RUTHZIL TRATOR COMERCIAL DE PEÇAS LTDA 11 97083-6812 ROLANDO CITRANGULO

NOVEMBRO 2006

DL 200

PARTS LIST
LISTE DE PIECES
DETACHEES

DOOSAN

N°DE REFERENCE : K1024536AEF
HLAH - 2801

DOOSAN Wheel Loader DL200

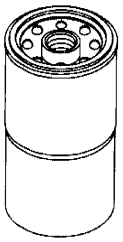

Filter		Interval(hr)
E/g oil filter	65.05510-5032A	500
E/g fuel filter	65.12503-5026	500
Element-inner(air cleaner)	474-00039	2000
Element-outer(air cleaner)	474-00040	1000
Suction filter-oil tank	2474-9016A	2000
Return filter-oil tank	474-00055	2000
Element-brake filter	K1009106	250
Aircon filter	2471-6050	1000
T/M filter	K1029612	1000
Element-Air Breather	K1029257	1000

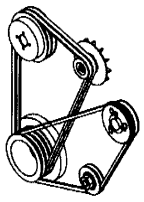

Belt	
Aircon Belt	2106-1019D25
Alternator Belt	65.96801-0194

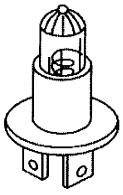

Bulb	
Bulb 24V 3W	515-00012A
Bulb-halogen 24V 70W	K1010656
Bulb 24V 21W	S864221H
Bulb 24V 70W	2515-1016D4

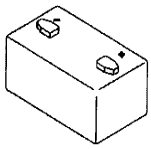



Battery / fuse / relay	
Battery	506-00006
Fuse 10A	2527-1016
Fuse 15A	2527-1017
Fuse 20A	2527-1018
Fuse 30A	2527-1025
Fusible link 27A	2527-1023A
Relay	2544-9033
Battery relay	2544-9024

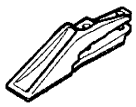

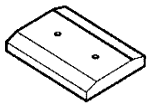

Teeth / Cutting edge	
Teeth(LH)	4713-4006A
Teeth(RH)	4713-4005A
Teeth(Center)	4713-4004A
Cutting edge(side)	4713-1190A
Cutting edge(Center)	4713-1192

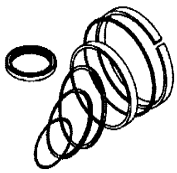

Seal kit	
Seal kit-steering	4440-6265K
Seal kit-lift	K9004590
Seal kit-bucket	K9004589

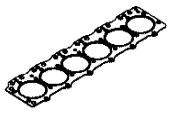

Engine Gasket kit	
Top overhaul gasket kit	65.99605-8042
All overhaul gasket kit	65.99601-8071

FOREWORD

● This parts list is shown the equipment components parts of 「DOOSAN WHEEL LOADER DL200」

1. HOW TO ORDER PARTS.

When ordering parts, please specify the follwing items as shown in the following example.

Ex.	1) Model of Machine	:	DL200	(Shown on name plate on the side cover)
	2) Machine Serial No	:	HLAH0-○○○○	(Shown on nameplate on the bed frame)
	3) Engine Serial No	:	DL06○○○○○○LD	(Shown on Engine cylinder block)
	4) Part No.	:	K1015172A	
	5) Description	:	PUMP	
	6) Q'ty	:	1	

2. HOW TO USE THIS PARTS LIST.

Key No. : It shows the reference no. on the illustration.

Part No. : It shows the part number of the parts which are included in an illustration.

Description : It shows the name of part. Components of an assembly part are shown with [•] marks and are shown on the line, or lines, below the assembly part. Also if the components with [•] mark is consists of further components part. These further components are shown with the marks [••].

Q'ty : It shows the quantity use for one machine. quantity of components show the quantity for one assembly part.

Service code : Abbreviations in this column have their own meaning as show below.

- B : The parts with this abbreviation shows that the part requires some work on it before installing in the machine.
- D : These parts are not serviceable, In case of the part with this abbreviation is a component of an assembly and is not available independently. The assembly part containing this part should be ordered.
- K : This means that the part is contained in the service part kit.
- M : This means that the part is available only with its mating parts altogether.
- R : The part with this abbreviation shows that the quantity of the part is changed depending on the machine, such as an adjusting shim etc.
- S : This part is specially provided as a service part, which was not provided in the machine before shipping from the factory.
- G : This part need grade control and should be requested as the same grade of counter part.

OP : Optional parts.

EX : Specific design parts.

OS : Over-sized parts.

US : Under-sized parts.
(Part with abbreviation "OS" or "US" is described on the line below the standard sized part.)

: The part with this mark is newly added on that page of the equipment.

Serial no. : Serial No. shows the machine serial number which the parts were applied.
As to the engine Serial No. shows only engine serial number which the parts were applied.
Parts without any applicable serial number are used in every machine.

ICA : ICA shows the interchangeability between the original and the improved parts.
Abbreviations used in this column are as follows;

I : Part No. in the column of "Replaceable part" can be used instead of this part but not vice versa.

P : This must not be used for machine. The part No. in the column "Replaceable part" should be used instead.

T : Parts No. those in the column of "Replaceable part" can be used as an assembly instead of this part.

Y : This part and the part in the column of "Replaceable part" are interchangeable with each other.

Blank : This part has no "Repleaceable part"

Replaceable part : Interchangeable parts nos. and their required quantity are shown in this column.
If interchangeable improved parts are provided for the parts which you may order, the improved parts classified as "I", "P" "T" or "Y" may be supplied.

● When repairing, it is recommended to use our standard part.

● Researching the assembling parts from Part No., see the 「Parts Index」 of this parts list.

NOV. 2006

AVANT-PROPOS

● Cette liste de pieces apparait dans le 「DOOSAN WHEEL LOADER DL200」.

1. COMMENT COMMANDER LES PICES.

Lorsque vous commanderez les pieces, veuillez specifier les articles suivants comme indiques dans l'exemple ci-dessous:

Ex.	1) Modele de machine	:	DL200
	2) Serie de la machine	:	HLAH0-○○○○
	3) Numero de serie du moteur	:	DL06○○○○○○LD
	4) Numero de la piece	:	K1015172A
	5) Description	:	POMPE
	6) Quantite	:	1

2. COMMENT UTILISER CE RECUEIL DE PIECES DETACHEES.

Numero de la cle : Indique le numero de reference de l'illustration.

Numero de la piece : Indique le numero de piece sur l'illustration.

Description : Nom de la piece. Les pieces composantes des pieces d'assemblage sont indiquees avec une marque [•] en dessous des pieces d'assemblage. Aussi, si les pieces composantes sont marques d'un [•]. Cela indique qu'ily a plusieurs pieces composantes, ces autres pieces composantes sont indiquees par un [••].

Quantite : Quantite, montre la quantite utilisee pour une machine, cependant Q'te des composants de pieces montre la quantite utilisee pour un assemblage de pieces.

Code de Service : L'Abveration est un composant d'un code de service qui a sa propre signification comme indique ci-dessous.

B : La piece avec cette abreviation indique que la piece exige d'etre travaillee avant d'etre installee dans la machine.

D : La piece avec cette abreviation est uun composant d'un assemblage et n'est pas diponible toute seule, la d'assemblage contenant cette peece dcvrait ctrc commandee

K : Cette veut dire que la piece est inclue dans la trousse de pieces de service. "ensemble kit"

M : Cela signifie que la piece est disponible uniquement avec as peice piece d'accouplement.

R : La piece avec cette abreviation montre que la quantite de la piece est changee en fonction de la machine.

S : Cette piece est specialement approvisionnee en tant que piece de service, qui n'a pas ete livree dans la machine lors du depart de l'usine.

G : Cette piece a besoin d'on degerde controle et doit etre commande avec un niveau de degre equivalent.

OP : Prieces facultatives

EX : Pieces specifiquement dessinees

OS : Pieces demesurees

US : Pieces uop petites
La piece avec abreviation OS-US est decrite sur la ligne en dessous de la piece standard

: La piece avec cette marque vient d'ent d'etre rajoutee sur la page de l'equipement.

Numero de serie : Numero de serie indique le numero de serie de la machine avcc lesquels les pieces etaient appliquees.
En ce qui conceme le numero de serie du moteur. Celui-ci indique seulement le numero de serie du moteur sur lesquels les pieces etaient appliquess.
Les pieces qui n'ont aucun numero de serie applicable sont utilisees dans toutes les machines.

ICA : Indique l'interchangeabilite entre la piece originale et les piece ameliorees.
Les abreviations utilisees dans cette colonne sont les suivantes:

I : Piece numero dans la colonne de piece de piece de remplacement peut etre utilisee au lieu de cette piece mais pas l'inverse.

P : Ceci ne peut etrc utilise pour la machine. Le numero de piece dans colonne pieces remplacable devrait etre utilise a la place.

T : Numcros de pieces, ceux dans la colonne piece de remplacement' peuvent etre utilisees en tant qu'assemblage au lieu de cette piece.

Y : Cette piece et la piece dans la colonne piece de remplacement'sont.

Piece de rechange : Numeros de pieces interchangeables et leurs quantites requises sont indiques sur cette colonne. Si les pieces ameliorees interchangeables sont fournies, les pieces que vous pouvez commander sont classees de la facon suivante "I", "P", "T" ou "Y" peuvent etre fournies.

- Lors de reparation. il est recommande d'utiliser notre piece standard.
- Recherche de pieces d'assemblage a partir des numeros de pieces
  Regarder l'index des pieces qui se trouvent a la fin du livre.

Nov. 2006

CONTENTS
TABLES DES MATIERES

● ENGINE PARTS

Fig.	011	CYLINDER BLOCK	BLOC CYLINDRE	2
	012	TIMING GEAR CASE	CARTER DE DISTRIBUTION	4
	013	FLYWHEEL HOUSING	CARTER DE VOLANT MOTEUR	6
	014	OIL SEAL	JOINT	8
	015	BREATHER	CONDUIT DE VENTILATION	10
	016	DRIVING SYSTEM	SYSTEME D'CENTRAINEMENT	12
	017	CYLINDER HEAD	CULLASSE	14
	018	CYLINDER HEAD COVER	COUVERTURE DE CULASSE	16
	019	TIMING SYSTEM	SYSTEME DE SYNCHRONISATION	18
	020	OIL PUMP	POMPE A HUILE	22
	021	OIL FILTER & OIL COOLER	FILTRE D'HUILE	24
	022	OIL PAN	CARTER D'HUILE	26
	023	THERMOSTAT	THERMOSTAT	28
	024	WATER PUMP	SYSTEME DE REFROIDSSEMENT	30
	025	COOLING FAN	VENTILATEUR	32
	026	INTAKE & EXHAUST MANIFOLD	D'ADMISSION ET D'ECHAPPEMENT	34
	027	TURBO CHARGER	CHARGEUR DE TURBO	36
	028	INJECTOR	INJECTEUR	38
	029	INJECTION PIPE	PIPE D'INJECTION	40
	030	INJECTION PUMP	POMPE D'INJECTION	42
	031	ENGINE CONTROL	COMMANDE REGIME MOTEUR	44
	032	FUEL SYSTEM	INJECTEUR ET POMPE-INJECTEUR	46
	033	ALTERNATOR MOUNTING	ALTERNATEUR	48
	034	LIFTING HOOK	CROCHET DE LEVAGE	50
	035	STARTER	DEMARREUR	52
	036	SENSOR	CAPTEUR	54
	037	WIRE HARNESS	JAGUE DE NIVEAU	56
	038	ENGINE MOUNTING	SUPPORT DE MOTEUR	58
	039	AIR COMPRESSOR	COMPRESSEUR D'AIR	60
	040	OVERHAUL GASKET KIT - ALL	KIT DE GARNITURE DE REVISION	62
	041	OVERHAUL GASKET KIT - TOP	KIT DE GARNITURE DE REVISION	64

● BODY PARTS

Fig.	1100	FRAME	CHASSIS	66
	1110	ENGINE MOUNTING	SUPPORT DE MOTEUR	70
	1120	OIL TANK	RESERVOIR D'HUILE	76
	1130	FUEL TANK	RESERVOIR DE GAZOLE	78
	1140	AXLE & DRIVE SHAFT	PONTS ET ARBRES DE TRANSMISSION	80
	1150	WHEEL ASS'Y	VOLANT	84
	1160	MAIN PIPING	CIRCUIT HYDRAULIQUE PRINCIPAL	86

1170	STEERING PIPING	CANALISATION DE PILOTAGE	90
1180	CONTROL VALVE PIPING - 3 SPOOL	CANALISATIONS PRINCIPALES	92
1190	PILOT PIPING - 3 SPOOL	CONDUITES DE PILOTE	96
1200	BRAKE PIPING	CANALISATION DE FREIN	98
1210	COOLER PIPING	SYSTEME REFROIDISSEMENT	104
1220	REMOTE PRESS CHECK PIPING	TUYAUTERIE DISTANCE DE PRESSION	112
1230	CABIN MOUNTING	MONTAGE DE CABINE	114
1240	CABIN(1)-BODY	CARTER DE CABINE	116
1250	CABIN(2) - INTERIOR SHEET	FEUILLE DE CABINE	120
1260	CABIN(3) - DOOR ASS'Y(L.H)	CADRE DE CABINE	122
1270	CABIN(4) - DOOR ASS'Y(R.H)	CADRE DE CABINE	126
1280	CABIN(5) - GLASS	VERRE DE CABINE	128
1290	CONTROL STAND	CONSOLE DE COMMANDE	130
1300	JOYSTICK MOUNTING - 3rd LEVER	SUPPORT DE MANCHE	134
1310	JOYSTICK MOUNTING - FINGER LEVER	SUPPORT DE MANCHE	136
1320	SEAT ASS'Y- MECHANICAL SUSPENSE	SIEGE	138
1330	DUCT ASS'Y	CONDUIT	140
1340	STEERING ASS'Y	ENSEMBLE DIRECTION	142
1350	COUNTER WEIGHT & REAR LAMP	CONTRE-POIDES ET COFFRE A BATTERIE	144
1360	BAFFLE ASS'Y	DEROUTTER	146
1370	ENGINE COVER ASS`Y	ENSEMBLE DE COUVERCLE	148
1380	FENDER & LADDER	GARDE-BOUE ECHELLE	154
1390	ELECTRIC BOX - FNR LEVER	EQUIPMENT ELECTRIQUE	158
1400	ELECTRIC BOX - FINGER REMOCON	EQUIPMENT ELECTRIQUE	162
1410	ELECTRIC PARTS - CABIN	EQUIPMENT ELECTRIQUE	166
1420	ELECTRIC PARTS - ENGINE	EQUIPMENT ELECTRIQUE	172
1430	ALTERNATOR MOUNTING	ALTERNATEUR	174
1440	ELECTRIC PARTS(1) - BATTERY & REAR LAMP	EQUIPMENT ELECTRIQUE	176
1450	ELECTRIC PARTS(2) - FRONT	EQUIPMENT ELECTRIQUE	178
1460	ELECTRIC PARTS(3) - WIRING	EQUIPMENT ELECTRIQUE	180
1470	AIRCONDITIONER(1)	REFRIGERATION	182
1490	AIRCONDITIONER(3)	REFRIGERATION	186
1490	AIRCONDITIONER(3)	REFRIGERATION	188

● FRONT PARTS

Fig. 2100	LOADER ARM ASS'Y	EQUIPMENT FRONTALES	190
2110	FRONT LUBRICATION PIPING	CONDUITES DE FRONTALES	192
2120	ARM RAISE KICK OUT ASS'Y	COUP-DE-PIED D'AUGMENTER DEHORS	194
2130	RETURN TO DIG ASS'Y	RETOUR EN POSITION	196
2140	BUCKET-1.9m³ TOOTH	GODET	198

● HYDRAULIC COMPONENTS

Fig. 3100	ENGINE CONNECT - TRANSMISSION	LE MOTEUR SE RELIENT	200
3110	INPUT - TRANSMISSION	ENTREE	202
3120	GEARBOX HOUSING - T/MISSION	GEARBOX HOUSING - T/MISSION	204
3130	COUPLING K1 - TRANSMISSION	EMBRAYAGE K1	206
3140	COUPLING K2 - TRANSMISSION	EMBRAYAGE K2	210

3150	COUPLING K3 - TRANSMISSION	EMBRAYAGE K3	214
3160	COUPLING K4 - TRANSMISSION	EMBRAYAGE K4	216
3170	COUPLING KV - TRANSMISSION	EMBRAYAGE KV	220
3180	COUPLING KR - TRANSMISSION	EMBRAYAGE KR	224
3190	OUTPUT - TRANSMISSION	RENDEMENT	228
3200	POWER TAKE OFF - TRANSMISSION	DECOLLAGE DE PUISSANCE	230
3210	GEAR SHIFT SYSTEM(1) - TRANSMISSION	SYSTEME DE CHANGEMENT DE VITESSE	232
3220	GEAR SHIFT SYSTEM(2) - TRANSMISSION	SYSTEME DE CHANGEMENT DE VITESSE	234
3230	PRESSURE REGULATOR - TRANSMISSION	REGULATEUR DE PRESSION	238
3240	PRESSURE OIL PUMP - TRANSMISSION	POMPE D'HUILE DE PRESSION	240
3250	EMG.STEERING PUMP - TRANSMISSION	POMPE DE DIRECTION	242
3260	INDICATOR TRANSMITTER - TRANSMISSION	EMETTEUR D'INDICATEUR	244
3270	TEMPERATURE SENSOR - TRANSMISSION	CAPTEUR	246
3280	FILTER - TRANSMISSION	FILTRE	248
3290	OIL DIPSTICK - TRANSMISSION	JAUGE D'DHUILE	250
3300	LOOSE PARTS - TRANSMISSION	PCES.DETACHEES	252
3310	INTERMEDIATE CONNECT - FRONT AXLE	RELIENT	254
3320	DIFFERENTIAL HOUSING - REAR AXLE	CARTER DE DIFFERENCIEL	256
3330	DIFFERENTIAL - FRONT AXLE	PORTEUR DIFFERENTIEL	258
3340	PLANETARY GEAR - FRONT AXLE	PLANETAIRE PIGNON	262
3350	BRAKE - FRONT AXLE	FREIN	264
3360	DIFFERENTIAL HOUSING - REAR AXLE	CARTER DE DIFFERENCIEL	268
3370	DIFFERENTIAL - REAR AXLE	PORTEUR DIFFERENTIEL	270
3380	PLANETARY GEAR - REAR AXLE	PLANETAIRE PIGNON	274
3390	BRAKE - REAR AXLE	FREIN	276
3400	MAIN PUMP	POMPE PRINCIPAL	278
3410	STEERING UNIT	UNITE	280
3420	CUSHION VALVE	SOUPAPE DE SECVRITE	282
3430	BRAKE & PILOT SUPPLY VALVE	FREIN ET SOUPAPE DE COMMANDE	284
3440	BRAKE FOOT VALVE	VANNE DE FREIN	286
3450	CONTROL VALVE - 3 SPOOL	VANNE DE COMMANDE	288
3460	CONTROL VALVE - 2 SPOOL	VANNE DE COMMANDE	290
3470	EMERGENCY STEERING PUMP	POMPE DE DIRECTION	292
3480	BUCKET CYLINDER	VERIN DE GODET	294
3490	LIFT CYLINDER	VERIN DE LEVAGE GAUCH	296
3500	STEERING CYLINDER	VERIN DE DIRECTION	298
3510	FAN MOTOR	MOTEUR DE VENTILATEUR	300
3520	FAN MOTOR (Bi-rotation)	MOTEUR DE VENTILATEUR	302
3530	REMOTE CONTROL VALVE	CANNE DE TELECOMMANDE	304
3540	REMOTE CONTROL VALVE - FNR	VANNE DE TELECOMMANDE	308
3550	REMOTE CONTROL VALVE - 3SP + 3 LEVER	VANNE DE TELECOMMANDE	312
3560	REMOTE CONTROL VALVE - 2SP + 2 LEVER	VANNE DE TELECOMMANDE	314
3570	INTERMEDIATE CONNECT-FRONT AXLE	RELIENT	316
3580	DIFFERENTIAL HOUSING-FRONT AXLE	CARTER DE DIFFERENCIEL	318
3590	DIFFERENTIAL-FRONT AXLE	DIFFERENCIEL AVANT	320
3600	PLANET GEAR-FRONT AXLE	REDUCTEUR AVANT	324

3610	BRAKE-FRONT AXLE	FREIN DE AXE	326
3620	INTERMEDIATE CONNECT- REAR AXLE	RELIENT	330
3630	DIFFERENTIAL HOUSING - REAR AXLE	CARTER DE DIFFERENCIEL	332
3640	DIFFERENTIAL - REAR AXLE	DIFFERENCIEL AVANT	334
3650	PLANETARY GEAR - REAR AXLE	REDUCTEUR AVANT	338
3660	BRAKE - REAR AXLE	FREIN DE AXE	340

● OTHER PARTS

Fig. 4100	TOOL	ENSEMBLE OUTILLAGE	342
4110	SPARE PARTS	PIECES DE RECHANGE	346
4120	NAME PLATE - EUROPE	PLAT NOMME	348
4130	NAME PLATE - EXPORT	PLAT NOMME	352

● OPTION PARTS

Fig. 5100	EMERGENCY STEERING	POMPE DE DIRECTION	356
5110	EMERGENCY STEERING - ELECTRIC	POMPE DE DIRECTION-ELECTRIQUE	358
5120	COUNTER WEIGHT & REAR FENDER MOUNTING	CONTRE-POIDS	360
5130	ADDITIONAL COUNTER WEIGHT	CONTRE-POIDES	362
5140	CONTROL VALVE PIPING - 2 SPOOL	CANALISATIONS PRINCIPALES	364
5150	PILOT PIPING - 2 SPOOL	CONDUITES DE PILOTE	368
5160	PILOT PIPING - 2 FNR + 2 SPOOL	CONDUITES DE PILOTE	370
5170	PILOT PIPING - FNR + 3 SPOOL	CONDUITES DE PILOTE	372
5180	LOAD ISOLATION SYSTEM	ISOLEMENT DE CHARGE	374
5190	LIS SWITCH	INTERRUPTEUR	376
5200	LOW NOISE COVER	LE BAS BRUIT COUVRENT	378
5210	RADIATOR GRILLE ASS'Y	RADIATEUR GRIL	380
5220	FENDER & LADDER - FULL	BOUE ECHELLE	382
5230	FENDER & LADDER & BUCKET	GARDE-BOUE ECHELLE	388
5240	REAR FENDER	SUPPORT	394
5250	WHEEL ASS'Y	VOLANT	398
5260	BUCKET -2.0m³ CUTTING EDGE	GODET	400
5270	COUNTER WEIGHT & REAR LAMP	CONTRE-POIDES ET COFFRE A BATTERIE	402
5280	FUEL HEATER	EQUIPMENT ELECTRIQUE	406
5290	ROTATING BEACON	FEU DE CIRCULATION	408
5300	ARM FLOAT KICK OUT ASS'Y	COUP-DE-PIED DE FLOTTEUR DEHORS	410
5310	ARM FLOAT KICK - ELECTRIC	INTERRUPTEUR	412
5320	ALTENATOR - 80A	ALTENATEUR	414
5330	FNR SWITCH	COMMUTATEUR	416
5340	NOISE FILTER - WIPER MOTOR	BRUIT FILTRE	418
5350	NOISE FILTER (AC)	BRUIT FILTRE	420
5360	CD PLAYER	JOUEUR DE CD	422
5370	AXLE & DRIVE SHAFT-SUPER MAX.TRAC	PONTS ET ARBRES DE TRANSMISSION	424
5380	QUICK COUPLER ASS'Y	COUPLEUR RAPIDE	428
5390	QUICK COUPLER PIPING	TUYAUTERIE DE COUPLEUR RAPIDE	430
5400	BUCKET - 1.9㎥ - QUICK COUPLER	GODET	432
5410	BUCKET - 1.9㎥ - QUICK COUPLER	GODET	434
5420	PALLET FORK - QUICK COUPLER	FOURCHES A PALETTES	436

● **WORLDWIDE NETWORK**

DATE	JUN. 30, 2007
REV.NO.	EXB07-06

Fig. 011 CYLINDER BLOCK
BLOC CYLINDRE

Serial No. ;

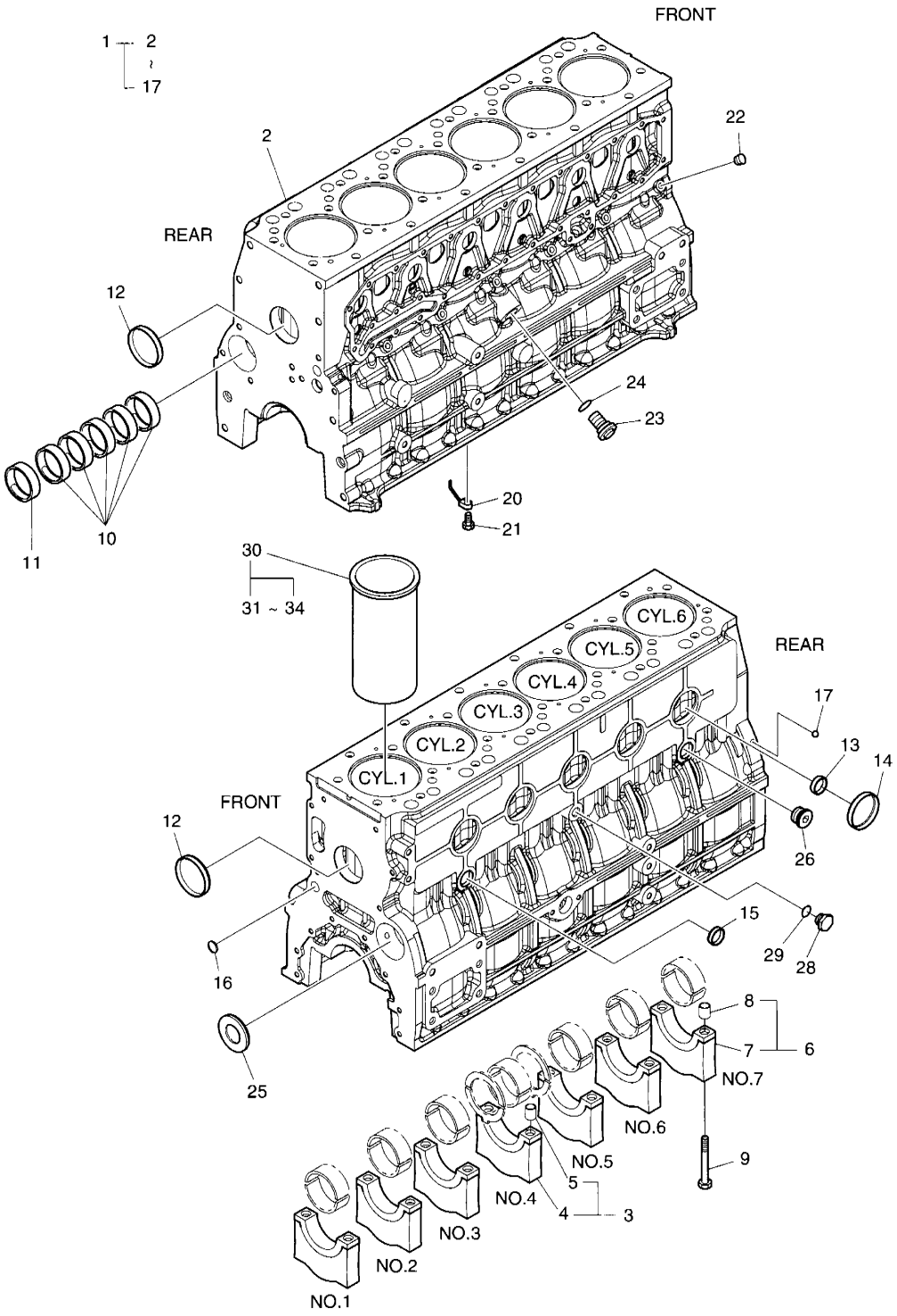

DATE	JUN. 30, 2007
REV. NO.	EXB07-06

Fig. 011 CYLINDER BLOCK BLOC CYLINDRE

Serial No. ;

Key No.	Part No.	Description	Description	Q'ty	S.C	Serial No.	ICA	Replaceable part	
								Part No.	Q'ty
I-1	65.01101-6085B	CYLINDER BLOCK ASS'Y	BLOC CYLINDRE	1		~070611	I	65.01101-6092A	1
	65.01101-6092A	**CYLINDER BLOCK ASS'Y**	BLOC CYLINDRE	1		070612~			
2	65.01101-0054B	. CYLINDER BLOCK	. BLOC CYLINDRE	1	D	~070611			
	65.01101-0056A	**. CYLINDER BLOCK**	. BLOC CYLINDRE	1	D	070612~			
3	65.01105-6005B	. BEARING CAP ASS'Y(No:3)	. CHAPEAU DE PALIER	1	D				
4	65.01105-1051B	.. CAP;BEARING	.. CHAPEAU	1	D				
5	65.91710-0001	.. RING. STOPPER. BRG CAP	.. BAGUE D'ETANCHEITE	2					
6	65.01105-6006B	. BEARING CAP ASS'Y	. CHAPEAU DE PALIER	6	D				
7	65.01105-1052B	.. CAP;BEARING	.. CHAPEAU	1	D				
8	65.91710-0001	.. RING. STOPPER. BRG CAP	.. BAGUE D'ETANCHEITE	2					
9	65.90020-0066A	. BOLT;BRG CAP	. BOULON A 6 PANS	14					
10	65.04410-0021A	. BUSH;CAMSHAFT	. BUISSON	6	B				
11	65.04410-0022	. BUSH;CAMSHAFT	. BUISSON	1	B				
12	65.90302-0009	. PLUG;CORE	. BOUCHON B28D	2					
13	65.90302-0042	. PLUG CORE	. BOUCHON DE	8					
14	65.90302-0034	. PLUG CORE	. BOUCHON DE	5					
15	65.90302-0041	. PLUG CORE	. BOUCHON DE	1					
16	65.91606-0041	. PLUG CORE	. BOUCHON DE	2					
17	06.31641-0618	. BALL;STEEL	. BILLE	1					
20	65.01601-5020	NOZZLE;OIL SPRAY	INJECTEUR	6					
21	65.05401-5031	RELIEF VALVE ASS'Y	SOULAGEMENT VANNE	6					
22	65.90320-0022	PLUG;SCREW	BOUCHON A VIS	7					
23	65.05401-5002F	RELIEF VALVE ASSY	SOULAGEMENT VANNE	1		~070416	Y	65.05401-5002G	1
	65.05401-5002G	**RELIEF VALVE ASSY**	SOULAGEMENT VANNE	1		070417~			
24	06.56021-0102	O-RING	JOINT TORIQUE	1					
25	65.91605-0002	COVER;CORE HOLE	COUVERCLE	1					
26	65.90310-0134	SCREW;PLUG	BOUCHON A VIS	1					
28	65.90310-0135	SCREW;PLUG	BOUCHON A VIS	1					
29	06.56190-0705	RING;SEAL	ENSEMBLE BAGUE	1					
30	65.01201-0075A	CYLINDER LINER - GRADE	VIS DE REGLAGE	6	D				
31	65.01201-0076	. LINER;CYLINDER - 1A	. CHEMISE DE CYLINDRE	6					
32	65.01201-0077	. LINER;CYLINDER - 1B	. CHEMISE DE CYLINDRE	6					
33	65.01201-0078	. LINER;CYLINDER - 2A	. CHEMISE DE CYLINDRE	6					
34	65.01201-0079	. LINER;CYLINDER - 2B	. CHEMISE DE CYLINDRE	6					

DATE	JUN. 30, 2007
REV.NO.	EXB07-06

Fig. 012 TIMING GEAR CASE
CARTER DE DISTRIBUTION

Serial No. ;

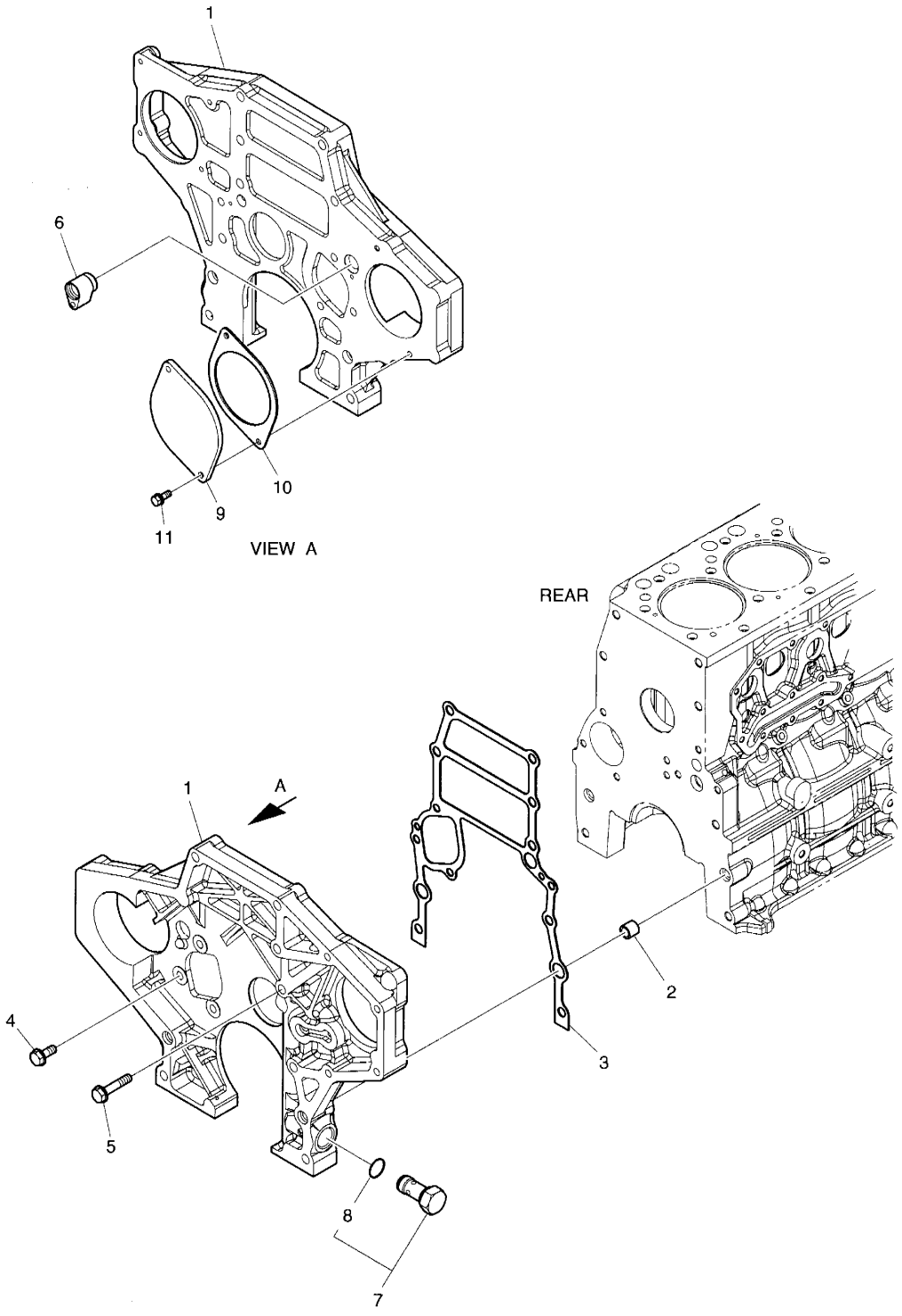

DATE	JUN. 30, 2007
REV. NO.	EXB07-06

Fig. 012 TIMING GEAR CASE
CARTER DE DISTRIBUTION

Serial No. ;

Key No.	Part No.	Description	Description	Q'ty	S.C	Serial No.	ICA	Replaceable part	
								Part No.	Q'ty
012-1	65.01304-0029	CASE;TIMING GEAR	CARTER	1		~070515	Y	65.01304-0029A	1
	65.01304-0029A	**CASE;TIMING GEAR**	CARTER	1		070516~			
2	65.91710-0016	RING;STOPPER	RESSORT	2					
3	65.01903-0034	GASKET	JOINT	1					
4	65.90020-0063B	BOLT	BOULON	3					
5	65.90020-0080	BOLT	BOULON	1					
6	65.98130-0241	ADAPTER	ADAPTEUR	1					
7	65.05401-5032	RELIEF VALVE ASS'Y	SOULAGEMENT VANNE	1					
8	65.96501-0074	. O-RING	. JOINT TORIQUE	1					
9	65.91601-0009	COVER	COUVERCLE	1					
10	65.38901-0018A	GASKET;PTO	JOINT	1					
11	06.01943-3317	BOLT	BOULON	2					

DATE	JUN. 30, 2007
REV.NO.	EXB07-06

Fig. 013 FLYWHEEL HOUSING
CARTER DE VOLANT MOTEUR

Serial No. ;

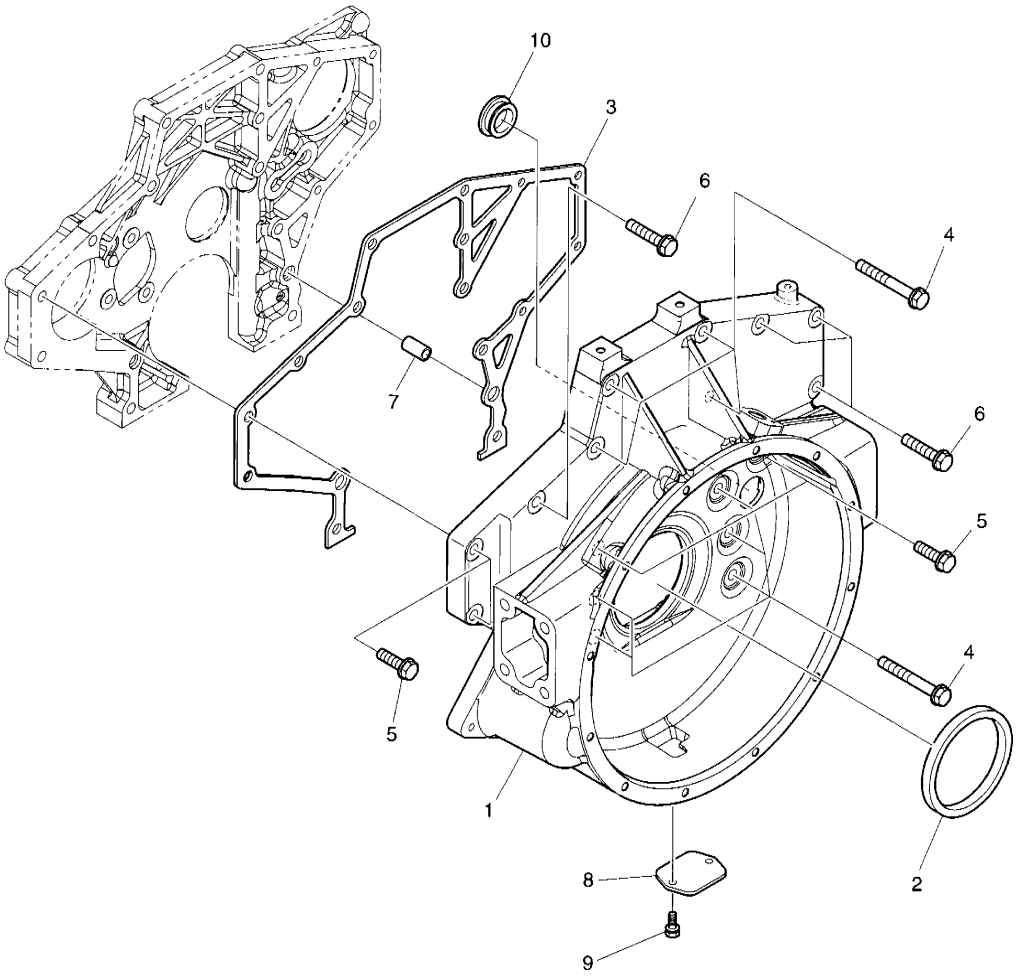

DATE	JUN. 30, 2007
REV. NO.	EXB07-06

Fig. 013 FLYWHEEL HOUSING
CARTER DE VOLANT MOTEUR

Serial No. ;

Key No.	Part No.	Description	Description	Q'ty	S.C	Serial No.	ICA	Replaceable part	
								Part No.	Q'ty
013-1	65.01401-0262	HOUSING;FLYWHEEL	BOITIER	1		~070312	Y	65.01401-0262A	1
	65.01401-0262A	**HOUSING;FLYWHEEL**	BOITIER	1		070313~			
2	65.01510-0040	SEAL;OIL	JOINT D'HUILE	1					
3	65.01904-0032	GASKET	JOINT	1					
4	65.90020-0100	BOLT	BOULON	9					
5	65.90020-0101	BOLT	BOULON	4					
6	65.90020-0105	BOLT	BOULON	4					
7	65.91710-0009	RING;STOPPER	RESSORT	2					
8	65.01414-0004A	COVER;TIMING POINT HOLE	COUVERCLE	1					
9	06.01923-3111	BOLT	BOULON	2					
10	65.96401-0014	CAP;RUBBER	ARRER	1					

DATE	NOV. 24, 2006
1st EDITION	

Fig. 014 OIL SEAL JOINT

Serial No. ;

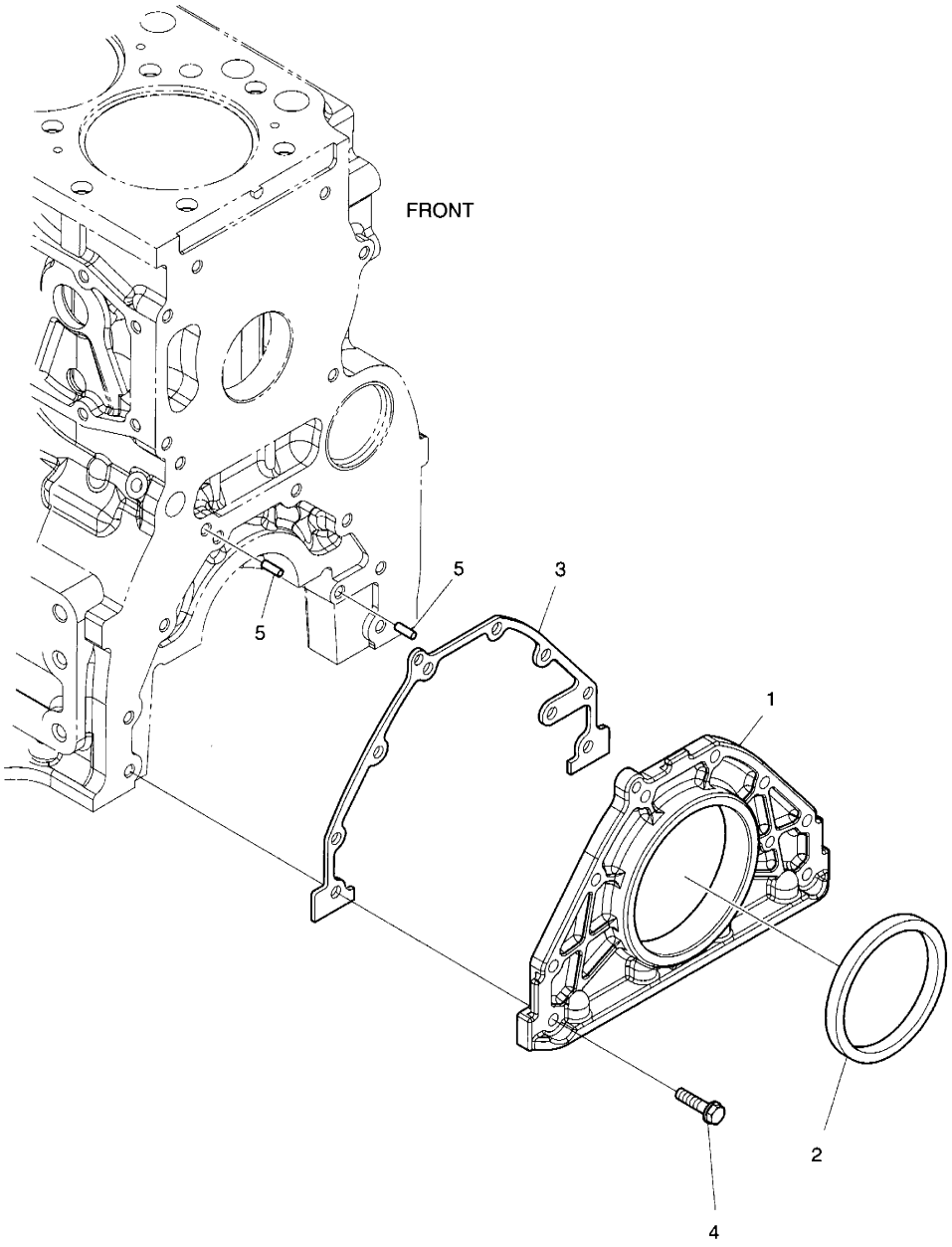

DATE	NOV. 24, 2006
1st EDITION	

Fig. 014 OIL SEAL JOINT

Serial No. ;

Key No.	Part No.	Description	Description	Q'ty	S.C	Serial No.	ICA	Replaceable part	
								Part No.	Q'ty
J14-1	65.01501-5003A	COVER;SEALING	COUVERCLE	1					
2	65.01510-0157	SEAL;OIL	JOINT D'HUILE	1					
3	65.01905-0009	GASKET	JOINT	1					
4	06.01923-3116	BOLT	BOULON	8					
5	06.22022-1063	PIN	GOUJON D'ASSEMBLAGE	2					

DATE	JUN. 30, 2007
REV.NO.	EXB07-06

Fig. 015 BREATHER
CONDUIT DE VENTILATION

Serial No. ;

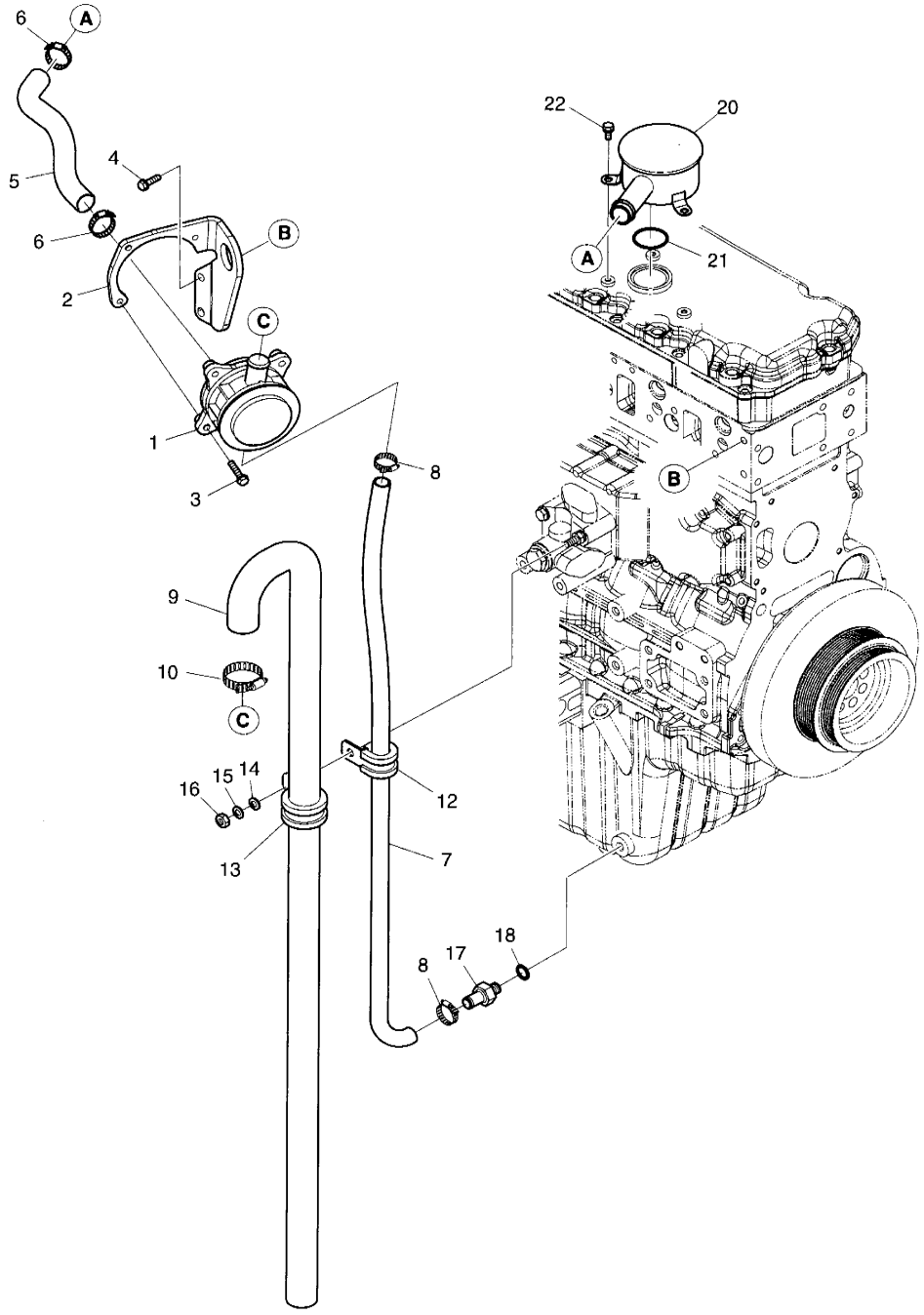

DATE	JUN. 30, 2007
REV. NO.	EXB07-06

Fig. 015 BREATHER
CONDUIT DE VENTILATION

Serial No. ;

Key No.	Part No.	Description	Description	Q'ty	S.C	Serial No.	ICA	Replaceable part	
								Part No.	Q'ty
015-1	65.01801-5100	HOUSING;BREATHER	LOGEMENT DE RENIFLARD	1					
2	65.01840-0017	BRACKET;BREATHER PIPE	SUPPORT	1					
3	06.01923-3114	BOLT	BOULON	3					
4	06.01924-3217	BOLT	BOULON	2					
5	65.96301-0478	HOSE;RUBBER	TUYAU FLEXIBLE	1					
6	06.67020-0105	CLAMP	COLLIER	2					
7	65.96301-0455A	HOSE;RUBBER	TUYAU FLEXIBLE	1					
8	65.97440-0005	CLAMP;HOSE	COLLIER	2		~071119	Y	65.97402-0025	2
	65.97402-0025	**CLAMP;HOSE**	COLLIER	2		071120~			
9	65.96301-0441	HOSE;RUBBER	TUYAU FLEXIBLE	1		~061220	Y	65.96301-0441A	1
	65.96301-0441A	HOSE;RUBBER	TUYAU FLEXIBLE	1		061221~			
10	06.67020-0105	CLAMP	COLLIER	1					
12	65.97401-5024	CLIP;PIPE	ATTACHE	1					
13	65.97401-5019	CLIP;PIPE	ATTACHE	1					
14	06.15010-2311	WASHER	CALE	1					
15	06.16731-2107	WASHER;SPRING	RONDELLE ELASTIQUE	1					
16	06.11063-8214	NUT	ECROU	1					
17	65.98131-0119	NIPPLE	GRAISSEUR	1					
18	06.56190-0719	SEAL RING	BAGUE D'ETANCHEITE	1					
20	65.01801-5043	HOUSING;BREATHER	LOGEMENT DE RENIFLARD	1		~061220	Y	65.01801-5043A	1
	65.01801-5043A	HOUSING;BREATHER	LOGEMENT DE RENIFLARD	1		061221~			
21	65.96501-0033B	O-RING	JOINT TORIQUE	1					
22	06.01923-3111	BOLT	BOULON	3					

DATE	JUN. 30, 2007
REV.NO.	EXB07-06

Fig. 016 DRIVING SYSTEM
SYSTEME D'CENTRAINEMENT

Serial No. ;

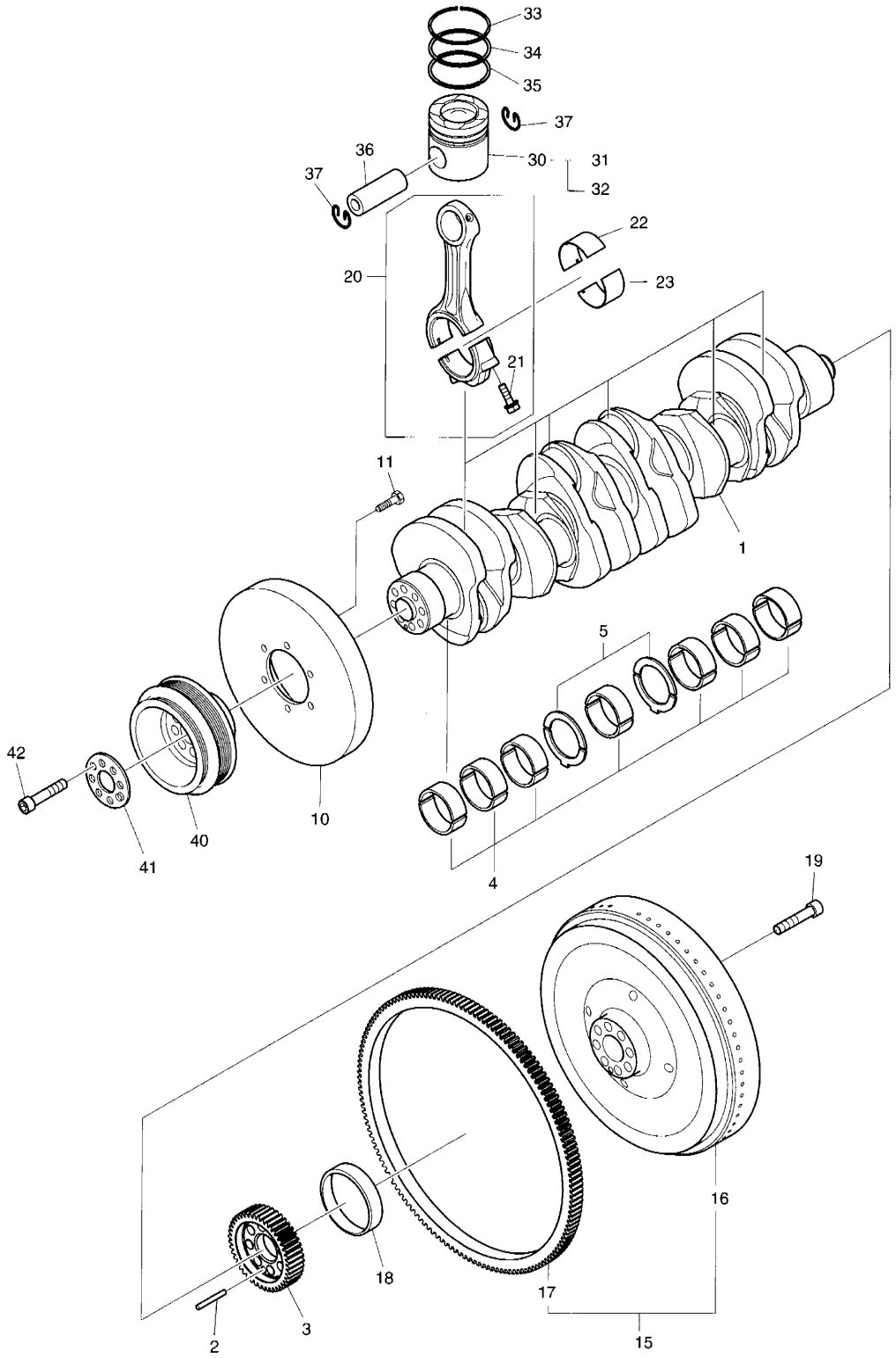

DATE	JUN. 30, 2007
REV. NO.	EXB07-06

Fig. 016 DRIVING SYSTEM SYSTEME D'CENTRAINEMENT

Serial No. ;

Key No.	Part No.	Description	Description	Q'ty	S.C	Serial No.	ICA	Replaceable part	
								Part No.	Q'ty
6-1	65.02101-0069A	CRANK SHAFT	VILEBREQUIN	1					
2	06.22022-1018	PIN;DOWEL	GOUPILLE	1					
3	65.02115-0016	GEAR;CRANKSHAFT	PIGNON	1					
4	65.01110-6140	METAL;MAIN	PALIER	7		~070314	Y	65.01110-6140A	7
	65.01110-6140A	**METAL;MAIN**	PALIER	7		070317~			
5	65.01150-6008	WASHER;THRUST	RONDELLE DE BUTEE	2					
10	65.02201-0002	DAMPER;VIBRATION	AMORTISSEUR DE	1					
11	65.90020-0062B	BOLT	BOULON	6					
15	65.02301-5152	FLYWHEEL ASS'Y	VOLANT	1					
16	65.02301-0294	. FLYWHEEL	. ENSEMBLE VOLANT	1					
17	65.02310-0006	. GEAR;RING	. ENGRENAGE	1					
18	65.02130-0004	BUSH;DRIVING	BUISSON	1					
19	65.90020-0123	BOLT	BOULON	8		~071120	Y	65.90020-0140A	8
	65.90020-0140A	**BOLT**	BOULON	8		071121~			
20	65.02401-6032B	CONNECTING ROD ASS'Y	BIELLE ASS'Y	6					
21	65.02411-0009	. BOLT;CONNECTING ROD	. VIS DE BIELLE	2					
22	65.02410-0040	METAL;CON-ROD(STD)	PALIER	6					
	65.02410-0041	METAL;CON-ROD(0.25)	PALIER	6	US				
	65.02410-0042	METAL;CON-ROD(0.50)	PALIER	6	US				
23	65.02410-0050	METAL;CON-ROD(STD)	PALIER	6					
	65.02410-0051	METAL;CON-ROD(0.25)	PALIER	6	US				
	65.02410-0052	METAL;CON-ROD(0.50)	PALIER	6	US				
30	65.02501-0476	PISTON;GRADE	PISTON	6	D				
31	65.02501-0477	. PISTON;A GRADE	. PISTON	6					
32	65.02501-0478	. PISTON;B GRADE	. PISTON	6					
33	65.02503-0132A	RING;PISTON	BAGUE D'ETANCHEITE	6					
34	65.02503-0133A	RING;PISTON	BAGUE D'ETANCHEITE	6					
35	65.02503-0134	RING;PISTON	BAGUE D'ETANCHEITE	6					
36	65.02502-0017A	PIN;PISTON	AXE DE PISTON	6					
37	06.29020-0125	RING;LOCK	BAGUE	12					
40	65.02601-0225B	PULLEY;V-BELT	POULIE DE COURROIE	1					
41	65.90701-0099	WASHER	CALE	1					
42	06.02106-0723	BOLT;SOCKET	BOULON	8					

DATE	DEC. 15, 2006
REV.NO.	EXB06-13

Fig. 017 CYLINDER HEAD CULLASSE

Serial No. ;

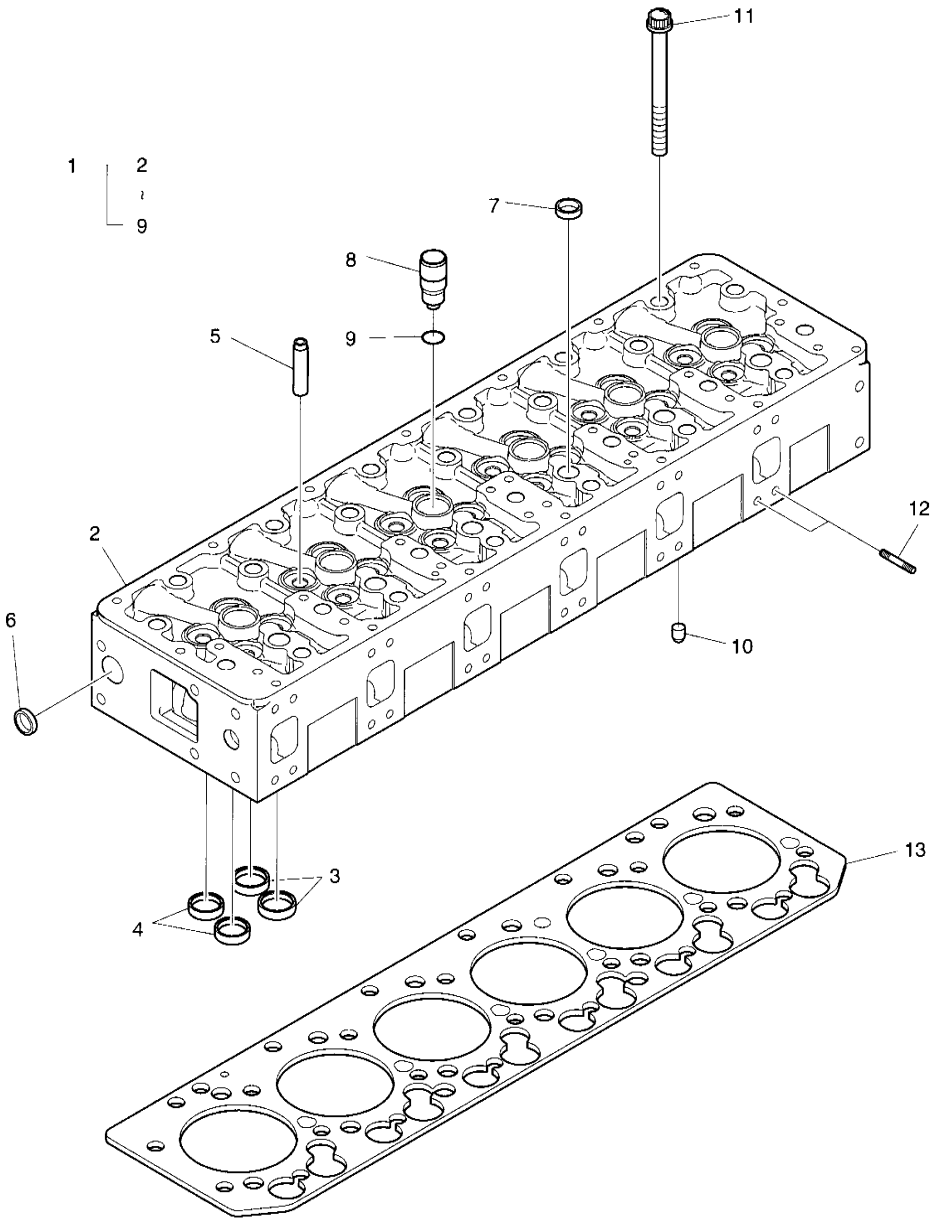

DATE	DEC. 15, 2006
REV. NO.	EXB06-13

Fig. 017 CYLINDER HEAD CULLASSE

Serial No. ;

Key No.	Part No.	Description	Description	Q'ty	S.C	Serial No.	ICA	Replaceable part	
								Part No.	Q'ty
017-1	65.03101-6090E	CYLINDER HEAD ASS'Y	CULLASSE	1		~061201	Y	65.03101-6090F	1
	65.03101-6090F	**CYLINDER HEAD ASS'Y**	CULLASSE	1		061202~			
2	65.03101-1068C	. CYLINDER HEAD	. CULLASSE	1	D				
3	65.03203-1062	. SEAT;VALVE	. SIEGE	12	B				
4	65.03203-1063	. SEAT;VALVE	. SIEGE	12	B				
5	65.03201-1016A	. GUIDE;VALVE	. GUIDE-SOUPAPE	24	B	~061201	Y	65.03201-1016B	24
	65.03201-1016B	**. GUIDE;VALVE**	. GUIDE-SOUPAPE	24	B	061202~			
6	65.90302-0048	. PLUG;CORE	. BOUCHON B28D	10					
7	65.90302-0029	. PLUG;CORE	. BOUCHON B28D	21					
8	65.03205-0006A	. BUSH;INJECTION NOZZLE	. COUSSINET	6					
9	65.96501-0088	. O-RING	. JOINT TORIQUE	6					
10	65.91030-0005	PIN;FIX	GOUJON	2					
11	65.90021-0009	BOLT	BOULON	26					
12	65.90201-0134	BOLT;STUD	GOUJON	24					
13	65.03901-0071	GASKET;CYLINDER HEAD	JOINT	1					

DATE	JUN. 30, 2007
REV.NO.	EXB07-06

Fig. 018 CYLINDER HEAD COVER
COUVERTURE DE CULASSE

Serial No. ;

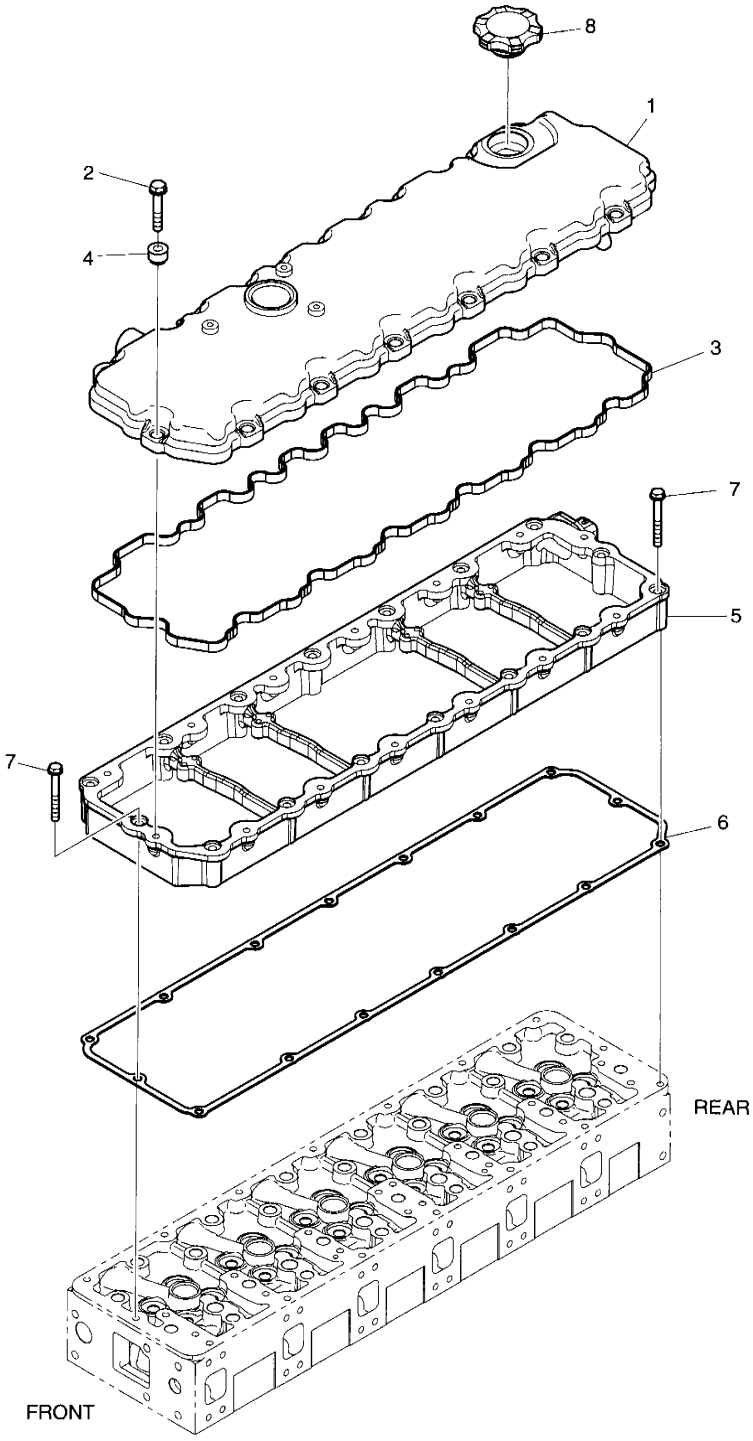

DATE	JUN. 30, 2007
REV. NO.	EXB07-06

Fig. 018 CYLINDER HEAD COVER COUVERTURE DE CULASSE

Serial No. ;

Key No.	Part No.	Description	Description	Q'ty	S.C	Serial No.	ICA	Replaceable part	
								Part No.	Q'ty
018-1	65.03401-5010	COVER;CYLINDER HEAD	COUVRE-CULASSE	1		~070705	Y	65.03401-5010B	1
	65.03401-5010B	COVER;CYLINDER HEAD	COUVRE-CULASSE	1		070706~			
2	65.90020-0109	BOLT	BOULON	14					
3	65.03905-0037A	GASKET;CYL. HEAD COVER	JOINT	1					
4	65.03905-5002	PACKING;CYL. HEAD COVER	JOINT	14					
5	65.03402-0008A	COVER;INTERMEDIATE	COUVERCLE	1		~070326	Y	65.03402-0008B	1
	65.03402-0008B	COVER;INTERMEDIATE	COUVERCLE	1		070327~			
6	65.03905-0041	GASKET;CYL. HEAD COVER	JOINT	1					
7	65.90020-0138	BOLT	BOULON	16					
8	65.01810-5011	CAP;OIL FILLER	VIBREUR	1					

DATE	JUN. 30, 2007
REV.NO.	EXB07-06

Fig. 019 TIMING SYSTEM
SYSTEME DE SYNCHRONISATION

Serial No. ;

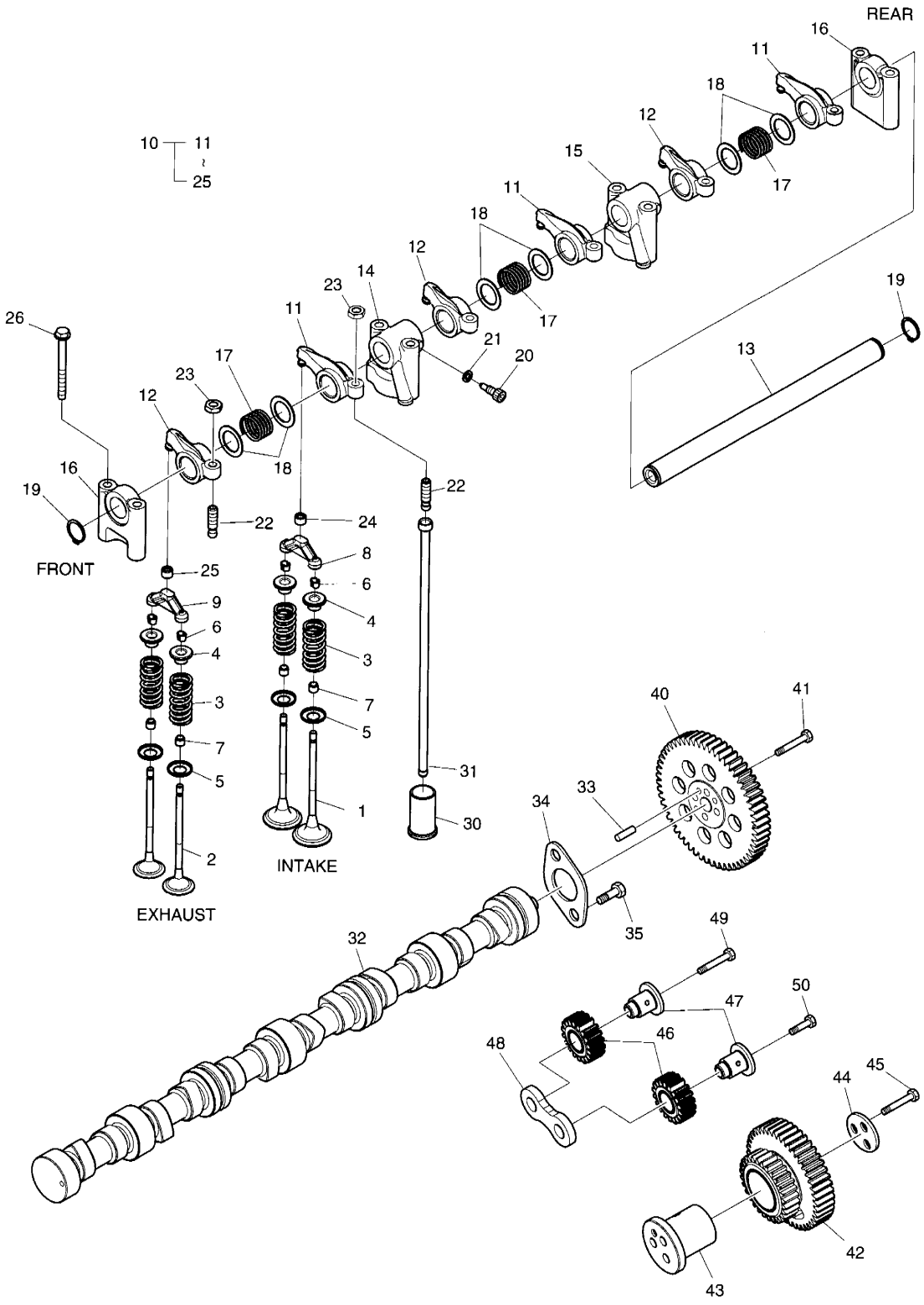

DATE	JUN. 30, 2007
REV. NO.	EXB07-06

Fig. 019 TIMING SYSTEM
SYSTEME DE SYNCHRONISATION

Serial No. ;

Key No.	Part No.	Description	Description	Q'ty	S.C	Serial No.	ICA	Replaceable part	
								Part No.	Q'ty
019-1	65.04101-0065B	VALVE;INTAKE	SOUPAPE D'ADMISSION	12					
2	65.04101-0066B	VALVE;EXHAUST	VANNE	12					
3	65.04102-0024	SPRING;VALVE	JOINT TORIQUE	24					
4	65.04103-0018	PLATE;VALVE SPRING	PLAQUE	24					
5	65.90701-0098	WASHER	CALE	24					
6	65.04104-0009	COTTER;VALVE	COTTER;VALVE	48					
7	65.04902-0016	SEAL;VALVE STEM	JOINT	24					
8	65.04130-0009A	CALIPER (INTAKE)	ETRIER	6					
9	65.04130-0011	CALIPER (EXHAUST)	ETRIER	6					
10	65.04200-6038A	ROCKER ARM S/F ASS'Y	AXE DE BRAS DE	2		~061213	Y	65.04200-6038B	2
	65.04200-6038B	ROCKER ARM S/F ASS'Y	AXE DE BRAS DE	2		~071121	Y	65.04200-6038C	2
	65.04200-6038C	**ROCKER ARM S/F ASS'Y**	AXE DE BRAS DE	2		071122~			
11	65.04201-5042A	. ROCKER ARM;INTAKE	. BRAS DE CULBUTEUR	3		~061213	Y	65.04201-5042B	3
	65.04201-5042B	. ROCKER ARM;INTAKE	. BRAS DE CULBUTEUR	3		~071121	Y	65.04201-5042C	3
	65.04201-5042C	**. ROCKER ARM;INTAKE**	. BRAS DE CULBUTEUR	3		071122~			
12	65.04201-5043A	. ROCKER ARM;EXHAUST	. BRAS DE CULBUTEUR	3		~061213	Y	65.04201-5043B	3
	65.04201-5043B	. ROCKER ARM;EXHAUST	. BRAS DE CULBUTEUR	3		~071121	Y	65.04201-5043C	3
	65.04201-5043C	**. ROCKER ARM;EXHAUST**	. BRAS DE CULBUTEUR	3		071122~			
13	65.04203-5020A	. SHAFT;ROCKER ARM	. AXE DU CULBUTEUR	1					
14	65.04202-0033	. BRACKET;ROCKER ARM	. SUPPORT	1					
15	65.04202-0034	. BRACKET;ROCKER ARM	. SUPPORT	1					
16	65.04202-0035	. BRACKET;ROCKER ARM	. SUPPORT	2					
17	65.97601-0124	. SPRING;COMPESSION	. RESSORT	3					
18	65.90701-0136B	. WASHER	. RONDELLE	6					
19	06.29010-0120	. RING;SNAP	. CIRCLIP	2					
20	65.90030-0018	. BOLT;SOCKET	. BOULON	1					
21	06.16110-0106	. WASHER	. RONDELLE	1					
22	65.04205-0014	. SCREW;ADJUST	. VIS	6					
23	65.90501-0003	. NUT	. ECROU 6 PANS	6					
24	65.04209-0005	. CAP;ADJUST SCREW (INTAKE)	. CHAPEAU	3		~071121	I	65.04209-5001	3
	65.04209-5001	**. CAP;ADJUST SCREW**	. CHAPEAU	3		071122~			
25	65.04209-0006	. CAP;ADJUST SCREW (EXHAUST)	. CHAPEAU	3					
26	65.90020-0120	. BOLT;COLLARED HEX.	. BOULON A 6 PANS	8					
30	65.04301-5003B	TAPPET;VALVE	TRINGLERIE	12		~070226	Y	65.04301-5003C	12
	65.04301-5003C	**TAPPET;VALVE**	TRINGLERIE	12		070227~			
31	65.04302-5015	ROD;PUSH	POUSSOIR	12					
32	65.04401-0045A	CAMSHAFT	EQUIPAGE MOBILE	1					
33	06.22022-1016	PIN;DOWEL	GOUPILLE	1					

DATE	JUN. 30, 2007
REV.NO.	EXB07-06

Fig. 019 TIMING SYSTEM
SYSTEME DE SYNCHRONISATION

Serial No. ;

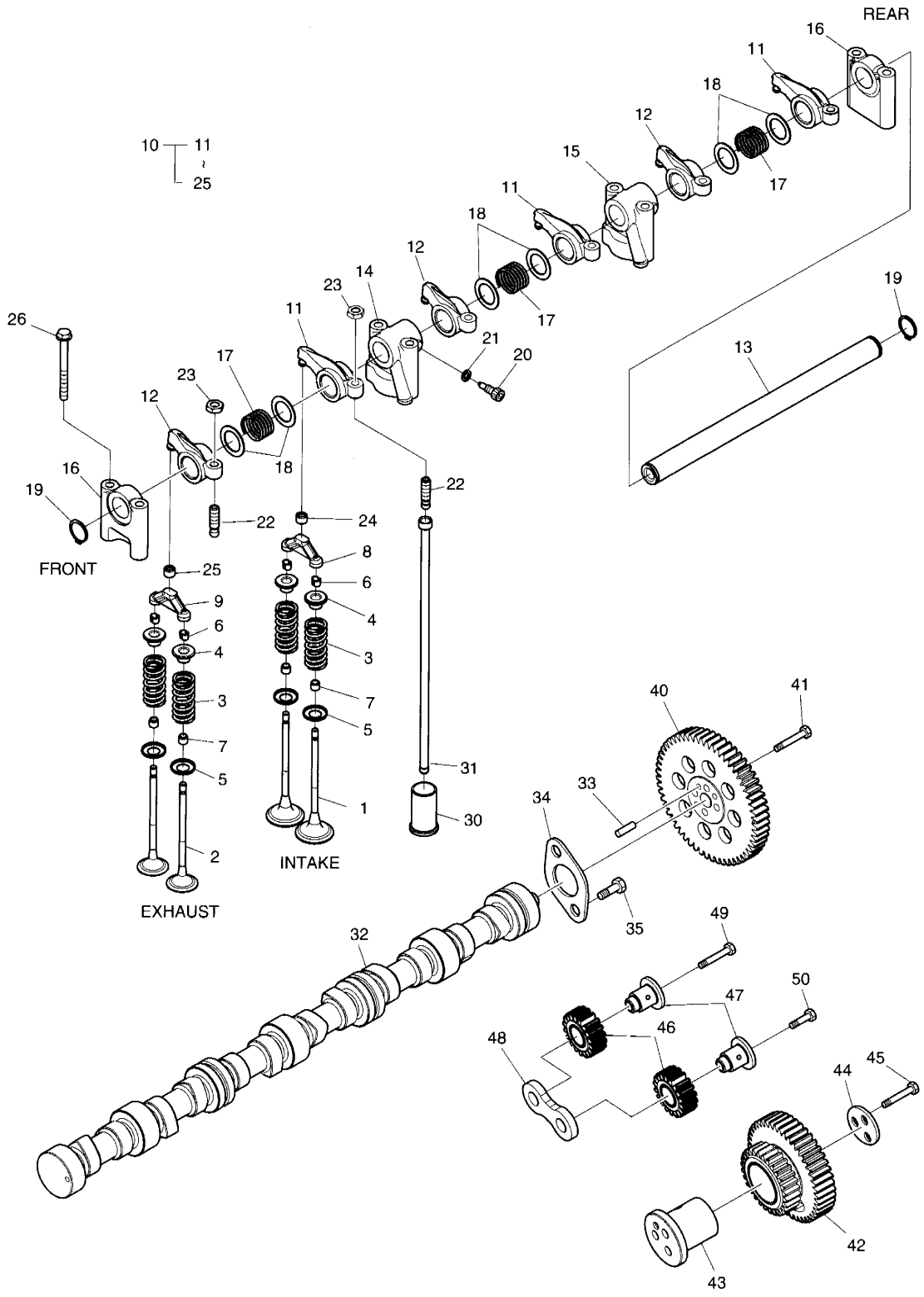

DATE	JUN. 30, 2007
REV. NO.	EXB07-06

Fig. 019 TIMING SYSTEM SYSTEME DE SYNCHRONISATION

Serial No. ;

Key No.	Part No.	Description	Description	Q'ty	S.C	Serial No.	ICA	Replaceable part	
								Part No.	Q'ty
019-34	65.90720-0032	WASHER;THRUST	RONDELLE DE BUTEE	1					
35	06.01913-2911	BOLT	BOULON	2					
40	65.04501-0017	GEAR;CAM SHAFT	PIGNON	1					
41	65.90020-0117	BOLT	BOULON	4					
42	65.04505-5018	GEAR;IDLE	PIGNON	1					
43	65.04506-0016	PIN;IDLE GEAR	GOUPILLE	1					
44	65.90720-0034B	WASHER;THRUST	RONDELLE DE BUTEE	1					
45	65.90020-0118	BOLT	BOULON	3					
46	65.11301-5002	GEAR;DRIVE;INJECTION	PIGNON	2					
47	65.04506-0015	PIN;IDLE GEAR	GOUPILLE	2					
48	65.90720-0033A	WASHER;THRUST	RONDELLE DE BUTEE	1					
49	65.90020-0118	BOLT	BOULON	1					
50	65.90020-0119	BOLT	BOULON	1					

DATE	JUN. 30, 2007
REV.NO.	EXB07-06

Fig. 020 OIL PUMP
POMPE A HUILE

Serial No. ;

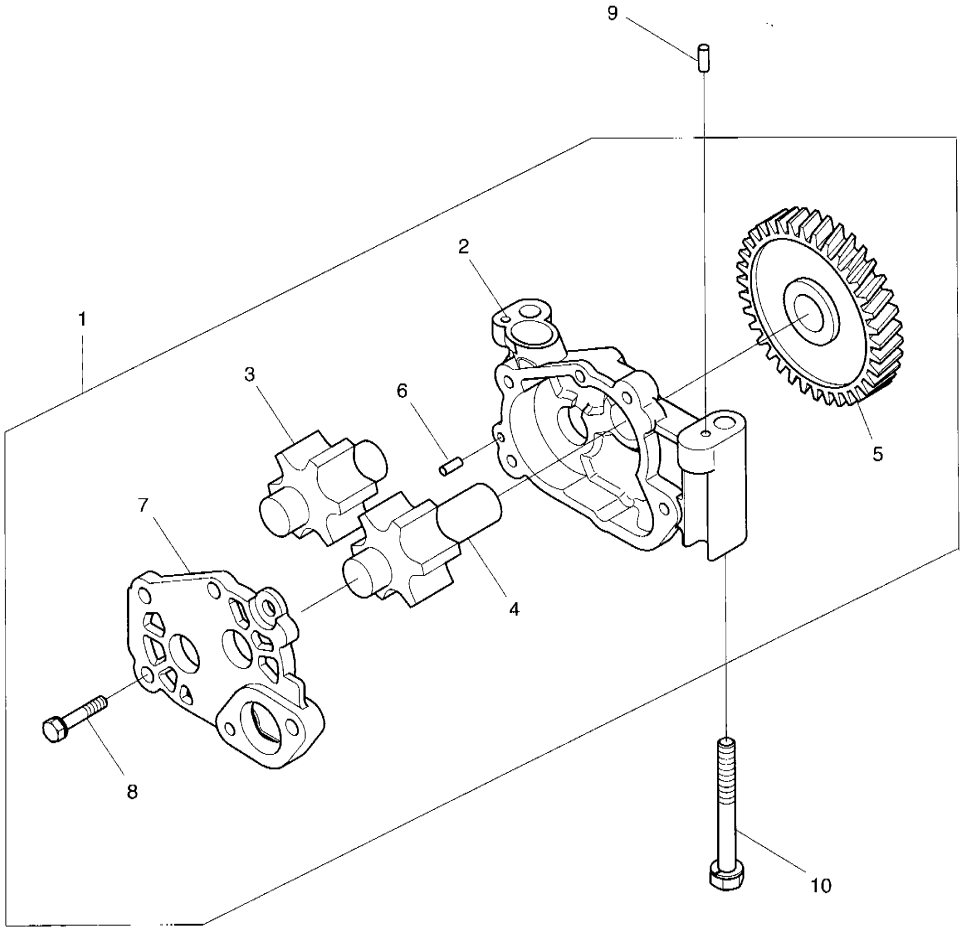

DATE	JUN. 30, 2007
REV. NO.	EXB07-06

Fig. 020 OIL PUMP POMPE A HUILE

Serial No. ;

Key No.	Part No.	Description	Description	Q'ty	S.C	Serial No.	ICA	Replaceable part	
								Part No.	Q'ty
1	65.05100-6063	OIL PUMP ASS'Y	ENSEMBLE POMPE A HUILE	1		~071108	Y	65.05100-6063A	1
	65.05100-6063A	**OIL PUMP ASS'Y**	ENSEMBLE POMPE A HUILE	1		071109~			
2	65.05102-0030	. HOUSING;OIL PUMP	. BOITIER POMPE A HUILE	1	D				
3	65.05104-0022	. GEAR;OIL PUMP	. POMPE A HUILE	1					
4	65.05104-0023	. GEAR;OIL PUMP	. POMPE A HUILE	1					
5	65.05201-0016	. GEAR;DRIVE;OIL PUMP	. PIGNON	1					
6	06.22022-0907	. DOWEL PIN 6M6X10	. GOUPILLE D'AJUSTAGE	1					
7	65.05103-0034	. COVER;OIL PUMP	. COUVERCLE	1					
8	06.01913-3114	. BOLT	. BOULON A 6 PANS	4					
9	06.22022-0909	PIN;DOWEL	GOUPILLE	2					
10	65.90020-0085	BOLT;COLLARED HEX.	BOULON A 6 PANS	2					

DATE	JUN. 30, 2007
REV.NO.	EXB07-06

Fig. 021 OIL FILTER & OIL COOLER
FILTRE D'HUILE

Serial No. ;

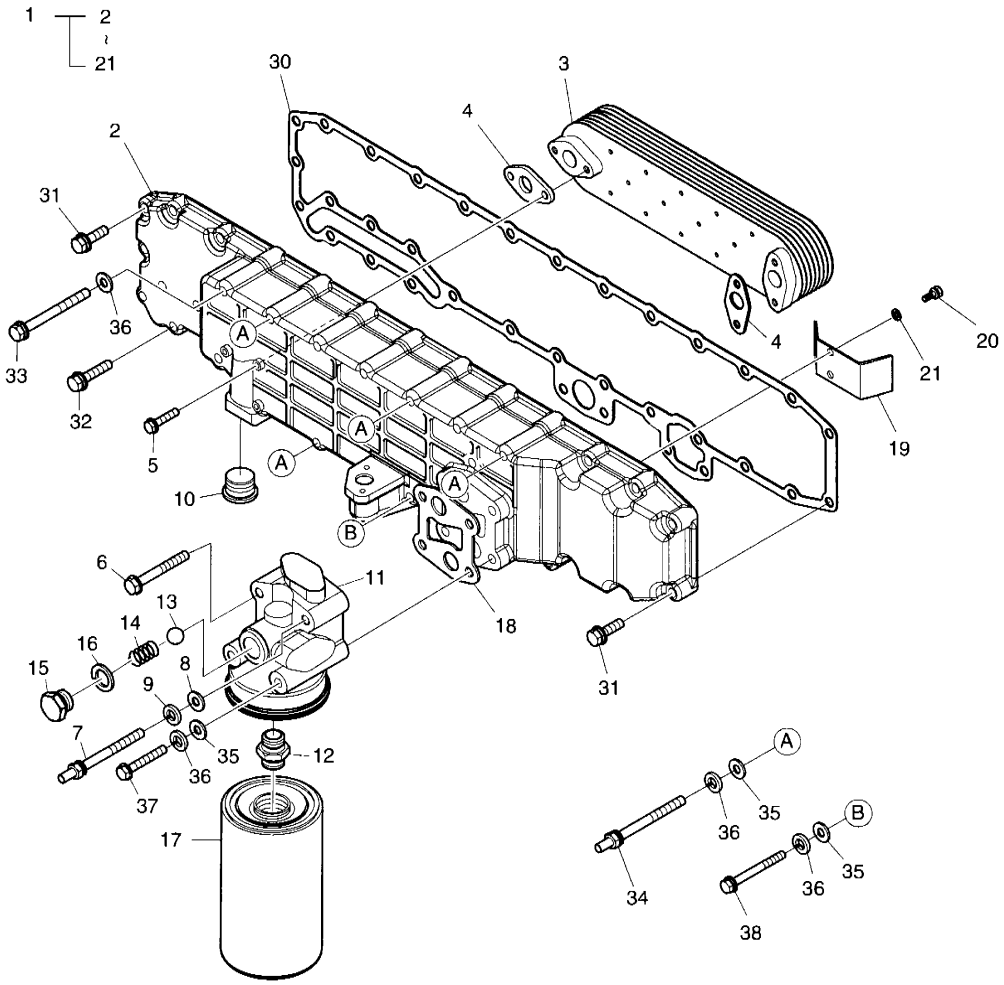

DATE	JUN. 30, 2007
REV. NO.	EXB07-06

Fig. 021 OIL FILTER & OIL COOLER FILTRE D'HUILE

Serial No. ;

Key No.	Part No.	Description	Description	Q'ty	S.C	Serial No.	ICA	Replaceable part	
								Part No.	Q'ty
21-1	65.05500-6014	OIL COOLER ASS'Y	FILTRE D'HUILE	1		~071119	Y	65.05500-6014A	1
	65.05500-6014A	**OIL COOLER ASS'Y**	FILTRE D'HUILE	1		071120~			
2	65.05604-0030A	. HOUSING;OIL COOLER	. CARTER	1					
3	65.05606-5032A	. ELEMENT;OIL COOLER	. ELEMENT	1					
4	65.05902-0022	. GASKET;OIL COOLIER	. JOINT	2					
5	06.01923-3119	. BOLT	. BOULON A 6 PANS	4					
6	06.01923-3123	. BOLT	. BOULON A 6 PANS	1					
7	65.90201-0139	. BOLT	. BOULON A 6 PANS	1					
8	06.15010-2311	. WASHER	. RONDELLE	1					
9	06.16731-2107	. WASHER;SPRING	. RONDELLE ELASTIQUE	1					
10	65.54109-0005A	. SCREW;PLUG M22X1.5	. BOUCHON A VIS	1					
11	65.05503-0050	. HEAD;OIL FILTER	. CULASSE	1					
12	65.05550-0010	. COCK;OIL FILTER	. ROBINET	1					
13	06.31641-0433	. BALL;STEEL	. BILLE	1					
14	65.97601-0075	. SPRING	. RESSORT	1					
15	65.90310-0115	. PLUG	. BOUCHON	1					
16	06.56190-0726	. SEAL;RING 26X31	. CONTACT DE NIVEAU	1					
17	65.05510-5032	. FILTER;OIL	. SUPPORT	1		~071119	Y	65.05510-5032A	1
	65.05510-5032A	**. FILTER;OIL**	. SUPPORT	1		071120~			
18	65.05901-0031	. GASKET;OIL FILTER	. JOINT	1					
19	65.05610-0007A	. GUIDE;WATER FLOW	. GUIDE	1					
20	06.02097-8306	. BOLT	. BOULON A 6 PANS	2					
21	06.16731-2105	. WASHER;SPRING	. RONDELLE ELASTIQUE	2					
30	65.05902-0023	GASKET;OIL COOLER	JOINT	1					
31	06.01923-3117	BOLT	BOULON	12					
32	06.01923-3119	BOLT	BOULON	8					
33	06.01913-3128	BOLT	BOULON	7					
34	65.90201-0135	BOLT;STUD	GOUJON	4					
35	06.15010-2311	WASHER	CALE	14					
36	06.16731-2107	WASHER;SPRING	RONDELLE ELASTIQUE	6					
37	65.90001-0098	BOLT	BOULON	2					
38	06.01913-3129	BOLT	BOULON	1					

DATE	JUN. 30, 2007
REV.NO.	EXB07-06

Fig. 022 OIL PAN
CARTER D'HUILE

Serial No. ;

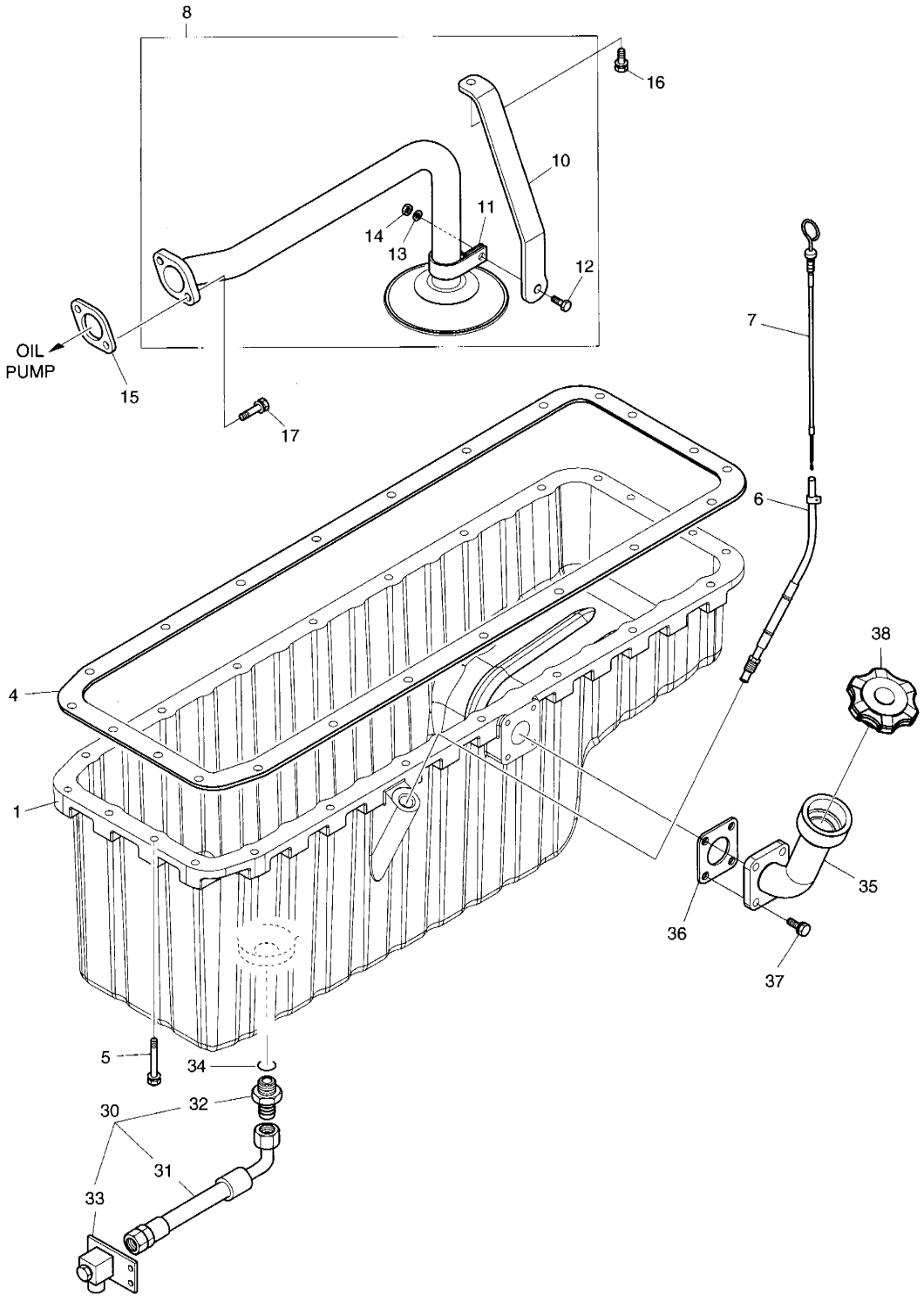

DATE	JUN. 30, 2007
REV. NO.	EXB07-06

Fig. 022 OIL PAN / CARTER D'HUILE

Serial No. ;

Key No.	Part No.	Description	Description	Q'ty	S.C	Serial No.	ICA	Replaceable part	
								Part No.	Q'ty
022-1	65.05801-5249	PAN;OIL	CARTER MOTEUR	1					
4	65.05904-0035	GASKET;OIL PAN	JOINT	1					
5	06.01923-3120	BOLT	BOULON	22					
6	65.05806-5005	TUBE;OIL LEVEL GAUGE	TUBE	1		~070201	Y	65.05806-5005A	1
	65.05806-5005A	**TUBE;OIL LEVEL GAUGE**	TUBE	1		070202~			
7	65.05805-5238	OIL LEVEL GAUGE	INDICATEUR DE NIVEAU	1		~070201	Y	65.05805-5238A	1
	65.05805-5238A	**OIL LEVEL GAUGE**	INDICATEUR DE NIVEAU	1		070202~			
8	65.05701-6122	OIL PIPE ASS'Y	CONDUITES DE HUILE	1					
10	65.05740-0222	. BRACKET;OIL SUCT. PIPE	. SUPPORT	1					
11	65.97401-0137	. CLIP;PIPE	. ATTACHE	1					
12	06.01283-7115	. BOLT	. BOULON A 6 PANS	1					
13	06.15010-2311	. WASHER	. RONDELLE	1					
14	65.90510-0012	. NUT	. ECROU 6 PANS	1					
15	65.05901-0032	GASKET	JOINT	1					
16	06.01913-3115	BOLT	BOULON	1					
17	06.01913-3119	BOLT	BOULON	2					
30	65.96340-6015	DRAIN HOSE ASS'Y	TUYAU FLEXIBLE	1					
31	65.96340-5013A	. HOSE;DRAIN	. TUYAU FLEXIBLE	1					
32	65.98130-0203	. ADAPTER	. ADAPTEUR	1					
33	65.98125-5004A	. COCK;DRAIN	. ROBINET DE PURGE	1					
34	06.56190-0732	RING;SEAL A30X36	BAGUE D'ETANCHEITE	1					
35	65.01813-5019	PIPE;OIL FILLER	TUYAU	1					
36	65.05903-0029A	GASKET	JOINT	1					
37	06.01913-3114	BOLT	BOULON	4					
38	65.01810-5011	CAP;OIL FILLER	VIBREUR	1					

DATE	JUN. 30, 2007
REV.NO.	EXB07-06

Fig. 023 THERMOSTAT
THERMOSTAT

Serial No. ;

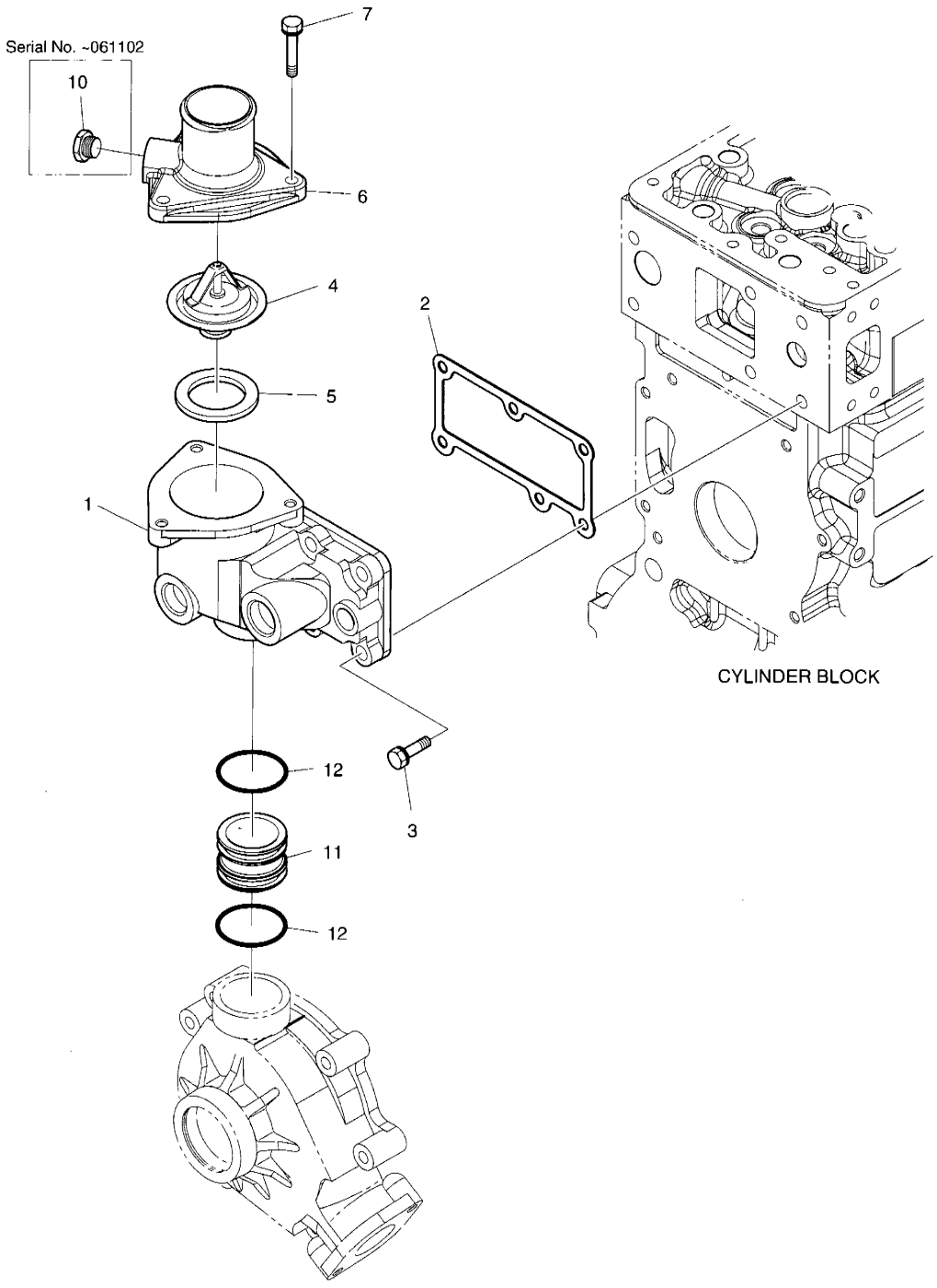

DATE	JUN. 30, 2007
REV. NO.	EXB07-06

Fig. 023 THERMOSTAT
THERMOSTAT

Serial No. ;

Key No.	Part No.	Description	Description	Q'ty	S.C	Serial No.	ICA	Replaceable part	
								Part No.	Q'ty
1	65.06404-0039A	HOUSING;THERMOSTAT	LOGEMENT	1					
2	65.06904-0020	GASKET;THERMOSTAT	JOINT	1		~070315	I	65.06904-0021	1
	65.06904-0021	**GASKET;THERMOSTAT**	JOINT	1		070316~			
3	06.01923-3218	BOLT	BOULON	6					
4	65.06402-5015	THERMOSTAT	FILTRE	1					
5	65.06904-0003	GASKET;THERMOSTAT	JOINT	1					
6	65.06405-0012A	OUTLET;WATER	SORTIE DE L'EAU	1		~061102	Y	65.06405-0039	1
	65.06405-0039	**OUTLET;WATER**	SORTIE DE L'EAU	1		061103~			
7	06.01923-3114	BOLT	BOULON	3					
10	**65.90320-0019**	**PLUG SCREW PT3/8**	VIS	1		~061102			
11	65.06301-0257	PIPE;COOLING WATER	CONDUITE D'EAU DE	1					
12	65.96501-0099A	O-RING	JOINT TORIQUE	2					

DATE	JUN. 30, 2007
REV.NO.	EXB07-06

Fig. 024 WATER PUMP
SYSTEME DE REFROIDSSEMENT

Serial No. ;

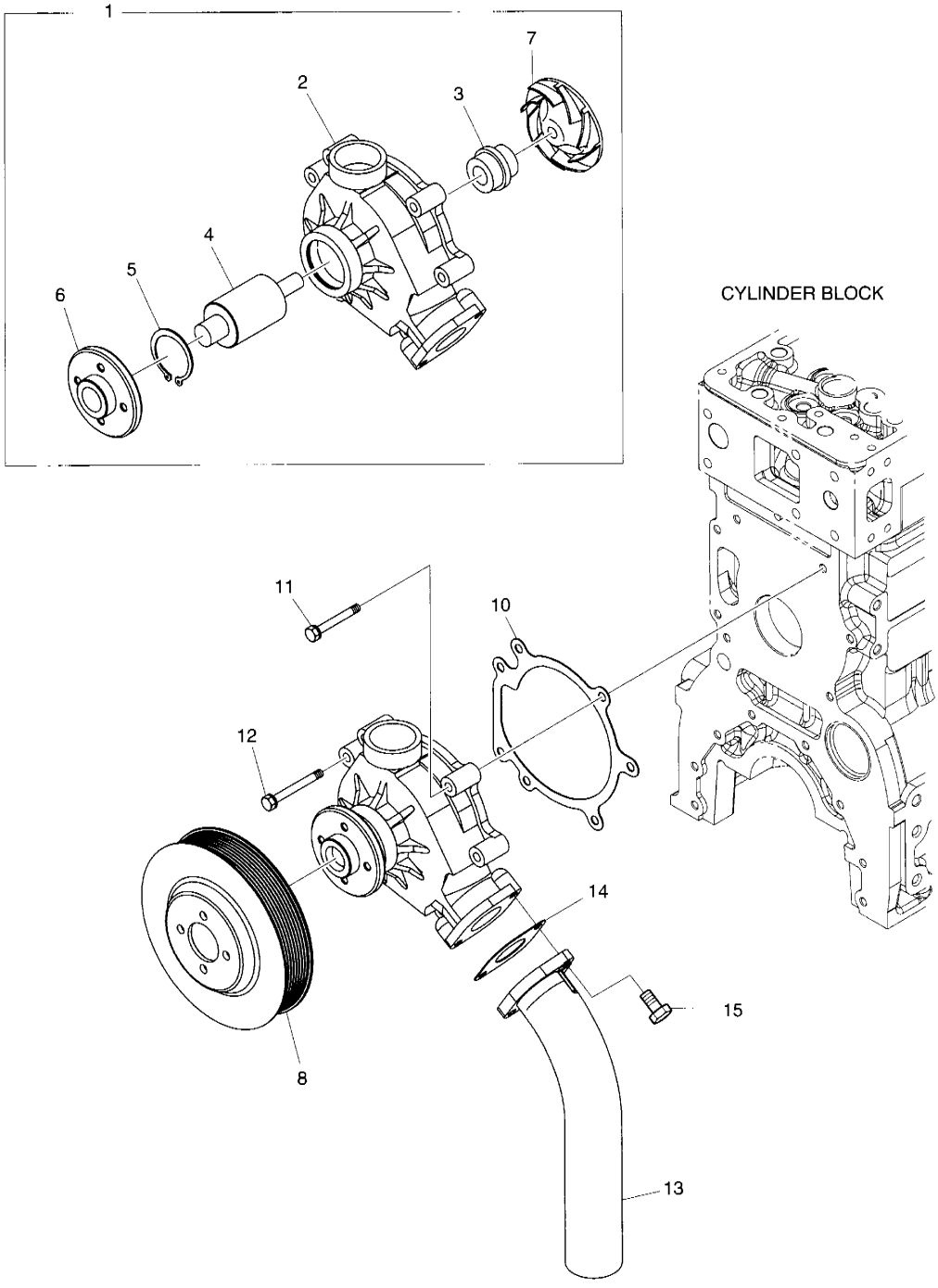

DATE	JUN. 30, 2007
REV. NO.	EXB07-06

Fig. 024 WATER PUMP
SYSTEME DE REFROIDSSEMENT

Serial No. ;

Key No.	Part No.	Description	Description	Q'ty	S.C	Serial No.	ICA	Replaceable part	
								Part No.	Q'ty
024-1	65.06500-6178B	WATER PUMP ASS'Y	ENSEMBLE POMPE A EAU	1		~070227	I	65.06500-6271A	1
	65.06500-6271A	**WATER PUMP ASS'Y**	ENSEMBLE POMPE A EAU	1		070228~			
2	65.06501-0099A	. HOUSING;WATER PUMP	. BOITIER	1	D	~070227			
	65.06501-0300	**. HOUSING;WATER PUMP**	. BOITIER	1	D	070228~			
3	65.06520-6007	. SEAL;MECHANICAL	. JOINT	1		~070227			
	65.06520-6008	**. SEAL;MECHANICAL**	. JOINT	1		070228~			
4	65.93410-0027	. BEARING	. PALIER	1					
5	06.29020-0132	. SNAP RING 55X2	. BAGUE ELASTIQUE	1					
6	65.06504-0033	. HUB;V-BELT PULLEY	. MOYEU	1					
7	65.06506-0029A	. IMPELLER;WATER PUMP	. TURBINE	1		~070227			
	65.06506-0032	**. IMPELLER;WATER PUMP**	. TURBINE	1		070228~			
8	65.06503-0113	PULLEY;V-BELT	POULIE DE COURROIE	1					
10	65.06901-0042	GASKET;WATER PUMP	JOINT	1					
11	06.01913-3120	BOLT	BOULON	5					
12	06.01913-3121	BOLT	BOULON	2					
13	65.06301-0258A	PIPE;COOLING WATER	CONDUITE D'EAU DE	1					
14	65.06903-0029	GASKET;WATER PIPE	JOINT	1					
15	06.01913-3117	BOLT	BOULON	2					

DATE	NOV. 24, 2006
1st EDITION	

Fig. 025 COOLING FAN VENTILATEUR

Serial No. ;

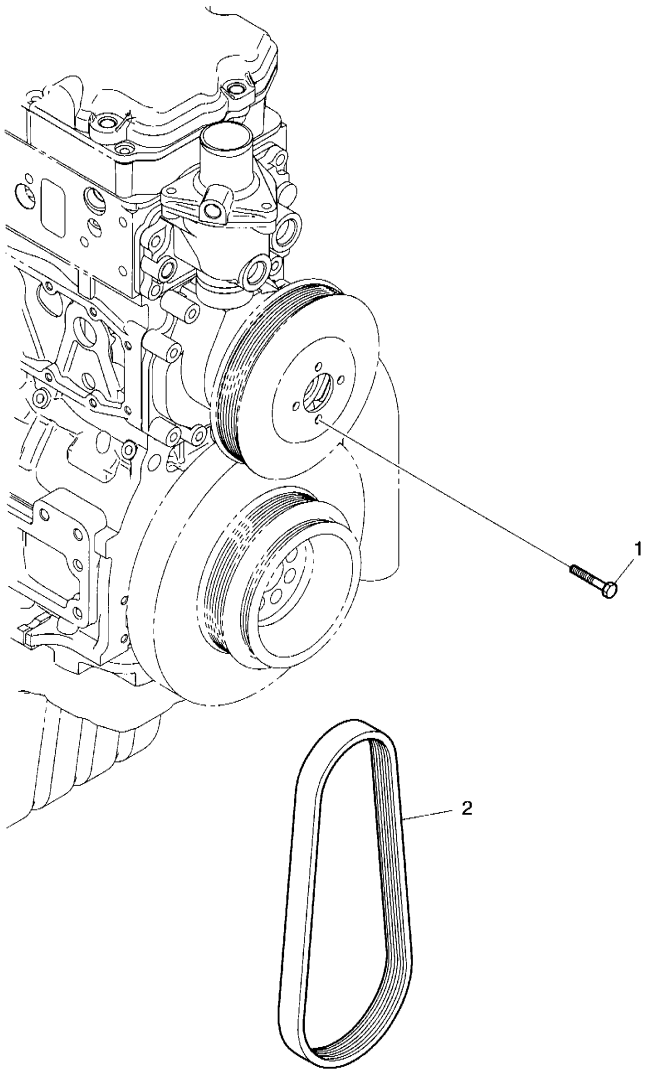

DATE	NOV. 24, 2006
1st EDITION	

Fig. 025 COOLING FAN VENTILATEUR

Serial No. ;

Key No.	Part No.	Description	Description	Q'ty	S.C	Serial No.	ICA	Replaceable part	
								Part No.	Q'ty
∪25-1	06.01913-3113	BOLT	BOULON	4					
2	65.96801-0194	BELT	COURROIE	1					

DATE	JUN. 30, 2007
REV.NO.	EXB07-06

Fig. 026 INTAKE & EXHAUST MANIFOLD D'ADMISSION ET D'ECHAPPEMENT

Serial No. ;

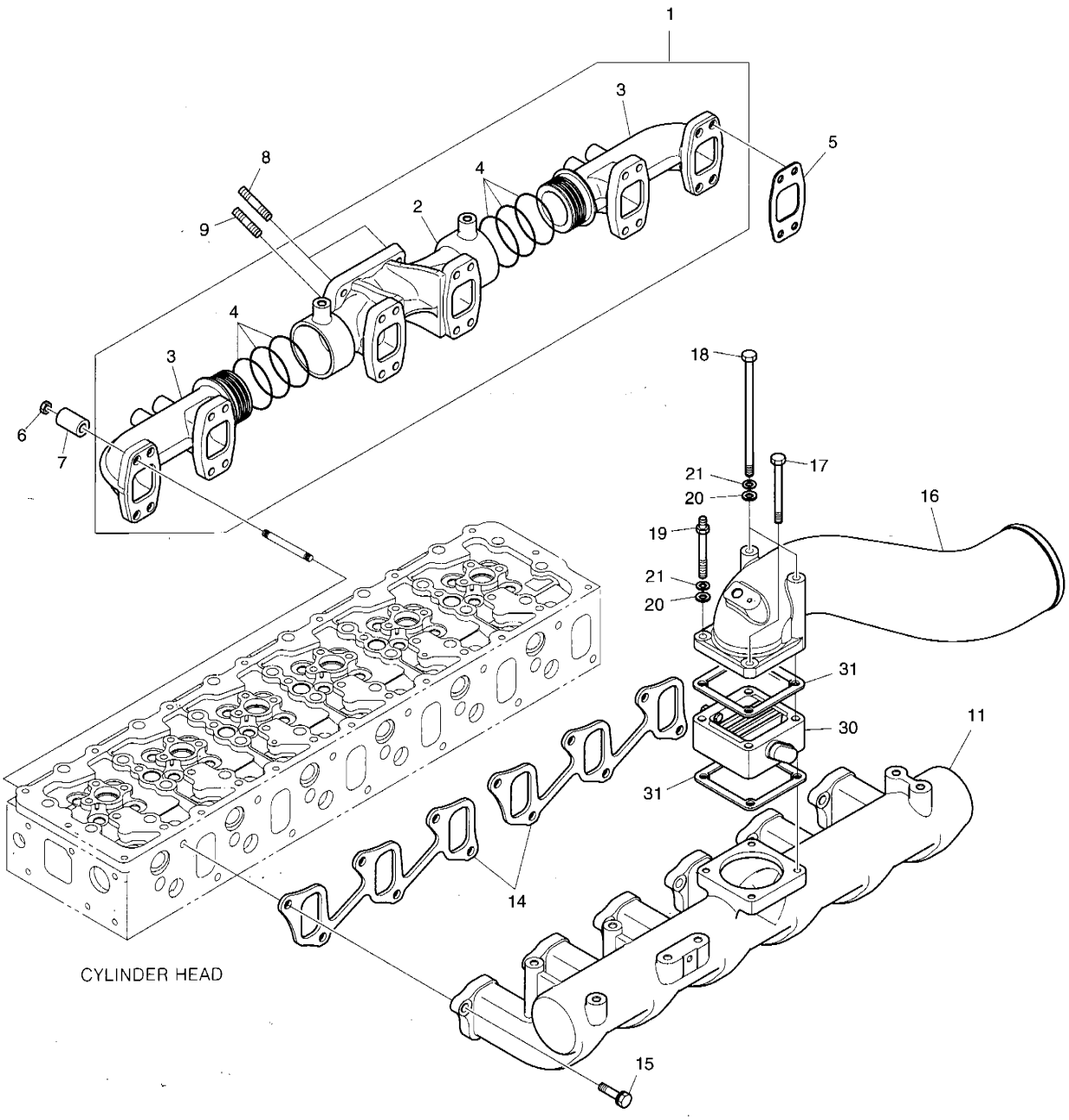

DATE	JUN. 30, 2007
REV. NO.	EXB07-06

Fig. 026 INTAKE & EXHAUST MANIFOLD D'ADMISSION ET D'ECHAPPEMENT

Serial No. ;

Key No.	Part No.	Description	Description	Q'ty	S.C	Scrial No.	ICA	Replaceable part	
								Part No.	Q'ty
0.	65.08100-6088A	EXHAUST MANIFOLD ASS'Y	TUBULURE	1		~070418	I	65.08100-6088B	1
	65.08100-6088B	**EXHAUST MANIFOLD ASS'Y**	TUBULURE	1		070419~			
2	65.08101-0263	. MANIFOLD;EXHAUST	. TUBULURE	1					
3	65.08101-0264	. MANIFOLD;EXHAUST	. TUBULURE	2		~070418	T	65.08101-0264A	2
								65.96507-0059	8
	65.08101-0264A	**. MANIFOLD;EXHAUST**	. TUBULURE	2		070419~			
4	65.96507-0059	. RING;SEAL	. BAGUE D'ETANCHEITE	6		~070418			
	65.96507-0059	**. RING;SEAL**	. BAGUE D'ETANCHEITE	8		070419~			
5	65.08901-0045	GASKET;EXHAUST MANIFOLD	JOINT	6					
6	65.90535-0003	NUT	ECROU	24					
7	65.91701-0086	SPACER	BAGUE D'ECARTEMENT	24					
8	65.90201-0076	BOLT	BOULON	2					
9	65.90201-0073	BOLT	BOULON	2					
11	65.08201-5075	MANIFOLD;INTAKE	COLLECTEUR	1					
14	65.08902-0030A	GASKET;INTAKE MANIFOLD	JOINT	2					
15	06.01923-3218	BOLT	BOULON	12					
16	65.08202-0194	STAKE;INTAKE	TUBULURE D'ADIMISSION	1					
17	06.01923-3125	BOLT	BOULON	1					
18	06.01013-9130	BOLT	BOULON	2					
19	65.90201-0136	BOLT	BOULON	1					
20	06.15010-2311	WASHER	CALE	3					
21	06.16731-2107	WASHER;SPRING	RONDELLE ELASTIQUE	3					
30	65.26803-7028B	AIR HEATER	RECHAUFFEUR D'AIR	1					
31	65.09904-0008	GASKET;AIR HEATER	JOINT	2					

DATE	NOV. 24, 2006
1st EDITION	

Fig. 027 TURBO CHARGER
CHARGEUR DE TURBO

Serial No. ;

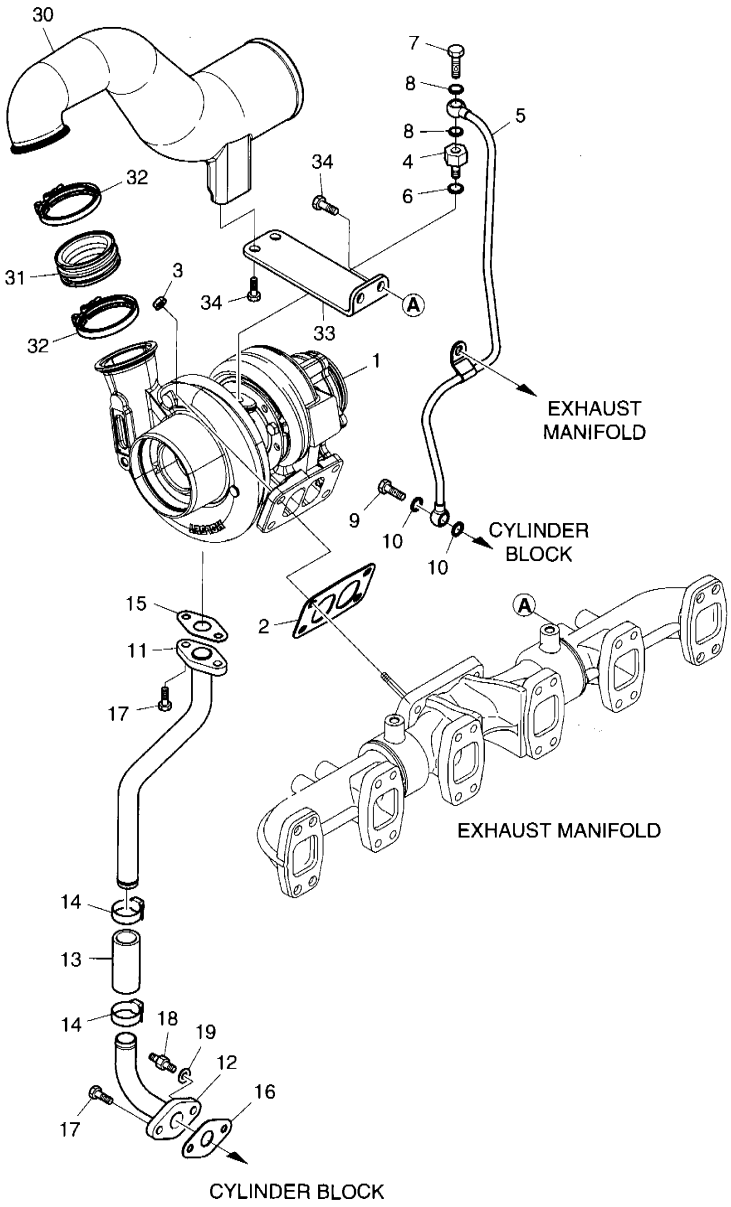

DATE	NOV. 24, 2006
1st EDITION	

Fig. 027 TURBO CHARGER
CHARGEUR DE TURBO

Serial No. ;

Key No.	Part No.	Description	Description	Q'ty	S.C	Serial No.	ICA	Replaceable part	
								Part No.	Q'ty
027-1	65.09100-7114	TURBOCHARGER ASS'Y	TURBOCOMPRESSEUR	1					
2	65.09901-0018A	GASKET	JOINT	1					
3	65.90535-0001	NUT	ECROU	4					
4	65.98130-0200A	ADAPTER	ADAPTEUR	1					
5	65.05701-5689	PIPE;OIL	CONDUITES DE HUILE	1					
6	06.56190-0709	SEAL;RING	BAGUE D'ETANCHEITE	1					
7	06.78144-2403	HOLLOW SCREW M12X1.5	VIS CREUSE	1					
8	06.56190-0704	SEAL RING A12X18	BAGUE D'ETANCHEITE	2					
9	06.78144-2403	HOLLOW SCREW M12X1.5	VIS CREUSE	1					
10	06.56190-0704	SEAL RING A12X18	BAGUE D'ETANCHEITE	2					
11	65.05701-5690	PIPE;OIL	CONDUITES DE HUILE	1					
12	65.05701-5569	PIPE;OIL	CONDUITES DE HUILE	1					
13	65.96301-0327A	HOSE;RUBBER	TUYAU FLEXIBLE	1					
14	06.67020-0104	CLAMP;HOSE	COLLIER	2					
15	65.96601-0067	GASKET;T/C OIL RETURN	JOINT	1					
16	65.96601-0052	GASKET;PIPE-BLOCK	JOINT	1					
17	06.01913-3114	BOLT;STUD	GOUJON	3					
18	65.90201-0075	BOLT;SPACER	BOUCHON	1					
19	06.16731-2107	WASHER	CALE	1					
30	65.09411-5114	PIPE;INLET	TUYAU	1					
31	65.96301-6003	HOSE;RUBBER	TUYAU FLEXIBLE	1					
32	65.97450-5003	CLAMP	COLLIER	2					
33	65.09440-0065	BRACKET	SUPPORT	1					
34	06.01923-3215	BOLT	BOULON	4					

DATE	JUN. 30, 2007
REV.NO.	EXB07-06

Fig. 028 INJECTOR
INJECTEUR

Serial No. ;

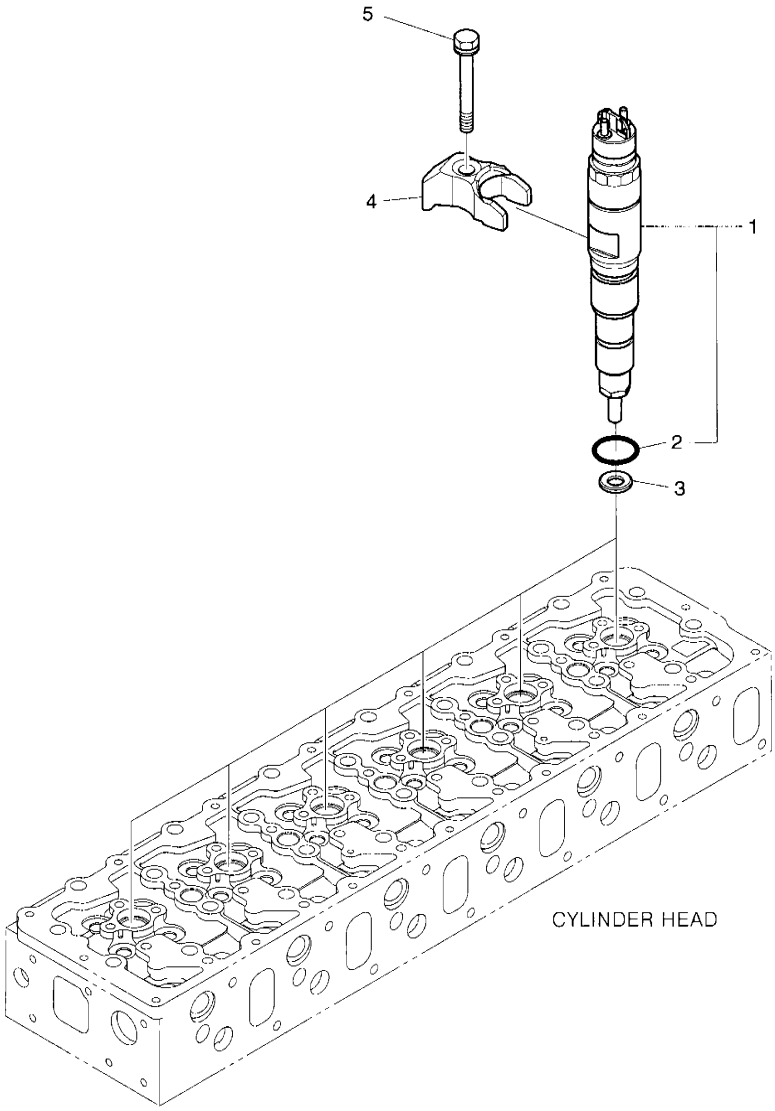

DATE	JUN. 30, 2007
REV. NO.	EXB07-06

Fig. 028 INJECTOR INJECTEUR

Serial No. ;

Key No.	Part No.	Description	Description	Q'ty	S.C	Serial No.	ICA	Replaceable part	
								Part No.	Q'ty
028-1	65.10401-7004A	INJECTOR ASS'Y	INDICATEUR	6					
2	65.96501-0437	. O-RING	. JOINT TORIQUE	1					
3	65.96507-0053	RING;SEAL	ENSEMBLE BAGUE	6					
4	65.10205-0006	FIXTURE	SUPPORT	6		~070611	Y	65.10205-0006A	6
	65.10205-0006A	**FIXTURE**	SUPPORT	6		070612~			
5	65.90020-0136	BOLT	BOULON	6					

DATE	NOV. 24, 2006
1st EDITION	

Fig. 029 INJECTION PIPE
PIPE D'INJECTION

Serial No. ;

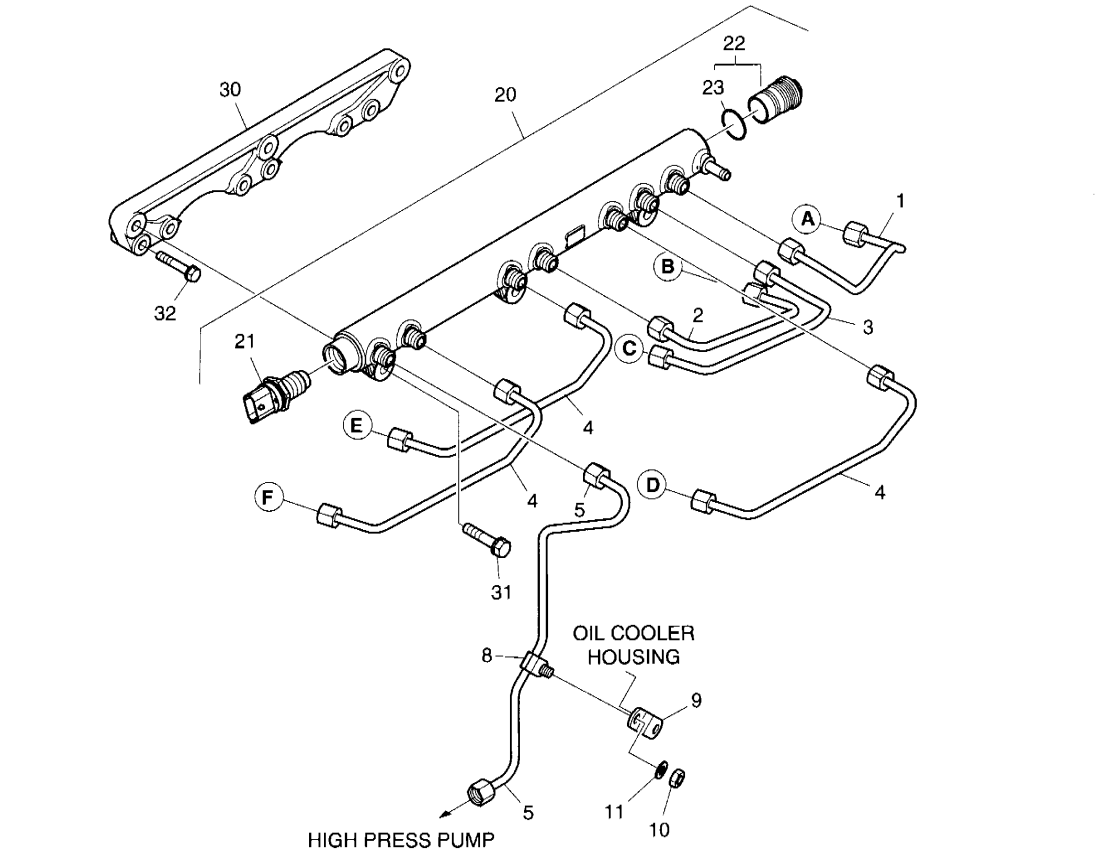

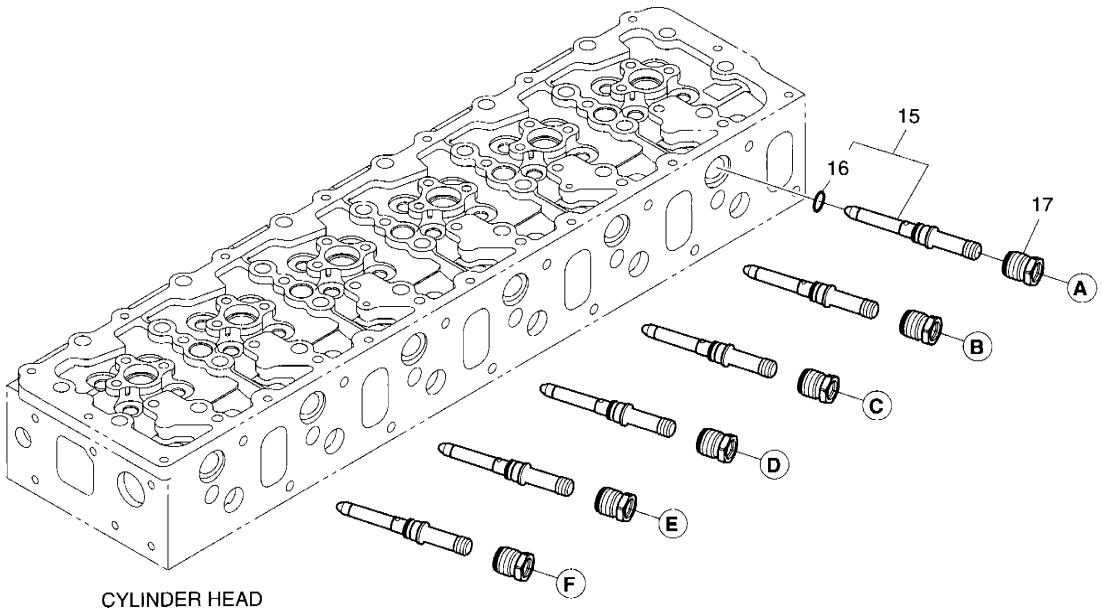

DATE	NOV. 24, 2006
1st EDITION	

Fig. 029 INJECTION PIPE
PIPE D'INJECTION

Serial No. ;

Key No.	Part No.	Description	Description	Q'ty	S.C	Serial No.	ICA	Replaceable part	
								Part No.	Q'ty
029-1	65.10301-6191	PIPE;INJECTION	TUYAU D'INJECTEUR	1					
2	65.10301-6192	PIPE;INJECTION	TUYAU D'INJECTEUR	1					
3	65.10301-6193	PIPE;INJECTION	TUYAU D'INJECTEUR	1					
4	65.10301-6194	PIPE;INJECTION	TUYAU D'INJECTEUR	3					
5	65.10301-6195	PIPE;INJECTION	TUYAU D'INJECTEUR	1					
8	65.97401-6039	CLIP;PIPE	ATTACHE	1					
9	65.97480-0220	HOLDER	SUPPORT	1					
10	06.11063-8214	NUT	ECROU	1					
11	06.16731-2107	WASHER	CALE	1					
15	65.10410-6003A	H.P.CONNECTOR	CONNECTEUR	6					
16	65.96501-0438	. O-RING	. JOINT TORIQUE	1					
17	65.10415-0001	NUT	ECROU	6					
20	65.10601-6004A	COMMON RAIL ASS'Y	CHEMIN DE FER	1					
21	65.27114-5002	. SENSOR;RAIL PRESSURE	. SENSER;RAIL	1					
22	65.52122-6002	. VALVE;PRESSURE LIMITING	. VANNE	1					
23	65.96501-0431	.. O-RING	.. JOINT TORIQUE	1					
30	65.10610-0003	BRACKET;MOUNTING	SUPPORT	1					
31	06.01913-3118	BOLT	BOULON	3					
32	06.01913-3119	BOLT	BOULON	6					

DATE	NOV. 24, 2006
1st EDITION	

Fig. 030 INJECTION PUMP
POMPE D'INJECTION

Serial No. ;

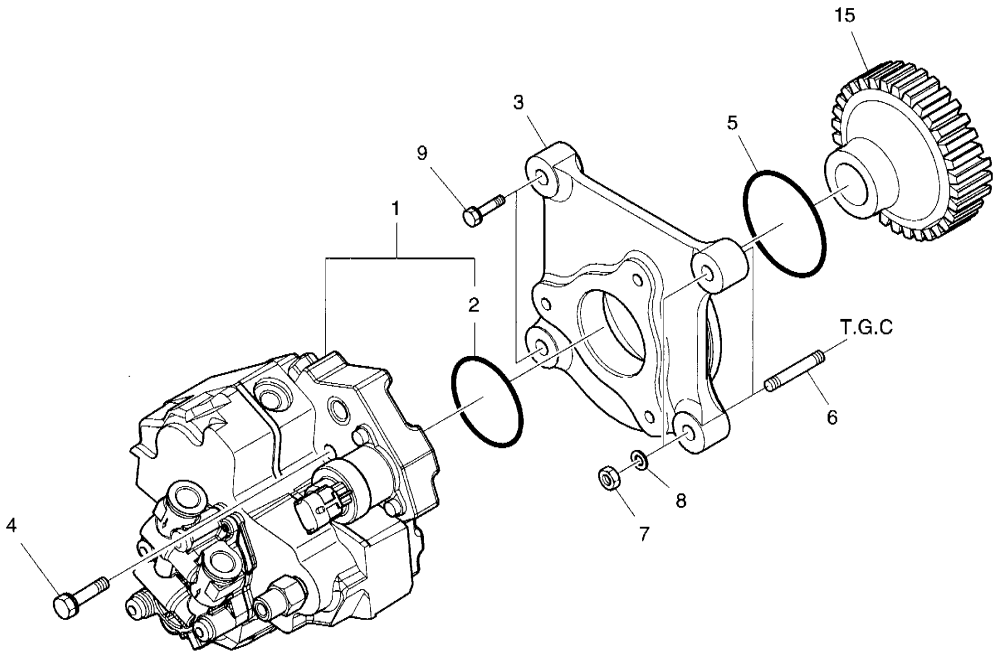

DATE	NOV. 24, 2006
1st EDITION	

Fig. 030 INJECTION PUMP POMPE D'INJECTION

Serial No. ;

Key No.	Part No.	Description	Description	Q'ty	S.C	Serial No.	ICA	Replaceable part	
								Part No.	Q'ty
J30-1	65.10501-7005A	PUMP;HIGH PRESSURE	POMPE	1					
2	65.96501-0439	. O-RING	. JOINT TORIQUE	1					
3	65.11304-0001	FLANGE;INJECTION PUMP	BRIDE	1					
4	65.90020-0121	BOLT	BOULON	3					
5	06.56020-0115	O-RING	JOINT TORIQUE	1					
6	06.06125-8709	BOLT;STUD	GOUJON	2					
7	06.11063-8214	NUT	ECROU	2					
8	06.16731-2107	WASHER	CALE	2					
9	06.01923-3118	BOLT	BOULON	2					
15	65.11301-0038	GEAR;PUMP DRIVE	PIGNON	1					

DATE	JUN. 30, 2007
REV.NO.	EXB07-06

Fig. 031 ENGINE CONTROL
COMMANDE REGIME MOTEUR

Serial No. ;

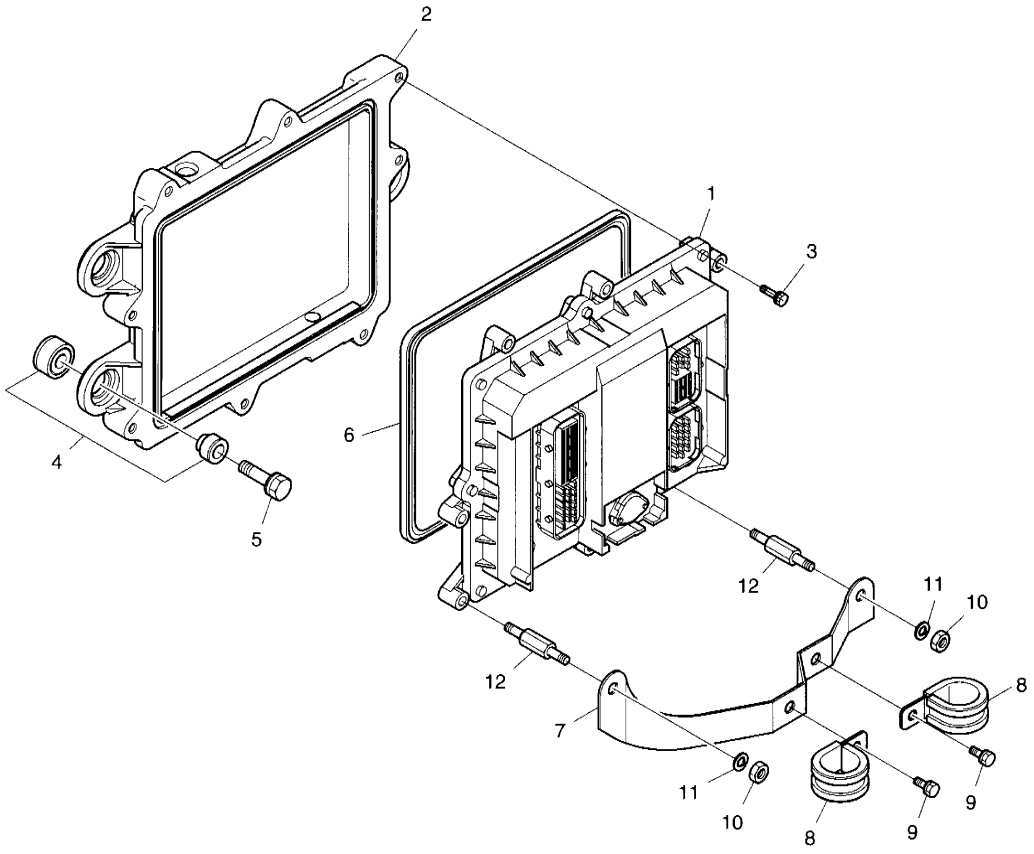

DATE	JUN. 30, 2007
REV. NO.	EXB07-06

Fig. 031 ENGINE CONTROL
COMMANDE REGIME MOTEUR

Serial No. ;

Key No.	Part No.	Description	Description	Q'ty	S.C	Serial No.	ICA	Replaceable part	
								Part No.	Q'ty
1-1	65.99497-8669	E.C.U	E.C.U	1					
2	65.11210-0003A	PLATE;ECU	PLAQUE	1		~071023	Y	65.11210-0003B	1
	65.11210-0003B	**PLATE;ECU**	PLAQUE	1		071024~			
3	06.01923-2917	BOLT	BOULON	6					
4	65.96210-6001A	RUBBER;CUSHION	CUSHION;RUBBER	3					
5	65.90020-0095	BOLT	BOULON	3					
6	65.96501-0102	PACKING	RONDELLE D'ETANCHEITE	1					
7	65.29150-5006	BRACKET	SUPPORT	1					
8	65.97401-0188	CLIP;PIPE	ATTACHE	2					
9	06.01923-2911	BOLT	BOULON	2					
10	06.11063-8212	NUT	ECROU	2					
11	06.16731-2106	WASHER	CALE	2					
12	65.90441-0066	BOLT;SPACER	BOUCHON	2					

DATE	JUN. 30, 2007
REV.NO.	EXB07-06

Fig. 032 FUEL SYSTEM
INJECTEUR ET POMPE-INJECTEUR

Serial No. ;

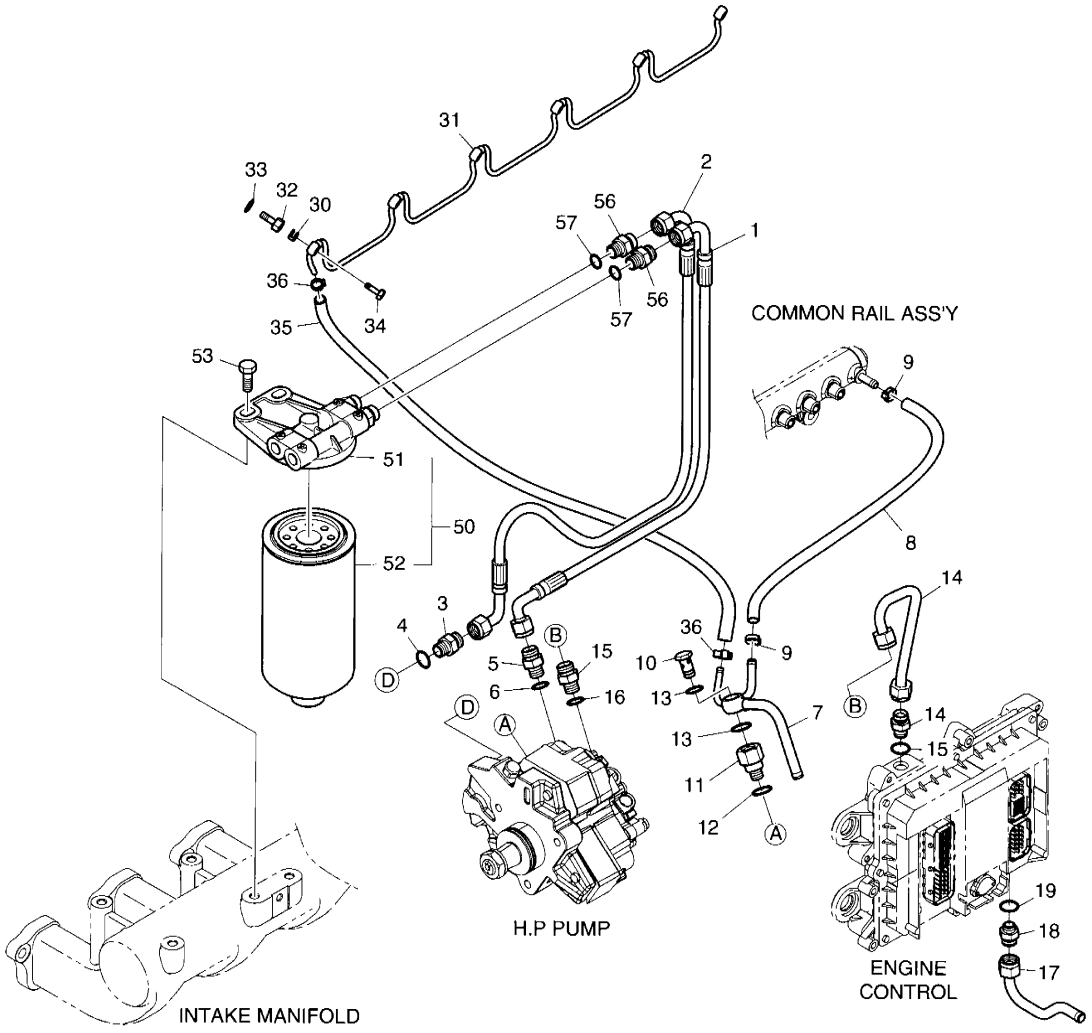

DATE	JUN. 30, 2007
REV. NO.	EXB07-06

Fig. 032 FUEL SYSTEM
INJECTEUR ET POMPE-INJECTEUR

Serial No. ;

Key No.	Part No.	Description	Description	Q'ty	S.C	Serial No.	ICA	Replaceable part	
								Part No.	Q'ty
2-1	65.96340-5081	HOSE;FUEL	TUYAU FLEXIBLE	1					
2	65.96340-5081	HOSE;FUEL	TUYAU FLEXIBLE	1					
3	65.98130-0211	ADAPTER	ADAPTEUR	1					
4	06.56190-0704	SEAL RING A12X18	BAGUE D'ETANCHEITE	1					
5	65.98130-0229	ADAPTER	ADAPTEUR	1					
6	06.56190-0706	SEAL RING A14X20	BAGUE D'ETANCHEITE	1					
7	65.12301-5291	PIPE;FUEL	CONDUITE	1					
8	65.96330-0018	HOSE;RUBBER;RING JOINT	TUYAU CAOUTCHOUC	1					
9	65.97440-0045	CLAMP;HOSE	COLLIER	2					
10	06.78144-2204	HOLLOW SCREW NW10	VIS CREUSE	1					
11	65.98130-0159A	ADAPTER	ADAPTEUR	1					
12	06.56190-0704	SEAL RING A12X18	BAGUE D'ETANCHEITE	1					
13	06.56190-0706	SEAL RING A14X20	BAGUE D'ETANCHEITE	2					
14	65.12301-5289	PIPE;FUEL	CONDUITE	1					
15	65.98130-0229	ADAPTER	ADAPTEUR	2					
16	06.56190-0706	SEAL RING A14X20	BAGUE D'ETANCHEITE	2					
17	65.12301-5268	PIPE;FUEL	CONDUITE	1					
18	65.98130-0229	ADAPTER	ADAPTEUR	1					
19	06.56190-0706	SEAL RING A14X20	BAGUE D'ETANCHEITE	1					
30	65.96507-0055	RING;SEAL	ENSEMBLE BAGUE	6					
31	65.12301-5288A	PIPE;FUEL	CONDUITE	1		~070316	Y	65.12301-5288B	1
	65.12301-5288B	**PIPE;FUEL**	CONDUITE	1		070317~			
32	65.98130-0154	ADAPTER	ADAPTEUR	6					
33	06.56180-0712	RING;SEAL	ENSEMBLE BAGUE	6					
34	65.98150-0042A	HOLLOW SCREW	VIS CREUSE M8x1	6					
35	65.96301-0462	HOSE;RUBBER	TUYAU FLEXIBLE	1					
36	65.97440-0045	CLAMP;HOSE	COLLIER	2		~071025	Y	65.97402-0003	2
	65.97402-0003	**CLAMP;HOSE**	COLLIER	2		071026~			
50	65.12501-7042	FUEL FILTER ASS'Y	ENSEMBLE FILTRE A	1		~061108	Y	65.12501-7042A	1
	65.12501-7042A	FUEL FILTER ASS'Y	ENSEMBLE FILTRE A	1		~071130	Y	65.12501-7042B	1
	65.12501-7042B	**FUEL FILTER ASS'Y**	ENSEMBLE FILTRE A	1		071131~			
51	65.12504-5027	. HEAD;FUEL FILTER	. COUVERCLE	1		~071130	I	65.12504-5028	1
	65.12504-5028	**. HEAD;FUEL FILTER**	. COUVERCLE	1		071131~			
52	65.12503-5026	. FILTER;FUEL	. FILTRE A GAZOLE	1					
53	06.01923-3217	BOLT	BOULON	2					
56	65.98130-0229	ADAPTER	ADAPTEUR	2					
57	06.56190-0706	SEAL RING A14X20	BAGUE D'ETANCHEITE	2		~071114	I	65.96507-0043	2
	65.96507-0043	**SEAL RING A14X20**	BAGUE D'ETANCHEITE	2		071115~			

DATE	JUN. 30, 2007
REV.NO.	EXB07-06

Fig. 033 ALTERNATOR MOUNTING
ALTERNATEUR

Serial No. ;

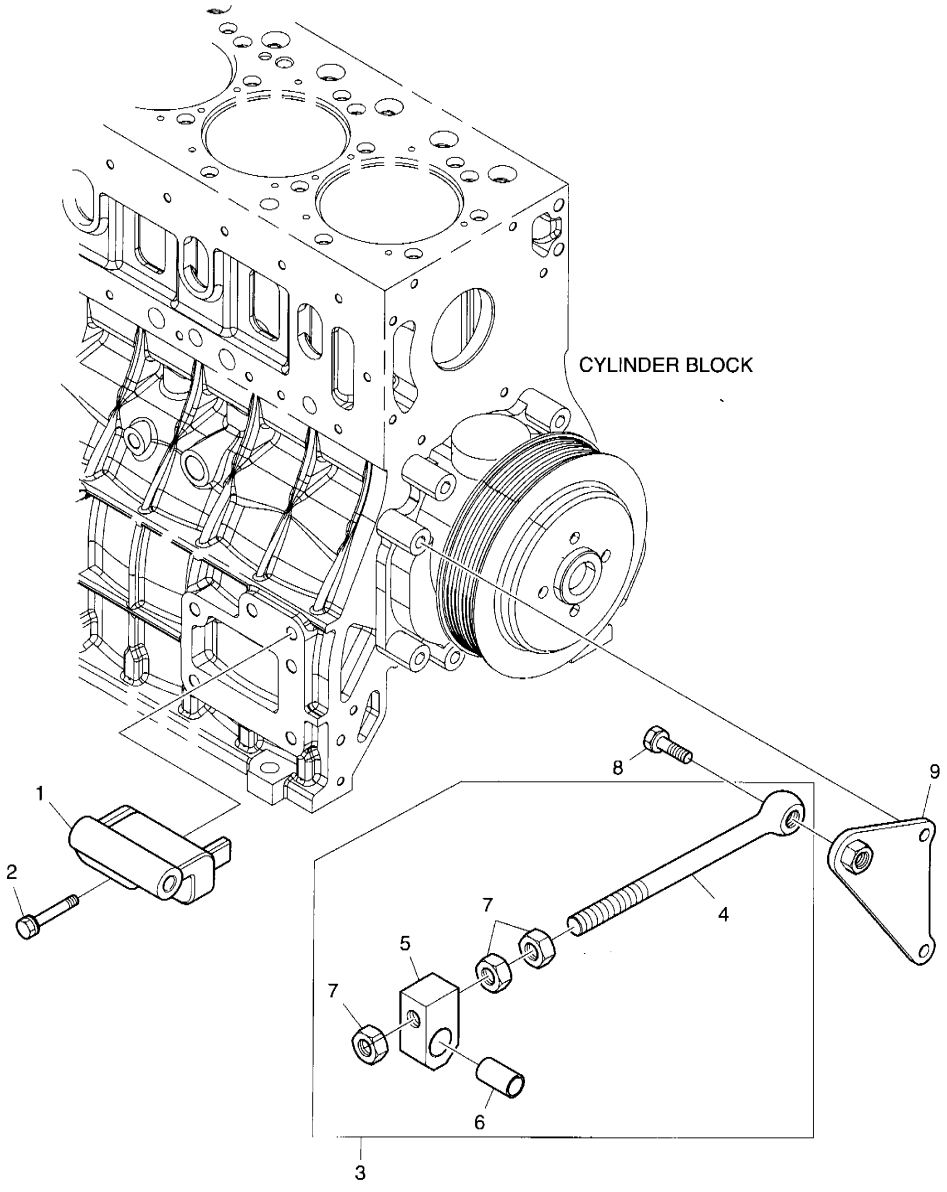

DATE	JUN. 30, 2007
REV. NO.	EXB07-06

Fig. 033 ALTERNATOR MOUNTING ALTERNATEUR

Serial No. ;

Key No.	Part No.	Description	Description	Q'ty	S.C	Serial No.	ICA	Replaceable part	
								Part No.	Q'ty
033-1	65.19102-0096	BRACKET;ALTERNATOR	SUPPORT	1		~071220	Y	65.19102-0103	1
	65.19102-0103	**BRACKET;ALTERNATOR**	SUPPORT	1		071221~			
2	06.01943-3323	BOLT	BOULON	2					
3	65.19103-6010A	BOLT	BOULON	1					
4	65.90441-0009A	. EYE BOLT	. BOUCHON A VIS	1	D				
5	65.19107-0001A	. PIECE;GUIDE	. GUIDE	1	D				
6	65.93020-0055	. BUSH	. AMPOULE	1	D				
7	06.11063-9217	. NUT	. ECROU 6 PANS	3					
8	06.01943-3319	BOLT	BOULON	1					
9	65.19103-5049	SUPPORT;ALTERNATOR	SUPPORT D'ALTERNATEUR	1					

DATE	NOV. 24, 2006
1st EDITION	

Fig. 034 LIFTING HOOK
CROCHET DE LEVAGE

Serial No. ;

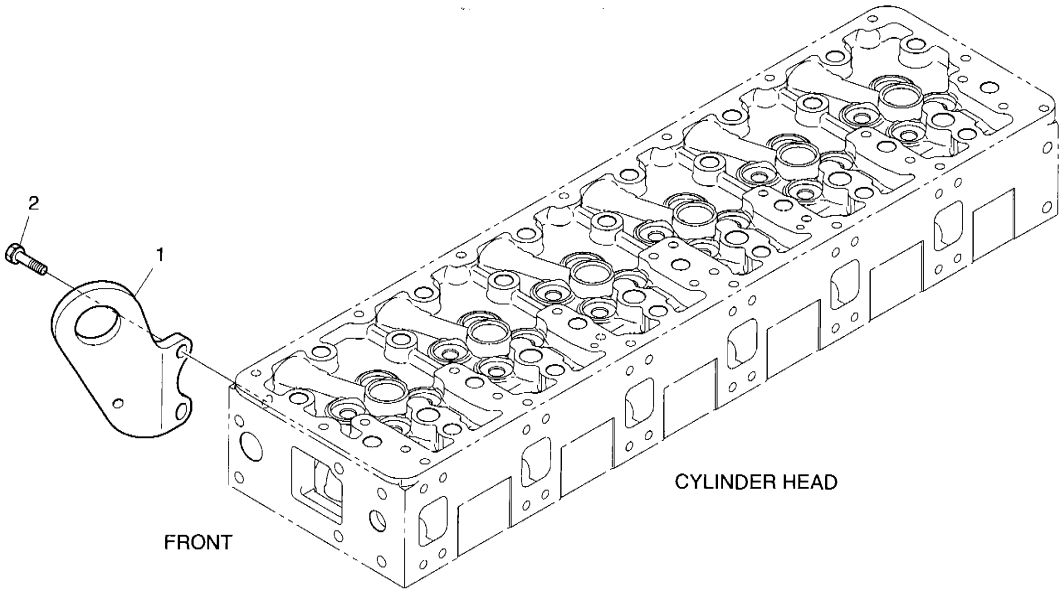

DATE	NOV. 24, 2006
1st EDITION	

Fig. 034 LIFTING HOOK CROCHET DE LEVAGE

Serial No. ;

Key No.	Part No.	Description	Description	Q'ty	S.C	Serial No.	ICA	Replaceable part	
								Part No.	Q'ty
034-1	65.19202-0057A	HOOK;LIFTING	CROCHET	1					
2	06.01924-3217	BOLT	BOULON	2					

DATE	JUN. 30, 2007
REV.NO.	EXB07-06

Fig. 035 STARTER DEMARREUR

Serial No. ;

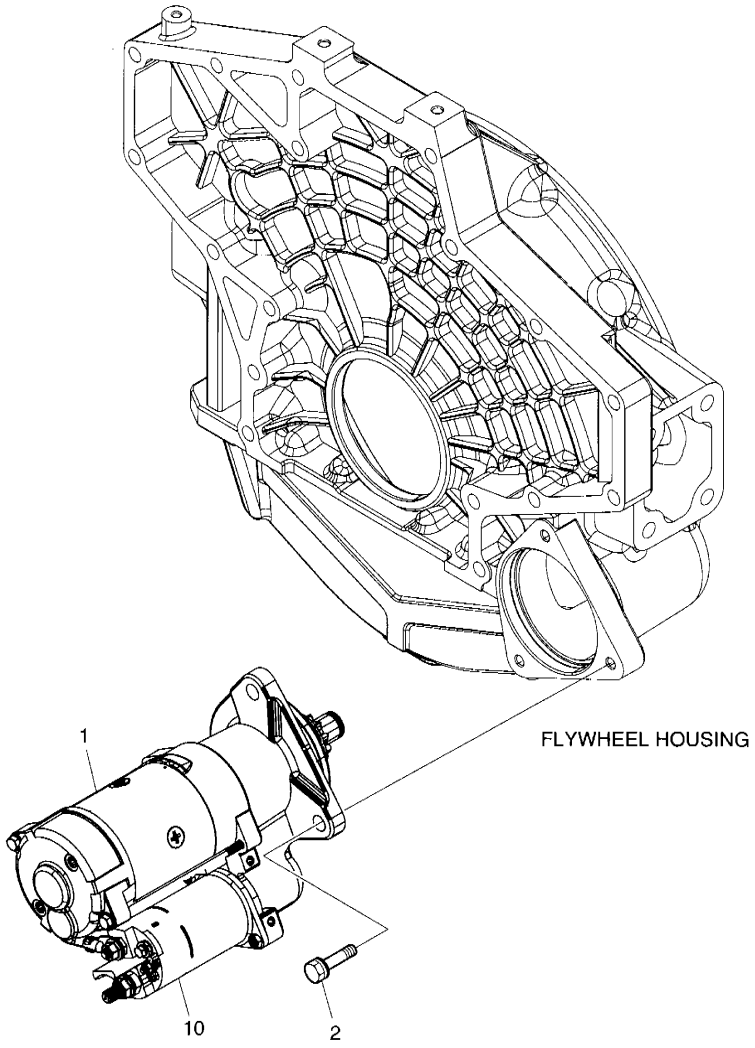

DATE	JUN. 30, 2007
REV. NO.	EXB07-06

Fig. 035 STARTER DEMARREUR

Serial No. ;

Key No.	Part No.	Description	Description	Q'ty	S.C	Serial No.	ICA	Replaceable part	
								Part No.	Q'ty
J35-1	65.26201-7075A	STARTER	D'MARREUR	1					
2	06.01953-3318	BOLT	BOULON	3					
10	**65.26214-0004**	**SWITCH;MAGNETIC**	COMMUTEZ MAGNETIQUE	1		071130~			

DATE	DEC. 15, 2006
REV.NO.	EXB06-13

Fig. 036 SENSOR CAPTEUR

Serial No. ;

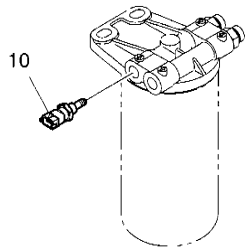

FUEL FILTER

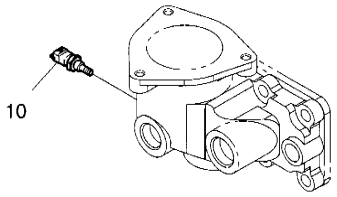

THERMOSTAT HOUSING

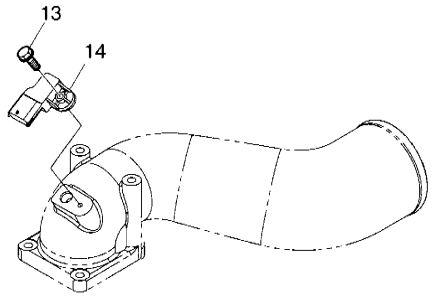

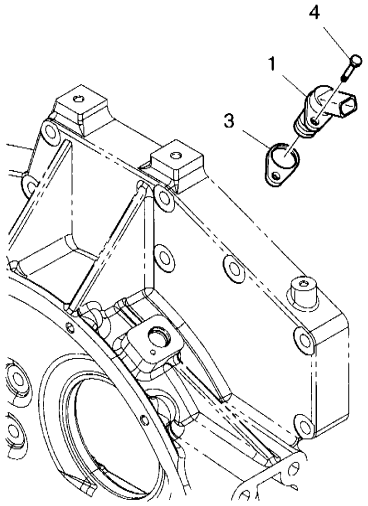

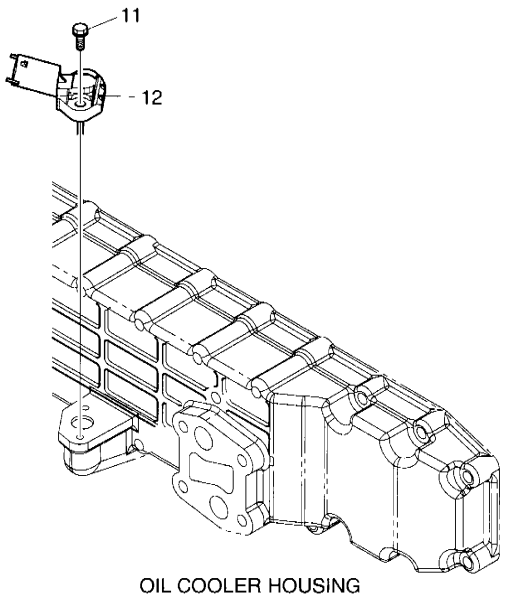

OIL COOLER HOUSING

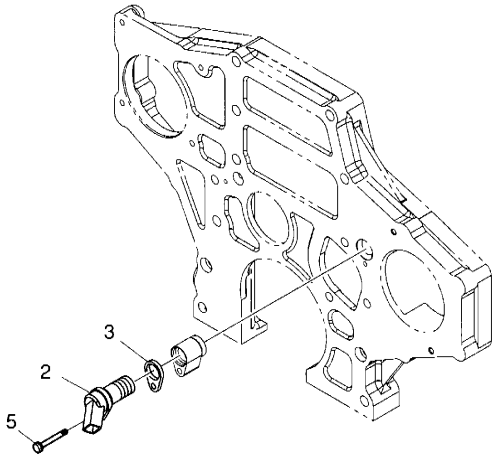

DATE	DEC. 15, 2006
REV. NO.	EXB06-13

Fig. 036 SENSOR CAPTEUR

Serial No. ;

Key No.	Part No.	Description	Description	Q'ty	S.C	Serial No.	ICA	Replaceable part	
								Part No.	Q'ty
1	65.27103-7014	SENSOR	CAPTEUR	1					
2	65.27103-7014	SENSOR	CAPTEUR	1					
3	65.11308-0005	SHIM	ENTERTOISE	2	R				
	65.11308-0006	SHIM	ENTERTOISE	2	R				
	65.11308-0007	SHIM	ENTERTOISE	2	R				
	65.11308-0008	SHIM	ENTERTOISE	2	R				
4	06.01923-2913	BOLT	BOULON	1					
5	06.01923-2919	BOLT	BOULON	1					
10	65.27423-7003	SENSOR;WATER TEMP	CAPTEUR	2					
11	06.01923-2913	BOLT	BOULON	2					
12	65.27427-7001	SENSOR;OIL PRESSURE	CAPTEUR	1					
13	**06.01923-2913**	**BOLT**	BOULON	1					
14	65.27444-7001	SENSOR;BOOST PRESSURE	CAPTEUR	1					

DATE	JUN. 30, 2007
REV.NO.	EXB07-06

Fig. 037 WIRE HARNESS
JAGUE DE NIVEAU

Serial No. ;

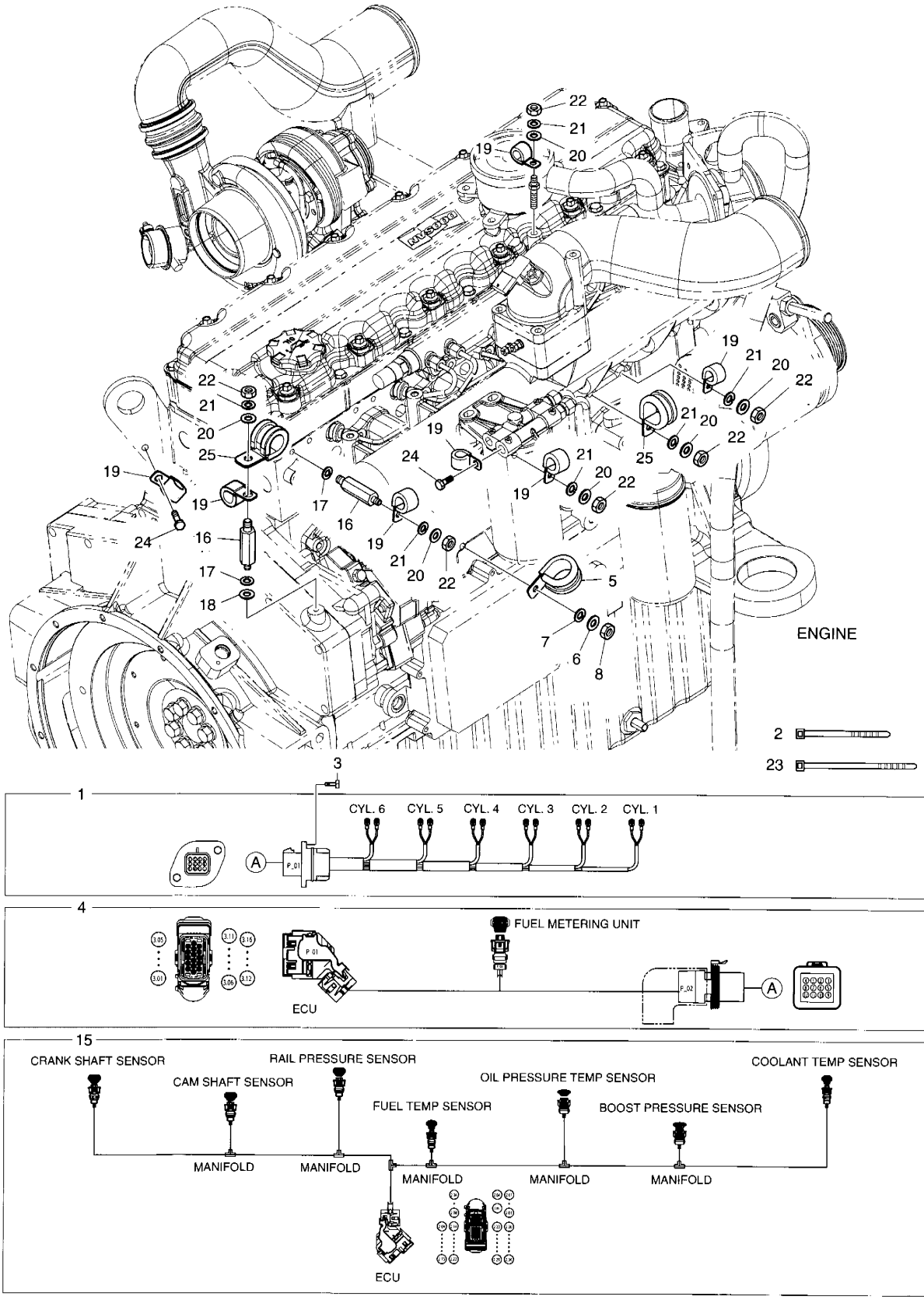

DATE	JUN. 30, 2007
REV. NO.	EXB07-06

Fig. 037 WIRE HARNESS JAGUE DE NIVEAU

Serial No. ;

Key No.	Part No.	Description	Description	Q'ty	S.C	Serial No.	ICA	Replaceable part	
								Part No.	Q'ty
037-1	65.29101-6184A	WIRE;ELECTRIC	FIL	1		~061120	Y	65.29101-6184B	1
	65.29101-6184B	WIRE;ELECTRIC	FIL	1		~070513	Y	65.29101-6184C	1
	65.29101-6184C	**WIRE;ELECTRIC**	FIL	1		070514~			
2	65.97460-0008	BAND;TENSION	JAGUE DE NIVEAU	5					
3	06.01913-2911	BOLT	BOULON	2					
4	65.29101-6201A	WIRE;ELECTRIC	FIL	1					
5	65.97401-0188	CLIP;PIPE	ATTACHE	1					
6	06.15010-2311	WASHER	CALE	1					
7	06.16731-2107	WASHER	CALE	1					
8	06.11063-8214	NUT	ECROU	1					
15	65.29101-6209	WIRE;ELECTRIC	FIL	1					
16	65.90201-0128	BOLT;STUD	GOUJON	2					
17	06.16731-2107	WASHER	CALE	2					
18	06.15010-2311	WASHER	CALE	1					
19	65.97401-0196	CLIP;PIPE	ATTACHE	7					
20	06.15010-2311	WASHER	CALE	6					
21	06.16731-2107	WASHER	CALE	6					
22	06.11063-8214	NUT	ECROU	6					
23	65.97460-0005	BAND;TENSION	JAGUE DE NIVEAU	2					
24	06.01923-3111	BOLT	BOULON	2					
25	65.97401-5024	CLIP;PIPE	ATTACHE	2					

DATE	NOV. 24, 2006
1st EDITION	

Fig. 038 ENGINE MOUNTING
SUPPORT DE MOTEUR

Serial No. ;

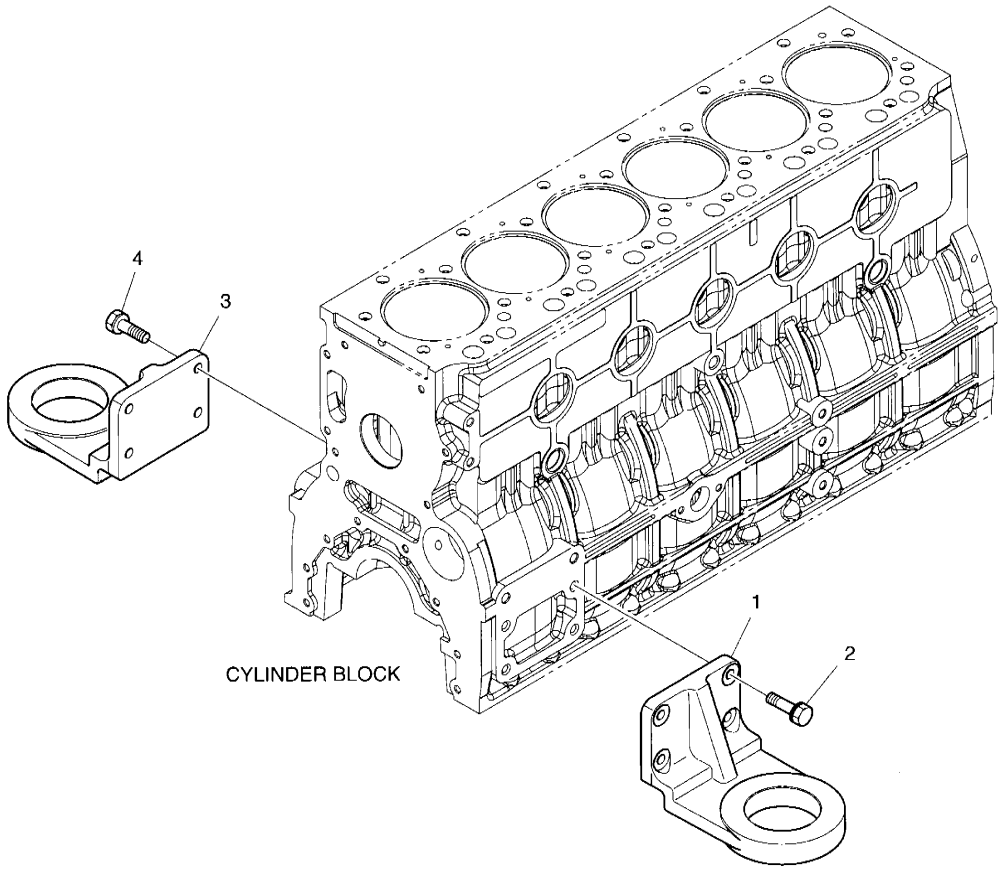

DATE	NOV. 24, 2006
1st EDITION	

Fig. 038 ENGINE MOUNTING SUPPORT DE MOTEUR

Serial No. ;

Key No.	Part No.	Description	Description	Q'ty	S.C	Serial No.	ICA	Replaceable part	
								Part No.	Q'ty
038-1	65.41530-0185	BRACKET;FRONT MOUNTING	SUPPORT	1					
2	06.01924-3217	BOLT	BOULON	4					
3	65.41530-0185	BRACKET;FRONT MOUNTING	SUPPORT	1					
4	06.01924-3217	BOLT	BOULON	4					

DATE	DEC. 15, 2006
REV.NO.	EXB06-13

Fig. 039 AIR COMPRESSOR COMPRESSEUR D'AIR

Serial No. ;

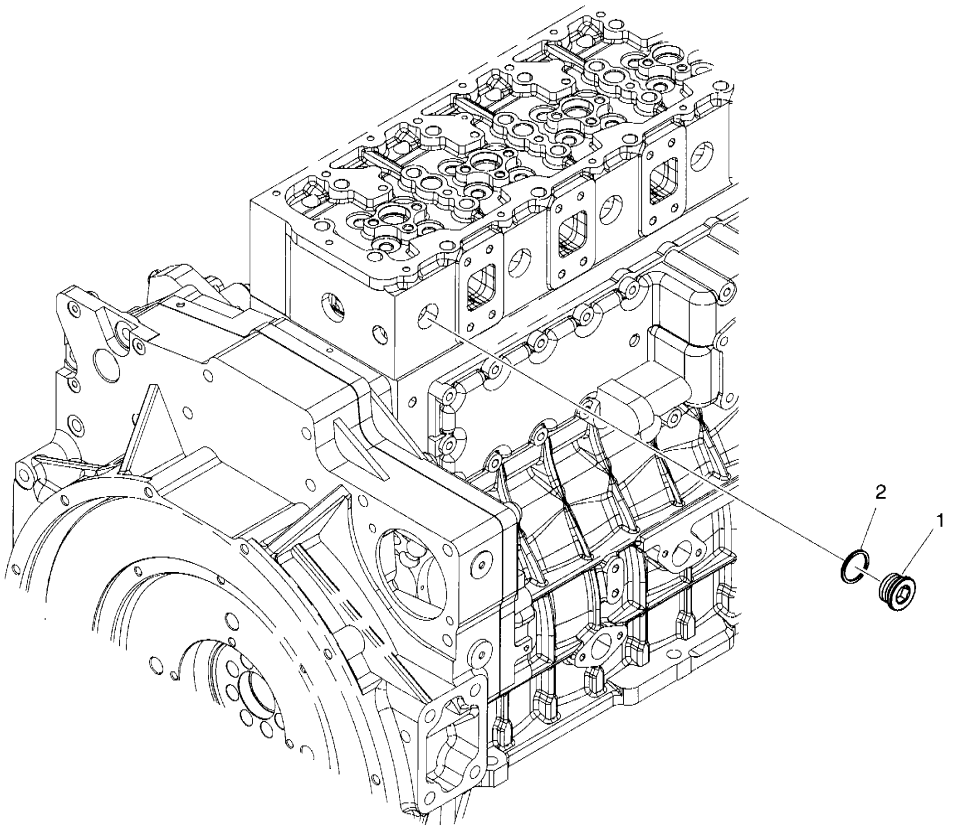

DATE	DEC. 15, 2006
REV. NO.	EXB06-13

Fig. 039 AIR COMPRESSOR COMPRESSEUR D'AIR

Serial No. ;

Key No.	Part No.	Description	Description	Q'ty	S.C	Serial No.	ICA	Replaceable part Part No.	Q'ty
039-1	65.90310-0135	PLUG;SCREW	BOUCHON A VIS	1					
2	06.56190-0705	RING;SEAL A14X18	ENSEMBLE BAGUE	1					

DATE	JUN. 30, 2007
REV.NO.	EXB07-06

Fig. 040 OVERHAUL GASKET KIT - ALL
KIT DE GARNITURE DE REVISION

Serial No. ;

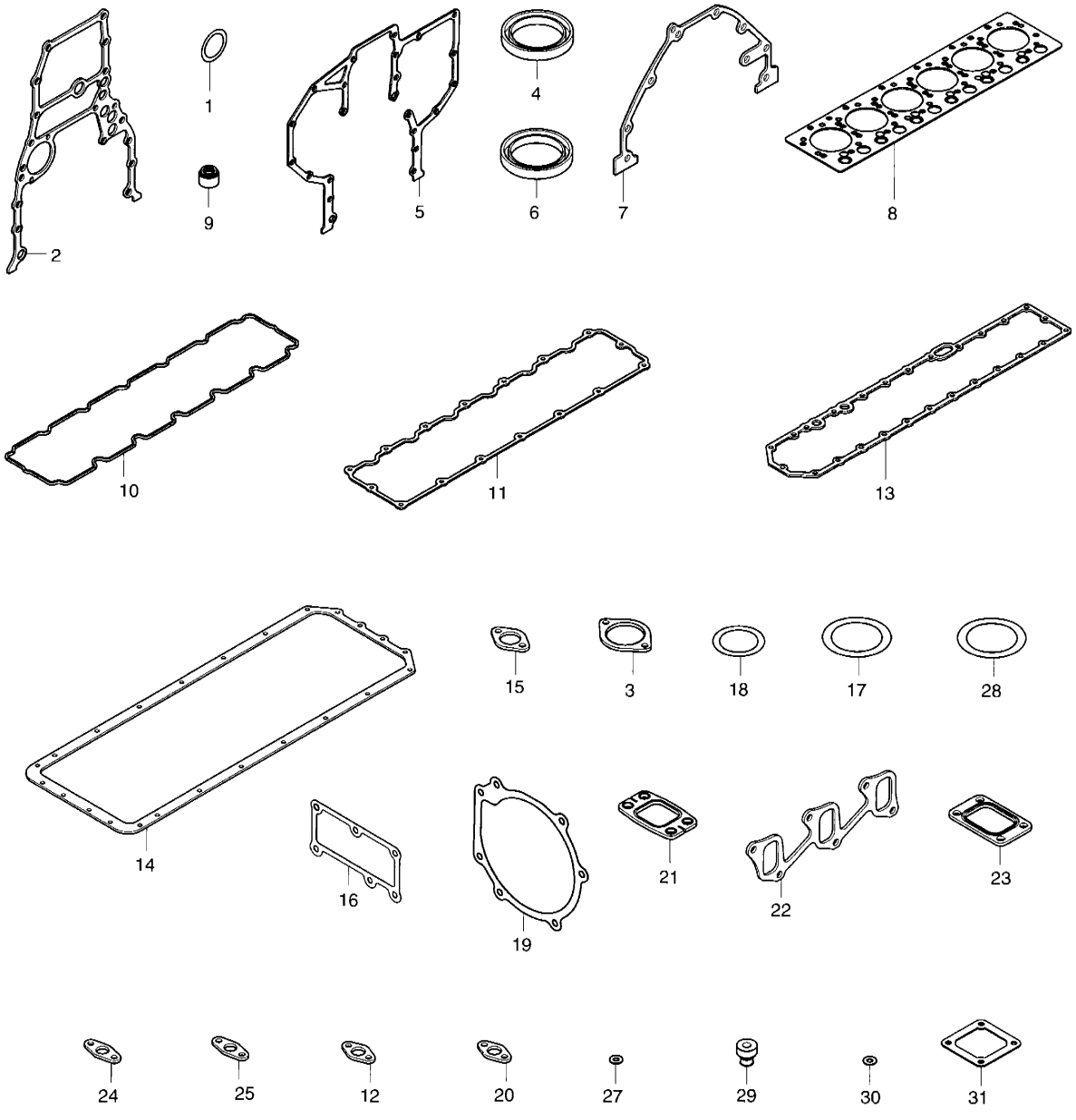

DATE	JUN. 30, 2007
REV. NO.	EXB07-06

Fig. 040 OVERHAUL GASKET KIT - ALL
KIT DE GARNITURE DE REVISION

Serial No. ;

Key No.	Part No.	Description	Description	Q'ty	S.C	Serial No.	ICA	Replaceable part	
								Part No.	Q'ty
040--	65.99601-8071	ALL OVERHAUL GASKET KIT	TOUS REVISENT LE KIT DE	1					
1	06.56021-0102	. O-RING	. JOINT TORIQUE	1					
2	65.01903-0034	. GASKET	. JOINT	1					
3	65.38901-0018A	. GASKET;PTO	. JOINT	1					
4	65.01510-0040	. SEAL;OIL	. JOINT D'HUILE	1					
5	65.01904-0032	. GASKET	. JOINT	1					
6	65.01510-0157	. SEAL;OIL	. JOINT D'HUILE	1					
7	65.01905-0009	. GASKET	. JOINT	1					
8	65.03901-0071	. GASKET;CYLINDER HEAD	. JOINT	1					
9	65.03905-5002	. PACKING;CYL.HEAD COVER	. JOINT	14					
10	65.03905-0037A	. GASKET;CYL.HEAD COVER	. JOINT	1					
11	65.03905-0041	. GASKET;CYL.HEAD COVER	. JOINT	1					
12	65.05903A0001	. GASKET	. JOINT	4					
13	65.05902-0023	. GASKET;OIL COOLER	. JOINT	1					
14	65.05904-0035	. GASKET;OIL PAN	. JOINT	1					
15	65.05901-0027	. GASKET;OIL FILTER	. JOINT	1					
16	65.06904-0020	. GASKET;THERMOSTAT	. JOINT	1		~070315	I	65.06904-0021	1
	65.06904-0021	**. GASKET;THERMOSTAT**	. JOINT	1		070316~			
17	65.06904-0003	. GASKET;THERMOSTAT	. JOINT	1					
18	65.96501-0099A	. O-RING	. JOINT TORIQUE	2					
19	65.06901-0042	. GASKET;WATER PUMP	. JOINT	1					
20	65.06903-0029	. GASKET;WATER PIPE	. JOINT	1					
21	65.08901-0045	. GASKET;EXHAUST MANIFOL	. JOINT	6					
22	65.08902-0030A	. GASKET;INTAKE MANIFOLD	. JOINT	2					
23	65.09901-0018A	. GASKET	. JOINT	1					
24	65.96601-0067	. GASKET;T/C OIL RETURN	. JOINT	1					
25	65.96601-0052	. GASKET(M/G OIL COOLER)	. JOINT	1					
27	65.96507-0053	. RING;SEAL	. BAGUE D'ETANCHEITE	6					
28	06.56020-0115	. O-RING	. JOINT TORIQUE	1					
29	65.96210-6001A	. RUBBER;CUSHION	. CUSHION;RUBBER	3					
30	06.56180-0712	. RING;SEAL A8X14	. BAGUE D'ETANCHEITE	18					
31	65.09904-0008	. GASKET;AIR HEATER	. JOINT	2					

DATE	JUN. 30, 2007
REV.NO.	EXB07-06

Fig. 041 OVERHAUL GASKET KIT - TOP
KIT DE GARNITURE DE REVISION

Serial No. ;

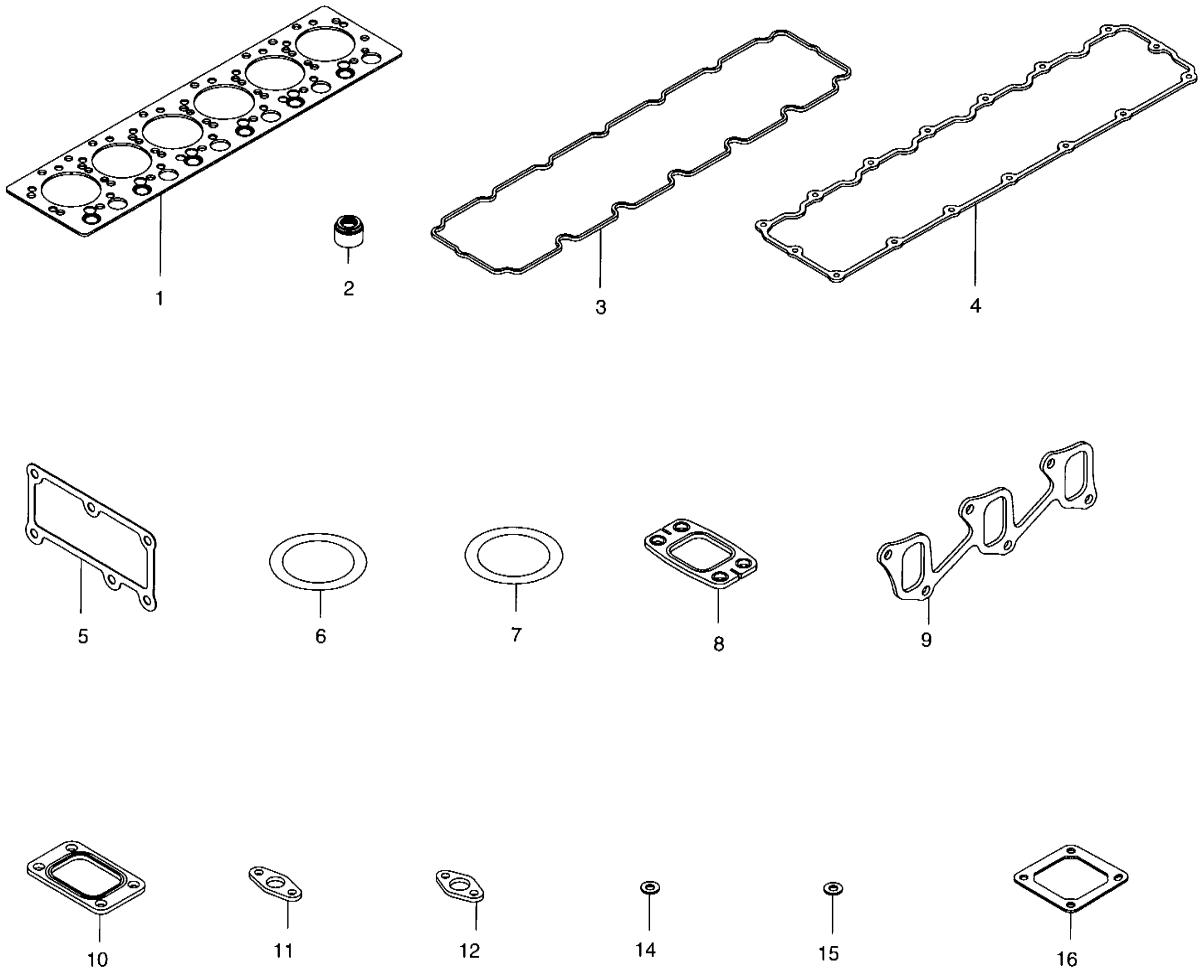

DATE	JUN. 30, 2007
REV. NO.	EXB07-06

Fig. 041 OVERHAUL GASKET KIT - TOP
KIT DE GARNITURE DE REVISION

Serial No. ;

Key No.	Part No.	Description	Description	Q'ty	S.C	Serial No.	ICA	Replaceable part	
								Part No.	Q'ty
-41--	65.99605-8042	TOP OVERHAUL GASKET KIT	TOUS REVISENT LE KIT DE	1					
1	65.03901-0071	. GASKET;CYLINDER HEAD	. JOINT	1					
2	65.03905-5002	. PACKING;CYL.HEAD COVER	. JOINT	14					
3	65.03905-0037A	. GASKET;CYL.HEAD COVER	. JOINT	1					
4	65.03905-0041	. GASKET;CYL.HEAD COVER	. JOINT	1					
5	65.06904-0020	. GASKET;THERMOSTAT	. JOINT	1		~070315	I	65.06904-0021	1
	65.06904-0021	**. GASKET;THERMOSTAT**	. JOINT	1		070316~			
6	65.06904-0003	. GASKET;THERMOSTAT	. JOINT	1					
7	65.96501-0099A	. O-RING	. JOINT TORIQUE	2					
8	65.08901-0045	. GASKET;EXHAUST MANIFOL	. JOINT	6					
9	65.08902-0030A	. GASKET;INTAKE MANIFOLD	. JOINT	2					
10	65.09901-0018A	. GASKET	. JOINT	1					
11	65.96601-0067	. GASKET;T/C OIL RETURN	. JOINT	1					
12	65.96601-0052	. GASKET(M/G OIL COOLER)	. JOINT	1					
14	65.96507-0053	. RING;SEAL	. BAGUE D'ETANCHEITE	6					
15	06.56180-0712	. RING;SEAL A8X14	. BAGUE D'ETANCHEITE	18					
16	65.09904-0008	. GASKET;AIR HEATER	. JOINT	2					

DATE	JUN. 30, 2007
REV.NO.	EXB07-06

Fig. 1100 FRAME CHASSIS

Serial No. ;

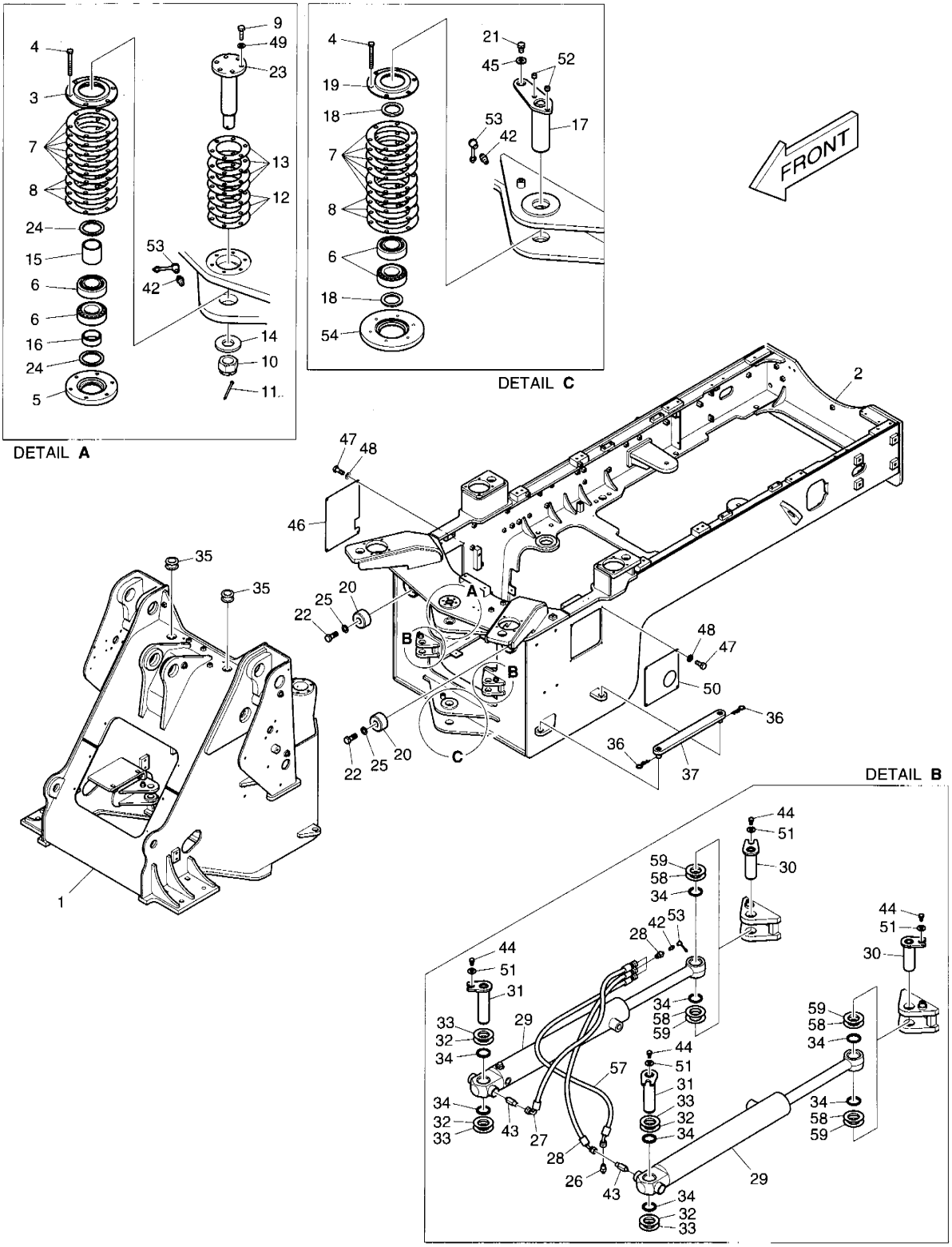

DATE	JUN. 30, 2007
REV. NO.	EXB07-06

Fig. 1100 FRAME CHASSIS

Serial No. ;

Key No.	Part No.	Description	Description	Q'ty	S.C	Serial No.	ICA	Replaceable part	
								Part No.	Q'ty
1	**K1018526M**	**FRAME**	ARMATURE	-	D				
1	K1018206B	FRAME;FRONT	ARMATURE	1		5001–5069	I	K1018206C	1
	K1018206C	**FRAME;FRONT**	ARMATURE	1		**5070–5096**			
	K1018206E	**FRAME;FRONT**	ARMATURE	1		**5097–5103**	I	K1018206G	1
	K1018206G	**FRAME;FRONT**	ARMATURE	1		**5104–**			
2	K1014089E	FRAME;REAR	ARMATURE	1		5001–5051	I	K1014089G	1
	K1014089G	**FRAME;REAR**	ARMATURE	1		**5052–5091**	I	K1014089H	1
	K1014089H	**FRAME;REAR**	ARMATURE	1		**5092–5105**	I	K1014089J	1
	K1014089J	**FRAME;REAR**	ARMATURE	1		**5106–**			
3	4111-1013A	CAP	CHAPEAU	1					
4	S0559266	BOLT	BOULON	12					
5	111-00029	CAP;BEARING	CHAPEAU	1					
6	4109-9068	BEARING;TAPER ROLLER	ROULEMENT ROULEAUX	4					
7	4114-1864	SHIM	CALE	12					
8	4114-1865	SHIM	CALE	6					
9	S0558266	BOLT	BOULON	6					
10	S4213633	NUT	ECROU	1		5001–5077			
	K1030744	**NUT**	ECROU	1		**5078–**			
11	S5735791	PIN	GOUPILLE	1		5001–5077			
	S5736091	**PIN**	GOUPILLE	1		**5078–**			
12	4114-4105	SHIM	CALE	3					
13	4114-4106	SHIM	CALE	4					
14	4114-4113	WASHER	RONDELLE	1		5001–5077			
	DS0401198	**WASHER**	RONDELLE	1		**5078–**			
15	4114-1867	SPACER	ENTERTOISE	1		5001–5077	I	K1030743	1
	K1030743	**SPACER**	ENTERTOISE	1		**5078–**			
16	4114-1866	SPACER	ENTERTOISE	1					
17	123-00368	PIN	GOUPILLE	1		5001–5077	I	K1033324	1
	K1033324	**PIN**	GOUPILLE	1		**5078–**			
18	2180-1106D7	SEAL;DUST	BAGUE D'ETANCHEITE	2					
19	4111-1012A	CAP	CHAPEAU	1					
20	K1007156	STOPPER	ARRET	2		5001–5030	I	161-00311	2
	161-00311	**STOPPER**	ARRET	2		**5031–5034**			
	K1030232	**STOPPER**	ARRET	2		**5035–5096**	I	K1030232A	2
	K1030232A	**STOPPER**	ARRET	2		**5097–**			
21	S0514856	BOLT	BOULON	1					
22	S0521556	BOLT	BOULON	2					
23	123-00369A	PIN	GOUPILLE	1		5001–5077			

DATE	JUN. 30, 2007
REV.NO.	EXB07-06

Fig. 1100 FRAME CHASSIS

Serial No. ;

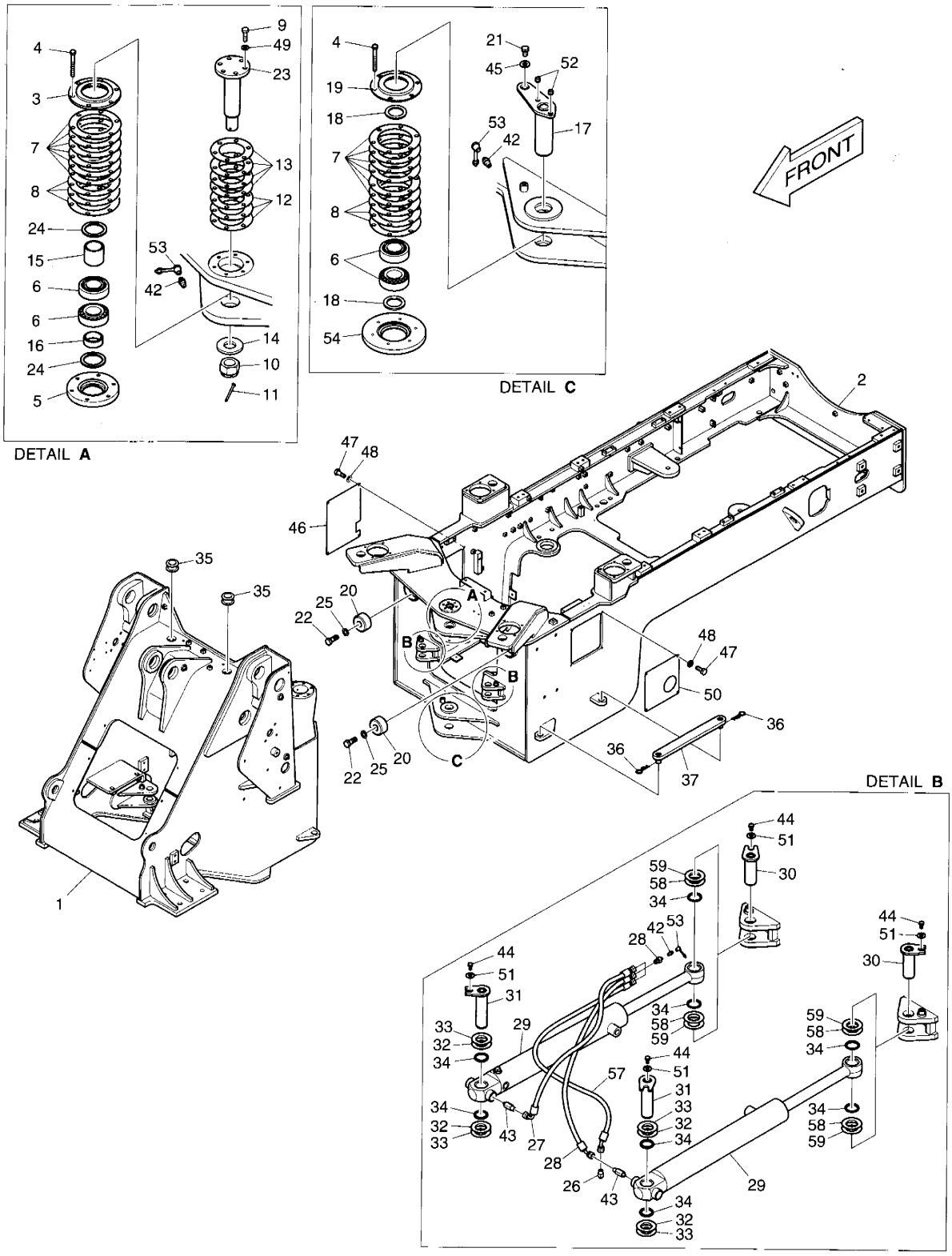

DATE	JUN. 30, 2007
REV. NO.	EXB07-06

Fig. 1100 FRAME CHASSIS

Serial No. ;

Key No.	Part No.	Description	Description	Q'ty	S.C	Serial No.	ICA	Replaceable part	
								Part No.	Q'ty
1100-23	**K1030742**	**PIN**	GOUPILLE	1		**5078–**			
24	2180-1106D8	SEAL;DUST	BAGUE D'ETANCHEITE	2					
25	S5010913	WASHER	RONDELLE	2					
26	2181-4112	ADAPTER	ADAPTEUR	4					
27	DS2055682	HOSE	TUYAU FLEXIBLE	1					
28	DS2054225	HOSE	TUYAU FLEXIBLE	1					
29	440-00252	CYLINDER;STEERING	VERIN DE DIRECTION	2					
30	K1018541	PIN	GOUPILLE	2					
31	K1028449	PIN	GOUPILLE	2					
32	2114-1059D45	SHIM	CALE	4					
33	2114-1059D46	SHIM	CALE	4					
34	2180-1106BD21	SEAL;DUST	BAGUE D'ETANCHEITE	8					
35	DS7603058	BUSHING;RUBBER	DOUILLE EN CAOUTCHOUC	2					
36	4123-2423	PIN	GOUPILLE	2					
37	178-00004A	BAR;LOCKING	BARRE	1					
42	S6710041	FITTING	RACCORD	5					
43	2181-1110D41	ADAPTER	ADAPTEUR	2					
44	S0511856	BOLT	BOULON	4					
45	2114-1058D68	WASHER	RONDELLE	1					
46	K1018543	COVER	COUVERCLE	1					
47	S0509066	BOLT	BOULON	8					
48	S5102503	WASHER;SPRING	RONDELLE ELASTIQUE	8					
49	4114-1793A	WASHER	RONDELLE	6					
50	K1018544	COVER	COUVERCLE	1					
51	4114-4104A	WASHER	RONDELLE	4					
52	S3524303	SCREW	VIS	2					
53	160-00020	CAP	CHAPEAU	5					
54	111-00030	CAP	CHAPEAU	1					
57	DS2054226	HOSE	TUYAU FLEXIBLE	1		5001–5096			
	DS2054404	**HOSE**	TUYAU FLEXIBLE	1		**5097–**			
58	2114-1059D3	WASHER	RONDELLE	4					
59	DS7701366	SHIM	CALE	4					

DATE	JUN. 30, 2007
REV.NO.	EXB07-06

Fig. 1110 ENGINE MOUNTING SUPPORT DE MOTEUR

Serial No. ;

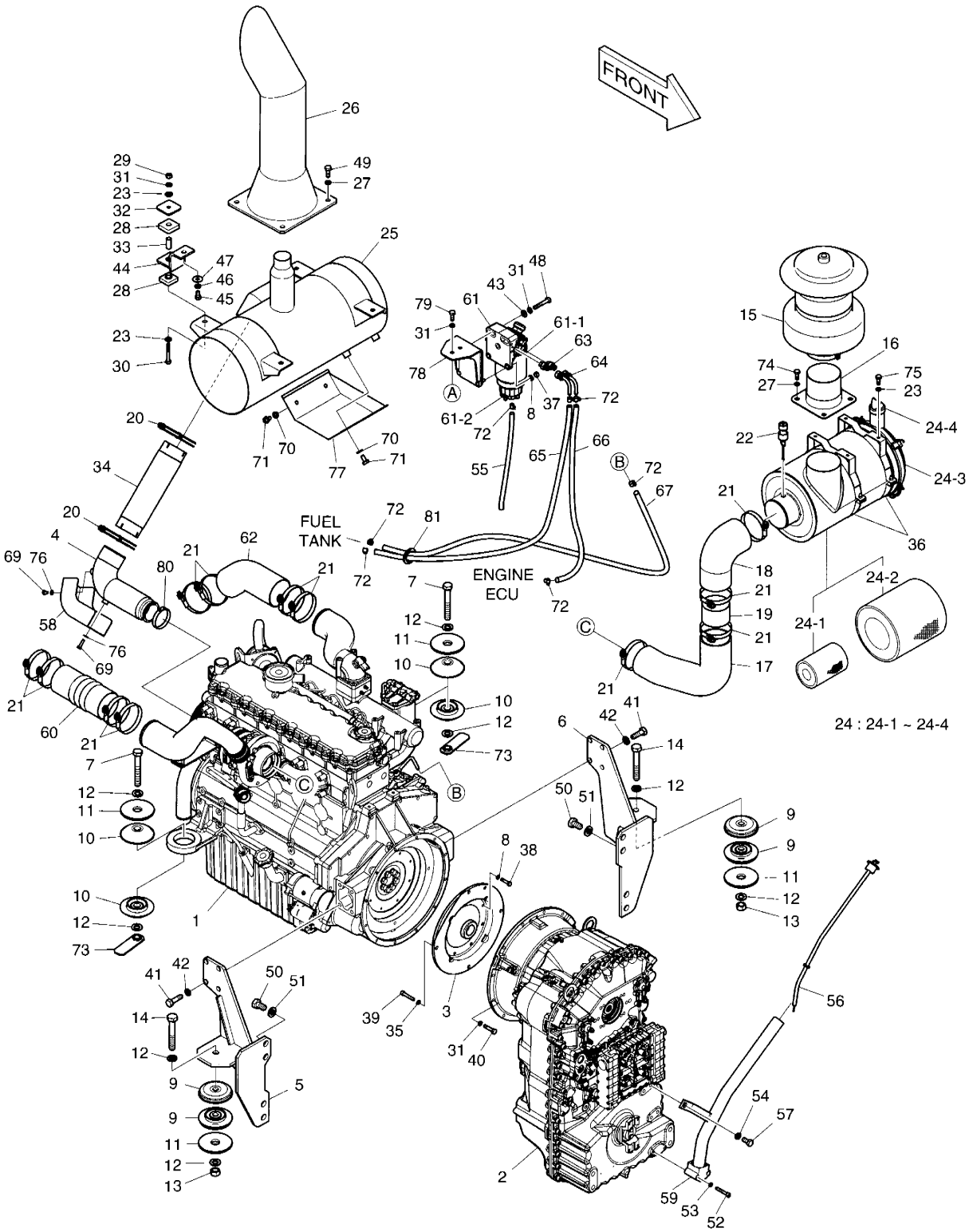

DATE	JUN. 30, 2007
REV. NO.	EXB07-06

Fig. 1110 ENGINE MOUNTING SUPPORT DE MOTEUR

Serial No. ;

Key No.	Part No.	Description	Description	Q'ty	S.C	Serial No.	ICA	Replaceable part	
								Part No.	Q'ty
1110--	K1017225C	ENGINE MOUNTING	SUPPORT DE MOTEUR	-	D				
1	K1017399	ENGINE (TIER-3)	MOTEUR	1					
	K1023611	ENGINE (TIER-2)	MOTEUR	1					
2	K1013517	TRANSMISSION	TRANSMISSION	1					
3	K1023887	ADAPTER	ADAPTEUR	1					
4	K1017227B	PIPE;EXHAUST	TUYAU	1					
5	K1017251A	BRACKET	SUPPORT	1					
6	K1017252	BRACKET	SUPPORT	1					
7	S0771566	BOLT	BOULON	2					
8	S5102503	WASHER;SPRING	RONDELLE ELASTIQUE	10					
9	161-00552	RUBBER;MOUNTING	SUPPORT	4					
10	161-00553	RUBBER;MOUNTING	SUPPORT	4					
11	2114-1929	WASHER	RONDELLE	4					
12	2114-9012A	WASHER	RONDELLE	7					
13	S4033133	NUT	ECROU	2					
14	S0771266	BOLT	BOULON	2					
15	K1017883	PRE CLEANER	PRE DECAPANT	1					
16	K1014413A	PIPE	TUYAU	1					
17	K1017254	HOSE;AIR	TUYAU FLEXIBLE	1					
18	K1014416	HOSE;AIR	TUYAU FLEXIBLE	1					
19	K1014423	PIPE;AIR	TUYAU	1					
20	4182-1671C	CLAMP;PIPE	COLLIER	2					
21	S8500130	CLAMP;CONSTANT TORQUE	COLLIER	12					
22	170-00004	INDICATOR;DUST	INDICATEUR	1					
23	2114-1058D63	WASHER	RONDELLE	12					
24	204-00067	AIR CLEANER ASS'Y	ENSEMBLE FILTRE A AIR	1					
24-1	474-00039	. ELEMENT;INNER	. ELEMENT	1					
24-2	474-00040	. ELEMENT;OUTER	. ELEMENT	1					
24-3	204-00075	. COVER	. COUVERCLE	1					
24-4	204-00070	. VALVE	. VANNE	1					
25	K1014424A	MUFFLER	SILENCIEUX	1					
26	203-00055	PIPE;MUFFLER	CONDUITE	1					
27	2114-2031D6	WASHER;SPRING	RONDELLE ELASTIQUE	8					
28	198-00026	RUBBER;MUFFLER MOUNT	CAOUTCHOUC	8					
29	S4012633	NUT	ECROU	4					
30	S0559066	BOLT	BOULON	4					
31	S5102603	WASHER;SPRING	RONDELLE ELASTIQUE	20					
32	114-00403	WASHER	RONDELLE	4					

DATE	JUN. 30, 2007
REV.NO.	EXB07-06

Fig. 1110 ENGINE MOUNTING SUPPORT DE MOTEUR

Serial No. ;

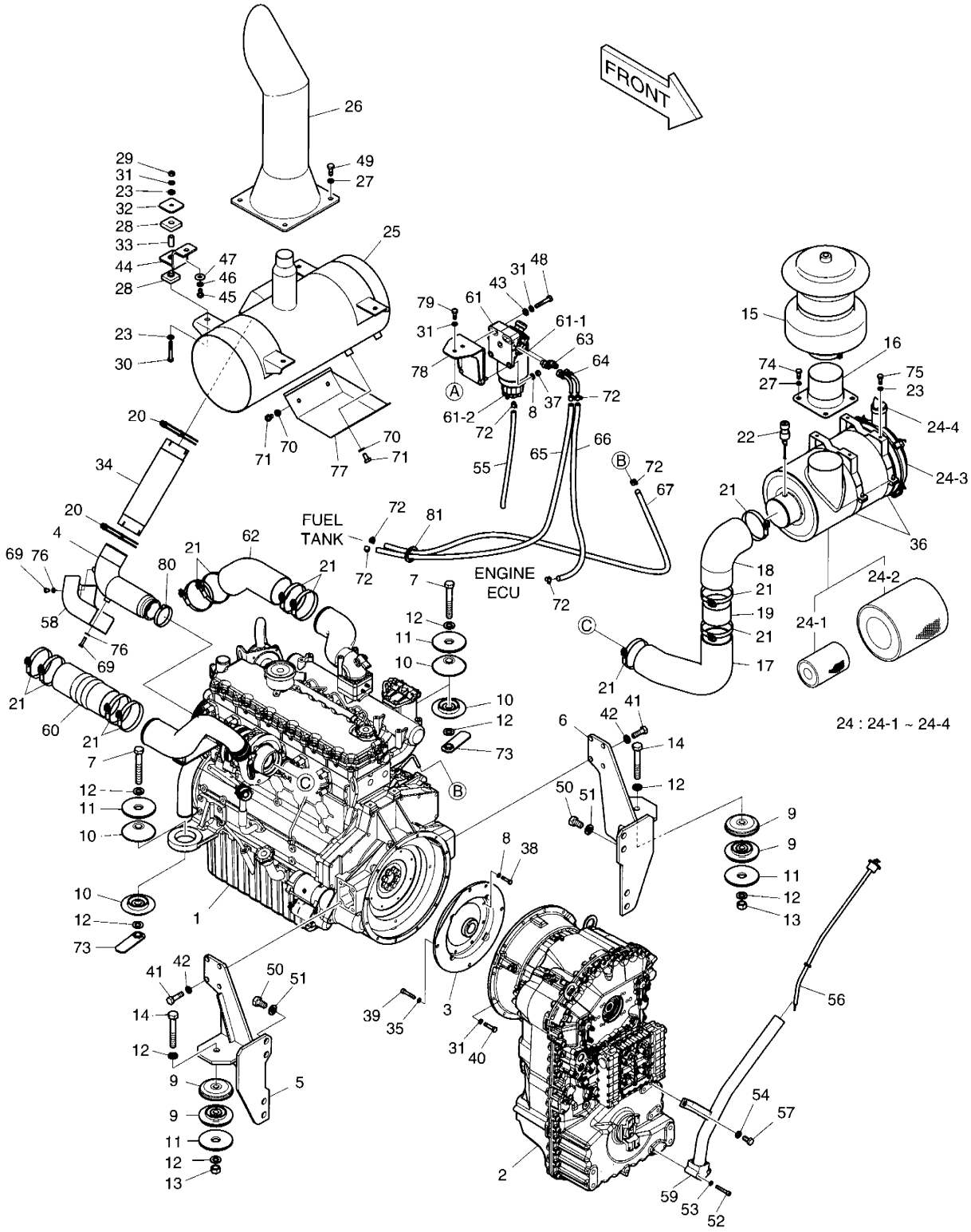

DATE	JUN. 30, 2007
REV. NO.	EXB07-06

Fig. 1110 ENGINE MOUNTING SUPPORT DE MOTEUR

Serial No. ;

Key No.	Part No.	Description	Description	Q'ty	S.C	Serial No.	ICA	Replaceable part	
								Part No.	Q'ty
10-33	114-00404	SPACER	ENTERTOISE	4					
34	K1017253	PIPE;EXHAUST	TUYAU	1					
35	S5110603	WASHER	RONDELLE	4					
36	124-00298A	BAND;AIR CLEANER	ATTACHE	2					
37	S4012533	NUT	ECROU	2					
38	S0509266	BOLT	BOULON	8					
39	S2213066	BOLT	BOULON	4					
40	S0558266	BOLT	BOULON	12					
41	S0565266	BOLT	BOULON	8					
42	S5102903	WASHER;SPRING	RONDELLE ELASTIQUE	8					
43	2114-1058D45	WASHER;PLAIN	RONDELLE PLATE	2					
44	K1008525	BRACKET	SUPPORT	4					
45	S0514966	BOLT	BOULON	4					
46	S5102703	WASHER;SPRING	RONDELLE ELASTIQUE	4					
47	2114-1058D30	WASHER;PLAIN	RONDELLE PLATE	4					
48	S0558866	BOLT	BOULON	2					
49	2120-2166D32	BOLT	BOULON	4					
50	S0527466	BOLT	BOULON	8					
51	S5103103	WASHER;SPRING	RONDELLE ELASTIQUE	8					
52	S2209666	BOLT	BOULON	2					
53	S5110503	WASHER;SPRING	RONDELLE ELASTIQUE	2					
54	S5102803	WASHER;SPRING	RONDELLE ELASTIQUE	1					
55	DS2105015	HOSE	TUYAU FLEXIBLE	1					
56	4187-9002	DIPSTICK	JAUGEUR	1					
57	S0518266	BOLT	BOULON	1					
58	K1015643	PLATE	PLAQUE	1					
59	K1017398	PIPE	TUYAU	1					
60	K1026660A	HOSE;AIR	TUYAU FLEXIBLE	1					
61	**K1006520**	**PRE FUEL FILTER ASS'Y**	PRE FILTRE D'ESSENCE	1					
61-1	**K1006530**	**. FILTER;PRE FUEL**	. CARTOUCHE	1					
61-2	K1006973	. BOWL	. CUVETTE	1					
62	K1026662	HOSE;AIR	TUYAU FLEXIBLE	1		5001–5015	I	K1026662A	1
	K1026662A	HOSE;AIR	TUYAU FLEXIBLE	1		5016–			
63	DS2479004	ADAPTER	ADAPTEUR	2					
64	K1002864	ELBOW	COUDE	2					
65	2185-1247D63	HOSE	TUYAU FLEXIBLE	1					
66	2185-1247D57	HOSE	TUYAU FLEXIBLE	1					
67	2185-1247D105	HOSE	TUYAU FLEXIBLE	1					

DATE	JUN. 30, 2007
REV.NO.	EXB07-06

Fig. 1110 ENGINE MOUNTING
SUPPORT DE MOTEUR

Serial No. ;

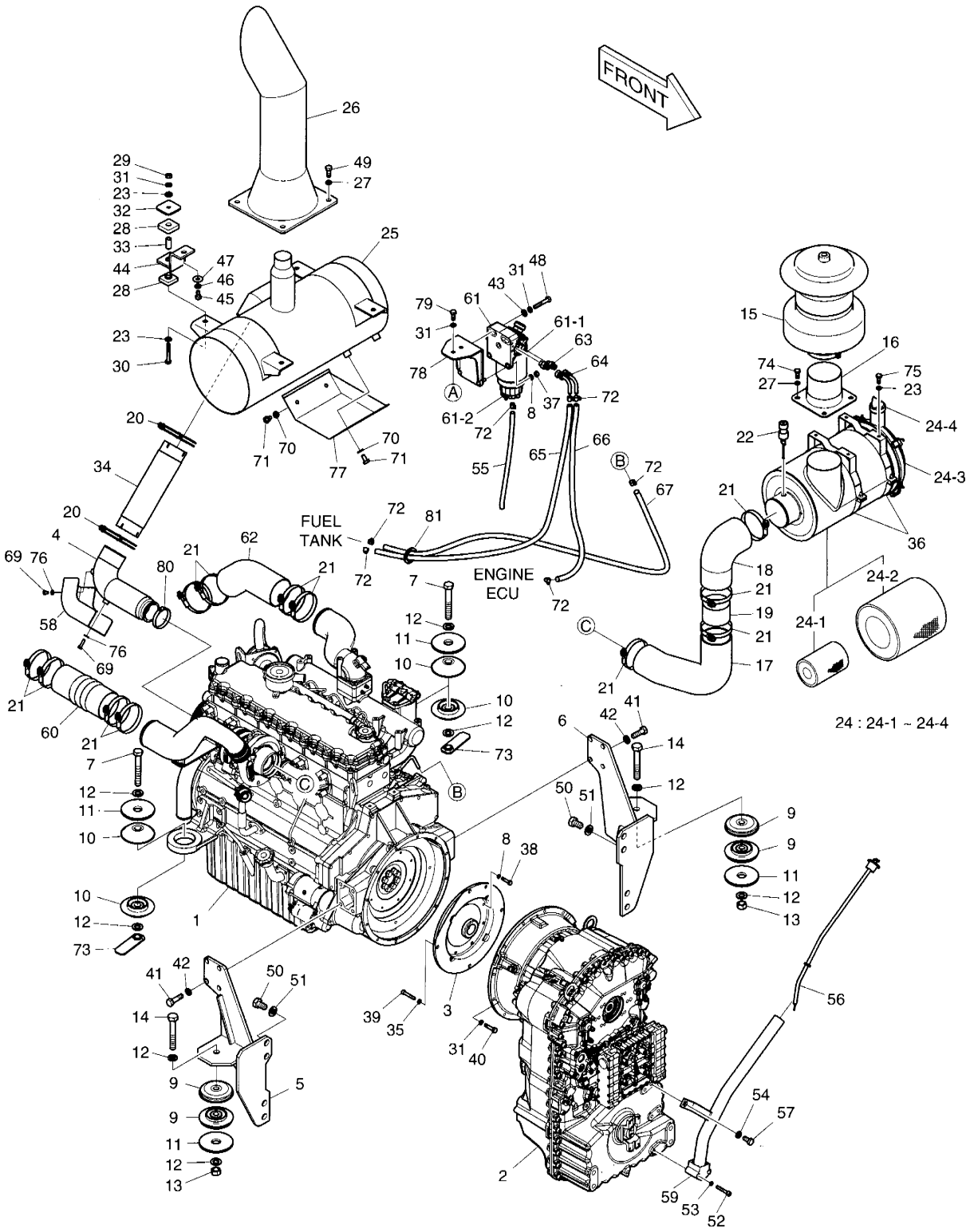

DATE	JUN. 30, 2007
REV. NO.	EXB07-06

Fig. 1110 ENGINE MOUNTING SUPPORT DE MOTEUR

Serial No. ;

Key No.	Part No.	Description	Description	Q'ty	S.C	Serial No.	ICA	Replaceable part	
								Part No.	Q'ty
10-69	S0508466	BOLT	BOULON	2					
70	2114-2031D5	WASHER;SPRING	RONDELLE ELASTIQUE	4					
71	2120-2166D4	BOLT	BOULON	4					
72	S8450012	CLAMP;HOSE	COLLIER DE LA CONDUITE	7					
73	K1010605	PLATE	PLAQUE	2					
74	2120-2166D27	BOLT	BOULON	4					
75	2120-2166D1	BOLT	BOULON	4					
76	S5010513	WASHER	RONDELLE	2					
77	K1015981	PLATE	PLAQUE	1					
78	K1018521A	BRACKET	SUPPORT	1					
79	S0512066	BOLT	BOULON	2					
80	K1024182	CLAMP	BRIDE	1					
81	2160-1004D32	BUSHING;RUBBER	DOUILLE EN CAOUTCHOUC	1					

DATE	JUN. 30, 2007
REV.NO.	EXB07-06

Fig. 1120 OIL TANK
RESERVOIR D'HUILE

Serial No. ;

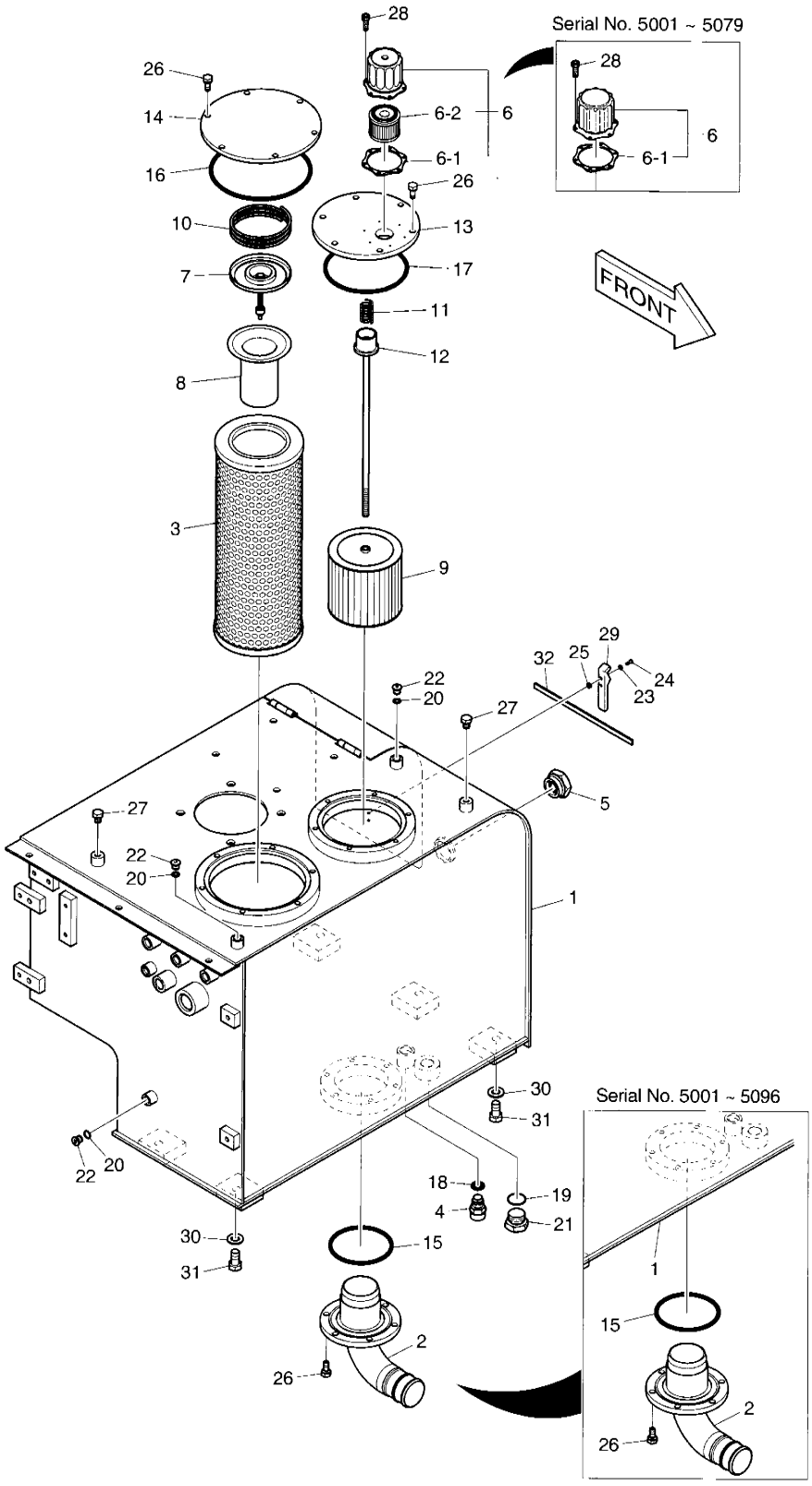

DATE	JUN. 30, 2007
REV. NO.	EXB07-06

Fig. 1120 OIL TANK RESERVOIR D'HUILE

Serial No. ;

Key No.	Part No.	Description	Description	Q'ty	S.C	Serial No.	ICA	Replaceable part	
								Part No.	Q'ty
.20--	**K1016434E**	**OIL TANK ASS'Y**	POMPE	-	D				
1	K1016436C	TANK;OIL	RESERVOIR DE HUILE	1		5001-5096			
	K1016436E	**TANK;OIL**	RESERVOIR DE HUILE	1		**5097-**			
2	K1009727A	PIPE;SUCTION	TUYAU	1		5001-5096			
	K1009727B	**PIPE;SUCTION**	TUYAU	1		**5097-**			
3	474-00055	ELEMENT;FILTER	ELEMENT	1					
4	426-00278	VALVE;DRAIN	VANNE	1					
5	528-00030	GAUGE;COOLANT SIGHT	MESURE	1					
6	**422-00027A**	**BREATHER;AIR**	SUPPORT	1		**5001-5079**	I	K1012685A	1
6-1	**180-00200**	**. PACKING**	. JOINT	1		**5001-5079**			
6	**K1012685A**	**BREATHER;AIR**	SUPPORT	1		**5080-**			
6-1	**K9005662**	**. PACKING**	. JOINT	1		**5080-**			
6-2	**K1029257**	**. ELEMENT;AIR BREATHER**	. ELEMENT	1		**5080-**			
7	2426-1175	VALVE;BY-PASS	VANNE	1					
8	471-00127	STRAINER;BY-PASS	FILTRE	1					
9	2474-9016A	FILTER;SUCTION	FILTRE	1					
10	2129-1393	SPRING	RESSORT	1					
11	2129-1008	SPRING;COMPRESS	RESSORT	1					
12	136-00025	ROD	TIGE	1					
13	K1010891	COVER;TANK	COUVERCLE	1					
14	2473-1080A	COVER	COUVERCLE	1					
15	S8011200	O-RING	JOINT TORIQUE	1					
16	S8012000	O-RING	JOINT TORIQUE	1					
17	S8011650	O-RING	JOINT TORIQUE	1					
18	S8000181	O-RING	JOINT TORIQUE	1					
19	S8000291	O-RING	JOINT TORIQUE	1					
20	S8000111	O-RING	JOINT TORIQUE	3					
21	2181-1950D9	PLUG	BOUCHON	1					
22	2181-1890D2	PLUG	BOUCHON	3					
23	S5100103	WASHER;SPRING	RONDELLE ELASTIQUE	2					
24	S3450573	SCREW	VIS	2					
25	S4012133	NUT	ECROU	2					
26	DS0025024	BOLT	BOULON	18					
27	S0514666	BOLT	BOULON	2					
28	S2202766	BOLT	BOULON	6					
29	4125-1099	LATCH;DRAW	LOQUET	1					
30	2114-1816A	WASHER	RONDELLE	5					
31	S0521266	BOLT	BOULON	5					

DATE	JUN. 30, 2007
REV.NO.	EXB07-06

Fig. 1120 OIL TANK
RESERVOIR D'HUILE

Serial No. ;

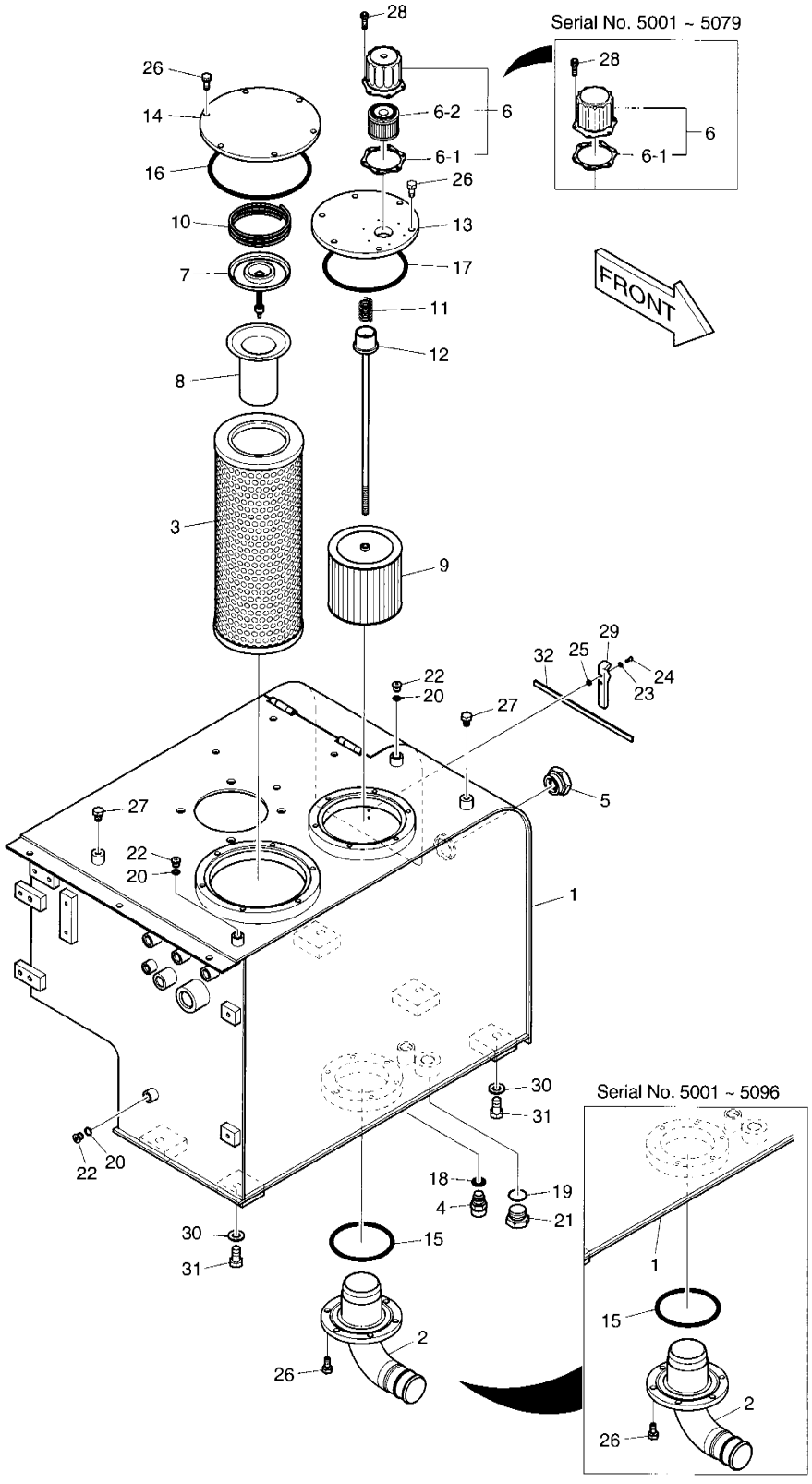

DATE	JUN. 30, 2007
REV. NO.	EXB07-06

Fig. 1120 OIL TANK RESERVOIR D'HUILE

Serial No. ;

Key No.	Part No.	Description	Description	Q'ty	S.C	Serial No.	ICA	Replaceable part	
								Part No.	Q'ty
.0-32	161-00530	RUBBER;CUSHION	CUSHION;RUBBER	1					

DATE	JUN. 30, 2007
REV.NO.	EXB07-06

Fig. 1130 FUEL TANK
RESERVOIR DE GAZOLE

Serial No. ;

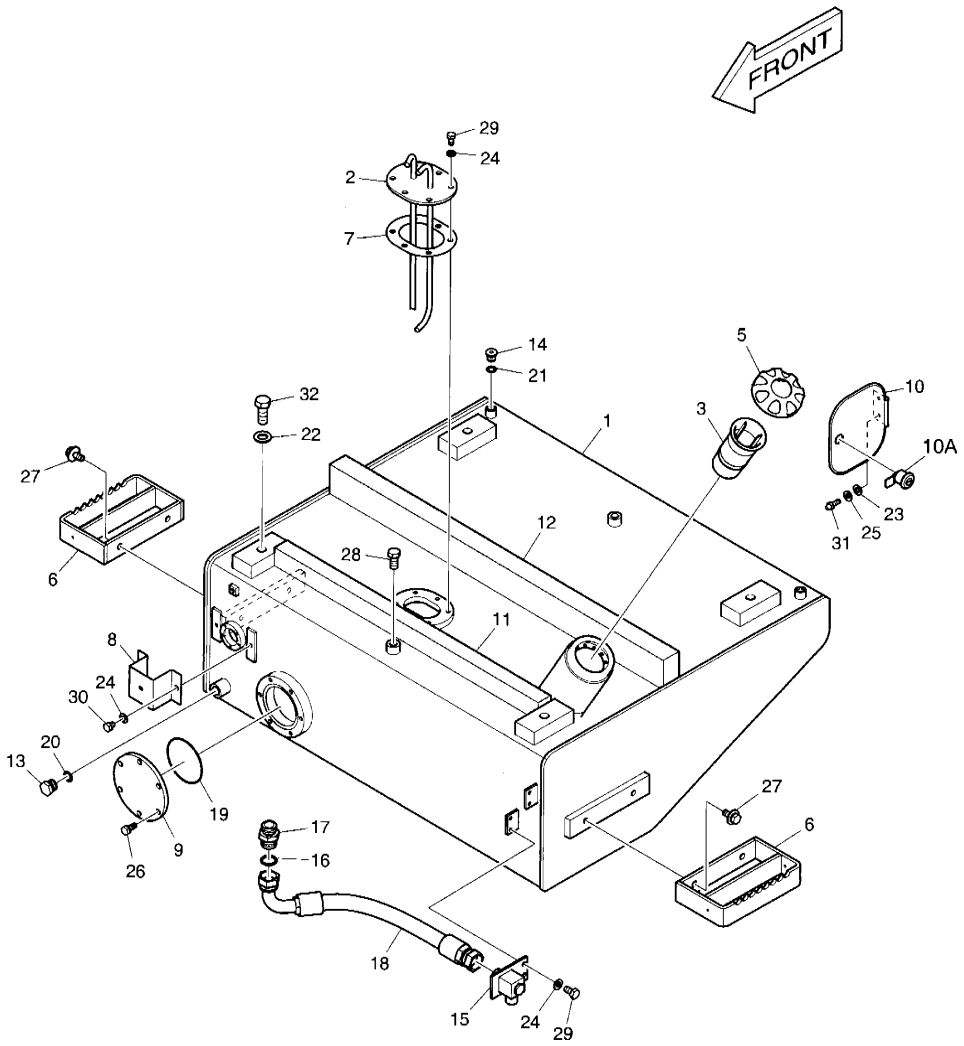

DATE	JUN. 30, 2007
REV. NO.	EXB07-06

Fig. 1130 FUEL TANK RESERVOIR DE GAZOLE

Serial No. ;

Key No.	Part No.	Description	Description	Q'ty	S.C	Serial No.	ICA	Replaceable part	
								Part No.	Q'ty
1130--	**K1016435G**	**FUEL TANK ASS'Y**	RESERVOIR D'GAZOLE	-	D				
1	K1023557B	TANK;FUEL	RESERVOIR DE	1		5001–5084	I	K1023557C	1
	K1023557C	**TANK;FUEL**	RESERVOIR DE	1		**5085–**			
2	K1016467A	PIPE;FUEL	TUYAU	1					
3	2471-9046	FILTER;FUEL	FILTRE	1					
5	K1004266	CAP;FUEL	CHAPEAU	1					
6	K1015364A	BRACKET	SUPPORT	2		5001–5077	I	K1015364	2
	K1015364	**BRACKET**	SUPPORT	2		**5078–**			
7	4180-4012	PACKING	JOINT	1					
8	K1009960	COVER	COUVERCLE	1					
9	K1009961	COVER;TANK	COUVERCLE	1					
10	K1016294	COVER;TANK	COUVERCLE	1		5001–5077	I	K1037997	1
	K1037997	**COVER;TANK**	COUVERCLE	1		**5078–**			
10A	K1006160	. CYLINDER;KEY	. CYLINDRE	1		5001–5077			
	K1037984	**. CYLINDER;KEY**	. CYLINDRE	1		**5078–**			
11	K1024258	SPONGE	EPONGE	1					
12	K1024259	SPONGE	EPONGE	1					
13	181-00343A	PLUG;DRAIN	BOUCHON DE VIDANGE	1					
14	2181-1890D2	PLUG	BOUCHON	2					
15	4181-2692	COCK;DRAIN	ROBINET DE PURGE	1					
16	S8180481	SEAL RING	BAGUE D'ETANCHEITE	1					
17	2181-1917D35	ADAPTER	ADAPTEUR	1					
18	2184-1036D132	HOSE	TUYAU FLEXIBLE	1					
19	S8011050	O-RING	JOINT TORIQUE	1					
20	S8000181	O-RING	JOINT TORIQUE	1					
21	S8000111	O-RING	JOINT TORIQUE	2					
22	2114-9012A	WASHER	RONDELLE	4					
23	S5010303	WASHER	RONDELLE	2					
24	S5102503	WASHER;SPRING	RONDELLE ELASTIQUE	10					
25	S5102303	WASHER;SPRING	RONDELLE ELASTIQUE	2					
26	DS0025024	BOLT	BOULON	6					
27	DS0025018	BOLT	BOULON	4					
28	S0521366	BOLT	BOULON	2					
29	S0508666	BOLT	BOULON	8					
30	S0508366	BOLT	BOULON	2					
31	S0504666	BOLT	BOULON	2					
32	S0569866	BOLT	BOULON	4					

DATE	JUN. 30, 2007
REV.NO.	EXB07-06

Fig. 1140 AXLE & DRIVE SHAFT
PONTS ET ARBRES DE TRANSMISSION

Serial No. ;

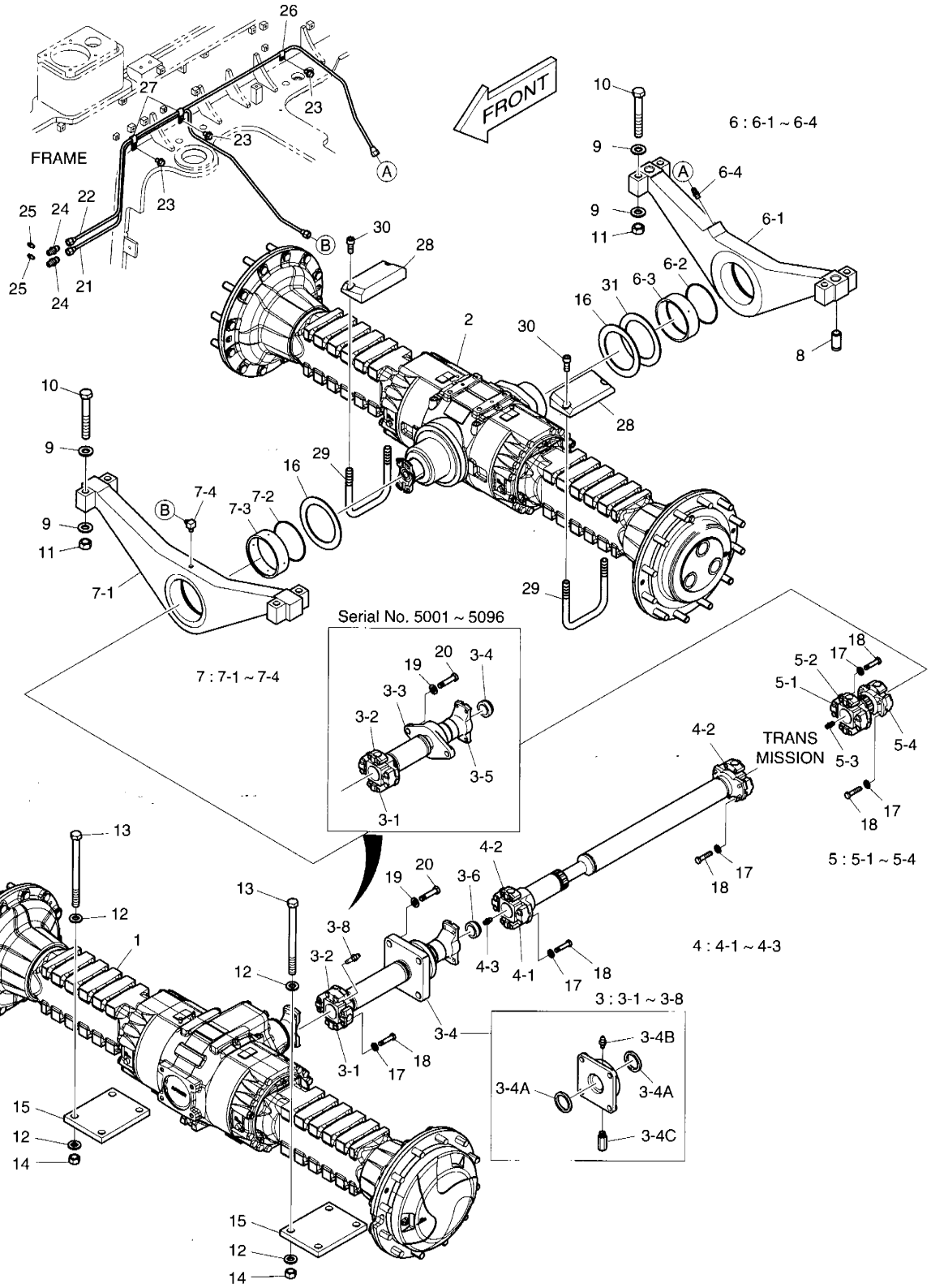

DATE	JUN. 30, 2007
REV. NO.	EXB07-06

Fig. 1140 AXLE & DRIVE SHAFT
PONTS ET ARBRES DE TRANSMISSION

Serial No. ;

Key No.	Part No.	Description	Description	Q'ty	S.C	Serial No.	ICA	Replaceable part	
								Part No.	Q'ty
1140--	**K1018081E**	**AXLE & DRIVE SHAFT ASS'Y**	PONTS ET ARBRES DE	-	D				
1	211-00065	AXLE;FRONT	AXE	1					
2	211-00066	AXLE;REAR	AXE	1					
3	260-00039	DRIVE SHAFT;FRONT	ARBRE D'ENTRANEMENT	1		5001–5096			
3-1	**1.120-00002**	**. BOLT**	. BOULON A 6 PANS	4					
3-2	1.109-00044	. BEARING;JOURNAL	. TOURILLON	1					
3-3	1.229-00006	. FLANGE;BEARING	. BRIDE	1					
3-4	1.121-00042	. NUT;LOCK	. ERROU	1					
3-5	1.229-00008	. FLANGE;COM	. BRIDE	1					
3	**K1036276**	**DRIVE SHAFT;FRONT**	ARBRE D'ENTRANEMENT	1		**5097–**			
3-1	**1.120-00002**	**. BOLT**	. BOULON A 6 PANS	4		**5097–**			
3-2	**K9004532**	**. BEARING;JOURNAL**	. TOURILLON	1		**5097–**			
3-4	**K9005524**	**. FLANGE;BEARING**	. BRIDE	1		**5097–**			
3-4A	**K9004534**	**.. SEAL**	.. JOINT	2		**5097–**			
3-4B	**K9003622**	**.. NIPPLE;GREASE**	.. GRAISSEUR	1		**5097–**			
3-4C	**K9000987**	**.. VALVE;AIR RELIEF**	.. VANNE	1		**5097–**			
3-6	**1.121-00042**	**. NUT**	. ERROU	1		**5097–**			
3-8	**1.181-00005**	**. NIPPLE;GREASE**	. GRAISSEUR	1		**5097–**			
4	260-00012	DRIVE SHAFT;CENTER	ARBRE D'ENTRANEMENT	1					
4-1	1.120.00002	. BOLT	. BOULON A 6 PANS	8					
4-2	1.109-00044	. BEARING;JOURNAL	. TOURILLON	2					
4-3	1.420-00024	. VALVE;AIR-RELIEF	. VANNE	1					
5	260-00041	DRIVE SHAFT;REAR	ARBRE D'ENTRANEMENT	1					
5-1	1.120.00002	. BOLT	. BOULON A 6 PANS	8					
5-2	1.109-00044	. BEARING;JOURNAL	. TOURILLON	1					
5-3	1.420-00024	. VALVE;AIR-RELIEF	. VANNE	1					
5-4	1.138-00019	. BEARING;JOURNAL	. TOURILLON	1					
6	K1018198A	SUPPORT;AXLE REAR	SUPPORT	1		5001–5069	I	K1018198B	1
	K1018198B	**SUPPORT;AXLE REAR**	SUPPORT	1		**5070–**			
6-1	-	. PIVOT BEARING	. PALIER	1	D				
6-2	S8011400	. O-RING	. JOINT TORIQUE	1					
6-3	4110-1410	. BUSHING	. DOUILLE	1					
6-4	2181-1919D10	. ADAPTER	. ADAPTEUR	1					
7	K1018197A	SUPPORT;AXLE FRONT	SUPPORT	1		5001–5069	I	K1018197B	1
	K1018197B	**SUPPORT;AXLE FRONT**	SUPPORT	1		**5070–**			
7-1	-	. PIVOT BEARING	. PALIER	1	D				
7-2	S8011400	. O-RING	. JOINT TORIQUE	1					
7-3	4110-1410	. BUSHING	. DOUILLE	1					

DATE	JUN. 30, 2007
REV.NO.	EXB07-06

Fig. 1140 AXLE & DRIVE SHAFT
PONTS ET ARBRES DE TRANSMISSION

Serial No. ;

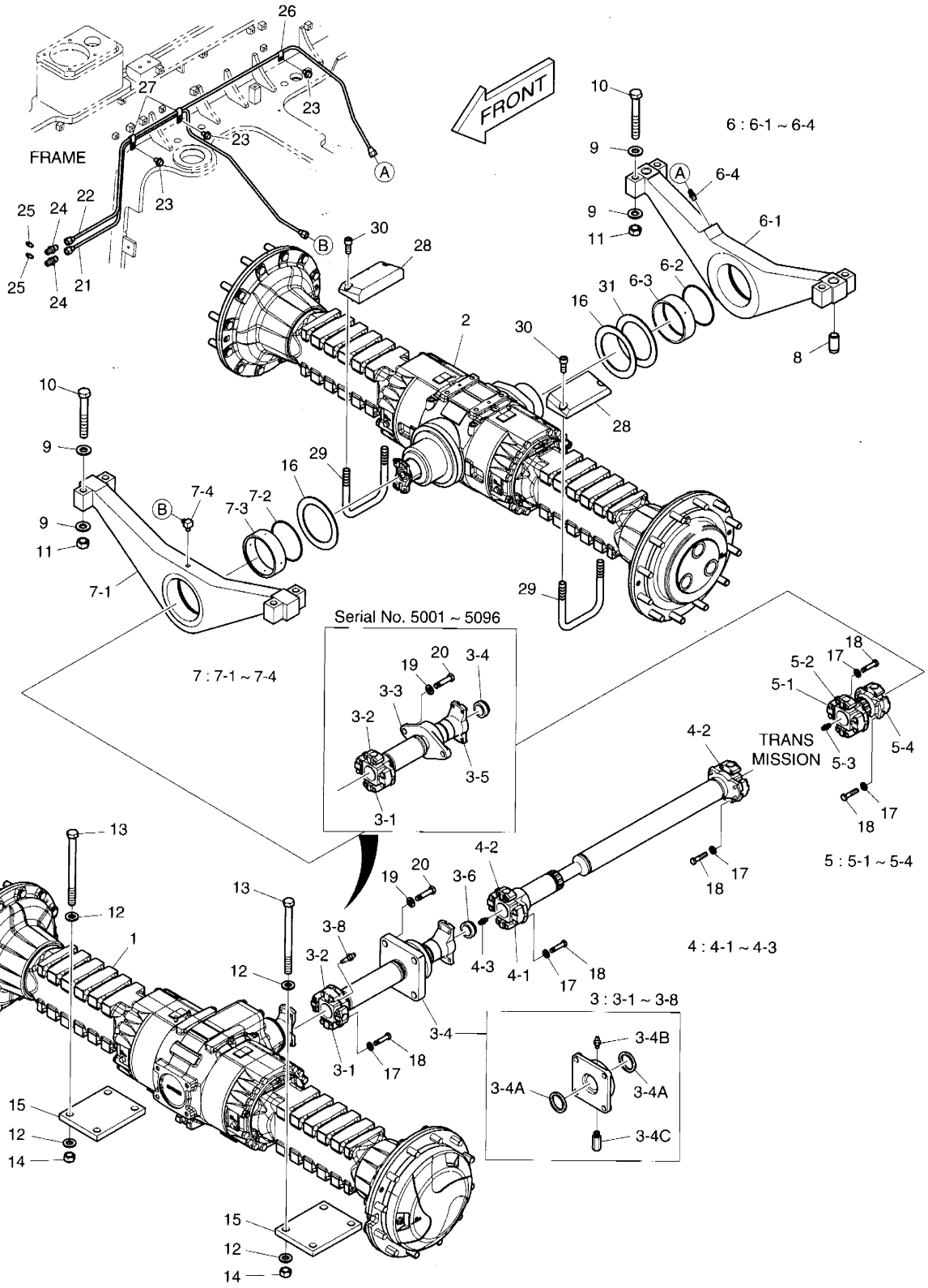

DATE	JUN. 30, 2007
REV. NO.	EXB07-06

Fig. 1140 AXLE & DRIVE SHAFT
PONTS ET ARBRES DE TRANSMISSION

Serial No. ;

Key No.	Part No.	Description	Description	Q'ty	S.C	Serial No.	ICA	Replaceable part	
								Part No.	Q'ty
140-7-4	2181-1918D6	. ADAPTER	. ADAPTEUR	1					
8	123-00264A	PIN	GOUPILLE	2		5001–5027			
	K1030101	**PIN**	GOUPILLE	2		**5028–**			
9	DS0401181	WASHER	RONDELLE	16					
10	S0571666	BOLT	BOULON	8					
11	S4013133	NUT	ECROU	8					
12	4114-4117A	WASHER	RONDELLE	16					
13	DS0002277	BOLT	BOULON	8					
14	S4013233	NUT	ECROU	8					
15	4222-1013A	PLATE	PLAQUE	2					
16	4114-1930	WASHER	RONDELLE	2					
17	S5110603	WASHER	RONDELLE	20					
18	4120-4016	BOLT	BOULON	20					
19	S5102903	WASHER;SPRING	RONDELLE ELASTIQUE	2		5001–5096			
	4114-1791A	**WASHER;HARD**	RONDELLE	4		**5097–**			
20	S0565066	BOLT	BOULON	2		5001–5096			
	S0565266	**BOLT**	BOULON	4		**5097–**			
21	K1018227A	PIPE;GREASE	TUYAU	1					
22	K1018228A	PIPE;GREASE	TUYAU	1					
23	K1001029	BOLT	BOULON	3					
24	2181-1919D10	ADAPTER	ADAPTEUR	2					
25	S6710041	FITTING	RACCORD	2					
26	2124-1248	CLIP	AGRAFE	1					
27	DS2805007	CLIP	AGRAFE	2					
28	4423-1515	BLOCK;STOP	BLOC	2					
29	4182-1732A	PIPE	TUYAU	2					
30	S2221466	BOLT	BOULON	4					
31	**K1030488**	**WASHER;THRUST**	RONDELLE DE BUTEE	1		**5070–**			

DATE	NOV. 24, 2006
1st EDITION	

Fig. 1150 WHEEL ASS'Y VOLANT

Serial No. ;

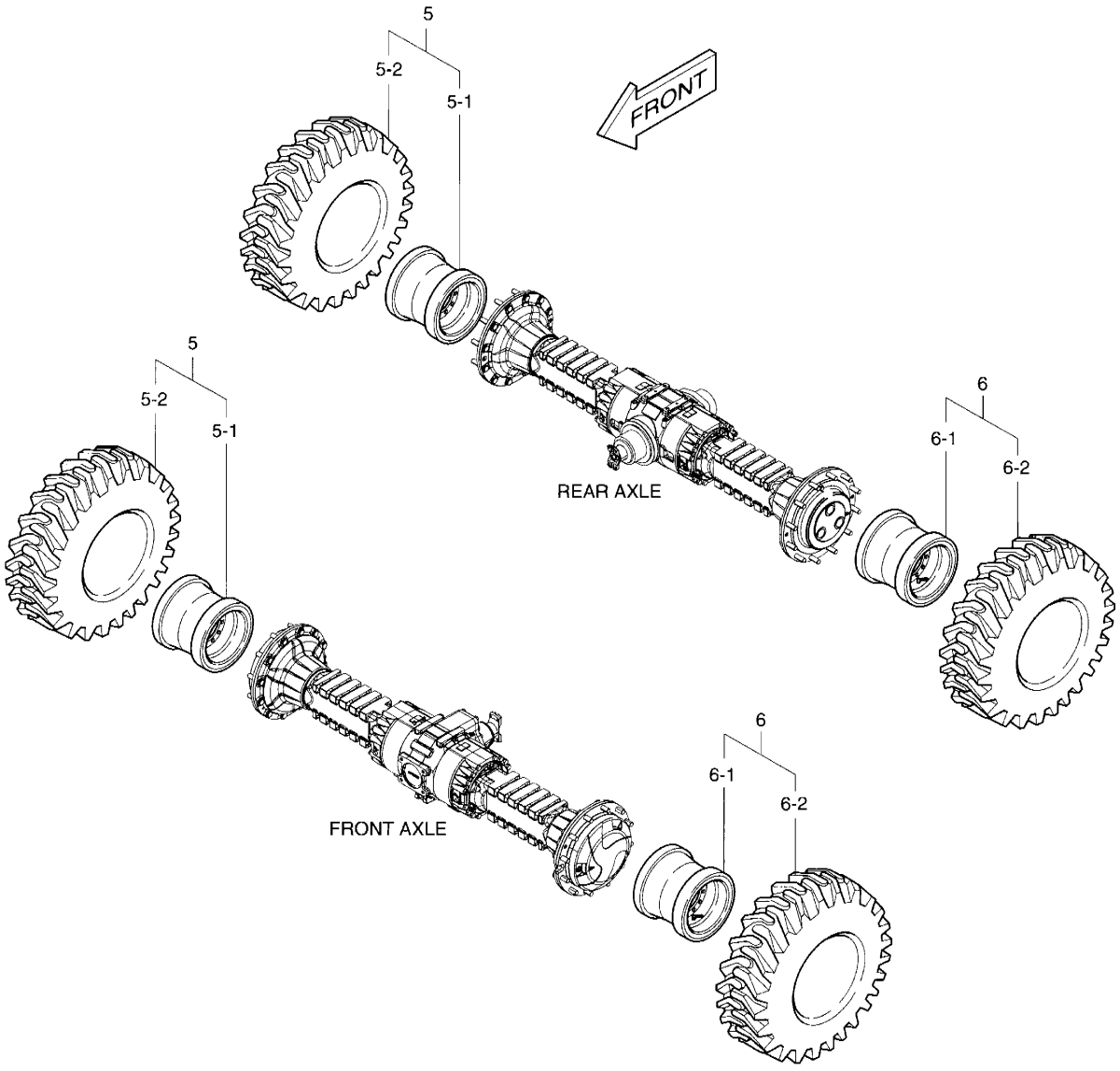

DATE	NOV. 24, 2006
1st EDITION	

Fig. 1150 WHEEL ASS'Y VOLANT

Serial No. ;

Key No.	Part No.	Description	Description	Q'ty	S.C	Serial No.	ICA	Replaceable part	
								Part No.	Q'ty
.150--	276-00075F3	WHEEL ASS'Y	ROUE	-	D				
5	276-00076	WHEEL ASS'Y(R.H)	VOLANT	2	D				
5-1	4278-9040	. RIM;WHEEL	. VOLANT	1					
5-2	4276-9037	. TIRE 20.5-25-16PR(L2)	. PNEU	1					
6	276-00077	WHEEL ASS'Y(L.H)	ROUE	2	D				
6-1	4278-9050	. RIM;WHEEL	. VOLANT	1					
6-2	4276-9037	. TIRE 20.5-25-16PR(L2)	. PNEU	1					

DATE	JUN. 30, 2007
REV.NO.	EXB07-06

Fig. 1160 MAIN PIPING
CIRCUIT HYDRAULIQUE PRINCIPAL

Serial No. ;

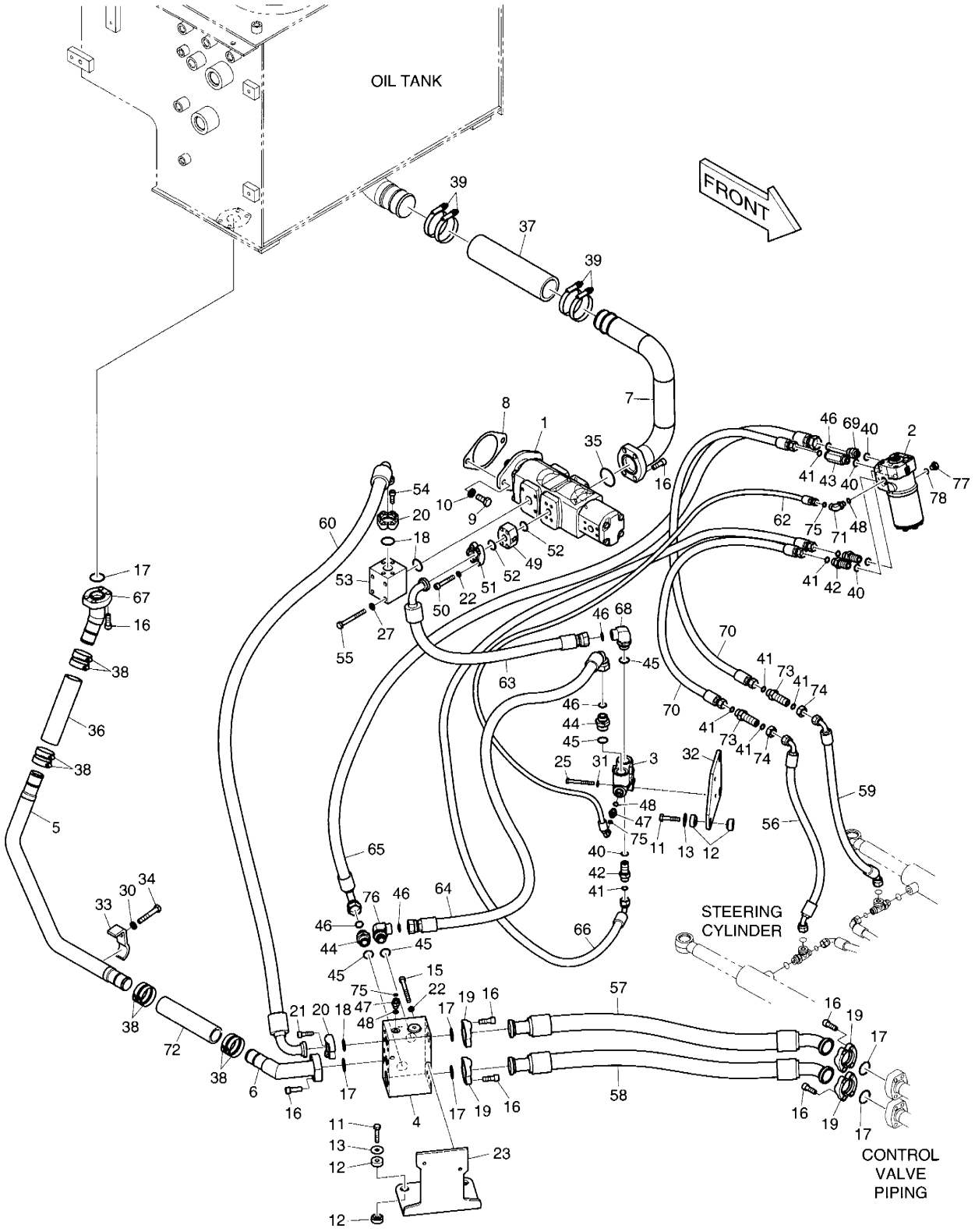

DATE	JUN. 30, 2007
REV. NO.	EXB07-06

Fig. 1160 MAIN PIPING
CIRCUIT HYDRAULIQUE PRINCIPAL

Serial No. ;

Key No.	Part No.	Description	Description	Q'ty	S.C	Serial No.	ICA	Replaceable part	
								Part No.	Q'ty
.60--	**K1017041E**	**MAIN PIPING ASS'Y**	ENSEMBLE BATI PRINCIPAL	-	D				
1	K1015172A	PUMP;MAIN	POMPE PRINCIPALE	1					
2	4420-9555	UNIT;STEER	MODULE DE COMMANDE	1					
3	4420-9406	VALVE;PRIORITY	SOUPAPE DE PRIORITE	1					
4	K1017902	VALVE;BLOCK	VANNE	1					
5	K1017123	PIPE;RETURN	TUYAU	1					
6	K1017128	PIPE;RETURN	TUYAU	1					
7	K1017131	PIPE;SUCTION	TUYAU	1		5001-5084			
	K1017131A	**PIPE;SUCTION**	TUYAU	1		**5085-**			
8	4180-4010A	GASKET	JOINT	1					
9	S0518366	BOLT	BOULON	2					
10	S5102803	WASHER;SPRING	RONDELLE ELASTIQUE	2					
11	S0558566	BOLT	BOULON	7					
12	2512-1077	RUBBER;CUSHION	CUSHION;RUBBER	14					
13	2114-1058D62	WASHER	RONDELLE	7					
15	S2213766	BOLT	BOULON	2					
16	S2215366	BOLT	BOULON	28					
17	2180-1026D23	O-RING	JOINT TORIQUE	6					
18	2180-1026D19	O-RING	JOINT TORIQUE	3					
19	4215-1003D7	FLANGE;HALF	BRIDE	8					
20	2181-9078	FLANGE	BRIDE	4					
21	S2212366	BOLT	BOULON	4					
22	S5110603	WASHER	RONDELLE	6					
23	K1017195	BRACKET	SUPPORT	1					
25	S0556866	BOLT	BOULON	2					
27	S5102603	WASHER;SPRING	RONDELLE ELASTIQUE	4					
30	S5102703	WASHER;SPRING	RONDELLE ELASTIQUE	1					
31	S5102503	WASHER;SPRING	RONDELLE ELASTIQUE	2					
32	K1017207	PLATE	PLAQUE	1					
33	2124-1224D6	CLAMP	BRIDE	1					
34	S0561266	BOLT	BOULON	1					
35	2180-1026D27	O-RING	JOINT TORIQUE	1					
36	DS2087046	HOSE	TUYAU FLEXIBLE	1					
37	DS2087048	HOSE	TUYAU FLEXIBLE	1					
38	S8500067	HOSE	TUYAU FLEXIBLE	8					
39	S8500092	CLAMP	BRIDE	4					
40	S8000181	O-RING	JOINT TORIQUE	5					
41	S8030081	O-RING	JOINT TORIQUE	8					

DATE	JUN. 30, 2007
REV.NO.	EXB07-06

Fig. 1160 MAIN PIPING
CIRCUIT HYDRAULIQUE PRINCIPAL

Serial No. ;

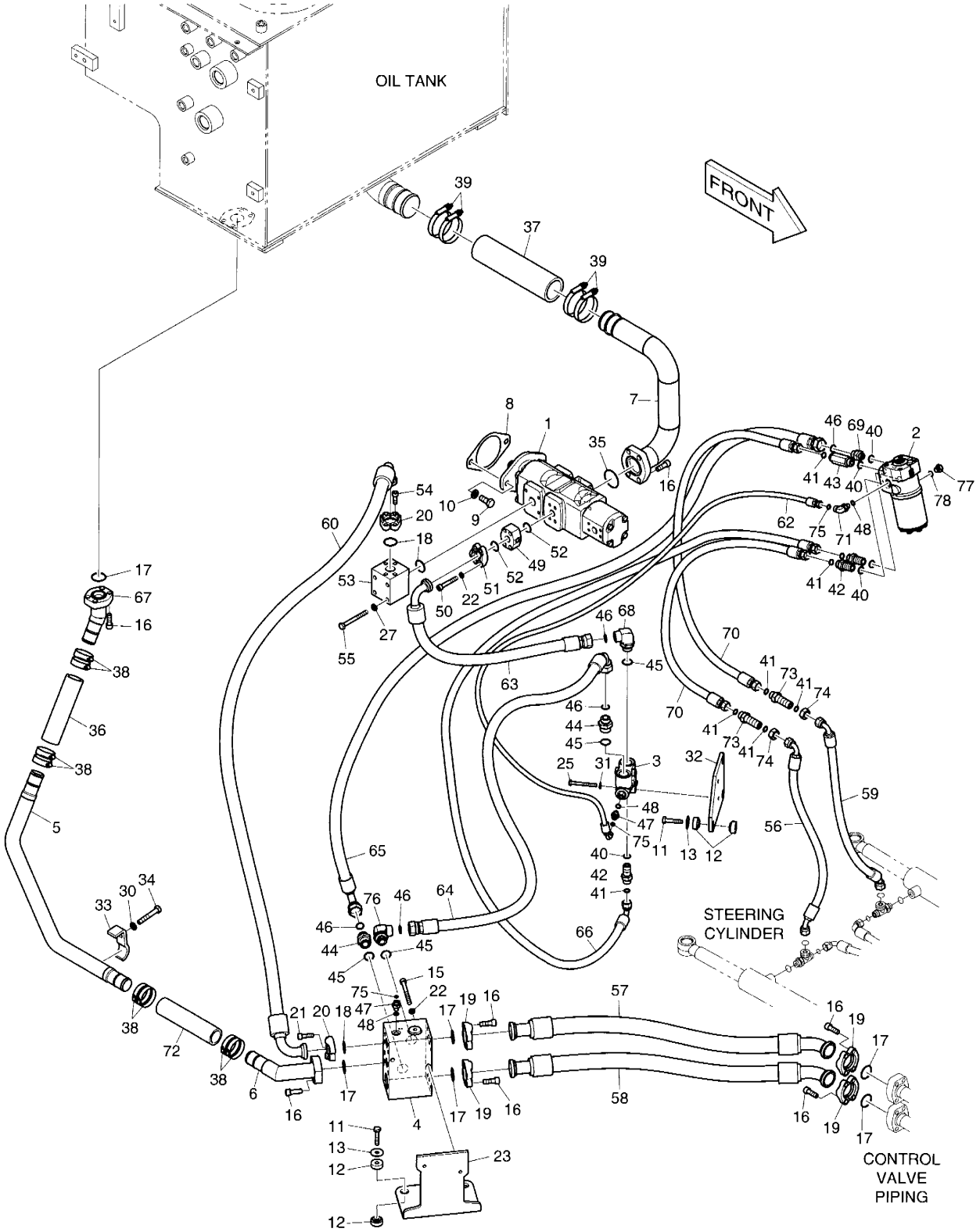

DATE	JUN. 30, 2007
REV. NO.	EXB07-06

Fig. 1160 MAIN PIPING
CIRCUIT HYDRAULIQUE PRINCIPAL

Serial No. ;

Key No.	Part No.	Description	Description	Q'ty	S.C	Serial No.	ICA	Replaceable part	
								Part No.	Q'ty
1160-42	2181-4133D3	ADAPTER	ADAPTEUR	3					
43	2181-4133D46	ADAPTER	ADAPTEUR	1					
44	2181-4133D5	ADAPTER	ADAPTEUR	2					
45	S8000241	O-RING	JOINT TORIQUE	4					
46	S8030121	O-RING	JOINT TORIQUE	5					
47	2181-4133D1	ADAPTER	ADAPTEUR	2					
48	S8000111	O-RING	JOINT TORIQUE	3					
49	4181-2749	BLOCK	BLOC	1					
50	S2212966	BOLT	BOULON	4					
51	2181-9079	FLANGE	BRIDE	2					
52	2180-1026D2	O-RING	JOINT TORIQUE	2					
53	4181-4281	BLOCK;PORT	BLOC	1					
54	S2212266	BOLT	BOULON	4					
55	S0559566	BOLT	BOULON	4					
56	DS2021076	HOSE	TUYAU FLEXIBLE	1					
57	DS2039079	HOSE	TUYAU FLEXIBLE	1					
58	DS2039127	HOSE	TUYAU FLEXIBLE	1					
59	DS2021194	HOSE	TUYAU FLEXIBLE	1					
60	DS2045440	HOSE	TUYAU FLEXIBLE	1					
62	DS2013786	HOSE	TUYAU FLEXIBLE	1					
63	DS2018151	HOSE	TUYAU FLEXIBLE	1					
64	DS2013861	HOSE	TUYAU FLEXIBLE	1					
65	2184-1197D65	HOSE	TUYAU FLEXIBLE	1					
66	2184-1197D177	HOSE	TUYAU FLEXIBLE	1					
67	K1017230	PIPE;RETURN	TUYAU	1					
68	2181-2294D2	ELBOW	COUDE	1					
69	2181-4133D30	ADAPTER	ADAPTEUR	1					
70	DS2011082	HOSE	TUYAU FLEXIBLE	2					
71	DS2304009	ELBOW	COUDE	1					
72	DS2087047	HOSE	TUYAU FLEXIBLE	1					
73	DS2415008	ADAPTER	ADAPTEUR	2					
74	121-00010D5	NUT	ECROU	2					
75	S8030041	O-RING	JOINT TORIQUE	3					
76	2181-2628D1	ELBOW	COUDE	1					
77	**2181-1950D1**	**PLUG**	BOUCHON	1		**5054–**			
78	**S8000111**	**O-RING**	JOINT TORIQUE	1		**5054–**			

DATE	NOV. 24, 2006
1st EDITION	

Fig. 1170 STEERING PIPING
CANALISATION DE PILOTAGE

Serial No. ;

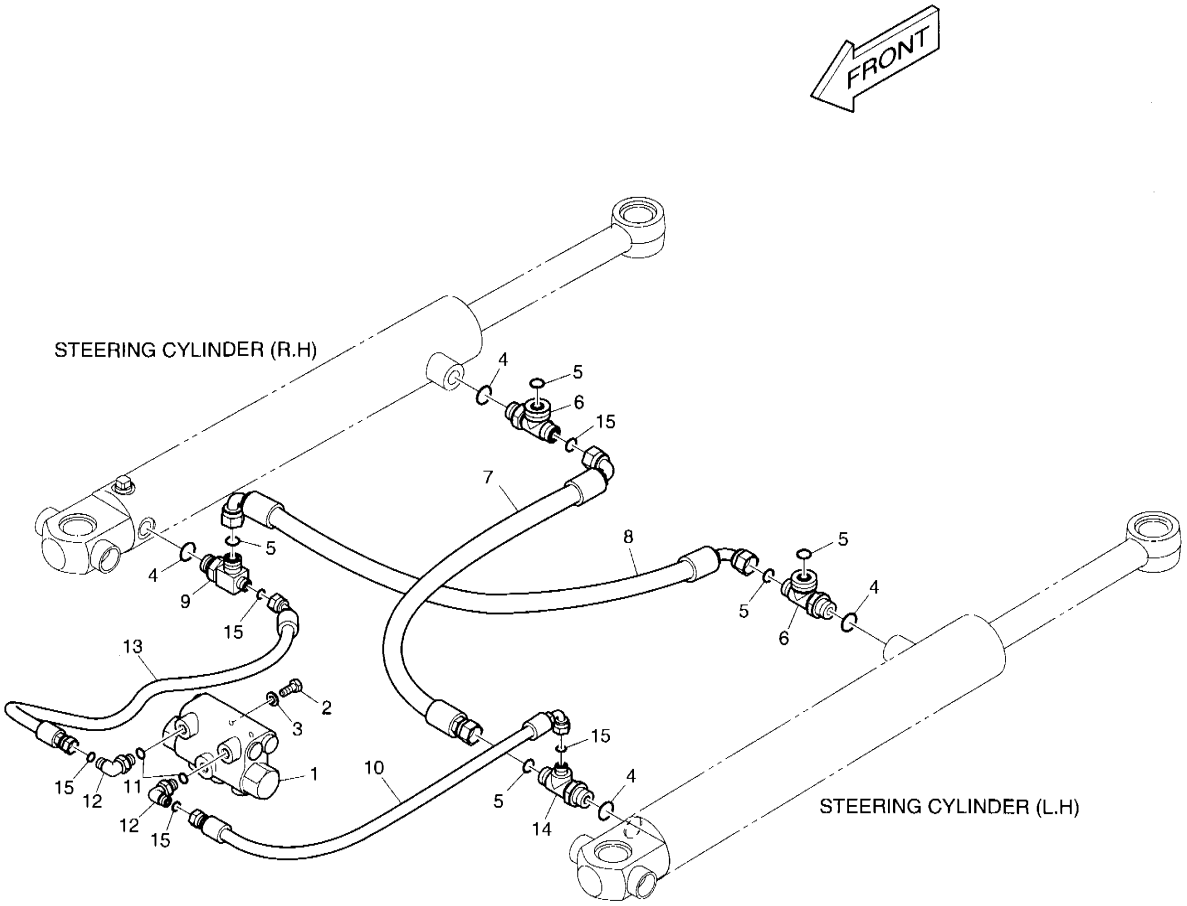

DATE	NOV. 24, 2006
1st EDITION	

Fig. 1170 STEERING PIPING
CANALISATION DE PILOTAGE

Serial No. ;

Key No.	Part No.	Description	Description	Q'ty	S.C	Serial No.	ICA	Replaceable part	
								Part No.	Q'ty
. . /0--	K1024247	STEERING PIPING ASS'Y	CANALISATION DE	-	D				
1	420-00172	VALVE;CUSHION	VANNE	1					
2	S0508866	BOLT	BOULON	2					
3	S5102503	WASHER;SPRING	RONDELLE ELASTIQUE	2					
4	S8000181	O-RING	JOINT TORIQUE	4					
5	S8030081	O-RING	JOINT TORIQUE	6					
6	181-00121D10	TEE	TE	2					
7	DS2013347	HOSE	TUYAU FLEXIBLE	1					
8	DS2023280	HOSE	TUYAU FLEXIBLE	1					
9	DS2412015	TEE	TE	1					
10	DS2013429	HOSE	TUYAU FLEXIBLE	1					
11	2180-1026D26	O-RING	JOINT TORIQUE	2					
12	DS2304043	ELBOW	COUDE	2					
13	DS2012329	HOSE	TUYAU FLEXIBLE	1					
14	DS2412006	TEE	TE	1					
15	S8030041	O-RING	JOINT TORIQUE	4					

DATE	NOV. 24, 2006
1st EDITION	

Fig. 1180 CONTROL VALVE PIPING - 3 SPOOL
CANALISATIONS PRINCIPALES

Serial No. ;

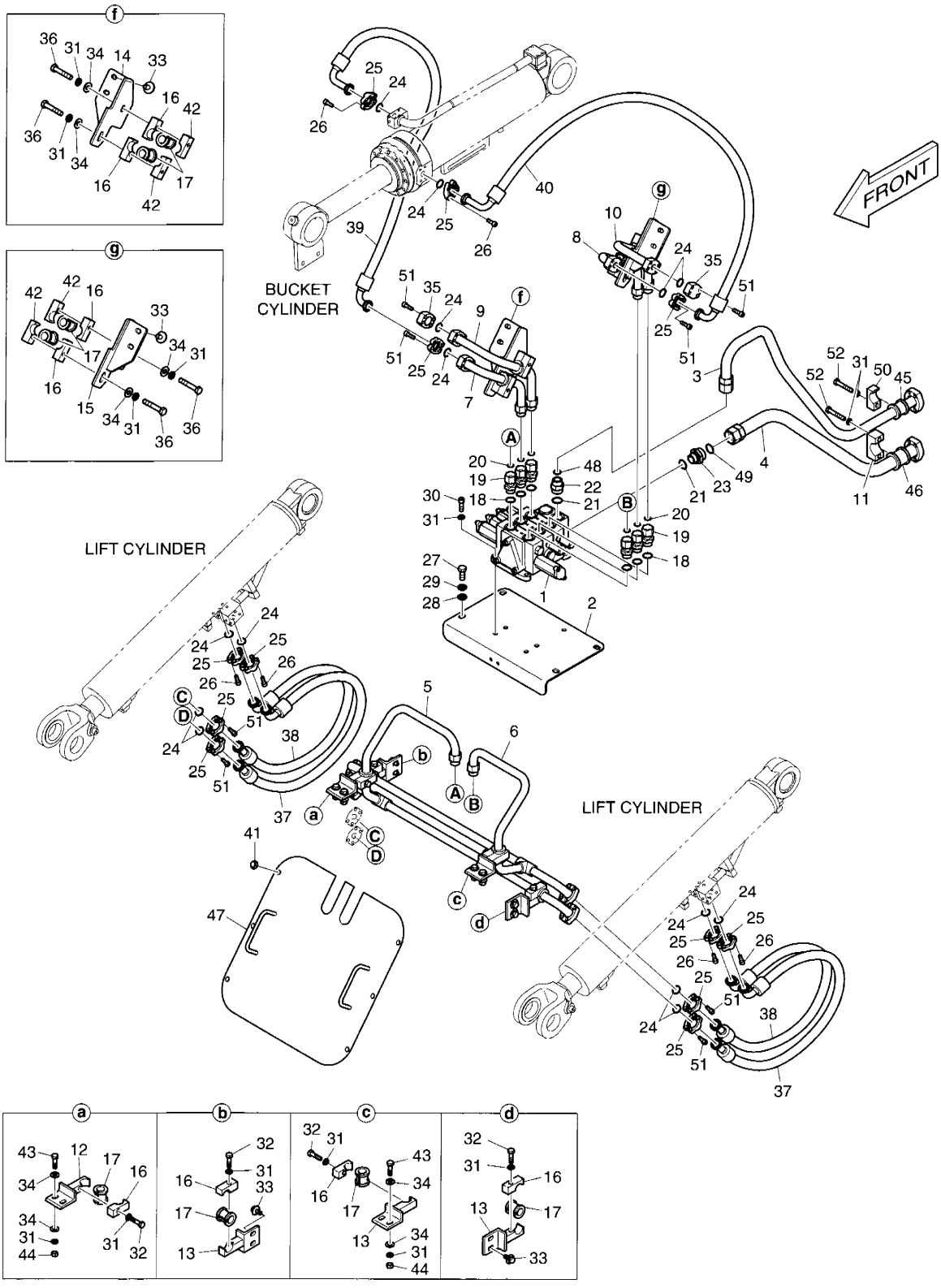

DATE	NOV. 24, 2006
1st EDITION	

Fig. 1180 CONTROL VALVE PIPING - 3 SPOOL
CANALISATIONS PRINCIPALES

Serial No. ;

Key No.	Part No.	Description	Description	Q'ty	S.C	Serial No.	ICA	Replaceable part	
								Part No.	Q'ty
1180--	K1016296A	CONTROL VALVE PIPING	CANALISATIONS	-	D				
1	420-00142	VALVE;CONTROL	VANNE	1					
2	195-01320	SUPPORT	SUPPORT	1					
3	K1016628A	PIPE	TUYAU	1					
4	K1016597	PIPE	TUYAU	1					
5	K1017505	PIPE	TUYAU	1					
6	K1017506	PIPE	TUYAU	1					
7	193-00575	PIPE	TUYAU	1					
8	193-00576	PIPE	TUYAU	1					
9	193-00577	PIPE	TUYAU	1					
10	193-00578	PIPE	TUYAU	1					
11	191-00364	CLAMP	BRIDE	1					
12	195-00604A	BRACKET;CONTROL PIPE	SUPPORT	1					
13	195-01344	BRACKET	SUPPORT	3					
14	195-02003B	BRACKET (R.H)	SUPPORT	1					
15	195-02004B	BRACKET (L.H)	SUPPORT	1					
16	2124-1601A	CLAMP	BRIDE	8					
17	K1010377	RUBBER	CAOUTCHOUC	8					
18	S8040141	O-RING	JOINT TORIQUE	6					
19	2181-2566D11	ADAPTER	ADAPTEUR	6					
20	S8030121	O-RING	JOINT TORIQUE	6					
21	S8040161	O-RING	JOINT TORIQUE	2					
22	DS2232051	ADAPTER	ADAPTEUR	1					
23	DS2234014	ADAPTER	ADAPTEUR	1					
24	2180-1026D2	O-RING	JOINT TORIQUE	14					
25	2181-9079	FLANGE	BRIDE	24					
26	S2212266	BOLT	BOULON	24					
27	S0521466	BOLT	BOULON	4					
28	S5010913	WASHER	RONDELLE	4					
29	S5102903	WASHER;SPRING	RONDELLE ELASTIQUE	4					
30	S2215466	BOLT	BOULON	3					
31	S5102703	WASHER;SPRING	RONDELLE ELASTIQUE	18					
32	S0560666	BOLT	BOULON	4					
33	DS0025019	BOLT	BOULON	8					
34	2114-1058D46	WASHER	RONDELLE	12					
35	2181-2157D1	FLANGE:COVER	BRIDE	2					
36	S0561066	BOLT	BOULON	4					
37	DS2040540	HOSE	TUYAU FLEXIBLE	2					

DATE	NOV. 24, 2006
1st EDITION	

Fig. 1180 CONTROL VALVE PIPING - 3 SPOOL
CANALISATIONS PRINCIPALES

Serial No. ;

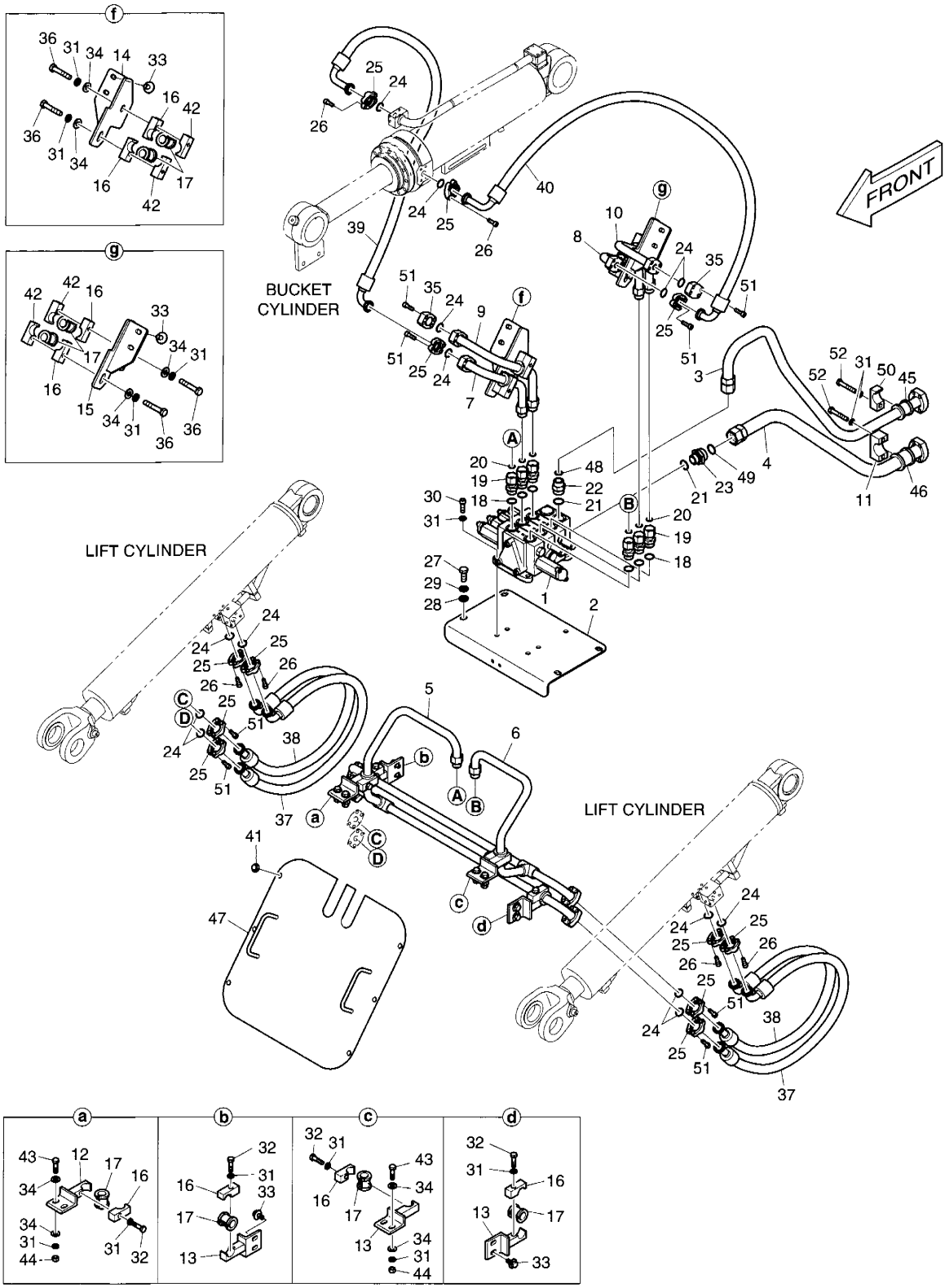

DATE	NOV. 24, 2006
1st EDITION	

Fig. 1180 CONTROL VALVE PIPING - 3 SPOOL
CANALISATIONS PRINCIPALES

Serial No. ;

Key No.	Part No.	Description	Description	Q'ty	S.C	Serial No.	ICA	Replaceable part	
								Part No.	Q'ty
1180-38	DS2040539	HOSE	TUYAU FLEXIBLE	2					
39	DS2045433	HOSE	TUYAU FLEXIBLE	1					
40	DS2045458	HOSE	TUYAU FLEXIBLE	1					
41	DS0025013	BOLT	BOULON	6					
42	124-00181	CLAMP	BRIDE	4					
43	S0560766	BOLT	BOULON	4					
44	S4012733	NUT	ECROU	4					
45	K1010378	RUBBER	CAOUTCHOUC	1					
46	K1010379	RUBBER	CAOUTCHOUC	1					
47	621-01344	COVER	COUVERCLE	1					
48	S8030161	O-RING	JOINT TORIQUE	1					
49	2180-1026D37	O-RING	JOINT TORIQUE	1					
50	124-00225	CLAMP	BRIDE	1					
51	S2212366	BOLT	BOULON	32					
52	S0561266	BOLT	BOULON	3					

DATE	JUN. 30, 2007
REV.NO.	EXB07-06

Fig. 1190 PILOT PIPING - 3 SPOOL
CONDUITES DE PILOTE

Serial No. ;

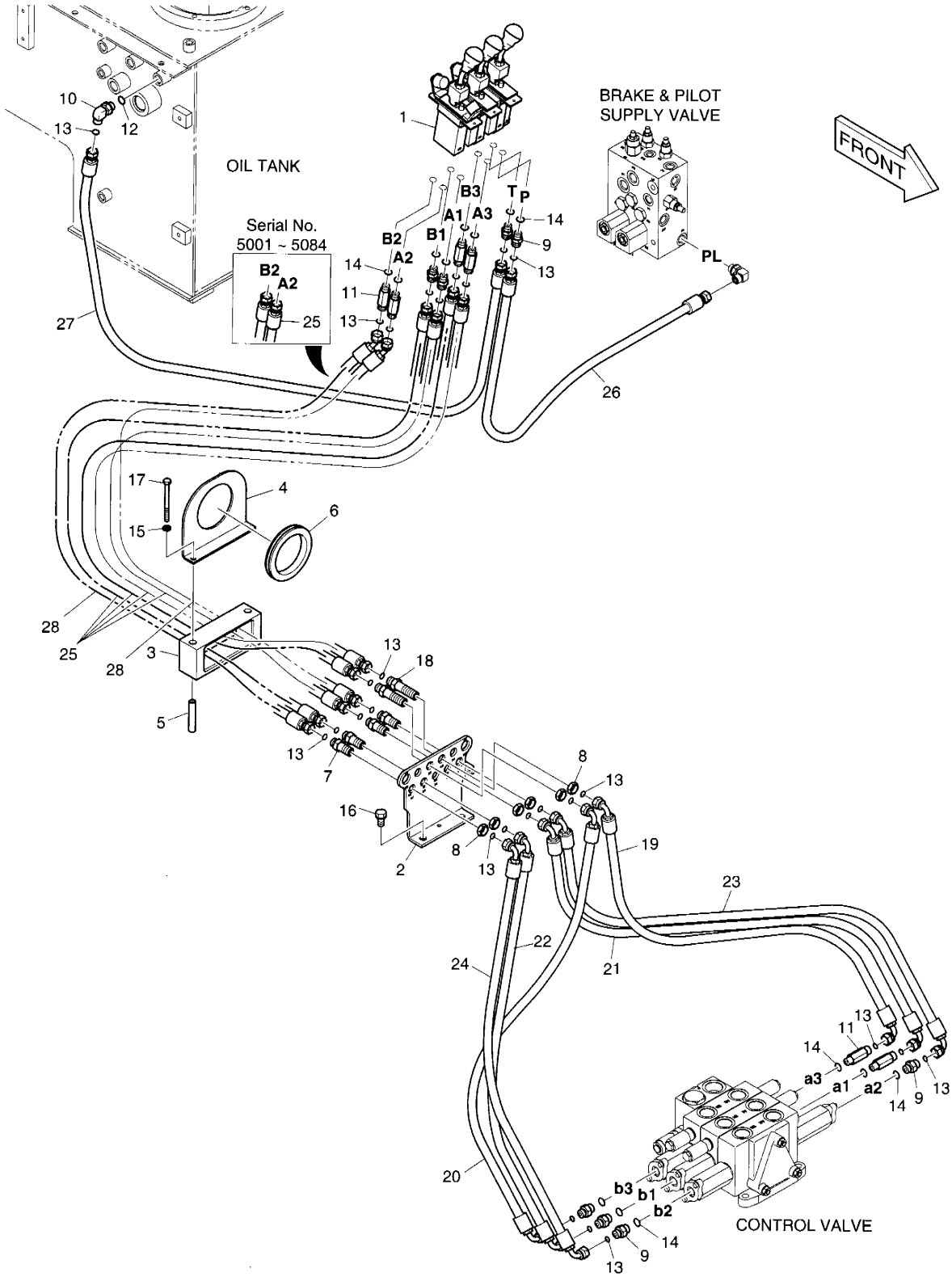

DATE	JUN. 30, 2007
REV. NO.	EXB07-06

Fig. 1190 PILOT PIPING - 3 SPOOL CONDUITES DE PILOTE

Serial No. ;

Key No.	Part No.	Description	Description	Q'ty	S.C	Serial No.	ICA	Replaceable part	
								Part No.	Q'ty
1190--	**K1024390C**	**PILOT PIPING - 3 SPOOL**	CONDUITES DE PILOTE	-	D				
1	K1003380A	VALVE;JOY STICK	VANNE	1					
2	195-03416	BRACKET	SUPPORT	1					
3	K1010139	RUBBER	CAOUTCHOUC	1					
4	K1013313	BRACKET	SUPPORT	1					
5	K1010903	SPACER	ENTERTOISE	2					
6	2160-1004D57	GROMMET	CANON ISOLANT	1					
7	DS2415002	ADAPTER	ADAPTEUR	4					
8	DS0301032	NUT	ECROU	6					
9	DS2232066	ADAPTER	ADAPTEUR	8					
10	2181-2815D6	ELBOW	COUDE	1					
11	DS2232067	ADAPTER	ADAPTEUR	6					
12	S8000141	O-RING	JOINT TORIQUE	1					
13	S8030061	O-RING	JOINT TORIQUE	27					
14	S8040061	O-RING	JOINT TORIQUE	14					
15	S5102503	WASHER;SPRING	RONDELLE ELASTIQUE	2					
16	DS0025021	BOLT	BOULON	2					
17	S0557266	BOLT	BOULON	2					
18	DS2415009	ADAPTER	ADAPTEUR	2					
19	DS2023248	HOSE	TUYAU FLEXIBLE	1					
20	DS2023246	HOSE	TUYAU FLEXIBLE	1					
21	DS2023271	HOSE	TUYAU FLEXIBLE	1					
22	DS2023270	HOSE	TUYAU FLEXIBLE	1					
23	DS2023229	HOSE	TUYAU FLEXIBLE	1					
24	DS2023245	HOSE	TUYAU FLEXIBLE	1					
25	DS2011510	HOSE	TUYAU FLEXIBLE	6		5001–5084			
	DS2011510	**HOSE**	TUYAU FLEXIBLE	4		**5085–**			
26	DS2011059	HOSE	TUYAU FLEXIBLE	1					
27	DS2011342	HOSE	TUYAU FLEXIBLE	1					
28	**DS2012498**	**HOSE**	TUYAU FLEXIBLE	2		**5085–**			

DATE	JUN. 30, 2007
REV.NO.	EXB07-06

Fig. 1200 BRAKE PIPING
CANALISATION DE FREIN

Serial No. ;

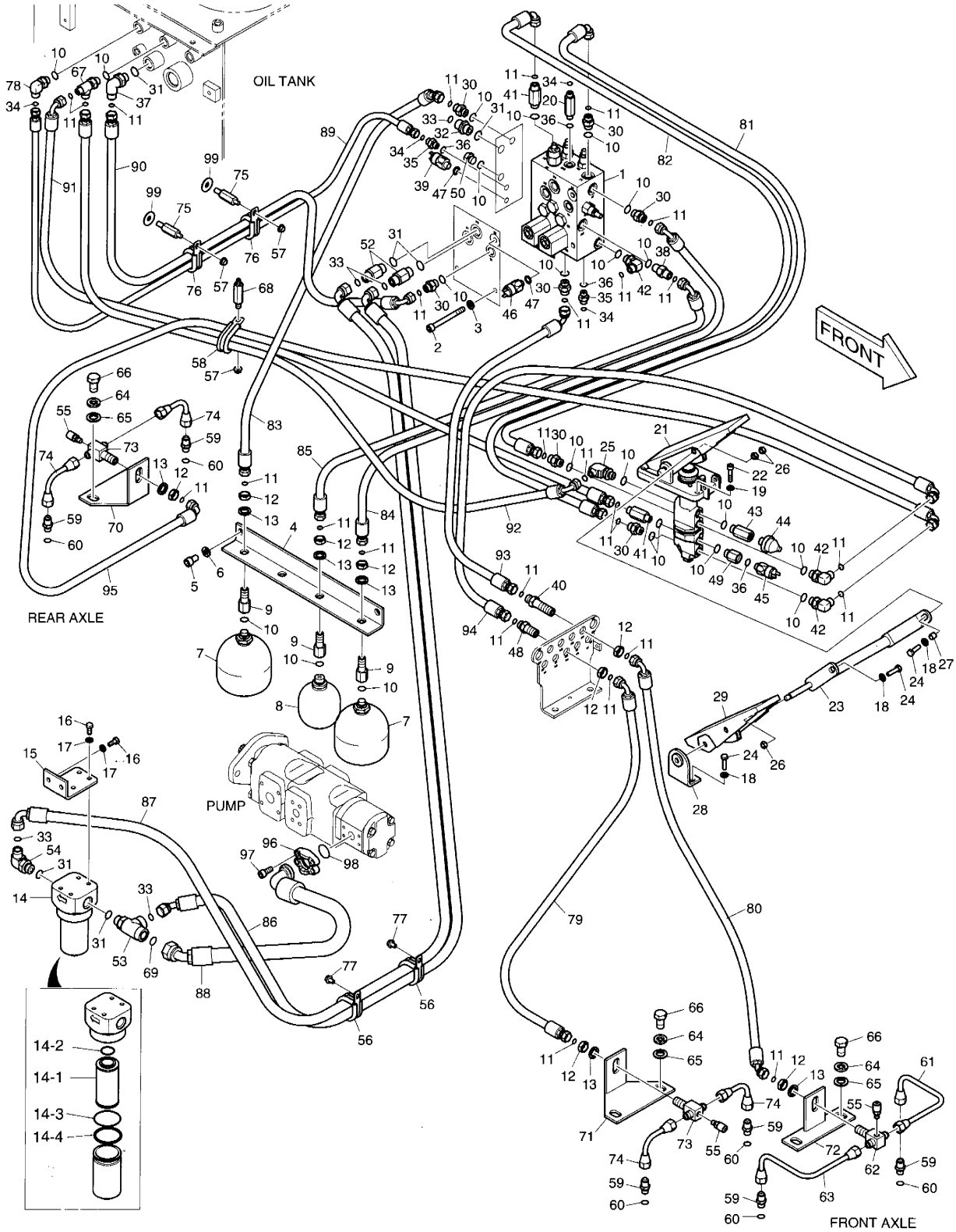

DATE	JUN. 30, 2007
REV. NO.	EXB07-06

Fig. 1200 BRAKE PIPING
CANALISATION DE FREIN

Serial No. ;

Key No.	Part No.	Description	Description	Q'ty	S.C	Serial No.	ICA	Replaceable part	
								Part No.	Q'ty
1200--	K1016270A	BRAKE PIPING	CANALISATION DE FREIN	-	D				
1	K1017622	BRAKE & PILOT SUPPLY VALVE	FREIN ET SOUPAPE DE	1					
2	S2213666	BOLT	BOULON	2					
3	S5110603	WASHER	RONDELLE	2					
4	195-01794	BRACKET	SUPPORT	1					
5	S2215066	BOLT	BOULON	2					
6	S5102703	WASHER;SPRING	RONDELLE ELASTIQUE	2					
7	K1014741	ACCUMULATOR	ACCUMULATEUR	2					
8	2460-9054	ACCUMULATOR	ACCUMULATEUR	1					
9	181-00141	REDUCER	REDUCTEUR	3					
10	S8000141	O-RING	JOINT TORIQUE	22					
11	S8030061	O-RING	JOINT TORIQUE	27					
12	DS0301032	NUT	ECROU	8					
13	S5111003	WASHER;SPRING	RONDELLE ELASTIQUE	6					
14	K1009104	FILTER;BRAKE	FILTRE	1					
14-1	K1009106	. ELEMENT;FILTER	. ELEMENT	1					
14-2	**S8000231**	**. O-RING**	. JOINT TORIQUE	1					
14-3	**K9005014**	**. O-RING**	. JOINT TORIQUE	1					
14-4	**K9005654**	**. RING;BACK UP**	. ANNEAU DE SOUTIEN	1					
15	K1010516	BRACKET	SUPPORT	1					
16	S0508866	BOLT	BOULON	6					
17	S5102503	WASHER;SPRING	RONDELLE ELASTIQUE	6					
18	S5010513	WASHER	RONDELLE	4					
19	S5110503	WASHER;SPRING	RONDELLE ELASTIQUE	4					
20	DS2232099	ADAPTER	ADAPTEUR	1					
21	420-00241A	VALVE;BRAKE PEDAL	VANNE	1					
22	S2209366	BOLT	BOULON	4					
23	136-00018C	ROD;BRAKE	FREIN ROD	1					
24	S0555966	BOLT	BOULON	4					
25	2181-2815D9	ELBOW	COUDE	1					
26	S4012533	NUT	ECROU	3					
27	DS5201078	SPACER	ENTERTOISE	1					
28	195-00614B	BRACKET	SUPPORT	1					
29	134-00008	PEDAL;BRAKE	PEDALE	1					
30	2181-4133D2	ADAPTER	ADAPTEUR	7					
31	S8000181	O-RING	JOINT TORIQUE	6					
32	2181-4133D3	ADAPTER	ADAPTEUR	1					
33	S8030081	O-RING	JOINT TORIQUE	5					

DATE	JUN. 30, 2007
REV.NO.	EXB07-06

Fig. 1200 BRAKE PIPING
CANALISATION DE FREIN

Serial No. ;

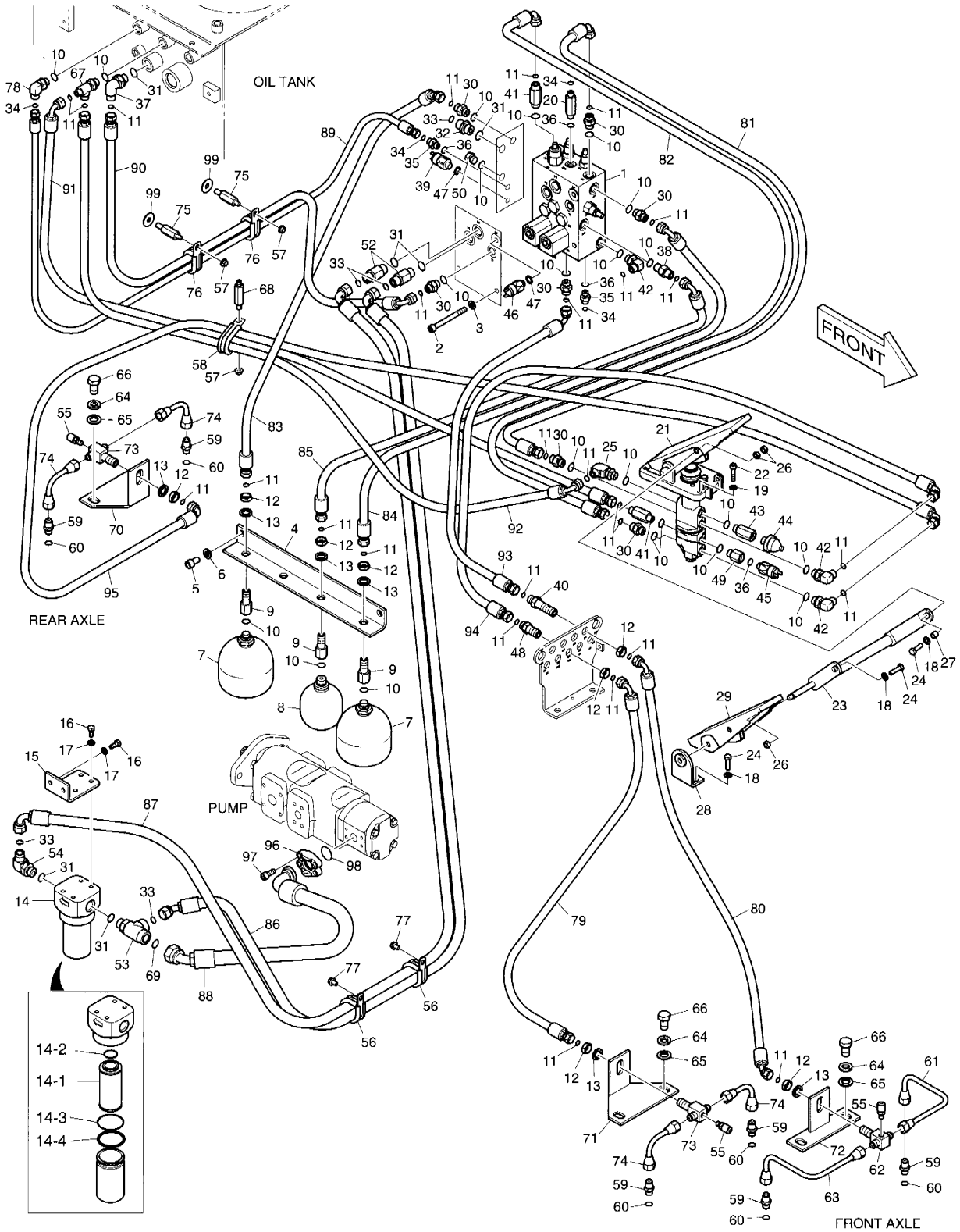

DATE	JUN. 30, 2007
REV. NO.	EXB07-06

Fig. 1200 BRAKE PIPING
CANALISATION DE FREIN

Serial No. ;

Key No.	Part No.	Description	Description	Q'ty	S.C	Serial No.	ICA	Replaccable part	
								Part No.	Q'ty
1200-34	S8030041	O-RING	JOINT TORIQUE	4					
35	2181-4133D1	ADAPTER	ADAPTEUR	2					
36	S8000111	O-RING	JOINT TORIQUE	4					
37	DS2304074	ELBOW	COUDE	1					
38	2181-4133D24	ADAPTER	ADAPTEUR	1					
39	549-00039	SWITCH;PRESSURE	INTERRUPTEUR	1					
40	DS2415009	ADAPTER	ADAPTEUR	1					
41	DS2232085	ADAPTER	ADAPTEUR	2					
42	2181-2815D6	ELBOW	COUDE	3					
43	181-00182	REDUCER	REDUCTEUR	1					
44	549-00010	SWITCH;PRESSURE	INTERRUPTEUR	1					
45	4549-9080	SWITCH;T/M CUT OFF	INTERRUPTEUR	1					
46	2549-9093	SWITCH;LOW PRESSURE	MANOSTAT	1					
47	S8180211	SEAL;RING	BAGUE D'ETANCHEITE	2					
48	DS2415002	ADAPTER	ADAPTEUR	1					
49	2181-2337D13	REDUCER	REDUCTEUR	1					
50	2181-1950D2	PLUG	BOUCHON	1					
52	2181-4133D37	ADAPTER	ADAPTEUR	2					
53	DS2412013	TEE	TE	1					
54	2181-2815D3	ELBOW	COUDE	1					
55	120-00002	SCREW	VIS	3					
56	124-00208D7	CLIP	AGRAFE	2					
57	2121-1305	NUT	ECROU	3					
58	124-00209D7	CLIP	AGRAFE	1					
59	2181-1916D1	ADAPTER	ADAPTEUR	6					
60	S8000121	O-RING	JOINT TORIQUE	6					
61	4182-1759	PIPE	TUYAU	1					
62	181-00783	TEE	TE	1					
63	4182-1760	PIPE	TUYAU	1					
64	S5102903	WASHER;SPRING	RONDELLE ELASTIQUE	6					
65	S5010913	WASHER	RONDELLE	6					
66	S0521166	BOLT	BOULON	6					
67	DS2412002	TEE	TE	1					
68	2120-2159	BOLT	BOULON	1					
69	S8030121	O-RING	JOINT TORIQUE	1					
70	K1017878	BRACKET	SUPPORT	1					
71	4197-2088	BRACKET	SUPPORT	1					
72	4197-2087	BRACKET	SUPPORT	1					

DATE	JUN. 30, 2007
REV.NO.	EXB07-06

Fig. 1200 BRAKE PIPING
CANALISATION DE FREIN

Serial No. ;

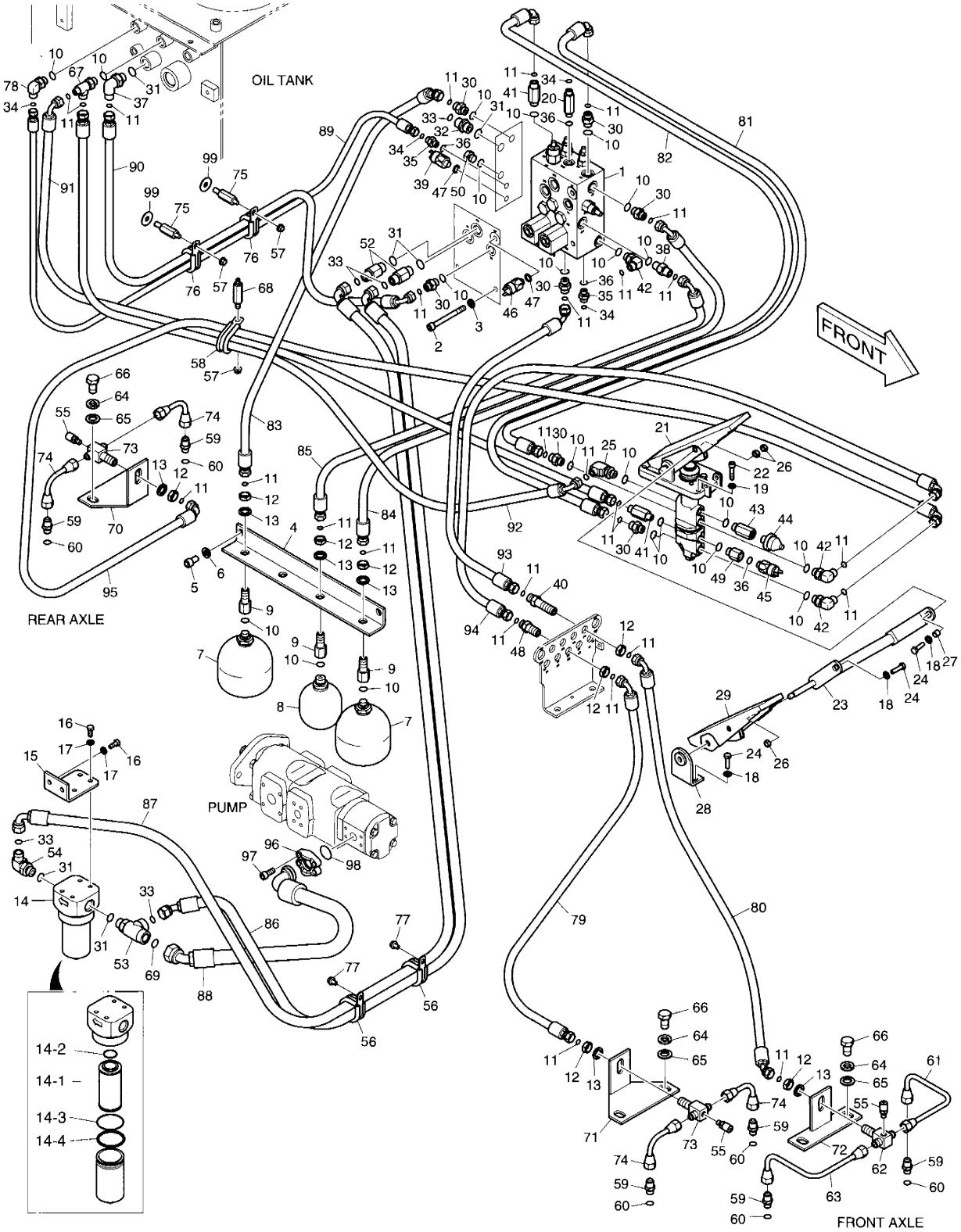

DATE	JUN. 30, 2007
REV. NO.	EXB07-06

Fig. 1200 BRAKE PIPING CANALISATION DE FREIN

Serial No. ;

Key No.	Part No.	Description	Description	Q'ty	S.C	Serial No.	ICA	Replaceable part	
								Part No.	Q'ty
200-73	181-00782	TEE	TE	2					
74	4182-1731	PIPE	TUYAU	4					
75	2120-2172	BOLT	BOULON	2					
76	124-00209D4	CLIP	AGRAFE	2					
77	K1001029	BOLT	BOULON	2					
78	2181-2815D7	ELBOW	COUDE	1					
79	DS2013809	HOSE	TUYAU FLEXIBLE	1					
80	DS2021111	HOSE	TUYAU FLEXIBLE	1					
81	DS2013976	HOSE	TUYAU FLEXIBLE	1					
82	DS2013736	HOSE	TUYAU FLEXIBLE	1					
83	DS2012386	HOSE	TUYAU FLEXIBLE	1					
84	DS2013812	HOSE	TUYAU FLEXIBLE	1					
85	DS2013811	HOSE	TUYAU FLEXIBLE	1					
86	DS2021167	HOSE	TUYAU FLEXIBLE	1					
87	DS2023269	HOSE	TUYAU FLEXIBLE	1					
88	DS2065046	HOSE	TUYAU FLEXIBLE	1					
89	DS2011495	HOSE	TUYAU FLEXIBLE	1					
90	DS2013021	HOSE	TUYAU FLEXIBLE	1					
91	DS2013975	HOSE	TUYAU FLEXIBLE	1					
92	DS2013740	HOSE	TUYAU FLEXIBLE	1					
93	DS2013813	HOSE	TUYAU FLEXIBLE	1					
94	DS2013044	HOSE	TUYAU FLEXIBLE	1					
95	DS2023275	HOSE	TUYAU FLEXIBLE	1					
96	2181-9079	FLANGE	BRIDE	2					
97	S2212066	BOLT	BOULON	4					
98	2180-1026D2	O-RING	JOINT TORIQUE	1					
99	2114-1058D1	WASHER	RONDELLE	2					

DATE	JUN. 30, 2007
REV.NO.	EXB07-06

Fig. 1210 COOLER PIPING
SYSTEME REFROIDISSEMENT

Serial No. ;

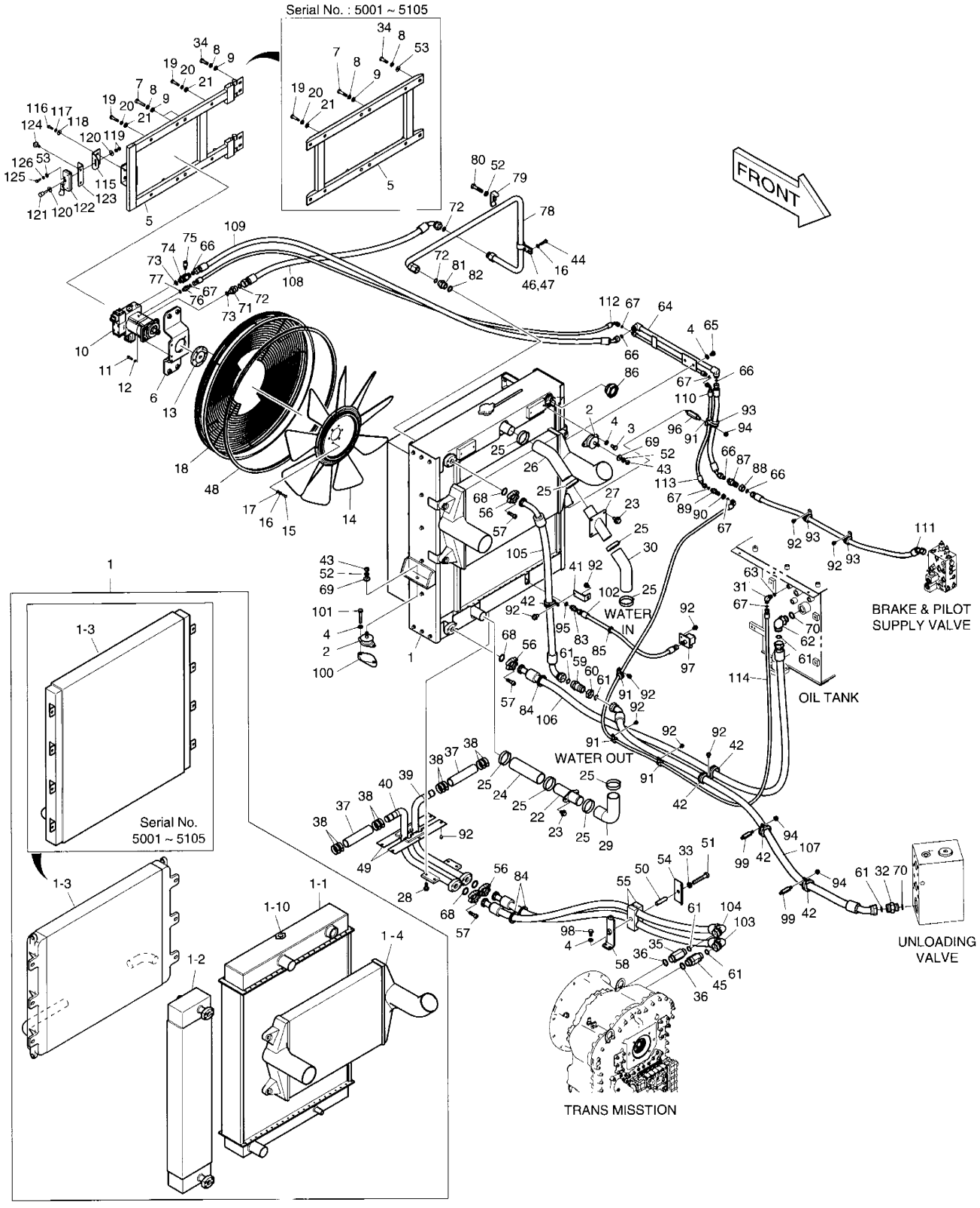

DATE	JUN. 30, 2007
REV. NO.	EXB07-06

Fig. 1210 COOLER PIPING
SYSTEME REFROIDISSEMENT

Serial No. ;

Key No.	Part No.	Description	Description	Q'ty	S.C	Serial No.	ICA	Replaceable part	
								Part No.	Q'ty
1210--	K1016269G	COOLER PIPING	SYSTEME	-	D				
1	K1014334B	RADIATOR	RADIATEUR	1		5001–5105	I	K1014334C	1
	K1014334C	**RADIATOR**	RADIATEUR	1		**5106–**			
1-1	K1014337	. RADIATOR	. RADIATEUR	1		5001–5105			
	K1014337A	**. RADIATOR**	. RADIATEUR	1		**5106–**			
1-2	K1014339	. HYD OIL COOLER	. RADIATEUR D'HUILE DE	1		5001–5105			
	K1014339A	**. HYD OIL COOLER**	. RADIATEUR D'HUILE DE	1		**5106–**			
1-3	K1014341	. T/M OIL COOLER	. RADIATEUR D'HUILE	1		5001–5105			
	K1014341A	**. T/M OIL COOLER**	. RADIATEUR D'HUILE	1		**5106–**			
1-4	K1013860	. INTER COOLER	. INTER REFROIDISSEUR	1					
1-10	K9002164	. CAP	. CHAPEAU	1					
2	K1004146	DAMPER	AMORTISSEUR	4					
3	S0511866	BOLT	BOULON	4					
4	S5102603	WASHER;SPRING	RONDELLE ELASTIQUE	12					
5	K1015133	BRACKET	SUPPORT	1		5001–5105			
	K1038875	**BRACKET**	SUPPORT	1		**5106–**			
6	K1015158	BRACKET	SUPPORT	1					
7	2120-2166D11	BOLT	BOULON	4					
8	2114-2031D6	WASHER;SPRING	RONDELLE ELASTIQUE	8					
9	2114-1898D6	WASHER	RONDELLE	4		5001–5105			
	2114-1898D6	**WASHER**	RONDELLE	8		**5106–**			
10	K1008305	MOTOR;FAN	MOTEUR DE VENTILATEUR	1					
	K1018841	MOTOR;FAN (Bi-DIRECTION)	MOTEUR DE VENTILATEUR	1					
11	S2209066	BOLT	BOULON	4					
12	S5110503	WASHER;SPRING	RONDELLE ELASTIQUE	4					
13	219-00009A	HUB	MOYEU	1					
14	920-00076	FAN;COOLER	VENTENT	1					
15	S0508866	BOLT	BOULON	6					
16	S5102503	WASHER;SPRING	RONDELLE ELASTIQUE	8					
17	S5010513	WASHER	RONDELLE	6					
18	142-00082A	GUARD;FAN	VENTENT	1		5001–5105			
	K1037627	**GUARD;FAN**	VENTENT	1		**5106–**			
19	2120-2166D48	BOLT	BOULON	4					
20	2114-2031D5	WASHER;SPRING	RONDELLE ELASTIQUE	4					
21	2114-1898D1	WASHER	RONDELLE	4					
22	K1014206	PIPE;WATER	TUYAU	1					
23	DS0025033	BOLT	BOULON	6					
24	DS2087071	HOSE	TUYAU FLEXIBLE	1					

DATE	JUN. 30, 2007
REV.NO.	EXB07-06

Fig. 1210 COOLER PIPING
SYSTEME REFROIDISSEMENT

Serial No. ;

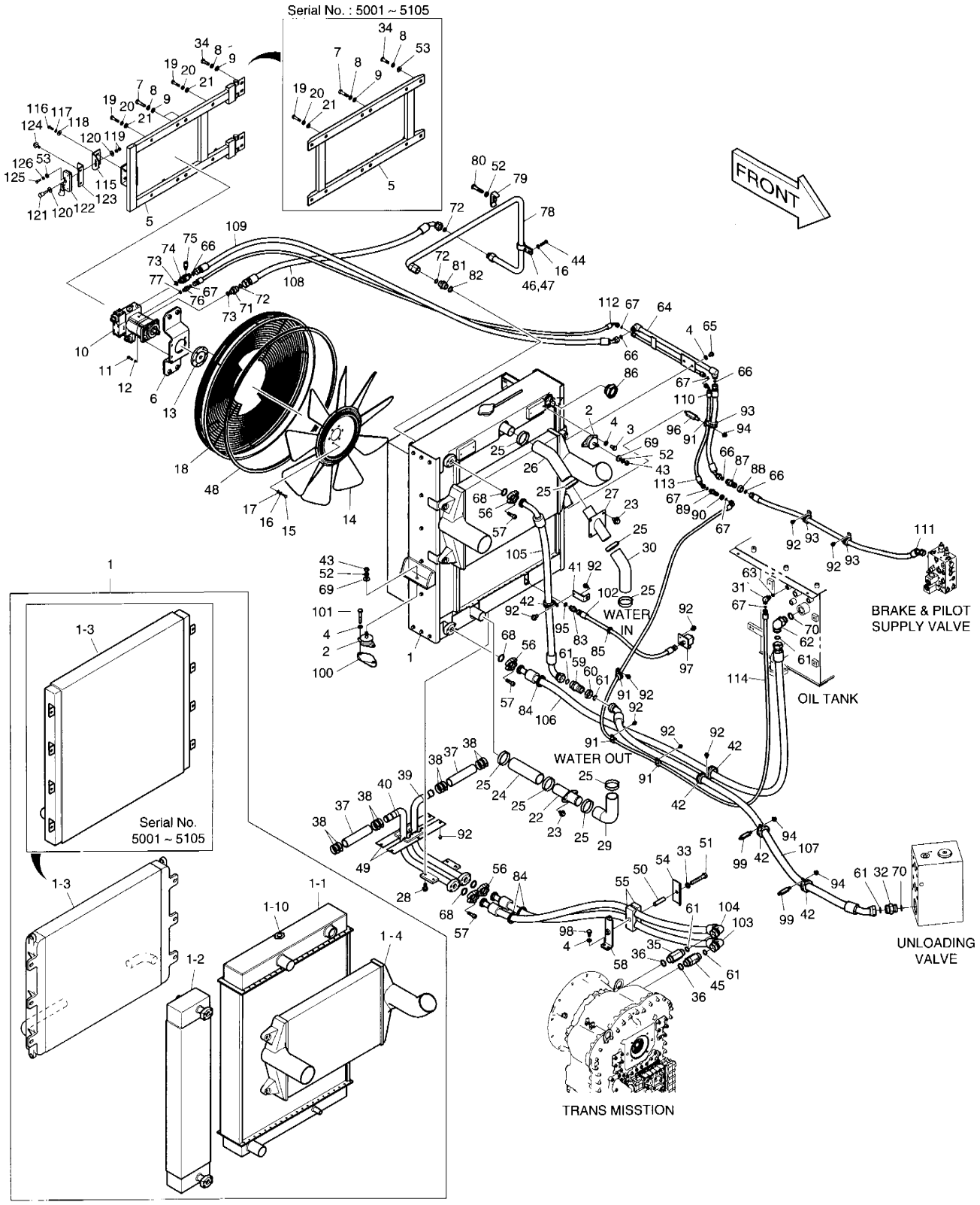

DATE	JUN. 30, 2007
REV. NO.	EXB07-06

Fig. 1210 COOLER PIPING
SYSTEME REFROIDISSEMENT

Serial No. ;

Key No.	Part No.	Description	Description	Q'ty	S.C	Serial No.	ICA	Replaceable part	
								Part No.	Q'ty
1210-25	S8500067	CLAMP;HOSE	COLLIER DE LA CONDUITE	8					
26	K1018108	HOSE;WATER	TUYAU FLEXIBLE	1					
27	K1015342	PIPE;WATER	TUYAU	1					
28	DS0025017	BOLT	BOULON	4					
29	K1017611A	HOSE;WATER	TUYAU FLEXIBLE	1					
30	K1017612	HOSE;WATER	TUYAU FLEXIBLE	1					
31	2181-2815D4	ELBOW	COUDE	1					
32	DS2232080	ADAPTER	ADAPTEUR	1					
33	S5102903	WASHER;SPRING	RONDELLE ELASTIQUE	1					
34	2120-2166D50	BOLT	BOULON	4		5001–5105			
	2120-2166D35	**BOLT**	BOULON	4		**5106–**			
35	DS2232122	ADAPTER	ADAPTEUR	1					
36	S8040161	O-RING	JOINT TORIQUE	2					
37	DS2087065	HOSE	TUYAU FLEXIBLE	2					
38	S8500054	CLAMP	BRIDE	8					
39	K1016104	PIPE	TUYAU	1					
40	K1016105	PIPE	TUYAU	1					
41	K1015291	BRACKET	SUPPORT	1					
42	124-00208D6	CLIP	AGRAFE	5					
43	S4012733	NUT	ECROU	4					
44	S0556066	BOLT	BOULON	2					
45	K1015411	ADAPTER	ADAPTEUR	1					
46	K1010490	CLAMP	BRIDE	1					
47	K1010491	CLAMP	BRIDE	1					
48	160-00065	HOSE	TUYAU FLEXIBLE	1					
49	K1015352	COVER;BAFFLE	COUVERCLE	2		5001–5068	I	K1015352A	2
	K1015352A	**COVER;BAFFLE**	COUVERCLE	2		**5069–**			
50	114-00456	SPACER	ENTERTOISE	1					
51	S0566466	BOLT	BOULON	1					
52	S5102703	WASHER;SPRING	RONDELLE ELASTIQUE	5					
53	2114-1898D17	WASHER	RONDELLE	4		5001–5105			
	2114-1898D5	**WASHER**	RONDELLE	2		**5106–**			
54	K1002000	PLATE	PLAQUE	1					
55	124-00247	CLAMP;HOSE	COLLIER DE LA CONDUITE	2					
56	2181-9083	FLANGE;SPLIT	BRIDE	8					
57	S2212366	BOLT	BOULON	16					
58	K1018121A	BRACKET	SUPPORT	1					
59	DS2415005	ADAPTER;CONNECTOR	ADAPTATEUR	1					

DATE	JUN. 30, 2007
REV.NO.	EXB07-06

Fig. 1210 COOLER PIPING
SYSTEME REFROIDISSEMENT

Serial No. ;

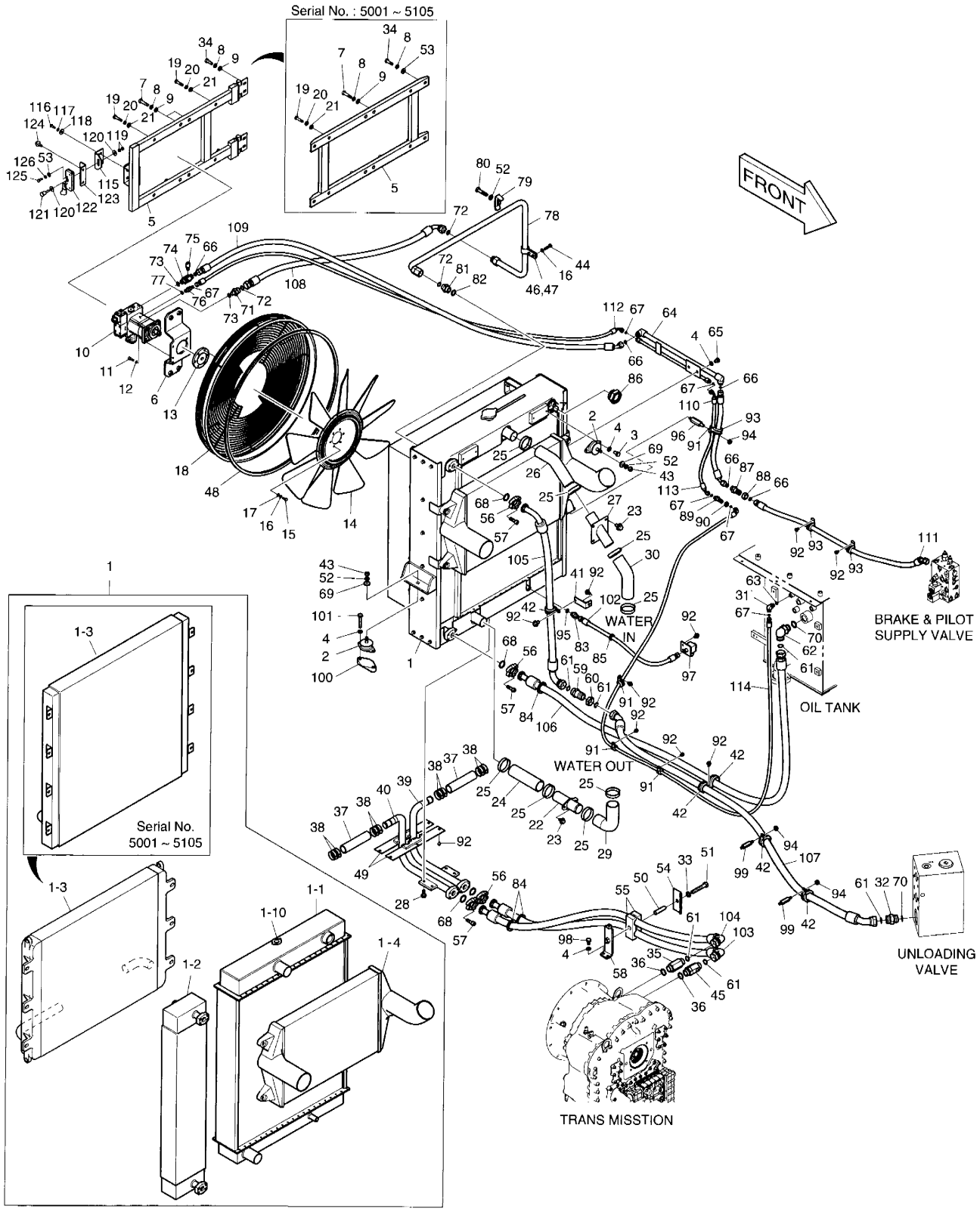

DATE	JUN. 30, 2007
REV. NO.	EXB07-06

Fig. 1210 COOLER PIPING SYSTEME REFROIDISSEMENT

Serial No. ;

Key No.	Part No.	Description	Description	Q'ty	S.C	Serial No.	ICA	Replaceable part	
								Part No.	Q'ty
.0-60	121-00010D9	NUT	ECROU	1					
61	S8030161	O-RING	JOINT TORIQUE	5					
62	2181-2815D1	ELBOW	COUDE	1					
63	S8000111	O-RING	JOINT TORIQUE	1					
64	K1019019	PIPE	TUYAU	1					
65	S0511566	BOLT	BOULON	2					
66	S8030081	O-RING	JOINT TORIQUE	5					
67	S8030041	O-RING	JOINT TORIQUE	6					
68	2180-1026D19	O-RING	JOINT TORIQUE	4					
69	DS0401191	WASHER	RONDELLE	4					
70	S8000291	O-RING	JOINT TORIQUE	1					
71	DS2234012	ADAPTER	ADAPTEUR	1					
72	S8030121	O-RING	JOINT TORIQUE	3					
73	S8040081	O-RING	JOINT TORIQUE	2					
74	DS2469002	ADAPTER	ADAPTEUR	1					
75	120-00002	SCREW COUPLING	VIS	1					
76	DS2232062	ADAPTER	ADAPTEUR	1					
77	S8040041	O-RING	JOINT TORIQUE	1					
78	K1016106	PIPE	TUYAU	1					
79	2124-1026D2	CLAMP	BRIDE	1					
80	S0560866	BOLT	BOULON	1					
81	2181-4133D5	ADAPTER	ADAPTEUR	1					
82	S8000241	O-RING	JOINT TORIQUE	1					
83	2181-1126D7	ADAPTER	ADAPTEUR	1					
84	160-00057	BUSHING;RUBBER	DOUILLE EN CAOUTCHOUC	3					
85	2160-1004D18	BUSHING;RUBBER	DOUILLE EN CAOUTCHOUC	1					
86	528-00030	GAUGE;COOLANT SIGHT	MESURE	1					
87	181-00128D3	ADAPTER;CONNECTOR	ADAPTATEUR	1					
88	121-00010D5	NUT	ECROU	1					
89	DS2415001	ADAPTER	ADAPTEUR	1					
90	DS0301031	NUT	ECROU	1					
91	124-00208D2	CLIP	AGRAFE	4					
92	K1001029	BOLT	BOULON	16					
93	124-00208D4	CLIP	AGRAFE	3					
94	2121-1305	NUT	ECROU	3					
95	S8000141	O-RING	JOINT TORIQUE	1					
96	2120-2159	BOLT	BOULON	1					
97	181-00341A	COCK ASS'Y	ROBINET	1					

DATE	JUN. 30, 2007
REV.NO.	EXB07-06

Fig. 1210 COOLER PIPING
SYSTEME REFROIDISSEMENT

Serial No. ;

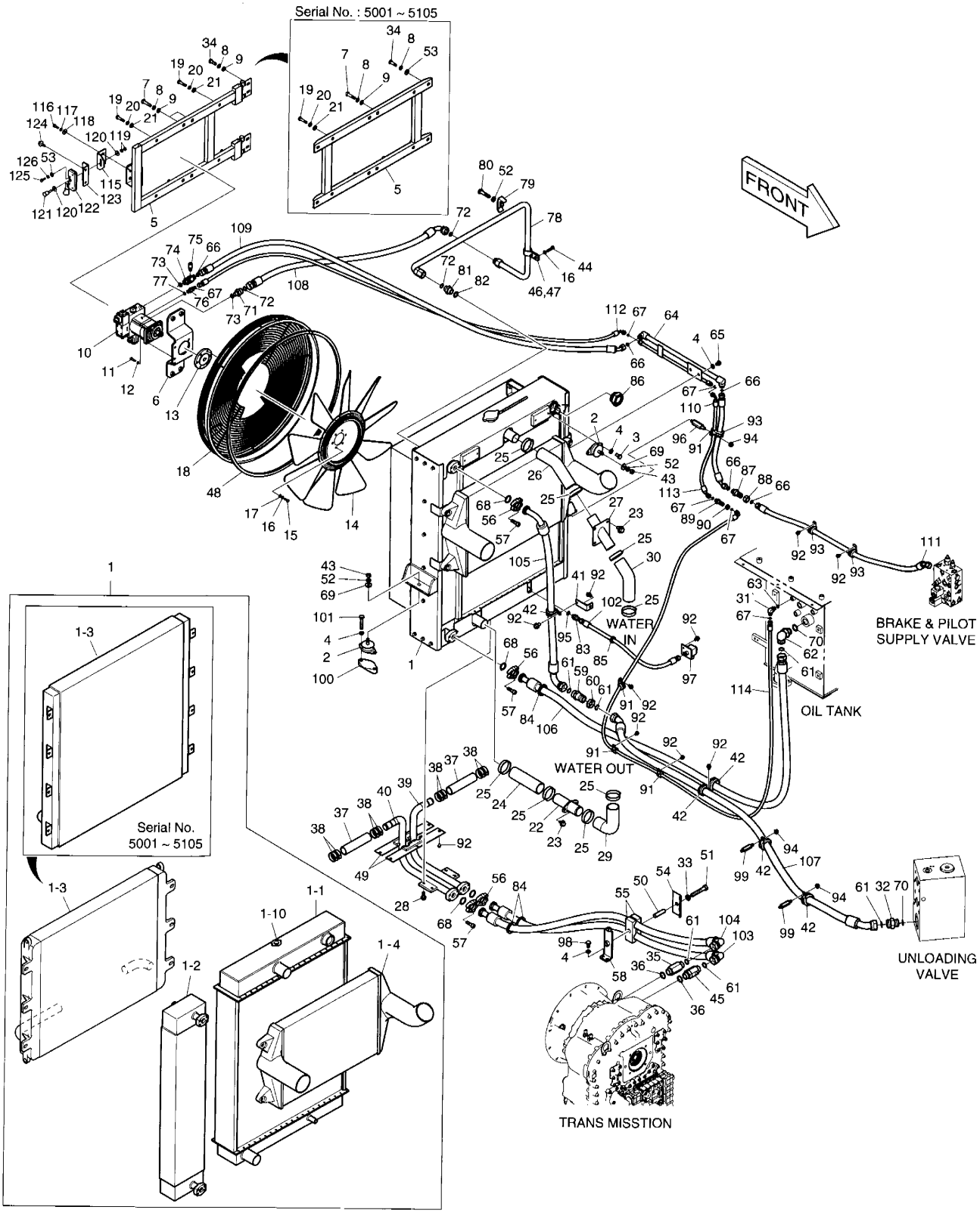

DATE	JUN. 30, 2007
REV. NO.	EXB07-06

Fig. 1210 COOLER PIPING
SYSTEME REFROIDISSEMENT

Serial No. ;

Key No.	Part No.	Description	Description	Q'ty	S.C	Serial No.	ICA	Replaceable part	
								Part No.	Q'ty
1210-98	S0512066	BOLT	BOULON	2					
99	120-00179	BOLT	BOULON	2					
100	K1018177A	PLATE	PLAQUE	2					
101	S0558466	BOLT	BOULON	4					
102	DS2053220	HOSE	TUYAU FLEXIBLE	1					
103	DS2025079	HOSE	TUYAU FLEXIBLE	1					
104	DS2025080	HOSE	TUYAU FLEXIBLE	1					
105	DS2026166	HOSE	TUYAU FLEXIBLE	1					
106	DS2016086	HOSE	TUYAU FLEXIBLE	1					
107	DS2012287	HOSE	TUYAU FLEXIBLE	1					
108	DS2013805	HOSE	TUYAU FLEXIBLE	1					
109	DS2012404	HOSE	TUYAU FLEXIBLE	1					
110	DS2012384	HOSE	TUYAU FLEXIBLE	1					
111	DS2012385	HOSE	TUYAU FLEXIBLE	1					
112	DS2013807	HOSE	TUYAU FLEXIBLE	1					
113	DS2021166	HOSE	TUYAU FLEXIBLE	1					
114	DS2013808	HOSE	TUYAU FLEXIBLE	1		5001–5053			
	DS20131076	**HOSE**	TUYAU FLEXIBLE	1		**5054–**			
115	**195-01984B**	**BRACKET**	SUPPORT	1		**5106–**			
116	**2120-2166D16**	**BOLT**	BOULON	2		**5106–**			
117	**2114-2031D4**	**WASHER;SPRING**	RONDELLE ELASTIQUE	2		**5106–**			
118	**2114-1898D8**	**WASHER**	RONDELLE	2		**5106–**			
119	**S4012533**	**NUT**	ECROU	2		**5106–**			
120	**2114-1058D29**	**WASHER**	RONDELLE	2		**5106–**			
121	**2142-1094**	**STRIKER**	FRAPPER	1		**5106–**			
122	**K1030531**	**LATCH**	LOQUET	1		**5106–**			
123	**K1038881**	**BRACKET**	SUPPORT	1		**5106–**			
124	**DS0025016**	**BOLT;SET**	BOULON A 6 PANS	2		**5106–**			
125	**2120-2166D36**	**BOLT**	BOULON	2		**5106–**			
126	**2114-2031D3**	**WASHER;SPRING**	RONDELLE ELASTIQUE	2		**5106–**			

Fig. 1220 REMOTE PRESS CHECK PIPING
TUYAUTERIE DISTANCE DE PRESSION

Serial No. ;

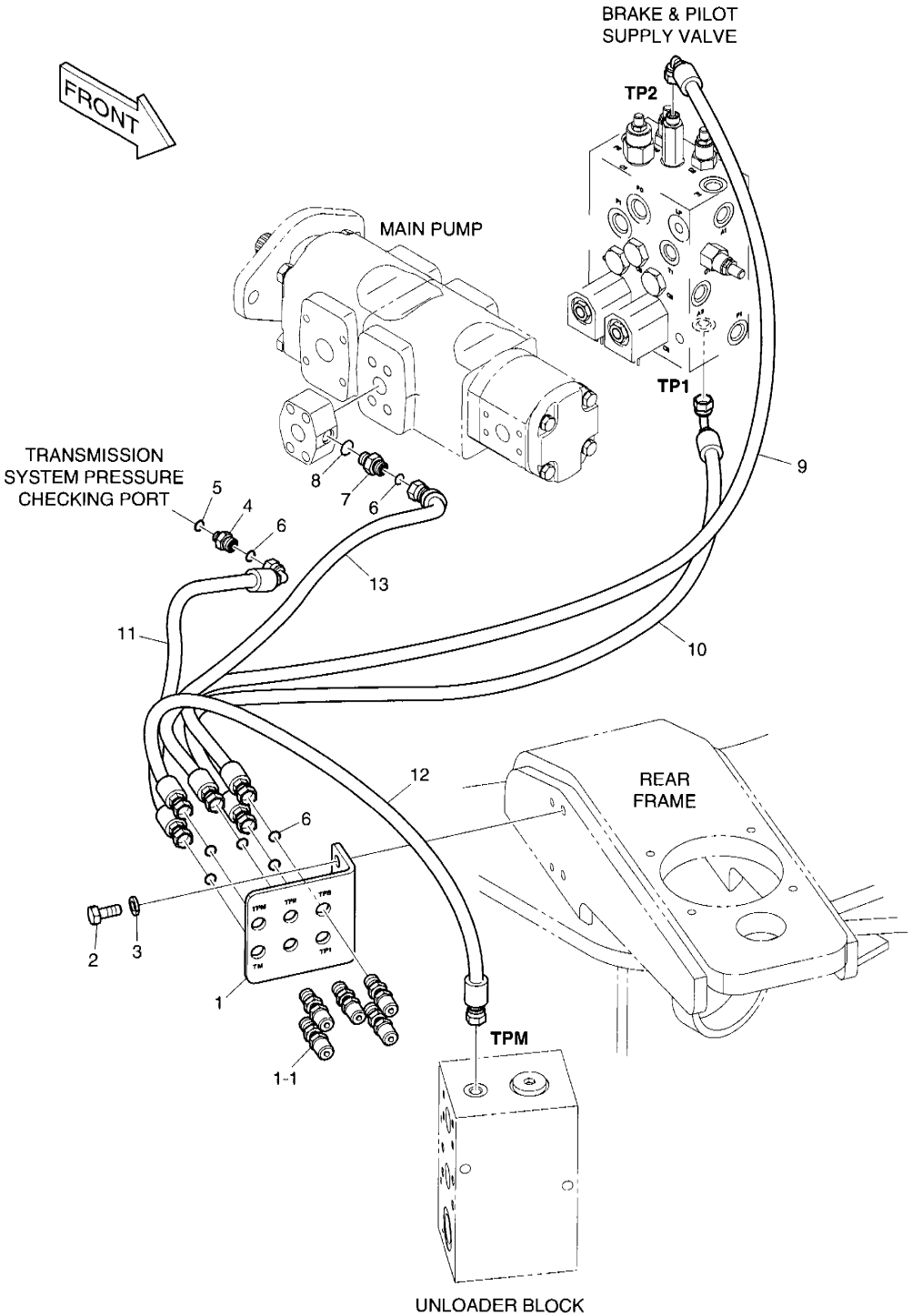

DATE	NOV. 24, 2006
1st EDITION	

Fig. 1220 REMOTE PRESS CHECK PIPING TUYAUTERIE DISTANCE DE PRESSION

Serial No. ;

Key No.	Part No.	Description	Description	Q'ty	S.C	Serial No.	ICA	Replaceable part	
								Part No.	Q'ty
1220--	K1017400	REMOTE PRESS CHECK PIPING	TUYAUTERIE DISTANCE DE	-	D				
1	K1006648	CHECK	CONTROLE	1					
1-1	120-00297	SCREW;COUPLING	VIS	1					
2	S0512066	BOLT	BOULON	2					
3	S5102603	WASHER;SPRING	RONDELLE ELASTIQUE	2					
4	K1006651	ADAPTER	ADAPTEUR	1					
5	180-00408	O-RING	JOINT TORIQUE	1					
6	S8030041	O-RING	JOINT TORIQUE	7					
7	2181-4133D1	ADAPTER	ADAPTEUR	1					
8	S8000111	O-RING	JOINT TORIQUE	1					
9	DS2013786	HOSE	TUYAU FLEXIBLE	1					
10	DS2013609	HOSE	TUYAU FLEXIBLE	1					
11	DS2013815	HOSE	TUYAU FLEXIBLE	1					
12	DS2011542	HOSE	TUYAU FLEXIBLE	1					
13	DS2012327	HOSE	TUYAU FLEXIBLE	1					

DATE	NOV. 24, 2006
1st EDITION	

Fig. 1230 CABIN MOUNTING
MONTAGE DE CABINE

Serial No. ;

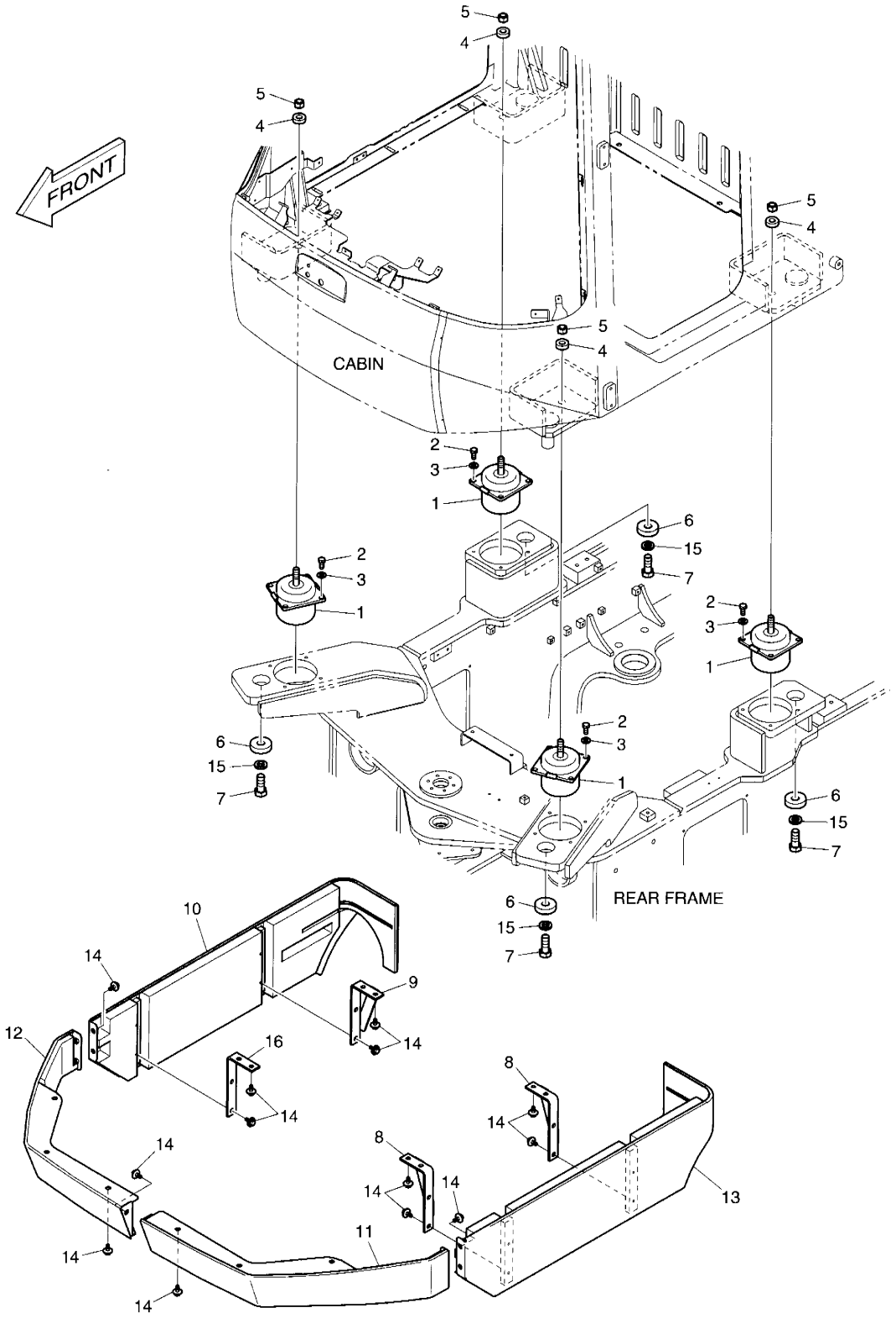

DATE	NOV. 24, 2006
1st EDITION	

Fig. 1230 CABIN MOUNTING MONTAGE DE CABINE

Serial No. ;

Key No.	Part No.	Description	Description	Q'ty	S.C	Serial No.	ICA	Replaceable part	
								Part No.	Q'ty
1230--	K1024017C	CABIN MOUNTING	MONTAGE DE CABINE	-	D				
1	2161-9057	RUBBER;MOUNTING	SUPPORT	4					
2	S0512066	BOLT	BOULON	16					
3	2114-1898D1	WASHER	RONDELLE	16					
4	DS0401186	WASHER	RONDELLE	4					
5	2121-9007	NUT	ECROU	4					
6	2114-1058D76	WASHER	RONDELLE	4					
7	S0727666	BOLT	BOULON	4					
8	195-01278	BRACKET	SUPPORT	2					
9	195-01288	BRACKET	SUPPORT	1					
10	K1025575A	COVER	COUVERCLE	1					
11	K1023927	COVER	COUVERCLE	1					
12	K1023928	COVER	COUVERCLE	1					
13	K1025576A	COVER	COUVERCLE	1					
14	DS0025032	BOLT	BOULON	27					
15	S5103103	WASHER;SPRING	RONDELLE ELASTIQUE	4					
16	K1028514	BRACKET	SUPPORT	1					

DATE	JUN. 30, 2007
REV.NO.	EXB07-06

Fig. 1240 CABIN(1)-BODY
CARTER DE CABINE

Serial No. ;

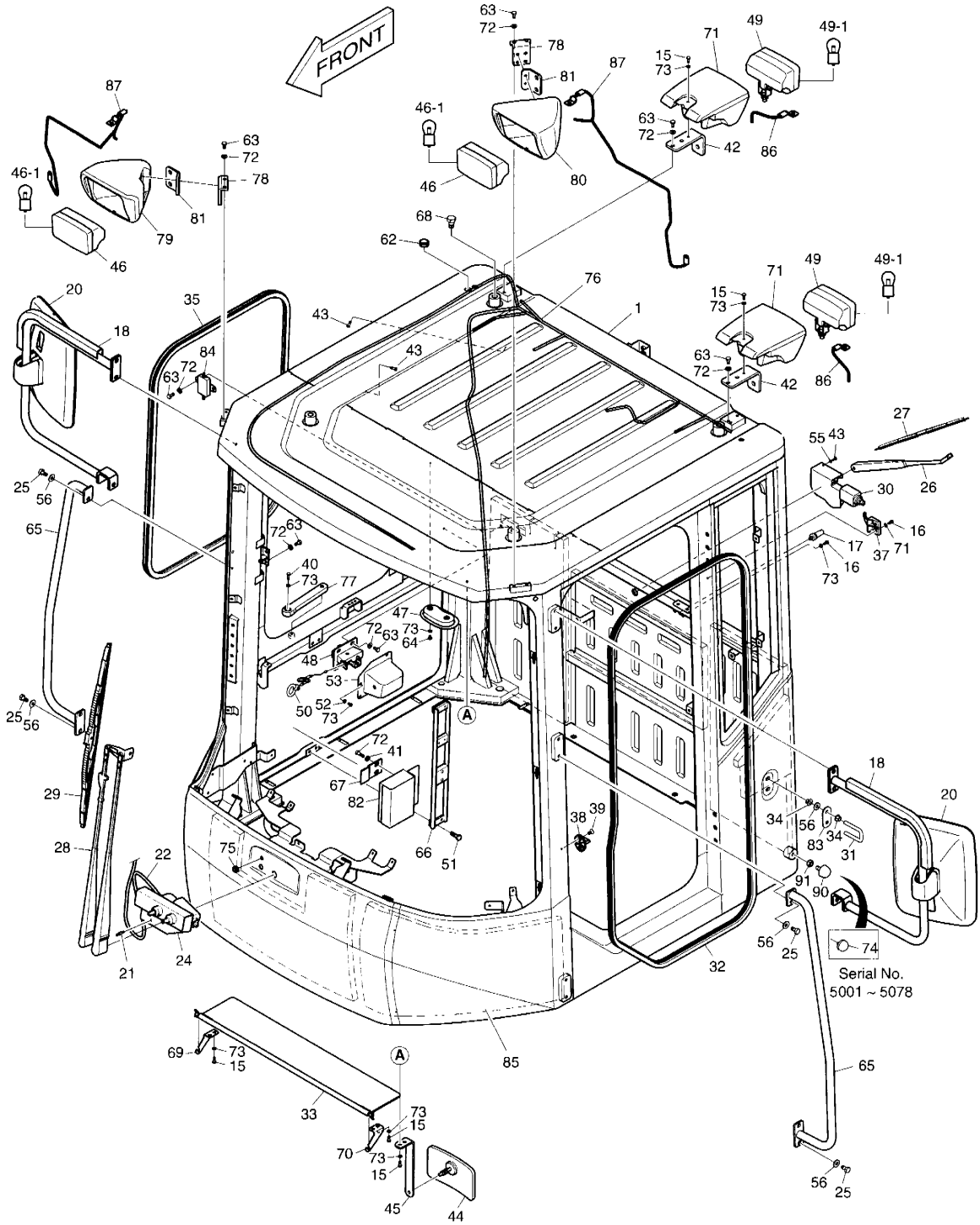

DATE	JUN. 30, 2007
REV. NO.	EXB07-06

Fig. 1240 CABIN(1)-BODY CARTER DE CABINE

Serial No. ;

Key No.	Part No.	Description	Description	Q'ty	S.C	Serial No.	ICA	Replaceable part	
								Part No.	Q'ty
1240--	K1016629A	CABIN ASS'Y	ENSEMBLE CABINE	1		5001-5049	I	K1016629B	1
	K1016629B	**CABIN ASS'Y**	ENSEMBLE CABINE	1		**5050-5078**	I	K1016629C	1
	K1016629C	**CABIN ASS'Y**	ENSEMBLE CABINE	1		**5079-5149**	I	K1016629E	1
	K1016629E	**CABIN ASS'Y**	ENSEMBLE CABINE	1		**5150-**			
1	-	BODY;CABIN	CORPS	1	D				
15	2120-2166D6	BOLT	BOULON	10					
16	2120-2166D7	SCREW	VIS	4					
17	2415-9001A	NOZZLE	INJECTEUR	1					
18	**K1029031**	**STAY;MIRROR**	ENTRETOISE	2					
20	K1011225	MIRROR	RETROVISEUR	2					
21	2415-1018	ADAPTER	ADAPTEUR	1					
22	4185-1777	HOSE;WATER	TUYAU D'EAU	2					
24	4538-9017	MOTOR;WIPER	MOTEUR	1					
25	2120-2166D4	BOLT	BOULON	12					
26	K1006361	ARM;REAR	BALANCIER	1		5001-5049			
	K1029787	**ARM;REAR**	BALANCIER	1		**5050-**			
27	507-00001	BLADE;WIPER REAR	ENSEMBLE LAME	1					
28	4541-9024	ARM;WIPER	BALANCIER	1					
29	4507-9003	BLADE;WIPER	ENSEMBLE LAME	1					
30	2538-9005A	MOTOR;WIPER	MOTEUR	1					
31	4120-2206	BOLT	BOULON	1					
32	K1005588	TRIM;DOOR	EQUILIBRE	1					
33	621-02577	VISOR;SUN	PROTECTEUR	1					
34	S4500633	NUT;FLANGE	ECROU	4					
35	K1005591	TRIM;DOOR	EQUILIBRE	1					
37	K1005593	HOOK	CROCHET	1					
38	2142-9005	STRIKER	FRAPPER	1					
39	2120-2131	SCREW	VIS	2					
40	2120-2166D24	SCREW	VIS	1					
41	2120-2166D16	BOLT	BOULON	6					
42	K1010358	PLATE	PLAQUE	2					
43	2120-2166D8	SCREW	VIS	3					
44	903-00064	MIRROR;ROOM	RETROVISEUR	2					
45	K1024165A	BRACKET	SUPPORT	2					
46	534-00085	LAMP;HEAD	LAMPE	2					
46-1	2515-1016D4	. BULB;HALOGEN	. LAMPE	1					
47	534-00079	LAMP;ROOM	ECLAIRAGE CABINE	1					
48	2125-9055	CATCH;BACK LOCK	LOQUET	1					

DATE	JUN. 30, 2007
REV.NO.	EXB07-06

Fig. 1240 CABIN(1)-BODY
CARTER DE CABINE

Serial No. ;

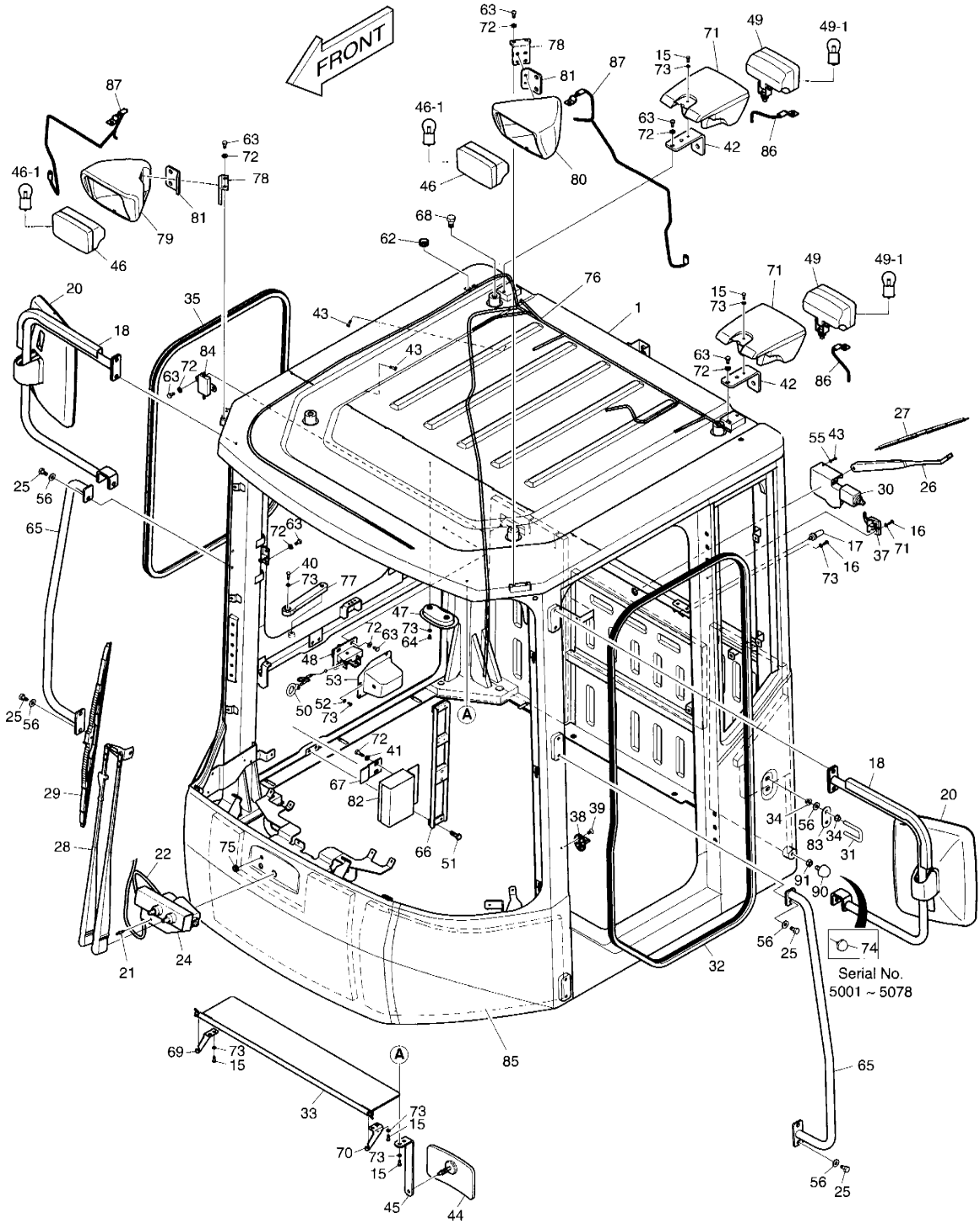

DATE	JUN. 30, 2007
REV. NO.	EXB07-06

Fig. 1240 CABIN(1)-BODY CARTER DE CABINE

Serial No. ;

Key No.	Part No.	Description	Description	Q'ty	S.C	Serial No.	ICA	Replaceable part	
								Part No.	Q'ty
240-49	534-00085	LAMP;HEAD	LAMPE	2					
49-1	2515-1016D4	. BULB;HALOGEN	. LAMPE	1					
50	K1005675B	WIRE ASS'Y	FAISCEAU	1					
51	2120-2166D36	BOLT	BOULON	4					
52	2120-2166D9	SCREW	VIS	4					
53	K1005986	NOZZLE	INJECTEUR	1					
55	2114-1898D4	WASHER	CALE	3					
56	2114-1898D1	WASHER	CALE	14					
62	2160-1310	BUSHING;RUBBER	MANCHON CAOUTCHOUC	1					
63	2120-2166D25	BOLT	BOULON	16					
64	S3450933	SCREW	VIS	2					
65	K1005599B	BAR	TIGE	2					
66	K1005573A	BRACKET	SUPPORT	1					
67	K1005577	PLATE	PLAQUE	1					
68	S0521056	BOLT	BOULON	4					
69	195-02499	BRACKET(R.H)	SUPPORT	1					
70	195-02500	BRACKET(L.H)	SUPPORT	1					
71	K1005530A	PLATE;COVER	PLAQUE	2					
72	2114-1898D2	WASHER	CALE	22					
73	2114-1898D3	WASHER	CALE	25					
74	**4161-2507**	**RUBBER;STOPPER**	CAOUTCHOUC	2		**5001-5078**			
75	4160-1343	GROMMET	MANCHON CAOUTCHOUC	1					
76	K1005896	HARNESS	FAISCEAU	1					
77	K1005934	PLATE	PLAQUE	1					
78	K1011221	BRACKET	SUPPORT	2					
79	K1011222	COVER	COUVERCLE	1					
80	K1011223	COVER	COUVERCLE	1					
81	K1011224	BRACKET	SUPPORT	2					
82	K1010428	BRACKET	SUPPORT	1					
83	K1013442	WASHER	CALE	1					
84	K1026460	ANTENNA	ANTENNE	1					
85	K1016700	FOAM	EPONGE	1					
86	K1011177	HARNESS;WORK REAR LAMP	FAISCEAU	2					
87	K1011179B	HARNESS;WORK REAR LAMP	FAISCEAU	2					
90	**161-00195**	**RUBBER;STOPPER**	CAOUTCHOUC	1		**5079-**			
91	**2121-1311D4**	**NUT**	ECROU	1		**5079-**			

DATE	JUN. 30, 2007
REV.NO.	EXB07-06

Fig. 1250 CABIN(2) - INTERIOR SHEET
FEUILLE DE CABINE

Serial No. ;

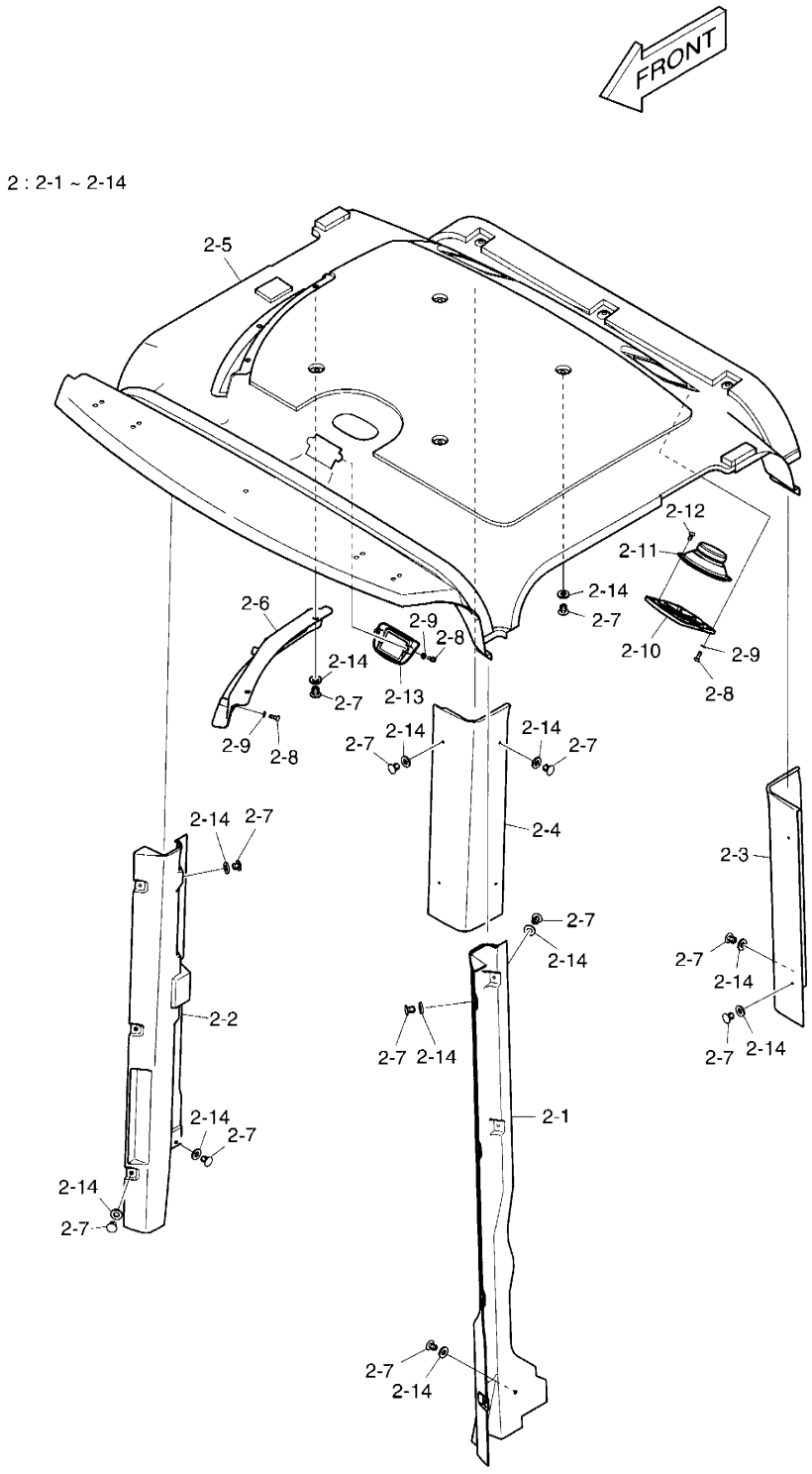

DATE	JUN. 30, 2007
REV. NO.	EXB07-06

Fig. 1250 CABIN(2) - INTERIOR SHEET FEUILLE DE CABINE

Serial No. ;

Key No.	Part No.	Description	Description	Q'ty	S.C	Serial No.	ICA	Replaceable part	
								Part No.	Q'ty
250--	K1016629A	CABIN ASS'Y	ENSEMBLE CABINE	1		5001-5049	I	K1016629B	1
	K1016629B	**CABIN ASS'Y**	ENSEMBLE CABINE	1		**5050-5078**	I	K1016629C	1
	K1016629C	**CABIN ASS'Y**	ENSEMBLE CABINE	1		**5079-5149**	I	K1016629E	1
	K1016629E	**CABIN ASS'Y**	ENSEMBLE CABINE	1		**5150-**			
2	**K1016682B**	**INTERIOR SHEET ASS'Y**	FEUILLE	-	D				
2-1	K1016683	. SHEET;INTERIOR	. FEUILLE	1		5001-5049	I	K1016683A	1
	K1016683A	**. SHEET;INTERIOR**	. FEUILLE	1		**5050-**			
2-2	K1016684	. SHEET;INTERIOR	. FEUILLE	1					
2-3	K1005952	. SHEET;INTERIOR	. FEUILLE	1					
2-4	K1005953	. SHEET;INTERIOR	. FEUILLE	1					
2-5	K1016685	. COVER	. COUVERCLE	1					
2-6	K1005955	. COVER;AUDIO	. COUVERCLE	1					
2-7	4120-2219	. SCRIVET	. RIVET	33					
2-8	2120-2166D8	. SCREW	. VIS	12					
2-9	2114-1898D4	. WASHER	. RONDELLE	12					
2-10	621-00268	. COVER;SPEAKER	. COUVERCLE	2					
2-11	2541-9020	. SPEAKER	. HAUT-PARLEUR	2					
2-12	S3450563	. SCREW	. VIS	8					
2-13	K1010579	. COVER	. COUVERCLE	1					
2-14	K1011169	. FOAM	. EPONGE	33					

DATE	JUN. 30, 2007
REV.NO.	EXB07-06

Fig. 1260 CABIN(3) - DOOR ASS'Y(L.H)
CADRE DE CABINE

Serial No. ;

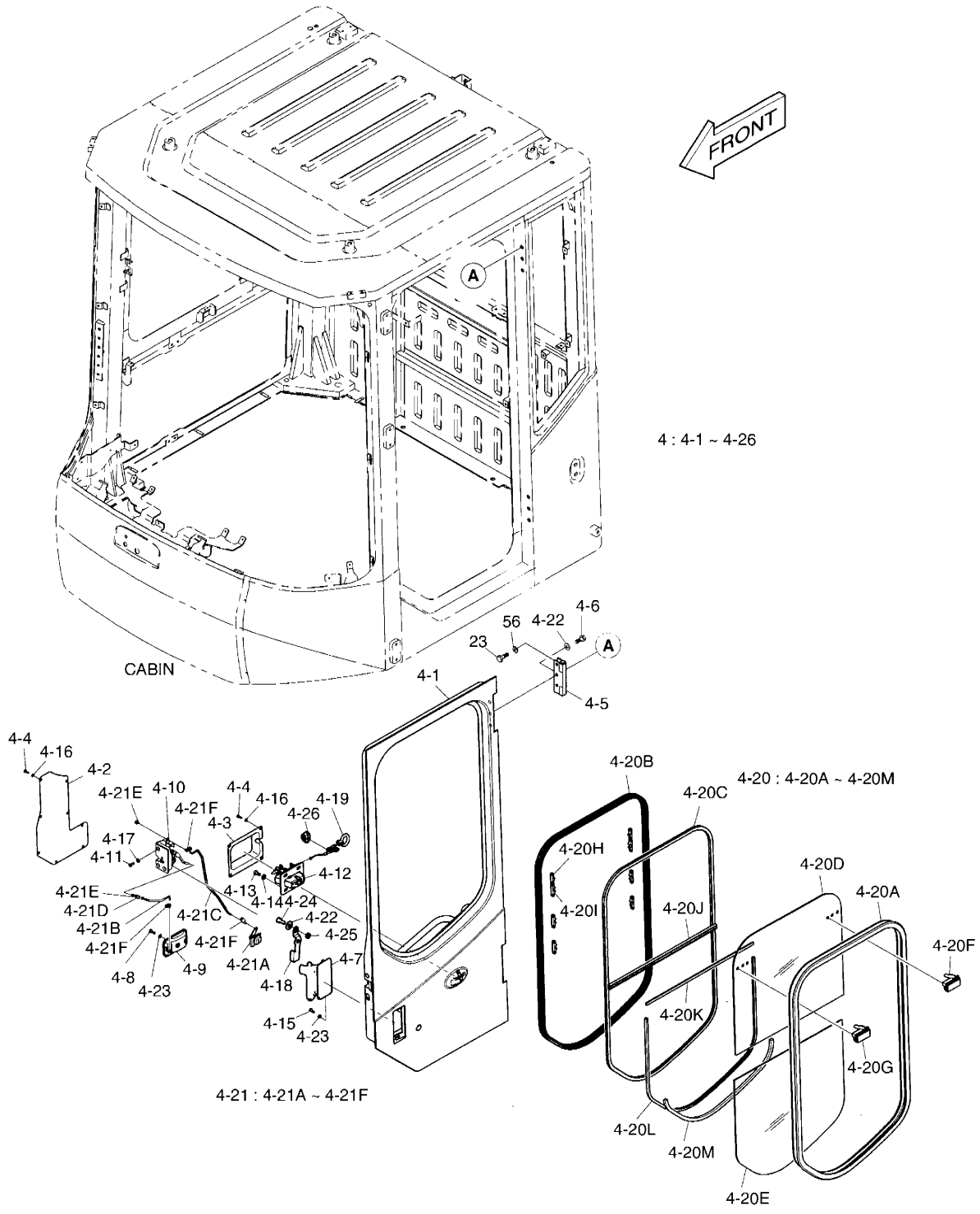

DATE	JUN. 30, 2007
REV. NO.	EXB07-06

Fig. 1260 CABIN(3) - DOOR ASS'Y(L.H) CADRE DE CABINE

Serial No. ;

Key No.	Part No.	Description	Description	Q'ty	S.C	Serial No.	ICA	Replaceable part	
								Part No.	Q'ty
260--	K1016629A	CABIN ASS'Y	ENSEMBLE CABINE	1		5001-5049	I	K1016629B	1
	K1016629B	**CABIN ASS'Y**	ENSEMBLE CABINE	1		**5050-5078**	I	K1016629C	1
	K1016629C	**CABIN ASS'Y**	ENSEMBLE CABINE	1		**5079-5149**	I	K1016629E	1
	K1016629E	**CABIN ASS'Y**	ENSEMBLE CABINE	1		**5150-**			
4	K1016686A	DOOR ASS'Y (L.H)	ENSEMBLE PORTE	1					
4-1	-	. BODY;DOOR	. PORTE	1	D				
4-2	K1005661	. COVER	. COUVERCLE	1					
4-3	K1005940	. PLATE	. PLAQUE	1					
4-4	2120-2166D8	. SCREW	. VIS	12					
4-5	4171-1111A	. HINGE	. CHARNIRE	2					
4-6	2120-2166D2	. BOLT	. BOULON A 6 PANS	6					
4-7	K1016690	. HANDLE;OUTER	. POIGNEE	1					
4-8	2120-2166D7	. SCREW	. VIS	1					
4-9	4172-9032	. HANDLE;INNER	. POIGNEE	1					
4-10	2125-9036	. CATCH;DOOR LOCK	. CROCHET	1					
4-11	2120-2150D3	. BOLT	. BOULON A 6 PANS	3					
4-12	2125-9055	. CATCH;BACK LOCK	. LOQUET	1					
4-13	2120-2166D25	. BOLT	. BOULON A 6 PANS	5					
4-14	2114-1898D2	. WASHER	. RONDELLE	5					
4-15	2120-2166D6	. BOLT	. BOULON A 6 PANS	2					
4-16	2114-1898D4	. WASHER	. RONDELLE	12					
4-17	S5210303	. WASHER	. RONDELLE	3					
4-18	K1023242	. STAY	. ENTRETOISE	1					
4-19	K1005675B	. WIRE ASS'Y	. FIL	1					
4-20	K1005679B	. SASH ASS'Y	. SASH	1					
4-20A	K1005680A	.. SASH	.. CHASSIS	1					
4-20B	K1005681A	.. CHANINER	.. LA MANCHE	1					
4-20C	K1005682	.. STRIP;WEATHER	.. TAMPON	1					
4-20D	K1005683A	.. GLASS;DOOR(UPPER)	.. VERRE	1					
4-20E	K1005684A	.. GLASS;DOOR(LOWER)	.. VERRE	1					
4-20F	2125-9026	.. LOCK(R.H)	.. RACCORD	1					
4-20G	2125-9027	.. LOCK(L.H)	.. VERROU	1					
4-20H	128-00003	.. STOPPER;CHAIN	.. TAQUET	2					
4-20I	128-00004	.. STOPPER;CHAIN	.. TAQUET	6					
4-20J	K1005689	.. BAR;CENTER	.. CAOUTCHOUC	1					
4-20K	K1005690	.. STRIP	.. TAMPON	1					
4-20L	K1011650	.. RUBBER	.. CAOUTCHOUC	1					
4-20M	K1011651	.. RUBBER	.. CAOUTCHOUC	1					

DATE	JUN. 30, 2007
REV.NO.	EXB07-06

Fig. 1260 CABIN(3) - DOOR ASS'Y(L.H)
CADRE DE CABINE

Serial No. ;

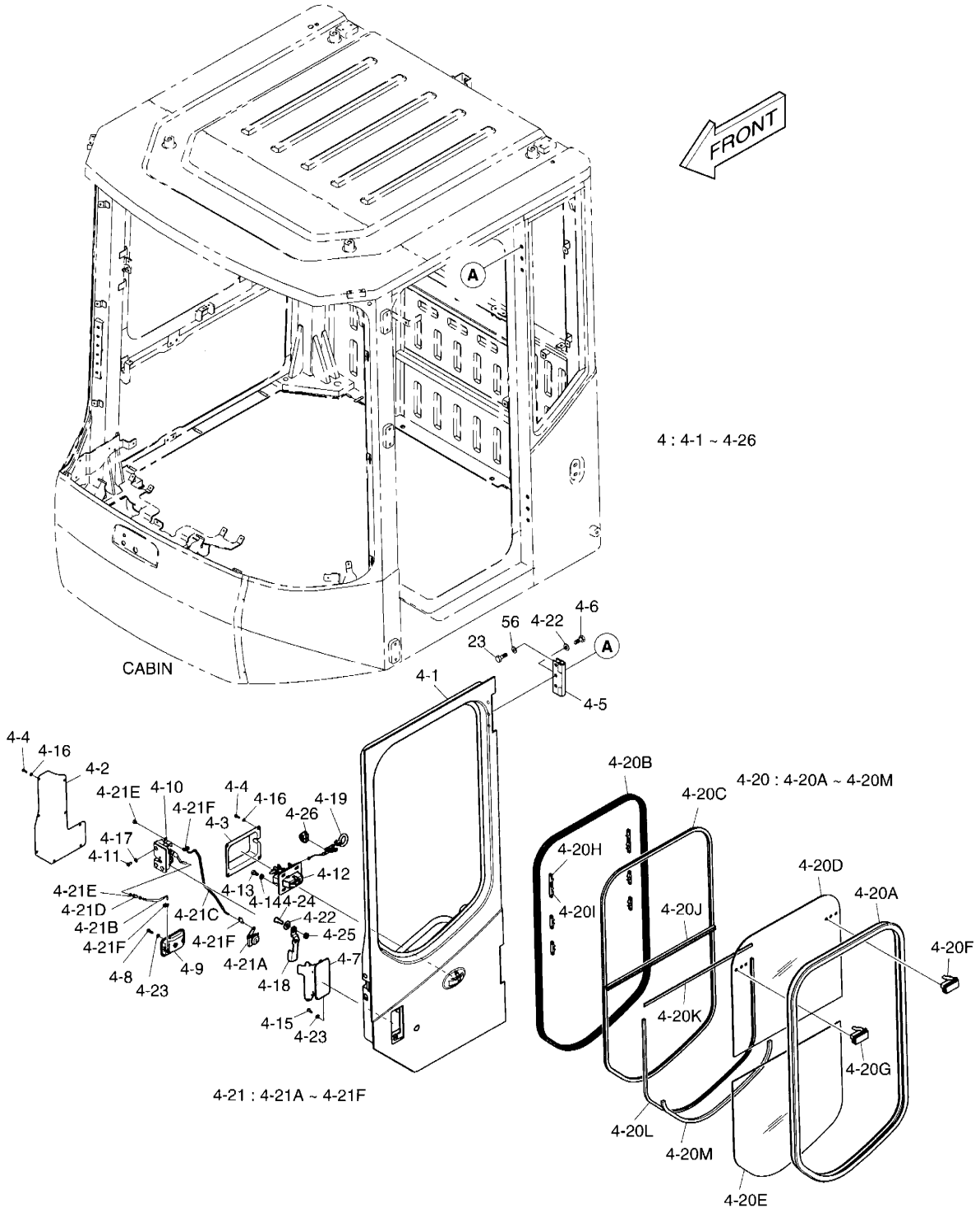

DATE	JUN. 30, 2007
REV. NO.	EXB07-06

Fig. 1260 CABIN(3) - DOOR ASS'Y(L.H) CADRE DE CABINE

Serial No. ;

Key No.	Part No.	Description	Description	Q'ty	S.C	Serial No.	ICA	Replaceable part	
								Part No.	Q'ty
1260-4-21	K1016693	. STAY ASS'Y	. SJOUR	1					
4-21A	K1003900	.. KEY;CYLINDER	.. CLE	1					
4-21B	K1016694	.. STAY	.. SJOUR	1					
4-21C	K1016695	.. STAY	.. SJOUR	1					
4-21D	K1023243	.. HOLDER	.. SUPPORT	1					
4-21E	S4012233	.. NUT	.. ECROU	2					
4-21F	4142-1670	.. HOLLDER	.. SUPPORT	3					
4-22	2114-1898D1	. WASHER	. RONDELLE	7					
4-23	2114-1898D3	. WASHER	. RONDELLE	3					
4-24	K1023241	. PIN;SWING LOCK	. GOUPILLE	1					
4-25	S4012533	. NUT	. ECROU 6 PANS	1					
4-26	K1017019	. GUIDE	. GUIDE	1					
23	2120-2166D2	BOLT	BOULON	6					
56	2114-1898D1	WASHER	CALE	6					

Fig. 1270 CABIN(4) - DOOR ASS'Y(R.H)
CADRE DE CABINE

Serial No. ;

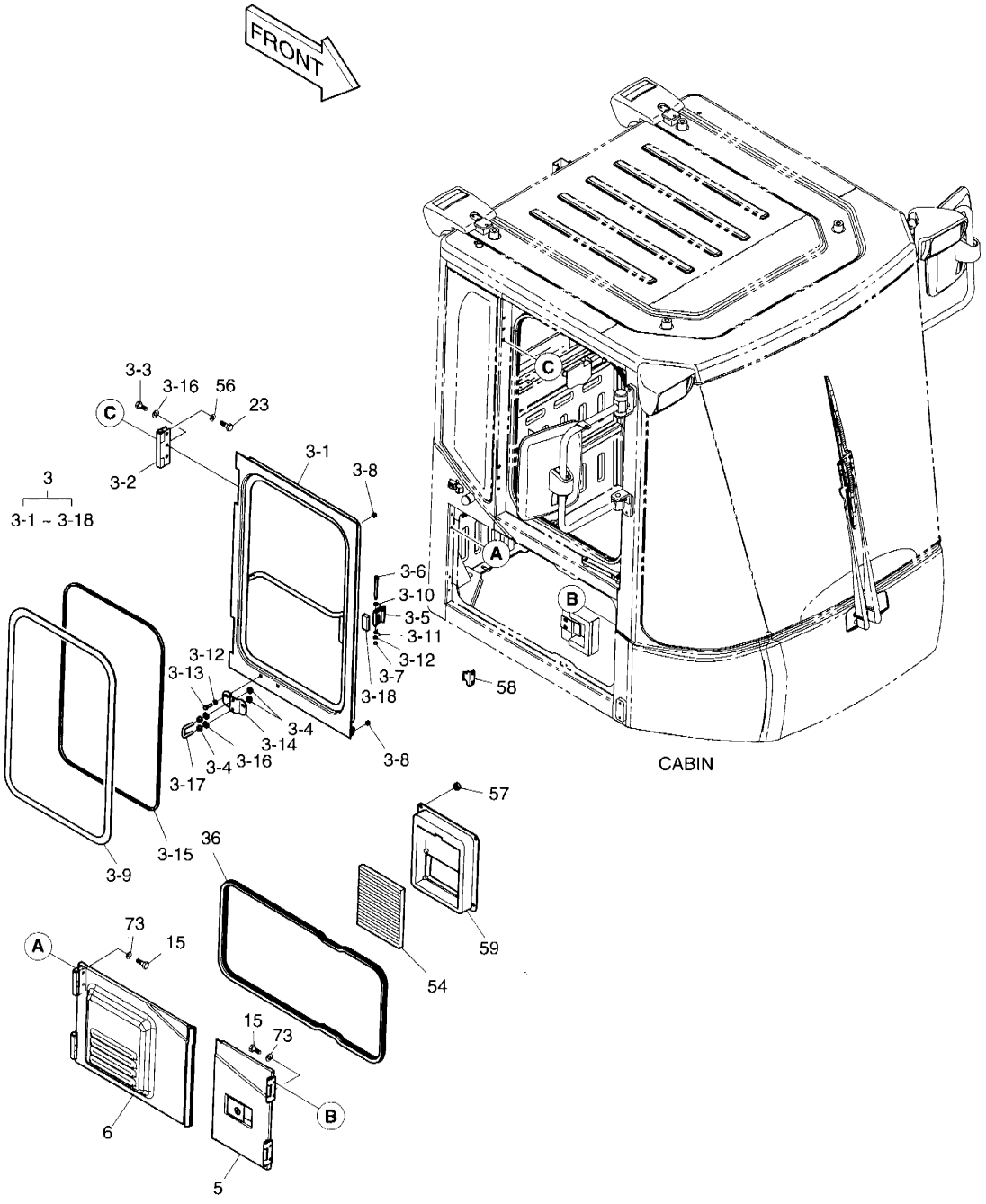

DATE	JUN. 30, 2007
REV. NO.	EXB07-06

Fig. 1270 CABIN(4) - DOOR ASS'Y(R.H) CADRE DE CABINE

Serial No. ;

Key No.	Part No.	Description	Description	Q'ty	S.C	Serial No.	ICA	Replaceable part	
								Part No.	Q'ty
1270--	K1016629A	CABIN ASS'Y	ENSEMBLE CABINE	1		5001-5049	I	K1016629B	1
	K1016629B	**CABIN ASS'Y**	ENSEMBLE CABINE	1		**5050-5078**	I	K1016629C	1
	K1016629C	**CABIN ASS'Y**	ENSEMBLE CABINE	1		**5079-5149**	I	K1016629E	1
	K1016629E	**CABIN ASS'Y**	ENSEMBLE CABINE	1		**5150-**			
3	K1005704B	DOOR ASS'Y(R.H)	ENSEMBLE PORTE	1		5001-5049	I	K1005704C	1
	K1005704C	**DOOR ASS'Y(R.H)**	ENSEMBLE PORTE	1		**5050-5149**	I	K1005704E	1
	K1005704E	**DOOR ASS'Y(R.H)**	ENSEMBLE PORTE	1		**5150-**			
3-1	-	. FRAME;DOOR	. ARMATURE	-	D				
3-2	4171-1111A	. HINGE	. CHARNIRE	2					
3-3	2120-2166D2	. BOLT	. BOULON A 6 PANS	6					
3-4	S4500633	. NUT	. ECROU 6 PANS	4					
3-5	K1010583	. CATCH	. CROCHET	1					
3-6	K1010850A	. PIN	. GOUJON	1					
3-7	S4012533	. NUT	. ECROU 6 PANS	1					
3-8	2161-1246	. STOPPER;RUBBER	. TAQUET D'ARRET	2					
3-9	K1005614A	. GLASS	. VITRE	1					
3-10	K1010851A	. SPRING	. RESSORT	1					
3-11	K1010852A	. SPRING	. RESSORT	1					
3-12	2114-1898D2	. WASHER	. RONDELLE	3					
3-13	S0509253	. BOLT	. BOULON A 6 PANS	2					
3-14	K1005941	. PLATE	. PLAQUE	1					
3-15	K1006467	. PLATE	. PLAQUE	1					
3-16	2114-1898D1	. WASHER	. RONDELLE	8					
3-17	K1006322	. BOLT	. BOULON A 6 PANS	1					
3-18	K1016971	. STOPPER	. ARRET	1		5001-5049	I	K1029785	1
	K1029785	**. STOPPER**	. ARRET	1		**5050-5149**	I	K1039311	1
	K1039311	**. STOPPER**	. ARRET	1		**5150-**			
5	K1005615B	FRONT COVER ASS'Y(R.H)	COUVERCLE	1					
6	K1005946C	REAR COVER ASS'Y(R.H)	COUVERCLE	1					
15	2120-2166D6	BOLT	BOULON	8					
23	2120-2166D2	BOLT	BOULON	6					
36	K1005592	TRIM	CANAL	1					
54	471-00107	FILTER	FILTRE	1					
56	2114-1898D1	WASHER	CALE	6					
57	132-00030	GRIP	ECROU	4					
58	K1010580	PLATE	PLAQUE	1					
59	K1005605A	COVER	COUVERCLE	1					
73	2114-1898D3	WASHER	CALE	8					

DATE	JUN. 30, 2007
REV.NO.	EXB07-06

Fig. 1280 CABIN(5) - GLASS VERRE DE CABINE

Serial No. ;

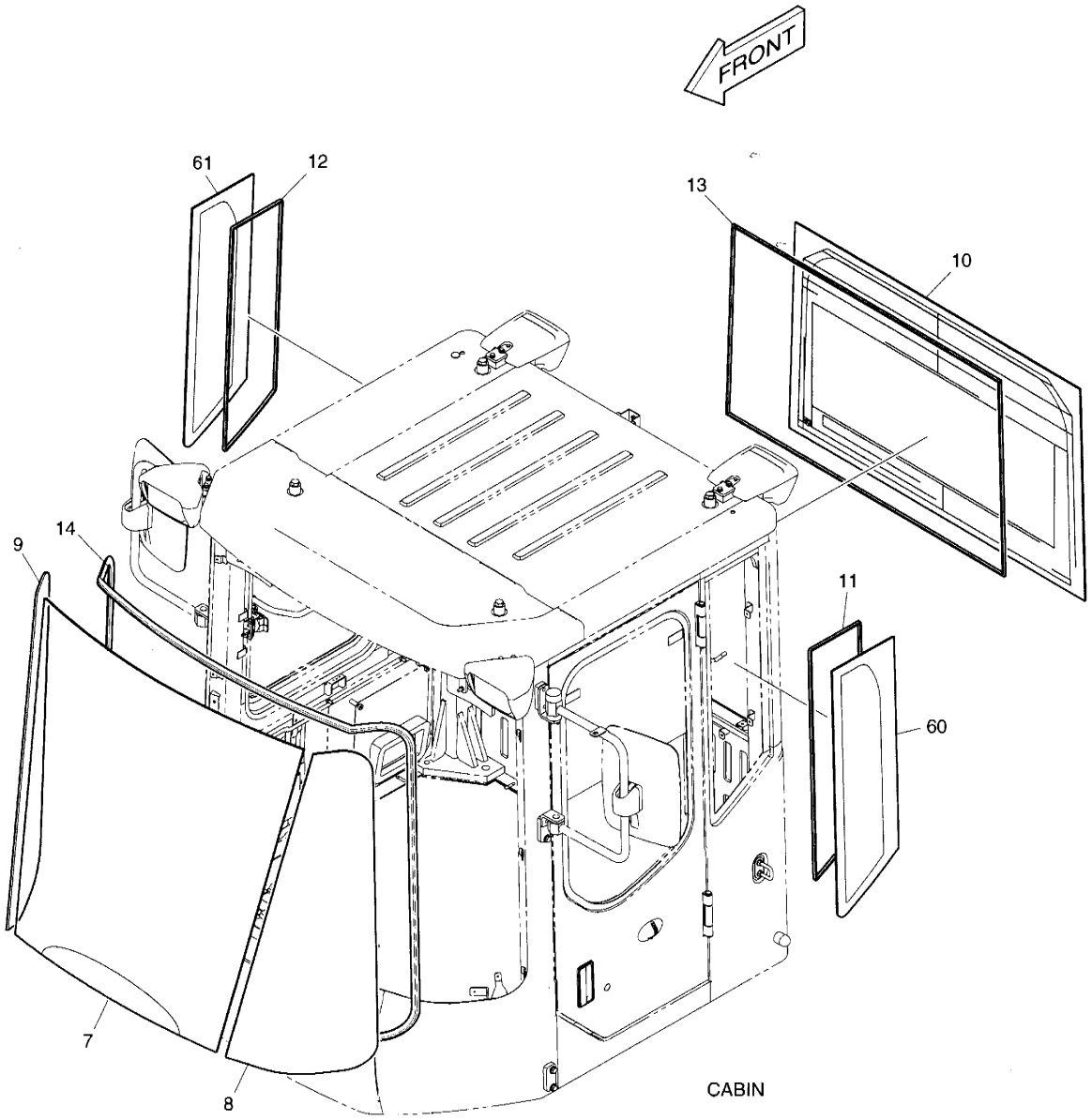

DATE	JUN. 30, 2007
REV. NO.	EXB07-06

Fig. 1280 CABIN(5) - GLASS VERRE DE CABINE

Serial No. ;

Key No.	Part No.	Description	Description	Q'ty	S.C	Serial No.	ICA	Replaceable part	
								Part No.	Q'ty
1280--	K1016629A	CABIN ASS'Y	ENSEMBLE CABINE	1		5001–5049	I	K1016629B	1
	K1016629B	**CABIN ASS'Y**	ENSEMBLE CABINE	1		**5050–5078**	I	K1016629C	1
	K1016629C	**CABIN ASS'Y**	ENSEMBLE CABINE	1		**5079–5149**	I	K1016629E	1
	K1016629E	**CABIN ASS'Y**	ENSEMBLE CABINE	1		**5150–**			
7	K1016696	GLASS;FRONT	VITRE	1					
8	K1005641	GLASS;FRONT SIDE (L.H)	VITRE	1					
9	K1005642	GLASS;FRONT SIDE (R.H)	VITRE	1					
10	K1016697	GLASS;REAR	VITRE	1					
11	K1006323A	FOAM;REAR SIDE (L.H)	EPONGE	1					
12	K1006324A	FOAM;REAR SIDE (R.H)	EPONGE	1					
13	K1016698	FOAM;REAR	EPONGE	1					
14	K1016699	FOAM;FRONT	EPONGE	1					
60	K1005601A	GLASS;REAR SIDE (L.H)	VITRE	1		5001–5078	I	K1005601B	1
	K1005601B	**GLASS;REAR SIDE (L.H)**	VITRE	1		**5079–**			
61	K1005602A	GLASS;REAR SIDE (R.H)	VITRE	1		5001–5078	I	K1005602B	1
	K1005602B	**GLASS;REAR SIDE (R.H)**	VITRE	1		**5079–**			

DATE	JUN. 30, 2007
REV.NO.	EXB07-06

Fig. 1290 CONTROL STAND
CONSOLE DE COMMANDE

Serial No. ;

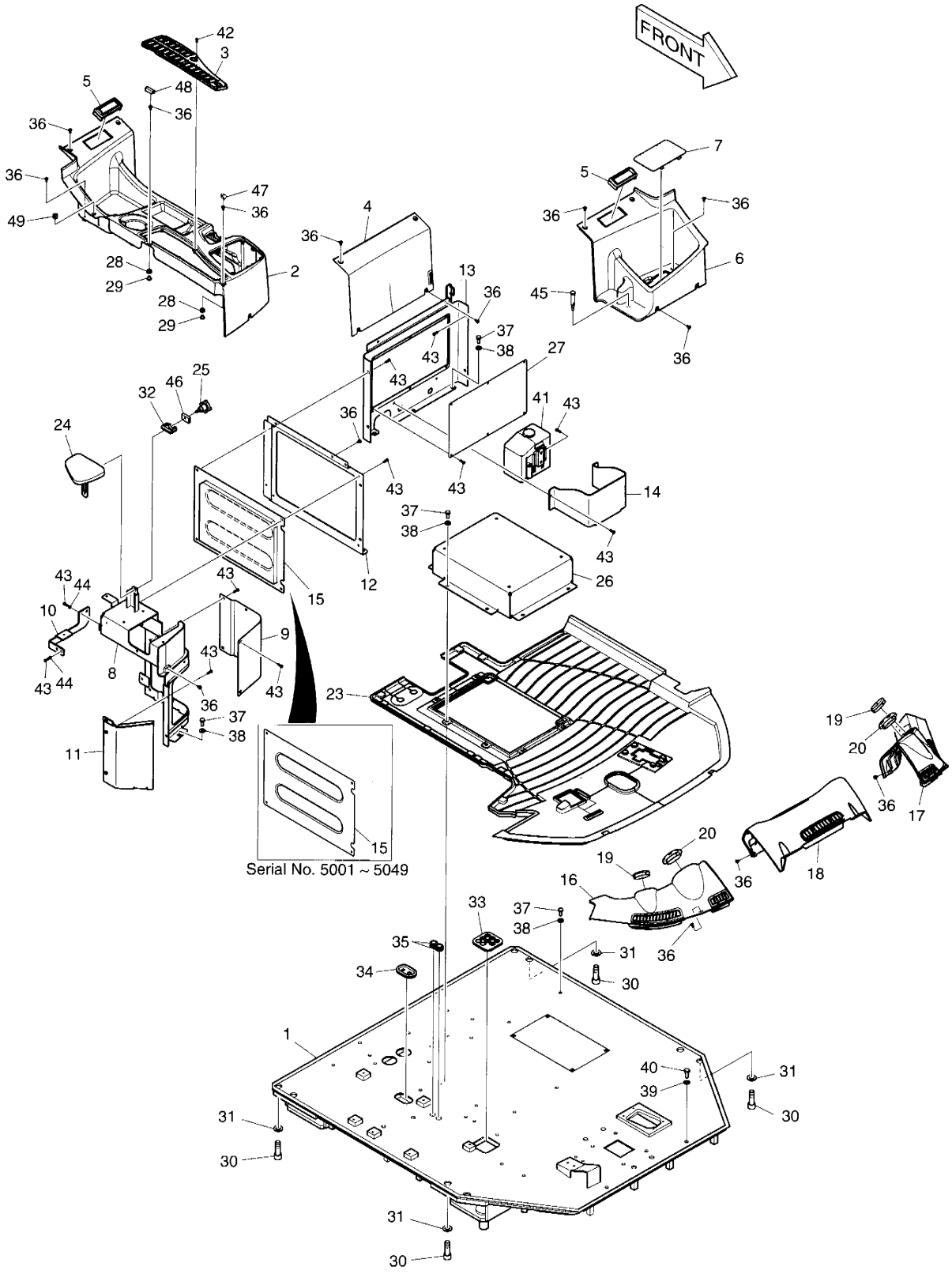

DATE	JUN. 30, 2007
REV. NO.	EXB07-06

Fig. 1290 CONTROL STAND / CONSOLE DE COMMANDE

Serial No. ;

Key No.	Part No.	Description	Description	Q'ty	S.C	Serial No.	ICA	Replaceable part	
								Part No.	Q'ty
-0--	**K1016711C**	**CONTROL STAND - MONO**	CONSOLE DE COMMANDE	-	D				
1	K1016712A	PLATE;FLOOR	PLAQUE PLANCHER	1		5001–5094	I	K1016712B	1
	K1016712B	**PLATE;FLOOR**	PLAQUE PLANCHER	1		**5095–**			
2	K1016736	STAND;FRONT (R.H)	COUVERCLE	1					
3	K1016739	COVER;SWITCH	COUVERCLE	1		5001–5094	I	K1016739A	1
	K1016739A	**COVER;SWITCH**	COUVERCLE	1		**5095–**			
4	K1016740	COVER;CENTER	COUVERCLE	1					
5	K1008877	NOZZLE	INJECTEUR	2					
6	K1005987A	COVER;STAND (L.H)	COUVERCLE	1					
7	K1005989	COVER;FUSE BOX	COUVERCLE	1					
8	K1016741	SUPPORT;FRONT (R.H)	SUPPORT	1					
9	K1016752	PLATE	PLAQUE	1					
10	K1006498A	PLATE;SUPPORT	PLAQUE SUPPORT	1					
11	K1006747B	BRACKET;FRT (R.H)	SUPPORT	1					
12	K1016755	SUPPORT;BTM REAR (R.H)	SUPPORT	1					
13	K1016764	SUPPORT;BTM REAR CENTER	SUPPORT	1					
14	K1029007	CASE;WASHER	CARTER	1					
15	K1006006	COVER	COUVERCLE	1		5001–5049	I	K1029814	1
	K1029814	**COVER**	COUVERCLE	1		**5050–**			
16	K1006025A	DASHBOARD (R.H)	TABLEAU DE BORD (R.H)	1					
17	K1006030A	DASHBOARD (L.H)	TABLEAU DE BORD (L.H)	1					
18	K1016771A	COVER;CENTER	COUVERCLE	1					
19	K1006041	NOZZLE;VENT SMALL	BEC	2					
20	K1006042	NOZZLE;VENT LARGE	BEC	2					
23	K1016798	MAT	LA T.A.O.	1					
24	K1006330	ARMREST	REPOS DE BRAS	1					
25	K1006333	KNOB;ARM REST	BOUTON	1					
26	K1016799	SUPPORT	SUPPORT	1					
27	K1016805	COVER	COUVERCLE	1					
28	K1005977	BUSH	BUSH	2					
29	K1005978	BUSH	BUSH	2					
30	S2227975	BOLT	BOULON	8					
31	2114-9012A	WASHER	CALE	8					
32	K1007004	PLATE	PLAQUE	1					
33	K1006094	PLATE	PLAQUE	1					
34	K1006095	PLATE	PLAQUE	1					
35	K1006096	PLATE	PLAQUE	2					
36	2120-2166D10	SCREW	VIS	29					

DATE	JUN. 30, 2007
REV.NO.	EXB07-06

Fig. 1290 CONTROL STAND
CONSOLE DE COMMANDE

Serial No. ;

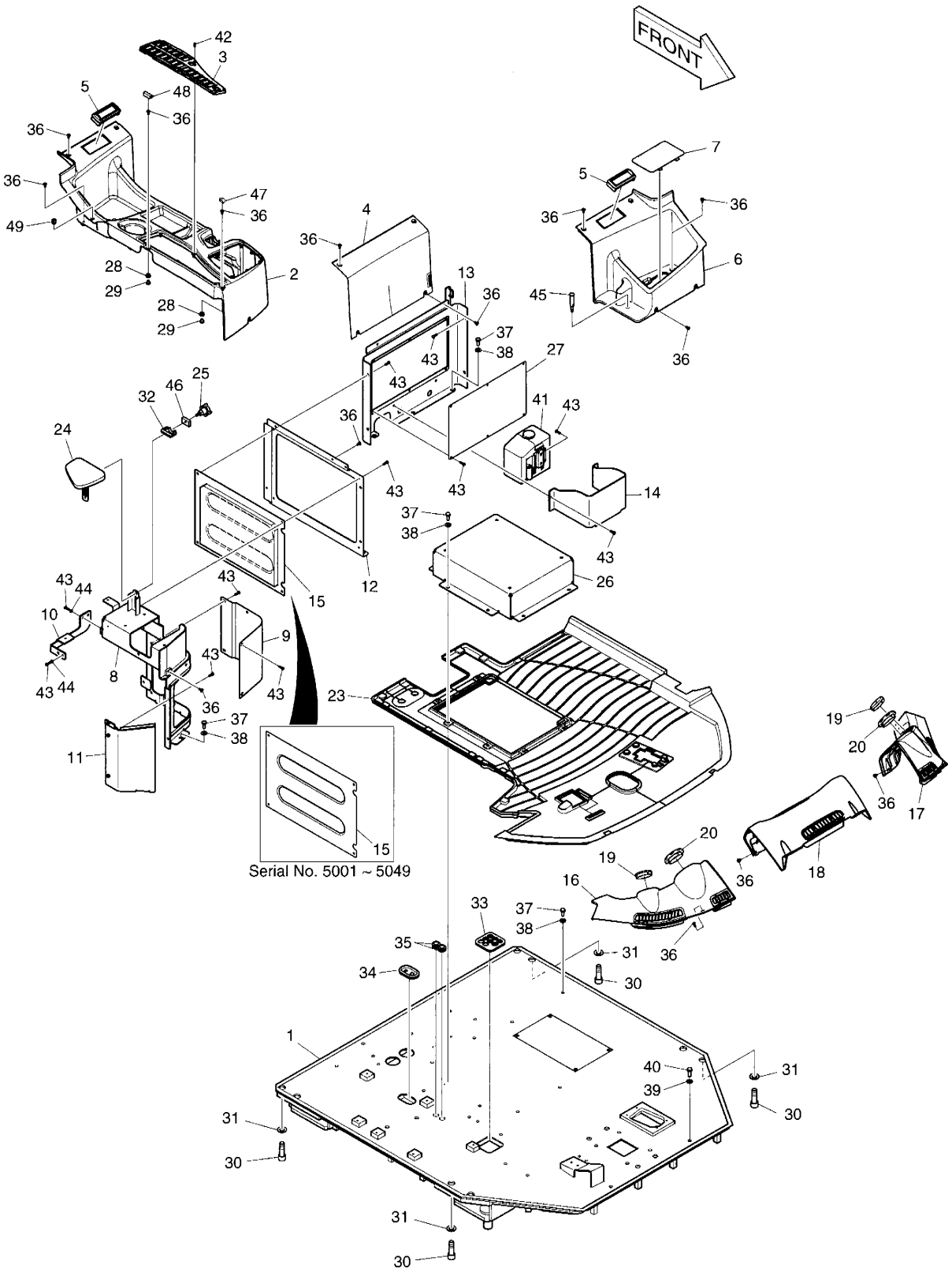

DATE	JUN. 30, 2007
REV. NO.	EXB07-06

Fig. 1290 CONTROL STAND
CONSOLE DE COMMANDE

Serial No. ;

Key No.	Part No.	Description	Description	Q'ty	S.C	Serial No.	ICA	Replaceable part	
								Part No.	Q'ty
290-37	2120-2166D2	BOLT	BOULON	19					
38	2114-1898D1	WASHER	CALE	20					
39	2114-1898D6	WASHER	CALE	4					
40	2120-2166D32	BOLT	BOULON	4					
41	4916-9006	WASHER	CALE	1					
42	2120-2166D26	SCREW	VIS	6					
43	2120-2166D28	BOLT	BOULON	30					
44	2114-1898D3	WASHER	CALE	30					
45	K1011751A	BAR	TIGE	1					
46	K1009798	PLATE	PLAQUE	1					
47	K1018857	CAP	BOUCHON	1					
48	K1018858	CAP	BOUCHON	1					
49	K1018334	GUIDE	GUIDE	1					

DATE	JUN. 30, 2007
REV.NO.	EXB07-06

Fig. 1300 JOYSTICK MOUNTING - 3rd LEVER SUPPORT DE MANCHE

Serial No. ;

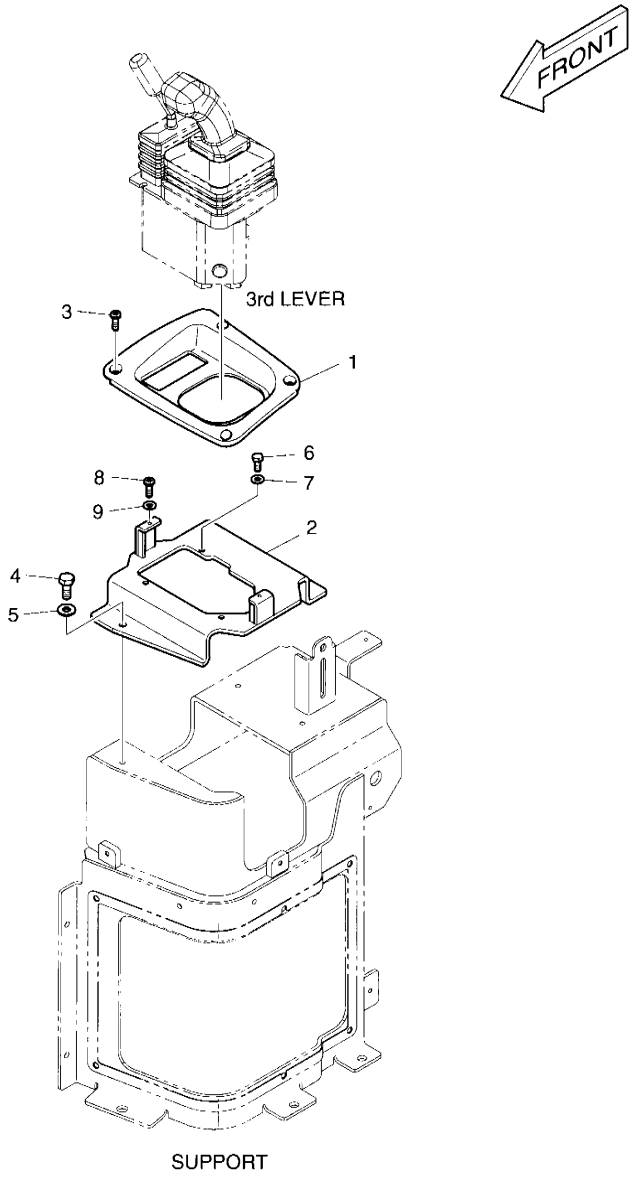

DATE	JUN. 30, 2007
REV. NO.	EXB07-06

Fig. 1300 JOYSTICK MOUNTING - 3rd LEVER SUPPORT DE MANCHE

Serial No. ;

Key No.	Part No.	Description	Description	Q'ty	S.C	Serial No.	ICA	Replaceable part	
								Part No.	Q'ty
1300--	**K1010016B**	**LEVER;FINGER 2-SPOOL**	LEVIER	-	D				
1	K1006098	COVER;LEVER	COUVERCLE	1		5001-5094	I	K1006098A	1
	K1006098A	**COVER;LEVER**	COUVERCLE	1		**5095-**			
2	K1006735B	BRACKET	SUPPORT	1					
3	2120-2166D26	SCREW	VIS	4					
4	2120-2166D5	BOLT	BOULON	3					
5	2114-1898D2	WASHER	CALE	3					
6	2120-2166D28	BOLT	BOULON	4					
7	2114-1898D3	WASHER	CALE	4					
8	2120-2166D8	BOLT	BOULON	2					
9	2114-1898D4	WASHER	CALE	2					

DATE	JUN. 30, 2007
REV.NO.	EXB07-06

Fig. 1310 JOYSTICK MOUNTING - FINGER LEVER SUPPORT DE MANCHE

Serial No. ;

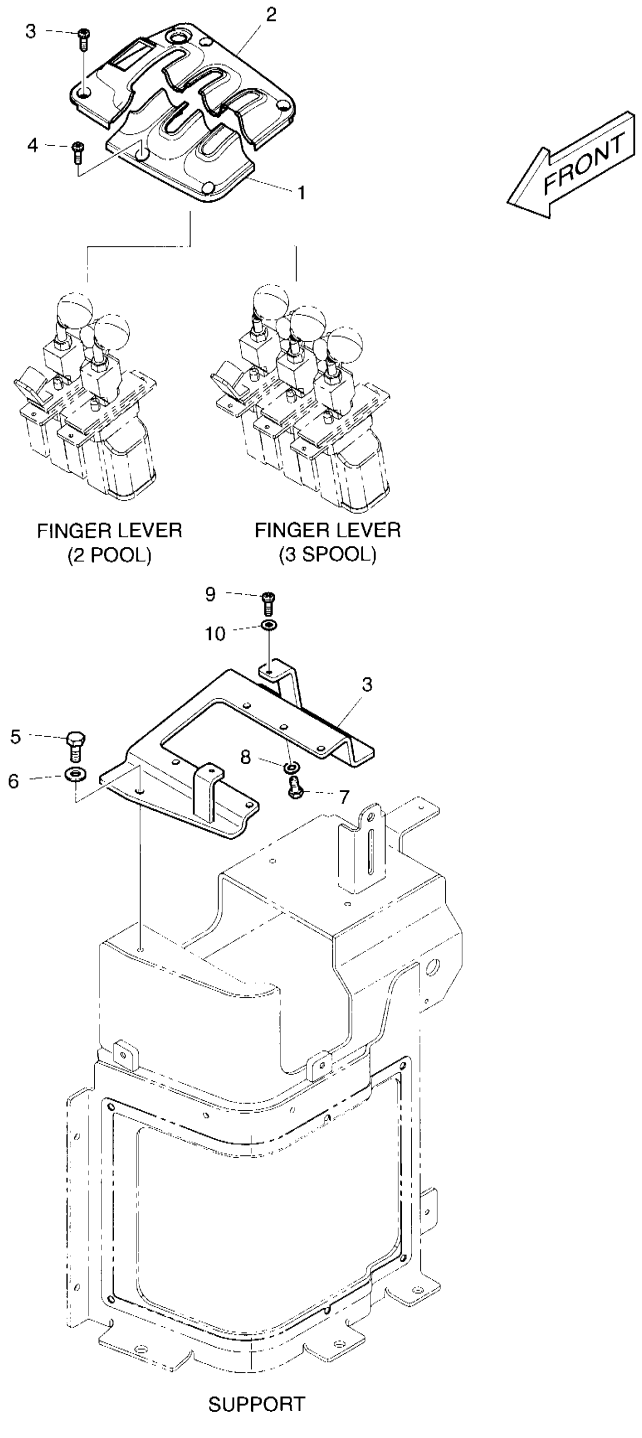

DATE	JUN. 30, 2007
REV. NO.	EXB07-06

Fig. 1310 JOYSTICK MOUNTING - FINGER LEVER SUPPORT DE MANCHE

Serial No. ;

Key No.	Part No.	Description	Description	Q'ty	S.C	Serial No.	ICA	Replaceable part	
								Part No.	Q'ty
1310--	**K1010015A**	**LEVER;FINGER 3-SPOOL**	LEVIER	-	D				
1	K1006100	COVER	COUVERCLE	1		5001–5094	I	K1006100A	1
	K1006100A	**COVER**	COUVERCLE	1		**5095–**			
2	K1006101	COVER	COUVERCLE	1		5001–5094	I	K1006101A	1
	K1006101A	**COVER**	COUVERCLE	1		**5095–**			
3	K1006743A	BRACKET;FINGER TIP	SUPPORT	1					
4	2120-2166D26	SCREW	VIS	6					
5	2120-2166D5	BOLT	BOULON	3					
6	2114-1898D2	WASHER	CALE	3					
7	2120-2166D28	BOLT	BOULON	4					
8	2114-1898D3	WASHER	CALE	4					
9	2120-2166D8	SCREW	VIS	2					
10	2114-1898D4	WASHER	CALE	2					

DATE	NOV. 24, 2006
1st EDITION	

Fig. 1320 SEAT ASS'Y- MECHANICAL SUSPENSE SIEGE

Serial No. ;

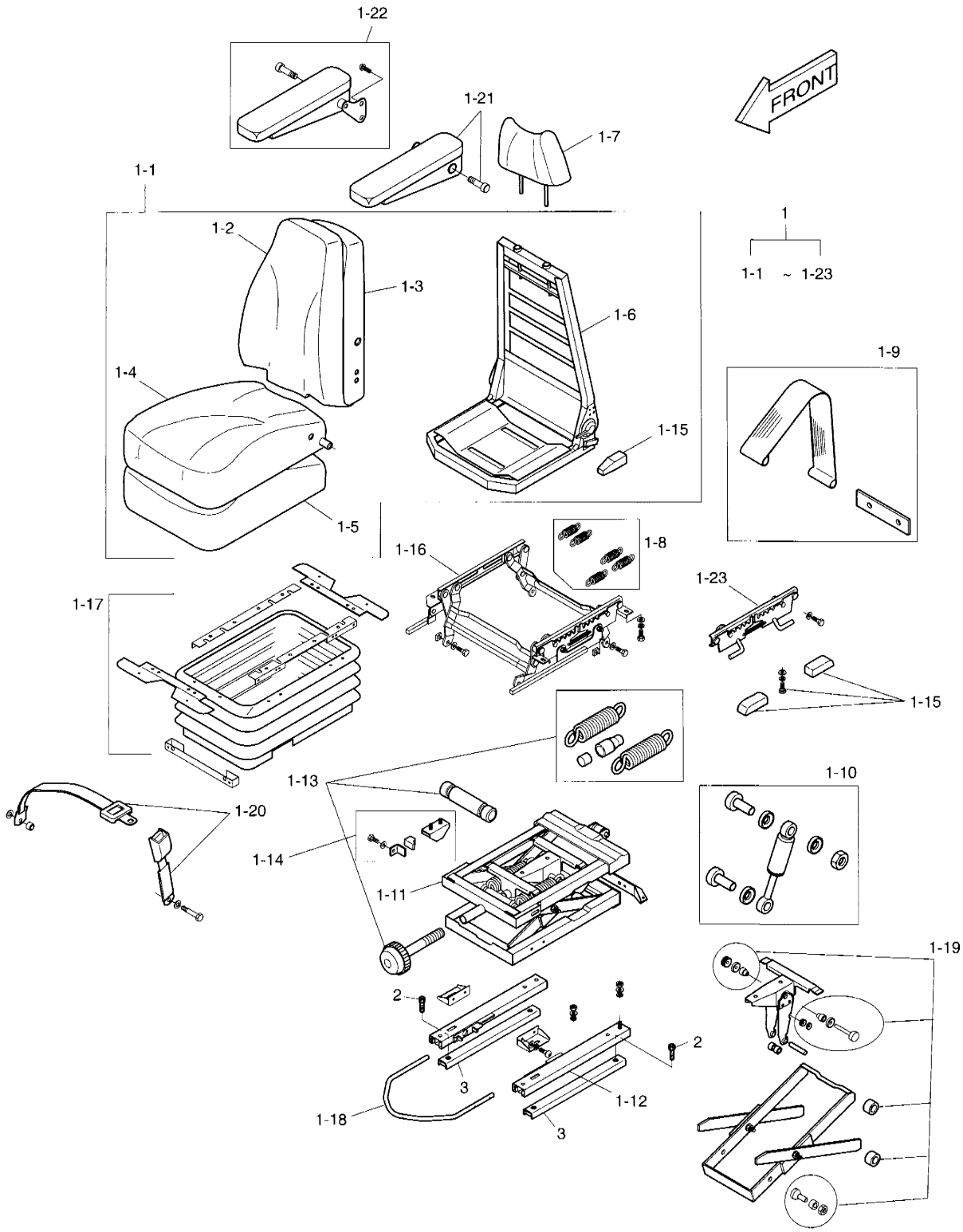

DATE	NOV. 24, 2006
1st EDITION	

Fig. 1320 SEAT ASS'Y- MECHANICAL SUSPENSE SIEGE

Serial No. ;

Key No.	Part No.	Description	Description	Q'ty	S.C	Serial No.	ICA	Replaceable part	
								Part No.	Q'ty
1320--	K1006125A	SEAT ASS'Y-MECHANICAL	ENSEMBLE SIEGE	-	D				
1	4901-9036	SEAT	SIEGE	1					
1-1	2.161-00017	. UPPER ASS'Y	. SIEGE	1					
1-2	2.430-00274	. BACK COVER	. COUVERCLE	1					
1-3	2.161-00013	. BACK FOAM	. EPONGE	1					
1-4	1.430-00214	. SEAT COVER	. COUVERCLE	1					
1-5	1.161-00013	. SEAT FOAM	. EPONGE	1					
1-6	1.604-00001	. FRAME	. CHASSIS	1					
1-7	2.429-00040	. HEAD REST	. TETE DE VERIN	1					
1-8	2.131-00382	. SPRING;HEIGHT RISER	. RESSORT	1					
1-9	2.106-00005	. TETHER BELT	. COURROIE	1					
1-10	2.161-00011	. DAMPER ASS'Y	. DAMPER	1					
1-11	2.300-00002	. SUSPENSION ASS'Y	. SUSPENSION	1					
1-12	2.195-00020	. FORE & AFT ADJUSTER	. ADJUSTEUR	1					
1-13	2.151-00001	. WEIGHT ADJUSTER	. ADJUSTEUR	1					
1-14	2.416-00037	. UPSTOP/BUMPSTOP	. UPSTOP/BUMPSTOP	1					
1-15	2.172-00001	. HANDLE	. POIGNEE	1					
1-16	2.131-00383	. HEIGHT RISER SPRING	. RESSORT	1					
1-17	2.430-00385	. SUSPENSION COVER	. COUVERCLE DE	1					
1-18	2.172-00012	. SLIDE RAIL HANDLE	. POIGNEE	1					
1-19	2.109-00088	. BEARING KIT	. PALIER	1					
1-20	1.901-00002	. SEAT BELT	. COURROIE	1					
1-21	2.197-00024	. ARM REST-L.H.	. REPOSE-PIED	1					
1-22	2.197-00025	. ARM REST-R.H.	. REPOSE-PIED	1					
1-23	2.125-00001	. HEIGHT RISER LATCH	. LOQUET	1					
2	S2209466	BOLT	BOULON	4					
3	K1006505A	BRACKET;CASE	SUPPORT	2					

DATE	NOV. 24, 2006
1st EDITION	

Fig. 1330 DUCT ASS'Y CONDUIT

Serial No. ;

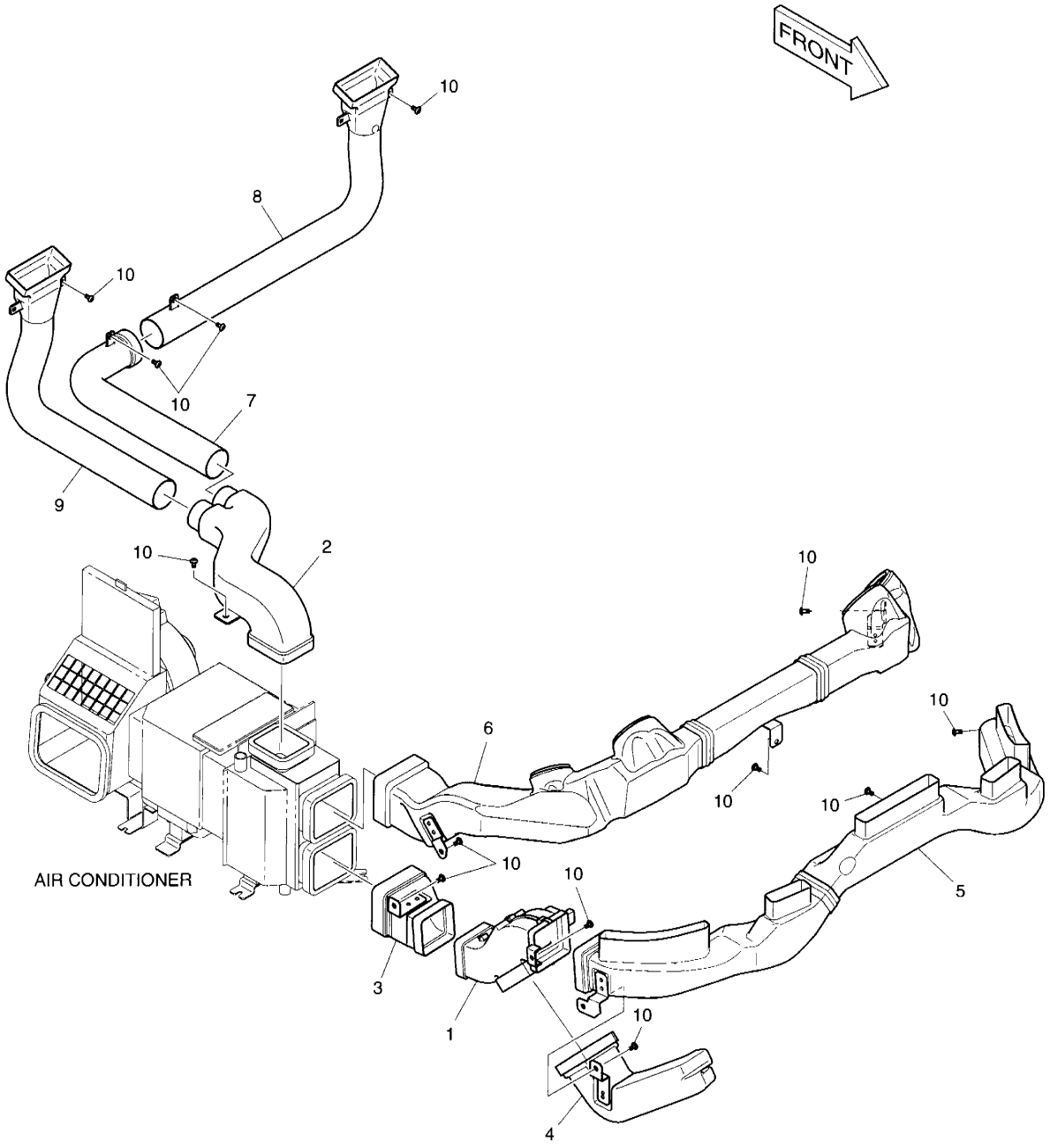

DATE	NOV. 24, 2006
1st EDITION	

Fig. 1330 DUCT ASS'Y CONDUIT

Serial No. ;

Key No.	Part No.	Description	Description	Q'ty	S.C	Serial No.	ICA	Replaceable part	
								Part No.	Q'ty
1330--	K1016782A	DUCT ASS'Y	CONDUIT	-	D				
1	2213-9002	DUCT;FOOT	COUVERCLE	1					
2	K1010160	DUCT	CHAPEAU	1					
3	K1006058	DUCT;FOOT DEF.	CONDUIT DE PIED	1					
4	K1006067A	DUCT;FOOT	COUVERCLE	1					
5	K1016783	DUCT;FOOT DEF. FRONT	CONDUIT DE PIED	1					
6	K1016787A	DUCT;VENT FRONT	CONDUIT	1					
7	K1006081	DUCT;VENT REAR1 (L.H)	CONDUIT	1					
8	K1018856	DUCT;VENT REAR2 (L.H)	CONDUIT	1					
9	K1006083	DUCT;VENT REAR (R.H)	CONDUIT	1					
10	2120-2166D10	BOLT	BOULON	15					

DATE	JUN. 30, 2007
REV.NO.	EXB07-06

Fig. 1340 STEERING ASS'Y
ENSEMBLE DIRECTION

Serial No. ;

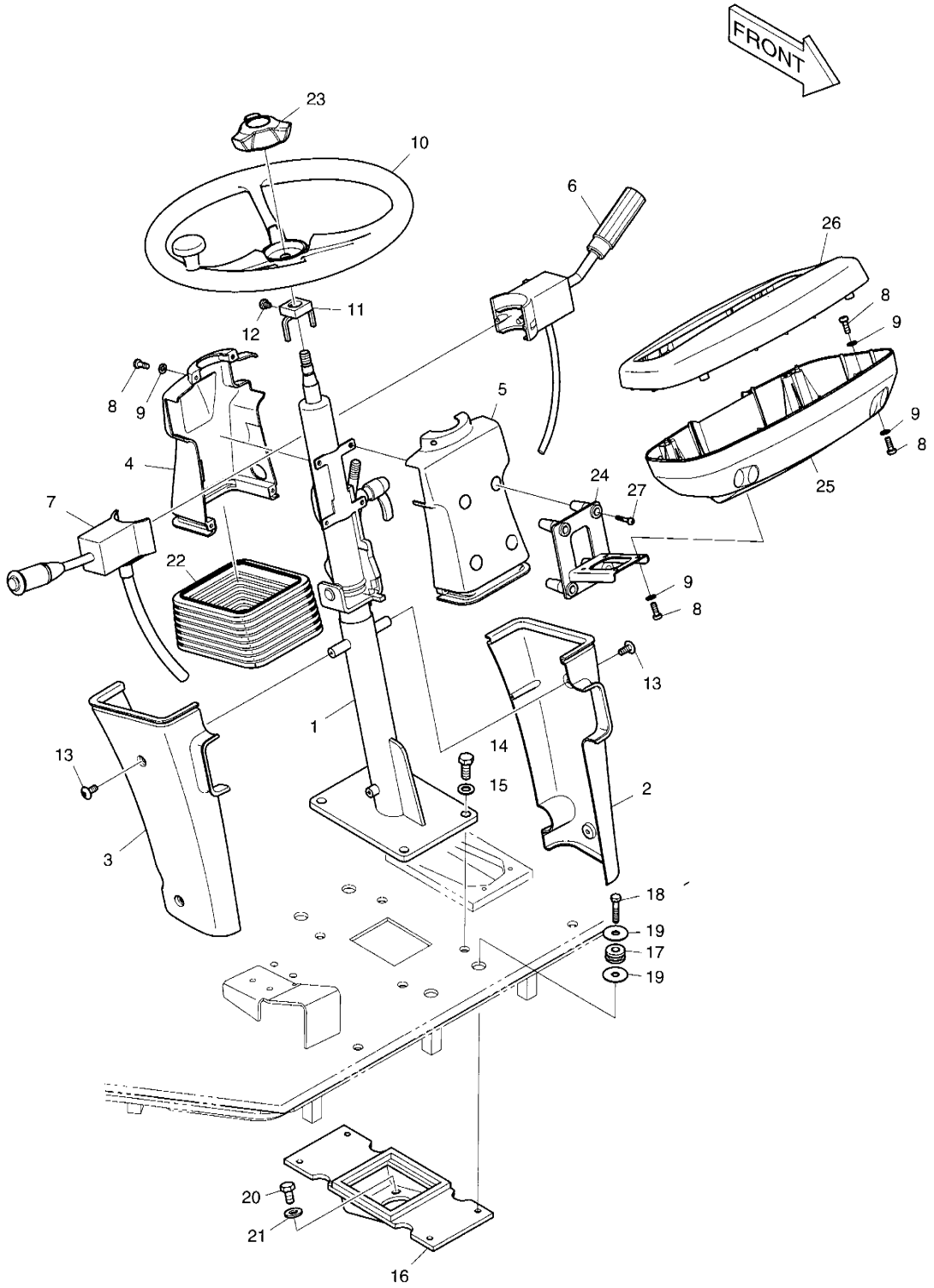

DATE	JUN. 30, 2007
REV. NO.	EXB07-06

Fig. 1340 STEERING ASS'Y ENSEMBLE DIRECTION

Serial No. ;

Key No.	Part No.	Description	Description	Q'ty	S.C	Serial No.	ICA	Replaceable part	
								Part No.	Q'ty
1340--	**K1016774C**	**STEERING COLUMN ASS'Y**	CANALISATION	-	D				
1	K1027634	COLUMN	PILIER	1					
2	K1006049	COVER	COUVERCLE	1					
3	K1006050	COVER	COUVERCLE	1					
4	K1006053	COVER	COUVERCLE	1					
5	K1006054	COVER	COUVERCLE	1					
6	4549-6072	SWITCH;SELECTOR (L.H)	SELECTEUR	1					
7	4549-9418	SWITCH;COLUMN (R.H)	INTERRUPTEUR	1					
8	2120-2166D8	BOLT	BOULON	14					
9	2114-1898D4	WASHER	CALE	18					
10	K1013184	WHEEL	VOLANT	1					
11	4142-1160C	STRIKER	FRAPPER	1					
12	S0504253	BOLT	BOULON	1					
13	2120-2166D10	SCREW	VIS	4					
14	2120-2166D32	BOLT	BOULON	4					
15	2114-1898D6	WASHER	CALE	4					
16	K1007019B	PLATE	PLAQUE	1					
17	4161-9036	MOUNT;FLEX.	ENSEMBLE SUPPORT DE	4					
18	2120-2166D29	BOLT	BOULON	4					
19	2114-1898D16	WASHER	CALE	8					
20	2120-2166D4	BOLT	BOULON	4					
21	2114-1898D1	WASHER	CALE	4					
22	K1013263	BOOT	GAINE DE PROTECTION	1					
23	K1013279	CAP;OPERATOR	CHAPEAU	1					
24	K1016776	COVER	COUVERCLE	1					
25	K1016777	COVER	COUVERCLE	1		5001–5049	I	K1016777A	1
	K1016777A	**COVER**	COUVERCLE	1		**5050–**			
26	K1016778	COVER	COUVERCLE	1		5001–5094	I	K1016778A	1
	K1016778A	**COVER**	COUVERCLE	1		**5095–**			
27	2120-2166D15	BOLT	BOULON	4					

DATE	JUN. 30, 2007
REV.NO.	EXB07-06

Fig. 1350 COUNTER WEIGHT & REAR LAMP
CONTRE-POIDES ET COFFRE A BATTERIE

Serial No. ;

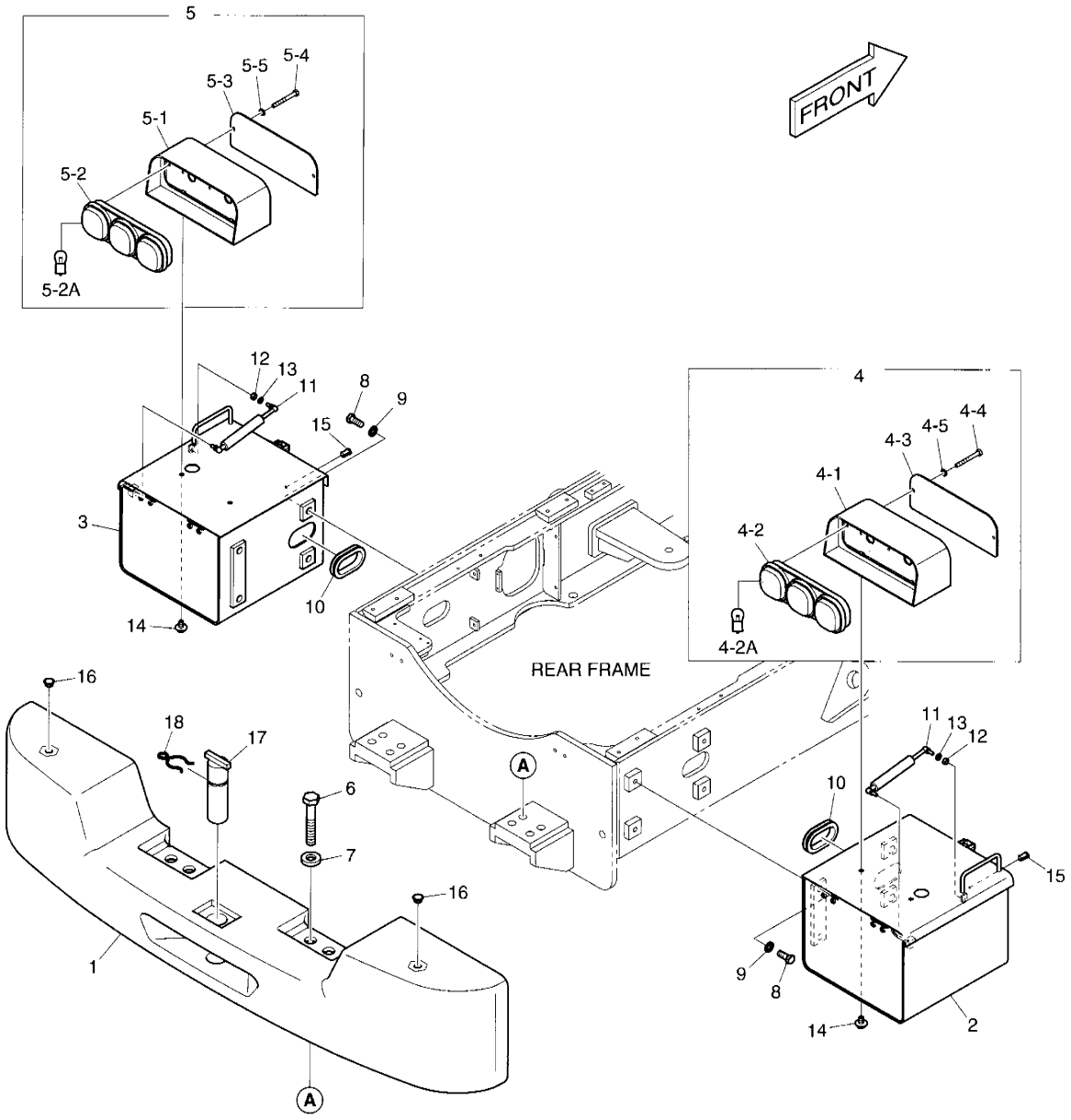

DATE	JUN. 30, 2007
REV. NO.	EXB07-06

Fig. 1350 COUNTER WEIGHT & REAR LAMP
CONTRE-POIDES ET COFFRE A BATTERIE

Serial No. ;

Key No.	Part No.	Description	Description	Q'ty	S.C	Serial No.	ICA	Replaceable part	
								Part No.	Q'ty
1000--	**K1018852C**	**COUNTER WEIGHT & REAR**	CONTRE-POIDES ET	-	D				
1	K1018851A	COUNTER WEIGHT	CONTRE- POIDS	1					
2	K1014190A	BOX;BATTERY	BOITE	1		5001–5099	I	K1014190B	1
	K1014190B	**BOX;BATTERY**	BOITE	1		**5100–**			
3	K1014191	BOX;BATTERY	BOITE	1		5001–5099	I	K1014191A	1
	K1014191A	**BOX;BATTERY**	BOITE	1		**5100–**			
4	K1003555A	LAMP;REAR COMBI. (R.H)	LAMPE	1					
4-1	K1003557A	. BRACKET	. SUPPORT	1					
4-2	K1003561	. LAMP	. LAMPE	1					
4-2A	515-00015	.. BULB	.. AMPOULE	2					
4-3	K1003559A	. PLATE	. PLAQUE	1					
4-4	S0556766	. BOLT	. BOULON A 6 PANS	2					
4-5	S5102503	. WASHER;SPRING	. RONDELLE ELASTIQUE	2					
5	K1003556A	LAMP;REAR COMBI. (L.H)	LAMPE	1					
5-1	K1003557A	. BRACKET	. SUPPORT	1					
5-2	K1003561	. LAMP	. LAMPE	1					
5-2A	515-00015	.. BULB	.. AMPOULE	2					
5-3	K1003559A	. PLATE	. PLAQUE	1					
5-4	S0556766	. BOLT	. BOULON A 6 PANS	2					
5-5	S5102503	. WASHER;SPRING	. RONDELLE ELASTIQUE	2					
6	DS0002272	BOLT	BOULON	4					
7	2114-1370	WASHER	RONDELLE	4					
8	DS0002273	BOLT	BOULON	8					
9	2114-1058D2	WASHER	RONDELLE	8					
10	2160-1201D12	BUSHING;RUBBER	DOUILLE EN CAOUTCHOUC	2					
11	DS1001065	SPRING;GAS	AMORTISSEUR	2					
12	S4012533	NUT	ECROU	2					
13	S5102503	WASHER;SPRING	RONDELLE ELASTIQUE	2					
14	DS0025014	BOLT	BOULON	4					
15	K1004529	CYLINDER KEY	CYLINDRE	2					
16	K1004331	CAP	CHAPEAU	2					
17	K1014299	PIN	GOUPILLE	1					
18	124-00017	CLIP	AGRAFE	1					

DATE	NOV. 24, 2006
1st EDITION	

Fig. 1360 BAFFLE ASS'Y DEROUTTER

Serial No. ;

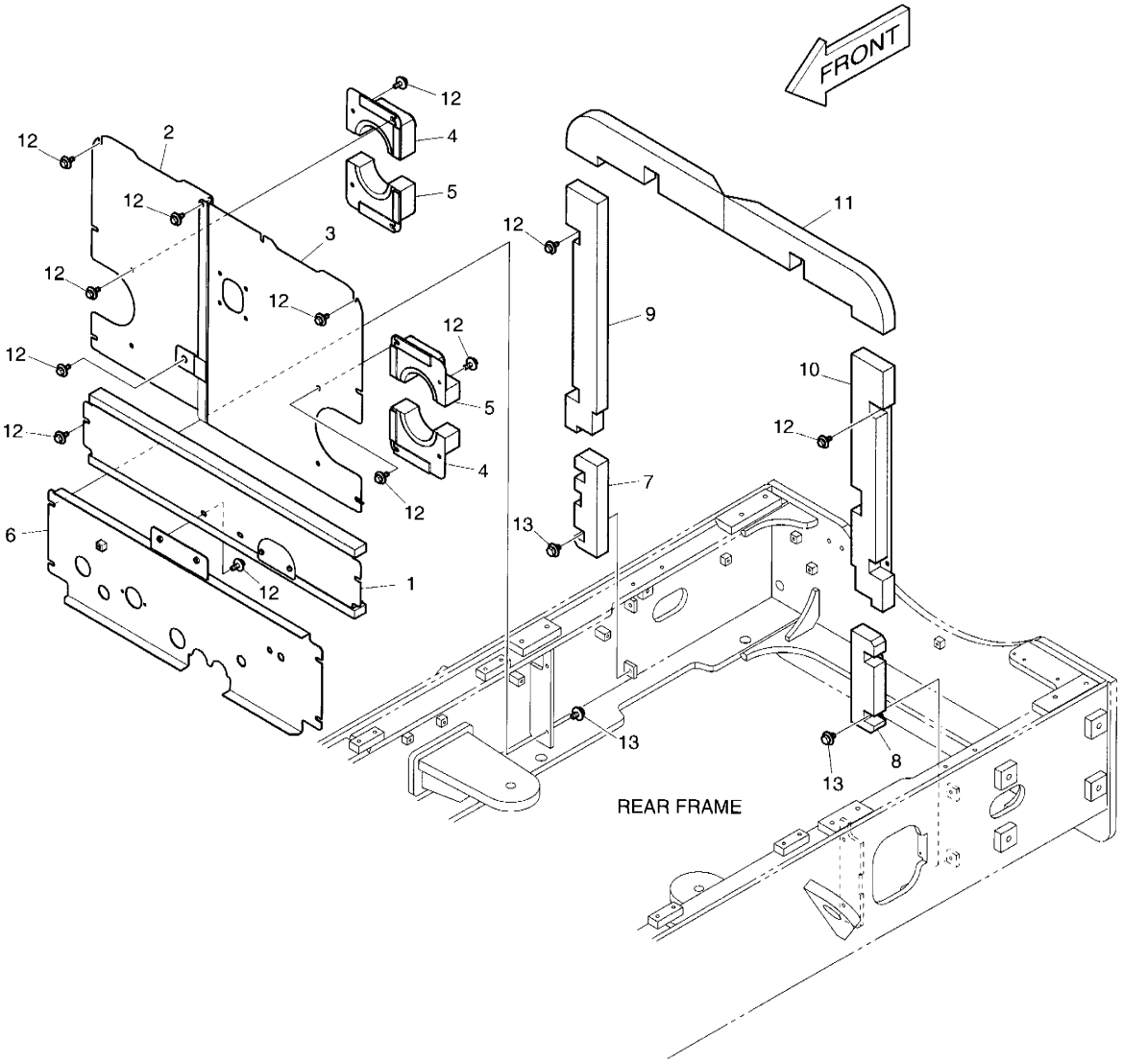

DATE	NOV. 24, 2006
1st EDITION	

Fig. 1360 BAFFLE ASS'Y DEROUTTER

Serial No. ;

Key No.	Part No.	Description	Description	Q'ty	S.C	Serial No.	ICA	Replaceable part	
								Part No.	Q'ty
30--	K1018986B	BAFFLE ASS'Y	CLOISON	-	D				
1	K1018980B	COVER;BAFFLE	COUVERCLE	1					
2	K1018987A	COVER;BAFFLE	COUVERCLE	1					
3	K1018988A	COVER;BAFFLE	COUVERCLE	1					
4	K1018989A	COVER;BAFFLE	COUVERCLE	2					
5	K1018997A	COVER;BAFFLE	COUVERCLE	2					
6	K1017815B	COVER;BAFFLE	COUVERCLE	1					
7	K1017816	BAFFLE	CLOISON	1					
8	K1017817	BAFFLE	CLOISON	1					
9	K1019036	BAFFLE	CLOISON	1					
10	K1019037	BAFFLE	CLOISON	1					
11	K1018996	FOAM	EPONGE	1					
12	DS0025032	BOLT	BOULON	25					
13	DS0025013	BOLT	BOULON	8					

DATE	JUN. 30, 2007
REV.NO.	EXB07-06

Fig. 1370 ENGINE COVER ASS`Y
ENSEMBLE DE COUVERCLE

Serial No. ;

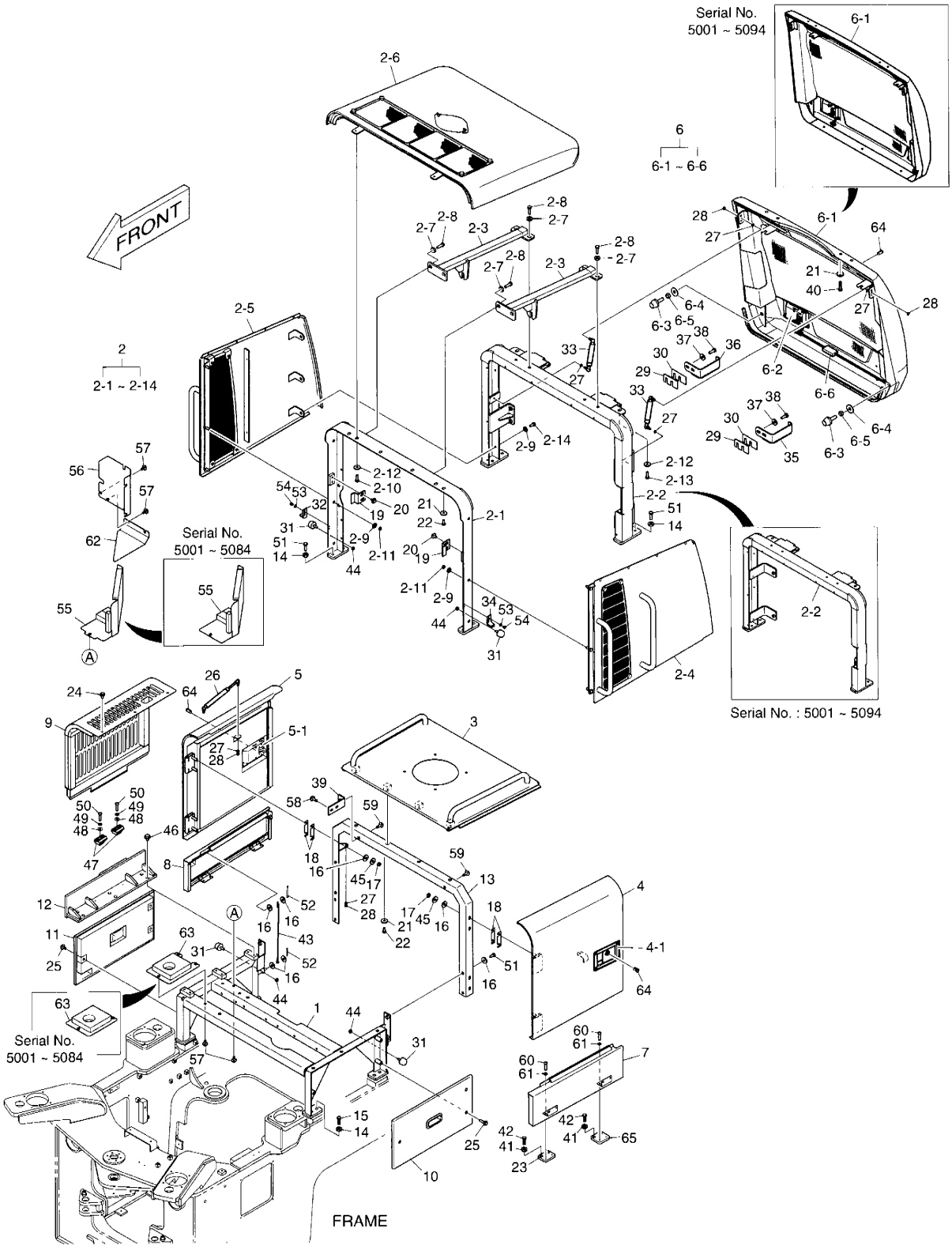

DATE	JUN. 30, 2007
REV. NO.	EXB07-06

Fig. 1370 ENGINE COVER ASS`Y ENSEMBLE DE COUVERCLE

Serial No. ;

Key No.	Part No.	Description	Description	Q'ty	S.C	Serial No.	ICA	Replaceable part	
								Part No.	Q'ty
-70--	**K1023187K**	**ENGINE COVER ASS`Y**	ENSEMBLE DE COUVERCLE	-	D				
1	K1023211B	SUPPORT;OIL TANK	SUPPORT	1		5001-5053			
	K1023211C	**SUPPORT;OIL TANK**	SUPPORT	1		**5054-5084**	I	K1023211E	1
	K1023211E	**SUPPORT;OIL TANK**	SUPPORT	1		**5085-**			
2	K1023214C	RADIATOR GUARD ASS'Y	GARDE ASS'Y DE	1		5054-5084	I	K1023214E	1
	K1023214E	**RADIATOR GUARD ASS'Y**	GARDE ASS'Y DE	1		**5085-5094**			
	K1023214G	**RADIATOR GUARD ASS'Y**	GARDE ASS'Y DE	1		**5095-**			
2-1	K1023215A	. SUPPORT	. SUPPORT	1		5054-5084	I	K1023215B	1
	K1023215B	**. SUPPORT**	. SUPPORT	1		**5085-**			
2-2	K1023216C	. SUPPORT	. SUPPORT	1		5001-5094			
	K1023216E	**. SUPPORT**	. SUPPORT	1		**5095-**			
2-3	K1023217	. SUPPORT	. SUPPORT	2					
2-4	K1023218A	. GUARD ASS'Y (L.H)	. GARDE	1					
2-5	K1023219A	. GUARD ASS'Y (R.H)	. GARDE	1					
2-6	K1023220A	. GUARD;ROOF	. GARDE	1					
2-7	2114-1058D70	. WASHER	. RONDELLE	8					
2-8	S0560566	. BOLT	. BOULON A 6 PANS	8					
2-9	2114-1898D17	. WASHER	. RONDELLE	12					
2-10	S0512066	. BOLT	. BOULON A 6 PANS	2					
2-11	S4012633	. NUT	. ECROU 6 PANS	6					
2-12	DS0401121	. WASHER	. RONDELLE	4					
2-13	S0558266	. BOLT	. BOULON A 6 PANS	2					
2-14	DS0025024	. BOLT	. BOULON A 6 PANS	6					
3	K1023172A	COVER;HOOD	COUVERCLE	1					
4	K1023173A	DOOR;SIDE (L.H)	PORTE	1		5001-5114	I	K1023173B	1
	K1023173B	**DOOR;SIDE (L.H)**	PORTE	1		**5115-**			
4-1	125-00035A	. LOCK ASS'Y (L.H)	. VERROU	1					
5	K1023174A	DOOR;SIDE (R.H)	PORTE	1		5001-5114	I	K1023174B	1
	K1023174B	**DOOR;SIDE (R.H)**	PORTE	1		**5115-**			
5-1	125-00034A	. LOCK ASS'Y (R.H)	. VERROU	1					
6	K1016909B	RADIATOR GRILLE ASS'Y	GRIL ASS'Y DE RADIATEUR	1		5001-5094	I	K1016909C	1
	K1016909C	**RADIATOR GRILLE ASS'Y**	GRIL ASS'Y DE RADIATEUR	1		**5095-**			
6-1	K1016910B	. GRILLE;RADIATOR	. RADIATEUR GRIL	1		5001-5094	I	K1016910C	1
	K1016910C	**. GRILLE;RADIATOR**	. RADIATEUR GRIL	1		**5095-**			
6-2	K1016911	. LOCK;GRILL	. LOQUET	1					
6-3	K1006666	. STOPPER;RUBBER	. TAQUET D'ARRET	2					
6-4	2114-1058D2	. WASHER	. RONDELLE	2					
6-5	S4012933	. NUT	. ECROU 6 PANS	2					

DATE	JUN. 30, 2007
REV.NO.	EXB07-06

Fig. 1370 ENGINE COVER ASS`Y
ENSEMBLE DE COUVERCLE

Serial No. ;

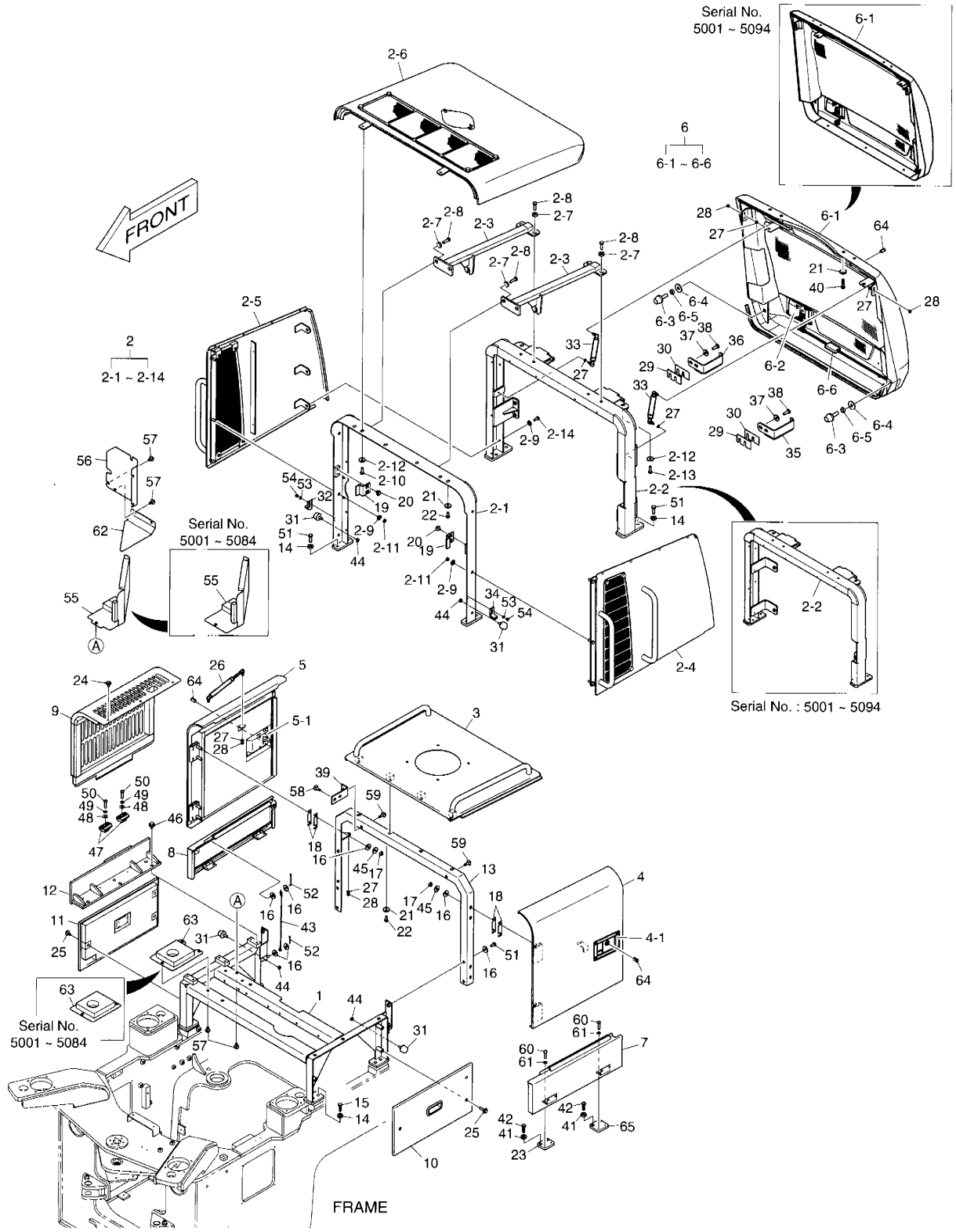

DATE	JUN. 30, 2007
REV. NO.	EXB07-06

Fig. 1370 ENGINE COVER ASS'Y ENSEMBLE DE COUVERCLE

Serial No. ;

Key No.	Part No.	Description	Description	Q'ty	S.C	Serial No.	ICA	Replaceable part	
								Part No.	Q'ty
1370-6-6	K1012269	. FOAM	. EPONGE	2					
7	K1023175B	DOOR;SIDE (L.H)	PORTE	1		5001–5114	I	K1023175C	1
	K1023175C	**DOOR;SIDE (L.H)**	PORTE	1		**5115–**			
8	K1023176B	DOOR;SIDE (R.H)	PORTE	1		5001–5114	I	K1023176C	1
	K1023176C	**DOOR;SIDE (R.H)**	PORTE	1		**5115–**			
9	K1023210	COVER	COUVERCLE	1					
10	K1023177B	COVER (L.H)	COUVERCLE	1					
11	K1023178B	COVER (R.H)	COUVERCLE	1					
12	K1023179	COVER	COUVERCLE	1					
13	K1023180A	SUPPORT;SIDE DOOR	PORTE DE SUPPORT	1					
14	2114-1058D70	WASHER	RONDELLE	16					
15	S0560466	BOLT	BOULON	8					
16	2114-1058D46	WASHER	RONDELLE	20					
17	S4012733	NUT	ECROU	8					
18	4114-4160B	SHIM	CALE	8					
19	4116-4024C	STOPPER	ARRET	2					
20	DS0025014	BOLT	BOULON	4					
21	DS0401121	WASHER	RONDELLE	12					
22	S0512066	BOLT	BOULON	8					
23	K1024489A	PLATE	PLAQUE	2		5001–5027			
	K1024489B	**PLATE**	PLAQUE	2		**5028–**			
24	DS0025023	BOLT	BOULON	3					
25	DS0025028	BOLT	BOULON	6					
26	DS1001048	GAS SPRING	AMORTISSEUR	2					
27	S5102503	WASHER;SPRING	RONDELLE ELASTIQUE	8					
28	S4012533	NUT	ECROU	6					
29	DS7722032	SHIM	CALE	2					
30	DS7722033	SHIM	CALE	2					
31	2875329M1	BUFFER	AMORTISSEUR	4					
32	4130-1014C	SPRING (R.H)	GAS	1					
33	DS1001074	SPRING;GAS (L.H)	AMORTISSEUR	2					
34	4130-1015C	SPRING (L.H)	GAS	1					
35	K1017495	BRACKET (L.H)	SUPPORT	1		5001–5084			
	K1017495A	**BRACKET (L.H)**	SUPPORT	1		**5085–**			
36	K1017496	BRACKET (R.H)	SUPPORT	1		5001–5105			
	K1017496A	**BRACKET (R.H)**	SUPPORT	1		**5106–**			
37	2114-1898D11	WASHER	RONDELLE	4					
38	S0515266	BOLT	BOULON	4					

DATE	JUN. 30, 2007
REV.NO.	EXB07-06

Fig. 1370 ENGINE COVER ASS`Y
ENSEMBLE DE COUVERCLE

Serial No. ;

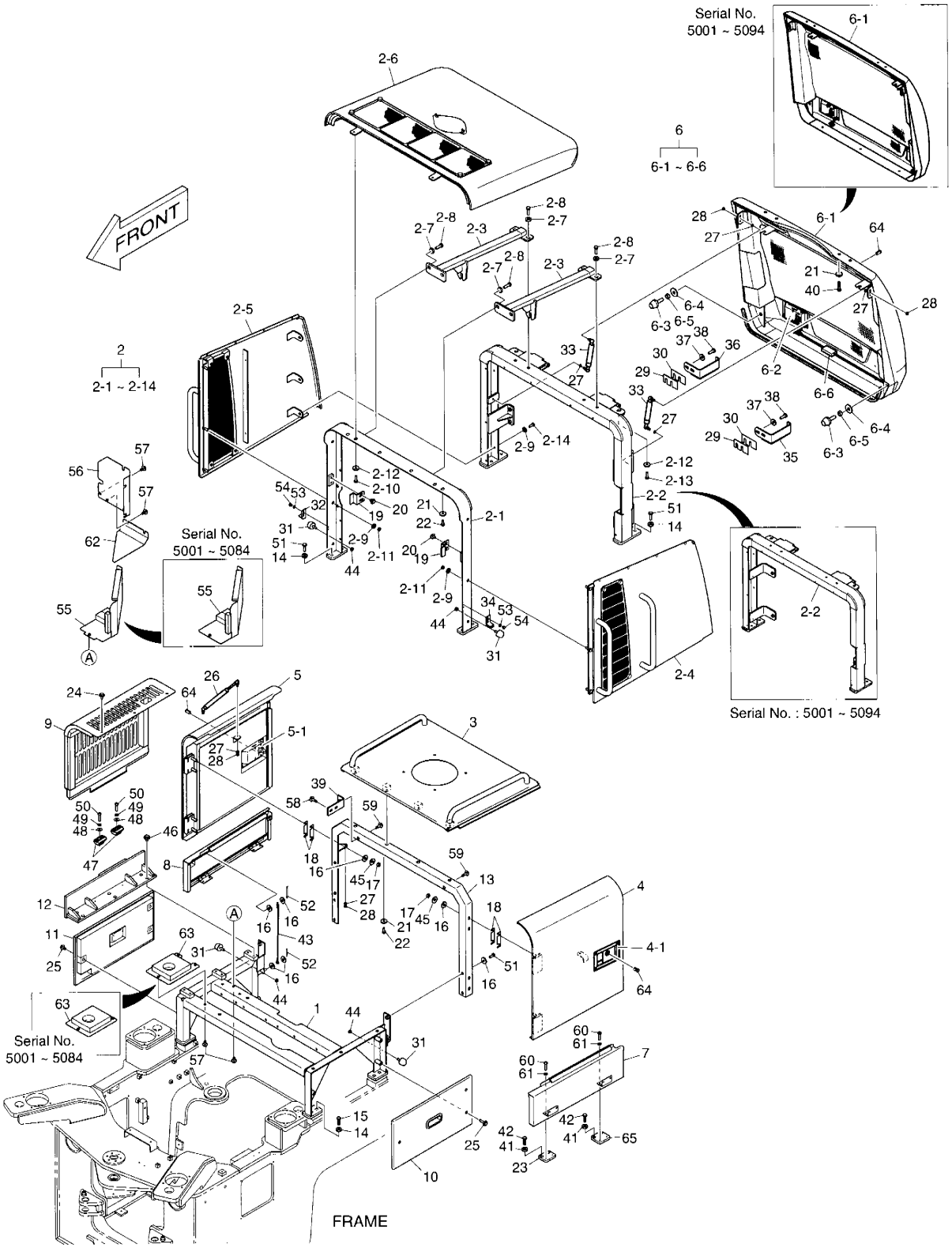

DATE	JUN. 30, 2007
REV. NO.	EXB07-06

Fig. 1370 ENGINE COVER ASS`Y ENSEMBLE DE COUVERCLE

Serial No. ;

Key No.	Part No.	Description	Description	Q'ty	S.C	Serial No.	ICA	Replaceable part	
								Part No.	Q'ty
1370-39	195-01329A	BRACKET	SUPPORT	1					
40	S0512666	BOLT	BOULON	4					
41	2114-1058D71	WASHER	RONDELLE	8					
42	S0512266	BOLT	BOULON	8					
43	4139-9083	CABLE	CABLE	2					
44	S4012333	NUT	ECROU	4					
45	S5102703	WASHER;SPRING	RONDELLE ELASTIQUE	8					
46	DS0025025	BOLT	BOULON	6					
47	2161-2212	STOPPER;RUBBER	TAQUET D'ARRET	2					
48	2114-1058D52	WASHER	RONDELLE	2					
49	S5102303	WASHER;SPRING	RONDELLE ELASTIQUE	2					
50	S3450993	SCREW	VIS	2					
51	S0560466	BOLT	BOULON	12					
52	S5735471	PIN;SPLIT	GOUPILLE	4		5001–5084			
	2705-9002	**PIN;LOCK**	GOUPILLE	4		**5085–**			
53	S5010313	WASHER	RONDELLE	4					
54	S0504266	BOLT	BOULON	4					
55	K1023181A	COVER	COUVERCLE	1		5001–5084			
	K1023181B	**COVER**	COUVERCLE	1		**5085–**			
56	K1023279A	COVER	COUVERCLE	1					
57	DS0025032	BOLT	BOULON	10					
58	DS0025017	BOLT	BOULON	2					
59	DS0025016	BOLT	BOULON	2					
60	S0508966	BOLT	BOULON	8					
61	2114-1058D56	WASHER	RONDELLE	8					
62	K1024870	COVER	COUVERCLE	1					
63	K1024597	PLATE	PLAQUE	1		5001–5084			
	K1024597A	**PLATE**	PLAQUE	1		**5085–**			
64	K1004630	KEY;CYLINDER	CLE	3					
65	K1027514	PLATE	PLAQUE	2		5001–5027			
	K1027514A	**PLATE**	PLAQUE	2		**5028–**			

DATE	JUN. 30, 2007
REV.NO.	EXB07-06

Fig. 1380 FENDER & LADDER
GARDE-BOUE ECHELLE

Serial No. ;

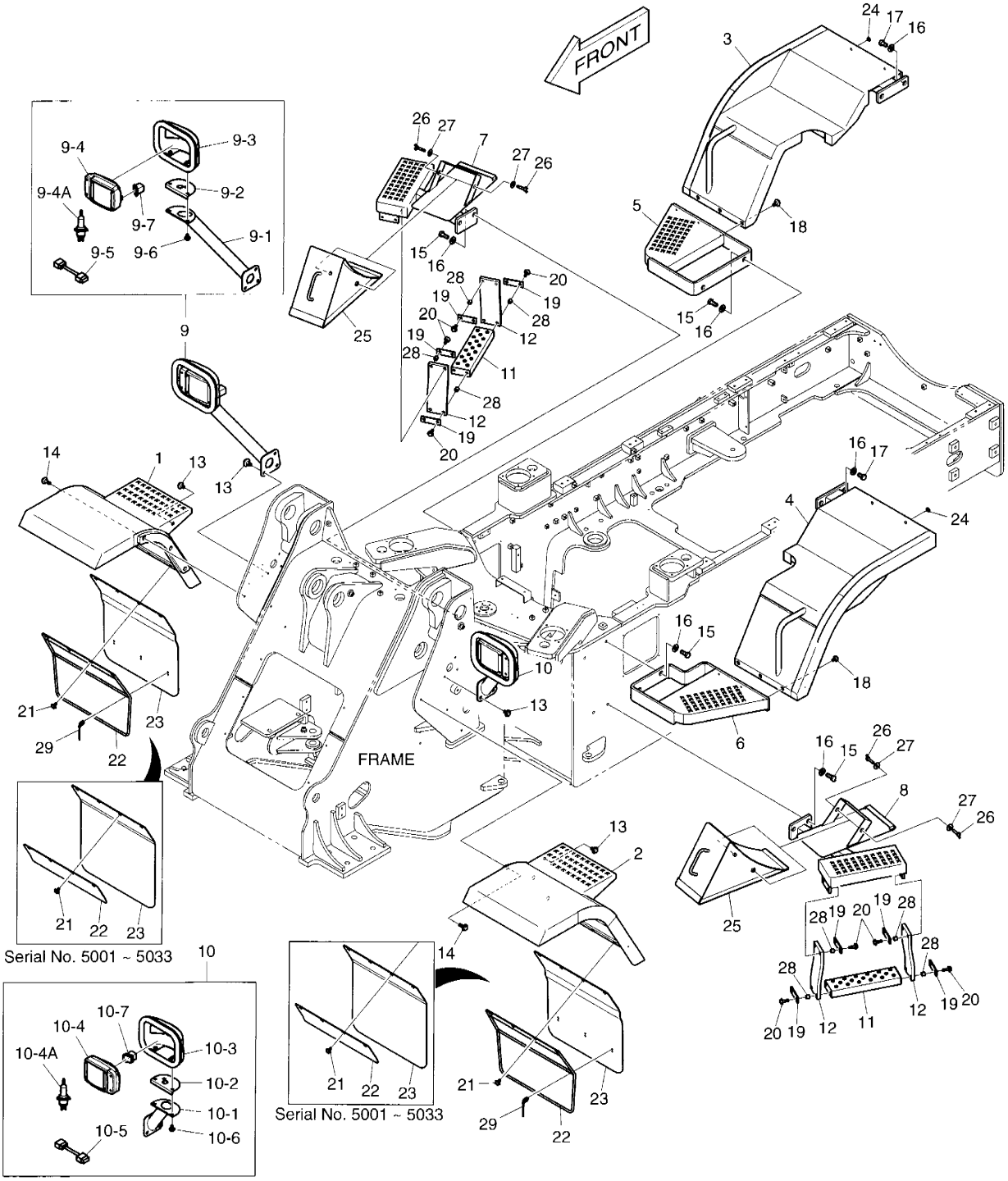

DATE	JUN. 30, 2007
REV. NO.	EXB07-06

Fig. 1380 FENDER & LADDER GARDE-BOUE ECHELLE

Serial No. ;

Key No.	Part No.	Description	Description	Q'ty	S.C	Serial No.	ICA	Replaceable part	
								Part No.	Q'ty
1380--	**K1018620E**	**FENDER & LADDER**	GARDE-BOUE ECHELLE	-	D				
1	621-02127	FENDER;FRONT (R.H)	AMORTISSEUR	1					
2	621-02128	FENDER;FRONT (L.H)	AMORTISSEUR	1					
3	K1018624	FENDER;REAR (RH)	AMORTISSEUR	1		5001–5077	I	K1018624A	1
	K1018624A	**FENDER;REAR (RH)**	AMORTISSEUR	1		**5078–**			
4	K1018625	FENDER;REAR (LH)	AMORTISSEUR	1		5001–5077	I	K1018625A	1
	K1018625A	**FENDER;REAR (LH)**	AMORTISSEUR	1		**5078–**			
5	K1015118	LADDER	ECHELLE	1					
6	K1015117	LADDER	ECHELLE	1					
7	K1015119A	LADDER	ECHELLE	1					
8	K1015120A	LADDER	ECHELLE	1					
9	K1004818B	SUPPORT (R.H	LAMPE	1					
9-1	K1004816	. PIPE	. TUYAU	1					
9-2	K1006250B	. SUPPORT;LAMP	. SUPPORT	1					
9-3	K1006182B	. COVER;LAMP	. COUVERCLE	1					
9-4	K1005906	. LAMP	. LAMPE	1					
9-4A	K1010656	.. BULB;HALOGEN	.. AMPOULE	1					
9-5	K1006366	. HARNESS	. HARNAIS	1					
9-6	DS0025023	. BOLT	. BOULON A 6 PANS	2					
9-7	K1006592	. CAP	. CHAPEAU	1					
10	K1004817B	SUPPORT (L.H)	LAMPE	1					
10-1	K1004816	. PIPE	. TUYAU	1					
10-2	K1006250B	. SUPPORT;LAMP	. SUPPORT	1					
10-3	K1006182B	. COVER;LAMP	. COUVERCLE	1					
10-4	K1005906	. LAMP	. LAMPE	1					
10-4A	K1010656	.. BULB;HALOGEN	.. AMPOULE	1					
10-5	K1006366	. HARNESS	. HARNAIS	1					
10-6	DS0025023	. BOLT	. BOULON A 6 PANS	2					
10-7	K1006592	. CAP	. CHAPEAU	1					
11	K1008755	LADDER	ECHELLE	2					
12	K1004701	HANGER;STEP	CINTRE D'ETAPE	4		5001–5033	I	K1004701A	4
	K1004701A	**HANGER;STEP**	CINTRE D'ETAPE	4		**5034–**			
13	DS0025015	BOLT	BOULON	8					
14	DS0025031	BOLT	BOULON	6					
15	S0565066	BOLT	BOULON	8					
16	2114-1058D2	WASHER	RONDELLE	12					
17	S0521266	BOLT	BOULON	4					
18	DS0025023	BOLT	BOULON	6					

DATE	JUN. 30, 2007
REV.NO.	EXB07-06

Fig. 1380 FENDER & LADDER
GARDE-BOUE ECHELLE

Serial No. ;

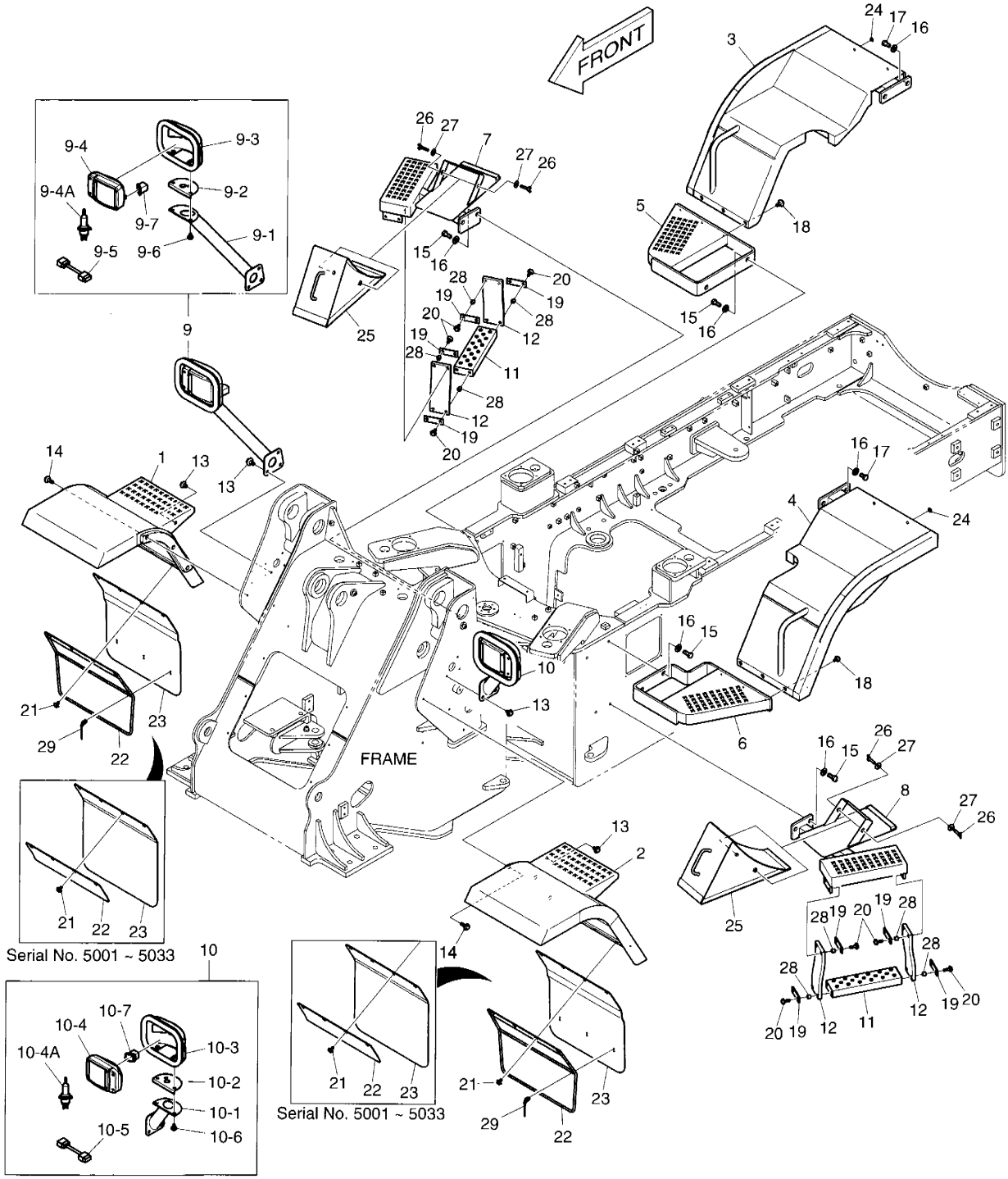

DATE	JUN. 30, 2007
REV. NO.	EXB07-06

Fig. 1380 FENDER & LADDER GARDE-BOUE ECHELLE

Serial No. ;

Key No.	Part No.	Description	Description	Q'ty	S.C	Serial No.	ICA	Replaceable part	
								Part No.	Q'ty
1380-19	K1009006	PLATE	PLAQUE	8					
20	DS0025030	BOLT	BOULON	16					
21	DS0025014	BOLT	BOULON	8					
22	621-01468	PLATE	PLAQUE	2		5001–5033			
	K1030175	**PLATE**	PLAQUE	2		**5034–**			
23	K1018630	RUBBER	CAOUTCHOUC	2		5001–5033	I	K1018630A	2
	K1018630A	**RUBBER**	CAOUTCHOUC	2		**5034–**			
24	K1013278	CAP	CHAPEAU	4					
25	K1004813A	CHOCK;WHEEL	D'APPUI	2					
26	S3056253	BOLT	BOULON	4					
27	2114-1058D10	WASHER;PLAIN	RONDELLE PLATE	4					
28	**K1029924**	**SPACER**	ENTRETOSE	16		**5034–**			
29	**2124-1622D1**	**CLIP;BAND**	ATTACHE	6		**5034–**			

DATE	NOV. 24, 2006
1st EDITION	

Fig. 1390 ELECTRIC BOX - FNR LEVER
EQUIPMENT ELECTRIQUE

Serial No. ;

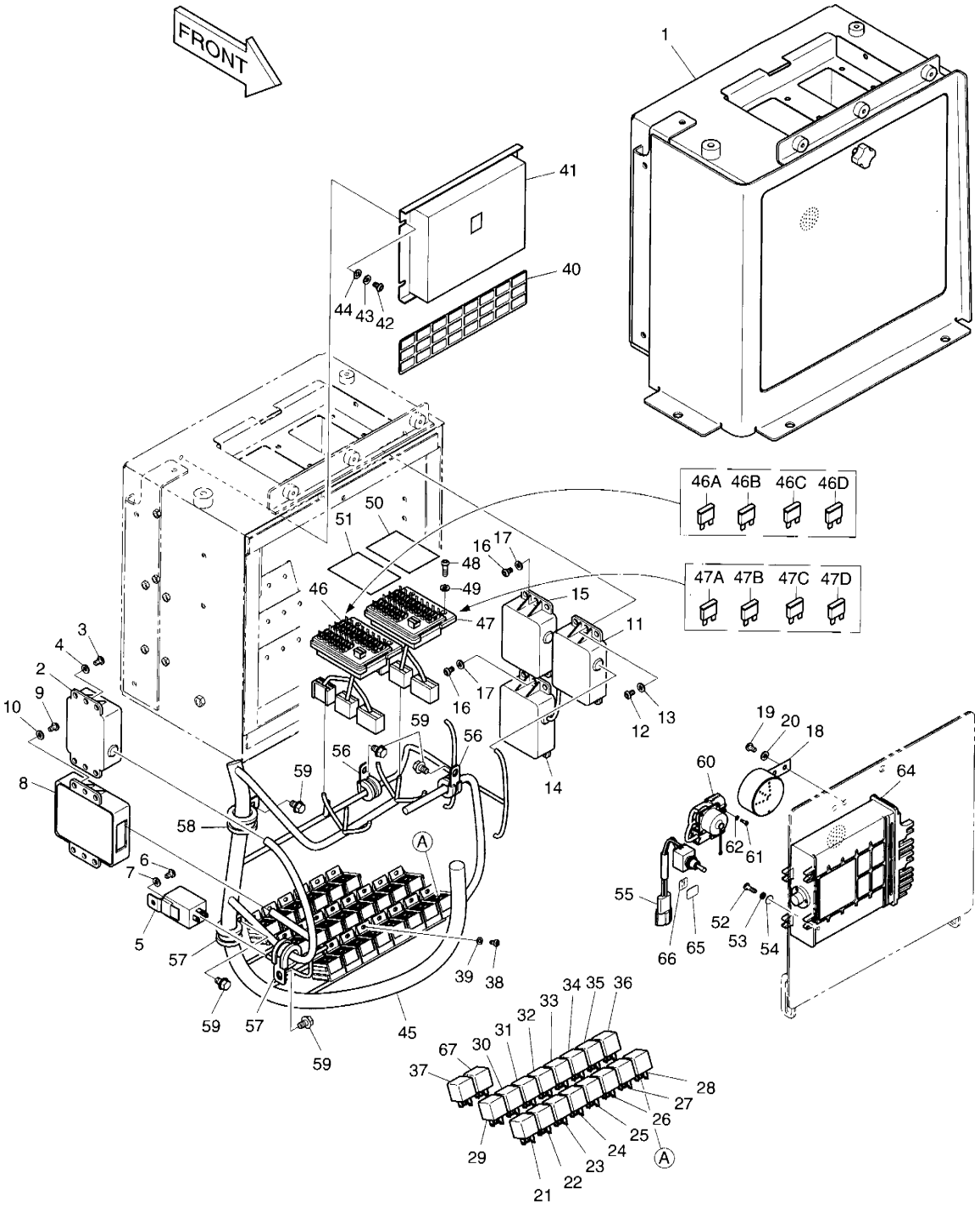

DATE	NOV. 24, 2006
1st EDITION	

Fig. 1390 ELECTRIC BOX - FNR LEVER EQUIPMENT ELECTRIQUE

Serial No. ;

Key No.	Part No.	Description	Description	Q'ty	S.C	Serial No.	ICA	Replaceable part	
								Part No.	Q'ty
1000--	K1024080B	ELECTRIC;BOX	EQUIPMENT ELECTRIQUE	1					
1	K1006134C	SUPPORT	SUPPORT	1					
2	2543-9015	CONTROLLER;STARTER	MOTEUR	1					
3	S3450943	SCREW	VIS	2					
4	S5102303	WASHER;SPRING	RONDELLE ELASTIQUE	2					
5	2525-1011	UNIT;BLINKER	UNITE DE CLIGNOTANTS	1					
6	S3450943	SCREW	VIS	1					
7	S5102303	WASHER;SPRING	RONDELLE ELASTIQUE	1					
8	543-00001	UNIT;CONTROL	UNITE DE CLIGNOTANTS	1					
9	S3450943	SCREW	VIS	4					
10	S5102303	WASHER;SPRING	RONDELLE ELASTIQUE	4					
11	2537-9002	TIMER;WIPER	TIMER ESSUIE-GLACE	1					
12	S3450943	SCREW	VIS	2					
13	S5102303	WASHER;SPRING	RONDELLE ELASTIQUE	2					
14	2531-1003	CONVERTER;DC-DC	CONVERTEUR	1					
15	2531-1003	CONVERTER;DC-DC	CONVERTEUR	1					
16	S3450943	SCREW	VIS	4					
17	S5102303	WASHER;SPRING	RONDELLE ELASTIQUE	4					
18	2516-1102A	BUZZER;PILOT	VIBREUR PILOTE	1					
19	S3450943	SCREW	VIS	2					
20	S5102303	WASHER;SPRING	RONDELLE ELASTIQUE	2					
21	2544-9033	RELAY	RELAIS AVERTISSEUR	1					
22	2544-9033	RELAY	RELAIS AVERTISSEUR	1					
23	2544-9033	RELAY	RELAIS AVERTISSEUR	1					
24	2544-9033	RELAY	RELAIS AVERTISSEUR	1					
25	2544-9033	RELAY	RELAIS AVERTISSEUR	1					
26	2544-9033	RELAY	RELAIS AVERTISSEUR	1					
27	2544-9033	RELAY	RELAIS AVERTISSEUR	1					
28	2544-9033	RELAY	RELAIS AVERTISSEUR	1					
29	2544-9033	RELAY	RELAIS AVERTISSEUR	1					
30	2544-9033	RELAY	RELAIS AVERTISSEUR	1					
31	2544-9033	RELAY	RELAIS AVERTISSEUR	1					
32	2544-9033	RELAY	RELAIS AVERTISSEUR	1					
33	2544-9033	RELAY	RELAIS AVERTISSEUR	1					
34	2544-9033	RELAY	RELAIS AVERTISSEUR	1					
35	2544-9033	RELAY	RELAIS AVERTISSEUR	1					
36	2544-9033	RELAY	RELAIS AVERTISSEUR	1					
37	2544-9033	RELAY	RELAIS AVERTISSEUR	1					

DATE	NOV. 24, 2006
1st EDITION	

Fig. 1390 ELECTRIC BOX - FNR LEVER
EQUIPMENT ELECTRIQUE

Serial No. ;

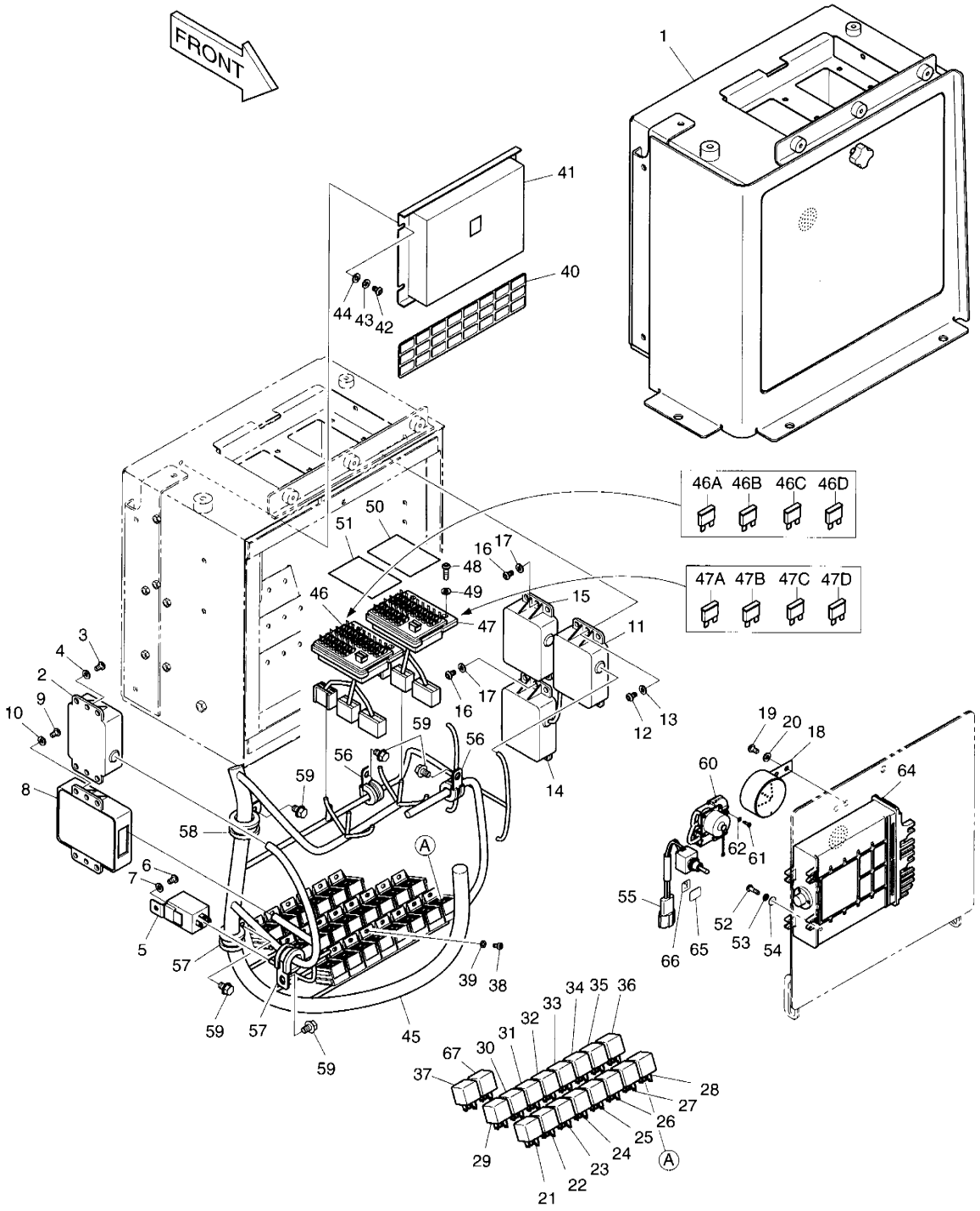

DATE	NOV. 24, 2006
1st EDITION	

Fig. 1390 ELECTRIC BOX - FNR LEVER
EQUIPMENT ELECTRIQUE

Serial No. ;

Key No.	Part No.	Description	Description	Q'ty	S.C	Serial No.	ICA	Replaceable part	
								Part No.	Q'ty
1. -38	S3450823	SCREW	VIS	9					
39	S5100203	WASHER;SPRING	RONDELLE ELASTIQUE	9					
40	K1010316	NAME;PLATE	PLAQUE D'IDENTIFICATION	1					
41	K1024242	CONTROLLER;FAN	CONTROLEUR	1					
42	S3450943	SCREW	VIS	4					
43	S5102303	WASHER;SPRING	RONDELLE ELASTIQUE	4					
44	S5010313	WASHER	CALE	4					
45	K1008401C	HARNESS;ELECTRIC BOX	FAISCEAU	1					
46	K1006678	BOX;FUSE	BOITE	1					
46A	2527-1016	. FUSE;BLADE 10A	. LAME DE FUSIBLE	8					
46B	2527-1017	. FUSE;BLADE 15A	. LAME DE FUSIBLE	4					
46C	2527-1018	. FUSE;BLADE 20A	. LAME DE FUSIBLE	1					
46D	2527-1025	. FUSE;BLADE 30A	. LAME DE FUSIBLE	1					
47	K1006678	BOX;FUSE	BOITE	1					
47A	2527-1016	. FUSE;BLADE 10A	. LAME DE FUSIBLE	8					
47B	2527-1017	. FUSE;BLADE 15A	. LAME DE FUSIBLE	4					
47C	2527-1018	. FUSE;BLADE 20A	. LAME DE FUSIBLE	1					
47D	2527-1025	. FUSE;BLADE 30A	. LAME DE FUSIBLE	1					
48	S3450983	SCREW	VIS	4					
49	S5102303	WASHER;SPRING	RONDELLE ELASTIQUE	4					
50	K1015518	NAME;PLATE FUSE BOX 1	PLAQUEUR	1					
51	K1015519	NAME;PLATE FUSE BOX 2	PLAQUEUR	1					
52	S3450853	SCREW	VIS	4					
53	S5100203	WASHER;SPRING	RONDELLE ELASTIQUE	4					
54	S5100213	WASHER;SPRING	RONDELLE ELASTIQUE	4					
55	K1001702	SWITCH;TOGGLE	INTERRUPTEUR	1					
56	124-00208D2	CLIP	ATTACHE	1					
57	124-00208D3	CLIP	ATTACHE	2					
58	124-00208D4	CLIP	ATTACHE	1					
59	K1001029	BOLT	BOULON	4					
60	530-00435A	HARNESS;CHECK CONNECTOR	FAISCEAU	1					
61	S3450343	SCREW	VIS	4					
62	S5100003	WASHER;SPRING	RONDELLE ELASTIQUE	4					
64	K1024152	CONTROLLER;TRANSMISSION	CONTROLEUR	1					
65	K1004425	DECAL	DECAL	1					
66	K1004427	NAME;PLATE	PLAQUE D'IDENTIFICATION	1					
67	2544-9033	RELAY	RELAIS AVERTISSEUR	1					

DATE	NOV. 24, 2006
1st EDITION	

Fig. 1400 ELECTRIC BOX - FINGER REMOCON

ELECTRIC BOX - FINGER REMOCON

Serial No. ;

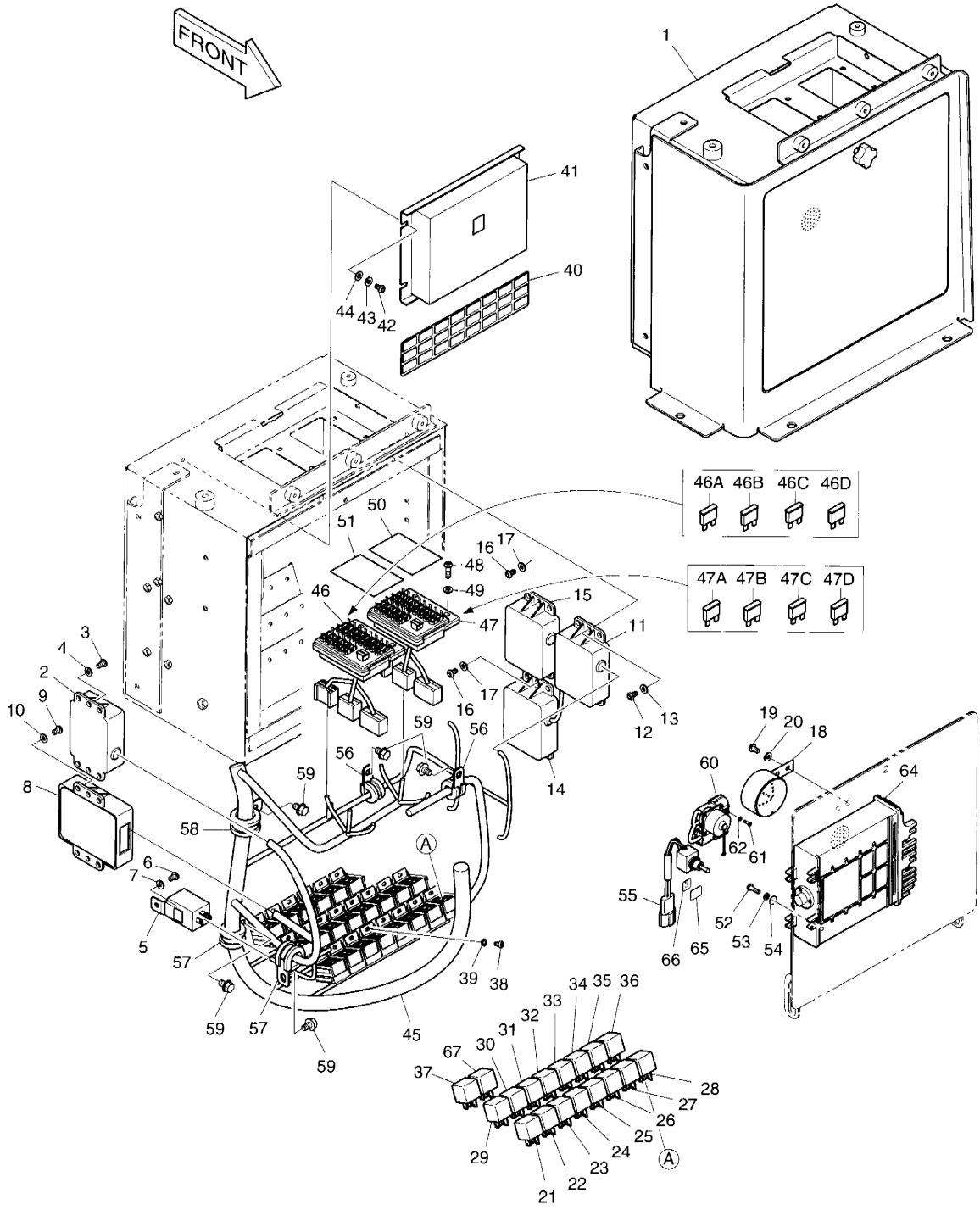

DATE	NOV. 24, 2006
1st EDITION	

Fig. 1400 ELECTRIC BOX - FINGER REMOCON

ELECTRIC BOX - FINGER REMOCON

Serial No. ;

Key No.	Part No.	Description	Description	Q'ty	S.C	Serial No.	ICA	Replaceable part	
								Part No.	Q'ty
.+00--	K1024081B	ELECTRIC BOX	BOITIER ELECTRIQUE	1					
1	K1006134C	SUPPORT	SUPPORT	1					
2	2543-9015	CONTROLLER;STARTER	MOTEUR	1					
3	S3450943	SCREW	VIS	2					
4	S5102303	WASHER;SPRING	RONDELLE ELASTIQUE	2					
5	2525-1011	UNIT;BLINKER	UNITE DE CLIGNOTANTS	1					
6	S3450943	SCREW	VIS	1					
7	S5102303	WASHER;SPRING	RONDELLE ELASTIQUE	1					
8	543-00001	UNIT;CONTROL	UNITE DE CLIGNOTANTS	1					
9	S3450943	SCREW	VIS	4					
10	S5102303	WASHER;SPRING	RONDELLE ELASTIQUE	4					
11	2537-9002	TIMER;WIPER	TIMER ESSUIE-GLACE	1					
12	S3450943	SCREW	VIS	2					
13	S5102303	WASHER;SPRING	RONDELLE ELASTIQUE	2					
14	2531-1003	CONVERTER;DC-DC	CONVERTEUR	1					
15	2531-1003	CONVERTER;DC-DC	CONVERTEUR	1					
16	S3450943	SCREW	VIS	4					
17	S5102303	WASHER;SPRING	RONDELLE ELASTIQUE	4					
18	2516-1102A	BUZZER;PILOT	VIBREUR PILOTE	1					
19	S3450943	SCREW	VIS	2					
20	S5102303	WASHER;SPRING	RONDELLE ELASTIQUE	2					
21	2544-9033	RELAY	RELAIS AVERTISSEUR	1					
22	2544-9033	RELAY	RELAIS AVERTISSEUR	1					
23	2544-9033	RELAY	RELAIS AVERTISSEUR	1					
24	2544-9033	RELAY	RELAIS AVERTISSEUR	1					
25	2544-9033	RELAY	RELAIS AVERTISSEUR	1					
26	2544-9033	RELAY	RELAIS AVERTISSEUR	1					
27	2544-9033	RELAY	RELAIS AVERTISSEUR	1					
28	2544-9033	RELAY	RELAIS AVERTISSEUR	1					
29	2544-9033	RELAY	RELAIS AVERTISSEUR	1					
30	2544-9033	RELAY	RELAIS AVERTISSEUR	1					
31	2544-9033	RELAY	RELAIS AVERTISSEUR	1					
32	2544-9033	RELAY	RELAIS AVERTISSEUR	1					
33	2544-9033	RELAY	RELAIS AVERTISSEUR	1					
34	2544-9033	RELAY	RELAIS AVERTISSEUR	1					
35	2544-9033	RELAY	RELAIS AVERTISSEUR	1					
36	2544-9033	RELAY	RELAIS AVERTISSEUR	1					
37	2544-9033	RELAY	RELAIS AVERTISSEUR	1					

DATE	NOV. 24, 2006
1st EDITION	

Fig. 1400 ELECTRIC BOX - FINGER REMOCON

ELECTRIC BOX - FINGER REMOCON

Serial No. ;

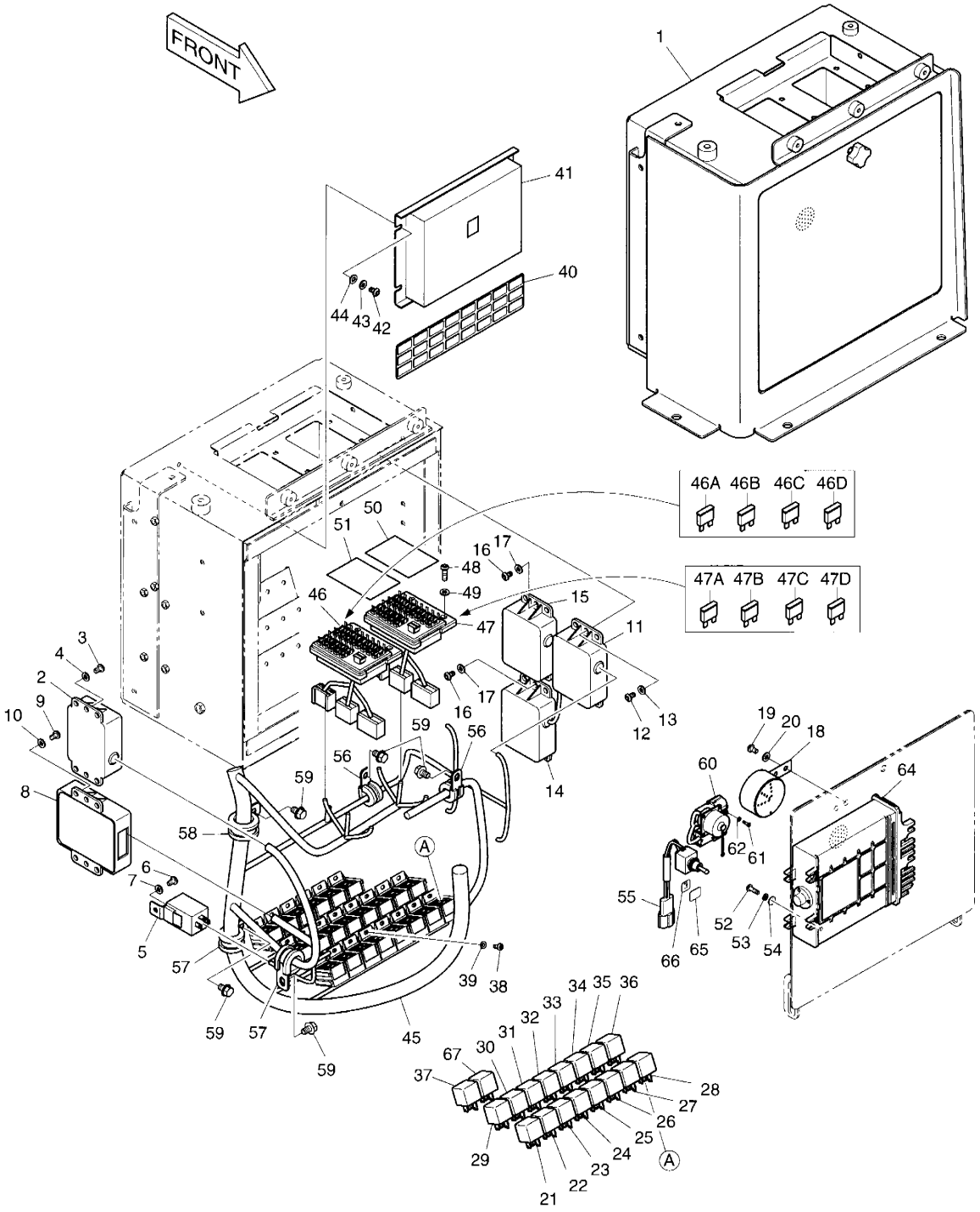

DATE	NOV. 24, 2006
1st EDITION	

Fig. 1400 ELECTRIC BOX - FINGER REMOCON

ELECTRIC BOX - FINGER REMOCON

Serial No. ;

Key No.	Part No.	Description	Description	Q'ty	S.C	Serial No.	ICA	Replaceable part	
								Part No.	Q'ty
400-38	S3450823	SCREW	VIS	9					
39	S5100203	WASHER;SPRING	RONDELLE ELASTIQUE	9					
40	K1010316	NAME;PLATE	PLAQUE D'IDENTIFICATION	1					
41	K1024242	CONTROLLER;FAN	CONTROLEUR	1					
42	S3450943	SCREW	VIS	4					
43	S5102303	WASHER;SPRING	RONDELLE ELASTIQUE	4					
44	S5010313	WASHER	CALE	4					
45	K1008401C	HARNESS;ELECTRIC BOX	FAISCEAU	1					
46	K1006678	BOX;FUSE	BOITE	1					
46A	2527-1016	. FUSE;BLADE 10A	. LAME DE FUSIBLE	8					
46B	2527-1017	. FUSE;BLADE 15A	. LAME DE FUSIBLE	4					
46C	2527-1018	. FUSE;BLADE 20A	. LAME DE FUSIBLE	1					
46D	2527-1025	. FUSE;BLADE 30A	. LAME DE FUSIBLE	1					
47	K1006678	BOX;FUSE	BOITE	1					
47A	2527-1016	. FUSE;BLADE 10A	. LAME DE FUSIBLE	8					
47B	2527-1017	. FUSE;BLADE 15A	. LAME DE FUSIBLE	4					
47C	2527-1018	. FUSE;BLADE 20A	. LAME DE FUSIBLE	1					
47D	2527-1025	. FUSE;BLADE 30A	. LAME DE FUSIBLE	1					
48	S3450983	SCREW	VIS	4					
49	S5102303	WASHER;SPRING	RONDELLE ELASTIQUE	4					
50	K1015518	NAME;PLATE FUSE BOX 1	PLAQUEUR	1					
51	K1015519	NAME;PLATE FUSE BOX 2	PLAQUEUR	1					
52	S3450853	SCREW	VIS	4					
53	S5100203	WASHER;SPRING	RONDELLE ELASTIQUE	4					
54	S5100213	WASHER	CALE	4					
55	K1001702	SWITCH;TOGGLE	INTERRUPTEUR	1					
56	124-00208D2	CLIP	ATTACHE	1					
57	124-00208D3	CLIP	ATTACHE	2					
58	124-00208D4	CLIP	ATTACHE	1					
59	K1001029	BOLT	BOULON	4					
60	530-00435A	HARNESS;CHECK CONNECTOR	FAISCEAU	1					
61	S3450343	SCREW	VIS	4					
62	S5100003	WASHER;SPRING	RONDELLE ELASTIQUE	4					
64	K1024153	CONTROLLER;TRANSMISSION	CONTROLEUR	1					
65	K1004425	DECAL	DECAL	1					
66	K1004427	NAME;PLATE	PLAQUE D'IDENTIFICATION	1					
67	2544-9033	RELAY	RELAIS AVERTISSEUR	1					

DATE	JUN. 30, 2007
REV.NO.	EXB07-06

Fig. 1410 ELECTRIC PARTS - CABIN
EQUIPMENT ELECTRIQUE

Serial No. ;

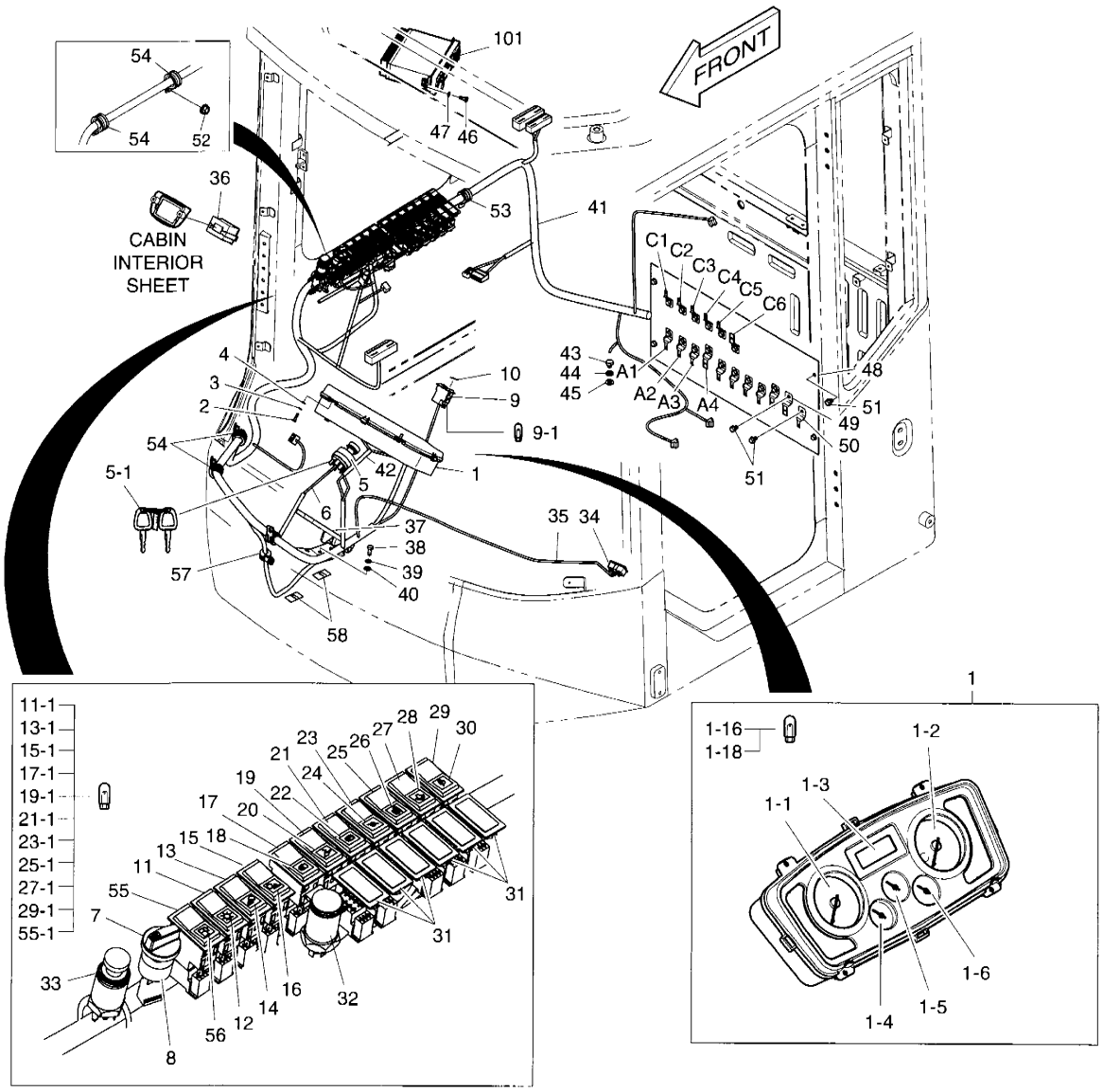

DATE	JUN. 30, 2007
REV. NO.	EXB07-06

Fig. 1410 ELECTRIC PARTS - CABIN
EQUIPMENT ELECTRIQUE

Serial No. ;

Key No.	Part No.	Description	Description	Q'ty	S.C	Serial No.	ICA	Replaceable part	
								Part No.	Q'ty
1410--	**K1024082C**	**ELECTRIC PARTS**	EQUIPMENT ELECTRIQUE	-	D				
1	K1014651	PANEL;GAUGE	TABLEAU DE BORD	1					
1-1	K1015286	. METER;SPEED	. TOTALISATEUR VITESSE	1					
1-2	K1015287	. METER;TACHO	. TOTALISATEUR	1					
1-3	4539-6036	. DISPLAY	. PARADE	1					
1-4	K1007136	. GAUGE;FUEL	. JAUGE DE NIVEAU	1					
1-5	K1007137	. GAUGE;WATER TEMP	. MESURE	1					
1-6	K1007138	. GAUGE;T/M OIL TEMP	. MESURE	1					
1-16	515-00012A	. BULB	. AMPOULE	17					
1-18	S862203H	. BULB	. AMPOULE	3					
2	S3450863	SCREW	VIS	4					
3	S5100203	WASHER;SPRING	RONDELLE ELASTIQUE	4					
4	S5000213	WASHER	CALE	4					
5	K1001654B	SWITCH;STARTER	CONTACT DE DEMARREUR	1					
5-1	K1001858A	. KEY;STARTER	. CLE	1					
6	530-00150	HARNESS;STARTER SWITCH	FAISCEAU	1					
7	K1006290	SWITCH;ROTARY	COMMUTATEUR	1					
8	K1006356	KNOB	BOUTON	1					
9	2549-9138	SWITCH;ROCKER	INTERRUPTEUR	1					
9-1	K9000353	. LAMP;PILOT	. LAMPE	1					
10	2190-2036D2	INSERT;HAZARD SW	RACCORD	1					
11	2549-9109	SWITCH;ROCKER	INTERRUPTEUR	1					
11-1	K9000353	. LAMP;PILOT	. LAMPE	1					
12	2190-2036D24	INSERT;LAMP	INSERTION	1					
13	2549-9098	SWITCH;ROCKER	INTERRUPTEUR	1					
13-1	K9000353	. LAMP;PILOT	. LAMPE	1					
14	2190-2036D5	INSERT;WORKING LAMP	RACCORD	1					
15	2549-9109	SWITCH;ROCKER	INTERRUPTEUR	1					
15-1	K9000353	. LAMP;PILOT	. LAMPE	1					
16	2190-2036D20	INSERT;REAR WORKING LAMP	INSERTION	1					
17	2549-9129	SWITCH;REAR WIPER	INTERRUPTEUR	1					
17-1	K9000353	. LAMP;PILOT	. LAMPE	1					
18	2190-2036D18	INSERT;REAR WIPER	INSERTION	1					
19	2549-9098	SWITCH;ROCKER	INTERRUPTEUR	1					
19-1	K9000353	. LAMP;PILOT	. LAMPE	1					
20	2190-2036D17	INSERT;PILOT CUT OFF	INSERTION	1					
21	2549-9098	SWITCH;ROCKER	INTERRUPTEUR	1					
21-1	K9000353	. LAMP;PILOT	. LAMPE	1					

DATE	JUN. 30, 2007
REV.NO.	EXB07-06

Fig. 1410 ELECTRIC PARTS - CABIN EQUIPMENT ELECTRIQUE

Serial No. ;

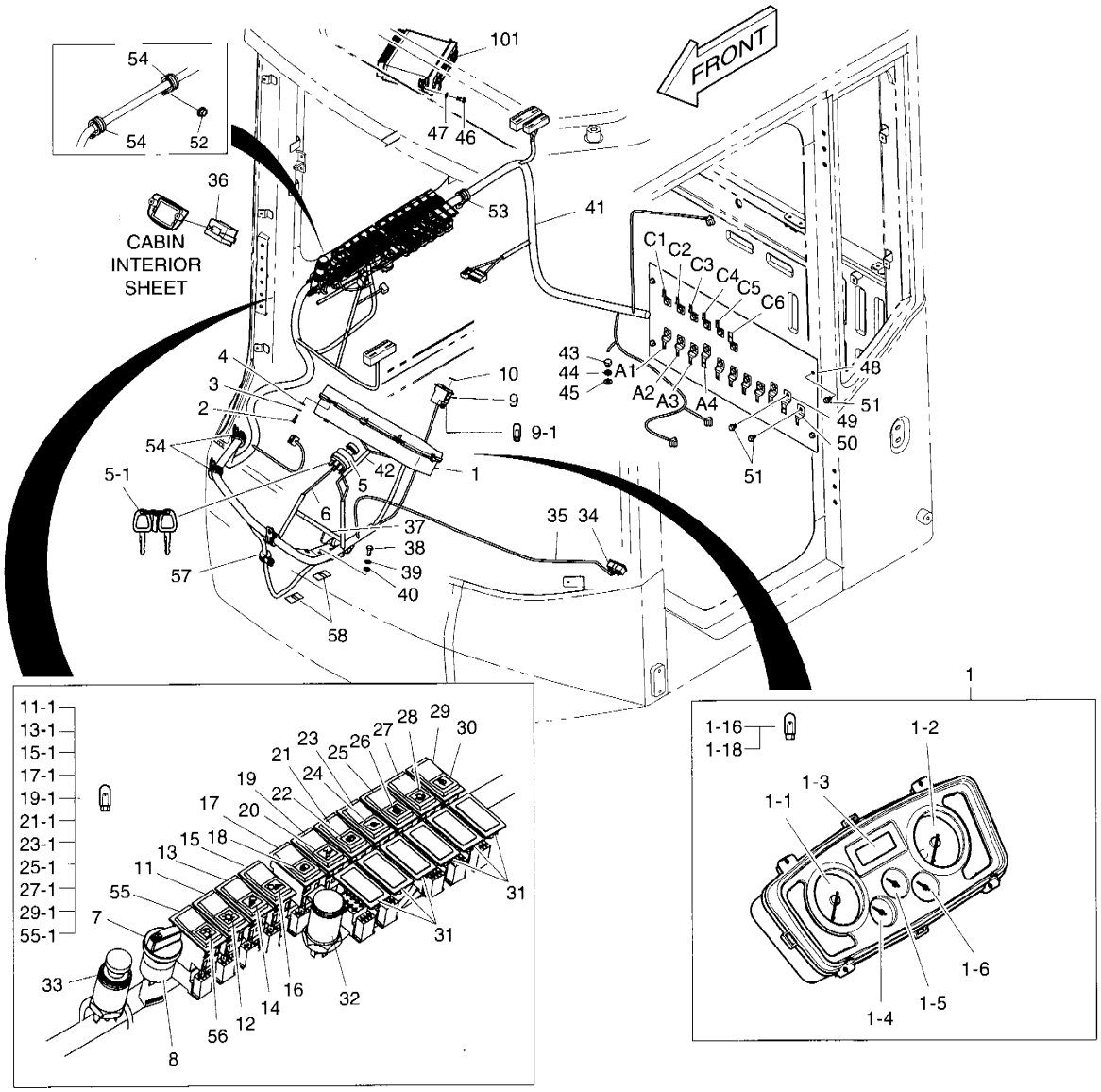

DATE	JUN. 30, 2007
REV. NO.	EXB07-06

Fig. 1410 ELECTRIC PARTS - CABIN EQUIPMENT ELECTRIQUE

Serial No. ;

Key No.	Part No.	Description	Description	Q'ty	S.C	Serial No.	ICA	Replaceable part	
								Part No.	Q'ty
1410-22	2190-2036D16	INSERT;PARKING BRAKE	INSERTION	1					
23	2549-9098	SWITCH;ROCKER	INTERRUPTEUR	1					
23-1	K9000353	. LAMP;PILOT	. LAMPE	1					
24	2190-2036D15	INSERT;FORWARD CUT OFF	INSERTION	1					
25	2549-9098	SWITCH;ROCKER	INTERRUPTEUR	1					
25-1	K9000353	. LAMP;PILOT	. LAMPE	1					
26	2190-2036D29	INSERT;MIRROR HEAT RAYS	INSERTION	1					
27	2549-9098	SWITCH;ROCKER	INTERRUPTEUR	1					
27-1	K9000353	. LAMP;PILOT	. LAMPE	1					
28	2190-2584D20	INSERT;REVERSE FAN	INSERTION	1					
29	2549-9098	SWITCH;ROCKER	INTERRUPTEUR	1					
29-1	K9000353	. LAMP;PILOT	. LAMPE	1					
30	2190-2584D9	INSERT;WARNING CHECK	INSERTION	1					
31	2621-9002	COVER	COUVERCLE	6					
32	527-00006	SOCKET;12V POWER	CLE A DOUILLE	1					
33	545-00001	LIGHTER;CIGAR	ALLUME-CIGARE	1					
34	2528-9040	METER;HOUR	TOTALISATEUR HORAIRE	1					
35	530-00434B	HARNESS;HOUR METER JOINT	FAISCEAU	1					
36	528-00039	CLOCK	HORLOGE	1		5001–5078	I	528-00039A	1
	528-00039A	**CLOCK**	HORLOGE	1		**5079–**			
37	K1011896	PEDAL;ACCELERATOR	PEDALE	1					
38	S0508853	BOLT	BOULON	2					
39	S5102503	WASHER;SPRING	RONDELLE ELASTIQUE	2					
40	S5010513	WASHER	CALE	2					
41	K1015716C	HARNESS;CABIN	FAISCEAU	1		5001–5091	I	K1015716E	1
	K1015716E	**HARNESS;CABIN**	FAISCEAU	1		**5092–**			
42	K1010325	HARNESS;JOINT GAUGE PANEL	FAISCEAU	1					
43	S0511353	BOLT	BOULON	1					
44	S5102603	WASHER;SPRING	RONDELLE ELASTIQUE	1					
45	S5010613	WASHER;PLAIN	RONDELLE PLATE	1					
46	S3450833	BOLT	BOULON	4					
47	S5100203	WASHER;SPRING	RONDELLE ELASTIQUE	4					
48	K1024189	BRACKET;CONNECTOR	SUPPORT	1					
49	2197-1660	BRACKET;HOUSING	SUPPORT	4					
50	2197-1661	BRACKET;HOUSING	SUPPORT	13					
51	K1001029	BOLT	BOULON	21					
52	2121-1305	NUT	ECROU	6					
53	124-00208D6	CLIP	ATTACHE	1					

DATE	JUN. 30, 2007
REV.NO.	EXB07-06

Fig. 1410 ELECTRIC PARTS - CABIN EQUIPMENT ELECTRIQUE

Serial No. ;

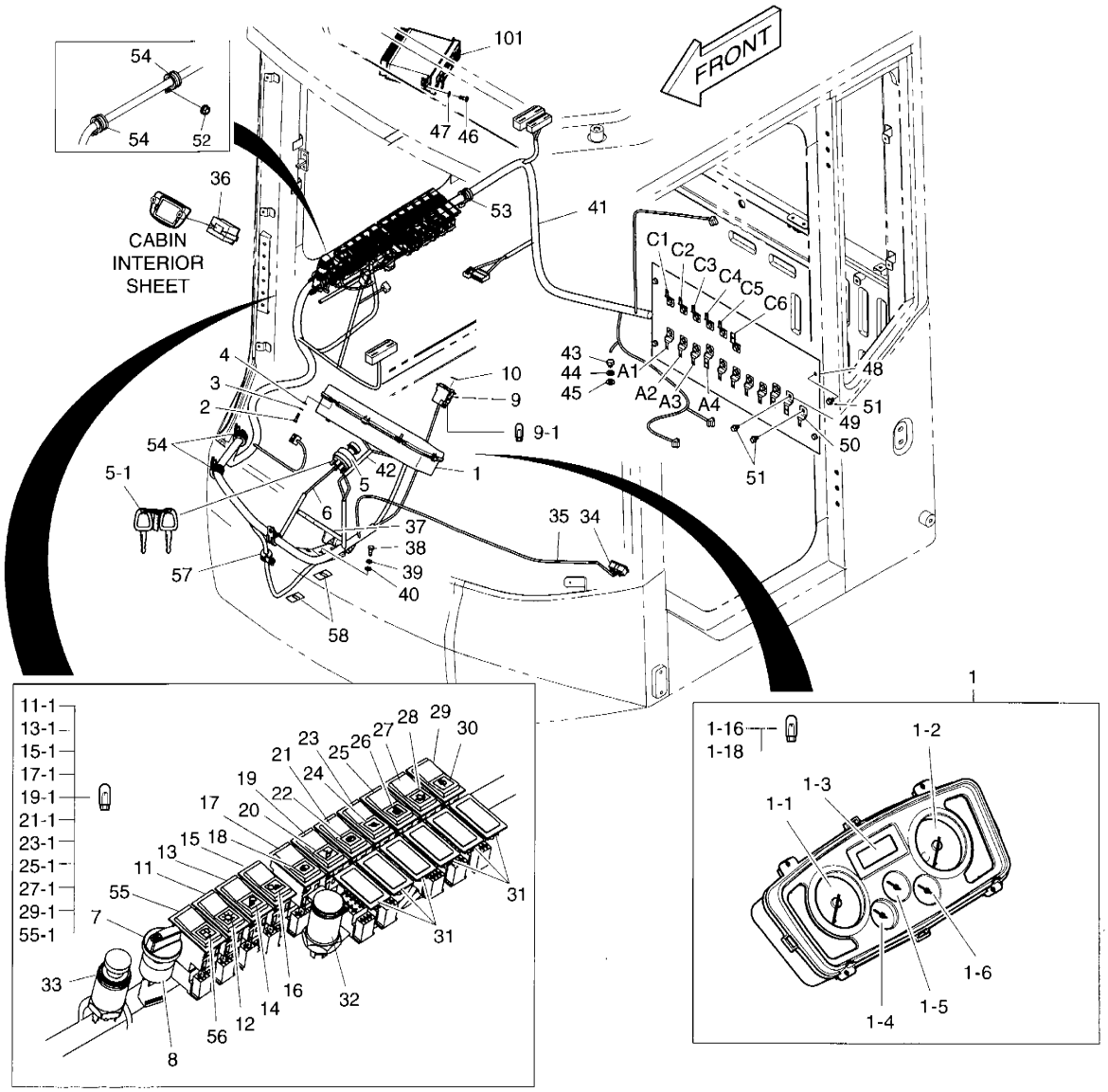

DATE	JUN. 30, 2007
REV. NO.	EXB07-06

Fig. 1410 ELECTRIC PARTS - CABIN EQUIPMENT ELECTRIQUE

Serial No. ;

Key No.	Part No.	Description	Description	Q'ty	S.C	Serial No.	ICA	Replaceable part	
								Part No.	Q'ty
1410-54	124-00208D5	CLIP	ATTACHE	4					
55	2549-9098	SWITCH;ROCKER	INTERRUPTEUR	1					
55-1	K9000353	. LAMP;PILOT	. LAMPE	1					
56	2190-2584D25	INSERT;ECONOMIC	INSERTION	1					
57	124-00208D2	CLIP	ATTACHE	1					
58	2128-1209D1	CLAMP;SUS	COLLIER	2					
101	K1013232	STEREO;CAR	STEREO VOITURE	1					

DATE	NOV. 24, 2006
1st EDITION	

Fig. 1420 ELECTRIC PARTS - ENGINE
EQUIPMENT ELECTRIQUE

Serial No. ;

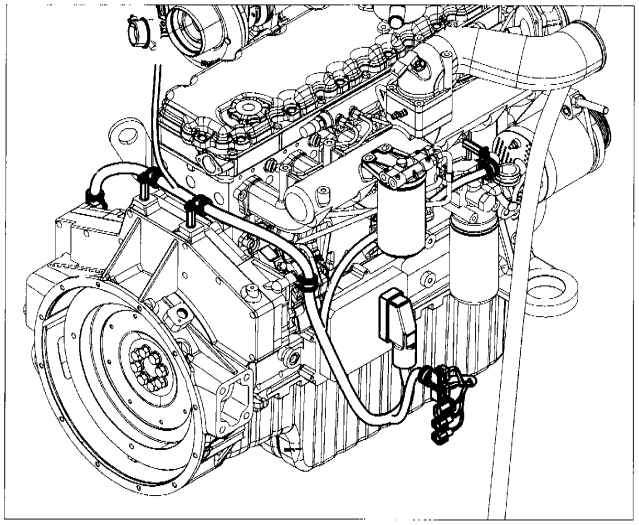

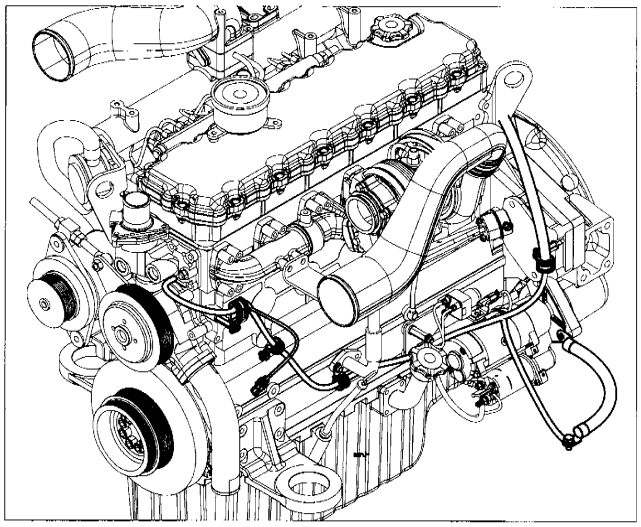

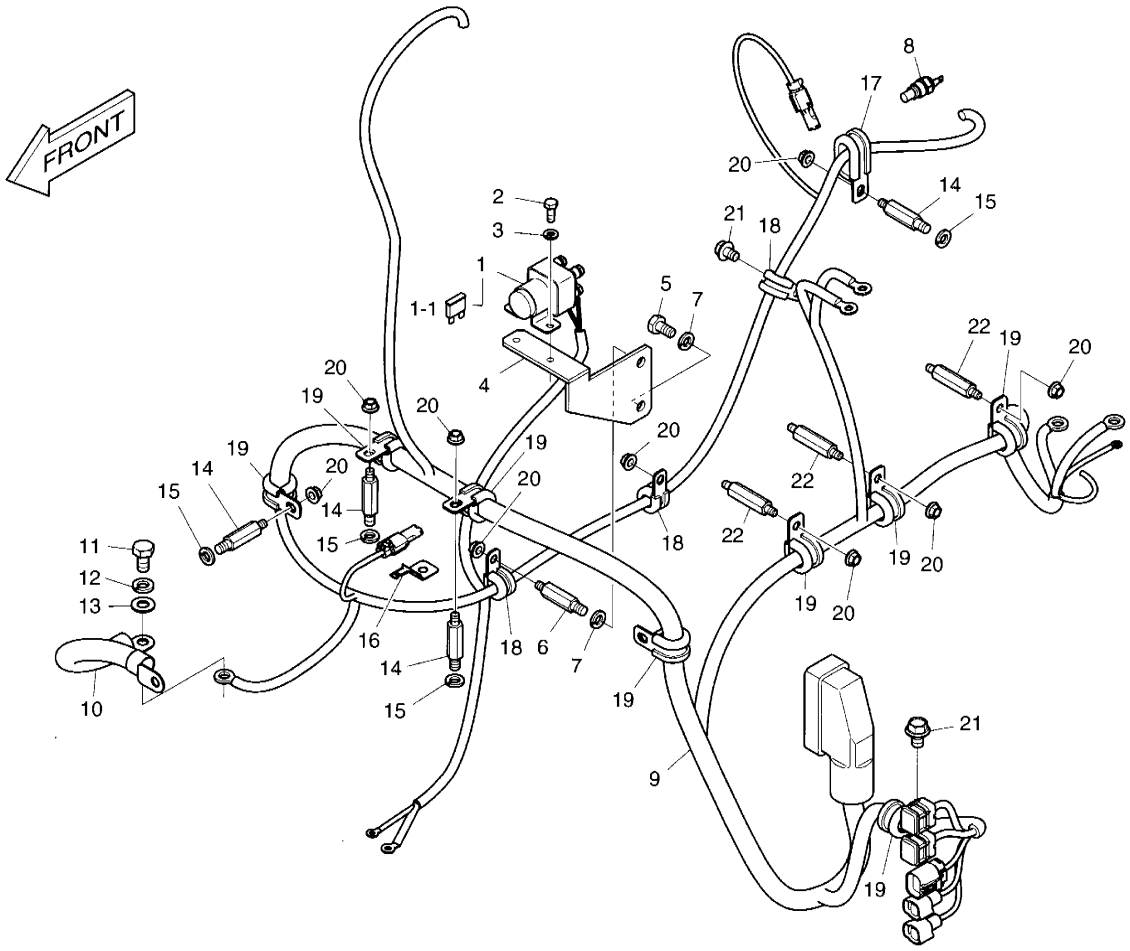

DATE	NOV. 24, 2006
1st EDITION	

Fig. 1420 ELECTRIC PARTS - ENGINE EQUIPMENT ELECTRIQUE

Serial No. ;

Key No.	Part No.	Description	Description	Q'ty	S.C	Serial No.	ICA	Replaceable part	
								Part No.	Q'ty
1420--	K1024077A	ELECTRIC PARTS - ENGINE	EQUIPMENT ELECTRIQUE	-	D				
1	544-00007	RELAY;PREHEAT	RELAIS	1					
1-1	527-00005	. FUSE;PREHEAT RELAY	. FUSIBLE	1					
2	S0504666	BOLT	BOULON	2					
3	S5102303	WASHER;SPRING	RONDELLE ELASTIQUE	2					
4	K1023668	BRACKETPREHAT;RELAY	BRACKETPREHAT;RELAY	1					
5	S0511866	BOLT	BOULON	1					
6	120-00246	BOLT;STUD	BOULON DE GOUJON	1					
7	S5102603	WASHER;SPRING	RONDELLE ELASTIQUE	2					
8	2547-6028	SENDER;WATER TEMP.	TRANSMETTEUR GAZOLE	1					
9	K1024115A	HARNESS;ENGINE	HARNAIS	1					
10	553-00001D4	CABLE;ENGINE EARTH	CABLE	1					
11	S0511853	BOLT	BOULON	1					
12	S5102603	WASHER;SPRING	RONDELLE ELASTIQUE	1					
13	S5010613	WASHER;SPRING	RONDELLE ELASTIQUE	1					
14	120-00246	BOLT;STUD	BOULON DE GOUJON	4					
15	S5102603	WASHER;SPRING	RONDELLE ELASTIQUE	4					
16	2197-1661	BRACKET;HOUSING	SUPPORT	1					
17	124-00209D1	CLIP	AGRAFE	1					
18	124-00208D2	CLIP	AGRAFE	3					
19	124-00208D3	CLIP	AGRAFE	8					
20	2121-1305	NUT	ECROU	9					
21	K1001029	BOLT	BOULON	2					
22	2120-2187	BOLT;STUD	BOULON DE GOUJON	3					

DATE	NOV. 24, 2006
1st EDITION	

Fig. 1430 ALTERNATOR MOUNTING
ALTERNATEUR

Serial No. ;

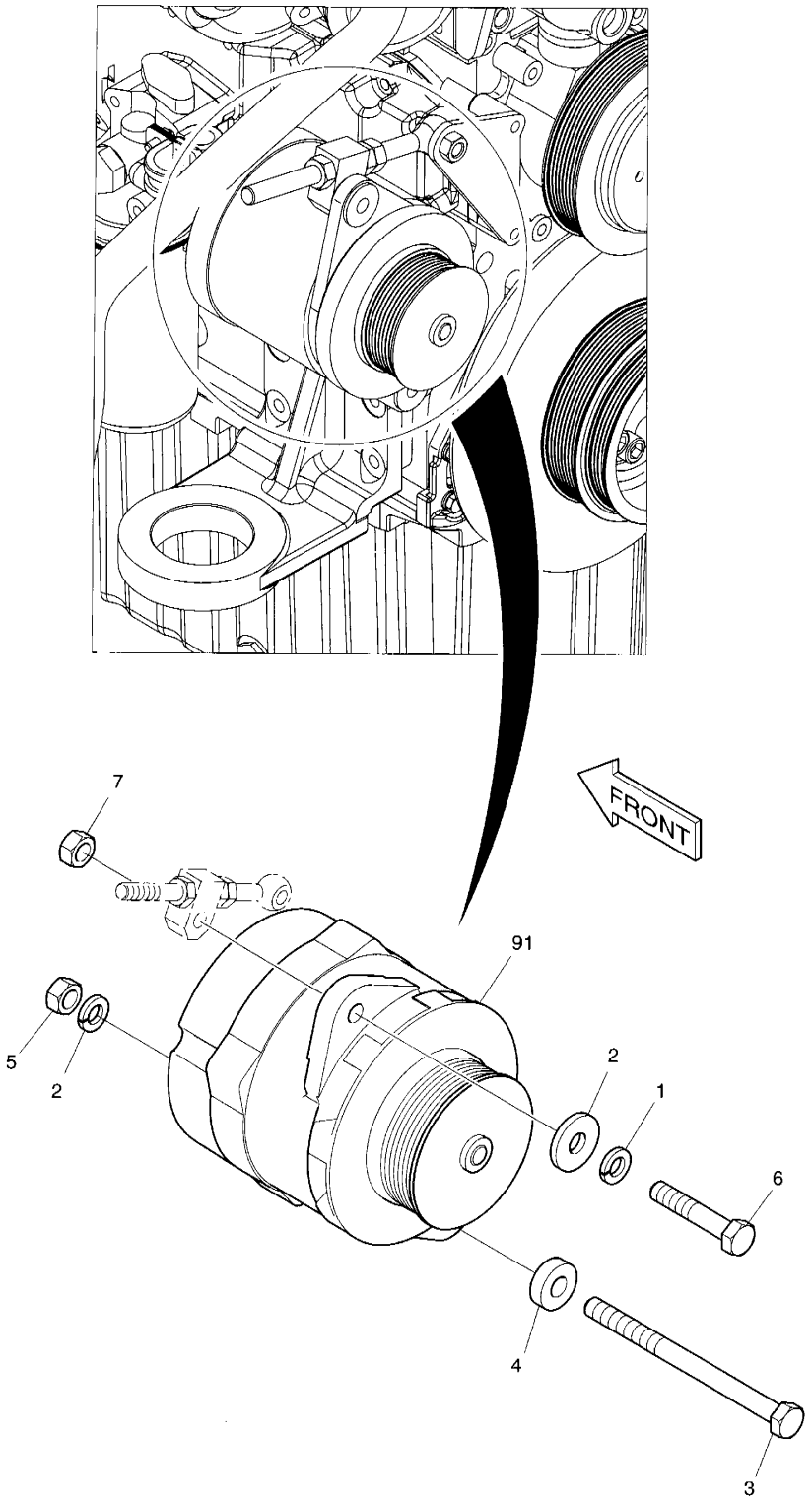

DATE	NOV. 24, 2006
1st EDITION	

Fig. 1430 ALTERNATOR MOUNTING ALTERNATEUR

Serial No. ;

Key No.	Part No.	Description	Description	Q'ty	S.C	Serial No.	ICA	Replaceable part	
								Part No.	Q'ty
1430--	K1024097A	ALTERNATOR	ALTERNATEUR	-	D				
1	S5102703	WASHER;SPRING	RONDELLE ELASTIQUE	2					
2	2114-1058D54	WASHER	RONDELLE	1					
3	S0562653	BOLT	BOULON	1					
4	2114-1058D70	WASHER	RONDELLE	1					
5	S4012733	NUT	ECROU	1					
6	S0761053	BOLT	BOULON	1					
7	S4032733	NUT	ECROU	1					
91	K1010702	ALTERNATOR 50A	ALTERNATEUR	1					

DATE	JUN. 30, 2007
REV.NO.	EXB07-06

Fig. 1440 ELECTRIC PARTS(1) - BATTERY & REAR LAMP
EQUIPMENT ELECTRIQUE

Serial No. ;

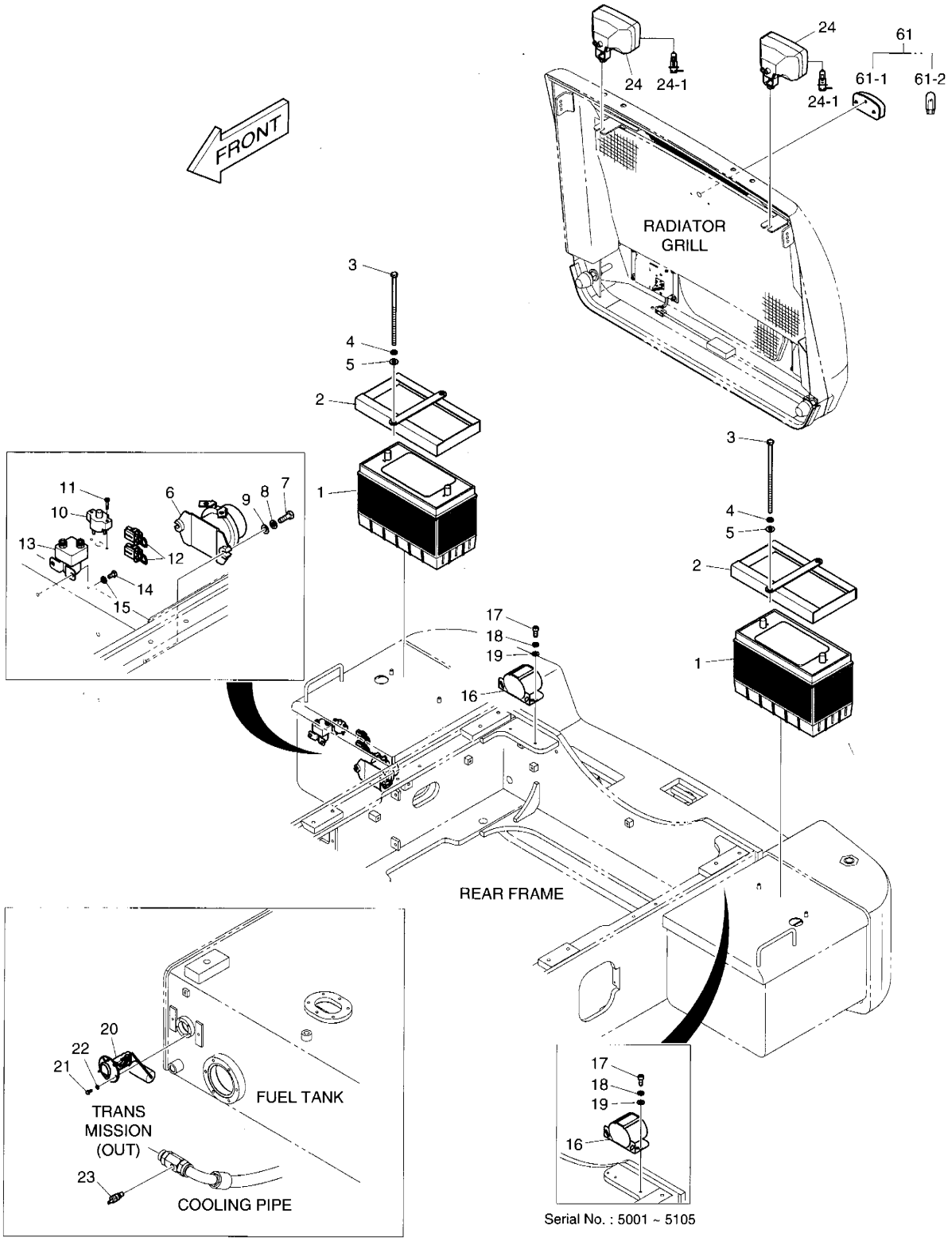

DATE	JUN. 30, 2007
REV. NO.	EXB07-06

Fig. 1440 ELECTRIC PARTS(1) - BATTERY & REAR LAMP EQUIPMENT ELECTRIQUE

Serial No. ;

Key No.	Part No.	Description	Description	Q'ty	S.C	Serial No.	ICA	Replaceable part	
								Part No.	Q'ty
1---0--	K1024075B	ELECTRIC PARTS(1) - BATTERY &	EQUIPMENT ELECTRIQUE	-	D				
1	506-00006	BATTERY	BATTERIE	2					
2	K1018105A	BRACKET	SUPPORT	2					
3	DS0001088	BOLT	BOULON	4					
4	2114-2031D5	WASHER;SPRING	RONDELLE ELASTIQUE	4					
5	2114-1898D1	WASHER	CALE	4					
6	2544-9024	RELAY;BATTERY	RELAIS BATTERIE	1					
7	S0509066	BOLT	BOULON	2					
8	S5102503	WASHER;SPRING	RONDELLE ELASTIQUE	2					
9	S5010513	WASHER	CALE	2					
10	2527-9004	BREAKER;CIRCUIT	COUPE-CIRCUIT	1					
11	2120-1354	SCREW	VIS	2					
12	2527-1023A	FUSIBLE LINK	FUSIBLE	2					
13	2544-1022	RELAY	RELAIS AVERTISSEUR	1					
14	S0504453	BOLT	BOULON	2					
15	S5102303	WASHER;SPRING	RONDELLE ELASTIQUE	2					
16	516-00011	BUZZER;ALARM	BUZZER;BACK-UP	1					
17	S2208866	BOLT	BOULON	2					
18	S5102503	WASHER;SPRING	RONDELLE ELASTIQUE	2					
19	S5010513	WASHER	CALE	2					
20	547-00020	SENDER;FUEL	SENDER	1					
21	S0502953	BOLT	BOULON	5					
22	S5100203	WASHER;SPRING	RONDELLE ELASTIQUE	5					
23	2547-6028	SENDER;WATER TEMP	TRANSMETTEUR GAZOLE	1					
24	534-00085	LAMP;HEAD	LAMPE	2					
24-1	2515-1016D4	. BULB;HALOGEN	. LAMPE	1					
61	K1005717	LAMP;REGISTRATION PLATE	LAMPE	1					
61-1	2534-6019	. CASE;LAMP	. CARTER	1					
61-2	2515-1021D5	. BULB	. AMPOULE	1					

DATE	DEC. 15, 2006
REV.NO.	EXB06-13

Fig. 1450 ELECTRIC PARTS(2) - FRONT EQUIPMENT ELECTRIQUE

Serial No. ;

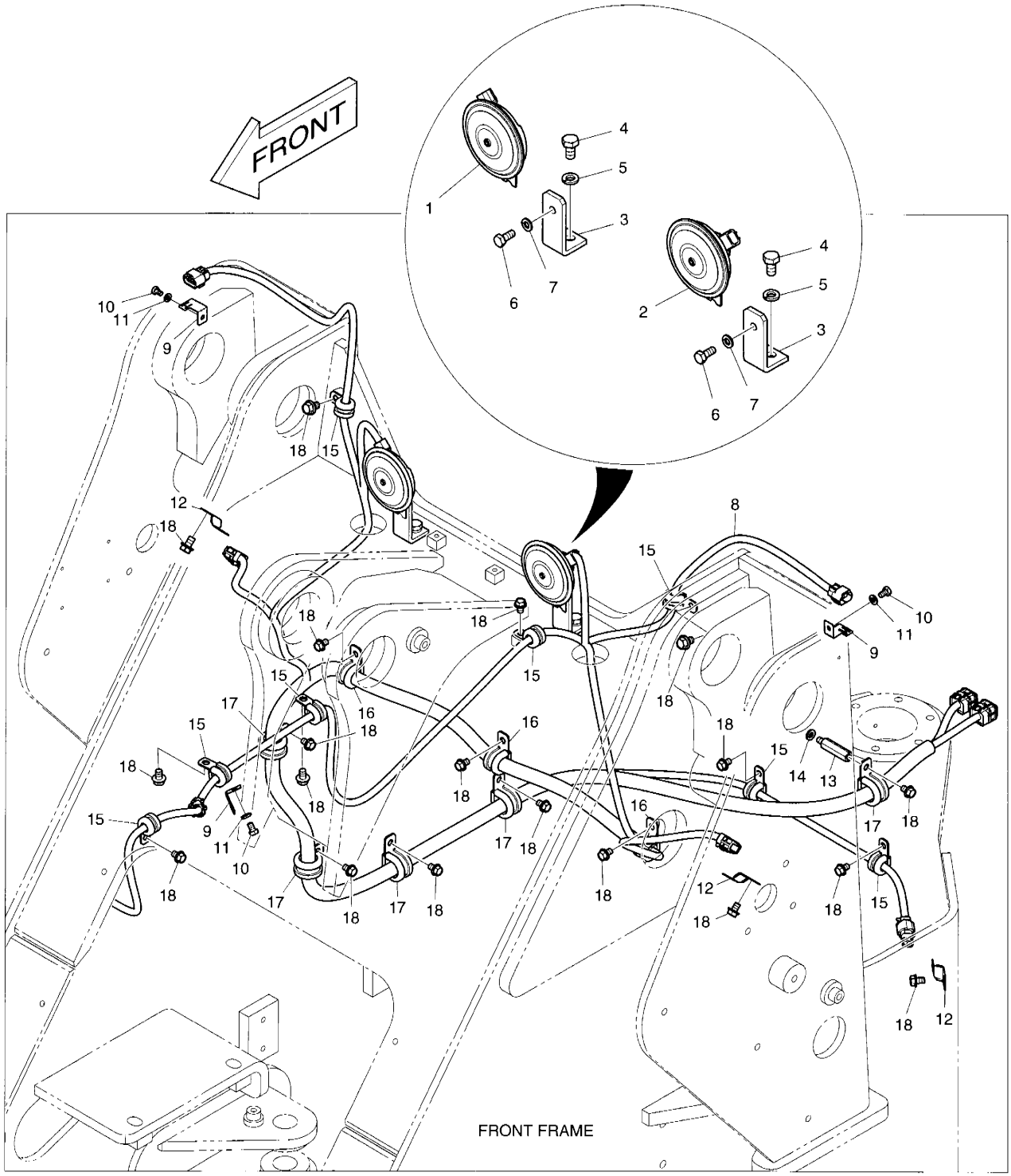

DATE	DEC. 15, 2006
REV. NO.	EXB06-13

Fig. 1450 ELECTRIC PARTS(2) - FRONT EQUIPMENT ELECTRIQUE

Serial No. ;

Key No.	Part No.	Description	Description	Q'ty	S.C	Serial No.	ICA	Replaceable part	
								Part No.	Q'ty
1450--	K1024076A	ELECTRIC PARTS (2) - FRONT	EQUIPMENT ELECTRIQUE	-	D				
1	516-00014	HORN;HIGH	AVERTISSEUR	1					
2	516-00015	HORN;LOW	AVERTISSEUR	1					
3	K1006282	BRACKET;HORN	SUPPORT	2					
4	S0511853	BOLT	BOULON	2					
5	S5102603	WASHER;SPRING	RONDELLE ELASTIQUE	2					
6	S0508853	BOLT	BOULON	2					
7	S5102503	WASHER;SPRING	RONDELLE ELASTIQUE	2					
8	K1018771A	HARNESS;FRONT FRAME	HARNAIS	1					
9	2195-3500	BRACKET;HOUSING	SUPPORT	3					
10	S0504366	BOLT	BOULON	3					
11	S5102303	WASHER;SPRING	RONDELLE ELASTIQUE M8	3					
12	2197-1661	BRACKET;HOUSING	SUPPORT	3					
13	2120-2187	BOLT;STUD	BOULON DE GOUJON	1					
14	S5102503	WASHER;SPRING	RONDELLE ELASTIQUE	1					
15	124-00208D2	CLIP	AGRAFE	8					
16	124-00208D3	CLIP	AGRAFE	3					
17	124-00208D4	CLIP	AGRAFE	5					
18	K1001029	BOLT	BOULON	19					

DATE	JUN. 30, 2007
REV.NO.	EXB07-06

Fig. 1460 ELECTRIC PARTS(3) - WIRING
EQUIPMENT ELECTRIQUE

Serial No. ;

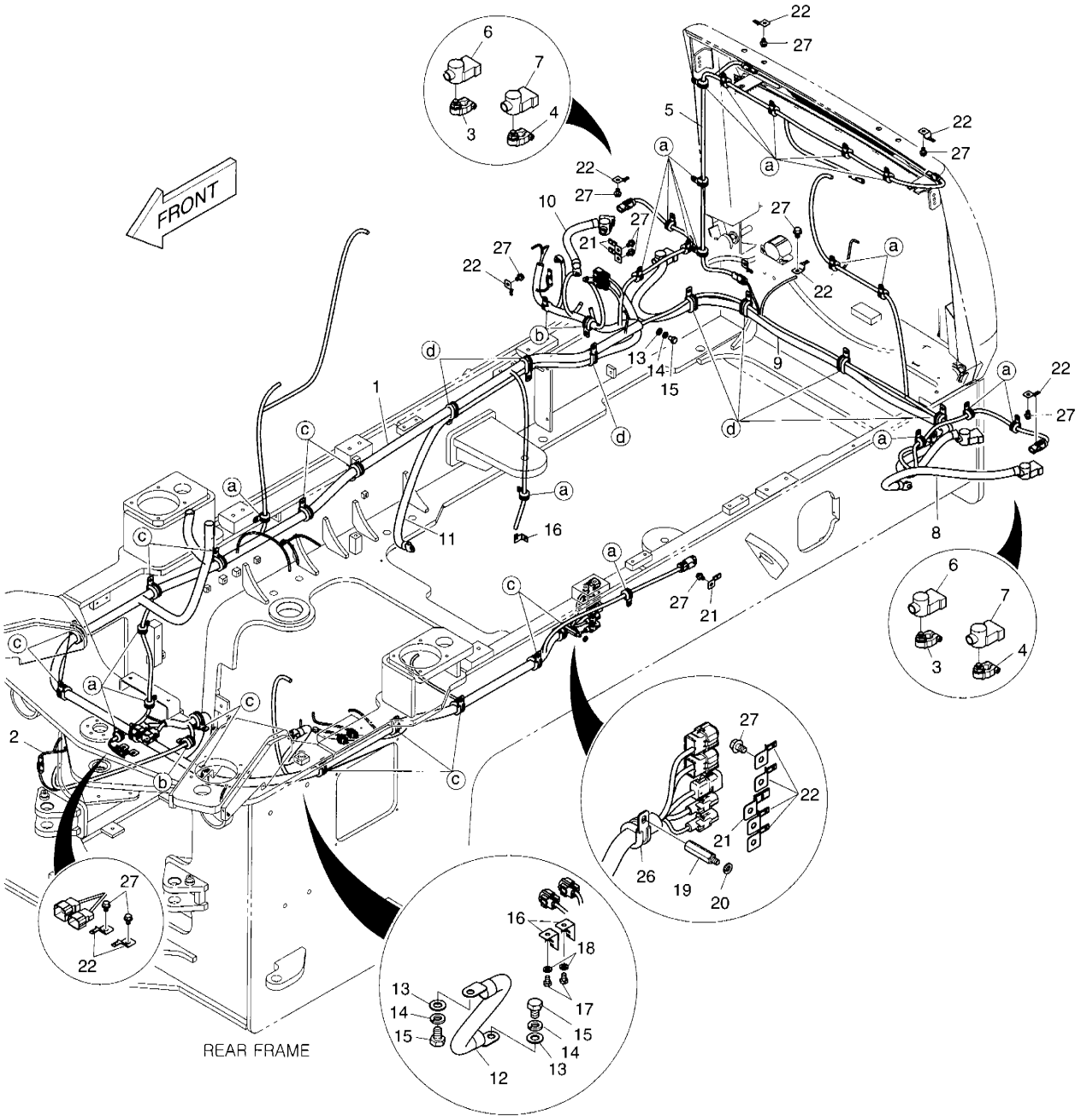

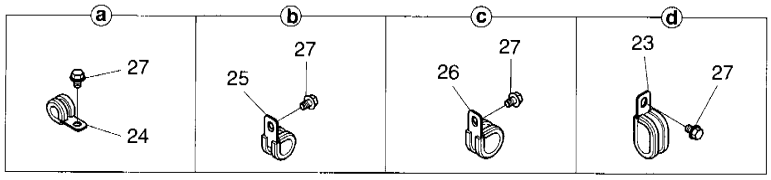

DATE	JUN. 30, 2007
REV. NO.	EXB07-06

Fig. 1460 ELECTRIC PARTS(3) - WIRING
EQUIPMENT ELECTRIQUE

Serial No. ;

Key No.	Part No.	Description	Description	Q'ty	S.C	Serial No.	ICA	Replaceable part	
								Part No.	Q'ty
-1460--	**K1024078C**	**ELECTRIC PRATS (3) -**	EQUIPMENT ELECTRIQUE	-	D				
1	K1018772B	HARNESS;MAIN	HARNAIS	1		5001–5105			
	K1018772C	**HARNESS;MAIN**	HARNAIS	1		**5106–**			
2	530-00067	HARNESS;STOP LAMP SWITCH	HARNAIS	1					
3	2550-1014D1	TERMINAL;BATTERY(+)	COSSE DE BATTERIE(+)	2					
4	2550-1014D2	TERMINAL;BATTERY(-)	COSSE DE BATTERIE(-)	2					
5	K1024138	HARNESS;REAR WORKING LAMP	HARNAIS	1					
6	2160-1212	CAP;BATTERY (+)	BATTERIE	2					
7	2160-1213	CAP;BATTERY (-)	BATTERIE	2					
8	2553-1275D86	CABLE;BATTERY	CABLE DE BATTERIE	1					
9	2553-1275D65	CABLE;BATTERY	CABLE DE BATTERIE	1					
10	2553-1275D69	CABLE;BATTERY RELAY	CABLE DE BATTERIE	1					
11	2553-1275D58	CABLE;BATT.RY-STARTER	CABLE DE BATTERIE	1					
12	2553-1275D22	CABLE;EARTH	CABLE	1					
13	S5010613	WASHER;PLAIN	RONDELLE PLATE	4					
14	S5102603	WASHER;SPRING	RONDELLE ELASTIQUE	4					
15	S0511653	BOLT	BOULON	4					
16	2195-3500	BRACKET;HOUSING	SUPPORT	3					
17	S0504366	BOLT	BOULON	2					
18	S5102303	WASHER;SPRING	RONDELLE ELASTIQUE	2					
19	2120-2187	BOLT	BOULON	1					
20	S5102503	WASHER;SPRING	RONDELLE ELASTIQUE	1					
21	2197-1660	BRACKET;HOUSING	SUPPORT	4					
22	2197-1661	BRACKET;HOUSING	SUPPORT	13					
23	124-00209D1	CLIP	AGRAFE	8					
24	124-00208D2	CLIP	AGRAFE	22					
25	124-00208D3	CLIP	AGRAFE	2					
26	124-00208D4	CLIP	AGRAFE	14					
27	K1001029	BOLT	BOULON	62					

DATE	NOV. 24, 2006
1st EDITION	

Fig. 1470 AIRCONDITIONER(1) REFRIGERATION

Serial No. ;

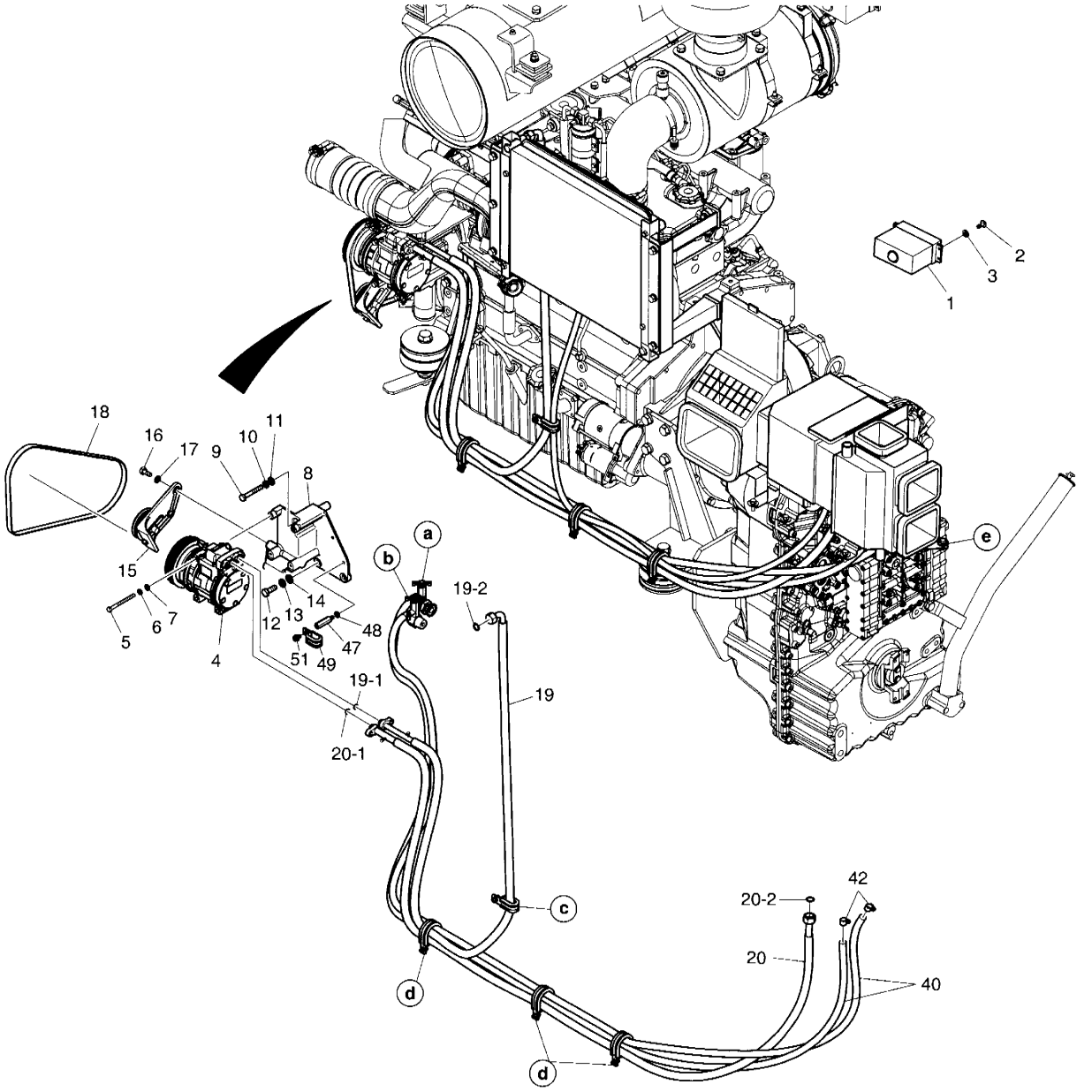

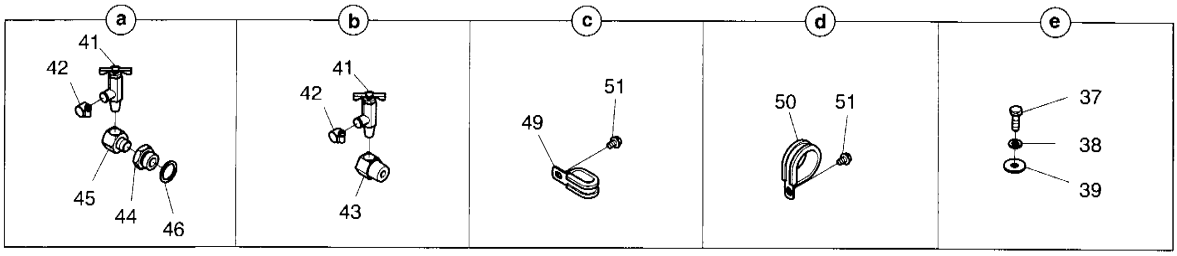

DATE	NOV. 24, 2006
1st EDITION	

Fig. 1470 AIRCONDITIONER(1) REFRIGERATION

Serial No. ;

Key No.	Part No.	Description	Description	Q'ty	S.C	Serial No.	ICA	Replaceable part	
								Part No.	Q'ty
1470--	K1024079A	AIRCONDITION (1)	AIRCONDITION	-	D				
1	K1010519	CONTROLLER;AIR CON.	CONTROLEUR	1					
2	S3450583	SCREW	VIS	4					
3	S5000113	WASHER;PLAIN	RONDELLE PLATE	4					
4	2208-6013B	COMPRESSOR	COMPRESSEUR	1					
5	S0557166	BOLT	BOULON	4					
6	S5102503	WASHER;SPRING	RONDELLE ELASTIQUE	4					
7	S5010513	WASHER	RONDELLE	4					
8	K1008482B	BRACKET;COMPRESSOR	SUPPORT	1					
9	S0558966	BOLT	BOULON	1					
10	S5102603	WASHER;SPRING	RONDELLE ELASTIQUE	1					
11	S5010613	WASHER;SPRING	RONDELLE ELASTIQUE	1					
12	S0786366	BOLT	BOULON	2					
13	S5102703	WASHER;SPRING	RONDELLE ELASTIQUE	2					
14	S5010713	WASHER	RONDELLE	2					
15	2107-6006	PULLEY ASS'Y	ENSEMBLE POULIE FOU	1					
16	S0512066	BOLT	BOULON	2					
17	S5102603	WASHER;SPRING	RONDELLE ELASTIQUE	2					
18	2106-1019D25	BELT;AIRCON	COURROIE	1					
19	4185-1771A	HOSE	TUYAU FLEXIBLE	1					
19-1	2180-6088	. O-RING(COMPRESSOR)	. JOINT TORIQUE	1					
19-2	2180-6089	. O-RING(EVAPORATOR)	. JOINT TORIQUE	1					
20	185-00324	HOSE	TUYAU FLEXIBLE	1					
20-1	2180-6086	. O-RING(COMPRESSOR)	. JOINT TORIQUE	1					
20-2	2180-6087	. O-RING(EVAPORATOR)	. JOINT TORIQUE	1					
37	S0509053	BOLT	BOULON	6					
38	S5102503	WASHER;SPRING	RONDELLE ELASTIQUE	6					
39	2114-1058D29	WASHER	RONDELLE	6					
40	2185-1308D5	HOSE	TUYAU FLEXIBLE	2					
41	2186-9003	VALVE	VANNE	2					
42	S8450016	CLAMP;HOSE	COLLIER DE LA CONDUITE	4					
43	2181-1159	ADAPTER	ADAPTEUR	1					
44	2181-1160A	ADAPTER	ADAPTEUR	1					
45	2181-1161A	ADAPTER	ADAPTEUR	1					
46	S8180411	SEAL;COPPER	BAGUE D'ETANCHEITE	1					
47	2120-2187	BOLT	BOULON	1					
48	S5102503	WASHER;SPRING	RONDELLE ELASTIQUE	1					
49	124-00209D1	CLIP	AGRAFE	2					

DATE	NOV. 24, 2006
1st EDITION	

Fig. 1470 AIRCONDITIONER(1) REFRIGERATION

Serial No. ;

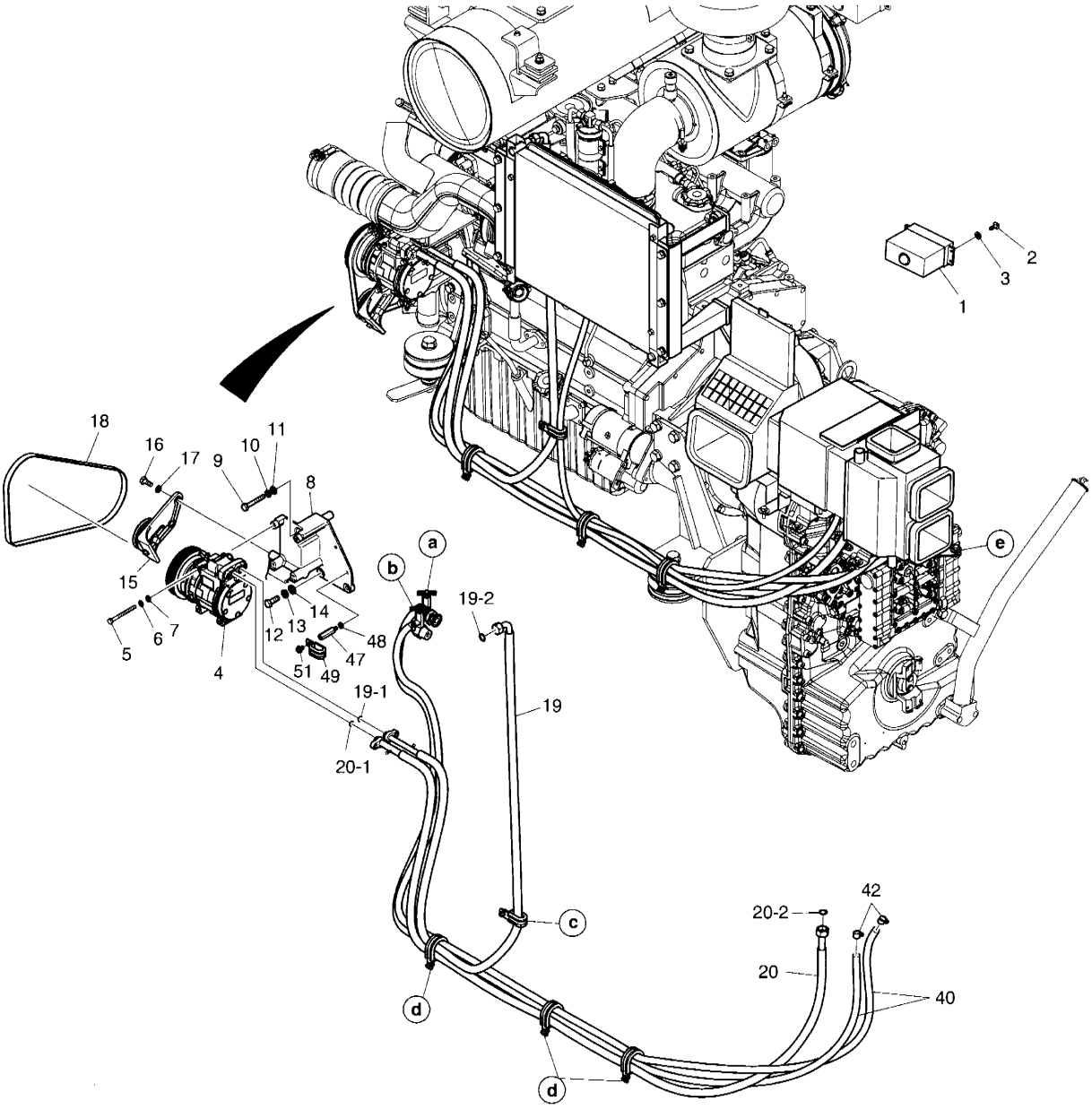

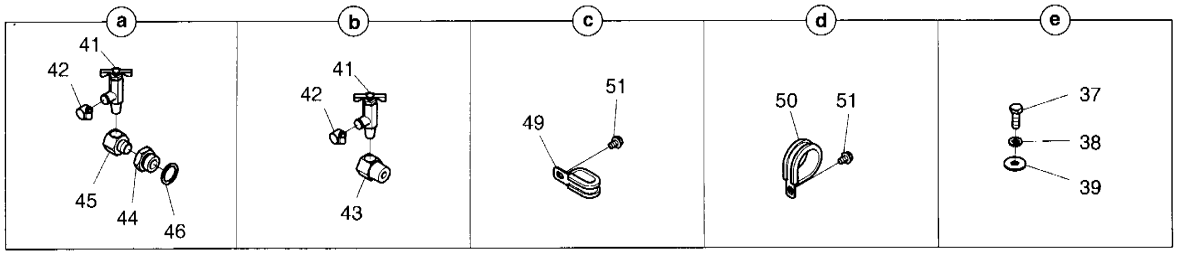

DATE	NOV. 24, 2006
1st EDITION	

Fig. 1470 AIRCONDITIONER(1) REFRIGERATION

Serial No. ;

Key No.	Part No.	Description	Description	Q'ty	S.C	Serial No.	ICA	Replaceable part	
								Part No.	Q'ty
1470-50	124-00208D7	CLIP	AGRAFE	3					
51	K1001029	BOLT	BOULON	5					

Fig. 1480 AIRCONDITIONER(2) REFRIGERATION

Serial No. ;

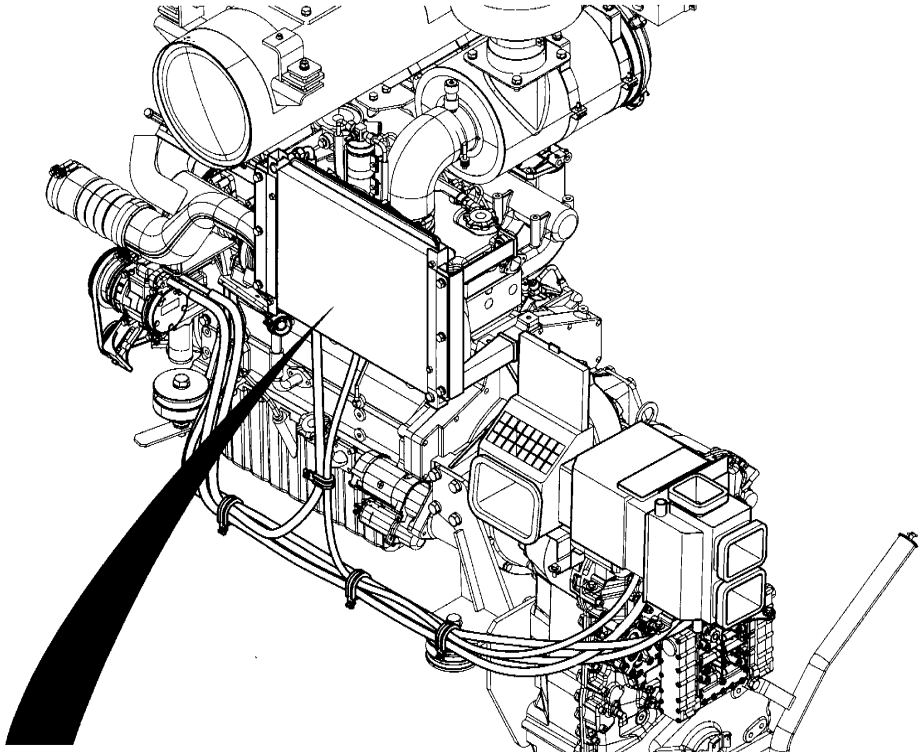

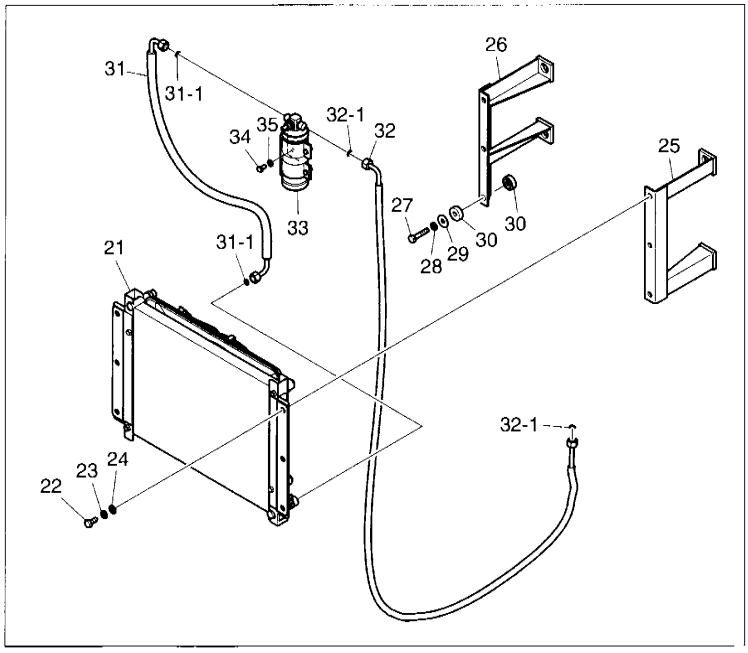

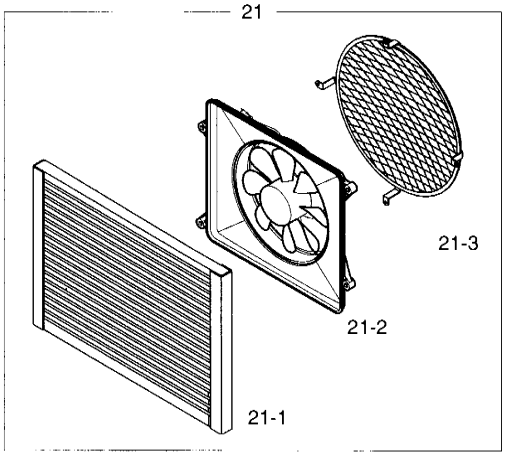

DATE	NOV. 24, 2006
1st EDITION	

Fig. 1480 AIRCONDITIONER(2) REFRIGERATION

Serial No. ;

Key No.	Part No.	Description	Description	Q'ty	S.C	Serial No.	ICA	Replaceable part	
								Part No.	Q'ty
1480--	K1024079A	AIRCONDITION (2)	REFRIGERATION	-	D				
21	2520-6004	CONDENSER ASS'Y	CONDENSEUR	1					
21-1	2520-6005	. CONDENSER CORE	. CONDENSEUR	1					
21-2	2538-6018	. FAN MOTOR ASS'Y	. MOTEUR	1					
21-3	2520-6006	. NET;CONDENSER	. ENSEMBLE	1					
22	S0512066	BOLT	BOULON	6					
23	S5102603	WASHER;SPRING	RONDELLE ELASTIQUE	6					
24	S5010613	WASHER;SPRING	RONDELLE ELASTIQUE	6					
25	195-01868	BRACKET;CONDENSER (R.H)	SUPPORT CONDENSEUR	1					
26	195-01362B	BRACKET;CONDENSER (L.H)	SUPPORT CONDENSEUR	1					
27	S0558566	BOLT	BOULON	4					
28	S5102603	WASHER;SPRING	RONDELLE ELASTIQUE	4					
29	2114-1058D1	WASHER	CALE	4					
30	2512-1077	RUBBER;CUSHION	CUSHION;RUBBER	8					
31	185-00288	HOSE	TUYAU FLEXIBLE	1					
31-1	2180-6090	. O-RING	. JOINT TORIQUE	2					
32	4185-1775D3	HOSE	TUYAU FLEXIBLE	1					
32-1	2180-6090	. O-RING	. JOINT TORIQUE	2					
33	2204-6039A	RECEIVER DRIER	RESERVOIR DESSICATEUR	1					
34	S0508666	BOLT	BOULON	2					
35	S5102503	WASHER;SPRING	RONDELLE ELASTIQUE	2					

DATE	JUN. 30, 2007
REV.NO.	EXB07-06

Fig. 1490 AIRCONDITIONER(3) REFRIGERATION

Serial No. ;

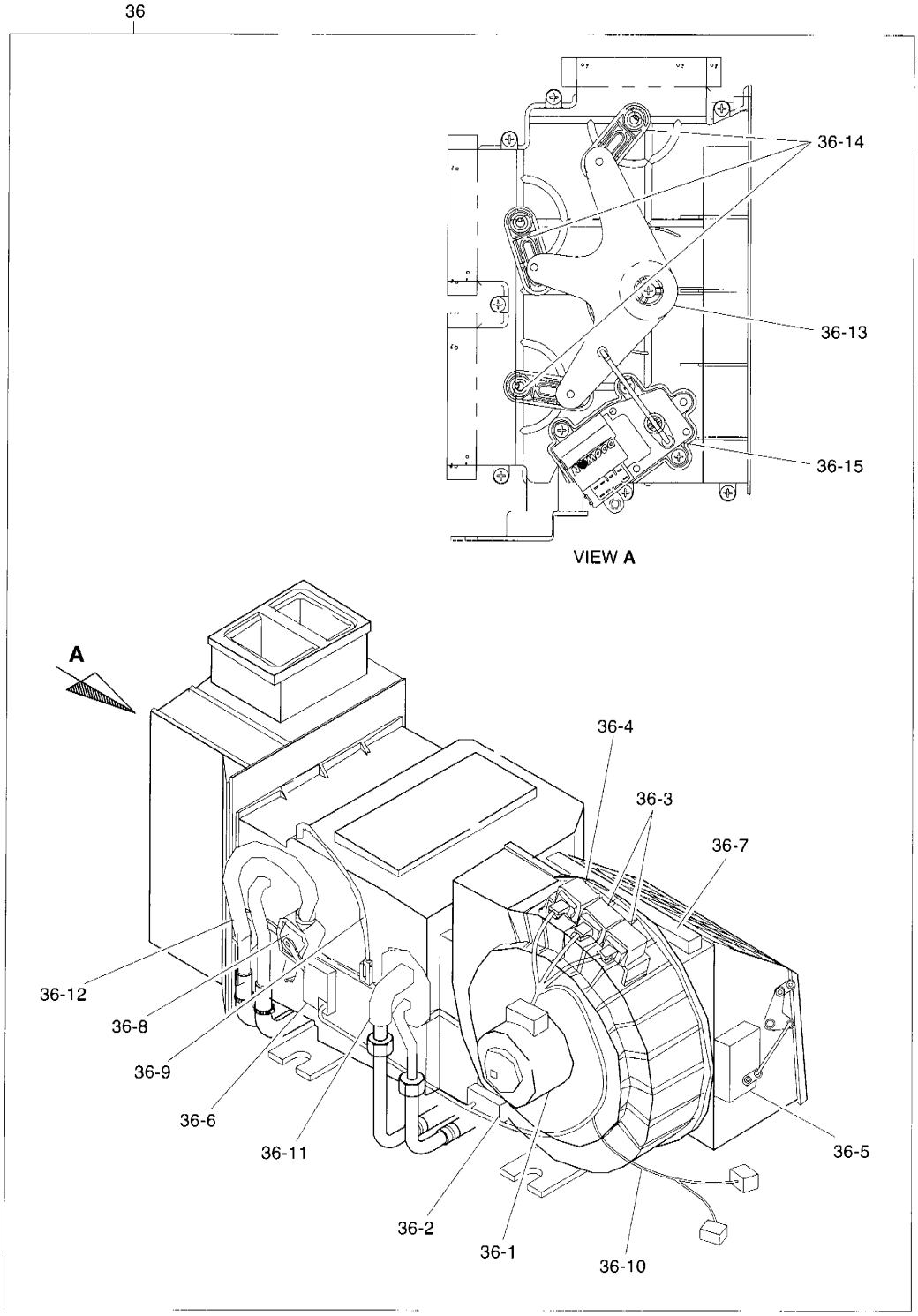

DATE	JUN. 30, 2007
REV. NO.	EXB07-06

Fig. 1490 AIRCONDITIONER(3) REFRIGERATION

Serial No. ;

Key No.	Part No.	Description	Description	Q'ty	S.C	Serial No.	ICA	Replaceable part	
								Part No.	Q'ty
1490--	K1024079A	AIRCONDITION (3)	REFRIGERATION	-	D				
36	4920-9050A	UNIT;AIRCON	UNITE DE CLIGNOTANTS	1		5001-5149	I	4920-9050B	1
	4920-9050B	**UNIT;AIRCON**	UNITE DE CLIGNOTANTS	1		**5150-**			
36-1	2538-6015	. MOTOR;BLOWER	. MOTEUR	1		5001-5149	I	K1040112	1
	K1040112	**. MOTOR;BLOWER**	. MOTEUR	1		**5150-**			
36-2	545-00003	. RESISTOR;BLOWER	. RESISTOR	1					
36-3	2544-6023	. RELAY;BLOWER(10A)	. RELAIS DEMARREUR	2					
36-4	2544-6024	. RELAY;BLOWER(20A)	. RELAIS DEMARREUR	1					
36-5	2538-6016	. MOTOR;INTAKE	. MOTEUR	1					
36-6	2538-6017	. MOTOR;MIX	. MOTEUR	1					
36-7	2471-6050	. FILTER;AIRCON.	. FILTRE	1					
36-8	2426-6048	. VALVE;STEM	. VANNE	1					
36-9	2547-6033	. THERMISTOR;AIRCON	. CAPTEUR REGIME	1					
36-10	2530-6005	. HARNESS;AIRCON UNIT	. FAISCEAU	1					
36-11	2920-6111	. EVAPORATOR CORE ASS'Y	. CHAUFFAGE	1					
36-12	2920-6112	. HEATER CORE ASS'Y	. CHAUFFAGE	1					
36-13	431-00001	. LEVER;MAIN(A/C UNIT)	. LEVIER	1					
36-14	431-00002	. LEVER;SUB(A/C UNIT)	. LEVIER	3					
36-15	538-00002	. MOTOR	. MOTEUR	1					

DATE	JUN. 30, 2007
REV.NO.	EXB07-06

Fig. 2100 LOADER ARM ASS'Y EQUIPMENT FRONTALES

Serial No. ;

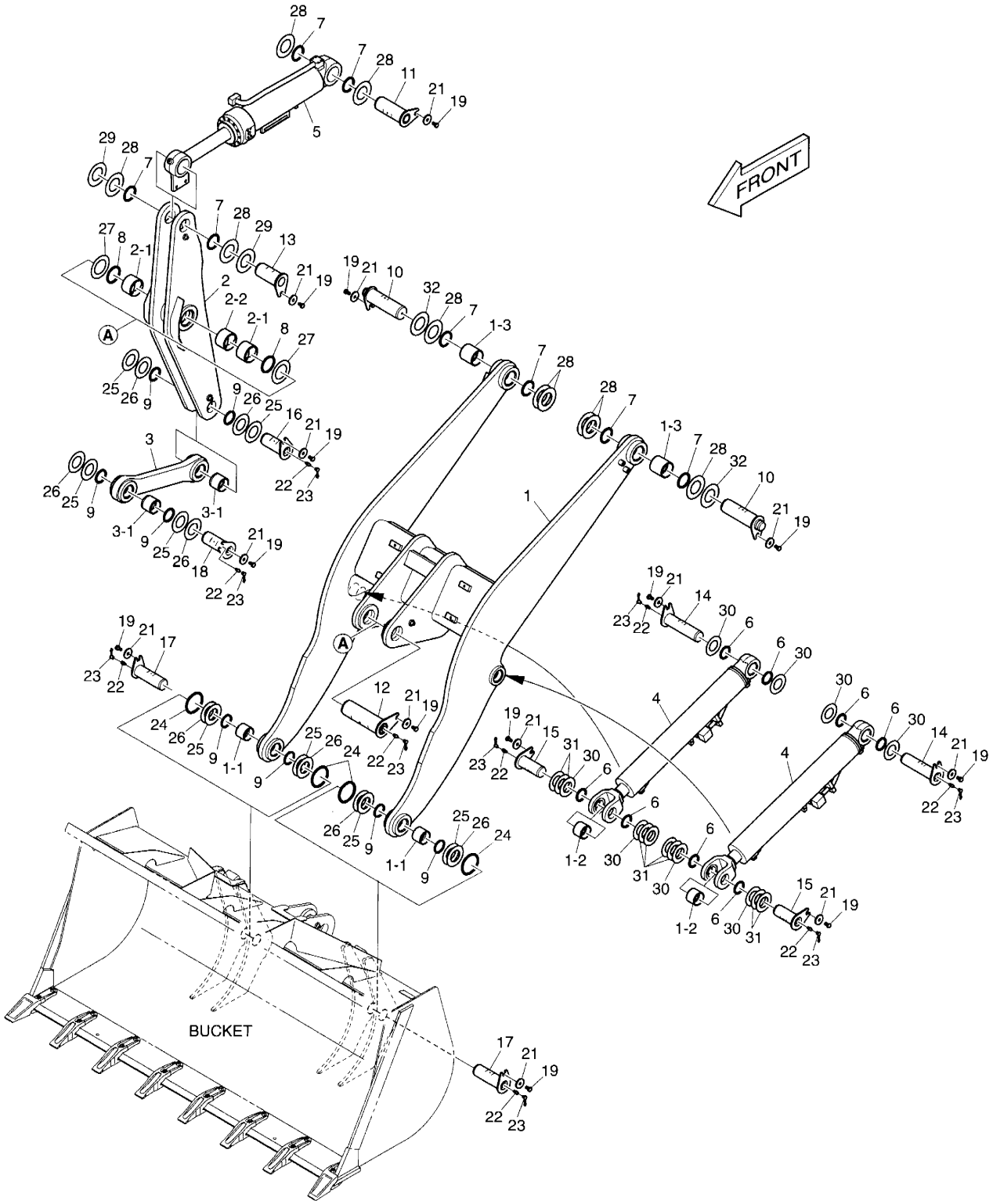

DATE	JUN. 30, 2007
REV. NO.	EXB07-06

Fig. 2100 LOADER ARM ASS'Y EQUIPMENT FRONTALES

Serial No. ;

Key No.	Part No.	Description	Description	Q'ty	S.C	Serial No.	ICA	Replaceable part	
								Part No.	Q'ty
2100--	**K1016858C**	**LOADER ARM ASS'Y**	BALANCIER	-	D				
1	K1016859B	ARM;LIFT	BRAS	1		5001–5023	I	K1016859C	1
	K1016859C	**ARM;LIFT**	BRAS	1		**5024–5087**	I	K1016859G	1
	K1016859G	**ARM;LIFT**	BRAS	1		**5088–**			
1-1	K1017108	. BUSH	. DOUILLE	2					
1-2	K1024527	. BUSH	. DOUILLE	2					
1-3	K1017107	. BUSH	. DOUILLE	2					
2	K1016863B	TILT LEVEL ASS'Y	NIVEAU ASS'Y	1		5001–5023	I	K1016863C	1
	K1016863C	**TILT LEVEL ASS'Y**	NIVEAU ASS'Y	1		**5024–**			
2-1	4110-1380A	. BUSH	. DOUILLE	2					
2-2	114-00454	. SPACER	. ENTRETOISE	1					
3	K1016866	LINK ASS'Y	ENSEMBLE	1		5001–5023	I	K1016866A	1
	K1016866A	**LINK ASS'Y**	ENSEMBLE	1		**5024–**			
3-1	K1017109	. BUSH	. DOUILLE	2					
4	K1016870	CYLINDER;LIFT	VERIN DE BALANCIER	2					
5	K1016873A	CYLINDER;BUCKET	VERIN DE GODET	1					
6	2180-1106BD3	SEAL;DUST	BAGUE D'ETANCHEITE	8					
7	2180-1106BD5	SEAL;DUST	BAGUE D'ETANCHEITE	8					
8	2180-1106BD6	SEAL;DUST	BAGUE D'ETANCHEITE	2					
9	2180-1106BD13	SEAL;DUST	BAGUE D'ETANCHEITE	8					
10	4123-2362C	PIN	GOUPILLE	2					
11	123-00394	PIN	GOUPILLE	1					
12	123-00425	PIN	GOUPILLE	1					
13	4123-2365B	PIN	GOUPILLE	1					
14	4123-2366C	PIN	GOUPILLE	2					
15	4123-2367B	PIN	GOUPILLE	2					
16	4123-2368B	PIN	GOUPILLE	1					
17	K1024501	PIN	GOUPILLE	2					
18	K1024502	PIN	GOUPILLE	1					
19	S0511866	BOLT	BOULON	13					
21	DS0401180	WASHER	RONDELLE	13					
22	S6710041	FITTING	RACCORD	9					
23	160-00020	CAP	CHAPEAU	9					
24	2180-1105D9	O-RING	JOINT TORIQUE	4					
25	2114-1059D122	WASHER	RONDELLE	8					
26	2114-1059D17	SHIM	CALE	8					
27	2114-1059D39	SHIM	CALE	2					
28	2114-1059D63	SHIM	CALE	10					

DATE	JUN. 30, 2007
REV.NO.	EXB07-06

Fig. 2100 LOADER ARM ASS'Y EQUIPMENT FRONTALES

Serial No. ;

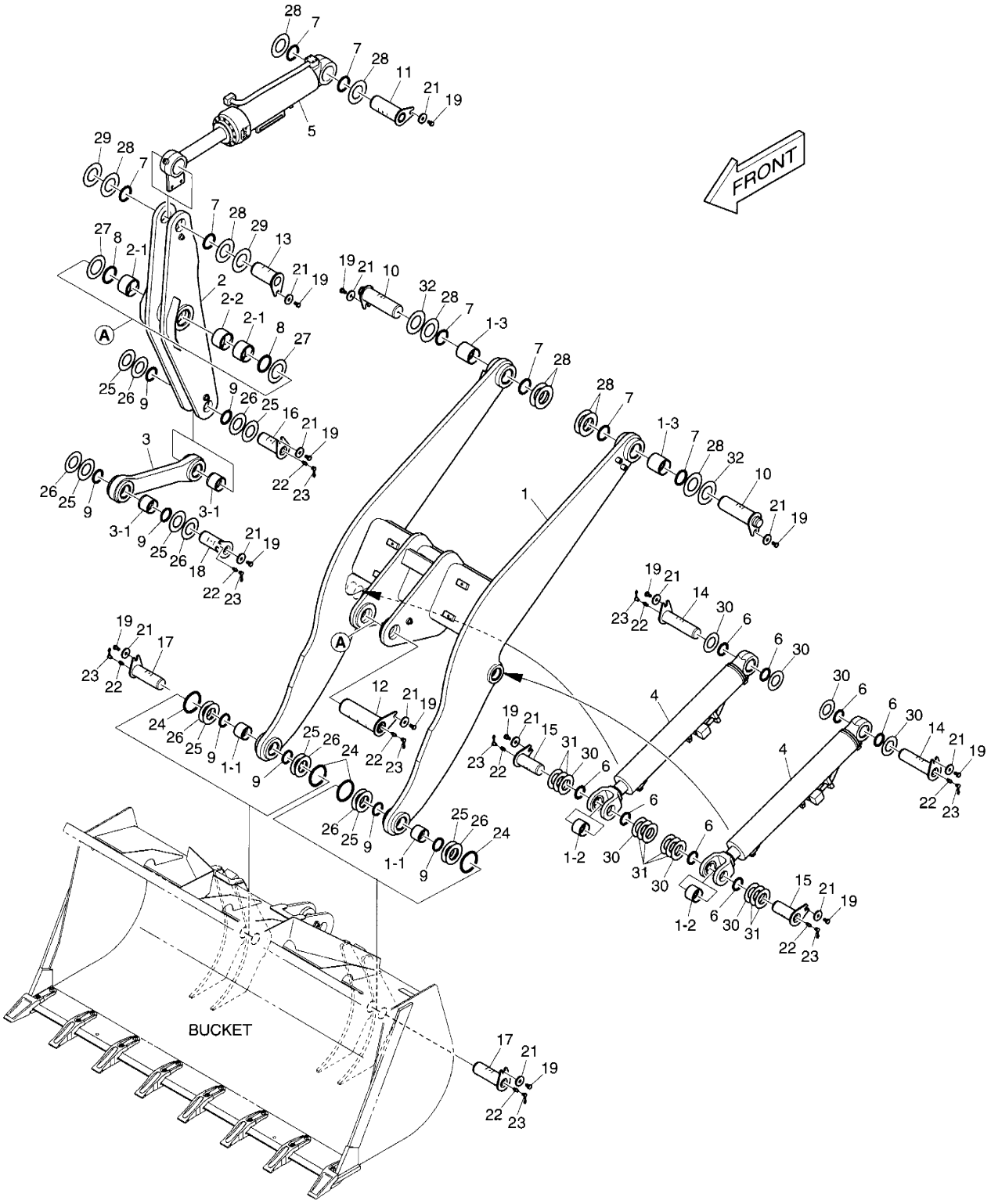

DATE	JUN. 30, 2007
REV. NO.	EXB07-06

Fig. 2100 LOADER ARM ASS'Y EQUIPMENT FRONTALES

Serial No. ;

Key No.	Part No.	Description	Description	Q'ty	S.C	Serial No.	ICA	Replaceable part	
								Part No.	Q'ty
2100-29	2114-1059D64	SHIM	CALE	2					
30	2114-1059D88	SHIM	CALE	8					
31	2114-1059D87	SHIM	CALE	8					
32	2114-1059D117	SHIM	CALE	2					

DATE	NOV. 24, 2006
1st EDITION	

Fig. 2110 FRONT LUBRICATION PIPING
CONDUITES DE FRONTALES

Serial No. ;

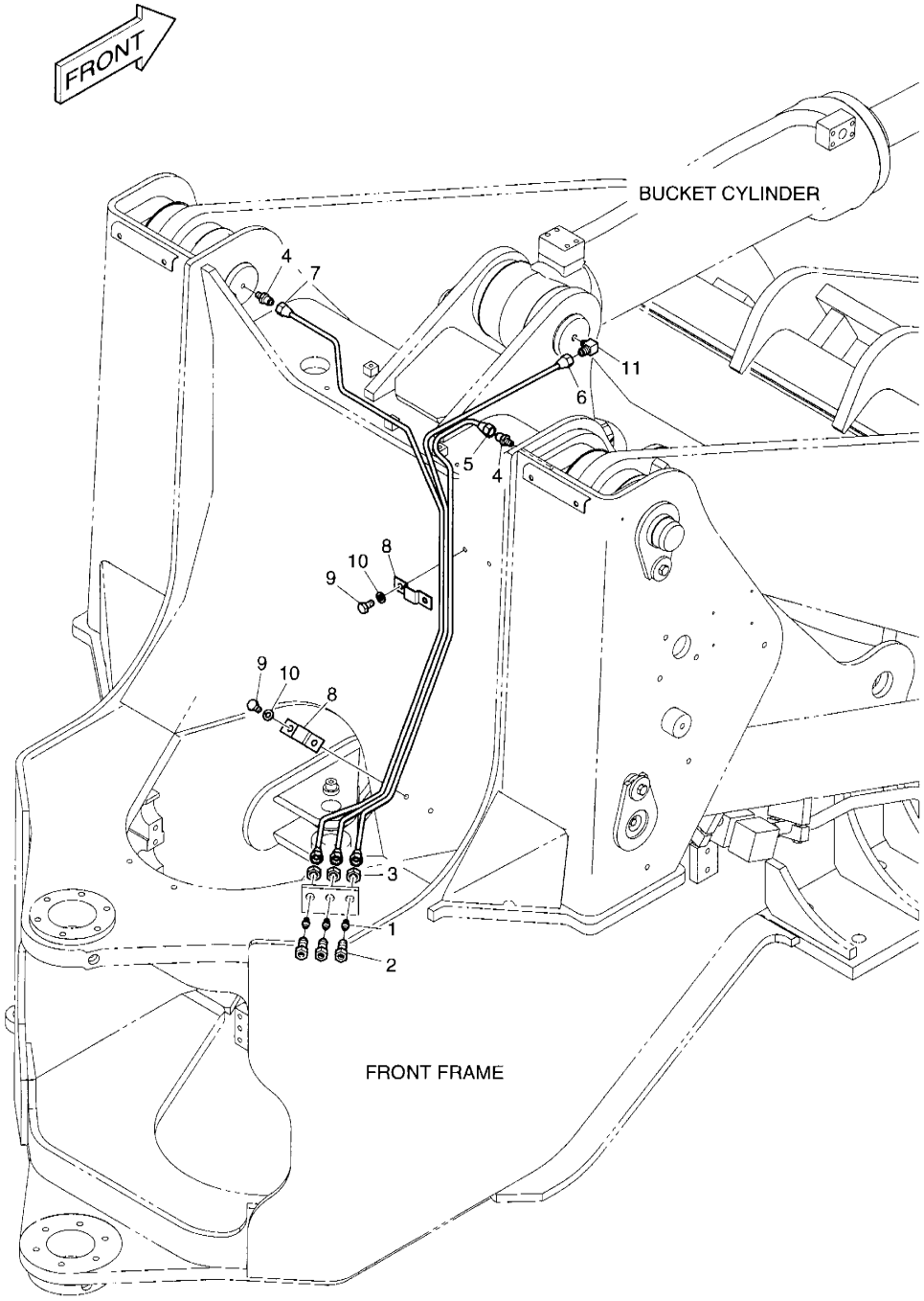

DATE	NOV. 24, 2006
1st EDITION	

Fig. 2110 FRONT LUBRICATION PIPING CONDUITES DE FRONTALES

Serial No. ;

Key No.	Part No.	Description	Description	Q'ty	S.C	Serial No.	ICA	Replaceable part	
								Part No.	Q'ty
2110--	K1016877	FRONT LUBRICATION PIPING	CONDUITES DE	-	D				
1	S6710041	FITTING	RACCORD	3					
2	181-00366	REDUCER	REDUCTEUR	3					
3	S4032833	NUT	ECROU	3					
4	2181-1919D9	ADAPTER	ADAPTEUR	2					
5	140-00830B	PIPE;LUBRICATION	TUYAU	1					
6	140-00831B	PIPE;LUBRICATION	TUYAU	1					
7	140-00832B	PIPE;LUBRICATION	TUYAU	1					
8	2124-1625	CLAMP;PIPE	COLLIER	2					
9	S0511866	BOLT	BOULON	4					
10	S5102603	WASHER;SPRING	RONDELLE ELASTIQUE	4					
11	2181-1918D7	ELBOW	COUDE	1					

DATE	NOV. 24, 2006
1st EDITION	

Fig. 2120 ARM RAISE KICK OUT ASS'Y
COUP-DE-PIED D'AUGMENTER DEHORS

Serial No. ;

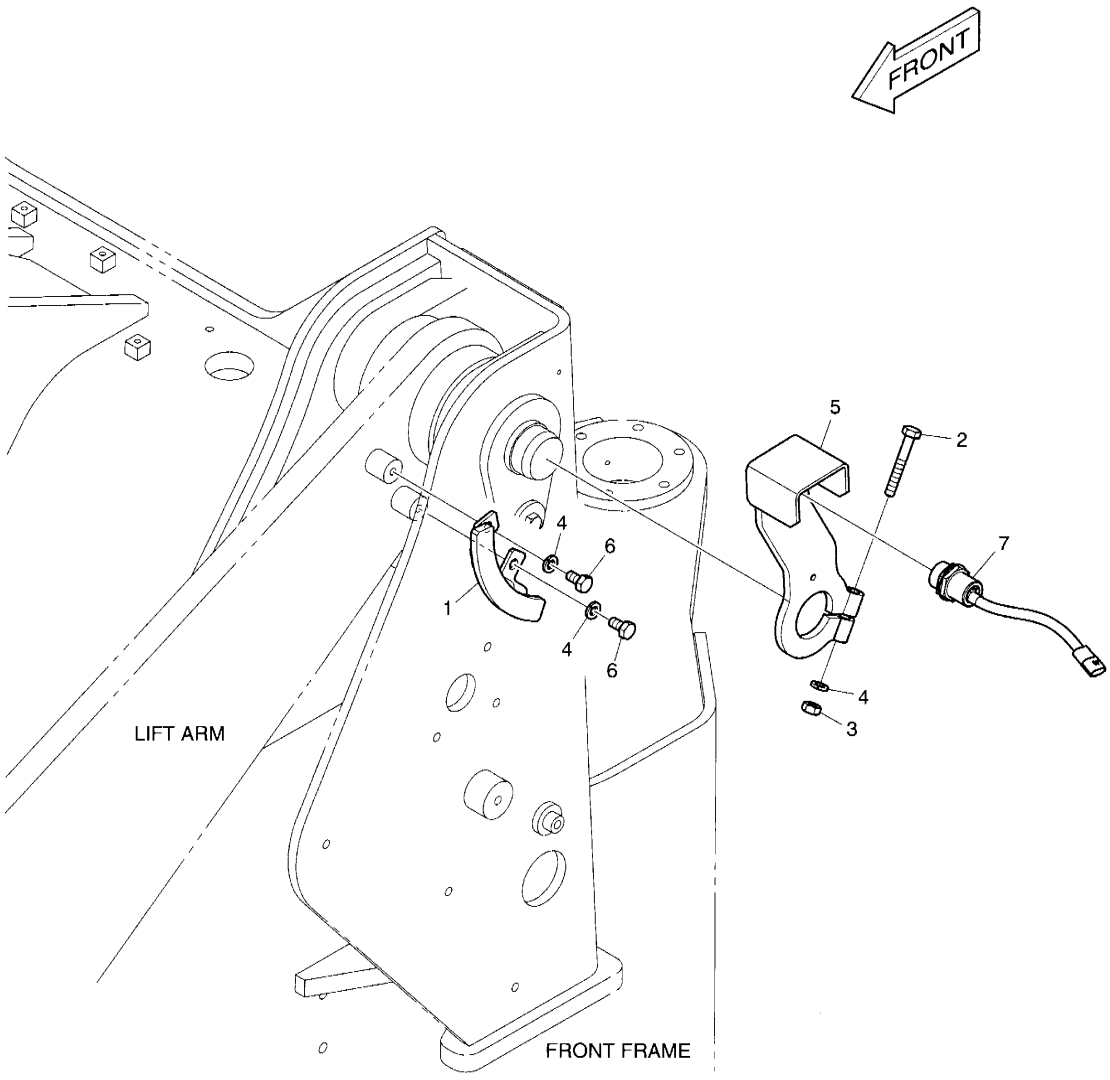

DATE	NOV. 24, 2006
1st EDITION	

Fig. 2120 ARM RAISE KICK OUT ASS'Y
COUP-DE-PIED D'AUGMENTER DEHORS

Serial No. ;

Key No.	Part No.	Description	Description	Q'ty	S.C	Serial No.	ICA	Replaceable part	
								Part No.	Q'ty
2120--	K1016879A	ARM RAISE KICK OUT	CAPTEUR DE POSITION	-	D				
1	4195-4645	BRACKET	SUPPORT	1					
2	S0558966	BOLT	BOULON	1					
3	S4012633	NUT	ECROU	1					
4	S5102603	WASHER;SPRING	RONDELLE ELASTIQUE	3					
5	4195-4644B	BRACKET	SUPPORT	1					
6	S0511866	BOLT	BOULON	2					
7	K1027017	SWITCH;PROXIMITY	INTERRUPTEUR	1					

DATE	JUN. 30, 2007
REV.NO.	EXB07-06

Fig. 2130 RETURN TO DIG ASS'Y
RETOUR EN POSITION

Serial No. ;

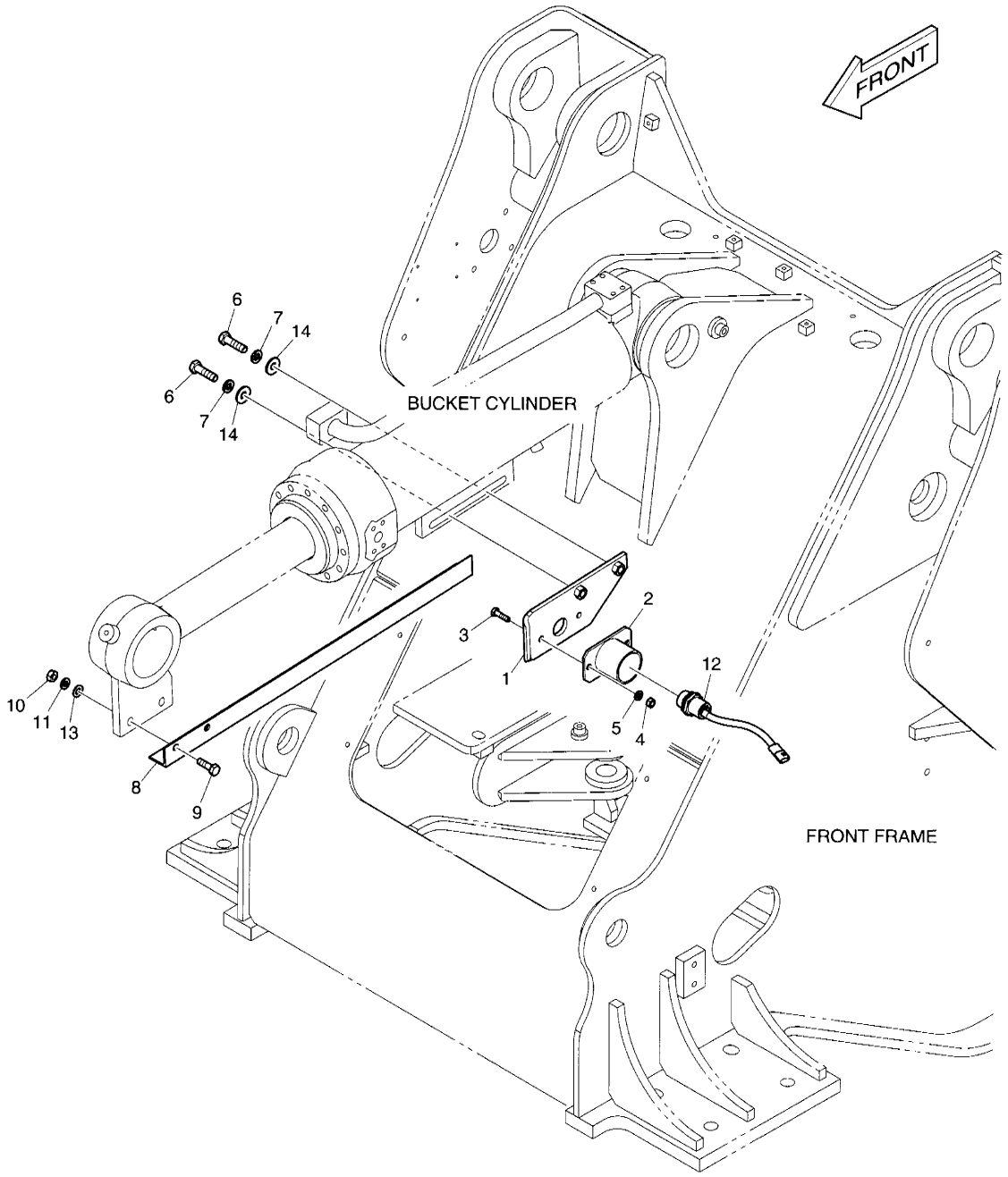

DATE	JUN. 30, 2007
REV. NO.	EXB07-06

Fig. 2130 RETURN TO DIG ASS'Y RETOUR EN POSITION

Serial No. ;

Key No.	Part No.	Description	Description	Q'ty	S.C	Serial No.	ICA	Replaceable part	
								Part No.	Q'ty
2130--	**K1016878B**	**RETURN TO DIG ASS'Y**	RETOUR EN POSITION	-	D				
1	K1023556A	PLATE	PLAQUE	1					
2	4159-4008	COVER	COUVERCLE	1					
3	S0509266	BOLT	BOULON	2					
4	S4012533	NUT	ECROU	2					
5	S5102503	WASHER;SPRING	RONDELLE ELASTIQUE	2					
6	S0515566	BOLT	BOULON	2					
7	S5102703	WASHER;SPRING	RONDELLE ELASTIQUE	2					
8	4192-1059	ANGLE	ANGLE	1					
9	S0512366	BOLT	BOULON	2					
10	S4012633	NUT	ECROU	2					
11	S5102603	WASHER;SPRING	RONDELLE ELASTIQUE	2					
12	K1027017	SWITCH;PROXIMITY	INTERRUPTEUR	1					
13	S5010613	WASHER;PLAIN	RONDELLE PLATE	2					
14	2114-1058D33	WASHER	RONDELLE	2		5001–5078			
	2114-1058D54	**WASHER**	RONDELLE	2		**5079–**			

DATE	NOV. 24, 2006
1st EDITION	

Fig. 2140 BUCKET-1.9m³ TOOTH GODET

Serial No. ;

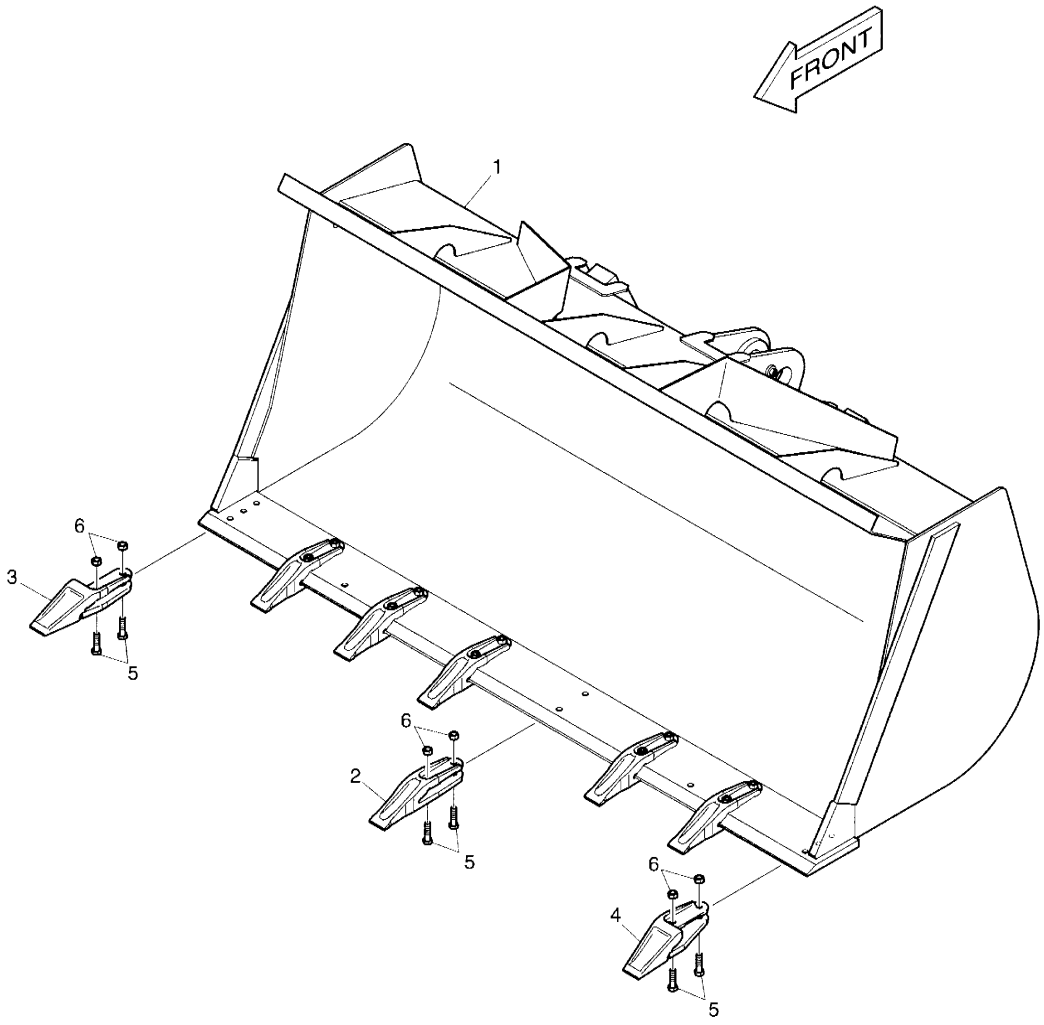

DATE	NOV. 24, 2006
1st EDITION	

Fig. 2140 BUCKET-1.9m³ TOOTH GODET

Serial No. ;

Key No.	Part No.	Description	Description	Q'ty	S.C	Serial No.	ICA	Replaceable part	
								Part No.	Q'ty
2140--	K1016875A	BUCKET ASS'Y - 1.9m³	GODET	1					
1	K1016876A	BUCKET - 1.9m³	GODET	1					
2	4713-4004A	TOOTH	OUTILLAGE	6					
3	4713-4005A	TOOTH;SIDE (R.H)	COUTEAU LATERAL DROIT	1					
4	4713-4006A	TOOTH;SIDE (L.H)	COUTEAU LATERAL	1					
5	S0565466	BOLT	BOULON	16					
6	S4012933	NUT	ECROU	16					

DATE	NOV. 24, 2006
1st EDITION	

Fig. 3100 ENGINE CONNECT - TRANSMISSION
LE MOTEUR SE RELIENT

Serial No. ;

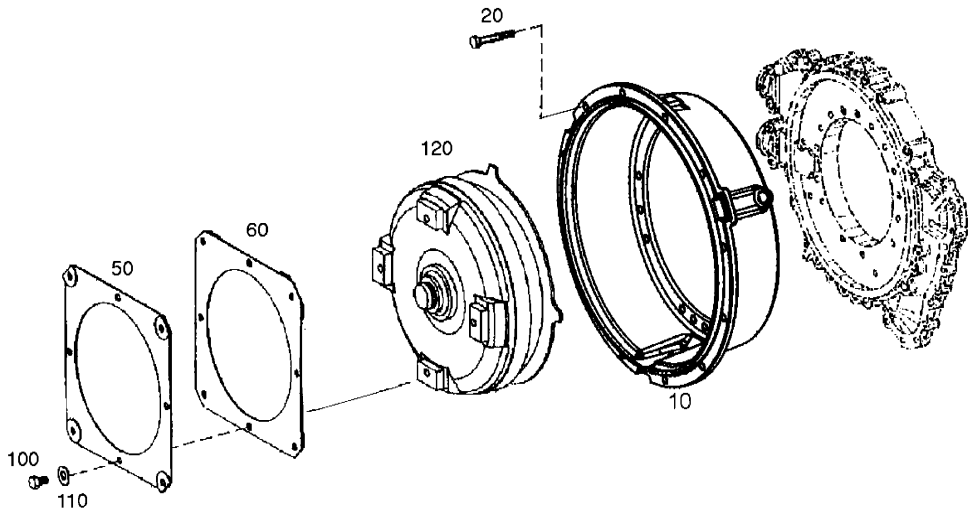

DATE	NOV. 24, 2006
1st EDITION	

Fig. 3100 ENGINE CONNECT - TRANSMISSION
LE MOTEUR SE RELIENT

Serial No. ;

Key No.	Part No.	Description	Description	Q'ty	S.C	Serial No.	ICA	Replaceable part	
								Part No.	Q'ty
3100--	K1013517	TRANSMISSION ASS'Y	TRANSMISSION	1					
10	K9000918	BELL;CONVERTER	CLOCHE CONVERTISSEUR	1					
20	1.120-00117	SCREW	VIS	18					
50	K9004357	DIAPHRAGM	MEMBRANE	1					
60	1.464-00015	DIAPHRAGM	MEMBRANE	1					
100	1.120-00118	SCREW	VIS	4					
110	1.114-00255	WASHER	RONDELLE	4					
120	K9004354	CONVERTER	CONVERTISSEUR	1					

DATE	NOV. 24, 2006
1st EDITION	

Fig. 3110 INPUT - TRANSMISSION
ENTREE

Serial No. ;

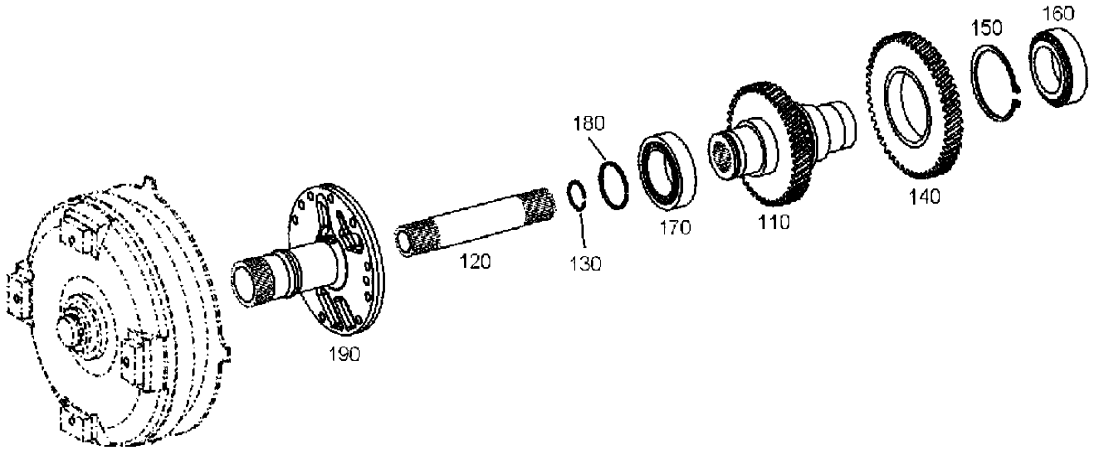

DATE	NOV. 24, 2006
1st EDITION	

Fig. 3110 INPUT - TRANSMISSION ENTREE

Serial No. ;

Key No.	Part No.	Description	Description	Q'ty	S.C	Serial No.	ICA	Replaceable part	
								Part No.	Q'ty
3110-110	1.405-00070	SHAFT;INPUT	ARBRE D'ENTREE	1					
120	1.405-00095	SHAFT;TURBINE	PIGNON	1					
130	1.115-00080	RING;SNAP	BAGUE	1					
140	1.403-00051	GEAR;INPUT	ARBRE DE TURB.	1					
150	1.115-00014	RING;RETAINING	JONC D'ARRET	1					
160	1.109-00067	BEARING;ROLLER	ROULEMENT ROULEAUX	1					
170	1.109-00067	BEARING;ROLLER	ROULEMENT ROULEAUX	1					
180	1.115-00296	RING;PISTON	SEGMENT	1					
190	1.405-00085	SHAFT;STATOR	ARBRE STATOR	1					

DATE	NOV. 24, 2006
1st EDITION	

Fig. 3120 GEARBOX HOUSING - T/MISSION

GEARBOX HOUSING - T/MISSION

Serial No. ;

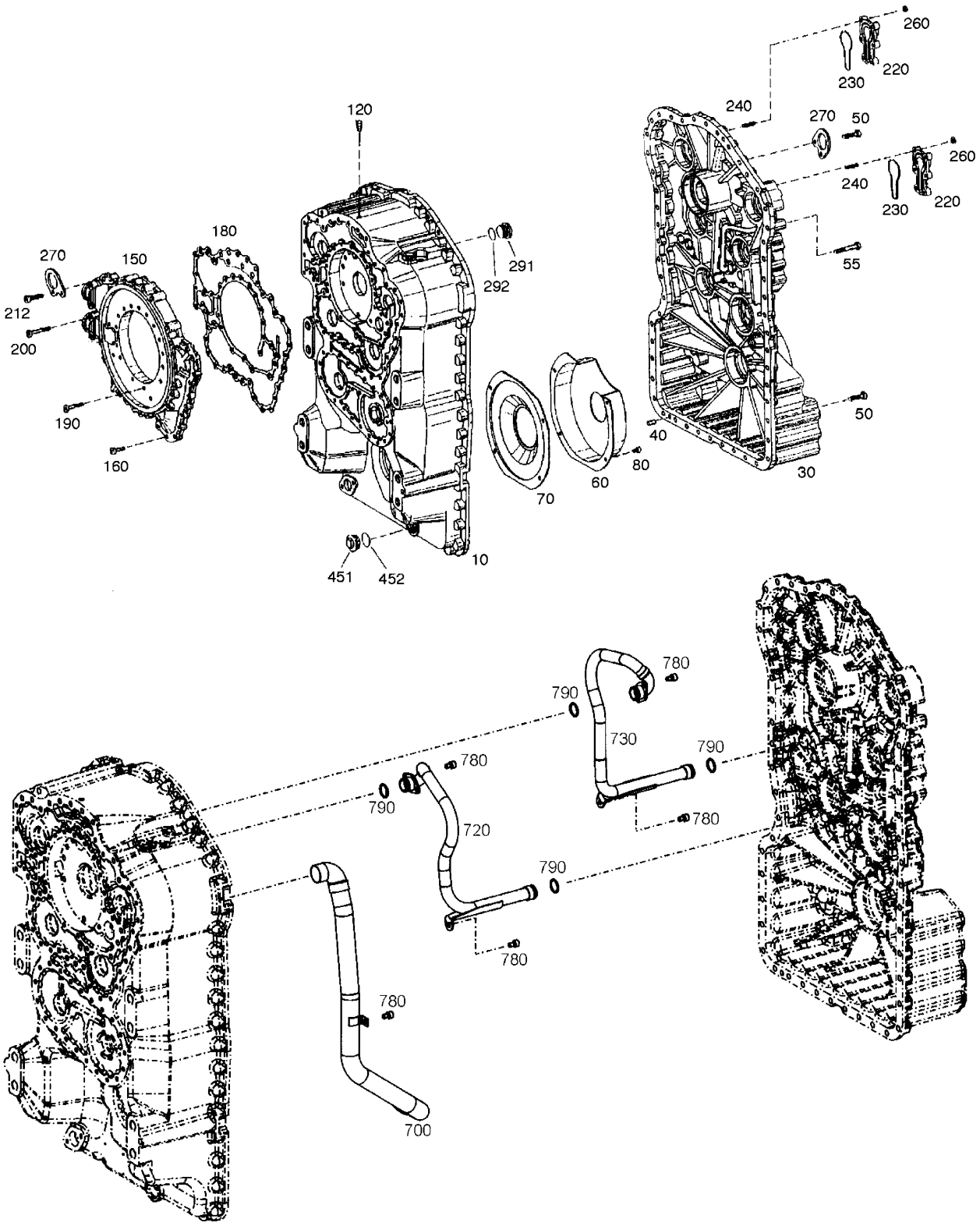

DATE	NOV. 24, 2006
1st EDITION	

Fig. 3120 GEARBOX HOUSING - T/MISSION
GEARBOX HOUSING - T/MISSION

Serial No. ;

Key No.	Part No.	Description	Description	Q'ty	S.C	Serial No.	ICA	Replaceable part	
								Part No.	Q'ty
3120-10	K9004355	HOUSING;FRONT	CARTER	1					
30	K9004356	HOUSING;REAR	CARTER	1					
40	1.123-00001	PIN	GOUPILLE	2					
50	1.120-00079	SCREW	VIS	44					
55	1.120-00080	SCREW	VIS	7					
60	1.461-00007	SHEET;SCREEN	TOLE DE PROT.	1					
70	1.461-00008	SHEET;SCREEN	TOLE DE PROT.	1					
80	1.120-00081	SCREW	VIS	4					
120	2.422-00001	BREATHER	RENIFLARD	1					
150	K9004016	HOUSING;OIL FEED	CARTER ALIM. HUILE	1					
160	1.120-00082	SCREW	VIS	15					
180	1.180-00001	GASKET	GARNITURE	1					
190	1.120-00083	SCREW	VIS	21					
200	1.120-00084	SCREW	VIS	4					
212	1.120-00079	SCREW	VIS	2					
220	1.430-00001	COVER	COUVERCLE	2					
230	1.180-00051	O-RING	JONT TORIQUE	2					
240	1.120-00036	STUD	GOUJON	12					
260	1.121-00034	NUT	ECROU	12					
270	1.412-00003	PLATE;FIXING	COUVERCLE	2					
291	1.120-00163	PLUG	BOUCHON	1					
292	1.180-00052	O-RING	JONT TORIQUE	1					
451	1.181-00015	PLUG	BOUCHON	1					
452	1.180-00052	O-RING	JONT TORIQUE	1					
700	1.441-00259	TUBE;SUCTION	TUBE	1					
720	K9004329	TUBE	KIT DE TUBE	1					
730	K9004330	TUBE	KIT DE TUBE	1					
780	1.120-00081	SCREW	VIS	7					
790	1.180-00053	O-RING	JONT TORIQUE	4					

DATE	NOV. 24, 2006
1st EDITION	

Fig. 3130 COUPLING K1 - TRANSMISSION
EMBRAYAGE K1

Serial No. ;

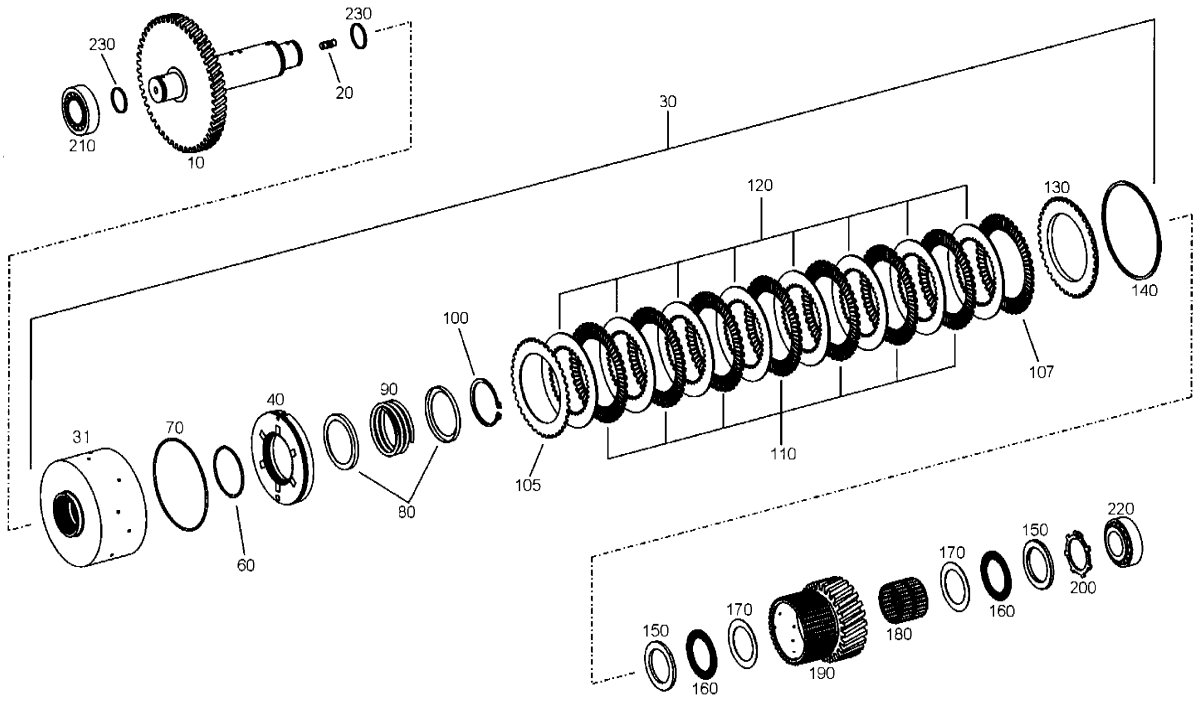

DATE	NOV. 24, 2006
1st EDITION	

Fig. 3130 COUPLING K1 - TRANSMISSION
EMBRAYAGE K1

Serial No. ;

Key No.	Part No.	Description	Description	Q'ty	S.C	Serial No.	ICA	Replaceable part	
								Part No.	Q'ty
30-10	K9004366	SHAFT	ARBRE	1					
20	1.120-00034	STUD	GOUJON	1					
30	K9004592	COUPLING	ACCOUPLEMENT	1					
31	K9004368	. CARRIER;DISC	. PORTE DISQUES	1					
40	1.409-00035	. PISTON	. PISTON	1					
60	1.180-00087	. O-RING	. JONT TORIQUE	1					
70	1.180-00089	. O-RING	. JONT TORIQUE	1					
80	K9004365	. RING;GUIDE	. BAGUE D'ETANCHEITE	2					
90	K9004351	. SPRING;COMPR	. RESSORT	1					
100	K9004336	. RING;RETAINING	. ARRTOIR DE BOUCLE	1					
105	1.222-00003	. DISC;O.CLUTCH	. DISQUE EXT	1					
107	1.222-00003	. DISC;O.CLUTCH	. DISQUE EXT	1					
110	1.222-00004	. DISC	. DISQUE	7					
120	1.222-00029	. DISC;I.CLUTCH	. DISQUE INT	8					
130	1.114-00164	. SHIM	. PLAQUE	1					
140	1.115-00319	. RING;SNAP S=2.1	. BAGUE ELASTIQUE	1					
	1.115-00321	. RING;SNAP S=2.25	. BAGUE ELASTIQUE	1					
	1.115-00323	. RING;SNAP S=2.4	. BAGUE ELASTIQUE	1					
	1.115-00325	. RING;SNAP S=2.55	. BAGUE ELASTIQUE	1					
	1.115-00327	. RING;SNAP S=2.7	. BAGUE ELASTIQUE	1					
	1.115-00329	. RING;SNAP S=2.85	. BAGUE ELASTIQUE	1					
	1.115-00331	. RING;SNAP S=3.0	. BAGUE ELASTIQUE	1					
	1.115-00333	. RING;SNAP S=3.15	. BAGUE ELASTIQUE	1					
	1.115-00335	. RING;SNAP S=3.30	. BAGUE ELASTIQUE	1					
	1.115-00337	. RING;SNAP S=3.45	. BAGUE ELASTIQUE	1					
	1.115-00339	. RING;SNAP S=3.60	. BAGUE ELASTIQUE	1					
	1.115-00341	. RING;SNAP S=3.75	. BAGUE ELASTIQUE	1					
	1.115-00343	. RING;SNAP S=3.90	. BAGUE ELASTIQUE	1					
	1.115-00345	. RING;SNAP S=4.05	. BAGUE ELASTIQUE	1					
	1.115-00347	. RING;SNAP S=4.20	. BAGUE ELASTIQUE	1					
150	1.222-00058	DISC;RUNNING	DISQUE	2					
160	1.216-00004	CAGE;AX NEEDLE	CAMP D'CAIGUILLE	2					
170	1.114-00384	WASHER	RONDELLE	2					
180	1.216-00005	CAGE;NEEDLE	CAGE A AIG.	1					
190	K9004367	IDLER	PIGNON FOU	1					
200	1.115-00015	RING;RETAINING	JONC D'ARRET	1					
210	1.109-00068	BEARING;ROLLER	ROULEMENT ROULEAUX	1					
220	1.109-00068	BEARING;ROLLER	ROULEMENT ROULEAUX	1					

DATE	NOV. 24, 2006
1st EDITION	

Fig. 3130 COUPLING K1 - TRANSMISSION
EMBRAYAGE K1

Serial No. ;

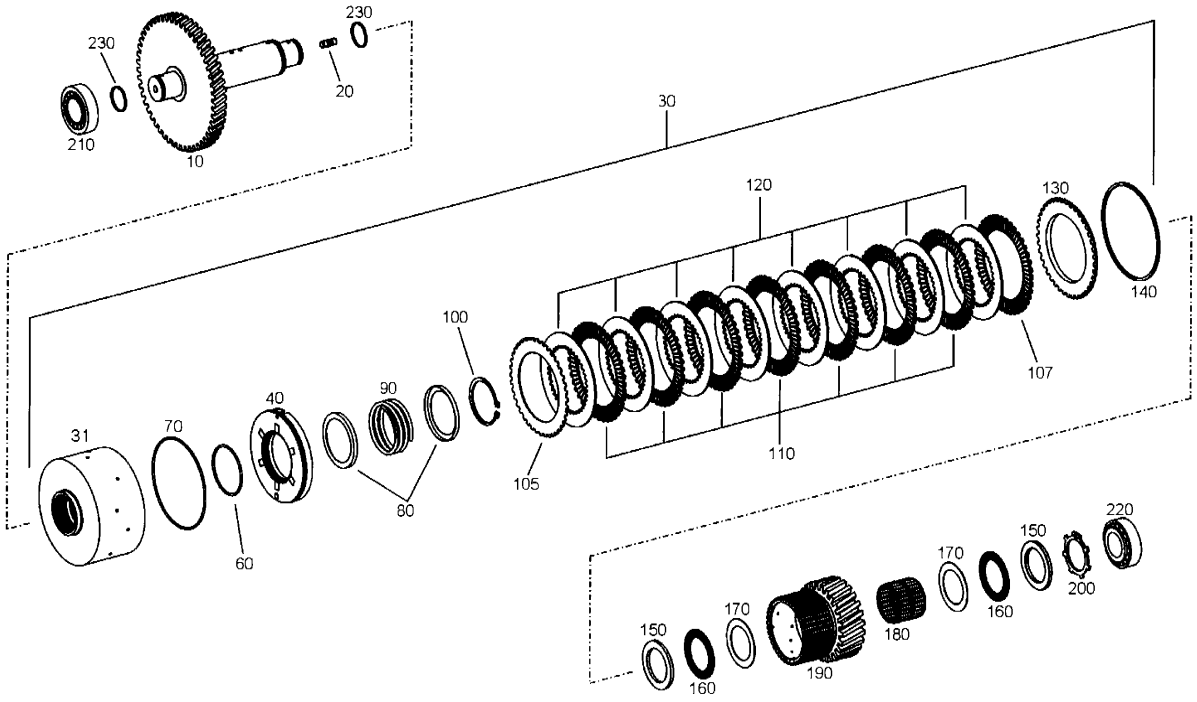

DATE	NOV. 24, 2006
1st EDITION	

Fig. 3130 COUPLING K1 - TRANSMISSION
EMBRAYAGE K1

Serial No. ;

Key No.	Part No.	Description	Description	Q'ty	S.C	Serial No.	ICA	Replaceable part	
								Part No.	Q'ty
3130-230	1.115-00294	RING;PISTON	SEGMENT	2					

DATE	NOV. 24, 2006
1st EDITION	

Fig. 3140 COUPLING K2 - TRANSMISSION
EMBRAYAGE K2

Serial No. ;

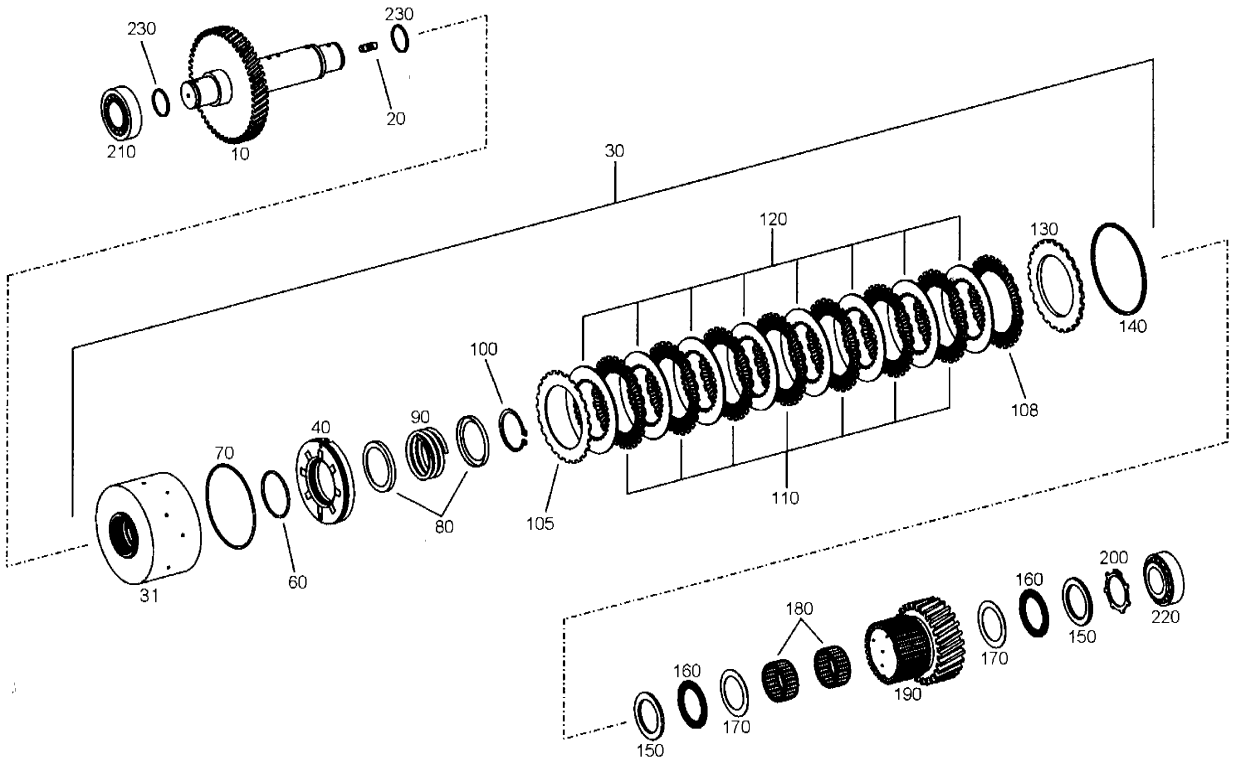

DATE	NOV. 24, 2006
1st EDITION	

Fig. 3140 COUPLING K2 - TRANSMISSION
EMBRAYAGE K2

Serial No. ;

Key No.	Part No.	Description	Description	Q'ty	S.C	Serial No.	ICA	Replaceable part	
								Part No.	Q'ty
3140-10	1.405-00002	SHAFT	ARBRE	1					
20	1.120-00034	STUD	GOUJON	1					
30	K9004359	COUPLING	ACCOUPLEMENT	1					
31	K9004370	. CARRIER;DISC	. PORTE DISQUES	1					
40	K9004358	. PISTON	. PISTON	1					
60	K9004338	. O-RING	. JONT TORIQUE	1					
70	K9003482	. O-RING	. JONT TORIQUE	1					
80	1.115-00227	. RING;GUIDE	. BAGUE D'ETANCHEITE	2					
90	1.131-00082	. SPRING;COMPR	. RESSORT	1					
100	K9004335	. RING;RETAINING	. ARRTOIR DE BOUCLE	1					
105	K9004327	. DISC;O.CLUTCH	. REIBLAMELLE	1					
108	K9004327	. DISC;O.CLUTCH	. REIBLAMELLE	1					
110	K9004328	. DISC;O.CLUTCH	. REIBLAMELLE	7					
120	K9004332	. DISC;I.CLUTCH	. DISQUE INT	8					
130	K9004333	. SHIM	. PLAQUE	1					
140	1.115-00348	. RING;SNAP S=2.1	. BAGUE ELASTIQUE	1					
	1.115-00351	. RING;SNAP S=2.25	. BAGUE ELASTIQUE	1					
	1.115-00354	. RING;SNAP S=2.4	. BAGUE ELASTIQUE	1					
	K9004339	. RING;SNAP S=2.55	. BAGUE ELASTIQUE	1					
	K9004340	. RING;SNAP S=2.7	. BAGUE ELASTIQUE	1					
	K9004341	. RING;SNAP S=2.85	. BAGUE ELASTIQUE	1					
	K9004342	. RING;SNAP S=3.0	. BAGUE ELASTIQUE	1					
	K9004343	. RING;SNAP S=3.15	. BAGUE ELASTIQUE	1					
	K9004344	. RING;SNAP S=3.30	. BAGUE ELASTIQUE	1					
	K9004345	. RING;SNAP S=3.45	. BAGUE ELASTIQUE	1					
	K9004346	. RING;SNAP S=3.60	. BAGUE ELASTIQUE	1					
	K9004347	. RING;SNAP S=3.75	. BAGUE ELASTIQUE	1					
	K9004348	. RING;SNAP S=3.90	. BAGUE ELASTIQUE	1					
	K9004349	. RING;SNAP S=4.05	. BAGUE ELASTIQUE	1					
	K9004350	. RING;SNAP S=4.20	. BAGUE ELASTIQUE	1					
150	1.222-00059	DISC;RUNNING	DISQUE	2					
160	1.216-00006	CAGE;AX NEEDLE	CAMP D'CAIGUILLE	2					
170	1.114-00385	WASHER	RONDELLE	2					
180	1.216-00007	CAGE;NEEDLE	CAGE A AIG.	2					
190	K9004369	IDLER	PIGNON FOU	1					
200	1.115-00016	RING;RETAINING	JONC D'ARRET	1					
210	1.109-00068	BEARING;ROLLER	ROULEMENT ROULEAUX	1					
220	1.109-00068	BEARING;ROLLER	ROULEMENT ROULEAUX	1					

DATE	NOV. 24, 2006
1st EDITION	

Fig. 3140 COUPLING K2 - TRANSMISSION
EMBRAYAGE K2

Serial No. ;

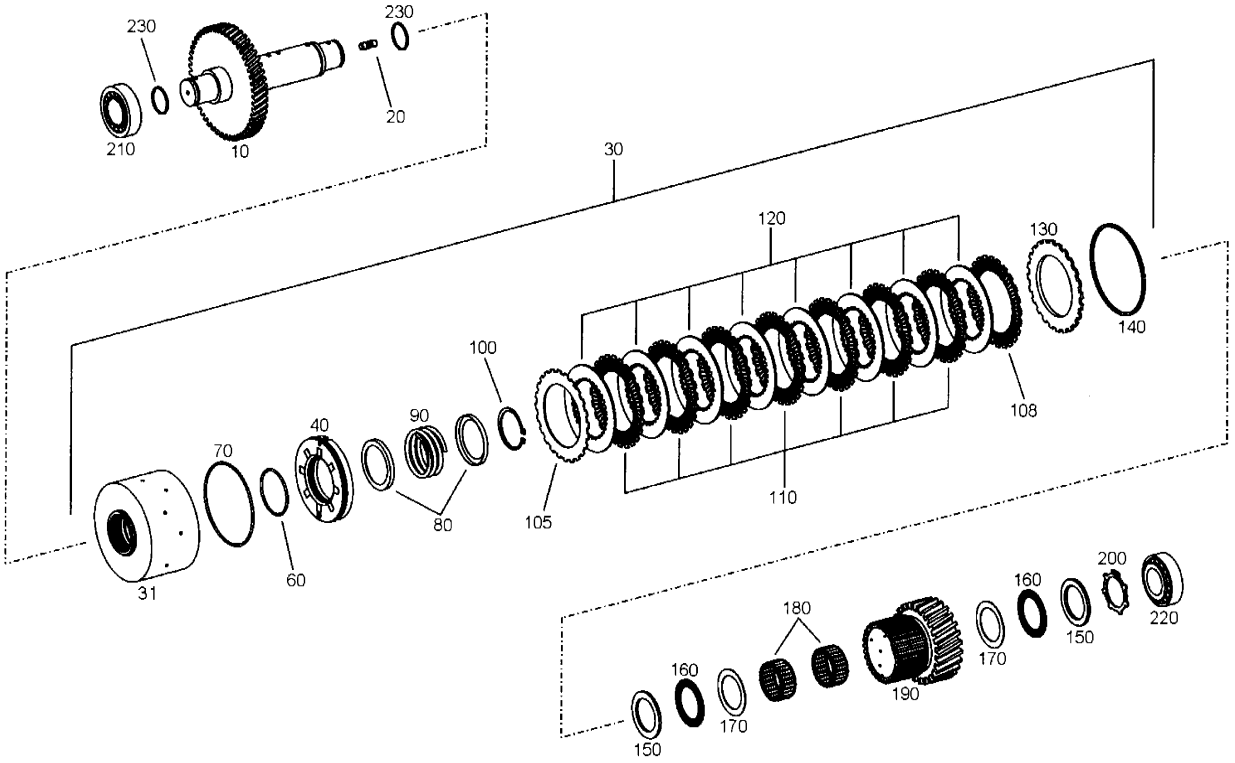

DATE	NOV. 24, 2006
1st EDITION	

Fig. 3140 COUPLING K2 - TRANSMISSION EMBRAYAGE K2

Serial No. ;

Key No.	Part No.	Description	Description	Q'ty	S.C	Serial No.	ICA	Replaceable part	
								Part No.	Q'ty
3140-230	1.115-00294	RING;PISTON	SEGMENT	2					

DATE	NOV. 24, 2006
1st EDITION	

Fig. 3150 COUPLING K3 - TRANSMISSION
EMBRAYAGE K3

Serial No. ;

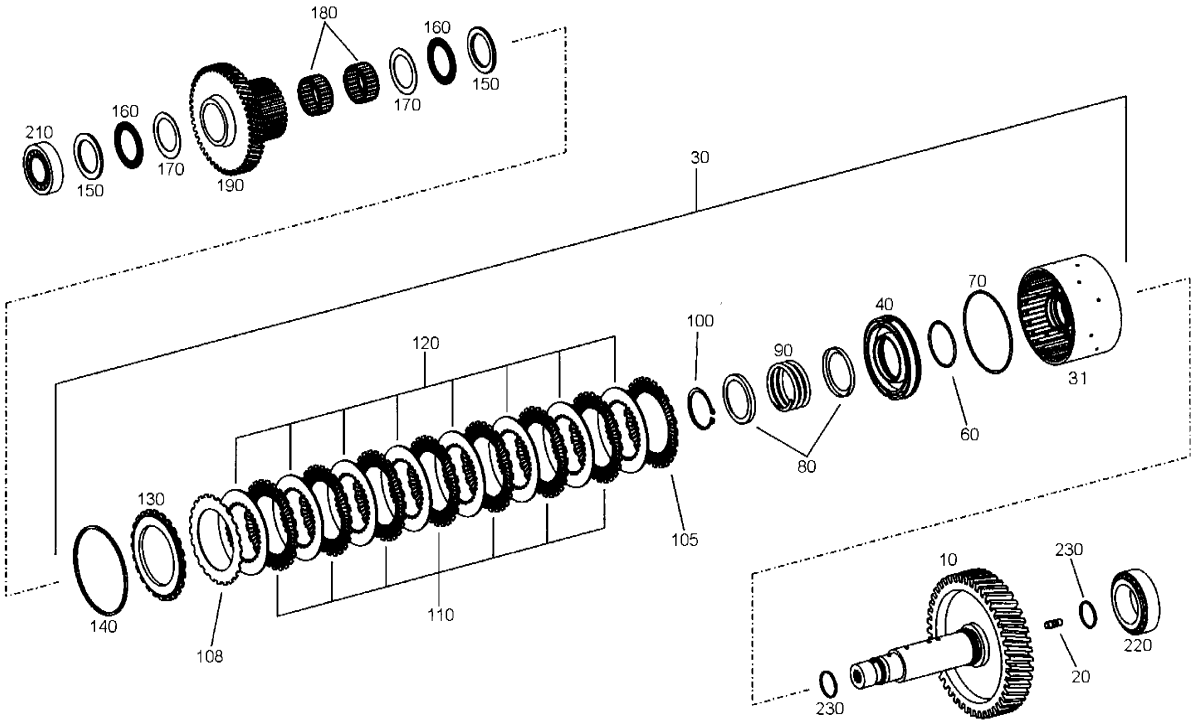

DATE	NOV. 24, 2006
1st EDITION	

Fig. 3150 COUPLING K3 - TRANSMISSION EMBRAYAGE K3

Serial No. ;

Key No.	Part No.	Description	Description	Q'ty	S.C	Serial No.	ICA	Replaceable part	
								Part No.	Q'ty
3150-10	1.405-00003	SHAFT	ARBRE	1					
20	1.120-00034	STUD	GOUJON	1					
30	K9004359	COUPLING	ACCOUPLEMENT	1					
31	K9004370	. CARRIER;DISC	. PORTE DISQUES	1					
40	K9004358	. PISTON	. PISTON	1					
60	K9004338	. O-RING	. JONT TORIQUE	1					
70	K9003482	. O-RING	. JONT TORIQUE	1					
80	1.115-00227	. RING;GUIDE	. BAGUE D'ETANCHEITE	2					
90	1.131-00082	. SPRING;COMPR	. RESSORT	1					
100	K9004335	. RING;RETAINING	. ARRTOIR DE BOUCLE	1					
105	K9004327	. DISC;O.CLUTCH	. REIBLAMELLE	1					
108	K9004327	. DISC;O.CLUTCH	. REIBLAMELLE	1					
110	K9004328	. DISC;O.CLUTCH	. REIBLAMELLE	7					
120	K9004332	. DISC;I.CLUTCH	. DISQUE INT	8					
130	K9004333	. SHIM	. PLAQUE	1					
140	1.115-00348	. RING;SNAP S=2.1	. BAGUE ELASTIQUE	1					
	1.115-00351	. RING;SNAP S=2.25	. BAGUE ELASTIQUE	1					
	1.115-00354	. RING;SNAP S=2.4	. BAGUE ELASTIQUE	1					
	K9004339	. RING;SNAP S=2.55	. BAGUE ELASTIQUE	1					
	K9004340	. RING;SNAP S=2.7	. BAGUE ELASTIQUE	1					
	K9004341	. RING;SNAP S=2.85	. BAGUE ELASTIQUE	1					
	K9004342	. RING;SNAP S=3.0	. BAGUE ELASTIQUE	1					
	K9004343	. RING;SNAP S=3.15	. BAGUE ELASTIQUE	1					
	K9004344	. RING;SNAP S=3.30	. BAGUE ELASTIQUE	1					
	K9004345	. RING;SNAP S=3.45	. BAGUE ELASTIQUE	1					
	K9004346	. RING;SNAP S=3.60	. BAGUE ELASTIQUE	1					
	K9004347	. RING;SNAP S=3.75	. BAGUE ELASTIQUE	1					
	K9004348	. RING;SNAP S=3.90	. BAGUE ELASTIQUE	1					
	K9004349	. RING;SNAP S=4.05	. BAGUE ELASTIQUE	1					
	K9004350	. RING;SNAP S=4.20	. BAGUE ELASTIQUE	1					
150	1.222-00059	DISC;RUNNING	DISQUE	2					
160	1.216-00006	CAGE;AX NEEDLE	CAMP D'CAIGUILLE	2					
170	1.114-00385	WASHER	RONDELLE	2					
180	1.216-00007	CAGE;NEEDLE	CAGE A AIG.	2					
190	1.270-00003	IDLER	PIGNON FOU	1					
210	1.109-00068	BEARING;ROLLER	ROULEMENT ROULEAUX	1					
220	1.109-00067	BEARING;ROLLER	ROULEMENT ROULEAUX	1					
230	1.115-00294	RING;PISTON	SEGMENT	2					

DATE	NOV. 24, 2006
1st EDITION	

Fig. 3160 COUPLING K4 - TRANSMISSION
EMBRAYAGE K4

Serial No. ;

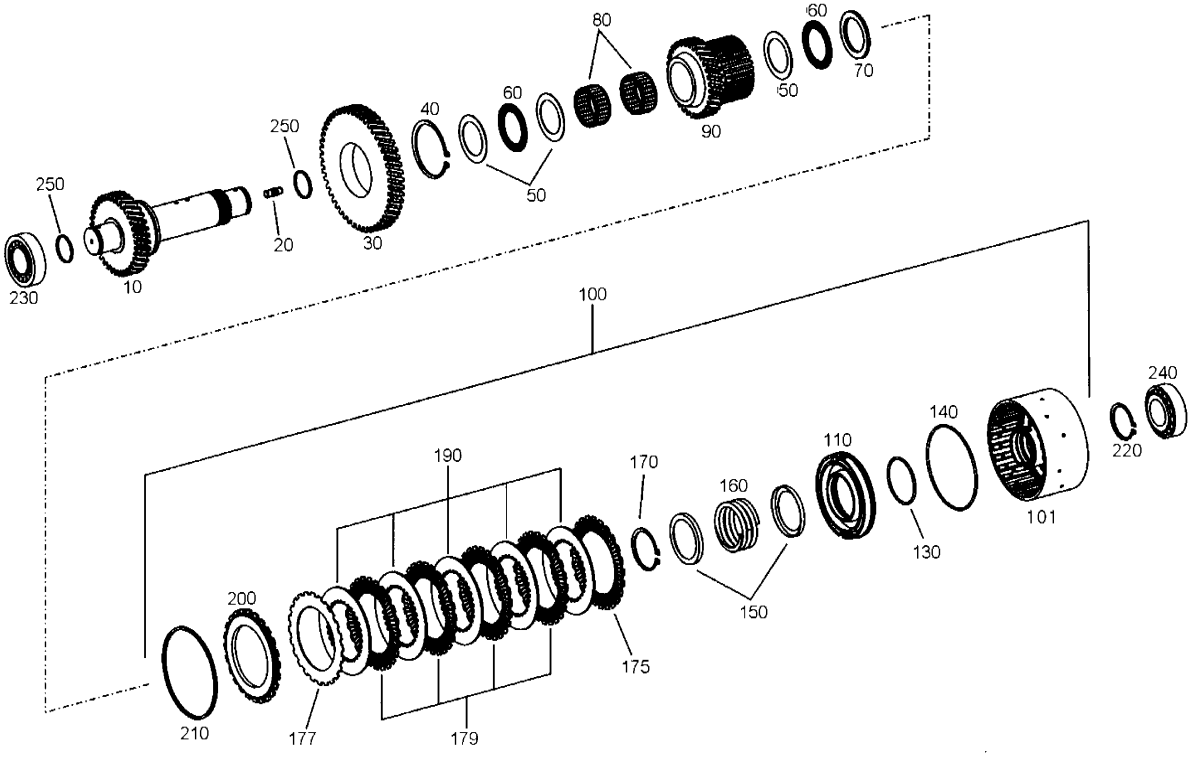

DATE	NOV. 24, 2006
1st EDITION	

Fig. 3160 COUPLING K4 - TRANSMISSION
EMBRAYAGE K4

Serial No. ;

Key No.	Part No.	Description	Description	Q'ty	S.C	Serial No.	ICA	Replaceable part	
								Part No.	Q'ty
3160-10	K9004371	SHAFT	ARBRE	1					
20	1.120-00034	STUD	GOUJON	1					
30	1.403-00001	GEAR	ENGRENAGE	1					
40	1.115-00017	RING;RETAINING	JONC D'ARRET	1					
50	1.114-00385	WASHER	RONDELLE	3					
60	1.216-00006	CAGE;AX NEEDLE	CAMP D'CAIGUILLE	2					
70	1.222-00059	DISC;RUNNING	DISQUE	1					
80	1.216-00007	CAGE;NEEDLE	CAGE A AIG.	2					
90	1.270-00004	IDLER	PIGNON FOU	1					
100	K9004360	COUPLING	ACCOUPLEMENT	1					
101	K9004372	. CARRIER;DISC	. PORTE DISQUES	1					
110	K9004358	. PISTON	. PISTON	1					
130	K9004338	. O-RING	. JONT TORIQUE	1					
140	K9003482	. O-RING	. JONT TORIQUE	1					
150	1.115-00227	. RING;GUIDE	. BAGUE D'ETANCHEITE	2					
160	1.131-00082	. SPRING;COMPR	. RESSORT	1					
170	K9004335	. RING;RETAINING	. ARRTOIR DE BOUCLE	1					
175	K9004327	. DISC;O.CLUTCH	. REIBLAMELLE	1					
177	K9004327	. DISC;O.CLUTCH	. REIBLAMELLE	1					
179	K9004328	. DISC;O.CLUTCH	. REIBLAMELLE	4					
190	K9004332	. DISC;I.CLUTCH	. DISQUE INT	5					
200	K9004333	. SHIM	. PLAQUE	1					
210	1.115-00348	. RING;SNAP S=2.1	. BAGUE ELASTIQUE	1					
	1.115-00351	. RING;SNAP S=2.25	. BAGUE ELASTIQUE	1					
	1.115-00354	. RING;SNAP S=2.4	. BAGUE ELASTIQUE	1					
	K9004339	. RING;SNAP S=2.55	. BAGUE ELASTIQUE	1					
	K9004340	. RING;SNAP S=2.7	. BAGUE ELASTIQUE	1					
	K9004341	. RING;SNAP S=2.85	. BAGUE ELASTIQUE	1					
	K9004342	. RING;SNAP S=3.0	. BAGUE ELASTIQUE	1					
	K9004343	. RING;SNAP S=3.15	. BAGUE ELASTIQUE	1					
	K9004344	. RING;SNAP S=3.30	. BAGUE ELASTIQUE	1					
	K9004345	. RING;SNAP S=3.45	. BAGUE ELASTIQUE	1					
	K9004346	. RING;SNAP S=3.60	. BAGUE ELASTIQUE	1					
	K9004347	. RING;SNAP S=3.75	. BAGUE ELASTIQUE	1					
	K9004348	. RING;SNAP S=3.90	. BAGUE ELASTIQUE	1					
	K9004349	. RING;SNAP S=4.05	. BAGUE ELASTIQUE	1					
	K9004350	. RING;SNAP S=4.20	. BAGUE ELASTIQUE	1					
220	1.115-00018	RING;RETAINING	JONC D'ARRET	1					

DATE	NOV. 24, 2006
1st EDITION	

Fig. 3160 COUPLING K4 - TRANSMISSION
EMBRAYAGE K4

Serial No. ;

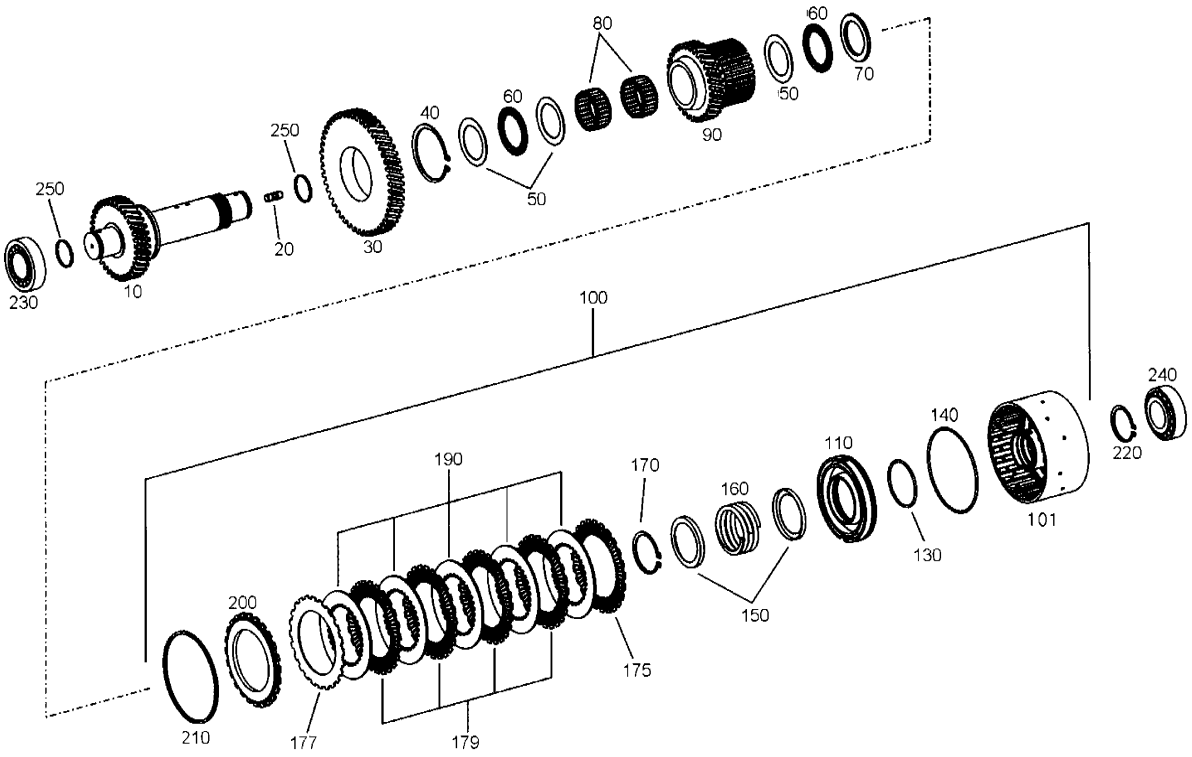

DATE	NOV. 24, 2006
1st EDITION	

Fig. 3160 COUPLING K4 - TRANSMISSION
EMBRAYAGE K4

Serial No. ;

Key No.	Part No.	Description	Description	Q'ty	S.C	Serial No.	ICA	Replaceable part	
								Part No.	Q'ty
3160-230	1.109-00068	BEARING;ROLLER	ROULEMENT ROULEAUX	1					
240	1.109-00068	BEARING;ROLLER	ROULEMENT ROULEAUX	1					
250	1.115-00294	RING;PISTON	SEGMENT	2					

DATE	NOV. 24, 2006
1st EDITION	

Fig. 3170 COUPLING KV - TRANSMISSION
EMBRAYAGE KV

Serial No. ;

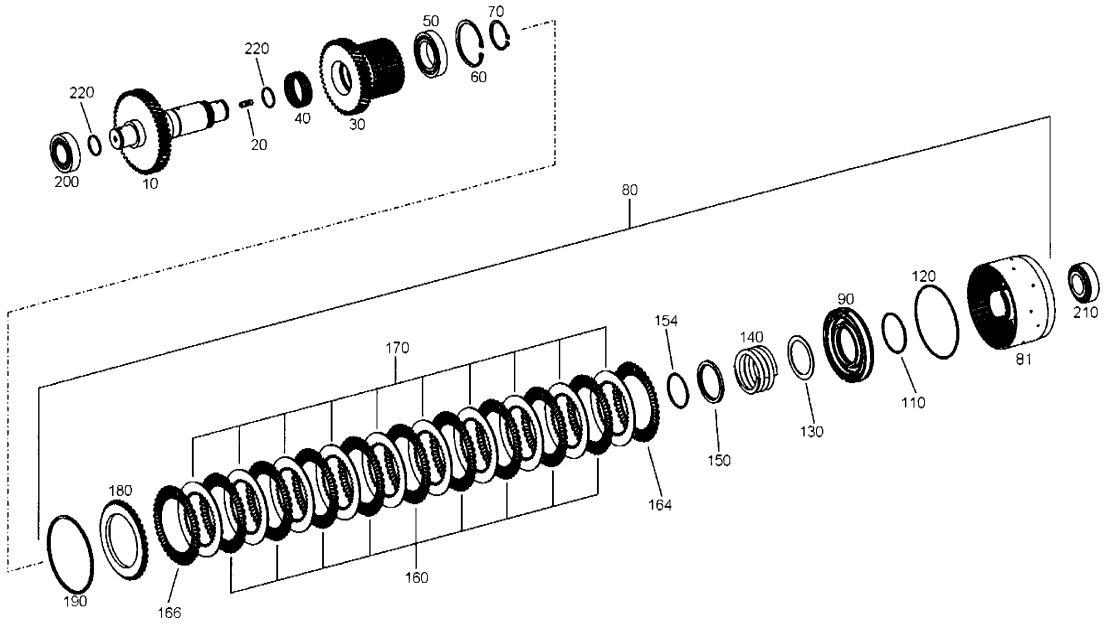

DATE	NOV. 24, 2006
1st EDITION	

Fig. 3170 COUPLING KV - TRANSMISSION
EMBRAYAGE KV

Serial No. ;

Key No.	Part No.	Description	Description	Q'ty	S.C	Serial No.	ICA	Replaceable part	
								Part No.	Q'ty
3170-10	1.405-00005	SHAFT	ARBRE	1					
20	1.120-00034	STUD	GOUJON	1					
30	1.270-00005	IDLER	PIGNON FOU	1					
40	1.216-00008	CAGE;NEEDLE	CAGE A AIG.	1					
50	1.109-00010	BEARING;BALL	ROULEMENT A BILLEX	1					
60	1.115-00019	RING;RETAINING	JONC D'ARRET	1					
70	1.115-00020	RING;RETAINING	JONC D'ARRET	1					
80	K9004361	COUPLING	ACCOUPLEMENT	1					
81	K9004373	. CARRIER;DISC	. PORTE DISQUES	1					
90	1.409-00035	. PISTON	. PISTON	1					
110	1.180-00087	. O-RING	. JONT TORIQUE	1					
120	1.180-00089	. O-RING	. JONT TORIQUE	1					
130	1.114-00274	. WASHER	. RONDELLE	1					
140	1.131-00084	. SPRING;COMPR	. RESSORT	1					
150	K9004374	. RING;GUIDE	. BAGUE D'ETANCHEITE	1					
154	1.115-00085	. RING;SNAP	. BAGUE	1					
160	1.222-00004	. DISC	. DISQUE	9					
164	1.222-00003	. DISC;O.CLUTCH	. DISQUE EXT	1					
166	1.222-00003	. DISC;O.CLUTCH	. DISQUE EXT	1					
170	1.222-00029	. DISC;I.CLUTCH	. DISQUE INT	10					
180	1.114-00164	. SHIM	. PLAQUE	1					
190	1.115-00319	. RING;SNAP S=2.1	. BAGUE ELASTIQUE	1					
	1.115-00321	. RING;SNAP S=2.25	. BAGUE ELASTIQUE	1					
	1.115-00323	. RING;SNAP S=2.4	. BAGUE ELASTIQUE	1					
	1.115-00325	. RING;SNAP S=2.55	. BAGUE ELASTIQUE	1					
	1.115-00327	. RING;SNAP S=2.7	. BAGUE ELASTIQUE	1					
	1.115-00329	. RING;SNAP S=2.85	. BAGUE ELASTIQUE	1					
	1.115-00331	. RING;SNAP S=3.0	. BAGUE ELASTIQUE	1					
	1.115-00333	. RING;SNAP S=3.15	. BAGUE ELASTIQUE	1					
	1.115-00335	. RING;SNAP S=3.30	. BAGUE ELASTIQUE	1					
	1.115-00337	. RING;SNAP S=3.45	. BAGUE ELASTIQUE	1					
	1.115-00339	. RING;SNAP S=3.60	. BAGUE ELASTIQUE	1					
	1.115-00341	. RING;SNAP S=3.75	. BAGUE ELASTIQUE	1					
	1.115-00343	. RING;SNAP S=3.90	. BAGUE ELASTIQUE	1					
	1.115-00345	. RING;SNAP S=4.05	. BAGUE ELASTIQUE	1					
	1.115-00347	. RING;SNAP S=4.20	. BAGUE ELASTIQUE	1					
200	1.109-00068	BEARING;ROLLER	ROULEMENT ROULEAUX	1					
210	1.109-00068	BEARING;ROLLER	ROULEMENT ROULEAUX	1					

DATE	NOV. 24, 2006
1st EDITION	

Fig. 3170 COUPLING KV - TRANSMISSION
EMBRAYAGE KV

Serial No. ;

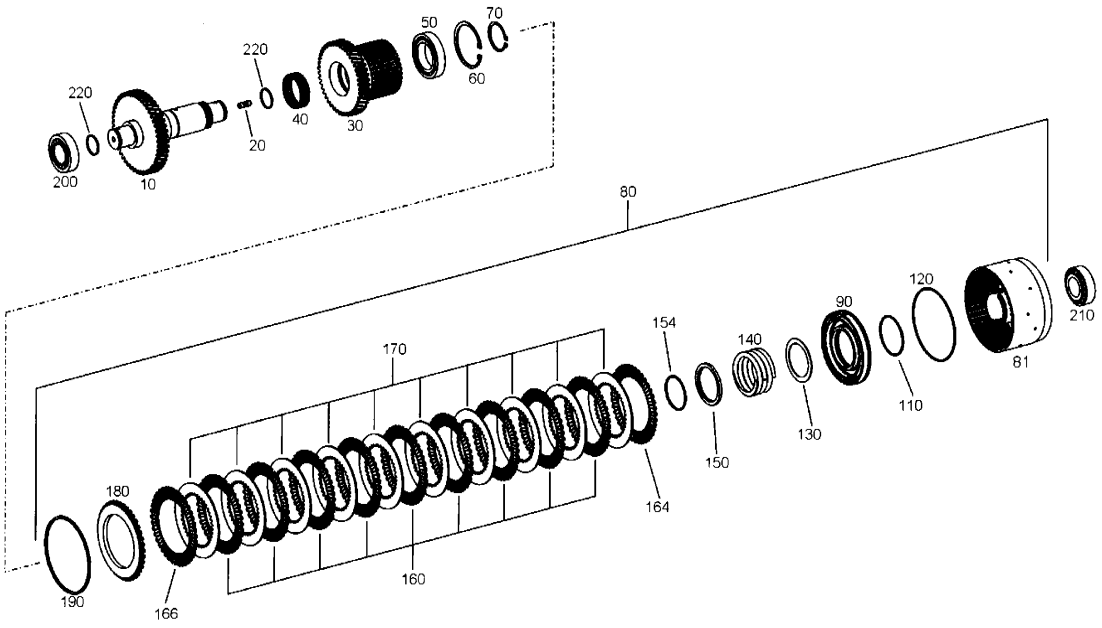

DATE	NOV. 24, 2006
1st EDITION	

Fig. 3170 COUPLING KV - TRANSMISSION
EMBRAYAGE KV

Serial No. ;

Key No.	Part No.	Description	Description	Q'ty	S.C	Serial No.	ICA	Replaceable part	
								Part No.	Q'ty
/0-220	1.115-00294	RING;PISTON	SEGMENT	2					

DATE	NOV. 24, 2006
1st EDITION	

Fig. 3180 COUPLING KR - TRANSMISSION
EMBRAYAGE KR

Serial No. ;

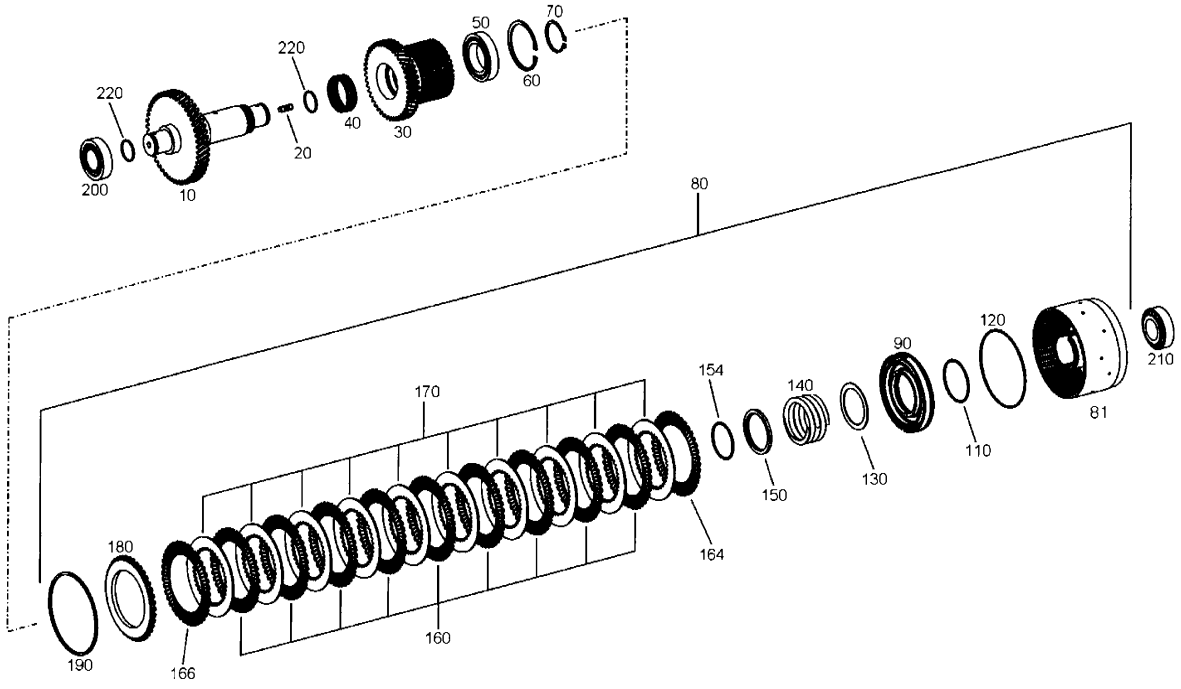

DATE	NOV. 24, 2006
1st EDITION	

Fig. 3180 COUPLING KR - TRANSMISSION
EMBRAYAGE KR

Serial No. ;

Key No.	Part No.	Description	Description	Q'ty	S.C	Serial No.	ICA	Replaceable part	
								Part No.	Q'ty
3180-10	1.405-00006	SHAFT	ARBRE	1					
20	1.120-00034	STUD	GOUJON	1					
30	1.270-00005	IDLER	PIGNON FOU	1					
40	1.216-00008	CAGE;NEEDLE	CAGE A AIG.	1					
50	1.109-00010	BEARING;BALL	ROULEMENT A BILLEX	1					
60	1.115-00019	RING;RETAINING	JONC D'ARRET	1					
70	1.115-00020	RING;RETAINING	JONC D'ARRET	1					
80	K9004361	COUPLING	ACCOUPLEMENT	1					
81	K9004373	. CARRIER;DISC	. PORTE DISQUES	1					
90	1.409-00035	. PISTON	. PISTON	1					
110	1.180-00087	. O-RING	. JONT TORIQUE	1					
120	1.180-00089	. O-RING	. JONT TORIQUE	1					
130	1.114-00274	. WASHER	. RONDELLE	1					
140	1.131-00084	. SPRING;COMPR	. RESSORT	1					
150	K9004374	. RING;GUIDE	. BAGUE D'ETANCHEITE	1					
154	1.115-00085	. RING;SNAP	. BAGUE	1					
160	1.222-00004	. DISC	. DISQUE	9					
164	1.222-00003	. DISC;O.CLUTCH	. DISQUE EXT	1					
166	1.222-00003	. DISC;O.CLUTCH	. DISQUE EXT	1					
170	1.222-00029	. DISC;I.CLUTCH	. DISQUE INT	10					
180	1.114-00164	. SHIM	. PLAQUE	1					
190	1.115-00319	. RING;SNAP S=2.1	. BAGUE ELASTIQUE	1					
	1.115-00321	. RING;SNAP S=2.25	. BAGUE ELASTIQUE	1					
	1.115-00323	. RING;SNAP S=2.4	. BAGUE ELASTIQUE	1					
	1.115-00325	. RING;SNAP S=2.55	. BAGUE ELASTIQUE	1					
	1.115-00327	. RING;SNAP S=2.7	. BAGUE ELASTIQUE	1					
	1.115-00329	. RING;SNAP S=2.85	. BAGUE ELASTIQUE	1					
	1.115-00331	. RING;SNAP S=3.0	. BAGUE ELASTIQUE	1					
	1.115-00333	. RING;SNAP S=3.15	. BAGUE ELASTIQUE	1					
	1.115-00335	. RING;SNAP S=3.30	. BAGUE ELASTIQUE	1					
	1.115-00337	. RING;SNAP S=3.45	. BAGUE ELASTIQUE	1					
	1.115-00339	. RING;SNAP S=3.60	. BAGUE ELASTIQUE	1					
	1.115-00341	. RING;SNAP S=3.75	. BAGUE ELASTIQUE	1					
	1.115-00343	. RING;SNAP S=3.90	. BAGUE ELASTIQUE	1					
	1.115-00345	. RING;SNAP S=4.05	. BAGUE ELASTIQUE	1					
	1.115-00347	. RING;SNAP S=4.20	. BAGUE ELASTIQUE	1					
200	1.109-00068	BEARING;ROLLER	ROULEMENT ROULEAUX	1					
210	1.109-00068	BEARING;ROLLER	ROULEMENT ROULEAUX	1					

DATE	NOV. 24, 2006
1st EDITION	

Fig. 3180 COUPLING KR - TRANSMISSION
EMBRAYAGE KR

Serial No. ;

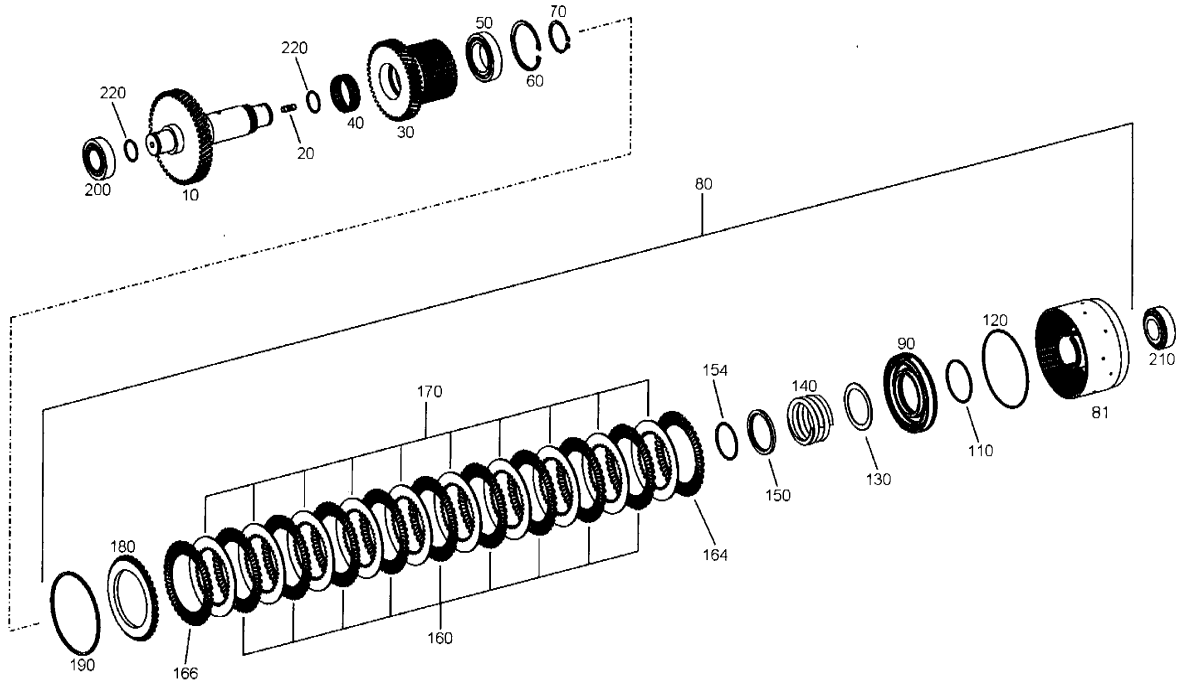

DATE	NOV. 24, 2006
1st EDITION	

Fig. 3180 COUPLING KR - TRANSMISSION
EMBRAYAGE KR

Serial No. ;

Key No.	Part No.	Description	Description	Q'ty	S.C	Serial No.	ICA	Replaceable part	
								Part No.	Q'ty
3180-220	1.115-00294	RING;PISTON	SEGMENT	2					

DATE	NOV. 24, 2006
1st EDITION	

Fig. 3190 OUTPUT - TRANSMISSION RENDEMENT

Serial No. ;

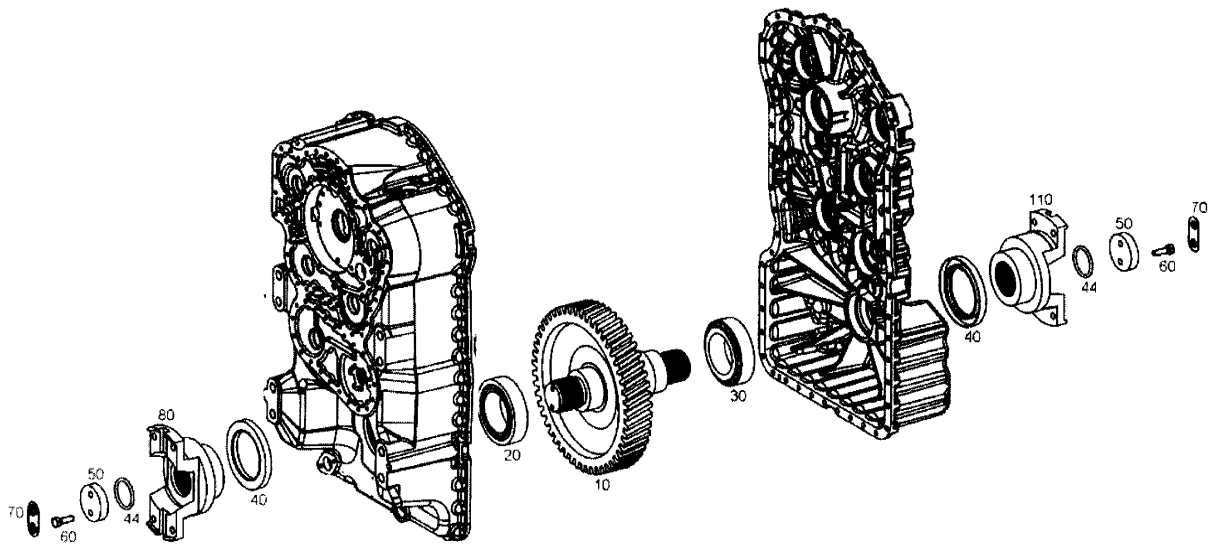

DATE	NOV. 24, 2006
1st EDITION	

Fig. 3190 OUTPUT - TRANSMISSION RENDEMENT

Serial No. ;

Key No.	Part No.	Description	Description	Q'ty	S.C	Serial No.	ICA	Replaceable part	
								Part No.	Q'ty
3190-10	1.405-00075	SHAFT;OUTPUT	ARBRE DE SORTIE	1					
20	1.109-00067	BEARING;ROLLER	ROULEMENT ROULEAUX	1					
30	1.109-00067	BEARING;ROLLER	ROULEMENT ROULEAUX	1					
40	1.180-00530	SEAL;SHAFT	JOINT	2					
44	1.180-00054	O-RING	JONT TORIQUE	2					
50	1.114-00256	WASHER	RONDELLE	2					
60	1.120-00119	SCREW	VIS	4					
70	1.114-00486	WASHER;TAB	TOLE FREIN	2					
80	1.229-00012	FLANGE;INPUT	BRIDE	1					
110	1.229-00012	FLANGE;INPUT	BRIDE	1					

DATE	NOV. 24, 2006
1st EDITION	

Fig. 3200 POWER TAKE OFF - TRANSMISSION
DECOLLAGE DE PUISSANCE

Serial No. ;

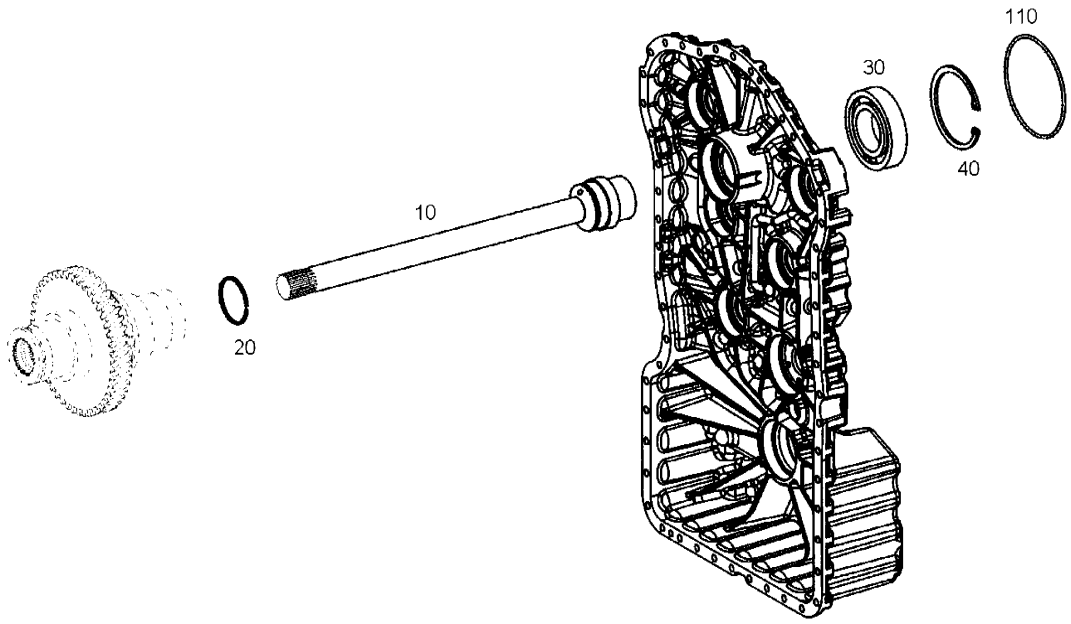

DATE	NOV. 24, 2006
1st EDITION	

Fig. 3200 POWER TAKE OFF - TRANSMISSION DECOLLAGE DE PUISSANCE

Serial No. ;

Key No.	Part No.	Description	Description	Q'ty	S.C	Serial No.	ICA	Replaceable part	
								Part No.	Q'ty
3200-10	K9004364	SHAFT;PUMP	ARBRE DE POMPE	1					
20	1.115-00295	RING;PISTON	SEGMENT	1					
30	1.109-00009	BEARING;BALL	ROULEMENT A BILLEX	1					
40	1.115-00021	RING;RETAINING	JONC D'ARRET	1					
110	1.180-00065	O-RING	JONT TORIQUE	1					

DATE	NOV. 24, 2006
1st EDITION	

Fig. 3210 GEAR SHIFT SYSTEM(1) - TRANSMISSION
SYSTEME DE CHANGEMENT DE VITESSE

Serial No. ;

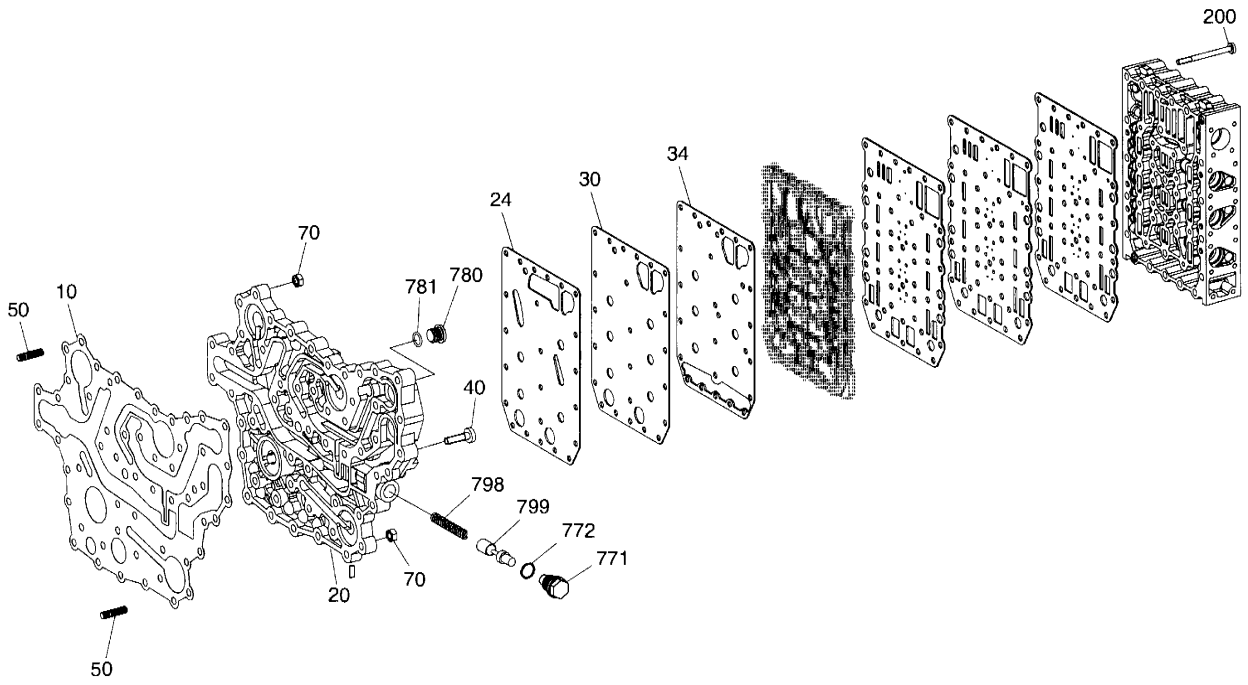

DATE	NOV. 24, 2006
1st EDITION	

Fig. 3210 GEAR SHIFT SYSTEM(1) - TRANSMISSION SYSTEME DE CHANGEMENT DE VITESSE

Serial No. ;

Key No.	Part No.	Description	Description	Q'ty	S.C	Serial No.	ICA	Replaceable part	
								Part No.	Q'ty
3210-10	K9004362	GASKET	GARNITURE	1					
20	K9004363	PLATE;DUCT	PLAQUE CANIVEAU	1					
24	1.180-00003	GASKET	GARNITURE	1					
30	1.461-00002	SHEET;INTERMEDIATE	TOLE INTERM.	1					
34	1.180-00004	GASKET	GARNITURE	1					
40	1.120-00082	SCREW	VIS	37					
50	1.120-00036	STUD	GOUJON	14					
70	1.121-00034	NUT;HEX	ECROU	14					
200	1.120-00085	SCREW	VIS	23					
771	1.181-00016	PLUG	BOUCHON	1					
772	1.180-00055	O-RING	JONT TORIQUE	1					
780	1.120-00164	PLUG	BOUCHON	1					
781	1.180-00055	O-RING	JONT TORIQUE	1					
798	1.131-00003	SPRING;COMPR	RESSORT	1					
799	K9000609	PISTON	PISTON	1					

DATE	NOV. 24, 2006
1st EDITION	

Fig. 3220 GEAR SHIFT SYSTEM(2) - TRANSMISSION
SYSTEME DE CHANGEMENT DE VITESSE

Serial No. ;

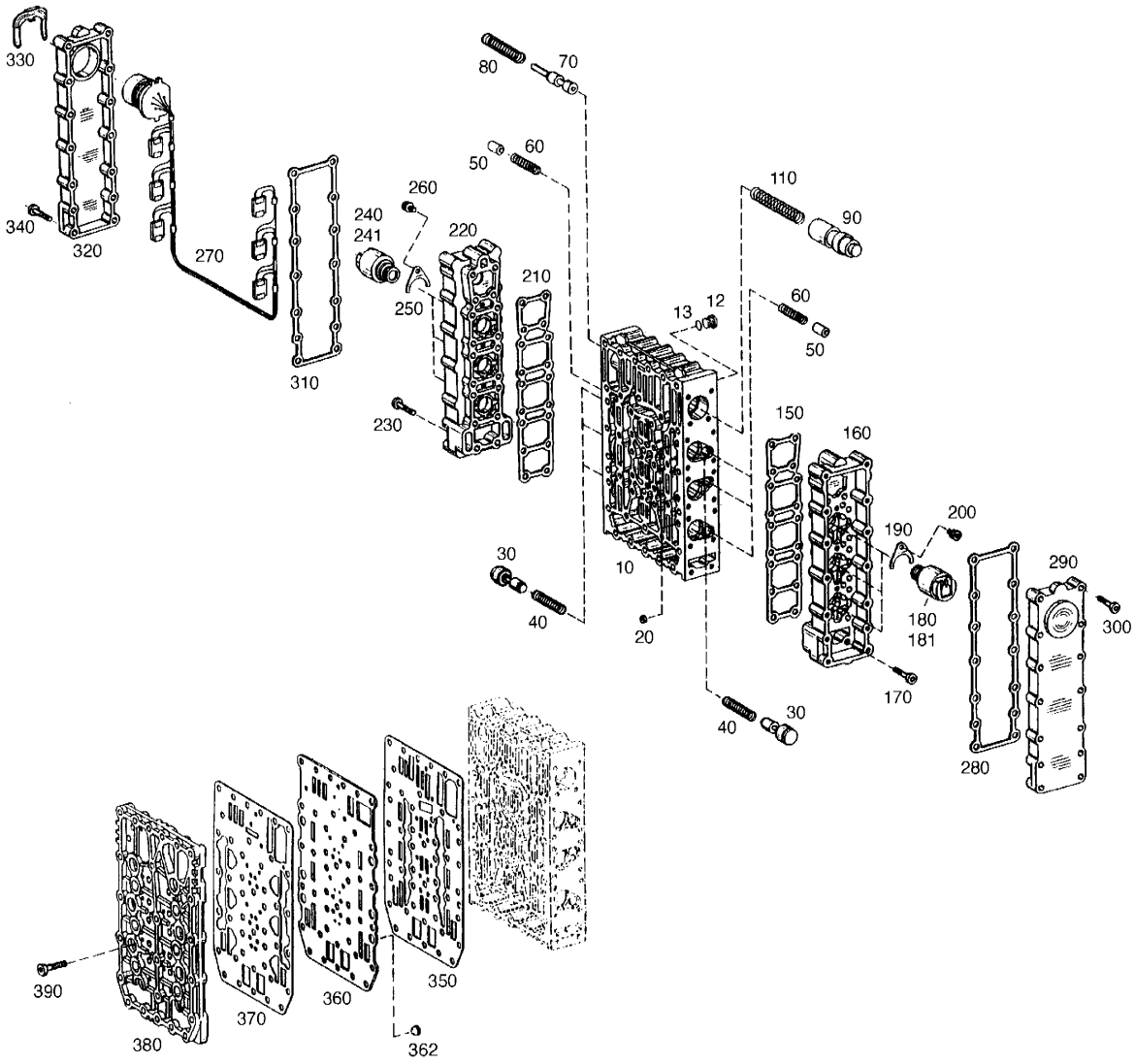

DATE	NOV. 24, 2006
1st EDITION	

Fig. 3220 GEAR SHIFT SYSTEM(2) - TRANSMISSION
SYSTEME DE CHANGEMENT DE VITESSE

Serial No. ;

Key No.	Part No.	Description	Description	Q'ty	S.C	Serial No.	ICA	Replaceable part	
								Part No.	Q'ty
3220-10	1.451-00082	BLOCK;VALVE	BLOC-VALVES	1					
12	1.120-00165	PLUG	BOUCHON	8					
13	180-00408	O-RING	JONT TORIQUE	8					
20	1.415-00001	ORIFICE	AJUTAGE	6					
30	1.409-00006	PISTON	PISTON	6					
40	1.131-00004	SPRING;COMPR	RESSORT	6					
50	1.409-00007	PISTON	PISTON	6					
60	1.131-00005	SPRING;COMPR	RESSORT	6					
70	1.409-00008	PISTON	PISTON	1					
80	1.131-00006	SPRING;COMPR	RESSORT	1					
90	K9000101	PISTON;CONTROL	PISTON REGLAGE	1					
110	1.131-00007	SPRING;COMPR	RESSORT	1					
150	K9000115	GASKET	GARNITURE	1					
160	2.402-00304	HOUSING	CARTER	1					
170	1.120-00057	SCREW	VIS	18					
180	1.421-00001	REGULATOR;PRESSURE	REGULULATOR PRESSION	3					
181	1.180-00057	. O-RING	. JONT TORIQUE	3					
190	1.412-00004	PLATE;FIXING	COUVERCLE	3					
200	1.120-00086	SCREW	VIS	3					
210	K9000115	GASKET	GARNITURE	1					
220	2.402-00304	HOUSING	CARTER	1					
230	1.120-00057	SCREW	VIS	18					
240	1.421-00001	REGULATOR;PRESSURE	REGULULATOR PRESSION	3					
241	1.180-00057	. O-RING	. JONT TORIQUE	3					
250	1.412-00004	PLATE;FIXING	COUVERCLE	3					
260	1.120-00086	SCREW	VIS	3					
270	1.530-00001	HARNESS;WIRING	FAISCEAU	1					
280	K9000109	GASKET	GARNITURE	1					
290	1.430-00002	COVER	COUVERCLE	1					
300	1.120-00057	SCREW	VIS	14					
310	K9000109	GASKET	GARNITURE	1					
320	1.430-00003	COVER	COUVERCLE	1					
330	1.124-00141	CLAMP;RETAINING	ETRIER RETENUE	1					
340	1.120-00057	SCREW	VIS	14					
350	1.180-00007	GASKET	GARNITURE	1					
360	K9002920	SHEET;INTERMEDIATE	TOLE INTERM.	1					
362	1.471-00007	SCREEN	TAMIS	6					
370	1.180-00008	GASKET	GARNITURE	1					

DATE	NOV. 24, 2006
1st EDITION	

Fig. 3220 GEAR SHIFT SYSTEM(2) - TRANSMISSION
SYSTEME DE CHANGEMENT DE VITESSE

Serial No. ;

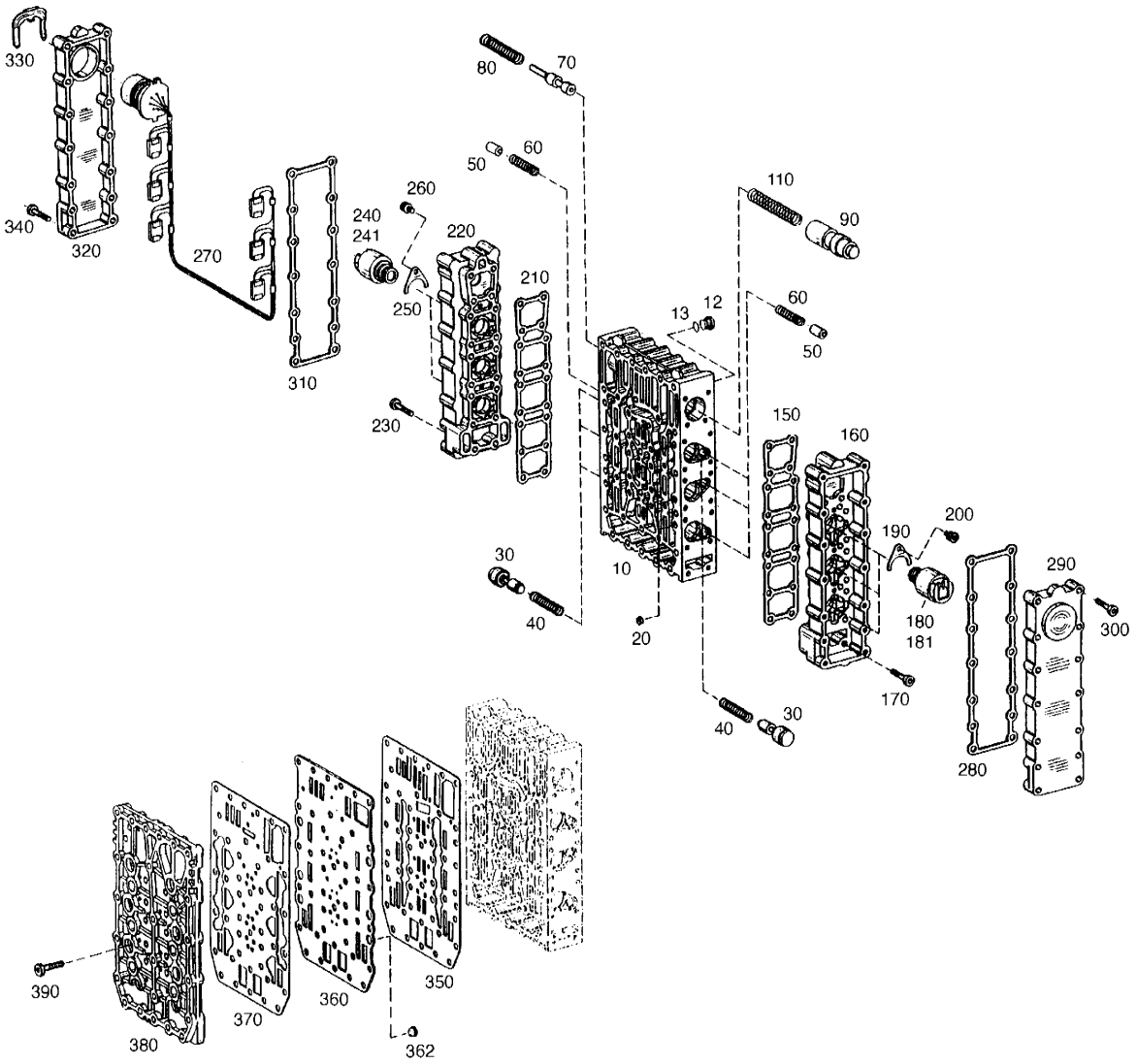

DATE	NOV. 24, 2006
1st EDITION	

Fig. 3220 GEAR SHIFT SYSTEM(2) - TRANSMISSION
SYSTEME DE CHANGEMENT DE VITESSE

Serial No. ;

Key No.	Part No.	Description	Description	Q'ty	S.C	Serial No.	ICA	Replaceable part	
								Part No.	Q'ty
3220-380	K9000100	PLATE;DUCT	PLAQUE CANIVEAU	1					
390	1.120-00087	SCREW M6X23	VIS	18					

DATE	NOV. 24, 2006
1st EDITION	

Fig. 3230 PRESSURE REGULATOR - TRANSMISSION
REGULATEUR DE PRESSION

Serial No. ;

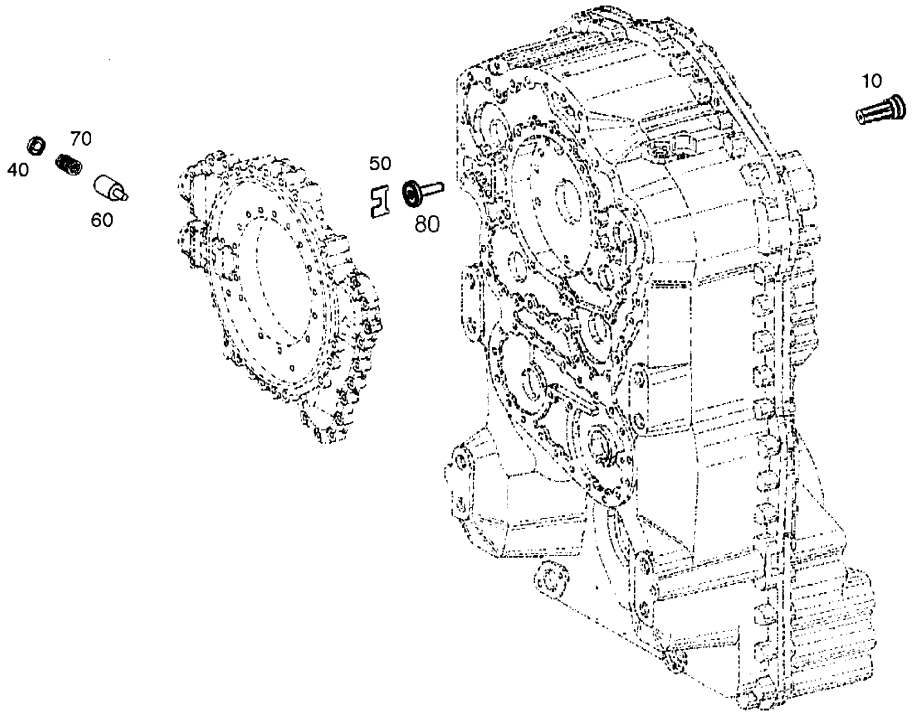

DATE	NOV. 24, 2006
1st EDITION	

Fig. 3230 PRESSURE REGULATOR - TRANSMISSION
REGULATEUR DE PRESSION

Serial No. ;

Key No.	Part No.	Description	Description	Q'ty	S.C	Serial No.	ICA	Replaceable part	
								Part No.	Q'ty
30-10	1.420-00007	VALVE	VANNE	1					
40	1.412-00078	PLATE;PRESSURE	PLAQUE PRESSION	1					
50	1.114-00487	WASHER;TAB	TOLE FREIN	1					
60	1.409-00009	PISTON	PISTON	1					
70	1.131-00008	SPRING;COMPR	RESSORT	1					
80	1.420-00084	VALVE;PRESSURE RELIEF	DECOMPRESSION	1					

DATE	NOV. 24, 2006
1st EDITION	

Fig. 3240 PRESSURE OIL PUMP - TRANSMISSION
POMPE D'HUILE DE PRESSION

Serial No. ;

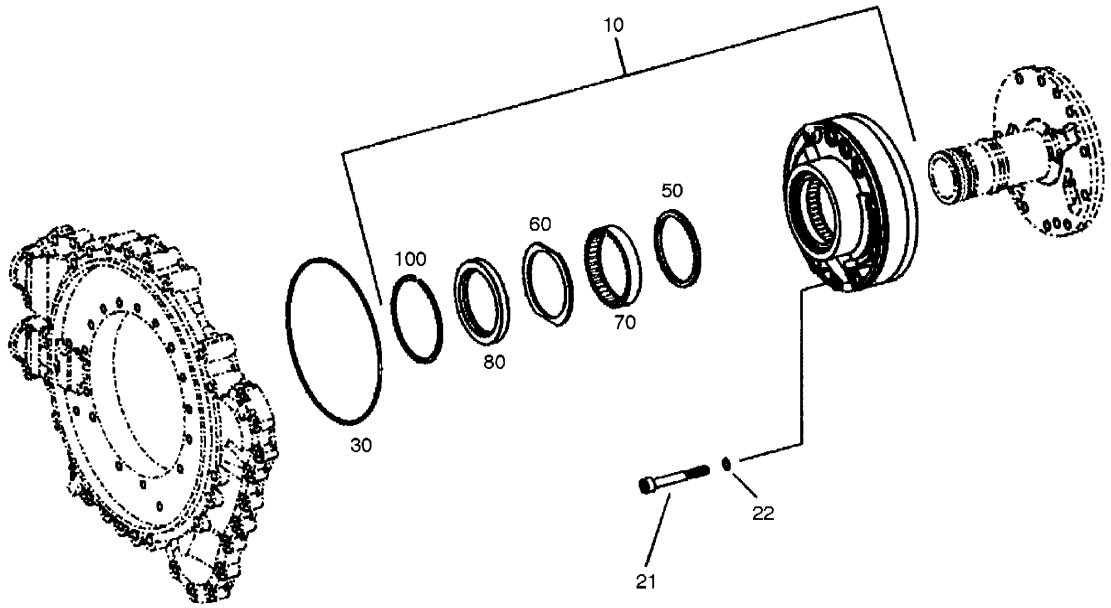

DATE	NOV. 24, 2006
1st EDITION	

Fig. 3240 PRESSURE OIL PUMP - TRANSMISSION
POMPE D'HUILE DE PRESSION

Serial No. ;

Key No.	Part No.	Description	Description	Q'ty	S.C	Serial No.	ICA	Replaceable part	
								Part No.	Q'ty
3240-10	K9004331	PUMP;GEAR	PIGNON DE POMPE	1					
50	1.115-00108	. RING	. BAGUE	1					
60	1.114-00231	. SHIM;SUPPORT	. CALE	1					
70	1.109-00046	. BEARING;NEEDLE	. PALIER	1					
80	1.180-00531	. SEAL;SHAFT	. JOINT	1					
100	1.115-00081	. RING;SNAP	. BAGUE	1					
21	1.120-00088	SCREW	VIS	10					
22	1.180-00058	O-RING	JONT TORIQUE	10					
30	1.180-00059	O-RING	JONT TORIQUE	1					

DATE	NOV. 24, 2006
1st EDITION	

Fig. 3250 EMG.STEERING PUMP - TRANSMISSION
POMPE DE DIRECTION

Serial No. ;

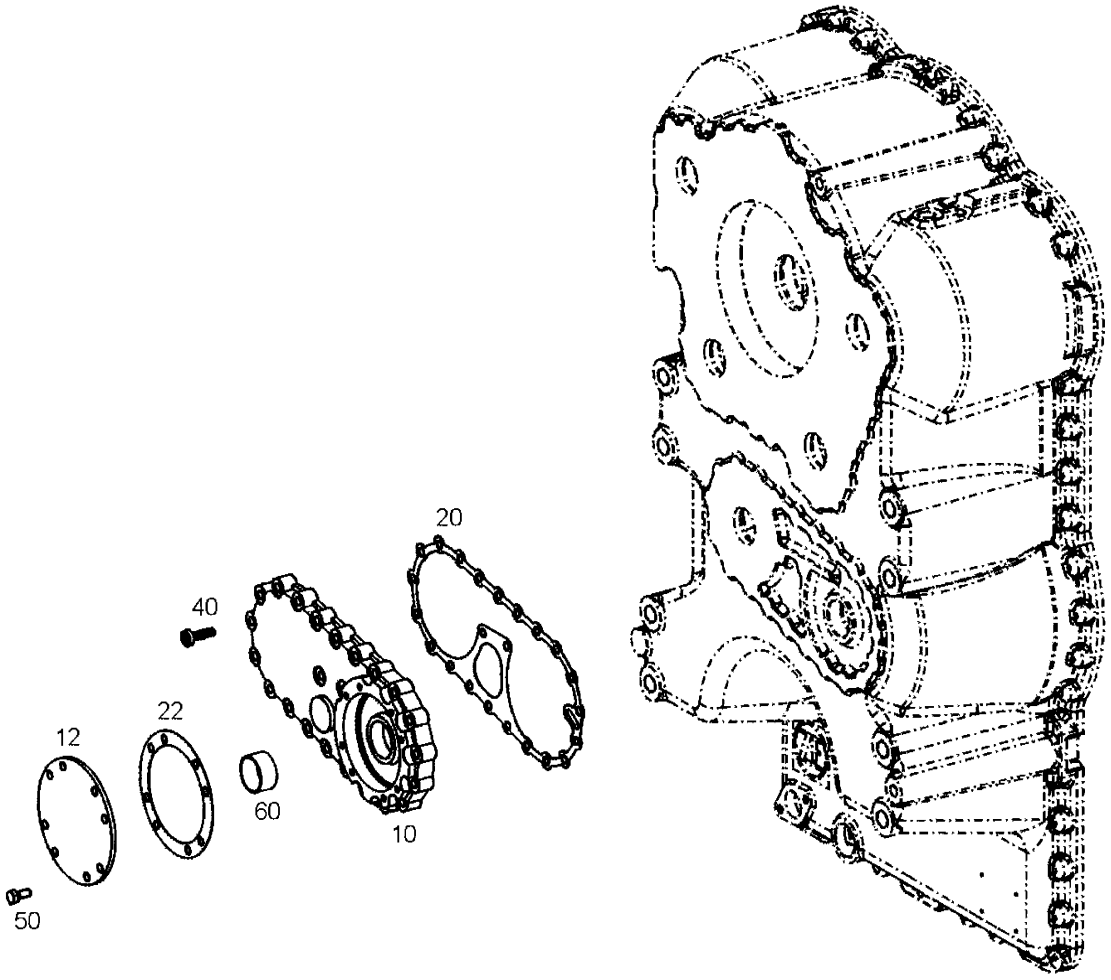

DATE	NOV. 24, 2006
1st EDITION	

Fig. 3250 EMG.STEERING PUMP - TRANSMISSION
POMPE DE DIRECTION

Serial No. ;

Key No.	Part No.	Description	Description	Q'ty	S.C	Serial No.	ICA	Replaceable part	
								Part No.	Q'ty
3250-10	1.430-00004	COVER	COUVERCLE	1					
12	1.430-00005	COVER	COUVERCLE	1					
20	1.180-00012	GASKET	GARNITURE	1					
22	1.180-00010	GASKET	GARNITURE	1					
40	1.120-00082	SCREW	VIS	23					
50	1.120-00120	SCREW	VIS	8					
60	1.109-00063	BEARING;PLAIN	COUSSINET	1					

DATE	NOV. 24, 2006
1st EDITION	

Fig. 3260 INDICATOR TRANSMITTER - TRANSMISSION
EMETTEUR D'INDICATEUR

Serial No. ;

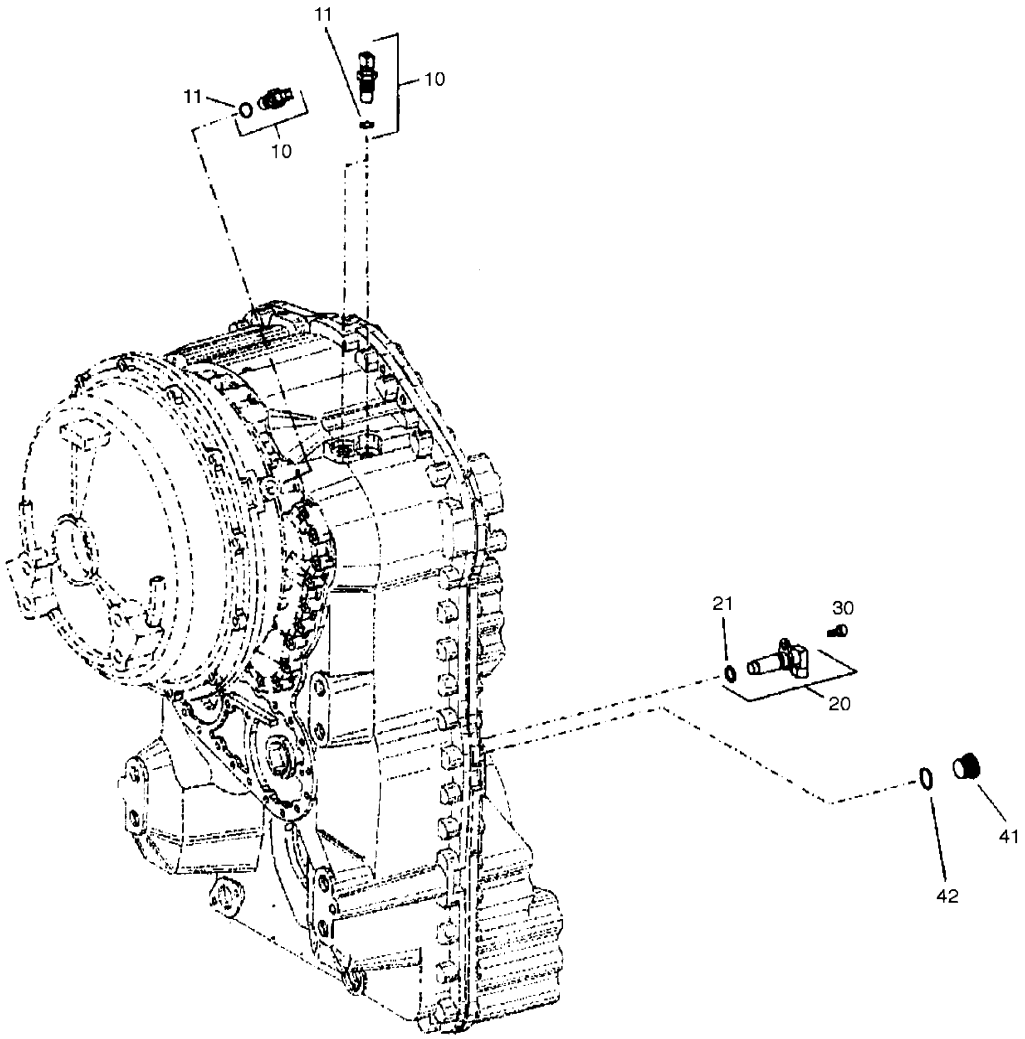

DATE	NOV. 24, 2006
1st EDITION	

Fig. 3260 INDICATOR TRANSMITTER - TRANSMISSION EMETTEUR D'INDICATEUR

Serial No. ;

Key No.	Part No.	Description	Description	Q'ty	S.C	Serial No.	ICA	Replaceable part	
								Part No.	Q'ty
3260-10	1.549-00011	TRANSMITTER;IND.	CAPTEUR IMPULS.	3					
11	K9000086	. O-RING	. JONT TORIQUE	1					
20	1.549-00015	TRANSMITTER;SPEED	CAPTEUR TACHYM.	1					
21	1.180-00061	. O-RING	. JONT TORIQUE	1					
30	1.120-00089	SCREW	VIS	1					
41	1.120-00166	PLUG	BOUCHON	1					
42	1.180-00062	O-RING	JONT TORIQUE	1					

DATE	DEC. 15, 2006
REV.NO.	EXB06-13

Fig. 3270 TEMPERATURE SENSOR - TRANSMISSION CAPTEUR

Serial No. ;

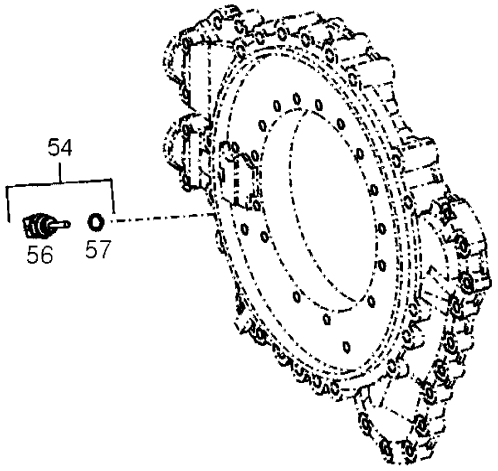

DATE	DEC. 15, 2006
REV. NO.	EXB06-13

Fig. 3270 TEMPERATURE SENSOR - TRANSMISSION CAPTEUR

Serial No. ;

Key No.	Part No.	Description	Description	Q'ty	S.C	Serial No.	ICA	Replaceable part	
								Part No.	Q'ty
3270-54	K9004019	SENSOR;TEMP.	CAPTEUR TEMPER.	1					
56	**K9002059**	**SENSOR;TEMP.**	CAPTEUR TEMPER.	1					
57	1.180-00063	O-RING	JONT TORIQUE	1					

DATE	NOV. 24, 2006
1st EDITION	

Fig. 3280 FILTER - TRANSMISSION
FILTRE

Serial No. ;

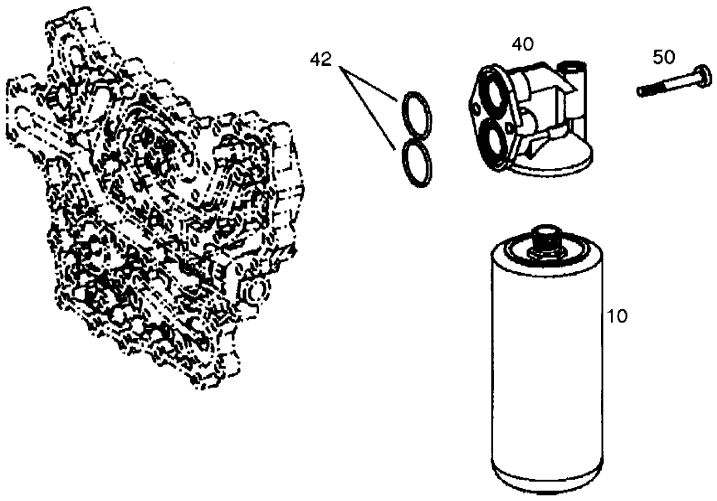

DATE	NOV. 24, 2006
1st EDITION	

Fig. 3280 FILTER - TRANSMISSION FILTRE

Serial No. ;

Key No.	Part No.	Description	Description	Q'ty	S.C	Serial No.	ICA	Replaceable part	
								Part No.	Q'ty
3280-10	K1029612	FILTER;PRESSURE	FILTER;PRESSURE	1					
40	1.451-00170	HEAD;FILTER	TETE DE FILTRE	1					
42	1.180-00064	O-RING	JONT TORIQUE	2					
50	1.120-00084	SCREW	VIS	2					

DATE	NOV. 24, 2006
1st EDITION	

Fig. 3290 OIL DIPSTICK - TRANSMISSION
JAUGE D'DHUILE

Serial No. ;

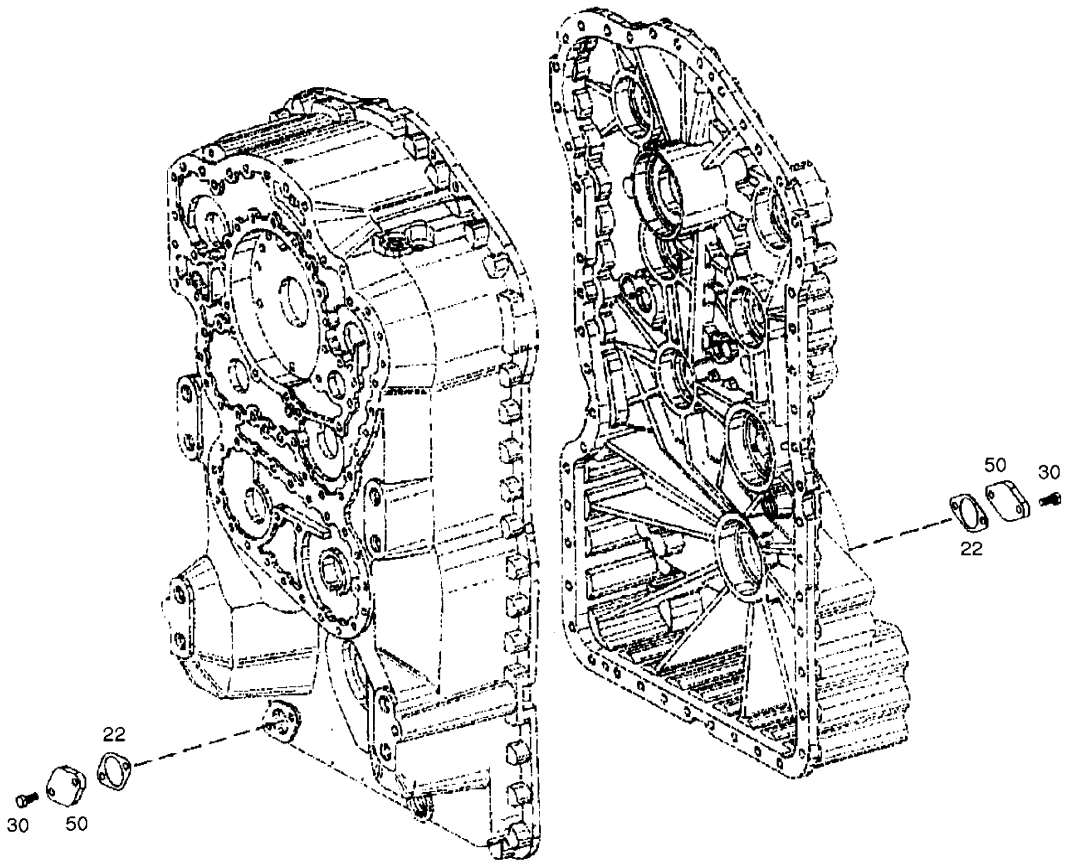

DATE	NOV. 24, 2006
1st EDITION	

Fig. 3290 OIL DIPSTICK - TRANSMISSION
JAUGE D'DHUILE

Serial No. ;

Key No.	Part No.	Description	Description	Q'ty	S.C	Serial No.	ICA	Replaceable part	
								Part No.	Q'ty
3290-22	1.180-00011	GASKET	GARNITURE	2					
30	1.120-00120	SCREW	VIS	4					
50	1.412-00031	PLATE	PLAQUE	2					

Fig. 3300 LOOSE PARTS - TRANSMISSION PCES.DETACHEES

Serial No. ;



10



20



30

DATE	NOV. 24, 2006
1st EDITION	

Fig. 3300 LOOSE PARTS - TRANSMISSION PCES.DETACHEES

Serial No. ;

Key No.	Part No.	Description	Description	Q'ty	S.C	Serial No.	ICA	Replaceable part	
								Part No.	Q'ty
3300-10	1.180-00011	GASKET	GARNITURE	2					
20	1.412-00029	PLATE;BAFFLE	PLAQUE	1					
30	1.180-00065	O-RING	JONT TORIQUE	1					

Fig. 3310 INTERMEDIATE CONNECT - FRONT AXLE RELIENT

Serial No. ;

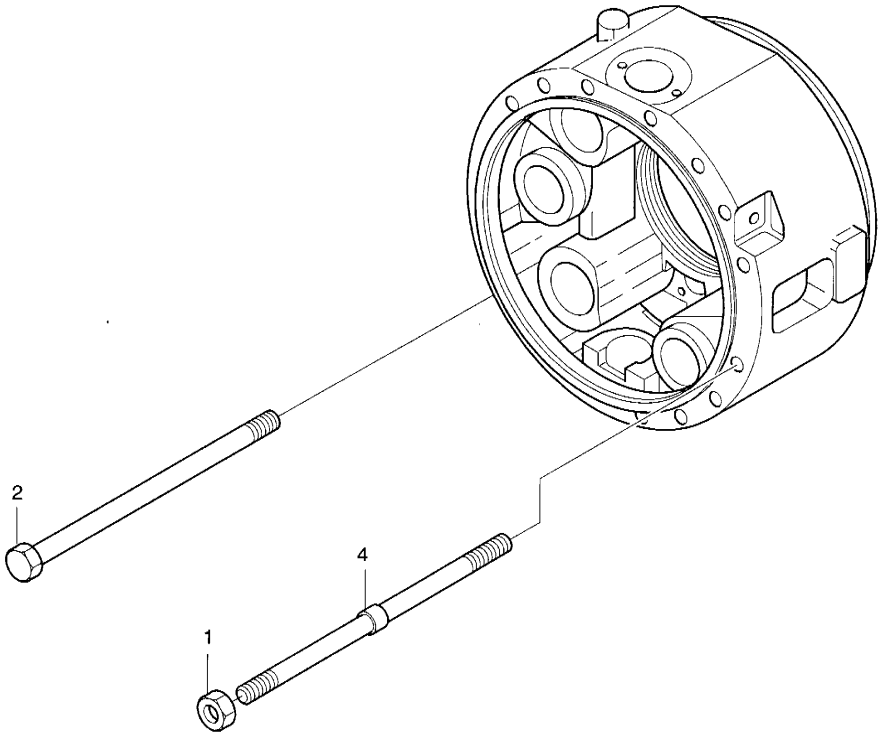

DATE	NOV. 24, 2006
1st EDITION	

Fig. 3310 INTERMEDIATE CONNECT - FRONT AXLE RELIENT

Serial No. ;

Key No.	Part No.	Description	Description	Q'ty	S.C	Serial No.	ICA	Replaceable part	
								Part No.	Q'ty
0--	211-00065	AXLE;FRONT	AXE	1					
1	2.121-00001	NUT	ECROU	4					
2	2.120-00001	BOLT	BOULON	28					
4	2.317-00001	STUD	GOUJON	4					

Fig. 3320 DIFFERENTIAL HOUSING - FRONT AXLE
CARTER DE DIFFERENCIEL

Serial No. ;

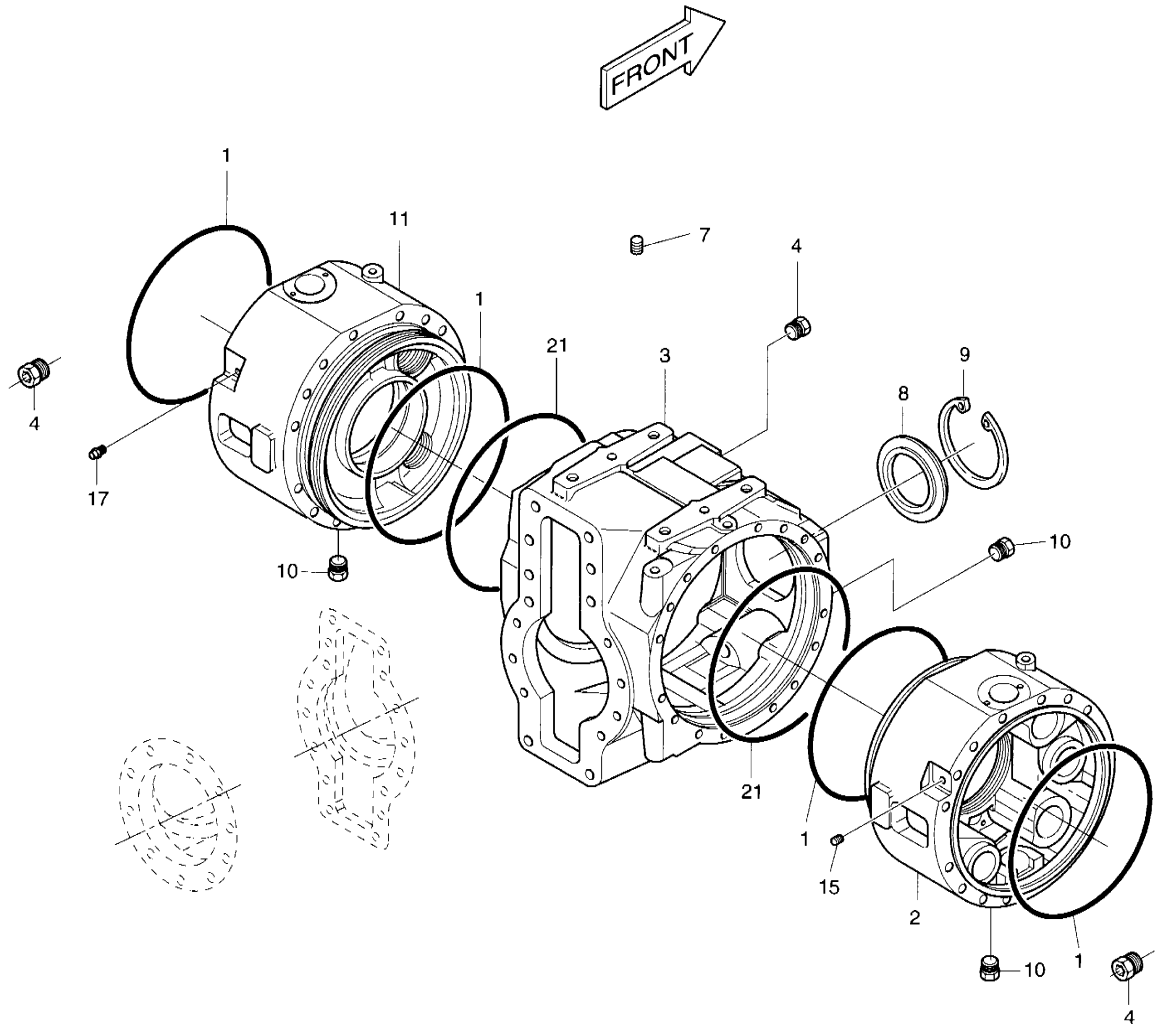

For fixing studs, bolts and nuts position see fig. 3310.

DATE	NOV. 24, 2006
1st EDITION	

Fig. 3320 DIFFERENTIAL HOUSING - FRONT AXLE
CARTER DE DIFFERENCIEL

Serial No. ;

Key No.	Part No.	Description	Description	Q'ty	S.C	Serial No.	ICA	Replaceable part	
								Part No.	Q'ty
3320--	211-00065	AXLE;FRONT	AVANT	1					
1	2.180-00204	O-RING	JONT TORIQUE	2					
2	2.430-00445	COVER;INTERMEDIATE	COUVERCLE	1					
3	2.402-00132	HOUSING	CARTER	1					
4	2.181-00110	PLUG	BOUCHON	4					
7	2.120-00003	BOLT	BOULON	2					
8	2.181-00108	PLUG	BOUCHON	1					
9	2.115-00338	RING;SNAP	BAGUE D'ARET	1					
10	2.181-00385	PLUG;MAGNET	BOUCHON MAGNETIQUE	3					
11	2.430-00442	COVER;INTERMEDIATE	COUVERCLE	1					
15	2.181-00109	PLUG	VIS DE FERMETURE	1					
17	2.181-00453	VENT	RENIFLARD	1					
21	2.180-00205	O-RING	JONT TORIQUE	2					

DATE	NOV. 24, 2006
1st EDITION	

Fig. 3330 DIFFERENTIAL - FRONT AXLE
PORTEUR DIFFERENTIEL

Serial No. ;

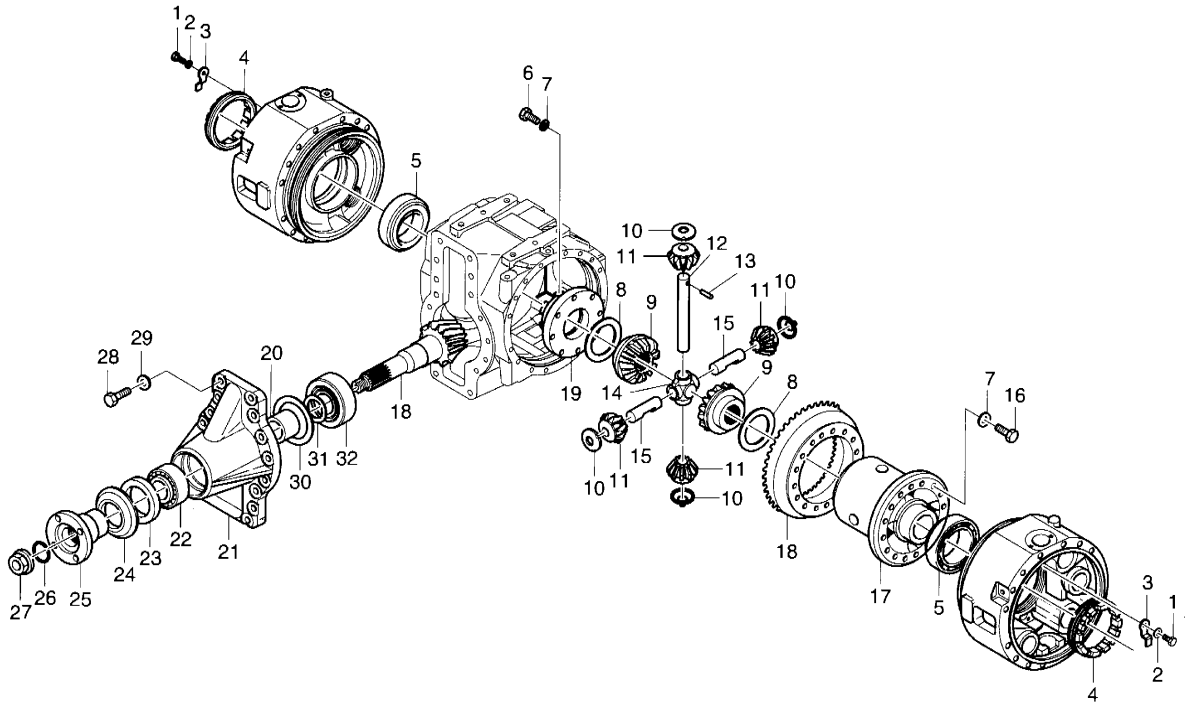

DATE	NOV. 24, 2006
1st EDITION	

Fig. 3330 DIFFERENTIAL - FRONT AXLE
PORTEUR DIFFERENTIEL

Serial No. ;

Key No.	Part No.	Description	Description	Q'ty	S.C	Serial No.	ICA	Replaceable part	
								Part No.	Q'ty
3330--	211-00065	AXLE;FRONT	AVANT	1					
1	2.120-00002	BOLT	BOULON	2					
2	2.114-01002	WASHER;LOCK	RONDELLE	2					
3	2.412-00180	PLATE;LOCKING	TOLE DE SECURITE	2					
4	2.121-00193	NUT;RING	ECROU	2					
5	2.109-00232	BEARING;TAPER ROLLER	ROULEMENT A R .	1					
6	2.120-00243	BOLT;HEX.	VIS A TETE EXAGONALE	8					
7	2.114-01100	WASHER;SPRING	RONDELLE ELASTIQUE	16					
8	2.114-00808	WASHER;FRICTION	RONDELLE	2					
9	2.403-00245	SIDE GEAR;DIFFERENTIAL	PLANETAIRE	2					
10	2.114-00807	WASHER;FRICTION	RONDELLE	4					
11	2.403-00178	PINION;DIFFERENTIAL	SATELLITE	4					
12	2.123-00004	PIN	AXE	1					
13	2.123-00190	PIN;ROLL	BROCHE ELASTIQUE	3					
14	2.115-00052	RETAINER;SHAFT	CROISILLON	1					
15	2.123-00003	PIN	AXE	2					
16	2.120-00242	BOLT;HEX.	VIS A TETE EXAGONALE	16					
17	2.217-00031	CARRIER;DIFFERENTIAL	CARTER DIFFERENTIEL	1					
18	2.403-00078	BEVEL GEAR SET	COUPLE CONIQUE	1					
19	2.430-00139	COVER	COVERCLE	1					
20	2.114-00707	SPACER	ENTRETOSE	1					
21	2.430-00146	COVER	COUVERCLE	1					
22	2.109-00233	BEARING;TAPER ROLLER	ROULEMENT A R .	1					
23	2.180-00669	SEAL	JOINT D'ETANCHEITE	1					
24	2.412-00133	PLATE;COVER	PROTECTION EN TOLE	1					
25	2.215-00001	FLANGE	BRIDE	1					
26	2.180-00207	O-RING	JONT TORIQUE	1					
27	2.121-00002	NUT	ECROU	1					
28	2.120-00016	BOLT;HEX.	VIS A TETE EXAGONALE	16					
29	2.114-01103	WASHER;SPRING	RONDELLE ELASTIQE	16					
30	2.114-00095	SHIM	CALE	1					
	2.114-00096	SHIM	CALE	1	R				
	2.114-00097	SHIM	CALE	1	R				
	2.114-00098	SHIM	CALE	1	R				
31	2.114-00084	SHIM	CALE	5					
	2.114-00085	SHIM	CALE	3	R				
	2.114-00086	SHIM	CALE	1	R				
	2.114-00087	SHIM	CALE	1	R				

DATE	NOV. 24, 2006
1st EDITION	

Fig. 3330 DIFFERENTIAL - FRONT AXLE
PORTEUR DIFFERENTIEL

Serial No. ;

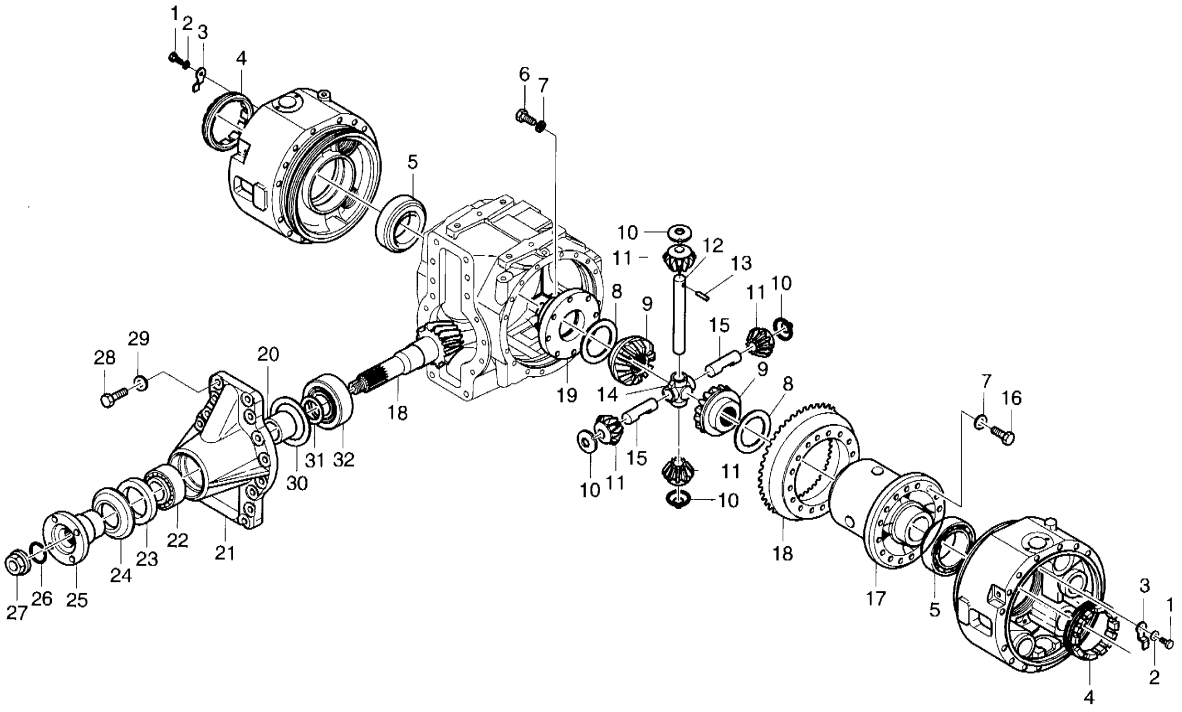

DATE	NOV. 24, 2006
1st EDITION	

Fig. 3330 DIFFERENTIAL - FRONT AXLE
PORTEUR DIFFERENTIEL

Serial No. ;

Key No.	Part No.	Description	Description	Q'ty	S.C	Serial No.	ICA	Replaceable part	
								Part No.	Q'ty
3330-31	2.114-00088	SHIM	CALE	1	R				
32	2.109-00234	BEARING;TAPER ROLLER	ROULEMENT A R .	1					

DATE	NOV. 24, 2006
1st EDITION	

Fig. 3340 PLANETARY GEAR - FRONT AXLE
PLANETAIRE PIGNON

Serial No. ;

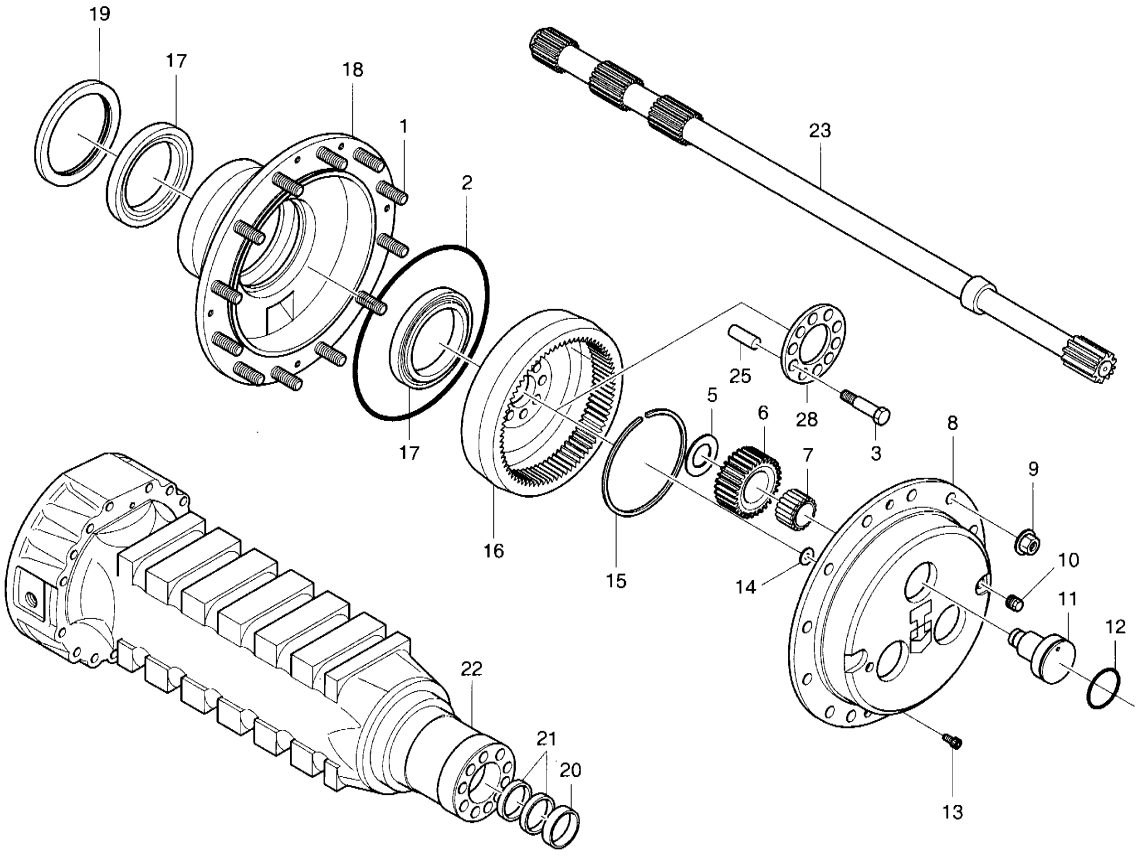

DATE	NOV. 24, 2006
1st EDITION	

Fig. 3340 PLANETARY GEAR - FRONT AXLE
PLANETAIRE PIGNON

Serial No. ;

Key No.	Part No.	Description	Description	Q'ty	S.C	Serial No.	ICA	Replaceable part	
								Part No.	Q'ty
3340--	211-00065	AXLE;FRONT	AVANT	1					
1	2.317-00076	STUD;WHEEL	GOUJON DE ROUE	24					
2	2.180-00265	O-RING	JONT TORIQUE	2					
3	2.120-00004	BOLT	BOULON	20					
5	2.114-00809	WASHER;FRICTION	RONDELLE	6					
6	2.403-00185	GEAR;PLANET	SATELLITE	6					
7	2.109-00160	BEARING;NEEDLE	ROULEMENT A AIGUILLE	6					
8	2.217-00048	CARRIER;PLANET GEAR	SUPPORT SATELLITES	2					
9	2.121-00003	NUT	ECROU	24					
10	2.181-00385	PLUG;MAGNET	BOUCHON MAGNETIQUE	2					
11	2.123-00017	PIN	AXE	6					
12	2.180-00266	O-RING	JONT TORIQUE	6					
13	2.120-00005	BOLT;CYLINDER	VIS A TETE CYLINDRIQUE	4					
14	2.114-00810	WASHER;FRICTION	RONDELLE	2					
15	2.124-00046	CIRCLIP	ARRETOIR	2					
16	2.403-00224	GEAR;RING	COURONNE DENTEE	2					
17	2.109-00235	BEARING;TAPER ROLLER	ROULEMENT A R .	4					
18	2.219-00023	HUB;WHEEL	MOYEU DE ROUE	2					
19	K9004352	SEAL	JOINT D'ETANCHEITE	2					
20	2.115-00191	RING;CENTERING	BAGUE DE CENTRAGE	2					
21	2.180-00670	SEAL	JOINT D'ETANCHEITE	2					
22	2.423-00029	CASE;AXLE	CORPS D'ESSIEU	2					
23	2.405-00135	SHAFT;HALF	DEMI ARBRE	2					
25	2.408-00119	BUSHING;REDUCTION	MANCHON DE REDUCTION	20					
28	2.412-00182	PLATE;LOCKING	TOLE DE SECURITE	2					

DATE	NOV. 24, 2006
1st EDITION	

Fig. 3350 BRAKE - FRONT AXLE
FREIN

Serial No. ;

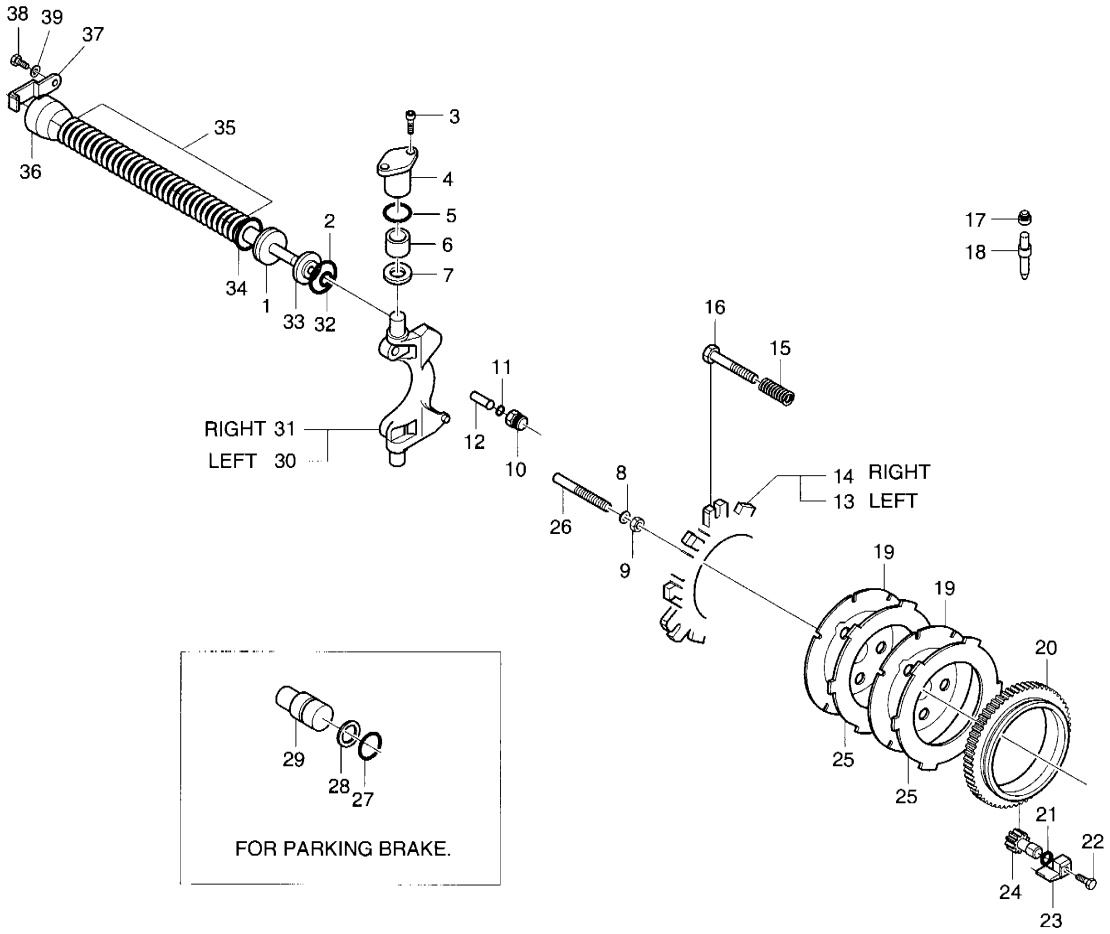

DATE	NOV. 24, 2006
1st EDITION	

Fig. 3350 BRAKE - FRONT AXLE FREIN

Serial No. ;

Key No.	Part No.	Description	Description	Q'ty	S.C	Serial No.	ICA	Replaceable part	
								Part No.	Q'ty
3350--	211-00065	AXLE;FRONT	AVANT	1					
1	K9004353	PISTON	PISTON	4					
2	2.180-00209	O-RING	JONT TORIQUE	12					
3	2.120-00006	BOLT;CYLINDER	VIS A TETE CYLINDRIQUE	8					
4	2.408-00120	BUSHING;REDUCTION	MANCHON DE REDUCTION	4					
5	2.180-00210	O-RING	JONT TORIQUE	4					
6	2.408-00091	BUSHING	DOUILLE	4					
7	2.114-00811	WASHER;FRICTION	RONDELLE	4					
8	2.114-01003	WASHER;LOCK	RONDELLE	2					
9	2.121-00004	NUT	ECROU	2					
10	2.181-00112	PLUG	BOUCHON	4					
11	2.180-00211	O-RING	JONT TORIQUE	4					
12	2.428-00005	PUSHER	POINTEAU	4					
13	2.222-00008	DISC	DISQUE	1					
14	2.222-00010	DISC	DISQUE	1					
15	2.131-00002	SPRING	RESSORT	6					
16	2.120-00322	BOLT;ADJUSTING	VIS DE REGLAGE	6					
17	2.181-00113	PLUG	BOUCHON	2					
18	2.120-00176	BOLT;BLEEDING	VIS DE PURGE	2					
19	2.222-00012	DISC;BRAKE	DISQUE DE FREIN	10					
20	2.115-00085	RING	BAGUE	2					
21	2.180-00212	O-RING	JONT TORIQUE	2					
22	2.120-00246	BOLT;HEX.	VIS A TETE EXAGONALE	2					
23	2.412-00183	PLATE;LOCKING	TOLE DE SECURITE	2					
24	2.403-00168	PINION	PIGNON	2					
25	2.222-00013	DISC;BRAKE	DISQUE DE FREIN	10					
26	2.120-00007	BOLT;ADJUSTING	VIS DE REGLAGE	2					
27	2.180-00213	O-RING	JONT TORIQUE	6					
28	2.180-00914	RING;BACK-UP	BAGUE ANTIEXTRUSION	6					
29	2.409-00002	PISTON	PISTON	6					
30	2.357-00016	LEVER	LEVIER	1					
31	2.357-00015	LEVER	LEVIER	1					
32	2.180-00214	O-RING	JONT TORIQUE	4					
33	2.181-00114	PLUG	BOUCHON	4					
34	2.180-00215	O-RING	JONT TORIQUE	4					
35	2.131-00003	SPRING	RESSORT	96					
36	2.424-00355	CYLINDER;WHEEL	CYLINDRE FREIN	4					
37	2.412-00184	PLATE;LOCKING	TOLE DE SECURITE	4					

DATE	NOV. 24, 2006
1st EDITION	

Fig. 3350 BRAKE - FRONT AXLE
FREIN

Serial No. ;

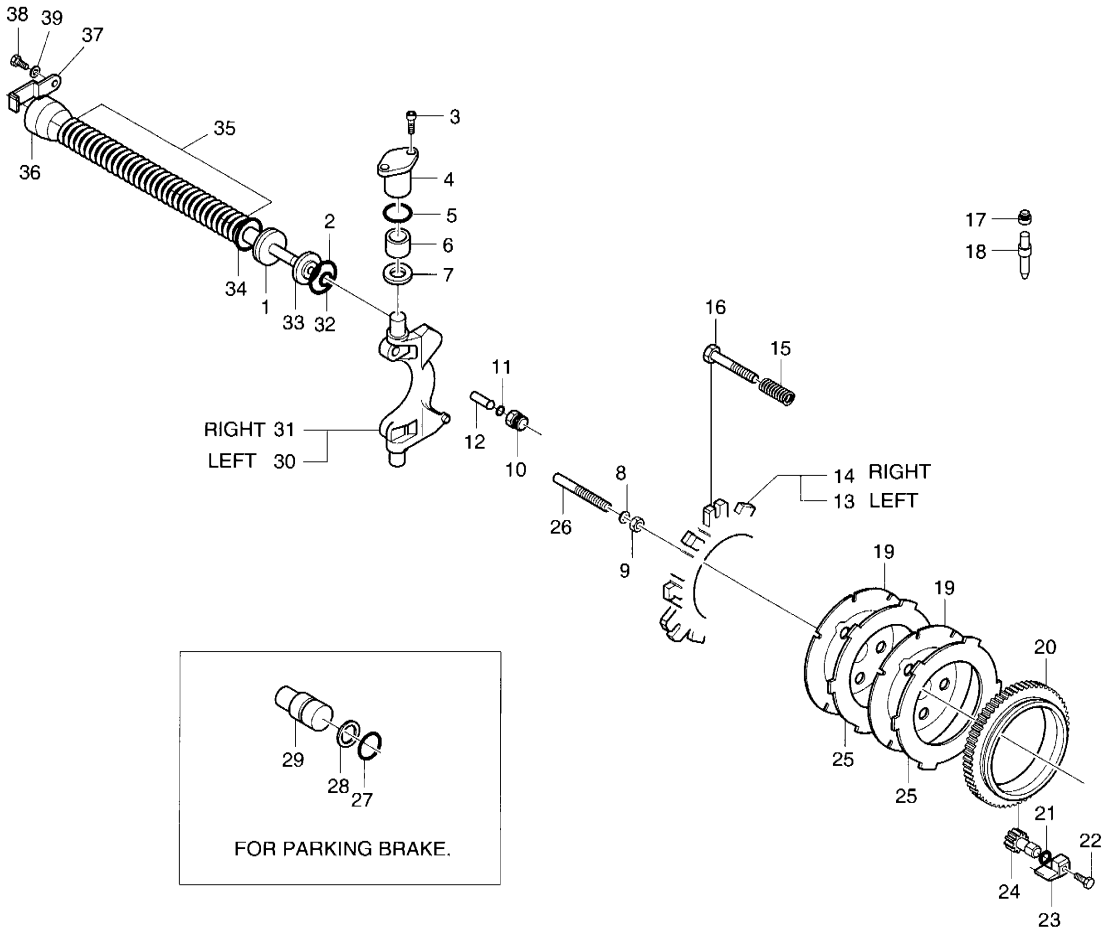

DATE	NOV. 24, 2006
1st EDITION	

Fig. 3350 BRAKE - FRONT AXLE FREIN

Serial No. ;

Key No.	Part No.	Description	Description	Q'ty	S.C	Serial No.	ICA	Replaceable part	
								Part No.	Q'ty
3350-38	2.120-00002	BOLT	BOULON	4					
39	2.114-01002	WASHER;LOCK	RONDELLE	4					

DATE	NOV. 24, 2006
1st EDITION	

Fig. 3360 DIFFERENTIAL HOUSING - REAR AXLE
CARTER DE DIFFERENCIEL

Serial No. ;

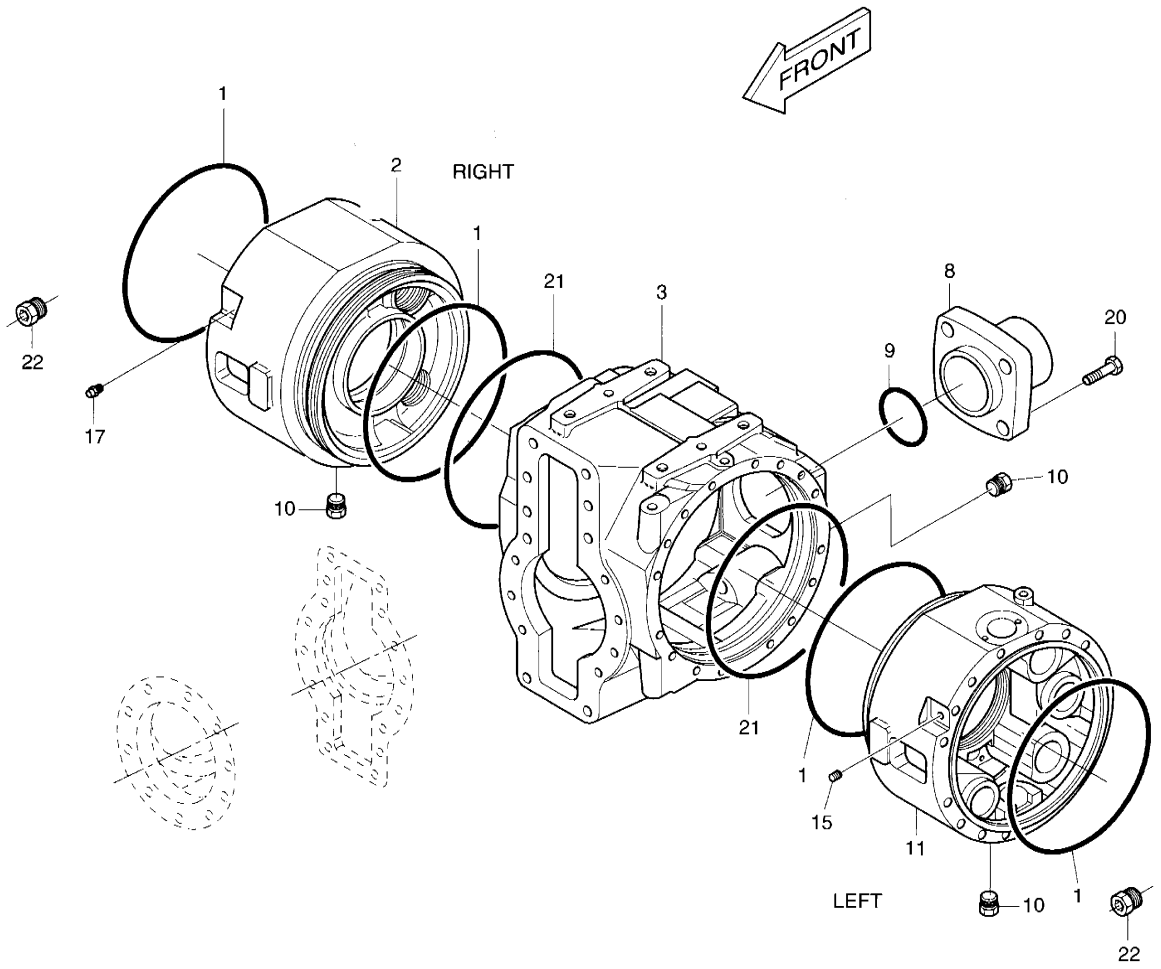

For fixing studs, bolts and nuts position see fig. 3310.

DATE	NOV. 24, 2006
1st EDITION	

Fig. 3360 DIFFERENTIAL HOUSING - REAR AXLE
CARTER DE DIFFERENCIEL

Serial No. ;

Key No.	Part No.	Description	Description	Q'ty	S.C	Serial No.	ICA	Replaceable part	
								Part No.	Q'ty
3360--	211-00066	AXLE;REAR	AXE	1					
1	2.180-00204	O-RING	JONT TORIQUE	2					
2	2.430-00444	COVER;INTERMEDIATE	COUVERCLE	1					
3	2.402-00127	HOUSING	CARTER	1					
8	2.197-00001	SUPPORT	SUPPORT	1					
9	2.180-00216	O-RING	JONT TORIQUE	1					
10	2.181-00385	PLUG;MAGNET	BOUCHON MAGENTIQUE	3					
11	2.430-00443	COVER;INTERMEDIATE	COUVERCLE	1					
15	2.181-00109	PLUG	VIS DE FERMETURE	1					
17	2.181-00453	VENT	RENIFLARD	1					
20	2.120-00008	BOLT;CYLINDER	VIS A TETE CYLINDRIQUE	4					
21	2.180-00205	O-RING	JONT TORIQUE	2					
22	2.181-00110	PLUG	BOUCHON	4					

DATE	NOV. 24, 2006
1st EDITION	

Fig. 3370 DIFFERENTIAL - REAR AXLE
PORTEUR DIFFERENTIEL

Serial No. ;

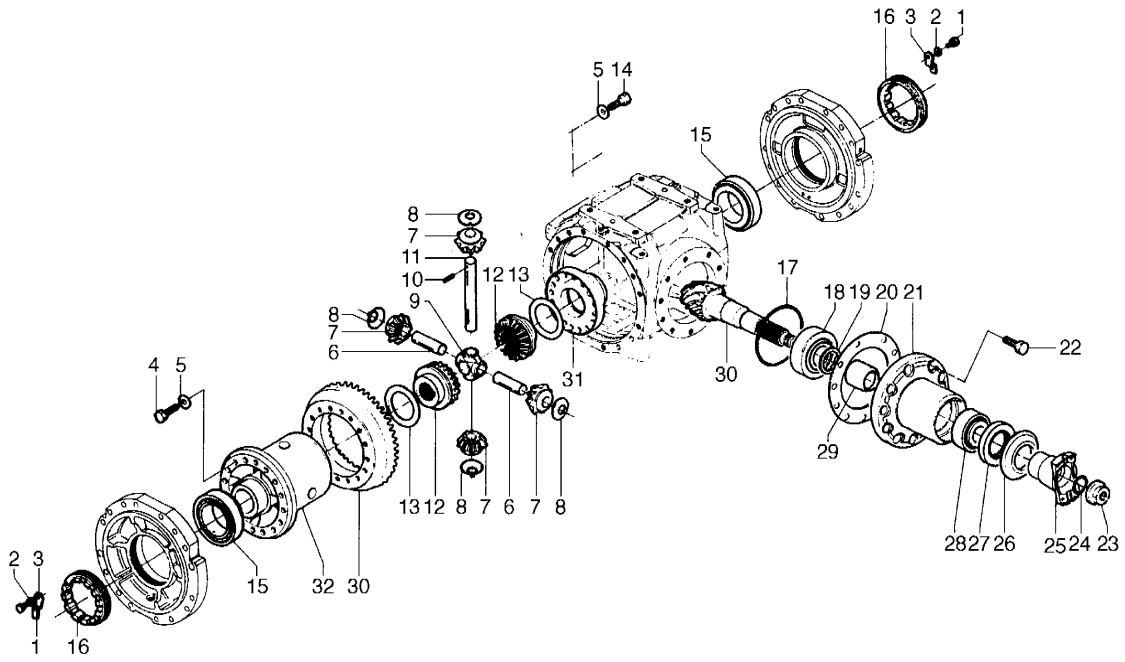

DATE	NOV. 24, 2006
1st EDITION	

Fig. 3370 DIFFERENTIAL - REAR AXLE
PORTEUR DIFFERENTIEL

Serial No. ;

Key No.	Part No.	Description	Description	Q'ty	S.C	Serial No.	ICA	Replaceable part	
								Part No.	Q'ty
0--	211-00066	AXLE;REAR	AXE	1					
1	2.120-00002	BOLT	BOULON	2					
2	2.114-01002	WASHER;LOCK	RONDELLE	2					
3	2.412-00180	PLATE;LOCKING	TOLE DE SECURITE	2					
4	2.120-00242	BOLT;HEX.	VIS A TETE EXAGONALE	16					
5	2.114-01100	WASHER;SPRING	RONDELLE ELASTIQUE	16					
6	2.123-00003	PIN	AXE	2					
7	2.403-00178	PINION;DIFFERENTIAL	SATELLITE	4					
8	2.114-00807	WASHER;FRICTION	RONDELLE	4					
9	2.115-00052	RETAINER;SHAFT	CROISILLON	1					
10	2.123-00190	PIN;ROLL	BROCHE ELASTIQUE	3					
11	2.123-00004	PIN	AXE	1					
12	2.403-00245	SIDE GEAR;DIFFERENTIAL	PLANETAIRE	2					
13	2.114-00808	WASHER;FRICTION	RONDELLE	2					
14	2.120-00243	BOLT;HEX.	VIS A TETE EXAGONALE	8					
15	2.109-00232	BEARING;TAPER ROLLER	ROULEMENT A R.	1					
16	2.121-00193	NUT;RING	ECROU	2					
17	2.180-00206	O-RING	JONT TORIQUE	1					
18	2.109-00234	BEARING;TAPER ROLLER	ROULEMENT A R.	1					
19	2.114-00084	SHIM	CALE	5					
	2.114-00085	SHIM	CALE	3	R				
	2.114-00086	SHIM	CALE	1	R				
	2.114-00087	SHIM	CALE	1	R				
	2.114-00088	SHIM	CALE	1	R				
20	2.114-00089	SHIM	CALE	1					
	2.114-00090	SHIM	CALE	1	R				
	2.114-00091	SHIM	CALE	1	R				
	2.114-00092	SHIM	CALE	1	R				
21	2.430-00140	COVER	COUVERCLE	1					
22	2.120-00009	BOLT;CYLINDER	VIS A TETE CYLINDRIQUE	10					
23	2.121-00002	NUT	ECROU	1					
24	2.180-00207	O-RING	JONT TORIQUE	1					
25	2.181-00030	FLANGE	BRIDE	1					
26	2.412-00133	PLATE;COVER	PROTECTION EN TOLE	1					
27	2.180-00669	SEAL	JOINT D'ETANCHEITE	1					
28	2.109-00233	BEARING;TAPER ROLLER	ROULEMENT A R.	1					
29	2.114-00707	SPACER	ENTRETOISE	1					
30	2.403-00071	BEVEL GEAR SET	COUPLE CONIQUE	1					

DATE	NOV. 24, 2006
1st EDITION	

Fig. 3370 DIFFERENTIAL - REAR AXLE
PORTEUR DIFFERENTIEL

Serial No. ;

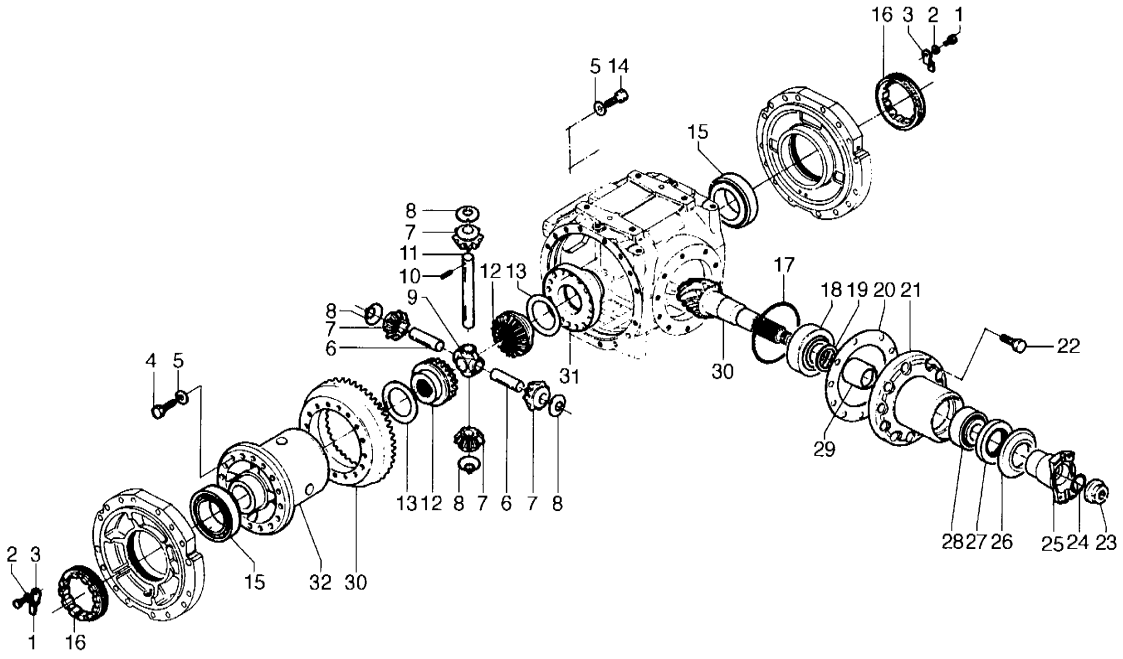

DATE	NOV. 24, 2006
1st EDITION	

Fig. 3370 DIFFERENTIAL - REAR AXLE
PORTEUR DIFFERENTIEL

Serial No. ;

Key No.	Part No.	Description	Description	Q'ty	S.C	Serial No.	ICA	Replaceable part	
								Part No.	Q'ty
3370-31	2.430-00139	COVER	COUVERCLE	1					
32	2.217-00031	CARRIER;DIFFERENTIAL	CARTER DIFFERENTIEL	1					

DATE	NOV. 24, 2006
1st EDITION	

Fig. 3380 PLANETARY GEAR - REAR AXLE
PLANETAIRE PIGNON

Serial No. ;

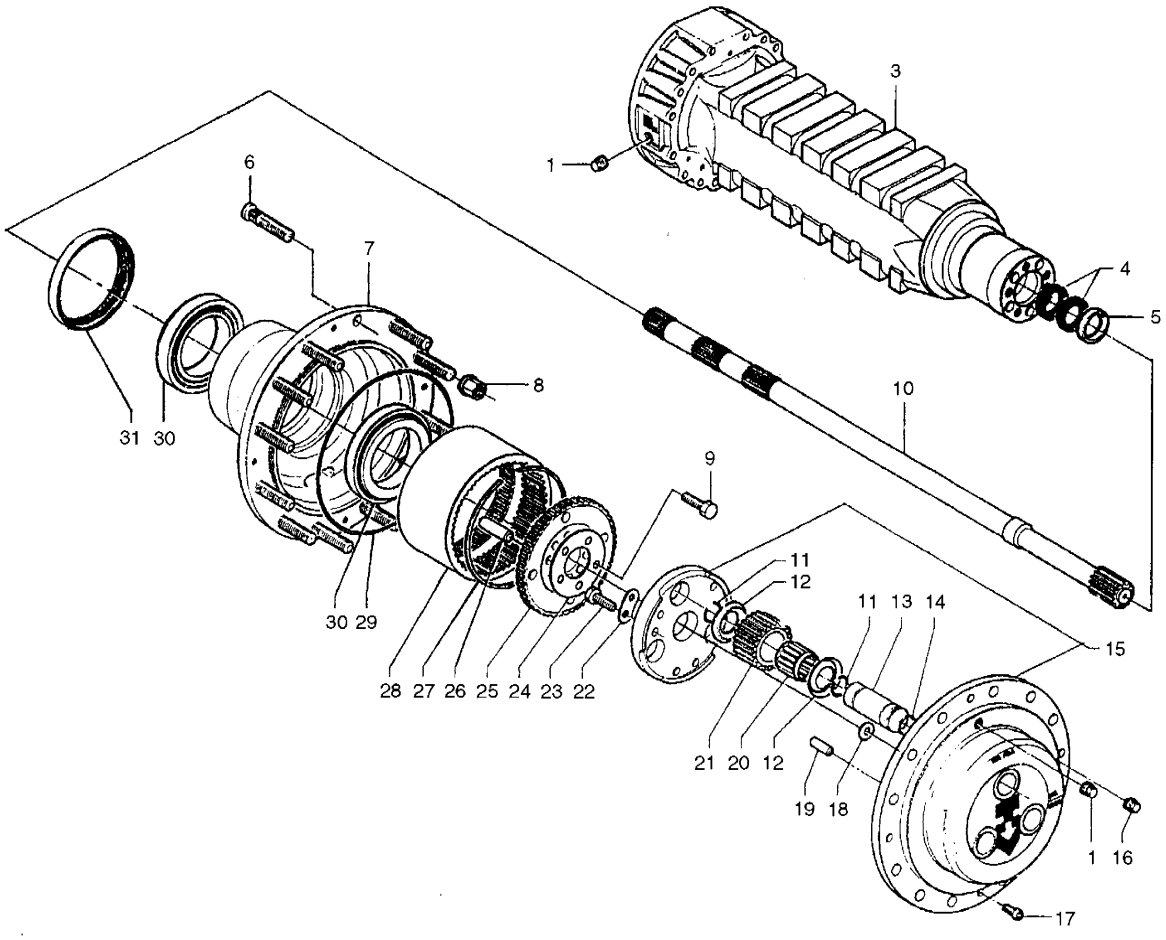

DATE	NOV. 24, 2006
1st EDITION	

Fig. 3380 PLANETARY GEAR - REAR AXLE
PLANETAIRE PIGNON

Serial No. ;

Key No.	Part No.	Description	Description	Q'ty	S.C	Serial No.	ICA	Replaceable part	
								Part No.	Q'ty
3380--	211-00066	AXLE;REAR	AXE	1					
1	2.181-00110	PLUG	BOUCHON	2					
3	2.423-00028	CASE;AXLE	CORQS D'ESSIEU	2					
4	2.180-00670	SEAL	JOINT D'ETANCHEITE	2					
5	2.115-00191	RING;CENTERING	BAGUE DE CENTRAGE	2					
6	2.317-00076	STUD;WHEEL	GOUJON DE ROUE	24					
7	2.219-00023	HUB;WHEEL	MOYEU DE ROUE	2					
8	2.121-00003	NUT	ECROU	24					
9	2.120-00018	BOLT;HEX.	VIS A TETE EXAGONALE	10					
10	2.405-00136	SHAFT;HALF	DEMI ARBRE	2					
11	2.115-00339	RING;SNAP	BAGUE D'ARRET	12					
12	2.114-00809	WASHER;FRICTION	RONDELLE	12					
13	2.123-00005	PIN	AXE	6					
14	2.180-00208	O-RING	JONT TORIQUE	6					
15	2.217-00049	CARRIER;PLANET GEAR	SUPPORT SATELLITES	2					
16	2.181-00385	PLUG;MAGNET	BOUCHON MAGNETIQUE	2					
17	2.120-00005	BOLT;CYLINDER	VIS A TETE CYLINDRIQUE	4					
18	2.114-00810	WASHER;FRICTION	RONDELLE	2					
19	2.123-00140	DOWEL	BROCHE ELASTIQUE	6					
20	2.109-00160	BEARING;NEEDLE	ROULEMENT A AIGUILLE	6					
21	2.403-00184	GEAR;PLANET	SATELLITE	6					
22	2.412-00181	PLATE;LOCKING	TOLE DE SECURITE	6					
23	2.120-00245	BOLT;HEX.	VIS A TETE EXAGONALE	12					
24	2.412-00187	PLATE;LOCKING	TOLE DE SECURITE	2					
25	2.197-00052	SUPPORT;RING GEAR	SUPPORT PORTE	2					
26	2.123-00259	DOWEL	BROCHE ELASTIQUE	10					
27	2.115-00340	RING;SNAP	BAGUE D'ARRET	2					
28	2.403-00223	GEAR;RING	COURONNE DENTEE	2					
29	2.180-00265	O-RING	JONT TORIQUE	2					
30	2.109-00235	BEARING;TAPER ROLLER	ROULEMENT A R.	4					
31	K9004352	SEAL	JOINT D'ETANCHEITE	2					

DATE	NOV. 24, 2006
1st EDITION	

Fig. 3390 BRAKE - REAR AXLE
FREIN

Serial No. ;

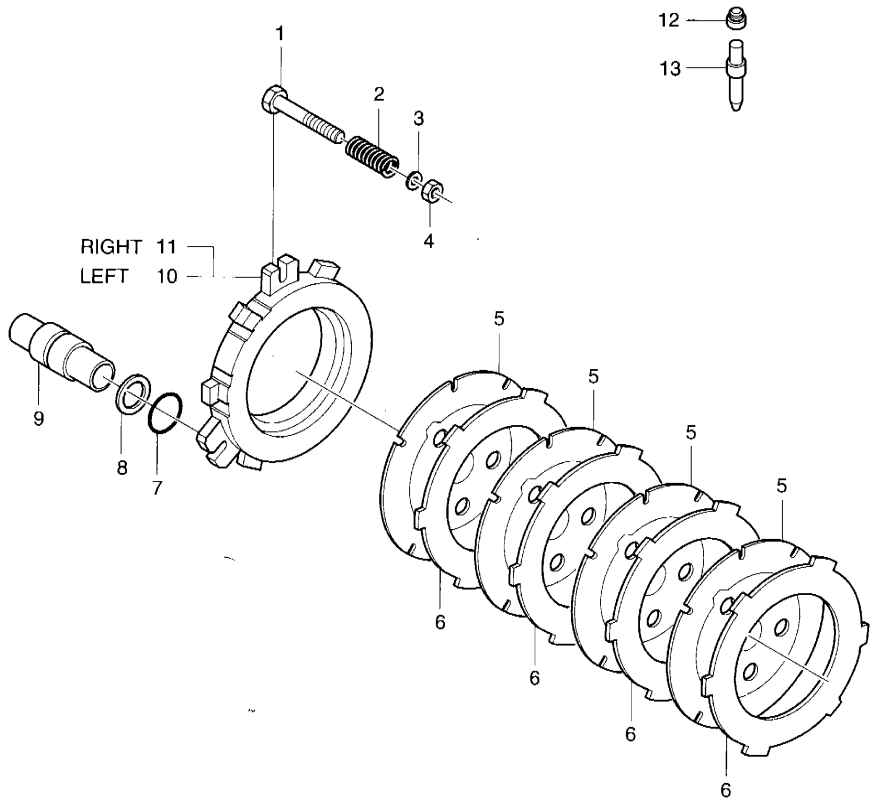

DATE	NOV. 24, 2006
1st EDITION	

Fig. 3390 BRAKE - REAR AXLE FREIN

Serial No. ;

Key No.	Part No.	Description	Description	Q'ty	S.C	Serial No.	ICA	Replaceable part	
								Part No.	Q'ty
3390--	211-00066	AXLE;REAR	AXE	1					
1	2.120-00010	BOLT;ADJUSTING	VIS DE REGLAGE	6					
2	2.131-00002	SPRING	RESSORT	6					
3	2.180-00217	O-RING	JONT TORIQUE	6					
4	2.121-00005	NUT	ECROU	6					
5	2.222-00012	DISC;BRAKE	DISQUE DE FREIN	8					
6	2.222-00013	DISC;BRAKE	DISQUE DE FREIN	8					
7	2.180-00213	O-RING	JONT TORIQUE	6					
8	2.180-00914	RING;BACK-UP	BAUGE ANTIEXTRUSION	6					
9	2.409-00002	PISTON	PISTON	6					
10	2.222-00004	DISC	DISQUE	1					
11	2.222-00005	DISC	DISQUE	1					
12	2.181-00113	PLUG	BOUCHON	2					
13	2.120-00176	BOLT;BLEEDING	VIS DE PURGE	2					

DATE	DEC. 15, 2006
REV.NO.	EXB06-13

Fig. 3400 MAIN PUMP
POMPE PRINCIPAL

Serial No. ;

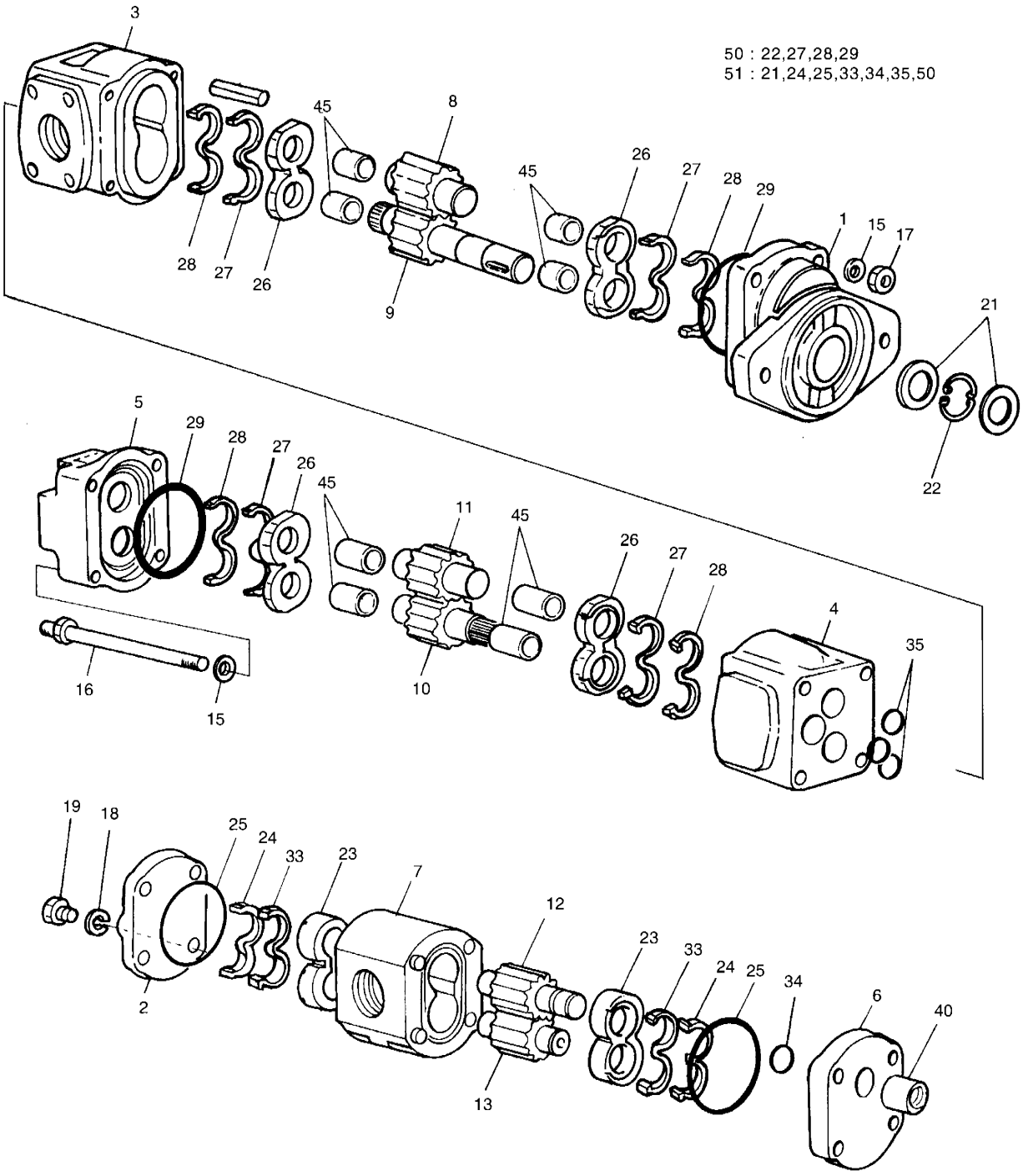

DATE	DEC. 15, 2006
REV. NO.	EXB06-13

Fig. 3400 MAIN PUMP POMPE PRINCIPAL

Serial No. ;

Key No.	Part No.	Description	Description	Q'ty	S.C	Serial No.	ICA	Replaceable part	
								Part No.	Q'ty
3400--	K1015172A	PUMP;MAIN	POMPE	1					
1	-	FLANGE	BRIDE	1	D				
2	-	COVER	COUVERCLE	1	D				
3	-	BODY	CARTER	1	D				
4	-	BODY	CARTER	1	D				
5	-	COVER	COUVERCLE	1	D				
6	-	PLATE	PLAQUE	1	D				
7	-	BODY	CARTER	1	D				
8	K9004576	GEAR;DRIVE	PIGNON	1					
9	K9004577	GEAR;DRIVEN	PIGNON	1					
10	K9004578	GEAR;DRIVE	PIGNON	1					
11	K9004577	GEAR;DRIVEN	PIGNON	1					
12	K9004580	GEAR;DRIVE	PIGNON	1					
13	K9004581	GEAR;DRIVEN	PIGNON	1					
15	2.114-01097	WASHER	RONDELLE	4					
16	2.317-00005	STUD	BOULON	4					
17	K9004582	NUT	ECROU	4					
18	K9004583	WASHER	RONDELLE	4					
19	K9004584	SCREW	VIS	4					
21	-	SEAL	JOINT	2	K				
22	-	CIRCLIP	CIRCLIP	1	K				
23	2.408-00009	BUSH	DOUILLE	2					
24	-	SEAL	JOINT	2	K				
25	-	SEAL	JOINT	2	K				
26	2.412-00089	PLATE	PLAQUE	4					
27	-	SEAL;ENERGISER	JOINT	4	K				
28	-	SEAL;ELEMENT	JOINT	4	K				
29	-	SEAL	JOINT	2	K				
33	-	SEAL	JOINT	2	K				
34	-	O-RING	JOINT TORIQUE	1	K				
35	-	O-RING	JOINT TORIQUE	4	K				
40	2.405-00003	SHIFT	FEUILLE	1					
45	2.408-00090	BUSH	DOUILLE	8					
50	**K9005012**	**SEAL KIT**	KIT D'ETANCHEITE	1					
51	**K9005013**	**SEAL KIT**	KIT D'ETANCHEITE	1					

DATE	NOV. 24, 2006
1st EDITION	

Fig. 3410 STEERING UNIT
UNITE

Serial No. ;

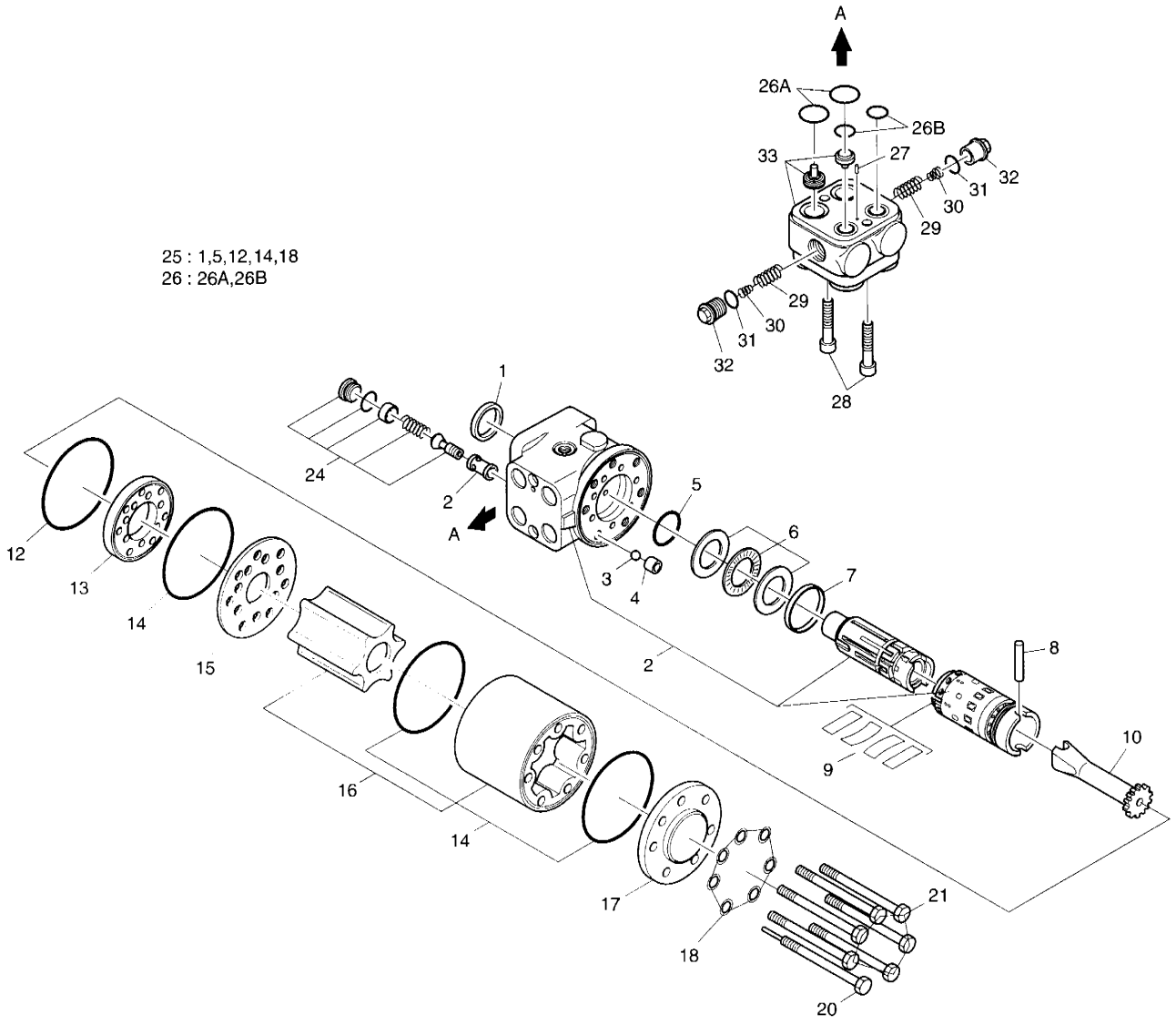

DATE	NOV. 24, 2006
1st EDITION	

Fig. 3410 STEERING UNIT UNITE

Serial No. ;

Key No.	Part No.	Description	Description	Q'ty	S.C	Serial No.	ICA	Replaceable part	
								Part No.	Q'ty
3410--	4420-9555	UNIT;STEERING	ORBITROL	1					
1	2.115-00194	RING;DUST SEAL	BAGUE	1					
2	-	HOUSING SPOOL	CARTER	1	D				
3	2.148-00001	BALL	BILLE	1					
4	2.408-00128	BUSHING;THREAD	MANCHON	1					
5	2.180-00199	O-RING	JOINT TORIQUE	1					
6	2.109-00085	BEARING ASS'Y	PALIER	1					
7	2.115-00080	RING	BAGUE	1					
8	2.123-00129	PIN;CROSS	BROCHE	1					
9	2.131-00500	SET OF SPRINGS	VIS DE REGLAGE	1					
10	2.405-00086	SHAFT;CARDON	TOURNEVIS EN CROIX	1					
12	2.180-00200	O-RING	JOINT TORIQUE	1					
13	2.412-00172	PLATE;INTERMEDIATE	INTERMEDIATE PLATE	1					
14	2.180-00201	O-RING	JOINT TORIQUE	3					
15	2.412-00143	PLATE;PISTRIBUTOR	PLAQUE	1					
16	2.403-00292	GEARWHEEL SET	ENSEMBLE DE PIGNON	1					
17	2.430-00295	COVER;END	COUVERCLE	1					
18	2.114-00806	WASHER	RONDELLE	7					
20	2.120-00505	SCREW WITH PIN	VIS	1					
21	2.120-00371	SCREW	VIS	6					
24	2.421-00229	COMPLETE RELIEF VALVE	CLAPET DE DECHARGE	1					
25	2.911-00060	SPARE KIT	KIT DE REPARATION	1					
26	2.180-00607	SET OF O-RINGS	VIS DE REGLAGE	1					
27	2.123-00018	PIN	BROCHE	1					
28	2.120-00372	SCREW	VIS	2					
29	2.421-00287	VALVE;SHOCK	SOUPAPE	2					
30	2.131-00018	SPRING	RESSORT	2					
31	2.180-00269	O-RING	JOINT TORIQUE	2					
32	2.181-00134	PLUG	BOUCHON	2					
33	-	HOUSING	CARTER	1	D				

DATE	NOV. 24, 2006
1st EDITION	

Fig. 3420 CUSHION VALVE SOUPAPE DE SECVRITE

Serial No. ;

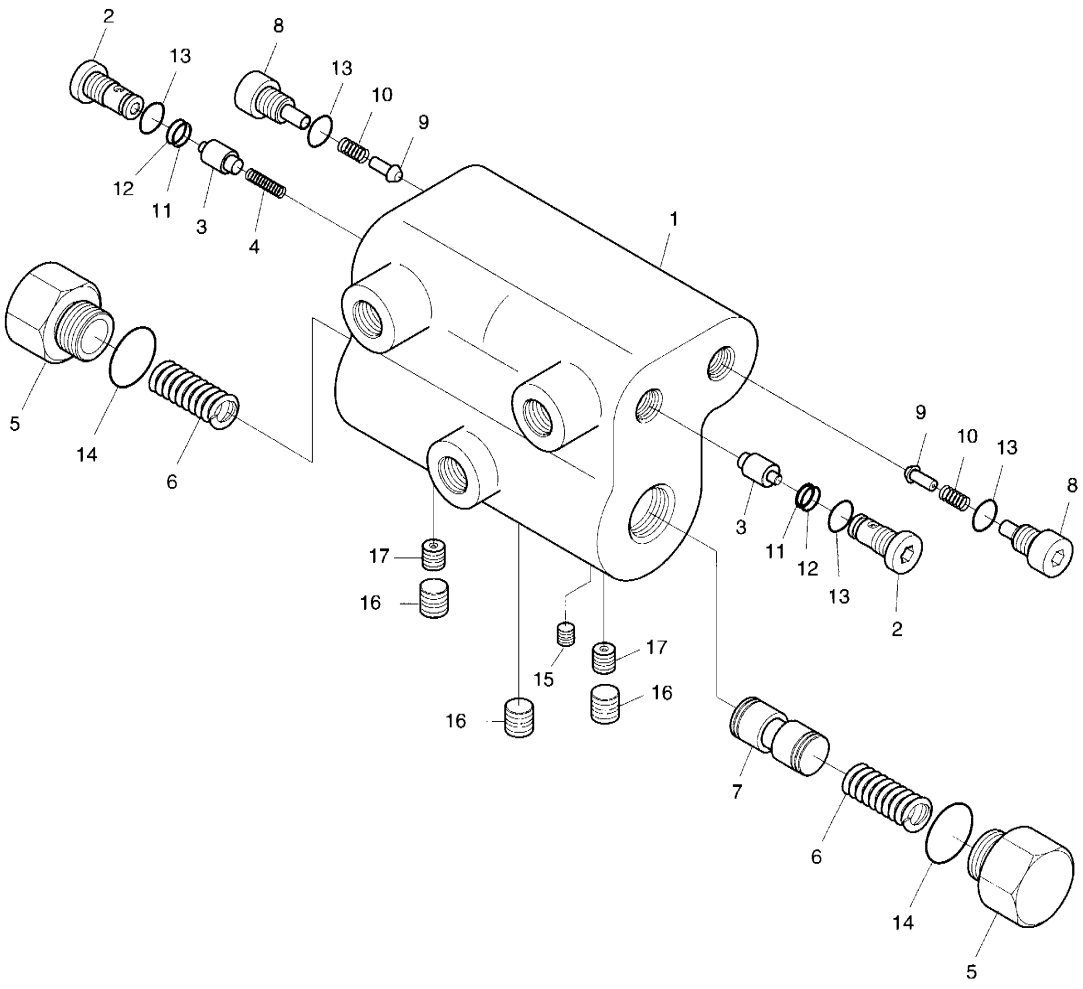

DATE	NOV. 24, 2006
1st EDITION	

Fig. 3420 CUSHION VALVE SOUPAPE DE SECVRITE

Serial No. ;

Key No.	Part No.	Description	Description	Q'ty	S.C	Serial No.	ICA	Replaceable part	
								Part No.	Q'ty
3420--	420-00172	VALVE;CUSHION	VANNE	1					
1	-	BODY	CARROSSERIE	1	D				
2	-	VALVE;SEAT	VANNE	2	D				
3	-	POPPET	SOUPAPE SOULEVANTE	2	D				
4	-	SPRING	RESSORT	1	D				
5	-	PLUG	BOUCHON	2	D				
6	-	SPRING	RESSORT	2	D				
7	-	SPOOL	BOBINE	1	D				
8	-	PLUG	BOUCHON	2	D				
9	-	POPPET	SOUPAPE SOULEVANTE	2	D				
10	-	SPRING	RESSORT	2	D				
11	S8060101	RING;BACK-UP	BAGUE DE SOUTIEN	2	K				
12	S8002701	O-RING	JOINT TORIQUE	2	K				
13	S8000141	O-RING	JOINT TORIQUE	4	K				
14	S8000241	O-RING	JOINT TORIQUE	2	K				
15	2181-1116D1	PLUG	BOUCHON	1					
16	2181-1116D2	PLUG	BOUCHON	3					
17	-	ORIFICE	ORIFICE	2	D				
*	420-00172KT	SEAL KIT	KIT D'ETANCHEITE	1					

DATE	NOV. 24, 2006
1st EDITION	

Fig. 3430 BRAKE & PILOT SUPPLY VALVE
FREIN ET SOUPAPE DE COMMANDE

Serial No. ;

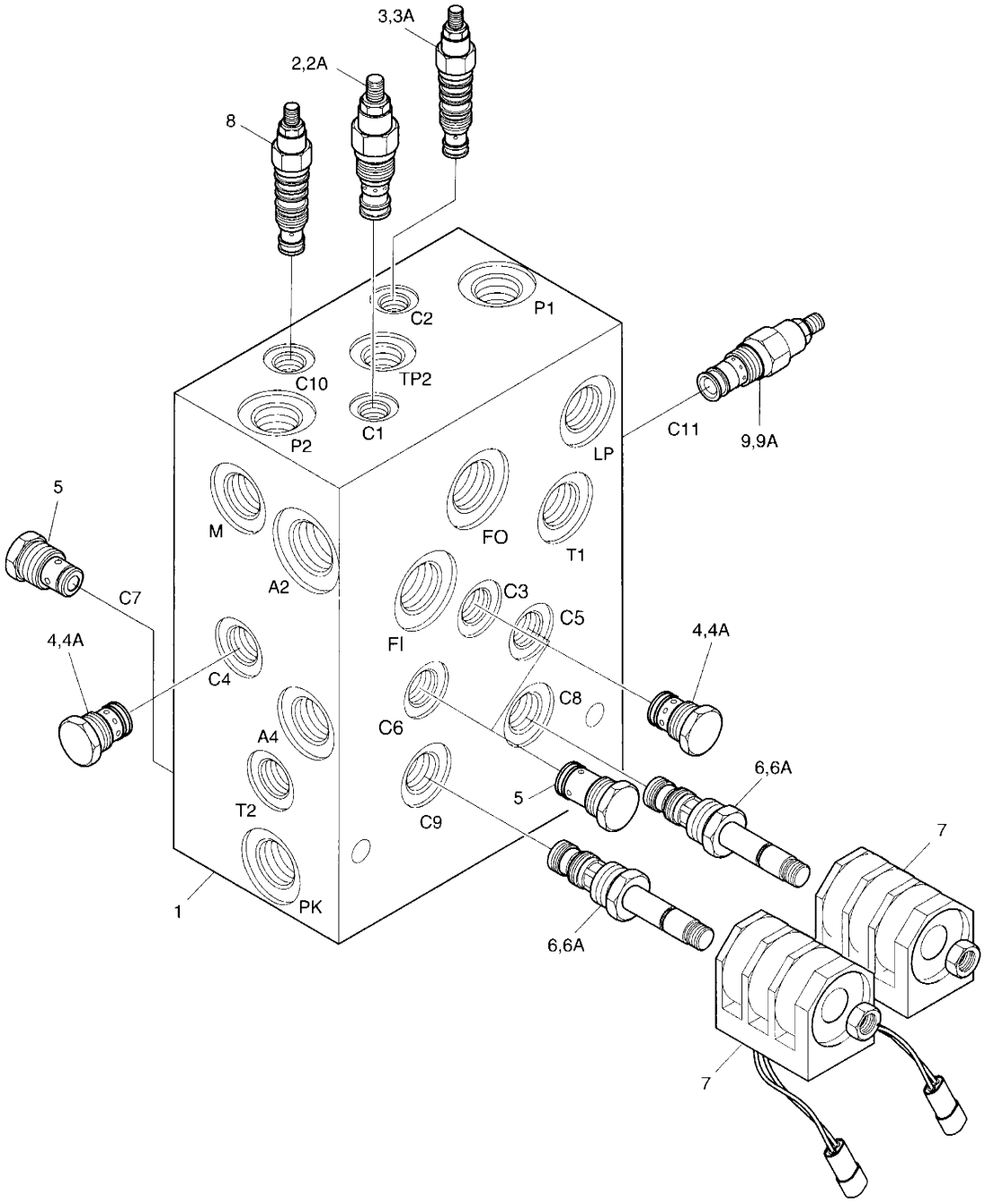

DATE	NOV. 24, 2006
1st EDITION	

Fig. 3430 BRAKE & PILOT SUPPLY VALVE FREIN ET SOUPAPE DE COMMANDE

Serial No. ;

Key No.	Part No.	Description	Description	Q'ty	S.C	Serial No.	ICA	Replaceable part	
								Part No.	Q'ty
3430--	K1017622	BRAKE & PILOT SUPPLY VALVE	SOUPAPE DE	1					
1	-	BODY	BODY	1	D				
2	1.420-00127	VALVE;SEQUENCE	VALVE D'CORDRE	1					
2A	1.180-00451	. SEAL KIT	. KIT DE REPARATION	1					
3	1.420-00092	VALVE;REDUCING	CLAPET DE TROP-PLEIN	1					
3A	1.180-00448	. SEAL KIT	. KIT DE REPARATION	1					
4	K9002251	VALVE;CHECK	VANNE DE CONTROLE	5					
4A	1.180-00447	. SEAL KIT	. KIT DE REPARATION	1					
5	K9002250	VALVE;CHECK	VANNE DE CONTROLE	3					
6	1.420-00138	VALVE;SOLENOID	VANNE	2					
6A	180-00226	. SEAL KIT	. KIT D'ETANCHEITE	1					
7	1.519-00001	COIL	ROBINET	2					
8	K9004389	VALVE;REDUCING	CLAPET DE TROP-PLEIN	1					
9	1.420-00102	VALVE;RELIEF	VANNE	1					
9A	1.180-00452	. SEAL KIT	. KIT D'ETANCHEITE	1					

Fig. 3440 BRAKE FOOT VALVE VANNE DE FREIN

Serial No. ;

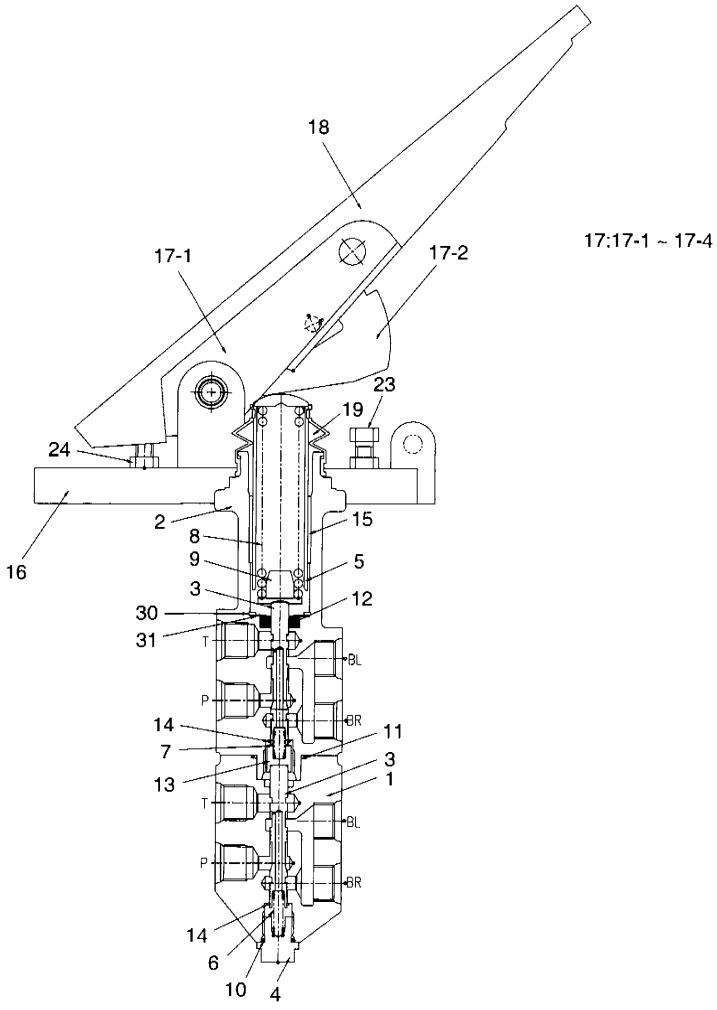

17:17-1 ~ 17-4

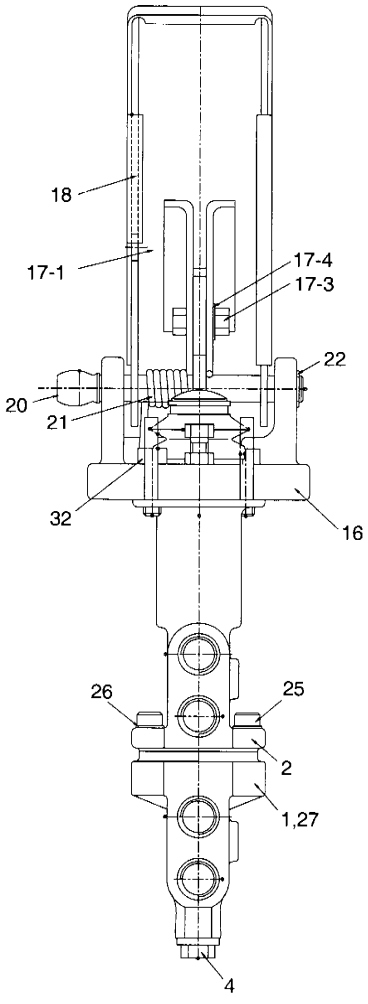

DATE	NOV. 24, 2006
1st EDITION	

Fig. 3440 BRAKE FOOT VALVE VANNE DE FREIN

Serial No. ;

Key No.	Part No.	Description	Description	Q'ty	S.C	Serial No.	ICA	Replaceable part	
								Part No.	Q'ty
,40--	420-00241A	BRAKE VALVE	VANNE DE FREIN	1					
1	-	BODY;LOWER	CARTER	1	D				
2	-	BODY;UPPER	CARTER	1	D				
3	-	SPOOL	BOBINE	2	D				
4	-	PLUG	BOUCHONE	1	D				
5	-	HOLDER;REAR	CARTER	1	D				
6	-	SPRING;LOWER	RESSORT	1	D				
7	-	SPRING;UPPER	RESSORT	1	D				
8	-	SPRING;MAIN	RESSORT	1	D				
9	-	RETAINER;SPRING	CROISILLON	1	D				
10	-	O-RING	JONT TORIQUE	1	K				
11	-	O-RING	JONT TORIQUE	1	K				
12	-	SEAL;OIL	JOINT	1	K				
13	-	GUIDE;SPRING	GUIDE	1	D				
14	-	RING;SNAP	BAGUE	2	D				
15	-	BUSH;DU	DOUILLE	1	D				
16	-	PLATE;PEDAL	PLAQUE	1	D				
17	134-00008	PEDAL ASS'Y	PEDALE DE CONSOLE	1					
17-1	-	. PEDAL	. PEDALE	1	D				
17-2	-	. PLATE;LOCK	. PLAQUE	1	D				
17-3	-	. BOLT M8X20	. BOULON A 6 PANS	1	D				
17-4	-	. WASHER	. RONDELLE	1	D				
18	-	RUBBER;PEDAL	MANCHON CAOUTCHOUC	1	D				
19	-	COVER	COUVERCLE	1	D				
20	-	PIN;LOCK	BROUCHE	1	D				
21	129-00088	SPRING;TORSION	RESSORT	1					
22	-	RING;SNAP	BAGUE	1	D				
23	-	BOLT M8X25	BOULON A 6 PANS	2	D				
24	-	NUT M8	ECROU	2	D				
25	-	BOLT;SOCKET M8X20	BOULON A 6 PANS CREUX	2	D				
26	-	WASHER;SPRING	RONDELLE ELASTIQUE	4	D				
27	-	CAP;PLASTIC	CHAPEAU	8	D				
30	-	WASHER	RONDELLE	1	D				
31	-	RING;SNAP	BAGUE	1	D				
32	-	BOLT;SOCKET	BOULON A 6 PANS CREUX	2	D				
*	420-00073K	SEAL KIT	KIT DE REPARATION	1					

DATE	NOV. 24, 2006
1st EDITION	

Fig. 3450 CONTROL VALVE - 3 SPOOL
VANNE DE COMMANDE

Serial No. ;

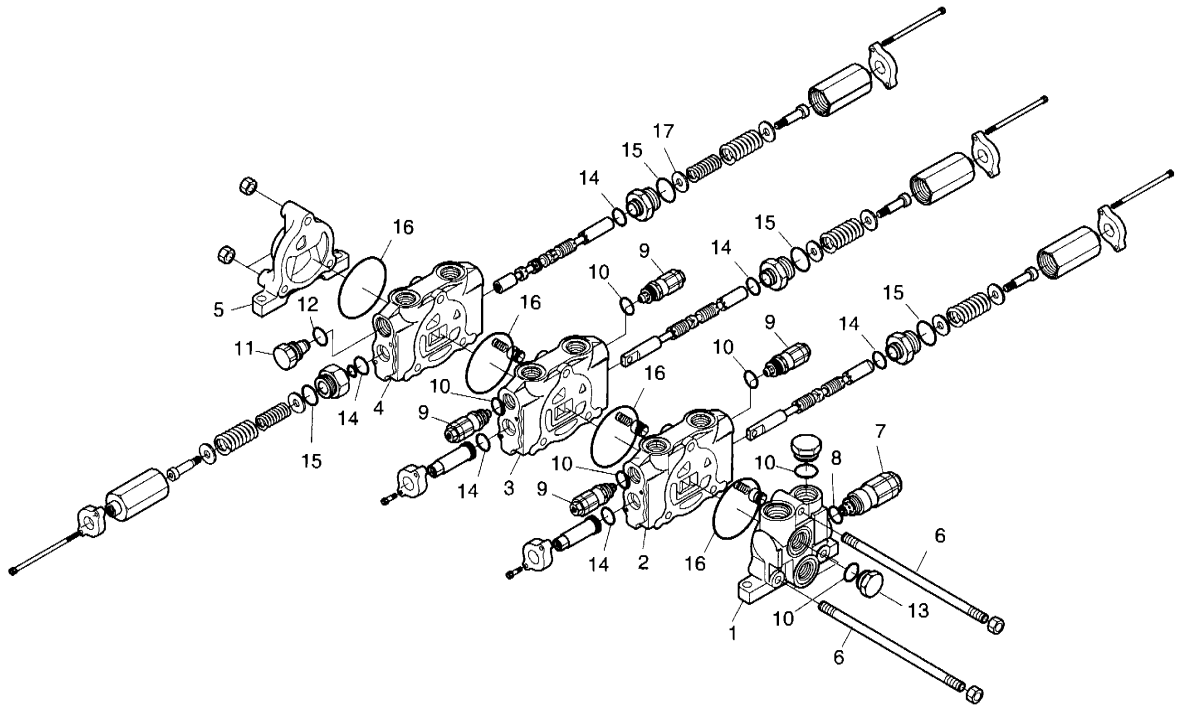

DATE	NOV. 24, 2006
1st EDITION	

Fig. 3450 CONTROL VALVE - 3 SPOOL VANNE DE COMMANDE

Serial No. ;

Key No.	Part No.	Description	Description	Q'ty	S.C	Serial No.	ICA	Replaceable part	
								Part No.	Q'ty
3450--	420-00142	CONTROL VALVE(3-SPOOL)	TIROIR DE COMMANDE	1					
1	2.410-00069	INLET SECTION	BLOC	1					
2	2.410-00124	WORK SECTION-OPTION	BLOC	1					
3	2.410-00124	WORK SECTION-BUCKET	BLOC	1					
4	2.410-00123	WORK SECTION-BOOM	BLOC	1					
5	2.410-00074	OUTLET SECTION	BLOC	1					
6	2.428-00058	TIE ROD	TIGE	3					
7	2.421-00175	MAIN RELIEF VALVE	ENSEMBLE CLAPET DE	1					
8	2.180-00195	O-RING	JOINT TORIQUE	1					
9	2.421-00199	OVER LOAD RELIEF VALVE	ENSEMBLE CLAPET DE	4					
10	2.180-00196	O-RING	JOINT TORIQUE	6					
11	2.421-00062	ANTI CAVITATION VALVE	ENSEMBLE CLAPET DE	1					
12	2.180-00197	O-RING	JOINT TORIQUE	1					
13	2.181-00104	PLUG	BOUCHON	1					
14	-	O-RING	JOINT TORIQUE	6	D				
15	-	O-RING	JOINT TORIQUE	4	D				
16	-	O-RING	JOINT TORIQUE	4	D				
17	-	RING;BACK UP	ANNEAU DE SOUTIEN	1	D				
*	2.180-00737	SEAL KIT;CONTROL VALVE	KIT DE REPARATION	1					

DATE	NOV. 24, 2006
1st EDITION	

Fig. 3460 CONTROL VALVE - 2 SPOOL
VANNE DE COMMANDE

Serial No. ;

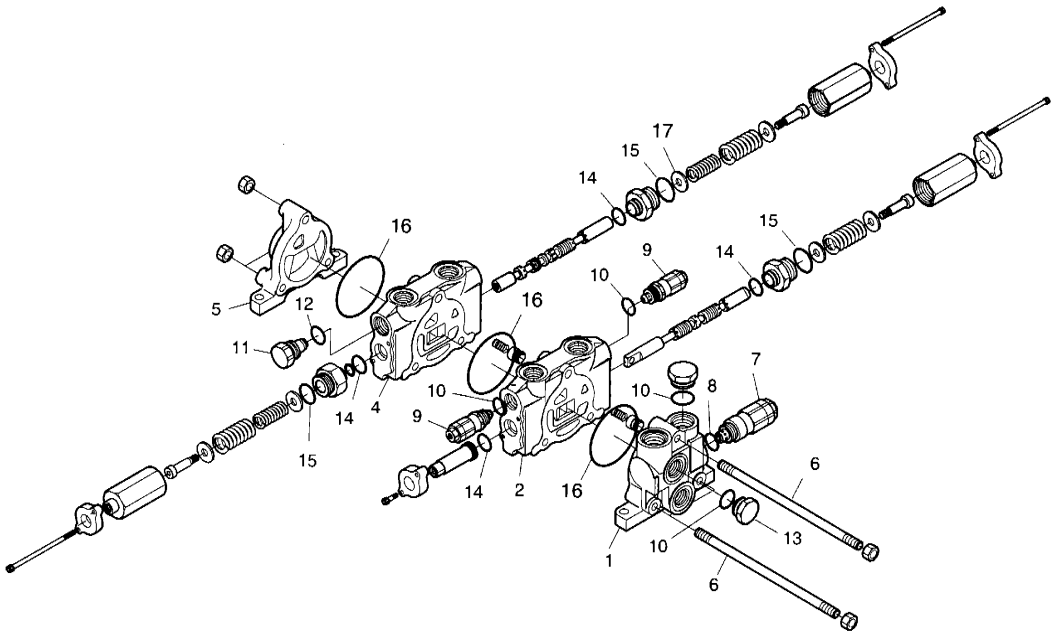

DATE	NOV. 24, 2006
1st EDITION	

Fig. 3460 CONTROL VALVE - 2 SPOOL
VANNE DE COMMANDE

Serial No. ;

Key No.	Part No.	Description	Description	Q'ty	S.C	Serial No.	ICA	Replaceable part	
								Part No.	Q'ty
3460--	420-00144	CONTROL VALVE(2-SPOOL)	TIROIR DE COMMANDE	1					
1	2.410-00069	INLET SECTION	BLOC	1					
2	2.410-00124	WORK SECTION-OPTION	BLOC	1					
4	2.410-00123	WORK SECTION-BOOM	BLOC	1					
5	2.410-00074	OUTLET SECTION	BLOC	1					
6	2.428-00058	TIE ROD	TIGE	3					
7	2.421-00175	MAIN RELIEF VALVE	ENSEMBLE CLAPET DE	1					
8	2.180-00195	O-RING	JOINT TORIQUE	1					
9	2.421-00199	OVER LOAD RELIEF VALVE	ENSEMBLE CLAPET DE	2					
10	2.180-00196	O-RING	JOINT TORIQUE	4					
11	2.421-00062	ANTI CAVITATION VALVE	ENSEMBLE CLAPET DE	1					
12	2.180-00197	O-RING	JOINT TORIQUE	1					
13	2.181-00104	PLUG	BOUCHONE	1					
14	-	O-RING	JOINT TORIQUE	4	D				
15	-	O-RING	JOINT TORIQUE	3	D				
16	-	O-RING	JOINT TORIQUE	3	D				
17	-	RING;BACK UP	ANNEAU DE SOUTIEN	1	D				
*	2.180-00737	SEAL KIT;CONTROL VALVE	KIT DE REPARATION	1					

DATE	NOV. 24, 2006
1st EDITION	

Fig. 3470 EMERGENCY STEERING PUMP
POMPE DE DIRECTION

Serial No. ;

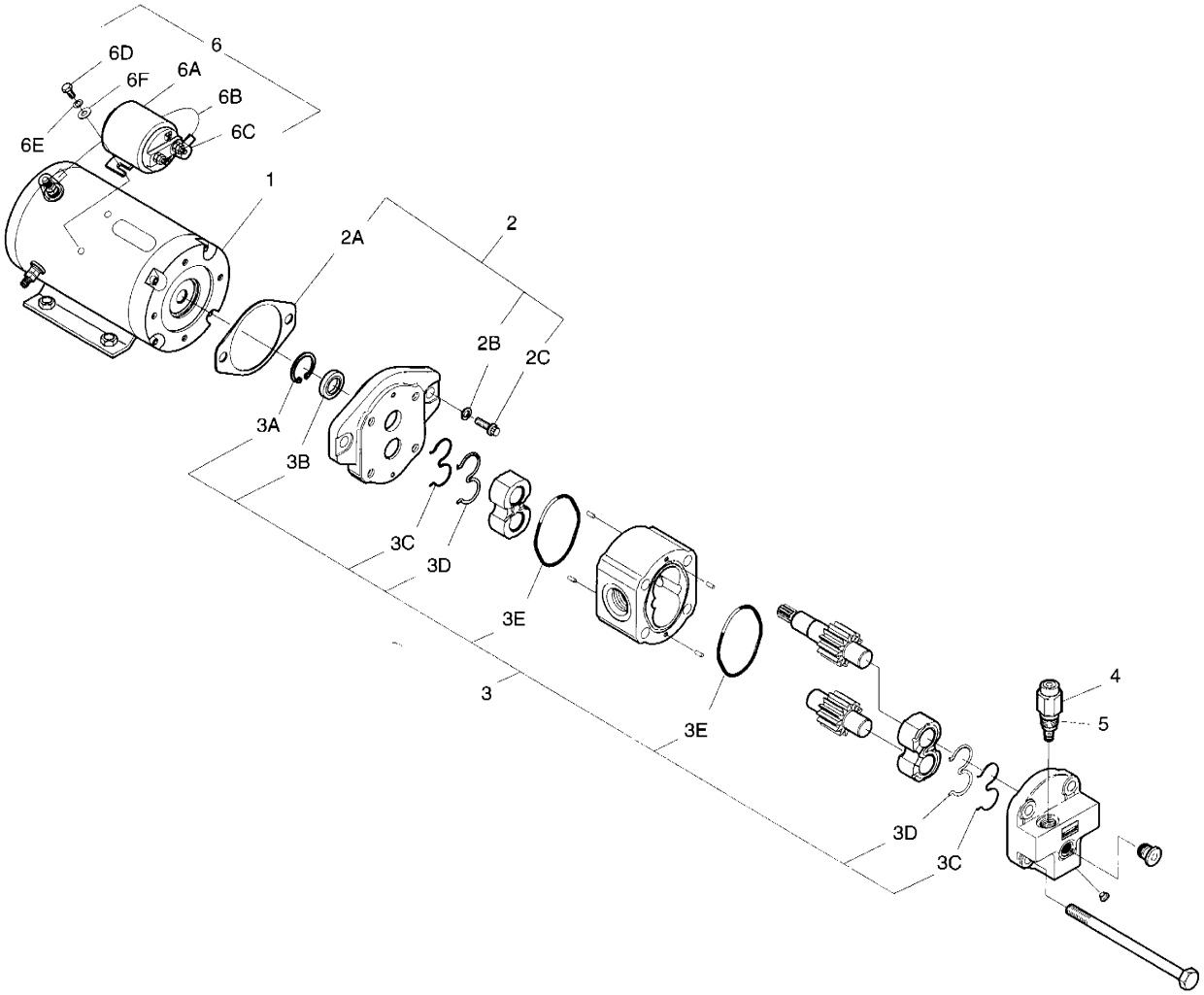

DATE	NOV. 24, 2006
1st EDITION	

Fig. 3470 EMERGENCY STEERING PUMP POMPE DE DIRECTION

Serial No. ;

Key No.	Part No.	Description	Description	Q'ty	S.C	Serial No.	ICA	Replaceable part	
								Part No.	Q'ty
3470--	401-00129A	EMERGENCY STEERING PUMP	MOTEUR	1					
1	2.401-00013	MOTOR;D.C	MOTEUR	1					
2	2.197-00047	MOUNTING KIT	KIT DE SUPPORT	1					
2A	-	. GASKET	. JOINT	1	D				
2B	-	. WASHER	. RONDELLE	2	D				
2C	-	. SCREW	. VIS	2	D				
3	2.180-00707	SEAL KIT	KIT D'ETANCHEITE	1					
3A	-	. RING;RETAINING	. RONDELLE DE RETENUE	1	D				
3B	-	. SEAL;SHAFT	. JOINT	1	D				
3C	-	. RING;BACK-UP	. BAGUE D'ETANCHEITE	2	D				
3D	-	. SEAL;E	. JOINT	2	D				
3E	-	. O-RING	. JOINT TORIQUE	2	D				
4	2.421-00230	VALVE;RELIEF	CLAPET DE DECHARGE	1					
5	2.180-00746	SEAL KIT;VALVE	KIT DE JOINT	1					
5A	-	. O-RING	. JOINT TORIQUE	1	D				
5B	-	. RING;BACK-UP	. BAGUE D'ETANCHEITE	1	D				
5C	-	. O-RING	. JOINT TORIQUE	2	D				
6	-	START SWITCH KIT	COMMENCEZ LE KIT DE	1	D				
6A	2.549-00023	. SWITCH;START	. INTERRUPTEUR	1					
6B	2.553-00008	. CABLE;POWER	. CABLE	1					
6C	-	. COVER;TERMINAL	. COUVERCLE	2	D				
6D	-	. SCREW	. VIS	2	D				
6E	-	. WASHER	. RONDELLE	2	D				
6F	-	. WASHER	. RONDELLE	2	D				

DATE	NOV. 24, 2006
1st EDITION	

Fig. 3480 BUCKET CYLINDER
VERIN DE GODET

Serial No. ;

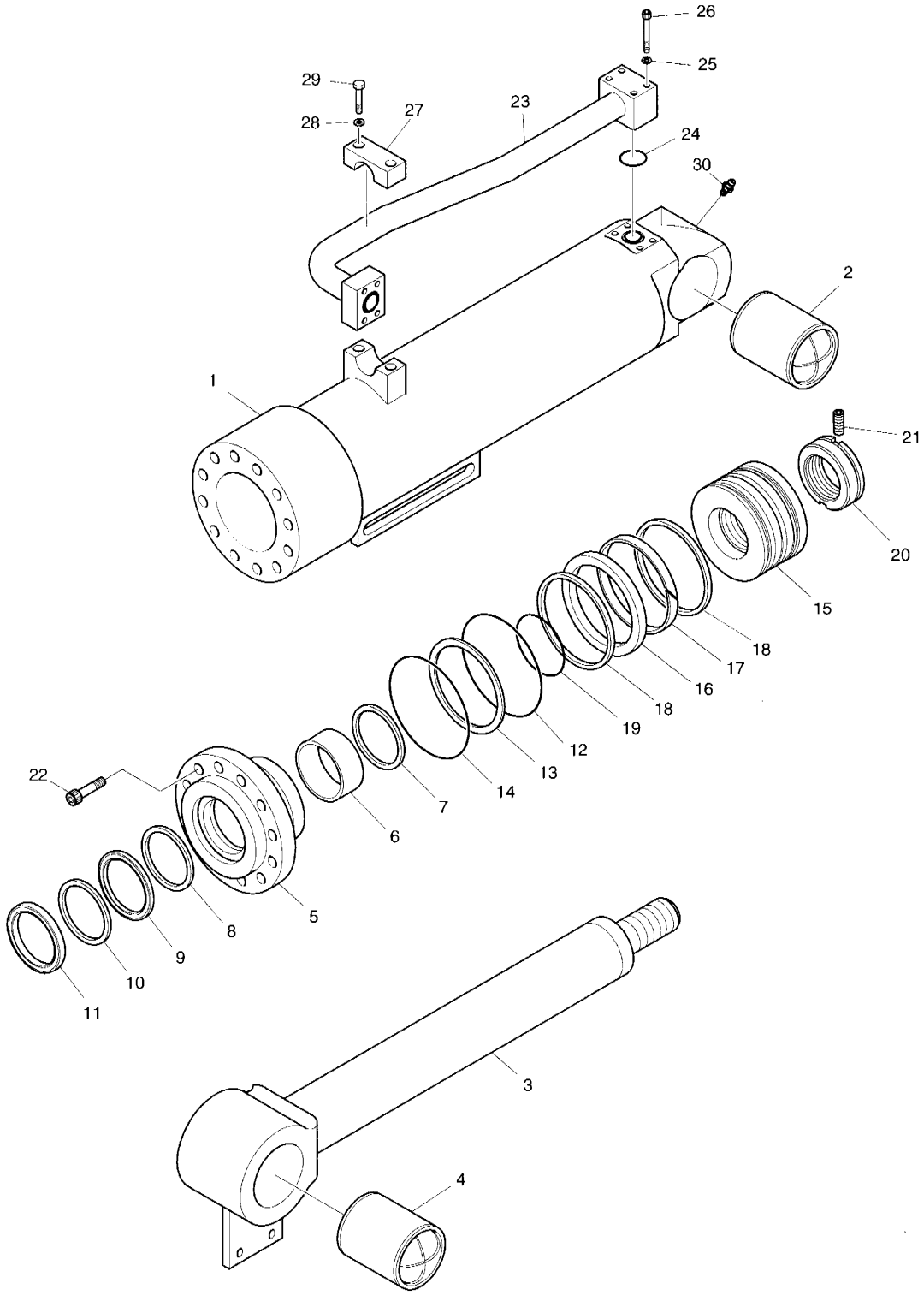

DATE	NOV. 24, 2006
1st EDITION	

Fig. 3480 BUCKET CYLINDER VERIN DE GODET

Serial No. ;

Key No.	Part No.	Description	Description	Q'ty	S.C	Serial No.	ICA	Replaceable part	
								Part No.	Q'ty
3480--	K1016873A	BUCKET CYLINDER	VERIN DE GODET	1					
1	K9004383	TUBE ASS'Y	ENSEMBLE TUBE	1					
2	110-00085	BUSH	COUSSINET	1					
3	K9004380	ROD ASS'Y	ENSEMBLE TIGE	1					
4	1.110-00107	BUSH	COUSSINET	1					
5	K9004381	COVER;ROD	COUVERCLE	1					
6	1.110-00077	BUSH;DU	DOUILLE DU	1					
7	115-00052	RING;RETAINING	RONDELLE DE RETENUE	1					
8	115-00058	PACKING;U	JOINT EN U	1	K				
9	1.180-00301	RING;BACK-UP	BAGUE DE SOUTIEN	1	K				
10	115-00060	WIPER;DUST	PARE-POUSSIERE	1	K				
11	115-00052	RING;RETAINING	RONDELLE DE RETENUE	1					
12	S8011351	O-RING	JOINT TORIQUE	1	K				
13	S8091350	RING;BACK-UP	BAGUE DE SOUTIEN	1	K				
14	2180-1217D96	O-RING	JOINT TORIQUE	1	K				
15	K9004382	PISTON	PISTON	1					
16	1.180-00342	RING;GLYD	SEGMENT GLYD	1	K				
17	1.180-00390	RING;WEAR	SEGMENT D'USURE	1	K				
18	K9001149	RING;DUST	BAGUE	1	K				
19	180-00276	O-RING	JOINT TORIQUE	1	K				
20	K9001862	NUT;PISTON	ECROU DE PISTON	1					
21	S3523836	SCREW;SET	VIS DE REGLAGE	1					
22	S2218561	BOLT;SOCKET	BOULON	12					
23	K9004384	PIPE ASS'Y	ENSEMBLE CONDUITES	1					
24	S8000281	O-RING	JOINT TORIQUE	1					
25	S5100603	WASHER;SPRING	RONDELLE ELASTIQUE	4					
26	S2212661	BOLT;HEX	BOULON A 6 PANS CREUX	4					
27	1.124-00147	CLAMP	COLLIER	1					
28	S5100603	WASHER;SPRING	RONDELLE ELASTIQUE	2					
29	S0558761	BOLT;HEX	BOULON A 6 PANS	2					
30	S6710032	NIPPLE;GREASE	GRAISSEUR	2					
*	K9004589	SEAL KIT;BUCKET	KIT DE JOINT	1					

DATE	NOV. 24, 2006
1st EDITION	

Fig. 3490 LIFT CYLINDER
VERIN DE LEVAGE GAUCH

Serial No. ;

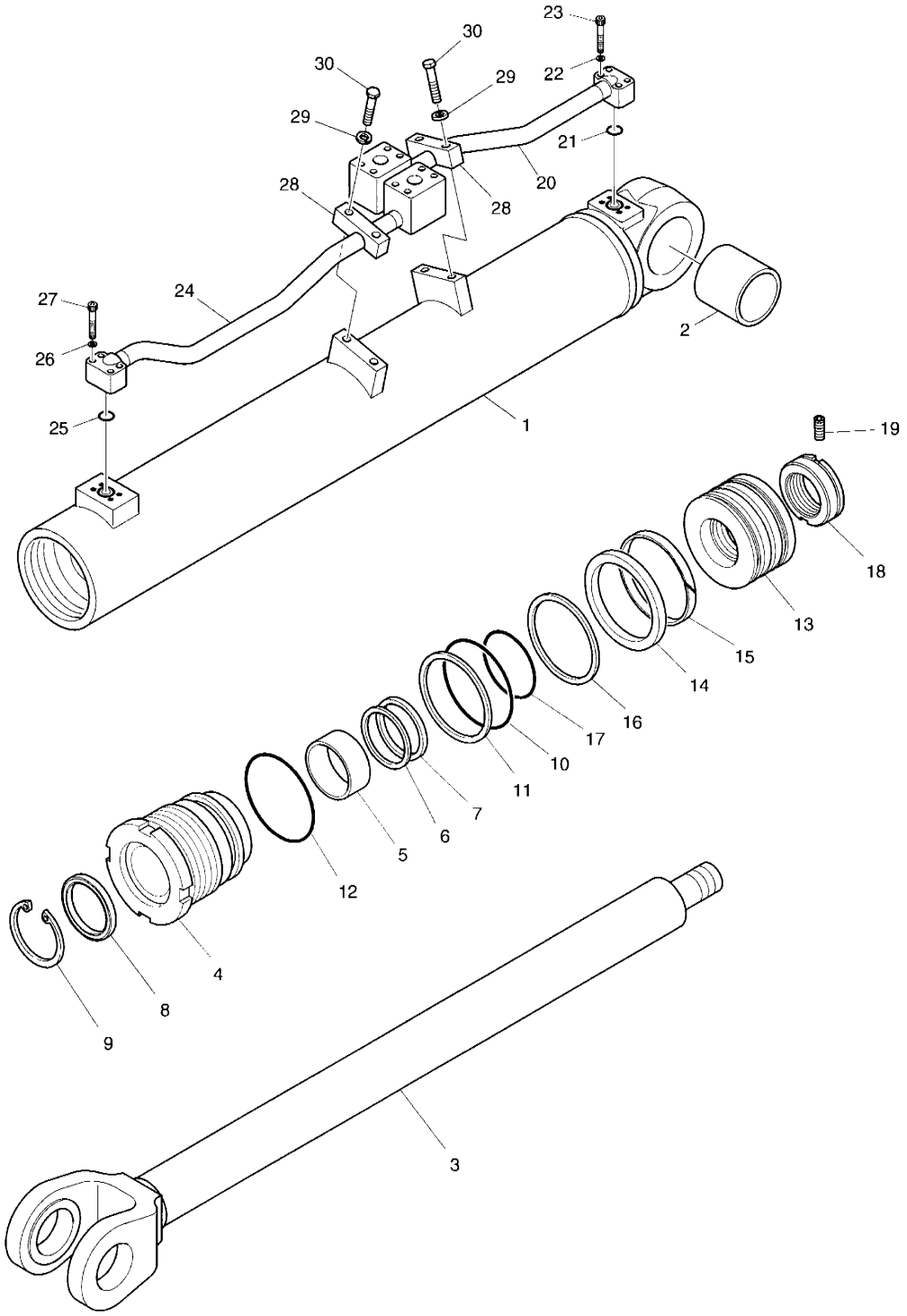

DATE	NOV. 24, 2006
1st EDITION	

Fig. 3490 LIFT CYLINDER VERIN DE LEVAGE GAUCH

Serial No. ;

Key No.	Part No.	Description	Description	Q'ty	S.C	Serial No.	ICA	Replaceable part	
								Part No.	Q'ty
3490--	K1016870	CYLINDER;LIFT	VERIN DE GODET	2					
1	K9004375	TUBE ASS'Y	ENSEMBLE TUBE	1					
2	1.110-00106	BUSH	COUSSINET	1					
3	K9004376	ROD ASS'Y	ENSEMBLE TIGE	1					
4	K9004377	COVER;ROD	COUVERCLE	1					
5	110-00147	BUSH;DU	DOUILLE DU	1					
6	1.180-00207	PACKING;U	JOINT EN U	1	K				
7	K9004387	RING;BACK-UP	BAGUE DE SOUTIEN	1	K				
8	1.180-00479	WIPER;DUST	PARE-POUSSIERE	1	K				
9	K9001401	RING;RETAINING	RONDELLE DE RETENUE	1					
10	S8011151	O-RING	JOINT TORIQUE	1	K				
11	K9004388	RING;BACK-UP	BAGUE DE SOUTIEN	1	K				
12	S8011201	O-RING	JOINT TORIQUE	1	K				
13	K9004378	PISTON	PISTON	1					
14	K9004386	RING;GLYD	SEGMENT GLYD	1	K				
15	1.180-00387	RING;WEAR	SEGMENT D'USURE	1	K				
16	K9001872	RING;DUST	BAGUE	1	K				
17	180-00247	O-RING	JOINT TORIQUE	1	K				
18	121-00043	NUT;PISTON	ECROU DE PISTON	1					
19	S3523836	SCREW;SET	VIS DE REGLAGE	1					
20	1.140-00076	PIPE ASS'Y	ENSEMBLE CONDUITES	1					
21	S8000201	O-RING	JOINT TORIQUE	1					
22	S5100503	WASHER;SPRING	RONDELLE ELASTIQUE	4					
23	S2209461	BOLT;SOCKET	BOULON	4					
24	K9004379	PIPE ASS'Y	ENSEMBLE CONDUITES	1					
25	S8000201	O-RING	JOINT TORIQUE	1					
26	S5100503	WASHER;SPRING	RONDELLE ELASTIQUE	4					
27	S2209461	BOLT;SOCKET	BOULON	4					
28	1.124-00148	CLAMP	COLLIER	2					
29	S5100603	WASHER;SPRING	RONDELLE ELASTIQUE	4					
30	S0558553	BOLT;HEX	BOULON A 6 PANS	4					
*	K9004590	SEAL KIT;LIFT CYLINDER	KIT DE JOINT	1					

DATE	NOV. 24, 2006
1st EDITION	

Fig. 3500 STEERING CYLINDER VERIN DE DIRECTION

Serial No. ;

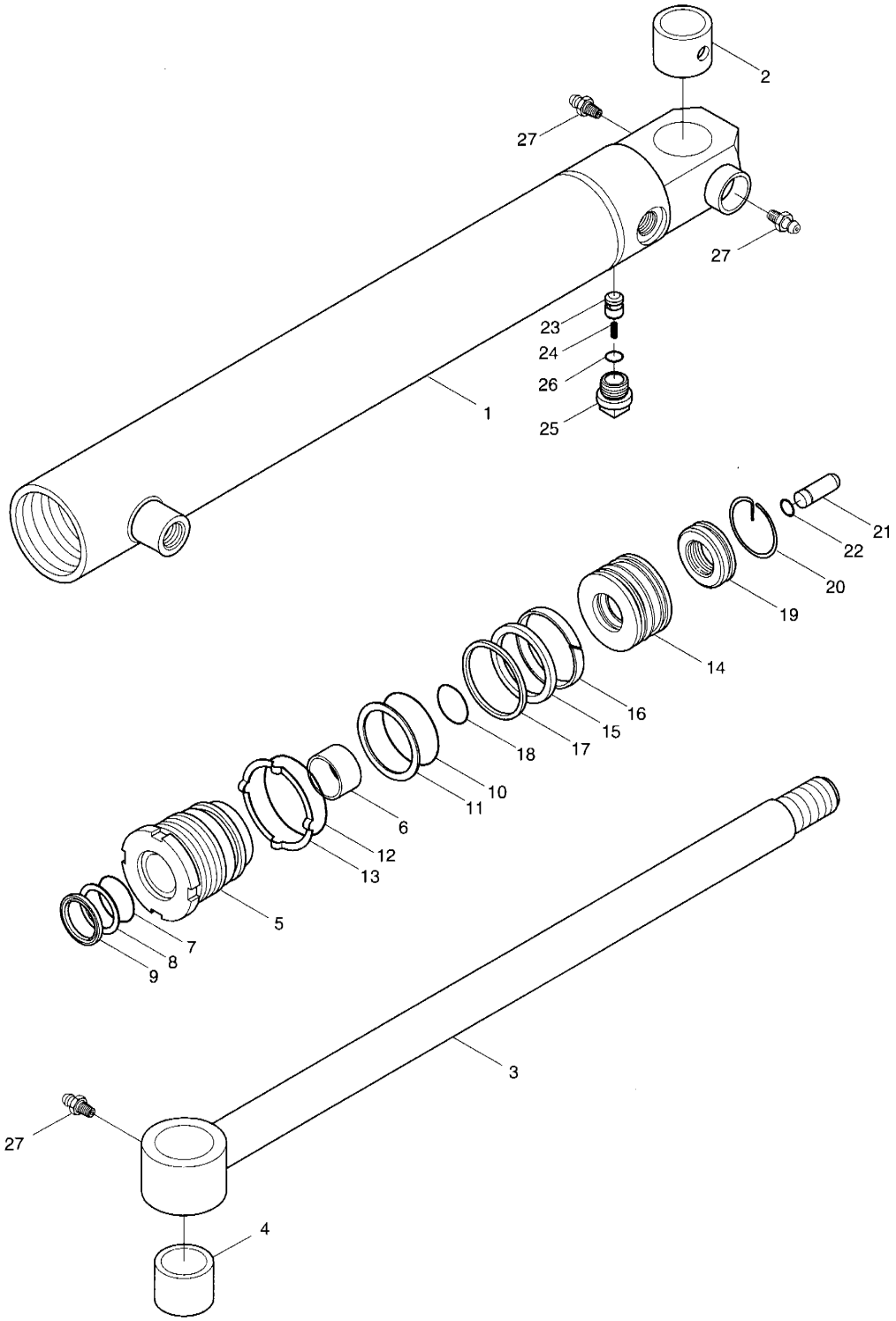

DATE	NOV. 24, 2006
1st EDITION	

Fig. 3500 STEERING CYLINDER VERIN DE DIRECTION

Serial No. ;

Key No.	Part No.	Description	Description	Q'ty	S.C	Serial No.	ICA	Replaceable part	
								Part No.	Q'ty
3500--	440-00252	STEERING CYLINDER	VERIN DE DIRECTION	2					
1	1.441-00027	TUBE ASS'Y	TUYAU	1					
2	1.110-00102	BUSH;STEEL	COUSSINET ACIER	1					
3	1.428-00030	ROD ASS'Y	TIGE	1					
4	1.110-00102	BUSH;STEEL	COUSSINET ACIER	1					
5	1.430-00083	COVER;ROD	COUVERCLE	1					
6	2110-1184D67	DU-BUSH	DOUILLE DU	1					
7	1.180-00190	U-PACKING	ARRET B	1	K				
8	1.180-00231	RING;BACK-UP	ANNEAU DE SOUTIEN	1	K				
9	1.180-00482	WIPER;DUST	PARE-POUSSIERE	1	K				
10	S8010651	O-RING	JONT TORIQUE	1	K				
11	S8090650	RING;BACK-UP	ANNEAU DE SOUTIEN	1	K				
12	S8010701	O-RING	JONT TORIQUE	1	K				
13	1.114-00261	WASHER	RONDELLE	1					
14	1.409-00016	PISTON	PISTON	1					
15	1.180-00343	RING;GLYD	BAGUE	1	K				
16	1.180-00389	RING;WEAR	SEGMENT D'USURE	1	K				
17	1.180-00325	RING;DUST	BAGUE	1	K				
18	S8010351	O-RING	JONT TORIQUE	1	K				
19	1.121-00054	NUT;PISTON	ECROU DE PISTON	1					
20	1.115-00236	RING;LOCK	BAGUE	1					
21	1.424-00009	PLUNGER;CUSHION	PLONGEURR DE SOUPAPE	1					
22	1.115-00365	RING;STOP	BAGUE	1					
23	1.420-00037	VALVE;CHECK	CLAPET DE RETENUE	1					
24	1.131-00009	SPRING	RESSORT	1					
25	1.181-00026	PLUG	BOUCHON	1					
26	S8000181	O-RING	JONT TORIQUE	1					
27	S6710032	NIPPLE;GREASE	GRAISSEUR	3					
*	4440-6265K	SEAL KIT;STEERING CYL	KIT D'ETANCHEITE	1					

DATE	NOV. 24, 2006
1st EDITION	

Fig. 3510 FAN MOTOR
MOTEUR DE VENTILATEUR

Serial No. ;

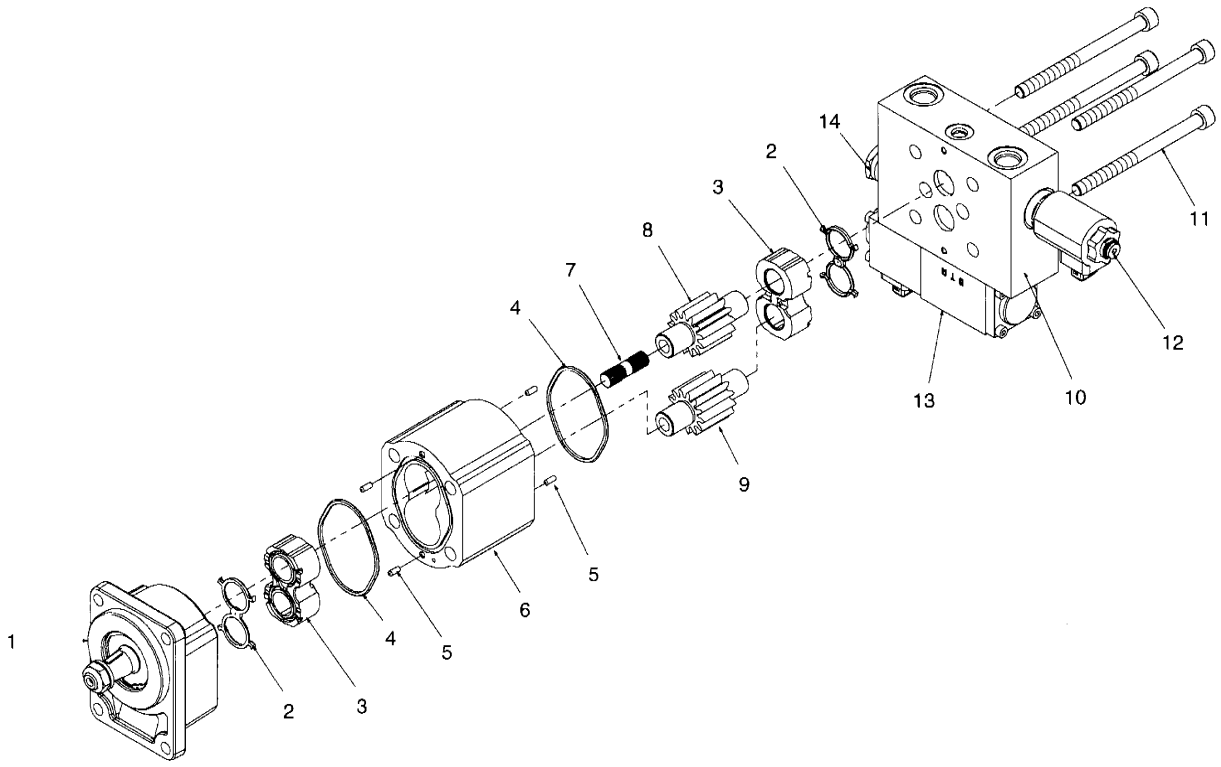

DATE	NOV. 24, 2006
1st EDITION	

Fig. 3510 FAN MOTOR MOTEUR DE VENTILATEUR

Serial No. ;

Key No.	Part No.	Description	Description	Q'ty	S.C	Serial No.	ICA	Replaceable part	
								Part No.	Q'ty
3510--	K1008305	MOTOR;FAN	MOTEUR DE VENTILATEUR	1					
1	-	FRONT BEARING	PALIER	1	D				
2	-	SEAL	JOINT	2	D				
3	-	BEARING;BLOCK	PALIER	2	D				
4	-	O-RING	JOINT TORIQUE	2	D				
5	-	PIN;DOWEL	GOUPILLE D'AJUSTAGE	4	D				
6	-	HOUSING;GEAR	BOITIER	1	D				
7	-	COUPLING	FIXATION DE POMPE	1	D				
8	-	GEAR;DRIVE	PIGNON MOTEUR	1	D				
9	-	GEAR;IDLER	ENGRENAGE	1	D				
10	-	COVER;VALVE	COUVERCLE	1	D				
11	-	BOLT	BOULON	4	D				
12	K9002258	RELIEF VALVE	VANNE	1					
13	K9002259	SOLENOID VALVE	SOUPAPE A SOLENOIDE	1					
14	K9002260	CHECK VALVE	CLAPET DE RETENUE	1					
*	K9000401	SEAL KIT	KIT D'ETANCHEITE	1					

DATE	NOV. 24, 2006
1st EDITION	

Fig. 3520 FAN MOTOR (Bi-rotation) MOTEUR DE VENTILATEUR

Serial No. ;

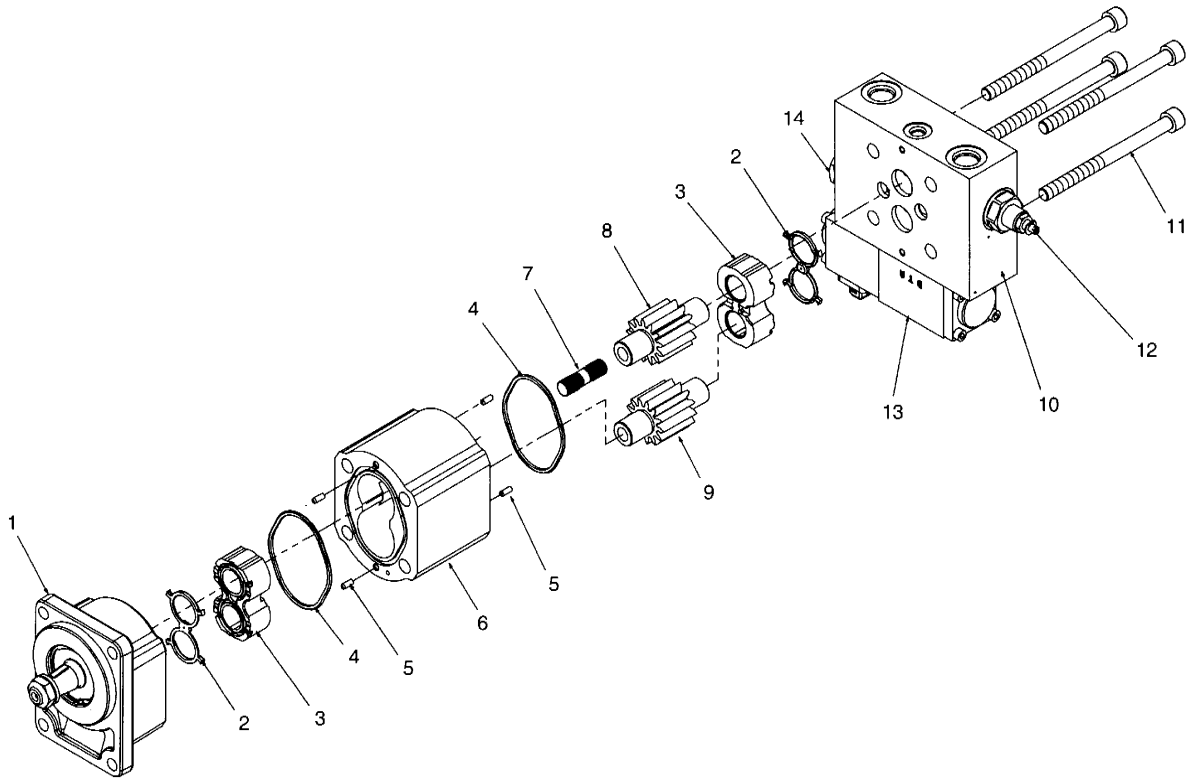

DATE	NOV. 24, 2006
1st EDITION	

Fig. 3520 FAN MOTOR (Bi-rotation) MOTEUR DE VENTILATEUR

Serial No. ;

Key No.	Part No.	Description	Description	Q'ty	S.C	Serial No.	ICA	Replaceable part	
								Part No.	Q'ty
3520--	K1024154	MOTOR;FAN(BI-ROTATION)	MOTEUR DE VENTILATEUR	1					
1	-	FRONT BEARING	PALIER	1	D				
2	-	SEAL	JOINT	2	D				
3	-	BEARING;BLOCK	PALIER	2	D				
4	-	O-RING	JOINT TORIQUE	2	D				
5	-	PIN;DOWEL	GOUPILLE D'AJUSTAGE	4	D				
6	-	HOUSING;GEAR	BOITIER	1	D				
7	-	COUPLING	FIXATION DE POMPE	1	D				
8	-	GEAR;DRIVE	PIGNON MOTEUR	1	D				
9	-	GEAR;IDLER	ENGRENAGE	1	D				
10	-	COVER;VALVE	COUVERCLE	1	D				
11	-	BOLT	BOULON	4	D				
12	K9003591	RELIEF VALVE	VANNE	1					
13	K9002259	SOLENOID VALVE	SOUPAPE A SOLENOIDE	1					
14	K9002260	CHECK VALVE	CLAPET DE RETENUE	1					
*	K9000401	SEAL KIT	KIT D'ETANCHEITE	1					

DATE	NOV. 24, 2006
1st EDITION	

Fig. 3530 REMOTE CONTROL VALVE
CANNE DE TELECOMMANDE

Serial No. ;

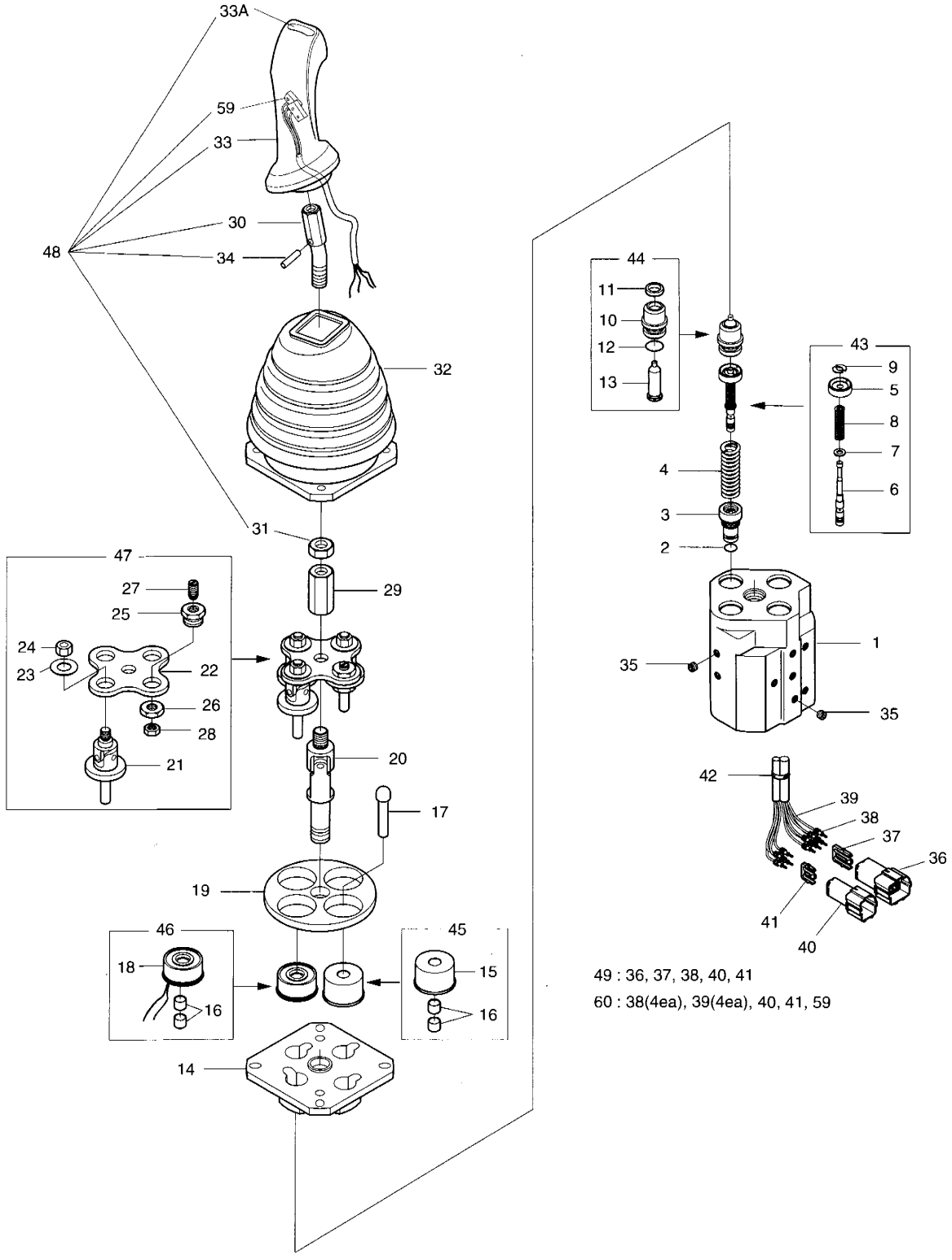

49 : 36, 37, 38, 40, 41

60 : 38(4ea), 39(4ea), 40, 41, 59

DATE	NOV. 24, 2006
1st EDITION	

Fig. 3530 REMOTE CONTROL VALVE CANNE DE TELECOMMANDE

Serial No. ;

Key No.	Part No.	Description	Description	Q'ty	S.C	Serial No.	ICA	Replaceable part	
								Part No.	Q'ty
3530--	426-00105	REMOCON VALVE	VANNE PILOTE	1					
1	-	BODY	CARTER	1	D				
2	S8000081	O-RING	JOINT TORIQUE	4					
3	181-00471	PLUG	BOUCHON	4					
4	1.131-00002	SPRING	RESSORT	4					
5	-	SEAT;SPRING	BOBINE	4	D				
6	-	SPOOL	RESSORT	4	D				
7	-	SEAT;SPRING	SIEGE DE RESSORT	4	D				
8	-	SPRING	RESSORT	4	D				
9	-	STOPPER	ARRET	4	D				
10	-	PLUG	BOUCHON	4	D				
11	-	SEAL;ROD	JOINT D'HUILE	4	D				
12	-	O-RING	JOINT TORIQUE	4	D				
13	-	ROD;PUSH	TIGE DE POUSSOIR	4	D				
14	1.412-00001	PLATE	PLAQUE	1					
15	-	STOPPER;ROD	ARRET	1	D				
16	-	BUSHING;DU	MANCHON	8	D				
17	1.428-00001	ROD	TIGE	1					
18	-	MAGNET	BOUCHON	3	D				
19	1.412-00002	PLATE	PLAQUE	1					
20	1.138-00003	JOINT ASS'Y	JOINT	1					
21	-	JOINT ASS'Y	JOINT	3	D				
22	-	PLATE	PLAQUE	1	D				
23	-	WASHER	RONDELLE	3	D				
24	-	NUT M8X1.25	ECROU	3	D				
25	-	PLUG	BOUCHON	1	D				
26	-	NUT	ECROU	1	D				
27	-	SCREW M8X1.25	VIS	1	D				
28	-	NUT M8X1.25	ECROU	1	D				
29	1.121-00001	NUT	ECROU	1					
30	-	CONNECTOR	RACCORD	1	D				
31	-	NUT M12X1.75	ECROU	1	D				
32	1.160-00003	BOOT	GAINE DE PROTECTION	1					
33	-	HANDLE ASS'Y	POIGNEE	1	D				
33A	1.161-00021	. CAP;PEANUT	. CHAPEAU	1					
34	-	PIN;SPRING	GOUPILLE	1	D				
35	2181-1116D10	PLUG	BOUCHON	8					
36	-	HOUSING	CARTER	1	D				

DATE	NOV. 24, 2006
1st EDITION	

Fig. 3530 REMOTE CONTROL VALVE
CANNE DE TELECOMMANDE

Serial No. ;

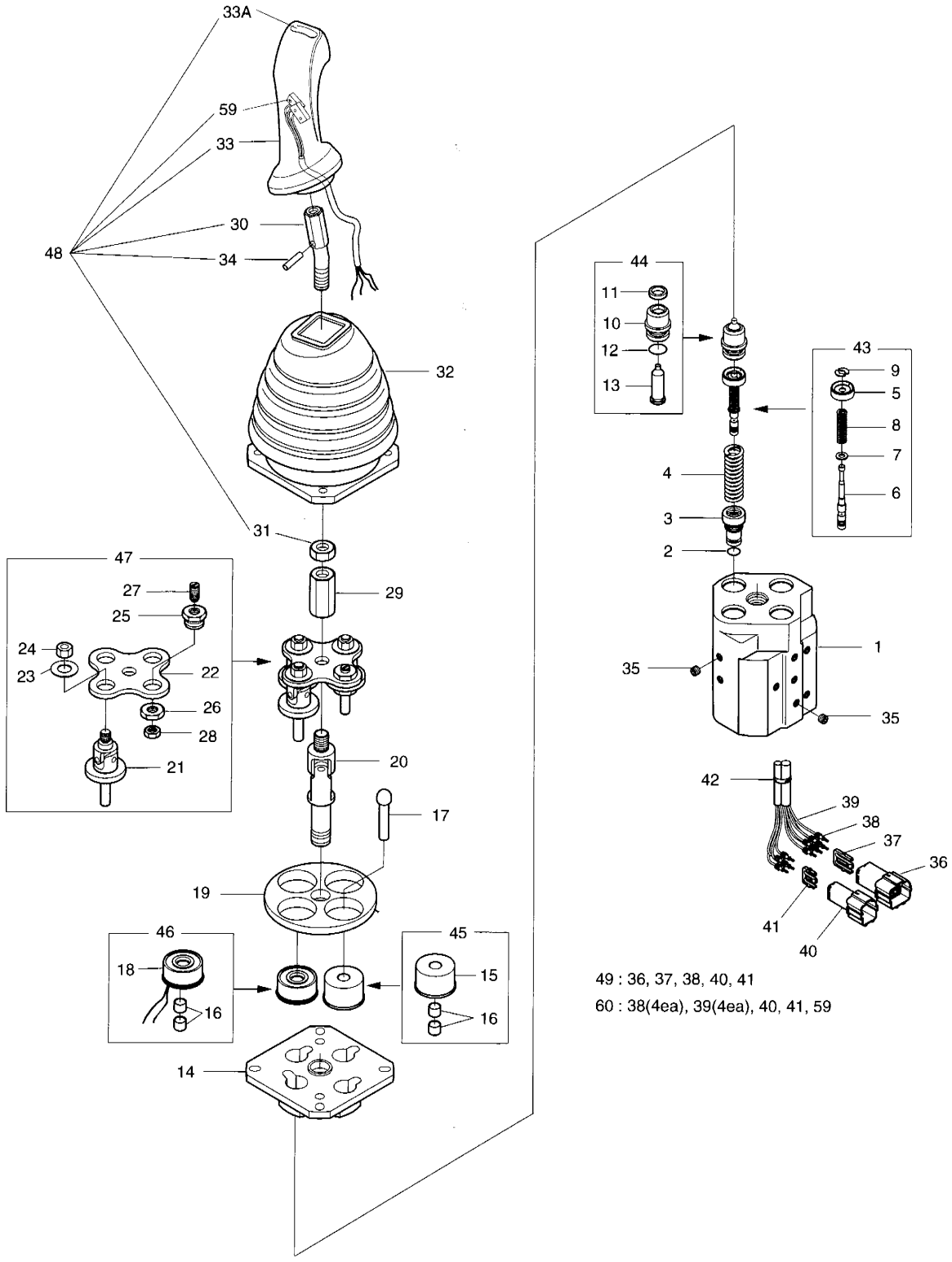

49 : 36, 37, 38, 40, 41

60 : 38(4ea), 39(4ea), 40, 41, 59

DATE	NOV. 24, 2006
1st EDITION	

Fig. 3530 REMOTE CONTROL VALVE CANNE DE TELECOMMANDE

Serial No. ;

Key No.	Part No.	Description	Description	Q'ty	S.C	Serial No.	ICA	Replaceable part	
								Part No.	Q'ty
3530-37	-	HOLDER;REAR	SUPPORT	1	D				
38	-	TERMINAL	TERMINAL	10	D				
39	-	SEAL;WIRE	FIL	10	D				
40	-	HOUSING	CARTER	1	D				
41	-	HOLDER;REAR	SUPPORT	1	D				
42	-	CLIP;BAND	ATTACHE	2	D				
43	1.424-00049	MAIN SPOOL KIT	KIT DE RESSORT	4					
44	1.181-00084	PLUG KIT	KIT DE BOUCHON	4					
45	1.416-00016	STOPPER KIT	KIT DE ARRET	1					
46	1.424-00010	MAGNET KIT	KIT DE BOUCHON	3					
47	1.412-00028	PLATE KIT	KIT DE PLAQUE	1					
48	1.172-00008	HANDLE KIT	KIT DE POIGNEE	1					
49	530-00388	HARNESS KIT	KIT DE FAISCEAM	1					
59	-	SWITCH	INTERRUPTEUR	2	D				
60	K9001001	SWITCH ASS'Y	INTERRUPTEUR	1					

DATE	DEC. 15, 2006
REV.NO.	EXB06-13

Fig. 3540 REMOTE CONTROL VALVE - FNR
VANNE DE TELECOMMANDE

Serial No. ;

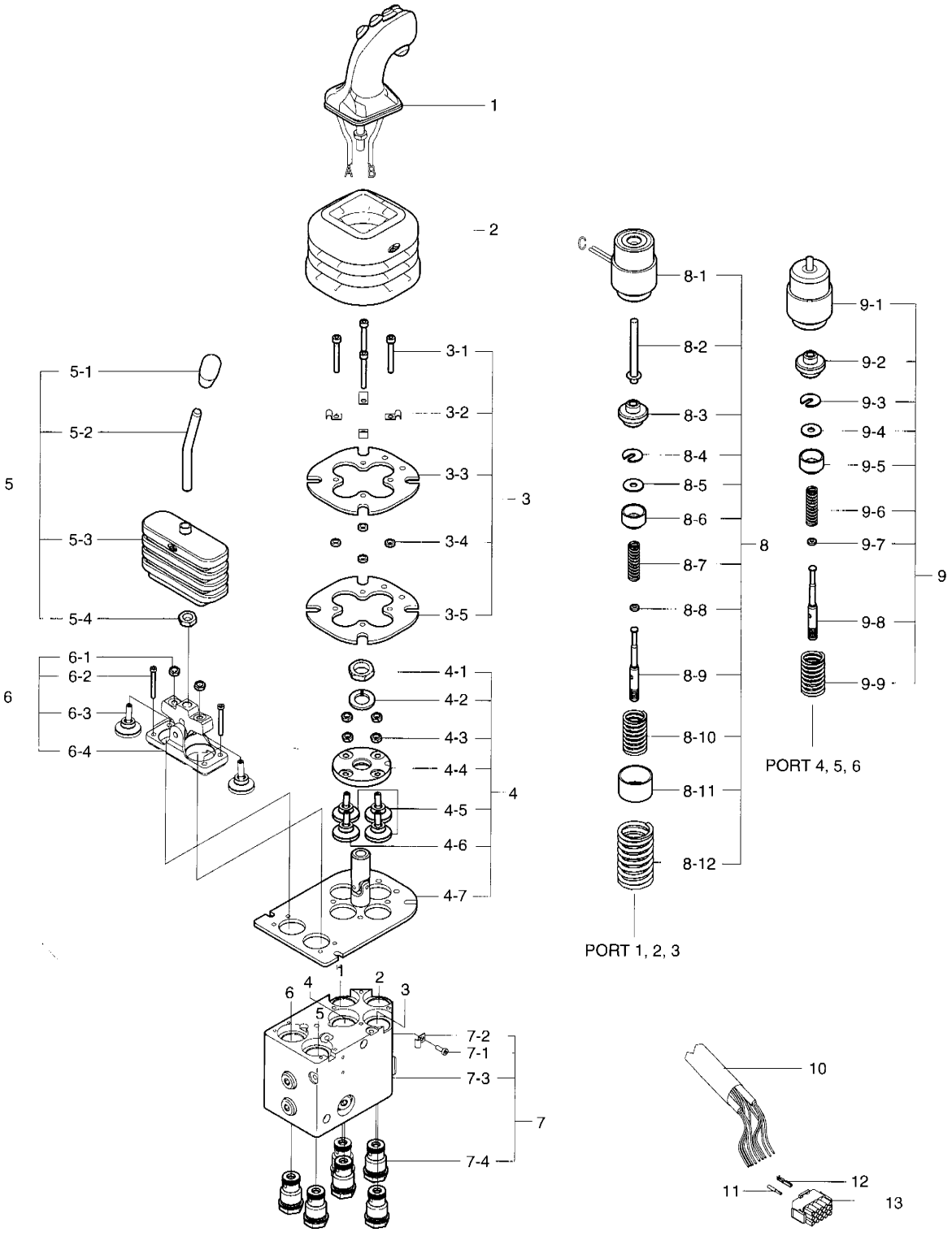

DATE	DEC. 15, 2006
REV. NO.	EXB06-13

Fig. 3540 REMOTE CONTROL VALVE - FNR
VANNE DE TELECOMMANDE

Serial No. ;

Key No.	Part No.	Description	Description	Q'ty	S.C	Serial No.	ICA	Replaceable part	
								Part No.	Q'ty
3540--	426-00254	JOYSTICK VALVE	VANNE	1					
1	2.301-00001	HANDLE	POIGNEE	1					
2	2.160-00021	BELLOWS;RUBBER	SOUFFLET	1					
3	2.195-00048	PLATE 1 KIT	PLAQUE	1					
3-1	-	. SCREW M5	. VIS	4	D				
3-2	-	. CLIP	. CLIP	4	D				
3-3	-	. FLANGE	. BRIDE	1	D				
3-4	-	. SPACER	. ENTRETOISE	4	D				
3-5	-	. FLANGE	. BRIDE	1	D				
4	2.353-00001	PLATE 2 KIT	PLAQUE	1					
4-1	-	. NUT M20	. ECROU	1	D				
4-2	-	. WASHER M20	. RONDELLE	1	D				
4-3	-	. NUT M6	. ECROU	4	D				
4-4	-	. RING;SELECTOR	. BAGUE	1	D				
4-5	-	. PIN KIT	. KIT DE GOUPILLE	3	D				
4-6	-	. PIN KIT	. KIT DE GOUPILLE	1	D				
4-7	-	. FLANGE	. BRIDE	1	D				
5	2.357-00047	LEVER KIT;2ND	KIT DE LEVIER	1					
5-1	-	. KNOB	. BOSSE	1	D				
5-2	-	. ROD;CROCKED M10	. TIGE	1	D				
5-3	-	. BELLOWS;RUBBER	. SOUFFLET	1	D				
5-4	-	. NUT M10	. ECROU	1	D				
6	2.360-00001	SPOOL KIT	KIT DE RESSORT	1					
6-1	-	. NUT M6	. ECROU	2	D				
6-2	-	. SCREW M4	. VIS	2	D				
6-3	-	. PIN KIT;LONG	. KIT DE GOUPILLE	2	D				
6-4	-	. MOUNTING KIT	. KIT DE SUPPORT	1	D				
7	2.423-00141	BODY KIT	KIT DE CORPS	1					
7-1	-	. SCREW M4	. VIS	1	D				
7-2	-	. CLIP	. CLIP	1	D				
7-3	-	. BODY	. CORPS	1	D				
7-4	-	. JOINT	. JOINT	6	D				
8	2.424-00379	PLUNGER 1 KIT	KIT DE PLONGEUR	3					
8-1	-	. SOLENOID KIT	. KIT DE SOLENOID	1	D				
8-2	-	. PLUNGER KIT	. KIT DE PLONGEUR	1	D				
8-3	-	. RING	. BAGUE	1	D				
8-4	-	. RING;OPEN	. BAGUE	3	D				
8-5	-	. RING	. BAGUE	1	D				

DATE	DEC. 15, 2006
REV.NO.	EXB06-13

Fig. 3540 REMOTE CONTROL VALVE - FNR
VANNE DE TELECOMMANDE

Serial No. ;

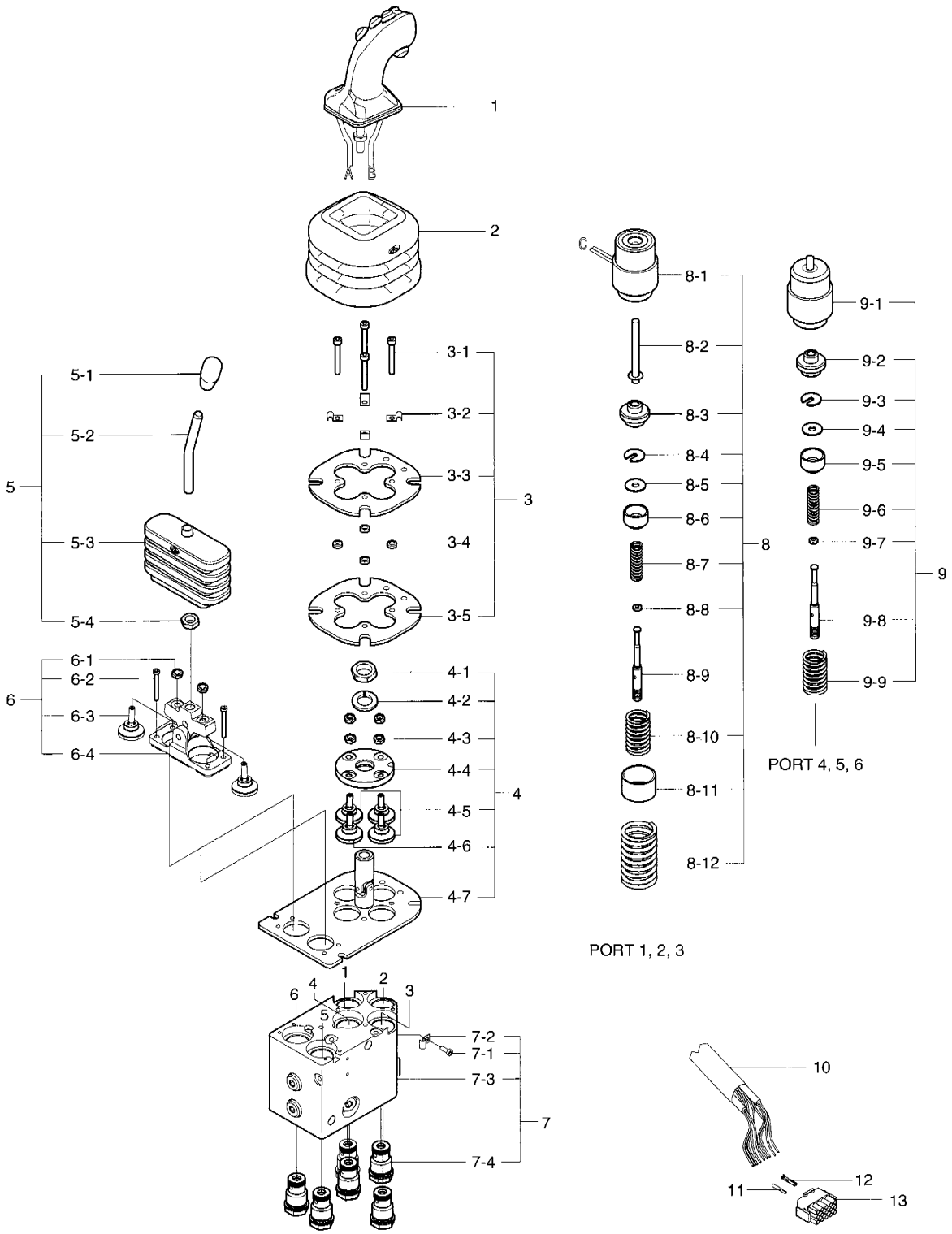

DATE	DEC. 15, 2006
REV. NO.	EXB06-13

Fig. 3540 REMOTE CONTROL VALVE - FNR
VANNE DE TELECOMMANDE

Serial No. ;

Key No.	Part No.	Description	Description	Q'ty	S.C	Serial No.	ICA	Replaceable part	
								Part No.	Q'ty
3540-8-6	-	. GUIDE;SPRING	. GUIDE	1	D				
8-7	-	. SPRING;REACTION	. RESSORT	1	D				
8-8	-	. RING;SEEGER	. BAGUE	1	D				
8-9	-	. ROD	. TIGE	1	D				
8-10	-	. SPRING;RETURN	. RESSORT	1	D				
8-11	-	. BUSHING	. DOUILLE	1	D				
8-12	-	. SPRING;PREFEELING	. RESSORT	1	D				
9	2.424-00380	PLUNGER 2 KIT	KIT DE PLONGEUR	3					
9-1	-	. BUSHING KIT	. KIT DE DOUILLE	1	D				
9-2	-	. RING	. BAGUE	1	D				
9-3	-	. RING;OPEN	. BAGUE	1	D				
9-4	-	. RING	. BAGUE	1	D				
9-5	-	. GUIDE;SPRING	. GUIDE	1	D				
9-6	-	. SPRING;REACTION	. RESSORT	1	D				
9-7	-	. RING;SEEGER	. BAGUE	1	D				
9-8	-	. ROD	. TIGE	1	D				
9-9	-	. SPRING;RETURN	. RESSORT	1	D				
10	2.308-00001	TUBE	KIT DE TUBE	1					
11	2.550-00001	PIN;KEYING	GOUPILLE	1					
12	2.550-00002	TERMINAL	BORNE	13					
13	2.521-00009	CONNECTOR	CONNECTEUR	1					

DATE	NOV. 24, 2006
1st EDITION	

Fig. 3550 REMOTE CONTROL VALVE - 3SP + 3 LEVER
VANNE DE TELECOMMANDE

Serial No. ;

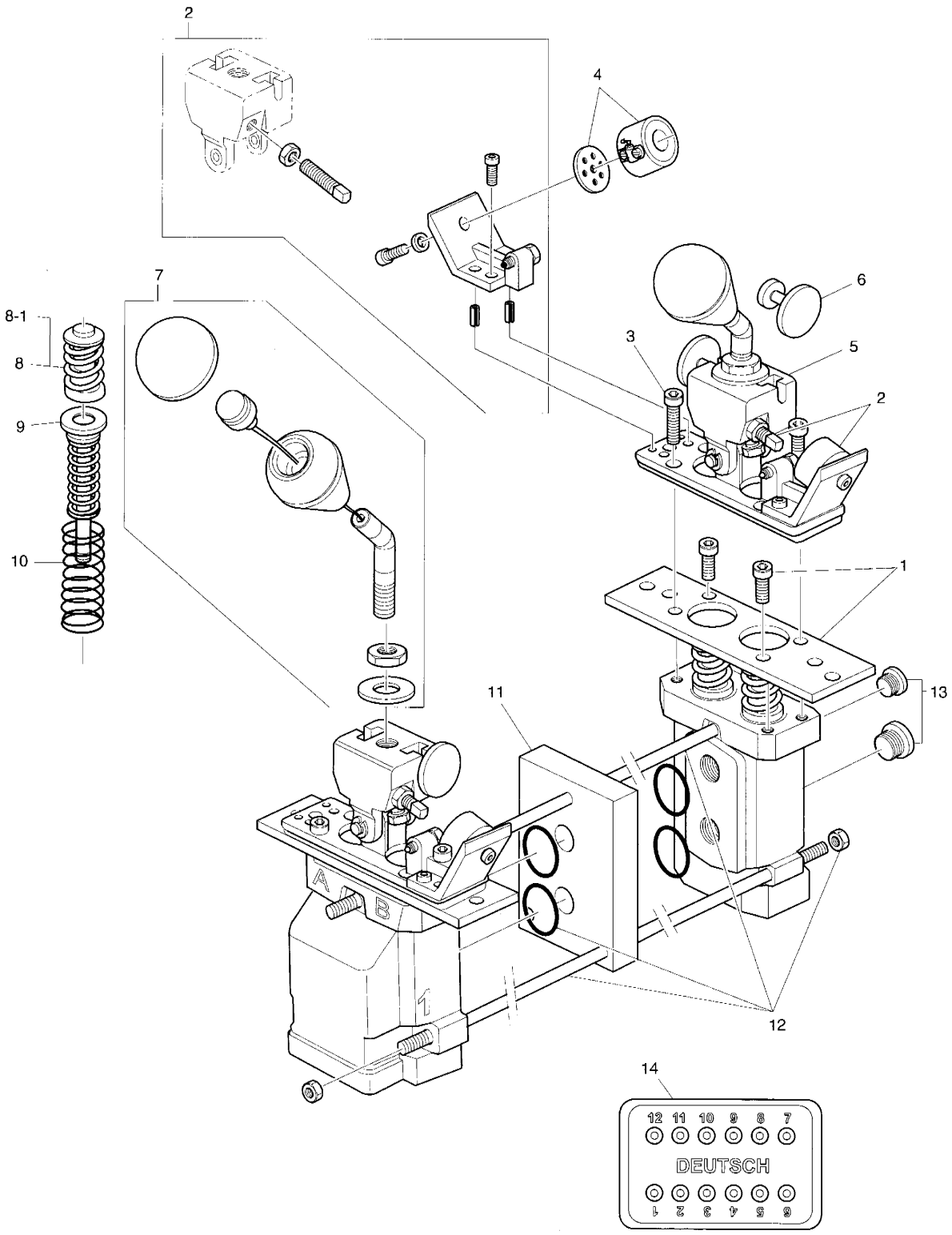

DATE	NOV. 24, 2006
1st EDITION	

Fig. 3550 REMOTE CONTROL VALVE - 3SP + 3 LEVER
VANNE DE TELECOMMANDE

Serial No. ;

Key No.	Part No.	Description	Description	Q'ty	S.C	Serial No.	ICA	Replaceable part	
								Part No.	Q'ty
3550--	K1003379	VALVE;JOYSTICK	VANNE PILOTE	1					
1	K9002716	PLATE;MOUNTING	PLAQUE	2					
2	K9002717	BRACKET KIT;MAGENT	SUPPORT	2					
3	S2203161	BOLT;SOCKET	BOULON A 6 PANS CREUX	4					
4	K9002718	MAGENT	AIMANT	4					
5	K9002719	BEARING PLATE/LEVER LINK	PLAQUE	2					
6	K9002720	PLATE;ANCHOR	PLAQUE	2					
7	K9002721	HANDLE KIT;SWITCH	RONDELLE ELASTIQUE	2					
8	K9002722	PIN;PUSH	GOUPILLE	4					
8-1	K9002723	. SEAL KIT;PUSH PIN	. KIT DE REPARATION	1					
9	K9002724	SPRING	RESSORT	4					
10	K9002726	SPRING;RETURN	RESSORT	4					
11	K9002727	BLOCK;SPACE	BLOC	1					
12	K9002728	ROD;TIE KIT	ROD	1					
13	K9002729	PLUG KIT	BOUCHON	1					
14	K9002730	CONNECTOR KIT;DEUTSCH	BIELLE	1					

DATE	NOV. 24, 2006
1st EDITION	

Fig. 3560 REMOTE CONTROL VALVE - 2SP + 2 LEVER
VANNE DE TELECOMMANDE

Serial No. ;

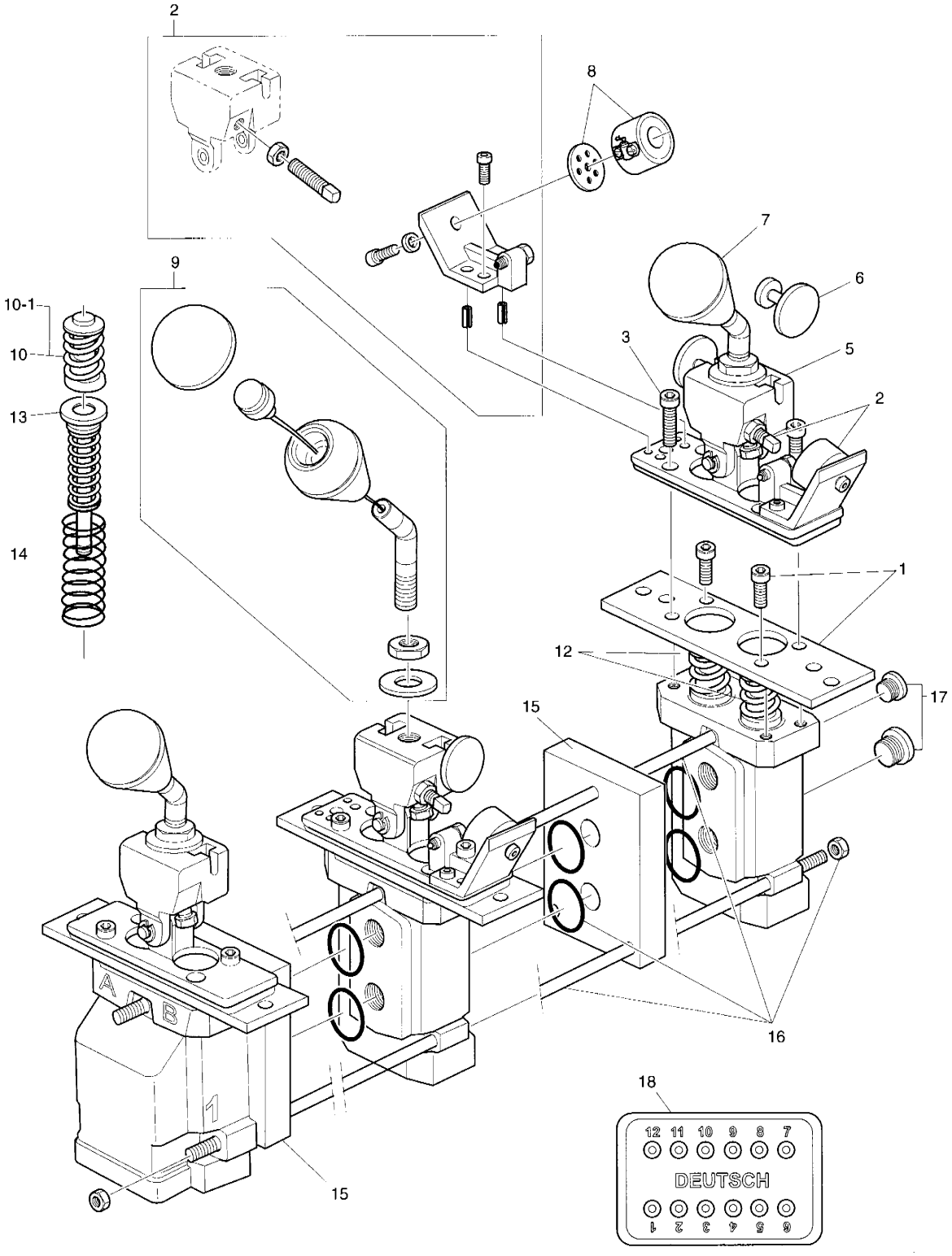

DATE	NOV. 24, 2006
1st EDITION	

Fig. 3560 REMOTE CONTROL VALVE - 2SP + 2 LEVER
VANNE DE TELECOMMANDE

Serial No. ;

Key No.	Part No.	Description	Description	Q'ty	S.C	Serial No.	ICA	Replaceable part	
								Part No.	Q'ty
3560--	K1003380A	VALVE;JOYSTICK	VANNE PILOTE	1					
1	K9002716	PLATE;MOUNTING	PLAQUE	3					
2	K9002717	BRACKET KIT;MAGENT	SUPPORT	6					
3	S2203161	BOLT;SOCKET	BOULON A 6 PANS CREUX	6					
5	K9002719	BEARING PLATE/LEVER LINK	PLAQUE	3					
6	K9002720	PLATE;ANCHOR	PLAQUE	3					
7	K9002731	HANDEL KIT	POIGNEE	1					
8	K9002718	MAGENT	AIMANT	4					
9	K9002721	SWITCH;HANDLE	RONDELLE ELASTIQUE	2					
10	K9002722	PIN;PUSH	GOUPILLE	6					
10-1	K9002723	. SEAL KIT;PUSH PIN	. KIT DE REPARATION	1					
12	K9002724	SPRING	RESSORT	4					
13	K9002732	SPRING	RESSORT	2					
14	K9002726	SPRING;RETURN	RESSORT	6					
15	K9002727	BLOCK;SPACE	BLOC	2					
16	K9002733	ROD KIT;TIE	KIT DE ROD	1					
17	K9002729	PLUG KIT	BOUCHON	1					
18	K9002730	CONNECTOR KIT;DEUTSCH	BIELLE	1					

Fig. 3570 INTERMEDIATE CONNECT-FRONT AXLE RELIENT

Serial No. ;

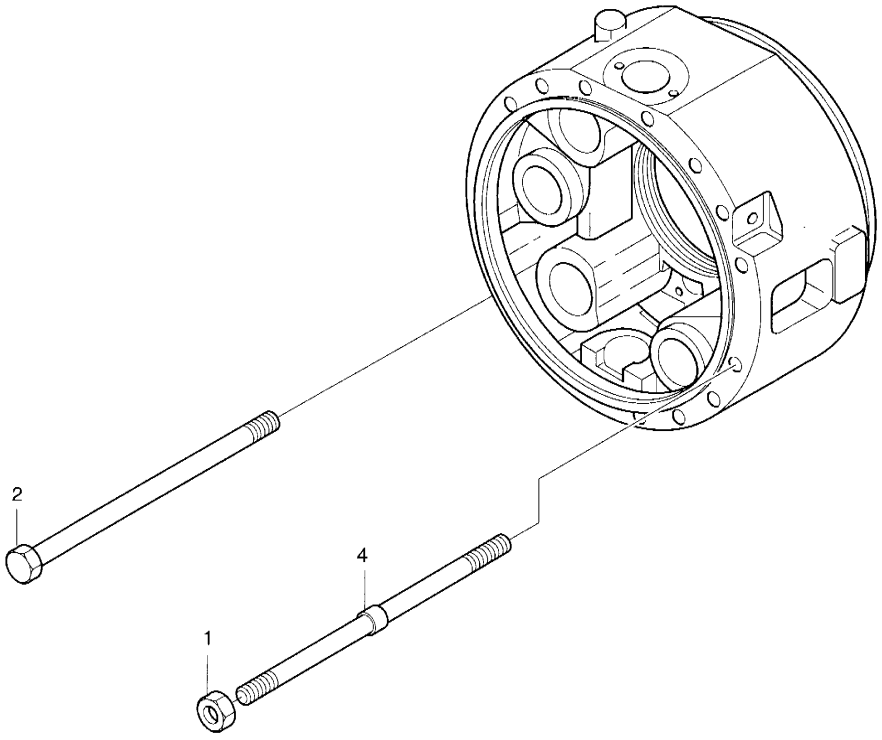

DATE	NOV. 24, 2006
1st EDITION	

Fig. 3570 INTERMEDIATE CONNECT-FRONT AXLE RELIENT

Serial No. ;

Key No.	Part No.	Description	Description	Q'ty	S.C	Serial No.	ICA	Replaceable part	
								Part No.	Q'ty
3570--	211-00067	AXLE;FRONT	AXE	1					
1	2.121-00001	NUT	ECROU	4					
2	2.120-00001	BOLT	BOULON	28					
4	2.317-00001	STUD	GOUJON	4					

DATE	NOV. 24, 2006
1st EDITION	

Fig. 3580 DIFFERENTIAL HOUSING-FRONT AXLE
CARTER DE DIFFERENCIEL

Serial No. ;

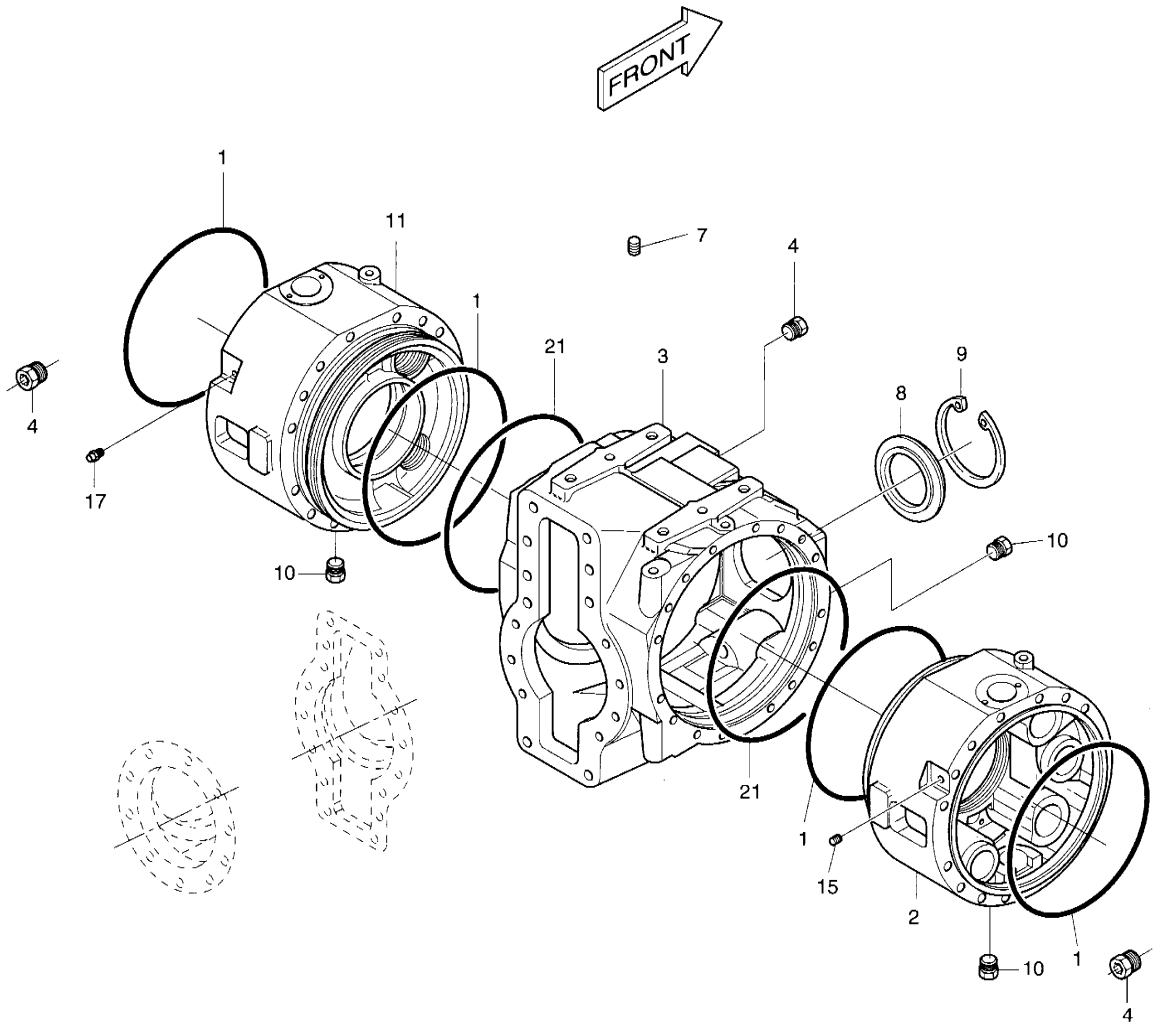

For fixing studs, bolts and nuts position see fig. 3310.

DATE	NOV. 24, 2006
1st EDITION	

Fig. 3580 DIFFERENTIAL HOUSING-FRONT AXLE CARTER DE DIFFERENCIEL

Serial No. ;

Key No.	Part No.	Description	Description	Q'ty	S.C	Serial No.	ICA	Replaceable part	
								Part No.	Q'ty
3580--	211-00067	AXLE;FRONT	AXE	1					
1	2.180-00204	O-RING	JONT TORIQUE	2					
2	2.430-00445	COVER;INTERMEDIATE	COUVERCLE	1					
3	2.402-00132	HOUSING	CARTER	1					
4	2.181-00110	PLUG	BOUCHON	4					
7	2.120-00003	BOLT	BOULON	2					
8	K9004586	PLUG	BOUCHON	1					
9	2.115-00338	RING;SNAP	BAGUE D'ARET	1					
10	2.181-00385	PLUG;MAGNET	BOUCHON MAGNETIQUE	3					
11	2.430-00442	COVER;INTERMEDIATE	COUVERCLE	1					
15	2.181-00109	PLUG	VIS DE FERMETURE	1					
17	2.181-00453	VENT	RENIFLARD	1					
21	2.180-00205	O-RING	JONT TORIQUE	2					

DATE	NOV. 24, 2006
1st EDITION	

Fig. 3590 DIFFERENTIAL-FRONT AXLE
DIFFERENCIEL AVANT

Serial No. ;

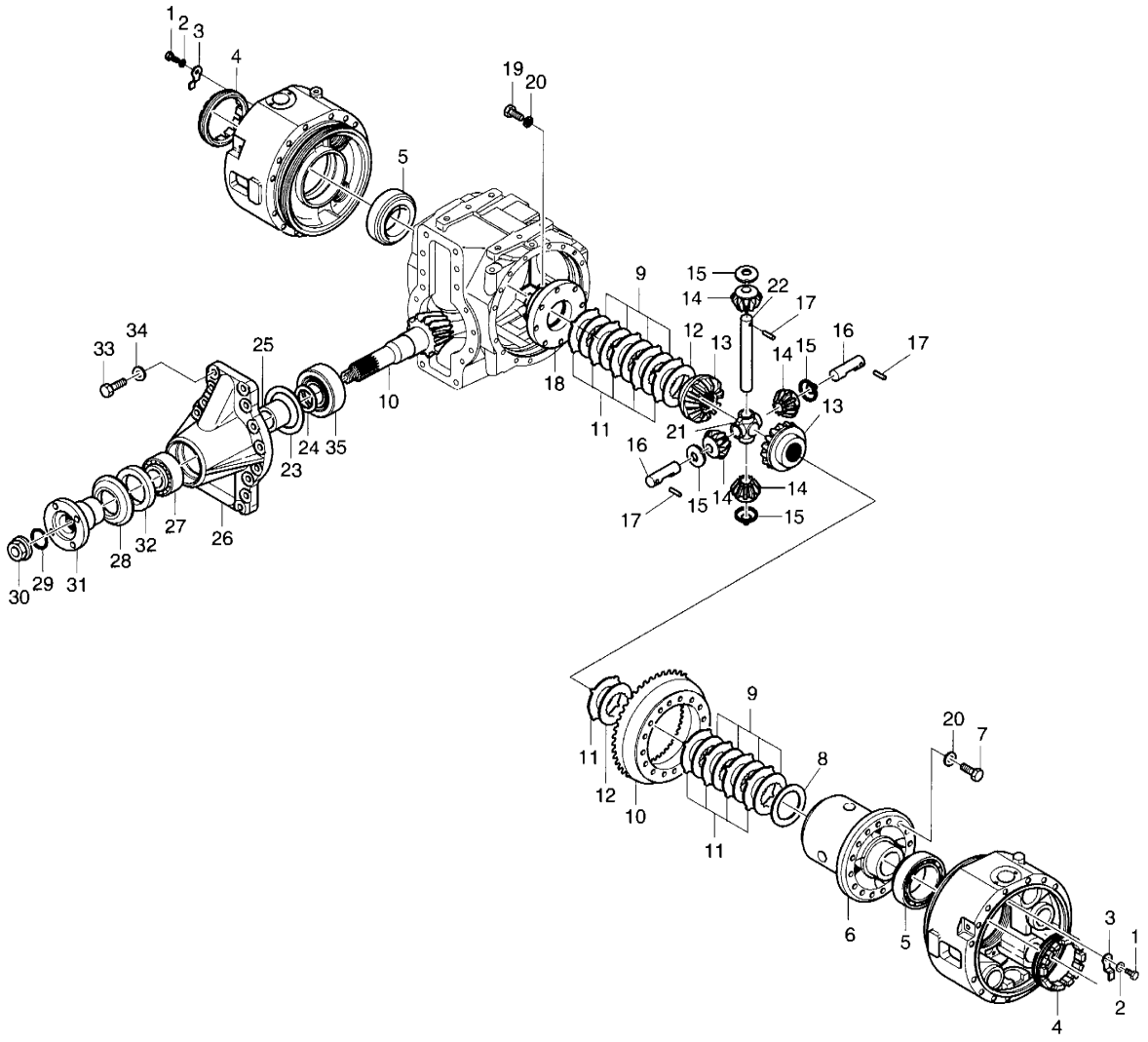

DATE	NOV. 24, 2006
1st EDITION	

Fig. 3590 DIFFERENTIAL-FRONT AXLE DIFFERENCIEL AVANT

Serial No. ;

Key No.	Part No.	Description	Description	Q'ty	S.C	Serial No.	ICA	Replaceable part	
								Part No.	Q'ty
3590--	211-00067	AXLE;FRONT	AXE	1					
1	2.120-00002	BOLT	BOULON	2					
2	2.114-01002	WASHER;LOCK	RONDELLE	2					
3	2.412-00180	PLATE;LOCKING	TOLE DE SECURITE	2					
4	2.121-00193	NUT;RING	ECROU	2					
5	2.109-00232	BEARING;TAPER ROLLER	ROULEMENT A R .	1					
6	2.217-00032	CARRIER;DIFFERENTIAL	CARTER DIFFERENTIEL	1					
7	2.120-00242	BOLT;HEX.	VIS A TETE EXAGONALE	16					
8	2.114-00105	SHIM	CALE	1					
	2.114-00106	SHIM	CALE	1					
	2.114-00107	SHIM	CALE	1					
9	2.222-00001	DISC	DISQUE	8					
10	2.403-00078	BEVEL GEAR SET	COUPLE CONIQUE	1					
11	2.222-00002	DISC	DISQUE	10					
12	2.222-00003	DISC	DISQUE	2					
13	2.403-00106	SIDE GEAR;DIFFERENTIAL	PLANETAIRE	2					
14	2.403-00178	PINION;DIFFERENTIAL	SATELLITE	4					
15	2.114-00807	WASHER;FRICTION	RONDELLE	4					
16	2.123-00003	PIN	AXE	2					
17	2.123-00190	PIN;ROLL	BROCHE ELASTIQUE	3					
18	2.430-00147	COVER	COVERCLE	1					
19	2.120-00017	BOLT;HEX.	VIS A TETE EXAGONALE	8					
20	2.114-01100	WASHER;SPRING	RONDELLE ELASTIQUE	16					
21	2.115-00052	RETAINER;SHAFT	CROISILLON	1					
22	2.123-00004	PIN	AXE	1					
23	2.114-00095	SHIM	CALE	1					
	2.114-00096	SHIM	CALE	1	R				
	2.114-00097	SHIM	CALE	1	R				
	2.114-00098	SHIM	CALE	1	R				
24	2.114-00084	SHIM	CALE	5					
	2.114-00085	SHIM	CALE	3	R				
	2.114-00086	SHIM	CALE	1	R				
	2.114-00087	SHIM	CALE	1	R				
	2.114-00088	SHIM	CALE	1	R				
25	2.114-00707	SPACER	ENTRETOSE	1					
26	2.430-00146	COVER	COUVERCLE	1					
27	2.109-00233	BEARING;TAPER ROLLER	ROULEMENT A R .	1					
28	2.412-00133	PLATE;COVER	PROTECTION EN TOLE	1					

DATE	NOV. 24, 2006
1st EDITION	

Fig. 3590 DIFFERENTIAL-FRONT AXLE
DIFFERENCIEL AVANT

Serial No. ;

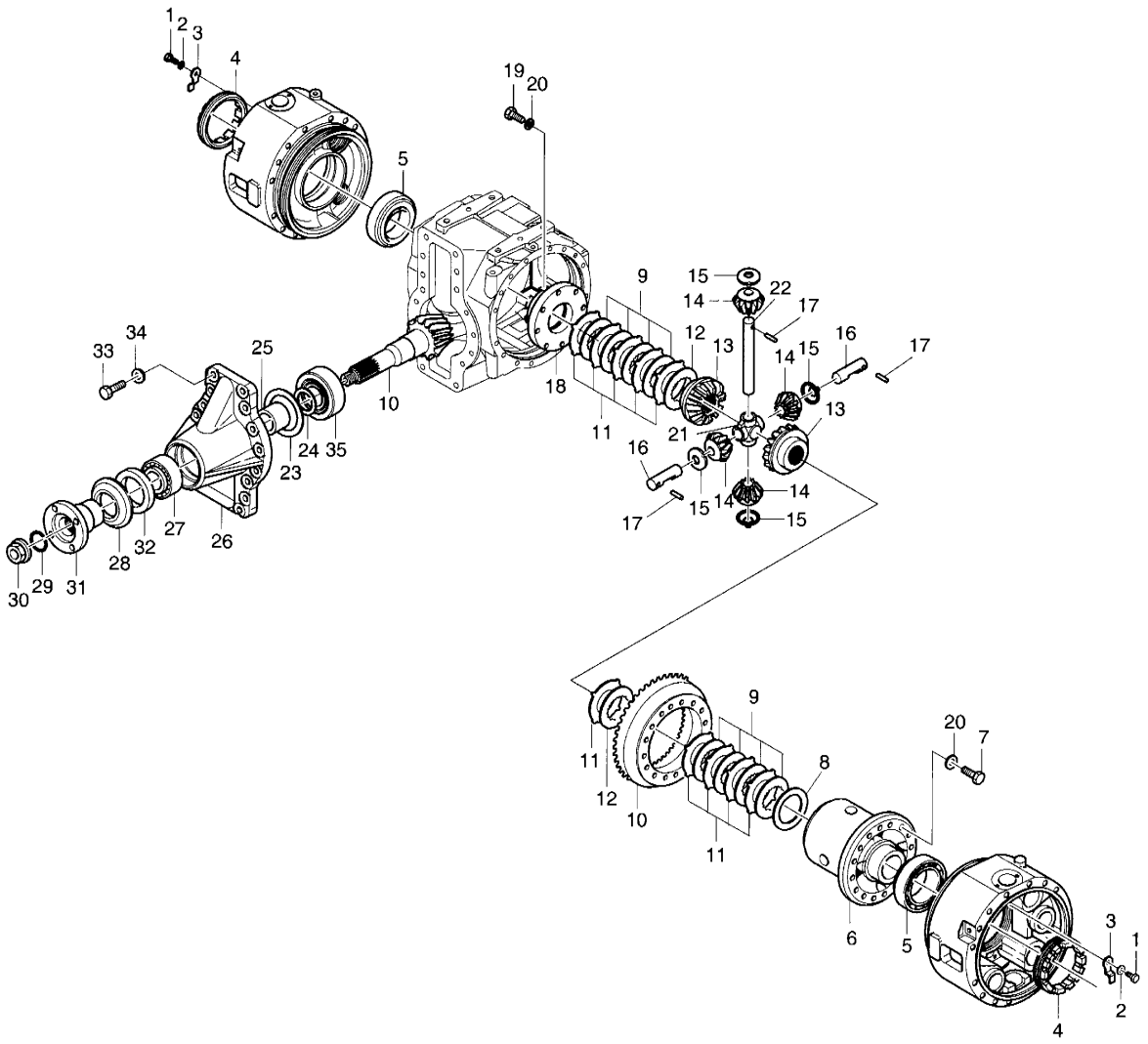

DATE	NOV. 24, 2006
1st EDITION	

Fig. 3590 DIFFERENTIAL-FRONT AXLE DIFFERENCIEL AVANT

Serial No. ;

Key No.	Part No.	Description	Description	Q'ty	S.C	Serial No.	ICA	Replaceable part	
								Part No.	Q'ty
30-29	2.180-00207	O-RING	JONT TORIQUE	1					
30	2.121-00002	NUT	ECROU	1					
31	2.215-00001	FLANGE	BRIDE	1					
32	2.180-00669	SEAL	JOINT D'ETANCHEITE	1					
33	2.120-00016	BOLT;HEX.	VIS A TETE EXAGONALE	16					
34	2.114-01103	WASHER;SPRING	RONDELLE ELASTIQUE	16					
35	2.109-00234	BEARING;TAPER ROLLER	ROULEMENT A R .	1					

DATE	NOV. 24, 2006
1st EDITION	

Fig. 3600 PLANET GEAR-FRONT AXLE REDUCTEUR AVANT

Serial No. ;

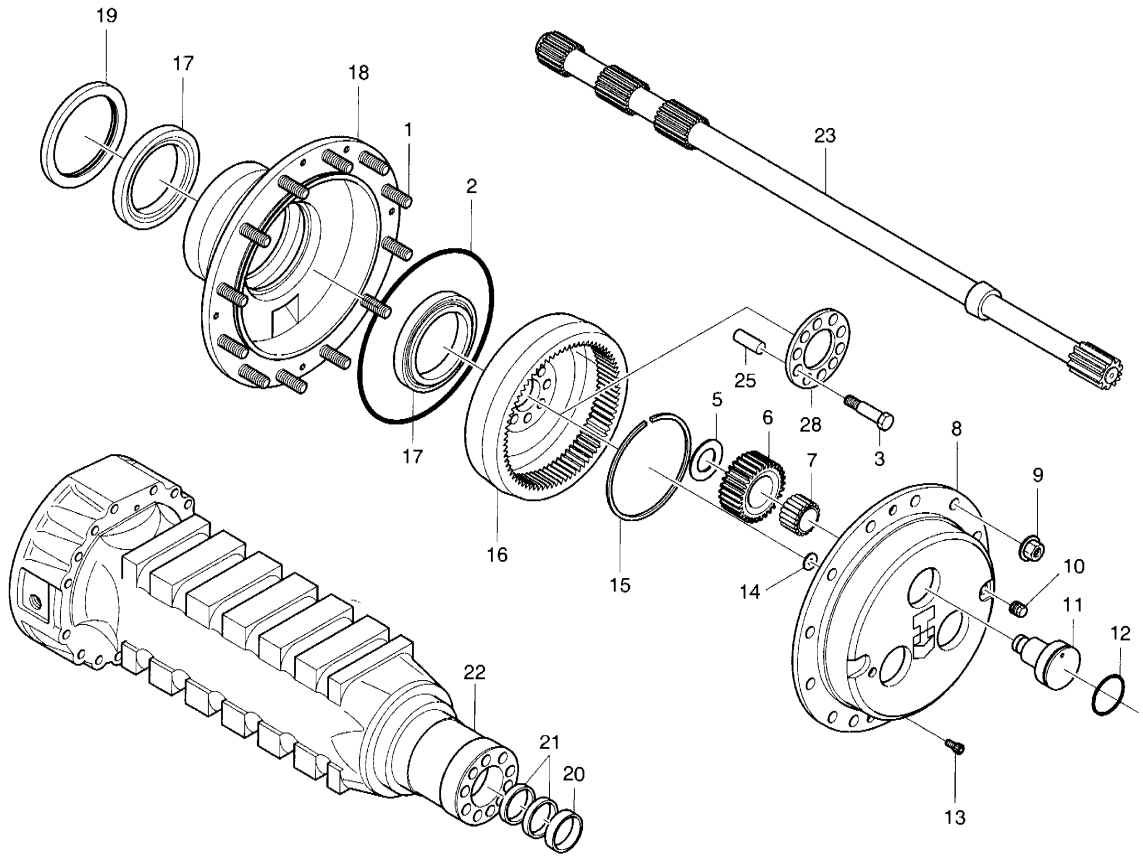

DATE	NOV. 24, 2006
1st EDITION	

Fig. 3600 PLANET GEAR-FRONT AXLE REDUCTEUR AVANT

Serial No. ;

Key No.	Part No.	Description	Description	Q'ty	S.C	Serial No.	ICA	Replaceable part	
								Part No.	Q'ty
3600--	211-00067	AXLE;FRONT	AXE	1					
1	2.317-00076	STUD;WHEEL	GOUJON DE ROUE	24					
2	2.180-00265	O-RING	JONT TORIQUE	2					
3	2.120-00004	BOLT	BOULON	20					
5	K9004587	WASHER;FRICTION	RONDELLE	6					
6	2.403-00185	GEAR;PLANET	SATELLITE	6					
7	2.109-00160	BEARING;NEEDLE	ROULEMENT A AIGUILLE	6					
8	K9004588	CARRIER;PLANET GEAR	SUPPORT SATELLITES	2					
9	2.121-00003	NUT	ECROU	24					
10	2.181-00385	PLUG;MAGNET	BOUCHON MAGNETIQUE	2					
11	2.123-00017	PIN	AXE	6					
12	2.180-00266	O-RING	JONT TORIQUE	6					
13	2.120-00186	BOLT;CYLINDER	VIS A TETE CYLINDRIQUE	4					
14	2.114-00810	WASHER;FRICTION	RONDELLE	2					
15	2.124-00046	CIRCLIP	ARRETOIR	2					
16	2.403-00224	GEAR;RING	COURONNE DENTEE	2					
17	2.109-00235	BEARING;TAPER ROLLER	ROULEMENT A R .	4					
18	2.219-00023	HUB;WHEEL	MOYEU DE ROUE	2					
19	2.180-00671	SEAL	JOINT D'ETANCHEITE	2					
20	2.115-00191	RING;CENTERING	BAGUE DE CENTRAGE	2					
21	2.180-00670	SEAL	JOINT D'ETANCHEITE	2					
22	2.423-00029	CASE;AXLE	CORPS D'ESSIEU	2					
23	2.405-00135	SHAFT;HALF	DEMI ARBRE	2					
25	2.408-00119	BUSHING;REDUCTION	MANCHON DE REDUCTION	20					
28	2.412-00182	PLATE;LOCKING	TOLE DE SECURITE	2					

DATE	NOV. 24, 2006
1st EDITION	

Fig. 3610 BRAKE-FRONT AXLE
FREIN DE AXE

Serial No. ;

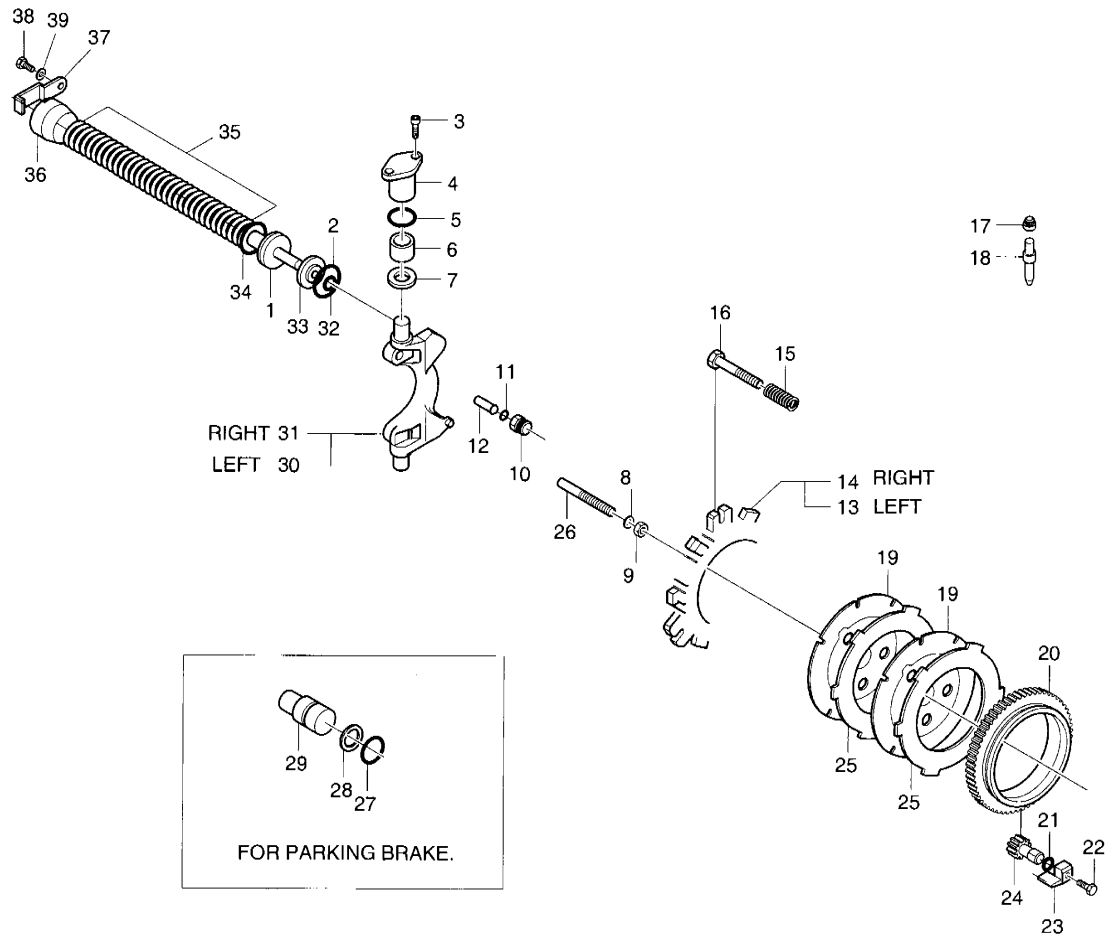

DATE	NOV. 24, 2006
1st EDITION	

Fig. 3610 BRAKE-FRONT AXLE FREIN DE AXE

Serial No. ;

Key No.	Part No.	Description	Description	Q'ty	S.C	Serial No.	ICA	Replaceable part	
								Part No.	Q'ty
3610--	211-00067	AXLE;FRONT	AXE	1					
1	K9004353	PISTON	PISTON	4					
2	2.180-00209	O-RING	JONT TORIQUE	12					
3	2.120-00006	BOLT;CYLINDER	VIS A TETE CYLINDRIQUE	8					
4	2.408-00120	BUSHING;REDUCTION	MANCHON DE REDUCTION	4					
5	2.180-00210	O-RING	JONT TORIQUE	4					
6	2.408-00091	BUSHING	DOUILLE	4					
7	2.114-00811	WASHER;FRICTION	RONDELLE	4					
8	2.114-01003	WASHER;LOCK	RONDELLE	2					
9	2.121-00004	NUT	ECROU	2					
10	2.181-00112	PLUG	BOUCHON	4					
11	2.180-00211	O-RING	JONT TORIQUE	4					
12	2.428-00005	PUSHER	POINTEAU	4					
13	2.222-00008	DISC	DISQUE	1					
14	2.222-00010	DISC	DISQUE	1					
15	2.131-00002	SPRING	RESSORT	6					
16	2.120-00322	BOLT;ADJUSTING	VIS DE REGLAGE	6					
17	2.181-00113	PLUG	BOUCHON	2					
18	2.120-00176	BOLT;BLEEDING	VIS DE PURGE	2					
19	2.222-00012	DISC;BRAKE	DISQUE DE FREIN	10					
20	2.115-00085	RING	BAGUE	2					
21	2.180-00212	O-RING	JONT TORIQUE	2					
22	2.120-00246	BOLT;HEX.	VIS A TETE EXAGONALE	2					
23	2.412-00183	PLATE;LOCKING	TOLE DE SECURITE	2					
24	2.403-00168	PINION	PIGNON	2					
25	2.222-00013	DISC;BRAKE	DISQUE DE FREIN	10					
26	2.120-00007	BOLT;ADJUSTING	VIS DE REGLAGE	2					
27	2.180-00914	RING;BACK-UP	BAGUE ANTIEXTRUSION	6					
28	2.180-00213	O-RING	JONT TORIQUE	6					
29	2.409-00002	PISTON	PISTON	6					
30	2.357-00016	LEVER	LEVIER	1					
31	2.357-00015	LEVER	LEVIER	1					
32	2.180-00214	O-RING	JONT TORIQUE	4					
33	2.181-00114	PLUG	BOUCHON	4					
34	2.180-00215	O-RING	JONT TORIQUE	4					
35	2.131-00003	SPRING	RESSORT	96					
36	2.424-00355	CYLINDER;WHEEL	CYLINDRE FREIN	4					
37	2.412-00184	PLATE;LOCKING	TOLE DE SECURITE	4					

DATE	NOV. 24, 2006
1st EDITION	

Fig. 3610 BRAKE-FRONT AXLE FREIN DE AXE

Serial No. ;

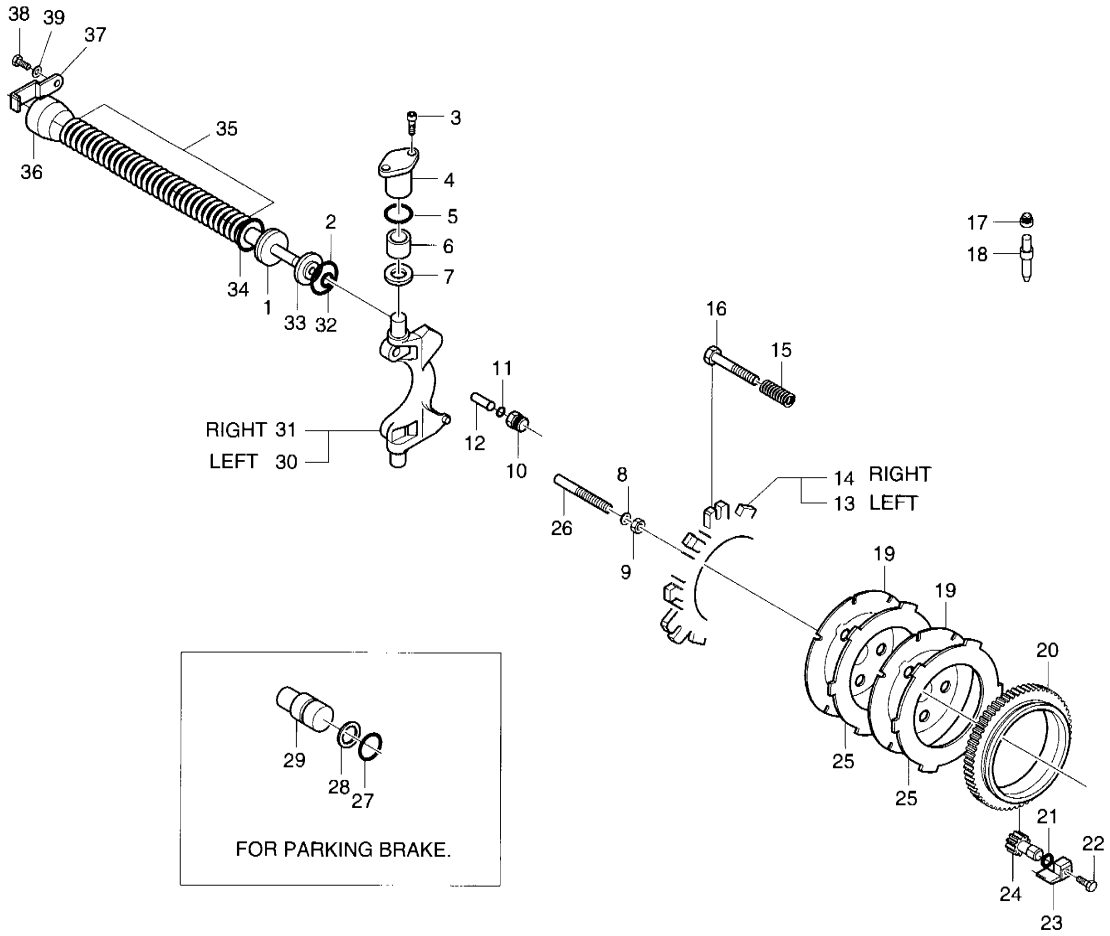

DATE	NOV. 24, 2006
1st EDITION	

Fig. 3610 BRAKE-FRONT AXLE FREIN DE AXE

Serial No. ;

Key No.	Part No.	Description	Description	Q'ty	S.C	Serial No.	ICA	Replaceable part	
								Part No.	Q'ty
3610-38	2.120-00002	BOLT	BOULON	4					
39	2.114-01002	WASHER;LOCK	RONDELLE	4					

DATE	NOV. 24, 2006
1st EDITION	

Fig. 3620 INTERMEDIATE CONNECT- REAR AXLE RELIENT

Serial No. ;

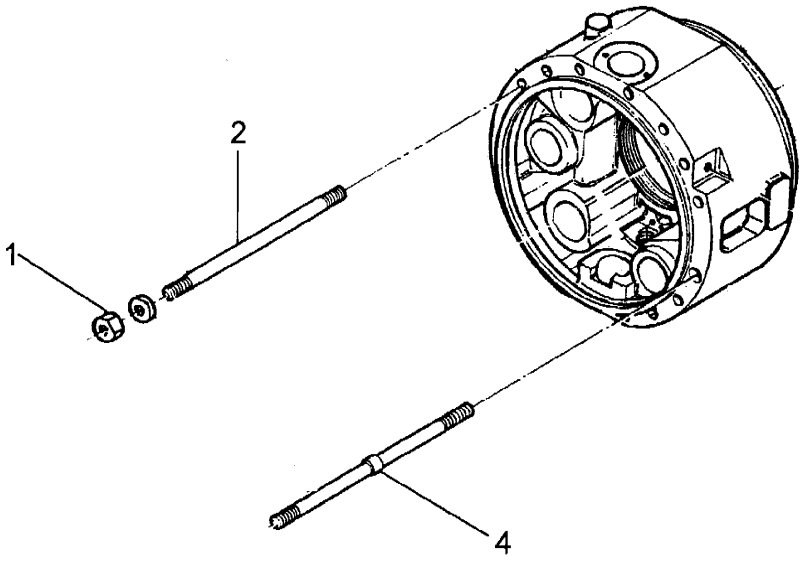

DATE	NOV. 24, 2006
1st EDITION	

Fig. 3620 INTERMEDIATE CONNECT- REAR AXLE RELIENT

Serial No. ;

Key No.	Part No.	Description	Description	Q'ty	S.C	Serial No.	ICA	Replaceable part	
								Part No.	Q'ty
ɔ620--	211-00068	AXLE;REAR	AXE	1					
1	2.121-00001	NUT	ECROU	4					
2	K9004593	BOLT;HEX	BOULON A 6 PANS	28					
4	2.317-00001	STUD	BOULON	4					

Fig. 3630 DIFFERENTIAL HOUSING - REAR AXLE
CARTER DE DIFFERENCIEL

Serial No. ;

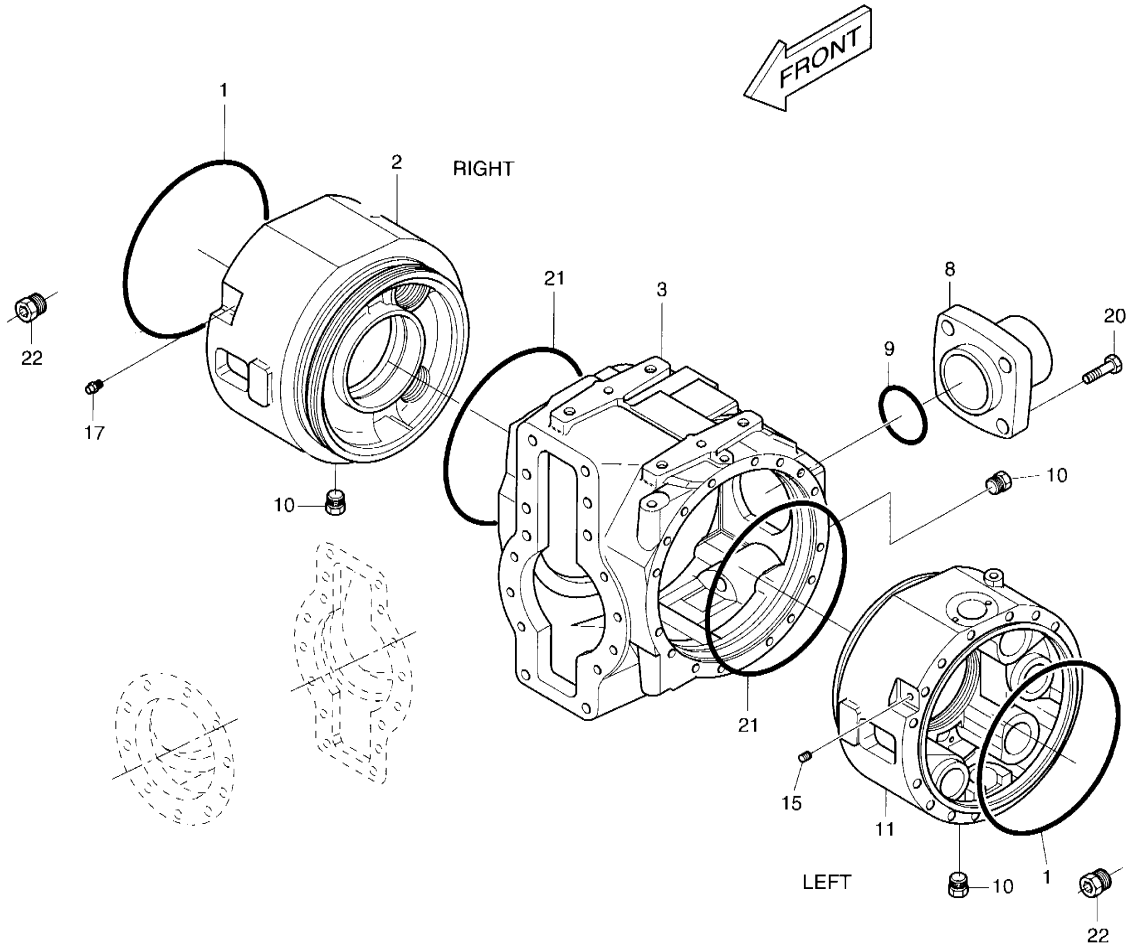

For fixing studs, bolts and nuts position see fig. 3310.

DATE	NOV. 24, 2006
1st EDITION	

Fig. 3630 DIFFERENTIAL HOUSING - REAR AXLE
CARTER DE DIFFERENCIEL

Serial No. ;

Key No.	Part No.	Description	Description	Q'ty	S.C	Serial No.	ICA	Replaceable part	
								Part No.	Q'ty
3630--	211-00068	AXLE;REAR	AXE	1					
1	2.180-00204	O-RING	JONT TORIQUE	2					
2	2.430-00444	COVER;INTERMEDIATE	COUVERCLE	1					
3	2.402-00127	HOUSING	CARTER	1					
8	2.197-00001	SUPPORT	SUPPORT	1					
9	2.180-00216	O-RING	JONT TORIQUE	1					
10	2.181-00385	PLUG;MAGNET	BOUCHON MAGENTIQUE	3					
11	2.430-00443	COVER;INTERMEDIATE	COUVERCLE	1					
15	2.181-00109	PLUG	VIS DE FERMETURE	1					
17	2.181-00453	VENT	RENIFLARD	1					
20	2.120-00008	BOLT;CYLINDER	VIS A TETE CYLINDRIQUE	4					
21	2.180-00205	O-RING	JONT TORIQUE	2					
22	2.181-00110	PLUG	BOUCHON	4					

DATE	DEC. 15, 2006
REV.NO.	EXB06-13

Fig. 3640 DIFFERENTIAL - REAR AXLE
DIFFERENCIEL AVANT

Serial No. ;

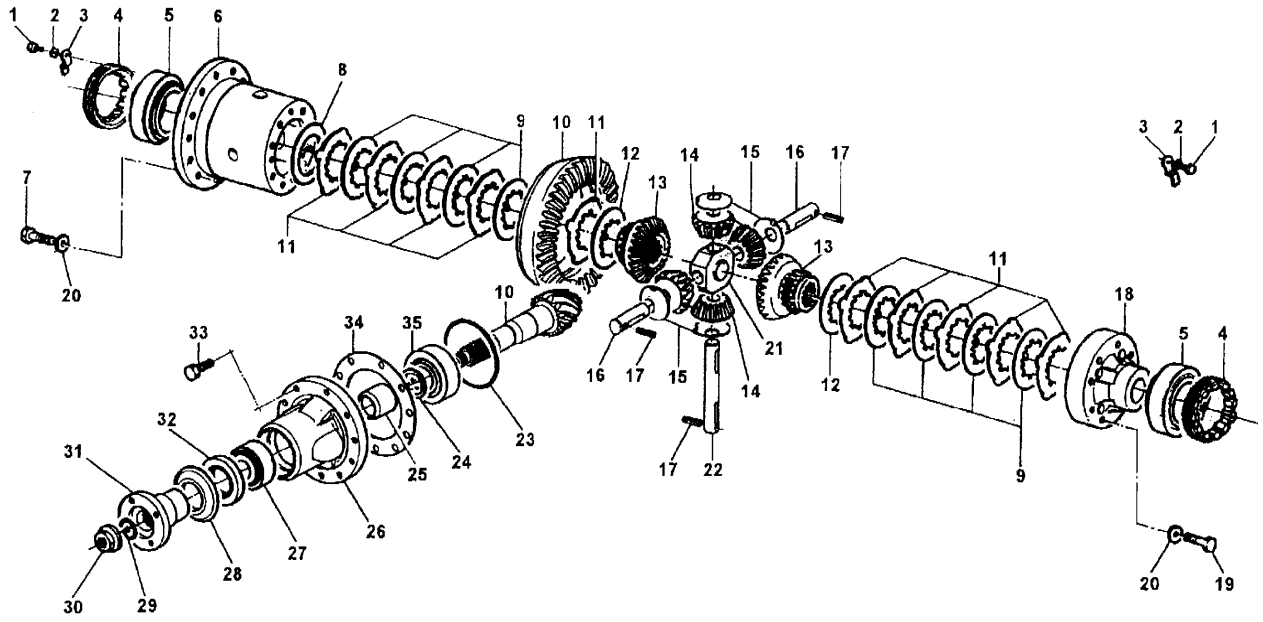

DATE	DEC. 15, 2006
REV. NO.	EXB06-13

Fig. 3640 DIFFERENTIAL - REAR AXLE DIFFERENCIEL AVANT

Serial No. ;

Key No.	Part No.	Description	Description	Q'ty	S.C	Serial No.	ICA	Replaceable part	
								Part No.	Q'ty
+0--	211-00068	AXLE;REAR	AXE	1					
1	2.120-00002	BOLT	BOULON	2					
2	K9004594	WASHER;SPRING	RONDELLE ELASTIQUE	2					
3	2.412-00180	PLATE;LOCKING	PLAQUE	2					
4	2.121-00193	NUT;RING	ECROU	2					
5	2.109-00232	BEARING;TAPER ROLLER	ROULEMENT ROULEAUX	2					
6	2.217-00032	CARRIER;DIFFERENTIAL	PORTE-SATELLITES	1					
7	2.120-00242	BOLT;HEX.	BOULON A 6 PANS	16					
8	2.114-00105	SHIM	CALE	1					
	2.114-00106	SHIM	CALE	1					
	2.114-00107	SHIM	CALE	1					
9	2.222-00001	DISC	DISQUE	8					
10	2.403-00071	BEVEL GEAR SET	ENSEMBLE DE PIGNON	1					
11	2.222-00002	DISC	DISQUE	10					
12	2.222-00003	DISC	DISQUE	2					
13	2.403-00106	PLANETAIRE	PLANETE	2					
14	2.403-00178	SATELLITE	SATELLITE	4					
15	2.114-00807	WASHER	RONDELLE	4					
16	2.123-00003	PIN	GOUPILLE	2					
17	2.123-00190	PIN;ROLL	GOUPILLE	3					
18	2.430-00147	COVER	COUVERCLE	1					
19	2.120-00017	BOLT	BOULON	8					
20	2.114-01100	WASHER;SPRING	RONDELLE ELASTIQUE	24					
21	2.115-00052	RETAINER;SHAFT	ARRETOIR	1					
22	2.123-00004	PIN	GOUPILLE	1					
23	2.180-00206	O-RING	JONT TORIQUE	1					
24	2.114-00084	SHIM	CALE	5					
	2.114-00085	SHIM	CALE	3					
	2.114-00086	SHIM	CALE	1					
	2.114-00087	SHIM	CALE	1					
	2.114-00088	SHIM	CALE	1					
25	2.114-00707	SPACER	DOUILLE D'ECARTEMENT	1					
26	2.430-00140	COVER	COUVERCLE	1					
27	2.109-00234	BEARING;TAPER ROLLER	ROULEMENT ROULEAUX	1					
28	2.412-00133	PLATE;COVER	PLAQUE	1					
29	2.180-00207	O-RING	JOINT TORIQUE	1					
30	2.121-00002	NUT	ECROU	1					
31	2.181-00030	FLANGE	BRIDE	1					

DATE	DEC. 15, 2006
REV.NO.	EXB06-13

Fig. 3640 DIFFERENTIAL - REAR AXLE
DIFFERENCIEL AVANT

Serial No. ;

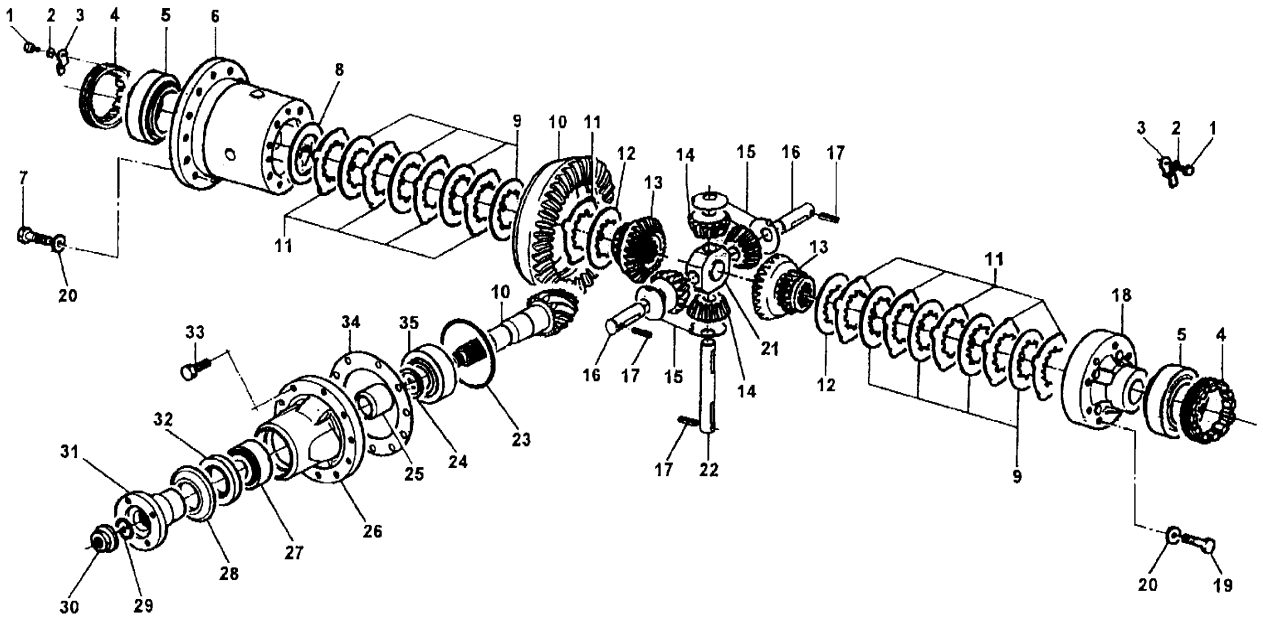

DATE	DEC. 15, 2006
REV. NO.	EXB06-13

Fig. 3640 DIFFERENTIAL - REAR AXLE
DIFFERENCIEL AVANT

Serial No. ;

Key No.	Part No.	Description	Description	Q'ty	S.C	Serial No.	ICA	Replaceable part	
								Part No.	Q'ty
3640-32	2.180-00669	SEAL	JOINT	1					
33	2.120-00009	BOLT	BOULON	10					
34	2.114-00089	SHIM	CALE	1					
	2.114-00090	SHIM	CALE	1					
	2.114-00091	SHIM	CALE	1					
	2.114-00092	SHIM	CALE	1					
35	2.109-00233	BEARING;TAPER ROLLER	ROULEMENT ROULEAUX	1					

DATE	NOV. 24, 2006
1st EDITION	

Fig. 3650 PLANETARY GEAR - REAR AXLE
REDUCTEUR AVANT

Serial No. ;

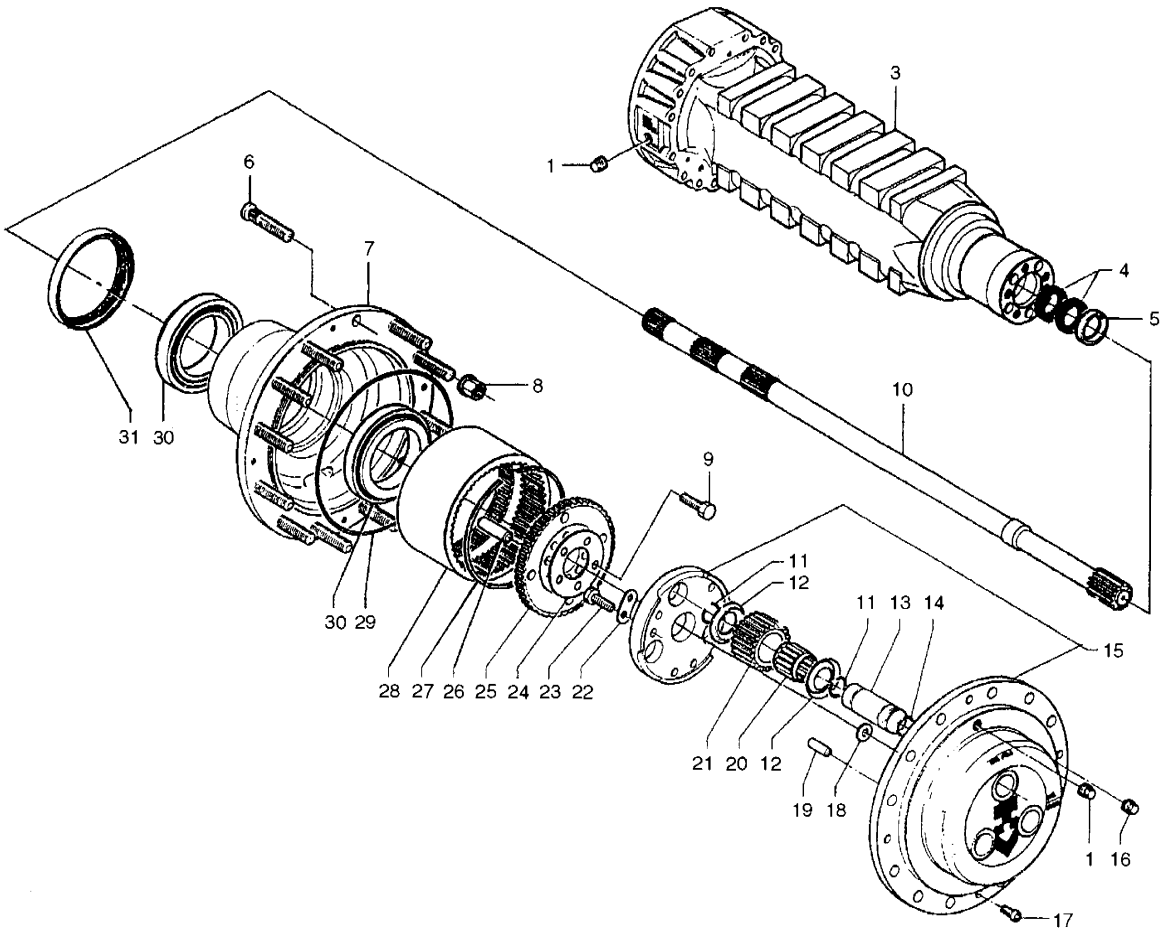

DATE	NOV. 24, 2006
1st EDITION	

Fig. 3650 PLANETARY GEAR - REAR AXLE
REDUCTEUR AVANT

Serial No. ;

Key No.	Part No.	Description	Description	Q'ty	S.C	Serial No.	ICA	Replaceable part	
								Part No.	Q'ty
3650- -	211-00068	AXLE;REAR	AXE	1					
1	2.181-00110	PLUG	BOUCHON	2					
3	2.423-00028	CASE;AXLE	CORQS D'ESSIEU	2					
4	K9004597	SEAL	JOINT D'ETANCHEITE	2					
5	2.115-00191	RING;CENTERING	BAGUE DE CENTRAGE	2					
6	2.317-00076	STUD;WHEEL	GOUJON DE ROUE	24					
7	2.219-00023	HUB;WHEEL	MOYEU DE ROUE	2					
8	2.121-00003	NUT	ECROU	24					
9	K9004598	BOLT;HEX.	VIS A TETE EXAGONALE	10					
10	2.405-00136	SHAFT;HALF	DEMI ARBRE	2					
11	2.115-00339	RING;SNAP	BAGUE D'ARRET	12					
12	2.114-00809	WASHER;FRICTION	RONDELLE	12					
13	2.123-00005	PIN	AXE	6					
14	2.180-00208	O-RING	JONT TORIQUE	6					
15	K9004599	CARRIER;PLANET GEAR	SUPPORT SATELLITES	2					
16	2.181-00385	PLUG;MAGNET	BOUCHON MAGNETIQUE	2					
17	2.120-00005	BOLT;CYLINDER	VIS A TETE CYLINDRIQUE	4					
18	2.114-00810	WASHER;FRICTION	RONDELLE	2					
19	2.123-00140	DOWEL	BROCHE ELASTIQUE	6					
20	2.109-00160	BEARING;NEEDLE	ROULEMENT A AIGUILLE	6					
21	2.403-00184	GEAR;PLANET	SATELLITE	6					
22	2.412-00181	PLATE;LOCKING	TOLE DE SECURITE	6					
23	2.120-00245	BOLT;HEX.	VIS A TETE EXAGONALE	12					
24	2.412-00187	PLATE;LOCKING	TOLE DE SECURITE	2					
25	2.197-00052	SUPPORT;RING GEAR	SUPPORT PORTE	2					
26	2.123-00259	DOWEL	BROCHE ELASTIQUE	10					
27	2.115-00340	RING;SNAP	BAGUE D'ARRET	2					
28	2.404-00002	GEAR;RING	COURONNE DENTEE	2					
29	2.180-00265	O-RING	JONT TORIQUE	2					
30	2.109-00235	BEARING;TAPER ROLLER	ROULEMENT A R.	4					
31	K9004352	SEAL	JOINT D'ETANCHEITE	2					

DATE	NOV. 24, 2006
1st EDITION	

Fig. 3660 BRAKE - REAR AXLE
FREIN DE AXE

Serial No. ;

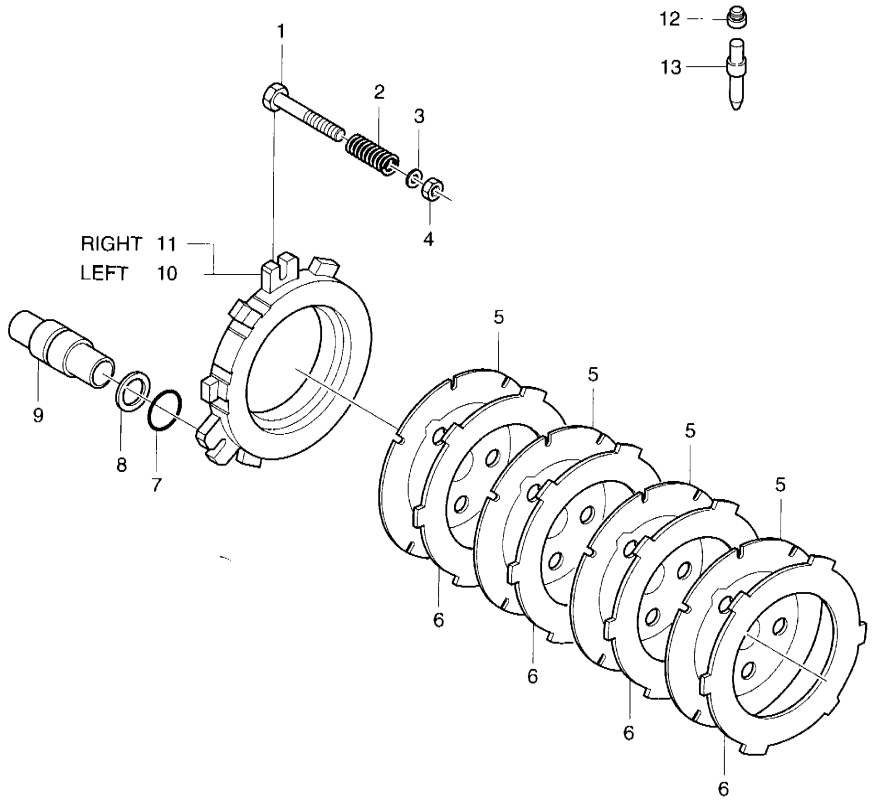

DATE	NOV. 24, 2006
1st EDITION	

Fig. 3660 BRAKE - REAR AXLE FREIN DE AXE

Serial No. ;

Key No.	Part No.	Description	Description	Q'ty	S.C	Serial No.	ICA	Replaceable part	
								Part No.	Q'ty
3660--	211-00068	AXLE;REAR	AXE	1					
1	2.120-00010	BOLT;ADJUSTING	VIS DE REGLAGE	6					
2	2.131-00002	SPRING	RESSORT	6					
3	2.180-00217	O-RING	JONT TORIQUE	6					
4	2.121-00005	NUT	ECROU	6					
5	2.222-00012	DISC;BRAKE	DISQUE DE FREIN	8					
6	2.222-00013	DISC;BRAKE	DISQUE DE FREIN	8					
7	2.180-00914	O-RING	JONT TORIQUE	6					
8	2.180-00213	RING;BACK-UP	BAUGE ANTIEXTRUSION	6					
9	2.409-00002	PISTON	PISTON	6					
10	2.222-00004	DISC	DISQUE	1					
11	2.222-00005	DISC	DISQUE	1					
12	2.181-00113	PLUG	BOUCHON	2					
13	2.120-00176	BOLT;BLEEDING	VIS DE PURGE	2					

DATE	DEC. 15, 2006
REV.NO.	EXB06-13

Fig. 4100 TOOL
ENSEMBLE OUTILLAGE

Serial No. ;

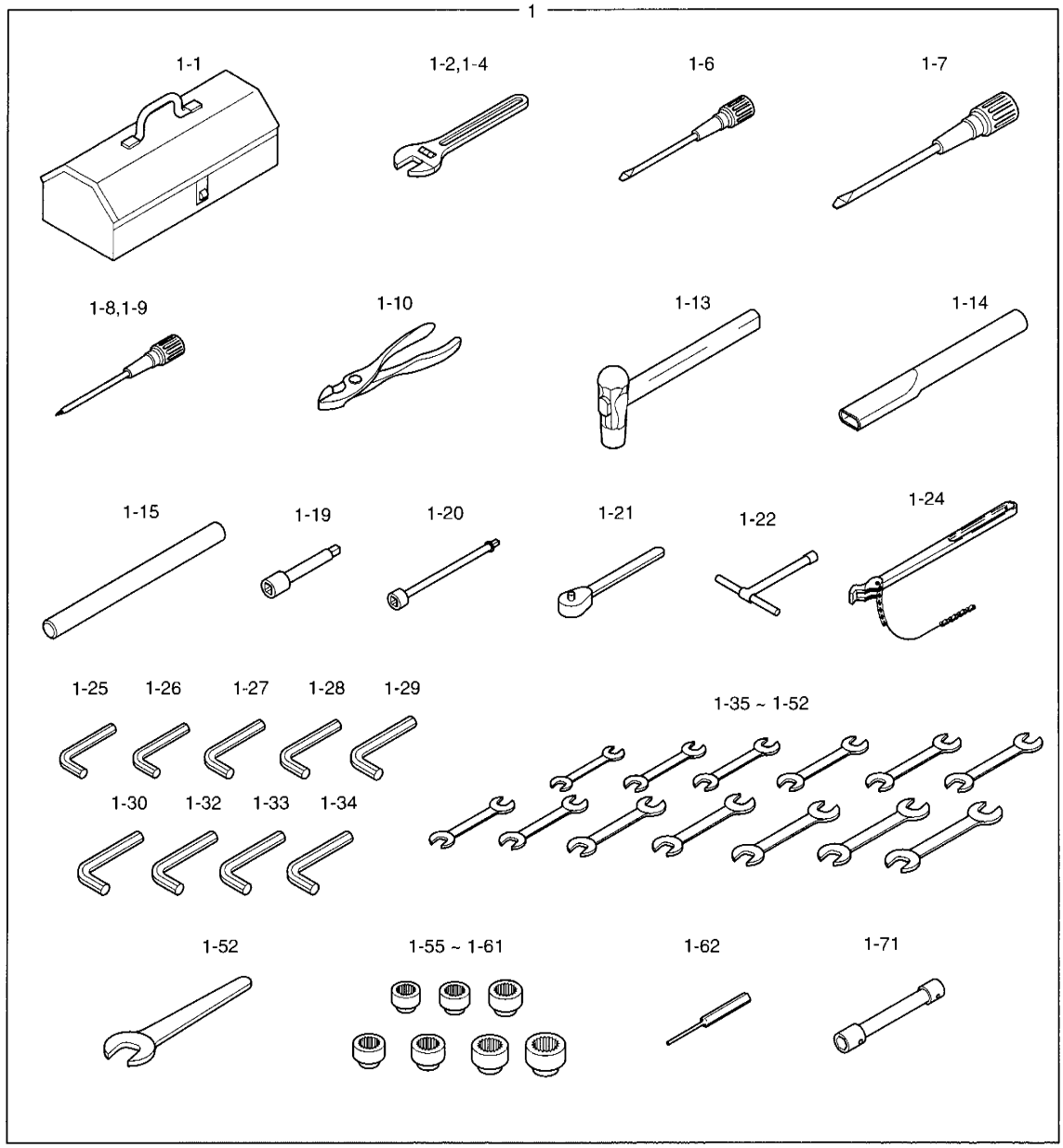

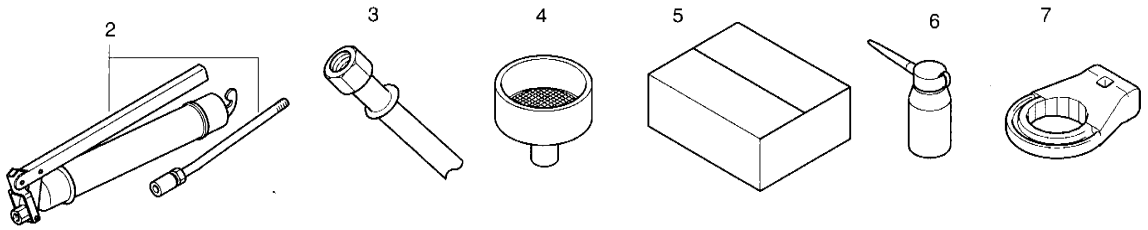

DATE	DEC. 15, 2006
REV. NO.	EXB06-13

Fig. 4100 TOOL ENSEMBLE OUTILLAGE

Serial No. ;

Key No.	Part No.	Description	Description	Q'ty	S.C	Serial No.	ICA	Replaceable part	
								Part No.	Q'ty
4100--	K1024491	TOOL	ENSEMBLE OUTILLAGE	-	D				
1	2199-1063F21	TOOL ASS'Y	OUTILLAGE	1					
1-1	2199-9043	BOX;TOOL	BOITE A OUTILS	1					
1-2	T6580008	WRENCH:ADJUST	RONDELLE	1					
1-4	T6580016	WRENCH:ADJUST	RONDELLE	1					
1-6	T7050003	DRIVER (-)	CONDUCTEUR	1					
1-7	T7050013	DRIVER	CONDUCTEUR	1					
1-8	T7050021	DRIVER - 6 100mm	CONDUCTEUR	1					
1-9	T7050022	DRIVER 8X150	CONDUCTEUR	1					
1-10	T7500004	PILER;COMBI 8	GERBEUR COMBI	1					
1-13	T7260057	HAMMER 2 L/B	MARTEAU	1					
1-14	2199-1004	BAR	BARRE	1					
1-15	2199-1005	PIPE	TUYAU	1					
1-19	T6690012	BAR;EXTENSION	BARRE DE PROLONGATION	1					
1-20	T6690013	BAR;EXTENSION	BARRE DE PROLONGATION	1					
1-21	T6750003	HANDLE;RATCHET	POIGNEE	1					
1-22	2199-9009	CLIP;DRIVER 13	AGRAFE	1					
1-24	2199-9057	WRENCH;FILTER	CLE A FILTRE	1					
1-25	2199-9014	WRENCH;T	CLE MALE	1					
1-26	T6550005	L-WRENCH	CLE MALE	1					
1-27	T6550006	L-WRENCH	CLE MALE	1					
1-28	T6550007	L-WRENCH	CLE MALE	1					
1-29	T6550009	L-WRENCH	CLE MALE	1					
1-30	T6550011	L-WRENCH	CLE MALE	1					
1-32	T6550015	L-WRENCH	PAPIER ONDULE	1					
1-33	T6550018	L-WRENCH	CLE MALE	1					
1-34	T6550020	L-WRENCH	CLE MALE	1					
1-35	T6510062	SPANNER	CLE PLATE	1					
1-36	T6510066	SPANNER	CLE PLATE	1					
1-37	T6510070	SPANNER	CLE PLATE	1					
1-38	T6510072	SPANNER	CLE PLATE	1					
1-39	T6510075	SPANNER	CLE PLATE	1					
1-40	T6510079	SPANNER 8X10	CLE PLATE	1					
1-41	T6510081	SPANNER 10X12	CLE PLATE	1					
1-42	T6510085	SPANNER	CLE PLATE	1					
1-44	T6510089	SPANNER	CLE PLATE	1					
1-45	T6510091	SPANNER	CLE PLATE	1					
1-47	T6510094	SPANNER	CLE PLATE	1					

DATE	DEC. 15, 2006
REV.NO.	EXB06-13

Fig. 4100 TOOL
ENSEMBLE OUTILLAGE

Serial No. ;

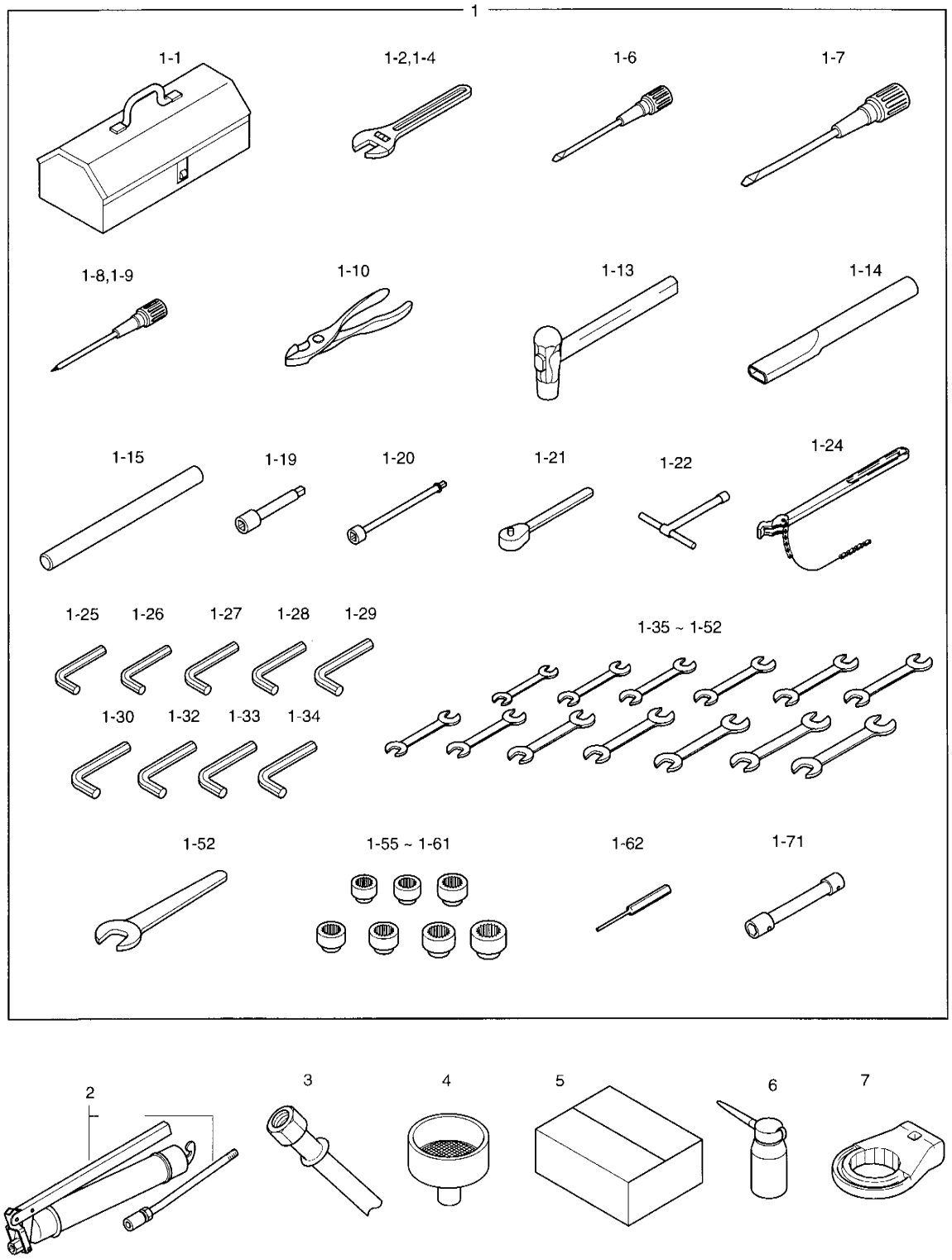

DATE	DEC. 15, 2006
REV. NO.	EXB06-13

Fig. 4100 TOOL ENSEMBLE OUTILLAGE

Serial No. ;

Key No.	Part No.	Description	Description	Q'ty	S.C	Serial No.	ICA	Replaceable part	
								Part No.	Q'ty
100-1-51	T6510025	SPANNER	CLE PLATE	1					
1-52	T6510027	SPANNER	CLE PLATE	1					
1-55	T6600183	SOCKET;WRENCH	CLE PLATE	1					
1-56	T6600189	SOCKET;WRENCH	CLE PLATE	1					
1-57	T6600197	SOCKET;WRENCH	CLE PLATE	1					
1-58	T6600201	SOCKET;WRENCH	CLE PLATE	1					
1-59	T6600211	SOCKET;WRENCH	CLE PLATE	1					
1-60	T6600223	SOCKET;WRENCH	CLE PLATE	1					
1-61	T6600227	SOCKET;WRENCH	CLE PLATE	1					
1-62	2199-9017	CHISEL	BURIN	1					
1-71	199-00002	WRENCH	CLE PLATE	1					
2	2199-9008	GREASE GUN	PISTOLET DE GRAISSAGE	1					
3	2184-9005	HOSE	TUYAU FLEXIBLE	1					
4	2199-1006	FUNNEL	ENTONNOIR	1					
5	4199-9055	BOX	BOITE	1					
6	2199-9056	FUNNEL	ENTONNOIR	1					
7	K1006586	TOOL;PRE FILTER	OUTIL	1					

DATE	JUN. 30, 2007
REV.NO.	EXB07-06

Fig. 4110 SPARE PARTS PIECES DE RECHANGE

Serial No. ;

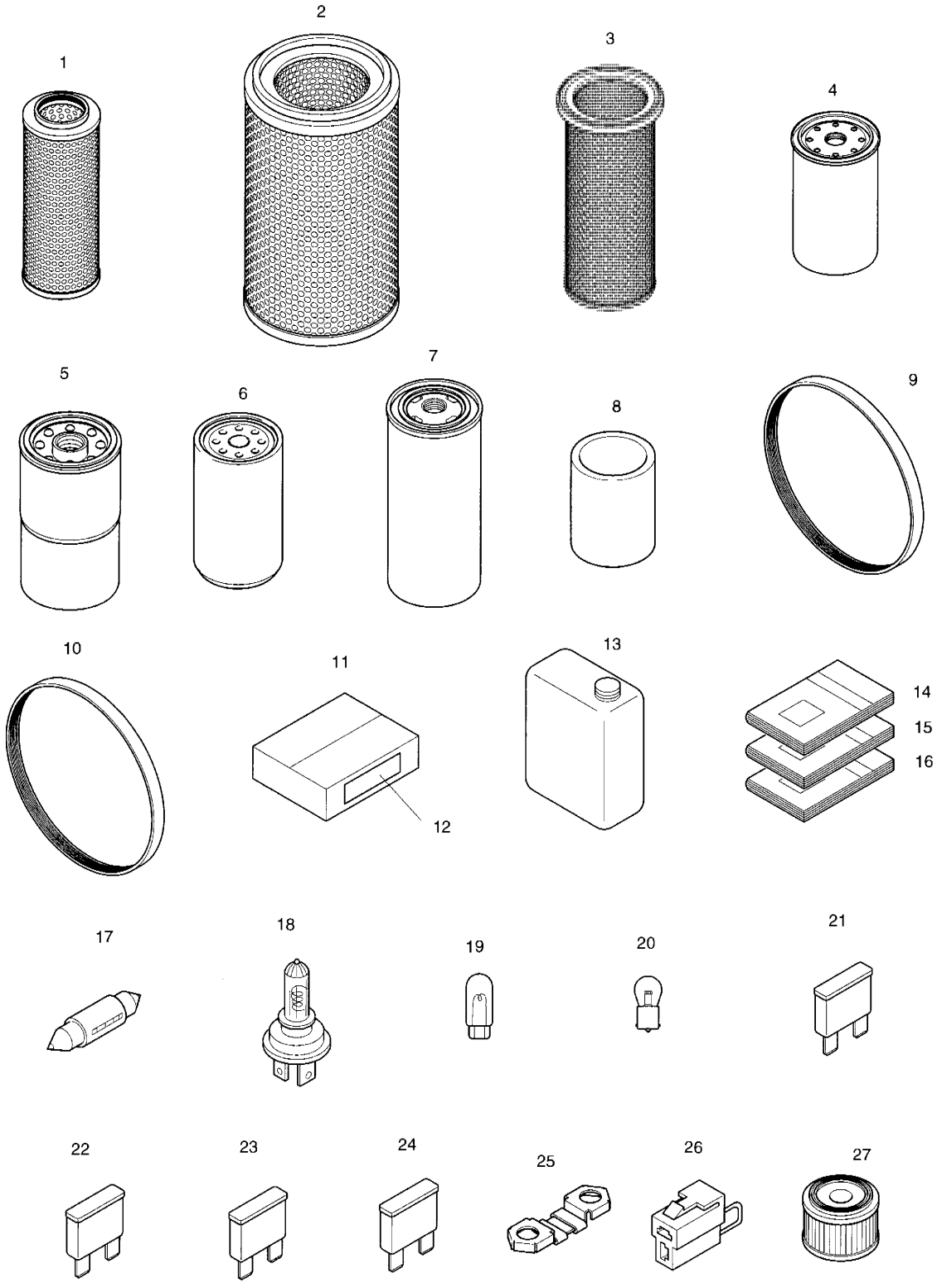

DATE	JUN. 30, 2007
REV. NO.	EXB07-06

Fig. 4110 SPARE PARTS PIECES DE RECHANGE

Serial No. ;

Key No.	Part No.	Description	Description	Q'ty	S.C	Serial No.	ICA	Replaceable part	
								Part No.	Q'ty
110--	K1024535	SPARE PARTS	BAGUE D'ECARTEMENT	-	D				
1	474-00055	ELEMENT;FILTER	ELEMENT	1					
2	474-00040	ELEMENT;OUTER (AIR CLEANER)	ELEMENT	1					
3	474-00039	ELEMENT;INNER (AIR CLEANER)	ELEMENT	1					
4	65.12503-5026	FILTER;FUEL	FILTRE	1					
5	65.05510-5032	FILTER;ENGINE OIL	FILTRE	1					
6	K1006530	FILTER;PRE FUEL	FILTRE	1					
7	K1029612	FILTER;T/M	ELEMENT	1					
8	K1009106	ELEMENT;BRAKE & PILOT	ELEMENT	1					
9	2106-1019D25	V-BELT;AIRCON	COURROIE	1					
10	65.96801-0194	V-BELT;ALTERNATOR	COURROIE	1					
11	K1010639	BOX;SPARE PARTS	BOITE	1					
12	K1024539	PLATE;NAME	PLAQUE D'IDENTIFICATION	1					
13	K1006854	OIL;ENGINE TIER-III	RESERVOIR D'HUILE	6					
14	K1024536EF	PARTS BOOK	CATALOGUE DES PIECES	1					
15	K1024537E	OPERATION MANUAL	MANUEL D'UTILISATION	1					
16	K1024538E	SHOP MANUAL	MANUEL DE MAGASIN	1					
17	2515-1016D4	BULB	AMPOULE	1					
18	K1010656	BULB;HALOGEN	AMPOULE	1					
19	515-00012A	BULB	AMPOULE	2					
20	S864221H	BULB	AMPOULE	1					
21	2527-1016	FUSE;BLADE	FUSIBLE	2					
22	2527-1017	FUSE;BLADE	FUSIBLE	2					
23	2527-1018	FUSE;BLADE	FUSIBLE	2					
24	2527-1025	FUSE;BLADE	FUSIBLE	1					
25	527-00005	FUSE;PREHEAT RELAY	FUSIBLE	2					
26	2527-1023A	FUSIBLE LINK	LIEN FUSIBLE	1					
27	**K1029257**	**ELEMENT;AIR BREATHER**	ELEMENT	1		**5098–**			

DATE	NOV. 24, 2006
1st EDITION	

Fig. 4120 NAME PLATE - EUROPE
PLAT NOMME

Serial No. ;

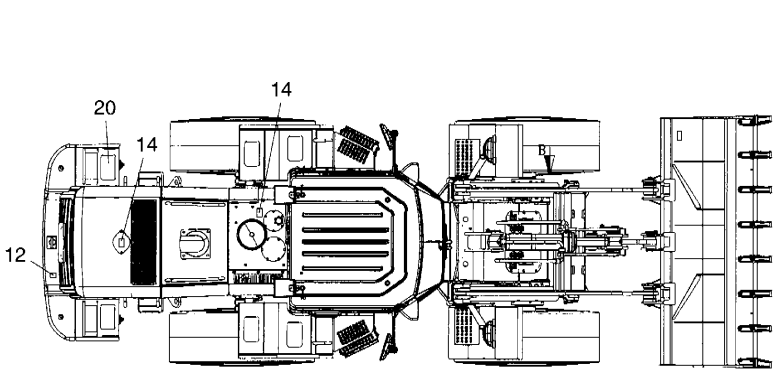

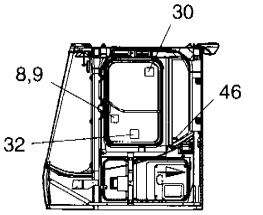

VIEW D

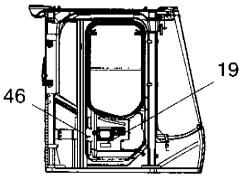

VIEW D

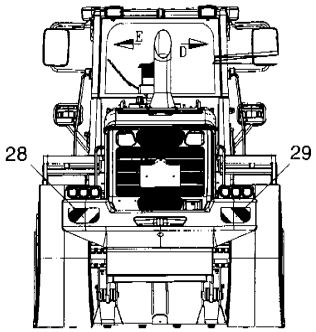

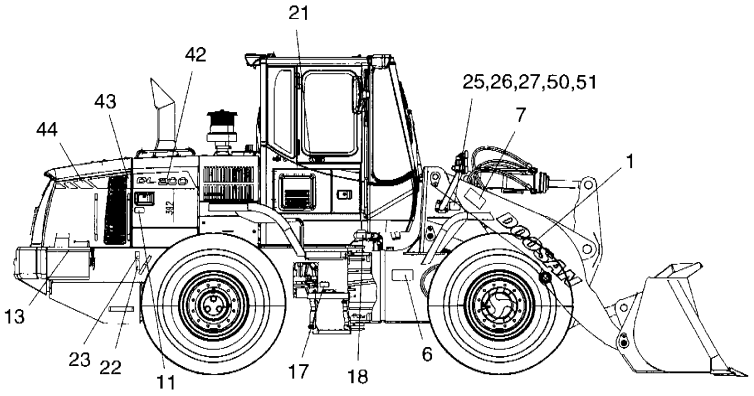

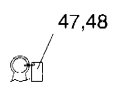

ENGINE LIFTING

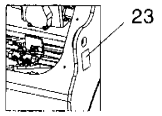

VIEW D

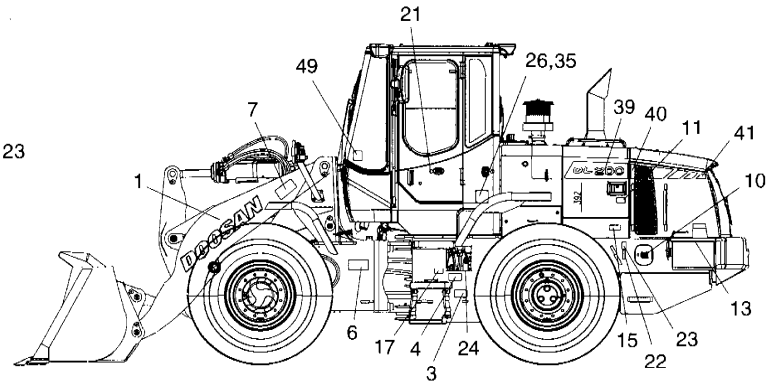



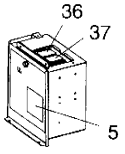

ELECTRIC BOX

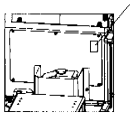

VIEW G

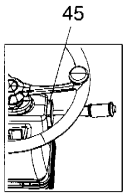

DATAIL OF COLUNM

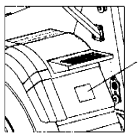

VIEW C

DATE	NOV. 24, 2006
1st EDITION	

Fig. 4120 NAME PLATE - EUROPE PLAT NOMME

Serial No. ;

Key No.	Part No.	Description	Description	Q'ty	S.C	Serial No.	ICA	Replaceable part	
								Part No.	Q'ty
120--	K1029368	NAME PLATE - EUROPE	PLAQUE D'IDENTIFICATION	1	D				
1	K1011645D1	DECAL (DOOSAN)	DECAL	2					
3	190-00121	PLATE;NAME	PLAQUE D'IDENTIFICATION	1					
4	190-00362	PLATE;NAME (T/M LEVEL)	PLAQUE D'IDENTIFICATION	1					
5	190-00092	PLATE;NAME	PLAQUE D'IDENTIFICATION	1					
6	190-00120	PLATE;NAME	PLAQUE D'IDENTIFICATION	2					
7	190-00105	PLATE;NAME	PLAQUE D'IDENTIFICATION	2					
8	4190-2482A	PLATE;NAME (LEVER DIRECRION)	PLAQUE D'IDENTIFICATION	1					
9	190-01197	PLATE;NAME (LEVER DIRECRION)	PLAQUE D'IDENTIFICATION	1					
10	K1016409	PLATE;NAME (FUEL)	DECAL	1					
11	190-00095	PLATE;NAME (FAN CAUTION-1)	PLAQUE D'IDENTIFICATION	2					
12	190-00557	PLATE;NAME (FAN CAUTION-2)	PLAQUE D'IDENTIFICATION	1					
13	190-00100	PLATE;NAME (BATTERY)	PLAQUE D'IDENTIFICATION	2					
14	190-00097	PLATE;NAME (HOT WATER)	PLAQUE D'IDENTIFICATION	2					
15	K1016408	DECAL (TIRE PRESS)	DECAL	1					
16	190-00098	PLATE;NAME	PLAQUE D'IDENTIFICATION	1					
17	190-00207	PLATE;NAME	PLAQUE D'IDENTIFICATION	2					
18	190-00542	PLATE;NAME	PLAQUE D'IDENTIFICATION	1					
19	2190-2566B	PLATE;NAME (BRAKE PRESS)	PLAQUE D'IDENTIFICATION	1					
20	2190-2314D3	TAPE;ANTI-SKID	PLAQUE ANTI-DERAPANTE	6					
21	2116-9003	PLATE	PLAQUE	2					
22	2190-2476	PLATE;NAME	PLAQUE D'IDENTIFICATION	2					
23	2190-2477	PLATE;NAME	PLAQUE D'IDENTIFICATION	4					
24	190-00099	PLATE;NAME (ACCUMULATOR)	PLAQUE D'IDENTIFICATION	3					
25	K1012204A	PLATE;NAME (LIFTING)	DECAL	1					
26	2122-1002D2	RIVET	RIVET	8					
27	K1012205A	DECAL	DECAL	1					
28	2190-3528	PLATE;NAME	PLAQUE D'IDENTIFICATION	1					
29	2190-3530	PLATE;NAME	PLAQUE D'IDENTIFICATION	1					
30	2190-2559	PLATE;NAME (EMERGENCY EXIT)	PLAQUE D'IDENTIFICATION	1					
31	2190-2524	PLATE;NAME	PLAQUE D'IDENTIFICATION	1					
32	190-00544	PLATE;NAME	PLAQUE D'IDENTIFICATION	1					
35	K1026865A	DECAL	DECAL	1					
36	K1015518	PLATE;NAME (FUSE BOX-1)	PLAQUE D'IDENTIFICATION	1					
37	K1015519	PLATE;NAME (FUSE BOX-2)	PLAQUE D'IDENTIFICATION	1					
38	K1029371	DECAL	DECAL	1					
39	K1029210	PLATE;NAME	PLAQUE D'IDENTIFICATION	1					
40	K1026838	DECAL	DECAL	1					

DATE	NOV. 24, 2006
1st EDITION	

Fig. 4120 NAME PLATE - EUROPE
PLAT NOMME

Serial No. ;

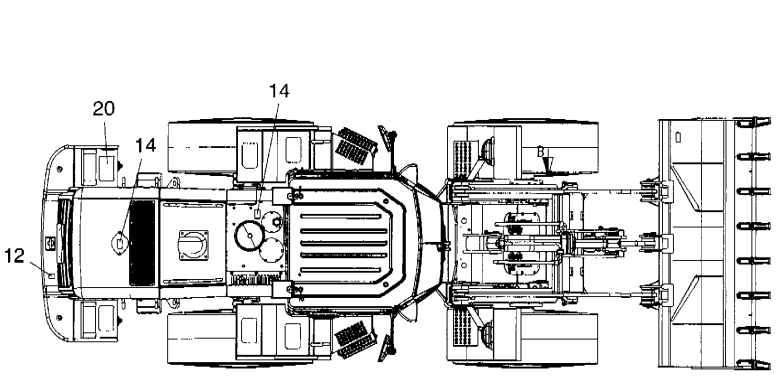

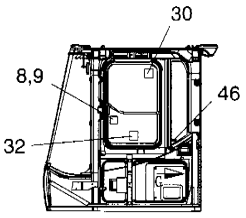

VIEW D

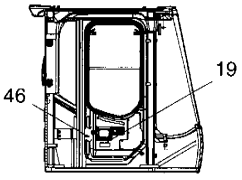

VIEW D

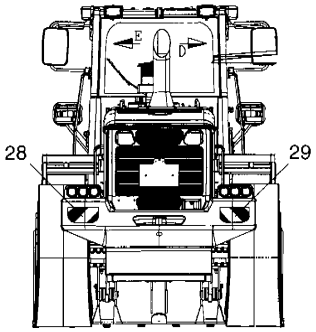

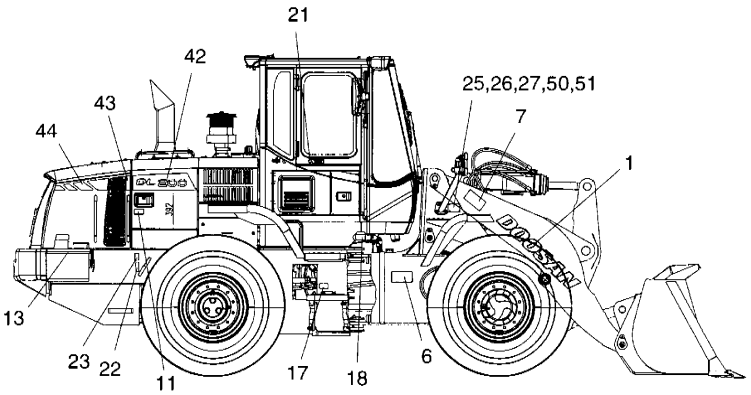

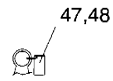

ENGINE LIFTING

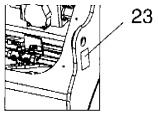

VIEW D

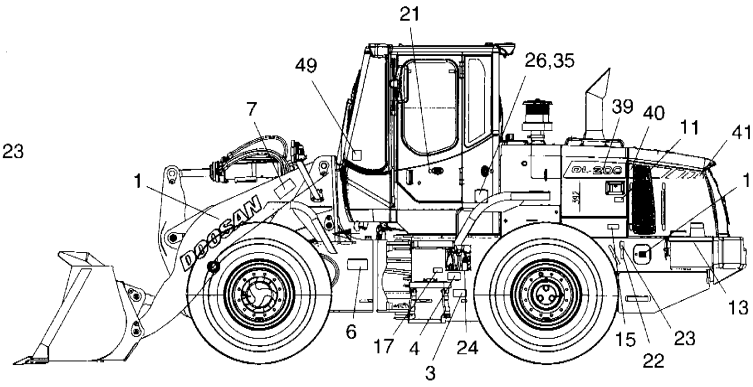

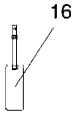

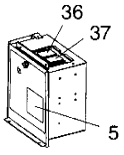

ELECTRIC BOX

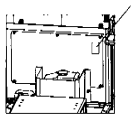

VIEW G

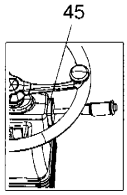

DATAIL OF COLUNM

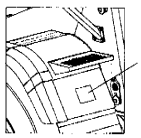

VIEW C

DATE	NOV. 24, 2006
1st EDITION	

Fig. 4120 NAME PLATE - EUROPE PLAT NOMME

Serial No. ;

Key No.	Part No.	Description	Description	Q'ty	S.C	Serial No.	ICA	Replaceable part	
								Part No.	Q'ty
.20-41	K1026839	DECAL	DECAL	1					
42	K1029211	PLATE;NAME	PLAQUE D'IDENTIFICATION	1					
43	K1026841	DECAL	DECAL	1					
44	K1026842	DECAL	DECAL	1					
45	K1016183	DECAL	DECAL	1					
46	K1016184	DECAL	DECAL	2					
47	190-00509BD25	PLATE;NAME	PLAQUE D'IDENTIFICATION	1					
48	2124-1622D1	CLIP;BAND	ATTACHE	1					
49	190-01059D15	PLATE;NAME	PLAQUE D'IDENTIFICATION	1					
50	K1029372	DECAL	DECAL	1					
51	K1029373	DECAL	DECAL	1					

DATE	JUN. 30, 2007
REV.NO.	EXB07-06

Fig. 4130 NAME PLATE - EXPORT PLAT NOMME

Serial No. ;

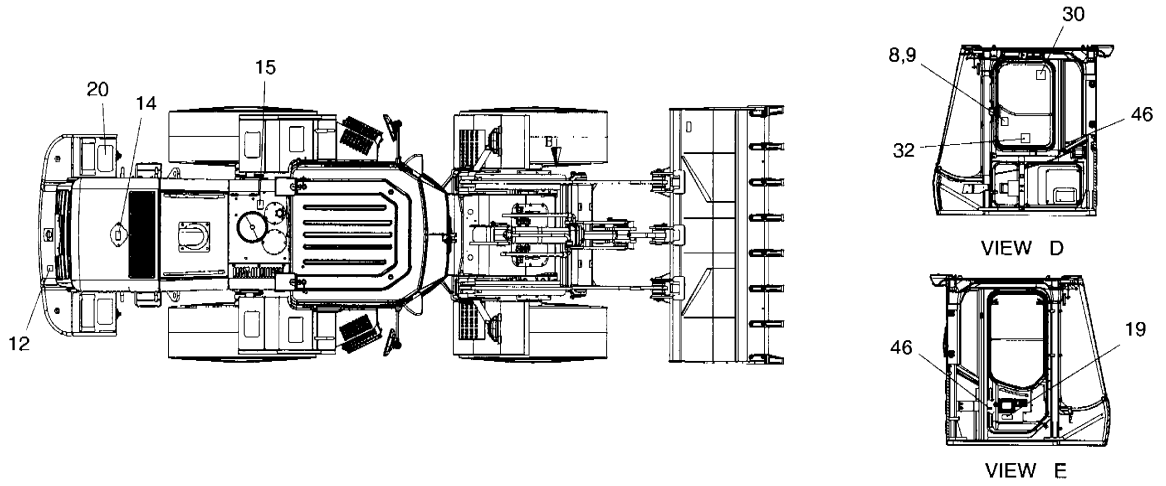

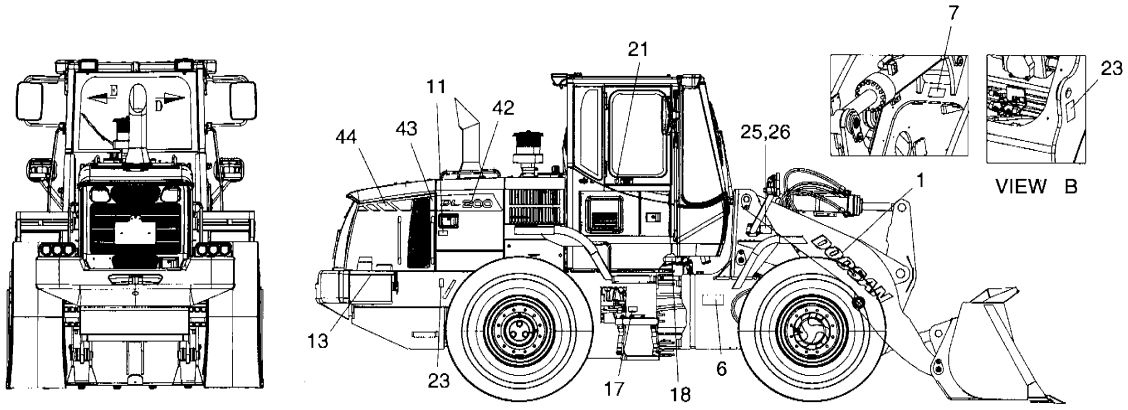

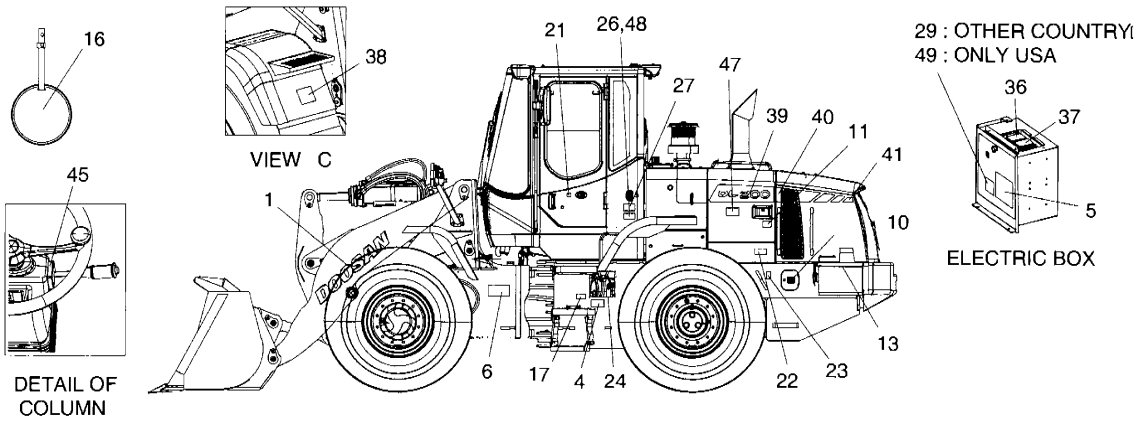

DATE	JUN. 30, 2007
REV. NO.	EXB07-06

Fig. 4130 NAME PLATE - EXPORT PLAT NOMME

Serial No. ;

Key No.	Part No.	Description	Description	Q'ty	S.C	Serial No.	ICA	Replaceable part	
								Part No.	Q'ty
4130--	**K1029209B**	**NAME PLATE - EXPORT**	PLAQUE D'IDENTIFICATION	-	D				
1	K1011645D1	DECAL (DOOSAN)	DECAL	2					
4	190-00359	PLATE;NAME (T/M LEVEL)	PLAQUE D'IDENTIFICATION	1		5001–5033	I	K1030123	1
	K1030123	**PLATE;NAME (T/M LEVEL)**	PLAQUE D'IDENTIFICATION	1		**5034–**			
5	4190-2545A	PLATE;NAME	PLAQUE D'IDENTIFICATION	1					
6	4190-1992A	PLATE;NAME	PLAQUE D'IDENTIFICATION	2					
7	4190-2546A	PLATE;NAME	PLAQUE D'IDENTIFICATION	1					
8	4190-2482A	PLATE;NAME (LEVER DIRECRION)	LABEL	1					
9	190-01197	PLATE;NAME (LEVER DIRECRION)	LABEL	1					
10	K1016409	PLATE;NAME (FUEL)	PLAQUE D'IDENTIFICATION	1					
11	190-00095	PLATE;NAME (FAN CAUTION-1)	PLAQUE D'IDENTIFICATION	2					
12	2190-3315	PLATE;NAME (FAN CAUTION-2)	PLAQUE D'IDENTIFICATION	1					
13	2190-2533A	PLATE;NAME (BATTERY)	PLAQUE D'IDENTIFICATION	2					
14	190-00692	PLATE;NAME (HOT WATER)	PLAQUE D'IDENTIFICATION	1					
15	190-00691	PLATE;NAME (HOT OIL)	PLAQUE D'IDENTIFICATION	1					
16	190-00695	PLATE;NAME (INSPECTION)	PLAQUE D'IDENTIFICATION	1					
17	4190-2547A	PLATE;NAME	PLAQUE D'IDENTIFICATION	2					
18	190-00542	PLATE;NAME	PLAQUE D'IDENTIFICATION	1		5001–5033			
	K1029643	**PLATE;NAME**	PLAQUE D'IDENTIFICATION	1		**5034–**			
19	2190-2566B	PLATE;NAME (BRAKE PRESS)	PLAQUE D'IDENTIFICATION	1					
20	2190-2314D3	TAPE;ANTI-SKID	PLAQUE ANTI-DERAPANTE	6					
21	**2116-9003**	**PLATE**	PLAQUE	2		**5034–**			
22	K1028948	PLATE;NAME (TIRE PRESS)	PLAQUE D'IDENTIFICATION	1					
23	2190-2477	PLATE;NAME (LIFTING)	PLAQUE D'IDENTIFICATION	4					
24	190-00703	PLATE;NAME (ACCUMULATOR)	PLAQUE D'IDENTIFICATION	3					
25	K1011647B	PLATE;NAME	PLAQUE D'IDENTIFICATION	1					
26	2122-1002D2	RIVET	RIVET	4		5001–5033			
	2122-1002D2	**RIVET**	RIVET	8		**5034–**			
27	190-00755	PLATE;NAME	PLAQUE D'IDENTIFICATION	1					
29	K1029208	PLATE;NAME	PLAQUE D'IDENTIFICATION	1		5001–5077	I	K1029208A	1
	K1029208A	**PLATE;NAME**	PLAQUE D'IDENTIFICATION	1		**5078–**			
30	2190-2559	PLATE;NAME (EMERGENCY EXIT)	PLAQUE D'IDENTIFICATION	1					
32	190-00537	PLATE;NAME	PLAQUE D'IDENTIFICATION	1					
36	K1015518	PLATE;NAME (FUSE BOX-1)	PLAQUE	1					
37	K1015519	PLATE;NAME (FUSE BOX-2)	PLAQUE	1					
38	K1029111	PLATE;NAME	PLAQUE D'IDENTIFICATION	1					
39	K1029210	PLATE;NAME	PLAQUE D'IDENTIFICATION	1					
40	K1026838	PLATE;NAME	PLAQUE D'IDENTIFICATION	1					

DATE	JUN. 30, 2007
REV.NO.	EXB07-06

Fig. 4130 NAME PLATE - EXPORT PLAT NOMME

Serial No. ;

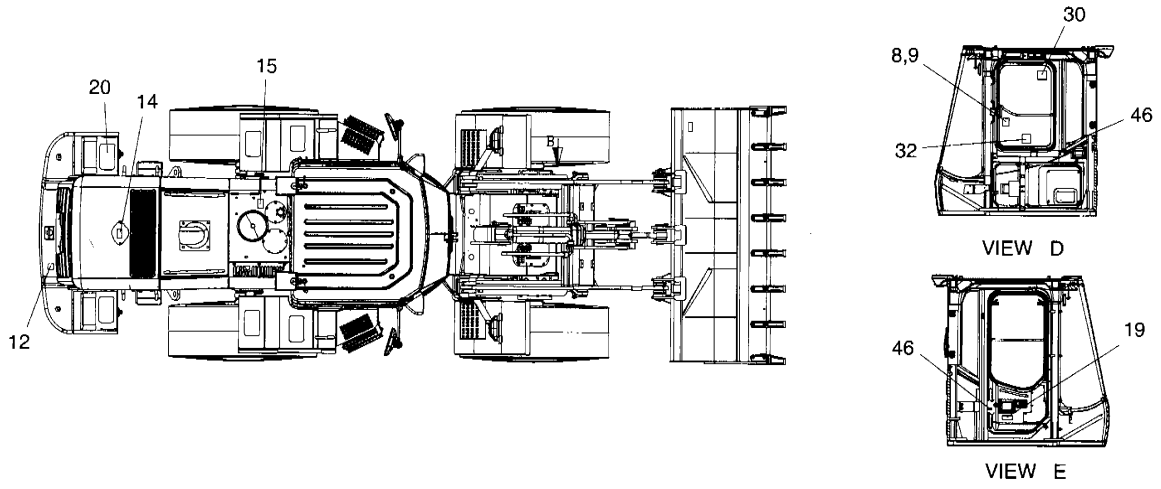

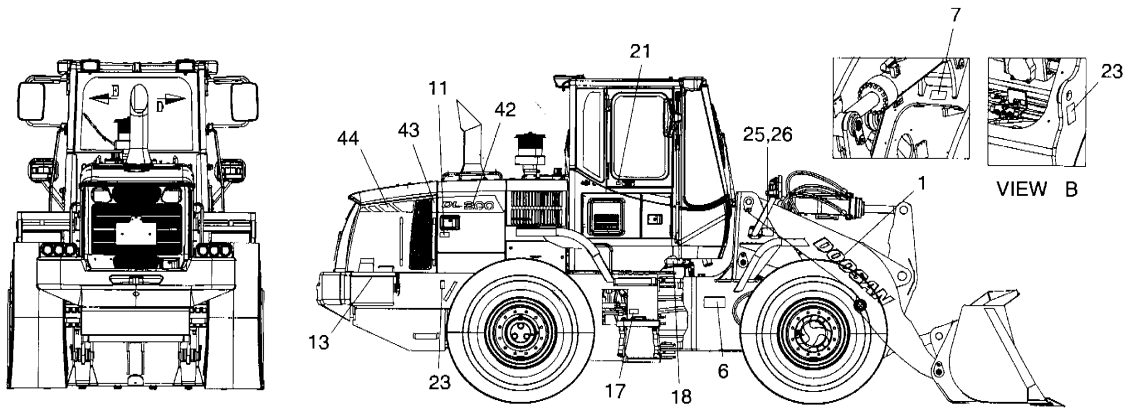

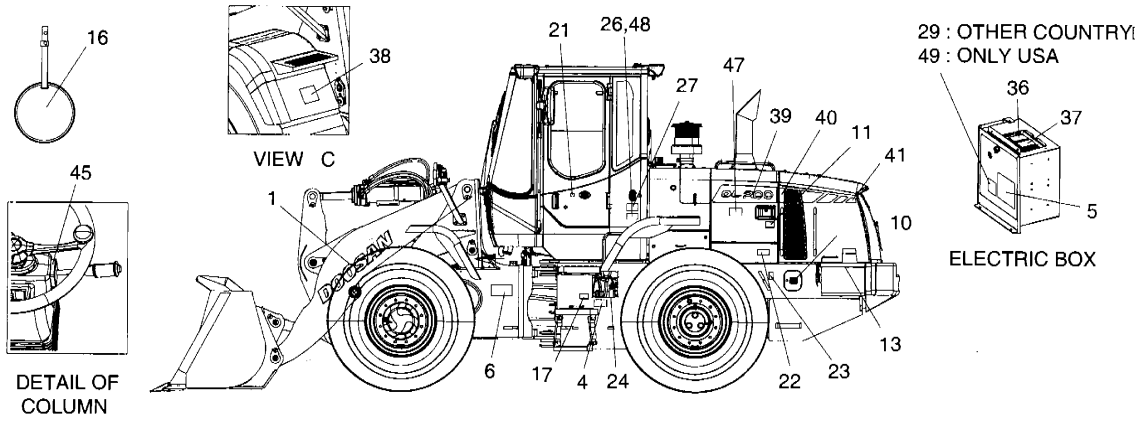

DATE	JUN. 30, 2007
REV. NO.	EXB07-06

Fig. 4130 NAME PLATE - EXPORT PLAT NOMME

Serial No. ;

Key No.	Part No.	Description	Description	Q'ty	S.C	Serial No.	ICA	Replaceable part	
								Part No.	Q'ty
4130-41	K1026839	PLATE;NAME	PLAQUE D'IDENTIFICATION	1					
42	K1029211	PLATE;NAME	PLAQUE D'IDENTIFICATION	1					
43	K1026841	PLATE;NAME	PLAQUE D'IDENTIFICATION	1					
44	K1026842	PLATE;NAME	PLAQUE D'IDENTIFICATION	1					
45	K1016183	PLATE;NAME	PLAQUE D'IDENTIFICATION	1					
46	K1016184	PLATE;NAME	PLAQUE D'IDENTIFICATION	1					
47	**K1018746AD6**	**PLATE;NAME**	PLAQUE D'IDENTIFICATION	1		**5001-5077**			
48	K1026865A	PLATE;NAME	PLAQUE D'IDENTIFICATION	1					
49	**K1036573**	**PLATE;NAME (SPEC)**	PLAQUE D'IDENTIFICATION	1		**5078-**			

DATE	NOV. 24, 2006
1st EDITION	

Fig. 5100 EMERGENCY STEERING POMPE DE DIRECTION

Serial No. ;

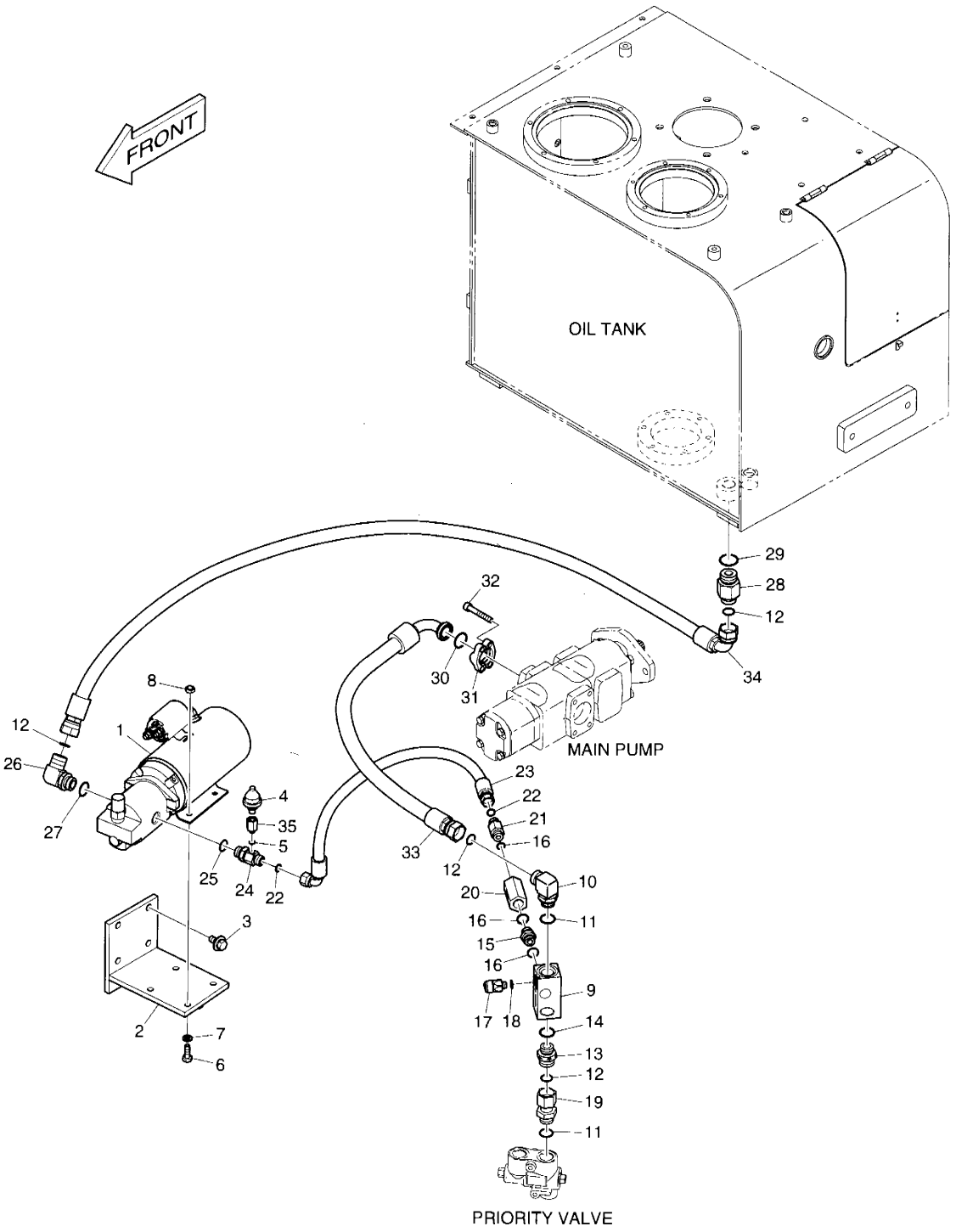

DATE	NOV. 24, 2006
1st EDITION	

Fig. 5100 EMERGENCY STEERING POMPE DE DIRECTION

Serial No. ;

Key No.	Part No.	Description	Description	Q'ty	S.C	Serial No.	ICA	Replaceable part	
								Part No.	Q'ty
5100--	K1017069	EMERGENCY STEERING	DIRECTION DE SECOURS	-	D				
1	401-00129A	PUMP;EMERGENCY STEER	MOTEUR	1					
2	K1017061	BRACKET	SUPPORT	1					
3	DS0025018	BOLT	BOULON	4					
4	K1018277	SWITCH;PRESSURE	INTERRUPTEUR	1					
5	S8000091	O-RING	JOINT TORIQUE	1					
6	S0512266	BOLT	BOULON	4					
7	S5102603	WASHER;SPRING	RONDELLE ELASTIQUE	4					
8	S4012633	NUT	ECROU	4					
9	420-00128	VALVE ASS'Y	ENSEMBLE DE VANNE	1					
10	2181-2294D2	ELBOW	COUDE	1					
11	S8000241	O-RING	JOINT TORIQUE	2					
12	S8030121	O-RING	JOINT TORIQUE	4					
13	2181-2627D1	ADAPTER	ADAPTEUR	1					
14	S8000231	O-RING	JOINT TORIQUE	1					
15	2181-1938D14	ADAPTER	ADAPTEUR	1					
16	S8000181	O-RING	JOINT TORIQUE	3					
17	2549-1135D11	SWITCH:PRESSURE	INTERRUPTEUR	1					
18	S8180221	PACKING	JOINT	1					
19	2181-2566D4	ADAPTER	ADAPTEUR	1					
20	2420-9466A	VALVE;CHECK	VANNE	1					
21	2181-4133D37	ADAPTER	ADAPTEUR	1					
22	S8030081	O-RING	JOINT TORIQUE	2					
23	DS2013804	HOSE	TUYAU FLEXIBLE	1					
24	DS2469003	ADAPTER	ADAPTEUR	1					
25	S8040101	O-RING	JOINT TORIQUE	1					
26	2181-2294D9	ELBOW	COUDE	1					
27	S8040121	O-RING	JOINT TORIQUE	1					
28	DS2232110	ADAPTER	ADAPTEUR	1					
29	S8000291	O-RING	JOINT TORIQUE	1					
30	2180-1026D2	O-RING	JOINT TORIQUE	1					
31	2181-9079	FLANGE	BRIDE	2					
32	S2212966	BOLT	BOULON	4					
33	DS2018154	HOSE	TUYAU FLEXIBLE	1					
34	DS2013170	HOSE	TUYAU FLEXIBLE	1					
35	DS2242021	ADAPTER	ADAPTEUR	1					

DATE	NOV. 24, 2006
1st EDITION	

Fig. 5110 EMERGENCY STEERING - ELECTRIC
POMPE DE DIRECTION-ELECTRIQUE

Serial No. ;

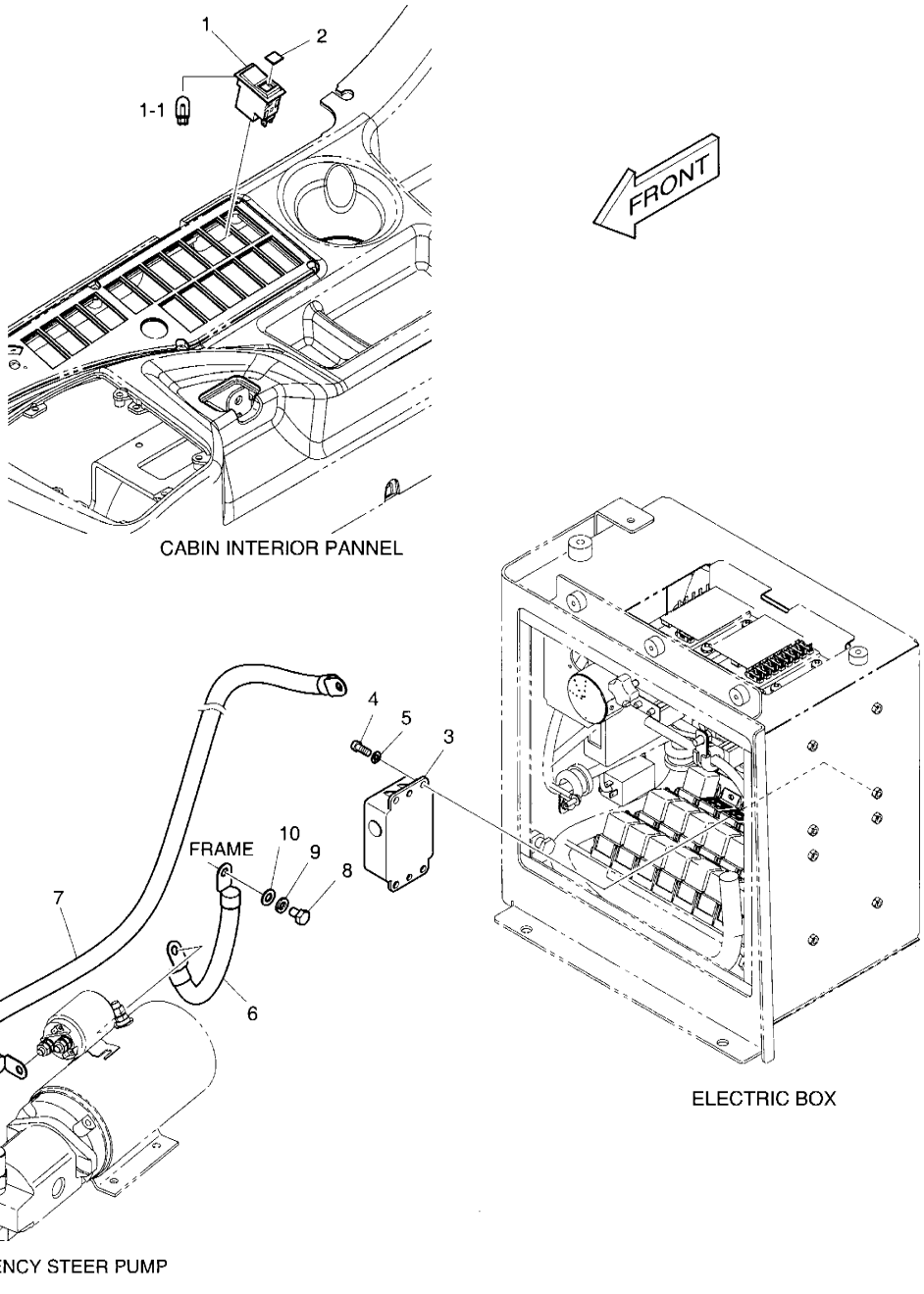

DATE	NOV. 24, 2006
1st EDITION	

Fig. 5110 EMERGENCY STEERING - ELECTRIC
POMPE DE DIRECTION-ELECTRIQUE

Serial No. ;

Key No.	Part No.	Description	Description	Q'ty	S.C	Serial No.	ICA	Replaceable part	
								Part No.	Q'ty
5110--	K1024086	EMERGENCY STEERING -	POMPE DE	-	D				
1	2549-9110	SWITCH;SEESAW	INTERRUPTEUR	1					
1-1	K9000353	. LAMP;PILOT	. LAMPE	1					
2	2190-2036D21	INSERT;EMERGENCY STEERING	INSERTION	1					
3	537-00039B	TIMER;EMG STEERING	TIMER	1					
4	S3450943	SCREW	VIS	2					
5	S5102303	WASHER;SPRING	RONDELLE ELASTIQUE	2					
6	2553-1275D5	CABLE;EMER STEERING	CABLE	1					
7	2553-1275D92	CABLE;BATT RY-STARTER	CABLE	1					
8	S0511653	BOLT	BOULON	1					
9	S5102603	WASHER;SPRING	RONDELLE ELASTIQUE	1					
10	S5010613	WASHER;PLAIN	RONDELLE PLATE	1					

DATE	JUN. 30, 2007
REV.NO.	EXB07-06

Fig. 5120 COUNTER WEIGHT & REAR FENDER MOUNTING
CONTRE-POIDS

Serial No. ;

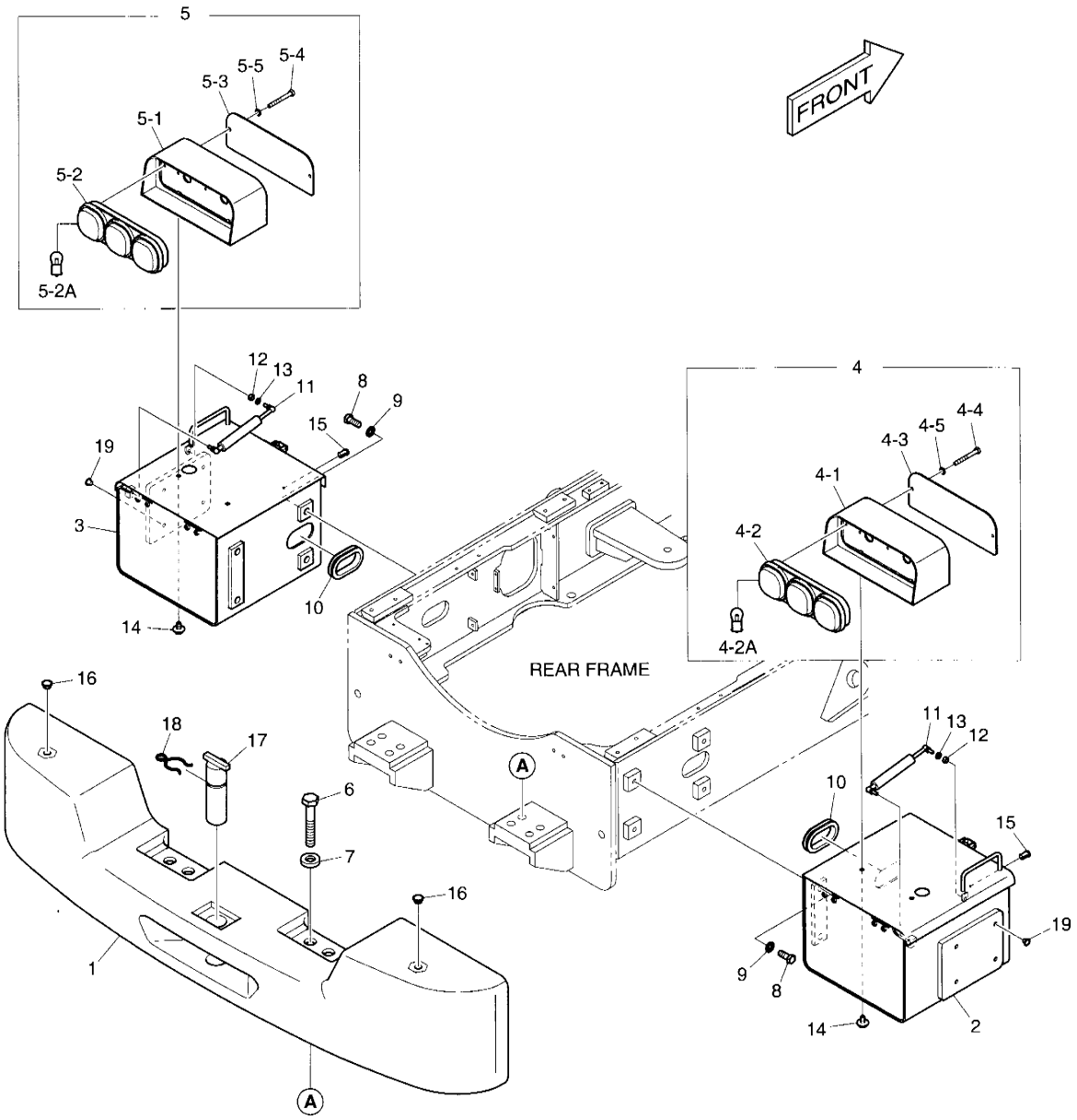

DATE	JUN. 30, 2007
REV. NO.	EXB07-06

Fig. 5120 COUNTER WEIGHT & REAR FENDER MOUNTING CONTRE-POIDS

Serial No. ;

Key No.	Part No.	Description	Description	Q'ty	S.C	Serial No.	ICA	Replaceable part	
								Part No.	Q'ty
5120--	**K1018333E**	**COUNTER WEIGHT;REAR**	CONTRE-POIDES ET	-	D				
1	K1018851A	COUNTERWEIGHT	CONTREPOIDS	1					
2	K1016378A	BOX;BATTERY	BOITE	1		5001-5111	I	K1016378B	1
	K1016378B	**BOX;BATTERY**	BOITE	1		**5112-**			
3	K1016379	BOX;BATTERY	BOITE	1		5001-5111	I	K1016379A	1
	K1016379A	**BOX;BATTERY**	BOITE	1		**5112-**			
4	K1003555A	LAMP;REAR COMBI. (R.H)	LAMPE	1					
4-1	K1003557A	. BRACKET	. SUPPORT	1					
4-2	K1003561	. LAMP	. LAMPE	1					
4-2A	515-00015	.. BULB	.. AMPOULE	2					
4-3	K1003559A	. PLATE	. PLAQUE	1					
4-4	S0556766	. BOLT	. BOULON A 6 PANS	2					
4-5	S5102503	. WASHER;SPRING	. RONDELLE ELASTIQUE	2					
5	K1003556A	LAMP;REAR COMBI. (L.H)	LAMPE	1					
5-1	K1003557A	. BRACKET	. SUPPORT	1					
5-2	K1003561	. LAMP	. LAMPE	1					
5-2A	515-00015	.. BULB	.. AMPOULE	2					
5-3	K1003559A	. PLATE	. PLAQUE	1					
5-4	S0556766	. BOLT	. BOULON A 6 PANS	2					
5-5	S5102503	. WASHER;SPRING	. RONDELLE ELASTIQUE	2					
6	DS0002272	BOLT	BOULON	4					
7	2114-1370	WASHER	RONDELLE	4					
8	DS0002273	BOLT	BOULON	8					
9	2114-1058D2	WASHER	RONDELLE	8					
10	2160-1201D12	BUSHING;RUBBER	DOUILLE EN CAOUTCHOUC	2					
11	DS1001065	SPRING;GAS	AMORTISSEUR	2					
12	S4012533	NUT	ECROU	2					
13	S5102503	WASHER;SPRING	RONDELLE ELASTIQUE	2					
14	DS0025014	BOLT	BOULON	4					
15	K1004529	CYLINDER;KEY	CYLINDRE	2					
16	K1004331	CAP	CHAPEAU	2					
17	K1014299	PIN	GOUPILLE	1					
18	124-00017	CLIP	AGRAFE	1					
19	160-00075	CAP	CHAPEAU	8					

DATE	JUN. 30, 2007
REV.NO.	EXB07-06

Fig. 5130 ADDITIONAL COUNTER WEIGHT CONTRE-POIDES

Serial No. ;

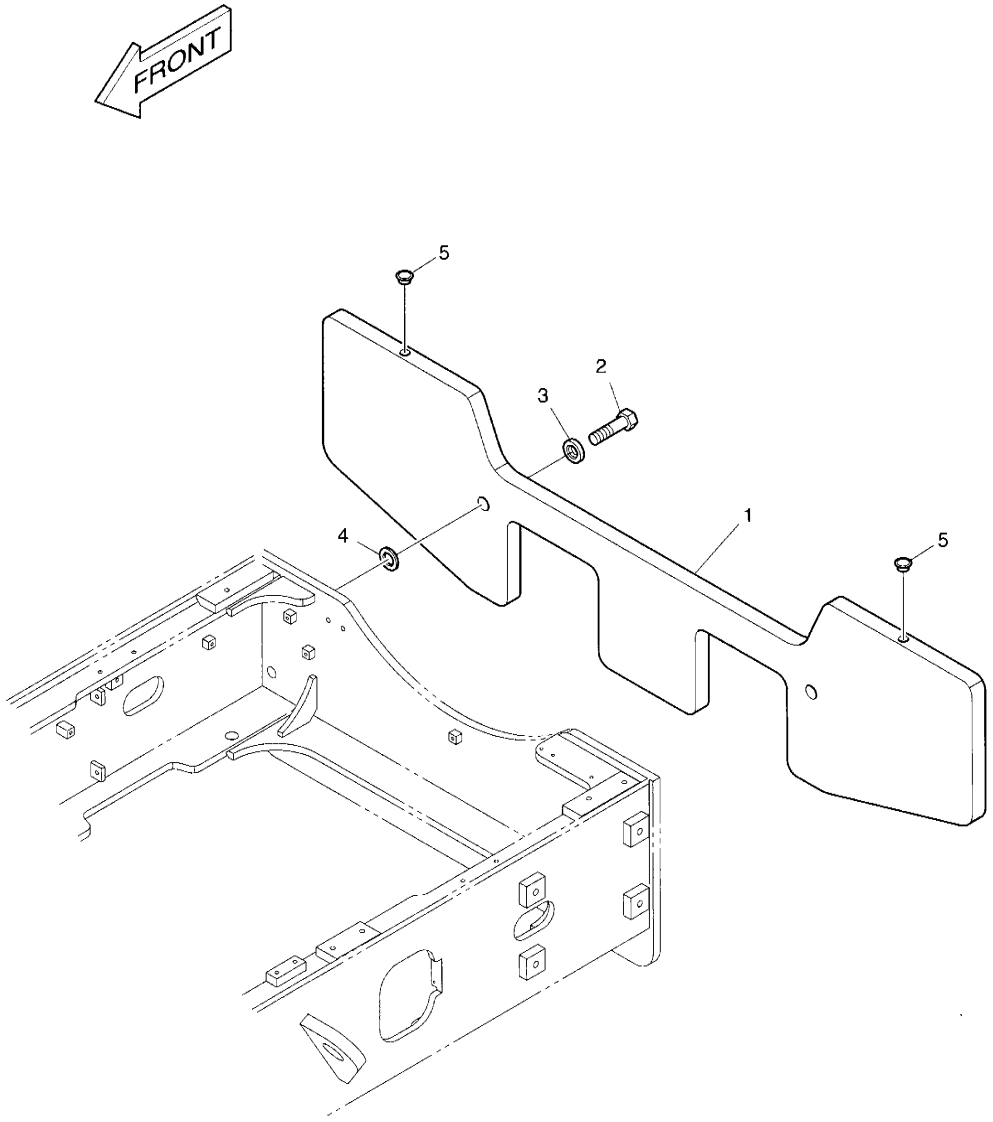

REAR FRAME

DATE	JUN. 30, 2007
REV. NO.	EXB07-06

Fig. 5130 ADDITIONAL COUNTER WEIGHT CONTRE-POIDES

Serial No. ;

Key No.	Part No.	Description	Description	Q'ty	S.C	Serial No.	ICA	Replaceable part	
								Part No.	Q'ty
5130--	K1018924	ADDITIONAL COUNTER WEIGHT	CONTRE-POIDES	-	D				
1	**K1018925**	**COUNTER WEIGHT;200Kg**	MASSE D'EQUILIBRAGE	1					
2	K1015206	BOLT	BOULON	2					
3	2114-1370	WASHER	RONDELLE	2					
4	2114-1058D60	WASHER	RONDELLE	2					
5	K1004331	CAP	CHAPEAU	2					

DATE	DEC. 15, 2006
REV.NO.	EXB06-13

Fig. 5140 CONTROL VALVE PIPING - 2 SPOOL
CANALISATIONS PRINCIPALES

Serial No. ;

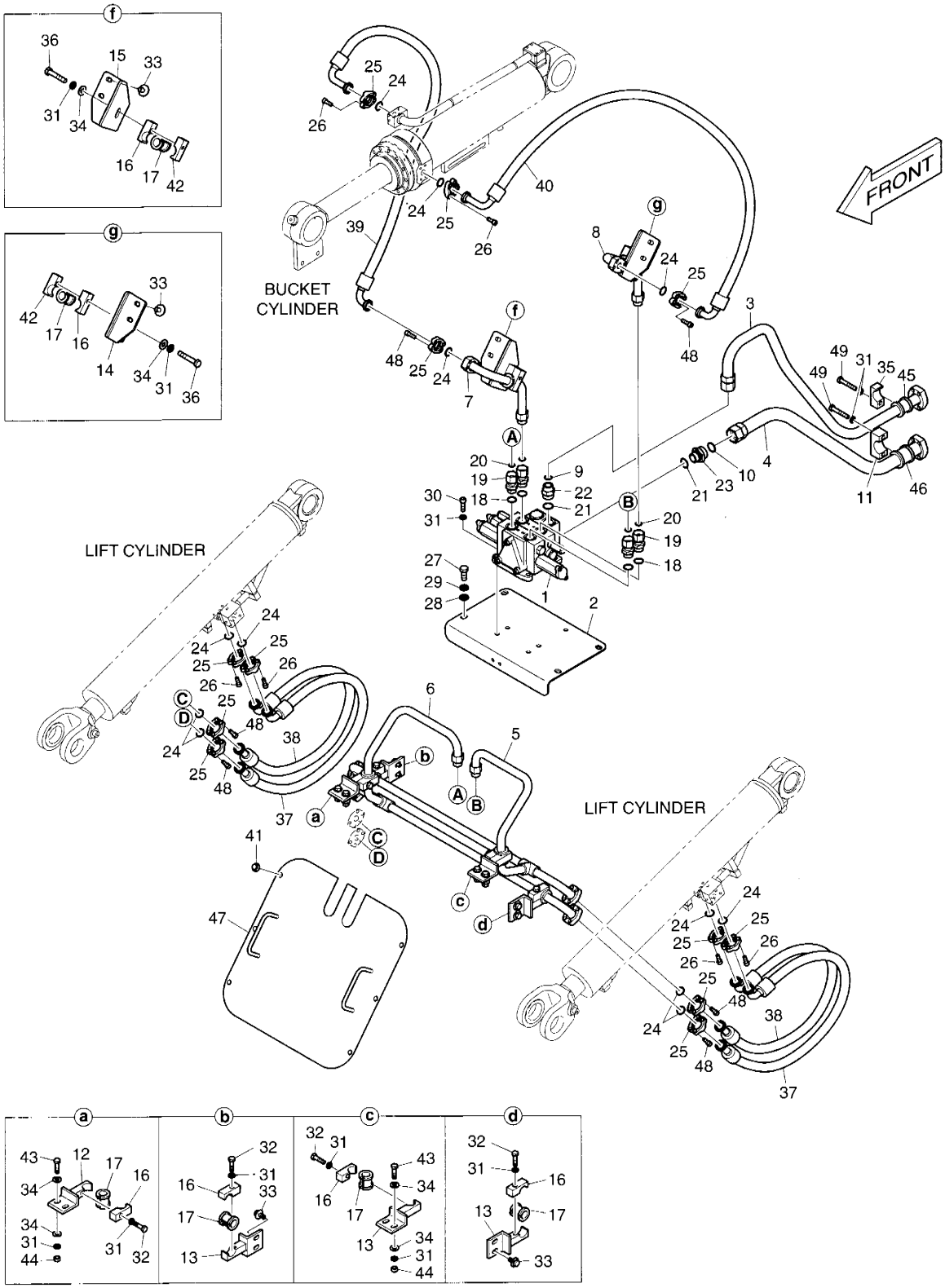

DATE	DEC. 15, 2006
REV. NO.	EXB06-13

Fig. 5140 CONTROL VALVE PIPING - 2 SPOOL
CANALISATIONS PRINCIPALES

Serial No. ;

Key No.	Part No.	Description	Description	Q'ty	S.C	Serial No.	ICA	Replaceable part	
								Part No.	Q'ty
-40--	K1017377A	CONTROL VALVE PIPING-2	CANALISATIONS	-	D				
1	420-00144	VALVE;CONTROL	VANNE	1					
2	195-01320	SUPPORT	SUPPORT	1					
3	K1016628A	PIPE	TUYAU	1					
4	K1016597	PIPE	TUYAU	1					
5	K1017507	PIPE	TUYAU	1					
6	K1017508	PIPE	TUYAU	1					
7	193-00587	PIPE	TUYAU	1					
8	193-00588	PIPE	TUYAU	1					
9	S8030161	O-RING	JOINT TORIQUE	1					
10	2180-1026D37	O-RING	JOINT TORIQUE	1					
11	191-00364	CLAMP;PIPE	COLLIER	1					
12	195-00604A	BRACKET;CONTROL PIPE	SUPPORT	1					
13	195-01344	BRACKET	SUPPORT	3					
14	195-01147A	BRACKET(L.H)	SUPPORT	1					
15	195-01146A	BRACKET(R.H)	SUPPORT	1					
16	2124-1601A	CLAMP;PIPE	COLLIER	6					
17	K1010377	RUBBER	CAOUTCHOUC	6					
18	S8040141	O-RING	JOINT TORIQUE	4					
19	2181-2566D11	ADAPTER	ADAPTEUR	4					
20	S8030121	O-RING	JOINT TORIQUE	4					
21	S8040161	O-RING	JOINT TORIQUE	2					
22	DS2232051	ADAPTER	ADAPTEUR	1					
23	DS2234014	ADAPTER	ADAPTEUR	1					
24	2180-1026D2	O-RING	JOINT TORIQUE	12					
25	2181-9079	FLANGE	BRIDE	24					
26	S2212266	BOLT	BOULON	24					
27	S0521466	BOLT	BOULON	4					
28	S5010913	WASHER	RONDELLE	4					
29	S5102903	WASHER;SPRING	RONDELLE ELASTIQUE	4					
30	S2215466	BOLT	BOULON	3					
31	S5102703	WASHER;SPRING	RONDELLE ELASTIQUE	16					
32	S0560666	BOLT	BOULON	4					
33	DS0025019	BOLT	BOULON	8					
34	2114-1058D46	WASHER	RONDELLE	10					
35	124-00225	CLAMP;PIPE	COLLIER	1					
36	S0561066	BOLT	BOULON	2					
37	DS2040540	HOSE	TUYAU FLEXIBLE	2					

DATE	DEC. 15, 2006
REV.NO.	EXB06-13

Fig. 5140 CONTROL VALVE PIPING - 2 SPOOL
CANALISATIONS PRINCIPALES

Serial No. ;

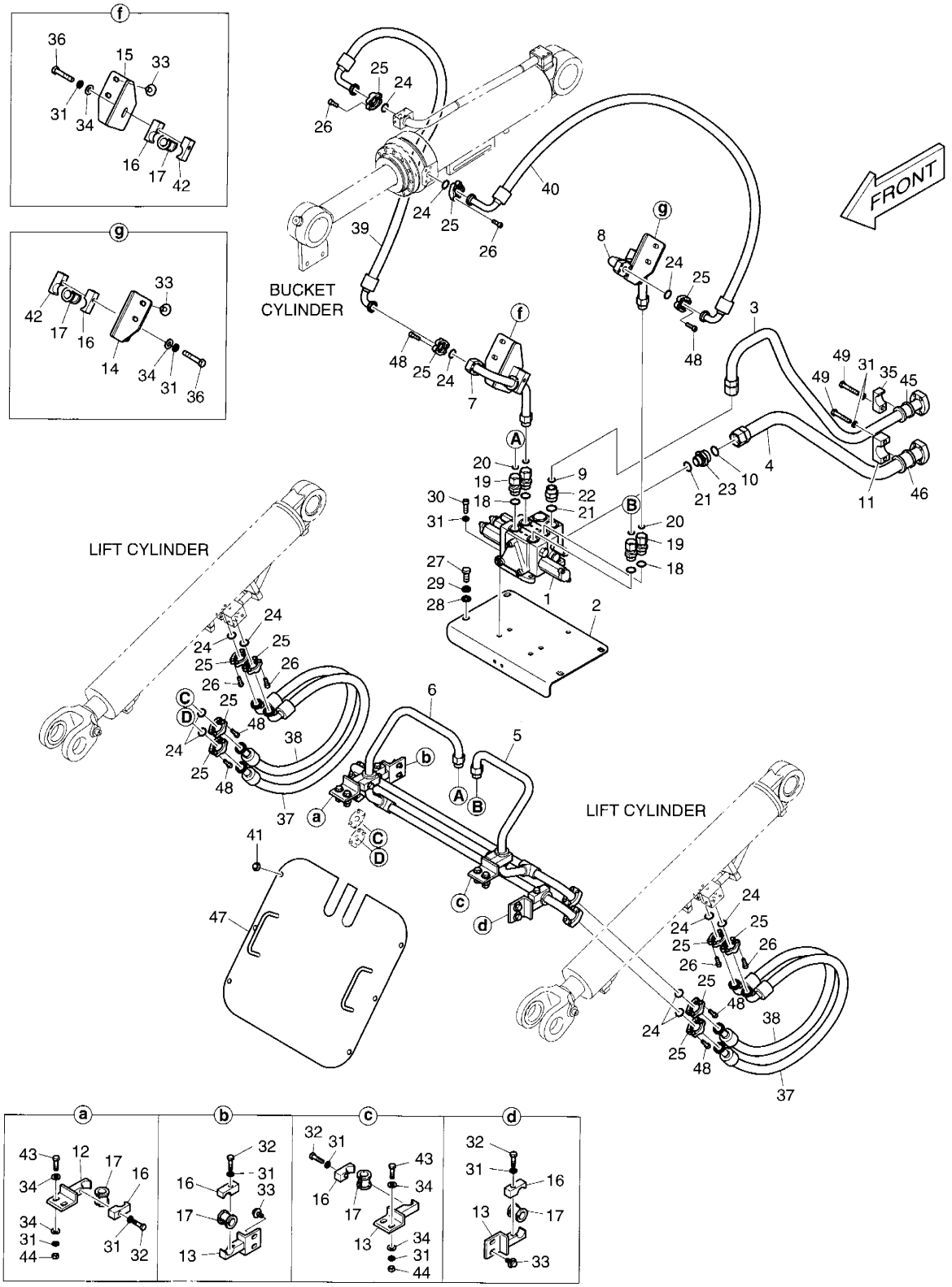

DATE	DEC. 15, 2006
REV. NO.	EXB06-13

Fig. 5140 CONTROL VALVE PIPING - 2 SPOOL
CANALISATIONS PRINCIPALES

Serial No. ;

Key No.	Part No.	Description	Description	Q'ty	S.C	Serial No.	ICA	Replaceable part	
								Part No.	Q'ty
38	DS2040539	HOSE	TUYAU FLEXIBLE	2					
39	DS2045433	HOSE	TUYAU FLEXIBLE	1					
40	DS2045458	HOSE	TUYAU FLEXIBLE	1					
41	DS0025013	BOLT	BOULON	6					
42	124-00181	CLAMP;PIPE	COLLIER	2					
43	S0560766	BOLT	BOULON	4					
44	S4012733	NUT	ECROU	4					
45	K1010378	RUBBER	CAOUTCHOUC	1					
46	K1010379	RUBBER	CAOUTCHOUC	1					
47	621-01363	COVER	COUVERCLE	1					
48	S2212366	BOLT	BOULON	24					
49	S0561266	BOLT	BOULON	3					

DATE	NOV. 24, 2006
1st EDITION	

Fig. 5150 PILOT PIPING - 2 SPOOL
CONDUITES DE PILOTE

Serial No. ;

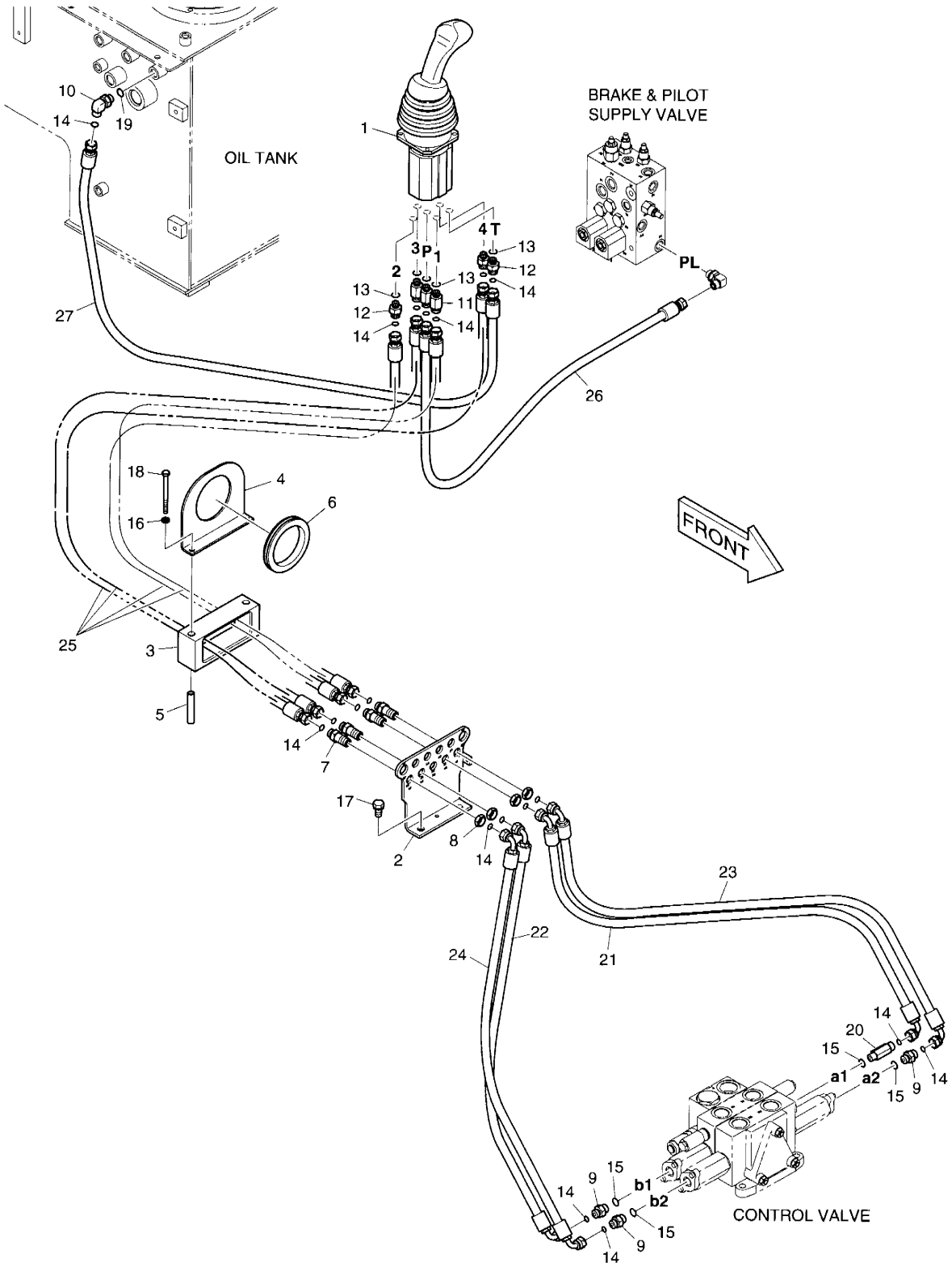

DATE	NOV. 24, 2006
1st EDITION	

Fig. 5150 PILOT PIPING - 2 SPOOL
CONDUITES DE PILOTE

Serial No. ;

Key No.	Part No.	Description	Description	Q'ty	S.C	Serial No.	ICA	Replaceable part	
								Part No.	Q'ty
5150--	K1024417	PILOT PIPING-2 SPOOL	TUYAUTERIE PILOTE	-	D				
1	426-00105	VALVE;JOYSTICK	VANNE	1					
2	195-03416	BRACKET	SUPPORT	1					
3	K1010139	RUBBER	CAOUTCHOUC	1					
4	K1013313	BRACKET	SUPPORT	1					
5	K1010903	SPACER	ENTERTOISE	2					
6	2160-1004D57	GROMMET	CANON ISOLANT	1					
7	DS2415002	ADAPTER	ADAPTEUR	4					
8	DS0301032	NUT	ECROU	4					
9	DS2232066	ADAPTER	ADAPTEUR	3					
10	2181-2815D6	ELBOW	COUDE	1					
11	DS2465010	ADAPTER	ADAPTEUR	3					
12	DS2465007	ADAPTER	ADAPTEUR	3					
13	S8180211	SEAL;RING	BAGUE D'ETANCHEITE	6					
14	S8030061	O-RING	JOINT TORIQUE	20					
15	S8040061	O-RING	JOINT TORIQUE	4					
16	S5102503	WASHER;SPRING	RONDELLE ELASTIQUE	2					
17	DS0025021	BOLT	BOULON	2					
18	S0557266	BOLT	BOULON	2					
19	S8000141	O-RING	JOINT TORIQUE	1					
20	DS2232067	ADAPTER	ADAPTEUR	1					
21	DS2023248	HOSE	TUYAU FLEXIBLE	1					
22	DS2023246	HOSE	TUYAU FLEXIBLE	1					
23	DS2023271	HOSE	TUYAU FLEXIBLE	1					
24	DS2023270	HOSE	TUYAU FLEXIBLE	1					
25	DS2011510	HOSE	TUYAU FLEXIBLE	4					
26	DS2011059	HOSE	TUYAU FLEXIBLE	1					
27	DS2011342	HOSE	TUYAU FLEXIBLE	1					

DATE	NOV. 24, 2006
1st EDITION	

Fig. 5160 PILOT PIPING - 2 FNR + 2 SPOOL
CONDUITES DE PILOTE

Serial No. ;

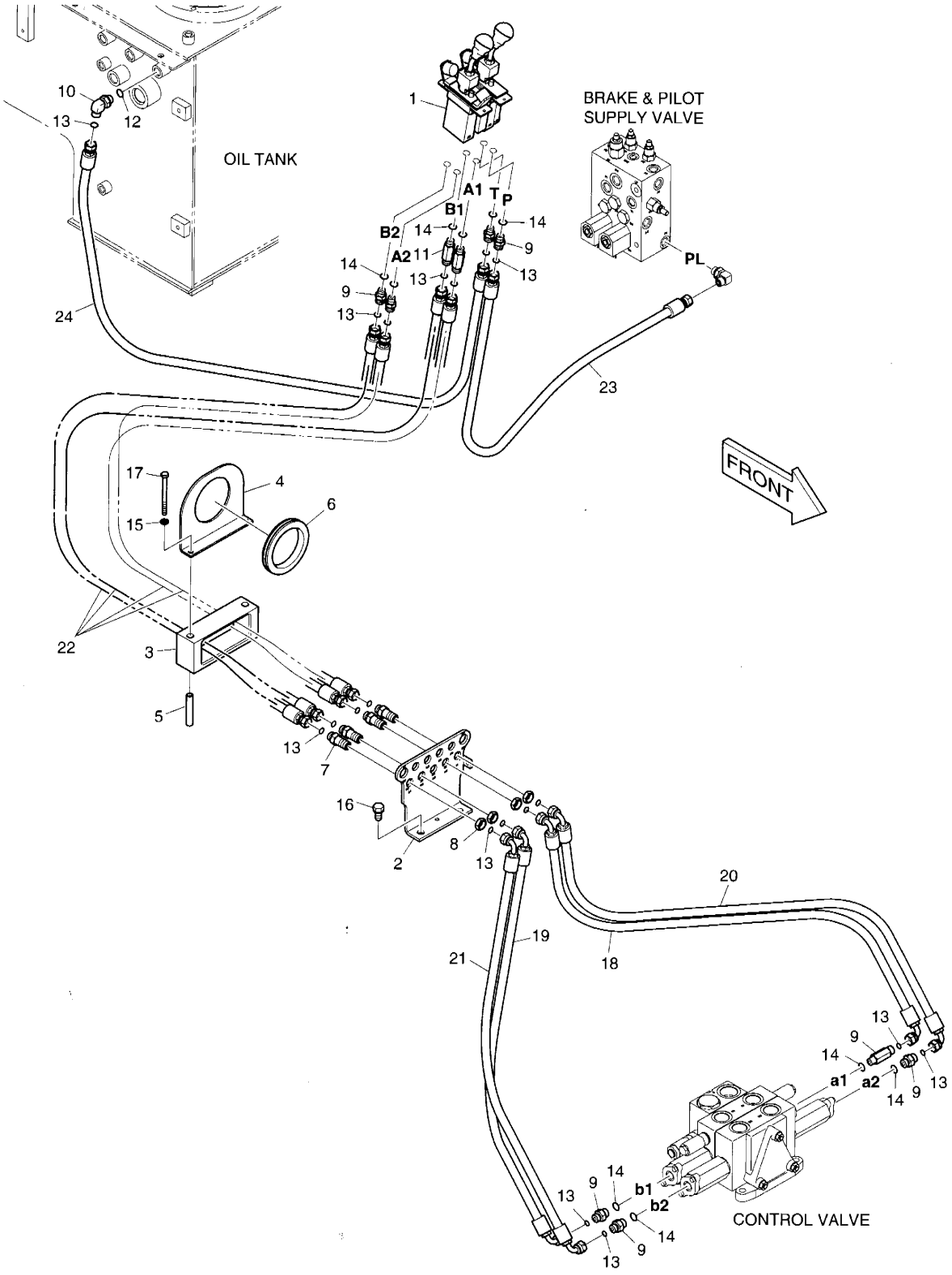

DATE	NOV. 24, 2006
1st EDITION	

Fig. 5160 PILOT PIPING - 2 FNR + 2 SPOOL CONDUITES DE PILOTE

Serial No. ;

Key No.	Part No.	Description	Description	Q'ty	S.C	Serial No.	ICA	Replaceable part	
								Part No.	Q'ty
5160--	K1024416	PILOT PIPING - 2 FNR + 2 SPOOL	CONDUITES DE PILOTE	-	D				
1	K1003379	VALVE;JOY STICK	VANNE	1					
2	195-03416	BRACKET	SUPPORT	1					
3	K1010139	RUBBER	CAOUTCHOUC	1					
4	K1013313	BRACKET	SUPPORT	1					
5	K1010903	SPACER	ENTERTOISE	2					
6	2160-1004D57	GROMMET	CANON ISOLANT	1					
7	DS2415002	ADAPTER	ADAPTEUR	4					
8	DS0301032	NUT	ECROU	4					
9	DS2232066	ADAPTER	ADAPTEUR	7					
10	2181-2815D6	ELBOW	COUDE	1					
11	DS2232067	ADAPTER	ADAPTEUR	3					
12	S8000141	O-RING	JOINT TORIQUE	1					
13	S8030061	O-RING	JOINT TORIQUE	20					
14	S8040061	O-RING	JOINT TORIQUE	10					
15	S5102503	WASHER;SPRING	RONDELLE ELASTIQUE	2					
16	DS0025021	BOLT	BOULON	2					
17	S0557266	BOLT	BOULON	2					
18	DS2023248	HOSE	TUYAU FLEXIBLE	1					
19	DS2023246	HOSE	TUYAU FLEXIBLE	1					
20	DS2023271	HOSE	TUYAU FLEXIBLE	1					
21	DS2023270	HOSE	TUYAU FLEXIBLE	1					
22	DS2011510	HOSE	TUYAU FLEXIBLE	4					
23	DS2011059	HOSE	TUYAU FLEXIBLE	1					
24	DS2011342	HOSE	TUYAU FLEXIBLE	1					

DATE	JUN. 30, 2007
REV.NO.	EXB07-06

Fig. 5170 PILOT PIPING - FNR + 3 SPOOL
CONDUITES DE PILOTE

Serial No. ;

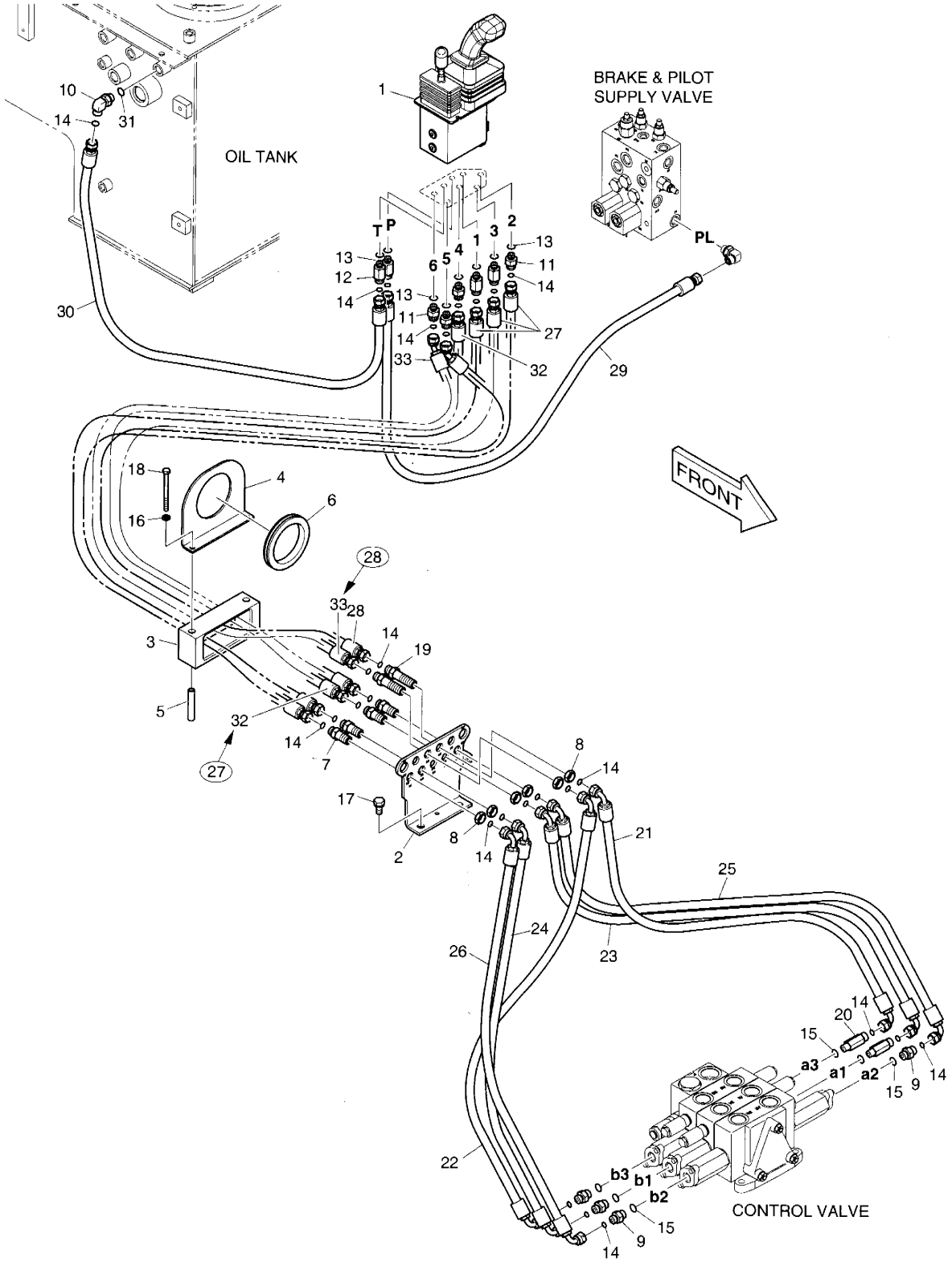

DATE	JUN. 30, 2007
REV. NO.	EXB07-06

Fig. 5170 PILOT PIPING - FNR + 3 SPOOL
CONDUITES DE PILOTE

Serial No. ;

Key No.	Part No.	Description	Description	Q'ty	S.C	Serial No.	ICA	Replaceable part	
								Part No.	Q'ty
70--	**K1017760C**	**PILOT PIPING - FNR + 3**	CONDUITES DE PILOTE	-	D				
1	426-00254	JOYSTICK VALVE	VANNE	1					
2	195-03416	BRACKET	SUPPORT	1					
3	K1010139	RUBBER	CAOUTCHOUC	1					
4	K1013313	BRACKET	SUPPORT	1					
5	K1010903	SPACER	ENTERTOISE	2					
6	2160-1004D57	GROMMET	CANON ISOLANT	1					
7	DS2415002	ADAPTER	ADAPTEUR	4					
8	DS0301032	NUT	ECROU	6					
9	DS2232066	ADAPTER	ADAPTEUR	4					
10	2181-2815D6	ELBOW	COUDE	1					
11	DS2465007	ADAPTER	ADAPTEUR	4					
12	DS2465010	ADAPTER	ADAPTEUR	4					
13	S8180211	SEAL;RING	BAGUE D'ETANCHEITE	8					
14	S8030061	O-RING	JOINT TORIQUE	28					
15	S8040061	O-RING	JOINT TORIQUE	6					
16	S5102503	WASHER;SPRING	RONDELLE ELASTIQUE	2					
17	DS0025021	BOLT	BOULON	2					
18	S0557266	BOLT	BOULON	2					
19	DS2415009	ADAPTER	ADAPTEUR	2					
20	DS2232067	ADAPTER	ADAPTEUR	2					
21	DS2023248	HOSE	TUYAU FLEXIBLE	1					
22	DS2023246	HOSE	TUYAU FLEXIBLE	1					
23	DS2023271	HOSE	TUYAU FLEXIBLE	1					
24	DS2023270	HOSE	TUYAU FLEXIBLE	1					
25	DS2023229	HOSE	TUYAU FLEXIBLE	1					
26	DS2023245	HOSE	TUYAU FLEXIBLE	1					
27	DS2011510	HOSE	TUYAU FLEXIBLE	4		5001–5084			
	DS2011510	**HOSE**	TUYAU FLEXIBLE	3		**5085–**			
28	DS2012242	HOSE	TUYAU FLEXIBLE	2		5001–5084			
	DS2012242	**HOSE**	TUYAU FLEXIBLE	1		**5085–**			
29	DS2011059	HOSE	TUYAU FLEXIBLE	1					
30	DS2011342	HOSE	TUYAU FLEXIBLE	1					
31	S8000141	O-RING	JOINT TORIQUE	1					
32	**DS2011694**	**HOSE**	TUYAU FLEXIBLE	1		**5085–**			
33	**DS2012496**	**HOSE**	TUYAU FLEXIBLE	1		**5085–**			

DATE	NOV. 24, 2006
1st EDITION	

Fig. 5180 LOAD ISOLATION SYSTEM
ISOLEMENT DE CHARGE

Serial No. ;

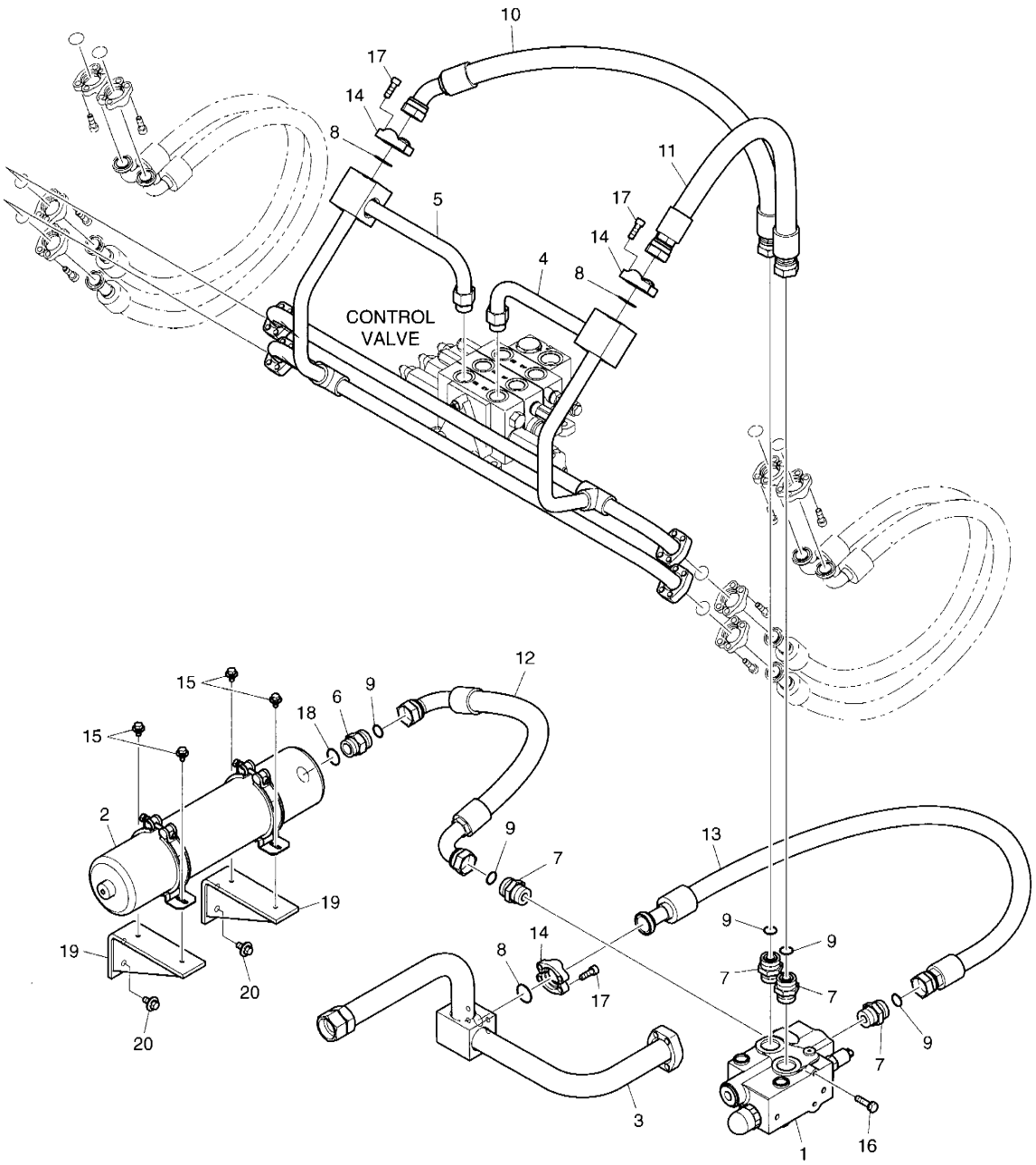

DATE	NOV. 24, 2006
1st EDITION	

Fig. 5180 LOAD ISOLATION SYSTEM ISOLEMENT DE CHARGE

Serial No. ;

Key No.	Part No.	Description	Description	Q'ty	S.C	Serial No.	ICA	Replaceable part	
								Part No.	Q'ty
5180--	K1017649	LOAD ISOLATION SYSTEM	TUYAUSURIE	-	D				
1	K1009189	VALVE;SHOCKLESS	VANNE	1					
2	K1015420	ACCUMULATOR	ACCUMULATEUR	1					
3	K1017657	PIPE;RETURN	TUYAU	1					
4	K1017651	PIPE	TUYAU	1					
5	K1017650	PIPE	TUYAU	1					
6	DS2232051	ADAPTER	ADAPTEUR	1					
7	K1010676	ADAPTER	ADAPTEUR	4					
8	2180-1026D19	O-RING	JOINT TORIQUE	3					
9	S8030161	O-RING	JOINT TORIQUE	5					
10	DS2017049	HOSE	TUYAU FLEXIBLE	1					
11	DS2016082	HOSE	TUYAU FLEXIBLE	1					
12	DS2023268	HOSE	TUYAU FLEXIBLE	1					
13	DS2016093	HOSE	TUYAU FLEXIBLE	1					
14	2181-9078	FLANGE	BRIDE	6					
15	DS0025033	BOLT	BOULON	4					
16	DS0025036	BOLT	BOULON	2					
17	S2212266	BOLT	BOULON	12					
18	S8040161	O-RING	JOINT TORIQUE	1					
19	K1016008	BRACKET	SUPPORT	2					
20	DS0025017	BOLT;SET	BOULON A 6 PANS	4					

DATE	NOV. 24, 2006
1st EDITION	

Fig. 5190 LIS SWITCH INTERRUPTEUR

Serial No. ;

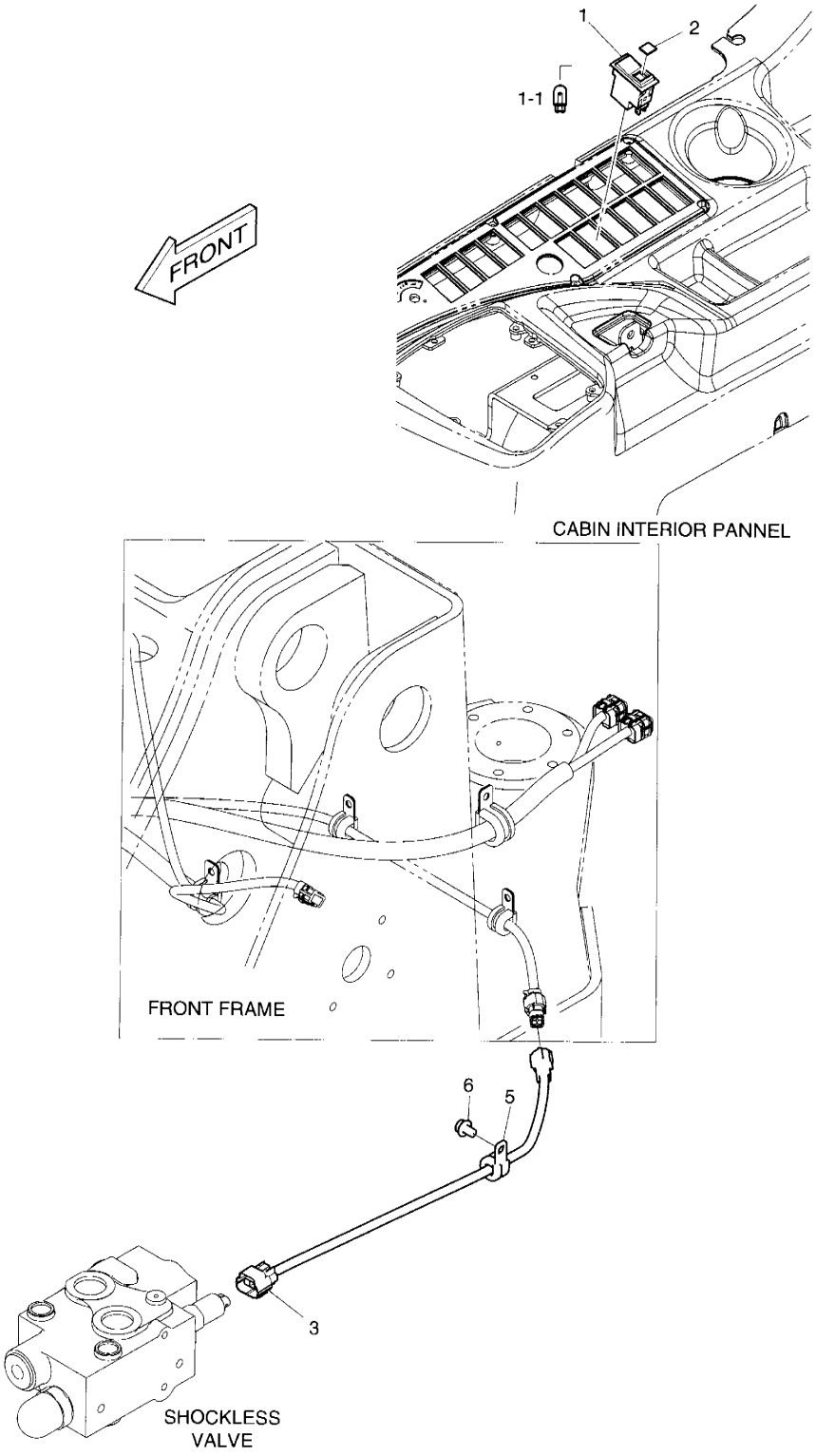

DATE	NOV. 24, 2006
1st EDITION	

Fig. 5190 LIS SWITCH INTERRUPTEUR

Serial No. ;

Key No.	Part No.	Description	Description	Q'ty	S.C	Serial No.	ICA	Replaceable part	
								Part No.	Q'ty
5190--	K1024085A	LIS - OPTION	COMMUTATEUR	-	D				
1	549-00083	SWITCH;ROCKER	COMMUTATEUR	1					
1-1	K9000353	. LAMP;PILOT	. LAMPE	1					
2	2190-2036D3	INSERT;LIS SWITCH	INSERTION	1					
3	K1007220	HARNESS	HARNAIS	1					
5	124-00208D2	CLIP	AGRAFE	1					
6	K1001029	BOLT	BOULON	1					

DATE	JUN. 30, 2007
REV.NO.	EXB07-06

Fig. 5200 LOW NOISE COVER
LE BAS BRUIT COUVRENT

Serial No. ;

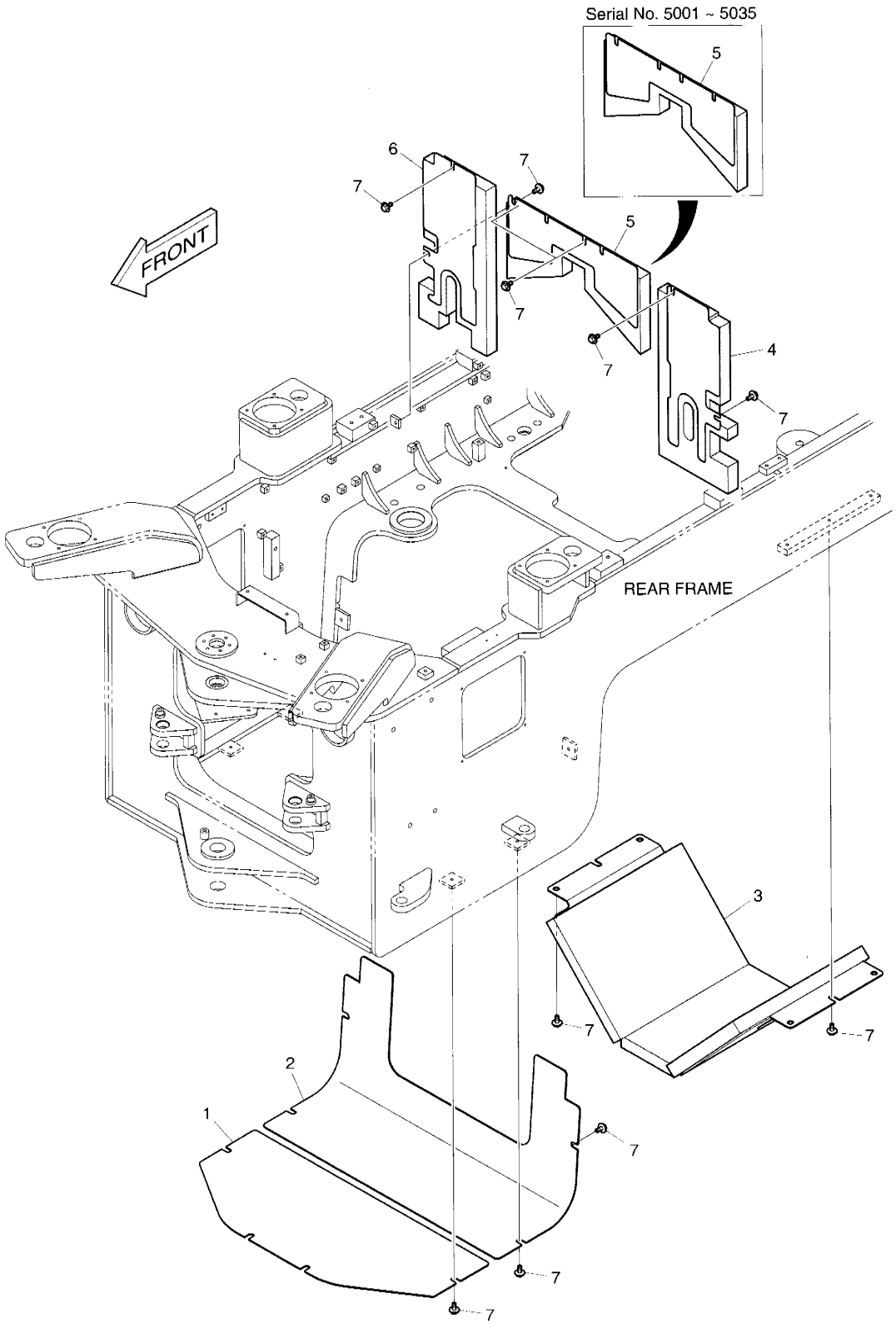

DATE	JUN. 30, 2007
REV. NO.	EXB07-06

Fig. 5200 LOW NOISE COVER
LE BAS BRUIT COUVRENT

Serial No. ;

Key No.	Part No.	Description	Description	Q'ty	S.C	Serial No.	ICA	Replaceable part	
								Part No.	Q'ty
5200--	**K1015881C**	**LOW NOISE COVER - OPTION**	LE BAS BRUIT COUVRENT	-	D				
1	K1015882	COVER;BAFFLE	COUVERCLE	1					
2	K1015883	COVER;BAFFLE	COUVERCLE	1					
3	K1015884A	COVER;BAFFLE	COUVERCLE	1					
4	K1016028B	COVER;BAFFLE	COUVERCLE	1					
5	K1016029	COVER;BAFFLE	COUVERCLE	1		5001–5053			
	K1016029A	**COVER;BAFFLE**	COUVERCLE	1		**5054–5084**			
	K1016029B	**COVER;BAFFLE**	COUVERCLE	1		**5085–**			
6	K1016030B	COVER;BAFFLE	COUVERCLE	1					
7	DS0025023	BOLT	BOULON	20					

DATE	JUN. 30, 2007
REV.NO.	EXB07-06

Fig. 5210 RADIATOR GRILLE ASS'Y
RADIATEUR GRIL

Serial No. ;

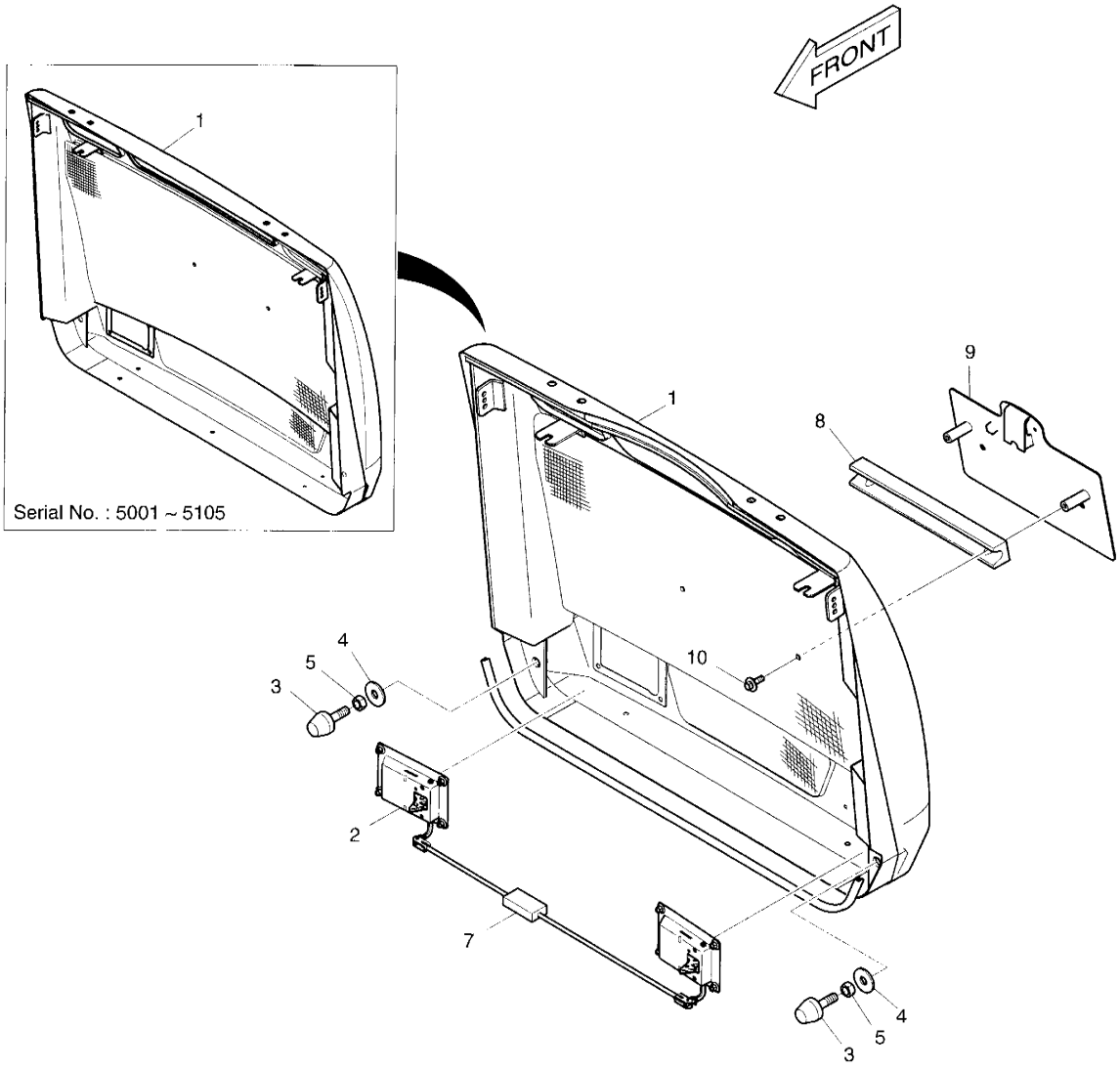

DATE	JUN. 30, 2007
REV. NO.	EXB07-06

Fig. 5210 RADIATOR GRILLE ASS'Y RADIATEUR GRIL

Serial No. ;

Key No.	Part No.	Description	Description	Q'ty	S.C	Serial No.	ICA	Replaceable part	
								Part No.	Q'ty
5210--	K1023990A	RADIATOR GRILLE ASSY	RADIATEUR GRIL	1		5001–5105	I	K1023990B	1
	K1023990B	**RADIATOR GRILLE ASSY**	RADIATEUR GRIL	1		**5106–**			
1	K1023991A	GRILLE;RADIATOR	RADIATEUR GRIL	1	D				
2	K1016911	LOCK;GRILL	LOQUET	1					
3	K1006666	STOPPER;RUBBER	TAQUET D'ARRET	2					
4	2114-1058D2	WASHER	RONDELLE	2					
5	S4012933	NUT	ECROU	2					
7	K1012269	FOAM	EPONGE	1					
8	K1012677	RUBBER	CAOUTCHOUC	1					
9	K1023993A	PLATE;LICENSE	PLAQUE	1					
10	DS0025034	BOLT	BOULON	2					

DATE	JUN. 30, 2007
REV.NO.	EXB07-06

Fig. 5220 FENDER & LADDER - FULL
BOUE ECHELLE

Serial No. ;

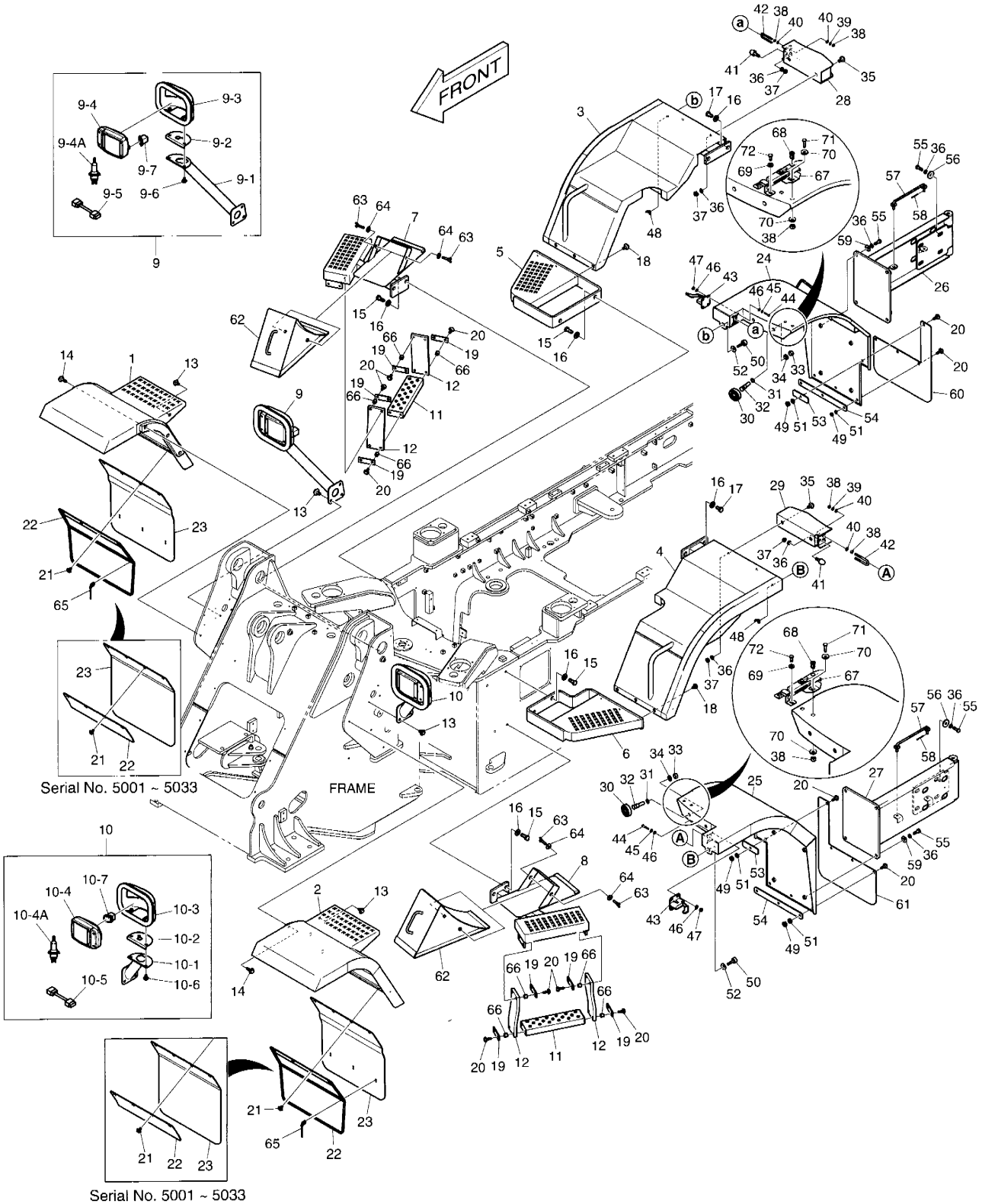

DATE	JUN. 30, 2007
REV. NO.	EXB07-06

Fig. 5220 FENDER & LADDER - FULL BOUE ECHELLE

Serial No. ;

Key No.	Part No.	Description	Description	Q'ty	S.C	Serial No.	ICA	Replaceable part	
								Part No.	Q'ty
52---	**K1018621G**	**FENDER & LADDER - FULL**	BOUE ECHELLE	-	D				
1	621-02127	FENDER;FRONT(R.H)	AMORTISSEUR	1					
2	621-02128	FENDER;FRONT(L.H)	AMORTISSEUR	1					
3	K1018624	FENDER;REAR (R.H)	AMORTISSEUR	1		5001–5077	I	K1018624A	1
	K1018624A	**FENDER;REAR (R.H)**	AMORTISSEUR	1		**5078–**			
4	K1018625	FENDER;REAR (L.H)	AMORTISSEUR	1		5001–5077	I	K1018625A	1
	K1018625A	**FENDER;REAR (L.H)**	AMORTISSEUR	1		**5078–**			
5	K1015118	LADDER	CHAPEAU	1					
6	K1015117	LADDER	CHAPEAU	1					
7	K1015119A	LADDER	CHAPEAU	1					
8	K1015120A	LADDER	CHAPEAU	1					
9	K1004818B	SUPPORT (R.H)	LAMPE	1					
9-1	K1004816	. PIPE	. TUYAU	1					
9-2	K1006250B	. SUPPORT;LAMP	. SUPPORT	1					
9-3	K1006182B	. COVER;LAMP	. COUVERCLE	1					
9-4	K1005906	. LAMP	. LAMPE	1					
9-4A	K1010656	.. BULB;HALOGEN	.. AMPOULE	1					
9-5	K1006366	. HARNESS	. HARNAIS	1					
9-6	DS0025023	. BOLT	. BOULON A 6 PANS	2					
9-7	K1006592	. CAP	. CHAPEAU	1					
10	K1004817B	SUPPORT (L.H)	LAMPE	1					
10-1	K1004816	. PIPE	. TUYAU	1					
10-2	K1006250B	. SUPPORT;LAMP	. SUPPORT	1					
10-3	K1006182B	. COVER;LAMP	. COUVERCLE	1					
10-4	K1005906	. LAMP	. LAMPE	1					
10-4A	K1010656	.. BULB;HALOGEN	.. AMPOULE	1					
10-5	K1006366	. HARNESS	. HARNAIS	1					
10-6	DS0025023	. BOLT	. BOULON A 6 PANS	2					
10-7	K1006592	. CAP	. CHAPEAU	1					
11	K1008755	LADDER	ECHELLE	2					
12	K1004701	RUBBER	CAOUTCHOUC	1		5001–5033	I	K1004701A	
	K1004701A	**RUBBER**	CAOUTCHOUC	1		**5034–**			
13	DS0025015	BOLT	BOULON	8					
14	DS0025031	BOLT	BOULON	6					
15	S0565066	BOLT	BOULON	8					
16	2114-1058D2	WASHER	RONDELLE	12					
17	S0521266	BOLT	BOULON	4					
18	DS0025023	BOLT	BOULON	6					

DATE	JUN. 30, 2007
REV.NO.	EXB07-06

Fig. 5220 FENDER & LADDER - FULL
BOUE ECHELLE

Serial No. ;

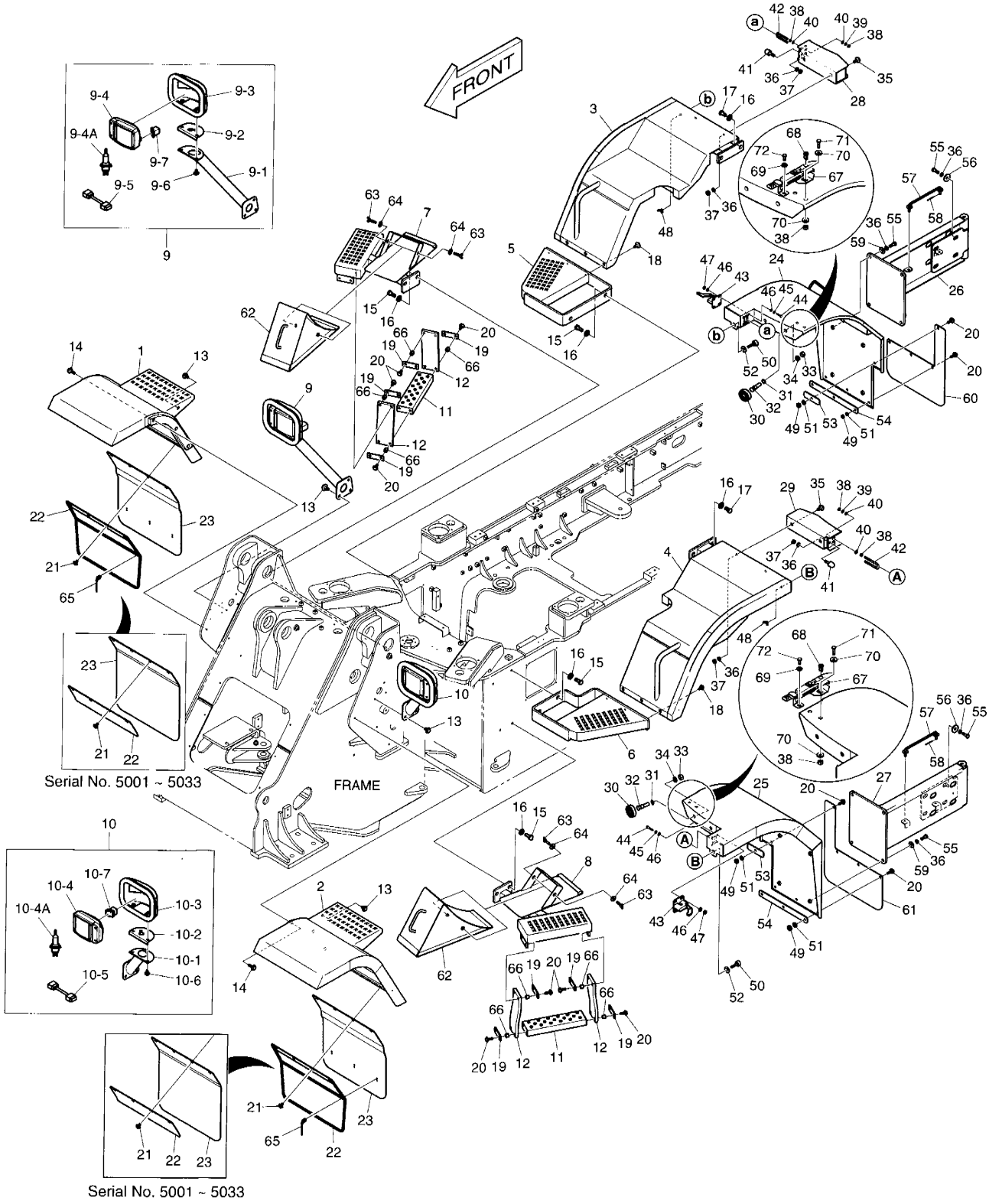

DATE	JUN. 30, 2007
REV. NO.	EXB07-06

Fig. 5220 FENDER & LADDER - FULL
BOUE ECHELLE

Serial No. ;

Key No.	Part No.	Description	Description	Q'ty	S.C	Serial No.	ICA	Replaceable part	
								Part No.	Q'ty
5220-19	K1009006	PLATE	PLAQUE	8					
20	DS0025030	BOLT	BOULON	24					
21	DS0025014	BOLT	BOULON	8					
22	621-01468	PLATE	PLAQUE	2		5001–5033			
	K1030175	**PLATE**	PLAQUE	2		**5034–**			
23	K1018630	RUBBER	CAOUTCHOUC	2		5001–5033	I	K1018630A	2
	K1018630A	**RUBBER**	CAOUTCHOUC	2		**5034–**			
24	K1018720	FENDER;REAR (R.H)	AMORTISSEUR	1		5001–5033	I	K1018720A	1
	K1018720A	**FENDER;REAR (R.H)**	AMORTISSEUR	1		**5034–5077**	I	K1018720B	1
	K1018720B	**FENDER;REAR (R.H)**	AMORTISSEUR	1		**5078–**			
25	K1018721	FENDER;REAR (L.H)	AMORTISSEUR	1		5001–5033	I	K1018721A	1
	K1018721A	**FENDER;REAR (L.H)**	AMORTISSEUR	1		**5034–5077**	I	K1018721B	1
	K1018721B	**FENDER;REAR (L.H)**	AMORTISSEUR	1		**5078–**			
26	K1018722A	HINGE	CHARNIRE	1					
27	K1018723A	HINGE	CHARNIRE	1					
28	K1018726	BRACKET	SUPPORT	1		5001–5033	I	K1018726A	1
	K1018726A	**BRACKET**	SUPPORT	1		**5034–**			
29	K1018727	BRACKET	SUPPORT	1		5001–5033	I	K1018727A	1
	K1018727A	**BRACKET**	SUPPORT	1		**5034–**			
30	161-00152	RUBBER;ROLLER	CAOUTCHOUC	4					
31	S6500200	RING	ANNEAU	4					
32	123-00262	PIN	GOUPILLE	4					
33	S4012933	NUT	ECROU	4					
34	S5102903	WASHER;SPRING	RONDELLE ELASTIQUE	4					
35	DS0025025	BOLT	BOULON	4					
36	S5102703	WASHER;SPRING	RONDELLE ELASTIQUE	22					
37	S4012733	NUT	ECROU	6					
38	S4012533	NUT	ECROU	8		5001–5033			
	S4012533	**NUT**	ECROU	12		**5034–**			
39	S5102503	WASHER;SPRING	RONDELLE ELASTIQUE	4					
40	S5010513	WASHER	RONDELLE	8					
41	2161-2179	STOPPER	ARRET	2					
42	142-00072	STRIKER	FRAPPER	2					
43	4125-9016	CATCH	CROCHET	2					
44	S0505266	BOLT	BOULON	8					
45	S5102303	WASHER;SPRING	RONDELLE ELASTIQUE	8					
46	S5010313	WASHER	RONDELLE	16					
47	S4012333	NUT	ECROU	8					

DATE	JUN. 30, 2007
REV.NO.	EXB07-06

Fig. 5220 FENDER & LADDER - FULL
BOUE ECHELLE

Serial No. ;

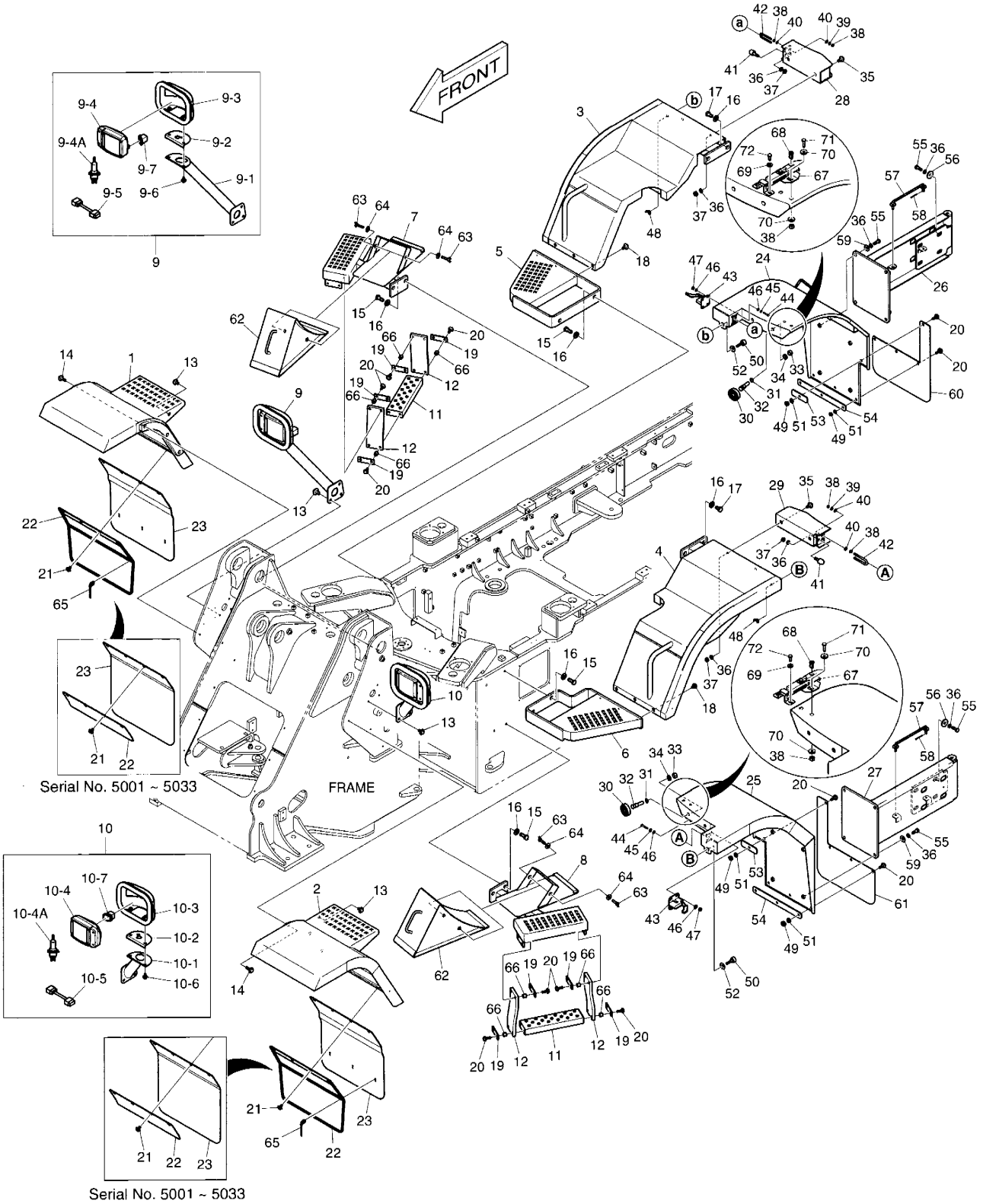

DATE	JUN. 30, 2007
REV. NO.	EXB07-06

Fig. 5220 FENDER & LADDER - FULL / BOUE ECHELLE

Serial No. ;

Key No.	Part No.	Description	Description	Q'ty	S.C	Serial No.	ICA	Replaceable part	
								Part No.	Q'ty
48	**S4540603**	**NUT**	ECROU	2		**5001–5077**			
49	S4012633	NUT	ECROU	8					
50	**120-00303A**	**BOLT**	BOULON	2		**5001–5077**			
51	S5102603	WASHER;SPRING	RONDELLE ELASTIQUE	8					
52	**2114-1898D9**	**WASHER**	RONDELLE	2		**5001–5077**			
53	K1018793	PLATE	PLAQUE	2					
54	K1018794	PLATE	PLAQUE	2					
55	S0515366	BOLT	BOULON	16					
56	4114-4078A	WASHER	RONDELLE	8					
57	K1016924	STAY	ENTRETOISE	2					
58	S5735591	PIN;SPLIT	GOUPILLE	2					
59	2114-1058D30	WASHER;PLAIN	RONDELLE PLATE	8					
60	K1018795A	PLATE	PLAQUE	1					
61	K1018796A	RUBBER	CAOUTCHOUC	1					
62	K1004813A	CHOCK;WHEEL	D'APPUI	2					
63	S3056253	BOLT	BOULON	4					
64	2114-1058D10	WASHER;PLAIN	RONDELLE PLATE	4					
65	**2124-1622D1**	**CLIP;BAND**	ATTACHE	6		**5034–**			
66	**K1029924**	**SPACER**	BAGUE D'ECARTEMENT	16		**5034–**			
67	**125-00075A**	**CATCH**	CROCHET	2		**5034–**			
68	**K1004630**	**CYLINDER;KEY**	CYLINDRE	2		**5034–**			
69	**2114-1058D86**	**WASHER**	RONDELLE	4		**5034–**			
70	**DS0401128**	**WASHER;HARDENED**	RONDELLE	8		**5034–**			
71	**S0509266**	**BOLT**	BOULON	4		**5034–**			
72	**S0508866**	**BOLT**	BOULON	4		**5034–**			

DATE	JUN. 30, 2007
REV.NO.	EXB07-06

Fig. 5230 FENDER & LADDER & BUCKET
GARDE-BOUE ECHELLE

Serial No. ;

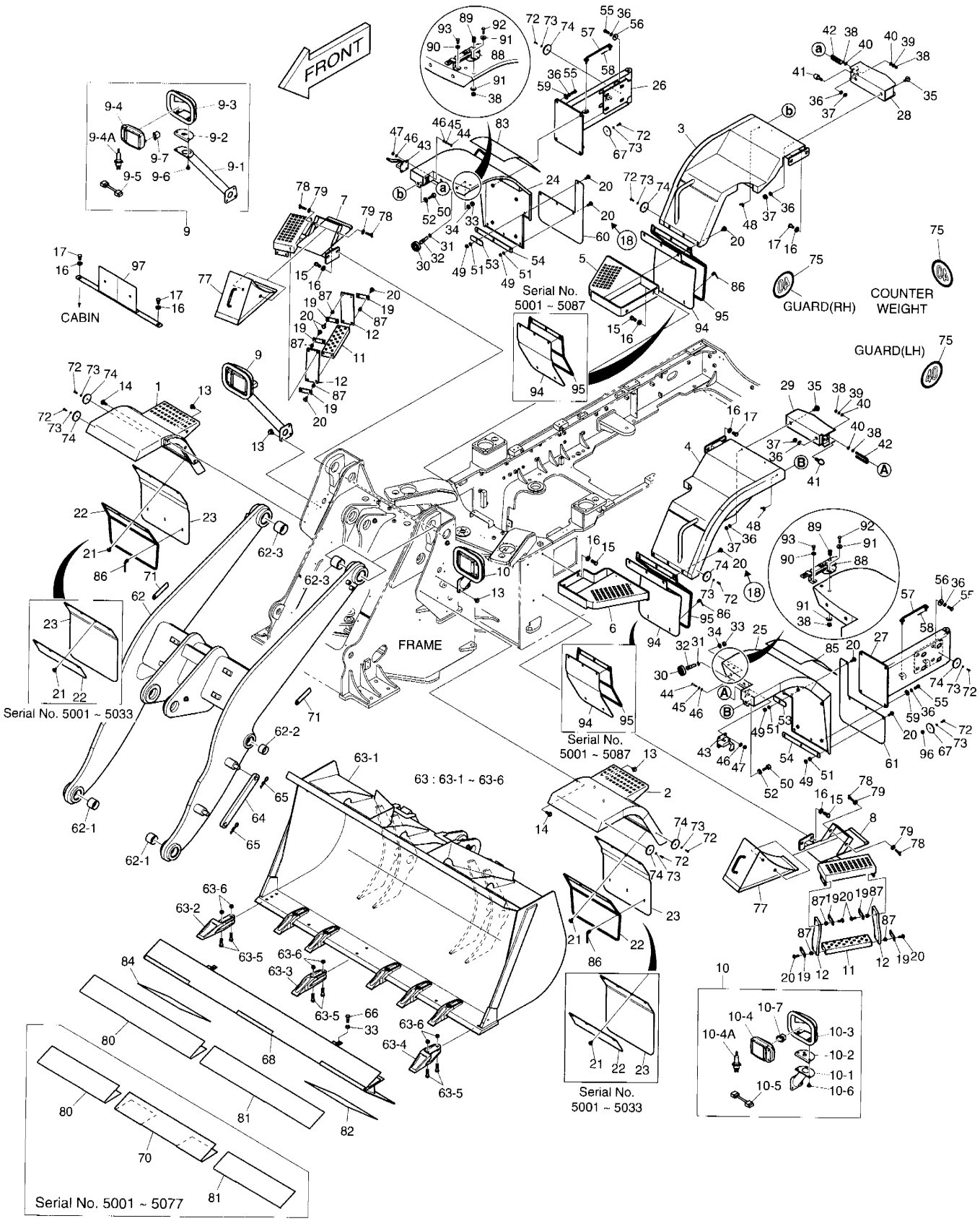

DATE	JUN. 30, 2007
REV. NO.	EXB07-06

Fig. 5230 FENDER & LADDER & BUCKET GARDE-BOUE ECHELLE

Serial No. ;

Key No.	Part No.	Description	Description	Q'ty	S.C	Serial No.	ICA	Replaceable part	
								Part No.	Q'ty
-0--	**K1018622G**	**FENDER & LADDER &**	AMORTISSEUR	-	D				
1	621-02127	FENDER;FRONT(R.H)	AMORTISSEUR	1		5001–5077	I	K1034056	1
	K1034056	**FENDER;FRONT(R.H)**	AMORTISSEUR	1		**5078–**			
2	621-02128	FENDER;FRONT(L.H)	AMORTISSEUR	1		5001–5077	I	K1034057	1
	K1034057	**FENDER;FRONT(L.H)**	AMORTISSEUR	1		**5078–**			
3	K1018624	FENDER;REAR (R.H)	AMORTISSEUR	1		5001–5077	I	K1018624A	1
	K1018624A	**FENDER;REAR (R.H)**	AMORTISSEUR	1		**5078–**			
4	K1018625	FENDER;REAR (L.H)	AMORTISSEUR	1		5001–5077	I	K1018625A	1
	K1018625A	**FENDER;REAR (L.H)**	AMORTISSEUR	1		**5078–**			
5	K1015118	LADDER	ECHELLE	1					
6	K1015117	LADDER	ECHELLE	1					
7	K1015119A	LADDER	ECHELLE	1					
8	K1015120A	LADDER	ECHELLE	1					
9	K1004818B	SUPPORT (R.H)	LAMPE	1					
9-1	K1004816	. PIPE	. TUYAU	1					
9-2	K1006250B	. SUPPORT;LAMP	. SUPPORT	1					
9-3	K1006182B	. COVER;LAMP	. COUVERCLE	1					
9-4	K1005906	. LAMP	. LAMPE	1					
9-4A	K1010656	.. BULB;HALOGEN	.. AMPOULE	1					
9-5	K1006366	. HARNESS	. HARNAIS	1					
9-6	DS0025023	. BOLT	. BOULON A 6 PANS	2					
9-7	K1006592	. CAP	. CHAPEAU	1					
10	K1004817B	SUPPORT (L.H)	LAMPE	1					
10-1	K1004816	. PIPE	. TUYAU	1					
10-2	K1006250B	. SUPPORT;LAMP	. SUPPORT	1					
10-3	K1006182B	. COVER;LAMP	. COUVERCLE	1					
10-4	K1005906	. LAMP	. LAMPE	1					
10-4A	K1010656	.. BULB;HALOGEN	.. AMPOULE	1					
10-5	K1006366	. HARNESS	. HARNAIS	1					
10-6	DS0025023	. BOLT	. BOULON A 6 PANS	2					
10-7	K1006592	. CAP	. CHAPEAU	1					
11	K1008755	LADDER	ECHELLE	2					
12	K1004701	RUBBER	CAOUTCHOUC	4		5001–5033	I	K1004701A	4
	K1004701A	**RUBBER**	CAOUTCHOUC	4		**5034–**			
13	DS0025015	BOLT	BOULON	8					
14	DS0025031	BOLT	BOULON	6					
15	S0565066	BOLT	BOULON	8					
16	2114-1058D2	WASHER	RONDELLE	12		5001–5077			

DATE	JUN. 30, 2007
REV.NO.	EXB07-06

Fig. 5230 FENDER & LADDER & BUCKET
GARDE-BOUE ECHELLE

Serial No. ;

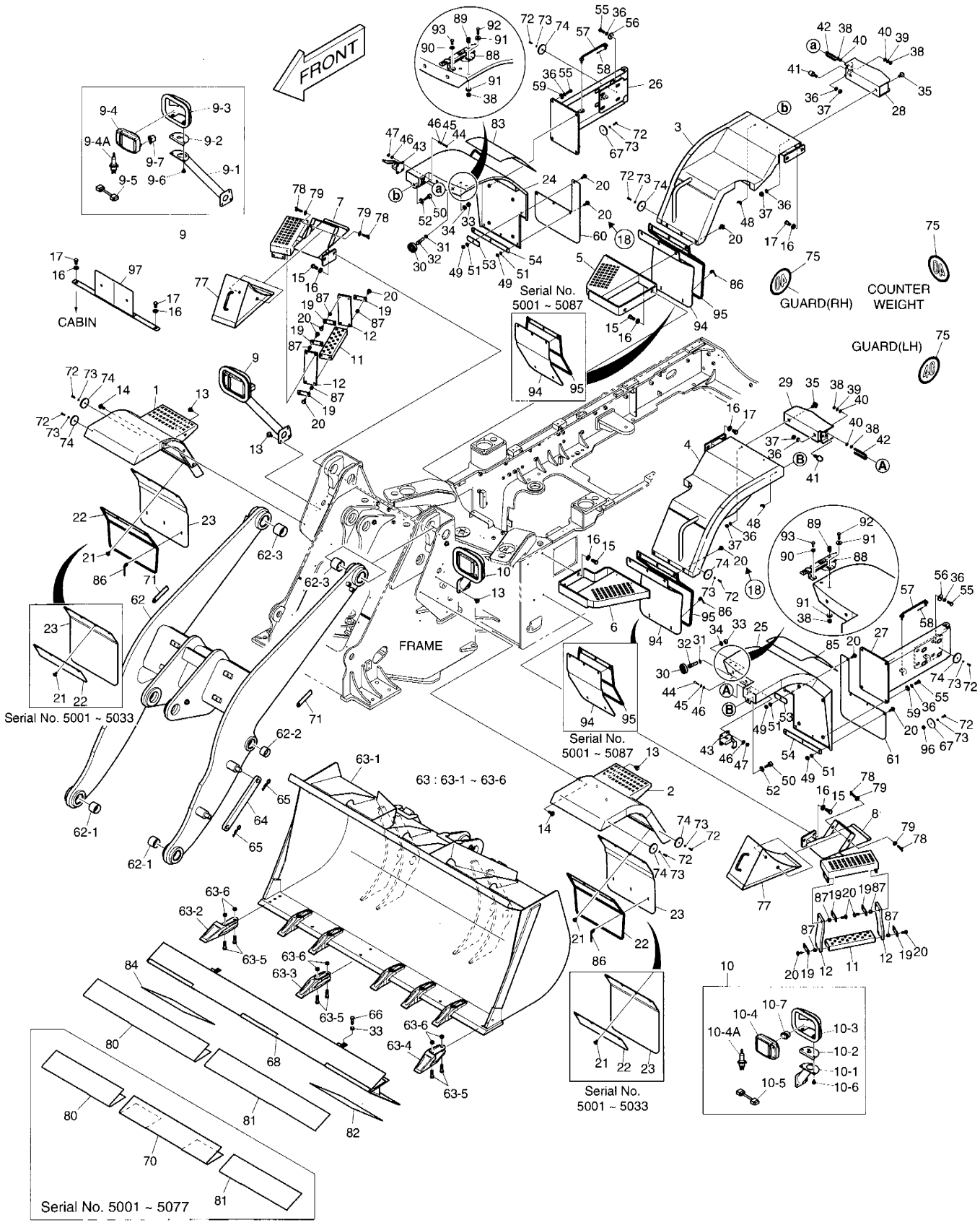

DATE	JUN. 30, 2007
REV. NO.	EXB07-06

Fig. 5230 FENDER & LADDER & BUCKET GARDE-BOUE ECHELLE

Serial No. ;

Key No.	Part No.	Description	Description	Q'ty	S.C	Serial No.	ICA	Replaceable part	
								Part No.	Q'ty
30-16	**2114-1058D2**	**WASHER**	RONDELLE	14		**5078–**			
17	S0521266	BOLT	BOULON	4		5001–5077			
	S0521266	**BOLT**	BOULON	6		**5078–**			
18	**DS0025023**	**BOLT**	BOULON	6		**5001–5077**			
19	K1009006	PLATE	PLAQUE	8					
20	DS0025030	BOLT	BOULON	24		5001–5077			
	DS0025030	**BOLT**	BOULON	30		**5078–**			
21	DS0025014	BOLT	BOULON	8					
22	621-01468	PLATE	PLAQUE	2		5001–5033			
	K1030175	**PLATE**	PLAQUE	2		**5034–**			
23	K1018630	RUBBER	CAOUTCHOUC	2		5001–5033	I	K1018630A	2
	K1018630A	**RUBBER**	CAOUTCHOUC	2		**5034–**			
24	K1018720	FENDER;REAR (R.H)	AMORTISSEUR	1		5001–5033	I	K1018720A	1
	K1018720A	**FENDER;REAR (R.H)**	AMORTISSEUR	1		**5034–5077**	I	K1018720B	1
	K1018720B	**FENDER;REAR (R.H)**	AMORTISSEUR	1		**5078–**			
25	K1018721	FENDER;REAR (L.H)	AMORTISSEUR	1		5001–5033	I	K1018721A	1
	K1018721A	**FENDER;REAR (L.H)**	AMORTISSEUR	1		**5034–5077**	I	K1018721B	1
	K1018721B	**FENDER;REAR (L.H)**	AMORTISSEUR	1		**5078–**			
26	K1018722A	HINGE	CHARNIRE	1					
27	K1018723A	HINGE	CHARNIRE	1					
28	K1018726	BRACKET	SUPPORT	1		5001–5033	I	K1018726A	1
	K1018726A	**BRACKET**	SUPPORT	1		**5034–**			
29	K1018727	BRACKET	SUPPORT	1		5001–5033	I	K1018727A	1
	K1018727A	**BRACKET**	SUPPORT	1		**5034–**			
30	161-00152	RUBBER;ROLLER	CAOUTCHOUC	4					
31	S6500200	RING	ANNEAU	4					
32	123-00262	PIN	GOUPILLE	4					
33	S4012933	NUT	ECROU	6					
34	S5102903	WASHER;SPRING	RONDELLE ELASTIQUE	4					
35	DS0025025	BOLT	BOULON	4					
36	S5102703	WASHER;SPRING	RONDELLE ELASTIQUE	22					
37	S4012733	NUT	ECROU	6					
38	S4012533	NUT	ECROU	8		5001–5033			
	S4012533	**NUT**	ECROU	12		**5034–**			
39	S5102503	WASHER;SPRING	RONDELLE ELASTIQUE	4					
40	S5010513	WASHER	RONDELLE	8					
41	2161-2179	STOPPER	ARRET	2					
42	142-00072	STRIKER	FRAPPER	2					

DATE	JUN. 30, 2007
REV.NO.	EXB07-06

Fig. 5230 FENDER & LADDER & BUCKET
GARDE-BOUE ECHELLE

Serial No. ;

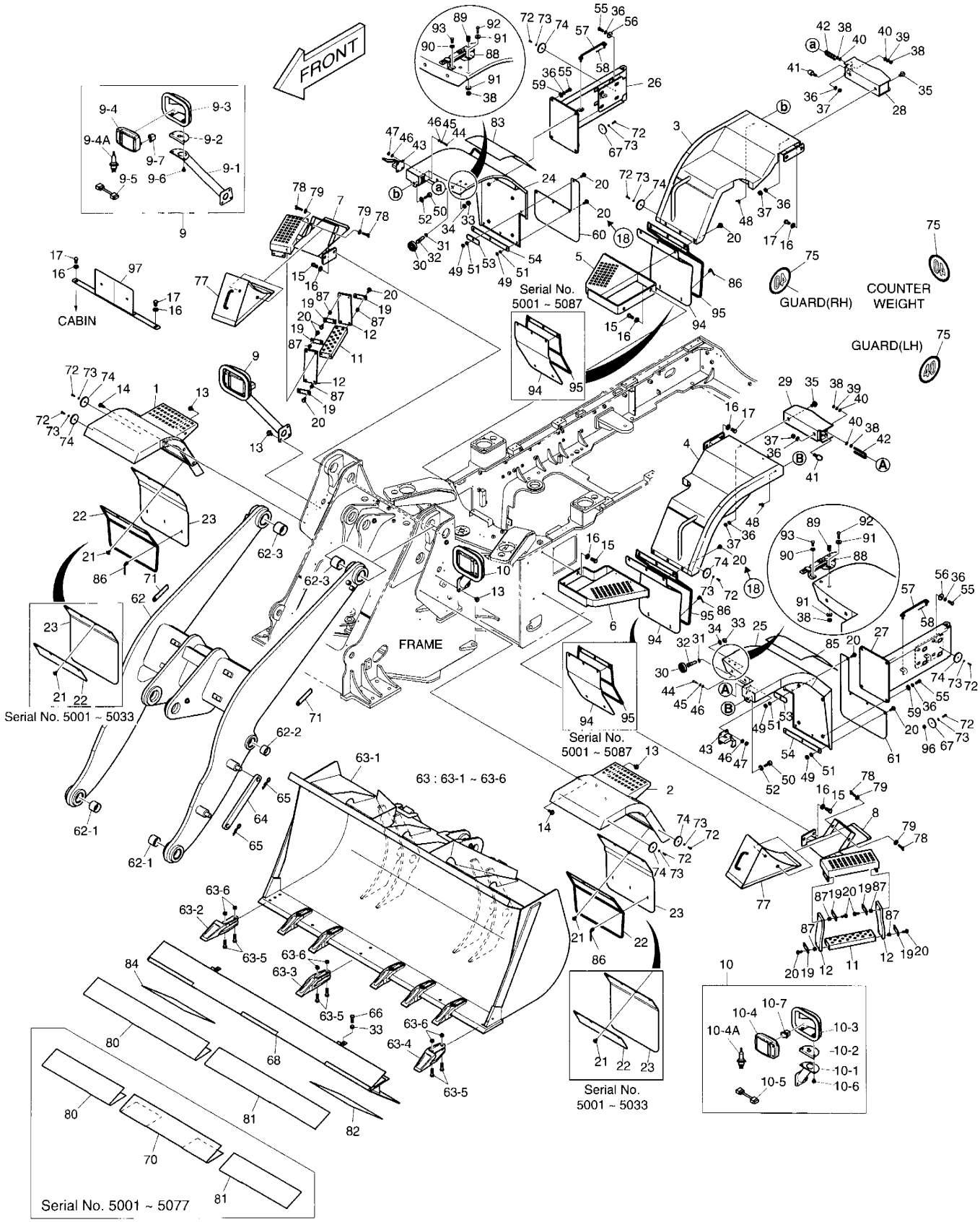

DATE	JUN. 30, 2007
REV. NO.	EXB07-06

Fig. 5230 FENDER & LADDER & BUCKET GARDE-BOUE ECHELLE

Serial No. ;

Key No.	Part No.	Description	Description	Q'ty	S.C	Serial No.	ICA	Replaceable part	
								Part No.	Q'ty
5230-43	4125-9016	CATCH	CROCHET	2					
44	S0505266	BOLT	BOULON	8					
45	S5102303	WASHER;SPRING	RONDELLE ELASTIQUE	8					
46	S5010313	WASHER	RONDELLE	16					
47	S4012333	NUT	ECROU	8					
48	**S4540603**	**NUT**	ECROU	2		**5001–5077**			
49	S4012633	NUT	ECROU	8					
50	**120-00303A**	**BOLT**	BOULON	2		**5001–5077**			
51	S5102603	WASHER;SPRING	RONDELLE ELASTIQUE	8					
52	**2114-1898D9**	**WASHER**	RONDELLE	2		**5001–5077**			
53	K1018793	PLATE	PLAQUE	2					
54	K1018794	PLATE	PLAQUE	2					
55	S0515366	BOLT	BOULON	16					
56	4114-4078A	WASHER	RONDELLE	8					
57	K1016924	STAY	ENTRETOISE	2					
58	S5735591	PIN;SPLIT	GOUPILLE	2					
59	2114-1058D30	WASHER;PLAIN	RONDELLE PLATE	8					
60	K1018795A	PLATE	PLAQUE	1					
61	K1018796A	RUBBER	CAOUTCHOUC	1					
62	K1018805A	ARM;LIFT	BRAS	1		5001–5033	I	K1018805B	1
	K1018805B	**ARM;LIFT**	BRAS	1		**5034–**			
62-1	K1017108	. BUSH	. DOUILLE	2					
62-2	4110-1382A	. BUSH	. DOUILLE	2		5001–5033	I	K1024527	2
	K1024527	**. BUSH**	. DOUILLE	2		**5034–**			
62-3	K1017107	. BUSH	. DOUILLE	2					
63	K1018807	BUCKET ASS'Y	ENSEMBLE GODET	1					
63-1	-	. BUCKET	. GODET	1	D				
63-2	4713-4004A	. TOOTH	. OUTILLAGE	1					
63-3	4713-4005A	. TOOTH	. OUTILLAGE	1					
63-4	4713-4006A	. TOOTH	. OUTILLAGE	6					
63-5	S0565466	. BOLT	. BOULON	16					
63-6	S4012933	. NUT	. ECROU	16					
64	4191-4506A	PLATE	PLAQUE	1		5001–5077	I	4191-4506B	1
	4191-4506B	**PLATE**	PLAQUE	1		**5078–**			
65	4123-2423	PIN;SET	GOUPILLE	2					
66	S0565266	BOLT	BOULON	2					
67	190-00078	REFLECTOR	RFLECTEUR	2					
68	K1018799A	PROTECTOR;TOOTH	PROTECTEUR	1		5001–5033	I	K1018799B	1

DATE	JUN. 30, 2007
REV.NO.	EXB07-06

Fig. 5230 FENDER & LADDER & BUCKET
GARDE-BOUE ECHELLE

Serial No. ;

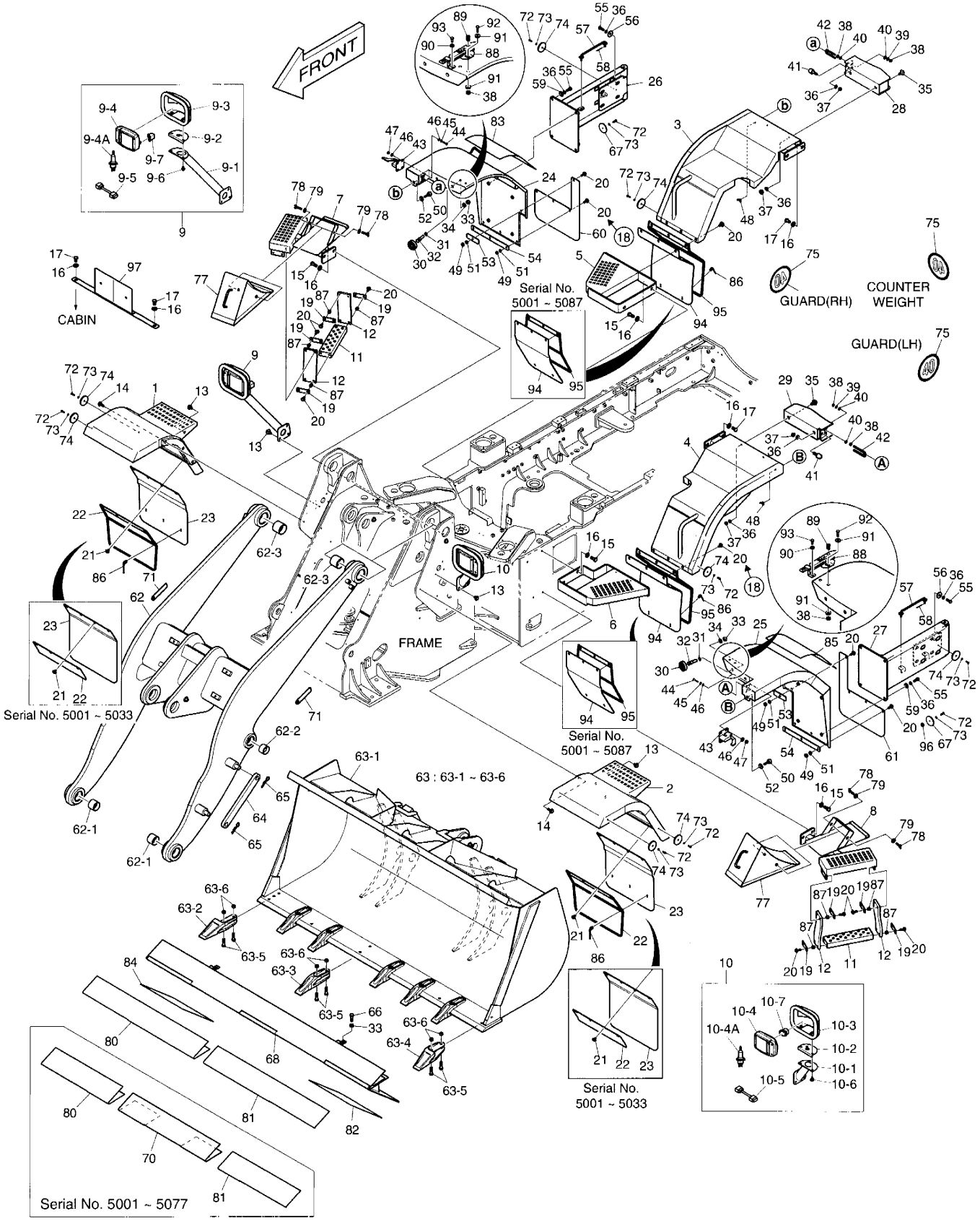

DATE	JUN. 30, 2007
REV. NO.	EXB07-06

Fig. 5230 FENDER & LADDER & BUCKET GARDE-BOUE ECHELLE

Serial No. ;

Key No.	Part No.	Description	Description	Q'ty	S.C	Serial No.	ICA	Replaceable part	
								Part No.	Q'ty
5230-68	**K1018799B**	**PROTECTOR;TOOTH**	PROTECTEUR	1		**5034–5077**			
	K1018799A	**PROTECTOR;TOOTH**	PROTECTEUR	1		**5078–**			
70	190-00365	NAME PLATE	PLAQUE D'IDENTIFICATION	1		5001–5033			
	K1030245	**NAME PLATE**	PLAQUE D'IDENTIFICATION	1		**5034–5077**			
71	195-01452	BRACKET	SUPPORT	1		5001–5077			
	K1034086	**BRACKET**	SUPPORT	2		**5078–**			
72	S3450853	SCREW	VIS	8		5001–5077			
	S3450853	**SCREW**	VIS	10		**5078–**			
73	S5102203	WASHER;SPRING	RONDELLE ELASTIQUE	8		5001–5077			
	S5102203	**WASHER;SPRING**	RONDELLE ELASTIQUE	10		**5078–**			
74	2190-9013	REFLECTOR	RFLECTEUR	6		5001–5077			
	2190-9013	**REFLECTOR**	RFLECTEUR	8		**5078–**			
75	190-00313	PLATE;NAME	PLAQUE	2		5001–5033			
	190-00313	**PLATE;NAME**	PLAQUE	3		**5034–**			
77	K1004813A	CHOCK;WHEEL	D'APPUI	2					
78	S3056253	BOLT;WING	BOULON A 6 PANS	4					
79	2114-1058D10	WASHER;PLAIN	RONDELLE PLATE	4					
80	K1028914	PLATE;NAME	PLAQUE	1		5001–5077			
	K1034058A	**PLATE;NAME**	PLAQUE	1		**5078–**			
81	K1028915	PLATE;NAME	PLAQUE	1		5001–5077			
	K1034059A	**PLATE;NAME**	PLAQUE	1		**5078–**			
82	K1027385	PLATE;NAME	PLAQUE	1					
83	**K1028857**	**PLATE;NAME**	PLAQUE	1		**5001–5077**			
84	K1029350	PLATE;NAME	PLAQUE	1					
85	**K1029352**	**PLATE;NAME**	PLAQUE	1		**5001–5077**			
86	**2124-1622D1**	**CLIP;BAND**	ATTACHE	6		**5034–5077**			
	2124-1622D1	**CLIP;BAND**	ATTACHE	10		**5078–**			
87	**K1029924**	**SPACER**	BAGUE D'ECARTEMENT	16		**5034–**			
88	**125-00075A**	**CATCH**	CROCHET	2		**5034–**			
89	**K1004630**	**CYLINDER;KEY**	CYLINDRE	2		**5034–**			
90	**2114-1058D86**	**WASHER**	RONDELLE	4		**5034–**			
91	**DS0401128**	**WASHER;HARDENED**	RONDELLE	8		**5034–**			
92	**S0509266**	**BOLT**	BOULON	4		**5034–**			
93	**S0508866**	**BOLT**	BOULON	4		**5034–**			
94	**K1034044**	**RUBBER;ROTECTOR**	CAOUTCHOUC	2		**5078–5087**			
	K1034044A	**RUBBER;ROTECTOR**	CAOUTCHOUC	2		**5088–**			
95	**K1034045**	**PLATE**	PLAQUE	2		**5078–5087**			
	K1034045A	**PLATE**	PLAQUE	2		**5088–**			

DATE	JUN. 30, 2007
REV.NO.	EXB07-06

Fig. 5230 FENDER & LADDER & BUCKET
GARDE-BOUE ECHELLE

Serial No. ;

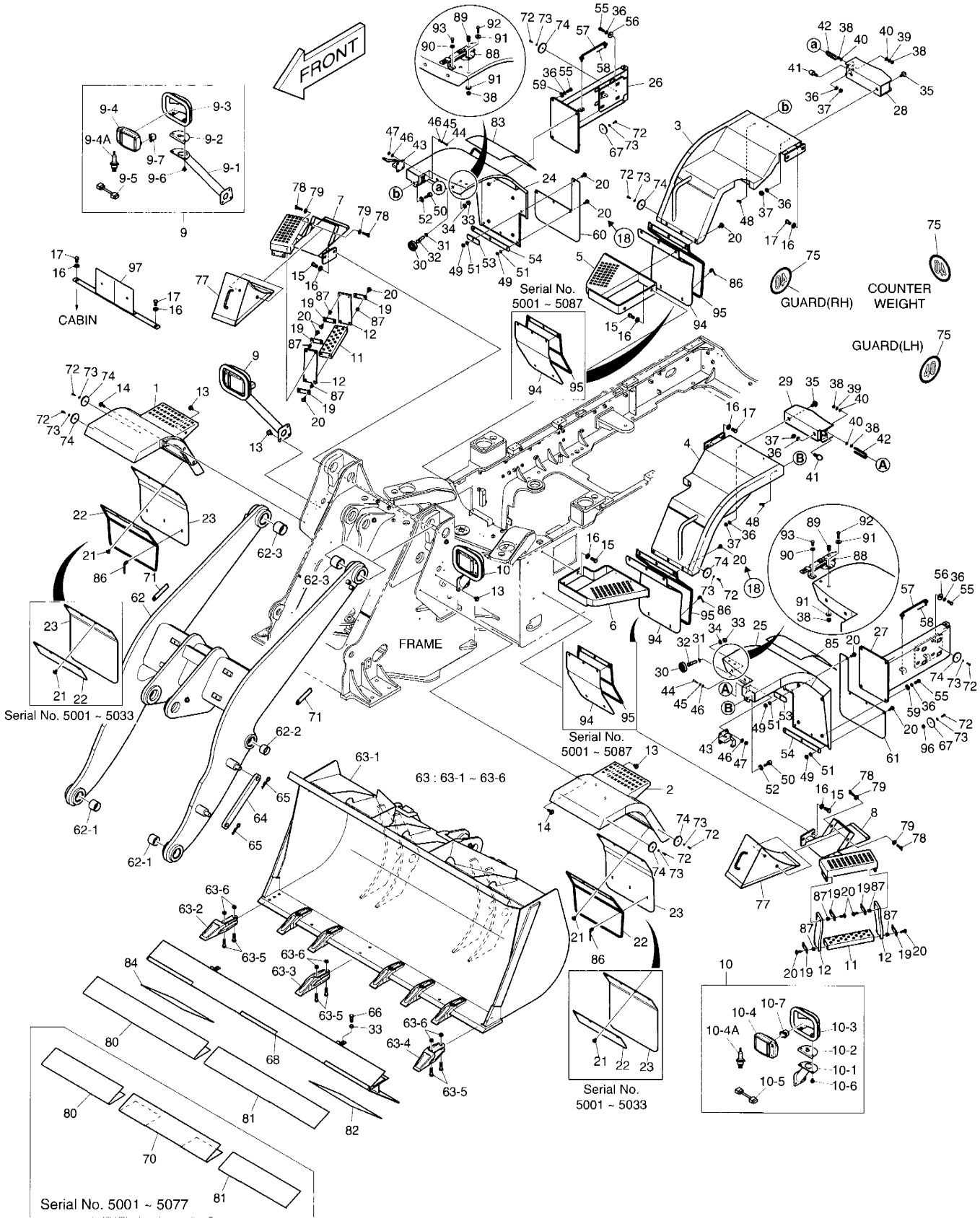

DATE	JUN. 30, 2007
REV. NO.	EXB07-06

Fig. 5230 FENDER & LADDER & BUCKET GARDE-BOUE ECHELLE

Serial No. ;

Key No.	Part No.	Description	Description	Q'ty	S.C	Serial No.	ICA	Replaceable part	
								Part No.	Q'ty
5230-96	**S4012233**	**NUT**	ECROU	2		**5078–**			
97	**K1038129**	**PLATE;LICENSE**	PLAQUE	1		**5078–**			

DATE	JUN. 30, 2007
REV.NO.	EXB07-06

Fig. 5240 REAR FENDER SUPPORT

Serial No. ;

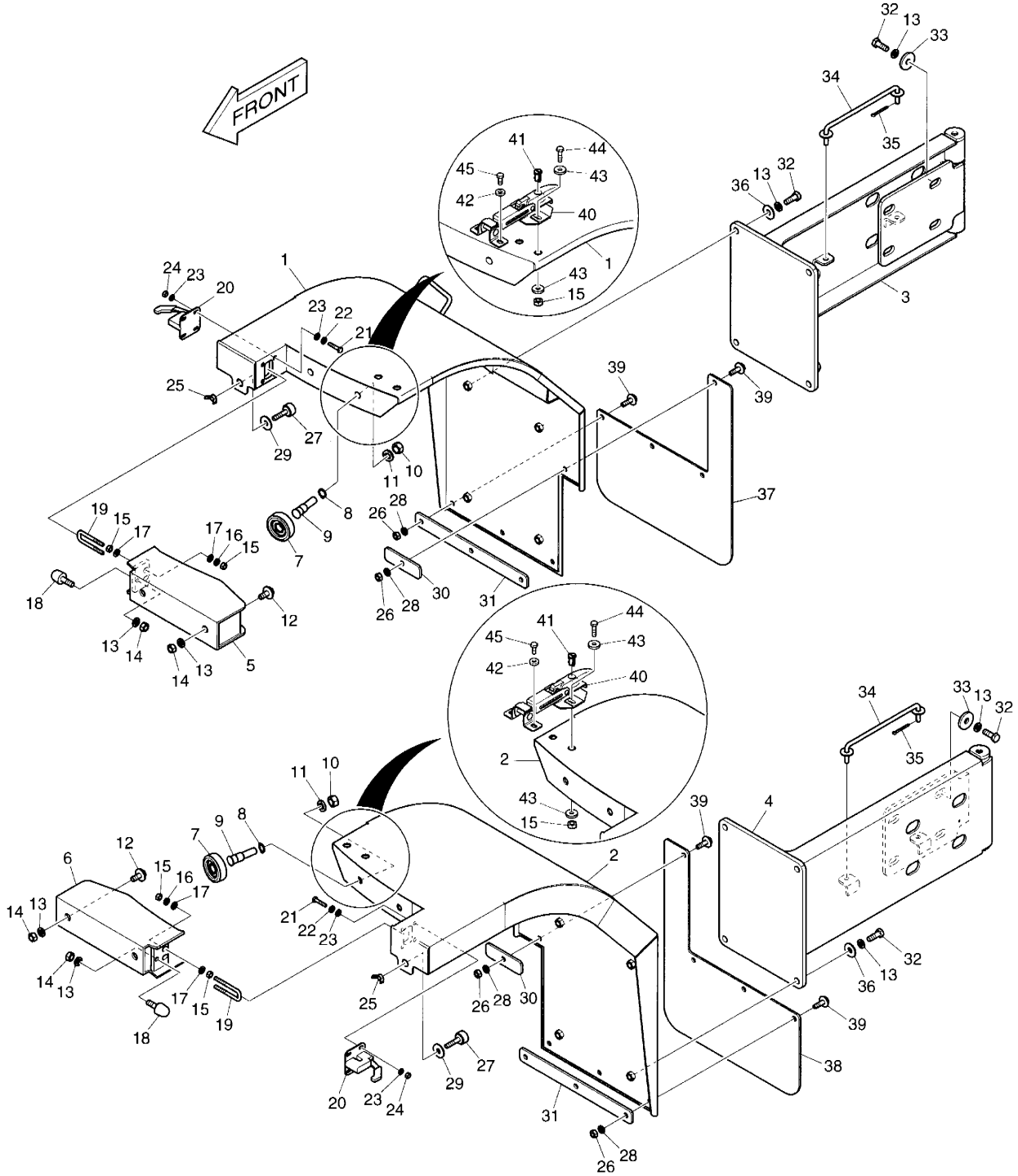

DATE	JUN. 30, 2007
REV. NO.	EXB07-06

Fig. 5240 REAR FENDER SUPPORT

Serial No. ;

Key No.	Part No.	Description	Description	Q'ty	S.C	Serial No.	ICA	Replaceable part	
								Part No.	Q'ty
5240--	**K1018623B**	**REAR FENDER**	AMORTISSEUR ARRIERE	-	D				
1	K1018720	FENDER;REAR (R.H)	AMORTISSEUR	1		5001-5033	I	K1018720A	1
	K1018720A	**FENDER;REAR (R.H)**	AMORTISSEUR	1		**5034-**			
2	K1018721	FENDER;REAR (L.H)	AMORTISSEUR	1		5001-5033	I	K1018721A	1
	K1018721A	**FENDER;REAR (L.H)**	AMORTISSEUR	1		**5034-**			
3	K1018722A	HINGE	CHARNIRE	1					
4	K1018723A	HINGE	CHARNIRE	1					
5	K1018726	BRACKET	SUPPORT	1		5001-5033	I	K1018726A	1
	K1018726A	**BRACKET**	SUPPORT	1		**5034-**			
6	K1018727	BRACKET	SUPPORT	1		5001-5033	I	K1018727A	1
	K1018727A	**BRACKET**	SUPPORT	1		**5034-**			
7	161-00152	RUBBER;ROLLER	CAOUTCHOUC	4					
8	S6500200	RING	ANNEAU	4					
9	123-00262	PIN	GOUPILLE	4					
10	S4012933	NUT	ECROU	4					
11	S5102903	WASHER;SPRING	RONDELLE ELASTIQUE	4					
12	DS0025025	BOLT	BOULON	4					
13	S5102703	WASHER;SPRING	RONDELLE ELASTIQUE	22					
14	S4012733	NUT	ECROU	6					
15	S4012533	NUT	ECROU	8		5001-5033			
	S4012533	**NUT**	ECROU	12		**5034-**			
16	S5102503	WASHER;SPRING	RONDELLE ELASTIQUE	4					
17	S5010513	WASHER	RONDELLE	8					
18	2161-2179	STOPPER	ARRET	2					
19	142-00072	STRIKER	FRAPPER	2					
20	4125-9016	CATCH	CROCHET	2					
21	S0505266	BOLT	BOULON	8					
22	S5102303	WASHER;SPRING	RONDELLE ELASTIQUE	8					
23	S5010313	WASHER	RONDELLE	16					
24	S4012333	NUT	ECROU	8					
25	S4540603	NUT	ECROU	2					
26	S4012633	NUT	ECROU	8					
27	120-00303A	BOLT	BOULON	2					
28	S5102603	WASHER;SPRING	RONDELLE ELASTIQUE	8					
29	2114-1898D9	WASHER	RONDELLE	2					
30	K1018793	PLATE	PLAQUE	2					
31	K1018794	PLATE	PLAQUE	2					
32	S0515366	BOLT	BOULON	16					

DATE	JUN. 30, 2007
REV.NO.	EXB07-06

Fig. 5240 REAR FENDER SUPPORT

Serial No. ;

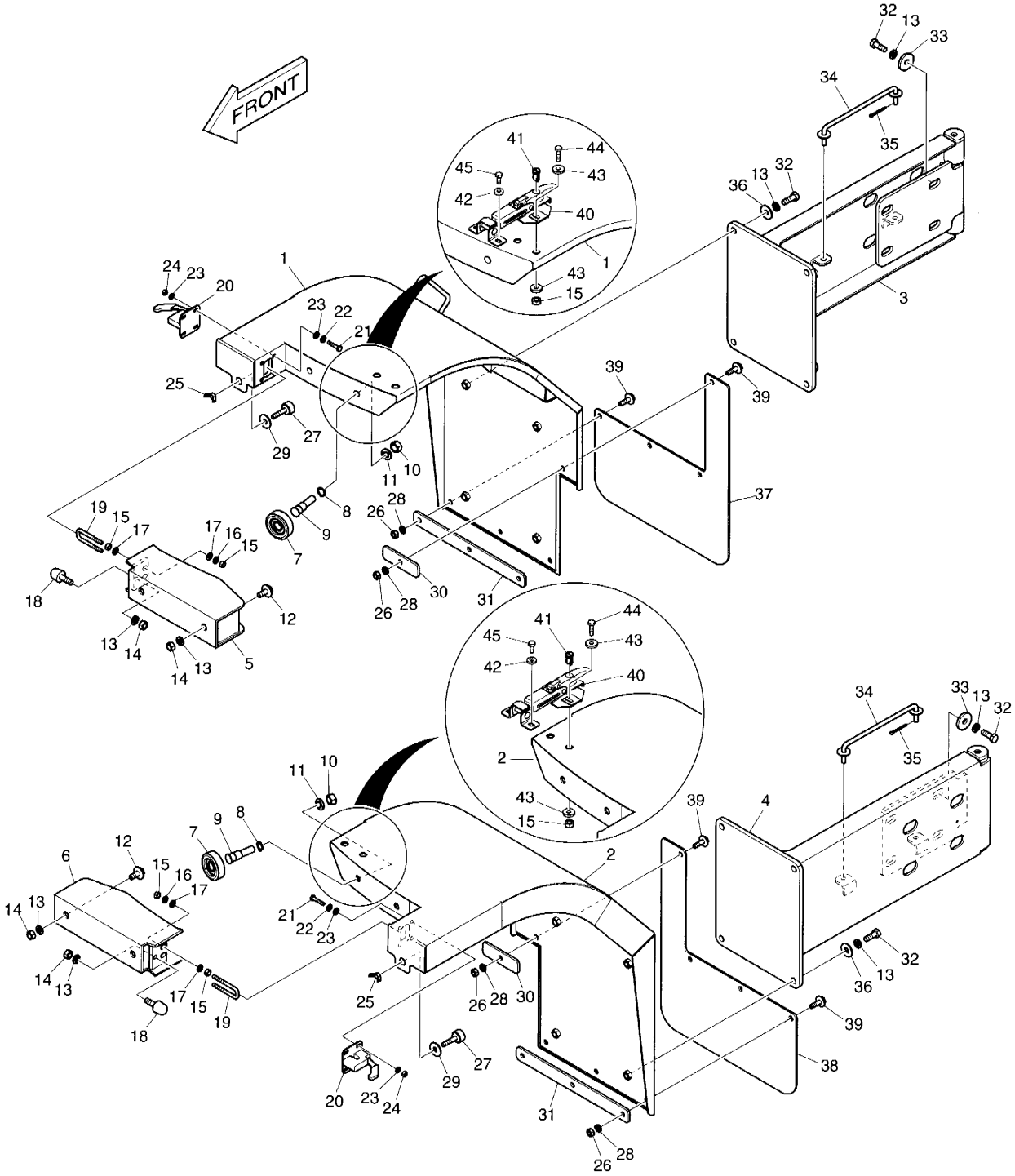

DATE	JUN. 30, 2007
REV. NO.	EXB07-06

Fig. 5240 REAR FENDER SUPPORT

Serial No. ;

Key No.	Part No.	Description	Description	Q'ty	S.C	Serial No.	ICA	Replaceable part	
								Part No.	Q'ty
5[illegible]-33	4114-4078A	WASHER	RONDELLE	8					
34	K1016924	STAY	ENTRETOISE	2					
35	S5735591	PIN;SPLIT	GOUPILLE	2					
36	2114-1058D30	WASHER;PLAIN	RONDELLE PLATE	8					
37	K1018795A	RUBBER	CAOUTCHOUC	1					
38	K1018796A	RUBBER	CAOUTCHOUC	1					
39	DS0025030	BOLT	BOULON	8					
40	**125-00075A**	**CATCH**	CROCHET	2		**5034–**			
41	**K1004630**	**CYLINDER;KEY**	CYLINDRE	2		**5034–**			
42	**2114-1058D86**	**WASHER**	RONDELLE	4		**5034–**			
43	**DS0401128**	**WASHER**	RONDELLE	8		**5034–**			
44	**S0509266**	**BOLT**	BOULON	4		**5034–**			
45	**S0508866**	**BOLT**	BOULON	4		**5034–**			

DATE	NOV. 24, 2006
1st EDITION	

Fig. 5250 WHEEL ASS'Y VOLANT

Serial No. ;

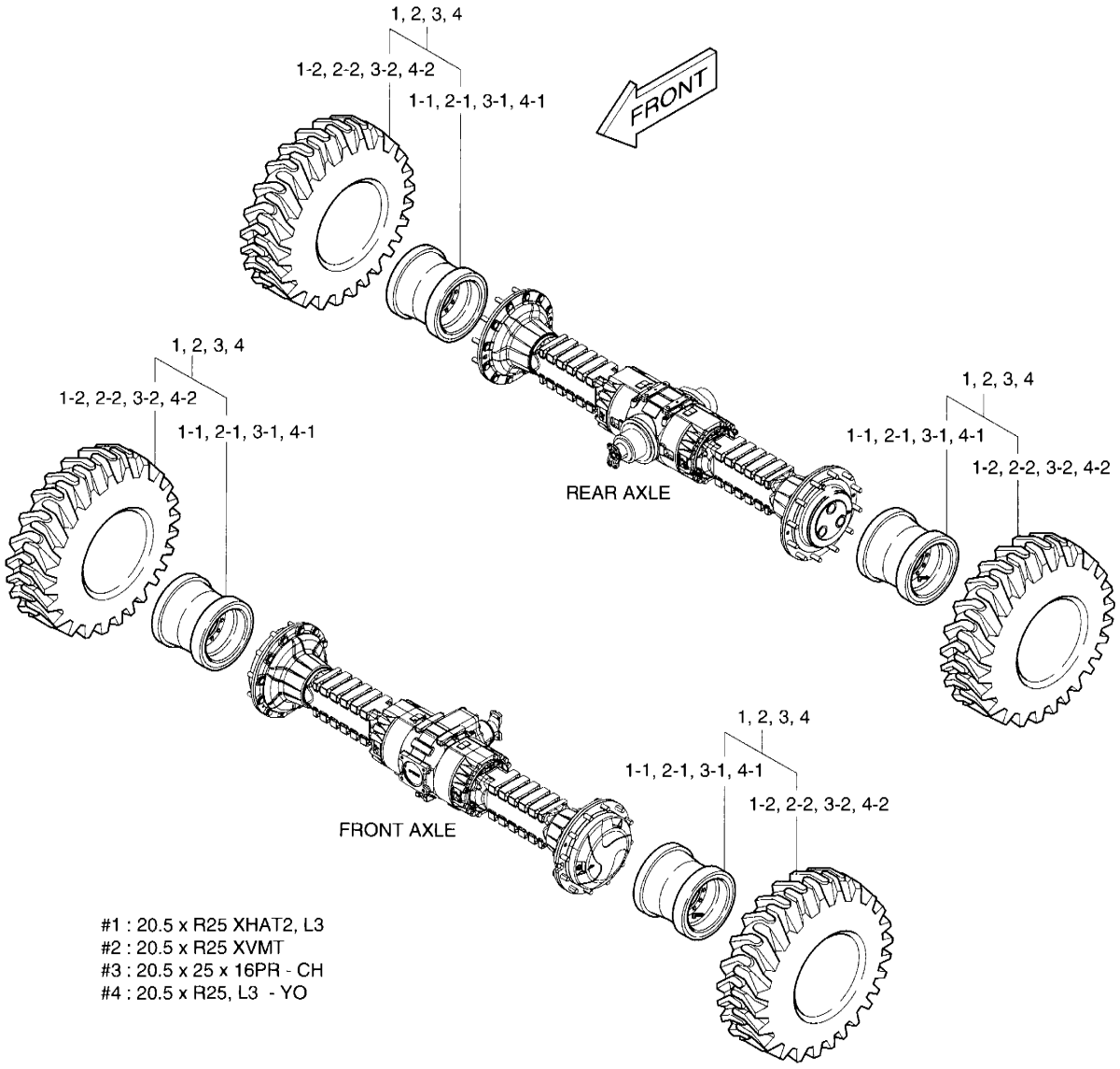

DATE	NOV. 24, 2006
1st EDITION	

Fig. 5250 WHEEL ASS'Y VOLANT

Serial No. ;

Key No.	Part No.	Description	Description	Q'ty	S.C	Serial No.	ICA	Replaceable part	
								Part No.	Q'ty
0--	276-00075F4	WHEEL ASS'Y	ROUE	-	D				
1	276-00082	WHEEL ASS'Y	ROUE	4	D				
1-1	4278-9040	. RIM	. JANTE	1					
1-2	4276-9052	. TIRE 20.5xR25 (L3)	. PNEU	1					
2	K1024532	WHEEL ASS'Y	ROUE	4	D				
2-1	278-00056	. RIM	. JANTE	1					
2-2	4276-9057	. TIRE 20.5xR25xVMT (L3)	. PNEU	1					
3	K1011398	WHEEL ASS'Y	ROUE	4	D				
3-1	278-00056	. RIM	. JANTE	1					
3-2	K1009256	. TIRE 20.5x25x16PR (L3) - CH	. PNEU	1					
4	276-00082	WHEEL ASS'Y	ROUE	4	D				
4-1	278-00056	. RIM	. JANTE	1					
4-2	K1011705	. TIRE 20.5x25x16PR (L3) - YO	. PNEU	1					

DATE	NOV. 24, 2006
1st EDITION	

Fig. 5260 BUCKET -2.0m³ CUTTING EDGE GODET

Serial No. ;

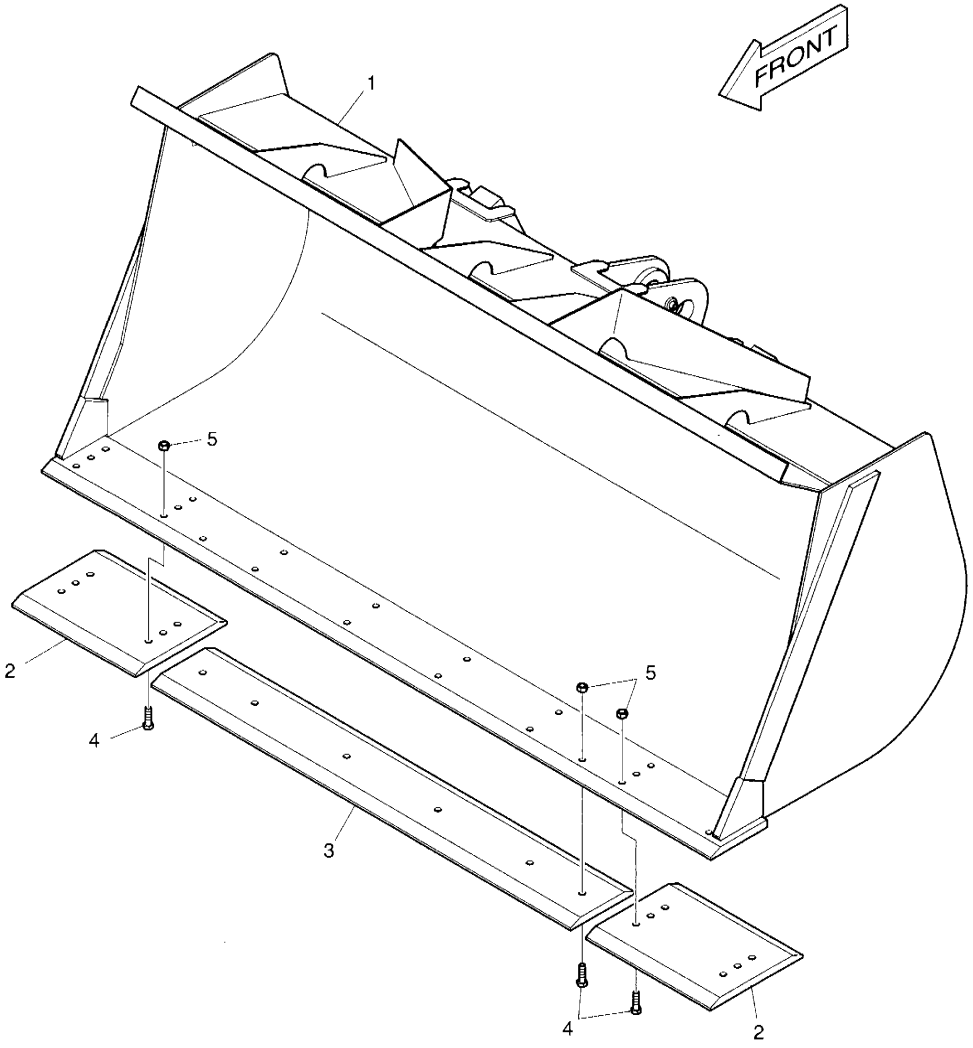

DATE	NOV. 24, 2006
1st EDITION	

Fig. 5260 BUCKET -2.0m³ CUTTING EDGE GODET

Serial No. ;

Key No.	Part No.	Description	Description	Q'ty	S.C	Serial No.	ICA	Replaceable part	
								Part No.	Q'ty
δ0--	K1024920A	BUCKET - 2.0m³ CUTTING EDGE	GODET	1					
1	K1016876A	BUCKET - 2.0m³	GODET	1					
2	4713-1190A	EDGE;CUTTING	COUTEAU BORD	2					
3	4713-1192	EDGE;CUTTING	COUTEAU BORD	1					
4	S0565366	BOLT	BOULON	18					
5	S4012933	NUT	ECROU	18					

DATE	JUN. 30, 2007
REV.NO.	EXB07-06

Fig. 5270 COUNTER WEIGHT & REAR LAMP
CONTRE-POIDES ET COFFRE A BATTERIE

Serial No. ;

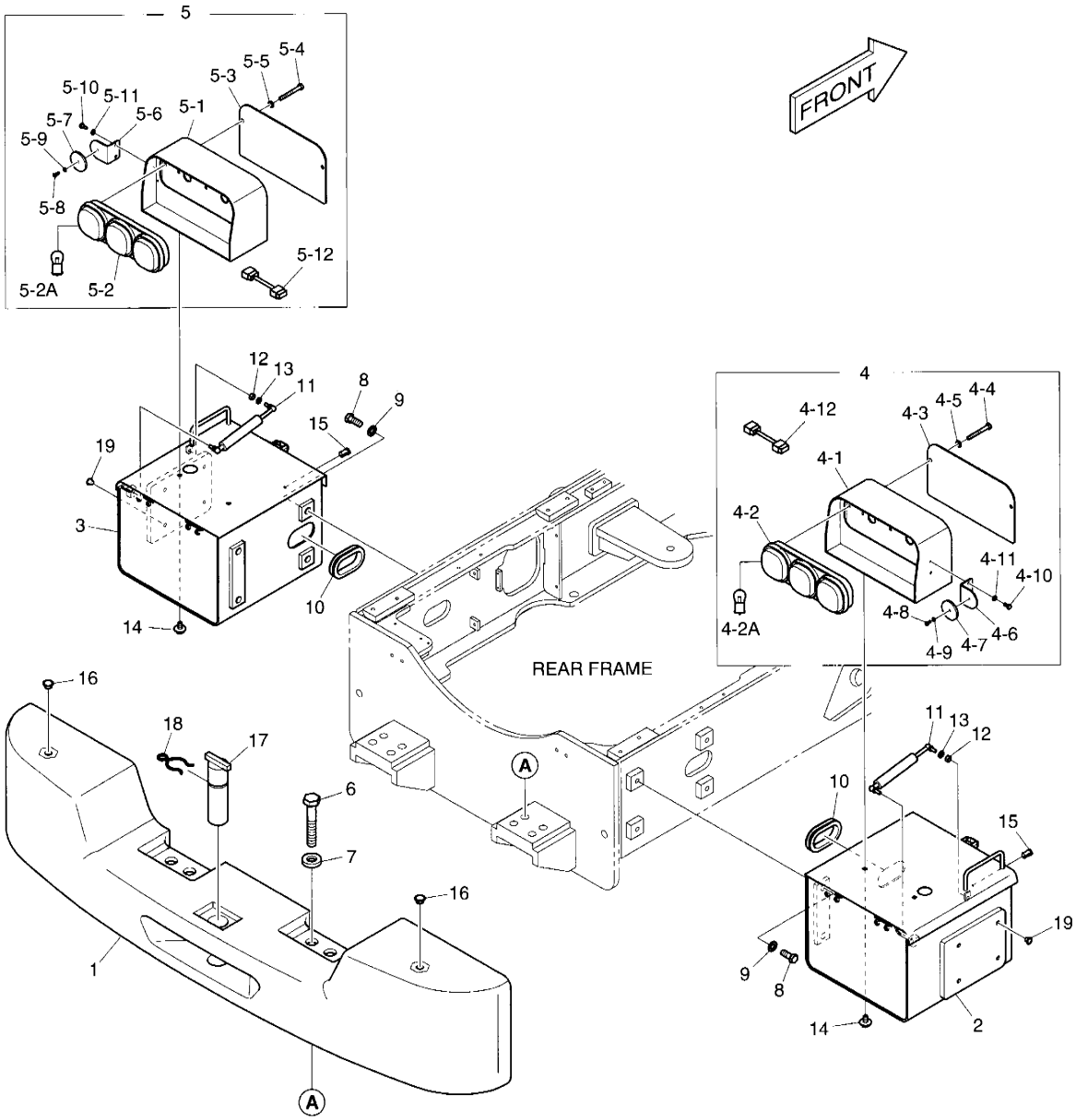

DATE	JUN. 30, 2007
REV. NO.	EXB07-06

Fig. 5270 COUNTER WEIGHT & REAR LAMP
CONTRE-POIDES ET COFFRE A BATTERIE

Serial No. ;

Key No.	Part No.	Description	Description	Q'ty	S.C	Serial No.	ICA	Replaceable part	
								Part No.	Q'ty
.70--	**K1028900A**	**COUNTER WEIGHT & REAR**	CONTRE-POIDS	-	D				
1	K1018851A	COUNTER WEIGHT	CONTRE- POIDS	1					
2	K1016378A	BOX;BATTERY	BOITE	1		5001–5111	I	K1016378B	1
	K1016378B	**BOX;BATTERY**	BOITE	1		**5112–**			
3	K1016379	BOX;BATTERY	BOITE	1		5001–5111	I	K1016379A	1
	K1016379A	**BOX;BATTERY**	BOITE	1		**5112–**			
4	K1024030A	LAMP;REAR COMBI. (R.H)	LAMPE	1		5001–5083	I	K1024030B	1
	K1024030B	**LAMP;REAR COMBI. (R.H)**	LAMPE	1		**5084–**			
4-1	K1024036A	. BRACKET (R.H)	. SUPPORT	1		5001–5083	I	K1024036B	1
	K1024036B	**. BRACKET (R.H)**	. SUPPORT	1		**5084–**			
4-2	K1003561	. LAMP	. LAMPE	1					
4-2A	515-00015	.. BULB	.. AMPOULE	2					
4-3	K1027388	. PLATE	. PLAQUE	1					
4-4	S0556766	. BOLT	. BOULON A 6 PANS	2					
4-5	S5102503	. WASHER;SPRING	. RONDELLE ELASTIQUE	2					
4-6	K1024042	. BRACKET	. SUPPORT	1					
4-7	190-00078	. REFLECTOR	. RFLECTEUR	1					
4-8	S3450833	. BOLT	. BOULON A 6 PANS	1					
4-9	S5102203	. WASHER;SPRING	. RONDELLE ELASTIQUE	1					
4-10	S0504566	. BOLT	. BOULON A 6 PANS	2					
4-11	S5010313	. WASHER;PLAIN	. RONDELLE PLATE	2					
4-12	**K1036705**	**. HARNESS**	. HARNAIS	1		**5084–**			
5	K1024029A	LAMP;REAR COMBI. (L.H)	LAMPE	1		5001–5083	I	K1024029B	1
	K1024029B	**LAMP;REAR COMBI. (L.H)**	LAMPE	1		**5084–**			
5-1	K1024053A	. BRACKET (R.H)	. SUPPORT	1		5001–5083	I	K1024053B	1
	K1024053B	**. BRACKET (R.H)**	. SUPPORT	1		**5084–**			
5-2	K1003561	. LAMP	. LAMPE	1					
5-2A	515-00015	.. BULB	.. AMPOULE	2					
5-3	K1027388	. PLATE	. PLAQUE	1					
5-4	S0556766	. BOLT	. BOULON A 6 PANS	2					
5-5	S5102503	. WASHER;SPRING	. RONDELLE ELASTIQUE	1					
5-6	K1024042	. BRACKET	. SUPPORT	1					
5-7	190-00078	. REFLECTOR	. RFLECTEUR	1					
5-8	S3450833	. BOLT	. BOULON A 6 PANS	1					
5-9	S5102203	. WASHER;SPRING	. RONDELLE ELASTIQUE	1					
5-10	S0504566	. BOLT	. BOULON A 6 PANS	1					
5-11	S5010313	. WASHER;PLAIN	. RONDELLE PLATE	2					
5-12	**K1036705**	**. HARNESS**	. HARNAIS	1		**5084–**			

DATE	JUN. 30, 2007
REV.NO.	EXB07-06

Fig. 5270 COUNTER WEIGHT & REAR LAMP
CONTRE-POIDES ET COFFRE A BATTERIE

Serial No. ;

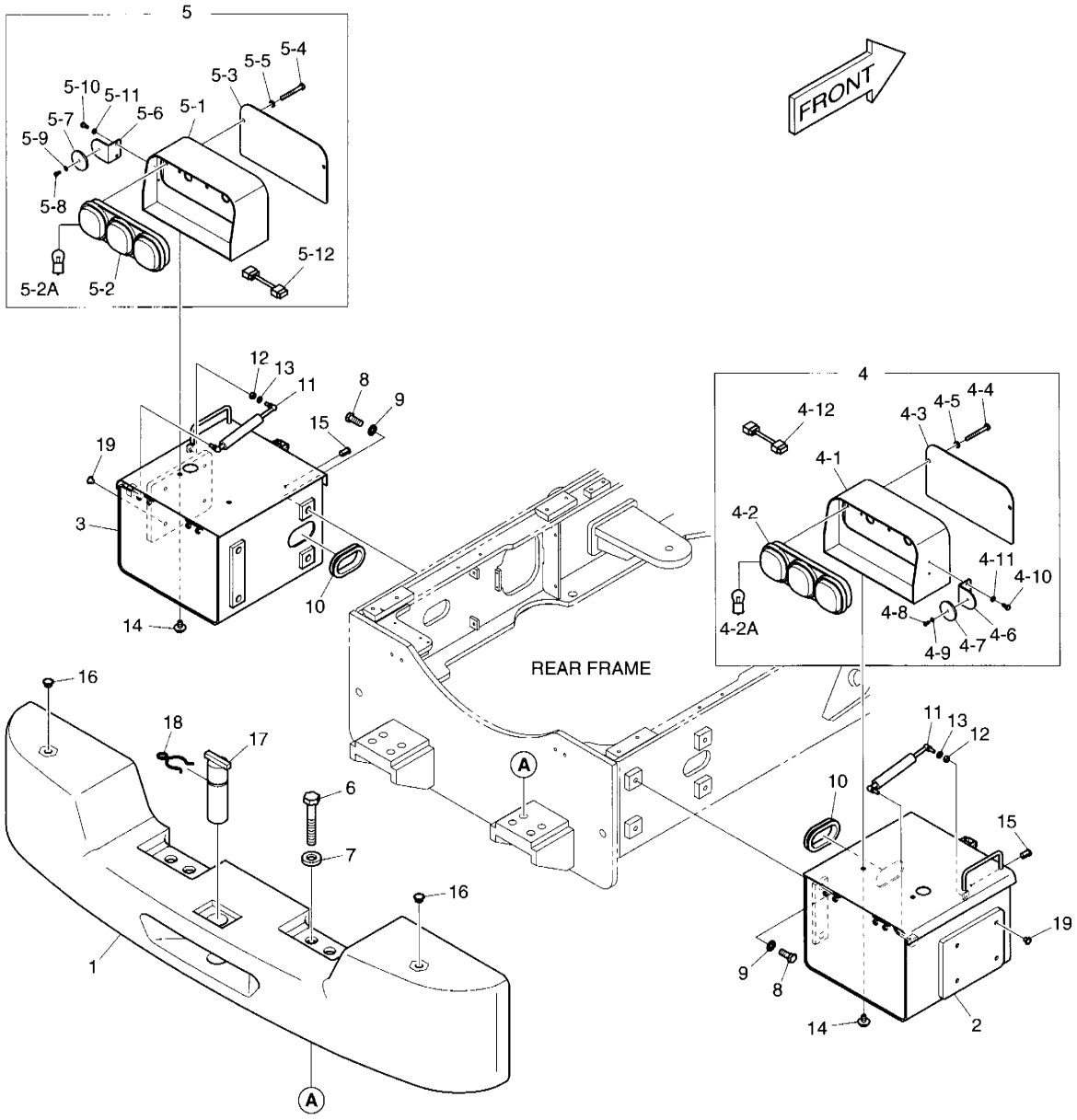

DATE	JUN. 30, 2007
REV. NO.	EXB07-06

Fig. 5270 COUNTER WEIGHT & REAR LAMP
CONTRE-POIDES ET COFFRE A BATTERIE

Serial No. ;

Key No.	Part No.	Description	Description	Q'ty	S.C	Serial No.	ICA	Replaceable part	
								Part No.	Q'ty
5270-6	DS0002272	BOLT	BOULON	4					
7	2114-1370	WASHER	RONDELLE	4					
8	DS0002273	BOLT	BOULON	8					
9	2114-1058D2	WASHER	RONDELLE	8					
10	2160-1201D12	BUSHING;RUBBER	DOUILLE EN CAOUTCHOUC	2					
11	DS1001065	SPRING;GAS	AMORTISSEUR	2					
12	S4012533	NUT	ECROU	2					
13	S5102503	WASHER;SPRING	RONDELLE ELASTIQUE	2					
14	DS0025014	BOLT	BOULON	4					
15	K1004529	CYLINDER;KEY	CYLINDRE	2					
16	K1004331	CAP	CHAPEAU	2					
17	K1014299	PIN	GOUPILLE	1					
18	124-00017	CLIP	AGRAFE	1					
19	160-00075	CAP	CHAPEAU	8					

DATE	NOV. 24, 2006
1st EDITION	

Fig. 5280 FUEL HEATER EQUIPMENT ELECTRIQUE

Serial No. ;

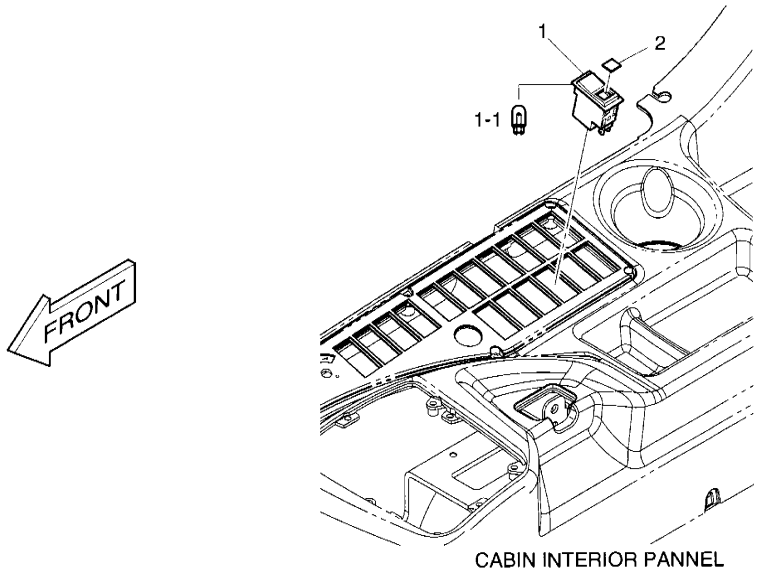

CABIN INTERIOR PANNEL

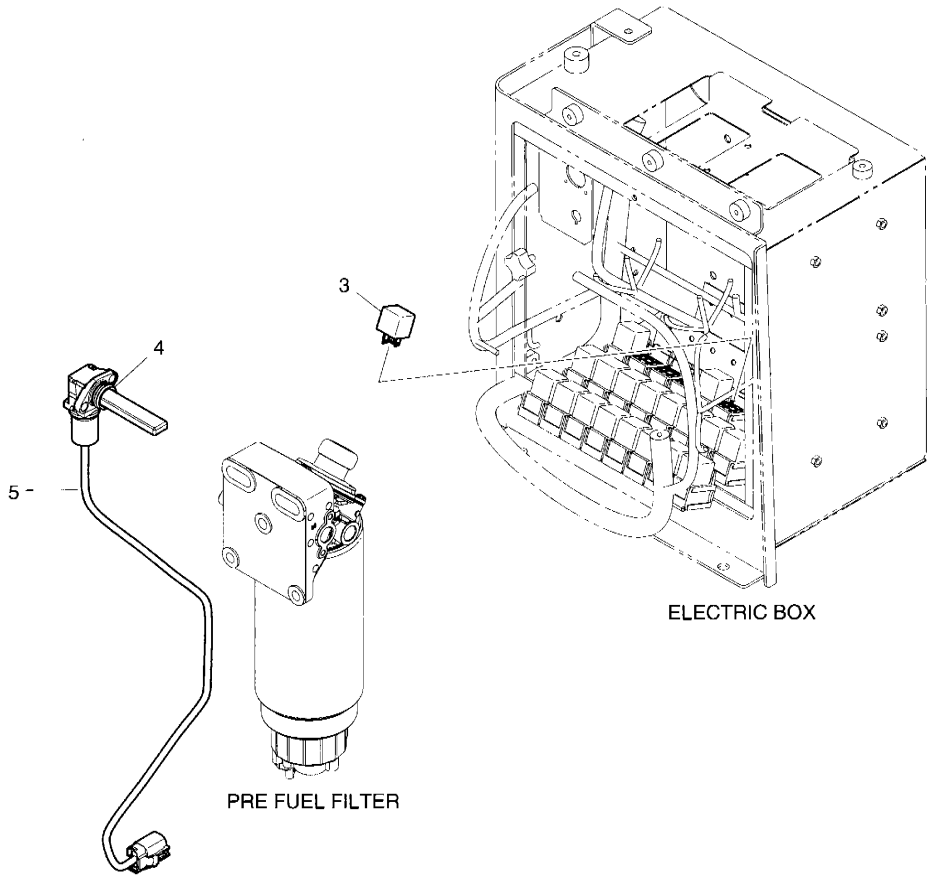

ELECTRIC BOX

PRE FUEL FILTER

DATE	NOV. 24, 2006
1st EDITION	

Fig. 5280 FUEL HEATER
EQUIPMENT ELECTRIQUE

Serial No. ;

Key No.	Part No.	Description	Description	Q'ty	S.C	Serial No.	ICA	Replaceable part	
								Part No.	Q'ty
5280--	K1024091	ELECTRIC;FUEL HEATER	ELEMENT	-	D				
1	2549-9098	SWITCH;ROCKER	INTERRUPTEUR	1					
1-1	K9000353	. LAMP;PILOT	. LAMPE	1					
2	2190-2036D30	INSERT;FUEL HEATER	INSERTION	1					
3	2544-9033	RELAY	RELAIS	1					
4	K1006668	HARNESS	HARNAIS	1					
5	K1004716	HEATER;FUEL	RECHAUFFEUR	1					

DATE	NOV. 24, 2006
1st EDITION	

Fig. 5290 ROTATING BEACON
FEU DE CIRCULATION

Serial No. ;

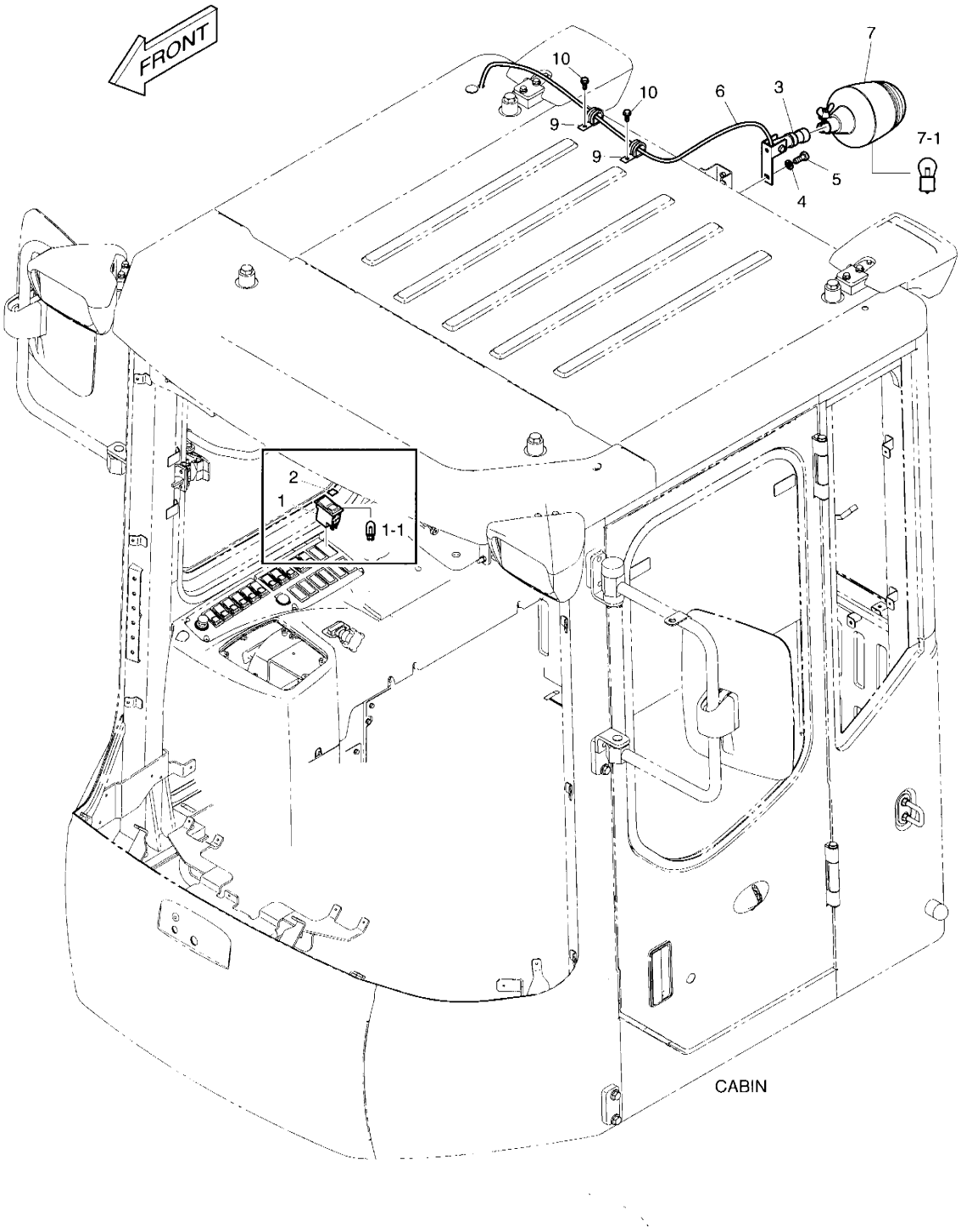

DATE	NOV. 24, 2006
1st EDITION	

Fig. 5290 ROTATING BEACON FEU DE CIRCULATION

Serial No. ;

Key No.	Part No.	Description	Description	Q'ty	S.C	Serial No.	ICA	Replaceable part	
								Part No.	Q'ty
5290--	K1024087A	ROTATING BEACON	FEU DE CIRCULATION	-	D				
1	2549-9098	SWITCH;ROCKER	INTERRUPTEUR	1					
1-1	K9000353	. LAMP;PILOT	. LAMPE	1					
2	2190-2036D10	INSERT;ROTATING BEACON	INSERTION	1					
3	160-00061	BUSHING	DOUILLE	1					
4	S5102503	WASHER;SPRING	RONDELLE ELASTIQUE	2					
5	S0508853	BOLT	BOULON	2					
6	K1008765	HARNESS;BEACON	HARNAIS	1					
7	534-00062	LAMP ASS'Y	LAMPE	1					
7-1	515-00013	. BULB	. AMPOULE	1					
9	124-00208D2	CLIP	AGRAFE	2					
10	K1001029	BOLT	BOULON	2					

DATE	NOV. 24, 2006
1st EDITION	

Fig. 5300 ARM FLOAT KICK OUT ASS'Y
COUP-DE-PIED DE FLOTTEUR DEHORS

Serial No. ;

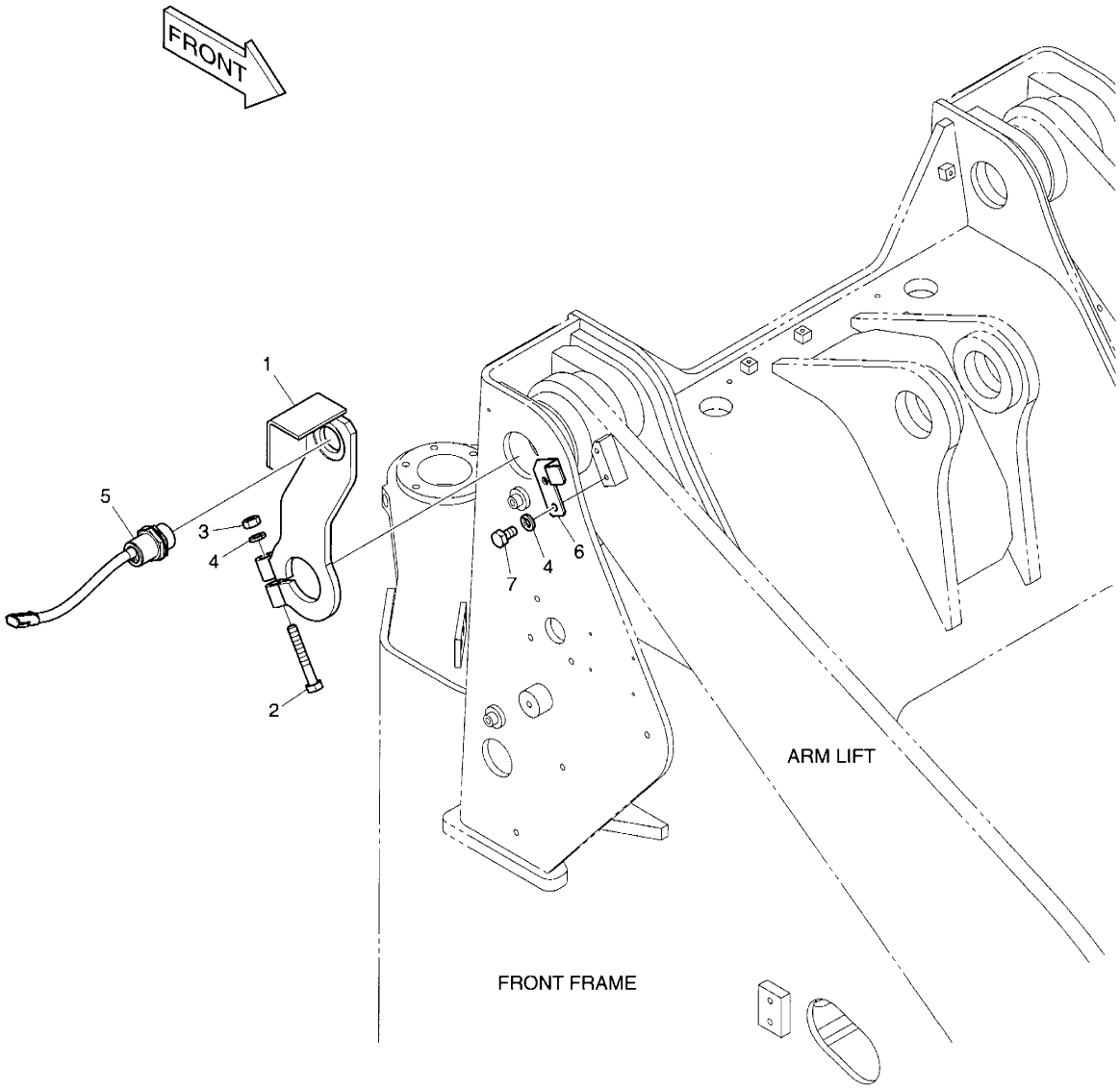

DATE	NOV. 24, 2006
1st EDITION	

Fig. 5300 ARM FLOAT KICK OUT ASS'Y
COUP-DE-PIED DE FLOTTEUR DEHORS

Serial No. ;

Key No.	Part No.	Description	Description	Q'ty	S.C	Serial No.	ICA	Replaceable part	
								Part No.	Q'ty
5300--	4715-4010A	ARM FLOAT KICK OUT ASS'Y	BALANCIER	-	D				
1	195-02348A	BRACKET	SUPPORT	1					
2	S0558966	BOLT	BOULON	1					
3	S4012633	NUT	ECROU	1					
4	S5102603	WASHER;SPRING	RONDELLE ELASTIQUE	3					
5	K1027017	SWITCH	INTERRUPTEUR	1					
6	191-02638A	PLATE	PLAQUE	1					
7	S0511853	BOLT	BOULON	2					

DATE	NOV. 24, 2006
1st EDITION	

Fig. 5310 ARM FLOAT KICK - ELECTRIC INTERRUPTEUR

Serial No. ;

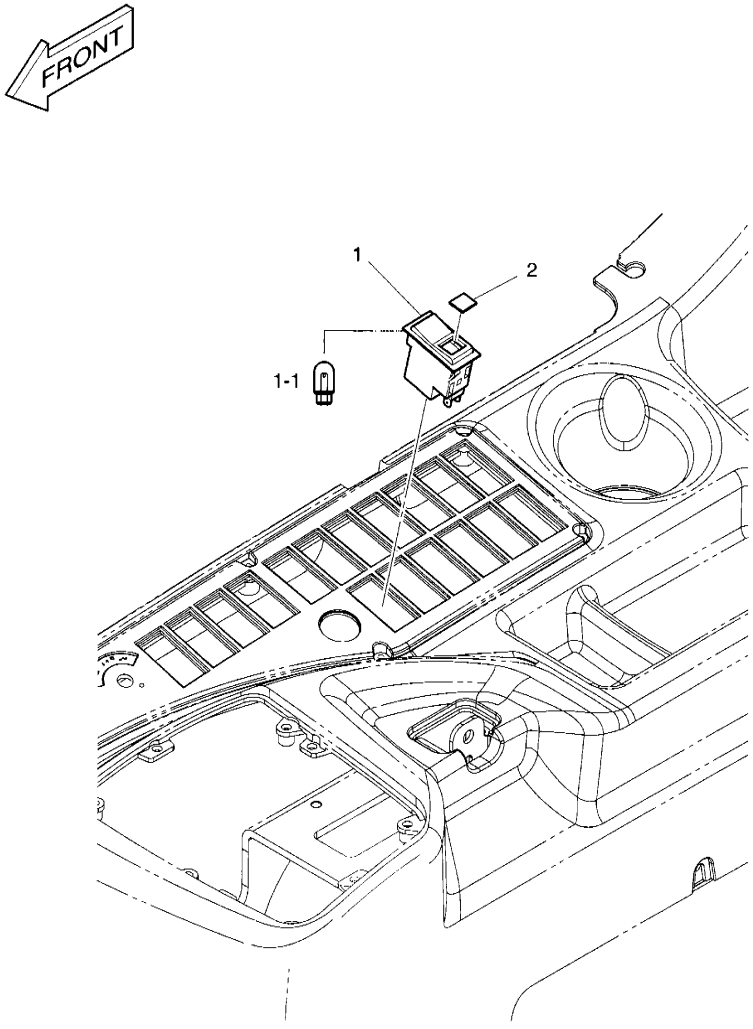

CABIN INTERIOR PANNEL

DATE	NOV. 24, 2006
1st EDITION	

Fig. 5310 ARM FLOAT KICK - ELECTRIC INTERRUPTEUR

Serial No. ;

Key No.	Part No.	Description	Description	Q'ty	S.C	Serial No.	ICA	Replaceable part	
								Part No.	Q'ty
ﾉ--	K1024084	ARM FLOAT KICK - ELECTRIC	COUP-DE-PIED DE	-	D				
1	2549-9098	SWITCH;ROCKER	INTERRUPTEUR	1					
1-1	K9000353	. LAMP;PILOT	. LAMPE	1					
2	2190-2036D22	INSERT;FLOAT KICK-OUT	INSERTION	1					

DATE	NOV. 24, 2006
1st EDITION	

Fig. 5320 ALTENATOR - 80A
ALTENATEUR

Serial No. ;

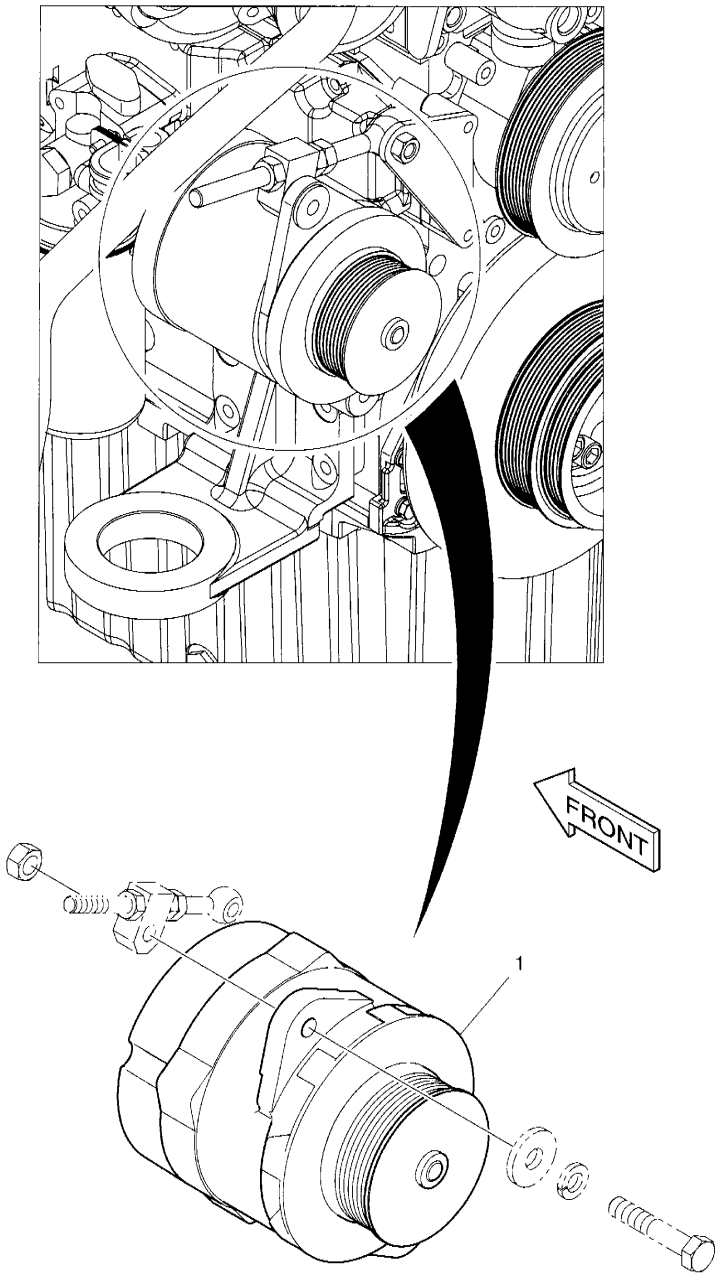

DATE	NOV. 24, 2006
1st EDITION	

Fig. 5320 ALTENATOR - 80A ALTENATEUR

Serial No. ;

Key No.	Part No.	Description	Description	Q'ty	S.C	Serial No.	ICA	Replaceable part	
								Part No.	Q'ty
0--	K1024099	ALTERNATOR 80A	ALTERNATEUR	-	D				
1	K1010703	ALTERNATOR 80A	ALTERNATEUR	1					

DATE	NOV. 24, 2006
1st EDITION	

Fig. 5330 FNR SWITCH COMMUTATEUR

Serial No. ;

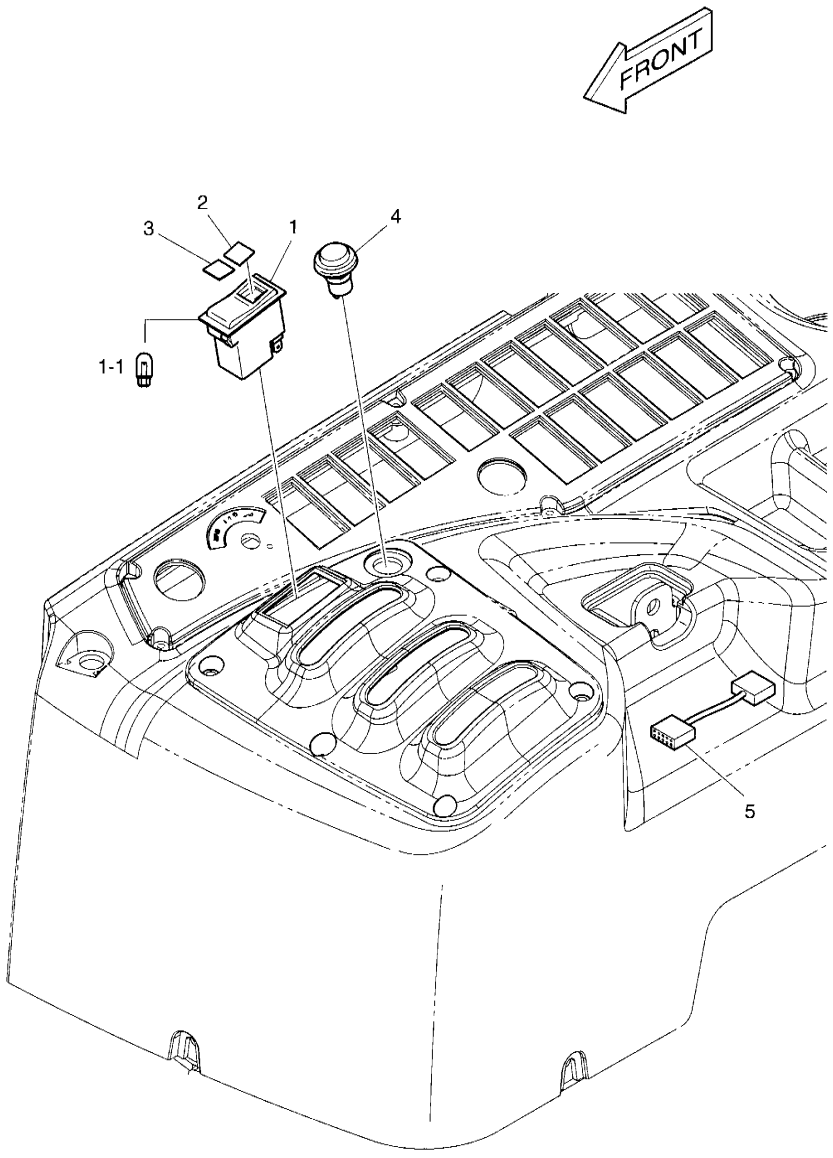

CABIN INTERIOR PANNEL

DATE	NOV. 24, 2006
1st EDITION	

Fig. 5330 FNR SWITCH COMMUTATEUR

Serial No. ;

Key No.	Part No.	Description	Description	Q'ty	S.C	Serial No.	ICA	Replaceable part	
								Part No.	Q'ty
30--	K1024083B	ELECTRIC PARTS	EQUIPMENT ELECTRIQUE	-	D				
1	549-00083	SWITCH;ROCKER	INTERRUPTEUR	1					
1-1	K9000353	. LAMP;PILOT	. LAMPE	1					
2	2190-2584D24	INSERT;REVERSE	INSERTION	1					
3	190-01184	PLATE	PLAQUE D'IDENTIFICATION	1					
4	K1006360A	SWITCH;FNR SELECT	INTERRUPTEUR	1					
5	K1024175A	HARNESS	FAISCEAU	1					

DATE	NOV. 24, 2006
1st EDITION	

Fig. 5340 NOISE FILTER - WIPER MOTOR
BRUIT FILTRE

Serial No. ;

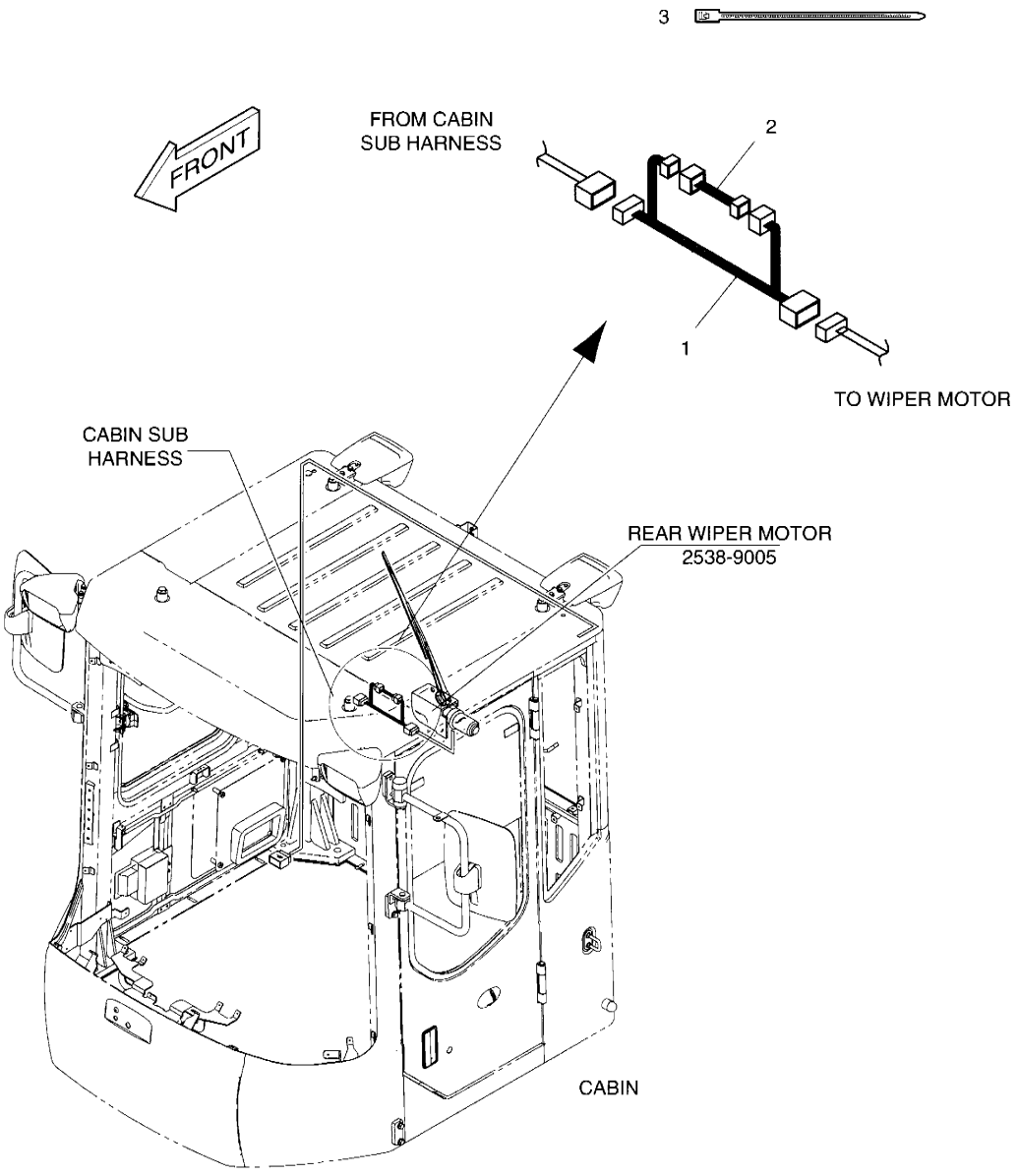

DATE	NOV. 24, 2006
1st EDITION	

Fig. 5340 NOISE FILTER - WIPER MOTOR BRUIT FILTRE

Serial No. ;

Key No.	Part No.	Description	Description	Q'ty	S.C	Serial No.	ICA	Replaceable part	
								Part No.	Q'ty
5340--	K1024096	NOISE FILTER	BRUIT FILTRE	-	D				
1	530-00224	HARNESS;JOINT	FAISCEAU	1					
2	2471-6062	FILTER;NOISE(BLOWER MOTOR)	FILTRE	1					
3	2124-1622D2	CLIP;BAND	ATTACHE	3					

DATE	NOV. 24, 2006
1st EDITION	

Fig. 5350 NOISE FILTER (AC) BRUIT FILTRE

Serial No. ;

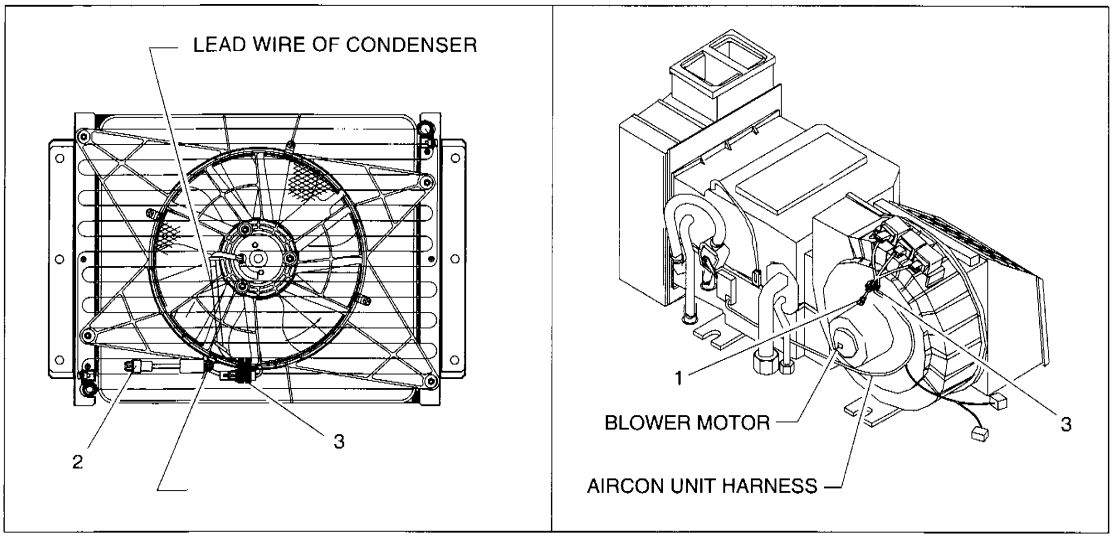

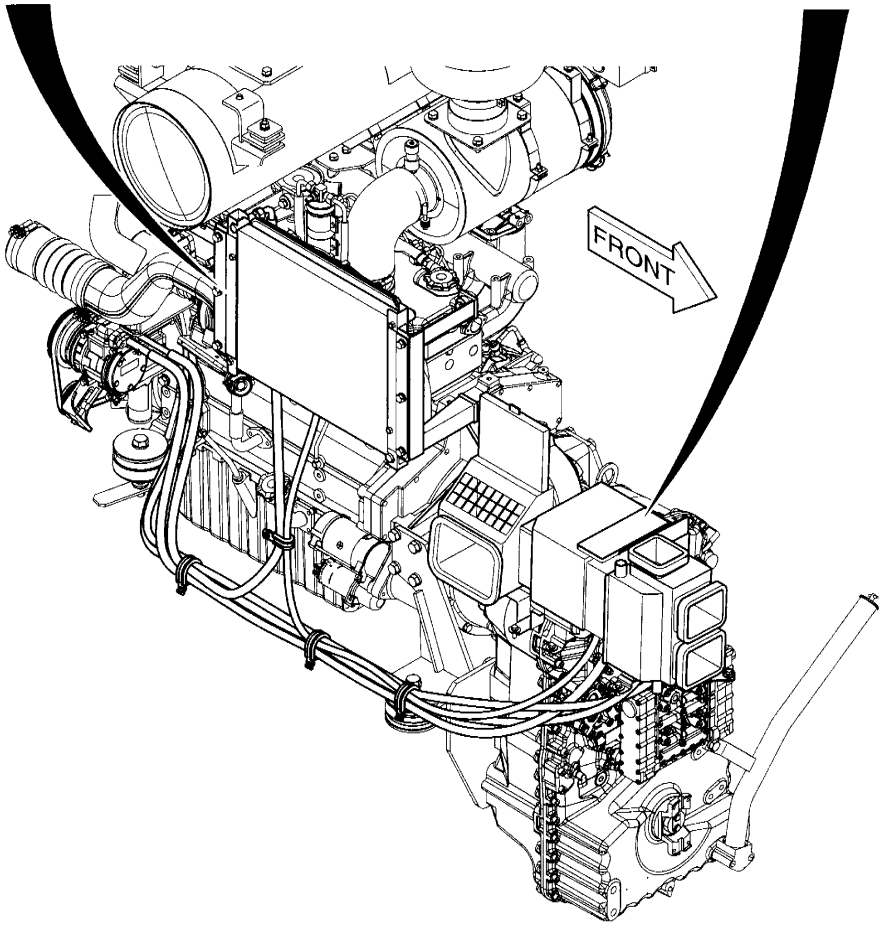

DATE	NOV. 24, 2006
1st EDITION	

Fig. 5350 NOISE FILTER (AC) BRUIT FILTRE

Serial No. ;

Key No.	Part No.	Description	Description	Q'ty	S.C	Serial No.	ICA	Replaceable part	
								Part No.	Q'ty
5350--	K1024095	NOISE FILTER (AC)	BRUIT FILTRE	-	D				
1	2471-6062	FILTER;NOISE (BLOWER MOTOR)	FILTRE	1					
2	2471-6063	FILTER;NOISE (C/D MOTOR)	FILTRE	1					
3	2124-1622D2	CLIP;BAND	AGRAFE	3					

DATE	NOV. 24, 2006
1st EDITION	

Fig. 5360 CD PLAYER
JOUEUR DE CD

Serial No. ;

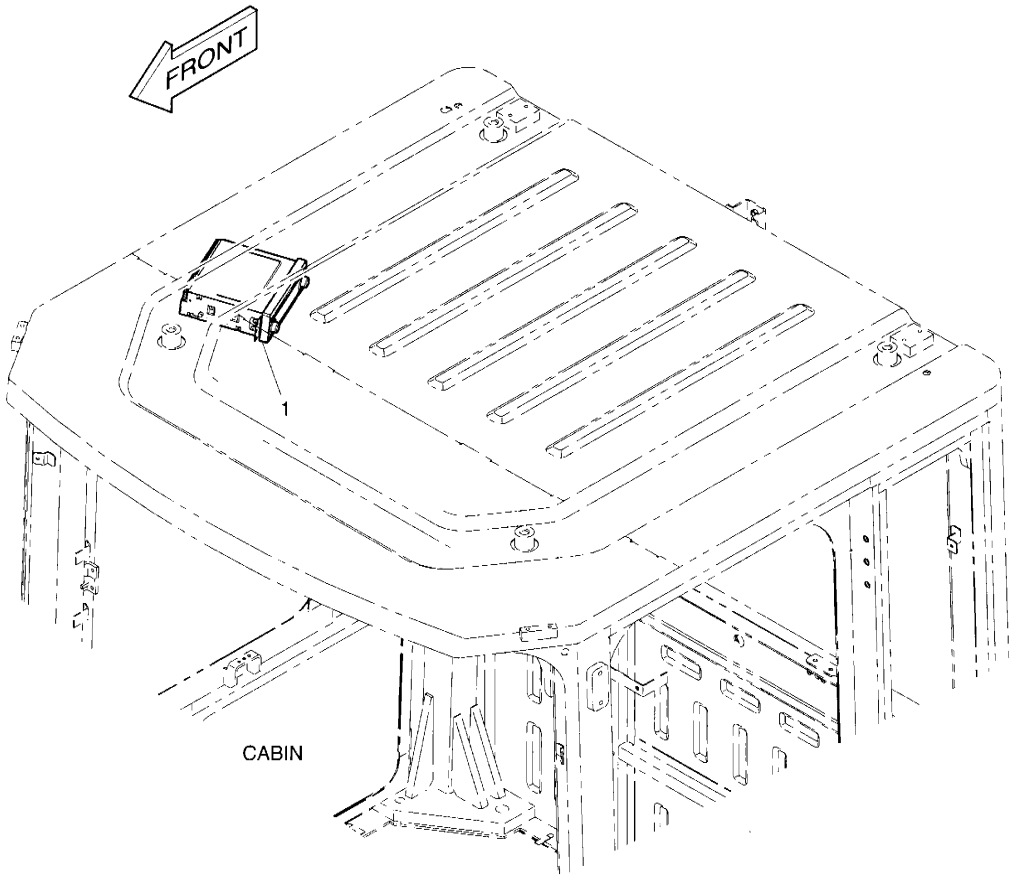

DATE	NOV. 24, 2006
1st EDITION	

Fig. 5360 CD PLAYER JOUEUR DE CD

Serial No. ;

Key No.	Part No.	Description	Description	Q'ty	S.C	Serial No.	ICA	Replaceable part	
								Part No.	Q'ty
5360--	K1024089	CD PLAYER	PLAQUEUR DE CD	-	D				
1	K1010982	CD PLAYER	PLAQUEUR DE CD	1					

DATE	JUN. 30, 2007
REV.NO.	EXB07-06

Fig. 5370 AXLE & DRIVE SHAFT-SUPER MAX.TRAC
PONTS ET ARBRES DE TRANSMISSION

Serial No. ;

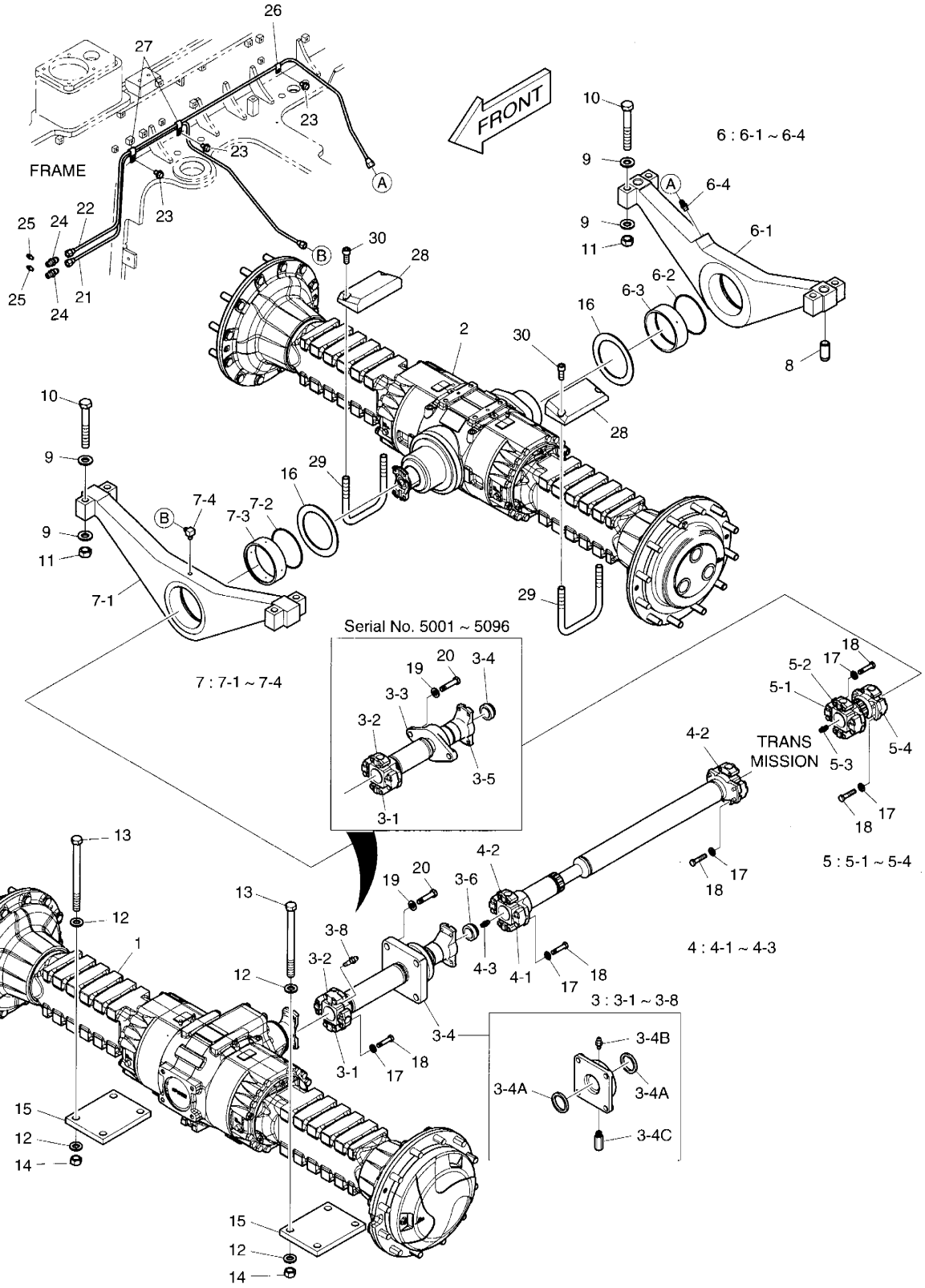

DATE	JUN. 30, 2007
REV. NO.	EXB07-06

Fig. 5370 AXLE & DRIVE SHAFT-SUPER MAX.TRAC
PONTS ET ARBRES DE TRANSMISSION

Serial No. ;

Key No.	Part No.	Description	Description	Q'ty	S.C	Serial No.	ICA	Replaceable part	
								Part No.	Q'ty
5370--	K1029482	AXLE & DRIVE SHAFT ASS'Y	PONTS ET ARBRES DE	-	D				
1	211-00067	AXLE;FRONT	AXE	1					
2	211-00068	AXLE;REAR	AXE	1					
3	260-00039	DRIVE SHAFT;FRONT	ARBRE D'ENTRANEMENT	1		5001–5096			
3-1	1.120-00002	. BOLT	. BOULON A 6 PANS	4					
3-2	1.109-00044	. BEARING;JOURNAL	. TOURILLON	1					
3-3	1.229-00006	. BEARING;FLANGE	. PALIER	1					
3-4	1.121-00042	. NUT;LOCK	. ECROU	1					
3-5	1.229-00008	. FLANGE;COM	. BRIDE	1					
3	**K1036276**	**DRIVE SHAFT;FRONT**	ARBRE D'ENTRANEMENT	1		**5097–**			
3-1	**1.120-00002**	**. BOLT**	. BOULON A 6 PANS	4		**5097–**			
3-2	**K9004532**	**. BEARING;JOURNAL**	. TOURILLON	1		**5097–**			
3-4	**K9005524**	**. FLANGE;BEARING**	. BRIDE	1		**5097–**			
3-4A	**K9004534**	**.. SEAL**	.. JOINT	2		**5097–**			
3-4B	**K9003622**	**.. NIPPLE;GREASE**	.. GRAISSEUR	1		**5097–**			
3-4C	**K9000987**	**.. VALVE;AIR RELIEF**	.. VANNE	1		**5097–**			
3-6	**1.121-00042**	**. NUT**	. ERROU	1		**5097–**			
3-8	**1.181-00005**	**. NIPPLE;GREASE**	. GRAISSEUR	1		**5097–**			
4	260-00012	DRIVE SHAFT;CENTER	ARBRE D'ENTRANEMENT	1					
4-1	1.120-00002	. BOLT	. BOULON A 6 PANS	8					
4-2	1.109-00044	. BEARING;JOURNAL	. TOURILLON	2					
4-3	1.420-00024	. VALVE;AIR-RELIEF	. VANNE	1					
5	260-00041	DRIVE SHAFT;REAR	ARBRE D'ENTRANEMENT	1					
5-1	1.120-00002	. BOLT	. BOULON A 6 PANS	8					
5-2	1.109-00044	. BEARING;JOURNAL	. TOURILLON	1					
5-3	1.420-00024	. VALVE;AIR-RELIEF	. VANNE	1					
5-4	1.138-00019	. BEARING;JOURNAL	. TOURILLON	1					
6	K1018198A	SUPPORT;REAR	LAMPE	1					
6-1	-	. PIVOT BEARING	. PALIER	1	D				
6-2	S8011400	. O-RING	. JOINT TORIQUE	1					
6-3	4110-1410	. BUSHING	. DOUILLE	1					
6-4	2181-1919D10	. ADAPTER	. ADAPTEUR	1					
7	K1018197A	SUPPORT;FRONT	LAMPE	1					
7-1	-	. PIVOT BEARING	. PALIER	1	D				
7-2	S8011400	. O-RING	. JOINT TORIQUE	1					
7-3	4110-1410	. BUSHING	. DOUILLE	1					
7-4	2181-1918D6	. ADAPTER	. ADAPTEUR	1					
8	123-00264A	PIN	GOUPILLE	2					

DATE	JUN. 30, 2007
REV.NO.	EXB07-06

Fig. 5370 AXLE & DRIVE SHAFT-SUPER MAX.TRAC
PONTS ET ARBRES DE TRANSMISSION

Serial No. ;

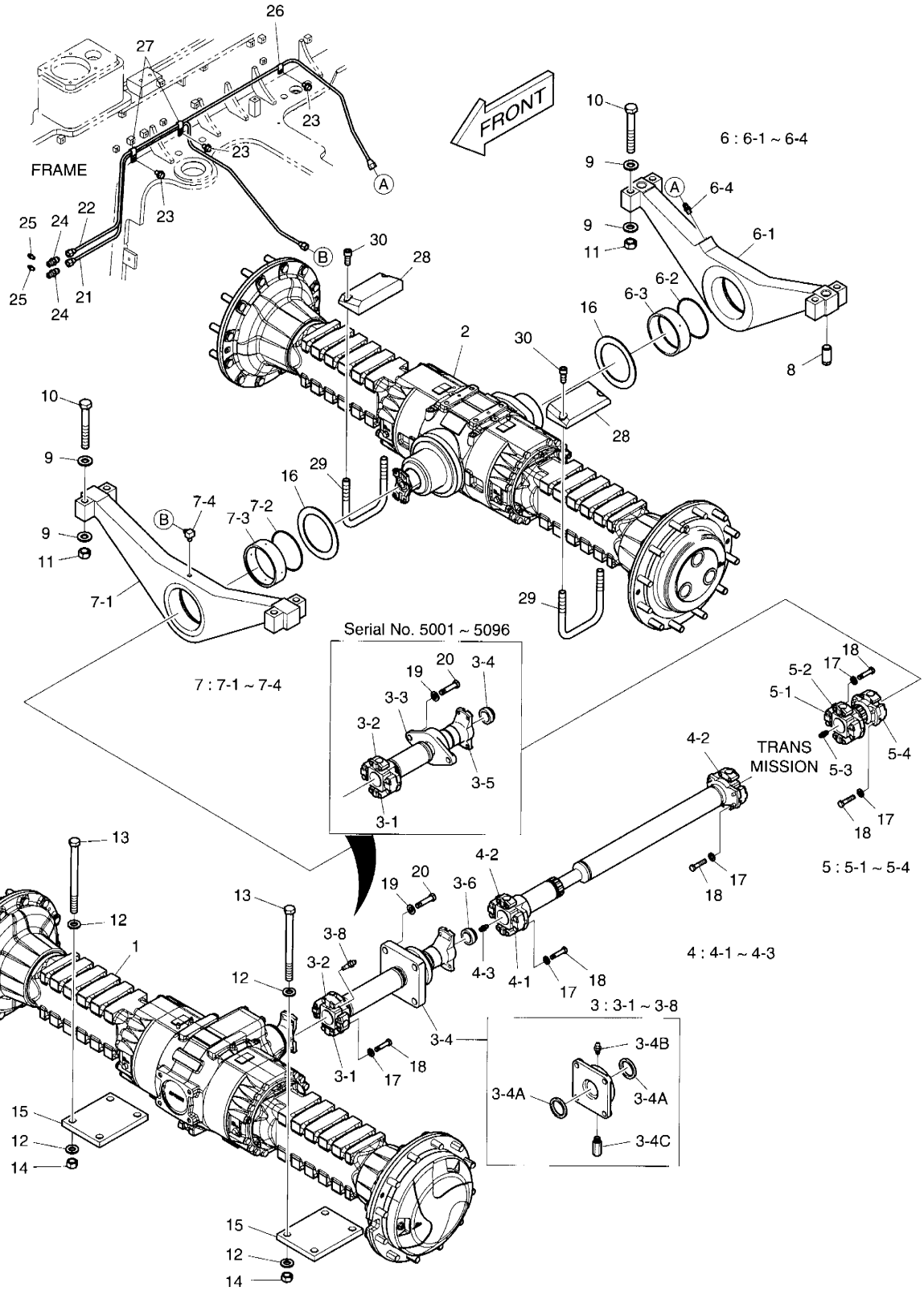

DATE	JUN. 30, 2007
REV. NO.	EXB07-06

Fig. 5370 AXLE & DRIVE SHAFT-SUPER MAX.TRAC
PONTS ET ARBRES DE TRANSMISSION

Serial No. ;

Key No.	Part No.	Description	Description	Q'ty	S.C	Serial No.	ICA	Replaceable part	
								Part No.	Q'ty
5370-9	DS0401181	WASHER	RONDELLE	16					
10	S0571666	BOLT	BOULON	8					
11	S4013133	NUT	ECROU	8					
12	4114-4117A	WASHER	RONDELLE	16					
13	DS0002277	BOLT	BOULON	8					
14	S4013233	NUT	ECROU	8					
15	4222-1013A	PLATE	PLAQUE	2					
16	4114-1930	WASHER;THRUST	RONDELLE DE BUTEE	2					
17	S5110603	WASHER	RONDELLE	20					
18	4120-4016	BOLT	BOULON	20					
19	S5102903	WASHER;SPRING	RONDELLE ELASTIQUE	2		5001–5096			
	4114-1791A	**WASHER;HARD**	RONDELLE	4		**5097–**			
20	S0565066	BOLT	BOULON	2		5001–5096			
	S0565266	**BOLT**	BOULON	4		**5097–**			
21	K1018227A	PIPE;GREASE	TUYAU	1					
22	K1018228A	PIPE;GREASE	TUYAU	1					
23	K1001029	BOLT	BOULON	3					
24	2181-1919D10	ADAPTER	ADAPTEUR	2					
25	S6710041	FITTING	RACCORD	2					
26	2124-1248	CLIP;PIPE	AGRAFE	1					
27	DS2805007	CLIP	AGRAFE	2					
28	4423-1515	STOP;BLOCK	BLOC	2					
29	4182-1732A	PIPE	TUYAU	2					
30	S2221466	BOLT	BOULON	4					

DATE	JUN. 30, 2007
REV.NO.	EXB07-06

Fig. 5380 QUICK COUPLER ASS'Y
COUPLEUR RAPIDE

Serial No. ;

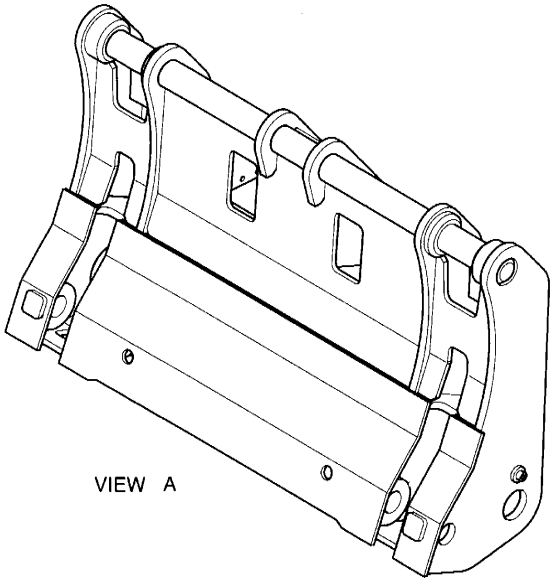

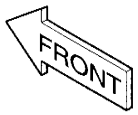

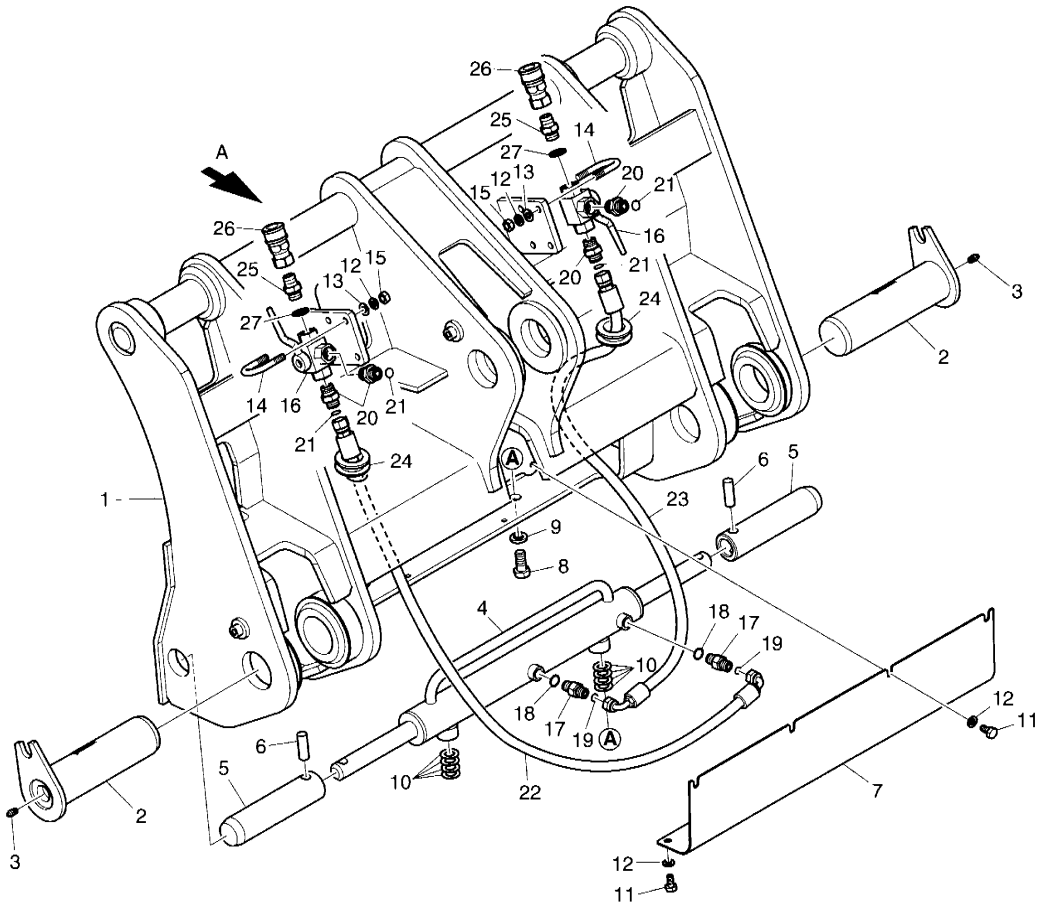

DATE	JUN. 30, 2007
REV. NO.	EXB07-06

Fig. 5380 QUICK COUPLER ASS'Y COUPLEUR RAPIDE

Serial No. ;

Key No.	Part No.	Description	Description	Q'ty	S.C	Serial No.	ICA	Replaceable part	
								Part No.	Q'ty
5 -	**K1029330B**	**QUICK COUPLER ASS'Y**	COUPLEUR RAPIDE	-	D				
1	**K1029331A**	**COUPLER;QUICK**	COUPLEUR RAPIDE	1					
2	K1029198	PIN	GOUPILLE	2					
3	S6710042	NIPPLE;GREASE	MAMELON	2					
4	K1029199	CYLINDER;QUICK COUPLER	CYLINDRE	1					
5	K1036665	PIN	GOUPILLE	2					
6	K1036666	PIN	GOUPILLE	2					
7	K1036668	COVER	COUVERCLE	1					
8	S0521366	BOLT M16X2.0X35	BOULON	2					
9	S5102903	WASHER;SPRING	RONDELLE ELASTIQUE	2					
10	2114-1059D197	SHIM	CALE	8					
11	S0511866	BOLT	BOULON	8					
12	S5102603	WASHER;SPRING	RONDELLE ELASTIQUE	16					
13	S5010603	WASHER	RONDELLE	8					
14	2120-1413D2	BOLT:U	BOULON	4					
15	2121-1311D4	NUT	ECROU	8					
16	**K1033763A**	**VALVE;3-WAY**	VANNE	2					
17	2181-4133D24	ADAPTER	ADAPTEUR	2					
18	S8000141	O-RING	JOINT TORIQUE	2					
19	S8030061	O-RING	JOINT TORIQUE	2					
20	**K1010458**	**ADAPTER**	ADAPTEUR	4					
21	**S8030081**	**O-RING**	JOINT TORIQUE	4					
22	DS20131090	HOSE	TUYAU FLEXIBLE	1					
23	DS20131091	HOSE	TUYAU FLEXIBLE	1					
24	**2160-1004D44**	**RUBBER;BUSHING**	CAOUTCHOUC	2					
25	**2181-1912D12**	**ADAPTER**	ADAPTEUR	2					
26	**K1022465**	**COUPLER**	COUPLEUR	2					
27	**180-00073D4**	**SEAL;RING**	CONTACT DE NIVEAU	2					

DATE	JUN. 30, 2007
REV.NO.	EXB07-06

Fig. 5390 QUICK COUPLER PIPING
TUYAUTERIE DE COUPLEUR RAPIDE

Serial No. ;

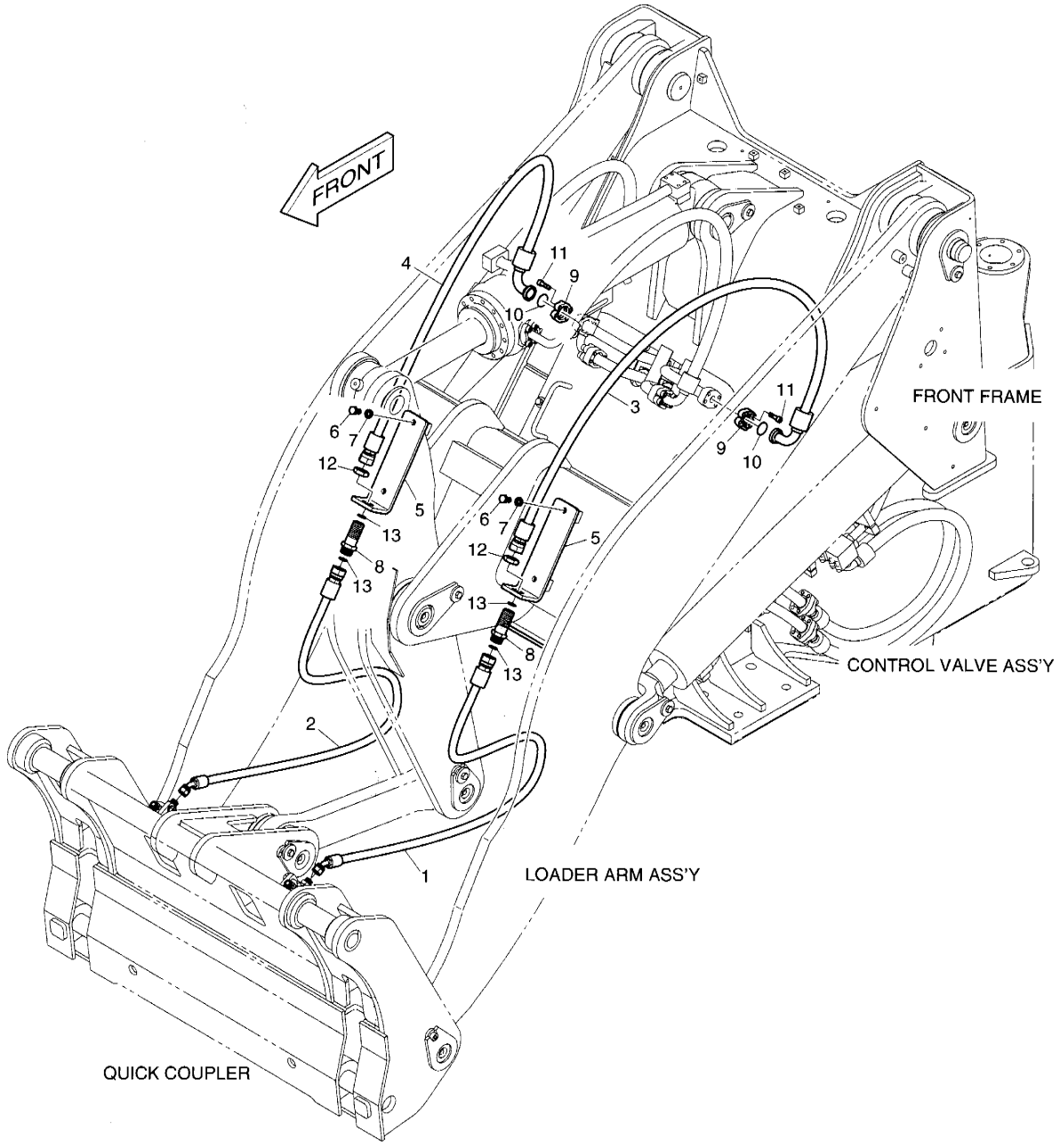

DATE	JUN. 30, 2007
REV. NO.	EXB07-06

Fig. 5390 QUICK COUPLER PIPING / TUYAUTERIE DE COUPLEUR RAPIDE

Serial No. ;

Key No.	Part No.	Description	Description	Q'ty	S.C	Serial No.	ICA	Replaceable part	
								Part No.	Q'ty
---	**K1036288A**	**QUICK COUPLER PIPING**	TUYAUTERIE DE	-	D				
1	DS2012492	HOSE	TUYAU FLEXIBLE	1		5001–5087			
	DS2012514	**HOSE**	TUYAU FLEXIBLE	1		**5088–**			
2	DS2012492	HOSE	TUYAU FLEXIBLE	1		5001–5887			
	DS2012514	**HOSE**	TUYAU FLEXIBLE	1		**5888–**			
3	DS2018190	HOSE	TUYAU FLEXIBLE	1		5001–5087			
	DS2018194	**HOSE**	TUYAU FLEXIBLE	1		**5088–**			
4	DS2018190	HOSE	TUYAU FLEXIBLE	1		5001–5087			
	DS2018194	**HOSE**	TUYAU FLEXIBLE	1		**5088–**			
5	K1034069	BRACKET	SUPPORT	2					
6	S0515066	BOLT	BOULON	4					
7	S5102703	WASHER;SPRING(M12)	RONDELLE ELASTIQUE	4					
8	DS2415013	ADAPTER;CONNECTOR	ADAPTEUR	2					
9	2181-9079	FLANGE	BRIDE	4					
10	2180-1026D2	O-RING	JOINT TORIQUE	2					
11	S2212261	BOLT;SOCKET M10X1.5X30	BOULON	8					
12	121-00010D2	NUT	ECROU	2					
13	S8030121	O-RING	JOINT TORIQUE	4					

DATE	JUN. 30, 2007
REV.NO.	EXB07-06

Fig. 5400 BUCKET - 1.9m³ - (QUICK COUPLER) GODET

Serial No. ;

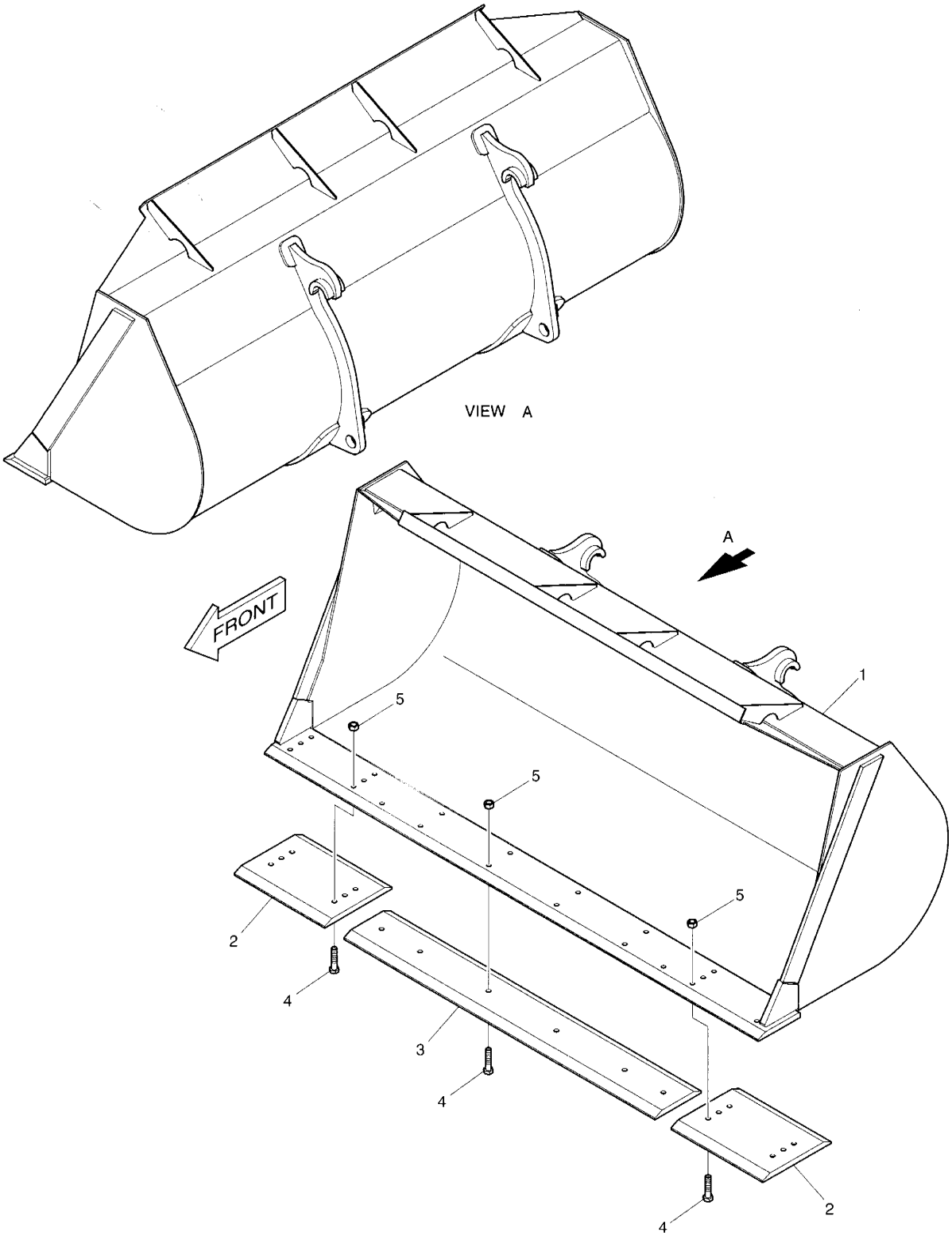

DATE	JUN. 30, 2007
REV. NO.	EXB07-06

Fig. 5400 BUCKET - 1.9m³ (QUICK COUPLER) GODET

Serial No. ;

Key No.	Part No.	Description	Description	Q'ty	S.C	Serial No.	ICA	Replaceable part	
								Part No.	Q'ty
5400--	K1029194	BUCKET-1.9m³-QUICK COUPLER	GODET	1					
1	K1028615	BUCKET-1.9m³	GODET	1					
2	4713-1190A	EDGE;CUTTING	COUTEAU BORD	2					
3	4713-1192	EDGE;CUTTING	COUTEAU BORD	1					
4	S0565366	BOLT	BOULON	18					
5	S4012933	NUT M16X2.0	ECROU	18					

DATE	JUN. 30, 2007
REV.NO.	EXB07-06

Fig. 5410 BUCKET - 1.9m³ - (QUICK COUPLER) GODET

Serial No. ;

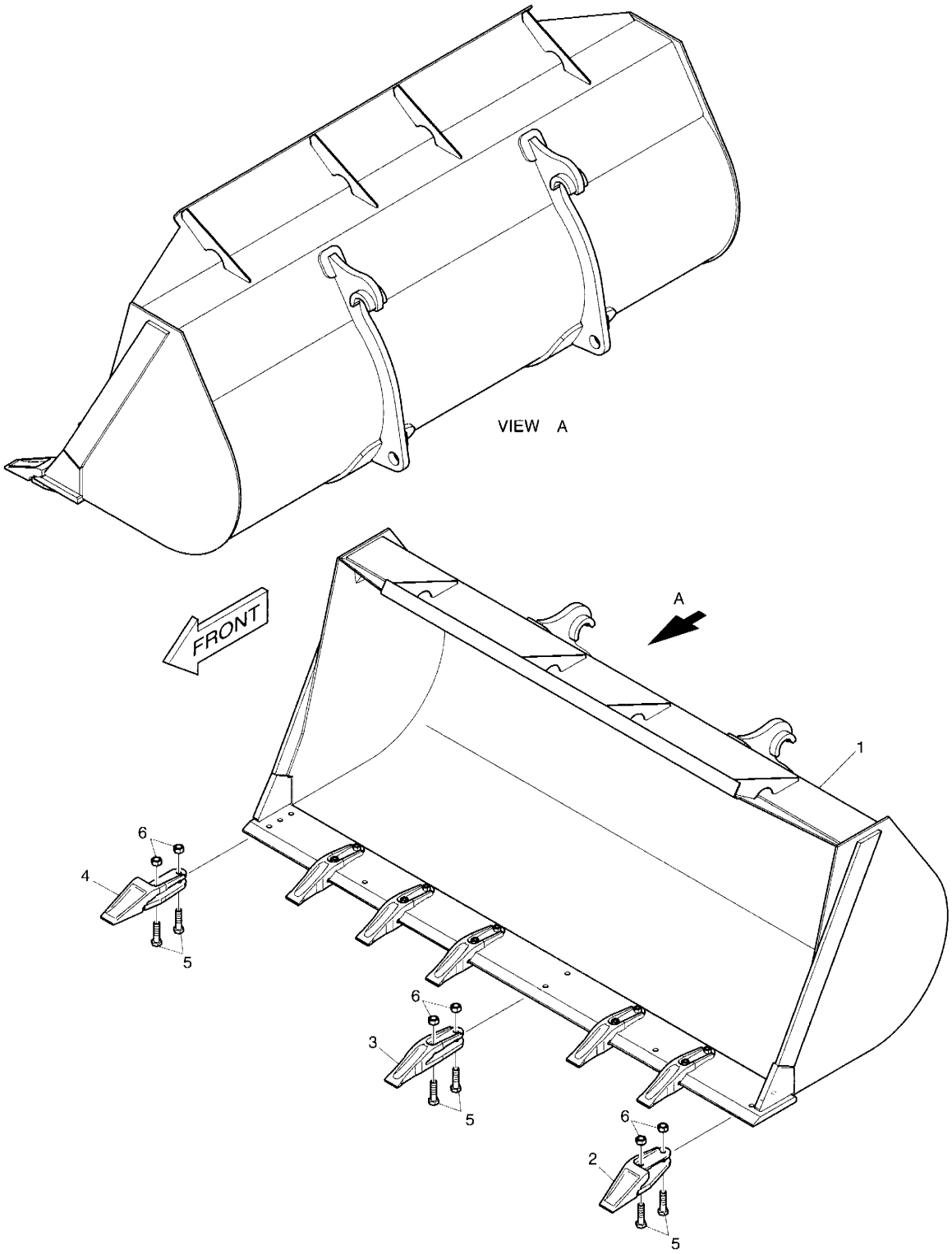

DATE	JUN. 30, 2007
REV. NO.	EXB07-06

Fig. 5410 BUCKET - 1.9m³ (QUICK COUPLER) GODET

Serial No. ;

Key No.	Part No.	Description	Description	Q'ty	S.C	Serial No.	ICA	Replaceable part	
								Part No.	Q'ty
5410--	K1028614	BUCKET-1.9m³-QUICK COUPLER	GODET	1					
1	K1028615	BUCKET-1.9m³	GODET	1					
2	4713-4006A	TOOTH;SIDE (L.H)	COUTEAU LATERAL	1					
3	4713-4004A	TOOTH	CHEVILLE DE DENT	6					
4	4713-4005A	TOOTH;SIDE (R.H)	COUTEAU LATERAL DROIT	1					
5	S0565466	BOLT	BOULON	16					
6	S4012933	NUT	ECROU	16					

DATE	JUN. 30, 2007
REV.NO.	EXB07-06

Fig. 5420 PALLET FORK - QUICK COUPLER
FOURCHES A PALETTES

Serial No. ;

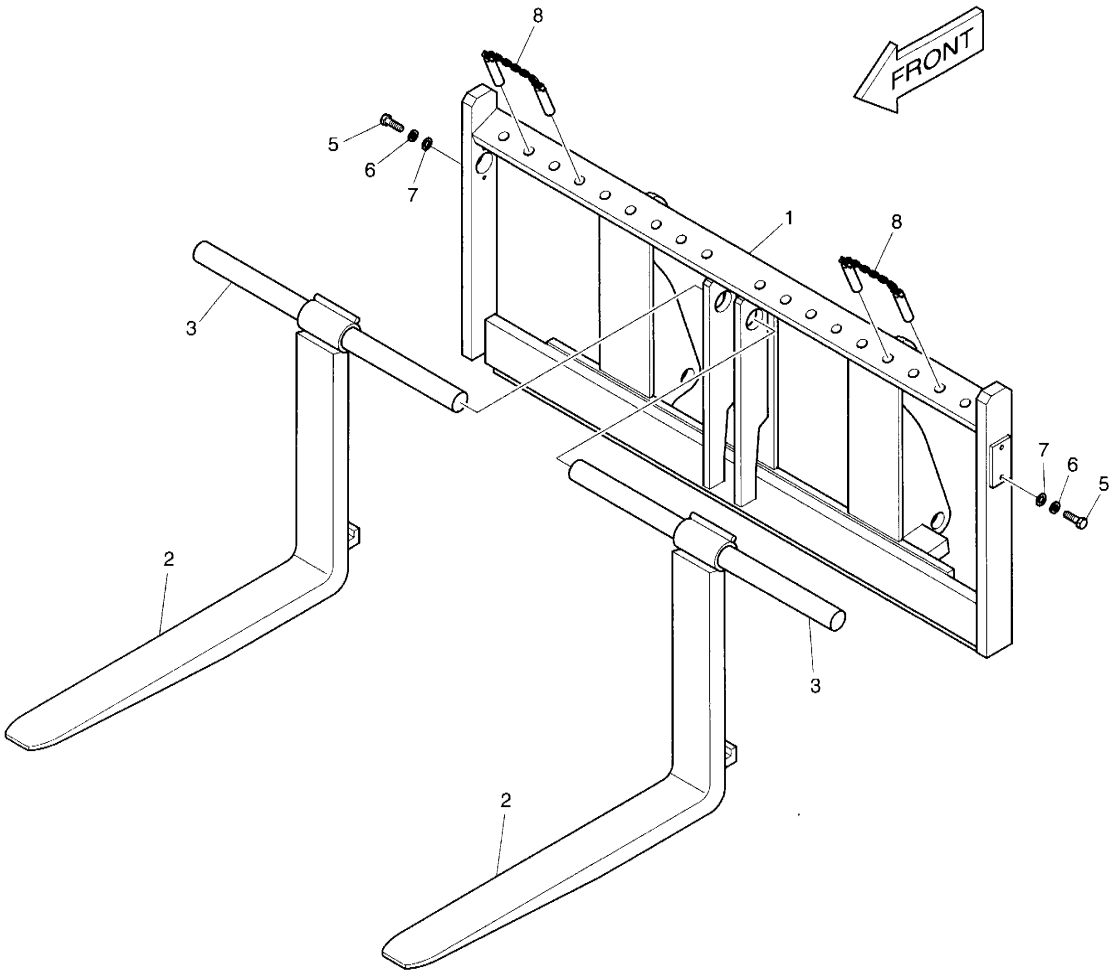

DATE	JUN. 30, 2007
REV. NO.	EXB07-06

Fig. 5420 PALLET FORK - QUICK COUPLER FOURCHES A PALETTES

Serial No. ;

Key No.	Part No.	Description	Description	Q'ty	S.C	Serial No.	ICA	Replaceable part	
								Part No.	Q'ty
5420--	K1028655	PALLET FORK-QUICK COUPLER	FOURCHETTE DE PALETTE	1					
1	K1028656	PALLET	PALETTE	1					
2	K1028658	FORK	FOURCHES	2					
3	K1036669	SHAFT	ARBRE	2					
5	S0515466	BOLT	BOULON	4					
6	S5102703	WASHER	RONDELLE	4					
7	S5010713	WASHER	RONDELLE	4					
8	K1033850	RETAINER	ARRETOIR	2					

DATE	JUN. 30, 2007
REV.NO.	EXB07-06

Fig. 5430 LOADER ARM ASS'Y - LONG BOOM
EQUIPMENT FRONTALES

Serial No. ;

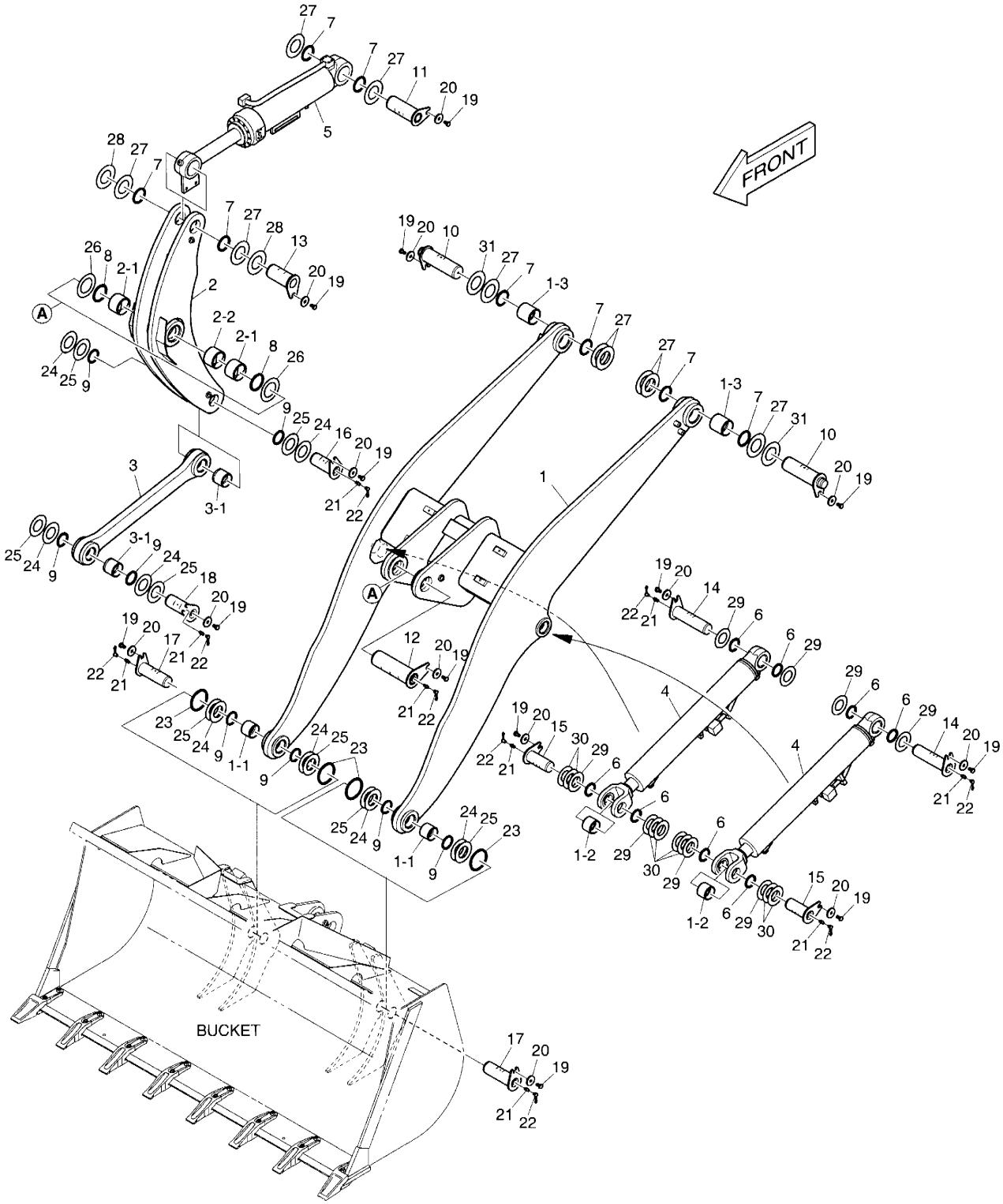

DATE	JUN. 30, 2007
REV. NO.	EXB07-06

Fig. 5430 LOADER ARM ASS'Y - LONG BOOM
EQUIPMENT FRONTALES

Serial No. ;

Key No.	Part No.	Description	Description	Q'ty	S.C	Serial No.	ICA	Replaceable part	
								Part No.	Q'ty
5430--	K1037545	LOADER ARM ASS'Y	BALANCIER	-	D				
1	K1037546	ARM;LIFT	BRAS	1					
1-1	K1017108	. BUSH	. DOUILLE	2					
1-2	K1024527	. BUSH	. DOUILLE	2					
1-3	K1017107	. BUSH	. DOUILLE	2					
2	K1037548	TILT LEVEL ASS'Y	NIVEAU ASS'Y	1					
2-1	4110-1380A	. BUSH	. DOUILLE	2					
2-2	114-00454	. SPACER	. ENTRETOISE	1					
3	K1037550	LINK ASS'Y	ENSEMBLE	1					
3-1	K1017109	. BUSH	. DOUILLE	2					
4	K1016870	CYLINDER;LIFT	VERIN DE BALANCIER	2					
5	K1016873A	CYLINDER;BUCKET	VERIN DE GODET	1					
6	2180-1106BD3	SEAL;DUST	BAGUE D'ETANCHEITE	8					
7	2180-1106BD5	SEAL;DUST	BAGUE D'ETANCHEITE	8					
8	2180-1106BD6	SEAL;DUST	BAGUE D'ETANCHEITE	2					
9	2180-1106BD13	SEAL;DUST	BAGUE D'ETANCHEITE	8					
10	4123-2362C	PIN	GOUPILLE	2					
11	123-00394	PIN	GOUPILLE	1					
12	123-00425	PIN	GOUPILLE	1					
13	4123-2365B	PIN	GOUPILLE	1					
14	4123-2366C	PIN	GOUPILLE	2					
15	4123-2367B	PIN	GOUPILLE	2					
16	4123-2368B	PIN	GOUPILLE	1					
17	K1024501	PIN	GOUPILLE	2					
18	K1024502	PIN	GOUPILLE	1					
19	S0511866	BOLT	BOULON	13					
20	DS0401180	WASHER	RONDELLE	13					
21	S6710041	FITTING	RACCORD	9					
22	160-00020	CAP	CHAPEAU	9					
23	2180-1105D9	O-RING	JOINT TORIQUE	4					
24	2114-1059D122	WASHER	RONDELLE	8					
25	2114-1059D17	SHIM	CALE	8					
26	2114-1059D39	SHIM	CALE	2					
27	2114-1059D63	SHIM	CALE	10					
28	2114-1059D64	SHIM	CALE	2					
29	2114-1059D88	SHIM	CALE	8					
30	2114-1059D87	SHIM	CALE	8					
31	2114-1059D117	SHIM	CALE	2					

INDEX

PART NO.	FIG NO.	KEY NO.
06.01013-9130	026	18
06.01283-7115	022	12
06.01913-2911	019	35
	037	3
06.01913-3113	025	1
06.01913-3114	020	8
	022	37
	027	17
06.01913-3115	022	16
06.01913-3117	024	15
06.01913-3118	029	31
06.01913-3119	022	17
	029	32
06.01913-3120	024	11
06.01913-3121	024	12
06.01913-3128	021	33
06.01913-3129	021	38
06.01923-2911	031	9
06.01923-2913	036	4
	036	11
	036	13
06.01923-2917	031	3
06.01923-2919	036	5
06.01923-3111	013	9
	015	22
	037	24
06.01923-3114	015	3
	023	7
06.01923-3116	014	4
06.01923-3117	021	31
06.01923-3118	030	9
06.01923-3119	021	5
	021	32
06.01923-3120	022	5
06.01923-3123	021	6
06.01923-3125	026	17
06.01923-3215	027	34
06.01923-3217	032	53
06.01923-3218	023	3
	026	15
06.01924-3217	015	4
	034	2
	038	2
	038	4
06.01943-3317	012	11
06.01943-3319	033	8
06.01943-3323	033	2
06.01953-3318	035	2
06.02097-8306	021	20
06.02106-0723	016	42
06.06125-8709	030	6
06.11063-8212	031	10
06.11063-8214	015	16
	029	10
	030	7
	037	8
	037	22
06.11063-9217	033	7
06.15010-2311	015	14
	021	8
	021	35
	022	13
	026	20
	037	6
	037	18
	037	20
06.16110-0106	019	21
06.16731-2105	021	21
06.16731-2106	031	11
06.16731-2107	015	15
	021	9
	021	36
	026	21
	027	19
	029	11
	030	8
	037	7
	037	17
	037	21
06.22022-0907	020	6
06.22022-0909	020	9
06.22022-1016	019	33
06.22022-1018	016	2
06.22022-1063	014	5
06.29010-0120	019	19
06.29020-0125	016	37
06.29020-0132	024	5
06.31641-0433	021	13
06.31641-0618	011	17
06.56020-0115	030	5
	040	28
06.56021-0102	011	24
	040	1
06.56180-0712	032	33
	040	30
	041	15
06.56190-0704	027	8
	027	10
	032	4
	032	12
06.56190-0705	011	29
	039	2
06.56190-0706	032	6
	032	13
	032	16
	032	19
	032	57
06.56190-0709	027	6
06.56190-0719	015	18
06.56190-0726	021	16
06.56190-0732	022	34
06.67020-0104	027	14
06.67020-0105	015	6
	015	10
06.78144-2204	032	10
06.78144-2403	027	7
	027	9
1.109-00009	3200	30
1.109-00010	3170	50
	3180	50
1.109-00044	1140	3-2
	1140	4-2
	1140	5-2
	5370	3-2
	5370	4-2
	5370	5-2
1.109-00046	3240	70
1.109-00063	3250	60
1.109-00067	3110	160
	3110	170
	3150	220
	3190	20
	3190	30
1.109-00068	3130	210
	3130	220
	3140	210
	3140	220
	3150	210
	3160	230
	3160	240
	3170	200
	3170	210
	3180	200
	3180	210
1.110-00077	3480	6
1.110-00102	3500	2
	3500	4
1.110-00106	3490	2
1.110-00107	3480	4
1.114-00164	3130	130

PART NO.	FIG NO.	KEY NO.
1.114-00164	3170	180
	3180	180
1.114-00231	3240	60
.114-00255	3100	110
1.114-00256	3190	50
1.114-00261	3500	13
1.114-00274	3170	130
	3180	130
1.114-00384	3130	170
1.114-00385	3140	170
	3150	170
	3160	50
1.114-00486	3190	70
1.114-00487	3230	50
1.115-00014	3110	150
1.115-00015	3130	200
1.115-00016	3140	200
1.115-00017	3160	40
1.115-00018	3160	220
1.115-00019	3170	60
	3180	60
1.115-00020	3170	70
	3180	70
1.115-00021	3200	40
115-00080	3110	130
1.115-00081	3240	100
1.115-00085	3170	154
	3180	154
1.115-00108	3240	50
1.115-00227	3140	80
	3150	80
	3160	150
1.115-00236	3500	20
1.115-00294	3130	230
	3140	230
	3150	230
	3160	250
	3170	220
	3180	220
1.115-00295	3200	20
1.115-00296	3110	180
1.115-00319	3130	140
	3170	190
	3180	190
1.115-00321	3130	140
	3170	190
	3180	190
1.115-00323	3130	140
	3170	190
	3180	190
1.115-00325	3130	140
	3170	190
	3180	190
1.115-00327	3130	140
	3170	190
	3180	190
1.115-00329	3130	140
	3170	190
	3180	190
1.115-00331	3130	140
	3170	190
	3180	190
1.115-00333	3130	140
	3170	190
	3180	190
1.115-00335	3130	140
	3170	190
	3180	190
1.115-00337	3130	140
	3170	190
	3180	190
1.115-00339	3130	140
	3170	190
	3180	190
1.115-00341	3130	140
	3170	190
	3180	190
1.115-00343	3130	140
	3170	190
	3180	190
1.115-00345	3130	140
	3170	190
	3180	190
1.115-00347	3130	140
	3170	190
	3180	190
1.115-00348	3140	140
	3150	140
	3160	210
1.115-00351	3140	140
	3150	140
	3160	210
1.115-00354	3140	140
	3150	140
	3160	210
1.115-00365	3500	22
1.120.00002	1140	4-1
	1140	5-1
1.120-00002	1140	3-1
	1140	3-1
1.120-00002	5370	3-1
	5370	3-1
	5370	4-1
	5370	5-1
1.120-00034	3130	20
	3140	20
	3150	20
	3160	20
	3170	20
	3180	20
1.120-00036	3120	240
	3210	50
1.120-00057	3220	170
	3220	230
	3220	300
	3220	340
1.120-00079	3120	50
	3120	212
1.120-00080	3120	55
1.120-00081	3120	80
	3120	780
1.120-00082	3120	160
	3210	40
	3250	40
1.120-00083	3120	190
1.120-00084	3120	200
	3280	50
1.120-00085	3210	200
1.120-00086	3220	200
	3220	260
1.120-00087	3220	390
1.120-00088	3240	21
1.120-00089	3260	30
1.120-00117	3100	20
1.120-00118	3100	100
1.120-00119	3190	60
1.120-00120	3250	50
	3290	30
1.120-00163	3120	291
1.120-00164	3210	780
1.120-00165	3220	12
1.120-00166	3260	41
1.121-00001	3530	29
1.121-00034	3120	260
	3210	70
1.121-00042	1140	3-4
	1140	3-6
	5370	3-4
	5370	3-6
1.121-00054	3500	19

PART NO.	FIG NO.	KEY NO.
1.123-00001	3120	40
1.124-00141	3220	330
1.124-00147	3480	27
1.124-00148	3490	28
1.131-00002	3530	4
1.131-00003	3210	798
1.131-00004	3220	40
1.131-00005	3220	60
1.131-00006	3220	80
1.131-00007	3220	110
1.131-00008	3230	70
1.131-00009	3500	24
1.131-00082	3140	90
	3150	90
	3160	160
1.131-00084	3170	140
	3180	140
1.138-00003	3530	20
1.138-00019	1140	5-4
	5370	5-4
1.140-00076	3490	20
1.160-00003	3530	32
1.161-00013	1320	1-5
1.161-00021	3530	33A
1.172-00008	3530	48
1.180-00001	3120	180
1.180-00003	3210	24
1.180-00004	3210	34
1.180-00007	3220	350
1.180-00008	3220	370
1.180-00010	3250	22
1.180-00011	3290	22
	3300	10
1.180-00012	3250	20
1.180-00051	3120	230
1.180-00052	3120	292
	3120	452
1.180-00053	3120	790
1.180-00054	3190	44
1.180-00055	3210	772
	3210	781
1.180-00057	3220	181
	3220	241
1.180-00058	3240	22
1.180-00059	3240	30
1.180-00061	3260	21
1.180-00062	3260	42
1.180-00063	3270	57
1.180-00064	3280	42
1.180-00065	3200	110
1.180-00065	3300	30
1.180-00087	3130	60
	3170	110
	3180	110
1.180-00089	3130	70
	3170	120
	3180	120
1.180-00190	3500	7
1.180-00207	3490	6
1.180-00231	3500	8
1.180-00301	3480	9
1.180-00325	3500	17
1.180-00342	3480	16
1.180-00343	3500	15
1.180-00387	3490	15
1.180-00389	3500	16
1.180-00390	3480	17
1.180-00447	3430	4A
1.180-00448	3430	3A
1.180-00451	3430	2A
1.180-00452	3430	9A
1.180-00479	3490	8
1.180-00482	3500	9
1.180-00530	3190	40
1.180-00531	3240	80
1.181-00005	1140	3-8
	5370	3-8
1.181-00015	3120	451
1.181-00016	3210	771
1.181-00026	3500	25
1.181-00084	3530	44
1.216-00004	3130	160
1.216-00005	3130	180
1.216-00006	3140	160
	3150	160
	3160	60
1.216-00007	3140	180
	3150	180
	3160	80
1.216-00008	3170	40
	3180	40
1.222-00003	3130	105
	3130	107
	3170	164
	3170	166
	3180	164
	3180	166
1.222-00004	3130	110
	3170	160
	3180	160
1.222-00029	3130	120
	3170	170
	3180	170
1.222-00058	3130	150
1.222-00059	3140	150
	3150	150
	3160	70
1.229-00006	1140	3-3
	5370	3-3
1.229-00008	1140	3-5
	5370	3-5
1.229-00012	3190	80
	3190	110
1.270-00003	3150	190
1.270-00004	3160	90
1.270-00005	3170	30
	3180	30
1.403-00001	3160	30
1.403-00051	3110	140
1.405-00002	3140	10
1.405-00003	3150	10
1.405-00005	3170	10
1.405-00006	3180	10
1.405-00070	3110	110
1.405-00075	3190	10
1.405-00085	3110	190
1.405-00095	3110	120
1.409-00006	3220	30
1.409-00007	3220	50
1.409-00008	3220	70
1.409-00009	3230	60
1.409-00016	3500	14
1.409-00035	3130	40
	3170	90
	3180	90
1.412-00001	3530	14
1.412-00002	3530	19
1.412-00003	3120	270
1.412-00004	3220	190
	3220	250
1.412-00028	3530	47
1.412-00029	3300	20
1.412-00031	3290	50
1.412-00078	3230	40
1.415-00001	3220	20
1.416-00016	3530	45
1.420-00007	3230	10
1.420-00024	1140	4-3
	1140	5-3
	5370	4-3

PART NO.	FIG NO.	KEY NO.
1.420-00024	5370	5-3
1.420-00037	3500	23
1.420-00084	3230	80
..420-00092	3430	3
1.420-00102	3430	9
1.420-00127	3430	2
1.420-00138	3430	6
1.421-00001	3220	180
	3220	240
1.424-00009	3500	21
1.424-00010	3530	46
1.424-00049	3530	43
1.428-00001	3530	17
1.428-00030	3500	3
1.430-00001	3120	220
1.430-00002	3220	290
1.430-00003	3220	320
1.430-00004	3250	10
1.430-00005	3250	12
1.430-00083	3500	5
1.430-00214	1320	1-4
1.441-00027	3500	1
1.441-00259	3120	700
1.451-00082	3220	10
.451-00170	3280	40
1.461-00002	3210	30
1.461-00007	3120	60
1.461-00008	3120	70
1.464-00015	3100	60
1.471-00007	3220	362
1.519-00001	3430	7
1.530-00001	3220	270
1.549-00011	3260	10
1.549-00015	3260	20
1.604-00001	1320	1-6
1.901-00002	1320	1-20
110-00085	3480	2
110-00147	3490	5
111-00029	1100	5
111-00030	1100	54
114-00403	1110	32
114-00404	1110	33
114-00454	2100	2-2
	5430	2-2
114-00456	1210	50
'15-00052	3480	7
	3480	11
115-00058	3480	8
115-00060	3480	10
120-00002	1200	55
120-00002	1210	75
120-00179	1210	99
120-00246	1420	6
	1420	14
120-00297	1220	1-1
120-00303A	5220	50
	5230	50
	5240	27
121-00010D2	5390	12
121-00010D5	1160	74
	1210	88
121-00010D9	1210	60
121-00043	3490	18
123-00262	5220	32
	5230	32
	5240	9
123-00264A	1140	8
	5370	8
123-00368	1100	17
123-00369A	1100	23
123-00394	2100	11
	5430	11
123-00425	2100	12
	5430	12
124-00017	1350	18
	5120	18
	5270	18
124-00181	1180	42
	5140	42
124-00208D2	1210	91
	1390	56
	1400	56
	1410	57
	1420	18
	1450	15
	1460	24
	5190	5
	5290	9
124-00208D3	1390	57
	1400	57
	1420	19
	1450	16
	1460	25
124-00208D4	1210	93
	1390	58
	1400	58
	1450	17
	1460	26
124-00208D5	1410	54
124-00208D6	1210	42
124-00208D6	1410	53
124-00208D7	1200	56
	1470	50
124-00209D1	1420	17
	1460	23
	1470	49
124-00209D4	1200	76
124-00209D7	1200	58
124-00225	1180	50
	5140	35
124-00247	1210	55
124-00298A	1110	36
125-00034A	1370	5-1
125-00035A	1370	4-1
125-00075A	5220	67
	5230	88
	5240	40
128-00003	1260	4-20H
128-00004	1260	4-20I
129-00088	3440	21
132-00030	1270	57
134-00008	1200	29
	3440	17
136-00018C	1200	23
136-00025	1120	12
140-00830B	2110	5
140-00831B	2110	6
140-00832B	2110	7
142-00072	5220	42
	5230	42
	5240	19
142-00082A	1210	18
160-00020	1100	53
	2100	23
	5430	22
160-00057	1210	84
160-00061	5290	3
160-00065	1210	48
160-00075	5120	19
	5270	19
161-00152	5220	30
	5230	30
	5240	7
161-00195	1240	90
161-00311	1100	20
161-00530	1120	32
161-00552	1110	9
161-00553	1110	10
170-00004	1110	22
178-00004A	1100	37

PART NO.	FIG NO.	KEY NO.
180-00073D4	5380	27
180-00200	1120	6-1
180-00226	3430	6A
180-00247	3490	17
180-00276	3480	19
180-00408	1220	5
	3220	13
181-00121D10	1170	6
181-00128D3	1210	87
181-00141	1200	9
181-00182	1200	43
181-00341A	1210	97
181-00343A	1130	13
181-00366	2110	2
181-00471	3530	3
181-00782	1200	73
181-00783	1200	62
185-00288	1480	31
185-00324	1470	20
190-00078	5230	67
	5270	4-7
	5270	5-7
190-00092	4120	5
190-00095	4120	11
	4130	11
190-00097	4120	14
190-00098	4120	16
190-00099	4120	24
190-00100	4120	13
190-00105	4120	7
190-00120	4120	6
190-00121	4120	3
190-00207	4120	17
190-00313	5230	75
	5230	75
190-00359	4130	4
190-00362	4120	4
190-00365	5230	70
190-00509BD25	4120	47
190-00537	4130	32
190-00542	4120	18
	4130	18
190-00544	4120	32
190-00557	4120	12
190-00691	4130	15
190-00692	4130	14
190-00695	4130	16
190-00703	4130	24
190-00755	4130	27
190-01059D15	4120	49
190-01184	5330	3
190-01197	4120	9
	4130	9
191-00364	1180	11
	5140	11
191-02638A	5300	6
193-00575	1180	7
193-00576	1180	8
193-00577	1180	9
193-00578	1180	10
193-00587	5140	7
193-00588	5140	8
195-00604A	1180	12
	5140	12
195-00614B	1200	28
195-01146A	5140	15
195-01147A	5140	14
195-01278	1230	8
195-01288	1230	9
195-01320	1180	2
	5140	2
195-01329A	1370	39
195-01344	1180	13
	5140	13
195-01362B	1480	26
195-01452	5230	71
195-01794	1200	4
195-01868	1480	25
195-01984B	1210	115
195-02003B	1180	14
195-02004B	1180	15
195-02348A	5300	1
195-02499	1240	69
195-02500	1240	70
195-03416	1190	2
	5150	2
	5160	2
	5170	2
198-00026	1110	28
199-00002	4100	1-71
2.106-00005	1320	1-9
2.109-00085	3410	6
2.109-00088	1320	1-19
2.109-00160	3340	7
	3380	20
	3600	7
	3650	20
2.109-00232	3330	5
	3370	15
	3590	5
2.109-00232	3640	5
2.109-00233	3330	22
	3370	28
	3590	27
	3640	35
2.109-00234	3330	32
	3370	18
	3590	35
	3640	27
2.109-00235	3340	17
	3380	30
	3600	17
	3650	30
2.114-00084	3330	31
	3370	19
	3590	24
	3640	24
2.114-00085	3330	31
	3370	19
	3590	24
	3640	24
2.114-00086	3330	31
	3370	19
	3590	24
	3640	24
2.114-00087	3330	31
	3370	19
	3590	24
	3640	24
2.114-00088	3330	31
	3370	19
	3590	24
	3640	24
2.114-00089	3370	20
	3640	34
2.114-00090	3370	20
	3640	34
2.114-00091	3370	20
	3640	34
2.114-00092	3370	20
	3640	34
2.114-00095	3330	30
	3590	23
2.114-00096	3330	30
	3590	23
2.114-00097	3330	30
	3590	23
2.114-00098	3330	30
	3590	23
2.114-00105	3590	8

PART NO.	FIG NO.	KEY NO.
2.114-00105	3640	8
2.114-00106	3590	8
	3640	8
2.114-00107	3590	8
	3640	8
2.114-00707	3330	20
	3370	29
	3590	25
	3640	25
2.114-00806	3410	18
2.114-00807	3330	10
	3370	8
	3590	15
	3640	15
2.114-00808	3330	8
	3370	13
2.114-00809	3340	5
	3380	12
	3650	12
2.114-00810	3340	14
	3380	18
	3600	14
	3650	18
2.114-00811	3350	7
	3610	7
2.114-01002	3330	2
	3350	39
	3370	2
	3590	2
	3610	39
2.114-01003	3350	8
	3610	8
2.114-01097	3400	15
2.114-01100	3330	7
	3370	5
	3590	20
	3640	20
2.114-01103	3330	29
	3590	34
2.115-00052	3330	14
	3370	9
	3590	21
	3640	21
2.115-00080	3410	7
2.115-00085	3350	20
	3610	20
2.115-00191	3340	20
	3380	5
	3600	20
	3650	5
2.115-00194	3410	1
2.115-00338	3320	9
	3580	9
2.115-00339	3380	11
	3650	11
2.115-00340	3380	27
	3650	27
2.120-00001	3310	2
	3570	2
2.120-00002	3330	1
	3350	38
	3370	1
	3590	1
	3610	38
	3640	1
2.120-00003	3320	7
	3580	7
2.120-00004	3340	3
	3600	3
2.120-00005	3340	13
	3380	17
	3650	17
2.120-00006	3350	3
	3610	3
2.120-00007	3350	26
	3610	26
2.120-00008	3360	20
	3630	20
2.120-00009	3370	22
	3640	33
2.120-00010	3390	1
	3660	1
2.120-00016	3330	28
	3590	33
2.120-00017	3590	19
	3640	19
2.120-00018	3380	9
2.120-00176	3350	18
	3390	13
	3610	18
	3660	13
2.120-00186	3600	13
2.120-00242	3330	16
	3370	4
	3590	7
	3640	7
2.120-00243	3330	6
	3370	14
2.120-00245	3380	23
	3650	23
2.120-00246	3350	22
	3610	22
2.120-00322	3350	16
	3610	16
2.120-00371	3410	21
2.120-00372	3410	28
2.120-00505	3410	20
2.121-00001	3310	1
	3570	1
	3620	1
2.121-00002	3330	27
	3370	23
	3590	30
	3640	30
2.121-00003	3340	9
	3380	8
	3600	9
	3650	8
2.121-00004	3350	9
	3610	9
2.121-00005	3390	4
	3660	4
2.121-00193	3330	4
	3370	16
	3590	4
	3640	4
2.123-00003	3330	15
	3370	6
	3590	16
	3640	16
2.123-00004	3330	12
	3370	11
	3590	22
	3640	22
2.123-00005	3380	13
	3650	13
2.123-00017	3340	11
	3600	11
2.123-00018	3410	27
2.123-00129	3410	8
2.123-00140	3380	19
	3650	19
2.123-00190	3330	13
	3370	10
	3590	17
	3640	17
2.123-00259	3380	26
	3650	26
2.124-00046	3340	15
	3600	15

PART NO.	FIG NO.	KEY NO.
2.125-00001	1320	1-23
2.131-00002	3350	15
	3390	2
	3610	15
	3660	2
2.131-00003	3350	35
	3610	35
2.131-00018	3410	30
2.131-00382	1320	1-8
2.131-00383	1320	1-16
2.131-00500	3410	9
2.148-00001	3410	3
2.151-00001	1320	1-13
2.160-00021	3540	2
2.161-00011	1320	1-10
2.161-00013	1320	1-3
2.161-00017	1320	1-1
2.172-00001	1320	1-15
2.172-00012	1320	1-18
2.180-00195	3450	8
	3460	8
2.180-00196	3450	10
	3460	10
2.180-00197	3450	12
	3460	12
2.180-00199	3410	5
2.180-00200	3410	12
2.180-00201	3410	14
2.180-00204	3320	1
	3360	1
	3580	1
	3630	1
2.180-00205	3320	21
	3360	21
	3580	21
	3630	21
2.180-00206	3370	17
	3640	23
2.180-00207	3330	26
	3370	24
	3590	29
	3640	29
2.180-00208	3380	14
	3650	14
2.180-00209	3350	2
	3610	2
2.180-00210	3350	5
	3610	5
2.180-00211	3350	11
	3610	11
2.180-00212	3350	21
	3610	21
2.180-00213	3350	27
	3390	7
	3610	28
	3660	8
2.180-00214	3350	32
	3610	32
2.180-00215	3350	34
	3610	34
2.180-00216	3360	9
	3630	9
2.180-00217	3390	3
	3660	3
2.180-00265	3340	2
	3380	29
	3600	2
	3650	29
2.180-00266	3340	12
	3600	12
2.180-00269	3410	31
2.180-00607	3410	26
2.180-00669	3330	23
	3370	27
	3590	32
	3640	32
2.180-00670	3340	21
	3380	4
	3600	21
2.180-00671	3600	19
2.180-00707	3470	3
2.180-00737	3450	*
	3460	*
2.180-00746	3470	5
2.180-00914	3350	28
	3390	8
	3610	27
	3660	7
2.181-00030	3370	25
	3640	31
2.181-00104	3450	13
	3460	13
2.181-00108	3320	8
2.181-00109	3320	15
	3360	15
	3580	15
	3630	15
2.181-00110	3320	4
	3360	22
	3380	1
2.181-00110	3580	4
	3630	22
	3650	1
2.181-00112	3350	10
	3610	10
2.181-00113	3350	17
	3390	12
	3610	17
	3660	12
2.181-00114	3350	33
	3610	33
2.181-00134	3410	32
2.181-00385	3320	10
	3340	10
	3360	10
	3380	16
	3580	10
	3600	10
	3630	10
	3650	16
2.181-00453	3320	17
	3360	17
	3580	17
	3630	17
2.195-00020	1320	1-12
2.195-00048	3540	3
2.197-00001	3360	8
	3630	8
2.197-00024	1320	1-21
2.197-00025	1320	1-22
2.197-00047	3470	2
2.197-00052	3380	25
	3650	25
2.215-00001	3330	25
	3590	31
2.217-00031	3330	17
	3370	32
2.217-00032	3590	6
	3640	6
2.217-00048	3340	8
2.217-00049	3380	15
2.219-00023	3340	18
	3380	7
	3600	18
	3650	7
2.222-00001	3590	9
	3640	9
2.222-00002	3590	11
	3640	11
2.222-00003	3590	12

PART NO.	FIG NO.	KEY NO.
2.222-00003	3640	12
2.222-00004	3390	10
	3660	10
2.222-00005	3390	11
	3660	11
2.222-00008	3350	13
	3610	13
2.222-00010	3350	14
	3610	14
2.222-00012	3350	19
	3390	5
	3610	19
	3660	5
2.222-00013	3350	25
	3390	6
	3610	25
	3660	6
2.300-00002	1320	1-11
2.301-00001	3540	1
2.308-00001	3540	10
2.317-00001	3310	4
	3570	4
	3620	4
2.317-00005	3400	16
2.317-00076	3340	1
	3380	6
	3600	1
	3650	6
2.353-00001	3540	4
2.357-00015	3350	31
	3610	31
2.357-00016	3350	30
	3610	30
2.357-00047	3540	5
2.360-00001	3540	6
2.401-00013	3470	1
2.402-00127	3360	3
	3630	3
2.402-00132	3320	3
	3580	3
2.402-00304	3220	160
	3220	220
2.403-00071	3370	30
	3640	10
2.403-00078	3330	18
	3590	10
2.403-00106	3590	13
	3640	13
2.403-00168	3350	24
	3610	24
2.403-00178	3330	11
	3370	7
	3590	14
	3640	14
2.403-00184	3380	21
	3650	21
2.403-00185	3340	6
	3600	6
2.403-00223	3380	28
2.403-00224	3340	16
	3600	16
2.403-00245	3330	9
	3370	12
2.403-00292	3410	16
2.404-00002	3650	28
2.405-00003	3400	40
2.405-00086	3410	10
2.405-00135	3340	23
	3600	23
2.405-00136	3380	10
	3650	10
2.408-00009	3400	23
2.408-00090	3400	45
2.408-00091	3350	6
	3610	6
2.408-00119	3340	25
	3600	25
2.408-00120	3350	4
	3610	4
2.408-00128	3410	4
2.409-00002	3350	29
	3390	9
	3610	29
	3660	9
2.410-00069	3450	1
	3460	1
2.410-00074	3450	5
	3460	5
2.410-00123	3450	4
	3460	4
2.410-00124	3450	2
	3450	3
	3460	2
2.412-00089	3400	26
2.412-00133	3330	24
	3370	26
	3590	28
	3640	28
2.412-00143	3410	15
2.412-00172	3410	13
2.412-00180	3330	3
	3370	3
	3590	3
	3640	3
2.412-00181	3380	22
	3650	22
2.412-00182	3340	28
	3600	28
2.412-00183	3350	23
	3610	23
2.412-00184	3350	37
	3610	37
2.412-00187	3380	24
	3650	24
2.416-00037	1320	1-14
2.421-00062	3450	11
	3460	11
2.421-00175	3450	7
	3460	7
2.421-00199	3450	9
	3460	9
2.421-00229	3410	24
2.421-00230	3470	4
2.421-00287	3410	29
2.422-00001	3120	120
2.423-00028	3380	3
	3650	3
2.423-00029	3340	22
	3600	22
2.423-00141	3540	7
2.424-00355	3350	36
	3610	36
2.424-00379	3540	8
2.424-00380	3540	9
2.428-00005	3350	12
	3610	12
2.428-00058	3450	6
	3460	6
2.429-00040	1320	1-7
2.430-00139	3330	19
	3370	31
2.430-00140	3370	21
	3640	26
2.430-00146	3330	21
	3590	26
2.430-00147	3590	18
	3640	18
2.430-00274	1320	1-2
2.430-00295	3410	17
2.430-00385	1320	1-17

PART NO.	FIG NO.	KEY NO.
2.430-00442	3320	11
	3580	11
2.430-00443	3360	11
	3630	11
2.430-00444	3360	2
	3630	2
2.430-00445	3320	2
	3580	2
2.521-00009	3540	13
2.549-00023	3470	6A
2.550-00001	3540	11
2.550-00002	3540	12
2.553-00008	3470	6B
2.911-00060	3410	25
203-00055	1110	26
204-00067	1110	24
204-00070	1110	24-4
204-00075	1110	24-3
2106-1019D25	1470	18
	4110	9
2107-6006	1470	15
211-00065	1140	1
	3310	-
	3320	-
	3330	-
	3340	-
	3350	-
211-00066	1140	2
	3360	-
	3370	-
	3380	-
	3390	-
211-00067	3570	-
	3580	-
	3590	-
	3600	-
	3610	-
	5370	1
211-00068	3620	-
	3630	-
	3640	-
	3650	-
	3660	-
	5370	2
2110-1184D67	3500	6
2114-1058D1	1200	99
	1480	29
2114-1058D10	1380	27
	5220	64
	5230	79
2114-1058D2	1350	9
	1370	6-4
	1380	16
	5120	9
	5210	4
	5220	16
	5230	16
	5230	16
	5270	9
2114-1058D29	1210	120
	1470	39
2114-1058D30	1110	47
	5220	59
	5230	59
	5240	36
2114-1058D33	2130	14
2114-1058D45	1110	43
2114-1058D46	1180	34
	1370	16
	5140	34
2114-1058D52	1370	48
2114-1058D54	1430	2
	2130	14
2114-1058D56	1370	61
2114-1058D60	5130	4
2114-1058D62	1160	13
2114-1058D63	1110	23
2114-1058D68	1100	45
2114-1058D70	1370	2-7
	1370	14
	1430	4
2114-1058D71	1370	41
2114-1058D76	1230	6
2114-1058D86	5220	69
	5230	90
	5240	42
2114-1059D117	2100	32
	5430	31
2114-1059D122	2100	25
	5430	24
2114-1059D17	2100	26
	5430	25
2114-1059D197	5380	10
2114-1059D3	1100	58
2114-1059D39	2100	27
	5430	26
2114-1059D45	1100	32
2114-1059D46	1100	33
2114-1059D63	2100	28
	5430	27
2114-1059D64	2100	29
	5430	28
2114-1059D87	2100	31
	5430	30
2114-1059D88	2100	30
	5430	29
2114-1370	1350	7
	5120	7
	5130	3
	5270	7
2114-1816A	1120	30
2114-1898D1	1210	21
	1230	3
	1240	56
	1260	4-22
	1260	56
	1270	3-16
	1270	56
	1290	38
	1340	21
	1440	5
2114-1898D11	1370	37
2114-1898D16	1340	19
2114-1898D17	1210	53
	1370	2-9
2114-1898D2	1240	72
	1260	4-14
	1270	3-12
	1300	5
	1310	6
2114-1898D3	1240	73
	1260	4-23
	1270	73
	1290	44
	1300	7
	1310	8
2114-1898D4	1240	55
	1250	2-9
	1260	4-16
	1300	9
	1310	10
	1340	9
2114-1898D5	1210	53
2114-1898D6	1210	9
	1210	9
	1290	39
	1340	15
2114-1898D8	1210	118
2114-1898D9	5220	52
	5230	52

PART NO.	FIG NO.	KEY NO.
2114-1898D9	5240	29
2114-1929	1110	11
2114-2031D3	1210	126
2114-2031D4	1210	117
2114-2031D5	1110	70
	1210	20
	1440	4
2114-2031D6	1110	27
	1210	8
2114-9012A	1110	12
	1130	22
	1290	31
2116-9003	4120	21
	4130	21
2120-1354	1440	11
2120-1413D2	5380	14
2120-2131	1240	39
2120-2150D3	1260	4-11
2120-2159	1200	68
	1210	96
2120-2166D1	1110	75
2120-2166D10	1290	36
	1330	10
	1340	13
2120-2166D11	1210	7
2120-2166D15	1340	27
2120-2166D16	1210	116
	1240	41
2120-2166D2	1260	4-6
	1260	23
	1270	3-3
	1270	23
	1290	37
2120-2166D24	1240	40
2120-2166D25	1240	63
	1260	4-13
2120-2166D26	1290	42
	1300	3
	1310	4
2120-2166D27	1110	74
2120-2166D28	1290	43
	1300	6
	1310	7
2120-2166D29	1340	18
2120-2166D32	1110	49
	1290	40
	1340	14
2120-2166D35	1210	34
2120-2166D36	1210	125
	1240	51
2120-2166D4	1110	71
	1240	25
	1340	20
2120-2166D48	1210	19
2120-2166D5	1300	4
	1310	5
2120-2166D50	1210	34
2120-2166D6	1240	15
	1260	4-15
	1270	15
2120-2166D7	1240	16
	1260	4-8
2120-2166D8	1240	43
	1250	2-8
	1260	4-4
	1300	8
	1310	9
	1340	8
2120-2166D9	1240	52
2120-2172	1200	75
2120-2187	1420	22
	1450	13
	1460	19
	1470	47
2121-1305	1200	57
	1210	94
	1410	52
	1420	20
2121-1311D4	1240	91
	5380	15
2121-9007	1230	5
2122-1002D2	4120	26
	4130	26
	4130	26
2124-1026D2	1210	79
2124-1224D6	1160	33
2124-1248	1140	26
	5370	26
2124-1601A	1180	16
	5140	16
2124-1622D1	1380	29
	4120	48
	5220	65
	5230	86
	5230	86
2124-1622D2	5340	3
	5350	3
2124-1625	2110	8
2125-9026	1260	4-20F
2125-9027	1260	4-20G
2125-9036	1260	4-10
2125-9055	1240	48
	1260	4-12
2128-1209D1	1410	58
2129-1008	1120	11
2129-1393	1120	10
2142-1094	1210	121
2142-9005	1240	38
2160-1004D18	1210	85
2160-1004D32	1110	81
2160-1004D44	5380	24
2160-1004D57	1190	6
	5150	6
	5160	6
	5170	6
2160-1201D12	1350	10
	5120	10
	5270	10
2160-1212	1460	6
2160-1213	1460	7
2160-1310	1240	62
2161-1246	1270	3-8
2161-2179	5220	41
	5230	41
	5240	18
2161-2212	1370	47
2161-9057	1230	1
2180-1026D19	1160	18
	1210	68
	5180	8
2180-1026D2	1160	52
	1180	24
	1200	98
	5100	30
	5140	24
	5390	10
2180-1026D23	1160	17
2180-1026D26	1170	11
2180-1026D27	1160	35
2180-1026D37	1180	49
	5140	10
2180-1105D9	2100	24
	5430	23
2180-1106BD13	2100	9
	5430	9
2180-1106BD21	1100	34
2180-1106BD3	2100	6
	5430	6
2180-1106BD5	2100	7
	5430	7

PART NO.	FIG NO.	KEY NO.
2180-1106BD6	2100	8
	5430	8
2180-1106D7	1100	18
2180-1106D8	1100	24
2180-1217D96	3480	14
2180-6086	1470	20-1
2180-6087	1470	20-2
2180-6088	1470	19-1
2180-6089	1470	19-2
2180-6090	1480	31-1
	1480	32-1
2181-1110D41	1100	43
2181-1116D1	3420	15
2181-1116D10	3530	35
2181-1116D2	3420	16
2181-1126D7	1210	83
2181-1159	1470	43
2181-1160A	1470	44
2181-1161A	1470	45
2181-1890D2	1120	22
	1130	14
2181-1912D12	5380	25
2181-1916D1	1200	59
2181-1917D35	1130	17
2181-1918D6	1140	7-4
	5370	7-4
2181-1918D7	2110	11
2181-1919D10	1140	6-4
	1140	24
	5370	6-4
	5370	24
2181-1919D9	2110	4
2181-1938D14	5100	15
2181-1950D1	1160	77
2181-1950D2	1200	50
2181-1950D9	1120	21
2181-2157D1	1180	35
2181-2294D2	1160	68
	5100	10
2181-2294D9	5100	26
2181-2337D13	1200	49
2181-2566D11	1180	19
	5140	19
2181-2566D4	5100	19
2181-2627D1	5100	13
2181-2628D1	1160	76
2181-2815D1	1210	62
2181-2815D3	1200	54
2181-2815D4	1210	31
2181-2815D6	1190	10
2181-2815D6	1200	42
	5150	10
	5160	10
	5170	10
2181-2815D7	1200	78
2181-2815D9	1200	25
2181-4112	1100	26
2181-4133D1	1160	47
	1200	35
	1220	7
2181-4133D2	1200	30
2181-4133D24	1200	38
	5380	17
2181-4133D3	1160	42
	1200	32
2181-4133D30	1160	69
2181-4133D37	1200	52
	5100	21
2181-4133D46	1160	43
2181-4133D5	1160	44
	1210	81
2181-9078	1160	20
	5180	14
2181-9079	1160	51
	1180	25
	1200	96
	5100	31
	5140	25
	5390	9
2181-9083	1210	56
2184-1036D132	1130	18
2184-1197D177	1160	66
2184-1197D65	1160	65
2184-9005	4100	3
2185-1247D105	1110	67
2185-1247D57	1110	66
2185-1247D63	1110	65
2185-1308D5	1470	40
2186-9003	1470	41
219-00009A	1210	13
2190-2036D10	5290	2
2190-2036D15	1410	24
2190-2036D16	1410	22
2190-2036D17	1410	20
2190-2036D18	1410	18
2190-2036D2	1410	10
2190-2036D20	1410	16
2190-2036D21	5110	2
2190-2036D22	5310	2
2190-2036D24	1410	12
2190-2036D29	1410	26
2190-2036D3	5190	2
2190-2036D30	5280	2
2190-2036D5	1410	14
2190-2314D3	4120	20
	4130	20
2190-2476	4120	22
2190-2477	4120	23
	4130	23
2190-2524	4120	31
2190-2533A	4130	13
2190-2559	4120	30
	4130	30
2190-2566B	4120	19
	4130	19
2190-2584D20	1410	28
2190-2584D24	5330	2
2190-2584D25	1410	56
2190-2584D9	1410	30
2190-3315	4130	12
2190-3528	4120	28
2190-3530	4120	29
2190-9013	5230	74
	5230	74
2195-3500	1450	9
	1460	16
2197-1660	1410	49
	1460	21
2197-1661	1410	50
	1420	16
	1450	12
	1460	22
2199-1004	4100	1-14
2199-1005	4100	1-15
2199-1006	4100	4
2199-1063F21	4100	1
2199-9008	4100	2
2199-9009	4100	1-22
2199-9014	4100	1-25
2199-9017	4100	1-62
2199-9043	4100	1-1
2199-9056	4100	6
2199-9057	4100	1-24
2204-6039A	1480	33
2208-6013B	1470	4
2213-9002	1330	1
2415-1018	1240	21
2415-9001A	1240	17
2420-9466A	5100	20
2426-1175	1120	7

PART NO.	FIG NO.	KEY NO.
2426-6048	1490	36-8
2460-9054	1200	8
2471-6050	1490	36-7
2471-6062	5340	2
	5350	1
2471-6063	5350	2
2471-9046	1130	3
2473-1080A	1120	14
2474-9016A	1120	9
2512-1077	1160	12
	1480	30
2515-1016D4	1240	46-1
	1240	49-1
	1440	24-1
	4110	17
2515-1021D5	1440	61-2
2516-1102A	1390	18
	1400	18
2520-6004	1480	21
2520-6005	1480	21-1
2520-6006	1480	21-3
2525-1011	1390	5
	1400	5
2527-1016	1390	46A
	1390	47A
	1400	46A
	1400	47A
	4110	21
2527-1017	1390	46B
	1390	47B
	1400	46B
	1400	47B
	4110	22
2527-1018	1390	46C
	1390	47C
	1400	46C
	1400	47C
	4110	23
2527-1023A	1440	12
	4110	26
2527-1025	1390	46D
	1390	47D
	1400	46D
	1400	47D
	4110	24
2527-9004	1440	10
2528-9040	1410	34
2530-6005	1490	36-10
2531-1003	1390	14
	1390	15
2531-1003	1400	14
	1400	15
2534-6019	1440	61-1
2537-9002	1390	11
	1400	11
2538-6015	1490	36-1
2538-6016	1490	36-5
2538-6017	1490	36-6
2538-6018	1480	21-2
2538-9005A	1240	30
2541-9020	1250	2-11
2543-9015	1390	2
	1400	2
2544-1022	1440	13
2544-6023	1490	36-3
2544-6024	1490	36-4
2544-9024	1440	6
2544-9033	1390	21
	1390	22
	1390	23
	1390	24
	1390	25
	1390	26
	1390	27
	1390	28
	1390	29
	1390	30
	1390	31
	1390	32
	1390	33
	1390	34
	1390	35
	1390	36
	1390	37
	1390	67
	1400	21
	1400	22
	1400	23
	1400	24
	1400	25
	1400	26
	1400	27
	1400	28
	1400	29
	1400	30
	1400	31
	1400	32
	1400	33
	1400	34
	1400	35
2544-9033	1400	36
	1400	37
	1400	67
	5280	3
2547-6028	1420	8
	1440	23
2547-6033	1490	36-9
2549-1135D11	5100	17
2549-9093	1200	46
2549-9098	1410	13
	1410	19
	1410	21
	1410	23
	1410	25
	1410	27
	1410	29
	1410	55
	5280	1
	5290	1
	5310	1
2549-9109	1410	11
	1410	15
2549-9110	5110	1
2549-9129	1410	17
2549-9138	1410	9
2550-1014D1	1460	3
2550-1014D2	1460	4
2553-1275D22	1460	12
2553-1275D5	5110	6
2553-1275D58	1460	11
2553-1275D65	1460	9
2553-1275D69	1460	10
2553-1275D86	1460	8
2553-1275D92	5110	7
260-00012	1140	4
	5370	4
260-00039	1140	3
	5370	3
260-00041	1140	5
	5370	5
2621-9002	1410	31
2705-9002	1370	52
276-00075F3	1150	-
276-00075F4	5250	-
276-00076	1150	5
276-00077	1150	6
276-00082	5250	1
	5250	4
278-00056	5250	2-1
	5250	3-1

PART NO.	FIG NO.	KEY NO.
278-00056	5250	4-1
2875329M1	1370	31
2920-6111	1490	36-11
2920-6112	1490	36-12
401-00129A	3470	-
	5100	1
4109-9068	1100	6
4110-1380A	2100	2-1
	5430	2-1
4110-1382A	5230	62-2
4110-1410	1140	6-3
	1140	7-3
	5370	6-3
	5370	7-3
4111-1012A	1100	19
4111-1013A	1100	3
4114-1791A	1140	19
	5370	19
4114-1793A	1100	49
4114-1864	1100	7
4114-1865	1100	8
4114-1866	1100	16
4114-1867	1100	15
4114-1930	1140	16
	5370	16
4114-4078A	5220	56
	5230	56
	5240	33
4114-4104A	1100	51
4114-4105	1100	12
4114-4106	1100	13
4114-4113	1100	14
4114-4117A	1140	12
	5370	12
4114-4160B	1370	18
4116-4024C	1370	19
4120-2206	1240	31
4120-2219	1250	2-7
4120-4016	1140	18
	5370	18
4123-2362C	2100	10
	5430	10
4123-2365B	2100	13
	5430	13
4123-2366C	2100	14
	5430	14
4123-2367B	2100	15
	5430	15
4123-2368B	2100	16
	5430	16
4123-2423	1100	36
	5230	65
4125-1099	1120	29
4125-9016	5220	43
	5230	43
	5240	20
4130-1014C	1370	32
4130-1015C	1370	34
4139-9083	1370	43
4142-1160C	1340	11
4142-1670	1260	4-21F
4159-4008	2130	2
4160-1343	1240	75
4161-2507	1240	74
4161-9036	1340	17
4171-1111A	1260	4-5
	1270	3-2
4172-9032	1260	4-9
4180-4010A	1160	8
4180-4012	1130	7
4181-2692	1130	15
4181-2749	1160	49
4181-4281	1160	53
4182-1671C	1110	20
4182-1731	1200	74
4182-1732A	1140	29
	5370	29
4182-1759	1200	61
4182-1760	1200	63
4185-1771A	1470	19
4185-1775D3	1480	32
4185-1777	1240	22
4187-9002	1110	56
4190-1992A	4130	6
4190-2482A	4120	8
	4130	8
4190-2545A	4130	5
4190-2546A	4130	7
4190-2547A	4130	17
4191-4506A	5230	64
4191-4506B	5230	64
4192-1059	2130	8
4195-4644B	2120	5
4195-4645	2120	1
4197-2087	1200	72
4197-2088	1200	71
4199-9055	4100	5
420-00073K	3440	*
420-00128	5100	9
420-00142	1180	1
420-00142	3450	-
420-00144	3460	-
	5140	1
420-00172	1170	1
	3420	-
420-00172KT	3420	*
420-00241A	1200	21
	3440	-
4215-1003D7	1160	19
422-00027A	1120	6
4222-1013A	1140	15
	5370	15
426-00105	3530	-
	5150	1
426-00254	3540	-
	5170	1
426-00278	1120	4
4276-9037	1150	5-2
	1150	6-2
4276-9052	5250	1-2
4276-9057	5250	2-2
4278-9040	1150	5-1
	5250	1-1
4278-9050	1150	6-1
431-00001	1490	36-13
431-00002	1490	36-14
440-00252	1100	29
	3500	-
4420-9406	1160	3
4420-9555	1160	2
	3410	-
4423-1515	1140	28
	5370	28
4440-6265K	3500	*
4507-9003	1240	29
4538-9017	1240	24
4539-6036	1410	1-3
4541-9024	1240	28
4549-6072	1340	6
4549-9080	1200	45
4549-9418	1340	7
471-00107	1270	54
471-00127	1120	8
4713-1190A	5260	2
	5400	2
4713-1192	5260	3
	5400	3
4713-4004A	2140	2
	5230	63-2
	5410	3

PART NO.	FIG NO.	KEY NO.
4713-4005A	2140	3
	5230	63-3
	5410	4
4713-4006A	2140	4
	5230	63-4
	5410	2
4715-4010A	5300	-
474-00039	1110	24-1
	4110	3
474-00040	1110	24-2
	4110	2
474-00055	1120	3
	4110	1
4901-9036	1320	1
4916-9006	1290	41
4920-9050A	1490	36
4920-9050B	1490	36
506-00006	1440	1
507-00001	1240	27
515-00012A	1410	1-16
	4110	19
515-00013	5290	7-1
515-00015	1350	4-2A
	1350	5-2A
	5120	4-2A
	5120	5-2A
	5270	4-2A
	5270	5-2A
516-00011	1440	16
516-00014	1450	1
516-00015	1450	2
527-00005	1420	1-1
	4110	25
527-00006	1410	32
528-00030	1120	5
	1210	86
528-00039	1410	36
528-00039A	1410	36
530-00067	1460	2
530-00150	1410	6
530-00224	5340	1
530-00388	3530	49
530-00434B	1410	35
530-00435A	1390	60
	1400	60
534-00062	5290	7
534-00079	1240	47
534-00085	1240	46
	1240	49
	1440	24
537-00039B	5110	3
538-00002	1490	36-15
543-00001	1390	8
	1400	8
544-00007	1420	1
545-00001	1410	33
545-00003	1490	36-2
547-00020	1440	20
549-00010	1200	44
549-00039	1200	39
549-00083	5190	1
	5330	1
553-00001D4	1420	10
621-00268	1250	2-10
621-01344	1180	47
621-01363	5140	47
621-01468	1380	22
	5220	22
	5230	22
621-02127	1380	1
	5220	1
	5230	1
621-02128	1380	2
	5220	2
	5230	2
621-02577	1240	33
65.01101-0054B	011	2
65.01101-0056A	011	2
65.01101-6085B	011	1
65.01101-6092A	011	1
65.01105-1051B	011	4
65.01105-1052B	011	7
65.01105-6005B	011	3
65.01105-6006B	011	6
65.01110-6140	016	4
65.01110-6140A	016	4
65.01150-6008	016	5
65.01201-0075A	011	30
65.01201-0076	011	31
65.01201-0077	011	32
65.01201-0078	011	33
65.01201-0079	011	34
65.01304-0029	012	1
65.01304-0029A	012	1
65.01401-0262	013	1
65.01401-0262A	013	1
65.01414-0004A	013	8
65.01501-5003A	014	1
65.01510-0040	013	2
	040	4
65.01510-0157	014	2
	040	6
65.01601-5020	011	20
65.01801-5043	015	20
65.01801-5043A	015	20
65.01801-5100	015	1
65.01810-5011	018	8
	022	38
65.01813-5019	022	35
65.01840-0017	015	2
65.01903-0034	012	3
	040	2
65.01904-0032	013	3
	040	5
65.01905-0009	014	3
	040	7
65.02101-0069A	016	1
65.02115-0016	016	3
65.02130-0004	016	18
65.02201-0002	016	10
65.02301-0294	016	16
65.02301-5152	016	15
65.02310-0006	016	17
65.02401-6032B	016	20
65.02410-0040	016	22
65.02410-0041	016	22
65.02410-0042	016	22
65.02410-0050	016	23
65.02410-0051	016	23
65.02410-0052	016	23
65.02411-0009	016	21
65.02501-0476	016	30
65.02501-0477	016	31
65.02501-0478	016	32
65.02502-0017A	016	36
65.02503-0132A	016	33
65.02503-0133A	016	34
65.02503-0134	016	35
65.02601-0225B	016	40
65.03101-1068C	017	2
65.03101-6090E	017	1
65.03101-6090F	017	1
65.03201-1016A	017	5
65.03201-1016B	017	5
65.03203-1062	017	3
65.03203-1063	017	4
65.03205-0006A	017	8
65.03401-5010	018	1
65.03401-5010B	018	1
65.03402-0008A	018	5

PART NO.	FIG NO.	KEY NO.
65.03402-0008B	018	5
65.03901-0071	017	13
	040	8
	041	1
65.03905-0037A	018	3
	040	10
	041	3
65.03905-0041	018	6
	040	11
	041	4
65.03905-5002	018	4
	040	9
	041	2
65.04101-0065B	019	1
65.04101-0066B	019	2
65.04102-0024	019	3
65.04103-0018	019	4
65.04104-0009	019	6
65.04130-0009A	019	8
65.04130-0011	019	9
65.04200-6038A	019	10
65.04200-6038B	019	10
65.04200-6038C	019	10
65.04201-5042A	019	11
65.04201-5042B	019	11
65.04201-5042C	019	11
65.04201-5043A	019	12
65.04201-5043B	019	12
65.04201-5043C	019	12
65.04202-0033	019	14
65.04202-0034	019	15
65.04202-0035	019	16
65.04203-5020A	019	13
65.04205-0014	019	22
65.04209-0005	019	24
65.04209-0006	019	25
65.04209-5001	019	24
65.04301-5003B	019	30
65.04301-5003C	019	30
65.04302-5015	019	31
65.04401-0045A	019	32
65.04410-0021A	011	10
65.04410-0022	011	11
65.04501-0017	019	40
65.04505-5018	019	42
65.04506-0015	019	47
65.04506-0016	019	43
65.04902-0016	019	7
65.05100-6063	020	1
65.05100-6063A	020	1
65.05102-0030	020	2
65.05103-0034	020	7
65.05104-0022	020	3
65.05104-0023	020	4
65.05201-0016	020	5
65.05401-5002F	011	23
65.05401-5002G	011	23
65.05401-5031	011	21
65.05401-5032	012	7
65.05500-6014	021	1
65.05500-6014A	021	1
65.05503-0050	021	11
65.05510-5032	021	17
	4110	5
65.05510-5032A	021	17
65.05550-0010	021	12
65.05604-0030A	021	2
65.05606-5032A	021	3
65.05610-0007A	021	19
65.05701-5569	027	12
65.05701-5689	027	5
65.05701-5690	027	11
65.05701-6122	022	8
65.05740-0222	022	10
65.05801-5249	022	1
65.05805-5238	022	7
65.05805-5238A	022	7
65.05806-5005	022	6
65.05806-5005A	022	6
65.05901-0027	040	15
65.05901-0031	021	18
65.05901-0032	022	15
65.05902-0022	021	4
65.05902-0023	021	30
	040	13
65.05903-0029A	022	36
65.05903A0001	040	12
65.05904-0035	022	4
	040	14
65.06301-0257	023	11
65.06301-0258A	024	13
65.06402-5015	023	4
65.06404-0039A	023	1
65.06405-0012A	023	6
65.06405-0039	023	6
65.06500-6178B	024	1
65.06500-6271A	024	1
65.06501-0099A	024	2
65.06501-0300	024	2
65.06503-0113	024	8
65.06504-0033	024	6
65.06506-0029A	024	7
65.06506-0032	024	7
65.06520-6007	024	3
65.06520-6008	024	3
65.06901-0042	024	10
	040	19
65.06903-0029	024	14
	040	20
65.06904-0003	023	5
	040	17
	041	6
65.06904-0020	023	2
	040	16
	041	5
65.06904-0021	023	2
	040	16
	041	5
65.08100-6088A	026	1
65.08100-6088B	026	1
65.08101-0263	026	2
65.08101-0264	026	3
65.08101-0264A	026	3
65.08201-5075	026	11
65.08202-0194	026	16
65.08901-0045	026	5
	040	21
	041	8
65.08902-0030A	026	14
	040	22
	041	9
65.09100-7114	027	1
65.09411-5114	027	30
65.09440-0065	027	33
65.09901-0018A	027	2
	040	23
	041	10
65.09904-0008	026	31
	040	31
	041	16
65.10205-0006	028	4
65.10205-0006A	028	4
65.10301-6191	029	1
65.10301-6192	029	2
65.10301-6193	029	3
65.10301-6194	029	4
65.10301-6195	029	5
65.10401-7004A	028	1
65.10410-6003A	029	15
65.10415-0001	029	17

PART NO.	FIG NO.	KEY NO.
65.10501-7005A	030	1
65.10601-6004A	029	20
65.10610-0003	029	30
65.11210-0003A	031	2
65.11210-0003B	031	2
65.11301-0038	030	15
65.11301-5002	019	46
65.11304-0001	030	3
65.11308-0005	036	3
65.11308-0006	036	3
65.11308-0007	036	3
65.11308-0008	036	3
65.12301-5268	032	17
65.12301-5288A	032	31
65.12301-5288B	032	31
65.12301-5289	032	14
65.12301-5291	032	7
65.12501-7042	032	50
65.12501-7042A	032	50
65.12501-7042B	032	50
65.12503-5026	032	52
	4110	4
65.12504-5027	032	51
65.12504-5028	032	51
65.19102-0096	033	1
65.19102-0103	033	1
65.19103-5049	033	9
65.19103-6010A	033	3
65.19107-0001A	033	5
65.19202-0057A	034	1
65.26201-7075A	035	1
65.26214-0004	035	10
65.26803-7028B	026	30
65.27103-7014	036	1
	036	2
65.27114-5002	029	21
65.27423-7003	036	10
65.27427-7001	036	12
65.27444-7001	036	14
65.29101-6184A	037	1
65.29101-6184B	037	1
65.29101-6184C	037	1
65.29101-6201A	037	4
65.29101-6209	037	15
65.29150-5006	031	7
65.38901-0018A	012	10
	040	3
65.41530-0185	038	1
	038	3
65.52122-6002	029	22

PART NO.	FIG NO.	KEY NO.
65.54109-0005A	021	10
65.90001-0098	021	37
65.90020-0062B	016	11
65.90020-0063B	012	4
65.90020-0066A	011	9
65.90020-0080	012	5
65.90020-0085	020	10
65.90020-0095	031	5
65.90020-0100	013	4
65.90020-0101	013	5
65.90020-0105	013	6
65.90020-0109	018	2
65.90020-0117	019	41
65.90020-0118	019	45
	019	49
65.90020-0119	019	50
65.90020-0120	019	26
65.90020-0121	030	4
65.90020-0123	016	19
65.90020-0136	028	5
65.90020-0138	018	7
65.90020-0140A	016	19
65.90021-0009	017	11
65.90030-0018	019	20
65.90201-0073	026	9
65.90201-0075	027	18
65.90201-0076	026	8
65.90201-0128	037	16
65.90201-0134	017	12
65.90201-0135	021	34
65.90201-0136	026	19
65.90201-0139	021	7
65.90302-0009	011	12
65.90302-0029	017	7
65.90302-0034	011	14
65.90302-0041	011	15
65.90302-0042	011	13
65.90302-0048	017	6
65.90310-0115	021	15
65.90310-0134	011	26
65.90310-0135	011	28
	039	1
65.90320-0019	023	10
65.90320-0022	011	22
65.90441-0009A	033	4
65.90441-0066	031	12
65.90501-0003	019	23
65.90510-0012	022	14
65.90535-0001	027	3
65.90535-0003	026	6

PART NO.	FIG NO.	KEY NO.
65.90701-0098	019	5
65.90701-0099	016	41
65.90701-0136B	019	18
65.90720-0032	019	34
65.90720-0033A	019	48
65.90720-0034B	019	44
65.91030-0005	017	10
65.91601-0009	012	9
65.91605-0002	011	25
65.91606-0041	011	16
65.91701-0086	026	7
65.91710-0001	011	5
	011	8
65.91710-0009	013	7
65.91710-0016	012	2
65.93020-0055	033	6
65.93410-0027	024	4
65.96210-6001A	031	4
	040	29
65.96301-0327A	027	13
65.96301-0441	015	9
65.96301-0441A	015	9
65.96301-0455A	015	7
65.96301-0462	032	35
65.96301-0478	015	5
65.96301-6003	027	31
65.96330-0018	032	8
65.96340-5013A	022	31
65.96340-5081	032	1
	032	2
65.96340-6015	022	30
65.96401-0014	013	10
65.96501-0033B	015	21
65.96501-0074	012	8
65.96501-0088	017	9
65.96501-0099A	023	12
	040	18
	041	7
65.96501-0102	031	6
65.96501-0431	029	23
65.96501-0437	028	2
65.96501-0438	029	16
65.96501-0439	030	2
65.96507-0043	032	57
65.96507-0053	028	3
	040	27
	041	14
65.96507-0055	032	30
65.96507-0059	026	4
	026	4

PART NO.	FIG NO.	KEY NO.
65.96601-0052	027	16
	040	25
	041	12
65.96601-0067	027	15
	040	24
	041	11
65.96801-0194	025	2
	4110	10
65.97401-0137	022	11
65.97401-0188	031	8
	037	5
65.97401-0196	037	19
65.97401-5019	015	13
65.97401-5024	015	12
	037	25
65.97401-6039	029	8
65.97402-0003	032	36
65.97402-0025	015	8
65.97440-0005	015	8
65.97440-0045	032	9
	032	36
65.97450-5003	027	32
65.97460-0005	037	23
65.97460-0008	037	2
65.97480-0220	029	9
65.97601-0075	021	14
65.97601-0124	019	17
65.98125-5004A	022	33
65.98130-0154	032	32
65.98130-0159A	032	11
65.98130-0200A	027	4
65.98130-0203	022	32
65.98130-0211	032	3
65.98130-0229	032	5
	032	15
	032	18
	032	56
65.98130-0241	012	6
65.98131-0119	015	17
65.98150-0042A	032	34
65.99497-8669	031	1
65.99601-8071	040	-
65.99605-8042	041	-
903-00064	1240	44
920-00076	1210	14
DS0001088	1440	3
DS0002272	1350	6
	5120	6
	5270	6
DS0002273	1350	8
DS0002273	5120	8
	5270	8
DS0002277	1140	13
	5370	13
DS0025013	1180	41
	1360	13
	5140	41
DS0025014	1350	14
	1370	20
	1380	21
	5120	14
	5220	21
	5230	21
	5270	14
DS0025015	1380	13
	5220	13
	5230	13
DS0025016	1210	124
	1370	59
DS0025017	1210	28
	1370	58
	5180	20
DS0025018	1130	27
	5100	3
DS0025019	1180	33
	5140	33
DS0025021	1190	16
	5150	17
	5160	16
	5170	17
DS0025023	1370	24
	1380	9-6
	1380	10-6
	1380	18
	5200	7
	5220	9-6
	5220	10-6
	5220	18
	5230	9-6
	5230	10-6
	5230	18
DS0025024	1120	26
	1130	26
	1370	2-14
DS0025025	1370	46
	5220	35
	5230	35
	5240	12
DS0025028	1370	25
DS0025030	1380	20
DS0025030	5220	20
	5230	20
	5230	20
	5240	39
DS0025031	1380	14
	5220	14
	5230	14
DS0025032	1230	14
	1360	12
	1370	57
DS0025033	1210	23
	5180	15
DS0025034	5210	10
DS0025036	5180	16
DS0301031	1210	90
DS0301032	1190	8
	1200	12
	5150	8
	5160	8
	5170	8
DS0401121	1370	2-12
	1370	21
DS0401128	5220	70
	5230	91
	5240	43
DS0401180	2100	21
	5430	20
DS0401181	1140	9
	5370	9
DS0401186	1230	4
DS0401191	1210	69
DS0401198	1100	14
DS1001048	1370	26
DS1001065	1350	11
	5120	11
	5270	11
DS1001074	1370	33
DS2011059	1190	26
	5150	26
	5160	23
	5170	29
DS2011082	1160	70
DS2011342	1190	27
	5150	27
	5160	24
	5170	30
DS2011495	1200	89
DS2011510	1190	25
	1190	25
	5150	25

PART NO.	FIG NO.	KEY NO.
DS2011510	5160	22
	5170	27
	5170	27
)S2011542	1220	12
DS2011694	5170	32
DS2012242	5170	28
	5170	28
DS2012287	1210	107
DS2012327	1220	13
DS2012329	1170	13
DS2012384	1210	110
DS2012385	1210	111
DS2012386	1200	83
DS2012404	1210	109
DS2012492	5390	1
	5390	2
DS2012496	5170	33
DS2012498	1190	28
DS2012514	5390	1
	5390	2
DS2013021	1200	90
DS2013044	1200	94
DS20131076	1210	114
DS20131090	5380	22
)S20131091	5380	23
DS2013170	5100	34
DS2013347	1170	7
DS2013429	1170	10
DS2013609	1220	10
DS2013736	1200	82
DS2013740	1200	92
DS2013786	1160	62
	1220	9
DS2013804	5100	23
DS2013805	1210	108
DS2013807	1210	112
DS2013808	1210	114
DS2013809	1200	79
DS2013811	1200	85
DS2013812	1200	84
DS2013813	1200	93
DS2013815	1220	11
DS2013861	1160	64
DS2013975	1200	91
DS2013976	1200	81
DS2016082	5180	11
DS2016086	1210	106
DS2016093	5180	13
DS2017049	5180	10
DS2018151	1160	63
DS2018154	5100	33
DS2018190	5390	3
	5390	4
DS2018194	5390	3
	5390	4
DS2021076	1160	56
DS2021111	1200	80
DS2021166	1210	113
DS2021167	1200	86
DS2021194	1160	59
DS2023229	1190	23
	5170	25
DS2023245	1190	24
	5170	26
DS2023246	1190	20
	5150	22
	5160	19
	5170	22
DS2023248	1190	19
	5150	21
	5160	18
	5170	21
DS2023268	5180	12
DS2023269	1200	87
DS2023270	1190	22
	5150	24
	5160	21
	5170	24
DS2023271	1190	21
	5150	23
	5160	20
	5170	23
DS2023275	1200	95
DS2023280	1170	8
DS2025079	1210	103
DS2025080	1210	104
DS2026166	1210	105
DS2039079	1160	57
DS2039127	1160	58
DS2040539	1180	38
	5140	38
DS2040540	1180	37
	5140	37
DS2045433	1180	39
	5140	39
DS2045440	1160	60
DS2045458	1180	40
	5140	40
DS2053220	1210	102
DS2054225	1100	28
DS2054226	1100	57
DS2054404	1100	57
DS2055682	1100	27
DS2065046	1200	88
DS2087046	1160	36
DS2087047	1160	72
DS2087048	1160	37
DS2087065	1210	37
DS2087071	1210	24
DS2105015	1110	55
DS2232051	1180	22
	5140	22
	5180	6
DS2232062	1210	76
DS2232066	1190	9
	5150	9
	5160	9
	5170	9
DS2232067	1190	11
	5150	20
	5160	11
	5170	20
DS2232080	1210	32
DS2232085	1200	41
DS2232099	1200	20
DS2232110	5100	28
DS2232122	1210	35
DS2234012	1210	71
DS2234014	1180	23
	5140	23
DS2242021	5100	35
DS2304009	1160	71
DS2304043	1170	12
DS2304074	1200	37
DS2412002	1200	67
DS2412006	1170	14
DS2412013	1200	53
DS2412015	1170	9
DS2415001	1210	89
DS2415002	1190	7
	1200	48
	5150	7
	5160	7
	5170	7
DS2415005	1210	59
DS2415008	1160	73
DS2415009	1190	18
	1200	40
	5170	19
DS2415013	5390	8

PART NO.	FIG NO.	KEY NO.
DS2465007	5150	12
	5170	11
DS2465010	5150	11
	5170	12
DS2469002	1210	74
DS2469003	5100	24
DS2479004	1110	63
DS2805007	1140	27
	5370	27
DS5201078	1200	27
DS7603058	1100	35
DS7701366	1100	59
DS7722032	1370	29
DS7722033	1370	30
K1001029	1140	23
	1200	77
	1210	92
	1390	59
	1400	59
	1410	51
	1420	21
	1450	18
	1460	27
	1470	51
	5190	6
	5290	10
	5370	23
K1001654B	1410	5
K1001702	1390	55
	1400	55
K1001858A	1410	5-1
K1002000	1210	54
K1002864	1110	64
K1003379	3550	-
	5160	1
K1003380A	1190	1
	3560	-
K1003555A	1350	4
	5120	4
K1003556A	1350	5
	5120	5
K1003557A	1350	4-1
	1350	5-1
	5120	4-1
	5120	5-1
K1003559A	1350	4-3
	1350	5-3
	5120	4-3
	5120	5-3
K1003561	1350	4-2

PART NO.	FIG NO.	KEY NO.
K1003561	1350	5-2
	5120	4-2
	5120	5-2
	5270	4-2
	5270	5-2
K1003900	1260	4-21A
K1004146	1210	2
K1004266	1130	5
K1004331	1350	16
	5120	16
	5130	5
	5270	16
K1004425	1390	65
	1400	65
K1004427	1390	66
	1400	66
K1004529	1350	15
	5120	15
	5270	15
K1004630	1370	64
	5220	68
	5230	89
	5240	41
K1004701	1380	12
	5220	12
	5230	12
K1004701A	1380	12
	5220	12
	5230	12
K1004716	5280	5
K1004813A	1380	25
	5220	62
	5230	77
K1004816	1380	9-1
	1380	10-1
	5220	9-1
	5220	10-1
	5230	9-1
	5230	10-1
K1004817B	1380	10
	5220	10
	5230	10
K1004818B	1380	9
	5220	9
	5230	9
K1005530A	1240	71
K1005573A	1240	66
K1005577	1240	67
K1005588	1240	32
K1005591	1240	35

PART NO.	FIG NO.	KEY NO.
K1005592	1270	36
K1005593	1240	37
K1005599B	1240	65
K1005601A	1280	60
K1005601B	1280	60
K1005602A	1280	61
K1005602B	1280	61
K1005605A	1270	59
K1005614A	1270	3-9
K1005615B	1270	5
K1005641	1280	8
K1005642	1280	9
K1005661	1260	4-2
K1005675B	1240	50
	1260	4-19
K1005679B	1260	4-20
K1005680A	1260	4-20A
K1005681A	1260	4-20B
K1005682	1260	4-20C
K1005683A	1260	4-20D
K1005684A	1260	4-20E
K1005689	1260	4-20J
K1005690	1260	4-20K
K1005704B	1270	3
K1005704C	1270	3
K1005704E	1270	3
K1005717	1440	61
K1005896	1240	76
K1005906	1380	9-4
	1380	10-4
	5220	9-4
	5220	10-4
	5230	9-4
	5230	10-4
K1005934	1240	77
K1005940	1260	4-3
K1005941	1270	3-14
K1005946C	1270	6
K1005952	1250	2-3
K1005953	1250	2-4
K1005955	1250	2-6
K1005977	1290	28
K1005978	1290	29
K1005986	1240	53
K1005987A	1290	6
K1005989	1290	7
K1006006	1290	15
K1006025A	1290	16
K1006030A	1290	17
K1006041	1290	19

PART NO.	FIG NO.	KEY NO.
K1006042	1290	20
K1006049	1340	2
K1006050	1340	3
K1006053	1340	4
K1006054	1340	5
K1006058	1330	3
K1006067A	1330	4
K1006081	1330	7
K1006083	1330	9
K1006094	1290	33
K1006095	1290	34
K1006096	1290	35
K1006098	1300	1
K1006098A	1300	1
K1006100	1310	1
K1006100A	1310	1
K1006101	1310	2
K1006101A	1310	2
K1006125A	1320	-
K1006134C	1390	1
	1400	1
K1006160	1130	10A
K1006182B	1380	9-3
	1380	10-3
	5220	9-3
	5220	10-3
	5230	9-3
	5230	10-3
K1006250B	1380	9-2
	1380	10-2
	5220	9-2
	5220	10-2
	5230	9-2
	5230	10-2
K1006282	1450	3
K1006290	1410	7
K1006322	1270	3-17
K1006323A	1280	11
K1006324A	1280	12
K1006330	1290	24
K1006333	1290	25
K1006356	1410	8
K1006360A	5330	4
K1006361	1240	26
K1006366	1380	9-5
	1380	10-5
	5220	9-5
	5220	10-5
	5230	9-5
	5230	10-5
K1006467	1270	3-15
K1006498A	1290	10
K1006505A	1320	3
K1006520	1110	61
K1006530	1110	61-1
	4110	6
K1006586	4100	7
K1006592	1380	9-7
	1380	10-7
	5220	9-7
	5220	10-7
	5230	9-7
	5230	10-7
K1006648	1220	1
K1006651	1220	4
K1006666	1370	6-3
	5210	3
K1006668	5280	4
K1006678	1390	46
	1390	47
	1400	46
	1400	47
K1006735B	1300	2
K1006743A	1310	3
K1006747B	1290	11
K1006854	4110	13
K1006973	1110	61-2
K1007004	1290	32
K1007019B	1340	16
K1007136	1410	1-4
K1007137	1410	1-5
K1007138	1410	1-6
K1007156	1100	20
K1007220	5190	3
K1008305	1210	10
	3510	-
K1008401C	1390	45
	1400	45
K1008482B	1470	8
K1008525	1110	44
K1008755	1380	11
	5220	11
	5230	11
K1008765	5290	6
K1008877	1290	5
K1009006	1380	19
	5220	19
	5230	19
K1009104	1200	14
K1009106	1200	14-1
K1009106	4110	8
K1009189	5180	1
K1009256	5250	3-2
K1009727A	1120	2
K1009727B	1120	2
K1009798	1290	46
K1009960	1130	8
K1009961	1130	9
K1010015A	1310	-
K1010016B	1300	-
K1010139	1190	3
	5150	3
	5160	3
	5170	3
K1010160	1330	2
K1010316	1390	40
	1400	40
K1010325	1410	42
K1010358	1240	42
K1010377	1180	17
	5140	17
K1010378	1180	45
	5140	45
K1010379	1180	46
	5140	46
K1010428	1240	82
K1010458	5380	20
K1010490	1210	46
K1010491	1210	47
K1010516	1200	15
K1010519	1470	1
K1010579	1250	2-13
K1010580	1270	58
K1010583	1270	3-5
K1010605	1110	73
K1010639	4110	11
K1010656	1380	9-4A
	1380	10-4A
	4110	18
	5220	9-4A
	5220	10-4A
	5230	9-4A
	5230	10-4A
K1010676	5180	7
K1010702	1430	91
K1010703	5320	1
K1010850A	1270	3-6
K1010851A	1270	3-10
K1010852A	1270	3-11
K1010891	1120	13

PART NO.	FIG NO.	KEY NO.
K1010903	1190	5
	5150	5
	5160	5
	5170	5
K1010982	5360	1
K1011169	1250	2-14
K1011177	1240	86
K1011179B	1240	87
K1011221	1240	78
K1011222	1240	79
K1011223	1240	80
K1011224	1240	81
K1011225	1240	20
K1011398	5250	3
K1011645D1	4120	1
	4130	1
K1011647B	4130	25
K1011650	1260	4-20L
K1011651	1260	4-20M
K1011705	5250	4-2
K1011751A	1290	45
K1011896	1410	37
K1012204A	4120	25
K1012205A	4120	27
K1012269	1370	6-6
	5210	7
K1012677	5210	8
K1012685A	1120	6
K1013184	1340	10
K1013232	1410	101
K1013263	1340	22
K1013278	1380	24
K1013279	1340	23
K1013313	1190	4
	5150	4
	5160	4
	5170	4
K1013442	1240	83
K1013517	1110	2
	3100	-
K1013860	1210	1-4
K1014089E	1100	2
K1014089G	1100	2
K1014089H	1100	2
K1014089J	1100	2
K1014190A	1350	2
K1014190B	1350	2
K1014191	1350	3
K1014191A	1350	3
K1014206	1210	22
K1014299	1350	17
	5120	17
	5270	17
K1014334B	1210	1
K1014334C	1210	1
K1014337	1210	1-1
K1014337A	1210	1-1
K1014339	1210	1-2
K1014339A	1210	1-2
K1014341	1210	1-3
K1014341A	1210	1-3
K1014413A	1110	16
K1014416	1110	18
K1014423	1110	19
K1014424A	1110	25
K1014651	1410	1
K1014741	1200	7
K1015117	1380	6
	5220	6
	5230	6
K1015118	1380	5
	5220	5
	5230	5
K1015119A	1380	7
	5220	7
	5230	7
K1015120A	1380	8
	5220	8
	5230	8
K1015133	1210	5
K1015158	1210	6
K1015172A	1160	1
	3400	-
K1015206	5130	2
K1015286	1410	1-1
K1015287	1410	1-2
K1015291	1210	41
K1015342	1210	27
K1015352	1210	49
K1015352A	1210	49
K1015364	1130	6
K1015364A	1130	6
K1015411	1210	45
K1015420	5180	2
K1015518	1390	50
	1400	50
	4120	36
	4130	36
K1015519	1390	51
	1400	51
K1015519	4120	37
	4130	37
K1015643	1110	58
K1015716C	1410	41
K1015716E	1410	41
K1015881C	5200	-
K1015882	5200	1
K1015883	5200	2
K1015884A	5200	3
K1015981	1110	77
K1016008	5180	19
K1016028B	5200	4
K1016029	5200	5
K1016029A	5200	5
K1016029B	5200	5
K1016030B	5200	6
K1016104	1210	39
K1016105	1210	40
K1016106	1210	78
K1016183	4120	45
	4130	45
K1016184	4120	46
	4130	46
K1016269G	1210	-
K1016270A	1200	-
K1016294	1130	10
K1016296A	1180	-
K1016378A	5120	2
	5270	2
K1016378B	5120	2
	5270	2
K1016379	5120	3
	5270	3
K1016379A	5120	3
	5270	3
K1016408	4120	15
K1016409	4120	10
	4130	10
K1016434E	1120	-
K1016435G	1130	-
K1016436C	1120	1
K1016436E	1120	1
K1016467A	1130	2
K1016597	1180	4
	5140	4
K1016628A	1180	3
	5140	3
K1016629A	1240	-
	1250	-
	1260	-

PART NO.	FIG NO.	KEY NO.
K1016629A	1270	-
	1280	-
K1016629B	1240	-
	1250	-
	1260	-
	1270	-
	1280	-
K1016629C	1240	-
	1250	-
	1260	-
	1270	-
	1280	-
K1016629E	1240	-
	1250	-
	1260	-
	1270	-
	1280	-
K1016682B	1250	2
K1016683	1250	2-1
K1016683A	1250	2-1
K1016684	1250	2-2
K1016685	1250	2-5
K1016686A	1260	4
K1016690	1260	4-7
K1016693	1260	4-21
K1016694	1260	4-21B
K1016695	1260	4-21C
K1016696	1280	7
K1016697	1280	10
K1016698	1280	13
K1016699	1280	14
K1016700	1240	85
K1016711C	1290	-
K1016712A	1290	1
K1016712B	1290	1
K1016736	1290	2
K1016739	1290	3
K1016739A	1290	3
K1016740	1290	4
K1016741	1290	8
K1016752	1290	9
K1016755	1290	12
K1016764	1290	13
K1016771A	1290	18
K1016774C	1340	-
K1016776	1340	24
K1016777	1340	25
K1016777A	1340	25
K1016778	1340	26
K1016778A	1340	26
K1016782A	1330	-
K1016783	1330	5
K1016787A	1330	6
K1016798	1290	23
K1016799	1290	26
K1016805	1290	27
K1016858C	2100	-
K1016859B	2100	1
K1016859C	2100	1
K1016859G	2100	1
K1016863B	2100	2
K1016863C	2100	2
K1016866	2100	3
K1016866A	2100	3
K1016870	2100	4
	3490	-
	5430	4
K1016873A	2100	5
	3480	-
	5430	5
K1016875A	2140	-
K1016876A	2140	1
	5260	1
K1016877	2110	-
K1016878B	2130	-
K1016879A	2120	-
K1016909B	1370	6
K1016909C	1370	6
K1016910B	1370	6-1
K1016910C	1370	6-1
K1016911	1370	6-2
	5210	2
K1016924	5220	57
	5230	57
	5240	34
K1016971	1270	3-18
K1017019	1260	4-26
K1017041E	1160	-
K1017061	5100	2
K1017069	5100	-
K1017107	2100	1-3
	5230	62-3
	5430	1-3
K1017108	2100	1-1
	5230	62-1
	5430	1-1
K1017109	2100	3-1
	5430	3-1
K1017123	1160	5
K1017128	1160	6
K1017131	1160	7
K1017131A	1160	7
K1017195	1160	23
K1017207	1160	32
K1017225C	1110	-
K1017227B	1110	4
K1017230	1160	67
K1017251A	1110	5
K1017252	1110	6
K1017253	1110	34
K1017254	1110	17
K1017377A	5140	-
K1017398	1110	59
K1017399	1110	1
K1017400	1220	-
K1017495	1370	35
K1017495A	1370	35
K1017496	1370	36
K1017496A	1370	36
K1017505	1180	5
K1017506	1180	6
K1017507	5140	5
K1017508	5140	6
K1017611A	1210	29
K1017612	1210	30
K1017622	1200	1
	3430	-
K1017649	5180	-
K1017650	5180	5
K1017651	5180	4
K1017657	5180	3
K1017760C	5170	-
K1017815B	1360	6
K1017816	1360	7
K1017817	1360	8
K1017878	1200	70
K1017883	1110	15
K1017902	1160	4
K1018081E	1140	-
K1018105A	1440	2
K1018108	1210	26
K1018121A	1210	58
K1018177A	1210	100
K1018197A	1140	7
	5370	7
K1018197B	1140	7
K1018198A	1140	6
	5370	6
K1018198B	1140	6
K1018206B	1100	1

PART NO.	FIG NO.	KEY NO.
K1018206C	1100	1
K1018206E	1100	1
K1018206G	1100	1
K1018227A	1140	21
	5370	21
K1018228A	1140	22
	5370	22
K1018277	5100	4
K1018333E	5120	-
K1018334	1290	49
K1018521A	1110	78
K1018526M	1100	-
K1018541	1100	30
K1018543	1100	46
K1018544	1100	50
K1018620E	1380	-
K1018621G	5220	-
K1018622G	5230	-
K1018623B	5240	-
K1018624	1380	3
	5220	3
	5230	3
K1018624A	1380	3
	5220	3
	5230	3
K1018625	1380	4
	5220	4
	5230	4
K1018625A	1380	4
	5220	4
	5230	4
K1018630	1380	23
	5220	23
	5230	23
K1018630A	1380	23
	5220	23
	5230	23
K1018720	5220	24
	5230	24
	5240	1
K1018720A	5220	24
	5230	24
	5240	1
K1018720B	5220	24
	5230	24
K1018721	5220	25
	5230	25
	5240	2
K1018721A	5220	25
	5230	25

PART NO.	FIG NO.	KEY NO.
K1018721A	5240	2
K1018721B	5220	25
	5230	25
K1018722A	5220	26
	5230	26
	5240	3
K1018723A	5220	27
	5230	27
	5240	4
K1018726	5220	28
	5230	28
	5240	5
K1018726A	5220	28
	5230	28
	5240	5
K1018727	5220	29
	5230	29
	5240	6
K1018727A	5220	29
	5230	29
	5240	6
K1018746AD6	4130	47
K1018771A	1450	8
K1018772B	1460	1
K1018772C	1460	1
K1018793	5220	53
	5230	53
	5240	30
K1018794	5220	54
	5230	54
	5240	31
K1018795A	5220	60
	5230	60
	5240	37
K1018796A	5220	61
	5230	61
	5240	38
K1018799A	5230	68
	5230	68
K1018799B	5230	68
K1018805A	5230	62
K1018805B	5230	62
K1018807	5230	63
K1018841	1210	10
K1018851A	1350	1
	5120	1
	5270	1
K1018852C	1350	-
K1018856	1330	8
K1018857	1290	47

PART NO.	FIG NO.	KEY NO.
K1018858	1290	48
K1018924	5130	-
K1018925	5130	1
K1018980B	1360	1
K1018986B	1360	-
K1018987A	1360	2
K1018988A	1360	3
K1018989A	1360	4
K1018996	1360	11
K1018997A	1360	5
K1019019	1210	64
K1019036	1360	9
K1019037	1360	10
K1022465	5380	26
K1023172A	1370	3
K1023173A	1370	4
K1023173B	1370	4
K1023174A	1370	5
K1023174B	1370	5
K1023175B	1370	7
K1023175C	1370	7
K1023176B	1370	8
K1023176C	1370	8
K1023177B	1370	10
K1023178B	1370	11
K1023179	1370	12
K1023180A	1370	13
K1023181A	1370	55
K1023181B	1370	55
K1023187K	1370	-
K1023210	1370	9
K1023211B	1370	1
K1023211C	1370	1
K1023211E	1370	1
K1023214C	1370	2
K1023214E	1370	2
K1023214G	1370	2
K1023215A	1370	2-1
K1023215B	1370	2-1
K1023216C	1370	2-2
K1023216E	1370	2-2
K1023217	1370	2-3
K1023218A	1370	2-4
K1023219A	1370	2-5
K1023220A	1370	2-6
K1023241	1260	4-24
K1023242	1260	4-18
K1023243	1260	4-21D
K1023279A	1370	56
K1023556A	2130	1

PART NO.	FIG NO.	KEY NO.
K1023557B	1130	1
K1023557C	1130	1
K1023611	1110	1
K1023668	1420	4
K1023887	1110	3
K1023927	1230	11
K1023928	1230	12
K1023990A	5210	-
K1023990B	5210	-
K1023991A	5210	1
K1023993A	5210	9
K1024017C	1230	-
K1024029A	5270	5
K1024029B	5270	5
K1024030A	5270	4
K1024030B	5270	4
K1024036A	5270	4-1
K1024036B	5270	4-1
K1024042	5270	4-6
	5270	5-6
K1024053A	5270	5-1
K1024053B	5270	5-1
K1024075B	1440	-
K1024076A	1450	-
K1024077A	1420	-
K1024078C	1460	-
K1024079A	1470	-
	1480	-
	1490	-
K1024080B	1390	-
K1024081B	1400	-
K1024082C	1410	-
K1024083B	5330	-
K1024084	5310	-
K1024085A	5190	-
K1024086	5110	-
K1024087A	5290	-
K1024089	5360	-
K1024091	5280	-
K1024095	5350	-
K1024096	5340	-
K1024097A	1430	-
K1024099	5320	-
K1024115A	1420	9
K1024138	1460	5
K1024152	1390	64
K1024153	1400	64
K1024154	3520	-
K1024165A	1240	45
K1024175A	5330	5
K1024182	1110	80
K1024189	1410	48
K1024242	1390	41
	1400	41
K1024247	1170	-
K1024258	1130	11
K1024259	1130	12
K1024390C	1190	-
K1024416	5160	-
K1024417	5150	-
K1024489A	1370	23
K1024489B	1370	23
K1024491	4100	-
K1024501	2100	17
	5430	17
K1024502	2100	18
	5430	18
K1024527	2100	1-2
	5230	62-2
	5430	1-2
K1024532	5250	2
K1024535	4110	-
K1024536EF	4110	14
K1024537E	4110	15
K1024538E	4110	16
K1024539	4110	12
K1024597	1370	63
K1024597A	1370	63
K1024870	1370	62
K1024920A	5260	-
K1025575A	1230	10
K1025576A	1230	13
K1026460	1240	84
K1026660A	1110	60
K1026662	1110	62
K1026662A	1110	62
K1026838	4120	40
	4130	40
K1026839	4120	41
	4130	41
K1026841	4120	43
	4130	43
K1026842	4120	44
	4130	44
K1026865A	4120	35
	4130	48
K1027017	2120	7
	2130	12
	5300	5
K1027385	5230	82
K1027388	5270	4-3
	5270	5-3
K1027514	1370	65
K1027514A	1370	65
K1027634	1340	1
K1028449	1100	31
K1028514	1230	16
K1028614	5410	-
K1028615	5400	1
	5410	1
K1028655	5420	-
K1028656	5420	1
K1028658	5420	2
K1028857	5230	83
K1028900A	5270	-
K1028914	5230	80
K1028915	5230	81
K1028948	4130	22
K1029007	1290	14
K1029031	1240	18
K1029111	4130	38
K1029194	5400	-
K1029198	5380	2
K1029199	5380	4
K1029208	4130	29
K1029208A	4130	29
K1029209B	4130	-
K1029210	4120	39
	4130	39
K1029211	4120	42
	4130	42
K1029257	1120	6-2
	4110	27
K1029330B	5380	-
K1029331A	5380	1
K1029350	5230	84
K1029352	5230	85
K1029368	4120	-
K1029371	4120	38
K1029372	4120	50
K1029373	4120	51
K1029482	5370	-
K1029612	3280	10
	4110	7
K1029643	4130	18
K1029785	1270	3-18
K1029787	1240	26
K1029814	1290	15
K1029924	1380	28
	5220	66

PART NO.	FIG NO.	KEY NO.
K1029924	5230	87
K1030101	1140	8
K1030123	4130	4
K1030175	1380	22
	5220	22
	5230	22
K1030232	1100	20
K1030232A	1100	20
K1030245	5230	70
K1030488	1140	31
K1030531	1210	122
K1030742	1100	23
K1030743	1100	15
K1030744	1100	10
K1033324	1100	17
K1033763A	5380	16
K1033850	5420	8
K1034044	5230	94
K1034044A	5230	94
K1034045	5230	95
K1034045A	5230	95
K1034056	5230	1
K1034057	5230	2
K1034058A	5230	80
K1034059A	5230	81
K1034069	5390	5
K1034086	5230	71
K1036276	1140	3
	5370	3
K1036288A	5390	-
K1036573	4130	49
K1036665	5380	5
K1036666	5380	6
K1036668	5380	7
K1036669	5420	3
K1036705	5270	4-12
	5270	5-12
K1037545	5430	-
K1037546	5430	1
K1037548	5430	2
K1037550	5430	3
K1037627	1210	18
K1037984	1130	10A
K1037997	1130	10
K1038129	5230	97
K1038875	1210	5
K1038881	1210	123
K1039311	1270	3-18
K1040112	1490	36-1
K9000086	3260	11
K9000100	3220	380
K9000101	3220	90
K9000109	3220	280
	3220	310
K9000115	3220	150
	3220	210
K9000353	1410	9-1
	1410	11-1
	1410	13-1
	1410	15-1
	1410	17-1
	1410	19-1
	1410	21-1
	1410	23-1
	1410	25-1
	1410	27-1
	1410	29-1
	1410	55-1
	5110	1-1
	5190	1-1
	5280	1-1
	5290	1-1
	5310	1-1
	5330	1-1
K9000401	3510	*
	3520	*
K9000609	3210	799
K9000918	3100	10
K9000987	1140	3-4C
	5370	3-4C
K9001001	3530	60
K9001149	3480	18
K9001401	3490	9
K9001862	3480	20
K9001872	3490	16
K9002059	3270	56
K9002164	1210	1-10
K9002250	3430	5
K9002251	3430	4
K9002258	3510	12
K9002259	3510	13
	3520	13
K9002260	3510	14
	3520	14
K9002716	3550	1
	3560	1
K9002717	3550	2
	3560	2
K9002718	3550	4
	3560	8
K9002719	3550	5
	3560	5
K9002720	3550	6
	3560	6
K9002721	3550	7
	3560	9
K9002722	3550	8
	3560	10
K9002723	3550	8-1
	3560	10-1
K9002724	3550	9
	3560	12
K9002726	3550	10
	3560	14
K9002727	3550	11
	3560	15
K9002728	3550	12
K9002729	3550	13
	3560	17
K9002730	3550	14
	3560	18
K9002731	3560	7
K9002732	3560	13
K9002733	3560	16
K9002920	3220	360
K9003482	3140	70
	3150	70
	3160	140
K9003591	3520	12
K9003622	1140	3-4B
	5370	3-4B
K9004016	3120	150
K9004019	3270	54
K9004327	3140	105
	3140	108
	3150	105
	3150	108
	3160	175
	3160	177
K9004328	3140	110
	3150	110
	3160	179
K9004329	3120	720
K9004330	3120	730
K9004331	3240	10
K9004332	3140	120
	3150	120
	3160	190
K9004333	3140	130
	3150	130

PART NO.	FIG NO.	KEY NO.
K9004333	3160	200
K9004335	3140	100
	3150	100
	3160	170
K9004336	3130	100
K9004338	3140	60
	3150	60
	3160	130
K9004339	3140	140
	3150	140
	3160	210
K9004340	3140	140
	3150	140
	3160	210
K9004341	3140	140
	3150	140
	3160	210
K9004342	3140	140
	3150	140
	3160	210
K9004343	3140	140
	3150	140
	3160	210
K9004344	3140	140
	3150	140
	3160	210
K9004345	3140	140
	3150	140
	3160	210
K9004346	3140	140
	3150	140
	3160	210
K9004347	3140	140
	3150	140
	3160	210
K9004348	3140	140
	3150	140
	3160	210
K9004349	3140	140
	3150	140
	3160	210
K9004350	3140	140
	3150	140
	3160	210
K9004351	3130	90
K9004352	3340	19
	3380	31
	3650	31
K9004353	3350	1
	3610	1
K9004354	3100	120
K9004355	3120	10
K9004356	3120	30
K9004357	3100	50
K9004358	3140	40
	3150	40
	3160	110
K9004359	3140	30
	3150	30
K9004360	3160	100
K9004361	3170	80
	3180	80
K9004362	3210	10
K9004363	3210	20
K9004364	3200	10
K9004365	3130	80
K9004366	3130	10
K9004367	3130	190
K9004368	3130	31
K9004369	3140	190
K9004370	3140	31
	3150	31
K9004371	3160	10
K9004372	3160	101
K9004373	3170	81
	3180	81
K9004374	3170	150
	3180	150
K9004375	3490	1
K9004376	3490	3
K9004377	3490	4
K9004378	3490	13
K9004379	3490	24
K9004380	3480	3
K9004381	3480	5
K9004382	3480	15
K9004383	3480	1
K9004384	3480	23
K9004386	3490	14
K9004387	3490	7
K9004388	3490	11
K9004389	3430	8
K9004532	1140	3-2
	5370	3-2
K9004534	1140	3-4A
	5370	3-4A
K9004576	3400	8
K9004577	3400	9
	3400	11
K9004578	3400	10
K9004580	3400	12
K9004581	3400	13
K9004582	3400	17
K9004583	3400	18
K9004584	3400	19
K9004586	3580	8
K9004587	3600	5
K9004588	3600	8
K9004589	3480	*
K9004590	3490	*
K9004592	3130	30
K9004593	3620	2
K9004594	3640	2
K9004597	3650	4
K9004598	3650	9
K9004599	3650	15
K9005012	3400	50
K9005013	3400	51
K9005014	1200	14-3
K9005524	1140	3-4
	5370	3-4
K9005654	1200	14-4
K9005662	1120	6-1
S0502953	1440	21
S0504253	1340	12
S0504266	1370	54
S0504366	1450	10
	1460	17
S0504453	1440	14
S0504566	5270	4-10
	5270	5-10
S0504666	1130	31
	1420	2
S0505266	5220	44
	5230	44
	5240	21
S0508366	1130	30
S0508466	1110	69
S0508666	1130	29
	1480	34
S0508853	1410	38
	1450	6
	5290	5
S0508866	1170	2
	1200	16
	1210	15
	5220	72
	5230	93
	5240	45
S0508966	1370	60

PART NO.	FIG NO.	KEY NO.
S0509053	1470	37
S0509066	1100	47
	1440	7
S0509253	1270	3-13
S0509266	1110	38
	2130	3
	5220	71
	5230	92
	5240	44
S0511353	1410	43
S0511566	1210	65
S0511653	1460	15
	5110	8
S0511853	1420	11
	1450	4
	5300	7
S0511856	1100	44
S0511866	1210	3
	1420	5
	2100	19
	2110	9
	2120	6
	5380	11
	5430	19
S0512066	1110	79
	1210	98
	1220	2
	1230	2
	1370	2-10
	1370	22
	1470	16
	1480	22
S0512266	1370	42
	5100	6
S0512366	2130	9
S0512666	1370	40
S0514666	1120	27
S0514856	1100	21
S0514966	1110	45
S0515066	5390	6
S0515266	1370	38
S0515366	5220	55
	5230	55
	5240	32
S0515466	5420	5
S0515566	2130	6
S0518266	1110	57
S0518366	1160	9
S0521056	1240	68
S0521166	1200	66
S0521266	1120	31
	1380	17
	5220	17
	5230	17
	5230	17
S0521366	1130	28
	5380	8
S0521466	1180	27
	5140	27
S0521556	1100	22
S0527466	1110	50
S0555966	1200	24
S0556066	1210	44
S0556766	1350	4-4
	1350	5-4
	5120	4-4
	5120	5-4
	5270	4-4
	5270	5-4
S0556866	1160	25
S0557166	1470	5
S0557266	1190	17
	5150	18
	5160	17
	5170	18
S0558266	1100	9
	1110	40
	1370	2-13
S0558466	1210	101
S0558553	3490	30
S0558566	1160	11
	1480	27
S0558761	3480	29
S0558866	1110	48
S0558966	1470	9
	2120	2
	5300	2
S0559066	1110	30
S0559266	1100	4
S0559566	1160	55
S0560466	1370	15
	1370	51
S0560566	1370	2-8
S0560665	1180	32
	5140	32
S0560766	1180	43
	5140	43
S0560866	1210	80
S0561066	1180	36
	5140	36
S0561266	1160	34
	1180	52
	5140	49
S0562653	1430	3
S0565066	1140	20
	1380	15
	5220	15
	5230	15
	5370	20
S0565266	1110	41
	1140	20
	5230	66
	5370	20
S0565366	5260	4
	5400	4
S0565466	2140	5
	5230	63-5
	5410	5
S0566466	1210	51
S0569866	1130	32
S0571666	1140	10
	5370	10
S0727666	1230	7
S0761053	1430	6
S0771266	1110	14
S0771566	1110	7
S0786366	1470	12
S2202766	1120	28
S2203161	3550	3
	3560	3
S2208866	1440	17
S2209066	1210	11
S2209366	1200	22
S2209461	3490	23
	3490	27
S2209466	1320	2
S2209666	1110	52
S2212066	1200	97
S2212261	5390	11
S2212266	1160	54
	1180	26
	5140	26
	5180	17
S2212366	1160	21
	1180	51
	1210	57
	5140	48
S2212661	3480	26
S2212966	1160	50
	5100	32

PART NO.	FIG NO.	KEY NO.
S2213066	1110	39
S2213666	1200	2
S2213766	1160	15
S2215066	1200	5
S2215366	1160	16
S2215466	1180	30
	5140	30
S2218561	3480	22
S2221466	1140	30
	5370	30
S2227975	1290	30
S3056253	1380	26
	5220	63
	5230	78
S3450343	1390	61
	1400	61
S3450563	1250	2-12
S3450573	1120	24
S3450583	1470	2
S3450823	1390	38
	1400	38
S3450833	1410	46
	5270	4-8
	5270	5-8
S3450853	1390	52
	1400	52
	5230	72
	5230	72
S3450863	1410	2
S3450933	1240	64
S3450943	1390	3
	1390	6
	1390	9
	1390	12
	1390	16
	1390	19
	1390	42
	1400	3
	1400	6
	1400	9
	1400	12
	1400	16
	1400	19
	1400	42
	5110	4
S3450983	1390	48
	1400	48
S3450993	1370	50
S3523836	3480	21
	3490	19
S3524303	1100	52
S4012133	1120	25
S4012233	1260	4-21E
	5230	96
S4012333	1370	44
	5220	47
	5230	47
	5240	24
S4012533	1110	37
	1200	26
	1210	119
	1260	4-25
	1270	3-7
	1350	12
	1370	28
	2130	4
	5120	12
	5220	38
	5220	38
	5230	38
	5230	38
	5240	15
	5240	15
	5270	12
S4012633	1110	29
	1370	2-11
	2120	3
	2130	10
	5100	8
	5220	49
	5230	49
	5240	26
	5300	3
S4012733	1180	44
	1210	43
	1370	17
	1430	5
	5140	44
	5220	37
	5230	37
	5240	14
S4012933	1370	6-5
	2140	6
	5210	5
	5220	33
	5230	33
	5230	63-6
	5240	10
	5260	5
	5400	5
S4012933	5410	6
S4013133	1140	11
	5370	11
S4013233	1140	14
	5370	14
S4032733	1430	7
S4032833	2110	3
S4033133	1110	13
S4213633	1100	10
S4500633	1240	34
	1270	3-4
S4540603	5220	48
	5230	48
	5240	25
S5000113	1470	3
S5000213	1410	4
S5010303	1130	23
S5010313	1370	53
	1390	44
	1400	44
	5220	46
	5230	46
	5240	23
	5270	4-11
	5270	5-11
S5010513	1110	76
	1200	18
	1210	17
	1410	40
	1440	9
	1440	19
	1470	7
	5220	40
	5230	40
	5240	17
S5010603	5380	13
S5010613	1410	45
	1420	13
	1460	13
	1470	11
	1480	24
	2130	13
	5110	10
S5010713	1470	14
	5420	7
S5010913	1100	25
	1180	28
	1200	65
	5140	28
S5100003	1390	62

PART NO.	FIG NO.	KEY NO.
S5100003	1400	62
S5100103	1120	23
S5100203	1390	39
	1390	53
	1400	39
	1400	53
	1410	3
	1410	47
	1440	22
S5100213	1390	54
	1400	54
S5100503	3490	22
	3490	26
S5100603	3480	25
	3480	28
	3490	29
S5102203	5230	73
	5230	73
	5270	4-9
	5270	5-9
S5102303	1130	25
	1370	49
	1390	4
	1390	7
	1390	10
	1390	13
	1390	17
	1390	20
	1390	43
	1390	49
	1400	4
	1400	7
	1400	10
	1400	13
	1400	17
	1400	20
	1400	43
	1400	49
	1420	3
	1440	15
	1450	11
	1460	18
	5110	5
	5220	45
	5230	45
	5240	22
S5102503	1100	48
	1110	8
	1130	24
	1160	31

PART NO.	FIG NO.	KEY NO.
S5102503	1170	3
	1190	15
	1200	17
	1210	16
	1350	4-5
	1350	5-5
	1350	13
	1370	27
	1410	39
	1440	8
	1440	18
	1450	7
	1450	14
	1460	20
	1470	6
	1470	38
	1470	48
	1480	35
	2130	5
	5120	4-5
	5120	5-5
	5120	13
	5150	16
	5160	15
	5170	16
	5220	39
	5230	39
	5240	16
	5270	4-5
	5270	5-5
	5270	13
	5290	4
S5102603	1110	31
	1160	27
	1210	4
	1220	3
	1410	44
	1420	7
	1420	12
	1420	15
	1450	5
	1460	14
	1470	10
	1470	17
	1480	23
	1480	28
	2110	10
	2120	4
	2130	11
	5100	7

PART NO.	FIG NO.	KEY NO.
S5102603	5110	9
	5220	51
	5230	51
	5240	28
	5300	4
	5380	12
S5102703	1110	46
	1160	30
	1180	31
	1200	6
	1210	52
	1370	45
	1430	1
	1470	13
	2130	7
	5140	31
	5220	36
	5230	36
	5240	13
	5390	7
	5420	6
S5102803	1110	54
	1160	10
S5102903	1110	42
	1140	19
	1180	29
	1200	64
	1210	33
	5140	29
	5220	34
	5230	34
	5240	11
	5370	19
	5380	9
S5103103	1110	51
	1230	15
S5110503	1110	53
	1200	19
	1210	12
S5110603	1110	35
	1140	17
	1160	22
	1200	3
	5370	17
S5111003	1200	13
S5210303	1260	4-17
S5735471	1370	52
S5735591	5220	58
	5230	58
	5240	35

PART NO.	FIG NO.	KEY NO.
S5735791	1100	11
S5736091	1100	11
S6500200	5220	31
	5230	31
	5240	8
S6710032	3480	30
	3500	27
S6710041	1100	42
	1140	25
	2100	22
	2110	1
	5370	25
	5430	21
S6710042	5380	3
S8000081	3530	2
S8000091	5100	5
S8000111	1120	20
	1130	21
	1160	48
	1160	78
	1200	36
	1210	63
	1220	8
S8000121	1200	60
S8000141	1190	12
	1200	10
	1210	95
	3420	13
	5150	19
	5160	12
	5170	31
	5380	18
S8000181	1120	18
	1130	20
	1160	40
	1170	4
	1200	31
	3500	26
	5100	16
S8000201	3490	21
	3490	25
S8000231	1200	14-2
	5100	14
S8000241	1160	45
	1210	82
	3420	14
	5100	11
S8000281	3480	24
S8000291	1120	19
	1210	70
S8000291	5100	29
S8002701	3420	12
S8010351	3500	18
S8010651	3500	10
S8010701	3500	12
S8011050	1130	19
S8011151	3490	10
S8011200	1120	15
S8011201	3490	12
S8011351	3480	12
S8011400	1140	6-2
	1140	7-2
	5370	6-2
	5370	7-2
S8011650	1120	17
S8012000	1120	16
S8030041	1160	75
	1170	15
	1200	34
	1210	67
	1220	6
S8030061	1190	13
	1200	11
	5150	14
	5160	13
	5170	14
	5380	19
S8030081	1160	41
	1170	5
	1200	33
	1210	66
	5100	22
	5380	21
S8030121	1160	46
	1180	20
	1200	69
	1210	72
	5100	12
	5140	20
	5390	13
S8030161	1180	48
	1210	61
	5140	9
	5180	9
S8040041	1210	77
S8040061	1190	14
	5150	15
	5160	14
	5170	15
S8040081	1210	73
S8040101	5100	25
S8040121	5100	27
S8040141	1180	18
	5140	18
S8040161	1180	21
	1210	36
	5140	21
	5180	18
S8060101	3420	11
S8090650	3500	11
S8091350	3480	13
S8180211	1200	47
	5150	13
	5170	13
S8180221	5100	18
S8180411	1470	46
S8180481	1130	16
S8450012	1110	72
S8450016	1470	42
S8500054	1210	38
S8500067	1160	38
	1210	25
S8500092	1160	39
S8500130	1110	21
S862203H	1410	1-18
S864221H	4110	20
T6510025	4100	1-51
T6510027	4100	1-52
T6510062	4100	1-35
T6510066	4100	1-36
T6510070	4100	1-37
T6510072	4100	1-38
T6510075	4100	1-39
T6510079	4100	1-40
T6510081	4100	1-41
T6510085	4100	1-42
T6510089	4100	1-44
T6510091	4100	1-45
T6510094	4100	1-47
T6550005	4100	1-26
T6550006	4100	1-27
T6550007	4100	1-28
T6550009	4100	1-29
T6550011	4100	1-30
T6550015	4100	1-32
T6550018	4100	1-33
T6550020	4100	1-34
T6580008	4100	1-2
T6580016	4100	1-4
T6600183	4100	1-55

PART NO.	FIG NO.	KEY NO.	PART NO.	FIG NO.	KEY NO.	PART NO.	FIG NO.	KEY NO.
T6600189	4100	1-56						
T6600197	4100	1-57						
T6600201	4100	1-58						
T6600211	4100	1-59						
T6600223	4100	1-60						
T6600227	4100	1-61						
T6690012	4100	1-19						
T6690013	4100	1-20						
T6750003	4100	1-21						
T7050003	4100	1-6						
T7050013	4100	1-7						
T7050021	4100	1-8						
T7050022	4100	1-9						
T7260057	4100	1-13						
T7500004	4100	1-10						

DOOSAN INFRACORE CO., LTD.
AROUND THE WORLD

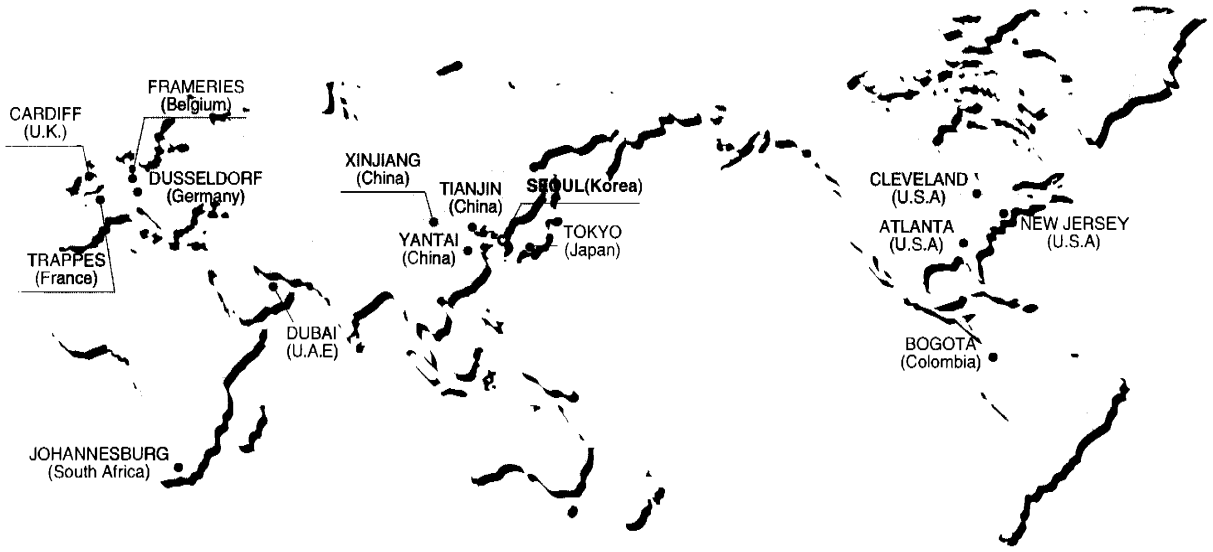

Head Office
Hwasu-Dong 7-11, Dong-Gu, Incheon, Korea.
Tel : +82-32-211-1114 Fax : +82-32-211-1231

Seoul Office
Doosan Tower 26TH FL. 18-12, Euljiro-6Ga,
Jung-Gu, Seoul, korea 100-730
Tel : +82-2-3389-8114 Fax : +82-2-3389-8117

ASIA & OCEANIA

Doosan Infracore Machine Tools Yantai Co.,Ltd.
1, Dayu Road 1, ETDZ, Yantai, Shandong, China
Tel : +86-0535-693-5060 , Fax : +86-0535-693-5619

Doosan Infracore Liaoning Machinery Co.,Ltd.
No.32 DongLing Road, DongLing District, ShenYang,
Liaoning, China
Tel : +86-24-8841-1407, Fax : +86-24-8841-1404

Doosan Infracore Xinjiang Machinery Co.,Ltd.
No. 178, Hetanbei Road, Wurumuqi, Xinjiang, China
Tel : +86-991-469-7217 , Fax : +86-991-469-8641

Dajian(Tianjin) Mechanical Construction Co., Ltd
No.87 Gongxing Road, Tanggu, Tianjin, china
Tel : +86-22-2521-0540 Fax : +86-22-2521-0714

Doosan Infracore (China) Co., Ltd.
#28, Wuzhishan Road, Eco. & Tech, Development Zone,
Yantai, Shandong, China
Tel : +86-535-638-2000 Fax : +86-535-638-2004

Doosan Infracore Japan Corporation
3rd Floor, k-1 Bld.,19-4, Nishi-shinbashi 2-Chome,
Minato-Ku, Tokyo, Japan
Phone : +81-3-3434-2547 Fax : +81-3-3434-2548

Doosan Infracore Middle East Center(Dubai)
183127, Al-Serkal Building, Air Port Road, Dubai, U.A.E
Phone : +971-4-295-2781, 2782 Fax : +971-4-295-2783

NORTH AMERICA

Doosan Infracore America Corporation
2905 Shawnee Industrial Way, Suwanee,
Georgia 30024, U. S. A
Tel : +1-770-831-2200 Fax : +1-770-831-0480

Doosan Infracore America Corporation Cleveland Office
4530 Renaissance Parkway, Warrensville Heights, OH 44128, U.S.A
Tel : +1-216-595-1212 Fax : +1-216-595-1214

Doosan Infracore America Corporation N.J. Office
8 York Avenue, West Caldwell, N.J. 07006, U.S.A
Tel : +1-973-618-2500 Fax : +1-973-618-2501

EUROPE

Doosan Infracore U.K., Ltd.
Doosan House, Unit 6.3, Nantgarw Park, Cardiff
CF47QU, U.K.
Tel : +44-1443-84-2273 Fax : +44-1443-84-1933

Doosan Infracore Germany GmbH
Hans-Boeckler strasse 27-29, D-40764, Langenfeld-Fuhrkamp,
Germany / Tel : +49-2173-8509-20 Fax : +49-2173-8509-60

Doosan Infracore Europe S.A. (Europe Head Office)
1A, Rue Achille Degrace, 7080 Frameries, Belgium
Tel : +32-65-61-3231 Fax : +32-65-61-3238

Doosan Infracore France SARL
(Doosan Infracore Europe S.A. France Office)
2Eme Etage, 1/3 Avenue Pavlov, Z.A.I. Des Bruyeres, 78190 Trappes France
Tel : +33-1-3016-2140 Fax : +33-1-3016-2144

Doosan Infracore Europe S.A. Italy Office
Via Monfalcone 41, 20090 Cinisello B.mo (MI)
Tel : +39-2-612-0565 Fax : +39-2-612-6322

SOUTH AMERICA

Colombia Liaison Office
Diagonal127 A No. 17-34 Oficina 302
Bogota, Colombia
Tel : +57-1-625-3470 Fax : 57-1 -625-3883

AFRICA

Doosan Infracore South Africa (PTY)Ltd.
60C Electron Road, Isando 1600, Johannesburg, South Africa
Tel : +27-11-974-2095 Fax : +27-11 -974-2778