Fig. 011 CYLINDER BLOCK

RUTHZIL TRATOR COMERCIAL DE PEÇAS LTDA 11 97083-6812 ROLANDO

Key No	Part No	Description	Qty	S.C	Serial No	ICA	Replacable	Qty
1	150102-00405	CYLINDER BLOCK ASS'Y	1		~140305			
1	150102-00405A	BLOCK ASSY,CYLINDER	1		140306~160515	Y	150102-00405B	1
1	150102-00405B	BLOCK ASSY,CYLINDER	1		160516~			
1A	65.01101-0040Q	BLOCK;CYLINDER(T/C)	1	D				
1B	65.91606-0037	PLUG;CORE	9					
1C	65.04410-0017	BUSH;CAM SHAFT	4	B	~160515			
1C	130702-00233	BUSHING;CAMSHAFT	4	B	160516~			
1D	65.01105-1172B	BEARING;CAP NO.1.2.6	3	D				
1E	65.01105-1160F	BEARING;CAP NO.3.5	2	D				
1F	65.01105-1156D	CAP BEARING;THRUST	1	D				
1G	140202-00123	CAP,BEARING	1	D				
1H	65.91710-0035B	RING;LOCATING	14					
1I	65.90020-0035B	BOLT;BEARING CAP	14					
1J	65.91606-0041	PLUG;CORE	2					
1K	65.91001-0013A	PIN;CORE	2					
1L	65.91020-0013	PLUG;CORE	1					
13	65.90310-0048	SCREW;PLUG M10X1.5	6					
14	06.56180-0714	RING;SEAL	6					
16	65.90310-0091	SCREW;PLUG M12X1.5X20	1					
17	06.56190-0704	RING;SEAL	1					
18	65.96601A0042	GASKET;END COVER	1					
19	65.91605-0006B	COVER;END	1					
20	06.01913-3114	BOLT ASS'Y M8X22	1					
21	06.06225-0704	BOLT;STUD M8X20	1					
22	120122-00014	BOLT,SPACER;M8	1					
23	06.16731-2107	WASHER	2					
24	06.11063-8214	NUT	1					
35	06.08092-2403	SCREW;PLUG M12X1.5	1					
36	06.56190-0704	RING;SEAL	1					
37	65.01601-6003C	OIL SPRAY NOZZLE ASS`Y	6					
38	65.05405-6001	RELIEF VALVE ASS`Y	6					
40	65.01201-0050	LINER;CYLINDER	6					
50	65.98130-0194	ADAPTER	1					
51	06.56180-0714	RING;SEAL	1					
52	65.27441-7007	SWITCH;OIL PRESSURE	1					

Fig. 011 CYLINDER BLOCK

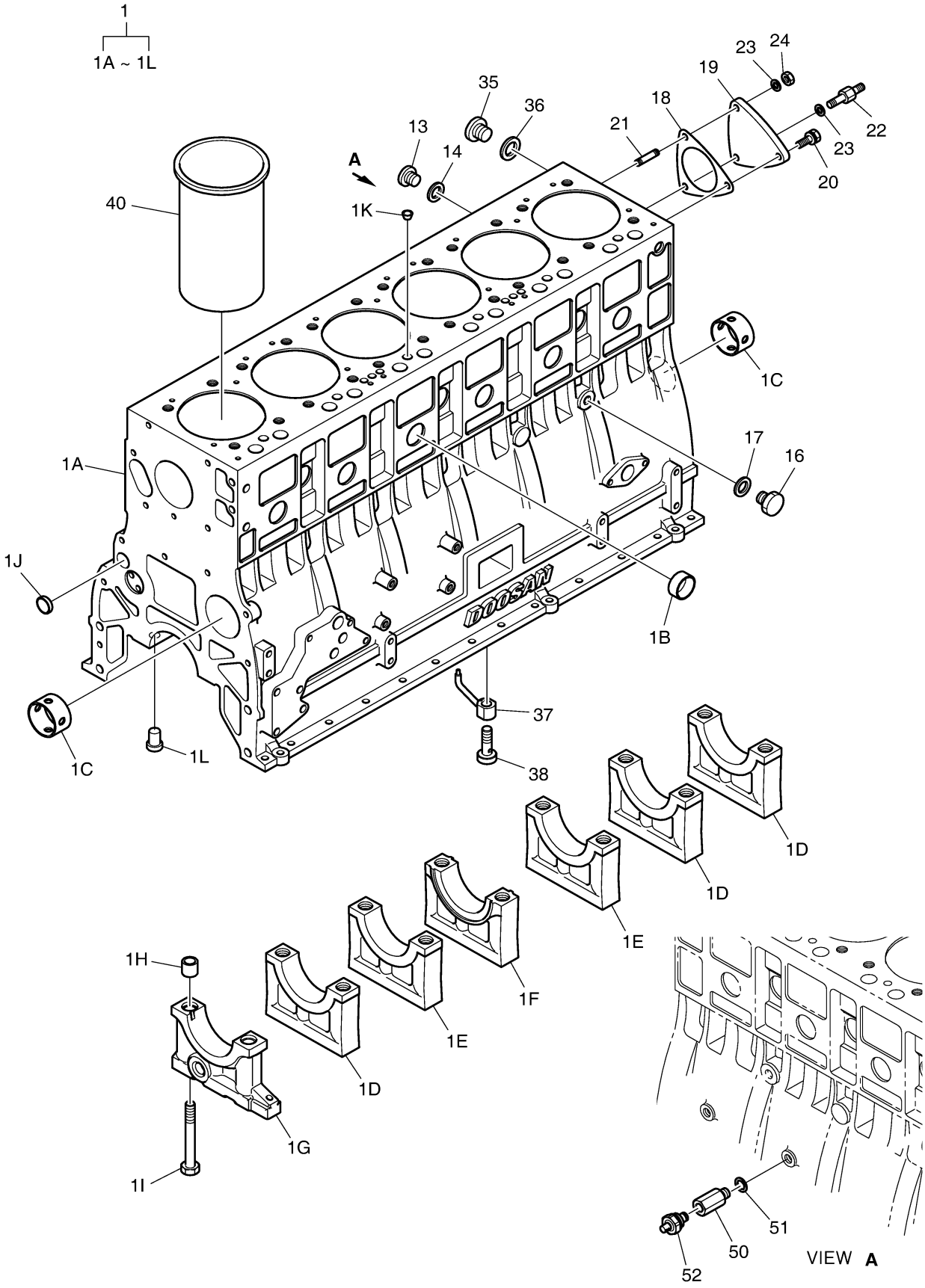

Fig. 012 TIMING GEAR CASE

Key No	Part No	Description	Qty	S.C	Serial No	ICA	Replacable	Qty
1	130405-00007	CASE;TIMING GEAR	1					
2	65.91010-0018	PIN;DOWEL	2					
3	65.01903C0021	GASKET;TIMING GEAR CASE	1					
4	06.01913-3113	BOLT ASS'Y M8X20	5					
5	06.06225-0704	BOLT;STUD M8X20	1					
6	06.16731-2107	WASHER	1					
7	06.11063-8214	NUT	1					
8	06.01943-3317	BOLT ASS`Y M12X1.5X30	4					
9	65.90201-0048	BOLT;STUD	1					
10	06.06225-0808	BOLT;STUD M10X30	4					
11	06.06225-0809	BOLT;STUD M10X35	2					
12	65.01903B0113	GASKET;T.G.C COVER	1					
13	06.22022-0907	PIN;DOWEL	2					
14	65.01305-5028C	COVER;TIMING GEAR CASE	1					
15	06.01923-2914	BOLT ASS`Y M6X22	13					
18	65.01903B0029	GASKET;COVER	1					
19	65.01307-5002	COVER;TIMING GEAR CASE	1					
20	06.01923-2918	BOLT ASS`Y M6X35	9					
22	65.90201-0146	BOLT;STUD M6X16	2					
23	06.15010-2309	WASHER;PLAIN	2					
24	06.16731-2105	WASHER	2					
25	06.11063-8212	NUT	2					
30	65.01510-0157	SEAL;OIL(FRONT)	1					
40	65.54302-0006B	BRACKET;AIRCOMP	1					
41	65.95840-0033	BRACKET;IDLE PULLEY	1					
42	06.01913-3215	BOLT ASS'Y M10X25	3					
43	65.54903A0013	GASKET	1					
44	06.02090-0511	BOLT;SOCKET M10X22	2					
45	06.02090-0513	BOLT;SOCKET	2					
46	06.16731-2108	WASHER;SPRING	4					

Fig. 012 TIMING GEAR CASE

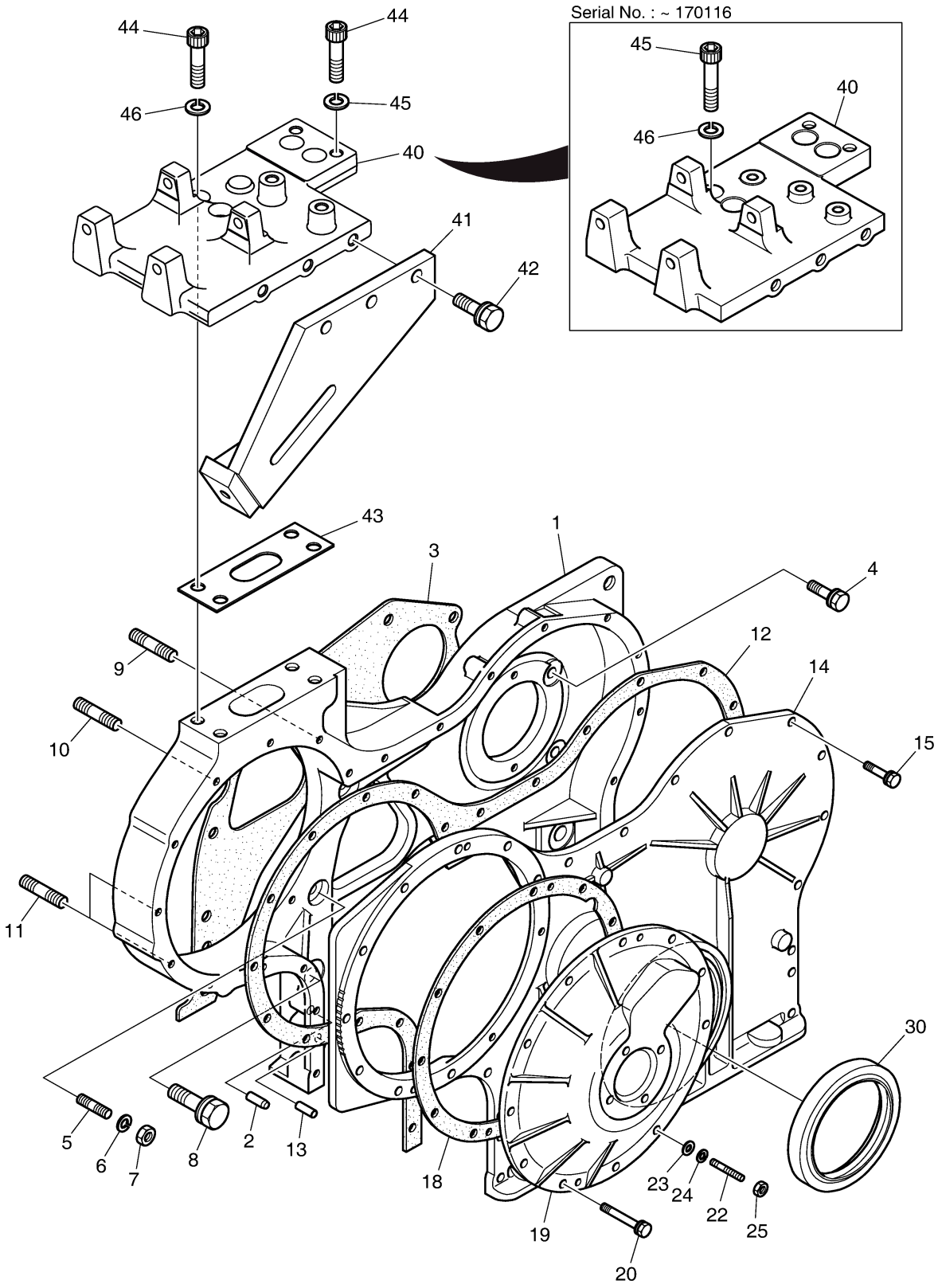

Fig. 013 FLYWHEEL HOUSING

Key No	Part No	Description	Qty	S.C	Serial No	ICA	Replacable	Qty
1	65.01401-0295B	HOUSING;FLY WHEEL	1					
5	65.01903A0178	GASKET;FLYWHEEL HOUSING	1					
6	65.96002-0003	PLUG;RUBBER	1					
7	06.06176-8309	BOLT,STUD	1					
9	06.16731-2109	WASHER;SPRING	1					
10	06.11063-9216	NUT;HEX. M12X1.5	1					
11	06.01943-3319	BOLT ASS'Y M12X1.5X40	9					
12	65.91710-0016	RING;STOPPER	2					
13	65.01510-0037	SEAL;OIL REAR	1					
17	06.08092-2405	PLUG SCREW M16 X 1.5	1					
18	06.56190-0709	SEAL;RING	1					

Fig. 013 FLYWHEEL HOUSING

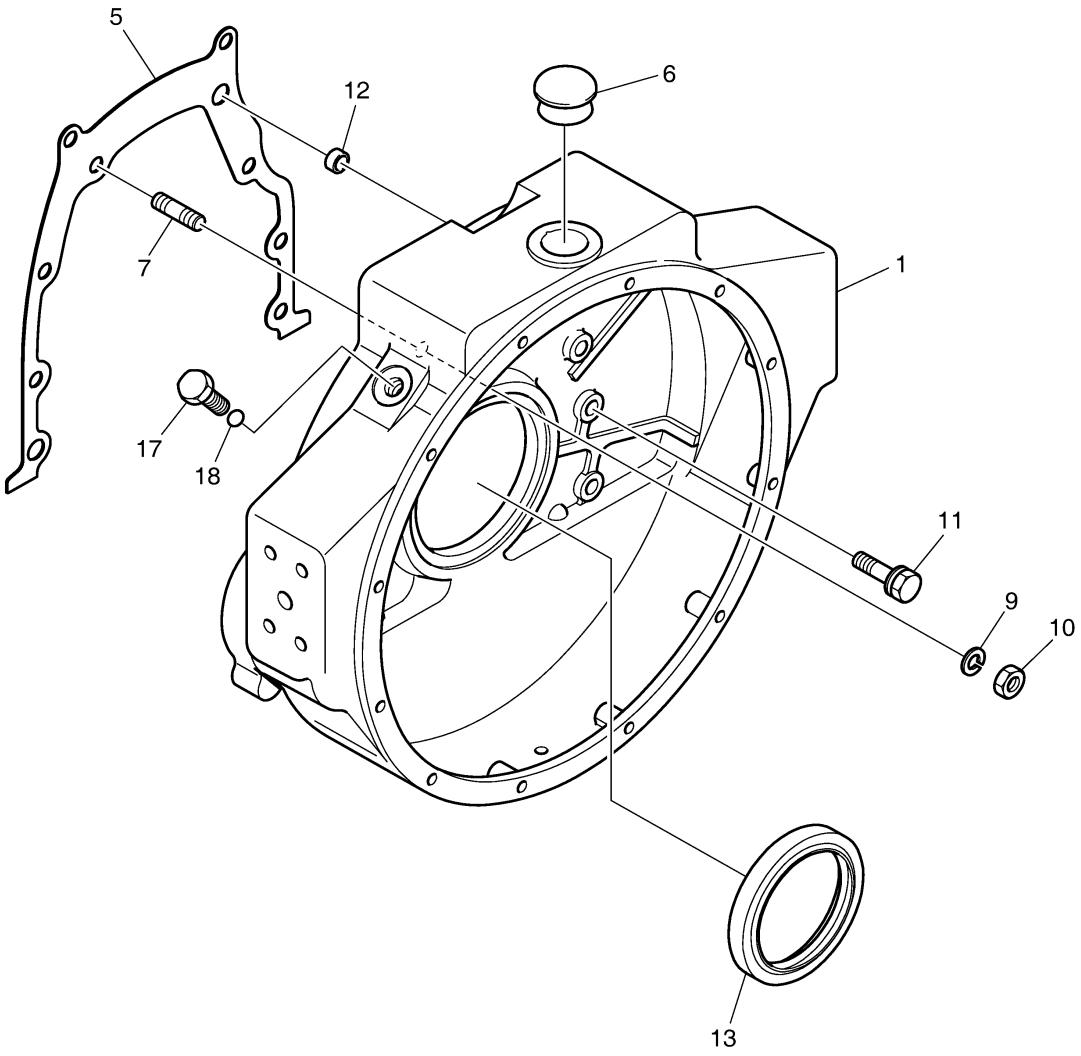

Fig. 014 BREATHER

Key No	Part No	Description	Qty	S.C	Serial No	ICA	Replacable	Qty
1	65.01801-5099C	BREATHER HOUSING ASS'Y	1					
2	65.96501-0033B	O-RING	1					
3	06.01923-3113	BOLT ASS'Y M8X20	3					
5	06.67020-0105	CLAMP	1					
6	65.97401-0142	CLIP;HOSE	1					
7	65.96301-0294	HOSE;RUBBER	1					

Fig. 014 BREATHER

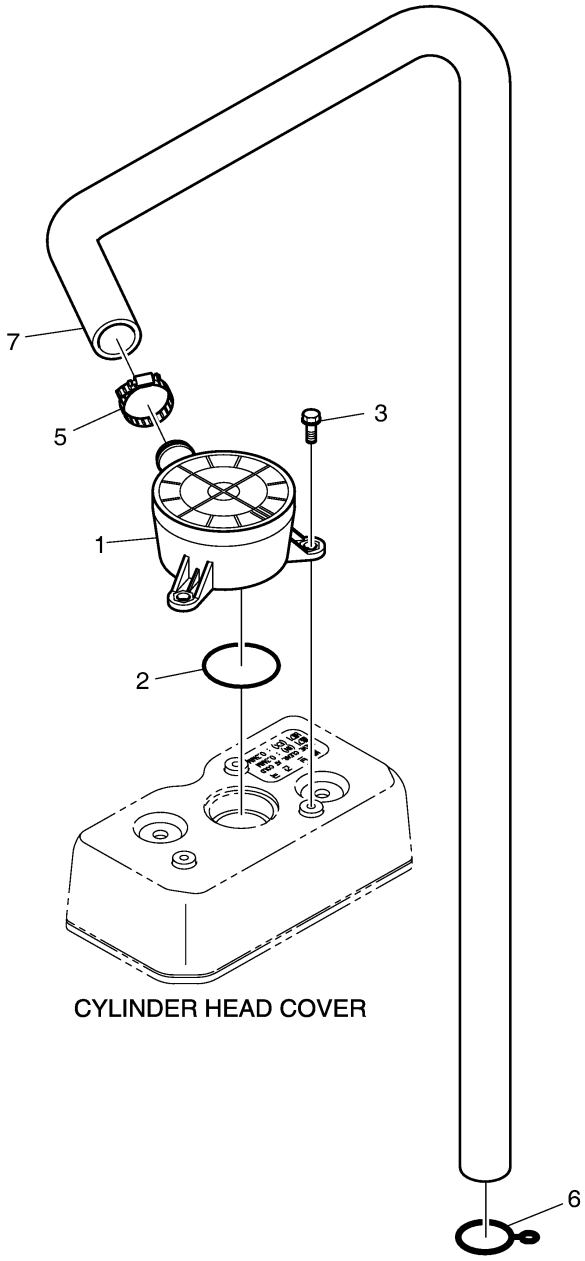

Fig. 015 CRANK SHAFT

Key No	Part No	Description	Qty	S.C	Serial No	ICA	Replacable	Qty
1	150107-00183	CRANK SHAFT	1					
2	130410-00044	GEAR,CRANKSHAFT	1		~130307	I	130410-00044A	1
2	130410-00044A	GEAR,CRANKSHAFT	1		130308~			
3	06.22022-0912	PIN:DOWEL	1					
6	65.01110-6351	METAL:MAIN STD	7		~140115	I	140103-00075	7
6	140103-00075	METAL,MAIN	7		140116~			
6	65.01110-6352	METAL:MAIN 0.25	1	US	~140115	I	140103-00076	1
6	140103-00076	METAL,MAIN(0.25)	1	US	140116~			
6	65.01110-6353	METAL:MAIN 0.50	1	US	~140115	I	140103-00077	1
6	140103-00077	METAL,MAIN(0.50)	1	US	140116~			
11	65.01150-0015	WASHER:THRUST(UPPER)	2		~140115			
11	120816-00083	WASHER,THRUST(UPPER)	2		~150423			
11	120816-00083A	WASHER,THRUST	2		150424~			
11	65.01150-0019	WASHER:THRUST(0.25)	2	US				
11	65.01150-0020	WASHER:THRUST(0.50)	2	US				
16	65.01150-0016A	WASHER:THRUST(LOWER)	2		~140115			
16	120816-00084	WASHER,THRUST(LOWER)	2		~150423			
16	120816-00084A	WASHER,THRUST	2		150424~			
16	65.01150-0023A	WASHER:THRUST(0.25)	2	US				
16	65.01150-0024A	WASHER:THRUST(0.50)	2	US				
20	65.02201-7032	DAMPER:VIBRATION	1			Y	65.02201-7033	1
20	65.02201-7033	DAMPER:VISCOUS	1					
21	65.90020-0062B	BOLT:HEX M10X20	6		~150427			
25	65.02601-0168	PULLEY:V-BELT	1					
26	65.90701-0088	WASHER	1					
27	06.02106-0619	BOLT:SOCKET HEAD	8					
51	120121-00071	BOLT,COLLARD HEX	6		150428~			
52	120808-00786	WASHER,SPACER	1		150428~			

Fig. 015 CRANK SHAFT

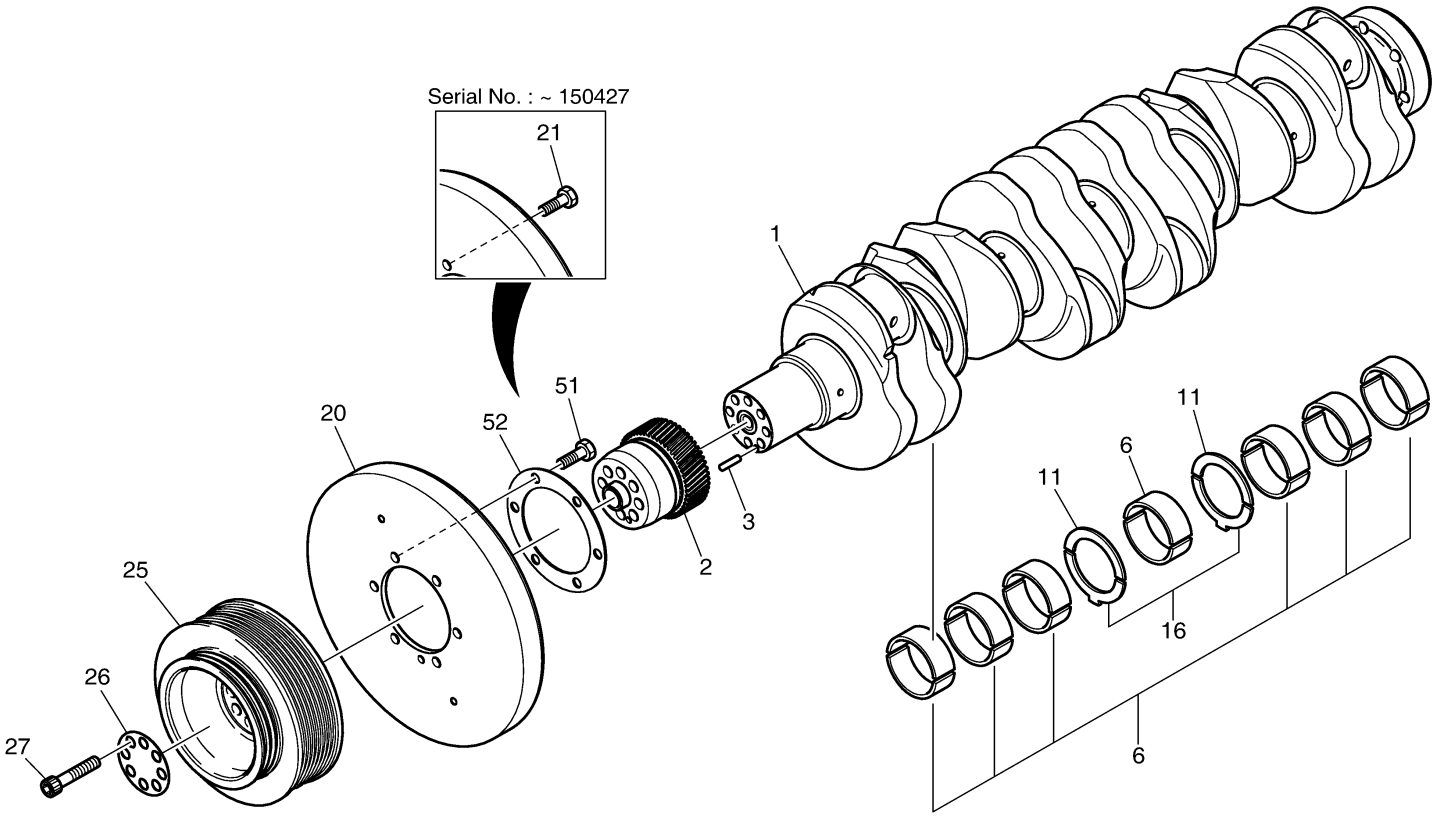

Fig. 016 FLY WHEEL

Key No	Part No	Description	Qty	S.C	Serial No	ICA	Replacable	Qty
1	65.02301-5120A	FLYWHEEL ASS'Y	1					
1A	65.02301-0264A	FLYWHEEL	1					
1B	65.02310-0010A	GEAR;STARTER RING	1					
4	06.22022-1010	PIN,DOWEL	1					
5	65.90001-0084	BOLT;HEX. M14X1.5X40	6					
6	06.16731-2110	WASHER;SPRING	6					

Fig. 016 FLY WHEEL

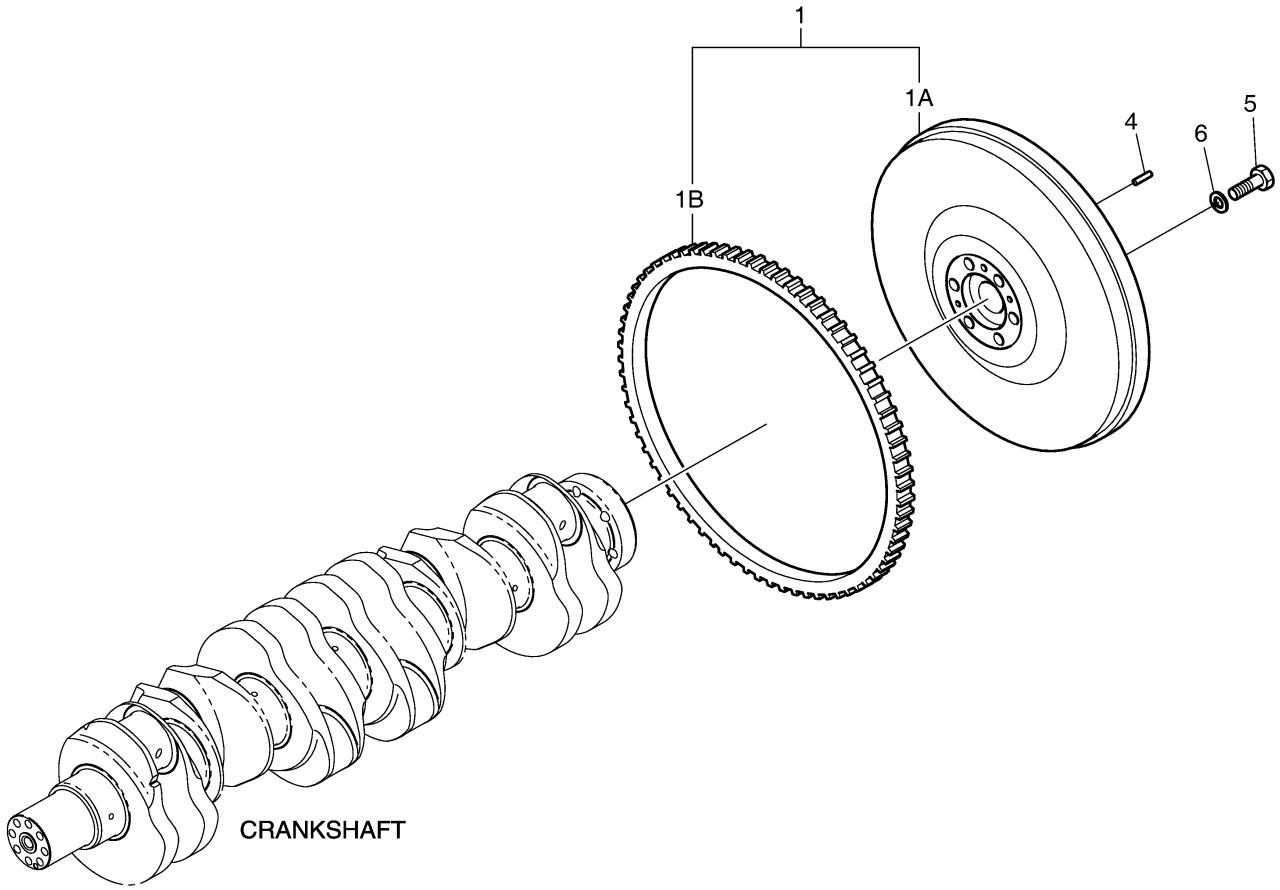

Fig. 017 PISTON & CONNECTING ROD

Key No	Part No	Description	Qty	S.C	Serial No	ICA	Replacable	Qty
1	65.02401-6101G	CONNECTING ROD ASS'Y	6		~140916	I	150121-00263	6
1	150121-00263	ROD ASSY,CONNECTING	6		~150607	I	150121-00263A	6
1	150121-00263A	ROD ASSY,CONNECTING	6		150608~			
1A	65.02401-0030G	ROD;CONNECTING	1	D	~150607			
1A	150121-00307	ROD,CONNECTING	1	D	150608~			
1B	65.90020-0009D	BOLT;CONNECTING ROD	2					
1C	65.02405-0015C	BUSH;SMALL END	1	B				
1D	65.91301-0010	PIN;DOWEL	2					
6	65.02410-0010	METAL;CONNECTING ROD(STD)	6					
6	65.02410-0011	METAL;CONNECTING ROD 0.25	6	US				
6	65.02410-0012	METAL;CONNECTING ROD 0.5	6	US				
10	65.02501-0507	PISTON	6					
11	65.02503-8146	PISTON RING KIT	1					
11A	-	RING;TOP 111X3.5	6	D				
11B	-	RING;SECOND 111X3.5	6	D				
11C	-	RING;OIL 111X4	6	D				
15	65.02502-0206	PIN,PISTON	6					
16	06.29020-0126	RING;SNAP 42X1.75	12					

Fig. 017 PISTON & CONNECTING ROD

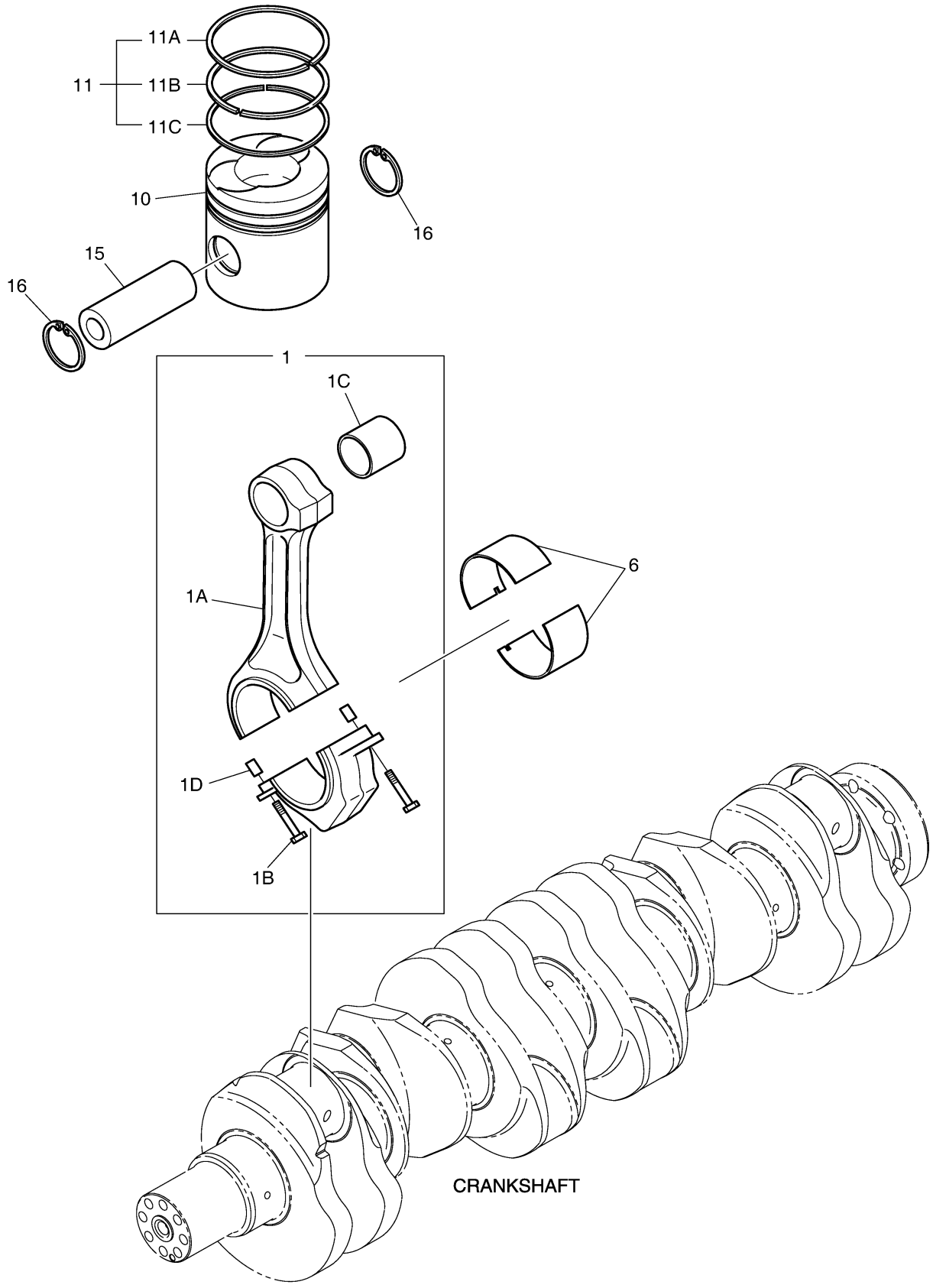

Fig. 018 CYLINDER HEAD & COVER

Key No	Part No	Description	Qty	S.C	Serial No	ICA	Replacable	Qty
1	150113-00036A	CYLINDER HEAD ASS'Y	3					
1A	150113-00200	HEAD,CYLINDER	1	D				
1B	65.03201-1061	GUIDE,VALVE	4	B				
1C	65.03203-1028D	RING;VALVE SEAT EXHAUST	2	B				
1D	65.03203-1029G	RING;VALVE SEAT INTAKE	2	B				
1E	65.90302-0041	PLUG;CORE	7					
1F	65.91001-0013A	PIN;CORE	2					
8	65.91001-0013A	PIN;CORE	6					
9	06.22022-0909	PIN;DOWEL 6M6X14	6					
10	65.03901-0070A	GASKET;CYLINDER HEAD	3		~160609	Y	400603-00119	3
10	400603-00119	GASKET,CYLINDER HEAD	3		160610~			
11	65.90021-0007	BOLT;CYLINDER HEAD	24					
12	120117-00053	BOLT,STUD	6					
14	120117-00046	BOLT,STUD	6					
20	65.03401-0021I	COVER;CYLINDER HEAD	2					
21	65.03401-6044B	COVER;CYLINDER HEAD	1					
22	65.03905-0022	GASKET;CYLINDER HEAD COVER	3					
23	65.90020-0073	BOLT;COLLARED HEX.	6					
24	400603-00049	GASKET;CYL. HEAD COVER	6					

Fig. 018 CYLINDER HEAD & COVER

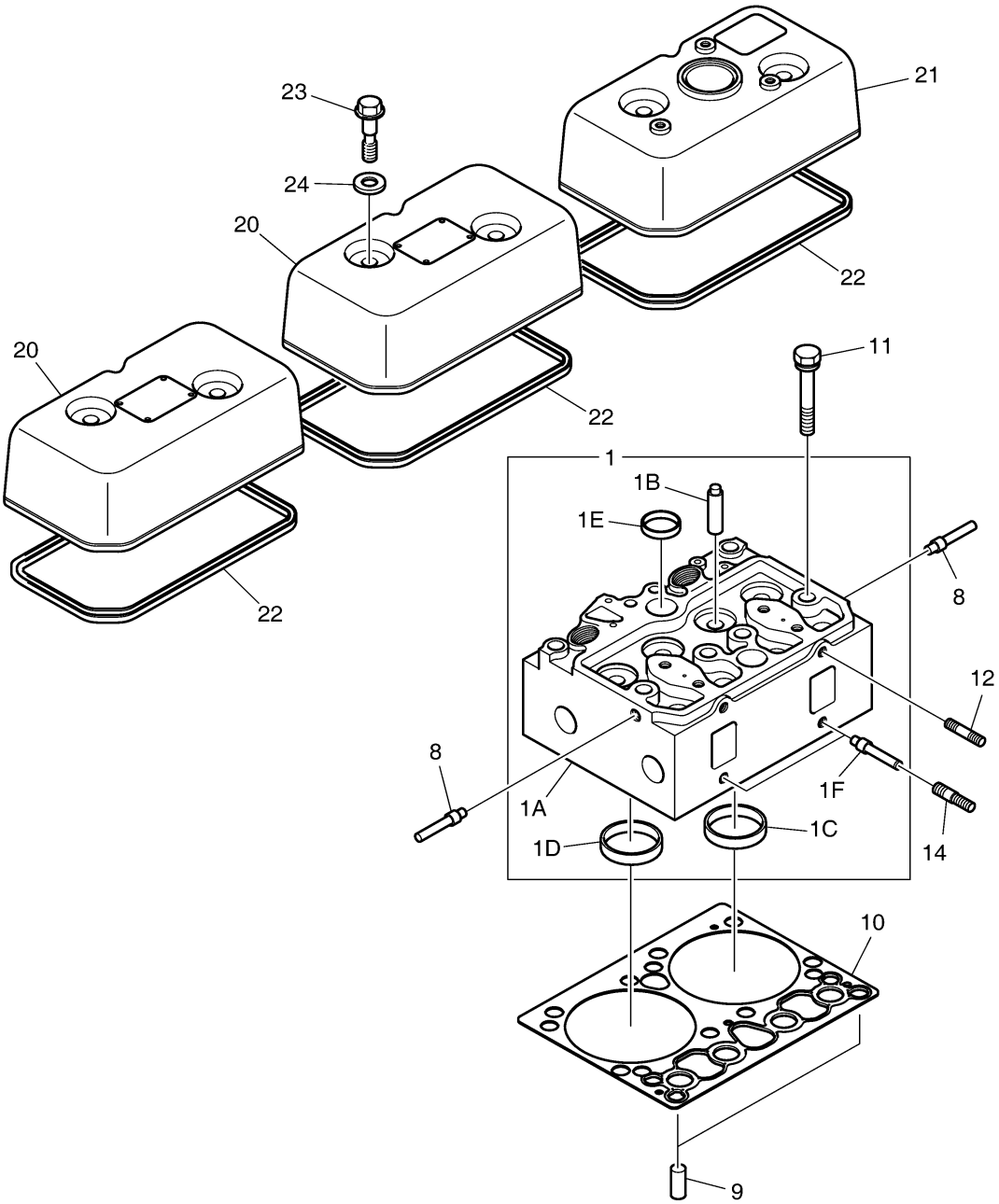

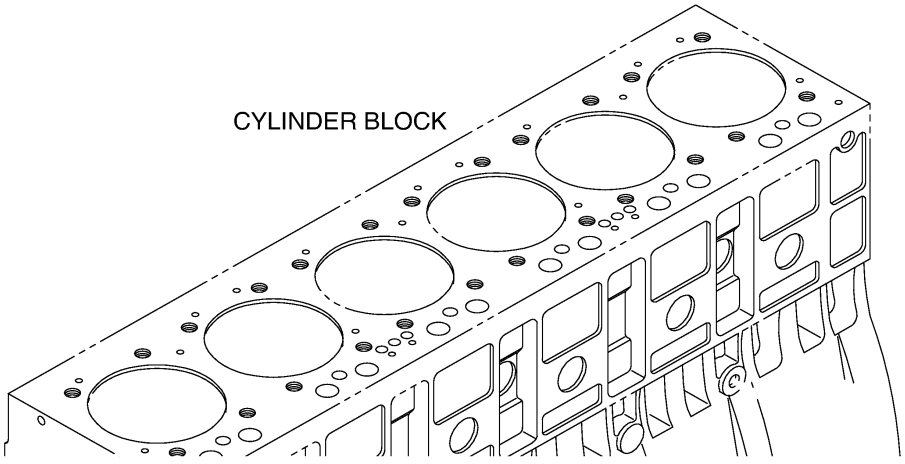

Fig. 019 VALVE & ROCKER ARM

Key No	Part No	Description	Qty	S.C	Serial No	ICA	Replacable	Qty
1	65.04101-0041	VALVE;INTAKE	6					
2	65.04101-0042	VALVE;EXHAUST	6					
3	65.04102-6002	SPRING;VALVE(EXHAUST)	6					
3A	65.04102-0003	SPRING;VALVE(EXHAUST OUTER)	1					
3B	65.04102-0004	SPRING;VALVE(EXHAUST INNER)	1					
4	65.04102-0007	SPRING;VALVE(INTAKE)	6					
5	65.04103-0013	RETAINER;VALVE SPRING	12					
6	65.04103-0009	SEAT;VALVE SPRING	12					
7	65.04104-0006	COTTER;VALVE	24					
8	65.04902-0013	SEAL;VALVE STEAM	12					
10	65.04200-6025E	ROCKER ARM ASS'Y	3					
10A	65.04201-5013E	ROCKER ARM	4					
10B	65.04205-0003A	BOLT;ADJUSTING	4					
10C	65.90501-0003	NUT	4					
10D	65.04203-5009	ROCKER ARM SHAFT ASS`Y	1					
10E	65.04202-0017A	BRACKET;ROCKER ARM	2					
10F	65.97601-0055	SPRING;ROCKER ARM SHAFT	1					
10G	65.90710-0039	WASHER;ROCKER ARM	2					
10H	06.29010-0120	RING;SNAP	2					
10I	65.90020-0056	BOLT;HEX. M12X1.5X80	2					
10J	06.01013-9221	BOLT;HEX. M10X80	2					
10K	06.16731-2108	WASHER;SPRING	2					
10L	06.15030-0514	WASHER;PLAIN	2					
15	65.04301-0005	TAPPET	12					
16	65.04302-5010	PUSH ROD	12					

Fig. 019 VALVE & ROCKER ARM

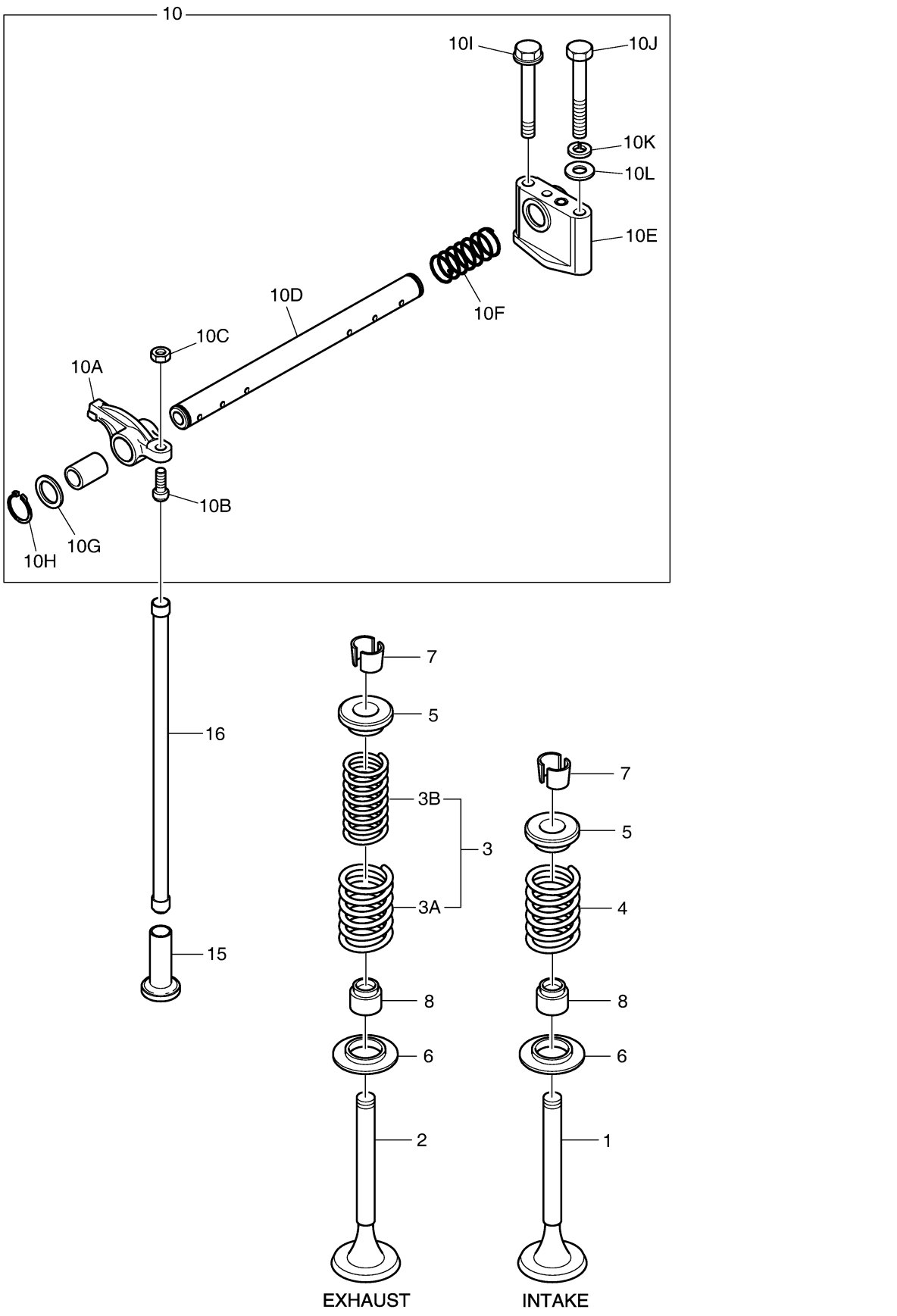

Fig. 020 CAM SHAFT

Key No	Part No	Description	Qty	S.C	Serial No	ICA	Replacable	Qty
1	150103-00053	CAMSHAFT	1					
2	65.90720-0099	WASHER;THRUST	1					
3	65.98112-0038	FLANGE	1					
4	65.90001-6003	BOLT ASS`Y M6X14	2					
5	06.22022-1016	PIN;DOWEL	1					
10	65.04501-0057	GEAR;CAM SHAFT	1					
11	65.90020-0086	BOLT;COLLARED HEX	4					
12	130428-00081	IDLE GEAR ASSY	1		~130307	I	130428-00081A	1
12	130428-00081A	GEAR ASSY,IDLE	1		130308~			
13	65.04506-0008	PIN;IDLE GEAR	1					
14	65.90720-0019	WASHER;THRUST	1					
15	06.01914-3126	BOLT;HEX. M8X75	2					

Fig. 020 CAM SHAFT

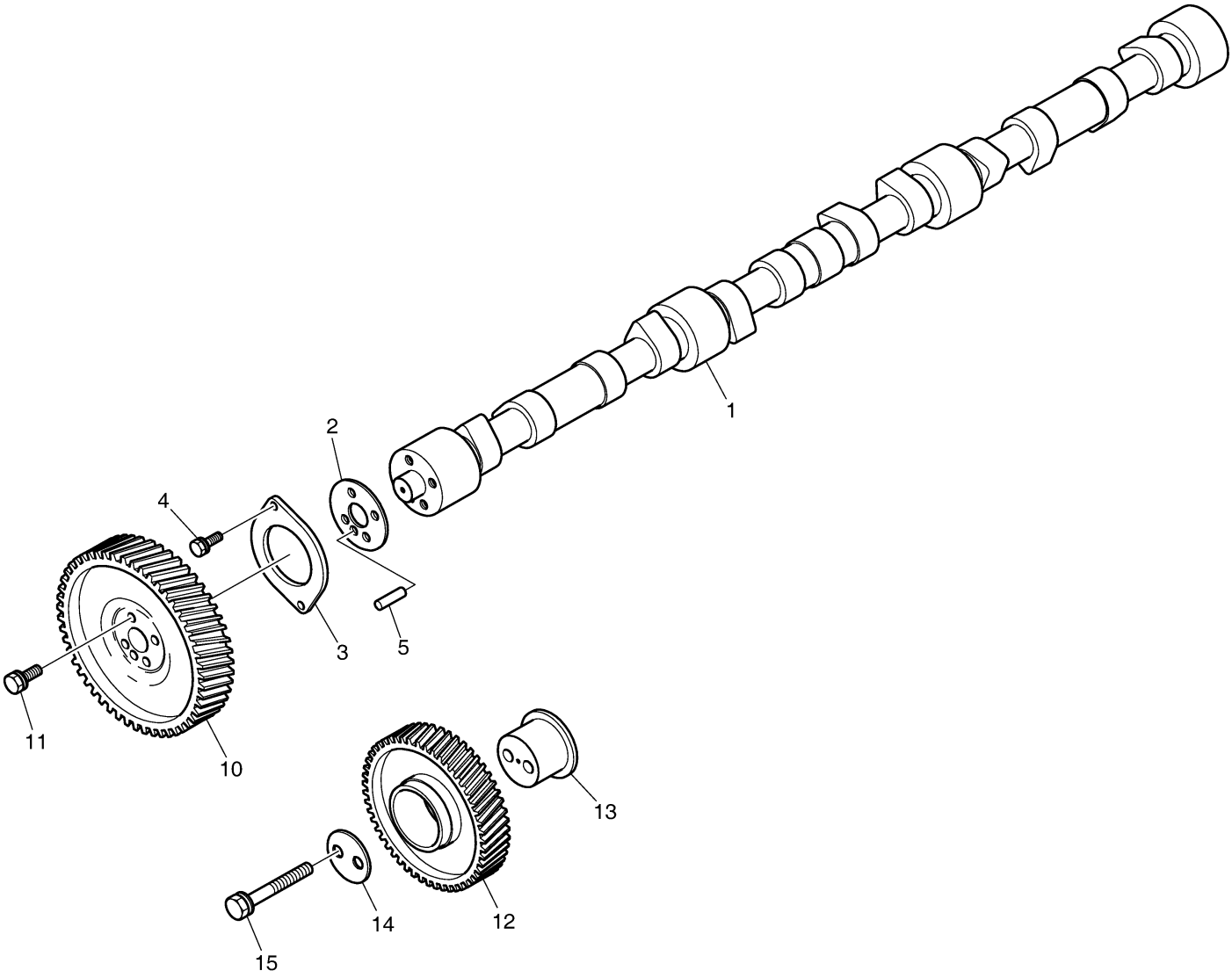

Fig. 021 OIL PUMP & IDLE GEAR

Key No	Part No	Description	Qty	S.C	Serial No	ICA	Replacable	Qty
1	65.05100-6022	OIL PUMP ASS'Y	1					
1A	65.05102-0014	HOUSING;OIL PUMP	1	D				
1B	65.05103-5015	OIL PUMP COVER(FRONT)	1					
1C	65.05103-5012	OIL PUMP COVER(REAR)	1					
1D	06.22022-0909	PIN;DOWEL 6M6X14	1					
1E	65.05410-0025	PLUNGER;VALVE	1					
1F	65.97601-0110	SPRING;COMPRESSION	1					
1G	65.90310-0104	SCREW;PLUG	1					
1H	65.05104-5004	GEAR;PUMP	1					
1I	65.05104-5003	GEAR	1					
1J	06.01013-9118	BOLT;HEX. M8X65	4					
1K	65.90510-0012	NUT	4					
1L	65.05201-0037	GEAR;OIL PUMP DRIVE	1					
1M	06.29141-0207	KEY;WOODRUFF	1					
1N	06.11053-9217	NUT;HEX.	1					
1O	06.16050-0311	WASHER;LOCK	1					
17	06.22022-0907	PIN;DOWEL	2					
18	06.01013-9215	BOLT;HEX. M10X50	2					
19	65.90801-0018	WASHER;LOCK	2					
21	65.05204-0036	GEAR;IDLE	1					
22	06.31420-0314	BEARING;BALL	2					
23	06.29020-0132	SNAP RING	2					
24	65.05205-0018	PIN;IDLE GEAR	1					
25	06.29010-0125	RING;SNAP 30X2	1					
26	65.90030-0009	BOLT;SOCKET HEAD M10X60	1					

Fig. 021 OIL PUMP & IDLE GEAR

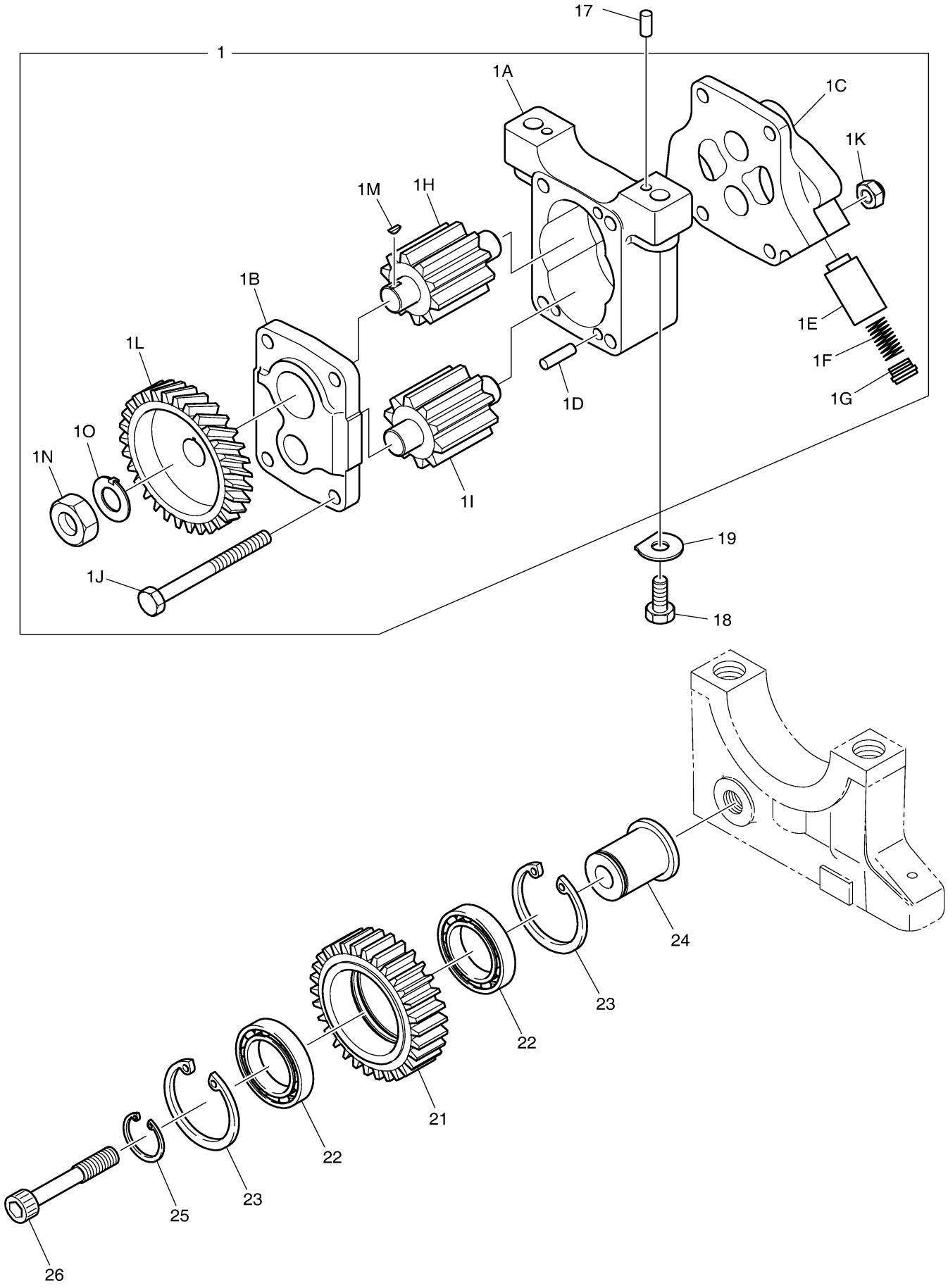

DOOSAN Doosan Infracore

Fig. 022 OIL FILTER

Key No	Part No	Description	Qty	S.C	Serial No	ICA	Replacable	Qty
1	65.05501-7064B	OIL FILTER ASS'Y	1					
1A	65.05510-5022B	CARTRIDGE;OIL FILTER	1					
1B	65.05503-5042	HEAD;FILTER	1					
1C	65.05518-0003	VALVE;PLUNGER	1					
1D	65.97601-0065	SPRING	1					
1E	65.90310-0057	SCREW;PLUG	1					
1F	06.56190-0716	RING;SEAL	1					
1G	65.05518-0006	VALVE	1					
1H	65.97601-0075	SPRING	1					
1I	65.90310-0065	SCREW;PLUG	1					
1J	06.56190-0726	SEAL;RING	1					
10	65.05901A0052	GASKET;OIL FILTER	1					
11	06.01913-3122	BOLT ASS'Y M8X55	2					
12	06.01913-3118	BOLT ASS'Y M8X35	2					

Fig. 022 OIL FILTER

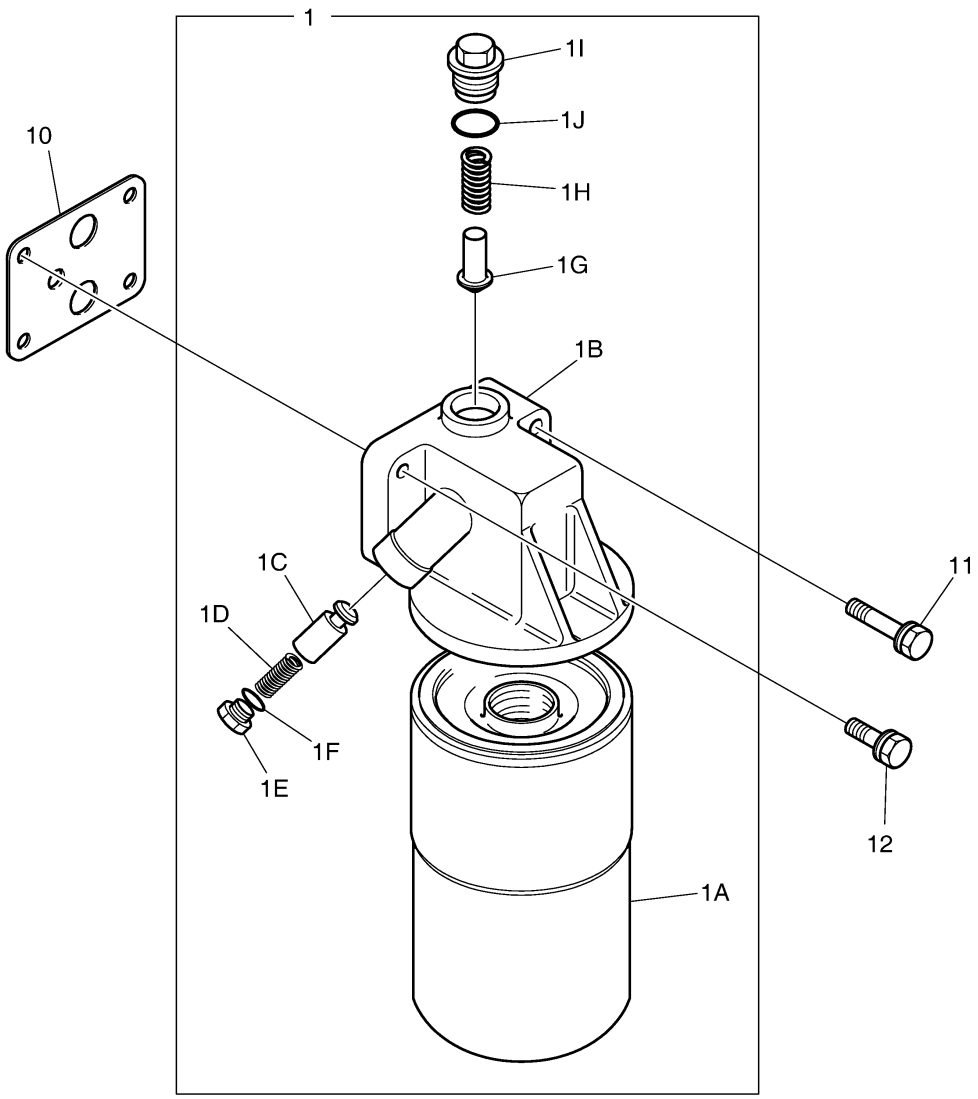

Fig. 023 OIL COOLER

Key No	Part No	Description	Qty	S.C	Serial No	ICA	Replacable	Qty
1	65.05601-7137B	OIL COOLER ASS'Y	1					
1A	65.05604-5030	HOUSING;OIL COOLER	1					
1B	65.90310-0136A	SCREW;PLUG	1					
1C	06.56190-0718	RING;SEAL	1					
1D	06.31641-0429	BALL;BY-PASS	1					
1E	65.97601-0004	SPRING	1					
1F	65.90310-0003	SCREW;PLUG M26X1.5	1					
1G	65.05611-0001	PIN	1					
1H	06.56190-0728	RING;SEAL	1					
1I	65.05606-5020	ELEMENT;OIL COOLER	1					
1J	65.96601-0018A	GASKET;OIL COOLER	2					
1K	06.02090-0418	BOLT;SOCKET HEAD M8X45	4					
1L	06.15030-0513	WASHER;PLAIN	4					
1M	06.16110-0106	WASHER	4					
1N	65.05605-0028	HEAD;OIL	1					
1O	65.06301-0160	PIPE;COOLING WATER	1					
1P	65.96601-0029	GASKET;FLANGE	1					
1Q	06.01923-3112	BOLT ASS'Y M8X18	4					
1R	65.05902-0008A	GASKET;OIL COOLER COVER	1					
1S	06.01923-3126	BOLT;HEX. M8X75	8					
33	65.90001-6011	BOLT ASS'Y M10X70	2					
34	06.01924-3225	BOLT ASS'Y M10X70	2					
38	65.05902A0011	GASKET;OIL COOLER COVER	1					
39	65.96601-0347	GASKET;OIL COOLER ASS`Y	1					
40	65.91605-0110	COVER;BLIND	1					
41	06.01913-3112	BOLT ASS'Y M8X18	4					

Fig. 023 OIL COOLER

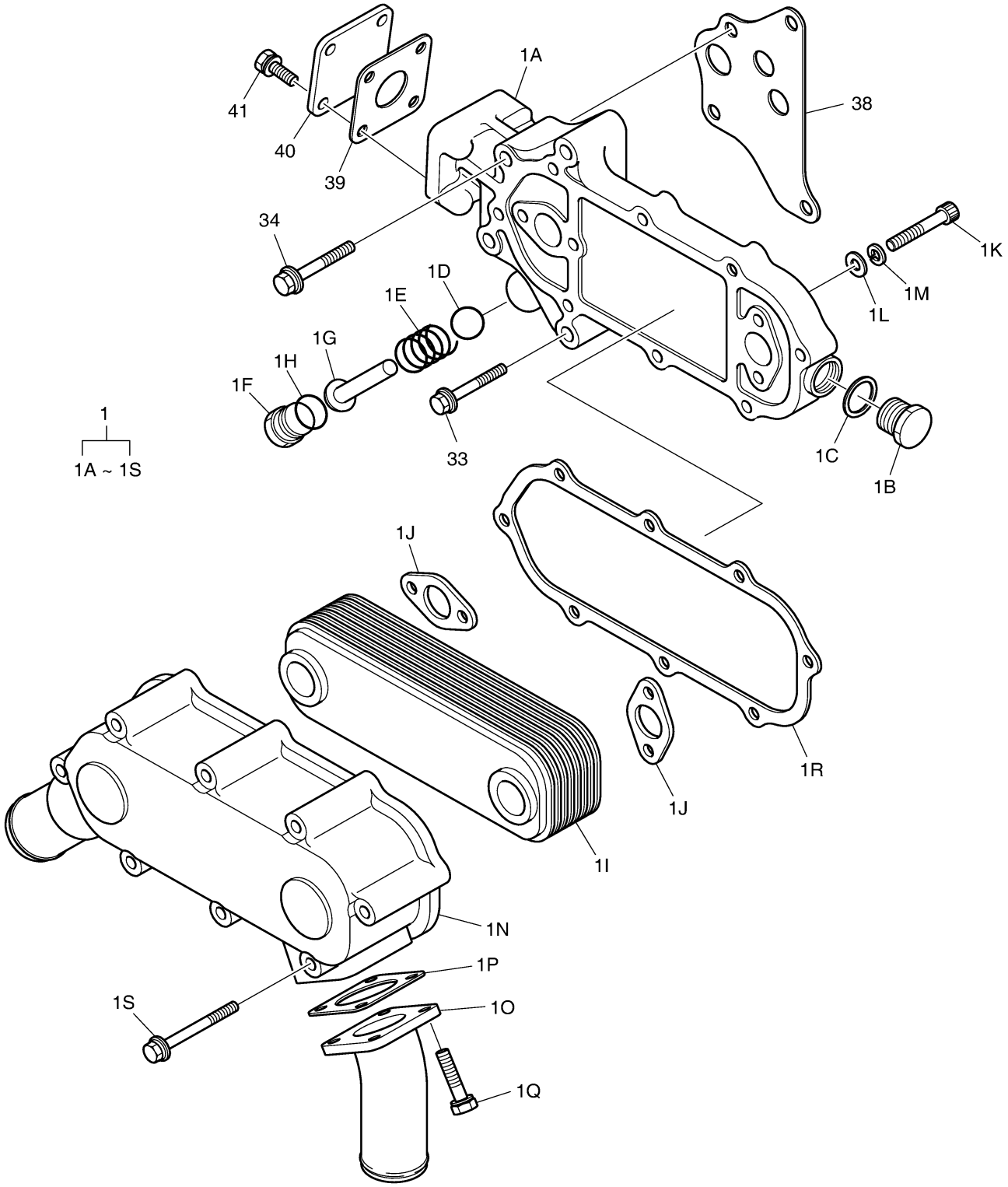

Fig. 024 OIL PIPE - IN OIL PAN

Key No	Part No	Description	Qty	S.C	Serial No	ICA	Replacable	Qty
1	150119-00007	OIL PAN	1					
2	65.98130-0203	ADAPTER	1					
3	06.56190-0732	SEAL;RING	1					
4	460102-00033	DRAIN ASS'Y	1					
4A	420108-00300	HOSE,DRAIN	1					
4B	410202-00014	COCK ASS'Y;DRAIN	1					
5	06.01923-3121	BOLT;HEX. M8X50	23					
6	06.01923-3122	BOLT ASS`Y M8X55	1					
7	06.01923-3126	BOLT;HEX. M8X75	6					
8	06.01913-7127	BOLT ASS'Y M8X80	4					
9	06.15010-2311	WASHER	4					
10	06.01923-3129	BOLT ASS'Y M8X90	3					
11	65.05904A0016	GASKET;OIL PAN	1					
12	65.01813-5016	PIPE;OIL FILLER	1					
13	06.01913-3114	BOLT ASS'Y M8X22	4					
14	65.05903-0025	GASKET	1					
15	65.01840-0003	BRACKET	1					
16	06.01913-3211	BOLT ASS'Y M10X1.5X16	2					
17	06.01283-7115	BOLT M8X25	1					
18	06.15010-2311	WASHER	1					
19	06.16731-2107	WASHER	1					
20	06.11063-8214	NUT	1					
21	65.05806-5098A	TUBE;GUIDE	1					
22	65.05805-5189A	GAUGE;OIL LEVEL	1					
23	65.05701-6075A	OIL SUCTION PIPE ASS'Y	1					
23A	65.05701-5635A	PIPE;SUCTION	1					
23B	65.05740-0096	HOLDER;OIL SUCTION PIPE	1					
23C	65.90510-0012	NUT	1					
23D	06.01283-7114	BOLT;HEX. M8X22	1					
23E	06.15010-2311	WASHER	2					
29	06.01913-3114	BOLT ASS'Y M8X22	2					
30	06.01913-3111	BOLT ASS'Y M8X16	1					
31	65.96601B0019	GASKET;OIL SUCTION PIPE	1					
32	65.05903B0003	GASKET;CONNECTING FLANGE	1					
33	65.05715-5001	CONNECTING FLANGE ASS`Y	1					
34	06.02090-0422	BOLT;SOCKET HEAD	2					

Key No	Part No	Description	Qty	S.C	Serial No	ICA	Replacable	Qty
35	06.16110-0106	WASHER	2					
36	06.15010-2311	WASHER	2					
37	65.96601-0050	GASKET;OIL PIPE	4					
38	65.05701-0030A	OIL PIPE ASS`Y(O/P->C/F)	1					
39	06.01923-3118	BOLT ASS'Y M8X35	1					
40	06.01923-3124	BOLT ASS'Y M8X65	1					
41	65.05701-5230	OIL PIPE ASS'Y	1					
42	65.90001-6006	BOLT;SOCKET HEAD M8X25	2					
43	06.15030-0513	WASHER;PLAIN	2					
44	06.01923-3113	BOLT ASS'Y M8X20	2					
45	06.01933-3121	BOLT ASSY	2					
46	65.01810-5011	CAP;OIL FILLER	1					

Fig. 024 OIL PIPE - IN OIL PAN

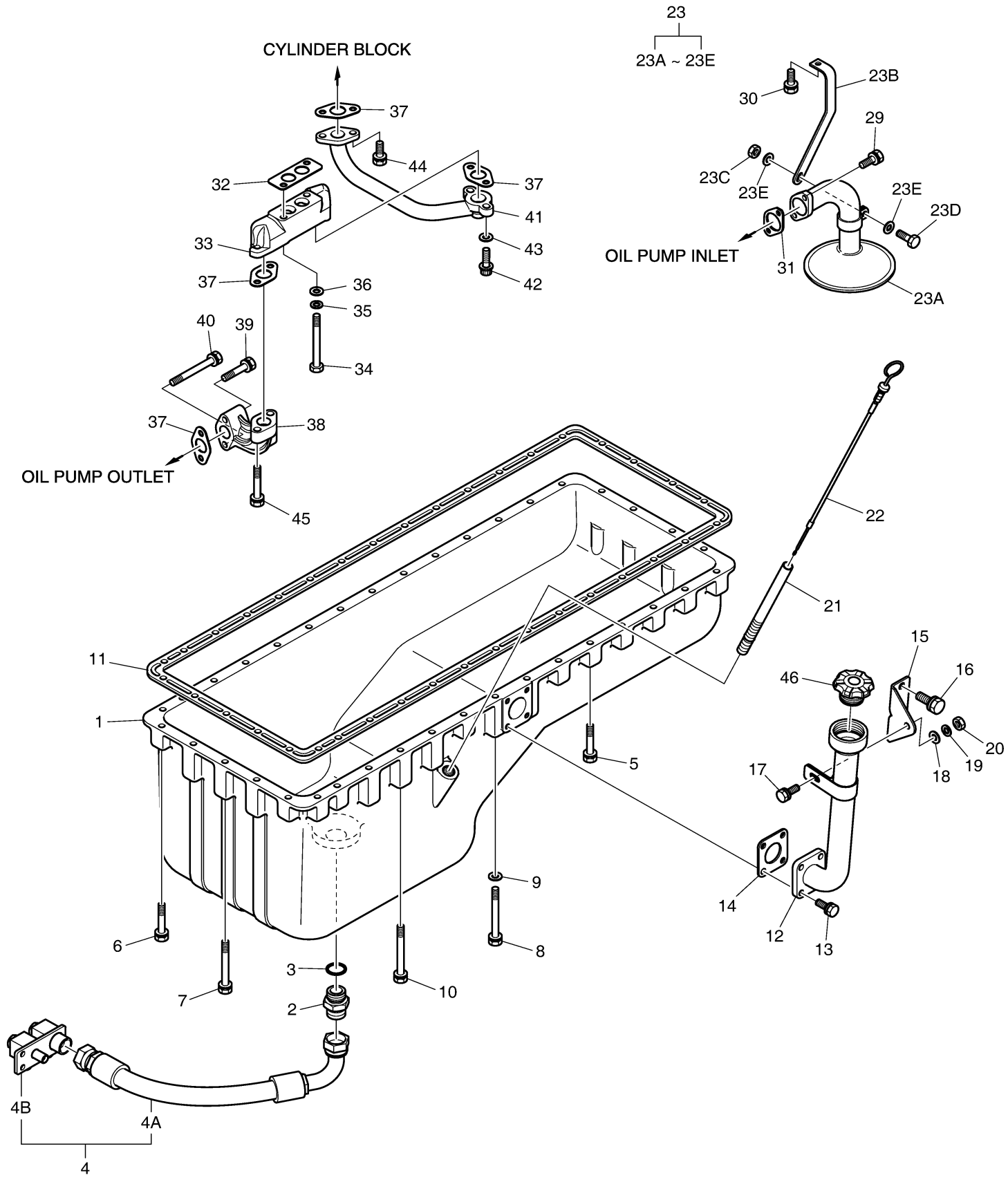

DOOSAN Doosan Infracore

Fig. 025 COOLING SYSTEM

Key No	Part No	Description	Qty	S.C	Serial No	ICA	Replacable	Qty
1	65.01705-0002B	COVER;WATER CHAMBER	1					
2	65.01907A0002	GASKET;WATER CHAMBER	1					
3	06.15010-2311	WASHER	12					
4	06.16731-2107	WASHER	12					
5	06.01923-3115	BOLT ASS'Y M8X25	14					
6	65.90201-0149	BOLT;STUD M8X25	10					
8	120122-00014	BOLT,SPACER;M8	2					
10	06.11063-8214	NUT	10					
20	65.06301-0134C	PIPE;COOLING WATER	1					
21	65.06903A0011	GASKET;COOLING WATER PIPE	3					
22	06.01923-3122	BOLT ASS`Y M8X55	3					
23	06.01923-3124	BOLT ASS'Y M8X65	3					
24	66.27435-6008	SWITCH;THERMO	1					
25	65.27435-6003	SWITCH;WATER TEMP	1					
26	65.90310-0168	SCREW;PLUG M26X1.5	1					
27	06.56190-0728	RING;SEAL	1					
28	65.96301-0256	HOSE;RUBBER	1					
29	06.67020-0109	CLAMP;HOSE	2					
30	65.06301-0083	PIPE;COOLING WATER	1					
31	04.27405-1908A	HOSE;RUBBER M50X62X80	2					
32	06.67020-0109	CLAMP;HOSE	4					
33	65.96301-0118B	HOSE;RUBBER	1					
34	06.67020-0106	CLAMP;HOSE	2					
40	65.06401-6050	THERMOSTAT	1					

Fig. 025 COOLING SYSTEM

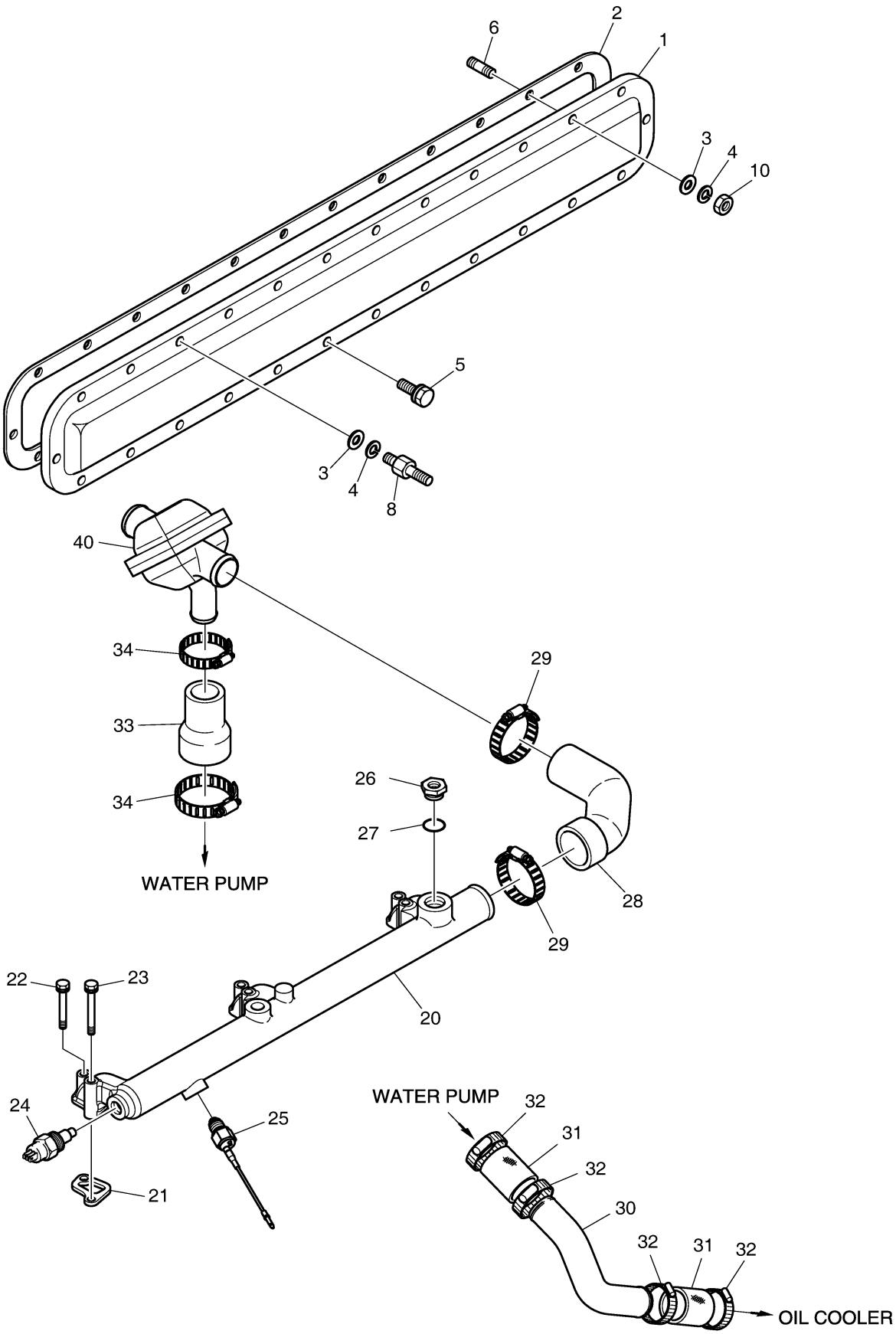

Fig. 026 COOLING WATER PUMP

Key No	Part No	Description	Qty	S.C	Serial No	ICA	Replacable	Qty
1	65.06500-6145D	WATER PUMP ASS`Y	1					
1A	-	HOUSING;WATER PUMP	1	D				
1B	65.06520-6007	SEAL;MECHANICAL	12					
1C	65.06506-0023	IMPELLAR	12					
1D	65.93410-0087	BEARING	14					
1E	06.29020-0132	SNAP RING	10					
1F	65.06504-0030A	HUB	2					
1G	65.06901A0019	GASKET;WATER PUMP INNER	10					
1H	65.06512-0010	COVER;WATER PUMP	1					
1I	06.04201-8907	BOLT;SLOTTED HEAD M6X14	3					
25	65.06901A0020	GASKET;WATER PUMP	3					
26	06.01913-3121	BOLT ASS'Y M8X50	3					
27	06.01913-3125	BOLT ASS`Y M8X70	1					
28	06.01013-9121	BOLT ASS`Y M8X80	1					
29	06.01914-3225	BOLT;HEX. M10X70	1					
30	06.16731-2107	WASHER	1					

Fig. 026 COOLING WATER PUMP

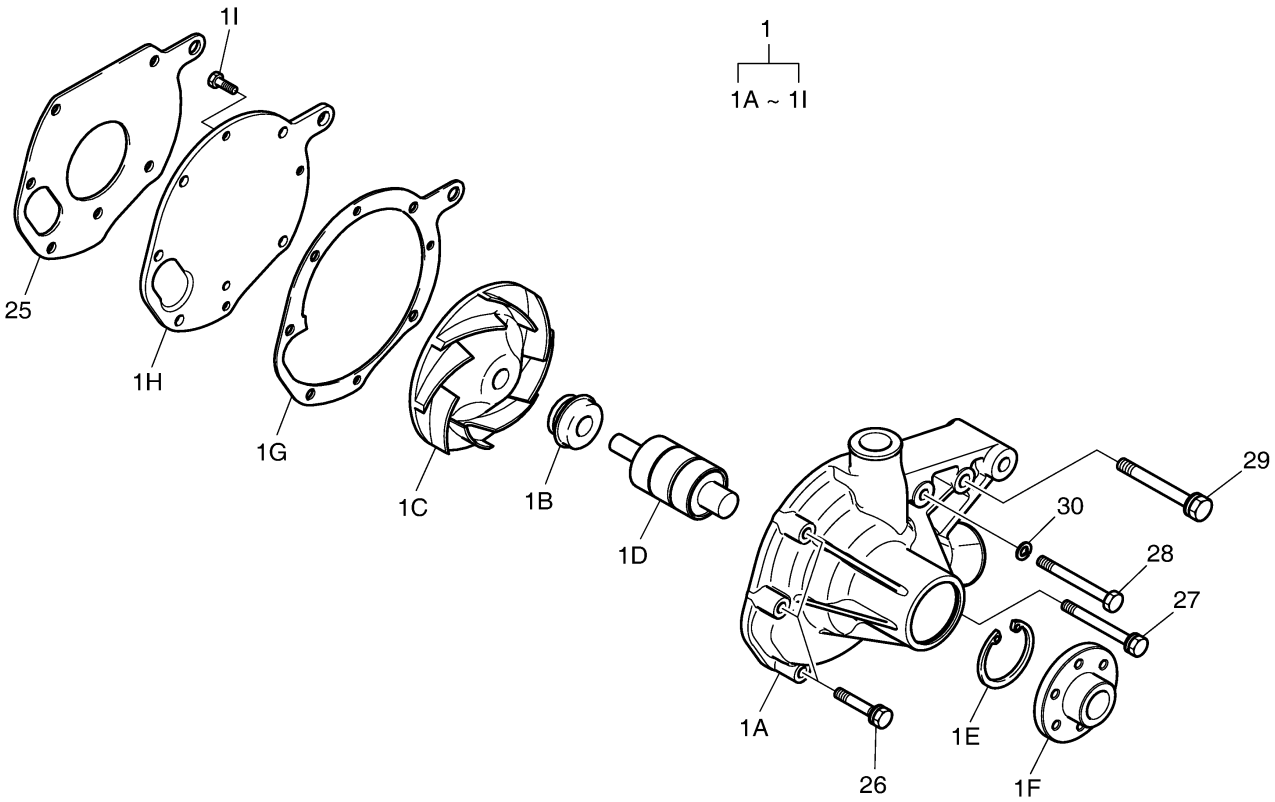

Fig. 027 COOLING FAN

Key No	Part No	Description	Qty	S.C	Serial No	ICA	Replacable	Qty
1	65.06611-0159	FLANGE;FAN	1					
3	65.06606-0055	PULLEY;FAN	1					
6	65.06601-5064	FAN;COOLING	12					
7	06.01013-9129	BOLT M8X140	12					
8	06.16731-2107	WASHER	14					
9	06.15010-2311	WASHER	10					

Fig. 027 COOLING FAN

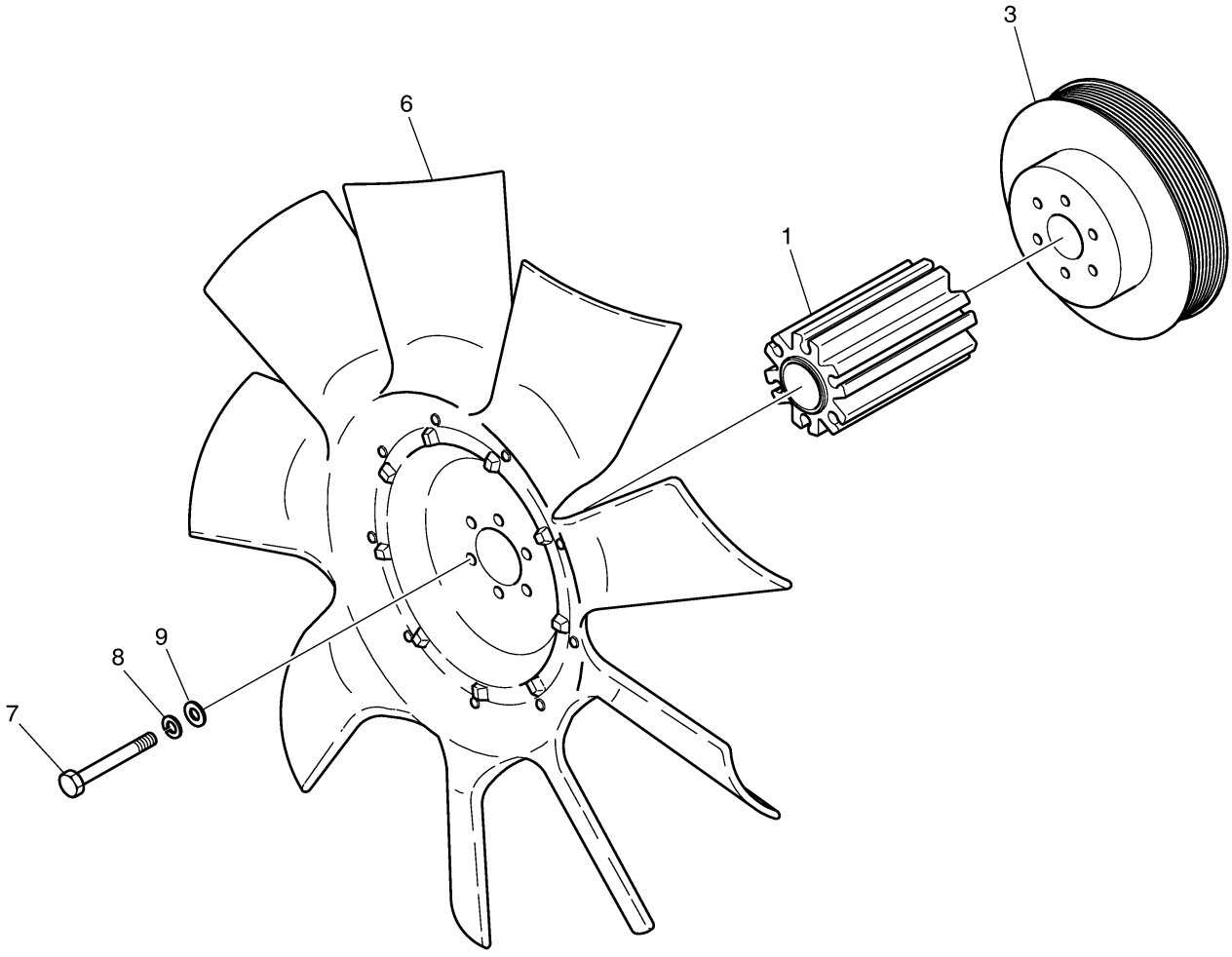

Fig. 028 EXHAUST MANIFOLD

Key No	Part No	Description	Qty	S.C	Serial No	ICA	Replacable	Qty
1	65.08100-6056A	EXHAUST MANIFOLD ASS`Y	1		~150702			
1	240102-00470	MANIFOLD ASSY,EXHAUST	1		150701~			
1A	65.08101-0193A	MANIFOLD;EXHAUST(L.H.)	1		~150702			
1A	240102-00467	MANIFOLD,EXHAUST;CYL,BODY	1		150701~			
1B	65.08101-0195A	MANIFOLD;EXHAUST(M)	1		~150702			
1B	240102-00448	MANIFOLD,EXHAUST	1		150701~			
1C	65.08101-0194A	MANIFOLD;EXHAUST(R.H.)	1		~150702			
1C	240102-00468	MANIFOLD,EXHAUST;CYL,BODY	1		150701~			
1D	65.96501-0007	RING;SEAL	4					
6	65.08901A0013	GASKET;EXHAUST MANIFOLD	6		~150702			
6	400610-00032	GASKET,EXHAUST MANIFOLD	6		150703~161003	Y	400610-00032A	6
6	400610-00032A	GASKET,EXHAUST MANIFOLD	6		161004~			
7	111002-00001	SCREEN;HEAT	1					
8	65.90535-0001	NUT	12					
14	65.08120-0017	SCREEN;HEAT	1					

Fig. 028 EXHAUST MANIFOLD

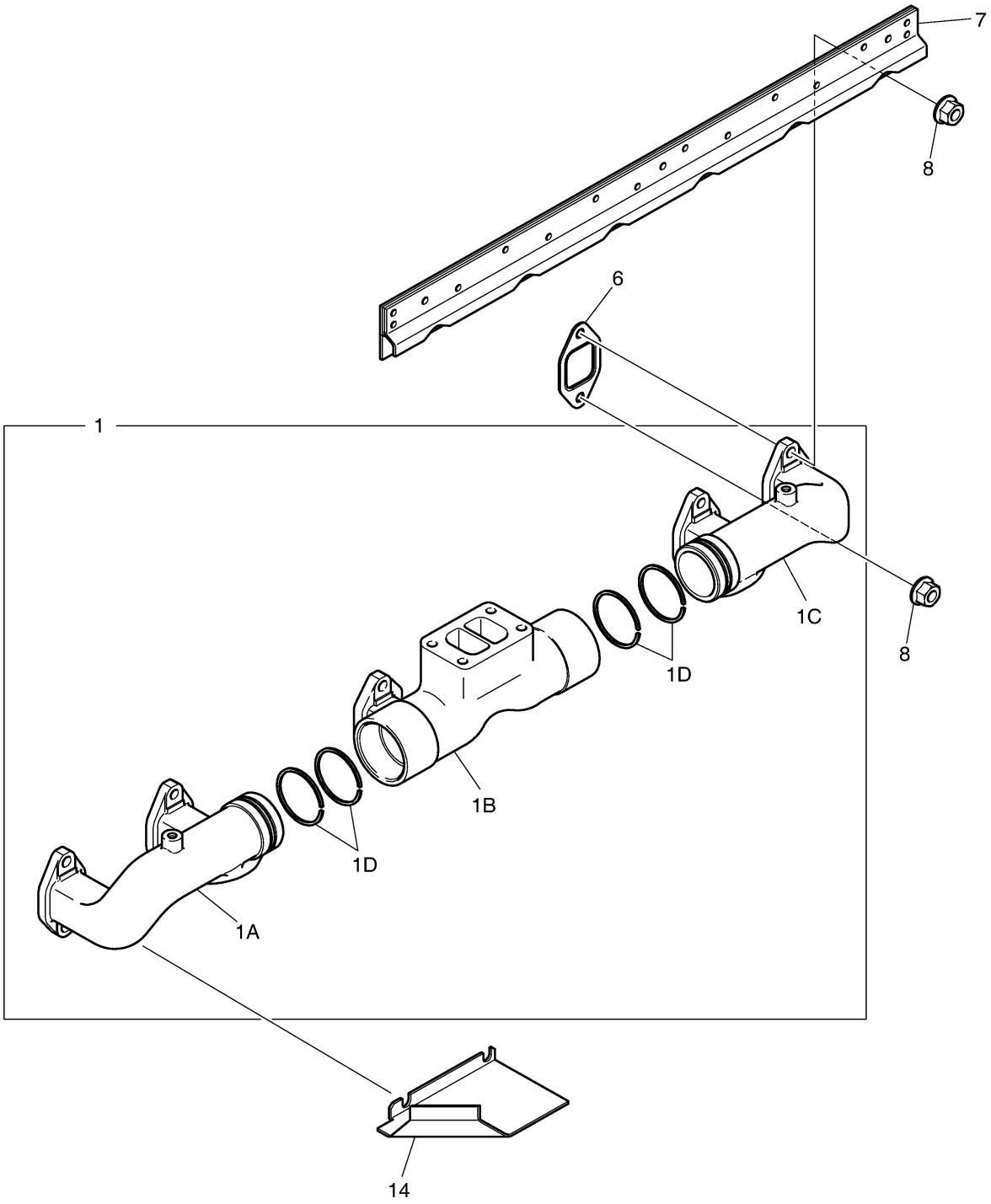

Fig. 029 INTAKE MANIFOLD

Key No	Part No	Description	Qty	S.C	Serial No	ICA	Replacable	Qty
1	65.08201-5053	INTAKE MANIFOLD	1					
3	65.08902A0024	GASKET;INTAKE MANIFOLD	1					
4	06.01923-3218	BOLT ASS'Y M10X35	10					
5	06.11063-8215	NUT;HEX. M10	2					
6	06.16731-2108	WASHER;SPRING	2					
7	06.15030-0514	WASHER;PLAIN	2					
8	65.90310-0033	SCREW;PLUG	1					
9	06.56180-0716	RING;SEAL	1					
10	65.09411-0050	PIPE;AIR	1					
11	65.26803-7028B	AIR HEATER	1					
12	65.09904-0008	GASKET;AIR HEATER	2					
13	06.01923-3125	BOLT ASS'Y M8X70	4					
15	06.06225-0809	BOLT;STUD M10X35	2					
20	65.08220-0002A	PIPE;CONNECTION	1					
21	65.96501-0058	O-RING	2					

Fig. 029 INTAKE MANIFOLD

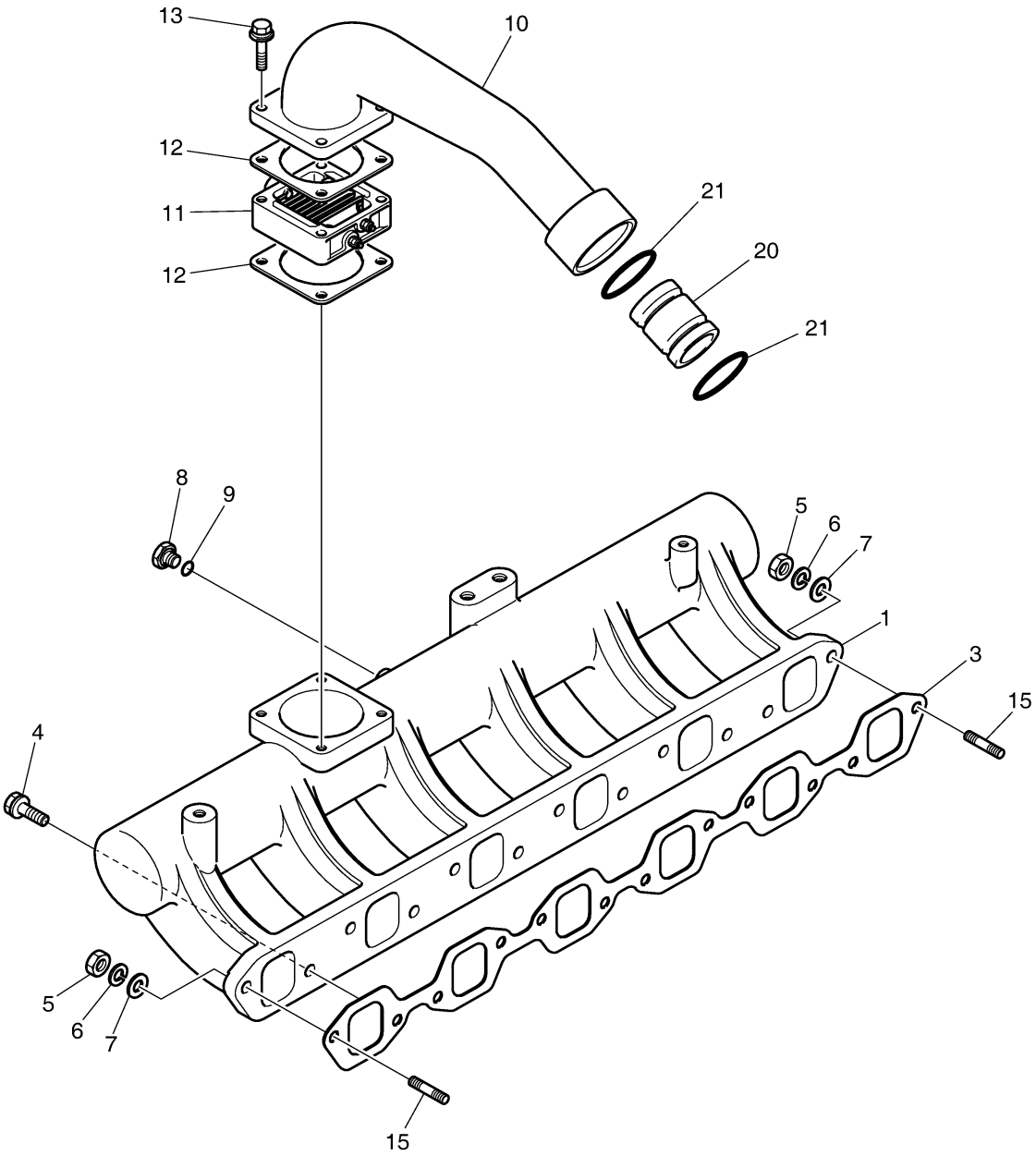

Fig. 030 TURBO CHARGER & OIL PIPE

Key No	Part No	Description	Qty	S.C	Serial No	ICA	Replacable	Qty
1	65.09100-7038	TURBO CHARGER ASS'Y	1					
2	65.90201-0073	BOLT;STUD	4					
3	65.09901-0018A	GASKET	1					
5	65.90535-0001	NUT	4					
6	65.90201-0072	BOLT;STUD M10X1.5X30	6					
7	65.09901-0012	GASKET	1					
8	06.16731-2108	WASHER;SPRING	6					
9	06.11063-8215	NUT;HEX. M10	6					
12	65.05701-5453	PIPE;OIL	1					
13	06.15010-2311	WASHER	1					
14	06.16731-2107	WASHER	1					
15	06.11063-8214	NUT	1					
16	06.78144-2403	HOLLOW SCREW M12X1.5	2					
17	06.56190-0704	RING;SEAL	4					
20	65.98131-5003	ADAPTER FLANGE ASS`Y	1					
21	65.96601-0046B	GASKET;OIL PIPE ADAPTER	1					
22	06.01913-3114	BOLT ASS'Y M8X22	2					
23	65.05701-5335	PIPE;OIL	1		~140521	I	420217-00288	1
23	420217-00288	PIPE,OIL RETURN	1		140522~150422			
23	420217-00288A	PIPE,OIL RETURN	1		150423~			
25	65.96601-0067	GASKET;T/C OIL RETURN	2					
26	65.05740-5001A	BRACKET	1					
27	65.90020-0068	BOLT ASS'Y M8X16	1					
28	06.01923-3217	BOLT ASS'Y M10X30	1					
29	65.05701-5336A	OIL PIPE ASS`Y(T/C-C/B)	1					
31	06.01913-3114	BOLT ASS'Y M8X22	2		~140521			
31	120106-00191	BOLT,HEX FLANGE	2		140522~			
32	06.01913-3113	BOLT ASS'Y M8X20	1					
33	65.90201-0075	BOLT;SPACER	1					
34	06.16731-2107	WASHER	1					
35	06.15010-2311	WASHER	1					
36	65.96301-0327A	HOSE;RUBBER	1		~150422			
36	420107-00495	HOSE,OIL	1		150423~			
37	06.67020-0105	CLAMP	2		~150422			
37	120202-00232	CLAMP,HOSE	2		150423~160501			
37	120202-00231	CLAMP	2		160502~			

Fig. 030 TURBO CHARGER & OIL PIPE

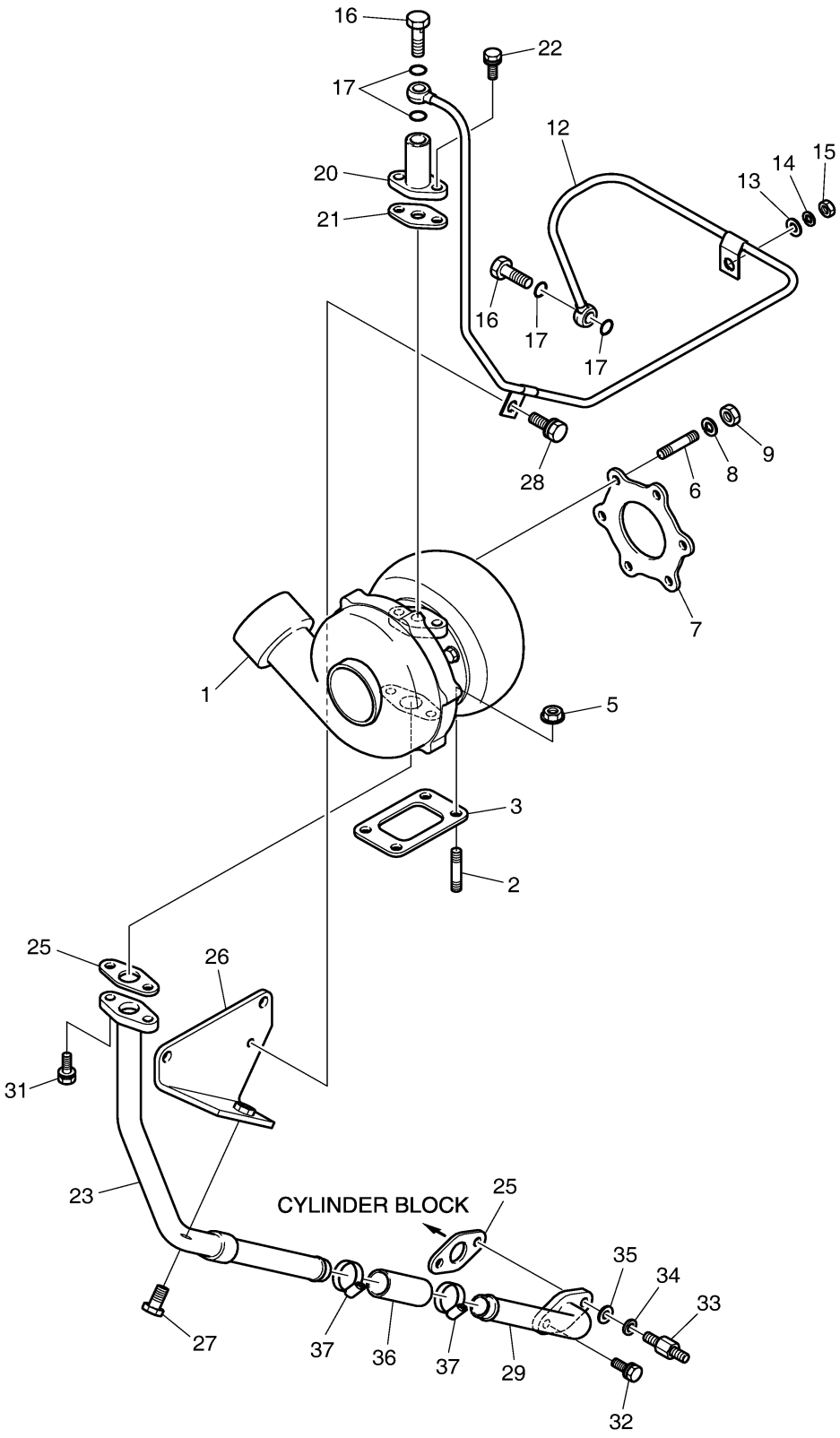

Fig. 031 NOZZLE & HOLDER

Key No	Part No	Description	Qty	S.C	Serial No	ICA	Replacable	Qty
1	65.10101-7050A	NOZZLE HOLDER ASS'Y	6					
1A	65.10102-6026A	TIP;NOZZLE	1					
4	65.96501-0057	RING;SEAL	6					

Fig. 031 NOZZLE & HOLDER

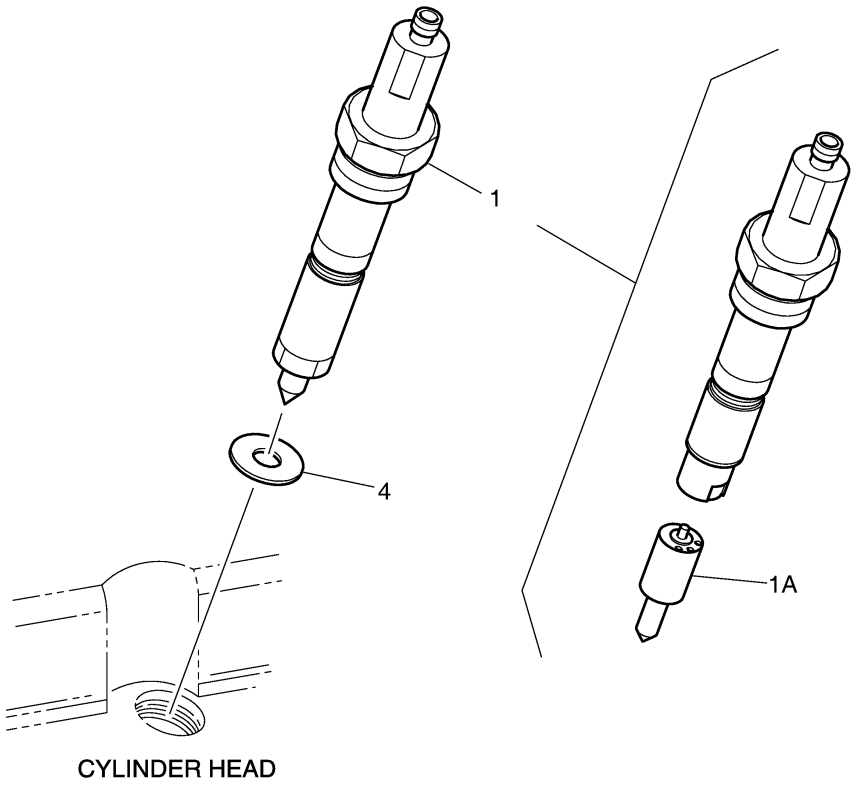

Fig. 032 INJECTION PIPE

Key No	Part No	Description	Qty	S.C	Serial No	ICA	Replacable	Qty
1	65.10301-6048C	INJECTION PIPE ASS'Y	1					
12	06.01923-3214	BOLT;HEX. M10X22	2					

Fig. 032 INJECTION PIPE

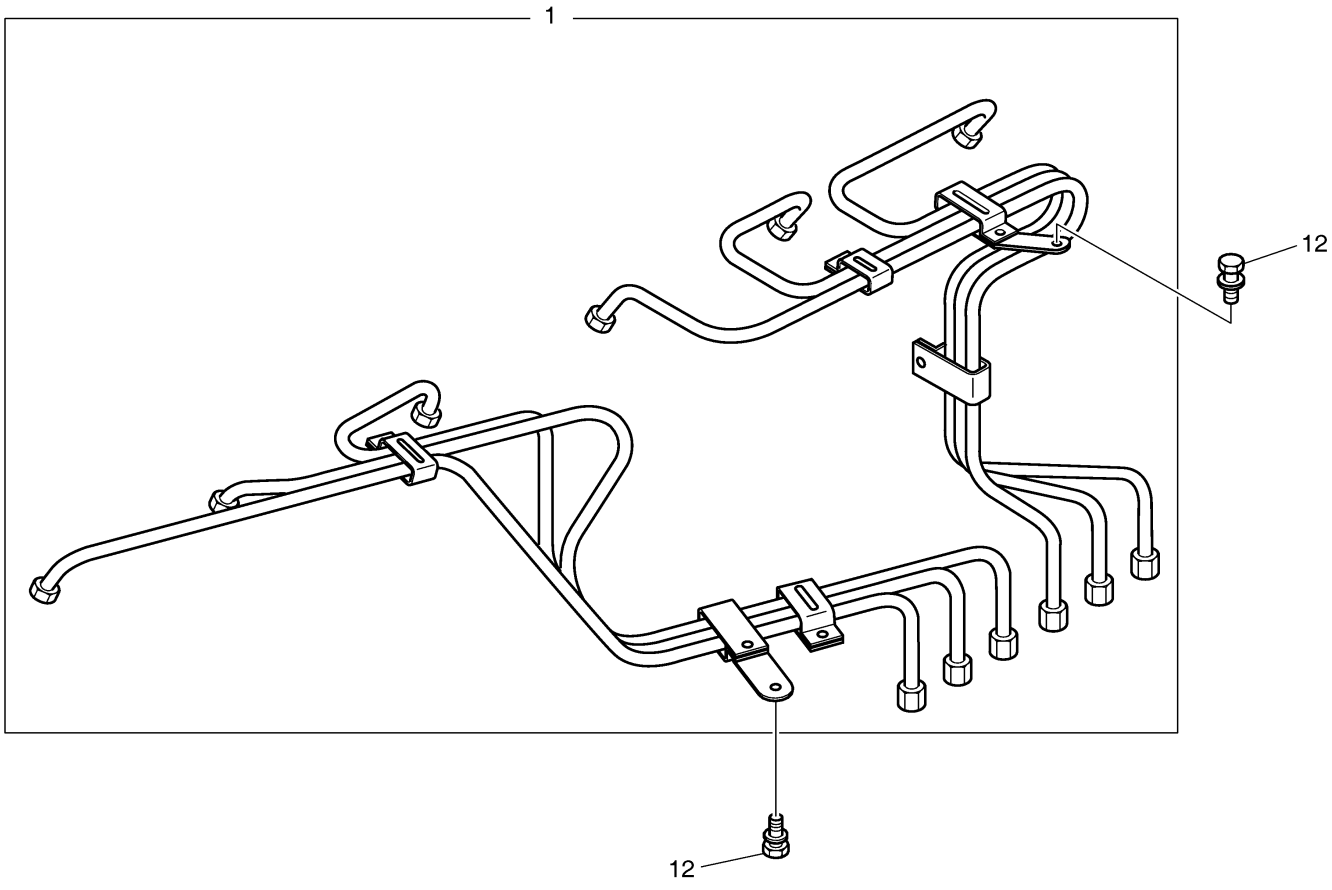

Fig. 033 INJECTION PUMP

Key No	Part No	Description	Qty	S.C	Serial No	ICA	Replacable	Qty
1	65.11101-7299A	INJECTION PUMP ASS'Y	1					
1A	65.12101-7026	PUMP;FEED	1					
1B	65.11125-0009S	PLUNGER	6					
1C	131110-8820	VALVE; DELIVERY	6					
1D	131424-1520	VALVE;OVERFLOW	1					
2	65.11401-0040	MOUNTING FLANGE ASS'Y	1					
5	65.93410-0036	BEARING;BALL	1					
6	65.90201-0059	BOLT;STUD M10X35	4					
7	06.16731-2108	WASHER;SPRING	4					
8	06.15010-2312	WASHER;PLAIN	4					
9	06.11063-8215	NUT;HEX. M10	4					
10	65.11106-0010	COUPLING;INJECTION PUMP	1					
11	65.11301-0063	GEAR;DRIVE	1					
12	06.01913-3116	BOLT;HEX. M8X28	6					
13	65.90710-0015	WASHER;PLAIN	6					
14	65.11902-0018A	GASKET;MOUNTING FLANGE	1					
15	06.22220-1110	PIN;SPRING	1					
17	06.16731-2108	WASHER;SPRING	7					
18	06.11063-8215	NUT;HEX. M10	7					
24	65.05701-5329	HOSE;OIL	1					
25	65.98130-0029	ADAPTER	1					
26	65.98150-0028	SCREW;HOLLOW	1					
27	06.56180-0714	RING;SEAL	3					
30	65.11401-0034A	BRACKET;F.I.P	1					
31	06.01913-3212	BOLT ASS'Y M10X18	2					
32	06.15010-2312	WASHER;PLAIN	1					
33	06.16731-2108	WASHER;SPRING	1					
34	06.11063-9215	NUT M10X1.25	1					

Fig. 033 INJECTION PUMP

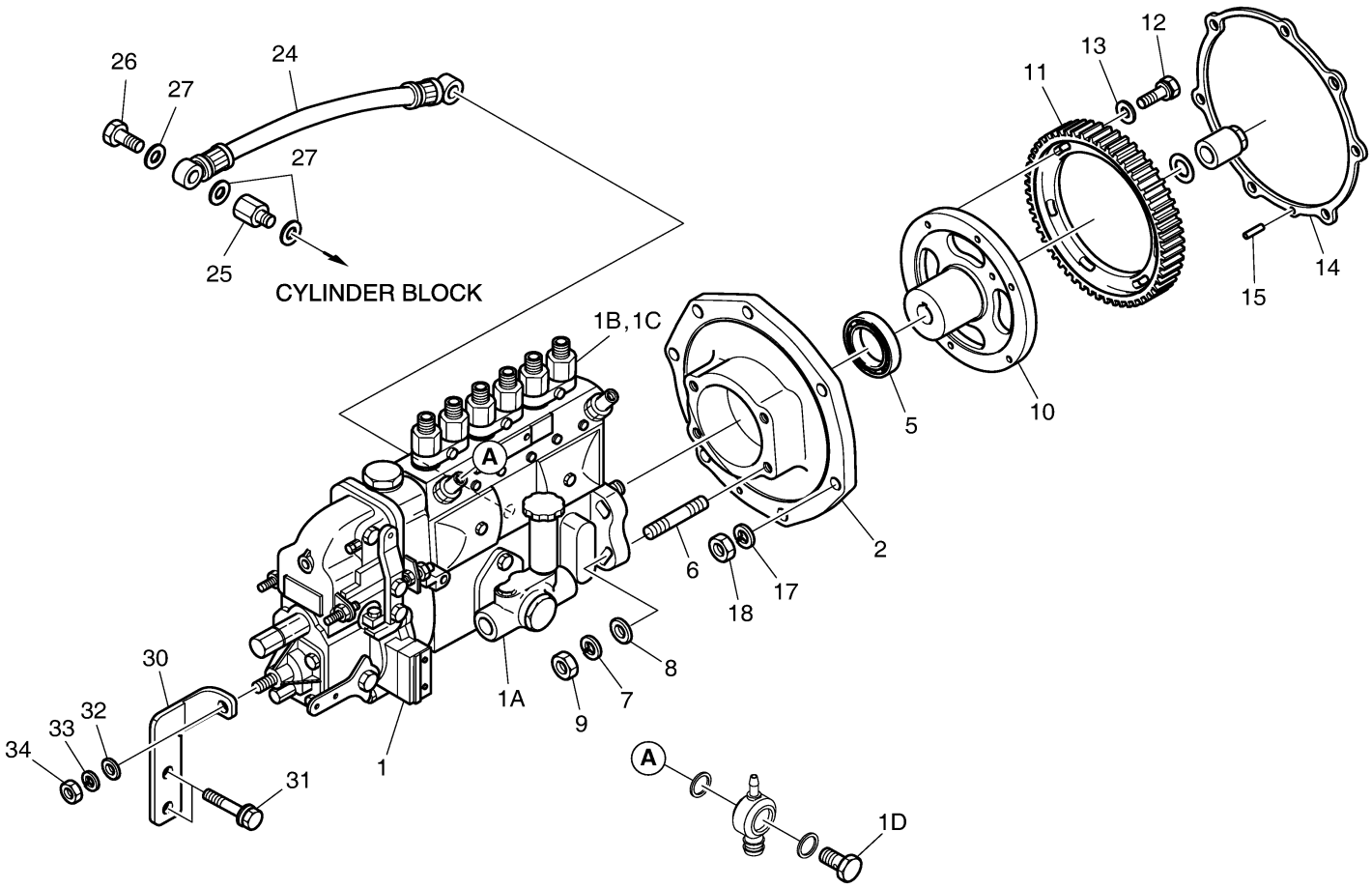

Fig. 034 FUEL FILTER

Key No	Part No	Description	Qty	S.C	Serial No	ICA	Replacable	Qty
1	420204-00160	PIPE,FUEL RETURN	1					
2	65.12301-5811A	OVER FLOW PIPE ASS'Y	1					
3	65.96330-0129	TUBE;FUEL OVER FLOW	1					
4	65.97445-0001	CLAMP;SPRING	2					
5	65.96341-0097	HOSE;FUEL(INLET)	1					
6	65.96341-0107	HOSE;FUEL	1					
7	06.78144-2204	SCREW;HOLLOW	2					
8	65.96507-0043	RING;SEAL	4					
9	65.97460-0001	BAND;TENSION	1					
10	65.98150-0042A	SCREW;HOLLOW	6					
11	401109-00086	RING;SEAL	12					
13	65.98101-0008	DOUBLE BANJO UNION	1					
16	65.12301-5022	PIPE;FUEL(RETURN)	1					
20	65.12501-7023B	FUEL FILTER ASS`Y	1					
20A	65.12504-5013B	HEAD;FUEL FILTER	1					
20B	65.12503-5016B	ELEMENT;E/G FUEL FILTER	1		10001~10271			
20B	65.12503-5018A	ELEMENT,FUEL	1		10272~			
20C	65.90310-0143	SCREW;PLUG	1					
20D	06.56180-0716	RING;SEAL	1					
21	06.01953-3318	BOLT ASS'Y M12X1.5X35	2					

Fig. 034 FUEL FILTER

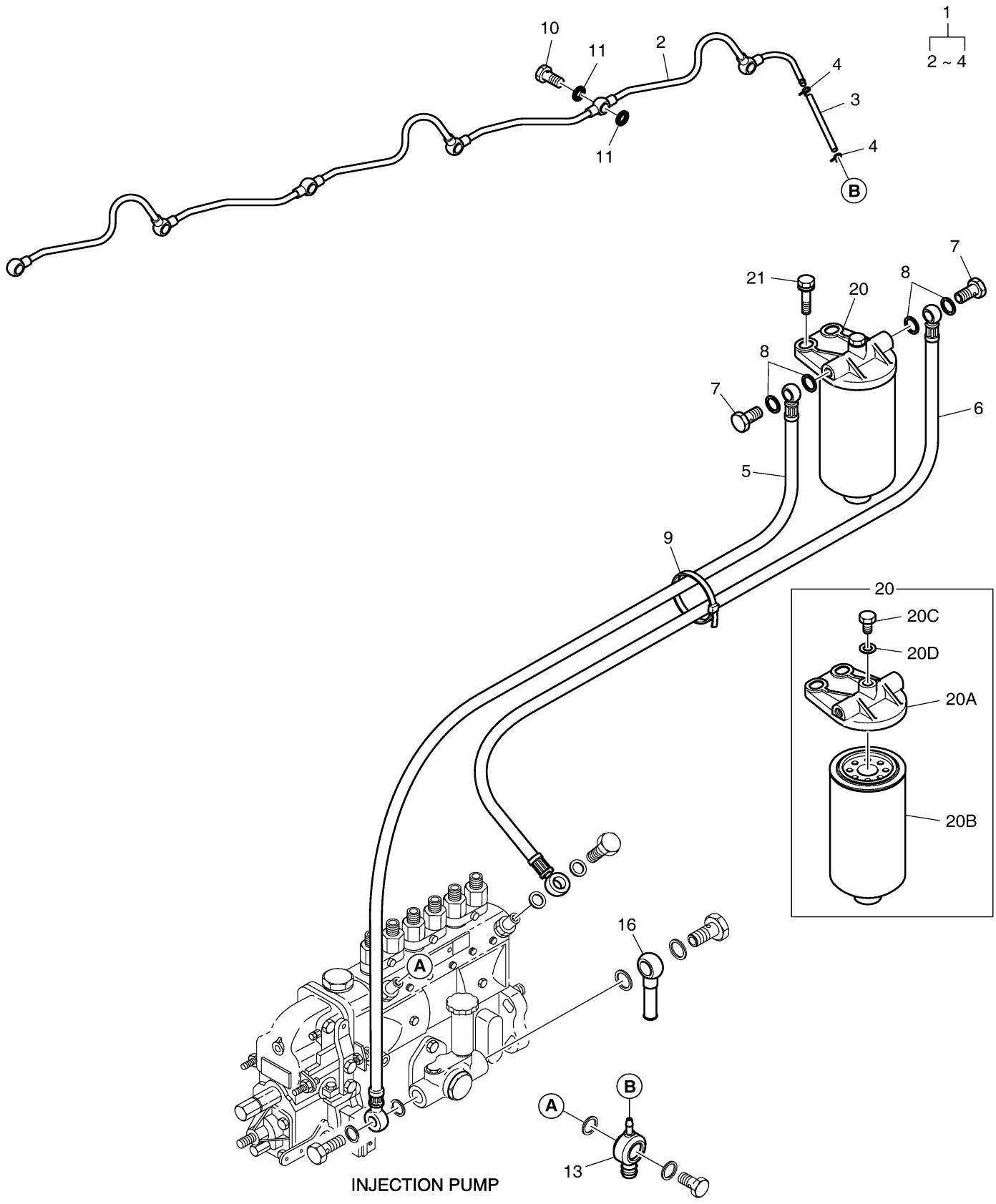

Fig. 035 ALTERNATOR & MOUNTING

Key No	Part No	Description	Qty	S.C	Serial No	ICA	Replacable	Qty
1	65.19102-0084A	BRACKET;ALTERNATOR	1					
2	06.01914-3320	BOLT ASS'Y M12X45	1					
3	06.01914-3219	BOLT ASS`Y M10	2					
4	65.19103-6012A	EYE BOLT ASS`Y	1					
4A	65.90435-0011	BOLT;EYE	1					
4B	65.19107-0001A	PIECE;GUIDE	1					
4C	65.93020-0055	BUSH	1					
4D	06.11063-9217	NUT	3					
9	06.01943-3319	BOLT ASS'Y M12X1.5X40	1					
10	65.96801-0227	BELT	1		~140422	Y	130205-00422	1
10	130205-00422	BELT,V	1		140423~			
11	65.19103-5040	SUPPORT;ALTERNATOR	1					
12	06.01913-3222	BOLT;HEX. M10X1.5X55	2					

Fig. 035 ALTERNATOR & MOUNTING

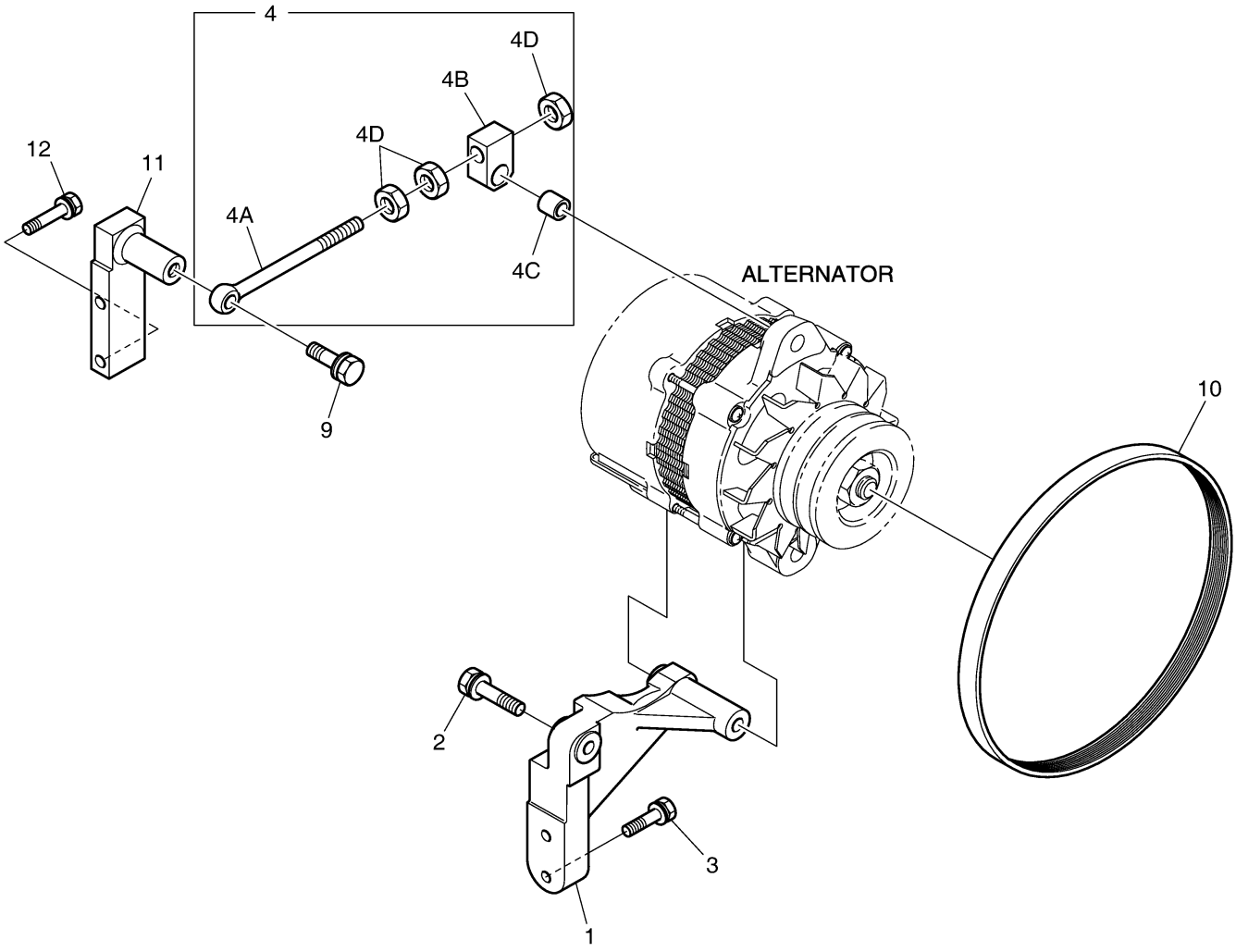

Fig. 036 LIFTING HOOK

Key No	Part No	Description	Qty	S.C	Serial No	ICA	Replacable	Qty
1	65.54306-0003	ANGLE;BRACKET	1					
2	65.91701-0273	RING;SPACER	1					
3	06.01013-9517	BOLT;HEX M16X60	1					
6	06.01913-3215	BOLT ASS'Y M10X25	2					
8	65.91701-0148	SPACER	1					
9	06.01283-7524	BOLT;HEX. M16X65	1					

Fig. 036 LIFTING HOOK

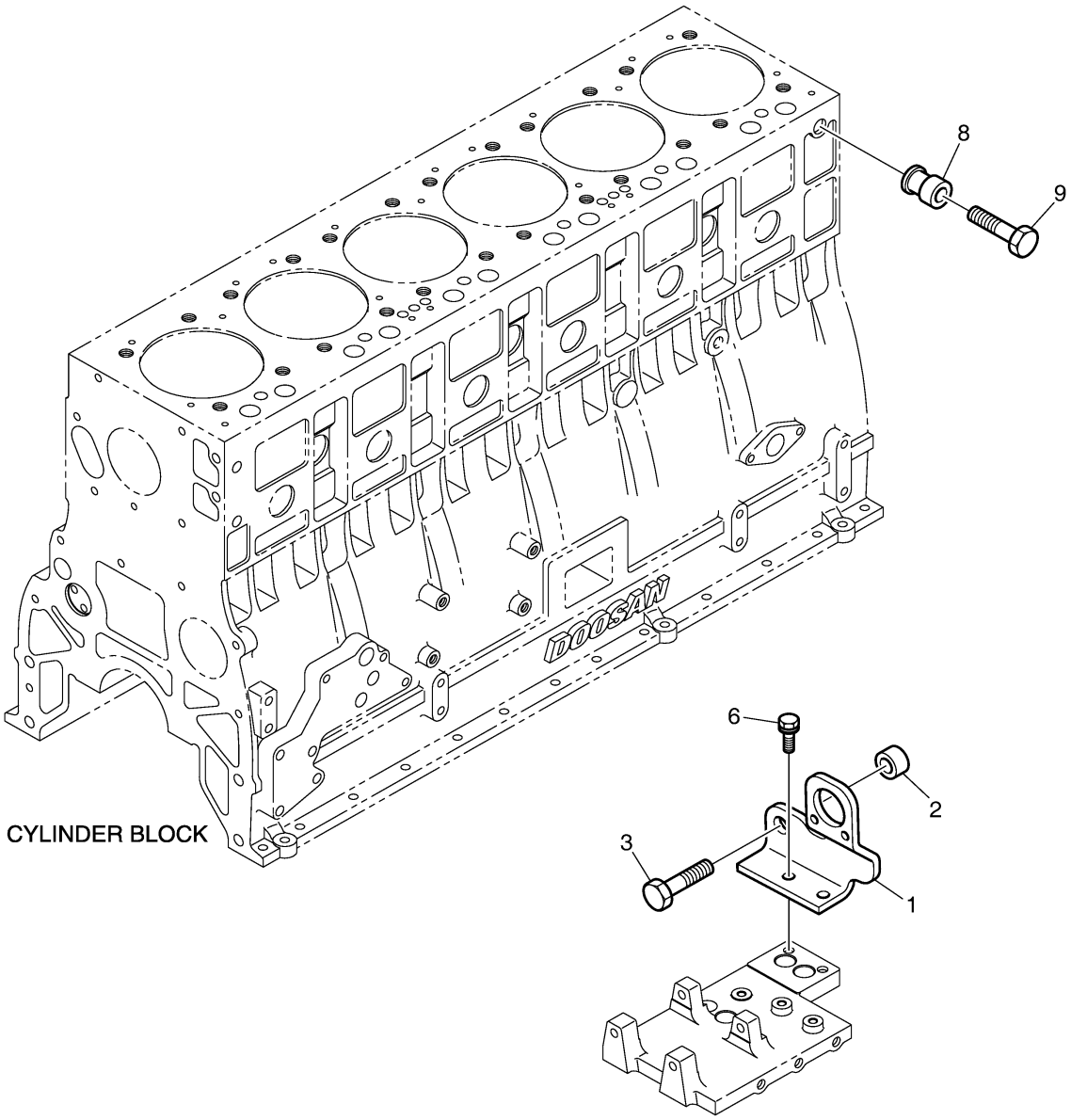

Fig. 037 STARTER

Key No	Part No	Description	Qty	S.C	Serial No	ICA	Replacable	Qty
1	65.26201-7070D	STARTER	1		~130806	I	300516-00055A	1
1	300516-00055A	STARTER ASSY	1		130807~150421	Y	300516-00055B	1
1	300516-00055B	STARTER ASSY	1		150422~161013	I	300516-00055C	1
1	300516-00055C	STARTER ASSY	1		161014~			
1A	65.26212-0006	RELAY;MAGNETIC	1					
1A	301206-00011	RELAY,STARTER	1		~161013	I	301206-00026	1
1A	301206-00026	RELAY,STARTER	1		161014~			
1B	65.26214-0005	SWITCH;MAGNETIC	1					
5	06.06225-0808	BOLT;STUD M10X30	3		~160529	U	06.06225-0809	3
5	06.06225-0809	BOLT;STUD M10X35	3		160530~			
6	06.11063-8215	NUT;HEX. M10	3					
7	06.16731-2108	WASHER;SPRING	3					

Fig. 037 STARTER

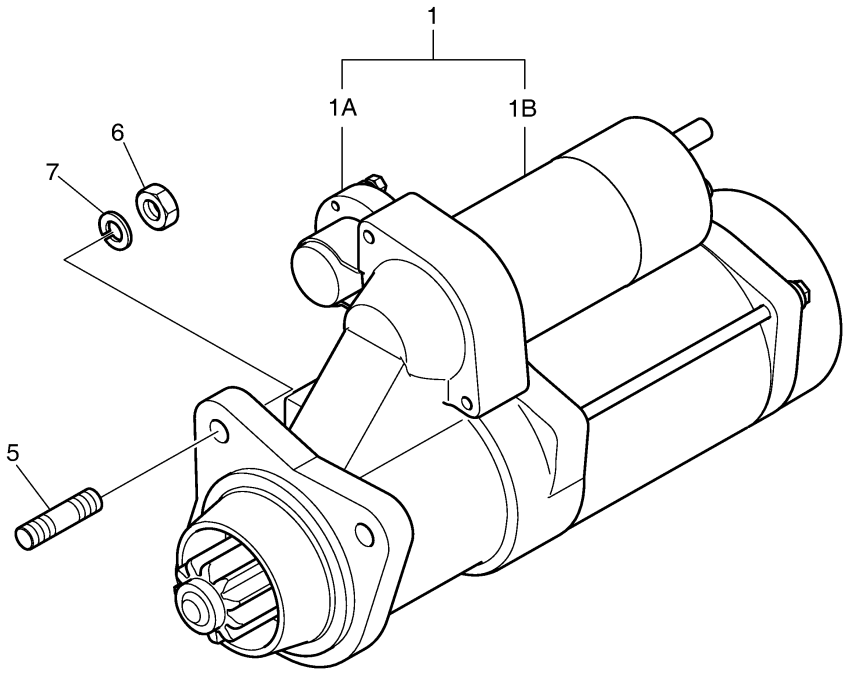

Fig. 038 ENGINE MOUNTING

Key No	Part No	Description	Qty	S.C	Serial No	ICA	Replacable	Qty
1	65.41530-0164	BRACKET;RH	1					
2	06.06176-8309	BOLT,STUD	1					
3	06.16731-2109	WASHER;SPRING	1					
4	06.11064-9216	NUT;HEX. M12X1.5	1					
5	65.90001-0096	BOLT;HEX.	2					
10	65.41530-0165A	BRACKET;LH	1					
11	65.90001-0096	BOLT;HEX.	3					

Fig. 038 ENGINE MOUNTING

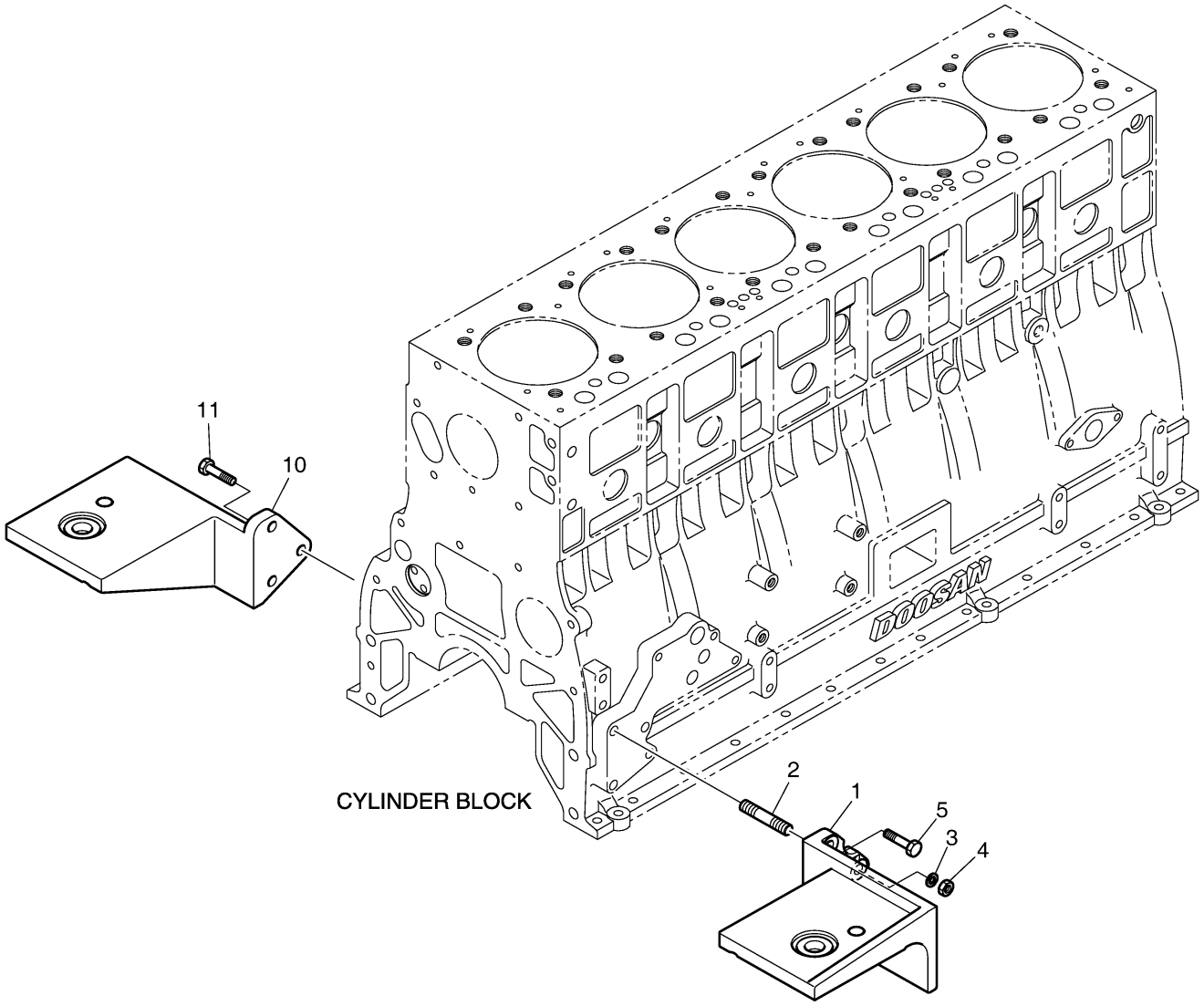

Fig. 039 OVER HAUL GASKET KIT - TOP

Key No	Part No	Description	Qty	S.C	Serial No	ICA	Replacable	Qty
-	65.99605-8011	OVER HAUL GASKET KIT-TOP	1					
1	65.03901-0070A	GASKET;CYLINDER HEAD	3		~160609	Y	400603-00119	3
1	400603-00119	GASKET,CYLINDER HEAD	3		160610~			
2	65.03905-0022	GASKET;CYLINDER HEAD COVER	3					
3	65.03905-0023A	GASKET;CYLINDER HEAD COVER	6					
4	65.96501-0033B	O-RING	1					
5	65.04902-0013	SEAL;VALVE STEAM	12					
6	65.06903A0011	GASKET;COOLING WATER PIPE	3					
7	65.08901A0013	GASKET;EXHAUST MANIFOLD	6					
8	65.08902A0024	GASKET;INTAKE MANIFOLD	1					
9	65.09904-0008	GASKET;AIR HEATER	2					
10	65.96501-0057	RING;SEAL	6					
11	06.56180-0712	RING;SEAL	12					
12	65.96501-0058	O-RING	2					
13	65.09901-0018A	GASKET	1					
14	65.09901-0012	GASKET	1					
15	65.96601-0046B	GASKET;OIL PIPE ADAPTER	1					
16	65.96601-0067	GASKET;T/C OIL RETURN	1					

Fig. 039 OVER HAUL GASKET KIT - TOP

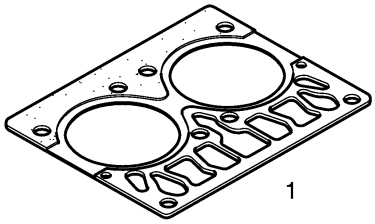
1

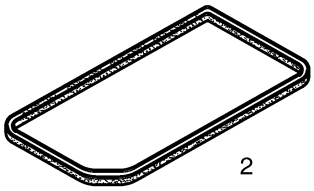
2


3


4


5


6


7

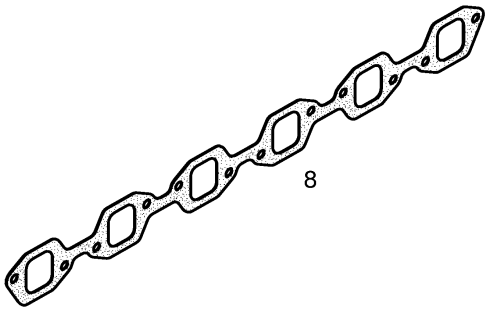
8

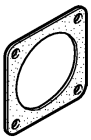
9


10


11


12


13

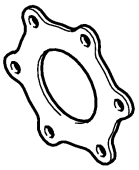
14


15


16

DOOSAN Doosan Infracore

Fig. 040 OVER HAUL GASKET KIT - ALL

Key No	Part No	Description	Qty	S.C	Serial No	ICA	Replacable	Qty
-	65.99601-8032	OVER HAUL GASKET KIT-ALL	1					
1	65.96601A0042	GASKET;END COVER	1					
2	65.01903C0021	GASKET;TIMING GEAR CASE	1					
3	65.01903B0113	GASKET;T.G.C COVER	1					
4	65.01510-0157	SEAL;OIL(FRONT)	1					
5	65.01903B0029	GASKET;COVER	1					
6	65.27901-0005B	GASKET	1					
7	65.01510-0037	SEAL;OIL REAR	1					
8	65.01903A0178	GASKET;FLYWHEEL HOUSING	1					
9	65.01907A0002	GASKET;WATER CHAMBER	1					
10	65.03901-0070A	GASKET;CYLINDER HEAD	3		~160609	Y	400603-00119	3
10	400603-00119	GASKET,CYLINDER HEAD	3		160610~			
11	65.03905-0022	GASKET;CYLINDER HEAD COVER	3					
12	65.03905-0023A	GASKET;CYLINDER HEAD COVER	6					
13	65.96501-0032B	O-RING;BREATHER	1					
14	65.04902-0013	SEAL;VALVE STEAM	12					
15	65.05901A0052	GASKET;OIL FILTER	1					
16	65.05902A0011	GASKET;OIL COOLER COVER	1					
17	65.96601-0347	GASKET;OIL COOLER ASS`Y	1					
18	65.05904A0016	GASKET;OIL PAN	1					
19	65.96601-0050	GASKET;OIL PIPE	2					
20	65.05903B0003	GASKET;CONNECTING FLANGE	1					
21	65.96601-0050	GASKET;OIL PIPE	2					
22	65.96601B0019	GASKET;OIL SUCTION PIPE	1					
23	65.06903A0011	GASKET;COOLING WATER PIPE	3					
24	65.06901A0020	GASKET;WATER PUMP	1					
25	65.08901A0013	GASKET;EXHAUST MANIFOLD	6					
26	65.08902A0024	GASKET;INTAKE MANIFOLD	1					
27	65.09904-0008	GASKET;AIR HEATER	2					
28	65.96501-0057	RING;SEAL	6					
29	65.11902-0018A	GASKET;MOUNTING FLANGE	1					
30	06.56180-0712	RING;SEAL	12					
31	65.54903A0013	GASKET	1					
33	65.96501-0058	O-RING	2					
34	65.09901-0018A	GASKET	1					
35	65.09901-0012	GASKET	1					

Key No	Part No	Description	Qty	S.C	Serial No	ICA	Replacable	Qty
36	65.96601-0046B	GASKET;OIL PIPE ADAPTER	1					
37	65.96601-0067	GASKET;T/C OIL RETURN	1					

Fig. 040 OVER HAUL GASKET KIT - ALL

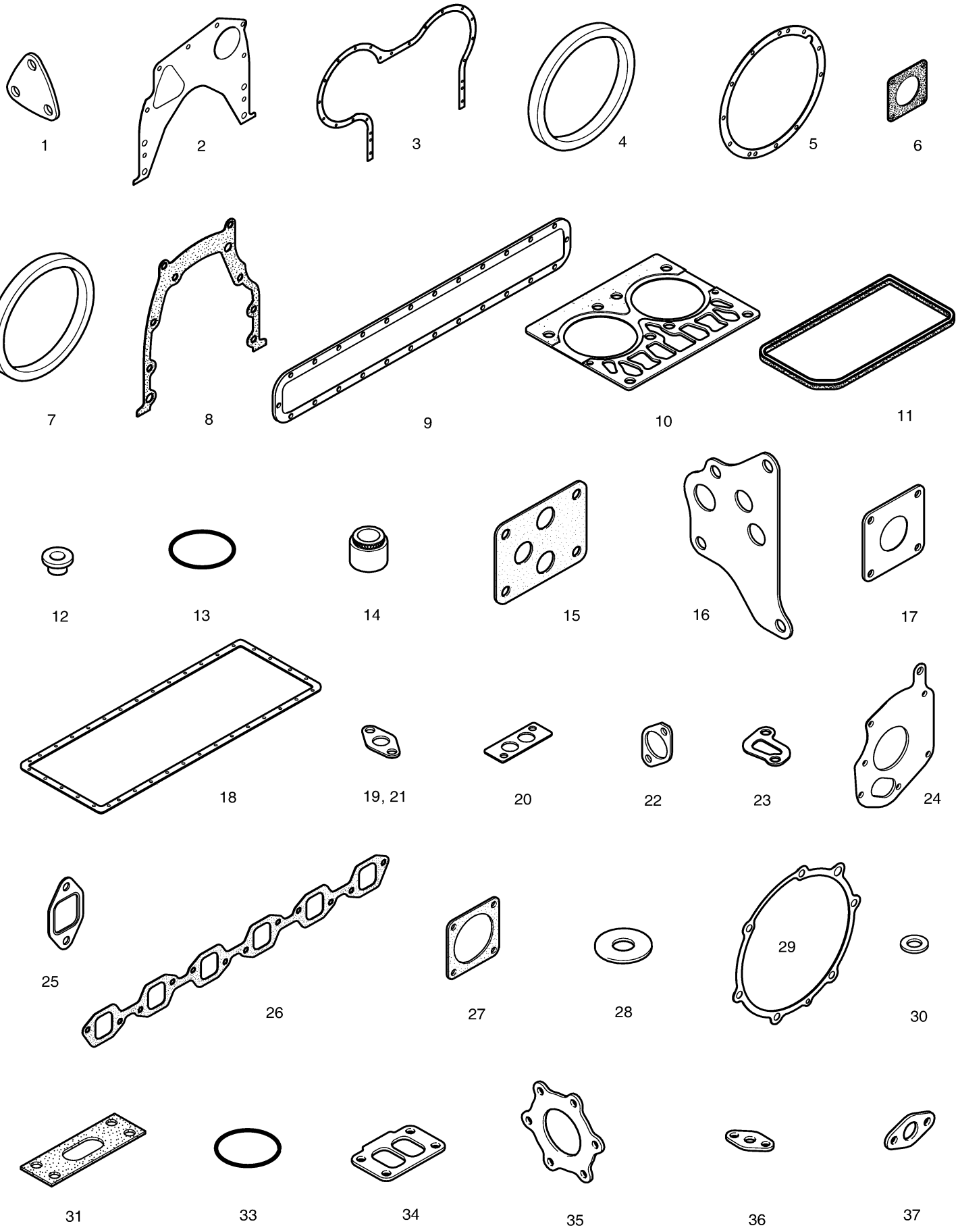

Fig. 1100 FRAME

Key No	Part No	Description	Qty	S.C	Serial No	ICA	Replacable	Qty
-	160620-00278	FRAME ASSY,MAIN	-	D				
1	160612-00098B	FRAME,FRONT	1		10001~10261			
1	160612-00098C	FRAME,FRONT	1		10262~10330	I	160612-00098G	1
1	160612-00098G	FRAME,FRONT	1		10331~			
2	160615-00164B	FRAME,REAR	1		10001~10056	I	160615-00164C	1
2	160615-00164C	FRAME,REAR	1		10057~10261	I	160615-00164E	1
2	160615-00164E	FRAME,REAR	1		10262~10330	I	160615-00164G	1
2	160615-00164G	FRAME,REAR	1		10331~			
3	4111-1009	CAP;END	1					
4	S0559166	BOLT	12					
5	111-00027	CAP;BEARING	1					
6	4109-9064	BEARING;TAPER ROLLER	4					
7	4114-1822	SHIM 0.1T	8					
8	4114-1823	SHIM 0.5T	4					
9	S0558366	BOLT	6					
10	S0560866	BOLT	4					
11	4403-1072A	COVER	1					
12	4114-1824	SHIM 0.1T	4					
13	4114-1825	SHIM 0.5T	2					
14	4114-1826	SHIM 1.0T	2					
15	4114-1819A	SPACER;UPPER	1					
16	4114-1818A	SPACER;LOWER	1					
17	120501-01143	PIN,HINGE;LOWER	1					
18	K1008008	SEAL;DUST	2					
19	4111-1010	CAP;END	1					
20	161-00311	RUBBER	2					
21	S0514856	BOLT	1					
22	S3524303	SCREW;SET M10X1.5X10	4					
23	2114-1058D68	WASHER	1					
24	120501-01144	PIN;UPPER	1					
25	K1008010	SEAL;DUST	2					
26	S5010913	WASHER	2					
27	2181-4112	ADAPTER	4					
28	2184-1026D38	HOSE PF1/4-1100L	1					
29	2184-1036D99	HOSE PF1/4-890L	1					
30	K1029996	CYLINDER;STEERING	2					

Key No	Part No	Description	Qty	S.C	Serial No	ICA	Replacable	Qty
31	2181-1110D41	ADAPTER	2					
32	120501-02173	PIN,STEER;FRONT FRAME	2		10001~10261	I	120501-01136	2
32	120501-01136	PIN,STEER;REAR FRAME	2		10262~			
33	120501-02174	PIN,STEER;REAR FRAME	2		10001~10261	I	120501-01146	2
33	120501-01146	PIN,STEER;FRONT FRAME	2		10262~			
34	4114-4104A	WASHER	4					
35	110508-04847	COVER;(R.H)	1					
36	110508-04846	COVER;(L.H)	1					
37	2114-1059D45	SHIM 1.6T	4					
38	2114-1059D46	SHIM 1.0T	4					
39	2180-1106D21	SEAL;DUST	8		10001~10330	U	DS5501021	8
39	DS5501021	SEAL,DUST	8		10331~			
40	S2221566	BOLT	2					
41	4123-2423	PIN;SET	2					
42	250201-01699	PLATE,LOCK	1					
43	111-00028	CAP;BEARING	1					
44	2184-1060D15	HOSE PF1/4-800L	1					
45	160-00020	CAP	5					
46	S6710041	NIPPLE,GREASE	2					
47	4114-1793A	WASHER;HARD	6					
48	4114-1792A	WASHER	4					
49	S0511866	BOLT	4					
50	K1001029	BOLT	8					
53	2114-1059D3	SHIM	4					
54	2114-1059D271	SHIM	4					
55	S6710101	NIPPLE,GREASE	3					

Fig. 1100 FRAME

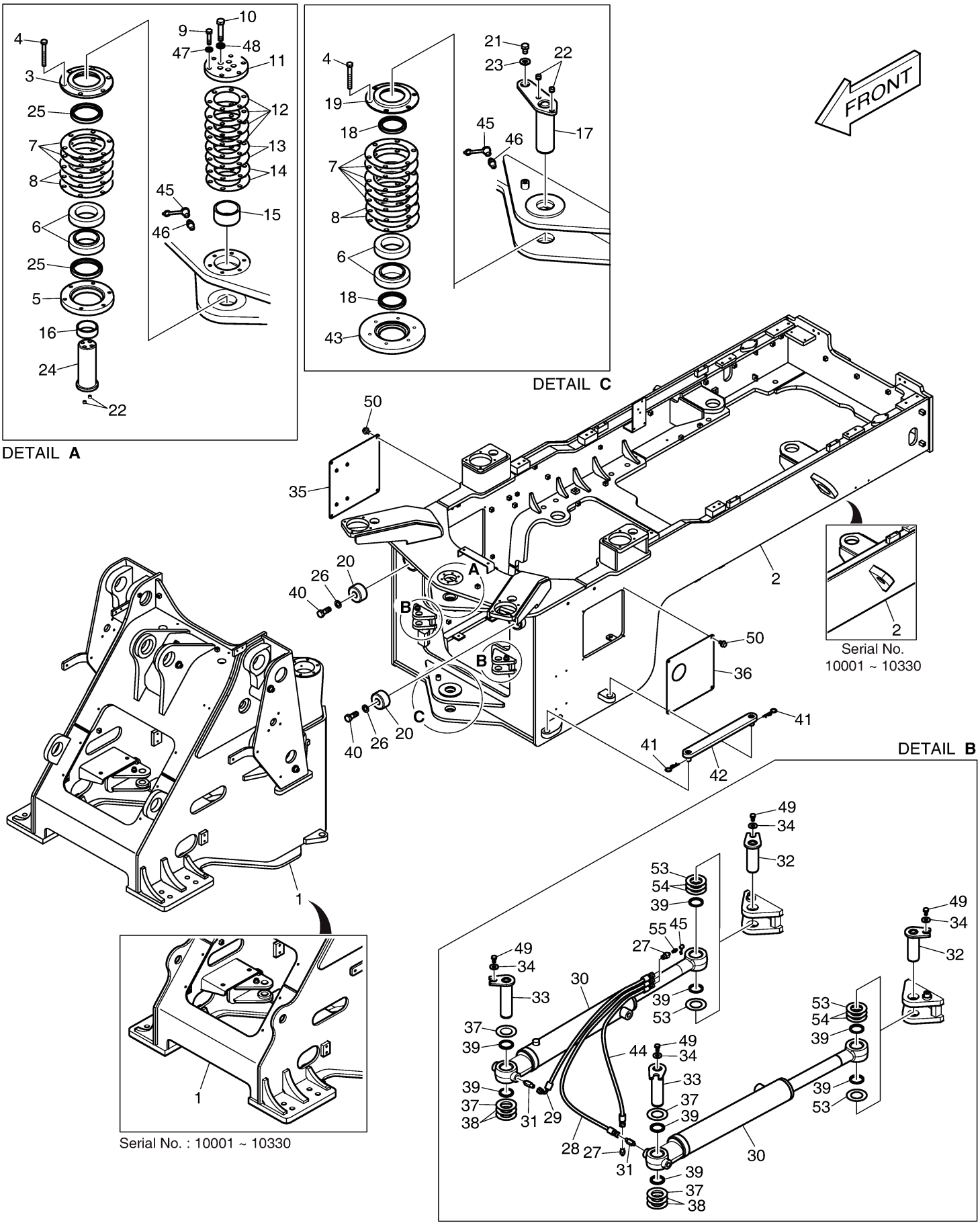

Fig. 1110 ENGINE MOUNTING

Key No	Part No	Description	Qty	S.C	Serial No	ICA	Replacable	Qty
-	150109-00721	ENGINE & TRANSMISSION ASSY	-	D				
2	210-00046C	TRANSMISSION	1					
3	181-00446A	ADAPTER;FLANGE	1					
4	195-00810A	BRACKET(R.H)	1		10001~10261	I	110427-00699	1
4	110427-00699	BRACKET ASSY,ENGINE	1		10262~			
5	195-00809A	BRACKET(L.H)	1		10001~10261	I	110427-00700	1
5	110427-00700	BRACKET ASSY,ENGINE	1		10262~			
6	240103-00236	MUFFLER	1		10001~10308	I	240103-00236A	1
6	240103-00236A	MUFFLER	1		10309~			
7	161-00552	MOUNT;T/M	4					
8	161-00550	RUBBER	4					
9	2114-1929	WASHER	4					
10	4114-4116	WASHER;HARD M20	4					
11	S4033133	NUT	4					
12	S0771266	BOLT M20X1.5X120	4					
13	K1043471	PRE CLEANER	1		10001~10330			
13	400415-00043	CLEANER,PRE	1		10331~			
14	K1014413B	PIPE	1		10001~10330			
14	420207-03584	PIPE	1		10331~			
15	124-00298A	BAND	2					
16	420101-00399	HOSE	1		10001~10261	I	420101-00399A	1
16	420101-00399A	HOSE,AIR	1		10262~			
17	S8500130	CLAMP;HOSE	1					
18	S8450066	CLAMP;HOSE	1		10001~10209			
18	S8510092	CLAMP	1		10210~			
19	4180-1143A	GASKET	2					
20	4182-1604A	PIPE;EXHAUST	1					
21	4124-9026A	CLAMP,SEAL	2					
22	4193-9003A	TUBE;FLEXIBLE	1					
24	420210-00516A	PIPE,DIPSTICK	1					
25	188-00011	CAP;FILLER	1					
26	S0527566	BOLT	8					
27	S5103103	WASHER	9		10001~10362			
27	DS0401245	WASHER;HARD; M14	9		10363~			
28	S0527051	BOLT M20X2.5X25	1					
29	S5102803	WASHER	4		10001~10362			

Key No	Part No	Description	Qty	S.C	Serial No	ICA	Replacable	Qty
29	DS0401243	WASHER	4		10363~			
30	S2212266	BOLT	8					
31	S5110603	WASHER	12					
32	S0558166	BOLT	12					
33	S5102603	WASHER	18					
34	S2212866	BOLT	4					
35	S4032833	NUT	4					
36	S4012633	NUT	6					
37	S0508853	BOLT	2		10001~10213			
37	S0508866	BOLT	2		10214~			
38	S5010513	WASHER	2					
39	S0718466	BOLT M14X1.5X40	4					
40	S0560466	BOLT	8					
41	S5102703	WASHER	8					
42	2120-2166D1	BOLT	8		10001~10308			
42	2120-2166D1	BOLT	12		10309~			
43	2114-1898D1	WASHER	8					
44	528-00036	GAUGE ASS'Y	1					
45	190-01158A	PLATE;NAME	1					
46	S8450012	CLAMP	6		10001~10209			
46	S8470020	CLAMP	6		10210~			
47	DS2450001	ADAPTER	1					
48	181-00074	ADAPTER	1					
49	S5010713	WASHER	4					
50	S0515066	BOLT	4					
51	DS2105055	HOSE,FUEL	1					
52	DS2105070	HOSE	1					
53	DS2076155	HOSE	1					
54	170-00004	INDICATOR;DUST	1		10001~10198			
54	800217-00100	INDICATOR,DUST	1		10199~			
55	204-00067	AIR CLEANER	1					
55A	474-00039	ELEMENT,INNER	1					
55B	474-00040	ELEMENT,OUTER	1					
55C	204-00075	COVER	1					
55D	204-00070	VALVE	1					
55E	401002-01072	O-RING	1					
56	124-00209D4	CLIP	1					
57	K1001029	BOLT	1					

Key No	Part No	Description	Qty	S.C	Serial No	ICA	Replacable	Qty
58	120-00002	SCREW	1					
59	S0514866	BOLT	4		10001~10056			
59	S0511866	BOLT	4		10057~10308			
60	S5010713	WASHER	4					
61	4910-9003	CAP;RAIN	1		10001~10308			
101	DE08-MAL00	ENGINE ASSY;DL250A	1					

Fig. 1110 ENGINE MOUNTING

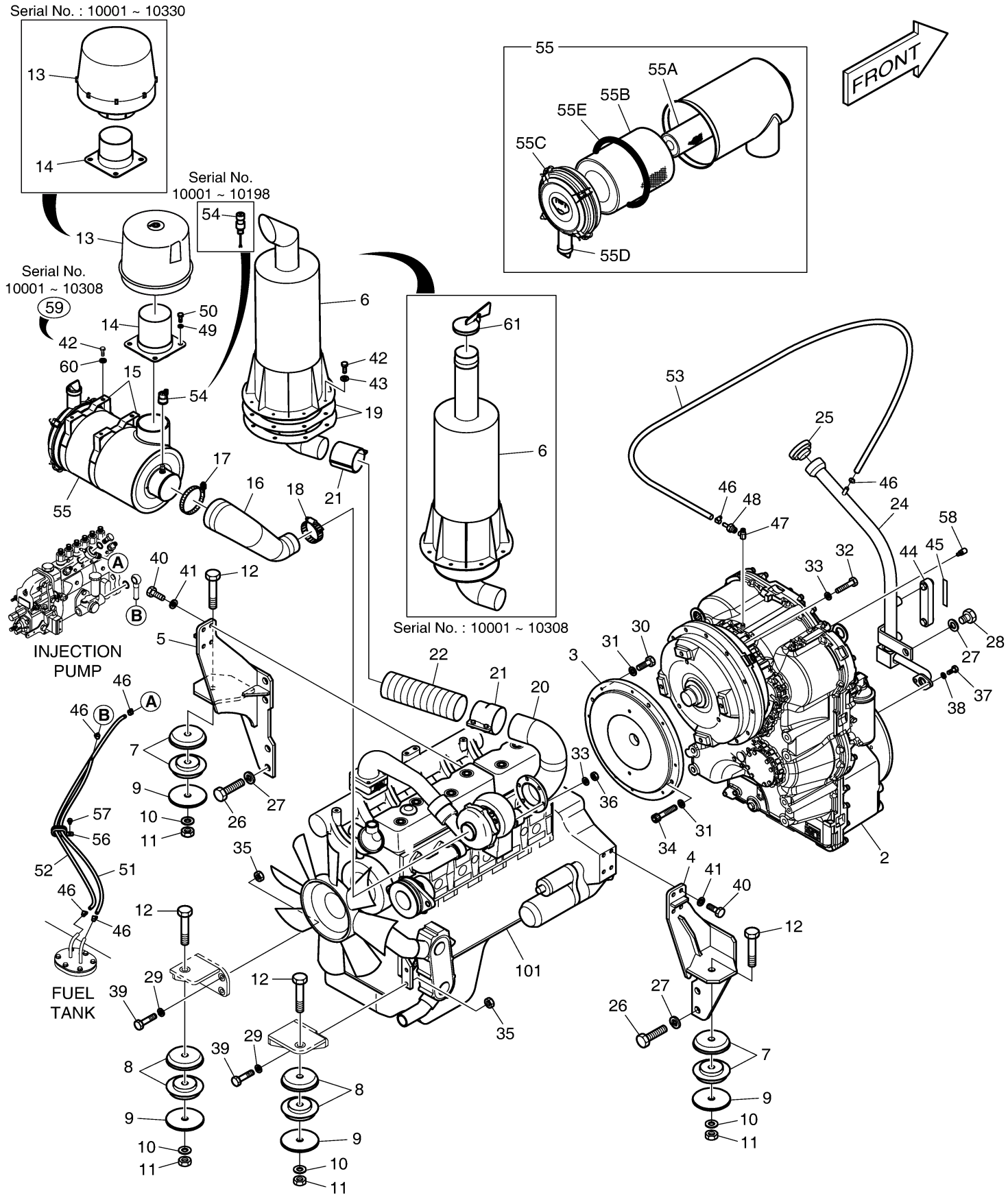

DOOSAN Doosan Infracore

Fig. 1120 OIL TANK

Key No	Part No	Description	Qty	S.C	Serial No	ICA	Replacable	Qty
-	450105-00272	TANK ASSY,OIL	-	D				
1	450105-00273A	TANK,OIL	1		10001~10228			
1	450105-00273B	TANK,OIL	1		10229~10272			
1	450105-00273C	TANK,OIL	1		10273~10363	Y	450105-00273E	1
1	450105-00273E	TANK,OIL	1		10364~			
2	K1009726A	PIPE;SUCTION	1		10001~10228			
2	420218-00377	PIPE,SUCTION	1		10229~			
3	528-00030	GAUGE;COOLANT SIGHT	1		10001~10272			
3	800109-00898	GAUGE;SIGHT	1		10273~			
4	K1012685A	BREATHER;AIR	1		10001~10242	I	400811-00087	1
4	400811-00087	BREATHER,AIR	1		10243~			
4A	K9005662	GASKET	1					
4B	K1029257	ELEMENT,AIR BREATHER	1		10001~10242			
4B	400504-00254	ELEMENT,AIR BREATHER	1		10243~			
5	2426-1175	VALVE;BY-PASS	1		10001~10193	I	410128-00031	1
5	410128-00031	VALVE,BY-PASS	1		10194~			
6	2474-9016A	FILTER,SUCTION	1					
7	426-00278	VALVE;DRAIN	1					
8	2129-1393	SPRING	1					
9	2181-1950D1	PLUG	2		10001~10312	Y	DS2901009	2
9	DS2901009	PLUG	2		10313~			
10	400504-00034	ELEMENT,FILTER	1					
11	2129-1008	SPRING,COMPRESS	1					
12	136-00025	ROD	1					
13	K1010891	COVER;TANK	1					
14	2473-1080A	COVER	1					
15	195-01023B	BRACKET;COVER	1					
16	S8012000	O-RING	1					
17	S8011650	O-RING	1					
18	S8000181	O-RING	1					
19	S8011200	O-RING	1					
20	S8000111	O-RING	2					
21	S0521266	BOLT	4					
22	2114-1816A	WASHER	4					
24	S2202766	BOLT	6					
25	S0514666	BOLT	2		10001~10228			

Key No	Part No	Description	Qty	S.C	Serial No	ICA	Replacable	Qty
25	110910-00077	CAP	2		10229~			
26	DS0025024	BOLT	18					
27	S4012633	NUT	1					
28	2120-2196D1	BOLT;SET M10X1.5X20	2					

Fig. 1120 OIL TANK

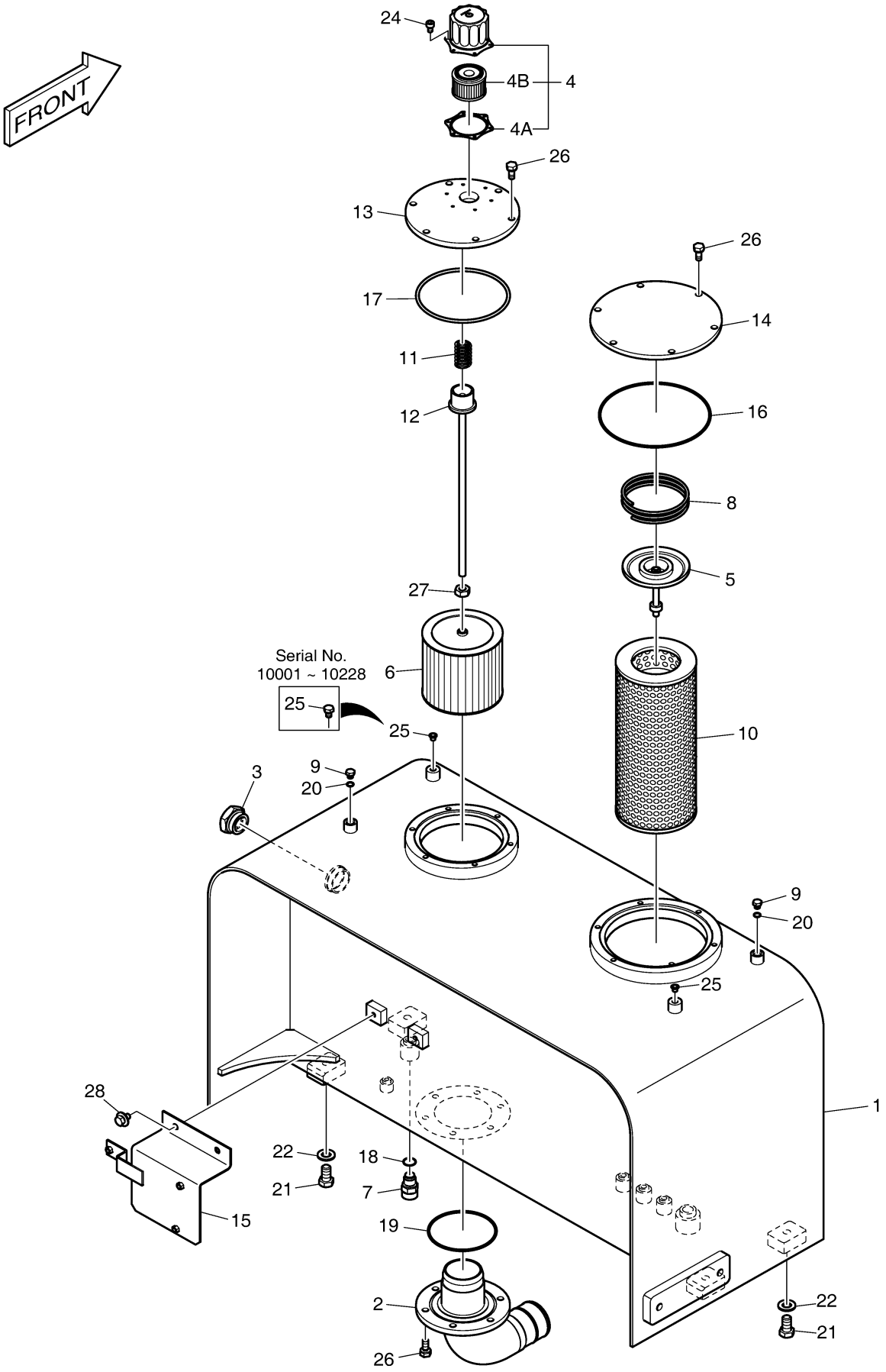

DOOSAN Doosan Infracore

Fig. 1130 FUEL TANK

Key No	Part No	Description	Qty	S.C	Serial No	ICA	Replacable	Qty
-	450103-00223	TANK ASSY,FUEL	-	D				
1	450103-00222B	TANK,FUEL	1		10001~10056	I	450103-00222C	1
1	450103-00222C	TANK,FUEL	1		10057~10117			
1	450103-00222E	TANK,FUEL	1		10118~10177			
1	450103-00222G	TANK,FUEL	1		10178~10301	Y	450103-00222H	1
1	450103-00222H	TANK,FUEL	1		10302~10363	I	450103-00222K	1
1	450103-00222K	TANK,FUEL	1		10364~			
2	420204-00179	PIPE,FUEL	1					
3	471-00105A	FILTER,FUEL STRAINER	1					
5	110911-00126	CAP,FUEL	1					
5A	400504-00045	ELEMENT,FUEL CAP	1					
6	110406-01678	BRACKET;STEP	2					
7	4180-4012	PACKING	1					
8	K1009960	COVER	1		10001~10117			
8	110508-13608	COVER;FUEL SENSOR	1		10118~			
9	K1009961	COVER;TANK	1					
13	181-00343A	PLUG;DRAIN	1					
19	S8011050	O-RING	1					
20	S8000181	O-RING	1					
21	S8000111	O-RING	2					
22	2114-9012A	WASHER	4					
24	S5102503	WASHER	2		10001~10117			
26	DS0025024	BOLT	6		10001~10177			
26	DS0025024	BOLT	12		10178~			
27	DS0025018	BOLT	4					
28	S0527866	BOLT	4					
29	S0520766	BOLT	2		10001~10301			
29	110910-00040A	CAP,PLASTIC	2		10302~			
30	S0508666	BOLT	6					
31	S0508366	BOLT	2					
32	2181-1950D1	PLUG	2		10001~10312	Y	DS2901009	2
32	DS2901009	PLUG	2		10313~			
33	S5010513	WASHER	6		10001~10117			
33	S5010513	WASHER	8		10118~			
34	110508-00926	COVER,TANK	1		10178~			
35	S8012200	O-RING	1		10178~			

Key No	Part No	Description	Qty	S.C	Serial No	ICA	Replacable	Qty
36	110947-00638	SHIM;1.0T	1		10364~			
37	110947-00625	SHIM;0.5	1		10364~			

Fig. 1130 FUEL TANK

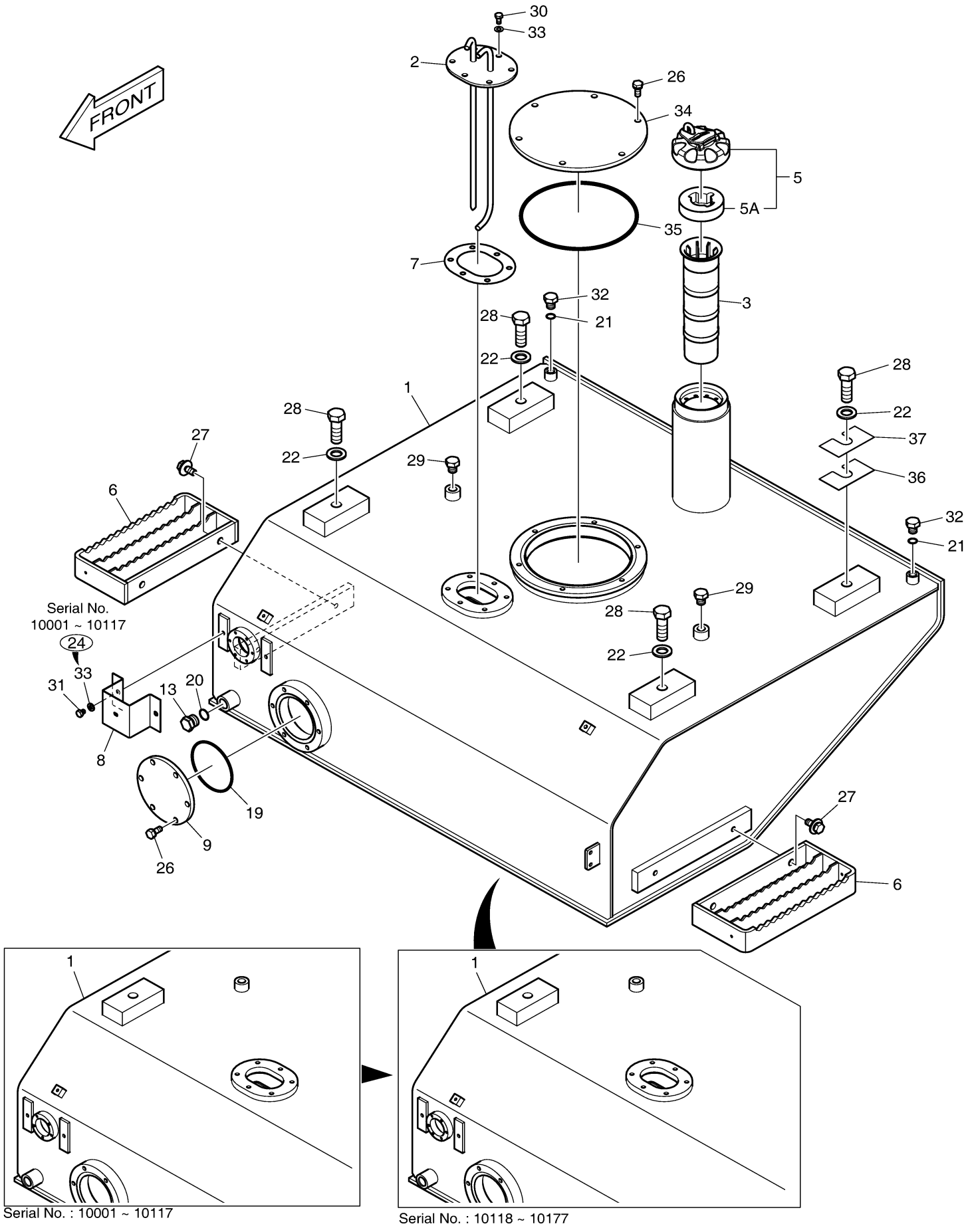

Fig. 1140 AXLE & DRIVE SHAFT

Key No	Part No	Description	Qty	S.C	Serial No	ICA	Replacable	Qty
-	190101-00048	AXLE ASSY	-	D				
1	190102-00056	AXLE,FRONT	1					
2	190103-00068	AXLE,REAR	1					
3	130712-00440	SHAFT;PROPELLER(FRONT)	1					
3-1	K9004532	BEARING;JOURNAL	1					
3-2	K9004533	FLANGE BEARING ASS'Y	1					
3-2A	K9004534	SEAL	2					
3-2B	S6710041	NIPPLE,GREASE	1					
3-2C	K9000987	VALVE;AIR-RELIEF	1					
3-3	1.181-00005	NIPPLE;GREASE	1					
4	260-00074A	DRIVE SHAFT;CENTER	1					
4-1	1.109-00044	BEARING;JOURNAL	1					
4-2	1.138-00021	JOINT;UNIVERSAL	1					
4-3	K9000990	NIPPLE;GREASE	2					
5	260-00066A	DRIVE SHAFT;REAR	1					
5-1	1.109-00044	BEARING;JOURNAL	2					
5-2	K9000990	NIPPLE;GREASE	2					
6	K1014995A	FRONT SUPPORT;REAR AXLE	1		5001~10298	Y	110958-03356	1
6	110958-03356	FRONT SUPPORT;REAR AXLE	1		10299~			
6-2	110-00254A	BUSH	1		5001~10298	Y	130702-00204	1
6-2	130702-00204	BUSH	1		10299~			
6-3	115-00131	RING;RETAINING	1					
6-4	2181-1918D8	ELBOW	1					
6-5	2181-1116D2	PLUG	1					
6-6	115-00132	RING;RETAINING	1					
6-7	K1008006	SEAL;OIL	2					
7	K1014984B	REAR SUPPORT;REAR AXLE	1		5001~10298	Y	110958-03357	1
7	110958-03357	REAR SUPPORT;REAR AXLE	1		10299~10362	Y	110958-03357A	1
7	110958-03357A	SUPPORT ASSY,REAR	1		10363~			
7-2	110-00255A	BUSH	1		5001~10298	Y	130702-00205	1
7-2	130702-00205	BUSH	1		10299~			
7-3	112-00079	SHAFT;PIVOT	1					
7-4	K1049140	WASHER;THRUST	1					
7-5	S0565266	BOLT	8					
7-6	S5102906	WASHER	8					
7-7	114-00569	DISC	1					

Key No	Part No	Description	Qty	S.C	Serial No	ICA	Replacable	Qty
7-8	2181-1919D10	ADAPTER	1					
7-9	K1008003	SEAL;OIL	1					
7-10	115-00134	RING;RETAINING	1					
8	K1014973B	PIPE;GREASE	1					
9	K1049140	WASHER;THRUST	1					
10	K1015097A	PIPE;GREASE	1					
11	K1014974A	PIPE;GREASE	1					
12	K1014977	COVER	1					
13	K1015098A	PIPE;GREASE	1					
14	2181-1918D6	ELBOW	1					
15	K1014975A	PIPE;GREASE	1					
16	S0776066	BOLT M24X2.0X140	8					
17	120810-00079	WASHER	32		10001~10363	Y	120810-00079A	32
17	120810-00079A	WASHER,HARD	32		10364~			
18	S4033333	NUT M24X2.0	16					
19	S0776366	BOLT M24X2.0X170	8					
20	K1015099A	PIPE;GREASE	1					
21	4120-4016	BOLT	16		10001~10177	I	DS0001115	16
21	DS0001115	BOLT,HEX	16		10178~10312			
21	DS0002330	BOLT,HEX	16		10313~			
22	S5110603	WASHER	16		10001~10312			
22	DS0401256	WASHER,PLAIN;HARD	16		10133~			
23	S0566466	BOLT M16X2.0X110	8					
24	4181-4196	ADAPTER	3					
25	S0565266	BOLT	8					
26	S5102906	WASHER	20					
27	DS7701557	SHIM;CIRCLE	1		10266~			
28	K1001029	BOLT	5					
29	2181-1919D10	ADAPTER	3					
30	S6710041	NIPPLE,GREASE	3					
31	DS0002267	BOLT	4		10001~10312			
31	DS0002267	BOLT	4		10313~			
32	4114-1686	WASHER;SPRING	4		10001~10312			
32	DS0401257	WASHER;HARD	4		10313~			
33	DS2805007	CLIP	1					
34	DS2805008	CLIP	3					
35	K1002433	NUT;WHEEL	48		10001~10194	I	120312-00427A	48
35	120312-00427A	NUT;WHEEL	48		10195~			

Key No	Part No	Description	Qty	S.C	Serial No	ICA	Replacable	Qty
36	S0565366	BOLT M16X2.0X55	4					
37	4114-1791A	WASHER	4					
38	S0508866	BOLT	8					
39	S5102503	WASHER	8					
40	K1038232	COVER	2					
41	DS2499001	TEE	2					
42	S8030081	O-RING	8					
43	DS2304110	ELBOW(90)	2					
44	S8030065	O-RING	2					
45	DS2232161	ADAPTER	2					
46	K9000239	VALVE;VENT	2					
47	K1027986	ADAPTER	1					
48	K1027738	ADAPTER	1					
49	S8450012	CLAMP	2		10001~10209			
49	S8470020	CLAMP	2		10210~			
50	120-00002	SCREW	2		10001~10179	I	430210-00245	2
50	430210-00245	COUPLING,SCREW	2		10180~			
51	420207-01148	PIPE;BRAKE	1					
52	420207-01149	PIPE;BRAKE	1					
53	420207-00197	PIPE;REAR	2					
54	DS2079206	HOSE	1					
55	DS2851076	O-RING	4					

Fig. 1140 AXLE & DRIVE SHAFT

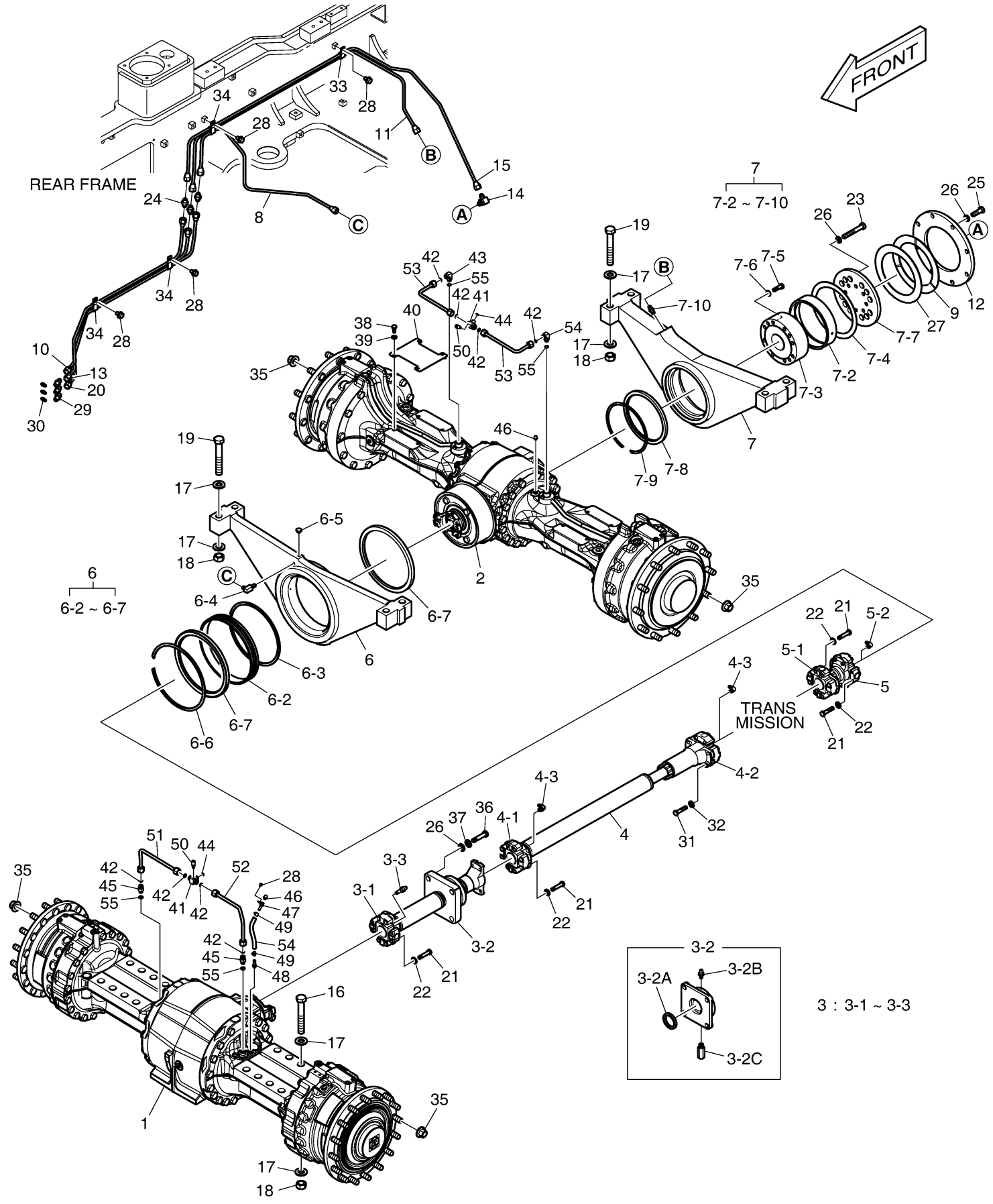

DOOSAN Doosan Infracore

Fig. 1150 WHEEL ASS'Y

Key No	Part No	Description	Qty	S.C	Serial No	ICA	Replacable	Qty
-	K1000768AF1	WHEEL ASS'Y	-	D				
1	K1000769A	WHEEL ASS'Y	4	D				
1-1	278-00106A	RIM;WHEEL	1					
1-1A	2.422-00007	VALVE	1					
1-1B	401002-01489	RING,O	1					
1-2	4276-9040	TYRE 20.5X25X16PR L3(BIAS)	1					

Fig. 1150 WHEEL ASS'Y

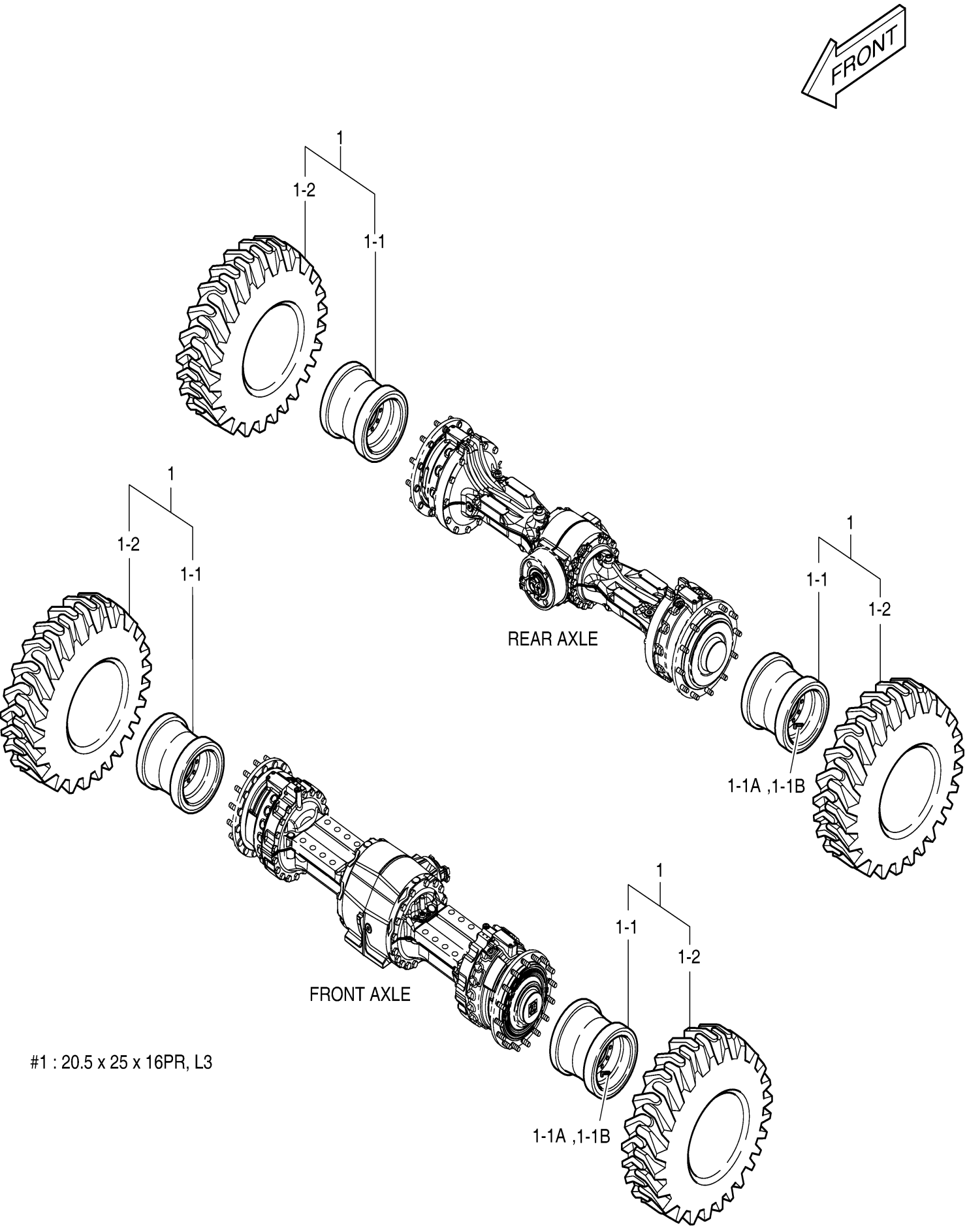

Fig. 1160 MAIN PIPING

Key No	Part No	Description	Qty	S.C	Serial No	ICA	Replacable	Qty
-	420212-04723	PIPING,MAIN	-	D				
1	401-00081A	MAIN PUMP	1					
2	410140-00009A	VALVE,PRIORITY	1					
3	410146-00007A	VALVE,UNLOADING	1					
4	110420-00414	BRACKET,MOUNTING	1					
5	250201-00409	PLATE;PRIORITY VALVE	1					
6	DS2039258	HOSE ASSY,HYDRAULIC	1					
7	DS2039240	HOSE	1					
8	DS2045431	HOSE	1					
9	DS2018318	HOSE	1					
10	DS2018323	HOSE ASSY,HYDRAULIC	1					
11	DS2039214	HOSE ASSY,HYDRAULIC	1					
12	2185-1776D29	HOSE 270L	1					
13	DS2018320	HOSE	1					
14	DS2018319	HOSE	1					
15	K1015370	PIPE;SUCTION	1					
16	2181-2815D4	ELBOW	1					
17	DS2304092	ELBOW	1					
18	2181-2816D6	ELBOW	1					
19	2181-4133D48	ADAPTER	1					
20	2181-4133D5	ADAPTER	1					
21	DS2412022	TEE	1					
22	2181-1950D1	PLUG	1		10001~10312	Y	DS2901009	1
22	DS2901009	PLUG	1		10313~			
24	430210-00113	COUPLING,SCREW	1		10001~10179	I	430210-00247	1
24	430210-00247	COUPLING,SCREW	1		10180~			
25	180-00189	GASKET	1					
26	124-00208D5	CLIP	3					
27	124-00209D7	CLIP	2					
28	S8500105	CLAMP	4					
30	2181-9083	FLANGE	6					
31	4215-1003D7	FLANGE	6					
32	4215-1003D5	FLANGE	6					
33	2181-9079	FLANGE	2					
34	S0558566	BOLT	7					
35	S2216666	BOLT;SOCKET M12X1.75X100	2					

Key No	Part No	Description	Qty	S.C	Serial No	ICA	Replacable	Qty
36	S2215366	BOLT	20					
38	S2215266	BOLT	4					
39	S2221466	BOLT	4					
40	S2212266	BOLT	4					
41	S0556766	BOLT	2					
42	S2212366	BOLT	12					
43	S0521466	BOLT	2					
44	K1001029	BOLT	5					
45	2114-1058D62	WASHER	6					
46	S5110703	WASHER	2					
47	S5102503	WASHER	2					
48	S5102906	WASHER	2					
50	2512-1077	RUBBER;CUSHION	14					
51	S8030121	O-RING	4					
52	2180-1026D2	O-RING	1					
53	S8040081	O-RING	1					
54	S8000291	O-RING	1					
55	S8000241	O-RING	2					
56	S8000111	O-RING	2					
57	S8000231	O-RING	1					
58	2180-1026D28	O-RING	3					
59	S8030081	O-RING	2					
60	2180-1026D23	O-RING	2					
61	2180-1026D19	O-RING	4					
62	S8030041	O-RING	1					
63	2180-1026D32	O-RING	1					
91	2181-1950D15	PLUG	1		10001~10312	Y	DS2901011	1
91	DS2901011	PLUG	1		10313~			
92	DS2304007	ELBOW	1					
93	DS2304011	ELBOW	1					
94	S8000231	O-RING	2					
95	S8000181	O-RING	1					
96	S8030121	O-RING	1					
97	S8030081	O-RING	1					

Fig. 1160 MAIN PIPING

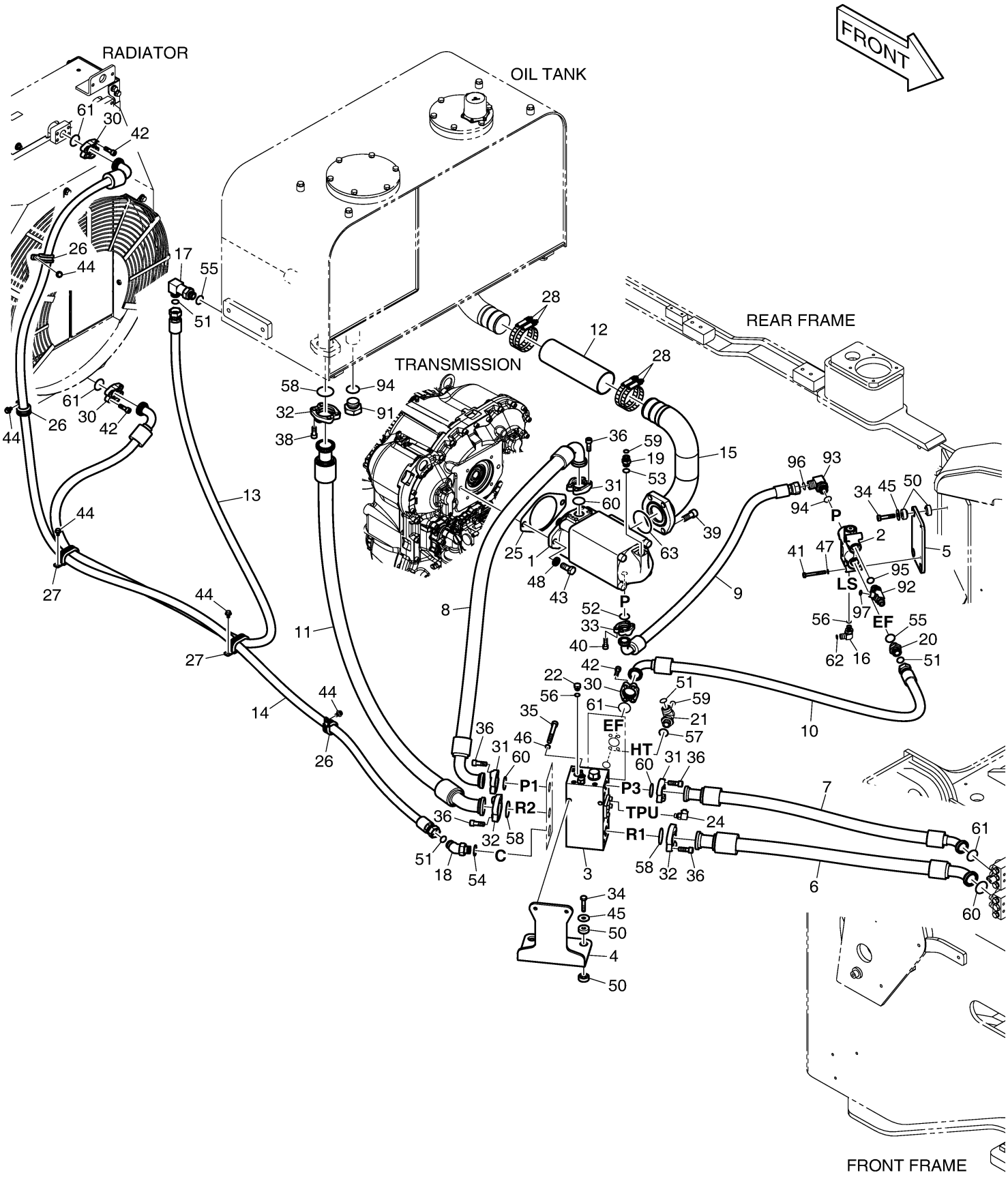

DOOSAN Doosan Infracore

Fig. 1170 STEERING PIPING

Key No	Part No	Description	Qty	S.C	Serial No	ICA	Replacable	Qty
-	420212-04724	PIPING,STEERING	-	D				
1	400804-00029	ACCUMULATOR	2					
2	DS2013347	HOSE	2					
3	DS2023654	HOSE	1					
4	DS2023655	HOSE	1					
5	DS20132073	HOSE	1					
6	DS20111338	HOSE	1					
7	DS2020143	HOSE	1					
8	DS2020144	HOSE	1					
9	DS20131302	HOSE 13/16"-16UN-2B-1600L	1					
10	DS20111339	HOSE	1					
11	DS20131125	HOSE	1					
12	181-00121D10	TEE	2					
13	DS2412045	TEE	2					
14	181-00141	REDUCER	2					
15	DS0301032	NUT	2					
16	S5111003	WASHER;SPRING	2					
17	S8000181	O-RING	4					
18	S8030061	O-RING	4					
19	S8030081	O-RING	6					
20	S8000141	O-RING	2					

Fig. 1170 STEERING PIPING

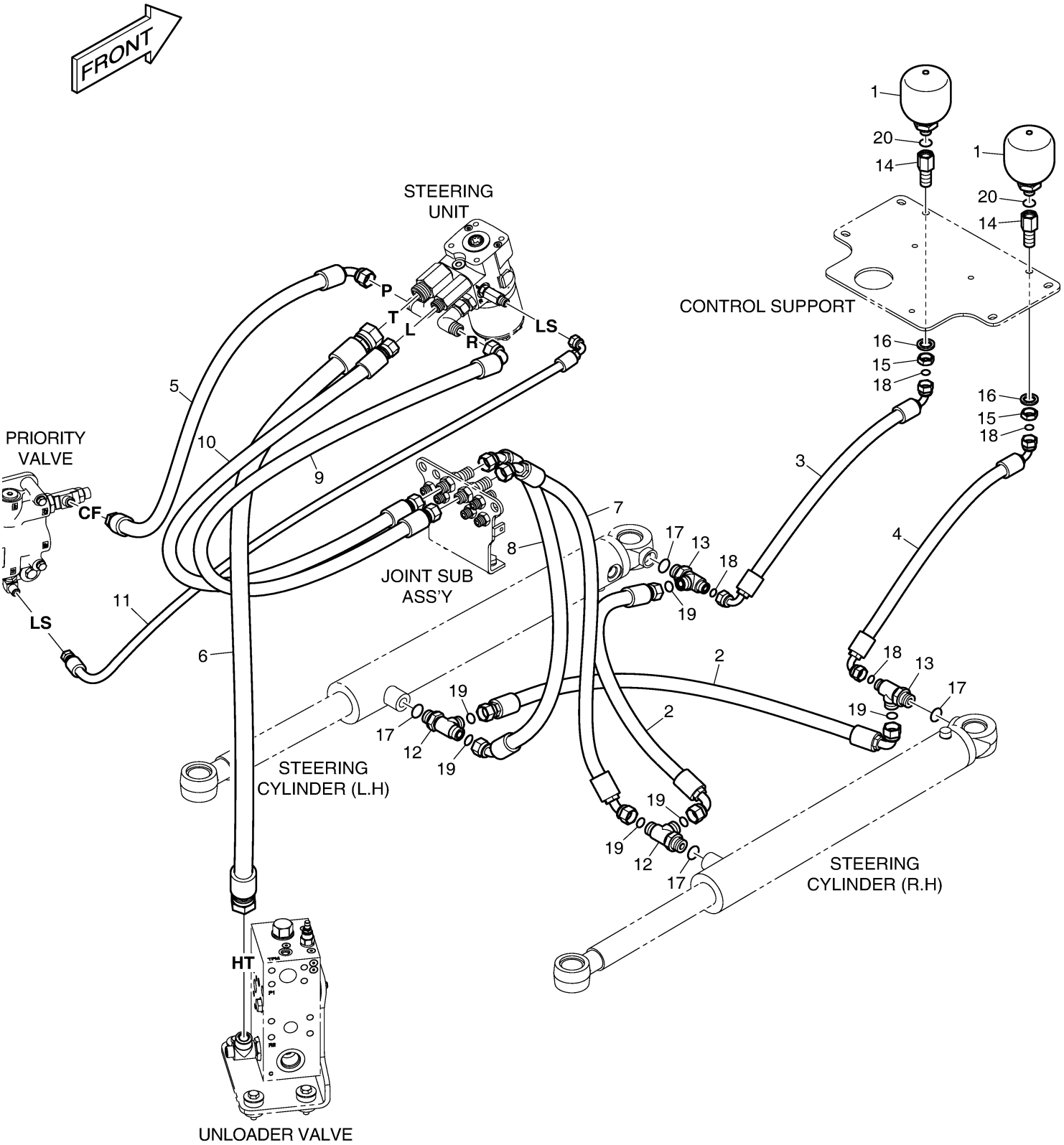

DOOSAN Doosan Infracore

Fig. 1180 BRAKE PEDAL VALVE & STEER

Key No	Part No	Description	Qty	S.C	Serial No	ICA	Replacable	Qty
-	220101-00634A	BRAKE PEDAL&STEERING UNIT	-	D	10001~10081			
-	220101-00634B	BRAKE PEDAL&STEERING UNIT	-	D	10082~10179			
-	220101-00634C	BRAKE PEDAL&STEERING UNIT	-	D	10180~10193			
-	220101-00634E	BRAKE PEDAL&STEERING UNIT	-	D	10194~10228			
-	220101-00634G	BRAKE PEDAL&STEERING UNIT	-	D	10229~10310			
-	220101-00634H	BRAKE PEDAL&STEERING UNIT	-	D	10311~			
1	190202-00041	STEERING UNIT	1					
1A	A215283	SEAL KIT	1					
1B	A215284	BEARING KIT;NEEDLE	1					
2	420-00239B	VALVE;BRAKE PEDAL	1					
3	136-00018C	ROD;BRAKE	1					
4	195-00614B	BRACKET	1					
5	134-00008	PEDAL;BRAKE	1					
6	181-00182	REDUCER	1					
7	549-00010	SWITCH;PRESSURE	1					
8	4549-9080	SWITCH;T/M CUT OFF	1					
9	430223-00024	REDUCER	1					
10	430210-00113	COUPLING,SCREW	1		10001~10179	I	430210-00247	1
10	430210-00247	COUPLING,SCREW	1		10180~			
11	2181-2815D9	ELBOW	1					
12	2181-4133D2	ADAPTER	2		10001~10228	Y	DS2232038	2
12	DS2232038	ADAPTER	2		10229~			
13	DS2232085	ADAPTER	1					
14	2181-2815D6	ELBOW	2					
15	2181-4133D3	ADAPTER	1		10001~10081			
15	2181-4133D3	ADAPTER	2		10082~10193			
15	2181-4133D3	ADAPTER	1		10194~10228	Y	DS2232012	1
15	DS2232012	ADAPTER	1		10229~			
16	2181-2815D3	ELBOW	1		10001~10081			
17	DS2257002	ADAPTER	1		10001~10081			
17	DS2257003	ADAPTER	1		10082~			
18	430201-00129	ADAPTER	1					
19	2181-2815D11	ELBOW	1		10001~10081			
20	401106-00180	SEAL,OIL	1					
21	S2209366	BOLT	4					
22	S0555966	BOLT	4					

Key No	Part No	Description	Qty	S.C	Serial No	ICA	Replacable	Qty
23	S4012533	NUT	3					
24	DS5201075	SPACER	1					
25	S5010513	WASHER	4					
26	S5110503	WASHER	4					
27	S8000141	O-RING	8					
28	S8030061	O-RING	6					
29	S8000181	O-RING	4					
30	S8030081	O-RING	3		10001~10081			
30	S8030081	O-RING	5		10082~			
31	S8030121	O-RING	1					
32	S8000111	O-RING	1					
33	S8030041	O-RING	1					
34	2181-4133D46	ADAPTER	1		10082~			
35	DS2291011	ELBOW	2		10082~			
36	DS2232136	ADAPTER	1		10194~			

Fig. 1180 BRAKE PEDAL VALVE & STEER

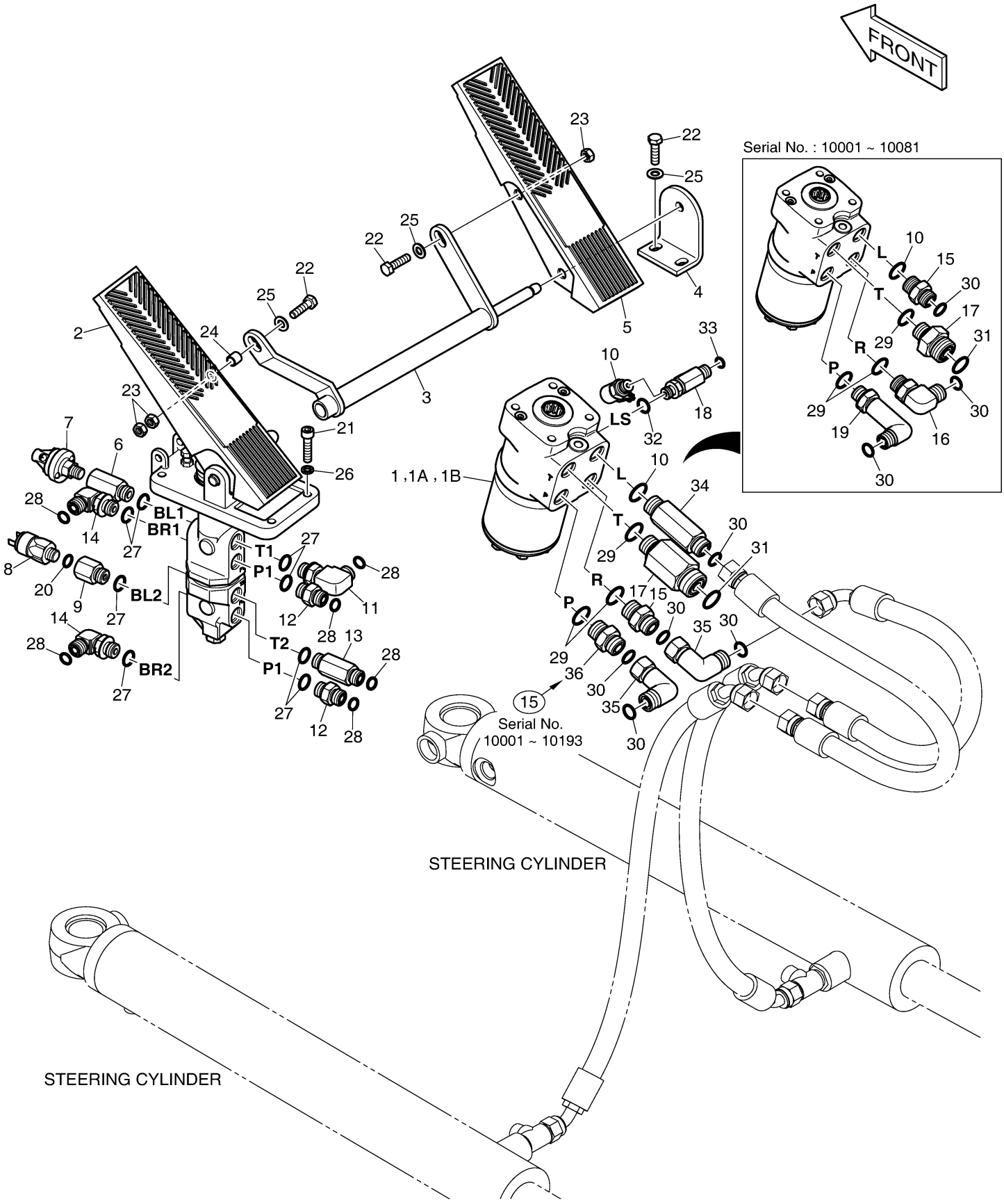

Fig. 1190 CONTROL VALVE PIPING - 2

Key No	Part No	Description	Qty	S.C	Serial No	ICA	Replacable	Qty
-	420212-06214	PIPING,FRONT	-	D				
1	K1003040A	CONTROL VALVE-2 SPOOL	1					
2	100201-00590	BLOCK,CONTACT	1					
3	100201-00589	BLOCK,CONTACT	1					
4	110958-01306	SUPPORT,CONTROL	1					
5	K1003010A	BRACKET(R.H);CONTROL PIPE	1					
6	K1003011A	BRACKET(L.H);CONTROL PIPE	1					
7	K1008282A	COVER;STANDARD	1					
8	110406-00511	BRACKET;PIPE CLAMP	2					
9	DS2043187	HOSE	1					
11	DS2045546	HOSE ASSY;(90-90)	1					
12	DS2045416	HOSE	1					
13	DS2045465	HOSE	1					
14	DS2045417	HOSE	1					
15	DS2045464	HOSE	1					
16	DS2045664	HOSE	1					
17	K1003310A	PIPE;BUCKET DUMP	1					
18	K1003311A	PIPE;BUCKET CROWD	1					
20	124-00067	CLAMP;PIPE	4					
21	DS2873022	CLAMP;PIPE	4					
22	K1004056	CLAMP	4					
23	2181-9078	FLANGE	10					
24	2181-9079	FLANGE	16					
25	4215-1003D4	FLANGE	4					
26	S0560866	BOLT	2					
27	S0521566	BOLT	4					
28	S0561866	BOLT	5					
29	S0561666	BOLT	2					
30	S0562466	BOLT	2					
31	S2212366	BOLT	40					
32	DS0025018	BOLT	4					
33	S2212266	BOLT	36					
34	DS0025017	BOLT	6		10001~10193			
34	DS0025013	BOLT	6		10194~			
35	S0562766	BOLT	4					
36	120119-00007A	BOLT,U;3/4" PIPE	2					

Key No	Part No	Description	Qty	S.C	Serial No	ICA	Replacable	Qty
37	S0558466	BOLT	4					
38	S4012733	NUT	4					
39	S4012633	NUT	4					
40	DS0401224	WASHER,PLAIN	4					
41	S5102703	WASHER	11					
42	2114-1058D46	WASHER	2					
43	S5102903	WASHER	4					
44	2114-1058D2	WAHSER	4					
45	S5102803	WASHER	4					
46	S5102603	WASHER	8					
47	S5010613	WASHER	4					
48	K1010377	RUBBER	4					
49	180308-00059	RUBBER,MOUNT;LOWER	4					
50	180308-00058	RUBBER,MOUNT;UPPER	4					
51	161-00281	RUBBER	2					
52	K1010378	RUBBER	2					
53	110951-00120	SPACER;MOUNTING	4					
54	2180-1026D23	O-RING	2					
55	2180-1026D19	O-RING	8					
56	2180-1026D2	O-RING	8					
57	4215-1003D7	FLANGE	2					
58	S2215366	BOLT	4					
59	110910-00037A	CAP	2					
60	S8000141	O-RING	1					
61	2181-1950D2	PLUG	1		10001~10312	Y	DS2901012	1
61	DS2901012	PLUG	1		10313~			
62	430210-00113	COUPLING,SCREW	1		10001~10179	I	430210-00247	1
62	430210-00247	COUPLING,SCREW	1		10180~			
91	K1015544A	PIPE	1					
92	K1015559A	PIPE	1					
93	110910-00038A	CAP	3					
112	DS2045545	HOSE ASSY;(90-90)	1					
128	2181-9078	FLANGE	4					
135	S2212366	BOLT	4					
138	S2212266	BOLT	4					
161	2180-1026D19	O-RING	2					

Fig. 1190 CONTROL VALVE PIPING - 2

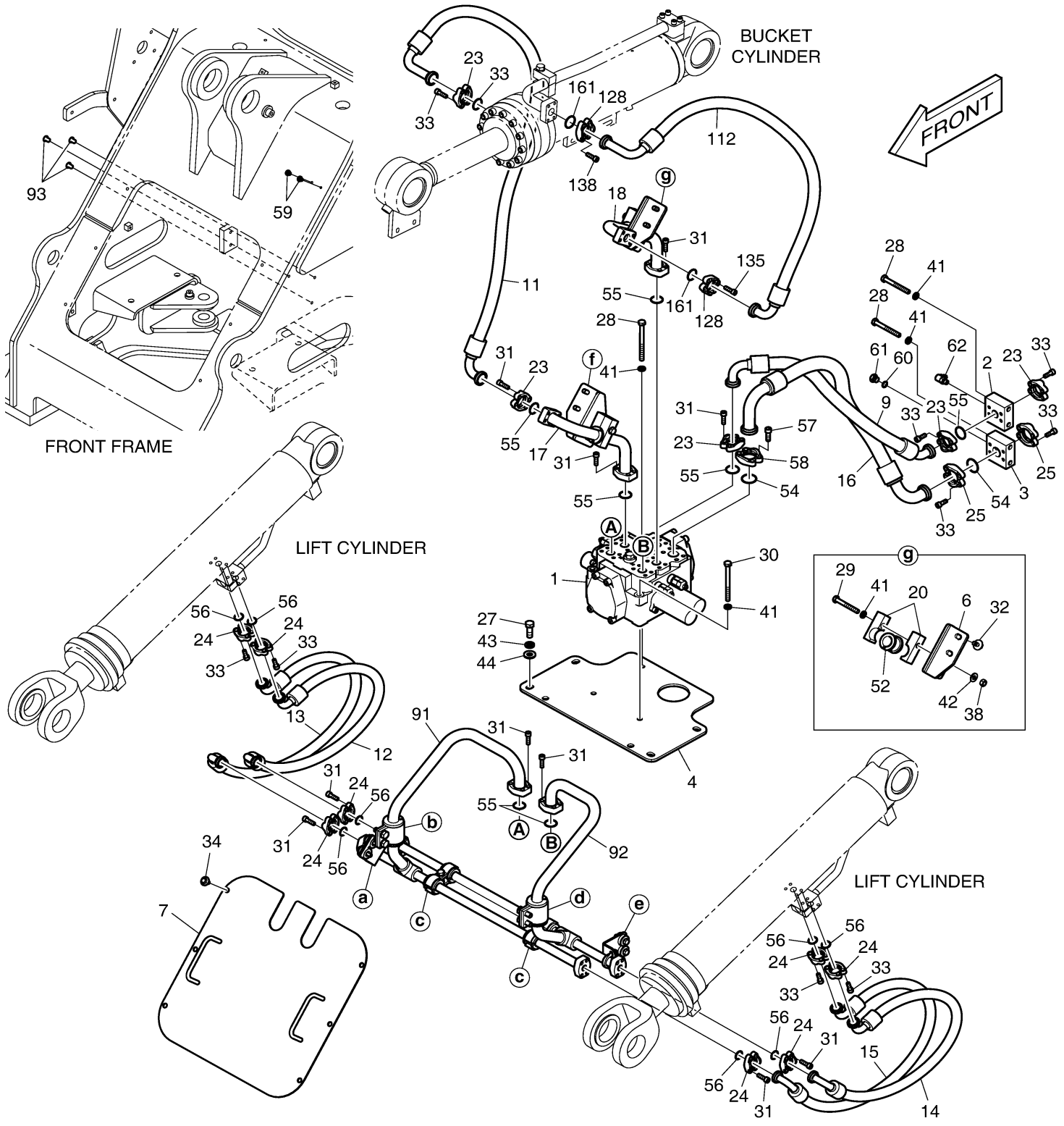

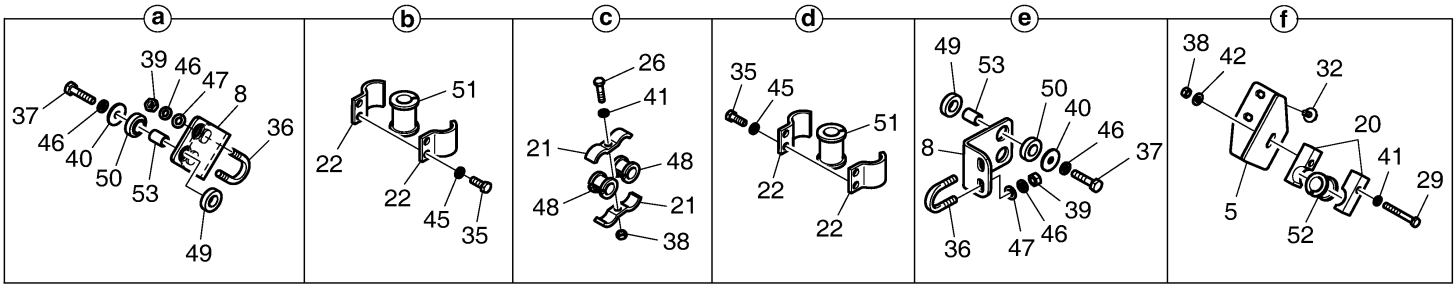

Fig. 1200 PILOT PIPING - 2 SPOOL

Key No	Part No	Description	Qty	S.C	Serial No	ICA	Replacable	Qty
-	420212-06244	PIPING,PILOT	-	D				
1	430216-00174	JOINT SUB ASSY	1					
1-1	110406-01602	BRACKET	1					
1-2	DS2415002	ADAPTER	5					
1-3	DS2415008	ADAPTER	2					
1-4	DS0301032	NUT	5					
1-5	121-00010D5	NUT	2					
1-6	S8030061	O-RING	10					
1-7	S8030081	O-RING	4					
2	250201-00413	PLATE	1					
3	DS2021497	HOSE	1					
4	DS2021498	HOSE	1					
5	DS2020170	HOSE ASSY,HYDRAULIC	1					
6	DS2020146	HOSE	1					
7	2160-1004D57	GROMMET	1					
8	DS2232038	ADAPTER	4					
9	2181-4133D2	ADAPTER	1					
10	K1004689	SPACER;TUBE	2					
11	120203-00034	CLAMP	1		10001~10298	I	120203-00034A	1
11	120203-00034A	CLAMP	1		10299~			
12	124-00208D6	CLIP	2					
13	124-00209D1	CLIP	2					
14	S0557066	BOLT	2					
15	K1001029	BOLT	4					
16	DS0025021	BOLT	2					
17	S5102503	WASHER	2					
18	S8030061	O-RING	5					
19	S8000141	O-RING	5					
51	410113-00017	VALVE ASSY,JOYSTICK	1		10001~10081			
51	410113-00156	VALVE ASSY,JOYSTICK	1		10082~10363	I	410113-00156A	1
51	410113-00156A	VALVE ASSY,JOYSTICK;5B	1		10364~			
52	DS2011059	HOSE 11/16"-16UN-2B-1600L	4					
53	DS20131501	HOSE	1		10001~10081			
53	DS20111175	HOSE ASSY,HYDRAULIC	1		10082~			
54	DS2011510	HOSE	1					
55	K1010455	ADAPTER	2		10001~10081			

Key No	Part No	Description	Qty	S.C	Serial No	ICA	Replacable	Qty
55	K1010455	ADAPTER	3		10082~			
56	K1044052	ADAPTER	4		10001~10081			
56	K1044052	ADAPTER	3		10082~			
57	2181-2667	PLUG	2		10001~10190			
57	DS2917003	PLUG	2		10191~			
58	S8030061	O-RING	6					
59	S8180211	SEAL;RING	2		10001~10190			

Fig. 1200 PILOT PIPING - 2 SPOOL

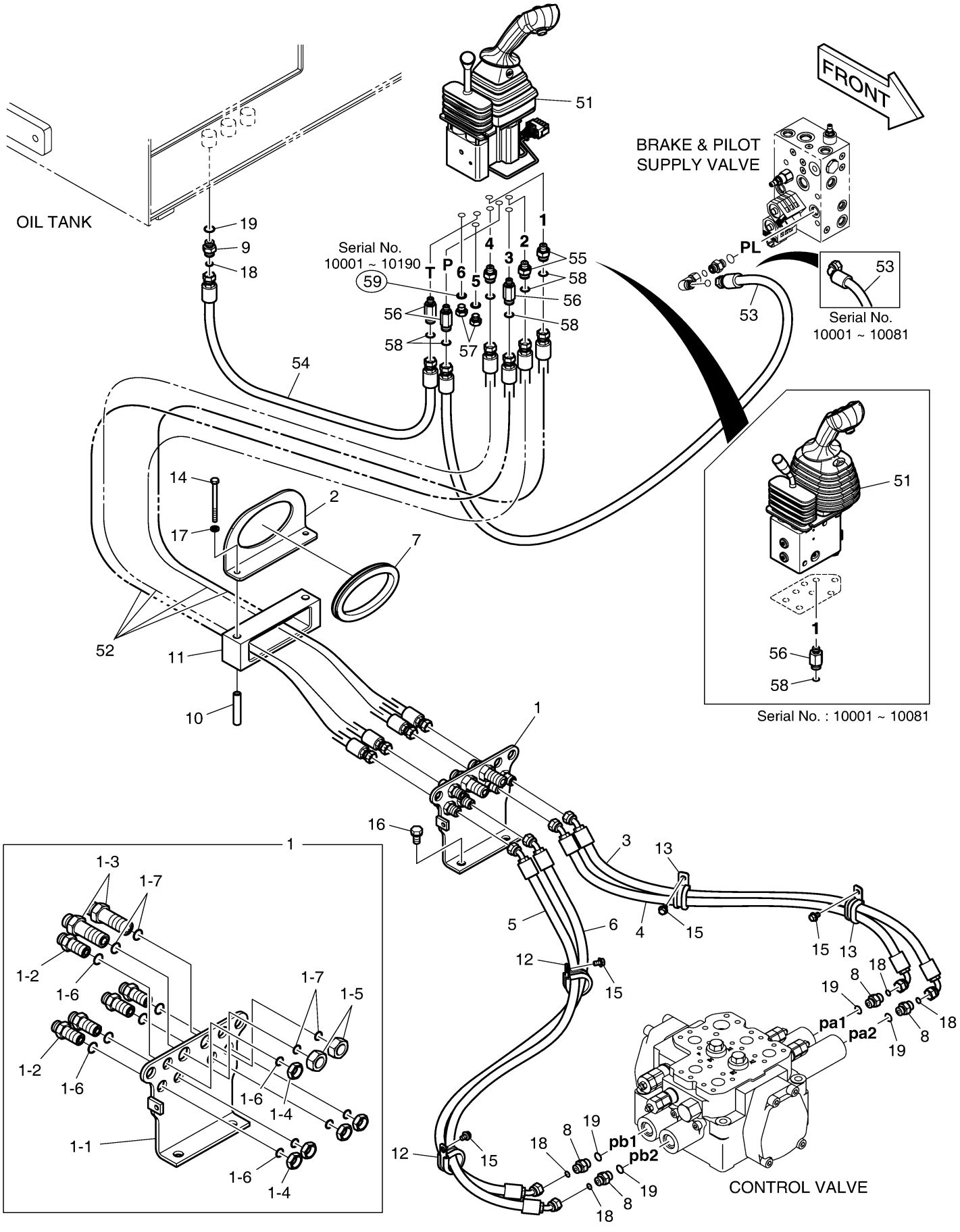

Fig. 1210 BRAKE PIPING

Key No	Part No	Description	Qty	S.C	Serial No	ICA	Replacable	Qty
-	420212-04734	PIPING,BRAKE	-	D				
1	410120-00019	VALVE,BRAKE PILOT SUPPLY	1					
2	K1014741	ACCUMULATOR	2					
3	2460-9054	ACCUMULATOR	1					
4	K1053861	FILTER,BRAKE	1					
4-1	K1055161	ELEMENT,FILTER;BRAKE	1					
4-2	101529-00026	KIT;REPAIR	1					
5	DS2013506	HOSE UNF13/16-650L	1					
6	DS20132075	HOSE	1					
7	DS2023657	HOSE	1					
8	DS20132040	HOSE ASSY,HYDRAULIC	1					
9	DS20111340	HOSE	1					
10	DS2021500	HOSE	1					
11	DS20132074	HOSE	1					
12	DS2012651	HOSE(45-ST)	1					
13	DS2012838	HOSE ASSY,HYDRAULIC	1					
14	DS2013965	HOSE ASSY	1					
15	DS2011929	HOSE ASSY	1					
16	DS2012993	HOSE	1					
17	DS2023776	HOSE ASSY,HYDRAULIC	1					
18	181-00141	REDUCER	1					
19	2181-4133D2	ADAPTER	7					
20	2181-4133D1	ADAPTER	2					
21	DS2465014	ADAPTER	1		10001~10081			
22	2181-4133D46	ADAPTER	1					
23	2181-2815D3	ELBOW	2					
24	2181-4133D3	ADAPTER	1					
25	2549-9093	SWITCH,LOW PRESSURE	2					
26	401106-00180	SEAL,OIL	2					
27	430210-00113	COUPLING,SCREW	2		10001~10179	I	430210-00247	2
27	430210-00247	COUPLING,SCREW	2		10180~			
28	124-00208D3	CLIP	3					
29	120202-00074	CLAMP,HOSE	1					
30	120202-00055	CLAMP	1					
31	S2213566	BOLT;SOCKET M10X1.5X95	4					
32	S0511666	BOLT	2					

Key No	Part No	Description	Qty	S.C	Serial No	ICA	Replacable	Qty
33	S0508966	BOLT	4					
34	K1001029	BOLT	4					
35	120-00280	BOLT;STUD M10X1.5	2					
36	DS0301032	NUT	1					
37	S5110603	WASHER	4					
38	S5111003	WASHER;SPRING	1					
39	S5102503	WASHER	4					
40	S8180161	PACKING	1		10001~10081			
41	S5102603	WASHER	2					
42	S8000141	O-RING	10					
43	S8030061	O-RING	10					
44	S8000181	O-RING	4					
45	S8030081	O-RING	4					
46	S8030041	O-RING	2					
47	S8000111	O-RING	2					
48	124-00208D4	CLIP	1					
49	DS2291007	ELBOW	1		10082~			
50	DS2508019	ADAPTER	1		10082~			

Fig. 1210 BRAKE PIPING

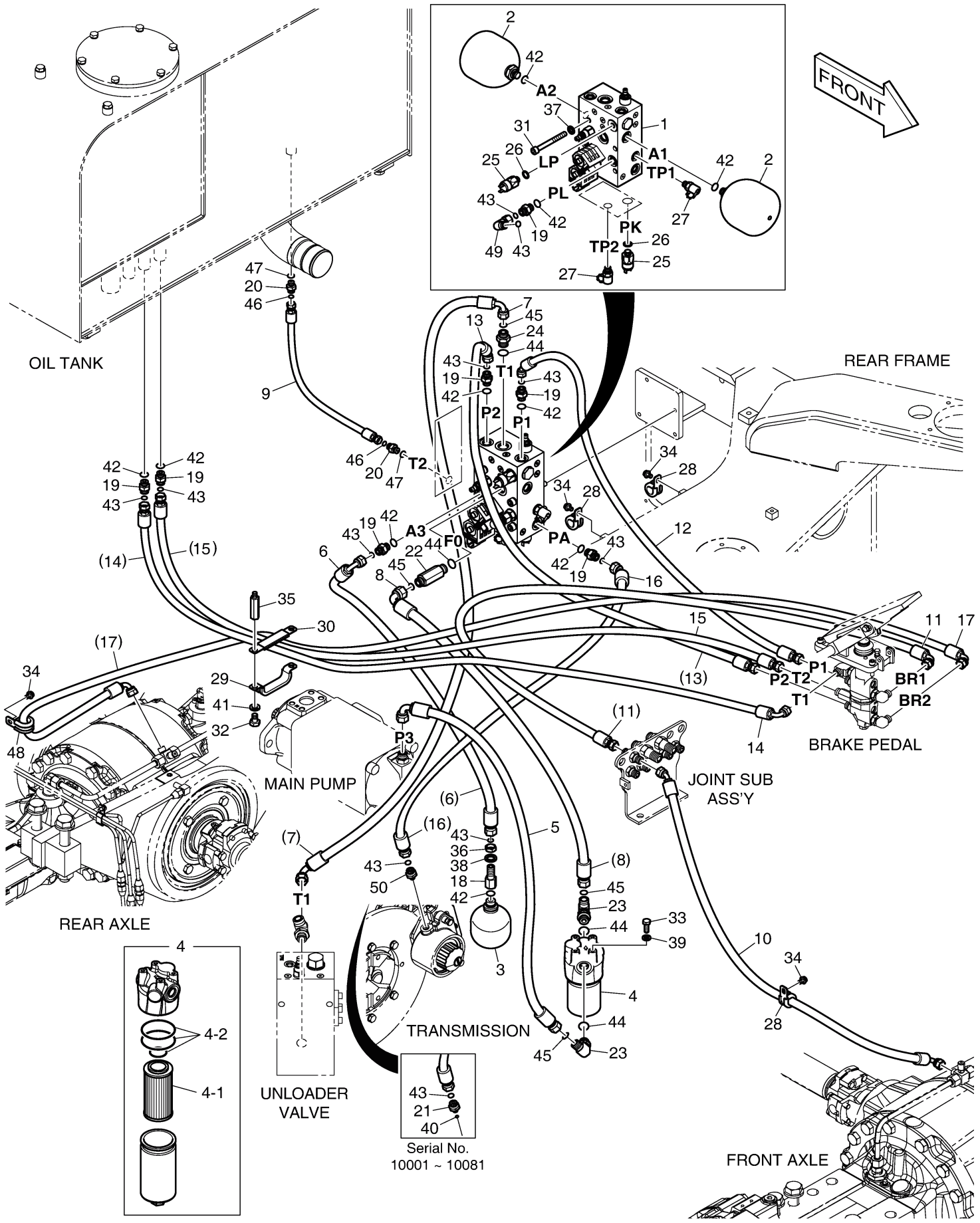

DOOSAN Doosan Infracore

Fig. 1220 COOLER PIPING

Key No	Part No	Description	Qty	S.C	Serial No	ICA	Replacable	Qty
-	420212-06253	PIPING,COOLER	-	D				
1	440211-00254B	RADIATOR ASSY	1		10001~10360	Y	440211-00254C	1
1	440211-00254C	RADIATOR ASSY	1		10361~			
1-1	440211-00398	RADIATOR	1					
1-2	400206-00384	COOLER,OIL	2					
1-7	110948-00104	SHROUD,FAN	1					
1-8	110921-01871	GUARD,FAN	1					
1-11	2185-1308D28	HOSE;HEATER 1800L	1					
1-17	110910-00523	CAP	1					
2	420109-00227A	HOSE,WATER	1		10001~10056	I	420109-00227B	1
2	420109-00227B	HOSE,WATER	1		10057~			
3	420109-00228A	HOSE,COOLING WATER	1					
4	S8040121	O-RING	1					
5	S2213266	BOLT	4					
6	DS2232004	ADAPTER	1					
7	124-00247	CLAMP	2					
8	250201-01550	PLATE	1					
9	S0566266	BOLT	1					
10	S5102903	WASHER	1					
11	100201-00641A	BLOCK,VALVE	1		10001~10272	I	100201-00641B	1
11	100201-00641B	BLOCK,VALVE	1		10273~			
12	DS20401107	HOSE,HYDRAULIC	1					
13	DS2025074	HOSE	1					
14	DS20132080	HOSE,HYDRAULIC	1					
15	DS2059617	HOSE ASSY	1					
16	2181-9083	FLANGE	6					
17	2180-1026D19	O-RING	3					
18	S2212366	BOLT	8					
19	S8450053	CLAMP;HOSE	3		10001~10209			
19	S8500079	CLAMP	3		10210~			
20	S8450044	CLAMP;HOSE	1		10001~10209			
20	S8500067	CLAMP	1		10210~			
21	124-00208D3	CLIP	1					
22	S8040161	O-RING	2					
23	S8030161	O-RING	3					
24	410202-00014	COCK ASS'Y;DRAIN	1		10001~10056			

Key No	Part No	Description	Qty	S.C	Serial No	ICA	Replacable	Qty
25	180309-00065	SPONGE	1					
26	180309-00066	SPONGE	2					
27	DS2232122	ADAPTER	1					
28	DS2232122	ADAPTER	1					
29	K1004146	DAMPER	4					
30	S4012733	NUT	4					
31	DS0401191	WASHER	4					
32	S0511966	BOLT	4					
33	S0512066	BOLT	4					
34	S5102603	WASHER	8					
35	S0508653	BOLT	2		10001~10213			
35	S0508666	BOLT	2		10214~10261			
35	120106-00596	BOLT	2		10262~			
36	S5102503	WASHER	2		10001~10261			
37	S8000141	O-RING	1					
38	430225-00121	TEE	1					
39	K1001029	BOLT	1					
40	114-00456	SPACER	1					
41	120202-00122	CLAMP,HOSE	1		10385~			

Fig. 1220 COOLER PIPING

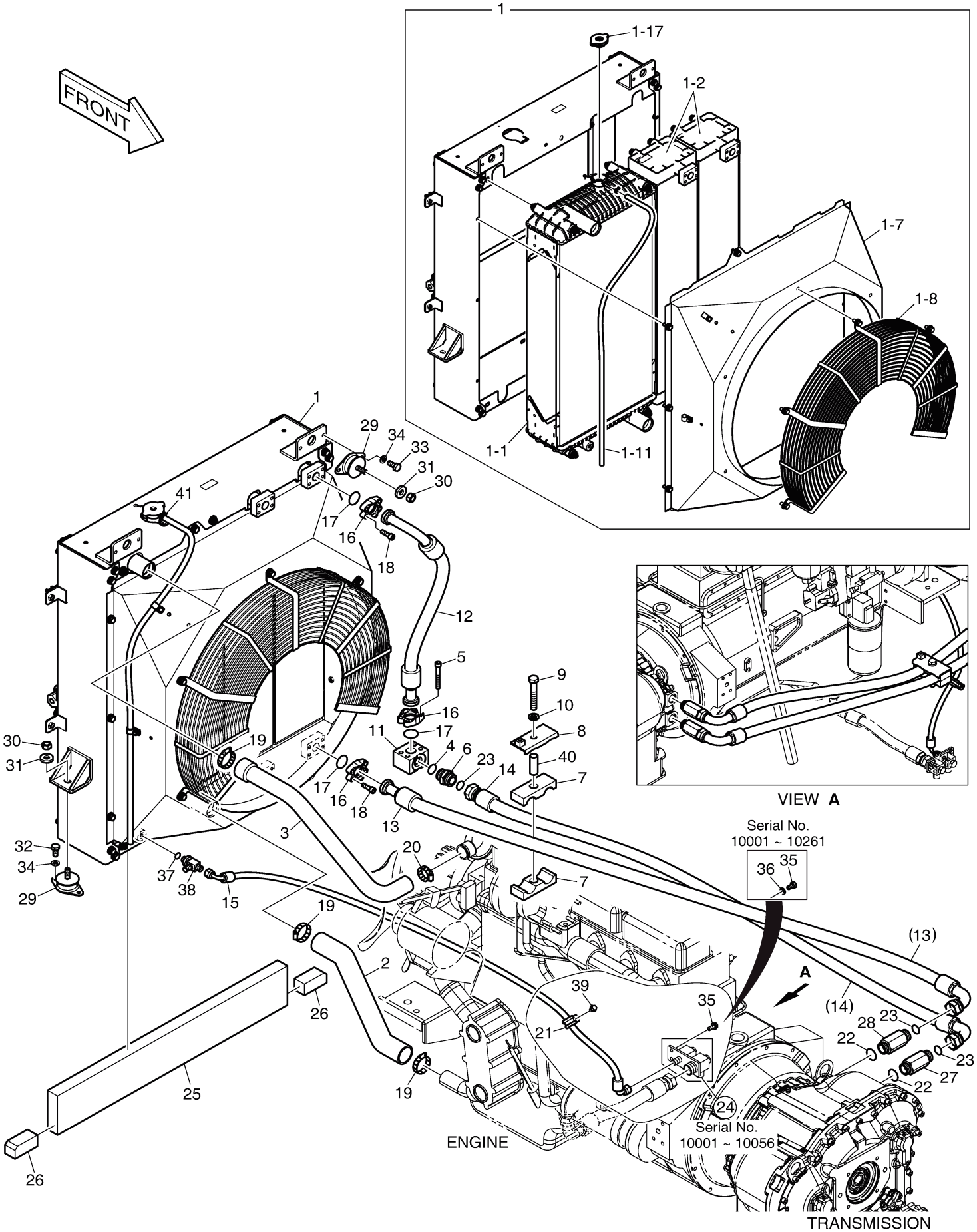

Fig. 1230 ENGINE CONTROL ASS'Y

Key No	Part No	Description	Qty	S.C	Serial No	ICA	Replacable	Qty
-	150126-00048	CONTROL ASSY,ENGINE	-	D				
3	S5102303	WASHER	2		10001~10213			
3	S5102303	WASHER	4		10214~			
5	4139-6062	CABLE;CONTROL 2350L	1					
6	2523-9016	MOTOR,E/G STOP	1					
7	S0508453	BOLT	1		10001~10056			
7	S0508653	BOLT	1		10057~10213			
7	K1001029	BOLT	1		10214~			
8	S5010513	WASHER	2					
9	S0508853	BOLT	2		10001~10056			
9	S0509053	BOLT	2		10057~10213	I	S0508866	2
9	S0508866	BOLT	2		10214~			
10	4197-1586A	BRACKET	1		10001~10261	I	110406-03611	1
10	110406-03611	BRACKET	1		10262~			
11	S0504553	BOLT	1		10001~10213			
11	S0504566	BOLT	3		10214~			
12	2195-3468A	BRACKET	1					
13	4197-1585	LEVER	1					
14	S0512053	BOLT	4		10001~10213	I	S0512066	2
14	S0512066	BOLT	2		10214~			
15	S5102603	WASHER	4		10001~10213			
15	S5102603	WASHER	2		10214~			
16	2138-9006B	JOINT,BALL	1					
17	S4012233	NUT	1					
18	S5100203	WASHER	1					
20	2124-1353D2	CLIP	1					
21	120810-00145	WASHER,PLAIN	1					
22	S4012303	NUT	2		10001~10213			
23	S0504653	BOLT	2		10001~10213			
51	134-00028	PEDAL ASS'Y	1					
52	S5010313	WASHER	3					
53	S5102303	WASHER	3					
54	S0504853	BOLT M6X1.0X20	3					
55	S0509853	BOLT M8X1.25X60	1					

Fig. 1230 ENGINE CONTROL ASS'Y

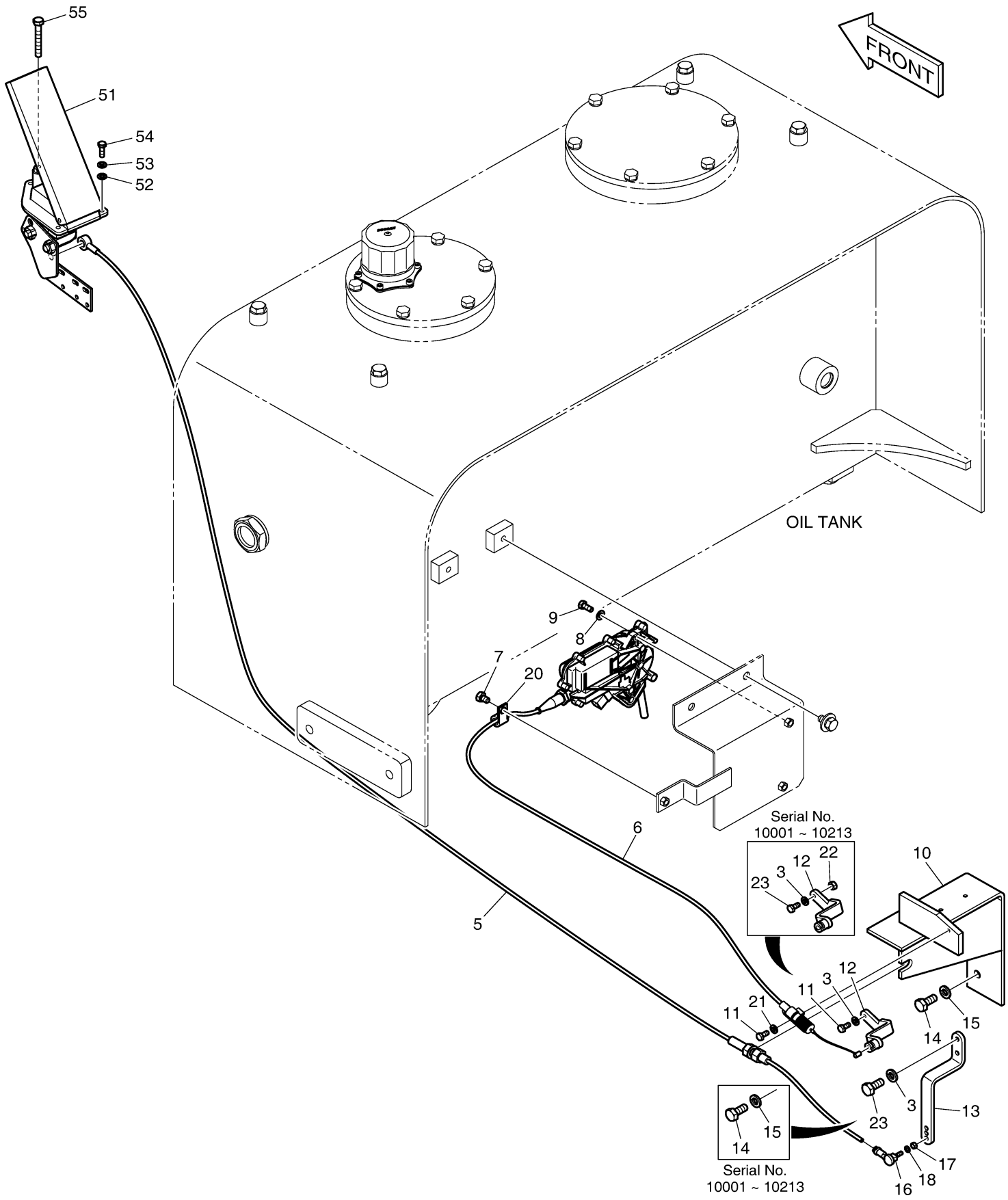

Fig. 1240 CABIN MOUNTING

Key No	Part No	Description	Qty	S.C	Serial No	ICA	Replacable	Qty
-	160626-00179	MOUNT ASSY,CABIN	-	D				
1	2161-9057	RUBBER,CABIN MOUNT	4					
2	S0512066	BOLT	16					
3	2114-1898D1	WASHER	16					
4	DS0401186	WASHER	4					
5	2121-9007	NUT	4					
6	2114-1058D76	WASHER	4					
7	S0727666	BOLT	4					
10	K1050727	COVER,UNDER;RH	1					
11	110513-00303	COVER,UNDER	1					
12	110513-00304	COVER,UNDER	1					
13	K1050722	COVER,UNDER;LH	1					
14	DS0025032	BOLT	17					
15	S5103103	WASHER	4					

Fig. 1240 CABIN MOUNTING

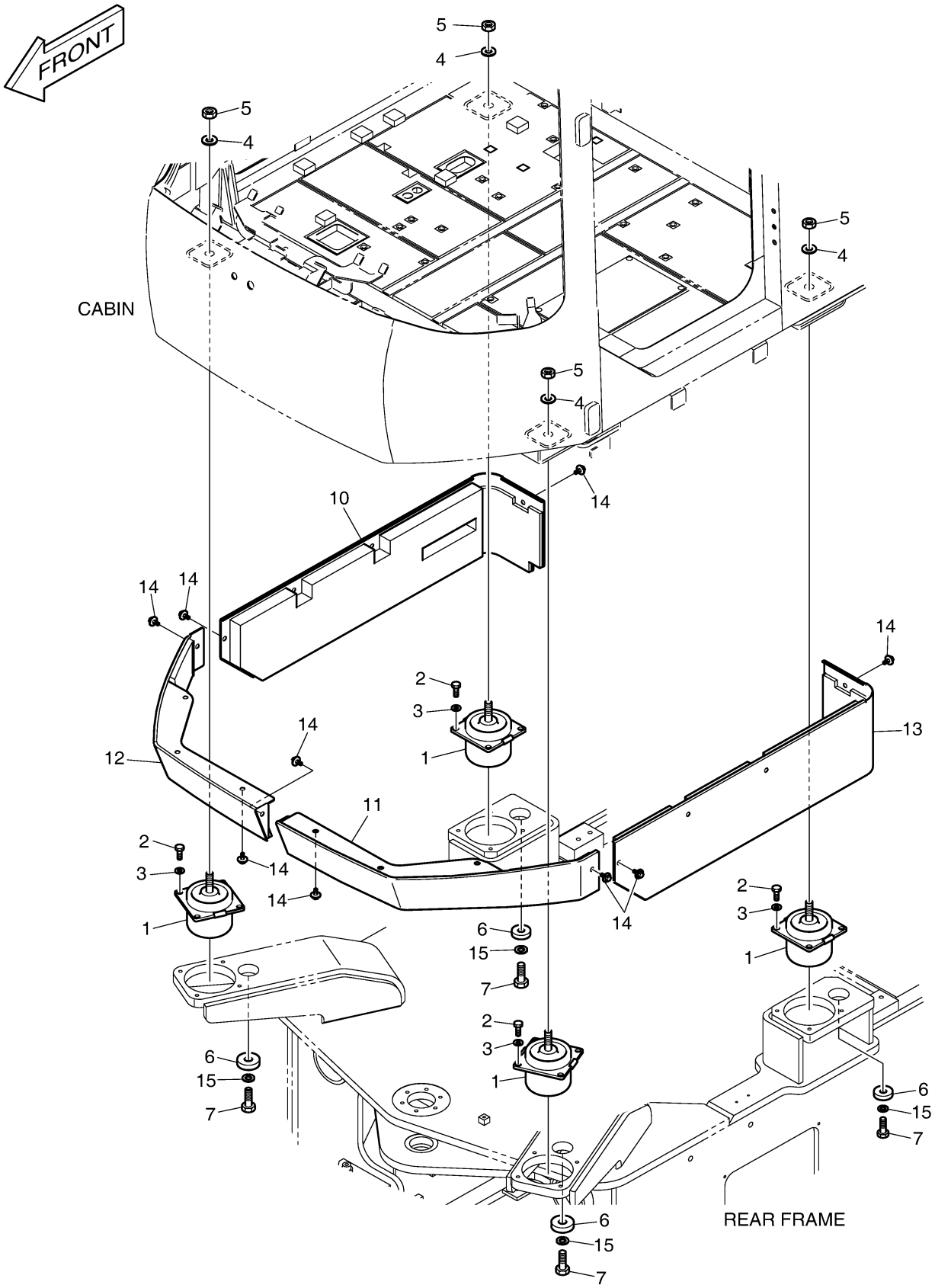

DOOSAN Doosan Infracore

Fig. 1250 CABIN(1) - BODY

Key No	Part No	Description	Qty	S.C	Serial No	ICA	Replacable	Qty
-	220101-00648C	CABIN ASSY	1		10001~10066	I	220101-00648E	1
-	220101-00648E	CABIN ASSY	1		10067~10161	Y	220101-00648G	1
-	220101-00648G	CABIN ASSY	1		10162~10188	I	220101-00648H	1
-	220101-00648H	CABIN ASSY	1		10189~10242			
-	220101-00648K	CABIN ASSY	1		10243~10308	I	220101-00648L	1
-	220101-00648L	CABIN ASSY	1		10309~10310	I	220101-00648M	1
-	220101-00648M	CABIN ASSY	1		10311~10343	I	220101-00648N	1
-	220101-00648N	CABIN ASSY	1		10344~10360	I	220101-00648P	1
-	220101-00648P	CABIN ASSY	1		10361~10363	I	220101-00648T	1
-	220101-00648T	CABIN ASSY	1		10364~			
1	-	CABIN;BODY	1	D				
15	2120-2166D6	BOLT	10					
16	2120-2166D7	SCREW	4					
17	2415-9001A	NOZZLE	1					
21	2415-1018	ADAPTER	1					
22	4185-1777	HOSE	2					
24	4538-9017	MOTOR;WIPER	1					
25	2120-2166D4	BOLT	6					
26	300704-00015	ARM,WIPER	1					
27	507-00001	BLADE;WIPER	1					
28	4541-9024	ARM;WIPER	1					
29	4507-9003	BLADE;WIPER	1					
30	2538-9005A	MOTOR;WIPER	1					
31	4120-2206	BOLT;U M10X1.5	1					
32	K1005588	TRIM;DOOR	1					
33	621-02577	VISOR;SUN	1					
34	S4500633	NUT	4					
35	K1005591	TRIM;DOOR	1					
37	K1005593	HOOK	1					
38	2142-9005	STRIKER	1		10001~10360	Y	101583-00039	1
38	101583-00039	STRIKER,DOOR	1		10361~			
39	2120-2131	SCREW	2					
40	2120-2166D24	SCREW M6X1.0X20	1		10001~10360			
41	2120-2166D16	BOLT	6					
42	K1010358	PLATE	2					
43	2120-2166D8	BOLT	5					

Key No	Part No	Description	Qty	S.C	Serial No	ICA	Replacable	Qty
44	903-00064	MIRROR;ROOM	2					
45	K1024165A	BRACKET	2					
46	534-00085	LAMP	2					
46-1	2515-1016D4	BULB,HALOGEN	1					
47	534-00079	ROOM LAMP	1					
48	2125-9055	LOCK;BACK	1					
49	534-00085	LAMP	2					
49-1	2515-1016D4	BULB,HALOGEN	1					
50	K1005675B	WIRE ASS'Y	1					
51	2120-2166D36	BOLT	4					
52	2120-2166D9	SCREW	4					
53	K1005986	NOZZLE	1					
55	2114-1898D4	WASHER	3					
56	2114-1898D1	WASHER	8					
62	2160-1310	BUSHING,RUBBER	1					
63	2120-2166D25	BOLT	16					
64	S3450933	SCREW M6X1.0X8	2					
65	101582-00305	BAR	2					
66	K1005573A	BRACKET	1					
67	K1005577	PLATE	1					
68	S0521056	BOLT	4					
69	195-02499	BRACKET	1					
70	195-02500	BRACKET	1					
71	K1005530A	PLATE;COVER	2					
72	2114-1898D2	WASHER	22					
73	2114-1898D3	WASHER	25		10001~10360			
73	2114-1898D3	WASHER	24		10361~			
75	4160-1343	BUSHING,RUBBER	1					
76	310207-01690	HARNESS,CABIN;SUB	1		10001~10242			
76	310207-01690A	HARNESS,CABIN;SUB	1		10243~			
77	K1005934	PLATE	1		10001~10360			
78	K1011221	BRACKET	2					
79	K1011222	COVER	1					
80	K1011223	COVER	1					
81	K1011224	BRACKET	2					
82	K1010428	BRACKET	1					
83	K1013442	WASHER	1					
84	K1026460	ANTENNA	1					

Key No	Part No	Description	Qty	S.C	Serial No	ICA	Replacable	Qty
85	K1016700	FOAM	1		10001~10161	Y	180102-00918	1
85	180102-00918	FOAM ASSY;CABIN INNER	1		10162~10308	I	180102-00918A	1
85	180102-00918A	FOAM ASSY;CABIN INNER	1		10309~			
86	K1011177	HARNESS;WORK REAR LAMP	2					
87	310207-01694	HARNESS;FRONT LAMP	2					
90	161-00195	STOPPER	1					
91	2121-1311D4	NUT	1					
92	110508-04701A	COVER,RUBBER;CABLE	1					

Fig. 1250 CABIN(1) - BODY

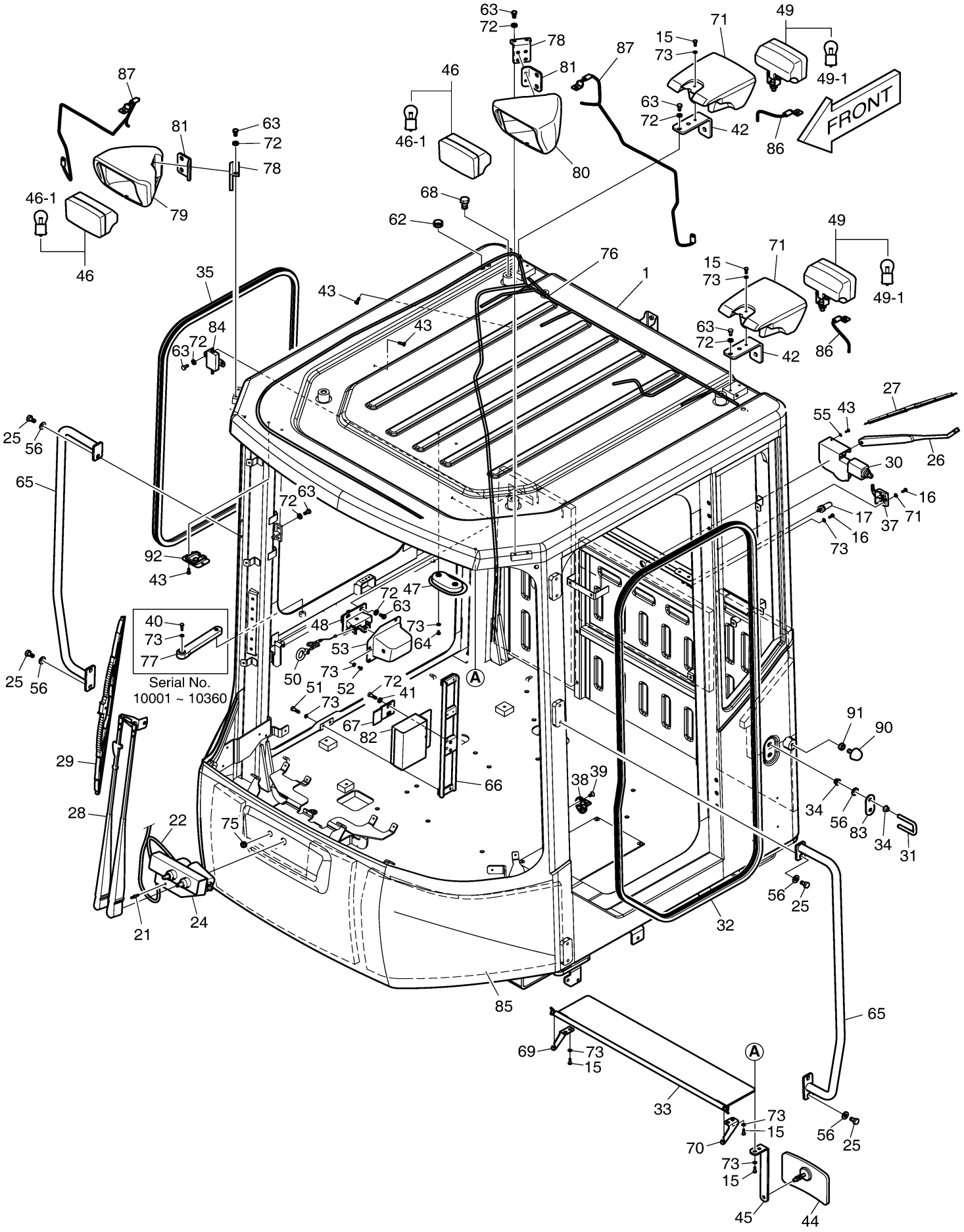

DOOSAN Doosan Infracore

Fig. 1260 CABIN(2) - INTERIOR SHEET

Key No	Part No	Description	Qty	S.C	Serial No	ICA	Replacable	Qty
-	220101-00648C	CABIN ASSY	1		10001~10066	I	220101-00648E	1
-	220101-00648E	CABIN ASSY	1		10067~10161	Y	220101-00648G	1
-	220101-00648G	CABIN ASSY	1		10162~10188	I	220101-00648H	1
-	220101-00648H	CABIN ASSY	1		10189~10242			
-	220101-00648K	CABIN ASSY	1		10243~10308	I	220101-00648L	1
-	220101-00648L	CABIN ASSY	1		10309~10310	I	220101-00648M	1
-	220101-00648M	CABIN ASSY	1		10311~10343	I	220101-00648N	1
-	220101-00648N	CABIN ASSY	1		10344~10360	I	220101-00648P	1
-	220101-00648P	CABIN ASSY	1		10361~10363	I	220101-00648T	1
-	220101-00648T	CABIN ASSY	1		10364~			
2	-	SHEET ASSY	1	D				
2-1	K1016683A	SHEET;INTERIOR	1		10001~10161	Y	110508-16023	1
2-1	110508-16023	COVER	1		10162~			
2-2	K1016684	SHEET;INTERIOR	1		10001~10161	Y	110508-16024	1
2-2	110508-16024	COVER	1		10162~			
2-3	K1005952	SHEET;INTERIOR	1		10001~10161	Y	110508-15853	1
2-3	110508-15853	COVER;PILLAR(L.H)	1		10162~			
2-4	K1005953	SHEET;INTERIOR	1		10001~10161	Y	110508-15854	1
2-4	110508-15854	COVER;PILLAR(R.H)	1		10162~			
2-5	110508-04145A	COVER,ROOF	1		10001~10161	Y	110508-04145B	1
2-5	110508-04145B	COVER,ROOF	1		10162~			
2-6	110508-10840	COVER;AUDIO	1		10001~10161	Y	110508-10840A	1
2-6	110508-10840A	COVER;AUDIO	1		10162~			
2-7	4120-2219	SCRIVET	33					
2-8	2120-2166D8	BOLT	12					
2-9	2114-1898D4	WASHER	12					
2-10	621-00268	COVER;SPEAKER	2		10001~10161	Y	110508-15856	2
2-10	110508-15856	COVER,SPEAKER	2		10162~			
2-11	2541-9020	SPEAKER	2		10001~10242			
2-11	300652-00014	SPEAKER	2		10243~			
2-12	S3450563	SCREW M4X0.7X8	8					
2-13	K1010579	COVER	1		10001~10161	Y	110508-15857	1
2-13	110508-15857	COVER;CLOCK	1		10162~			
2-14	K1011169	FOAM	33					

Fig. 1260 CABIN(2) - INTERIOR SHEET

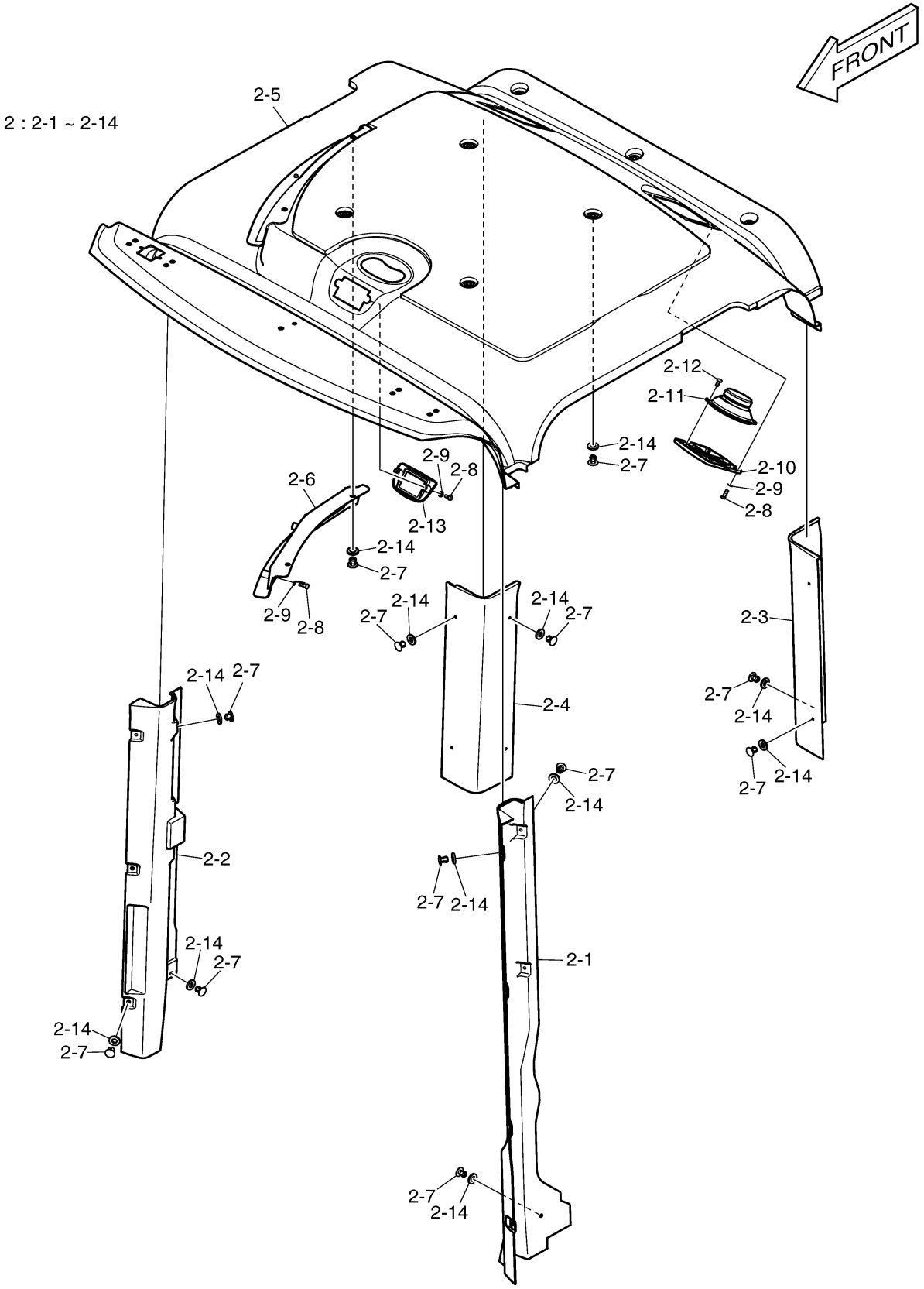

DOOSAN Doosan Infracore

Fig. 1270 CABIN(3) - DOOR ASS'Y(L.H)

Key No	Part No	Description	Qty	S.C	Serial No	ICA	Replacable	Qty
-	220101-00648C	CABIN ASSY	1		10001~10066	I	220101-00648E	1
-	220101-00648E	CABIN ASSY	1		10067~10161	Y	220101-00648G	1
-	220101-00648G	CABIN ASSY	1		10162~10188	I	220101-00648H	1
-	220101-00648H	CABIN ASSY	1		10189~10242			
-	220101-00648K	CABIN ASSY	1		10243~10308	I	220101-00648L	1
-	220101-00648L	CABIN ASSY	1		10309~10310	I	220101-00648M	1
-	220101-00648M	CABIN ASSY	1		10311~10343	I	220101-00648N	1
-	220101-00648N	CABIN ASSY	1		10344~10360	I	220101-00648P	1
-	220101-00648P	CABIN ASSY	1		10361~10363	I	220101-00648T	1
-	220101-00648T	CABIN ASSY	1		10364~			
4	220205-00043A	DOOR ASSY(L.H)	1					
4-1	-	BODY;DOOR	1	D				
4-2	K1005661	COVER	1					
4-3	K1005940	PLATE	1					
4-4	2120-2166D8	BOLT	12					
4-5	4171-1111A	HINGE	2					
4-6	2120-2166D2	BOLT	6					
4-7	K1016690	HANDLE;OUTER	1					
4-8	2120-2166D7	SCREW	1					
4-9	4172-9032	HANDLE;INNER	1					
4-10	2125-9036	CATCH,DOOR LOCK	1					
4-11	2120-2150D3	SCREW	3					
4-12	2125-9055	LOCK;BACK	1					
4-13	2120-2166D5	BOLT	5					
4-14	2114-1898D2	WASHER	5					
4-15	2120-2166D6	BOLT	2					
4-16	2114-1898D4	WASHER	12					
4-17	S5210303	WASHER	3					
4-18	K1023242	STAY	1					
4-19	K1005675B	WIRE ASS'Y	1					
4-20	K1005679B	SASH ASS`Y	1					
4-20A	K1005680A	SASH	1					
4-20B	K1005681A	CHANINER	1					
4-20C	K1005682	STRIP;WEATHER	1					
4-20D	K1005683A	GLASS;DOOR(UPPER)	1					
4-20E	K1005684A	GLASS;DOOR(LOWER)	1					

Key No	Part No	Description	Qty	S.C	Serial No	ICA	Replacable	Qty
4-20F	2125-9026	LOCK(R.H)	1					
4-20G	2125-9027	LOCK(L.H)	1					
4-20H	128-00003	STOPPER;CHAIN	2					
4-20I	128-00004	STOPPER;CHAIN	6					
4-20J	K1005689	BAR;CENTER	1					
4-20K	K1005690	STRIP	1					
4-20L	K1011650	RUBBER	1					
4-20M	K1011651	RUBBER	1					
4-21	K1016693	STAY ASS'Y	1					
4-21A	K1003900	KEY ASSY,DOOR	1					
4-21B	K1016694	STAY	1					
4-21C	K1016695	STAY	1					
4-21D	K1023243	HOLDER	1					
4-21E	S4012233	NUT	2					
4-21F	4142-1670	HOLLDER	3					
4-22	2114-1898D1	WASHER	7					
4-23	2114-1898D3	WASHER	3					
4-24	K1023241	PIN;SWING LOCK	1					
4-25	S4012533	NUT	1					
4-26	K1017019	GUIDE	1					
23	2120-2166D2	BOLT	6					
56	2114-1898D1	WASHER	6					

Fig. 1270 CABIN(3) - DOOR ASS'Y(L.H)

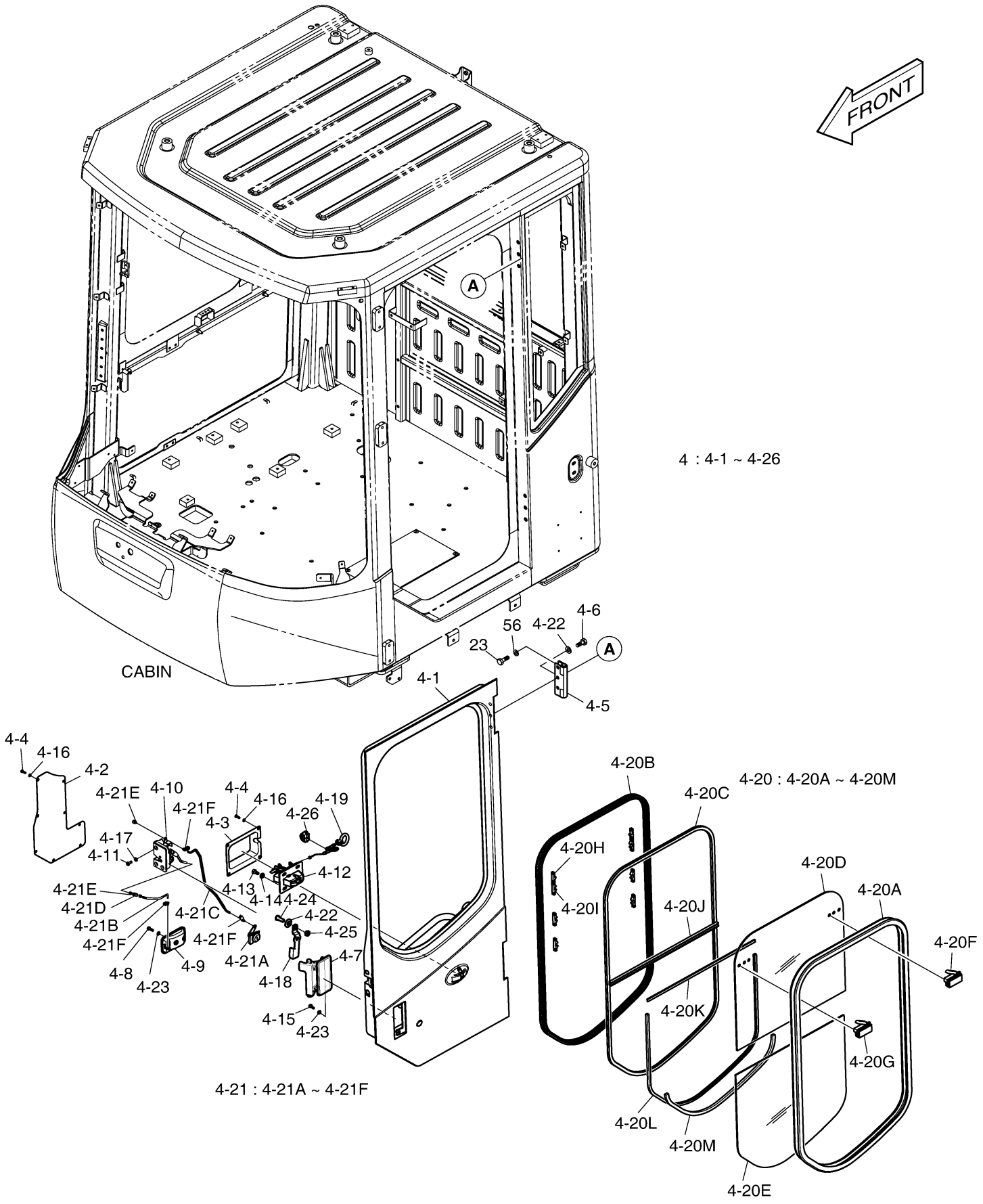

DOOSAN Doosan Infracore

Fig. 1280 CABIN(4) - DOOR ASS'Y(R.H)

Key No	Part No	Description	Qty	S.C	Serial No	ICA	Replacable	Qty
-	220101-00648C	CABIN ASSY	1		10001~10066	I	220101-00648E	1
-	220101-00648E	CABIN ASSY	1		10067~10161	Y	220101-00648G	1
-	220101-00648G	CABIN ASSY	1		10162~10188	I	220101-00648H	1
-	220101-00648H	CABIN ASSY	1		10189~10242			
-	220101-00648K	CABIN ASSY	1		10243~10308	I	220101-00648L	1
-	220101-00648L	CABIN ASSY	1		10309~10310	I	220101-00648M	1
-	220101-00648M	CABIN ASSY	1		10311~10343	I	220101-00648N	1
-	220101-00648N	CABIN ASSY	1		10344~10360	I	220101-00648P	1
-	220101-00648P	CABIN ASSY	1		10361~10363	I	220101-00648T	1
-	220101-00648T	CABIN ASSY	1		10364~			
3	220205-00150B	DOOR ASSY(R.H)	1		10001~10363	Y	220205-00150C	1
3	220205-00150C	DOOR ASSY	1		10364~			
3-1	-	FRAME,WINDOW	1	D				
3-2	4171-1111A	HINGE	2					
3-3	2120-2166D2	BOLT	6					
3-4	S4500633	NUT	4					
3-5	100601-00048A	CATCH,DOOR	1					
3-6	K1010850A	PIN	1					
3-7	S4012533	NUT	1					
3-8	110956-00279	RUBBER;STOPPER	2					
3-9	K1005614A	GLASS	1					
3-10	111601-00240	SPRING	1					
3-11	111601-00241	SPRING	1					
3-12	2114-1898D2	WASHER	3					
3-13	S0509253	BOLT	2					
3-14	K1005941	PLATE	1					
3-15	K1006467	PLATE	1					
3-16	2114-1898D1	WASHER	8					
3-17	K1006322	BOLT	1					
3-18	K1039311	STOPPER	1					
5	K1005615B	FRONT COVER ASS'Y (R.H)	1					
6	K1005946C	REAR COVER ASS'Y (R.H)	1					
15	2120-2166D6	BOLT	8					
23	2120-2166D2	BOLT	6					
36	K1005592	TRIM;REAR COVER	1					
54	471-00107	FILTER	1		10001~10310	Y	400406-00685	1

Key No	Part No	Description	Qty	S.C	Serial No	ICA	Replacable	Qty
54	400406-00685	FILTER	1		10311~			
56	2114-1898D1	WASHER	6					
57	132-00030	NUT;KNOB	4					
58	K1010580	PLATE	1		10001~10188			
58	250105-00147C	PLATE,CABIN	1		10189~			
59	K1005605A	COVER	1					
73	2114-1898D3	WASHER	8					

Fig. 1280 CABIN(4) - DOOR ASS'Y(R.H)

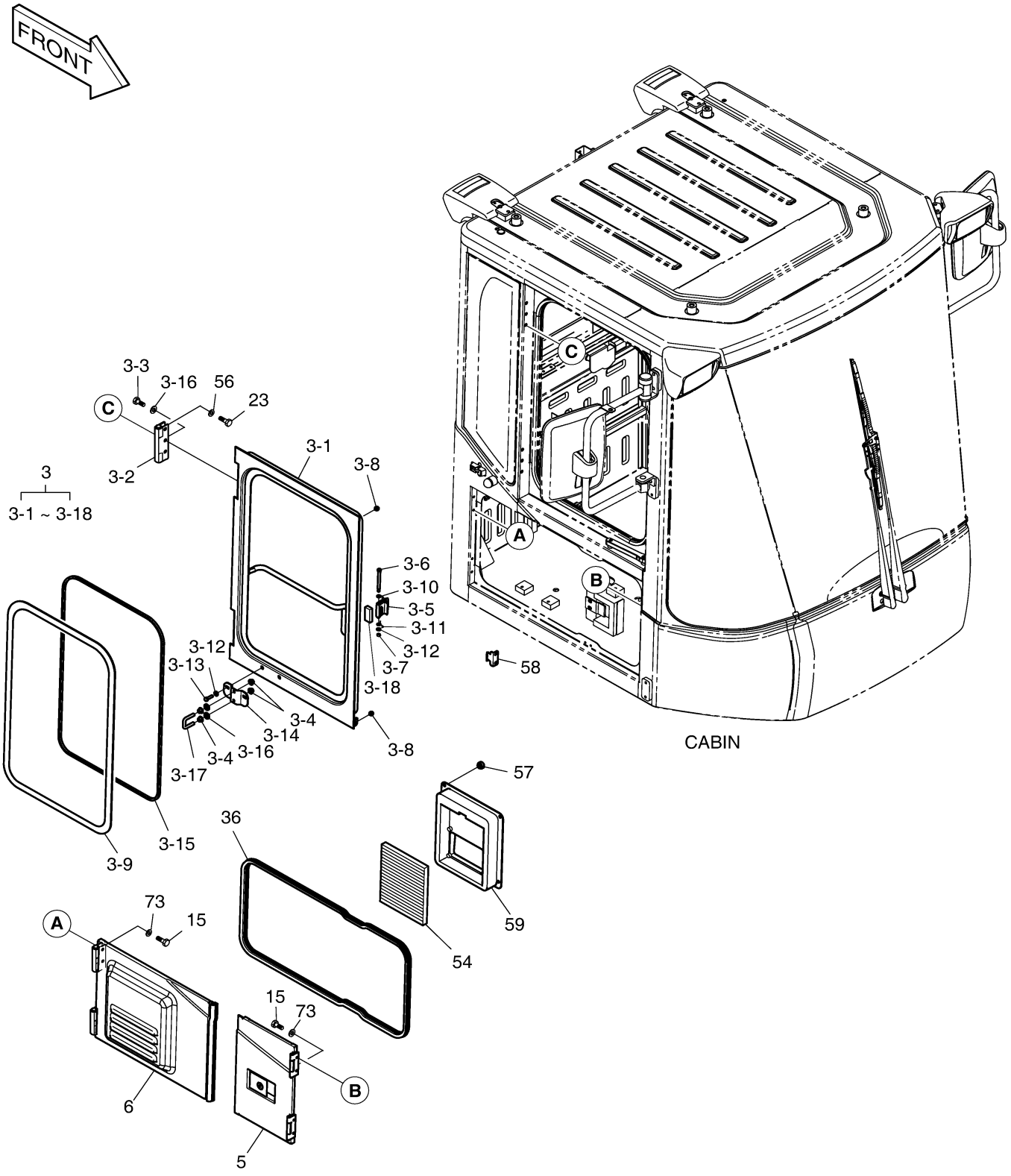

Fig. 1290 CABIN(5) - GLASS

Key No	Part No	Description	Qty	S.C	Serial No	ICA	Replacable	Qty
-	220101-00648C	CABIN ASSY	1		10001~10066	I	220101-00648E	1
-	220101-00648E	CABIN ASSY	1		10067~10161	Y	220101-00648G	1
-	220101-00648G	CABIN ASSY	1		10162~10188	I	220101-00648H	1
-	220101-00648H	CABIN ASSY	1		10189~10242			
-	220101-00648K	CABIN ASSY	1		10243~10308	I	220101-00648L	1
-	220101-00648L	CABIN ASSY	1		10309~10310	I	220101-00648M	1
-	220101-00648M	CABIN ASSY	1		10311~10343	I	220101-00648N	1
-	220101-00648N	CABIN ASSY	1		10344~10360	I	220101-00648P	1
-	220101-00648P	CABIN ASSY	1		10361~10363	I	220101-00648T	1
-	220101-00648T	CABIN ASSY	1		10364~			
7	K1016696	GLASS;FRONT	1					
8	K1005641	GLASS;FRONT SIDE (L.H)	1					
9	K1005642	GLASS;FRONT SIDE (R.H)	1					
10	K1016697	GLASS;REAR	1					
11	K1006323A	FOAM;REAR SIDE (L.H)	1					
12	K1006324A	FOAM;REAR SIDE (R.H)	1					
13	K1016698	FOAM;REAR	1					
14	K1016699	FOAM;FRONT	1					
60	K1005601B	GLASS;REAR SIDE (L.H)	1					
61	K1005602B	GLASS;REAR SIDE (R.H)	1					
101	110910-01862	CAP,RUBBER	1		10311~			

Fig. 1290 CABIN(5) - GLASS

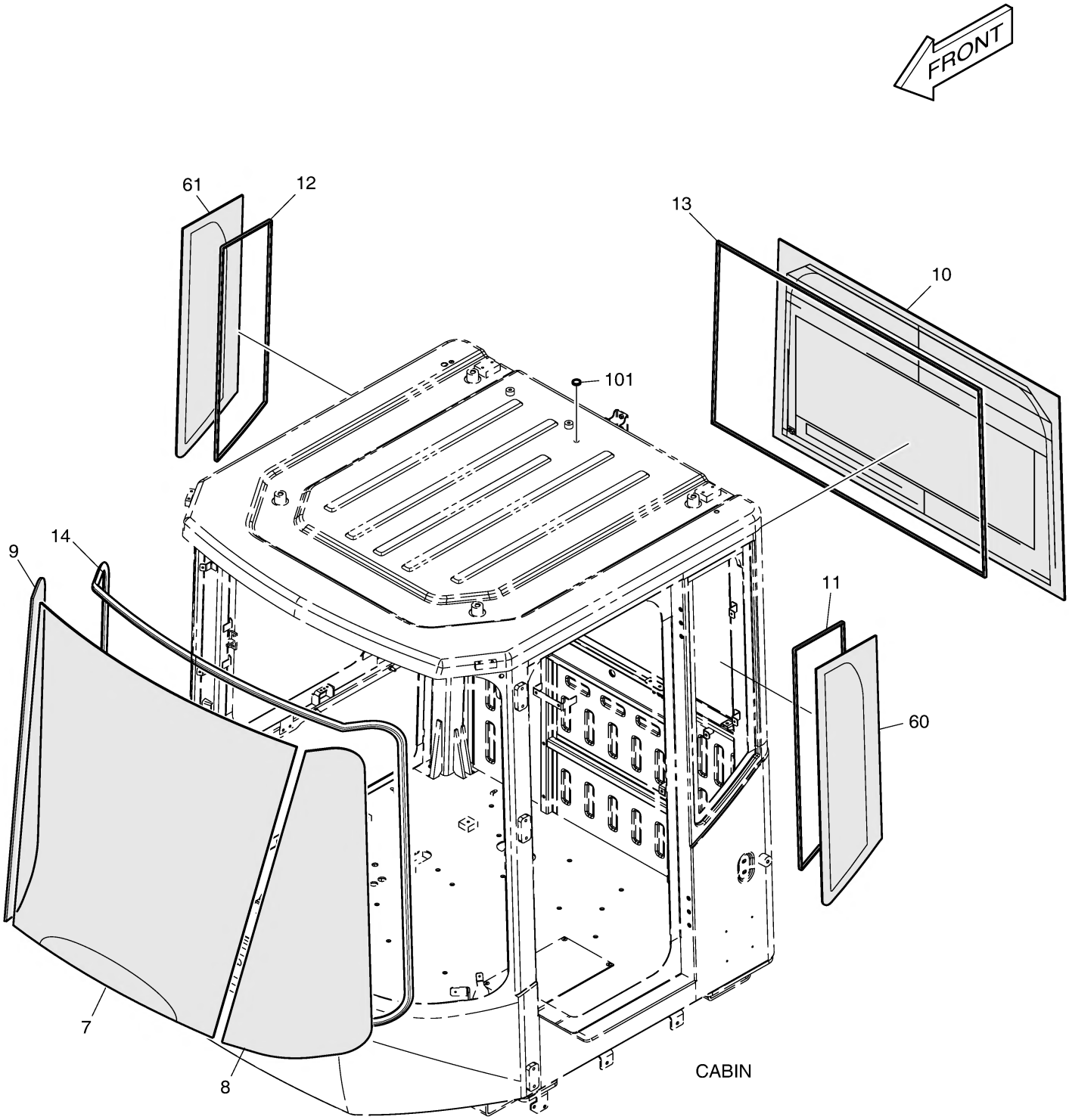

Fig. 1300 MIRROR-CABIN

Key No	Part No	Description	Qty	S.C	Serial No	ICA	Replacable	Qty
-	110969-00053	MIRROR ASSY,REAR VIEW	-	D				
1	110969-00055	MIRROR ASSY(L.H)	1					
1-1	2903-9012A	MIRROR	1					
1-2	101582-00022	STAY(L.H)	1					
1-3	K1050944	CAP	1					
2	2120-2166D4	BOLT	3					
3	2114-1898D1	WASHER	3					
4	110969-00054	MIRROR ASSY(R.H)	1					
4-1	2903-9012A	MIRROR	1					
4-2	101582-00023	STAY(R.H)	1					
4-3	K1050944	CAP	1					
5	2120-2166D4	BOLT	3					
6	2114-1898D1	WASHER	3					

Fig. 1300 MIRROR-CABIN

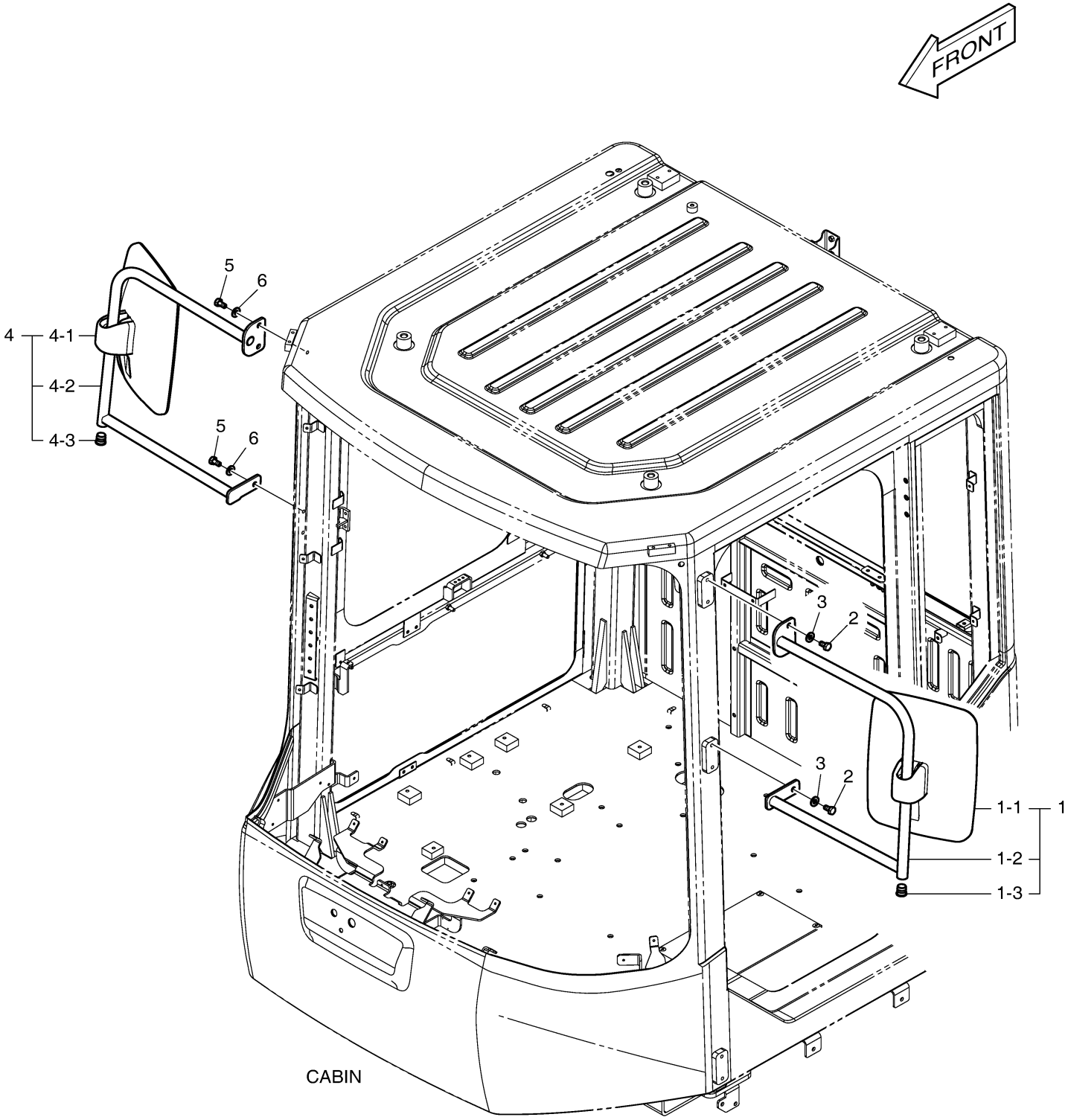

Fig. 1310 FLOOR MAT

Key No	Part No	Description	Qty	S.C	Serial No	ICA	Replacable	Qty
1	110935-00193	MAT,FLOOR	1					

Fig. 1310 FLOOR MAT

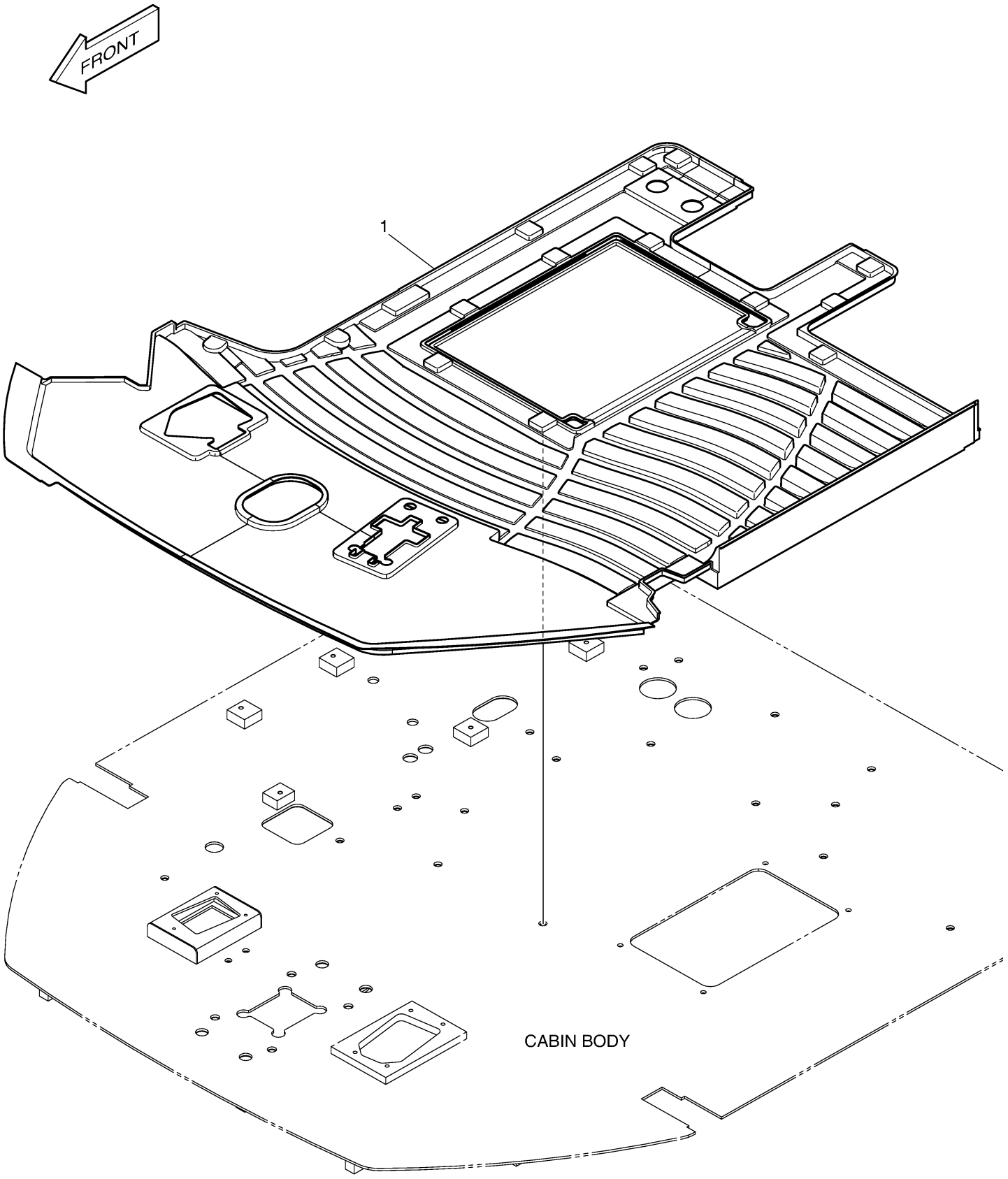

Fig. 1320 CONTROL STAND

Key No	Part No	Description	Qty	S.C	Serial No	ICA	Replacable	Qty
-	110953-00004C	STAND ASSY	-	D	10001~10166			
-	110953-00004E	STAND ASSY	-	D	10167~10188			
-	110953-00004G	STAND ASSY	-	D	10189~10213			
-	110953-00004H	STAND ASSY	-	D	10214~10363			
-	110953-00004L	STAND ASSY	-	D	10364~			
2	K1016736	STAND;FRONT (R.H)	1		10001~10166	Y	220111-00076	1
2	220111-00076	STAND,CONTROL	1		10167~10213	I	220111-00076A	1
2	220111-00076A	STAND,CONTROL	1		10214~			
3	K1016739A	COVER;SWITCH	1		10001~10166	Y	110508-16012	1
3	110508-16012	COVER	1		10167~			
4	K1016740	COVER;CENTER	1		10001~10166	Y	110508-16014	1
4	110508-16014	COVER	1		10167~			
5	430218-00001	NOZZLE,DUCT	2					
6	K1005987A	COVER;STAND (L.H)	1		10001~10166	Y	110913-00276	1
6	110913-00276	CASE,STAND	1		10167~			
7	K1005989	COVER;FUSE BOX	1		10001~10166	Y	110508-15866	1
7	110508-15866	COVER	1		10167~			
8	K1016741	SUPPORT;FRONT(R.H)	1					
9	K1016752	PLATE	1					
10	K1006498A	PLATE;SUPPORT	1					
11	K1006747B	BRACKET;FRT (R.H)	1		10001~10188	I	110406-02927	1
11	110406-02927	BRACKET;FRONT(R.H)	1		10189~			
12	K1016755	SUPPORT;BTM REAR(R.H)	1					
13	K1016764A	SUPPORT;BTM REAR CENTER	1					
15	K1029814	COVER	1		10001~10166	Y	110508-16015	1
15	110508-16015	COVER;SIDE	1		10167~			
16	K1006025A	DASHBOARD (R.H)	1		10001~10166	Y	300605-00148	1
16	300605-00148	BOARD,DASH	1		10167~			
17	K1006030A	DASHBOARD (L.H)	1		10001~10166	Y	300605-00150	1
17	300605-00150	BOARD,DASH	1		10167~			
18	K1016771A	COVER;CENTER	1					
19	K1006041	NOZZLE;VENT SMALL	2					
20	K1006042	NOZZLE;VENT LARGE	2					
24	K1006330	ARMREST	1		10001~10166	Y	220106-00046	1
24	220106-00046	REST,ARM	1		10167~			
25	K1006333	KNOB;ARM REST	1					

Key No	Part No	Description	Qty	S.C	Serial No	ICA	Replacable	Qty
26	160102-00024	BASE ASSY,SEAT	1					
27	K1016805	COVER	1					
28	K1005977	BUSHING	2					
29	K1005978	BUSHING	2					
32	K1007004	PLATE	1					
33	K1006094	PLATE	1					
34	K1006095	PLATE	1					
35	K1006096	PLATE	2					
36	2120-2166D10	SCREW	29					
37	2120-2166D2	BOLT	18					
38	2114-1898D1	WASHER	20					
41	4916-9006	WASHER;WINDOW	1					
41A	K9009874	MOTOR,RESERVE TANK	1					
42	2120-2166D26	SCREW	6					
43	2120-2166D36	BOLT	30		10001~10188			
43	2120-2166D36	BOLT	32		10189~			
44	2114-1898D3	WASHER	30		10001~10188			
44	2114-1898D3	WASHER	32		10189~			
46	K1009798	PLATE	1					
47	K1018857	CAP	1					
48	K1018858	CAP	1					
49	K1018334	GUIDE	1					
50	S0511363	BOLT,HEX	1					

Fig. 1320 CONTROL STAND

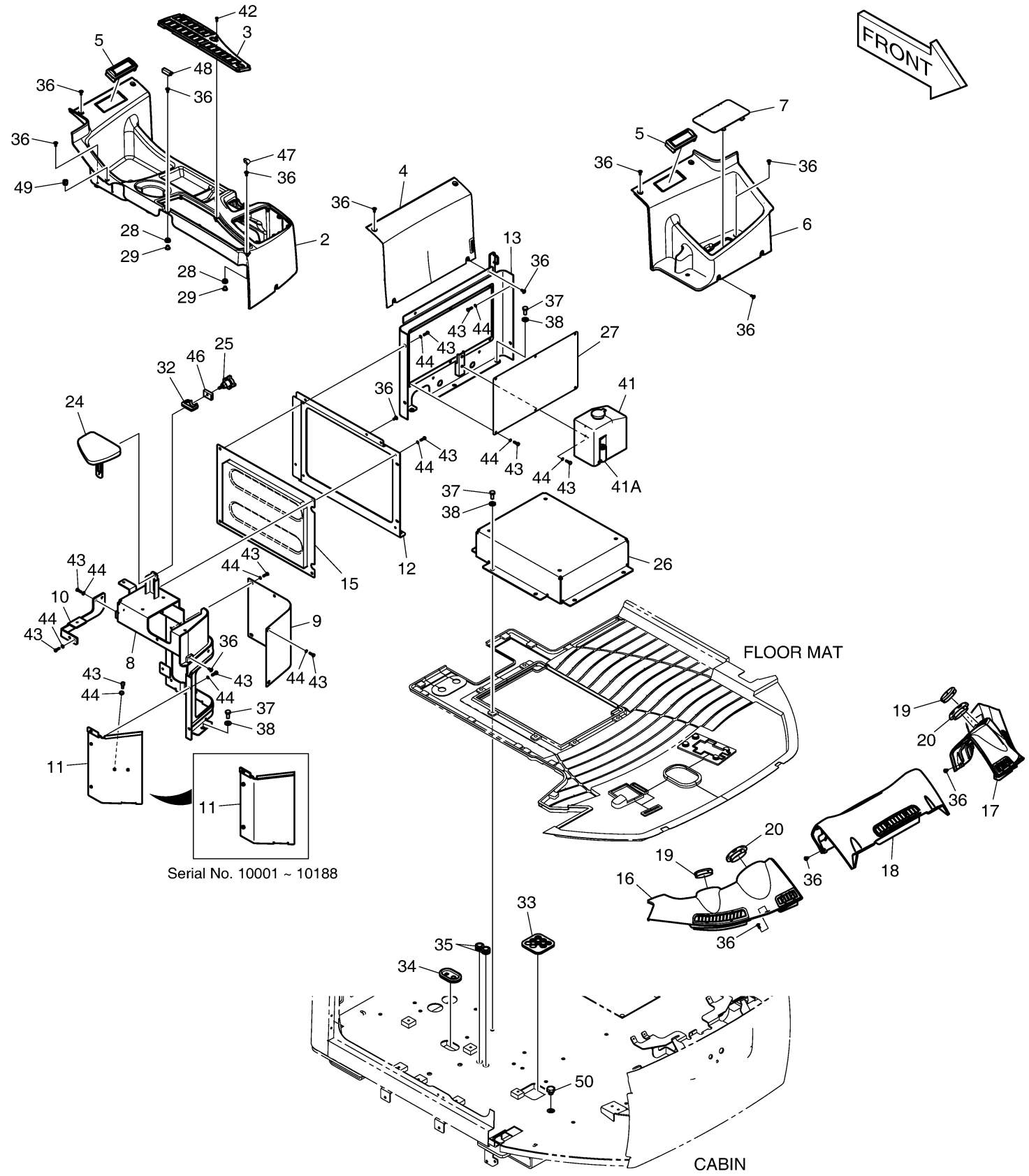

Fig. 1330 JOYSTICK MOUNTING - 3RD

Key No	Part No	Description	Qty	S.C	Serial No	ICA	Replacable	Qty
-	101101-00064A	LEVER ASSY	-	D	10001~10081			
-	101101-00064B	LEVER ASSY	-	D	10082~10166			
-	101101-00064C	LEVER ASSY	-	D	10167~10360			
-	101101-00064E	LEVER ASSY;WALVOIL	-	D	10361~			
1	110508-00628A	COVER;LEVER	1		10001~10081			
1	110508-00628B	COVER,LEVER	1		10082~10166	Y	110508-00628C	1
1	110508-00628C	COVER,LEVER	1		10167~			
2	K1006735B	BRACKET	1		10001~10081			
2	110406-02242	BRACKET	1		10082~10360	I	110406-02242A	1
2	110406-02242A	BRACKET;WALVOIL	1		10361~			
3	2120-2166D26	SCREW	4					
4	2120-2166D5	BOLT	3					
5	2114-1898D2	WASHER	3					
6	2120-2166D28	BOLT	4					
7	2114-1898D3	WASHER	4					
8	2120-2166D8	BOLT	2					
9	2114-1898D4	WASHER	2					

Fig. 1330 JOYSTICK MOUNTING - 3RD

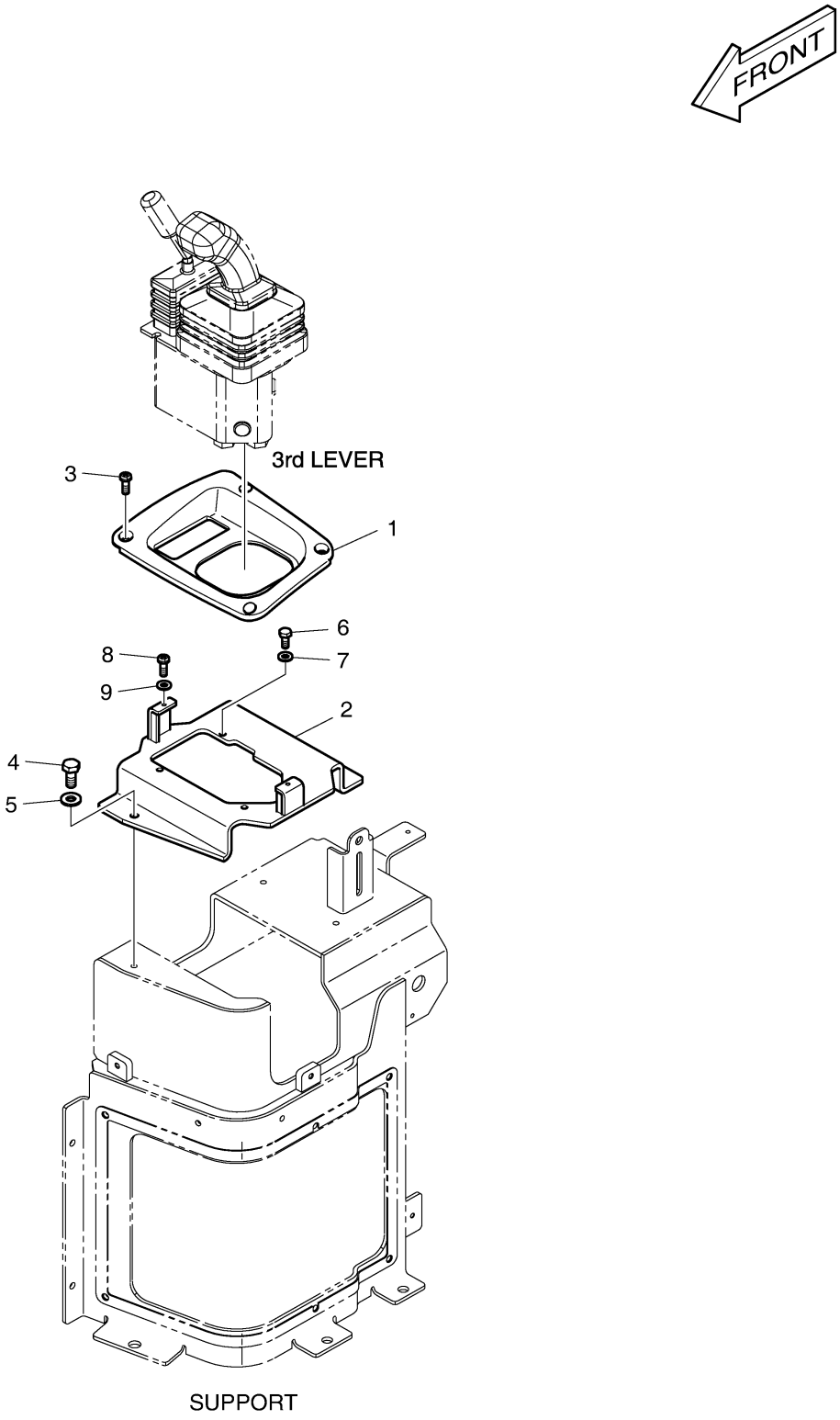

Fig. 1340 SEAT ASS'Y- MECHANICAL

Key No	Part No	Description	Qty	S.C	Serial No	ICA	Replacable	Qty
-	K1051872	SEAT;MECHANICAL SUSPENSE	-	D				
1	4901-9036	SEAT	1					
1-1	2.161-00017	UPPER ASS'Y	1					
1-2	2.430-00274	BACK COVER	1					
1-3	2.161-00013	BACK FOAM	1					
1-4	1.430-00214	SEAT COVER	1					
1-5	1.161-00013	SEAT FOAM	1					
1-6	1.604-00001	FRAME,SEAT	1					
1-7	2.429-00040	HEAD REST	1					
1-8	2.131-00382	SPRING;HEIGHT RISER	1					
1-9	2.106-00005	TETHER BELT	1					
1-10	2.161-00011	DAMPER ASS'Y	1					
1-11	2.300-00002	SUSPENSION ASS'Y	1					
1-12	2.195-00020	FORE & AFT ADJUSTER	1					
1-13	2.151-00001	WEIGHT ADJUSTER	1					
1-14	2.416-00037	UPSTOP/BUMPSTOP	1					
1-15	2.172-00001	HANDLE	1					
1-16	2.131-00383	HEIGHT RISER SPRING	1					
1-17	2.430-00385	SUSPENSION COVER	1					
1-18	2.172-00012	SLIDE RAIL HANDLE	1					
1-19	2.109-00088	BEARING KIT	1					
1-20	1.901-00002	SEAT BELT	1					
1-21	2.197-00024	ARM REST(L.H)	1					
1-22	2.197-00025	ARM REST(R.H)	1					
1-23	2.125-00001	HEIGHT RISER LATCH	1					
2	S2208866	BOLT	4					

Fig. 1340 SEAT ASS'Y- MECHANICAL

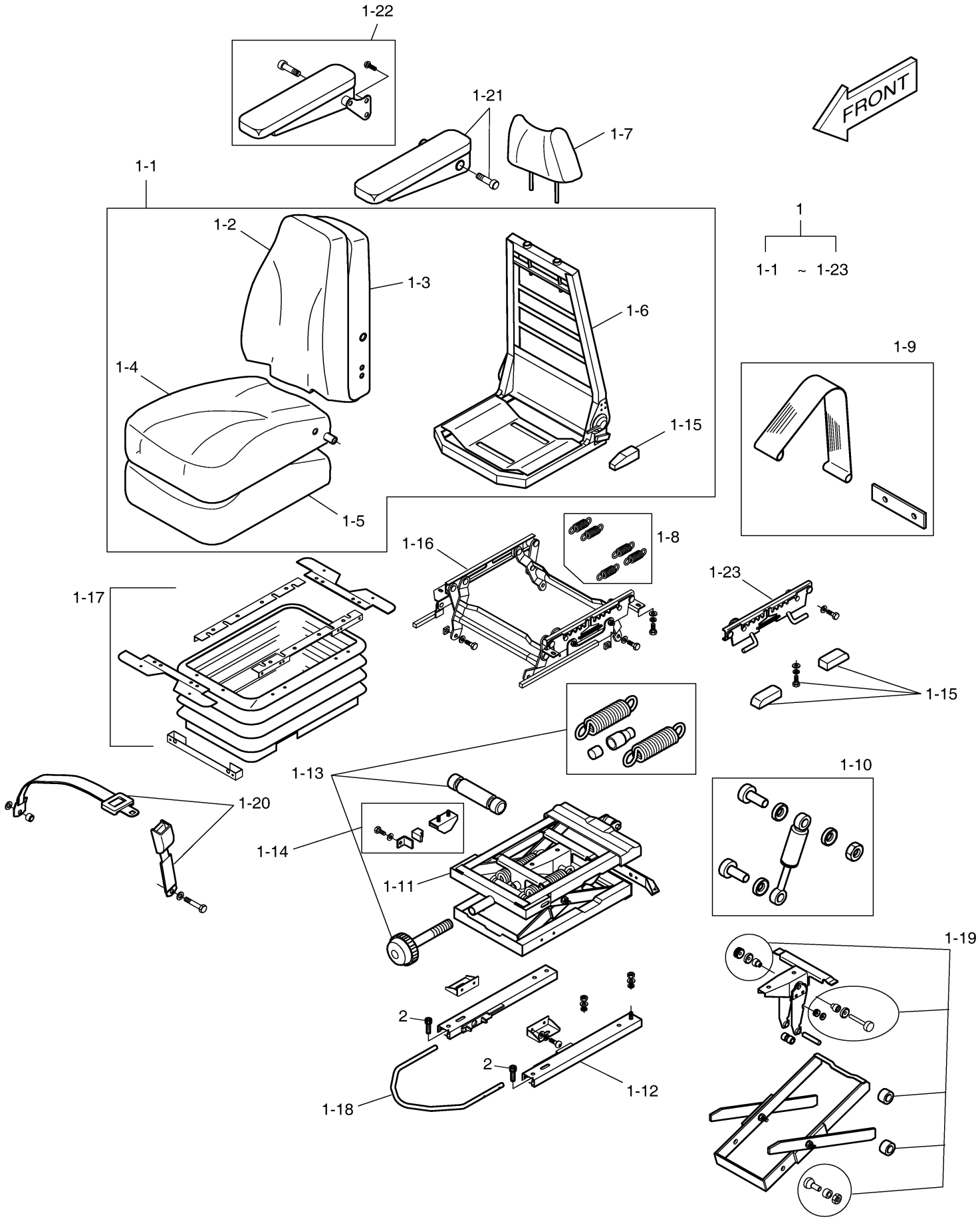

DOOSAN Doosan Infracore

Fig. 1350 DUCT ASS'Y

Key No	Part No	Description	Qty	S.C	Serial No	ICA	Replacable	Qty
-	K1016782A	DUCT ASS'Y	-	D	10001~10166			
-	460103-00833	DUCT ASS'Y	-	D	10167~			
1	2213-9002	DUCT;FOOT	1					
2	K1010160	DUCT	1		10001~10166	Y	460103-00823	1
2	460103-00823	DUCT	1		10167~			
3	K1006058	DUCT;FOOT DEF.	1		10001~10166	Y	460103-00802	1
3	460103-00802	DUCT ASSY,DEFROST	1		10167~			
4	K1006067A	DUCT;FOOT	1		10001~10166	Y	460103-00804	1
4	460103-00804	DUCT ASSY,FOOT	1		10167~			
5	K1016783	DUCT;FOOT DEF. FRONT	1		10001~10166	Y	460103-00834	1
5	460103-00834	DUCT	1		10167~			
6	K1016787A	DUCT;VENT FRONT	1		10001~10166	Y	460103-00835	1
6	460103-00835	DUCT	1		10167~			
7	K1006081	DUCT;VENT REAR1 (L.H)	1		10001~10166	Y	460103-00809	1
7	460103-00809	DUCT,VENTILATION	1		10167~			
8	K1018856	DUCT;VENT REAR2 (L.H)	1		10001~10166	Y	460103-00836	1
8	460103-00836	DUCT	1		10167~			
9	K1006083	DUCT;VENT REAR (R.H)	1		10001~10166	Y	460103-00814	1
9	460103-00814	DUCT,VENTILATION	1		10167~			
10	2120-2166D10	SCREW	15					

Fig. 1350 DUCT ASS'Y

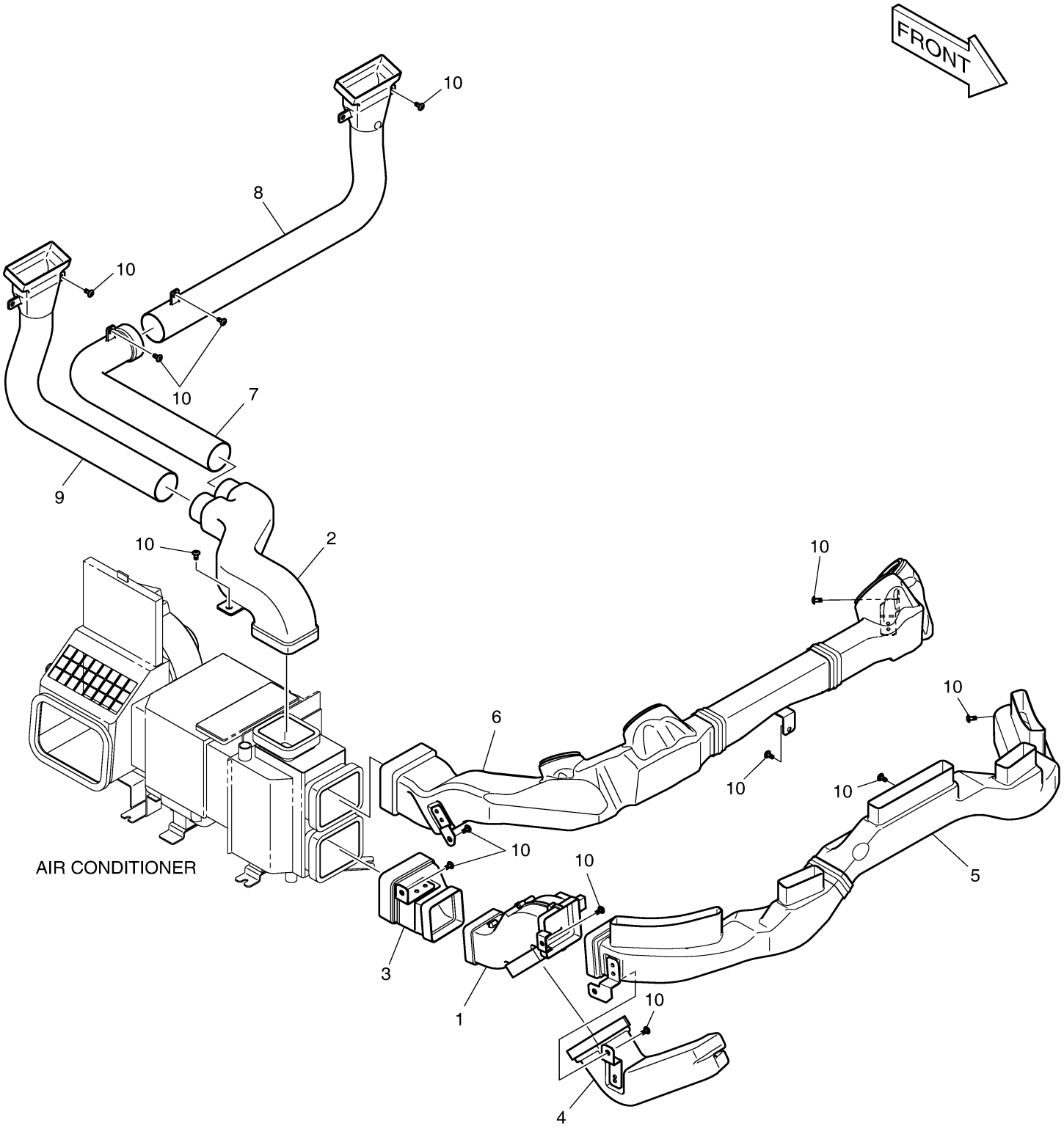

Fig. 1360 STEERING ASS'Y

Key No	Part No	Description	Qty	S.C	Serial No	ICA	Replacable	Qty
-	190109-00029	COLUMN ASSY,STEERING	-	D	10001~10363			
-	190109-00029B	COLUMN ASSY,STEERING	-	D	10364~			
1	K1027634	COLUMN	1					
2	K1006049	COVER	1					
3	K1006050	COVER	1					
4	K1006053	COVER	1					
5	K1006054	COVER	1					
6	4549-6072	SWITCH;SELECTOR(L.H)	1					
7	4549-9418A	SWITCH;COLUMN(R.H)	1					
8	2120-2166D8	BOLT	14					
9	2114-1898D4	WASHER	18					
10	K1013184	WHEEL	1					
11	4142-1160C	STRIKER	1					
12	S0504253	BOLT M6X8-8.8	1					
13	2120-2166D10	SCREW	4					
14	2120-2166D32	BOLT	4					
15	2114-1898D6	WASHER	4					
16	K1007019B	PLATE	1					
17	4161-9036	MOUNT;FLEX	4					
18	2120-2166D29	BOLT	4					
19	2114-1898D16	WASHER	8					
20	2120-2166D4	BOLT	4					
21	2114-1898D1	WASHER	4					
22	K1013263	BOOT	1					
23	K1013279	CAP;OPERATOR	1		10001~10363	I	110910-02068	1
23	110910-02068	CAP ASSY;STEERING WHEEL	1		10364~			
24	K1016776	COVER	1					
25	K1016777A	COVER	1					
26	K1016778A	COVER	1					
27	2120-2166D15	BOLT	4					

Fig. 1360 STEERING ASS'Y

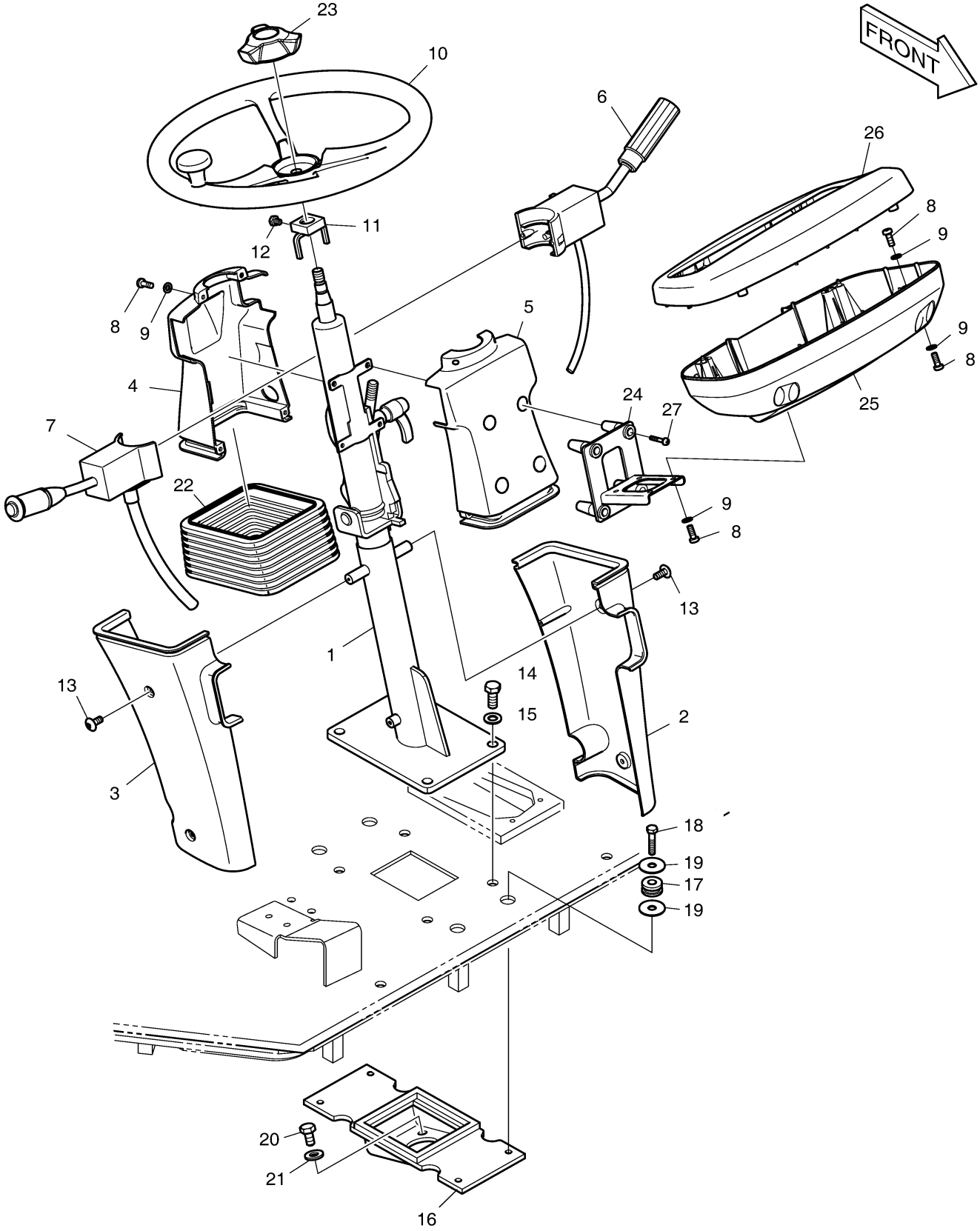

DOOSAN Doosan Infracore

Fig. 1370 COUNTER WEIGHT & REAR LAMP

Key No	Part No	Description	Qty	S.C	Serial No	ICA	Replacable	Qty
-	160702-00374	WEIGHT ASSY,COUNTER	-	D				
2	110503-00097	COVER,BATTERY;TOP(L.H)	1		10001~10261	I	110503-00097B	1
2	110503-00097B	COVER,BATTERY;TOP(L.H)	1		10262~			
3	110503-00098B	COVER,BATTERY;SIDE(L.H)	1		10001~10177	Y	110503-00098C	1
3	110503-00098C	COVER,BATTERY;SIDE(L.H)	1		10178~			
4	110503-00099	COVER,BATTERY;TOP(R.H)	1		10001~10261	I	110503-00099B	1
4	110503-00099B	COVER,BATTERY;TOP(R.H)	1		10262~			
5	110503-00100B	COVER,BATTERY;SIDE(R.H)	1		10001~10177	Y	110503-00100C	1
5	110503-00100C	COVER,BATTERY;SIDE(R.H)	1		10178~			
6	110508-00577A	COVER,LAMP;REAR SUB(L.H)	1		10001~10056	I	110508-00577B	1
6	110508-00577B	COVER,LAMP;REAR SUB(L.H)	1		10057~			
6-1	110508-00578	COVER,LAMP;REAR(L.H)	1		10001~10056	I	110508-00578A	1
6-1	110508-00578A	COVER,LAMP;REAR(L.H)	1		10057~			
6-2	K1055987	PLATE,LAMP	1		10001~10056	I	250201-02213	1
6-2	250201-02213	PLATE,LAMP	1		10057~			
6-3	K1003561	LAMP ASS`Y	1		10001~10056	I	301005-00309	1
6-3	301005-00309	LAMP ASS'Y	1		10057~			
6-3A	515-00015	BULB	2					
6-4	S0556766	BOLT	2					
6-5	S5010513	WASHER	2					
7	110508-00579A	COVER,LAMP;REAR SUB(R.H)	1		10001~10056	I	110508-00579B	1
7	110508-00579B	COVER,LAMP;REAR SUB(R.H)	1		10057~			
7-1	110508-00580	COVER,LAMP;REAR(R.H)	1		10001~10056	I	110508-00580A	1
7-1	110508-00580A	COVER,LAMP;REAR(R.H)	1		10057~			
7-2	K1055987	PLATE,LAMP	1		10001~10056	I	250201-02213	1
7-2	250201-02213	PLATE,LAMP	1		10057~			
7-3	K1003561	LAMP ASS`Y	1		10001~10056	I	301005-00309	1
7-3	301005-00309	LAMP ASS'Y	1		10057~			
7-3A	515-00015	BULB	2					
7-4	S0556766	BOLT	2					
7-5	S5010513	WASHER	2					
8	K1056032	CAP,RUBBER	4					
9	K1004331	CAP	2					
10	161-00195	STOPPER	2		10001~10177			
11	DS1001065	SPRING;GAS	2					
12	S4012533	NUT	4		10001~10177			

Key No	Part No	Description	Qty	S.C	Serial No	ICA	Replacable	Qty
12	S4012533	NUT	6		10178~10261			
12	S4012533	NUT	8		10262~			
13	S5102503	WASHER	4					
14	K1014299	PIN	1					
15	124-00017	CLIP;PIN	1					
16	DS0025014	BOLT	4					
17	DS0025033	BOLT	16					
18	250201-00392A	PLATE;BATTERY CATCH	2					
19	100601-00020	CATCH ASSY	2					
20	S3450573	SCREW	4					
21	S5100103	WASHER	4					
22	S5000113	WASHER	4					
23	S4012633	NUT	2		10001~10177			
24	DS0002272	BOLT	4					
25	2114-1370	WASHER	4		10001~10213	I	120804-00074A	4
25	120804-00074A	WASHER,HARD	4		10214~			
26	110956-00232	STOPPER,RUBBER	2		10001~10177			
26	110956-00232	STOPPER,RUBBER	4		10178~			
28	250201-01786	PLATE	2					
29	S3450623	SCREW M4X0.7X25	6					
51	110910-00077	CAP	8					
71	160702-00375B	WEIGHT,COUNTER	1					

Fig. 1370 COUNTER WEIGHT & REAR LAMP

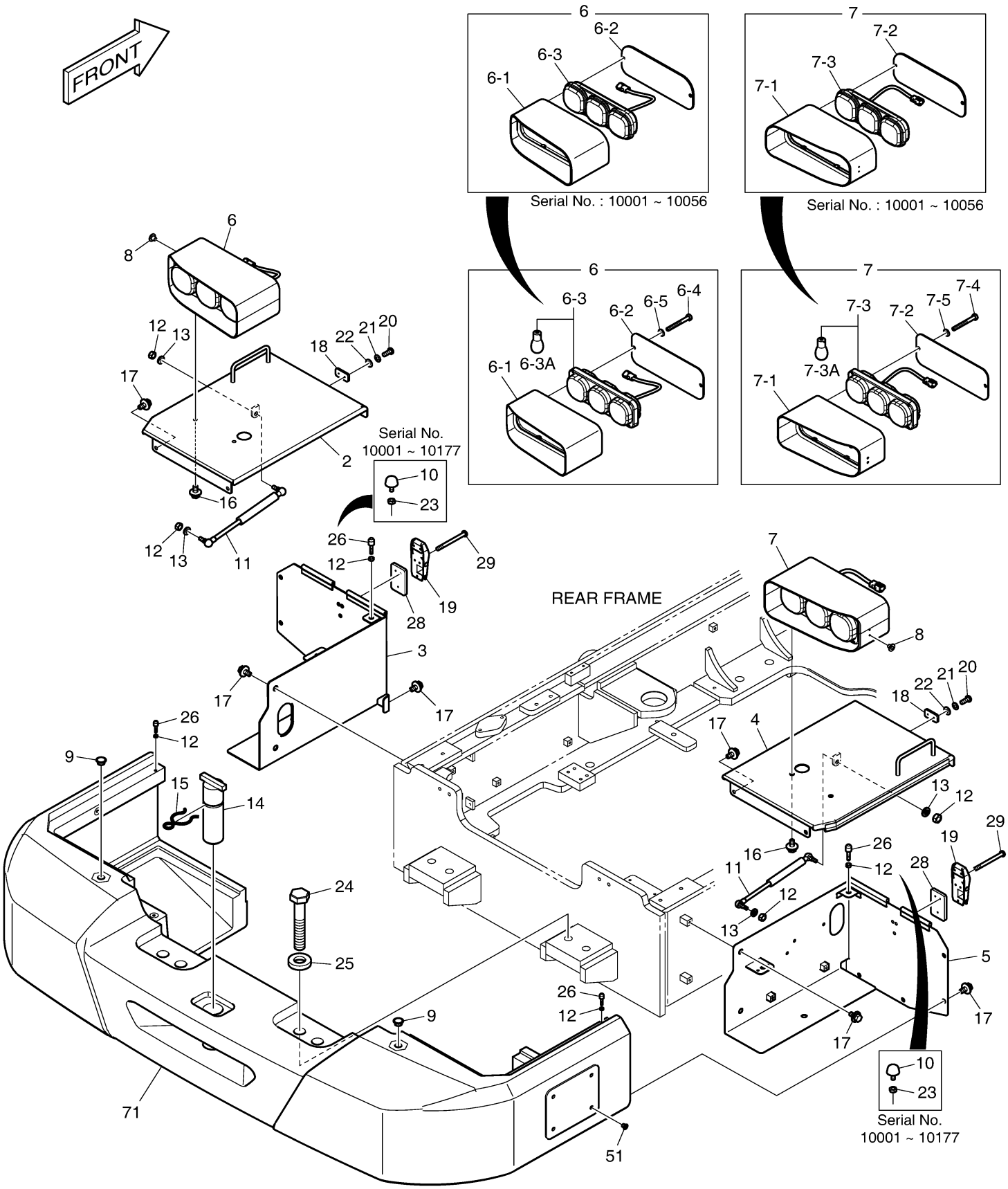

Fig. 1380 BAFFLE ASS'Y

Key No	Part No	Description	Qty	S.C	Serial No	ICA	Replacable	Qty
-	110502-00422	COVER ASSY,BAFFLE	-	D				
1	110502-00428A	COVER,BAFFLE;(L.H)	1		10001~10099	I	110502-00428B	1
1	110502-00428B	COVER,BAFFLE;(L.H)	1		10100~10243	I	110502-00428C	1
1	110502-00428C	COVER,BAFFLE;LH	1		10244~			
2	110502-00429A	COVER,BAFFLE;(R.H)	1		10001~10099	I	110502-00429B	1
2	110502-00429B	COVER,BAFFLE;(R.H)	1		10100~10243	I	110502-00429C	1
2	110502-00429C	COVER,BAFFLE;RH	1		10244~			
3	110502-00430	COVER,BAFFLE;(L.H)	1		10001~10243	I	110502-00430A	1
3	110502-00430A	COVER,BAFFLE;LH	1		10244~			
4	110502-00431	COVER,BAFFLE;(R.H)	1		10001~10243	I	110502-00431A	1
4	110502-00431A	COVER,BAFFLE;RH	1		10244~			
5	DS0025033	BOLT	8		10001~10117			
5	DS0025032	BOLT	8		10118~			

Fig. 1380 BAFFLE ASS'Y

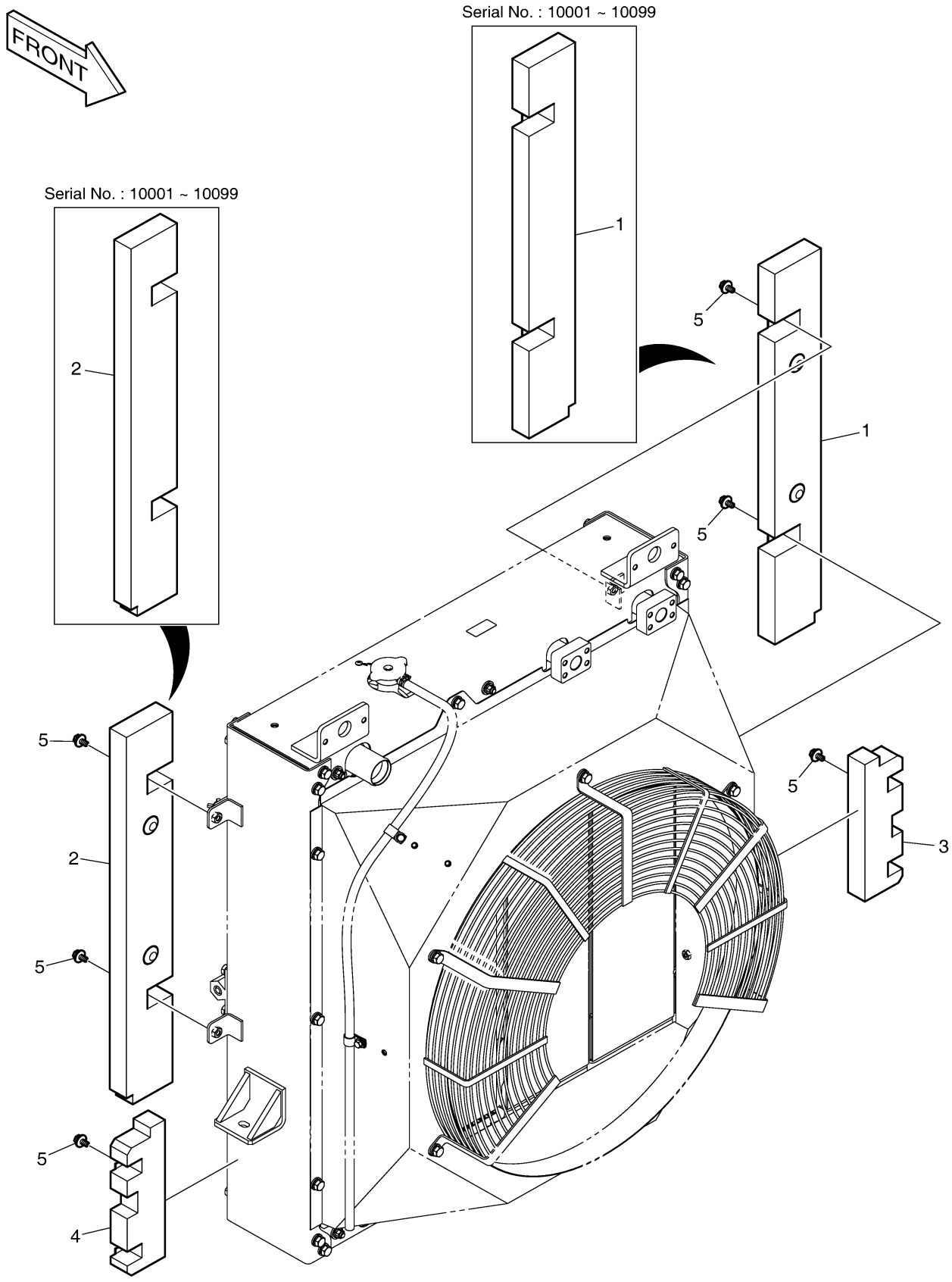

Fig. 1390 RADIATOR GUARD

Key No	Part No	Description	Qty	S.C	Serial No	ICA	Replacable	Qty
-	110508-04355	COVER ASSY	-	D				
2	101569-00063A	GUARD ASSY,RADIATOR	1		10001~10165	I	101569-00063B	1
2	101569-00063B	GUARD ASSY,RADIATOR	1		10166~10243	I	101569-00063C	1
2	101569-00063C	GUARD ASSY,RADIATOR	1		10244~10272	I	101569-00063E	1
2	101569-00063E	GUARD ASSY,RADIATOR	1		10273~10285	I	101569-00063G	1
2	101569-00063G	GUARD ASSY,RADIATOR	1		10286~10310			
2	101569-00063H	GUARD ASSY,RADIATOR	1		10311~10363	Y	101569-00063K	1
2	101569-00063K	GUARD ASSY,RADIATOR	1		10364~			
2-1	110958-00886A	SUPPORT	1		10001~10272	I	110958-00886B	1
2-1	110958-00886B	SUPPORT,RADIATOR	1		10273~10363	Y	110958-00886C	1
2-1	110958-00886C	SUPPORT,RADIATOR	1		10364~			
2-2	110958-00887	SUPPORT	1		10001~10310			
2-2	110958-00887A	SUPPORT,RADIATOR	1		10311~10363	Y	110958-00887B	1
2-2	110958-00887B	SUPPORT,RADIATOR	1		10364~			
2-3	110958-00888	SUPPORT,RADIATOR	2		10001~10363	Y	110958-00888A	2
2-3	110958-00888A	SUPPORT,RADIATOR;LH	2		10364~			
2-4	101569-00064	GUARD,RADIATOR;(L.H)	1					
2-5	101569-00066	GUARD,RADIATOR;(R.H)	1					
2-6	110921-01079A	GUARD ASSY,ROOF	1		10001~10285	Y	110921-01079B	1
2-6	110921-01079B	GUARD,ROOF	1		10286~10363	Y	110921-01079C	1
2-6	110921-01079C	GUARD,ROOF	1		10364~			
2-6A	4621-2347	COVER	1					
2-6B	2120-9006	BOLT;WING M6X1.0	2					
2-7	S4012633	NUT	6					
2-8	DS0401211	WASHER,PIN	14					
2-9	S0560466	BOLT	8					
2-10	DS0025016	BOLT	4					
2-11	DS0401121	WASHER	4		10001~10165			
2-11	DS0401240	WASHER	4		10166~10243			
2-11	DS0401224	WASHER,PLAIN	4		10244~			
2-12	S0512066	BOLT	2		10001~10243			
2-12	S0511866	BOLT	2		10244~			
2-13	S0558166	BOLT	2		10001~10243			
2-13	S0512066	BOLT	2		10244~			
10	K1017495A	BRACKET	1					
11	K1017496A	BRACKET	1					

Key No	Part No	Description	Qty	S.C	Serial No	ICA	Replacable	Qty
12	S0515266	BOLT	4					
13	2114-1898D11	WASHER	4					
14	DS5201040	SPACER	8					
15	S0560666	BOLT	8					
19	4116-4024C	STOPPER	2					
20	DS0025014	BOLT	4					
21	S0512066	BOLT	7					
23	S5102503	WASHER	4					
24	S4012533	NUT	2					
25	DS7722032	SHIM	2					
26	DS7722033	SHIM	2					
27	2875-329M1	BUFFER	2					
28	DS1001094	SPRING,GAS	2					
31	S5010313	WASHER	4		10001~10310			
31	S5010513	WASHER	4		10311~			
32	S0504266	BOLT	4		10001~10310			
32	S0508566	BOLT	4		10311~			
33	4130-1015C	SPRING	1		10001~10310			
33	111601-00647	SPRING,DOOR	2		10311~			
34	4130-1014C	SPRING(R.H)	1		10001~10310			
35	S4012333	NUT	2					
38	101524-00044B	GRILL ASSY,RADIATOR	1		10001~10165	I	101524-00044C	1
38	101524-00044C	GRILL ASSY,RADIATOR	1		10166~			
38-2	K1016911	LOCK;GRILL	1					
38-3	K1006666	STOPPER;RUBBER	2					
38-4	2114-1058D2	WAHSER	2					
38-5	S4012933	NUT	2					
38-7	K1012269	FOAM	1					
39	K1004630	KEY,CYLINDER	1					
40	DS0401121	WASHER	7					
45	250201-03529	PLATE	2		10311~			
46	S3450933	SCREW M6X1.0X8	4		10311~			

Fig. 1390 RADIATOR GUARD

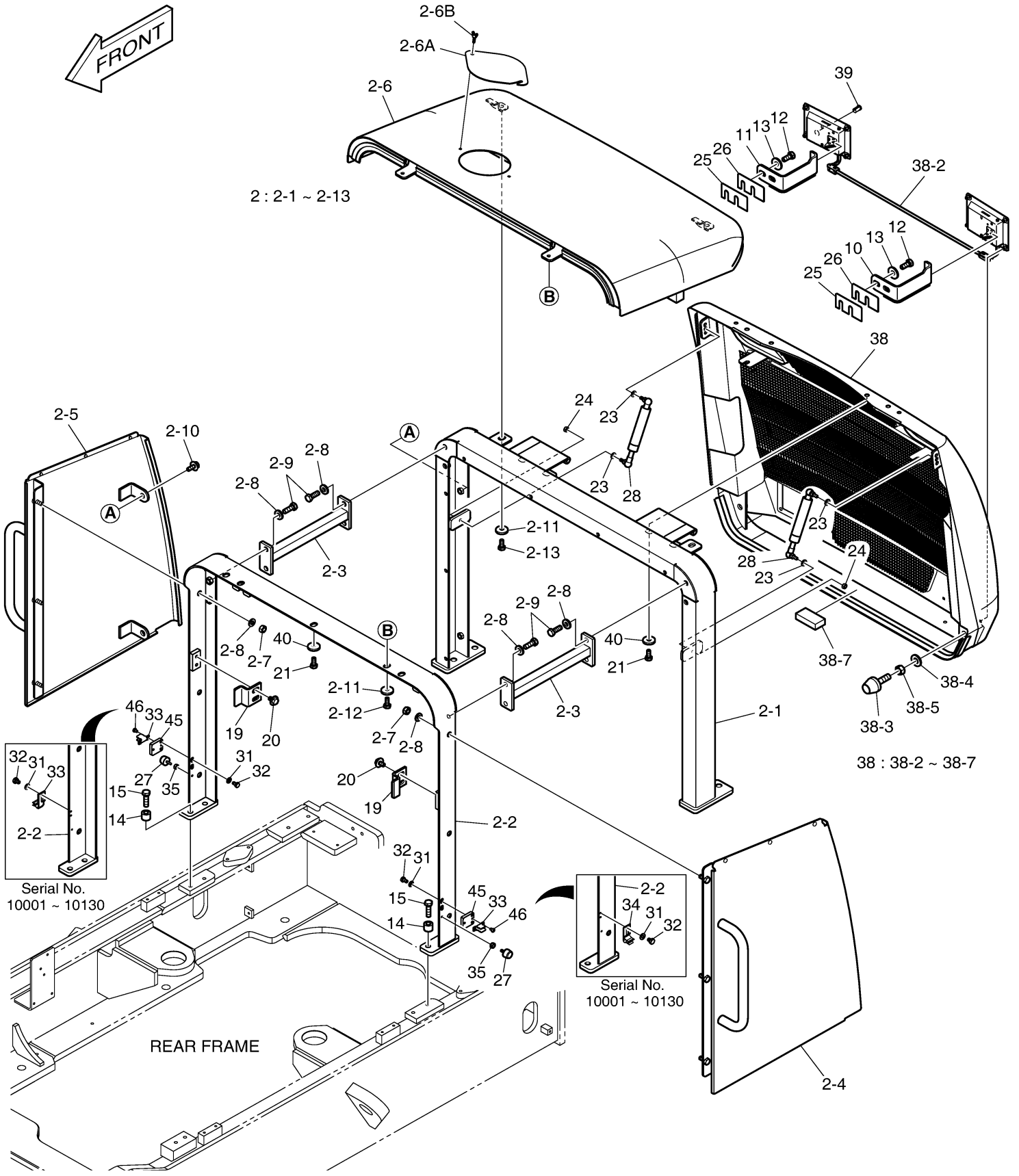

DOOSAN Doosan Infracore

Fig. 1400 ENGINE COVER

Key No	Part No	Description	Qty	S.C	Serial No	ICA	Replacable	Qty
-	110508-04355	COVER ASSY	-	D				
1	110958-00885A	SUPPORT,OIL TANK	1		10001~10166			
1	110958-00885B	SUPPORT,OIL TANK	1		10167~10178	Y	110958-00885C	1
1	110958-00885C	SUPPORT,OIL TANK	1		10179~			
3	110508-04463	COVER,TOP	1					
4	110982-00450A	DOOR,SIDE;(L.H)	1		10001~10056			
4	110982-00450B	DOOR,SIDE;(L.H)	1		10057~			
4A	2171-9004	HINGE	2					
4B	125-00035A	LOCK	1					
4C	S0515466	BOLT	4					
5	110982-00454B	DOOR,SIDE;LOWER(L.H)	1		10001~10056			
5	110982-00454C	DOOR,SIDE;LOWER(L.H)	1		10057~10310			
5	110982-00454E	DOOR,SIDE;LH	1		10311~			
6	110517-00336	COVER,SIDE;(L.H)	1					
6A	2125-9001	CATCH	1					
7	110982-00455A	DOOR,SIDE;(R.H)	1		10001~10056			
7	110982-00455B	DOOR,SIDE;(R.H)	1		10057~10117	I	110982-00455C	1
7	110982-00455C	DOOR,SIDE;(R.H)	1		10118~			
7A	2171-9004	HINGE	2					
7B	125-00035A	LOCK	1					
7C	S0515466	BOLT	4					
8	110982-00453B	DOOR,SIDE;LOWER(R.H)	1		10001~10056			
8	110982-00453C	DOOR,SIDE;LOWER(R.H)	1		10057~10310			
8	110982-00453E	DOOR,SIDE;RH	1		10311~			
9	110517-00337	COVER,SIDE;(R.H)	1					
9A	2125-9001	CATCH	1					
14	DS5201040	SPACER	8					
15	S0560666	BOLT	8					
16	2114-1058D46	WASHER	8		10001~10117			
16	2114-1058D45	WASHER	8		10118~			
17	S4012733	NUT	8					
18	4114-4160B	SHIM	4					
20	DS0025014	BOLT	6					
21	S0512066	BOLT	3					
22	DS1001048	SPRING;GAS	2					
23	S5102503	WASHER	4					

Key No	Part No	Description	Qty	S.C	Serial No	ICA	Replacable	Qty
24	S4012533	NUT	4					
27	2875-329M1	BUFFER	2					
29	310401-00842	CABLE;DOOR	2					
30	2705-9002	PIN	4					
35	S4012333	NUT	2					
36	S5102703	WASHER	8		10001~10243			
37	S0508966	BOLT	8					
39	K1004630	KEY,CYLINDER	2					
40	DS0401121	WASHER	3					
41	2114-1058D72	WASHER	8					
42	2114-1058D29	WASHER	8					
43	110513-00870	COVER,UNDER	1		10001~10243	I	110513-00870A	1
43	110513-00870A	COVER,UNDER	1		10244~			
44	DS0025023	BOLT	4					

Fig. 1400 ENGINE COVER

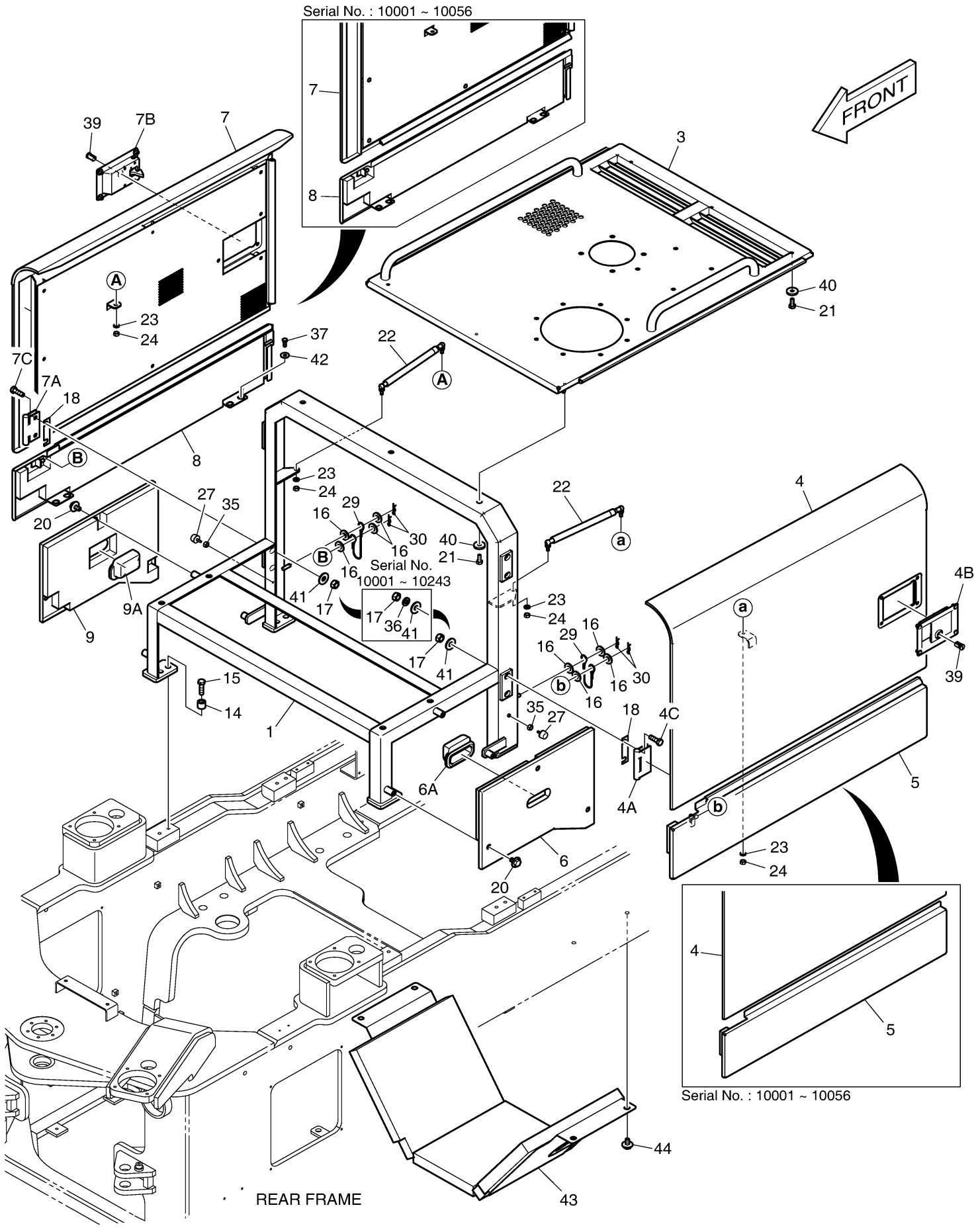

Fig. 1410 FENDER & LADDER

Key No	Part No	Description	Qty	S.C	Serial No	ICA	Replacable	Qty
-	180307-00319	FENDER ASSY	-	D				
1	180307-00322A	FENDER ASSY,REAR;(L.H)	1		10001~10056	I	180307-00322B	1
1	180307-00322B	FENDER ASSY,REAR;(L.H)	1		10057~			
1-1	180307-00323A	FENDER,REAR;(L.H)	1		10001~10056	I	180307-00323B	1
1-1	180307-00323B	FENDER,REAR;(L.H)	1		10057~			
1-2	110932-00077	LADDER;(L.H)	1					
1-3	110932-00035A	LADDER	1					
1-4	110926-00004	HANGER;STEP	2					
1-5	110932-00001	RUNG,LADDER	1					
1-6	250201-00003	PLATE	4					
1-7	DS0025030	BOLT	8					
1-8	DS0025023	BOLT	3					
1-9	S0521466	BOLT	4					
1-10	2114-1058D2	WAHSER	4					
1-11	110910-00038A	CAP	2					
2	180307-00324A	FENDER ASSY,REAR;(R.H)	1		10001~10056	I	180307-00324B	1
2	180307-00324B	FENDER ASSY,REAR;(R.H)	1		10057~			
2-1	180307-00325A	FENDER,REAR;(R.H)	1		10001~10056	I	180307-00325B	1
2-1	180307-00325B	FENDER,REAR;(R.H)	1		10057~			
2-2	110406-00936	BRACKET;LADDER(R.H)	1					
2-3	DS0025014	BOLT	2					
3	S0521466	BOLT	4					
4	2114-1058D2	WAHSER	8					
5	S0521266	BOLT	4					
6	110406-01678	BRACKET;STEP	1					
7	DS0025018	BOLT	2					
8	K1013278	CAP	10					
9	K1046074	CHOCK;WHEEL	2		10001~10265			
10	K1046075	CASE;WHEEL CHOCK	2		10001~10265			
11	S2209066	BOLT	8		10001~10265			
12	S5010513	WASHER	8		10001~10265			
13	110910-00037A	CAP	4					
14	110910-00040A	CAP,PLASTIC	1					
51	180307-00259C	FENDER,FRONT(L.H)	1					
52	180307-00260C	FENDER,FRONT(R.H)	1					
53	DS0025015	BOLT	12					

Key No	Part No	Description	Qty	S.C	Serial No	ICA	Replacable	Qty
54	K1004818B	SUPPORT(R.H)	1					
54-1	K1004816	PIPE(R.H)	1					
54-2	K1006251B	SUPPORT;LAMP(R.H)	1					
54-3	K1006182B	COVER;LAMP(R.H)	1					
54-4	K1005906	LAMP	1					
54-4A	515-00005	BULB	1					
54-4B	2515-1016D4	BULB,HALOGEN	1					
54-4C	K1010656	BULB;HALOGEN	1					
54-4D	515-00015	BULB	1					
54-5	K1006366	HARNESS	1					
54-6	DS0025023	BOLT	2					
54-7	K1006592	CAP	1					
55	K1004817B	SUPPORT(L.H)	1					
55-1	K1004815	PIPE(L.H)	1					
55-2	K1006250B	SUPPORT;LAMP(L.H)	1					
55-3	K1006181B	COVER;LAMP(L.H)	1					
55-4	K1005907	LAMP	1					
55-4A	515-00005	BULB	1					
55-4B	2515-1016D4	BULB,HALOGEN	1					
55-4C	K1010656	BULB;HALOGEN	1					
55-4D	515-00015	BULB	1					
55-5	K1006366	HARNESS	1					
55-6	DS0025023	BOLT	2					
55-7	K1006592	CAP	1					
71	110910-00037A	CAP	8		10266~			

Fig. 1410 FENDER & LADDER

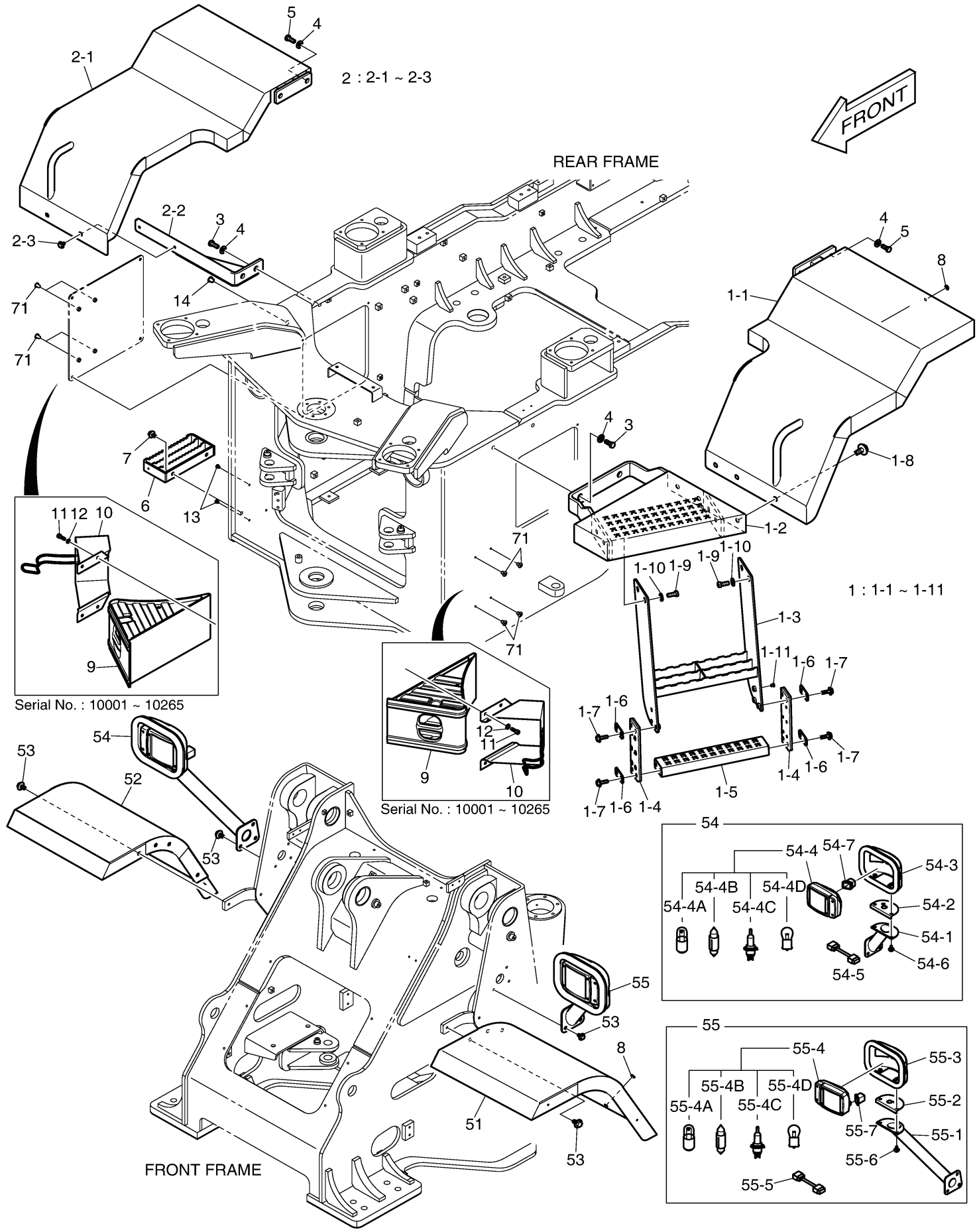

DOOSAN Doosan Infracore

Fig. 1420 ELECTRIC BOX - FNR LEVER

Key No	Part No	Description	Qty	S.C	Serial No	ICA	Replacable	Qty
-	300619-01456A	ELECTRIC ASSY;ELECTRIC BOX	1		10001~10066			
-	300619-01456B	ELECTRIC ASSY;ELECTRIC BOX	1		10067~10117	I	300619-01456C	1
-	300619-01456C	ELECTRIC ASSY;ELECTRIC BOX	1		10118~10141	I	300619-01456E	1
-	300619-01456E	ELECTRIC ASSY;ELECTRIC BOX	1		10142~10193	I	300619-01456G	1
-	300619-01456G	ELECTRIC ASSY;ELECTRIC BOX	1		10194~10360	I	300619-01456H	1
-	300619-01456H	ELECTRIC ASSY;ELECTRIC BOX	1		10361~			
1	110958-01336	SUPPORT	1					
2	2543-9015	CONTROLLER,STARTER	1		10001~10193			
2	300611-00704	CONTROLLER,STARTER	1		10194~			
3	2525-1011	UNIT;BLINKER	1					
4	543-00001	UNIT;CONTROL	1		10001~10117	I	300611-00494	1
4	300611-00494	UNIT;CONTROL	1		10118~			
5	2537-9002	TIMER,WIPER	1					
6	300612-00001A	CONVERTER,DC	1					
7	2516-1102A	BUZZER;PILOT	1					
8	S3450823	SCREW	8					
9	950209-02884	PLATE,NAME;RELAY(1)	1					
10	K1006678	BOX;FUSE	2					
10-1	2527-1016	FUSE,BLADE 10A	8					
10-2	2527-1017	FUSE,BLADE 15A	4					
10-3	2527-1018	FUSE,BLADE 20A	1					
10-4	2527-1025	FUSE,BLADE 30A	1					
11	S3450983	SCREW	4					
12	S3450853	SCREW	4					
13	S5100203	WASHER	12					
14	S5100213	WASHER;SPRING	4					
15	124-00208D2	CLAMP	1					
16	124-00208D4	CLIP	1					
17	300611-00437	CONTROLLER;TRANSMISSION	1					
18	950209-02885	PLATE,NAME;RELAY(2)	1		10001~10141	I	950209-02885A	1
18	950209-02885A	PLATE,NAME;RELAY(2)	1		10142~			
19	S3450943	SCREW	14		10001~10193			
19	S3450943	SCREW	13		10194~			
20	S5102303	WASHER	18		10001~10193			
20	S5102303	WASHER	19		10194~			
21	2121-1305	NUT	2					

Key No	Part No	Description	Qty	S.C	Serial No	ICA	Replacable	Qty
22	2544-9033	RELAY	17		10001~10141			
22	2544-9033	RELAY	18		10142~			
23	2523-9007	CONTROLLER;PREHEAT	1		10001~10360	I	300611-01120	1
23	300611-01120	CONTROL UNIT;PREHEAT	1		10361~			
24	300619-02309A	ELECTRIC UNIT,TIME DELAY	1		10194~			
25	S3450943	SCREW	2		10194~			

Fig. 1420 ELECTRIC BOX - FNR LEVER

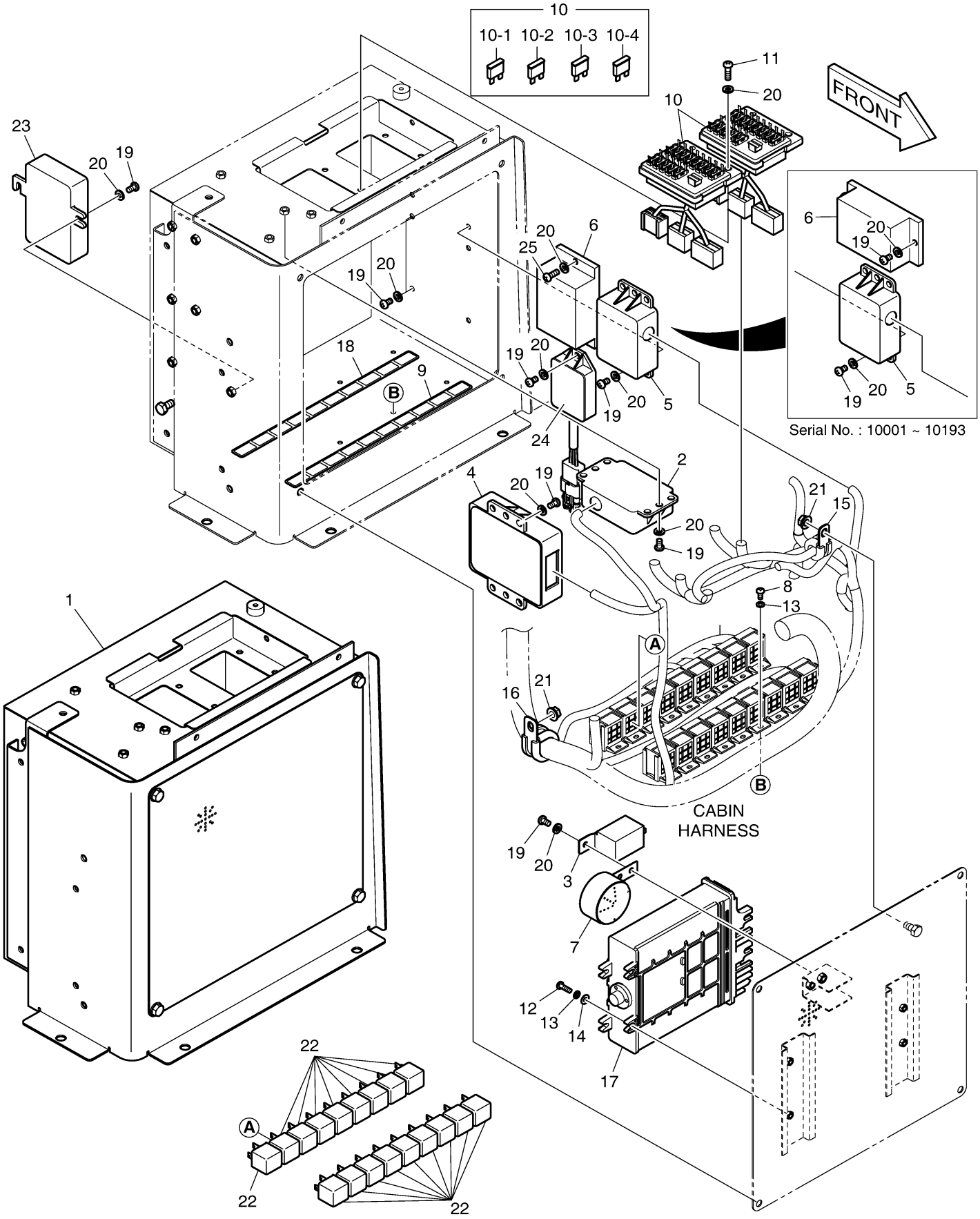

Fig. 1430 ELECTRIC PARTS - CABIN

Key No	Part No	Description	Qty	S.C	Serial No	ICA	Replacable	Qty
-	300619-01462B	ELECTRIC ASSY;CABIN	-	D	10001~10141			
-	300619-01462C	ELECTRIC ASSY;CABIN	-	D	10142~10193			
-	300619-01462E	ELECTRIC ASSY;CABIN	-	D	10194~10198			
-	300619-01462H	ELECTRIC ASSY;CABIN	-	D	10199~10251			
-	300619-01462K	ELECTRIC ASSY;CABIN	-	D	10252~10308			
-	300619-01462L	ELECTRIC ASSY;CABIN	-	D	10309~10310			
-	300619-01462M	ELECTRIC ASSY;CABIN	-	D	10311~10336			
-	300619-01462N	ELECTRIC ASSY	-	D	10337~			
1	300426-00121	PANEL ASSY,GAUGE	1		10001~10198			
1	300426-00192	PANEL,GAUGE	1		10199~10251	Y	300426-00192A	1
1	300426-00192A	PANEL,GAUGE	1		10252~			
1-1	K1011744	METER;SPEED	1		10001~10198			
1-1	300426-00190	PANEL,GAUGE	1		10199~			
1-2	800113-00005	GAUGE,RPM	1		10001~10198			
1-2	K1045382	DISPLAY	1		10199~10251	Y	970210-00053	1
1-2	970210-00053	DISPLAY	1		10252~			
1-3	K1045382	DISPLAY	1		10001~10198			
1-3	110446-00266	BRACKET,GUIDE	1		10199~			
1-4	K1007136	GAUGE;FUEL	1	D	10001~10198			
1-5	K1007137	GAUGE;WATER TEMP	1		10001~10198			
1-6	K1007138	GAUGE;T/M OIL TEMP	1		10001~10198			
1-7	515-00012A	BULB	17		10001~10198			
2	S3450863	SCREW	4					
3	S5000213	WASHER	4					
4	301419-00106	SWITCH,STARTER	1					
4A	110702-00151	KEY,START SWITCH	1					
5	K1006290	SWITCH;ROTARY	1					
6	K1006356	KNOB	1					
7	2549-9138	SWITCH;ROCKER	1		10001~10193			
7	301423-00055	SWITCH,ROCKER	1		10194~			
7-1	K9000353	LAMP;PILOT	1		10001~10193			
8	2190-2036D2	INSERT;HAZARD	1					
9	2190-2036D24	INSERT;LAMP	1					
10	2190-2036D5	INSERT;WORKING LAMP	1					
11	2549-9109	SWITCH;LAMP	2		10001~10193			
11	301423-00051	SWITCH,ROCKER	2		10194~			

Key No	Part No	Description	Qty	S.C	Serial No	ICA	Replacable	Qty
11-1	K9000353	LAMP;PILOT	1		10001~10193			
12	2190-2036D20	INSERT;REAR WORKING LAMP	1					
13	2549-9129	SWITCH;REAR WIPER/WASHER	1		10001~10093			
13	301423-00054	SWITCH,ROCKER	1		10094~			
13-1	K9000353	LAMP;PILOT	1		10001~10093			
14	2190-2036D18	INSERT;REAR WIPER/WASHER	1					
15	2190-2036D17	INSERT;PILOT CUT OFF	1					
16	2190-2036D16	INSERT;PARKING BRAKE	1					
17	2190-2036D15	INSERT;T/M CUT OFF	1					
18	2621-9002	COVER	8					
19	K1053423	SOCKET,12V POWER	1					
20	300730-00006	LIGHTER,CIGAR	1					
21	2528-9040	METER;HOUR	1		10001~10198	Y	800224-00011	1
21	800224-00011	METER,HOUR	1		10199~			
22	528-00039A	CLOCK	1					
23	310207-01679A	HARNESS;CABIN	1		10001~10141			
23	310207-01679B	HARNESS,CABIN	1		10142~10193			
23	310207-01679C	HARNESS,CABIN	1		10194~10198			
23	310207-01679G	HARNESS,CABIN	1		10199~10308	I	310207-01679H	1
23	310207-01679H	HARNESS,CABIN	1		10309~10336	I	310207-01679K	1
23	310207-01679K	HARNESS,CABIN	1		10337~			
24	S0511353	BOLT	1		10001~10310			
24	120106-00701	BOLT	1		10311~			
25	S5102603	WASHER	1		10001~10310			
26	S5010613	WASHER	1		10001~10310			
27	S3450833	SCREW	4					
28	S5100203	WASHER	8					
29	K1051948	BRACKET;CONNECTOR	1					
30	2197-1660	BRACKET	3					
31	2197-1661	BRACKET	8					
32	K1001029	BOLT	15		10001~10310			
32	K1001029	BOLT	13		10311~			
33	2121-1305	NUT	6					
34	124-00208D6	CLIP	1		10001~10310			
35	2549-9098	SWITCH;ROCKER	4		10001~10193			
35	301423-00058	SWITCH,ROCKER	4		10194~			
35-1	K9000353	LAMP;PILOT	1		10001~10193			
36	124-00208D2	CLAMP	1		10001~10310			

Key No	Part No	Description	Qty	S.C	Serial No	ICA	Replacable	Qty
36	120402-00440	CLIP	1		10311~			
37	124-00208D5	CLIP	6		10001~10310			
37	120402-00439	CLIP	7		10311~			
38	530-00067	HARNESS	1					
39	120106-00596	BOLT	2		10311~			
81	300637-00002	PLAYER,CD/MP3(24V)+USB	1					

Fig. 1430 ELECTRIC PARTS - CABIN

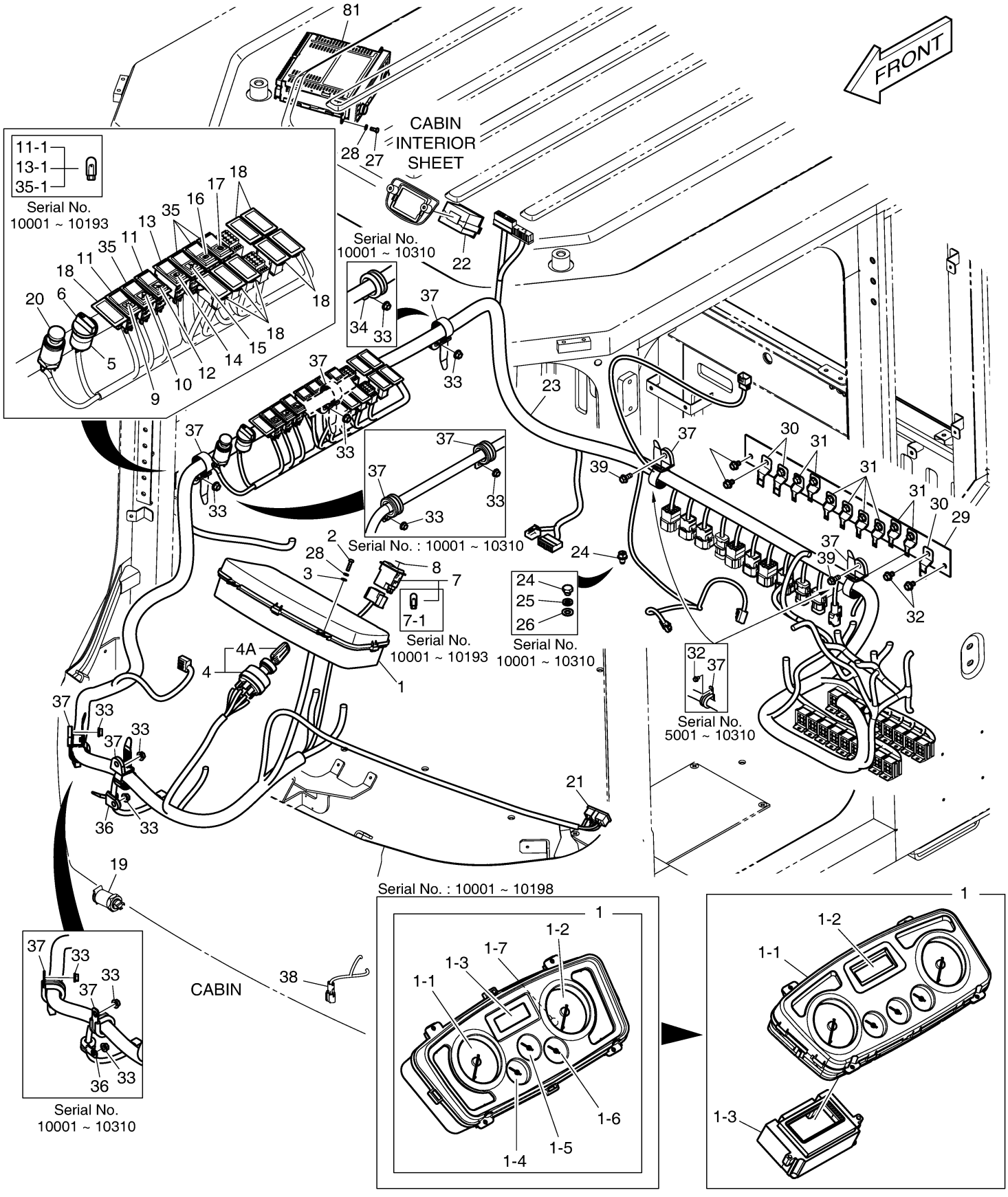

Fig. 1440 ELECTRIC PARTS - ENGINE

Key No	Part No	Description	Qty	S.C	Serial No	ICA	Replacable	Qty
-	300619-01435	ELECTRIC ASSY;ENGINE	-	D				
1	310207-01689A	HARNESS,ENGINE	1		10001~10066			
1	310207-01689B	HARNESS,ENGINE	1		10067~10198			
1	310207-01689C	HARNESS,ENGINE	1		10199~			
1A	300803-00086	FUSE;200A	1					
2	2120-2187	BOLT	5		10001~10066			
2	2120-2159	BOLT	2		10067~			
3	S5102503	WASHER	1					
4	110420-00330	BRACKET	5					
5	S5102603	WASHER	4					
6	DS0025049	BOLT	5					
10	2124-1353D8	CLIP D22/M12	1					
11	2553-1275D22	CABLE;EARTH	1					
12	2120-2196D1	BOLT;SET M10X1.5X20	1		10001~10310			
12	120106-00701	BOLT	1		10311~			
14	2547-6028	SENSOR;WATER TEMP	1					
15	310101-00035	TIE,CABLE	5					
16	120117-00073	BOLT	3		10067~			

Fig. 1440 ELECTRIC PARTS - ENGINE

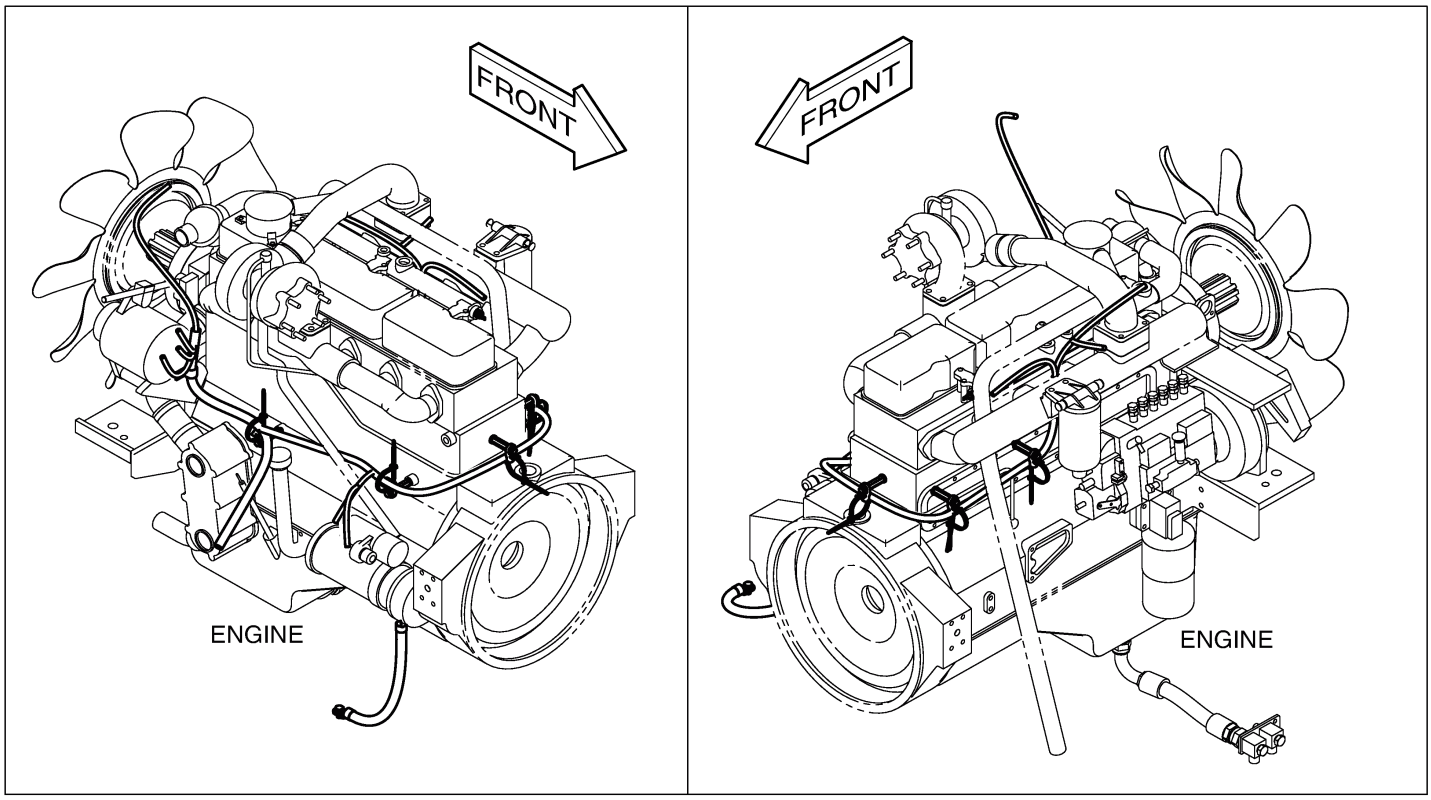

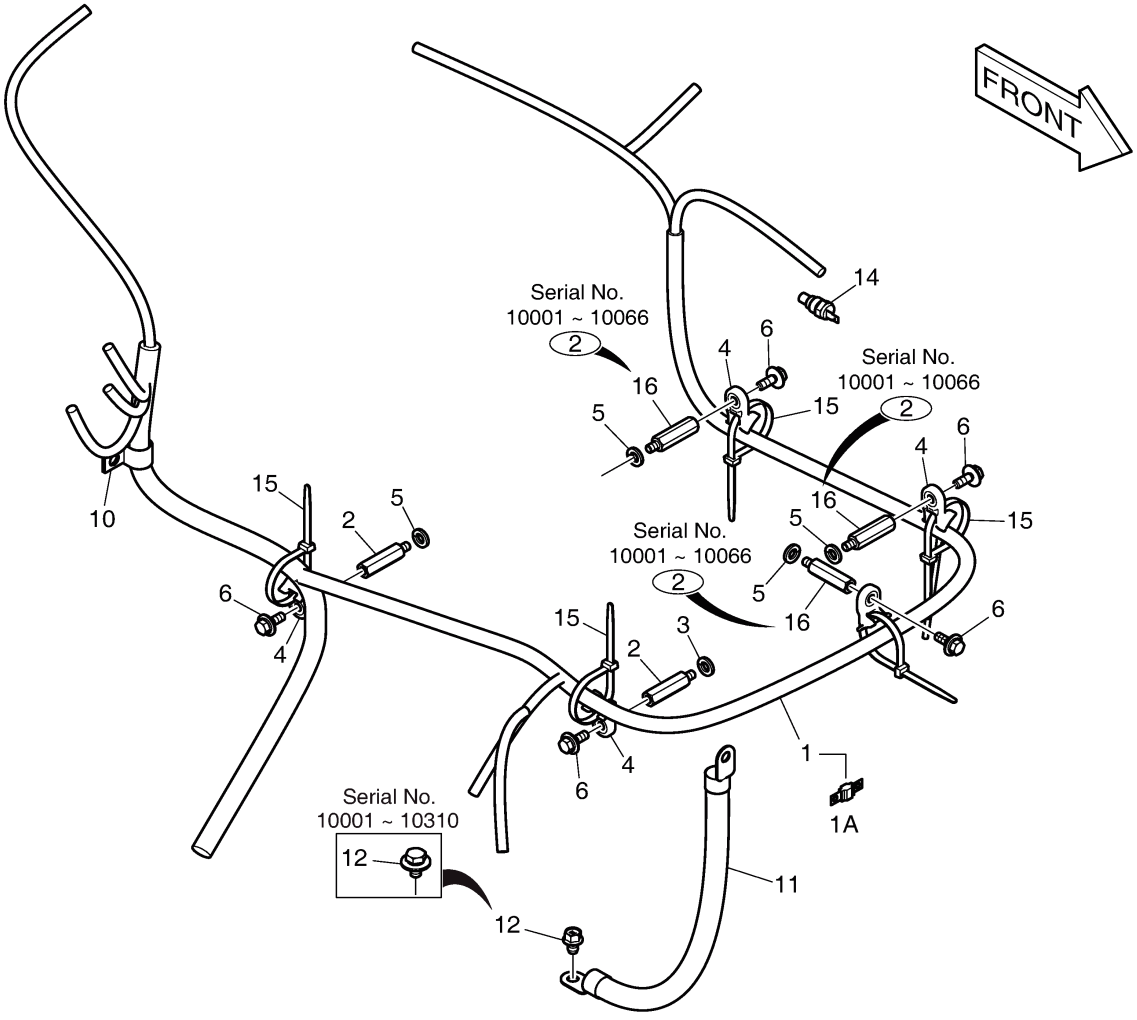

Fig. 1450 ALTERNATOR MOUNTING

Key No	Part No	Description	Qty	S.C	Serial No	ICA	Replacable	Qty
-	300619-01461	ALTERNATOR ASSY	-	D				
1	S0760853	BOLT	1					
2	2114-1058D54	WASHER	1					
3	S0562653	BOLT	1					
4	S5102703	WASHER	2					
5	S5010713	WASHER	2					
6	S4012733	NUT	1					
7	530-00123	HARNESS,ALTERNATOR	1					
8	300901-00034	ALTERNATOR(60A)	1					
8A	130707-00042	PULLEY,ALTERNATOR	1					

Fig. 1450 ALTERNATOR MOUNTING

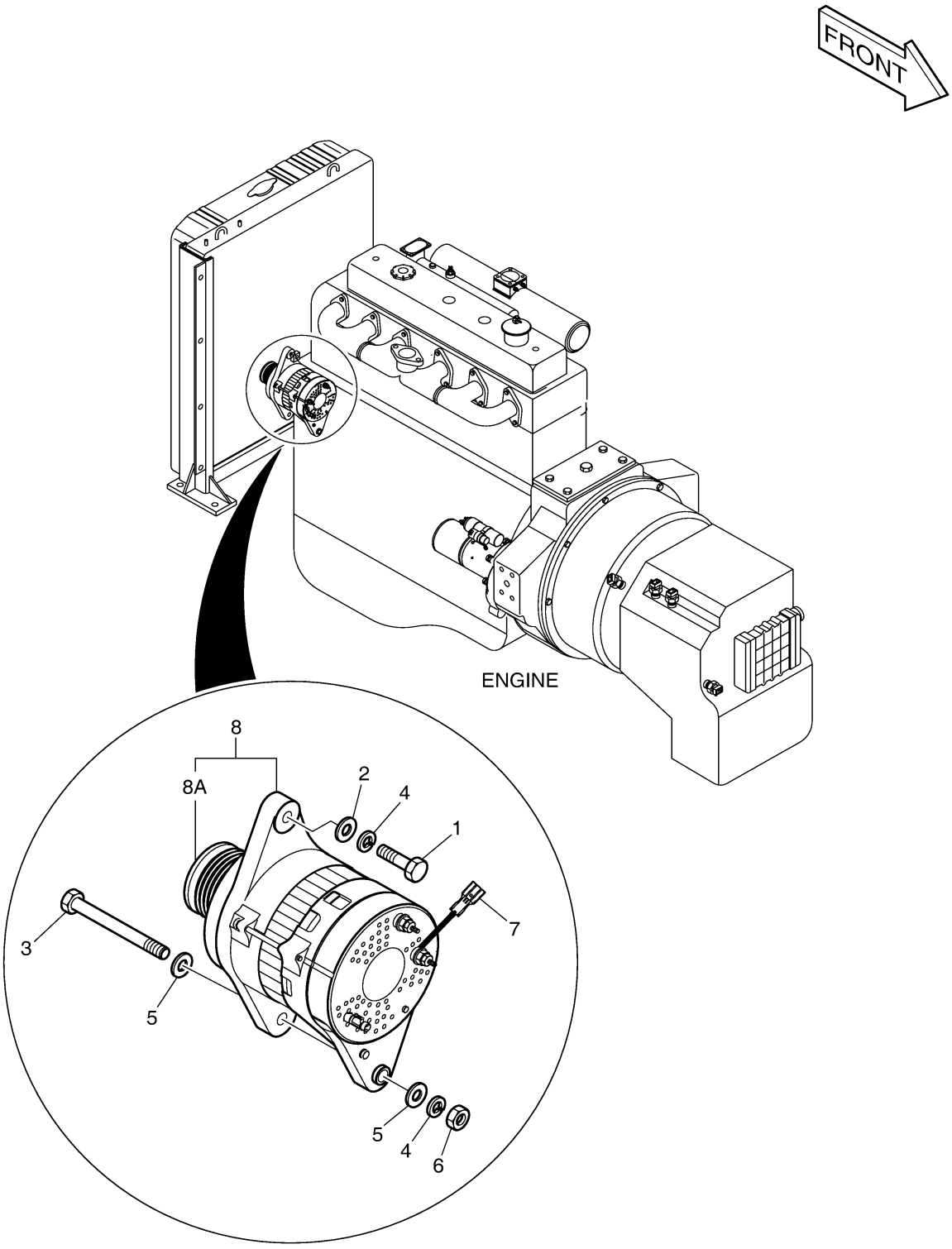

Fig. 1460 ELECTRIC PARTS - BATTERY &

Key No	Part No	Description	Qty	S.C	Serial No	ICA	Replacable	Qty
-	300619-01430	ELECTRIC ASSY;REAR FRAME	-	D				
1	S0509053	BOLT	4					
2	2544-9024	RELAY;BATTERY	1		10001~10188			
2	301202-00153	RELAY,BATTERY	1		10189~			
3	DS0025039	BOLT	2		10001~10188			
3	DS0025044	BOLT	2		10189~			
4	S5102503	WASHER	8		10001~10188			
4	S5102503	WASHER	10		10189~			
5	S5010513	WASHER	8		10001~10188			
5	S5010513	WASHER	10		10189~			
6	2527-9004	BREAKER;CIRCUIT	1					
7	2120-1354	SCREW	2					
8	2527-1023A	LINK,FUSIBLE	1					
9	301202-00067	RELAY,PRE HEATER	1					
10	534-00085	LAMP	2					
10A	2515-1016D4	BULB,HALOGEN	1					
11	600105-00002	NAME PLATE;SWITCH	1		10001~10240			
12	301316-00014	SENSOR,FUEL	1		10001~10117			
12	301316-00049	SENSOR,FUEL	1		10118~			
13	S0502953	BOLT	5		10001~10117			
13	S3450833	SCREW	6		10118~			
14	S5100203	WASHER	5		10001~10117			
14	S5100203	WASHER	6		10118~			
15	K1057605	SWITCH,DISCONNECTOR	1					
16	110406-00881B	BRACKET	2					
17	300101-00050	BATTERY	2					
18	516-00011	BUZZER	1					
19	S2208866	BOLT	2					
21	S3450573	SCREW	2					
22	S4012533	NUT	2		10001~10188			
22	S4012533	NUT	4		10189~			
23	DS0025033	BOLT	2					
24	310207-01067	HARNESS;PREHEAT RELAY	1					
25	2197-1661	BRACKET	1					

Fig. 1460 ELECTRIC PARTS - BATTERY &

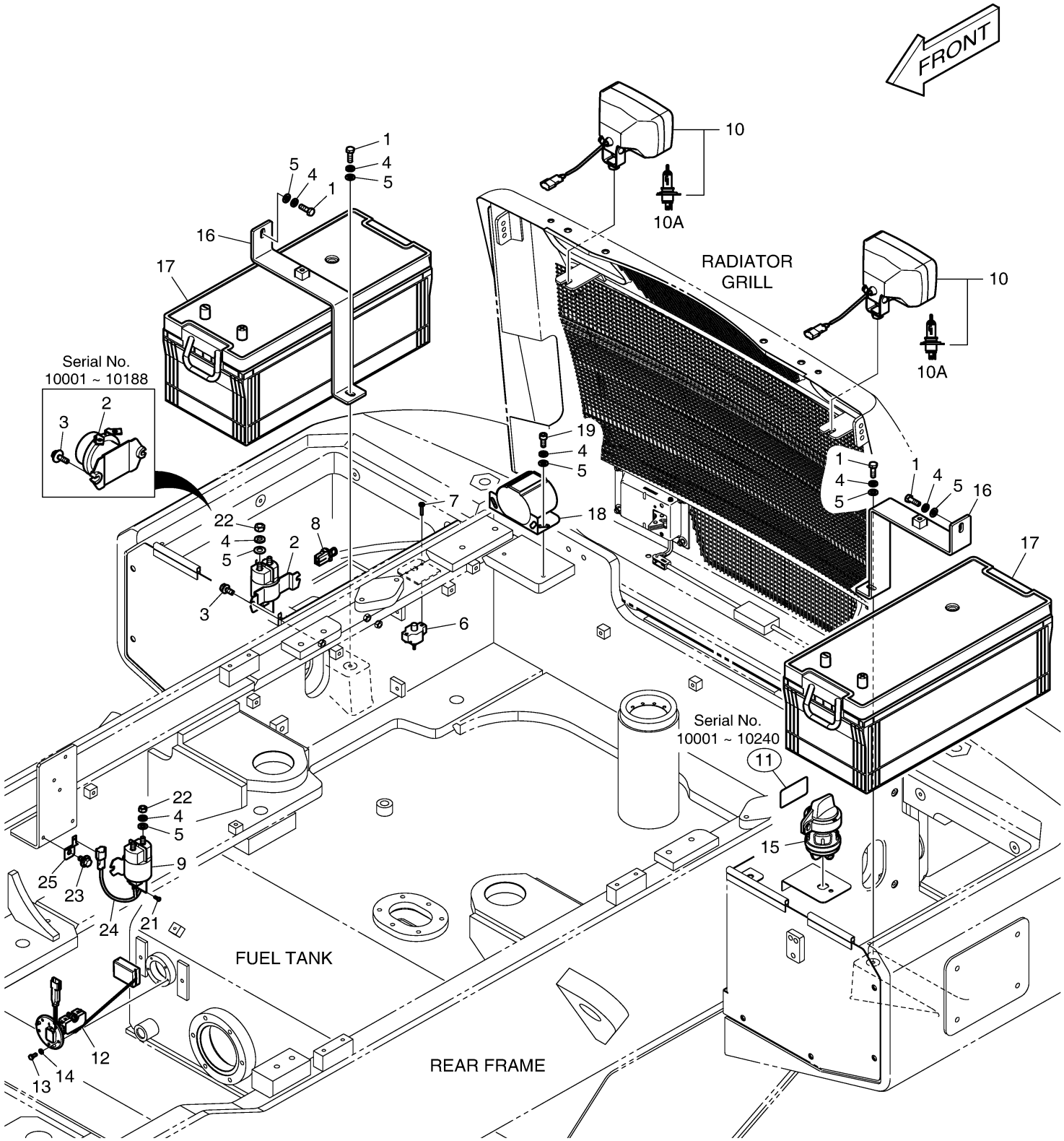

Fig. 1470 ELECTRIC PARTS - FRONT

Key No	Part No	Description	Qty	S.C	Serial No	ICA	Replacable	Qty
-	300619-01434	ELECTRIC ASSY;FRONT FRAME	-	D				
1	K1006282	BRACKET;HORN	2					
2	S0511866	BOLT	2					
3	S5102603	WASHER	4					
4	S0508866	BOLT	2					
5	S5102503	WASHER	3					
6	310207-01687A	HARNESS,FRONT FRAME	1		10001~10066			
6	310207-01687B	HARNESS,FRONT FRAME	2		10067~			
7	2195-3500	BRACKET	3					
8	S0504453	BOLT	3					
9	S5102303	WASHER	3					
10	2197-1661	BRACKET	4					
11	124-00208D2	CLAMP	9		10001~10310			
12	124-00208D4	CLIP	4		10001~10310			
12	124-00208D4	CLIP	1		10311~			
13	K1001029	BOLT	16		10001~10310			
13	K1001029	BOLT	3		10311~			
14	300726-00003	HORN,LOW	1					
15	300726-00002	HORN,HIGH	1					
16	2120-2187	BOLT	1					
18	S0511653	BOLT	2					
19	110433-00121A	BRACKET,CONNECTOR	1					
20	2160-1004D65	BUSHING,RUBBER	2		10067~			
21	120402-00439	CLIP	3		10311~			
22	120402-00440	CLIP	9		10311~			
23	120106-00596	BOLT	12		10311~			

Fig. 1470 ELECTRIC PARTS - FRONT

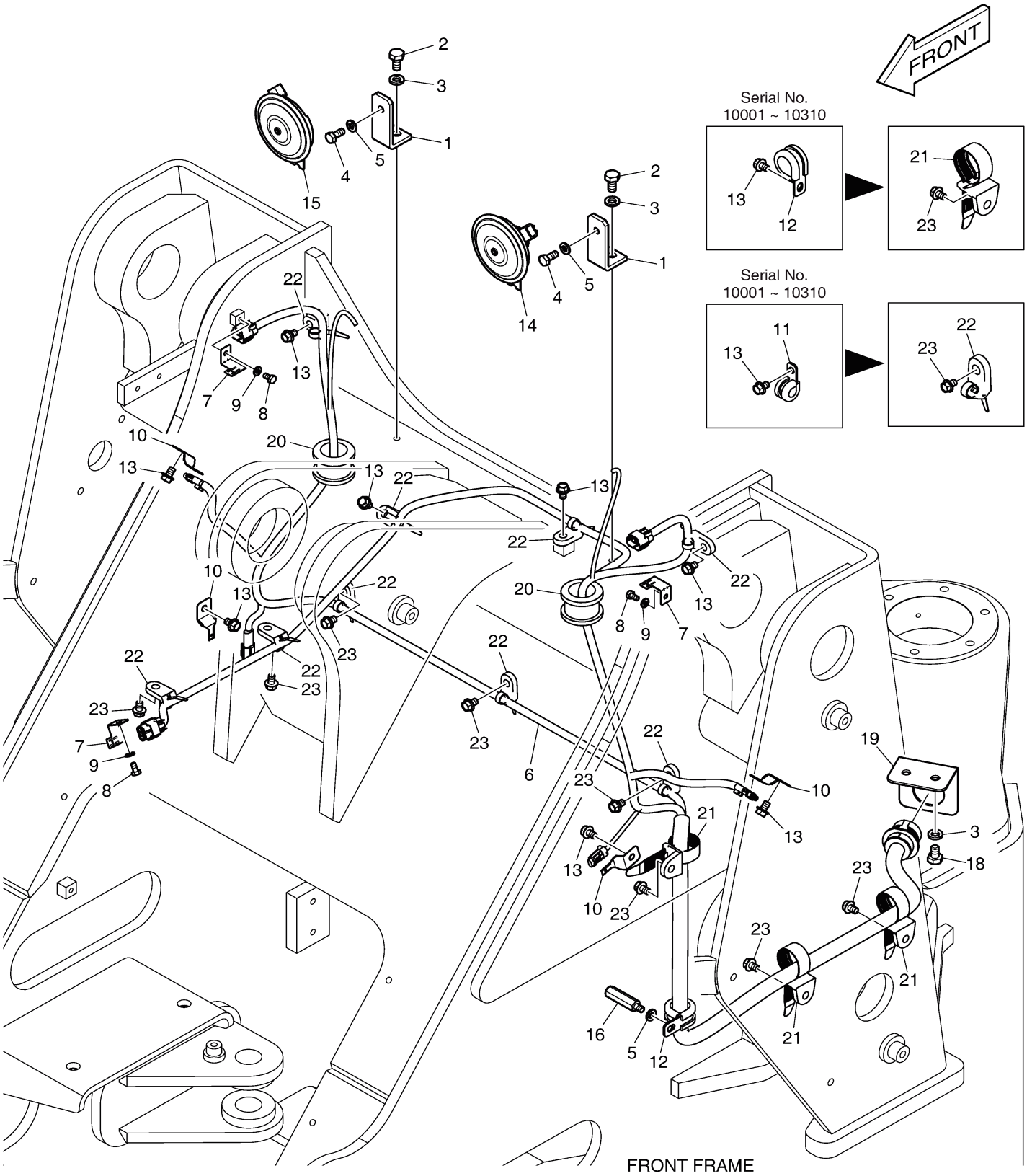

Fig. 1480 ELECTRIC PARTS - WIRING

Key No	Part No	Description	Qty	S.C	Serial No	ICA	Replacable	Qty
-	300619-01440	ELECTRIC ASSY;WIRING	-	D				
2	310207-01656A	HARNESS,MAIN	1		10001~10198			
2	310207-01656C	HARNESS,MAIN	1		10199~			
2A	2548-1027	DIODE	7					
2B	548-00003A	DIODE;ZENER	1					
2C	K1000815	DIODE,8 PIN	1					
3	2550-1014D1	TERMINAL,BATTERY(+)	2					
4	2550-1014D2	TERMINAL,BATTERY(-)	2					
5	2160-1212	CAP,BATT. TML(+)	2					
6	2160-1213	CAP,BATT. TML(-)	2					
7	2553-1275D22	CABLE;EARTH	1					
8	2553-1275D71	CABLE;BATT-STARTER 1500L	1					
9	2553-1275D12	CABLE;EARTH	1					
10	S0511653	BOLT	4					
11	2553-1275D139	CABLE,BATTERY	1					
12	S5102603	WASHER	4					
13	2553-1275D138	CABLE,BATTERY RELAY	1					
14	S5010613	WASHER	4					
15	2195-3500	BRACKET	1					
18	2197-1660	BRACKET	3					
19	2197-1661	BRACKET	6		10001~10198			
19	2197-1661	BRACKET	5		10199~			
20	124-00208D2	CLAMP	9					
21	124-00208D3	CLIP	7					
22	124-00208D4	CLIP	4					
23	124-00208D5	CLIP	3					
24	124-00209D1	CLIP	4					
25	124-00209D2	CLIP	4					
26	K1001029	BOLT	42					
28	2553-1275D31	CABLE;BATT-BATT RELAY	1					
29	S5102303	WASHER	1					
30	S0504453	BOLT	1					
31	124-00208D6	CLIP	3					
32	310207-03303	HARNESS,JOINT;GRILL	1		10199~			
33	110406-02674	BRACKET	1		10199~			

Fig. 1480 ELECTRIC PARTS - WIRING

Serial No. : 10001 ~ 10198

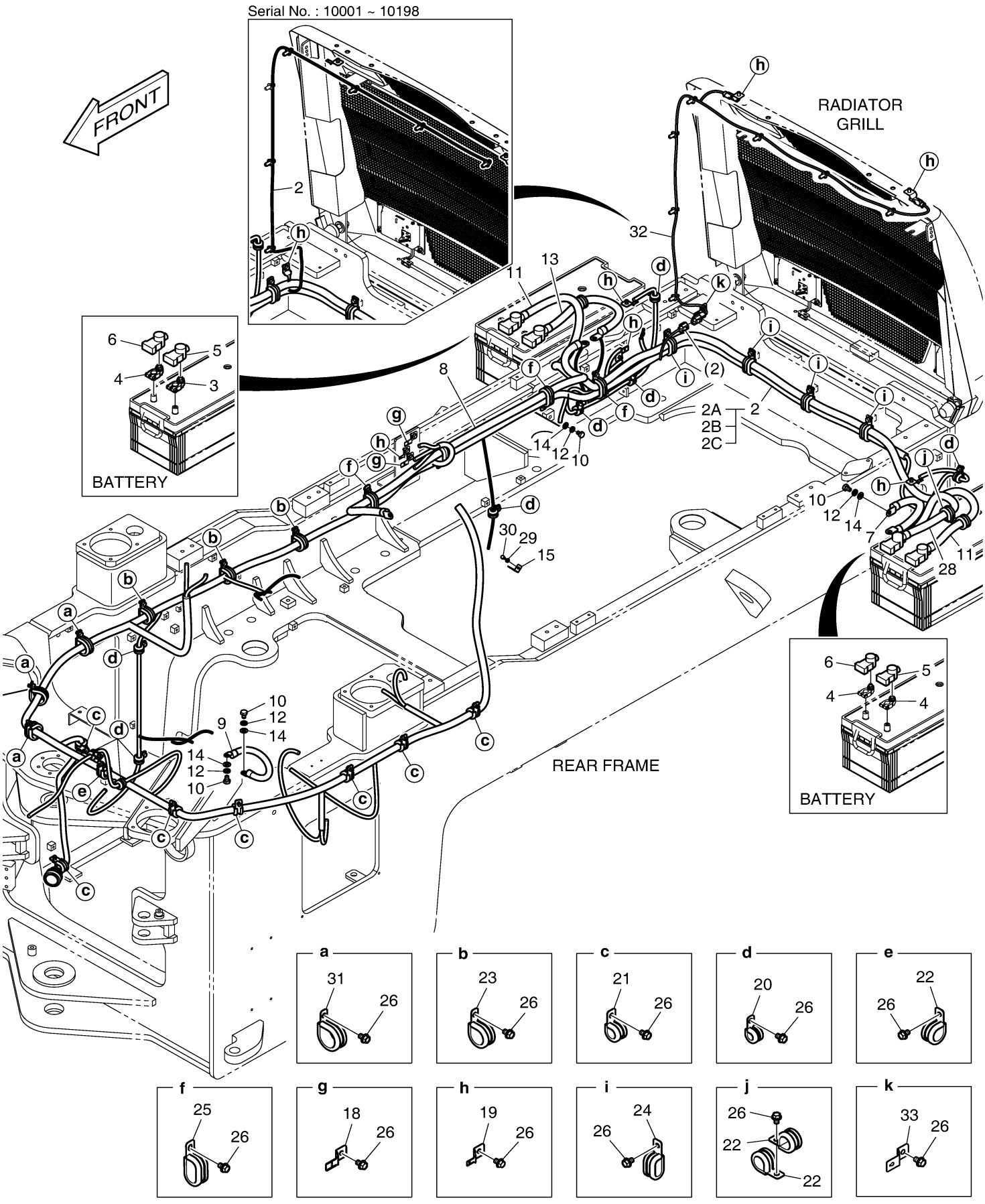

Fig. 1481 ELECTRIC PARTS - WIRING

Key No	Part No	Description	Qty	S.C	Serial No	ICA	Replacable	Qty
-	300619-01440	ELECTRIC ASSY;WIRING	-	D				
2	310207-01656C	HARNESS,MAIN	1					
2A	2548-1027	DIODE	7					
2B	548-00003A	DIODE;ZENER	1					
2C	K1000815	DIODE,8 PIN	1					
3	2550-1014D1	TERMINAL,BATTERY(+)	2					
4	2550-1014D2	TERMINAL,BATTERY(-)	2					
5	2160-1212	CAP,BATT. TML(+)	2					
6	2160-1213	CAP,BATT. TML(-)	2					
7	2553-1275D22	CABLE;EARTH	1					
8	2553-1275D71	CABLE;BATT-STARTER 1500L	1					
9	2553-1275D12	CABLE;EARTH	1					
10	120106-00701	BOLT	4					
11	2553-1275D139	CABLE,BATTERY	1					
13	2553-1275D138	CABLE,BATTERY RELAY	1					
15	2195-3500	BRACKET	1					
18	2197-1660	BRACKET	3					
19	2197-1661	BRACKET	5					
22	124-00208D4	CLIP	2					
24	124-00209D1	CLIP	4					
25	124-00209D2	CLIP	4					
26	K1001029	BOLT	18					
28	2553-1275D31	CABLE;BATT-BATT RELAY	1					
29	S5102303	WASHER	1					
30	S0504453	BOLT	1					
32	310207-03303	HARNESS,JOINT;GRILL	1					
33	110406-02674	BRACKET	1					
34	120402-00439	CLIP	15					
35	120402-00440	CLIP	9					
36	120106-00596	BOLT	24					

Fig. 1481 ELECTRIC PARTS - WIRING

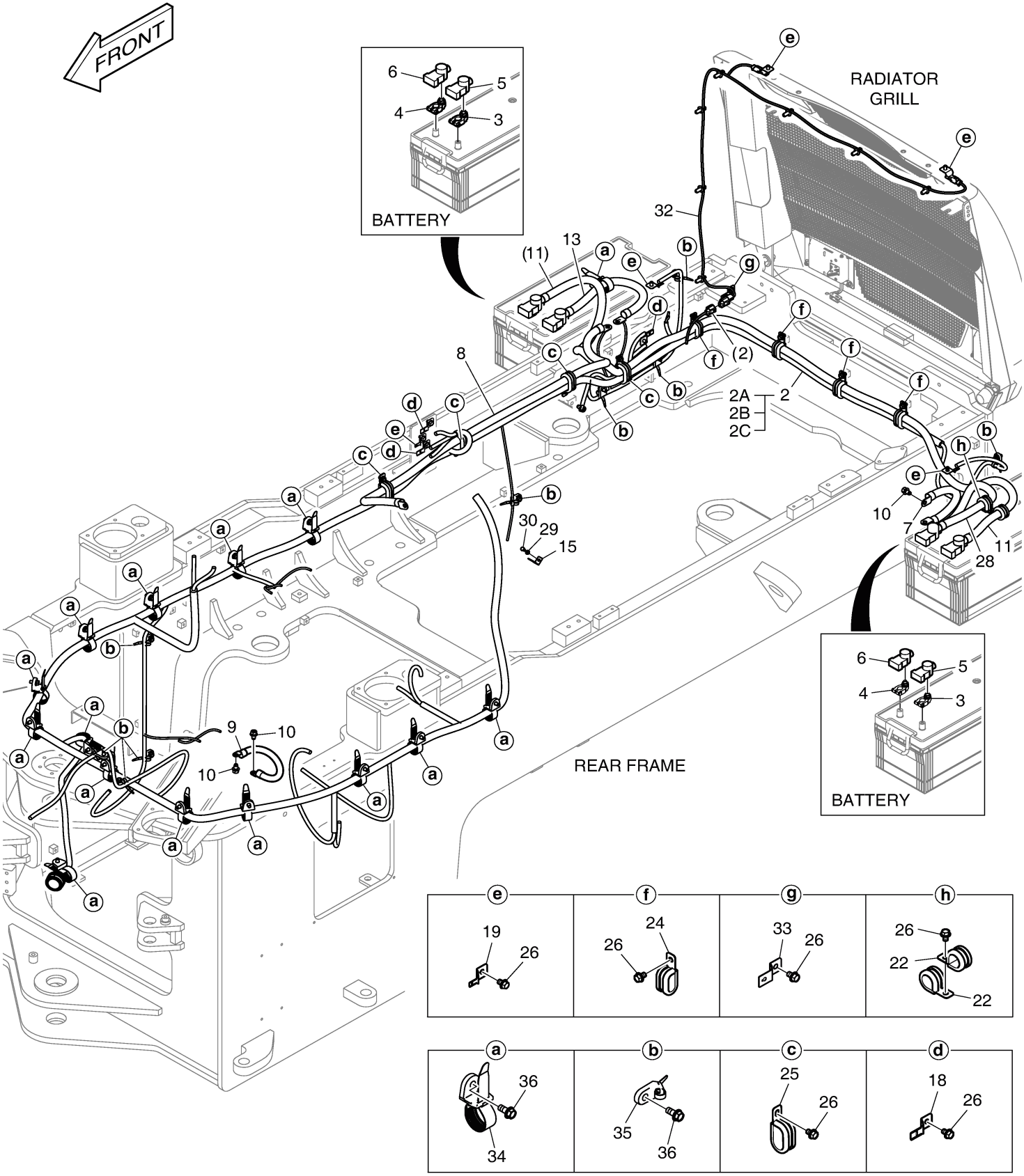

Fig. 1490 AIRCONDITIONER - CABIN

Key No	Part No	Description	Qty	S.C	Serial No	ICA	Replacable	Qty
-	440213-00307A	VENTILATION ASSY,CABIN	-	D	10001~10066			
-	440213-00307C	VENTILATION ASSY,CABIN	-	D	10067~10228			
-	440213-00307H	VENTILATION ASSY,CABIN	-	D	10229~10357			
-	440213-00307K	VENTILATION ASSY,CABIN	-	D	10358~			
1	K1010519	CONTROLLER;AIR CON	1					
2	S3450583	SCREW	4					
3	S5000113	WASHER	4					
4	420102-00247	HOSE,AIR CON;SUCTION	1					
4A	2180-6087	O-RING	1					
4B	2180-6086	O-RING	1					
5	420102-00248	HOSE,LIQUID;(2)	1					
5A	K1011388	O-RING	2					
6	440205-00013	CONDITIONER;AIR	1		10001~10228	I	440205-00013A	1
6	440205-00013A	CONDITIONER,AIR	1		10229~			
7	S0509053	BOLT	6					
8	S5102503	WASHER	6					
9	2114-1058D29	WASHER	6					
10	2185-1308D11	HOSE;RUBBER	1					
11	2185-1308D6	HOSE;RUBBER	1					
12	S8450012	CLAMP	2		10001~10228			
12	DS2807026	CLIP;HOSE	2		10229~10357	U	DS2809008	2
12	DS2809008	CLIP	2		10358~			

Fig. 1490 AIRCONDITIONER - CABIN

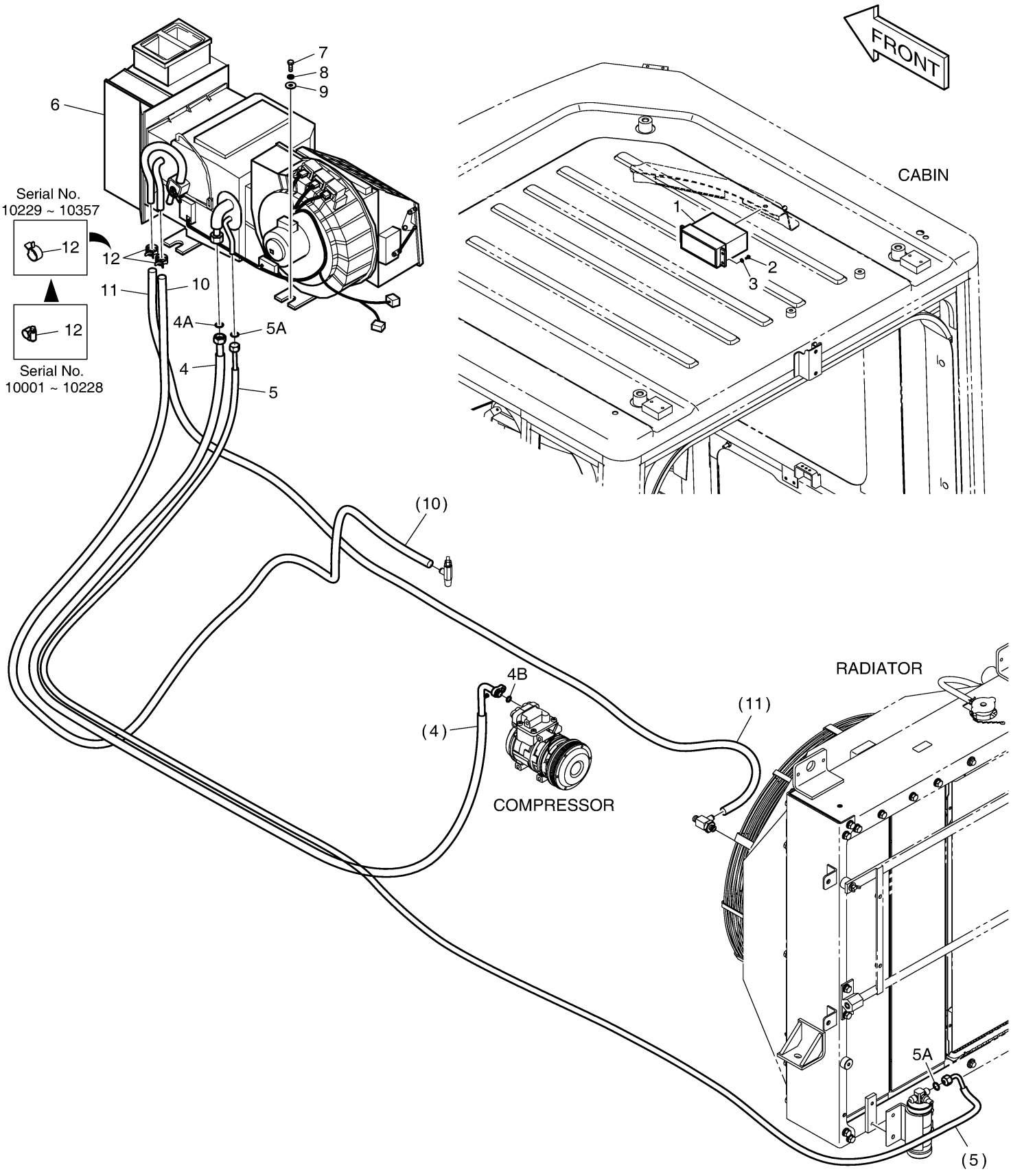

Fig. 1500 AIRCON UNIT

Key No	Part No	Description	Qty	S.C	Serial No	ICA	Replacable	Qty
-	440205-00013	CONDITIONER;AIR	1		10001~10228	I	440205-00013A	1
-	440205-00013A	CONDITIONER,AIR	1		10229~			
1	K1040112	MOTOR;BLOWER	1					
2	545-00003	RESISTOR;BLOWER	1					
3	2544-6023	RELAY 10A	2					
4	2544-6024	RELAY 20A	1					
5	2538-6016	MOTOR;INTAKE 24V	1					
6	2538-6017	MOTOR;MIX 12V	1					
7	400402-00001	FILTER;AIRCON	1					
8	2426-6048	VALVE;STEM	1					
9	2547-6033	SENSOR;TEMPERATURE	1					
10	2530-6005	HARNESS;AIRCON UNIT	1					
11	2920-6111	EVAPORATOR	1					
11A	410116-00098	VALVE;EXPANSION	1					
12	2920-6112	HEATER CORE	1					
13	431-00001	LEVER;MAIN	1					
14	431-00002	LEVER;SUB	3					
15	538-00002	MOTOR;MODE 12V	1					
16	250122-00061	PLATE,SUPPORT	1					
17	400402-00023	FILTER,AIRCON;MESH	1		10229~			
18	120601-00076	ROD,LEVER	1					

Fig. 1500 AIRCON UNIT

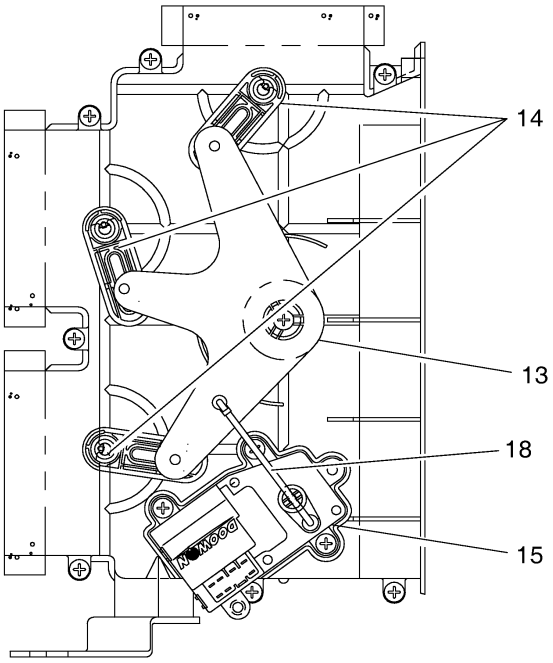

VIEW **A**

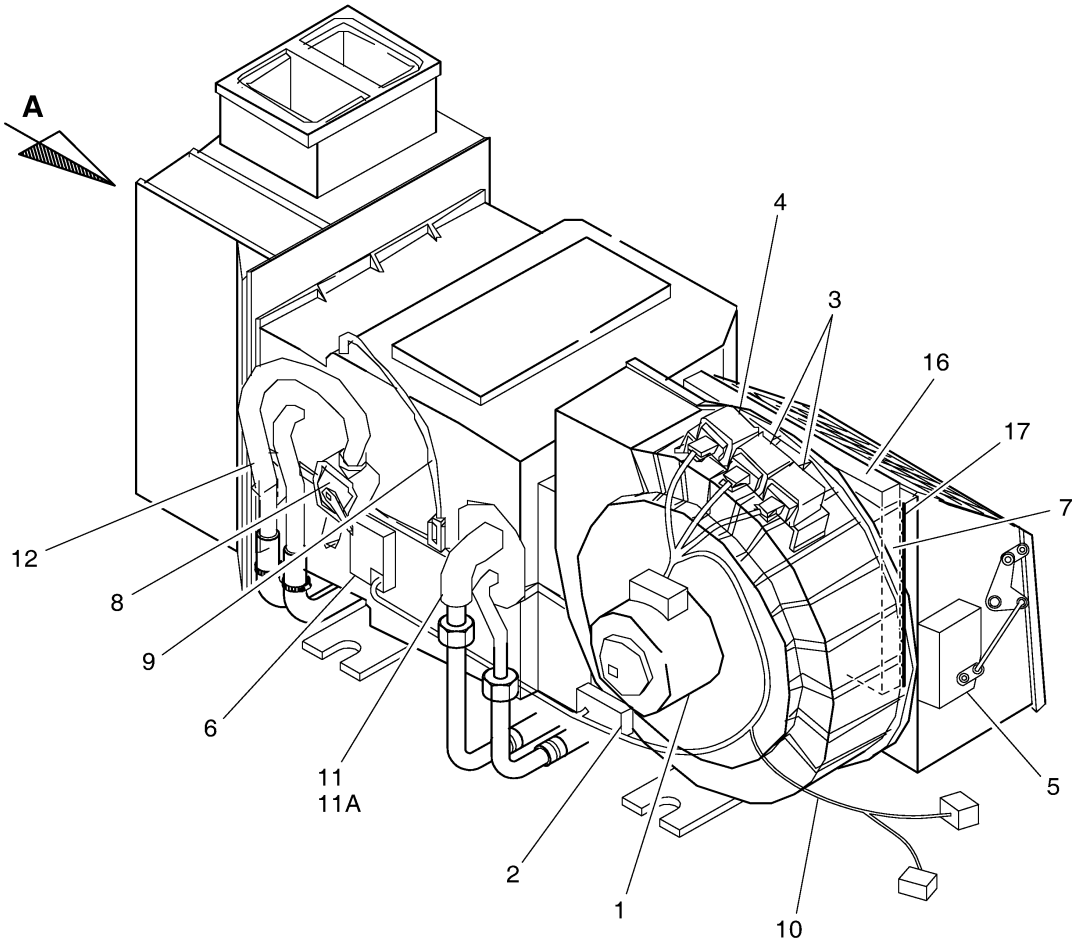

Fig. 1510 AIRCONDITIONER - CHASSIS

Key No	Part No	Description	Qty	S.C	Serial No	ICA	Replacable	Qty
-	440213-00306	VENTILATION ASSY	-	D				
1	520-00004	CONDENSER,AIR CON	1					
2	S0509853	BOLT M8X1.25X60	4					
3	S5102503	WASHER	8					
4	2114-1058D29	WASHER	8					
5	K1005017	SPACER	4					
6	S0504653	BOLT	1					
7	S8450016	CLAMP	2		10001~10209			
7	DS2807026	CLIP;HOSE	2		10210~10357	U	DS2809008	1
7	DS2809008	CLIP	1		10358~			
8	124-00209D4	CLIP	1					
9	S5000313	WASHER	2					
10	S5102303	WASHER	3					
11	S4012303	NUT	2					
12	K1001029	BOLT	14		10001~10066			
12	K1001029	BOLT	11		10067~			
13	2204-6039A	RECEIVER DRIER	1		10001~10202	Y	300720-00003	1
13	300720-00003	DRYER,RECEIVER	1		10203~			
14	DS0025032	BOLT	2		10001~10066			
14	DS0025044	BOLT	2		10067~			
15	2186-9005	COCK	1					
17	2181-2774	NIPPLE;HOSE	2		10001~10066			
17	2181-2774	NIPPLE;HOSE	1		10067~10357	Y	DS2228012	1
17	DS2228012	ADAPTER	1		10358~			
18	S4012533	NUT	6					
19	420102-00245	HOSE,DISCHARGE	1					
19A	2180-6088	O-RING	1					
19B	K1011384	O-RING	1					
20	420102-00246A	HOSE,LIQUID;(1)	1					
20A	K1011388	O-RING	2					
21	2208-6013B	COMPRESSOR	1		10001~10202	I	440205-00070	1
21	440205-00070	COMPRESSOR	1		10203~			
22	124-00208D4	CLIP	11		10001~10066			
22	124-00208D4	CLIP	9		10067~			
23	124-00208D3	CLIP	3		10001~10066			
23	124-00208D3	CLIP	1		10067~			

Key No	Part No	Description	Qty	S.C	Serial No	ICA	Replacable	Qty
24	S0557763	BOLT M8X1.25X120	2					
25	S5010513	WASHER	4					
26	2107-6004B	PULLEY ASS'Y;IDLE 4PK	1		10001~10202	Y	130710-00079	1
26	130710-00079	PULLEY ASSY,IDLE	1		10203~			
27	2106-1019D2	V-BELT;4PK-1470L	1		10001~10291			
27	2106-1019D28	V-BELT(4PK 1490L AIR-COMP)	1		10292~			
28	K1006603	BRACKET	1					
29	S0511853	BOLT	2					
30	S5102603	WASHER	2					
31	S0557153	BOLT	2					
32	S8470020	CLAMP	1		10358~			

Fig. 1510 AIRCONDITIONER - CHASSIS

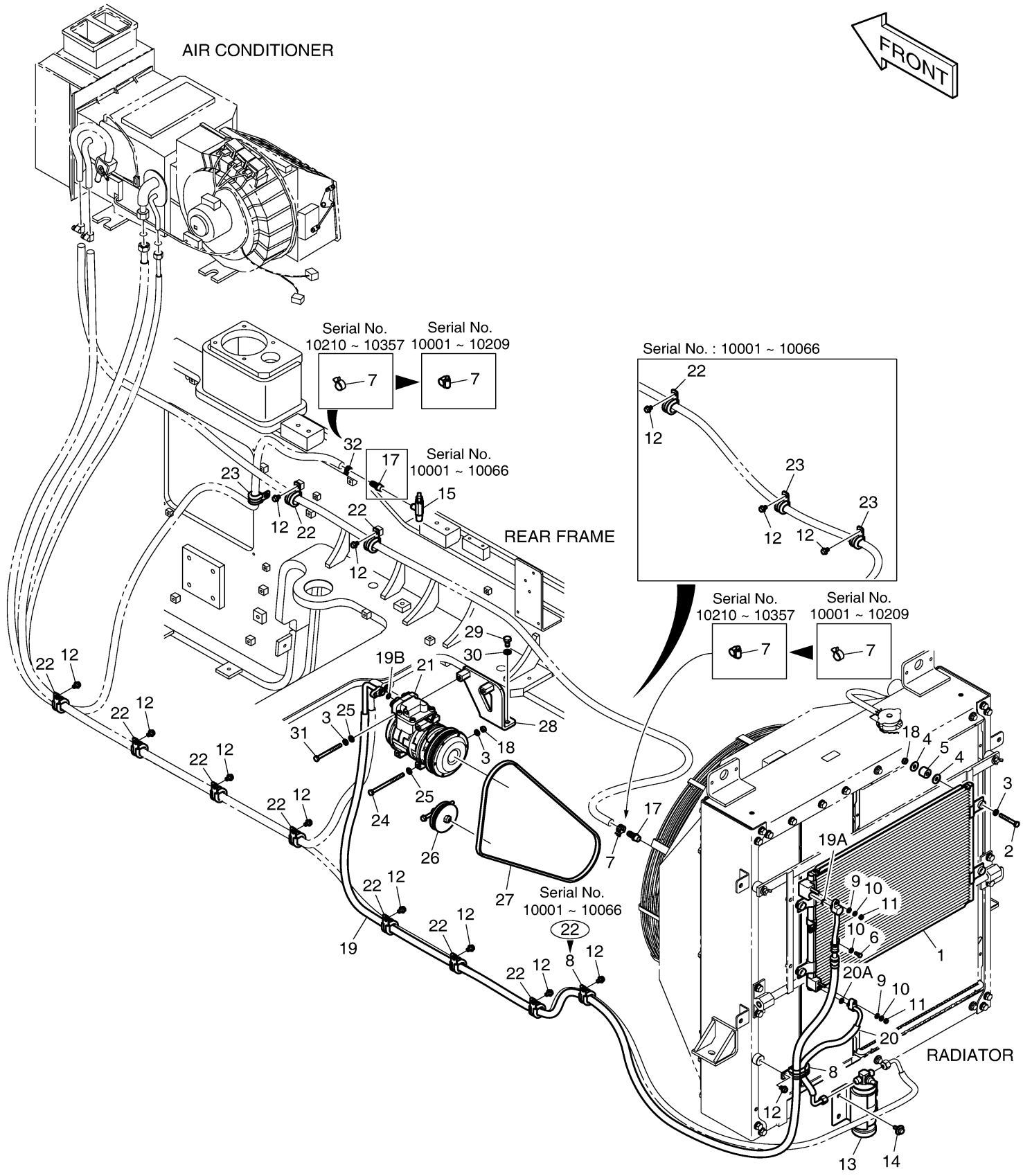

Fig. 2100 LOADER ARM ASS'Y

Key No	Part No	Description	Qty	S.C	Serial No	ICA	Replacable	Qty
-	650102-00110	ATTACHMENT,FRONT	-	D				
1	101101-00098A	LEVER ASSY	1		10001~10360			
1	101101-00444	LEVER ASSY,TILT	1		10361~			
1-2	4110-1337	BUSHING	2					
1-3	114-00455	SPACER	1					
2	101541-00049A	LINK ASSY,PUSH	1		10001~10360			
2	101541-00240	LINK ASSY,PUSH;640MM	1		10361~			
2-2	4110-1339	BUSHING	1					
2-3	4110-1340	BUSHING	1					
3	400310-00135	CYLINDER,BUCKET	1		10001~10360			
3	400310-00135A	CYLINDER,BUCKET	1		10361~			
4	440-00248A	CYLINDER;LIFT	2		10001~10360			
4	K1041787	CYLINDER;LIFT	2		10361~			
5	120501-01172A	PIN,MASTER	1		10001~10291	I	120501-01172B	1
5	120501-01172B	PIN,MASTER	1		10292~			
6	120501-00964A	PIN,MASTER	2					
7	120501-01173A	PIN,MASTER	2					
8	120501-00966A	PIN,MASTER	1		10001~10360			
8	120501-00966B	PIN;ARM TO LEVER	1		10361~			
9	120501-01174A	PIN,MASTER	1		10001~10291	I	120501-01174B	1
9	120501-01174B	PIN,MASTER	1		10292~			
10	120501-00968A	PIN,MASTER	1		10001~10291	I	120501-00968B	1
10	120501-00968B	PIN,MASTER	1		10292~10360			
10	120501-03999	PIN;LEVER TO LINK	1		10361~			
11	120501-00987A	PIN,MASTER	1		10001~10360			
11	120501-04000	PIN;BUCKET CYL ROD	1		10361~			
12	120501-01175A	PIN,MASTER	2		10001~10360			
12	120501-04001	PIN;LIFT CYL ROD	2		10361~			
13	120501-00744B	PIN,MASTER	2					
14	S6710041	NIPPLE,GREASE	9					
15	160-00020	CAP	9					
16	2180-1106BD5	SEAL;DUST	8		10001~10319	Y	DS5502005	8
16	DS5502005	NUT,SEAL	8		10320~			
17	2180-1106BD6	SEAL,DUST	8		10001~10319	I	DS5502006	8
17	DS5502006	SEAL,DUST	8		10320~			
18	2180-1106BD14	SEAL;DUST	2		10001~10319	I	DS5502014	2

Key No	Part No	Description	Qty	S.C	Serial No	ICA	Replacable	Qty
18	DS5502014	SEAL,DUST	2		10320~			
19	180-00077D3	O-RING	4		10001~10187	Y	DS2855003	4
19	DS2855003	O-RING	4		10188~			
20	S0515066	BOLT	11					
21	4114-4078A	WASHER	11					
22	4114-4031A	WASHER	2					
23	S0521066	BOLT	2					
24	DS7752045	SHIM	2					
25	DS7752126	SHIM,POLYMER	8					
26	DS7752146	SHIM	6					
28	DS7752026	SHIM	4					
29	DS7752015	SHIM	4					
30	DS7752016	SHIM	4					
31	2114-1059D63	SHIM	8					
32	2114-1059D117	SHIM	8					
33	2180-1106BD24	SEAL,DUST	8		10001~10319	I	DS5502024	8
33	DS5502024	SEAL,DUST	8		10320~			
51	230203-00103C	ARM ASSY,LOADER	1		10001~10041	I	230203-00146	1
51	230203-00146	ARM ASSY,LOADER	1		10042~10360			
51	230203-00146A	ARM ASSY,LIFT;2670MM	1		10361~			
51-2	4110-1335	BUSHING	2					
51-3	K1023197	BUSH	2					
51-4	4110-1338	BUSHING	2					

Fig. 2100 LOADER ARM ASS'Y

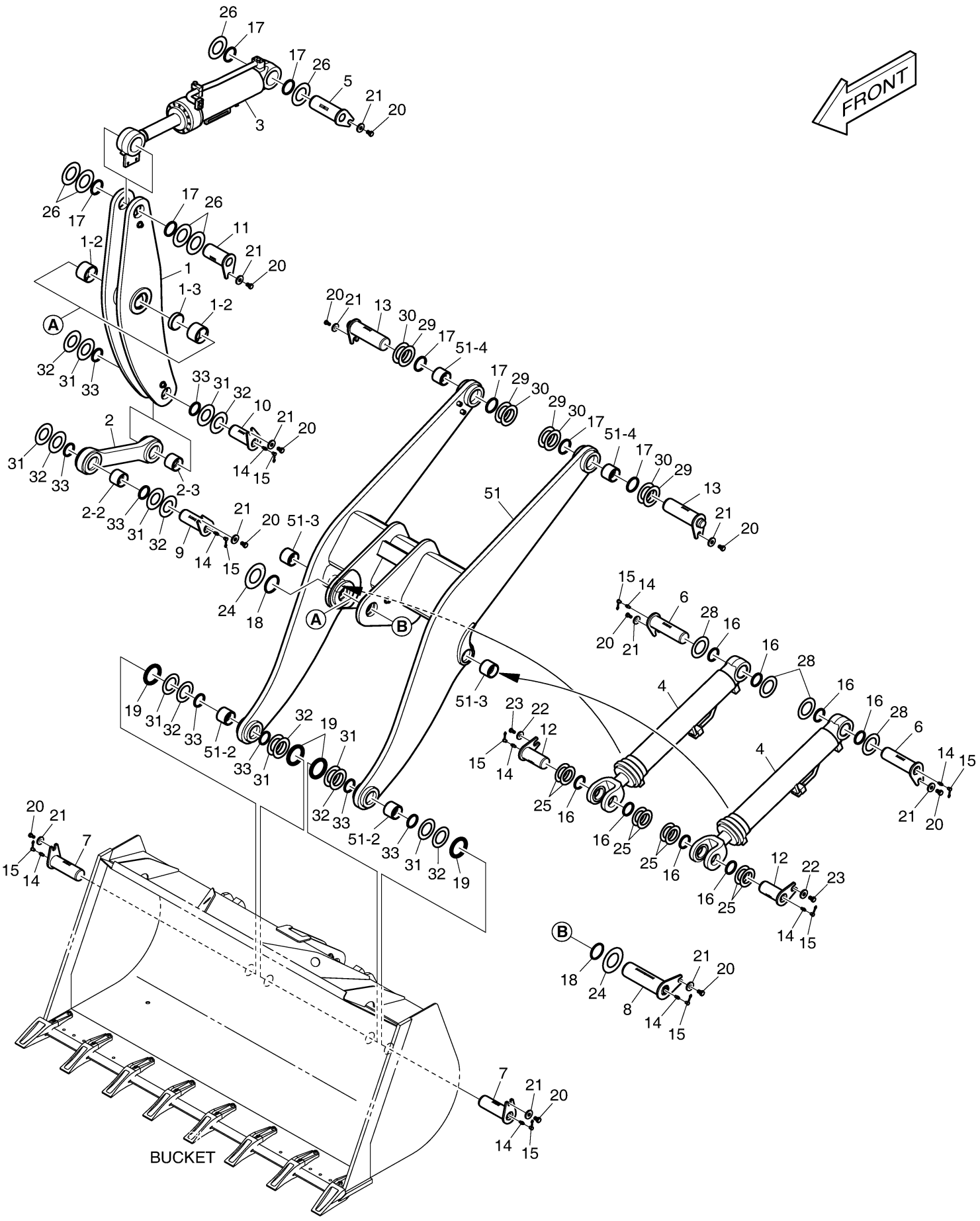

DOOSAN Doosan Infracore

Fig. 2110 FRONT LUBRICATION PIPING

Key No	Part No	Description	Qty	S.C	Serial No	ICA	Replacable	Qty
-	420212-04814	PIPING,LUBRICATION,FRONT	-	D				
1	S6710041	NIPPLE,GREASE	3					
2	181-00366	REDUCER	3					
3	S4032833	NUT	3					
4	2181-1919D9	ADAPTER	2					
5	420205-00223	PIPE,LUBRICATION	1		10001~10261			
5	420205-00223A	PIPE,LUBRICATION	1		10262~			
6	420205-00224A	PIPE,LUBRICATION	1		10001~10261			
6	420205-00224B	PIPE,LUBRICATION	1		10262~			
7	420205-00225	PIPE,LUBRICATION	1		10001~10261			
7	420205-00225A	PIPE,LUBRICATION	1		10262~			
8	2124-1625	CLAMP;PIPE	2					
9	S0511853	BOLT	4		10001~10213	I	S0511866	4
9	S0511866	BOLT	4		10214~			
10	S5102603	WASHER	4					
11	2181-1918D7	ELBOW	1					
12	160-00020	CAP	3		10262~			

Fig. 2110 FRONT LUBRICATION PIPING

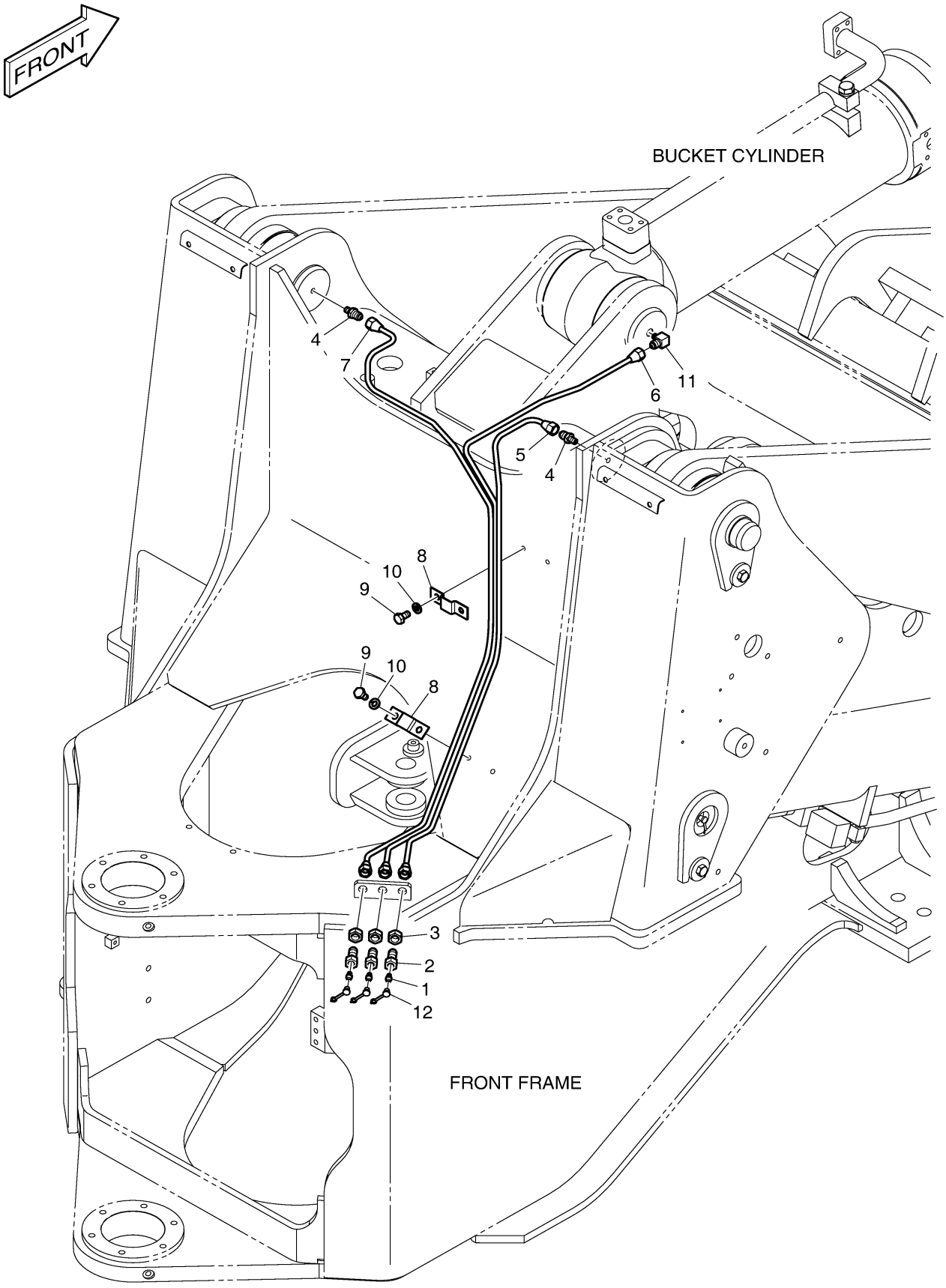

Fig. 2120 ARM RAISE KICK OUT ASS'Y

Key No	Part No	Description	Qty	S.C	Serial No	ICA	Replacable	Qty
-	620202-20088	ARM RAISE KICK-OUT	-	D				
1	250201-00498	PLATE;RAISE KICK-OUT	1		10001~10360			
1	250201-00498A	PLATE,RAISE KICK OUT	1		10361~			
2	K1004357	PLATE	1		10001~10360			
2	250201-04636	PLATE	1		10361~			
3	191-01453	PLATE	1					
4	4159-4008	COVER	1					
5	K1027017	SWITCH,PROXIMITY	1					
6	S0509066	BOLT	6					
7	S5102503	WASHER	8					
8	S4012533	NUT	2					
9	2114-1058D29	WASHER	2					
10	S0508966	BOLT	2					

Fig. 2120 ARM RAISE KICK OUT ASS'Y

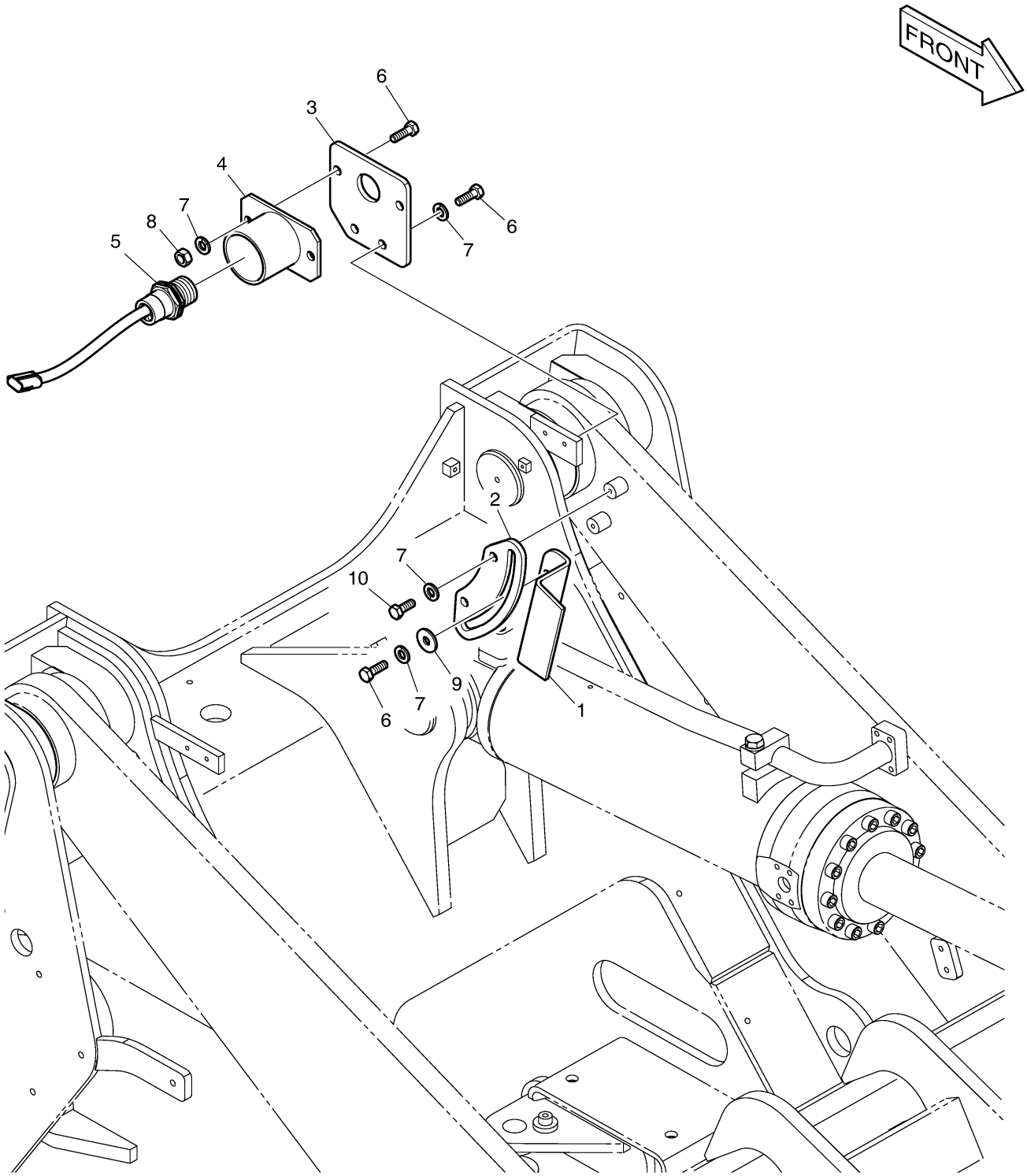

FRONT FRAME

Fig. 2130 RETURN TO DIG ASS'Y

Key No	Part No	Description	Qty	S.C	Serial No	ICA	Replacable	Qty
-	620202-20090	RETURN TO DIG	-	D				
1	K1010825	ANGLE	1		10001~10360			
1	110101-00060	ANGLE	1		10361~			
2	S0512466	BOLT	2					
3	S5102603	WASHER	2					
4	S4012633	NUT	2					
5	110446-00032	BRACKET;RETURN TO DIG	1		10001~10360			
5	110446-00356	BRACKET,GUIDE;RETURN TO	1		10361~			
6	S0515566	BOLT M12X1.75X45	2					
7	S5102703	WASHER	2					
8	4159-4008	COVER	1		10001~10360			
8	110508-22814	COVER,SWITCH	1		10361~			
9	S0509066	BOLT	2					
10	S5102503	WASHER	2					
11	S4012533	NUT	2					
12	K1027017	SWITCH,PROXIMITY	1					
13	2114-1058D54	WASHER	2					
14	S5010613	WASHER	2					

Fig. 2130 RETURN TO DIG ASS'Y

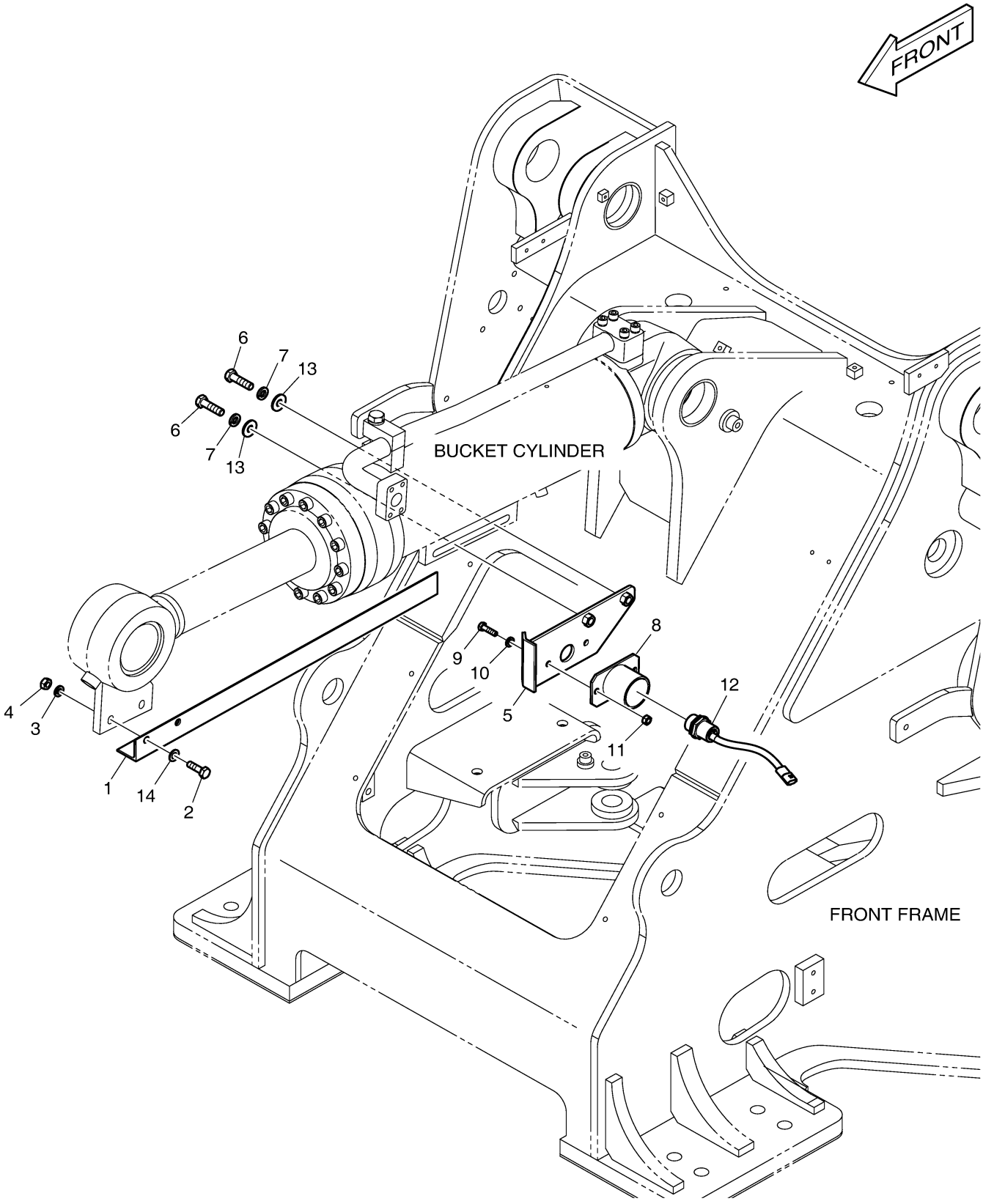

Fig. 2140 BUCKET-2.5M³ TOOTH

Key No	Part No	Description	Qty	S.C	Serial No	ICA	Replacable	Qty
-	230104-00492B	BUCKET ASSY;2.5M3 TOOTH	1		10001~10075	I	230104-00492C	1
-	230104-00492C	BUCKET ASSY;2.5M3 TOOTH	1		10076~10188	I	230104-00492G	1
-	230104-00492G	BUCKET ASSY;2.5M3 TOOTH	1		10189~10291	I	230104-00492H	1
-	230104-00492H	BUCKET ASSY;2.5M3 TOOTH	1		10292~			
1	-	BUCKET;2.5M3	1	D	10001~10075			
1	-	BUCKET;2.5M3	1	D	10076~10188			
1	-	BUCKET;2.5M3	1	D	10189~10291			
1	-	BUCKET;2.5M3	1	D	10292~			
2	4713-1115A	TOOTH;SIDE(L.H)	1					
3	4713-1114A	TOOTH;SIDE(R.H)	1					
4	2983341M91C	TOOTH	6					
5	S0565666	BOLT	16					
6	S4012933	NUT	16					
7	110913-00289A	CASE,BUCKET NAME PLATE	1		10189~			
8	950209-04415A	PLATE,NAME	1		10189~			
9	DS0501007	RIVET	4		10189~			

Fig. 2140 BUCKET-2.5M³ TOOTH

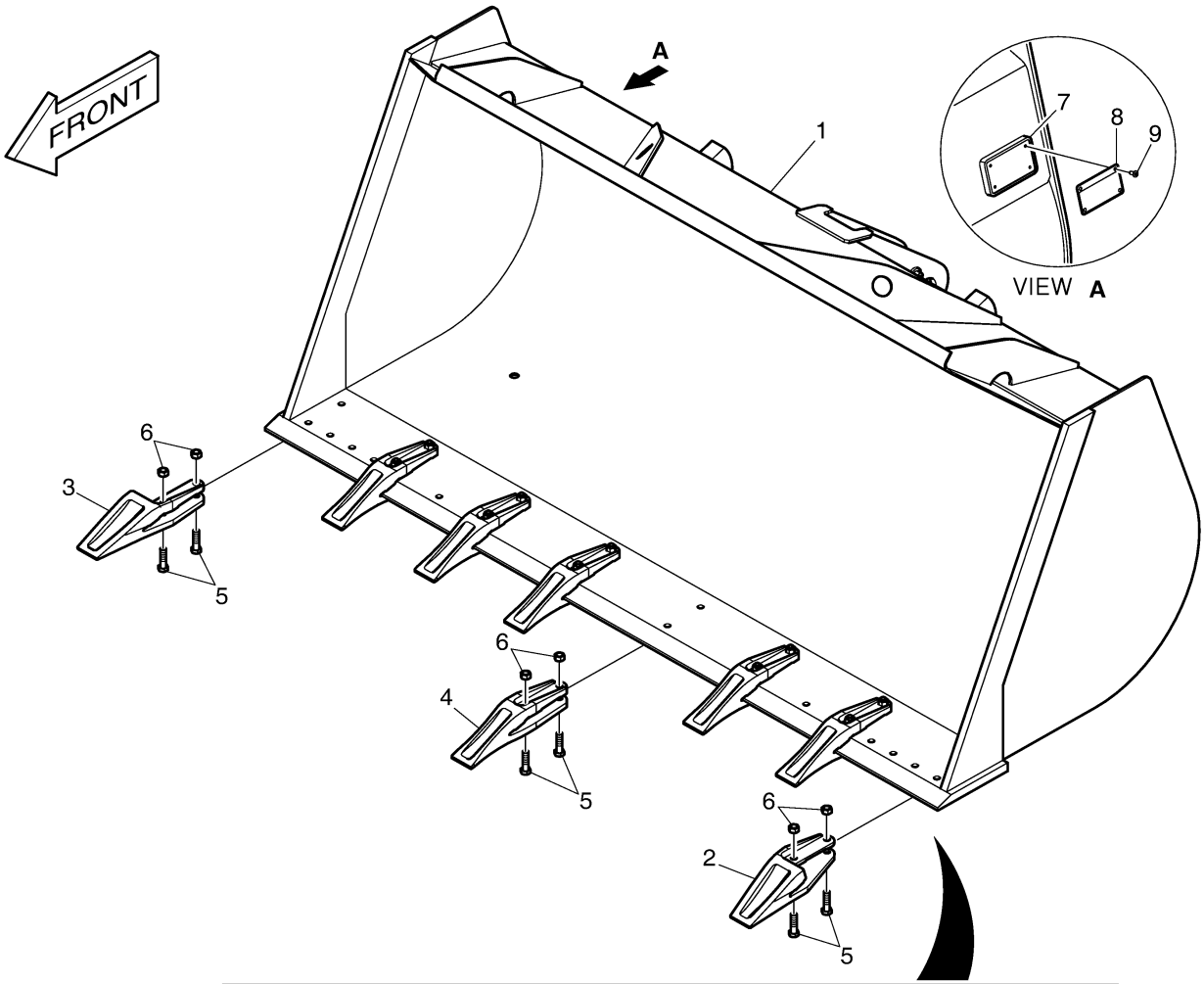

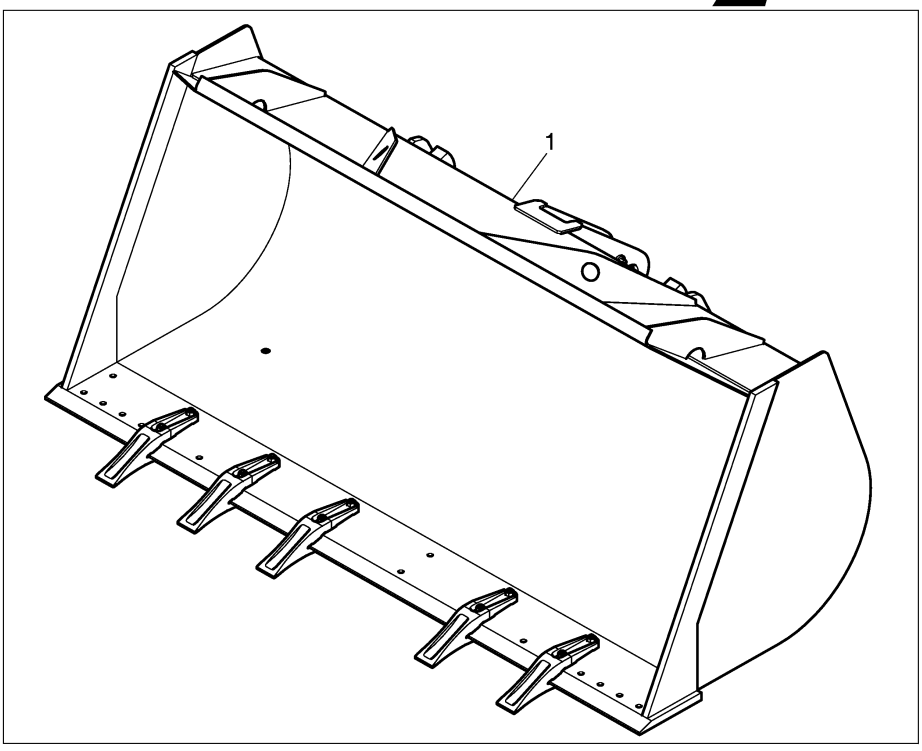

Serial No. : 10001 ~ 10075

Fig. 3100 ENGINE CONNECT -

Key No	Part No	Description	Qty	S.C	Serial No	ICA	Replacable	Qty
-	210-00046C	TRANSMISSION	1					
10	2.125-00006	BELL:CONVERTER	1					
20	1.120-00117	SCREW	18					
50	410106-00001	DIAPHRAGM	1					
100	1.120-00118	SCREW	4					
110	1.114-00255	WASHER	8					
120	K9004014	CONVERTER	1					

Fig. 3100 ENGINE CONNECT -

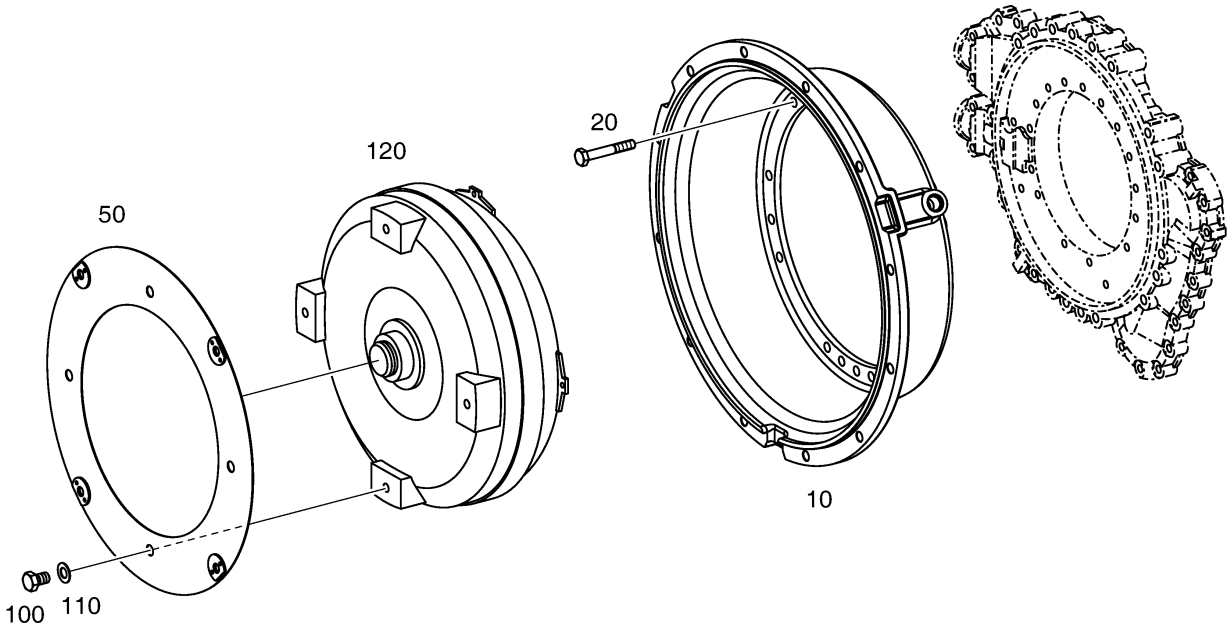

Fig. 3110 INPUT - TRANSMISSION

Key No	Part No	Description	Qty	S.C	Serial No	ICA	Replacable	Qty
10	1.405-00072	SHAFT;INPUT	1					
16	1.403-00052	GEAR	1					
18	1.115-00027	RING;RETAINING	1					
20	1.405-00095	SHAFT;TURBINE	1					
30	1.115-00080	RING;SNAP	1					
40	1.109-00067	BEARING;ROLLER	1					
50	1.109-00067	BEARING;ROLLER	1					
60	1.115-00296	RING;PISTON	2					
70	K9006650	SHAFT;STATOR	1					

Fig. 3110 INPUT - TRANSMISSION

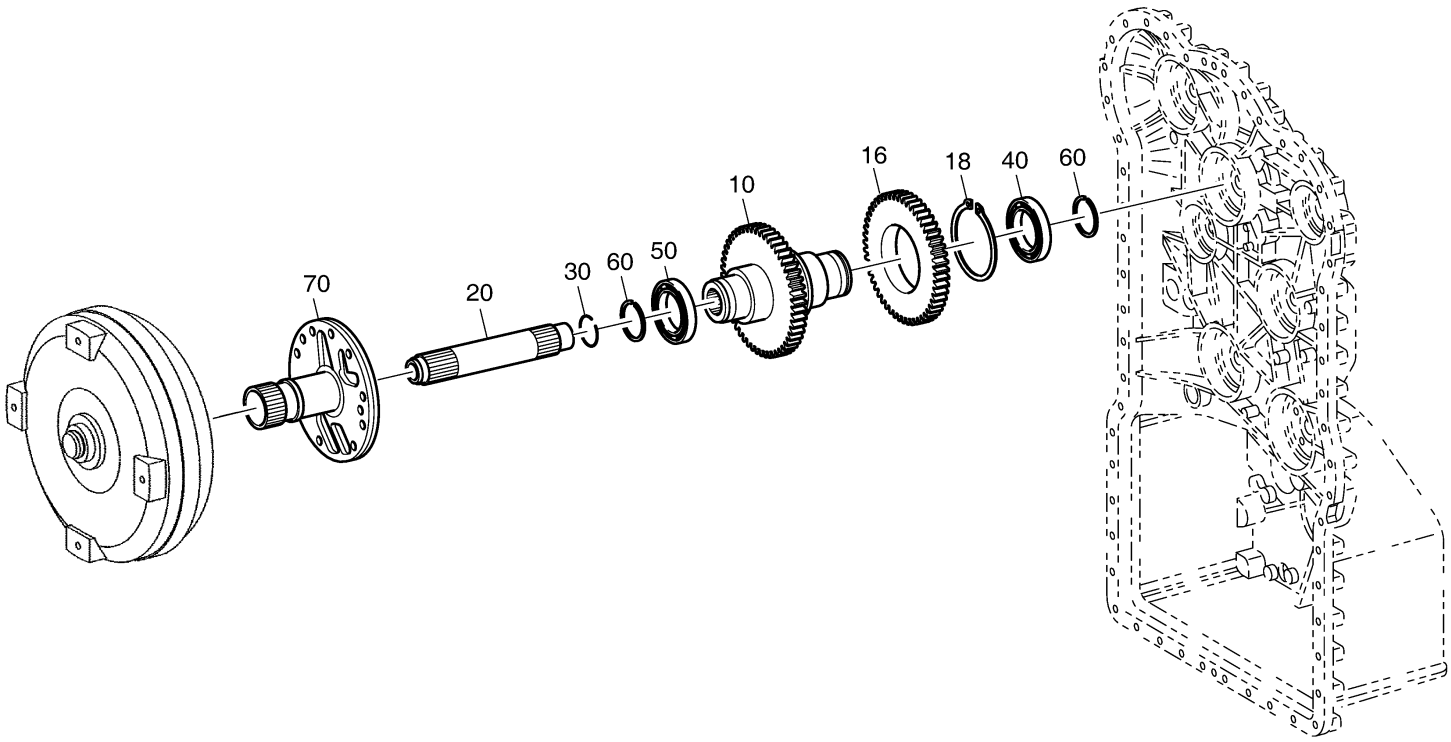

Fig. 3120 PRESSURE OIL

Key No	Part No	Description	Qty	S.C	Serial No	ICA	Replacable	Qty
10	400915-00003	PUMP;OIL	1					
21	1.120-00088	SCREW	10					
22	1.180-00058	O-RING	10					
30	K9006640	O-RING	1					
50	1.180-00531	SEAL;SHAFT	1					

Fig. 3120 PRESSURE OIL

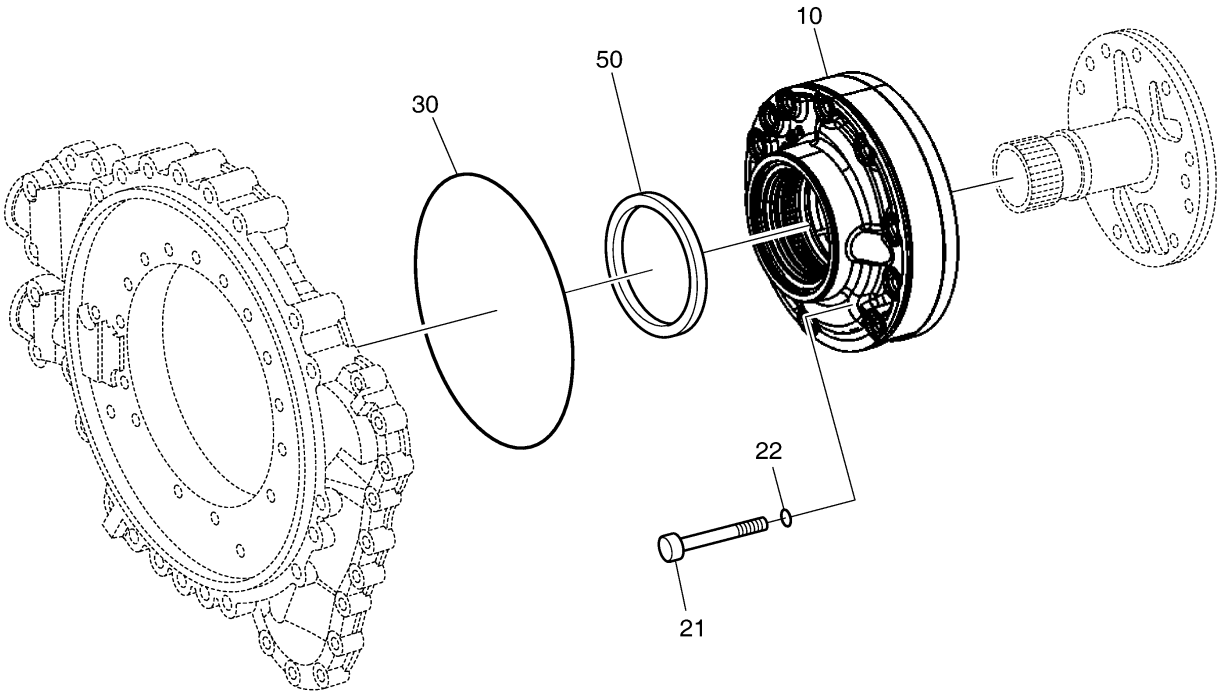

Fig. 3130 GEARBOX HOUSING - T/MISSION

Key No	Part No	Description	Qty	S.C	Serial No	ICA	Replacable	Qty
10	110931-00004	HOUSING;FRONT	1					
30	110931-00072	HOUSING;REAR	1					
40	1.123-00001	PIN	2					
50	1.120-00098	SCREW	40					
60	1.412-00003	PLATE;FIXING	1					
70	1.120-00098	SCREW	2					
80	1.461-00009	SHEET;SCREEN	1					
90	1.461-00010	SHEET;SCREEN	1					
100	1.120-00081	SCREW	5					
140	2.422-00001	BREATHER	1					
160	K9004016	HOUSING;OIL FEED	1					
170	1.180-00001	GASKET	1					
180	1.120-00083	SCREW	21					
200	1.120-00082	SCREW	15					
220	1.120-00084	SCREW	4					
240	1.412-00003	PLATE;FIXING	1					
250	1.120-00079	SCREW	2					
260	K9006639	PLUG	4					
310	K9000588	TUBE;OIL	1					
311	K9000177	O-RING	1					
312	1.120-00081	SCREW	2					
314	1.441-00257	TUBE;OIL	1					
328	1.120-00099	SCREW	1					
340	K9000177	O-RING	2					
350	K9000589	TUBE;OIL	1					
351	K9000177	O-RING	1					
352	1.120-00081	SCREW	2					
354	1.441-00257	TUBE;OIL	1					
364	1.120-00099	SCREW	1					
380	K9000177	O-RING	2					
390	1.441-00260	TUBE;SUCTION	1					
400	1.120-00081	SCREW	1					
451	1.181-00015	PLUG	1					
452	1.180-00052	O-RING	1					

Fig. 3130 GEARBOX HOUSING - T/MISSION

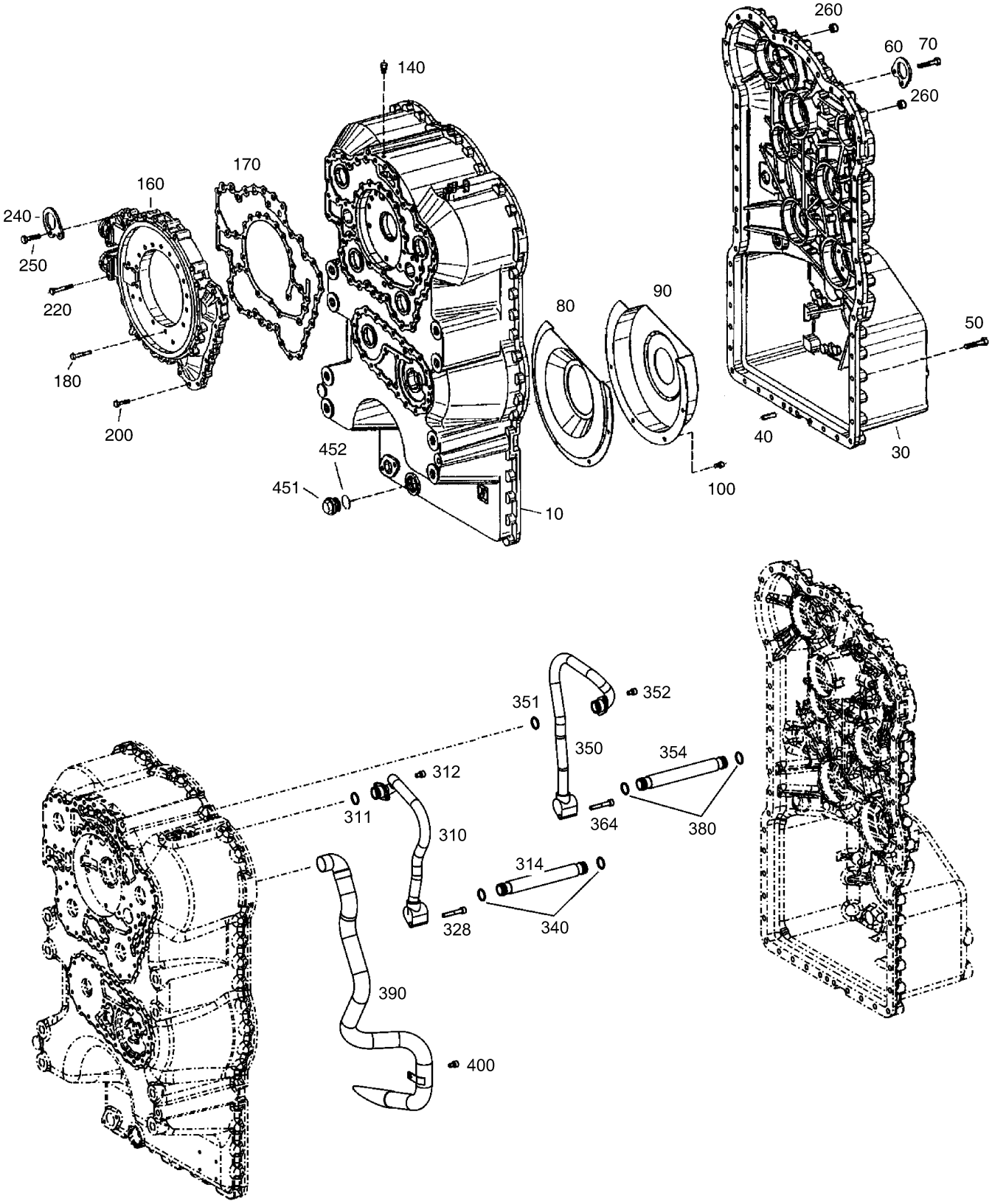

Fig. 3140 CLUTCH - K1 - TRANSMISSION

Key No	Part No	Description	Qty	S.C	Serial No	ICA	Replacable	Qty
10	1.405-00009	SHAFT	1					
20	1.120-00034	STUD	1					
40	430210-00014	COUPLING	1					
42	100502-00003	CARRIER;DISC	1					
52	K9002700	PISTON	1					
60	1.180-00087	O-RING	1					
70	1.180-00088	O-RING	1					
72	1.131-00120	SPRING;CUP	7					
92	K9006638	RING	1					
106	1.222-00001	DISC	1					
110	1.222-00002	DISC	9					
120	1.222-00028	DISC;I.CLUTCH	9					
130	1.114-00163	SHIM;END	1					
150	1.115-00318	RING;SNAP S=2.10	1					
150	1.115-00320	RING;SNAP S=2.25	1					
150	1.115-00322	RING;SNAP S=2.40	1					
150	1.115-00324	RING;SNAP S=2.55	1					
150	1.115-00326	RING;SNAP S=2.70	1					
150	1.115-00328	RING;SNAP S=2.85	1					
150	1.115-00330	RING;SNAP S=3.00	1					
150	1.115-00332	RING;SNAP S=3.15	1					
150	1.115-00334	RING;SNAP S=3.30	1					
150	1.115-00336	RING;SNAP S=3.45	1					
150	1.115-00338	RING;SNAP S=3.60	1					
150	1.115-00340	RING;SNAP S=3.75	1					
150	1.115-00342	RING;SNAP S=3.90	1					
150	1.115-00344	RING;SNAP S=4.05	1					
150	1.115-00346	RING;SNAP S=4.20	1					
160	1.270-00006	GEAR;IDLE	1					
170	1.222-00058	DISC;RUNNING	2					
190	1.216-00004	CAGE;AX.NEEDLE	2					
200	1.114-00384	WASHER;AXIAL	2					
210	1.216-00011	CAGE;NEEDLE	1					
220	1.115-00015	RING;RETAINING	1					
230	1.109-00064	BEARING;ROLLER	1					
240	1.109-00065	BEARING;ROLLER	1					

Key No	Part No	Description	Qty	S.C	Serial No	ICA	Replacable	Qty
250	1.115-00294	RING;PISTON	2					

Fig. 3140 CLUTCH - K1 - TRANSMISSION

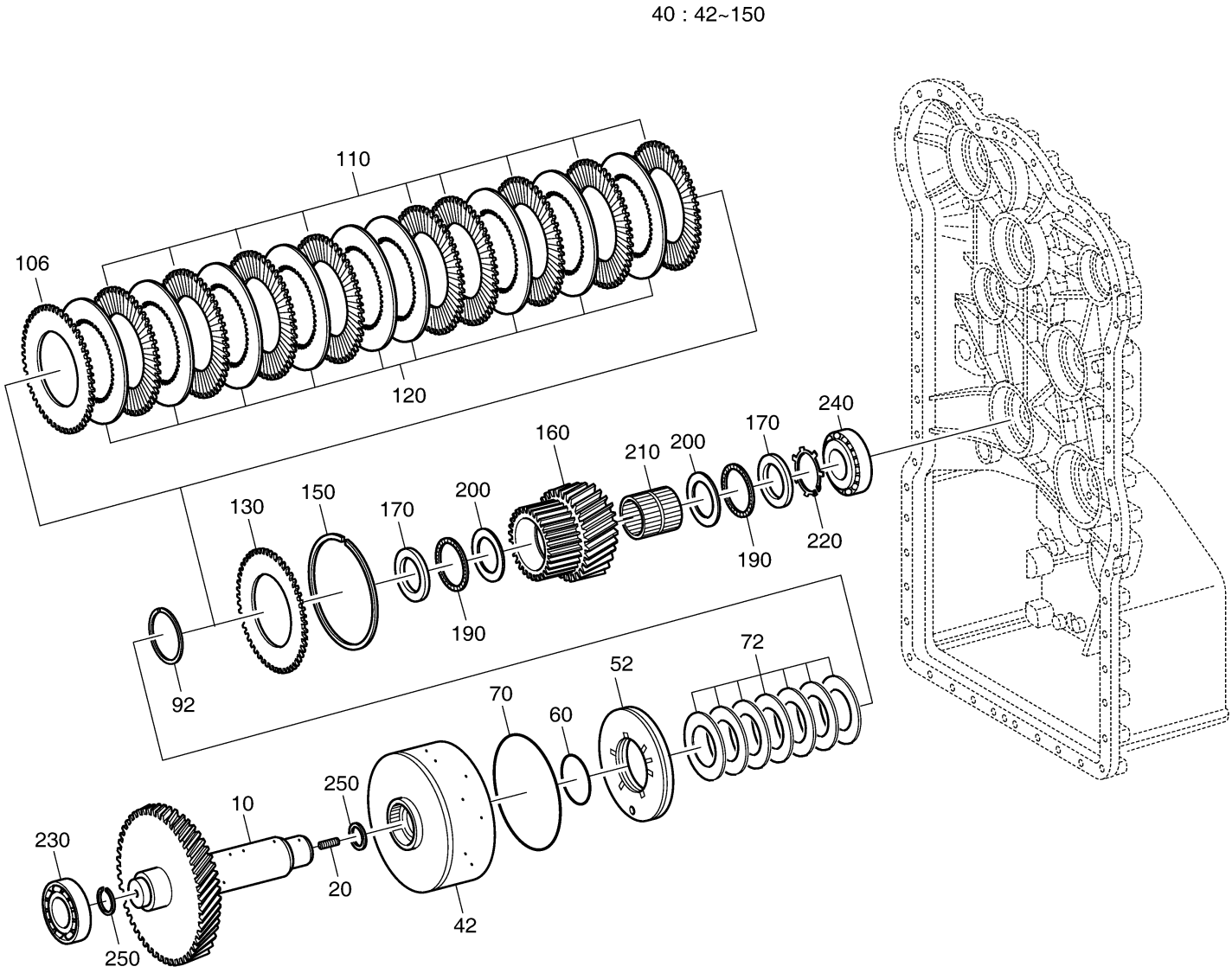

Fig. 3150 CLUTCH - K2 - TRANSMISSION

Key No	Part No	Description	Qty	S.C	Serial No	ICA	Replacable	Qty
10	1.405-00010	SHAFT	1					
20	1.120-00034	STUD	1					
40	430210-00015	COUPLING	1					
42	100502-00004	CARRIER;DISC	1					
52	1.409-00035	PISTON	1					
60	1.180-00087	O-RING	1					
70	1.180-00089	O-RING	1					
72	1.131-00120	SPRING;CUP	7					
92	K9006638	RING	1					
106	1.222-00003	DISC;O.CLUTCH	1					
110	1.222-00004	DISC	7					
120	1.222-00029	DISC;I.CLUTCH	7					
130	1.114-00164	SHIM;END	1					
150	1.115-00319	RING;SNAP S=2.10	1					
150	1.115-00321	RING;SNAP S=2.25	1					
150	1.115-00323	RING;SNAP S=2.40	1					
150	1.115-00325	RING;SNAP S=2.55	1					
150	1.115-00327	RING;SNAP S=2.70	1					
150	1.115-00329	RING;SNAP S=2.85	1					
150	1.115-00331	RING;SNAP S=3.00	1					
150	1.115-00333	RING;SNAP S=3.15	1					
150	1.115-00335	RING;SNAP S=3.30	1					
150	1.115-00337	RING;SNAP S=3.45	1					
150	1.115-00339	RING;SNAP S=3.60	1					
150	1.115-00341	RING;SNAP S=3.75	1					
150	1.115-00343	RING;SNAP S=3.90	1					
150	1.115-00345	RING;SNAP S=4.05	1					
150	1.115-00347	RING;SNAP S=4.20	1					
160	1.270-00007	GEAR;IDLE	1					
170	1.222-00058	DISC;RUNNING	2					
190	1.216-00004	CAGE;AX.NEEDLE	2					
200	1.114-00384	WASHER;AXIAL	2					
210	1.216-00005	CAGE;NEEDLE	1					
220	1.115-00015	RING;RETAINING	1					
230	1.109-00065	BEARING;ROLLER	1					
240	1.109-00065	BEARING;ROLLER	1					

Key No	Part No	Description	Qty	S.C	Serial No	ICA	Replacable	Qty
250	1.115-00294	RING;PISTON	2					

Fig. 3150 CLUTCH - K2 - TRANSMISSION

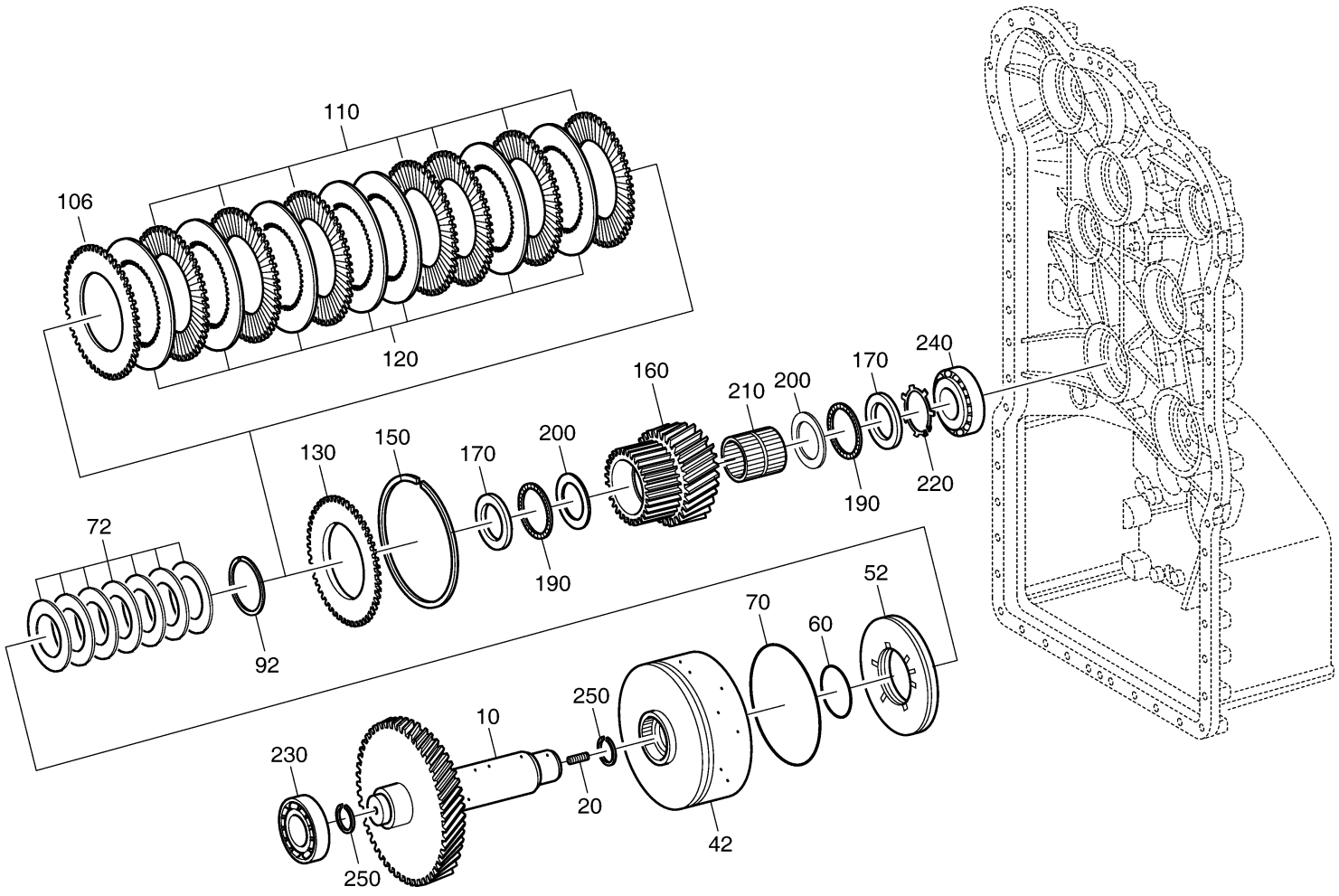

40 : 42~150

Fig. 3160 CLUTCH - K3 - TRANSMISSION

Key No	Part No	Description	Qty	S.C	Serial No	ICA	Replacable	Qty
10	130712-00008	SHAFT	1					
20	1.120-00034	STUD	1					
40	430210-00016	COUPLING	1					
42	100502-00004	CARRIER;DISC	1					
52	1.409-00035	PISTON	1					
60	1.180-00087	O-RING	1					
70	1.180-00089	O-RING	1					
72	1.131-00120	SPRING;CUP	7					
92	K9006638	RING	1					
109	1.222-00003	DISC;O.CLUTCH	1					
110	1.222-00004	DISC	7					
120	1.222-00029	DISC;I.CLUTCH	7					
130	1.114-00164	SHIM;END	1					
150	1.115-00319	RING;SNAP S=2.10	1					
150	1.115-00321	RING;SNAP S=2.25	1					
150	1.115-00323	RING;SNAP S=2.40	1					
150	1.115-00325	RING;SNAP S=2.55	1					
150	1.115-00327	RING;SNAP S=2.70	1					
150	1.115-00329	RING;SNAP S=2.85	1					
150	1.115-00331	RING;SNAP S=3.00	1					
150	1.115-00333	RING;SNAP S=3.15	1					
150	1.115-00335	RING;SNAP S=3.30	1					
150	1.115-00337	RING;SNAP S=3.45	1					
150	1.115-00339	RING;SNAP S=3.60	1					
150	1.115-00341	RING;SNAP S=3.75	1					
150	1.115-00343	RING;SNAP S=3.90	1					
150	1.115-00345	RING;SNAP S=4.05	1					
150	1.115-00347	RING;SNAP S=4.20	1					
160	1.270-00008	GEAR;IDLE	1					
170	1.222-00058	DISC;RUNNING	2					
190	1.216-00004	CAGE;AX.NEEDLE	2					
200	1.114-00384	WASHER;AXIAL	2					
210	1.216-00005	CAGE;NEEDLE	1					
220	1.109-00065	BEARING;ROLLER	1					
230	1.109-00064	BEARING;ROLLER	1					
240	1.115-00294	RING;PISTON	2					

Fig. 3160 CLUTCH - K3 - TRANSMISSION

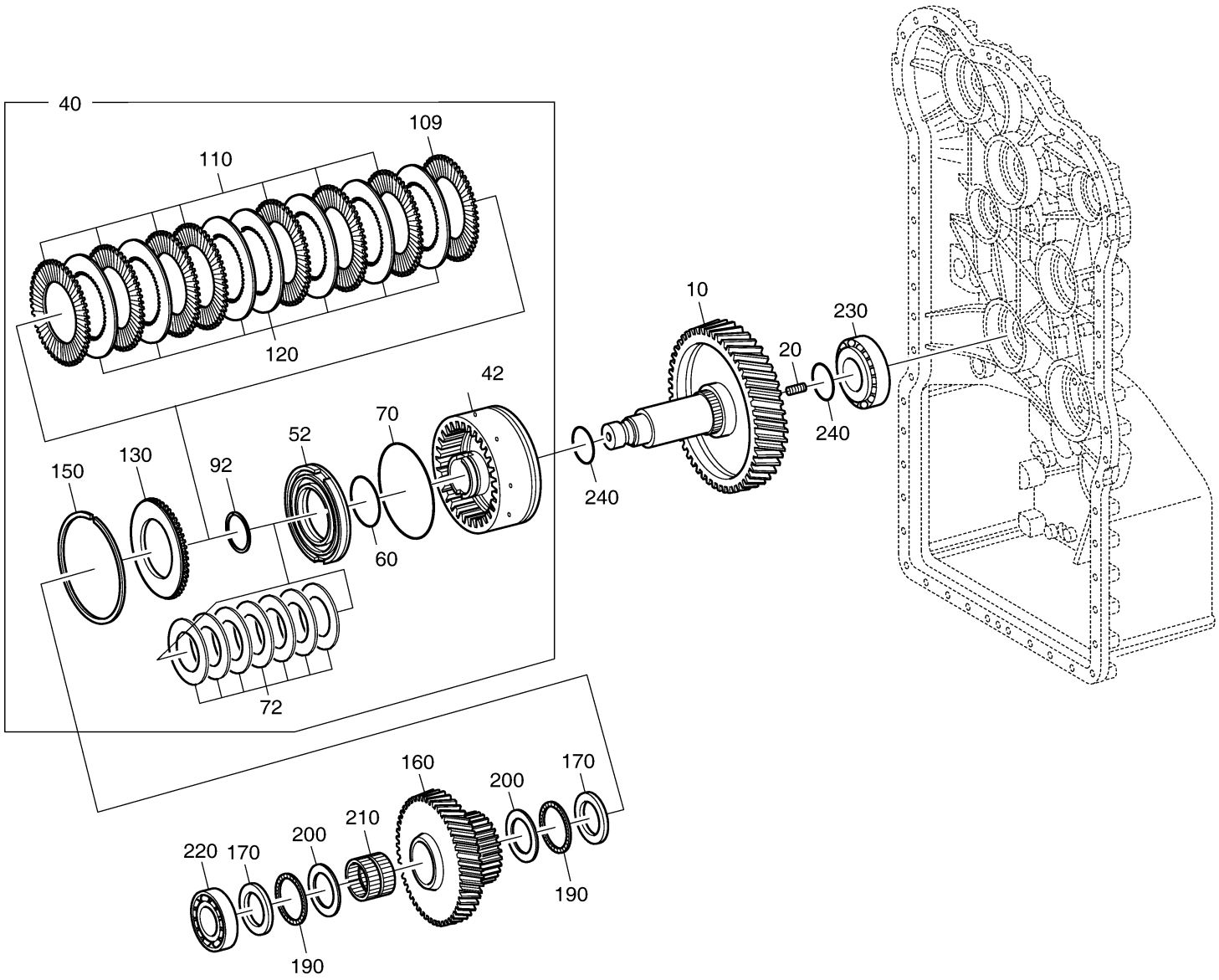

Fig. 3170 CLUTCH - K4 - TRANSMISSION

Key No	Part No	Description	Qty	S.C	Serial No	ICA	Replacable	Qty
10	1.405-00012	SHAFT	1					
16	1.403-00002	GEAR	1					
18	1.115-00017	RING;RETAINING	1					
20	1.120-00034	STUD	1					
40	430210-00017	COUPLING	1					
42	100502-00017	CARRIER;DISC	1					
52	1.409-00035	PISTON	1					
60	1.180-00087	O-RING	1					
70	1.180-00089	O-RING	1					
72	1.131-00120	SPRING;CUP	7					
92	K9006638	RING	1					
106	1.222-00003	DISC;O.CLUTCH	1					
110	1.222-00004	DISC	5					
120	1.222-00029	DISC;I.CLUTCH	5					
130	1.114-00164	SHIM;END	1					
150	1.115-00319	RING;SNAP S=2.10	1					
150	1.115-00321	RING;SNAP S=2.25	1					
150	1.115-00323	RING;SNAP S=2.40	1					
150	1.115-00325	RING;SNAP S=2.55	1					
150	1.115-00327	RING;SNAP S=2.70	1					
150	1.115-00329	RING;SNAP S=2.85	1					
150	1.115-00331	RING;SNAP S=3.00	1					
150	1.115-00333	RING;SNAP S=3.15	1					
150	1.115-00335	RING;SNAP S=3.30	1					
150	1.115-00337	RING;SNAP S=3.45	1					
150	1.115-00339	RING;SNAP S=3.60	1					
150	1.115-00341	RING;SNAP S=3.75	1					
150	1.115-00343	RING;SNAP S=3.90	1					
150	1.115-00345	RING;SNAP S=4.05	1					
150	1.115-00347	RING;SNAP S=4.20	1					
160	1.270-00009	GEAR;IDLE	1					
170	1.222-00058	DISC;RUNNING	1					
190	1.216-00004	CAGE;AX.NEEDLE	2					
200	1.114-00384	WASHER;AXIAL	3					
210	1.216-00005	CAGE;NEEDLE	1					
220	1.115-00020	RING;RETAINING	1					

Key No	Part No	Description	Qty	S.C	Serial No	ICA	Replacable	Qty
230	1.109-00065	BEARING;ROLLER	1					
240	1.109-00068	BEARING;ROLLER	1					
250	1.115-00294	RING;PISTON	2					

Fig. 3170 CLUTCH - K4 - TRANSMISSION

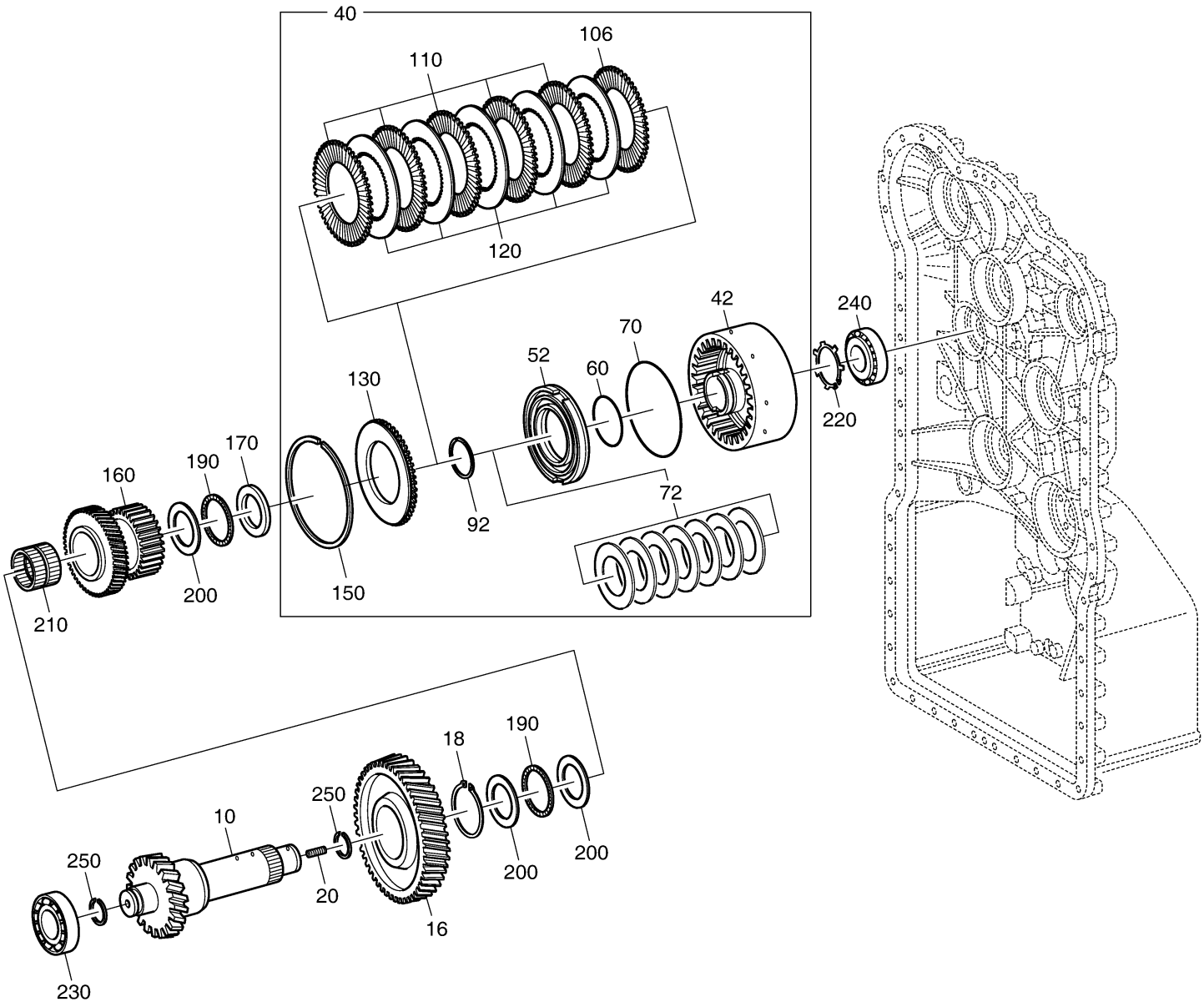

DOOSAN Doosan Infracore

Fig. 3180 CLUTCH - KV - TRANSMISSION

Key No	Part No	Description	Qty	S.C	Serial No	ICA	Replacable	Qty
10	1.405-00013	SHAFT	1					
20	1.120-00034	STUD	1					
40	430210-00018	COUPLING	1					
42	100502-00006	CARRIER;DISC	1					
52	1.409-00035	PISTON	1					
60	1.180-00087	O-RING	1					
70	1.180-00089	O-RING	1					
74	1.114-00274	WASHER	1					
80	K9006642	RING;GUIDE	1					
90	1.131-00084	SPRING	1					
92	K9006638	RING	1					
106	1.222-00001	DISC	1					
110	1.222-00002	DISC	10					
120	1.222-00028	DISC;I.CLUTCH	10					
130	1.114-00163	SHIM;END	1					
150	1.115-00318	RING;SNAP S=2.10	1					
150	1.115-00320	RING;SNAP S=2.25	1					
150	1.115-00322	RING;SNAP S=2.40	1					
150	1.115-00324	RING;SNAP S=2.55	1					
150	1.115-00326	RING;SNAP S=2.70	1					
150	1.115-00328	RING;SNAP S=2.85	1					
150	1.115-00330	RING;SNAP S=3.00	1					
150	1.115-00332	RING;SNAP S=3.15	1					
150	1.115-00334	RING;SNAP S=3.30	1					
150	1.115-00336	RING;SNAP S=3.45	1					
150	1.115-00338	RING;SNAP S=3.60	1					
150	1.115-00340	RING;SNAP S=3.75	1					
150	1.115-00342	RING;SNAP S=3.90	1					
150	1.115-00344	RING;SNAP S=4.05	1					
150	1.115-00346	RING;SNAP S=4.20	1					
160	1.270-00010	IDLER	1					
170	1.216-00008	CAGE;NEEDLE	1					
180	1.109-00010	BEARING;BALL	1					
190	1.115-00019	RING;RETAINING	1					
200	1.115-00020	RING;RETAINING	1					
210	1.109-00068	BEARING;ROLLER	1					

Key No	Part No	Description	Qty	S.C	Serial No	ICA	Replacable	Qty
220	1.109-00068	BEARING;ROLLER	1					
230	1.115-00294	RING;PISTON	2					

Fig. 3180 CLUTCH - KV - TRANSMISSION

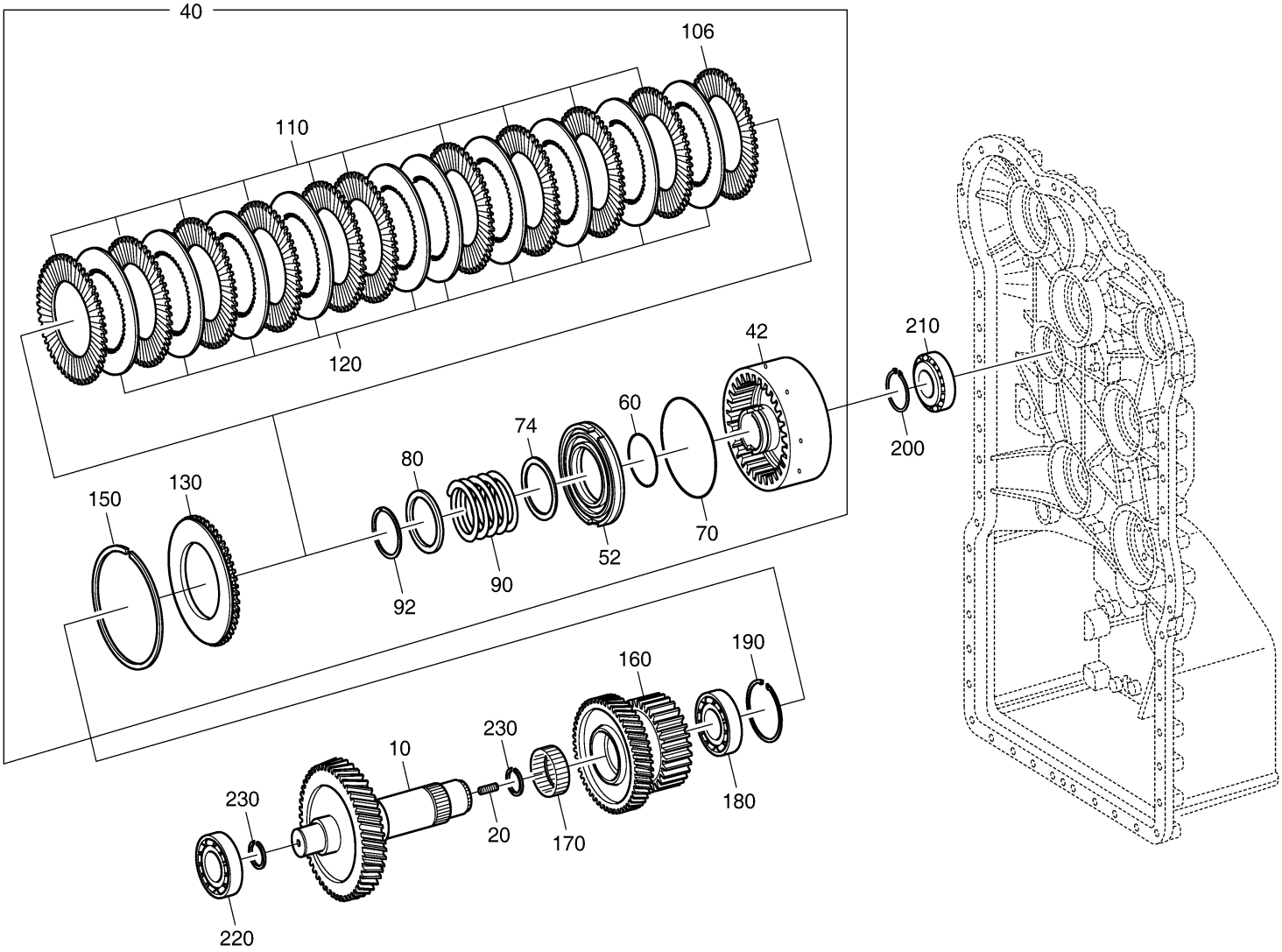

Fig. 3190 CLUTCH - KR - TRANSMISSION

Key No	Part No	Description	Qty	S.C	Serial No	ICA	Replacable	Qty
10	1.405-00014	SHAFT	1					
20	1.120-00034	STUD	1					
40	430210-00018	COUPLING	1					
42	100502-00006	CARRIER;DISC	1					
52	1.409-00035	PISTON	1					
60	1.180-00087	O-RING	1					
70	1.180-00089	O-RING	1					
74	1.114-00274	WASHER	1					
80	K9006642	RING;GUIDE	1					
90	1.131-00084	SPRING	1					
92	K9006638	RING	1					
106	1.222-00001	DISC	1					
110	1.222-00002	DISC	10					
120	1.222-00028	DISC;I.CLUTCH	10					
130	1.114-00163	SHIM;END	1					
150	1.115-00318	RING;SNAP S=2.10	1					
150	1.115-00320	RING;SNAP S=2.25	1					
150	1.115-00322	RING;SNAP S=2.40	1					
150	1.115-00324	RING;SNAP S=2.55	1					
150	1.115-00326	RING;SNAP S=2.70	1					
150	1.115-00328	RING;SNAP S=2.85	1					
150	1.115-00330	RING;SNAP S=3.00	1					
150	1.115-00332	RING;SNAP S=3.15	1					
150	1.115-00334	RING;SNAP S=3.30	1					
150	1.115-00336	RING;SNAP S=3.45	1					
150	1.115-00338	RING;SNAP S=3.60	1					
150	1.115-00340	RING;SNAP S=3.75	1					
150	1.115-00342	RING;SNAP S=3.90	1					
150	1.115-00344	RING;SNAP S=4.05	1					
150	1.115-00346	RING;SNAP S=4.20	1					
160	1.270-00010	IDLER	1					
170	1.216-00008	CAGE;NEEDLE	1					
180	1.109-00010	BEARING;BALL	1					
190	1.115-00019	RING;RETAINING	1					
200	1.115-00020	RING;RETAINING	1					
210	1.109-00065	BEARING;ROLLER	1					

Key No	Part No	Description	Qty	S.C	Serial No	ICA	Replacable	Qty
220	1.109-00068	BEARING;ROLLER	1					
230	1.115-00294	RING;PISTON	2					

Fig. 3190 CLUTCH - KR - TRANSMISSION

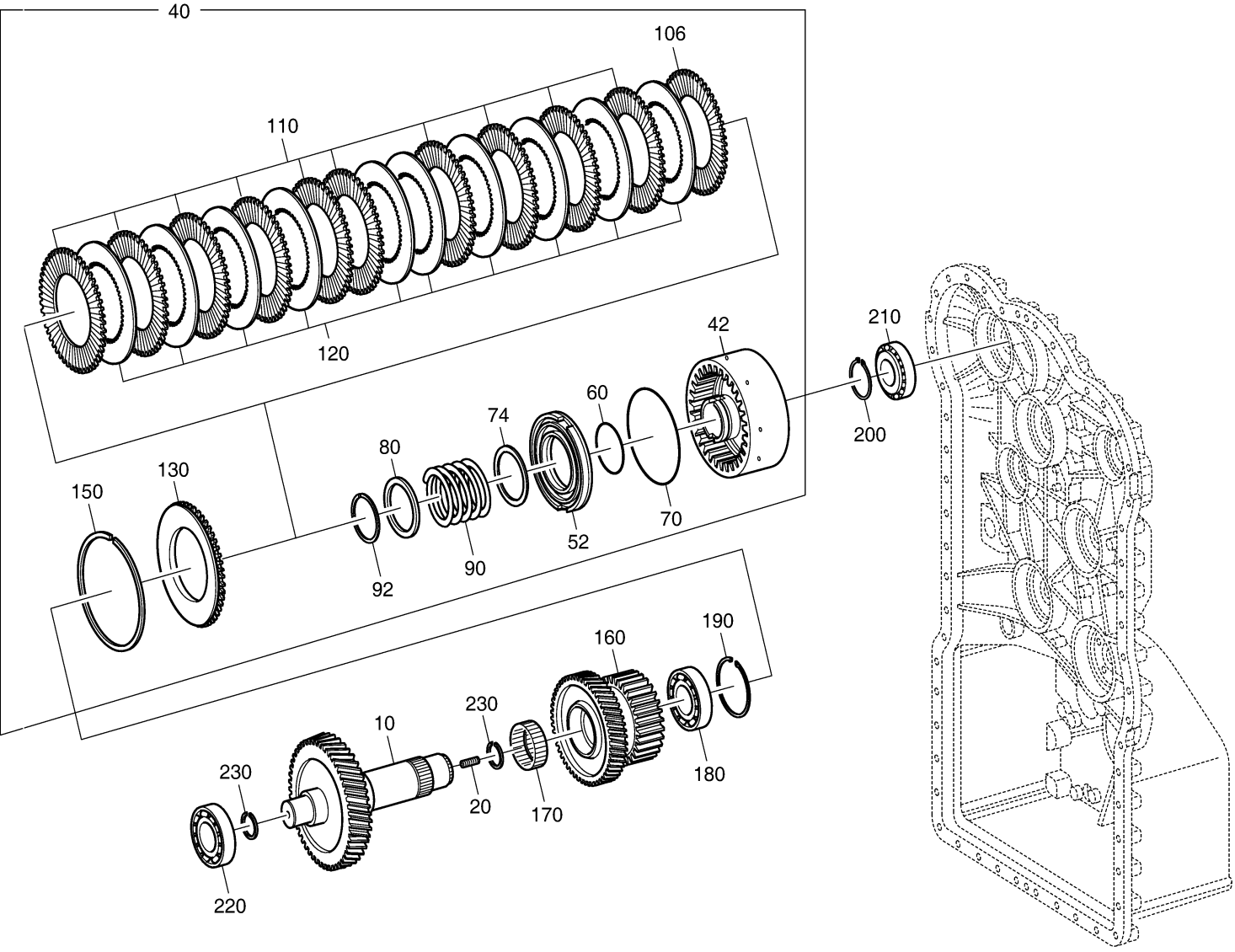

Fig. 3200 OUTPUT - TRANSMISSION

Key No	Part No	Description	Qty	S.C	Serial No	ICA	Replacable	Qty
10	130712-00007	SHAFT;OUTPUT	1					
20	1.109-00064	BEARING;ROLLER	1					
30	1.109-00064	BEARING;ROLLER	1					
40	1.180-00533	SEAL;SHAFT	2					
50	1.114-00275	WASHER	2					
60	1.120-00126	SCREW	4					
80	1.229-00017	FLANGE;OUTPUT	1					
85	1.461-00011	SHEET;SCREEN	1					
110	K9000605	FLANGE;OUTPUT	1					
116	102104-00001	SHEET;SCREEN	1					
130	1.180-00079	O-RING	2					

Fig. 3200 OUTPUT - TRANSMISSION

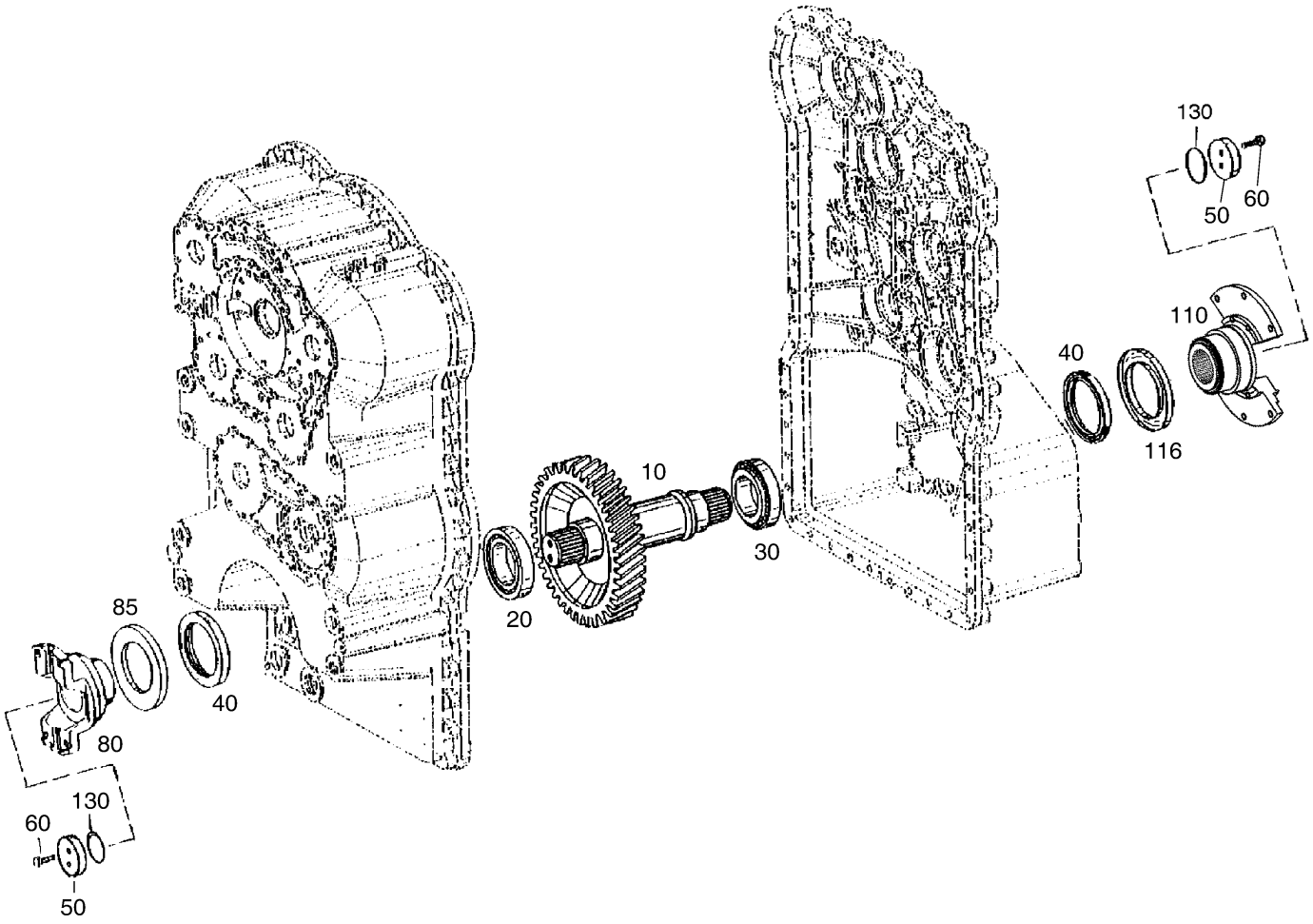

Fig. 3210 PARKING BRAKE -

Key No	Part No	Description	Qty	S.C	Serial No	ICA	Replacable	Qty
10	130104-00036	BRAKE;PARKING	1					
10-1	401107-00465	SEAL KIT	1					
10-2	101529-00017	KIT;REPAIR	1					
10-3	101529-00018	KIT;REPAIR	1					
10-4	101529-00019	KIT;REPAIR	1					
10-5	101529-00020	KIT;REPAIR	1					
10-6	101529-00021	KIT;REPAIR	1					
10-7	130110-00002	KIT;BRAKE LINING	1					
10-8	101529-00022	KIT;REPAIR	1					
100	K9000604	DISC;BRAKE	1					
140	1.120-00155	SCREW;HEX.	6					
150	1.114-00263	WASHER	6					
160	120808-00069	WASHER	1					
170	S2211661	BOLT;SOCKET	1					
181	1.120-00165	PLUG	1					
182	180-00408	O-RING	1					

Fig. 3210 PARKING BRAKE -

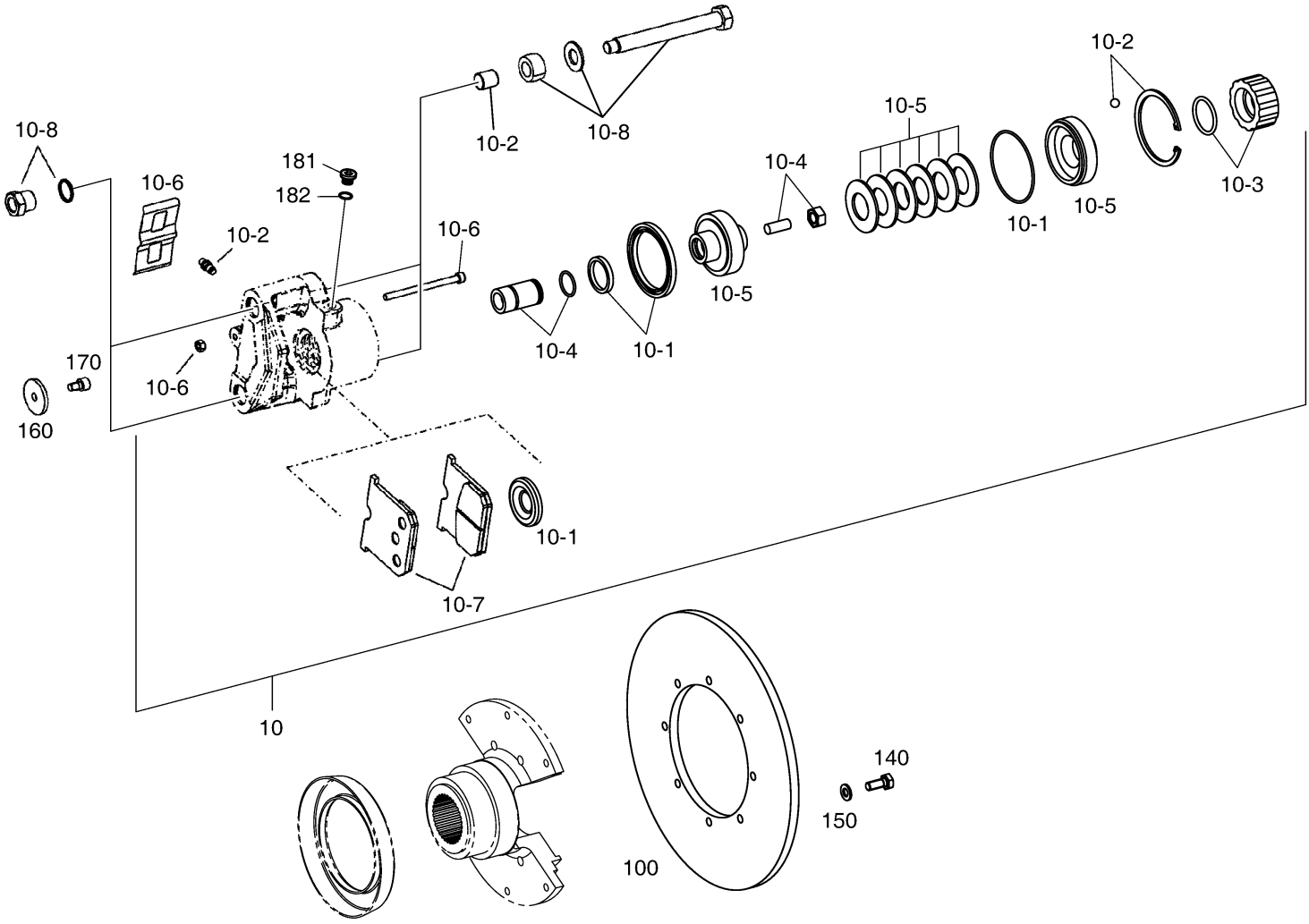

Fig. 3220 POWER TAKE OFF -

Key No	Part No	Description	Qty	S.C	Serial No	ICA	Replacable	Qty
10	1.405-00080	SHAFT;PUMP	1					
12	1.115-00021	RING;RETAINING	1					
20	1.115-00296	RING;PISTON	1					
30	1.109-00009	BEARING;BALL	1					
110	2.180-00284	O-RING	1					

Fig. 3220 POWER TAKE OFF -

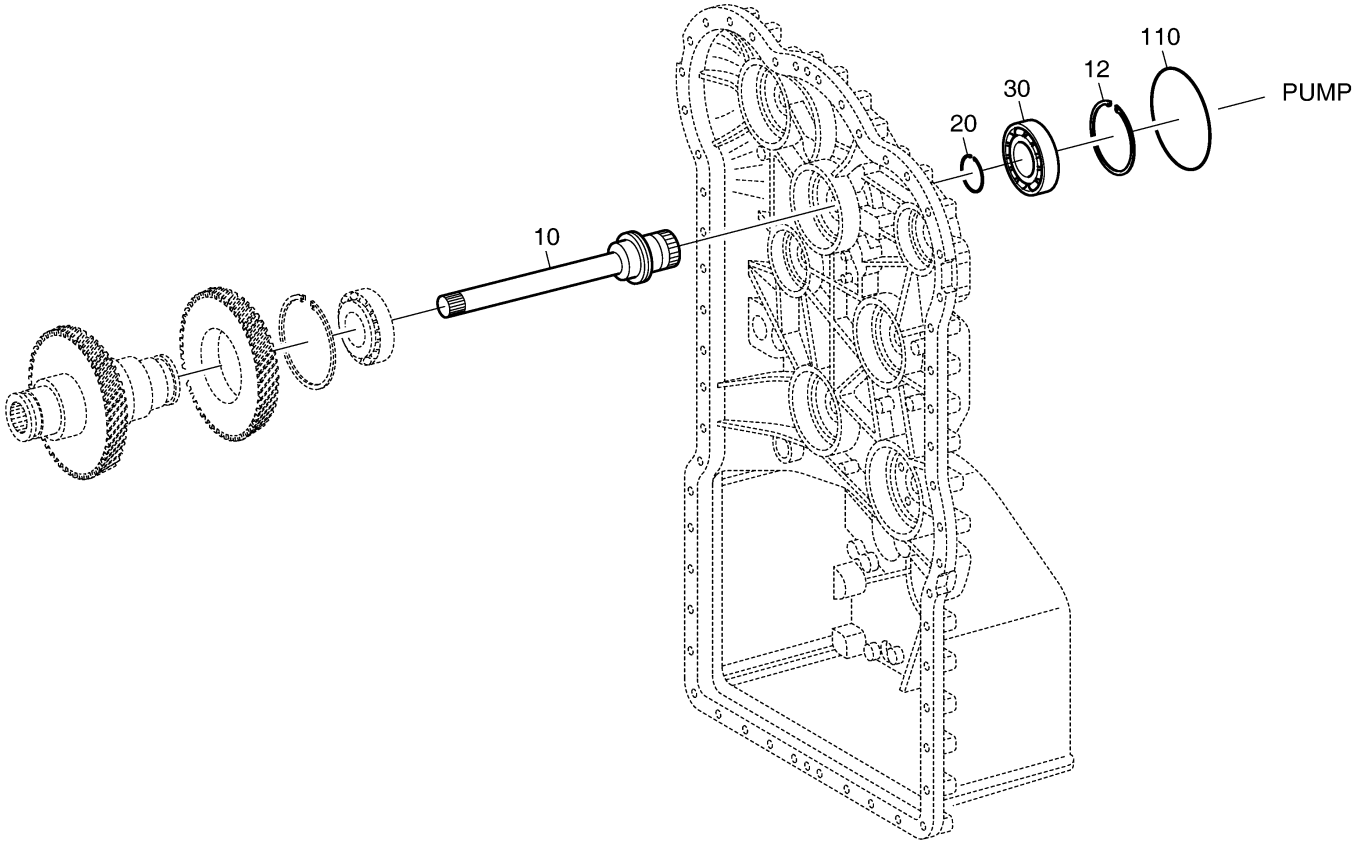

Fig. 3230 GEAR SHIFT SYSTEM(1) -

Key No	Part No	Description	Qty	S.C	Serial No	ICA	Replacable	Qty
10	1.180-00022	GASKET	1					
20	K9000608	PLATE;DUCT	1					
30	K9006636	PLATE;SEALING	1					
40	1.120-00082	SCREW	36					
50	1.120-00036	STUD	14					
70	1.121-00034	NUT;HEX	14					
200	1.120-00061	SCREW	23					
770	1.549-00001	SWITCH	1					
794	K9000609	PISTON	1					
798	1.131-00003	SPRING;COMPR	1					
810	1.120-00165	PLUG	8					
820	1.180-00408	RING;WEAR	8					

Fig. 3230 GEAR SHIFT SYSTEM(1) -

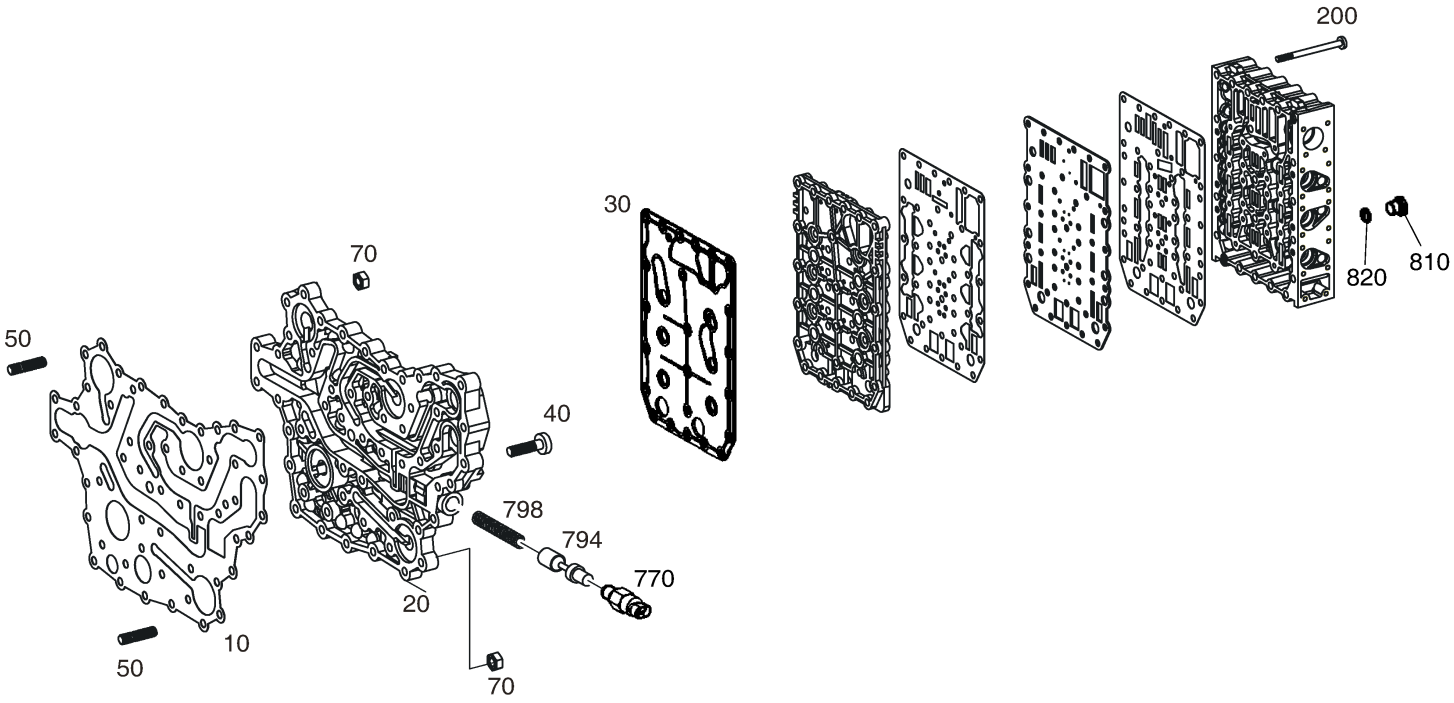

Fig. 3240 GEAR SHIFT SYSTEM(2) -

Key No	Part No	Description	Qty	S.C	Serial No	ICA	Replacable	Qty
10	K9006652	BLOCK;VALVE	1					
20	1.415-00001	ORIFICE	6					
30	1.409-00006	PISTON	6					
40	1.131-00004	SPRING;COMPR.	6					
50	1.409-00007	PISTON	6					
60	1.131-00005	SPRING;COMPR.	6					
70	1.409-00008	PISTON	1					
80	1.131-00006	SPRING;COMPR.	1					
90	K9000101	PISTON;CONTROL	1					
110	1.131-00007	SPRING;COMPR.	1					
150	K9000115	GASKET	1					
160	2.402-00304	HOUSING	1					
170	1.120-00057	SCREW	18					
180	1.421-00001	REGULATOR;PRESSURE	3					
181	1.180-00057	O-RING	3					
190	1.412-00004	PLATE;FIXING	3					
200	1.120-00086	SCREW	3					
210	K9000115	GASKET	1					
220	2.402-00304	HOUSING	1					
230	1.120-00057	SCREW	18					
240	1.421-00001	REGULATOR;PRESSURE	3					
241	1.180-00057	O-RING	3					
250	1.412-00004	PLATE;FIXING	3					
260	1.120-00086	SCREW	3					
270	1.530-00001	HARNESS;WIRING	1					
280	K9000109	GASKET	1					
290	1.430-00002	COVER	1					
300	1.120-00057	SCREW	14					
310	K9000109	GASKET	1					
320	1.430-00003	COVER	1					
330	1.124-00141	CLAMP;RETAINING	1					
340	1.120-00057	SCREW	14					
360	K9006637	PLATE;SEALING	1					
362	1.471-00007	SCREEN	6					
380	K9000100	PLATE;DUCT	1		~2978845	Y	250201-03898	1
380	250201-03898	PLATE,DUCT	1		2978846~			

Key No	Part No	Description	Qty	S.C	Serial No	ICA	Replacable	Qty
390	1.120-00062	SCREW	18					

Fig. 3240 GEAR SHIFT SYSTEM(2) -

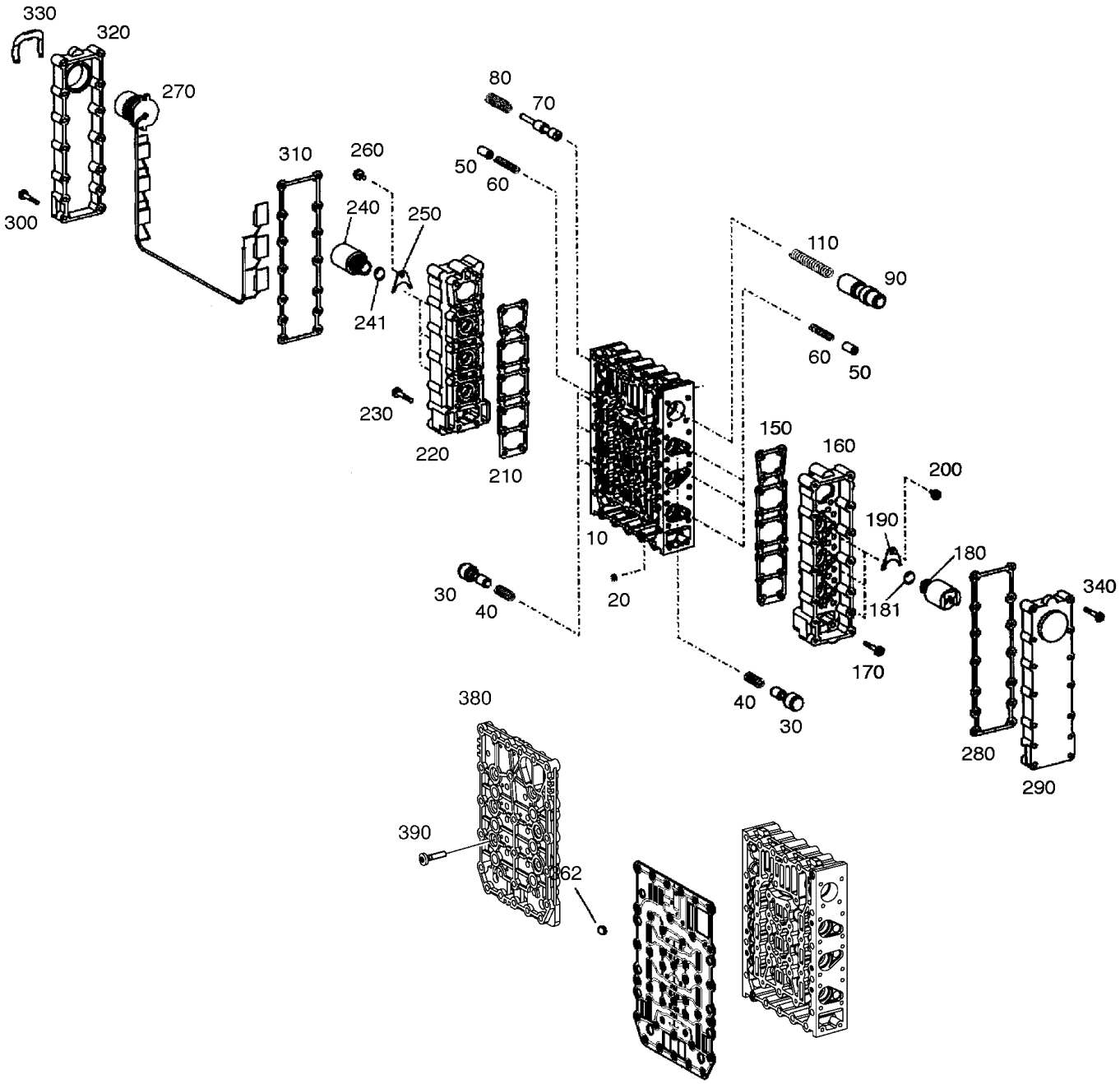

DOOSAN Doosan Infracore

Fig. 3250 CONTROL UNIT - TRANSMISSION

Key No	Part No	Description	Qty	S.C	Serial No	ICA	Replacable	Qty
491	1.120-00166	PLUG	1					
492	1.180-00062	O-RING	1					
771	1.120-00164	PLUG	2					
772	1.180-00055	O-RING	2					

Fig. 3250 CONTROL UNIT - TRANSMISSION

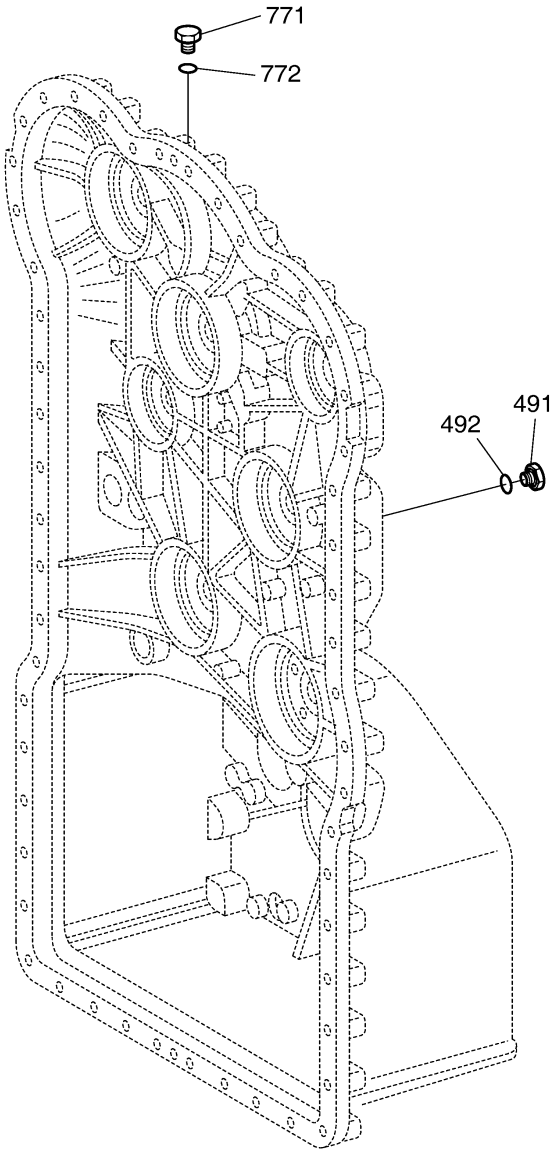

Fig. 3260 PRESSURE REGULATOR -

Key No	Part No	Description	Qty	S.C	Serial No	ICA	Replacable	Qty
10	1.420-00007	VALVE	1					
40	1.409-00009	PISTON	1					
50	1.131-00008	SPRING;COMPR.	1					
60	1.412-00078	PLATE;PRESSURE	1					
70	1.114-00487	WASHER;TAB	1					

Fig. 3260 PRESSURE REGULATOR -

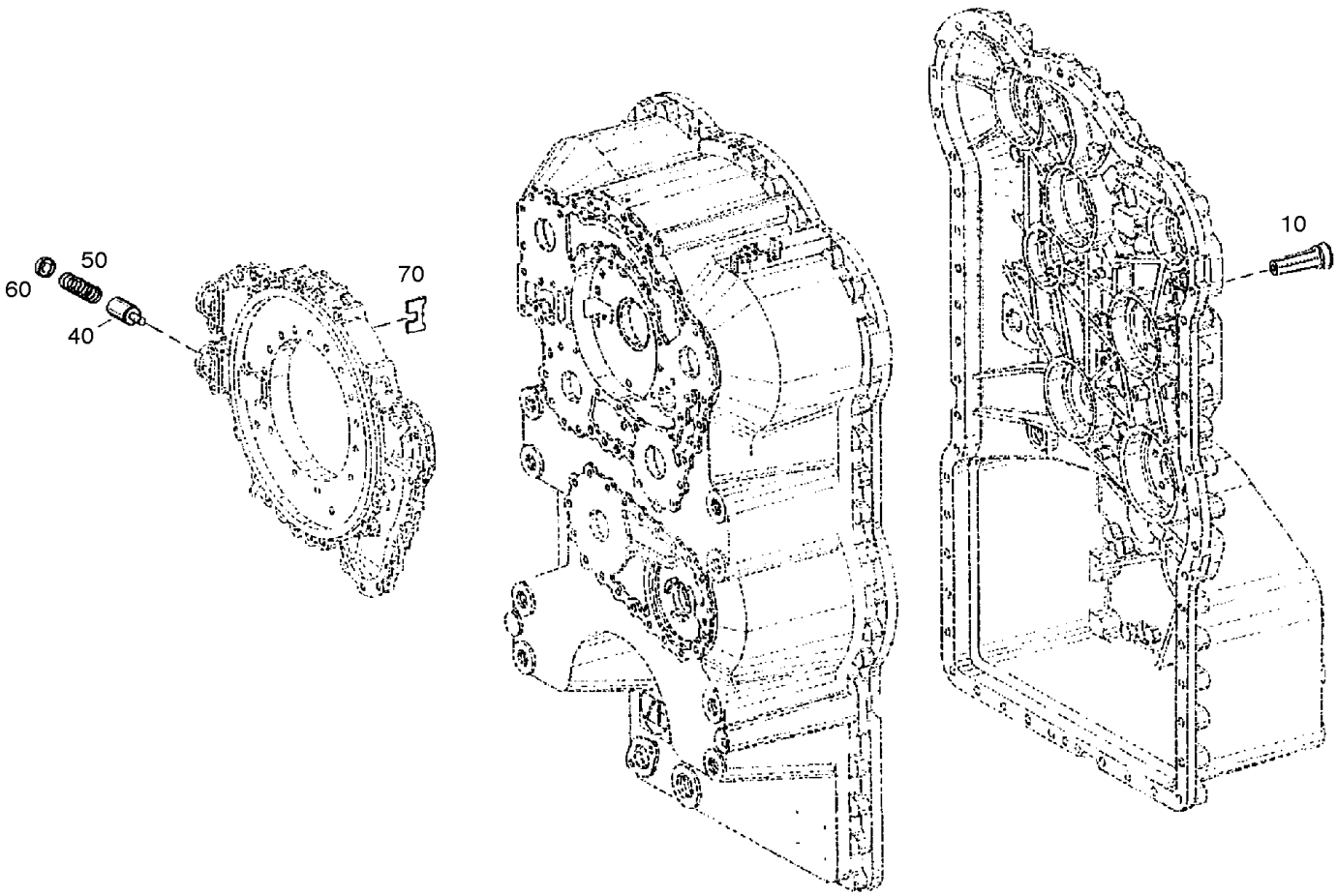

Fig. 3270 FILTER - TRANSMISSION

Key No	Part No	Description	Qty	S.C	Serial No	ICA	Replacable	Qty
10	K1029612	FILTER;T/M	1		10001~10363	Y	400409-00006	1
10	400409-00006	FILTER,TRANSMISSION	1		10364~			
40	1.451-00170	HEAD;FILTER	1					
42	K9004018	O-RING	2					
50	1.120-00084	SCREW	2					

Fig. 3270 FILTER - TRANSMISSION

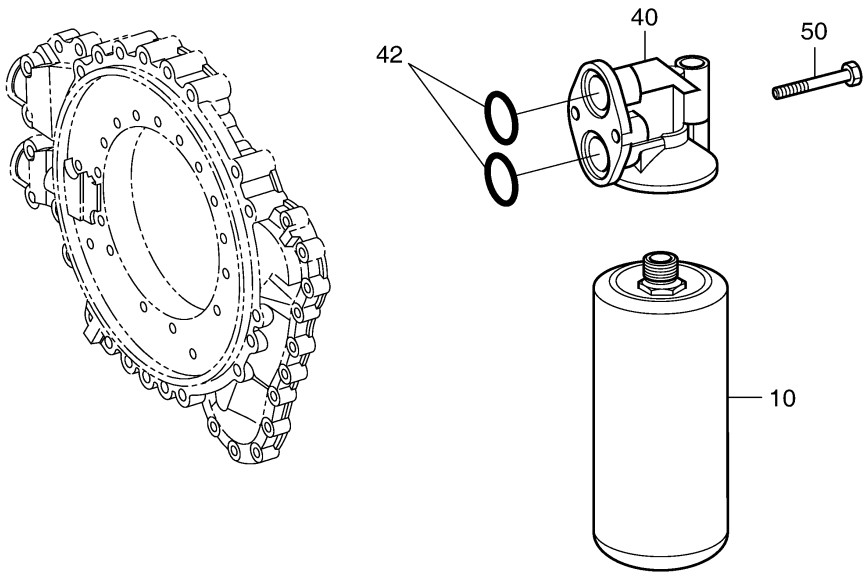

Fig. 3280 TEMPERATURE SENSOR -

Key No	Part No	Description	Qty	S.C	Serial No	ICA	Replacable	Qty
54	301317-00015	SENSOR;TEMP.	1					
56	1.180-00063	O-RING	1					

Fig. 3280 TEMPERATURE SENSOR -

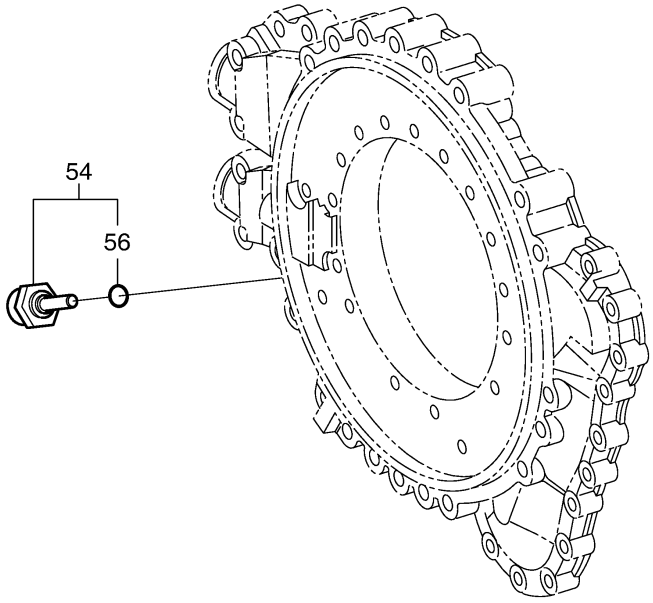

Fig. 3290 INDICATOR TRANSMITTER -

Key No	Part No	Description	Qty	S.C	Serial No	ICA	Replacable	Qty
10	1.549-00011	TRANSMITTER;IND.	3					
11	K9000086	O-RING	3					
20	1.549-00015	TRANSMITTER;SPEED	1					
21	1.180-00061	O-RING	1					
30	1.120-00089	SCREW	1					

Fig. 3290 INDICATOR TRANSMITTER -

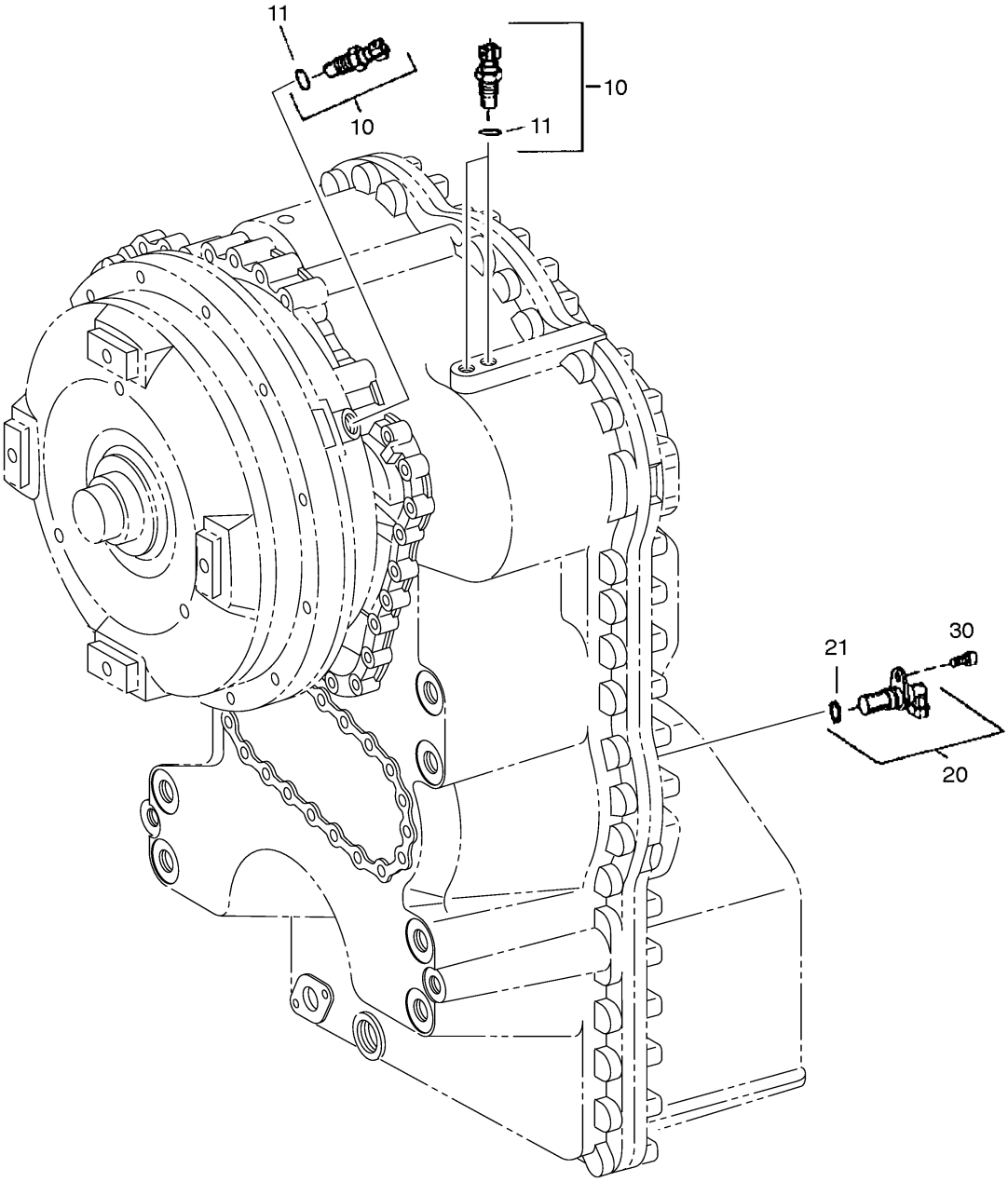

Fig. 3300 EMERGENCY STEERING PUMP -

Key No	Part No	Description	Qty	S.C	Serial No	ICA	Replacable	Qty
10	110508-00064	COVER	1					
20	1.180-00012	GASKET	1					
40	1.120-00120	SCREW:HEX.	23					

Fig. 3300 EMERGENCY STEERING PUMP -

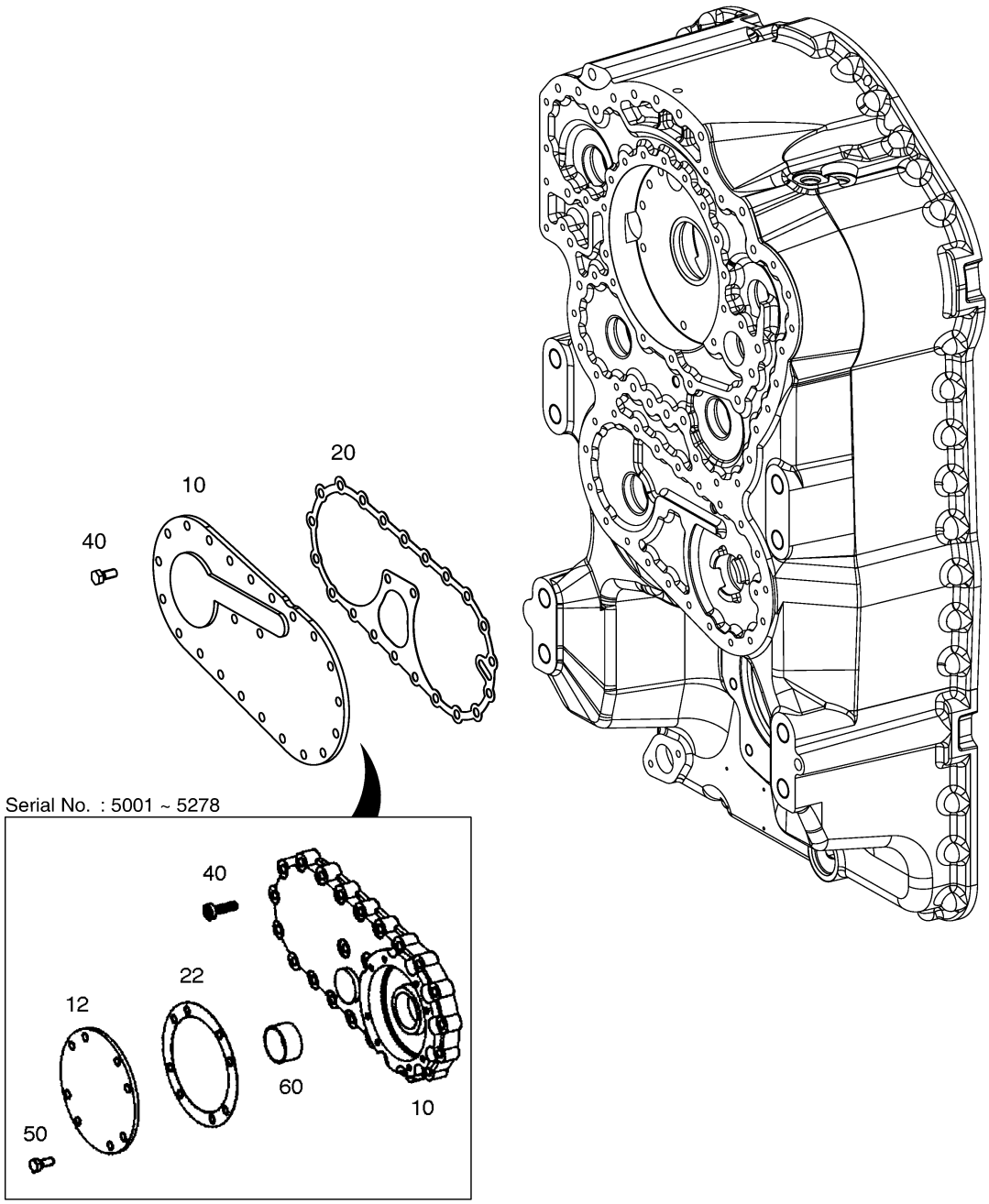

Fig. 3310 FILLER NECK - TRANSMISSION

Key No	Part No	Description	Qty	S.C	Serial No	ICA	Replacable	Qty
30	1.180-00011	GASKET	2					
130	1.412-00031	PLATE;COVER	2					
150	1.120-00120	SCREW;HEX.	4					

Fig. 3310 FILLER NECK - TRANSMISSION

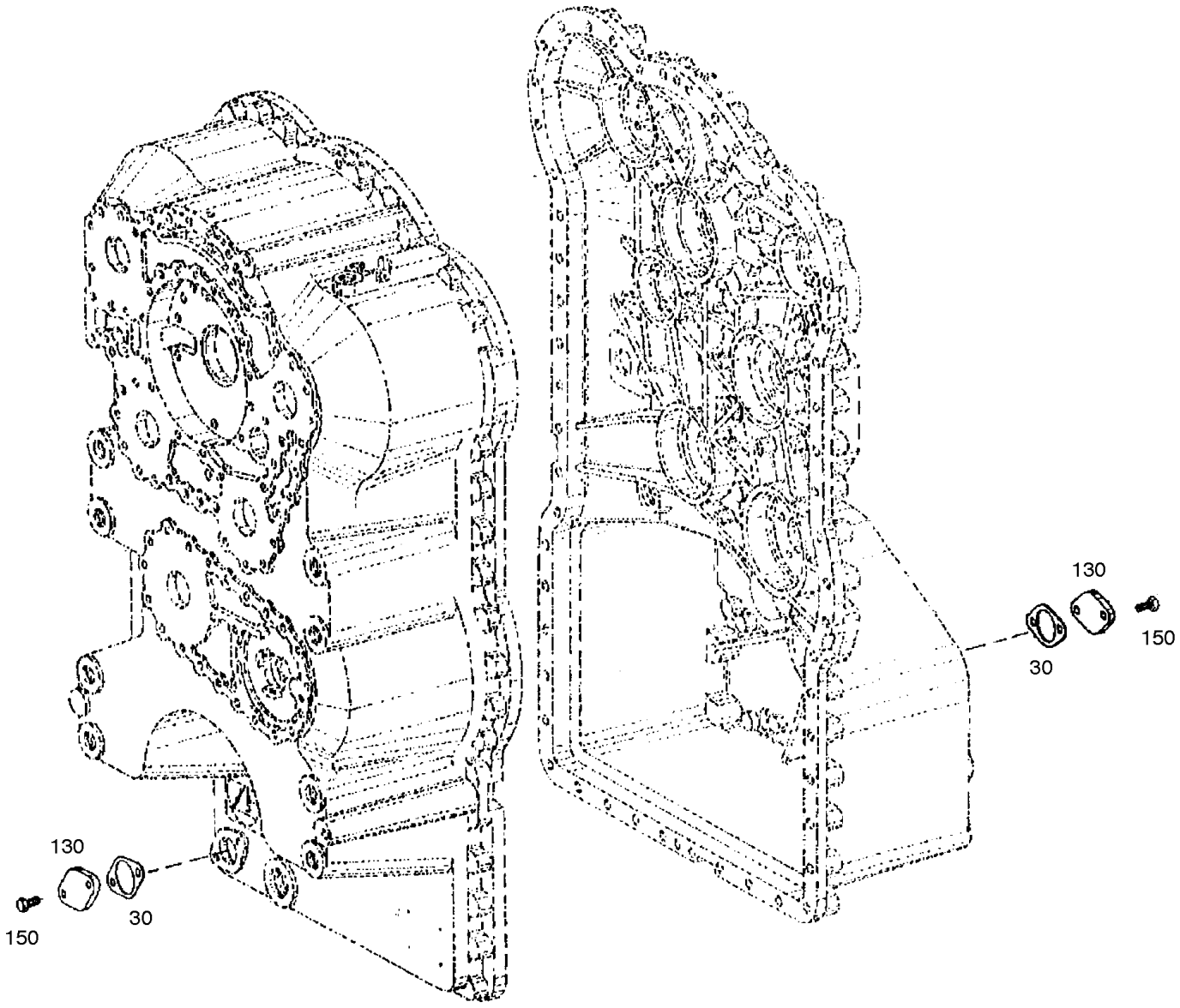

Fig. 3320 LOOSE PARTS - TRANSMISSION

Key No	Part No	Description	Qty	S.C	Serial No	ICA	Replacable	Qty
10	1.180-00011	GASKET	2					
20	1.412-00029	PLATE:BAFFLE	1					
30	2.180-00284	O-RING	1					

Fig. 3320 LOOSE PARTS - TRANSMISSION



10



20



30

Fig. 3330 DIFFERENTIAL CARRIER - FRONT

Key No	Part No	Description	Qty	S.C	Serial No	ICA	Replacable	Qty
10	110931-00756	HOUSING,DIFFERENTIAL	1					
20	140107-00006	BEARING,TAPER ROLLER	1					
30	K9000205	RING;SPACER A=7.30	1	R				
30	K9000206	RING;SPACER A=7.40	1	R				
30	K9000207	RING;SPACER A=7.50	1	R				
30	K9000208	RING;SPACER A=7.60	1	R				
30	K9000209	RING;SPACER A=7.70	1	R				
30	K9000210	RING;SPACER A=7.90	1	R				
30	K9000211	RING;SPACER A=8.00	1	R				
30	K9000212	RING;SPACER A=8.10	1	R				
30	K9000213	RING;SPACER A=8.20	1	R				
30	K9000214	RING;SPACER A=8.30	1	R				
30	K9000215	RING;SPACER A=8.40	1	R				
30	K9000216	RING;SPACER A=8.50	1	R				
30	K9000217	RING;SPACER A=8.60	1	R				
30	K9000218	RING;SPACER A=8.70	1	R				
30	K9000219	RING;SPACER A=8.80	1	R				
30	K9000220	RING;SPACER A=8.90	1	R				
30	K9000221	RING;SPACER A=9.00	1	R				
30	K9000222	RING;SPACER A=7.80	1	R				
30	K9000223	RING;SPACER A=7.82	1	R				
30	K9000224	RING;SPACER A=7.84	1	R				
30	K9000225	RING;SPACER A=7.86	1	R				
30	K9000226	RING;SPACER A=7.88	1	R				
30	K9000227	RING;SPACER A=7.92	1	R				
30	K9000228	RING;SPACER A=7.94	1	R				
30	K9000229	RING;SPACER A=7.96	1	R				
30	K9000230	RING;SPACER A=7.98	1	R				
30	K9000231	RING;SPACER A=8.02	1	R				
30	K9000232	RING;SPACER A=8.04	1	R				
30	K9000233	RING;SPACER A=8.06	1	R				
30	K9000234	RING;SPACER A=8.08	1	R				
30	K9000235	RING;SPACER A=8.12	1	R				
30	K9000236	RING;SPACER A=8.14	1	R				
30	K9000237	RING;SPACER A=8.16	1	R				
30	K9000238	RING;SPACER A=8.18	1	R				

Key No	Part No	Description	Qty	S.C	Serial No	ICA	Replacable	Qty
40	140107-00008	BEARING,ROLLER	1					
50	K9000308	WASHER S=0.7	1	R				
50	K9000309	WASHER S=0.8	1	R				
50	K9000310	WASHER S=0.9	1	R				
50	K9000311	WASHER S=1.0	1	R				
50	K9000312	WASHER S=1.1	1	R				
50	K9000313	WASHER S=1.2	1	R				
50	K9000314	WASHER S=1.3	1	R				
50	K9000315	WASHER S=1.4	1	R				
50	K9000316	WASHER S=1.5	1	R				
50	K9000629	WASHER S=0.2	1	R				
50	K9000630	WASHER S=0.1	1	R				
60	K9000245	SEAL;SHAFT	1					
70	K9000204	WASHER A=5.00	1					
80	K9000250	NUT;SLOTTED	1					
100	120705-00003	SCREW,PLUG	3					
100A	1.180-00135	O-RING	1					
110	130407-00043	GEAR SET,BEVEL	1					
120	430215-00604	FLANGE;INPUT	1					
130	160503-00011	PROTECTION	1					
1	110931-00748	HOUSING,DIFFERENTIAL	1					
2	K9000262	WASHER;THRUST	2					
3	K9000261	WASHER;THRUST	2					
4	K9000266	DISC;O.CLUTCH S=3.00	4	R				
4	K9000265	DISC;O.CLUTCH S=2.70	4	R				
4	K9000267	DISC;O.CLUTCH S=2.90	4	R				
4	K9000264	DISC;O.CLUTCH S=3.10	4	R				
4	K9000268	DISC;O.CLUTCH S=3.20	4	R				
4	K9000270	DISC;O.CLUTCH S=3.30	4	R				
4	130107-00028	DISC,CLUTCH;OUTER S=3.5	4	R				
5	K9000258	DISC;I.CLUTCH	4					
6	401003-00337	RING,PRESSURE	2					
7	K9000260	AXLE;DIFFERENTIAL	2					
8	K9000326	GEAR;AXLE BEVEL	2					
9	K9000259	GEAR;BEVEL	4					
11	110514-00067	COVER,HOUSING	1					
13	K9000251	SCREW;LOCKING	20					
14	140107-00307	BEARING,TAPER ROLLER	2					

Key No	Part No	Description	Qty	S.C	Serial No	ICA	Replacable	Qty

Fig. 3330 DIFFERENTIAL CARRIER - FRONT

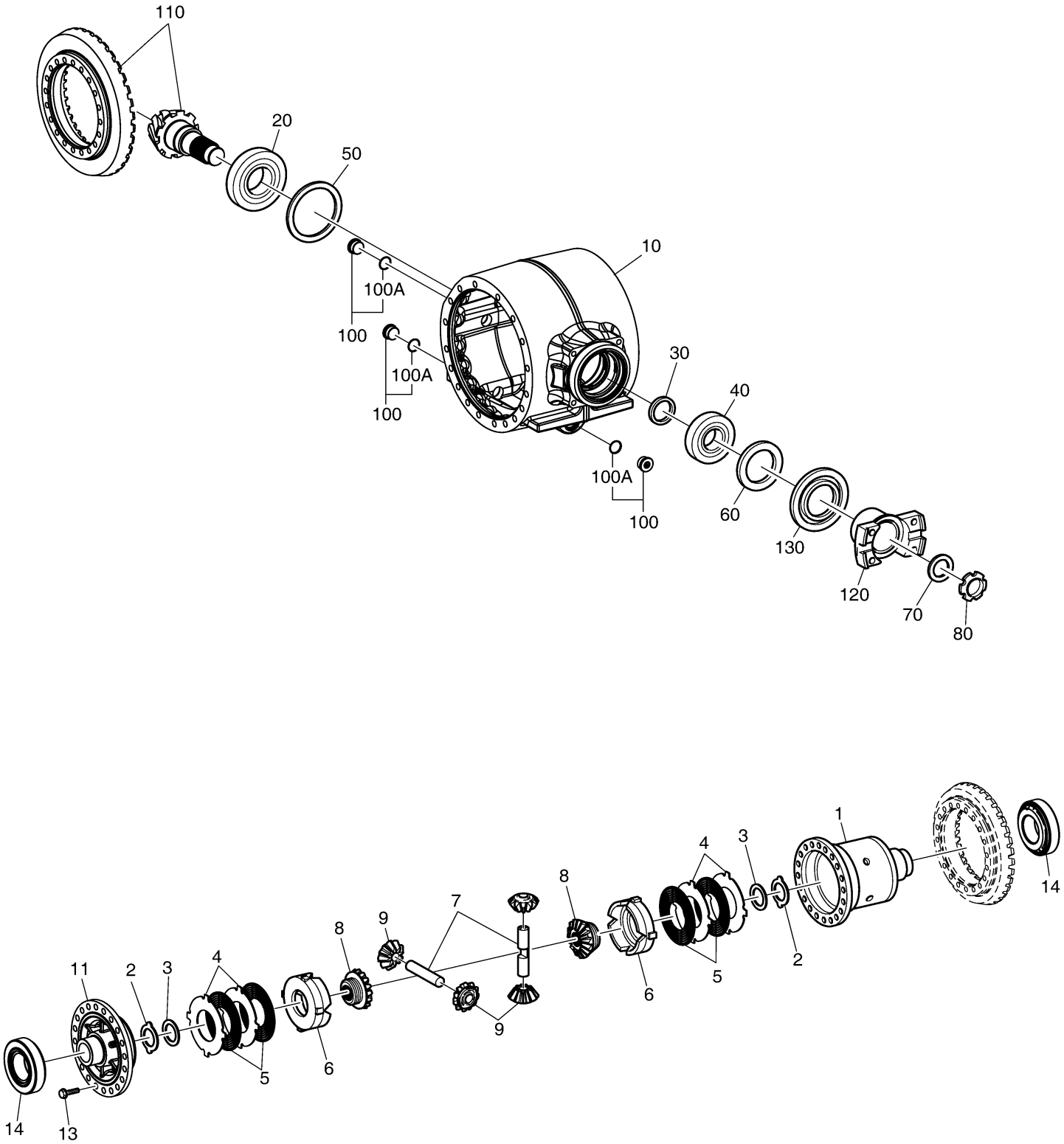

Fig. 3340 AXLE CASING - FRONT AXLE

Key No	Part No	Description	Qty	S.C	Serial No	ICA	Replacable	Qty
10	190113-00054	HOUSING,AXLE	2					
20	110947-00220	SHIM S=0.8	2	R				
20	110947-00221	SHIM S=0.9	2	R				
20	110947-00222	SHIM S=1.0	2	R				
30	130712-00930	SHAFT,STUB	2					
40	K9000186	SHIM S=0.60	1	R				
40	K9000187	SHIM S=1.00	1	R				
40	K9000188	SHIM S=1.60	1	R				
40	K9000197	SHIM A=2.00	1	R				
40	K9000198	SHIM A=2.50	1	R				
120	120705-00669	SCREW,HEX	36					
130	401002-00732	RING,O	2					
140	K9002851	SCREW	38					
150	K9000176	O-RING	2					
160	120705-00002	SCREW,PLUG	2					
160A	1.180-00137	O-RING	2					
220	1.120-00180	PLUG;SCREW	1					
226	K9000333	RING;SEALING	1					
227	120705-00673	SCREW	2					
230	420406-00928	TUBE,BRAKE	2					
233	K9000177	O-RING	2					
234	K9000291	NUT;HEX.	2					
310	430221-00558	PLUG,SCREW	2					
310A	2.180-00346	O-RING	1					

Fig. 3340 AXLE CASING - FRONT AXLE

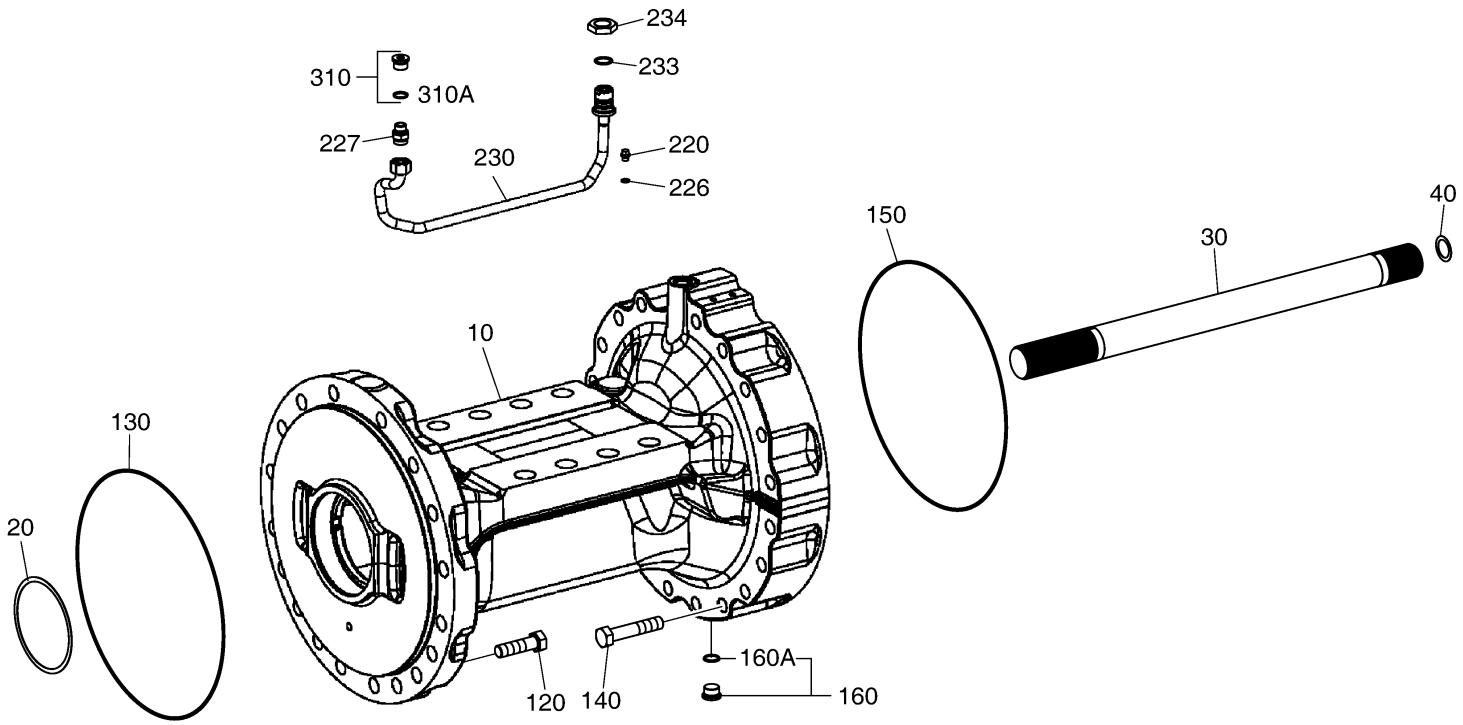

Fig. 3350 OUTPUT - FRONT AXLE

Key No	Part No	Description	Qty	S.C	Serial No	ICA	Replacable	Qty
10	110931-00757	HOUSING,BRAKE	1					
30	1.420-00157	VALVE;VENT	1					
40	401107-00009	SEAL	1					
60	K9000324	BEARING;TAPER ROLLER	1					
70	140107-00289	BEARING,TAPER ROLLER	1					
80	130712-00931	SHAFT;OUTPUT	1		~3191234	I	130712-01897	1
80	130712-01897	SHAFT;OUTPUT	1		3191235~			
85	120112-00778	BOLT,WHEEL	12					
100	110508-08588	COVER	1					
110	120705-00672	SCREW,LOCKING	6					
120	K9000286	COVER	1					
130	2.180-00284	O-RING	1					
140	130712-00811	SHAFT,SUN GEAR	1					
152	130418-00002	GEAR;PLANET	3					
160	130413-00032	GEAR,PLANETARY	1					
180	120112-00895	BOLT,STOP	1					
200	401003-00005	RING,RETAINING	4					
210	120705-00002	SCREW,PLUG	1					
210A	1.180-00137	O-RING	1					
220	K9000179	O-RING	1					

Fig. 3350 OUTPUT - FRONT AXLE

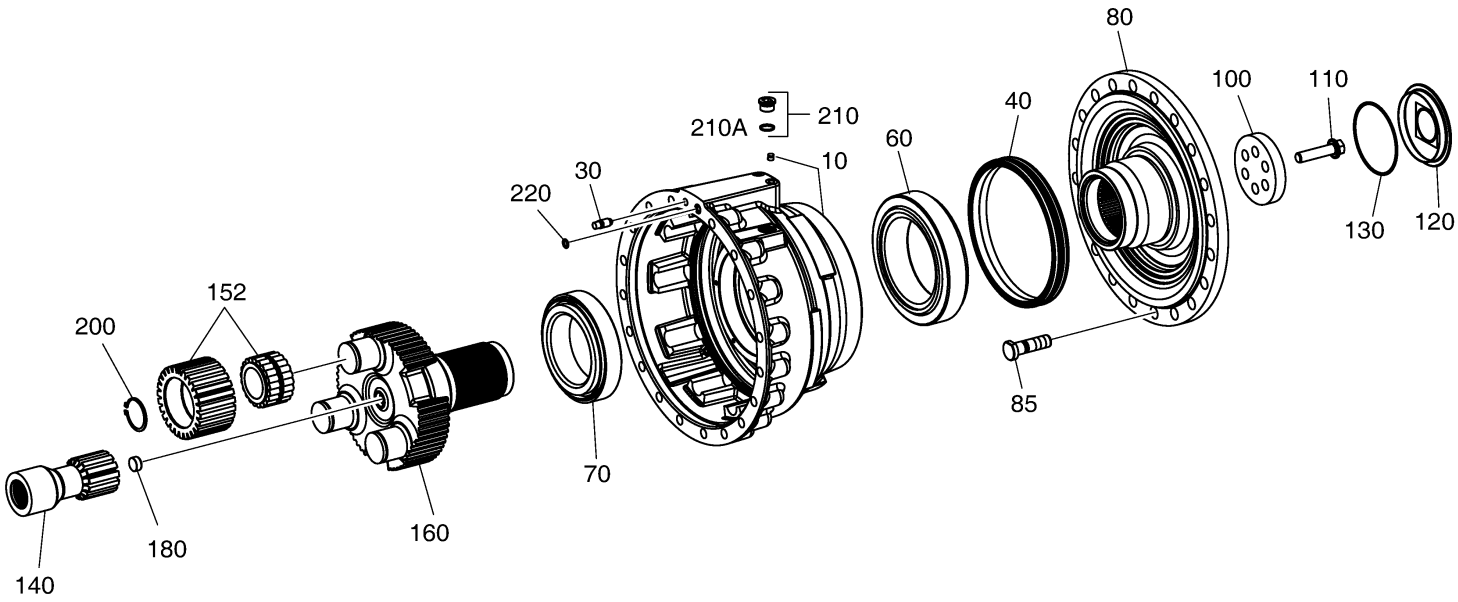

Fig. 3360 BRAKE - FRONT AXLE

Key No	Part No	Description	Qty	S.C	Serial No	ICA	Replacable	Qty
10	130602-00889	PISTON	2					
20	K9000243	U-RING	2	K				
30	K9000241	RING:SUPPORT	2	K				
40	K9000244	U-RING	2	K				
50	K9000242	RING:SUPPORT	2	K				
60	K9000168	RING:GUIDE	2	K				
70	110947-00205	SHIM:END	2					
90	K9002702	DISC:I.CLUTCH S=4.7	8					
100	K9000287	DISC:O.CLUTCH	8					
110	K9000327	DISC:O.CLUTCH A=2.0	4					
120	K9006018	PIN	12					
130	120808-00531	WASHER	2					
140	111601-00407	SPRING,CUP	2					
150	110508-10725	COVER	2					
160	120705-00671	SCREW,HEX	12					
*	401107-02121	SEAL KIT,FRONT AXLE(BRAKE)	1					

Fig. 3360 BRAKE - FRONT AXLE

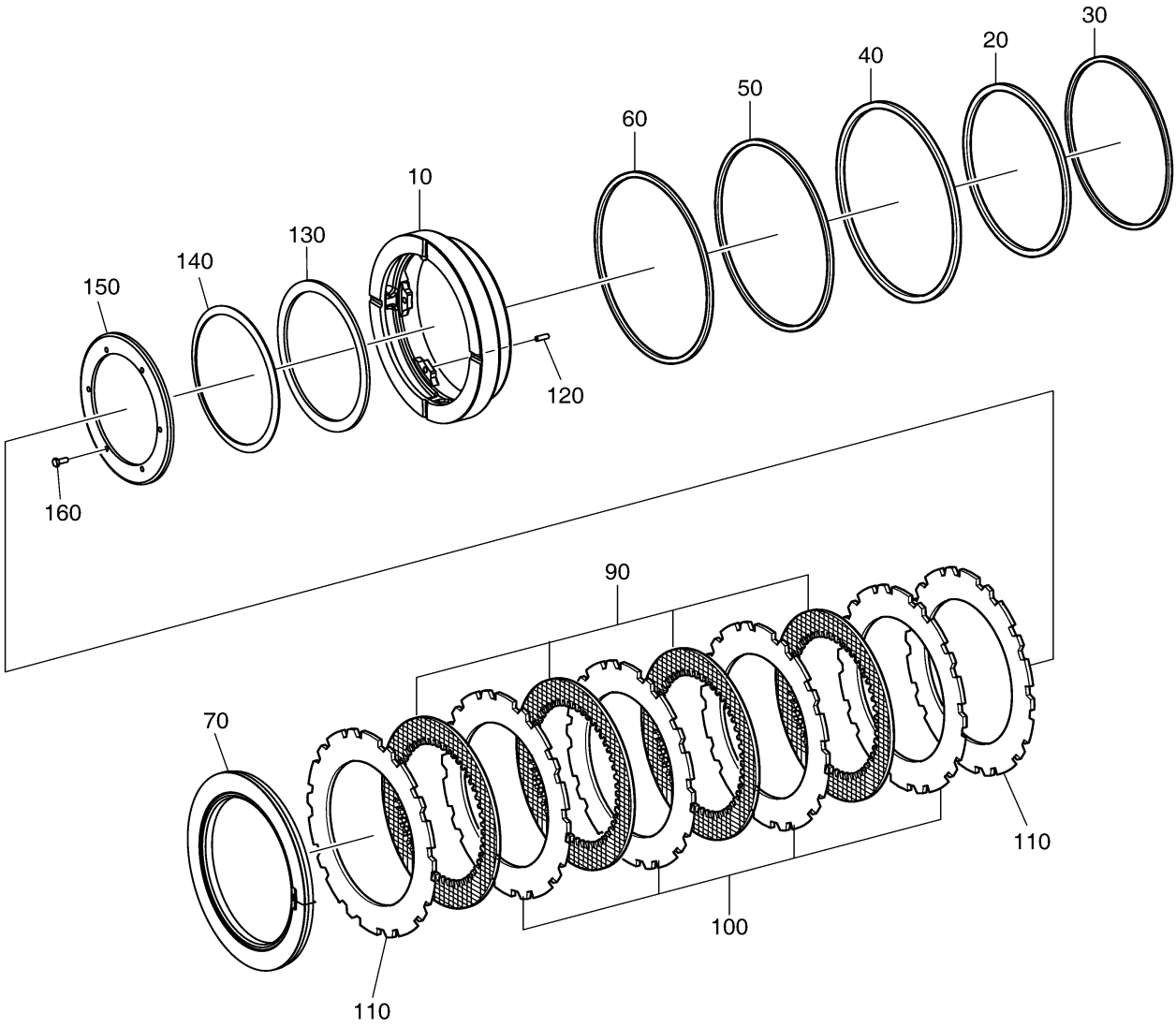

Fig. 3370 DIFFERENTIAL CARRIER - REAR

Key No	Part No	Description	Qty	S.C	Serial No	ICA	Replacable	Qty
10	K9006053	HOUSING;AXLE	1					
20	K9000719	BEARING;ROLLER	1					
30	K9000631	WASHER;SPACING S=8.8	1	R				
30	K9000632	WASHER;SPACING S=8.7	1	R				
30	K9000633	WASHER;SPACING S=8.6	1	R				
30	K9000634	WASHER;SPACING S=8.5	1	R				
30	K9000635	WASHER;SPACING S=8.4	1	R				
30	K9000636	WASHER;SPACING S=8.3	1	R				
30	K9000637	WASHER;SPACING S=8.9	1	R				
30	K9000638	WASHER;SPACING S=9.1	1	R				
30	K9000639	WASHER;SPACING S=9.2	1	R				
30	K9000640	WASHER;SPACING S=9.3	1	R				
30	K9000641	WASHER;SPACING S=9.4	1	R				
40	1.109-00091	BEARING;ROLLER	1					
50	K9000720	WASHER S=0.7	1	R				
50	K9000721	WASHER S=0.8	1	R				
50	K9000722	WASHER S=0.9	1	R				
50	K9000723	WASHER S=1.0	1	R				
50	K9000724	WASHER S=1.2	1	R				
50	K9000725	WASHER S=1.3	1	R				
50	K9000726	WASHER S=1.4	1	R				
50	K9000727	WASHER S=1.5	1	R				
50	K9000728	WASHER S=1.6	1	R				
50	K9000729	WASHER S=1.7	1	R				
50	K9000730	WASHER S=1.8	1	R				
50	K9000731	WASHER S=1.9	1	R				
50	K9000732	WASHER S=2.0	1	R				
50	K9000733	WASHER S=1.1	1	R				
60	K9000645	SEAL;SHAFT	1					
70	K9000646	WASHER	1					
80	K9000647	NUT;HEX.	1					
100	120705-00003	SCREW,PLUG	2					
100A	1.180-00135	O-RING	1					
110	130407-00058	GEAR SET,BEVEL	1					
120	K9000708	FLANGE;INPUT	1					
130	K9006041	PROTECT;SHEET	1					

Key No	Part No	Description	Qty	S.C	Serial No	ICA	Replacable	Qty
140	K9006050	FLANGE	1					
150	K9006025	SCREW;HEXAGON	4					
2	110931-00800	HOUSING,DIFFERENTIAL	1					
3	130107-00023	DISC,CLUTCH;OUTER T=1.8	9	R				
3	130107-00024	DISC,CLUTCH;OUTER T=1.9	9	R				
3	130107-00025	DISC,CLUTCH;OUTER T=2.0	9	R				
4	130107-00026	DISC,CLUTCH;INNER T=1.5	8					
5	K9006064	WASHER;THRUST	2					
6	130407-00053	GEAR,BEVEL	2					
7	130407-00054	GEAR,BEVEL	4					
8	120816-00116	WASHER,THRUST	4					
9	190105-00011	AXLE,DIFFERENTIAL	1					
11	K9006020	PIN	2					
12	K9006021	PIN	2					
13	K9006065	COVER;HOUSING	1					
14	K9000251	SCREW;LOCKING	12					
15	1.109-00073	BEARING;TAPPER ROLLER	2					
16	190105-00012	AXLE,DIFFERENTIAL	2					

Fig. 3370 DIFFERENTIAL CARRIER - REAR

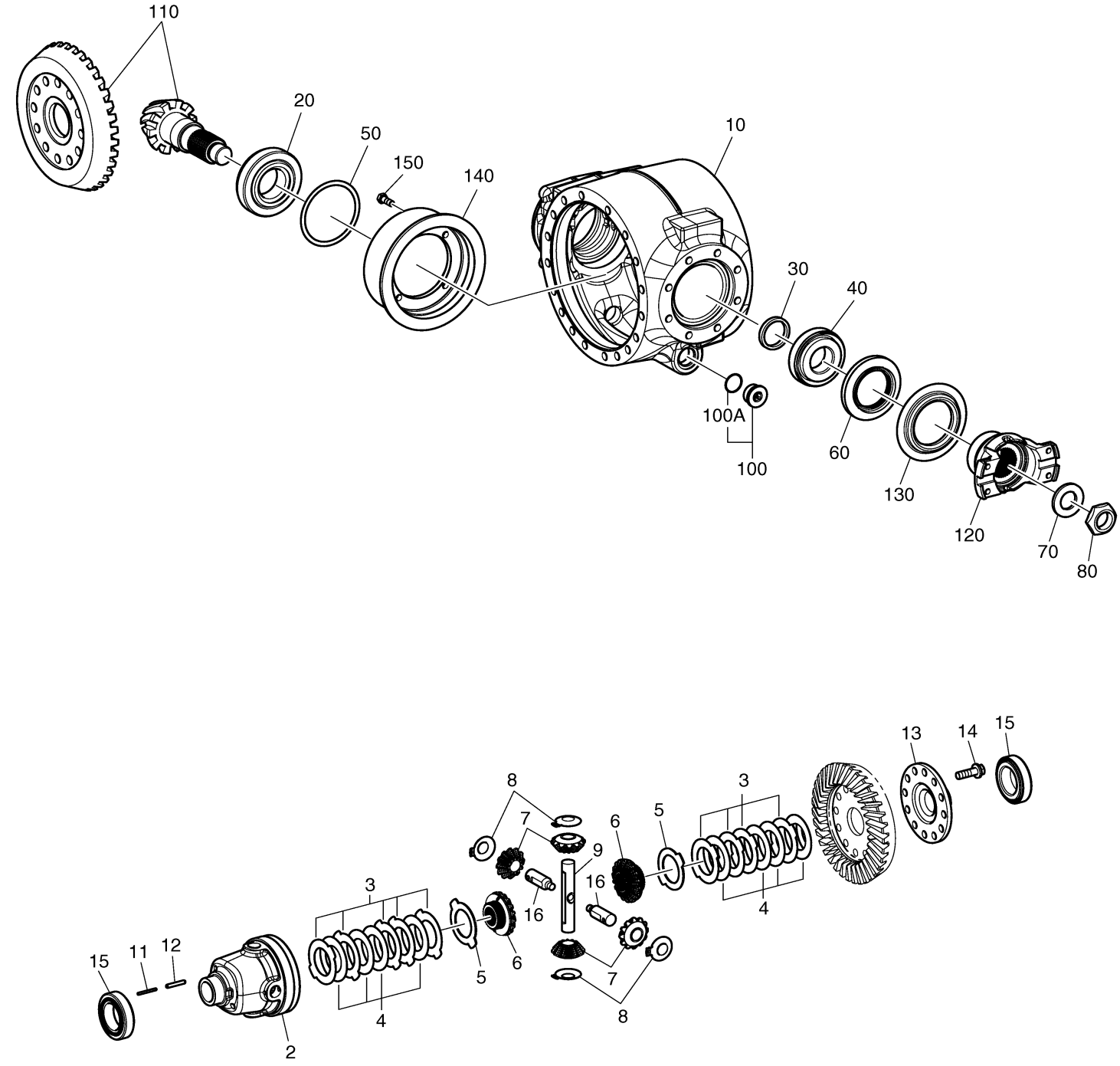

Fig. 3380 AXLE CASING - REAR AXLE

Key No	Part No	Description	Qty	S.C	Serial No	ICA	Replacable	Qty
10	190113-00053	HOUSING,AXLE	2					
15	K9006028	SHIM A=0,8	1	R				
15	K9006029	SHIM A=0,9	1	R				
15	K9006030	SHIM A=1,0	1	R				
15	K9006031	SHIM A=1,1	1	R				
15	K9006032	SHIM A=1,2	1	R				
30	130712-00920	SHAFT,STUB	2					
40	K9000764	WASHER S=0.2	1	R				
40	K9000765	WASHER S=0.4	1	R				
40	K9000766	WASHER S=1.0	1	R				
40	K9000767	WASHER S=1.5	1	R				
120	1.120-00134	SCREW:HEXAGON	36					
130	K9006022	O-RING	2					
140	K9000758	SCREW:HEX.	24					
150	K9000176	O-RING	2					
160	120705-00821	SCREW,PLUG	2					
160A	1.180-00137	O-RING	1					

Fig. 3380 AXLE CASING - REAR AXLE

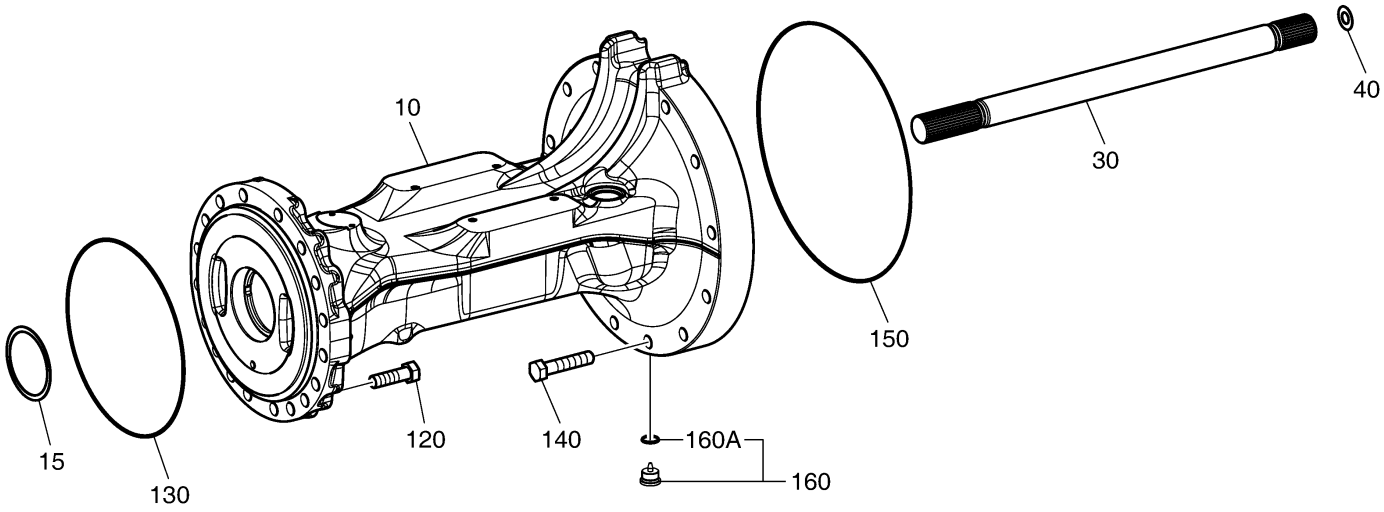

Fig. 3390 OUTPUT - REAR AXLE

Key No	Part No	Description	Qty	S.C	Serial No	ICA	Replacable	Qty
10	110931-00801	HOUSING,BRAKE	1					
30	1.420-00157	VALVE;VENT	1					
40	401107-00009	SEAL	1					
60	140107-00289	BEARING,TAPER ROLLER	1					
70	K9006037	BEARING;TAPER ROLLER	1					
80	K9006055	SHAFT;DUTPUT	1					
90	K9002864	BOLT;WHEEL	12					
100	K9006054	COVER	1					
110	120705-00672	SCREW,LOCKING	4					
120	K9000286	COVER	1					
130	2.180-00284	O-RING	1					
140	K9006051	SHAFT;SUN GEAR	1					
152	K9002965	GEAR;PLANET	4					
160	130413-00033	GEAR,PLANETARY	1					
180	K9000277	BOLT;STOP	1					
200	K9000777	RING;RETAINING	4					
210	120705-00002	SCREW,PLUG	1					
210A	1.180-00137	O-RING	1					

Fig. 3390 OUTPUT - REAR AXLE

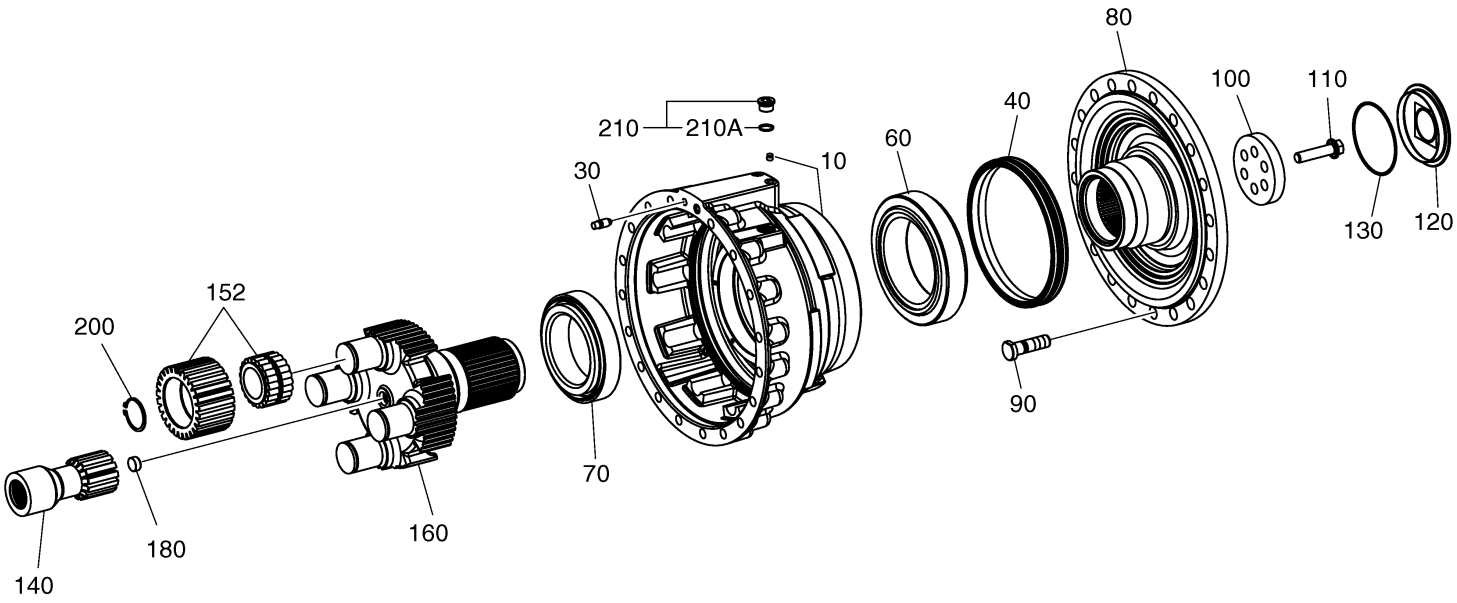

Fig. 3400 BRAKE - REAR AXLE

Key No	Part No	Description	Qty	S.C	Serial No	ICA	Replacable	Qty
10	130602-00889	PISTON	2					
20	K9006035	U-RING	2					
30	K9000241	RING;SUPPORT	2					
40	K9006036	U-RING	2					
50	K9000242	RING;SUPPORT	2					
60	K9000168	RING;GUIDE	2					
70	110947-00263	SHIM;END	2					
90	K9002702	DISC;I.CLUTCH S=4.7	8					
100	K9000287	DISC;O.CLUTCH	6					
110	K9000327	DISC;O.CLUTCH A=2.0	4					
120	K9006018	PIN	12					
130	120808-00531	WASHER	2					
140	111601-00407	SPRING,CUP	2					
150	110508-10725	COVER	2					
160	K9006024	SCREW;HEXAGON	12					

Fig. 3400 BRAKE - REAR AXLE

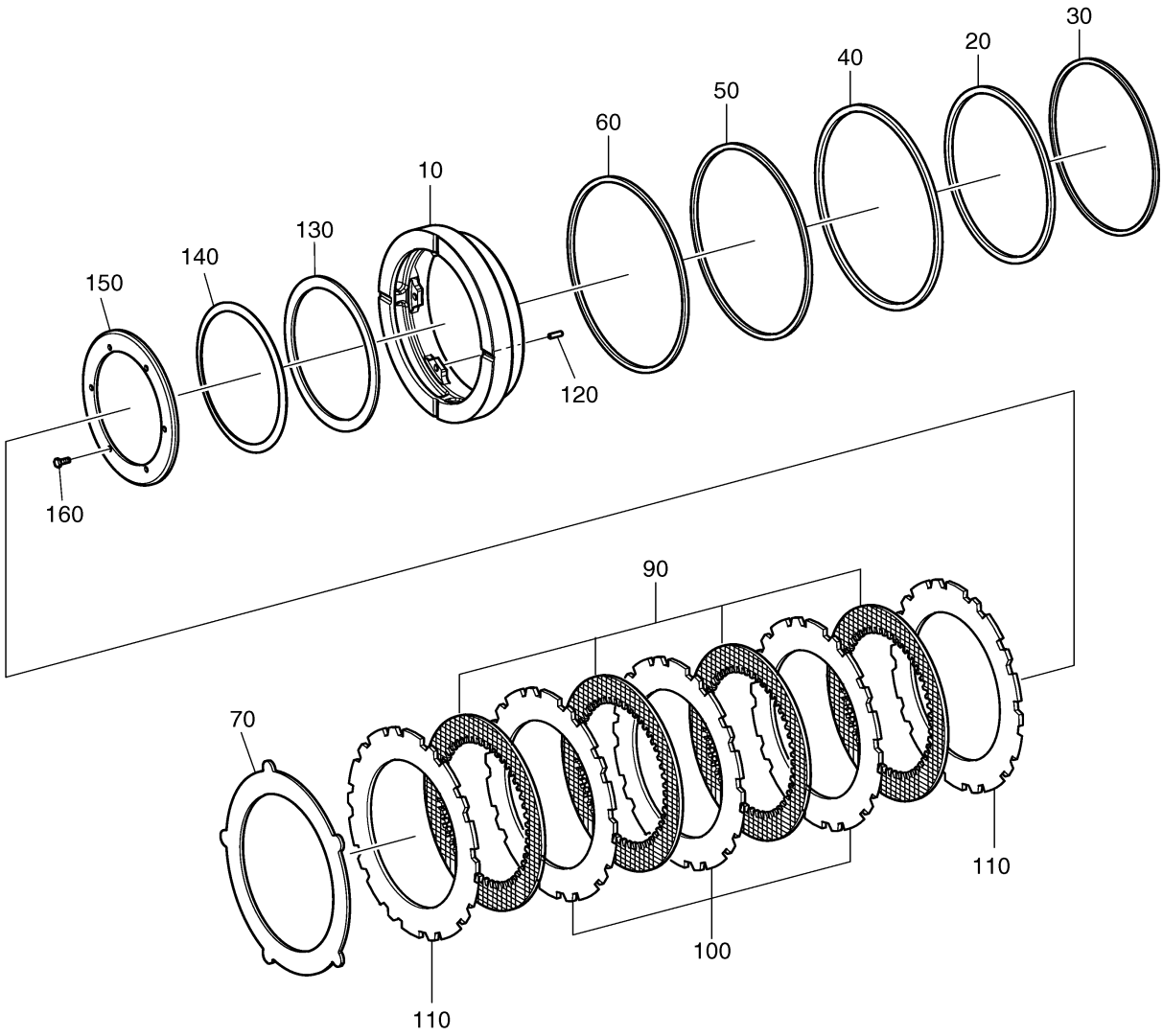

Fig. 3410 AXLE PIPING - REAR AXLE

Key No	Part No	Description	Qty	S.C	Serial No	ICA	Replacable	Qty
20	1.120-00180	PLUG;SCREW	2					
26	K9000333	RING;SEALING	2					
27	120705-00822	SCREW	2					
27A	1.180-00124	O-RING	1					
30	K9006042	TUBE;BRAKE	2					
34	1.120-00093	SCREW;CAP	4					
90	120705-00823	SCREW,PLUG	2					
90A	K9002821	O-RING	1					
100	120705-00003	SCREW,PLUG	2					
100A	1.180-00135	O-RING	1					

Fig. 3410 AXLE PIPING - REAR AXLE

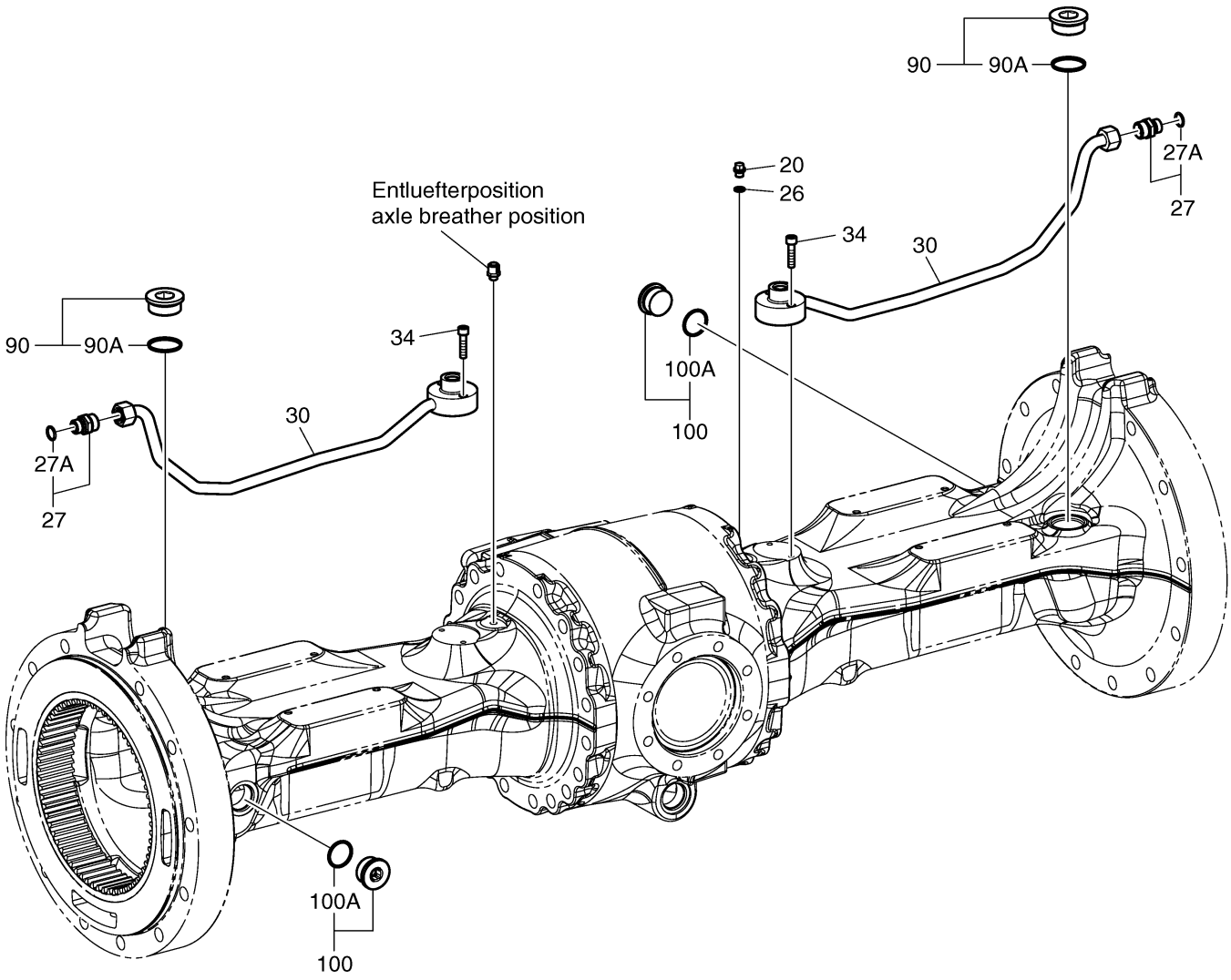

Fig. 3420 MAIN PUMP

Key No	Part No	Description	Qty	S.C	Serial No	ICA	Replacable	Qty
-	401-00081A	MAIN PUMP	1					
1	-	CAP;END	1	D				
2	-	PIN,DOWEL	2	D				
3	-	PIN	12	D				
4	-	O-RING	2	K				
5	-	BLOCK;PORT	1	D				
6	-	SEAL;SECTION	2	K				
7	-	RING,BACK UP	2	K				
8	-	VANE	20	D				
9	-	RING;CAM	1	D				
10	-	PIN,DOWEL	4	D				
11	-	BUSH	1	D				
12	-	PORT PLATE;REAR	2	D				
13	-	HOUSING	1	D				
14	-	O-RING	1	K				
15	-	RING;RETAINING	1	D				
16	-	BEARING;BALL	1	D				
17	-	SHAFT	1	D				
18	-	SEAL,SHAFT	1	K				
19	-	CAP;MOUNTING	1	D				
20	-	RING;ROUND SECTION	1	D				
23	-	ROTOR	1	D				
24	-	PIN,DOWEL	2	D				
25	-	ROTOR	1	D				
26	-	PIN	20	D				
27	-	PORT PLATE;PRESS.	2	D				
28	-	SEAL;SECTION	2	K				
29	-	BUSH	1	D				
30	-	RING;CAM	1	D				
31	-	VANE	12	D				
32	-	ROTOR	1	D				
33	-	PORT PLATE;PRESS.	1	D				
34	-	SEAL;SECTION	1	K				
35	-	SEAL;SECTION	1	K				
36	-	SCREW	4	D				
37	-	SCREW	4	D				

Key No	Part No	Description	Qty	S.C	Serial No	ICA	Replacable	Qty
38	-	SCREW	4	D				
39	2.420-00023	P1 CARTRIDGE;MAIN	1					
40	K9002790	P2 CARTRIDGE;STEER	1					
41	K9002791	P3 CARTRIDGE;PILOT	1					
42	K9002793	SHAFT ASS'Y	1					
*	K9002912	SEAL KIT	1					

Fig. 3420 MAIN PUMP

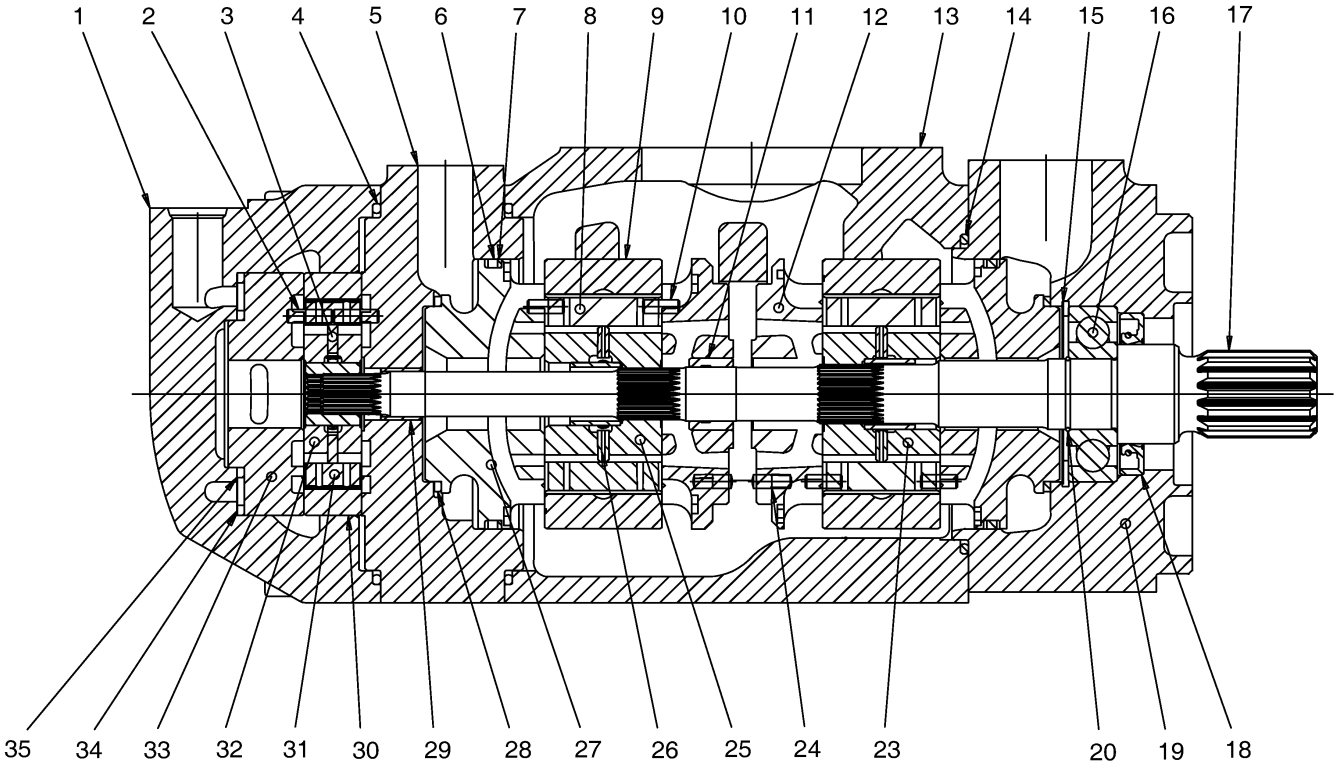

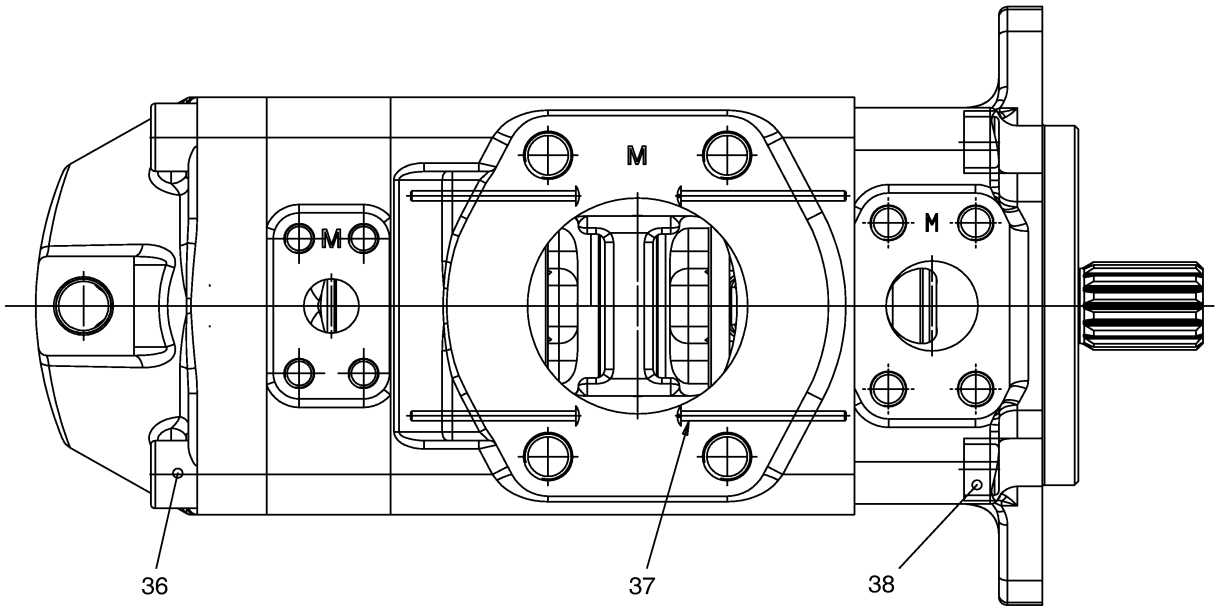

39 : 23, 8(10EA), 26(10EA), 27(1EA)
40 : 25, 8(10EA), 26(10EA), 27(1EA)
41 : 33, 32, 31, 3
42 : 17, 16, 15
* : 4, 6, 7, 14, 18, 28, 34, 35

Fig. 3430 UNLOADER VALVE

Key No	Part No	Description	Qty	S.C	Serial No	ICA	Replacable	Qty
-	410146-00007A	VALVE,UNLOADING	1					
1	-	BODY	1	D				
2	1.420-00059	DIRECTION VALVE	1					
2A	1.180-00450	SEAL KIT	1					
3	1.420-00068	LOGIC VALVE	1					
4	1.420-00038	VALVE;CHECK	1					
4A	1.180-00453	SEAL KIT	1					
5	410104-00196	VALVE,CHECK	1					
8	S2208866	BOLT	4					

Fig. 3430 UNLOADER VALVE

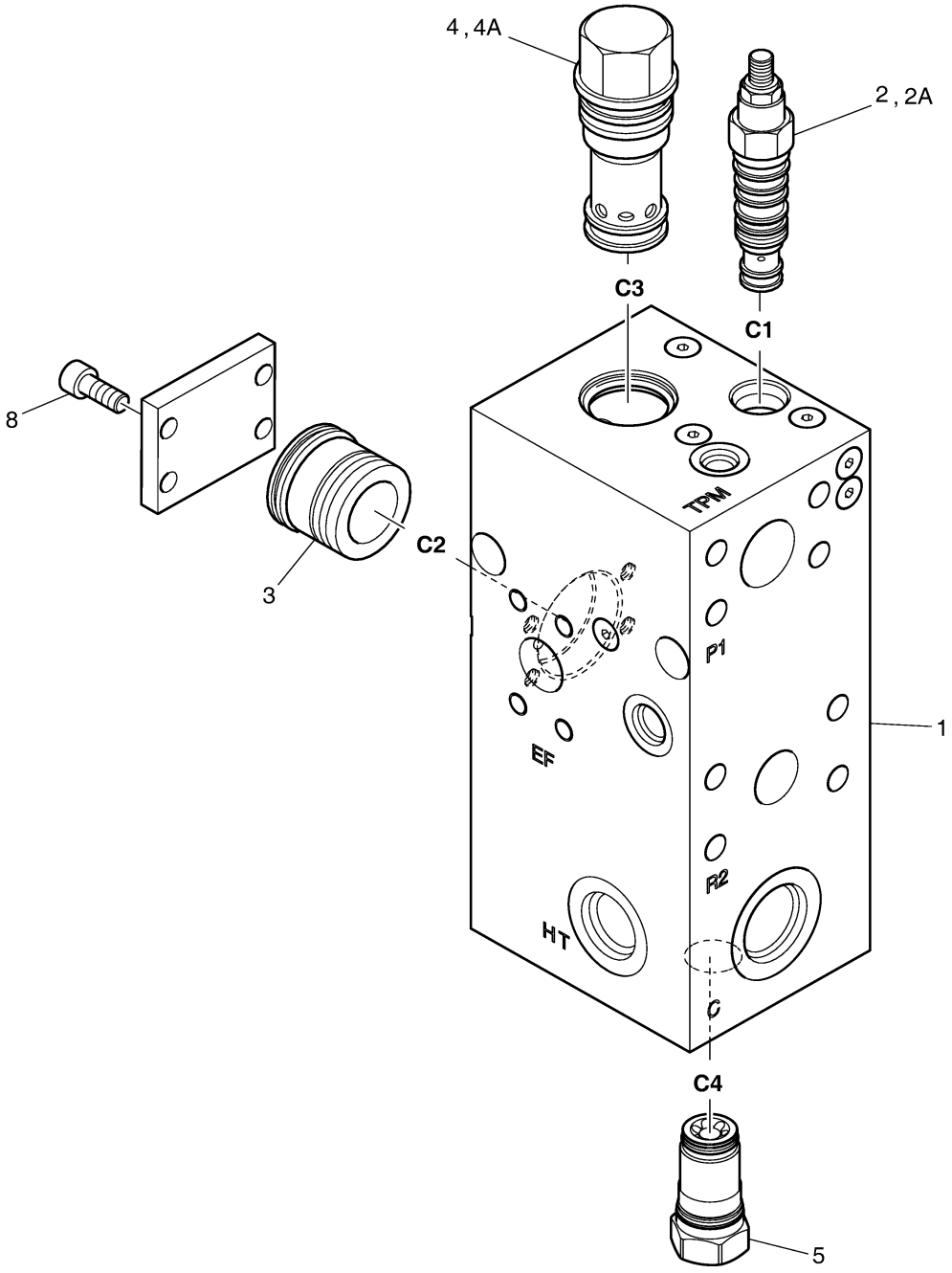

Fig. 3440 BRAKE & PILOT SUPPLY VALVE

Key No	Part No	Description	Qty	S.C	Serial No	ICA	Replacable	Qty
-	410120-00019	VALVE,BRAKE PILOT SUPPLY	1					
1	-	BODY	1	D				
2	1.420-00092	REDUCING VALVE	1					
2A	1.180-00448	SEAL KIT	1					
3	K9002251	VALVE,CHECK	2					
4	K9002250	VALVE,CHECK	1					
4A	1.180-00447	KIT,SEAL	1					
5	1.420-00138	SOLENOID VALVE	2					
5A	180-00226	KIT;SEAL	1					
6	300715-00038	COIL(24V)	2					
7	1.420-00102	VALVE;RELIEF	1					
7A	1.180-00452	KIT;SEAL	1					

Fig. 3440 BRAKE & PILOT SUPPLY VALVE

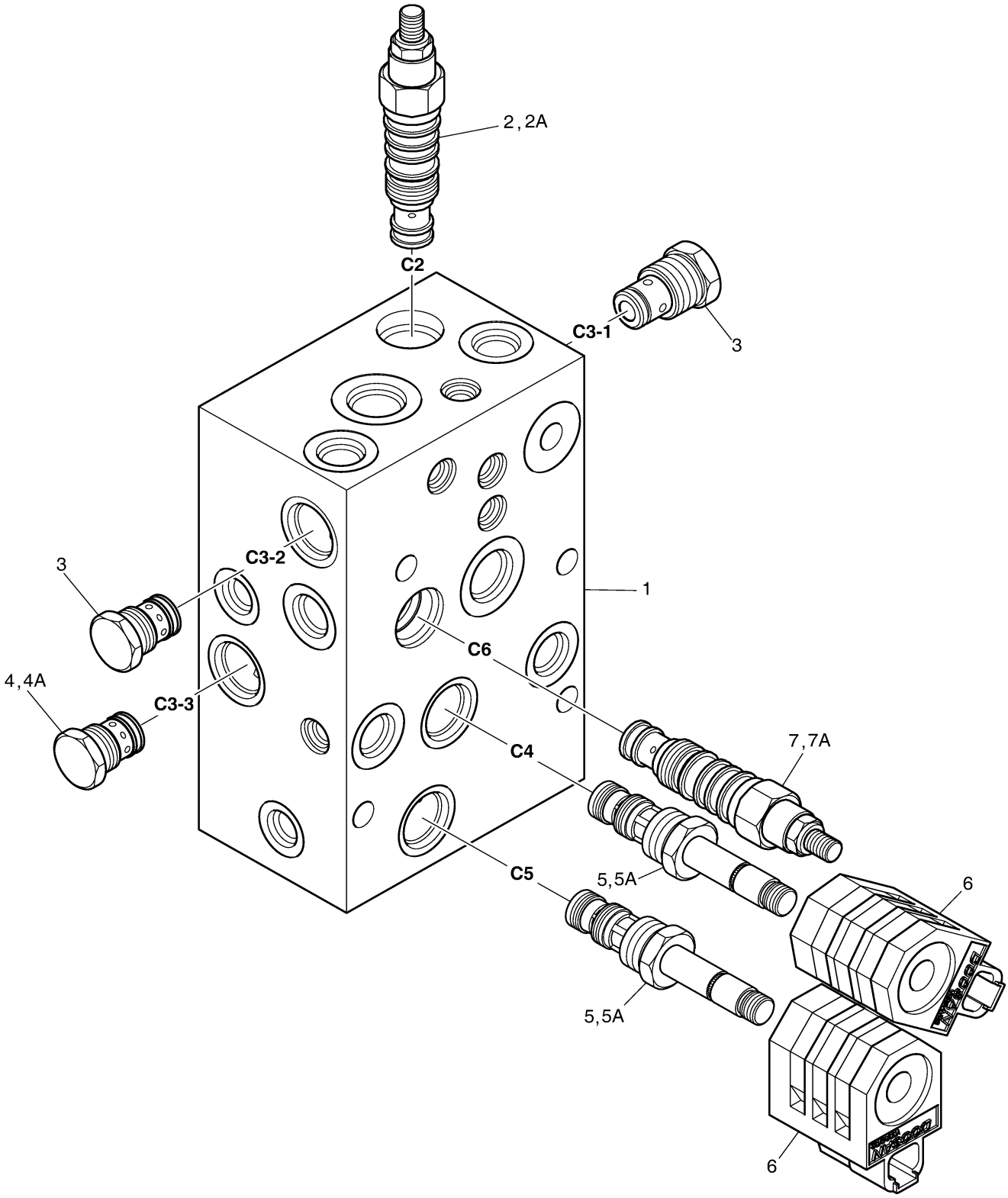

Fig. 3450 BRAKE FOOT VALVE

Key No	Part No	Description	Qty	S.C	Serial No	ICA	Replacable	Qty
-	420-00239B	VALVE;BRAKE PEDAL	1					
1	-	BODY;LOWER	1	D				
2	-	BODY;UPPER	1	D				
3	-	SPOOL	2	D				
4	-	PLUG	1	D				
5	-	HOLDER;REAR	1	D				
6	-	SPRING;LOWER	1	D				
7	-	SPRING;UPPER	1	D				
8	-	SPRING;MAIN	1	D				
9	-	RETAINER;SPRING	1	D				
10	-	O-RING	1	K				
11	-	O-RING	1	K				
12	-	SEAL;OIL	1	K				
13	-	GUIDE;SPRING	1	D				
14	-	RING,SNAP	2	D				
15	-	DD-BUSH	1	D				
16	-	PLATE;PEDAL	1	D				
17	134-00008	PEDAL;BRAKE	1					
17-1	-	PEDAL	1	D				
17-2	-	PLATE;LOCK	1	D				
17-3	-	BOLT	1	D				
17-4	-	WASHER	1	D				
18	-	RUBBER;PEDAL	1	D				
19	-	COVER	1	D				
20	-	PIN;LOCK	1	D				
21	1.129-00009	SPRING;TORSION	1					
22	-	RING,SNAP	1	D				
23	-	BOLT	2	D				
24	-	NUT M8	2	D				
25	-	BOLT;SOCKET	2	D				
26	-	WASHER;SPRING	4	D				
27	-	CAP;PLASTIC	8	D				
30	-	WASHER	1	D				
31	-	RING,SNAP	1	D				
32	-	BOLT;SOCKET	2	D				
*	420-00073K	SEAL KIT;FOOT BRAKE VALVE	1					

Fig. 3450 BRAKE FOOT VALVE

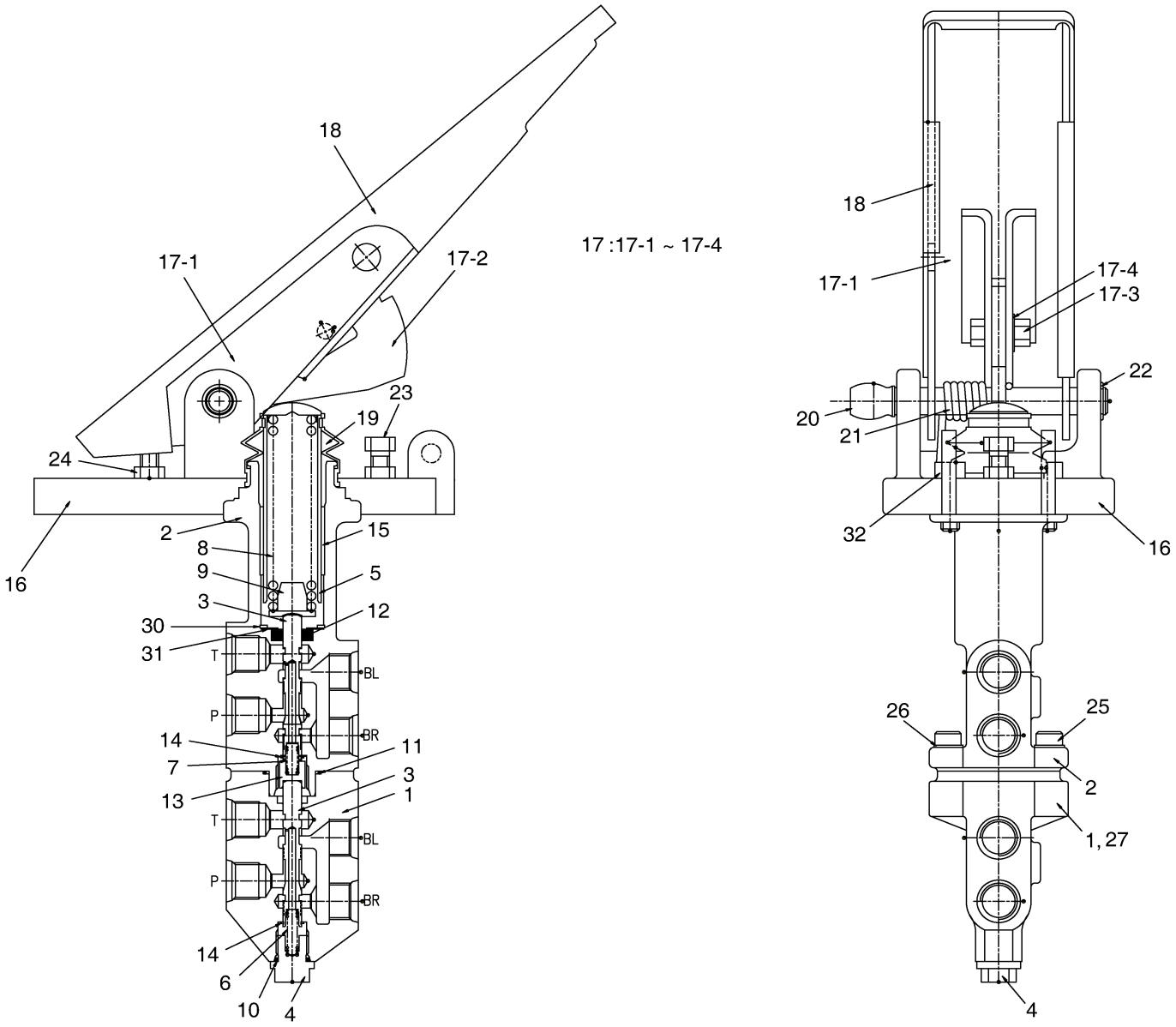

Fig. 3460 REMOTE CONTROL VALVE - FNR

Key No	Part No	Description	Qty	S.C	Serial No	ICA	Replacable	Qty
-	410113-00017	VALVE ASSY,JOYSTICK	1					
1	2.357-00047	LEVER KIT;2ND	1					
2	2.360-00001	SPOOL KIT	1					
3	2.423-00141	BODY KIT	1					
4	430221-00239	PLUG	6					
6	250201-00837	PLATE KIT	1					
7	430215-00189	FLANGE KIT;HANDLE UPPER	1					
8	430205-00009	BELLOWS KIT	1					
9	110925-00038	HANDLE	1					
10	2124-1084D2	CLIP,BAND	4					
14	2.550-00002	TERMINAL	1					
15	2.521-00009	CONNECTOR	1					
16	2.550-00001	PIN;KEYING	1					
19	410207-00154	SPOOL KIT;(UT1,2,3)	3					
20	410207-00153	SPOOL KIT;(UT4,5,6)	3					

Fig. 3460 REMOTE CONTROL VALVE - FNR

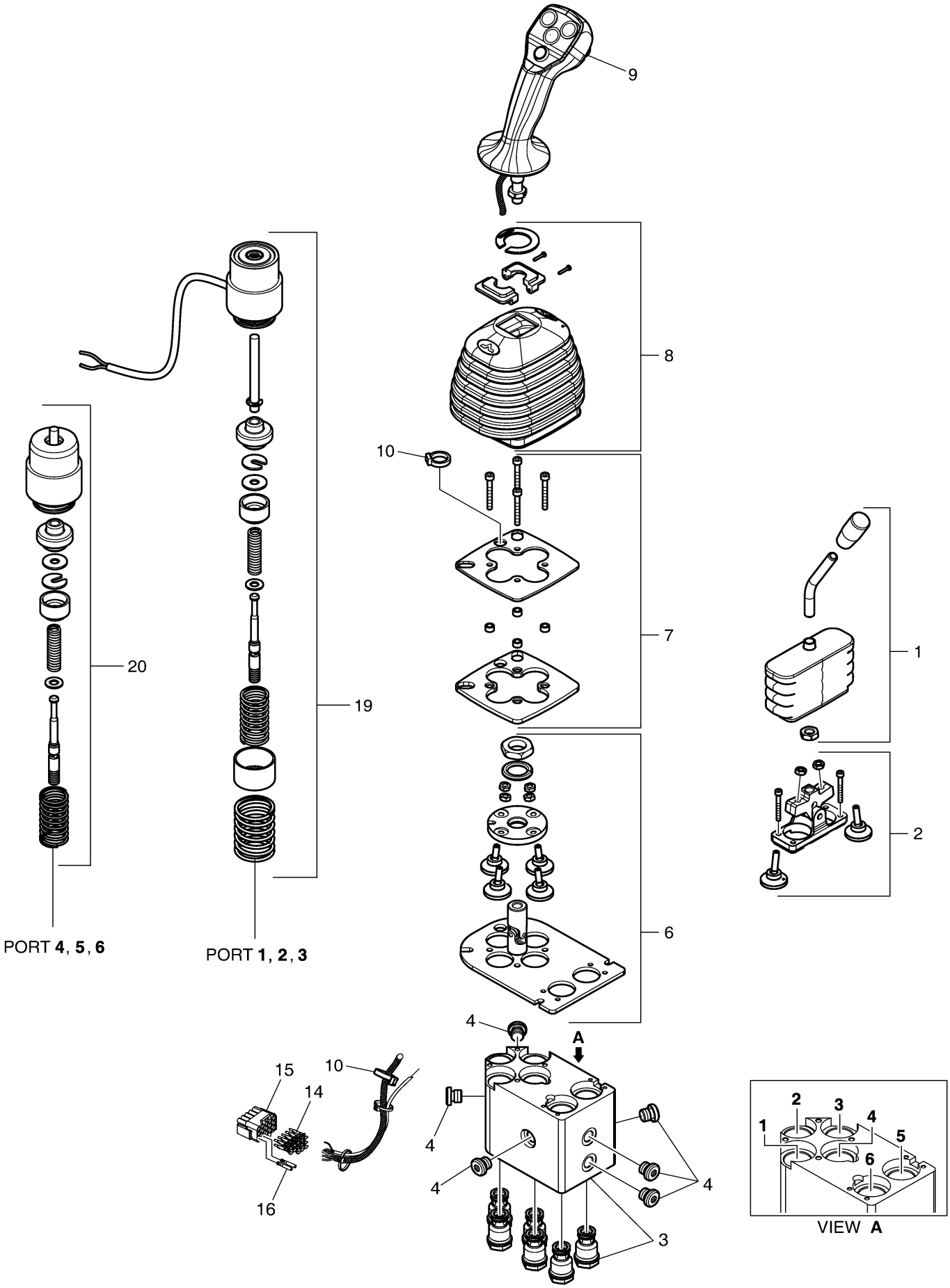

Fig. 3461 REMOTE CONTROL VALVE - FNR

Key No	Part No	Description	Qty	S.C	Serial No	ICA	Replacable	Qty
-	410113-00156	VALVE ASSY,JOYSTICK	1		10082~10363	I	410113-00156A	1
-	410113-00156A	VALVE ASSY,JOYSTICK;5B	1		10364~			
1	101101-00233	LEVER KIT;2ND	1					
2	410207-00402	SPOOL KIT	1					
3	160601-00771	BODY	1					
4	110958-01843	SUPPORT;CLIP	3					
5	120112-01047	BOLT	3					
6	310401-00987	CABLE KIT	1					
7	2.550-00001	PIN;KEYING	2					
8	2.550-00002	TERMINAL	6					
9	120402-00335	CLIP,BAND	4					
10	250201-02226	PLATE KIT	1					
11	430215-00630	FLANGE KIT;HANDLE UPPER	1		10082~10363			
11	430215-01884	FLANGE KIT;HANDLE UPPER	1		10364~			
12	120808-00605	WASHER	1					
13	S4013051	NUT-HEXAGON	1					
14	430205-00037	BELLOWS	1		10082~10363			
14	430205-00072	BELLOWS	1		10364~			
15	110925-00228	HANDLE	1					
16	410207-00403	SPOOL KIT;(UT4,5,6)	1					
17	410207-00404	SPOOL KIT;(UT1,2,3)	1		10082~10363			
17	410207-01008	SPOOL KIT;(UT1,2,3)	1		10364~			

Fig. 3461 REMOTE CONTROL VALVE - FNR

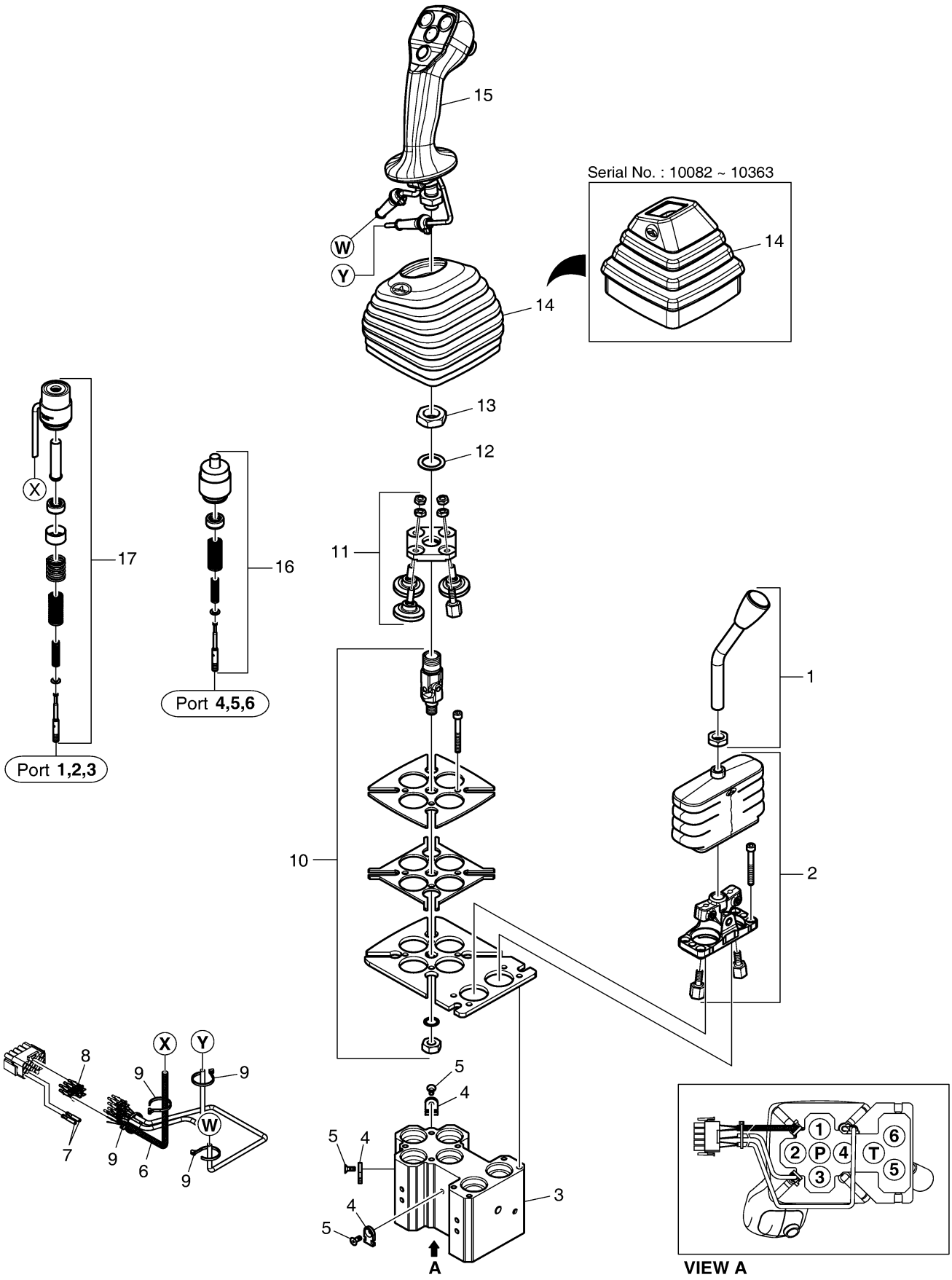

Fig. 3470 CONTROL VALVE - 2 SPOOL

Key No	Part No	Description	Qty	S.C	Serial No	ICA	Replacable	Qty
-	K1003040A	CONTROL VALVE-2 SPOOL	1					
1	K9001088	HOUSING	1	D				
2	K9001089	SPOOL	1	D				
3	K9001090	SPOOL	1	D				
4	K9001091	SEAT;SPRING	4					
5	K9001092	SPRING	1					
6	K9001093	SPRING	1					
7	K9001094	SPOOL END	1					
8	K9001095	SPOOL END	1					
9	K9001096	CAP	1					
10	K9001097	CAP	1					
11	K9001098	CAP	2					
12	S8010400	O-RING	4					
13	S2212161	BOLT;SOCKET	8					
14	K9001099	SPACER	2					
15	K9001100	COVER	1					
16	2180-1216D134	O-RING	2					
17	S2218861	BOLT;SOCKET	8					
18	K9001101	PLUG	2					
19	K9001102	SPRING	2					
20	K9001103	POPPET	2					
21	180-00400	O-RING	2					
23	2181-1116D4	PLUG	1					
24	2181-1116D1	PLUG	2					
27	K9001107	RELIEF VALVE ASS'Y	1					
28	K9001108	RELIEF VALVE ASS'Y	1					
29	K9001109	RELIEF VALVE ASS'Y	1					
30	K9001110	RELIEF VALVE ASS'Y	1					
31	K9001111	ANTI-CAVITATION VALVE	1					
32	K9001112	COVER	1					
33	K9001113	PLUG ASS'Y	1					

Fig. 3470 CONTROL VALVE - 2 SPOOL

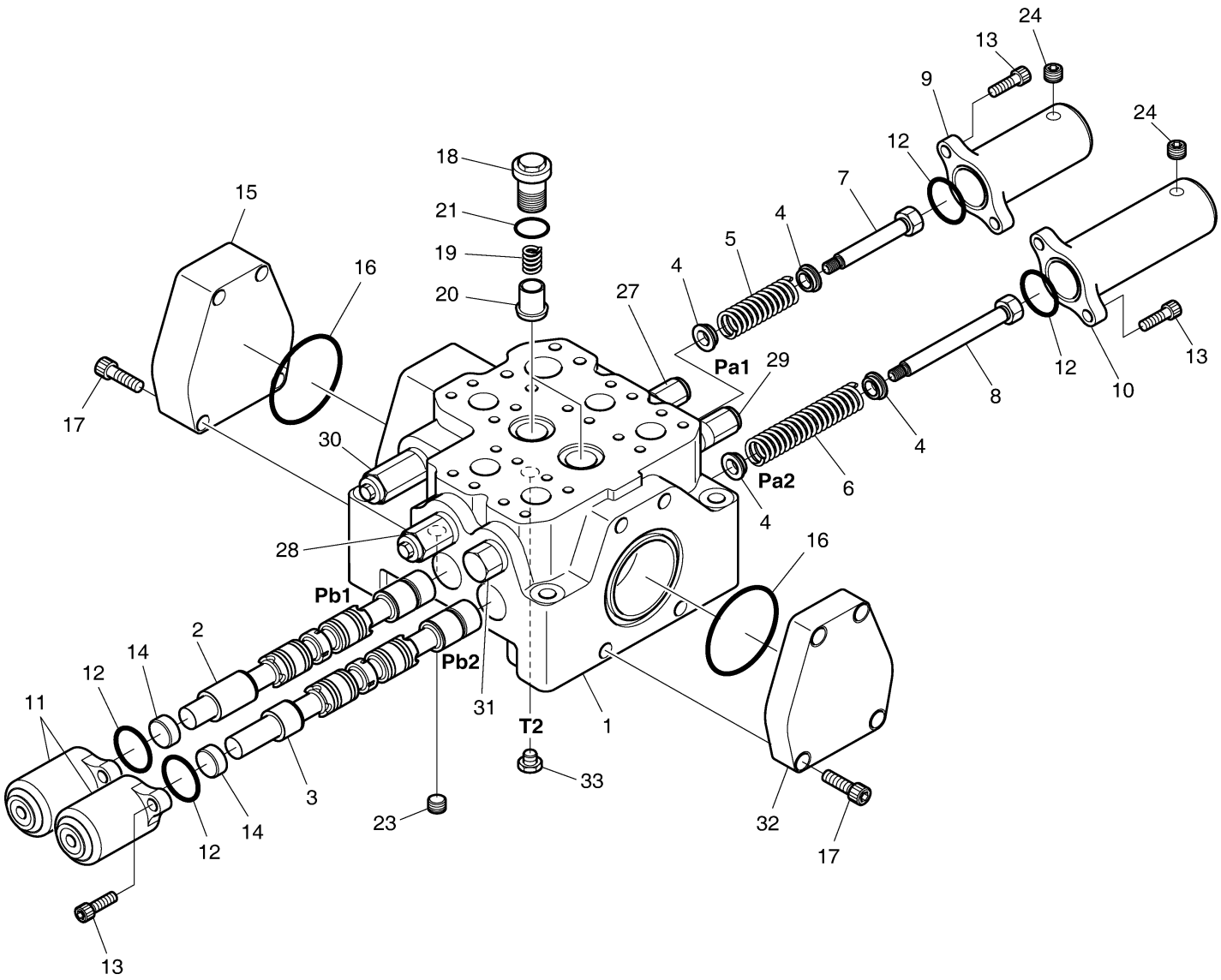

Fig. 3480 CONTROL VALVE - 3 SPOOL

Key No	Part No	Description	Qty	S.C	Serial No	ICA	Replacable	Qty
-	K1003041A	CONTROL VALVE-3 SPOOL	1					
1	K9001088	HOUSING	1	D				
2	K9001089	SPOOL	1	D				
3	K9001090	SPOOL	1	D				
4	K9001091	SEAT;SPRING	4					
5	K9001092	SPRING	1					
6	K9001093	SPRING	1					
7	K9001094	SPOOL END	1					
8	K9001095	SPOOL END	1					
9	K9001096	CAP	1					
10	K9001097	CAP	1					
11	K9001098	CAP	2					
12	S8010400	O-RING	4					
13	S2212161	BOLT;SOCKET	8					
14	K9001099	SPACER	2					
15	K9001100	COVER	1					
16	2180-1216D134	O-RING	3					
17	S2218861	BOLT;SOCKET	4					
18	K9001101	PLUG	2					
19	K9001102	SPRING	2					
20	K9001103	POPPET	2					
21	180-00400	O-RING	2					
22	K9001104	OPTION BLOCK ASS'Y	1					
22-1	K9001105	HOUSING	1	D				
22-2	K9001106	SPOOL	1	D				
22-4	K9001101	PLUG	1					
22-5	K9001103	POPPET	1					
22-6	K9001102	SPRING	1					
22-7	180-00400	O-RING	1					
22-8	K9001098	CAP	1					
22-9	K9001096	CAP	1					
22-10	K9001091	SEAT;SPRING	2					
22-11	K9001092	SPRING	1					
22-12	K9001094	SPOOL END	1					
22-13	S8010400	O-RING	2					
22-14	S2212161	BOLT;SOCKET	4					

Key No	Part No	Description	Qty	S.C	Serial No	ICA	Replacable	Qty
22-15	2181-1116D1	PLUG	1					
22-16	K9001099	SPACER	1					
23	2181-1116D4	PLUG	1					
24	2181-1116D1	PLUG	2					
27	K9001107	RELIEF VALVE ASS'Y	3					
28	K9001108	RELIEF VALVE ASS'Y	1					
29	K9001109	RELIEF VALVE ASS'Y	1					
30	K9001110	RELIEF VALVE ASS'Y	1					
31	K9001111	ANTI-CAVITATION VALVE	1					
32	K9001112	COVER	1					
33	K9001113	PLUG ASS'Y	1					
34	S2220361	BOLT;SOCKET	4					

Fig. 3480 CONTROL VALVE - 3 SPOOL

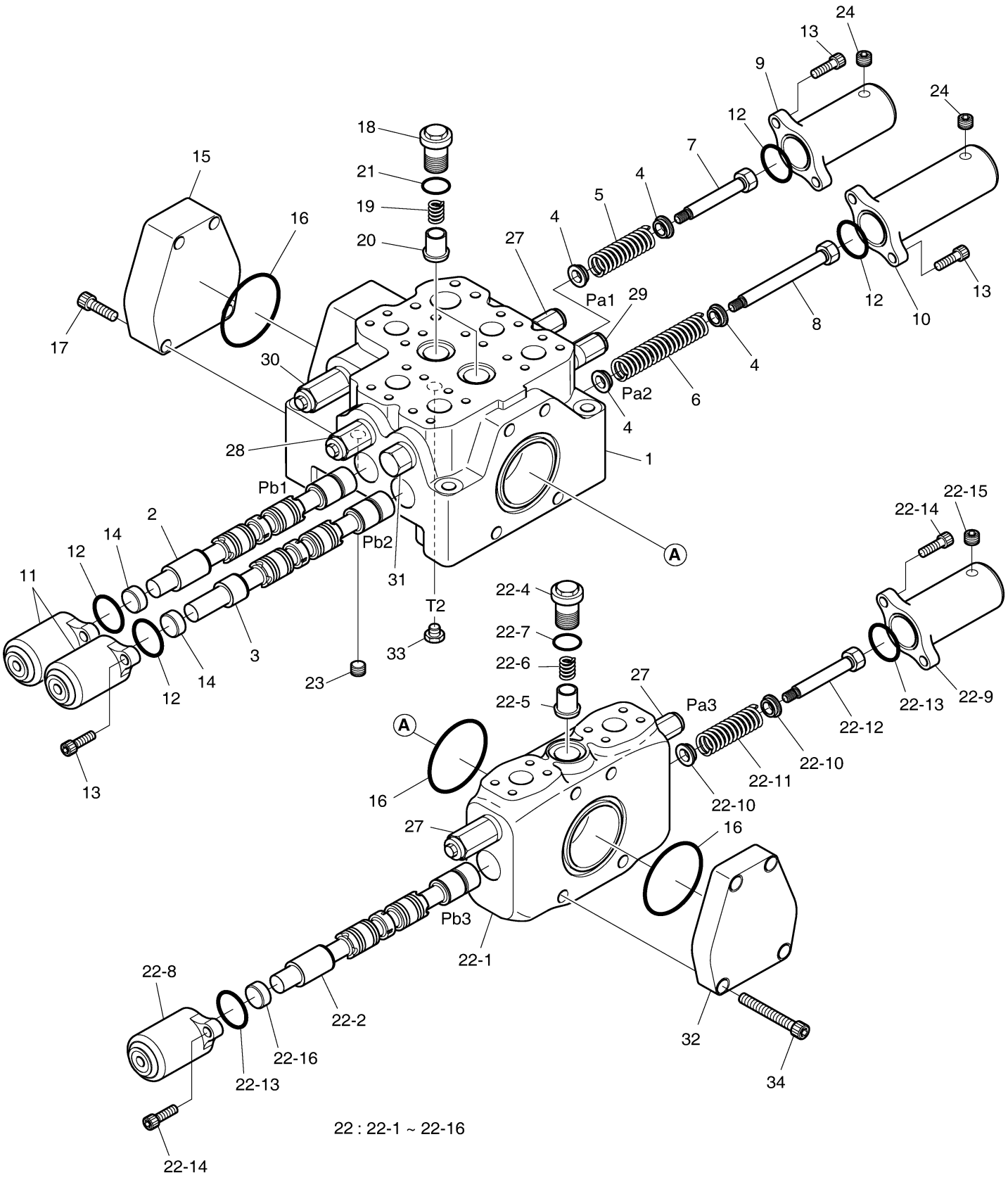

22 : 22-1 ~ 22-16

Fig. 3490 BUCKET CYLINDER

Key No	Part No	Description	Qty	S.C	Serial No	ICA	Replacable	Qty
-	400310-00135	CYLINDER,BUCKET	1		10001~10360			
-	400310-00135A	CYLINDER,BUCKET	1		10361~			
1	420402-00280	TUBE,CYLINDER	1		10001~10360			
1	420402-00280-D	TUBE,CYLINDER	1		10361~			
2	110-00094	BUSH	1					
3	400337-00401	ROD,CYLINDER	1		10001~10360			
3	400337-00401-D	ROD,CYLINDER	1		10361~			
4	110-00093	BUSH	1					
5	110508-10737	COVER,ROD	1					
6	K9009862	DD-BUSH	1					
7	K9001401	RING;RETAINING	1					
8	-	SEAL;BUFFER	1	K				
9	-	U-PACKING	1	K				
10	-	RING;BACK UP	1	K				
11	-	WIPER;DUST	1	K				
12	115-00063	RING;RETAINING	1					
13	-	O-RING	1	K				
14	-	BACK UP RING	1	K				
15	-	O-RING	1	K				
16	130602-00893	PISTON	1					
17	-	RING;GLYD	1	K				
18	-	RING;WEAR	1	K				
19	-	DUST RING	1	K				
20	-	O-RING	1	K				
21	-	RING;BACK UP	2	K				
22	120312-00047	NUT,PISTON	1					
23	S3523738	SCREW;SET	1					
24	S2218561	BOLT;SOCKET M14X2.0X45	12					
25	2180-1026D19	O-RING	1					
26	420210-01136	PIPE ASSY	1		10001~10360			
26	420210-01136-D	PIPE ASSY	1		10361~			
27	S5100603	WASHER	4					
28	S2212461	BOLT;SOCKET	4					
29	K9001159	CLAMP;PIPE	1		10001~10360			
29	K9001159-DG	CLAMP,PIPE	1		10361~			
30	S5102903	WASHER	1					

Key No	Part No	Description	Qty	S.C	Serial No	ICA	Replacable	Qty
31	S0565666	BOLT	1					
32	S6710041	NIPPLE,GREASE	2					
*	401107-01232	SEAL KIT;BUCKET CYLINDER	1					

Fig. 3490 BUCKET CYLINDER

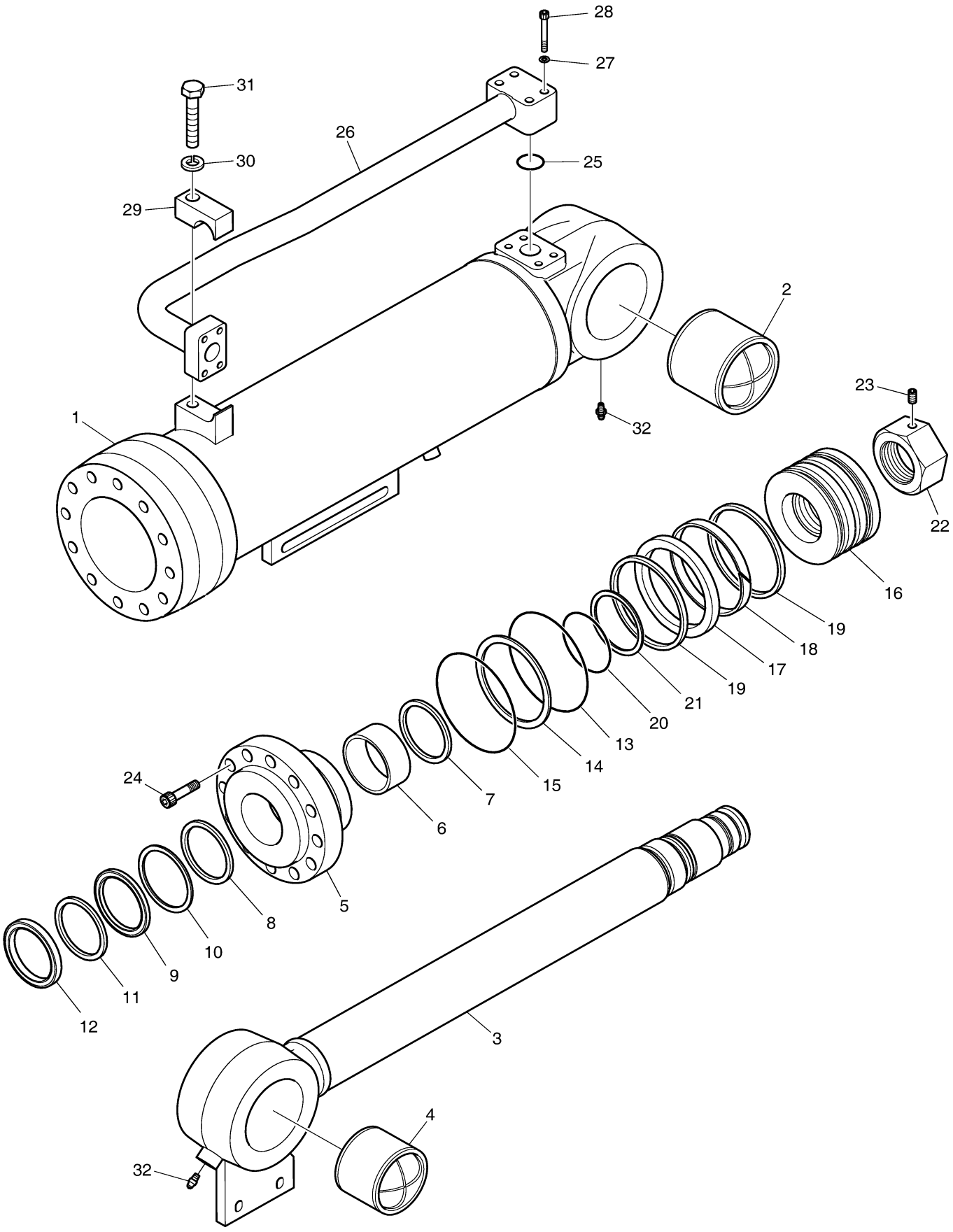

DOOSAN Doosan Infracore

Fig. 3500 LIFT CYLINDER

Key No	Part No	Description	Qty	S.C	Serial No	ICA	Replacable	Qty
-	440-00248A	CYLINDER;LIFT	2		10001~10360			
-	K1041787	CYLINDER;LIFT	2		10361~			
1	1.441-00246A	TUBE ASS'Y	1		10001~10360			
1	K9006515	TUBE ASS'Y	1		10361~			
2	1.110-00160	BUSH;STEEL	1					
3	1.428-00205A	ROD ASS'Y	1		10001~10360			
3	K9006516	ROD ASS'Y	1		10361~			
4	1.430-00089	COVER;ROD	1					
5	1.110-00078	BUSH;DU	1		10001~10360			
5	K9006525	DU-BUSH	1		10361~			
6	K9001401	RING;RETAINING	1					
7	1.180-00191	U-PACKING	1	K				
8	1.180-00296	RING;BACK-UP	1	K				
9	1.180-00483	WIPER;DUST	1	K				
10	S8011351	O-RING	1	K				
11	S8091350	RING;BACK-UP	1	K				
12	2180-1217D96	O-RING	1	K				
13	1.409-00018	PISTON	1					
14	1.180-00342	RING;GLYD	1	K				
15	1.180-00390	RING;WEAR	1	K				
16	1.180-00324	RING;DUST	1	K	10001~10360			
16	K9001149	RING;DUST	1	K	10361~			
17	S8010751	O-RING	1	K				
18	1.121-00056	NUT;PISTON	1					
19	1.115-00235	RING;LOCK	1					
20	S2218561	BOLT;SOCKET M14X2.0X45	12					
21	1.140-00122	PIPE ASS'Y-H	1		10001~10360			
21	K9006517	PIPE ASS'Y-H	1		10361~			
22	S8000281	O-RING	1					
23	S5100603	WASHER	4					
24	S2212661	BOLT;SOCKET M10X1.5X50	4					
25	1.140-00197A	PIPE ASS'Y-R	1		10001~10360			
25	K9006518	PIPE ASS'Y-R	1		10361~			
26	S8000281	O-RING	1					
27	S5100603	WASHER	4					
28	S2212661	BOLT;SOCKET M10X1.5X50	4					

Key No	Part No	Description	Qty	S.C	Serial No	ICA	Replacable	Qty
29	1.124-00147	CLAMP;PIPE	1					
30	S5100603	WASHER	4					
31	S0558653	BOLT M10X1.5X55	2					
32	S0511753	BOLT M10X1.5X18	2					
33	S6710032	NIPPLE;GREASE	1					
*	440-00248KT	SEAL KIT;LIFT CYL.	1					

Fig. 3500 LIFT CYLINDER

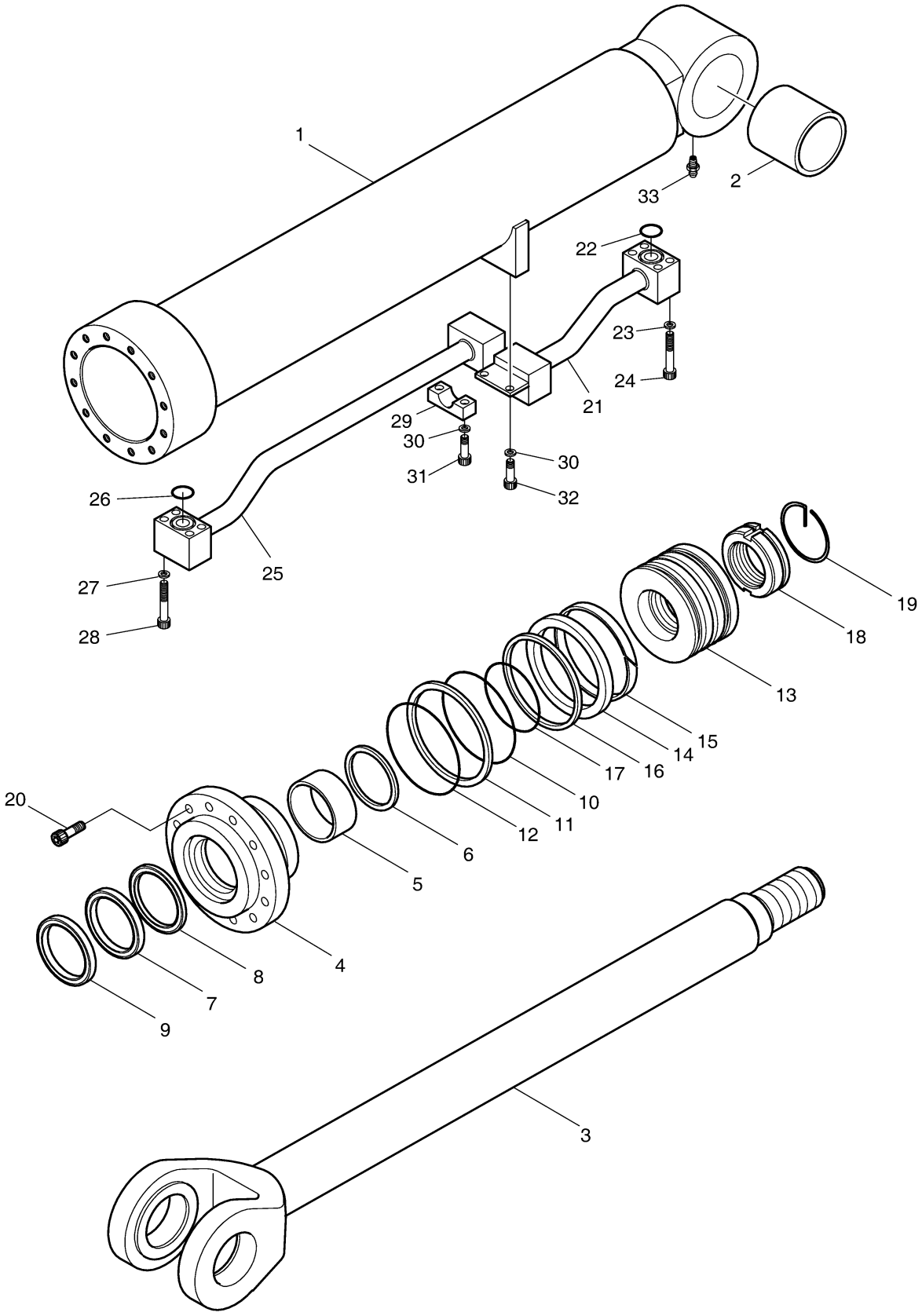

Fig. 3510 STEERING CYLINDER

Key No	Part No	Description	Qty	S.C	Serial No	ICA	Replacable	Qty
-	K1029996	CYLINDER;STEERING	2					
1	1.441-00036	TUBE ASS'Y	1					
2	1.110-00102	BUSH;STEEL	1					
3	K9005343	ROD ASS'Y	1					
4	1.110-00102	BUSH;STEEL	1					
5	1.430-00083	COVER;ROD	1					
6	2110-1184D67	DU-BUSH	1					
7	1.180-00190	U-PACKING	1	K				
8	1.180-00231	RING;BACK-UP	1	K				
9	1.180-00482	WIPER;DUST	1	K				
10	S8010651	O-RING	1	K				
11	S8090650	RING;BACK-UP	1	K				
12	S8010701	O-RING	1	K				
13	1.114-00261	WASHER	1					
14	1.409-00016	PISTON	1					
15	1.180-00343	RING;GLYD	1	K				
16	1.180-00389	RING;WEAR	1	K				
17	1.180-00325	RING;DUST	1	K				
18	S8010351	O-RING	1	K				
19	1.121-00054	NUT;PISTON	1					
20	1.115-00236	RING;LOCK	1					
21	1.424-00009	PLUNGER;CUSHION	1					
22	1.115-00365	RING;STOP	1					
23	1.420-00037	VALVE;CHECK	1					
24	1.131-00009	SPRING	1					
25	1.181-00026	PLUG	1					
26	S8000181	O-RING	1					
27	S6710032	NIPPLE;GREASE	3					
*	4440-6265K	SEAL KIT;STEERING CYL.	1					

Fig. 3510 STEERING CYLINDER

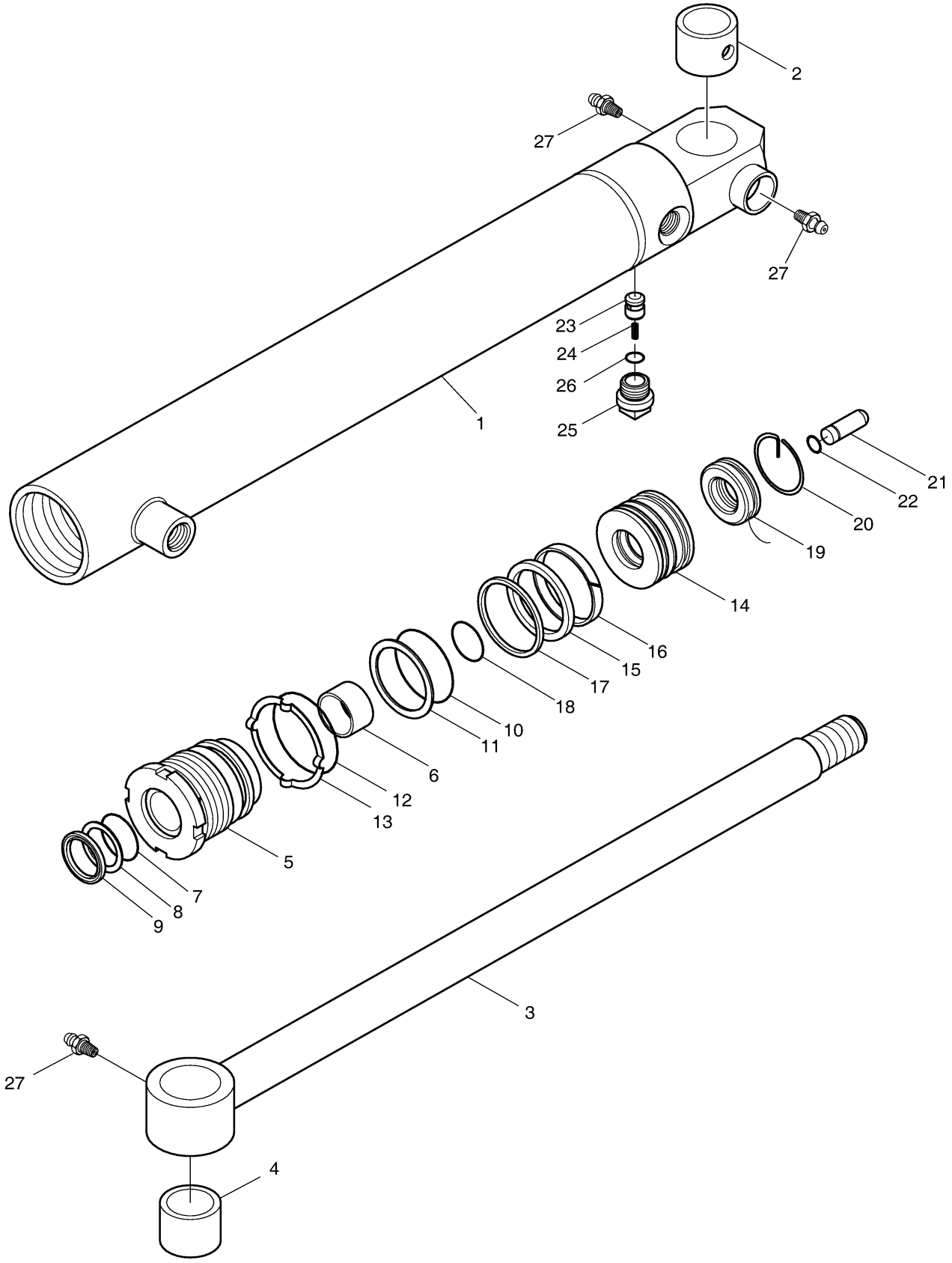

DOOSAN Doosan Infracore

Fig. 3520 SHOCKLESS VALVE - LIS

Key No	Part No	Description	Qty	S.C	Serial No	ICA	Replacable	Qty
-	410133-00001A	VALVE,SHOCKLESS	1					
1	300715-00079	COIL 24V	1					
2	K9006940	VALVE:CHECK	5					
3	410116-00549	VALVE,LOGIC:DIRECTIONAL	2					
4	K9006944	VALVE:FLOW CONTROL	1					
5	K9006943	VALVE:REDUCING	1					
6	K9006945	VALVE:RELIEF	1					
7	K9006946	VALVE:SOLENOID	1					

Fig. 3520 SHOCKLESS VALVE - LIS

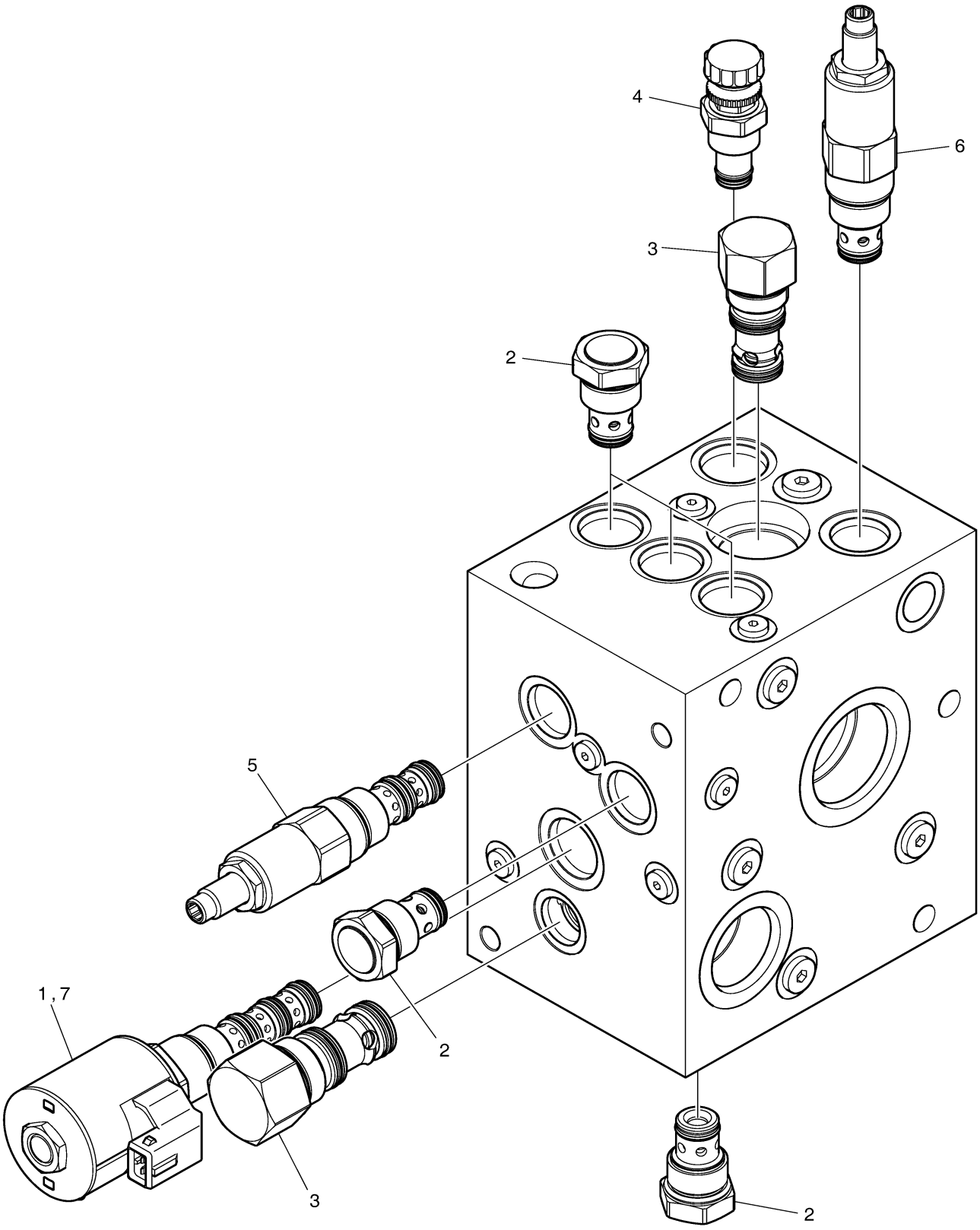

Fig. 3530 REMOTE CONTROL VALVE -

Key No	Part No	Description	Qty	S.C	Serial No	ICA	Replacable	Qty
-	426-00105	VALVE;REMOCON	1					
1	-	BODY	1	D				
2	S8000081	O-RING	4					
3	181-00471	PLUG	4					
4	1.131-00002	SPRING	4					
5	-	SEAT;SPRING	4	D				
6	-	SPOOL	4	D				
7	-	SEAT;SPRING	4	D				
8	-	SPRING	4	D				
9	-	STOPPER	4	D				
10	-	PLUG	4	D				
11	-	SEAL;ROD	4	D				
12	-	O-RING	4	D				
13	-	ROD;PUSH	4	D				
14	1.412-00001	PLATE	1					
15	-	STOPPER;ROD	1	D				
16	-	BUSHING;DU	8	D				
17	1.428-00001	ROD	1					
18	-	MAGNET	3	D				
19	1.412-00002	PLATE	1					
20	1.138-00003	JOINT ASS`Y	1					
21	-	JOINT ASS`Y	3	D				
22	-	PLATE	1	D				
23	-	WASHER	3	D				
24	-	NUT M8X1.25	3	D				
25	-	PLUG	1	D				
26	-	NUT	1	D				
27	-	SCREW M8X1.25	1	D				
28	-	NUT M8X1.25	1	D				
29	1.121-00001	NUT	1					
30	-	CONNECTOR	1	D				
31	-	NUT M12X1.75	1	D				
32	1.160-00003	BOOT	1					
33	-	HANDLE ASS`Y	1	D				
33A	1.161-00021	CAP;PEANUT	1					
34	-	PIN,SPRING	1	D				

Key No	Part No	Description	Qty	S.C	Serial No	ICA	Replacable	Qty
35	181-00318	PLUG	8					
36	-	HOUSING	1	D				
37	-	HOLDER;REAR	1	D				
38	-	TERMINAL	10	D				
39	-	SEAL;WIRE	10	D				
40	-	HOUSING	1	D				
41	-	HOLDER;REAR	1	D				
42	-	CLIP;BAND	2	D				
43	1.424-00049	MAIN SPOOL KIT	1					
44	1.181-00084	PLUG KIT	1					
45	1.416-00016	STOPPER KIT	1					
46	1.424-00010	MAGNET KIT	1					
47	1.412-00028	PLATE KIT	1					
48	1.172-00008	HANDLE KIT	1					
49	530-00388	HARNESS KIT	1					
59	-	SWITCH	2	D				
60	K9001001	SWITCH ASS`Y	1					

Fig. 3530 REMOTE CONTROL VALVE -

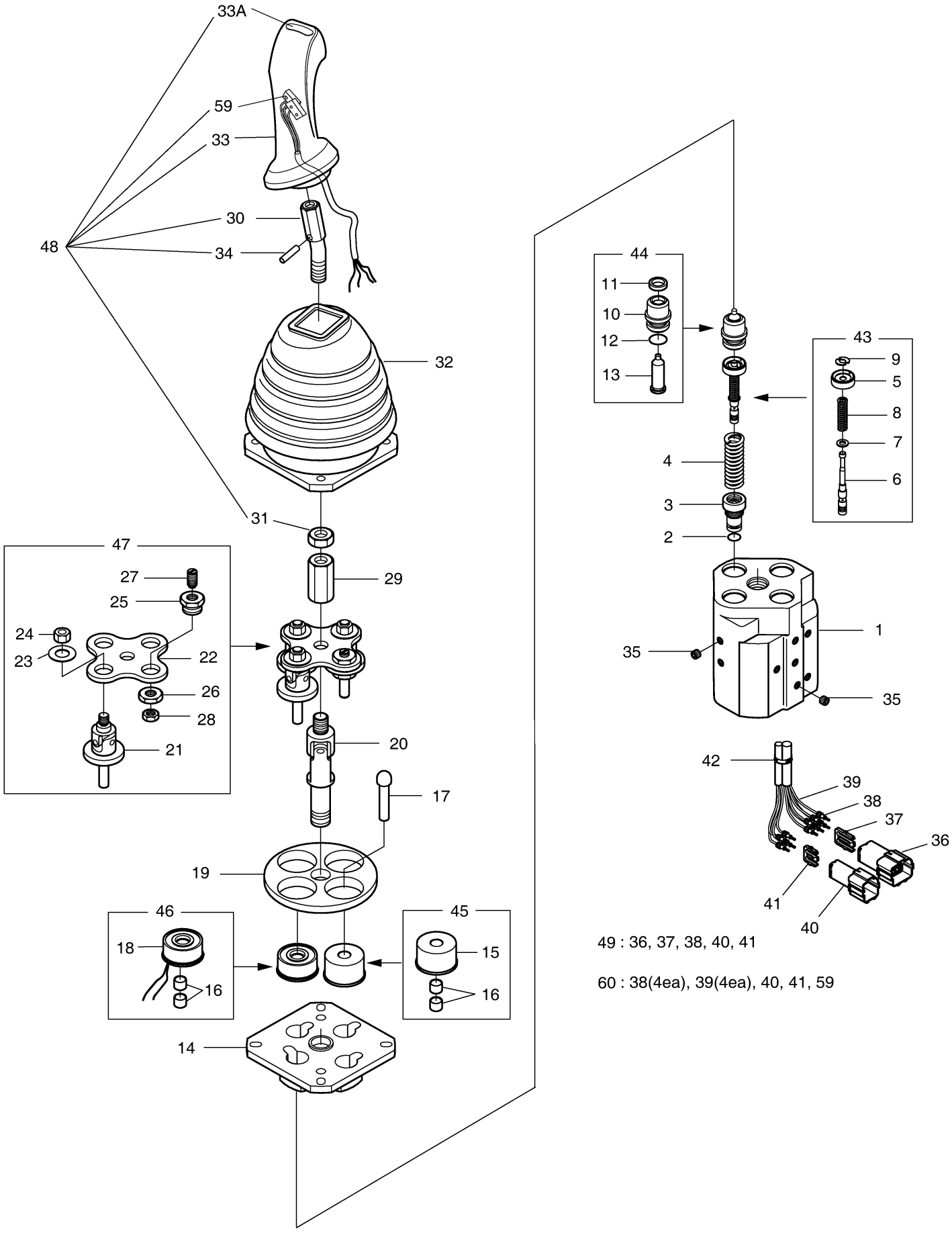

49 : 36, 37, 38, 40, 41

60 : 38(4ea), 39(4ea), 40, 41, 59

DOOSAN Doosan Infracore

Fig. 3531 REMOTE CONTROL VALVE -

Key No	Part No	Description	Qty	S.C	Serial No	ICA	Replacable	Qty
-	426-00104	VALVE;REMOCON	1					
1	-	BODY	1	D				
2	-	PLUG	1	D				
3	P0008	O-RING	5					
4	-	SPOOL	1	D				
5	-	SEAT;SPRING	1	D				
6	-	SPRING	1	D				
7	-	SEAT;SPRING	1	D				
8	-	O-RING	1	D				
9	-	PLATE	1	D				
10	-	BOLT;WRENCH M5X10	2	D				
11	-	SCREW;SET	1	D				
12	-	NUT	1	D				
13	J98E1001	PLUG	4					
14	JA0E3008	SPRING	4					
15	-	SEAT;SPRING	4	D				
16	-	SPOOL	4	D				
17	-	SEAT;SPRING	4	D				
18	-	SPRING	4	D				
19	-	STOPPER	4	D				
20	-	PLUG	4	D				
21	-	SEAL;ROD	4	D				
22	-	O-RING	4	D				
23	-	ROD;PUSH	4	D				
24	JA0E3011	PLATE	1					
25	-	STOPPER;ROD	1	D				
26	-	BUSHING;DU	8	D				
27	JA0E3013	ROD	1					
28	-	MAGNET	3	D				
29	JA0E3015	PLATE	1					
30	JA0E3016	JOINT ASS`Y	1					
31	-	JOINT ASS`Y	3	D				
32	-	PLATE	1	D				
33	-	WASHER	3	D				
34	-	NUT M8X1.25	3	D				
35	-	PLUG	1	D				

Key No	Part No	Description	Qty	S.C	Serial No	ICA	Replacable	Qty
36	-	NUT	1	D				
37	-	SCREW M8X1.25	1	D				
38	-	NUT M8X1.25	1	D				
39	JA0E3023	NUT	1					
40	-	CONNECTOR	1	D				
41	-	NUT M12X1.75	1	D				
42	JA0E3025	BOOT	1					
43	-	HANDLE ASS`Y	1	D				
43A	1.161-00021	CAP;PEANUT	1	D				
44	-	PIN,SPRING	1	D				
45	WPT116	PLUG	11					
46	EP05	EXPANDER	2					
47	-	HOUSING	1	D				
48	-	HOLDER;REAR	1	D				
49	-	TERMINAL	10	D				
50	-	SEAL;WIRE	10	D				
51	-	HOUSING	1	D				
52	-	HOLDER;REAR	1	D				
53	-	CLIP;BAND	2	D				
54	WPT18	PLUG	1					
55	JA0E3027	ORIFICE	1					
56	JA0E3028	SPOOL KIT	1					
57	JA0E3029	MAIN SPOOL KIT	1					
58	JA0E3030	PLUG KIT	1					
59	JA0E3031	STOPPER KIT	1					
60	JA0E3032	MAGNET KIT	1					
61	JA0E3033	PLATE KIT	1					
62	JA0E3034	HANDLE KIT	1					
63	530-00388	HARNESS KIT	1					
69	-	SWITCH	2	D				
70	K9001001	SWITCH ASS`Y	1					

Fig. 3531 REMOTE CONTROL VALVE -

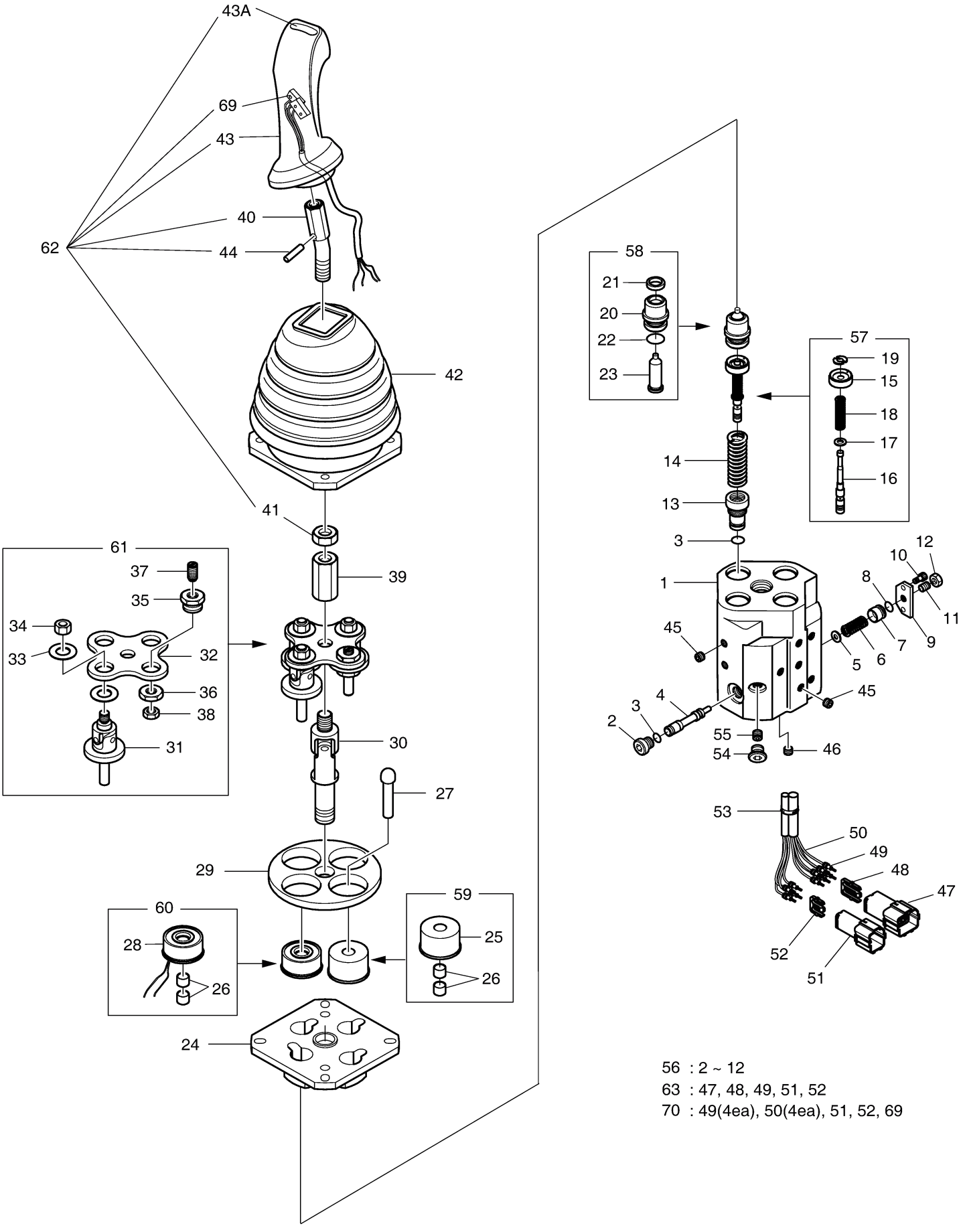

56 : 2 ~ 12
63 : 47, 48, 49, 51, 52
70 : 49(4ea), 50(4ea), 51, 52, 69

DOOSAN Doosan Infracore

Fig. 4100 TOOL

Key No	Part No	Description	Qty	S.C	Serial No	ICA	Replacable	Qty
-	850329-00039	TOOL	-	D				
1	850329-00049	TOOL ASSY	1					
1-1	2199-9043	BOX,TOOL	1					
1-5	T6580020	WRENCH,ADJUST	1					
1-6	T7050003	DRIVER(-)	1					
1-7	T7050013	DRIVER	1					
1-8	T7050021	DRIVER	1					
1-9	T7050022	DRIVER	1					
1-10	T7500004	PILER,COMBI	1					
1-11	T7570003	CUTTER PLIER 8	1					
1-13	T7260057	HAMMER	1					
1-14	2199-1004	BAR	1					
1-15	2199-1005	PIPE	1					
1-19	T6690012	BAR,EXTENSION	1					
1-20	T6690013	BAR,EXTENSION	1					
1-21	T6750003	HANDLE,RATCHET	1					
1-22	2199-9009	CLIP,DRIVER	1					
1-24	2199-9057	WRENCH,FILTER	1					
1-25	2199-9014	WRENCH;T	1					
1-26	T6550005	L-WRENCH	1					
1-27	T6550006	L-WRENCH 5	1					
1-28	T6550007	L-WRENCH 6	1					
1-29	T6550009	L-WRENCH 8	1					
1-30	T6550011	L-WRENCH 10	1					
1-35	T6510062	SPANNER	1					
1-36	T6510066	SPANNER 10x13	1					
1-37	T6510070	SPANNER	1					
1-38	T6510072	SPANNER	1					
1-39	T6510075	SPANNER 19x22	1					
1-40	T6510079	SPANNER 22x24	1					
1-41	T6510081	SPANNER 24X27	1					
1-42	T6510085	SPANNER 27X30	1					
1-43	T6510087	SPANNER 30x32	1					
1-44	T6510089	SPANNER 32X36	1					
1-45	T6510091	SPANNER 36X41	1					
1-46	T6510092	SPANNER 41X46	1					

Key No	Part No	Description	Qty	S.C	Serial No	ICA	Replacable	Qty
1-47	T6510094	SPANNER 46X50	1					
1-49	T6510018	SPANNER 24	1					
1-52	T6510027	SPANNER 41	1					
1-53	T6600179	SOCKET 8"-M5	1					
1-54	T6600183	SOCKET M6	1					
1-56	T6600189	SOCKET M8	1					
1-57	T6600197	SOCKET,WRENCH	1					
1-58	T6600201	SOCKET,WRENCH	1					
1-59	T6600211	SOCKET,WRENCH	1					
1-60	T6600223	SOCKET,WRENCH	1					
1-61	T6600227	SOCKET 32	1					
1-62	2199-9017	CHISEL	1					
1-71	199-00002	WRENCH	1					
2	2199-9008	GREASE GUN	1					
3	2184-9005	HOSE,GREASE	1					
4	2199-9007	BOX	1					
5	2199-1019	HANDLE	1					
6	2199-9056	FUNNEL	1					
7	K1006586	TOOL;PRE FILTER	1		10001~10228			
7	850332-00007	WRENCH,FILTER;FUEL PRE	1		10229~			

Fig. 4100 TOOL

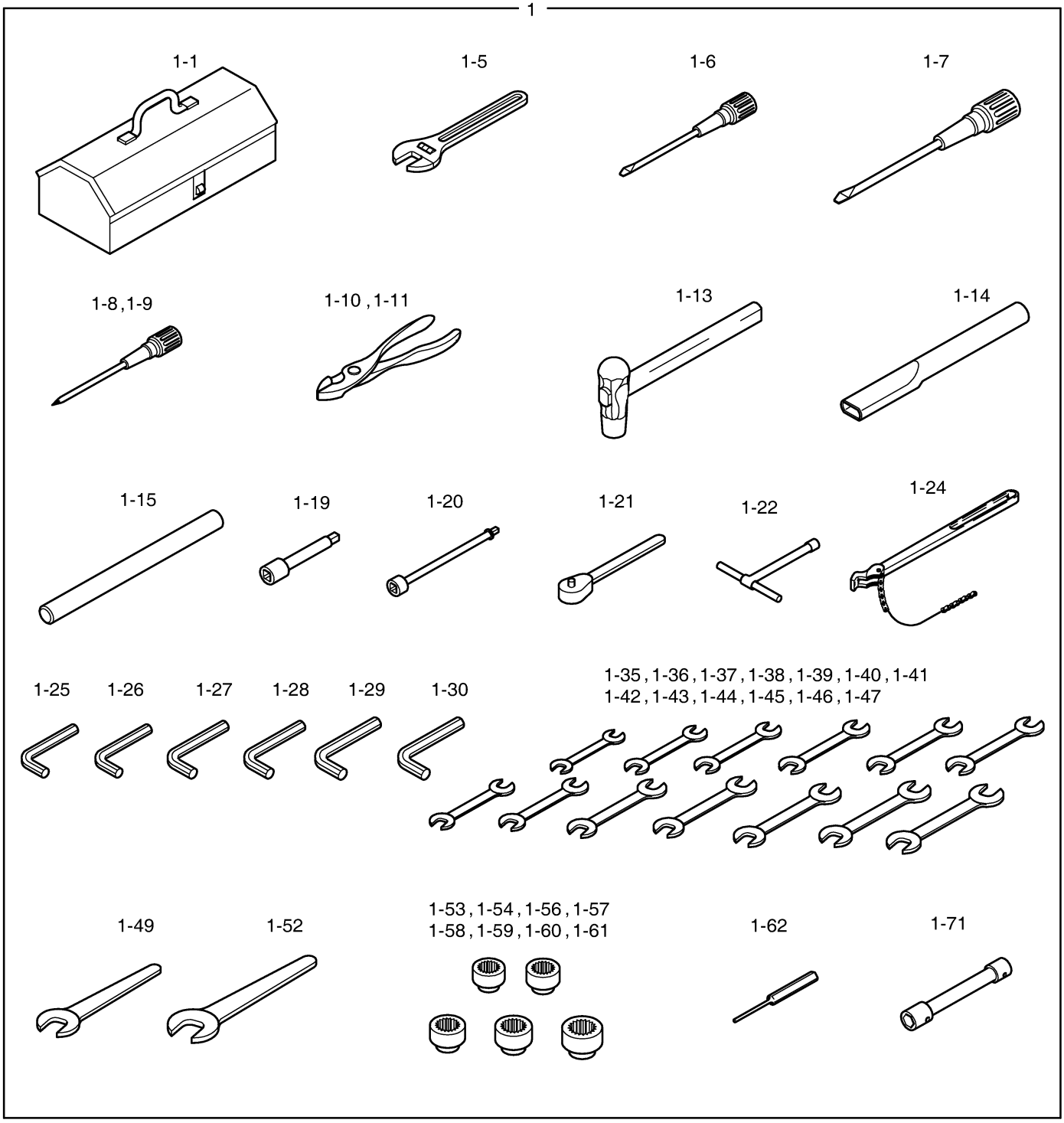

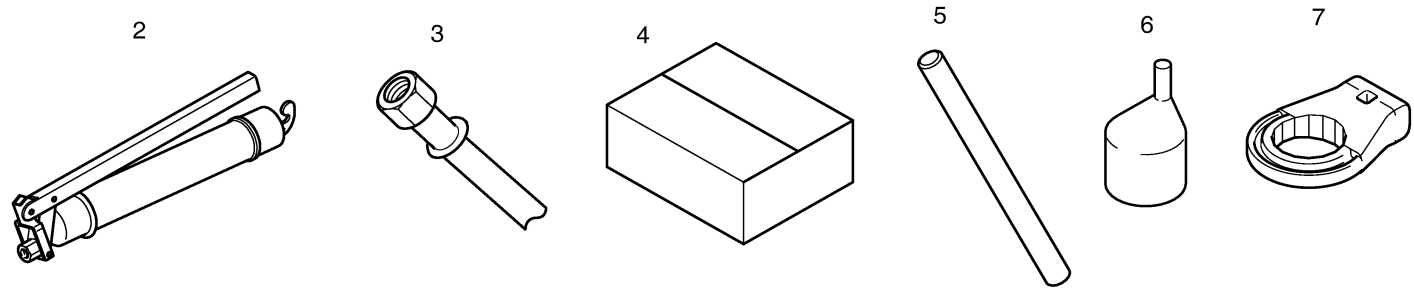

DOOSAN Doosan Infracore

Fig. 4110 SPARE PARTS

Key No	Part No	Description	Qty	S.C	Serial No	ICA	Replacable	Qty
-	101594-00277	SPARE PARTS ASSY	-	D				
1	400504-00034	ELEMENT,FILTER	1					
2	474-00040	ELEMENT,OUTER	1					
3	474-00039	ELEMENT,INNER	1					
4	65.12503-5016B	ELEMENT;E/G FUEL FILTER	1		10001~10271			
4	65.12503-5018A	ELEMENT,FUEL	1		10272~			
5	65.05510-5022B	CARTRIDGE;OIL FILTER	1		10001~10310	Y	400508-00093	1
5	400508-00093	CARTRIDGE,OIL FILTER	1		10311~			
6	K1029612	FILTER;T/M	1		10001~10363	Y	400409-00006	1
6	400409-00006	FILTER,TRANSMISSION	1		10364~			
7	K1055161	ELEMENT,FILTER;BRAKE	1					
8	K1010639	BOX;SPARE PARTS	1					
9	2106-1019D2	V-BELT;4PK-1470L	1		10001~10291			
9	2106-1019D28	V-BELT(4PK 1490L AIR-COMP)	1		10292~			
10	2515-1016D4	BULB,HALOGEN	1					
11	K1010656	BULB;HALOGEN	1					
12	515-00012A	BULB	2					
13	S864221H	BULB 24V 21W	1					
14	2527-1016	FUSE,BLADE 10A	2					
15	2527-1017	FUSE,BLADE 15A	2					
16	2527-1018	FUSE,BLADE 20A	2					
17	2527-1025	FUSE,BLADE 30A	1					
18	300803-00086	FUSE;200A	2					
19	2527-1023A	LINK,FUSIBLE	1					
20	K1029257	ELEMENT,AIR BREATHER	1		10001~10242			
20	400504-00254	ELEMENT,AIR BREATHER	1		10243~			
21	400504-00045	ELEMENT,FUEL CAP	1					
41	950106-00786AE	MANUAL,OPERATION	1					
42	950106-00787EF	PARTS BOOK	1					

Fig. 4110 SPARE PARTS

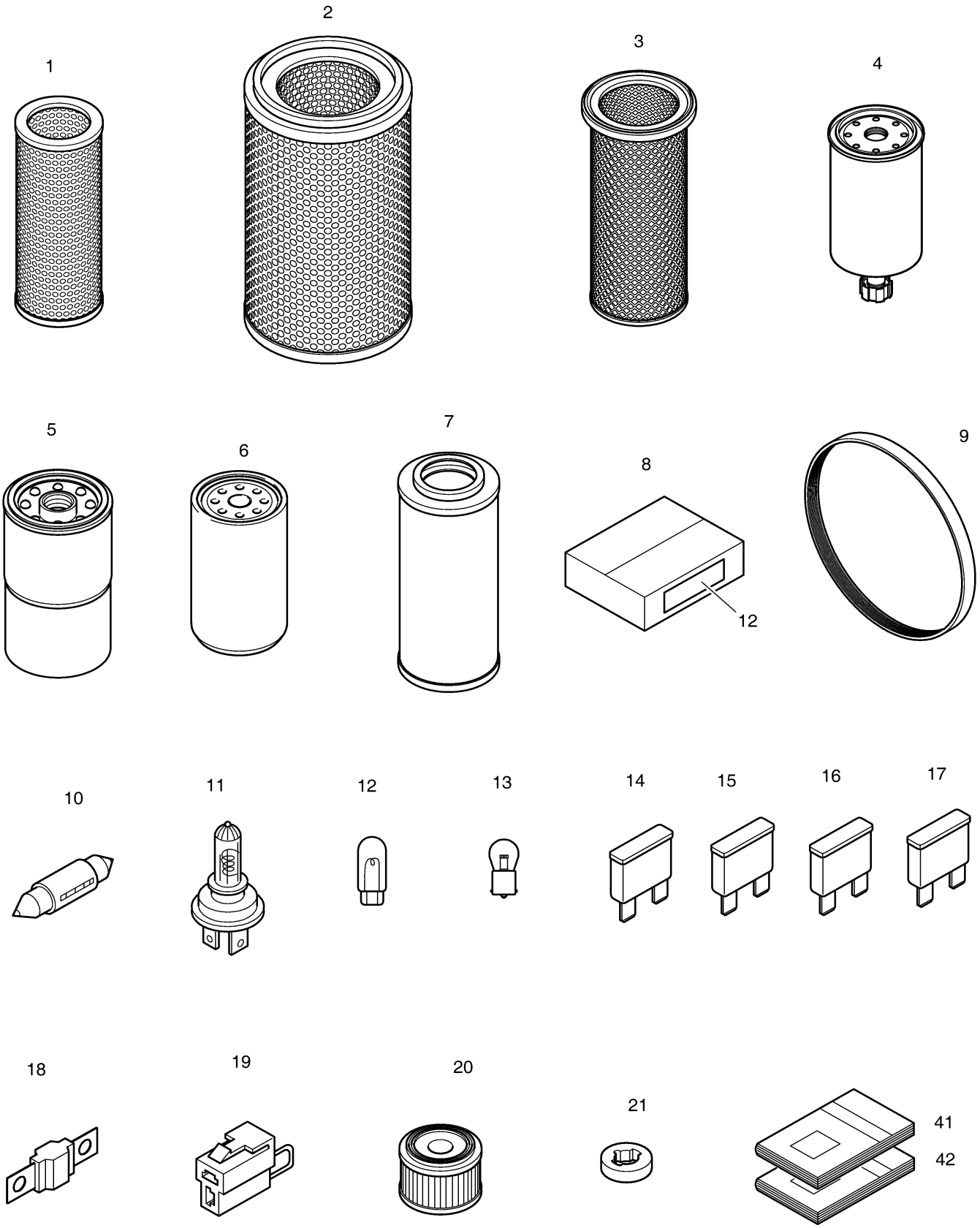

DOOSAN Doosan Infracore

Fig. 4120 DECAL - CABIN(EXPORT) [10001

Key No	Part No	Description	Qty	S.C	Serial No	ICA	Replacable	Qty
-	950209-02178	NAME PLATE ASSY;CABIN	-	D				
1	950205-01488	DECAL	1					
2	K1044188	DECAL	1					
3	950205-01487	DECAL	2					
4	950205-01486	DECAL	1					
5	950205-01481	DECAL	1					
7	950205-01451	DECAL;WARNING(MAINTEN)	1					
8	950205-01449	DECAL	1					
9	950205-01452	DECAL	1					

Fig. 4120 DECAL - CABIN(EXPORT) [10001

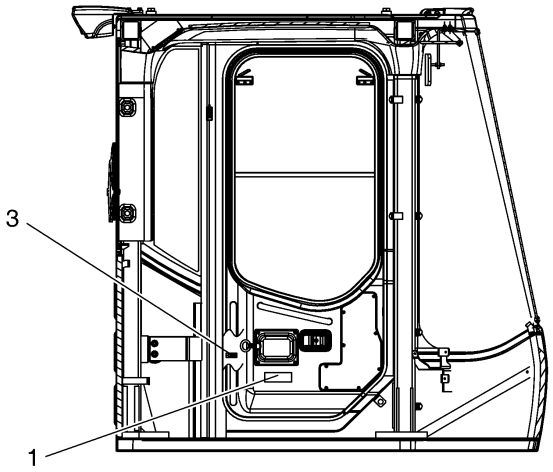

LEFT SIDE VIEW
OF CABIN INSIDE

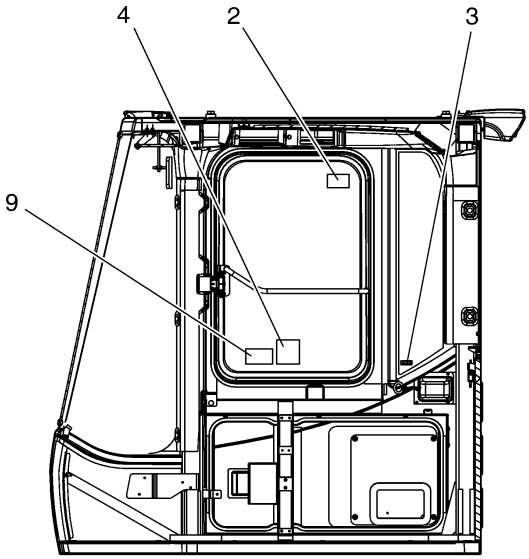

RIGHT SIDE VIEW
OF CABIN INSIDE

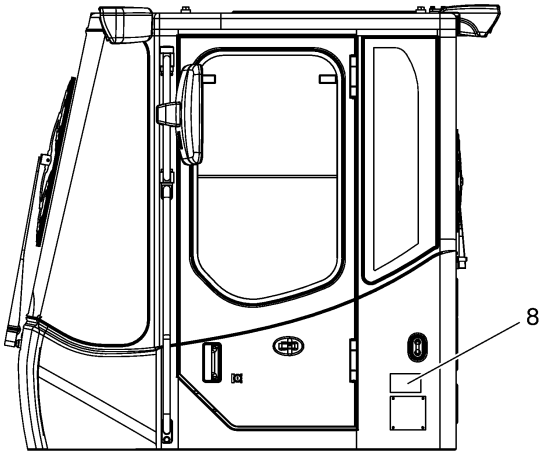



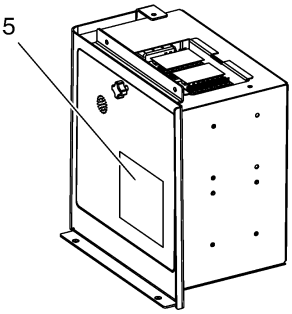

ELECTRIC BOX

Fig. 4121 DECAL - CABIN [10266 ~]

Key No	Part No	Description	Qty	S.C	Serial No	ICA	Replacable	Qty
-	950212-02471	LABEL ASSY	-	D				
1	950205-04643	DECAL	1					
2	950205-03802	DECAL,DO NOT OPERATE	1					
4	950205-04645	DECAL	1		10266~10360	I	950205-04645A	1
4	950205-04645A	DECAL	1		10361~			
5	950212-02440	LABEL,WELDING ATTENTION	1					
6	950205-04644A	DECAL;GENERAL HAZARD	1		10266~10360	I	950205-04644B	1
6	950205-04644B	DECAL;GENERAL HAZARD	1		10361~			
7	950205-01487	DECAL	1					
8	950205-04915	DECAL;OPERATING LOAD	1		10266~10360	Y	950205-04915A	1
8	950205-04915A	DECAL;OPERATING LOAD	1		10361~			

Fig. 4121 DECAL - CABIN [10266 ~]

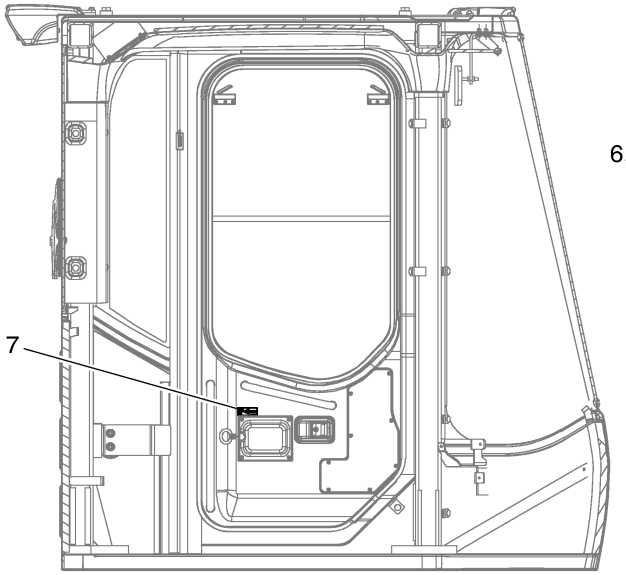

LEFT SIDE VIEW OF CABIN INSIDE

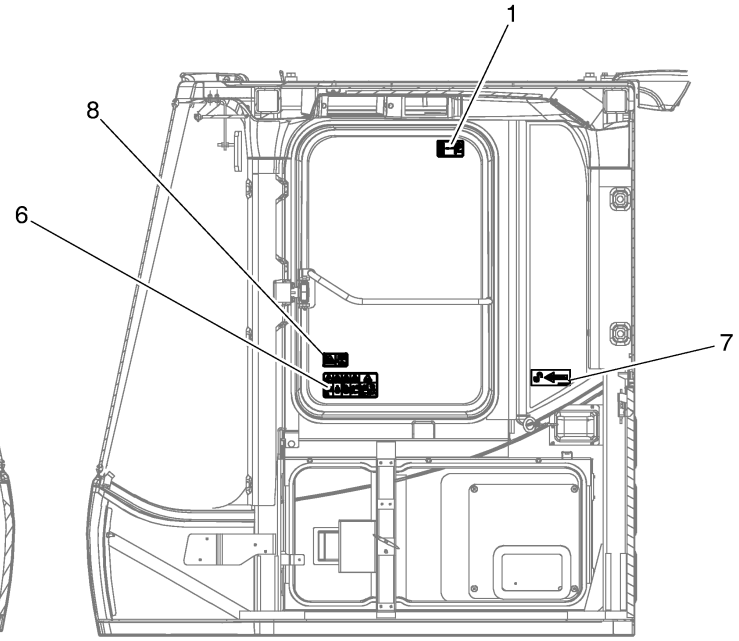

RIGHT SIDE VIEW OF CABIN INSIDE

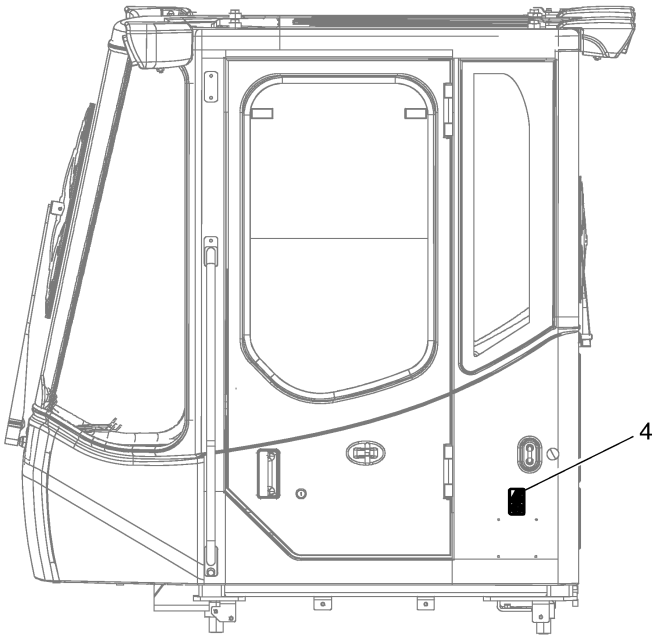

LEFT SIDE VIEW OF CABIN (OUTSIDE)

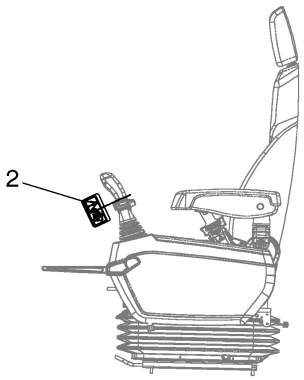

LEFT CONTROL STAND

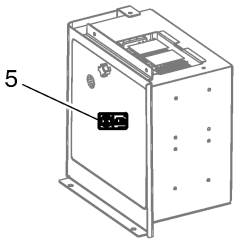

ELECTRIC BOX

Fig. 4130 DECAL - EXPORT [10001 ~

Key No	Part No	Description	Qty	S.C	Serial No	ICA	Replacable	Qty
-	950205-02409	DECAL ASSY	-	D				
1	950205-00662	DECAL(DOOSAN)	2					
2	950205-01485	DECAL	1					
3	950205-01479	DECAL	2					
4	950205-01480	DECAL	1					
6	950205-01469	DECAL	2					
7	950205-01482	DECAL	1					
8	950205-01448	DECAL;WARNING(BATTERY)	2					
9	950205-01453	DECAL;WARNING(RADI CAP)	1					
10	950205-01450B	DECAL;SAFETY(ROTATING)	1					
11	950205-01484	DECAL	2					
13	2190-2314D3	TAPE,ANTI-SKID	6					
14	K1028948	DECAL	1					
15	K1042074A	PLATE;NAME	4					
16	950205-01454A	DECAL;WARNING(ACC)	3					
17	950205-02345A	DECAL	1					
18	950205-02346A	DECAL	1					
19	2190-3528	PLATE,NAME(SWING AREA)	1					
20	2190-3530	PLATE;NAME	1					
21	950205-01483	DECAL	2					
22	950205-01755	DECAL	2					

Fig. 4130 DECAL - EXPORT [10001 ~

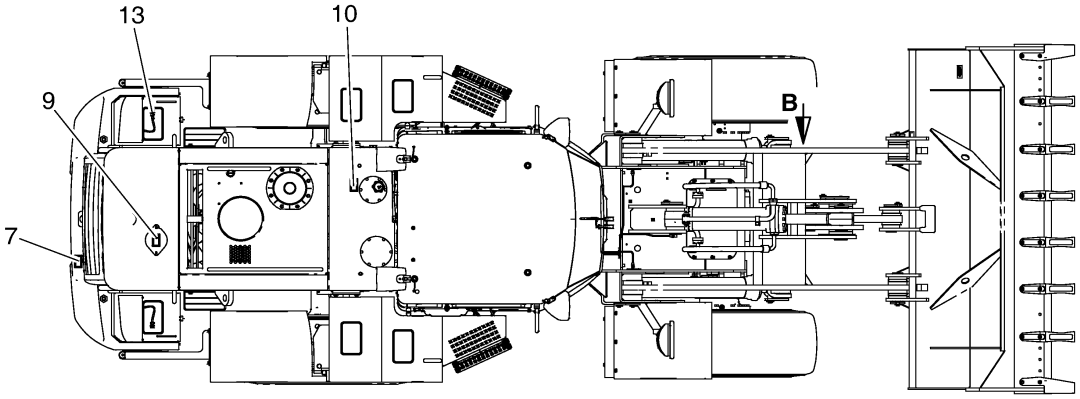

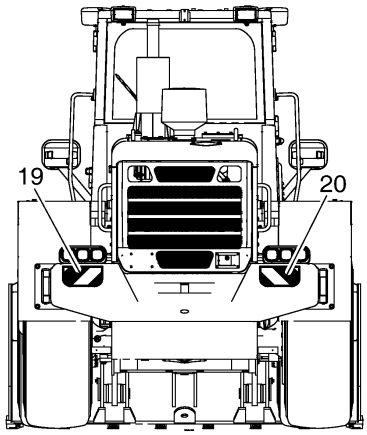

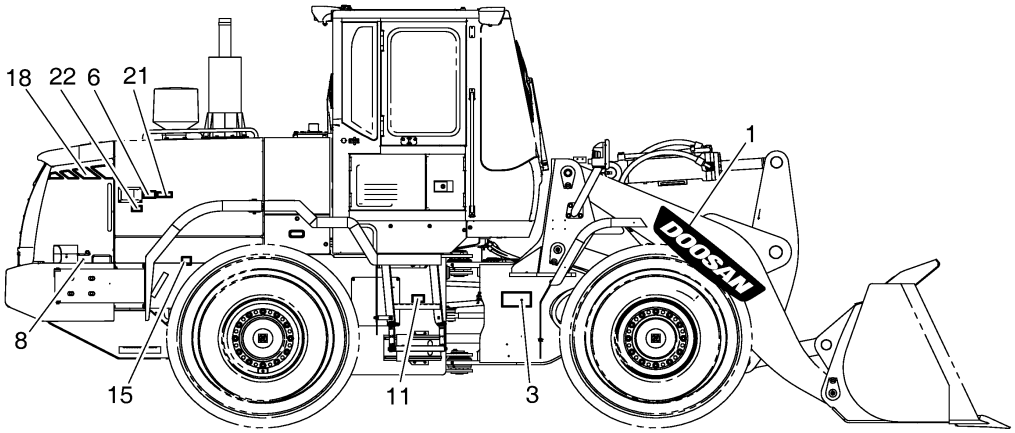

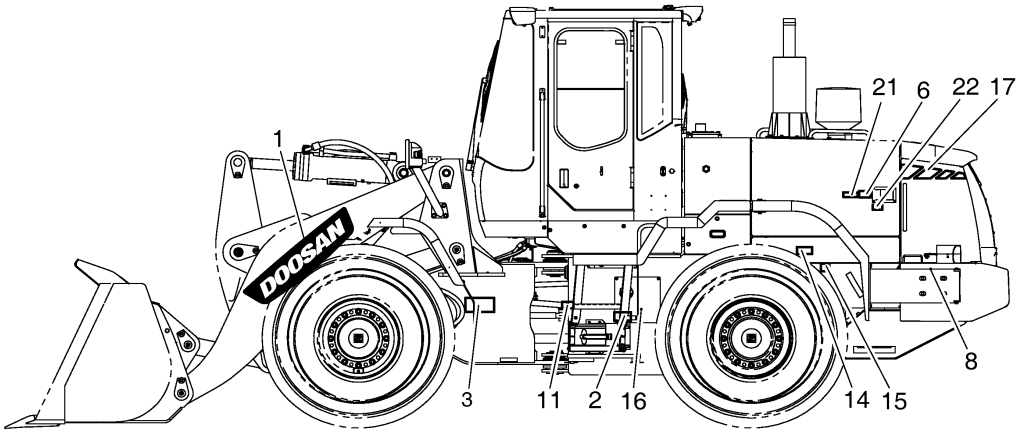

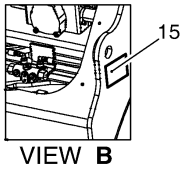

VIEW **B**

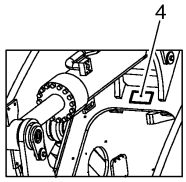

Fig. 4140 DECAL - SPEC [10001 ~ 10265]

Key No	Part No	Description	Qty	S.C	Serial No	ICA	Replacable	Qty
-	950209-03225	DECAL & NAME PLATE ASSY	-	D				
1	950205-02100A	DECAL;SPEC	1					

Fig. 4140 DECAL - SPEC [10001 ~ 10265]

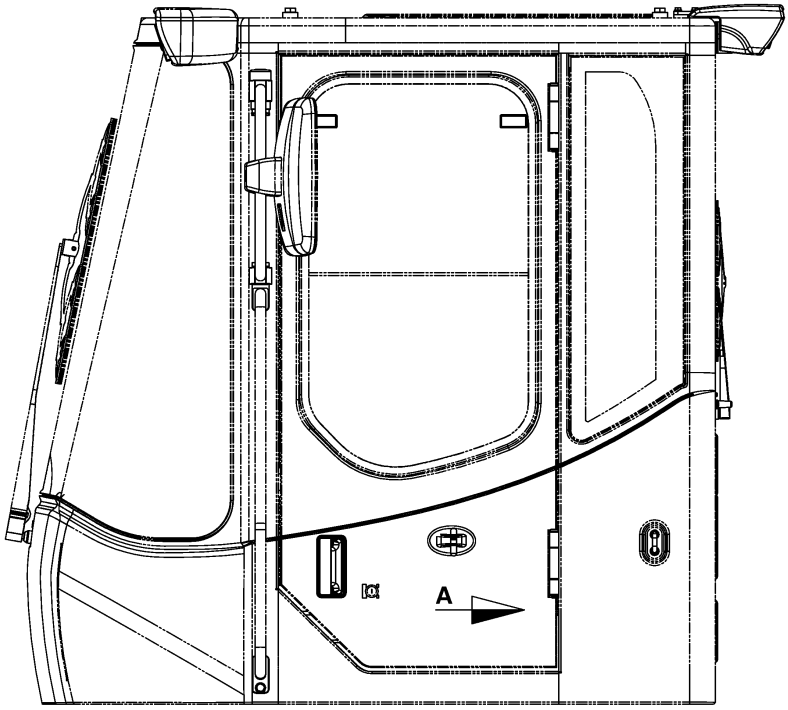

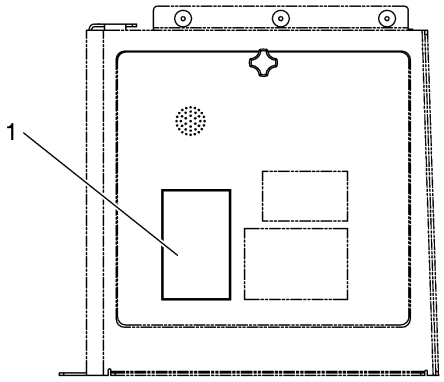

DETAIL **A**
ELECTRIC BOX

Fig. 4150 DECAL - FUSE BOX

Key No	Part No	Description	Qty	S.C	Serial No	ICA	Replacable	Qty
-	950205-02405	DECAL ASSY;FUSE BOX	-	D				
1	950209-03147	PLATE,NAME;FUSE BOX(1)	1					
2	950209-03148	PLATE,NAME;FUSE BOX(2)	1					

Fig. 4150 DECAL - FUSE BOX

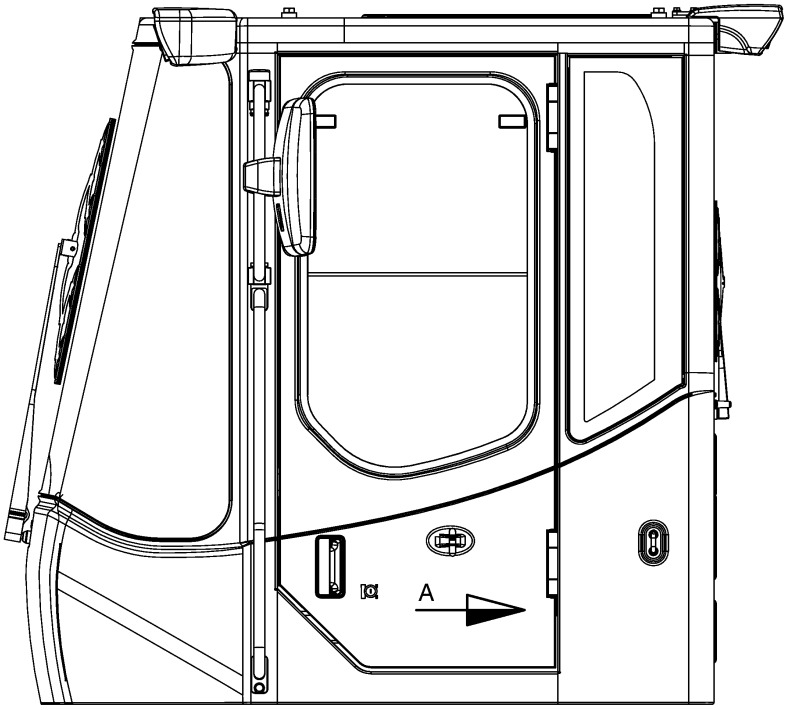

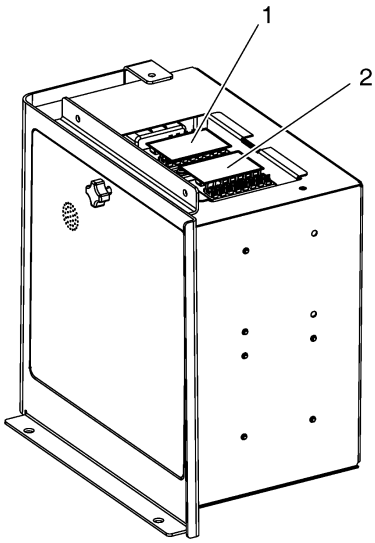

DETAIL A
ELECTRIC BOX

Fig. 4160 DECAL - 3RD LEVER

Key No	Part No	Description	Qty	S.C	Serial No	ICA	Replacable	Qty
-	K1046243	NAME PLATE ASS`Y	-	D				
1	4190-2482A	PLATE:NAME(LEVER DIRECT)	1					

Fig. 4160 DECAL - 3RD LEVER

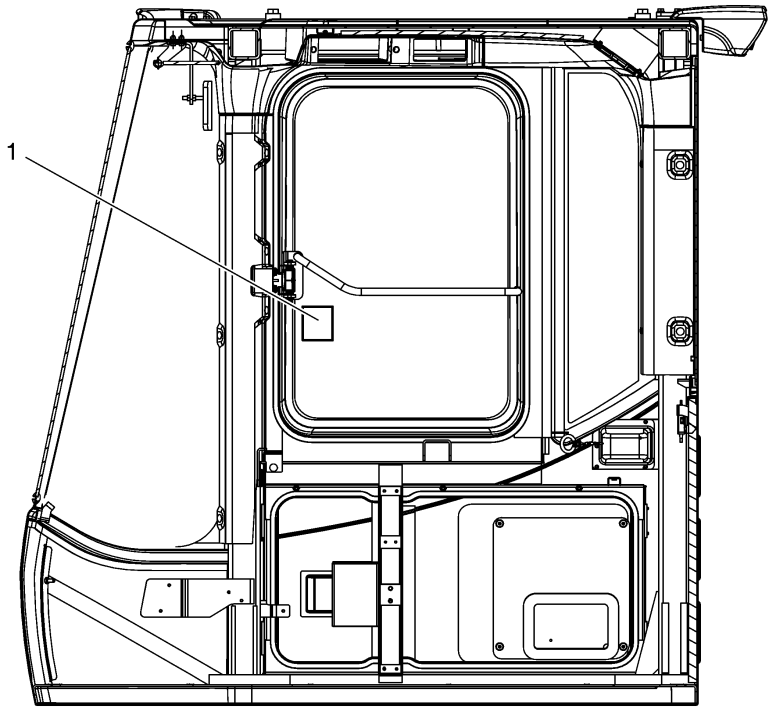

RIGHT SIDE VIEW OF CABIN INSIDE

Fig. 4170 DECAL - MACHINE NAME [10001

Key No	Part No	Description	Qty	S.C	Serial No	ICA	Replacable	Qty
-	950209-03360	DECAL & NAME PLATE ASSY	-	D				
1	950205-02347	DECAL	1					
2	950205-02348	DECAL	1					

Fig. 4170 DECAL - MACHINE NAME [10001

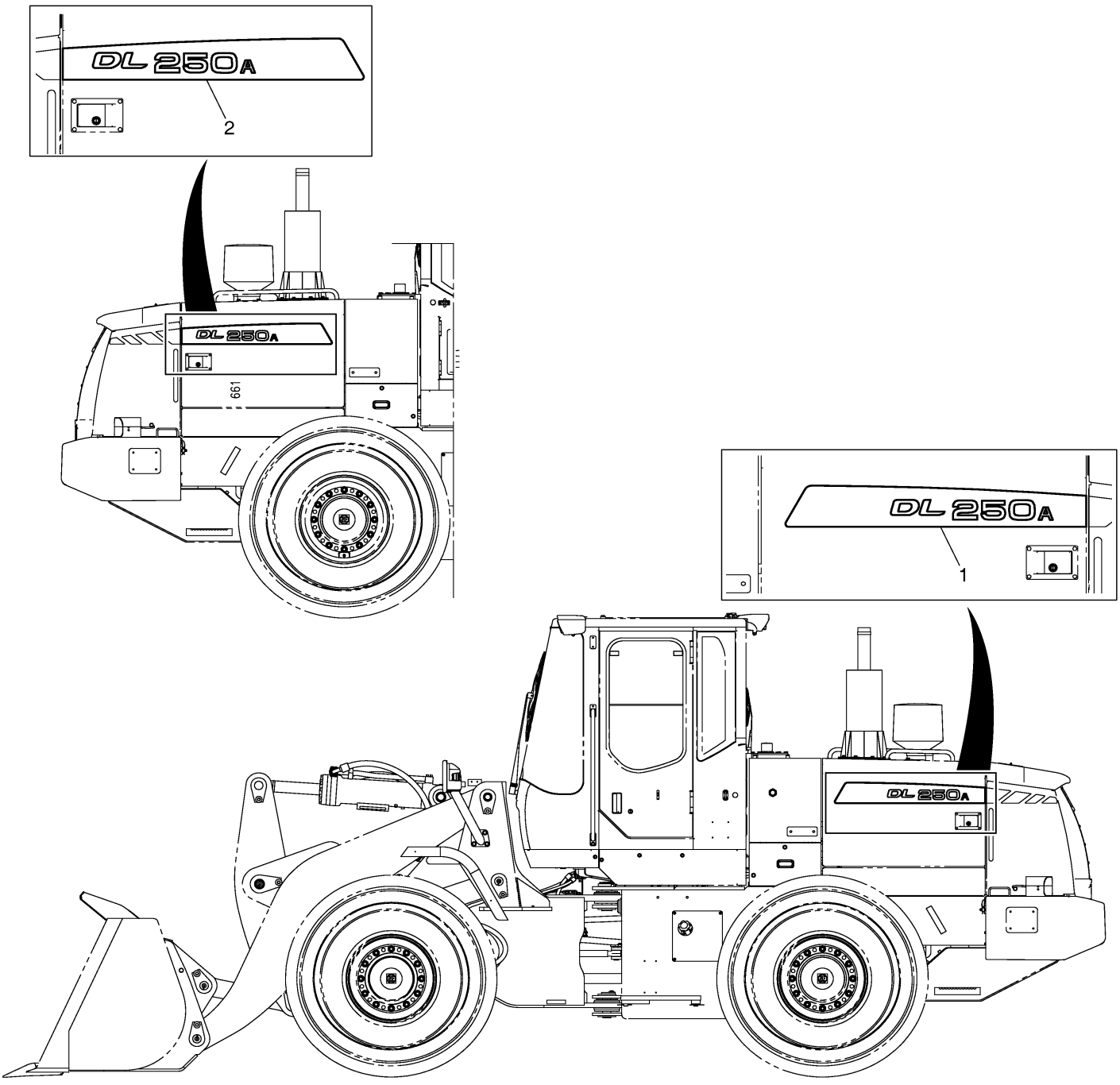

Fig. 4171 DECAL - MACHINE NAME [10266

Key No	Part No	Description	Qty	S.C	Serial No	ICA	Replacable	Qty
-	950205-04848	DECAL ASSY	1					
1	950205-02345A	DECAL	1					
2	950205-02346A	DECAL	1					
3	950205-00662	DECAL(DOOSAN)	2		10266~10360			
3	950205-06390	DECAL;DOOSAN	2		10361~			
5	2190-3528	PLATE,NAME(SWING AREA)	1					
6	2190-3530	PLATE:NAME	1					
7	950205-03782	DECAL,ACCUMULATOR	6					
8	2190-2314D3	TAPE,ANTI-SKID	6					
9	950205-02347	DECAL	1					
10	950205-02348	DECAL	1					

Fig. 4171 DECAL - MACHINE NAME [10266

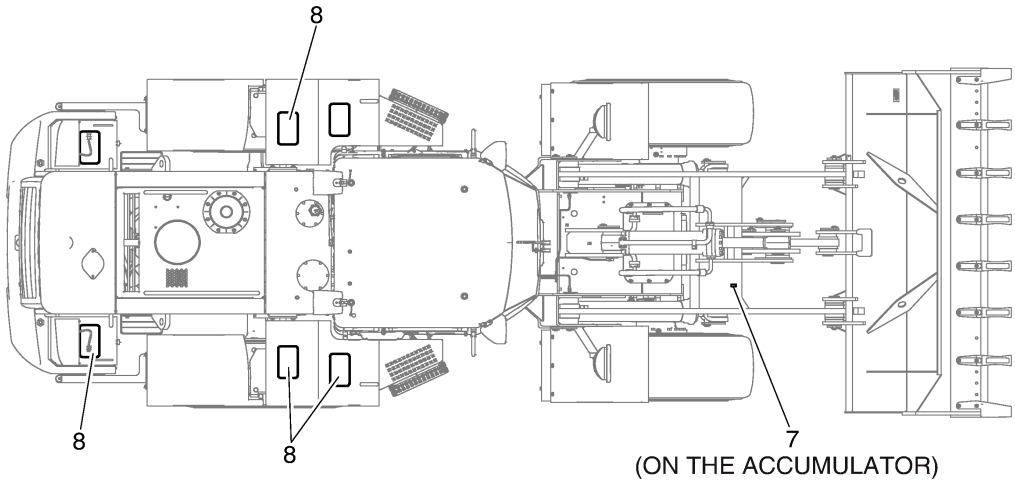

(ON THE ACCUMULATOR)

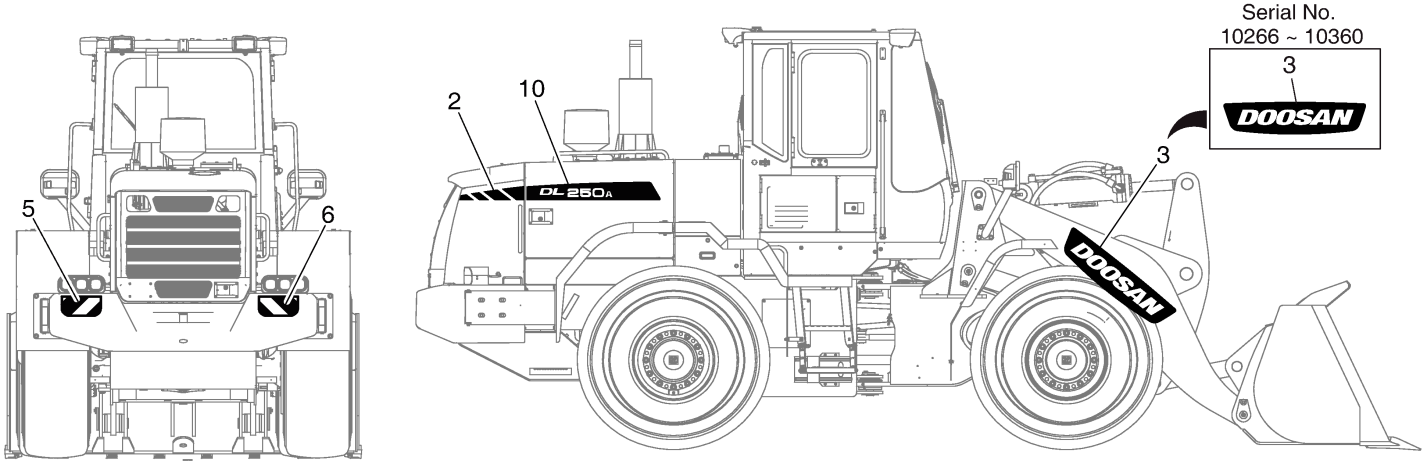

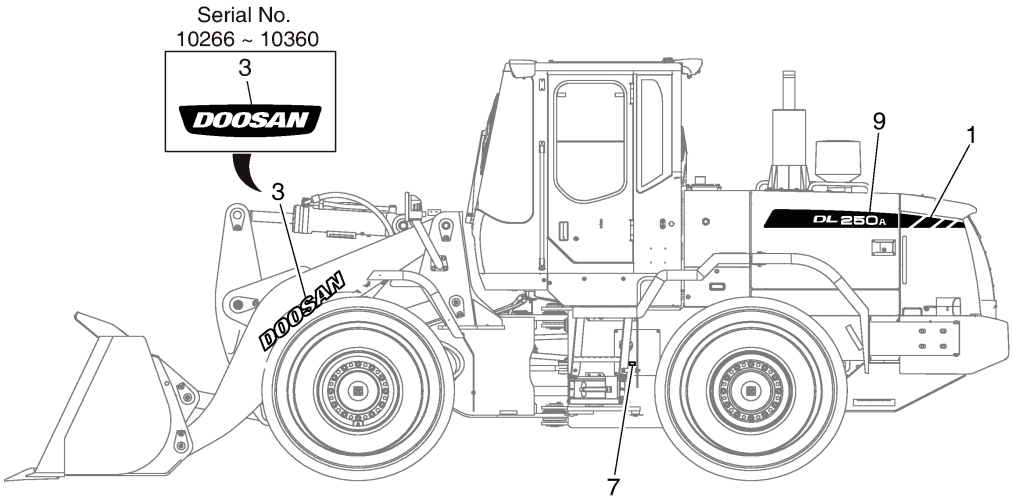

(ON THE ACCUMULATOR)

Fig. 4180 DECAL - SERIAL

Key No	Part No	Description	Qty	S.C	Serial No	ICA	Replacable	Qty
-	950209-02978	NAME PLATE ASSY	-	D				
1	950209-02977	PLATE,NAME	1					
2	2122-1002D2	RIVET	4					

Fig. 4180 DECAL - SERIAL

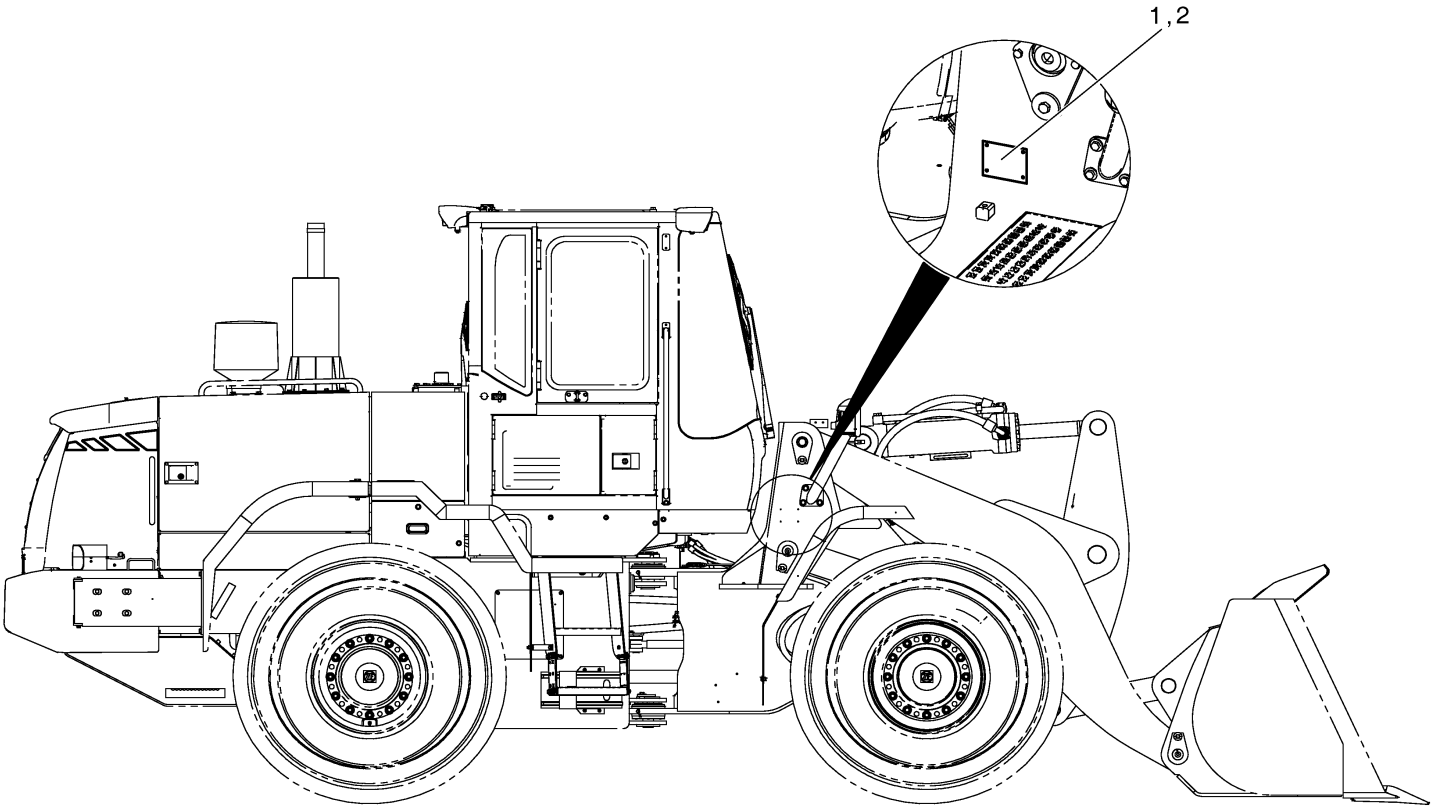

Fig. 4190 DECAL - DIESEL

Key No	Part No	Description	Qty	S.C	Serial No	ICA	Replacable	Qty
-	950205-02404	DECAL ASSY;DIESEL	-	D				
1	K1048962	PLATE;NAME	1					

Fig. 4190 DECAL - DIESEL

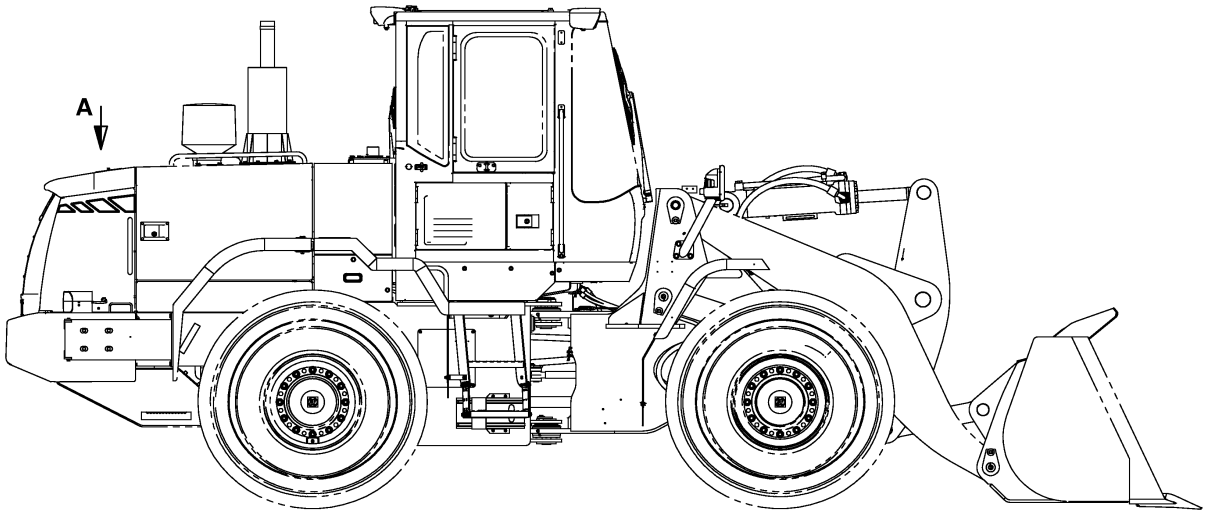

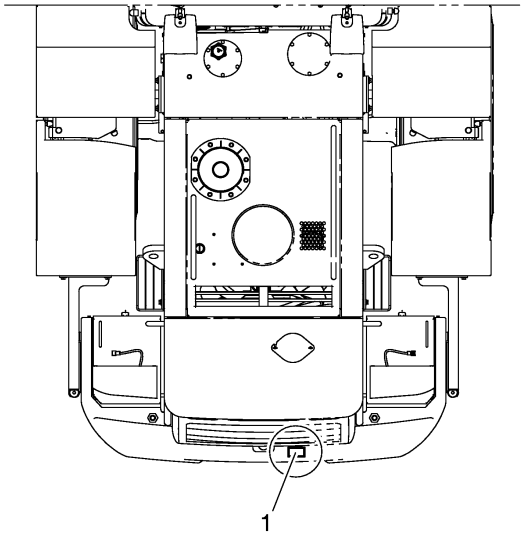

VIEW **A**

Fig. 4200 DECAL - LUBRICANT

Key No	Part No	Description	Qty	S.C	Serial No	ICA	Replacable	Qty
-	950209-03224	DECAL & NAME PLATE ASSY	-	D				
1	950205-02099	DECAL	1		10001~10066	I	950205-02099A	1
1	950205-02099A	DECAL;LUBRICATION	1		10067~10127	I	950205-02099B	1
1	950205-02099B	DECAL	1		10128~10202	I	950205-02099C	1
1	950205-02099C	DECAL;LUBRICATION	1		10203~			

Fig. 4200 DECAL - LUBRICANT

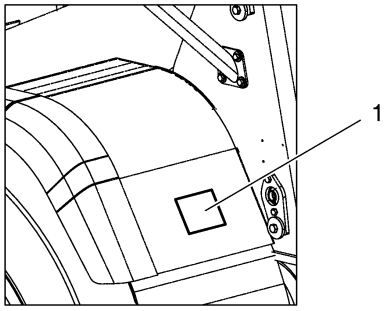

VIEW **A**

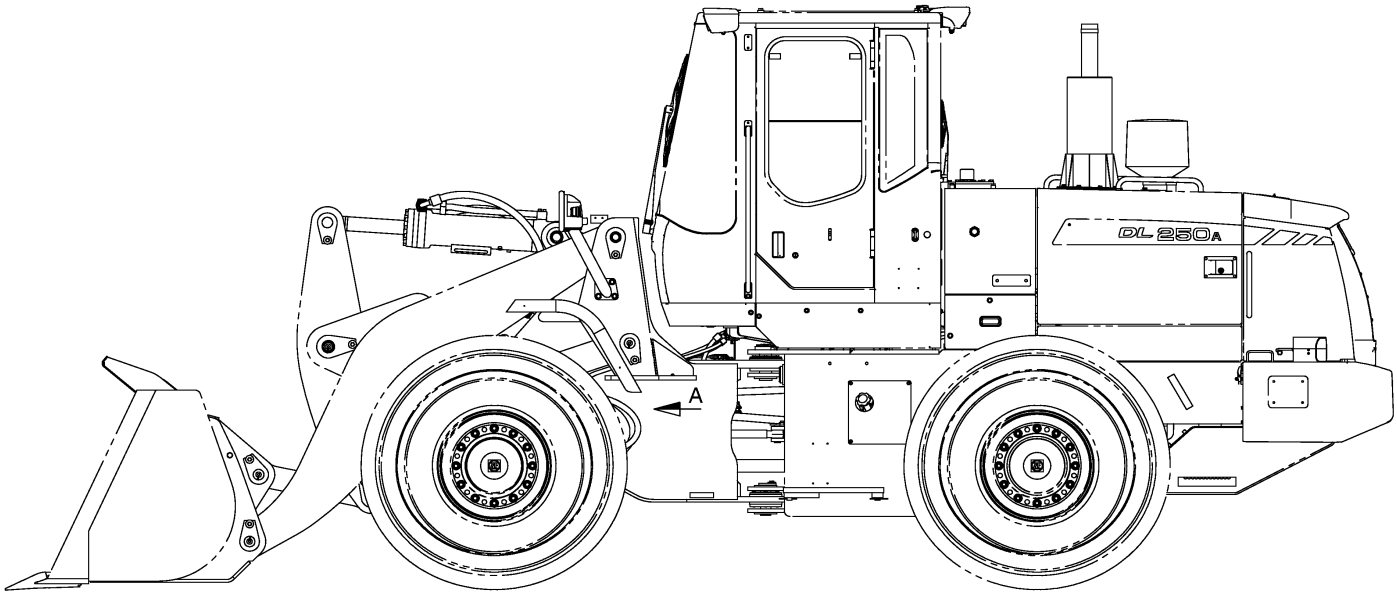

Fig. 4210 DECAL - SERIAL(RUSSIA)

Key No	Part No	Description	Qty	S.C	Serial No	ICA	Replacable	Qty
-	950209-03549	PLATE ASSY,NAME;RUSSIA	-	D				
1	950209-02979	PLATE,NAME	1					
2	2122-1002D2	RIVET	4					

Fig. 4210 DECAL - SERIAL(RUSSIA)

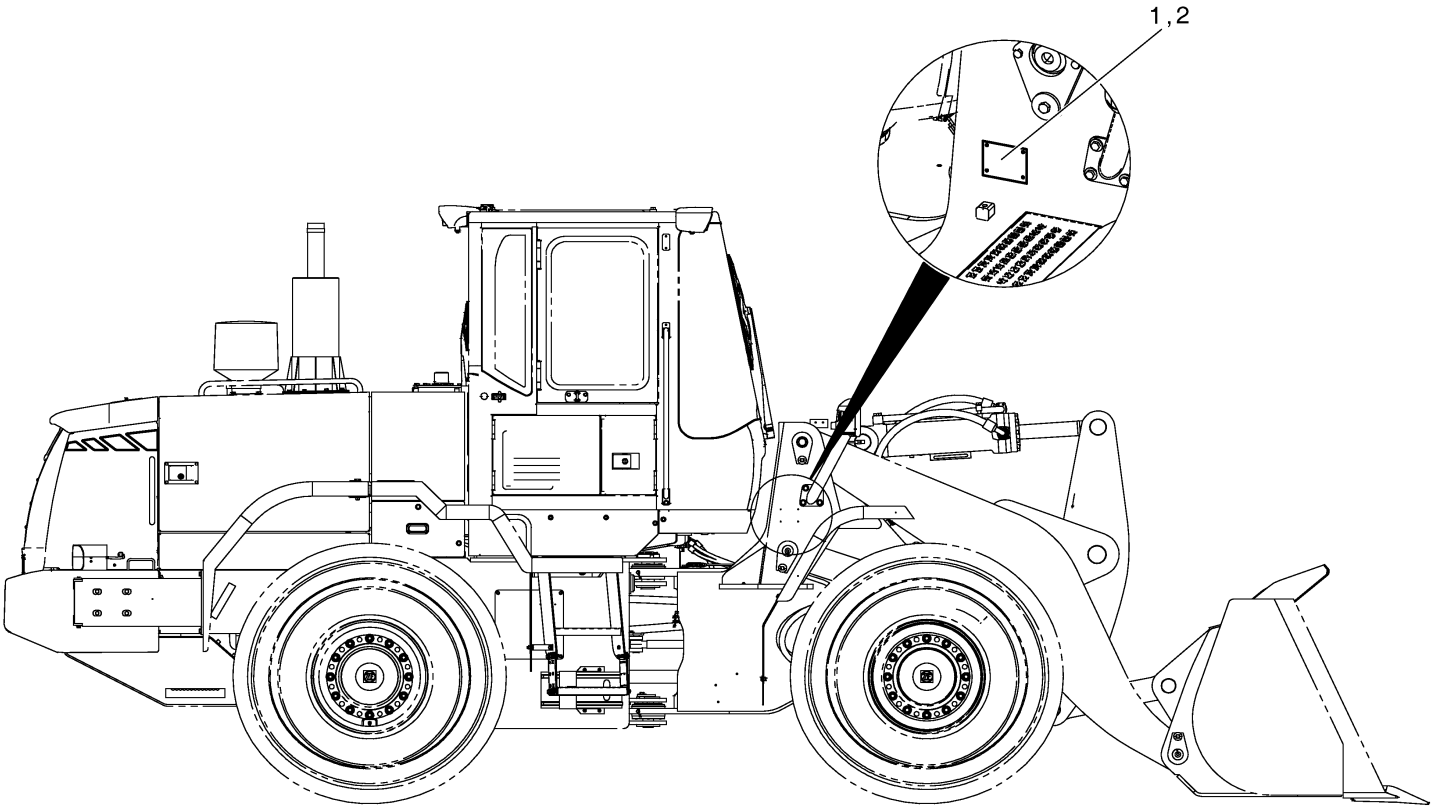

Fig. 4220 DECAL - LIFTING CAPA [10001

Key No	Part No	Description	Qty	S.C	Serial No	ICA	Replacable	Qty
-	950205-02604	DECAL ASSY;OPERATING LOAD	-	D				
1	950205-02605	DECAL;OPERATING LOAD	1					

Fig. 4220 DECAL - LIFTING CAPA [10001

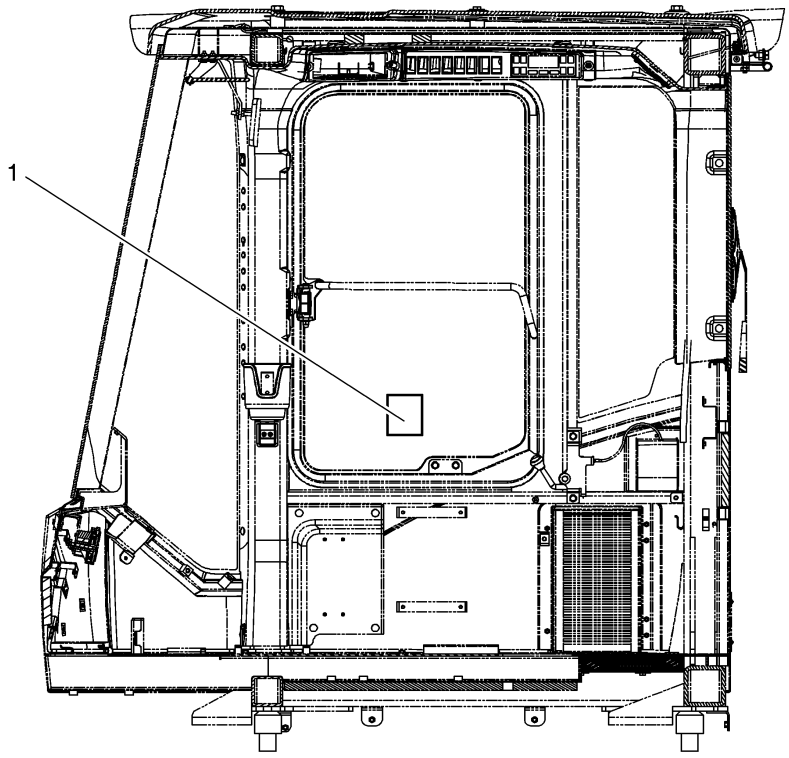

RIGHT SIDE VIEW OF CABIN INSIDE

Fig. 4230 DECAL - LONG BOOM

Key No	Part No	Description	Qty	S.C	Serial No	ICA	Replacable	Qty
-	K1048086	NAME PLATE;LONG BOOM	-	D				
1	K1040827	DECAL(HIGH LIFT)	2					

Fig. 4230 DECAL - LONG BOOM

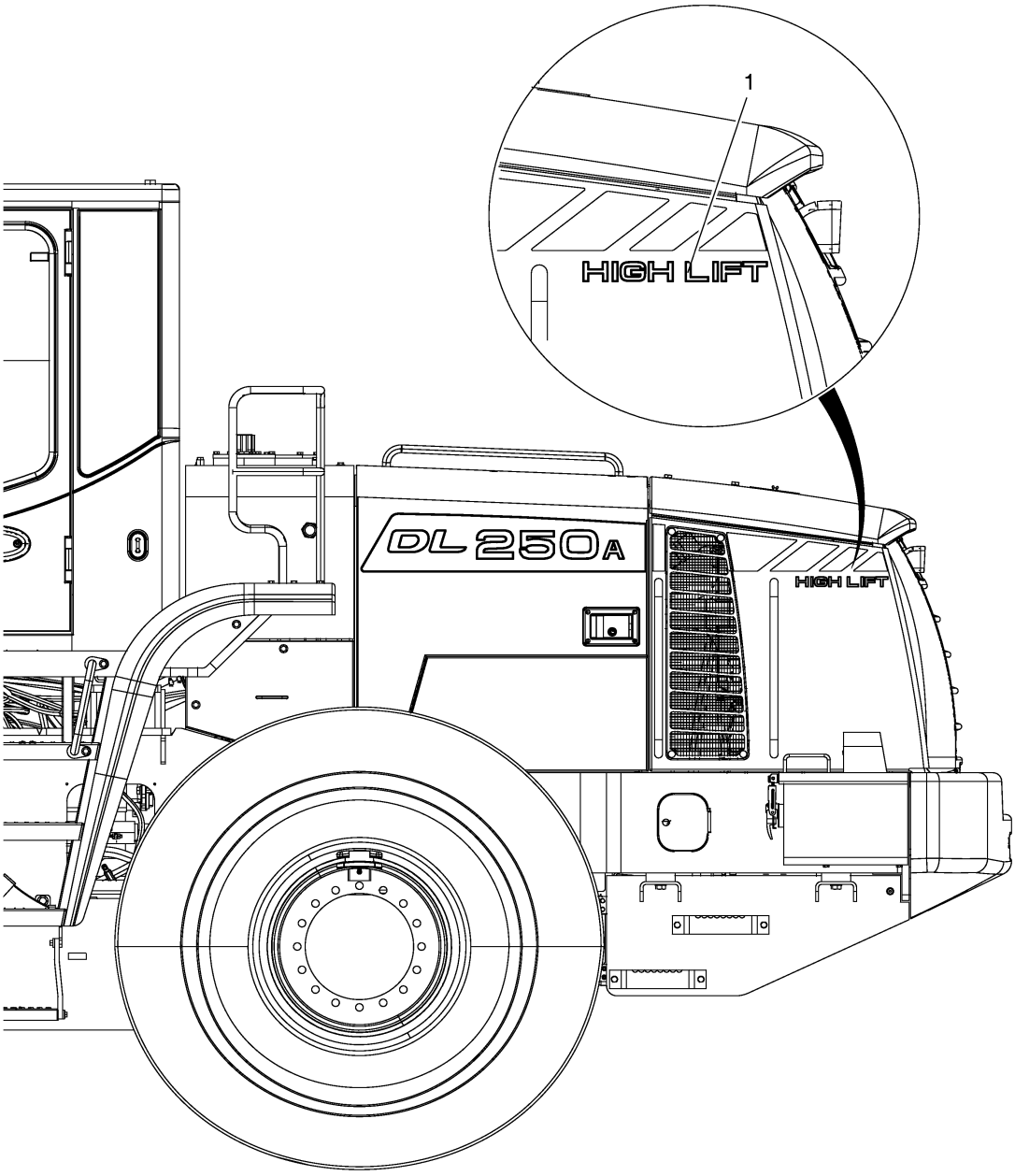

Fig. 4240 DECAL - SPEC(OPT) [10001 ~

Key No	Part No	Description	Qty	S.C	Serial No	ICA	Replacable	Qty
-	950209-04045	DECAL & NAME PLATE	-	D				
1	950205-03313	DECAL;HIGH LIFT	1		10001~10194	I	950205-03313A	1
1	950205-03313A	DECAL;HIGH LIFT	1		10195~			

Fig. 4240 DECAL - SPEC(OPT) [10001 ~

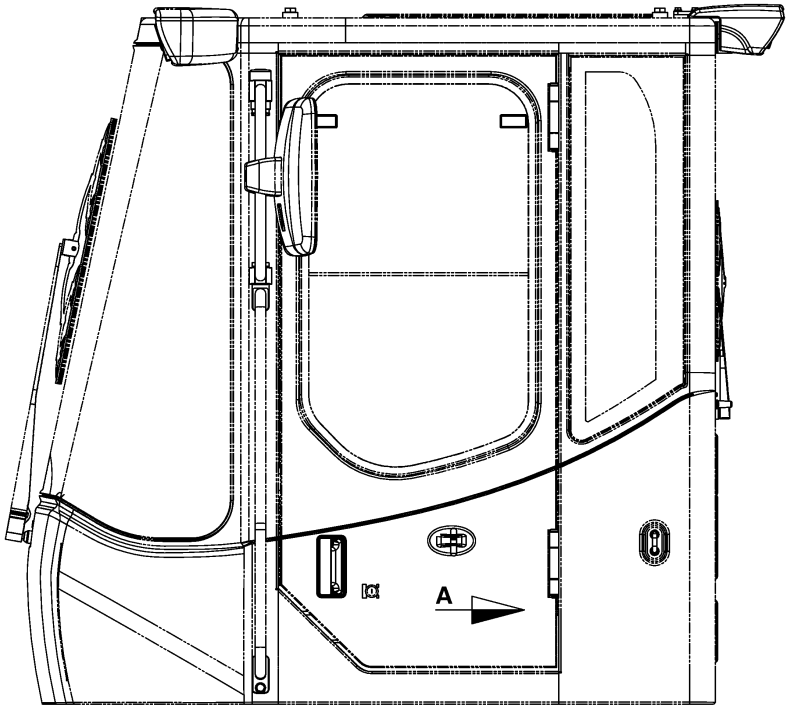

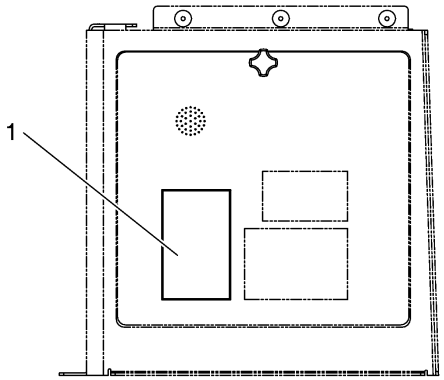

DETAIL **A**
ELECTRIC BOX

Fig. 4250 DECAL - SERIAL(SYRIA)

Key No	Part No	Description	Qty	S.C	Serial No	ICA	Replacable	Qty
-	950209-00454	NAME PLATE ASSY;SYRIA	-	D				
1	950205-00381A	DECAL	1					
2	2122-1002D2	RIVET	4					

Fig. 4250 DECAL - SERIAL(SYRIA)

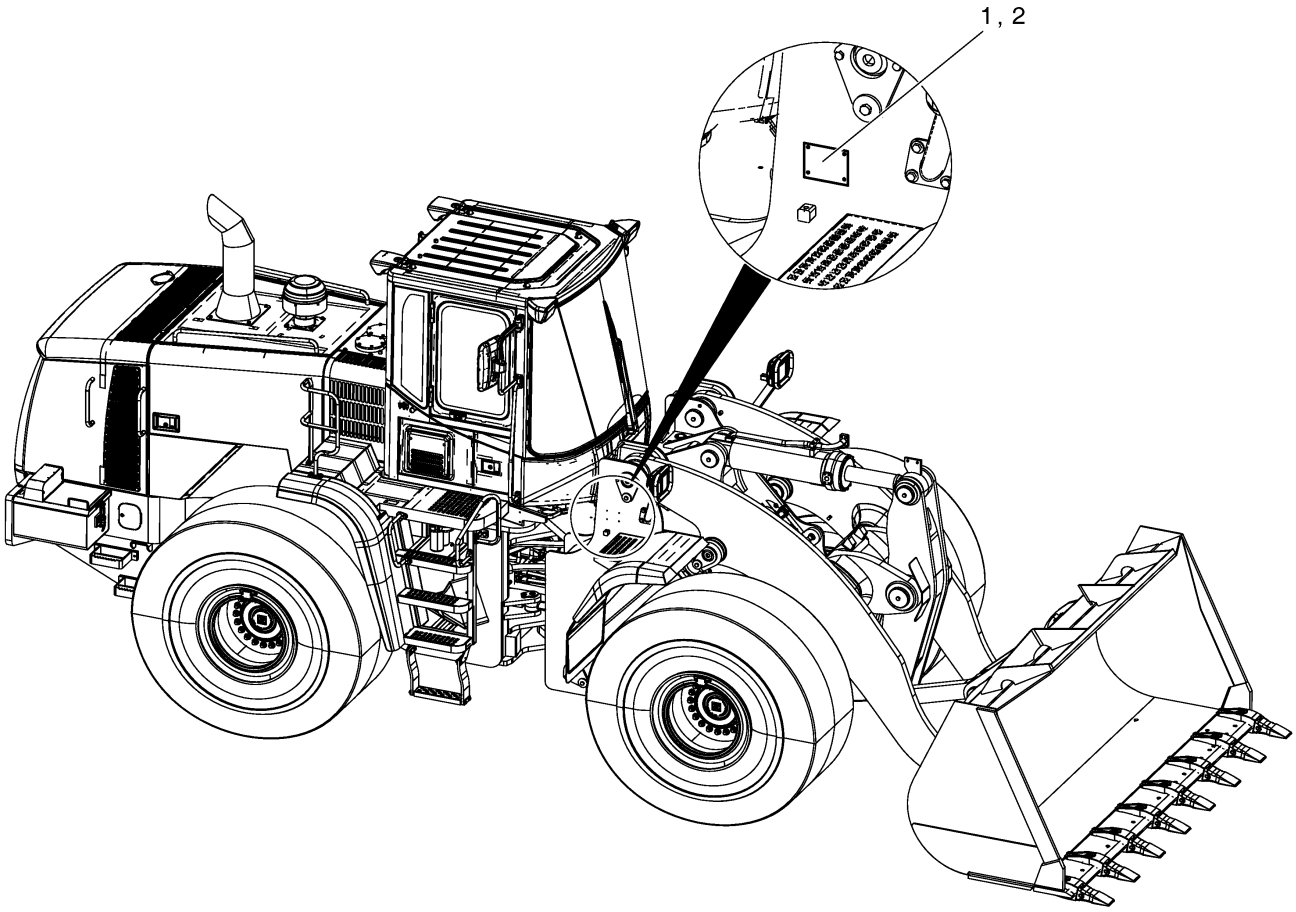

Fig. 4260 DECAL - LIFTING CAPA(LONG

Key No	Part No	Description	Qty	S.C	Serial No	ICA	Replacable	Qty
-	950205-03317	DECAL ASSY;OPERATING LOAD	-	D				
1	950205-03318	DECAL;OPERATING LOAD	1					

Fig. 4260 DECAL - LIFTING CAPA(LONG

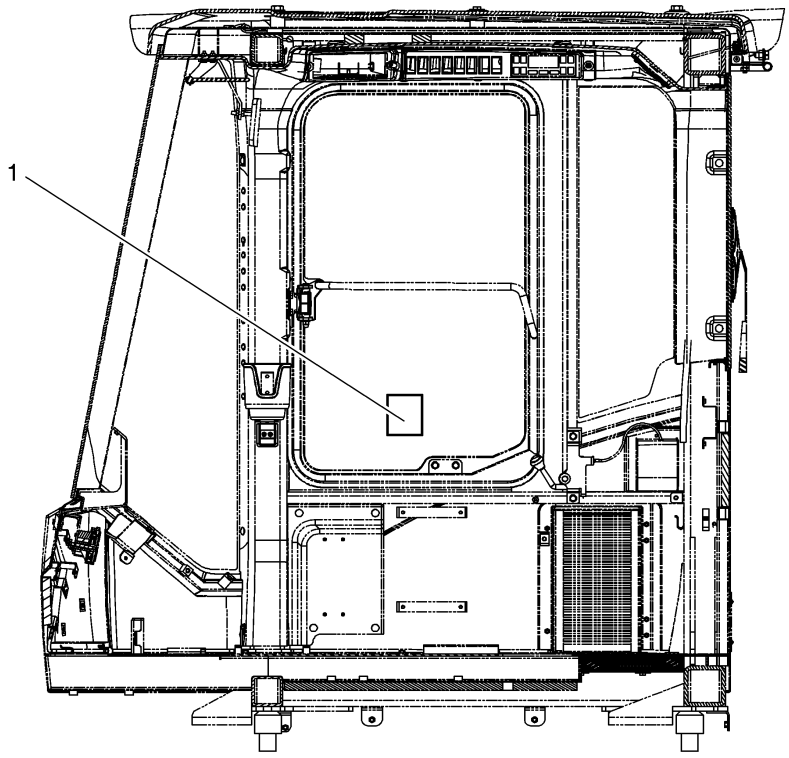

RIGHT SIDE VIEW OF CABIN INSIDE

Fig. 4270 DECAL - SERIAL(RUSSIA) [10272

Key No	Part No	Description	Qty	S.C	Serial No	ICA	Replacable	Qty
-	950205-05336	DECAL ASSY;PRODUCT NUMBER	-	D				
1	950205-05337	DECAL;PRODUCT NUMBER	1					
2	2122-1002D2	RIVET	4					

Fig. 4270 DECAL - SERIAL(RUSSIA) [10272

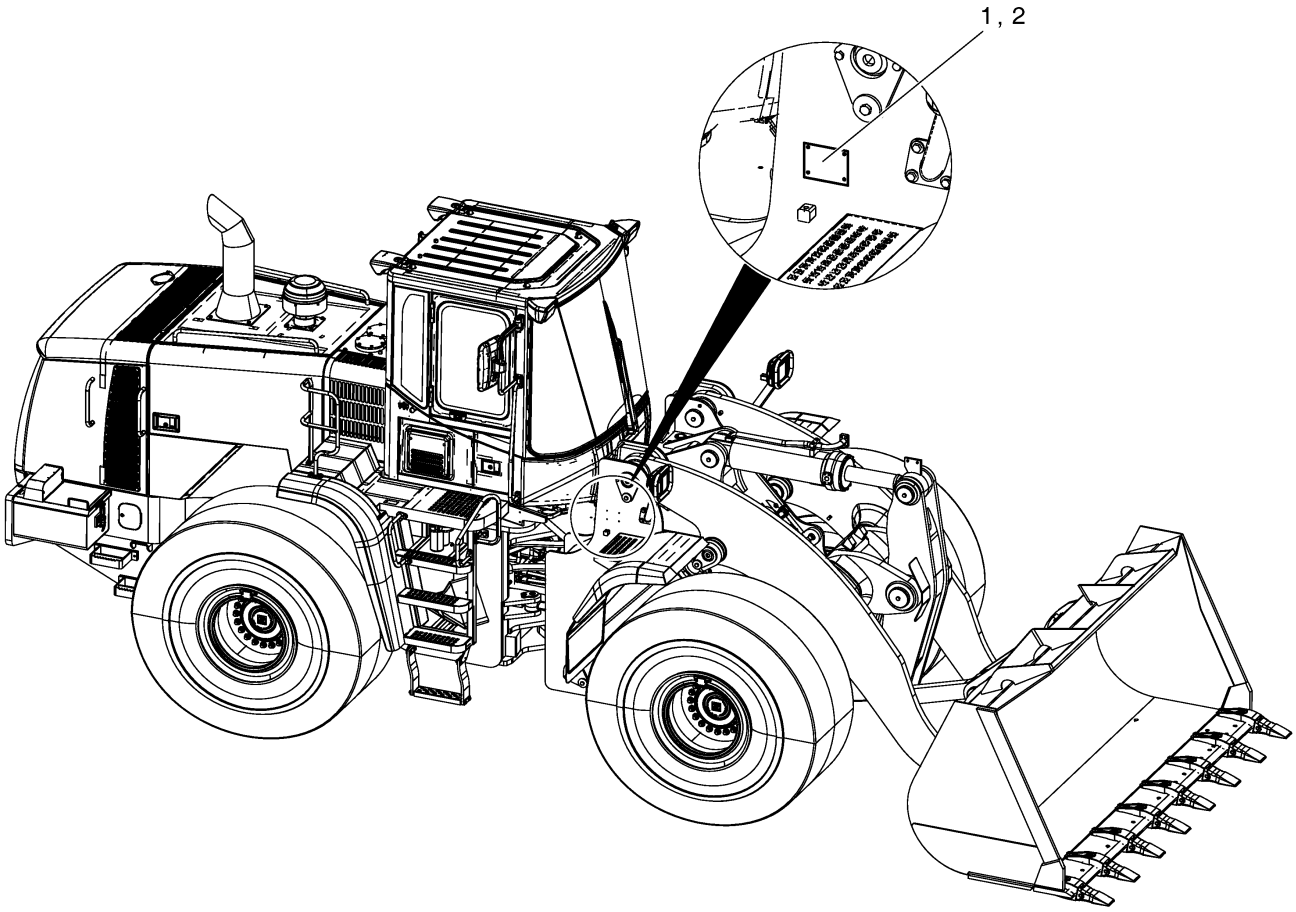

Fig. 4280 DECAL - WHEEL CHOCKS

Key No	Part No	Description	Qty	S.C	Serial No	ICA	Replacable	Qty
-	950205-05156	DECAL ASSY;WHEEL CHOCK	-	D				
1	950205-01691A	DECAL	2					

Fig. 4280 DECAL - WHEEL CHOCKS

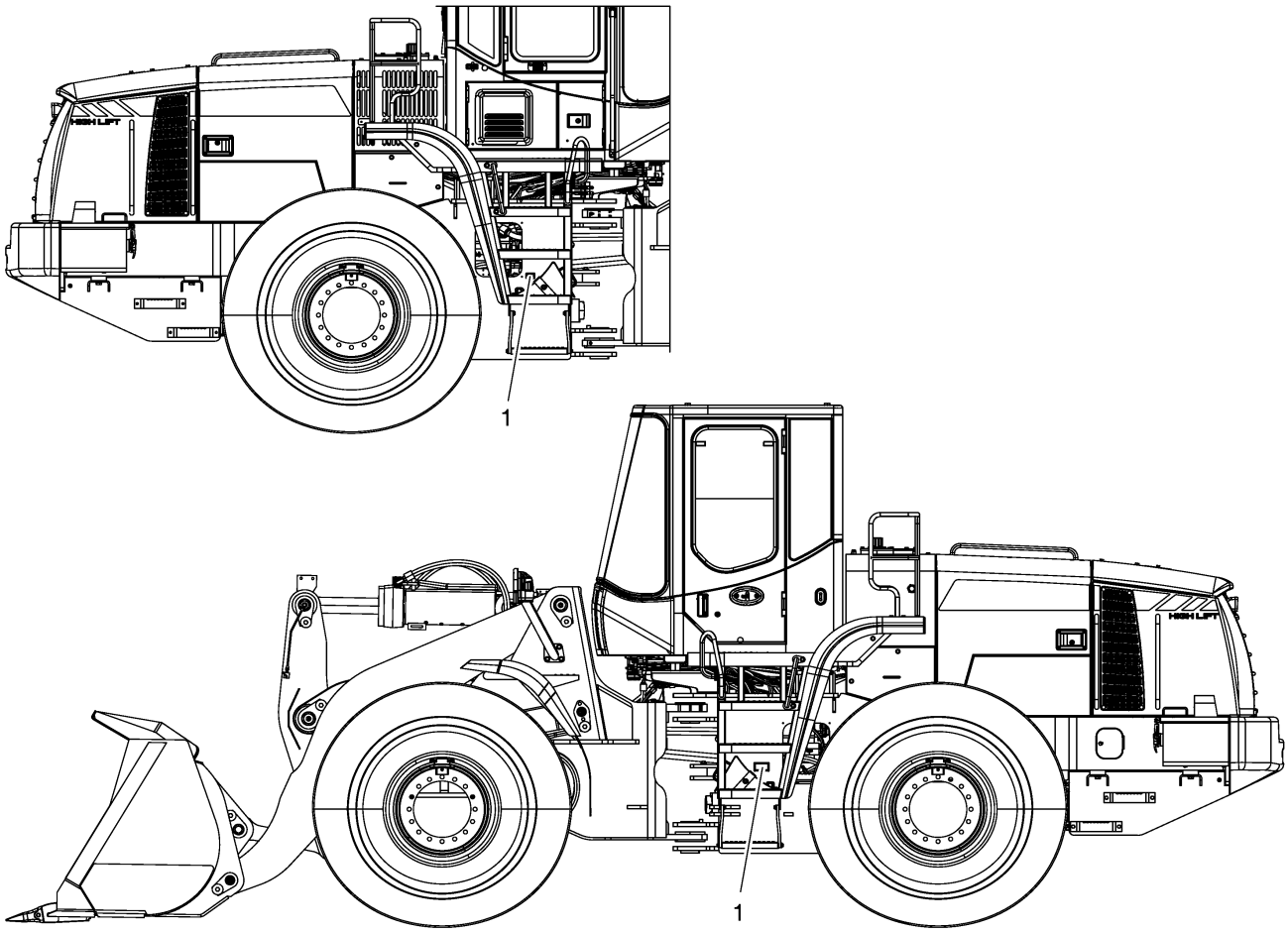

Fig. 4290 DECAL - EXTERIOR [10266 ~]

Key No	Part No	Description	Qty	S.C	Serial No	ICA	Replacable	Qty
-	950212-02477	LABEL ASSY	-	D				
1	950205-01690B	DECAL;T/M OIL LEVEL	1					
2	950205-01687A	DECAL	1					
3	950205-01692A	DECAL	1					
4	950205-03791	DECAL,ROTATING PART	1					
5	950205-03788	DECAL,FAN WARNING	1					
6	950205-03785	DECAL,BATTERY EXPLOSION	1					
7	950205-03781	DECAL,HOT RADIATOR	1					
8	950205-03815	DECAL,LIFT/TIE DOWN	1					
9	950205-03784	DECAL,BATTERY DISCONNECT	1					
10	190-00078	REFLECTOR	1					
11	S3450833	SCREW	1					
12	S5102203	WASHER	1					
13	950205-01694B	DECAL;TIRE PRESSURE	1					
14	950205-01688B	DECAL;SAFETY LOCK	1					
15	K1016409	PLATE;NAME (FUEL)	1					

Fig. 4290 DECAL - EXTERIOR [10266 ~]

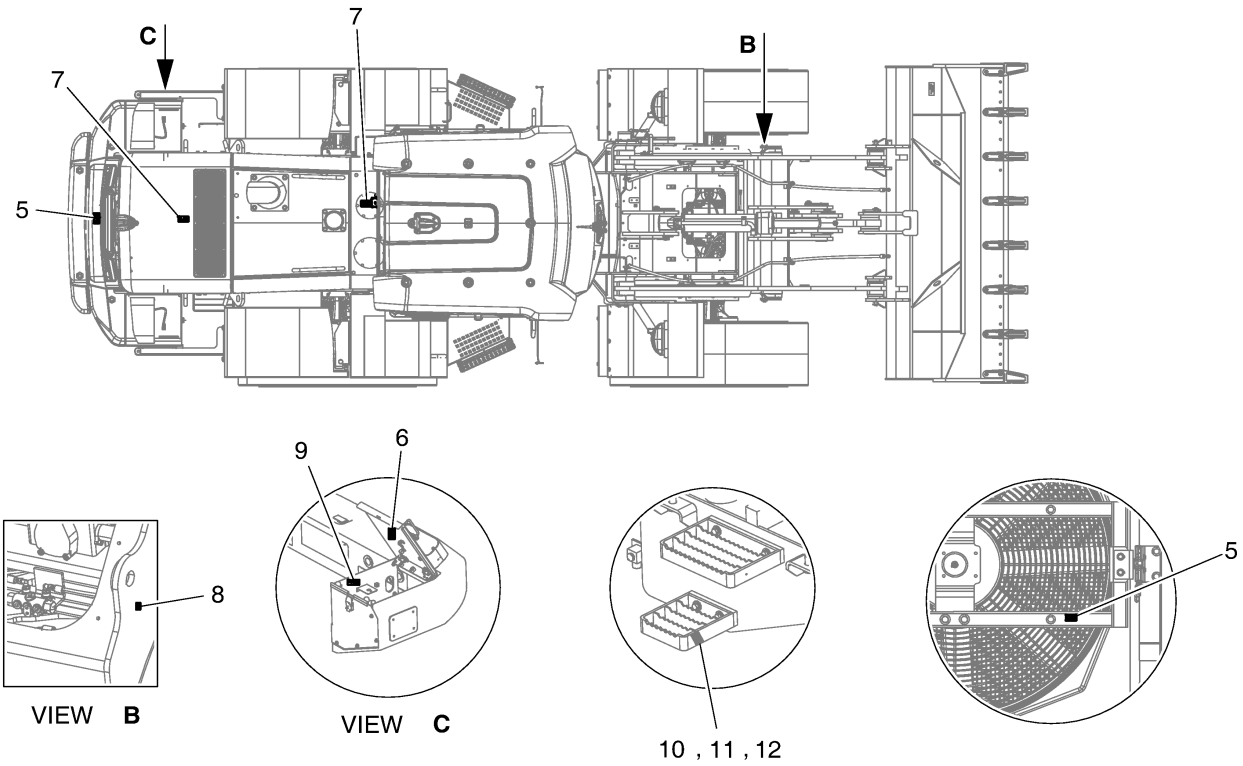

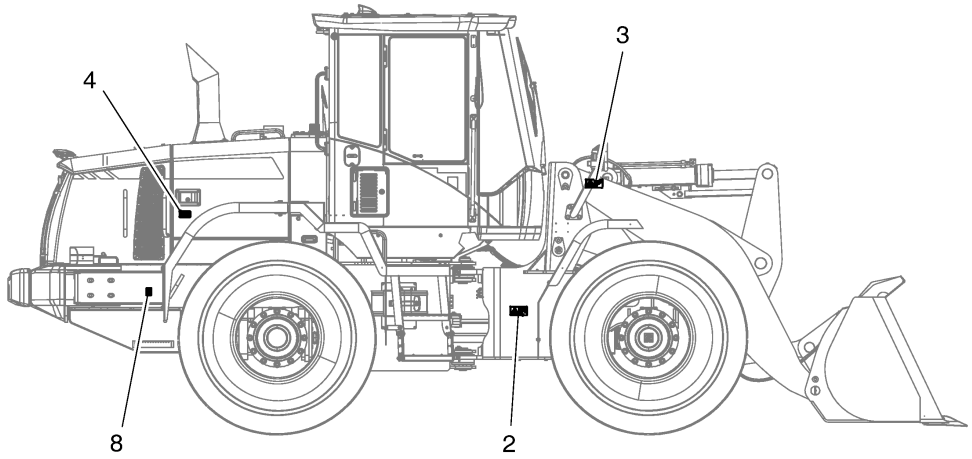

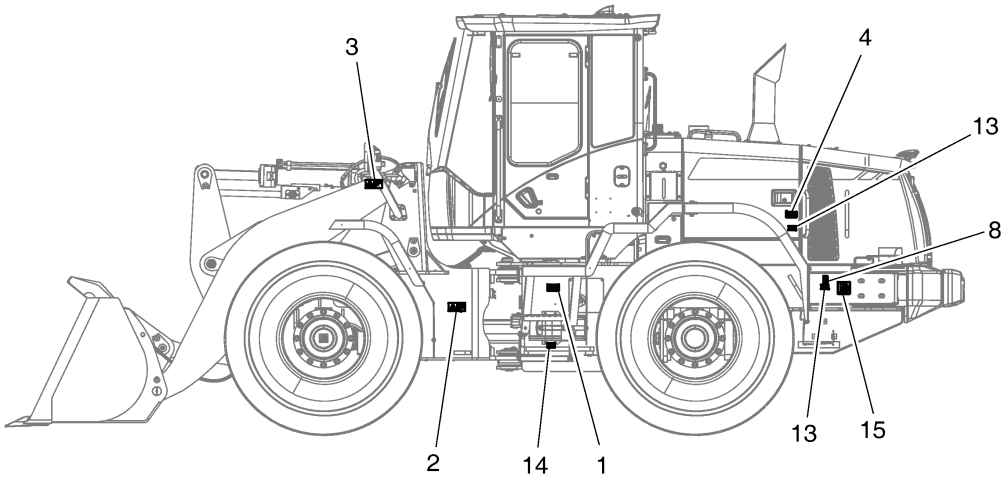

Fig. 5100 CONTROL VALVE PIPING - 3

Key No	Part No	Description	Qty	S.C	Serial No	ICA	Replacable	Qty
-	420212-06215	PIPING,FRONT	-	D				
1	K1003041A	CONTROL VALVE-3 SPOOL	1					
2	100201-00590	BLOCK,CONTACT	1					
3	100201-00589	BLOCK,CONTACT	1					
4	110958-01306	SUPPORT,CONTROL	1					
5	K1015615	BRACKET	1					
6	K1015616	BRACKET	1					
7	K1007132A	COVER;OPTION	1					
8	DS2045416	HOSE	1					
9	DS2045465	HOSE	1					
10	DS2045417	HOSE	1					
11	DS2045464	HOSE	1					
13	DS2045546	HOSE ASSY;(90-90)	1					
14	DS2045664	HOSE	1					
15	DS2043187	HOSE	1					
16	K1003310A	PIPE;BUCKET DUMP	1					
17	K1003311A	PIPE;BUCKET CROWD	1					
18	K1015566	PIPE	1					
19	K1015563	PIPE	1					
20	2181-1950D2	PLUG	1		10001~10312	Y	DS2901012	1
20	DS2901012	PLUG	1		10313~			
22	110951-00120	SPACER;MOUNTING	4					
23	124-00067	CLAMP;PIPE	8					
24	DS2873022	CLAMP;PIPE	4					
25	K1004056	CLAMP	4					
26	110406-00511	BRACKET;PIPE CLAMP	2					
27	2181-2157D5	FLANGE;COVER	2					
28	2181-9078	FLANGE	10					
29	2181-9079	FLANGE	16					
30	4215-1003D4	FLANGE	4					
31	S0560866	BOLT	2					
32	S0521566	BOLT	4					
33	S0561866	BOLT	5					
34	S0561666	BOLT	4					
35	S2212366	BOLT	48					
36	S2212466	BOLT	8					

Key No	Part No	Description	Qty	S.C	Serial No	ICA	Replacable	Qty
37	DS0025018	BOLT	4					
38	S2212266	BOLT	36					
39	DS0025017	BOLT	6		10001~10193			
39	DS0025013	BOLT	6		10194~			
40	S0562466	BOLT	2					
41	S0562766	BOLT	4					
42	120119-00007A	BOLT,U;3/4" PIPE	2					
43	S0558466	BOLT	4					
44	S4012733	NUT	6					
45	S4012633	NUT	4					
46	S5102703	WASHER	13					
47	2114-1058D46	WASHER	4					
48	S5102903	WASHER	4					
49	2114-1058D2	WAHSER	4					
50	S5102603	WASHER	8					
51	S5102803	WASHER	4					
52	S5010613	WASHER	4					
53	DS0401224	WASHER,PLAIN	4					
54	K1010378	RUBBER	4					
55	K1010377	RUBBER	4					
56	161-00281	RUBBER	2					
57	180308-00059	RUBBER,MOUNT;LOWER	4					
58	180308-00058	RUBBER,MOUNT;UPPER	4					
59	S8000141	O-RING	1					
60	2180-1026D23	O-RING	2					
61	2180-1026D19	O-RING	12					
62	2180-1026D2	O-RING	8					
63	S2215366	BOLT	4					
64	4215-1003D7	FLANGE	2					
65	110910-00037A	CAP	2					
66	430210-00113	COUPLING,SCREW	1		10001~10179	I	430210-00247	1
66	430210-00247	COUPLING,SCREW	1		10180~			
91	K1015544A	PIPE	1					
92	K1015559A	PIPE	1					
93	110910-00038A	CAP	3					

Fig. 5100 CONTROL VALVE PIPING - 3

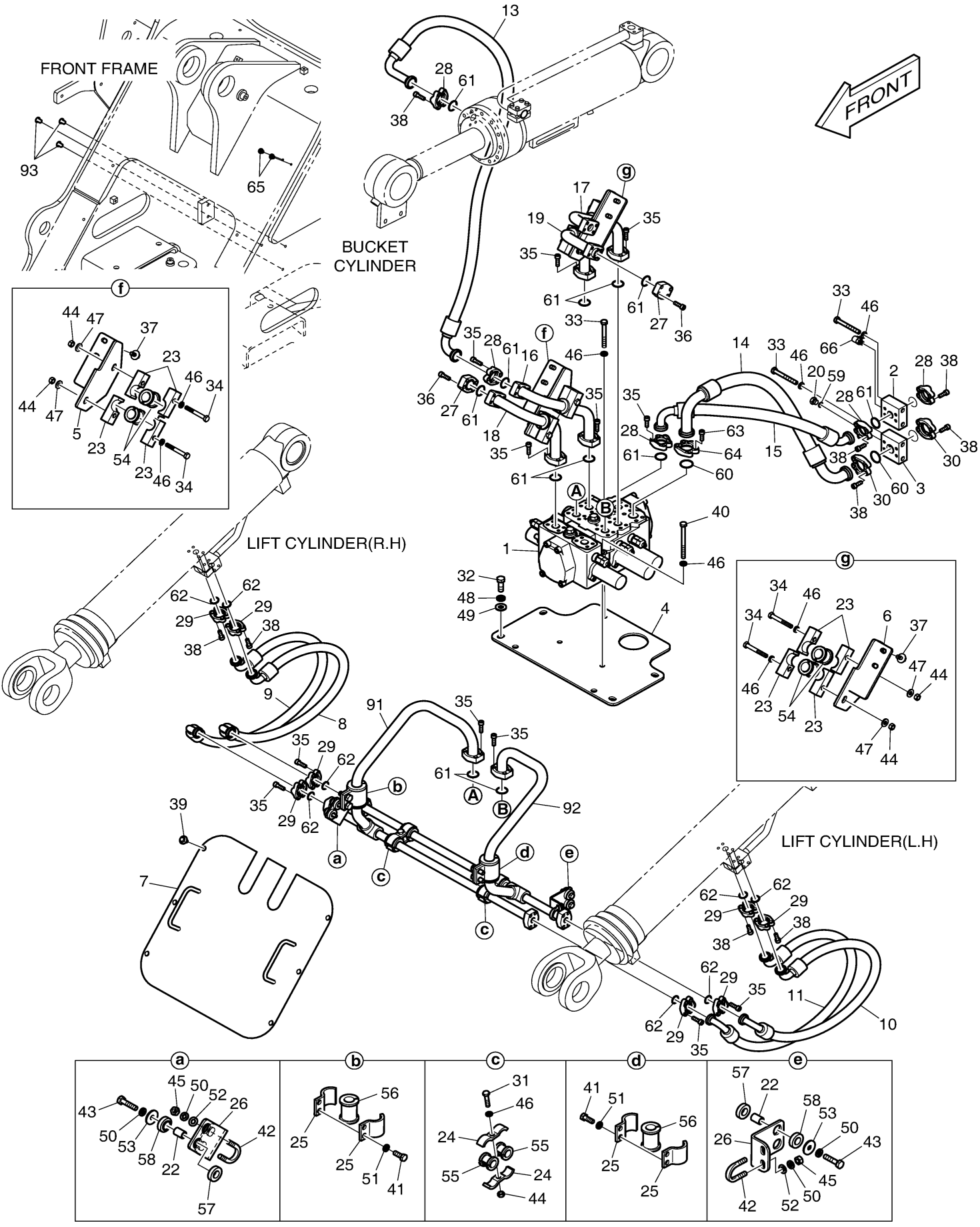

DOOSAN Doosan Infracore

Fig. 5110 PILOT PIPING - 3 SPOOL

Key No	Part No	Description	Qty	S.C	Serial No	ICA	Replacable	Qty
-	420212-06245	PIPING,PILOT	-	D				
1	430216-00174	JOINT SUB ASSY	1					
1-1	110406-01602	BRACKET	1					
1-2	DS2415002	ADAPTER	5					
1-3	DS2415008	ADAPTER	2					
1-4	DS0301032	NUT	5					
1-5	121-00010D5	NUT	2					
1-6	S8030061	O-RING	10					
1-7	S8030081	O-RING	4					
2	250201-00413	PLATE	1					
3	DS2021497	HOSE	1					
4	DS2021498	HOSE	1					
5	DS2020170	HOSE ASSY,HYDRAULIC	1					
6	DS2020146	HOSE	1					
7	DS2021499	HOSE	1					
8	DS2020147	HOSE	1					
9	2160-1004D57	GROMMET	1					
10	DS2415002	ADAPTER	2					
11	DS2232038	ADAPTER	6					
12	2181-4133D2	ADAPTER	1					
13	K1004689	SPACER;TUBE	2					
14	124-00208D6	CLIP	2					
15	124-00208D7	CLIP	2					
16	120203-00034	CLAMP	1		10001~10298	I	120203-00034A	1
16	120203-00034A	CLAMP	1		10299~			
17	S0557066	BOLT	2					
18	K1001029	BOLT	4					
19	DS0025021	BOLT	2					
20	DS0301032	NUT	2					
21	S5102503	WASHER	2					
22	S8030061	O-RING	11					
23	S8000141	O-RING	7					
51	410113-00017	VALVE ASSY,JOYSTICK	1		10001~10081			
51	410113-00156	VALVE ASSY,JOYSTICK	1		10082~10363	I	410113-00156A	1
51	410113-00156A	VALVE ASSY,JOYSTICK;5B	1		10364~			
52	DS2011059	HOSE 11/16"-16UN-2B-1600L	4					

Key No	Part No	Description	Qty	S.C	Serial No	ICA	Replacable	Qty
53	DS2012507	HOSE 11/16"-16UN-2B-1680L	1					
54	DS2012030	HOSE	1					
55	DS20131501	HOSE	1		10001~10081			
55	DS20111175	HOSE ASSY,HYDRAULIC	1		10082~			
56	DS2011510	HOSE	1					
57	K1010455	ADAPTER	3		10001~10081			
57	K1010455	ADAPTER	4		10082~			
58	K1044052	ADAPTER	5		10001~10081			
58	K1044052	ADAPTER	4		10082~			
59	S8030061	O-RING	8					

Fig. 5110 PILOT PIPING - 3 SPOOL

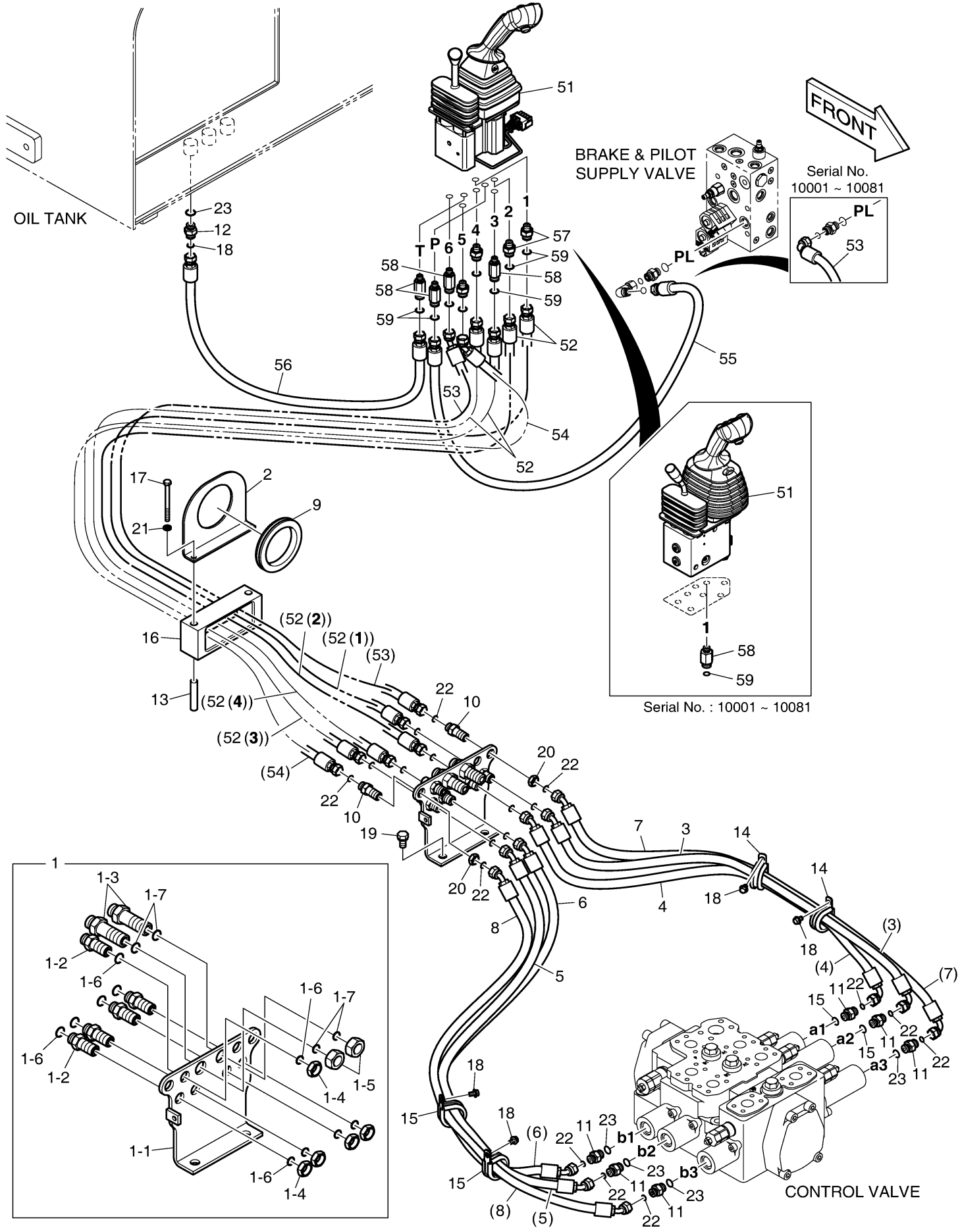

Fig. 5120 EMERGENCY STEERING

Key No	Part No	Description	Qty	S.C	Serial No	ICA	Replacable	Qty
-	420212-04726	PIPING,EMERGENCY STEER	-	D				
1	K1053898	PUMP ASSY,EMR STEERING	1					
1-1	300506-00035	MOTOR,DC	1					
1-2	400910-00061	PUMP,GEAR	1					
1-3	301412-00042	SWITCH ASSY;SOLENOID	1					
1-4	410127-00056	VALVE,RELIEF	1					
2	K1010905	BRACKET	1					
3	DS2023656	HOSE	1					
4	DS2012771	HOSE ASSY,HYDRAULIC	1					
5	DS2469003	ADAPTER	1					
6	2181-2294D5	ELBOW	1					
7	2181-2627D1	ADAPTER	1		10001~10312	Y	DS2404001	1
7	DS2404001	ADAPTER	1		10313~			
8	DS2242021	ADAPTER	1					
9	430225-00077	TEE,SHUTTLE VALVE	1					
10	430225-00099	TEE;SOCKET	1					
11	K1018277	SWITCH;PRESSURE 10bar	1					
12	2549-1135D11	SWITCH;PRESSURE 3bar	1		10001~10363	Y	301413-00256	1
12	301413-00256	SWITCH,PRESSURE	1		10364~			
13	401106-00180	SEAL,OIL	1					
14	S0515266	BOLT	4					
15	S0512266	BOLT	4					
16	S4012633	NUT	4					
17	S5102703	WASHER	4					
18	S5010713	WASHER	4					
19	S5102603	WASHER	4					
20	S8030121	O-RING	3					
21	S8000231	O-RING	2					
22	S8030081	O-RING	3					
23	S8040101	O-RING	1					
24	S8040121	O-RING	1					
25	S8000091	O-RING	1					

Fig. 5120 EMERGENCY STEERING

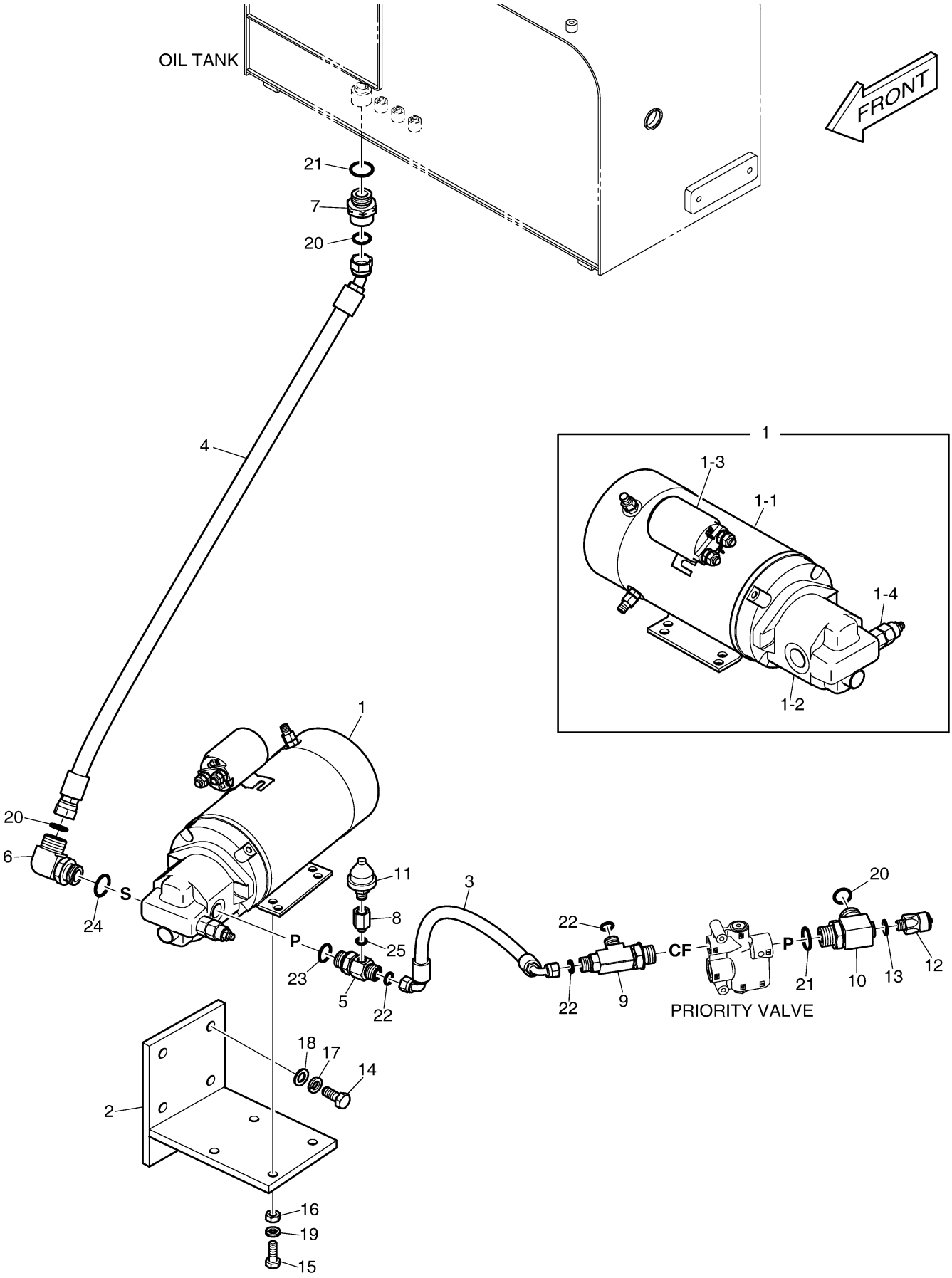

Fig. 5130 EMERGENCY STEERING -

Key No	Part No	Description	Qty	S.C	Serial No	ICA	Replacable	Qty
-	190202-00066	STEERING ASSY,EMERGENCY	-	D				
1	2553-1275D91	CABLE;EMER STEERING	1					
2	2553-1275D32	CABLE;BATT-BATT RELAY	1					
3	S0511653	BOLT	1		10001~10310			
3	120106-00701	BOLT	1		10311~			
4	S5102603	WASHER	1		10001~10310			
5	S5010613	WASHER	1		10001~10310			
6	2530-1400	HARNESS;PRESS SWITCH	1					
8	530-00067	HARNESS	1					
9	124-00208D3	CLIP	5		10001~10310			
9	120402-00439	CLIP	5		10311~			
10	K1001029	BOLT	5		10001~10066			
10	K1001029	BOLT	4		10067~10310			
10	120106-00596	BOLT	4		10311~			
61	2549-9110	SWITCH;WASHER	1		10001~10193			
61	301423-00052	SWITCH,ROCKER	1		10194~			
61A	K9000353	LAMP;PILOT	1		10001~10193			
62	2190-2036D21	INSERT;EMG STEERING	1					
63	537-00039B	TIMER;EMR STEERING	1					
64	S3450943	SCREW	2					
65	S5102303	WASHER	2					

Fig. 5130 EMERGENCY STEERING -

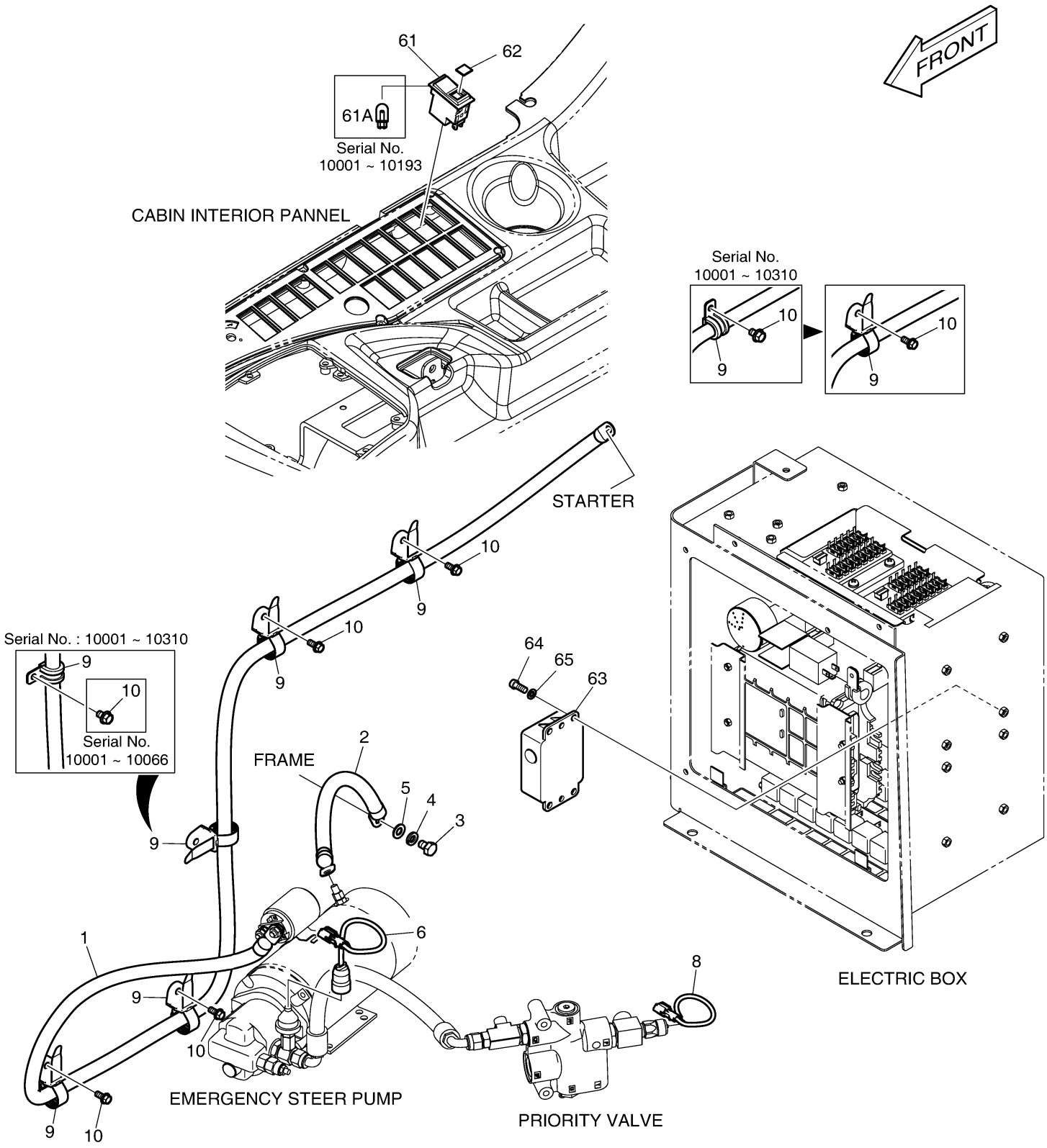

Fig. 5140 LOAD ISOLATION SYSTEM

Key No	Part No	Description	Qty	S.C	Serial No	ICA	Replacable	Qty
-	420212-06249	PIPING,LIS	-	D				
1	410133-00001A	VALVE,SHOCKLESS	1					
2	K1015422	ACCUMULATOR	1					
3	110406-01457	BRACKET;LIS	2					
4	DS2026330	HOSE	1					
5	DS2026331	HOSE	1					
6	DS2013550	HOSE	1					
7	DS2023659	HOSE	1					
8	K1015620A	PIPE	1					
9	K1015624A	PIPE	1					
10	DS2232051	ADAPTER	2					
11	DS2304070	ELBOW	1					
12	2181-4133D6	ADAPTER	1					
13	DS2232101	ADAPTER	2					
14	2181-1950D6	PLUG	1		10001~10312	Y	DS2901019	1
14	DS2901019	PLUG	1		10313~			
15	124-00208D5	CLIP	1		10001~10081			
16	2181-9078	FLANGE	4					
17	DS0025033	BOLT	3		10001~10081			
17	DS0025033	BOLT	4		10082~			
18	S2212266	BOLT	8					
19	DS0025017	BOLT	4					
20	DS0025039	BOLT	1		10001~10081			
21	S0560266	BOLT	3					
22	2121-1305	NUT	1		10001~10081			
23	S5102603	WASHER	3					
24	DS0401234	WASHER	3					
25	2180-1026D19	O-RING	2					
26	S8030161	O-RING	6					
27	S8040161	O-RING	3					
28	S8000291	O-RING	1					
29	S8040201	O-RING	2					
30	S8040061	O-RING	1					

Fig. 5140 LOAD ISOLATION SYSTEM

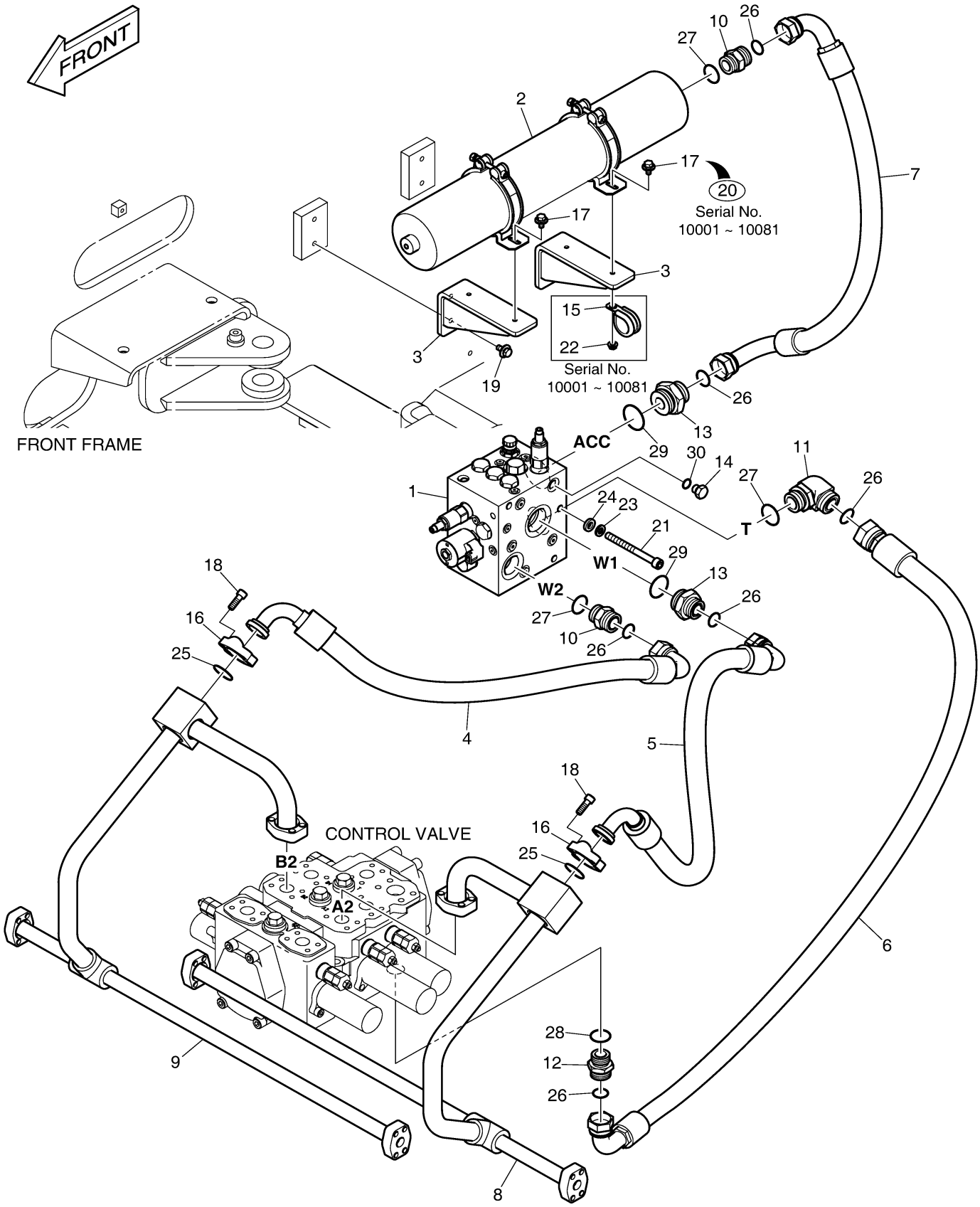

Fig. 5150 LIS SWITCH

Key No	Part No	Description	Qty	S.C	Serial No	ICA	Replacable	Qty
-	300619-01436	ELECTRIC ASSY;LIS	-	D				
1	310207-01688A	HARNESS,SOLENOID VALVE	1					
2	124-00208D2	CLAMP	3		10001~10310			
2	120402-00440	CLIP	3		10311~			
3	K1001029	BOLT	3		10001~10310			
3	120106-00596	BOLT	3		10311~			
11	K1045522	SWITCH;ROCKER	1		10001~10193			
11	301423-00059	SWITCH,ROCKER	1		10194~			
11A	K9000353	LAMP;PILOT	1		10001~10193			
12	2190-2036D3	INSERT;LIS	1					

Fig. 5150 LIS SWITCH

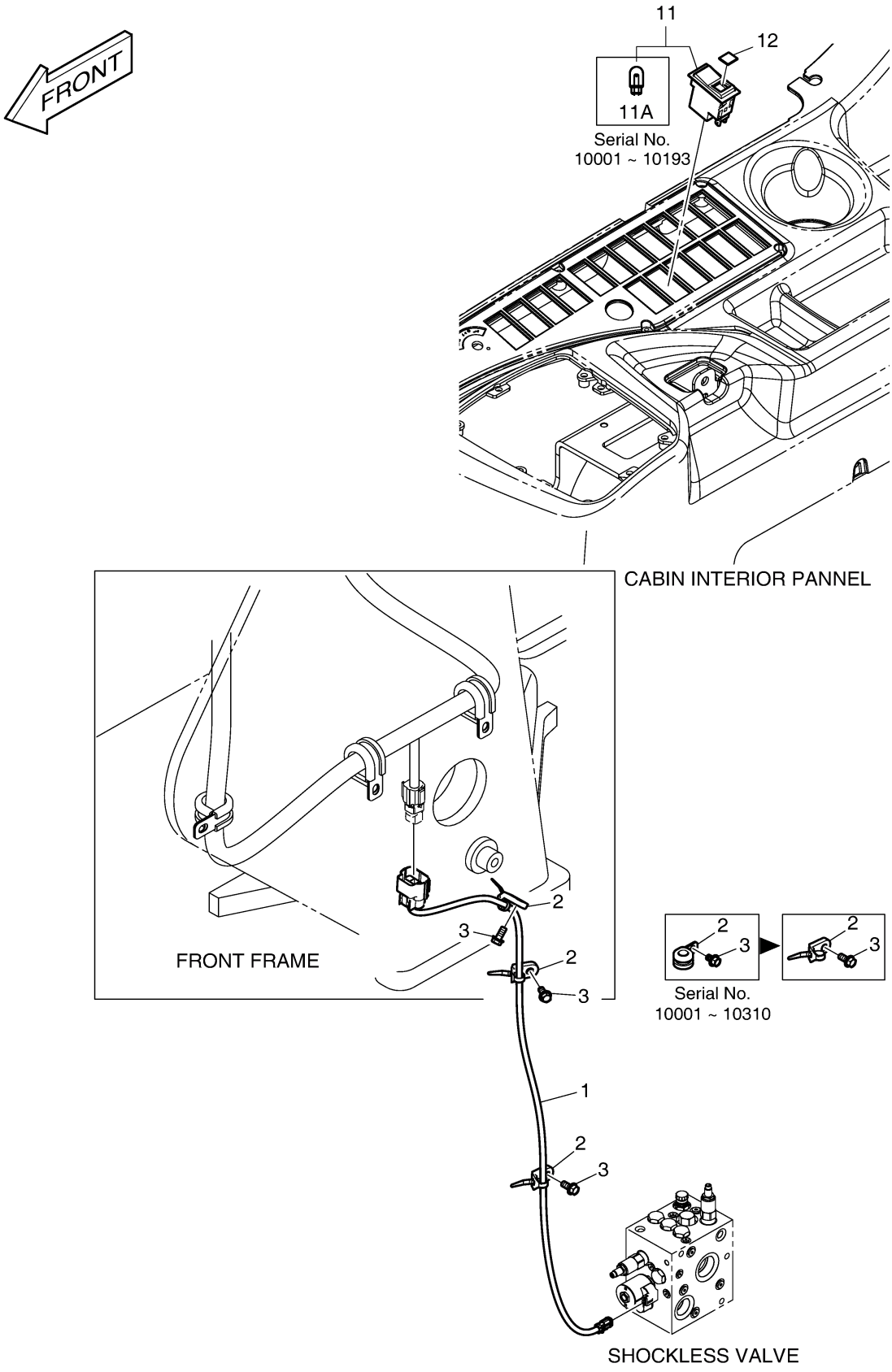

Fig. 5160 FENDER & LADDER - FULL

Key No	Part No	Description	Qty	S.C	Serial No	ICA	Replacable	Qty
-	180307-00320	FENDER ASSY;FULL	-	D				
1	180307-00326A	FENDER ASSY,REAR;(L.H)	1		10001~10056	I	180307-00326B	1
1	180307-00326B	FENDER ASSY,REAR;(L.H)	1		10057~			
1-1	180307-00323A	FENDER,REAR;(L.H)	1		10001~10056	I	180307-00323B	1
1-1	180307-00323B	FENDER,REAR;(L.H)	1		10057~			
1-2	110932-00077	LADDER;(L.H)	1					
1-3	110932-00035A	LADDER	1					
1-4	110926-00004	HANGER;STEP	2					
1-5	110932-00001	RUNG,LADDER	1					
1-6	250201-00003	PLATE	4					
1-7	DS0025030	BOLT	8					
1-8	DS0025029	BOLT	3					
1-9	S0521466	BOLT	4					
1-10	2114-1058D2	WAHSER	4					
1-11	180308-00198	RUBBER	1					
1-12	250201-00874	PLATE	1					
1-13	DS0025023	BOLT	3					
1-14	250201-00919	PLATE;LADDER	1					
1-15	110910-00038A	CAP	1					
2	180307-00327A	FENDER ASSY,REAR;(R.H)	1		10001~10056	I	180307-00327B	1
2	180307-00327B	FENDER ASSY,REAR;(R.H)	1		10057~			
2-1	180307-00328A	FENDER,REAR;(R.H)	1		10001~10056	I	180307-00328B	1
2-1	180307-00328B	FENDER,REAR;(R.H)	1		10057~			
2-2	110932-00079	LADDER	1					
2-3	110932-00035A	LADDER	1					
2-4	110926-00004	HANGER;STEP	2					
2-5	110932-00001	RUNG,LADDER	1					
2-6	250201-00003	PLATE	4					
2-7	DS0025030	BOLT	8					
2-8	DS0025029	BOLT	3					
2-9	S0521466	BOLT	4					
2-10	2114-1058D2	WAHSER	4					
2-11	180308-00198	RUBBER	1					
2-12	250201-00874	PLATE	1					
2-13	DS0025023	BOLT	3					
2-14	250201-00919	PLATE;LADDER	1					

Key No	Part No	Description	Qty	S.C	Serial No	ICA	Replacable	Qty
2-15	110910-00038A	CAP	1					
3	S0521466	BOLT	4					
4	2114-1058D2	WAHSER	8					
5	S0521266	BOLT	4					
6	DS0025014	BOLT	10					
7	180308-00190	RUBBER	2					
8	250201-00875	PLATE	2					
9	180307-00329B	FENDER,FULL;(L.H)	1		10001~10056			
9	180307-00329C	FENDER,FULL;(L.H)	1		10057~			
10	180307-00330B	FENDER,FULL;(R.H)	1		10001~10056			
10	180307-00330C	FENDER,FULL;(R.H)	1		10057~			
11	110406-01096B	BRACKET(L.H)	1					
12	110406-01097B	BRACKET(R.H)	1					
13	110927-00132A	HINGE ASSY;(L.H)	1		10001~10056			
13	110927-00132B	HINGE ASSY(L.H)	1		10057~			
14	110927-00133A	HINGE ASSY;(R.H)	1		10001~10056			
14	110927-00133B	HINGE ASSY(R.H)	1		10057~			
15	DS0025025	BOLT	4					
16	161-00195	STOPPER	2					
17	S4012633	NUT	2					
18	S5102603	WASHER	2					
19	161-00152	RUBBER;ROLLER	2					
20	S6500200	RING	2					
21	123-00262	PIN	2					
22	S4012933	NUT	2					
23	S5102903	WASHER	2					
24	S0515266	BOLT	16					
25	K1011630	STAY	2					
26	S5735591	PIN;SPLIT	2					
27	2161-2179	STOPPER	2					
28	110933-00013	LATCH	1					
29	110933-00010	LATCH	1					
30	101583-00048	STRIKER	2					
31	S5102303	WASHER	4					
32	2114-1898D5	WASHER	4					
33	S5011013	WASHER	2					
34	S0504866	BOLT	4					
35	4114-4078A	WASHER	8					

Key No	Part No	Description	Qty	S.C	Serial No	ICA	Replacable	Qty
36	2114-1058D30	WASHER	10					
37	S4012733	NUT	8					
38	S5102703	WASHER	8					
39	K1046074	CHOCK;WHEEL	2		10001~10265			
40	K1046075	CASE;WHEEL CHOCK	2		10001~10265			
41	S2209066	BOLT	8		10001~10265			
42	S5010513	WASHER	8		10001~10265			
43	110910-00037A	CAP	4					
44	110910-00077	CAP	2					
45	180102-00496	FOAM	2					
46	114-00594A	SPACER	4					
47	110947-00169	SHIM	2					
48	S0556266	BOLT	4					
49	2114-1058D29	WASHER	4					
50	250201-01412	PLATE;LATCH	1					
51	250201-01411	PLATE;LATCH	1					
52	160-00020	CAP	2					
71	110910-00037A	CAP	8		10266~			

Fig. 5160 FENDER & LADDER - FULL

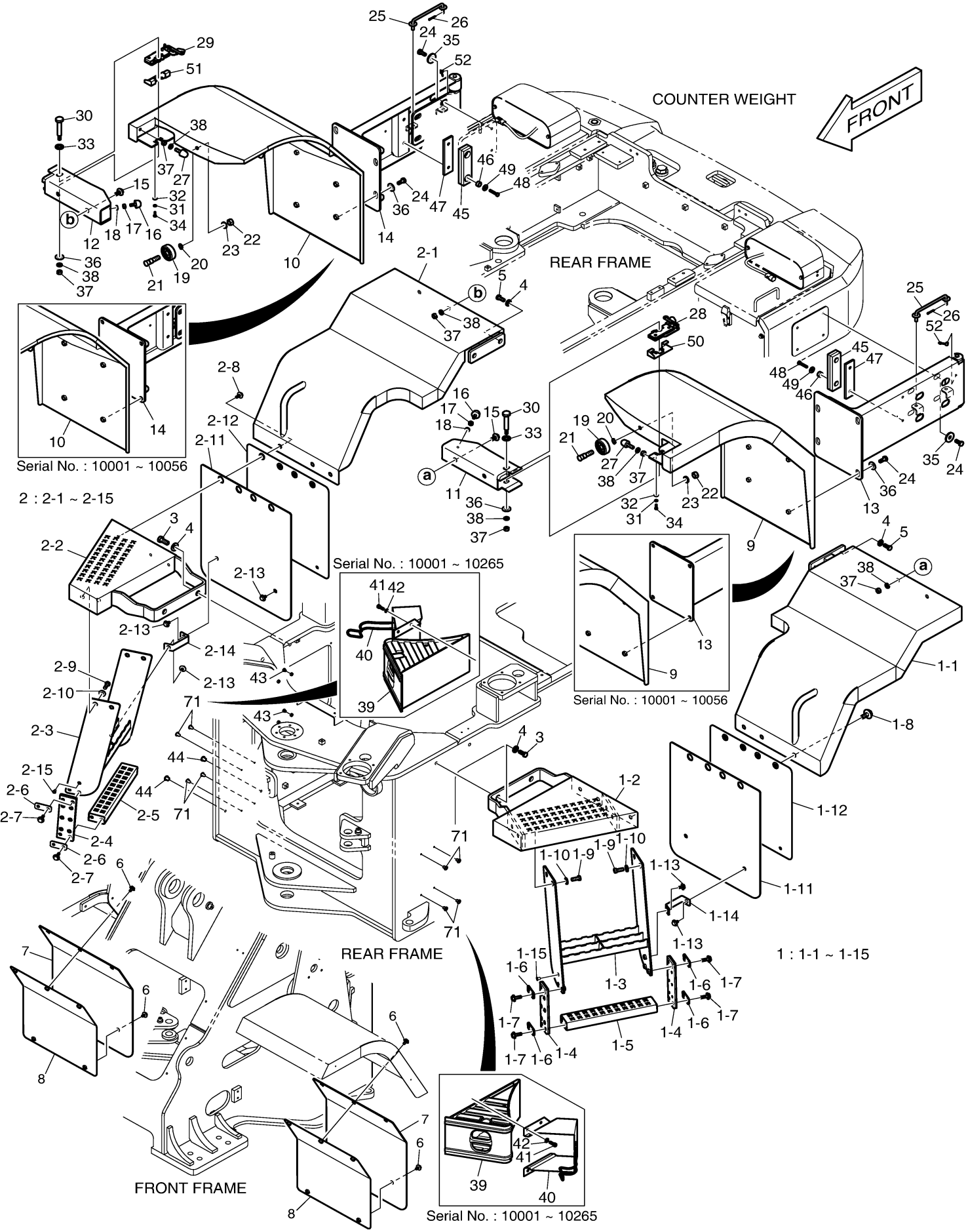

DOOSAN Doosan Infracore

Fig. 5170 ALTENATOR - 80A

Key No	Part No	Description	Qty	S.C	Serial No	ICA	Replacable	Qty
-	300619-01455	ALTERNATOR ASSY	-	D				
1	300901-00033	ALTERNATOR	1					
1A	130707-00042	PULLEY,ALTERNATOR	1					

Fig. 5170 ALTENATOR - 80A

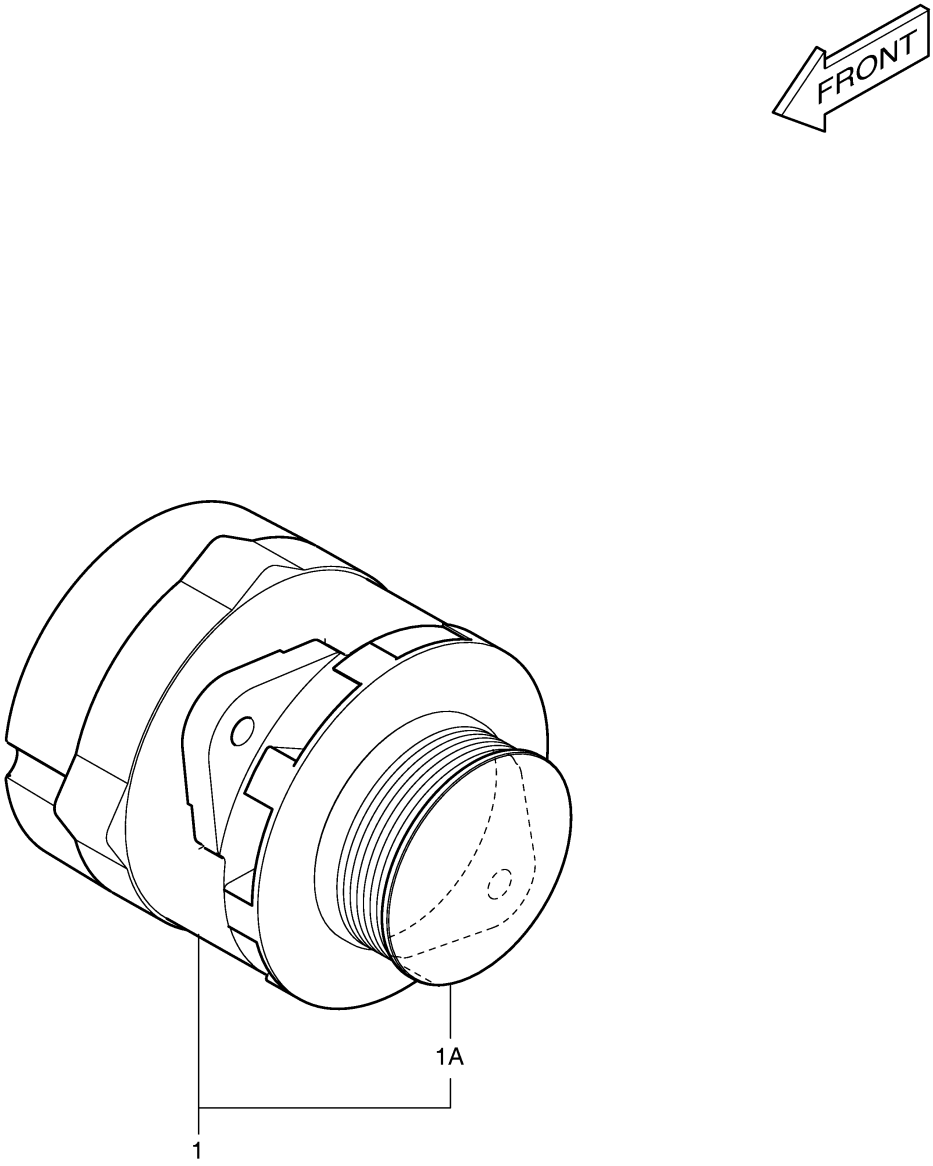

Fig. 5180 RADIO

Key No	Part No	Description	Qty	S.C	Serial No	ICA	Replacable	Qty
-	300619-01046	ELECTRIC ASSY;RADIO	-	D				
1	300654-00009	STEREO,CAR;RADIO(24V)+USB	1					

Fig. 5180 RADIO

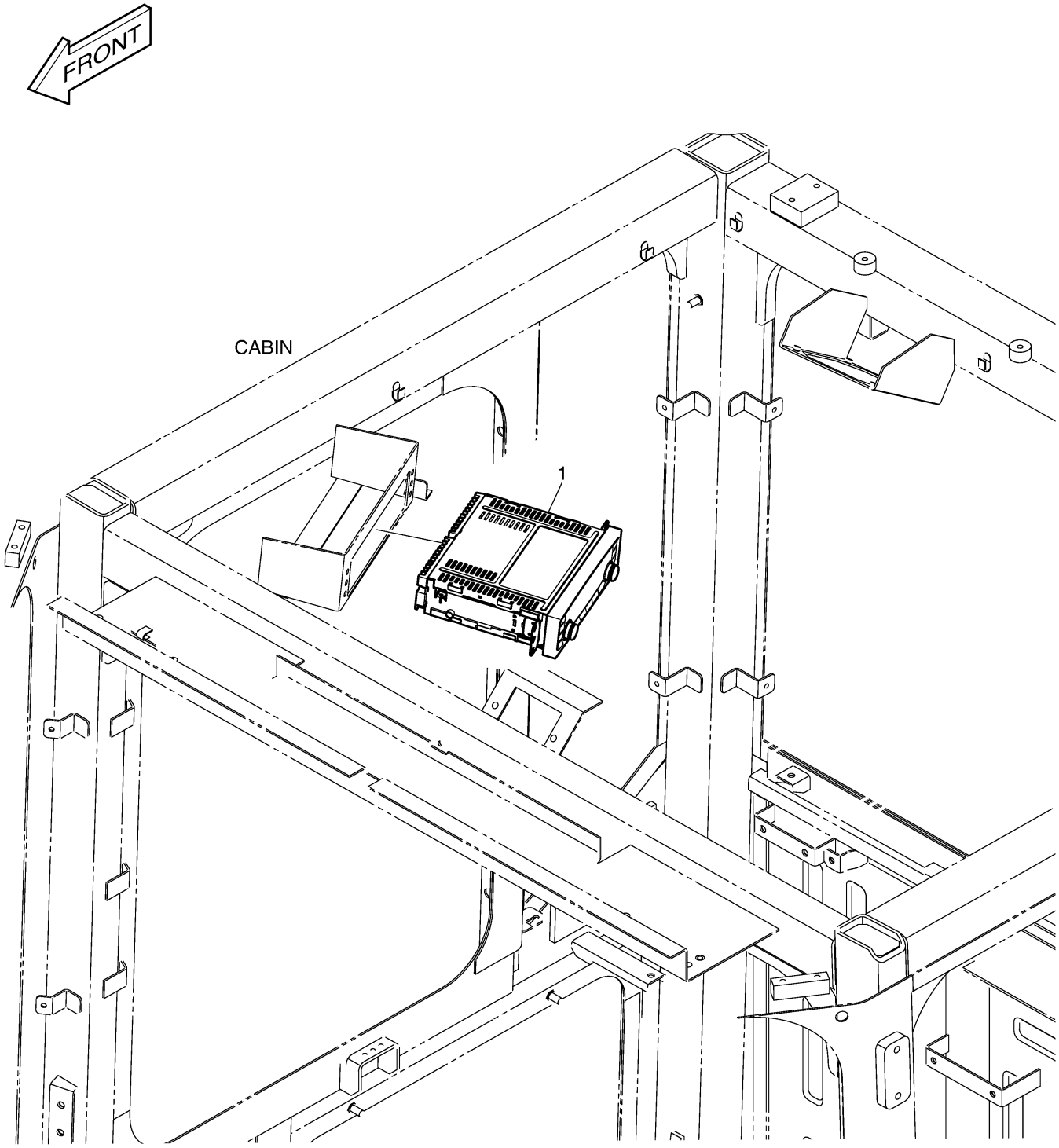

Fig. 5190 ROTATING BEACON

Key No	Part No	Description	Qty	S.C	Serial No	ICA	Replacable	Qty
-	300705-00027A	BEACON ASSY,ROTATING	-	D	10001~10117			
-	300705-00027B	BEACON ASSY,ROTATING	-	D	10118~10193			
-	300705-00027C	BEACON ASSY,ROTATING	-	D	10194~			
1	2549-9098	SWITCH;ROCKER	1		10001~10193			
1	301423-00058	SWITCH,ROCKER	1		10194~			
1A	K9000353	LAMP;PILOT	1		10001~10193			
2	2190-2036D10	INSERT;ROTATING BEACON	1					
3	131002-00085	BUSHING ASS'Y	1		10001~10117	I	131002-00085A	1
3	131002-00085A	BUSHING ASSY	1		10118~			
4	S5102503	WASHER	2					
5	S0508853	BOLT	2					
6	K1008765	HARNESS;BEACON	1					
7	300705-00037	LAMP	1					
7A	300710-00023	BULB	1					
9	124-00208D2	CLAMP	2					
10	K1001029	BOLT	2					

Fig. 5190 ROTATING BEACON

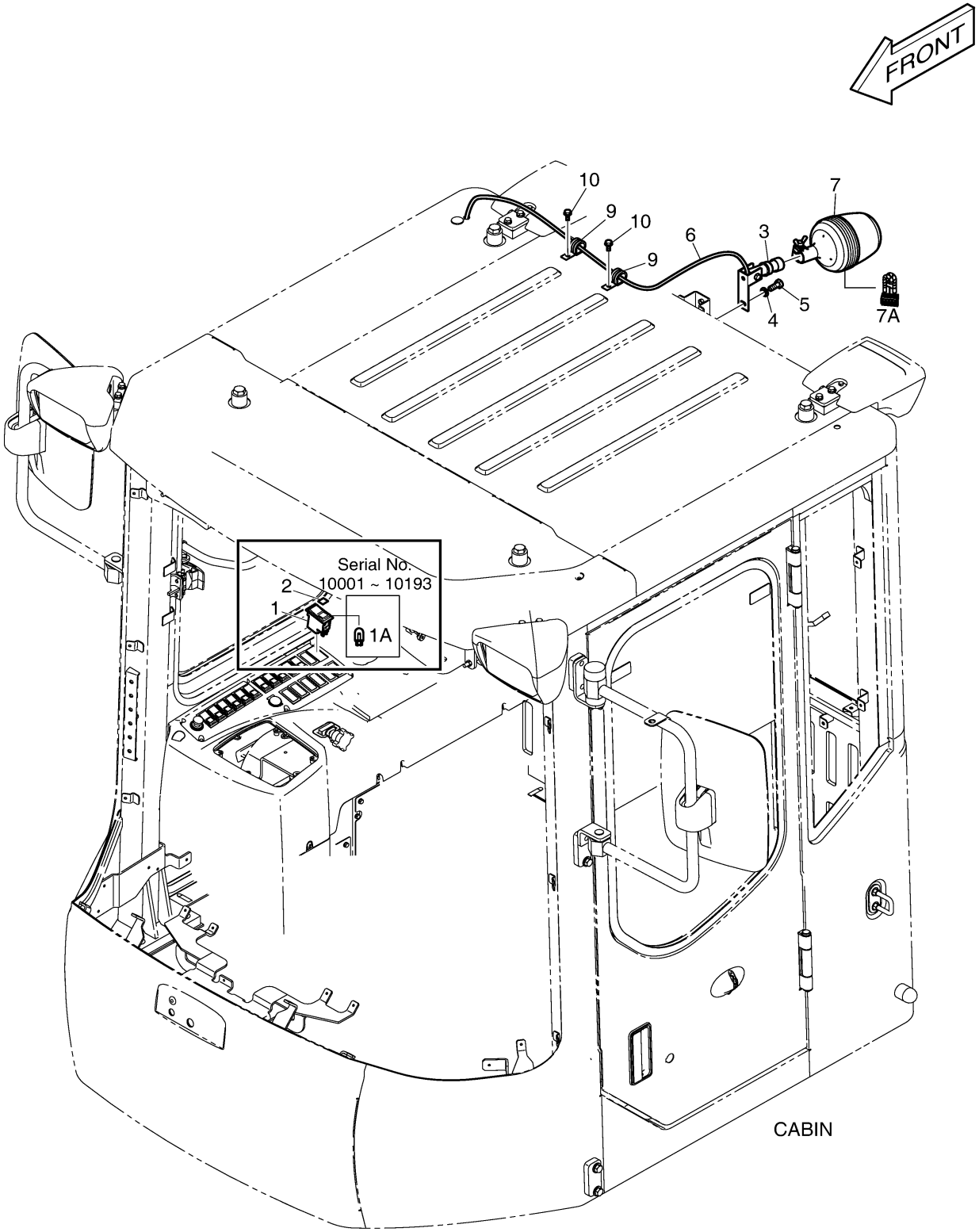

Fig. 5200 ARM FLOAT KICK OUT ASS'Y

Key No	Part No	Description	Qty	S.C	Serial No	ICA	Replacable	Qty
-	620202-20089	ARM FLOAT KICK-OUT	-	D				
1	250201-00499	PLATE;FLOAT KICK-OUT	1		10001~10360			
1	250201-00499A	PLATE,FLOAT KICK OUT	1		10361~			
2	K1004357	PLATE	1		10001~10360			
2	250201-04636	PLATE	1		10361~			
3	191-01453	PLATE	1					
4	4159-4008	COVER	1					
5	K1027017	SWITCH,PROXIMITY	1					
6	S0509066	BOLT	6					
7	S5102503	WASHER	8					
8	S4012533	NUT	2					
9	S0508966	BOLT	2					
10	2114-1058D29	WASHER	2					

Fig. 5200 ARM FLOAT KICK OUT ASS'Y

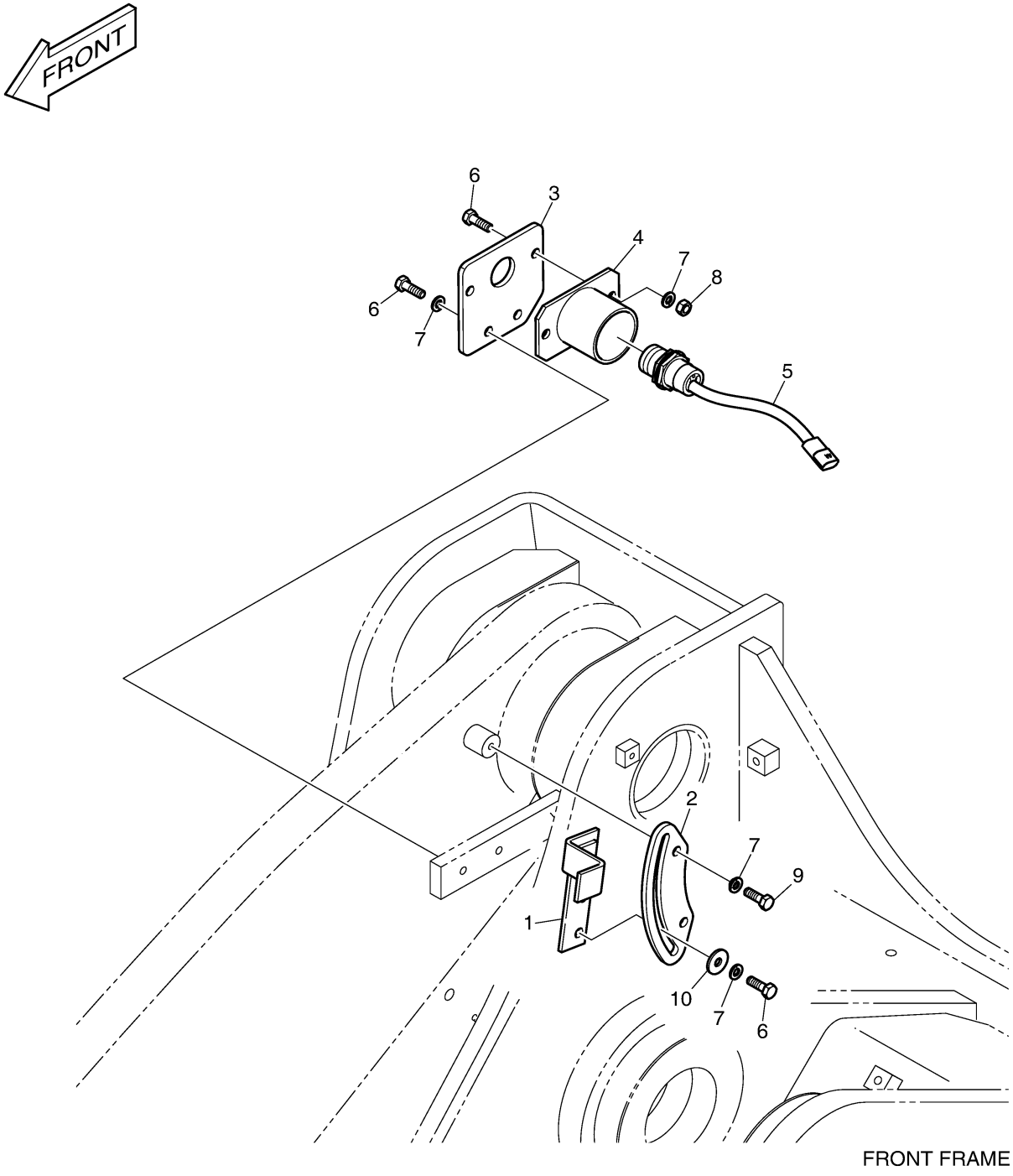

Fig. 5210 ARM FLOAT KICK OUT -

Key No	Part No	Description	Qty	S.C	Serial No	ICA	Replacable	Qty
-	K1015696	ARM FLOAT KICK OUT-ELEC	-	D	10001~10193			
-	300619-02502	ARM FLOAT KICK OUT-ELEC	-	D	10194~			
1	2549-9098	SWITCH;ROCKER	1		10001~10193			
1	301423-00058	SWITCH,ROCKER	1		10194~			
1A	K9000353	LAMP;PILOT	1		10001~10193			
2	2190-2036D22	INSERT;FLOAT KICK-OUT	1					

Fig. 5210 ARM FLOAT KICK OUT -

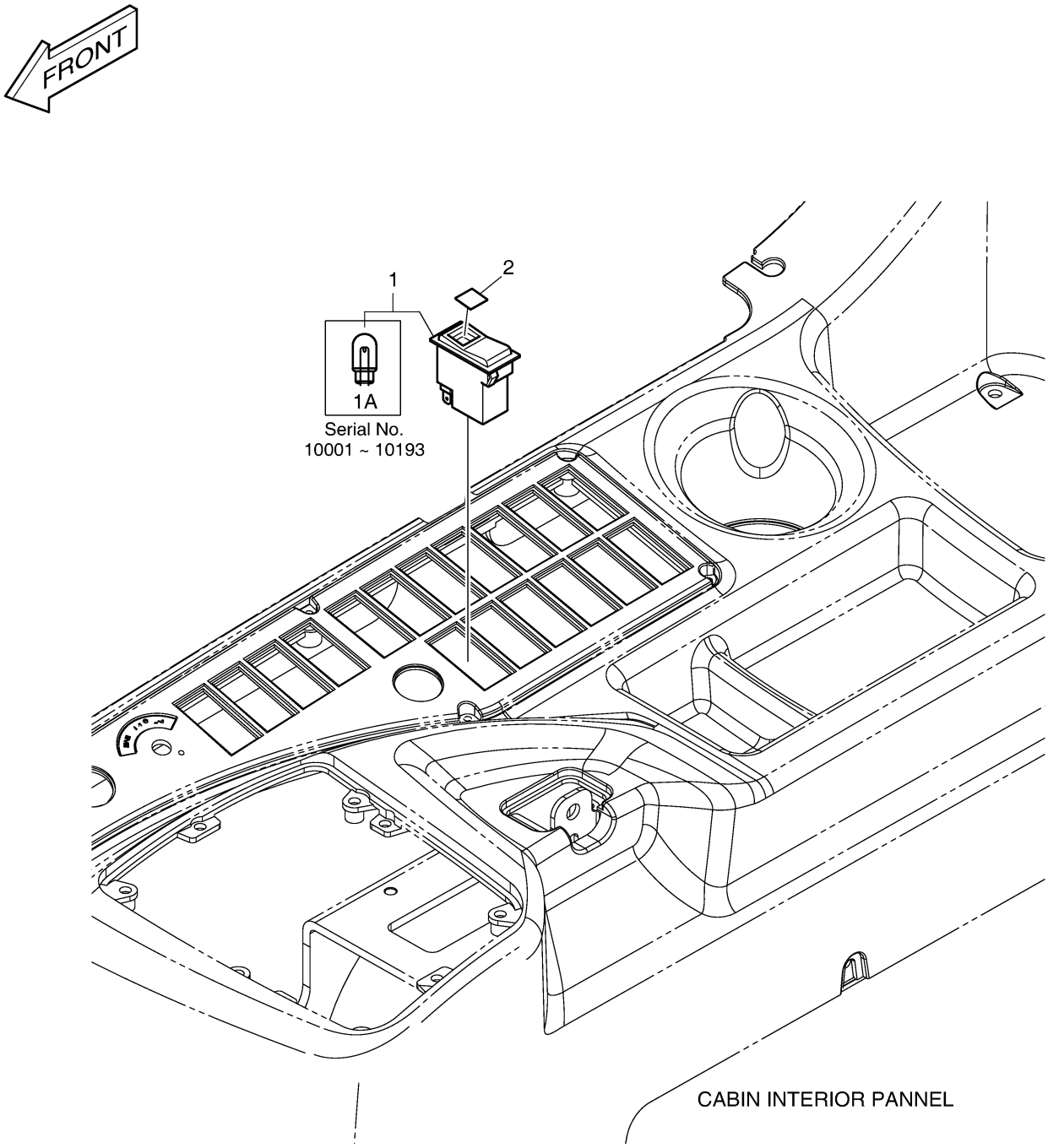

Fig. 5220 BUCKET - 2.6? (CUTTING EDGE)

Key No	Part No	Description	Qty	S.C	Serial No	ICA	Replacable	Qty
-	230104-00493B	BUCKET ASSY;2.6M3 EDGE	1		10001~10075	I	230104-00493C	1
-	230104-00493C	BUCKET ASSY;2.6M3 EDGE	1		10076~10188	I	230104-00493G	1
-	230104-00493G	BUCKET ASSY;2.6M3 EDGE	1		10189~10291	I	230104-00493H	1
-	230104-00493H	BUCKET ASSY;2.6M3 EDGE	1		10292~			
1	-	BUCKET;2.5M3	1	D	10001~10075			
1	-	BUCKET;2.5M3	1	D	10076~10188			
1	-	BUCKET;2.5M3	1	D	10189~10291			
1	-	BUCKET;2.5M3	1	D	10292~			
2	100902-00014	EDGE,CUTTING;CENTER	1					
3	100902-00015	EDGE,CUTTING;SIDE	2					
4	S0565566	BOLT M16X2.0X65	16					
5	S4012933	NUT	16					
6	110913-00289A	CASE,BUCKET NAME PLATE	1		10189~			
7	950209-04415A	PLATE,NAME	1		10189~			
8	DS0501007	RIVET	4		10189~			

Fig. 5220 BUCKET - 2.6? (CUTTING EDGE)

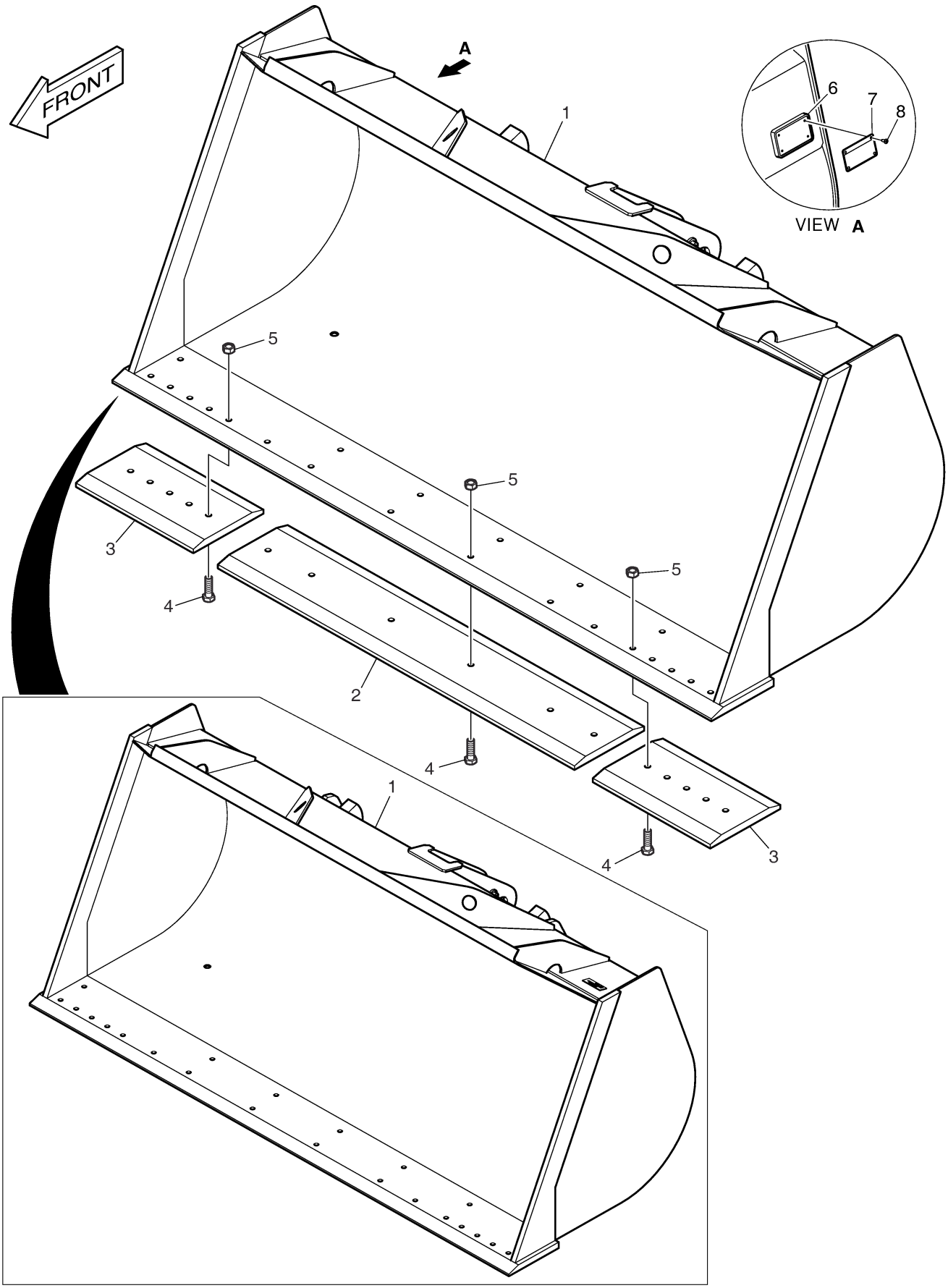

Serial No. : 10001 ~ 10188

DOOSAN Doosan Infracore

Fig. 5230 BUCKET - 3.0? - TOOTH

Key No	Part No	Description	Qty	S.C	Serial No	ICA	Replacable	Qty
-	230104-00511A	BUCKET ASSY;3.0M3 TOOTH	1		10001~10075	I	230104-00511B	1
-	230104-00511B	BUCKET ASSY;3.0M3 TOOTH	1		10076~10188	I	230104-00511E	1
-	230104-00511E	BUCKET ASSY;3.0M3 TOOTH	1		10189~10291	I	230104-00511G	1
-	230104-00511G	BUCKET ASSY;3.0M3 TOOTH	1		10292~			
1	-	BUCKET;3.0M3	1	D	10001~10075			
1	-	BUCKET;3.0M3	1	D	10076~10188			
1	-	BUCKET	1	D	10189~10291			
1	-	BUCKET;3.0M3	1	D	10292~			
2	4713-1115A	TOOTH;SIDE(L.H)	1					
3	4713-1114A	TOOTH;SIDE(R.H)	1					
4	2983341M91C	TOOTH	6					
5	S0565666	BOLT	16					
6	S4012933	NUT	16					
7	110913-00289A	CASE,BUCKET NAME PLATE	1		10189~			
8	950209-04415A	PLATE,NAME	1		10189~			
9	DS0501007	RIVET	4		10189~			

Fig. 5230 BUCKET - 3.0? - TOOTH

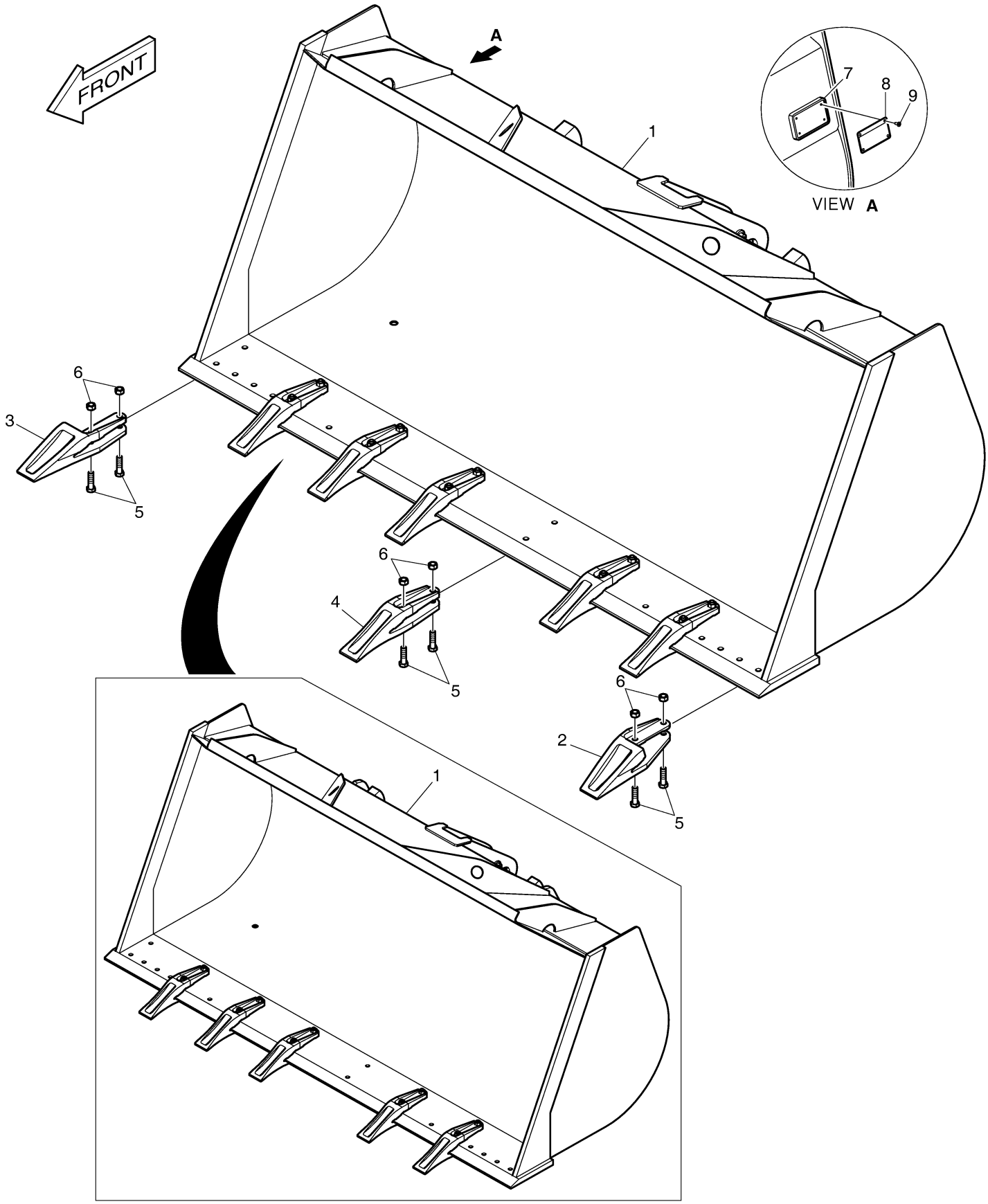

Serial No. : 10001 ~ 10188

DOOSAN Doosan Infracore

Fig. 5240 BUCKET - 3.1? - CUTTING EDGE

Key No	Part No	Description	Qty	S.C	Serial No	ICA	Replacable	Qty
-	230104-00512A	BUCKET ASSY;3.1M3 EDGE	1		10001~10075	I	230104-00512B	1
-	230104-00512B	BUCKET ASSY;3.1M3 EDGE	1		10076~10188	I	230104-00512E	1
-	230104-00512E	BUCKET ASSY;3.1M3 EDGE	1		10189~10291	I	230104-00512G	1
-	230104-00512G	BUCKET ASSY;3.1M3 EDGE	1		10292~			
1	-	BUCKET;3.0M3	1	D	10001~10075	I	230104-00513B	1
1	-	BUCKET;3.0M3	1	D	10076~10188	I	230104-00513E	1
1	-	BUCKET	1	D	10189~10291	I	230104-00513G	1
1	-	BUCKET;3.0M3	1	D	10292~			
2	100902-00016	EDGE,CUTTING	1					
3	100902-00015	EDGE,CUTTING;SIDE	2					
4	S0565566	BOLT M16X2.0X65	16					
5	S4012933	NUT	16					
6	110913-00289A	CASE,BUCKET NAME PLATE	1		10189~			
7	950209-04415A	PLATE,NAME	1		10189~			
8	DS0501007	RIVET	4		10189~			

Fig. 5240 BUCKET - 3.1? - CUTTING EDGE

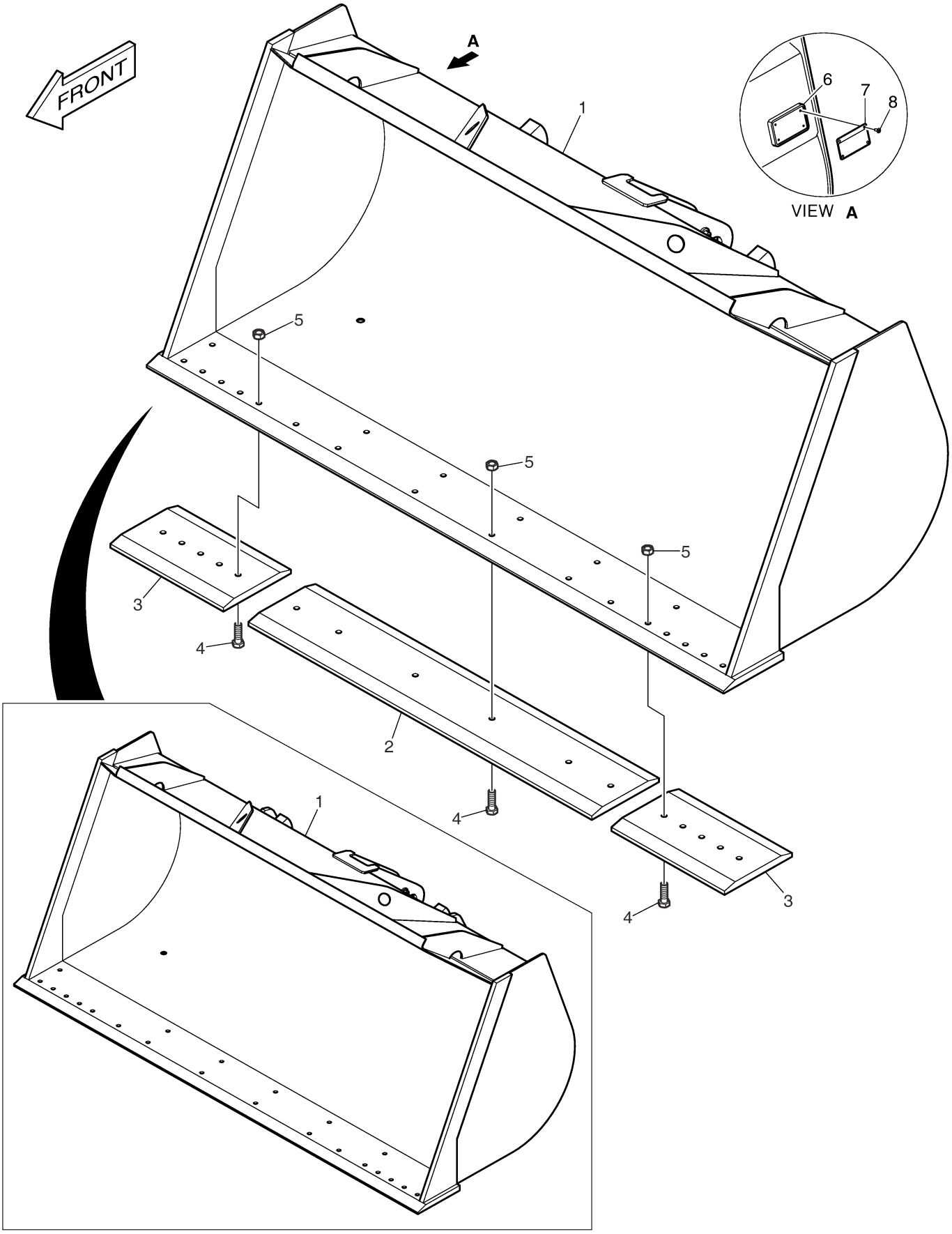

Serial No. : 10001 ~ 10188

Fig. 5250 CANOPY

Key No	Part No	Description	Qty	S.C	Serial No	ICA	Replacable	Qty
-	220101-00745A	CABIN;CANOPY	1					
2	250105-00446	PLATE ASSY,CABIN;ROOF	1					
5	101582-00305	BAR	2					
6	101588-00036	TRIM,RUBBER;SASH DOOR	1					
7	K1051774	PLATE;HATCH	1					
8	2114-1898D1	WASHER	25					
9	2114-9012A	WASHER	8					
10	S0170066	BOLT	8					
11	S3453103	SCREW M8X1.25X16	4					
12	2120-2166D4	BOLT	25					
13	250105-00486	PLATE,CABIN	1					

Fig. 5250 CANOPY

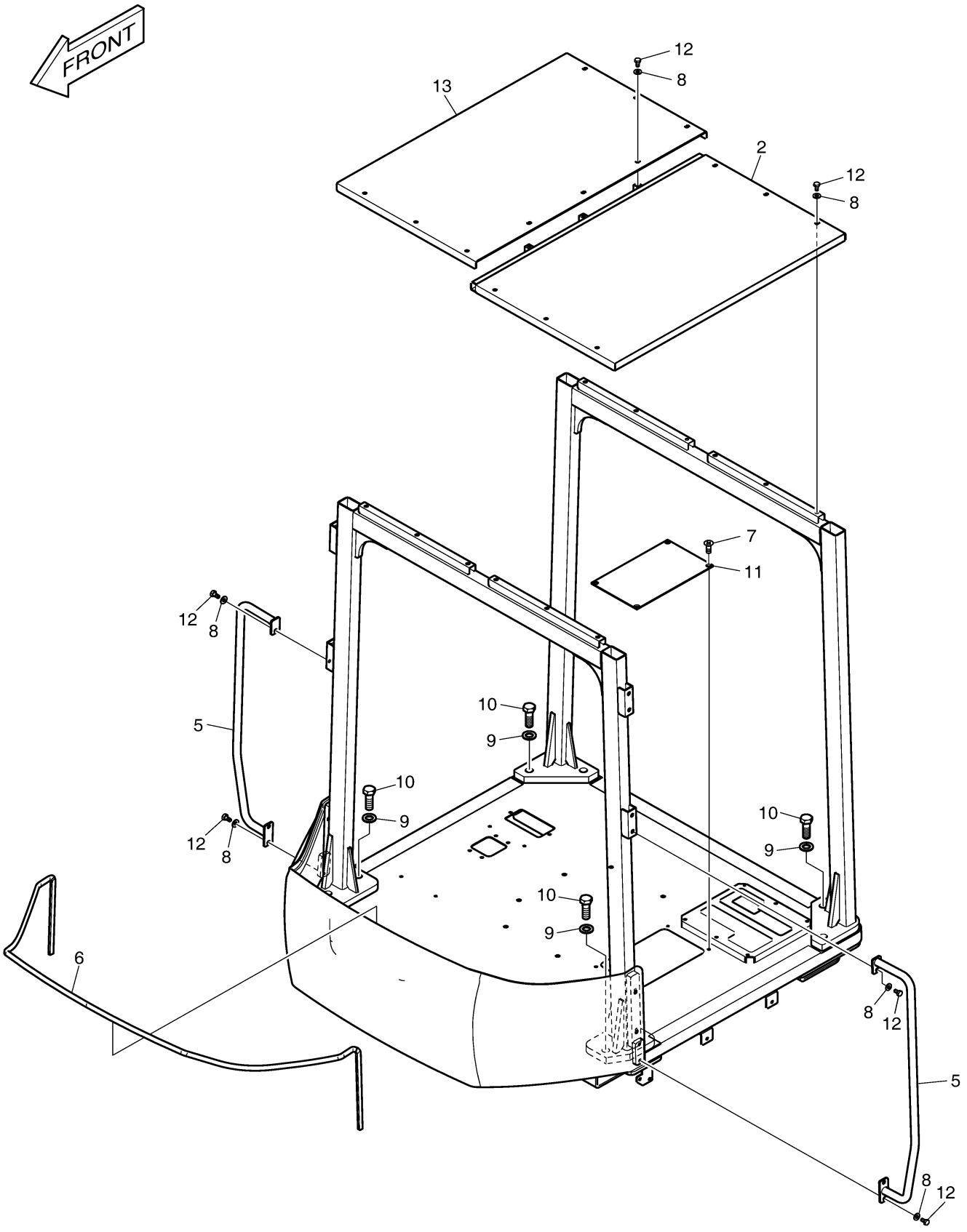

DOOSAN Doosan Infracore

Fig. 5260 CONTROL STAND ASS'Y-OPEN

Key No	Part No	Description	Qty	S.C	Serial No	ICA	Replacable	Qty
-	220111-00052A	STAND ASSY,CONTROL	-	D	10001~10166			
-	220111-00052B	STAND ASSY,CONTROL	-	D	10167~			
1	-	REST,ARM	1	D				
1-1	K1057549	REST,ARM;CONTROL STAND	1		10001~10166	Y	220106-00045	1
1-1	220106-00045	REST,ARM	1		10167~			
1-2	110406-00433	BRACKET,ARMREST	1					
1-3	2120-2166D4	BOLT	2					
1-4	2114-1898D1	WASHER	2					
2	110958-01672	SUPPORT,CONTROL VALVE	1					
3	K1056691	BRACKET,STAND	1					
4	101588-00004	TRIM,RUBBER	1					
5	101588-00005	TRIM,RUBBER	1					
6	101588-00006	TRIM,RUBBER	2					
7	110508-00450E	COVER,CONTROL STAND(R.H)	1		10001~10166	Y	110508-00450G	1
7	110508-00450G	COVER,CONTROL STAND(R.H)	1		10167~			
8	110508-00451B	COVER,CONTROL STAND(L.H)	1		10001~10166	Y	110508-00451C	1
8	110508-00451C	COVER,CONTROL STAND(L.H)	1		10167~			
9	2114-1898D14	WASHER	4					
10	2120-2166D16	BOLT	2					
11	2120-2166D10	SCREW	10					
12	2120-2166D8	BOLT	2					
13	110406-00432	BRACKET	1					
14	250126-00001A	PLATE,SLIDING	2					
15	K1040058A	KNOB;ARM REST	2					
16	180308-00056A	RUBBER,PLATE	1					
17	2114-1898D2	WASHER	8					
18	110406-01455	BRACKET;STAND	2					
19	2120-2166D5	BOLT	14					
20	2114-1898D8	WASHER	4					
21	160102-00024	BASE ASSY,SEAT	1					
22	2120-2166D2	BOLT	6					
23	2114-1898D1	WASHER	6					
25	101588-00038	TRIM,RUBBER	1					
26	180102-00538	FOAM,SPONGE	1					
51	110508-00624E	COVER,LEVER	1					
52	110406-00346	BRACKET	1					

Key No	Part No	Description	Qty	S.C	Serial No	ICA	Replacable	Qty
53	2120-2166D8	BOLT	5					
54	2120-2166D5	BOLT	3					
55	2114-1898D2	WASHER	3					
56	2120-2166D28	BOLT	4					
57	2114-1898D3	WASHER	4					
58	110508-00063A	WASHER	5					

Fig. 5260 CONTROL STAND ASS'Y-OPEN

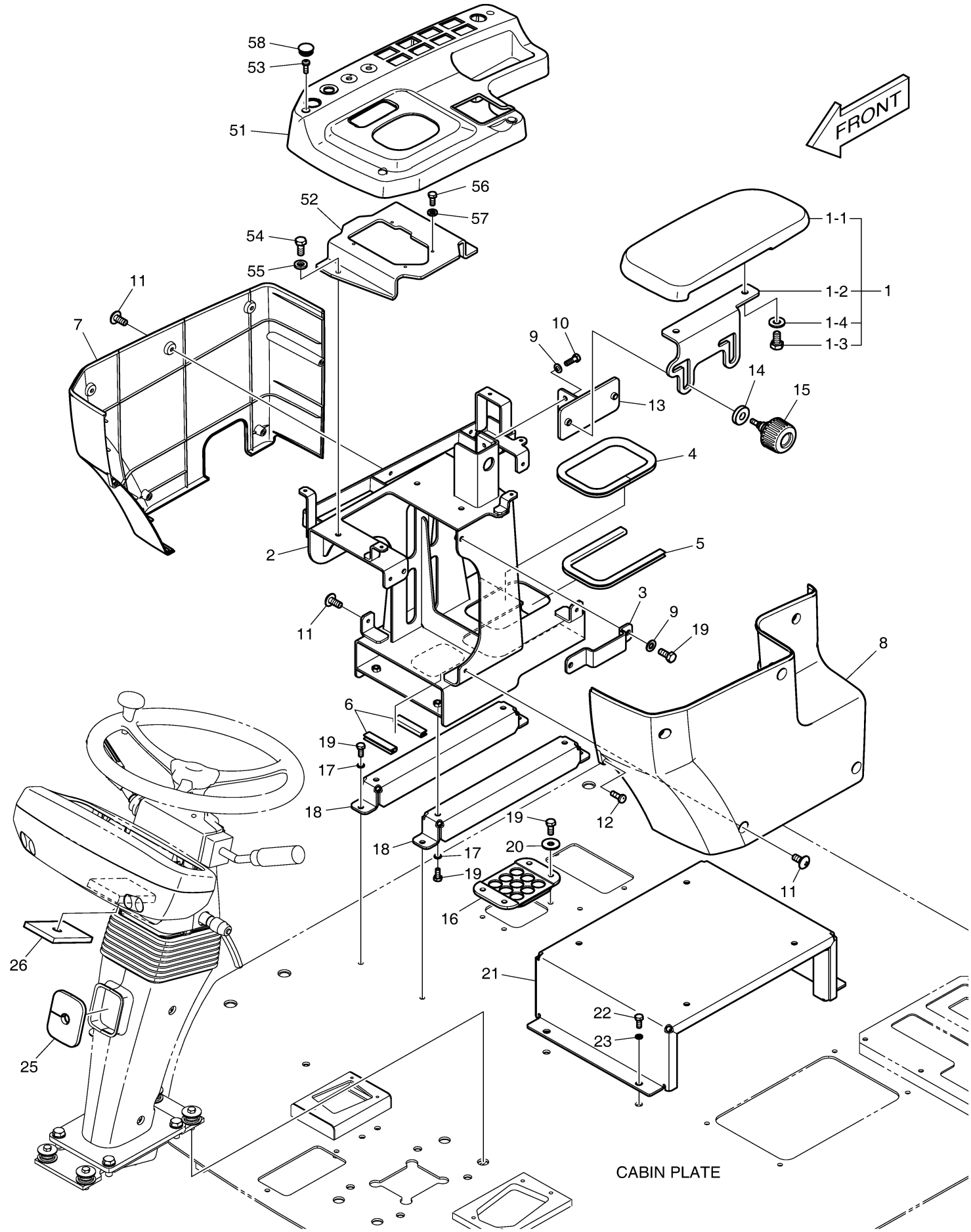

DOOSAN Doosan Infracore

Fig. 5270 SEAT ASS'Y-FOR CANOPY

Key No	Part No	Description	Qty	S.C	Serial No	ICA	Replacable	Qty
-	220110-00071	SEAT ASSY,OPERATER	-	D				
1	901-00041	SEAT	1					
2	2114-1898D2	WASHER	4					
3	2120-2166D16	BOLT	4					

Fig. 5270 SEAT ASS'Y-FOR CANOPY

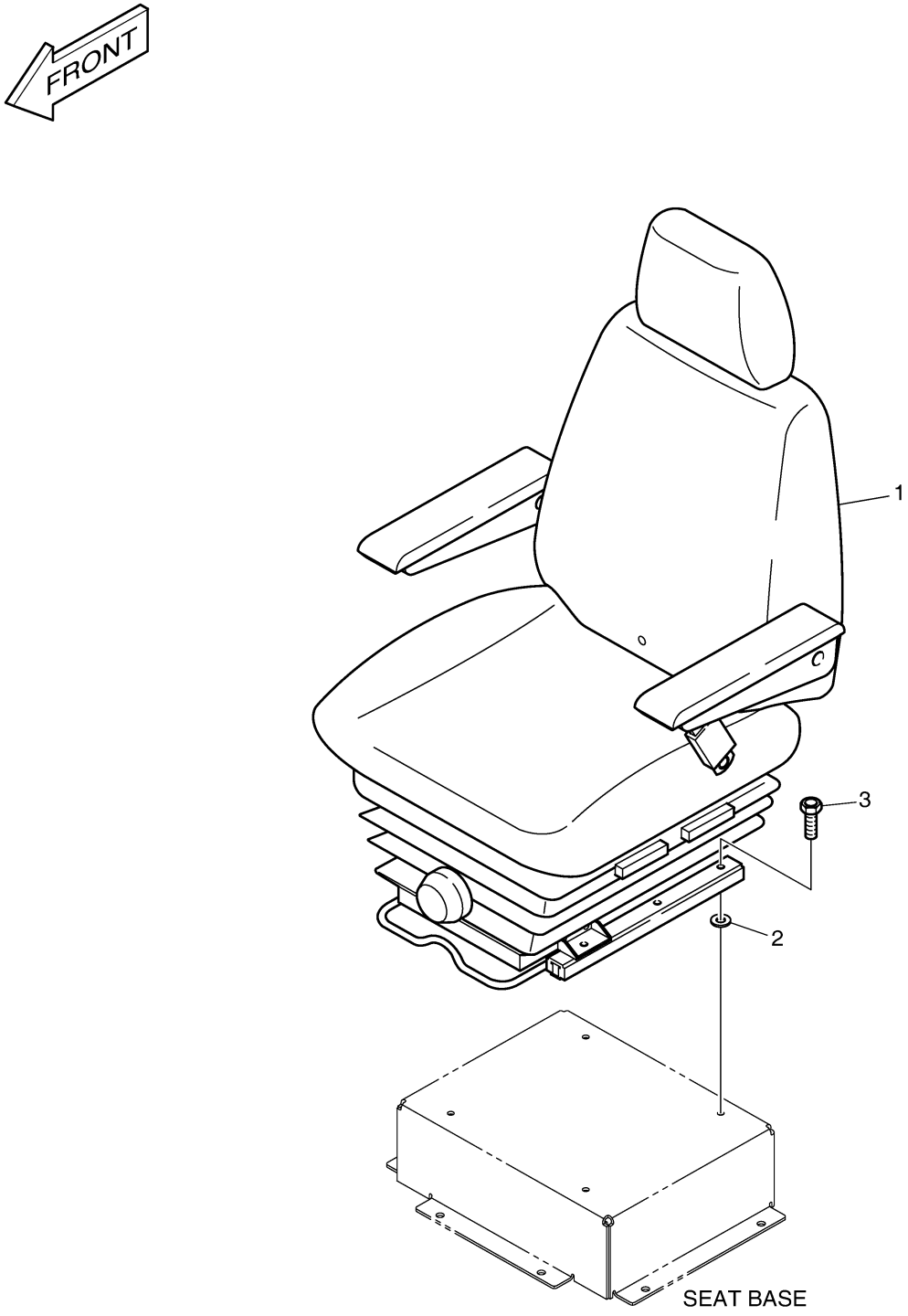

Fig. 5280 SEAT - FOR CANOPY

Key No	Part No	Description	Qty	S.C	Serial No	ICA	Replacable	Qty
-	901-00041	SEAT	1					
1	2.901-00002	UPPER ASS'Y	1					
2	2.160-00018	BACK COVER	1					
3	2.161-00013	BACK FOAM	1					
4	2.160-00019	SEAT COVER	1					
5	1.161-00013	SEAT FOAM	1					
6	-	FRAME	1	D				
7	2.901-00003	HEAD REST	1					
8	2.131-00382	SPRING;HEIGHT RISER	1					
9	2.106-00005	TETHER BELT	1					
10	2.161-00011	DAMPER ASS'Y	1					
11	2.300-00002	SUSPENSION ASS'Y	1					
12	2.195-00020	FORE & AFT ADJUSTER	1					
13	2.151-00001	WEIGHT ADJUSTER	1					
14	2.416-00037	UPSTOP/BUMPSTOP	1					
15	2.172-00001	HANDLE	1					
16	2.131-00383	HEIGHT RISER SPRING	1					
17	2.430-00385	SUSPENSION COVER	1					
18	2.172-00012	SLIDE RAIL HANDLE	1					
19	2.109-00088	BEARING KIT	1					
20	1.901-00002	SEAT BELT	1					
21	2.197-00024	ARM REST(L.H)	1					
22	2.197-00025	ARM REST(R.H)	1					
23	2.125-00001	HEIGHT RISER LATCH	1					

Fig. 5280 SEAT - FOR CANOPY

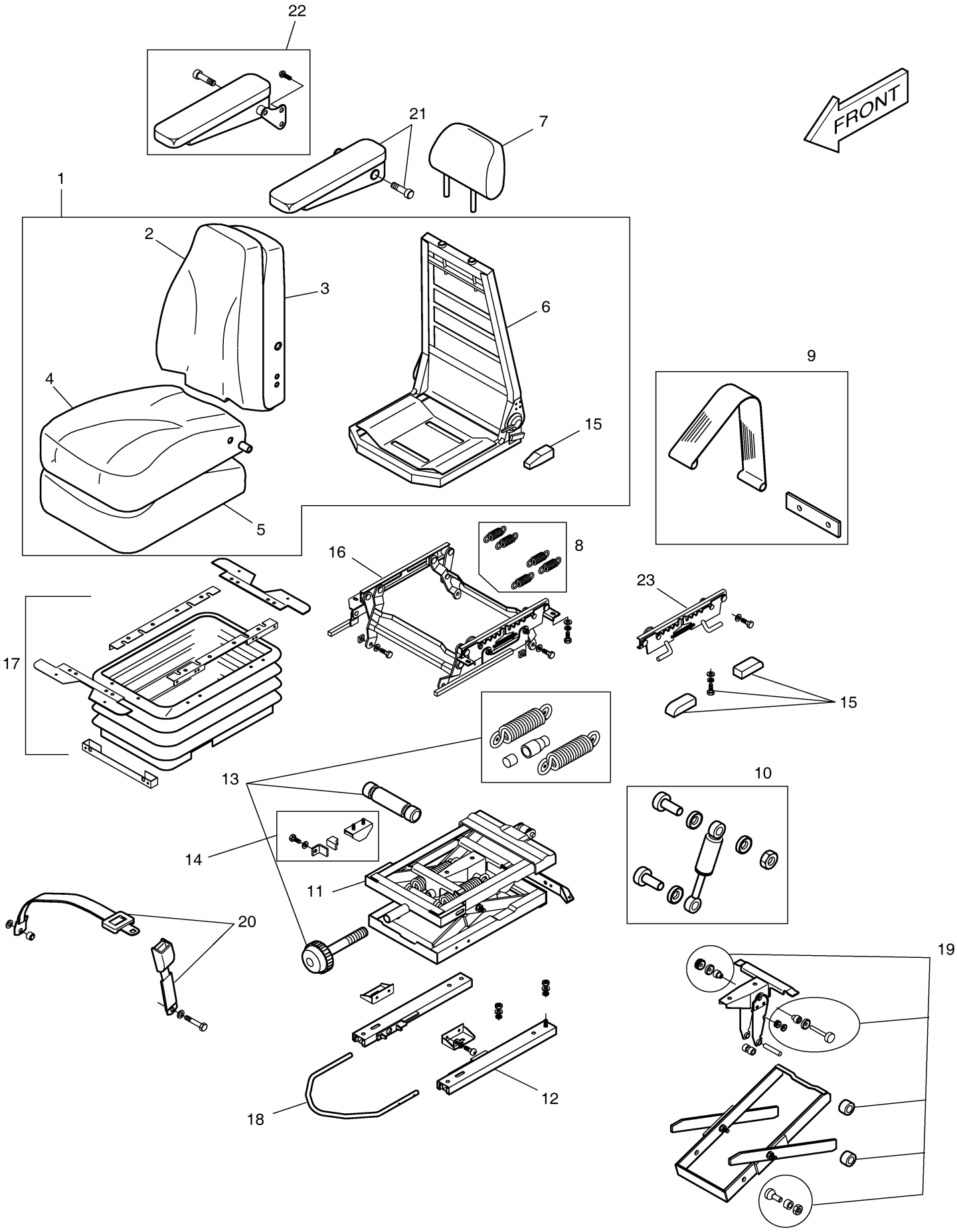

DOOSAN Doosan Infracore

Fig. 5290 PILOT PIPING - 2

Key No	Part No	Description	Qty	S.C	Serial No	ICA	Replacable	Qty
-	220101-00810	PILOT PIPING;CANOPY 2SPOOL	-	D	10001~10081			
-	220101-00810A	CABIN ASSY:PILOT CANOPY 2SP	-	D	10082~			
1	410113-00017	VALVE ASSY,JOYSTICK	1		10001~10081			
1	410113-00156	VALVE ASSY,JOYSTICK	1		10082~10363	I	410113-00156A	1
1	410113-00156A	VALVE ASSY,JOYSTICK;5B	1		10364~			
2	DS2012507	HOSE 11/16"-16UN-2B-1680L	4					
3	DS2021090	HOSE	1		10001~10081			
3	DS2012782	HOSE ASSY,HYDRAULIC	1		10082~			
4	DS2012017	HOSE	1					
5	K1010455	ADAPTER	2		10001~10081			
5	K1010455	ADAPTER	3		10082~			
6	K1044052	ADAPTER	4		10001~10081			
6	K1044052	ADAPTER	3		10082~			
7	2181-2667	PLUG	2		10001~10190			
7	DS2917003	PLUG	2		10191~			
8	S8030061	O-RING	6					
9	S8180211	SEAL;RING	2		10001~10190			

Fig. 5290 PILOT PIPING - 2

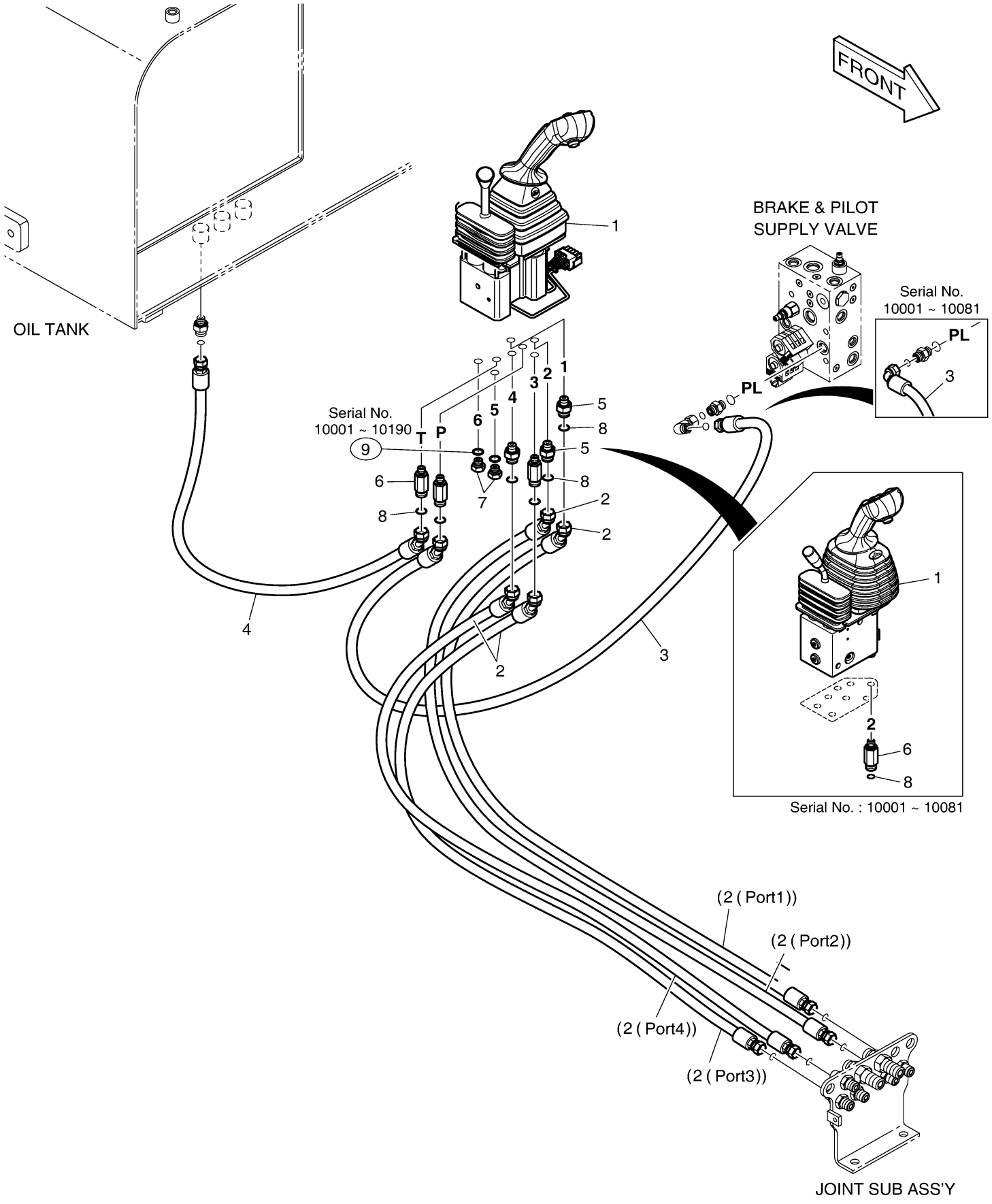

Fig. 5300 UNDER COVER

Key No	Part No	Description	Qty	S.C	Serial No	ICA	Replacable	Qty
-	110513-00502	COVER ASSY,UNDER	-	D				
1	110513-00873	COVER,UNDER	1					
2	110513-00874	COVER,UNDER	1					
3	DS0025023	BOLT	8		10001~10177			
3	S0512066	BOLT	8		10178~			
4	DS0401240	WASHER	8		10178~			

Fig. 5300 UNDER COVER

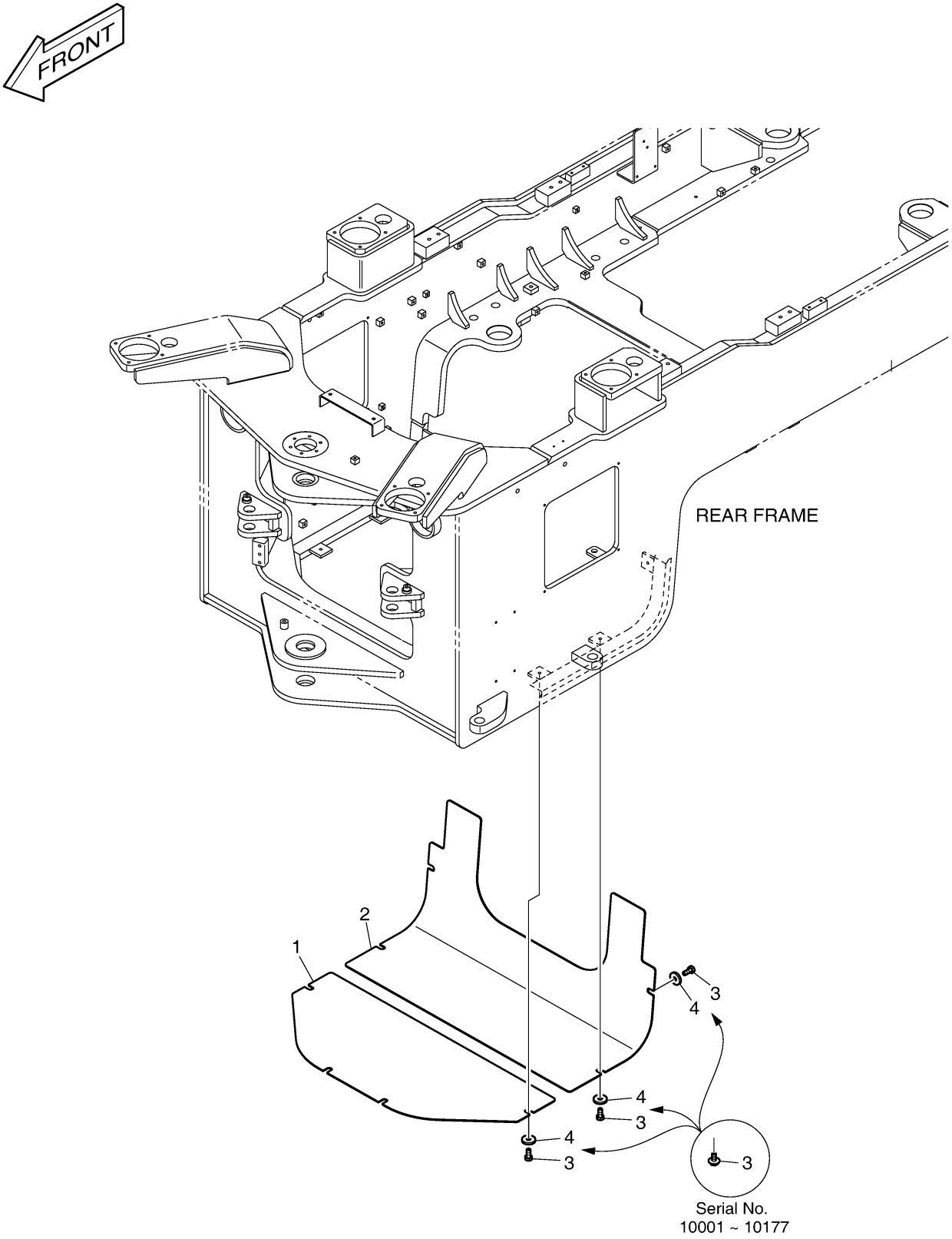

Fig. 5310 WHEEL ASS'Y

Key No	Part No	Description	Qty	S.C	Serial No	ICA	Replacable	Qty
-	K1000768AF2	WHEEL ASS'Y	-	D				
1	K1000771A	WHEEL ASS'Y	4	D				
1-1	278-00106A	RIM;WHEEL	1					
1-1A	2.422-00007	VALVE	1					
1-1B	401002-01489	RING,O	1					
1-2	4276-9057	TIRE 20.5-25-VMT(L3)	1					
2	K1000773A	WHEEL ASS'Y	4	D				
2-1	278-00106A	RIM;WHEEL	1					
2-1A	2.422-00007	VALVE	1					
2-1B	401002-01489	RING,O	1					
2-2	4276-9052	TIRE 20.5-25-XHA(L3)	1					
3	K1000775A	WHEEL ASS'Y	4	D				
3-1	278-00106A	RIM;WHEEL	1					
3-1A	2.422-00007	VALVE	1					
3-1B	401002-01489	RING,O	1					
3-2	276-00063	TIRE 555/70R25XLD70-1(L3)	1					
4	K1011156A	WHEEL ASS'Y	4	D				
4-1	278-00106A	RIM;WHEEL	1					
4-1A	2.422-00007	VALVE	1					
4-1B	401002-01489	RING,O	1					
4-2	K1009256	TIRE 20.5-25-16PR(L3)	1					
5	K1011720A	WHEEL ASS'Y	4	D				
5-1	278-00106A	RIM;WHEEL	1					
5-1A	2.422-00007	VALVE	1					
5-1B	401002-01489	RING,O	1					
5-2	K1011705	TIRE 20.5-R25-L3	1					
6	900141-00594	WHEEL ASSY;20.5X25R25	4	D				
6-1	K1030144	RIM;WHEEL	1					
6-1A	2.422-00007	VALVE	1					
6-1B	401002-01489	RING,O	1					
6-2	4276-9057	TIRE 20.5-25-VMT(L3)	1					
7	900141-00595	WHEEL ASSY;HOMO,20.5R25	4	D				
7-1	K1030144	RIM;WHEEL	1					
7-1A	2.422-00007	VALVE	1					
7-1B	401002-01489	RING,O	1					
7-2	K1033095	TIRE (20.5X25X12PR-L3)	1					

Fig. 5310 WHEEL ASS'Y

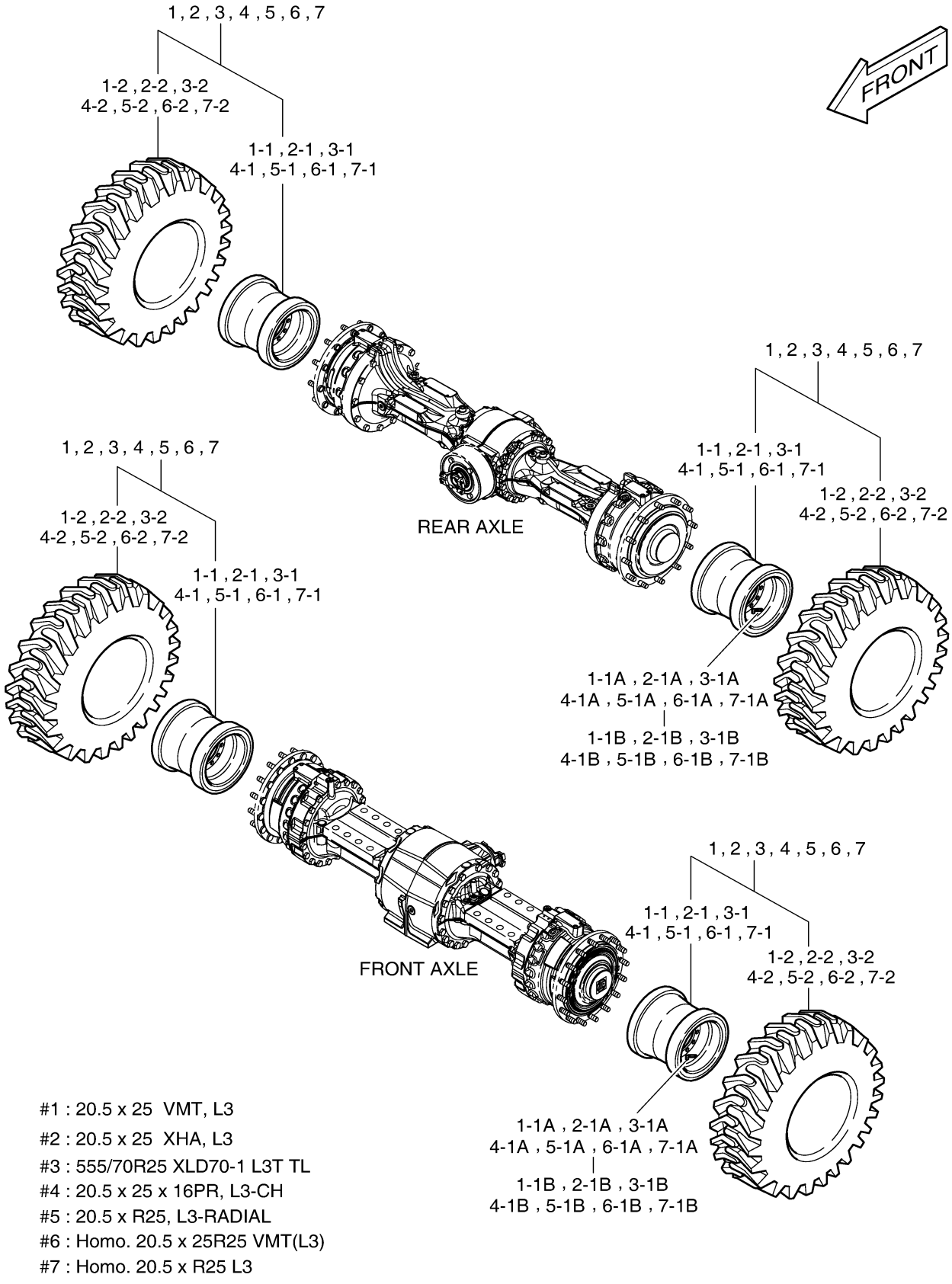

#1 : 20.5 x 25 VMT, L3
#2 : 20.5 x 25 XHA, L3
#3 : 555/70R25 XLD70-1 L3T TL
#4 : 20.5 x 25 x 16PR, L3-CH
#5 : 20.5 x R25, L3-RADIAL
#6 : Homo. 20.5 x 25R25 VMT(L3)
#7 : Homo. 20.5 x R25 L3

Fig. 5320 SEAT MOUNTING - AIR

Key No	Part No	Description	Qty	S.C	Serial No	ICA	Replacable	Qty
-	K1050514	SEAT;MOUNTING	-	D				
1	K1050538	SEAT;OPERATOR	1					
2	2120-2166D16	BOLT	4					
3	2114-1898D2	WASHER	4					

Fig. 5320 SEAT MOUNTING - AIR

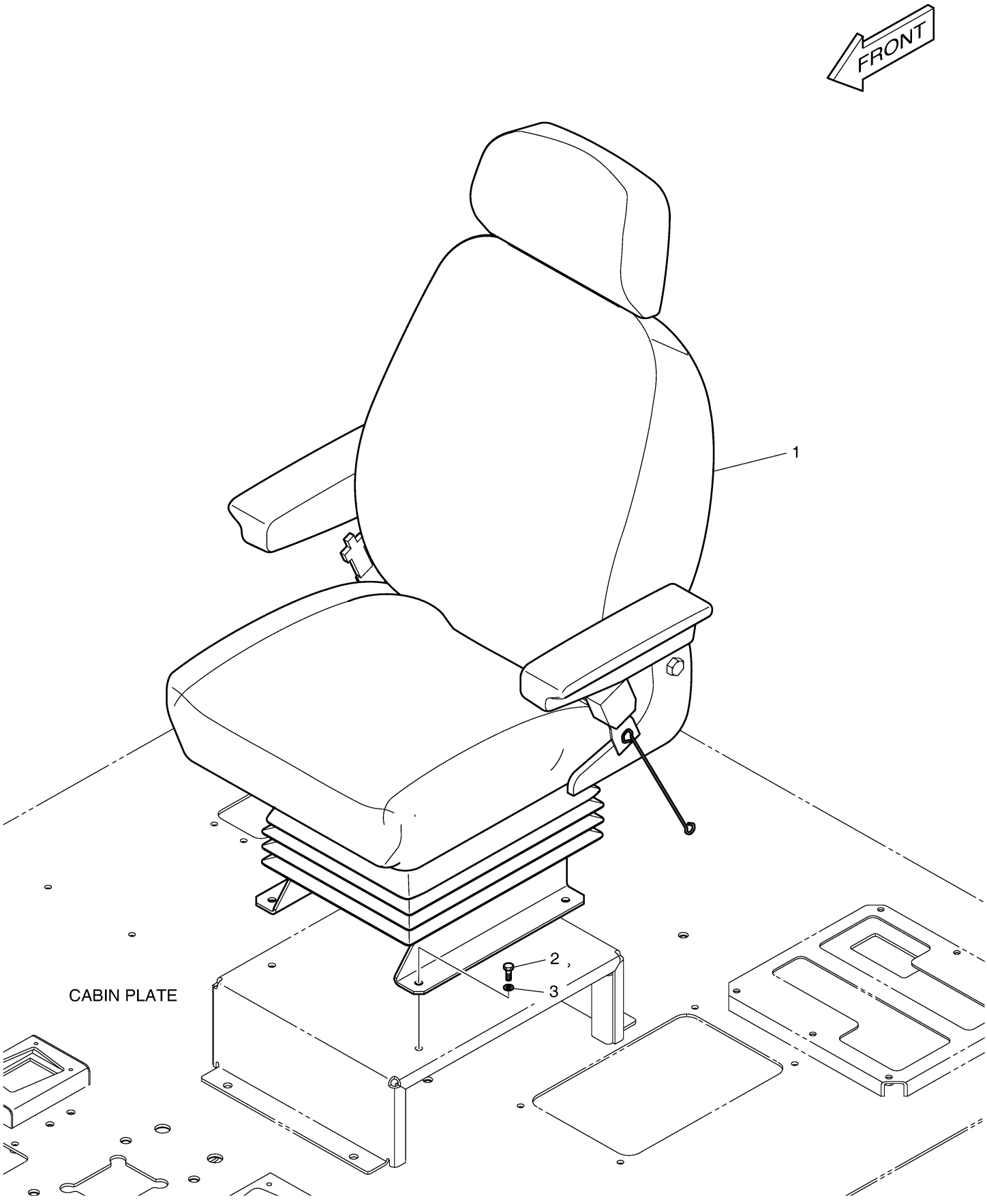

Fig. 5330 SEAT ASS'Y - AIR SUSPENSION

Key No	Part No	Description	Qty	S.C	Serial No	ICA	Replacable	Qty
-	K1050538	SEAT;OPERATOR	1					
1	190112-00005	SUSPENSION ASSY;AIR	1					
1-6	111601-00308	SPRING,AIR	1					
1-12	180301-00005	ABSORBER,SHOCK	1					
1-15	410105-00488	VALVE,CONTROL;AIR	1					
1-18	180303-00002	BUMPER	2					
3	101555-00105	PAD ASSY;HIGHBACK	1					
5	220108-00004	REST,HEAD	1					
6	110946-00098	SEAT;LUMBAR KIT	1					
7	101555-00106	PAD ASSY	1					
8	220106-00019	REST,ARM(L.H)	1					
9	220106-00020	REST,ARM;(R.H)	1					
11	110903-00007	BOOT;SUSPENSION	1					
15	220213-00009	BELT,SEAT	1					
17	110446-00096	BRACKET,GUIDE;HEAD REST	1					
18	310207-01240	HARNESS	1					
29	110946-00099	RECLINER	1					

Fig. 5330 SEAT ASS'Y - AIR SUSPENSION

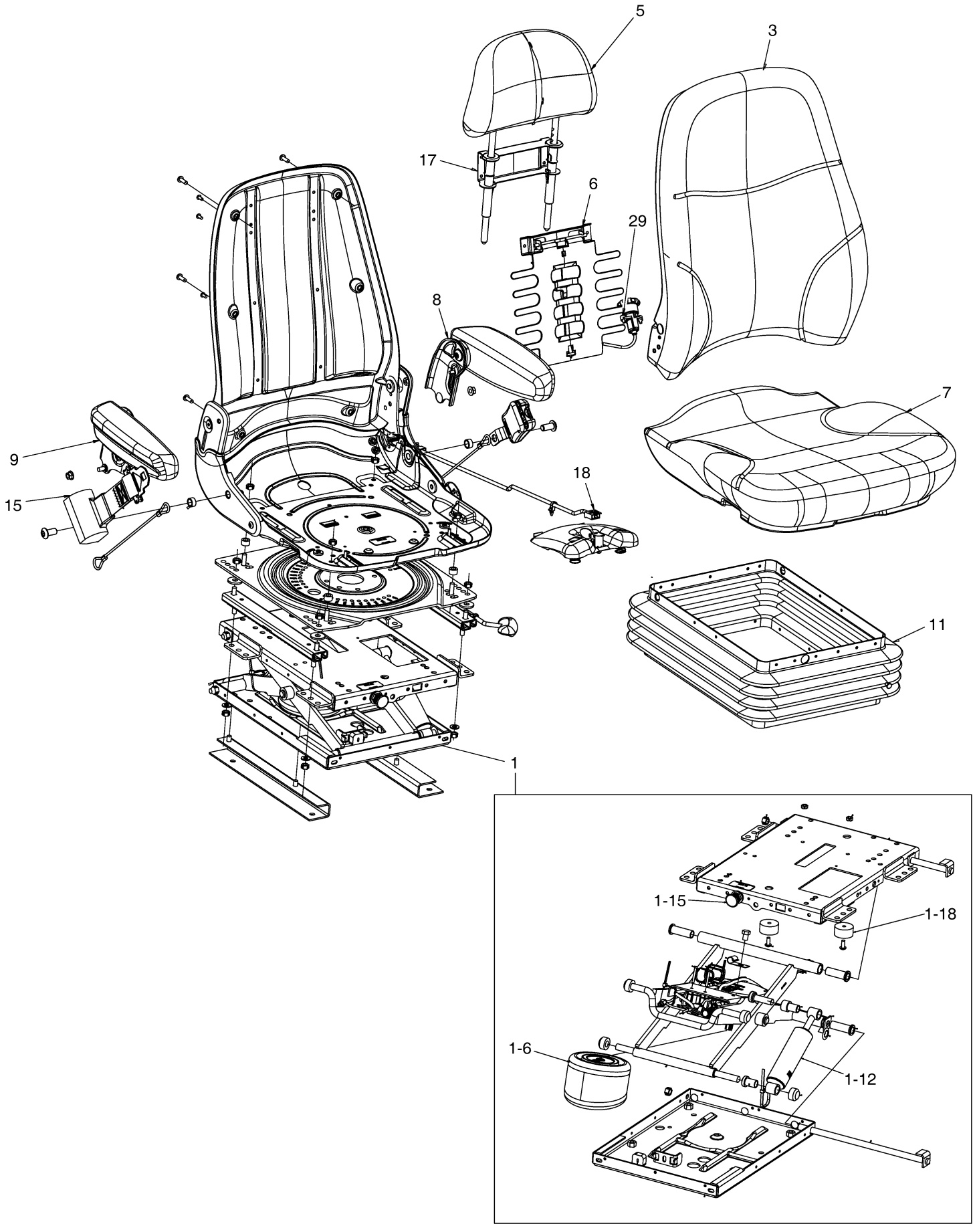

Fig. 5340 QUICK COUPLER PIPING [10042

Key No	Part No	Description	Qty	S.C	Serial No	ICA	Replacable	Qty
-	420212-07279	PIPING,FRONT;3SP QC	-	D				
1	K1003041A	CONTROL VALVE-3 SPOOL	1					
2	100201-00590	BLOCK,CONTACT	1					
3	100201-00589	BLOCK,CONTACT	1					
4	110958-01306	SUPPORT,CONTROL	1					
5	K1015615	BRACKET	1					
8	DS2045416	HOSE	1					
9	DS2045465	HOSE	1					
10	DS2045417	HOSE	1					
11	DS2045464	HOSE	1					
12	DS2045545	HOSE ASSY;(90-90)	1					
13	DS2045546	HOSE ASSY;(90-90)	1					
14	DS2045664	HOSE	1					
15	DS2043187	HOSE	1					
16	K1003310A	PIPE;BUCKET DUMP	1					
17	K1003311A	PIPE;BUCKET CROWD	1					
18	K1015566	PIPE	1					
19	K1015563	PIPE	1					
22	110951-00120	SPACER;MOUNTING	4					
23	124-00067	CLAMP;PIPE	8					
24	DS2873022	CLAMP;PIPE	4					
25	K1004056	CLAMP	4					
26	110406-00511	BRACKET;PIPE CLAMP	2					
27	2181-2157D5	FLANGE;COVER	2					
28	2181-9078	FLANGE	14					
29	2181-9079	FLANGE	16					
30	4215-1003D4	FLANGE	4					
31	S0560866	BOLT	2					
32	S0521566	BOLT	4					
33	S0561866	BOLT	5					
34	S0561666	BOLT	4					
35	S2212366	BOLT	52					
36	S2212466	BOLT	8					
37	DS0025018	BOLT	4					
38	S2212266	BOLT	40					
39	DS0025017	BOLT	6		10042~10193			

Key No	Part No	Description	Qty	S.C	Serial No	ICA	Replacable	Qty
39	DS0025013	BOLT	6		10194~			
40	S0562466	BOLT	2					
41	S0562766	BOLT	4					
42	120119-00007A	BOLT,U:3/4" PIPE	2					
43	S0558466	BOLT	4					
44	S4012733	NUT	6					
45	S4012633	NUT	4					
46	S5102703	WASHER	13					
47	2114-1058D46	WASHER	4					
48	S5102903	WASHER	4					
49	2114-1058D2	WAHSER	4					
50	S5102603	WASHER	8					
51	S5102803	WASHER	4					
52	S5010613	WASHER	4					
53	DS0401224	WASHER,PLAIN	4					
54	K1010378	RUBBER	4					
55	K1010377	RUBBER	4					
56	161-00281	RUBBER	2					
57	180308-00059	RUBBER,MOUNT;LOWER	4					
58	180308-00058	RUBBER,MOUNT;UPPER	4					
59	S8000141	O-RING	5					
60	2180-1026D23	O-RING	2					
61	2180-1026D19	O-RING	14					
62	2180-1026D2	O-RING	8					
69	110436-00154	BRACKET,CONTROL PIPE	1					
70	110420-00400	BRACKET,MOUNTING	1					
71	110406-01420	BRACKET	1					
72	DS2415002	ADAPTER	3					
73	2181-4133D2	ADAPTER	2					
74	2181-2815D6	ELBOW	1					
77	DS2232085	ADAPTER	2					
79	S2209666	BOLT	2					
80	DS0025033	BOLT	2					
81	DS0301032	NUT	3					
82	S5110503	WASHER	2					
83	S8030061	O-RING	11					
84	410135-00071A	VALVE,SOLENOID	1					
90	430201-00129	ADAPTER	1					

Key No	Part No	Description	Qty	S.C	Serial No	ICA	Replacable	Qty
91	S8000111	O-RING	1					
92	S8030041	O-RING	1					
93	S2215366	BOLT	4					
94	4215-1003D7	FLANGE	2					
95	DS2013660	HOSE,OIL	1					
96	DS2013660	HOSE,OIL	1					
97	DS20131236	HOSE	1					
98	DS2021550	HOSE ASSY,HYDRAULIC	1					
99	DS2013008	HOSE ASSY,HYDRAULIC	1					
100	110508-10397	COVER	1					
101	430210-00113	COUPLING,SCREW	1		10042~10179	I	430210-00247	1
101	430210-00247	COUPLING,SCREW	1		10180~			
171	110910-00038A	CAP	4					
172	DS2916010	PLUG	2					

Fig. 5340 QUICK COUPLER PIPING [10042

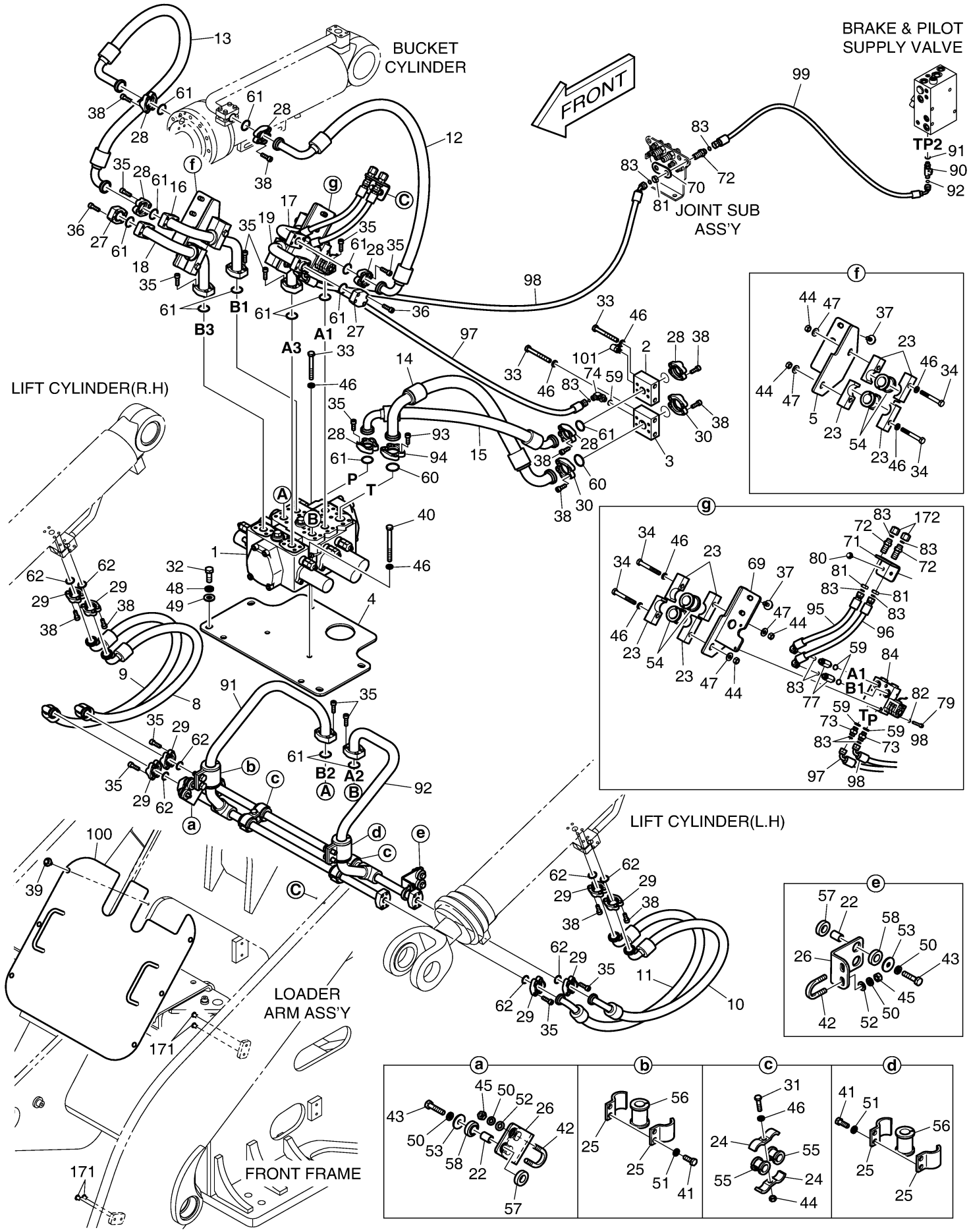

DOOSAN Doosan Infracore

Fig. 5341 QUICK COUPLER PIPING [10272

Key No	Part No	Description	Qty	S.C	Serial No	ICA	Replacable	Qty
-	420212-13493	PIPING,FRONT;Q-COUPLER	-	D				
1	100201-01249	BLOCK,CONTACT	1					
2	DS2045545	HOSE ASSY;(90-90)	1					
3	DS2916007	PLUG	1					
5	S8000141	O-RING	1					
6	S8030041	O-RING	1					
28	2181-9078	FLANGE	4					
38	S2212266	BOLT	4					
61	2180-1026D19	O-RING	3					
62	DS2232041	ADAPTER	1					
63	S2212966	BOLT	4					

Fig. 5341 QUICK COUPLER PIPING [10272

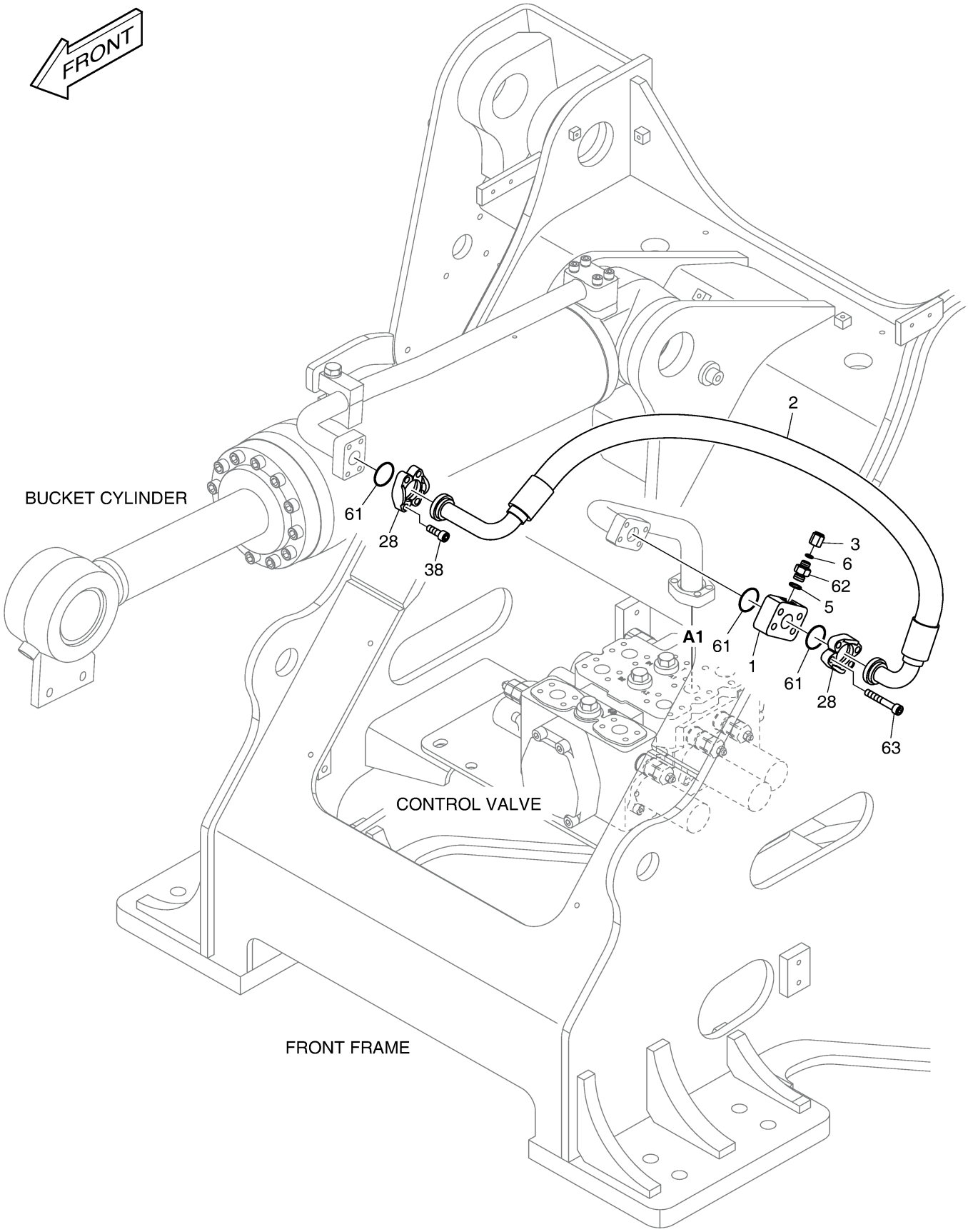

Fig. 5350 QUICK COUPLER PIPING [10042

Key No	Part No	Description	Qty	S.C	Serial No	ICA	Replacable	Qty
-	420212-07527	PIPING,QUICK CLAMP	-	D				
1	DS2012641	HOSE;(45-ST)	2					
2	420207-02109	PIPE,OPTION	2					
3	250201-02140	PLATE	2					
4	DS0025013	BOLT	4					
5	S0560566	BOLT	2					
6	S5102703	WASHER	2					
7	DS2916010	PLUG	2					
8	S8030061	O-RING	4					
9	DS2873027	CLAMP	2					

Fig. 5350 QUICK COUPLER PIPING [10042

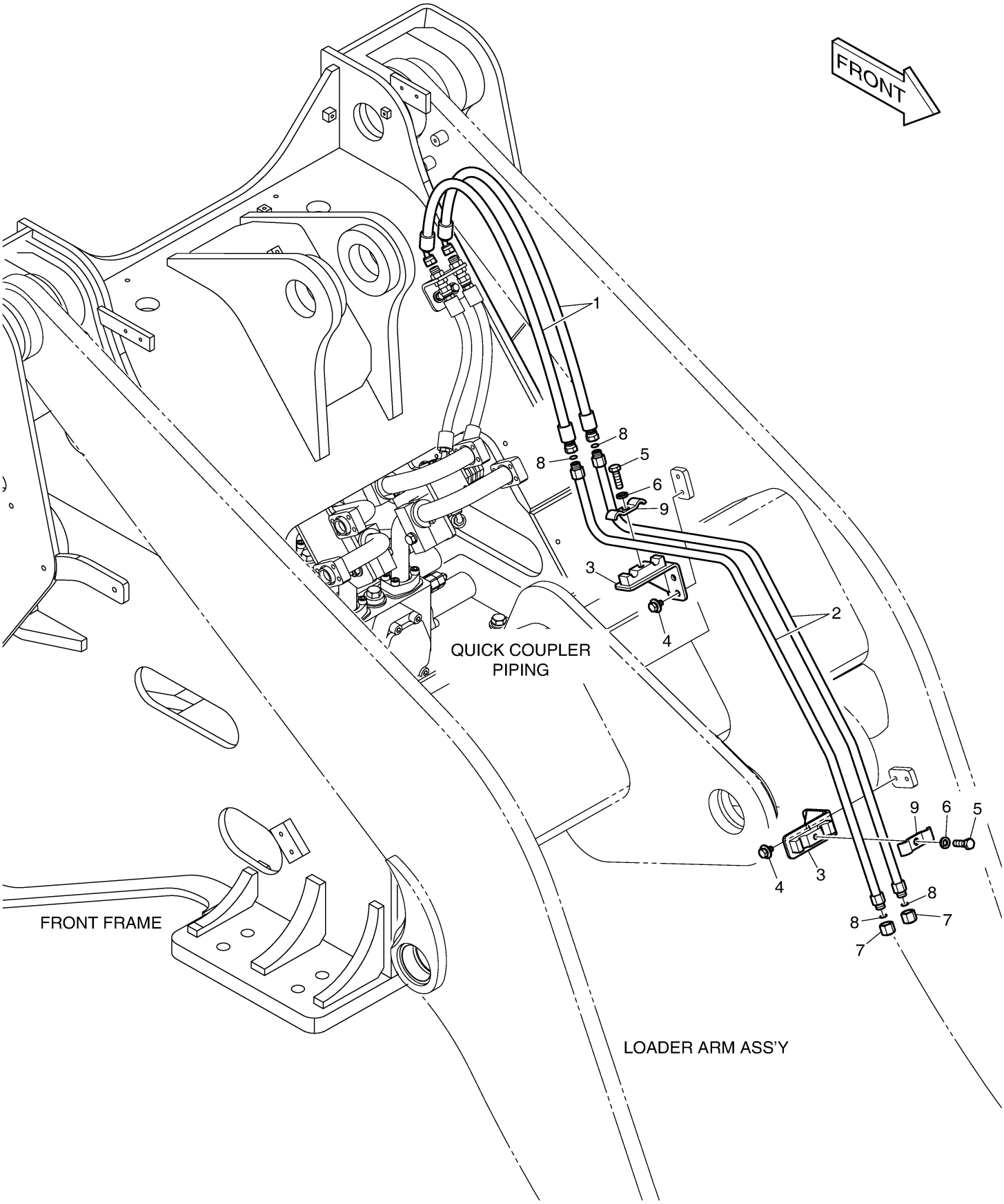

DOOSAN Doosan Infracore

Fig. 5360 PILOT PIPING - 2 SPOOL

Key No	Part No	Description	Qty	S.C	Serial No	ICA	Replacable	Qty
-	220101-00635	CABIN SUB ASSY; MONO	-	D	10001~10081			
-	220101-00635A	CABIN SUB ASSY; MONO	-	D	10082~10190			
-	220101-00635B	CABIN SUB ASSY; MONO	-	D	10191~			
1	426-00105	VALVE;REMOCON	1		10001~10081			
1	426-00104	VALVE;REMOCON	1		10082~			
2	DS2011059	HOSE 11/16"-16UN-2B-1600L	4					
3	DS20131501	HOSE	1		10001~10081			
3	DS20111175	HOSE ASSY,HYDRAULIC	1		10082~			
4	DS2011510	HOSE	1					
5	310207-00870	HARNESS ASSY;JOINT	1					
6	K1010455	ADAPTER	5					
7	K1044052	ADAPTER	1					
8	S8030061	O-RING	6					
9	S8180211	SEAL;RING	1		10001~10190			
10	2181-2667	PLUG	1		10001~10190			
10	DS2917003	PLUG	1		10191~			

Fig. 5360 PILOT PIPING - 2 SPOOL

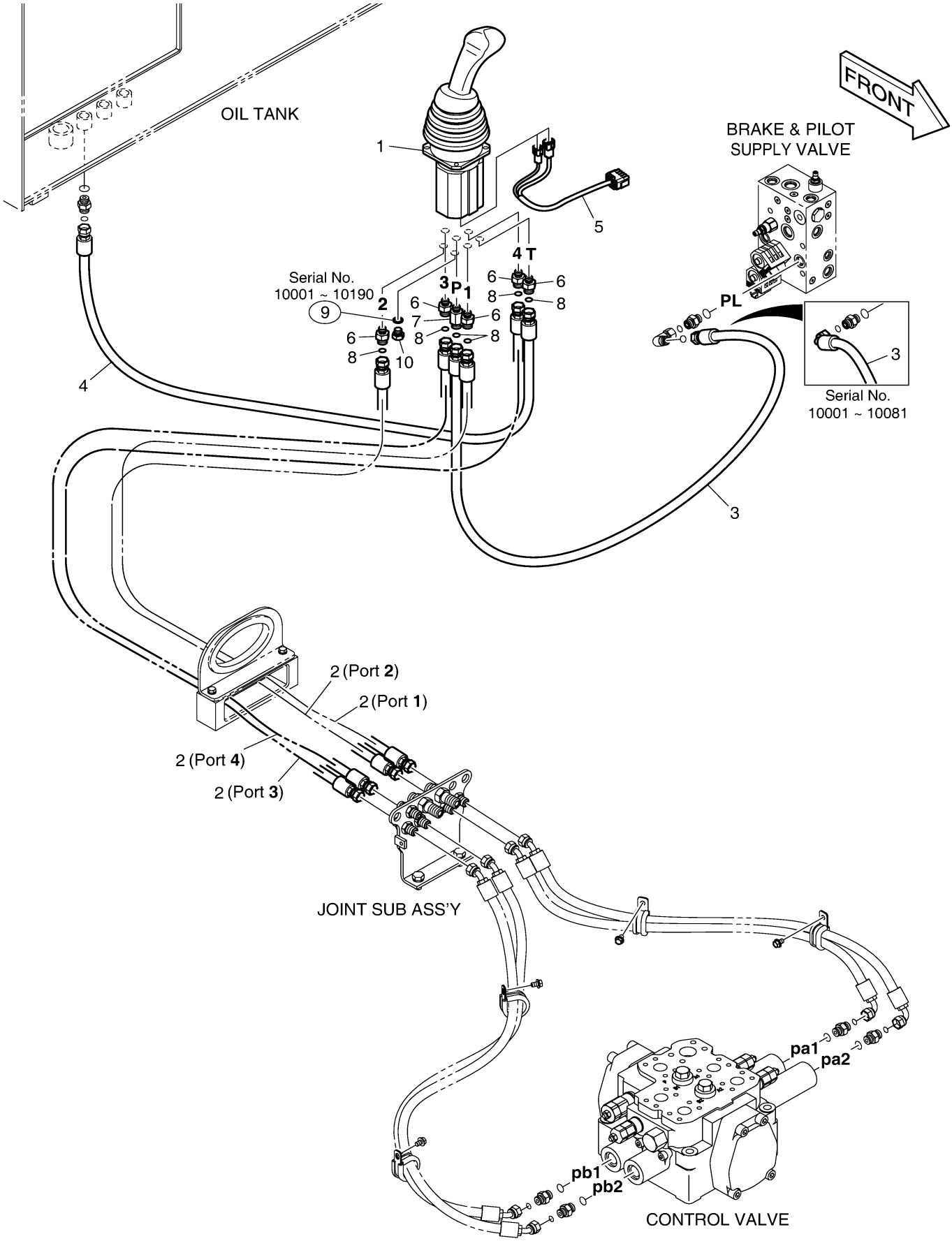

Fig. 5370 JOYSTICK MOUNTING

Key No	Part No	Description	Qty	S.C	Serial No	ICA	Replacable	Qty
-	K1010017A	LEVER;FINGER	-	D	10001~10166			
-	101101-00290	LEVER ASSY	-	D	10167~			
1	K1006103A	COVER;LEVER	1		10001~10166	Y	110508-16018	1
1	110508-16018	COVER;LEVER	1		10167~			
2	K1006104	BRACKET	1					
3	2120-2166D26	SCREW	4					
4	2120-2166D5	BOLT	3					
5	2114-1898D2	WASHER	3					
6	2120-2166D28	BOLT	4					
7	2114-1898D3	WASHER	4					
8	2120-2166D8	BOLT	2					
9	2114-1898D4	WASHER	2					

Fig. 5370 JOYSTICK MOUNTING

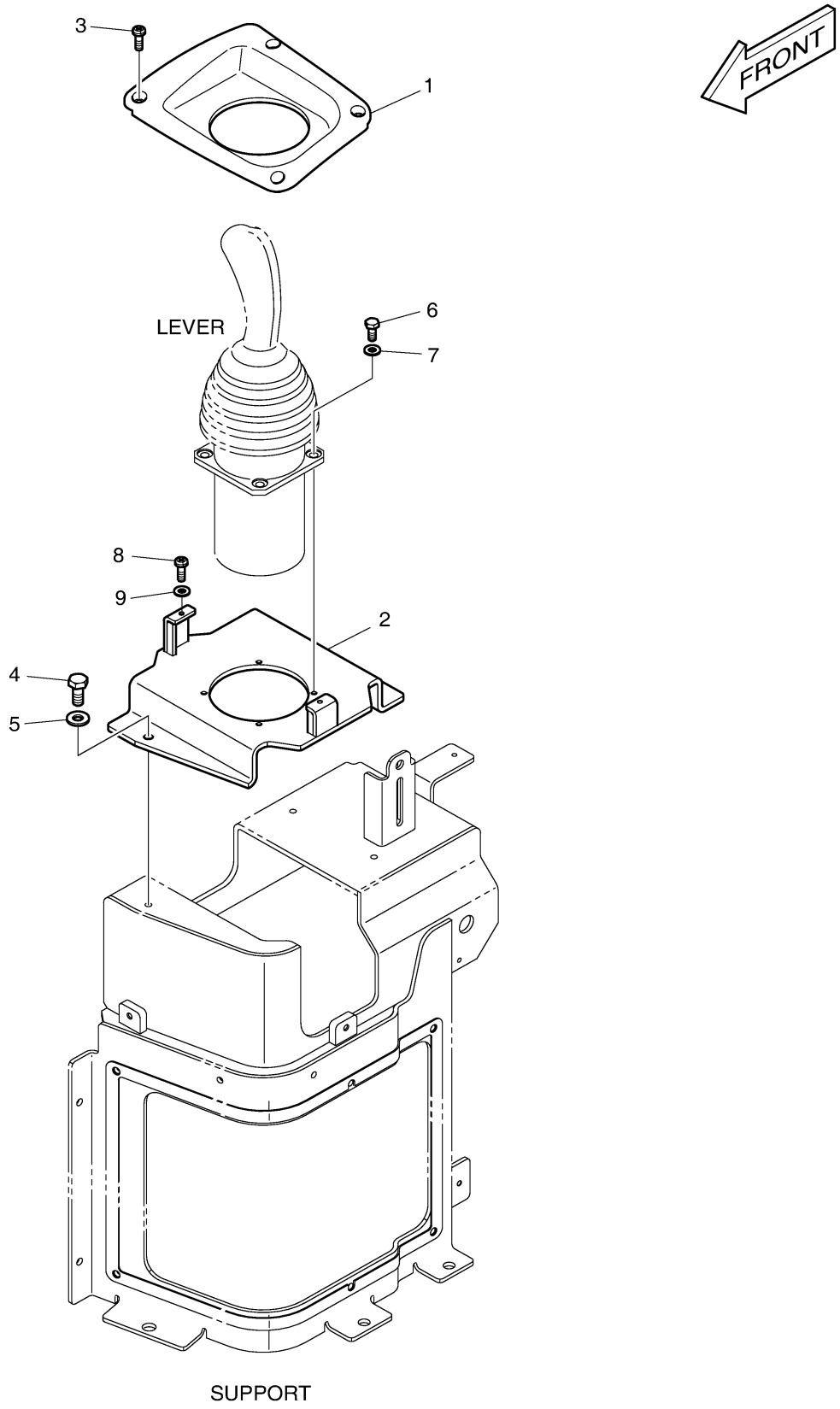

Fig. 5380 ELECTRIC BOX ASS'Y - MONO

Key No	Part No	Description	Qty	S.C	Serial No	ICA	Replacable	Qty
-	300619-01660B	ELEC ASSY:ELEC BOX(MONO)	1		10001~10141	I	300619-01660C	1
-	300619-01660C	ELEC ASSY:ELEC BOX(MONO)	1		10142~10193	I	300619-01660E	1
-	300619-01660E	ELEC ASSY:ELEC BOX(MONO)	1		10194~10360	I	300619-01660G	1
-	300619-01660G	ELEC ASSY:ELEC BOX(MONO)	1		10361~			
1	110958-01336	SUPPORT	1					
1-1	K1050488	DOOR:E-BOX	1					
1-2	S5010513	WASHER	4					
1-3	S0508653	BOLT	4					
2	2543-9015	CONTROLLER,STARTER	1					
3	2525-1011	UNIT:BLINKER	1					
4	300611-00494	UNIT:CONTROL	1					
5	2537-9002	TIMER,WIPER	1					
6	300612-00001A	CONVERTER,DC	1					
7	2516-1102A	BUZZER:PILOT	1					
8	S3450823	SCREW	8					
9	950209-02884	PLATE,NAME:RELAY(1)	1					
10	K1006678	BOX:FUSE	1					
10-1	2527-1016	FUSE,BLADE 10A	8					
10-2	2527-1017	FUSE,BLADE 15A	4					
10-3	2527-1018	FUSE,BLADE 20A	1					
10-4	2527-1025	FUSE,BLADE 30A	1					
11	S3450983	SCREW	4					
12	S3450853	SCREW	4					
13	S5100203	WASHER	12					
14	S5100213	WASHER:SPRING	4					
15	124-00208D2	CLAMP	1					
16	124-00208D4	CLIP	1					
17	300611-00438	CONTROLLER,TRANSMISSION	1					
18	950209-02885	PLATE,NAME:RELAY(2)	1		10001~10141	I	950209-02885A	1
18	950209-02885A	PLATE,NAME:RELAY(2)	1		10142~			
19	S3450943	SCREW	14		10001~10193			
19	S3450943	SCREW	13		10194~			
20	S5102303	WASHER	18		10001~10193			
20	S5102303	WASHER	19		10194~			
21	2121-1305	NUT	2					
22	2544-9033	RELAY	17		10001~10141			

Key No	Part No	Description	Qty	S.C	Serial No	ICA	Replacable	Qty
22	2544-9033	RELAY	18		10142~			
23	2523-9007	CONTROLLER;PREHEAT	1		10001~10360	I	300611-01120	1
23	300611-01120	CONTROL UNIT;PREHEAT	1		10361~			
24	K1006678	BOX;FUSE	1					
24-1	2527-1016	FUSE,BLADE 10A	8					
24-2	2527-1017	FUSE,BLADE 15A	4					
24-3	2527-1018	FUSE,BLADE 20A	1					
24-4	2527-1025	FUSE,BLADE 30A	1					
25	300619-02309A	ELECTRIC UNIT,TIME DELAY	1		10194~			
26	S3450973	SCREW	2		10194~			

Fig. 5380 ELECTRIC BOX ASS'Y - MONO

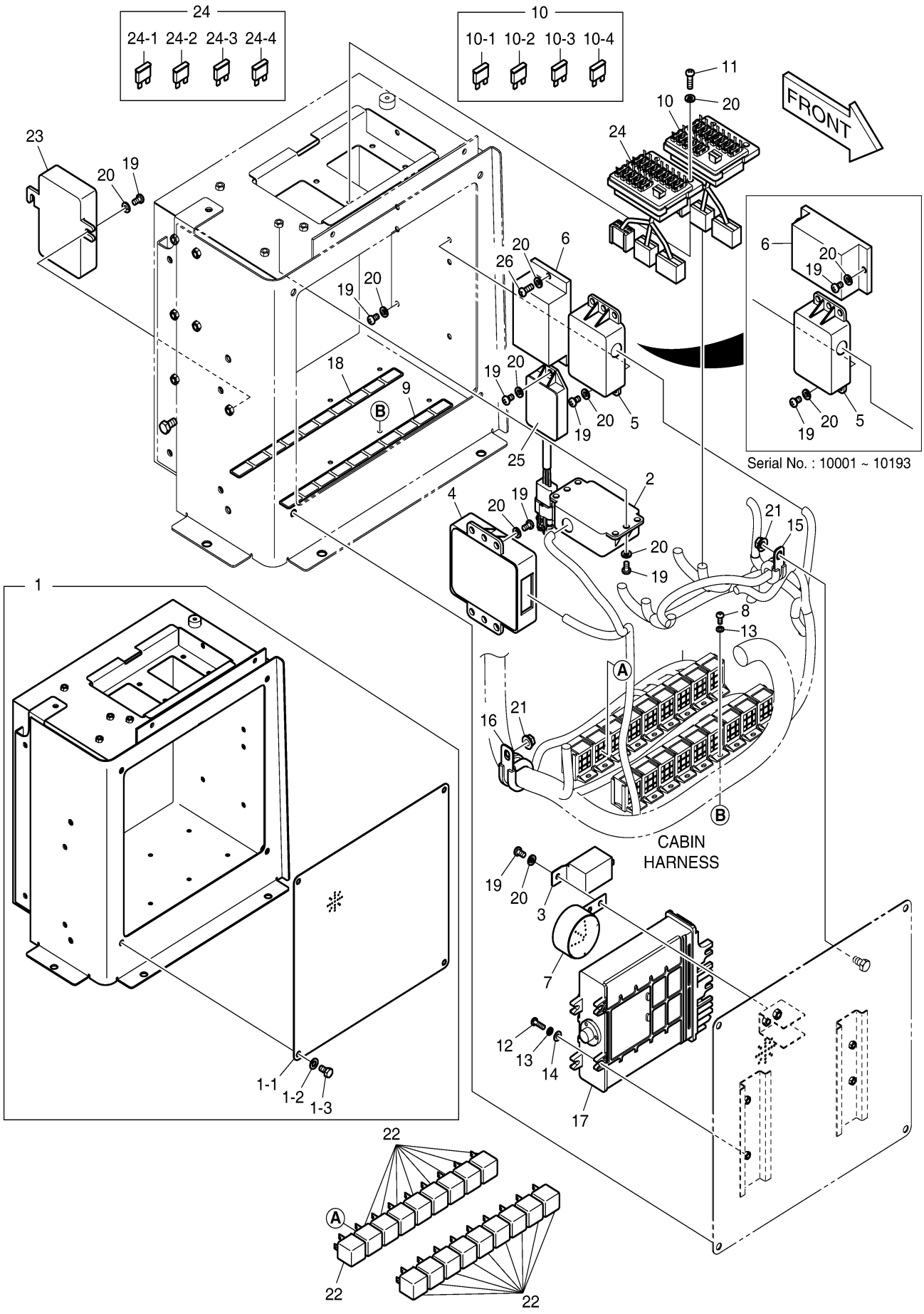

Doosan Infracore

Fig. 5390 LOADER ARM ASS'Y - LONG

Key No	Part No	Description	Qty	S.C	Serial No	ICA	Replacable	Qty
-	650102-00397	ATTACHMENT ASSY;HIGH LIFT	-	D				
1	101101-00138	LEVER ASSY	1		10001~10360			
1	101101-00445	LEVER ASSY,TILT;HIGH LIFT	1		10361~			
1-2	4110-1337	BUSHING	2					
1-3	114-00455	SPACER	1					
2	101541-00074	LINK ASSY,PUSH	1		10001~10360			
2	101541-00241	LINK ASSY,PUSH;H/L 840MM	1		10361~			
2-2	4110-1339	BUSHING	1					
2-3	4110-1340	BUSHING	1					
3	400310-00135	CYLINDER,BUCKET	1		10001~10360			
3	400310-00135A	CYLINDER,BUCKET	1		10361~			
4	440-00248A	CYLINDER;LIFT	2		10001~10360			
4	K1041787	CYLINDER;LIFT	2		10361~			
5	120501-01172A	PIN,MASTER	1		10001~10291	I	120501-01172B	1
5	120501-01172B	PIN,MASTER	1		10292~			
6	120501-00964A	PIN,MASTER	2					
7	120501-01173A	PIN,MASTER	2					
8	120501-00966A	PIN,MASTER	1		10001~10360			
8	120501-00966B	PIN;ARM TO LEVER	1		10361~			
9	120501-01174A	PIN,MASTER	1		10001~10291	I	120501-01174B	1
9	120501-01174B	PIN,MASTER	1		10292~			
10	120501-00968A	PIN,MASTER	1		10001~10291	I	120501-00968B	1
10	120501-00968B	PIN,MASTER	1		10292~10360			
10	120501-03999	PIN;LEVER TO LINK	1		10361~			
11	120501-00987A	PIN,MASTER	1		10001~10360			
11	120501-04000	PIN;BUCKET CYL ROD	1		10361~			
12	120501-01175A	PIN,MASTER	2		10001~10360			
12	120501-04001	PIN;LIFT CYL ROD	2		10361~			
13	120501-00744B	PIN,MASTER	2					
14	160-00020	CAP	9					
15	2180-1106BD5	SEAL;DUST	8		10001~10319	Y	DS5502005	8
15	DS5502005	NUT,SEAL	8		10320~			
16	2180-1106BD6	SEAL,DUST	8		10001~10319	I	DS5502006	8
16	DS5502006	SEAL,DUST	8		10320~			
17	2180-1106BD14	SEAL;DUST	2		10001~10319	I	DS5502014	2
17	DS5502014	SEAL,DUST	2		10320~			

Key No	Part No	Description	Qty	S.C	Serial No	ICA	Replacable	Qty
18	180-00077D3	O-RING	4		10001~10187	Y	DS2855003	4
18	DS2855003	O-RING	4		10188~			
19	S0515066	BOLT	11					
20	4114-4078A	WASHER	11					
21	4114-4031A	WASHER	2					
22	S0521066	BOLT	2					
23	DS7752045	SHIM	2					
24	DS7752126	SHIM,POLYMER	8					
25	DS7752146	SHIM	6					
27	DS7752026	SHIM	4					
28	DS7752015	SHIM	4					
29	DS7752016	SHIM	4					
30	2114-1059D63	SHIM	8					
31	2114-1059D117	SHIM	8					
32	2180-1106BD24	SEAL,DUST	8		10001~10319	I	DS5502024	8
32	DS5502024	SEAL,DUST	8		10320~			
33	S6710041	NIPPLE,GREASE	9					
71	230203-00190	ARM ASSY,LOADER;HIGH LIFT	1		10001~10360			
71	230203-00190A	ARM ASSY,LIFT;H/L 3000MM	1		10361~			
71-2	4110-1335	BUSHING	2					
71-3	K1023197	BUSH	2					
71-4	4110-1338	BUSHING	2					

Fig. 5390 LOADER ARM ASS'Y - LONG

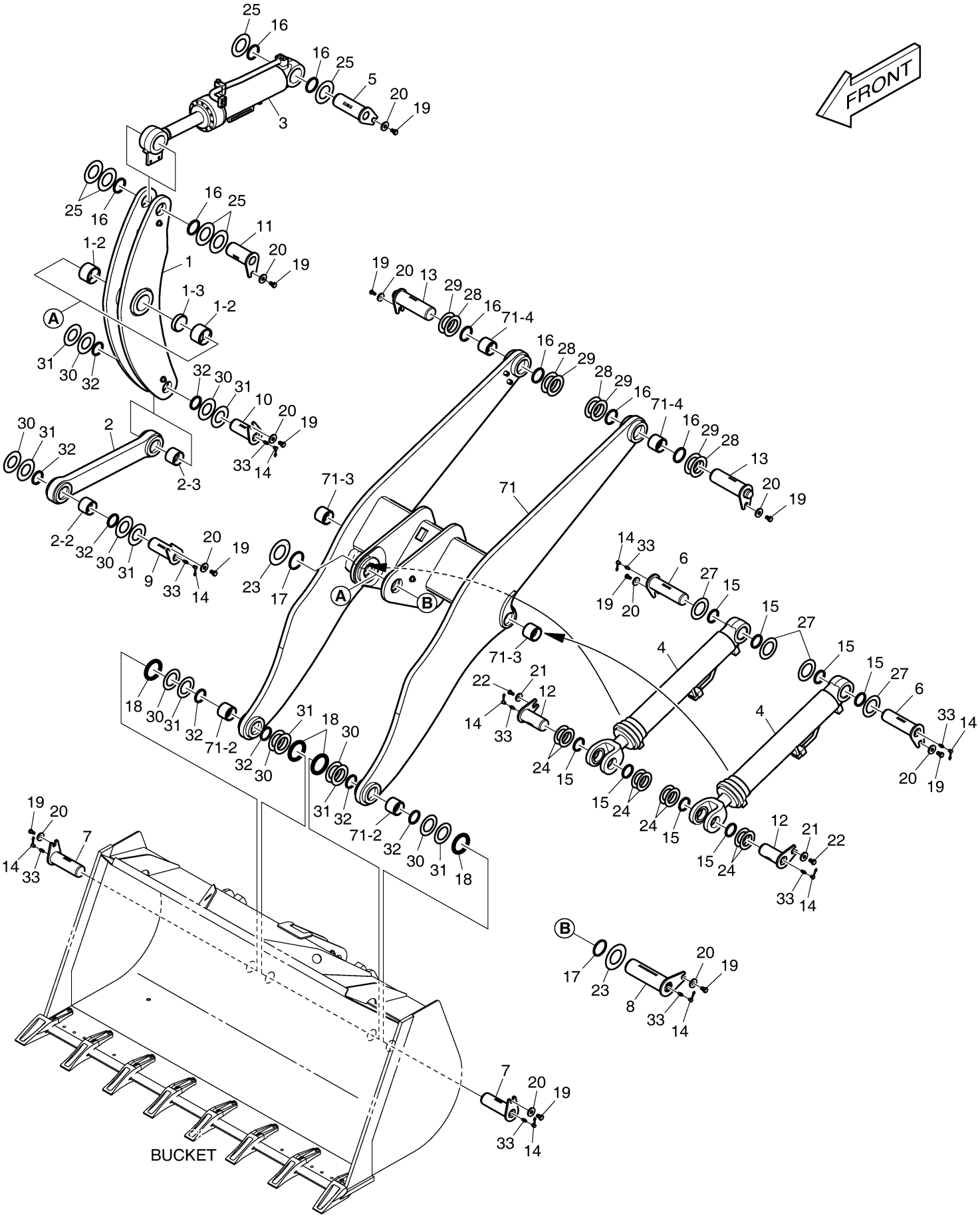

Fig. 5400 QUICK COUPLER PIPING- LONG

Key No	Part No	Description	Qty	S.C	Serial No	ICA	Replacable	Qty
-	420212-10115	PIPING,QUICK CLAMP;HIGH LIFT	-	D				
1	DS20121204	HOSE ASSY,HYDRAULIC	2					
2	420207-02109	PIPE,OPTION	2					
3	250201-02140	PLATE	2					
4	DS0025013	BOLT	4					
5	S0560566	BOLT	2					
6	S5102703	WASHER	2					
7	DS2916010	PLUG	2					
8	S8030061	O-RING	4					
9	DS2873027	CLAMP	2					

Fig. 5400 QUICK COUPLER PIPING- LONG

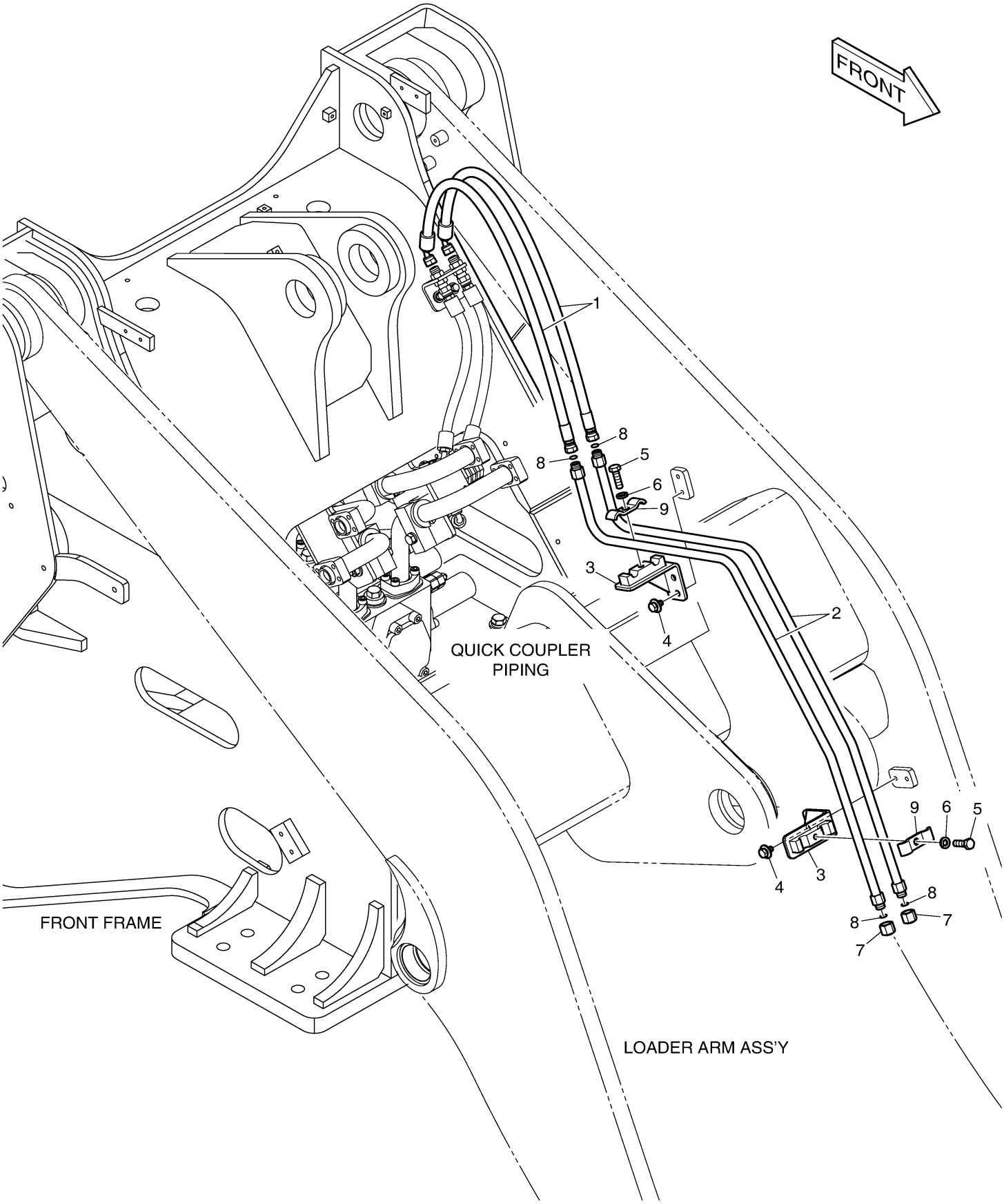

Fig. 5410 COUNTER WEIGHT - LONG

Key No	Part No	Description	Qty	S.C	Serial No	ICA	Replacable	Qty
-	160702-00800	WEIGHT ASSY,COUNTER;HIGH	-	D				
1	160702-00785	WEIGHT,COUNTER	1					

Fig. 5410 COUNTER WEIGHT - LONG BOOM

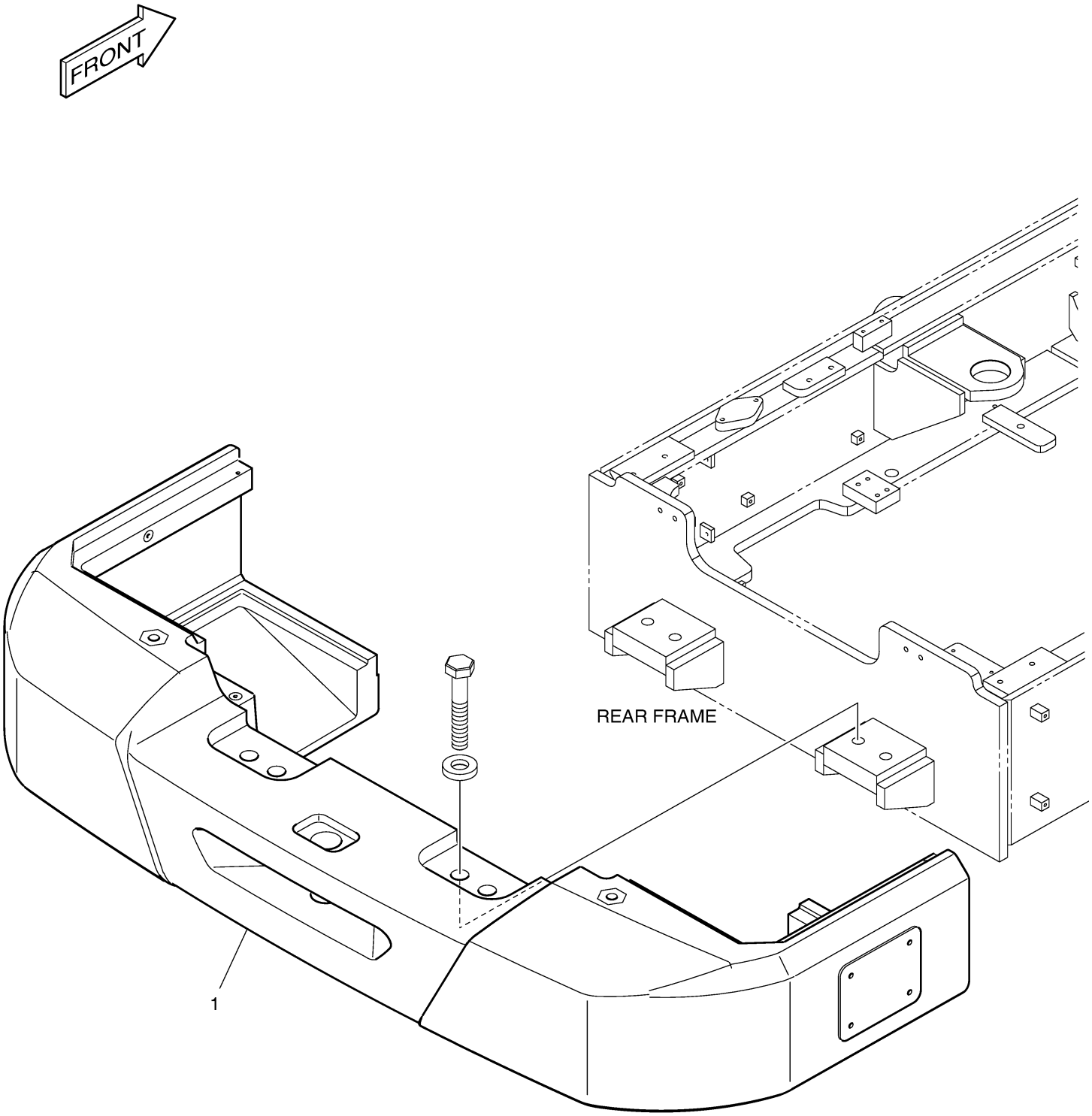

Fig. 5420 TMS [10309 ~]

Key No	Part No	Description	Qty	S.C	Serial No	ICA	Replacable	Qty
-	300619-03342	ELECTRIC ASSY	-	D				
1	300619-03139	ELECTRIC ASSY	1					
1-1	300611-00902	CONTROLLER	1					
1-2	310207-04176	HARNESS,JOINT	1					
1-3	300703-00035	ANTENNA,GSM	1					
1-4	430201-01471	ADAPTER	1					
3	300619-03302	TMS,ANTENNA	1	D				
3-1	300703-00036	ANTENNA,ORB/GPS	1					

Fig. 5420 TMS [10309 ~]

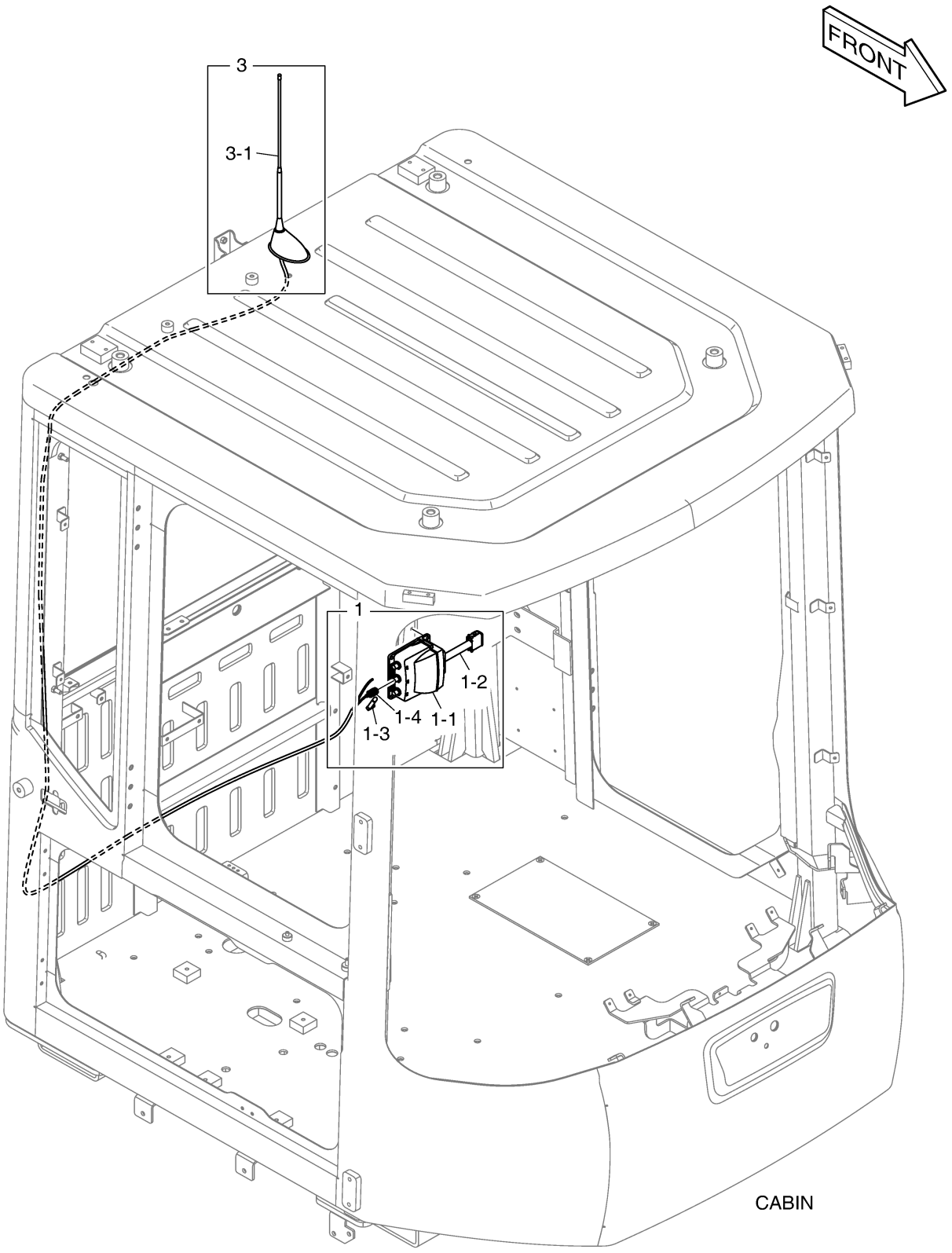

Fig. 5430 TMS - NA [10309 ~]

Key No	Part No	Description	Qty	S.C	Serial No	ICA	Replacable	Qty
-	300619-03341	ELECTRIC ASSY	-	D				
1	300619-03138	ELECTRIC ASSY	1					
1-1	300611-00901	CONTROLLER	1					
1-2	310207-04176	HARNESS,JOINT	1					
1-3	300703-00035	ANTENNA,GSM	1					
1-4	430201-01471	ADAPTER	1					

Fig. 5430 TMS - NA [10309 ~]

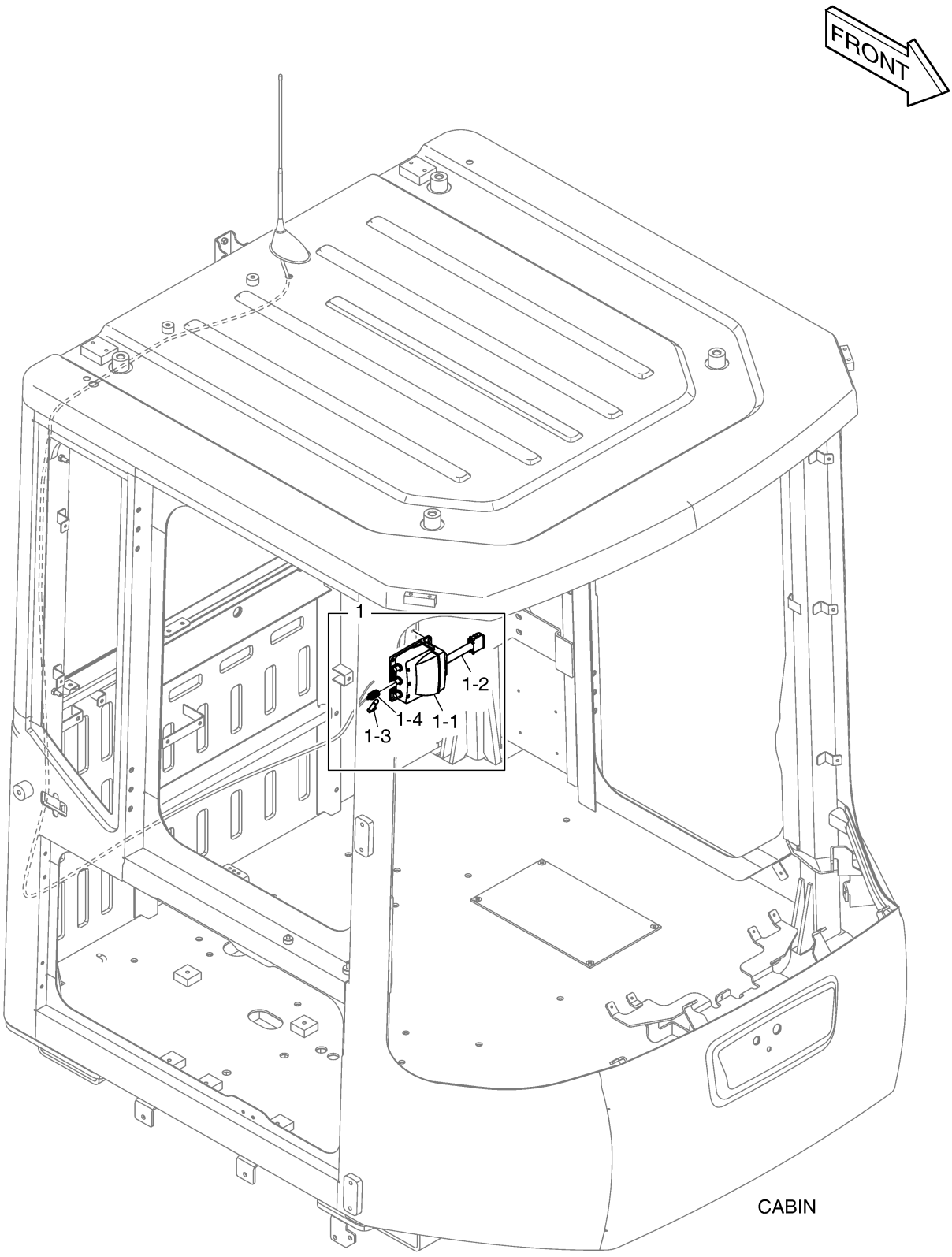

Fig. 5440 WHEEL CHOCK [10266 ~]

Key No	Part No	Description	Qty	S.C	Serial No	ICA	Replacable	Qty
-	180307-00829	FENDER & LADDER ASSY	-	D				
1	K1046074	CHOCK;WHEEL	2					
2	K1046075	CASE;WHEEL CHOCK	2					
3	S2209066	BOLT	8					
4	S5010513	WASHER	8					

Fig. 5440 WHEEL CHOCK [10266 ~]

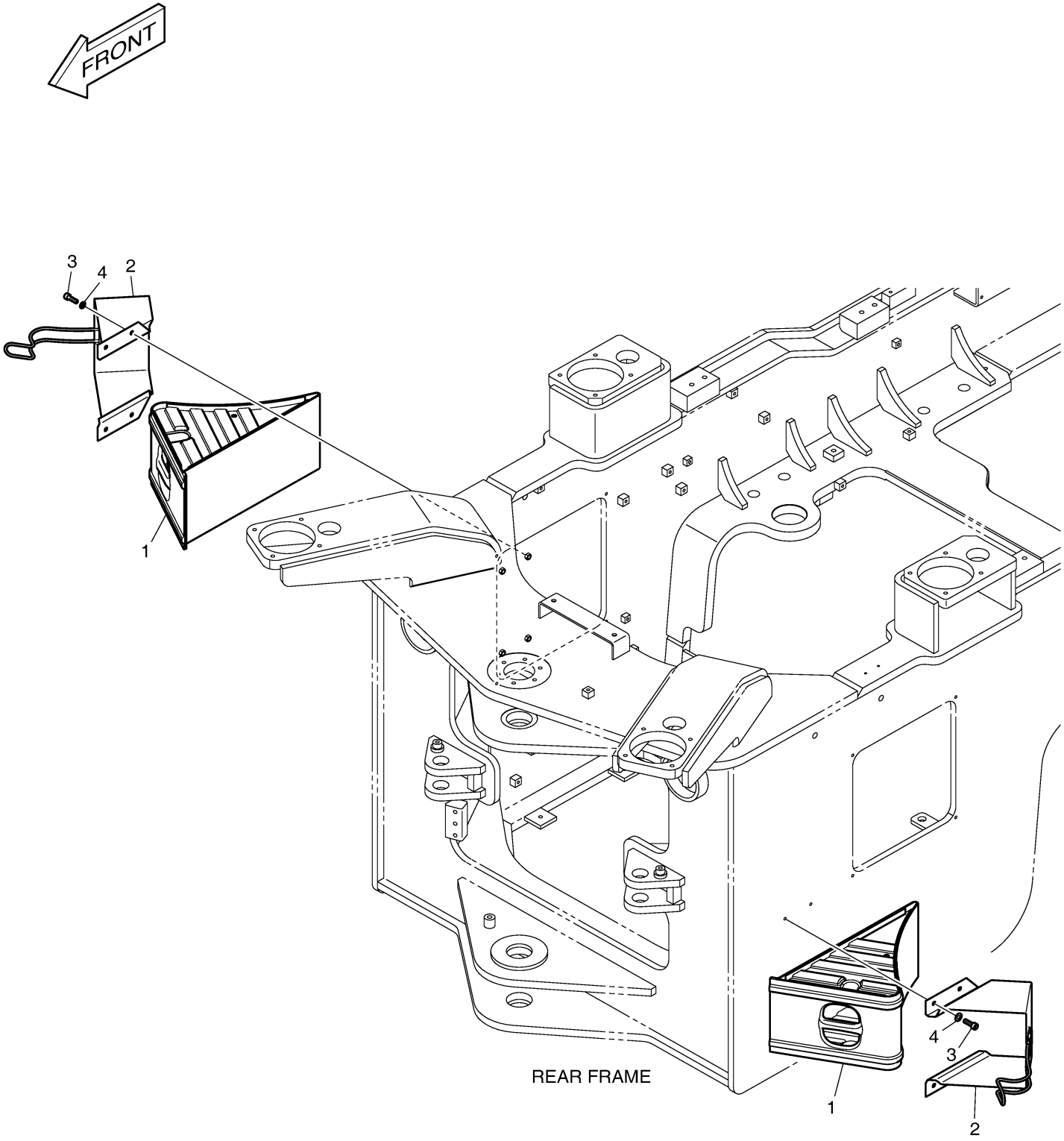

Fig. 5450 WHEEL CHOCK - FULL FENDER

Key No	Part No	Description	Qty	S.C	Serial No	ICA	Replacable	Qty
-	180307-00831	FENDER & LADDER ASSY	-	D				
1	K1046074	CHOCK;WHEEL	2					
2	K1046075	CASE;WHEEL CHOCK	2					
3	S2209066	BOLT	8					
4	S5010513	WASHER	8					

Fig. 5450 WHEEL CHOCK - FULL FENDER

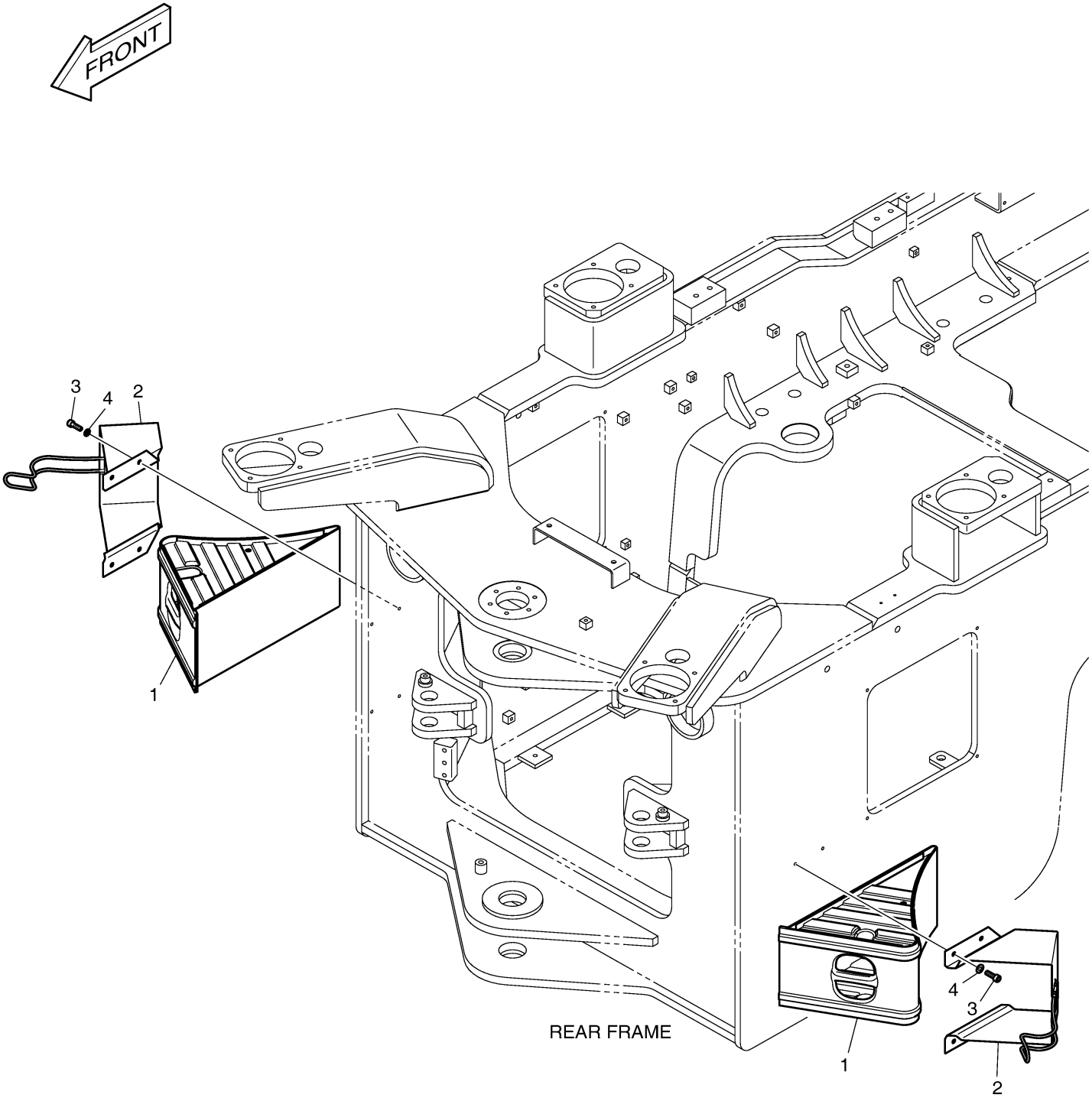

Fig. 5460 ELECTRIC ASS'Y - QUICK

Key No	Part No	Description	Qty	S.C	Serial No	ICA	Replacable	Qty
-	300619-01658	ELECTRIC ASSY;QUICK	-	D				
1	310207-01879	HARNESS,JOINT;QUICK CLAMP	1					
2	120402-00440	CLIP	1					
3	120106-00596	BOLT	1					
71	301423-00065	SWITCH,ROCKER	1					
72	2190-2584D26	INSERT,SWITCH	1					

Fig. 5460 ELECTRIC ASS'Y - QUICK

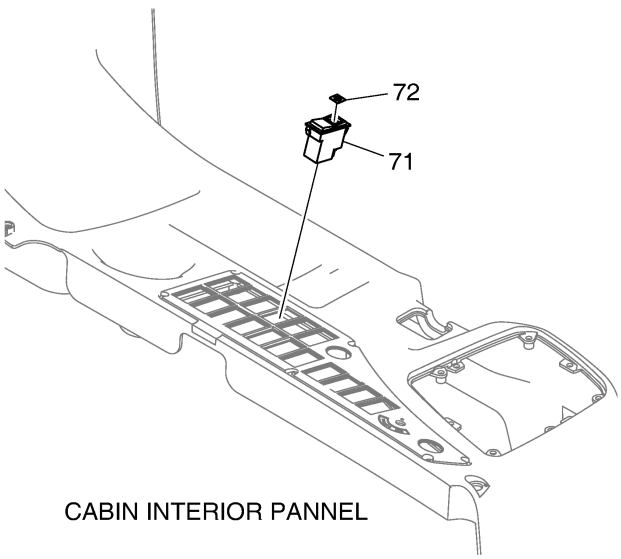

CABIN INTERIOR PANNEL

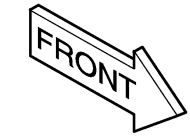

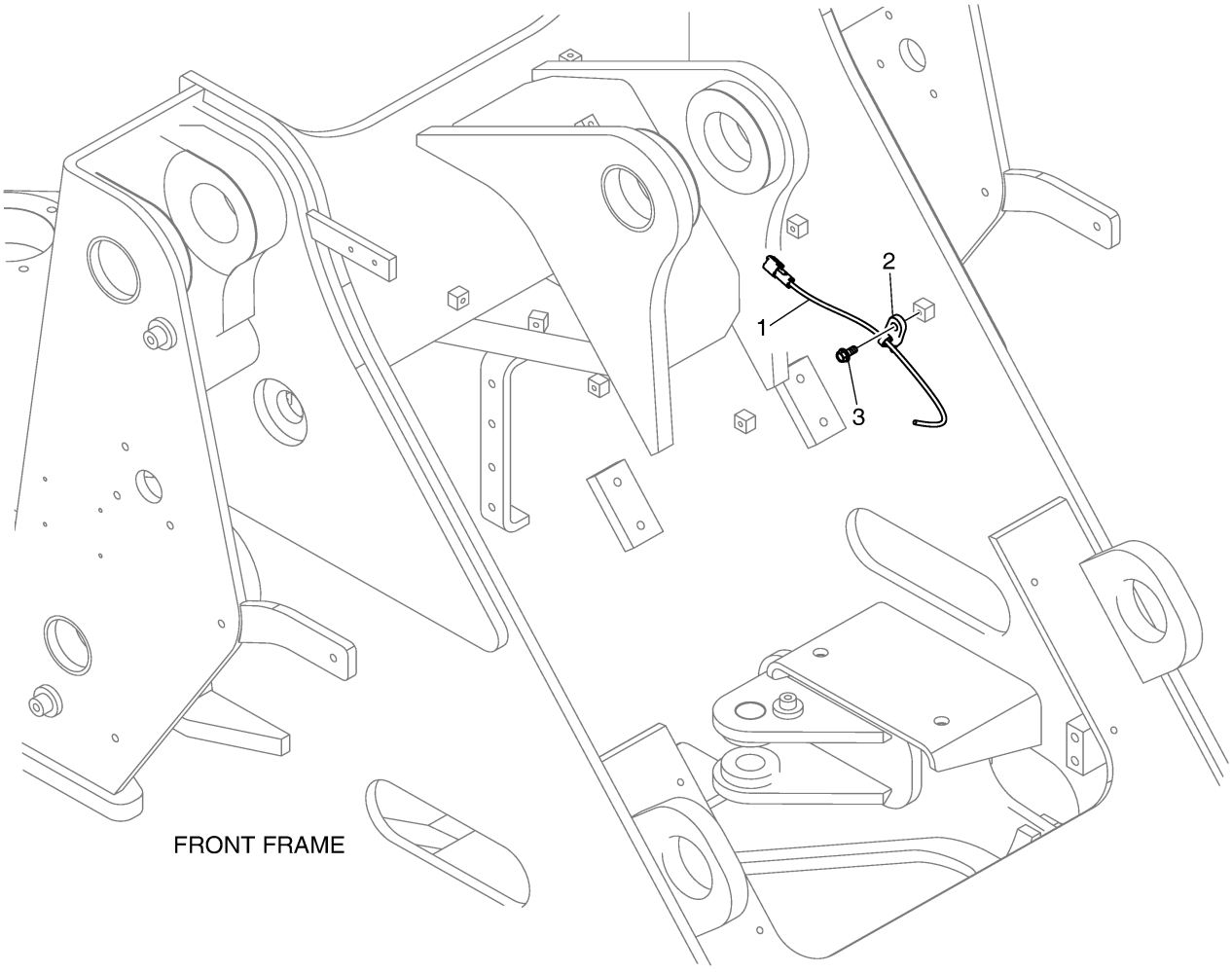

FRONT FRAME