RUTHZIL TRATOR COMERCIAL DE PEÇAS LTDA 11 97083-6812 ROLANDO CITRANGULO

MANUAL DE OPERAÇÃO E SERVIÇO

DL300

Shop Manual

K1010636E

Serial Number 5001 and Up

DOOSAN

DOOSAN reserves the right to improve our products in a continuing process to provide the best possible product to the market place. These improvements can be implemented at any time with no obligation to change materials on previously sold products. It is recommended that consumers periodically contact their distributors for recent documentation on purchased equipment.

This documentation may include attachments and optional equipment that is not available in your machine's package. Please call your distributor for additional items that you may require.

Illustrations used throughout this manual are used only as a representation of the actual piece of equipment, and may vary from the actual item.

Table of Contents

Safety

Wheel Loader Safety SP000095

Specifications

Specification for DL300 ..... SP000104

General Maintenance

General Maintenance Procedures SP000097
Standard Torques SP000098

Drive Train

Transmission and Torque Converter SP000118
Transmission Error Codes (ZF) SP000100
Front Axle (ZF-MT-L 3095) SP000199
Rear Axle (ZF-MT-L 3085) SP000217
Drive Shaft SP000218

Brake

Service Brake SP000219
Brake Supply Valve SP000220
Parking Brake SP000221
Brake Pedal Valve SP000222
Accumulator SP000223

Steering

Steering SP000224
Cushion Valve SP000328
Emergency Steering SP000225

Frame

Articulation Center SP000231
Counterweight..... SP000130

Tank

Oil Tank SP000226
Fuel Tank..... SP000227

Hydraulics

Main Control Valve SP000233
Load Isolation System SP000228
Cooling System..... SP000229
Pilot System..... SP000230
Hydraulic Schematic (DL300) SP000234

Electrical System

Air Conditioner..... SP000172
Electrical System SP000268
Electrical Schematic (DL300) SP000272

Wheel Loader Safety

Edition 1

Table of Contents

Wheel Loader Safety

Safety Precautions 5
Applicable Models 5
To the Operator of a *DOOSAN* Wheel Loader 6
General Safety Essentials 10
Location of Safety Labels 10
Unauthorized Modifications 10
General Hazard Information 11
Before Starting Engine 20
Machine Operation 25
Maintenance 32
Battery 41
Towing 43
Shipping and Transportation 44

SAFETY PRECAUTIONS

CAUTION!

Follow all safety recommendations and safe shop practices outlined in the front of this manual or those contained within this section.

Always use tools and equipment that are in good working order.

Use lifting and hoisting equipment capable of safely handling load.

Remember, that ultimately safety is your own personal responsibility.

APPLICABLE MODELS

The contents of this section apply to the following models and serial number ranges.

MODEL	SERIAL NUMBER RANGE
DL300	5001 and Up
DL400	5001 and Up

TO THE OPERATOR OF A *DOOSAN* WHEEL LOADER

DANGER!

Unsafe use of the wheel loader could lead to serious injury or death. Operating procedures, maintenance and equipment practices or traveling or shipping methods that do not follow the safety guidelines on the following pages could cause serious, potentially fatal injuries or extensive damage to the machine or nearby property.

Please respect the importance of taking responsibility for your own safety, and that other people who may be affected by your actions.

Safety information on the following pages is organized into the following topics.

1. “General Safety Essentials” on page 1-10.
2. “Location of Safety Labels” on page 1-10.
3. “Unauthorized Modifications” on page 1-10.
4. “General Hazard Information” on page 1-11.
5. “Before Starting Engine” on page 1-20.
6. “Machine Operation” on page 1-25.
7. “Maintenance” on page 1-32.
8. “Battery” on page 1-41.
9. “Towing” on page 1-43.
10. “Shipping and Transportation” on page 1-44.

⚠ WARNING!

Improper operation and maintenance of this machine can be hazardous and could result in serious injury or death.

Operator and maintenance personnel should read this manual thoroughly before beginning operation or maintenance.

Keep this manual in the storage compartment to the rear of the operator's seat, and have all personnel involved in working on the machine periodically read the manual.

Some actions involved in operation and maintenance of the machine can cause a serious accident, if they are not done in a manner described in this manual.

The procedures and precautions given in this manual apply only to intended uses of the machine.

If you use your machine for any unintended uses that are not specifically prohibited, you must be sure that it is safe for any others. In no event should you or others engage in prohibited uses or actions as described in this manual.

DOOSAN **delivers machines that comply with all applicable regulations and standards of the country to which it has been shipped. If this machine has been purchased in another country or purchased from someone in another country, it may lack certain safety devices and specifications that are necessary for use in your country. If there is any question about whether your product complies with the applicable standards and regulations of your country, consult** ***DOOSAN*** **or your** ***DOOSAN*** **distributor before operating the machine.**

SAFETY ALERT SYMBOL

Be Prepared - Get to Know All Operating and Safety Instructions.

This is the Safety Alert Symbol. Wherever it appears in this manual or on safety signs on the machine you should be alert to the potential for personal injury or accidents. Always observe safety precautions and follow recommended procedures.

Learn the Signal Words Used with the Safety Alert Symbol

The words **"CAUTION," "WARNING," and "DANGER"** used throughout this manual and on decals on the machine indicate degree of risk of hazards or unsafe practices. All three degrees of risk indicate that safety is involved. Observe precautions indicated whenever you see the Safety Alert "Triangle," no matter which signal word appears next to the "Exclamation Point" symbol.

CAUTION!

This word is used on safety messages and safety labels and indicates potential of a hazardous situation that, if not avoided, could result in minor or moderate injury. It may also be used to alert against a generally unsafe practice.

WARNING!

This word is used on safety messages and safety labels and indicates potential of a hazardous situation that, if not avoided, could result in serious injury or death. It may also be used to alert against a highly unsafe practice.

DANGER!

This word is used on safety messages and safety labels and indicates an imminent hazard of a situation that, if not avoided, is very likely to cause death or extremely serious injury. It may also be used to alert against equipment that may explode or detonate if handled or treated carelessly.

Safety precautions are described in SAFETY from page -10 on.

DOOSAN cannot predict every circumstance that might involve a potential hazard in operation and maintenance. Therefore the safety messages in this manual and on the machine may not include all possible safety precautions. If any procedures or actions not specifically recommended or allowed in this manual are used, you must be sure that you and others can do such procedures and actions safely and without damaging the machine. If you are unsure about the safety of some procedures, contact a *DOOSAN* distributor.

GENERAL SAFETY ESSENTIALS

Accessory Applications

This wheel loader has been designed primarily for moving earth with a bucket. For use as a grapple or for other object handling, contact *DOOSAN*. Lifting-work applications are permitted in approved lift configuration, to rated capacity only, with no side-loading (unless prohibited by local regulation). Do not use machine for activities for which it was not intended. Do not use bucket for lifting work, unless lift slings are used in approved configuration.

LOCATION OF SAFETY LABELS

Location of safety labels (decals) can vary from unit to unit. Refer to appropriate Operation and Maintenance Manual, and Parts Manual for your unit.

There are several specific warning signs on this machine. The exact location of hazards and the description of the hazards are reviewed in the appropriate Operation and Maintenance Manual.

Please become familiarized with all warning signs.

Make sure that all of the warning signs are legible. Clean the warning signs or replace the warning signs if you cannot read the words. Replace the illustrations if the illustrations are not visible. When you clean the warning signs, use a cloth, water and soap. Do not use solvent, gasoline, or other harsh chemicals to clean the safety signs. Solvents, gasoline, or other harsh chemicals could loosen the adhesive that secures the warning sign. Loose adhesive will allow the warning sign to fall off.

Replace any safety sign that is damaged, or missing. If a safety sign is attached to a part that is replaced, install a safety sign on the replacement part.

UNAUTHORIZED MODIFICATIONS

Any modification made without authorization or written approval from *DOOSAN* can create a safety hazard, for which the machine owner must be held responsible.

For safety's sake, replace all OEM parts with the correct authorized or genuine *DOOSAN* part. For example, not taking the time to replace fasteners, bolts or nuts with the correct replacement parts could lead to a condition in which the safety of critical assemblies is dangerously compromised.

GENERAL HAZARD INFORMATION

Safety Rules

Only trained and authorized personnel can operate and maintain the machine.

Follow all safety rules, precautions and instructions when operating or performing maintenance on the machine.

Do not operate the machine if you are not feeling well, if you are taking medication that makes you feel sleepy, if you have been drinking, or if you are suffering from emotional problems. These problems will interfere with your sense of judgement in emergencies and may cause accidents.

When working with another operator or with a person on work site traffic duty, be sure that all personnel know the nature of the work and understand all hand signals that are to be used.

Always observe strictly any other rules related to safety.

Safety Features

Be sure that all guards and covers are installed in their proper position. Have guards and covers repaired immediately if damaged.

Be sure that you understand the method of use of safety features such as transmission lever neutral lock and the seat belt, and use them properly.

Never remove any safety features. Always keep them in good operating condition.

Failure to use safety features according to the instructions in the Operation and Maintenance Manual could result in serious bodily injury.

Inside Operator's Compartment

When entering the operator's compartment, always remove all mud and oil from the soles of your shoes. If you operate the accelerator and brake pedals with mud or oil stuck to your shoes, your foot may slip and this may cause a serious accident.

Clean grease and dirt from pedals and controls. This contributes to safe operation. Cleaning also provides an opportunity to inspect equipment. Minor damage can be repaired or corrected before major problems result.

Keep cab floor and consoles free of tools and personal items.

After using the ashtray, make sure that any matches or cigarettes are properly extinguished, and be sure to close the ashtray. If the ashtray is left open, there is danger of fire.

Do not stick suction pads to the window glass. Suction pads act as a lens and may cause fire.

Do not leave lighters laying around the operator's compartment. If the temperature inside the operator's compartment becomes high, there is danger that the lighter may explode.

Do not use cellular telephones inside the operator's compartment when driving or operating the machine. There is danger that this may lead to an unexpected accident.

Never bring any dangerous objects such as flammable or explosive items into the operator's cab.

To ensure safety, do not use the radio or music headphones when operating the machine. There is danger that this may lead to a serious accident.

When operating the machine, do not put your hands or head out of the window.

When standing up from the operator's seat, always place transmission neutral lock lever in the "LOCK" position and set pilot cutoff switch to "O" (OFF) position. If you accidentally touch the work equipment levers when they are not locked, the machine may suddenly move and cause serous injury or damage.

When leaving the machine, lower the work equipment completely to the ground, set transmission neutral lock lever in the "LOCK" position, set pilot cutoff switch to "O" (OFF) position, "APPLY" parking brake, and shut down engine. Use the key to lock all the equipment. Always remove the key and take it with you.

Clothing and Personal Protective Items

Contain long hair, and avoid loose clothing and jewelry. They can catch on controls or in protruding parts and cause serious injury or death.

Do not wear oily clothes. They are highly flammable.

Full eye protection, a hard hat, safety shoes and gloves may be required at the work site.

While working on the machine, never use inadequate tools. They could break or slip, causing injury, or they may not adequately perform intended functions.

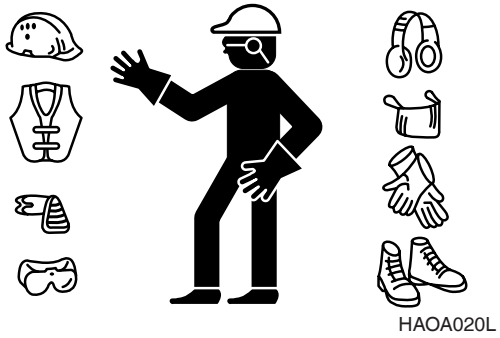
HAOA020L

Figure 1

Breathing Masks, Ear Protection May Be Required

Do not forget that some risks to your health may not be immediately apparent. Exhaust gases and noise pollution may not be visible, but these hazards can cause disabling or permanent injuries.

NOTE: *The equivalent continuous A-weighted sound pressure level at the workstation for this machine is given in the operation manual.*

Measurement is obtained on a dynamic machine following the procedures and cab conditions as described in ISO 6396.

NOTE: *The guaranteed sound power level emitted by the machinery for this machine is given in the operation manual.*

Measurement is obtained on a dynamic machine with the procedures as described in 2000/14/EC.

Vibration Level Information

Hands/Arms: The weighted root mean square acceleration to which the hands/arms are subjected, is less than 2.5 m/s^2.

Whole body: The weighted root mean square acceleration to which the whole body is subjected, is less than 0.5 m/s^2.

Measurements are obtained on a representative machine, using measuring procedures as described in the following standard: ISO 2631/1. ISO 5349, and SAE J1166.

Asbestos Dust Hazard Prevention

Asbestos dust can be HAZARDOUS to your health if it is inhaled. Materials containing asbestos fiber can be present on work site. Breathing air that contains asbestos fiber can ultimately cause serious or fatal lung damage. To prevent lung damage from asbestos fiber, observe following precautions;

- Use a respirator that is approved for use in an asbestos-laden atmosphere.
- Never use compressed air for cleaning.
- Use water for cleaning to keep down the dust.
- Work on the machine or component with the wind at your back whenever possible.
- Always observe any rules and regulations related to the work site and working environment.



ARO1770L

Figure 2

Mounting and Dismounting

Before getting on or off the machine, if there is any oil, grease, or mud on the handrails, steps, or track shoes, wipe it off immediately. Always keep these parts clean. Repair any damage and tighten any loose bolts.

Never get on or off a moving machine. In particular, never get on or off a moving machine. These actions may lead to serious injury.

When getting on or off the machine, always face the machine, and maintain a three-point contact (both feet and one hand or one foot and both hands) with the handholds and steps to ensure that you support yourself securely.

Never hold any control levers when getting on or off the machine.

Never get up from operator's seat or leave operator's station and dismount machine if engine is running.

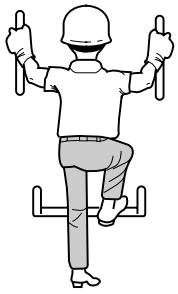

HA3O1003

Figure 3

Fuel, Oil and Hydraulic Fluid Fire Hazards

Fuel, oil and antifreeze will catch fire if it is brought close to a flame. Fuel is particularly flammable and can be hazardous.

Always strictly observe the following.

Add fuel, oil, antifreeze and hydraulic fluid to the machine only in a well ventilated area. The machine must be parked with controls, lights and switches turned "OFF." The engine must be "OFF" and any flames, glowing embers, auxiliary heating units or spark causing equipment must be doused, turned "OFF" and/or kept well clear of the machine.

Static electricity can produce dangerous sparks at the fuel filling nozzle. In very cold, dry weather or other conditions that could produce a static discharge, keep the tip of the fuel nozzle in constant contact with the neck of the fuel filling nozzle, to provide a ground.

Keep fuel and other fluid reservoir caps tight and do not start the engine until caps have been secured.



ARO1050S

Figure 4

Precautions When Handling Fluids at High Temperature

Immediately after operations are stopped, the coolant, engine oil, and hydraulic oil are at high temperature and the radiator and hydraulic tank are still under pressure. Attempting to remove the cap, drain the oil or coolant, or replace the filters may lead to serious burns. Always wait for the temperature to go down, and follow the specified procedures when carrying out these operations.

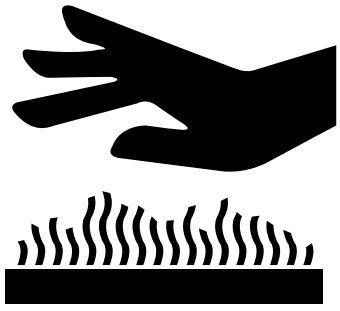

HAOA050L

Figure 5

To prevent hot coolant from spurting out, shut down engine, wait for the coolant to cool, then loosen the cap slowly to relieve the pressure.

To prevent hot oil from spurting out, shut down engine, wait for the oil to cool, then loosen the cap slowly to relieve the pressure.



HAOA060L

Figure 6

Injury from Work Equipment

Do not enter or put your hand, arm or any other part of your body between movable parts, such as between the work equipment and cylinders, or between the machine and work equipment.

If the control levers are operated, the clearance between the machine and the work equipment will change and this may lead to serious damage or personal injury.

If going between movable parts is necessary, always position and secure the work equipment so that it cannot move.



HDO1010L

Figure 7

Fire Extinguisher and First Aid Kit

As a precaution if any injury or fire should occur, always do the following.

- Be sure that fire extinguishers have been provided and read the labels to ensure that you know now to use them. It is recommended that an appropriately sized (2.27 kg [5 lb] or larger) multipurpose "A/B/C" fire extinguisher be mounted in the cab. Check and service the fire extinguisher at regular intervals and make sure that all work site crew members are adequately trained in its use.
- Provide a first aid kit in the storage compartment and keep another at the work site. Check the kit periodically and make any additions if necessary.
- Know what to do in case of injury from fire.
- Keep emergency numbers for doctor, ambulance service, hospital and fire department near your telephone.

If the machine catches fire, it may lead to serious personal injury or death. If a fire occurs during operation, escape from the machine as follows;

- Turn the starter switch "OFF" and shut down engine.

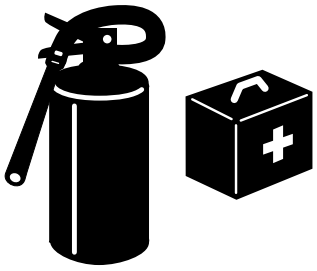

HDO1009L

Figure 8

- If there is time, use the fire extinguisher to extinguish as much of the fire as possible.
- Use the handrails and steps to escape from the machine.

The above is the basic method for escaping from the machine, but changing the method may be necessary according to the conditions, so carry out practice drills at the work site.

Protection from Falling or Flying Objects

On work sites where there is danger that falling objects or flying objects may hit the operator's cab select a guard to match the operating conditions to protect the operator.

Work in mines, tunnels, deep pits or on loose or wet surfaces could produce danger of falling rock, roll over or hazardous flying objects. Additional protection for operator's cab could be required in form of a FOPS/Falling Object Protective Structure and/or ROPS/Roll Over Protective Structure reinforcement system.

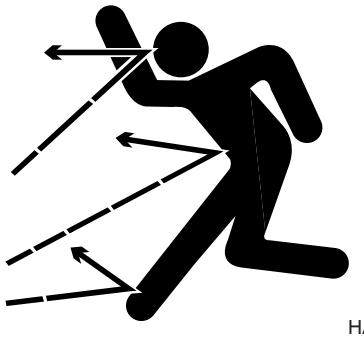

HAOA110L

Figure 9

Any reinforcement system that is installed on machine must pass safety and certification standards and carry appropriate labeling and rating information. For example, most often added type of reinforcement system, FOPS, must meet or exceed Society of Automotive Engineers standard SAE J1356, "Performance Criteria for Falling Object Guards for Wheel loaders."

Never attempt to alter or modify any type of protective structure reinforcement system, by drilling holes, welding or remounting or relocating fasteners. Any serious impact or damage to system requires a complete integrity reevaluation. Reinstallation, recertification and/or replacement of system may be necessary.



HAOA100L

Figure 10

Install Additional Safety Equipment If Conditions Require

Laminate glass protection for the front, side or rear windows may also be recommended depending upon particular site conditions.

Contact your *DOOSAN* distributor for available safety guards and/or recommendations if there is any danger of getting hit by objects that could strike the operator's cab. Make sure that all other work site crew members are kept well away from wheel loader and safe from potential hazards.

Maintain Standard Safety Equipment in Good Condition

Machinery guards and body panel covers must be in place at all times. Keep well clear of rotating parts. Pinch point hazards such as cooling fan and alternator drive belts could catch hair, jewelry or oversize or very loose clothing.

Safety labels must be replaced if they are damaged or become unreadable. Information on labels gives work crew members an important safety reminder. Part numbers for each decal and required mounting locations are shown on pages 1-2 through 1-4 of this section.

Attachment Precautions

Options kits are available through your dealer. Contact *DOOSAN* for information on available one-way (single-acting) and two-way (double-acting) piping / valving / auxiliary control kits. Because *DOOSAN* cannot anticipate, identify or test all attachments that owners may wish to install on their machines, please contact *DOOSAN* for authorization and approval of attachments, and their compatibility with options kits.

Accumulator

The pilot control system is equipped with an accumulator. For a brief period of time after the engine has been shut down, the accumulator will store a pressure charge that may enable hydraulic controls to be activated. Activation of any controls may enable the selected function to operate under force of gravity.

When performing maintenance on the pilot control system, the hydraulic pressure in the system must be released as describe in Operation and Maintenance Manual.

The accumulator is charged with high-pressure nitrogen gas, so it is extremely dangerous if it is handled in the wrong way. Always observe the following precautions;

- Do not drill or make any holes in the accumulator or expose it any flame, fire or heat source.
- Do not weld on the accumulator, or try attaching anything to it.
- When carrying out disassembly or maintenance of the accumulator, or when disposing of the accumulator, the charged gas must be properly released. Contact your *DOOSAN* distributor.
- Wear safety goggles and protective gloves when working on an accumulator. Hydraulic oil under pressure can penetrate the skin and cause serious injuries.

Engine Ventilation

Engine exhaust gases can cause loss of judgment, loss of alertness, and loss of motor control. These gases can also cause unconsciousness, serious injury and fatal accidents.

Make sure of adequate ventilation before starting engine in any enclosed area.

You should also be aware of open windows, doors or ductwork into which exhaust may be carried, or blown by wind, exposing others to danger.



ARO1770L

Figure 11

BEFORE STARTING ENGINE

Work Site Precautions

Before starting operations, thoroughly check the area for any unusual conditions that could be dangerous.

Check the terrain and condition of the ground at the work site, and determine the best and safest method of operation.

Make the ground surface as hard and horizontal as possible before carrying out operations. If there is a lot of dust and sand on the work site, spray water before starting operations.

If you need to operate on a street, protect pedestrians and cars by designating a person for work site traffic duty or by erecting fences and posting "No Entry" signs around the work site.

Erect fences, post "No Entry" signs, and take other steps to prevent people from coming close to or entering the work site. If people come close to a moving machine, they may be hit or caught by the machine, and this may lead to serious personal injury or death.

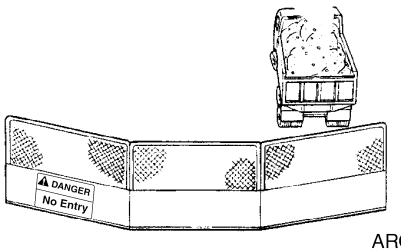

ARO1251L

Figure 12

Water lines, gas lines, phone lines and high voltage electrical lines may be buried under the work site. Contact each utility and identify their locations. Be careful not to damage or cut any of these lines.

NEVER be in water that is in excess of the permissible water depth. Refer to "Operation Manual."

Any type of object in the vicinity of the boom could represent a potential hazard, or cause the operator to react suddenly and cause an accident. Use a spotter or signal person working near bridges, phone lines, work site scaffolds, or other obstructions.

Minimum levels of insurance coverage, work permits or certification, physical barriers around the work site or restricted hours of operation may be mandated by governing authorities. There may also be regulations, guidelines, standards or restrictions on equipment that may have to be followed for local requirements. There may also be regulations related to performing certain kinds of work. If there is any question about whether your machine and work site complies with the applicable standards and regulations contact your local authorities and agencies.

Avoid entering soft ground. It will be difficult for the machine to escape.

Avoid operating your machine to close to the edge of cliffs, overhangs, and deep ditches. The ground may be weak in such areas. If the ground should collapse, the machine could fall or tip over and this could result in serious injury or death.

Remember that the soil after heavy rain, blasting or after earthquakes, is weakened in these areas.

Earth laid on the ground and the soil near ditches is loose. It can collapse under the weight of vibration of your machine and cause your machine to tip over.

Install the head guard (FOPS) if working in areas where there is danger of falling rocks.

Checks Before Starting Engine

Every day before starting the engine for the first time, carry out the following checks. If these checks are not carried out properly, there is danger of serious injury.

- Completely remove all wood chips, leaves, grass, paper and other flammable materials accumulated in the engine compartment and around the battery. They could cause a fire. Remove any dirt from the window glass, mirrors, handrails, and steps.
- Do not leave tools or spare parts laying around in the operator's compartment. The vibration of the machine when traveling or during operations may cause them to fall and damage or break the control levers or switches. They may also get caught in the gap of the control levers and cause the work equipment to malfunction or move dangerously. This may lead to unexpected accidents.
- Check the coolant level, fuel level, and hydraulic tank oil level, and check for clogged air cleaner and damage to the electrical wiring.
- Adjust the operator's seat to a position where it is easy to operate the machine, and check the seat belt and mounts for damage and wear.
- Check the operation of the gauges and the angle of the mirrors, and check that the safety lever is in "LOCKED" position.
- If any abnormalities are found in the above checks, carry out repairs immediately.

Engine Starting

- Walk around your machine before getting in operator's cab. Look for evidence of leaking fluid, loose fasteners, misaligned assemblies or any other indications of possible equipment hazard.
- All equipment covers and machinery safety guards must be in place, to protect against injury while machine is being operated.
- Look around work site area for potential hazards, or people or property that could be at risk while operation is in progress.
- NEVER start engine if there is any indication that maintenance or service work is in progress, or if a warning tag is attached to controls in cab.
- A machine that has not been used recently, or is being operated in extremely cold temperatures, could require a warm-up or maintenance service before start up.

- Check gauges and monitor displays for normal operation before starting engine. Listen for unusual noises and remain alert for other potentially hazardous conditions at start of work cycle.
- Check tire inflation and check tires for damage or uneven wear. Perform maintenance before operation.
- Do not short circuit the starting motor to start the engine. This is not only dangerous, but may also damage the machine.
- When starting the engine, sound the horn as an alert.
- Start and operate the machine only while seated.

Before Operating Machine

If checks are not carried out properly after starting the engine, it may result in a delay in discovering abnormalities in the machine, and this may lead to personal injury or damage to the machine.

Carry out the checks in an open area where there are no obstructions. Do not let anyone near the machine when carrying out the checks.

- Check the operating condition of the equipment, and the actuation of the bucket, boom, and travel systems.
- Check the machine for any abnormal noise, vibration, heat, smell, or abnormality with the gauges. Check also for leakage of air, oil, and fuel.
- If any abnormality is found, repair the problem immediately. If the machine is used without repairing the problems, it may lead to unexpected injury or failure.
- Clear all personnel from directly around machine and from the area.
- Clear all obstacles from the machine's path. Beware of hazards.
- Be sure that all windows are clean. Secure the doors and the windows in the open position or in the shut position.
- Adjust the rear view mirrors for best visibility close to the machine. Make sure that the horn, the travel alarm (if equipped), and all other warning devices are working properly.
- Fasten the seat belt securely.
- Warm up the engine and hydraulic oil before operating machine.
- Before moving the machine, check the position of undercarriage. The normal travel position is with idler wheels to the front under the cab and the drive sprockets to the rear. When the undercarriage is in the reversed position, the travel controls must be operated in opposite directions.

MACHINE OPERATION

IMPORTANT

If you need more information or have any questions or concerns about safe operating procedures or working the wheel loader correctly in a particular application or in the specific conditions of your individual operating environment, please consult your local *DOOSAN* representative.

Operate While Seated at Operator's Station ONLY

Never reach in through a window to work a control. Do not try to operate wheel loader unless you're in command position - seated at controls. You should stay alert and focused on your work at all times. Do not twist out of seat if job activity behind you (or to the side) requires your attention.

Use a spotter or signal person if you cannot see clearly and something is happening behind you.

Replace damaged safety labels and lost or damaged operator's manuals.

Do not let anyone operate machine unless they've been fully and completely trained, in safety and in operation of the machine.



HAOA151L

Figure 13

Seat Belts Should Be Used at All Times

Whenever engine is running, operator should be seated at the control station with seat belt properly engaged.



HAOD060P

Figure 14

Movement Alarms

If wheel loader is equipped with an audible travel movement alarm, test alarm on a daily basis. Audible alarm should sound as soon as travel system is engaged.

Travel Precautions

When traveling, wheel loader always keeps lights on; make sure that you are in compliance with all state and local regulations concerning warning flags and signs.

Never turn the starter switch to the "O" (OFF) position when traveling. It is dangerous if the engine stops when the machine is traveling. It will be impossible to operate the steering unless the unit is equipped with an emergency steering system.

Pilot control valve lever (joystick) should not be operated while traveling.

Lower work equipment so that it is 400 mm (16 in) above ground.

Never travel over obstacles or slopes that will cause machine to tilt severely. Travel around any slope or obstacle that causes 10° tilt, or more.

Do not operate the steering suddenly. The work equipment may hit the ground and cause the machine to lose its balance, and this may damage the machine or structures in the area.

When traveling on rough ground, travel at low speed, and avoid sudden changes in direction.

Always keep to the permissible water depth.

When traveling over bridges or structures on private land, check first that the bridge or structure can withstand the weight of the machine. When traveling on public roads, check with the local authorities and follow their instructions.

Sloping Terrain Requires Caution

Dig evenly around work site whenever possible, trying to gradually level any existing slope. If it's not possible to level area or avoid working on a slope, reducing size and cycling rate workload is recommended.

On sloping surfaces, use caution when positioning wheel loader before starting a work cycle. Stay alert for unstable situations to avoid getting into them. For example, you should always avoid working bucket over downhill side of machine when parked perpendicular to slope. Avoid full extensions of bucket in a downhill direction. Lifting bucket too high, too close to machine, while wheel loader is turned uphill can also be hazardous.

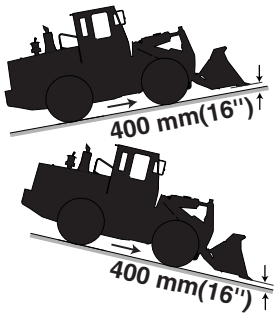

AHO0970L

Figure 15

Avoid High Voltage Cables

Serious injury or death can result from contact or proximity to high voltage electric lines. The bucket does not have to make physical contact with power lines for current to be transmitted.

Use a spotter and hand signals to stay away from power lines not clearly visible to operator.

Voltage	Minimum Safe Distance
6.6 kV	3 m (9' 10")
33.0 kV	4 m (13' 1")
66.0 kV	5 m (16' 5")
154.0 kV	8 m (26' 3")
275.0 kV	10 m (32' 10")

Use these minimum distances as a guideline only. Depending upon voltage in line and atmospheric conditions, strong current shocks can occur with boom or bucket as far away as 4 - 6 m (13 - 20 ft) from power line. Very high voltage and rainy weather could further decrease that safety margin.

NOTE: *Before starting any type of operation near power lines (either above ground or buried cable type) you should always contact power utility directly and work out a safety plan with them.*

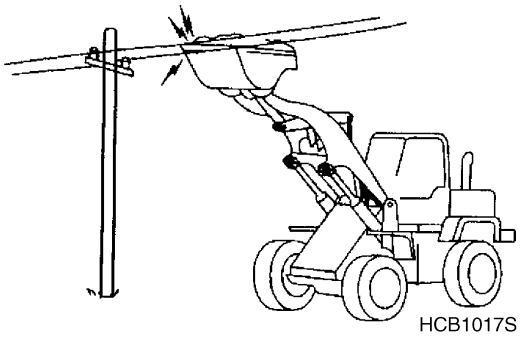

Figure 16

Before Starting to Dig, Contact Authorities

Below ground hazards also include natural gas lines, water mains, tunnels and buried foundations. Know what's underneath work site before starting to dig.

Be Aware of Height Obstacles

Any type of object in vicinity of boom could represent a potential hazard, or cause operator to react suddenly and cause an accident. Use a spotter or signal person working near bridges, phone lines, work site scaffolds, or other obstructions.

Use Care on Loose Support

Working heavy loads over loose, soft ground or uneven, broken terrain can cause dangerous side load conditions and possible tipover and injury. Travel without a load or balanced load may also be hazardous.

If temperatures are changing, be cautious of dark and wet patches when working or traveling over frozen ground. Stay away from ditches, overhangs and all other weak support surfaces. Halt work and install support mats or blocking if work is required in an area of poor support.

Use Solid Support Blocking

Never rely on lift jacks or other inadequate supports when work is being done. Block wheels fore and aft to prevent any movement.

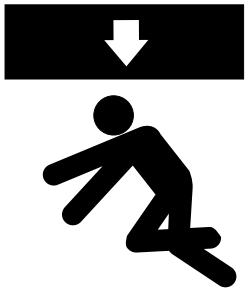

HDO1042L

Figure 17

Digging Beneath Overhangs

Digging beneath an overhang is dangerous. Overhang could collapse on top of operator and cause serious injury or death. Go on to another digging area before steep overhangs are formed. Know height and reach limits of wheel loader and plan ahead while working. Park wheel loader away from overhangs before work shut down.

Digging Beneath Wheel Loader

Digging beneath wheel loader is dangerous. Earth beneath could collapse. This could cause wheel loader to tip, which could cause serious injury or death to operator. Working around deep pits, trenching or along high walls may require support blocks, especially after heavy rainfalls or during spring thaws.

Stay Alert for People Moving Through Work Area

When loading a truck you should always know where the driver is.

Avoid loading over the cab of a truck even if the driver is in a safe spot. Someone else could have gone inside, for any number of reasons. Avoid working where unseen passersby might be.

Slow down work cycle and use slower travel speeds in congested or populated areas. Use a commonly understood signal so that other members of work crew can warn operator to slow or halt work in an impending hazardous situation.



HAOA171L

Figure 18

Be Aware of and Conform to Local Regulations

Minimum levels of insurance coverage, work permits or certification, physical barriers around work site or restricted hours of operation may be mandated by governing authorities. There may also be guidelines, standards or restrictions on equipment that may be used to perform certain kinds of work. Check and follow all local requirements, which may also be related to below ground hazards and power lines.

Never Use Ether Starting Aids

An electric grid type manifold heater is used for cold starting. Glowing heater element can cause ether or other starting fluid to detonate, causing injury.



HAOA311P

Figure 19

Observe General Safety Rules

Only trained and authorized personnel, with a good knowledge and awareness of safe procedures, may be allowed to operate or perform maintenance or service on wheel loader.

All personnel at work site should be aware of assigned individual responsibilities and tasks. Communication and hand signals used should be understood by everyone.

Terrain and soil conditions at work site, approaching traffic, weather related hazards and any above or below ground obstacles or hazards should be observed and monitored by all work crew members.

Take Time to Provide Good Visibility

Be careful not to go close to the edge of a cliff by mistake.

Use the machine only for its main purpose. Using it for other purposes will cause failures.

To ensure an ample view, do as follows:

- When working in dark areas, attach working lights and front lights to the machine. If necessary, set up lighting at the work site.
- Stop operations when the visibility is poor, such as in fog, mist, snow, and rain. Wait for the visibility to improve to a level which causes no problems for the operation.
- Keep dirt and dust off of windows and off lens surfaces of work lights. Stop working if lights, windows or mirrors need cleaning or adjustment.

To avoid hitting the work equipment, always do the following;

- When working in tunnels, on bridges, under electric wires, or when parking the machine or carrying out other operations in places with limited height, be extremely careful not to hit the bucket or other parts.
- To prevent collisions, operate the machine at a safe speed when working in confined spaces, indoors, or

in crowded areas.

- Do not pass the bucket over the heads of workers or over the operator's compartment of dump truck.

Keep "Pinch Point" Areas Clear - Use Caution in Reverse

Use a signal person in high traffic areas and whenever operator's view is not clear, such as when traveling in reverse.

Anyone standing near wheels, or working assemblies of the attachment, is at risk of being caught between moving parts of machine.

Never allow anyone to ride on any part of machine or attachment, including any part of operator's cab.

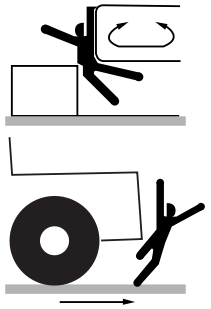

HAOA191L

Figure 20

Operate Carefully on Snow and Ice and in Very Cold Temperatures

In icy cold weather avoid sudden travel movements and stay away from even very slight slopes. Machine could skid off to one side very easily.

Snow accumulation could hide or obscure potential hazards. Use care while operating or while using machine to clear snow.

Warming up engine for a short period may be necessary, to avoid operating with sluggish or reduced working capacity. Jolting shocks and impact loads caused by bumping or bottoming boom or attachment are more likely to cause severe stress in very cold temperatures. Reducing work cycle rate and work load may be necessary.

When the temperature rises, frozen road surfaces become soft, so the machine travel becomes unstable.

In cold weather, do not touch metal surfaces with your bare hands. If you touch a metal surface in extremely cold weather, your skin may freeze to the metal surface.

Parking Machine

Avoid making sudden stops, or parking machine wherever it happens to be at the end of the work day. Plan ahead so that the wheel loader will be on firm, level ground away from traffic and away from high walls, cliff edges and any area of potential water accumulation or runoff. If parking on inclines is unavoidable, block wheels to prevent movement. Lower bucket or other working attachment completely to ground, or to an overnight support saddle. There should be no possibility of unintended or accidental movement.

When parking on public roads, provide fences, signs, flags, or lights, and put up any other necessary signs to ensure that

passing traffic can see the machine clearly, and park the machine so that the machine, flags, and fences do not obstruct traffic.

Shutdown Control Functions

After bucket has been lowered to overnight storage position, move all switches and controls to "OFF" position. Pull parking brake knob to "APPLIED" position. This will apply parking brake. Move pilot cutoff switch to "LOCK" position. This will disable pilot control valve lever (joystick). Move key in starter switch to "OFF" position, and remove key from switch.

Engage all lock-down security equipment that may have been installed on machine.

IMPORTANT

When hydraulic system maintenance or service work must be performed, be aware that accumulators in system store fluid under pressure after system has been shut down. To release hydraulic pressure in accumulators, operate control with engine "OFF" until accumulator pressure is completely dissipated.

Never Let Anyone Ride on Attachment

Never let anyone ride on any work attachment, such as the bucket, crusher, grapple, or clamshell (grab bucket). There is a danger of the person falling and suffering serious injury.



HAAD4050

Figure 21

Use Warning Tag During Service

Alert others that service or maintenance is being performed and tag operator's cab controls - and other machine areas if required - with a warning notice.

Warning tags for controls are available from *DOOSAN* distributors; see Figure 22.



HAOC920L

Figure 22

Clean Before Inspection or Maintenance

Clean the machine before carrying out inspection and maintenance. This prevents dirt from getting into the machine and also ensures safety during maintenance.

If inspection and maintenance are carried out when the machine is dirty, it will become more difficult to locate the problems, and also there is danger that you may get dirt or mud in your eyes or that you may slip and injure yourself.

When washing the machine, do the following;

- Wear shoes with nonslip soles to prevent yourself from slipping and falling on wet places.
- Wear safety glasses and protective clothing when washing the machine with high-pressure steam.
- Take action to prevent touching high-pressure water and cutting your skin or having mud fly into your eyes.
- Do not spray water directly on electrical components (sensors, connector) (1, Figure 23). If water gets into the electrical system, there is danger that it will cause defective operation and malfunction.

Pick up any tools or hammers that are laying in the work place, wipe up any grease or oil or any other slippery substances, and clean the area to make it possible to carry out the operation in safety. If the work place is left untidy, you may trip or slip and suffer injury.

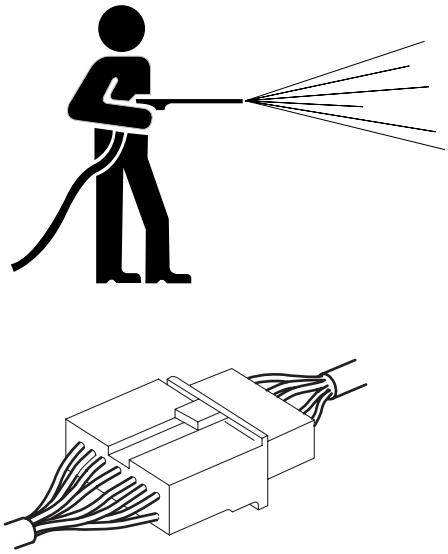

ARO1330L

Figure 23

Proper Tools

Use only tools suited to the task. Using damaged, low qualify, faulty, or makeshift tools could cause personal injury. There is danger that pieces from, chisels with crushed heads, or hammers, may get into your eyes and cause blindness.



HDO1037L

Figure 24

Use of Lighting

When checking fuel, oil, battery electrolyte, or window washing fluid, always use lighting with anti-explosion specifications. If such lighting equipment is not used, there is danger of explosion.

If work is carried out in dark places without using lighting, it may lead to injury, so always use proper lighting.

Even if the place is dark, never use a lighter or flame instead of lighting. There is danger of fire. There is also danger that the battery gas may catch fire and cause and explosion.



HDO1040L

Figure 25

Fire Prevention and Explosion Prevention

All fuels, most lubricants and some coolant mixtures are flammable. Leaking fuel or fuel that is spilled onto hot surfaces or onto electrical components can cause a fire.

Store all fuels and all lubricants in properly marked containers and away from all unauthorized persons.

Store oily rags and other flammable material in a protective container.

Do not smoke while you refuel the machine or while you are in a refueling area.

Do not smoke in battery charging areas or in areas the contain flammable material.

Clean all electrical connections and tighten all electrical connections. Check the electrical wires daily for wires that are loose of frayed. Tighten all lose electrical wires before you operate the machine. Repair all frayed electrical wires before you operate the machine.

Remove all flammable materials before they accumulate on the machine.

Do not weld on pipes or on tubes that contain flammable fluids. Do not flame cut on pipes or on tubes that contain flammable fluids. Before you weld on pipes or on tubes or before you flame

cut on pipes or on tubes, clean the pipes or tubes thoroughly with a nonflammable solvent.

Burn Prevention

When checking the radiator coolant level, shut down engine, let the engine and radiator cool down, then check the coolant recovery tank. If the coolant level in the coolant recovery tank is near the upper limit, there is enough coolant in the radiator.

Loosen the radiator cap gradually to release the internal pressure before removing the radiator cap.

If the coolant level in the coolant recovery tank is below the lower limit, add coolant.

Cooling system conditioner contains alkali. Alkali can cause personal injury. Do not allow alkali to contact the skin, the eyes, or the mouth.

Allow cooling system components to cool before you drain the cooling system.

Hot oil and hot components can cause personal injury. Do not allow hot oil or hot components to contact the skin.

Remove the hydraulic tank filter plug only after the engine has been stopped. Make sure that the hydraulic tank filter plug is cool before you remove it with your bare hand. Remove the hydraulic tank filter plug slowly to relieve pressure.

Relieve all pressure in the hydraulic oil system, in the fuel system, or in the cooling system before you disconnect any lines, fittings, or related items.

Batteries give off flammable fumes that can explode.

Do not smoke while you are checking the battery electrolyte levels.

Electrolyte is an acid. Electrolyte can cause personal injury. Do not allow electrolyte to contact the skin or the eyes.

Always wear protective glasses when you work on batteries.

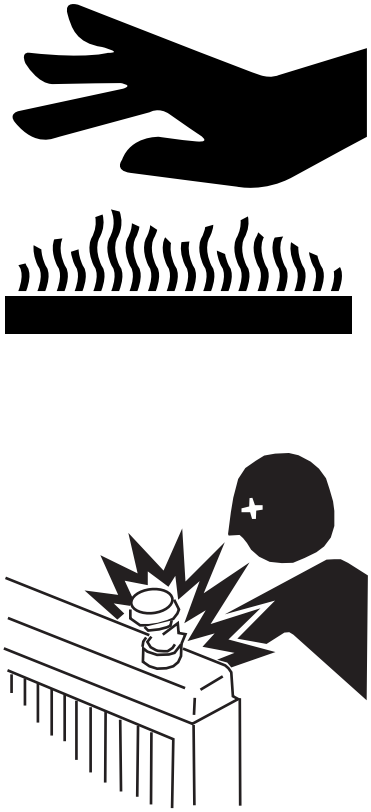

HAAE1980

Figure 26

Welding Repairs

When carrying out welding repairs, carry out the welding in a properly equipped place. The welding should be performed by a qualified worker. During welding operations, there is the danger of, generation of gas, fire, or electric shock, so never let an unqualified worker do welding.

The qualified welder must do the following;

- To prevent explosion of the battery, disconnect the battery terminals and remove batteries.
- To prevent generation of gas, remove the paint from the location of the weld.
- If hydraulic equipment, piping or places close to them are heated, a flammable gas or mist will be generated and there is danger of it catching fire. To avoid this, never subject these places to heat.
- Do not weld on pipes or on tubes that contain flammable fluids. Do not flame cut on pipes or on tubes that contain flammable fluids. Before you weld on pipes or on tubes or before you flame cut on pipes or on tubes, clean the pipes or tubes thoroughly with a nonflammable solvent.
- If heat is applied directly to rubber hoses or piping under pressure, they may suddenly break so cover them with a fireproof covering.
- Wear protective clothing.
- Make sure there is good ventilation.
- Remove all flammable objects and provide a fire extinguisher.

Precautions for Removal, Installation, and Storage of Attachments

Before starting removal and installation of attachments, decide the team leader.

Do not allow anyone except the authorized workers close to the machine or attachment.

Place attachments that have been removed from the machine in a safe place so that they do not fall. Put up a fence around the attachments and take other measures to prevent unauthorized persons from entering.



HDO1041L

Figure 27

Precautions When Working on Machine

When carrying out maintenance operations on the machine, keep the area around your feet clean and tidy to prevent you from falling. Always do the following;

- Do not spill oil or grease.
- Do not leave tools laying about.
- Watch your step when walking.

Never jump down from the machine. When getting on or off the machine, use the steps and handrails, and maintain a three-point contact (both feet and one hand or both hands and one foot) to support yourself securely.

If the job requires it, wear protective clothing.

To prevent injury from slipping or falling, when working on the hood or covers, never use any part except the inspection passage fitted with nonslip pads.



ARO1380L

Figure 28

Lock Inspection Covers

When carrying out maintenance with the inspection cover open, lock the cover securely in position with the lock bar.

If maintenance work is carried out with the inspection cover open but not locked, there is danger that it may suddenly close and cause injury if there is a gust of wind.

Crushing Prevention and Cutting Prevention

You should always have at least two people working together if the engine must be run during service. One person needs to remain in the operator's seat, ready to work the controls or stop the machine and shut off the engine.

Unless you are instructed otherwise, never attempt adjustments while the machine is moving or while the engine is running.

Stay clear of all rotating parts and moving parts.

Keep objects away from moving fan blades. The fan blades will throw objects and the fan blades can cut objects.

Do not use a wire rope cable that is kinked or flayed. Wear gloves when you handle a wire rope cable.

When you strike a retainer pin, the retainer pin might fly out. The loose retainer pin can injure personnel. Make sure that the area is clear of people when you strike a retainer pin. To avoid injury to your eyes, wear protective glasses when you strike a retainer pin.

Do Not Run Engine If Repairs or Work Are Being Performed Alone

You should always have at least two people working together if engine must be run during service. One person needs to remain in operator's seat, ready to work controls or stop machine and shut "OFF" engine.

Always Use Adequate Equipment Supports and Blocking

Do not allow weight or equipment loads to remain suspended. Lower everything to ground before leaving operator's seat. Do not use hollow, cracked or unsteady, wobbling weight supports. Do not work under any equipment supported solely by a lift jack.

Do Not Work on Hot Engines or Hot Cooling or Hydraulic Systems

Wait for engine to cool off after normal operation. Park wheel loader on firm, level ground and lower all equipment before shutting down and switching "OFF" controls. When engine lube oil, gearbox lubricant or other fluids require change, wait for fluid temperatures to decrease to a moderate level before removing drain plugs.

NOTE: *Oil will drain more quickly and completely if it is warm. Do not drain fluids at temperatures exceeding 95°C (203°F), however do not allow full cool down.*

Hydraulic Cylinder Seals Require Periodic Replacement

Check cylinder drift rate at regular intervals. Overhaul seal kits are available through *DOOSAN*.

High-pressure Hydraulic Lines Can Store a Great Deal of Energy

Exposed hydraulic hoses on arm or boom could react with explosive force if struck by a falling rock, overhead obstacle or other work site hazard. Extra safety guards may be required. NEVER allow hoses to be hit, bent or interfered with during operation.

Precautions with High-pressure Line, Tubes and Hoses

When inspecting or replacing high-pressure piping or hoses, check that the pressure has been released from the circuit. Failure to release the pressure may lead to serious injury. Always do the following;

- Wear protective glasses and leather gloves.
- Fluid leaks from hydraulic hoses or pressurized components can be difficult to see but pressurized oil has enough force to pierce the skin and cause serious injury. Always use a piece of wood or cardboard to check for suspected hydraulic leaks. Never use your hands or expose your fingers.
- Do not bend high-pressure lines. Do not strike high-pressure lines. Do not install lines, tubes or hoses that are bent or damaged.
- Make sure that all clamps, guards and heat shields are installed correctly to prevent vibration, rubbing against other parts, and excessive heat during operation.
  - If any of the following conditions are found, replace the part.
  - Damage or leakage from hose end.
  - Wear, damage, cutting of covering, or exposure of strengthening wire layer.
  - Cover portion is swollen in places.
  - There is twisting or crushing at movable parts of hose.
  - Foreign material is embedded in the covering.
  - Hose end is deformed.

NOTE: *Refer to "Hose In-service Lifetime Limit (European Standard ISO 8331 and EN982 CEN)" in Operation and Maintenance Manual, for additional European regulations.*

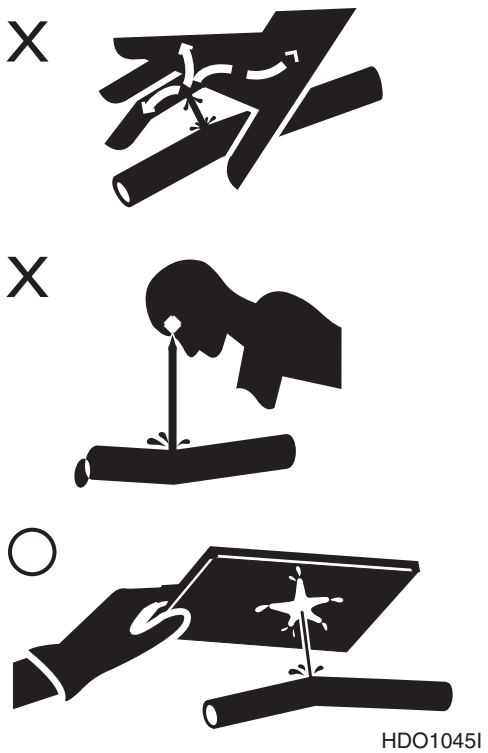

HDO1045I

Figure 29

Obtain Immediate Medical Attention if Pressurized Oil Pierces Skin.

WARNING!

Failure to obtain prompt medical assistance could result in gangrene or other serious damage to tissue.

Use Correct Replacement Fasteners Tightened to Proper Torque

Refer to "General Maintenance" section of Shop Manual for information on tightening torques and recommended assembly compounds and always use correct part.

Poor or incorrect fastener connections can dangerously weaken assemblies.

Safety Critical Parts Must Be Replaced Periodically

Replace following fire related components as soon as they begin to show any sign of wear, or at regular periodic intervals, whether or not deterioration is visible:

- Fuel system flexible hoses, the tank overflow drain hose and the fuel fill cap.
- Hydraulic system hoses, especially the pump outlet lines and front and rear pump branch hoses.
- Keep mounting brackets and hose and cable routing straps tight. Hose routing should have gradual bends.

Dispose of All Petroleum Based Oils and Fluids Properly

Physical contact with used motor oil may pose a health risk. Wipe oil from your hands promptly and wash off any remaining residue.

Used motor oil is an environmental contaminant and may only be disposed of at approved collection facilities. To prevent pollution of the environment, always do the following;

- Never dump waste oil in a sewer system, rivers, etc.
- Always put oil drained from your machine in containers. Never drain oil directly onto the ground.
- Obey appropriate laws and regulations when disposing of harmful materials such as oil, fuel, solvent, filters, and batteries.

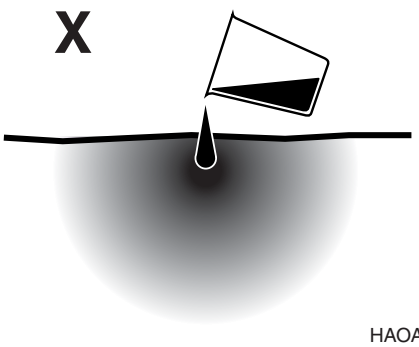

HAOA470L

Figure 30

Check Tire Pressure and Condition

Maintain tire pressure but do not overinflate. Inspect tires and wheels daily. When inflating tires, follow procedures in Maintenance Section, which include using an extension to allow you to avoid standing in front of or over a tire. Do not change a tire unless you have both experience and proper equipment.

BATTERY

Battery Hazard Prevention

Battery electrolyte contains diluted sulfuric acid and batteries generate hydrogen gas. Hydrogen gas is highly explosive, and mistakes in handling them can cause serious injury or fire. To prevent problems, always do the following;

- Do not smoke or bring any flame near the battery.
- When working with batteries, ALWAYS wear safety glasses and rubber gloves.
- If you spill battery electrolyte on yourself or your clothes, immediately flush the area with water.
- If battery electrolyte gets into your eyes, flush them immediately with large quantities of water and see a doctor at once.
- If you accidentally drink battery electrolyte, drink a large quantity of water or milk, raw egg or vegetable oil. Call a doctor or poison prevention center immediately.
- When cleaning the top surface of the battery, wipe it with a clean, damp cloth. Never use gasoline, thinner, or any other organic solvent or detergent.
- Tighten the battery caps securely.
- Explosive battery gas can be set off by sparks from incidental contact or static discharge. Turn "OFF" all switches and engine when working on batteries. Keep battery terminals tight. Contact between a loose terminal and post can create an explosive spark.
- If the battery electrolyte is frozen, do not charge the battery or start the engine with power from another source. There is danger that the battery may catch fire.
- When charging the battery or starting with power from another source, let the battery electrolyte melt and check that there is no leakage of battery electrolyte before starting the operation.
- Always remove the battery from the machine before charging.

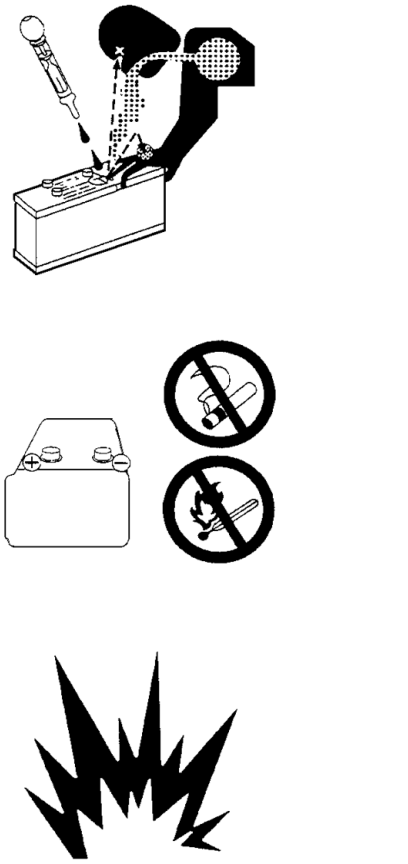

HAAE2100

Figure 31

Disconnect Batteries Before Electrical Service or Electrical Welding

Remove cable to negative terminal first when disconnecting cable. Connect positive terminal cables first when installing a battery.

Use Low Heat Portable Lighting

Hot surfaces on trouble lights or portable work lights can set off fuel or battery explosive gases.

Boost Starting or Charging Engine Batteries

If any mistake is made in the method of connecting the booster cables, it may cause an explosion or fire. Always do the following;

- Turn off all electrical equipment before connecting leads to the battery. This includes electrical switches on the battery charger or boost starting equipment.
- When boost starting from another machine or vehicle do not allow the two machines to touch. Wear safety glasses or goggles while required battery connections are made.
- 24 volt battery units consisting of two series connected twelve volt batteries have a cable connecting one positive terminal on one of the 12 volt batteries to a negative terminal on the other battery. Booster or charger cable connections must be made between the nonseries connected positive terminals and between the negative terminal of the booster battery and the metal frame of the machine being boosted or charged. Refer to the procedure and illustration in Operation and Maintenance Manual.
- Connect positive cable first when installing cables and disconnect the negative cable first when removing them. The final cable connection, at the metal frame of the machine being charged or boost started, should be as far away from the batteries as possible.

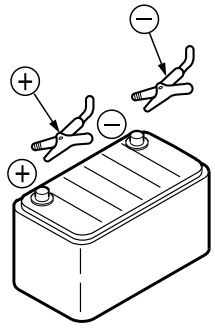

HAOA310L

Figure 32

TOWING

Precautions When Towing

If any mistake is made in the method of selecting or inspecting the towing wire or in the method of towing, it may lead to serious personal injury. Always do the following;

- Always use the method of towing given in this Operation and Maintenance Manual. Do not use any other method.
- Use leather gloves when handling the wire rope.
- When carrying out the preparation work for towing with two or more workers, determine the signals to use and follow these signals correctly.
- If the engine on the problem machine will not start or there is a failure in the brake system. always contact your *DOOSAN* distributor.
- Never go between the towing machine and the towed machine during the towing operation.
- It is dangerous to carry out towing on slopes, so select a place where the slope is gradual. If there is no place where the slope is gradual, carry out operations to reduce the angle of the slope before starting the towing operation.
- When towing a problem machine, always use a wire rope with a sufficient towing capacity.
- Do not use a frayed, kinked rope or a rope with any loss of diameter.

SHIPPING AND TRANSPORTATION

Obey State and Local Over-the-Road Regulations

Check state and local restrictions regarding weight, width and length of a load before making any other preparation for transport.

Hauling vehicle, trailer and load must all be in compliance with local regulations governing intended shipping route.

Partial disassembly or tear-down of wheel loader may be necessary to meet travel restrictions or particular conditions at work site.

Refer to the section "Transportation" section of operation manual.

Summary of Safety Precautions for Lifting

WARNING!

Improper lifting can allow load to shift and cause personal injury or damage to the machine.

To make safe lifts, the following items must be evaluated by operator and work site crew.

- Condition of ground support.
- Wheel loader configuration and attachments.
- Weight, lifting height and lifting radius.
- Safe rigging of load.
- Proper handling of suspended load.

Tag lines on opposite sides of load can be very helpful in keeping a suspended load secure, if they are anchored safely to control points on ground.

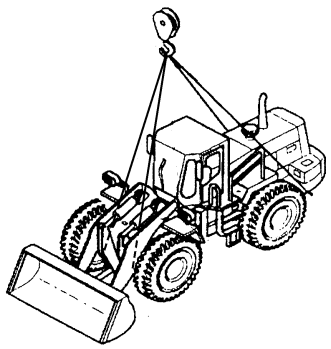

HAOJ581S

Figure 33

Specification for DL300

Edition 1

Table of Contents

Specification for DL300

Safety Precautions 5
Applicable Models 5
Component Locations 6
General Specifications 9
Engine Performance Curves 10
Working Range and Dimensions 12
Working Capacities 15
- Bucket Capacity 15
- Tipping Load 15

Material Weight 15
- Approximate Weight of Workload Materials 15

SAFETY PRECAUTIONS

CAUTION!

Follow all safety recommendations and safe shop practices outlined in the front of this manual or those contained within this section.

Always use tools and equipment that are in good working order.

Use lifting and hoisting equipment capable of safely handling load.

Remember, that ultimately safety is your own personal responsibility.

APPLICABLE MODELS

The contents of this section apply to the following models and serial number ranges.

MODEL	SERIAL NUMBER RANGE
DL300	5001 and Up

COMPONENT LOCATIONS

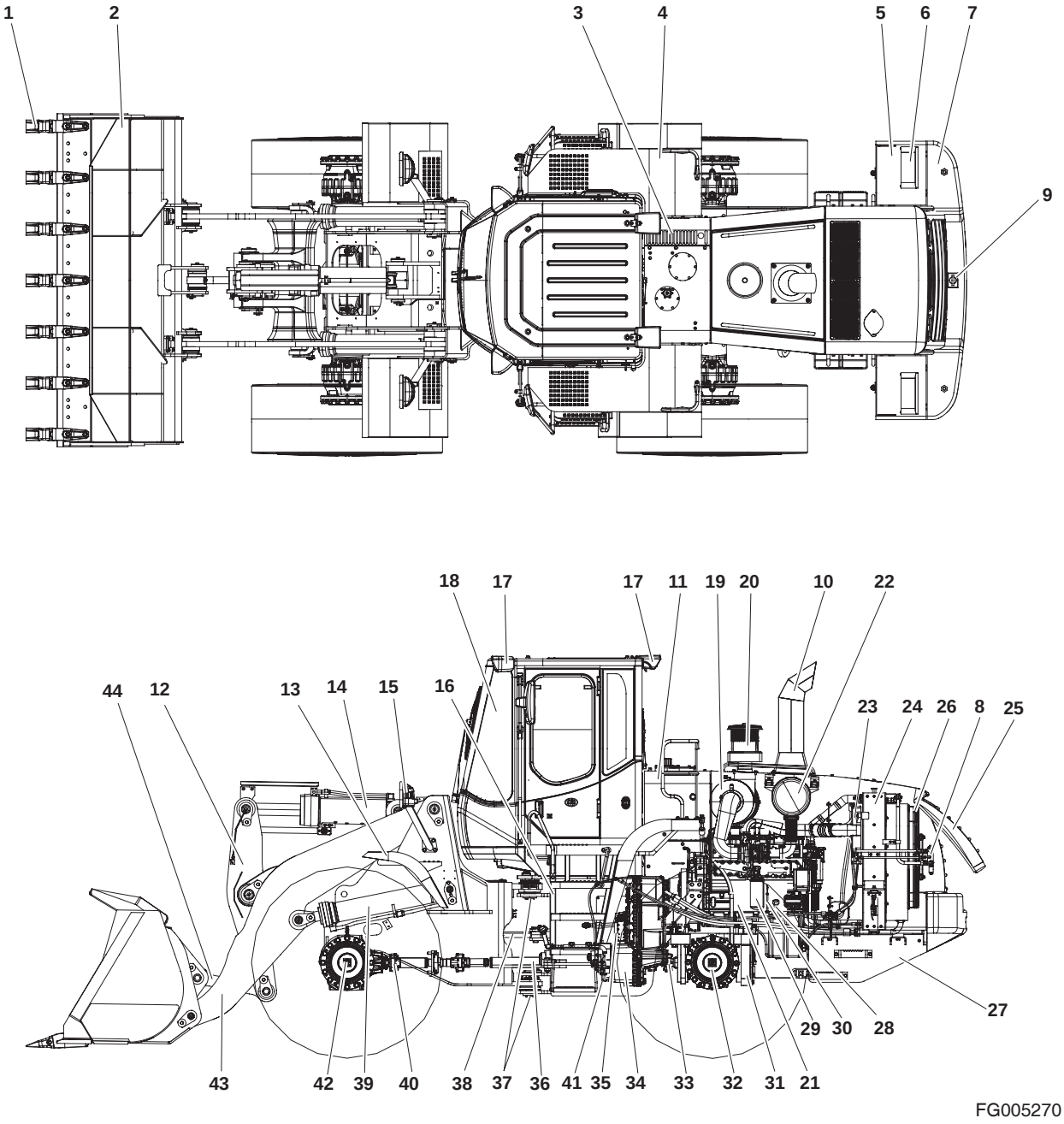

Figure 1

Reference Number	Description
1	Bucket Teeth
2	Bucket
3	Air Conditioner Condenser
4	Rear Wheel Cover
5	Battery Box
6	Rear Light
7	Counterweight
8	Fan Motor
9	Towing Pin
10	Muffler Tail Pipe
11	Oil Tank
12	Tilt Lever
13	Front Wheel Cover
14	Bucket Cylinder
15	Headlight Support
16	Ladder
17	Work Light
18	Operator's Cab
19	Air Cleaner
20	Engine Air Intake Precleaner
21	Engine
22	Muffler

Reference Number	Description
23	CAC Cooler
24	Radiator
25	Grill
26	Fan
27	Fuel Tank
28	Engine Oil Fill Cap
29	Engine Oil Filter
30	Engine Oil Level Dipstick
31	Rear Axle Pivot
32	Rear Axle
33	Drive Shaft (Rear)
34	Transmission
35	Transmission Oil Filter
36	Drive Shaft (Center)
37	Center Pin
38	Steering Wheel Cylinder
39	Boom Cylinder
40	Drive Shaft (Front)
41	Parking Brake
42	Front Axle
43	Loader Arm
44	Link

GENERAL SPECIFICATIONS

DL300		
Item		**Specification**
Serial Number		5001 and Up
Standard Bucket Capacity		3.0 m^3 (3.92 yd^3)
Vehicle Weight		17,300 kg (38,150 lb) / 18,100 kg (39,900 lb)* EU Option
Engine		
	Type	*DOOSAN* DL08
	Rated power (SAE J 1995 gross)	220 ps @ 2,000 rpm (217 hp @ 2,000 rpm)
	Max. Torque (SAE J 1995 gross)	105 kg•m / 1,300 rpm (760 ft lb @ 1,300 rpm)
Transmission		
	Full Automatic Power -Shift	Full Automatic Power Shift
	Speeds	4 Forward, 3 Reverse
Brake Systems		
	Service Brakes	4 Wheel, Wet Multi Disks, Dual Pedal
	Parking Brake	Dry Disk on Transmission
Performance		
	Travel Speed (1 / 2 / 3 / 4) km/h	Forward: 6.5 (4.0) / 12.0 (7.5) / 22.5 (14.0) / 34.0 (21.1) km/h (MPH) Reverse: 6.6 (4.0) / 12.6 (7.8) / 23.6 (14.7) km/h (MPH)
	Steering Angle	+ 40°
	Min. Tire Turning Radius (Out-Tire Center)	5,470 mm (17' - 11")
	Max Tractive Effort	18,200 kg (40,120 lb)
	Max. Breakout Force	18,200 kg (40,120 lb)
	Boom Up	5.9± 0.5 Seconds
	Boom Down	3.7± 0.4 Seconds
	Bucket Crowd	2.5± 0.3 Seconds
	Bucket Dump	1.9± 0.5 Seconds
	Maximum Gradeability	58% (30°)
Working Range		
	Dump Height at 45° (w teeth)	2,780 mm (9' - 1")
	Dump Reach at 45° (w teeth)	1,285 mm (4' - 2")
	Max Dump Angle at Fully Raised	47°
	Max Tilt Angle at Carry	46°
Travel Dimension		
	Overall Length	8,150 mm (26' - 9")
	Overall Width	2,920 mm (9' - 7")
	Overall Height	3,438 mm (11' - 3")
	Wheel Base	3,200 mm (10' - 6")
	Tread	2,150 mm (7' - 0")
	Ground Clearance	470 mm (1' - 6")

ENGINE PERFORMANCE CURVES

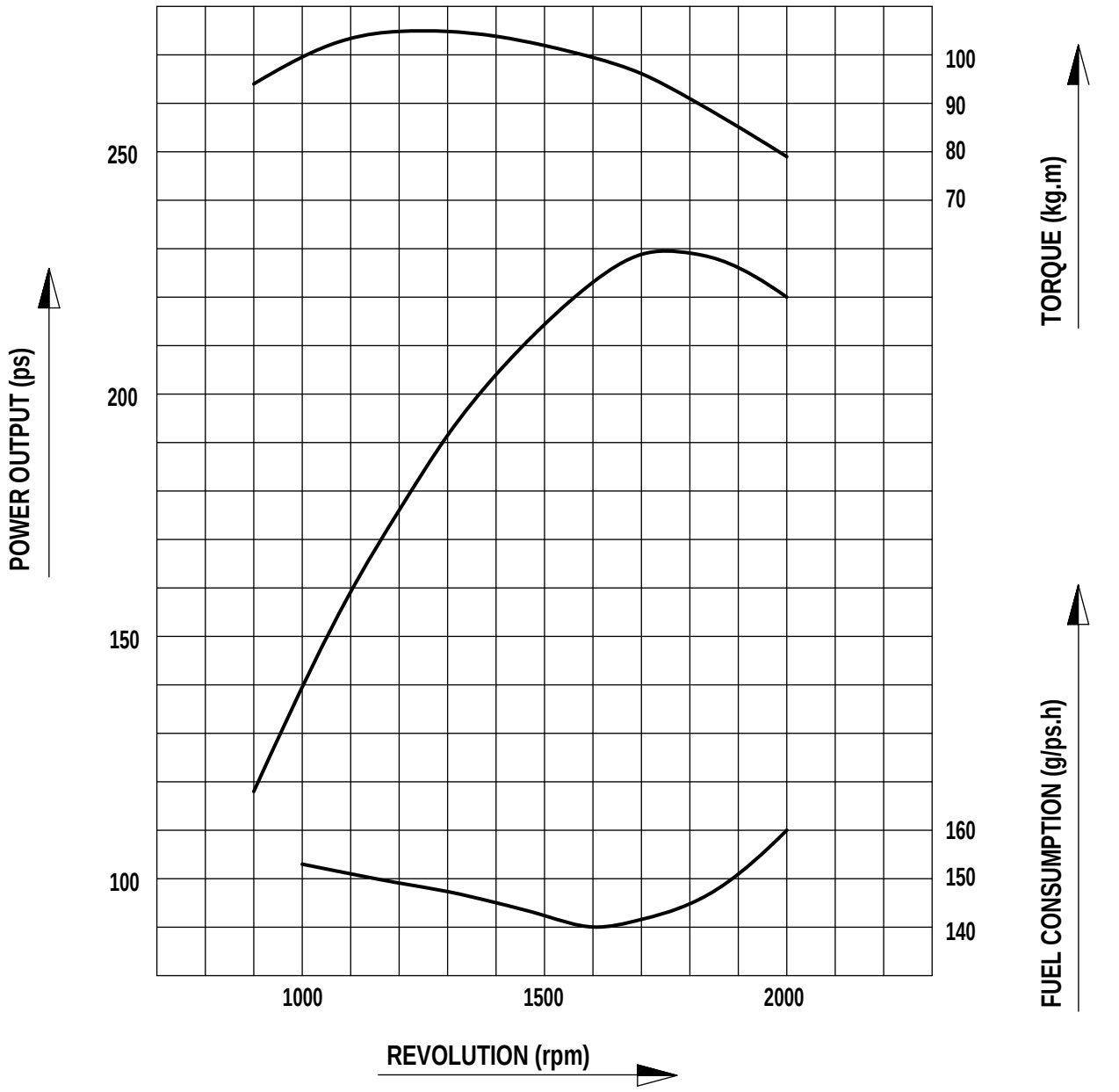

Figure 2

Performance standard	SAE J 1995 gross
Rated Power	220 ps @ 2,000 rpm (217 hp @ 2,000 rpm)
Maximum Torque	105 kg•m @ 1,300 rpm (759 ft lb @ 1,300 rpm)
Fuel Consumption	160 g / ps.h @ Rated Speed

NOTE: *Barometric Pressure: 760 mm (30") Mercury*

Temperature: 20°C (68°F)

W/O Cooling Fan: Driven by hydraulic fan motor

Alternator: 24 V, 50 amp

Exhaust System: Complete, attached

Air Cleaner; Installed

WORKING RANGE AND DIMENSIONS

Figure 3, illustrates exterior machine dimensions and working range of machine when it is equipped with a standard bucket.

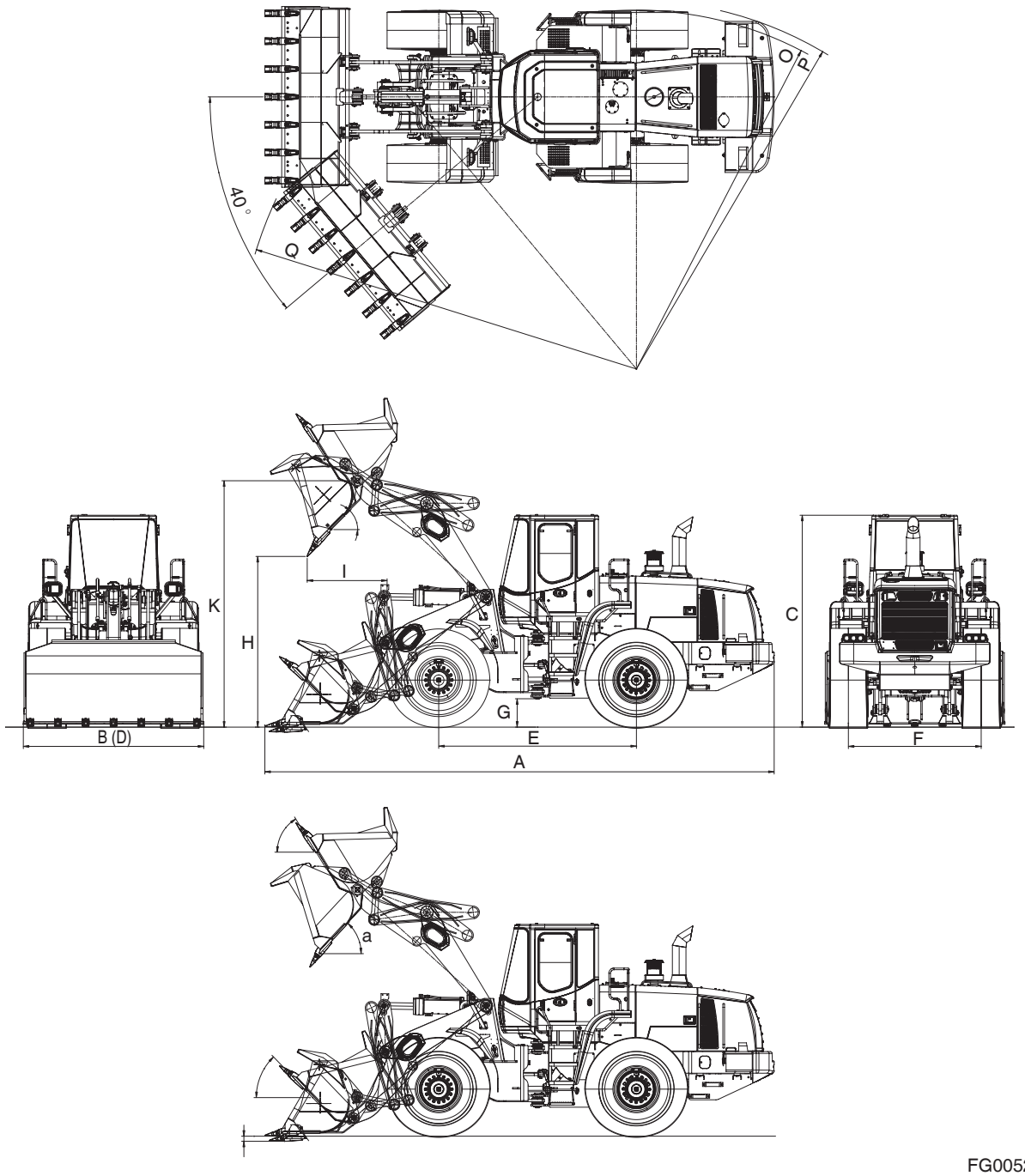

FG005273

Figure 3

Category	Dimension	
Overall Length (A)	8,150 mm (26' 9")	
Overall Width (B)	2,920 mm (9' 7")	
Overall Height (C)	3,438 mm (11' 3")	3,433 mm (11' 3")
Bucket Width (D)	2,920 mm (9' 7")	
Wheel Base (E)	3,200 mm (10' 6")	
Tread (F)	2,150 mm (7' 0")	
Ground Clearance (G)	470 mm (1' 7")	465 mm (1' 6")
Dump Height, to tooth (H)	2,780 mm (9' 1")	2,775 mm (9' 1")
Dump Reach, to Tooth (I)	1,285 mm (4' 2")	1,279 mm (4' 2")
Dump Height to Bucket Pivot (K)	4,000 mm (13' 1")	3,995 mm (13' 1")
Max. Dump Angle at Fully Raised (a)	47°	
Max. Tilt Angle at Carry (b)	46°	
Turning Radius (O)	5,780 mm (18' 11")	5,800 mm (19' 0")
Turning Radius (P)	5,890 mm (19' 7")	
Turning Radius (Q)	6,360 mm (20' 10")	
Tire Size	23.5-25-16 PR(L3)	23.5 R25 (L3)

Figure 4 illustrate working range when machine is equipped with optional pallet or log fork.

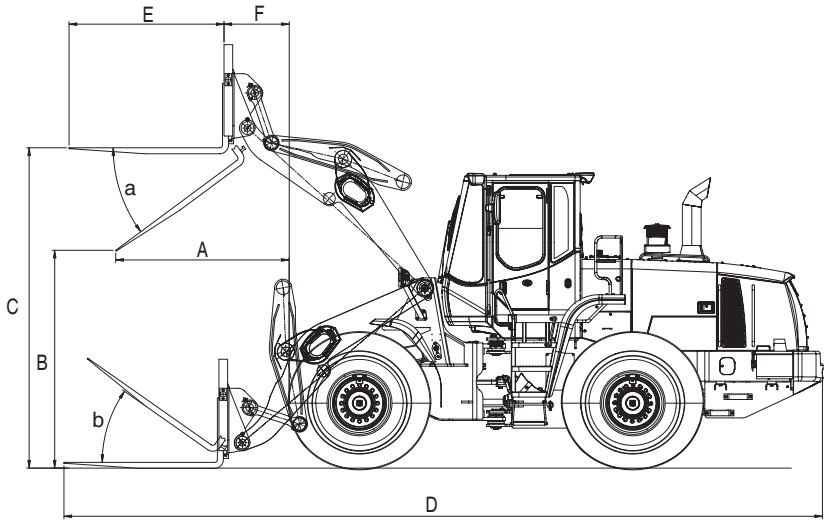

FG005172

Figure 4

Reference Number	Description
A	1519.5 mm (4' 11")
B	1873.5 mm (6' 2")
C	3749.5 mm (12' 3")
D	8834.5 mm (28' 12")

Reference Number	Description
E	1,800 mm (5' 11")
F	798 mm (2' 7")
a	36.5°
b	35°

WORKING CAPACITIES

Bucket Capacity

Standard toothed bucket has a capacity of 3.0 m^3 (3.9cu. yd.). An optional bucket equipped with a cutting edge and no teeth has a capacity of 3.0 m^3 (3.9 cu. yd.).

Tipping Load

Static Tipping Load with bucket in Over Front position is 14,500 kg (31,967 lb). With bucket in Fully Turned position, Static Tipping Load is 12,100 kg (26,676 lb).

MATERIAL WEIGHT

The data below describes weight of a cubic meter (cubic yard) of many types of workload materials.

Approximate Weight of Workload Materials

MATERIAL	LOW WEIGHT OR DENSITY 1,100 KG/M^3 (1,850 LB/YD^3), OR LESS	MEDIUM WEIGHT OR DENSITY 1,600 KG/M^3 (2,700 LB/YD^3), OR LESS	HIGH WEIGHT OR DENSITY 2,000 KG/M^3 (3,370 LB/YD^3), OR LESS
Charcoal	401 kg/m^3 (695 lb/yd^3)	----------	----------
Coke, blast furnace size	433 kg/m^3 (729 lb/yd^3)	----------	----------
Coke, foundry size	449 kg/m^3 (756 lb/yd^3)	----------	----------
Coal, bituminous slack, piled	801 kg/m^3 (1,350 lb/yd^3)	----------	----------
Coal, bituminous r. of m., piled	881 kg/m^3 (1,485 lb/yd^3)	----------	----------
Coal, anthracite	897 kg/m^3 (1,512 lb/yd^3)	----------	----------
Clay, DRY, in broken lumps	1,009 kg/m^3 (1,701 lb/yd^3)	----------	----------

MATERIAL	LOW WEIGHT OR DENSITY 1,100 KG/M^3 (1,850 LB/YD^3), OR LESS	MEDIUM WEIGHT OR DENSITY 1,600 KG/M^3 (2,700 LB/YD^3), OR LESS	HIGH WEIGHT OR DENSITY 2,000 KG/M^3 (3,370 LB/YD^3), OR LESS
Clay, DAMP, natural bed	----------	1,746 kg/m^3 (2,943 lb/yd^3)	----------
Cement, Portland, DRY granular	----------	1,506 kg/m^3 (2,583 lb/yd^3)	----------
Cement, Portland, DRY clinkers	----------	1,362 kg/m^3 (2,295 lb/yd^3)	----------
Dolomite, crushed	----------	1,522 kg/m^3 (2,565 lb/yd^3)	----------
Earth, loamy, DRY, loose	----------	1,202 kg/m^3 (2,025 lb/yd^3)	----------
Earth, DRY, packed	----------	1,522 kg/m^3 (2,565 lb/yd^3)	----------
Earth, WET, muddy	----------	----------	1,762 kg/m^3 (2,970 lb/yd^3)
Gypsum, calcined, (heated, powder)	961 kg/m^3 (1,620 lb/yd^3)	----------	----------
Gypsum, crushed to 3 inch size	----------	1,522 kg/m^3 (2,565 lb/yd^3)	----------
Gravel, DRY, packed fragments	----------	----------	1,810 kg/m^3 (3,051 lb/yd^3)
Gravel, WET, packed fragments	----------	----------	1,922 kg/m^3 (3,240 lb/yd^3)
Limestone, graded above 2	----------	1,282 kg/m^3 (2,160 lb/yd^3)	----------
Limestone, graded 1-1/2 or 2	----------	1,362 kg/m^3 (2,295 lb/yd^3)	----------
Limestone, crushed	----------	1,522 kg/m^3 (2,565 lb/yd^3)	----------
Limestone, fine	----------	----------	1,602 kg/m^3 (2,705 lb/yd^3)
Phosphate, rock	----------	1,282 kg/m^3 (2,160 lb/yd^3)	----------

MATERIAL	LOW WEIGHT OR DENSITY 1,100 KG/M^3 (1,850 LB/YD^3), OR LESS	MEDIUM WEIGHT OR DENSITY 1,600 KG/M^3 (2,700 LB/YD^3), OR LESS	HIGH WEIGHT OR DENSITY 2,000 KG/M^3 (3,370 LB/YD^3), OR LESS
Salt	929 kg/m^3 (1,566 lb/yd^3)	----------	----------
Snow, light density	529 kg/m^3 (891 lb/yd^3)	----------	----------
Sand, DRY, loose	----------	1,522 kg/m^3 (2,565 lb/yd^3)	----------
Sand, WET, packed	----------	----------	1,922 kg/m^3 (3,240 lb/yd^3)
Shale, broken	----------	1,362 kg/m^3 (2,295 lb/yd^3)	----------
Sulphur, broken	529 kg/m^3 (1,620 lb/yd^3)	----------	----------

IMPORTANT

Weights are approximations of estimated average volume and mass. Exposure to rain, snow or ground water; settling or compaction due to overhead weight and chemical or industrial processing or changes due to thermal or chemical transformations could all increase value of weights listed in table.

General Maintenance Procedures

Edition 1

MEMO

Table of Contents

General Maintenance Procedures

Safety Precautions 5
Applicable Models 5
Welding Precautions and Guidelines 6
Hydraulic System - General Precautions 7
Maintenance Service and Repair Procedure 9
General Precautions 9
Hydraulic System Cleanliness and Oil Leaks 10
Maintenance Precautions for Hydraulic System Service 10
Oil Leakage Precautions 11
Cleaning and Inspection 12
General Guidelines 12
Bearing inspection 13

SAFETY PRECAUTIONS

CAUTION!

Follow all safety recommendations and safe shop practices outlined in the front of this manual or those contained within this section.

Always use tools and equipment that are in good working order.

Use lifting and hoisting equipment capable of safely handling load.

Remember, that ultimately safety is your own personal responsibility.

APPLICABLE MODELS

The contents of this section apply to the following models and serial number ranges.

MODEL	SERIAL NUMBER RANGE
ALL MODELS	ALL RANGES

WELDING PRECAUTIONS AND GUIDELINES

IMPORTANT

To avoid accidents, personal injury and the possibility of causing damage to the machine or to components, welding must only be performed by properly trained and qualified personnel, who possess the correct certification (when required) for the specific welding fabrication or specialized repair being performed.

⚠ WARNING!

Structural elements of the machine may be built from a variety of steels. These could contain unique alloys or may have been heat treated to obtain particular strength characteristics. It is extremely important that welding repairs on these types of steel are performed with the proper procedures and equipment. If repairs are performed incorrectly, structural weakening or other damage to the machine (that is not always readily visible) could be caused. Always consult *DOOSAN* After Sales Service before welding on integral components (loader arm, frames, car body, track frames, turntable, attachment, etc.) of the machine. It is possible that some types of structurally critical repairs may require Magnetic Particle or Liquid Penetrant testing, to make sure there are no hidden cracks or damage, before the machine can be returned to service.

⚠ CAUTION!

Always perform welding procedures with the proper safety equipment on hand. Adequate ventilation and a dry work area are absolutely essential. Keep a fire extinguisher nearby and always wear protective clothing and the recommended type of eye protection.

⚠ CAUTION!

Observe the following safety precautions:

1. **Use extra caution and adequate safety shielding when welding near fuel and oil tanks, batteries, hydraulic piping lines or other fire hazards.**
2. **Never weld when the engine is running. Battery cables must be disconnected before the welding procedure is started.**
3. **Never weld on a wet or damp surface. The presence of moisture causes hydrogen embrittlement and structural weakening of the weld.**
4. **If welding procedures are being performed near cylinder rods, operator's cabin window areas or any other assemblies that could be damaged by weld spatters, use adequate shielding protection in front of the assembly.**
5. **During equipment setup, always attach ground cables directly to the area or component being welded to prevent arcing through bearings, bushings, or spacers.**
6. **Always use correct welding rods for the type of weld being performed and observe recommended precautions and time constraints. AWS Class E7018 welding rods for low alloy to medium carbon steel must be used within two hours after removal from a freshly opened container. Class E11018G welding rods for T-1 and other higher strength steel must be used within 1/2 hour.**

HYDRAULIC SYSTEM - GENERAL PRECAUTIONS

Always maintain oil level in the system at recommended levels. Assemblies that operate under heavy loads, at high speed, with extremely precise dimensional tolerances between moving parts - pistons and cylinders, or shoes and swash plates, for example - can be severely damaged if oil supply runs dry.

Assemblies can be run dry and damaged severely in a very short time when piping or hoses are disconnected to repair leaks and/or replace damaged components. Hoses that are inadvertently switched during disassembly (inlet for outlet and vice versa), air introduced into the system or assemblies that are low on oil due to neglect or careless maintenance, could all produce sufficient fluid loss to cause damage.

When starting the engine (particularly after long layoff or storage intervals), make sure that all hydraulic controls and operating

circuits are in neutral, or "OFF." That will prevent pumps or other components that may be temporarily oil starved from being run under a load.

Replacement of any hydraulic system component could require thorough cleaning, flushing, and some amount of prefilling with fresh, clean oil if the protective seal on replacement parts has obviously been broken or if seal integrity may have been compromised. When protective seals are removed before installation and reassembly, inspect all replacement parts carefully, before they are installed. If the replacement part is bone dry (with no trace of factory prelube) or has been contaminated by dirt or by questionable oils, flushing and prefilling with clean hydraulic fluid is recommended.

Vibration, irregular or difficult movement or unusual noise from any part of the hydraulic system could be an indication of air in the system (and many other types of problems). As a general precaution (and to help minimize the risk of potential long-term damage), allow the engine to run at no-load idle speed immediately after initial start-up. Hydraulic fluid will circulate, releasing any air that may have been trapped in the system before load demands are imposed.

A daily walk-around prestart equipment safety inspection, including a quick visual scan for any exterior evidence of leaking hydraulic fluid, can help extend the service life of system components.

IMPORTANT

Hydraulic system operating conditions (repetitive cycling, heavy work loads, fluid circulating under high-pressure) make it extremely critical that dust, grit or any other type of contamination be kept out of the system. Observe fluid and filter change maintenance interval recommendations and always preclean any exterior surface of the system before it is exposed to air. For example, the reservoir fill cap and neck area, hoses that have to be disassembled, and the covers and external surfaces of filter canisters should all be cleaned before disassembly.

MAINTENANCE SERVICE AND REPAIR PROCEDURE

General Precautions

Fluid level and condition should always be checked whenever any other type of maintenance service or repair is being performed.

NOTE: *If the unit is being used in an extreme temperature environment (in sub-freezing climates or in high temperature, high humidity tropical conditions), frequent purging of moisture condensation from the hydraulic reservoir drain tap should be a regular and frequent part of the operating routine. In more moderate, temperate climates, draining reservoir sediment and moisture may not be required more than once or twice every few months.*

Inspect drained oil and used filters for signs of abnormal coloring or visible fluid contamination at every oil change. Abrasive grit or dust particles will cause discoloration and darkening of the fluid. Visible accumulations of dirt or grit could be an indication that filter elements are overloaded (and will require more frequent replacement) or that disintegrating bearings or other component failures in the hydraulic circuit may be imminent or have already occurred. Open the drain plugs on the main pump casings and check and compare drain oil in the pumps. Look for evidence of grit or metallic particles.

Vibration or unusual noise during operation could be an indication of air leaking into the circuit (Refer to the appropriate Troubleshooting section for component or unit for procedures.), or it may be evidence of a defective pump. The gear type pilot pump could be defective, causing low pilot pressure, or a main pump broken shoe or piston could be responsible.

NOTE: *If equipped, indicated operating pressure, as shown on the multidisplay digital gauge on the Instrument Panel ("F-Pump" and "R-Pump") will be reduced as a result of a mechanical problem inside the pump. However, pressure loss could also be due to cavitation or air leakage, or other faults in the hydraulic system.*

Check the exterior case drain oil in the main pumps. If no metallic particles are found, make sure there is no air in the system. Unbolt and remove the tank return drain line from the top part of the swing motor, both travel motors and each main pump. If there is air in any one of the drain lines, carefully prefill the assembly before bolting together the drain line piping connections. Run the system at low rpm.

HYDRAULIC SYSTEM CLEANLINESS AND OIL LEAKS

Maintenance Precautions for Hydraulic System Service

Whenever maintenance, repairs or any other type of troubleshooting or service is being performed, it's important to remember that the hydraulic system - including both the interior and exterior surfaces of assemblies, and every drop of operating fluid - must be protected from contamination.

Dust and other foreign contaminants are major contributors to premature wear in hydraulic circuits. The narrow tolerances, rapidly moving parts and high operating pressures of the system require that fluid be kept as clean as possible. The performance and dependability of the machine (and the service lift of individual components) can be noticeably reduced if proper precautions are not observed:

- Use a safe, noncombustible, evaporative type, low-residue solvent and thoroughly clean exterior surfaces of assemblies before any part of the circuit is opened up or disassembled.

  NOTE: *It's just as important to clean the cap and reservoir top before routine fluid changes or quick checks as it is before major repairs. (Accumulated dirt attracts moisture, oil and other fluids - and more dirt.)*

- Keep dismantled parts covered during disassembly. Use clean caps, plugs or tape to protect the disconnected openings of flanges, manifolds and piping.
- Do not allow cleaning solvents or other fluids to mix with the oil in the system. Use clean oil to flush any traces of solvent or other residue before reassembly.
- If metal or rubber fragments are found in the system, flush and replace all fluid in the system and troubleshoot the circuit to identify the source of contamination.

IMPORTANT

Make sure that cleaning solvents will be compatible with rubber materials used in the hydraulic system. Many petroleum based compounds can cause swelling, softening, or other deterioration of system sealing elements, such as O-rings, caps and other seals.

Oil Leakage Precautions

Oil that is visibly seeping from joints or seals should always serve as a "red flag" alarm.

Leaks must alert the machine operator and maintenance crew that air, water and dirt have an open, free passageway through which to enter the circuit. Harsh, corrosive salt air, freezing and thawing condensation cycles and working environments that are full of fine dust are especially hazardous. Clogging of valve spools or external piping (especially pilot circuit piping) can gradually diminish or very suddenly put a complete stop to normal hydraulic function. You can prevent having to make these types of repairs by following recommended assembly procedures:

1. Use new O-rings and oil seals whenever hydraulic assemblies are rebuilt.
2. Prepare joint surfaces before assembly by checking alignment and flatness. Clean and repair corrosion or any other damage.
3. Follow bolt torque recommendations and all other assembly requirements.

NOTE: *Grease lip seals before assembly.*

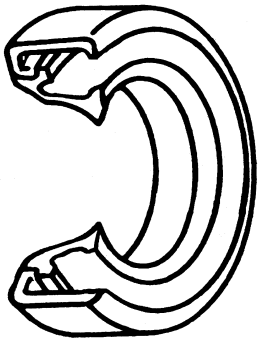

0565A

Figure 1

CLEANING AND INSPECTION

General Guidelines

All parts must be clean to permit an effective inspection. During assembly, it is very important that no dirt or foreign material enters unit being assembled. Even minute particles can cause malfunction of close fitting parts such as thrust bearing, matched parts, etc.

⚠ WARNING!

Care should be exercised to avoid inhalation of vapors, exposure to skin and creating fire hazards when using solvent type cleaners.

1. Clean all metal parts thoroughly using a suitable cleaning fluid. It is recommended that parts be immersed in cleaning fluid and moved up and down slowly until all oils, lubricants, and/or foreign materials are dissolved and parts are thoroughly clean.
2. For bearings that can be removed, soak them in a suitable cleaning fluid for a minute or two, then remove bearings from cleaning fluid and strike flat against a block of wood to dislodge solidified particles of lubricant. Immerse again in cleaning fluid to flush out particles. Repeat above operation until bearings are thoroughly clean. To dry bearings, use moisture-free compressed air. Be careful to direct air stream across bearing to avoid spinning bearings that are not lubricated. DO NOT SPIN BEARINGS WHEN DRYING; bearings may be rotated slowly by hand to facilitate drying process.
3. Carefully inspect all bearing rollers, cages and cups for wear, chipping or nicks to determine condition. Do not replace a bearing cone or cup individually without replacing mating cup or cone at the same time. After inspection, dip bearings in light weight oil and wrap in clean lintless cloth or paper to protect them until installation.

   For those bearings that are to be inspected in place; inspect bearings for roughness of rotation, scoring, pitting, cracked or chipped races. If any of these defects are found, replace bearings. Also, inspect defective bearing housing and/or shaft for grooved, galled or burred conditions that indicate bearing has been turning in its housing or on its shaft.
4. It is more economical to replace oil seals, O-rings, sealing rings, gaskets and retaining rings when unit is disassembled than waiting for premature failures; refer to latest Micro Fiche and/or Parts Book for replacement items. Be extremely careful when installing sealing members, to avoid cutting or scratching. Curling under of

any seal lip will seriously impair its efficiency. Apply a thin coat of Loctite #120 to outer diameter, of metal casing, on oil seals to assure an oil tight fit into retainer. Use extreme care not to get Loctite on lips of oil seals. If this happens, that portion of the seal will become brittle and allow leakage.

When replacing lip type seals, make sure spring loaded side is towards oil to be sealed.

5. If available, use magna-flux or similar process for checking for cracks that are not visible to the eye. Examine teeth on all gears carefully for wear, pitting, chipping, nicks, cracks or scores. Replace all gears showing cracks or spots where case hardening has worn through. Small nicks may be removed with suitable hone. Inspect shafts and quills to make certain they have not been sprung, bent, or splines twisted, and that shafts are true.

   NOTE: *Spline wear is not considered detrimental except where it affects tightness of splined parts.*

   Inspect thrust washers for distortion, scores, burs, and wear. Replace thrust washer if defective or worn.

6. Inspect bores and bearing surfaces of cast parts and machined surfaces for scratches, wear, grooves and dirt. Remove any scratches and burrs with crocus cloth. Remove foreign material. Replace any parts that are deeply grooved or scratched which would affect their operation.

Bearing inspection

The conditions of the bearing are vital to the smooth and efficient operation of the machinery. When any component containing bearings is disassembled, always carefully examine the condition of the bearings and all of its components for wear and damage.

Once the bearing is removed, clean all parts thoroughly using a suitable cleaning solution. If the bearing is excessively dirty soak the bearing assembly in a light solution and move the bearing around until all lubricants and or foreign materials are dissolved and the parts are thoroughly clean.

When drying bearings, moisture free compressed air can be used. Be careful not to direct the air in a direction which will force the bearing to dry spin while not being properly lubricated.

After the bearings have been cleaned and dried, carefully inspect all bearing rollers, cages and cups for wear, chipping or nicks. If the bearing cannot be removed and is to be inspected in place, check foe roughness of rotation, scoring, pitting, cracked or chipped races. If any of these defects are found replace the whole bearing assembly. NEVER replace the bearing alone without replacing the mating cup or the cone at the same time.

After inspection lightly coat the bearing and related parts with oil and wrap in a clean lintless cloth or paper and protect them from moisture and other foreign materials until installation.

It is also important to inspect the bearing housing and/or shaft for grooved, galled or burred conditions that indicate that the bearing has been turning in its housing or on its shaft.

If available, use magna-flux or similar process for checking for cracks that are not visible to the naked eye.

The following illustrations will aid in identifying and diagnosing some of the bearing related problems.

NOTE: *The illustrations will only show tapered roller bearings, but the principles of identifying, diagnosing and remedying the defects are common to all styles and types of bearings.*

Normal Bearing

Smooth even surfaces with no discoloration or marks.

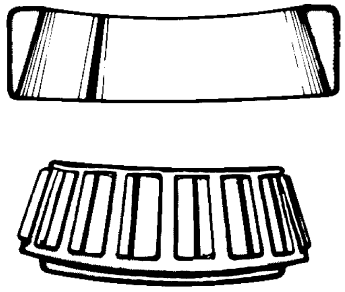

HASA620S

Figure 2

Bent Cage

Cage damage due to improper handling or tool usage.

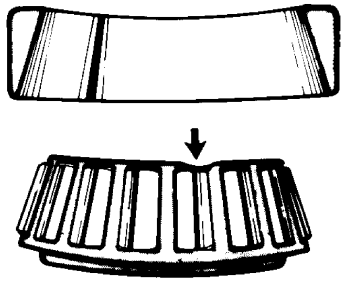

HASA460S

Figure 3

Replace bearing.

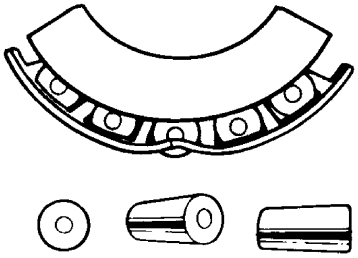

HASA470S

Figure 4

Galling

Metal smears on roller ends due to overheat, lubricant failure or overload.

Replace bearing - check seals and check for proper lubrication.

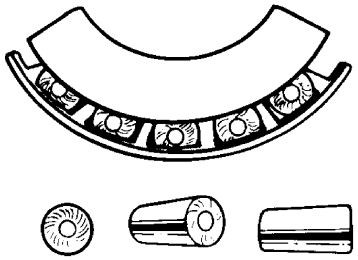

HASA480S

Figure 5

Abrasive Step Wear

Pattern on roller ends caused by fine abrasives.

Clean all parts and housings, check all parts and housings, check seals and bearings and replace if leaking, rough or noisy.

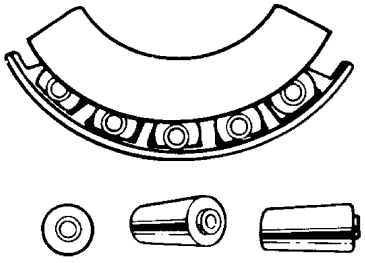

HASA490S

Figure 6

Etching

Bearing surfaces appear gray or grayish black in color with related etching away of material usually at roller spacing.

Replace bearings - check seals and check for proper lubrication.

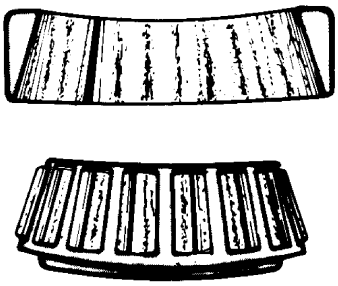

HASA500S

Figure 7

Misalignment

Outer race misalignment due to foreign object.

Clean related parts and replace bearing. Make sure races are properly seated.

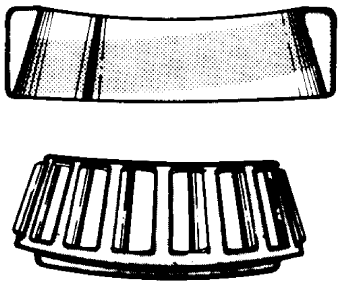

HASA510S

Figure 8

Indentations

Surface depressions on race and rollers caused by hard particles of foreign materials.

Clean all parts and housings, check seals and replace bearings if rough or noisy.

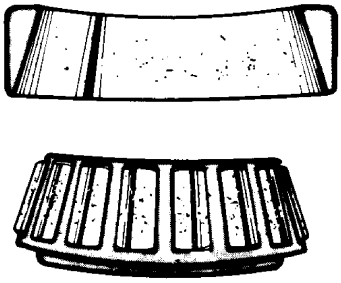

HASA520S

Figure 9

Fatigue Spalling

Flaking of surface metal resulting from fatigue.

Replace bearing - clean all related parts.

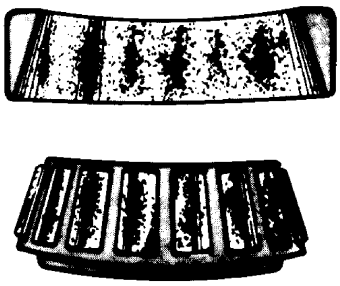

HASA530S

Figure 10

Brinelling

Surface indentations in raceway caused by rollers either under impact loading or vibration while the bearing is not rotating.

Replace bearing if rough or noisy.

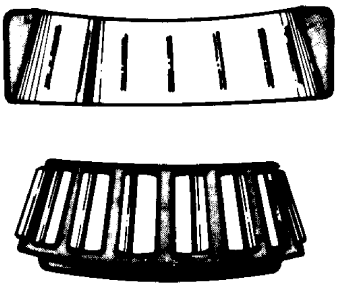

HASA540S

Figure 11

Cage Wear

Wear around outside diameter of cage and roller pockets caused by abrasive material and inefficient lubrication.

Replace bearings - check seals.

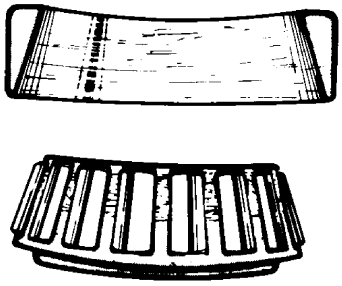

HASA550S

Figure 12

Abrasive Roller Wear

Pattern on races and rollers caused by fine abrasives.

Clean all parts and housings, check seals and bearings and replace if leaking, rough or noisy.

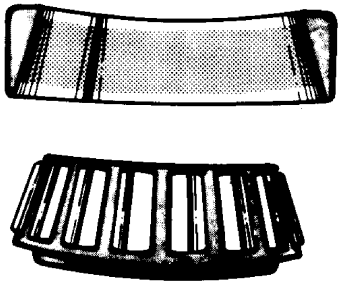

HASA560S

Figure 13

Cracked Inner Race

Race cracked due to improper fit, cocking or poor bearing seat.

Replace all parts and housings, check seals and bearings and replace if leaking.

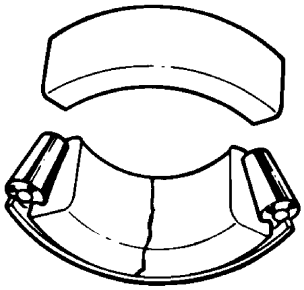

HASA570S

Figure 14

Smears

Smearing of metal due to slippage caused by poor fitting, lubrication, overheating, overloads or handling damage.

Replace bearings, clean related parts and check for proper fit and lubrication.

Replace shaft if damaged.

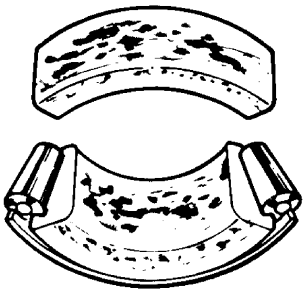

HASA580S

Figure 15

Frettage

Corrosion set up by small relative movement of parts with no lubrication.

Replace bearing. Clean all related parts. Check seals and check for proper lubrication.

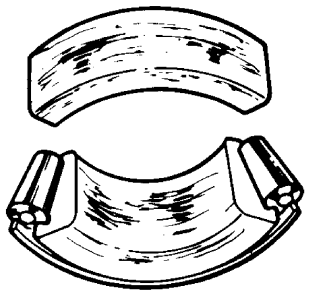

HASA590S

Figure 16

Heat Discoloration

Heat discoloration can range from faint yellow to dark blue resulting from overload or incorrect lubrication.

Excessive heat can cause softening of races or rollers.

To check for loss of temper on races or rollers, a simple file test may be made. A file drawn over a tempered part will grab and cut metal, whereas a file drawn over a hard part will glide readily with no metal cutting.

Replace bearing if over heating damage is indicated. Check seals and other related parts for damage.

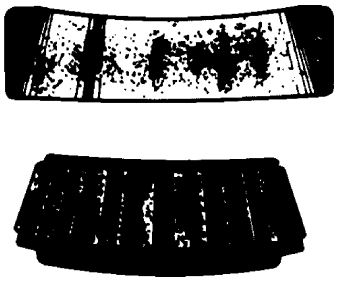

HASA600S

Figure 17

Stain Discoloration

Discoloration can range from light brown to black caused by incorrect lubrication or moisture.

if the stain can be removed by light polishing or if no evidence of overheating is visible, the bearing can be reused.

Check seals and other related parts for damage.

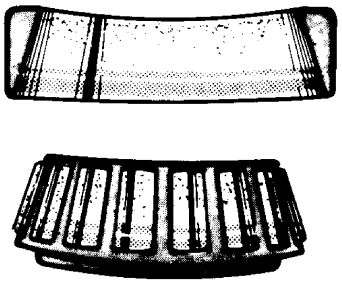

HASA610S

Figure 18

Standard Torques

Edition 1

Table of Contents

Standard Torques

Safety Precautions 5
Applicable Models 5
Torque Values for Standard Metric Fasteners..... 6
Torque Values for Standard U.S. Fasteners 7
Type 8 Phosphate Coated Hardware 9
Torque Values for Hose Clamps 10
Torque Values for Split Flanges 11
Torque Wrench Extension Tools 12
Torque Multiplication 12
Other Uses for Torque Wrench Extension Tools..... 13
Tightening Torque Specifications (Metric)..... 13

MEMO

SAFETY PRECAUTIONS

CAUTION!

Follow all safety recommendations and safe shop practices outlined in the front of this manual or those contained within this section.

Always use tools and equipment that are in good working order.

Use lifting and hoisting equipment capable of safely handling load.

Remember, that ultimately safety is your own personal responsibility.

APPLICABLE MODELS

The contents of this section apply to the following models and serial number ranges.

MODEL	SERIAL NUMBER RANGE
ALL MODELS	ALL RANGES

TORQUE VALUES FOR STANDARD METRIC FASTENERS

NOTE: *The units for the torque values are kg•m (ft lb).*

Dia. x Pitch (mm)	Grade										
	3.6 (4A)	4.6 (4D)	4.8 (4S)	5.6 (5D)	5.8 (5S)	6.6 (6D)	6.8 (6S)	6.9 (6G)	8.8 (8G)	10.9 (10K)	12.9 (12K)
M5 x Std.	0.15 (1.08)	0.16 (1.15)	0.25 (1.80)	0.22 (1.59)	0.31 (2.24)	0.28 (2.02)	0.43 (3.11)	0.48 (3.47)	0.50 (3.61)	0.75 (5.42)	0.90 (6.50)
M6 x Std.	0.28 (2.02)	0.30 (2.16)	0.45 (3.25)	0.40 (2.89)	0.55 (3.97)	0.47 (3.39)	0.77 (5.56)	0.85 (6.14)	0.90 (6.50)	1.25 (9.04)	1.50 (10.84)
M7 x Std.	0.43 (3.11)	0.46 (3.32)	0.70 (5.06)	0.63 (4.55)	0.83 (6.00)	0.78 (5.64)	1.20 (8.67)	1.30 (9.40)	1.40 (10.12)	1.95 (14.10)	2.35 (16.99)
M8 x Std.	0.70 (5.06)	0.75 (5.42)	1.10 (7.95)	1.00 (7.23)	1.40 (10.12)	1.25 (9.04)	1.90 (13.74)	2.10 (15.18)	2.20 (15.91)	3.10 (22.42)	3.80 (27.48)
M8 x 1	0.73 (5.28)	0.80 (5.78)	1.20 (8.67)	1.00 (7.23)	1.50 (10.84)	1.35 (9.76)	2.10 (15.18)	2.30 (16.63)	2.40 (17.35)	3.35 (24.23)	4.10 (29.65)
M10 x Std.	1.35 (9.76)	1.40 (10.12)	2.20 (15.91)	1.90 (13.74)	2.70 (19.52)	2.35 (19.99)	3.70 (26.76)	4.20 (30.37)	4.40 (31.18)	6.20 (44.84)	7.20 (52.07)
M10 x 1	1.50 (10.84)	1.60 (11.57)	2.50 (18.08)	2.10 (15.18)	3.10 (22.42)	2.80 (20.25)	4.30 (31.10)	4.90 (35.44)	5.00 (36.16)	7.00 (50.63)	8.40 (60.75)
M12 x Std.	2.40 (17.35)	2.50 (18.08)	3.70 (26.76)	3.30 (23.86)	4.70 (33.99)	4.20 (30.37)	6.30 (45.56)	7.20 (52.07)	7.50 (54.24)	10.50 (75.94)	12.50 (90.41)
M12 x 1.5	2.55 (18.44)	2.70 (19.52)	4.00 (28.93)	3.50 (25.31)	5.00 (36.16)	4.50 (32.54)	6.80 (49.18)	7.70 (55.69)	8.00 (57.86)	11.20 (81.00)	13.40 (96.92)
M14 x Std.	3.70 (26.76)	3.90 (28.20)	6.00 (13.23)	5.20 (37.61)	7.50 (54.24)	7.00 (50.63)	10.00 (72.33)	11.50 (83.17)	12.00 (86.79)	17.00 (122.96)	20.00 (144.66)
M14 x 1.5	4.10 (29.65)	4.30 (31.10)	6.60 (47.73)	5.70 (41.22)	8.30 (60.03)	7.50 (54.24)	11.10 (80.28)	12.50 (90.41)	13.00 (94.02)	18.50 (11.26)	22.00 (158.12)
M16 x Std.	5.60 (40.50)	6.00 (43.39)	9.00 (65.09)	8.00 (57.86)	11.50 (83.17)	10.50 (75.94)	15.50 (112.11)	17.90 (129.47)	18.50 (133.81)	26.00 (188.05)	31.00 (224.22)
M16 x 1.5	6.20 (44.84)	6.50 (47.01)	9.70 (70.16)	8.60 (62.20)	12.50 (90.41)	11.30 (81.73)	17.00 (122.96)	19.50 (141.04)	20.00 (144.66)	28.00 (202.52)	35.50 (256.77)
M18 x Std.	7.80 (56.41)	8.30 (60.03)	12.50 (90.41)	11.00 (79.56)	16.00 (115.72)	14.50 (104.87)	21.00 (151.89)	27.50 (198.90)	28.50 (206.14)	41.00 (296.55)	43.00 (311.01)
M18 x 1.5	9.10 (65.82)	9.50 (68.71)	14.40 (104.15)	12.50 (90.41)	18.50 (133.81)	16.70 (120.79)	24.50 (177.20)	27.50 (198.90)	28.50 (206.14)	41.00 (296.55)	49.00 (354.41)
M20 x Std.	11.50 (83.17)	12.00 (86.79)	18.00 (130.19)	16.00 (115.72)	22.00 (159.12)	19.00 (137.42)	31.50 (227.83)	35.00 (253.15)	36.00 (260.38)	51.00 (368.88)	60.00 (433.98)
M20 x 1.5	12.80 (92.58)	13.50 (97.64)	20.50 (148.27)	18.00 (130.19)	25.00 (180.82)	22.50 (162.74)	35.00 (253.15)	39.50 (285.70)	41.00 (296.55)	58.00 (419.51)	68.00 (491.84)
M22 x Std.	15.50 (112.11)	16.00 (115.72)	24.50 (177.20)	21.00 (151.89)	30.00 (216.99)	26.00 (188.05)	42.00 (303.78)	46.00 (332.71)	49.00 (354.41)	67.00 (484.61)	75.00 (542.47)
M22 x 1.5	17.00 (122.96)	18.50 (133.81)	28.00 (202.52)	24.00 (173.59)	34.00 (245.92)	29.00 (209.75)	47.00 (339.95)	52.00 (44.76)	56.00 (405.04)	75.00 (542.47)	85.00 (614.80)
M24 x Std.	20.50 (148.27)	21.50 (155.50)	33.00 (238.68)	27.00 (195.29)	40.00 (289.32)	34.00 (245.92)	55.00 (397.81)	58.00 (419.51)	63.00 (455.67)	82.00 (593.10)	92.00 (655.43)
M24 x 1.5	23.00 (166.35)	35.00 (253.15)	37.00 (267.62)	31.00 (224.22)	45.00 (325.48)	38.00 (202.52)	61.00 (441.21)	67.00 (484.61)	74.00 (535.24)	93.00 (672.66)	103.00 (744.99)

TORQUE VALUES FOR STANDARD U.S. FASTENERS

Type	S.A.E. Grade	Description	Bolt Head Marking
1	1 OR 2	WILL HAVE NO MARKINGS IN THE CENTER OF THE HEAD. Low or Medium Carbon Steel Not Heat Treated.	
5	5	WILL HAVE THREE RADIAL LINES. Quenched and Tempered Medium Carbon Steel.	
8	8	WILL HAVE 6 RADIAL LINES. Quenched and Tempered Special Carbon or Alloy Steel.	

Recommended torque, in foot pounds, for all Standard Application Nuts and Bolts, provided:

1. All thread surfaces are clean and lubricated with SAE-30 engine oil. (See Note.)
2. Joints are rigid, that is, no gaskets or compressible materials are used.
3. When reusing nuts or bolts, use minimum torque values.

NOTE: *Multiply the standard torque by:*

- 0.65 When finished jam nuts are used.
- 0.70 When Molykote, white lead or similar mixtures are used as lubricants.
- 0.75 When Parkerized bolts or nuts are used.
- 0.85 When cadmium plated bolts or nuts and zinc bolts w/waxed zinc nuts are used.
- 0.90 When hardened surfaces are used under the nut or bolt head.

NOTE: *When reusing bolts and nuts in service, use minimum torque values.*

The following General Torque Values must be used in all cases where **SPECIAL TORQUE VALUES** are not given.

NOTE: *Torque values listed throughout this manual are lubricated (wet) threads; values should be increased 1/3 for nonlubricated (dry) threads.*

Thread Size	Heat Treated Material Grade 5 and Grade 8			
	Grade 5 (3 Radial Dashes On Head)		Grade 8 (6 Radial Dashes On Head)	
	Foot Pounds (ft lb)	Newton Meter (Nm)	Foot Pounds (ft lb)	Newton Meter (Nm)
1/4" - 20	6	8	9	12
1/4" - 28	7	9	11	15
5/16" - 18	13	18	18	24
5/16" - 24	15	20	21	28
3/8" - 16	24	33	34	46
3/8" - 24	27	37	38	52
7/16" - 14	38	52	54	73
7/16" - 20	42	57	60	81
1/2" - 13	58	79	82	111
1/2" - 20	65	88	90	122
9/16" - 12	84	114	120	163
9/16" - 18	93	126	132	179
5/8" - 11	115	156	165	224
5/8" - 18	130	176	185	251
3/4" - 10	205	278	290	393
3/4" - 16	240	312	320	434
7/8" - 9	305	414	455	617
7/8" - 14	334	454	515	698
1" - 8	455	617	695	942
1" - 14	510	691	785	1064
1 1/8" - 7	610	827	990	1342
1 1/8" - 12	685	929	1110	1505
1 1/4" - 7	860	1166	1400	1898
1 1/4" - 12	955	1295	1550	2102
1 3/8" - 6	1130	1532	1830	2481
1 3/8" - 12	1290	1749	2085	2827
1 1/2" - 6	1400	2034	2430	3295
1 1/2" - 12	1690	2291	2730	3701
1 3/4" - 5	2370	3213	3810	5166
2" - 4 1/2	3550	4813	5760	7810

NOTE: *If any bolts and nuts are found loose or at values less than what the chart states, it is recommended that the loose bolt and/or nut be replaced with a new one.*

TYPE 8 PHOSPHATE COATED HARDWARE

This chart provides tightening torque for general purpose applications using original equipment standard hardware as listed in the Parts Manual for the machine involved. **DO NOT SUBSTITUTE**. In most cases, original equipment standard hardware is defined as Type 8, coarse thread bolts and nuts and thru hardened flat washers (Rockwell "C" 38 - 45), all phosphate coated and assembled without supplemental lubrication (as received) condition.

The torques shown below also apply to the following:

1. Phosphate coated bolts used in tapped holes in steel or gray iron.
2. Phosphate coated bolts used with phosphate coated prevailing torque nuts (nuts with distorted threads or plastic inserts).
3. Phosphate coated bolts used with copper plated weld nuts.

Markings on bolt heads or nuts indicate material grade ONLY and are NOT to be used to determine required torque.

Nominal Thread Diameter	Standard Torque ±10%	
	Kilogram Meter (kg•m)	Foot Pounds (ft lb)
1/4"	1.1	8
5/16"	2.2	16
3/8"	3.9	28
7/16"	6.2	45
1/2"	9.7	70
9/16"	13.8	100
5/8"	19.4	140
3/4"	33.2	240
7/8"	53.9	390
1"	80.2	580
1 - 1/8"	113.4	820
1 - 1/4"	160.4	1160
1 - 3/8"	210.2	1520
1 - 1/2"	279.4	2020
1 - 3/4"	347.1	2510
2	522.8	3780

TORQUE VALUES FOR HOSE CLAMPS

The following chart provides the tightening torques for hose clamps used in all rubber applications (radiator, air cleaner, operating lever boots, hydraulic system, etc.).

Clamp Type And Size	Torque			
	Radiator, Air Cleaner, Boots, Etc.		Hydraulic System	
	Kilogram Meter (kg•m)	Inch Pounds (in lb)	Kilogram Meter (kg•m)	Inch Pounds (in lb)
"T" Bolt (Any Diameter)	0.68 - 0.72	59 - 63	-------	------
Worm Drive - Under 44 mm (1-3/4 in) Open Diameter	0.2 - 0.3	20 - 30	0.5 - 0.6	40 - 50
Worm Drive - Over 44 mm (1-3/4 in) Open Diameter	0.5 - 0.6	40 - 50	-------	------
Worm Drive - All "Ultra-Tite"	0.6 - 0.7	50 - 60	0.5 - 0.6	40 - 50

TORQUE VALUES FOR SPLIT FLANGES

The following chart provides the tightening torques for split flange connections used in hydraulic systems. Split flanges and fitting shoulders should fit squarely. Install all bolts, finger tight and then torque evenly.

NOTE: *Over torquing bolts will damage the flanges and/or bolts, which may cause leakage.*

Flange Size (*)	Bolt Size	Bolt Torque	
		Kilogram Meter (kg•m)	Foot Pounds (ft lb)
1/2"	5/16"	2.1 - 2.5	15 - 18
3/4"	3/8"	3.0 - 3.7	22 - 27
1"	3/8"	3.7 - 4.8	27 - 35
1 - 1/4"	7/16"	4.8 - 6.2	35 - 45
1 - 1/2"	1/2"	6.4 - 8.0	46 - 58
2"	1/2"	7.6 - 9.0	55 - 65
2 - 1/2"	1/2"	10.9 - 12.6	79 - 91
3"	5/8"	19.1 - 20.7	138 - 150
3 - 1/2"	5/8"	16.2 - 18.4	117 - 133

(*) - Inside diameter of flange on end of hydraulic tube or hose fitting.

NOTE: *Values stated in chart are for Standard Pressure Series (Code 61) Split Flanges.*

TORQUE WRENCH EXTENSION TOOLS

Very large diameter, high grade fasteners (nuts, bolts, cap screws, etc.) require a great deal of turning force to achieve recommended tightening torque values.

Common problems that could occur as a result are:

- Recommended torque exceeds the measuring capacity of the torque wrench.
- Specialized sockets do not fit the adapter on the front end (nose) of the torque wrench.
- Generating adequate force on the back end (handle) of the wrench is difficult or impossible.
- Restricted access or an obstruction may make use of the torque wrench impossible.
- A unique application requires fabrication of an adapter or other special extension.

Most standard torque wrenches can be adapted to suit any one of the proceeding needs or situations, if the right extension tool is used or fabricated.

Torque Multiplication

A wrench extension tool can be used to increase the tightening force on a high capacity nut or bolt.

For example, doubling the distance between the bolt and the back (handle) end of the torque wrench doubles the tightening force on the bolt. It also halves the indicated reading on the scale or dial of the torque wrench. To accurately adjust or convert indicated scale or dial readings, use the following formula:

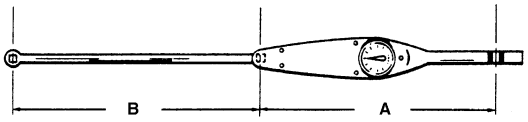

0552A

Figure 1

I = A x T / A + B where:

I = Indicated force shown on the torque wrench scale or dial.

T = Tightening force applied to the nut or bolt (actual Torque).

A = Length of the torque wrench (between the center of the nut or bolt and the center of the handle).

B = Length of the extension.

As an example, if a 12" extension is added to a 12" torque wrench, and the indicated torque on the dial reads "150 ft lb," the real force applied to the bolt is 300 ft lb:

$$I = \frac{A \times T}{A + B} = \frac{12 \times 300}{12 + 12} = \frac{3600}{24} = 150$$

NOTE: *The formula assumes that there is no added deflection or "give" in the joint between the*

extension and torque wrench. Readings may also be inaccurate:

- If the extension itself absorbs some of the tightening force and starts to bend or bow out.
- If an extension has to be fabricated that is not perfectly straight (for example, an extension made to go around an obstruction, to allow access to a difficult to tighten fastener), the materials and methods used must be solid enough to transmit full tightening torque.

Other Uses for Torque Wrench Extension Tools

Torque wrench extensions are sometimes made up for reasons other than increasing leverage on a fastener.

For example, a torque wrench and extension can be used to measure adjustment "tightness" of a linkage or assembly. Specially fabricated extensions can be used to make very precise checks of the force required to engage or disengage a clutch mechanism, release a spring-applied brake assembly, or "take up" free play in most any movable linkage.

Once the value of the adjustment force is established, repeated checks at regular intervals can help to monitor and maintain peak operating efficiency. These types of adjustment checks are especially useful if physical measurements of linkage travel are difficult to make or will not provide the needed degree of precision and accuracy.

To allow the assembly or mechanism to accept a torque wrench, welding a nut or other adapter on the end of a linkage shaft or other leverage point will allow turning the shaft or assembly manually.

Tightening Torque Specifications (Metric)

(For coated threads, prelubricated assemblies.)

CAUTION!

Disassembly, overhaul and replacement of components on the machine, installation of new or replacement parts and/ or other service-related maintenance may require the use of thread or flange sealing assembly compound.

Use the information on this page as a general guide in selecting specific formulas that will meet the particular requirements of individual assembly installations. *DOOSAN* does not specifically endorse a specific manufacturer or brand name but the following table of "Loctite" applications is included for which cross-references to other makers' products should also be widely available.

IMPORTANT

Use primer "T" or "N" for all cold weather assembly of fastener adhesives, with Thread locker sealers 222, 242/243, 262, 271, 272, or 277.

I. "Loctite" Fastener Adhesives

Product	Application	Color	Removal	Breakaway Cure Strength (in lb) of Sealer Alone
222	Low strength for 6 mm (1/4") or smaller fasteners.	Purple	Hand tools	45
242 or 243	Medium strength for 6 mm (1/4") and larger fasteners.	Blue	Hand tools	80
262	High strength for high grade fasteners subject to shock, stress and vibration.	Red	Heat/260°C (500°F) Remove HOT (NO solvent)	160
271	Extra high strength for fine thread fasteners up to 25 mm (1") diameter.	Red	Heat/260°C (500°F) Remove HOT	160
272	High temperature/high strength for hostile environments to 232°C (450°F).	Red	Heat/316°C (600°F) Remove HOT	180
277	Extra high strength for coarse thread fasteners 25 mm (1") diameter and larger.	Red	Heat/260°C (500°F) Remove HOT	210

II. "Loctite" Pipe Thread Sealant

Product	Application	Color	Removal	Required Setup
545	"No-filler/nonclog" formula for high-pressure hydraulic systems. Over application will not restrict or foul system components.	Purple	Hand tools	4 Hours (or 1/2 hour with Locquic "T" Primer)
656	Solvent resistant, higher viscosity tapered thread sealer.	White	Hand tools	4 Hours (or 1/2 hour with Locquic "T" Primer)

III. "Loctite" gasket/flange sealer

Product	Application	Color	Notes
518	Gasket eliminator specifically made for aluminum flanges/surfaces. For hydraulic systems to 34,475 kPa (5,000 psi).	Red	Use Locquic "N" primer for fast (1/2 - 4 hours) setup. Unprimed setup 4 - 24 hours.
504	Low-pressure/wide-gap gasket eliminator compound. Fills gaps to 0.0012 mm (0.030"), cures to rigid seal.	Orange	Use Locquic "N" primer for faster (1/2 - 4 hours) setup. Unprimed setup 4 - 24 hours.
515	General purpose, fast setup, flexible-cure gasket eliminator. For nonrigid assemblies subject to shock, vibration or deflection.	Purple	Use Locquic "N" primer for faster (1/4 - 2 hours) setup. Unprimed setup 1 - 12 hours.

IV. "Loctite" retaining compounds

Product	Application	Color	Notes
609	For bushings, sleeves, press fit bearings, splines and collars. For gaps to 0.0002 mm (0.005"), temperatures to 121°C (250°F).	Green	Use Locquic "N" primer for increased bond strength and all cold temperature applications.
620	For high temperatures to 232°C (450°F).	Green	Same as 609, above.
680	For high strength bonds and tight clearance gaps, to 0.00008 mm (0.002").	Green	Same as 609, above.

V. "Loctite" Adhesives

Product	Application	Color	Notes
380	Black Max instant adhesive for shock and vibration-resistant bonds.	Black	May take 120 hours to reach full cure strength.
454	Adhesive for porous surfaces.	Clear	Full strength in 24 hours.
480	Increased strength (+50%), shock and vibration-resistant.	Black	Full strength in 24 hours.

Transmission and Torque Converter

Edition 1

Table of Contents

Transmission and Torque Converter

Transmission and Torque Converter 6
Applicable Models 6
General 7
Transmission and Torque Converter 9
Powershift Transmission 10
Transmission Control 10
Schedule of Measuring Points and Connection 4 WG-210 12
Oil Circuit Diagram 4WG-210 Forward 1st Speed 14
Transmission Electrical Components 16
TCU (Transmission Control Unit) 18
Transmission Control Valve 18
Transmission Oil Temperature Sensor 18
Engine Pickup Sensor 19
Central Gear Pickup Sensor 19
Turbine Pickup Sensor 19
Output Speed Sensor 20
Shift Lever Switch (DW-3) 20
Forward, Reverse Switch Lever (Optional) 21
Finger Tip Work Lever 22
Auto Selector Switch 23
Display 24
Transmission Faults Codes 25
Fault Display 25
CAN - Message 25
Description of Fault Codes 25
Abbreviations 26
Definition of Operation Modes 26
Table of Fault Codes 27
Measurement of Resistance at Actuator/sensors and Cable 27
Transmission Electrical Circuits 29

T/M Controller Circuit 29
Traveling Circuits..... 30
Downshift..... 39
Transmission Cutoff 44
LIS (Load Isolation System) - Option 45
Aeb Starter 47
Introduction..... 47
Procedure to Start AEB..... 48
Display During AEB-mode..... 48
Installation View (S/N 1001 thru 2000) 50
Inner Section 50
Front View 51
Front View with Disk Brake 52
Side View 52
Side View with Disk Brake..... 54
Rear View..... 55
Rear View with Disk Brake 56
Installation View (S/N 2001 thru 3000, 3001 and Up)..... 57
Inner Section 57
Front View 58
Front View with Disk Brake 59
Side View 60
Side View with Disk Brake..... 61
Rear View..... 62
Rear View with Disk Brake 63
Special Tools 64
Gearshift System..... 64
Engine Connection 67
Pressure Oil Pump 68
Gearbox Housing 69
Input 71
Coupling 72
Output..... 78

Power Take-off 79
Hydraulic Control Unit (HSG-94) 80
Disassembly 82
Reassembly 85
Transmission Disassembly 91
Hydraulic Control Unit (HSG-94) and Duct plate 91
Engine Connection - Converter 92
Hydraulic Pump 94
Converter Back Pressure Valve 95
Remove Output, Input and Clutches 96
Disassemble Clutch - KV and KR 100
Disassemble Clutch - K1, K2 and K3 104
Disassemble Clutch - K4 106
Disassemble Drive Shaft 108
Transmission Reassembly 109
Install Oil Tube 109
Reassemble Clutch - KV and KR 111
Reassemble Clutch - K1, K2 and K3 116
Reassemble Clutch - K4 122
Preassemble Drive Shaft 128
Preassemble and Install Output 129
Install Preassembled Drive Shaft and Clutches 130
Install Pump Shaft (Power Take-off) 134
Install Output Flanges 135
Converter Back Pressure Valve 136
Oil Feed Housing - Transmission Pump 137
Engine Connection - Converter 139
Converter Safety Valve 141
Mount Duct Plate and Hydraulic Control Unit 142
Install Plugs and Oil Level Tube 143
Speed Sensor and Inductive Transmitters 144

TRANSMISSION AND TORQUE CONVERTER

CAUTION!

Follow all safety recommendations and safe shop practices outlined in the front of this manual or those contained within this section.

Always use tools and equipment that are in good working order.

Use lifting and hoisting equipment capable of safely handling load.

Remember, that ultimately safety is your own personal responsibility.

APPLICABLE MODELS

The contents of this section apply to the following models and serial number ranges.

MODEL	SERIAL NUMBER RANGE
DL300	5001 and Up

GENERAL

Figure 1, shows layout of power train assemblies. The engine (1, Figure 1) drives a torque converter (2),which drives a power shift transmission (3). Two output shafts extend out of the transmission. Each output shaft has a propeller shaft attached to it. Center propeller shaft (4) drives a front propeller shaft (6) that drives the front differential (7).

A parking brake (8, Figure 1) is mounted on transmission output shaft. The front differential is enclosed in the front axle housing (9). Each end of the front axle housing contains reduction gearing (10). Each end of the front axle housing also contains a service brake (11). Rear propeller shaft (5) drives the rear differential (12). The rear differential is enclosed in the rear axle housing (13). Each end of the rear axle housing contains reduction gearing (10). Each end of the rear axle housing also contains a service brake (11).

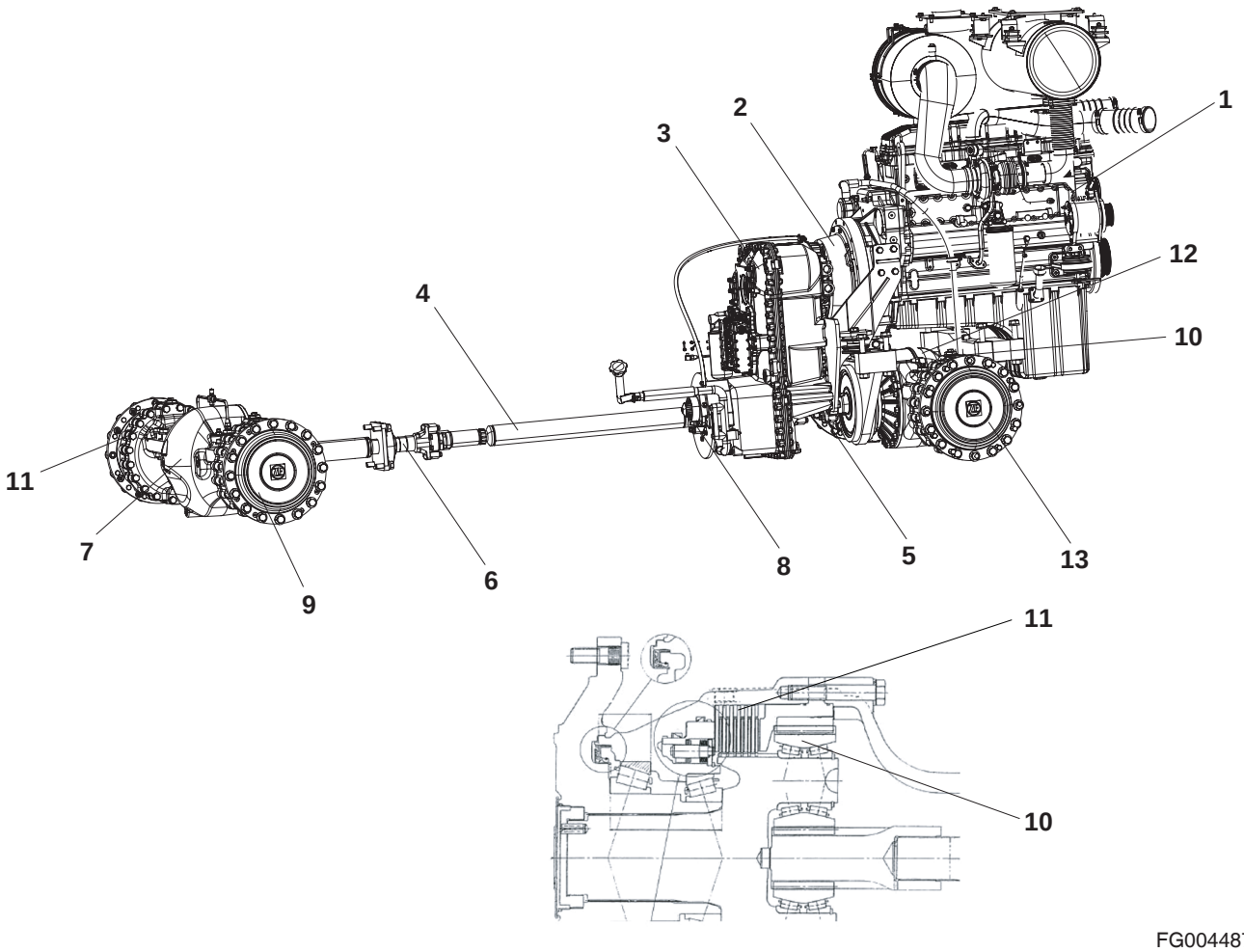

Figure 1

Reference Number	Description
1	Engine
2	Torque Converter
3	Transmission
4	Center Drive Shaft
5	Rear Drive Shaft
6	Front Drive Shaft
7	Front Differential

Reference Number	Description
8	Parking Brake
9	Front Axle Housing
10	Reduction Gearing
11	Service Brake
12	Rear Differential
13	Rear Axle Housing

TRANSMISSION AND TORQUE CONVERTER

The machine contains a powershift transmission that has four forward speeds and three speeds in reverse. Gear changes are made by an electrohydraulic control valve that is mounted on transmission. Moving gear select lever in cab, generates an electrical signal that is transmitted to the control valve. The control valve contains proportional valves that direct pressurized fluid to various clutches that control the forward and reverse gears.

Item		DL300
Torque Converter	Model	4WG 210 (Full Auto)
	Type	3-Element, 1-Stage, Single-phase, E/G mounted with flexible plate
	Oil Cooler	Air-cooled
	Charging Pump	105 liters/min (28 U.S. gal.) @ 2,000 rpm
	Hydraulic Pump PTO	1 : 1
	T/C Size	ø 340 mm (13.39 in)
	Stall Ratio	2.845
	Safety Relief	11 Bar (160 psi)
Transmission	Type	Full Power Shift, Counter shaft
	Speeds	4 Forward / 3 Reverse
	Ratio	F: 4.152 / 2.184 / 1.072 / 0.636 R: 3.937 / 2.071 / 1.017
	Power Shift Control Pressure	16 - 18 Bar (230 - 260 psi)
	Shift Control	Electric Shift with Proportional Valve
Oil Capacity		38 liters (10 U.S. gal)
Dry Weight		470 kg (1,036 lb)
Output Flange	Front	7C Mechanics
	Rear	7C Mechanics

Powershift Transmission

The multispeed reversing transmission in countershaft design is power shiftable by hydraulically actuated multidisk clutches.

All gears are constantly meshing and carried on antifriction bearings.

The gear wheels, bearings and clutches are cooled and lubricated with oil.

The 4-speed reversing transmission is equipped with 6 multidisk clutches.

At the shifting, the actual plate pack is compressed by a piston, movable in axial direction, which is pressurized by pressure oil.

A compression spring takes over the pushing back of the piston, thus the release of the plate pack. As to the layout of the transmission and the specifications of the closed clutches in the single speeds, See “Schedule of Measuring Points and Connection 4 WG-210” on page -12. and “Oil Circuit Diagram 4WG-210 Forward 1st Speed” on page 1-14.

Transmission Control

Transmission control, See “Schedule of Measuring Points and Connection 4 WG-210” on page -12., Electrohydraulic unit on page -13 and “Oil Circuit Diagram 4WG-210 Forward 1st Speed” on page 1-14.

The transmission pump, necessary for the oil supply of the converter, and for the transmission control, is sitting in the transmission on the engine dependent input shaft.

The feed rate of the pump is Q = 105 l/min at n_{Engine} = 2000 min-1.

This pump is sucking the oil via the coarse filter out of the oil sump and delivers it via the ZF fine filter - the filters is fitted externally from the transmission - to the main pressure valve.

ZF fine filter

Filtration ratio according to ISO 4572: $\beta_{30} \geq 75$ $\beta_{15} = 25$ $\beta_{10} = 5.0$

Filter surface at least: 2 x 6,700 cm^2 = 13,400 cm^2

Dust capacity according to ISO 4572 at least: 17g

The six clutches of the transmission are selected via the 6 proportional valves P1 to P6.

The proportional valve (pressure regulator unit) is composed of pressure regulator (e.g. Y6). follow-on slide and vibration damper.

The control pressure of 9 bar (130 psi) for the actuation of the follow-on slides is created by the pressure reducing valve. The pressure oil [16 +2 bar (230 +30 psi)] is directed via the follow-on slide to the respective clutch.

Due to the direct proportional selection with separated pressure modulation for each clutch, the pressure to the clutches, which are engaged in the gear change, will be controlled. In this way, a hydraulic intersection of the clutches to be engaged and disengaged becomes possible. This is creating spontaneous shifts without traction force interruption.

At the shifting, the following criteria will be considered:

- Speed of engine, turbine, central gear train and output.
- Transmission temperature.
- Shifting mode (up, down, reverse shifting and speed engagement out of Neutral).
- Load condition (full and part load, traction, overrun inclusive consideration of load cycles during the shifting).

The main pressure valve is limiting the max. control pressure to 16 +2 bar (230 +30 psi) and releases the main stream to the converter and lubricating circuit.

In the inlet to the converter, a converter safety valve is installed which protects the converter from high internal pressure (opening pressure 11 bar (160 psi)).

Within the converter, the oil serves to transmit the power according to the well-known hydrodynamic principle.

To avoid cavitation, the converter must be always completely filled with oil.

This is achieved by a converter pressure backup valve, rear mounted to the converter, with an opening pressure of at least 5 bar (70 psi).

The oil, escaping out of the converter, is directed to a heat exchanger.

From the heat exchanger, the oil is directed to the transmission and there to the lubricating oil circuit, so that all lubricating points are supplied with cooled oil.

The allocation of the pressure regulators to the single speeds can be seen on the “Schedule of Measuring Points and Connection 4 WG-210” on page 1-12 and “Oil Circuit Diagram 4WG-210 Forward 1st Speed” on page 1-14.

Schedule of Measuring Points and Connection 4 WG-210

The marked positions (e.g. 53) correspond with the positions on the “Oil Circuit Diagram 4WG-210 Forward 1st Speed” on page 1-14.

The measurements have to be carried out at hot transmission (about 80° - 95°C).

No.	Denomination of the Position	Connection	Marking on the Valve Block
Measuring Points for Pressure Oil and Temperature			
51	Converter Inlet - Opening pressure 9 bar (130 psi)	M10 x 1	H
52	Converter Exit - Opening pressure 3.5 bar (50 psi)	M14 x 1.5	
53	Clutch Forward 16 +2 bar (230 +30 psi) KV	M10 x 1	B
55	Clutch Reverse 16 +2 bar (230 +30 psi) KR	M10 x 1	E
56	Clutch Reverse 16 +2 bar (230 +30 psi) K1	M10 x 1	D
57	Clutch Reverse 16 +2 bar (230 +30 psi) K2	M10 x 1	A
58	Clutch Reverse 16 +2 bar (230 +30 psi) K3	M10 x 1	C
60	Clutch Reverse 16 +2 bar (230 +30 psi) K4	M10 x 1	F
63	Converter Exit Temperature 100°C, Short-time 120°C	M14 x 1.5	
65	System Pressure 16 +2 bar (230 +30 psi)	M10 x 1	K
Measuring Points for Delivery Rates			
15	Connection to the Heat Exchanger	1 5/16"-12 UNF-2B	
16	Connection from the Heat Exchanger	1 5/16"-12 UNF-2B	
Inductive Transmitter and Speed Sensor			
21	Inductive Transmitter n Turbine	M18 x 1.5	
34	Speed Sensor n Output and Speedometer	-------	
47	Inductive Transmitter n Central Gear Train	M18 x 1.5	
48	Inductive Transmitter n Engine	M18 x 1.5	
Connections			
49	Plug Connection on the Hydraulic Control Unit		
68	Pilot Pressure (Option)	M16 x 1.5	J
69	System Pressure (Option)	M16 x 1.5	G

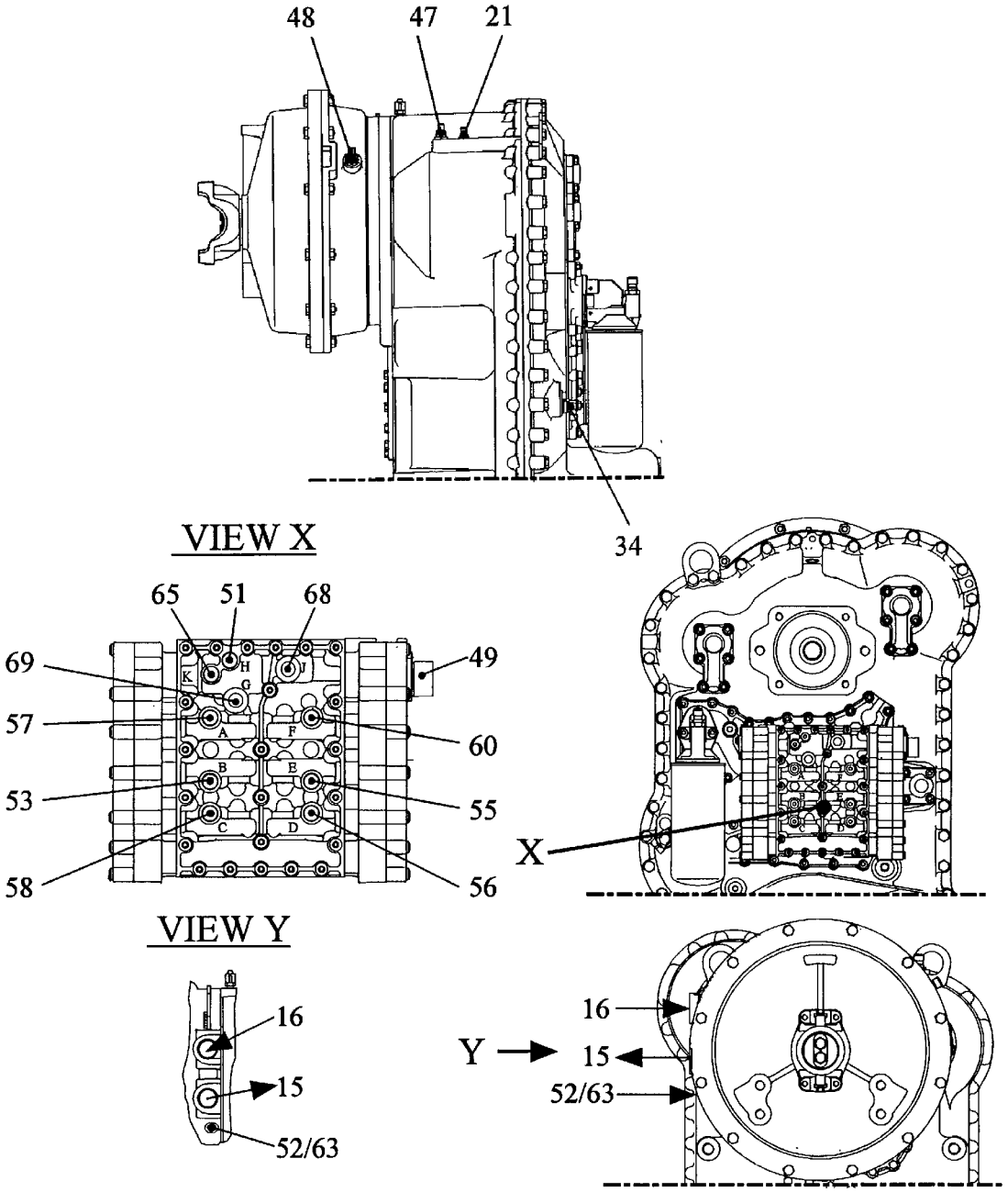

CODE

		• PRESSURE REGULATOR UNDER VOLTAGE						ENGAGED CLUTCHES	
DRIVING DIRECTION	SPEED	Y1	Y2	Y3	Y4	Y5	Y6		
FORWARD	1			•		•		K1	KV
	2					•	•	KV	K2
	3				•	•		K3	KV
	4	•			•			K4	K3
REVERSE	1		•	•				KR	K1
	2		•				•	KR	K2
	3		•		•			KR	K3
NEUTRAL									
ENGAGED CLUTCH		K4	KR	K1	K3	KV	K2		
POSITIONS ON THE VALVE BLOCK		F	E	D	C	B	A		
CURRENT NO. OF THE MEASURING POINTS		60	55	56	58	53	57		

AMS1060S

Figure 2

Oil Circuit Diagram 4WG-210 Forward 1st Speed

The marked positions (e.g. 53) correspond with the positions on “Schedule of Measuring Points and Connection 4 WG-210” on page 1-12.

Reference Number	Positions
WT	Heat Changer
WGV	Converter Back Pressure Valve 3.50 bar (50 psi)
WSV	Converter Relief Valve 9 bar (130 psi)
HDV	System Pressure Valve 16 +2 bar (230 +30 psi)
RV-9	Pressure Reducing Valve 9 bar (130 psi)
NFS	Follow-on Slide
D	Oscillation Damper
B	Orifice
P1	Proportional Valve - Clutch K4
P2	Proportional Valve - Clutch KR
P3	Proportional Valve - Clutch K1
P4	Proportional Valve - Clutch K3
P5	Proportional Valve - Clutch KV
P6	Proportional Valve - Clutch K2
Y1 - Y6	Pressure Regulator
TEMP	Temperature Sensor

CODE

		• PRESSURE REGULATOR UNDER VOLTAGE						ENGAGED CLUTCHES	
DRIVING DIRECTION	SPEED	Y1	Y2	Y3	Y4	Y5	Y6		
FORWARD	1			•		•		K1	KV
	2					•	•	KV	K2
	3				•	•		K3	KV
	4	•			•			K4	K3
REVERSE	1		•	•				KR	K1
	2		•				•	KR	K2
	3		•		•			KR	K3
NEUTRAL									
ENGAGED CLUTCH		K4	KR	K1	K3	KV	K2		
POSITIONS ON THE VALVE BLOCK		F	E	D	C	B	A		
CURRENT NO. OF THE MEASURING POINTS		60	55	56	58	53	57		

AMS0860S

Figure 3

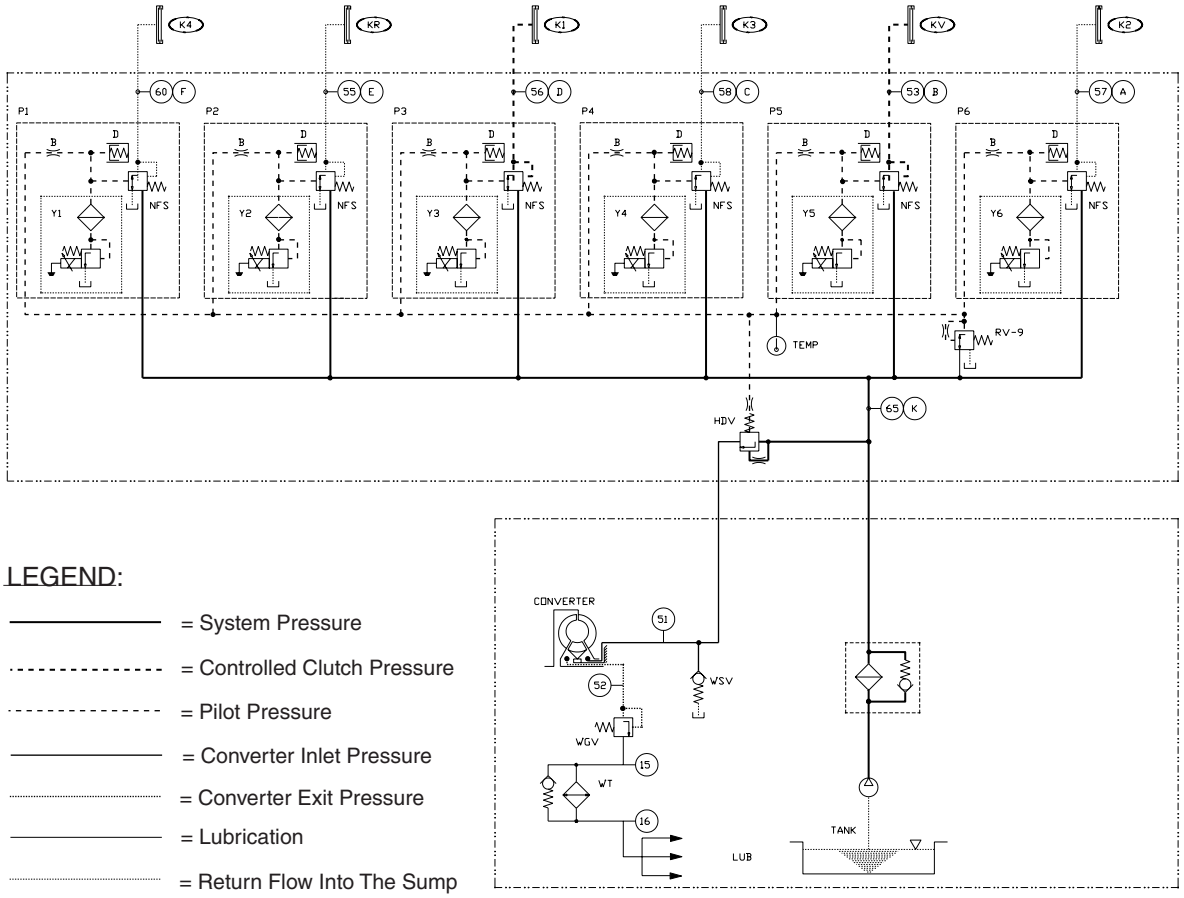

AMS1110L

Figure 4

TRANSMISSION ELECTRICAL COMPONENTS

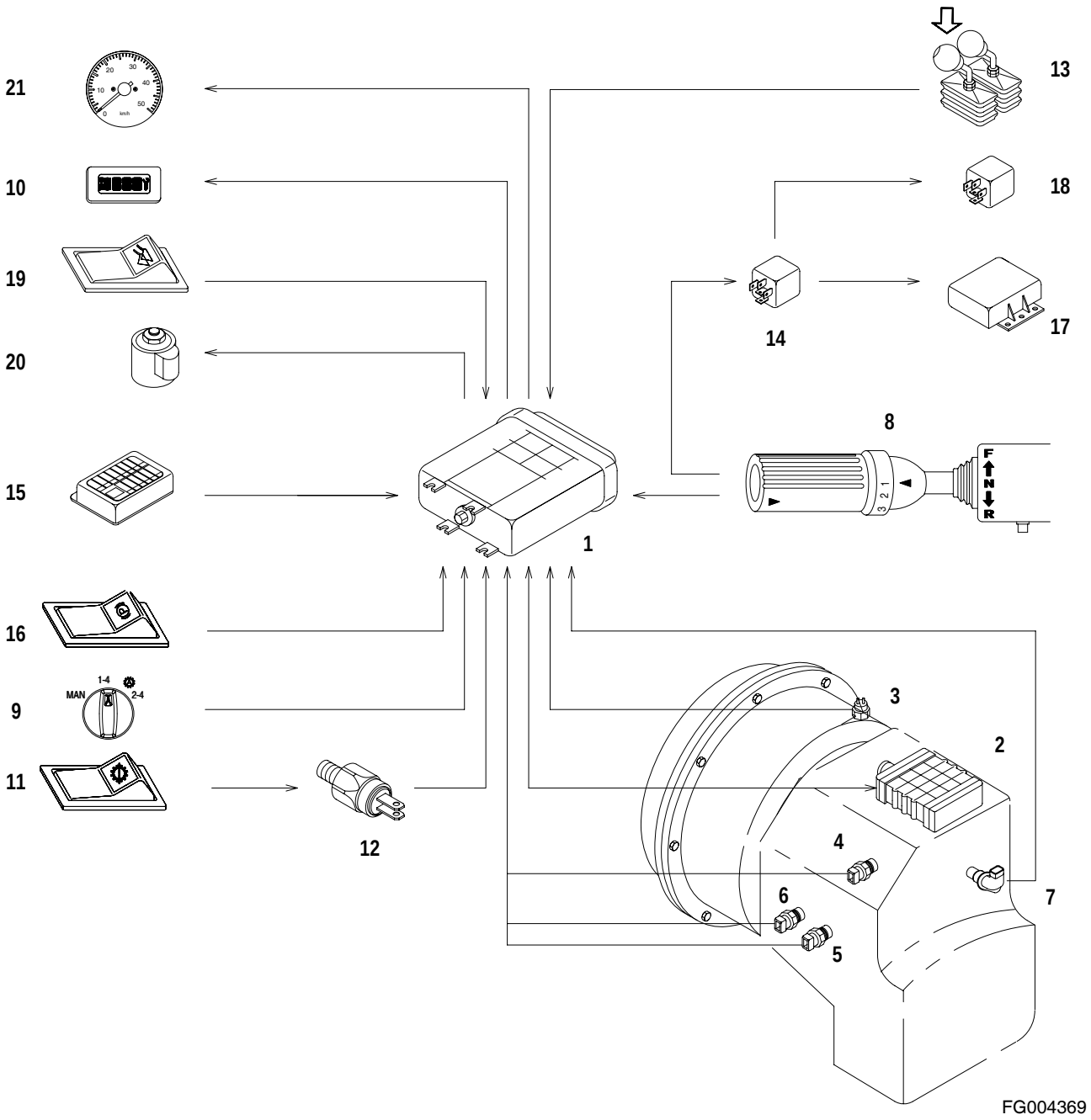

Figure 5

Reference Number	Description
1	T/M Controller
2	T/M Control Valve
3	T/M Oil Temperature Sensor
4	Engine Pickup Sensor
5	Central Gear Pickup Sensor
6	Turbine Pickup Sensor
7	Output Speed Sensor
8	Shift Lever Switch
9	Auto Selector Switch
10	Display
11	T/M Cutoff Switch

Reference Number	Description
12	T/M Cutoff Pressure Switch
13	Downshift Switch
14	Safety Starter Switch
15	Fuse Box
16	Parking Brake Switch
17	Control Unit
18	Starter Controller
19	LIS (Load Isolation System) Switch (Option)
20	LIS Solenoid Valve
21	Speedometer

TCU (Transmission Control Unit)

1. Sending a control signal transmitted from the shift lever to the control valve, generates a speed.
2. At the auto mode, transmits the appreciate signals to the control valves according to the load and engine rpm.
3. Detecting a fault, controls various clutches.

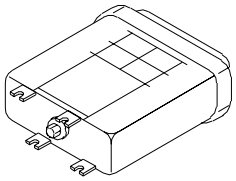

AJS0200L

Figure 6

Transmission Control Valve

1. The transmission control valve contains a temperature sensor and proportional solenoid valves (Y1 - Y6) that direct pressurized fluid to various clutches that generates a speed with control the shift gears.
2. Specification of the proportional solenoid valve
   - Resistance: 19 ±1.9 ohm at 20°C
   - Pressure: 0.8 - 8.3 kg/cm^2 (11.4 - 118 psi)
3. The contained temperature sensor detects the temperature of the control valve and transmits the electrical signal to the TCU, and serves TCU determines gears to change.
   - Neutral: At temperature less than -30°C
   - 1st or 2nd gear: At temperature less than -10°C
   - Normal Operation: At temperature greater than -10°C

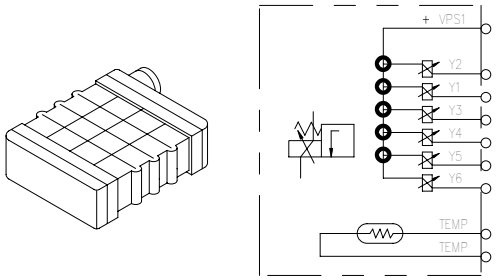

FG005184

Figure 7

Transmission Oil Temperature Sensor

1. Detecting a oil temperature of transmission and send a control signal to transmission oil temperature gauge.
2. Specification
   - Resistance

     216 ±30 Ohm (at 60°C)

     81.2 ±10 Ohm (at 90°C)

     36.5 ±3.5 Ohm (at 120°C)

     18.7 ±2.1 Ohm (at 150°C)

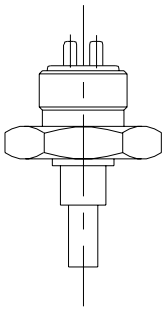

AJS0220L

Figure 8

Engine Pickup Sensor

1. Detect a revolution of gear array in engine side.
2. Specification
   - Resistance: 1050Ω ± 10% (at 20°C)
   - Fasten torque: 3.06 kg•m (22 ft lb)
   - Gap: 0.5 + 0.3 mm
     (0.0197 +0.0118 in)
   - Output: 4 Pulse/Rev.

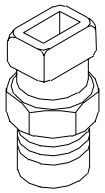

AJS0230L

Figure 9

Central Gear Pickup Sensor

1. Detect a revolution of central gear array
2. Specification
   - Resistance: 1050Ω ±10% (at 20°C)
   - Fasten torque: 3.06 kg•m (22 ft lb)
   - Gap: 0.5 + 0.3 mm
     (0.0197 +0.0118 in)
   - Output: 91 Pulse/Rev.

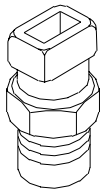

AJS0240L

Figure 10

Turbine Pickup Sensor

1. Detect a revolution of gear array in turbine side.
2. Specification
   - Resistance: 1050Ω ± 10% (at 20°C)
   - Fasten torque: 3.06 kg•m (22 ft lb)
   - Gap: 0.5 + 0.3 mm
     (0.0197 +0.0118 in)
   - Output: 59 Pulse/Rev.

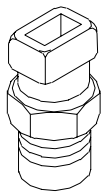

AJS0250L

Figure 11

Output Speed Sensor

1. Detect a revolution of gear array in transmission output side.
2. Specification
   - Voltage Supply: 20 V - 32 V
   - Operation Frequency: 2 Hz - 5 KHz
   - Fasten torque (M8): 2.35 kg•m (17 ft lb)
   - Gap: 0.5 + 0.3 mm
     (0.0197 +0.0118 in)
   - Output: 60 Pulse/Rev.

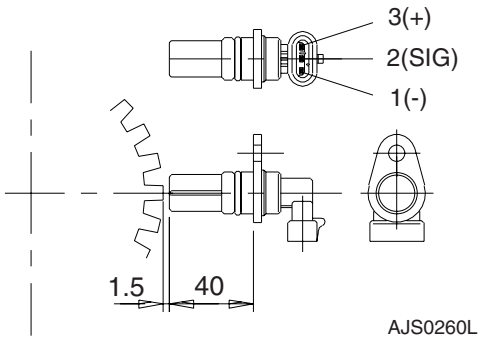

Figure 12

Shift Lever Switch (DW-3)

1. Forward, Reverse and Shift
   - F: Forward
   - N: Neutral
   - R: Reverse
   - 1,2,3,4: Shift Step
     * Forward shift range: 1 - 4
     * Reverse shift range: 1 - 3
2. Kick-down (Down Shift) Switch
   - KD: Kick-down Switch
3. Lever Lock Key
   - N: Neutral (The lever is not moved.)
   - D: Driving (The lever is released.)
4. Switch Circuit

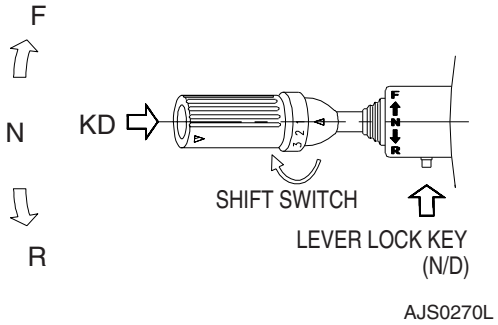

Figure 13

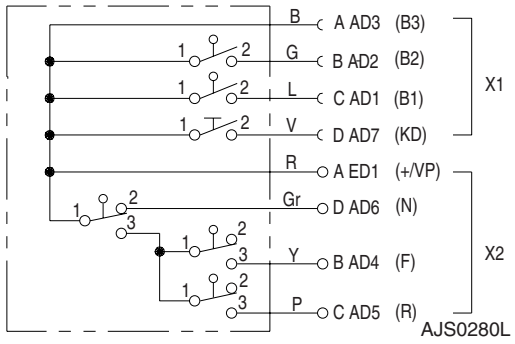

Figure 14

5. Terminal Position and Color

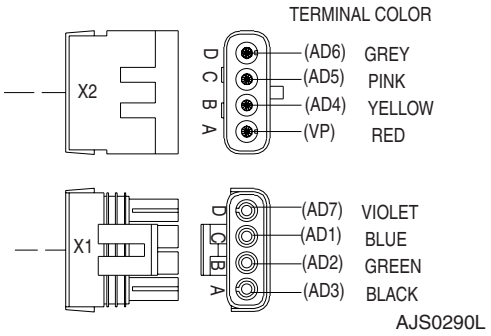

Figure 15

6. Switch Connection

GEAR / TERMINAL		FORWARD				REVERSE				NEUTRAL				KICK DOWN
		1	2	3	4	1	2	3	4	1	2	3	4	
ED1	VP	❁	❁	❁	❁	❁	❁	❁	❁	❁	❁	❁	❁	❁
AD1	B1	❁			❁	❁			❁	❁			❁	
AD2	B2			❁	❁			❁	❁			❁	❁	
AD3	B3	❁	❁	❁	❁	❁	❁	❁	❁	❁	❁	❁	❁	
AD4	V	❁	❁	❁	❁									
AD5	R					❁	❁	❁	❁					
AD6	AS									❁	❁	❁	❁	
AD7	KD													❁

AJS0300L

Figure 16

Forward, Reverse Switch Lever (Optional)

1. Forward, Reverse Switch
   - F: Forward
   - N: Neutral
   - R: Reverse
2. Horn Switch
   - H: Horn Switch
3. Kick-down (Down Shift) Switch
   - KD: Kick-down Switch

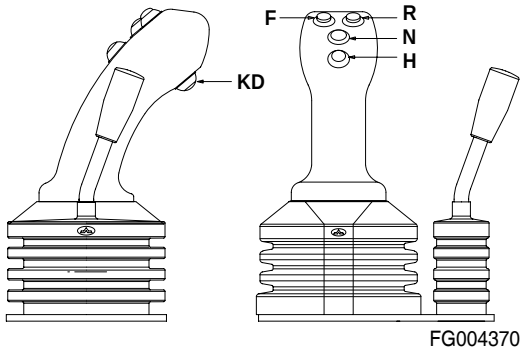

Figure 17

Finger Tip Work Lever

2-Lever (Optional)

1. Horn Switch
    - H: Horn Switch
2. Kick-down (Down Shift) Switch
    - KD: Kick-down Switch

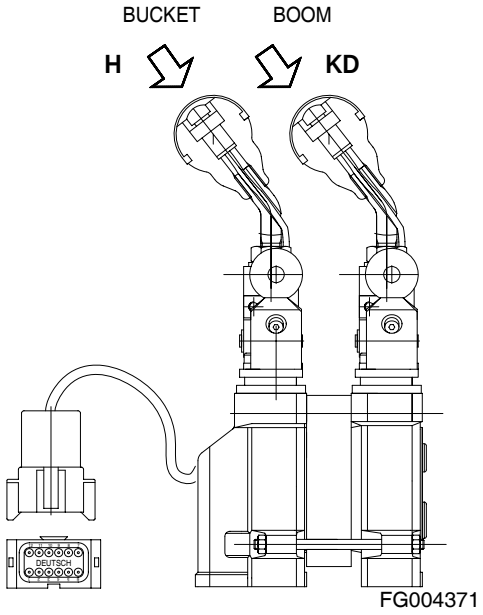

Figure 18

3-Lever (Optional)

1. Horn Switch
    - H: Horn Switch
2. Kick-down (Down Shift) Switch
    - KD: Kick-down Switch

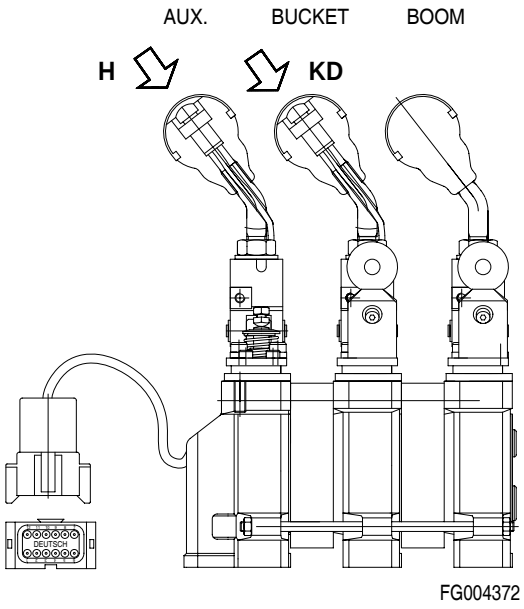

Figure 19

Switch Circuit

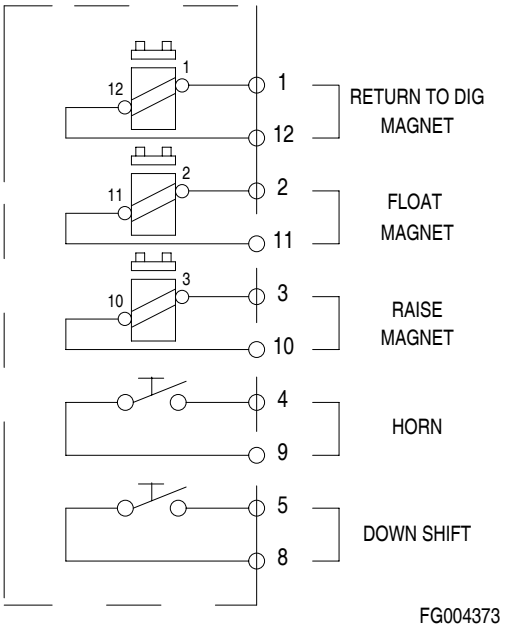

Figure 20

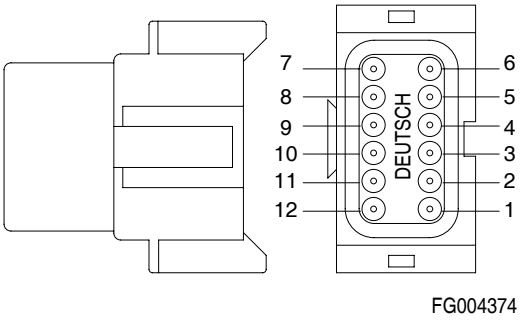

Figure 21

Auto Selector Switch

1. This is an auto/manual selector switch.
2. When the switch is in the "I" - (Auto) position, the gear shifting will take place automatically to be selected by the operator, according to the load and to the vehicle speed.
3. Automatic shifting takes place between gears.
   - Forward: 2nd - 3rd - 4th
   - Reverse: 2nd - 3rd
4. When the switch is in the "0" - (Manual) position, the shifting is returned to the manual mode and the control signal shifts the transmission to gear selected by the operator.

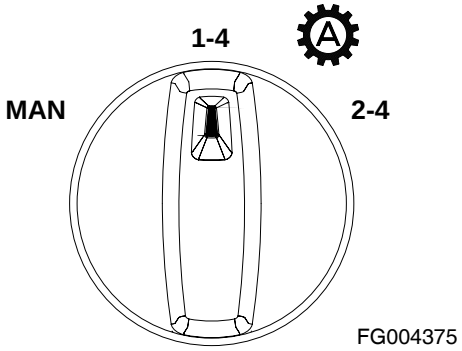

Figure 22

Display

Fault codes are given in a separate section "Transmission Faults Codes."

TRANSMISSION FAULTS CODES

The transmission has a monitoring system that indicates when a malfunction is occurring.

Fault Display

If a fault is detected, the display shows a spanner symbol (g) for a fault. The display shows the fault code, if the gear selector is in neutral.

If more than one fault is detected, each fault code is shown for about 1 second.

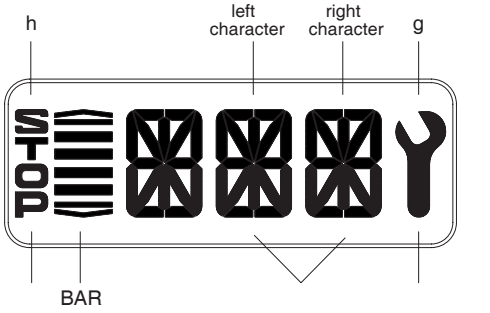

FG004442

Figure 23

CAN - Message

The TCU sends the fault code of a detected fault in the specified CAN - message, while the fault is active.

If more than one fault is detected, the fault code scrolls.

Description of Fault Codes

First Number	Meaning of Number
1 Hex	Digital Input Signal
2 Hex	Analog Input Signal
3 Hex	Speed Signal
4 Hex	Can Signal Error
5 Hex	Can Signal Error
6 Hex	Can Signal Error
7 Hex	Analog Current Output Signal
8 Hex	Analog Current Output Signal
9 Hex	Digital Output Signal
A Hex	Digital Output Signal
B Hex	Transmission Fault, Clutch Error
C Hex	Logical Fault
D Hex	Power Supply
E Hex	High Speed Signal
F Hex	General Fault

Abbreviations

Throughout this section the following abbreviations are used to indicate various conditions.

Abbreviations	
O.C.	Open Circuit
S.C.	Short Circuit
OP-Mode	OPeration Mode
TCU	Transmission Control Unit
ABS	Anti Blocking System
ASR	Anti Slipping Regulation
EEC	Electronic Engine Controller
PTO	Power Take Off
CCO	Clutch Cut Off

Definition of Operation Modes

Normal

There is no failure detected in transmission system or failure has no or slight effects on transmission control. TCU will work without or in special cases with little limitations. (see following table)

Substitute Clutch Control

TCU cannot change gears or direction under control of normal clutch modulation. TCU uses substitute strategy for clutch control. All modulations are only time controlled. (Comparable with EST 25)

Limp-home

The detected failure in the system has strong limitations to transmission control. TCU can engage only one gear in each direction. In some cases only one direction will be possible. TCU will shift the transmission into neutral at the first occurrence of the failure. First, the operator must shift the gear selector into neutral position. If output speed is less than a threshold for neutral to gear and the operator shifts the gear selector into forward or reverse, the TCU will select the limp-home gear. If output speed is less than a threshold for reversal speed and TCU has changed into the limp-home gear and the operator selects a shuttle shift, TCU will shift immediately into the limp-home gear of the selected direction. If output speed is greater than the threshold, TCU will shift the transmission into neutral. The operator has to slow down the vehicle and must shift the gear selector into neutral position.

Transmission Shut Down

TCU has detected a severe failure that disables control of the transmission. TCU will shut off the solenoid valves for the clutches and also the common power supply (VPS1). Transmission shifts to Neutral. The park brake will operate normally, also the other functions which use ADM 1 to ADM 8. The operator has to slow down the vehicle. The transmission will stay in neutral.

TCU Shut Down

TCU has detected a severe failure that disables control of system. TCU will shut off all solenoid valves and also both common power supplies (VPS1, VPS2). The park brake will engage, also all functions are disabled which use ADM 1 to ADM 8. The transmission will stay in neutral.

Table of Fault Codes

Fault codes are given in a separate section "Transmission Faults Codes."

Measurement of Resistance at Actuator/ sensors and Cable

Actuator

open circuit:$R_{12} \approx R_{1G} \approx R_{2G} \approx \infty$

short cut to ground:$R_{12} \approx R$;$R_{1G} \approx 0$, $R_{2G} \approx R$ or $R_{1G} \approx R$, $R_{2G} \approx 0$ (for S.C. to ground, G is connected to vehicle ground)

short cut to battery:$R_{12} \approx R$;$R_{1G} \approx 0$, $R_{2G} \approx R$ or $R_{1G} \approx R$, $R_{2G} \approx 0$ (for S.C. to battery, G is connected to battery voltage).

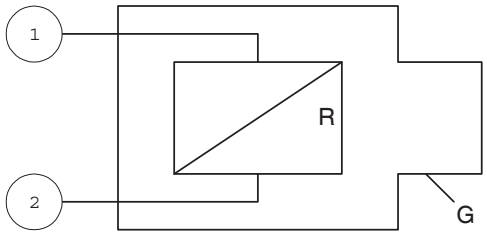

HBOE640I

Figure 24

Cable

<u>open circuit:</u>

$R_{12} \approx R_{1P} \approx R_{1C} \approx R_{2P} \approx R_{2C} \approx \infty$

<u>short cut to ground:</u>

$R_{12} \approx 0; R_{1C} \approx R_{2C} \approx 0, R_{1P} \approx R_{2P} \approx \infty$

<u>short cut to battery:</u>

$R_{12} \approx 0, R_{1C} \approx R_{2C} \approx \infty, R_{1P} \approx R_{2P} \approx 0$

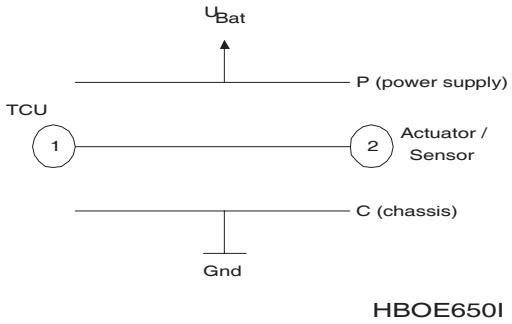

Figure 25

TRANSMISSION ELECTRICAL CIRCUITS

T/M Controller Circuit

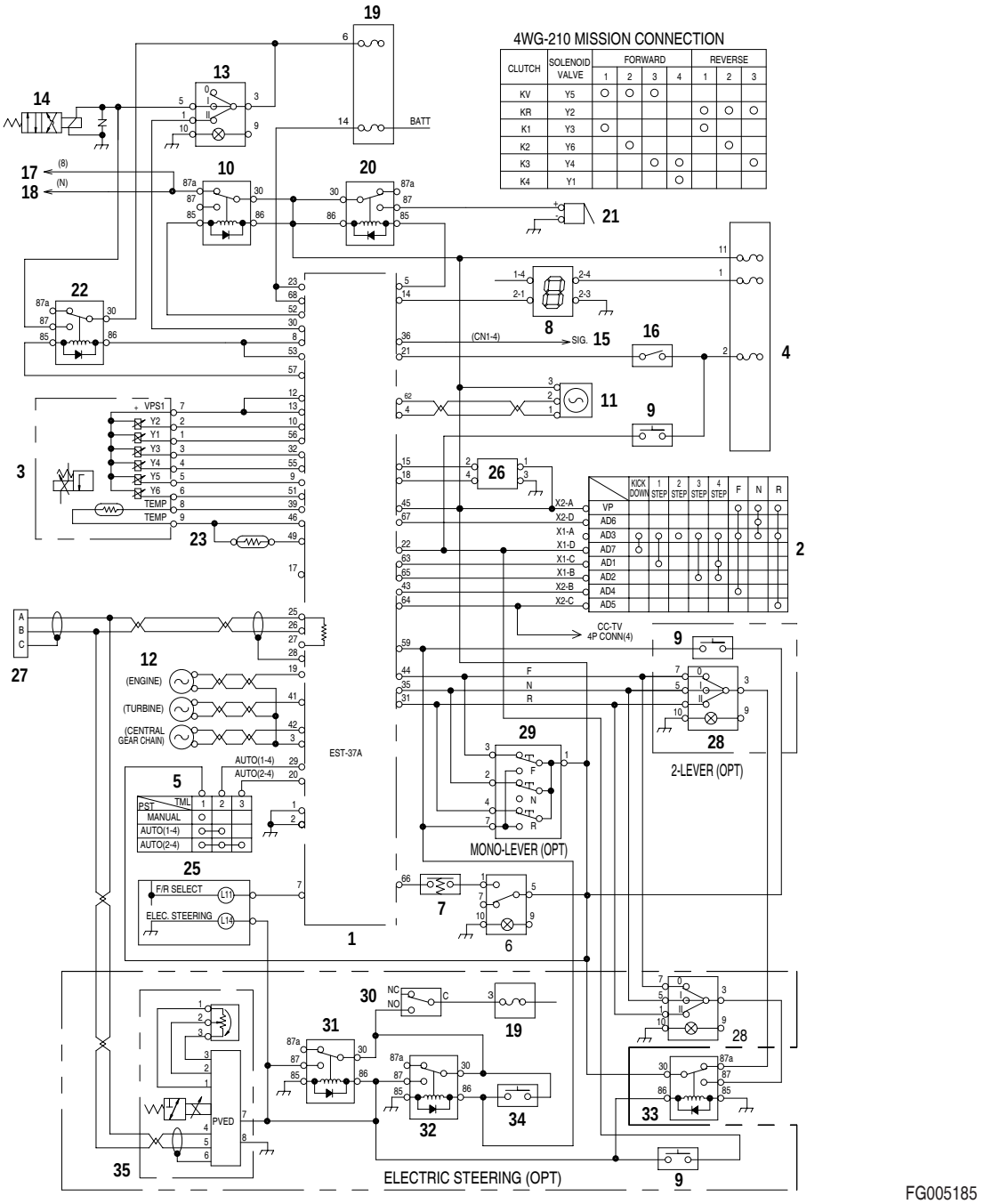

Figure 26

The transmission proportioning solenoid valves are shown here as (Y1 thru Y6, Figure 31).

Reference Number	Description
1	T/M Controller
2	Shift Lever Switch
3	T/M Control Valve
4	Fuse Box 1
5	Auto Selector Switch
6	T/M Cutoff Selector Switch
7	T/M Cutoff Pressure Switch
8	Display
9	Downshift Switch
10	Safety Starter Switch
11	Output Speed Sensor
12	Speed Pickup 3
13	LIS (Load Isolation System) Switch
14	LIS Solenoid Valve
15	Speedometer
16	Parking Brake Switch
17	Control Unit
18	Starter Relay

Reference Number	Description
19	Fuse Box 2
20	Reverse Relay
21	Reverse Warning Buzzer
22	LIS Relay
23	T/M Oil Pressure Sensor
24	Bypass Filter Switch
25	Gauge Panel
26	AEB Check Connector
27	Diagnostic Connector
28	FNR Switch
29	FNR Selector Switch
30	Mono Lever Switch
31	Armrest Switch
32	Electric Steering Relay 1
33	Electric Steering Relay 2
34	FNR Selector Relay
35	Electric Steering Switch
36	Electric Steering Equipment

Traveling Circuits

Shift Lever Position		TCU Input	TCU Output	T/M Control Valve
Neutral		45, 67, 20	(12, 13)	-
Forward	1st Gear	45, 20, 43, 63	(12, 13) - 32, 9	Y3, Y5
	2nd Gear	45, 20, 43	(12, 13) - 9, 51	Y5, Y6
	3rd Gear	45, 20, 43, 65	(12, 13) - 55, 9	Y4, Y5
	4th Gear	45, 20, 43, 63, 65	(12, 13) - 56, 55	Y2, Y4
Reverse	1st Gear	45, 20, 64, 63	(12, 13) - 10, 32	Y1, Y3
	2nd Gear	45, 20, 64	(12, 13) - 10, 51	Y1, Y6
	3rd Gear	45, 20, 64, 65	(12, 13) - 32, 9	Y1, Y4

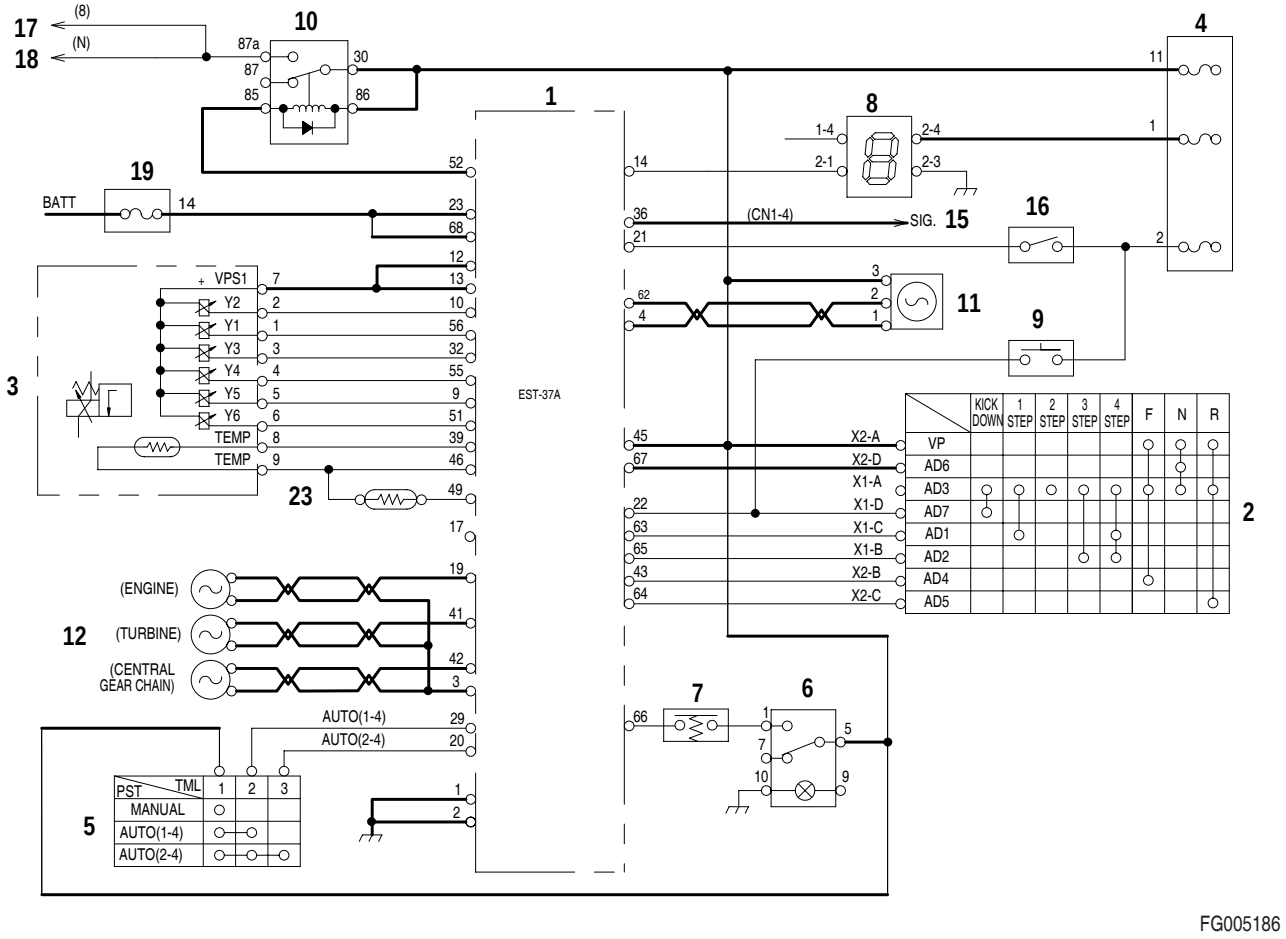

FG005186

Figure 27

When all transmission solenoid valves are de-energized (OFF) the transmission is in "NEUTRAL."

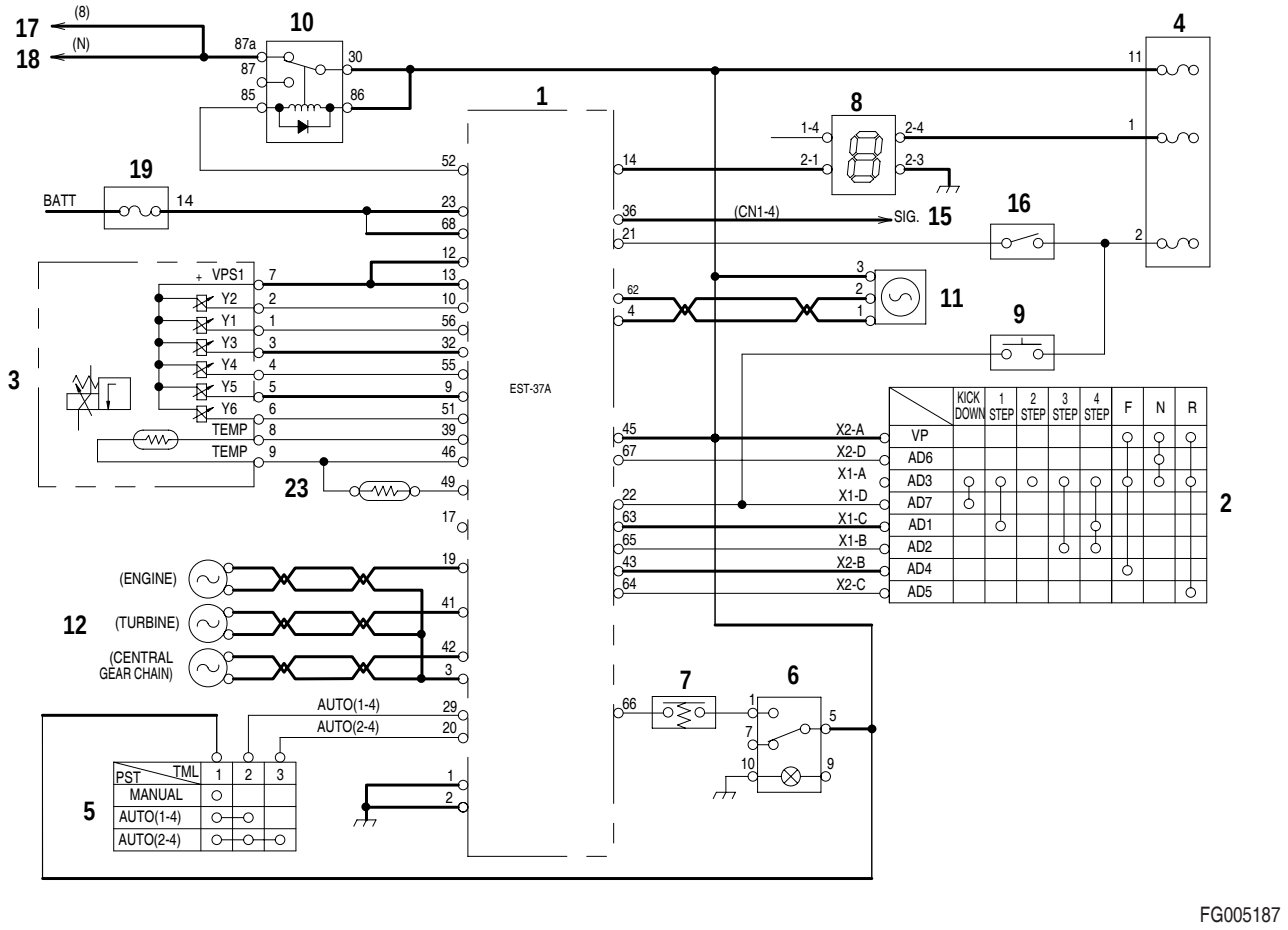

FG005187

Figure 28

Transmission solenoid valves (Y3 and Y5, Figure 28) are energized when in forward first gear.

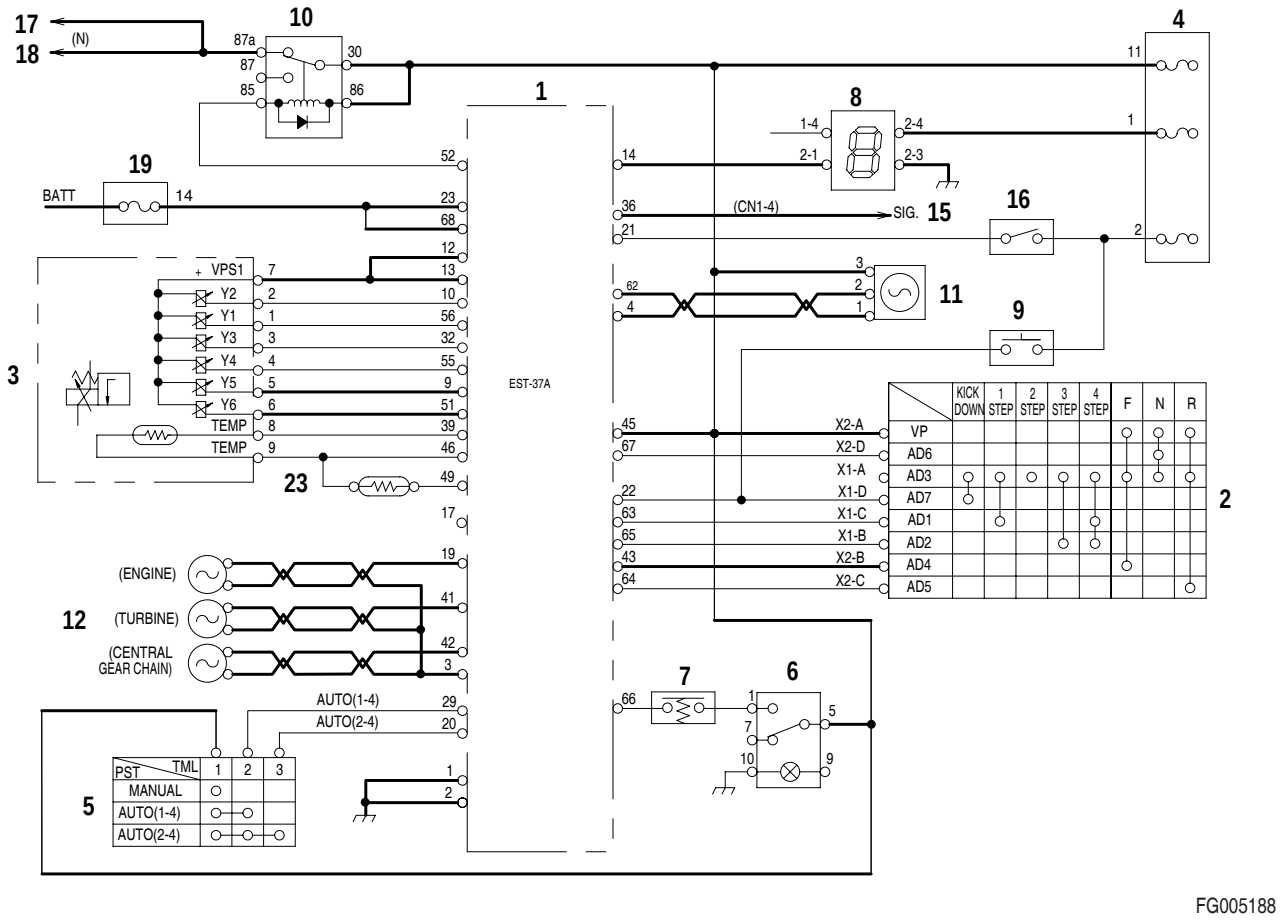

Figure 29

Transmission solenoid valves (Y5 and Y6, Figure 29) are energized when in forward second gear.

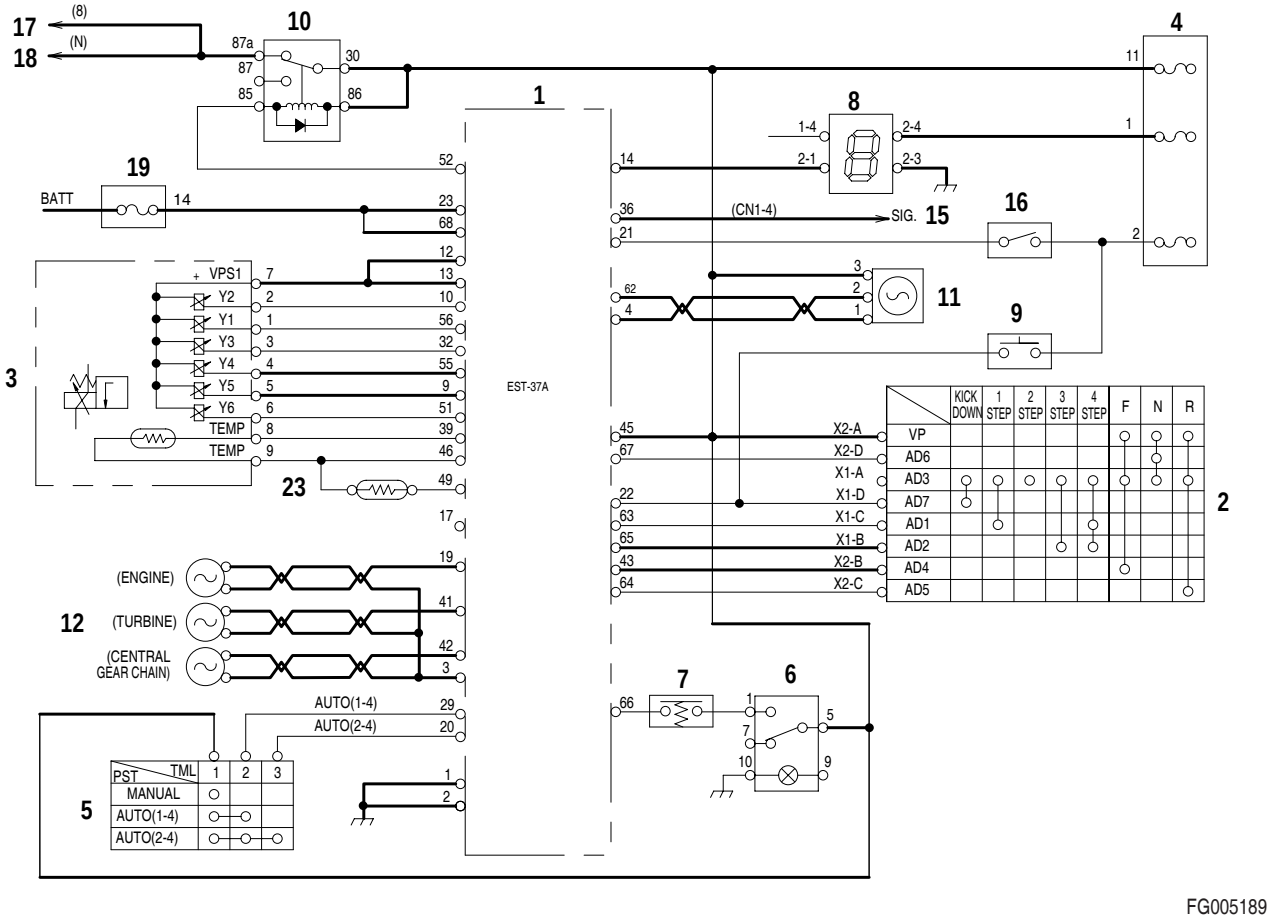

Figure 30

Transmission solenoid valves (Y4 and Y5, Figure 30) are energized when in forward third gear.

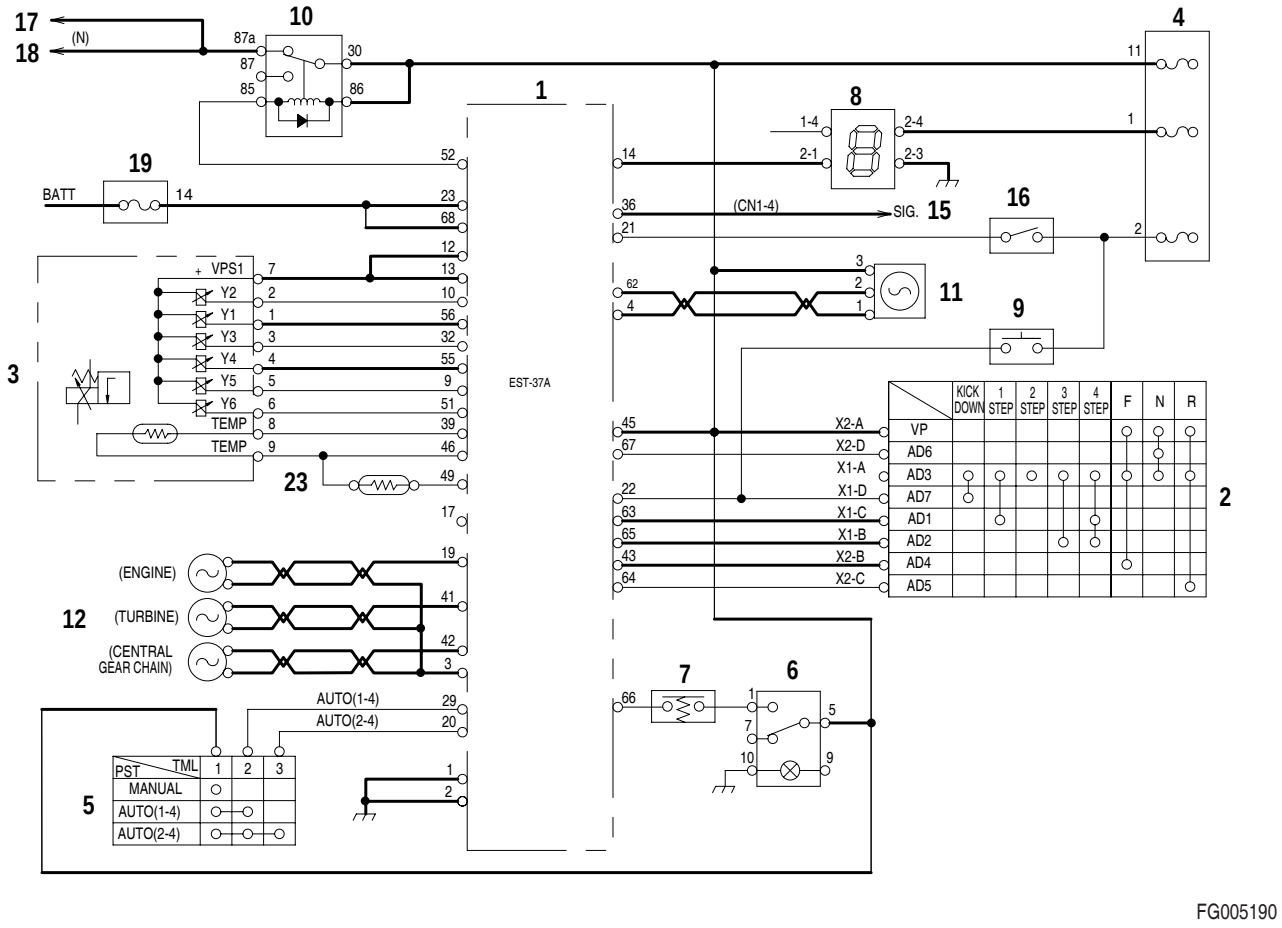

FG005190

Figure 31

Transmission solenoid valves (Y2 and Y4, Figure 31) are energized when in forward fourth gear.

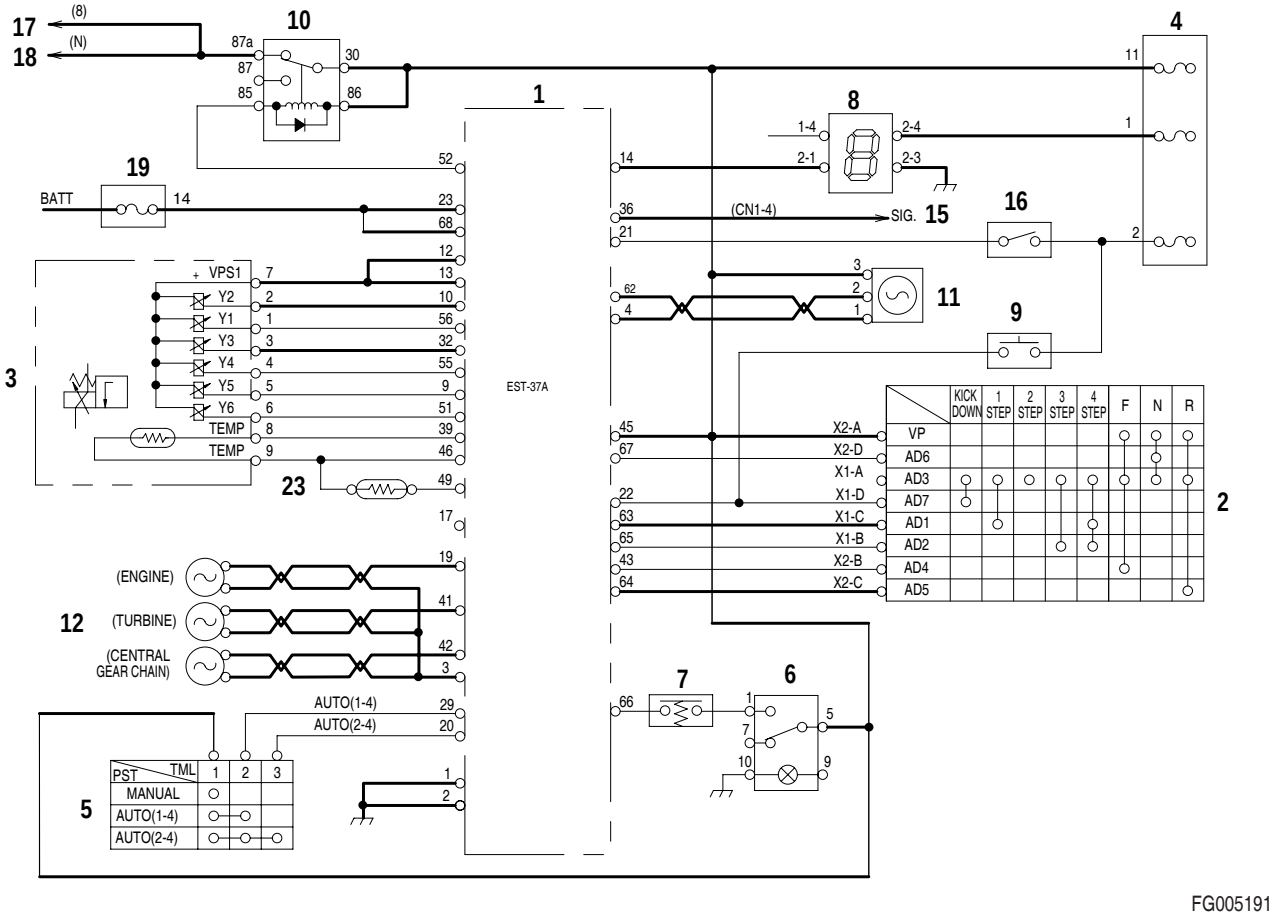

Figure 32

Transmission solenoid valves (Y1 and Y3, Figure 32) are energized when in reverse first gear.

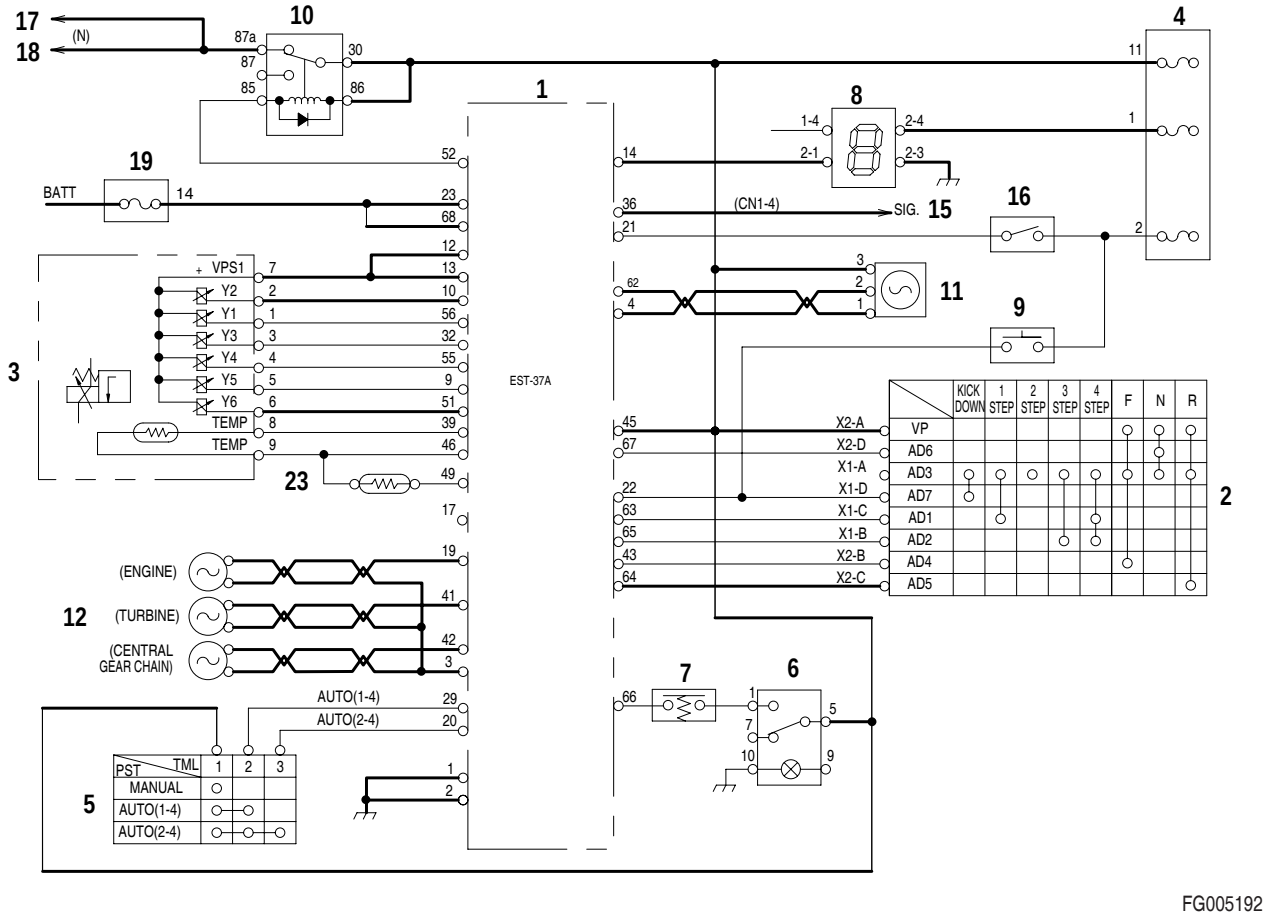

Figure 33

Transmission solenoid valves (Y1 and Y6, Figure 33) are energized when in reverse second gear.

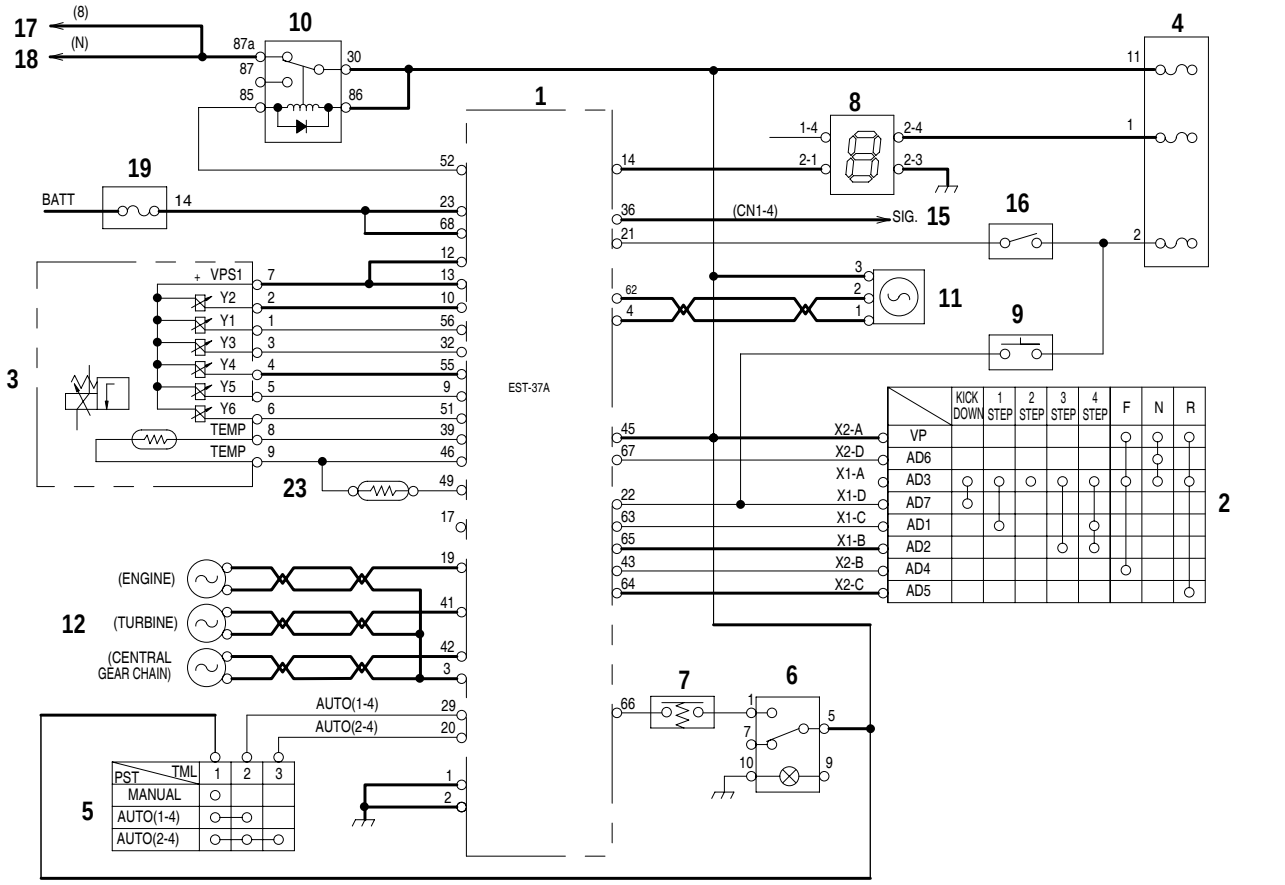

FG005193

Figure 34

Transmission solenoid valves (Y1 and Y4, Figure 34) are energized when in reverse third gear.

Downshift

Overview

1. There are two downshift switches down Figure 35, and it is possible for operators to select one of them according to the condition.
2. If the downshift switch is depressed during the machine moving, downshifting takes place automatically. As a result, fast digging and moving is possible. But at the manual mode the kick-down can only be activated.
3. If a change or traveling direction takes place or the downshift switch is depressed a second time, downshifting is released automatically.

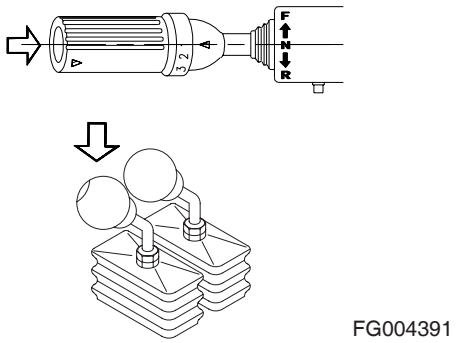

FG004391

Figure 35

Kick-down: Forward Second Gear to Forward First Gear
(Auto Selector Switch "O"- Manual Mode)

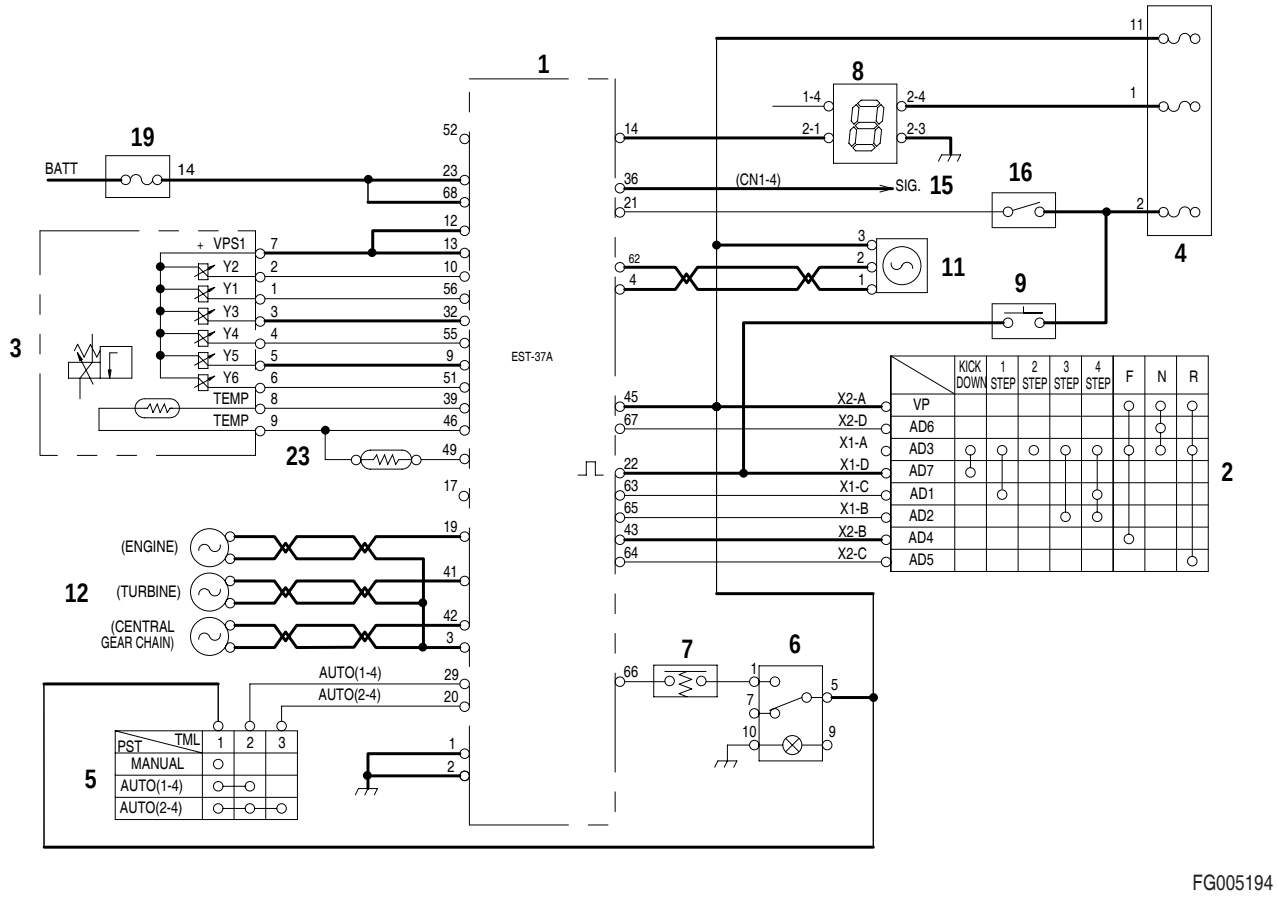

FG005194

Figure 36

With the auto selector switch (Figure 37) is in the "O" and the forward second gear is selected, if either downshift switch (Figure 35) is activated, a pulse is sent to the "22" transmission controller. This signal energizes solenoid valves, (Y3 and Y5), which shifts the transmission to the forward first gear. When either switch (Figure 35) is selected a second time, the transmission pulse signal of the "22" terminal is interrupted and solenoid valve, Y5 and Y6, are energized and the transmission returns to the forward second gear.

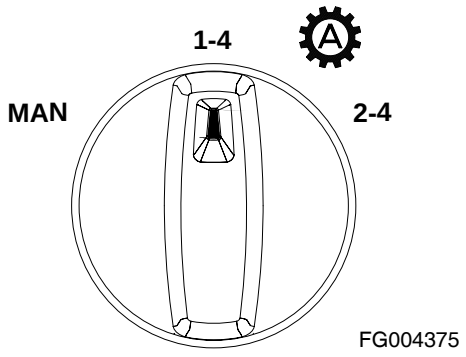

FG004375

Figure 37

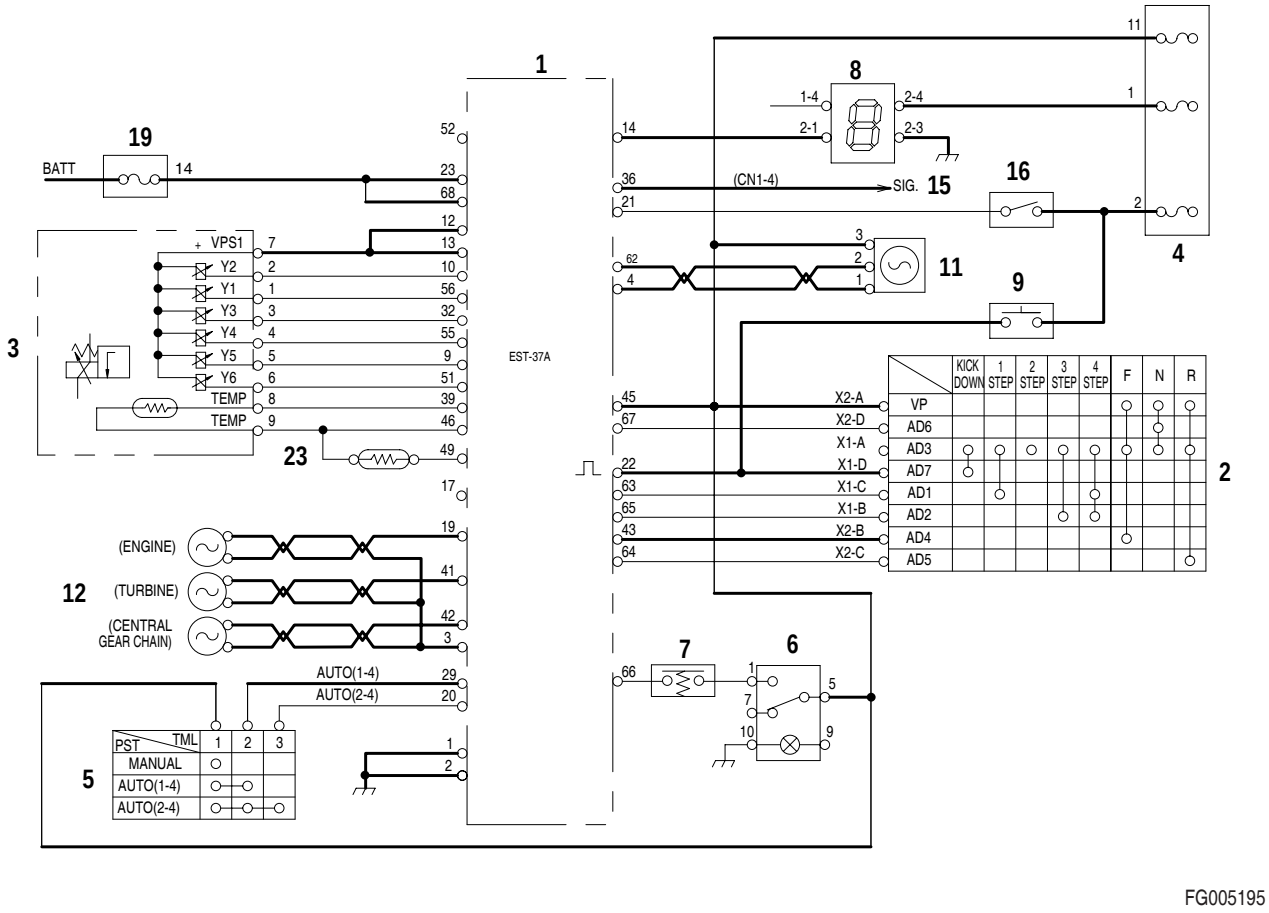

FG005195

Figure 38

When the auto selector switch (Figure 38) is in the "I" position, the "29" terminal of transmission controller is energized. This allows the transmission to automatically upshift and downshift gears depending on the load and on the engine speed.

If either downshift switch (Figure 35) is activated, a pulse signal is sent to the "22" terminal of transmission controller. This signal shifts the transmission to the next lowest gear.

Automatic Gear Selection	Downshift Switch "Activated"
Fourth Gear	Downshift to Third Gear
Third Gear	Downshift to Second Gear
Second Gear	Downshift to First Gear
First Gear	Remains in First Gear

When either downshift (Figure 35) is depressed a second time, the transmission pulse signal of the "22" is interrupted and the transmission returns to normal operation.

NOTE: *The fourth to the third gear changes without any rpm change when the downshift switch is pressed.*

NOTE: *The third to the second gear, and the third to the first gear, changes occur when the rpm is reduced 200 - 300 rpm from current setting.*

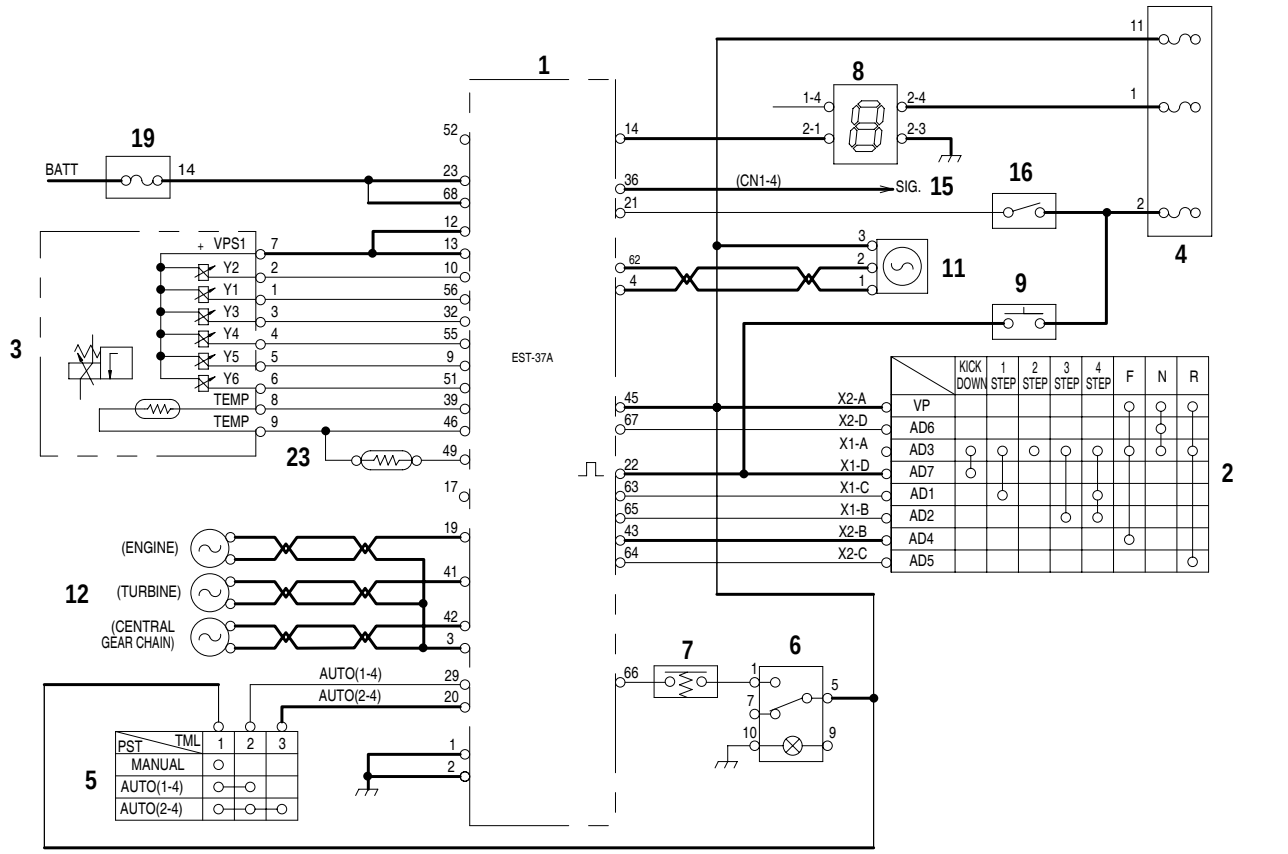

FG005196

Figure 39

When the auto selector switch (Figure 39) is in the "I" position, the "20" terminal of transmission controller is energized. This allows the transmission to automatically upshift and downshift gears depending on the load and on the engine speed.

If either downshift switch (Figure 35) is activated, a pulse signal is sent to the "22" terminal of transmission controller. This signal shifts the transmission to the next lowest gear.

Automatic Gear Selection	Downshift Switch "Activated"
Fourth Gear	Downshift to Third Gear
Third Gear	Downshift to Second Gear
Second Gear	Downshift to First Gear
First Gear	Remains in First Gear

When either downshift (Figure 35) is depressed a second time, the transmission pulse signal of the "22" is interrupted and the transmission returns to normal operation.

NOTE: *The fourth to the third gear changes without any rpm change when the downshift switch is pressed.*

NOTE: *The third to the second gear, and the third to the first gear, changes occur when the rpm is reduced 200 - 300 rpm from current setting.*

Transmission Cutoff

When the brake pedal is depressed while transmission cutoff switch (Figure 40) is in the "I" position, the transmission cutoff pressure switch turns "ON" and current is supplied to the "66" terminal of the transmission controller.

All current being supplied to the transmission solenoid valves (Y1 thru Y6) is cut off and the transmission is in "NEUTRAL."

NOTE: *To protect transmission, transmission cutoff switch does not function in third and fourth gears.*

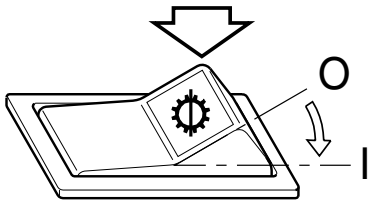

HA3O2018

Figure 40

CAUTION!

When the machine is traveling or working in the place of inclination, the transmission cutoff switch (Figure 40) must be placed in position 'O' for the purse of using engine braking and the normal braking function at the same time.

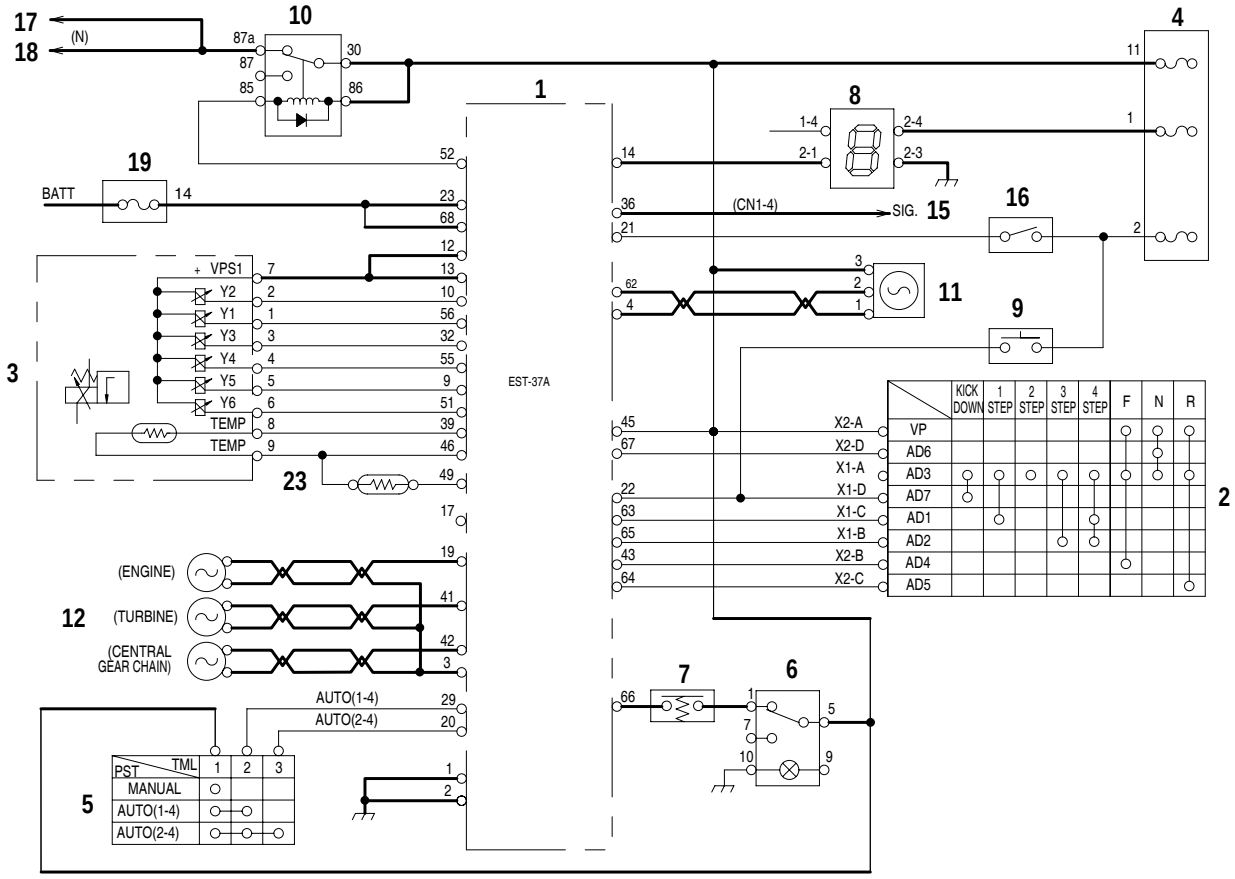

FG005197

Figure 41

LIS (Load Isolation System) - Option

Excessive bucket pitching is drastically reduced and good flotation is maintained for minimum operator fatigue and maximum productivity.

LIS is useful for sites where frequent cycles of loading and carry are needed or rough terrain.

When the LIS switch is "I" and the vehicle speed is above 8 km/h (4.97 MPH), the LIS solenoids valves (14) are energized and the LIS system is "ON."

When the LIS switch is "I" and the vehicle speed is below 6 km/h (3.73 MPH) the LIS solenoids valves (14) are de-energized and the LIS system is "OFF."

NOTE: *If the LIS switch is in the 'O' position, despite the vehicle speed the LIS solenoid valves (14) de-energized and the LIS system is not operating.*

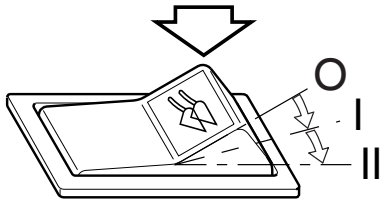

FG004389

Figure 42

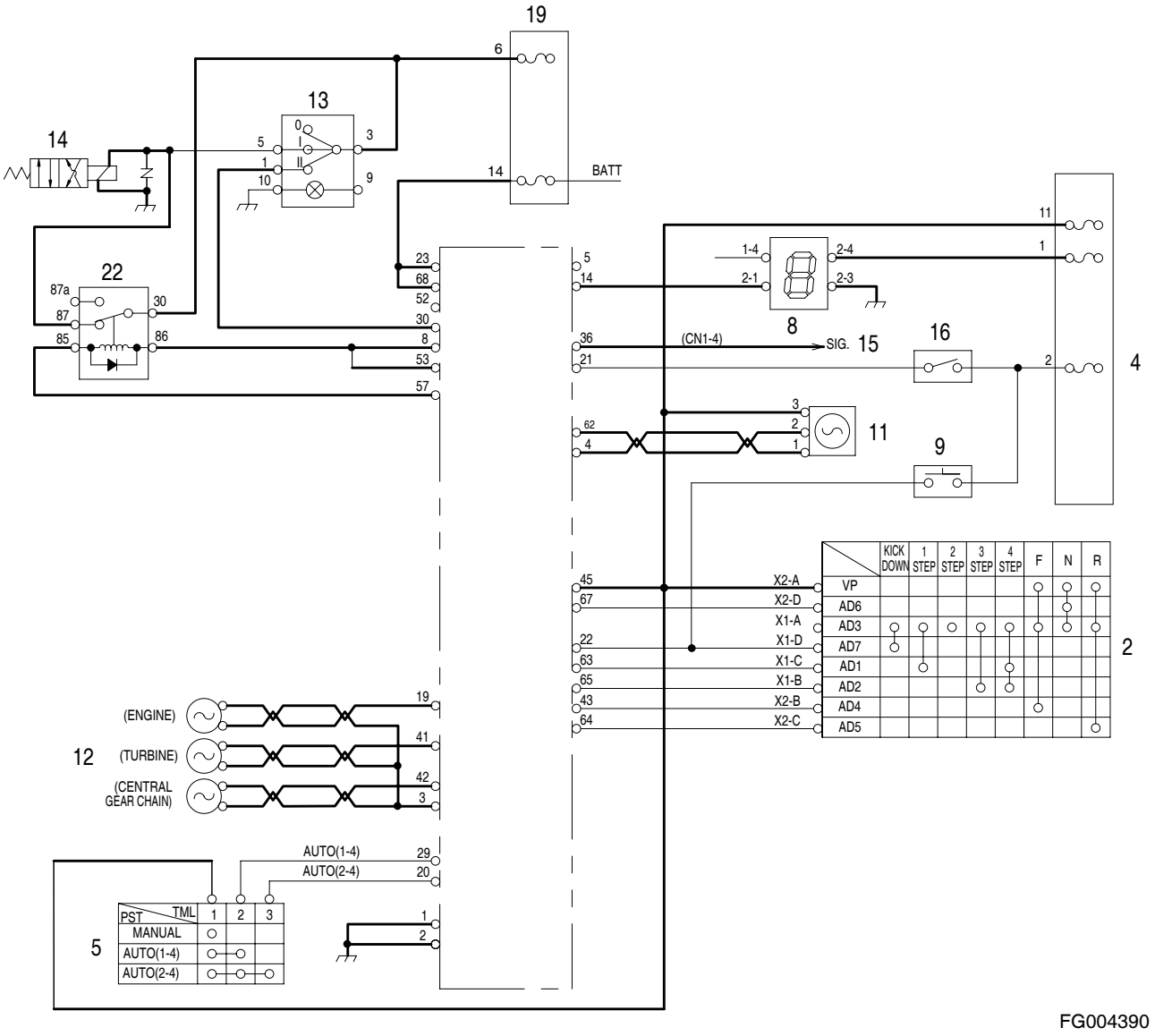
19
6
13
14
BATT
22
87a
87
85
30
86
23
68
52
30
8
53
57
5
14
36
21
(CN1-4)
SIG.
15
16
11
1-4
2-4
2-1
2-3
8
1
2
4
3
2
1
62
4
11
9
45
67
22
63
65
43
64
X2-A
X2-D
X1-A
X1-D
X1-C
X1-B
X2-B
X2-C
KICK DOWN
1 STEP
2 STEP
3 STEP
4 STEP
F
N
R
VP
AD6
AD3
AD7
AD1
AD2
AD4
AD5
2
(ENGINE)
(TURBINE)
(CENTRAL GEAR CHAIN)
12
19
41
42
3
AUTO(1-4)
AUTO(2-4)
29
20
1
2
PST
TML
1
2
3
MANUAL
AUTO(1-4)
AUTO(2-4)
5
FG004390

Figure 43

AEB STARTER

INTRODUCTION

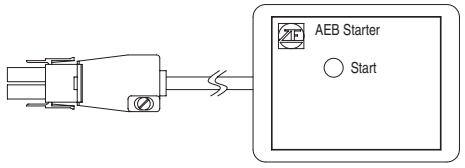

BOS0360L

Figure 44

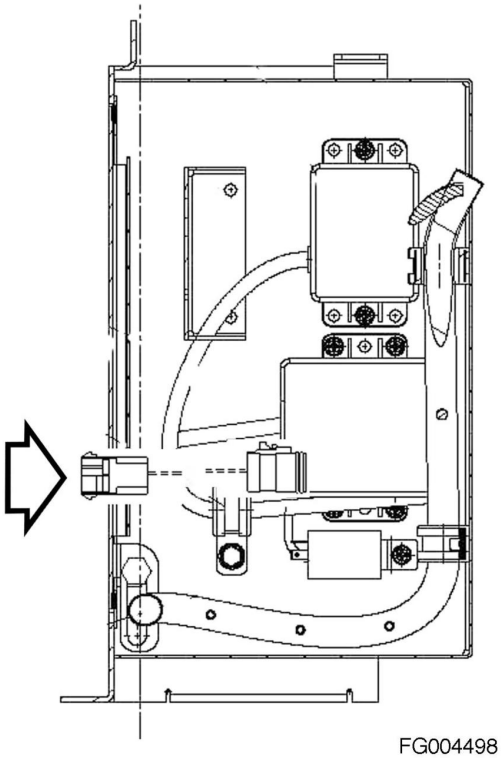

FG004498

Figure 45

PROCEDURE TO START AEB

Step to do		Display message	Remarks
1	Warm up transmission	Normal operating messages	
2	Turn off starter switch	Nothing	
3	Plug in AEB-starter		
4	Bring shift lever to "N" position. Engage park brake.		
5	Start engine	"PL"	TCU must recognize PL for at least 2s before you can press the button
6	Put engine speed to 800 rpm	"PL" if start conditions are ok	
7	Press button of the AEB-Starter	"ST" if start conditions are ok	The button must not be released before TCU has started the AEB or quit whit an error code
8	Hold button until AEB has started	"K1" … (Information about the AEB state)	TCU has started the AEB, and goes on adjusting K1, K2, …, KR. (Button may be released)
9	Wait until AEB has finished	"OK" (AEB has been successful)	
10	Turn off starter switch and unplug AEB-Starter	Nothing	

DISPLAY DURING AEB-MODE

Symbol	Meaning	Remarks
PL	AEB - Starter is plugged at the diagnostic plug	
ST	AEB-Starter-button is pressed	
K1… KV,KR	Calibrating clutch K1… K4,KV,KR	
+ Kx	Wait for start, initialization of clutch Kx, x: 1, 2, 3, 4, V, R	
 + Kx	Fast fill time determination of clutch Kx	
 + Kx	Compensating pressure determination of clutch Kx	
OK	Calibration for all clutches finished	Transmissions stays in neutral, you have to restart the TCU (starter switch off/on) after removing AEB-Starter
STOP	AEB canceled (activation stopped)	Transmissions stays in neutral, you have to restart the TCU (starter switch off/on)
STOP and Kx	AEB stopped, clutch Kx can't be calibrated	Transmissions stays in neutral, you have to restart the TCU (starter switch off/on)
 + Kx	Kx couldn't be calibrated, AEB finished	Transmissions stays in neutral, you have to restart the TCU (starter switch off/on)
 + E	Engine speed too low, → raise engine speed	

Symbol	Meaning	Remarks
 + E	Engine speed too high, → lower engine speed	
 + T	Transmission oil temperature too low → heat up transmission	
 + T	Transmission oil temperature too high → cool down transmission	
FT	Transmission temperature not in defined range during calibration	Transmissions stays in neutral, you have to restart the TCU (starter switch off/on)
FB	Operating mode not NORMAL or transmission temperature sensor defective or storing of calibrated values to EEPROM-has failed.	Transmissions stays in neutral, you have to restart the TCU (starter switch off/on)
FO	Output speed_not_zero	Transmissions stays in neutral, you have to restart the TCU (starter switch off/on)
FN	Shift lever not in Neutral position	Transmissions stays in neutral, you have to restart the TCU (starter switch off/on)
FP	Parking brake_not_applied	Transmissions stays in neutral, you have to restart the TCU (starter switch off/on)
STOP	AEB - Starter was used incorrect or is defective	Transmissions stays in neutral, you have to restart the TCU (starter switch off/on)

NOTE: *To prevent the transmission oil temperature from falling down while AEB operating, keep the transmission oil temperature about 80℃ before starting AEB. (Temperature Range: 60℃ ~ 90℃)*

INSTALLATION VIEW (S/N 1001 THRU 2000)

Inner Section

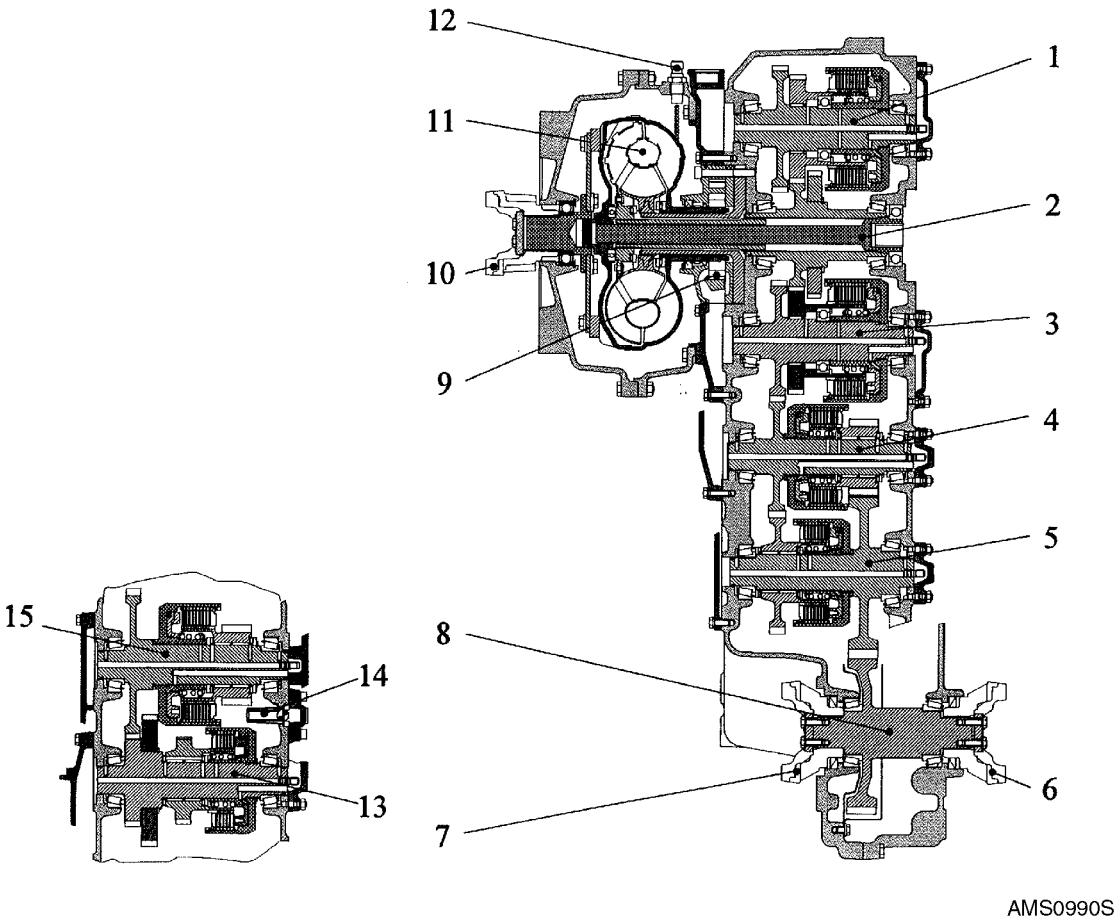

Figure 46

Reference Number	Description
1	Clutch Shaft "KR"
2	Power Take-off; Coaxial; Engine-dependent
3	Clutch Shaft "KV"
4	Clutch Shaft "K2"
5	Clutch Shaft "K3"
6	Output Flange - Rear
7	Output Flange - Converter Side
8	Output Shaft

Reference Number	Description
9	Transmission Pump
10	Input Flange - Input Through Universal Shaft
11	Converter
12	Input Transmitter for Engine Speed
13	Clutch Shaft "K4"
14	Converter Relief Valve
15	Clutch Shaft "K1"

Front View

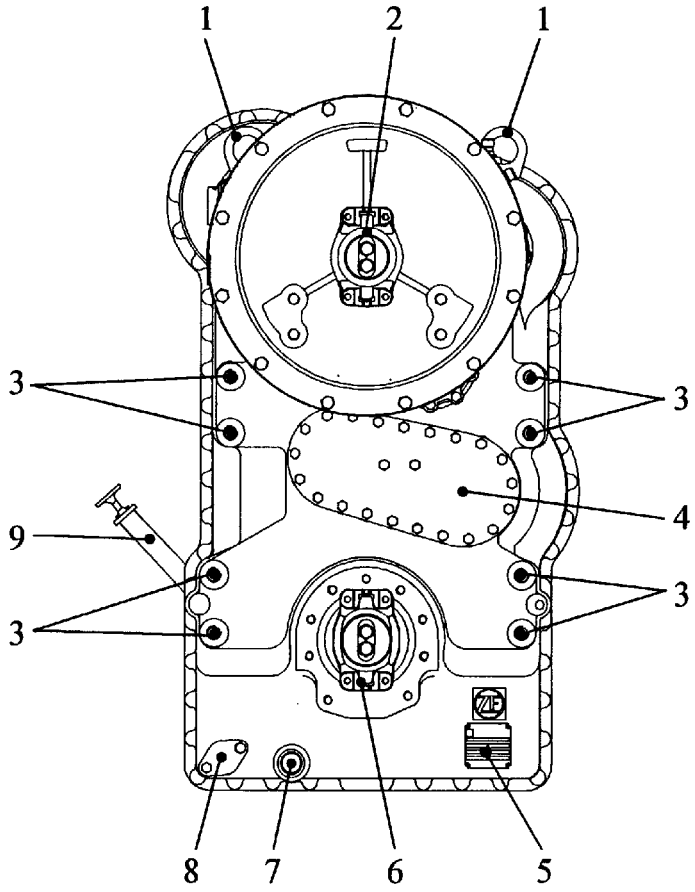

AMS1000S

Figure 47

Reference Number	Description
1	Lifting Lugs
2	Drive Flange - Input Through Universal Shaft
3	Transmission Suspension Bores M20
4	Model Identification Plate

Reference Number	Description
5	Oil Drain Plug with Magnetic Insert M38x1.5
6	output Flange - Converter Side
7	Attachment Possibility for Emergency
8	Attachment Possibility for Emergency Steering Pump

Front View with Disk Brake

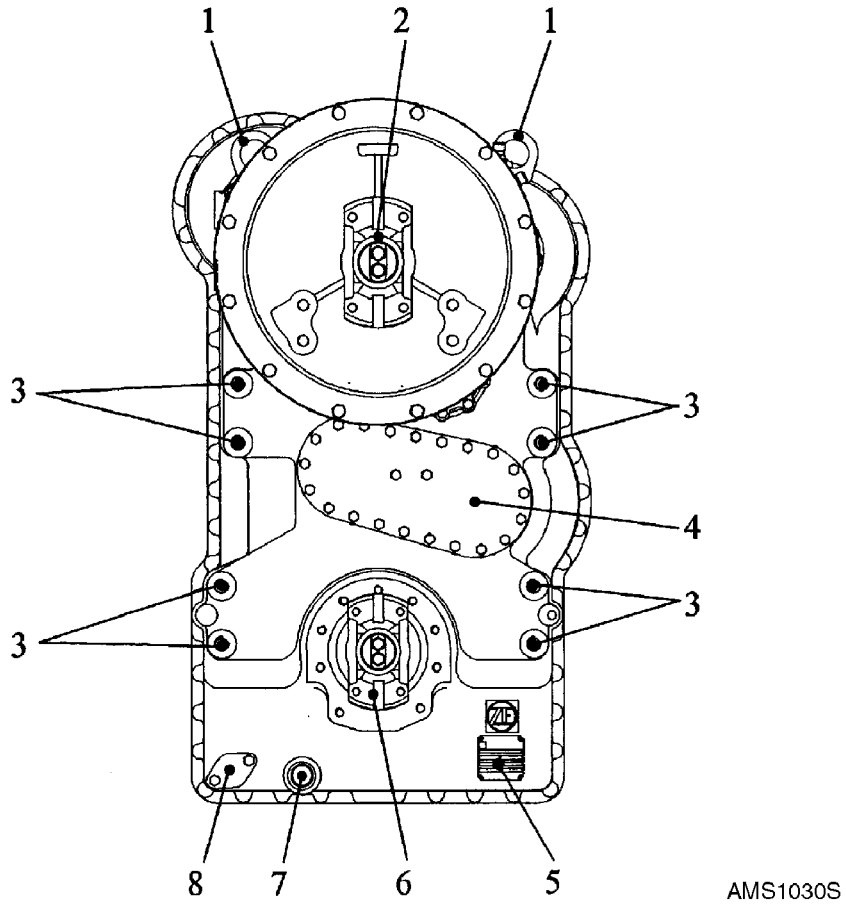

Figure 48

Reference Number	Description
1	Lifting Lugs
2	Drive Flange - Input Through Universal Shaft
3	Transmission Suspension Bores M20
4	Attachment Possibility for Emergency Steering Pump

Reference Number	Description
5	Model Identification Plate
6	output Flange - Converter Side
7	Oil Drain Plug with Magnetic Insert M38x1.5
8	Attachment Possibility for Oil Filter Pipe with Oil Dipstick (Converter Side)

Side View

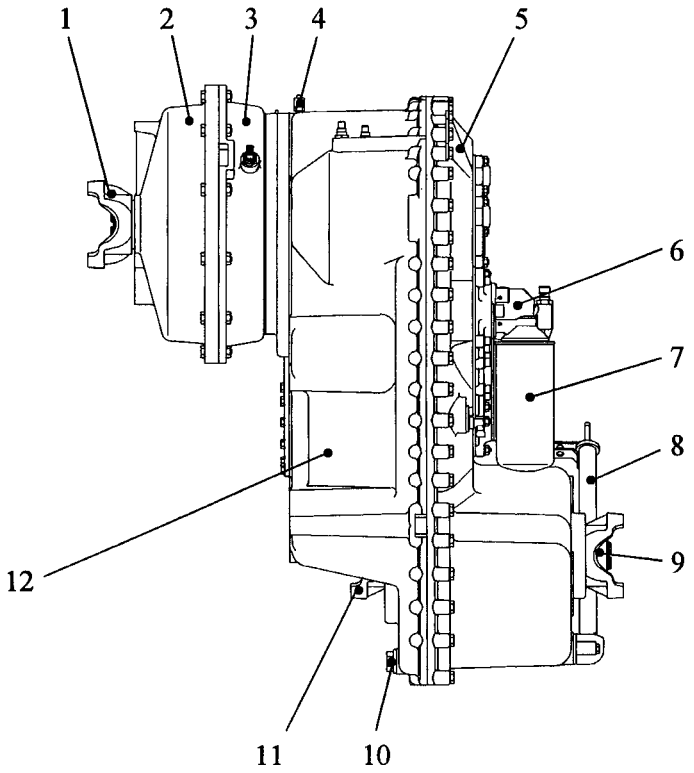

AMS1010S

Figure 49

Reference Number	Description
1	Drive Flange - Input Through Universal Shaft
2	Cover
3	Converter Bell Housing
4	Breather
5	Transmission - Case Cover
6	Filter Head with Alarm Switch

Reference Number	Description
7	Box Filter (Fine Filter)
8	Oil Fill Pipe with Oil Dipstick
9	Output Flange - Rear
10	Oil Drain Plug with Magnetic Insert M38x1.5
11	Output Flange - Converter Side
12	Transmission Case

Side View with Disk Brake

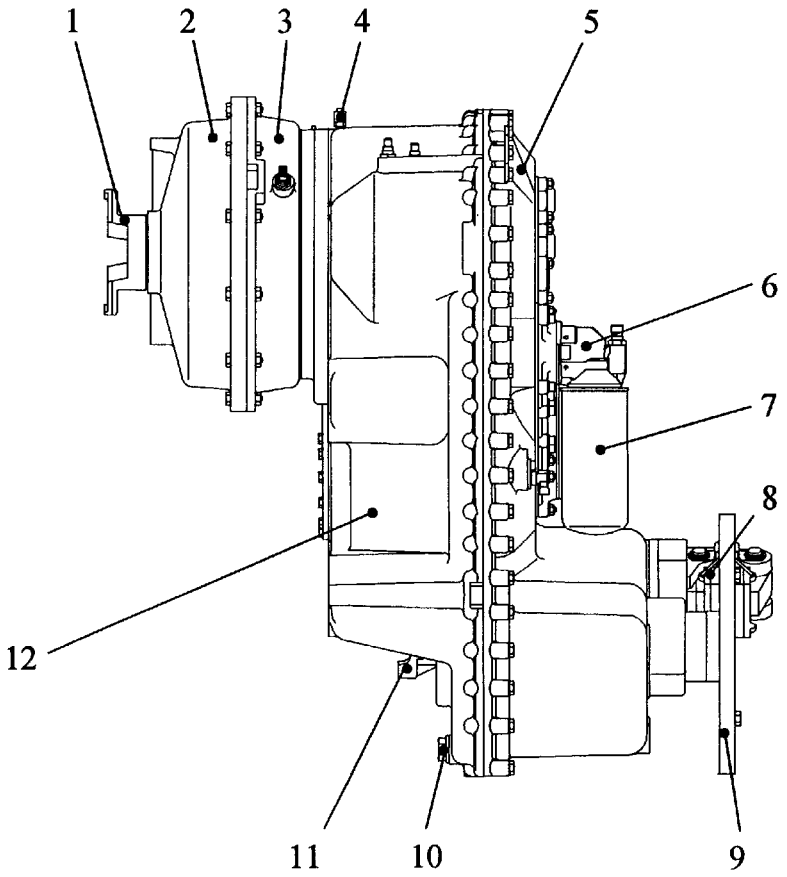

AMS1040S

Figure 50

Reference Number	Description
1	Drive Flange - Input Through Universal Shaft
2	Cover
3	Converter Bell Housing
4	Breather
5	Transmission - Case Cover
6	Filter Head with Alarm Switch
7	Box Filter (Fine Filter)

Reference Number	Description
8	Disk Brake (Parking Brake)
9	Output Flange with Disk Brake - Rear
10	Oil Drain Plug with Magnetic Insert M38x1.5
11	Output Flange - Converter Side
12	Transmission Case

Rear View

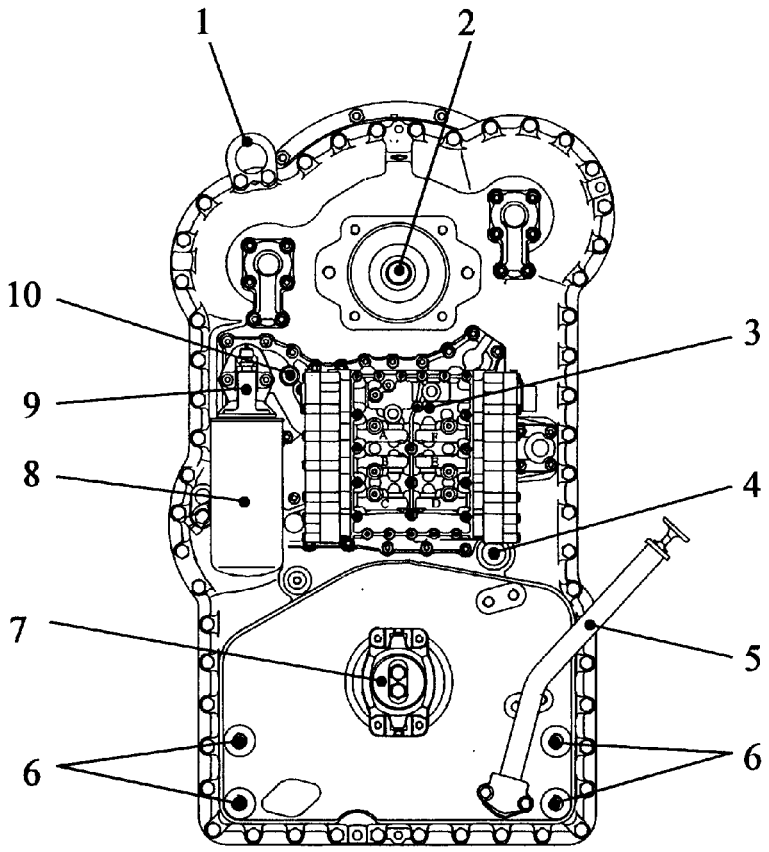

AMS1020S

Figure 51

Reference Number	Description
1	Lifting Lugs
2	Power Take-off; Coaxial; Engine-dependent
3	Electrohydraulic Control
4	Port-return Line M26x1.5 (Option-e.g. from Parking Brake)
5	Oil Filter Pipe with Oil Dipstick
6	Transmission Suspension Bores M20

Reference Number	Description
7	Output Flange - Rear
8	Box Filter (Fine Filter)
9	Filter Head with Connection for Alarm Switch
10	Port-system Pressure M16x1.5 (Option-e.g. to Parking Brake Valve)

Rear View with Disk Brake

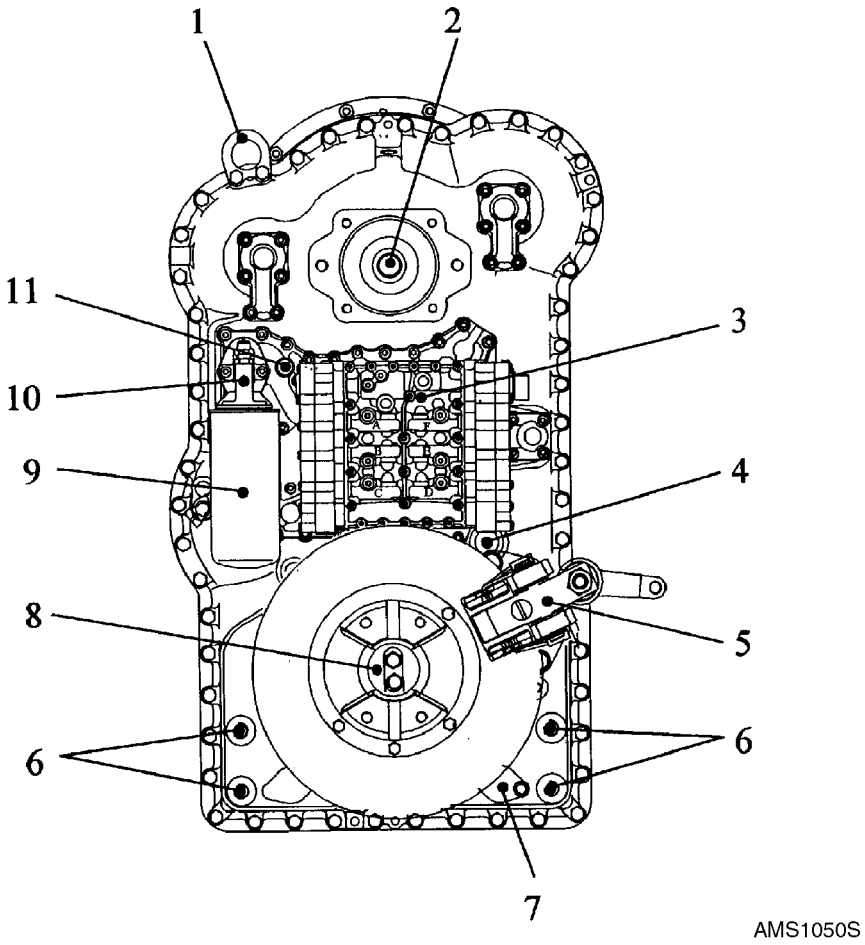

Figure 52

Reference Number	Description
1	Lifting Lugs
2	Power Take-off; Coaxial; Engine-dependent
3	Electrohydraulic Control
4	Port Return Line M26x1.5 (Option, e.g. from Parking Brake)
5	Disk Brake
6	Transmission Suspension Bores M20

Reference Number	Description
7	Attachment Possibility for Oil Fill Pipe with Oil Dipstick (Rear)
8	X Filter (Fine Filter)
9	Filter Head with Connection for Alarm Switch
10	Port-system Pressure M16x1.5 ((Option-e.g. to Parking Brake Valve)

INSTALLATION VIEW (S/N 2001 THRU 3000, 3001 AND UP)

Inner Section

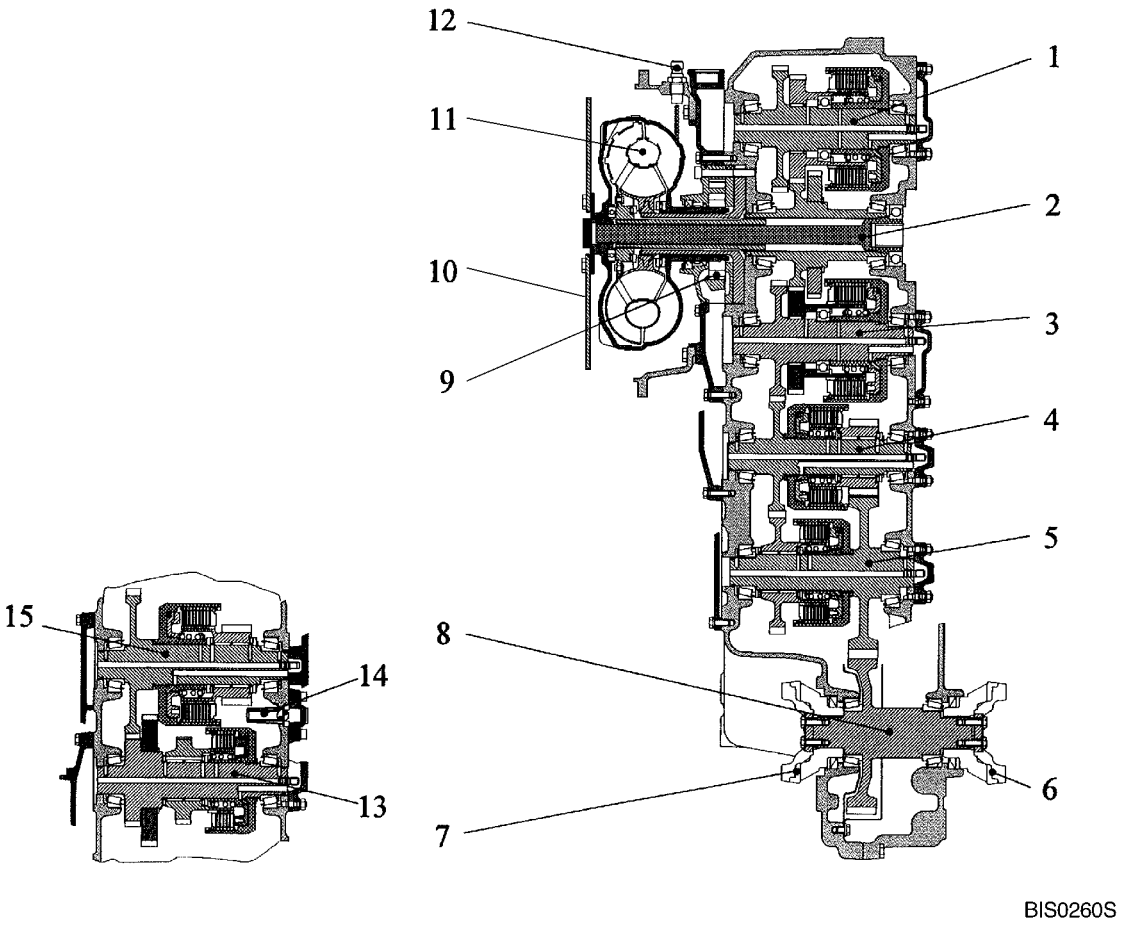

Figure 53

Reference Number	Description
1	Clutch Shaft "KR"
2	Power Take-off; Coaxial; Engine-dependent
3	Clutch Shaft "KV"
4	Clutch Shaft "K2"
5	Clutch Shaft "K3"
6	Output Flange - Rear
7	Output Flange - Converter Side
8	Output Shaft

Reference Number	Description
9	Transmission Pump
10	Flexible Plate
11	Converter
12	Input Transmitter for Engine Speed
13	Clutch Shaft "K4"
14	Converter Relief Valve
15	Clutch Shaft "K1"

Front View

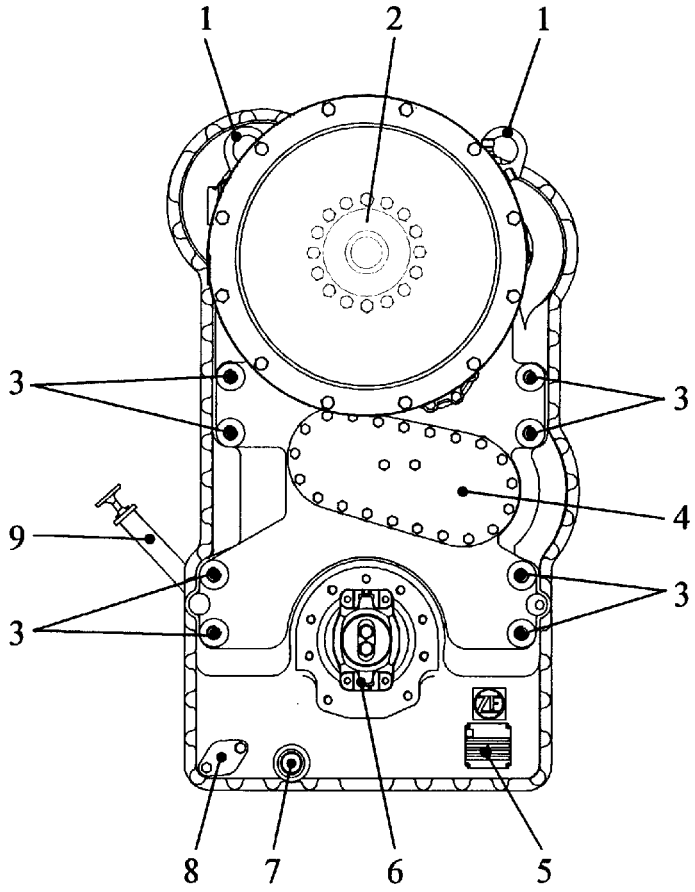

BIS0130S

Figure 54

Reference Number	Description
1	Lifting Lugs
2	Flexible Plate
3	Transmission Suspension Bores M20
4	Attachment Possibility for Emergency Steering Pump
5	Model Identification Plate

Reference Number	Description
6	Output Flange - Converter Side
7	Oil Drain Plug with Magnetic Insert M38x1.5
8	Attachment Possibility for Oil Fill Pipe with Oil Dipstick
9	Oil Fill Pipe with Oil Dipstick

Front View with Disk Brake

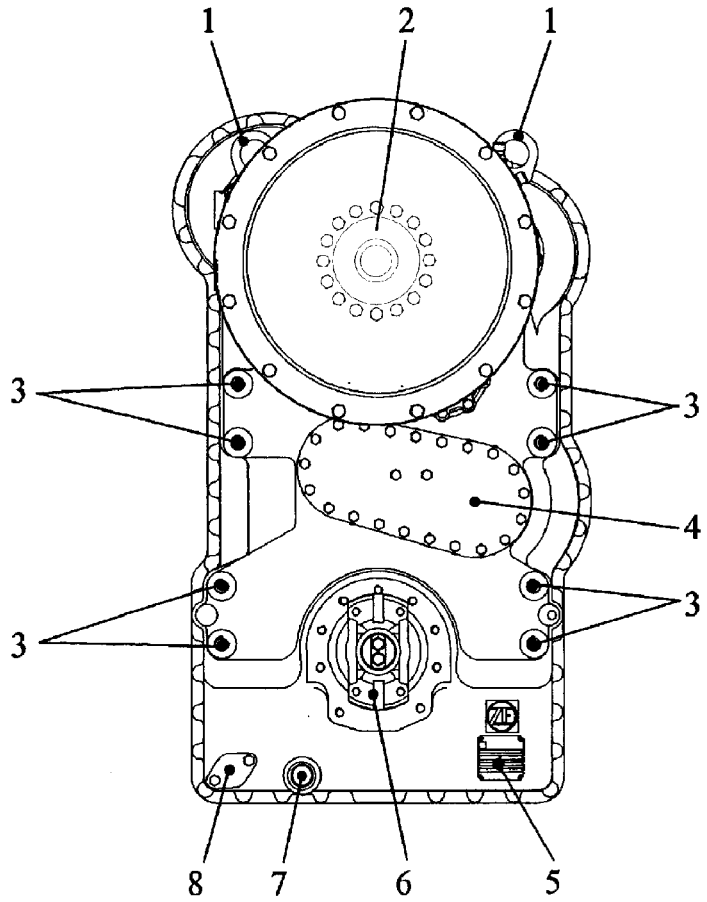

BIS0140S

Figure 55

Reference Number	Description
1	Lifting Lugs
2	Flexible Plate
3	Transmission Suspension Bores M20
4	Attachment Possibility for Emergency Steering Pump

Reference Number	Description
5	Model Identification Plate
6	output Flange - Converter Side
7	Oil Drain Plug with Magnetic Insert M38x1.5
8	Attachment Possibility for Oil Fill Pipe with Oil Dipstick (Converter Side)

Side View

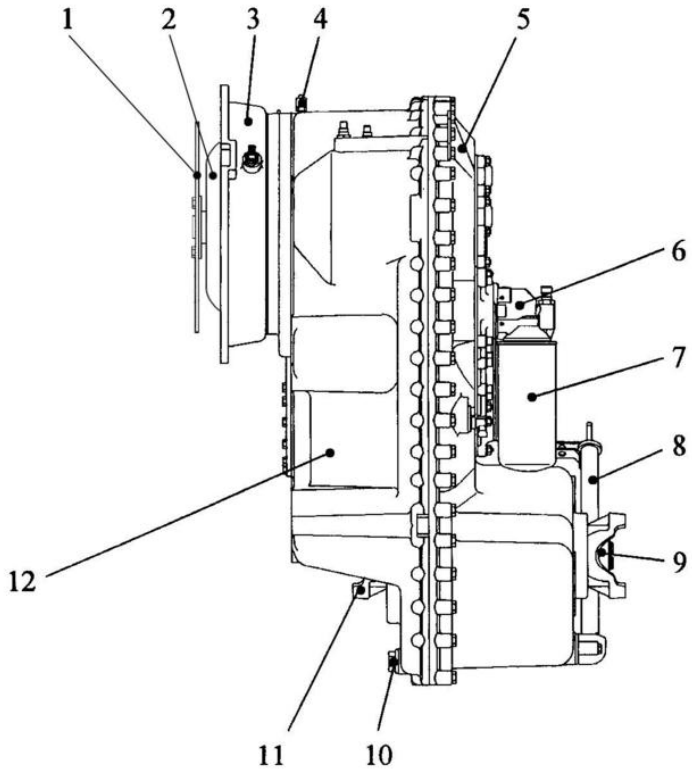

Figure 56

Reference Number	Description
1	Flexible Plate
2	Converter
3	Converter Bell Housing
4	Breather
5	Transmission - Case Cover
6	Filter Head with Alarm Switch
7	Box Filter (Fine Filter)

Reference Number	Description
8	Oil Fill Pipe with Oil Dipstick
9	Output Flange - Rear
10	Oil Drain Plug with Magnetic Insert M38x1.5
11	Output Flange - Converter Side
12	Transmission Case

Side View with Disk Brake

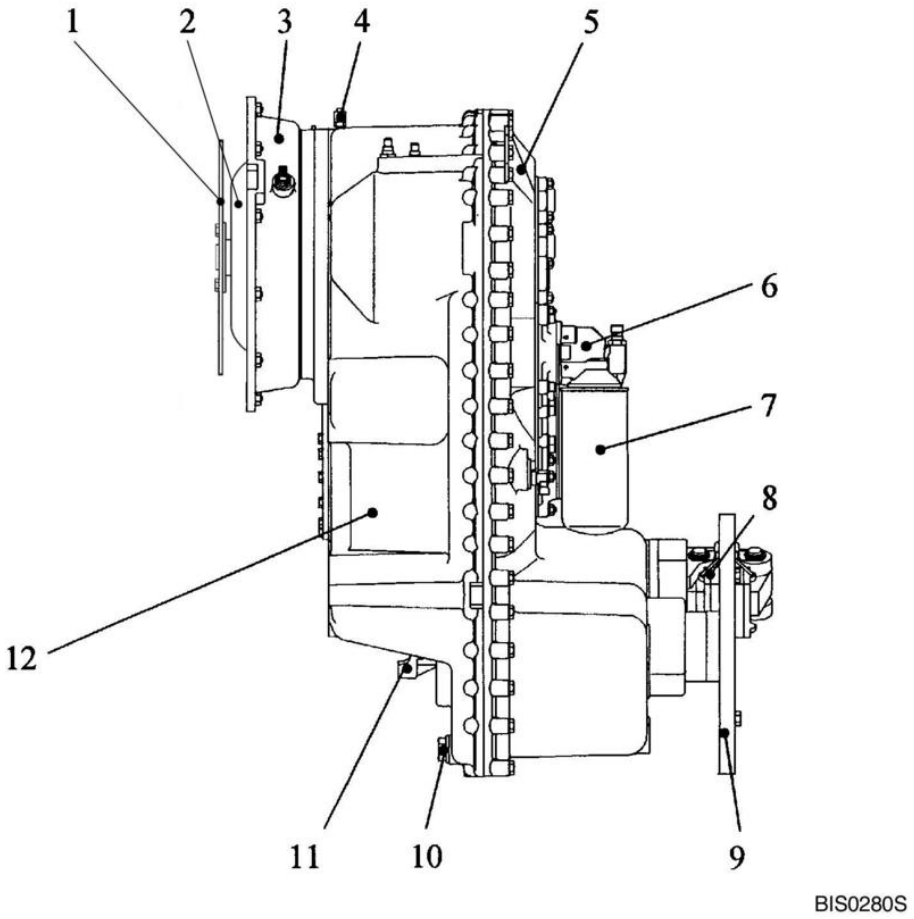

Figure 57

Reference Number	Description
1	Flexible Plate
2	Converter
3	Converter Bell Housing
4	Breather
5	Transmission - Case Cover
6	Filter Head with Alarm Switch
7	Box Filter (Fine Filter)

Reference Number	Description
8	Disk Brake (Parking Brake)
9	Output Flange with Disk Brake - Rear
10	Oil Drain Plug with Magnetic Insert M38x1.5
11	Output Flange - Converter Side
12	Transmission Case

Rear View

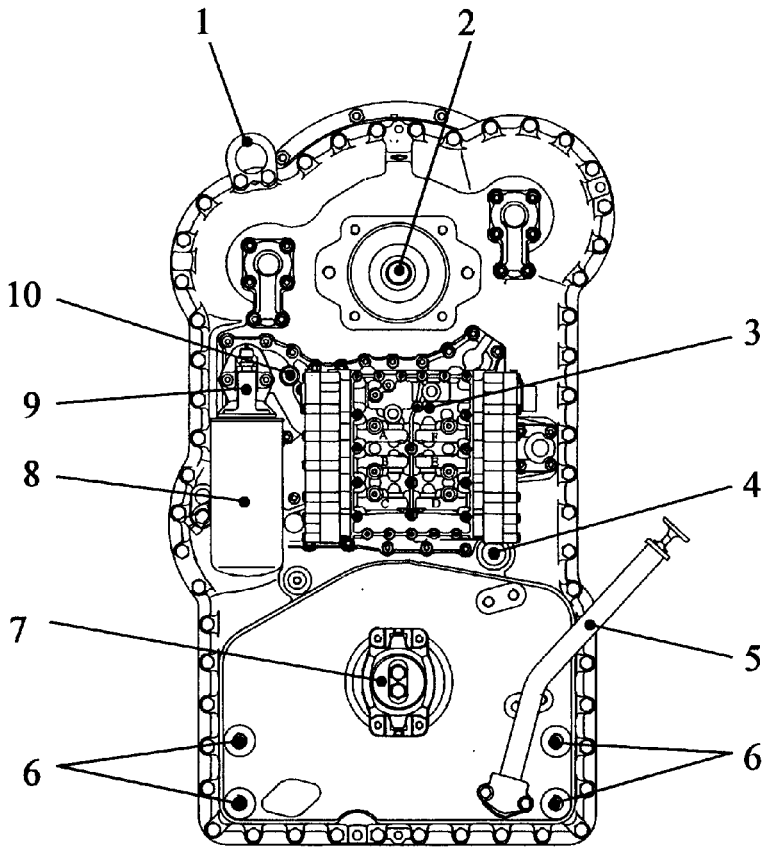

AMS1020S

Figure 58

Reference Number	Description
1	Lifting Lugs
2	Power Take-off; Coaxial; Engine-dependent
3	Electrohydraulic Control
4	Port-return Line M26x1.5 (Option-e.g. from Parking Brake)
5	Oil Fill Pipe with Oil Dipstick
6	Transmission Suspension Bores M20

Reference Number	Description
7	Output Flange - Rear
8	Box Filter (Fine Filter)
9	Filter Head with Connection for Alarm Switch
10	Port-system Pressure M16x1.5 ((Option-e.g. to Parking Brake Valve)

Rear View with Disk Brake

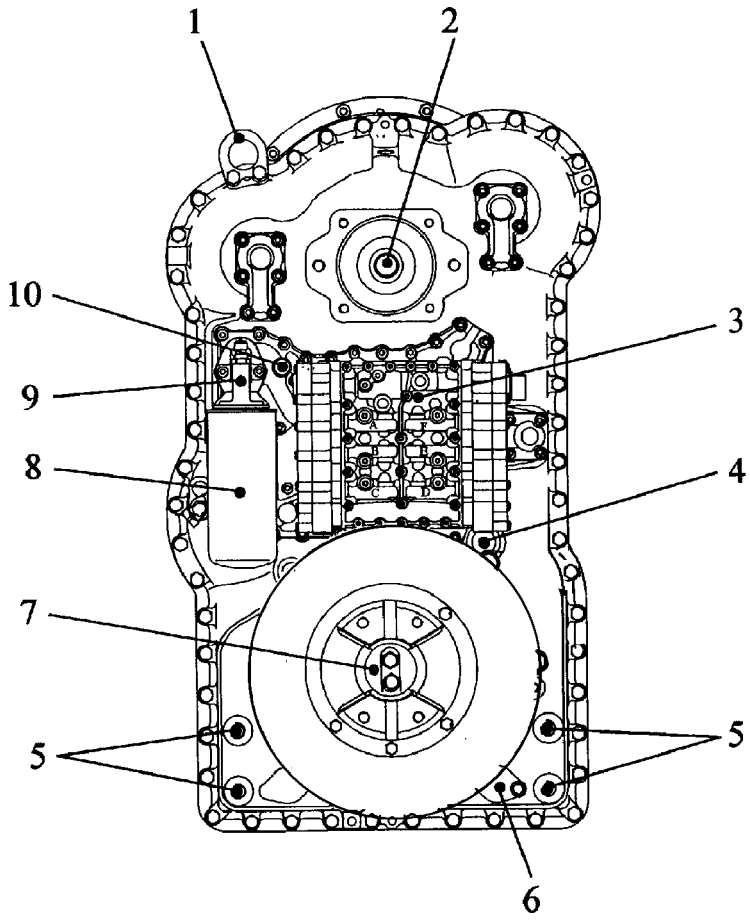

BIS0100S

Figure 59

Reference Number	Description
1	Lifting Lugs
2	Power Take-off; Coaxial; Engine-dependent
3	Electrohydraulic Control
4	Port Return Line M26x1.5 (Option, e.g. from Parking Brake)
5	Transmission Suspension Bores M20
6	Attachment Possibility for Oil Fill Pipe with Oil Dipstick (Rear)

Reference Number	Description
7	Output Flange with Disk Brake (Rear)
8	X Filter (Fine Filter)
9	Filter Head with Connection for Alarm Switch
10	Port-system Pressure M16x1.5 (Option-e.g. to Parking Brake Valve)

SPECIAL TOOLS

Gearshift System

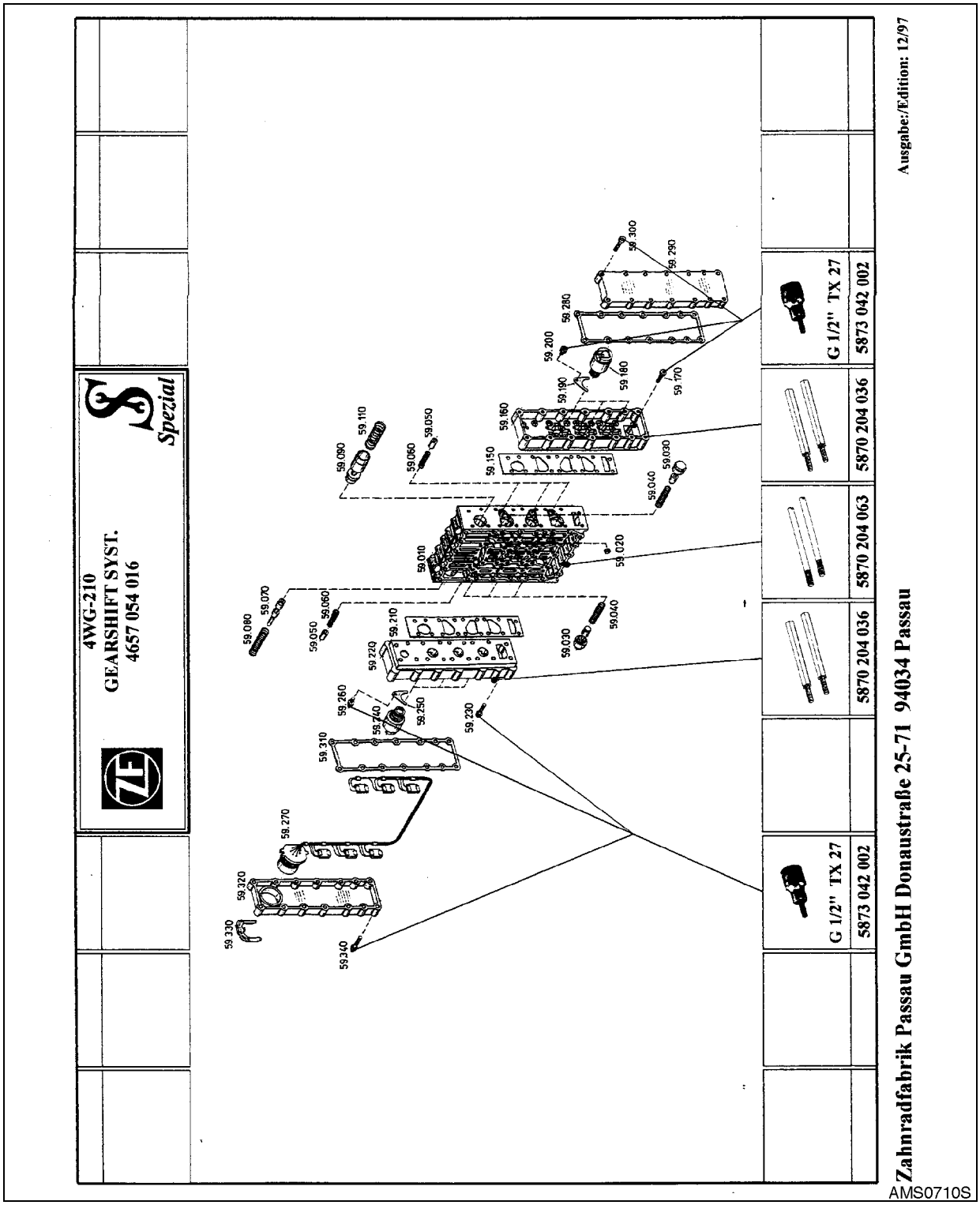
4WG-210
GEARSHIFT SYST.
4657 054 016
Spezial
Ausgabe:/Edition: 12/97
G 1/2" TX 27
5873 042 002
5870 204 036
5870 204 063
5870 204 036
G 1/2" TX 27
5873 042 002
Zahnradfabrik Passau GmbH Donaustraße 25-71 94034 Passau
AMS0710S

Figure 60

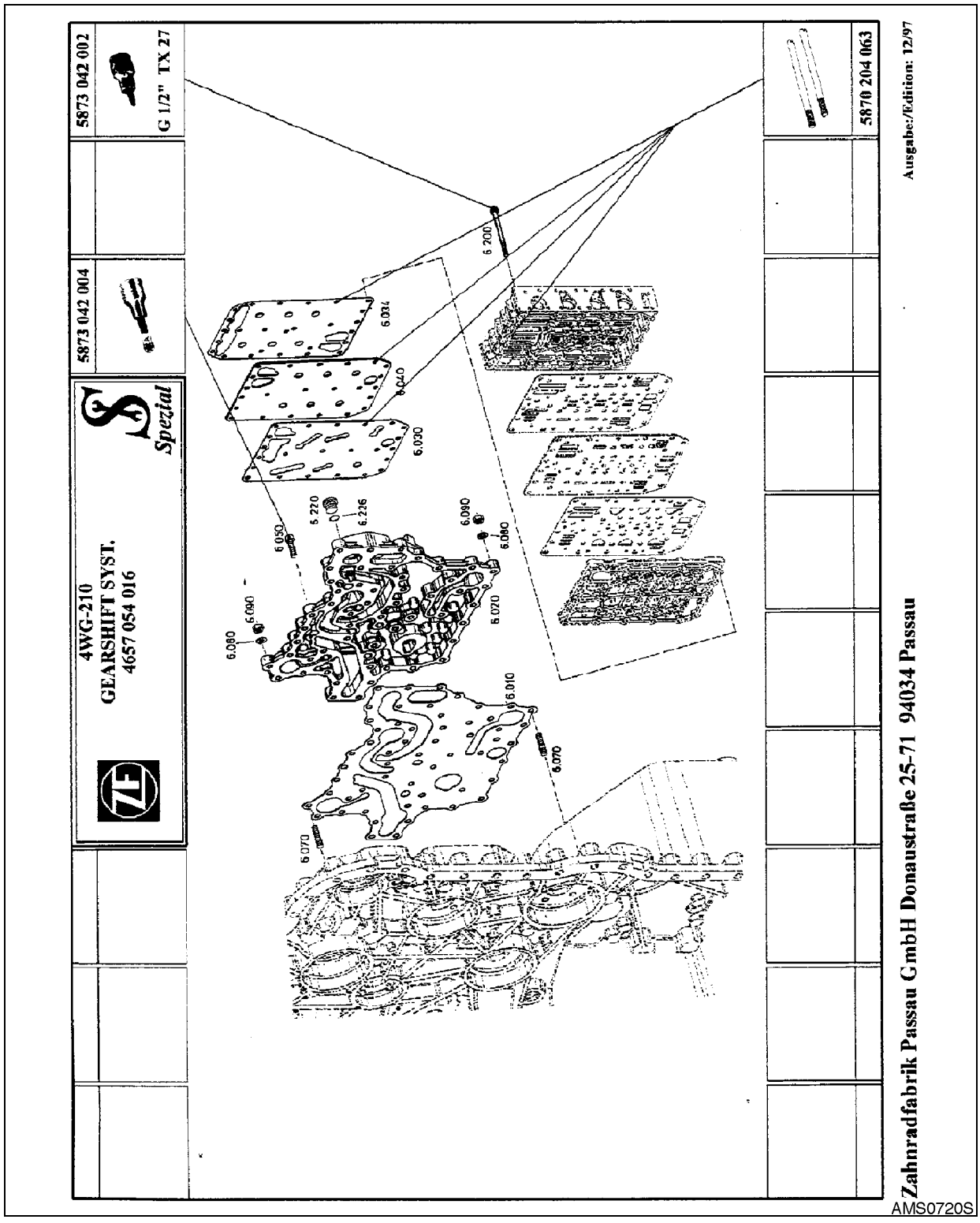
5873 042 002
G 1/2" TX 27
5873 042 004
4WG-210
GEARSHIFT SYST.
4657 054 016
Spezial
5870 204 063
Ausgabe:/Edition: 12/97
Zahnradfabrik Passau GmbH Donaustraße 25-71 94034 Passau
AMS0720S

Figure 61

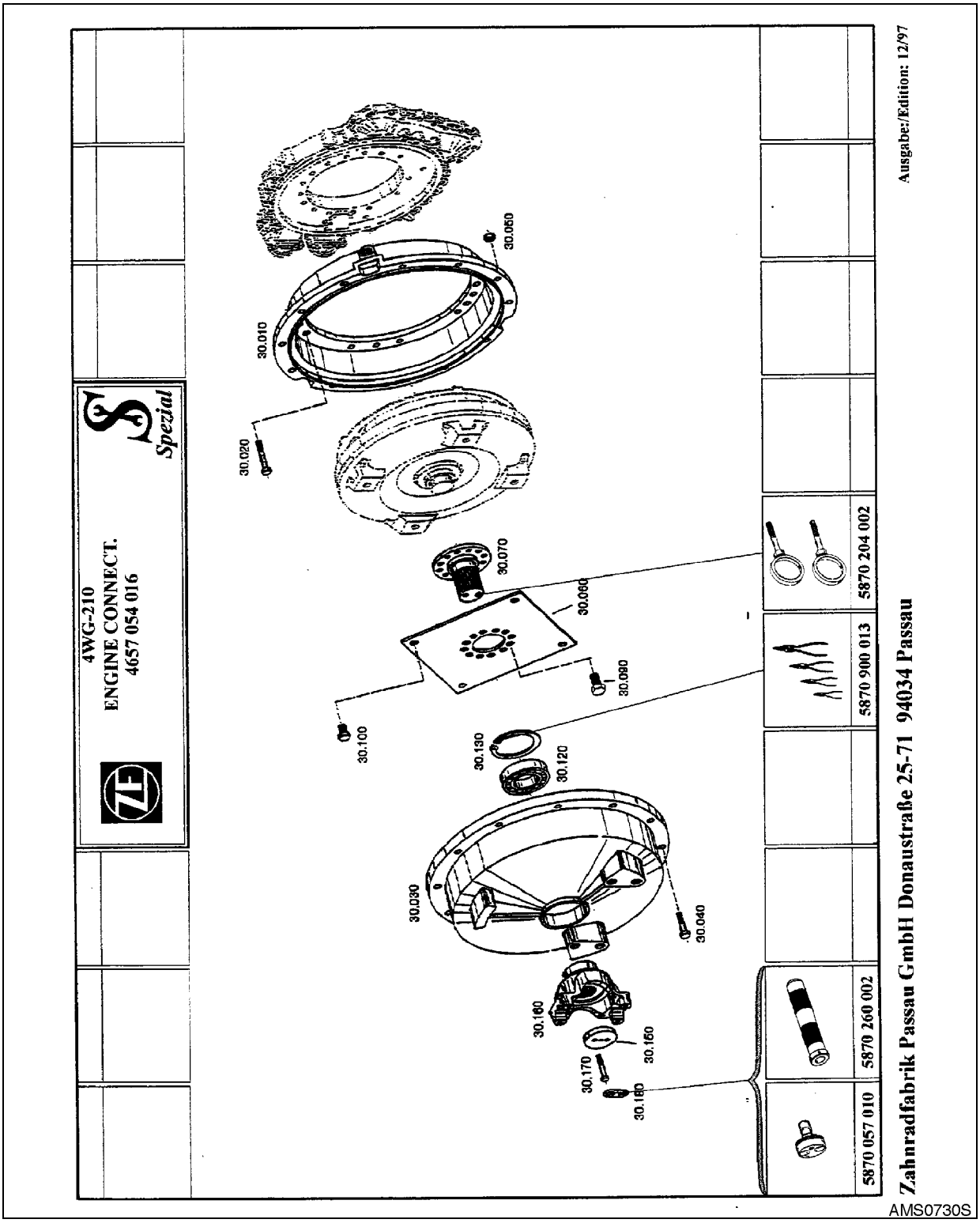
4WG-210
ENGINE CONNECT.
4657 054 016
Spezial
Ausgabe:/Edition: 12/97
Zahnradfabrik Passau GmbH Donaustraße 25-71 94034 Passau
5870 057 010
5870 260 002
5870 900 013
5870 204 002
30.010
30.020
30.030
30.040
30.050
30.060
30.070
30.080
30.090
30.100
30.120
30.130
30.150
30.160
30.170
30.180
AMS0730S

Figure 62

Pressure Oil Pump

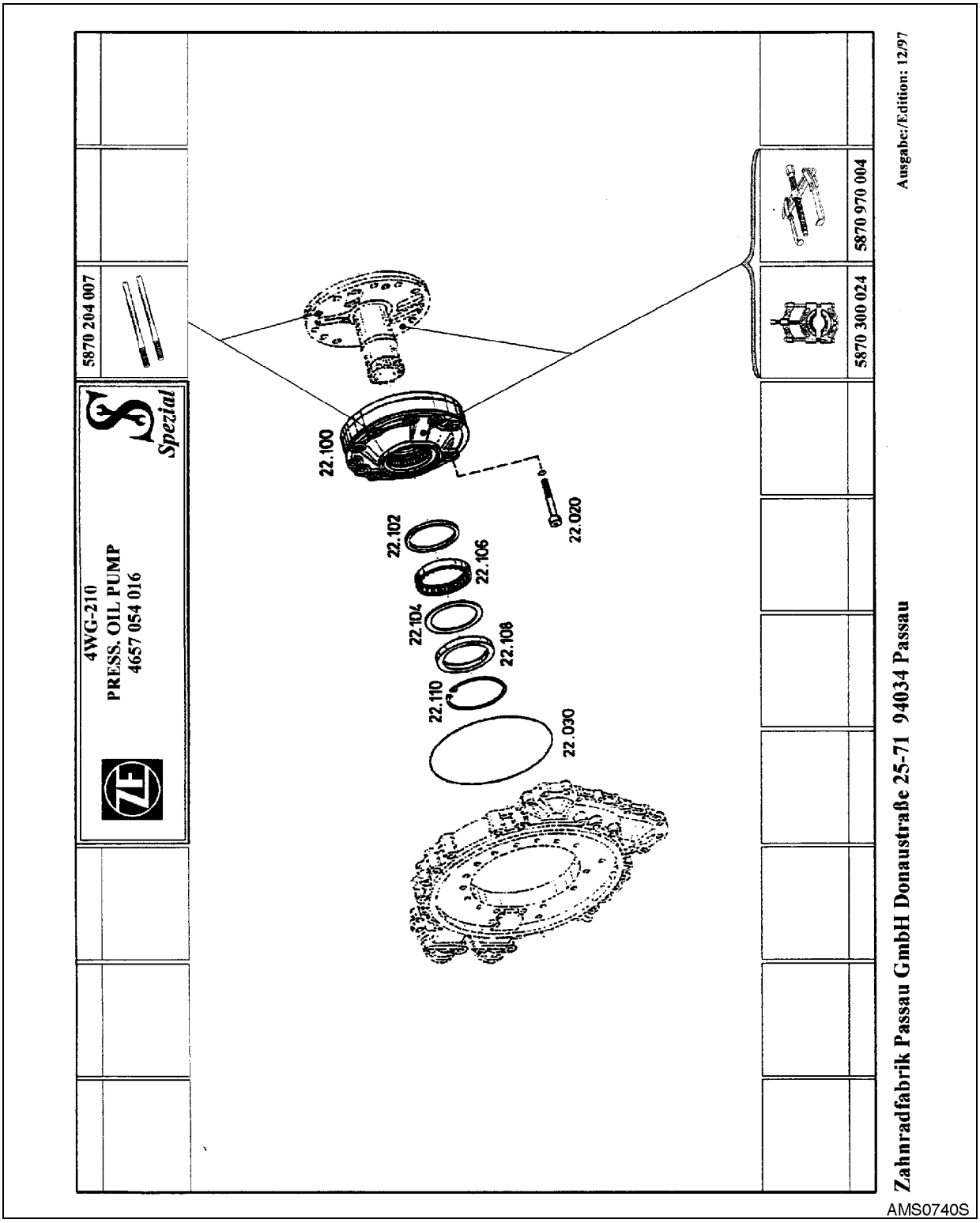

Figure 63

Gearbox Housing

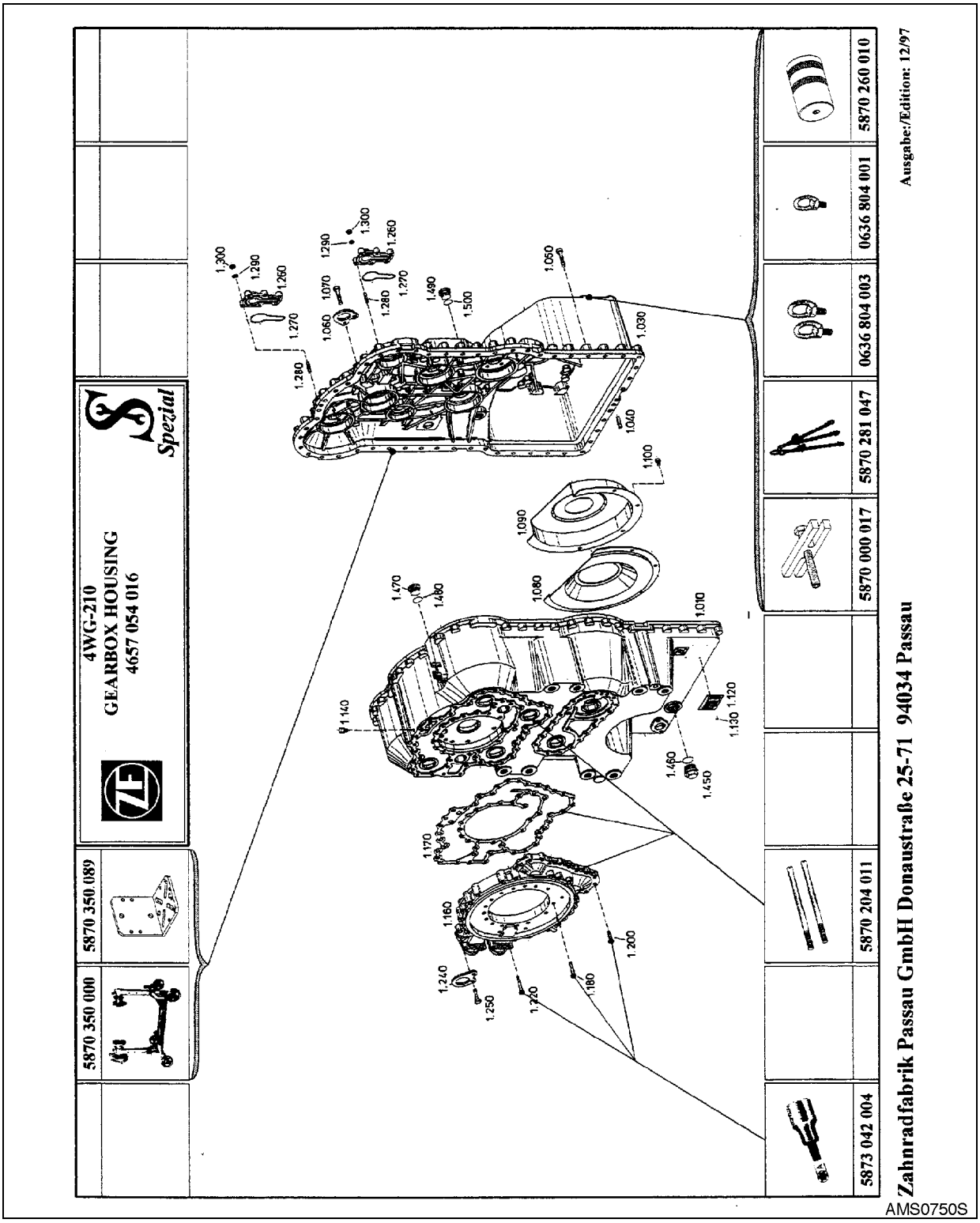

Figure 64

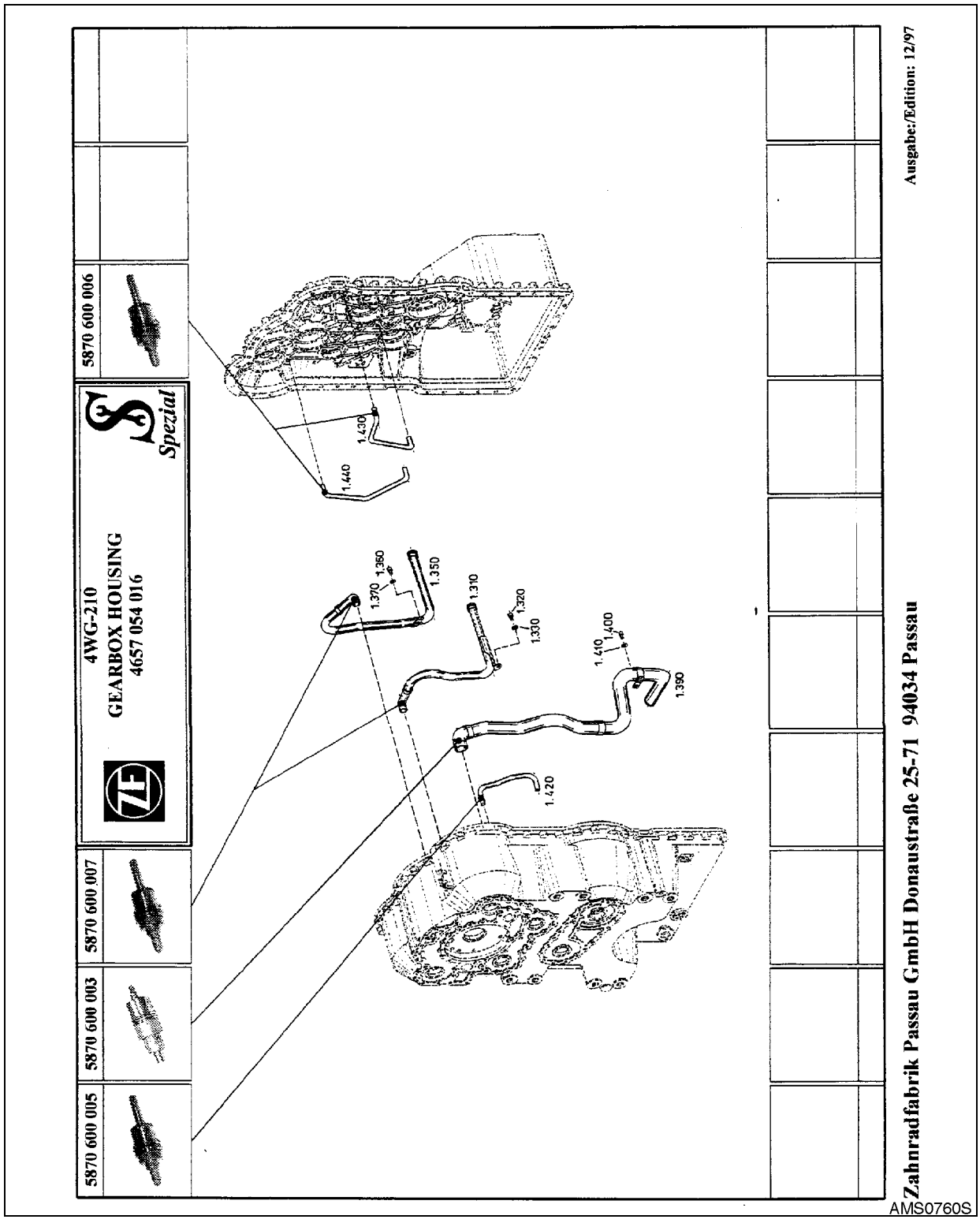
5870 600 006
5870 600 007
5870 600 003
5870 600 005
4WG-210
GEARBOX HOUSING
4657 054 016
Special
Ausgabe:/Edition: 12/97
Zahnradfabrik Passau GmbH Donaustraße 25-71 94034 Passau
1.430
1.440
1.360
1.370
1.350
1.310
1.320
1.330
1.410
1.400
1.390
1.420
AMS0760S

Figure 65

Input

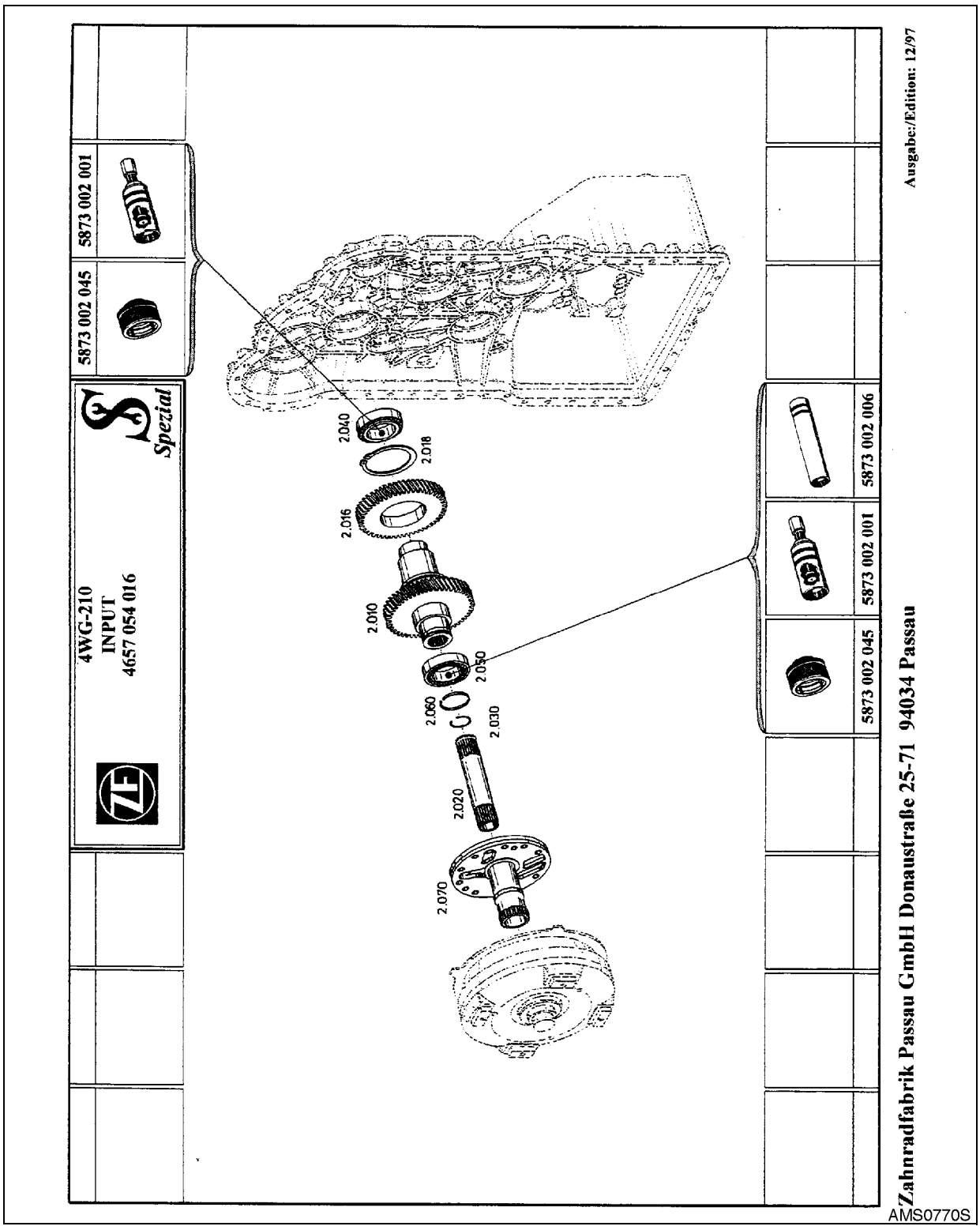

Figure 66

Coupling

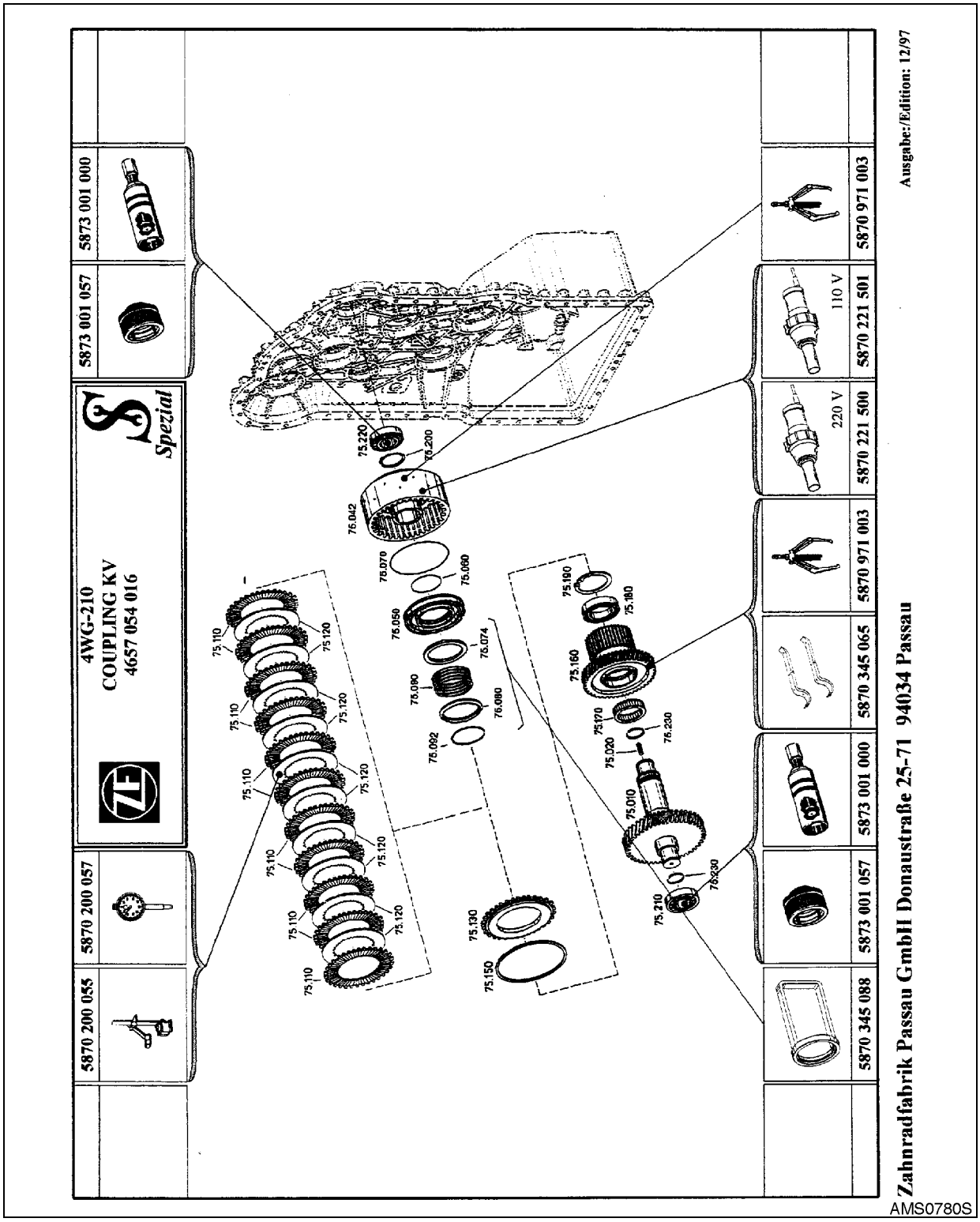

Figure 67

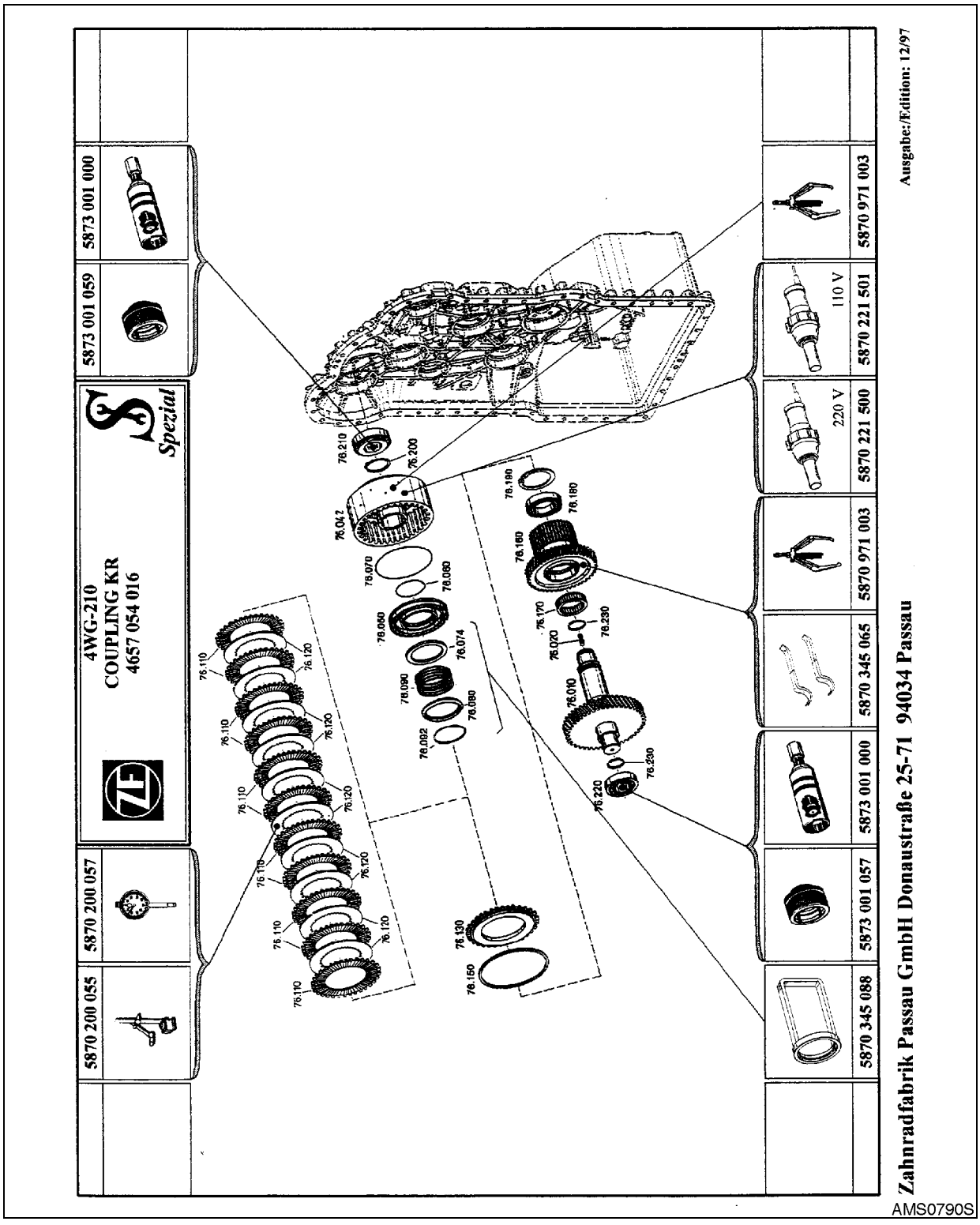
4WG-210
COUPLING KR
4657 054 016
Spezial
5870 200 055
5870 200 057
5873 001 059
5873 001 000
5870 345 088
5873 001 057
5873 001 000
5870 345 065
5870 971 003
5870 221 500
5870 221 501
5870 971 003
220 V
110 V
Ausgabe:/Edition: 12/97
Zahnradfabrik Passau GmbH Donaustraße 25-71 94034 Passau
AMS0790S

Figure 68

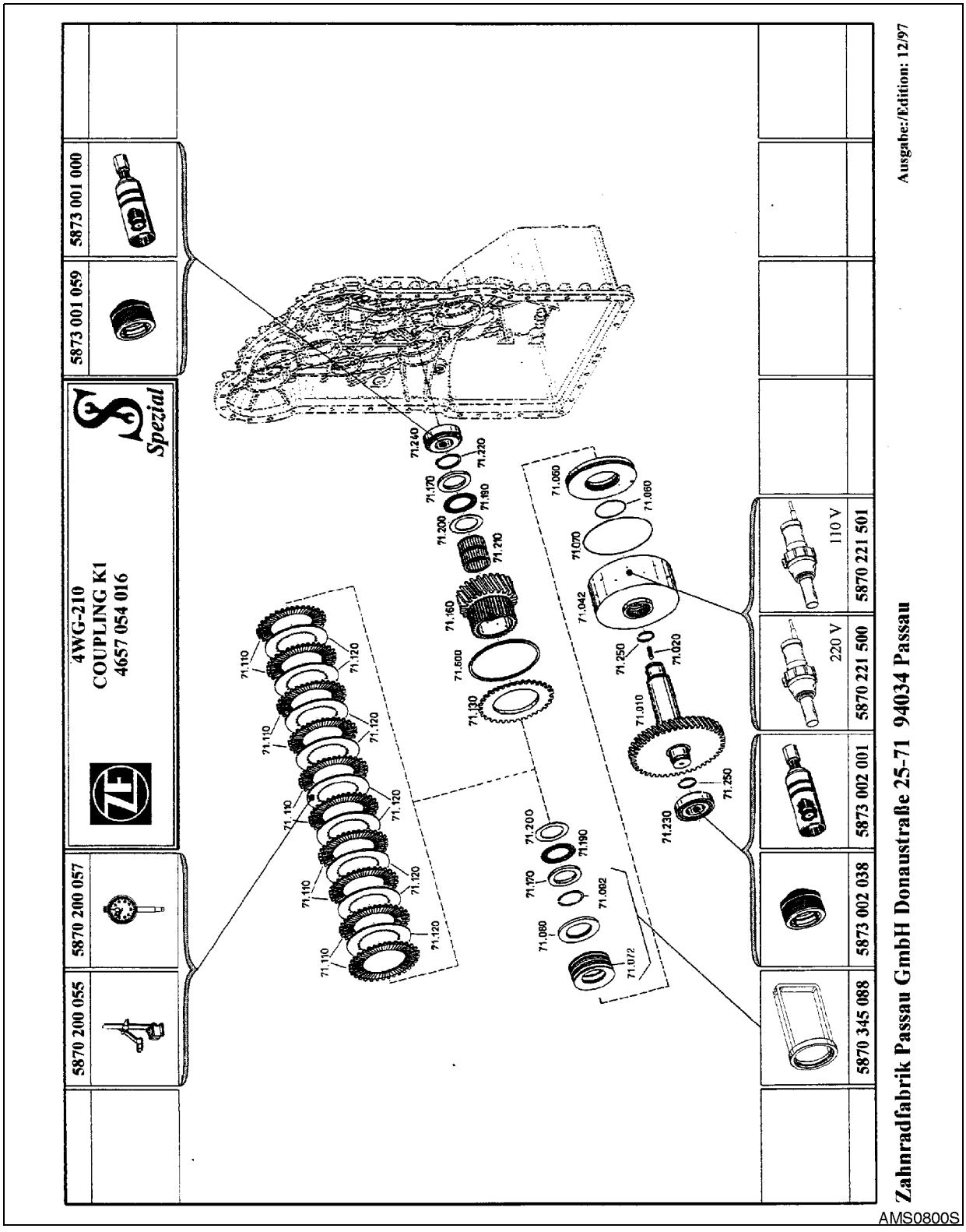
4WG-210
COUPLING K1
4657 054 016
Spezial
5870 200 055
5870 200 057
5873 001 059
5873 001 000
5870 345 088
5873 002 038
5873 002 001
5870 221 500
5870 221 501
220 V
110 V
Ausgabe:/Edition: 12/97
Zahnradfabrik Passau GmbH Donaustraße 25-71 94034 Passau
AMS0800S

Figure 69

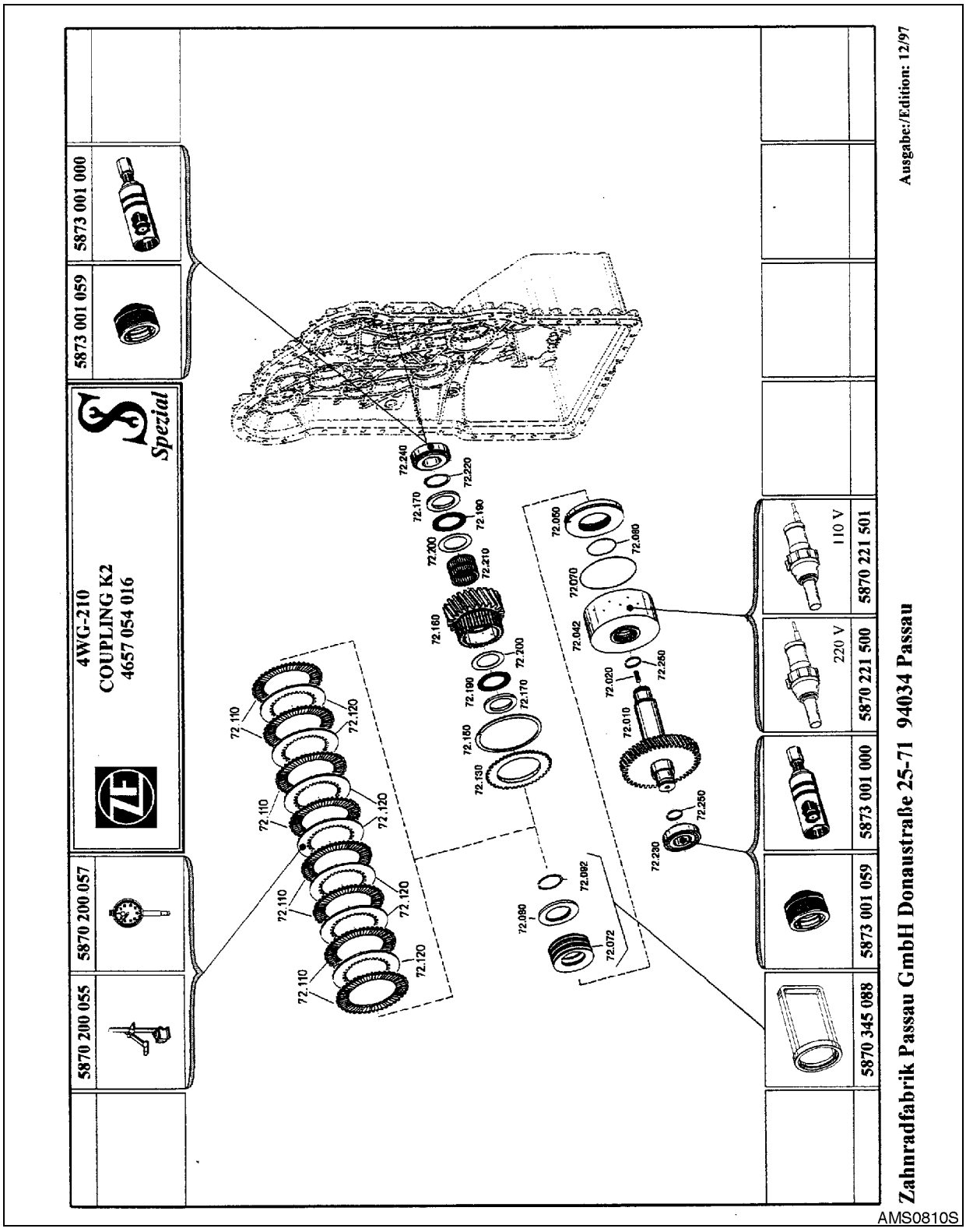
4WG-210
COUPLING K2
4657 054 016
Spezial
5870 200 055
5870 200 057
5873 001 059
5873 001 000
5870 345 088
5873 001 059
5873 001 000
5870 221 500
220 V
5870 221 501
110 V
Ausgabe:/Edition: 12/97
Zahnradfabrik Passau GmbH Donaustraße 25-71 94034 Passau
AMS0810S

Figure 70

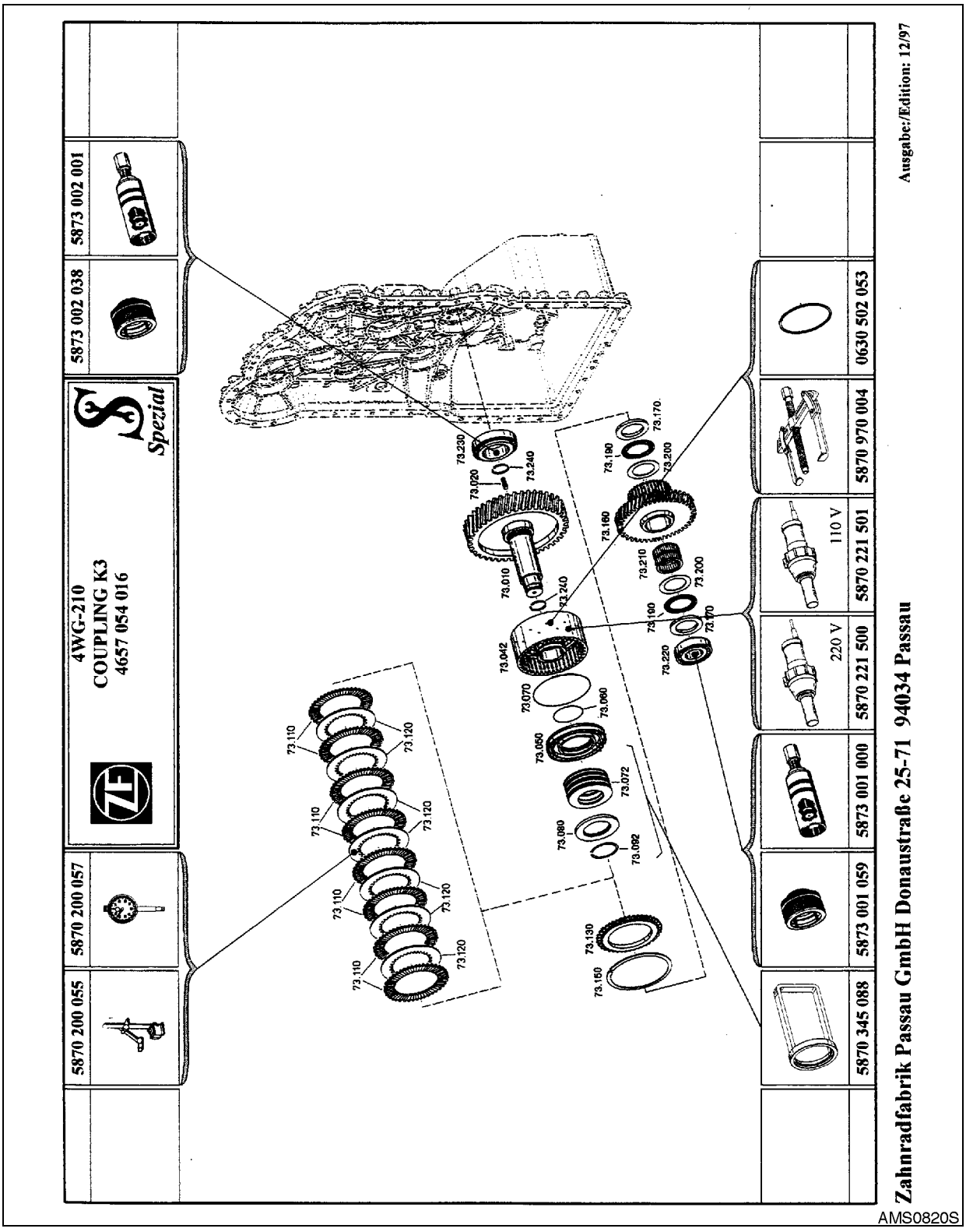
4WG-210
COUPLING K3
4657 054 016
Spezial
5870 200 055
5870 200 057
5873 002 038
5873 002 001
5870 345 088
5873 001 059
5873 001 000
5870 221 500
5870 221 501
5870 970 004
0630 502 053
220 V
110 V
73.010
73.020
73.042
73.050
73.060
73.070
73.072
73.080
73.092
73.110
73.120
73.130
73.150
73.160
73.170
73.180
73.190
73.200
73.210
73.220
73.230
73.240
Zahnradfabrik Passau GmbH Donaustraße 25-71 94034 Passau
Ausgabe:/Edition: 12/97
AMS0820S

Figure 71

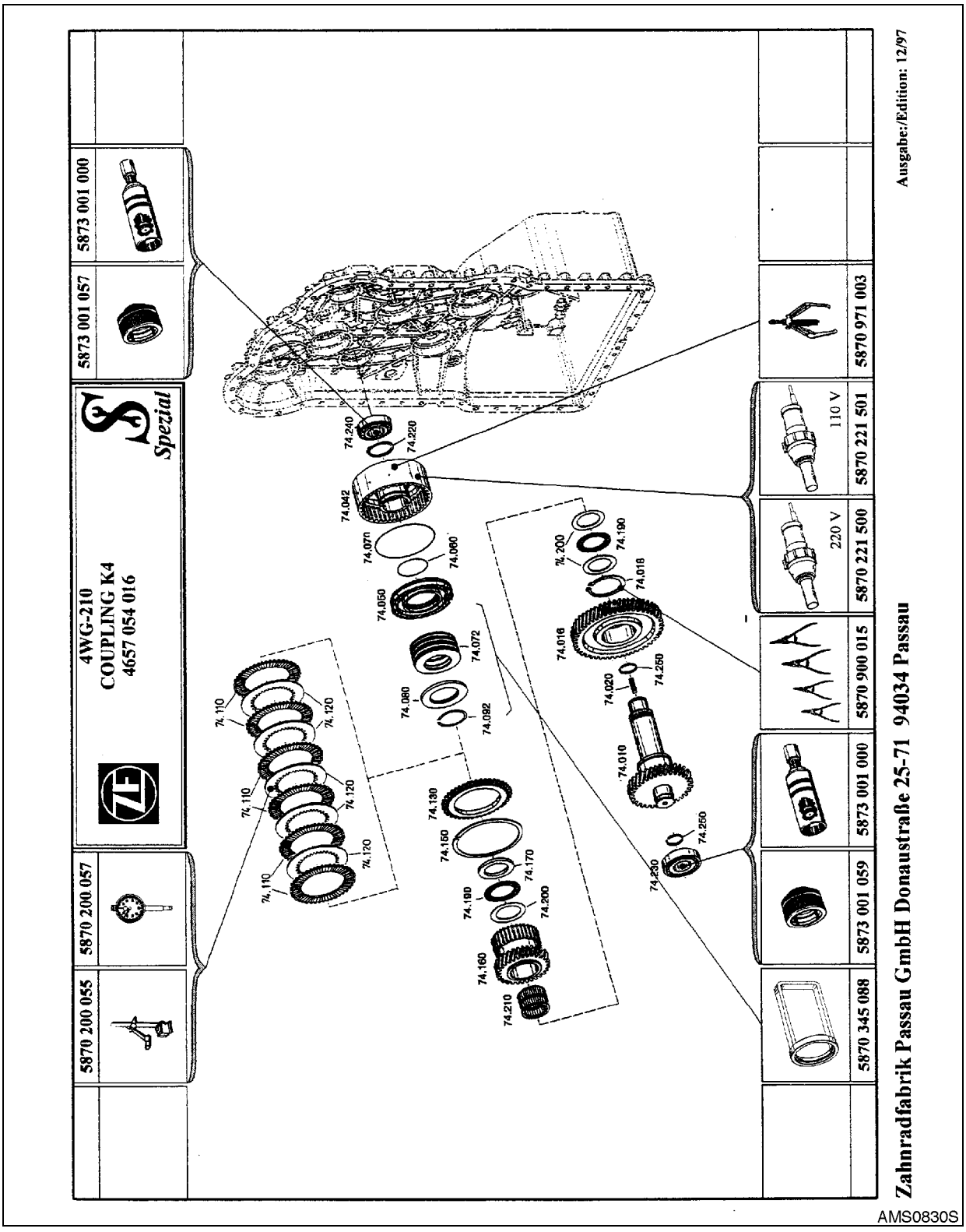
4WG-210
COUPLING K4
4657 054 016
Spezial
5870 200 055
5870 200 057
5873 001 057
5873 001 000
5870 345 088
5873 001 059
5873 001 000
5870 900 015
5870 221 500
5870 221 501
5870 971 003
110 V
220 V
Zahnradfabrik Passau GmbH Donaustraße 25-71 94034 Passau
Ausgabe:/Edition: 12/97
AMS0830S

Figure 72

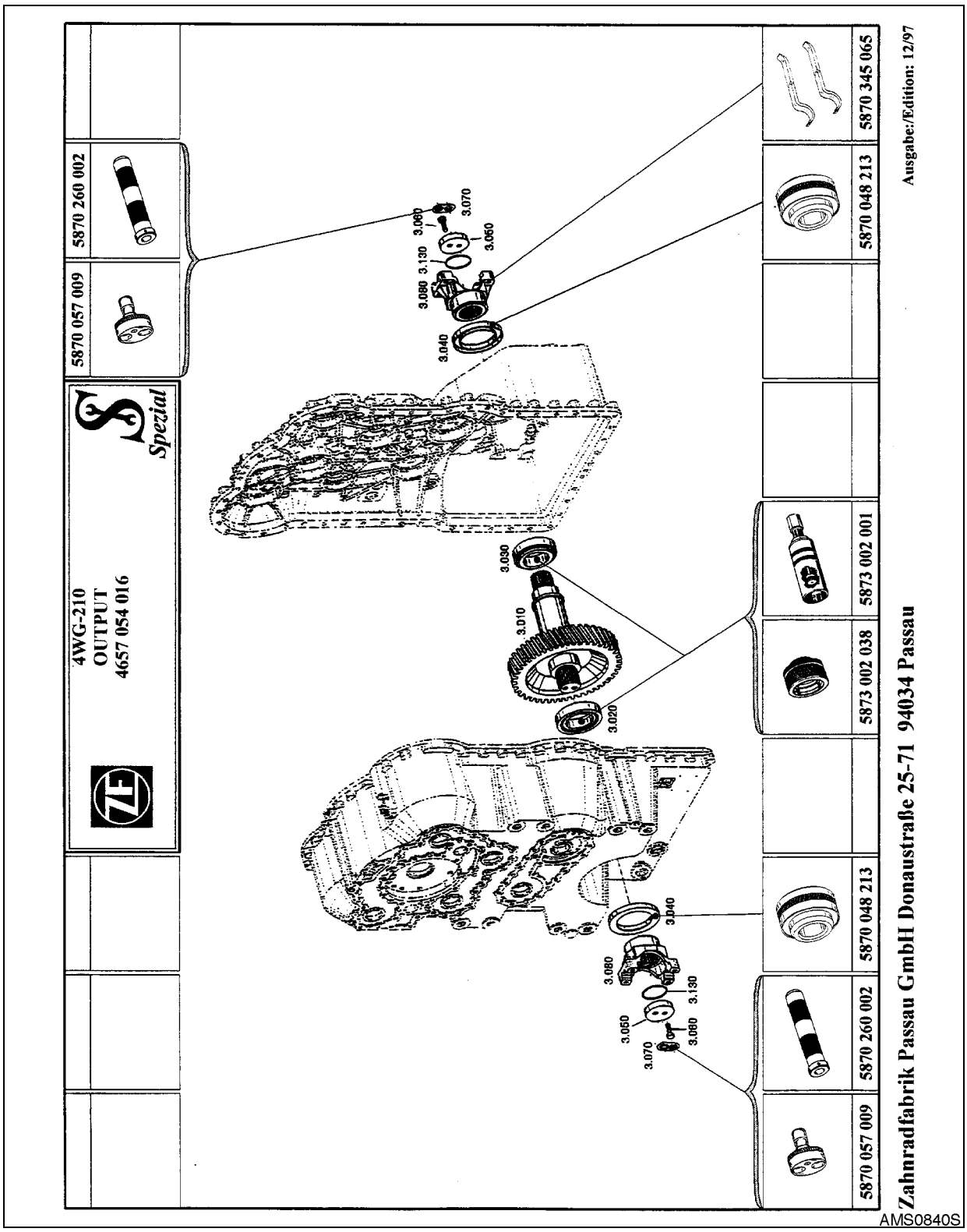
4WG-210
OUTPUT
4657 054 016
Spezial
5870 260 002
5870 057 009
5870 345 065
5870 048 213
5873 002 001
5873 002 038
5870 048 213
5870 260 002
5870 057 009
3.060
3.070
3.130
3.080
3.040
3.090
3.010
3.020
3.050
Zahnradfabrik Passau GmbH Donaustraße 25-71 94034 Passau
Ausgabe:/Edition: 12/97
AMS0840S

Figure 73

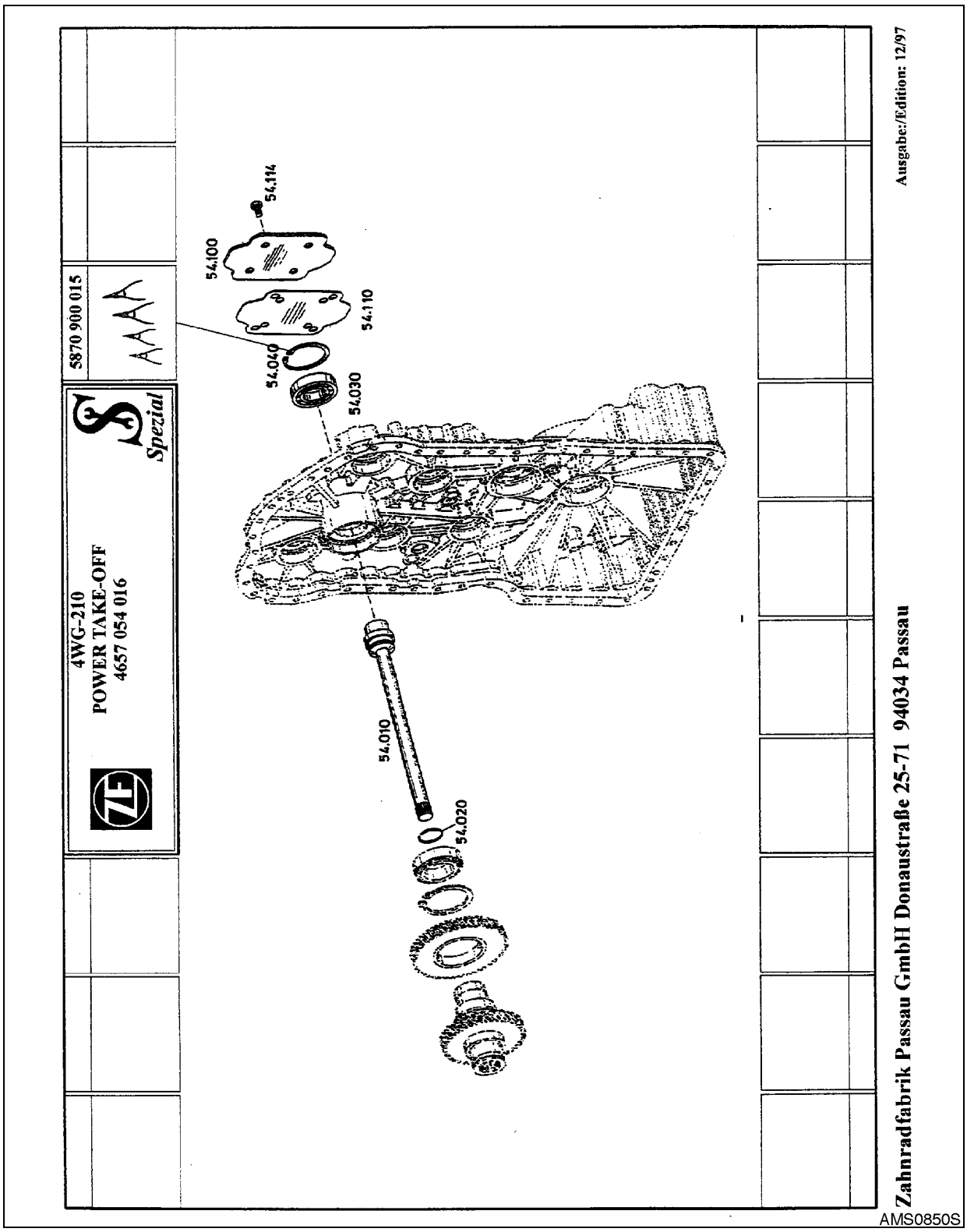
4WG-210
POWER TAKE-OFF
4657 054 016
5870 900 015
Spezial
54.114
54.100
54.110
54.040
54.030
54.010
54.020
Ausgabe:/Edition: 12/97
Zahnradfabrik Passau GmbH Donaustraße 25-71 94034 Passau
AMS0850S

Figure 74

HYDRAULIC CONTROL UNIT (HSG-94)

Figure 75, shows a sectional view of the HSG-94.

IMPORTANT

Different versions in relation to the position of the cable harness are possible.

In this connection, pay attention to the Specifications of the Vehicle Manufacturer.

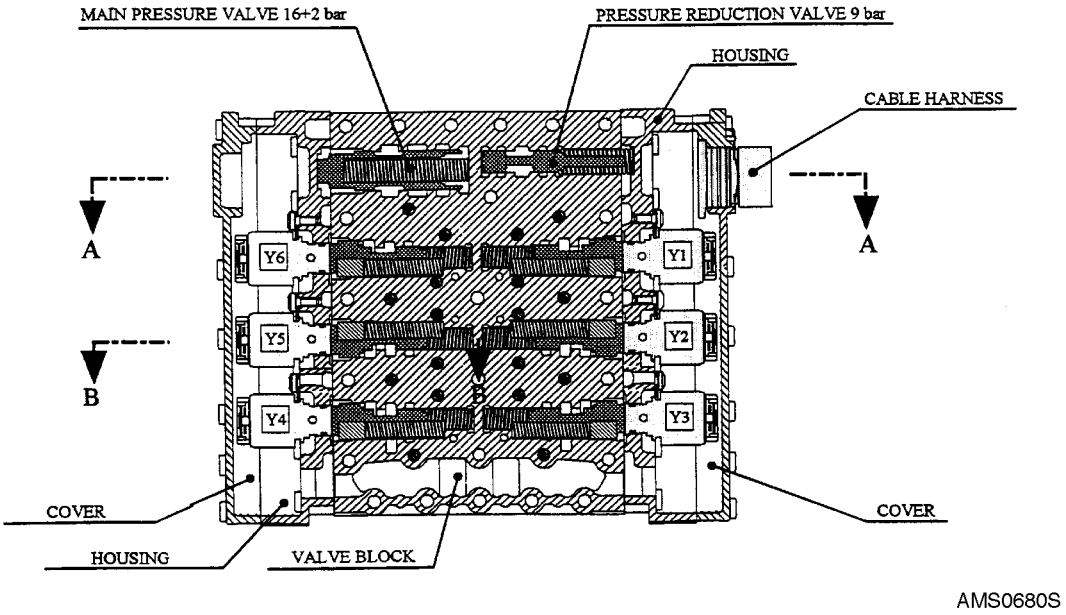

Figure 75

Section A - A

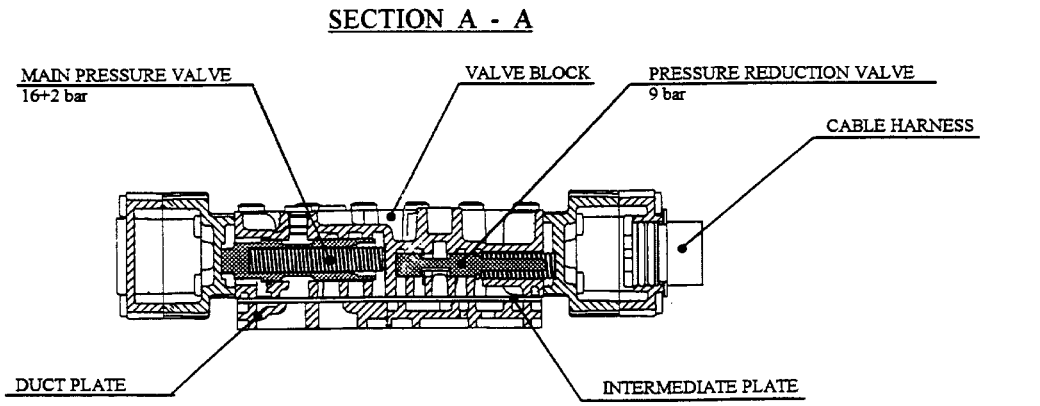

AMS0690S

Figure 76

Section B - B

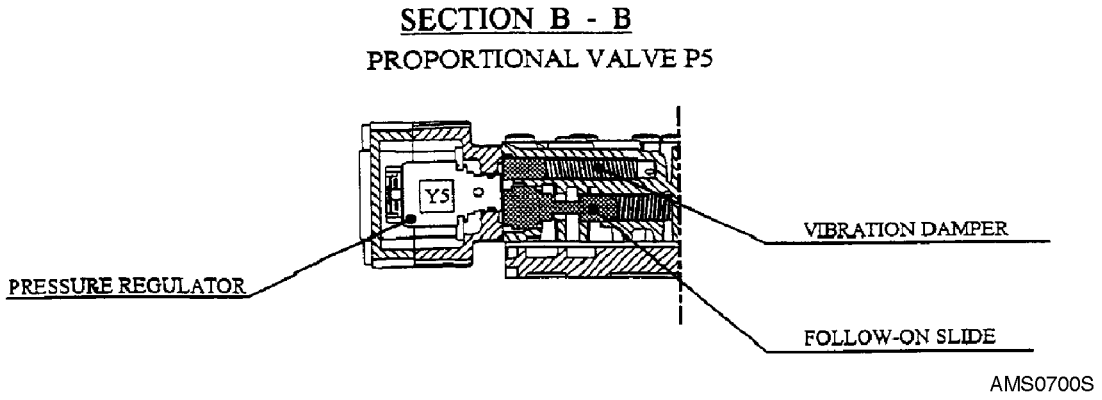

AMS0700S

Figure 77

Disassembly

1. Figure 78, shows complete control unit.

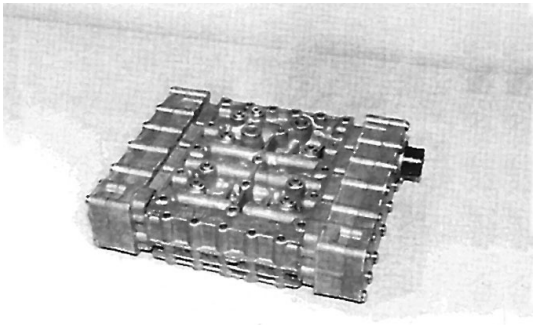

HLM2005P

Figure 78

2. Mark the installation position of different covers, the housing and the cable harness with the valve housing.

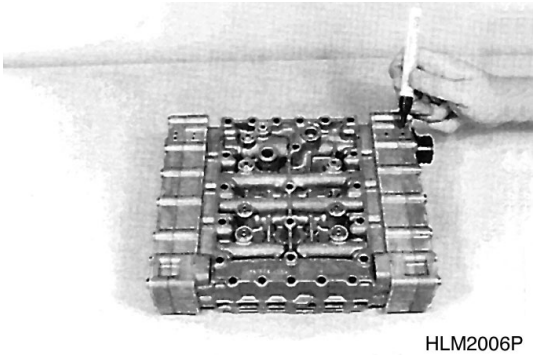

HLM2006P

Figure 79

3. Loosen socket head screws.
4. Separate duct plate, 1st gasket, intermediate plate and 2nd gasket from the valve housing.

   (S) Box spanner (Torx TX-27) - 5873 042 002

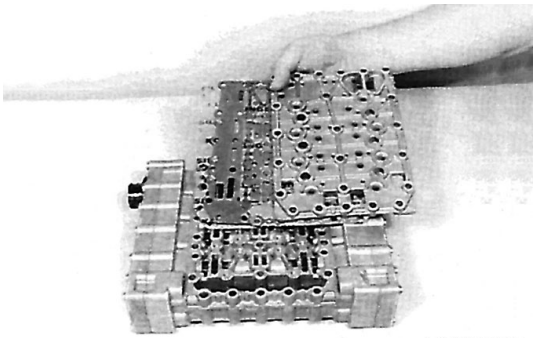

HLM2007P

Figure 80

5. Remove retaining clip.

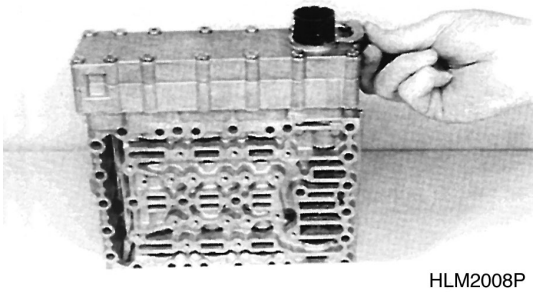

HLM2008P

Figure 81

6. Loosen socket head screws.
7. Separate cover from housing and cable harness.

   (S) Box spanner (Torx TX - 27) - 5873 042 002

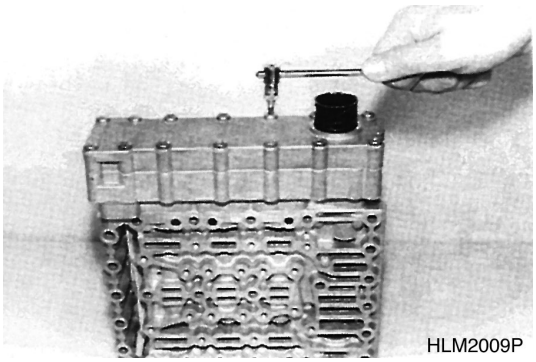

Figure 82

8. Disassemble opposite cover.
9. Disconnect pressure regulator and remove cable harness.

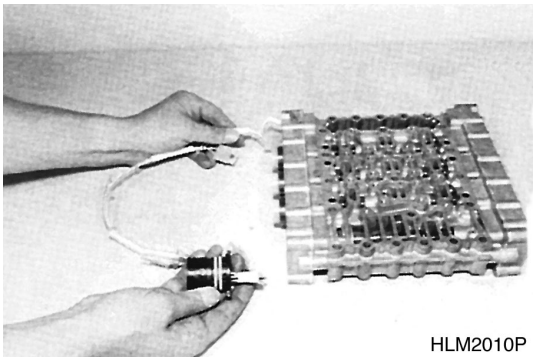

Figure 83

10. Loosen socket head screws, remove fixing plate and pressure regulators (3x).

    (S) Box spanner (Torx TX - 27) - 5873 042 002

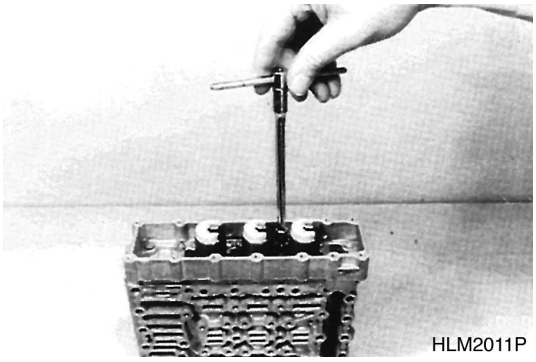

Figure 84

11. Loosen two socket head screws and locate housing provisionally, using adjusting screws. (Housing is spring loaded). Then loosen remaining socket and screws.

    (S) Box spanner (Torx TX - 27) - 5873 042 002

    (S) Adjusting screws - 5870 204 036

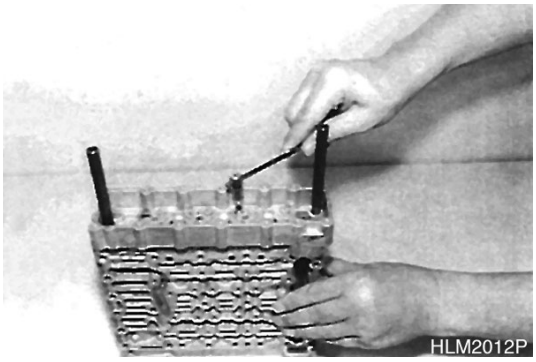

Figure 85

12. Separate housing from valve housing by loosening adjusting screws uniformly.

    (S) Adjusting screws - 5870 204 036

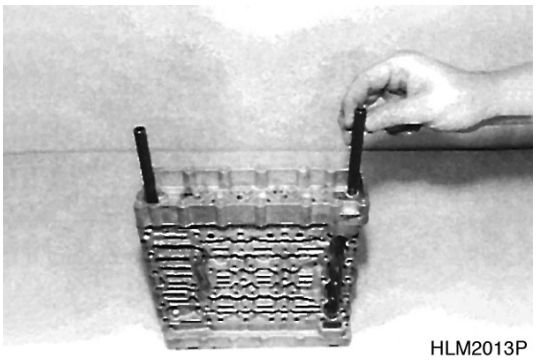

Figure 86

13. Remove components (Figure 87).
14. Remove opposite pressure regulators, housing and components accordingly (Figure 88).

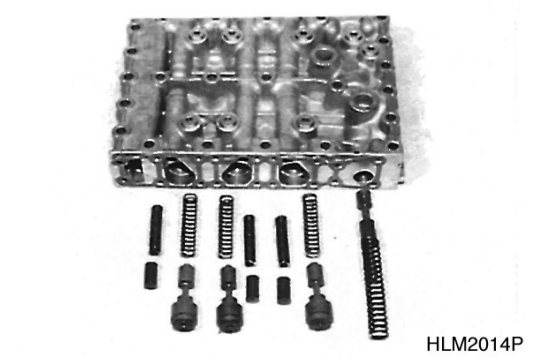

Figure 87



Figure 88

Reassembly

NOTE: *Check all components for damage and replace if necessary. Before installation, check free travel of all moving parts in housing. Spools can be exchanged individually. Oil components before reassembly according to ZF list of lubricants TE-ML 03.*

Insert diaphragms with concave side facing upward until contact is obtained.

NOTE: *Installation position, see arrows.*

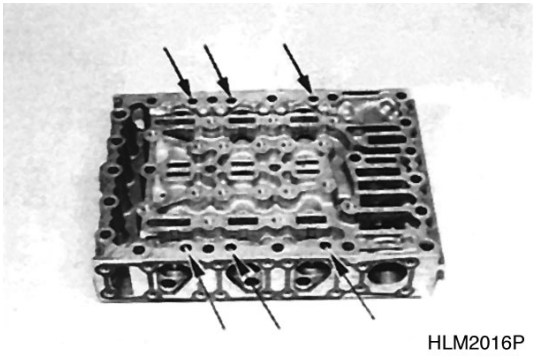

Figure 89

1. Figure 90, shows the following components:

Reference Number	Description
1	Vibration Damper (3x Spool and Compression Spring)
2	Follow On Site (3x Spool and Compression Spring)
3	Pressure Reducing Valve (1x Spool and Compression Spring)

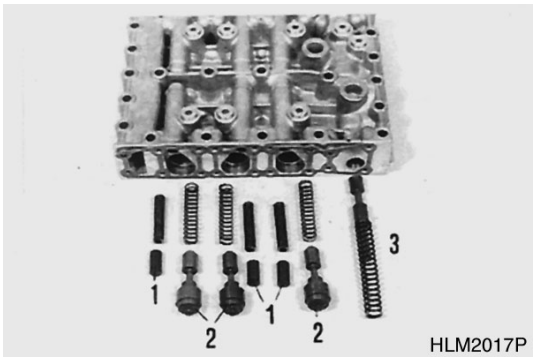

Figure 90

2. Install components according to Figure 90.

NOTE: *Preload compression spring of the follow on slides and locate spool provisionally using cylindrical pins Ø 5.0 mm (0.1969 in) (assembly aid), See Figure 91.*

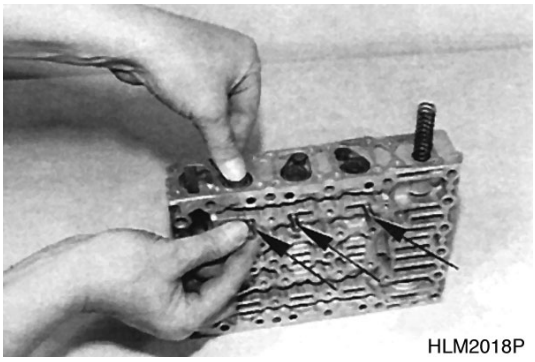

Figure 91

3. Install two adjusting screws.
4. Assemble gasket (1, Figure 92) and housing cover (Figure 92). Position housing cover uniformly, using adjusting screws, until contact is obtained and remove cylindrical pins (assembly aid) again (Figure 93).

NOTE: *Pay attention to different housing covers.*

NOTE: *Install recess Ø 15.0 mm (0.5906 in) (2, Figure 92), facing spring of pressure reducing valve.*

(S) Adjusting screws - 5870 204 036

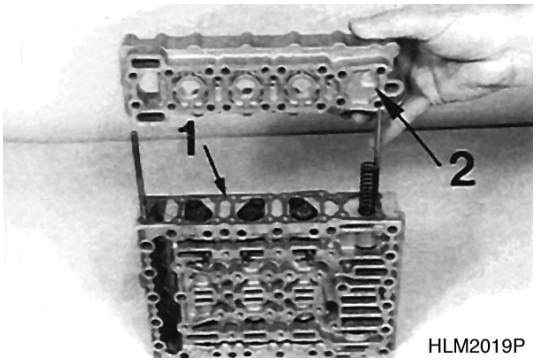

Figure 92

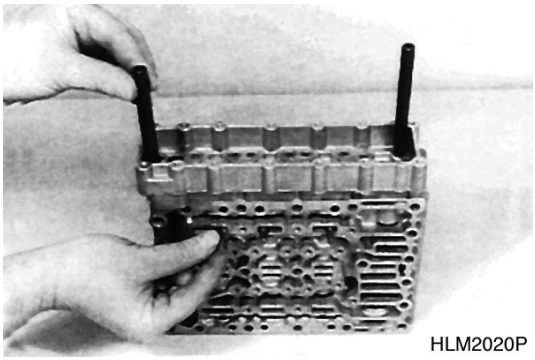

Figure 93

5. Fasten housing cover using socket head screws.

   NOTE: *Torque limit 0.56 kg•m (4 ft lb).*

   (S) Box spanner (Torx TX-27) - 5873 042 002

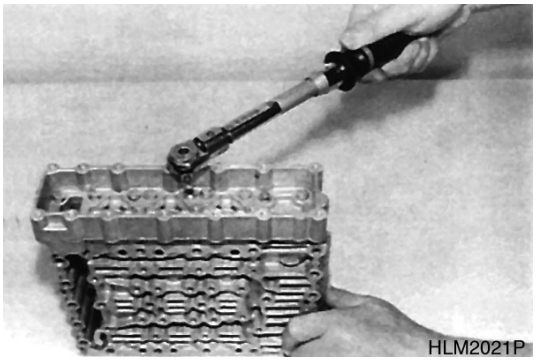

Figure 94

6. Install pressure regulators and secure using fixing plates and socket head screws.

   NOTE: *Install fixing plate, with claw facing downward. Pay attention to radial installation position of pressure regulators, see Figure 95.*

   NOTE: *Torque limit 0.56 kg•m (4 ft lb).*

   (S) Box spanner (Torx TX-27) - 5873 042 002

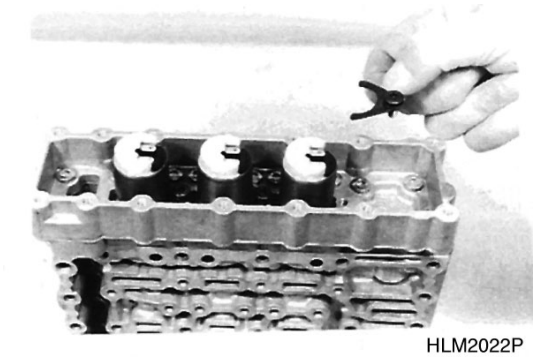

Figure 95

7. Preassemble opposite side.

   A. Figure 96, shows the following components:

Reference Number	Description
1	Main Pressure Valve (1x Spool and Compression Spring.)
2	Follow On Slide (3x Spool and Compression Spring)
3	Vibration Damper (3x Spool and Compression Spring)

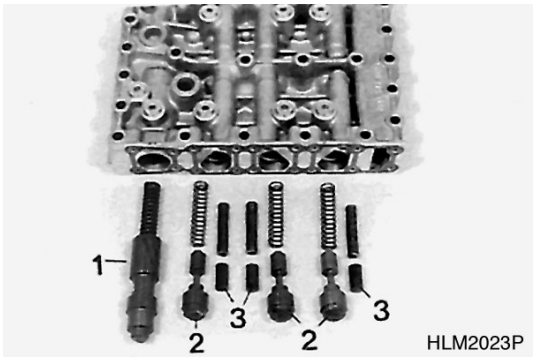

Figure 96

B. Install components according to Figure 96.

C. Preload compression springs of the follow on slides and locate spool provisionally using cylindrical pins Ø 5 mm (0.1969 in) (assembly aid). See arrows.

D. Install two adjusting screws.

E. Assemble gasket (1, Figure 97) and housing cover, and position them uniformly against shoulder, using adjusting screws.

NOTE: *Pay attention to different housing covers, install the recess Ø 19 mm (0.7480 in) (2, Figure 97), facing the main pressure valve.*

F. Fasten housing cover using socket head screws.

NOTE: *Torque limit 0.56 kg•m (4 ft lb).*

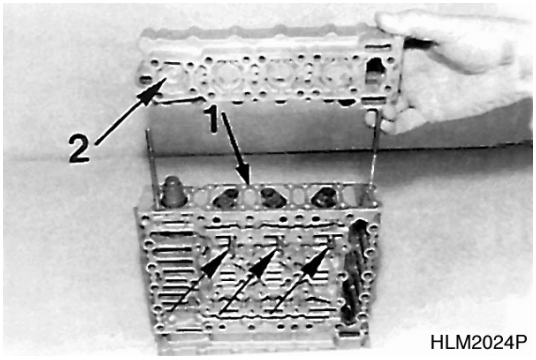

Figure 97

G. Remove cylindrical pins (assembly aid) again.

(S) Adjusting screws - 5870 204 036

(S) Box spanner (Torx TX-27) - 5873 042 002

H. Install pressure regulators and secure using fixing plates and socket head screws.

NOTE: *Install fixing plates, with claw facing downward.*

Pay attention to radial installation position of pressure regulators, see Figure 98.

NOTE: *Torque limit 0.56 kg•m (4 ft lb).*

(S) Box spanner (Torx TX-27) - 5873 042 002



Figure 98

I. Introduce cable harness and connect pressure regulators (6x).

NOTE: *Pay attention to installation position of cable harness, see also markings (Figure 79).*

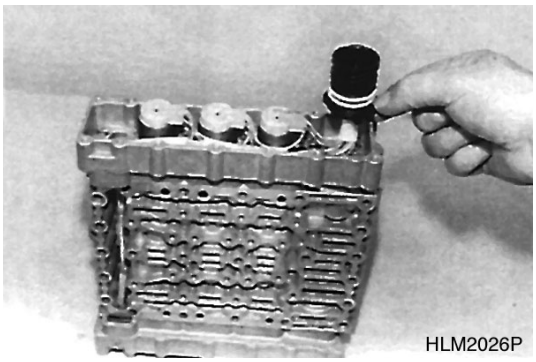

Figure 99

J. Introduce female connector against shoulder, with groove facing guide nose of cover.

K. Install gaskets (Figure 100) and fasten cover using socket head screws.

NOTE: *Torque limit 0.56 kg•m (4 ft lb).*

(S) Box spanner (Torx TX-27) - 5873 042 002

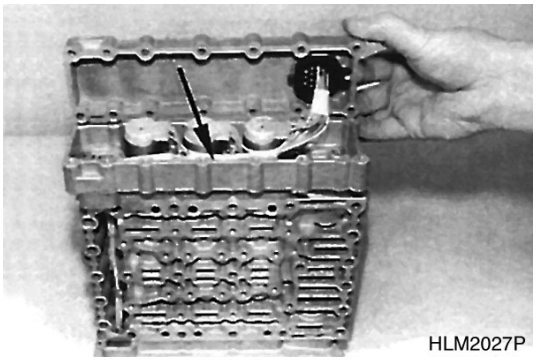

Figure 100

L. Secure female connector using retaining clamp, see Figure 101.

M. Install opposite cover.

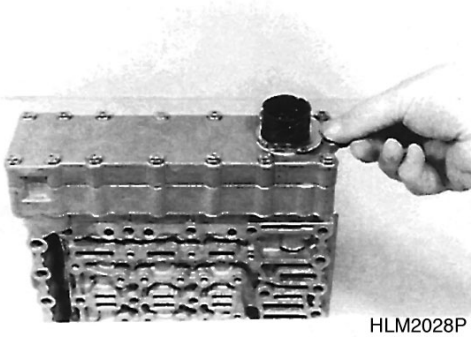

HLM2028P

Figure 101

N. Install two adjusting screws and mount gasket I.

NOTE: *Pay attention to different gaskets, see Figure 102 and Figure 105.*

(S) Adjusting screws - 5870 204 063

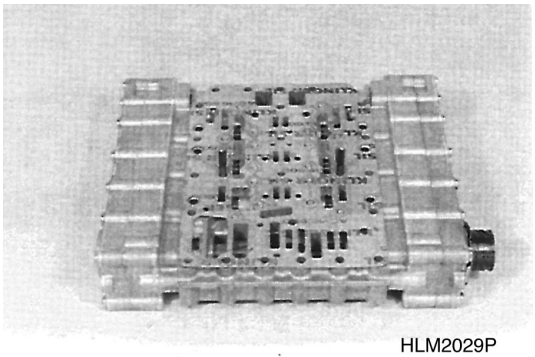

HLM2029P

Figure 102

8. Intermediate plate-version with screens:

A. Insert screens (6x) flash -mounted into bore of intermediate plate, see Figure 103.

NOTE: *Pay attention to installation position- screens are facing upward (facing duct plate).*

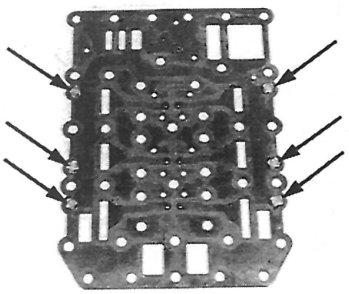

HLM2030P

Figure 103

B. Mount intermediate plate, with screens with screens facing upward.

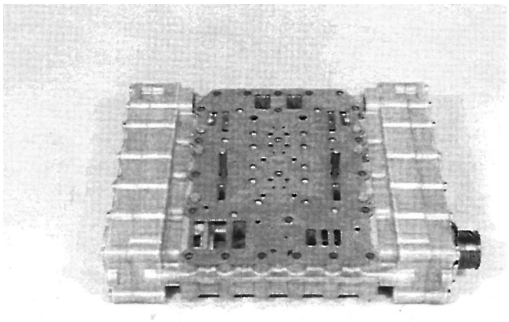

HLM2031P

Figure 104

C. Mount gasket II.

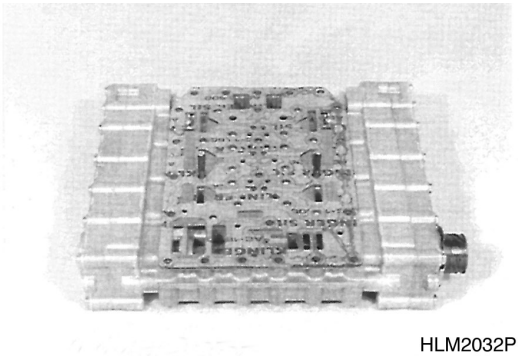

HLM2032P

Figure 105

D. Mount duct plate and fasten it uniformly using socket head screws.

NOTE: *Torque limit 0.97 kg•m (7 ft lb).*

(S) Box spanner (Torx TX-27) - 5873 042 002

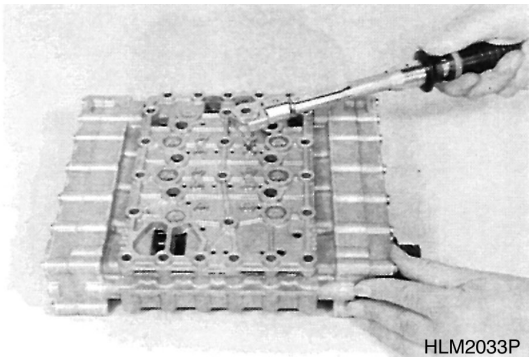

HLM2033P

Figure 106

E. Equip screw plugs (8x) with new O-rings and install them.

NOTE: *Torque limit 0.61 kg•m (4 ft lb).*

NOTE: *The installation of hydraulic control unit is described in following section, "Mount Duct Plate and Hydraulic Control Unit" on page 1-142.*

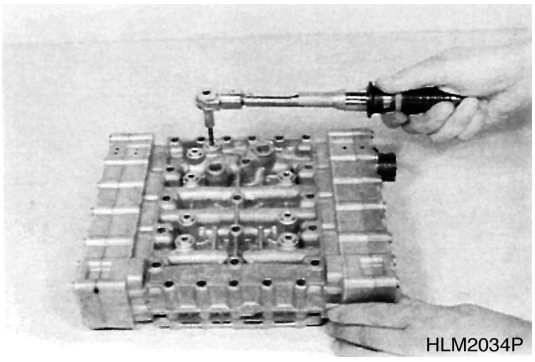

HLM2034P

Figure 107

TRANSMISSION DISASSEMBLY

1. Fasten transmission on the assembly car.

   (S) Assembly car - 5870 350 000

   (S) Strips - 5870 350 063

   (S) Support - 5870 350 090

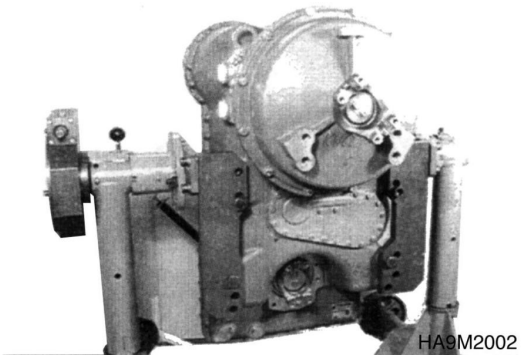

Figure 108

Hydraulic Control Unit (HSG-94) and Duct plate

1. Loosen two socket head screws and install adjusting screws.
2. Loosen remaining socket head screws and separate valve housing from duct plate.

   (S) Adjusting screws (M6) - 5870 204 063

   (S) Box spanner (Torx TX-27) - 5870 042 002

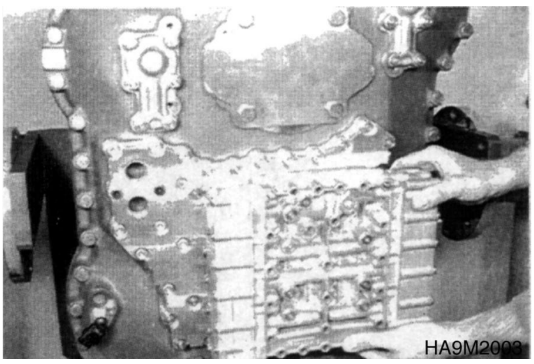

Figure 109

3. Remove both gaskets and intermediate plate.
4. Loosen socket head screws and hex nuts (Figure 110) and separate duct plate from gearbox housing. Remove gasket.

   (S) Box spanner (Torx TX-27) - 5870 042 004

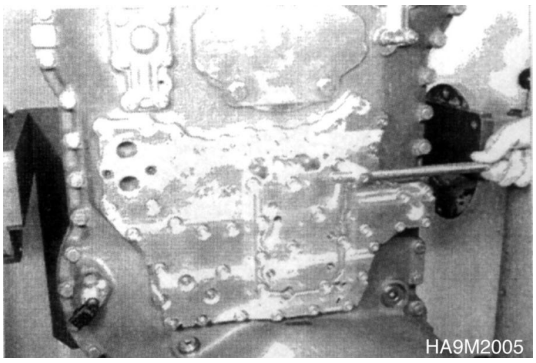

Figure 110

5. Pull converter safety valve out of housing bore.

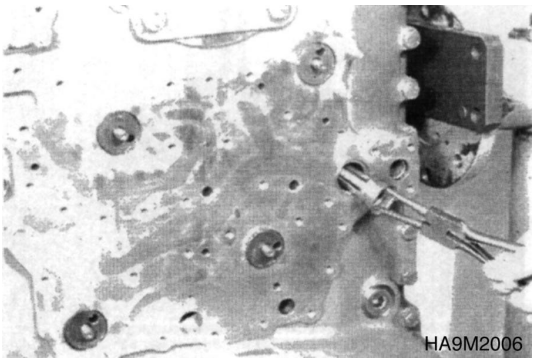

Figure 111

Engine Connection - Converter

1. Remove lock plate and loosen hex head screws.
2. Remove disk and pry drive flange off shaft.

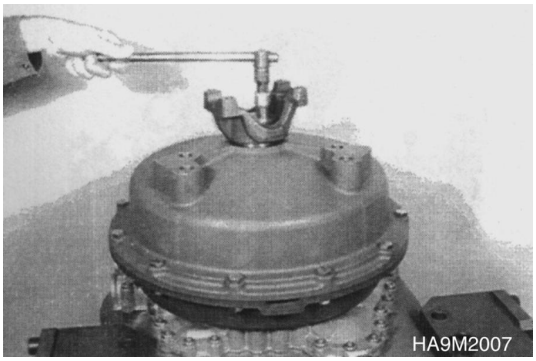

Figure 112

3. Loosen screw connection.

   NOTE: *Mark radial installation position of housing cover.*

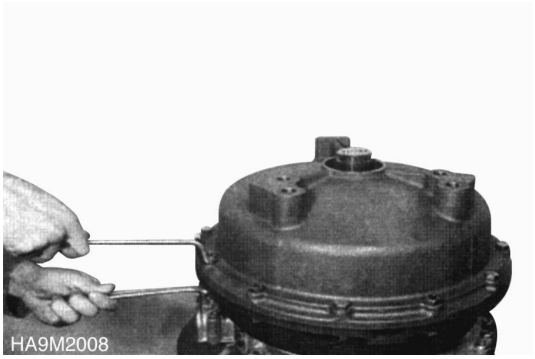

Figure 113

4. Separate converter, along with cover from the transmission, using lifting device.

   (S) Set of eyebolts - 5870 204 002

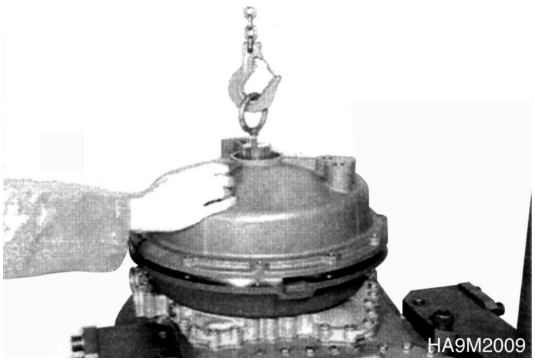

Figure 114

5. Press drive shaft resp. converter out of the cover (ball bearing).

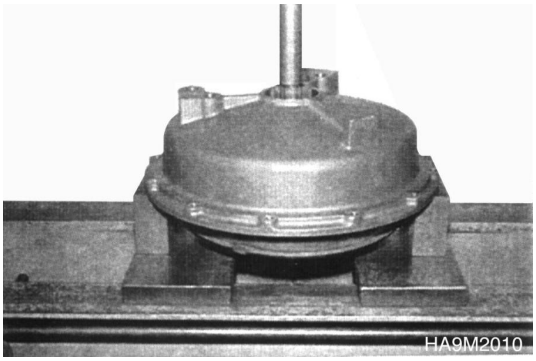

Figure 115

6. Squeeze retaining ring out and remove ball bearing.

   (S) Set of internal pliers - 5870 900 013

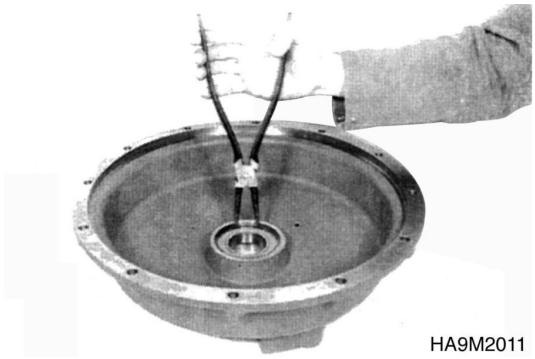

Figure 116

7. Loosen hex head screws and separate diaphragm from the converter.

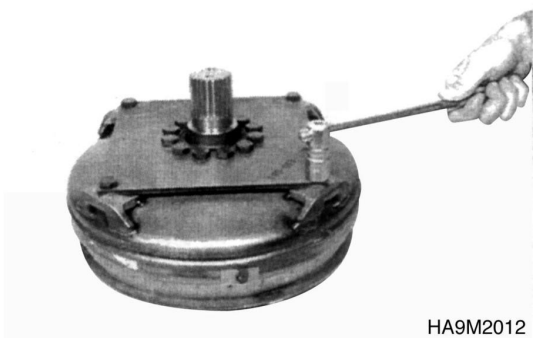

Figure 117

8. Loosen hex head screws and separate drive shaft from the diaphragm.

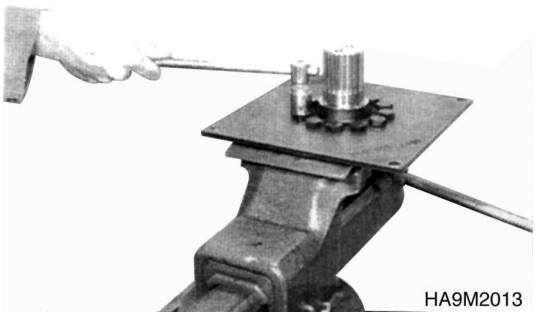

Figure 118

9. Remove inductive transmitter (n Engine).

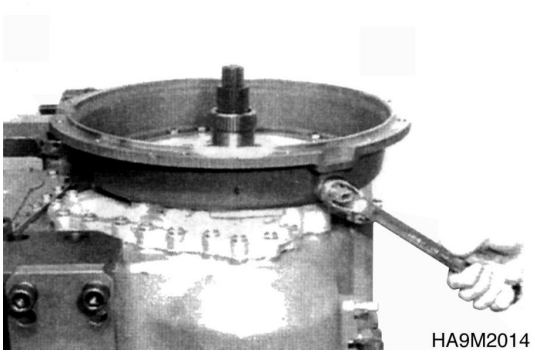

Figure 119

10. Loosen hex head screws and remove converter bell.

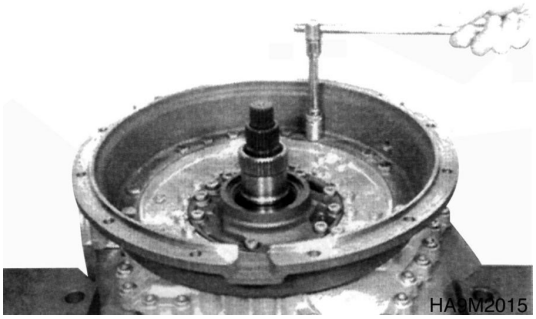

Figure 120

Hydraulic Pump

1. Loosen socket head screws.

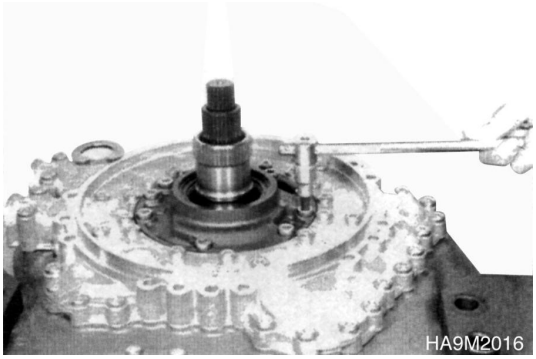

Figure 121

2. Apply separate device (S) on the gear teeth run out of the stator shaft and pull (compl.) using two-armed puller carefully out of the housing bores.

   (S) Separating device - 5870 300 024

   (S) Two-armed puller - 5870 970 004

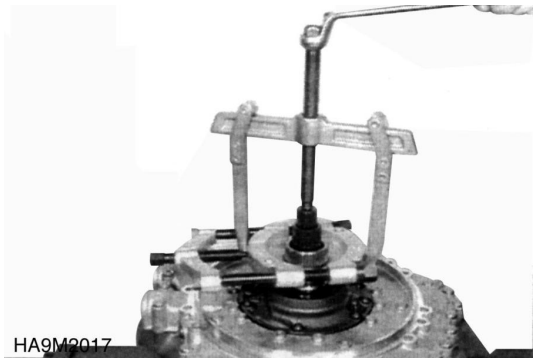

Figure 122

3. Separate hydraulic pump from stator shaft.
4. Separate control disk from pump.

   NOTE: *If traces due to running-in should be encountered in the pump housing or on the control disk, the complete pump has to be replaced.*

5. Lay on control disk again and secure it using grooved pins (2x).



Figure 123

6. Loosen socket head screws and the two hex head screws and remove oil feed housing.

   Remove gasket.

   (S) Box spanner (Torx, TX-40) - 5873 023 004

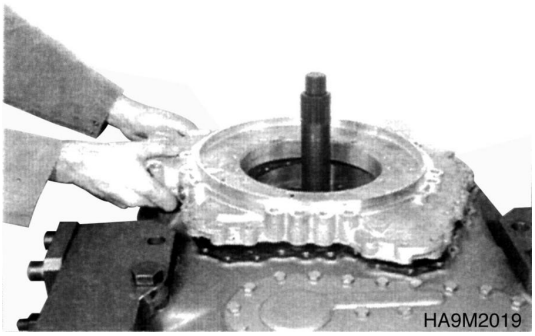

Figure 124

Converter Back Pressure Valve

1. Preload compression spring and remove lock plate.
2. Remove released components.

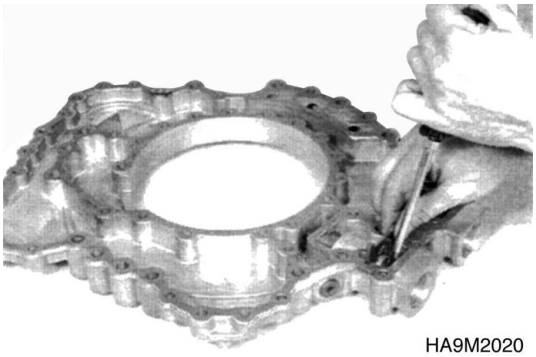

Figure 125

3. Loosen hex head screws. Remove cover and gasket.

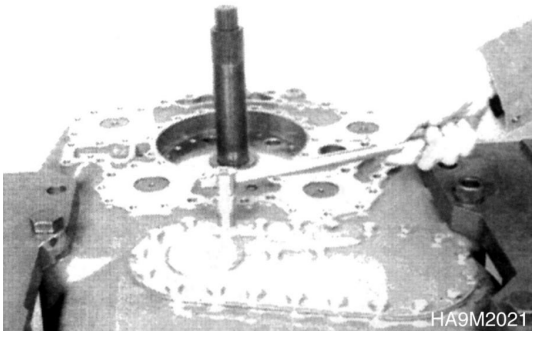

Figure 126

Remove Output, Input and Clutches

1. Remove lock plate, loosen hex head screws and pry converter-side output flange off the shaft.
2. Pry shaft seal out of the housing bore.
3. Tilt transmission 180° and remove rear-side output flange accordingly.

   (S) Pry bar - 5870 345 065

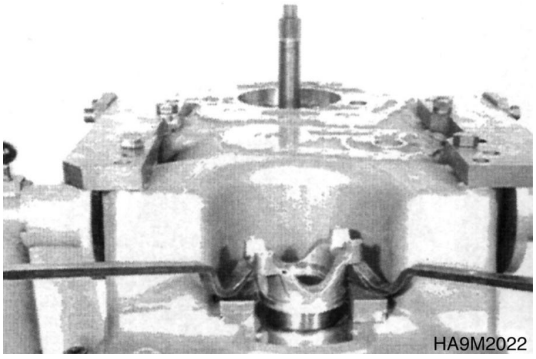

Figure 127

4. Remove speed sensor and both inductive transmitters (Arrows).

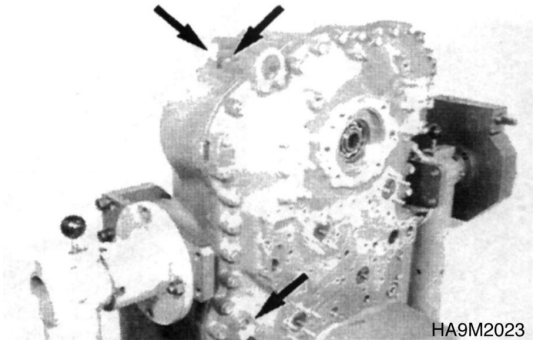

Figure 128

5. Loosen hex nuts and remove both covers (Arrows).
6. Loosen screw connection (housing/housing cover).

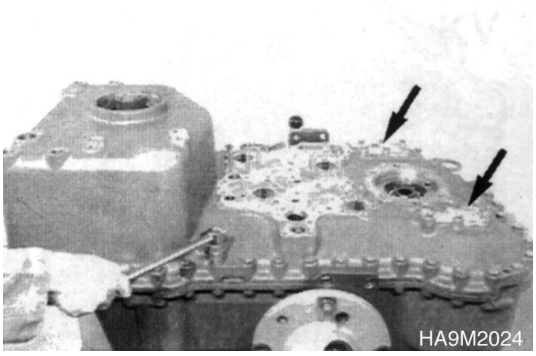

Figure 129

7. Drive both cylindrical pins out (Arrows).

   NOTE: *The following figures show the common removal of all clutches.*

8. The removal of single clutches without use of the special tool (Handles - 5870 260 010) due to the installation conditions is extremely difficult.

   NOTE: *Besides there is the danger of injuries.*

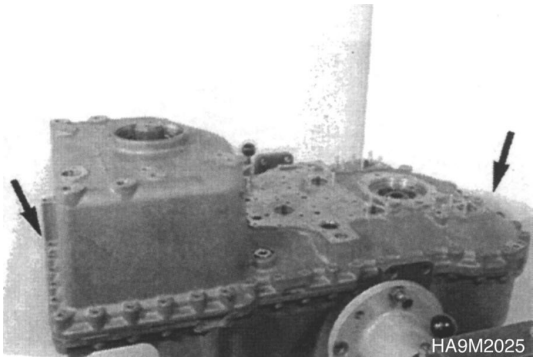

Figure 130

9. Locate all clutches using handles (S) in the housing cover.
10. Install eyebolts and hang in the lifting device.

    (S) Handles (6 pieces needed) - 5870 260 010

    (S) Eyebolt 2x (M20) - 0636 804 003

    (S) Eyebolt 1x (M16) - 0636 804 001

    (S) Puller device - 5870 000 017

    (S) Lifting chain - 5870 281 047

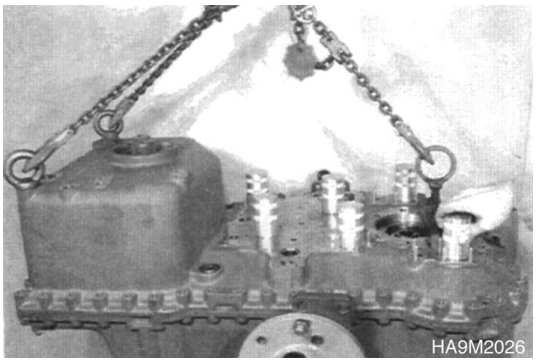

Figure 131

11. Separate housing cover along with clutches from the gearbox housing using lifting device.

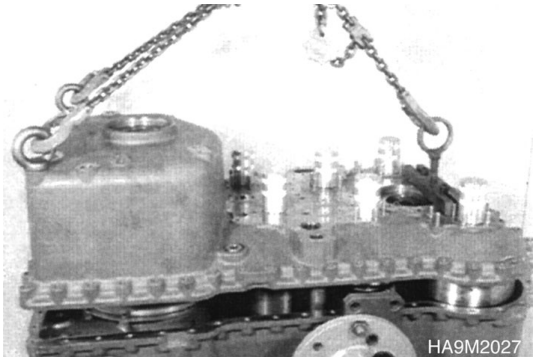

Figure 132

12. Fasten housing cover on the assembly car.

    (S) Assembly car - 5870 350 000

    (S) Clamping bracket - 5870 350 089

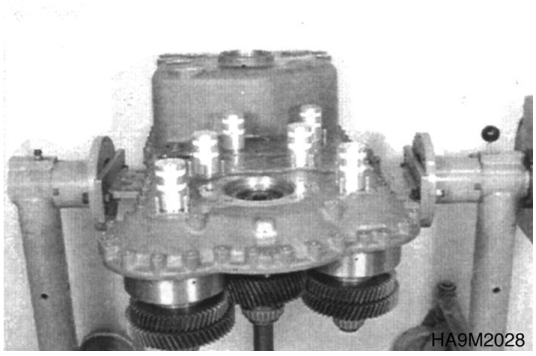

Figure 133

13. Loosen socket head screws and remove output shaft and the two oil collecting plates.

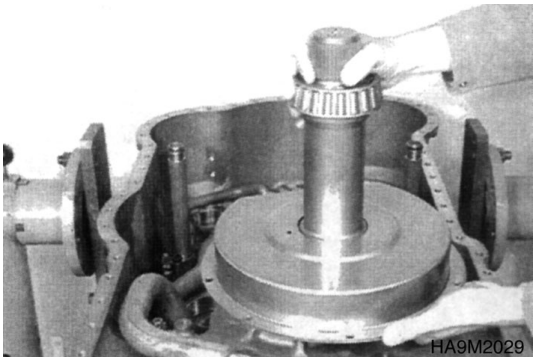

Figure 134

14. Remove tapered roller bearing.
15. Remove opposite tapered roller bearing accordingly.

    (S) Grab sleeve - 5873 002 038

    (S) Basic set - 5873 002 001

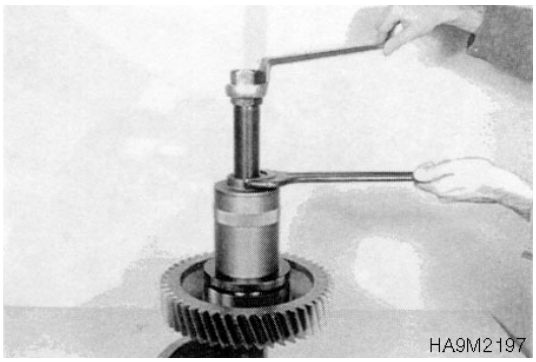

Figure 135

16. Tilt gearbox housing 180°.
17. Figure 136, shows the arrangement of the single clutches and the input in the housing cover.

Reference Number	Description
AN	Input
KV	Clutch - Forward
KR	Clutch - Reverse
K1	Clutch - 1st Speed
K2	Clutch - 2nd Speed
K3	Clutch - 3rd Speed
K4	Clutch - 4th Speed

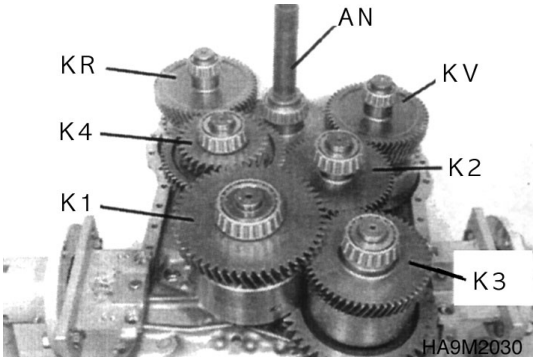

Figure 136

18. Remove handles (S) (Figure 137).

    (S) Handles - 5870 260 010

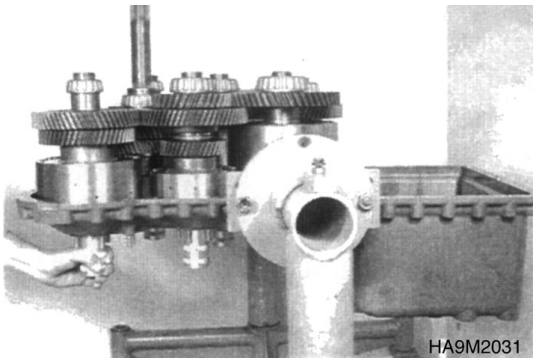

Figure 137

19. Lift Clutch-K4 a bit using pry bars and remove Clutch-K1.

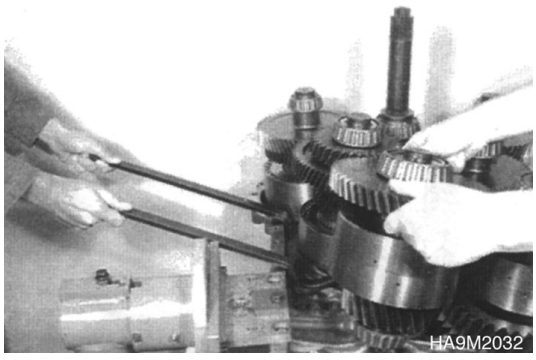

Figure 138

20. Remove Clutch-K2.

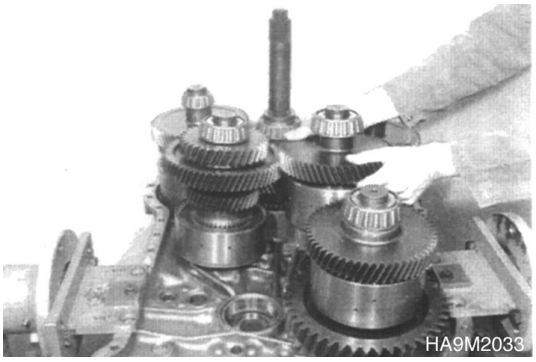

Figure 139

21. Remove Clutch-K3.

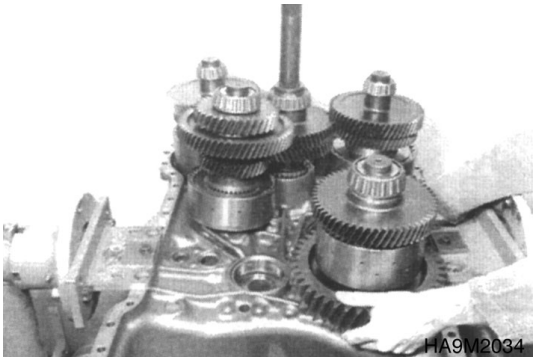

Figure 140

22. Lift Clutch - KV and KR using pry bars and remove Clutch - K4.

    (S) Pry bar - 5870 345 065



Figure 141

23. Lift Clutch - KV and Clutch - KR and input together out of the housing cover.
24. Remove outer bearing races out of the housing bores.

IMPORTANT

If contrary to the ZF recommendation the tapered roller bearing of the clutches and of the input and output will not be replaced, the allocation (inner bearing races to outer bearing races) must at least be maintained.

Mark inner bearing races and outer bearing races accordingly to each other.

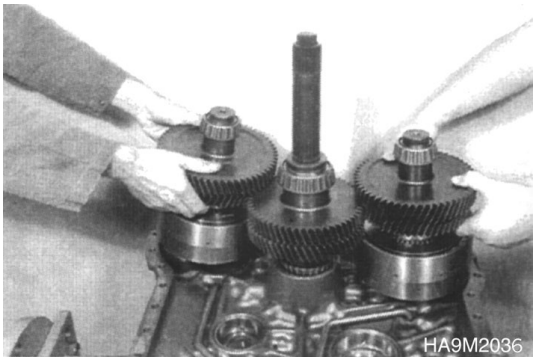

Figure 142

25. Tilt housing cover 90°.
26. Squeeze retaining ring out and separate pump shaft from housing cover.

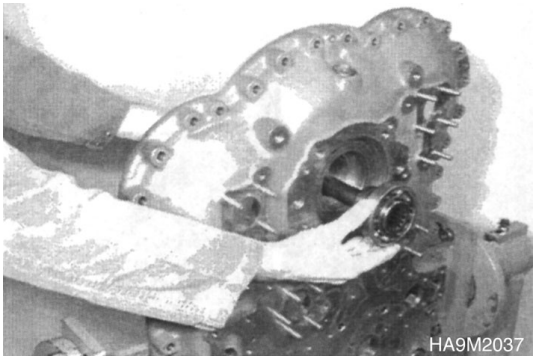

Figure 143

27. Squeeze rectangular ring out (Arrow) and press ball bearing from the shaft.

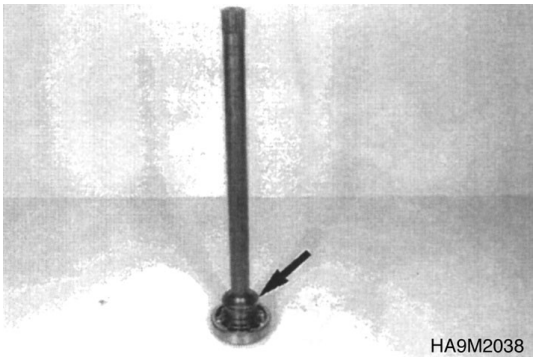

Figure 144

Disassemble Clutch - KV and KR

1. Squeeze rectangular ring out (Arrow).

   NOTE: *The following figures show the disassembly of Clutch - KV. The disassembly of Clutch - KR is similar.*

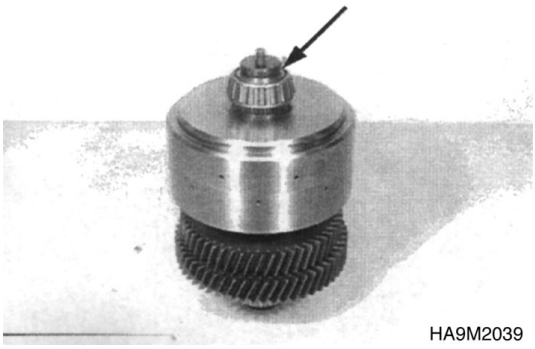

Figure 145

2. Pull tapered roller bearing from the shaft.
3. Remove opposite tapered roller bearing accordingly.

   (S) Grab sleeve - 5873 001 057

   (S) Grab sleeve - 5873 001 059

   (S) Basic set - 5873 001 000

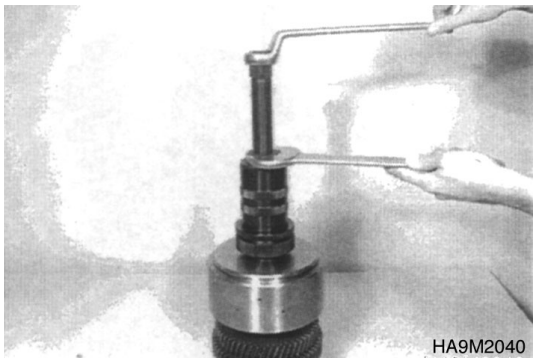

Figure 146

4. Squeeze retaining ring out.

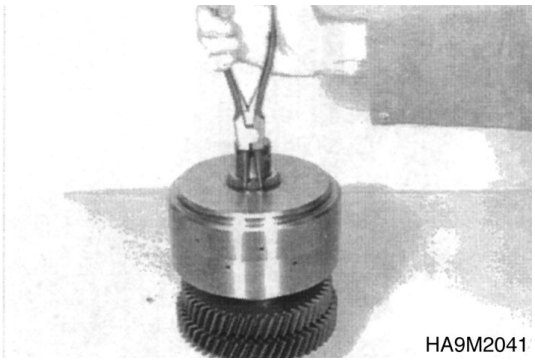

Figure 147

5. Separate plate carrier from the shaft.

   (S) Three0leg puller - 5870 970 003

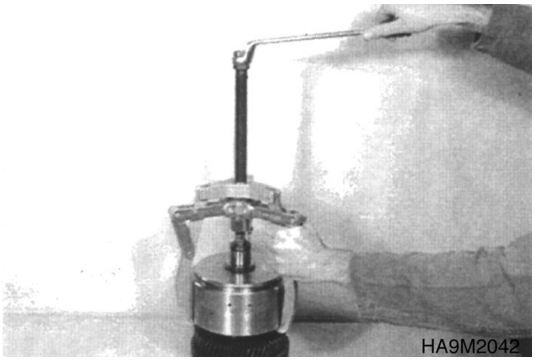

Figure 148

6. Squeeze retaining ring out and remove plate pack.

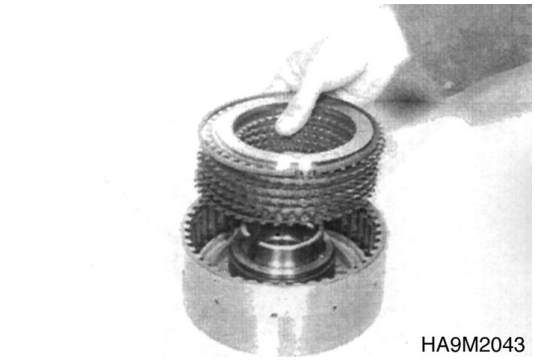

Figure 149

7. Preload compression spring, squeeze retaining ring out and remove components.

   (S) Assembly aid - 5870 345 088

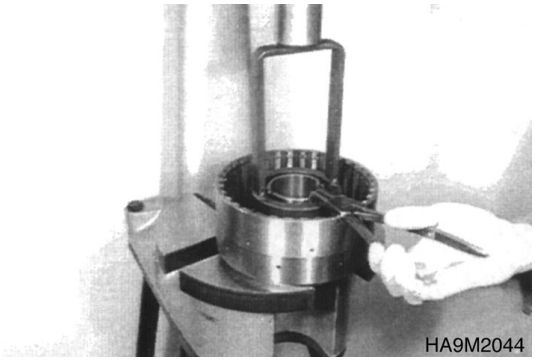

Figure 150

8. Lift piston using compressed air out of the cylinder bore and remove it.

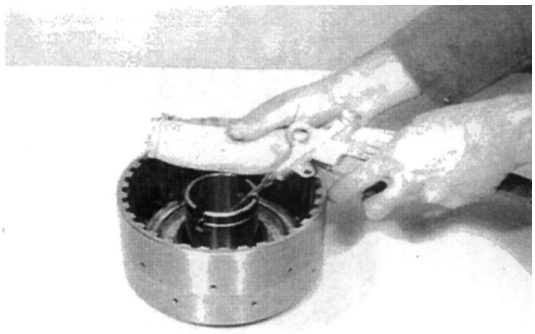

HA9M2045

Figure 151

9. Remove both O-rings (Arrows).

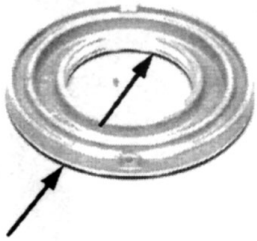

HA9M2046

Figure 152

10. Lift idler gear a bit using pry bars (Figure 153).
11. Apply puller and separate idler gear from the clutch shaft (Figure 154).

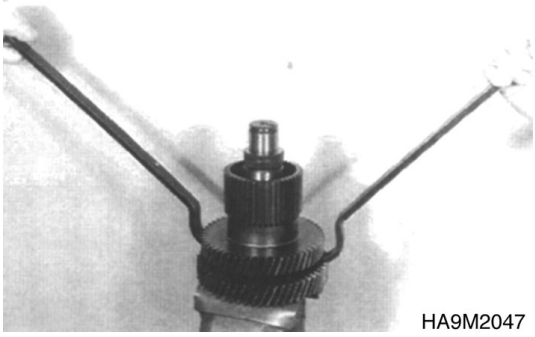

HA9M2047

Figure 153

12. Squeeze retaining ring out and remove ball bearing.

    NOTE: *The disassembly of Clutch - KR has to be carried out accordingly.*

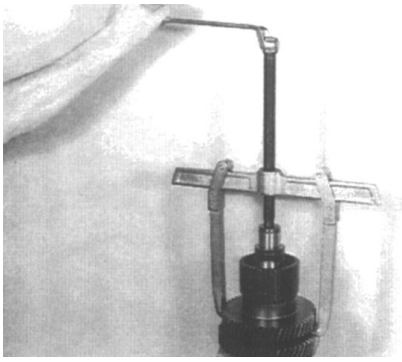

HA9M2048

Figure 154

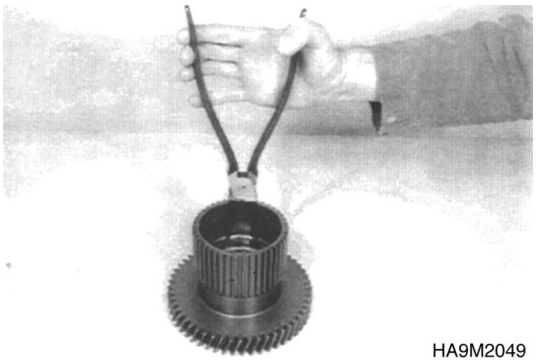

HA9M2049

Figure 155

Disassemble Clutch - K1, K2 and K3

NOTE: *The following figures show the disassembly of Clutch - K3. The disassembly of the Clutches - K1 and K2 is similar.*

1. Squeeze rectangular ring out. Pull tapered roller bearing from the shaft.
2. Remove the opposite tapered roller bearing accordingly.

   (S) Grab sleeve (Bearing 33800) - 5873 001 059

   (S) Grab sleeve (Bearing 33800) - 5873 002 038

   (S) Basic set - 5873 001 000

   (S) Basic set - 5873 002 001
3. Remove running disk, axial needle cage and axial washer.



Figure 156



Figure 157

4. Remove idler gear.

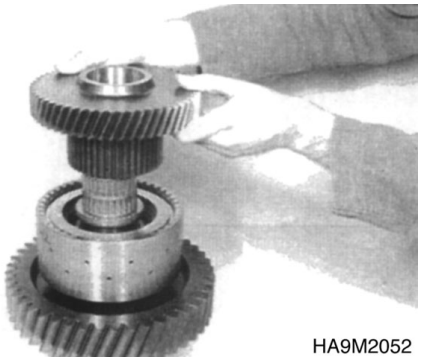

Figure 158

5. Remove needle bearings and the axial bearing (compl.).



Figure 159

6. Squeeze retaining ring out and remove plate pack.



Figure 160

7. Preload cup-spring pack and squeeze retaining ring out. Remove released components.

   (S) Assembly aid - 5870 345 088

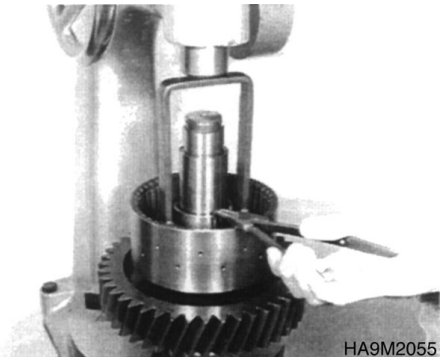

Figure 161

8. Squeeze retaining ring (S) into the groove of the plate carrier.
9. Apply puller on the retaining ring and pull plate carrier from the clutch shaft.

   (S) Puller - 5870 970 004

   (S) Retaining ring - 0630 502 053

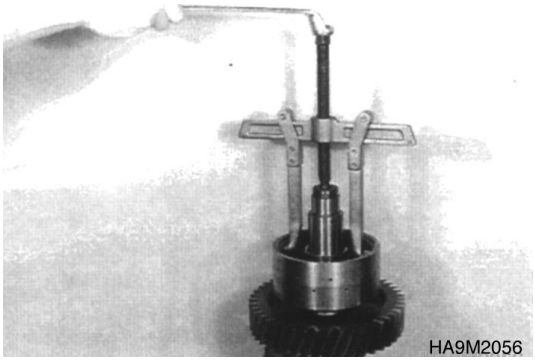

Figure 162

Disassemble Clutch - K4

1. Squeeze rectangular ring out (Arrow).

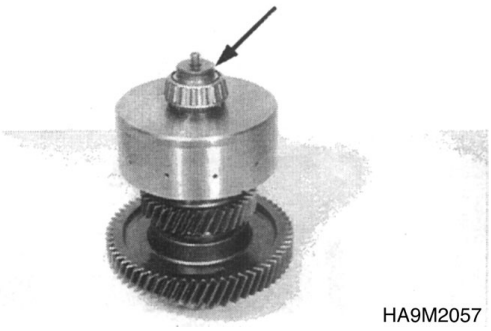

Figure 163

2. Pull tapered roller bearing from the shaft.
3. Remove opposite tapered roller bearing accordingly.

   (S) Grab sleeve - 5873 001 057

   (S) Grab sleeve - 5873 001 059

   (S) Basic set - 5873 001 000

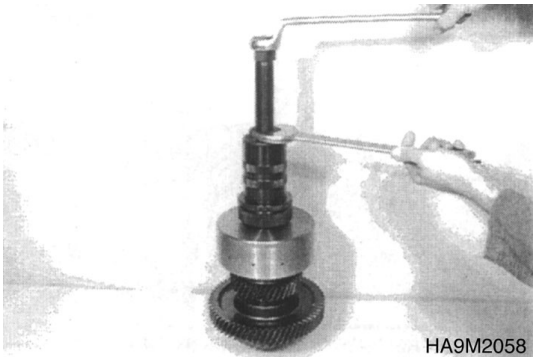

Figure 164

4. Squeeze retaining ring out and separate plate carrier from the shaft.

   (S) Three-armed puller - 5870 971 003

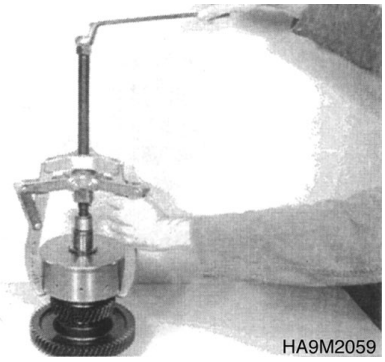

Figure 165

5. Squeeze retaining ring out and remove plate pack.



Figure 166

6. Preload cup-spring pack and squeeze retaining ring out.
7. Remove released components. Remove piston.

   (S) Assembly aid - 5870 345 088

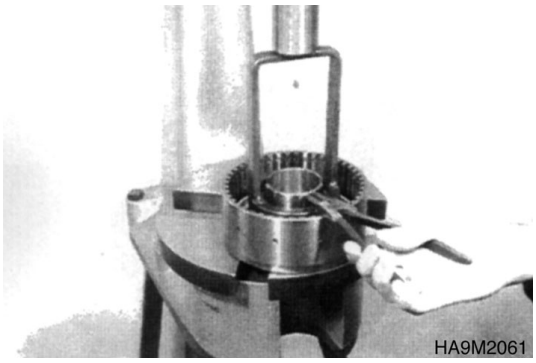

Figure 167

8. Lift piston using compressed air out of the cylinder bore and remove it.

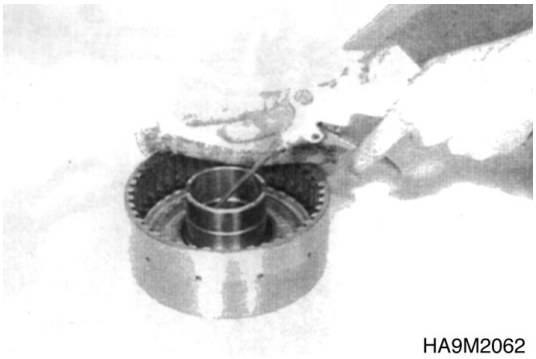

Figure 168

9. Take off the idler gear and remove released components.

   NOTE: *The separation of shaft and gear is not possible (shrink fit).*



Figure 169

Disassemble Drive Shaft

1. Squeeze rectangular ring out.
2. Remove tapered roller bearing. Remove opposite tapered roller bearing accordingly.

   (S) Grab sleeve - 5873 002 045

   (S) Basic set - 5873 002 001

   (S) Basic set - 5873 002 006



Figure 170

3. If necessary, press turbine shaft out of the drive shaft.

   NOTE: *The turbine shaft is axially fixed with a retaining ring which will be destroyed at the pressing out.*

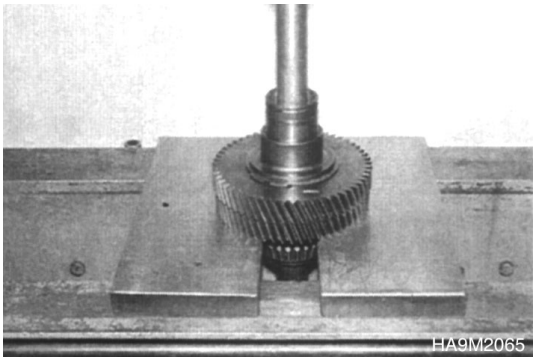

Figure 171

TRANSMISSION REASSEMBLY

Install Oil Tube

IMPORTANT

To ensure the correct installation of the oil tubes, the use of the indicated special tool (S) is imperative.

1. Insert suction pipe (1), pressure pipes (2) and pressure pipe lubrication (3) into the housing bores.
2. Fasten suction and pressure pipes using socket head screws.

   NOTE: *Torque limit (M8/8.8) 2.35 kg•m (17 ft lb)*

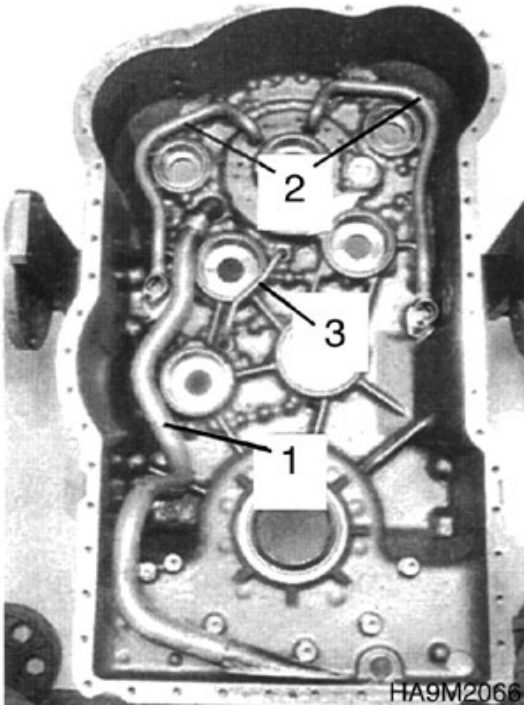

Figure 172

3. Tilt housing 180°.
4. Roll suction and pressure pipes (Arrows) into the housing bores, using special tool.

IMPORTANT

The pipe end must be maximally plane with the housing face. If necessary, equalize projection of pipe.

(S) Rolling tool - 5870 600 003

(S) Rolling tool - 5870 600 005

(S) Rolling tool - 5870 600 007

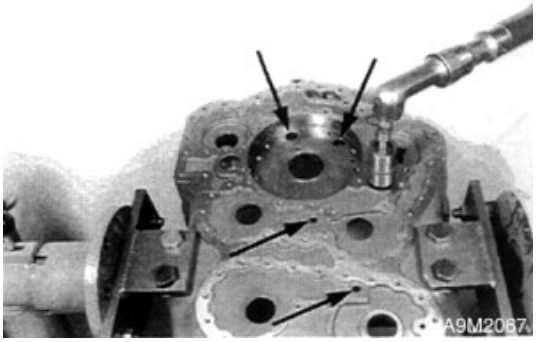

Figure 173

5. Insert O-rings (2x/pipe) into the annular grooves of the two oil tubes and oil them.

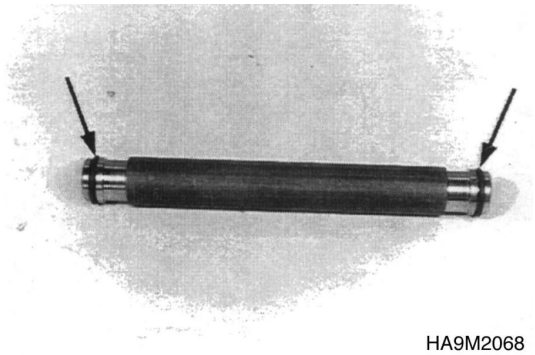

Figure 174

6. Assemble both oil tubes (Arrows) until contact is obtained.
7. Equip screw plug with new O-ring and install it.

   NOTE: *Torque limit 14.28 kg•m (103 ft lb).*

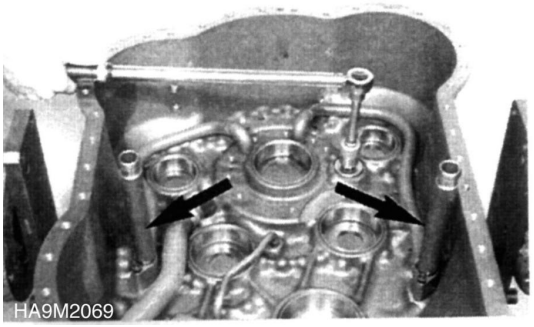

Figure 175

8. Insert both oil tubes (Arrows) into the housing cover, tilt housing cover 180° and roll oil tubes into the housing bores.

   (S) Rolling tool - 5870 600 008

IMPORTANT

The pipe end must be maximally plane with the housing face. If necessary, equalize projection of pipe.

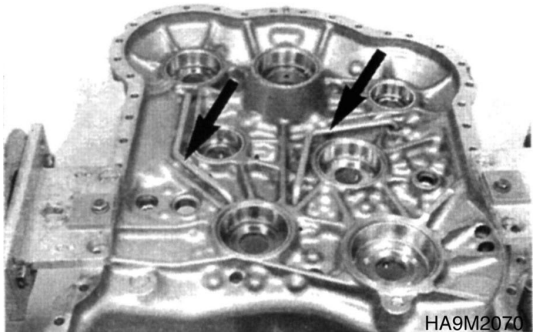

Figure 176

9. Mount studs (M8 x 25).

   NOTE: *Torque limit (studs) 0.92 kg•m (7 ft lb).*

   NOTE: *Wet screw thread with Loctite #262.*
10. Equip plugs (Arrows) with new O-ring and install them.

    NOTE: *Torque limit (M16x1.5) 4.08 kg•m (30 ft lb).*

    NOTE: *Torque limit (M18x1.5) 5.10 kg•m (37 ft lb).*

    NOTE: *Torque limit (M26x1.5) 8.16 kg•m (39 ft lb).*

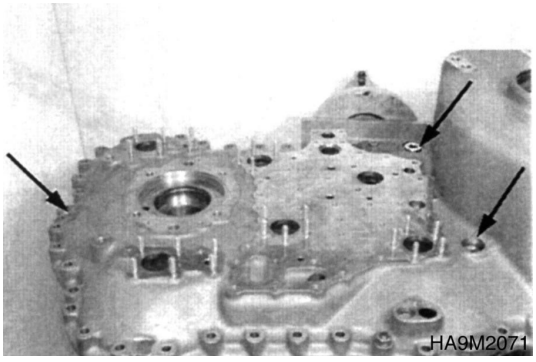

Figure 177

11. Insert sealing cover, with the recess facing upward.

    NOTE: *Wet contact face with Loctite #262.*

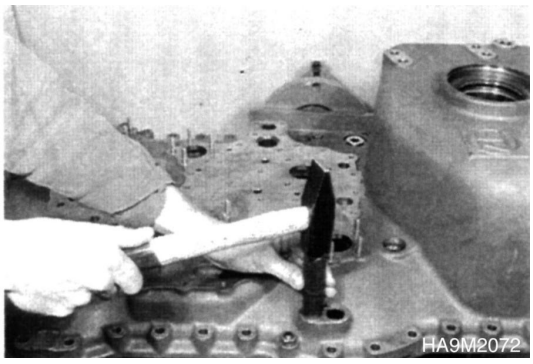

Figure 178

Reassemble Clutch - KV and KR

NOTE: *The following figures show the reassembly of the Clutch - KV. The reassembly of the Clutch - KR has to be carried out accordingly.*

1. Preassemble Plate Carrier (Figure 179 thru Figure 182).

   A. Check function of the purge valve.

   NOTE: *Ball must not stick, if necessary, clean with compressed air.*

   B. Insert both O-rings (Arrows) scroll free into the grooves of the piston and oil.

   C. Introduce piston until contact is obtained.

   NOTE: *Pay attention to installation position, see Figure 180.*

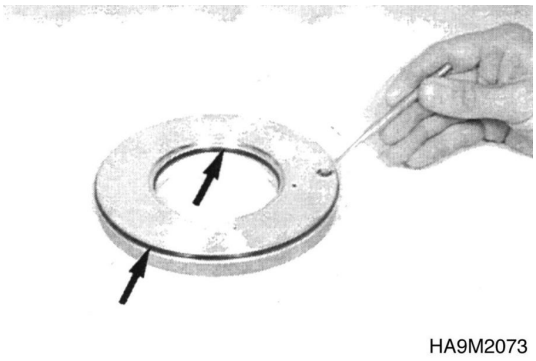

HA9M2073

Figure 179

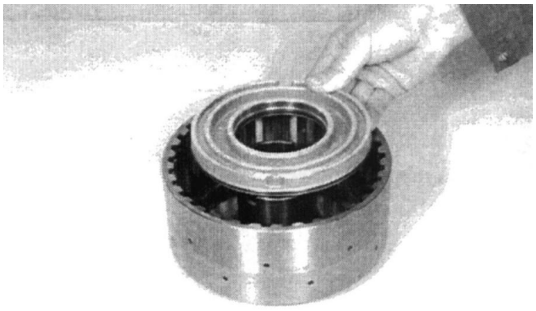

HA9M2074

Figure 180

   D. Install disk, compression spring and guide ring.

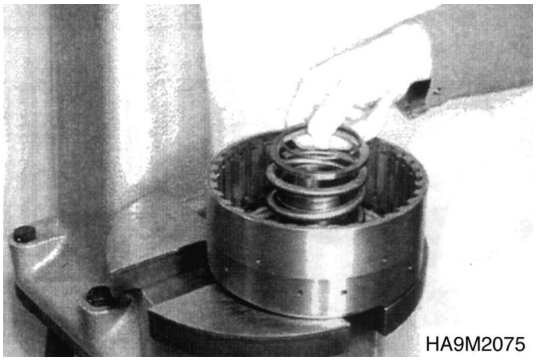

HA9M2075

Figure 181

   E. Preload compression spring and secure it using retaining ring.

   (S) Assembly aid - 5870 345 088

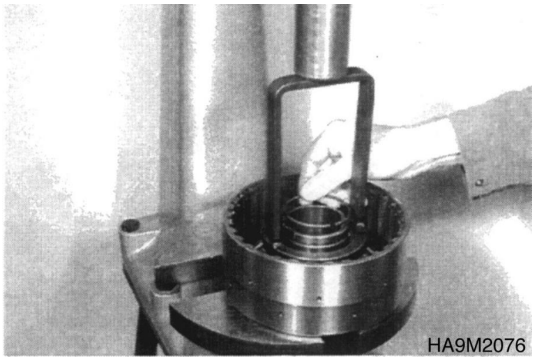

HA9M2076

Figure 182

F. Plate pack- KV, KR

Figure 183, shows the installation position of components.

NOTE: *The plate arrangement resp. stacking of clutch - KV and KR is identical.*

Reference Number	Description
1	Plate Carrier
2	Piston
3	Outer Plate - One Sided Coated (1 Piece)
4	Inner Plates (10 Pieces)
5	Outer Plate - Coated on Both Sides (10 Pieces)
6	Retaining Ring [optional s = 2.1 - 4.2 mm (0.0827 - 0.1654 in)]
7	End Shim

NOTE: *Effective number of friction surface = 20.*

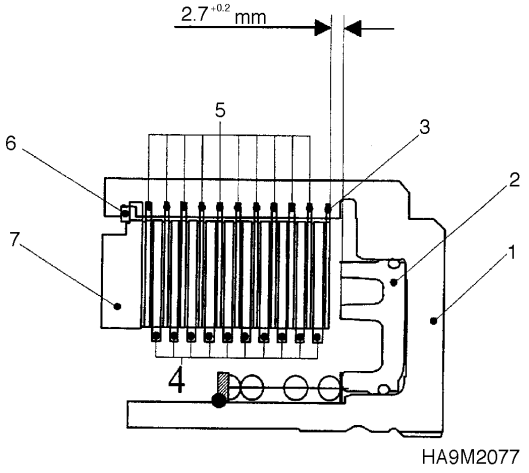

Figure 183

IMPORTANT

Install outer plate (3) with the uncoated side facing the piston.

- Adjust Plate Clearance = 2.7 $^{+0.2}$ mm (0.1654 +0.0079 in).

NOTE: *For the adjustment of the plate clearance are retaining rings of different thickness available. To ensure a faultless measuring result, install plates for the moment without oil.*

2. Introduce plate pack accordingly to Figure 183.

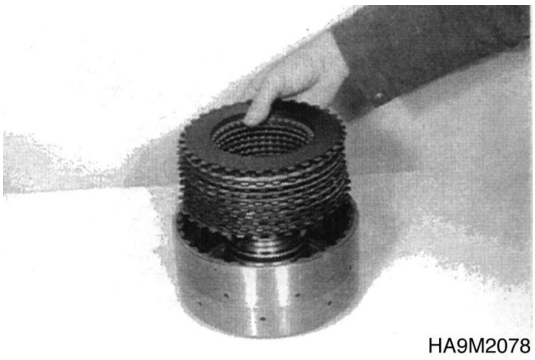

Figure 184

3. Lay on the end shim and squeeze the retaining ring in (e.g. s = 2.55 mm (0.10 in)).



Figure 185

4. Press on end shim with about 100 N (10 kg), apply dial indicator and set it at zero (Figure 186).

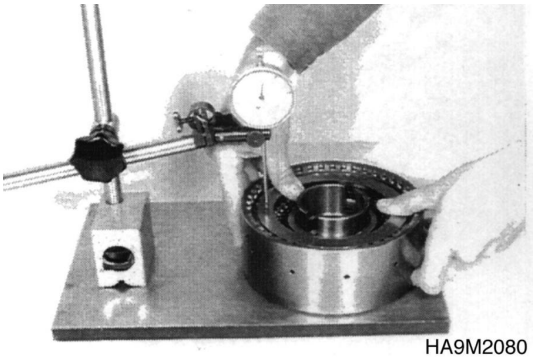

Figure 186

5. Press on the end shim, using screwdriver against retaining ring until contact is obtained (upward) and read plate clearance on the dial indicator (Figure 187).

   NOTE: *In case of a deviation from the required plate clearance, correct with corresponding retaining ring (s = 2.1 - 4.2 mm (0.08 - 0.17 in)).*

6. After the adjustment of the plate clearance has been carried out, remove the plate pack, oil plates and install it again.

   (S) Magnetic stand - 5870 200 055

   (S) Dial indicator 5870 200 057

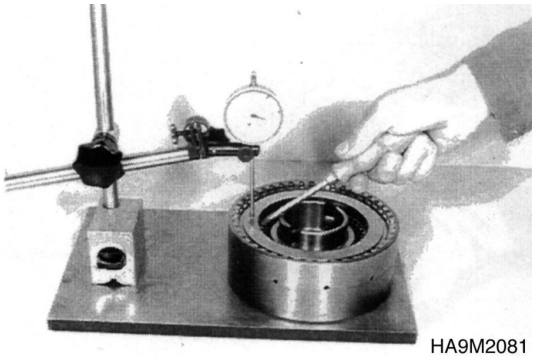

Figure 187

IMPORTANT

Use oil according to the list of lubricants TE-ML 03.

7. Introduce idler gear until all inner plates are accommodated.

   NOTE: *This step makes the later assembly of the idler gear easier.*

8. Remove the idler gear again.



Figure 188

9. Mount stud (Arrow).

   NOTE: *Wet screw thread with Loctite #241.*

   NOTE: *Torque limit (M10) 1.73 kg•m (13 ft lb).*

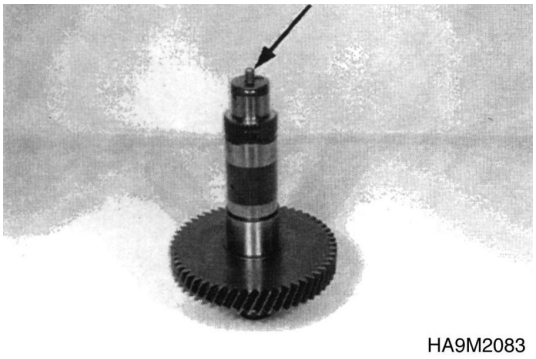

Figure 189

10. Insert ball bearing until contact is obtained and secure using retaining ring.

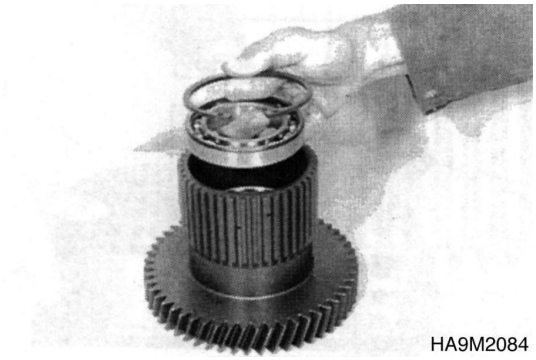

Figure 190

11. Assemble needle bearing.

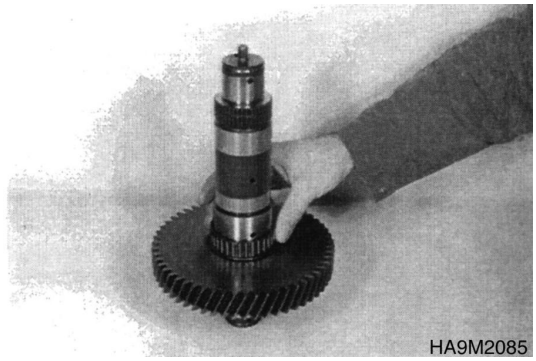

Figure 191

12. Press idler gear against shoulder.

    NOTE: *Support it on the inner bearing race.*

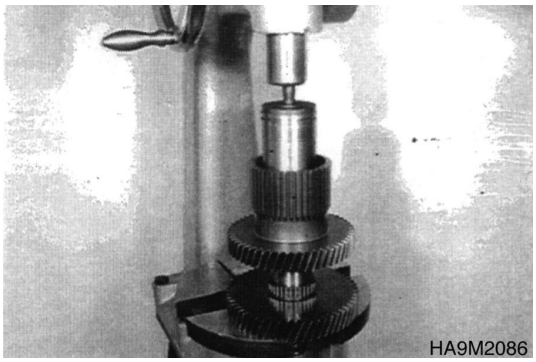

Figure 192

13. Heat inner diameter of plate carrier (about 120°C).

    (S) Hot-air blower 220V - 5870 221 500

    (S) Hot-air blower 110V - 5870 221 501



Figure 193

14. Assemble preassembled plate carrier until contact is obtained.



Figure 194

15. Locate plate carrier axially using retaining ring.



Figure 195

16. Check function of clutch using compressed air.

    NOTE: *At correctly installed components, the closing resp. opening of the clutch is clearly audible.*

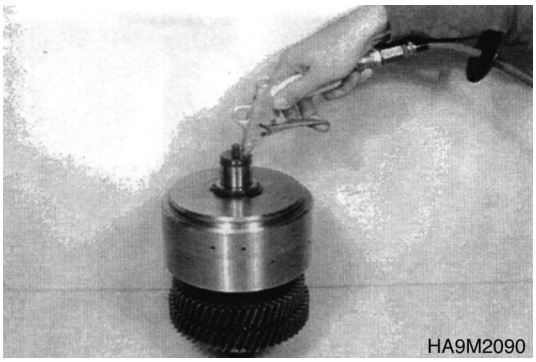

Figure 196

17. Press tapered roller bearing against shoulder.
18. Install opposite tapered roller bearing accordingly.



Figure 197

19. Squeeze rectangular rings in (Arrows) and let them snap in.

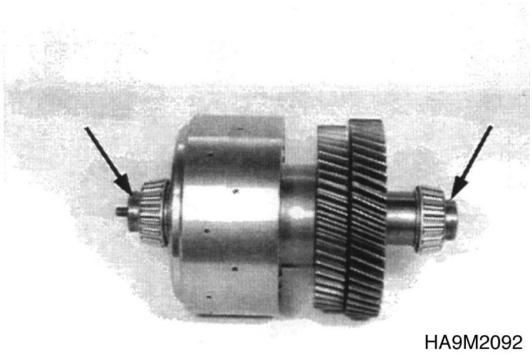

Figure 198

Reassemble Clutch - K1, K2 and K3

1. The following figures show the reassembly of Clutch-K3. The reassembly of the Clutches-K1 and K2 has to be carried out accordingly.
2. Install stud (Arrow).

    NOTE: *Wet screw thread with Loctite #241.*

    NOTE: *Torque limit (M10) 1.73 kg•m (13 ft lb).*

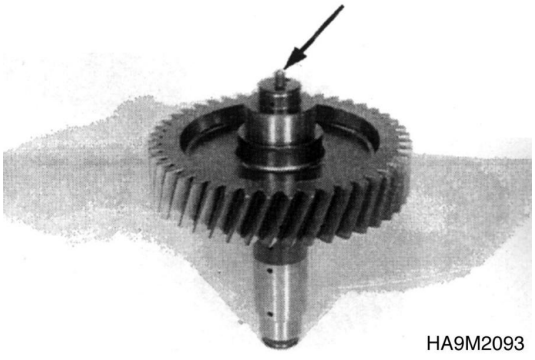

Figure 199

3. Heat inner diameter of plate carrier (Figure 200) and assemble plate carrier until contact is obtained (Figure 201).

   (S) Hot-air blower 220V - 5870 221 500

   (S) Hot-air blower 110V - 5870 221 501

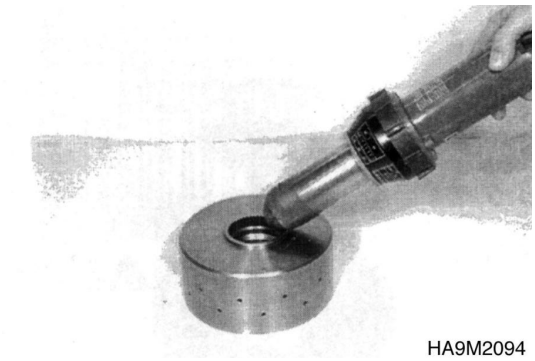

Figure 200



Figure 201

4. Check function of the purge valve.

   NOTE: *Ball must not stick, if necessary clean with compressed air.*

5. Insert both O-rings (Arrows) scroll free into the grooves of the piston and oil.

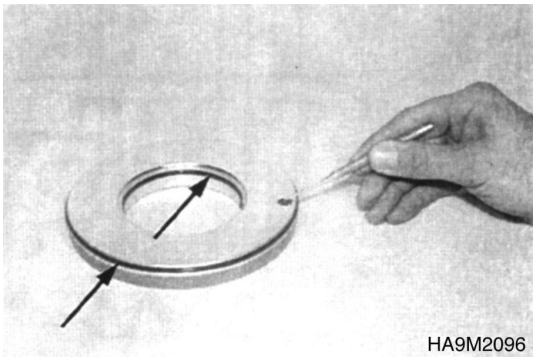

Figure 202

6. Introduce piston until contact is obtained.

   NOTE: *Pay attention to installation position, see Figure 203.*

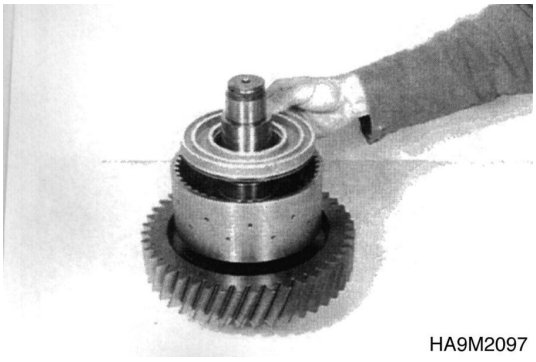

Figure 203

7. Lay on cup-spring pack and guide ring.

NOTE: *Pay attention to the stacking of the cup springs, see Figure 136.*

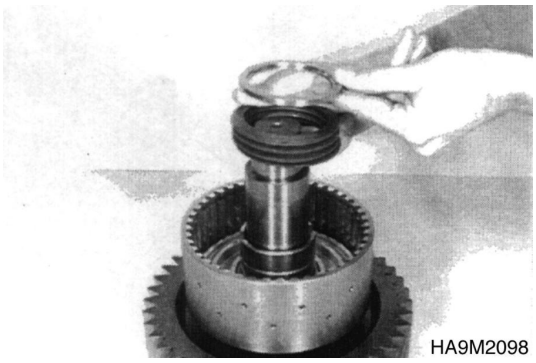

Figure 204

8. Preload cup-spring pack and secure it using retaining ring.

(S) Assembly aid - 5870 345 088

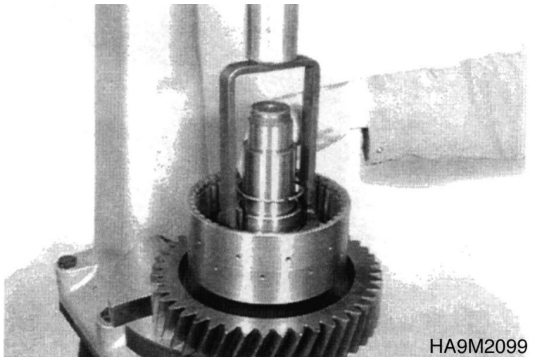

Figure 205

A. Plate pack- K1

IMPORTANT

The plate arrangement of Clutch-K1is not identical with Clutch-K2 and K3. In this connection see Figure 206.

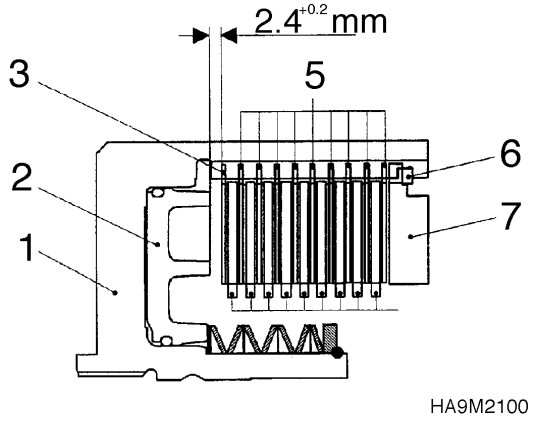

Figure 206

Reference Number	Description
1	Plate Carrier
2	Piston
3	Outer Plate - One Sided Coated (1 Piece)
4	Inner Plates (9 Pieces)
5	Outer Plate - Coated on Both Sides (9 Pieces)
6	Retaining Ring (Optional s = 2.1 - 4.2 mm (0.08 - 0.17 in))
7	End Shim

NOTE: *Effective number of friction surface = 18.*

- Adjust plate clearance = $2.4^{+0.2\ mm}$ (0.05 +0.01 in)

B. Plate pack- K2 and K3

Reference Number	Description
1	Plate Carrier
2	Piston
3	Outer Plate - One Sided Coated (1 Piece)
4	Inner Plates (7 Pieces)
5	Outer Plate - Coated on Both Sides (7 Pieces)
6	Retaining Ring (Optional s = 2.1 - 4.2 mm (0.08 - 0.17 in))
7	End Shim

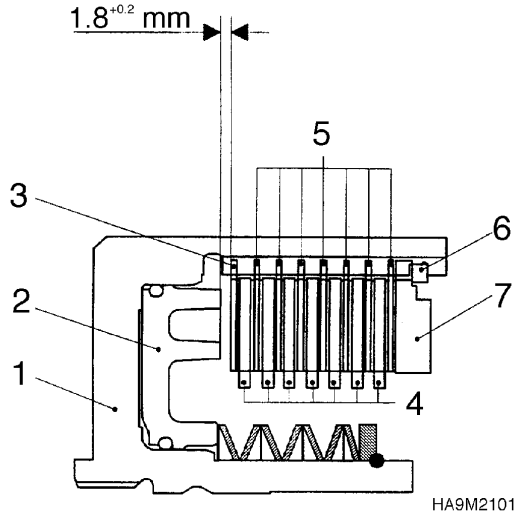

Figure 207

NOTE: *Effective number of friction surface = 14.*

- Adjust plate clearance = $1.8^{+0.2\ mm}$ (0.07 +0.01 in)

IMPORTANT

Install outer plate (3) with the uncoated side facing the piston.

9. Introduce plate pack according to Figure 206 and Figure 207.

   NOTE: *For the adjustment of the plate clearance are retaining rings with different thickness available. To ensure a faultless measuring result, install the plates for the moment without oil.*

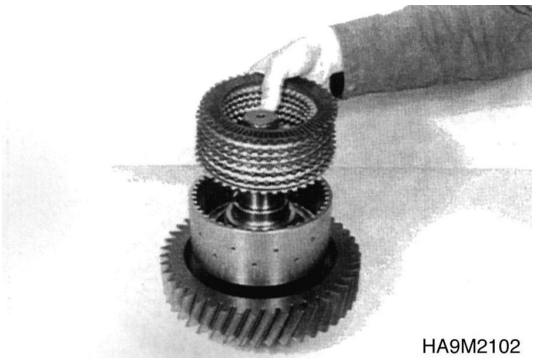

Figure 208

10. Lay on the end shim and squeeze retaining ring in (e.g. s = 3.1 mm (0.12 in)).



Figure 209

11. Press on the end shim with about 100 N (10 kg), apply dial indicator and set it at zero (Figure 210).

12. Push the end shim using screwdriver against retaining ring until contact is obtained (upward) and read plate clearance on the dial indicator (Figure 211).

    NOTE: *In case of a deviation from the required plate clearance, correct with corresponding retaining ring (s= 2.1 - 4.2 mm (0.08 - 0.17 in)).*

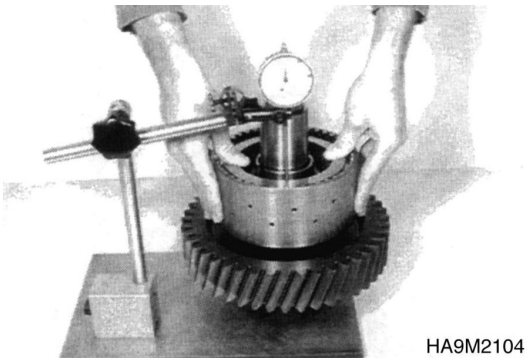

Figure 210

13. After the adjustment of the plate clearance has been carried out, remove the plate pack, oil plates and install it again.

IMPORTANT

Use oil according to the list of lubricants TE-ML 03.

(S) Magnetic stand - 5870 200 055

(S) Dial indicator - 5870 200 057

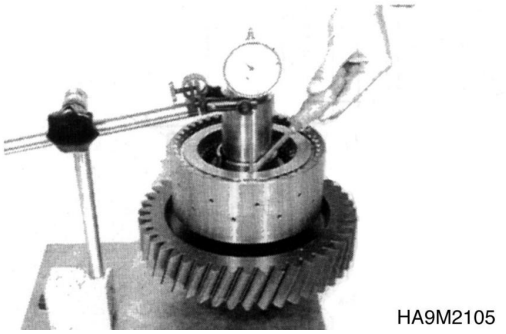

Figure 211

14. Assemble running disk (1) (55 x 78 x 5), axial needle cage (2) and axial washer (3) (55 x 78 x 1).

    NOTE: *Install running disk (1), with the chamber facing the axial needle cage.*

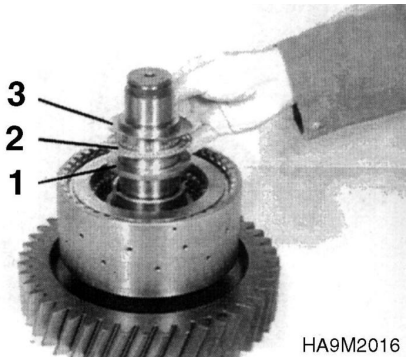

Figure 212

15. Assemble both needle bearing.



Figure 213

16. Introduce idler gear until all inner plates are accommodated.

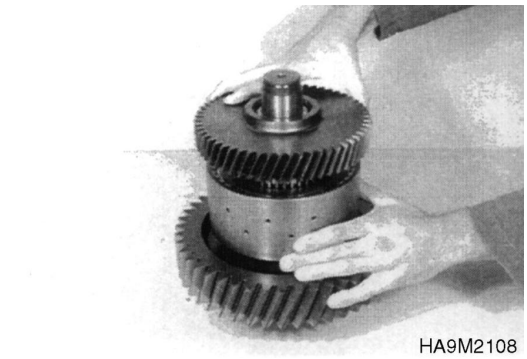

Figure 214

17. Assemble axial washer (3) (55 x 78 x), axial needle cage (2) and running disk (1) (55 x 78 x 5).

    NOTE: *Install running disk (1), with the chamber facing the axle needle cage.*

IMPORTANT

Only if the running disk is overlapping with the shaft collar is ensured that all inner plates are accommodated.

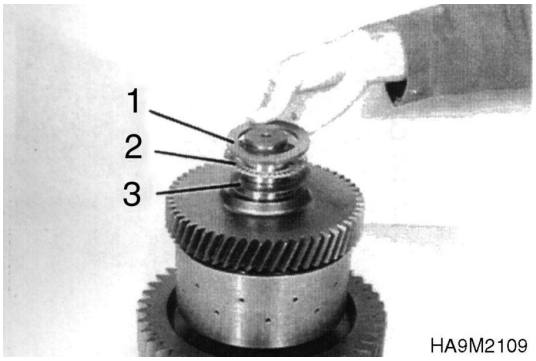

Figure 215

18. Press tapered roller bearing against shoulder.

    Press opposite tapered roller bearing against shoulder.

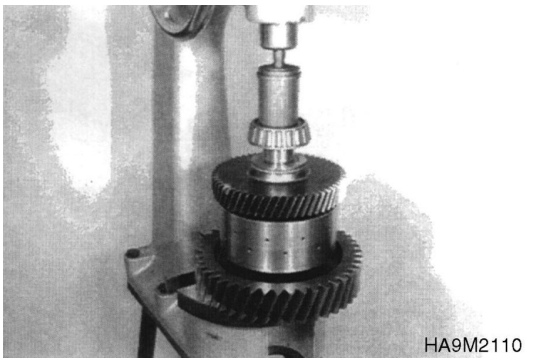

Figure 216

19. Check function of the clutch using compressed air.

    NOTE: *At correctly installed components, the closing resp. opening of the clutch is clearly audible.*

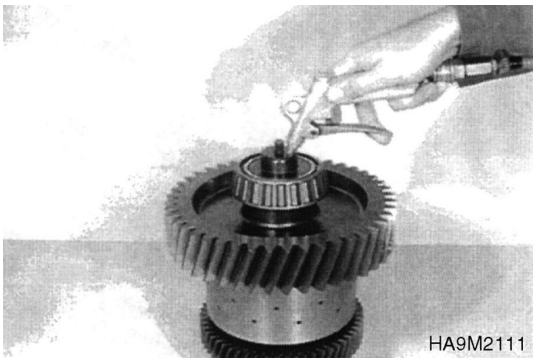

Figure 217

20. Squeeze rectangular ring in (Arrow) and let it snap in. Install opposite rectangular ring accordingly.
21. Tilt clutch into horizontal position and install spur gear K4 until all inner plates are accommodated.

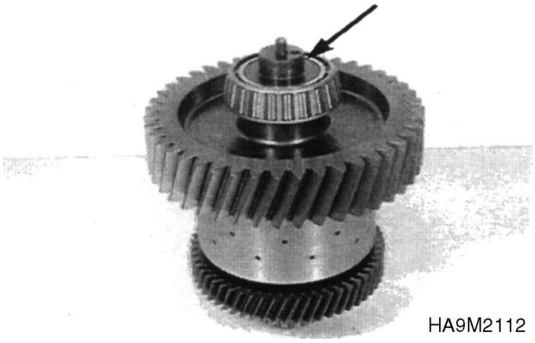

Figure 218

Reassemble Clutch - K4

1. Cool shaft (about -80°C) and assemble it until contact is obtained.

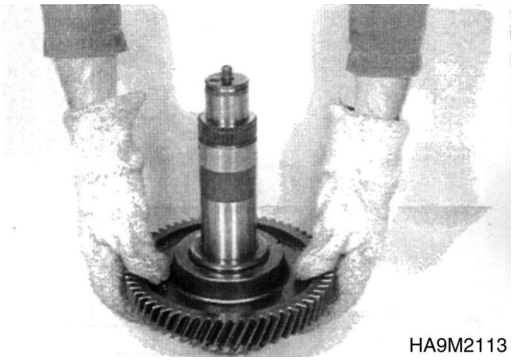

Figure 219

2. Secure gear axially using retaining ring.

   (S) set of external pliers - 5870 900 015



Figure 220

3. Install stud (Arrow).

   NOTE: *Wet screw thread with Loctite #241.*

   NOTE: *Torque limit (M10) 1.73 kg•m (13 ft lb).*



Figure 221

4. Check function of the purge valve.

   NOTE: *Ball must not stick, if necessary clean with compressed air.*

5. Insert both O-rings (Arrows) scroll free into the grooves of the piston and oil them.

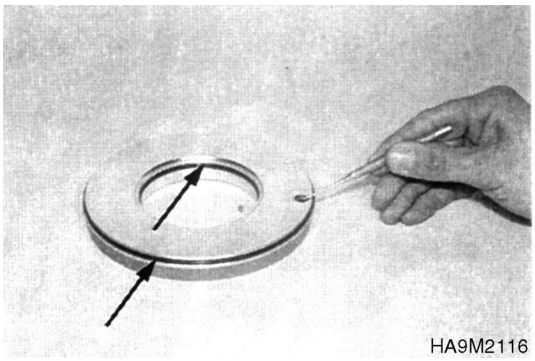

Figure 222

6. Introduce piston until contact is obtained.

   NOTE: *Pay attention to installation position, see Figure 223.*

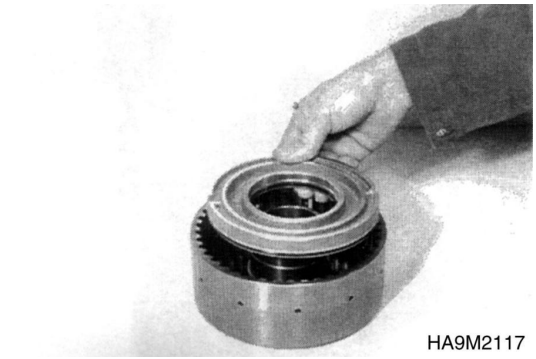

Figure 223

7. Install cup-spring pack and guide ring.

   NOTE: *Pay attention to the stacking of the cup springs, see Figure 226.*

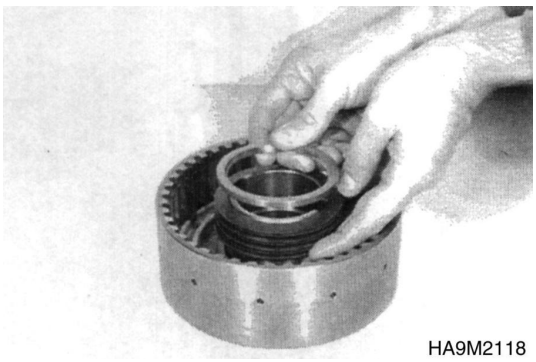

Figure 224

8. Preload cup-spring pack and secure it using retaining ring.

   (S) Assembly aid - 5870 345 088

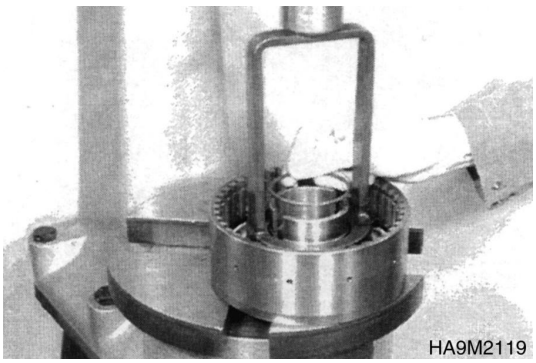

Figure 225

9. Plate pack - K4

Figure 226, shows the installation position of components.

Reference Number	Description
1	Plate Carrier
2	Piston
3	Outer Plate - One Sided Coated (1 Piece)
4	Inner Plates (9 Pieces)
5	Outer Plate - Coated on Both Sides (9 Pieces)
6	Retaining Ring (Optional s = 2.1 - 4.2 mm (0.08 - 0.17 in))
7	End Shim

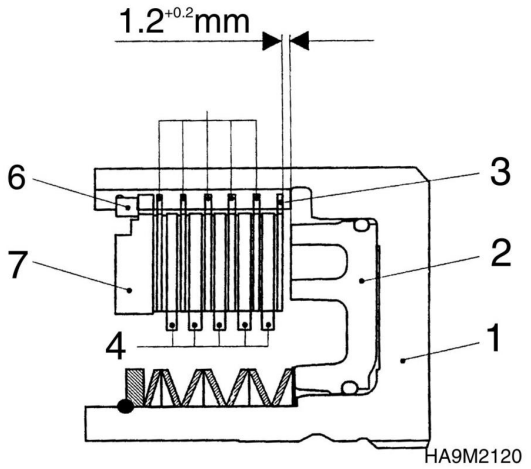

Figure 226

NOTE: *Effective number of friction surface = 10.*

- Adjust plate clearance = $1.2^{+0.2\ mm}$ (0.05 +0.01 in)

IMPORTANT

Install outer plate (3) with the uncoated side facing the piston.

10. Introduce plate pack according to Figure 226.

NOTE: *For the adjustment of the plate clearance are retaining rings with different thickness available. To ensure a faultless measuring result, install the plates for the moment without oil.*

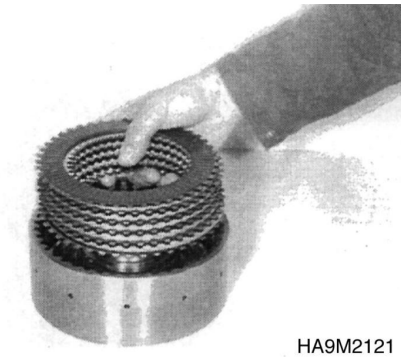

Figure 227

11. Lay on end shim and squeeze retaining ring in (e.g. s = 3.4 mm (0.13 in)).



Figure 228

12. Press on the end shim with about 100 N (10 kg), apply dial indicator and set it at zero (Figure 229).

13. Push the end shim using screwdriver against retaining ring until contact is obtained (upward) and read plate clearance on the dial indicator (Figure 231).

    NOTE: *In case of a deviation from the required plate clearance, correct with corresponding retaining ring. (s = 2.1 - 4.2 mm)* (0.08 - 0.17 in).

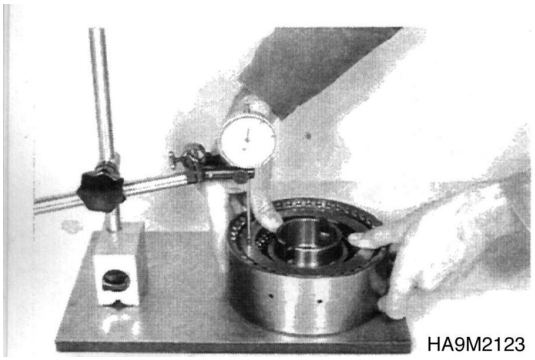

Figure 229

14. After the adjustment of the plate clearance has been carried out, remove plate pack, oil plates and install it again.

IMPORTANT

Use oil according to the list of lubricants TE-ML 03.

(S) Magnetic stand - 5870 200 055

(S) Dial indicator - 5870 200 057

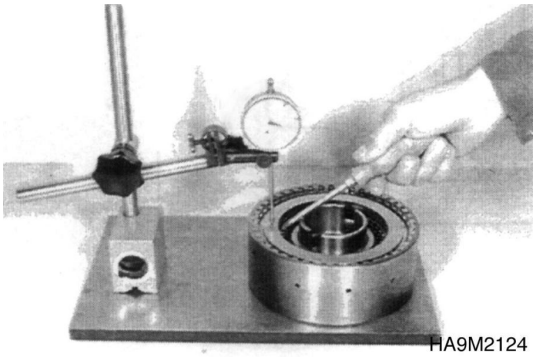

Figure 230

15. Introduce idler gear until all inner plates are accommodated.

    NOTE: *This step makes the later assembling of the idler gear easier.*

16. Remove idler gear again.

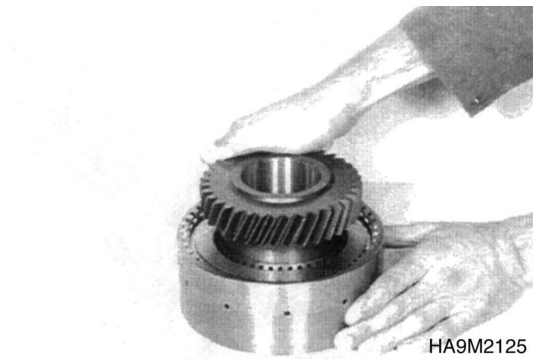

Figure 231

17. Assemble both axial washer and needle cage.

    NOTE: *Upper and lower axial washer have the same thickness (55 x 78 x 1).*



Figure 232

18. Assemble both needle bearings.



Figure 233

19. Assemble idler gear.



Figure 234

20. Assemble axial washer (3) (55 x 78 x 1), needle cage (2) and running disk (1) (55 x 78 x 5).

    NOTE: *Install running disk (1), with the chamber facing the needle cage.*

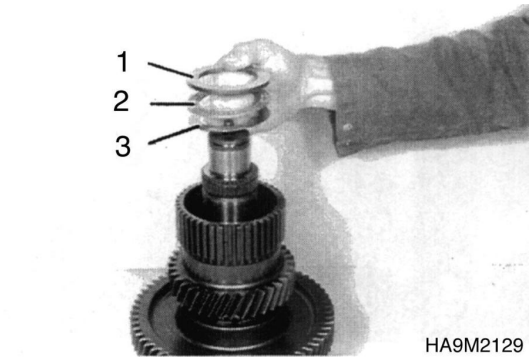

Figure 235

21. Heat inner diameter of the plate carrier (about 120°C). Assemble preassembled plate carrier until all inner plates are accommodated.

CAUTION!

Use safety gloves.

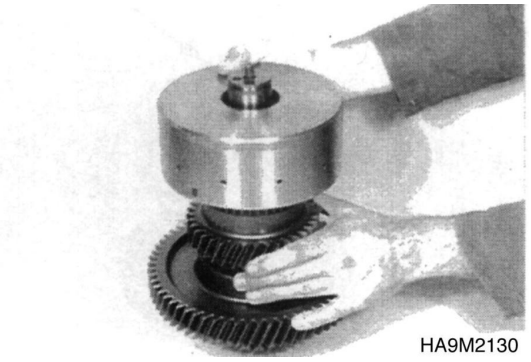

Figure 236

22. Secure plate carrier axially using retaining ring.

    (S) Set of external pliers - 5870 900 015



Figure 237

23. Check function of the clutch by means if compressed air.

    NOTE: *At correctly installed components, the closing resp. opening of the clutch is clearly audible.*

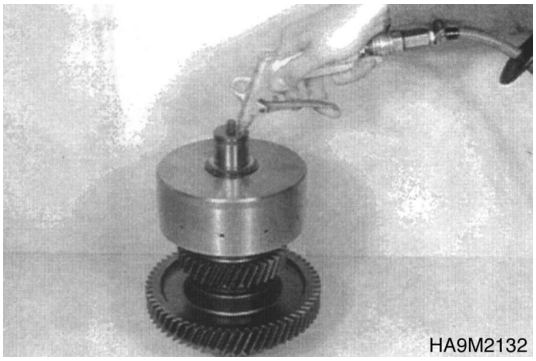

Figure 238

24. Press tapered roller bearing against shoulder. Install opposite tapered roller bearing.

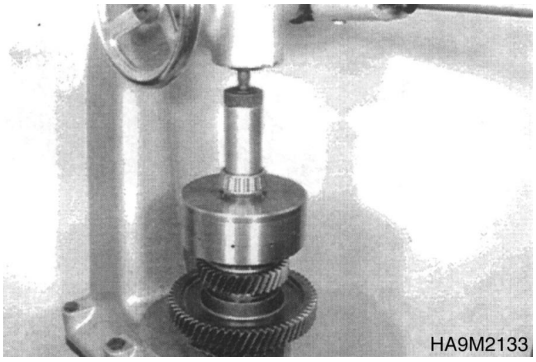

Figure 239

25. Squeeze rectangular ring in (Arrow) and let it snap in. Install opposite rectangular ring.

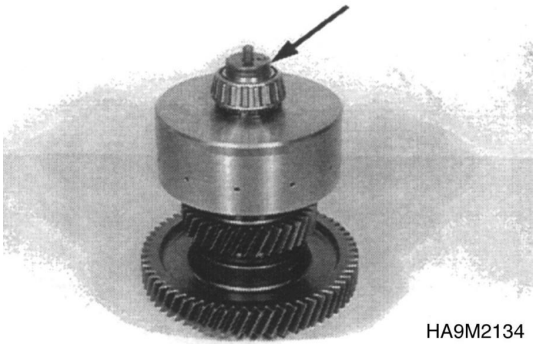

Figure 240

Preassemble Drive Shaft

1. Cool drive shaft (about -80°C). heat the gear (about +120°C) and assemble it until contact is obtained.

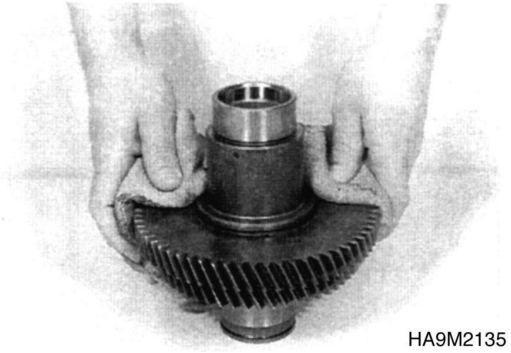
HA9M2135

Figure 241

2. Secure gear axially using retaining ring.

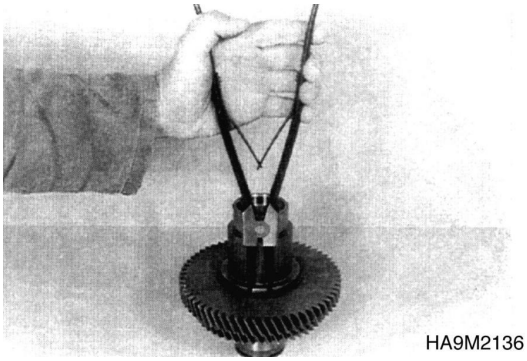
HA9M2136

Figure 242

3. Squeeze retaining ring into the groove of the turbine shaft.

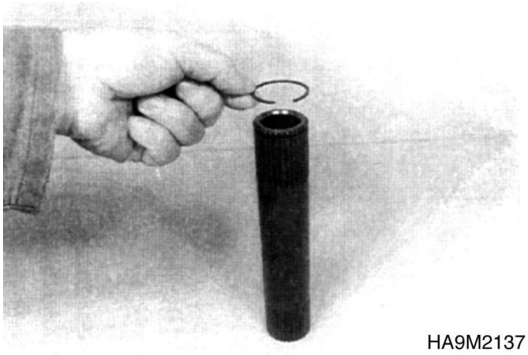
HA9M2137

Figure 243

4. Introduce turbine shaft until the retaining ring snaps into the groove of the drive shaft - turbine shaft is axially secured.

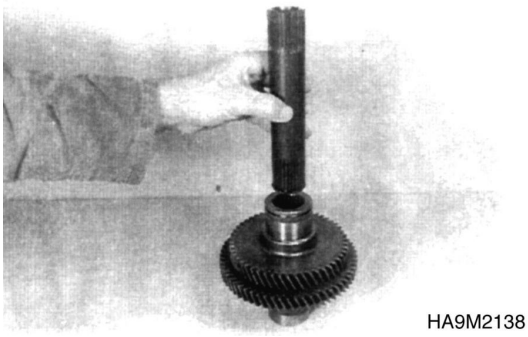
HA9M2138

Figure 244

5. Press tapered roller bearing against shoulder. Squeeze rectangular ring into the groove of the drive shaft and let it snap in.
6. Install opposite tapered roller bearing.



Figure 245

Preassemble and Install Output

1. Lay on screening plate.



Figure 246

2. Heat tapered roller bearing and assemble it until contact is obtained.
3. Install opposite tapered roller bearing accordingly.



Figure 247

4. Insert all outer bearing races into the bearing bores of the housing. Install O-ring (Arrows).

   NOTE: *At the use of already run bearings, pay attention to the allocation of the outer bearing races.*

Reference Number	Description
AN	Input
KV	Clutch - Forward
KR	Clutch - Reverse
K1	Clutch - 1st Speed
K2	Clutch - 2nd Speed

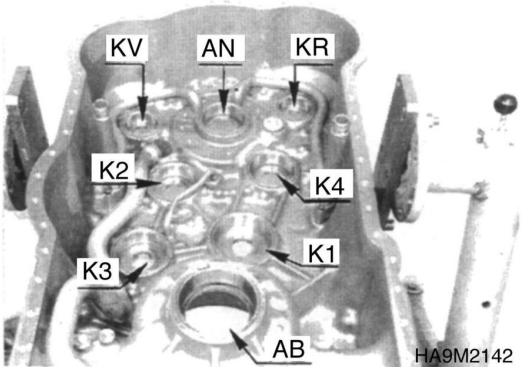

Figure 248

Reference Number	Description
K3	Clutch - 3rd Speed
K4	Clutch - 4th Speed
AB	Output

5. Lay on screening plate.

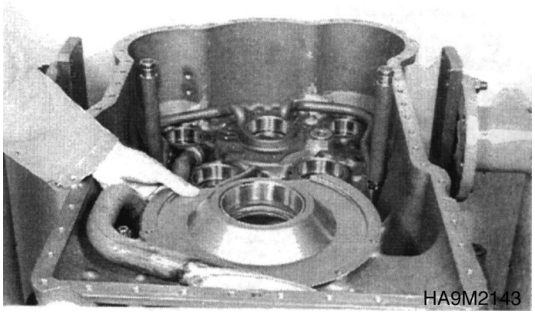

Figure 249

6. Insert preassembled output shaft.

   NOTE: *Secure screening plates using socket head screws.*

   NOTE: *Torque limit (M8/8.8) 2.35 kg•m (17 ft lb).*



Figure 250

Install Preassembled Drive Shaft and Clutches

1. Insert all outer bearing races into the bearing bores of the housing cover.

   NOTE: *At the reuse of already run bearings, pay attention to the allocation of the outer bearing races.*

Reference Number	Description
AN	Input
KV	Clutch - Forward
KR	Clutch - Reverse
K1	Clutch - 1st Speed
K2	Clutch - 2nd Speed
K3	Clutch - 3rd Speed
K4	Clutch - 4th Speed
AB	Output

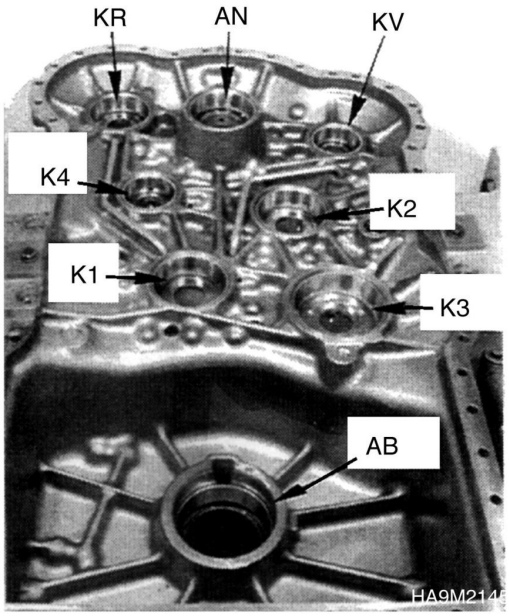

Figure 251

2. Insert Clutch - KR, drive shaft and Clutch - KV together into the housing cover.

IMPORTANT

Before the installation of the clutches and the drive shaft, grease rectangular rings and align them centrally.



Figure 252

3. Lift drive gear and position Clutch-K4.

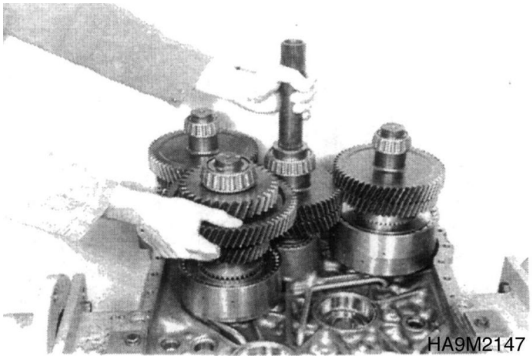

Figure 253

4. Install Clutch-K3.



Figure 254

5. Position Clutch-K2.



Figure 255

6. Lift Clutch - K4 and position Clutch-K1.

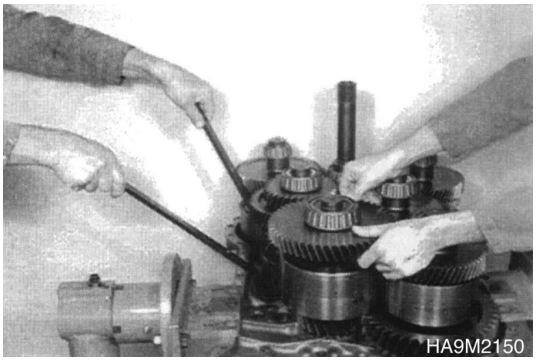

Figure 256

7. Figure 257, shows the installation position of single clutches in the housing cover.
8. Grease rectangular rings (Arrows) and align them centrally.

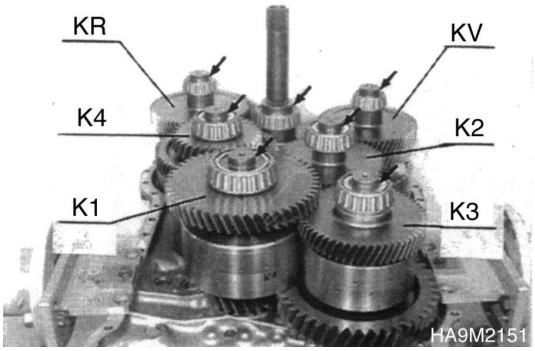

Figure 257

9. Secure all clutches using handles (S).

   (S) Handle (6 pieces needed) - 5870 260 010

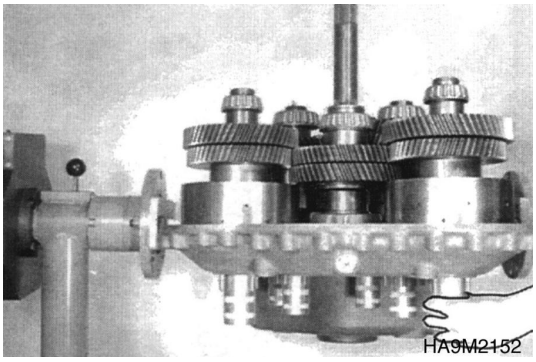

Figure 258

10. Tilt housing cover 180°C.
11. Install eyebolts (Arrows).

    (S) Eyebolt 2x (M20) - 0636 804 003

    (S) Eyebolt 1x (M16) - 0636 804 001

    (S) Puller device - 5870 000 017

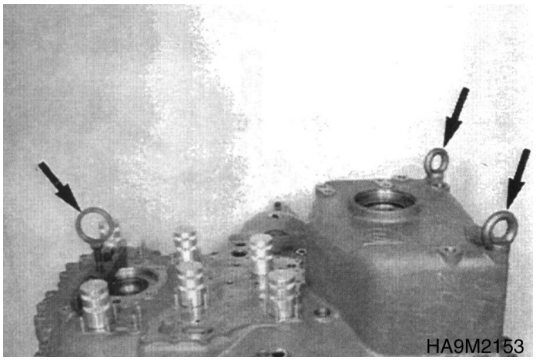

Figure 259

12. Grease O-rings of the two oil tubes (see also Figure 174). Wet mounting face with sealing compound Loctite #574.

13. Position preassembled housing cover using lifting device carefully on the gearbox housing until contact is obtained (Figure 260).

    NOTE: *Pay attention to the overlapping of the oil tubes with the bores in the housing cover.*

    (S) Lifting chain - 5870 281 047

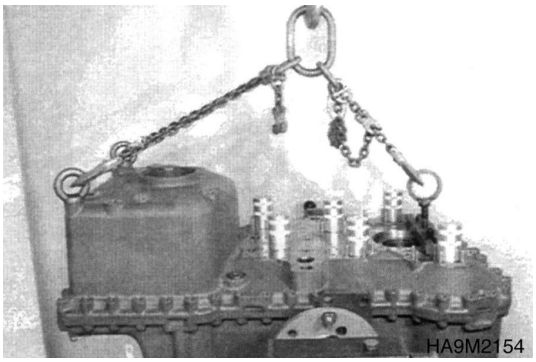

Figure 260

14. Remove handles (S) again.

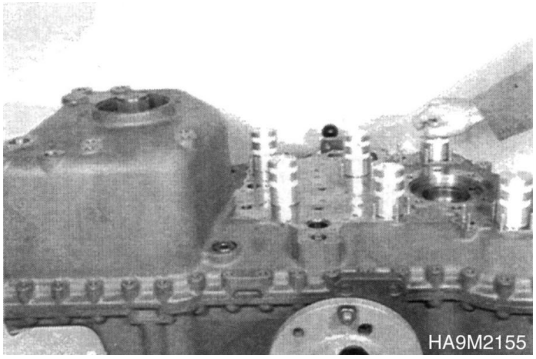

Figure 261

15. Install both cylindrical pins centrally to the housing face.

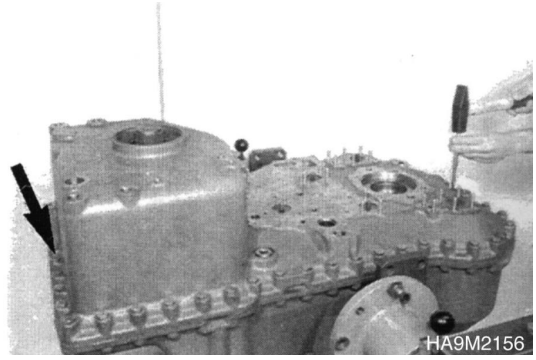

Figure 262

16. Fasten housing cover using hex head screws.

    NOTE: *Torque limit (M10/8.8) 4.69 kg•m (34 ft lb).*

    NOTE: *Pay attention to the position of fixing plates, see Arrow.*

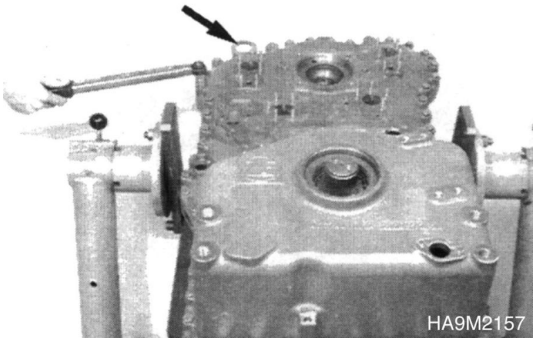

Figure 263

Install Pump Shaft (Power Take-off)

1. Install ball bearing.
2. Squeeze rectangular ring in (Arrow) and let it snap in.

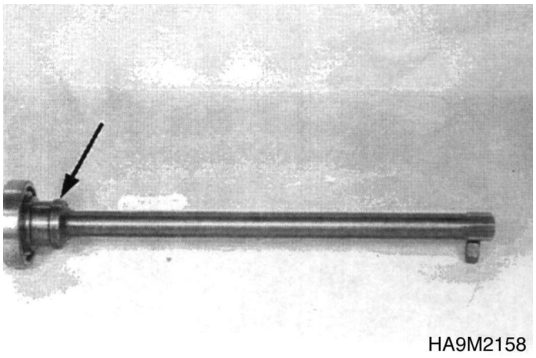

Figure 264

3. Grease rectangular ring, align it centrally and introduce pump shaft until contact is obtained.

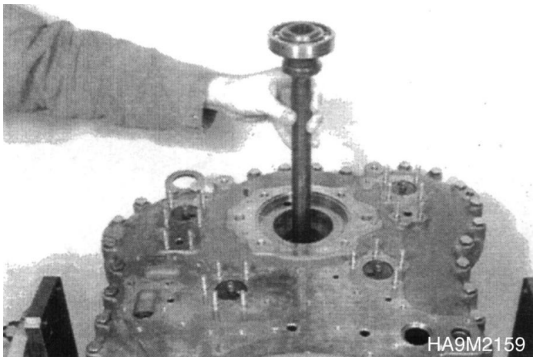

Figure 265

4. Secure pump shaft using retaining ring.

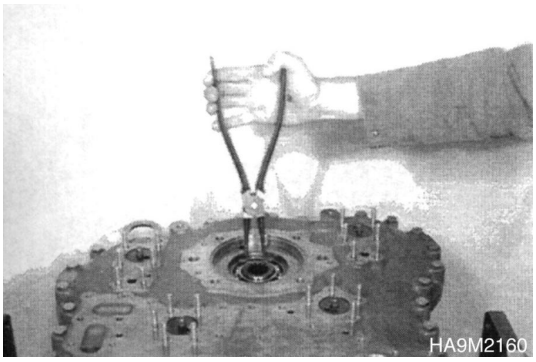

Figure 266

5. Insert O-ring (Arrow) into the annular groove of the oil feed covers.

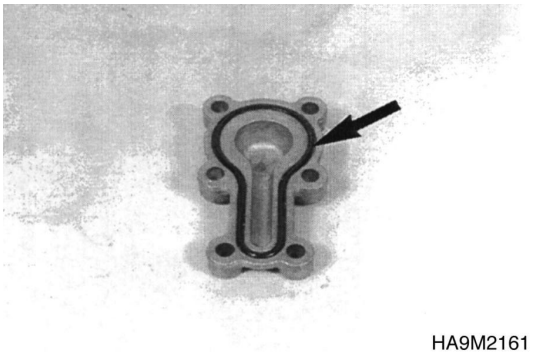

Figure 267

6. Fasten both covers (Arrows) using hex nuts (use plain washers).

   NOTE: *Torque limit 2.35 kg•m (17 ft lb).*

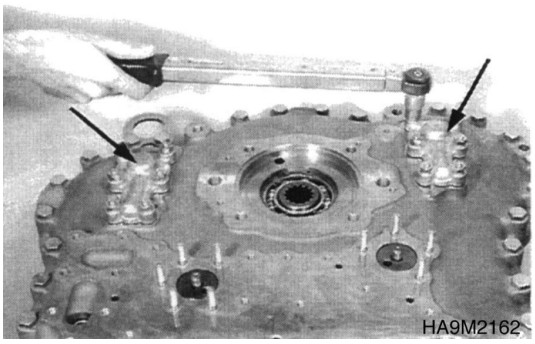

Figure 268

Install Output Flanges

1. Install shaft seal with the sealing lip facing the oil chamber.

   NOTE: *At the use of the prescribed driver, the exact installation position is obtained. Wet rubber0coated outer diameter with mineral spirits. Grease sealing lip.*

   (S) Driver - 5870 048 213

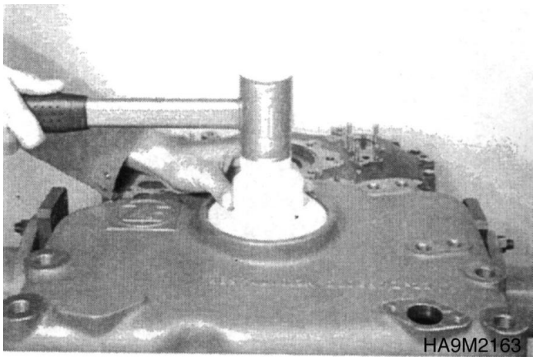

Figure 269

2. Assemble output flange.
3. Insert O-ring (Arrow) into the gap of drive flange and shaft.

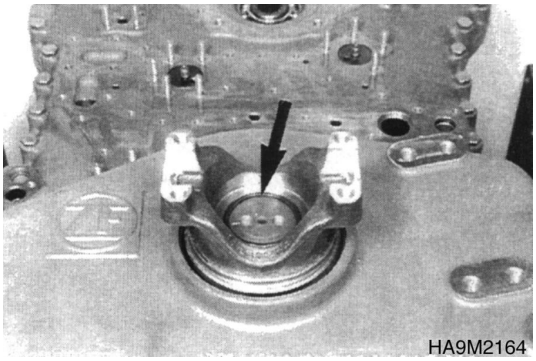

Figure 270

4. Fasten output flange using disk and hex, head screws.

   NOTE: *Torque limit (M10/8.8) 4.69 kg•m (34 ft lb).*

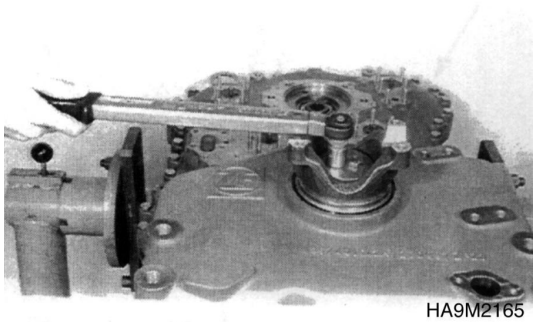

Figure 271

5. Secure hex head screws using lock plate.

   (S) Driver 5870 057 009

   (S) Handle 5870 260 002

6. Install converter-side output flange accordingly.

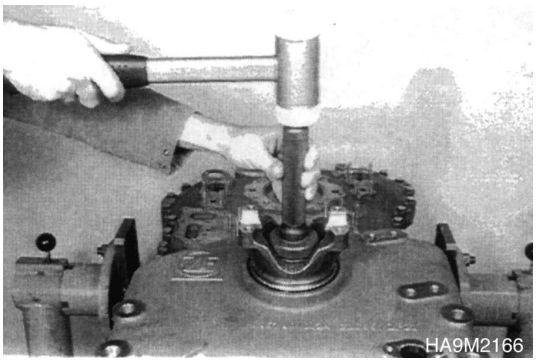

Figure 272

Converter Back Pressure Valve

1. Figure 273, shows the components of the converter back pressure valve.

Reference Number	Description
1	Piston
2	Compression Spring
3	Pressure Plate
4	Lock Plate

   NOTE: *Install pressure plate with the spigot (∅6 mm (0.24 in)) facing the lock plate.*

2. Introduce components according to Figure 273, preload and secure using lock plate.

3. Equip plug (Arrow) with new O-ring and install it.

   NOTE: *Torque limit (M14 x 1.5) 2.55 kg•m (18 ft lb).*

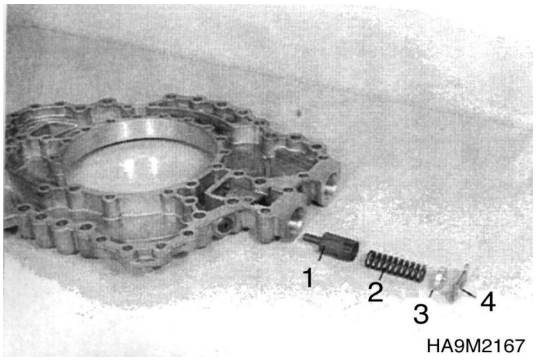

Figure 273

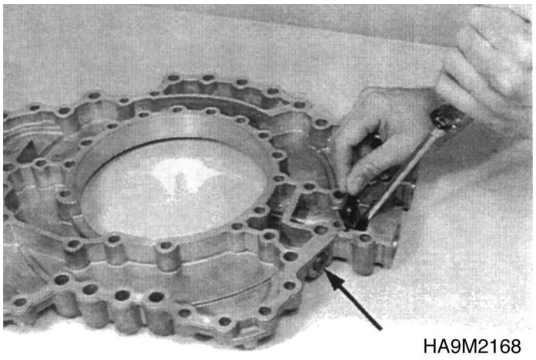

Figure 274

Oil Feed Housing - Transmission Pump

1. Install two adjusting screws (Arrows) and lay on gasket.

   (S) Adjusting screws (M18) - 5870 204 011

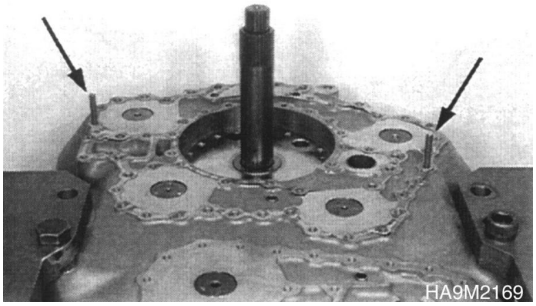

Figure 275

2. Lay on oil feed housing and secure it provisionally using socket head screws.

   NOTE: *Screw socket head screws only in until contact is obtained - do not tighten.*

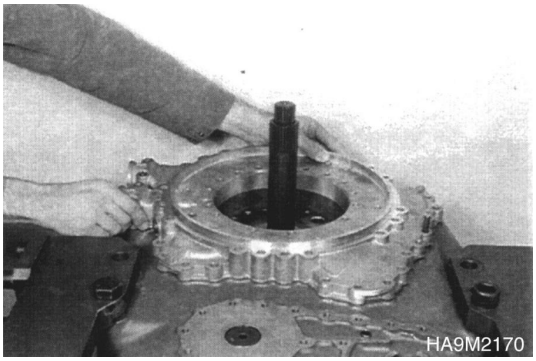

Figure 276

3. Install two adjusting screws and introduce stator shaft until contract is obtained.

   NOTE: *Pay attention to the overlapping of the bores.*

   (S) Adjusting screws (M10) - 5870 204 007



Figure 277

4. Insert O-ring (Arrow) into the annular groove and oil it.

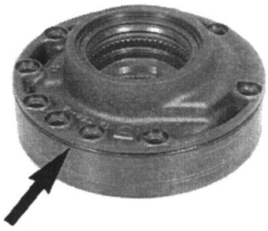

Figure 278

5. Introduce transmission pump (compl.) and put it using socket head screws (for the moment without O-rings) evenly against shoulder.
6. Remove socket head screws again.

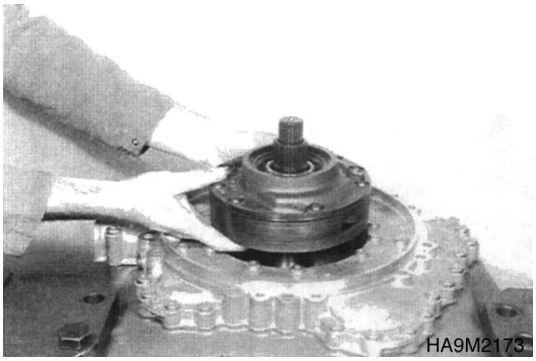

Figure 279

7. Equip socket head screws with new O-rings (Arrow).

   NOTE: *Grease O-rings.*

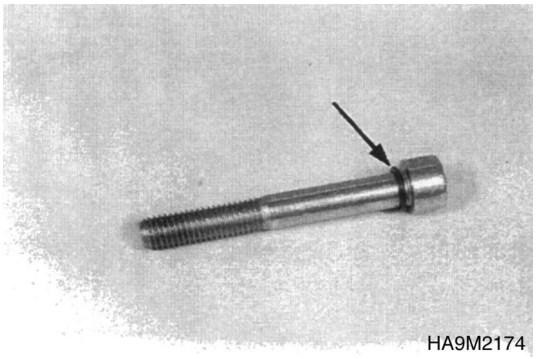

Figure 280

8. Fasten transmission pump using socket head screws.

   NOTE: *Torque limit 4.69 kg•m (34 ft lb).*

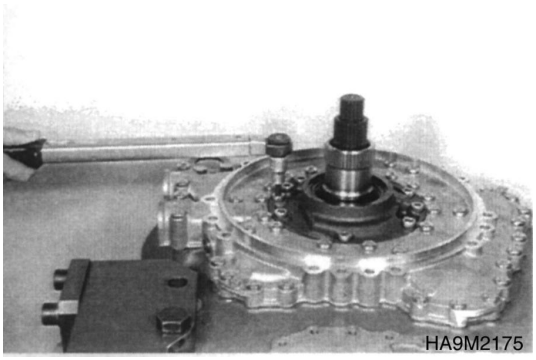

Figure 281

9. Fasten oil feed housing using socket head screws and hex head screws (2 pieces).

   NOTE: *Torque limit (Socket head screws) 2.35 kg•m (17 ft lb).*

   NOTE: *Torque limit (Hex head screws) 4.69 kg•m (34 ft lb).*

   NOTE: *Pay attention to the position of fixing plate, see Arrow.*

   (S) Box spanner (Torx, TX-40) - 5870 042 004

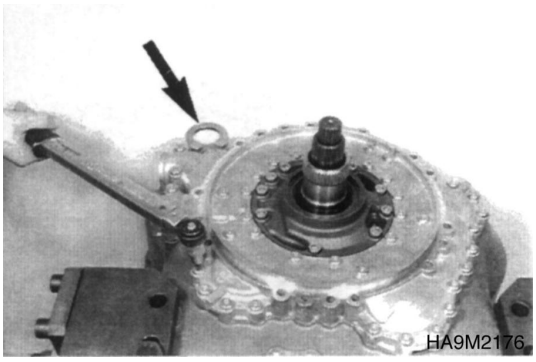

Figure 282

Engine Connection - Converter

1. Fasten converter bell using hex head screws.

   NOTE: *Torque limit (M10/10.9) 6.93 kg•m (50 ft lb).*

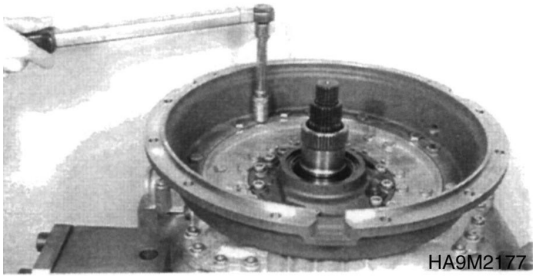

Figure 283

2. Screw drive shaft and diaphragm together.

   NOTE: *Torque limit (M12/10.9) 11.73 kg•m (85 ft lb).*

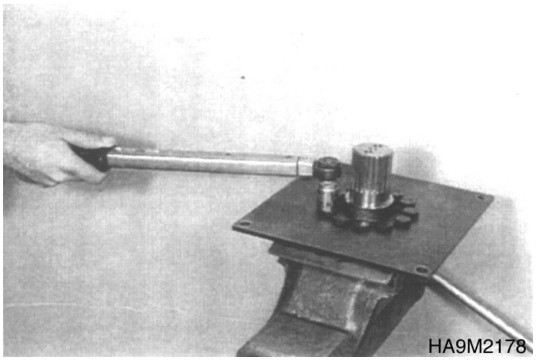

Figure 284

3. Fasten diaphragm using hex head screws on the converter.

   NOTE: *Torque limit (M12/10.9) 11.73 kg•m (85 ft lb).*

   NOTE: *Insert hex head screws with Loctite #262.*

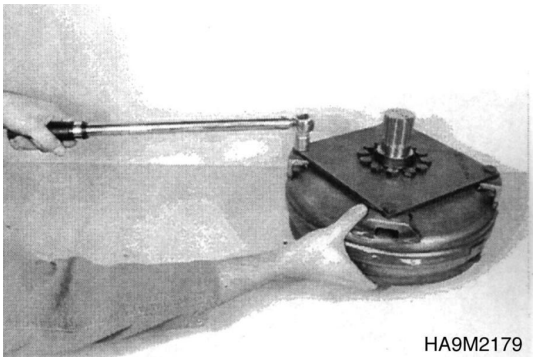

Figure 285

4. Introduce converter until contact is obtained.

   NOTE: *Pulse disk of the converter must be positioned centrally to the bore of the inductive transmitter, see Figure 287. Only in this way will be ensured that the converter is perfectly introduced.*

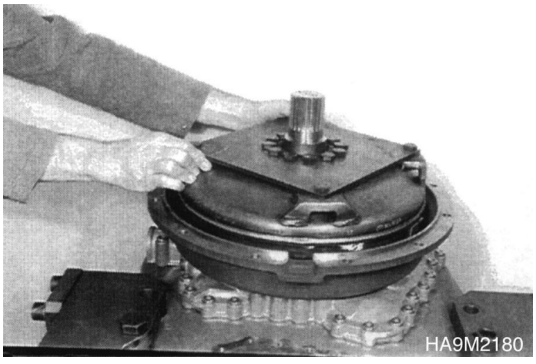

Figure 286

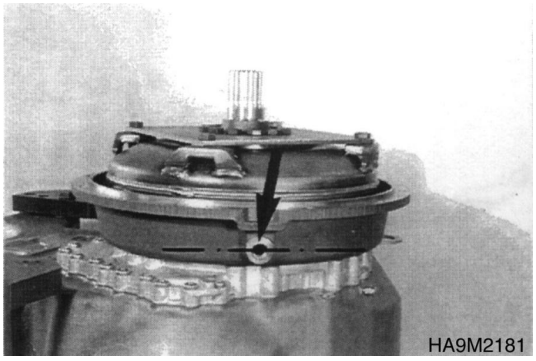

Figure 287

5. Insert ball bearing until contact is obtained and secure it using retaining ring.

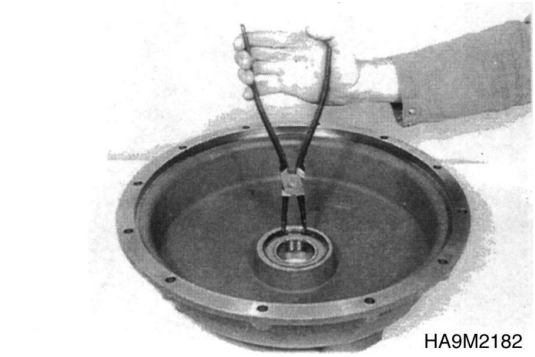

Figure 288

6. Assemble housing cover.
7. Install drive flange, lay on disk and pull cover using hex head screws evenly against shoulder.

   NOTE: *Torque limit (M8/10.9) 3.47 kg•m (25 ft lb).*

   NOTE: *Pay attention to the radial installation position of cover, see Figure 289.*

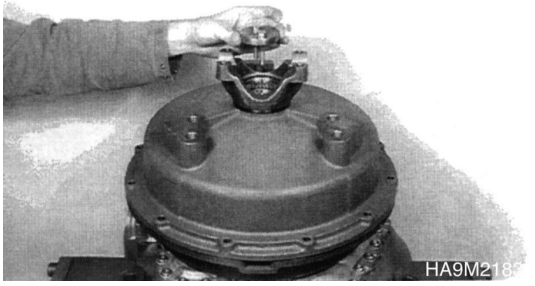

Figure 289

8. Secure hex head screws using lock plate.

   (S) Driver - 5870 057 010

   (S) Handle - 5870 260 002

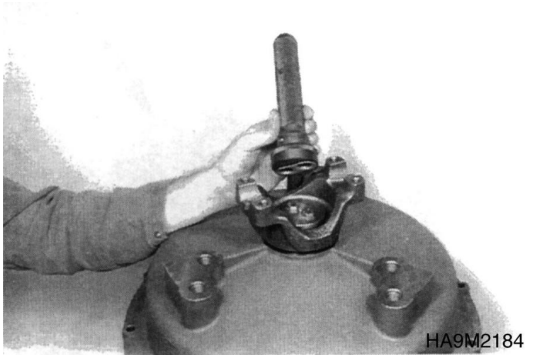

Figure 290

9. Fasten cover using hex head screws and nuts on the converter bell.

   NOTE: *Torque limit (M10/8.8) 4.69 kg•m (34 ft lb).*

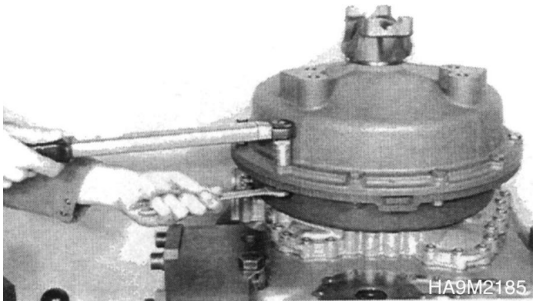

Figure 291

10. Mount gasket and fasten cover using hex head screws.

    NOTE: *Torque limit (M8/8.8) 2.35 kg•m (17 ft lb).*

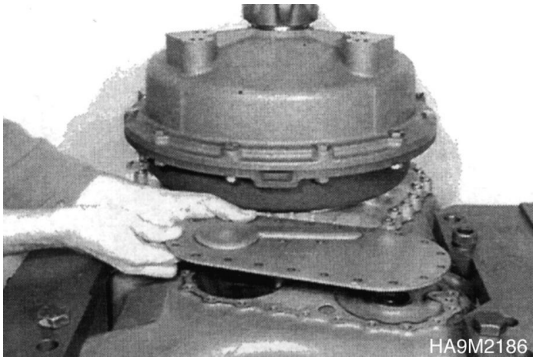

Figure 292

Converter Safety Valve

1. Insert converter safety valve (compl.) into the housing bore.

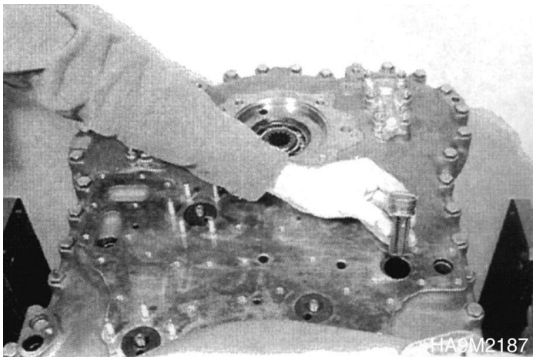

Figure 293

Mount Duct Plate and Hydraulic Control Unit

1. Install components according to the Figure 294.

   NOTE: *Torque limit (M8) 2.35 kg•m (17 ft lb) (Hex nuts and socket head screws).*

   NOTE: *Pay attention to installation position of different gaskets, see Figure 294.*

Reference Number	Description
1	Gasket
2	Duct Plate
3	Gasket
4	Intermediate Plate
5	Gasket

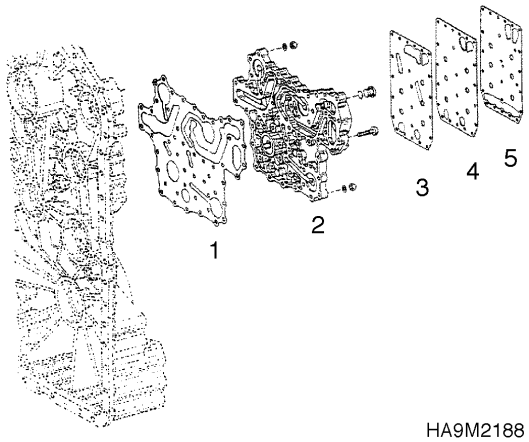

Figure 294

   (S) Adjusting screws - 5870 204 063

   (S) Box spanner (Torx TX-40) - 5873 042 004

2. Equip screw plug (Arrow) with new O-ring and install it.

   NOTE: *Torque limit (M16/1.5) 3.06 kg•m (22 ft lb).*

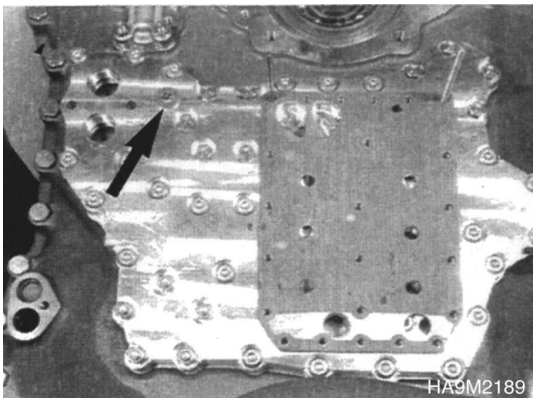

Figure 295

3. Fasten hydraulic control unit (HSG-94) using socket head screws.

   NOTE: *Torque limit (M6) 0.97 kg•m (7 ft lb).*

   (S) Adjusting screws - 5870 204 063

   (S) Box spanner (Torx TX-27) - 5873 042 002

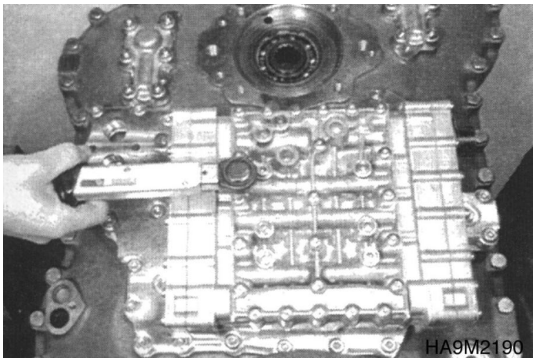

Figure 296

Install Plugs and Oil Level Tube

1. Equip both plugs (Arrows) with new O-rings and install them.

   NOTE: *Torque limit (M18 x 1.5) 5.10 kg•m (37 ft lb).*

   NOTE: *Torque limit (M26 x 1.5) 8.16 kg•m (59 ft lb).*

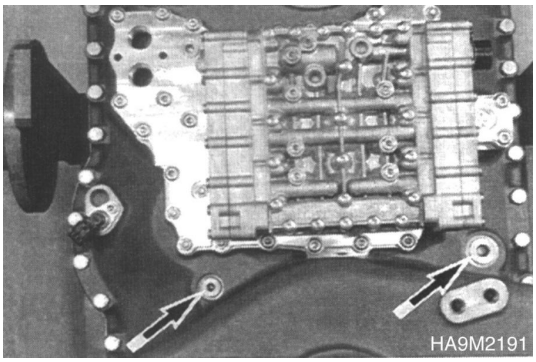

Figure 297

2. Install oil level tube (Arrow).

   NOTE: *Mount new gasket.*

   NOTE: *Torque limit (M8/109) 3.47 kg•m (25 ft lb).*

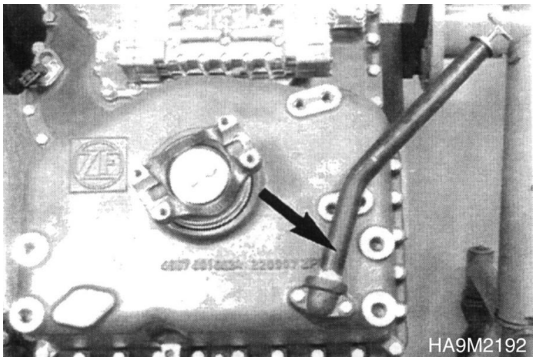

Figure 298

3. Install cover plate (1, Figure 299).

   NOTE: *Install new gasket.*

   NOTE: *Torque limit (M8/8.8) 2.35 kg•m (17 ft lb).*

4. Equip screw plug (2, Figure 299) with new O-ring and install it.

   NOTE: *Torque limit (M38 x 1.5) 14.28 kg•m (103 ft lb).*

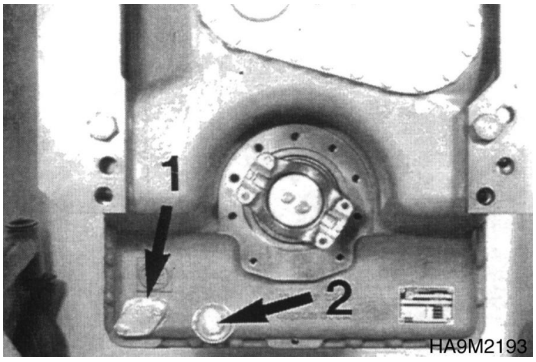

Figure 299

Speed Sensor and Inductive Transmitters

1. The Figure 300 and Figure 301 show the installation position of single inductive transmitters and the speed sensor.

Reference Number	Description
34	Speed Sensor N-Output and Speedometer
21	Inductive Transmitter N-Turbine
47	Inductive Transmitter N-Central Gear Train
48	Inductive Transmitter N-Engine

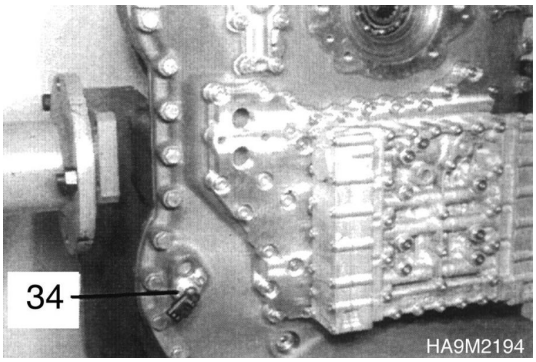

Figure 300

2. Grease O-rings and install speed sensor and inductive transmitters.

   NOTE: *Torque limit 2.35 kg•m (17 ft lb) (Socket head screw / Speed sensor).*

   NOTE: *Torque limit 3.06 kg•m (22 ft lb) (Inductive transmitter).*

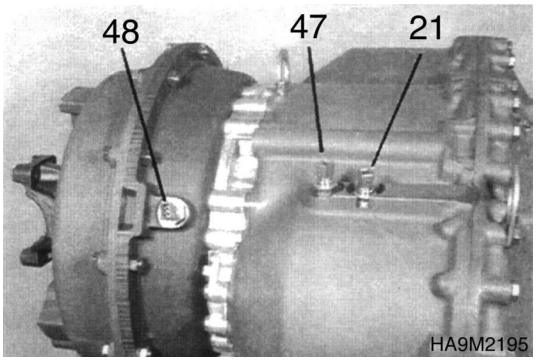

Figure 301

3. Install breather (Arrow).

   NOTE: *Torque limit 1.22 kg•m (9 ft lb).*

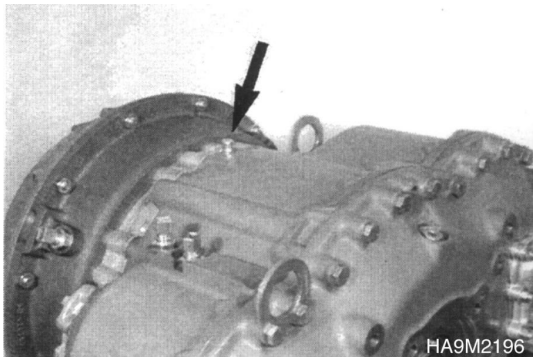

Figure 302

Transmission Error Codes (ZF)

Edition 1

MEMO

Table of Contents

Transmission Error Codes (ZF)

Safety Precautions 5
Applicable Models 5
Introduction 6
Abbreviations 6
Display 7
Description of Fault Codes 7
Display During Operation 8
Display During AEB-Mode 10
Definition of Operating Modes 12
Normal 12
Substitute Clutch Control 12
Limp-home 12
Transmission shut Down 12
TCU Shut Down 13
Table of Fault Codes 14
Table of Fault Codes - ERGO-Control 50
Measurement of Resistance at Actuator/sensors and Cable 53
Actuator 53
Cable 53

MEMO

SAFETY PRECAUTIONS

CAUTION!

Follow all safety recommendations and safe shop practices outlined in the front of this manual or those contained within this section.

Always use tools and equipment that are in good working order.

Use lifting and hoisting equipment capable of safely handling load.

Remember, that ultimately safety is your own personal responsibility.

APPLICABLE MODELS

The contents of this section apply to the following models and serial number ranges.

MODEL	SERIAL NUMBER RANGE
DL300	5001 and Up
DL400	5001 and Up

INTRODUCTION

The "WG" series of ZF Transmissions use an electronic control system called "ZF-Ergopower."

The Ergo System (for short) allows the transmission to function either in a manual powershift mode, or in a fully automatic mode.

An LCD display (Figure 1) is in the cab. This display gives the machine operator a continuos status of the operating condition of the system. It displays normal operational codes, and fault codes.

ABBREVIATIONS

Throughout this section the following abbreviations are used to indicate various conditions.

Abbreviations	
O.C.	Open Circuit
S.C.	Short Circuit
Op-Mode	OPeration Mode
TCU	Transmission Control Unit
EEC	Electronic Engine Controller
PTO	Power Take Off

DISPLAY

If a fault is detected, the display shows a spanner symbol (g) for a fault. The display shows the fault code, if the gear selector is in neutral position.

If more than one fault is detected, each fault code is shown for about 1 second.

Reference Letter	Description
a, f	Automatic Range (Upshifting and Downshifting)
b, c, d, e	Preselected Gear
g	EST-37 has detected an error and is flashing.
h	This character will not be used at the EST-37.

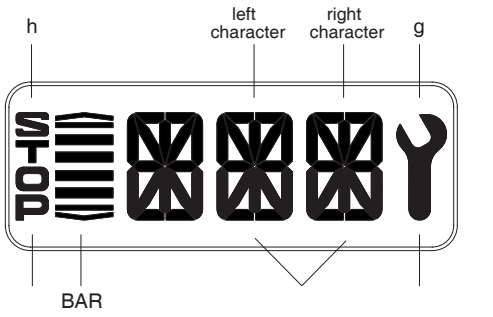

FG004442

Figure 1

Description of Fault Codes

The first number of the error code is the category that it is grouped into. They are as follows for the first number.

First Number	Meaning of Number
1 Hex	Digital Input Signal
2 Hex	Analog Input Signal
3 Hex	Speed Signal
4 Hex	CAN Signal Error
5 Hex	CAN Signal Error
6 Hex	CAN Signal Error
7 Hex	Analog Current Output Signal
8 Hex	Analog Current Output Signal
9 Hex	Digital Output Signal
A Hex	Digital Output Signal
B Hex	Transmission Fault, Clutch Error
C Hex	Logical Fault
D Hex	Power Supply
E Hex	High Speed Signal
F Hex	General Fault

DISPLAY DURING OPERATION

Symbol	Meaning	Remarks
1F, 1R 2F, 2R 3F, 3R 4F 5F 6F LF, LR	Actual gear and direction. Left digit shows actual gear. Right digit shows actual direction. Limp home gear.	----------
F or R, no gear	Clutch Cut Off.	----------
F or R flashing	Direction F or R selected while turbine speed is too high. **CAUTION:** Gear will engage if turbine speed drops.	----------
NN	Not neutral, waiting for neutral after power up or a severe fault.	Go engage a gear, first move shift selector to neutral position and again to F or R position.
**	Oil temperature too low, no gear available.	Warm up engine / transmission.
*N	Oil temperature low, only one gear available.	Warm up engine / transmission.
1 bar (special symbol)	Manual mode 1. gear.	----------
2 bars	Manual mode 2. gear.	----------
3 bars	Manual mode 3. gear.	----------
4 bars	Manual mode 4. gear.	----------
4 bars and 2 arrows	Automatic mode.	----------
Bars flashing	6 WG: converter lockup clutch open. 4 WG: Downshift mode active.	Difference of engine and turbine speed above a certain limit and lockup clutch not activated.
Spanner	At least one fault active.	Select neutral to get fault code displayed.
Fault code	See fault code list (See page -14).	----------
WS	Warning sump temperature.	Changes between actual gear/direction while driving, in neutral only displayed if no fault is detected (spanner).
WR	Warning retarder temperature.	Changes between actual gear/direction while driving, in neutral only displayed if no fault is detected (spanner).
WT	Warning torque converter temperature.	Changes between actual gear/direction while driving, in neutral only displayed if no fault is detected (spanner)
WE	Warning high engine speed.	Changes between actual gear/direction while driving, in neutral only displayed if no fault is detected (spanner).

Symbol	Meaning	Remarks
PN	Direction F or R selected while parking brake engaged.	Transmission in neutral until parking brake is released. **CAUTION**: Vehicle starts to move after release of parking brake.
EE flashing	No communication with display.	Checked wiring from TCU to display.

DISPLAY DURING AEB-MODE

Symbol	Meaning	Remarks
PL	AEB - Starter is plugged at the diagnostic plug.	----------
ST	AEB - Starter-button is pressed.	----------
K1... K4, KV, KR	Calibrating clutch K1... K4, KV or KR resp.	----------
_ and Kx	Wait for start, initialization of clutch Kx, x: 1, 2, 3, ,4, V, R	----------
≡ and Kx	Fast fill time determination of clutch Kx.	----------
═ and Kx	Compensating pressure determination of cluth Kx.	----------
OK	Calibration for all clutches finished	Transmissions stays in neutral, you have to restart the TUC (ignition off/on) after removing AEB-starter
STOP	AEB canceled (activation stopped)	Transmissions stays in neutral, you have to restart the TUC (ignition off/on)
STOP and Kx	AEB stopped, clutch Kx can't be calibrated.	Transmissions stays in neutral, you have to restart the TCU (ignition off/on)
Spanner and Kx	Kx couldn't be calibrated, AEB finished	----------
△ E	Engine speed too low, → raise engine	----------
▽ E	Engine speed too high. → lower engine speed.	----------
△ T	Transmission oil temperature too low. → Heat up transmission	----------
▽ T	Transmission oil temperature too high. → Cool down transmission	----------
FT	Transmission temperature not in defined range during calibration	Transmissions stays in neutral, you have to restart the TUC (ignition off/on)
FB	Operating mode not NORMAL or transmission temperature sensor defective or storing of Calibrated values to EEPROM-has failed.	Transmissions stays in neutral, you have to restart the TUC (ignition off/on)
FO	Outputspeed_not_zero	Transmissions stays in neutral, you have to restart the TUC (ignition off/on)
FN	Shift lever not in Neutral position	Transmissions stays in neutral, you have to restart the TUC (ignition off/on)
FP	Parkbrake_not_applied	Transmissions stays in neutral, you have to restart the TUC (ignition off/on)

Symbol	Meaning	Remarks
STOP	AEB - Starter was used incorrect or is defective. Wrong device or wrong cable used.	Transmissions stays in neutral, you have to restart the TUC (ignition off/on)

DEFINITION OF OPERATING MODES

Normal

There is no failure detected in transmission system or failure has no or slight effects on transmission control. TCU will work without or in special cases with little limitations. (See “Table of Fault Codes” on page -14.)

Substitute Clutch Control

TCU cannot change gears or direction under control of normal clutch modulation. TCU uses substitute strategy for clutch control. All modulations are only time controlled. (Comparable with EST 25.)

Limp-home

The detected failure in the system has strong limitations to transmission control. TCU can engage only one gear in each direction. In some cases only one direction will be possible.

TCU will shift the transmission into neutral at the first occurrence of the failure. First, the operator must shift the gear selector into neutral position.

If output speed is less than a threshold for neutral to gear and the operator shifts the gear selector into forward or reverse, the TCU will select the limp-home gear.

If output speed is less than a threshold for reversal speed and TCU has changed into the limp-home gear and the operator selects a shuttle shift, TCU will shift immediately into the limp-home gear of the selected direction.

If output speed is greater than the threshold, TCU will shift the transmission into neutral. The operator has to slow down the vehicle and must shift the gear selector into neutral position.

Transmission shut Down

TCU has detected a severe failure that disables control of the transmission.

TCU will shut off the solenoid valves for the clutches and also the common power supply (VPS1).

Transmission shifts to Neutral. The park brake will operate normally, also the other functions which use ADM 1 to ADM 8.

The operator has to slow down the vehicle. The transmission will stay in neutral.

TCU Shut Down

TCU has detected a severe failure that disables control of system.

TCU will shut off all solenoid valves and also both common power supplies (VPS1, VPS2). The park brake will engage, also all functions are disabled which use ADM 1 to ADM 8.

The transmission will stay in neutral.

NOTE: *VPS2: is the LIS (option power supply).*

TABLE OF FAULT CODES

The fault codes shown in this table are a complete list of codes that are common to more than one version of the transmission. Some of the versions are 4WG (four speed) and 6WG (six speed).

NOTE: *This fault code list is valid for the ZF Software Versions V 53.x to V58.0*

Fault Code (hex)	Meaning of the Fault Code (Possible reason for fault detection.)	Reaction of the TCU	Possible Steps to Repair	Remarks
11	Logical error at gear range signal. TCU detected a wrong signal combination for gear range. • Cable from shift lever to TCU is broken. • Cable is defective and is contacted to battery voltage or vehicle ground. • Shift lever is defective.	TCU shifts transmission to neutral. Op-Mode: transmission shut down.	Check cables from TCU to shift lever. Check signal combinations of shift lever positions for gear range.	Failure cannot be detected in systems with DW2/DW3 shift lever. Fault is taken back if TCU detects a valid signal for position.
12	Logical error at direction select signal. TCU detected a wrong signal combination for direction. • Cable from shift lever to TCU is broken. • Cable is defective and is contacted to battery voltage or vehicle ground. • Shift lever is defective.	TCU shifts transmission to neutral. Op-Mode: transmission shut down.	Check cables from TCU to shift lever. Check signal combinations of shift lever positions F-N-R.	Fault is taken back if TCU detects a valid signal for direction at shift lever.
13	Logical error at engine derating device. TCU detected no reaction of engine while derating device activ.	After selcting neutral, TCU changes to OP-Mode limp home.	Check engine derating device.	This fault is reset after power up of TCU.
14	Logical error at parkbrake status parkbrake-status-signal measured by TCU and parkbrake-status-signal send by CAN don't fit. • One of the cables from status-switch to electronic box is broken. • One of the status-siwtches is defective,	TCU shifts transmission to DCO-State. OP-Mode : normal	Check the cables from electronic boxes to status switches. Check signals of the status switches.	----------

Fault Code (hex)	Meaning of the Fault Code (Possible reason for fault detection.)	Reaction of the TCU	Possible Steps to Repair	Remarks
15	Logical error at direction select signal 2. shift lever. TCU detected a wrong signal combination for the direction. • Cable from shift lever 2 to TCU is broken. • Cable is defective and is contacted to battery voltage or vehicle ground. • Shift lever is defective.	TCU shifts transmission to neutral if selector activ OP-Mode: transmission shutdown if selector activ.	Check the cables from TCU to shift lever2. Check signal combinations of shift lever positions F-N-R	Fault is taken if TCU detects a valid neutral signal for the direction at the shift lever.
16	Logical error at axle connection feedback axle connection measured by TCU and output signal axle connection don't fit. • Axle can't be connected or disconnected due to mechanical problem. • One of the cables from feedback axle connection-switch to TCU is broken.	OP-Mode : normal	Check the cables from TCU to feedback axle connectionswitch. Check signals of the feedback axle connection switch.	----------
17	S.C. to ground at customer specific (Function No. 1) TCU detected a wrong voltage at output pin, that looks like a S.C. to vehicle ground. • Cable is defective and is contacted to vehicle ground. • Customer specific (Function No. 1) device has an internal defect. • Connector pin is contacted to vehicle ground.	Customer specific.	Check cable from TCU to customer specific (Function No. 1) device. Check connectors from customer specific (Function No. 1) to TCU. Check resistance of customer specific (Function No. 1) device.	1) See "Measurement of Resistance at Actuator/sensors and Cable" on page 1-53.
18	S.C. to battery voltage at customer specific (Function No. 1). TCU detected a wrong voltage at output pin, that looks like a S.C. to battery voltage. • Cable is defective and is contacted to battery voltage. • Customer specific (Function No. 1) device has an internal defect. • Connector pin is contacted to battery voltage.	Customer specific.	Check cable from TCU to customer specific (Function No. 1) device. Check connectors from customer specific (Function No. 1) to TCU. Check resistance of customer specific (Function No. 1) device.	1) See "Measurement of Resistance at Actuator/sensors and Cable" on page 1-53.

Fault Code (hex)	Meaning of the Fault Code (Possible reason for fault detection.)	Reaction of the TCU	Possible Steps to Repair	Remarks
19	O.C. at customer specific (Function No. 1). TCU detected a wrong voltage at output pin, that looks like a O.C. for this output pin. • Cable is defective and has no connection to TCU. • Customer specific (Function No. 1) device has an internal defect. • Connector has no connection to TCU.	Customer specific.	Check cable from TCU to customer specific (Function No. 1) device. Check connectors from customer specific (Function No. 1) device to TCU. Check resistance of customer specific (Function No. 1) device.	1) See “Measurement of Resistance at Actuator/sensors and Cable” on page 1-53.
1A	S.C. to ground at customer specific (Function No. 2). TCU detected a wrong voltage at output pin, that looks like a S.C. to vehicle ground. • Cable is defective and is contacted to vehicle ground. • Customer specific (Function No. 2) device has an internal defect. • Connector pin is contacted to vehicle ground.	Customer specific.	Check cable from TCU to customer specific (Function No. 2) device. Check connectors from customer specific (Function No. 2) device to TCU. Check resistance of customer specific (Function No. 2) device.	1) See “Measurement of Resistance at Actuator/sensors and Cable” on page 1-53.
1B	S.C. to battery voltage at customer specific (Function No. 2). TCU detected a wrong voltage at output pin, that looks like a S.C. to battery voltage. • Cable is defective and is contacted to battery voltage. • Customer specific (Function No. 2) device has an internal defect. • Connector pin is contacted to battery voltage.	Customer specific.	Check cable from TCU to customer specific (Function No. 2) device. Check connectors from customer specific (Function No. 2) device to TCU. Check resistance of customer specific (Function No. 2) device.	1) See “Measurement of Resistance at Actuator/sensors and Cable” on page 1-53.
1C	O.C. at customer specific (Function No. 2). TCU detected a wrong voltage at output pin, that looks like a O.C. for this output pin. • Cable is defective and has no connection to TCU. • Customer specific (Function No. 2) device has an internal defect. • Connector has no connection to TCU.	Customer specific.	Check cable from TCU to customer specific (Function No. 2) device. Check connectors from customer specific (Function No. 2) device to TCU. Check resistance of customer specific (Function No. 2) device.	1) See “Measurement of Resistance at Actuator/sensors and Cable” on page 1-53.

Fault Code (hex)	Meaning of the Fault Code (Possible reason for fault detection.)	Reaction of the TCU	Possible Steps to Repair	Remarks
1D	S.C. to ground at customer specific (Function No. 3). TCU detected a wrong voltage at output pin, that looks like a S.C. to vehicle ground. • Cable is defective and is contacted to vehicle ground. • Customer specific (Function No. 3) device has an internal defect. • Connector pin is contacted to vehicle ground.	Customer specific.	Check cable from TCU to customer specific (Function No. 3) device. Check connectors from customer specific (Function No. 3) device to TCU. Check resistance of customer specific (Function No. 3) device.	1) See “Measurement of Resistance at Actuator/sensors and Cable” on page 1-53.
1E	S.C. to battery voltage at customer specific (Function No. 3). TCU detected a wrong voltage at output pin, that looks like a S.C. to battery voltage. • Cable is defective and is contacted to battery voltage. • Customer specific (Function No. 3) device has an internal defect. • Connector pin is contacted to battery voltage.	Customer specific.	Check cable from TCU to customer specific (Function No. 3) device. Check connectors from customer specific (Function No. 3) device to TCU. Check resistance of customer specific (Function No. 3) device.	1) See “Measurement of Resistance at Actuator/sensors and Cable” on page 1-53.
1F	O.C. at customer specific (Function No. 3). TCU detected a wrong voltage at output pin, that looks like a O.C. for this output pin. • Cable is defective and has no connection to TCU. • Customer specific (Function No. 3) device has an internal defect. • Connector has no connection to TCU.	Customer specific.	Check cable from TCU to customer specific (Function No. 3) device. Check connectors from customer specific (Function No. 3) device to TCU. Check resistance of customer specific (Function No. 3) device.	1) See “Measurement of Resistance at Actuator/sensors and Cable” on page 1-53.
21	S.C to battery voltage at clutch cutoff input. The measured voltage is too high. • Cable is defective and is contacted to battery voltage. Clutch cut off sensor has an internal defect. Connector pin is contacted to battery voltage.	Clutch cutoff function is disabled OP-Mode: normal	Check the cable from TCU to the sensor. Check the connectors. Check the clutch cutoff sensor.	----------

Fault Code (hex)	Meaning of the Fault Code (Possible reason for fault detection.)	Reaction of the TCU	Possible Steps to Repair	Remarks
22	S.C. to ground or O.C. at clutch cutoff input. The measured voltage is too low: • Cable is defective and is contacted to vehicle ground. • Clutch cutoff sensor has an internal defect. • Connector pin is contacted to vehicle ground or is broken.	Clutch cutoff function is disabled OP-Mode: normal	Check the cable from TCU to the sensor. Check the connectors. Check the clutch cutoff sensor.	----------
23	S.C. to battery voltage at load sensor input. The measured voltage is too high • Cable is defective and is contacted to battery voltage. • Load sensor has an internal defect. • Connector pin is contacted to battery voltage.	Retarder function is affected TCU uses default load OP-Mode: normal	Check the cable from TCU to the sensor. Check the connectors. Check the load sensor Check the assembly tolerances of load sensor.	Availability of retarder depends on dafault load.
24	S.C. to ground or O.C. at load sensor input. The measured voltage is too low: Cable is defective and is contacted to vehicle ground. Cable has no connection to TCU. Load sensor has an internal defect. Connector pin is contacted to vehicle ground or is broken.	Retarder function is affected TCU uses default load. OP-Mode: normal	Check the cable from TCU to the sensor. Check the connectors. Check the load sensor. Check the assembly tolerances of load sensor.	Availability of retarder depends on default load.
25	S.C. to battery voltage or O.C. at transmission sump temperature sensor input. The measured voltage is too high: • Cable is defective and is contacted to battery voltage. • Cable has no connection to TCU. • Temperature sensor has an internal defect. • Connector pin is contacted to battery voltage or is broken.	No reaction. TCU uses default temperature. Op-Mode: normal.	Check cable from TCU to sensor. Check connectors. Check temperature sensor.	----------
26	S.C. to ground at transmission sump temperature sensor input. The measured voltage is too low: • Cable is defective and is contacted to vehicle ground. • Temperature sensor has an internal defect. • Connector pin is contacted to vehicle ground.	No reaction. TCU uses default temperature. Op-Mode: normal.	Check cable from TCU to sensor. Check connectors. Check temperature sensor.	----------

Fault Code (hex)	Meaning of the Fault Code (Possible reason for fault detection.)	Reaction of the TCU	Possible Steps to Repair	Remarks
27	S.C. to battery voltage or O.C. at retarder temperature sensor input. The measured voltage is too high: • Cable is defective and is contacted to battery voltage. • Cable has no connection to TCU. • Temperature sensor has an internal defect. • Connector pin is contacted to battery voltage or is broken.	No reaction. TCU uses default temperature. Op-Mode: normal.	Check cable from TCU to sensor. Check connectors. Check temperature sensor.	----------
28	S.C. to ground at retarder temperature sensor input. The measured voltage is too low: • Cable is defective and is contacted to vehicle ground. • Temperature sensor has an internal defect. • Connector pin is contacted to vehicle ground.	No reaction. TCU uses default temperature. Op-Mode: normal.	Check cable from TCU to sensor. Check connectors. Check temperature sensor.	----------
29	S.C. to battery voltage or O.C. at parking brake sensor input. The measured voltage is too high: • Cable is defective and is contacted to battery voltage. • Cable has no connection to TCU. • Sensor has an internal defect. • Connector pin is contacted to battery voltage or is broken.	TCU uses default value. Op-Mode: normal.	Check cable from TCU to sensor. Check connectors. Check parking brake sensor.	----------
2A	S.C. to ground parking brake sensor input. The measured voltage is too low: • Cable is defective and is contacted to vehicle ground. • Sensor has an internal defect. • Connector pin is contacted to vehicle ground.	TCU uses default value. Op-Mode: normal.	Check cable from TCU to sensor. Check connectors. Check parking brake sensor.	----------
2B	Inchsensor-signal mismatch The measured voltage from CCO and CCO2 signal don't match: • Cable is defective. • Sensor has an internal defect	During inching mode: TCU shifts to neutral. While not inching: no change OP-Mode: normal	Check cable from TCU to sensor. Check connectors. Check sensor.	----------

Fault Code (hex)	Meaning of the Fault Code (Possible reason for fault detection.)	Reaction of the TCU	Possible Steps to Repair	Remarks
31	S.C. to battery voltage or O.C. at engine speed input. TCU measures a voltage higher than 7.00 V at speed input pin. • Cable is defective and is contacted to battery voltage. • Cable has no connection to TCU. • Speed sensor has an internal defect. • Connector pin is contacted to battery voltage or has no contact.	Op-Mode: substitute clutch control.	Check cable from TCU to sensor. Check connectors. Check speed sensor.	----------
32	S.C. to ground at engine speed input. TCU measures a voltage less than 0.45V at speed input pin. • Cable / connector is defective and is contacted to vehicle ground. • Speed sensor has an internal defect.	Op-Mode: substitute clutch control.	Check cable from TCU to sensor. Check connectors. Check speed sensor.	----------
33	Logical error at engine speed input. TCU measures a engine speed over a threshold and the next moment the measured speed is zero. • Cable / connector is defective and has bad contact. • Speed sensor has an internal defect. • Sensor gap is incorrect.	Op-Mode: substitute clutch control.	Check cable from TCU to sensor. Check connectors. Check speed sensor. Check sensor gap.	This fault is reset after power up of TCU.
34	S.C. to battery voltage or O.C. at turbine speed input. TCU measures a voltage higher than 7.00 V at speed input pin. • Cable is defective and is contacted to battery voltage. • Cable has no connection to TCU. • Speed sensor has an internal defect. • Connector pin is contacted to battery voltage or has no contact.	Op-Mode: substitute clutch control. If a failure is existing at output speed. TCU shifts to neutral. Op-Mode: limp home.	Check cable from TCU to sensor. Check connectors. Check speed sensor.	----------

Fault Code (hex)	Meaning of the Fault Code (Possible reason for fault detection.)	Reaction of the TCU	Possible Steps to Repair	Remarks
35	S.C. to ground at turbine speed input. TCU measures a voltage less than 0.45V at speed input pin. • Cable / connector is defective and is contacted to vehicle ground. • Speed sensor has an internal defect.	Op-Mode: substitute clutch control. If a failure is existing at output speed. TCU shifts to neutral. Op-Mode: limp home.	Check cable from TCU to sensor. Check connectors. Check speed sensor.	----------
36	Logical error at turbine speed input. TCU measures a turbine speed over a threshold and at the next moment the measured speed is zero. • Cable / connector is defective and has bad contact. • Speed sensor has an internal defect. • Sensor gap is incorrect.	Op-Mode: substitute clutch control. If a failure is existing at output speed. TCU shifts to neutral. Op-Mode: limp home.	Check cable from TCU to sensor. Check connectors. Check speed sensor. Check sensor gap.	This fault is reset after power up of TCU.
37	S.C. to battery voltage or O.C. at internal speed input. TCU measures a voltage higher than 7.00 V at speed input pin. • Cable is defective and is contacted to battery voltage. • Cable has no connection to TCU. • Speed sensor has an internal defect. • Connector pin is contacted to battery voltage or has no contact.	Op-Mode: substitute clutch control.	Check cable from TCU to sensor. Check connectors. Check speed sensor.	----------
38	S.C. to ground at internal speed input. TCU measures a voltage less than 0.45V at speed input pin. • Cable / connector is defective and is contacted to vehicle ground. • Speed sensor has an internal defect.	Op-Mode: substitute clutch control.	Check cable from TCU to sensor. Check connectors. Check speed sensor.	----------

Fault Code (hex)	Meaning of the Fault Code (Possible reason for fault detection.)	Reaction of the TCU	Possible Steps to Repair	Remarks
39	Logical error at internal speed input. TCU measures a internal speed over a threshold and at the next moment the measured speed is zero. • Cable / connector is defective and has bad contact. • Speed sensor has an internal defect. • Sensor gap is incorrect.	Op-Mode: substitute clutch control.	Check cable from TCU to sensor. Check connectors. Check speed sensor. Check sensor gap.	This fault is reset after power up of TCU.
3A	S.C. to battery voltage or O.C. at output speed input. TCU measures a voltage higher than 12.5 V at speed input pin. • Cable is defective and is contacted to battery voltage. • Cable has no connection to TCU. • Speed sensor has an internal defect. • Connector pin is contacted to battery voltage or has no contact.	Special mode for gear selection; Op-Mode: substitute clutch control. If a failure is existing at turbine speed. TCU shifts to neutral. Op-Mode: limp home.	Check cable from TCU to sensor. Check connectors. Check speed sensor.	----------
3B	S.C. to ground at output speed input. TCU measures a voltage less than 1.00V at speed input pin. • Cable / connector is defective and is contacted to vehicle ground. • Speed sensor has an internal defect.	Special mode for gear selection. Op-Mode: substitute clutch control. If a failure is existing at turbine speed. TCU shifts to neutral. Op-Mode: limp home.	Check cable from TCU to sensor. Check connectors. Check speed sensor.	----------
3C	Logical error at output speed input. TCU measures a output speed over a threshold and at the next moment the measured speed is zero. • Cable / connector is defective and has bad contact. • Speed sensor has an internal defect. • Sensor gap is incorrect.	Special mode for gear selection. Op-Mode: substitute clutch control. If a failure is existing at turbine speed. TCU shifts to neutral. Op-Mode: limp home.	Check cable from TCU to sensor. Check connectors. Check speed sensor. Check sensor gap.	This fault is reset after power up of TCU.
3D	Turbine speed zero doesn't fit to other speed signals	----------	----------	Not used.

Fault Code (hex)	Meaning of the Fault Code (Possible reason for fault detection.)	Reaction of the TCU	Possible Steps to Repair	Remarks
3E	Output speed zero doesn't fit to other speed signals. If transmission is not neutral and the shifting has finished. TCU measures output speed zero and turbine speed or internal speed not equal to zero. • Speed sensor has an internal defect. • Sensor gap is incorrect.	Special mode for gear selection. Op-Mode: substitute clutch control. If a failure is existing at turbine speed. TCU shifts to neutral. Op-Mode: limp home.	Check sensor signal of output speed sensor. Check sensor gap of output speed sensor. Check cable from TCU to sensor.	This fault is reset after power up of TCU.
40	Gear range restriction signal CAN signal for gear range restriction is defective. • Cluster controller is defective. • Interference on CAN-Bus	No gear range restriction	Check cluster controller Check wire of CAN-Bus Check cable to cluster controller	----------
40	FCAN MESSAGE 'Gear range select (ZF_3_IDENT)' contains invalid data	gear range set from 1st to 5th	Check FWD controller Check wire of CAN-Bus	----------
41	Declutch modulation selection signal	----------	----------	----------
41	TCU receives messages 'Gear range select (ZF_3_IDENT)' and 'Front wheel drive status' (V_IDENT_FWD) Alhtough configuration states that FWD controller is not installed.	ignore FWD commands	Reconfigure with TCU Configuration Command (ID PC)	----------
50	FMR1 timeout Timeout of CAN-message FMR1 from engine controller. • Interference on CAN-Bus • CAN wire/ connector is broken • CAN wire/ connector is defective and has contact to vehicle ground or battery voltage. • Engine controller is defective.	TCU operates like jake brake is off and exhaust brake is off. OP-Mode: normal	Check engine controller. Check wire of CAN-Bus. Check cable to engine controller.	----------
51	FMR2 timeout Timeout of CAN-message FMR2 from engine controller. • Interference on CAN-Bus • CAN wire/ connector is broken • CAN wire/ connector is defective and has contact to vehicle ground or battery voltage. • Engine controller is defective.	OP-Mode: substitute clutch control	Check engine controller. Check wire of CAN-Bus. Check cable to engine controller.	----------

Fault Code (hex)	Meaning of the Fault Code (Possible reason for fault detection.)	Reaction of the TCU	Possible Steps to Repair	Remarks
52	EAMODUL1 timeout Timeout of CAN-message EAM1 from I/O controller. • Interference on CAN-Bus • CAN wire/ connector is broken • CAN wire/ connector is defective and has contact to vehicle ground or battery voltage.	TCU shifts to neutral and uses substitute gear selector. OP-Mode: normal	Check I/O controller. Check wire of CAN-Bus. Check cable to I/O controller.	----------
53	ABS timeout Timeout of CAN-message ABS from ABS controller. • Interference on CAN-Bus • CAN wire/ connector is broken • CAN wire/ connector is defective and has contact to vehicle ground or battery voltage.	No reaction.	Check ABS controller. Check wire of CAN-Bus. Check cable to ABS controller.	----------
54	MDU1 timeout Timeout of CAN-message MDU1 from cluster controller. • Interference on CAN-Bus • CAN wire/ connector is broken • CAN wire/ connector is defective and has contact to vehicle ground or battery voltage.	TCU keeps old auto downshift information and old manual downshift information. OP-Mode: normal	Check cluster controller. Check wire of CAN-Bus. Check cable to cluster controller.	----------
54	DCT1 timeout Timeout of CAN-message DCT1 from cluster controller. • Interference on CAN-Bus • CAN wire/ connector is broken • CAN wire/ connector is defective and has contact to vehicle ground or battery voltage.	TCU keeps old auto downshift information and old manual downshift information. OP-Mode: normal	Check cluster controller. Check wire of CAN-Bus. Check cable to cluster controller.	----------
54	Gear range select timeout. Timeout of CAN-message 'Gear range select (ZF_3_IDENT)' • Interference on CAN-Bus • CAN wire/ connector is broken • CAN wire/ connector is defective and has contact to vehicle ground or battery voltage. • FWD controller is defective.	Gear range set from 1st to 5th.	Check wire of CAN-Bus. Check FWD controller.	----------

Fault Code (hex)	Meaning of the Fault Code (Possible reason for fault detection.)	Reaction of the TCU	Possible Steps to Repair	Remarks
55	DNS1 timeout Timeout of CAN-message DNS1 from OMRON-master. • Interference on CAN-Bus • CAN wire/ connector is broken • CAN wire/ connector is defective and has contact to vehicle ground or battery voltage.	TCU shifts to neutral. OP-Mode: normal	Check OMRON-master. Check wire of CAN-Bus. Check cable to OMRON-master.	----------
55	SCT1 timeout. Timeout of CAN-message SCT1 from steering computer. • Interference on CAN-Bus. • CAN wire/ connector is broken • CAN wire/ connector is defective and has contact to vehicle ground or battery voltage.	OP-Mode: normal	Check steering computer. Check wire of CAN-Bus. Check cable to steering computer.	----------
55	Front wheel drive status timeout. Timeout of CAN-message 'Front wheel drive status (V_IDENT_FWD)' • Interference on CAN-Bus. • CAN wire/ connector is broken • CAN wire/ connector is defective and has contact to vehicle ground or battery voltage. • FWD controller is defective.	TCU shifts to neutral.	Check wire of CAN-Bus. Check FWD controller.	----------
56	Engine conf timeout. Timeout of CAN-message Engine conf from engine controller. • Interference on CAN-Bus. • CAN wire/ connector is broken • CAN wire/ connector is defective and has contact to vehicle ground or battery voltage.	Op-Mode: substitute clutch control	Check engine controller. Check wire of CAN-Bus. Check cable to engine controller.	----------
57	EEC1 timeout. Timeout of CAN-message EEC1 from EEC controller. • Interference on CAN-Bus. • CAN wire/ connector is broken • CAN wire/ connector is defective and has contact to vehicle ground or battery voltage.	Op-Mode: substitute clutch control	Check EEC controller. Check wire of CAN-Bus. Check cable to EEC controller.	----------

Fault Code (hex)	Meaning of the Fault Code (Possible reason for fault detection.)	Reaction of the TCU	Possible Steps to Repair	Remarks
58	EEC3 timeout. Timeout of CAN-message EEC3 from EEC controller. • Interference on CAN-Bus. • CAN wire/ connector is broken • CAN wire/ connector is defective and has contact to vehicle ground or battery voltage.	Op-Mode: substitute clutch control	Check EEC controller. Check wire of CAN-Bus. Check cable to EEC controller.	----------
59	Test mode signal CAN signal for test mode status is defective. • Cluster controller is defective. • Interference on CAN-Bus	Testmode is aborted, if activ.	Check cluster controller. Check wire of CAN-Bus. Check cable to cluster controller.	----------
5A	Rarkbrake status signal CAN signal for parkbrake status is defective. • Cluster controller is defective. • Interference on CAN-Bus	No reaction.	Check cluster controller. Check wire of CAN-Bus. Check cable to cluster controller.	----------
5B	Shift quality sel signal CAN signal for shift quality selection is defective. • Cluster controller is defective. • Interference on CAN-Bus.	Last selection is kept.	Check cluster controller. Check wire of CAN-Bus. Check cable to cluster controller.	----------
5C	Auto downshift signal CAN signal for automatic downshift is defective, • Cluster controller is defective. • Interference on CAN-Bus.	Last selection is kept.	Check cluster controller. Check wire of CAN-Bus. Check cable to cluster controller.	----------
5D	Manual downshift signal CAN signal for automatic downshift is defective. • Cluster controller is defective. • Interference on CAN-Bus.	Last selection is kept.	Check cluster controller. Check wire of CAN-Bus. Check cable to ???? controller	----------
5E	CCO request signal CAN signal for CCO request is defective. • Cluster controller is defective. • Interference on CAN-Bus.	Last selection is kept.	Check cluster controller. Check wire of CAN-Bus. Check cable to ???? controller	----------

Fault Code (hex)	Meaning of the Fault Code (Possible reason for fault detection.)	Reaction of the TCU	Possible Steps to Repair	Remarks
5F	Shift lever signal CAN signal for shift lever is defective. • I/O controller is defective. • Interference on CAN-Bus.	TCU shifts to neutral and uses informations from substitute shift lever. OP-Mode: normal	Check I/O controller. Check wire of CAN-Bus. Check cable to I/O controller	----------
5F	Transmission neutral request signal CAN signal for transmission neutral request is defective. • Steering computer is defective. • Interference on CAN-Bus.	OP-Mode: normal	Check steering computer. Check wire of CAN-Bus. Check cable to steering computer.	----------
5F	CAN message 'Front wheel drive status (V_IDENT_FWD)' contains invalid data.	TCU shifts to neutral	Check FWD controller.	----------
60	Additional brake status signal CAN signal for additional park brake status is defective. • I/O controller is defective. • Interference on CAN-Bus.	No reaction. OP-Mode: normal	Check I/O controller. Check wire of CAN-Bus. Check cable to I/O controller	----------
61	AEB request signal CAN signal for AEB request is defective • I/O controller is defective. • Interference on CAN-Bus.	No reaction. OP-Mode: normal Last selection is kept	Check I/O controller. Check wire of CAN-Bus. Check cable to I/O controller	----------
62	PTO torque signal CAN signal for PTO torque is defective • I/O controller is defective. • Interference on CAN-Bus.	No reaction. TCU uses dafault PTO torque signal OP-Mode: normal	Check I/O controller. Check wire of CAN-Bus. Check cable to I/O controller	----------
63	Driving mode signal CAN signal for driving mode is defective. • I/O controller is defective. • Interference on CAN-Bus.	No reaction. TCU uses dafault driving mode signal OP-Mode: normal	Check I/O controller. Check wire of CAN-Bus. Check cable to I/O controller	----------
64	Starting gear signal CAN signal for starting gear is defective. • I/O controller is defective. • Interference on CAN-Bus.	No reaction. TCU uses dafault starting gear OP-Mode: normal	Check I/O controller. Check wire of CAN-Bus. Check cable to I/O controller	----------
65	Engine torque signal CAN signal for engine torque is defective • Engine controller is defective. • Interference on CAN-Bus.	OP-Mode: substitute clutch control	Check engine controller Check wire of CAN-Bus. Check cable to engine controller	----------

Fault Code (hex)	Meaning of the Fault Code (Possible reason for fault detection.)	Reaction of the TCU	Possible Steps to Repair	Remarks
69	Reference engine torque signal CAN signal for reference of engine torque id defective • Engine controller is defective. • Interference on CAN-Bus.	OP-Mode: substitute clutch contro	Check engine controller Check wire of CAN-Bus. Check cable to engine controller	----------
6A	Actual engine torque signal CAN signal for actual engine torque is defective • Engine controller is defective. • Interference on CAN-Bus.	OP-Mode: substitute clutch contro	Check engine controller Check wire of CAN-Bus. Check cable to engine controller	----------
6B	NOM friction torque signal CAN signal for nominal friction torque is defective • Engine controller is defective. • Interference on CAN-Bus.	OP-Mode: substitute clutch contro	Check engine controller Check wire of CAN-Bus. Check cable to engine controller	----------
6E	EEC2 timeout Timeout of CAN-message EEC2 from EEC controller • Interference on CAN-Bus. • CAN wire/ connector is broken • CAN wire/ connector is defective and has contact to vehicle ground or battery voltage.	No reaction. TCU uses default signal accelerator pedal in idle position OP-Mode: normal	Check EEC controller Check wire of CAN-Bus. Check cable to EEC controller	----------
71	S.C. to battery voltage at clutch K1. The measured resistance value of valve is out of limit, voltage at K1 valve is too high. • Cable / connector is defective and has contact to battery voltage. • Cable / connector is defective and has contact to another regulator output of TCU. • Regulator has an internal defect.	TCU shifts to neutral. Op-Mode: limp home. If failure at another clutch is pending. TCU shifts to neutral. Op-Mode: TCU shut down.	Check cable from TCU to gearbox. Check connectors from TCU to gearbox. Check regulator resistance. [1)] Check internal wire harness of gearbox.	[1)] See “Measurement of Resistance at Actuator/sensors and Cable” on page 1-53.
72	S.C. to ground at clutch K1. The measured resistance value of valve is out of limit, voltage at K1 valve is too low. • Cable / connector is defective and has contact to vehicle ground. • Regulator has an internal defect.	TCU shifts to neutral. Op-Mode: limp home. If failure at another clutch is pending. TCU shifts to neutral. Op-Mode: TCU shut down.	Check cable from TCU to gearbox. Check connectors from gearbox to TCU. Check regulator resistance. [1)] Check internal wire harness of gearbox.	[1)] See “Measurement of Resistance at Actuator/sensors and Cable” on page 1-53.

Fault Code (hex)	Meaning of the Fault Code (Possible reason for fault detection.)	Reaction of the TCU	Possible Steps to Repair	Remarks
73	O.C. at clutch K1. The measured resistance value of valve is out of limit. • Cable / connector is defective and has no contact to TCU. • Regulator has an internal defect.	TCU shifts to neutral. Op-Mode: limp home. If failure at another clutch is pending. TCU shifts to neutral. Op-Mode: TCU shut down.	Check cable from TCU to gearbox. Check connectors from gearbox to TCU. Check regulator resistance. 1) Check internal wire harness of gearbox.	1) See “Measurement of Resistance at Actuator/sensors and Cable” on page 1-53.
74	S.C. to battery voltage at clutch K2. The measured resistance value of valve is out of limit, voltage at K2 valve is too high. • Cable / connector is defective and has contact to battery voltage. • Cable / connector is defective and has contact to another regulator output of TCU. • Regulator has an internal defect.	TCU shifts to neutral. Op-Mode: limp home. If failure at another clutch is pending. TCU shifts to neutral. Op-Mode: TCU shut down.	Check cable from TCU to gearbox. Check connectors from gearbox to TCU. Check regulator resistance. 1) Check internal wire harness of gearbox.	1) See “Measurement of Resistance at Actuator/sensors and Cable” on page 1-53.
75	S.C. to ground at clutch K2. The measured resistance value of valve is out of limit, voltage at K2 valve is too low. • Cable / connector is defective and has contact to vehicle ground. • Regulator has an internal defect.	TCU shifts to neutral. Op-Mode: limp home. If failure at another clutch is pending. TCU shifts to neutral. Op-Mode: TCU shut down.	Check cable from TCU to gearbox. Check connectors from gearbox to TCU. Check regulator resistance. 1) Check internal wire harness of gearbox.	1) See “Measurement of Resistance at Actuator/sensors and Cable” on page 1-53.
76	O.C. at clutch K2. The measured resistance value of valve is out of limit. • Cable / connector is defective and has no contact to TCU. • Regulator has an internal defect.	TCU shifts to neutral. Op-Mode: limp home. If failure at another clutch is pending. TCU shifts to neutral. Op-Mode: TCU shut down.	Check cable from TCU to gearbox. Check connectors from gearbox to TCU. Check regulator resistance. 1) Check internal wire harness of gearbox.	1) See “Measurement of Resistance at Actuator/sensors and Cable” on page 1-53.
77	S.C. to battery voltage at clutch K3. The measured resistance value of valve is out of limit, voltage at K3 valve is too high. • Cable / connector is defective and has contact to battery voltage. • Cable / connector is defective and has contact to another regulator output of TCU. • Regulator has an internal defect.	TCU shifts to neutral. Op-Mode: limp home. If failure at another clutch is pending. TCU shifts to neutral. Op-Mode: TCU shut down.	Check cable from TCU to gearbox. Check connectors from gearbox to TCU. Check regulator resistance. 1) Check internal wire harness of gearbox.	1) See “Measurement of Resistance at Actuator/sensors and Cable” on page 1-53.

Fault Code (hex)	Meaning of the Fault Code (Possible reason for fault detection.)	Reaction of the TCU	Possible Steps to Repair	Remarks
78	S.C. to ground at clutch K3. The measured resistance value of valve is out of limit, voltage at K3 valve is too low. • Cable / connector is defective and has contact to vehicle ground. • Regulator has an internal defect.	TCU shifts to neutral. Op-Mode: limp home. If failure at another clutch is pending. TCU shifts to neutral. Op-Mode: TCU shut down.	Check cable from TCU to gearbox. Check connectors from gearbox to TCU. Check regulator resistance. 1) Check internal wire harness of gearbox.	1) See “Measurement of Resistance at Actuator/sensors and Cable” on page 1-53.
79	O.C. at clutch K3. The measured resistance value of valve is out of limit. • Cable / connector is defective and has no contact to TCU. • Regulator has an internal defect.	TCU shifts to neutral. Op-Mode: limp home. If failure at another clutch is pending. TCU shifts to neutral. Op-Mode: TCU shut down.	Check cable from TCU to gearbox. Check connectors from gearbox to TCU. Check regulator resistance. 1) Check internal wire harness of gearbox.	1) See “Measurement of Resistance at Actuator/sensors and Cable” on page 1-53.
7A	S.C. to battery voltage at converter clutch	----------	----------	----------
7B	S.C. to ground at converter clutch	----------	----------	----------
7C	O.C. at converter clutch	----------	----------	----------
7D	S.C. to ground at engine derating device. • Cable is defective and is contacted to vehicle ground. • Engine derating device has an internal defect. • Connector pin is contacted to vehicle ground.	Engine derating will be on until TCU power down even if fault vanishes (loose connection). Op-Mode: normal.	Check cable from TCU to engine derating device. Check connectors from engine derating device to TCU. Check resistance 1) of engine derating device.	1) See “Measurement of Resistance at Actuator/sensors and Cable” on page 1-53. (Only Mega 500-V)
7E	S.C. to battery voltage at engine derating device. • Cable / connector is defective and is contacted to battery voltage. • Engine derating device has an internal defect.	No reaction. Op-Mode: normal.	Check cable from TCU to engine derating device. Check connectors from backup alarm device to TCU. Check resistance 1) of backup alarm device.	Only Mega 500-V
7F	O.C. at engine derating device. TCU detected a wrong voltage at output pin, that looks like a O.C. for this output pin. • Cable is defective and has no connection to TCU. • Engine derating device has an internal defect. • Connector has no connection to TCU.	No reaction. Op-Mode: normal.	Check cable from TCU to engine derating device. Check connectors from engine derating device to TCU. Check resistance 1) of engine derating device.	1) See “Measurement of Resistance at Actuator/sensors and Cable” on page 1-53. (Only Mega 500-V)

Fault Code (hex)	Meaning of the Fault Code (Possible reason for fault detection.)	Reaction of the TCU	Possible Steps to Repair	Remarks
81	S.C. to battery voltage at clutch K4. The measured resistance value of valve is out of limit, voltage at K4 valve is too high. • Cable / connector is defective and has contact to battery voltage. • Cable / connector is defective and has contact to another regulator output of TCU. • Regulator has an internal defect.	TCU shifts to neutral. Op-Mode: limp home. If failure at another clutch is pending. TCU shifts to neutral. Op-Mode: TCU shut down.	Check cable from TCU to gearbox. Check connectors from gearbox to TCU. Check regulator resistance. 1) Check internal wire harness of gearbox.	1) See “Measurement of Resistance at Actuator/sensors and Cable” on page 1-53.
82	S.C. to ground at clutch K4. The measured resistance value of valve is out of limit, voltage at K4 valve is too low. • Cable / connector is defective and has contact to vehicle ground. • Regulator has an internal defect.	TCU shifts to neutral. Op-Mode: limp home. If failure at another clutch is pending. TCU shifts to neutral. Op-Mode: TCU shut down.	Check cable from TCU to gearbox. Check connectors from gearbox to TCU. Check regulator resistance. 1) Check internal wire harness of gearbox.	1) See “Measurement of Resistance at Actuator/sensors and Cable” on page 1-53.
83	O.C. at clutch K4. The measured resistance value of valve is out of limit. • Cable / connector is defective and has no contact to TCU. • Regulator has an internal defect.	TCU shifts to neutral. Op-Mode: limp home. If failure at another clutch is pending. TCU shifts to neutral. Op-Mode: TCU shut down.	Check cable from TCU to gearbox. Check connectors from gearbox to TCU. Check regulator resistance. 1) Check internal wire harness of gearbox.	1) See “Measurement of Resistance at Actuator/sensors and Cable” on page 1-53.
84	S.C. to battery voltage at clutch KV. The measured resistance value of valve is out of limit, voltage at KV valve is too high. • Cable / connector is defective and has contact to battery voltage. • Cable / connector is defective and has contact to another regulator output of TCU. • Regulator has an internal defect.	TCU shifts to neutral. Op-Mode: limp home. If failure at another clutch is pending. TCU shifts to neutral. Op-Mode: TCU shut down.	Check cable from TCU to gearbox. Check connectors from gearbox to TCU. Check regulator resistance. 1) Check internal wire harness of gearbox.	1) See “Measurement of Resistance at Actuator/sensors and Cable” on page 1-53.
85	S.C. to ground at clutch KV. The measured resistance value of valve is out of limit, voltage at KV valve is too low. • Cable / connector is defective and has contact to vehicle ground. • Regulator has an internal defect.	TCU shifts to neutral. Op-Mode: limp home. If failure at another clutch is pending. TCU shifts to neutral. Op-Mode: TCU shut down.	Check cable from TCU to gearbox. Check connectors from gearbox to TCU. Check regulator resistance. 1) Check internal wire harness of gearbox.	1) See “Measurement of Resistance at Actuator/sensors and Cable” on page 1-53.

Fault Code (hex)	Meaning of the Fault Code (Possible reason for fault detection.)	Reaction of the TCU	Possible Steps to Repair	Remarks
86	O.C. at clutch KV. The measured resistance value of valve is out of limit. • Cable / connector is defective and has no contact to TCU. • Regulator has an internal defect.	TCU shifts to neutral. Op-Mode: limp home. If failure at another clutch is pending. TCU shifts to neutral. Op-Mode: TCU shut down.	Check cable from TCU to gearbox. Check connectors from gearbox to TCU. Check regulator resistance. 1) Check internal wire harness of gearbox.	1) See “Measurement of Resistance at Actuator/sensors and Cable” on page 1-53.
87	S.C. to battery voltage at clutch KR. The measured resistance value of valve is out of limit, voltage at KR valve is too high. • Cable / connector is defective and has contact to battery voltage. • Cable / connector is defective and has contact to another regulator output of TCU. • Regulator has an internal defect.	TCU shifts to neutral. Op-Mode: limp home. If failure at another clutch is pending. TCU shifts to neutral. Op-Mode: TCU shut down.	Check cable from TCU to gearbox. Check connectors from gearbox to TCU. Check regulator resistance. 1) Check internal wire harness of gearbox.	1) See “Measurement of Resistance at Actuator/sensors and Cable” on page 1-53.
88	S.C. to ground at clutch KR. The measured resistance value of valve is out of limit, voltage at KR valve is too low. • Cable / connector is defective and has contact to vehicle ground. • Regulator has an internal defect.	TCU shifts to neutral. Op-Mode: limp home. If failure at another clutch is pending. TCU shifts to neutral. Op-Mode: TCU shut down.	Check cable from TCU to gearbox. Check connectors from gearbox to TCU. Check regulator resistance. 1) Check internal wire harness of gearbox.	1) See “Measurement of Resistance at Actuator/sensors and Cable” on page 1-53.
89	O.C. at clutch KR. The measured resistance value of valve is out of limit. • Cable / connector is defective and has no contact to TCU. • Regulator has an internal defect.	TCU shifts to neutral. Op-Mode: limp home. If failure at another clutch is pending. TCU shifts to neutral. Op-Mode: TCU shut down.	Check cable from TCU to gearbox. Check connectors from gearbox to TCU. Check regulator resistance. 1) Check internal wire harness of gearbox.	1) See “Measurement of Resistance at Actuator/sensors and Cable” on page 1-53.
91	S.C. to ground at relay reverse warning alarm. TCU detected a wrong voltage at output pin, that looks like a S.C. to vehicle ground. • Cable is defective and is contacted to vehicle ground. • Backup alarm device has an internal defect. • Connector pin is contacted to vehicle ground.	Backup alarm will be on until TCU power down even if fault vanishes (loose connection). Op-Mode: normal.	Check cable from TCU to backup alarm device. Check connectors from backup alarm device to TCU. Check resistance 1) of backup alarm device.	1) See “Measurement of Resistance at Actuator/sensors and Cable” on page 1-53.

Fault Code (hex)	Meaning of the Fault Code (Possible reason for fault detection.)	Reaction of the TCU	Possible Steps to Repair	Remarks
92	S.C. to battery voltage at relay reverse warning alarm. TCU detected a wrong voltage at output pin, that looks like a S.C. to battery voltage. • Cable is defective and is contacted to battery voltage. • Backup alarm device has an internal defect. • Connector pin is contacted to battery voltage.	No reaction. Op-Mode: normal.	Check cable from TCU to backup alarm device. Check connectors from backup alarm device to TCU. Check resistance 1) of backup alarm device.	1) See “Measurement of Resistance at Actuator/sensors and Cable” on page 1-53.
93	O.C. at relay reverse warning alarm. TCU detected a wrong voltage at output pin, that looks like a O.C. for this output pin. • Cable is defective and has no connection to TCU. • Backup alarm device has an internal defect. • Connector has no connection to TCU.	No reaction. Op-Mode: normal.	Check cable from TCU to backup alarm device. Check connectors from backup alarm device to TCU. Check resistance 1) of backup alarm device.	1) See “Measurement of Resistance at Actuator/sensors and Cable” on page 1-53.
94	S.C. to ground at relay starter interlock. TCU detected a wrong voltage at output pin, that looks like a S.C. to vehicle ground. • Cable is defective and is contacted to vehicle ground. • Starter interlock relay has an internal defect. • Connector pin is contacted to vehicle ground.	No reaction. Op-Mode: normal.	Check cable from TCU to starter interlock relay. Check connectors from starter interlock relay to TCU. Check resistance 1) of starter interlock relay.	1) See “Measurement of Resistance at Actuator/sensors and Cable” on page 1-53.
95	S.C. to battery voltage at relay starter interlock. TCU detected a wrong voltage at output pin, that looks like a S.C. to battery voltage. • Cable is defective and is contacted to battery voltage. • Starter interlock relay has an internal defect. • Connector pin is contacted to battery voltage.	No reaction. Op-Mode: normal.	Check cable from TCU to starter interlock relay. Check connectors from starter interlock relay to TCU. Check resistance 1) of starter interlock relay.	1) See “Measurement of Resistance at Actuator/sensors and Cable” on page 1-53.

Fault Code (hex)	Meaning of the Fault Code (Possible reason for fault detection.)	Reaction of the TCU	Possible Steps to Repair	Remarks
96	O.C. at relay starter interlock. TCU detected a wrong voltage at output pin, that looks like a O.C. for this output pin. • Cable is defective and has no connection to TCU. • Starter interlock relay has an internal defect. • Connector has no connection to TCU.	No reaction. Op-Mode: normal.	Check cable from TCU to starter interlock relay. Check connectors from starter interlock relay to TCU. Check resistance [1] of starter interlock relay.	[1] See “Measurement of Resistance at Actuator/sensors and Cable” on page 1-53.
97	S.C. to ground at park brake solenoid. TCU detected a wrong voltage at output pin, that looks like a S.C. to vehicle ground. • Cable is defective and is contacted to vehicle ground • Park brake solenoid has an internal defect. • Connector pin is contacted to vehicle ground.	No reaction. Op-Mode: normal.	Check cable from TCU to the park brake solenoid. Check connectors from park brake solenoid to TCU. Check resistance [1] of park brake solenoid.	[1] See “Measurement of Resistance at Actuator/sensors and Cable” on page 1-53.
98	S.C. to battery voltage at park brake solenoid TCU detected a wrong voltage at the output pin, that looks like a S.C. to battery voltage. • Cable is defective and is contacted to vehicle ground • Park brake solenoid has an internal defect. • Connector pin is contacted to vehicle ground	No reaction. Optional: (some customers) TCU shifts to neutral caused by park brake feed back. Op-Mode: normal.	Check cable from TCU to the park brake solenoid. Check connectors from park brake solenoid to TCU. Check resistance [1] of park brake solenoid.	[1] See “Measurement of Resistance at Actuator/sensors and Cable” on page 1-53.
99	O.C. at park brake solenoid TCU detected a wrong voltage at the output pin, that looks like a O.C. for this output pin. • Cable is defective and has no connection to TCU. • Park brake solenoid has an internal defect. • Connector has no connection to TCU.	No reaction. Optional: (some customers) TCU shifts to neutral caused by park brake feed back. Op-Mode: normal.	Check cable from TCU to the park brake solenoid. Check connectors from park brake solenoid to TCU. Check resistance [1] of park brake solenoid.	----------

Fault Code (hex)	Meaning of the Fault Code (Possible reason for fault detection.)	Reaction of the TCU	Possible Steps to Repair	Remarks
9A	S.C. to ground at converter lock up clutch solenoid. TCU detected a wrong voltage at the output pin, that looks like a S.C. to vehicle ground. • Cable is defective and is contacted to vehicle ground. • Converter clutch solenoid has an internal defect. • Connector pin is contacted to vehicle ground.	No reaction. Op-Mode: normal.	Check cable from TCU to the converter clutch solenoid. Check connectors from converter clutch solenoid to TCU. Check resistance 1) of converter clutch solenoid.	----------
9B	O.C. at converter lock up clutch solenoid. TCU detected a wrong voltage at the output pin, that looks like a O.C. for this output pin. • Cable is defective and has no connection to TCU. • Converter clutch solenoid has an internal defect. • Connector has no connection to TCU.	Converter clutch always open, retarder not available. Op-Mode: normal.	Check cable from TCU to the converter clutch solenoid. Check connectors from converter clutch solenoid to TCU. Check resistance 1) of converter clutch solenoid.	1) See “Measurement of Resistance at Actuator/sensors and Cable” on page 1-53.
9C	S.C. to battery voltage at converter lock up clutch solenoid. TCU detected a wrong voltage at the output pin, that looks like a S.C. to battery voltage. • Cable is defective and is contacted to battery voltage • Converter clutch solenoid has an internal defect. • Connector pin is contacted to battery voltage	No reaction. Op-Mode: normal.	Check cable from TCU to the converter clutch solenoid. Check connectors from converter clutch solenoid to TCU. Check resistance 1) of converter clutch solenoid.	1) See “Measurement of Resistance at Actuator/sensors and Cable” on page 1-53.
9D	S.C. to ground at retarder solenoid. TCU detected a wrong voltage at the output pin, that looks like a S.C. to vehicle ground. • Cable is defective and is contacted to vehicle ground. • Retarder solenoid has an internal defect. • Connector pin is contacted to vehicle ground.	No reaction. Op-Mode: normal.	Check cable from TCU to the retarder solenoid. Check connectors from retarder solenoid to TCU. Check resistance 1) of retarder solenoid.	1) See “Measurement of Resistance at Actuator/sensors and Cable” on page 1-53.

Fault Code (hex)	Meaning of the Fault Code (Possible reason for fault detection.)	Reaction of the TCU	Possible Steps to Repair	Remarks
9E	O.C. at retarder solenoid. TCU detected a wrong voltage at the output pin, that looks like a O.C. for this output pin. • Cable is defective and has no connection to TCU. • Retarder solenoid has an internal defect. • Connector has no connection to TCU.	No reaction. Op-Mode: normal.	Check cable from TCU to the retarder solenoid. Check connectors from retarder solenoid to TCU. Check resistance [1] of retarder solenoid.	[1] See “Measurement of Resistance at Actuator/sensors and Cable” on page 1-53.
9F	S.C. to battery voltage at retarder solenoid. TCU detected a wrong voltage at the output pin, that looks like a S.C. to battery voltage. • Cable is defective and is contacted to battery voltage • Retarder solenoid has an internal defect. • Connector pin is contacted to battery voltage	No reaction. Op-Mode: normal.	Check cable from TCU to the retarder solenoid. Check connectors from retarder solenoid to TCU. Check resistance [1] of retarder solenoid.	[1] See “Measurement of Resistance at Actuator/sensors and Cable” on page 1-53.
A1	S.C. to ground at difflock or axle connection solenoid. TCU detected a wrong voltage at the output pin, that looks like a S.C. to vehicle ground. • Cable is defective and is contacted to vehicle ground • Difflock solenoid has an internal defect. • Connector pin is contacted to vehicle ground	No reaction. Op-Mode: normal.	Check cable from TCU to the difflock solenoid. Check connectors from difflock solenoid to TCU. Check resistance [1] of difflock solenoid.	[1] See “Measurement of Resistance at Actuator/sensors and Cable” on page 1-53.
A2	S.C. to battery voltage at difflock or axle connection solenoid. TCU detected a wrong voltage at the output pin, that looks like a S.C. to battery voltage. • Cable is defective and is contacted to battery voltage • Difflock solenoid has an internal defect. • Connector pin is contacted to battery voltage	No reaction. Op-Mode: normal.	Check cable from TCU to the difflock solenoid. Check connectors from difflock solenoid to TCU. Check resistance [1] of difflock solenoid.	[1] See “Measurement of Resistance at Actuator/sensors and Cable” on page 1-53.

Fault Code (hex)	Meaning of the Fault Code (Possible reason for fault detection.)	Reaction of the TCU	Possible Steps to Repair	Remarks
A3	O.C. at difflock or axle connection solenoid. TCU detected a wrong voltage at the output pin, that looks like a O.C. for this output pin. • Cable is defective and has no connection to TCU. • Difflock solenoid has an internal defect. • Connector has no connection to TCU.	No reaction. Op-Mode: normal.	Check cable from TCU to the difflock solenoid. Check connectors from difflock solenoid to TCU. Check resistance 1) of difflock solenoid.	1) See “Measurement of Resistance at Actuator/sensors and Cable” on page 1-53.
A4	S.C. to ground at warning signal output. TCU detected a wrong voltage at the output pin, that looks like a S.C. to vehicle ground. • Cable is defective and is contacted to vehicle ground • Warning device has an internal defect. • Connector pin is contacted to vehicle ground	No reaction. Op-Mode: normal.	Check cable from TCU to the warning device. Check connectors from warning device to TCU. Check resistance 1) of warning device.	1) See “Measurement of Resistance at Actuator/sensors and Cable” on page 1-53.
A5	O.C. at warning signal output TCU detected a wrong voltage at the output pin, that looks like a O.C. for this output pin. • Cable is defective and has no connection to TCU. • Warning device has an internal defect. • Connector has no connection to TCU.	No reaction. Op-Mode: normal.	Check cable from TCU to the warning device. Check connectors from warning device to TCU. Check resistance 1) of warning device.	1) See “Measurement of Resistance at Actuator/sensors and Cable” on page 1-53.
A6	S.C. to battery voltage at warning signal output. TCU detected a wrong voltage at the output pin, that looks like a S.C. to battery voltage. • Cable is defective and is contacted to battery voltage • Warning device has an internal defect. • Connector pin is contacted to battery voltage	No reaction. Op-Mode: normal.	Check cable from TCU to the warning device. Check connectors from warning device to TCU. Check resistance 1) of warning device.	1) See “Measurement of Resistance at Actuator/sensors and Cable” on page 1-53.

Fault Code (hex)	Meaning of the Fault Code (Possible reason for fault detection.)	Reaction of the TCU	Possible Steps to Repair	Remarks
A7	S.C. to ground at customer specific function No. 4 TCU detected a wrong voltage at the output pin, that looks like a S.C. to vehicle ground. • Cable is defective and is contacted to vehicle ground. • Customer specific function No. 4 device has an internal defect. • Connector pin is contacted to vehicle ground	Customer specific.	Check cable from TCU to customer specific function No. 4 device. Check connectors from customer specific function No. 4 device to TCU. Check resistance [1] of customer specific function No. 4 device.	[1] See “Measurement of Resistance at Actuator/sensors and Cable” on page 1-53.
A8	S.C. to battery voltage at customer specific function No. 4 TCU detected a wrong voltage at the output pin, that looks like a S.C. to battery voltage. • Cable is defective and is contacted to battery voltage. • Customer specific function No. 4 device has an internal defect. • Connector pin is contacted to battery voltage	Customer specific.	Check cable from TCU to customer specific function No. 4 device. Check connectors from customer specific function No. 4 device to TCU. Check resistance [1] of customer specific function No. 4 device.	[1] See “Measurement of Resistance at Actuator/sensors and Cable” on page 1-53.
A9	O.C. at customer specific function No. 4. TCU detected a wrong voltage at the output pin, that looks like a O.C. for this output pin. • Cable is defective and has no connection to TCU. • Customer specific function No. 4 device has an internal defect. • Connector has no connection to TCU.	Customer specific.	Check cable from TCU to customer specific function No. 4 device. Check connectors from customer specific function No. 4 device to TCU. Check resistance [1] of customer specific function No. 4 device.	[1] See “Measurement of Resistance at Actuator/sensors and Cable” on page 1-53.
AA	S.C. to ground at customer specific function No. 5 TCU detected a wrong voltage at the output pin, that looks like a S.C. to vehicle ground. • Cable is defective and is contacted to vehicle ground. • Customer specific function No. 5 device has an internal defect. • Connector pin is contacted to vehicle ground	Customer specific.	Check cable from TCU to customer specific function No. 5 device. Check connectors from customer specific function No. 5 device to TCU. Check resistance [1] of customer specific function No. 5 device.	[1] See “Measurement of Resistance at Actuator/sensors and Cable” on page 1-53.

Fault Code (hex)	Meaning of the Fault Code (Possible reason for fault detection.)	Reaction of the TCU	Possible Steps to Repair	Remarks
AB	S.C. to battery voltage at customer specific function No. 5 TCU detected a wrong voltage at the output pin, that looks like a S.C. to battery voltage. • Cable is defective and is contacted to battery voltage. • Customer specific function No. 5 device has an internal defect. • Connector pin is contacted to battery voltage	Customer specific.	Check cable from TCU to customer specific function No. 5 device. Check connectors from customer specific function No. 5 device to TCU. Check resistance [1] of customer specific function No. 5 device.	[1] See “Measurement of Resistance at Actuator/sensors and Cable” on page 1-53.
AC	O.C. at customer specific function No. 5. TCU detected a wrong voltage at the output pin, that looks like a O.C. for this output pin. • Cable is defective and has no connection to TCU. • Customer specific function No. 5 device has an internal defect. • Connector has no connection to TCU.	Customer specific.	Check cable from TCU to customer specific function No. 5 device. Check connectors from customer specific function No. 5 device to TCU. Check resistance [1] of customer specific function No. 5 device.	[1] See “Measurement of Resistance at Actuator/sensors and Cable” on page 1-53.
AD	S.C. to ground at customer specific function No. 6 TCU detected a wrong voltage at the output pin, that looks like a S.C. to vehicle ground. • Cable is defective and is contacted to vehicle ground. • Customer specific function No. 6 device has an internal defect. • Connector pin is contacted to vehicle ground	Customer specific.	Check cable from TCU to customer specific function No. 6 device. Check connectors from customer specific function No. 6 device to TCU. Check resistance [1] of customer specific function No. 6 device.	[1] See “Measurement of Resistance at Actuator/sensors and Cable” on page 1-53.
AE	S.C. to battery voltage at customer specific function No. 6 TCU detected a wrong voltage at the output pin, that looks like a S.C. to battery voltage. • Cable is defective and is contacted to battery voltage. • Customer specific function No. 6 device has an internal defect. • Connector pin is contacted to battery voltage	Customer specific.	Check cable from TCU to customer specific function No. 6 device. Check connectors from customer specific function No. 6 device to TCU. Check resistance [1] of customer specific function No. 6 device.	[1] See “Measurement of Resistance at Actuator/sensors and Cable” on page 1-53.

Fault Code (hex)	Meaning of the Fault Code (Possible reason for fault detection.)	Reaction of the TCU	Possible Steps to Repair	Remarks
AF	O.C. at customer specific function No. 6. TCU detected a wrong voltage at the output pin, that looks like a O.C. for this output pin. • Cable is defective and has no connection to TCU. • Customer specific function No. 6 device has an internal defect. • Connector has no connection to TCU.	Customer specific.	Check cable from TCU to customer specific function No. 6 device. Check connectors from customer specific function No. 6 device to TCU. Check resistance [1)] of customer specific function No. 6 device.	[1)] See “Measurement of Resistance at Actuator/sensors and Cable” on page 1-53.
B1	Slippage at clutch K1. TCU calculates a differential speed at closed clutch K1. If this calculated value is out of range, TCU interprets this as slipping clutch. • Low-pressure at clutch K1. • Low main pressure. • Wrong signal at internal speed sensor. • Wrong signal at output speed sensor. • Sensor gap is incorrect. • Clutch is defective.	TCU shifts to neutral. Op-Mode: limp home. If failure at another clutch is pending. TCU shifts to neutral. Op-Mode: TCU shut down.	Check pressure at clutch K1. Check main pressure in system. Check sensor gap at internal speed sensor. Check sensor gap at output speed sensor. Check signal at internal speed sensor. Check signal at output speed sensor. Replace clutch.	----------
B2	Slippage at clutch K2. TCU calculates a differential speed at closed clutch K2. If this calculated value is out of range, TCU interprets this as slipping clutch. • Low-pressure at clutch K2. • Low main pressure. • Wrong signal at internal speed sensor. • Wrong signal at output speed sensor. • Sensor gap is incorrect. • Clutch is defective.	TCU shifts to neutral. Op-Mode: limp home. If failure at another clutch is pending. TCU shifts to neutral. Op-Mode: TCU shut down.	Check pressure at clutch K2. Check main pressure in system. Check sensor gap at internal speed sensor. Check sensor gap at output speed sensor. Check signal at internal speed sensor. Check signal at output speed sensor. Replace clutch.	----------

Fault Code (hex)	Meaning of the Fault Code (Possible reason for fault detection.)	Reaction of the TCU	Possible Steps to Repair	Remarks
B3	Slippage at clutch K3. TCU calculates a differential speed at closed clutch K3. If this calculated value is out of range, TCU interprets this as slipping clutch. • Low-pressure at clutch K3. • Low main pressure. • Wrong signal at internal speed sensor. • Wrong signal at output speed sensor. • Sensor gap is incorrect. • Clutch is defective.	TCU shifts to neutral. Op-Mode: limp home. If failure at another clutch is pending. TCU shifts to neutral. Op-Mode: TCU shut down.	Check pressure at clutch K3. Check main pressure in system. Check sensor gap at internal speed sensor. Check sensor gap at output speed sensor. Check signal at internal speed sensor. Check signal at output speed sensor. Replace clutch.	----------
B4	Slippage at clutch K4. TCU calculates a differential speed at closed clutch K4. If this calculated value is out of range, TCU interprets this as slipping clutch. • Low-pressure at clutch K4. • Low main pressure. • Wrong signal at internal speed sensor. • Wrong signal at turbine speed sensor. • Sensor gap is incorrect. • Clutch is defective.	TCU shifts to neutral. Op-Mode: limp home. If failure at another clutch is pending. TCU shifts to neutral. Op-Mode: TCU shut down.	Check pressure at clutch K4. Check main pressure in system. Check sensor gap at internal speed sensor. Check sensor gap at turbine speed sensor. Check signal at internal speed sensor. Check signal at turbine speed sensor. Replace clutch.	----------
B5	Slippage at clutch KV. TCU calculates a differential speed at closed clutch KV. If this calculated value is out of range, TCU interprets this as slipping clutch. • Low-pressure at clutch KV. • Low main pressure. • Wrong signal at internal speed sensor. • Wrong signal at turbine speed sensor. • Sensor gap is incorrect. • Clutch is defective.	TCU shifts to neutral. Op-Mode: limp home. If failure at another clutch is pending. TCU shifts to neutral. Op-Mode: TCU shut down.	Check pressure at clutch KV. Check main pressure in system. Check sensor gap at internal speed sensor. Check sensor gap at turbine speed sensor. Check signal at internal speed sensor. Check signal at turbine speed sensor. Replace clutch.	----------

Fault Code (hex)	Meaning of the Fault Code (Possible reason for fault detection.)	Reaction of the TCU	Possible Steps to Repair	Remarks
B6	Slippage at clutch KR. TCU calculates a differential speed at closed clutch KR. If this calculated value is out of range, TCU interprets this as slipping clutch. • Low-pressure at clutch KR. • Low main pressure. • Wrong signal at internal speed sensor. • Wrong signal at turbine speed sensor. • Sensor gap is incorrect. • Clutch is defective.	TCU shifts to neutral. Op-Mode: limp home. If failure at another clutch is pending. TCU shifts to neutral. Op-Mode: TCU shut down.	Check pressure at clutch KR. Check main pressure in system. Check sensor gap at internal speed sensor. Check sensor gap at turbine speed sensor. Check signal at internal speed sensor. Check signal at turbine speed sensor. Replace clutch.	----------
B7	Overtemp sump. TCU measured a temperature in oil sump that is over allowed threshold.	No reaction. Op-Mode: normal.	Cool down machine. Check oil level. Check temperature sensor.	----------
B8	Overtemp retarder. TCU measured a temperature in retarder oil that is over allowed threshold.	TCU disables retarder. Op-Mode: normal.	Cool down machine. Check oil level. Check temperature sensor.	----------
B9	Overspeed engine.	Retarder applies if configured Op-Mode: normal.	----------	----------
BA	Differential pressure oil filter TCU measured a voltage at differential pressure switch out of the allowable range. • Oil filter is dirty. • Cable or connectors are defect and are contacted to battery voltage. • Cable or connectors are defect and are contacted to vehicle ground. • Differential pressure switch is defective.	No reaction. Op-Mode: normal.	Check oil filter. Check the cable from TCU to the differential pressure switch. Check differential pressure switch.	----------

Fault Code (hex)	Meaning of the Fault Code (Possible reason for fault detection.)	Reaction of the TCU	Possible Steps to Repair	Remarks
BB	Slippage at converter lockup clutch. TCU calculates a differential speed at closed converter lockup clutch. If this calculated value is out of range, TCU interprets this as slipping clutch. • Low-pressure at converter lockup clutch. • Low main pressure. • Wrong signal at engine speed sensor. • Wrong signal at turbine speed sensor. • Sensor gap is incorrect. • Clutch is defective.	----------	Check pressure at converter lockup clutch. Check main pressure in system. Check sensor gap at engine speed sensor. Check sensor gap at turbine speed sensor. Check signal at engine speed sensor. Check signal at turbine speed sensor. Replace clutch.	----------
BD	S.C. to ground at engine brake solenoid. TCU detected a wrong voltage at the output pin, that looks like a S.C. to vehicle ground. • Cable is defective and is contacted to vehicle ground • Engine brake solenoid has an internal defect. • Connector pin is contacted to vehicle ground	No reaction. Op-Mode: normal.	Check cable from TCU to the engine brake solenoid. Check connectors from engine brake solenoid to TCU. Check resistance [1] of engine brake solenoid.	[1] See “Measurement of Resistance at Actuator/sensors and Cable” on page 1-53.
BE	S.C. to battery voltage at engine brake. TCU detected a wrong voltage at the output pin, that looks like a S.C. to battery voltage. • Cable is defective and is contacted to battery voltage. • Engine brake solenoid has an internal defect. • Connector pin is contacted to battery voltage	No reaction. Op-Mode: normal.	Check cable from TCU to engine brake solenoid. Check connectors from customer engine brake solenoid to TCU. Check resistance [1] of engine brake solenoid.	[1] See “Measurement of Resistance at Actuator/sensors and Cable” on page 1-53.
BF	O.C. at engine brake TCU detected a wrong voltage at the output pin, that looks like a O.C. for this output pin. • Cable is defective and has no connection to TCU. • Engine brake solenoid has an internal defect. • Connector has no connection to TCU.	No reaction. Op-Mode: normal.	Check cable from TCU to the engine brake solenoid. Check connectors from engine brake solenoid to TCU. Check resistance [1] of engine brake solenoid.	[1] See “Measurement of Resistance at Actuator/sensors and Cable” on page 1-53.

Fault Code (hex)	Meaning of the Fault Code (Possible reason for fault detection.)	Reaction of the TCU	Possible Steps to Repair	Remarks
C3	Overtemp converter output. TCU measured a oil temperatureat the converter output that is over allowed threshold.	No reaction. Op-Mode: normal.	Cool down machine. Check oil level. Check temperature sensor.	----------
C4	S.C. to ground joystick status indicator. TCU detected a wrong voltage at the output pin, that looks like a S.C. to vehicle ground. • Cable is defective and is contacted to vehicle ground • Joystick status indicator has an internal defect. • Connector pin is contacted to vehicle ground	No reaction. Op-Mode: normal.	Check cable from TCU to joystick status indicator. Check connectors from joystick status indicator to TCU. Check resistance [1] of joystick status indicator.	[1] See “Measurement of Resistance at Actuator/sensors and Cable” on page 1-53.
C5	S.C. to battery voltage at joystick status indicator. TCU detected a wrong voltage at the output pin, that looks like a S.C. to vehicle ground. • Cable is defective and is contacted to vehicle ground. • Joystick status indicator has an internal defect. • Connector pin is contacted to vehicle ground.	No reaction. Op-Mode: normal.	Check cable from TCU to joystick status indicator. Check connectors from joystick status indicator to TCU. Check resistance [1] of joystick status indicator.	[1] See “Measurement of Resistance at Actuator/sensors and Cable” on page 1-53.
C5	S.C. to battery voltage at joystick status indicator. TCU detected a wrong voltage at the output pin, that looks like a S.C. to battery voltage. • Cable is defective and is contacted to battery voltage. • Joystick status indicator has an internal defect. • Connector pin is contacted to battery voltage.	No reaction. Op-Mode: normal.	Check cable from TCU to joystick status indicator. Check connectors from joystick status indicator to TCU. Check resistance [1] of joystick status indicator.	----------
C6	O.C. at joystick status indicator TCU detected a wrong voltage at the output pin, that looks like a O.C. for this output pin. • Cable is defective and has no connection to TCU. • Joystick status indicator has an internal defect. • Connector has no connection to TCU.	No reaction. Op-Mode: normal.	Check cable from TCU to the joystick status indicator. Check connectors from joystick status indicator to TCU. Check resistance [1] of joystick status indicator.	----------

Fault Code (hex)	Meaning of the Fault Code (Possible reason for fault detection.)	Reaction of the TCU	Possible Steps to Repair	Remarks
C7	S.C. to ground at overtemp neutral indicator. TCU detected a wrong voltage at the output pin, that looks like a S.C. to vehicle ground. • Cable is defective and is contacted to vehicle ground • Overtemp status indicator has an internal defect. • Connector pin is contacted to vehicle ground	No reaction. Op-Mode: normal.	Check cable from TCU toovertemp neutral indicator. Check connectors from overtemp neutral indicator to TCU. Check resistance 1) of overtemp neutral indicator.	1) See “Measurement of Resistance at Actuator/sensors and Cable” on page 1-53.
C8	S.C. to battery voltage at overtemp neutral indicator. TCU detected a wrong voltage at the output pin, that looks like a S.C. to battery voltage. • Cable is defective and is contacted to battery voltage. • Overtemp status indicator has an internal defect. • Connector pin is contacted to battery voltage.	No reaction. Op-Mode: normal.	Check cable from TCU to overtemp neutral indicator. Check connectors from overtemp neutral indicator to TCU. Check resistance 1) of overtemp neutral indicator.	1) See “Measurement of Resistance at Actuator/sensors and Cable” on page 1-53.
C9	O.C. at overtemp neutral indicator TCU detected a wrong voltage at the output pin, that looks like a O.C. for this output pin. • Cable is defective and has no connection to TCU. • Overtemp status indicator has an internal defect. • Connector has no connection to TCU.	No reaction. Op-Mode: normal.	Check cable from TCU to the overtemp neutral indicator. Check connectors from overtemp neutral indicator to TCU. Check resistance 1) of overtemp neutral indicator.	----------
CA	Engine_retarder config_timeout Timeout of CAN-message Engine_retarder config from EEC controller. • Interference on CAN-Bus • CAN wire/ connector is broken. • CAN wire/ connector is defective an has contact to vehicle ground or battery voltage.	Op-Mode: substitute clutch control.	Check EEC controller. Check wire of CAN-Bus. Check cable to EEC controller.	----------

Fault Code (hex)	Meaning of the Fault Code (Possible reason for fault detection.)	Reaction of the TCU	Possible Steps to Repair	Remarks
CB	ERC1 timeout. Timeout of CAN-message ERC1 from EEC controller. • Interference on CAN-Bus • CAN wire/ connector is broken. • CAN wire/ connector is defective an has contact to vehicle ground or battery voltage.	Op-Mode: substitute clutch control.	Check EEC controller. Check wire of CAN-Bus. Check cable to EEC controller.	----------
D1	S.C. to battery voltage at power supply for sensors. TCU measures more than 6V at the pin AU1 (5V sensor supply).	See fault codes No. 21 - 2C.	Check cables and connectors to sensors, which are supplied from AU1. Check the power supply at the pin AU1 (should be approximately 5V).	Fault codes No. 21 to No. 2C may be a reaction of this fault.
D2	S.C. to ground at power supply for sensors. TCU measures less than 4V at the pin AU1 (5V sensor supply).	See fault codes No. 21 - 2C.	Check cables and connectors to sensors, which are supplied from AU1. Check the power supply at the pin AU1 (should be approximately 5V).	Fault codes No. 21 to No. 2C may be a reaction of this fault.
D3	Low power at battery. Measured voltage at power supply is lower than 18 V.	Shift to neutral. Op-Mode: TCU shut down.	Check power supply battery. Check cables from batteries to TCU. Check connectors from batteries to TCU.	----------
D4	High power at battery. Measured voltage at power supply is higher than 32 V.	Shift to neutral. Op-Mode: TCU shut down.	Check power supply battery. Check cables from batteries to TCU. Check connectors from batteries to TCU.	----------

Fault Code (hex)	Meaning of the Fault Code (Possible reason for fault detection.)	Reaction of the TCU	Possible Steps to Repair	Remarks
D5	Error at switch 1 for valve power supply VPS1. TCU switched on VPS1 and measured VPS1 is off or TCU switched off VPS1 and measured VPS1 is still on. • Cable or connectors are defect and are contacted to battery voltage. • Cable or connectors are defect and are contacted to vehicle ground. • Permanent power supply KL30 missing. • TCU has an internal defect.	Shift to neutral. Op-Mode: TCU shut down.	Check fuse. Check cables from gearbox to TCU. Check connectors from gearbox to TCU. Replace TCU.	----------
D6	Error at switch 2 for valve power supply VPS2. TCU switched on VPS2 and measured VPS2 is off or TCU switched off VPS2 and measured VPS2 is still on. • Cable or connectors are defect and are contacted to battery voltage. • Cable or connectors are defect and are contacted to vehicle ground. • Permanent power supply KL30 missing. • TCU has an internal defect.	Shift to neutral. Op-Mode: TCU shut down.	Check fuse. Check cables from gearbox to TCU. Check connectors from gearbox to TCU. Replace TCU.	----------
E3	S.C. to battery voltage at display output. TCU sends data to the display and measures always a high voltage level on the connector. • Cable or connectors are defective and are contacted to battery voltage. • Display has an internal defect.	No reaction. Op-Mode: normal.	Check the cable from TCU to the display. Check the connectors at the display. Change display.	----------
E4	S.C. to ground at display output. TCU sends data to the display and measures always a high voltage level on the connector. • Cable or connectors are defective and are contacted to vehicle ground. • Display has an internal defect.	No reaction. Op-Mode: normal.	Check the cable from TCU to the display. Check the connectors at the display. Change display.	----------

Fault Code (hex)	Meaning of the Fault Code (Possible reason for fault detection.)	Reaction of the TCU	Possible Steps to Repair	Remarks
E5	DISPID1_timeout Timeout of CAN-message DISPID1 from display controller. • Interference on CAN-Bus • CAN wire/ connector is broken. • CAN wire/ connector is defective an has contact to vehicle ground or battery voltage.	TCU select parameter set with ID0. Op-Mode: Limp Home	Check display controller. Check wire of CAN-Bus. Check cable to display controller.	----------
E5	CL1 timeout Timeout of CAN-message CL1 from cluster controller. • Interference on CAN-Bus • CAN wire/ connector is broken. • CAN wire/ connector is defective an has contact to vehicle ground or battery voltage.	TCU keeps old information for: Status test mode Status plock Shift quality selection Gear range restriction Op-Mode: normal	Check cluster controller. Check wire of CAN-Bus. Check cable to cluster controller.	----------
E6	Illegal ID request via CAN	Transmission stay neutral Op-Mode: normal	----------	----------
F1	General EEPROM fault. TCU cannot read nonvolatile memory. • TCU is defective.	Transmission stay neutral. Op-Mode: TCU shut down.	Replace TCU.	Often shown together with fault code F2.
F2	Configuration lost. TCU has lost the correct configuration and can't control the transmission. • Interference during saving data on nonvolatile memory. • TCU is brand new or from another vehicle.	Transmission stay neutral. Op-Mode: TCU shut down.	Reprogram the correct configuration for the vehicle (e.g. with cluster controller,...).	----------
F2	FWD configuration lost TCU has lost the FWD configuration. Interference during saving data on non volatile memory. TCU is brand new or from another vehicle.	Gear range set from 1st to 4th.	Reconfigure with TCU configuration command (ID PC).	----------
F3	Application error. Something of this application is wrong.	Transmission stay neutral. Op-Mode: TCU shut down.	Replace TCU!	This fault occurs only if an test engineer did something wrong in the application of the vehicle.
F4	Limp home request. No fault! Indicates that another computer requested limp home via CAN.	Shift to neutral. Op-Mode: limp home.	The external controller has to cancel the request.	----------

Fault Code (hex)	Meaning of the Fault Code (Possible reason for fault detection.)	Reaction of the TCU	Possible Steps to Repair	Remarks
F5	Clutch failure. AEB was not able to adjust clutch filling parameters. • One of the AEB-Values is out of limit.	Transmission stay neutral. Op-Mode: TCU shut down.	Check clutch.	TCU shows also the affected clutch on the Display.
F6	Clutch Adjustment Data lost or Inchpedal Calibration Data lost. TCU was not able to read correct clutch adjustment parameters. • Interference during saving data on nonvolatile memory. • TCU is brand new.	Default values = 0 for AEB offsets used. Op-Mode: normal. No Inchmode available.	Execute AEB.	----------

TABLE OF FAULT CODES - ERGO-CONTROL

Error Code Number	Meaning of Error Code	Remarks
11	Logical error at gear range signal.	
12	Logical error at direction select signal.	
21	Short circuit to battery voltage at clutch cutoff input.	
22	Short circuit to ground or open circuit at clutch cutoff input.	
23	Short circuit to battery voltage at load sensor input.	Not used.
24	Short circuit to ground or open circuit at load sensor input.	Not used.
25	Short circuit to battery voltage or open circuit at temperature sensor input.	
26	Short circuit to ground at temperature sensor input.	
31	Short circuit to battery voltage at engine speed input.	
32	Short circuit to ground or open circuit at engine speed input.	
33	Logical error at engine speed input.	
34	Short circuit to battery voltage at turbine speed input.	
35	Short circuit to ground or open circuit at turbine speed input.	
36	Logical error at turbine speed input.	
37	Short circuit to battery voltage at internal speed input.	
38	Short circuit to ground or open circuit at internal speed input.	
39	Logical error at internal speed input.	
3A	Short circuit to battery voltage at output speed input.	
3B	Short circuit to ground or open circuit at output speed input.	
3C	Logical error at output speed input.	
71	Short circuit to battery voltage at clutch K1.	
72	Short circuit to ground at clutch K1.	
73	Open circuit at clutch K1.	
74	Short circuit to battery voltage at clutch K2.	
75	Short circuit to ground at clutch K2.	
76	Open circuit at clutch K2.	

Error Code Number	Meaning of Error Code	Remarks
77	Short circuit to battery voltage at clutch K3.	
78	Short circuit to ground at clutch K3.	
79	Open circuit at clutch K3.	
7A	Short circuit to battery voltage at converter clutch.	Not used.
7B	Short circuit to ground at converter clutch.	Not used.
7C	Open circuit at converter clutch.	Not used
81	Short circuit battery voltage at clutch K4.	
82	Short circuit to ground at clutch K4.	
83	Open circuit at clutch K4.	
84	Short circuit to battery voltage at clutch KV.	
85	Short circuit to ground at clutch KV.	
86	Open circuit at clutch KV.	
87	Short circuit to battery voltage at clutch KR.	
88	Short circuit to ground at clutch KR.	
89	Open circuit at clutch KR.	
91	Short circuit battery voltage at relay reverse warning alarm.	
92	Short circuit to ground at relay reverse warning alarm.	
93	Open circuit at relay reverse warning alarm.	
94	Short circuit to battery voltage at relay starter interlock.	
95	Short circuit to ground at relay starter interlock.	
96	Open circuit at relay starter interlock.	
97	Short circuit to battery voltage at park brake solenoid.	
98	Short circuit ground at park brake solenoid.	
99	Open circuit at park brake solenoid.	
B1	Slippage at clutch K1.	
B2	Slippage at clutch K2.	
B3	Slippage at clutch K3.	
B4	Slippage at clutch K4.	
B5	Slippage at clutch KV.	

Error Code Number	Meaning of Error Code	Remarks
B6	Slippage at clutch KR.	
BA	Differential pressure oil filter.	
D1	Short circuit to battery voltage at power supply for sensors.	
D2	Short circuit to ground at power supply for sensors.	
D3	Low power at battery.	
D4	High power at battery.	
D5	Error at switch 1 for valve power supply.	
D6	Error at switch 2 for valve power supply.	
E1	Short circuit to battery at speedometer output.	Not used.
E2	Short circuit to ground or open circuit at speedometer output.	Not used.
E3	Short circuit to battery voltage at display output.	Not used.
E4	Short circuit to ground or open circuit at display output.	Not used.
E5	Error at communication on CAN.	
F1	General EEPROM fault.	
F2	Configuration lost.	
F3	Application error.	

MEASUREMENT OF RESISTANCE AT ACTUATOR/ SENSORS AND CABLE

Actuator

Open circuit:$R_{12} \approx R_{1G} \approx R_{2G} \approx \infty$

Short cut to ground:$R_{12} \approx R$;$R_{1G} \approx 0$, $R_{2G} \approx R$ or $R_{1G} \approx R$, $R_{2G} \approx 0$ (for S.C. to ground, G is connected to vehicle ground)

Short cut to battery:$R_{12} \approx R$;$R_{1G} \approx 0$, $R_{2G} \approx R$ or $R_{1G} \approx R$, $R_{2G} \approx 0$ (for S.C. to battery, G is connected to battery voltage.

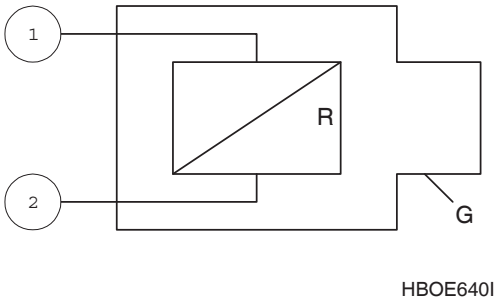

HBOE640I

Figure 2

Cable

open circuit:

$R_{12} \approx R_{1P} \approx R_{1C} \approx R_{2P} \approx R_{2C} \approx \infty$

short cut to ground:

$R_{12} \approx 0$;$R_{1C} \approx R_{2C} \approx 0$,$R_{1P} \approx R_{2P} \approx \infty$

short cut to battery:

$R_{12} \approx 0$,$R_{1C} \approx R_{2C} \approx \infty$,$R_{1P} \approx R_{2P} \approx 0$

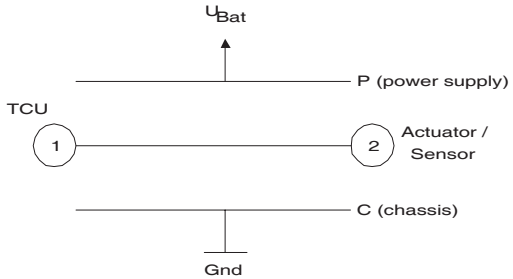

HBOE650I

Figure 3

Front Axle (ZF-MT-L 3095)

Edition 1

Table of Contents

Front Axle (ZF MT-L 3095)

Safety Precautions 5
Applicable Models 5
General Description 7
Outline 7
Drive Axle 7
Differential 10
Lubrication Instructions 12
Make Wear Measurement on Multidisk Brake 14
Inscriptions On Model Identification Plate 15
Torque Limits for Screws 16
Examples of Gear Tooth Contact Patterns for the Gleason Gear-tooth System 17
Special Tool 20
List of Special Tools for Disassembly and Reassembly 20
ZF Multitrac Rigid Axle MT-L 3095 29
Disassembly of Output and Brake 29
Reassembly of Output and Brake 38
Disassembly of Differential Carrier and Brake Tubes ... 51
Reassembly of Brake Tubes and Differential Carrier 59
Parking Brake 75
Functional Characteristics and Maintenance Instructions for Spring-loaded Sliding Caliper Brakes 75
1. Functional Characteristics of Spring-loaded Sliding Caliper Brakes 75
2. Mounting and Basic Setting Regulations 76
3. Adjusting Regulations 77
4. Emergency Release of Parking Brake 77
5. Maintenance and Repair Work 78
6. General 80

SAFETY PRECAUTIONS

CAUTION!

Follow all safety recommendations and safe shop practices outlined in the front of this manual or those contained within this section.

Always use tools and equipment that are in good working order.

Use lifting and hoisting equipment capable of safely handling load.

Remember, that ultimately safety is your own personal responsibility.

APPLICABLE MODELS

The contents of this section apply to the following models and serial number ranges.

MODEL	SERIAL NUMBER RANGE
DL300	5001 and Up

GENERAL DESCRIPTION

Outline

		Front Axle
Type		Frame-Fixed, Semifloating
Serial Number		3001 and Up
Overall Reduction Ratio		23.334
Differential type		Limited Slip Differential (Locking Ratio: 45%)
Max Static Load		35,700.0 kg (78,710 lb)
Max Output Torque		11,800.0 kg•m (85,350 ft lb)
Brake	Type	Multi Wet Disk
	Torque	2,362 kg•m @ 80 Bar (17,084 ft lb @ 1,160 psi)
Parking Brake	Type	SAHR CALIPER DISK BRAKE
	Torque	342.0 kg•m (2,474 ft lb)
	Release Press.	97.83 Bar (1,418.5 psi)
Drive Flange		7 C

Drive Axle

The drive axle consists of differential, final reduction gear assembly, wet type hydraulic disk brake unit, and axle shafts to which wheels are attached.

The power from drive unit is transmitted through the drive shafts to front and rear drive axles. The power is then transmitted to differential where it is divided into right and left axle shafts to final reduction gear assembly on each shaft end, thus driving the wheels.

The wet type hydraulic disk brake unit is installed in front of final reduction gear assembly and serves as a service brake.

Axle Mount

The front axle is bolted directly to front frame.

The rear axle is supported by the trunnion method in which axle supports are installed across the rear axle and bolted to rear frame. Consequently, the rear axle is cradled up and down around the center line of differential according to ground condition the loader travels. The trunnion mounted drive axle helps improve operator comfort because loaders with a trunnion mounted drive axle jolt less than those with the conventional cradle supported drive axle, when they travel on bad ground conditions.

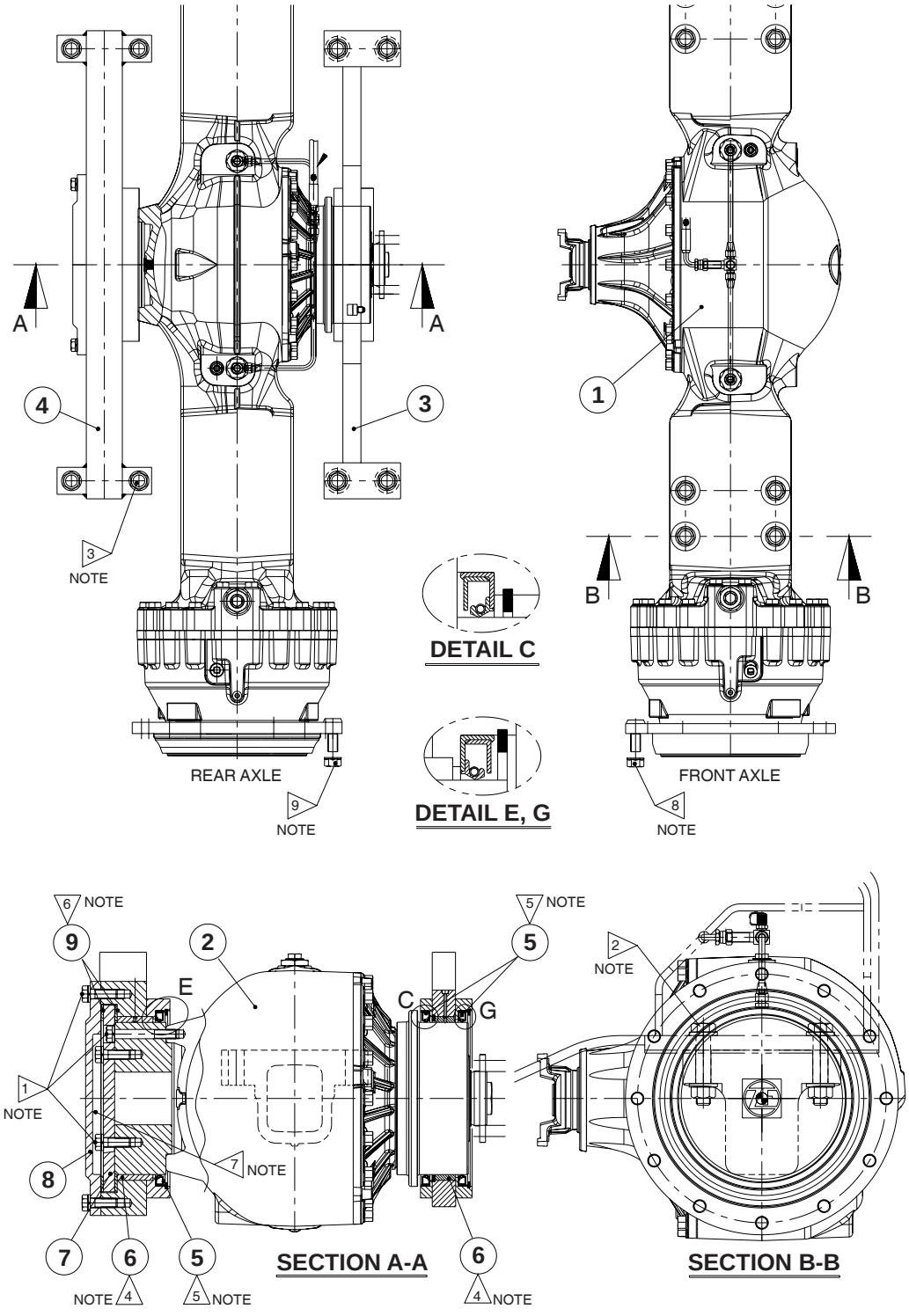

FG005271

Figure 1 DRIVE AXLE ASSEMBLY

Reference Number	Description
1	Front Axle
2	Rear Axle
3	Axle Support (Front)
4	Axle Support (Rear)
5	Packing

Reference Number	Description
6	Bushing
7	Thrust Plate
8	Thrust Cap
9	Thrust Washer

NOTE: *1) 28 kg•m (200 ft lb) Threaded area: Loctite #262.*

NOTE: *2) 95±5 kg•m (687 ±36 ft lb)*

NOTE: *3) 95±5 kg•m (687 ±36 ft lb)*

NOTE: *4) Inner surface: Grease (Assemble with chamfered surface toward axle.)*

NOTE: *5) Assemble with lip pointing outward.*

NOTE: *6) Assemble with groove pointing toward plate (7).*

NOTE: *7) Apply grease and assemble.*

NOTE: *8) Tightening Torque: 80±8 kg•m (580 ±58 ft lb) (Nut: 12 - M22x1.5)*

Thread Area: Loctite #262

NOTE: *9) Tightening Torque: 80±8 kg•m (580 ±58 ft lb) (Nut: 12 - M22x1.5)*

Thread Area: Loctite #262

Differential

The differential is integral with the reduction gear.

The power from drive shafts is transmitted through the drive pinion and the ring gear to differential gear case. It is then sent through the right and left side gears to final reduction gear assembly. The speed reduction of power is accomplished by the drive pinion and the ring gear.

Differential Operation

While the loader travels straight, the ring gear, differential gear case, and side gears rotate together, with the pinion gears inside the differential gear case not rotating. The power of same speed is thus transmitted from right and left side gears through the axle shafts to wheels. When the loader makes a turn, the right and left wheels rotate at different speeds; the pinion gears in differential gear case rotate around their own axes according to difference in speed between the right and left side gears.

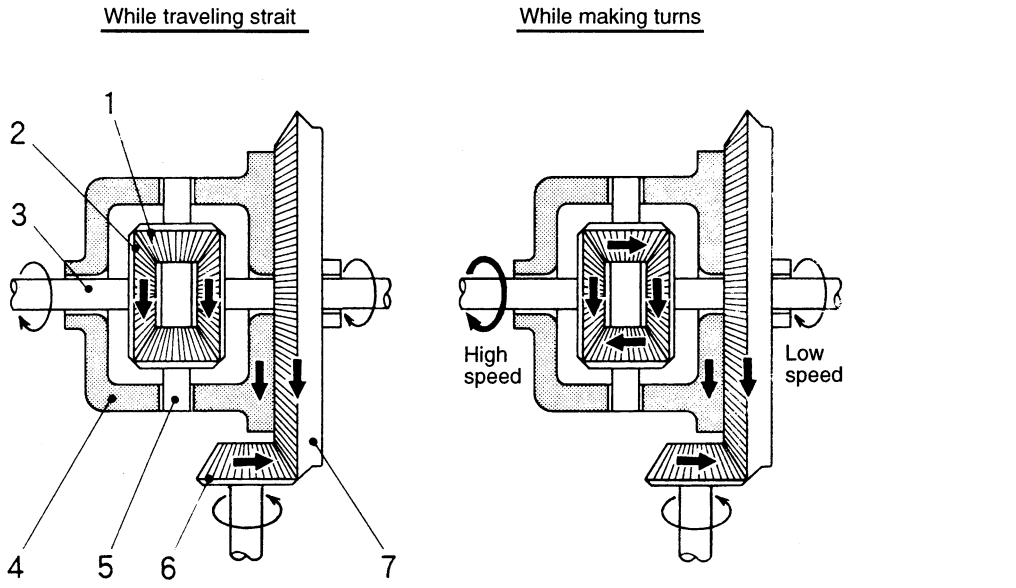

Figure 2 DIFFERENTIAL GEAR OPERATION

Reference Number	Description
1	Pinion Gear
2	Side Gear
3	Axle Shaft
4	Differential Gear Case

Reference Number	Description
5	Spider
6	Drive Pinion
7	Ring Gear

Limited Slip Differential Cross Section

Figure 3, shows a cross-sectional view of parts contained in limited slip differential.

Reference Number	Description
1	Ring Gear
2	Bevel Pinion
3	Cross
4	Upper Thrust Ring
5	Outer Disk
6	Inner Disk
7	Cover
8	Clutch Disk
9	Side Gear
10	Lower Thrust Ring

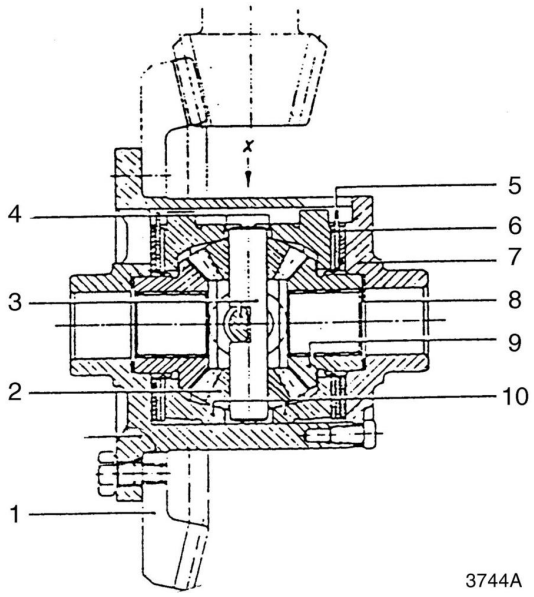

Figure 3

Lubrication Instructions

Oils according to ZF List of lubricants TE-ML 05 that are allowed to be used for ZF Axles MT-L 3095.

The basic condition for a correct oil change of axle is the horizontal plane of installation in every direction.

Place vehicle in a horizontal position.

All drain, filter and level plugs must be cleaned carefully before opening.

Only drain oil immediately after a longer running time.

Reference Number	Description
1	Oil Drain Hole M24x1.5 Axle Casing
2	Oil Drain Hole M24x1.5 Outputs
3	Oil Filler Hole M36x1.5
4	Brake Bleeder
5	Bleeder

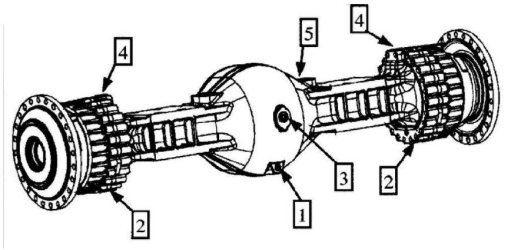

BSS0170S

Figure 4

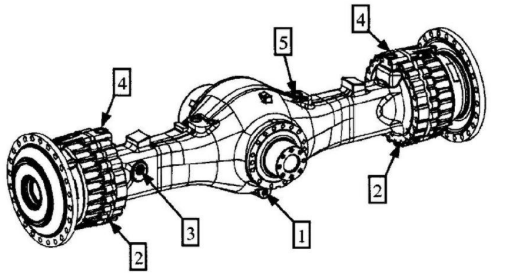

BSS0180S

Figure 5

Oil Drain

Remove drain plugs 1 and 2 and drain oil.

Oil Filling

Provide drain plugs (M24x1.5) with new O-ring and install them.

Tightening torque M_A = 7.14 kg•m (51.63 ft lb).

Fill oil to overflow on fill/level plug 3.

Filling quantity approximately 30 liters (8 U.S. gal.).

Check

Check oil level after a few minutes and fill up to specified level, until level remains constant.

Provide fill/level plug (M36x1.5) with new O-ring and install it.

Tightening torque M_A = 13.26 kg•m (95.88 ft lb).

Oil Change Intervals

1st oil change after 500 operating hours, further oil changes every 1,000 operating hours, however, at least once a year.

Oil Level Check

Oil level check once a month, but especially before starting a vehicle with new or repaired axles and axle components respectively.

Bleeders

At initial operation and during the oil change intervals, clean Bleeder 3 and 5 and make a functional check.

Brake

For the pneumatic-hydraulic or via an accumulator system operated brake actuation the following oils are permissible:

1.Motor oils SAE 10W according to specification MIL-L 2104 C, MIL-L 46152, API-CC, CD, SC, SD, SE

2.ATF-Oils Type A, Suffix A, Dexron of II D

Brake Bleeding at Vehicle

1. Open bleeder (4).
2. Slowly depress the brake pedal until oil flows from bleeder.
3. Close bleeder again.
4. Slowly pressurize the brake and hold pressure for some seconds.

NOTE: *The brake piston extends and the cylinder chamber fills p with oil. The air accumulates in upper section of cylinder chamber.*

5. Release the brake pedal and loosen the brake.

   NOTE: *The reversing piston presses the air from upper section of cylinder into brake line.*

6. Open bleeder (4) again.

7. Slowly depress the brake pedal until oil flows from bleeder.

   NOTE: *Repeat procedure - Item 3 - 7 - until - at Item 7 - from beginning of actuation no more air exits from bleeder.*

Make Wear Measurement on Multidisk Brake

NOTE: *A wear measurement on multidisk brake has to be made at least once a year, especially in case of a changed braking behavior like e.g.*

- *Braking noise*
- *Braking power reduced*
- *Deceleration changed*
- *Brake fluid level changed*
- *Braking pressure changed*

Wear measurement - Multidisk brake

A wear measurement has to be made on both output sides.

Remove plug, actuate brake and determine Dimension X according to Figure 6 and Figure 7 using a feeler gauge. Dimension X corresponds with thickness of inner clutch disk on piston side.

NOTE: *If Dim. X <= 4.0 mm, the lined disks on both output sides have to be replaced!*

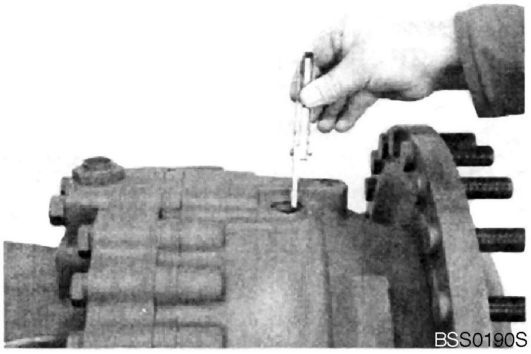

Figure 6

Following to this provide level plug with a new O-ring and install it!

Tightening torque M_A = 7.14 kg•m (51.63 ft lb)

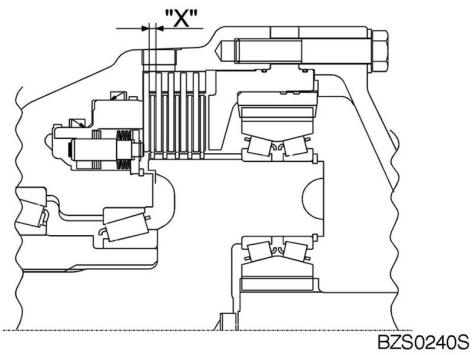

Figure 7

Inscriptions On Model Identification Plate

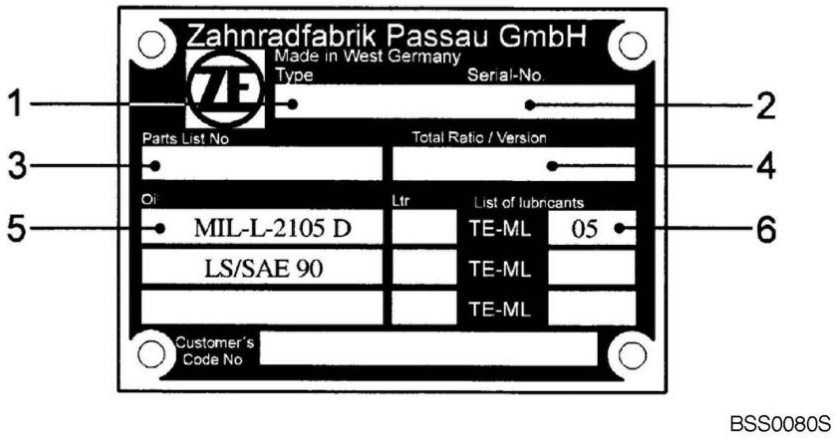

Figure 8

Reference Number	Description
1	Axle Type
2	Axle Serial No.
3	ZF Parts - List No.
4	Total-ratio of Axle / Version With or Without ZF multidisk Self Locking Differential
5	Type of Lubricant
6	Lubricant Specifications

NOTE: *ZF List of lubricants for ZF Axles TE - ML 05*

Torque Limits for Screws

Torque Limits for Screws (In Nm) According to ZF Standards 148

Coefficient of friction: m total 0.12 for screws and nuts without after treatment and for phosphate nuts.

NOTE: *Tighten by hand.*

Torque limits, if not specifically shown, can be taken from following list:

Metric ISO-Standard Thread DIN 13				Metric ISO-Fine Thread DIN 13			
Size	8.8	10.9	12.9	Size	8.8	10.9	12.9
M 4	2.8	4.1	4.8	M 8 x 1	24	36	43
M 5	5.5	8.1	9.5	M 9 x 1	36	53	62
M 6	9.5	14.0	16.5	M 10 x 1	52	76	89
M 7	15	23.0	28.0	M 10 x 1, 25	49	72	84
M 8	23	34	40	M 12 x 1, 25	87	125	150
M 10	46	68	79	M 12 x 1, 5	83	120	145
M 12	79	115	135	M 14 x 1, 5	135	200	235
M 14	125	185	215	M 16 x 1, 5	205	300	360
M 16	195	280	330	M 18 x 1, 5	310	440	520
M 18	280	390	460	M 18 x 2	290	420	490
M 20	390	560	650	M 20 x 1, 5	430	620	720
M 22	530	750	880	M 22 x 1, 5	580	820	960
M 24	670	960	1,100	M 24 x 1, 5	760	1,100	1,250
M 27	1,000	1,400	1,650	M 24 x 2	730	1,050	1,200
M 30	1,350	1,900	2,250	M 27 x 1, 5	1,100	1,600	1,850
M 33	1,850	2,600	3,000	M 27 x 2	1,050	1,500	1,800
M 36	2,350	3,300	3,900	M 30 x1, 5	1,550	2,200	2,550
M 39	3,000	4,300	5,100	M 30 x 2	1,500	2,100	2,500
				M 33 x 1, 5	2,050	2,900	3,400
				M 33 x 2	2,000	2,800	3,300
				M 36 x 1, 5	2,700	3,800	4,450
				M 36 x 3	2,500	3,500	4,100
				M 39 x 1, 5	3,450	4,900	5,700
				M 39 x 3	3,200	4,600	5,300

Examples of Gear Tooth Contact Patterns for the Gleason Gear-tooth System

Ideal tooth-contact pattern i.e. pinion distance is correct

Coast side (concave)

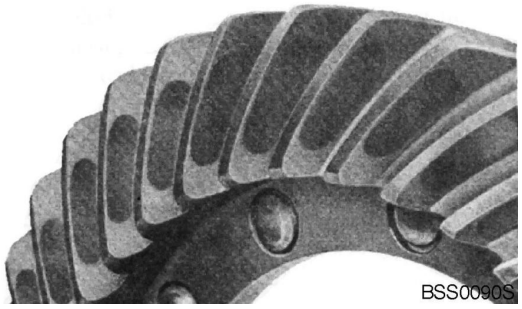

Figure 9

Drive side (convex)

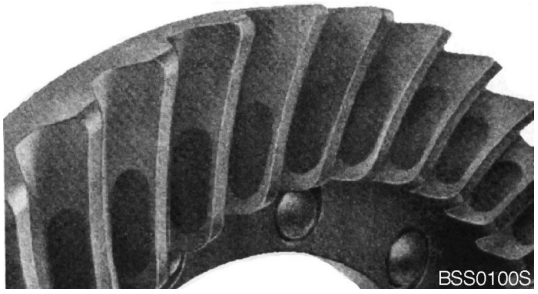

Figure 10

Pinion distance must be increased

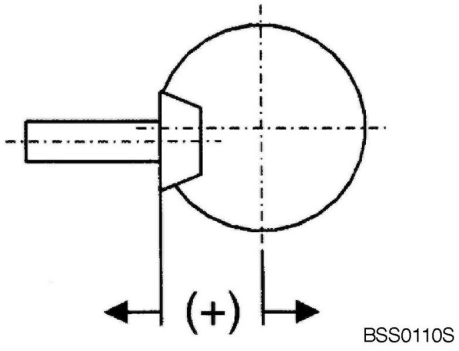

Figure 11

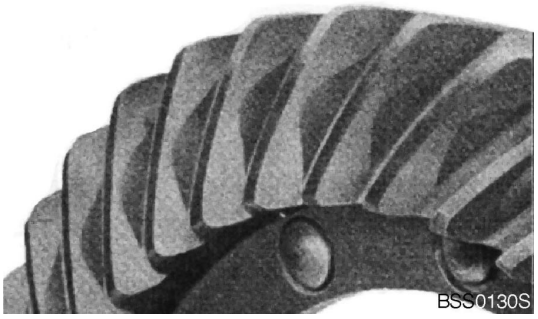

Figure 12

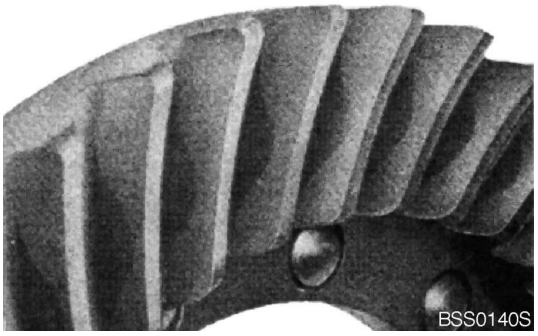

Figure 13

Pinion distance must be decreased

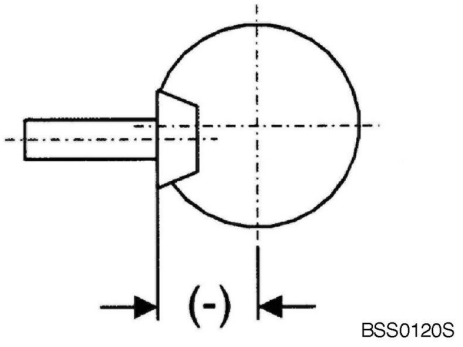

Figure 14

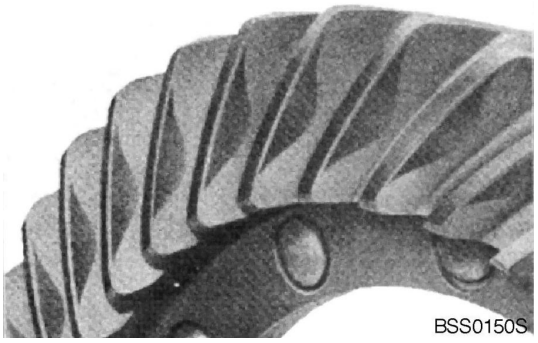

Figure 15

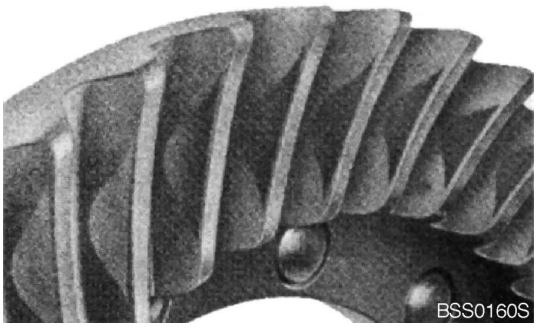

Figure 16

SPECIAL TOOL

List of Special Tools for Disassembly and Reassembly

ZF Multitrac MT-L 3095 / Output and Brake

4474 052 014 / 015

Disassembly	Reassembly	Subject No.	Designation / Application Special Tools (S)
Figure 24		5870 350 000	Assembly truck assembly with tilting device
		5870 350 077	Holding fixture (set of 2)
		5870 350 075	Clamps
Figure 27 Figure 57 Figure 59		5870 345 065	Pry bar (set of 2)
Figure 28		5870 650 001	Striker
Figure 29	Figure 100	5870 656 077	Socket Spanner #
		5870 912 028	Centering bracket #
Figure 30	Figure 98	5870 281 043	Lifting bracket
Figure 35		5870 300 019	Extractor
Figure 36	Figure 91	5870 900 015	Set of external pliers A1-A2-A3-A4
Figure 37		5870 971 002	Three - armed puller
Figure 38		5873 001 020	Gripping insert
		5873 026 100	Back off insert
Figure 39 Figure 54		5870 970 007	Two-armed puller
		5870 654 034	Clamping bracket (set of 2)
		5870 506 140	Press bushing
Figure 44		5870 900 016	Set of external pliers A11-A21-A31-A41
Figure 48	Figure 77	5870 900 051	Assembly pliers #
Figure 51		5870 400 001	Adjusting device
Figure 55	Figure 67	5870 281 047	Lifting chain
		5870 204 071	Eyebolts (set of 2)
Figure 58		5873 014 017	Rapid grip #
		5873 004 001	Basic device #
	Figure 60	5870 610 010	Wheel bolt puller - Basic set
		5870 610 005	Insert 3/4" - 16UNF
	Figure 62	5870 506 141	Pressure ring # EBM = 16.8 - 0.2 mm
	Figure 64	5870 051 052	Driver # EBM = 6 + 0.2 mm
	Figure 73 Figure 74	5870 345 096	Assembly fixture #
	Figure 80	5870 705 011	Drive mandrel EBM = 4 mm
	Figure 87	5870 204 029	Adjusting screws (set of 2)
	Figure 92	5870 200 072	Digital depth gauge # 200 mm
	Figure 95	5870 200 022	Straightedge # 580 mm

Disassembly	Reassembly	Subject No.	Designation / Application Special Tools (S)
		5870 200 066	Gauge blocks # 60 mm
	Figure 104	5870 287 007	HD-Pump #
		5870 950 115	Measuring hub # 9/16" - 18UNF
Figure 105		5870 350 000	Assembly truck assembly with tilting device
		5870 350 077	Holding fixture (set of 2)
		5870 350 075	Clamps
Figure 108 Figure 109	Figure 192	5870 281 043	Lifting bracket
Figure 112	Figure 188	5870 281 044	Lifting tackle
Figure 113		5870 350 000	Assembly truck assembly with tilting device
		5870 350 004	Holding fixture (set of 2)
Figure 115	Figure 184	5870 656 080	Socket spanner
Figure 116		5870 221 500	Hot-air blower # 230 V
Figure 125		5870 221 501	Hot-air blower # 115 V
Figure 119	Figure 178	5870 281 013	Lifting tackle
Figure 120		5873 002 025	Gripping insert #
		5873 002 001	Basic set (size 2)
Figure 121		5873 012 012	Rapid grip #
		5873 002 001	Basic set (size 2)
		5870 240 002	Fixture #
Figure 129		5870 970 007	Two-armed puller #
Figure 130		5873 002 030	Gripping insert #
		5873 002 001	Basic set (size 2)
	Figure 147	5870 500 044	Adapter pieces #
	Figure 148	5870 500 001	Measuring shaft #
		5870 351 016	Measuring pin #
		5870 351 027	Stop washer
	Figure 149	5870 200 072	Digital depth gauge # 200 mm
	Figure 172 Figure 173	5870 200 066	Gauge blocks # 60 mm
	Figure 152	5870 058 060	Driver
		5870 260 002	Handle
	Figure 153	5870 058 087	Driver
		5870 260 002	Handle
	Figure 157	5870 056 012	Driver
		5870 260 002	Handle
	Figure 162	5870 048 225	Driver EBM = 16.6 mm
	Figure 175	5870 204 040	Adjusting screws (set of 2)
	Figure 184	5870 200 055	Magnetic stand #
		5870 200 057	Dial indicator #
	Figure 185	5870 200 058	Caliper gauge 0 - 500 mm
	Figure 188	5870 204 022	Adjusting screws (set of 2)
			# Particularly important special tools for partial repair (wear part repair).

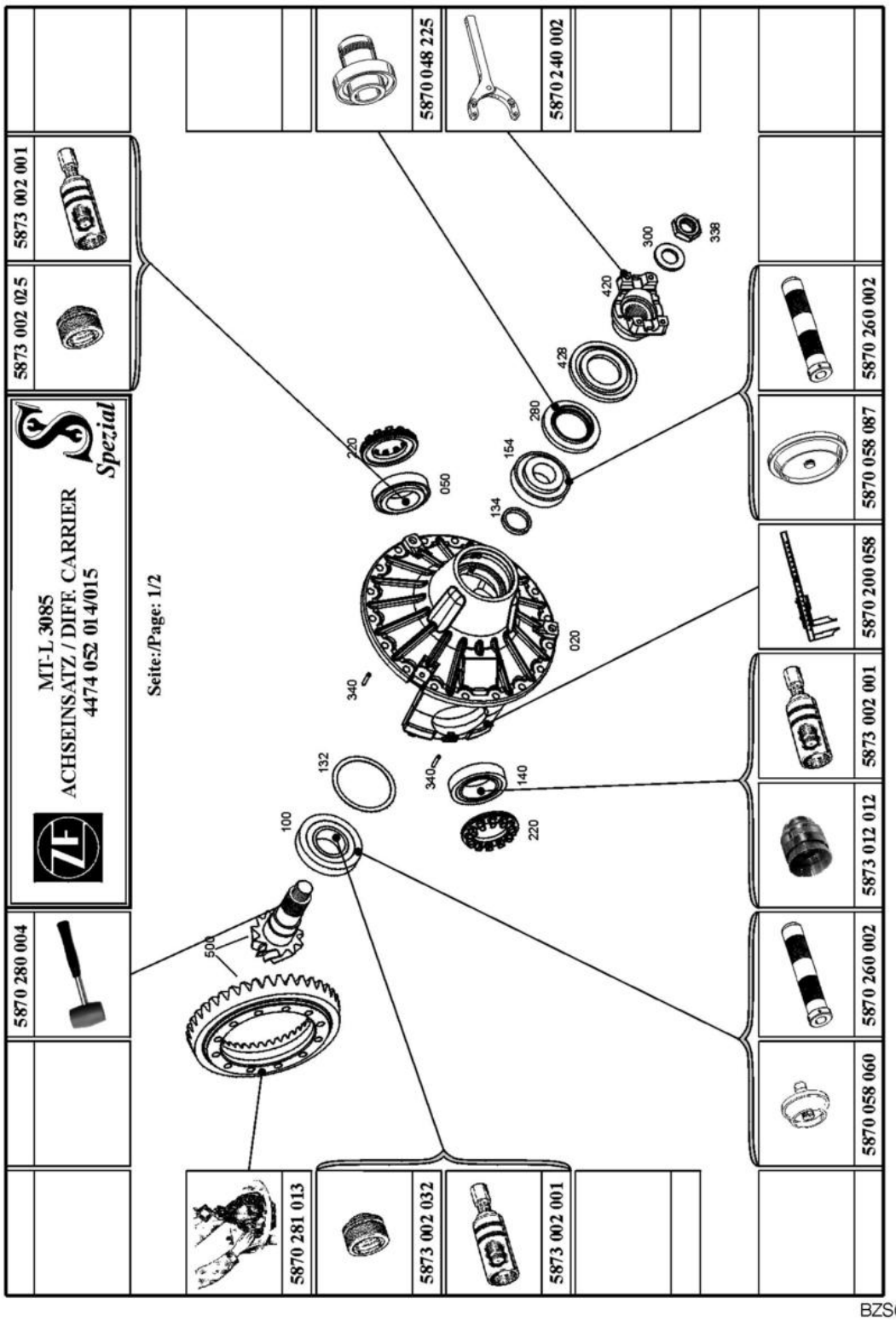
MT-L 3085
ACHSEINSATZ / DIFF. CARRIER
4474 052 014/015
Spezial
Seite:/Page: 1/2
5870 280 004
5873 002 025
5873 002 001
5870 281 013
5873 002 032
5873 002 001
5870 058 060
5870 260 002
5873 012 012
5873 002 001
5870 200 058
5870 058 087
5870 260 002
5870 048 225
5870 240 002
500
100
132
340
140
220
020
050
220
134
154
280
428
420
300
338
BZS0280S

Figure 17

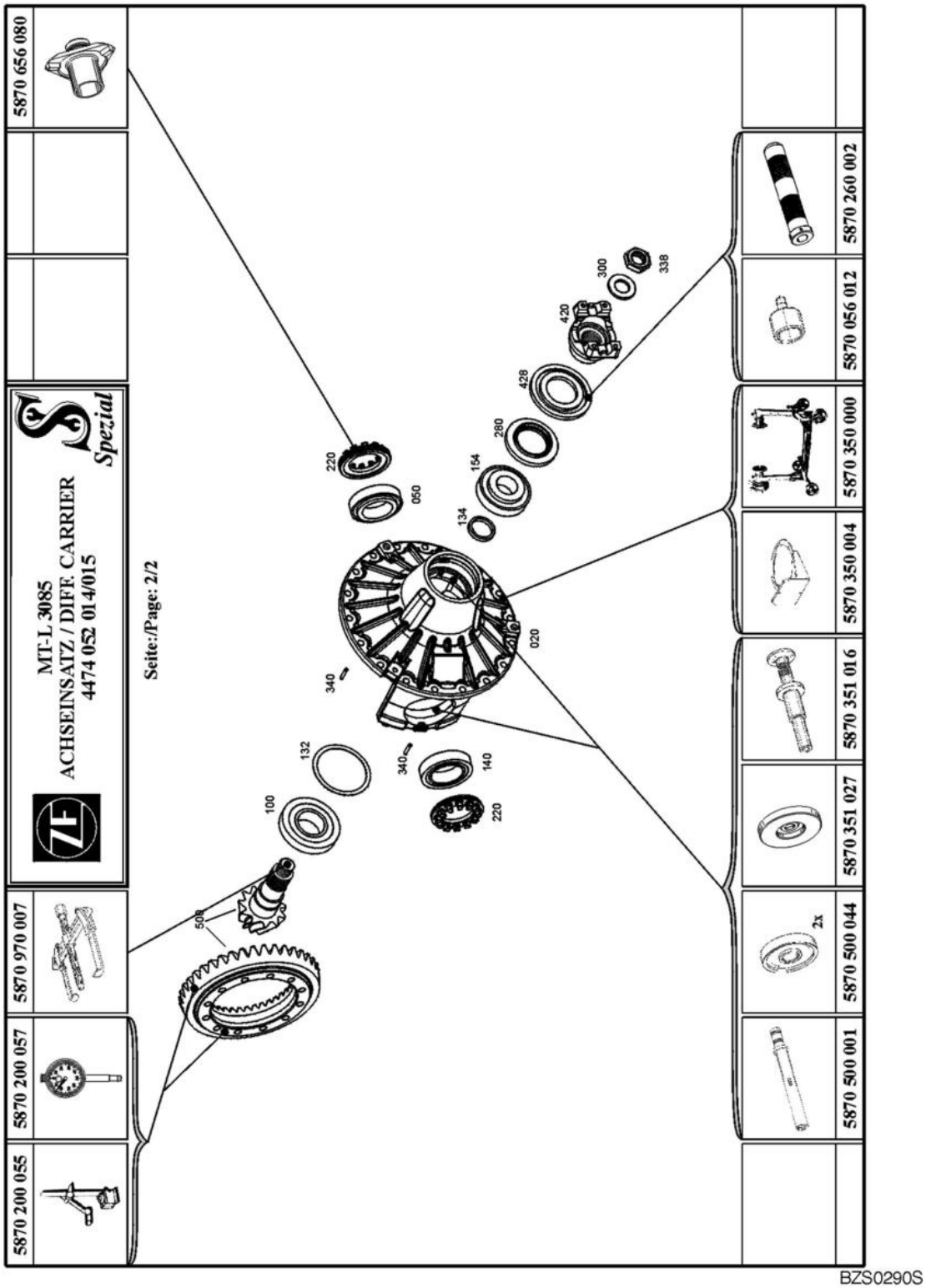

BZS0290S

Figure 18

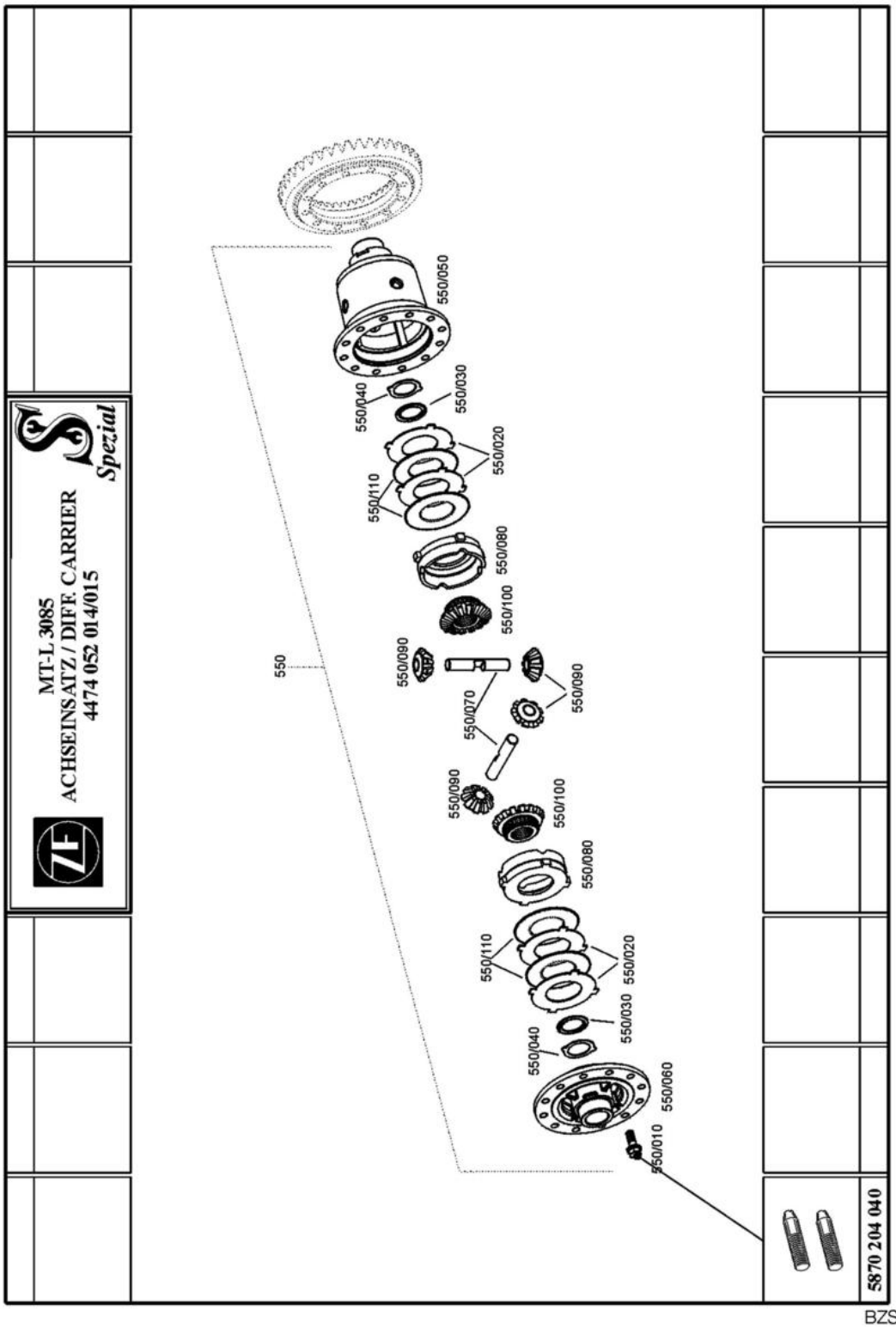
MT-L 3085
ACHSEINSATZ / DIFF. CARRIER
4474 052 014/015
Spezial
ZF
550
550/050
550/040
550/030
550/020
550/110
550/080
550/100
550/090
550/070
550/090
550/090
550/100
550/080
550/110
550/020
550/030
550/040
550/060
550/010
5870 204 040
BZS0300S

Figure 19

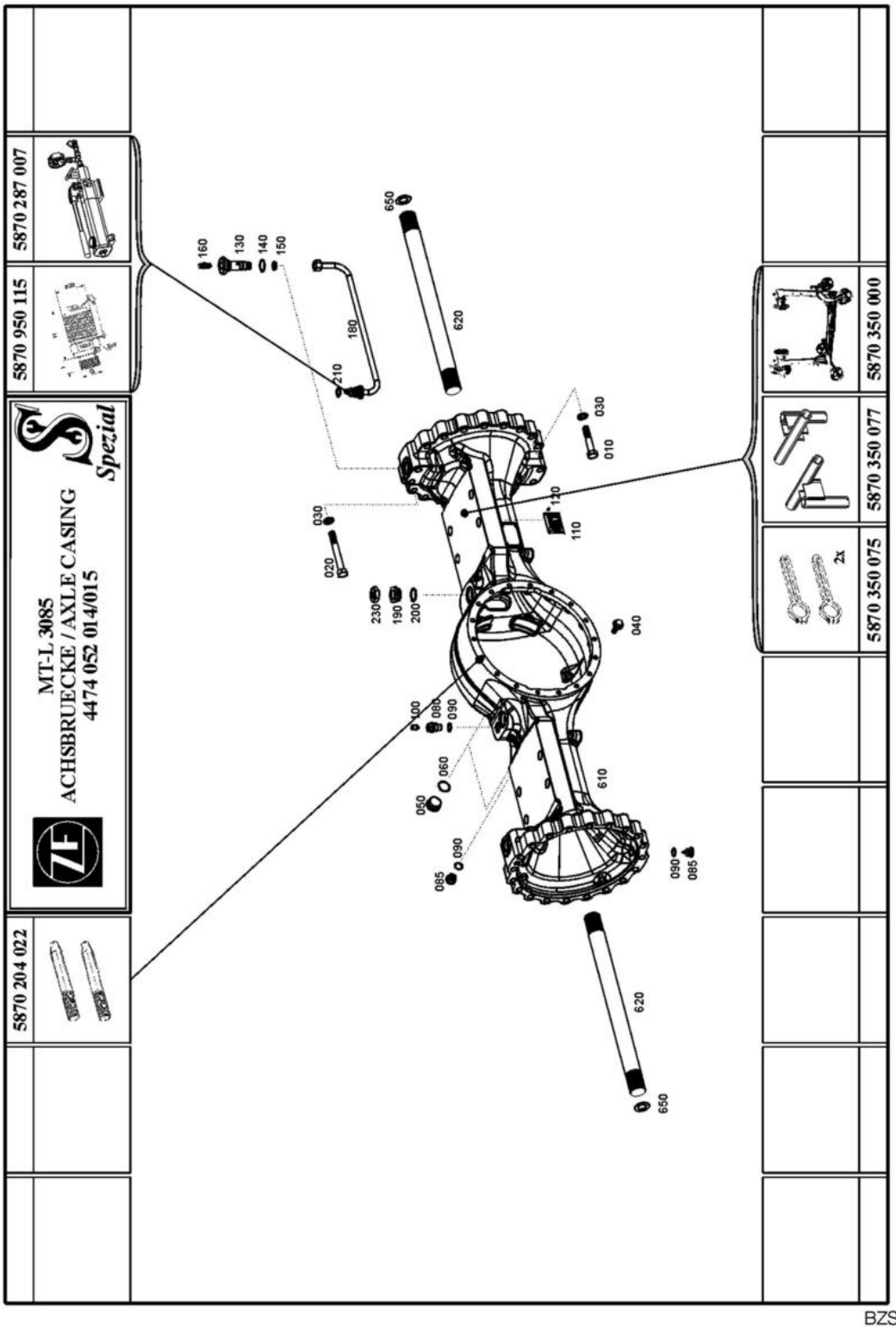
5870 287 007
5870 950 115
MT-L 3085
ACHSBRUECKE / AXLE CASING
4474 052 014/015
Spezial
5870 204 022
5870 350 000
5870 350 077
5870 350 075
2x
160
130
140
150
180
210
650
620
030
010
110
120
020
230
190
200
040
100
080
090
060
050
610
095
085
BZS0310S

Figure 20

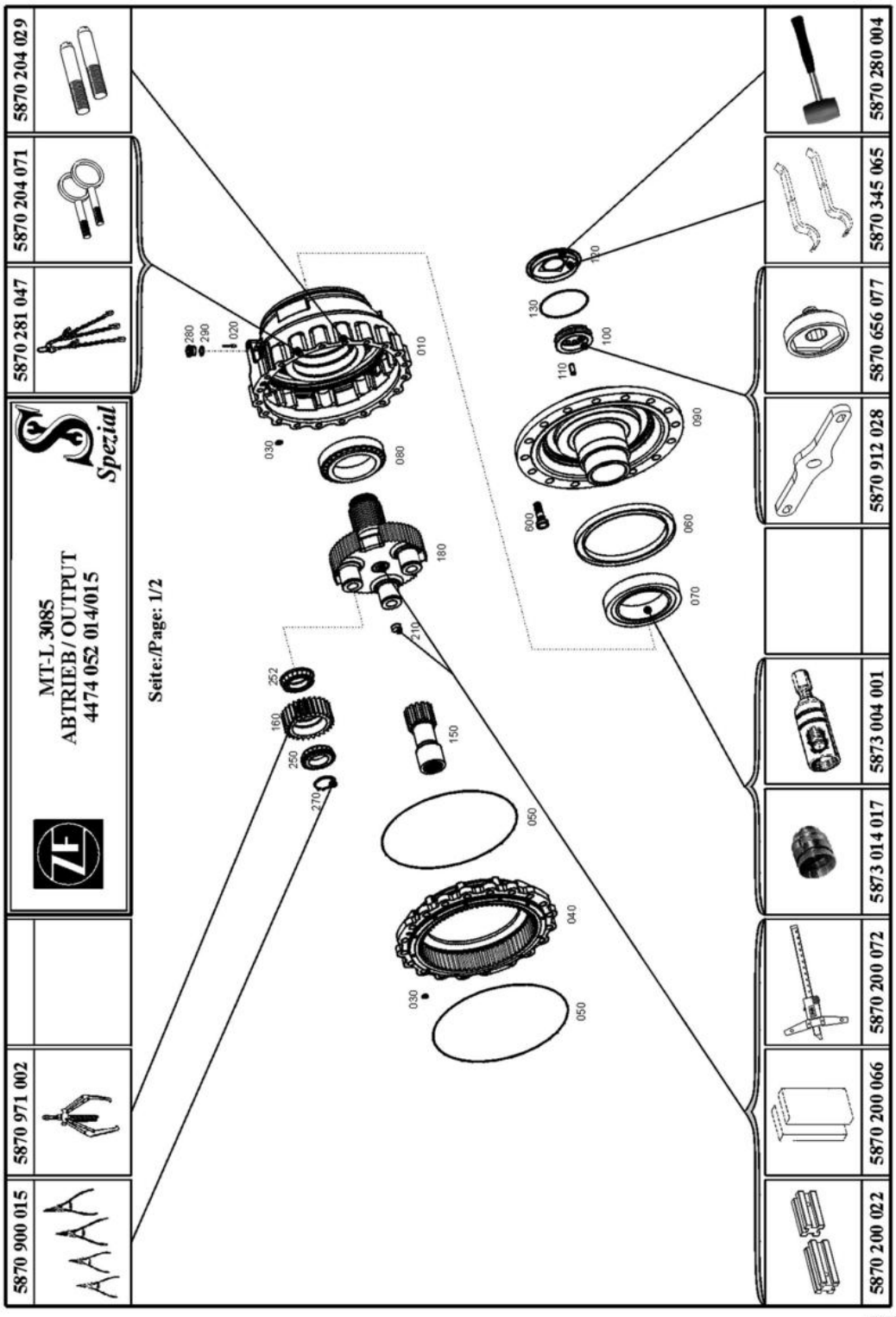

BZS0320S

Figure 21

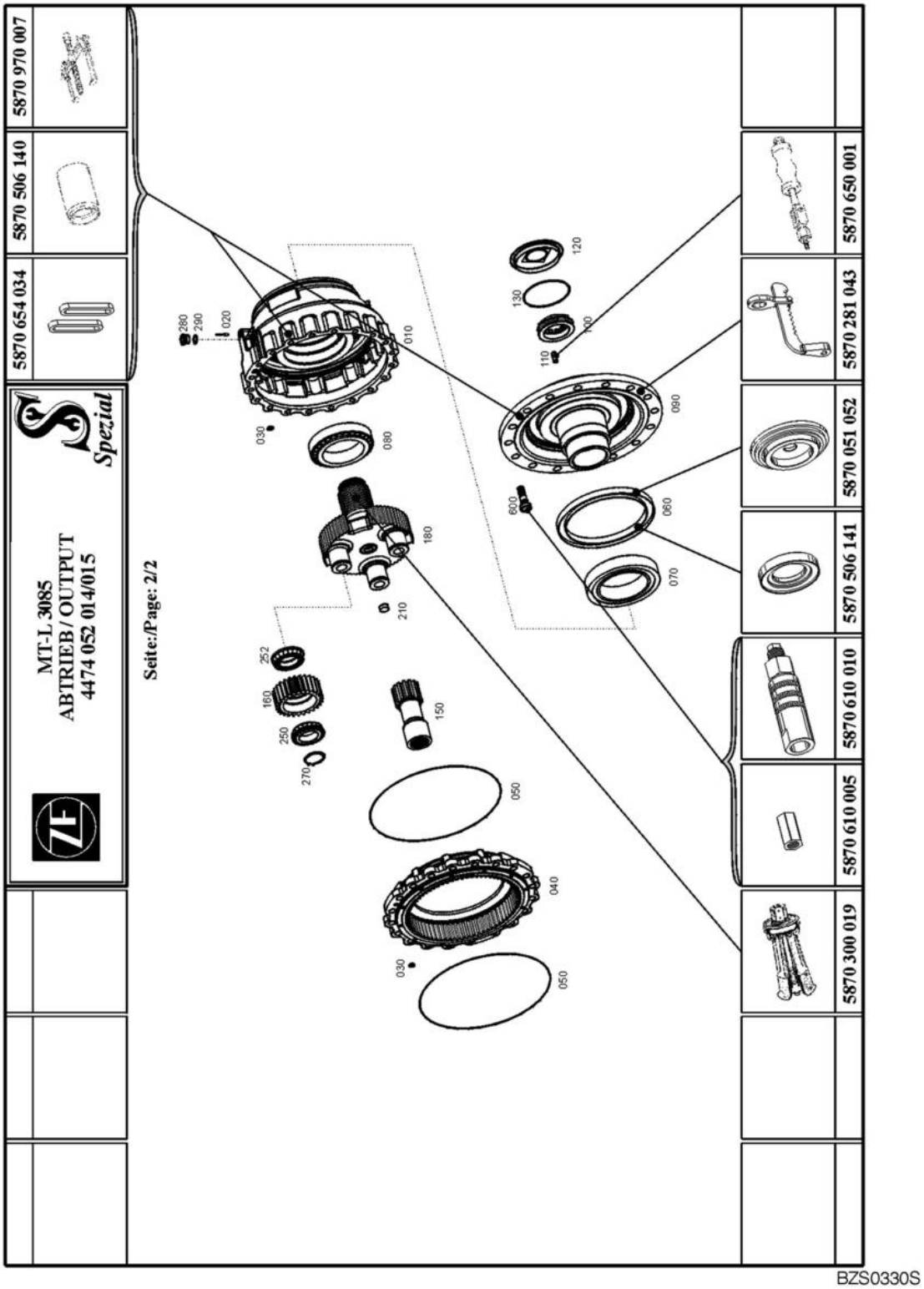
MT-L 3085
ABTRIEB / OUTPUT
4474 052 014/015
Spezial
Seite:/Page: 2/2
5870 654 034
5870 506 140
5870 970 007
5870 650 001
5870 281 043
5870 051 052
5870 506 141
5870 610 010
5870 610 005
5870 300 019
BZS0330S

Figure 22

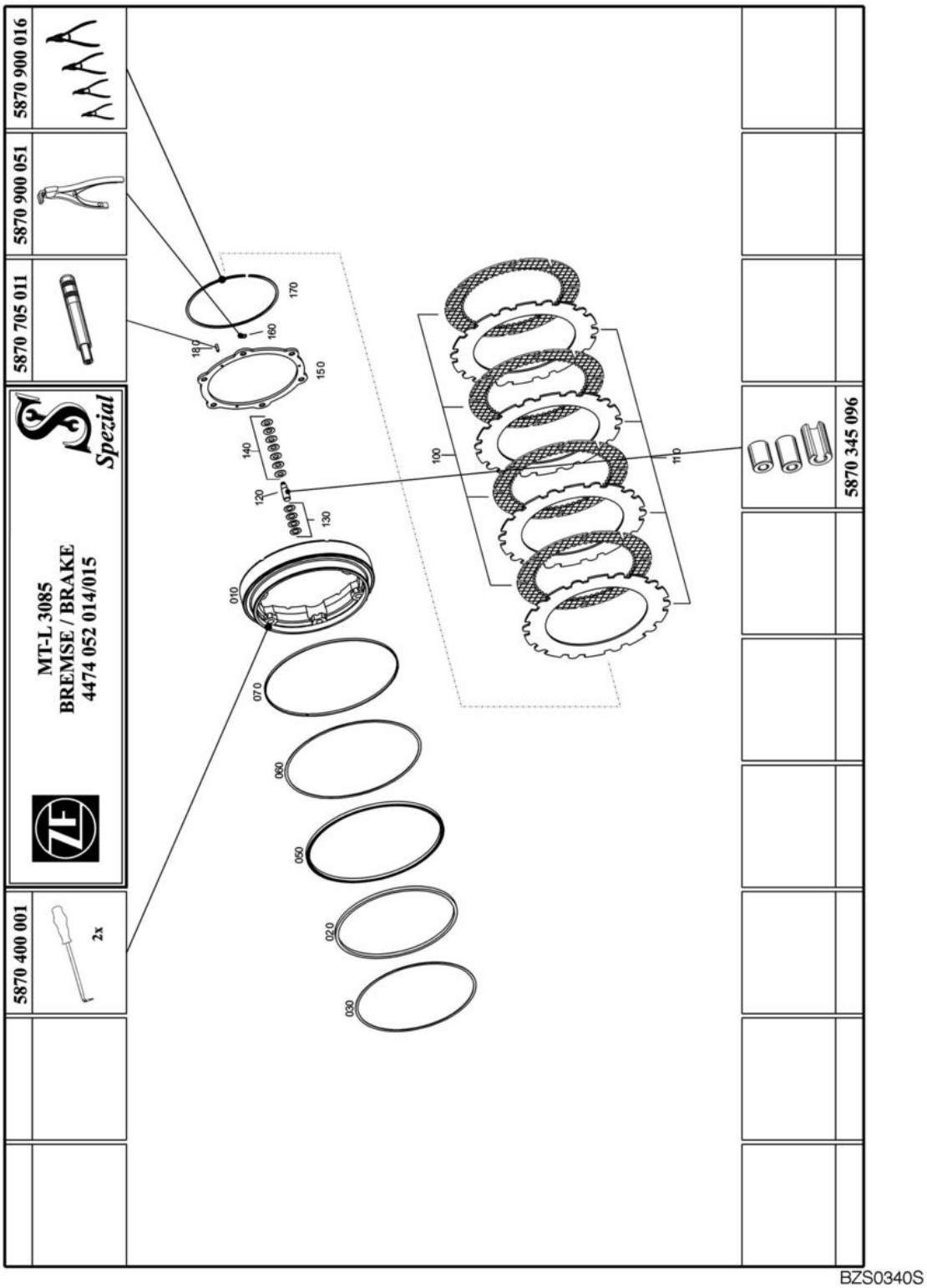
5870 900 016
5870 900 051
5870 705 011
5870 400 001
2x
Spezial
MT-L 3085
BREMSE / BRAKE
4474 052 014/015
5870 345 096
010
020
030
050
060
070
100
110
120
130
140
150
160
170
180
BZS0340S

Figure 23

ZF MULTITRAC RIGID AXLE
MT-L 3095

Disassembly of Output and Brake

1. Fasten axle on assembly truck.

   (S) Assembly truck 5870 350 000

   (S) Holding fixtures 5870 350 077

   (S) Clamps 5870 350 075

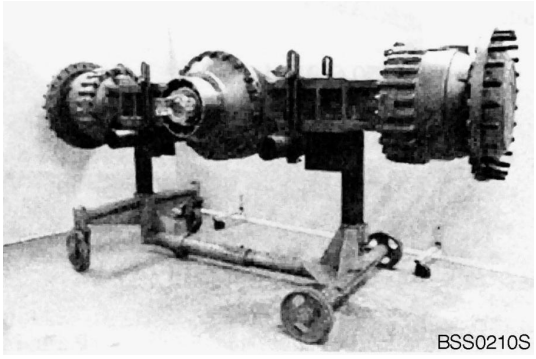

Figure 24

2. Remove plugs (3x, Figure 25 and Figure 26) and drain oil from axle casing.

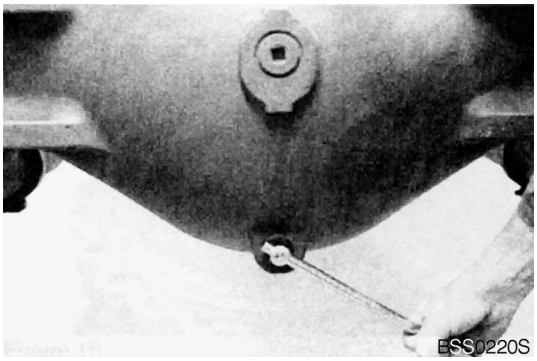

Figure 25

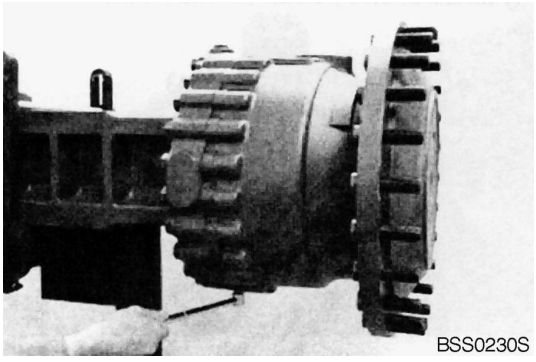

Figure 26

3. Remove cover from output shaft.

   (S) Pry bar set 5870 345 065

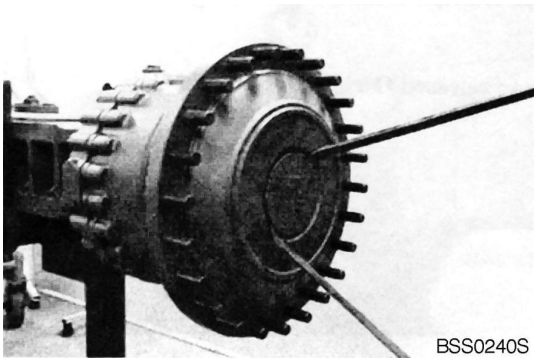

Figure 27

4. Remove slotted pin using striker (S) from bore in slotted nut.

   (S) Striker 5870 650 001

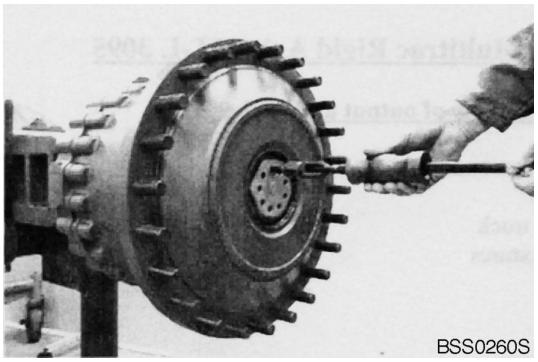

Figure 28

5. Remove slotted nut.

   (S) Socket spanner 5870 656 077

   (S) Centering bracket 5870 912 028

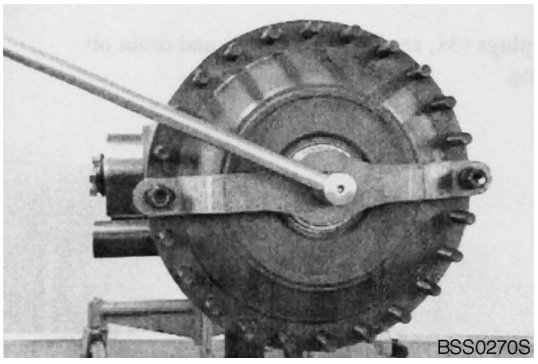

Figure 29

6. Secure output using lifting tackle (S) and remove hex screws.

   (S) Lifting bracket 5870 281 043

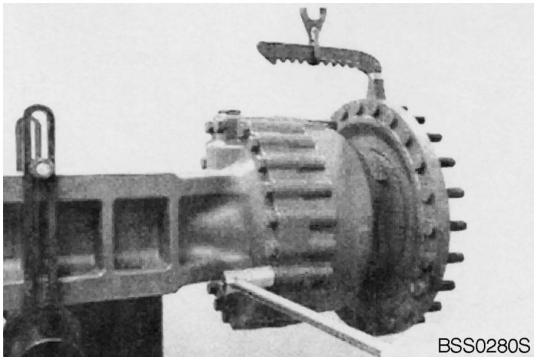

Figure 30

7. Separate complete output from axle casing.

   NOTE: *Pay attention to released O-ring (see arrow).*

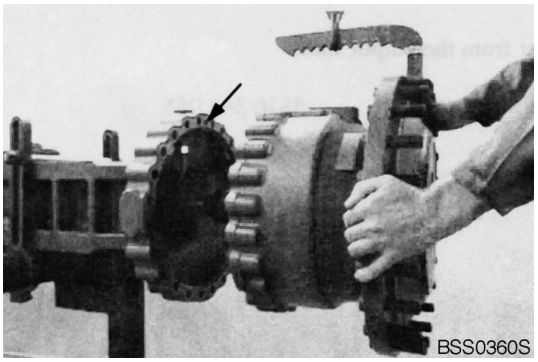

Figure 31

8. Remove stub shaft from sun gear shaft.

   NOTE: *Pay attention to possibly released shim(s).*

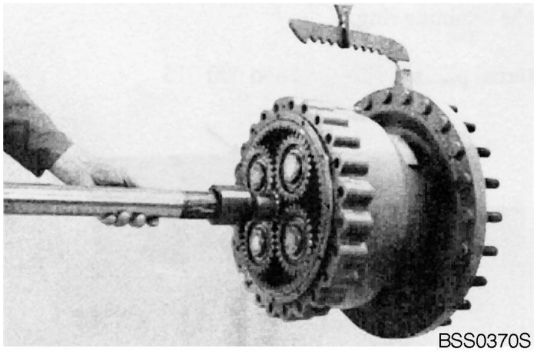

Figure 32

9. Remove shim(s) from sun gear shaft.

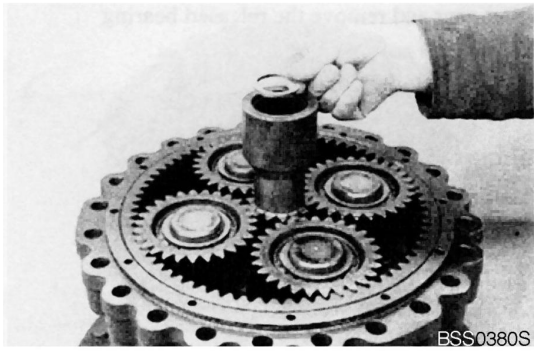

Figure 33

10. Remove sun gear shaft from planet gears.

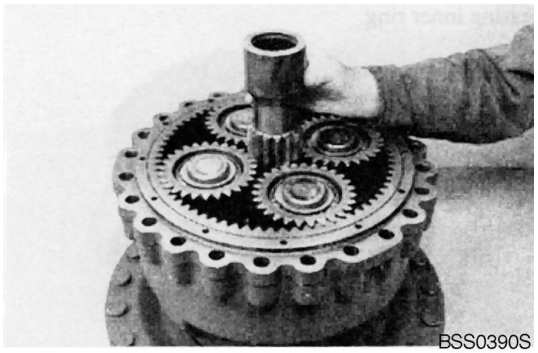

Figure 34

11. Remove planet carrier from brake housing.
    (S) Internal extractor 5870 300 019

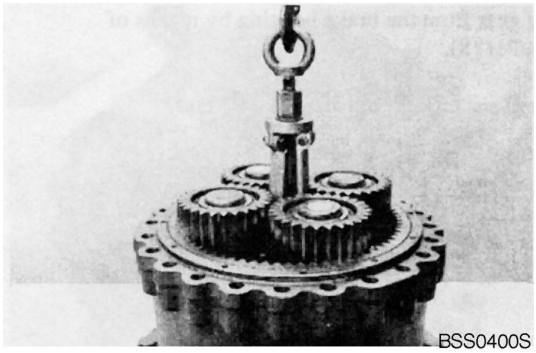

Figure 35

12. Remove retaining ring.
    (S) Set of external pliers 5870 900 015

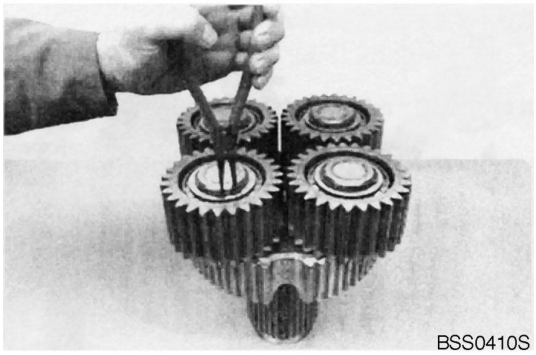

Figure 36

13. Remove planet gear and inner bearing race.
    (S) Three-armed puller 5873 971 002

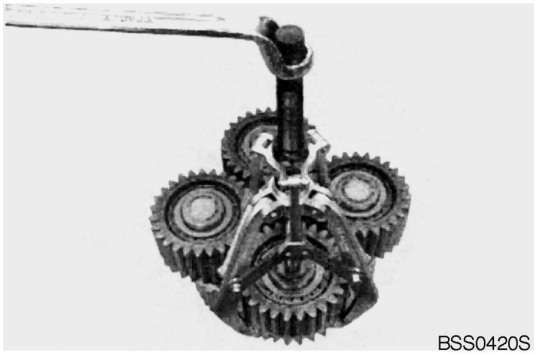

Figure 37

14. Remove inner bearing race.
    (S) Gripping insert 5873 001 020
    (S) Back off insert 5873 026 100

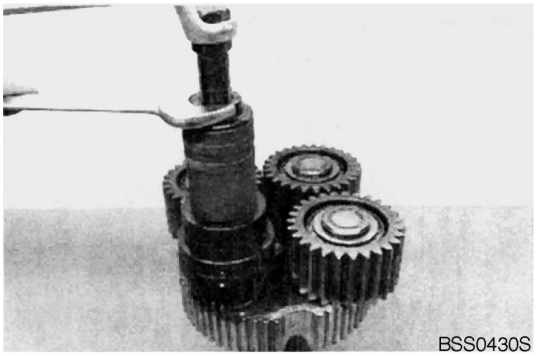

Figure 38

15. Separate ring gear from brake housing using two-armed puller (S).

    (S) Two-armed puller 5870 970 007

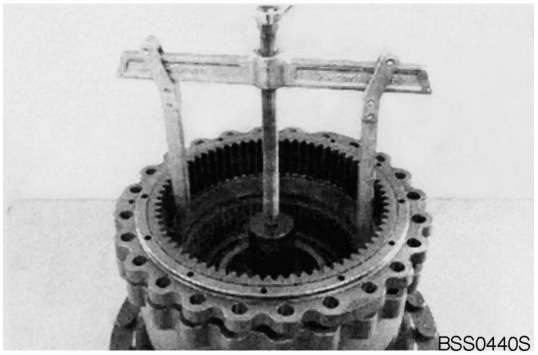

Figure 39

16. Remove O-rings (see arrows) from annular grooves of ring gear.

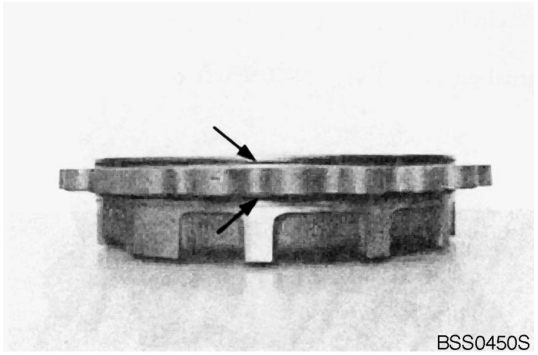

Figure 40

17. Remove O-ring (see arrow) from recess of brake housing.

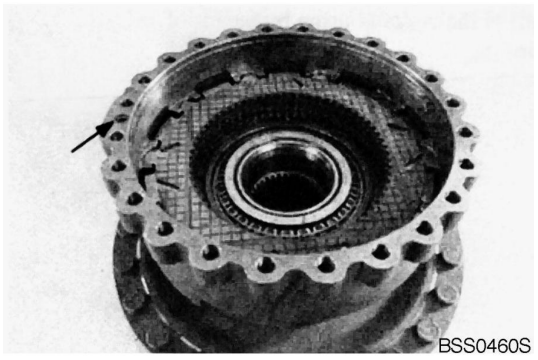

Figure 41

18. Remove disk pack from brake housing.

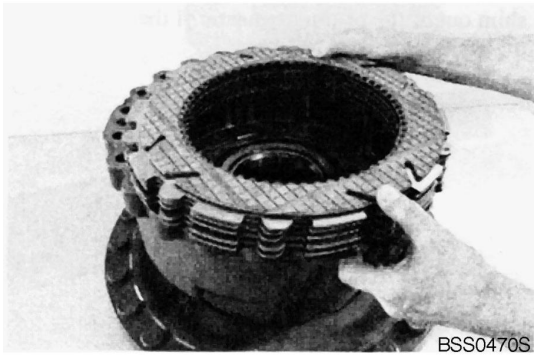

Figure 42

19. Install slotted pins (6x) in support shim until they are flush mounted.

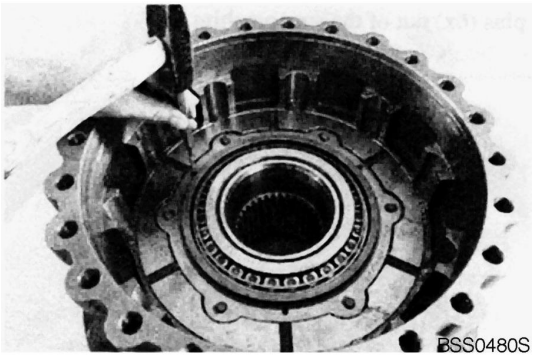

Figure 43

20. Remove retaining ring.

    (S) Set of external pliers 5870 900 016

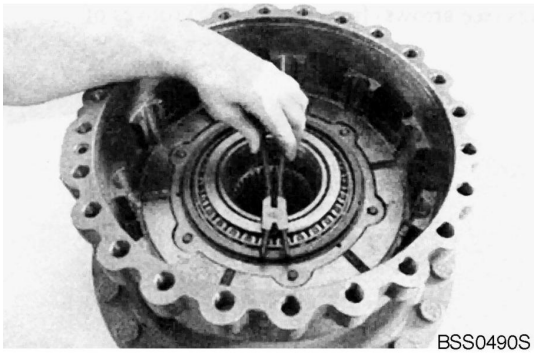

Figure 44

21. Remove piston from brake housing using compressed air.

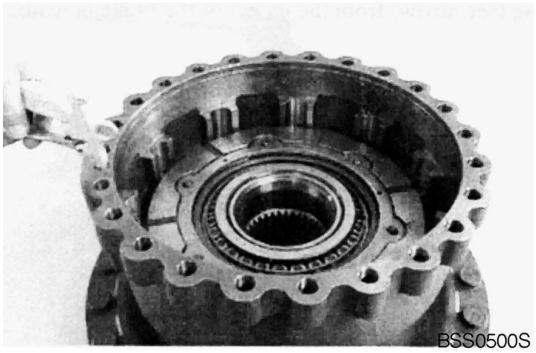

Figure 45

22. Remove support shim from piston using automatic piston adjusting.

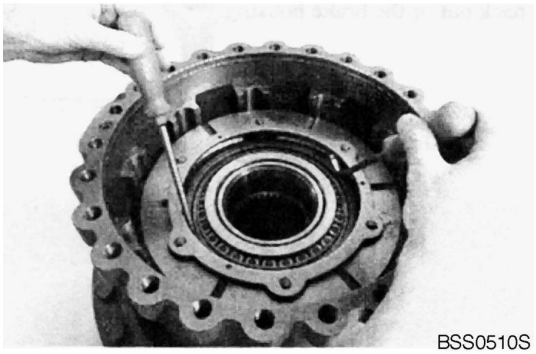

Figure 46

23. Remove slotted pins (6x) from support shim.

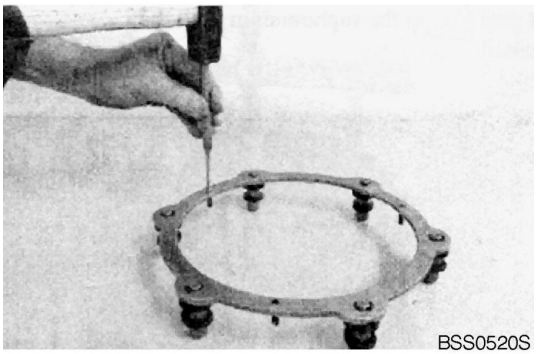

Figure 47

24. Preload cup springs using a press and remove retaining ring.

    (S) Assembly pliers 5870 900 051

    (S) Assembly fixture 5870 345 096

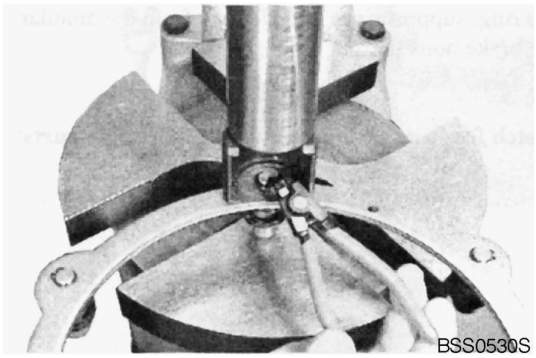

Figure 48

25. Remove pin from support shim and remove released cup springs.

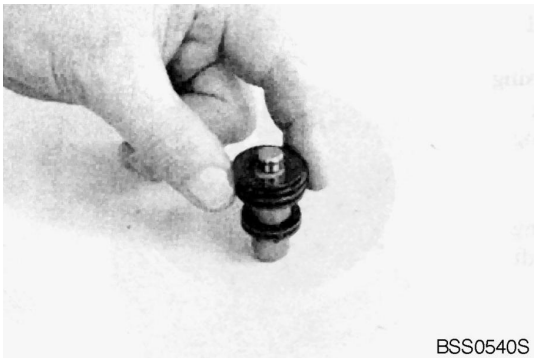

Figure 49

26. Remove gripping rings from pin.

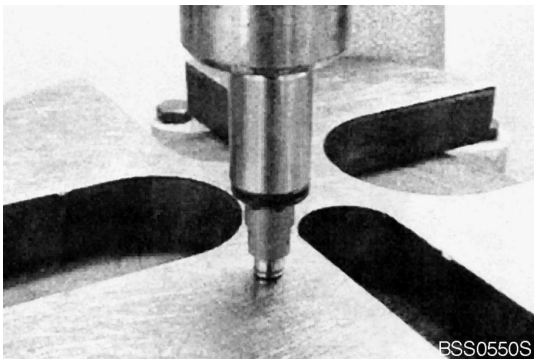

Figure 50

27. Remove piston from brake housing.

    (S) Adjusting device 5870 400 001



Figure 51

28. Remove guide ring, support rings and U-rings from annular grooves of brake housing.

    NOTE: *See Figure 53, for installation position of single parts.*

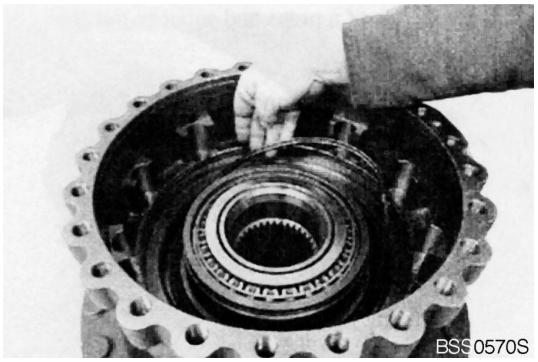

Figure 52

Reference Number	Description
1	Brake Housing
2	Guide Ring
3	Support Ring
4	U-ring
5	U-ring
6	Support Ring
7	Output Shaft

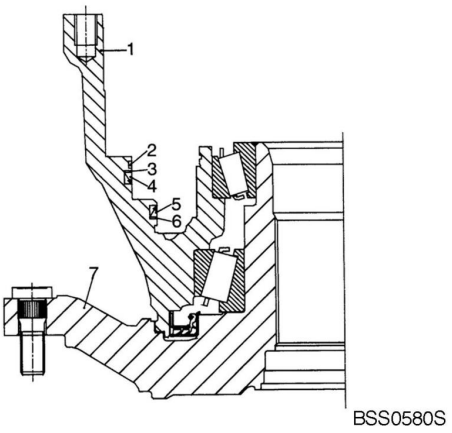

Figure 53

29. Remove brake housing using two-armed puller (S) from output shaft and remove released inner bearing race.

    (S) Two-armed puller 5870 970 007

    (S) Clamping bracket 5870 654 034

    (S) Press bushing 5870 506 140

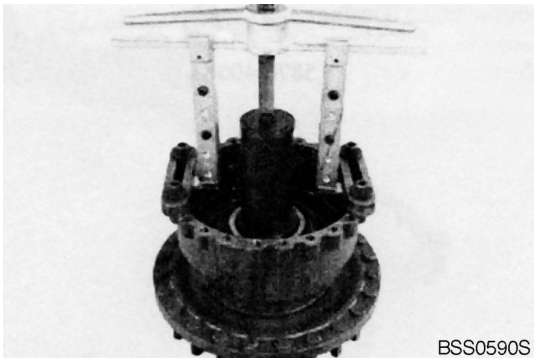

Figure 54

30. Remove brake housing with lifting tackle (S) from output shaft.

    (S) Lifting chain 5870 281 047

    (S) Eyebolts 5870 204 071

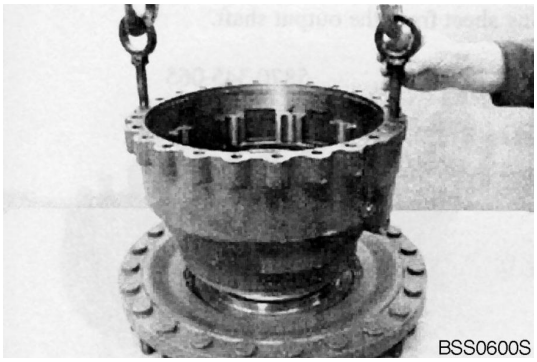

Figure 55

31. If necessary drive both outer bearing races from bearing bores in brake housing.

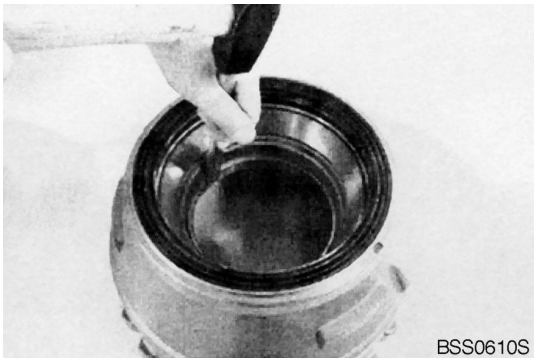

Figure 56

32. Remove shaft seal from brake housing.

    (S) Pry bar set 5870 345 065

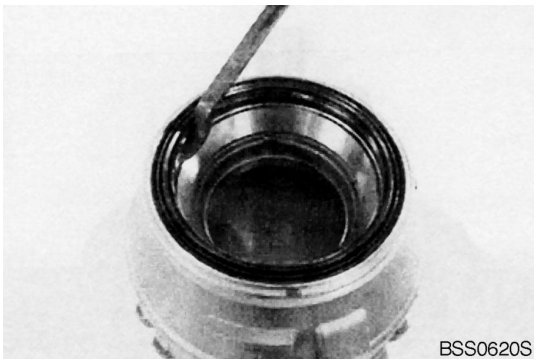

Figure 57

33. Remove inner bearing race from output shaft.
    (S) Rapid grip 5873 014 017
    (S) Basic set 5873 004 001

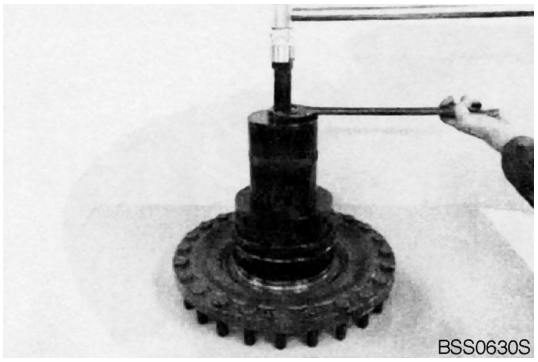

Figure 58

34. Remove bearing sheet from output shaft.
    (S) Pry bar set 5870 345 065

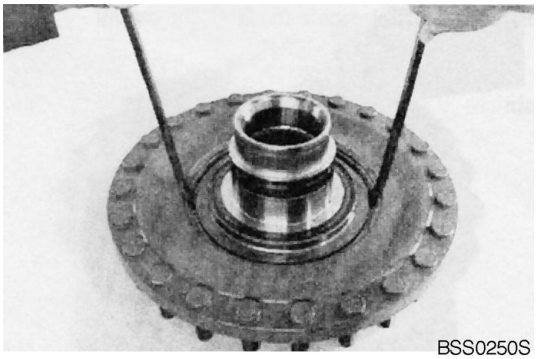

Figure 59

Reassembly of Output and Brake

1. Insert wheel bolt into output shaft until seated.
    (S) Wheel bolt puller - basic set 5870 610 010
    (S) Insert (3/4" - 16 UNF) 5870 610 005

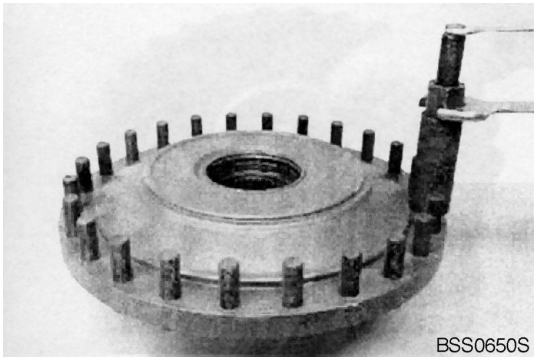

Figure 60

2. Assemble bearing sheet (shaft seal / Part 2).

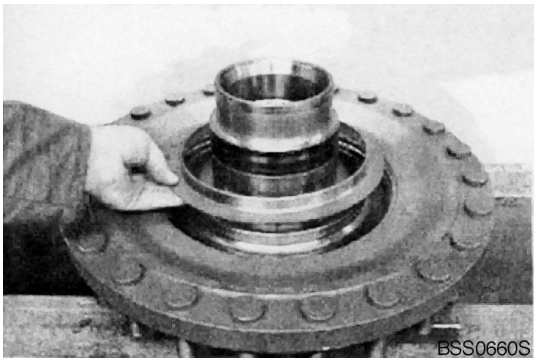

Figure 61

3. Press bearing sheet over collar of output shaft.

   (S) Pressure ring 5870 506 141

   NOTE: *The exact installation position of bearing sheet will be obtained by using specified pressure ring.*

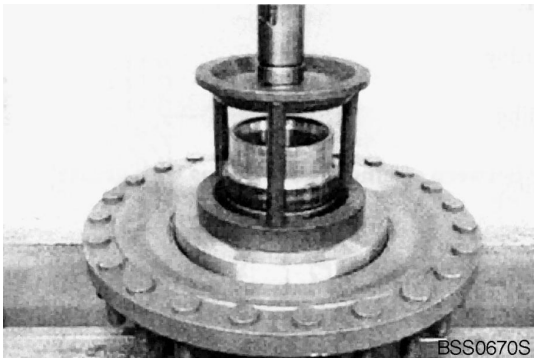

Figure 62

4. Heat roller bearing and install it until seated.

   NOTE: *After cooling down bearing it has to be installed immediately.*

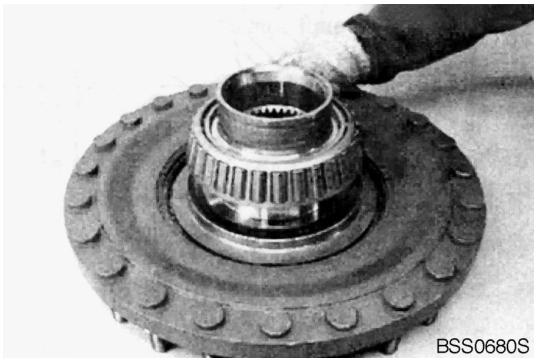

Figure 63

5. Press both outer bearing races into brake housing until seated.

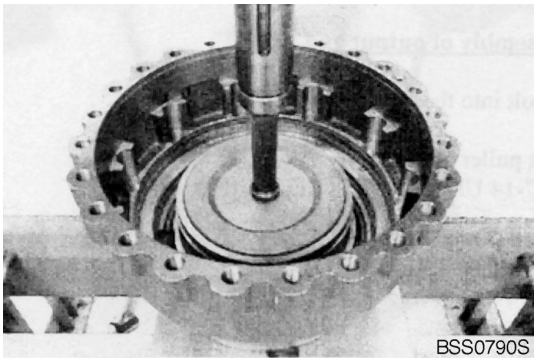

Figure 64

6. Install shaft seal with the sealing lip visible to oil chamber (See Figure 66.).

   (S) Driver 5870 051 052

   NOTE: *The exact installation position of shaft seal will be obtained by using specified driver (S).*

   NOTE: *Just before installation, wet outer diameter of shaft seal with mineral spirits.*

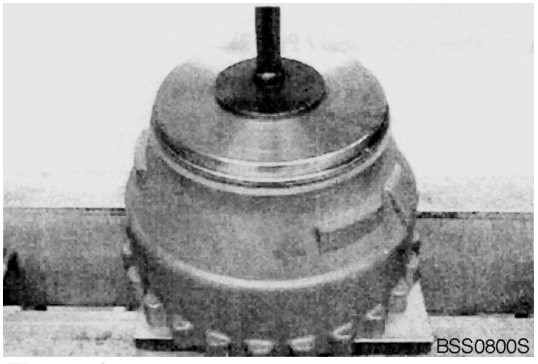

Figure 65

Reference Number	Description
1	Brake Housing
2	Shaft Seal
*	Grease Filling

NOTE: *Fill space between sealing - and dust lips with grease.*

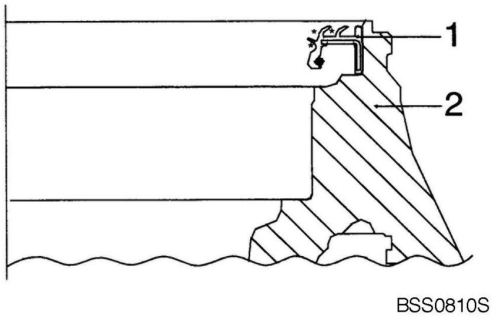

Figure 66

7. Install preassembled brake housing using lifting tackle (S) over output shaft until seated.

   (S) Lifting chain 5870 281 047

   (S) Eyebolts 5870 204 071

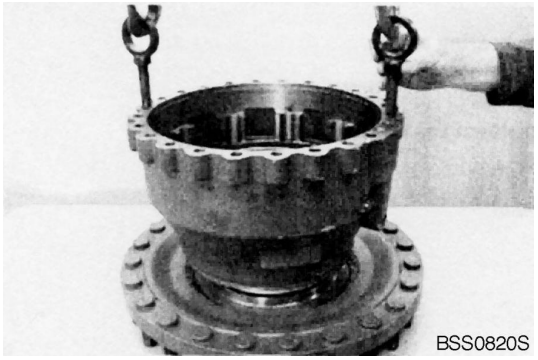

Figure 67

8. Heat roller bearing and install it until seated.

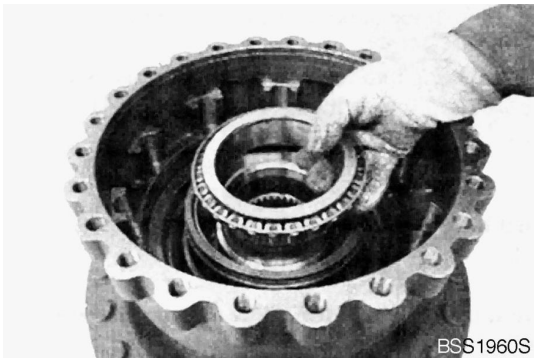

Figure 68

9. Insert support - and U-rings into annular grooves of brake housing.

   NOTE: *Pay attention to installation position, see Figure 70.*

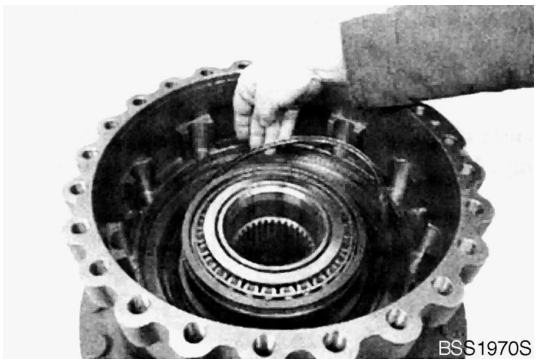

Figure 69

Reference Number	Description
1	Brake Housing
2	Guide Ring
3	Support Ring
4	U-ring
5	U-ring
6	Support Ring
7	Output Shaft

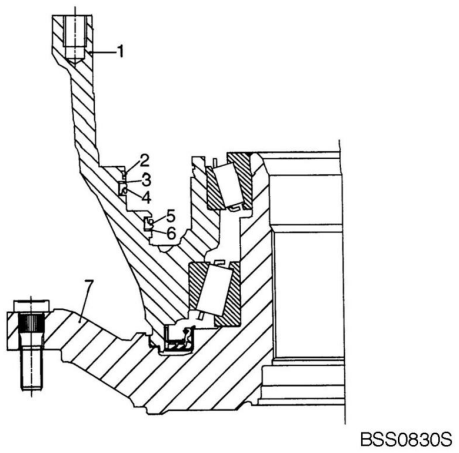

Figure 70

10. Clean annular groove of brake housing with mineral spirits.

    Then insert guide ring into annular groove (also see Figure 70) and secure with Loctite #415 at its extremities.

    NOTE: *Guide ring must have seated on whole circumference.*

    NOTE: *Upon installation of the orifice of guide ring must show upwards (12 o'clock).*

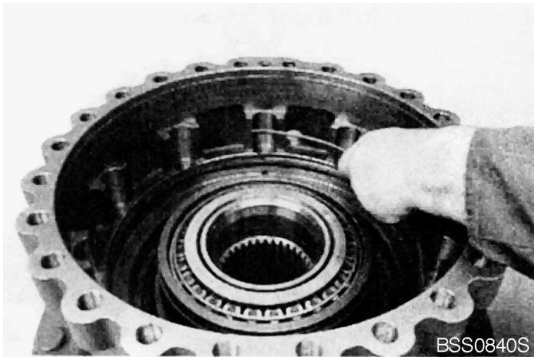

Figure 71

11. Insert piston into brake housing and install it cautiously until seated.

    NOTE: *Apply sufficiently oil on sliding surface of piston or support rings, U-rings and guide ring (use W-10 oils).*

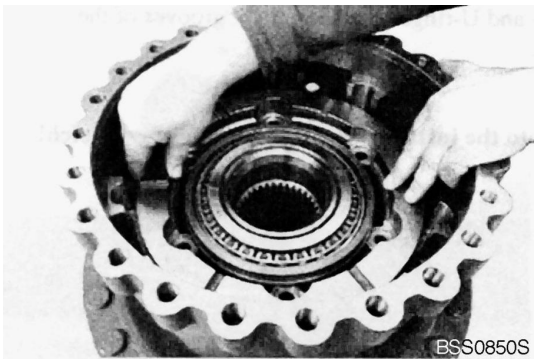

Figure 72

12. Insert pins into assembly fixture (S) until seated.

    (S) Assembly fixture 5870 345 096

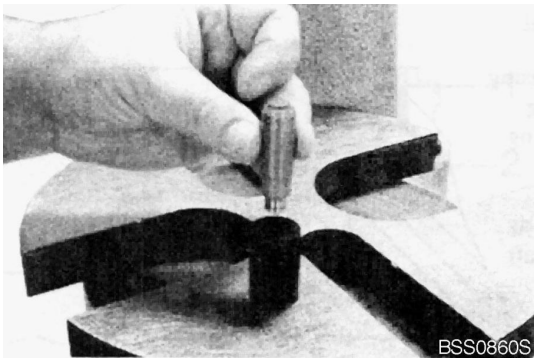

Figure 73

13. Press gripping rings (4x, see arrows) onto pins until seated on assembly fixture (S).

    NOTE: *The exact installation dimension (see Figure 76) of gripping rings is obtained when using specified assembly fixture.*

    NOTE: *Pay attention to installation position, install gripping rings with orifices offset by 180° to each other.*

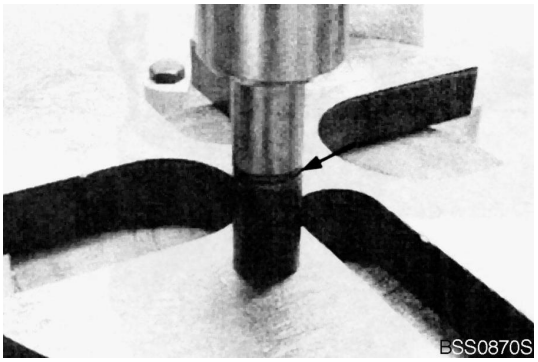

Figure 74

14. Install cup springs (7 pieces each / pin).

    NOTE: *Pay attention to installation position of cup springs, see Figure 76.*



Figure 75

Reference Number	Description
1	Pin
2	Gripping Rings
3	Cup Springs
4	Support Shim
5	Retaining Ring
X	Installation Dimension Gripping Rings 10.5 $^{+0.3}$ mm

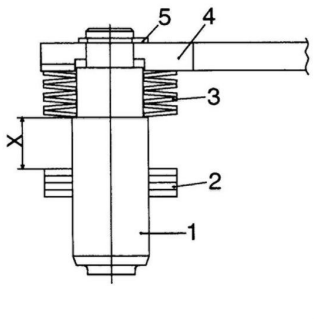

Figure 76

15. Insert preassembled pins into support shim and secure using retaining ring.

    (S) Assembly pliers 5870 900 051

    NOTE: *Pay attention to clearance of cup springs.*

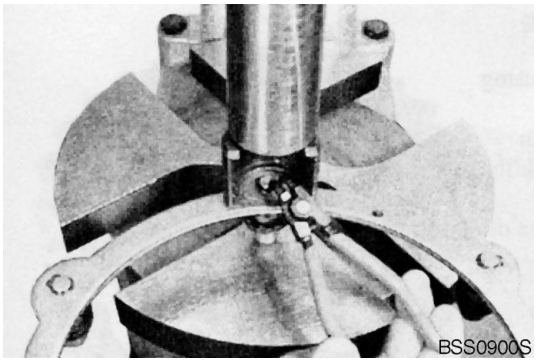

Figure 77

16. Insert preassembled support shim into piston.

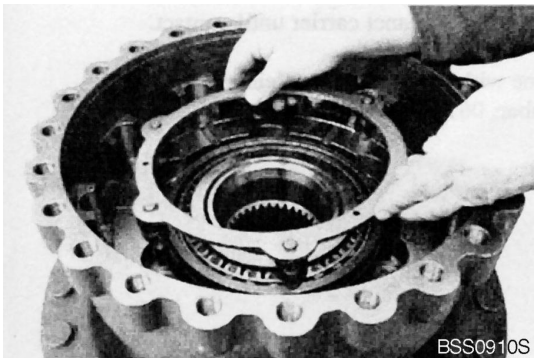

Figure 78

17. Install support shim using retaining ring.

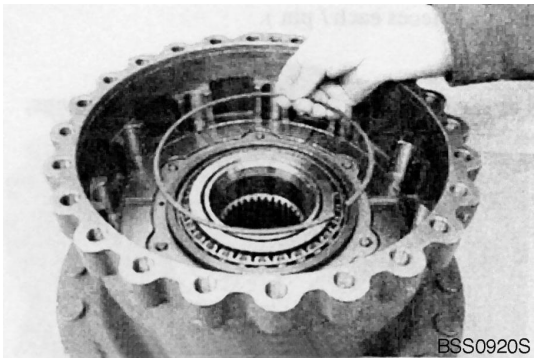

Figure 79

18. Drive slotted pins (6x) into bores of support shim to lock retaining ring.

    (S) Drive mandrel 5870 705 011

    NOTE: *Pay attention to installation position, see Figure 81.*

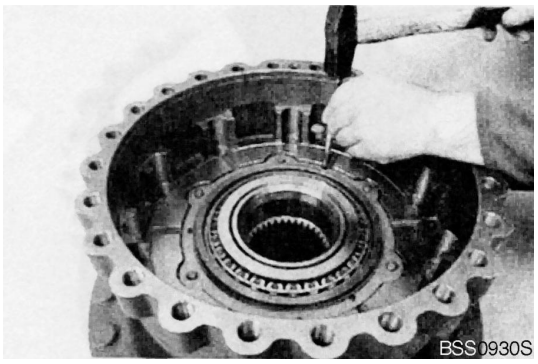

Figure 80

Reference Number	Description
1	Brake Housing
2	Retaining Ring
3	Slotted Pin
4	Support Shim
5	Piston
X	Installation Dimension $4.0_{-0.5}$ mm

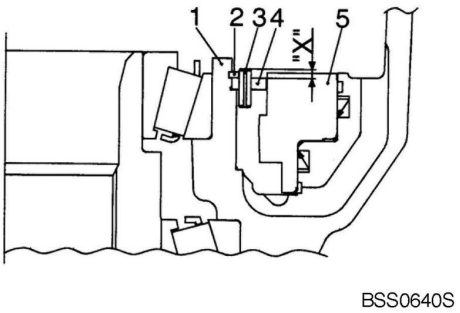

BSS0640S

Figure 81

19. Drive stop bolt into planet carrier until seated.

    Then wet spline with anticorrosive Weicon Antiseize (ZF Part Number: 0671 196 001) (see arrow).

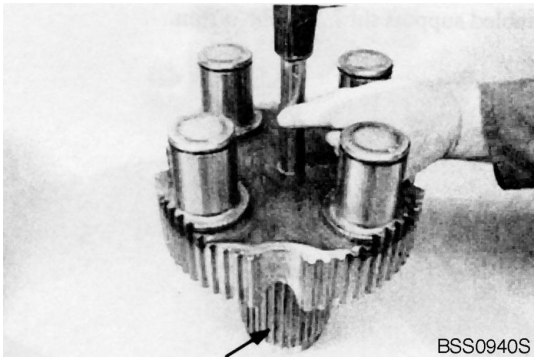
BSS0940S

Figure 82

20. Insert planet carrier into spline of output shaft until seated.

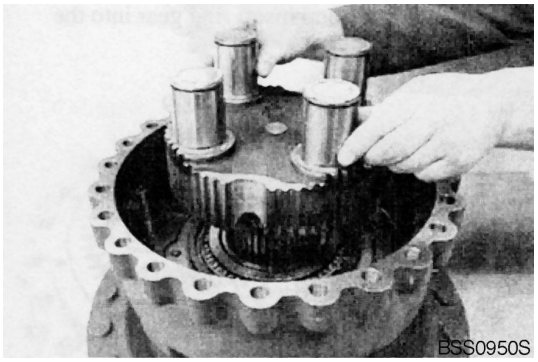
BSS0950S

Figure 83

21. Install outer and inner clutch disks alternately starting with an outer clutch disk.

    NOTE: *Oil clutch disks according to ZF List of Lubricants TE-ML 05.*

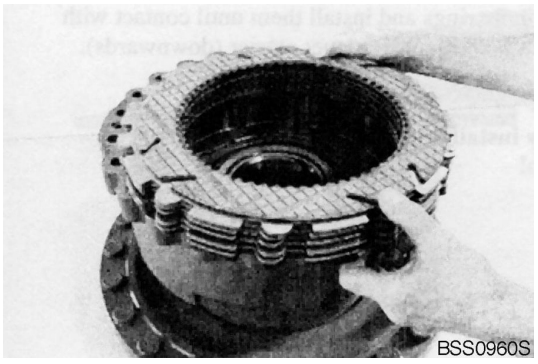
BSS0960S

Figure 84

22. Insert O-ring (see arrow) into recess of brake housing.

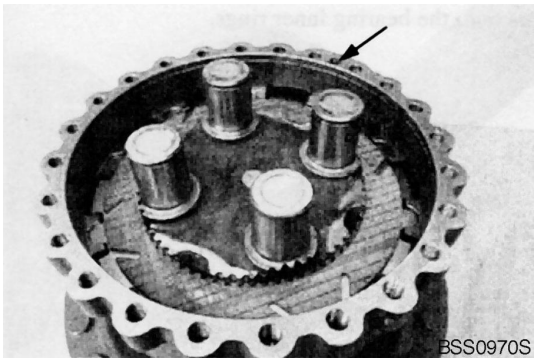

Figure 85

23. Grease both O-rings (see arrows) and insert them into annular grooves of ring gear.

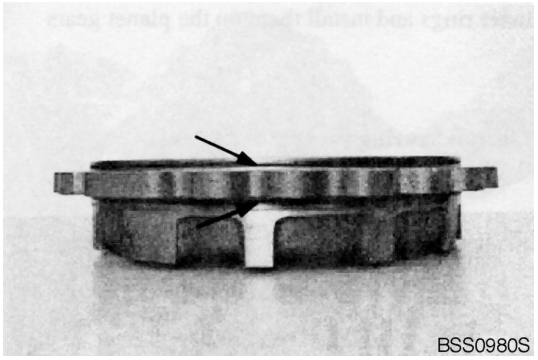

Figure 86

24. Install two adjusting screws (S) and insert ring gear into brake housing until seated.

    (S) Adjusting screws 5870 204 029

    NOTE: *Pay attention to radial location.*

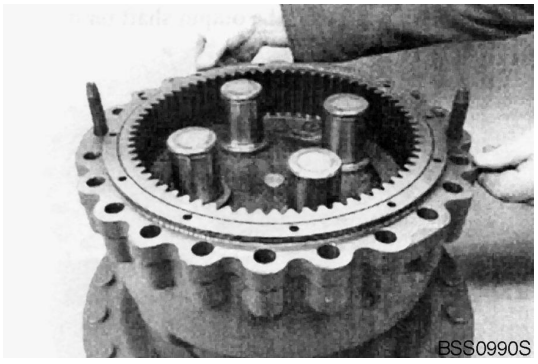

Figure 87

25. Heat inner bearing races and install them until seated with big radius showing to planet carrier (downwards).

    NOTE: *Subsequently install inner bearing races after cooling down.*

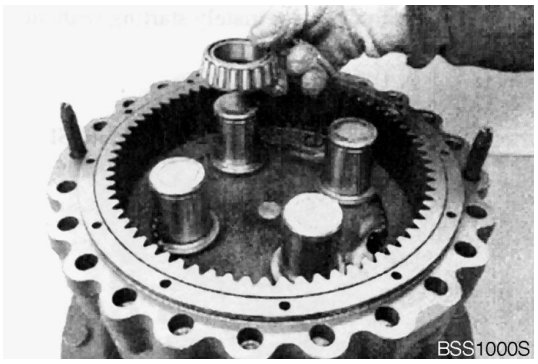

Figure 88

26. Put planet gears onto inner bearing races.

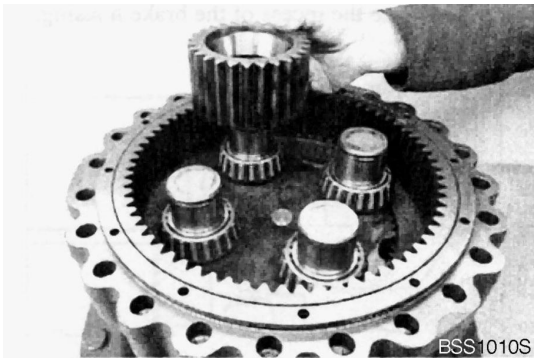

Figure 89

27. Heat inner bearing races and install them on planet gears until seated.

    NOTE: *Subsequently install inner bearing races after cooling down.*



Figure 90

28. Fasten planet gears using retaining rings.

    (S) Set of external pliers 5870 900 015

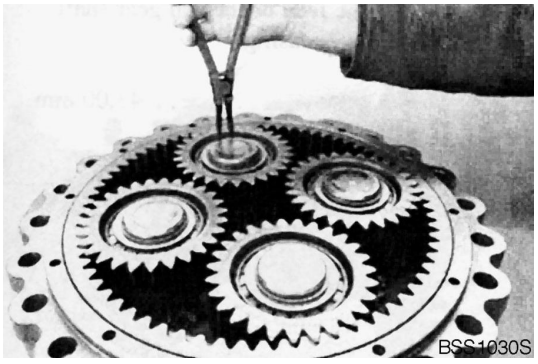

Figure 91

29. Adjust end play of sun gear shaft 0.5 - 2.0 mm

    Fasten ring gear using cap screws until seated.

    Then determine Dimension I, from mounting face of ring gear up to face of stop bolt.

    Dimension I e.g. 46.20 mm

    (S) Digital depth gauge 5870 200 072

    (S) Gauge blocks 5870 200 066

    (S) Straightedge 5870 200 022

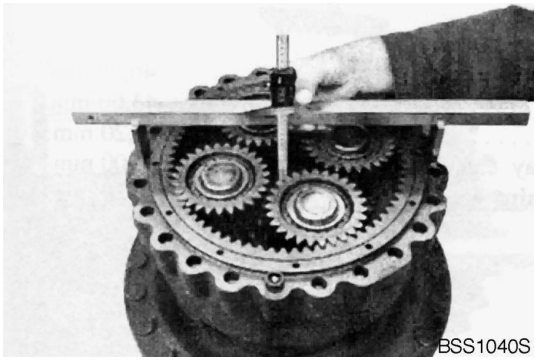

Figure 92

30. Insert stub shaft into spline of axle bevel gear until seated.

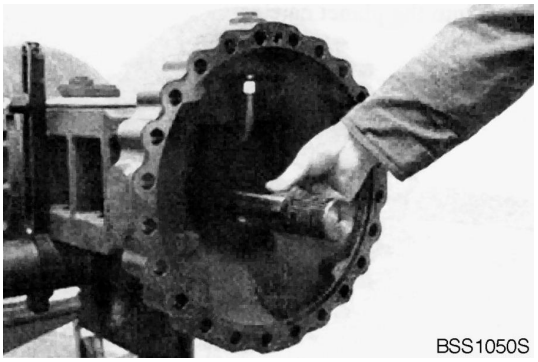

Figure 93

31. Assemble sun gear shaft until seated.

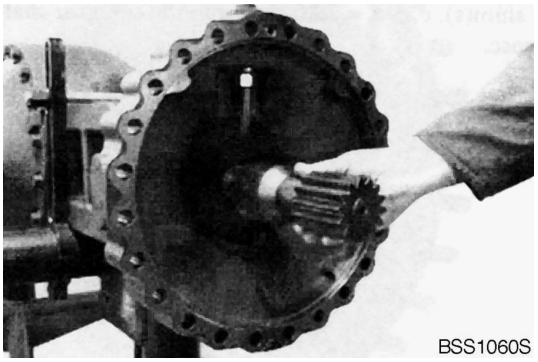

Figure 94

32. Determine Dimension II from face of sun gear shaft up to mounting face of axle casing.

    Dimension II e.g. 43.00 mm

    (S) Digital depth gauge 5870 200 072

    (S) Gauge blocks 5870 200 066

    (S) Straightedge 5870 200 022

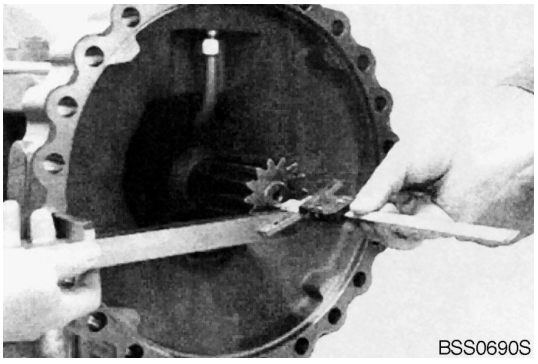

Figure 95

EXAMPLE

Dimension I		46.20 mm (1.8189 in)
Dimension II	-	43.00 mm (1.6929 in)
Difference		3.20 mm (0.1260 in)
required end play e.g.	-	1.00 mm (0.0394 in)
Difference = shim e.g.	=	2.20 mm (0.0866 in)

33. Insert sun gear shaft into planet carrier.



Figure 96

34. Install determined shim(s), e.g. s = 2.20 mm, into sun gear shaft using grease.

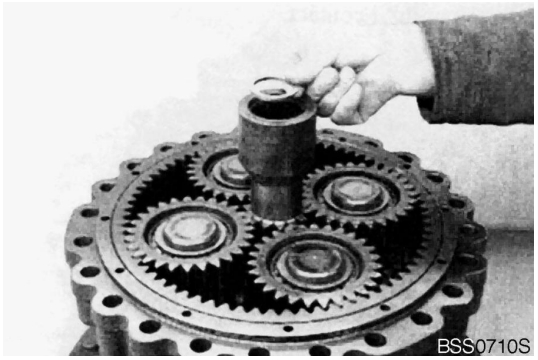

Figure 97

35. Install O-ring (see arrow) into recess of axle casing using grease and install preassembled output to axle casing until seated using lifting tackle (S).

    (S) Lifting bracket 5870 281 043

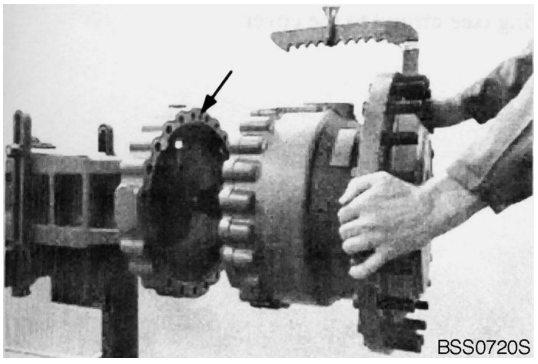

Figure 98

36. Fasten output using hex screws and washers.

    Tightening torque (M18 / 10.9) M_A = 39.77 kg•m (287.65 ft lb)

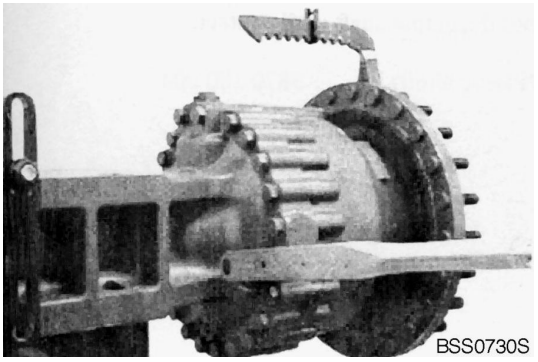

Figure 99

37. Unscrew slotted nut by hand and then fasten it.

    Tightening torque M_A = 71.38 - 101.97 kg•m (516.29 - 737.56 ft lb)

    (S) Socket spanner 5870 656 077

    (S) Centering bracket 5870 912 028

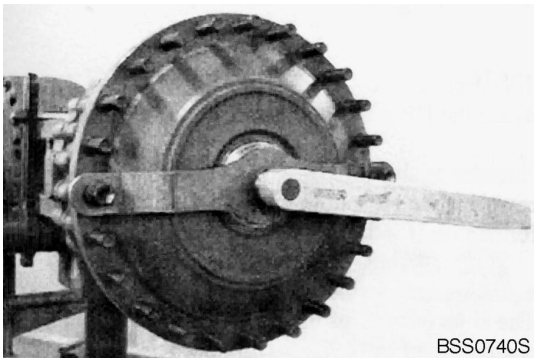

Figure 100

38. Secure slotted nut using slotted pin.

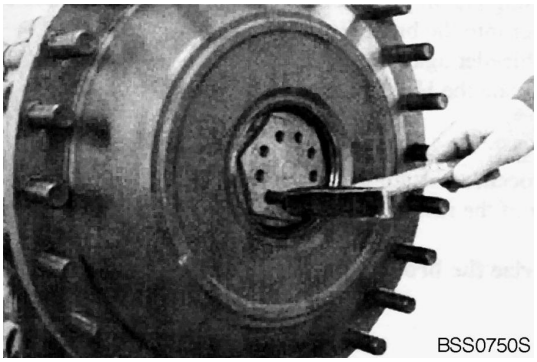

Figure 101

39. Assemble O-ring (see arrow) to cover.

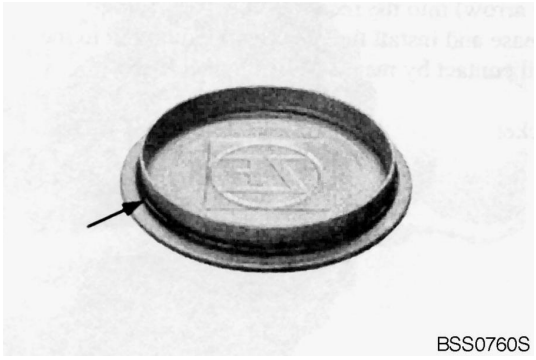

Figure 102

40. Insert cover into output shaft until seated.

    (S) Hammer (Plastic ø60) 5870 280 004

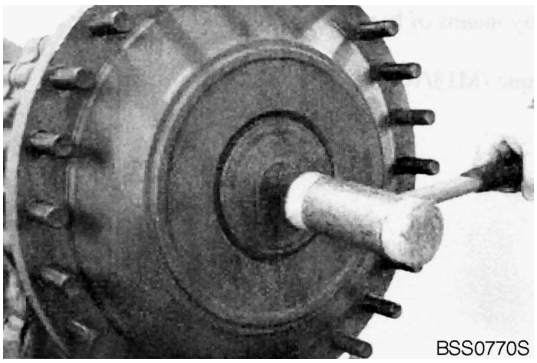

Figure 103

41. Leakage test of brake hydraulics

NOTE: *Before starting test, bleed brake hydraulics completely.*

1. Open bleeder.
2. Slowly actuate HP-pump until oil flows from bleeder.
3. Close bleeder again.
4. Slowly pressurize HP-pump with p > 10 bar and hold pressure for some seconds.

NOTE: *The brake piston extends and cylinder chamber fills up with oil. The air accumulates in upper section of cylinder chamber.*

5. Remove shutoff valve from HP-pump.

NOTE: *The reversing piston presses air from upper section of cylinder into brake line.*

6. Open bleeder again.
7. Slowly actuate HP-pump until oil flows from bleeder.

NOTE: *Repeat procedure - Item 3-7 - until - at Item 7 - from beginning of actuation no more air exits from bleeder.*

NOTE: *Then pressurize brake temporarily (5x) with p = 100 bar max.*

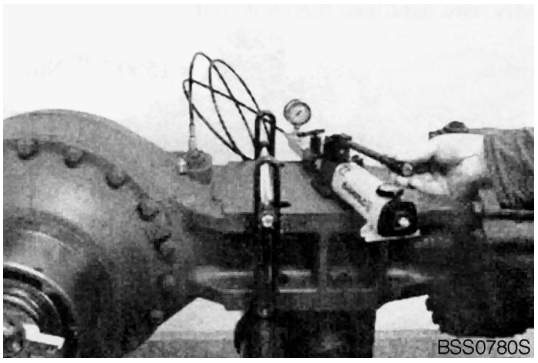

Figure 104

High-pressure test

Increase test pressure up to p = 100 $_{-10}$ bar and close connection to HD-pump using shutoff valve. During a 5 min. testing time, a pressure drop of max. 2% (2 bar) is allowed.

NOTE: *If maximum pressure of 100 bar is exceeded, there will be an excessive piston adjustment and a repeated disassembly of brake or adjusting is required to reset gripping rings to adjusting dimension.*

Low-pressure test

Reduce test pressure to p = 5 bar and close shutoff valve again.
During a 5 min. testing time, a pressure drop is not allowed.

Test media

Motor oils SAE 10-W corresponding with,
MIL-L 2104 C, MIL-L 46152,
API-CC, CD, SC, SD, SE,
ATF-Oils Type A, Suffix A Dexron of II D.

(S) HD-Pump 5870 287 007

(S) Mini-measuring hub (9 / 16" - 18UNF) 5870 950 115

NOTE: *Before putting axle into operation, fill it with oil according to "Lubrication Instructions" on page 1-12.*

Disassembly of Differential Carrier and Brake Tubes

Disassembly of Differential Carrier

1. Fasten axle on assembly truck.

   (S) Assembly truck 5870 350 000

   (S) Holding fixtures 5870 350 077

   (S) Clamps 5870 350 075

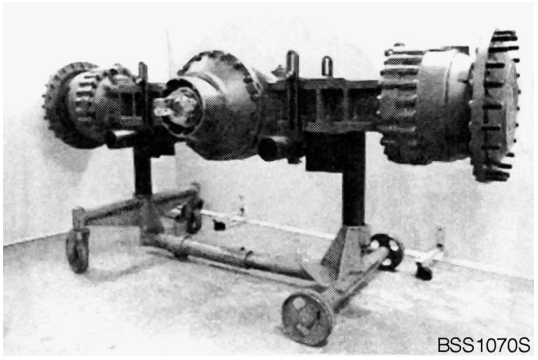

Figure 105

2. Remove plugs (3x, Figure 106, Figure 107) and drain oil from axle casing.

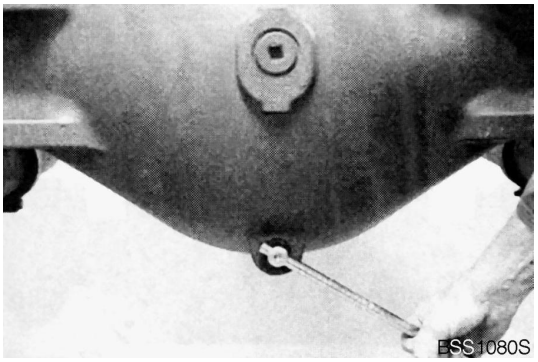

Figure 106

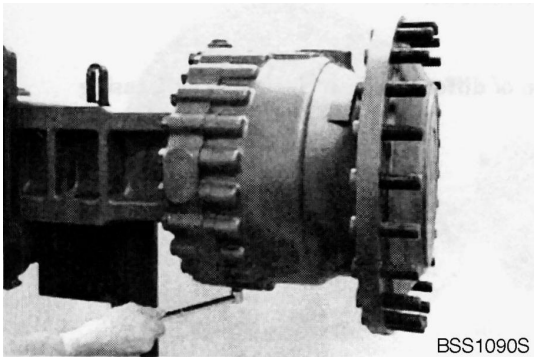

Figure 107

3. Secure output using lifting tackle (S) and remove hex screws.

   (S) Lifting bracket 5870 281 043

   NOTE: *Repeat steps (Figure 108 thru Figure 110) on both output sides.*

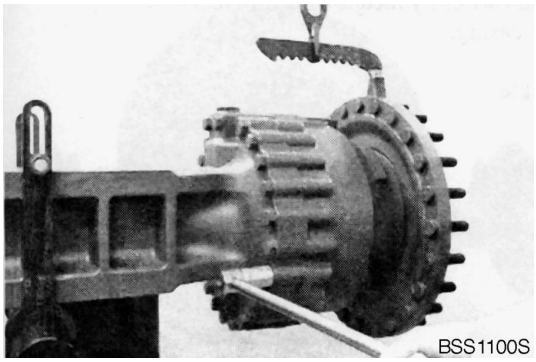

Figure 108

4. Separate complete output from axle casing.

   NOTE: *Pay attention to released O-ring (see arrow).*

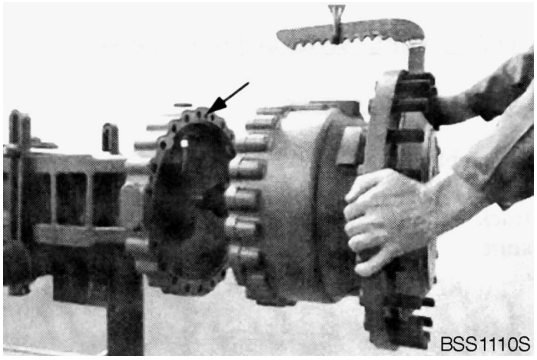

Figure 109

5. Remove stub shaft from sun gear shaft.

   NOTE: *Pay attention to released shim(s).*

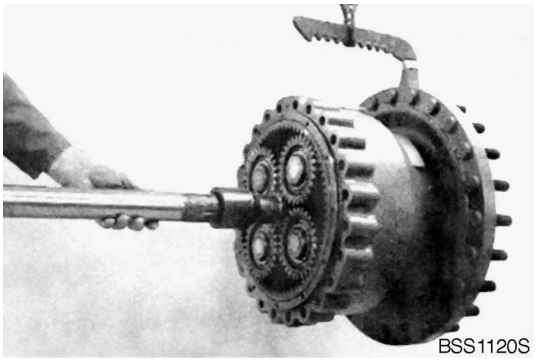

Figure 110

6. Remove hex screws.

   NOTE: *Mark location of differential carrier to axle casing (see arrows).*

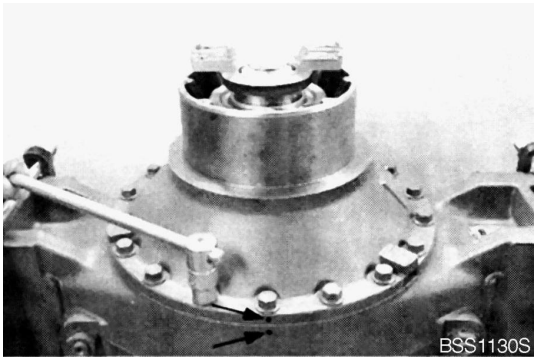

Figure 111

7. Remove differential carrier using lifting tackle (S) from axle casing.

   (S) Lifting tackle 5870 281 044

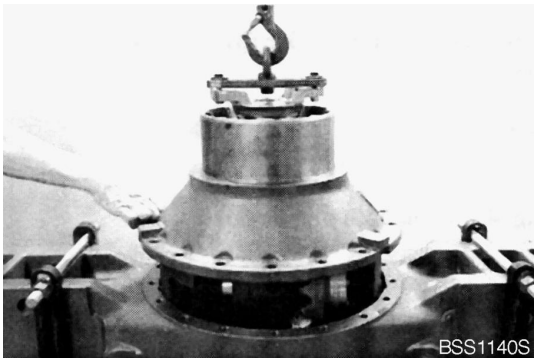

Figure 112

8. Fasten differential carrier to assembly truck.

   (S) Assembly truck 5870 350 000

   (S) Holding fixture 5870 350 004

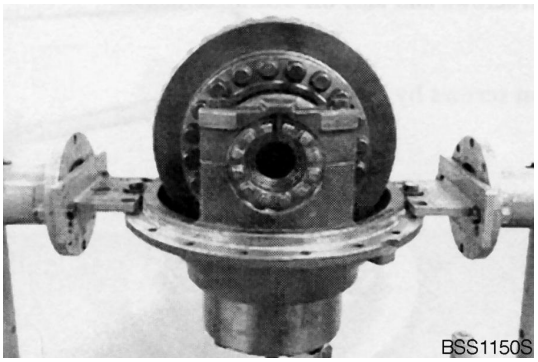

Figure 113

9. Remove slotted pins.

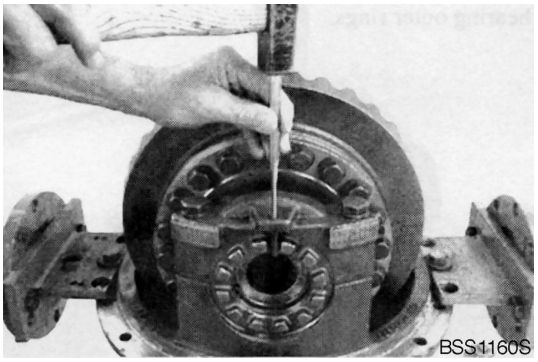

Figure 114

10. Remove both adjusting nuts.

    (S) Socket spanner 5870 656 080

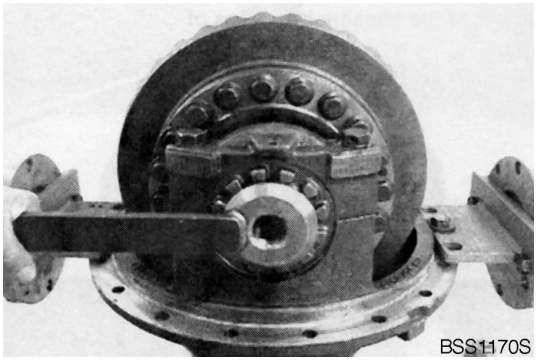

Figure 115

11. Heat axle drive housing using hot-air blower (S).

    (S) Hot-air blower 230 V 58770 221 500

    (S) Hot-air blower 115 V 5870 221 501

    NOTE: *Hex screws are installed with Loctite #262.*

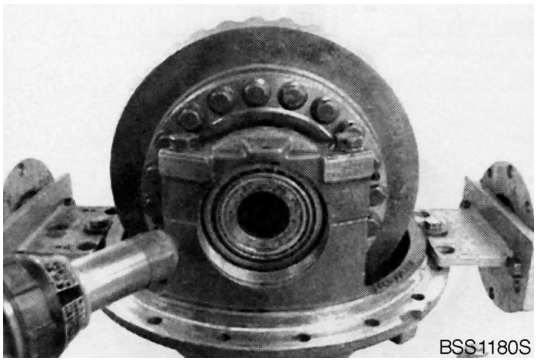

Figure 116

12. Remove hex screws and bearing bracket.

    NOTE: *Remove hex screws by hand only.*

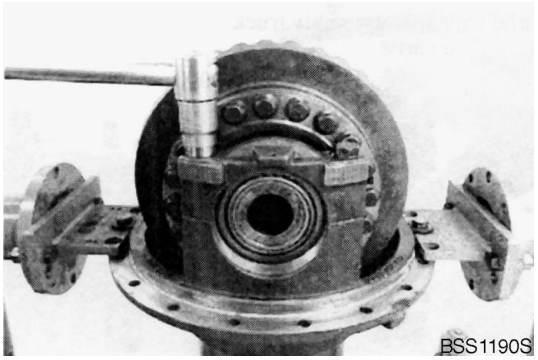

Figure 117

13. Remove both outer bearing races.

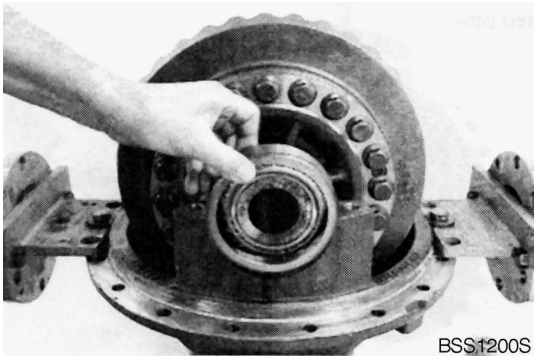

Figure 118

14. Remove differential from housing using lifting tackle (S).

    (S) Lifting tackle 5870 281 013

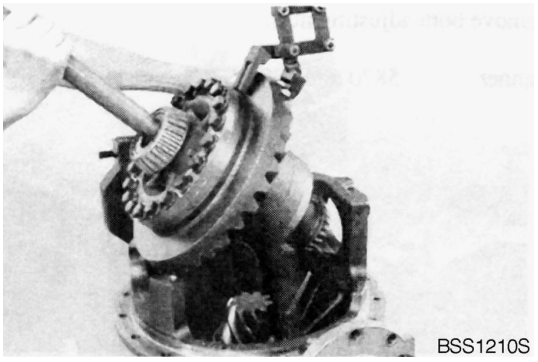

Figure 119

Disassembly of Limited Slip Differential

1. Remove inner bearing race from differential housing.

   (S) Gripping insert 5873 002 025

   (S) Basic set 5873 002 001

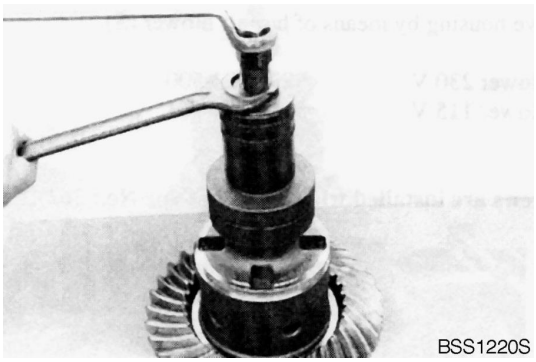

Figure 120

2. Remove inner bearing race from housing cover.

   (S) Rapid grip 5873 012 012

   (S) Basic set 5873 002 001

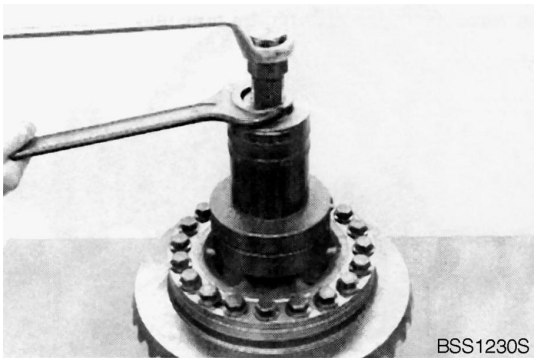

Figure 121

3. Fasten differential using press, remove locking screws and remove released housing cover.

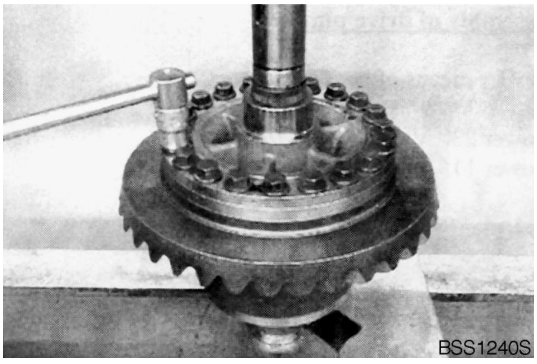

Figure 122

4. Remove all single parts from differential housing.

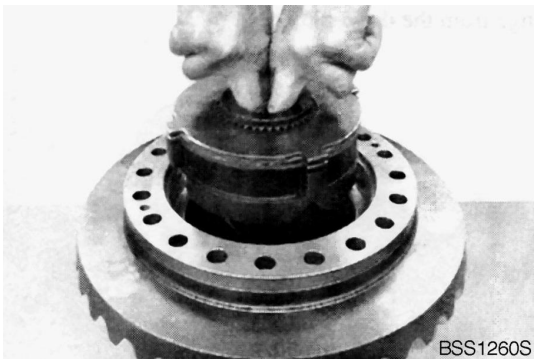

Figure 123

5. Remove crown wheel from differential housing.

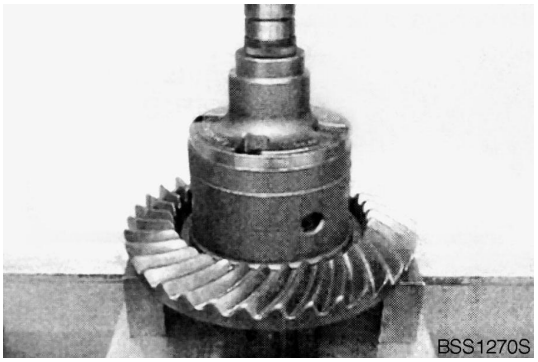

Figure 124

Disassembly of Drive Pinion

1. Heat slotted nut using hot-air blower (S).

   (S) Hot-air blower 230 V 5870 221 500

   (S) Hot-air blower 115 V 5870 221 501

   NOTE: *Slotted nut is locked with Loctite #262.*

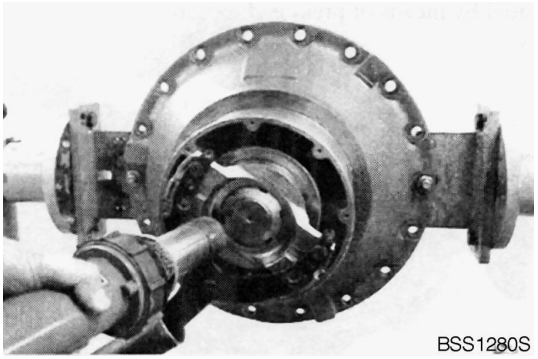

Figure 125

2. Remove hex nut and remove washer behind it.

   (S) Fixture 5870 240 002

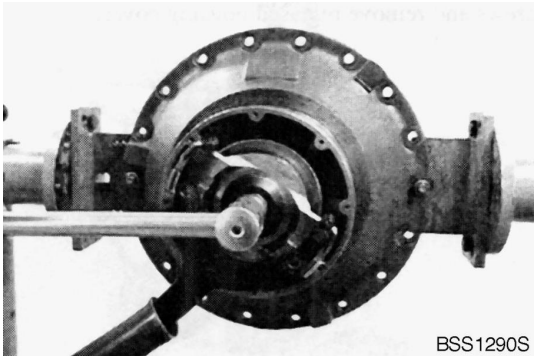

Figure 126

3. Remove input flange from drive pinion.

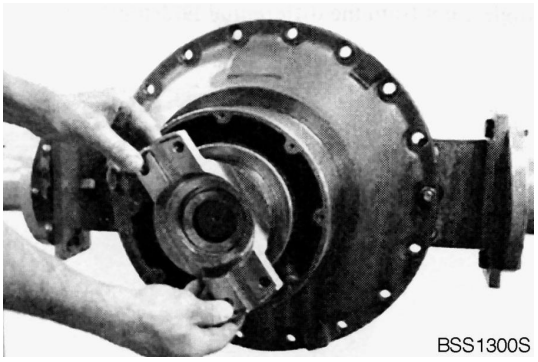

Figure 127

4. Remove shaft seal from axle drive housing.

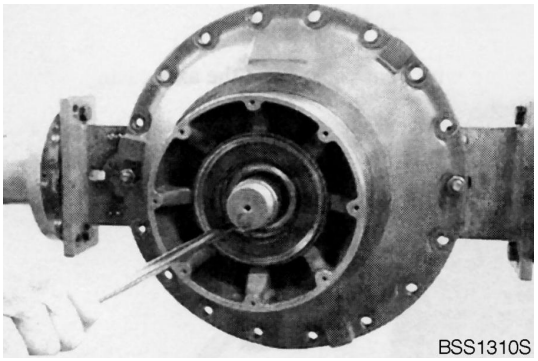

Figure 128

5. Remove drive pinion from axle drive housing using two-armed puller (S) and remove released inner bearing race.

   (S) Two-armed puller 5870 970 007

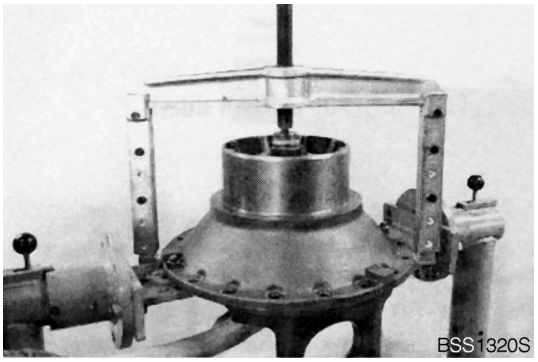

Figure 129

6. Take off spacer ring and remove inner bearing race from drive pinion.

   (S) Gripping insert 5873 002 032

   (S) Basic set 5873 002 001

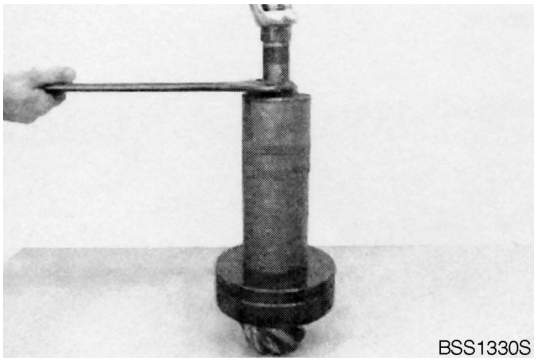

Figure 130

7. If necessary drive out both outer bearing races from axle drive housing.

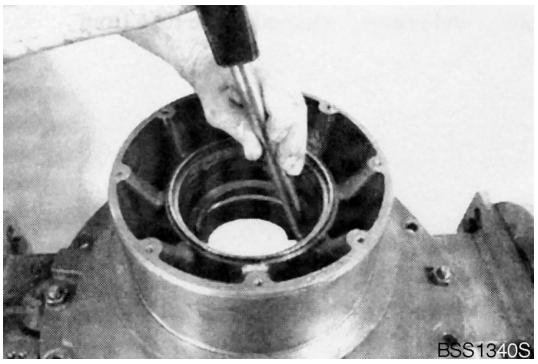

Figure 131

8. Remove plug with vent valve from axle casing.

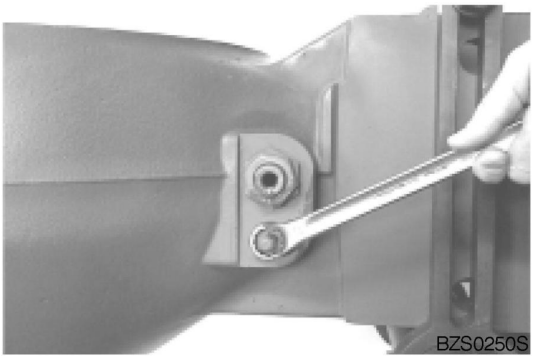

Figure 132

Disassembly of Brake Tubes

1. Remove hex nut.

   NOTE: *Repeat step (Figure 133 thru Figure 137) on both sides.*

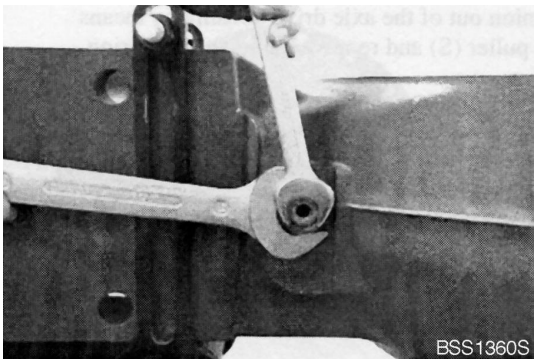

Figure 133

2. Remove union screw.

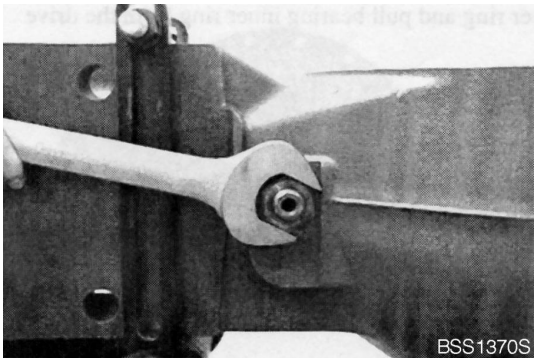

Figure 134

3. Remove pipe union and brake tube from axle casing.

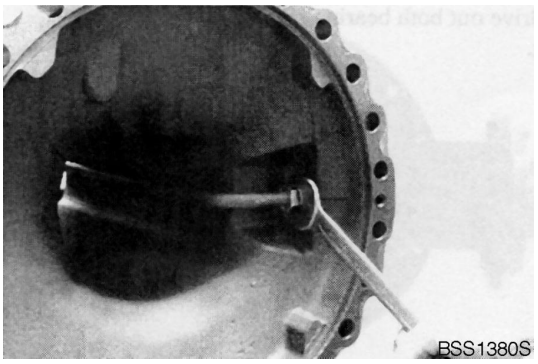

Figure 135

4. Remove vent valve from connection part.

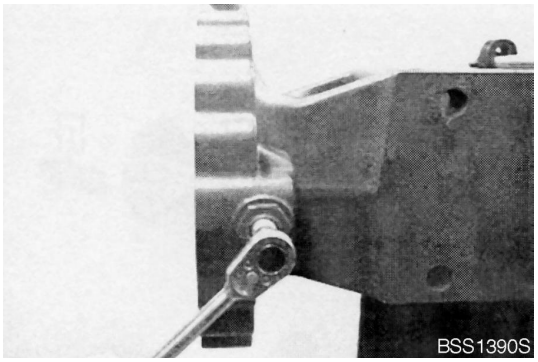

Figure 136

5. Remove connection part from axle casing.

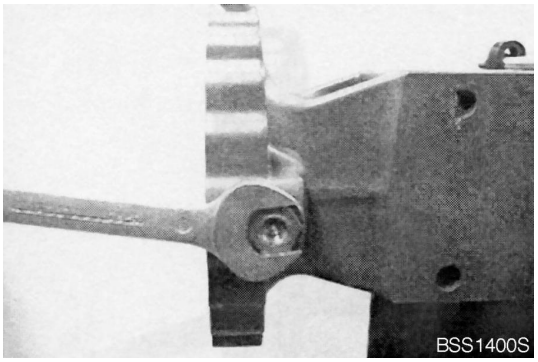

Figure 137

Reassembly of Brake Tubes and Differential Carrier

Reassembly of Oil Pipes

1. Preassemble connection part as shown in opposite figure.

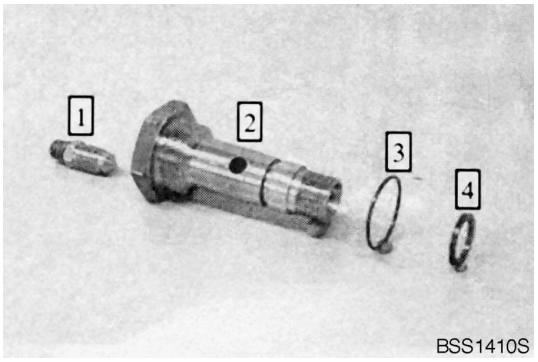

Figure 138

Reference Number	Description
1	Vent Valve
2	Connection Part
3	O-ring
4	Rectangular Ring

NOTE: *Repeat step (Figure 138 thru Figure 147) on both output sides.*

2. Install connection part.

   Tightening torque M_A = 13.26 kg•m (95.88 ft lb)

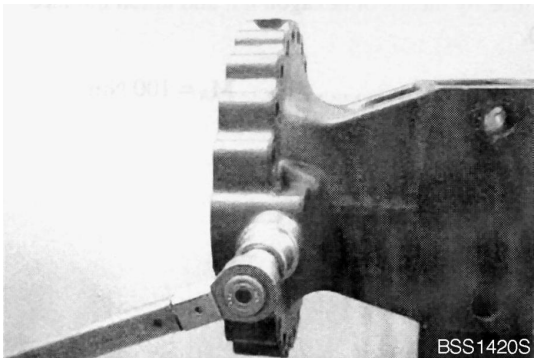

Figure 139

3. Provide union screw with new O-ring and install it.

   Tightening torque M_A = 15.30 kg•m (110.63 ft lb)

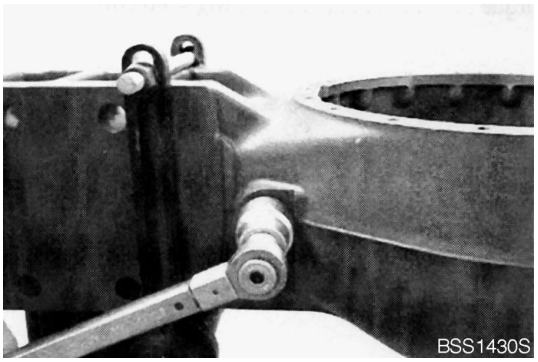

Figure 140

4. Insert O-ring (see arrow) into annular groove of brake tube.

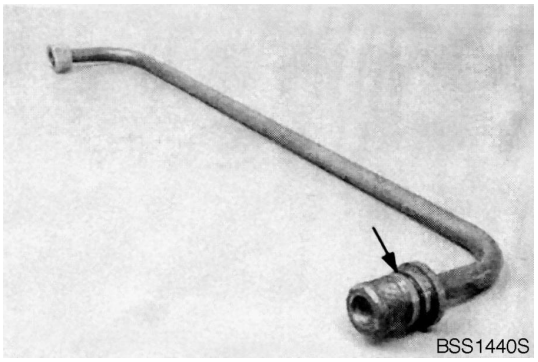

Figure 141

5. Insert brake tube into axle casing, assembling connection part (see arrow 1) through union screw (see arrow 2).

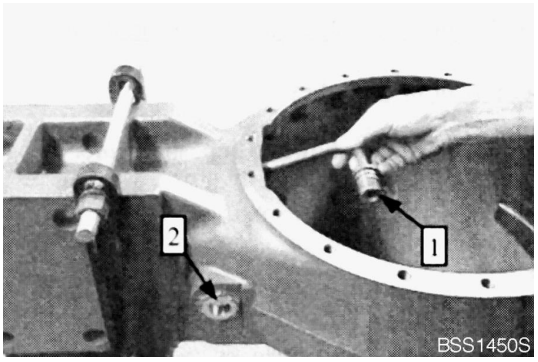

Figure 142

6. Fasten brake tube using hex nut and union nut (see below figure).

   Tightening torque M_A = 10.20 kg•m (73.76 ft lb)

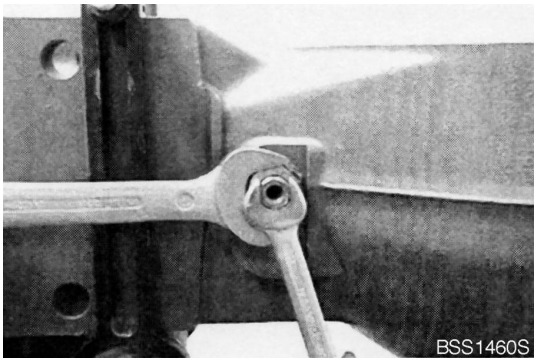

Figure 143

7. Tightening torque M_A = 8.16 kg•m (59.0 ft lb)

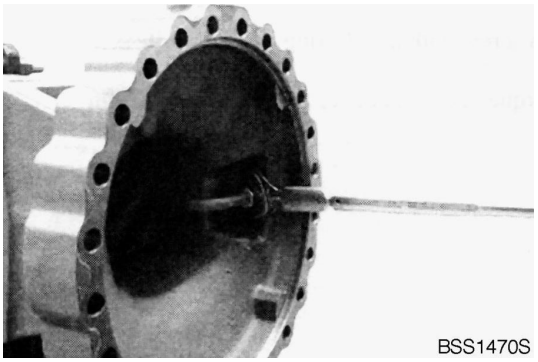

Figure 144

8. Preassemble plug as shown in opposite figure.

Reference Number	Description
1	O-ring
2	Screw Plug
3	Vent Valve

   Tightening torque M_A = 10.20 kg•m (73.76 ft lb)

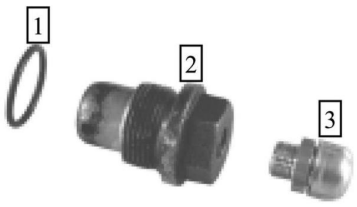

BZS0260S

Figure 145

9. Install plug.

   Tightening torque M_A = 7.14 kg•m (51.63 ft lb)

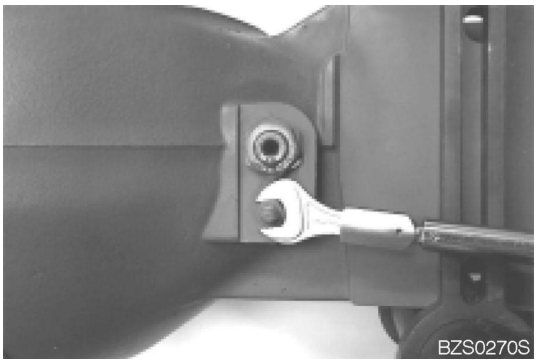

Figure 146

Reassembly of Differential Carrier

NOTE: *If crown wheel or drive pinion are damaged, both parts have to be replaced together.*
For new installation of a complete bevel gear set, pay attention to same pair number of drive pinion and crown wheel.

Determine Shim Thickness for Tooth Contact Pattern

NOTE: *Make the following measuring steps at maximum accuracy.*
Inexact measurements result in a faulty tooth contact pattern and require a repeated disassembly and reassembly of drive pinion and of differential.

10. Install adapter pieces(1) and preliminarily fasten the bearing bracket using hex screws.

    Then install stop washer (4) and measuring pin (3) and assemble measuring shaft (2) (see Figure 147).

    (S) Adapter piece 5870 500 044

    (S) Measuring shaft 5870 500 001

    (S) Measuring pin 5870 351 016

    (S) Stop washer 5870 351 027

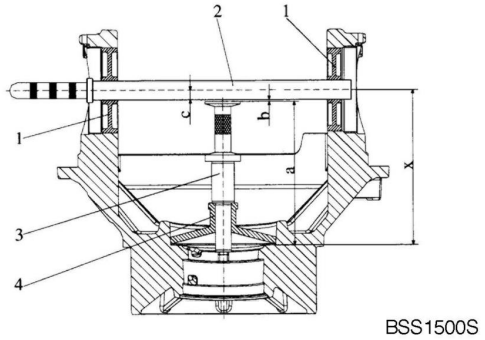

Figure 147

11. Determine gap (Dimension b) between measuring shaft and measuring pin using a feeler gauge.

    Dimension b e.g. 0.25 mm

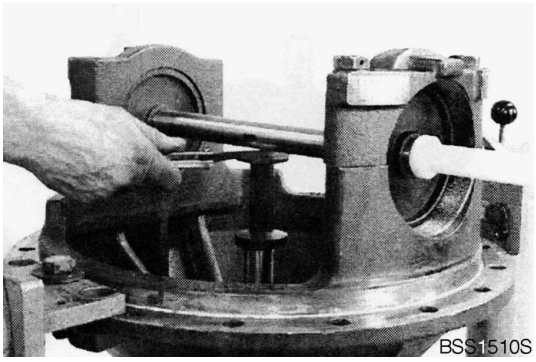

Figure 148

EXAMPLE "A"

Dimension a (= Measuring pin + stop washer)	190.00 mm (7.4803 in)
Dimension b	+ 0.25 mm (0.0098 in)
Dimension c	+ 15.00 mm (0.5906 in)
Dimension X	= 205.25 mm (8.0807 in)

12. Determine Dimension I (bearing width).

    Dimension I e.g. 36.00 mm

    (S) Digital depth gauge 5870 200 072

    (S) Gauge blocks 5870 200 066

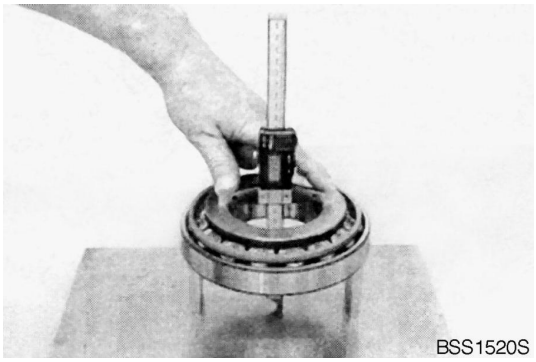

Figure 149

13. Read Dimension II (dimension for pinion).

    Dimension II e.g. 168.05 mm

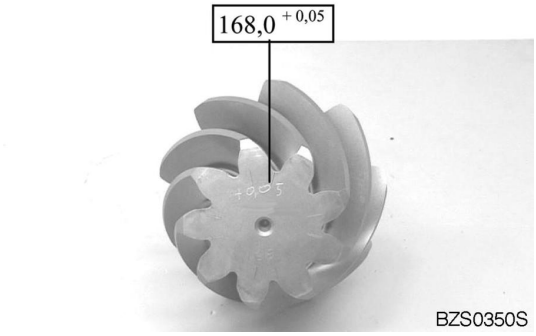

Figure 150

EXAMPLE "B"

Dimension I		36.00 mm (1.4173 in)
Dimension II	+	168.05 mm (6.6161 in)
Dimension Y	=	204.05 mm (8.0335 in)

EXAMPLE "C"

Dimension X		205.25 mm (8.0807 in)
Dimension Y	-	204.05 mm (8.0335 in)
Difference = Shim e.g.	=	1.20 mm (0.0472 in)

Install Drive Pinion

1. Place determined shim e.g. s = 1.20 mm into bearing bore.

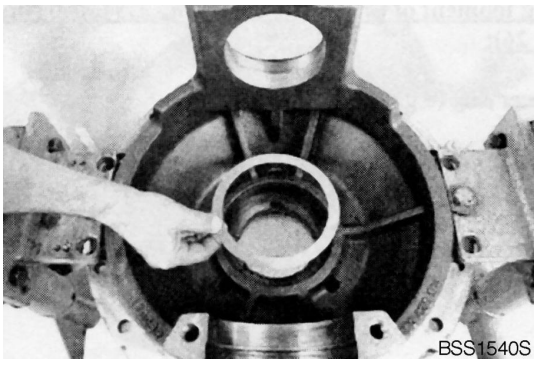

Figure 151

2. Cool outer bearing race and insert it into bearing bore until seated.

   (S) Driver 5870 058 060

   (S) Handle 5870 260 002

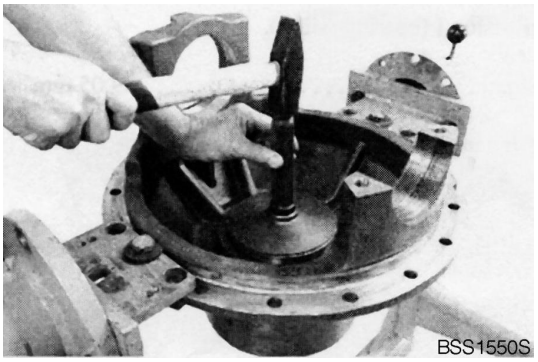

Figure 152

3. Cool outer bearing race on input flange side and inset it until seated.

   (S) Driver 5870 058 087

   (S) Handle 5870 260 002

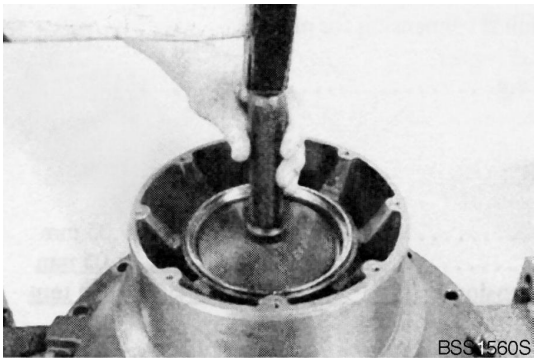

Figure 153

4. Press inner bearing race on drive pinion until seated.

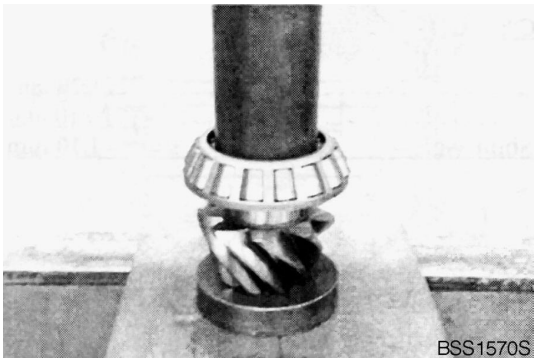

Figure 154

5. Adjust rolling moment of drive pinion bearing 0.15 - 0.31 kg•m (1.11 - 2.21 ft lb) (Figure 155 thru Figure 163).

   Assemble spacer ring (e.g. s = 8.70 mm).

   NOTE: *As per experience the required rolling moment is obtained by use of spacer ring (e.g. s = 8.70 mm) available at disassembly.*
   However, a later checking of rolling moment is imperative.

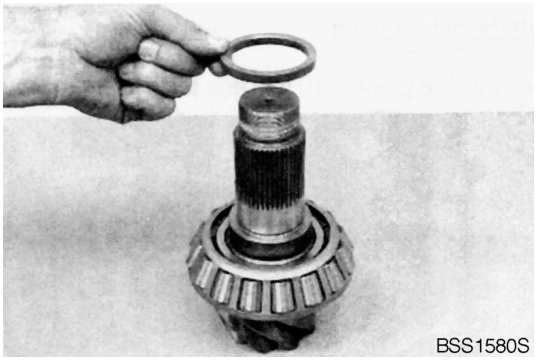

Figure 155

6. Insert preassembled drive pinion into axle drive housing and assemble the heated inner bearing race until seated.

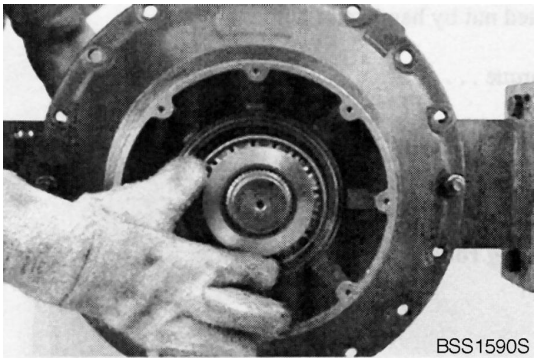

Figure 156

7. Press dust protection on input flange until seated.

   (S) Driver 5870 056 012

   (S) Handle 5870 260 002

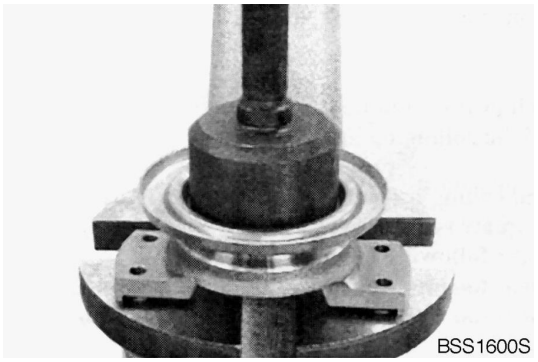

Figure 157

8. Assemble input flange.

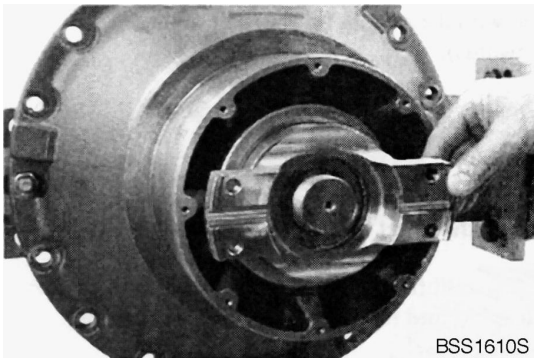

Figure 158

9. Assemble washer.

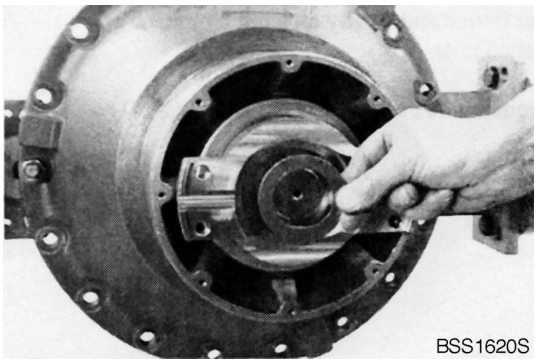

Figure 159

10. Unscrew slotted nut by hand and tighten it.

    Tightening torque M_A = 71.38 kg•m (516.29 ft lb)

    (S) Fixture 5870 240 002

    NOTE: *When tightening rotate drive pinion in both directions several times.*

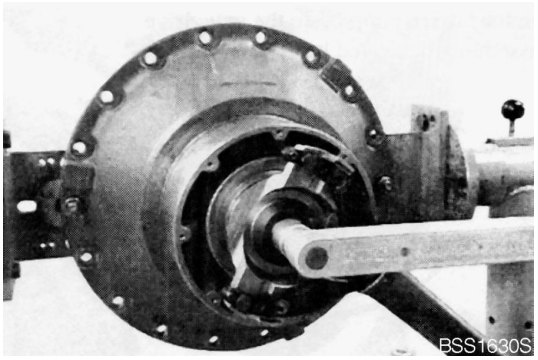

Figure 160

11. Check rolling moment 0.15 - 0.31 kg•m (1.11 - 2.21 ft lb)

    NOTE: *For new bearings it should be tried to achieve the max. value of rolling moment.*

    NOTE: *If required rolling moment is not obtained, correct it with an adequate spacer ring (Figure 155), according to following indications:*
    Rolling moment too low - install a thinner spacer ring
    Rolling moment too high - install a thicker spacer ring.

    Then remove slotted nut again and remove input flange from drive pinion.

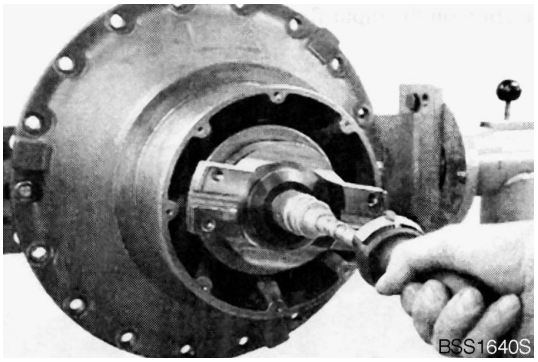

Figure 161

12. Install shaft seal with the sealing lip visible to oil chamber (downwards).

    (S) Driver 5870 048 225

    NOTE: *The exact installation position of shaft seal will be obtained by using exact driver (S).*

    NOTE: *Just before installation, wet outer diameter of shaft seal with mineral spirits and fill the space between sealing and dust lip with grease.*

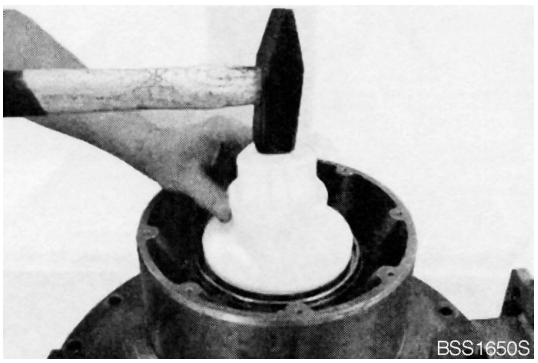

Figure 162

13. Assemble input flange and finally fasten in using washer and slotted nut.

    Tightening torque M_A = 71.38 kg•m (516.29 ft lb)

    (S) Fixture 5870 240 002

    NOTE: *Apply Loctite #262 onto thread of slotted nut.*

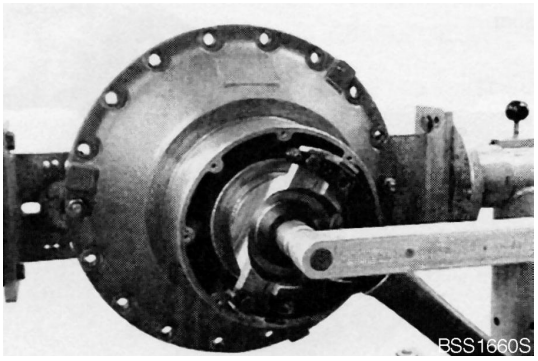

Figure 163

Reassemble of Limited Slip Differential

1. Place both thrust washers into differential housing.

   NOTE: *Before installation, all single parts of differential must be oiled according to ZF List of lubricants TE-ML 05.*

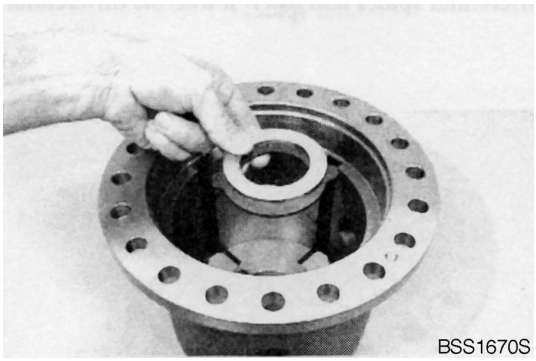

Figure 164

2. Starting with an outer clutch disk install alternately the outer and inner clutch disks.

   NOTE: *Thickness of disk pack must be identical on both sides.*

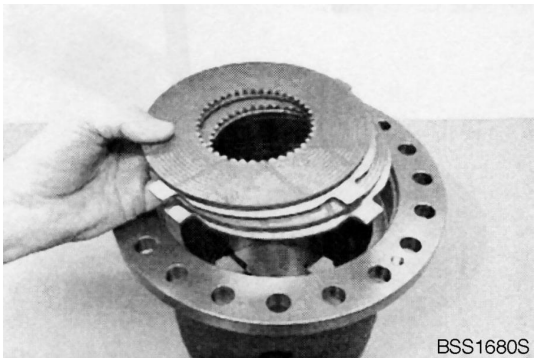

Figure 165

3. Install pressure ring.

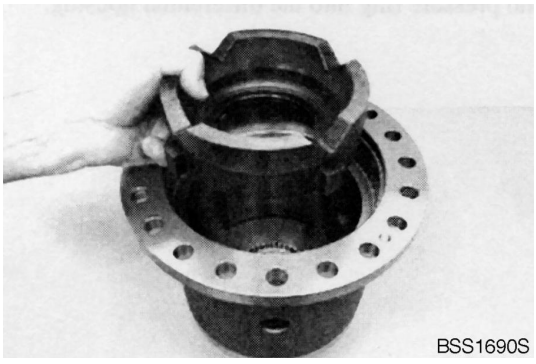

Figure 166

4. Insert axle bevel gear until seated and at the same time, assemble all inner clutch disks with splines.

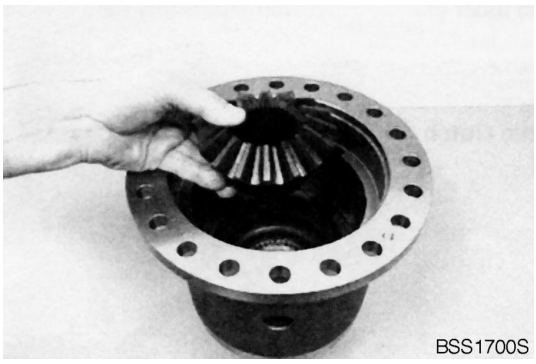

Figure 167

5. Preassemble differential spider and insert it into differential housing.

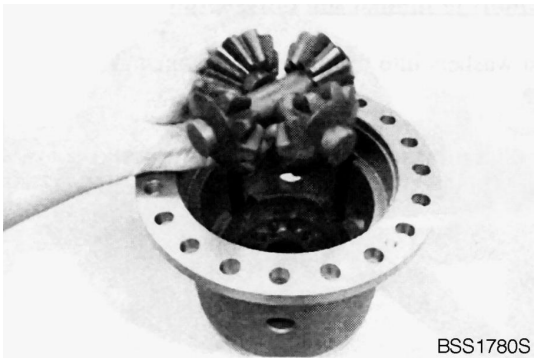

Figure 168

6. Install second axle bevel gear.

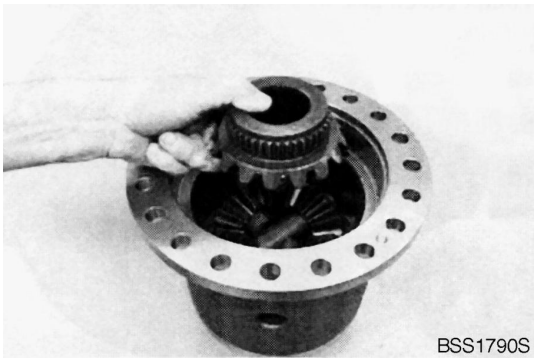

Figure 169

7. Insert second pressure ring into differential housing.

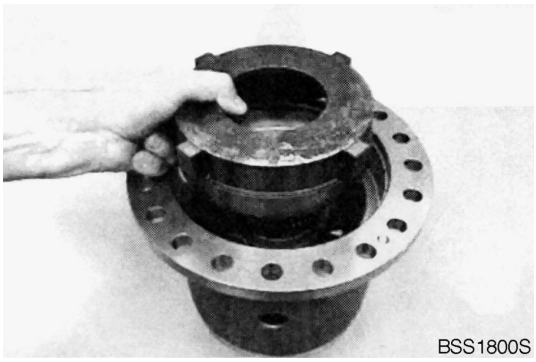

Figure 170

8. Starting with an inner clutch disk install alternately the inner and outer clutch disks.

   NOTE: *Thickness of clutch disk pack must be identical on both sides.*

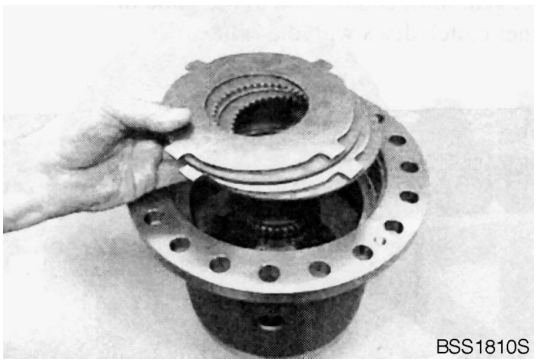

Figure 171

Determine Disk Clearance 0.2 - 0.8 mm

1. Determine Dimension I, from mounting face of differential housing to plane face of outer clutch disk.

   Dimension I e.g. 38.05 mm

   (S) Digital depth gauge 5870 200 072

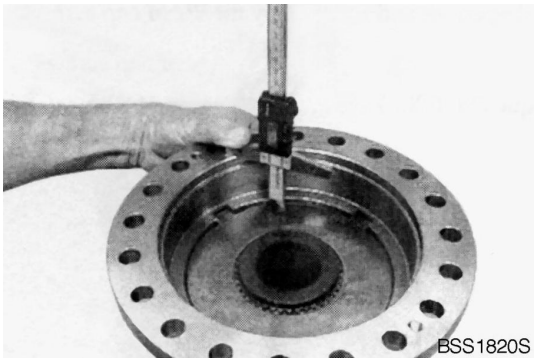

Figure 172

2. Determine Dimension II, from contact surface of outer clutch disk to mounting face of housing cover.

   Dimension II e.g. 37.75 mm

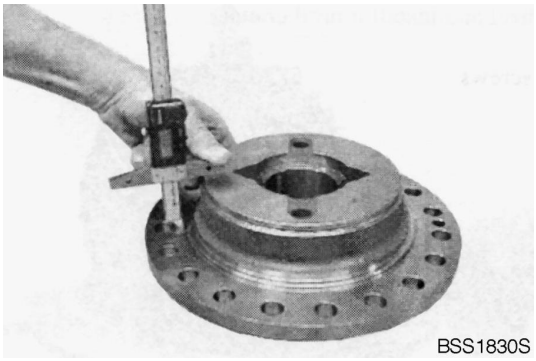

Figure 173

EXAMPLE "D"

Dimension I		38.05 mm (1.4980 in)
Dimension II	-	37.75 mm (1.4862 in)
Difference = Disk clearance	=	0.30 mm (0.0118 in)

NOTE: *If required disk clearance is not obtained, correct it with adequate outer clutch disks (s = 2.9, s = 3.0 or s = 3.3 mm), taking care that difference in thickness between left and right disk pack must only be 0.01 at a maximum.*

3. Install both thrust washers with grease into recess of housing cover.

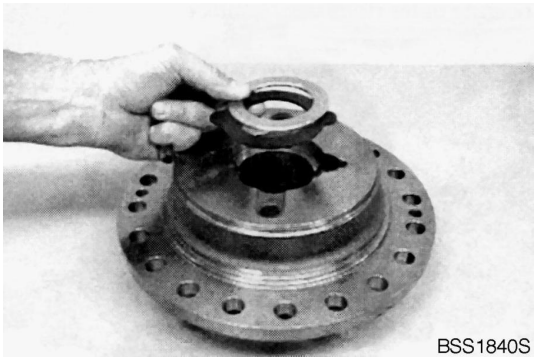

Figure 174

4. Install housing cover.

   Then heat crown wheel and install it until seated.

   (S) Adjusting screws 5870 204 040

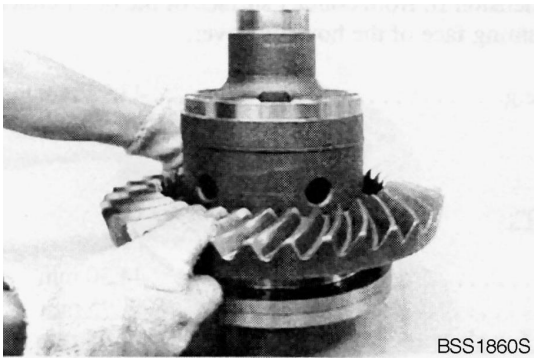

Figure 175

5. Install differential using press and fasten crown wheel using new locking screws.

   Tightening torque M_A = 41.81 kg•m (302.40 ft lb)

   NOTE: *Only use of new locking screws is permissible.*

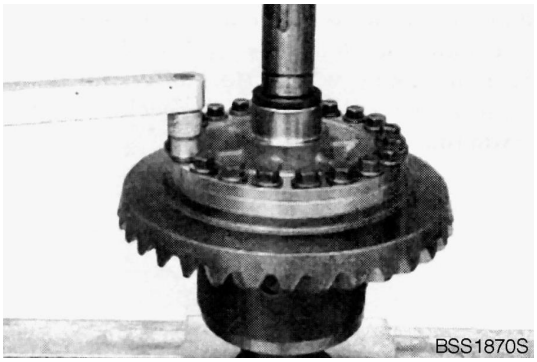

Figure 176

6. Press on both outer bearing races until seated.

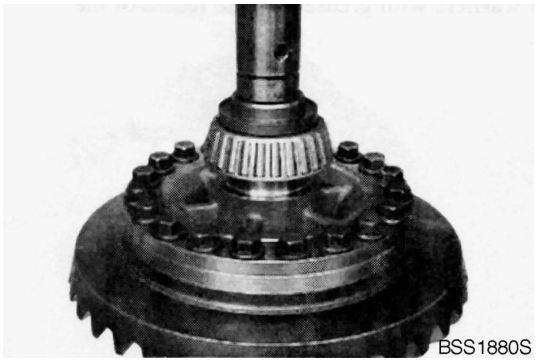

Figure 177

7. Insert differential into axle drive housing using lifting tackle (S).

   (S) Lifting tackle 5870 281 013

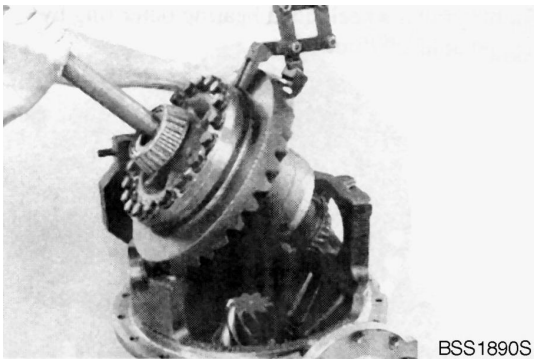

Figure 178

8. Place outer bearing race into axle drive housing.

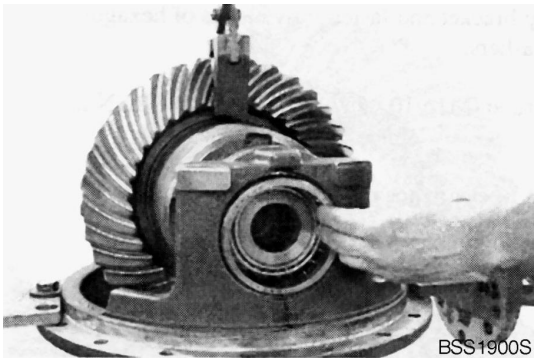

Figure 179

9. Preliminarily install outer bearing race using adjusting nut.

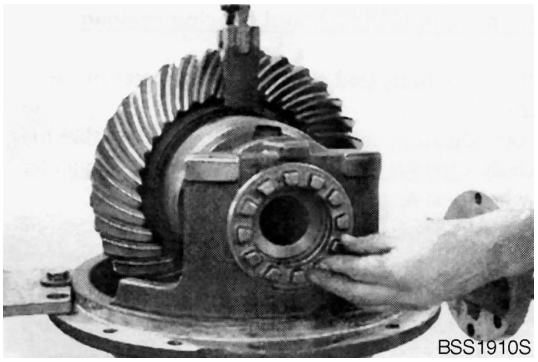

Figure 180

10. Install crown wheel side outer bearing race.

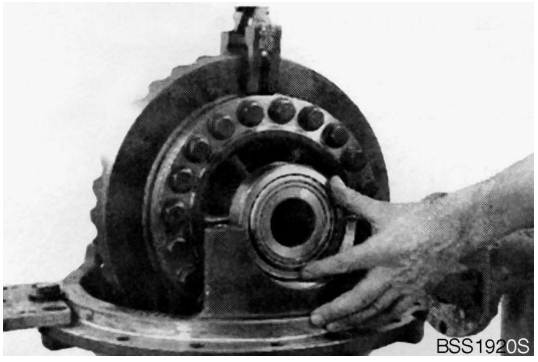

Figure 181

11. Preliminarily install crown wheel side outer bearing race using second adjusting nut.

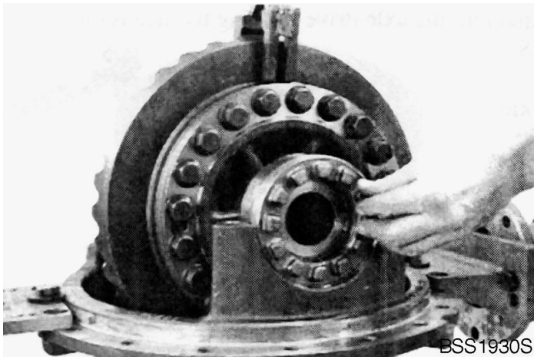

Figure 182

12. Install bearing bracket and fasten it using hex screws and washers.

    Tightening torque (M16/10.9) M_A = 28.55 kg•m (206.52 ft lb)

    NOTE: *Pay attention to clearance of adjusting nut.*

    NOTE: *Apply Loctite #262 onto threads of hex screws.*

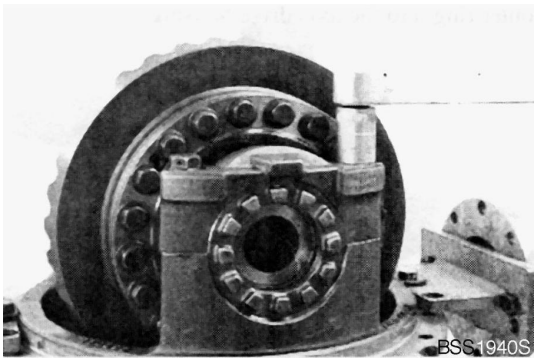

Figure 183

Adjustment of Backlash and Bearing Preload

1. Place dial indicator at a right-angle to outer diameter of tooth flank (crown wheel).
   Then install both adjusting nuts only to such an extent that required backlash - see value etched on outer diameter of crown wheel - is reached.

   (S) Magnetic stand 5870 200 055

   (S) Dial indicator 5870 200 057

   NOTE: *During this step rotate differential several times.*

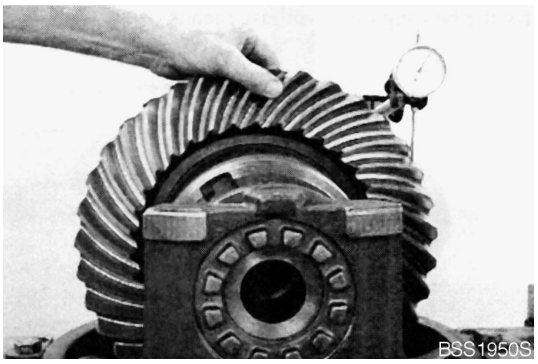

Figure 184

2. Determine bracket width and correct it on both adjusting nuts, if required.

   Bracket width 367.90 $^{-0.05}$ mm

   (S) Caliper gauge 5870 200 058

   Then check backlash again.

   NOTE: *Adjusting of bracket width results in required bearing preload.*

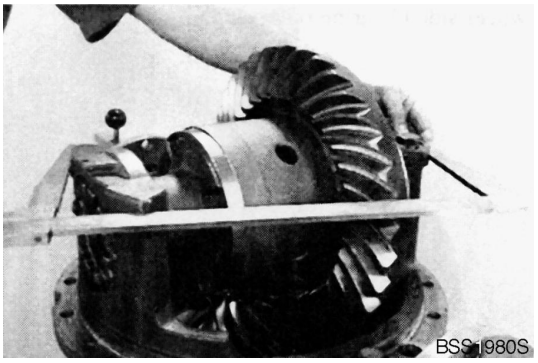

Figure 185

3. Cover some tooth flanks of crown wheel with marking ink and roll crown wheel in both directions over drive pinion.

   Compare obtained tooth contact pattern with examples on (See page -17)

   NOTE: *If tooth contact pattern differs, there has been a measuring error at determination of shim (Figure 151), what is imperative to be corrected.*



Figure 186

4. Secure both adjusting nuts using slotted pins.

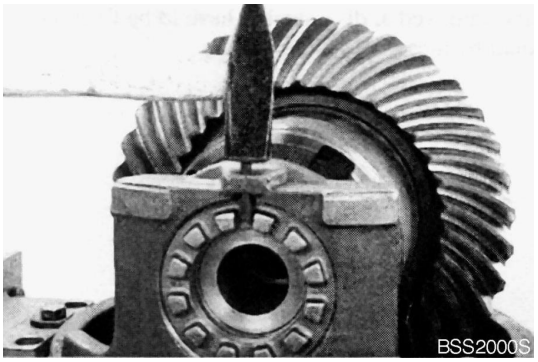

Figure 187

5. Install two adjusting screws (S) and insert differential carrier into axle casing until seated using lifting tackle (S).

   (S) Adjusting screws 5870 204 022

   (S) Lifting tackle 5870 281 044

   NOTE: *Observe radial location (see marking Figure 111).*

   NOTE: *Apply sealing compound (Three Bond Type 1215, ZF Part Number 0666 791 002) on mounting face.*

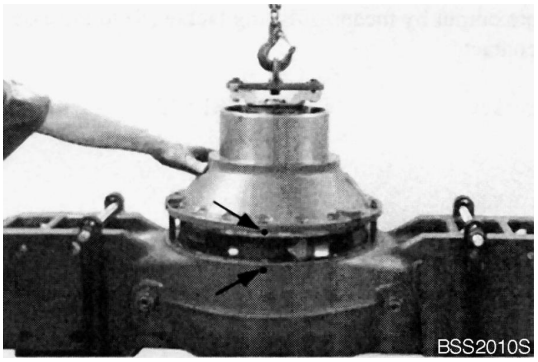

Figure 188

6. Fasten differential carrier using new locking screws.

   Tightening torque M_A = 25.49 kg•m (184.39 ft lb)

   NOTE: *Only use of new locking screws is permissible.*

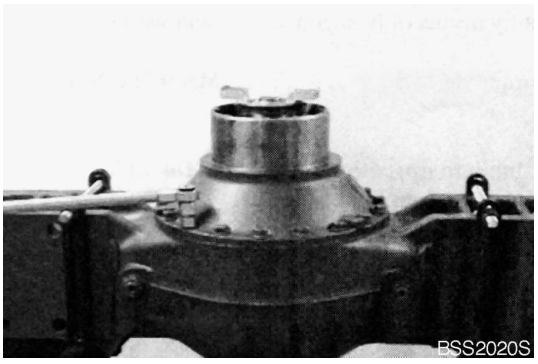

Figure 189

7. Insert stub shaft into spline of axle bevel gear until seated.

   Then install O-ring (see arrow) using grease into recess of axle casing.

   NOTE: *Step (Figure 190 thru Figure 193) is to be made on both output sides.*

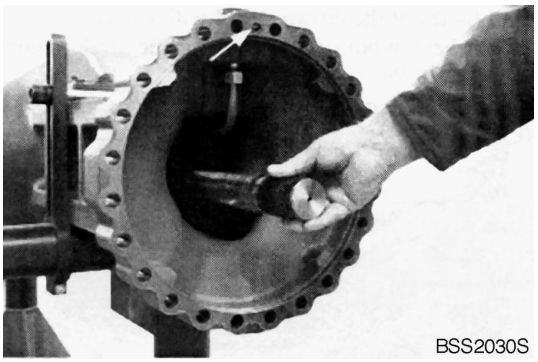

Figure 190

8. Thrust washer(s) removed at disassembly have to be held in sun gear shaft using grease.

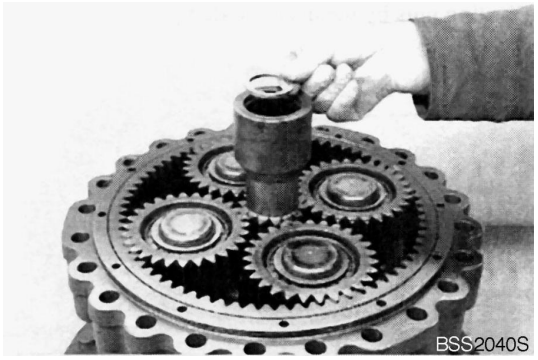

Figure 191

9. Place complete output using lifting tackle (S) to axle casing until seated.

   (S) Lifting bracket 5870 281 043

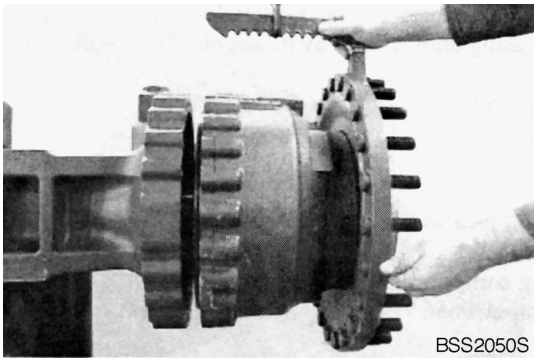

Figure 192

10. Fasten output using hex screws and washers.

    Tightening torque (M18 / 10.9) M_A = 39.77 kg•m (287.65 ft lb)

    NOTE: *Before putting into operation of axle, fill oil in accordance with "Lubrication Instructions" on page 1-12.*

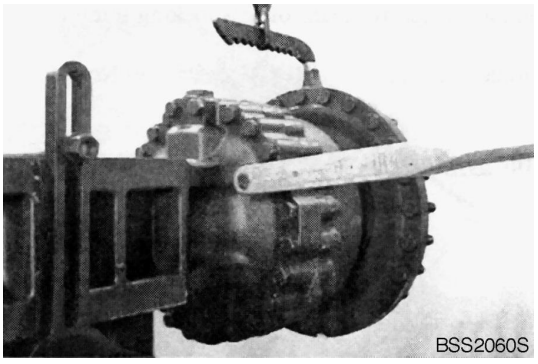

Figure 193

PARKING BRAKE

Functional Characteristics and Maintenance Instructions for Spring-loaded Sliding Caliper Brakes

1. Functional Characteristics of Spring-loaded Sliding Caliper Brakes

The two identical brake pads (3 and 4) must slide freely on guide bolt (2), which is fastened in housing (1). The guide bolts (2) are guided in an additional brake anchor plate which in turn is screwed onto vehicle, i.e. at its axle.

When actuated, the brake generates a clamping force between the brake lining plates (3 and 4). This causes a tangential force/ braking moment to be generated at the brake disk, the extent of which depends on the coefficients of friction generated by the linings.

The clamping force is generated by a stack of cup springs (5), that move piston (6) along with adjusting screw (7), thrust bolt (8) and brake pad (3), towards brake disk.

When brake pad (3) comes into contact with brake disk, reaction force moves housing (1) on guide bolts (2) until brake pad (4) is pressed against brake disk.

The brake is released by compressing the stack of cup springs (5). Pressurized hydraulic oil enters cavity (10) overcoming cup spring force. This pressure moves piston (6) back until it meets pressure ring (9). The brake disk is then free to rotate.

The clamping force will diminish with wear of brake lining and brake disk. The brake must be periodically adjusted according to specification below (point 3).

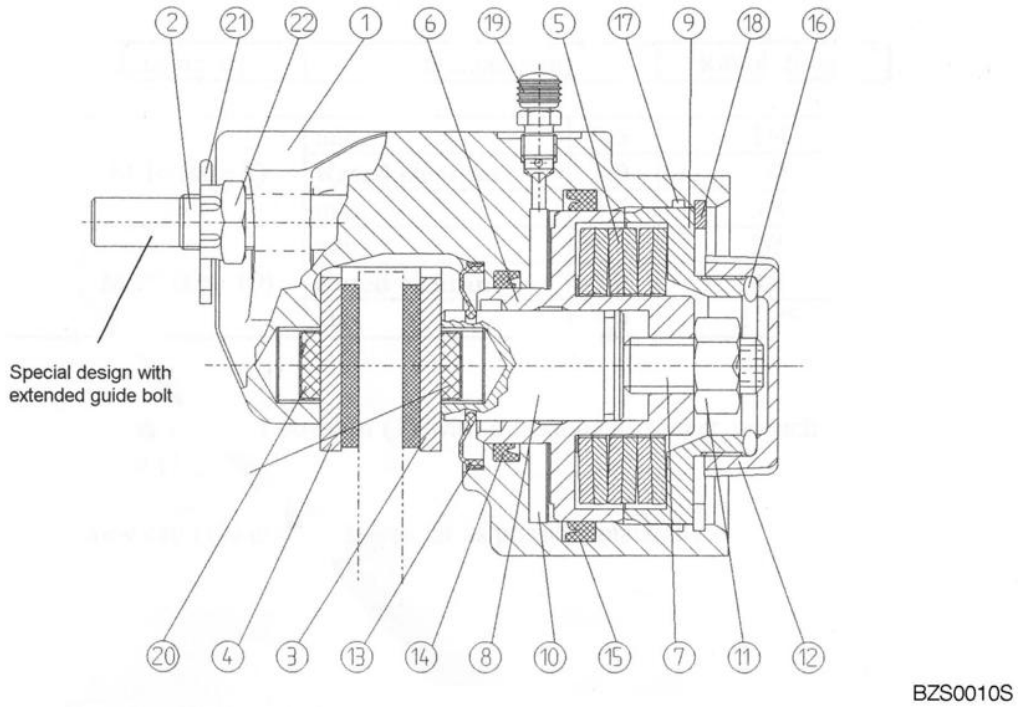

Figure 194

2. Mounting and Basic Setting Regulations

Basic brake setting is required after mounting new brake lining plates or brake disks, and during all repair stages and in case of insufficient braking performance.

All mounting and basic adjustments must be carried out on brake when cold. Proceed as follows:

1. Release screw cap (12).
2. Release lock nut (11) (size 24 or 30 mm) and turn adjusting screw (7) counterclockwise using a 8 or 10 mm socket wrench until pressure bolt (8) comes to rest against face surface of piston (6).
3. In this status, brake can be mounted onto brake disk and fastened.
4. Mount pressure connection and apply necessary release pressure to brake until stack of cup springs (5) are completely compressed.
5. Turn adjusting screw (7) manually clockwise until both brake pads (3 and 4) make contact with brake disk (it is then no longer possible to turn adjusting screw (7) without exerting a major amount of force).
6. Turn adjusting screw (7) counterclockwise in order to set following rated clearances:

Type	Adjusting screw	Clearance (mm)		Revolutions
Small	M16 (size 8)	min.	0.5	1/4
		Rated clearance	1.0	1/2
		max.	1.5	3/4
Large	M20 (size 10)	min.	1.0	2/5
		Rated clearance	2.0	4/5
		max.	3.0	1 1/5

7. Hold adjusting screw in position (7) with a hex socket wrench and lock with lock nut (11).
8. Mount screw cap (12) and tighten as far as possible manually.
9. Mount pressure connection in accordance with instructions of axle / gear manufacturer and bleed piston chamber using bleeding valve (19), socket size 13.

3. Adjusting Regulations

During this adjusting process, parking brake must be released, i.e. stack of cup springs (5) must be completely compressed

1. Park machine on firm, level ground, and block tires. Only then, release parking brake.
2. Release screw cap (12) and unscrew.
3. Release lock nut (11) (size 24 or 30 mm) and turn adjusting screw (7) with an 8 or 10 mm socket wrench manually clockwise until two brake pads (3 and 4) make contact with brake disk.
4. Turn adjusting screw (7) counterclockwise and set clearance specified in above table.
5. Hold adjusting screw (7) in position with hex socket wrench and lock with lock nut (11).
6. Mount screw cap (12) and tighten as far as possible manually.
7. Actuate brake valve several times and check braking efficiency of parking brake on a slope.

4. Emergency Release of Parking Brake

After a pressure failure, release parking brake by using following manual procedure.

1. The vehicle has to be against moving away.
2. Release screw cap (12) and unscrew.
3. Release lock nut (11) (size 24 or 30 mm) and turn adjusting screw (7) with an 8 or 10 mm socket wrench manually counterclockwise until brake disk is free.

NOTE: *A force of 4.08 -7.14 kg•m (29.50 - 51.63 ft lb) must be applied for emergency release of parking brake.*

4. Mount lock nut (11) and screw cap (12) and manually tighten both as far as possible. (Protection against dirt)

   NOTE: *Now, vehicle will not have any brake function. The vehicle must be secured against moving away with proper means. Before putting vehicle into operation again, the brake has to be adjusted according to point 2. respectively point 3.*

5. Maintenance and Repair Work

Maintenance and Exchange of Brake Pads

The brake pads themselves are maintenance free. All that is required here is a check for damaged parts, and inspection to ensure that brake disk remains easy running.

The thickness of brake lining must be subjected to a visual inspection at regular intervals, which depend on vehicle usage, but every six months at the latest. In case of a minimal residual lining thickness, these intervals must be reduced accordingly in order to avoid major damage to brake or disk.

Small brake: min. residual thickness 1.0 mm per brake lining plate (6 mm carrier plate thickness)

Large brake: min. residual thickness 2.0 mm per brake lining plate (8 mm carrier plate thickness)

Once these thicknesses are reached, brake lining must be replaced in accordance with the following regulation:

1. Park machine on firm, level ground, and block tires. Only then, release the parking brake by applying the necessary release pressure.
2. Release screw cap (12) and unscrew.
3. Release lock nut (11) (size 24 or 30 mm) and turn adjusting screw (7) with an 8 or 10 mm socket wrench manually clockwise until it lies flush with inside of piston (6).
4. Press back pressure bolt (8) using a suitable screwdriver until it comes to rest against piston (6) (i.e. by levering)
5. Depending on free space available, release one of two guide bolts (2), removing safety splint (21), unscrewing castellated nut (22) and pulling guide bolt (2) out of brake anchor plate (1). brake lining plates (3 and 4) can now be removed tangentially to brake disk.

   NOTE: *In case of minimal clearance, i.e. it is not possible for space reasons to exchange brake lining plate in accordance with these instructions, brake must be removed completely.*

To do this, remove two guide bolts out of brake anchor plate.

NOTE: *Check pressure hose. If pressure hose is too short, it must be unscrewed in order to allow brake to be removed.*
Steps 4.1.3 and 4.1.4 must always have been performed beforehand, than release pressure by actuating hand brake valve.

6. Exchange brake pads (3 and 4) and insert guide bolts (2) into brake anchor plate (1), checking whether permanent magnets (20) still have sufficient magnetic force to hold brake lining plates (3 and 4).

   NOTE: *Should this not be case, permanent magnets (20) must also be changed ("lever out" using a suitable screwdriver).*

   NOTE: *When brake has been completely removed, pressure hose must be screwed back on and brake bled.*

7. Secure guide bolts (2) with castellated nut (22) and locking splint (21).

   NOTE: *Only Knott original spare lining plates may be used. If any other spare parts are used, no warranty claims will be accepted either for brakes or for their functional characteristics.*

   After mounting new brake lining plates or their repair, brake must be correctly set in accordance with instructions under point 3.

Changing the Seal

Faulty seals must be exchanged in accordance with instructions below:

1. Park machine on firm, level ground, and block tires. Only then, release parking brake by applying necessary release pressure.
2. Release screw cap (12) and unscrew.
3. Release lock nut (11) (size 24 or 30 mm) and turn adjusting screw (7) with an 8 or 10 mm socket wrench manually counterclockwise until adjuster screw (7) measured 27 mm - 30 mm outside of piston (6).
4. Release pressure by actuating hand brake valve, than unscrew pressure hose and completely remove brake. The stack of cup springs (5) is now completely depressurized.
5. Remove retaining ring (18) and remove pressure ring (9) from housing (1).
6. Remove stack of cup springs (5) and piston (6).
7. Exchange seals (14, 15 and 17) and replace individual parts in reverse sequence.

NOTE: *Pay attention to mounting direction of seal rings (14 and 15), otherwise leaks can occur.*

NOTE: *When mounting new seal rings, pay attention not to damage sealing lip by using a suitable mounting device with rounded edges.*

When mounting piston, sliding and sealing surfaces must be greased lightly using lubricating grease to DIN 51825.

The dust protection cap (13) is fitted with a vulcanized steel ring that is used to press it through locating hole. For exchanging, "lever out" ring using a suitable tool. The new dust protection cap must be pressed in with the aid of a suitable mounting ring and screw clamps or a lever press.

8. Mount brake in accordance with above procedure into vehicle / at axle.

NOTE: *For exchange purpose, only use Knott original spares and spare parts sets. These must be ordered through vehicle manufacturer.*

6. General

Any discovered defects or damage to parts not listed here must naturally be repaired or replaced using original parts.

For any other information not contained in these instructions or for more detailed instructions, please contact vehicle or brake manufacturer.

Rear Axle (ZF-MT-L 3085)

Edition 1

Table of Contents

Rear Axle (ZF-MT-L 3085)

Safety Precautions 5
Applicable Models 5
General Description 7
Outline 7
Drive Axle 7
Differential (Standard) 10
Lubrication Instructions 12
Make Wear Measurement on Multidisk Brake 14
Inscriptions on Model Identification Plate 15
Torque Limits for Screws 16
Examples of Gear Tooth Contact Patterns for the Gleason Gear-tooth System 17
Special Tool 20
List of Special Tools for Disassembly and Reassembly 20
ZF Multitrac Rigid Axle MT-L 3085 30
Disassembly of Output and Brake 30
Reassembly of Output and Brake 39
Disassembly of Differential Carrier and Brake Tubes ... 52
Reassembly of Brake Tubes and Differential Carrier 61

MEMO

SAFETY PRECAUTIONS

CAUTION!

Follow all safety recommendations and safe shop practices outlined in the front of this manual or those contained within this section.

Always use tools and equipment that are in good working order.

Use lifting and hoisting equipment capable of safely handling load.

Remember, that ultimately safety is your own personal responsibility.

APPLICABLE MODELS

The contents of this section apply to the following models and serial number ranges.

MODEL	SERIAL NUMBER RANGE
DL300	5001 and Up

GENERAL DESCRIPTION

Outline

		Rear Axle
Type		Trunnion Mounting, Semifloating
Overall Reduction Ratio		23.334
Differential type		Limited Slip Differential (Limited Slip: 45%)
Max Static Load		28,500.0 kg (62,830 lb)
Max Output Torque		8,790.0 kg•m (63,580 ft lb)
Brake	Type	Multi Wet Disk
	Torque	2,362 kg•m @ 80 Bar (17,084 ft lb @ 1,160 psi)
Drive Flange		7 C

Drive Axle

The drive axle consists of differential, final reduction gear assembly, wet type hydraulic disk brake unit, and axle shafts to which wheels are attached.

The power from drive unit is transmitted through the drive shafts to front and rear drive axles. The power is then transmitted to differential where it is divided into right and left axle shafts to final reduction gear assembly on each shaft end, thus driving the wheels.

The wet type hydraulic disk brake unit is installed in front of final reduction gear assembly and serves as a service brake.

Axle Mount

The front axle is bolted directly to front frame.

The rear axle is supported by the trunnion method in which axle supports are installed across the rear axle and bolted to rear frame. Consequently, the rear axle is cradled up and down around the center line of differential according to ground condition the loader travels. The trunnion mounted drive axle helps improve operator comfort because loaders with a trunnion mounted drive axle jolt less than those with the conventional cradle supported drive axle, when they travel on bad ground conditions.

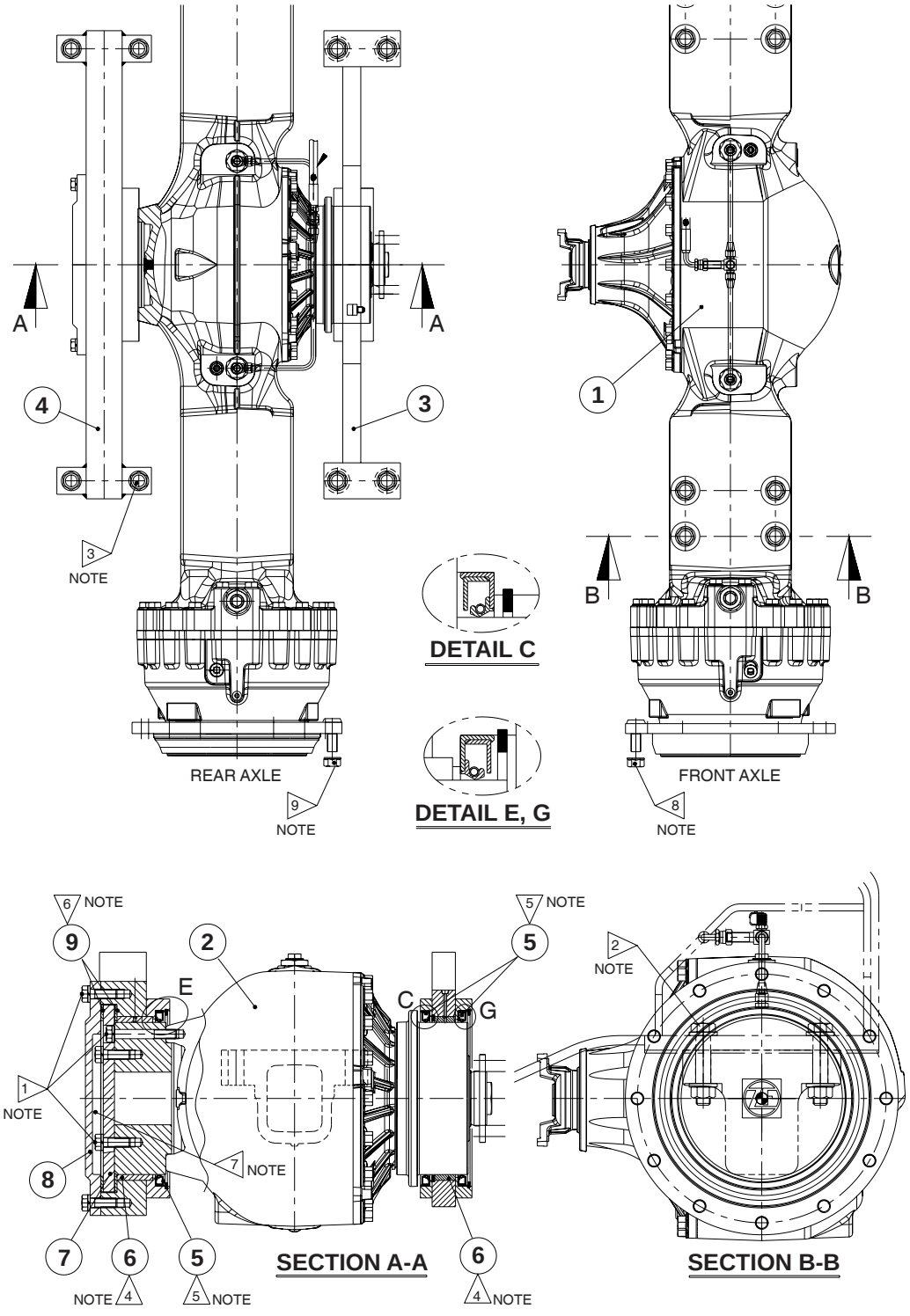

Figure 1 DRIVE AXLE ASSEMBLY

Reference Number	Description
1	Front Axle
2	Rear Axle
3	Axle Support (Front)
4	Axle Support (Rear)
5	Packing

Reference Number	Description
6	Bushing
7	Thrust Plate
8	Thrust Cap
9	Thrust Washer

NOTE: *1) 28 kg•m (200 ft lb) Threaded area: Loctite #262.*

NOTE: *2) 95±5 kg•m (687 ±36 ft lb)*

NOTE: *3) 95±5 kg•m (687 ±36 ft lb)*

NOTE: *4) Inner surface: Grease (Assemble with chamfered surface toward axle.)*

NOTE: *5) Assemble with lip pointing outward.*

NOTE: *6) Assemble with groove pointing toward plate (7).*

NOTE: *7) Apply grease and assemble.*

NOTE: *8) Tightening Torque: 80±8 kg•m (580 ±58 ft lb) (Nut: 12 - M22x1.5)*

Thread Area: Loctite #262

NOTE: *9) Tightening Torque: 80±8 kg•m (580 ±58 ft lb) (Nut: 12 - M22x1.5)*

Thread Area: Loctite #262

Differential (Standard)

The differential is integral with the reduction gear.

The power from drive shafts is transmitted through the drive pinion and the ring gear to differential gear case. It is then sent through the right and left side gears to final reduction gear assembly. The speed reduction of power is accomplished by the drive pinion and the ring gear.

Differential Operation

While the loader travels straight, the ring gear, differential gear case, and side gears rotate together, with the pinion gears inside the differential gear case not rotating. The power of same speed is thus transmitted from right and left side gears through the axle shafts to wheels. When the loader makes a turn, the right and left wheels rotate at different speeds; the pinion gears in differential gear case rotate around their own axes according to difference in speed between the right and left side gears.

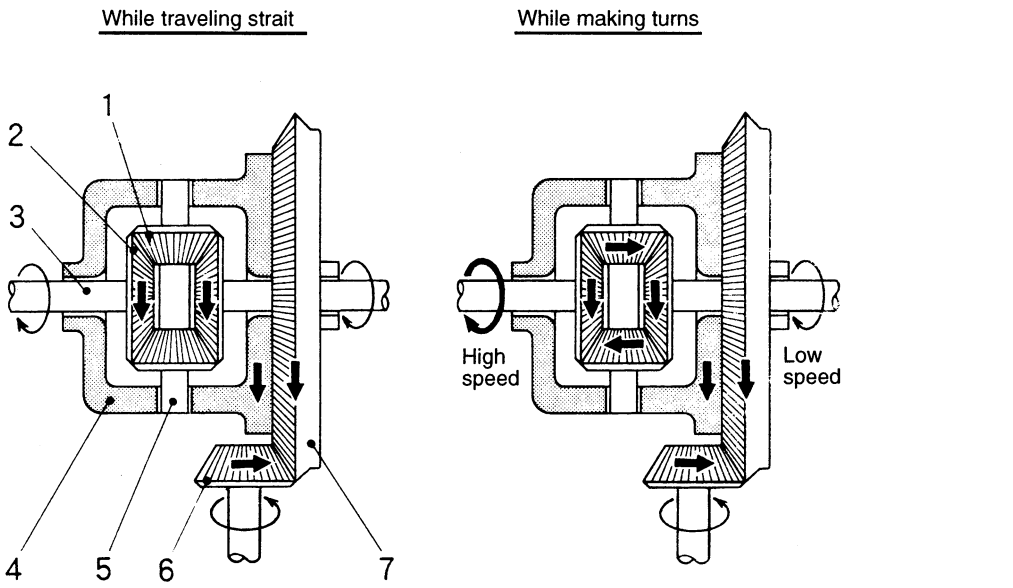

Figure 2 DIFFERENTIAL GEAR OPERATION

Reference Number	Description
1	Pinion Gear
2	Side Gear
3	Axle Shaft
4	Differential Gear Case

Reference Number	Description
5	Spider
6	Drive Pinion
7	Ring Gear

Limited Slip Differential Cross Section

Figure 3, shows a cross-sectional view of parts contained in limited slip differential.

Reference Number	Description
1	Ring Gear
2	Bevel Pinion
3	Cross
4	Upper Thrust Ring
5	Outer Disk
6	Inner Disk
7	Cover
8	Clutch Disk
9	Side Gear
10	Lower Thrust Ring

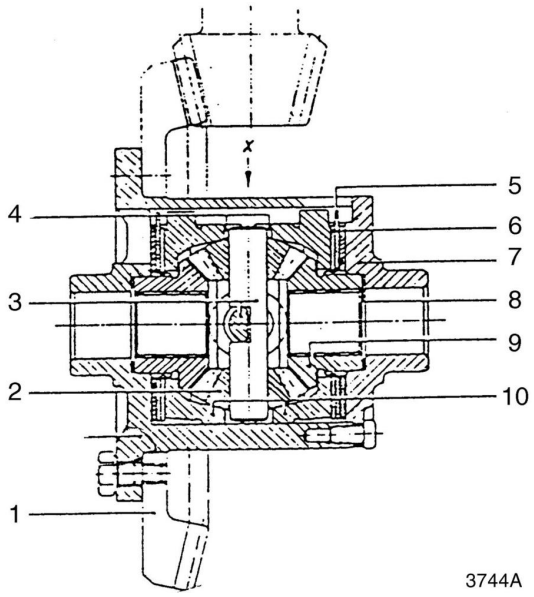

Figure 3

Lubrication Instructions

Oils according to ZF List of lubricants TE-ML 05 that are allowed to be used for ZF Axles MT-L 3085.

The basic condition for a correct oil change of axle is the horizontal plane of installation in every direction.

Place vehicle in a horizontal position.

All drain, filter and level plugs must be cleaned carefully before opening.

Only drain oil immediately after a longer running time.

Reference Number	Description
1	Oil Drain Hole M24x1.5 Axle Casing
2	Oil Drain Hole M24x1.5 Outputs
3	Oil Filler Hole M36x1.5
4	Brake Bleeder
5	Bleeder

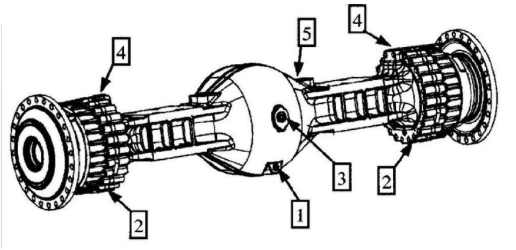

BSS0170S

Figure 4

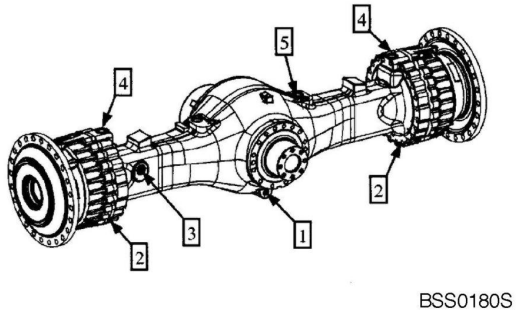

BSS0180S

Figure 5

Oil Drain

Remove drain plugs 1 and 2 and drain oil.

Oil Filling

Provide drain plugs (M24x1.5) with new O-ring and install them.

Tightening torque M_A = 7.14 kg•m (52 ft lb).

Fill oil to overflow on fill/level plug 3.

Filling quantity approximately 30 liters (8 U.S. gal.).

Check

Check oil level after a few minutes and fill up to specified level, until level remains constant.

Provide fill/level plug (M36x1.5) with new O-ring and install it.

Tightening torque M_A = 13.26 kg•m (96 ft lb).

Oil Change Intervals

1st oil change after 500 operating hours, further oil changes every 1,000 operating hours, however, at least once a year.

Oil Level Check

Oil level check once a month, but especially before starting a vehicle with new or repaired axles and axle components respectively.

Bleeders

At initial operation and during the oil change intervals, clean Bleeder 3 and 5 and make a functional check.

Brake

For the pneumatic-hydraulic or via an accumulator system operated brake actuation the following oils are permissible:

1. Motor oils SAE 10W according to specification MIL-L 2104 C, MIL-L 46152, API-CC, CD, SC, SD, SE
2. ATF-Oils Type A, Suffix A, Dexron of II D

Brake Bleeding at Vehicle

1. Open bleeder (4).
2. Slowly depress the brake pedal until oil flows from bleeder.
3. Close bleeder again.
4. Slowly pressurize the brake and hold pressure for some seconds.

NOTE: *The brake piston extends and the cylinder chamber fills p with oil. The air accumulates in upper section of cylinder chamber.*

5. Release the brake pedal and loosen the brake.

   NOTE: *The reversing piston presses the air from upper section of cylinder into brake line.*

6. Open bleeder (4) again.

7. Slowly depress the brake pedal until oil flows from bleeder.

   NOTE: *Repeat procedure - Item 3 - 7 - until - at Item 7 - from beginning of actuation no more air exits from bleeder.*

Make Wear Measurement on Multidisk Brake

NOTE: *A wear measurement on multidisk brake has to be made at least once a year, especially in case of a changed braking behavior like, e.g.*

- *Braking noise*
- *Braking power reduced*
- *Deceleration changed*
- *Brake fluid level changed*
- *Braking pressure changed*

Wear Measurement of Multidisk Brake

A wear measurement has to be made on both output sides.

Remove plug, actuate brake and determine Dimension X according to Figure 6 and Figure 7 using a feeler gauge. Dimension X corresponds with thickness of inner clutch disk on piston side.

NOTE: *If Dim. X <= 4.0 mm, the lined disks on both output sides have to be replaced.*

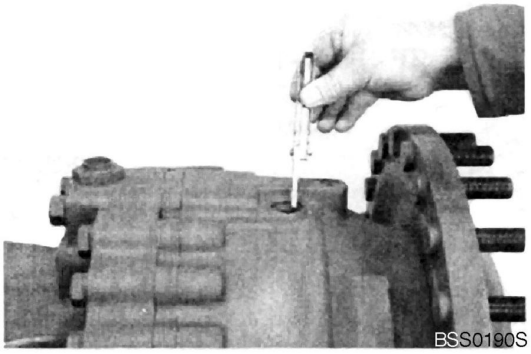

Figure 6

Following to this provide level plug with a new O-ring and install it.

Tightening torque M_A =7.14 kg•m (52 ft lb)

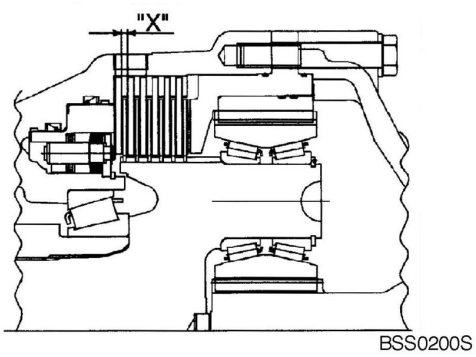

Figure 7

Inscriptions on Model Identification Plate

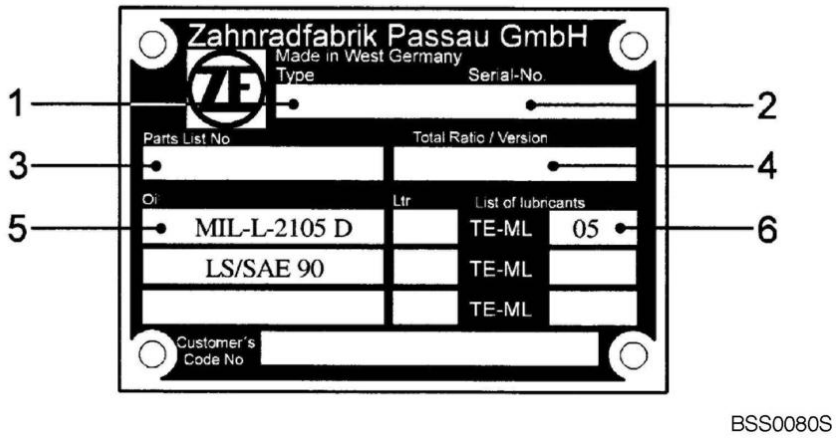

Figure 8

Reference Number	Description
1	Axle Type
2	Axle Serial No.
3	ZF Parts - List No.
4	Total-ratio of Axle / Version With or Without ZF multidisk Self Locking Differential
5	Type of Lubricant
6	Lubricant Specifications

NOTE: *ZF List of lubricants for ZF Axles from TE-ML 05.*

Torque Limits for Screws

Torque Limits for Screws (In Nm) According to ZF Standards 148

Coefficient of friction: m total 0.12 for screws and nuts without after treatment and for phosphate nuts.

NOTE: *Tighten by hand.*

Torque limits, if not specifically shown, can be taken from following list:

Metric ISO-Standard Thread DIN 13				Metric ISO-Fine Thread DIN 13			
Size	8.8	10.9	12.9	Size	8.8	10.9	12.9
M 4	2.8	4.1	4.8	M 8 x 1	24	36	43
M 5	5.5	8.1	9.5	M 9 x 1	36	53	62
M 6	9.5	14.0	16.5	M 10 x 1	52	76	89
M 7	15	23.0	28.0	M 10 x 1, 25	49	72	84
M 8	23	34	40	M 12 x 1, 25	87	125	150
M 10	46	68	79	M 12 x 1, 5	83	120	145
M 12	79	115	135	M 14 x 1, 5	135	200	235
M 14	125	185	215	M 16 x 1, 5	205	300	360
M 16	195	280	330	M 18 x 1, 5	310	440	520
M 18	280	390	460	M 18 x 2	290	420	490
M 20	390	560	650	M 20 x 1, 5	430	620	720
M 22	530	750	880	M 22 x 1, 5	580	820	960
M 24	670	960	1,100	M 24 x 1, 5	760	1,100	1,250
M 27	1,000	1,400	1,650	M 24 x 2	730	1,050	1,200
M 30	1,350	1,900	2,250	M 27 x 1, 5	1,100	1,600	1,850
M 33	1,850	2,600	3,000	M 27 x 2	1,050	1,500	1,800
M 36	2,350	3,300	3,900	M 30 x1, 5	1,550	2,200	2,550
M 39	3,000	4,300	5,100	M 30 x 2	1,500	2,100	2,500
				M 33 x 1, 5	2,050	2,900	3,400
				M 33 x 2	2,000	2,800	3,300
				M 36 x 1, 5	2,700	3,800	4,450
				M 36 x 3	2,500	3,500	4,100
				M 39 x 1, 5	3,450	4,900	5,700
				M 39 x 3	3,200	4,600	5,300

Examples of Gear Tooth Contact Patterns for the Gleason Gear-tooth System

Ideal Tooth-contact Pattern I. E. Pinion Distance Is Correct

Coast side (concave).

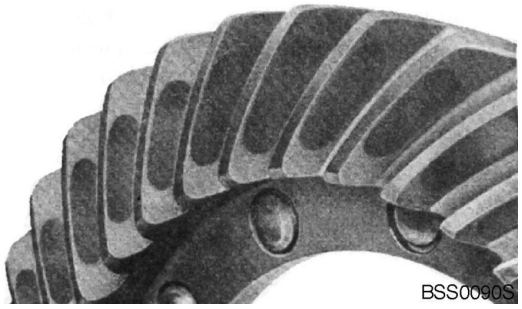

Figure 9

Drive side (convex).

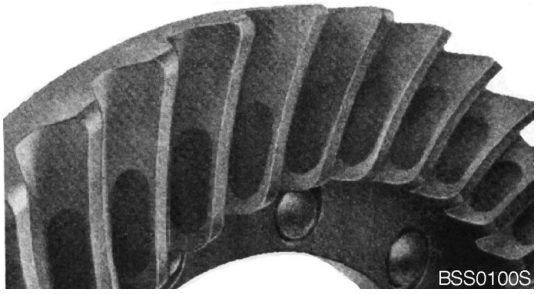

Figure 10

Pinion distance must be increased.

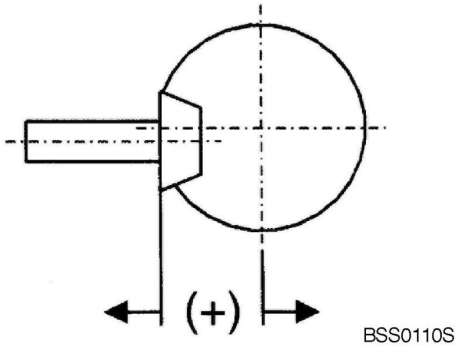

Figure 11

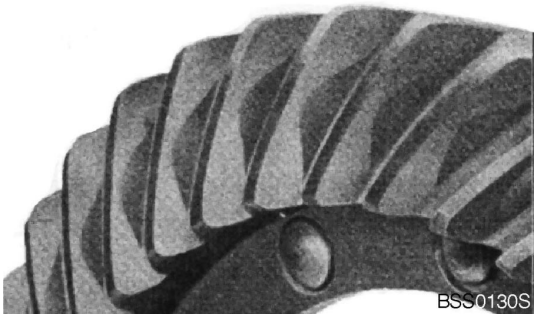

Figure 12

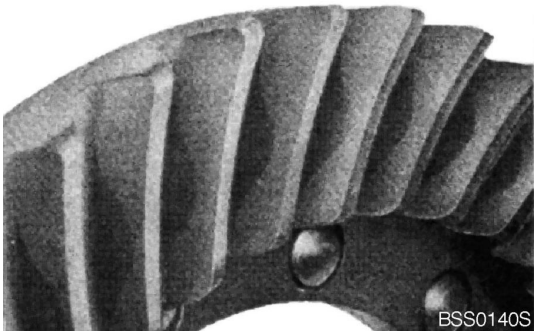

Figure 13

Pinion distance must be decreased.

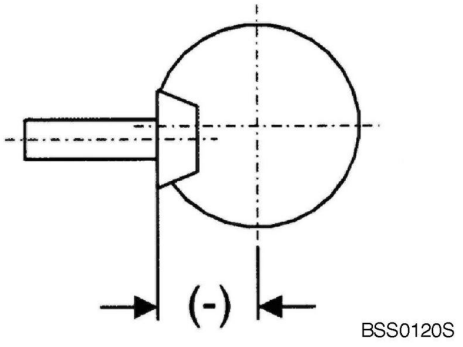

Figure 14

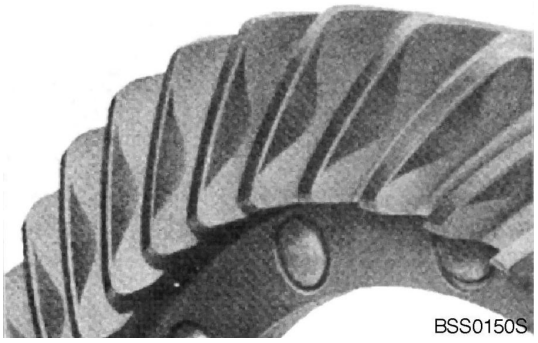

Figure 15

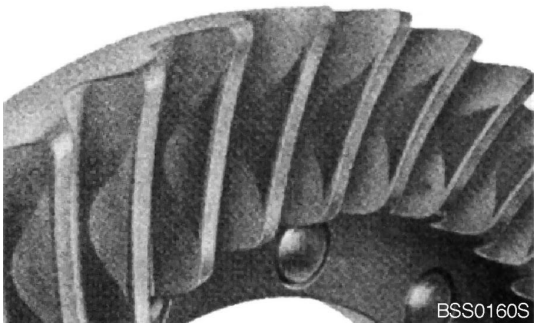

Figure 16

SPECIAL TOOL

List of Special Tools for Disassembly and Reassembly

ZF Multitrac MT-L 3085 / Output and Brake

4474 053 007

Disassembly	Reassembly	Subject No.	Designation / Application Special Tools (S)
Figure 24		5870 350 000	Assembly truck assembly with tilting device
		5870 350 077	Holding fixture (set of 2)
		5870 350 075	Clamps
Figure 27 Figure 57 Figure 59		5870 345 065	Pry bar (set of 2)
Figure 28		5870 650 001	Striker
Figure 29	Figure 100	5870 656 078	Socket Spanner #
		5870 912 028	Centering bracket #
Figure 30	Figure 98	5870 281 043	Lifting bracket
Figure 35		5870 300 019	Extractor
Figure 36	Figure 91	5870 900 015	Set of external pliers A1-A2-A3-A4
Figure 37		5870 971 002	Three-armed puller
Figure 38		5873 001 020	Gripping insert
		5873 001 000	Basic device
Figure 39 Figure 54		5870 970 007	Two-armed puller
		5870 654 034	Clamping bracket (set of 2)
		5870 506 140	Press bushing
Figure 44		5870 900 016	Set of external pliers A11-A21-A31-A41
Figure 48	Figure 77	5870 900 051	Assembly pliers #
Figure 51		5870 400 001	Adjusting device
Figure 55	Figure 67	5870 281 047	Lifting chain
		5870 204 071	Eyebolts (set of 2)
Figure 58		5873 014 013	Rapid grip #
		5873 004 001	Basic device #
	Figure 60	5870 610 010	Wheel bolt puller - Basic set
		5870 610 011	Insert 7/8" - 14UNF
	Figure 62	5870 506 141	Pressure ring # EBM = 16.8 - 0.2 mm
	Figure 64	5870 051 052	Driver # EBM = 6 + 0.2 mm
	Figure 73 Figure 74	5870 345 096	Assembly fixture #
	Figure 80	5870 705 011	Drive mandrel EBM = 4 mm
	Figure 87	5870 204 029	Adjusting screws (set of 2)
	Figure 92	5870 200 072	Digital Depth gauge # 200 mm
	Figure 95	5870 200 022	Straightedge # 580 mm

Disassembly	Reassembly	Subject No.	Designation / Application Special Tools (S)
		5870 200 066	Gauge blocks # 60 mm
	Figure 104	5870 287 007	HD-Pump #
		5870 950 115	Measuring hub # 9/16" - 18UNF
Figure 105		5870 350 000	Assembly truck assembly with tilting device
		5870 350 077	Holding fixture (set of 2)
		5870 350 075	Clamps
Figure 108 Figure 109	Figure 194 Figure 195	5870 281 043	Lifting bracket
Figure 112	Figure 190	5870 281 044	Lifting tackle
Figure 113		5870 350 000	Assembly truck assembly with tilting device
		5870 350 034	Holding fixture (set of 2)
Figure 115	Figure 186	5870 656 079	Socket spanner
Figure 116		5870 221 500	Hot-air blower # 230 V
Figure 126		5870 221 501	Hot-air blower # 115 V
Figure 119	Figure 180	5870 281 013	Lifting tackle
Figure 120		5873 002 023	Gripping insert #
		5873 002 001	Basic set (size 2)
Figure 121		5873 012 017	Rapid grip #
		5873 002 001	Basic set (size 2)
Figure 127	Figure 161 Figure 164	5870 401 139	Slotted nut wrench #
		5870 240 002	Fixture #
Figure 130		5870 970 007	Two-armed puller #
Figure 131		5873 002 030	Gripping insert #
		5873 002 001	Basic set (size 2)
	Figure 148	5870 500 007	Adapter pieces #
	Figure 149	5870 500 001	Measuring shaft #
		5870 351 016	Measuring pin #
		5870 351 029	Stop washer
	Figure 150	5870 200 072	Digital Depth gauge # 200 mm
	Figure 173 Figure 174	5870 200 066	Gauge blocks # 60 mm
	Figure 153	5870 058 060	Driver
		5870 260 002	Handle
	Figure 154	5870 058 079	Driver
		5870 260 002	Handle
	Figure 158	5870 056 003	Driver
		5870 260 002	Handle
	Figure 163	5870 048 233	Driver EBM = 15.2 mm
	Figure 177	5870 204 040	Adjusting screws (set of 2)
	Figure 186	5870 200 055	Magnetic stand #
		5870 200 057	Dial indicator #
	Figure 187	5870 200 058	Caliper gauge 0 - 500 mm
	Figure 190	5870 204 023	Adjusting screws (set of 2)

Disassembly	Reassembly	Subject No.	Designation / Application Special Tools (S)
			# Particularly important special tools for partial repair (wear part repair).

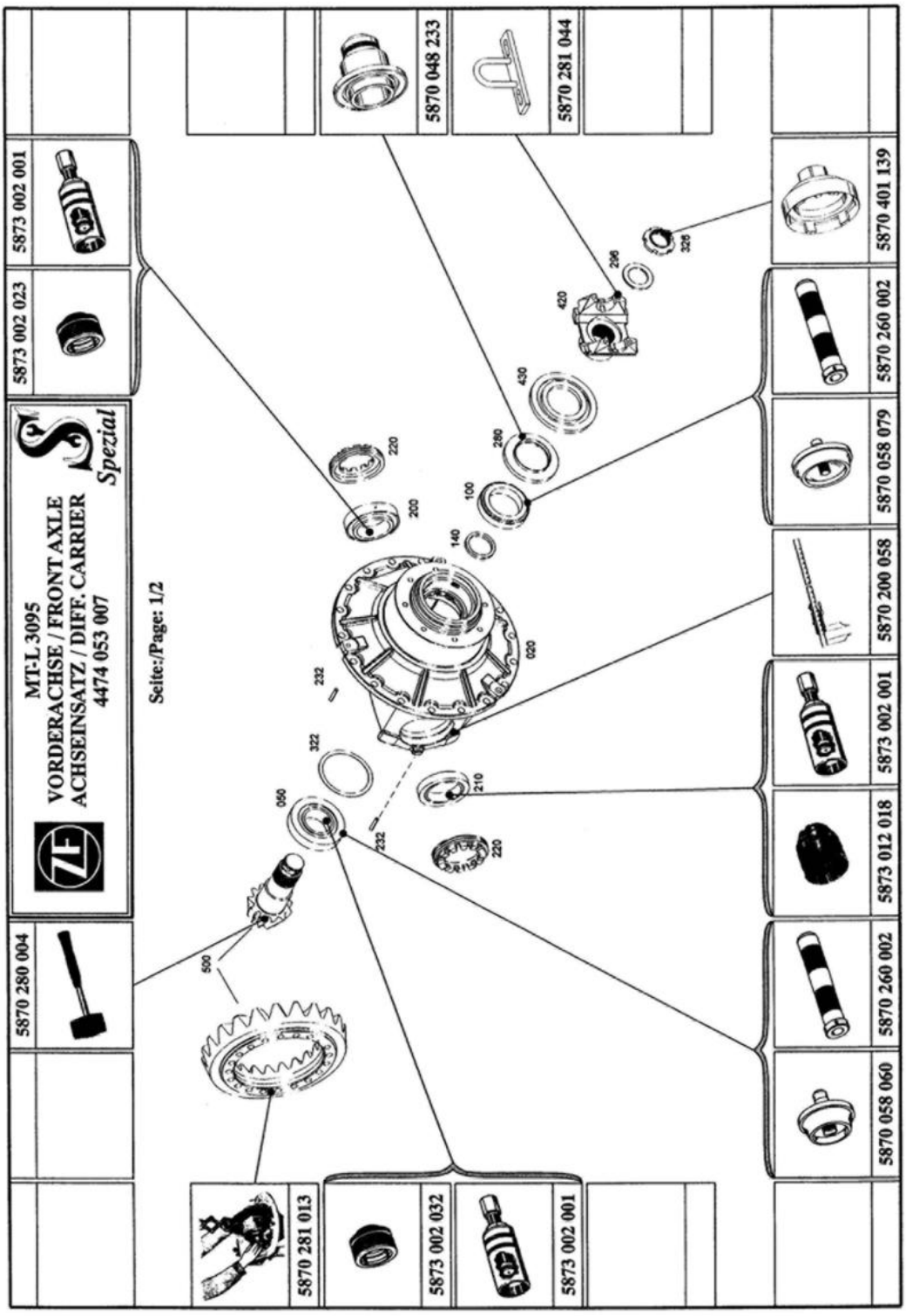

BSS1710S

Figure 17

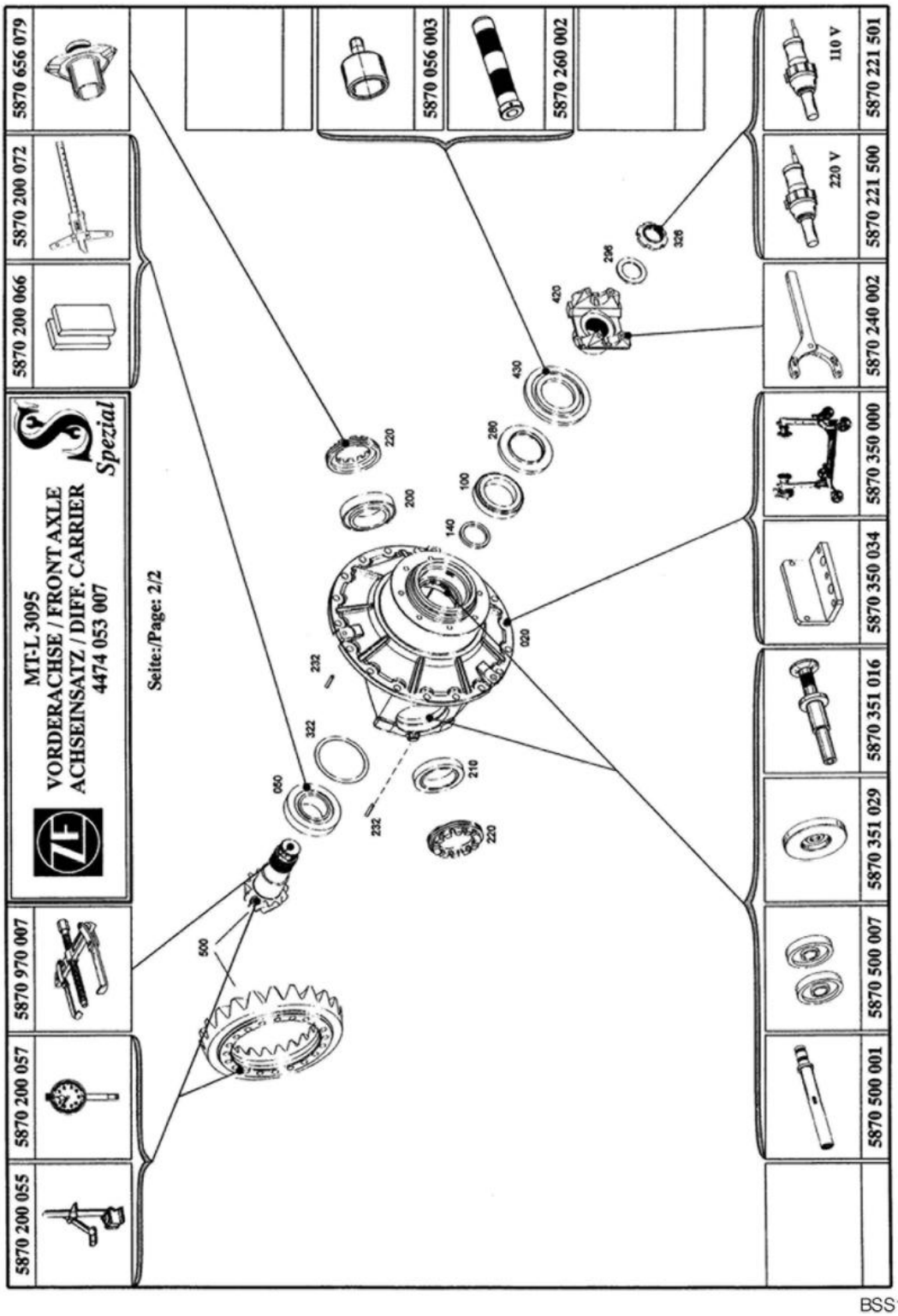
MT-L 3095
VORDERACHSE / FRONT AXLE
ACHSEINSATZ / DIFF. CARRIER
4474 053 007
Spezial
Seite:/Page: 2/2
5870 200 055
5870 200 057
5870 970 007
5870 200 066
5870 200 072
5870 656 079
5870 500 001
5870 500 007
5870 351 029
5870 351 016
5870 350 034
5870 350 000
5870 240 002
5870 221 500
5870 221 501
5870 056 003
5870 260 002
110 V
220 V
BSS1720S

Figure 18

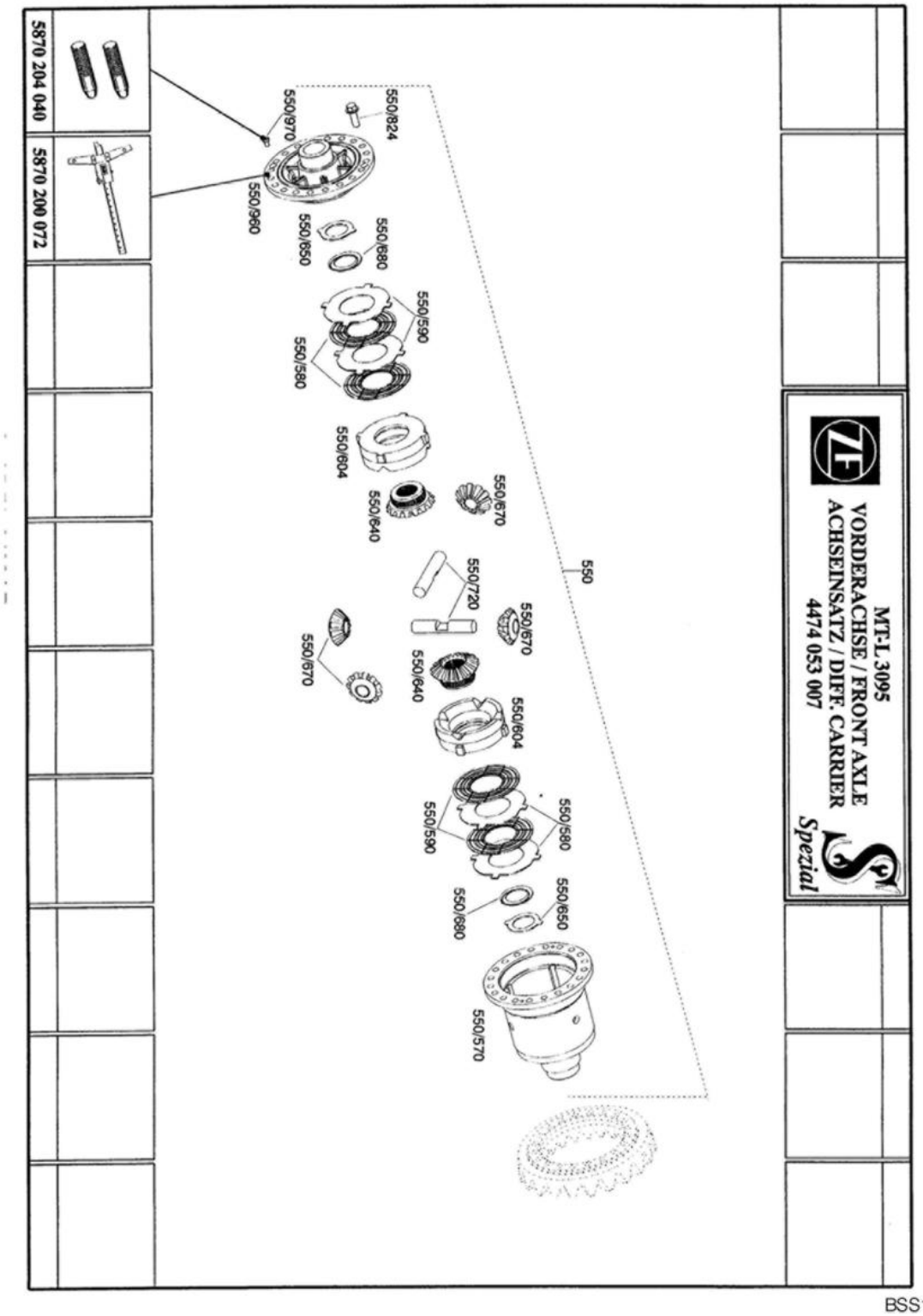
5870 204 040
5870 200 072
550/970
550/824
550/960
550/650
550/680
550/590
550/580
550/604
550/640
550/670
550/720
550/870
550
MT-L 3095
VORDERACHSE / FRONT AXLE
ACHSEINSATZ / DIFF. CARRIER
4474 053 007
Spezial
550/580
550/590
550/680
550/650
550/570
BSS1730S

Figure 19

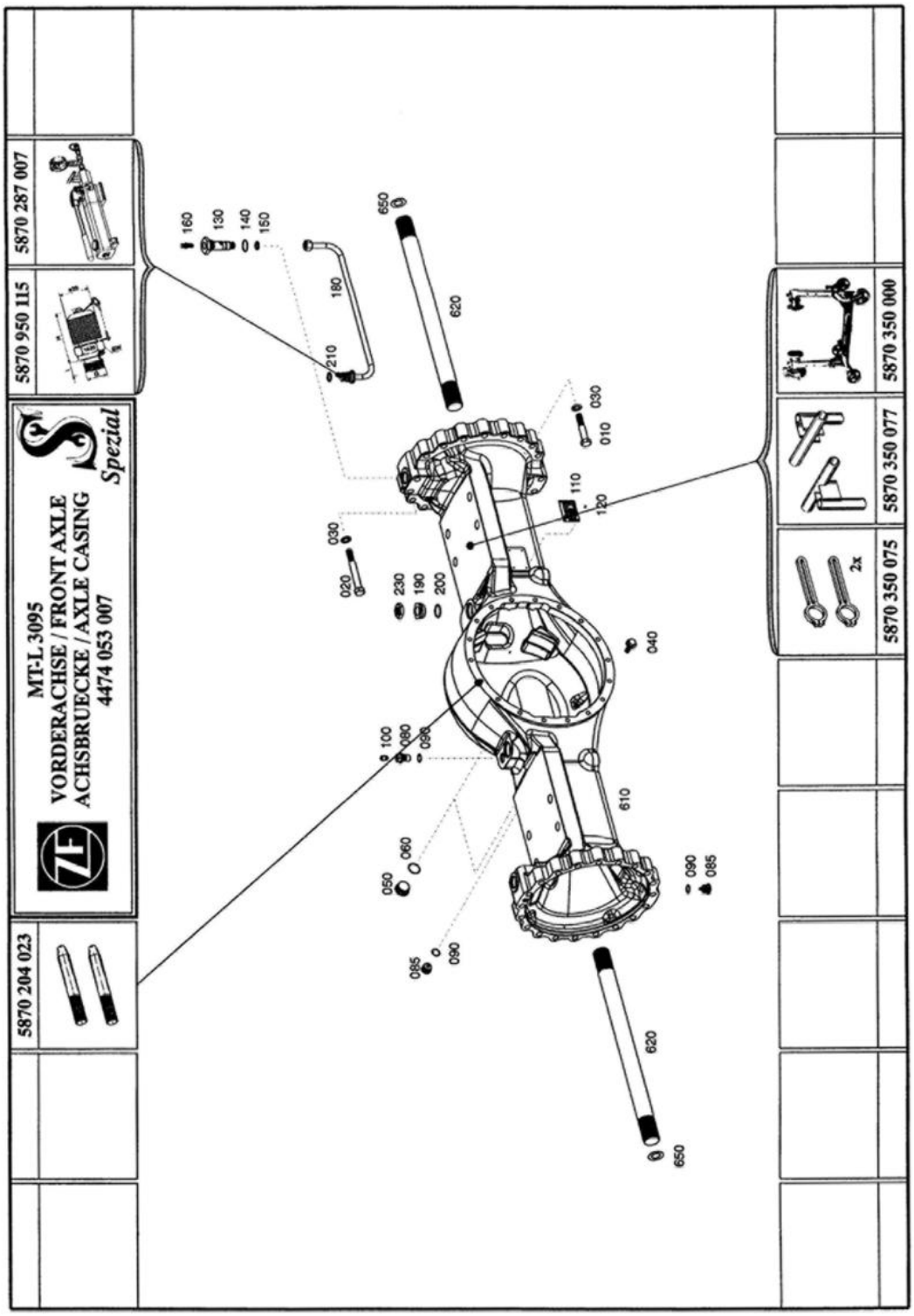

BSS1740S

Figure 20

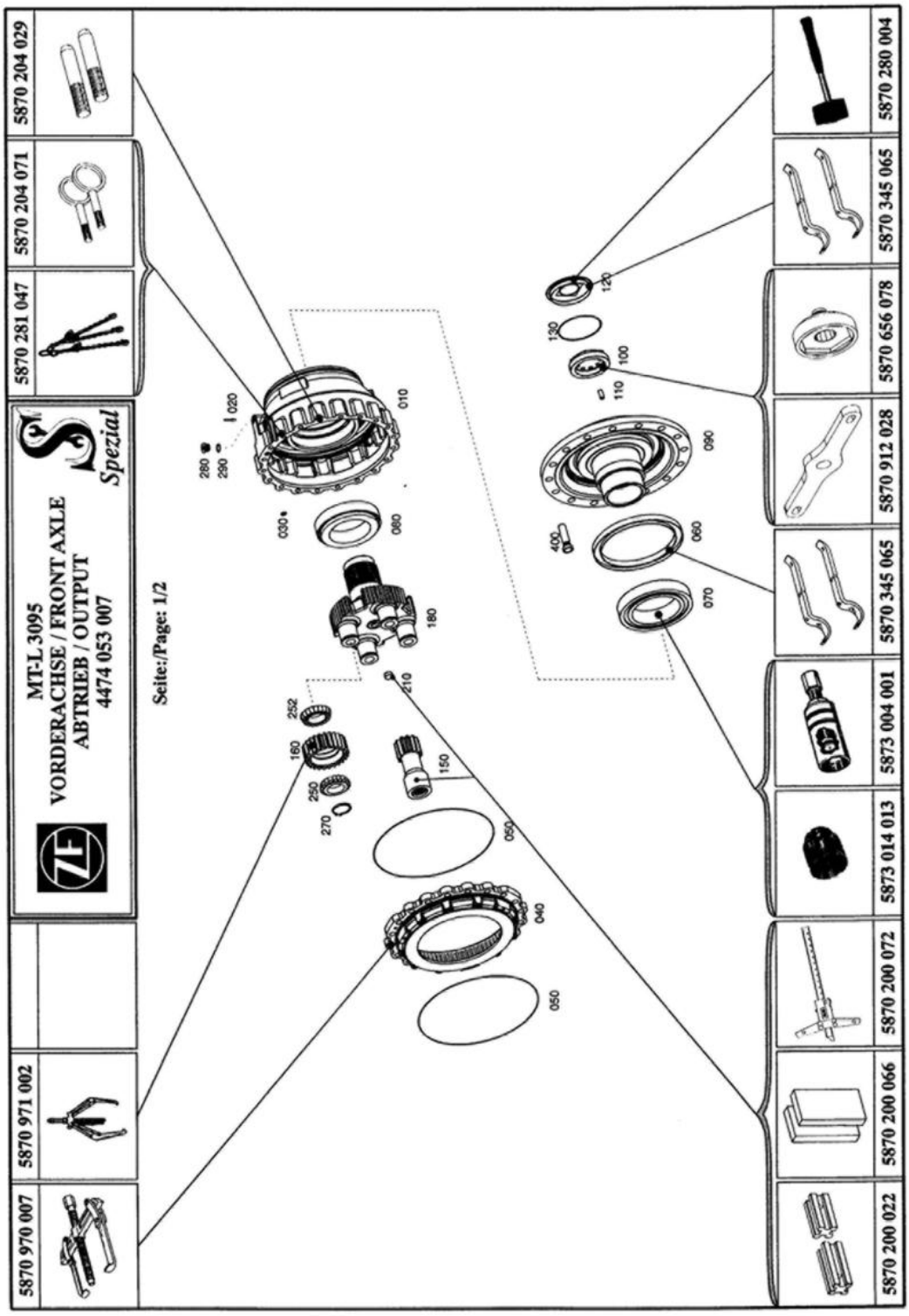

BSS1750S

Figure 21

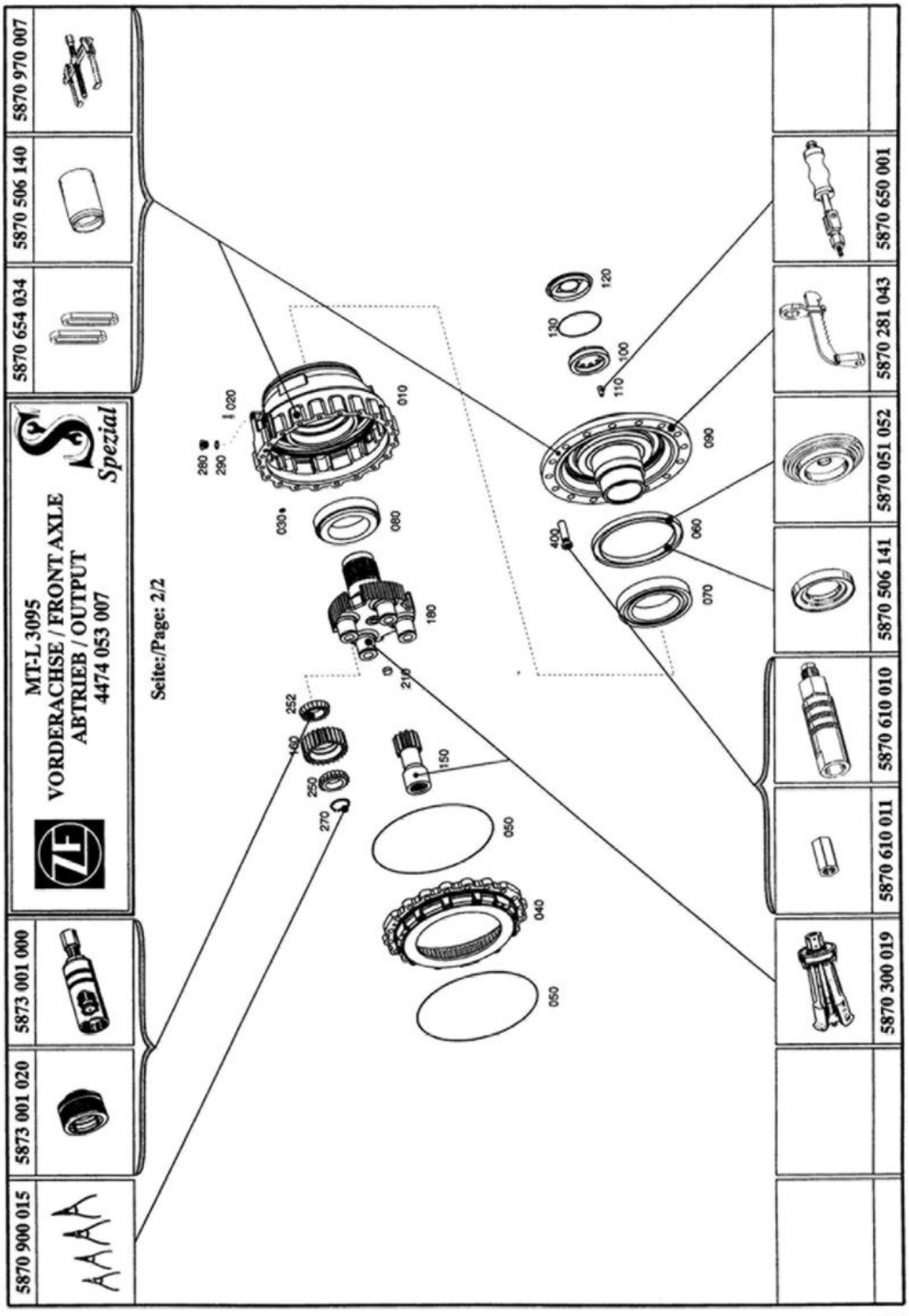

BSS1760S

Figure 22

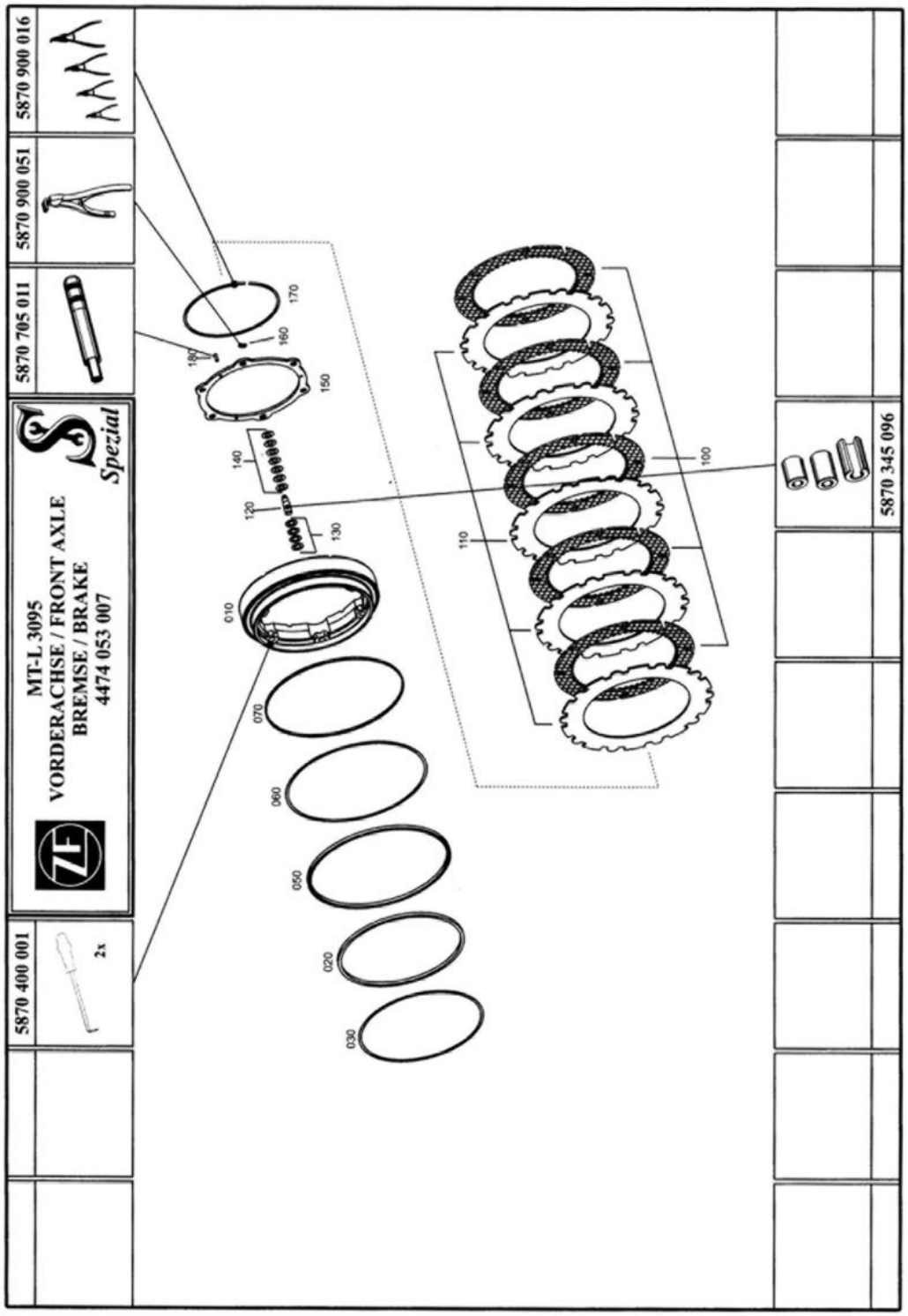

BSS1770S

Figure 23

Disassembly of Output and Brake

1. Fasten axle on assembly truck.

   (S) Assembly truck 5870 350 000

   (S) Holding fixtures 5870 350 077

   (S) Clamps 5870 350 075

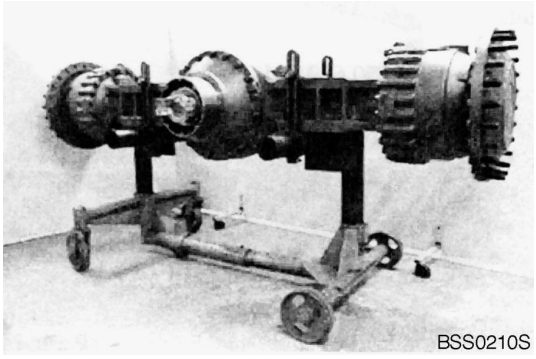

Figure 24

2. Remove plugs (3x, Figure 25 and Figure 26) and drain oil from axle casing.

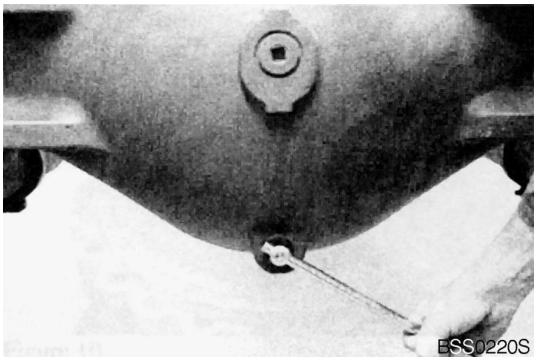

Figure 25

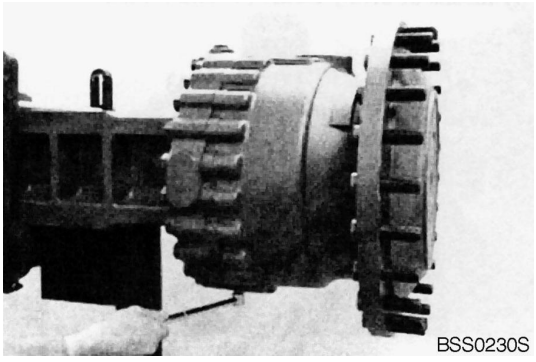

Figure 26

3. Remove cover from output shaft.

   (S) Pry bar set 5870 345 065

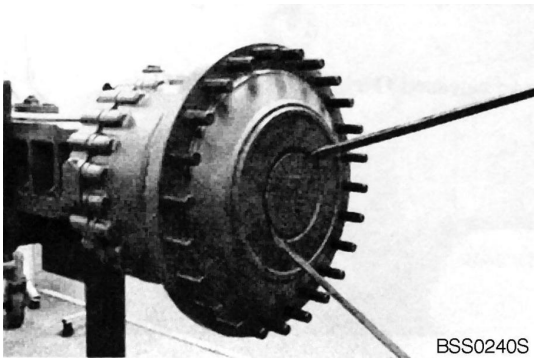

Figure 27

4. Remove slotted pin using striker (S) from bore in slotted nut.

   (S) Striker 5870 650 001

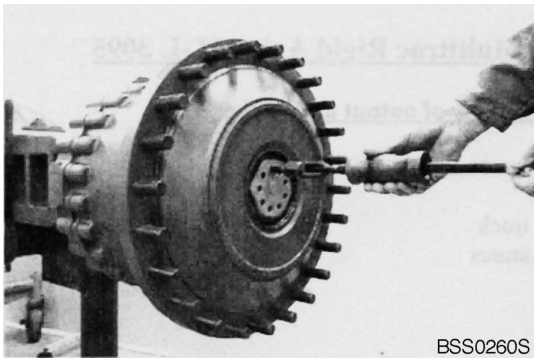

Figure 28

5. Remove slotted nut.

   (S) Socket spanner

   (S) Centering bracket

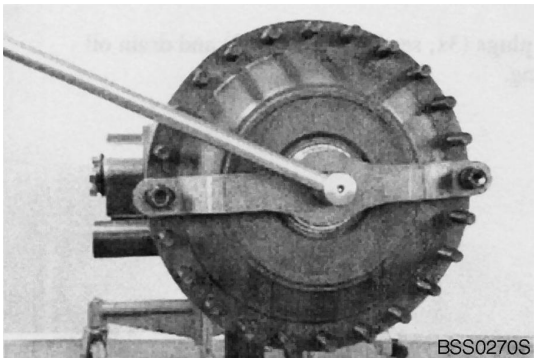

Figure 29

6. Secure output using lifting tackle (S) and remove hex screws.

   (S) Lifting bracket 5870 281 043

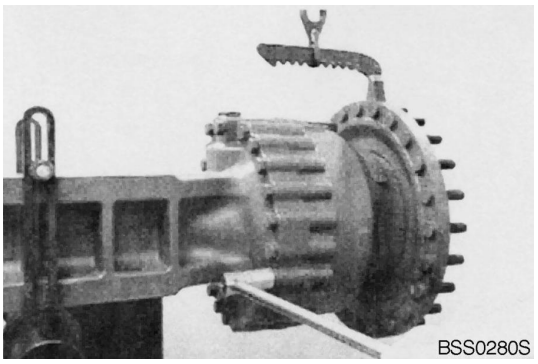

Figure 30

7. Separate complete output from axle casing.

   NOTE: *Pay attention to released O-ring (see arrow).*

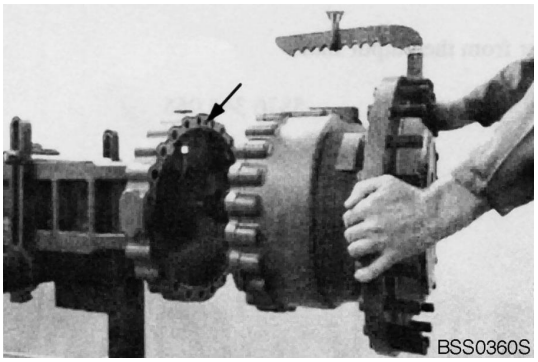

Figure 31

8. Remove stub shaft from sun gear shaft.

   NOTE: *Pay attention to possibly released shim(s).*

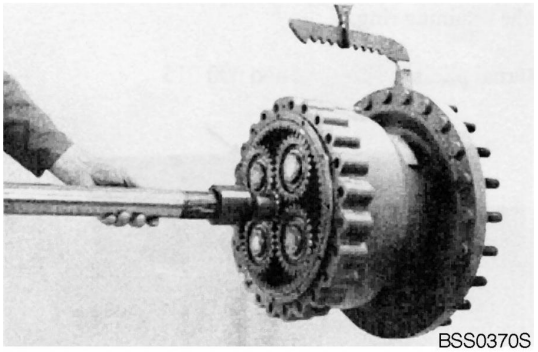

Figure 32

9. Remove shim(s) from sun gear shaft.

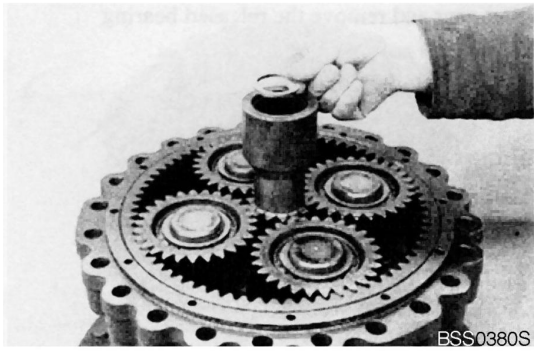

Figure 33

10. Remove sun gear shaft from planet gears.

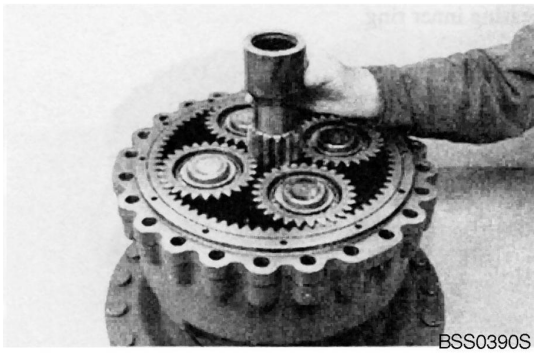

Figure 34

11. Remove planet carrier from brake housing.
    (S) Internal extractor 5870 300 019

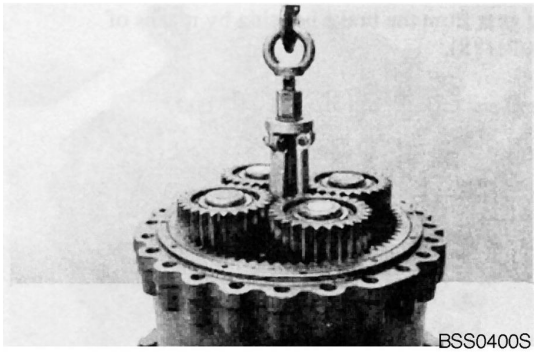

Figure 35

12. Remove retaining ring.
    (S) Set of external pliers 5870 900 015

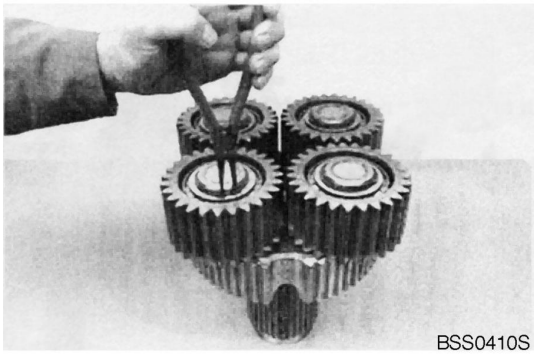

Figure 36

13. Remove planet gear and inner bearing race.
    (S) Three-armed puller 5873 971 002

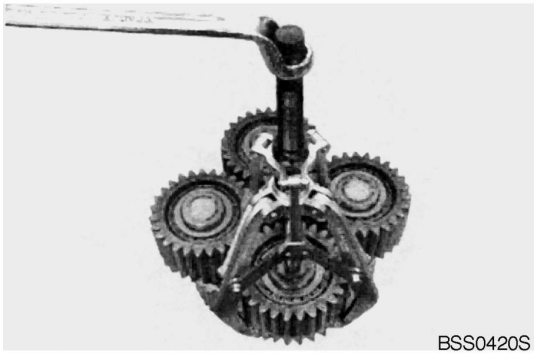

Figure 37

14. Remove inner bearing race.
    (S) Gripping insert 5873 001 020
    (S) Basic set 5873 001 000

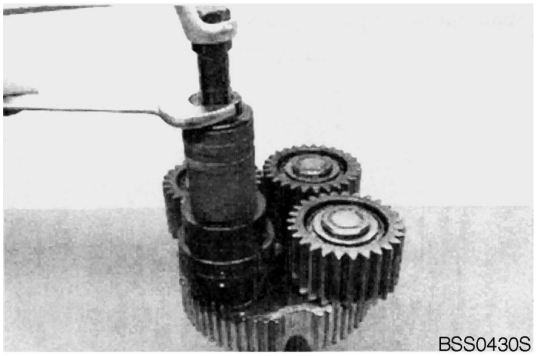

Figure 38

15. Separate ring gear from brake housing using two-armed puller (S).

    (S) Two-armed puller 5870 970 007

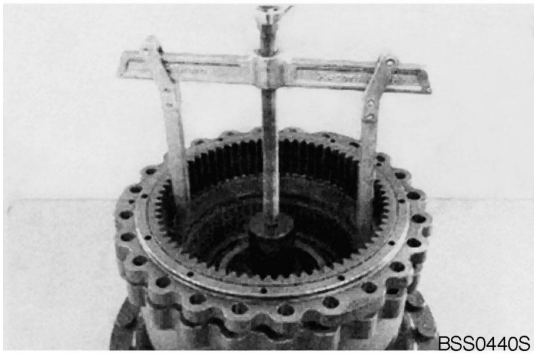

Figure 39

16. Remove O-rings (see arrows) from annular grooves of ring gear.

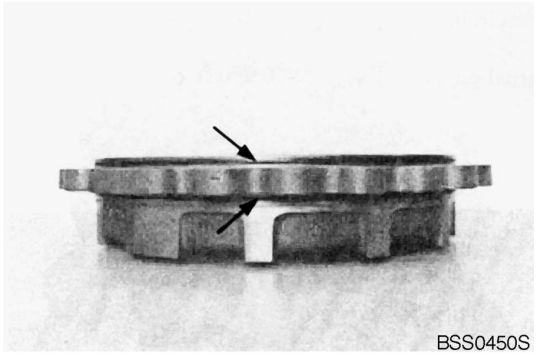

Figure 40

17. Remove O-ring (see arrow) from recess of brake housing.

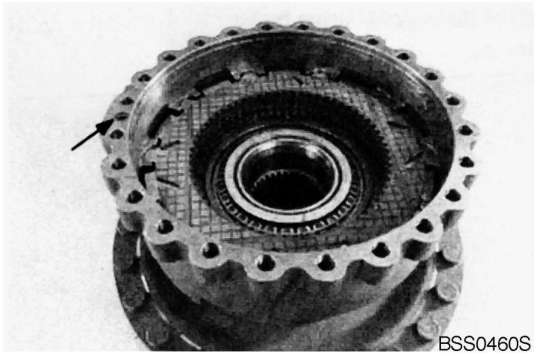

Figure 41

18. Remove disk pack from brake housing.

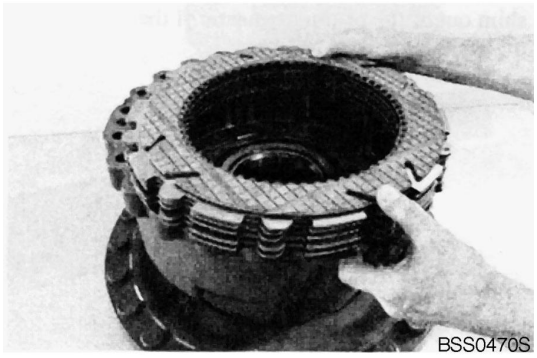

Figure 42

19. Install slotted pins (6x) in support shim until they are flush mounted.

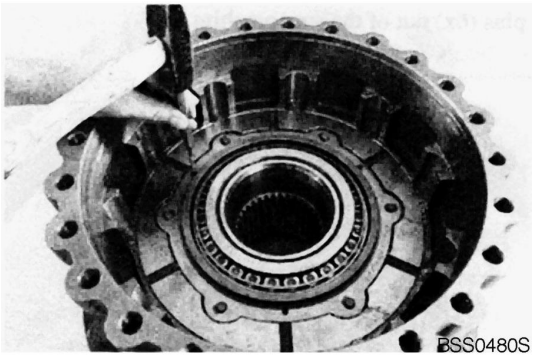

Figure 43

20. Remove retaining ring.

    (S) Set of external pliers 5870 900 016

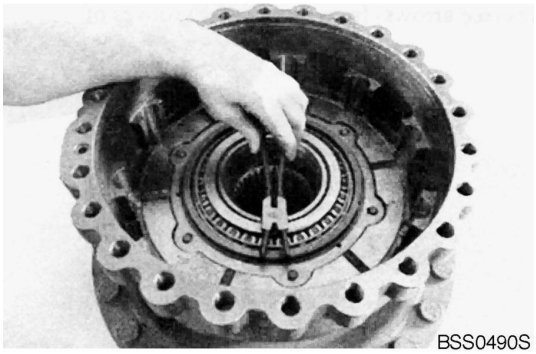

Figure 44

21. Remove piston from brake housing using compressed air.

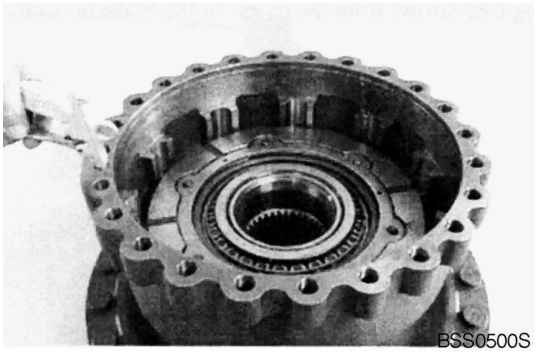

Figure 45

22. Remove support shim from piston using automatic piston adjusting.

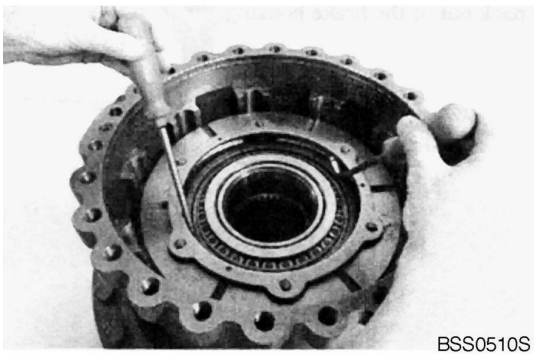

Figure 46

23. Remove slotted pins (6x) from support shim.

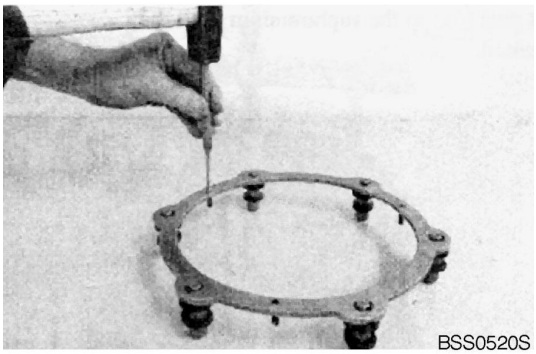

Figure 47

24. Preload cup springs using a press and remove retaining ring.

    (S) Assembly pliers 5870 900 051

    (S) Assembly fixture 5870 345 096

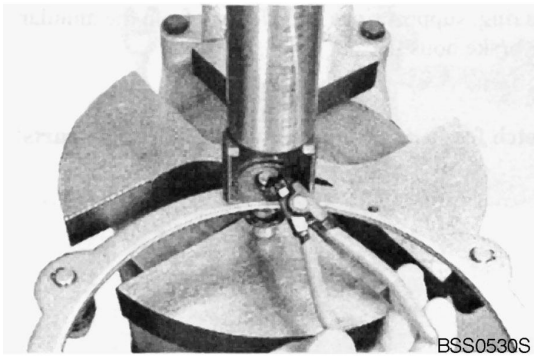

Figure 48

25. Remove pin from support shim and remove released cup springs.

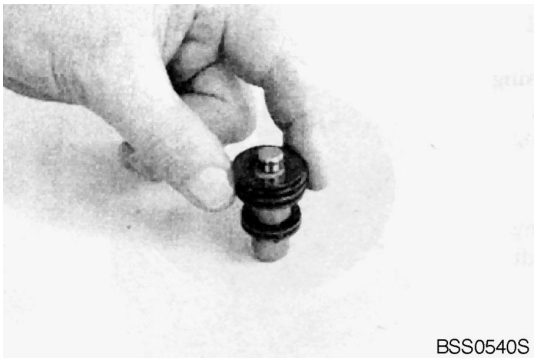

Figure 49

26. Remove gripping rings from pin.

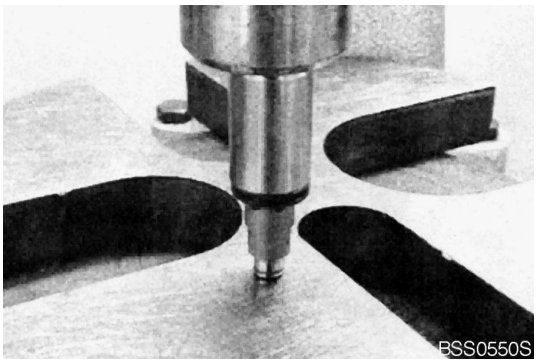

Figure 50

27. Remove piston from brake housing.

    (S) Adjusting device 5870 400 001



Figure 51

28. Remove guide ring, support rings and U-rings from annular grooves of brake housing.

    NOTE: *See Figure 53, for installation position of single parts.*

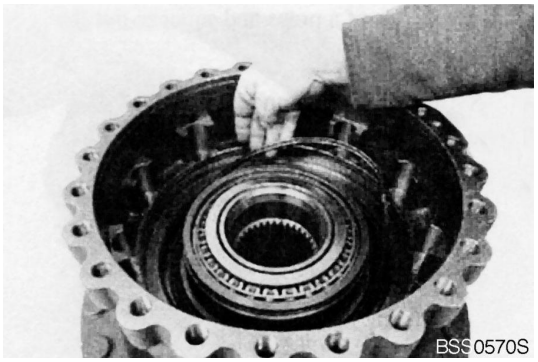

Figure 52

Reference Number	Description
1	Brake Housing
2	Guide Ring
3	Support Ring
4	U-ring
5	U-ring
6	Support Ring
7	Output Shaft

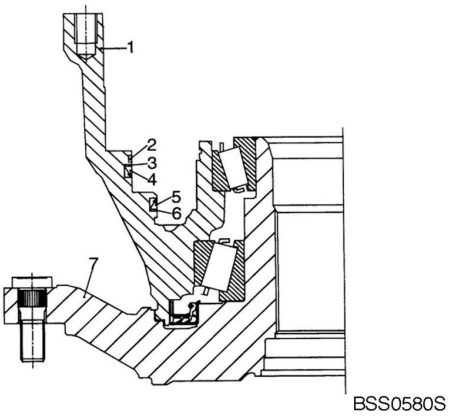

Figure 53

29. Remove brake housing using two-armed puller (S) from output shaft and remove released inner bearing race.

    (S) Two-armed puller 5870 970 007

    (S) Clamping bracket 5870 654 034

    (S) Press bushing 5870 506 140

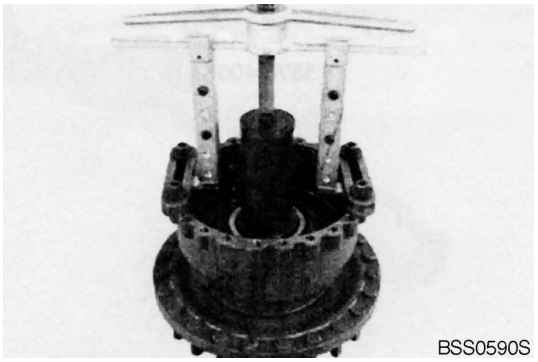

Figure 54

30. Remove brake housing with lifting tackle (S) from output shaft.

    (S) Lifting chain 5870 281 047

    (S) Eyebolts 5870 204 071

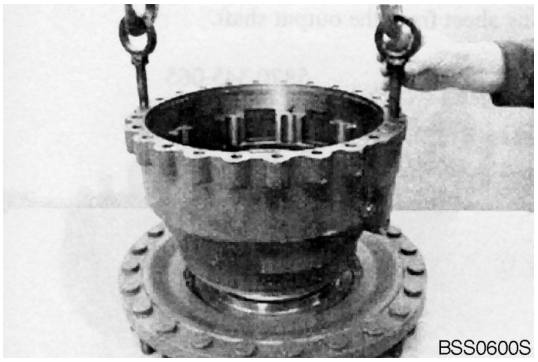

Figure 55

31. If necessary drive both outer bearing races from bearing bores in brake housing.

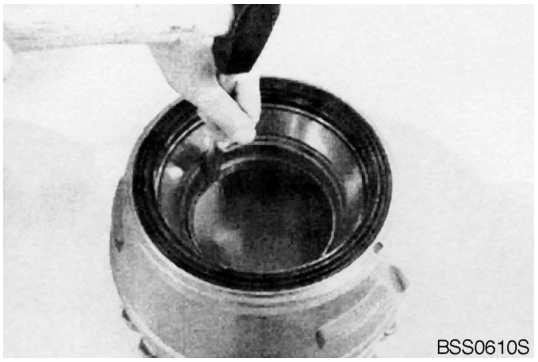

Figure 56

32. Remove shaft seal from brake housing.

    (S) Pry bar set 5870 345 065

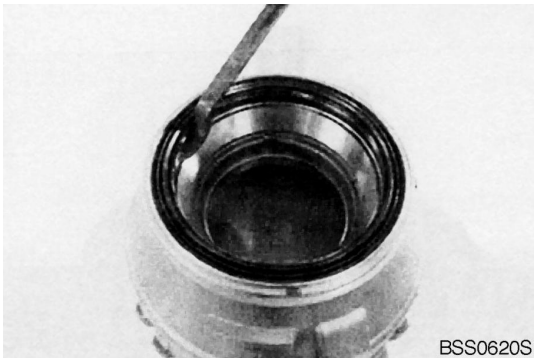

Figure 57

33. Remove inner bearing race from output shaft.

    (S) Rapid grip 5873 014 013

    (S) Basic set 5873 004 001

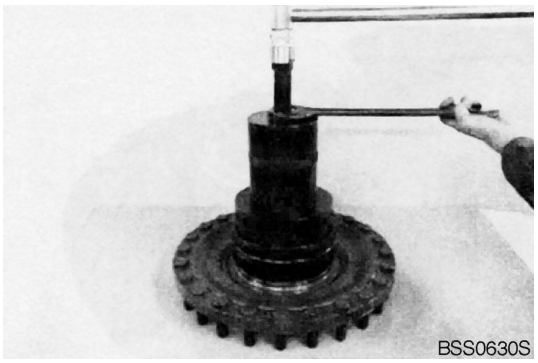

Figure 58

34. Remove bearing sheet from output shaft.

(S) Pry bar set 5870 345 065

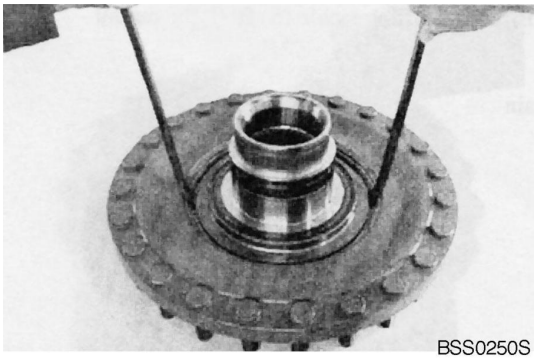

Figure 59

Reassembly of Output and Brake

1. Insert wheel bolt into output shaft until seated.

(S) Wheel bolt puller - basic set 5870 610 010

(S) Insert (7/8" - 14 UNF) 5870 610 011

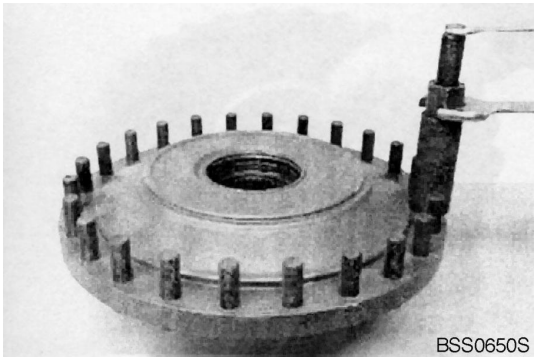

Figure 60

2. Assemble bearing sheet (shaft seal / Part 2).

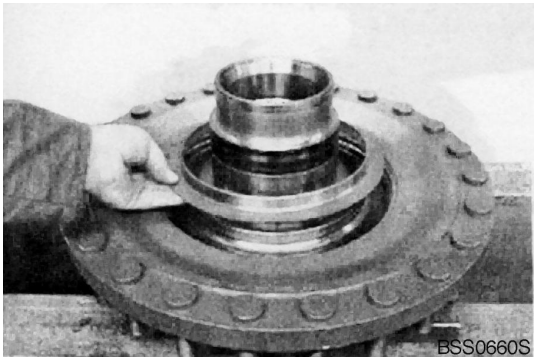

Figure 61

3. Press bearing sheet over collar of output shaft.

(S) Pressure ring 5870 506 141

NOTE: *The exact installation position of bearing sheet will be obtained by using specified pressure ring.*

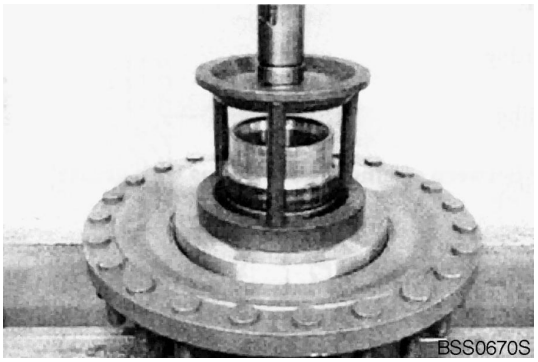

Figure 62

4. Heat roller bearing and install it until seated.

   NOTE: *After cooling down bearing, it has to be installed immediately.*



Figure 63

5. Press both outer bearing races into brake housing until seated.

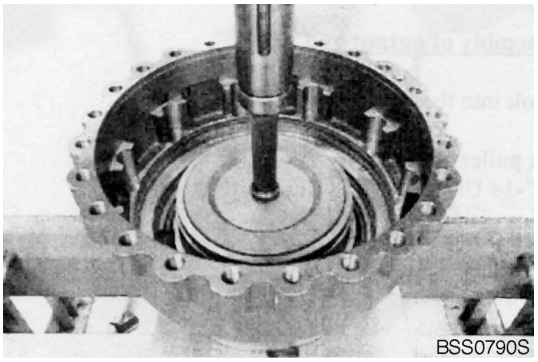

Figure 64

6. Install shaft seal with sealing lip visible to oil chamber, see Figure 66.

   (S) Driver 5870 051 052

   NOTE: *The exact installation position of shaft seal will be obtained by using specified driver (S).*

   NOTE: *Just before installation, wet outer diameter of shaft seal with mineral spirits.*

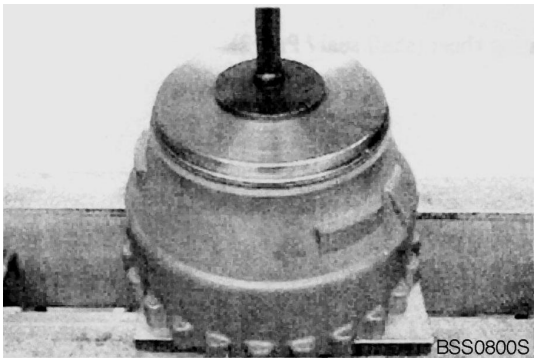

Figure 65

Reference Number	Description
1	Shaft Seal
2	Brake Housing
*	Grease Filling

NOTE: *Fill space between sealing and dust lips with grease.*

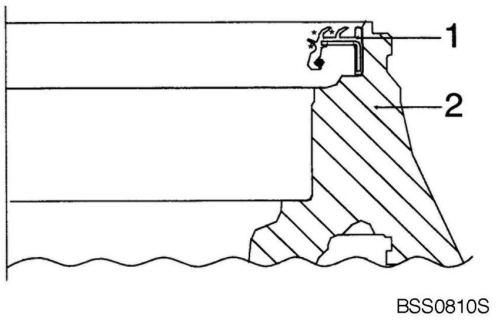

Figure 66

7. Install preassembled brake housing using lifting tackle (S) over output shaft until seated.

   (S) Lifting chain 5870 281 047

   (S) Eyebolts 5870 204 071

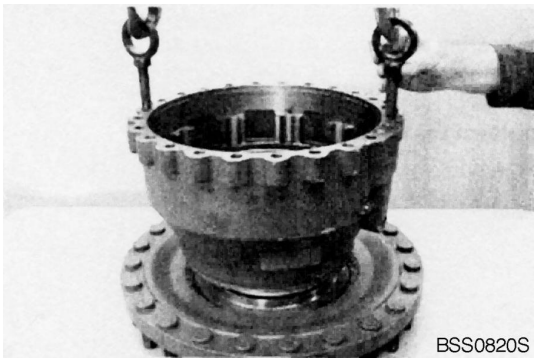

Figure 67

8. Heat roller bearing and install it until seated.

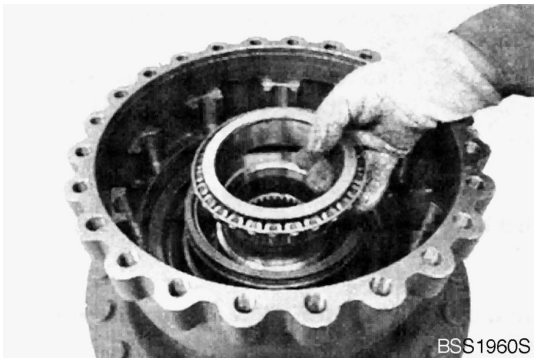

Figure 68

9. Insert support and U-rings into annular grooves of brake housing.

   NOTE: *Pay attention to installation position, see Figure 70.*

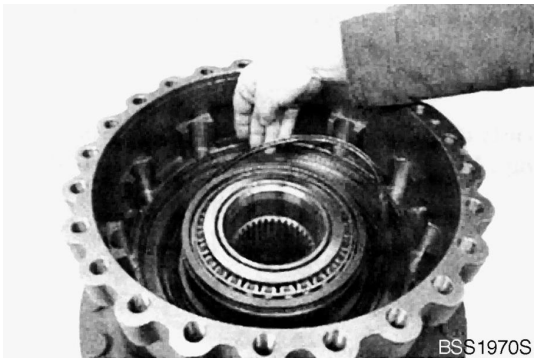

Figure 69

Reference Number	Description
1	Brake Housing
2	Guide Ring
3	Support Ring
4	U-ring
5	U-ring
6	Support Ring
7	Output Shaft

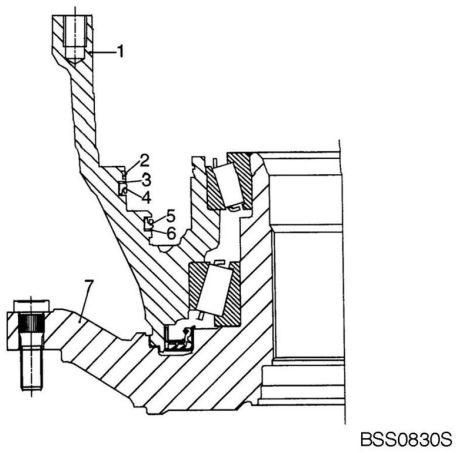

Figure 70

10. Clean annular groove of brake housing with mineral spirits.

    Then insert guide ring into annular groove (also see Figure 70) and secure with Loctite #415 at its extremities.

    NOTE: *Guide ring must have seated on whole circumference.*

    NOTE: *Upon installation of the orifice of guide ring must show upwards (12 o'clock).*

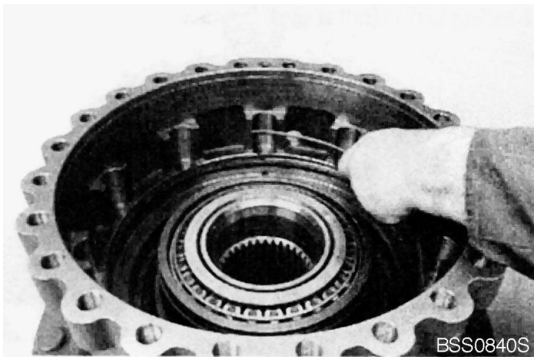

Figure 71

11. Insert piston into brake housing and install it cautiously until seated.

    NOTE: *Apply sufficiently oil on sliding surface of piston or support rings, U-rings and guide ring (use W-10 oils).*

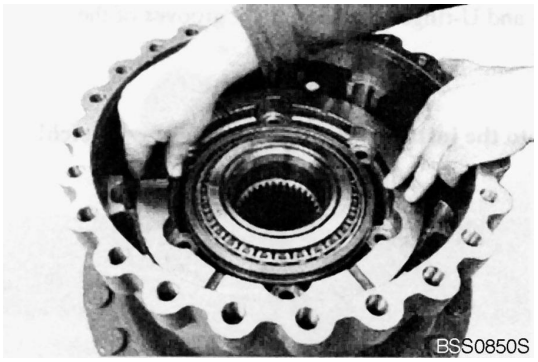

Figure 72

12. Insert pins into assembly fixture (S) until seated.

    (S) Assembly fixture 5870 345 096

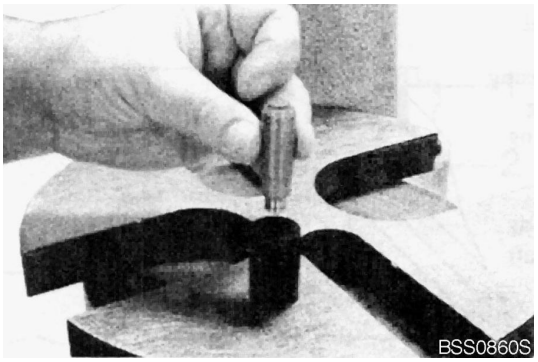

Figure 73

13. Press gripping rings (4x, see arrows) onto pins until seated on assembly fixture (S).

    NOTE: *The exact installation dimension (see Figure 76) of gripping rings is obtained when using specified assembly fixture.*

    NOTE: *Observe installation position, install gripping rings with orifices offset by 180° to each other.*

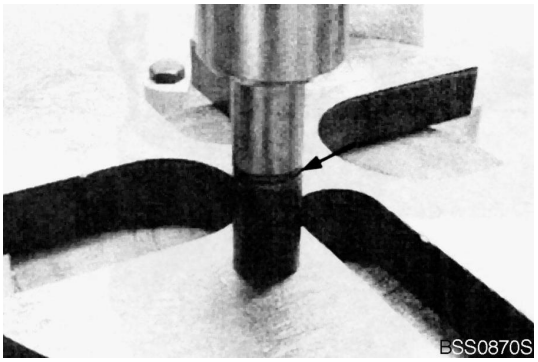

Figure 74

14. Install cup springs (7 pieces each / pin).

    NOTE: *Pay attention to installation position of cup springs, see Figure 76.*



Figure 75

Reference Number	Description
1	Pin
2	Gripping Rings
3	Cup Springs
4	Support Shim
5	Retaining Ring
X	Installation Dimension Gripping Rings 10.5 $^{+0.3}$ mm

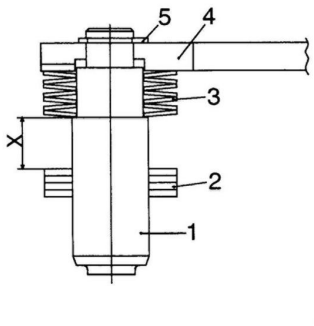

Figure 76

15. Insert preassembled pins into support shim and secure using retaining ring.4

    (S) Assembly pliers 5870 900 051

    NOTE: *Pay attention to clearance of cup springs.*

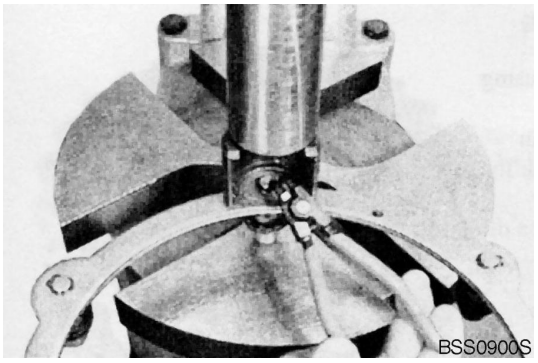

Figure 77

16. Insert preassembled support shim into piston.

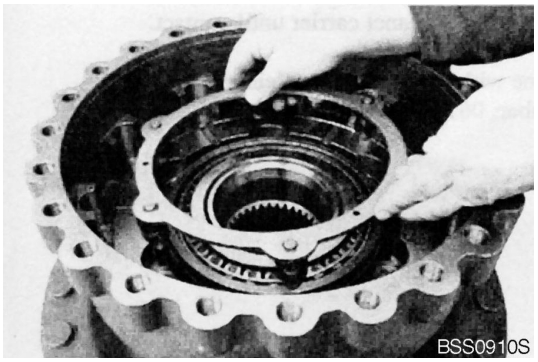

Figure 78

17. Install support shim using retaining ring.

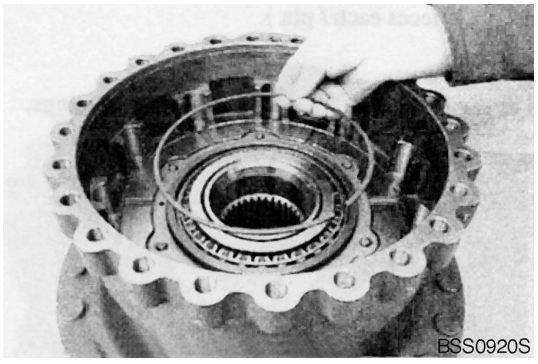

Figure 79

18. Drive slotted pins (6x) into bores of support shim to lock retaining ring.

    (S) Drive mandrel 5870 705 011

    NOTE: *Pay attention to installation position, see Figure 81.*

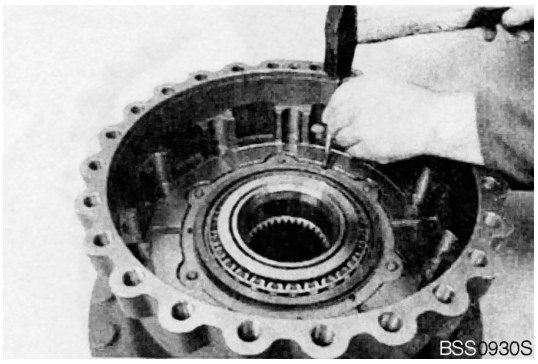

Figure 80

Reference Number	Description
1	Brake Housing
2	Retaining Ring
3	Slotted Pin
4	Support Shim
5	Piston
X	Installation Dimension $4.0_{-0.5}$ mm

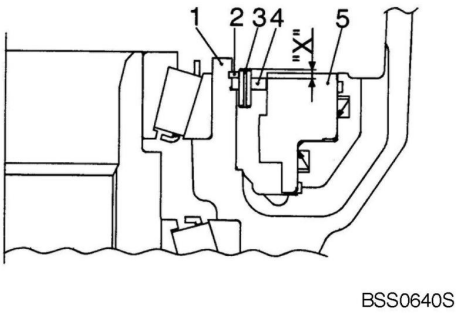

Figure 81

19. Drive stop bolt into planet carrier until seated.

    Then wet spline with anticorrosive Weicon Antiseize (ZF Part Number: 0671 196 001) (see arrow).

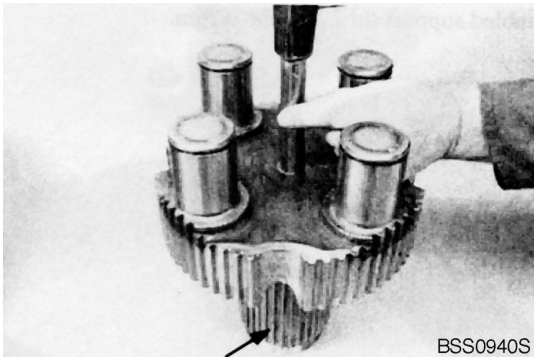

Figure 82

20. Insert planet carrier into spline of output shaft until seated.

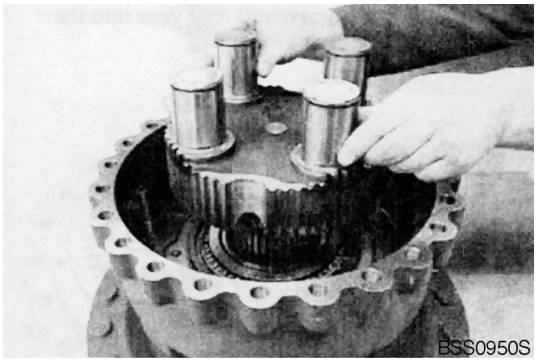

Figure 83

21. Install outer and inner clutch disks alternately starting with an outer clutch disk.

    NOTE: *Oil clutch disks according to ZF List of Lubricants TE-ML 05.*

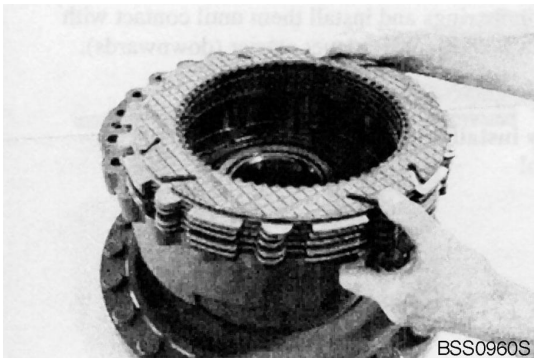

Figure 84

22. Insert O-ring (see arrow) into recess of brake housing.

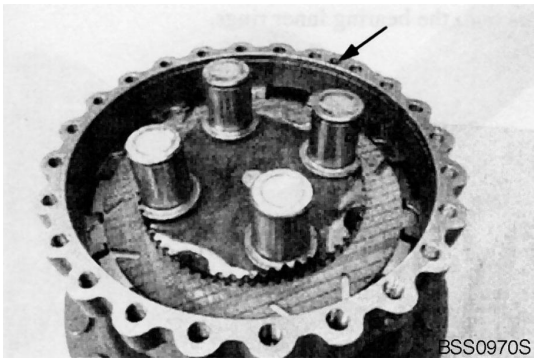

Figure 85

23. Grease both O-rings (see arrows) and insert them into annular grooves of ring gear.

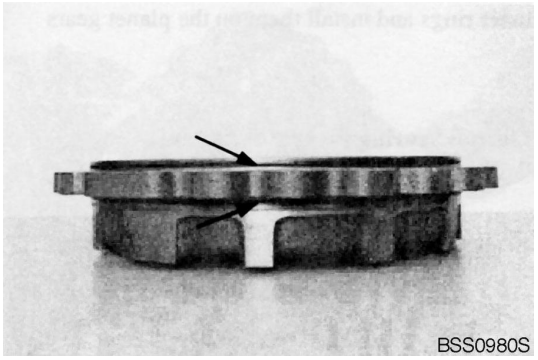

Figure 86

24. Install two adjusting screws (S) and insert ring gear into brake housing until seated.

    (S) Adjusting screws 5870 204 029

    NOTE: *Pay attention to radial location.*

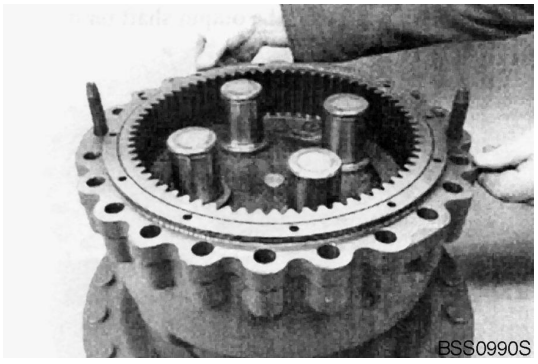

Figure 87

25. Heat inner bearing races and install them until seated with big radius showing to planet carrier (downwards).

    NOTE: *Subsequently install inner bearing races after cooling down.*

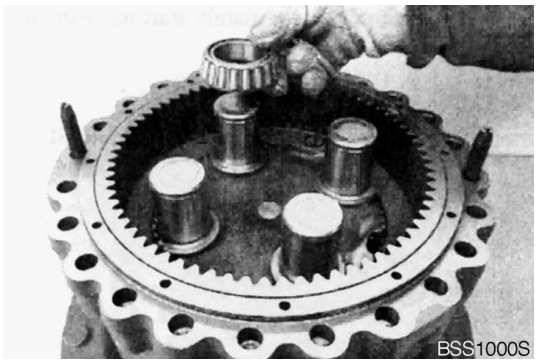

Figure 88

26. Put planet gears onto inner bearing races.

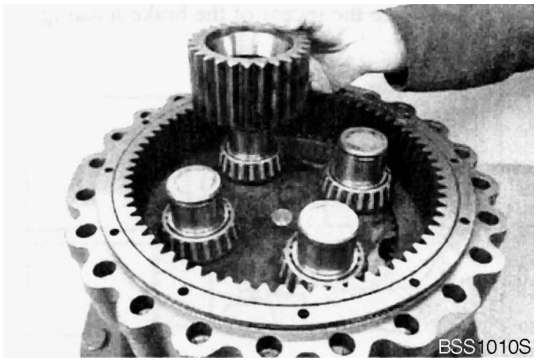

Figure 89

27. Heat inner bearing races and install them on planet gears until seated.

    NOTE: *Subsequently install inner bearing races after cooling down.*



Figure 90

28. Fasten planet gears using retaining rings.

    (S) Set of external pliers 5870 900 015

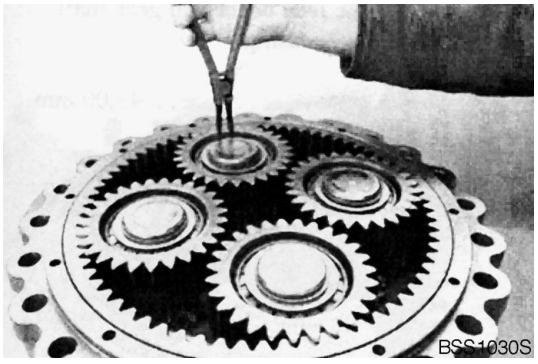

Figure 91

29. Adjust end play of sun gear shaft 0.5 - 2.0 mm

    Fasten ring gear using cap screws until seated.

    Then determine Dimension I, from mounting face of ring gear up to face of stop bolt.

    Dimension I, e.g. 46.20 mm

    (S) Digital depth gauge 5870 200 072

    (S) Gauge blocks 5870 200 066

    (S) Straightedge 5870 200 022

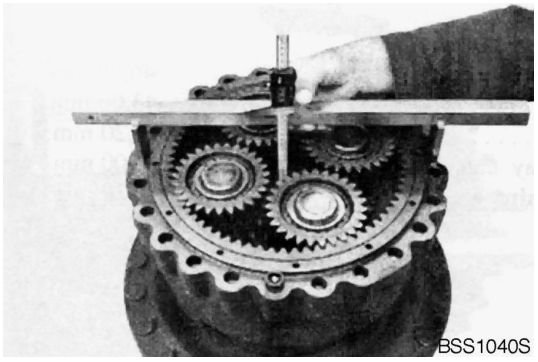

Figure 92

30. Insert stub shaft into spline of axle bevel gear until seated.

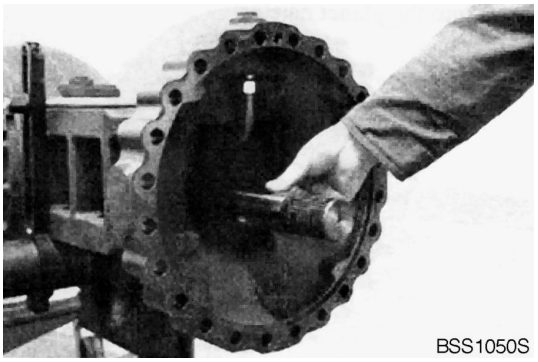

Figure 93

31. Assemble sun gear shaft until seated.

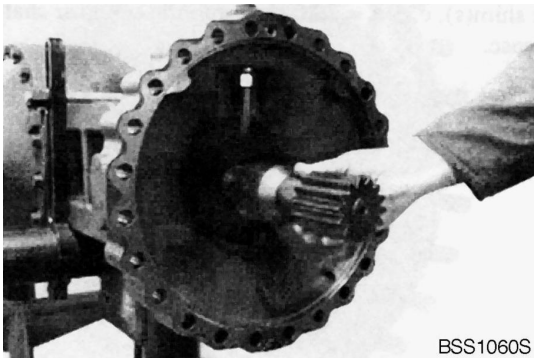

Figure 94

32. Determine Dimension II from face of sun gear shaft up to mounting face of axle casing.

    Dimension II, e.g. 43.00 mm

    (S) Digital depth gauge 5870 200 072

    (S) Gauge blocks 5870 200 066

    (S) Straightedge 5870 200 022

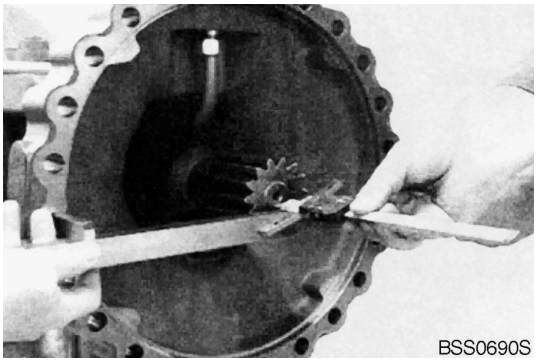

Figure 95

EXAMPLE

Dimension I		46.20 mm (1.8189 in)
Dimension II	-	43.00 mm (1.6929 in)
Difference		3.20 mm (0.1260 in)
required end play, e.g.	-	1.00 mm (0.0394 in)
Difference = shim, e.g.	=	2.20 mm (0.0866 in)

33. Insert sun gear shaft into planet carrier.



Figure 96

34. Install determined shim(s), e.g. s = 2.20 mm, into sun gear shaft using grease.

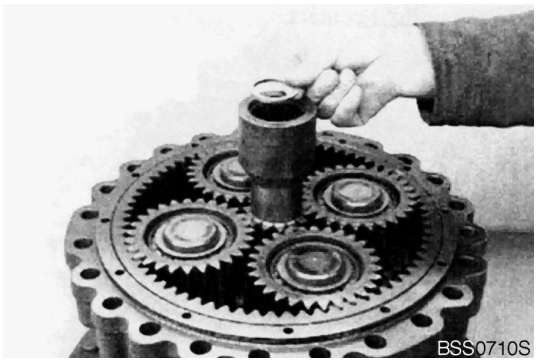

Figure 97

35. Install O-ring (see arrow) into recess of axle casing using grease and install preassembled output to axle casing until seated using lifting tackle (S).

    (S) Lifting bracket 5870 281 043

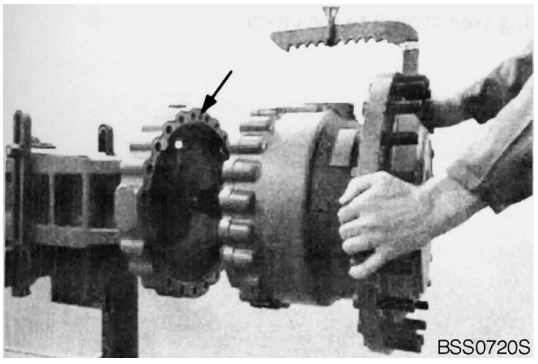

Figure 98

36. Fasten output using hex screws and washers.

    Tightening torque (M18 / 10.9) M_A = 39.77 kg•m (288 ft lb)

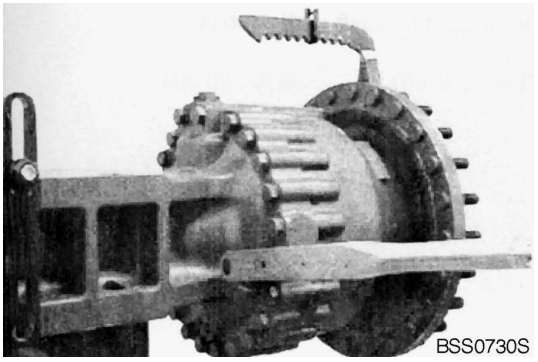

Figure 99

37. Unscrew slotted nut by hand and then fasten it.

    Tightening torque M_A = 152.96 - 173.35 kg•m (1,106 - 1,254 ft lb)

    (S) Socket spanner 5870 656 078

    (S) Centering bracket 5870 912 028

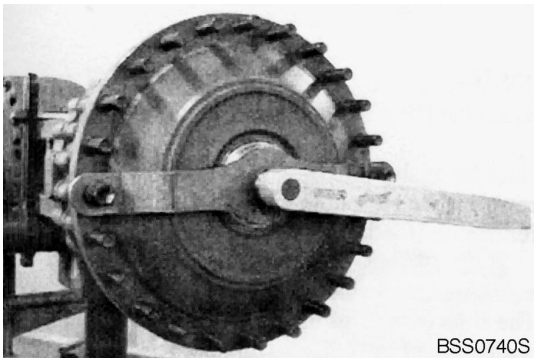

Figure 100

38. Secure slotted nut using slotted pin.

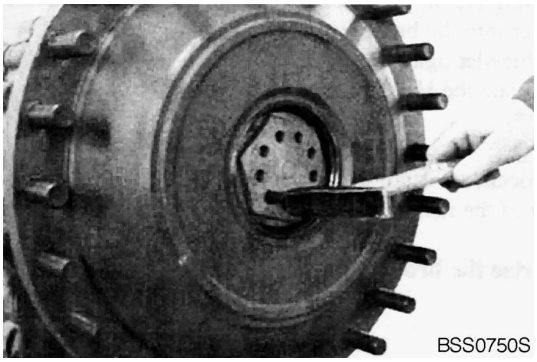

Figure 101

39. Assemble O-ring (see arrow) to cover.

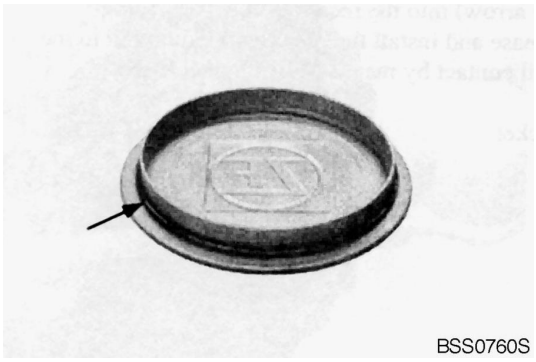

Figure 102

40. Insert cover into output shaft until seated.

    (S) Hammer (Plastic ø60) 5870 280 004

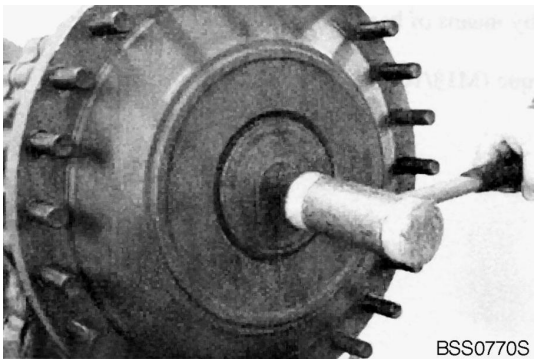

Figure 103

41. Leakage test of brake hydraulics

NOTE: *Before starting test, bleed brake hydraulics completely.*

1. Open bleeder.
2. Slowly actuate HP-pump until oil flows from bleeder.
3. Close bleeder again.
4. Slowly pressurize HP-pump with p > 10 bar and hold pressure for some seconds.

NOTE: *The brake piston extends and cylinder chamber fills up with oil. The air accumulates in upper section of cylinder chamber.*

5. Remove shutoff valve on HP-pump.

NOTE: *The reversing piston presses air from upper section of cylinder into brake line.*

6. Open bleeder again.
7. Slowly actuate HP-pump until oil flows from bleeder.

NOTE: *Repeat procedure - Item 3-7 - until - at Item 7 - from beginning of actuation no more air exits from bleeder.*

NOTE: *Then pressurize brake temporarily (5x) with p = 100 bar max.*

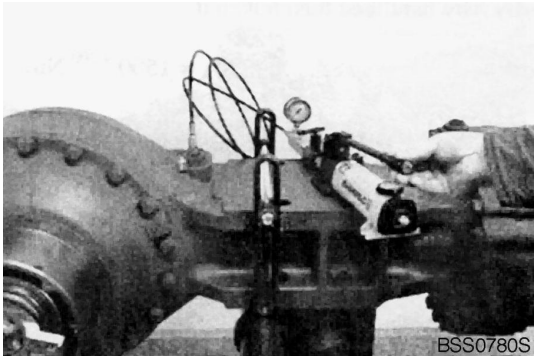

Figure 104

High-pressure test

Increase test pressure up to p = 100 $_{-10}$ bar and close connection to HD-pump using shutoff valve. During a 5 min. testing time, a pressure drop of max. 2% (2 bar) is allowed.

NOTE: *If maximum pressure of 100 bar is exceeded, there will be an excessive piston adjustment and a repeated disassembly of brake or adjusting is required to reset gripping rings to adjusting dimension.*

Low-pressure test

Reduce test pressure to p = 5 bar and close shutoff valve again. During a 5 min. testing time, a pressure drop is not allowed.

Test media

Motor oils SAE 10-W corresponding with,
MIL-L 2104 C, MIL-L 46152,
API-CC, CD, SC, SD, SE,
ATF-Oils Type A, Suffix A Dexron of II D.

(S) HD-Pump 5870 287 007

(S) Mini-measuring hub (9 / 16" - 18UNF) 5870 950 115

NOTE: *Before putting axle into operation, fill it with oil according to “Lubrication Instructions” on page 1-12.*

Disassembly of Differential Carrier and Brake Tubes

Disassembly of Differential Carrier

1. Fasten axle on assembly truck.

   (S) Assembly truck 5870 350 000

   (S) Holding fixtures 5870 350 077

   (S) Clamps 5870 350 075

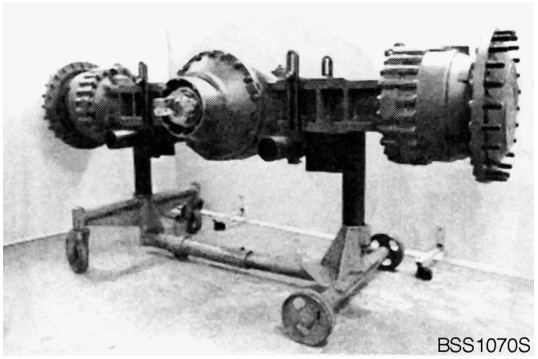

Figure 105

2. Remove plugs (3x, Figure 106, Figure 107) and drain oil from axle casing.

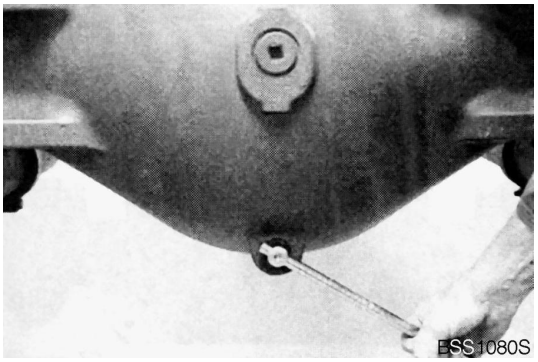

Figure 106

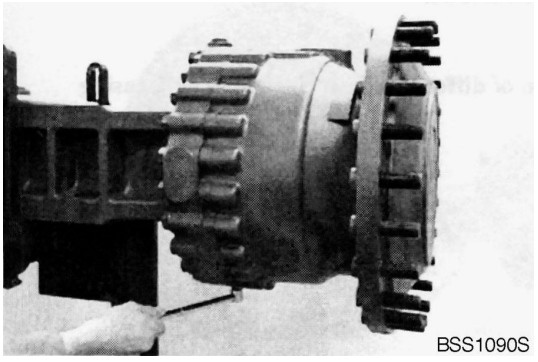

Figure 107

3. Secure output using lifting tackle (S) and remove hex screws.

   (S) Lifting bracket 5870 281 043

   NOTE: *Repeat steps (Figure 108 thru Figure 110) on both output sides.*

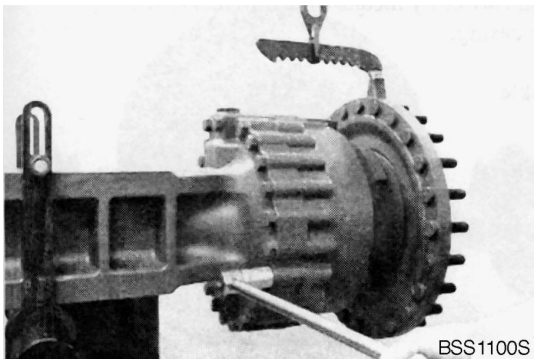

Figure 108

4. Separate complete output from axle casing.

   NOTE: *Pay attention to released O-ring (see arrow).*

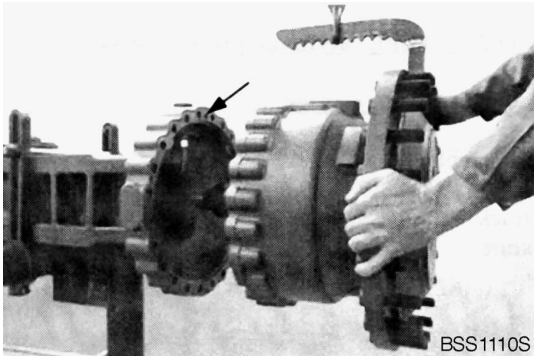

Figure 109

5. Remove stub shaft from sun gear shaft.

   NOTE: *Pay attention to released shim(s).*

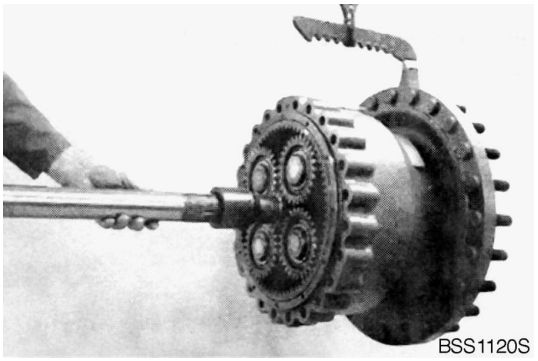

Figure 110

6. Remove hex screws.

   NOTE: *Mark location of differential carrier to axle casing (see arrows).*

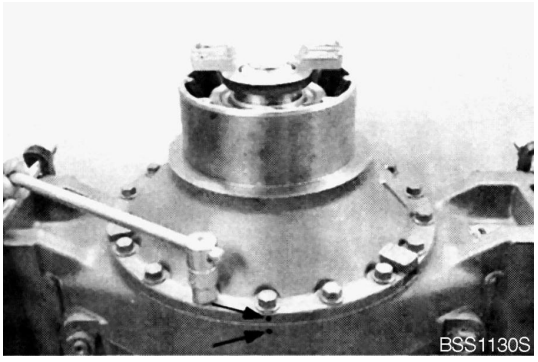

Figure 111

7. Remove differential carrier using lifting tackle (S) from axle casing.

   (S) Lifting tackle 5870 281 044

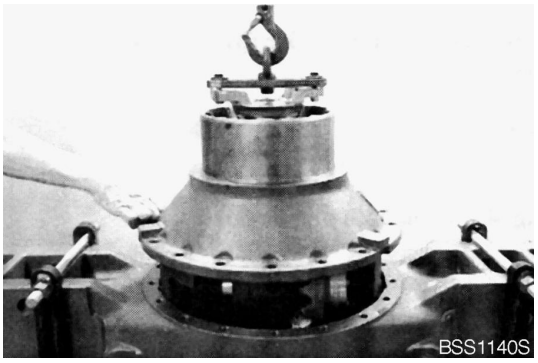

Figure 112

8. Fasten differential carrier to assembly truck.
   (S) Assembly truck 5870 350 000
   (S) Holding fixture 5870 350 034

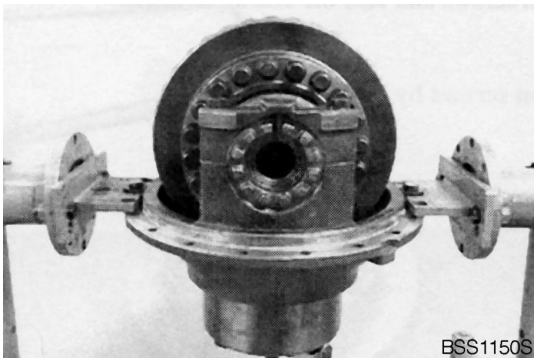

Figure 113

9. Remove slotted pins.

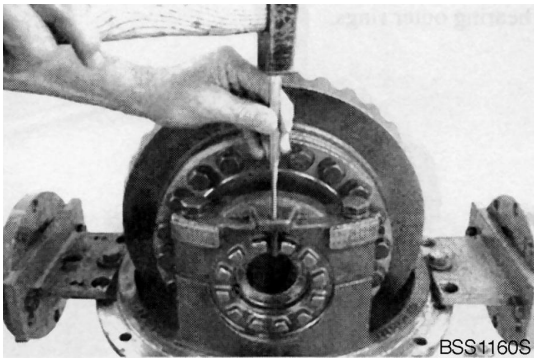

Figure 114

10. Remove both adjusting nuts.
    (S) Socket spanner 5870 656 079

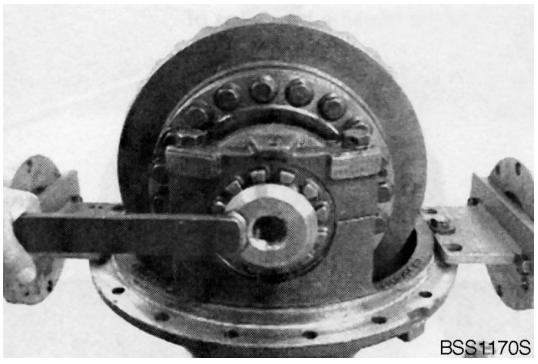

Figure 115

11. Heat axle drive housing using hot-air blower (S).
    (S) Hot-air blower 230 V 58770 221 500
    (S) Hot-air blower 115 V 5870 221 501
    NOTE: *Hex screws are installed with Loctite #262.*

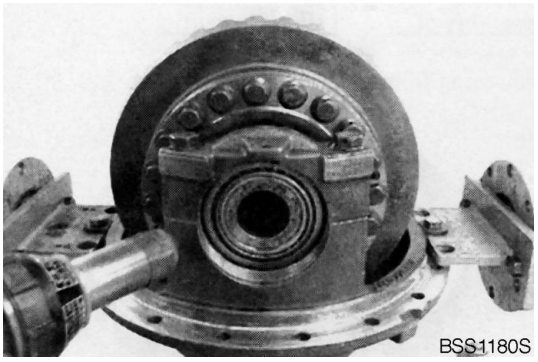

Figure 116

12. Remove hex screws and bearing bracket.

    NOTE: *Remove hex screws by hand only.*

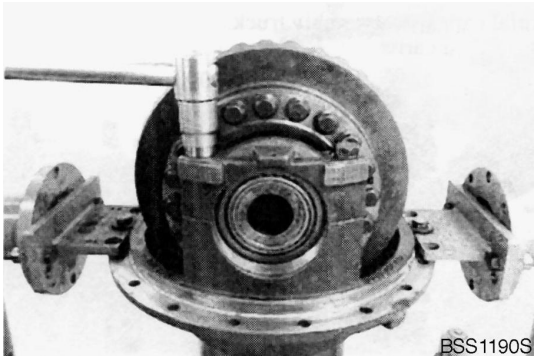

Figure 117

13. Remove both outer bearing races.

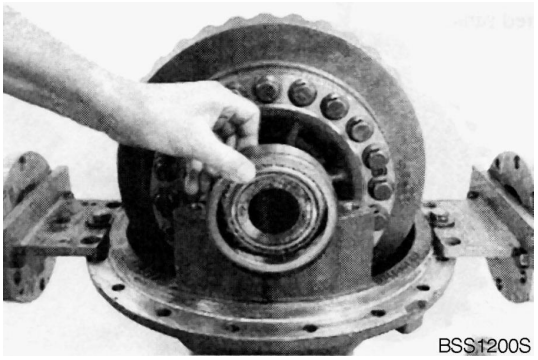

Figure 118

14. Remove differential from housing using lifting tackle (S).

    (S) Lifting tackle 5870 281 013

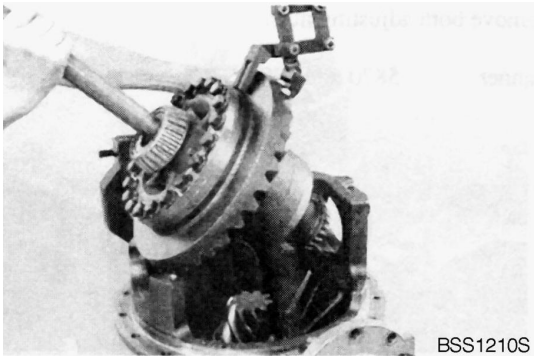

Figure 119

Disassembly of Limited Slip Differential

1. Remove inner bearing race from differential housing.

    (S) Gripping insert 5873 002 023

    (S) Basic set 5873 002 001

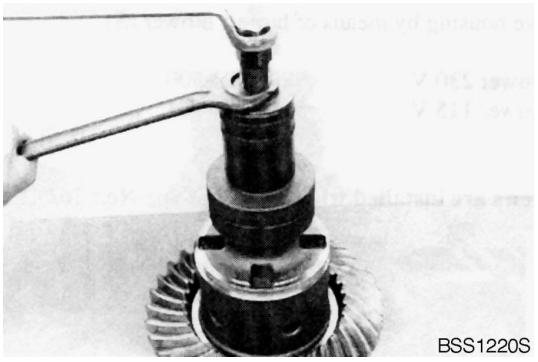

Figure 120

2. Remove inner bearing race from housing cover.

   (S) Rapid grip 5873 012 018

   (S) Basic set 5873 002 001

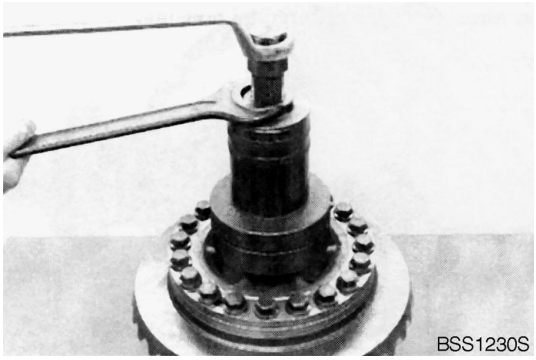

Figure 121

3. Fasten differential using press and remove locking screws.

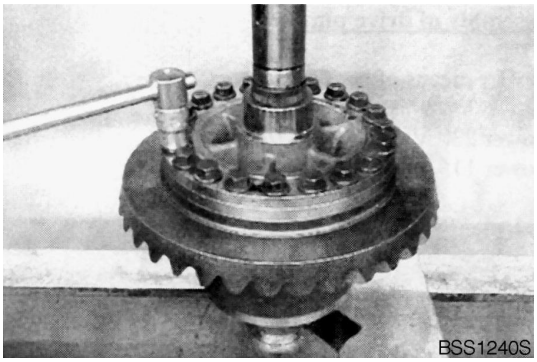

Figure 122

4. Remove cap screws and housing cover.

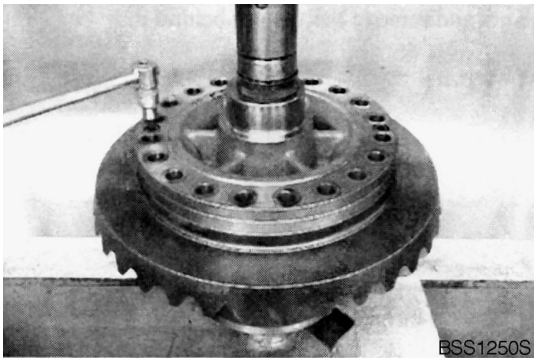

Figure 123

5. Remove all single parts from differential housing.

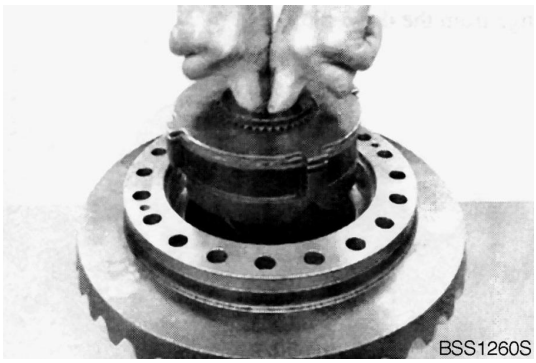

Figure 124

6. Remove crown wheel from differential housing.

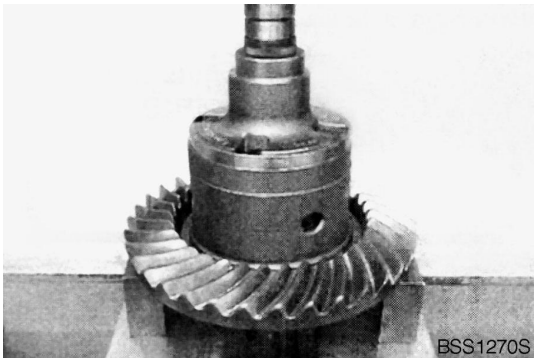

Figure 125

Disassembly of Drive Pinion

1. Heat slotted nut using hot-air blower (S).

   (S) Hot-air blower 230 V 5870 221 500

   (S) Hot-air blower 115 V 5870 221 501

   NOTE: *Slotted nut is locked with Loctite #262.*

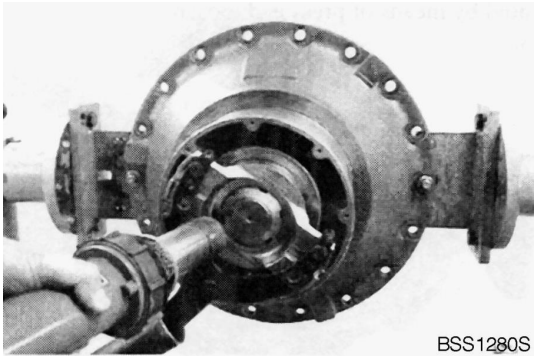

Figure 126

2. Remove slotted nut and washer.

   (S) Slotted nut wrench 5870 401 139

   (S) Fixture 5870 240 002

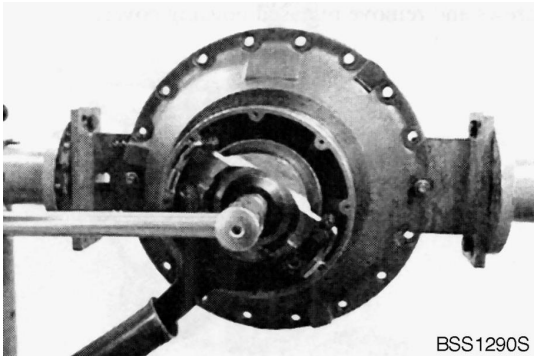

Figure 127

3. Remove input flange from drive pinion.

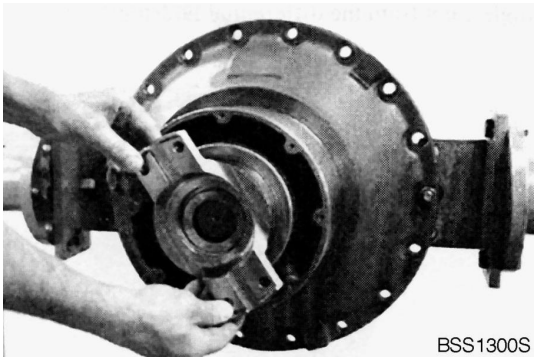

Figure 128

4. Remove shaft seal from axle drive housing.

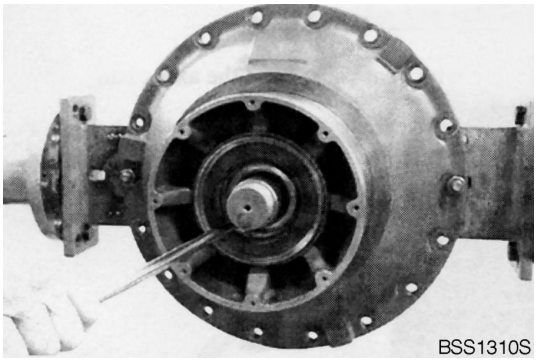

Figure 129

5. Remove drive pinion from axle drive housing using two-armed puller (S) and remove released inner bearing race.

   (S) Two-armed puller 5870 970 007

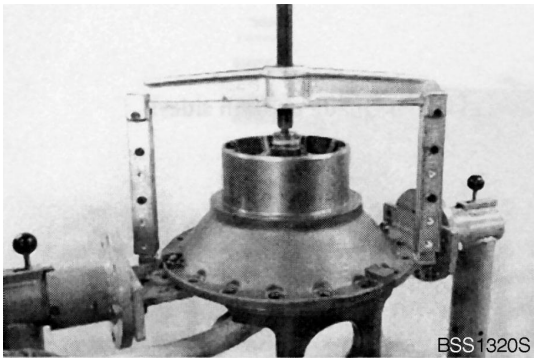

Figure 130

6. Remove spacer ring and remove inner bearing race from drive pinion.

   (S) Gripping insert 5873 002 032

   (S) Basic set 5873 002 001

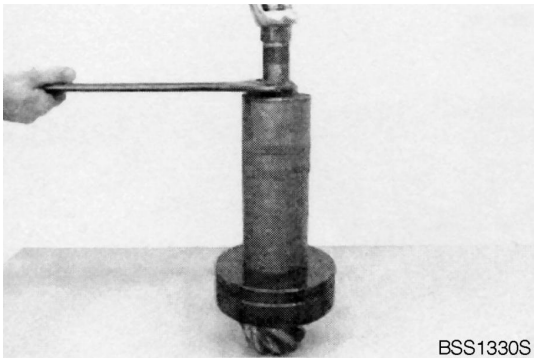

Figure 131

7. If necessary, remove both outer bearing races from axle drive housing.

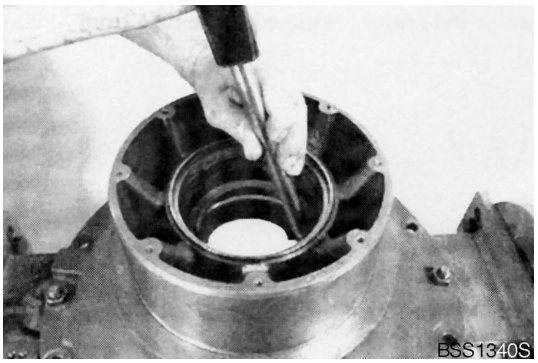

Figure 132

Disassembly of Brake Tubes

1. Remove plug with vent valve from axle casing.

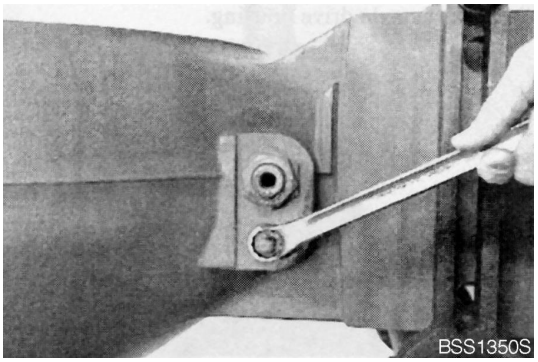

Figure 133

2. Remove hex nut.

   NOTE: *Repeat steps (Figure 134 thru Figure 138) on both sides.*

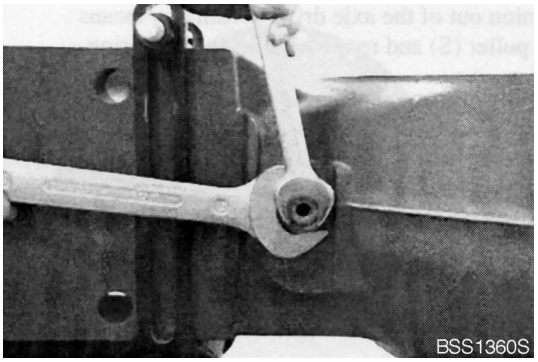

Figure 134

3. Remove union screw.

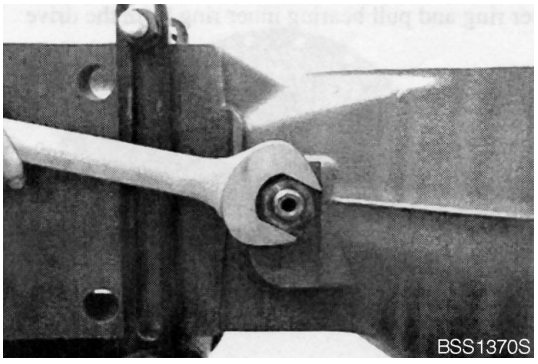

Figure 135

4. Remove pipe union and brake tube from axle casing.

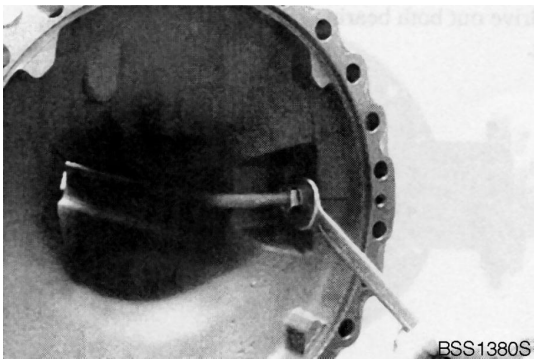

Figure 136

5. Remove vent valve from connection part.

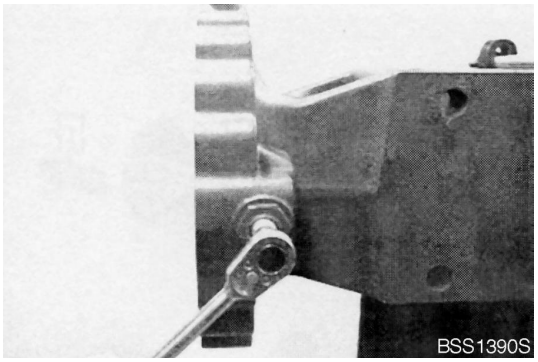

Figure 137

6. Remove connection part from axle casing.

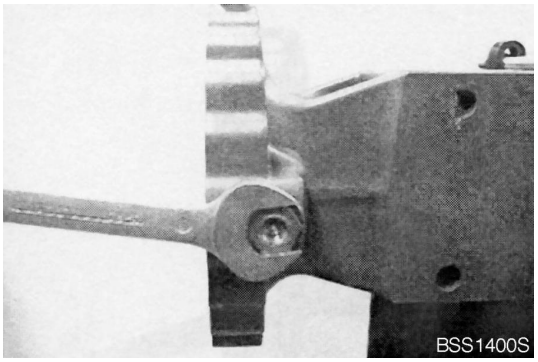

Figure 138

Reassembly of Brake Tubes and Differential Carrier

Reassembly of Brake Tubes

1. Preassemble connection part as shown in Figure 139.

Reference Number	Description
1	Vent Valve
2	Connection Part
3	O-ring
4	Rectangular Ring

NOTE: *Repeat steps (Figure 139 thru Figure 145) on both output sides.*

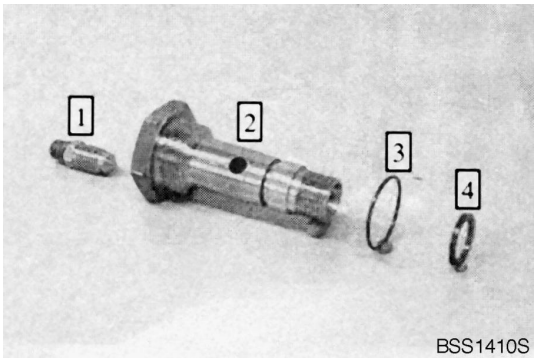

Figure 139

2. Install connection part.

   Tightening torque M_A = 13.26 kg•m (96 ft lb)

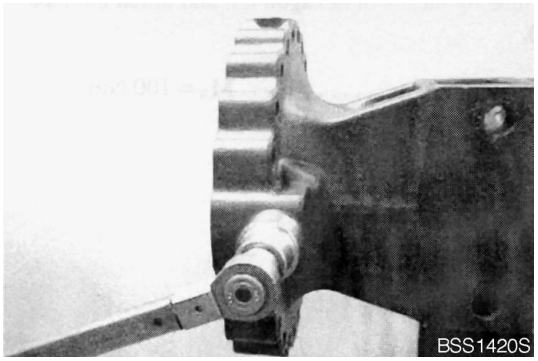

Figure 140

3. Provide union screw with new O-ring and install it.

   Tightening torque M_A = 15.30 kg•m (111 ft lb)

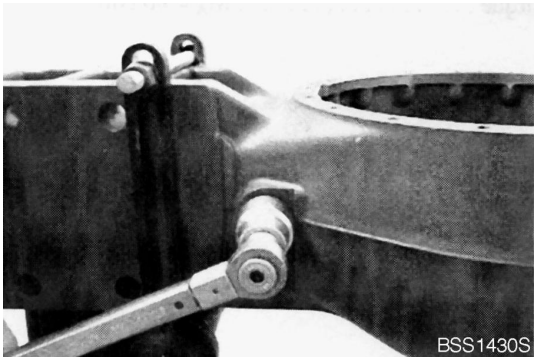

Figure 141

4. Insert O-ring (see arrow) into annular groove of brake tube.

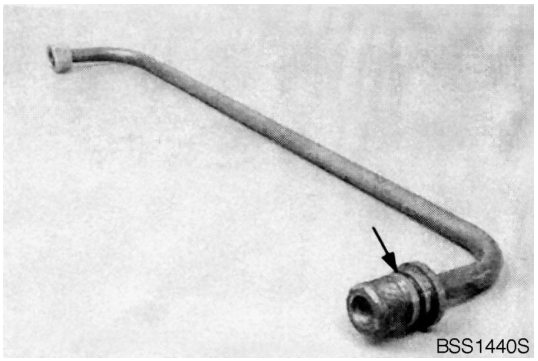

Figure 142

5. Insert brake tube into axle casing, assembling connection part (see arrow 1) through union screw (see arrow 2).

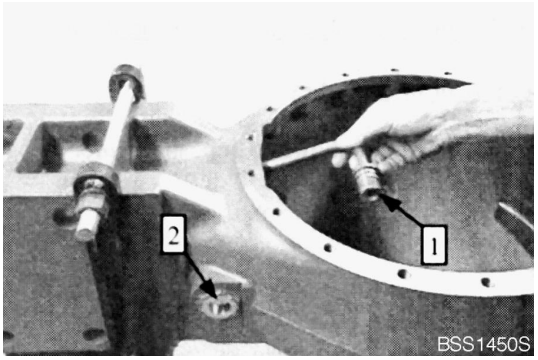

Figure 143

6. Fasten brake tube using hex nut and union nut (Figure 144).

   Tightening torque M_A = 10.20 kg•m (74 ft lb)

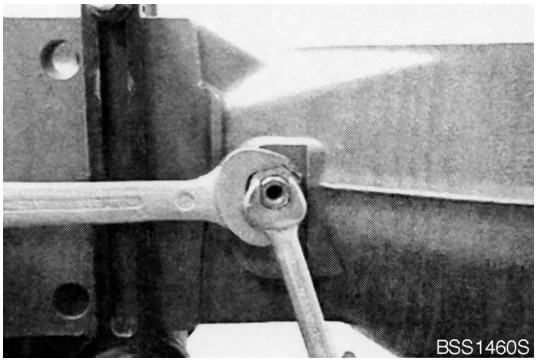

Figure 144

7. Tightening torque M_A = 8.16 kg•m (59 ft lb)

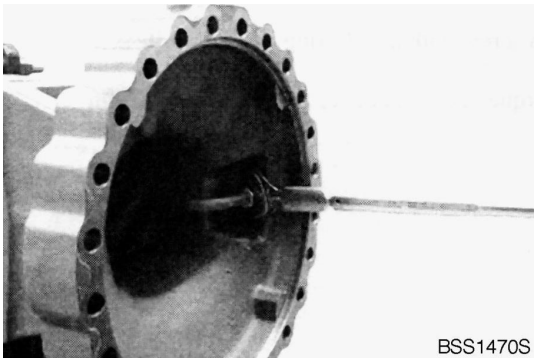

Figure 145

8. Preassemble plug as shown in Figure 146.

Reference Number	Description
1	O-ring
2	Screw Plug
3	Vent Valve

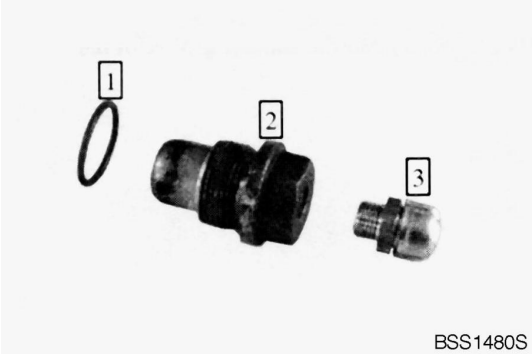

Figure 146

9. Install plug.

   Tightening torque M_A = 7.14 kg•m (52 ft lb)

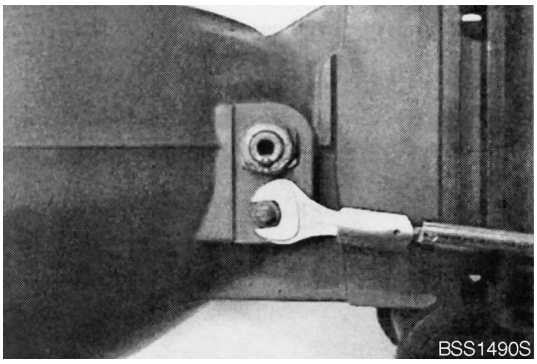

Figure 147

Reassembly of Differential Carrier

NOTE: *If crown wheel or drive pinion are damaged, both parts have to be replaced together. For new installation of a complete bevel gear set, pay attention to same pair number of drive pinion and crown wheel.*

Determine Shim Thickness for Tooth Contact Pattern

NOTE: *Make following measurements with accuracy. Inexact measurements result in a faulty tooth contact pattern and require a repeated disassembly and reassembly of drive pinion and of differential.*

10. Install adapter pieces(1) and preliminarily fasten bearing bracket using hex screws.

    Then install stop washer (4) and measuring pin (3) and assemble measuring shaft (2), see Figure 148.

    (S) Adapter piece 5870 500 007

    (S) Measuring shaft 5870 500 001

    (S) Measuring pin 5870 351 016

    (S) Stop washer 5870 351 029

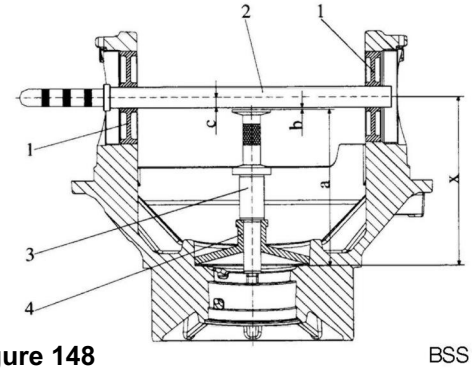

Figure 148

11. Determine gap (Dimension b) between measuring shaft and measuring pin using a feeler gauge.

    Dimension b, e.g. 0.20 mm

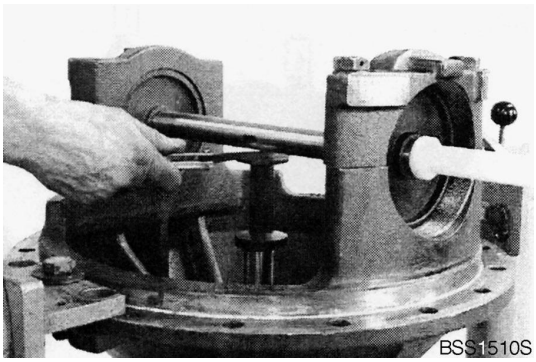

Figure 149

EXAMPLE "A"

Dimension a (= Measuring pin + stop washer)	206.00 mm (8.1102 in)
Dimension b	+ 0.20 mm (0.0078 in)
Dimension c	+ 15.00 mm (0.5906 in)
Dimension X	= 221.20 mm (8.7087 in)

12. Determine Dimension I (bearing width).

    Dimension I, e.g. 39.05 mm

    (S) Digital depth gauge 5870 200 072

    (S) Gauge blocks 5870 200 0660

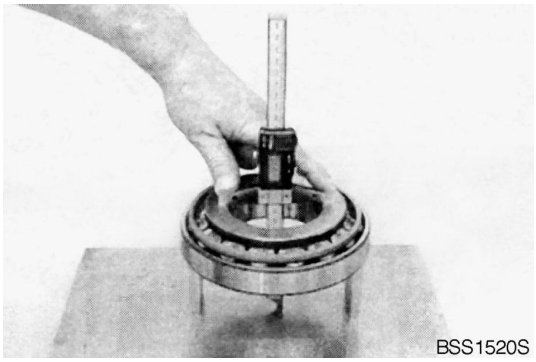

Figure 150

13. Read Dimension II (dimension for pinion).

    Dimension II, e.g. 181.05 mm

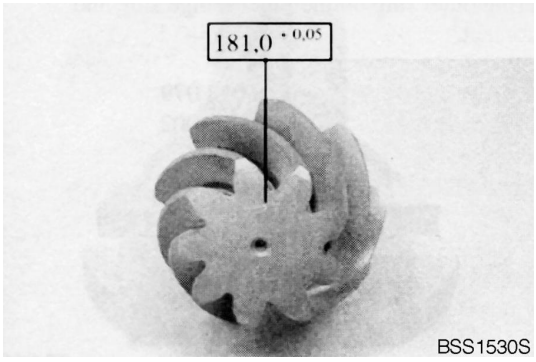

Figure 151

EXAMPLE "B"

Dimension I	39.05 mm (1.5374 in)
Dimension II	+ 181.05 mm (7.1280 in)
Dimension Y	= 220.10 mm (8.6654 in)

EXAMPLE "C"

Dimension X		221.20 mm (8.7087 in)
Dimension Y	-	220.10 mm (8.6654 in)
Difference = Shim, e.g.	=	1.10 mm (0.0433 in)

Install Drive Pinion

1. Place determined shim, e.g. s = 1.10 mm into bearing bore.

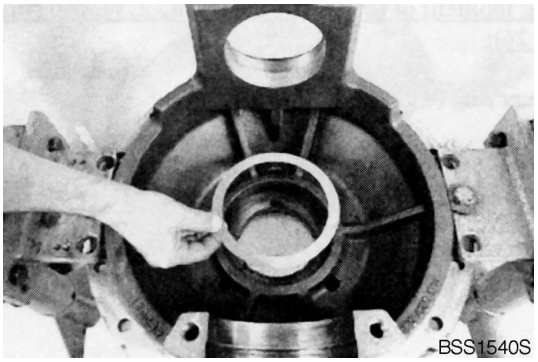

Figure 152

2. Cool outer bearing race and insert it into bearing bore until seated.

   (S) Driver 5870 058 060

   (S) Handle 5870 260 002

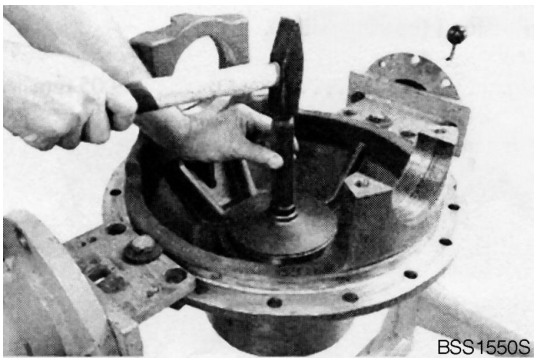

Figure 153

3. Cool outer bearing race on input flange side and inset it until seated.

   (S) Driver 5870 058 079

   (S) Handle 5870 260 002

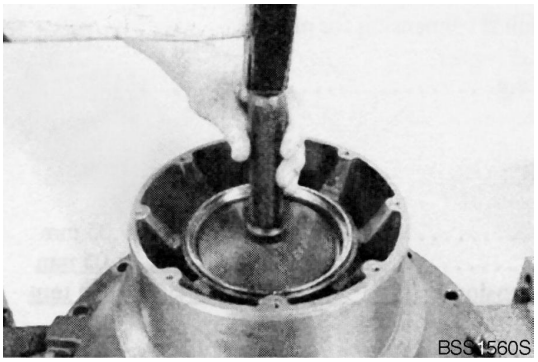

Figure 154

4. Press inner bearing race on drive pinion until seated.

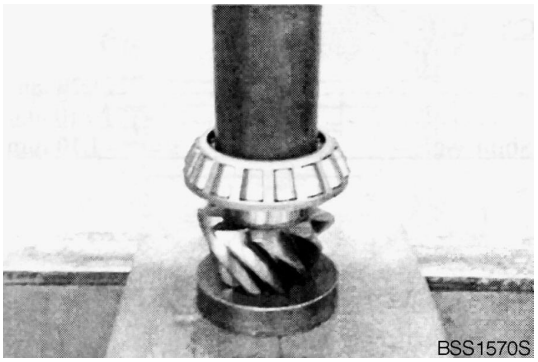

Figure 155

5. Adjust rolling moment of drive pinion bearing 0.15 - 0.31 kg•m (1.11 - 2.21 ft lb) (Figure 156 thru Figure 164).

   Assemble spacer ring (e.g. s = 8.10 mm).

   NOTE: *As per experience, required rolling moment is obtained by use of spacer ring (e.g. s = 8.10 mm) available at disassembly. However, a later checking of rolling moment is imperative.*

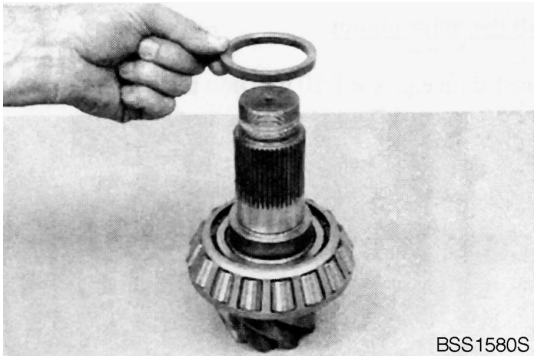

Figure 156

6. Insert preassembled drive pinion into axle drive housing and assemble heated inner bearing race until seated.

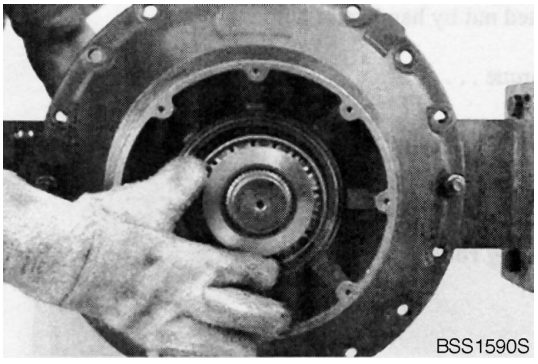

Figure 157

7. Press dust protection on input flange until seated.

   (S) Driver 5870 056 003

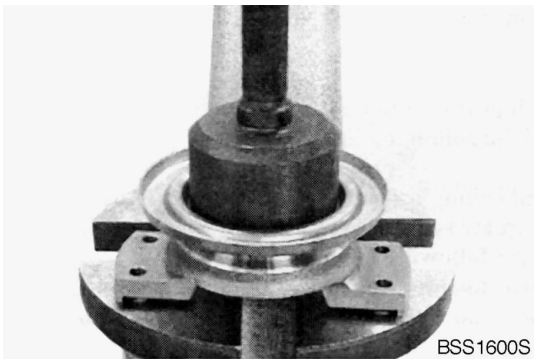

Figure 158

8. Assemble input flange.

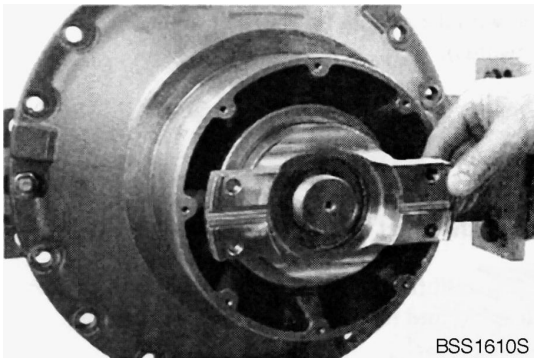

Figure 159

9. Assemble washer.

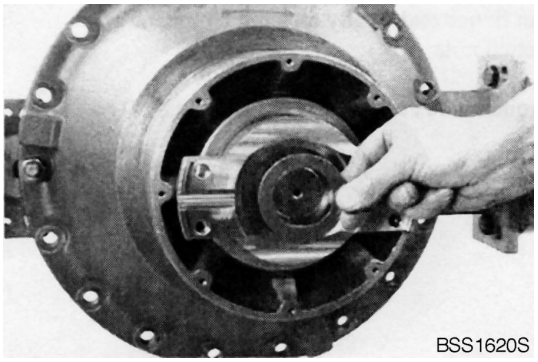

Figure 160

10. Unscrew slotted nut by hand and tighten it.

    Tightening torque M_A = 122.37 kg•m (885 ft lb)

    (S) Slotted nut wrench 5870 401 139

    (S) Fixture 5870 240 002

    NOTE: *When tightening rotate drive pinion in both directions several times.*

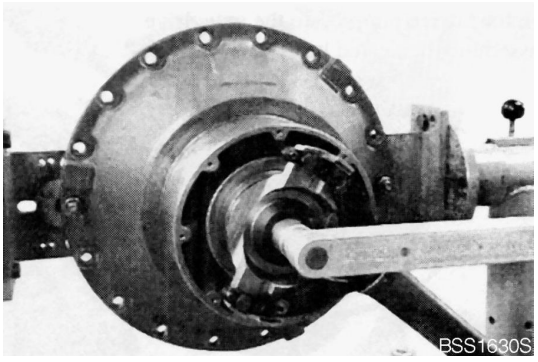

Figure 161

11. Check rolling moment (0.15 - 0.31 kg•m (1.11 - 2.21 ft lb)).

    NOTE: *For new bearings, it should be tried to achieve maximum value of rolling moment.*

    NOTE: *If required rolling moment is not obtained, correct it with an adequate spacer ring (Figure 156), according to following indications:*

    Rolling moment too low - install a thinner spacer ring

    Rolling moment too high - install a thicker spacer ring.

    Then remove slotted nut again and remove input flange from drive pinion.

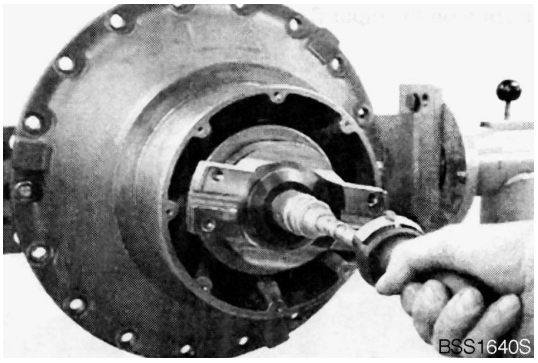

Figure 162

12. Install shaft seal with sealing lip visible to oil chamber (downwards).

    (S) Driver 5870 048 233

    NOTE: *The exact installation position of shaft seal will be obtained by using exact driver (S).*

    NOTE: *Just before installation, wet outer diameter of shaft seal with mineral spirits. and fill space between sealing and dust lip with grease.*

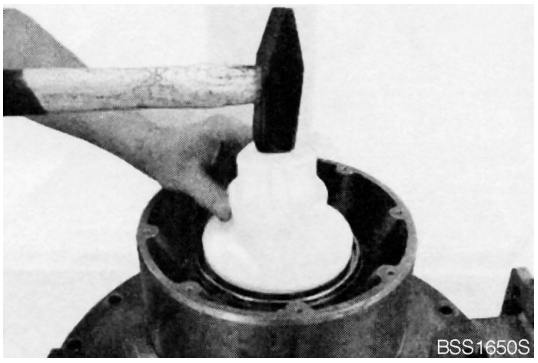

Figure 163

13. Assemble input flange and finally fasten in using washer and slotted nut.

    Tightening torque M_A = 122.37 kg•m (885 ft lb)

    NOTE: *Apply Loctite #262 onto thread of slotted nut.*

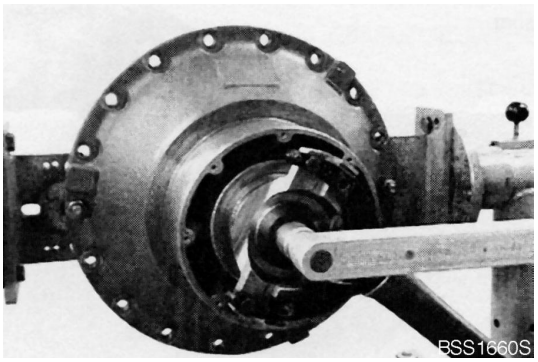

Figure 164

Reassemble of Limited Slip Differential

1. Place both thrust washers into differential housing.

    NOTE: *Before installation, all single parts of differential must be oiled according to ZF List of lubricants TE-ML 05.*

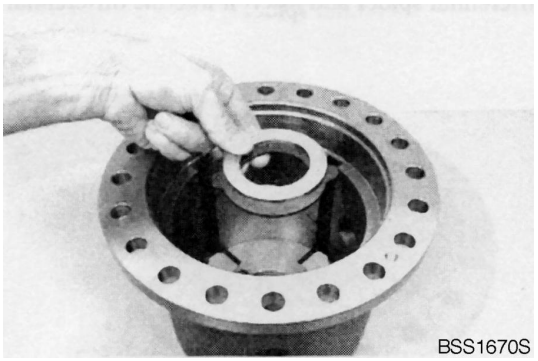

Figure 165

2. Starting with an outer clutch disk, install alternately outer and inner clutch disks.

    NOTE: *Thickness of disk pack must be identical on both sides.*

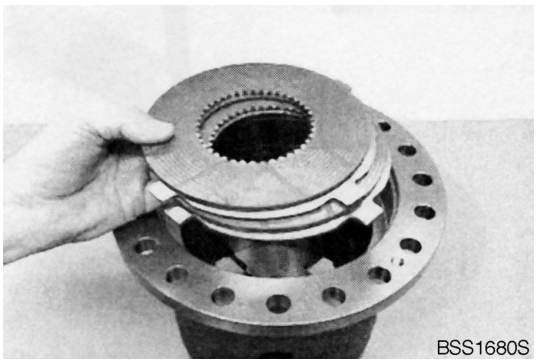

Figure 166

3. Install pressure ring.

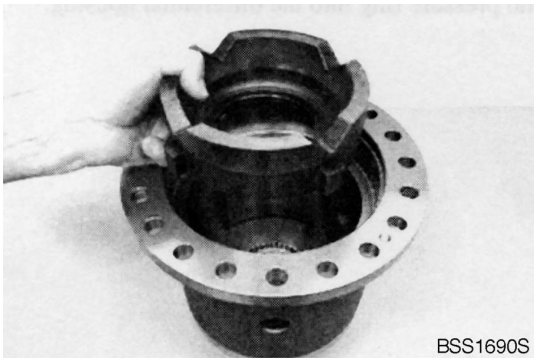

Figure 167

4. Insert axle bevel gear until seated and at same time, assemble all inner clutch disks with splines.

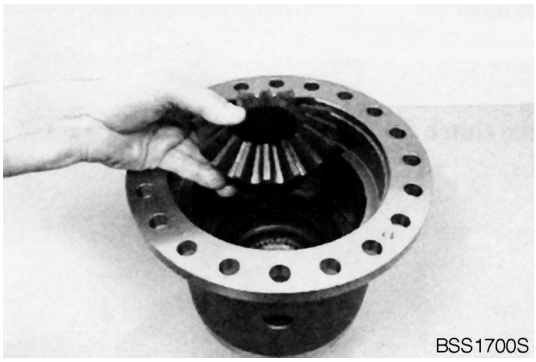

Figure 168

5. Preassemble differential spider and insert it into differential housing.

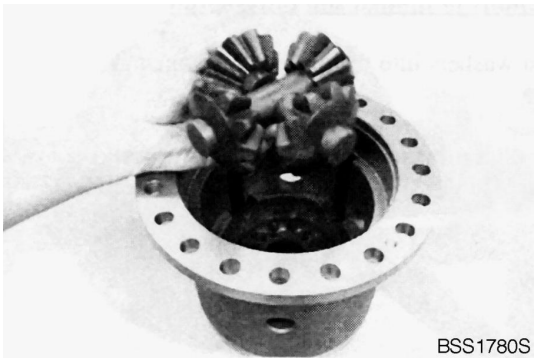

Figure 169

6. Install second axle bevel gear.

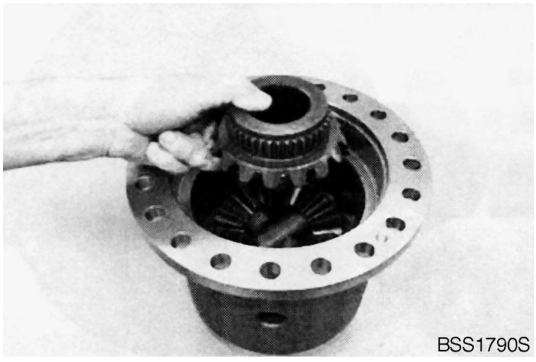

Figure 170

7. Insert second pressure ring into differential housing.

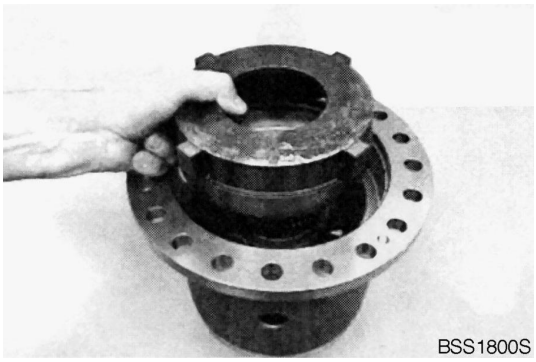

Figure 171

8. Starting with an inner clutch disk, install alternately inner and outer clutch disks.

   NOTE: *Thickness of clutch disk pack must be identical on both sides.*

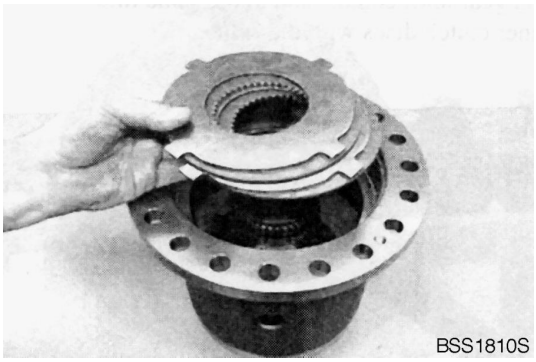

Figure 172

Determine Disk Clearance 0.2 - 0.8 mm

1. Determine Dimension I, from mounting face of differential housing to plane face of outer clutch disk.

   Dimension I, e.g. 44.30 mm

   (S) Digital depth gauge 5870 200 072

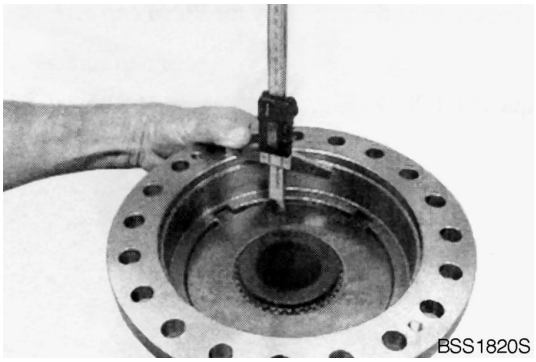

Figure 173

2. Determine Dimension II, from contact surface of outer clutch disk to mounting face of housing cover.

   Dimension II, e.g. 43.95 mm

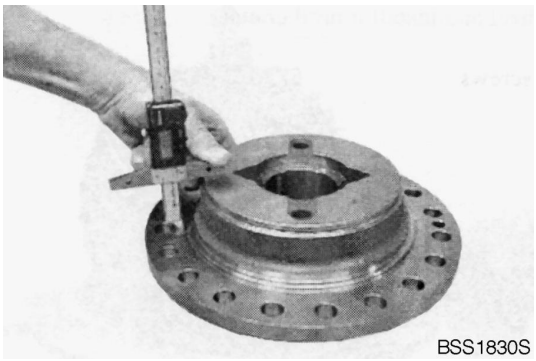

Figure 174

EXAMPLE "D"

Dimension I		44.30 mm (1.7441 in)
Dimension II	-	43.95 mm (1.7303 in)
Difference = Disk clearance	=	0.35 mm (0.0138 in)

NOTE: *If required disk clearance is not obtained, correct it with adequate outer clutch disks (s = 2.7, s = 2.9, s = 3.0, s = 3.1 or s = 3.3 mm), taking care that difference in thickness between left and right disk pack must only be 0.01 at a maximum.*

3. Install both thrust washers with grease into recess of housing cover.

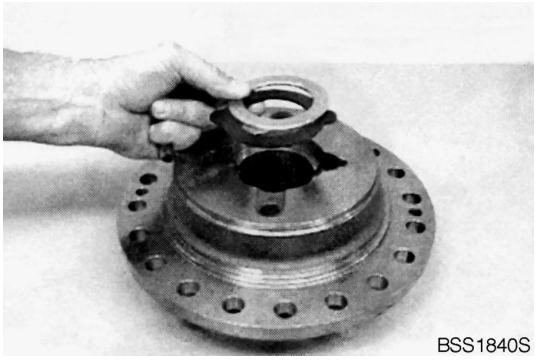

Figure 175

4. Install housing cover and fasten it using cap screws (2x).

   Tightening torque (M10/8.8) M_A = 4.69 kg•m (34 ft lb)

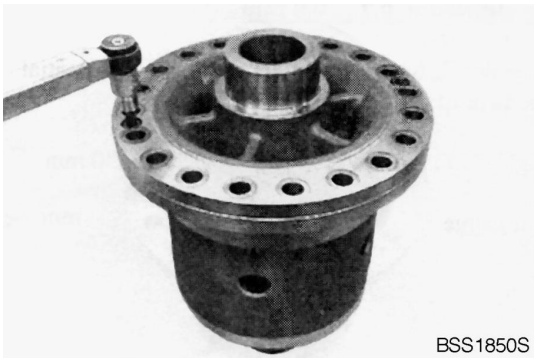

Figure 176

5. Heat crown wheel and install it until seated.

   (S) Adjusting screws 5870 204 040

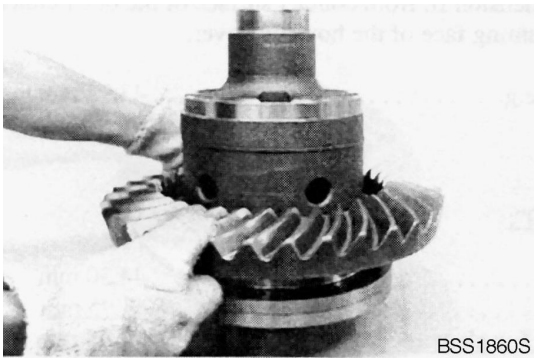

Figure 177

6. Install differential using press and fasten crown wheel using new locking screws.

   Tightening torque M_A = 41.81 kg•m (302 ft lb)

   NOTE: *Only use of new locking screws is permissible.*

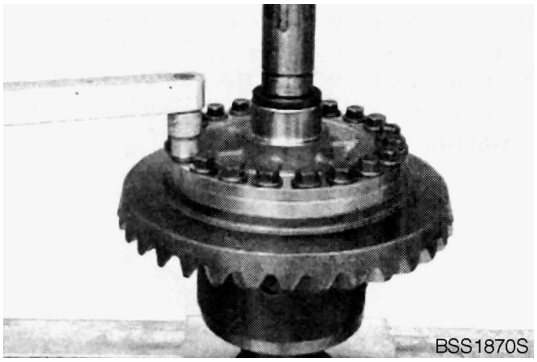

Figure 178

7. Press on both outer bearing races until seated.

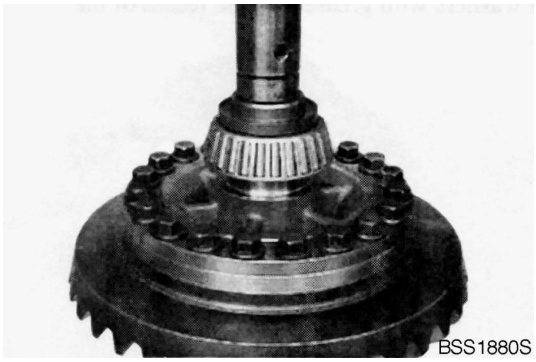

Figure 179

8. Insert differential into axle drive housing using lifting tackle (S).

   (S) Lifting tackle 5870 281 013

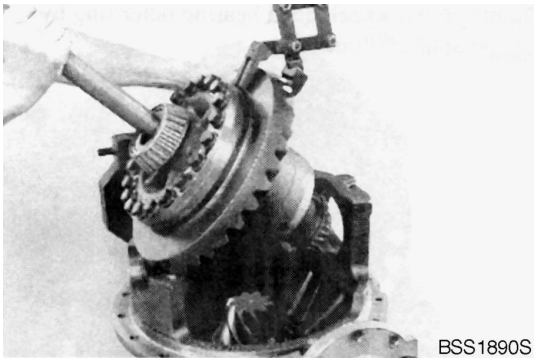

Figure 180

9. Place outer bearing race into axle drive housing.

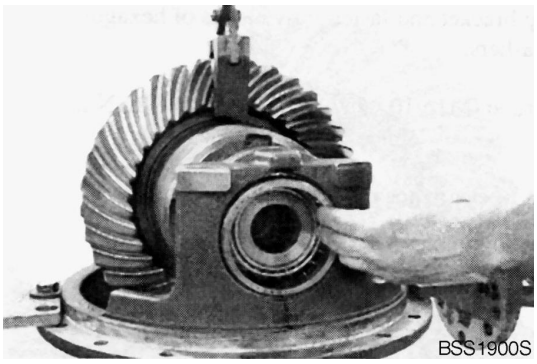

Figure 181

10. Preliminarily install outer bearing race using adjusting nut.

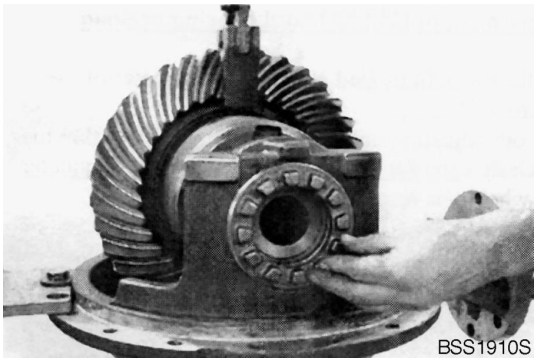

Figure 182

11. Install crown wheel-side outer bearing race.

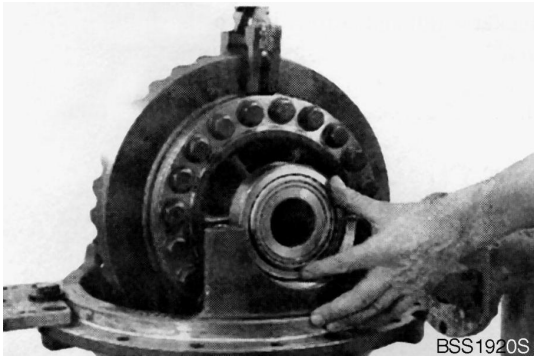

Figure 183

12. Preliminarily install crown wheel-side outer bearing race using second adjusting nut.

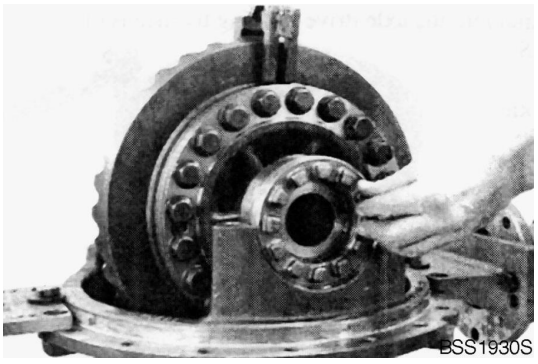

Figure 184

13. Install bearing bracket and fasten it using hex screws and washers.

    Tightening torque (M16/10.9) M_A = 28.55 kg•m (207 ft lb)

    NOTE: *Pay attention to clearance of adjusting nut.*

    NOTE: *Apply Loctite #262 onto threads of hex screws.*

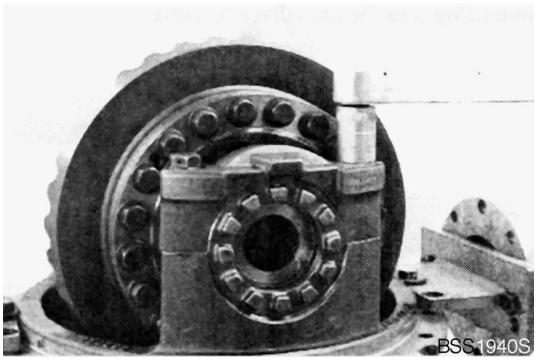

Figure 185

Adjustment of Backlash and Bearing Preload

1. Place dial indicator at a right angle of outer diameter of tooth flank (crown wheel). Then install both adjusting nuts only to such an extent that required backlash is obtained. See that value etched on outer diameter of crown wheel is reached.

   (S) Magnetic stand 5870 200 055

   (S) Dial indicator 5870 200 057

   (S) Socket spanner 5870 656 079

   NOTE: *During this step, rotate differential several times.*

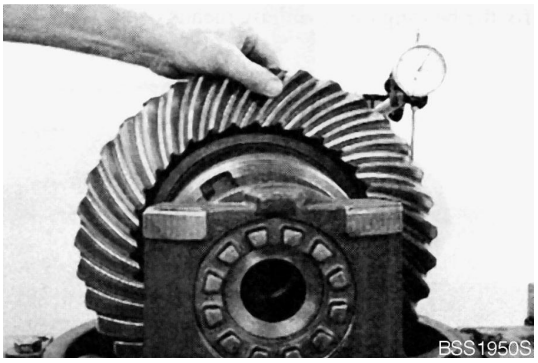

Figure 186

2. Determine bracket width and correct it on both adjusting nuts, if required.

   Bracket width 418 $^{-0.05}$ mm

   (S) Caliper gauge 5870 200 058

   Then check backlash again.

   NOTE: *Adjusting of bracket width results in required bearing preload.*

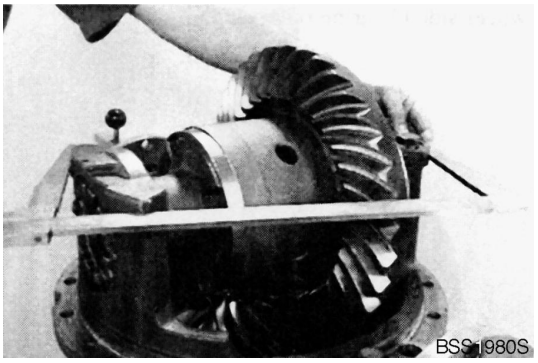

Figure 187

3. Cover some tooth flanks of crown wheel with marking ink and roll crown wheel in both directions over drive pinion.

   Compare obtained tooth contact pattern with examples on (See page -17)

   NOTE: *If tooth contact pattern differs, there has been a measuring error at determination of shim (Figure 152), what is imperative to be corrected.*



Figure 188

4. Secure both adjusting nuts using slotted pins.

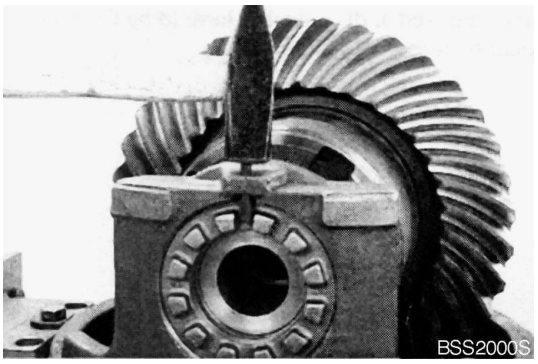

Figure 189

5. Install two adjusting screws (S) and insert differential carrier into axle casing until seated using lifting tackle (S).

   (S) Adjusting screws 5870 204 023

   (S) Lifting tackle 5870 281 044

   NOTE: *Observe radial location (see marking Figure 111).*

   NOTE: *Apply sealing compound (Three Bond Type 1215, ZF Part Number 0666 791 002) on mounting face.*

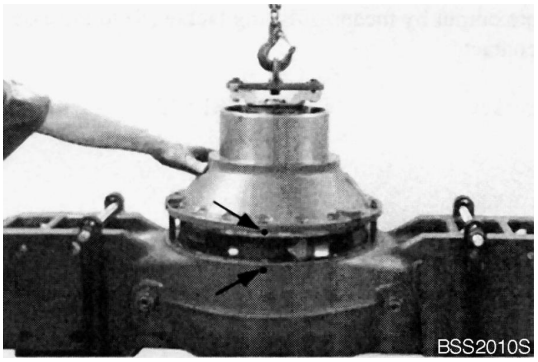

Figure 190

6. Fasten differential carrier using new locking screws.

   Tightening torque M_A = 25.49 kg•m (184 ft lb)

   NOTE: *Only use of new locking screws is permissible.*

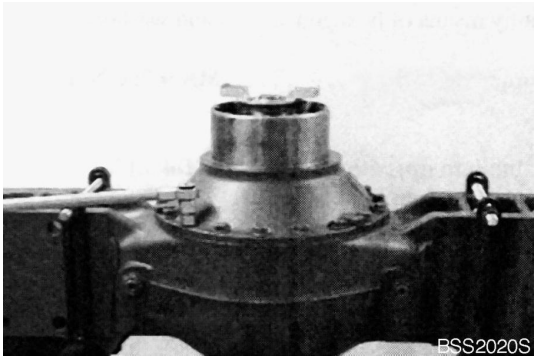

Figure 191

7. Insert stub shaft into spline of axle bevel gear until seated.

   Then install O-ring (see arrow) using grease into recess of axle casing.

   NOTE: *Repeat steps (Figure 192 thru Figure 195) on both output sides.*

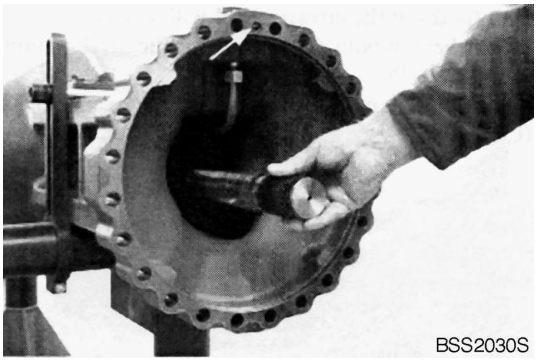

Figure 192

8. Thrust washer(s) removed at disassembly have to be held in sun gear shaft using grease.

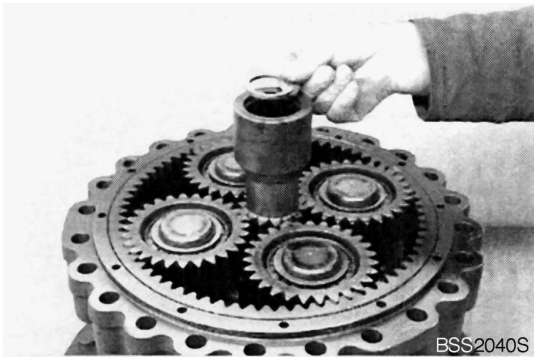

Figure 193

9. Place complete output using lifting tackle (S) to axle casing until seated.

   (S) Lifting bracket 5870 281 043

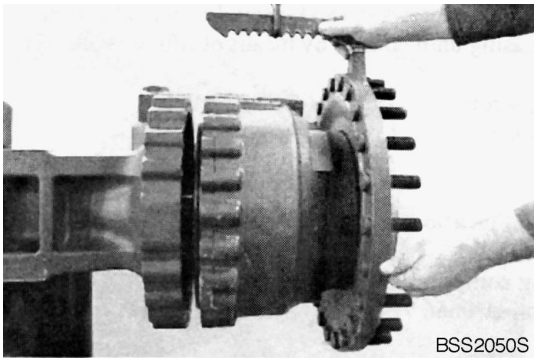

Figure 194

10. Fasten output using hex screws and washers.

    Tightening torque (M18/10.9) M_A = 39.77 kg•m (288 ft lb)

    NOTE: *Before putting into operation of axle, fill oil in accordance with "Lubrication Instructions" on page 1-12.*

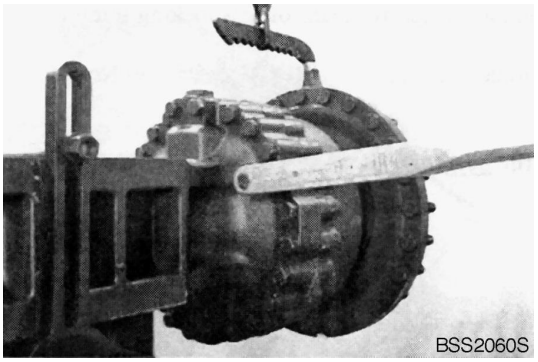

Figure 195

Drive Shaft

Edition 1

Table of Contents

Drive Shaft

Safety Precautions 5

Applicable Models 5

Drive Shaft Weight 6

Drive Shaft Coupling Dimension 6

Drive Shaft, Tightening Torque 6

SAFETY PRECAUTIONS

CAUTION!

Follow all safety recommendations and safe shop practices outlined in the front of this manual or those contained within this section.

Always use tools and equipment that are in good working order.

Use lifting and hoisting equipment capable of safely handling load.

Remember, that ultimately safety is your own personal responsibility.

APPLICABLE MODELS

The contents of this section apply to the following models and serial number ranges.

MODEL	SERIAL NUMBER RANGE
DL300	5001 and Up

Drive Shaft Weight

Front propeller shaft (1): approx. 29.9kg (63.9 lbs).

Center propeller shaft (2): approx. 25.5 kg (56.2 lbs).

Rear propeller shaft (3): approx. 10.2 kg (22.5 lbs).

Drive Shaft Coupling Dimension

Front/ Center /Rear propeller shaft: 7C

Drive Shaft, Tightening Torque

Front/ Center/ Rear propeller shaft: 15kg•m (109 lb ft)

Threaded area: Loctite #262

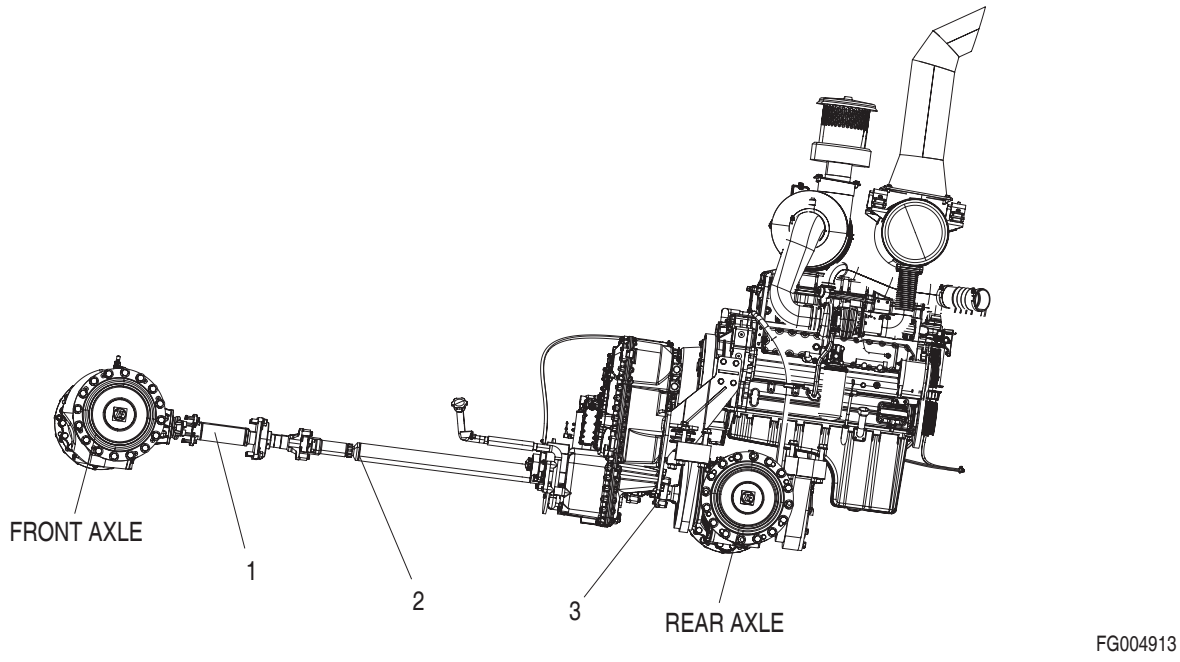

Figure 1

Service Brake

Edition 1

Table of Contents

Service Brake

Safety Precautions 5
Applicable Models 5
General Description 6
Service Brake System 8

SAFETY PRECAUTIONS

CAUTION!

Follow all safety recommendations and safe shop practices outlined in the front of this manual or those contained within this section.

Always use tools and equipment that are in good working order.

Use lifting and hoisting equipment capable of safely handling load.

Remember, that ultimately safety is your own personal responsibility.

APPLICABLE MODELS

The contents of this section apply to the following models and serial number ranges.

MODEL	SERIAL NUMBER RANGE
DL300	5001 and Up

GENERAL DESCRIPTION

This machine is equipped with a fully hydraulic operated brake system and have independent circuit for the front axle & rear axle.

The brake system is composed of brake pedal valve, brake supply valve & accumulators and provided with oil through brake supply valve from pump.

A system pressure drop below 65 Bar(943 psi) will be indicated on the display panel in the cab, warning lamp will flash and also alarm will sound.

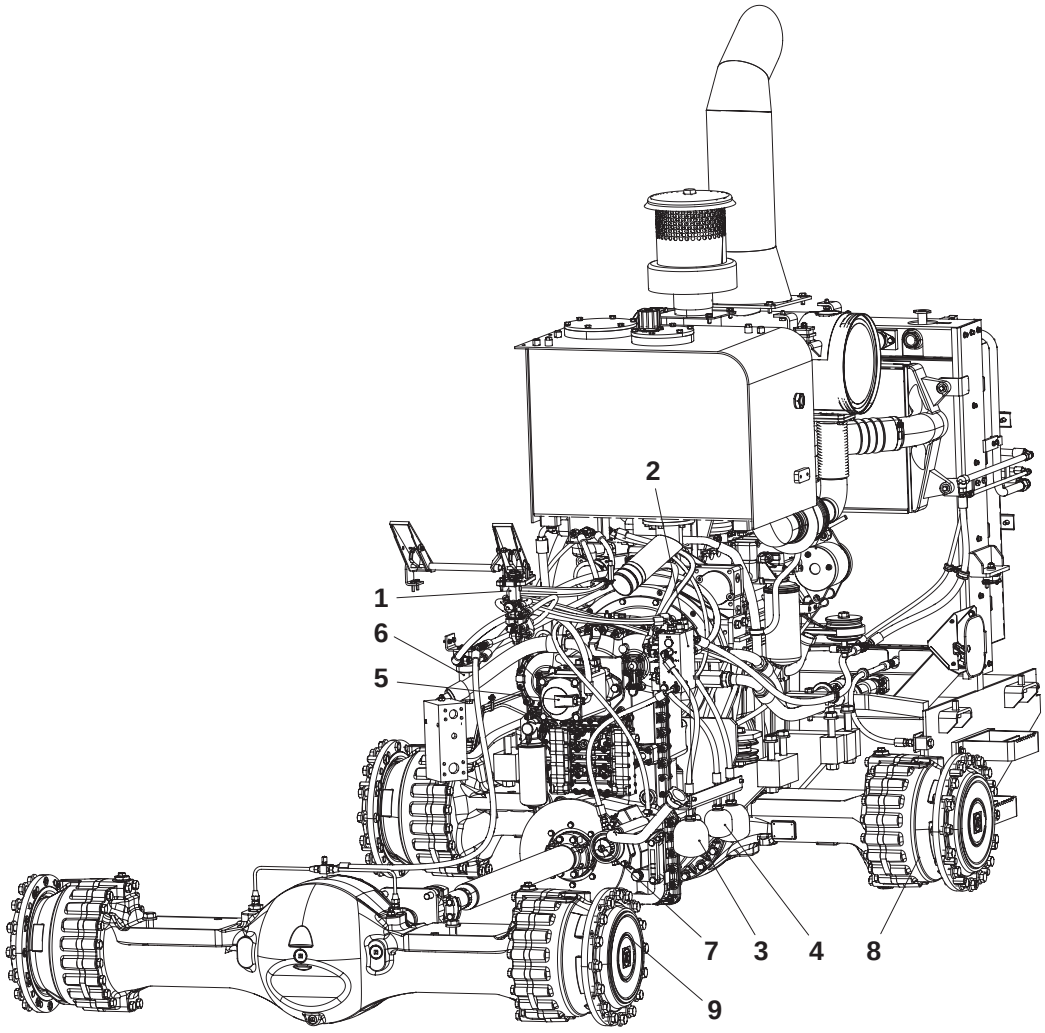

FG004914

Figure 1

Reference Number	Description
1	Brake Pedal Valve
2	Brake, Pilot & Fan Motor Supply Valve
3	Brake Accumulator
4	Pilot Accumulator

Reference Number	Description
5	Brake Pump
6	Brake Filter
7	Parking Brake
8	Rear Axle
9	Front Axle

SERVICE BRAKE SYSTEM

A brake pump (10, Figure 2) supplies pressurized fluid to the brake hydraulic system. Force on the brake pedal (5) moves two spools in the brake valve (9). The spools are proportional. The farther the brake pedal is pushed, the greater the amount of fluid that passes through each spool. One spool ports fluid to brake pistons in the front axle (3). The other spool ports fluid to brake pistons in the rear axle (1). Pressure on the brake pistons applies pressure to the brake discs, and this stops axle shaft and wheel rotation. The brake hydraulic system also contains three accumulators (8). The accumulators hold a volume of pressurized fluid large enough to allow the brakes to be applied nine times with full pressure, after the engine has been turned off. The brake hydraulic system includes a pressure operated transmission cutoff switch (2, Figure 2). Pressing the brake pedal (5) will open cutoff switch (2). When the transmission cutoff switch in the operator`s cab is selected, this will cut off current to a solenoid operated hydraulic valve in the transmission. This prevents operation of the forward clutch in the transmission. This prevents the transmission from driving the wheels forward when the brake pedal is pressed.

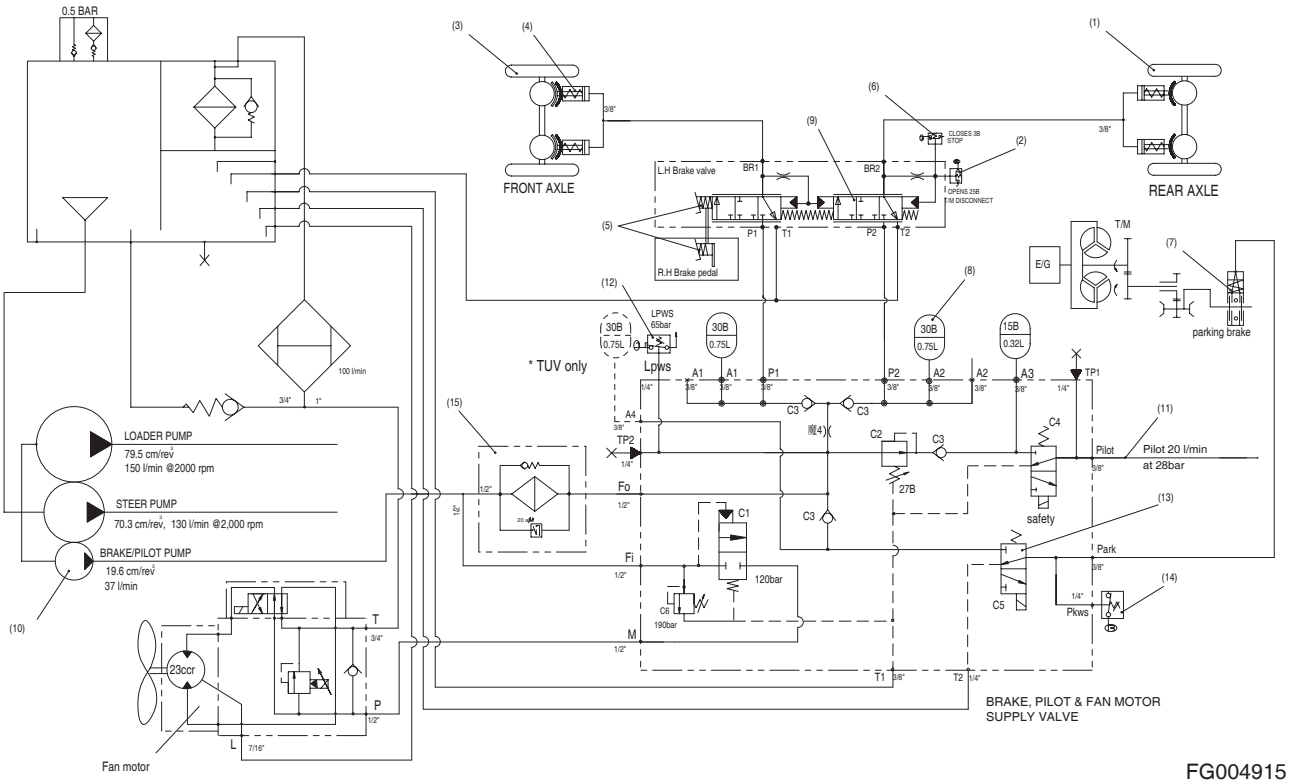

FG004915

Figure 2

Reference Number	Description
1	Rear Axle
2	Transmission Cutoff Switch
3	Front Axle
4	Brake
5	Brake Pedal
6	Stop Light Switch
7	Parking Brake
8	Accumulators : Brake

Reference Number	Description
9	Brake Valve
10	Brake Pump
11	Pilot Supply Line
12	Low Pressure Warning Switch
13	Parking Brake Valve
14	Low Pressure Warning Switch
15	Brake and Pilot Filter

Brake Supply Valve

Edition 1

MEMO

Table of Contents

Brake Supply Valve

Safety Precautions 5

Applicable Models 5

Brake, Pilot & Fan Motor Supply Valve 6

Specifications 8

MEMO

SAFETY PRECAUTIONS

CAUTION!

Follow all safety recommendations and safe shop practices outlined in the front of this manual or those contained within this section.

Always use tools and equipment that are in good working order.

Use lifting and hoisting equipment capable of safely handling load.

Remember, that ultimately safety is your own personal responsibility.

APPLICABLE MODELS

The contents of this section apply to the following models and serial number ranges.

MODEL	SERIAL NUMBER RANGE
DL300	5001 and Up

BRAKE, PILOT & FAN MOTOR SUPPLY VALVE

This valve controls oil flow to the brake pedal valve for braking, to the pilot controller for operation of bucket and boom and to the fan motor.

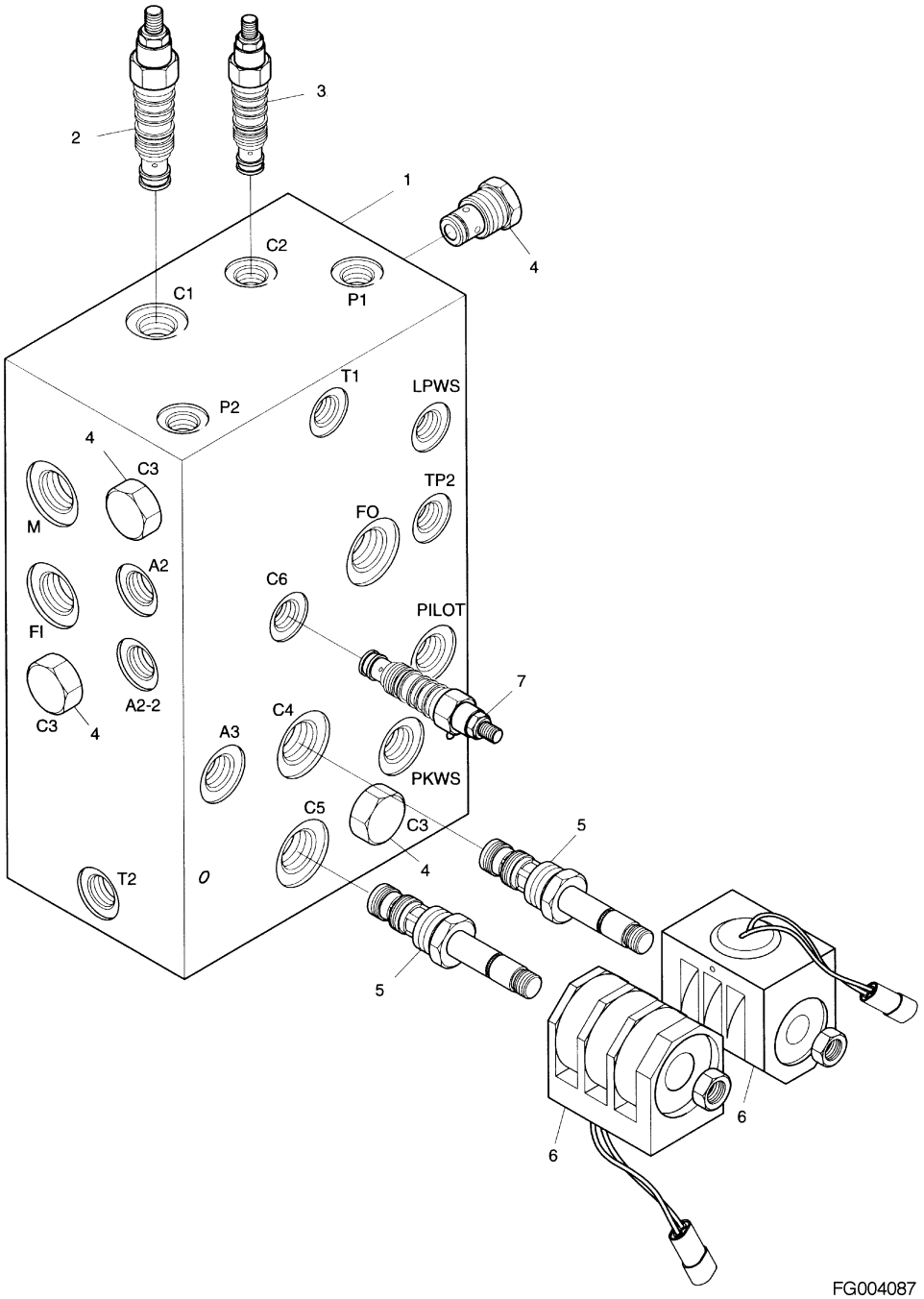

Figure 1

Reference Number	Description
1	Body (200*120*79)
2	Sequence (C1)
3	Reducing (C2)
4	Check (C3)

Reference Number	Description
5	Solenoid (C4 and C5)
6	Coil (C4 and C5)
7	Relief Valve (C6)

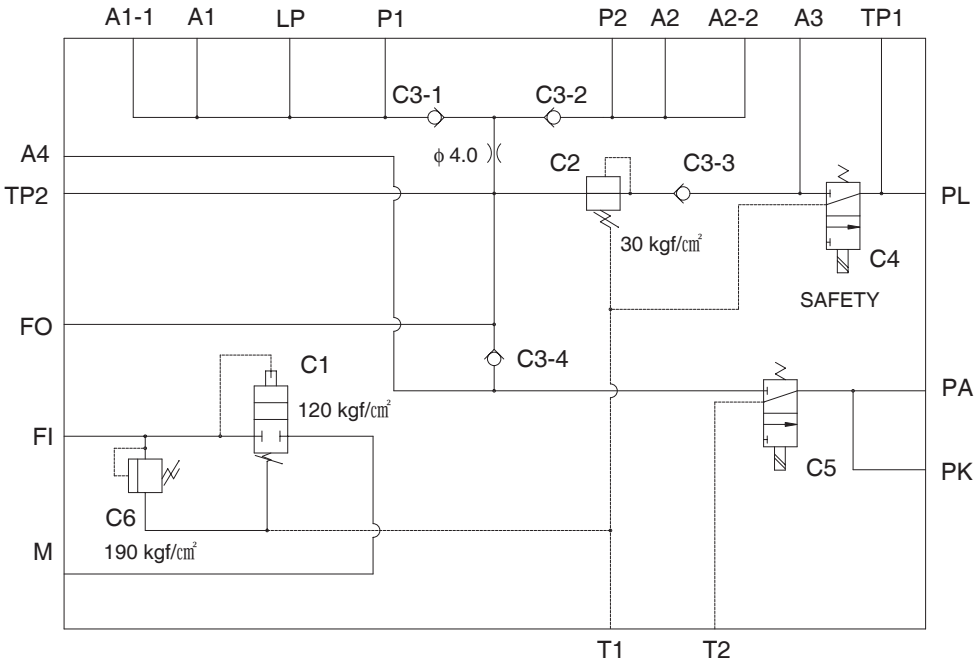

FG004916

Figure 2 Hydraulic Circuit

Specifications

Item		Specifications
Max. Operating Pressure		210 kg/cm^2 (3,000 psi)
Max. Flow		57 *l*/min (15 U.S gpm)
System Pressure		120 kg/cm^2 (1,710 psi)
Setting Pressure	C1	120 ±2 kg/cm^2 (40 *l*/min) (1,71028psi at 14U.S gpm)
	C2	30 kg/cm^2 (20 *l*/min)
	C3 Cracking Pressure	2.4 kg/cm^2
	C6	190 kg/cm^2 (40 *l*/min)
Port Size	FO, F1, M	PF 1/2 O-ring
	TP1, TP2, T2	PF 1/4 O-ring
	LP, PK	ø30 PF 1/4 BSP
	All other ports	PF 3/8 O-ring

Parking Brake

Edition 1

Table of Contents

Parking Brake

Safety Precautions 5

Applicable Models 5

General Description 6

Functional Characteristics and Maintenance Instructions for Spring Loaded Sliding Caliper Brakes 8

1. Functional Characteristics of Spring Loaded Sliding Caliper Brakes 8

2. Mounting and Basic Setting Regulations 11

3. Adjusting Regulations 12

4. Emergency Release of Parking Brake 12

5. Maintenance and Repair Work 13

6. General 15

SAFETY PRECAUTIONS

CAUTION!

Follow all safety recommendations and safe shop practices outlined in the front of this manual or those contained within this section.

Always use tools and equipment that are in good working order.

Use lifting and hoisting equipment capable of safely handling load.

Remember, that ultimately safety is your own personal responsibility.

APPLICABLE MODELS

The contents of this section apply to the following models and serial number ranges.

MODEL	SERIAL NUMBER RANGE
DL300	5001 and Up

GENERAL DESCRIPTION

• Type	• Electrically-controlled hydraulic caliper brake
• Control Pressure	• 120 kg/cm^2(1740 psi)

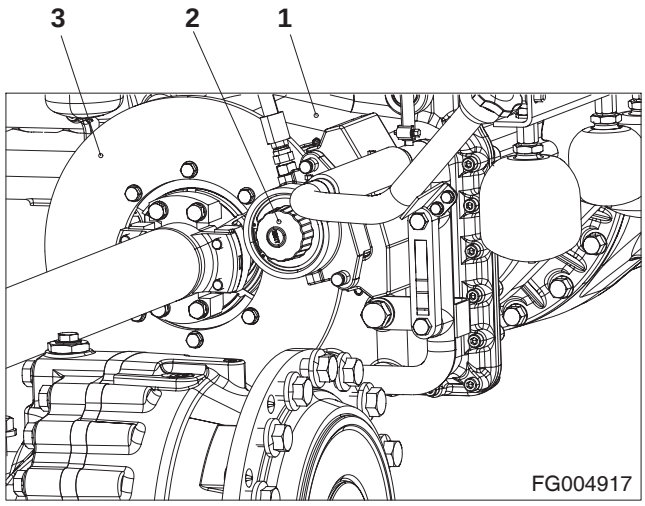

Figure 1

Reference Number	Description
1	Transmission
2	Parking Brake

Reference Number	Description
3	Parking Brake Disk

Functional Characteristics and Maintenance Instructions for Spring Loaded Sliding Caliper Brakes

1. Functional Characteristics of Spring Loaded Sliding Caliper Brakes

The two identical brake pads (3) and (4) slide freely on guide bolt (2), which is fastened in housing (1). The guide bolts (2) are guided in an additional brake anchor plate which in turn is screwed onto vehicle; i.e. its transmission.

On actuation, the brake generates a clamping force at the brake lining plates (3) and (4), which causes a tangential force/braking moment to be generated at the brake disk, the extent of which depends on coefficients of friction generated by the linings.

The clamping force is generated by the bank of cup springs (5), during which the piston (6) is moved together with the adjusting screw (7), the thrust bolt (8) and the brake pad (3) towards the brake disk.

When the brake pad (3) comes into contact with the brake disk, the reaction force shifts the housing (1) onto guide bolts (2) until the brake pad (4) is also pressed against the brake disk.

The brake is released by complete pretensioning of bank of cup springs (5). During this process, through application of necessary release pressure after overcoming the cup spring force, the piston (6) must move back until it comes to rest against the pressure ring (9).

The clamping force diminishes with wear of brake lining and brake disk. The brake must be adjusted at the latest at the times indicated by the adjusting specification below (point 3).

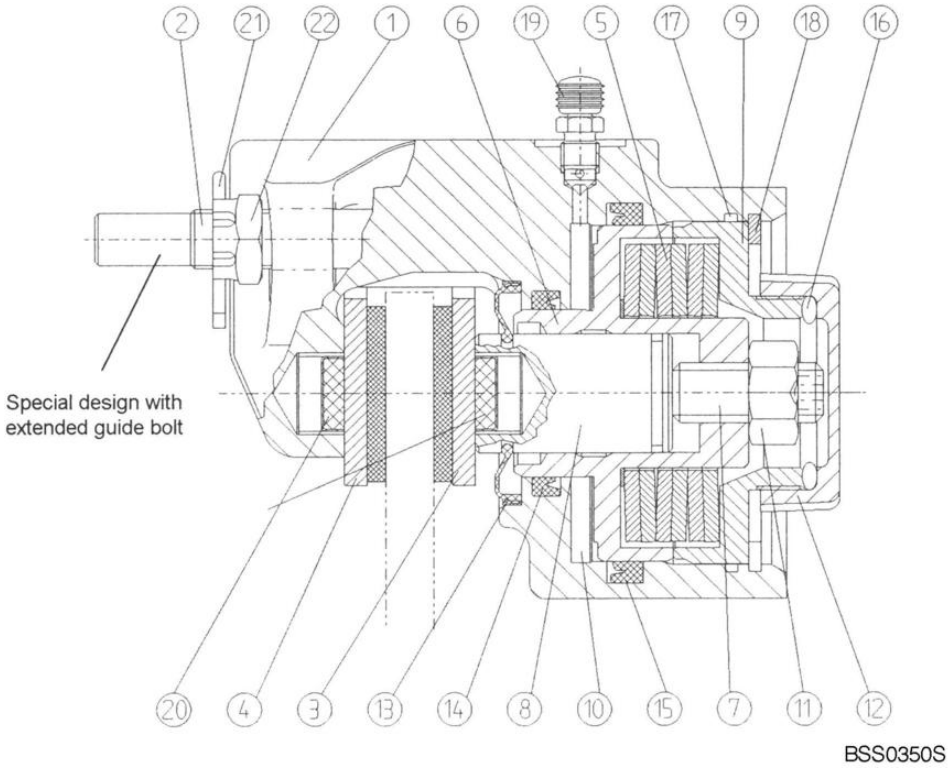

Figure 2

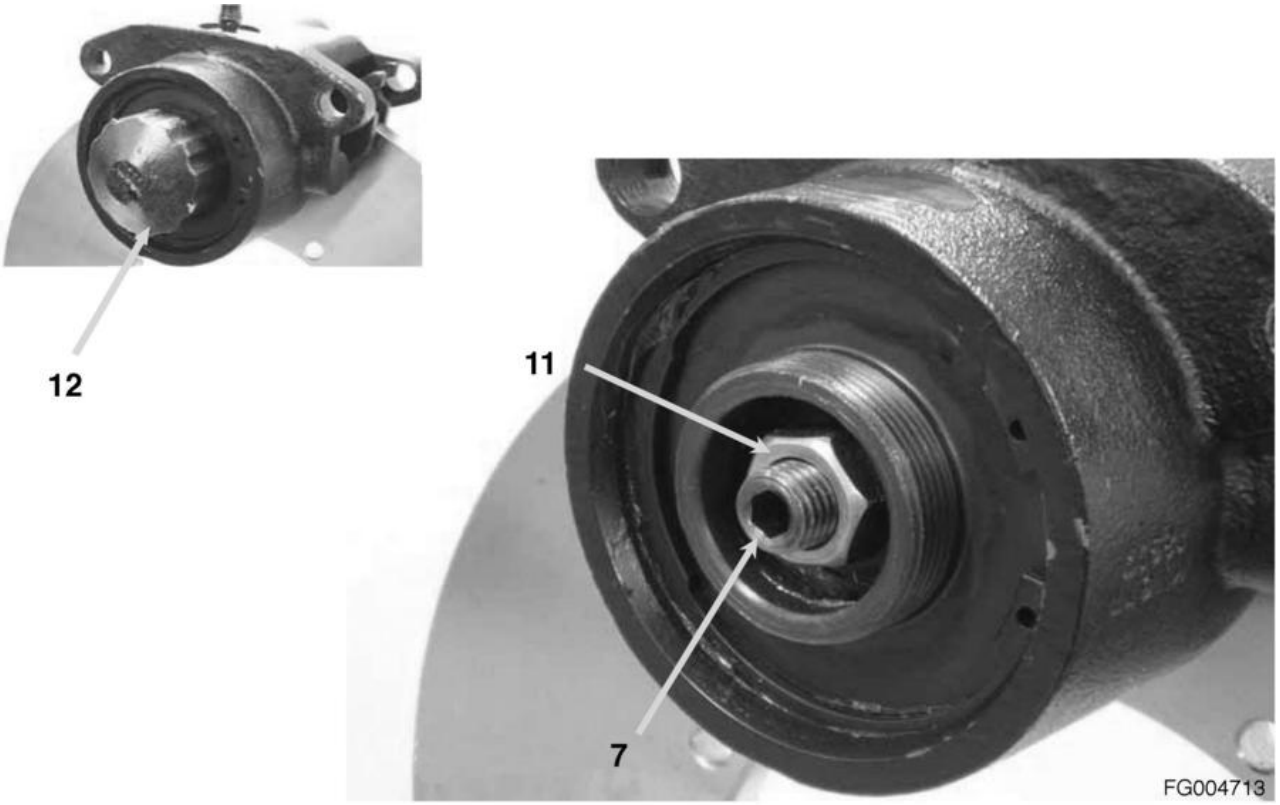

Figure 3

2. Mounting and Basic Setting Regulations

Basic brake setting is required after mounting new brake lining plates or brake disks, and during all repair stages and in case of insufficient braking performance.

All mounting and basic setting work must be carried out on brake when cold. Proceed as follows:

1. Release the screw cap (12).
2. Release the lock nut (11) (size 24 or 30) and turn the adjusting screw (7) counterclockwise using a size 8 or 10 socket wrench until the pressure bolt (8) comes to rest against the face surface of piston (6).
3. In this status, the brake can be mounted onto brake disk and fastened.
4. Mount the pressure connection and apply necessary release pressure to the brake until the bank of cup springs (5) is completely pretensioned.
5. Turn the adjusting screw (7) manually clockwise until both brake pads (3) and (4) make contact with the brake disk (it is then no longer possible to turn the adjusting screw (7) without exerting a major amount of force).
6. Turn the adjusting screw (7) counterclockwise in order to set the following rated clearances:

Type	Adjusting screw	Clearance (mm)		Revolutions
Small	M16 (size 8)	min.	0.5	1/4
		Rated clearance	1.0	12
		max.	1.5	3/4
Large	M20 (size 10)	min.	1.0	2/5
		Rated clearance	2.0	4/5
		max.	3.0	1 1/5

7. Hold the adjusting screw in position (7) with a hexagonal socket wrench and lock with lock nut (11).
8. Mount the screw cap (12) and tighten as far as possible manually.
9. Mount the pressure connection in accordance with the instructions of axle/gear manufacturer and bleed the piston chamber using bleeding valve (19).

3. Adjusting Regulations

During this adjusting process, the parking brake must be released; i.e. the bank of cup springs (5) must be completely pretensioned.

1. Stand the vehicle on an even surface and secure against rolling away. Only then, release the parking brake.
2. Release the screw cap (12) and unscrew.
3. Release the lock nut (11) (size 24 or 30) and turn the adjusting screw (7) with socket wrench size 8 or 10 manually clockwise until the two brake pads (3) and (4) make contact with the brake disk.
4. Turn the adjusting screw (7) counterclockwise and set the clearance specified in the above table.
5. Hold the adjusting screw (7) in position with the hexagonal socket wrench and lock with the lock nut (11).
6. Mount the screw cap (12) and tighten as far as possible manually.
7. Actuate the brake valve several times and check the braking efficiency of parking brake on a slope.

4. Emergency Release of Parking Brake

After the failure of pressure, release the parking brake by using following manual procedure.

1. The vehicle has to be against moving away.
2. Release the screw cap (12) and unscrew.
3. Release the lock nut (11) (size 24 or 30) and turn the adjusting screw (7) with socket wrench size 8 or 10 manually counterclockwise until the brake disk is free.

   NOTE: *You need for the emergency release an actuation torque of 4.08 kg•m (30 ft lb) respectively 7.14 kg•m (52 ft lb).*

4. Mount the lock nut (11) and the screw cap (12) and tighten both as far as possible manually. (Protection against dirt)

   NOTE: *Now, the vehicle do not have any brake function. The vehicle must be secured against moving away with proper means. Before putting the vehicle into operation again, the brake has to be adjusted according to point 2. respectively point 3.*

5. Maintenance and Repair Work

Maintenance and Exchange of Brake Pads

The brake pads themselves are maintenance free. All that is required here is a check for damaged parts, and inspection to ensure that the brake disk remains easy running.

The thickness of brake lining must be subjected to a visual inspection at regular intervals, which depend on vehicle usage, but every six months at the latest. In case of a minimal residual lining thickness, these intervals must be reduced accordingly in order to avoid major damage to the brake or disk.

Small brake: min. residual thickness 1.0 mm per brake lining plate (6 mm carrier plate thickness)

Large brake: min. residual thickness 2.0 mm per brake lining plate (8 mm carrier plate thickness)

Once these thickness are reached, the brake lining must be replaced in accordance with the following regulation:

1. Stand the vehicle on an even surface and secure against rolling away. Only then, release the parking brake by applying the necessary release pressure.
2. Release the screw cap (12) and unscrew.
3. Release the lock nut (11) (size 24 or 30) and turn the adjusting screw (7) with socket wrench size 8 or 10 manually clockwise until it lies flush with the inside of piston (6).
4. Press back the pressure bolt (8) using a suitable screw driver until it comes to rest against the piston (6) (i.e. by levering).
5. Depending on free space available, release one of two guide bolts (2), removing the safety splint (21), unscrewing the castellated nut (22) and pulling the guide bolt (2) from brake anchor plate (1). The brake lining plates (3) and (4) can now be removed tangentially to the brake disk.

   NOTE: *In case of minimal clearance; i.e. it is not possible for space reasons to exchange the brake lining plate in accordance with these instructions, the brake must be moved completely. To do this, pull the two guide bolts from brake anchor plate.*

   NOTE: *Check the pressure hose. If the pressure hose is too short, it must be unscrewed in order to allow the brake to be removed.*

   Reassembly of Oil Pipes and Differential Carrier, must always have been performed beforehand, than release pressure by actuating the hand brake valve!
6. Exchange the brake pads (3) and (4) and insert the guide bolts (2) into brake anchor plate (1), checking whether the

permanent magnets (20) still have sufficient magnetic force to hold the brake lining plates (3) and (4).

NOTE: *Should this not be the case, the permanent magnets (20) must also be changed ("lever out" using a suitable screw driver).*

NOTE: *When the brake has been completely removed, the pressure hose must be screwed back on and the brake bled.*

7. Secure the guide bolts (2) with castellated nut (22) and locking splint (21).

   NOTE: *Only Knott original spare lining plates may be used. If any other spare parts are used, no warranty claims will be accepted for either the brakes or their functional characteristics.*

   After mounting new brake lining plates or their repair, the brake must be correctly set in accordance with the instructions under point 3.

Changing the Seal

Faulty seals must be exchanged in accordance with the instructions below:

1. Stand the vehicle on an even surface and secure against rolling away. Only then, release the parking brake by applying the necessary release pressure.
2. Release the screw cap (12) and unscrew.
3. Release the lock nut (11) (size 24 or 30) and turn the adjusting screw (7) with socket wrench size 8 or 10 manually counter clockwise until the adjuster screw (7) measured 27 mm - 30 mm outside of piston (6).
4. Release pressure by actuating the hand brake valve, than unscrew the pressure hose and completely remove brake. The bank of cup springs (5) is now completely depressurized.
5. Remove retaining ring (18) and remove pressure ring (9) from housing (1).
6. Remove bank of cup springs (5) and piston (6).
7. Exchange the seals (14) (15) and (17) and replace the individual parts in reverse sequence.

   NOTE: *Pay attention to the mounting direction of seal rings (14) and (15), otherwise leaks can occur.*

   NOTE: *When mounting the new seal rings, pay attention not to damage the sealing lip by using a suitable mounting needle with rounded edges.*

   When mounting the piston, the sliding and sealing surfaces must be greased lightly using lubricating grease to DIN 51825.

The dust protection cap (13) is fitted with a vulcanized steel ring that is used to press it through the locating hole. For exchanging, "lever out" the ring using a suitable tool. The new dust protection cap must be pressed in with the aid of a suitable mounting ring and screw clamps or a lever press.

8. Mount the brake in accordance with the above procedure into vehicle / at the axle.

NOTE: *For exchange purpose, only use Knott original spare and spare parts sets. These must be ordered through the vehicle manufacturer.*

6. General

Any discovered defects or damage to parts not listed here must naturally be repaired or replaced using original parts.

For any other information not contained in these instructions or for more detailed instructions, please contact the vehicle or brake manufacturer.

Brake Pedal Valve

Edition 1

Table of Contents

Brake Pedal Valve

Safety Precautions 5

Applicable Models 5

General Description 6

Theory of Operation 6

Specification 8

MEMO

SAFETY PRECAUTIONS

CAUTION!

Follow all safety recommendations and safe shop practices outlined in the front of this manual or those contained within this section.

Always use tools and equipment that are in good working order.

Use lifting and hoisting equipment capable of safely handling load.

Remember, that ultimately safety is your own personal responsibility.

APPLICABLE MODELS

The contents of this section apply to the following models and serial number ranges.

MODEL	SERIAL NUMBER RANGE
DL300	5001 and Up

GENERAL DESCRIPTION

Theory of Operation

The brake pedal valve is attached to, and operated by, the brake pedal. See Figure 1. The valve contains two spools. See Figure 2. One spool ports fluid to the brake pistons in the front axle, and the other spool ports fluid to the brake pistons in the rear axle. Maximum system operating pressure is 80 ±3 bars (1,160 ±44 psi). If something in one of the circuits should fail, the other circuit will continue to operate.

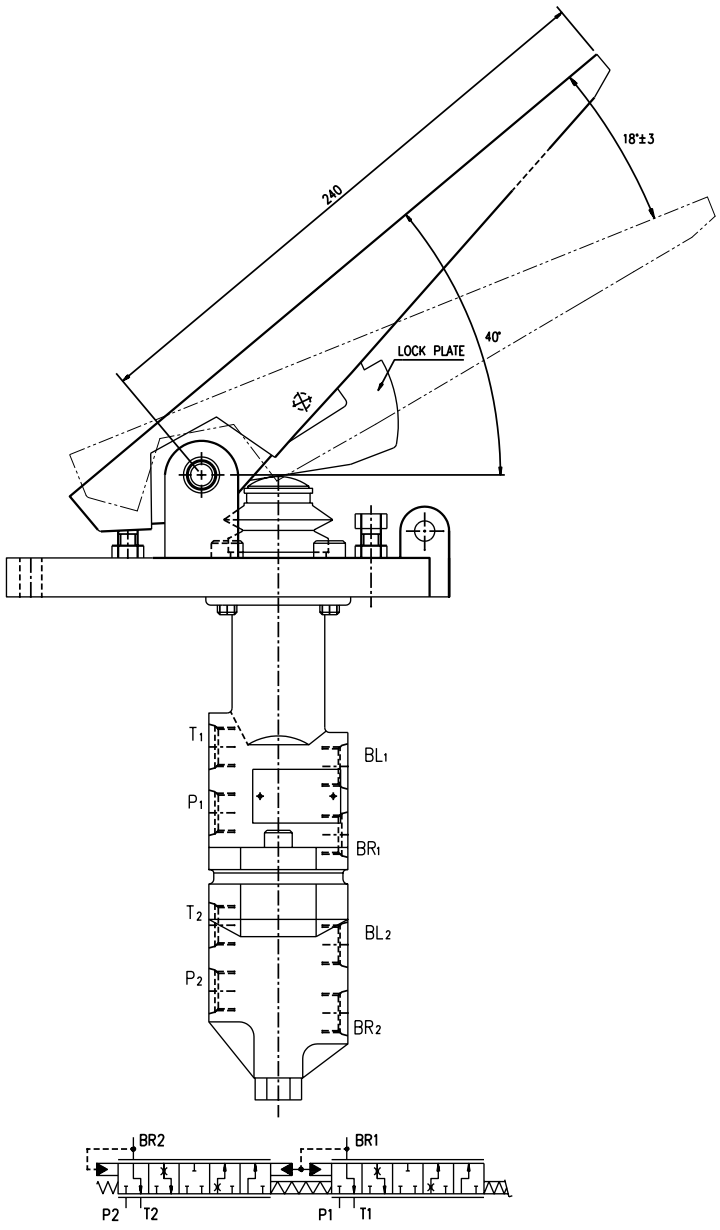

AJS0720L

Figure 1

When the brake pedal is depressed, force is applied to the working element (6, Figure 2). This force is transferred to the primary control spool (1) and the secondary control spool (2) by the main control spring (5). This causes the control spool lands to close the path from the supply ports (P1 and P2) to the tank ports (T1 and T2). Simultaneously, the spool then open a path from the brake circuit ports (Br1 and Br2) to the supply ports (P1 and P2). Drilled passages in the control spools (1 and 2) allow fluid pressure in the ports P1 and P2 to act against the main control spring (5). This allows the brake pressure in both circuits to rise proportionally to the force applied to the brake pedal.

As the force applied to the brake pedal becomes constant, the control spools (1 and 2) move into a balanced position and hold the braking pressure constant.

When force is removed from the brake pedal, this removes force from the control spring. The return springs (3 and 4) now move the control spools (1 and 2) to the upward. The spools open a path from the brake circuit ports (Br1 and Br2) to the tank ports (T1 and T2) and this releases the pressure from the brake circuits.

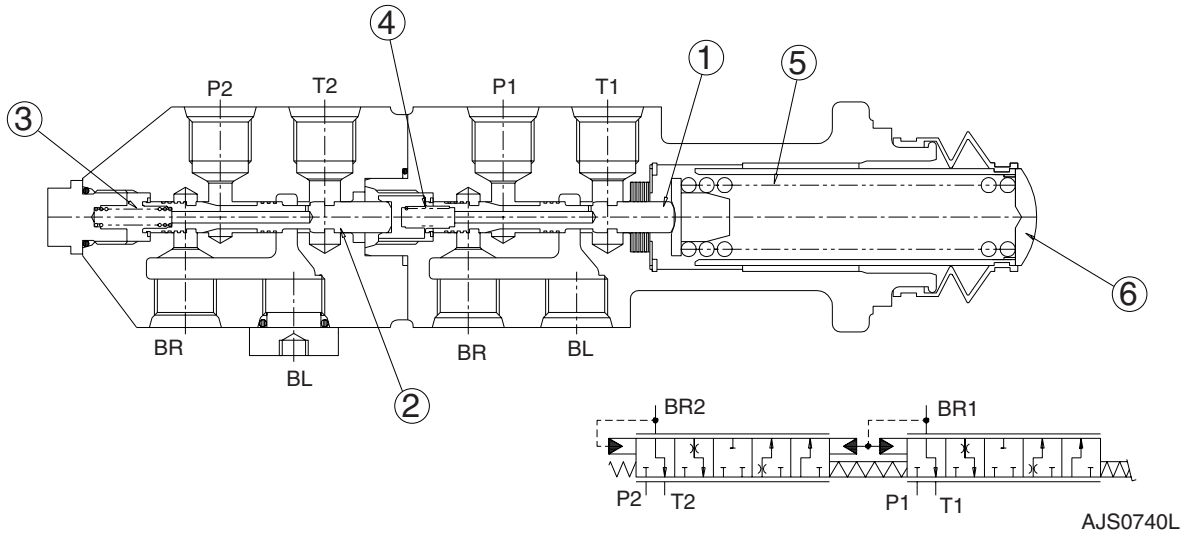

Figure 2

Reference Number	Description
1	Primary Control Spool
2	Secondary Control Spool
3	Lower Spring

Reference Number	Description
4	Upper Spring
5	Main Control Spring
6	Working Element

Specification

Item	Specification
Braking Pressure	60 ±3 kg/cm^2
Pedal Force	16 ±1.5 kg
Operating Angle	18.0 ±2.0°

Accumulator

Edition 1

MEMO

Table of Contents

Accumulator

Safety Precautions 5
Applicable Models 5
General Description 6
Specifications 8

SAFETY PRECAUTIONS

CAUTION!

Follow all safety recommendations and safe shop practices outlined in the front of this manual or those contained within this section.

Always use tools and equipment that are in good working order.

Use lifting and hoisting equipment capable of safely handling load.

Remember, that ultimately safety is your own personal responsibility.

APPLICABLE MODELS

The contents of this section apply to the following models and serial number ranges.

MODEL	SERIAL NUMBER RANGE
DL300	5001 and Up

GENERAL DESCRIPTION

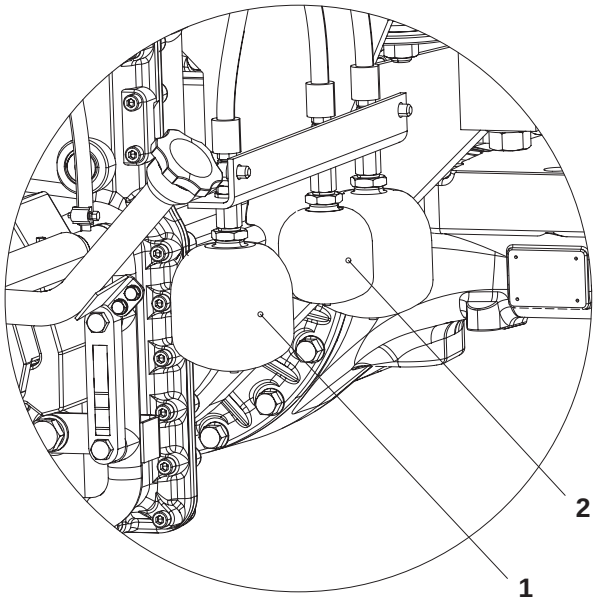

FG004918

Figure 1

Reference Number	Description
1	Brake Accumulator - 2ea

Reference Number	Description
2	Pilot Accumulator

The accumulator is a gas charged storage device designed to hold a reserve quantity of hydraulic fluid under pressure. Accumulators are used in hydraulic circuits in much the same way that condensers (or capacitors) are used to collect, store and maintain electrical charge in a circuit.

In a hydraulic circuit, minor variations or lags in pump output that might otherwise cause unsteady or irregular operation are made up from the supply of pressurized oil in the accumulator.

Reference Number	Description
1	Shell
2	Diaphragm
3	Poppet
4	Fluid Port

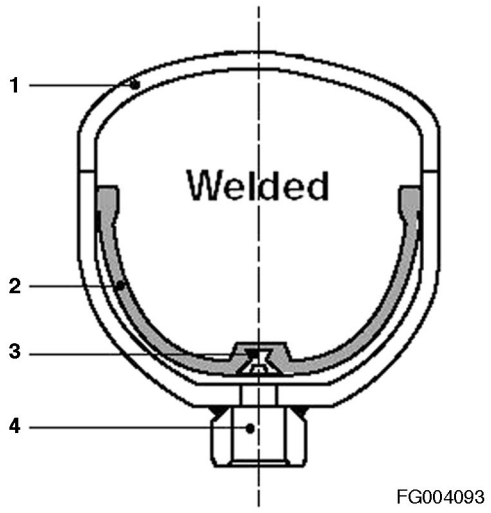

Figure 2

Accumulators are solidly constructed to resist the high operating pressures of the fluids they contain. There are only three main moving parts: a valve assembly at the top allows adding or expelling gas from the compressible, precharged upper chamber; a valve assembly at the bottom of the accumulator for passing hydraulic fluid in and out, and an elastic diaphragm to separate the two chambers. The flexible diaphragm changes shape to conform to the changing pressures and volumes of the two fluids in the upper and lower chambers.

There are six possible positions the diaphragm can be in and they are as follows:

1. With no gas charge in the upper chamber 0 bar (0 psi, empty) and no oil in the bottom 0 bar (0 psi, dry) the elastic diaphragm hangs loosely.
2. When the prepressure charge of gas (usually nitrogen) is introduced through the valve at the top of the accumulator, the diaphragm expands to maximum size. The valve button in the center of the diaphragm pushes into the fluid opening in the bottom chamber, sealing off the lower valve. If the pressure of the gas charge exceeds system oil pressure, no fluid enters the accumulator. The button also keeps the diaphragm from protruding into the lower valve opening.

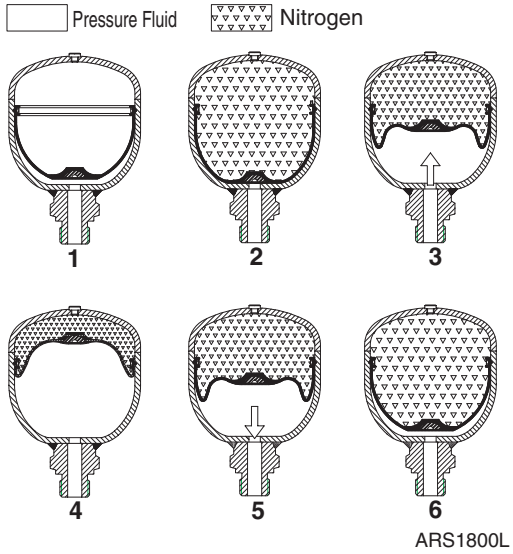

Figure 3

NOTE: *Precharge pressure is referred to as the "P1" pressure. The accumulator manufacturer's "P1" rated pressure should be stamped or marked on the accumulator's rating plate. Annual checks of actual precharge pressure should be made by tapping a hydraulic pressure gauge (and 3-way adapter coupling) into the valve on the bottom of the accumulator. When hydraulic fluid is pushed out the lower valve opening by the pressure of the gas charge on the other side of the diaphragm - and there is no counter pressure from system oil - the valve button on the bottom of the diaphragm eventually seals off the lower oil passage. Just after the needle on the gauge reaches its highest point (when there is 0 bar (0 psi) resistance from hydraulic system pressure) pressure on the gauge will drop sharply to zero, as the accumulator is completely emptied of oil and the diaphragm button closes.*

Record the highest gauge reading and compare to the "P1" rated precharge pressure on the accumulator manufacturer's data label. Repeat this test at least once a year to verify proper functioning of the accumulator.

3. As hydraulic system pressure overcomes accumulator precharge pressure, the flexible diaphragm begins to retract upward.

4. When system oil is at highest working pressure and the accumulator fills to maximum reserve capacity, the flexible diaphragm is pushed up into the top of the upper chamber.

   The highest working pressure is sometimes referred to as the "P3" pressure and can also be referenced on the manufacturer's data label on the exterior of the accumulator.

5. If system oil pressure begins to fall off or is momentarily checked or interrupted, the energy stored on the other side of the diaphragm, in the form of compressed gas, pushes oil back out of the lower chamber, maintaining oil pressure of the circuit.

6. With minimal system pressure, an equilibrium point may be reached in which accumulator precharge pressure and hydraulic system oil pressure achieve a rough balance. In this condition a minimal amount of oil is stored in the accumulator.

Specifications

System	Charge Pressure	Volume
Brake	30 kg/cm^2 (430 psi)	750 cc (45.77 in^3)
Pilot	15 kg/cm^2 (210 psi)	320 cc (19.53 in^3)

Steering

Edition 1

Table of Contents

Steering

Safety Precautions 5
Applicable Models 5
General Description 6
Power Steering System 6
EHPS Valve 8
Parts List 10
Steering Spool at Neutral Position 12
Steering Spool Operated 14
Pressure Reducing Valves 16
Steering Unit 18
Function 18
Function 20
Picture of Components in the EHPS 20

SAFETY PRECAUTIONS

CAUTION!

Follow all safety recommendations and safe shop practices outlined in the front of this manual or those contained within this section.

Always use tools and equipment that are in good working order.

Use lifting and hoisting equipment capable of safely handling load.

Remember, that ultimately safety is your own personal responsibility.

APPLICABLE MODELS

The contents of this section apply to the following models and serial number ranges.

MODEL	SERIAL NUMBER RANGE
DL300	5001 and Up

GENERAL DESCRIPTION

Power Steering System

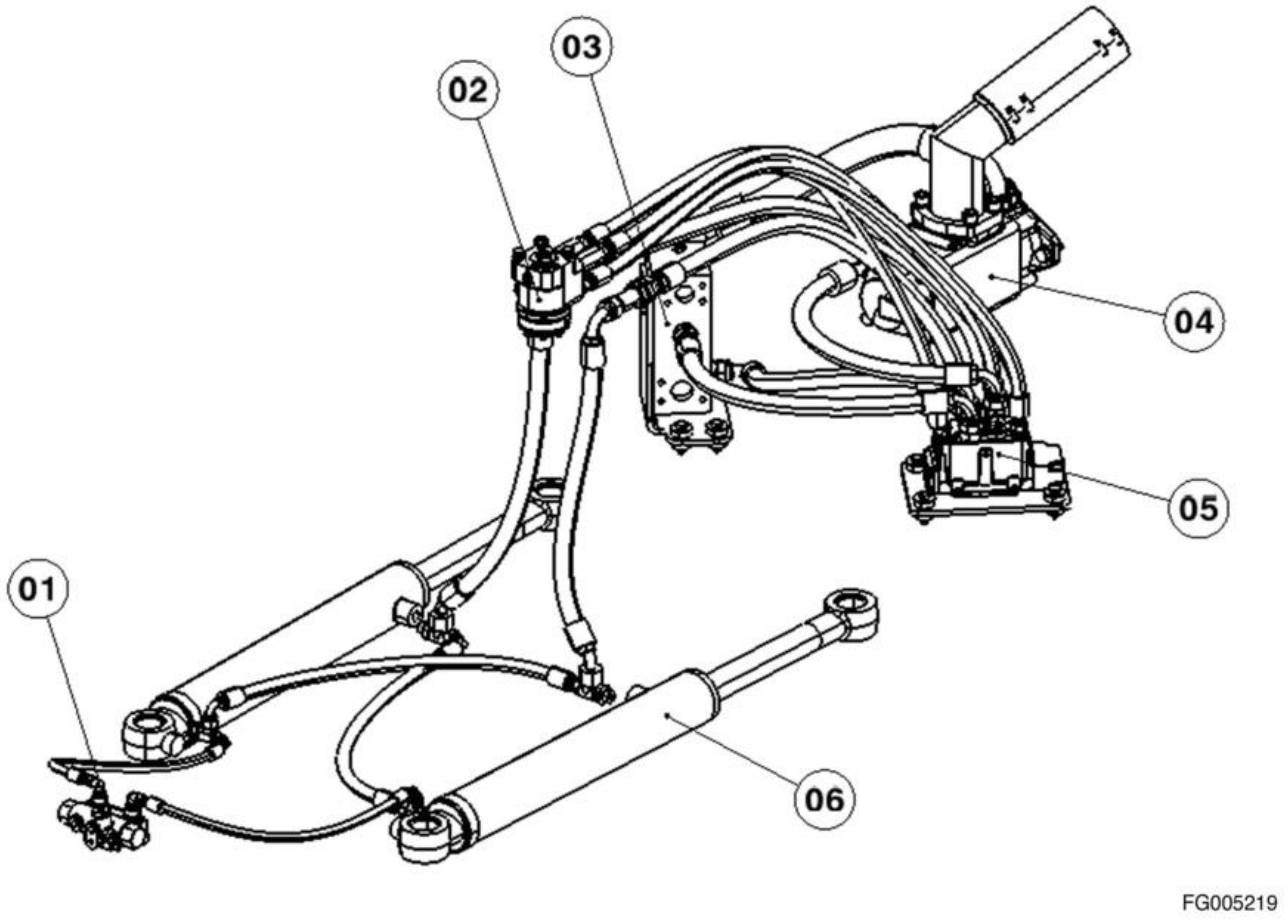

Figure 1

Reference Number	Description
1	Cushion Valve
2	Steering Unit
3	Main Block Valve

Reference Number	Description
4	Main Pump
5	EHPS Valve
6	Steering Cylnder

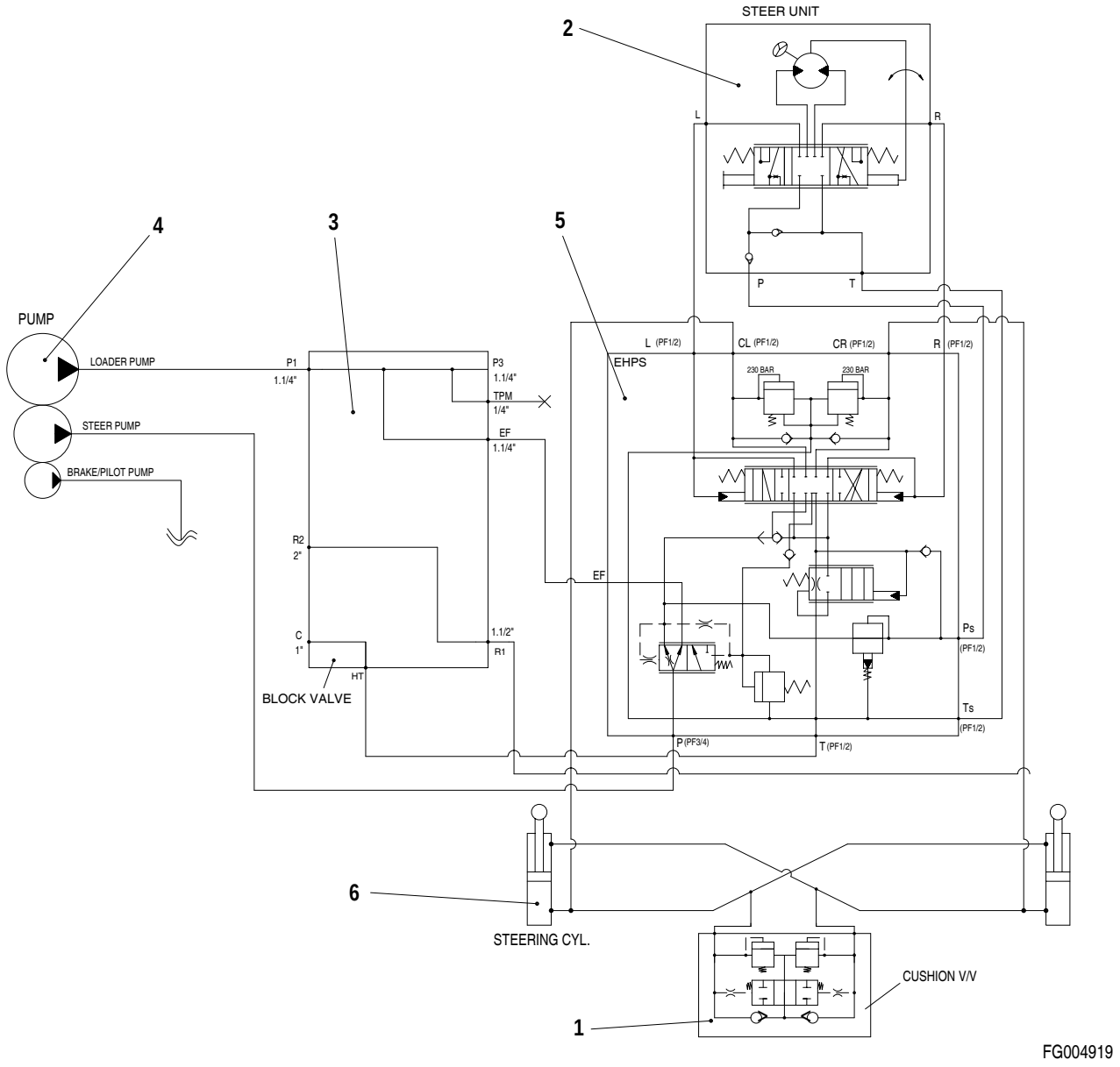

Figure 2 HYDRAULIC CIRCUIT

Reference Number	Description
1	Cushion Valve
2	Steering Unit
3	Main Block Valve

Reference Number	Description
4	Main Pump
5	EHPS Valve
6	Steering Cylnder

EHPS Valve

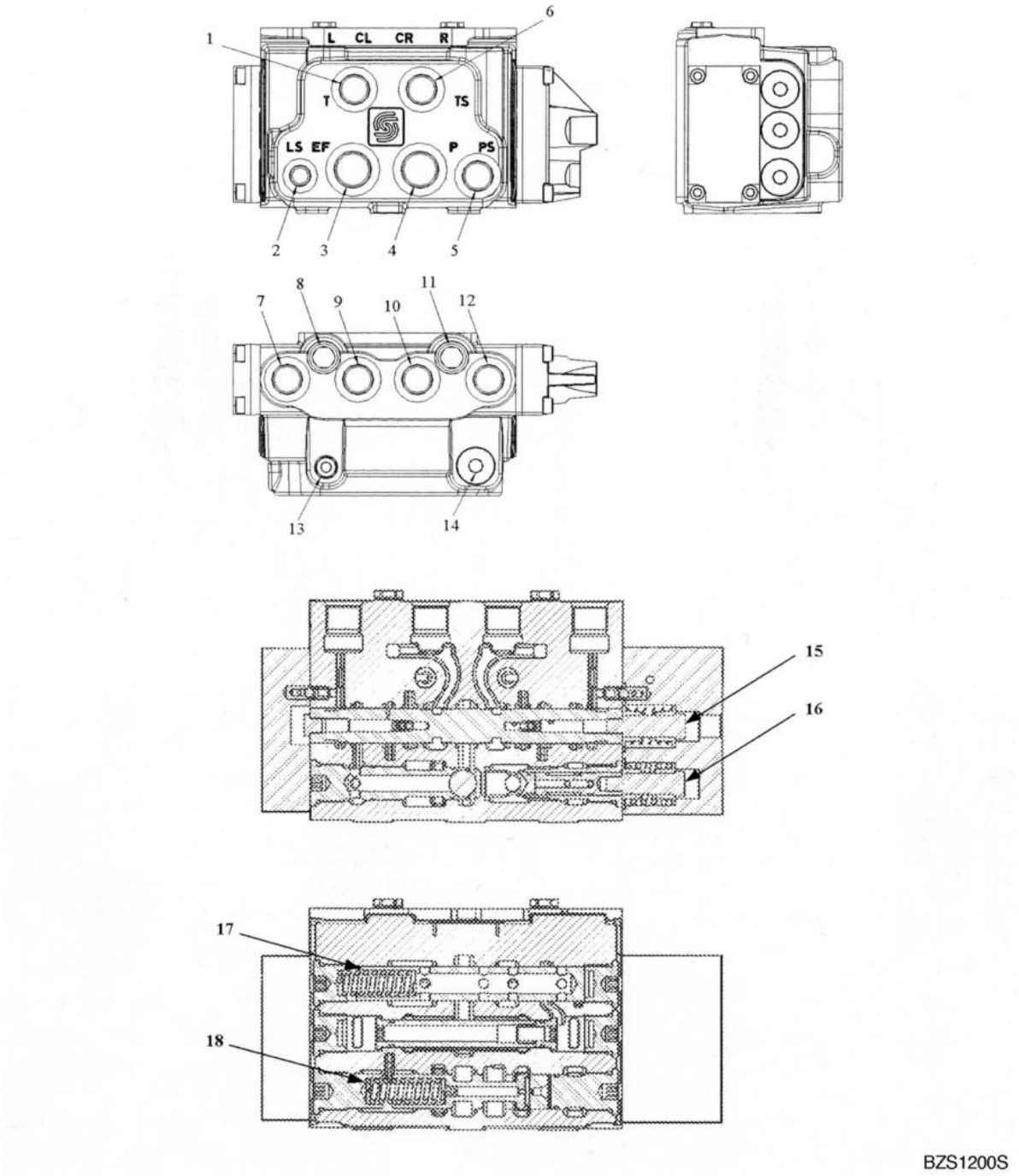

Figure 1

Reference Number	Description
1	To Tank
2	To Emergency System
3	To Main Pump
4	From Main Pump
5	To Steering Unit P-port
6	From Steering Unit T-port
7	From Steering Unit L-port
8	Shock and Suction Valve (Left Side)
9	To Steering Cylinder (Left Side)

Reference Number	Description
10	To Steering Cylinder (Right Side)
11	Shock and Suction Valve (Right Side)
12	From Steering Unit R-port
13	Relief Valve
14	Check Valve
15	Main Steering Spool
16	Pressure Reducing Valve
17	Metering Spool
18	Priority Spool

Parts List

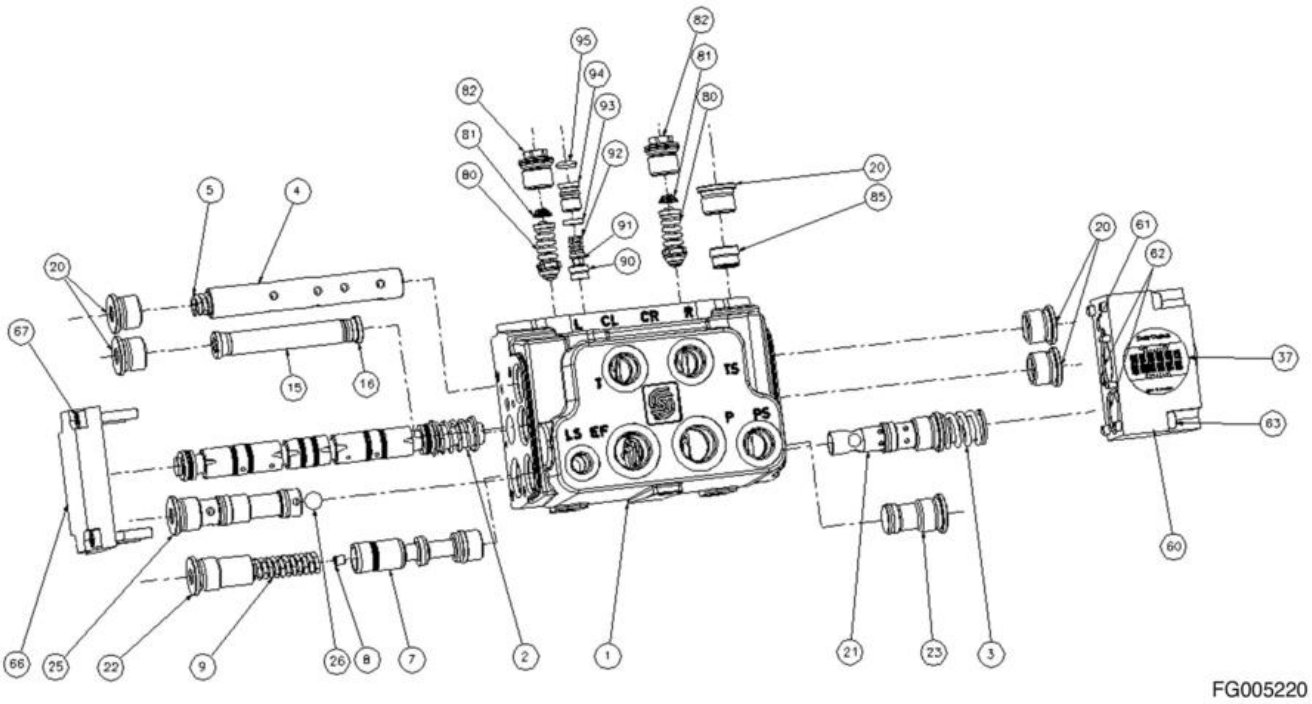

Figure 2

Reference Number	Description
1	Valve Block
2	Spool W. Spring
3	Spool W. Spring, Reduction Valve
4	Spool, Metering
5	Compress Spring
7	Spool, Dynamic / Intern PP
8	Throttle Screw
9	Compress Spring
15	Pipe W. O-ring
16	Plug W. O-ring, Pipe
20	Plug W. O-ring
21	Bush W. Plug, Reduction Valve
22	Plug W. O-ring, LS
23	Plug W. O-ring, PP
25	Plug W. O-ring, Shuttle
26	Ball, 1/2
37	Label
40	Plug
50	Threaded Plug

Reference Number	Description
51	Threaded Plug
52	Threaded Plug
60	Cover, Spring Housing
61	O-ring
62	O-ring
63	Screw
65	Plug
66	Cover
67	Screw
80	Shock Valve PVLP
81	Spring Conically
82	Plug with. O-ring
85	Check Valve
90	Valve Seat
91	Pilot Cone
92	Spring OSV
94	Adjustment Screw, PVB/PVP
95	Plug OSV
150	Packing, EHPS Type 1&2 M/ELAKTIV

Description of operation of EHPS with integrated priority valve

Figure 3 shows a diagram of the steering system.
The system includes the following Sauer-Danfoss components:
One steering unit, type OSPCX CN and one steering valve, type 0 EHPS valve

The following valves are integrated in the EHPS (position numbers refer to numbers on drawing Figure 1)

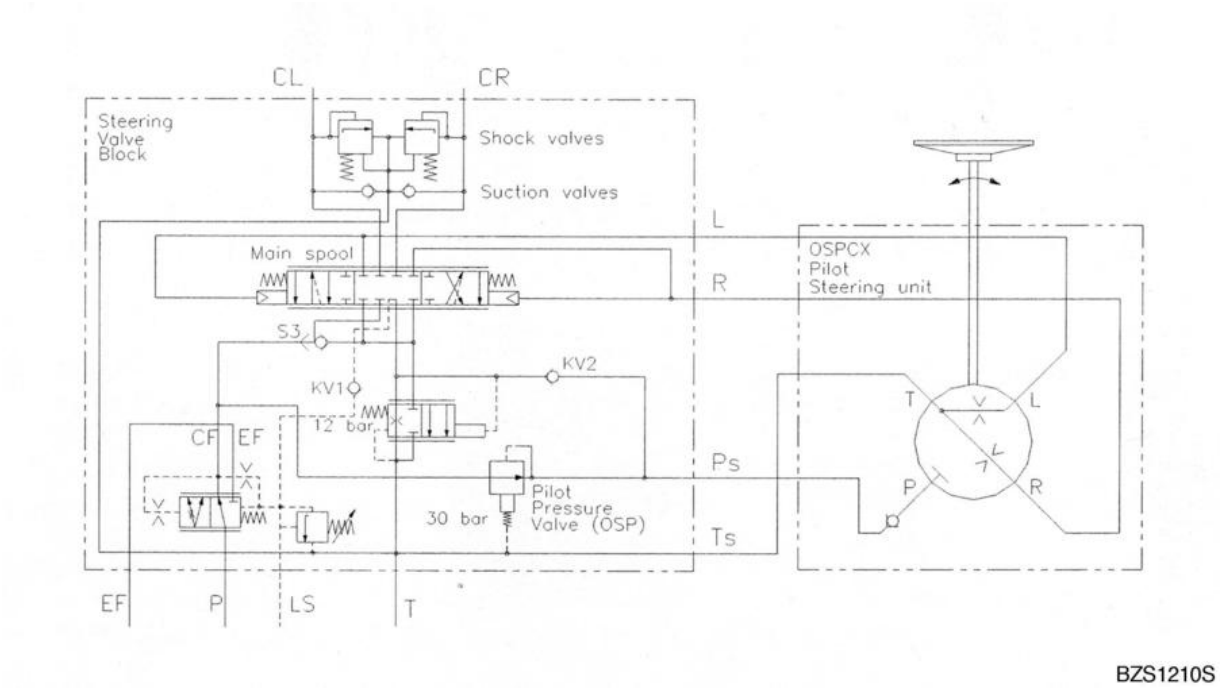

Figure 3

Steering Spool at Neutral Position

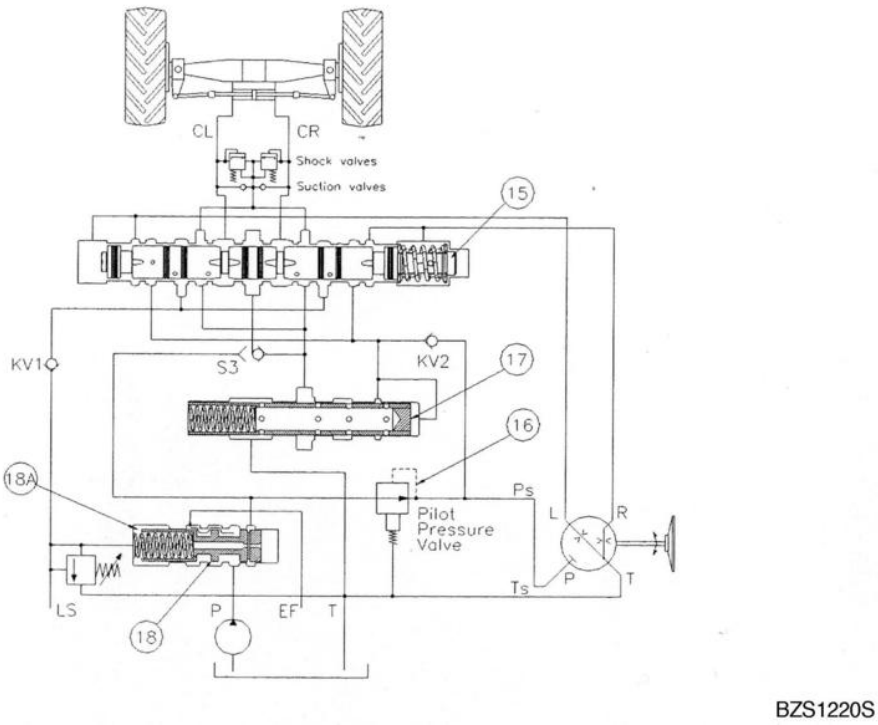

Figure 4

In neutral position, the oil will pass from the pump across the integrated priority valve (18) in the EHPS valve for discharge through the EF port. When the steering unit is in neutral, flow through it is blocked and all flow through the priority valve (18) in EHPS valve is directed out the EF port and passed to the main control valve.

When the engine is turned off, the priority valve spool (18) is pushed to the right by the spring.
The passage to the EF port is blocked while the passage to the CF port is open.

When the machine is started, EF port of the EHPS valve may be connected to the working hydraulic. Maximum pressure on the EF port = 250 bar.

The operating pressure in the loader system has not effected on the operation of the priority valve (18) of EHPS valve. Independently of operation of the loader actuated in relief, the priority valve (18) will not shift until the machine is steered.

A part of flow through the priority valve spool (18) will flow to P port of steering unit through the pressure reducing valve. Also, flow as pilot signal of steering through the priority valve spool (18) passes from the P port through the Dynamic orifice and into the LS line. It flows to the tank through the LS orifice in main spool.

In neutral position, the main spool will be in its center position. This means that knocks and impacts from the cylinder are not transmitted to the steering unit. The EHPS valve is thus of the nonreactive type.

Steering Spool Operated

1. Turning Left

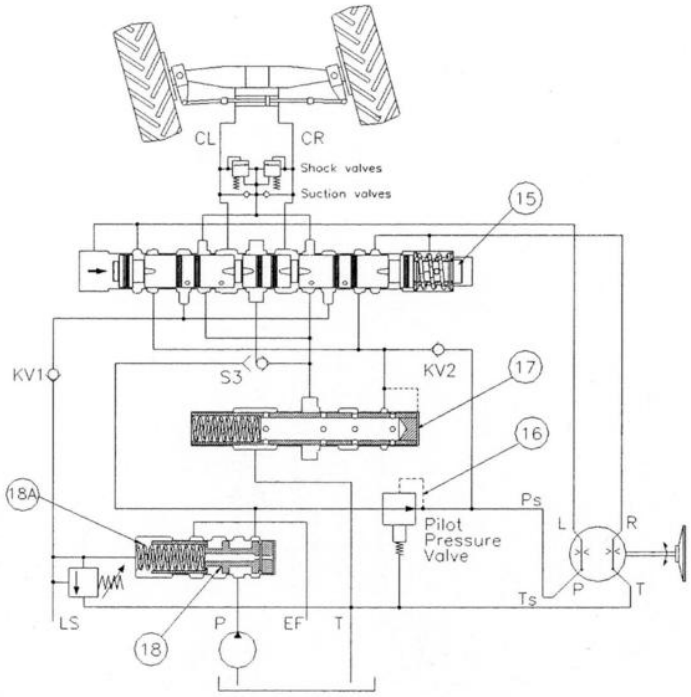

BZS1230S

Figure 5

When the steering wheel is turned to the left, the pressure oil from the steering unit will fill the left side chamber of main steering spool (15), and the main steering spool (15) moves to the right.

At the same time of moving of the main steering spool (15), LS signal will be blocked.

If LS signal of main steering spool (15) is blocked, it cause the to pressure increase in the left chamber of the priority valve (18A) and then the priority valve (18) will be pushed to the right side.
Consequently, oil will flow via CF from the priority valve to the main spool.
Oil will now push steering cylinder rod out and it will cause wheel loader to be steered to left side.

The rate of movement of main steering spool (15) is concluded as flow rate, which is kept in left chamber from steering unit. Furthermore, the rate controls speed of movement for cylinder.

When the cylinder reaches to end position, pressure of oil flowing through main steering spool (15) will increase. If the oil pressure increase up to the setting of relief valve, the relief valve will be activated. This results in decreasing pressure in the left chamber of priority valve (18A), and will push the priority valve (18) to right side. The oil flow to cylinder will be blocked.

2. Turning Right

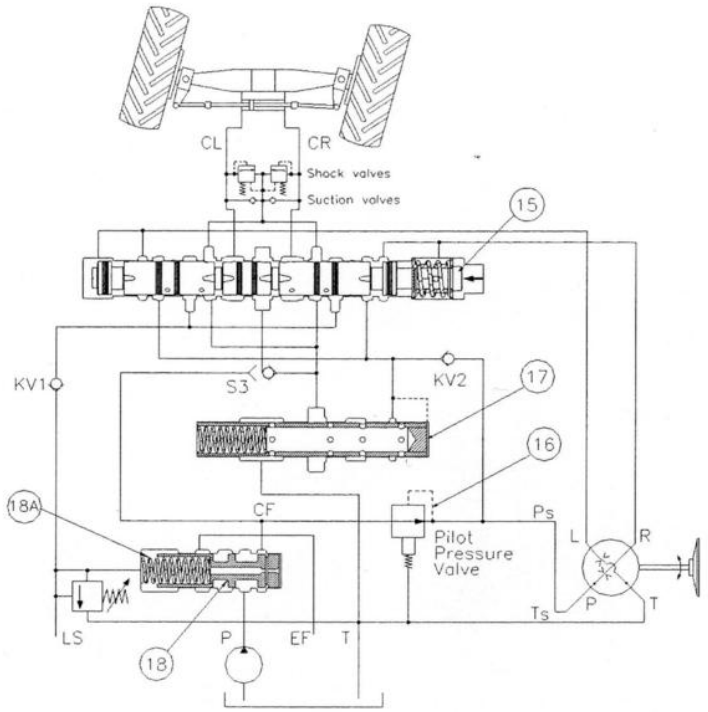

Figure 6

When the steering wheel is turned to the right, the pressure oil from the steering unit will fill the right side chamber of main steering spool (15), and main steering spool (15) moves to the left.

At the same time as the main spool (15) is moving the LS signal will be blocked.

If LS signal of main steering spool (15) is blocked, it cause the pressure to increase in the left chamber of priority valve (18A) and then the priority valve (18) will be pushed to the right side. Consequently, oil will flow via CF of priority valve to main spool. This oil will push the steering cylinder rod out and it will cause wheel loader to be steered to right side.

The rate of movement of main steering spool (15) is concluded as flow rate, which is kept in right chamber from steering unit. Furthermore, the rate controls speed of movement for cylinder.

When the cylinder reaches the end position, pressure of oil flowing through main steering spool (15) will increase. If the oil pressure increase up to relief valve setting, the relief valve will be activated. It results in decreasing pressure on the left chamber of priority valve (18A), and will push the priority valve (18) to right side. Then, oil flow to cylinder will be blocked.

Pressure Reducing Valves

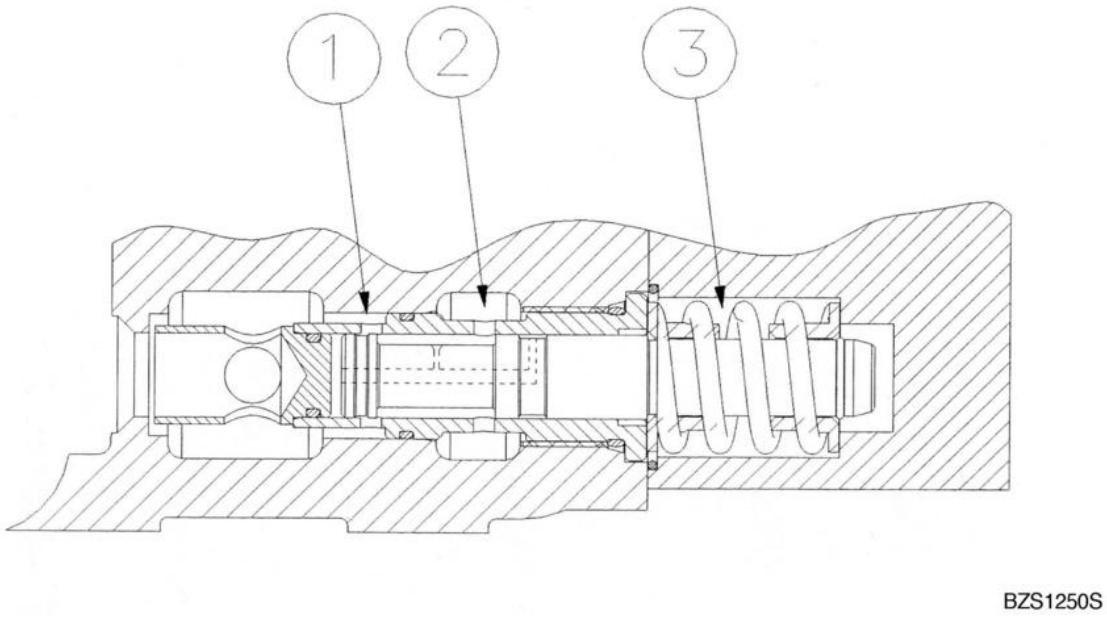

Figure 7

Pressure reducing valve is a valve, which is supplying pilot oil to steering unit (30 bar).

That is one of advantage of steering system adopting EHPS valve.

The pressure reducing valves is a pressure limiting devices that limit pressure in one portion of a circuit while leaving system pressure unaffected.

The pressure reducing valves allow flow to pass from (1) to (2) until the pressure at (1) reaches the predetermined setting, at that point the spool shifts to restrict input flow from (1) (reducing mode) or to open flow from (2) to (3) (relieving mode) as needed to maintain the regulated pressure at (2).

Pilot Relief Valve

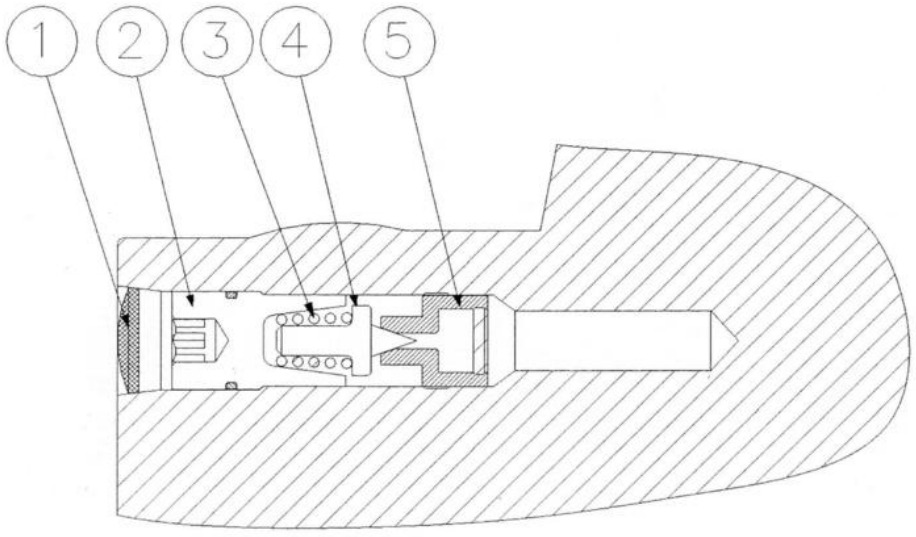

BZS1260S

Figure 8

Reference Number	Description
1	Plastic Plug
2	Adjustment Screw
3	Spring

Reference Number	Description
4	Thrust Pad
5	Valve Seat

Steering Unit

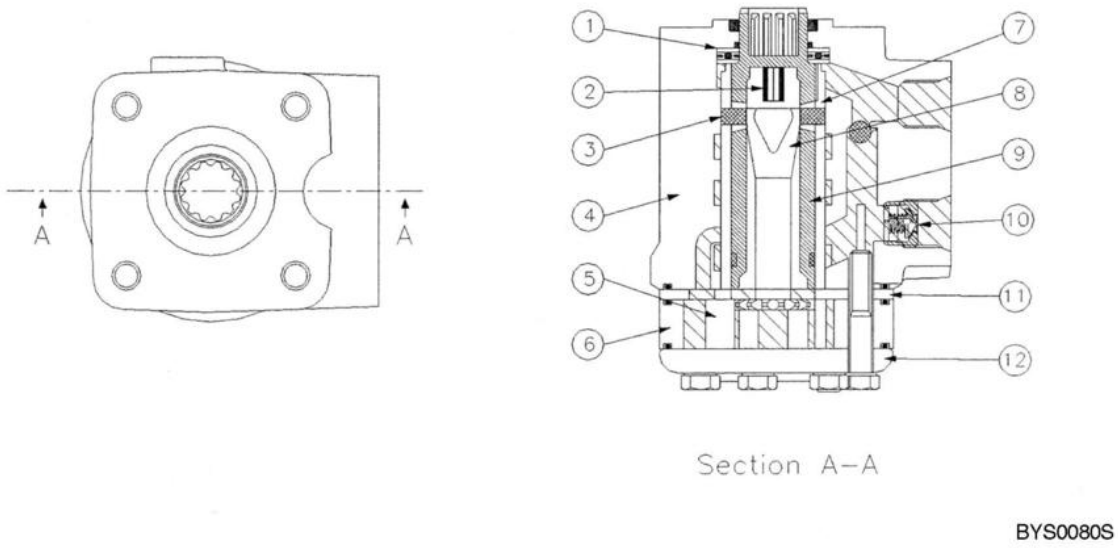

Figure 9

Reference Number	Description
1	Bearing
2	Neutral Position Spring
3	Cross Pin
4	Housing
5	Gear Wheel
6	Gear Rim

Reference Number	Description
7	Sleeve
8	Cardan Shaft
9	Spool
10	Check Valve
11	Distributor Plate
12	End Cover

Function

The steering unit consists of a rotary valve and a rotary metering unit.

Via a steering column the steering unit is connected to the steering wheel of the vehicle.

When the steering wheel is turned, oil is directed from the steering system pump via the rotary valve (spool and sleeve) and rotary metering (gear wheel set) to the cylinder ports L or R, depending on the direction of turn. The rotary meter, meters the oil flow to the steering cylinder in proportion to the rotation of the steering wheel.

Exploded View of a Steering Unit

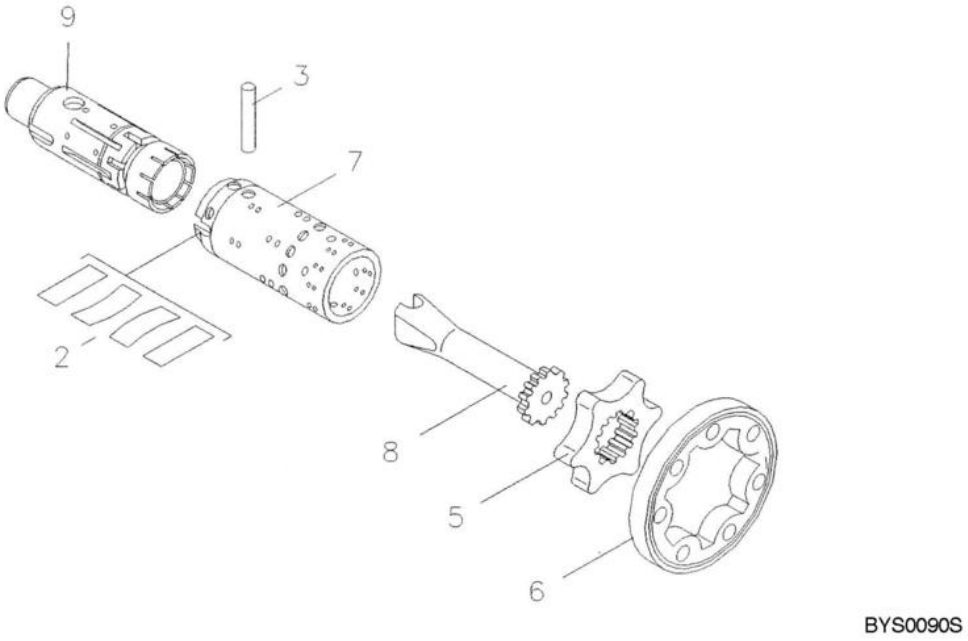

Figure 10

Spool (9) is connected directly to the drive shaft of steering wheel. It is connected to sleeve (7) by center pin (3) (not in contact with the spool when the steering wheel is at Neutral) and neutral position spring.

Cardan shaft (8) is meshed at the top with center pin (3) and forms one unit with the sleeve (7).
At the same time, the cardan shaft is meshed with the gear rim (5) of the Gerotor set, by the splices.

There are four ports in valve body. They are connected to the pump circuit, tank circuit, and the head, and left and right steering cylinder. In addition, the pump port and tank port are connected inside the body by the check valve. If there is on flow available, oil will be sucked in directly from the tank through the check valve (Emergency steering).

FUNCTION

The main relief valve is inside the EHPS valve, and set the maximum circuit pressure of the steering circuit. When the EHPS valve is being actuated, and the steering circuit goes up above the set pressure of this valve, oil will be relieved, and the priority valve spool will be actuated, and the oil will be drained to EF port.

Picture of Components in the EHPS

Main steering spool.

Position 15.



Figure 11

Priority spool.

Position 18.

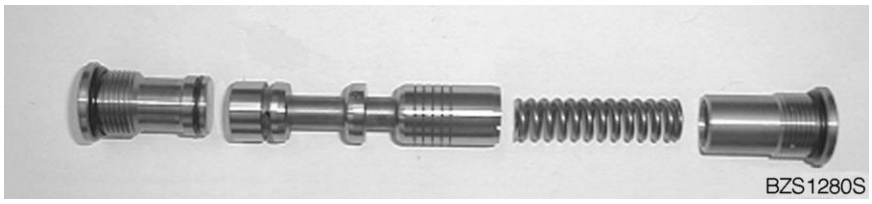

Figure 12

Metering spool.

Position 17.

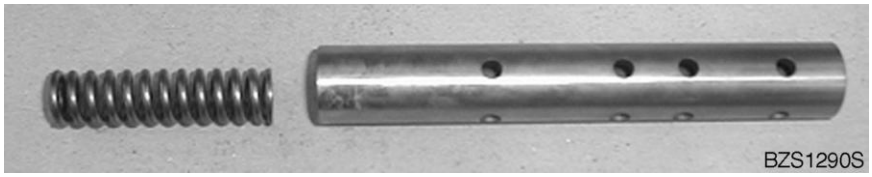

Figure 13

Relief valve.

Position 13.

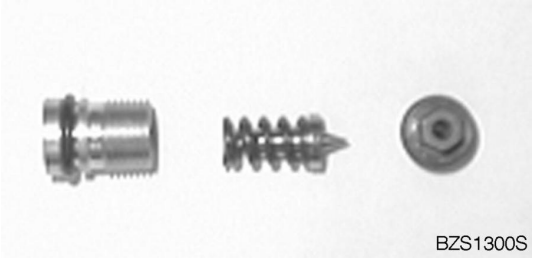

Figure 14

Shock valve

Position 10.



Figure 15

Pressure reducing valve

Position 16.



Figure 16

Shuttle valve

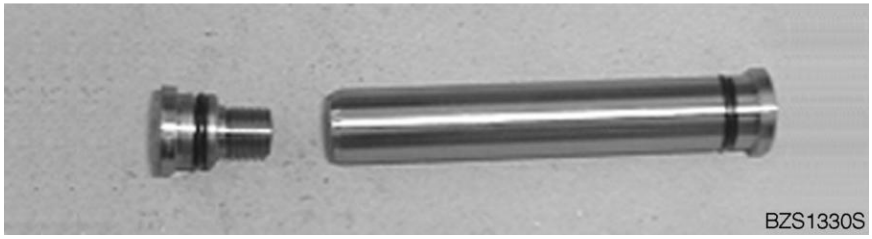

Figure 17

End cover mounted on the house with 4 screws

Torque 0.82 ±0.05 kg•m (5.90 ft lb).

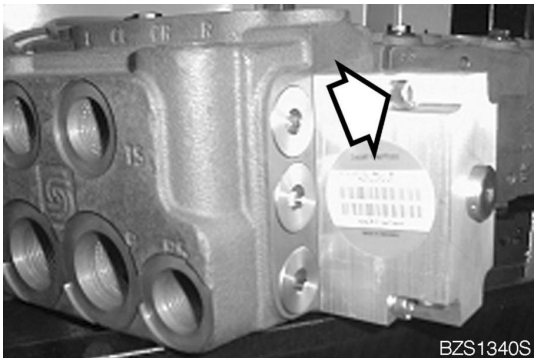

Figure 18

EHPS house.

Reference Number	Description
1	Metering Spool Position 17
2	Main Spool Position 15 (Behind End Cover)
3	Pressure Reduction Valve Position 16 (Behind End Cover)
4	Priority Spool Position 18

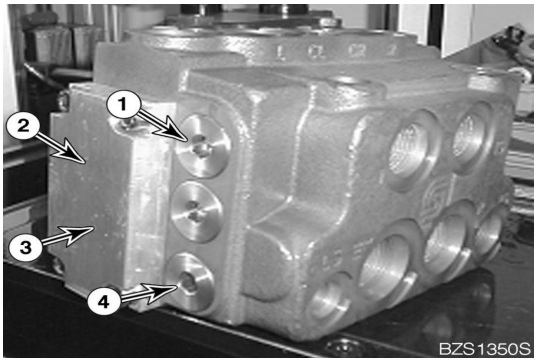

Figure 19

Cushion Valve

Edition 1

MEMO

Table of Contents

Cushion Valve

Safety Precautions 5
Applicable Models 5
Cushion Valve 6
Cushion Valve Operation 6
Function 6
Working Principle 6
Specifications 6
Parts List 7

SAFETY PRECAUTIONS

CAUTION!

Follow all safety recommendations and safe shop practices outlined in the front of this manual or those contained within this section.

Always use tools and equipment that are in good working order.

Use lifting and hoisting equipment capable of safely handling load.

Remember, that ultimately safety is your own personal responsibility.

APPLICABLE MODELS

The contents of this section apply to the following models and serial number ranges.

MODEL	SERIAL NUMBER RANGE
DL300	5001 and Up

CUSHION VALVE

Cushion Valve Operation

Function

The cushion valve absorbs any excessive peak pressure that maybe generated during initial movement of the steering wheel or during a change in steering direction. The cushion valve also prevents excessive high-pressure and shock that can result from steering load inertia.

Working Principle

If a high-pressure oil is fed back to port R, it pushes spring (3) and opens poppet (2). This operation directs the high-pressure oil to port L through the center hole in spool (12) and the check valve poppet in port L part. At the same time, oil reaches the pressure room of the plug through orifice (8). This operation closes the passage from port R to port L. This releases the pressure and prevents machine shock by intercepting oil. If a low-pressure oil flows, the cushion operation is not necessary. It is due to the speed of closing spool (12) is faster than the speed of opening poppet (2), therefore, the cushion valve does not work.

Specifications

General	
Max. Pressure	210 bar (3,046 psi)
Main Relief Pressure	15 bar (218 psi)
Hydraulic Oil	ISO VG 46 WR or SIMILAR
Hydraulic Oil Temperature	-20 - +90 °C
Environments	
Atmospheric Temperature	-30 - +45 °C
Vibration	3 - 5G/ 30 Hz
Shock	10G

Parts List

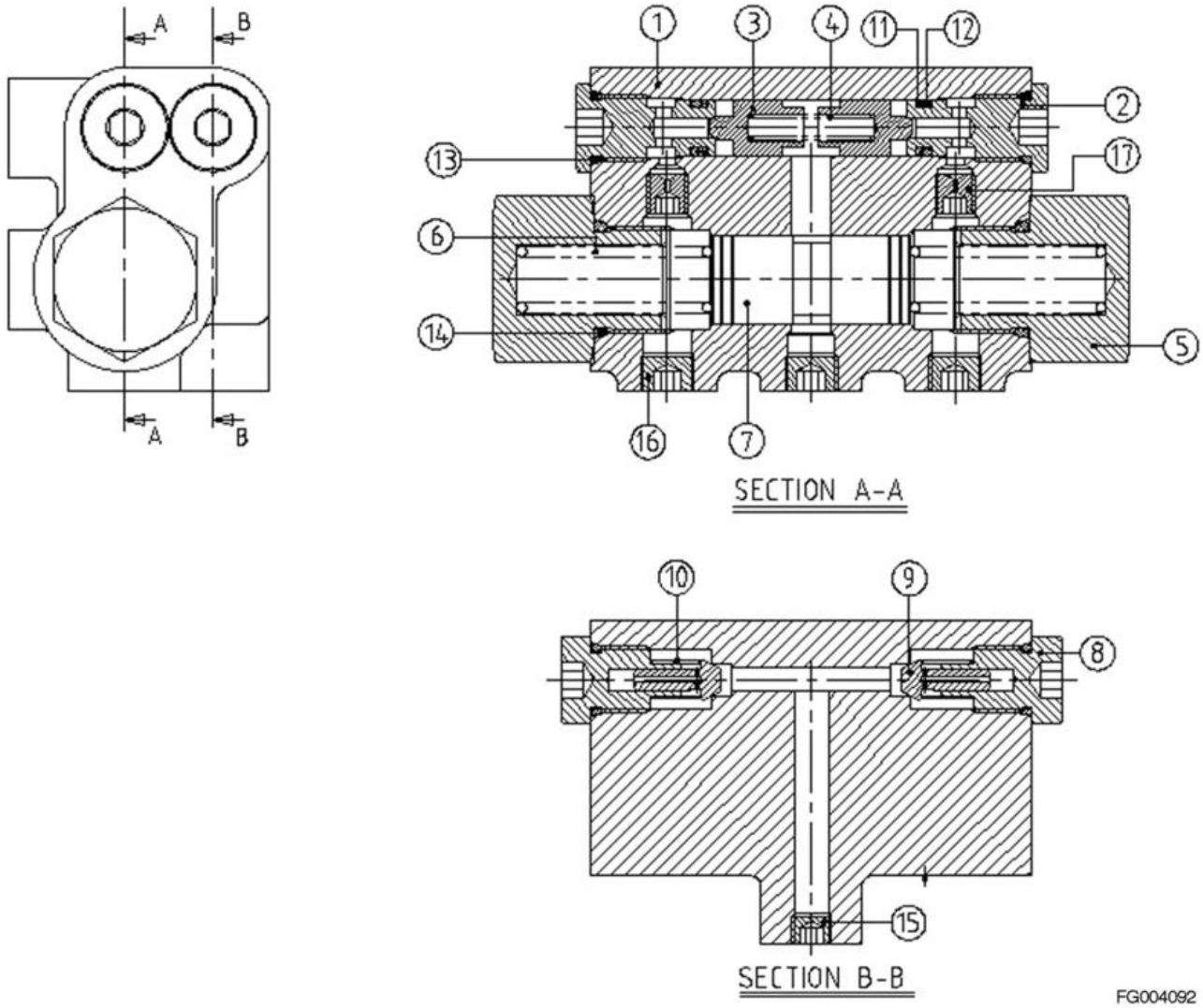

Figure 1

Reference Number	Description
1	Body
2	Seat Valve
3	Poppet
4	Spring
5	Plug
6	Spring
7	Spool
8	Plug
9	Poppet

Reference Number	Description
10	Spring
11	Back up Ring
12	O-ring
13	O-ring
14	O-ring
15	Plug
16	Plug
17	Orifice

Emergency Steering

Edition 1

Table of Contents

Emergency Steering

Safety Precautions 5
Applicable Models 5
General Description 6
Emergency Steering Function Test 8
Emergency Steering Automatic Test 8
Pump & DC Motor 10

SAFETY PRECAUTIONS

CAUTION!

Follow all safety recommendations and safe shop practices outlined in the front of this manual or those contained within this section.

Always use tools and equipment that are in good working order.

Use lifting and hoisting equipment capable of safely handling load.

Remember, that ultimately safety is your own personal responsibility.

APPLICABLE MODELS

The contents of this section apply to the following models and serial number ranges.

MODEL	SERIAL NUMBER RANGE
DL300	5001 and Up

GENERAL DESCRIPTION

This system is designed for applications requiring a secondary steering when the primary source becomes nonfunctional & includes electrically-driven hydraulic pump controlled by the emergency steering relay.

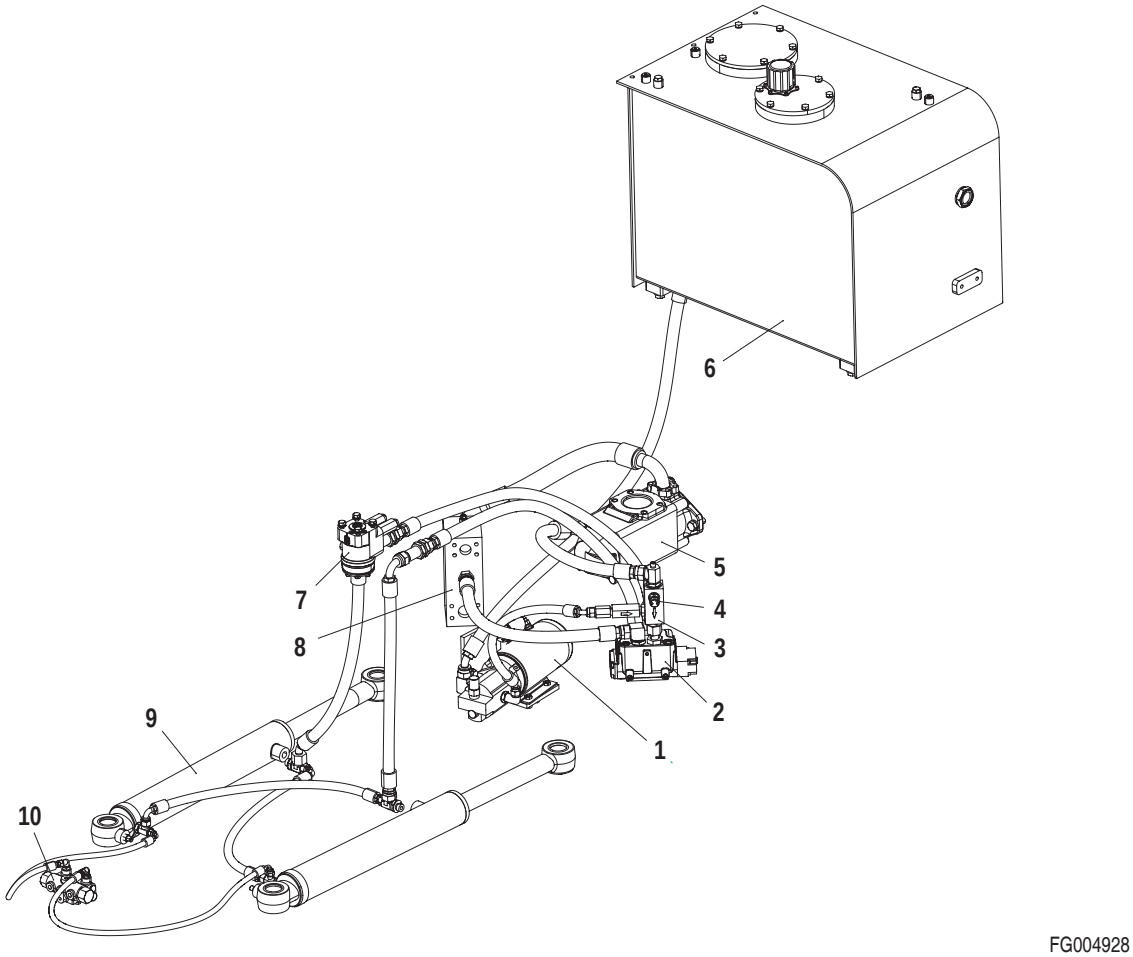

Figure 1

Reference Number	Description
1	Pump & DC Motor
2	Steering Pump
3	Check Valve
4	Pressure Sensor
5	Pump

Reference Number	Description
6	Oil Tank
7	Steering Unit
8	Block Valve
9	Steer Cylinder
10	Cushion Valve

If travel speed exceeds 5 km/h and the pressure at the check valve (4) is under 3.0 bar (44 psi), emergency steering starts. This is run for 60 seconds by the timer.

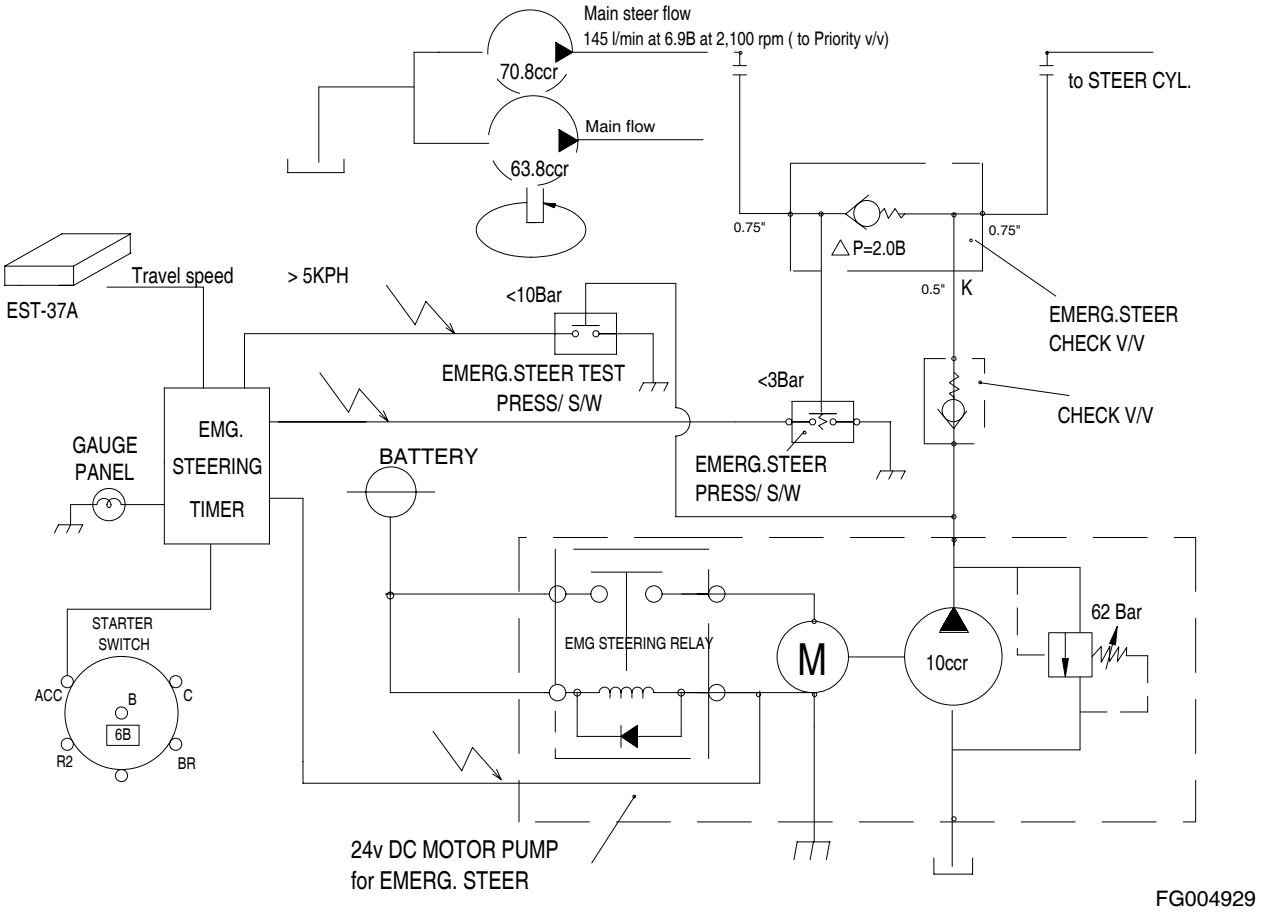

Figure 2 ELECTRIC CIRCUIT

Emergency Steering Function Test

Emergency steering system function test is performed on a stationary machine with engine off. The ignition switch must be in position I (ON). When test switch in the cabin is pressed, turn steering wheel at the same time. If system is functioning properly the machine should steer.

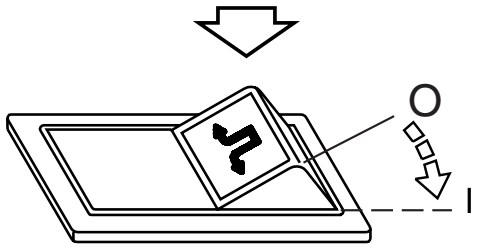

AJO0011L

Figure 3 TEST SWITCH

The secondary steering indicator light should turn "ON". Emergency steering indicator light (option) indicates that emergency steering pump starts(1).

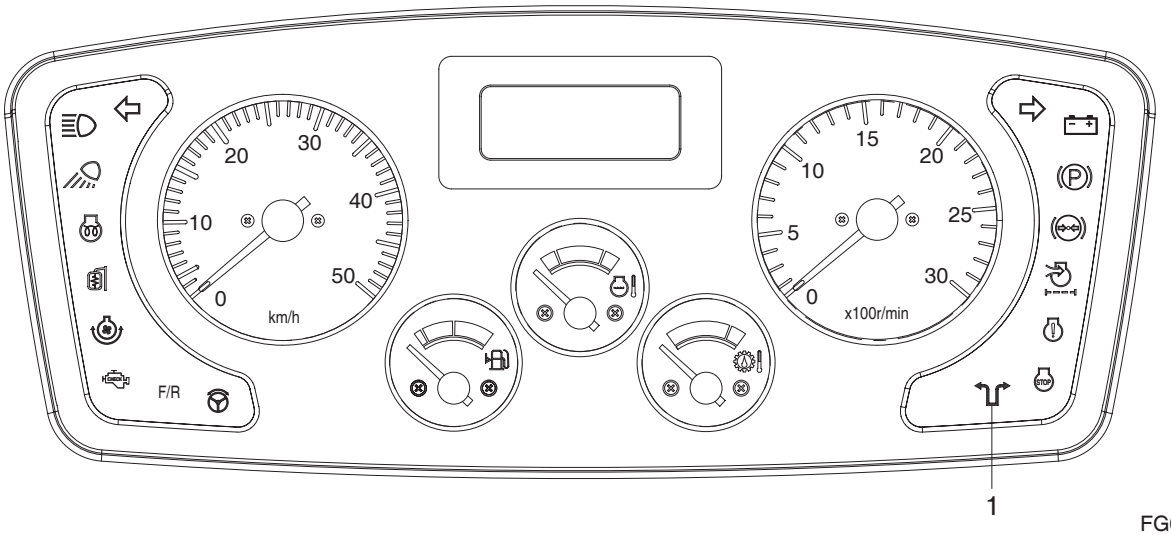

FG004535

Figure 4

Emergency Steering Automatic Test

This is a system that check a pressure on the emergency steering line. It starter switch turn to I (ON) position, a emergency lamp on the front gauge panel light up about 3 seconds.

Do not press test switch continuously. Continuously pressing switch will cause heavy battery discharge. The emergency steering DC-motor uses high consumption of power as Figure 5.

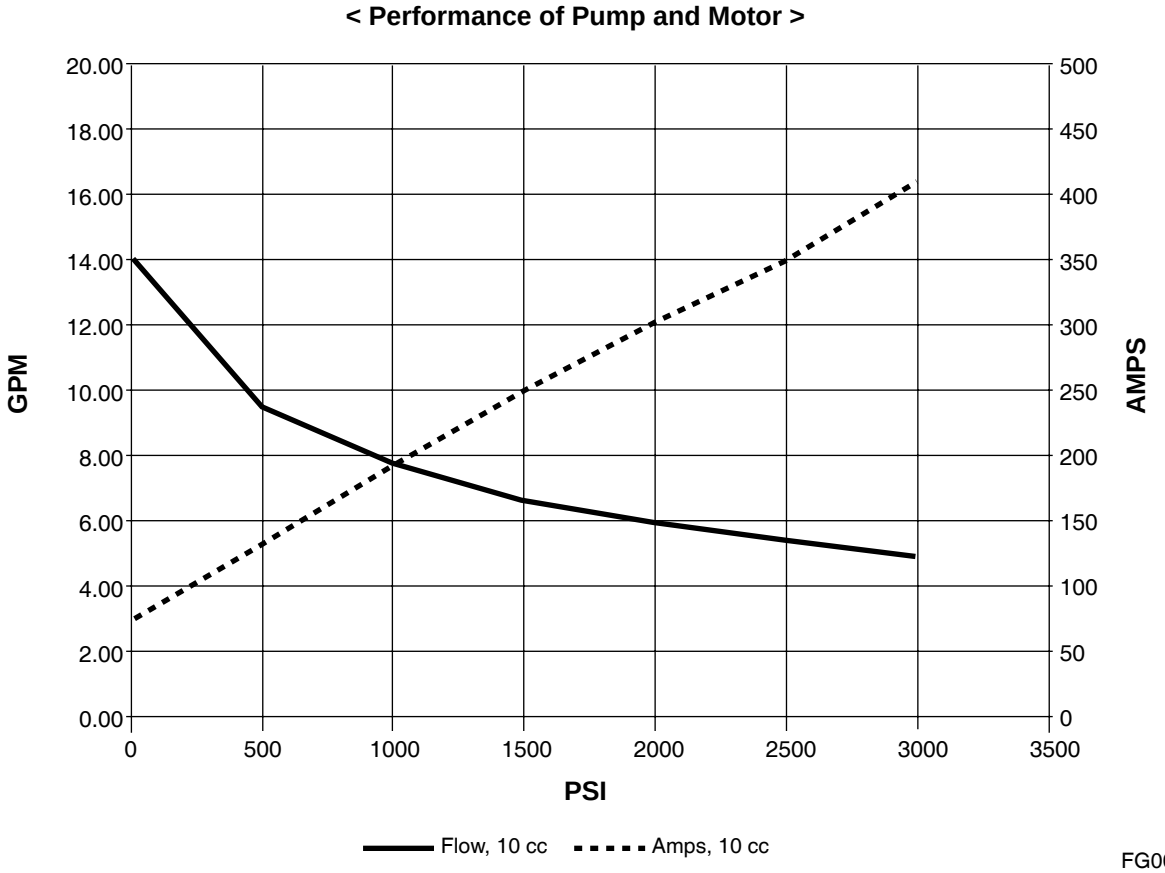

Figure 5

PUMP & DC MOTOR

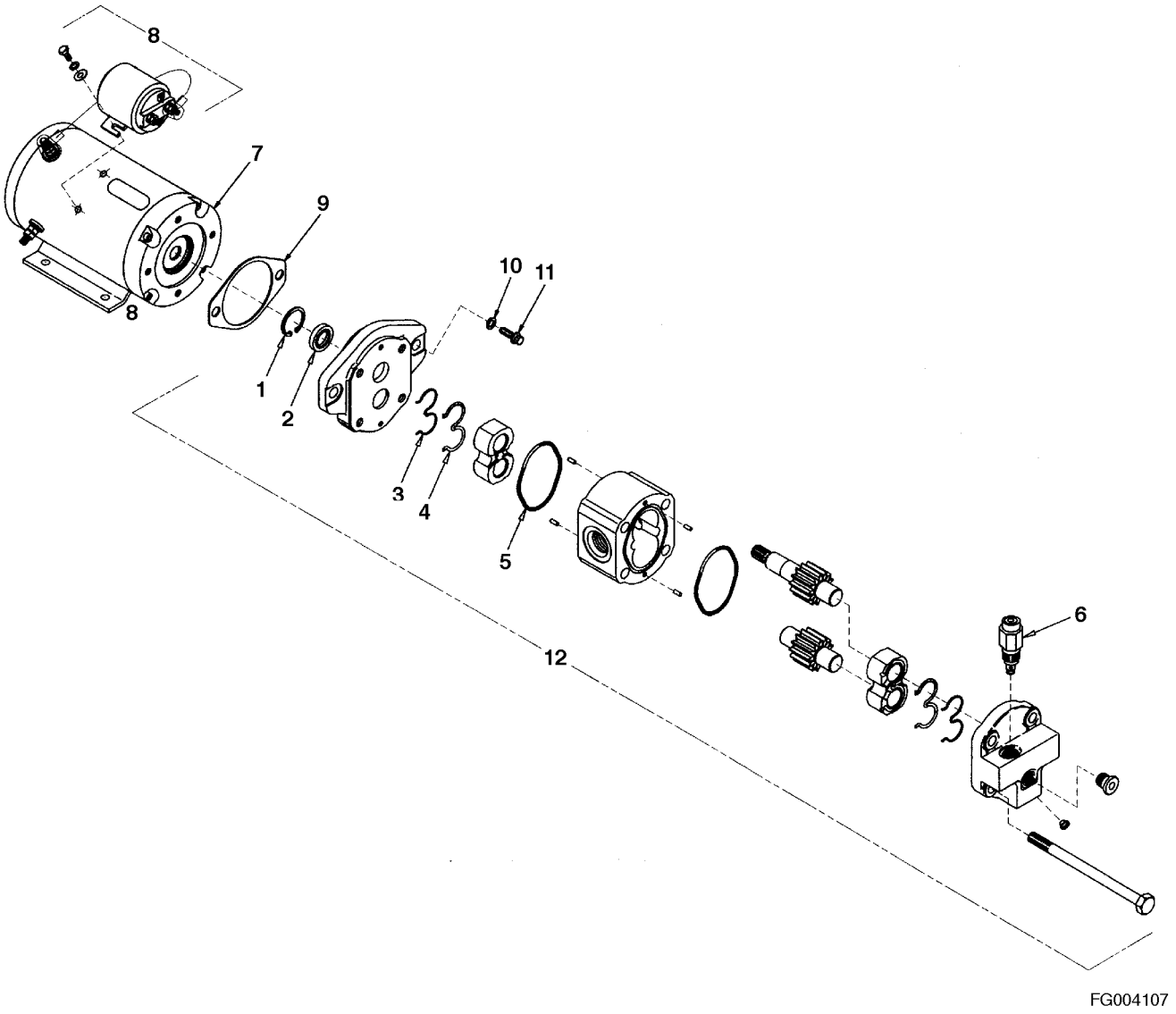

Figure 6

Reference Number	Description
1	Retaining Ring
2	Shaft Seal
3	Backup Ring
4	Seal
5	O-ring
6	Valve Assembly

Reference Number	Description
7	DC Motor
8	Start Sw Kit
9	Gasket
10	Lock Washer
11	Mounting Screw
12	Pump Assembly

Articulation Center

Edition 1

Table of Contents

Articulation Center

Safety Precautions 5
Applicable Models 5
General Description 6
Maintenance Standard 7

SAFETY PRECAUTIONS

CAUTION!

Follow all safety recommendations and safe shop practices outlined in the front of this manual or those contained within this section.

Always use tools and equipment that are in good working order.

Use lifting and hoisting equipment capable of safely handling load.

Remember, that ultimately safety is your own personal responsibility.

APPLICABLE MODELS

The contents of this section apply to the following models and serial number ranges.

MODEL	SERIAL NUMBER RANGE
DL300	5001 and Up

GENERAL DESCRIPTION

The loader frame is an articulated type: the front frame is joined to the rear frame with two hinge pins around which the loader pivots for steering.

CAUTION!

When the loader is steered, the area near the center hinge pins becomes so narrow that you might get caught between the front and rear frames. Before trying to service the loader, make sure to set the frame lock plate.

Before moving (traveling) the loader, make sure the frame lock plate is set to the original position.

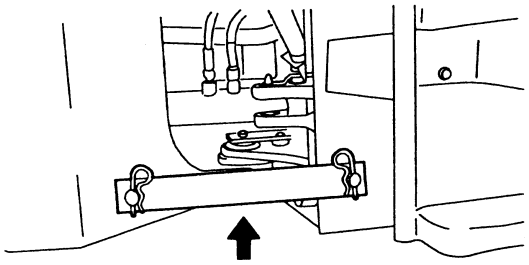

(When servicing the loader)

HAAA2000

Figure 1

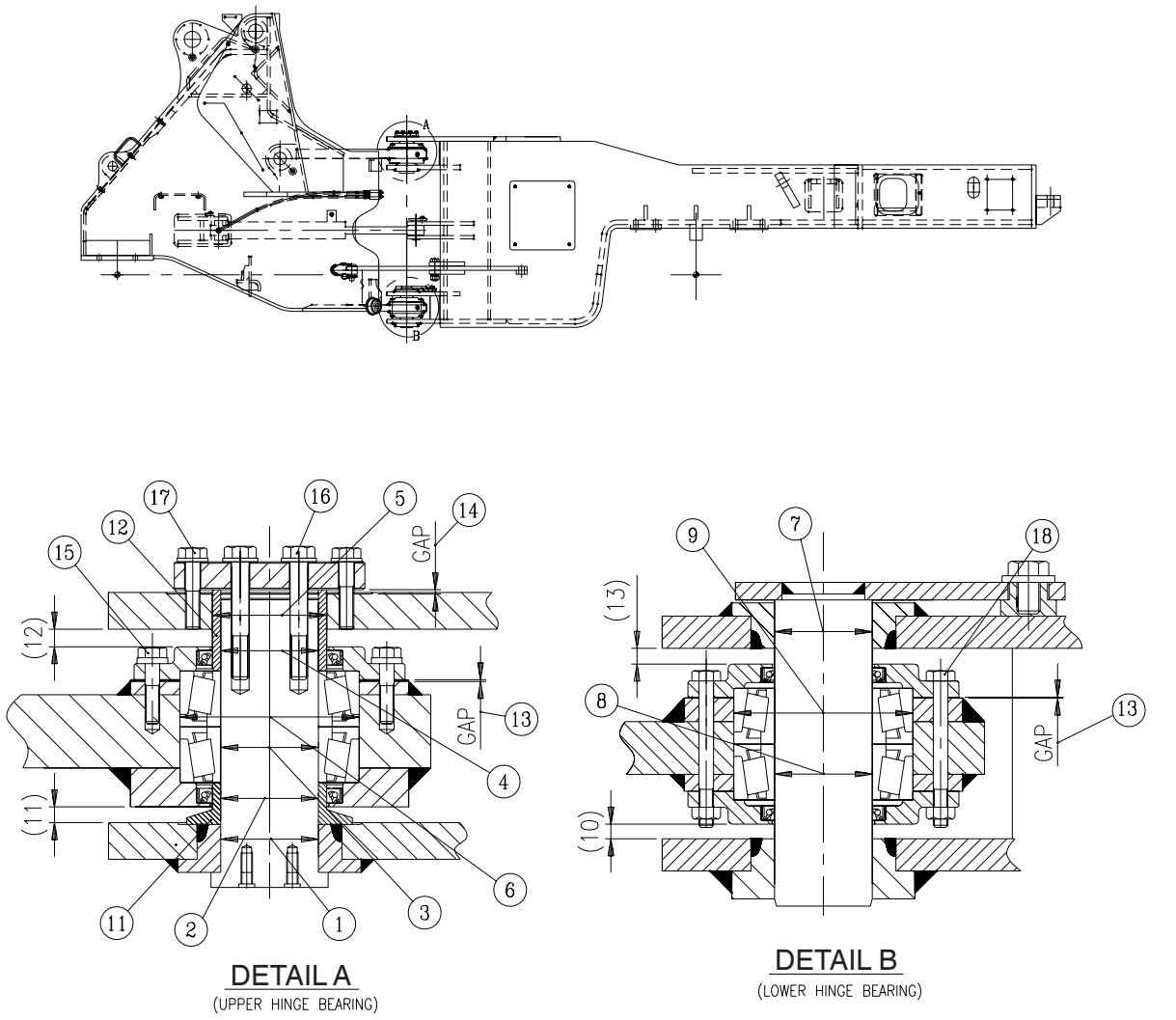

AMS0600L

Figure 2

Unit: mm

No.	Check item	Criteria					Remedy
1	Clearance between upper hinge pin and rear frame	Standard size	Tolerance		Standard clearance	Clearance limit	Replace
		66.7	-0.040 -0.076	+0.060 +0.030	0.070 - 0.136	-	
2	Clearance between upper hinge pin and spacer (small)	66.7	-0.040 -0.076	+0.060 +0.030	0.070 - 0.136	-	
3	Clearance between upper hinge pin and bearing	66.7	-0.040 -0.076	0 -0.015	0.055 - 0.076	-	
4	Clearance between upper hinge pin and spacer (large)	66.7	-0.040 -0.076	+0.060 +0.030	0.055 - 0.076	-	
5	Clearance between rear frame and spacer (large)	78	+0.060 +0.030	-0.036 -0.090	0.066 - 0.15	-	
6	Clearance between front frame and upper hinge bearing	122.3	-0.048 -0.088	-0.037 -0.062	-0.011 - -0.125	-	
7	Clearance between lower hinge pin and rear frame	66.7	-0.020 -0.076	+0.046 0	0.020 - 0.122	-	
8	Clearance between lower hinge pin and bearing	66.7	-0.020 -0.076	0 -0.015	0.035 - 0.076	-	
9	Clearance between front frame and lower hinge bearing	122.3	-0.048 -0.088	-0.037 -0.062	-0.11 - -0.125	-	
11	Height of upper hinge spacer (small)	$28.5^{+0}_{-0.1}$	-	-	0	0	
12	Height of upper hinge spacer (large)	$55.5^{+0}_{-0.1}$	-	-	0	0	
13	Shim thickness for upper hinge and retainer (front frame)	0.5 - 1.04	-	-	-	-	
14	Shim thickness for upper hinge and retainer (rear frame)	2.24 - 3.55	-	-	-	-	
15	Tightening torque of upper hinge retainer mounting bolt	When adjusting with shim: 4 ±0.2 kg•m					Retighten
		Final value: 13 ±1.0 kg•m					
16	Tightening torque of upper hinge retainer mounting bolt	When adjusting with shim: 4 ±0.2 kg•m					
		Final value: 13 ±1.0 kg•m					
17	Tightening torque of upper hinge pin mounting bolt	13 ±1.0 kg•m					
18	Tightening torque of lower hinge pin mounting bolt	13 ±1.0 kg•m					

Counterweight

Edition 1

Table of Contents

Counterweight

Safety Precautions 5
Applicable Models 5
Specifications 6
Counterweight 6

SAFETY PRECAUTIONS

CAUTION!

Follow all safety recommendations and safe shop practices outlined in the front of this manual or those contained within this section.

Always use tools and equipment that are in good working order.

Use lifting and hoisting equipment capable of safely handling load.

Remember, that ultimately safety is your own personal responsibility.

APPLICABLE MODELS

The contents of this section apply to the following models and serial number ranges.

MODEL	SERIAL NUMBER RANGE
DL300	5001 and Up
DL400	5001 and Up

SPECIFICATIONS

NOTE: *Weight.*

Model	Weight	Serial Number Range
DL300	980 kg (2,160 lb)	S/N 5001 and Up
DL400	1,450 kg (3,417 lb)	S/N 5001 and Up

COUNTERWEIGHT

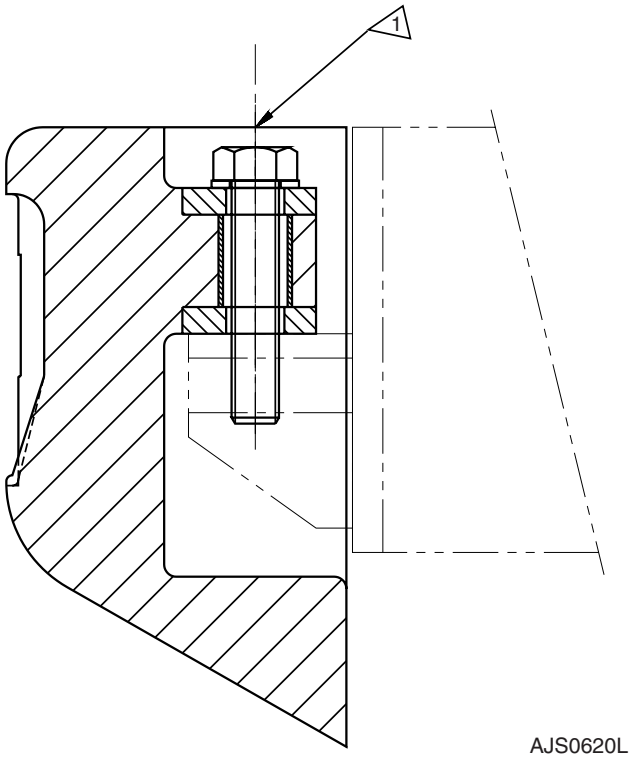

Figure 1

NOTE: *1) Tighten bolts to the torque value list in the following table.*

DL300	250 kg•m (1,800 ft lb)
DL400	250 kg•m (1,800 ft lb)

Oil Tank

Edition 1

Table of Contents

Oil Tank

Safety Precautions 5

Applicable Models 5

General Description 6

Parts List 6

Specifications 7

SAFETY PRECAUTIONS

CAUTION!

Follow all safety recommendations and safe shop practices outlined in the front of this manual or those contained within this section.

Always use tools and equipment that are in good working order.

Use lifting and hoisting equipment capable of safely handling load.

Remember, that ultimately safety is your own personal responsibility.

APPLICABLE MODELS

The contents of this section apply to the following models and serial number ranges.

MODEL	SERIAL NUMBER RANGE
DL300	5001 and Up

GENERAL DESCRIPTION

Parts List

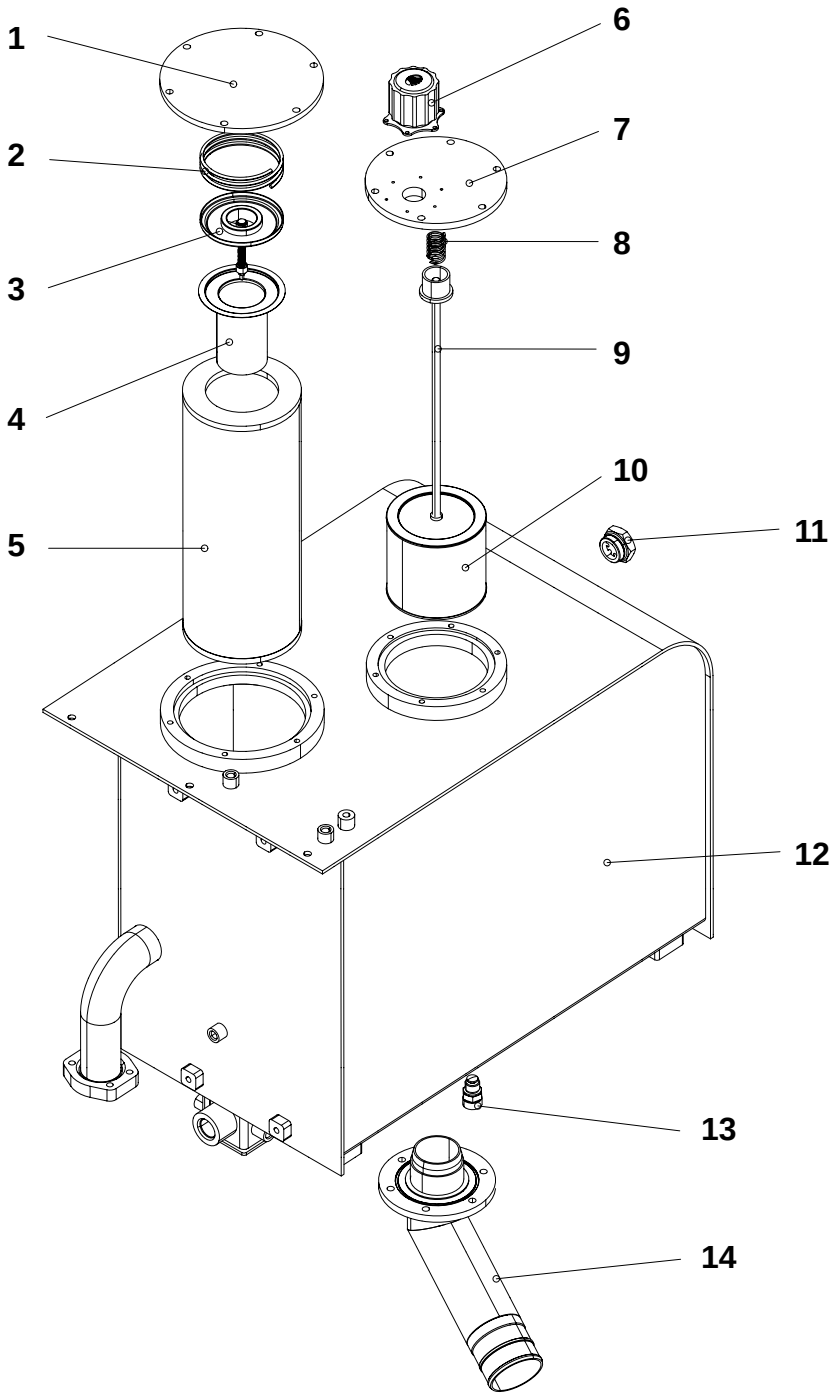

FG004931

Figure 1

Reference Number	Description
1	Cover
2	Spring
3	Bypass Valve
4	Bypass Strainer
5	Return Filter
6	Air Breather
7	Cover

Reference Number	Description
8	Spring
9	Rod
10	Suction Filter
11	Level Gauge
12	Oil Tank
13	Drain Cock
14	Suction Pipe

Specifications

Oil Tank	
Type	Pressurized Sealing
Capacity (System)	198 liters (52 U.S. gal.)
Air Breather	
Open Pressure	0.40 kg/cm^2 (5.7 psi)
Vacuum pressure	0.035 kg/cm^2 (0.5 psi) at 900 liters/min. (238 U.S. gal./min.)
Return Filter	
Filtration Rating	10 μ
Pressure Drop	0.25 kg/cm^2 (3 psi) at 680 liters (159 U.S. gal.), 20 cSt
Filtration Efficiency	Over 99.5 %
Suction Filter	
Filtration Rating	177 μ
Bypass Valve	
Cracking Pressure	1.5 kg/cm^2 (21 psi) at 40 liters (10.5 U.S. gal.), 20 cSt
Pressure Drop	2.0 kg/cm^2 (28 psi) at 40 liters (10.5 U.S. gal.), 20 cSt

Fuel Tank

Edition 1

Table of Contents

Fuel Tank

Safety Precautions 5
Applicable Models 5
General Description 6
Parts List 6
Specifications 7

SAFETY PRECAUTIONS

CAUTION!

Follow all safety recommendations and safe shop practices outlined in the front of this manual or those contained within this section.

Always use tools and equipment that are in good working order.

Use lifting and hoisting equipment capable of safely handling load.

Remember, that ultimately safety is your own personal responsibility.

APPLICABLE MODELS

The contents of this section apply to the following models and serial number ranges.

MODEL	SERIAL NUMBER RANGE
DL300	5001 and Up

GENERAL DESCRIPTION

Parts List

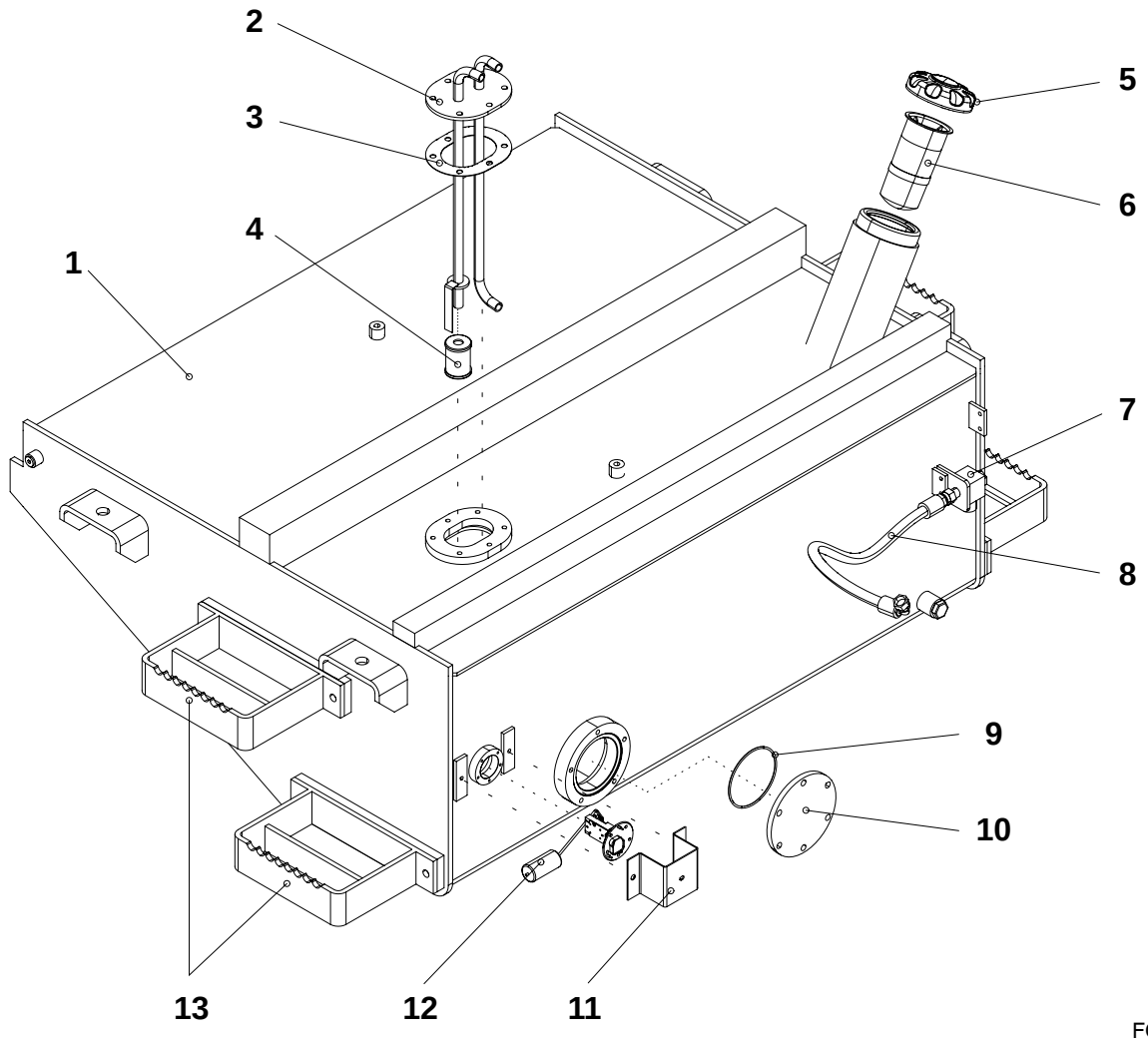

FG004101

Figure 1

Reference Number	Description
1	Fuel Tank
2	Fuel Pipe
3	Packing
4	Suction Filter
5	Fuel Cap
6	Fuel Strainer
7	Drain Cock

Reference Number	Description
8	Hose; Engine Oil Drain
9	O-ring
10	Cover
11	Sender Cover
12	Fuel Sender
13	Step

Specifications

Fuel Tank	
Capacity (System)	326 liters (86 U.S. gal.)
Suction Filter	
Filtration Rating	60 μ
Ambient Temperature Range	-40 ~ +80°C
Fuel Strainer	
Filtration Rating	24 μ
Ambient Temperature Range	-40 ~ +80°C

Fuel Sender Setting

POINTER Position	Unit	E	1/4	H	3/4	F
Float Height	mm	73	125	222	307	347
Available Fuel Volume	liter	21.2	57.8	143.1	235.3	314
Ratio (/Total Volume)	%	6.7	18.4	45.6	74.9	100

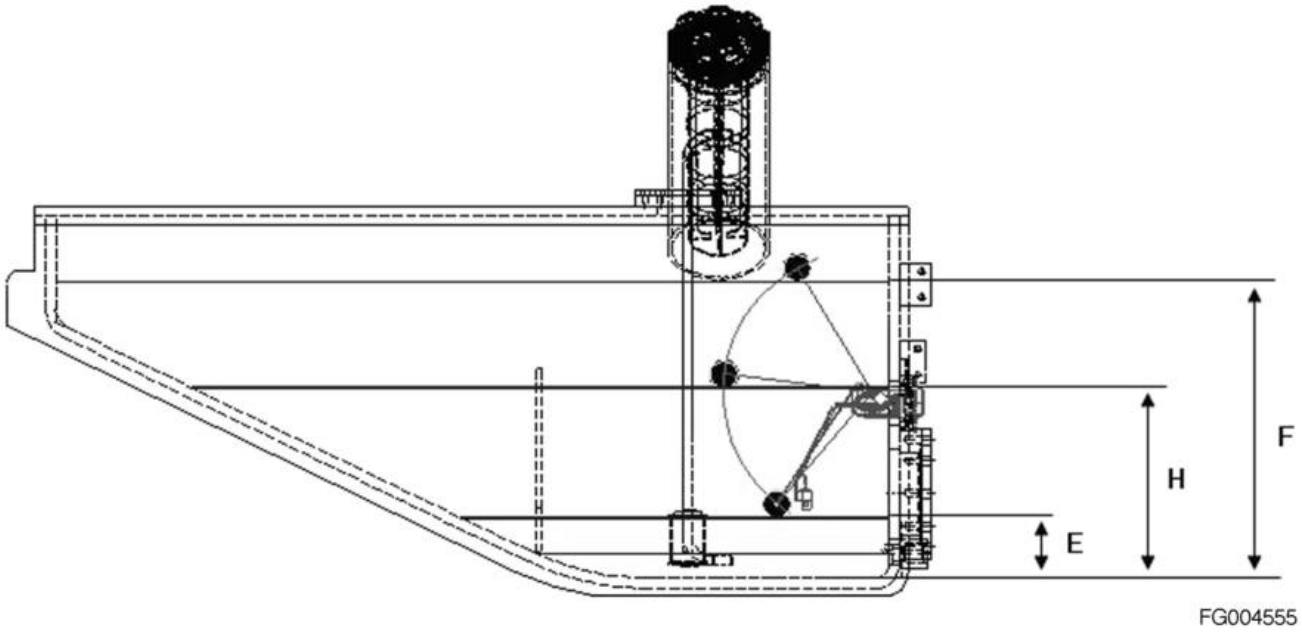

Figure 2

Main Control Valve

Edition 1

MEMO

Table of Contents

Main Control Valve

Safety Precautions 5
Applicable Models 5
Parts List 6
Disassembly 8
Order of Replacement 8
Cleaning and Inspection (Wear Limits and Tolerances) 10
Reassembly 11
Reassembly Order 12
Valve Maintenance 14
Main Relief Valve 14
Overload Relief Valve 16
Anticavatation Valve 17
Valve Adjustment 19
Installation 20
Operation 20

MEMO

SAFETY PRECAUTIONS

CAUTION!

Follow all safety recommendations and safe shop practices outlined in the front of this manual or those contained within this section.

Always use tools and equipment that are in good working order.

Use lifting and hoisting equipment capable of safely handling load.

Remember, that ultimately safety is your own personal responsibility.

APPLICABLE MODELS

The contents of this section apply to the following models and serial number ranges.

MODEL	SERIAL NUMBER RANGE
DL300	5001 and Up

PARTS LIST

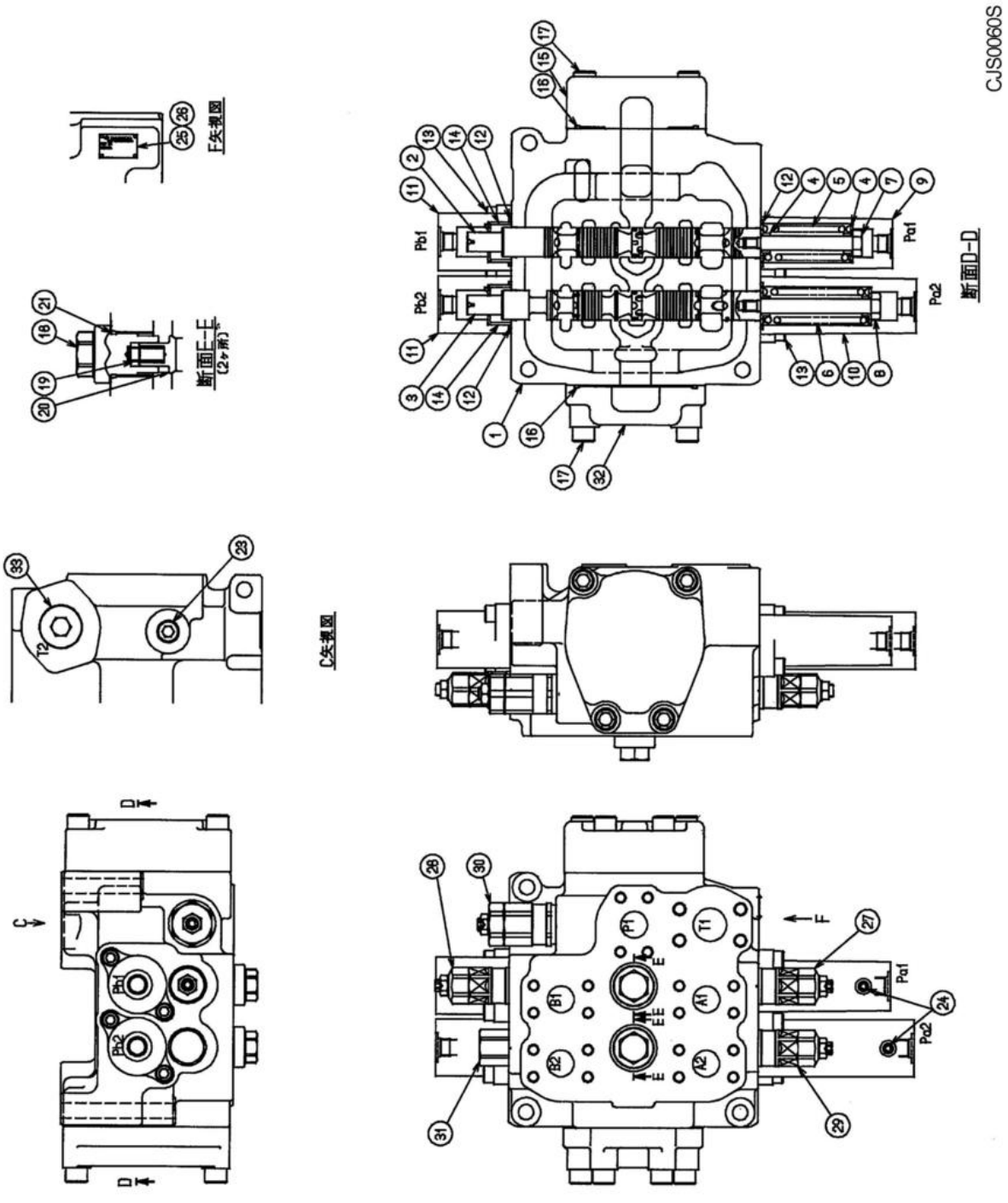

Figure 1

Reference Number	Description	Type
1	Valve Housing	D
2	Spool	D
3	Spool	D
4	Spring Seat	C
5	Spring	C
6	Spring	C
7	Spool End	C
8	Spool End	C
9	Cap	C
10	Cap	C
11	Cap	C
12	O-ring	A
13	Socket Head Bolt	C
14	Spacer	C
15	Cover	C
16	O-ring	A
17	Socket Head Bolt	C

Reference Number	Description	Type
18	Plug	C
19	Spring	C
20	Poppet	C
21	O-ring	A
22		
23	Plug	C
24	Hex Hole Plug	C
25	Name Plate	D
26	Drive Screw	D
27	Relief Valve Kit	B
28	Relief Valve Kit	B
29	Relief Valve Kit	B
30	Relief Valve Kit	B
31	Anticavatation Valve Assembly	B
32	Cover	C
33	Plug Assembly	B

Types	Description
A	Must replaced when Disassembly / Reassembly, supplied in repair kit.
B	Supplied as spare parts for quality warranty or assembly.
C	Supplied as single item.
D	Cannot be supplied.

DISASSEMBLY

Perform following before starting disassembly:

1. Rest bucket and all attachments on ground. Relief pressure from all cylinders and actuators. Leaving any pressure in hydraulic system is dangerous when performing maintenance on system. disassemble it with pressure being in it, since high-pressure may be emitted or a part pulled off.
2. Loosen breather cap and relieve air pressure from hydraulic oil tank.
3. Completely clean surrounding area of component to be disassemble. This will help eliminate foreign materials from entering component or hydraulic system.
4. Match mark and tag disassemble parts, for proper orientation and location during reassembly.
5. Replaced all seals (O-ring, backup ring, seal, and wiper) with new parts.
6. Take care not to damage spool. The spool is tolerances matched to valve housing and thus cannot be replaced without replacing housing.

Order of Replacement

Reference numbers are those shown in Figure 1.

1. Remove overload relief valves (27, 28, and 29) from valve housing.
2. Remove main relief valve (30) from valve housing.
3. Remove anticavatation valve (31) from valve housing.

   NOTE: *Do not disassemble relief valve and anticavatation valve unless problems are found in them, because they should be replaced as assemblies. They should be removed according to "Valve Maintenance" on page 1-14, and "Anticavatation Valve" on page 1-17. Provided, that overload relief valve whose setting pressure is higher than that of main relief valve should not be removed because its adjustment is impossible. Match mark parts, for proper orientation and location during reassembly.*

4. Loosen socket head bolt (13) and remove long caps (9 and 10) along with O-rings (12) on flange (of bucket and boom spools).
5. Remove bucket spool (2) and boom spool, as assemblies, from valve housing (1).

   NOTE: *Take care to prevent any dent or scratches on surface of spool when taking it out.*

6. Loosen socket head bolt (13) and remove short cap (11) along with O-rings (12) on flange and spacer (14) (of bucket and boom spools).

7. Loosen socket head bolt (17) and remove cover (32) and O-ring (16) from valve housing (1).

8. Remove plug (18) with O-ring (21), spring (19) and poppet (20) from valve housing (1). (2 parts)

9. Remove plug assembly (33) from housing (1).

10. Insert it one-quarter of the way into a wood holding block (Figure 2). Use caution not to damage outside of spool assembly. Remove spring seat (4) and springs (5 and 6) by loosening spool ends (7 and 8). Use care not to drop spool. The spool is under pressure from springs (5 and 6).

    NOTE: *Caps on each end of spools are held in place with Loctite. They may have to be heated using an industrial hot air gun. Avoid overheating parts. Recommended temperature is about 200 - 250°C (392 - 482°F). Overheated parts must be replaced with new ones.*

    NOTE: *Match mark parts, for proper orientation and location during reassembly.*

11. Do not remove plugs (23 and 24) unless they are damaged.

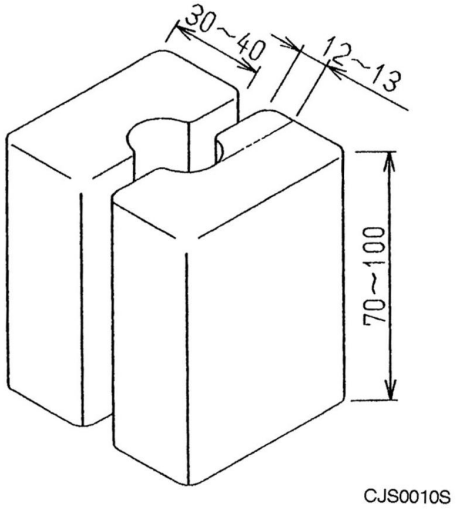

Figure 2 Wood

CLEANING AND INSPECTION (WEAR LIMITS AND TOLERANCES)

For general cleaning and inspection procedures, refer to "General Maintenance Procedures" section.

Check every part to see if there are any burrs, dents, scratches, or any other defect on its surface.

1. Remove any dents or scratches made on surface of load check seat in valve housing (Plane E-E) with lapping compound.
2. Check outside of spool for any dents or scratches. Remove any small scratches with lapping compound.
3. Be sure that all mating surfaces that must move, are free of any foreign substances in the thread grooves and their travel path.
4. The spring should not be broken, deformed, or worn.
5. Check relief valve in accordance with “Valve Maintenance” on page 1-14, making sure that it is properly operating.
6. Replace all old O-rings and backup rings with new ones.
7. Remove cap or plug and check if there is any pieces of paint around the plug seat. This may cause the valve to malfunction or leak.

REASSEMBLY

Take care when reassembling O-rings:

1. Do not use O-ring with defects or cuts made when handling them.
2. Lubricate O-ring and its mating parts with grease or oil.
3. Do not stretch O-ring so it deforms.
4. Do not roll O-ring into position when installing it. It is hard for a twisted O-ring to recover its original shape, which may cause leakage.

Use caution when handling spool(s):

1. Use specified torque values when installing spools. Excessive torque may cause a spool to malfunction.
2. Make sure that every part (spool, spring, and spool end) is reassembled in the location that they were removed from.

How to apply Loctite.

1. Cleaning (Oil removing)

   Do either a vapor degreasing using acetate or ether; or clean with alkali cleaner. Do not use gasoline or kerosene.

2. Dry

   Dry matting surfaces by blowing clean air on them or allow them to dry in open air. Parts that are not fully dried will have less adhesiveness.

3. Primer

   Spray curing accelerator, Loctite Primer "T," on surface and let it dry for 3 - 5 minutes in open air.

4. Adhesive

   Apply a small amount of adhesive (Loctite #638 or equivalent) on 2 - 3 threads at screw hole in end of spool. Make sure end of spool does not have Loctite on it. Do not get Loctite on spring seat.

Reassembly Order

1. Degrease threaded hole on end of spool (2). Hold spool in wooden blocks. Apply Loctite #638 on threads in hole. Install first spring seat (4), spring (5) and second spring seat (4) on spool end (7). Install spool end (with seats and spring) into threaded end of spool. Tighten spool end to a torque of 1.0 - 1.20 kg•m (7 - 9 ft lb). Set assembly aside and allow Loctite to cure.

   NOTE: *Use specified torque, because excessive torque may deform the spool causing a malfunction.*

2. Degrease threaded hole on end of spool (9). Hold spool in wooden blocks. Apply Loctite #638 on threads in hole. Install first spring seat (4), spring (6) and second spring seat (4) on spool end (8). Install spool end (with seats and spring) into threaded end of spool. Tighten spool end to a torque of 1.0 - 1.20 kg•m (7 - 9 ft lb). Set assembly aside and allow Loctite to cure.

   NOTE: *Use specified torque, because excessive torque may deform the spool causing a malfunction.*

3. Tighten plug assembly (33) on bottom of housing (1) to a torque of 9 - 11 kg•m (65 - 80 ft lb).

4. Install O-ring (21) on plug (18). Then insert poppet (20) and spring (19) into valve housing (1). Install and tighten plug (18) and tighten to a torque of 13 - 14 kg•m (94 - 101 ft lb) (Width across flat: 27 mm) (2 parts).

5. Install O-ring (16) in O-ring groove of cover (15) and tighten socket head bolt (17) to a torque of 16 - 17 kg•m (112 - 119 ft lb).

6. Install O-ring (16) in O-ring groove of cover (32) and tighten socket head bolt (17) to a torque of 16 - 17 kg•m (112 - 119 ft lb)).

   NOTE: *Make sure that there is no foreign materials or O-rings protruding between mating surfaces of valve housing and cover.*

7. Slowly Insert spools (reassembled in Steps 1 and 2) into valve spool bores from which they were removed.

   NOTE: *Coat spools with clean hydraulic oil to aid installation. Make sure that spools are free to move and do not bind in the valve housing.*

8. Insert O-ring (12) in cap (9). Position cap, over end of spool assembly and secure into place with socket head bolt (13). Torque socket head bolt from 3.9 - 4.5 kg•m (29 - 32 ft lb).

9. Insert O-ring (12) in cap (10). Position cap, over end of spool assembly and secure into place with socket head bolt (13). Torque socket head bolt from 3.9 - 4.5 kg•m (29 - 32 ft lb).

10. Insert O-ring (12) in cap (11) and tighten socket head bolt (13) with torque of 3.9 - 4.5 kg•m (29 - 32 ft lb).

11. Insert O-ring (12) in cap (11). Then slide spacer (14) into cap.

    NOTE: *Make sure that spacer (14) is inserted in cap (11) with its indexing tab (凸) inserted into notch (凹) located inside cap. (See Figure 3)*

12. Position cap, over end of spool assembly and secure into place with socket head bolt (13). Torque socket head bolt from 3.9 - 4.5 kg•m (29 - 32 ft lb). Repeat procedure for remaining cap (11).

    NOTE: *Make sure that there is no foreign materials or O-rings protruding between mating surfaces of valve housing and caps.*

13. Tighten anticavatation valve (31) firmly against valve housing with torque of 8 - 9 kg•m (58 - 65 ft lb). (Width across flat: 32 mm)

14. Tighten overload relief valves (27, 28, and 29) firmly against valve housing with torque of 8 - 9 kg•m (58 - 65 ft lb). (Width across flat: 32 mm)

15. Tighten main relief valve (30) firmly against valve housing with torque of 9 - 11 kg•m (69 - 80 ft lb).

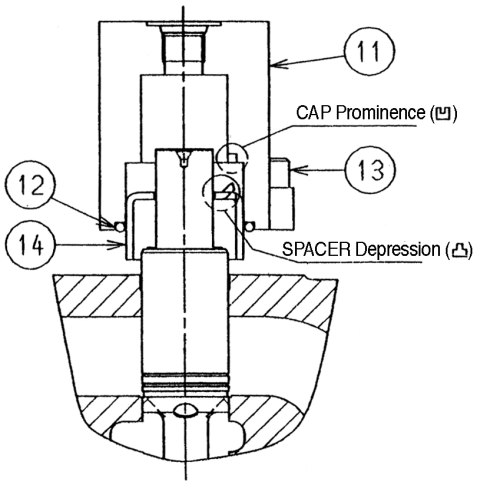

Figure 3 Wood

VALVE MAINTENANCE

Main Relief Valve

Disassembly

1. Remove plug (2), spring (7), poppet (4) and sleeve (3) from relief valve cartridge housing (1).
2. Remove adjustment lock nut assembly (13) and remove pilot poppet (6) and spring (8).
3. Remove O-rings and backup rings from all pieces.

   NOTE: *Do not remove pilot seat (5) that is attached to the plug body by crimping.*

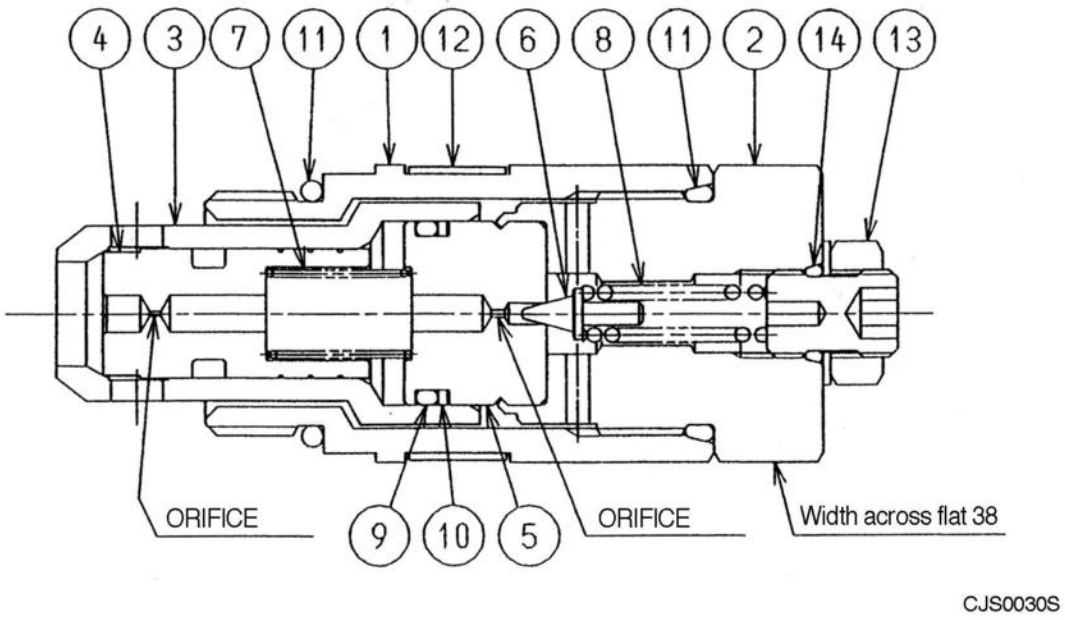

Figure 4

Cleaning and Inspection

NOTE: *Wash every part with clean mineral oil, dry it with compressed air, and inspect them as outlined in the following steps:*

1. Check if there is damage on poppet seat and sleeve, and that it contacts its mating surface evenly.
2. The main poppet (4) should slide easily in sleeve (3), while properly seating against each other. There should be no scratches on outside of main poppet or inside sleeve.
3. The spring should not be broken, deformed, or worn.

4. The orifices of main poppet (4) and pilot seat (5) should not be blocked with foreign substances.
5. Replace all old O-rings and backup rings with new ones.

   NOTE: *Any minor defect found should be corrected by lapping.*

   NOTE: *If a part is found defective, the whole main relief valve assembly should be replaced.*

Reassembly

1. Install O-ring (9) and backup ring (10) on pilot seat (5).
2. Install O-ring (11) on plug (2).
3. Install O-ring (11) on relief valve cartridge housing (1).
4. Install sleeve (3), main poppet (4), spring (7) and pilot seat (5) (with plug) in relief valve cartridge housing (1). Tighten plug (2) to a torque of 10 - 11 kg•m (69 - 80 ft lb).
5. Insert pilot poppet (6) and spring (8) in plug (2). Position O-ring (14) on plug (2). Install adjustment lock nut assembly (13) in plug. Temporarily tighten lock nut.
6. Insert main relief valve assembly in valve housing and tighten to a torque of 9 - 11 kg•m (69 - 80 ft lb).

   NOTE: *Adjust pressure as described in "Main Relief Valve Adjustment" on page 1-19.*

Overload Relief Valve

Disassembly

1. Remove plug (2), springs (7 and 8), piston (5), main poppet (4), and sleeve (3) from relief valve cartridge housing (1).
2. Loosen adjustment lock nut assembly (10) and remove spring (9) and pilot poppet (6).
3. Remove O-rings and backup rings from all pieces.

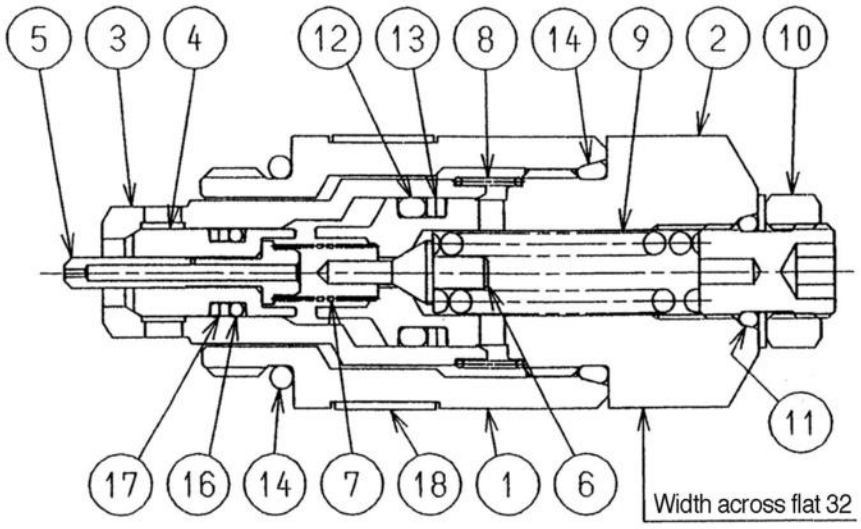

CJS0040S

Figure 5

Cleaning and Inspection

NOTE: *Wash every part with clean mineral oil, dry it with compressed air, and inspect them as outlined in the following steps:*

1. Check if there is damage on poppet seat and sleeve, and that it contacts its mating surface evenly.
2. The main poppet (4) should slide easily in sleeve (3), while properly seating against each other. There should be no scratches on outside of main poppet or inside sleeve.
3. The spring should not be broken, deformed, or worn.
4. The orifice of piston (5) should not be blocked with foreign substances. Each seat end should be properly shaped to ensure uniform contact.
5. Replace all old O-rings and backup rings with new ones.

NOTE: *Any minor defect found should be corrected by lapping.*

NOTE: *If a part is found defective, the whole overload relief valve assembly should be replaced.*

Reassembly

1. Install O-ring (12) and backup ring (13) on plug (2).
2. Install O-ring (16) and backup ring (17) on main poppet (4).
3. Install O-ring (14) on plug (2).
4. Install O-ring (14) on relief valve cartridge housing (1).
5. Slide piston (5) into main poppet (4), and then into sleeve (3).
6. Install sleeve (3) into relief valve cartridge housing (1).
7. Set springs (7 and 8) in position on piston (5) and sleeve (3).
8. Carefully install plug (2) in relief valve cartridge housing (1), making sure that springs (7 and 8) are properly seated. Tighten plug (2) to a torque of 8 - 9 kg•m (58 - 65 ft lb).
9. Insert pilot poppet (6) and spring (9) in plug (2). Position O-ring (11) on plug (2). Install adjustment lock nut assembly (10) in plug. Temporarily tighten lock nut.
10. Install overload relief valve assembly in valve housing and tighten to a torque of 8 - 9 kg•m (58 - 65 ft lb).

    NOTE: *Adjust pressure as described in "Overload Relief Valve Adjustment" on page 1-19.*

Anticavatation Valve

Disassembly

1. Remove plug (6) from poppet sleeve (1).

    NOTE: *Do not disassemble main poppet (2). It is connected to spring seat (4) and by C-pin (5) which keeps it assembled to other parts.*

2. Remove O-ring (7) and backup ring (8) from poppet sleeve (1).
3. Remove O-ring (9) from plug (6)

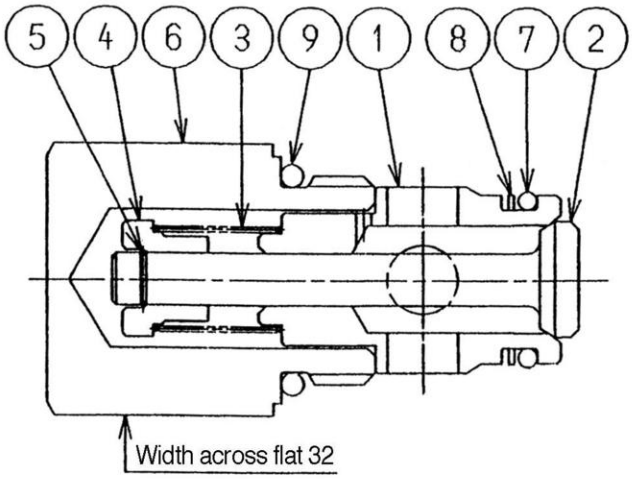

Figure 6

Cleaning and Inspection

NOTE: *Wash every part with clean mineral oil, dry it with compressed air, and inspect them as outlined in the following steps:*

1. Check if there is damage on poppet seat, and that it contacts its mating surface evenly.
2. There should be no scratches on outside of main poppet, or inside the sleeve.
3. The spring should not be broken, deformed, or worn.

NOTE: *Any minor defect found should be corrected by lapping.*

NOTE: *If a part is found defective, the whole anticavitation valve assembly should be replaced.*

Reassembly

1. Install O-ring (7) and backup ring (8) on poppet sleeve (1).
2. Install O-ring (9) on plug (6)
3. Slide poppet sleeve (1) in plug (6).
4. Install anticavataton valve in valve housing. Tighten it to a torque of 8 - 9 kg•m (58 - 65 ft lb).

VALVE ADJUSTMENT

Main Relief Valve Adjustment

1. Install a correct pressure gauge in outlet circuit.
2. Run pump according at its nominal number of rotation.
3. Activate spool in control valve and read value of pressure gauge at end of cylinder stroke.
4. Turn adjustment screw clockwise until needed pressure is obtained. Pressure will increases approximately 180 kg/ cm^2 (2,580 psi) for every full turn of adjustment screw. (Reference value)
5. When nominal pressure set, hold adjustment screw to prevent it from turning and tighten lock nut with a torque of 2.8 - 3.2 kg•m (20 - 23 ft lb).
6. Increase pressure again and check if it returns to nominal pressure.

Overload Relief Valve Adjustment

> **NOTE:** *If pressure setting is higher than value of main relief valve, replace it with a relief valve assembly that has been factory set instead of adjusting overload relief valve.*

1. Change main spool and read value of pressure gauge at end of cylinder stroke.
2. Turn adjustment screw clockwise until needed pressure is obtained. Pressure will increases approximately 220 kg/ cm^2 (3,080 psi) for every full turn of adjustment screw. (Reference value)
3. When nominal pressure set, hold adjustment screw to prevent it from turning and tighten lock nut with a torque of 2.8 - 3.2 kg•m (20 - 23 ft lb).
4. Increase pressure again and check if it returns to nominal pressure.

INSTALLATION

Take precautions for installation:

- Ensure that all hose and tube connections do not apply unnecessary pressure on valves.
- Bolts should be uniformly tightened.
- Use caution when welding near valves, where excessive heat or splatter may cause damage to seals.
- Do not remove port caps until valve is completely installed, to prevent foreign materials from entering the valve or hydraulic system.

OPERATION

1. First, check if valve arrangement is correct and oil is clean. Check for leakage by increasing pressure gradually (inching device with low idle).
2. Use hydraulic oil specified in the Operation and Maintenance Manual.
3. Do not increase pressure of relief valve above its nominal pressure value.
4. Start normal work cycle operations only after sufficiently warming up the pilot circuit.

   NOTE: *When operating at low temperatures, use the following procedures to prevent the valve from sticking, due to heat shock of spool:*

5. Do not move main relief valve or overload relief valve abruptly and successively in case of pilot operation, but operate the system slowly so that the oil in hydraulic actuators flows smoothly and increases its temperature evenly.
6. Do not try minute or composite operation at low temperatures which may cause heat in some parts.

Load Isolation System

Edition 1

Table of Contents

Load Isolation System

Safety Precautions 5
Applicable Models 5
General Description 6
Over View 7
Hydraulic Circuit 8
Function 9
Maintenance and Service work 9
LIS Valve-RSM2 10
Characteristic Curve 10
Parts List 11
Accumulator 12

SAFETY PRECAUTIONS

CAUTION!

Follow all safety recommendations and safe shop practices outlined in the front of this manual or those contained within this section.

Always use tools and equipment that are in good working order.

Use lifting and hoisting equipment capable of safely handling load.

Remember, that ultimately safety is your own personal responsibility.

APPLICABLE MODELS

The contents of this section apply to the following models and serial number ranges.

MODEL	SERIAL NUMBER RANGE
DL300	5001 and Up

GENERAL DESCRIPTION

Load Isolation System (LIS) reduces pitching movements that effect the vehicle and driver.

For this the lifting line is connected to the hydraulic accumulator via a switching valve that absorbs the loads caused by the pitching movement.

The following advantages apply when Load Isolation System is fitted:

- Higher transport speeds
- Higher handling rates
- Stable steering characteristics
- Shorter braking distances
- Higher comfort for the driver
- Lower mechanical loading of the entire machine
- Fewer repairs or down times with identical handling rates

Over View

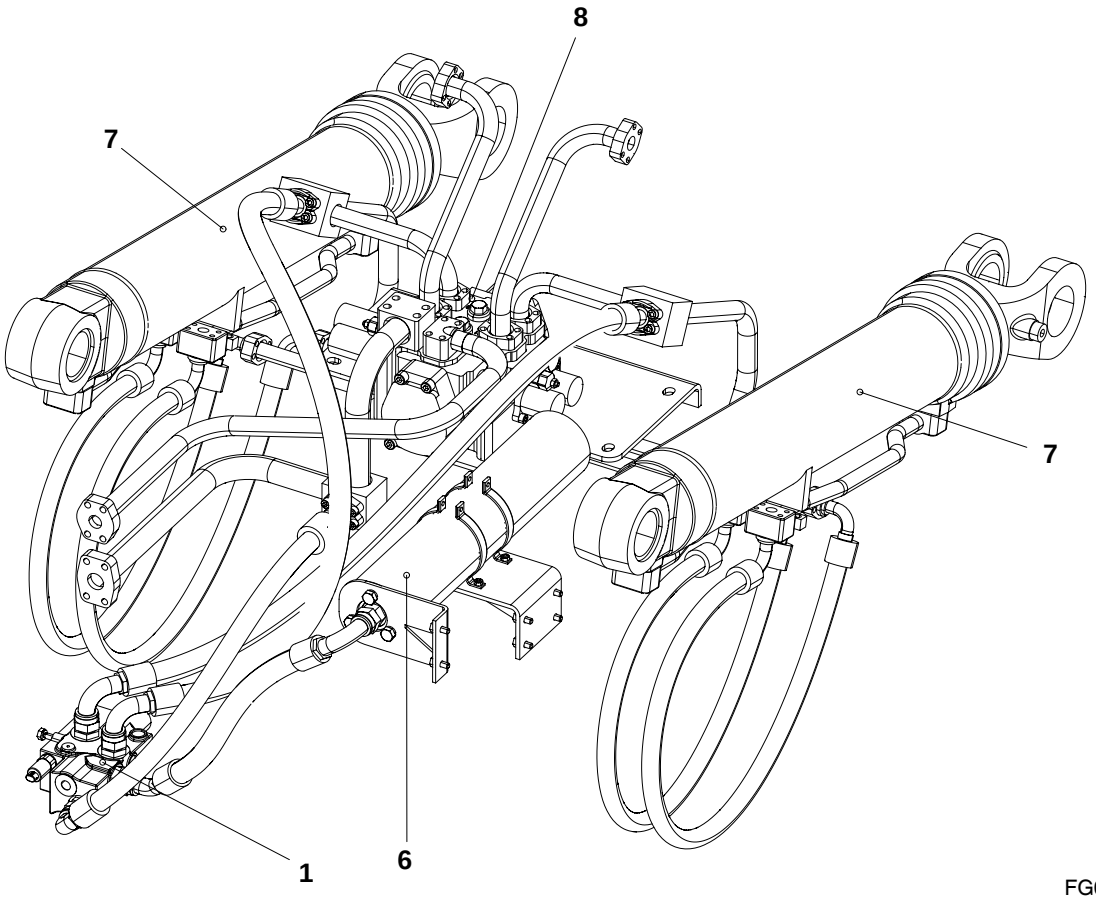

Figure 1

Hydraulic Circuit

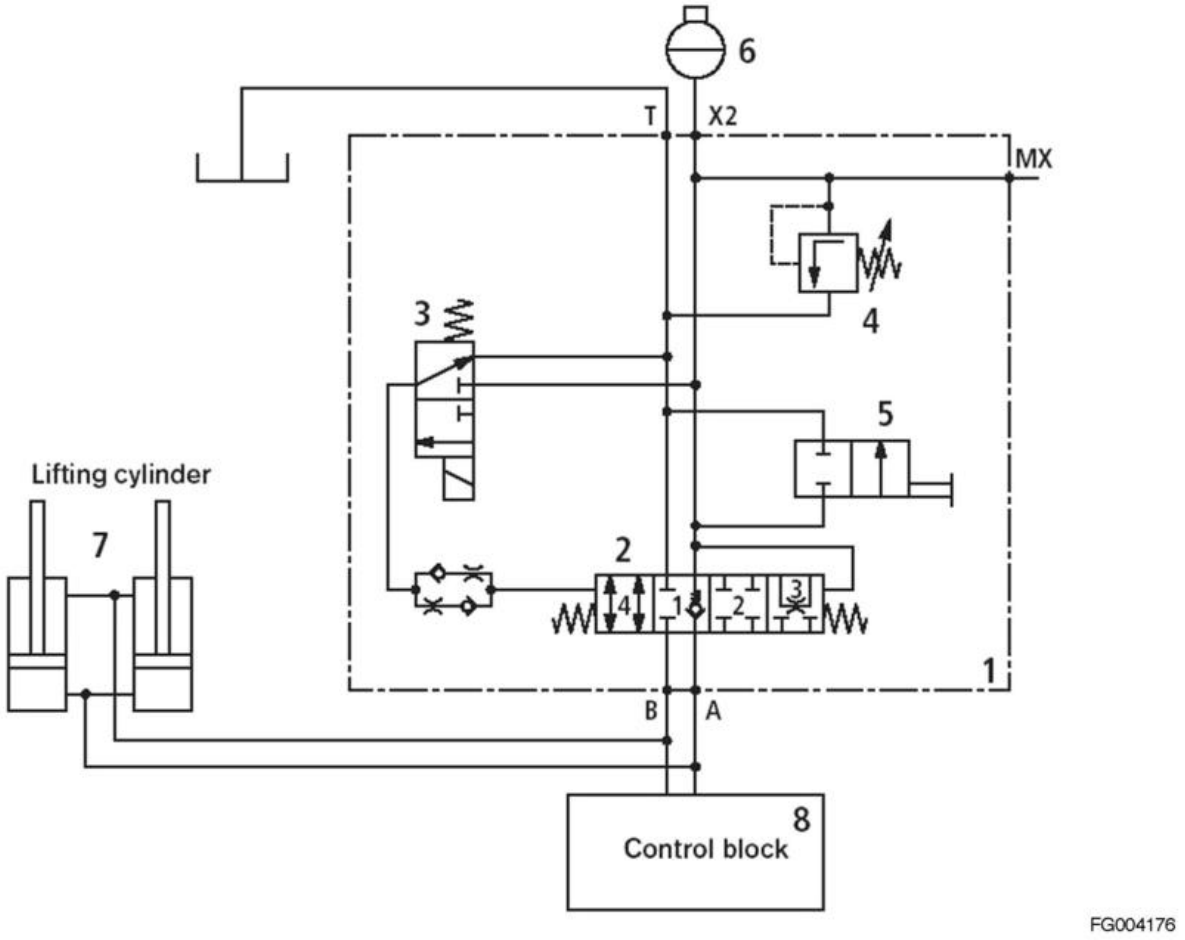

Figure 2

Reference Number	Description
1	LIS Valve (RSM2)
2	Valve spool
3	3/2-way Directional Valve, Solenoid Operated
4	Pressure Relief Valve (EC Design Tested)

Reference Number	Description
5	Emergency Drain Screw
6	Accumulator
7	Lift Cylinder
8	Control Valve

Function

If the hydraulic cylinder (7) has pressure applied to the piston side, then the pressure is also applied to the check valve in the valve spool (2) and the accumulator (6).

Dependent on B120 > from 120 bar the connection from the lifting cylinder (7) to the accumulator (6) via the valve spool (2) is interrupted (switched position 2).

A pressure reducing function for the accumulator (6) is integrated in switched position 3 of the valve spool (2).

The pressure reducing function lies approx. 30 bar over the pressure relief valve.

The damping valve can be automatically activated via the travel speed.

The 3/2-way directional valve (3) is switched into switched position 2.

The valve spool (2) moves into the 4th switched position and opens the connection from the piston side of the hydraulic cylinder (7) to the accumulator (6) as well as the rod side of the hydraulic cylinder (7) to tank.

The pressure relief valve (4) prevents the pressure from impermissibly exceeding the pressure in the accumulator. (setting < permissible accumulator pressure).

Maintenance and Service work

Via the emergency drain screw (5) (shown in the circuit as a mechanically operated 2/2-way directional valve) it is possible to unload the accumulator so that the above mentioned work can be carried out.

CAUTION!

The safety technical requirements of the vehicle have to be taken into account!

Before carrying out any maintenance work the accumulators must be unloaded. (zero pressure).

LIS Valve-RSM2

Specification

General		
Installation		Optional
Ambient Temperature Range		- 20 ~ + 80 °C
Weight		15 kg
Hydraulic		
Max. Operating Pressure	Ports A, B	420 bar
	Port X2	350 bar
	Port T	30 bar
Max. Nominal Flow	Ports A, X2	150 l/min
Pressure Fluid Mineral Oil		(HL, HLP) to DIN 51 524
Viscosity range		10 ~ 380 mm^2/s
Degree of Contamination (Max. Permissible)		ISO 4406 (C) class 20/18/15
Electrical		
Control Voltage		12, 24 V
Power Consumption (Solenoid)		14.4 W

Characteristic Curve

(measured with HLP 68, Oil = 40 ± 5°C)

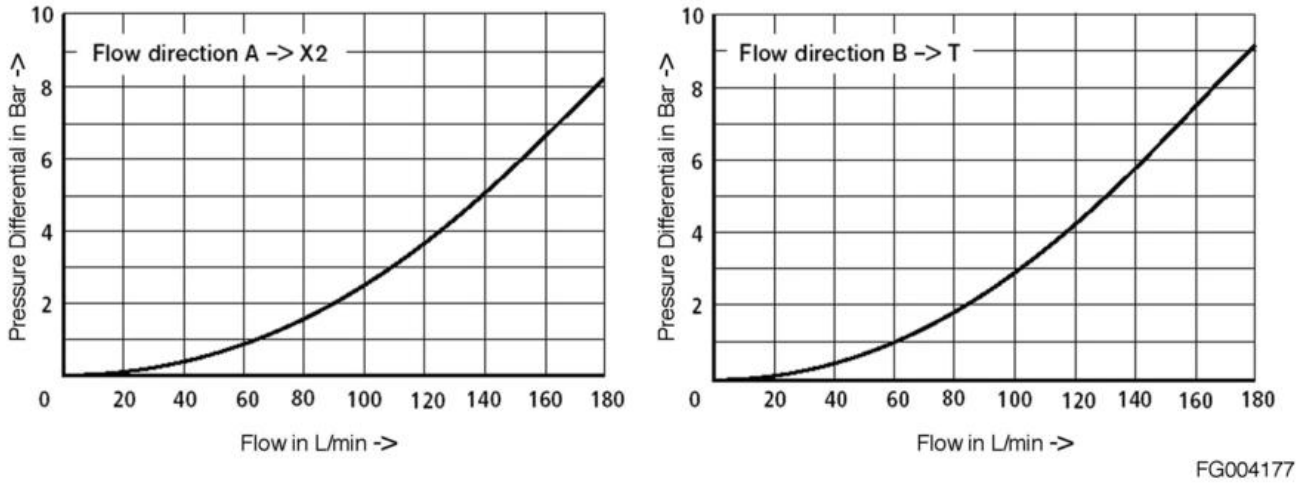

Figure 3

Parts List

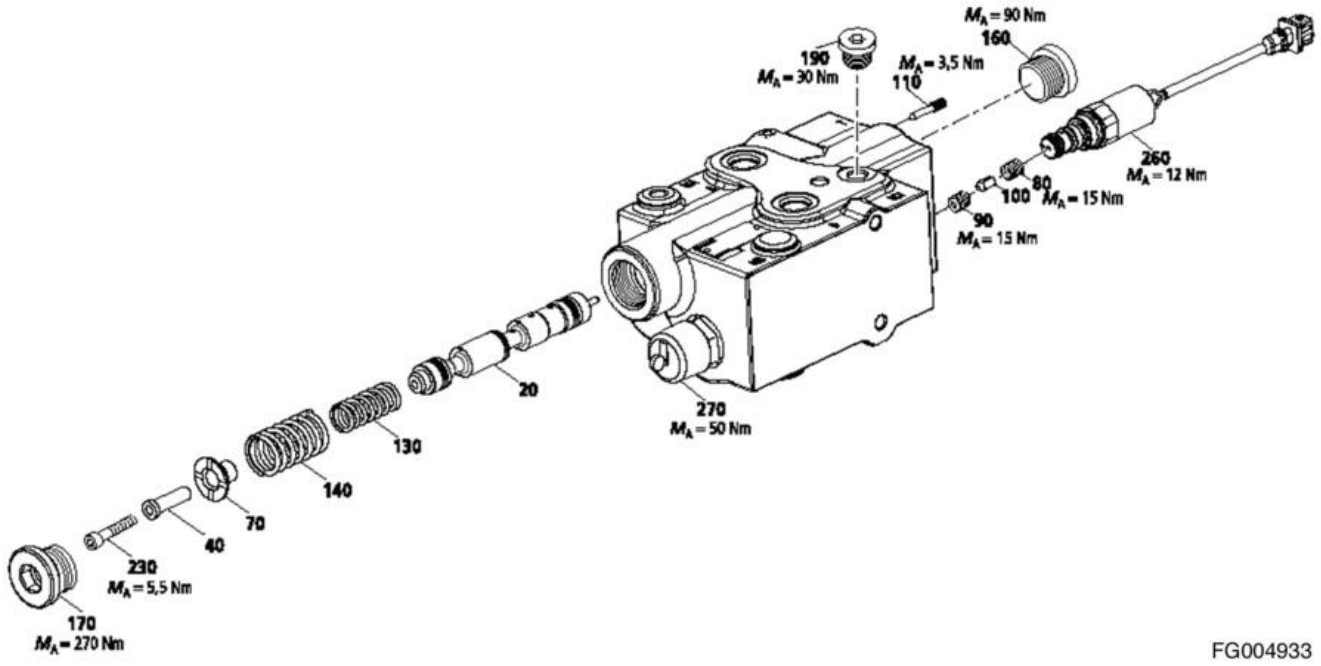

Figure 4

Reference Number	Description
10	Housing
20	Piston
40	Socket
70	Spring Disc
80	Valve Seat
90	Valve Seat
100	Throttle Pin
110	Grubscrew

Reference Number	Description
130	Compression Spring
140	Compression Spring
160	Plug
170	Plug
190	Plug
230	Cheese Head Screw
260	FTWE
270	DBDS

Accumulator

Specification

General	
Ambient Temperature Range	- 53 ~ + 204 °C
Weight	28.7 kg
Hydraulic	
Operating Pressure	275 bar
Max. Nominal Flow	380 //min
Capacity (Oil)	3.79 liters

Parts List

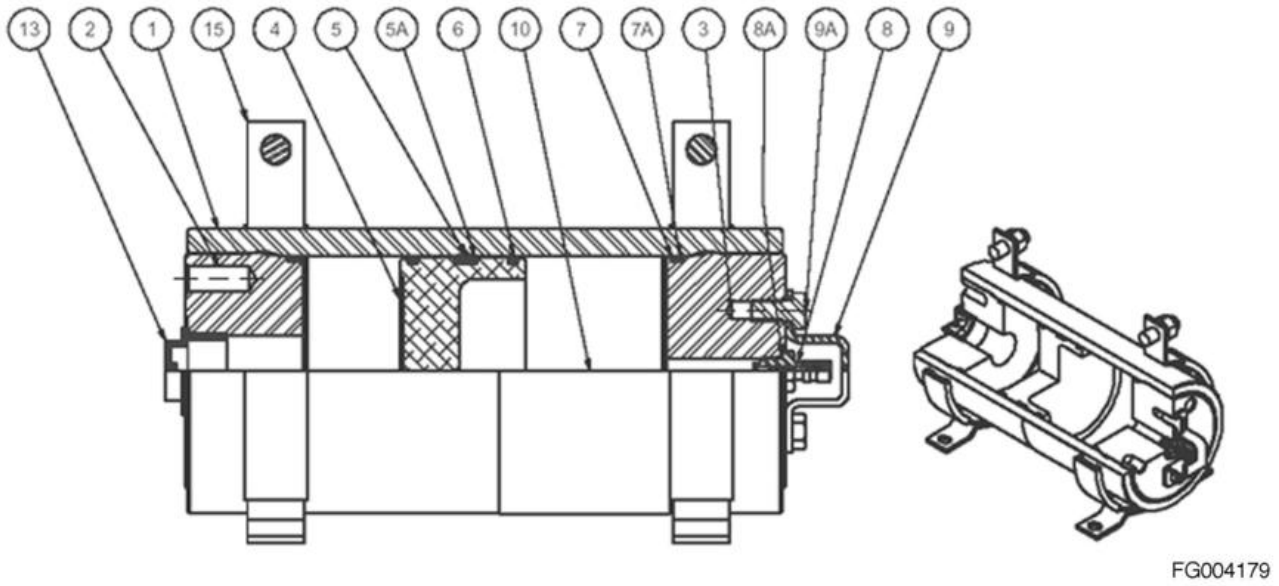

Figure 5

Reference Number	Description
01	Accumulator Body
02	Hydraulic Cap
03	Gas Cap
04	Piston
05	V O-ring
5A	Backup Washer
07	End Seal O-ring
7A	Backup Washer

Reference Number	Description
08	Gas Valve Body
8A	Gas Valve O-ring
09	Protective Strap
9A	Protective Screw
10	Name Plate
13	Port Protector
15	Mounting Bracket Assembly

Cooling System

Edition 1

Table of Contents

Cooling System

Safety Precautions 5
Applicable Models 5
General 6
Cooling System 7
Circuit 8
Specifications 9
Checking Hydraulic Function 10
Fan Motor 11
Cooling Fan : Bi-directional motor with speed control . 12
Cooling Fan Maximum Speed 12
Proportional Pressure Relief Cartridge 13
Proportional inverse pressure relief valve 13
Parts List 15
Solenoid Operated Spool Valve 16
Check Valve 16
Cooling Fan : Bi-directional Motor 16

SAFETY PRECAUTIONS

CAUTION!

Follow all safety recommendations and safe shop practices outlined in the front of this manual or those contained within this section.

Always use tools and equipment that are in good working order.

Use lifting and hoisting equipment capable of safely handling load.

Remember, that ultimately safety is your own personal responsibility.

APPLICABLE MODELS

The contents of this section apply to the following models and serial number ranges.

MODEL	SERIAL NUMBER RANGE
DL300	5001 and Up

GENERAL

The cooling system is to minimize energy consumption & noise by speed control of fan motor. The cooling is accomplished by continuously monitoring the temperature of the cooling water of engine & oil of the transmission and fitting the required fan speed.

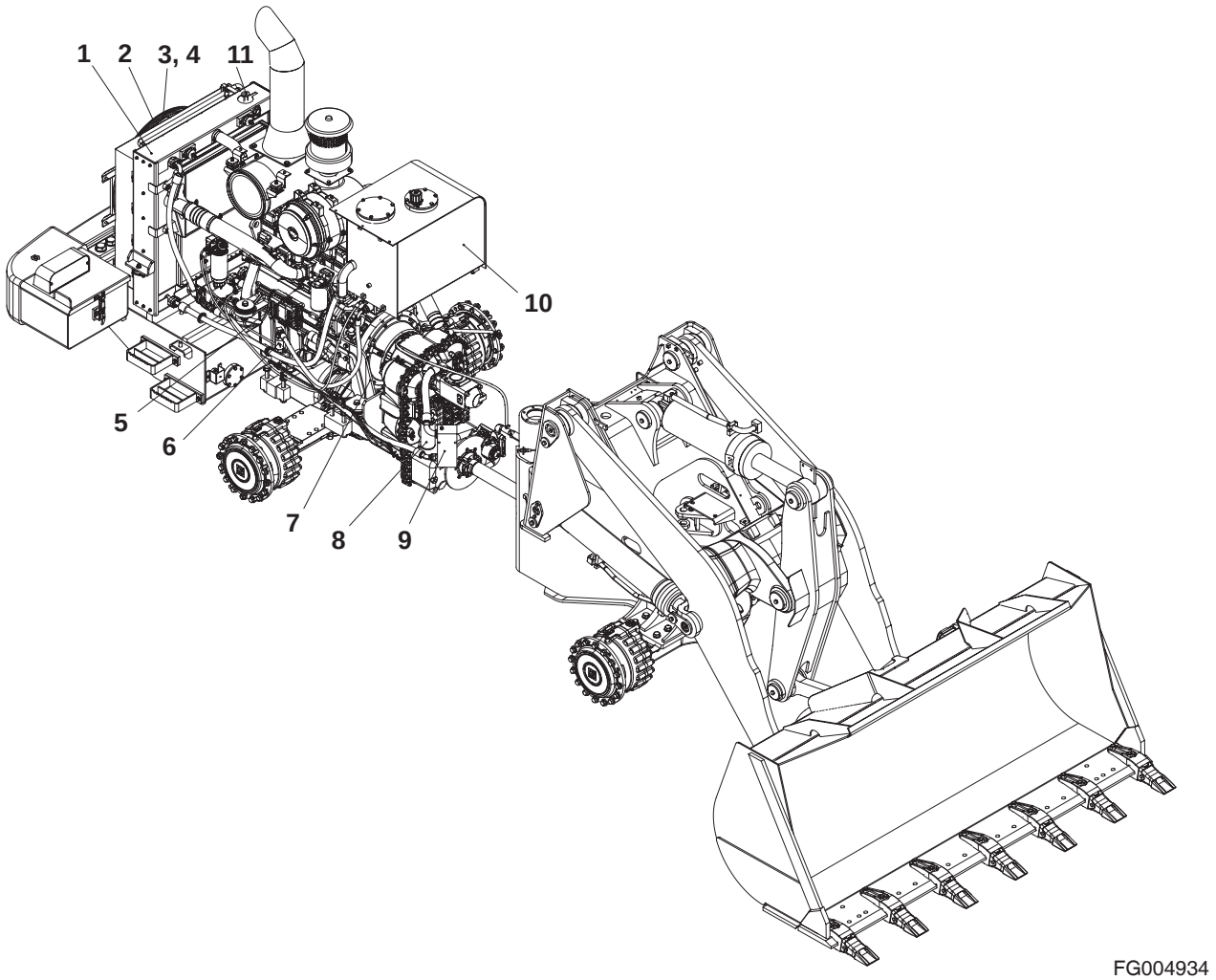

Figure 1

Reference Number	Description
1	Radiator Assembly
2	Fan Guard
3	Fan Motor (Rear Side)
4	Cooling Fan (Rear Side)
5	Engine
6	Bypass Valve

Reference Number	Description
7	Transmission
8	Transmission Oil Filter
9	Block Valve
10	Oil Tank
11	Radiator Cap

COOLING SYSTEM

By the motor-integrated proportional pressure relief valve, the fan speed (and there with the cooling performance) can be infinitely controlled in dependence on two different simultaneously input signals from temperature sensors.

The electronic control unit ECU processes the input signals and controls the valve coil current. The proportional relief valve has a fail safe-characteristic, this means, max. relief valve setting is adjusted automatically at interrupted voltage supply (e. g. broken wire). This results in a max. fan speed and therefore in a max. cooling performance.

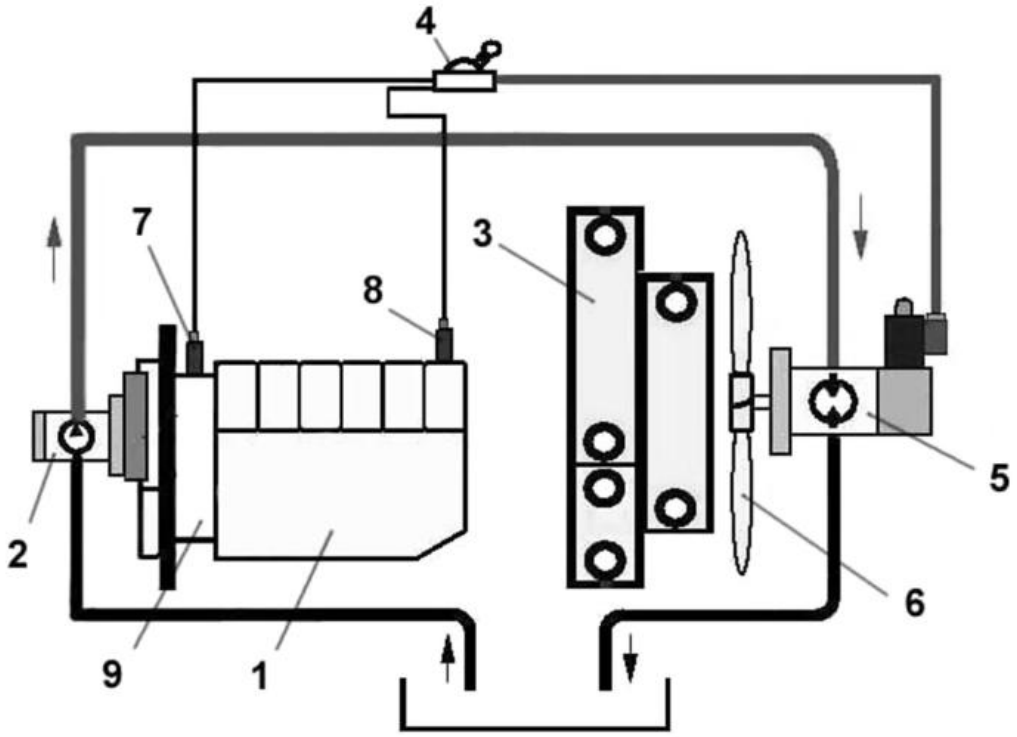

FG004198

Figure 2

Reference Number	Description
1	Engine
2	Brake & Pilot Pump
3	Cooler
4	Electronic Unit (ECU)
5	Fan Motor

Reference Number	Description
6	Cooling Fan
7	Temperature Sensor
8	Temperature Sensor
9	Transmission

Circuit

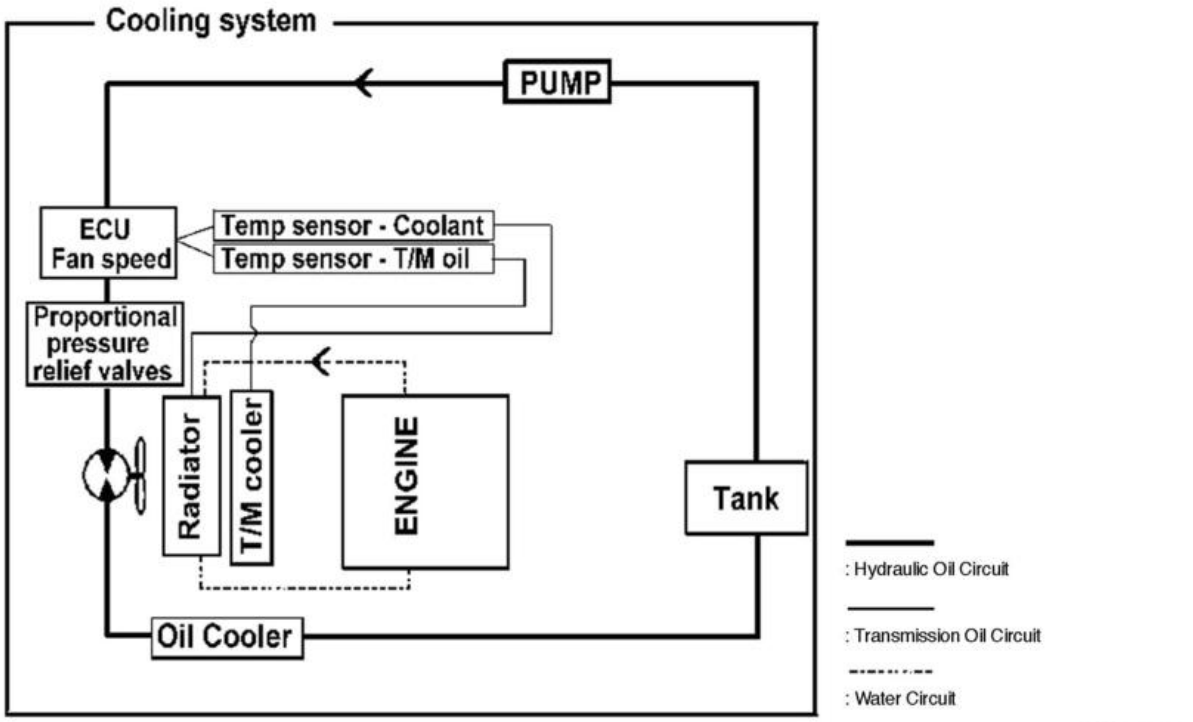

Figure 3

This system have advantages as following :

1. lower fuel consumption
2. lower sound level
3. Faster warming of the transmission
4. Faster warming of the oil in the hydraulic oil tank

Specifications

Cooling Fan Pump / Brake Pump	
Type	Gear Pump
Displacement	19.8 cm^3/rev (1.2 in^3/rev)
Flow	39.6 *l*/min (10.46 U.S. gpm.)
Thermostat	
No.	1ea
Begins Temperature to Open	71 °C
Fully Opened Temperature	85 °C
Cooling Fan	
Size	34"
No. Of Blade	8ea
Bypass valve	
Rated Flow	105 *l*/min (28 U.S. gpm.)
Cracking Pressure	3.0 ± 0.6kgf/cm^2 (42.7±8.5 psi)
Pressure Difference Δp	3.0 kgf/cm^2 at 1 *l*/min (42.7 psi at 0.26 U.S. gpm.)
	4.5 kgf/cm^2 at 105 *l*/min (64.0 psi at 28 U.S. gal.)

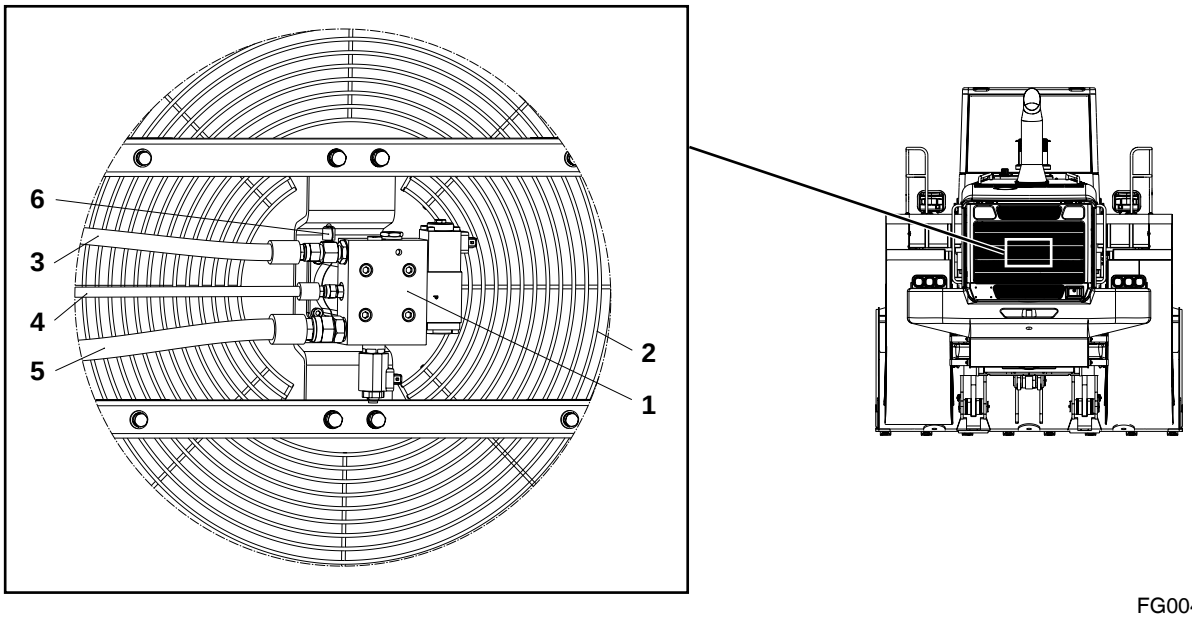

FG004236

Figure 4

Reference Number	Description
1	Fan Motor
2	Fan Guard
3	Inlet Line

Reference Number	Description
4	Drain Line
5	Outlet Line

Maximum Fan Speed, Checking

1. Open the radiator grill in order to connect the pressure gauge
2. Connect the pressure gauge to the pressure port (6) on the inlet hose (3)
   Check the maximum pressure by pressing in towards the end position of accelerator pedal and reading the pressure in the gauge.

   Maximum fan motor pressure : 140 ± 2 kfg/cm^2
   ($1{,}990 \pm 28.4$psi)
   (The fan speed is approximately 1200 rpm at this time)
3. If fan speed requires adjusting, stop the engine & adjust a proportional relief valve of the fan motor or the program of control unit.

WARNING

A modifying program of the control unit is permitted by an authorized person.

FAN MOTOR

The cooling fan is driven by a proportional & bi-directional fan motor.

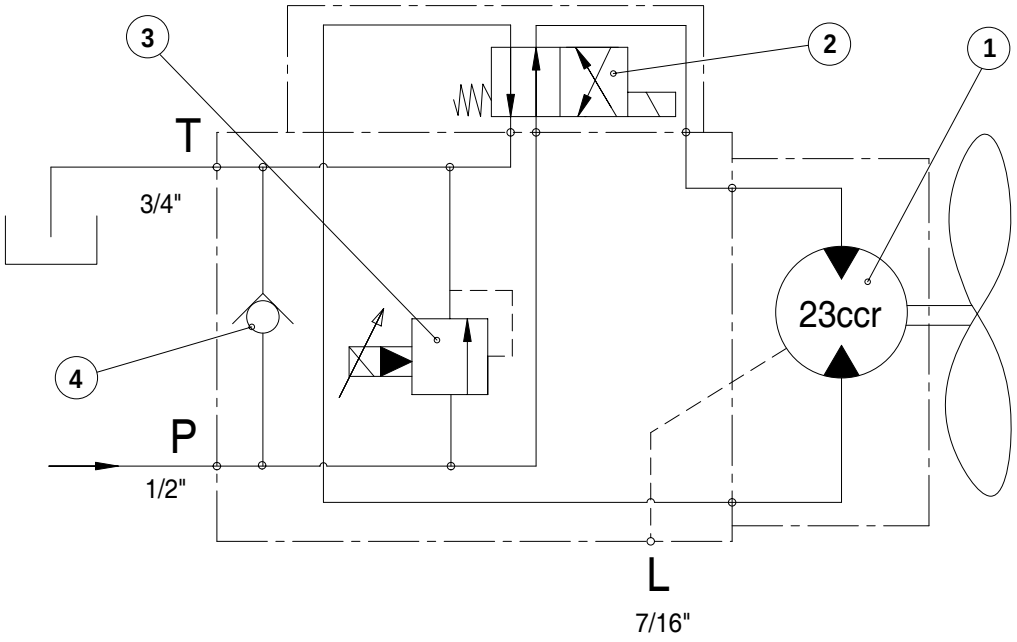

FG004935

Figure 5

Reference Number	Description
1	Motor
2	Solenoid Operated Spool Valve

Reference Number	Description
3	Prop. Pressure Relief Cartridge
4	Check Valve

Cooling Fan : Bi-directional motor with speed control

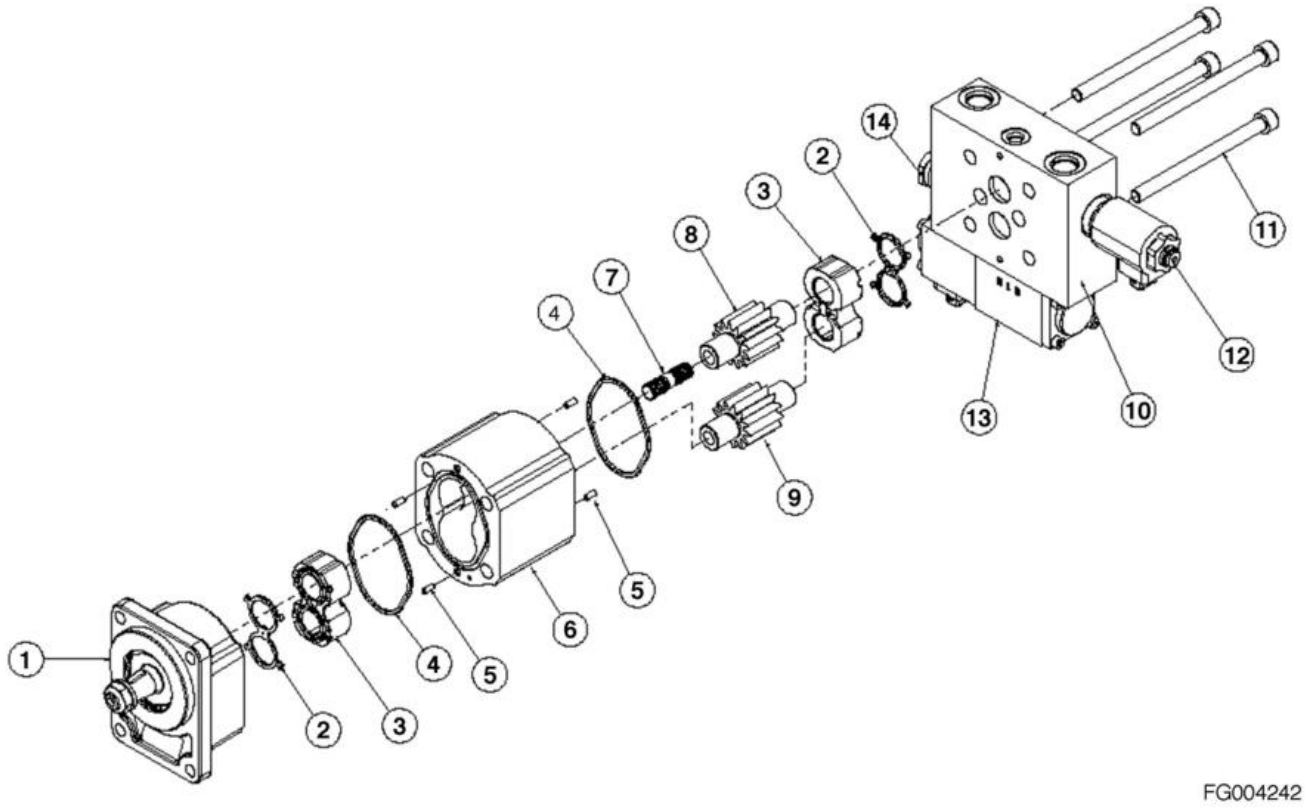

Figure 6

Reference Number	Description	Qty.
1	Front Bearing	1
2	Seal	2
3	Bearing Block	2
4	O-ring	2
5	Dowel Pin	4
6	Gear Housing	1
7	Coupling	1
8	Drive Gear	1

Reference Number	Description	Qty.
9	Idler Gear	1
10	Valve Cover	1
11	Bolt	4
12	Prop. Relief Valve Catridge	1
13	Solenoid Operated Spool Valve	1
14	Check Valve Catridge	1

Cooling Fan Maximum Speed

Max. speed	1200 rpm
Noise reduction kit	840 rpm
Max. speed when faulty signals	1200 rpm or above
Max. reverse speed	1200 rpm or above

Proportional Pressure Relief Cartridge

Function

The principal function of the pilot operated PRV is controls the motor speed from idle to max. speed by infinitely adjusting the applied solenoid current. Further, the PRV protects the motor from over-pressurisation. Due to the failsafe function, maximum PRV pressure is automatically set when solenoid de-energized (motor runs at max. speed = max. cooling power). Increasing solenoid current results in decreasing induced spring force, thereby reducing valve opening pressure (motor speed decreases). The nominal pressure is factory-set, not adjustable. Because of the pilot operation, the minimal adjustable pressure drop across the valve is slightly higher than for direct operated RV at the same flow.

NOTE: *In the case of bi-directional motor with pressurized outlet port, the back pressure is added to the nominal PRV setting (due to the internal PRV drain).*

Proportional inverse pressure relief valve

Screw-in cartridge

- Pilot operated
- Nominal pressure adjustable + 20 % / - 30 %
- Qmax = 100 l/min
- Pmax = 400 bar
- PN max = 200 bar

General Specifications

Description	Pilot operated proportional inverse pressure relief valve
Construction	Screw-in cartridge, cavity to ISO 7789
Operation	Proportional solenoid with slip-on coil
Mounting	Screw-in thread M22x1.5
Ambient temperature	-30 ~ +90°C
Fastening torque	MD = 40 Nm for screw-in cartridge
	MD max = 5 Nm for coil retaining nut
Weight	m = 0.45 kg

Hydraulic Specifications

Fluid	Mineral oil
Contamination	ISO 4406: 1999, class 18/16/13
Viscosity range	10 mm^2/s ~ 320 mm^2/s
Fluid temperature	-25 ~ +90°C
Peak pressure	Pmax = 400 bar
Tank pressure in port T	Pmax = 50 bar
Nominal pressure ranges	PN = 160 bar
Recommended vol. flow	Q = 5 ~100 //min with PN = 100 / 160 bar
	Q =10 ~100 //min with PN = 200 bar

Electrical Control

Construction	Solenoid, Wet pin, Push type, Pressure tight with exchangeable slip-on coil
Standard nominal voltage	U = 24 VDC
Limiting current	IG = 680 mA
Protection class	IP 65 to EN 60 529 (only with tested connector)

Efficiency

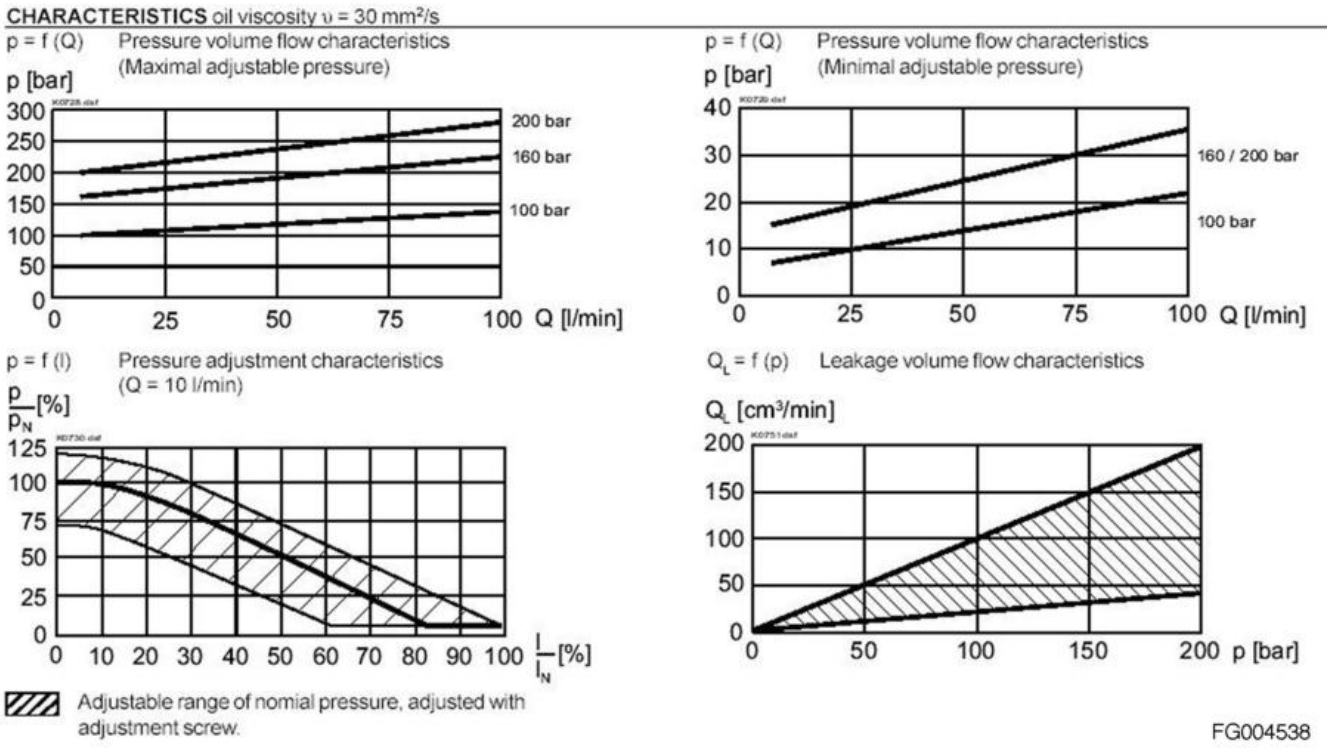

Figure 7

Parts List

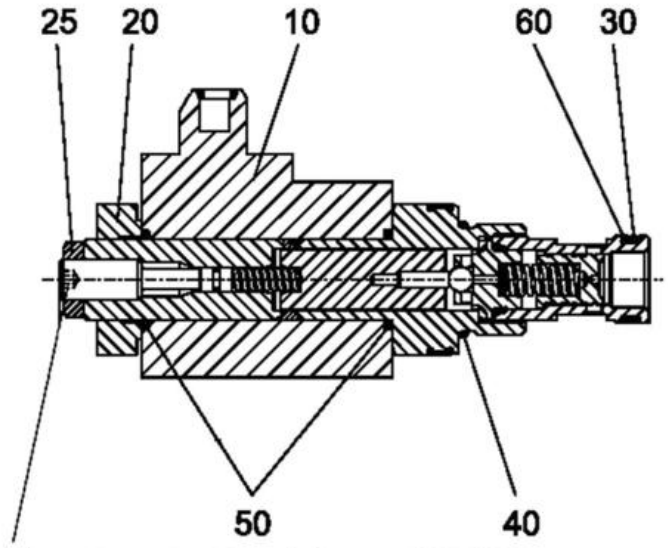

Adjustment screw to set the nominal pressure (+20% / 30%)
Screw out to vent the valve.

FG004250

Figure 8

Reference Number	Description
10	Coil KJ35/16 - G24
20	Retaining Nut M16x1x9.2
25	Hexagon Nut M8x1
30	O-ring Viton ID 14.00x1.78

Reference Number	Description
40	O-ring Viton ID 18.77x1.78
50	O-ring Viton ID 15.60x1.78
60	Backup Ring RD 14.6x17.5x1.4

Solenoid Operated Spool Valve

This can be used for cleaning the guard grill at the fan inlet side. The 2-way SV controls the direction of the flow through the motor and thereby the motor rotation. The maximum motor speed and protection against over-pressurization in both directions is provided by a double acting RV. The AC check valve prevents cavitation and erosion during motor speed deceleration and spin down.

Check Valve

The AC check valve prevents cavitation and erosion during motor speed deceleration and spin-down.

Cooling Fan : Bi-directional Motor

In case of this fan, the cooling system have only a bi-rotation without speed control. The pump of pilot & fan motor provides the required oil flow for the hydrostatic fan drive system as shown on the following schematic. The oil flow drives the hydraulic motor and the fan impeller mounted on the motor shaft.

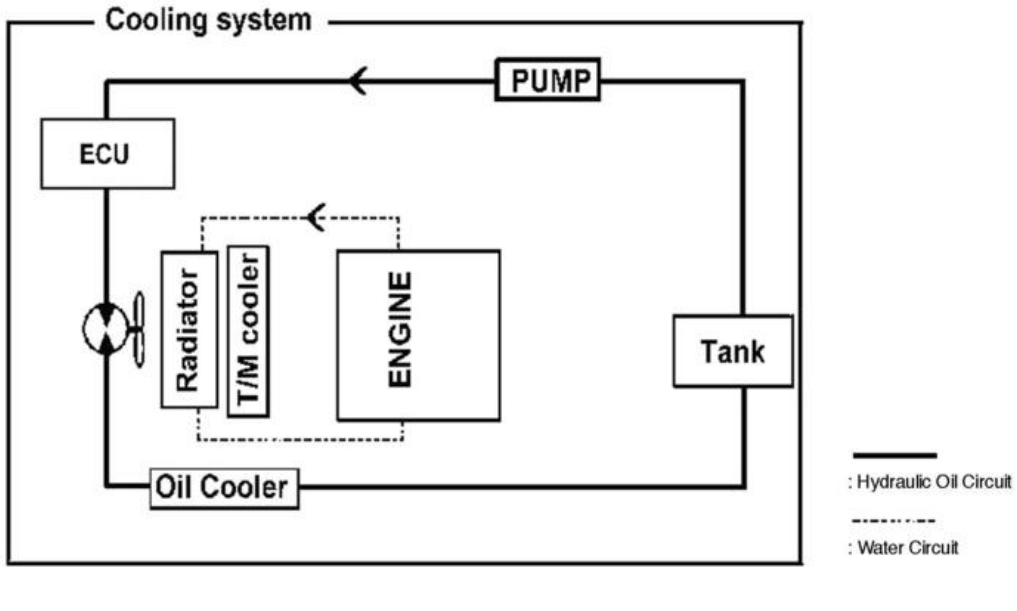

Figure 9

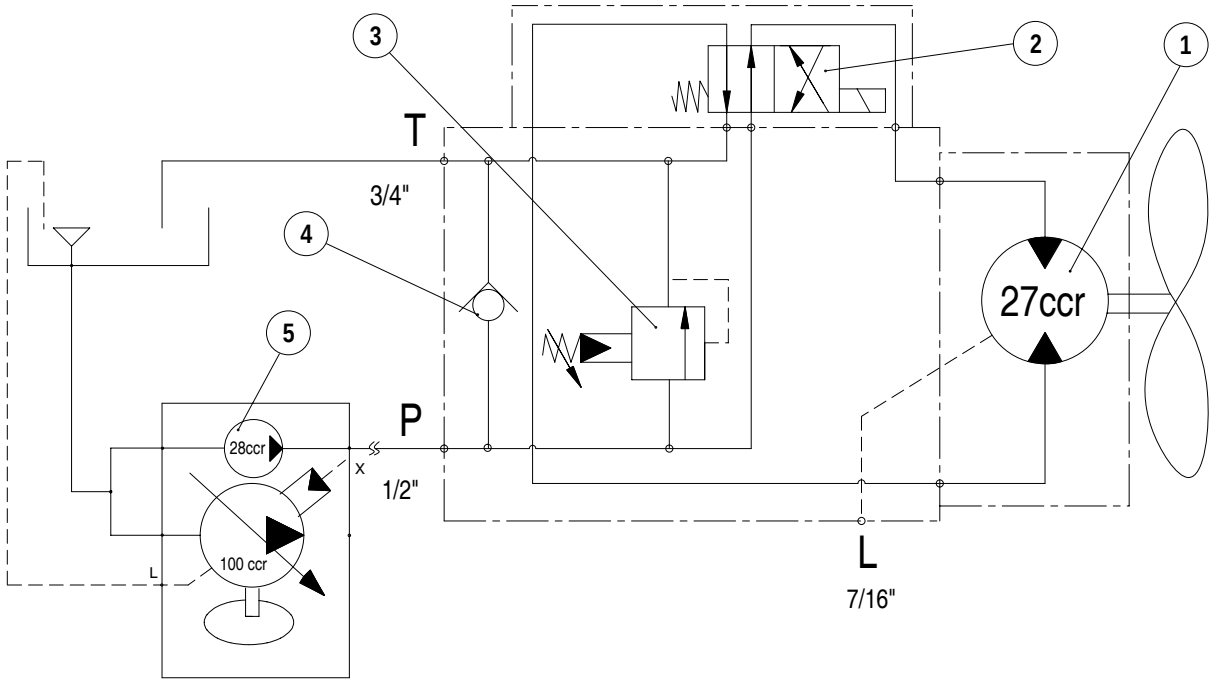

FG005168

Figure 10

Reference Number	Description
1	Motor
2	Solenoid Operated Spool Valve
3	Pressure Relief Cartridge

Reference Number	Description
4	Check Valve
5	Pilot & Brake Pump

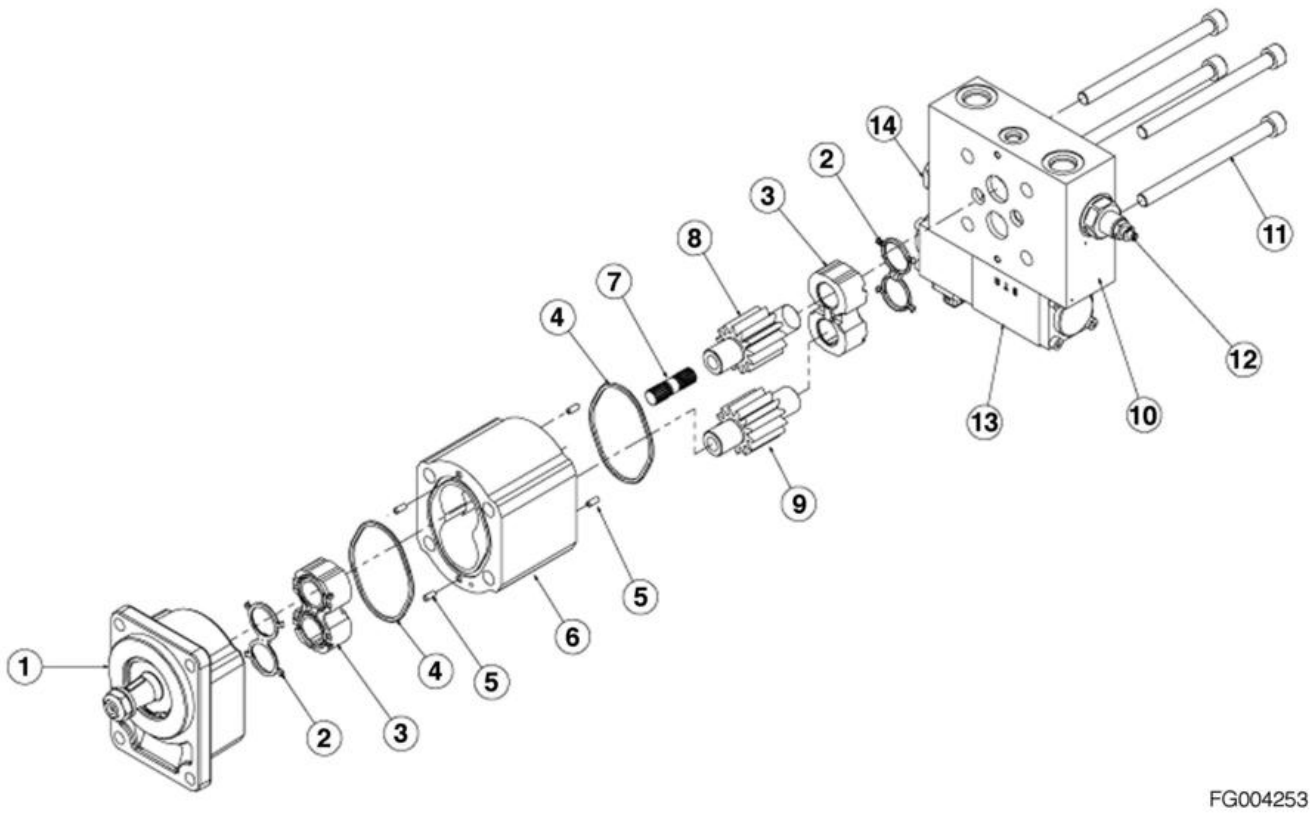

Figure 11

Reference Number	Description	Qty.
1	Front Bearing	1
2	Seal	2
3	Bearing Block	2
4	O-ring	2
5	Dowel Pin	4
6	Gear Housing	1
7	Coupling	1
8	Drive Gear	1

Reference Number	Description	Qty.
9	Idler Gear	1
10	Valve Cover	1
11	Bolt	4
12	Relief Valve Catridge	1
13	Solenoid Operated Spool Valve	1
14	Check Valve Catridge	1

Pilot System

Edition 1

Table of Contents

Pilot System

Safety Precautions 5
Applicable Models 5
Overview 6
Function 7
Block Diagram 8
Finger-tip 3 Lever + 3 Spool Control Valve 8
Finger-tip 2 Lever + 2 Spool Control Valve 8
FNR Lever + 3 Spool Control Valve 9
FNR Lever + 2 Spool Control Valve 9
Finger-tip Joystick 10
Specification 10
Parts List 11
Walvoil FNR Joystick 12
Specification 12
Parts List 13

SAFETY PRECAUTIONS

CAUTION!

Follow all safety recommendations and safe shop practices outlined in the front of this manual or those contained within this section.

Always use tools and equipment that are in good working order.

Use lifting and hoisting equipment capable of safely handling load.

Remember, that ultimately safety is your own personal responsibility.

APPLICABLE MODELS

The contents of this section apply to the following models and serial number ranges.

MODEL	SERIAL NUMBER RANGE
DL300	5001 and Up

OVERVIEW

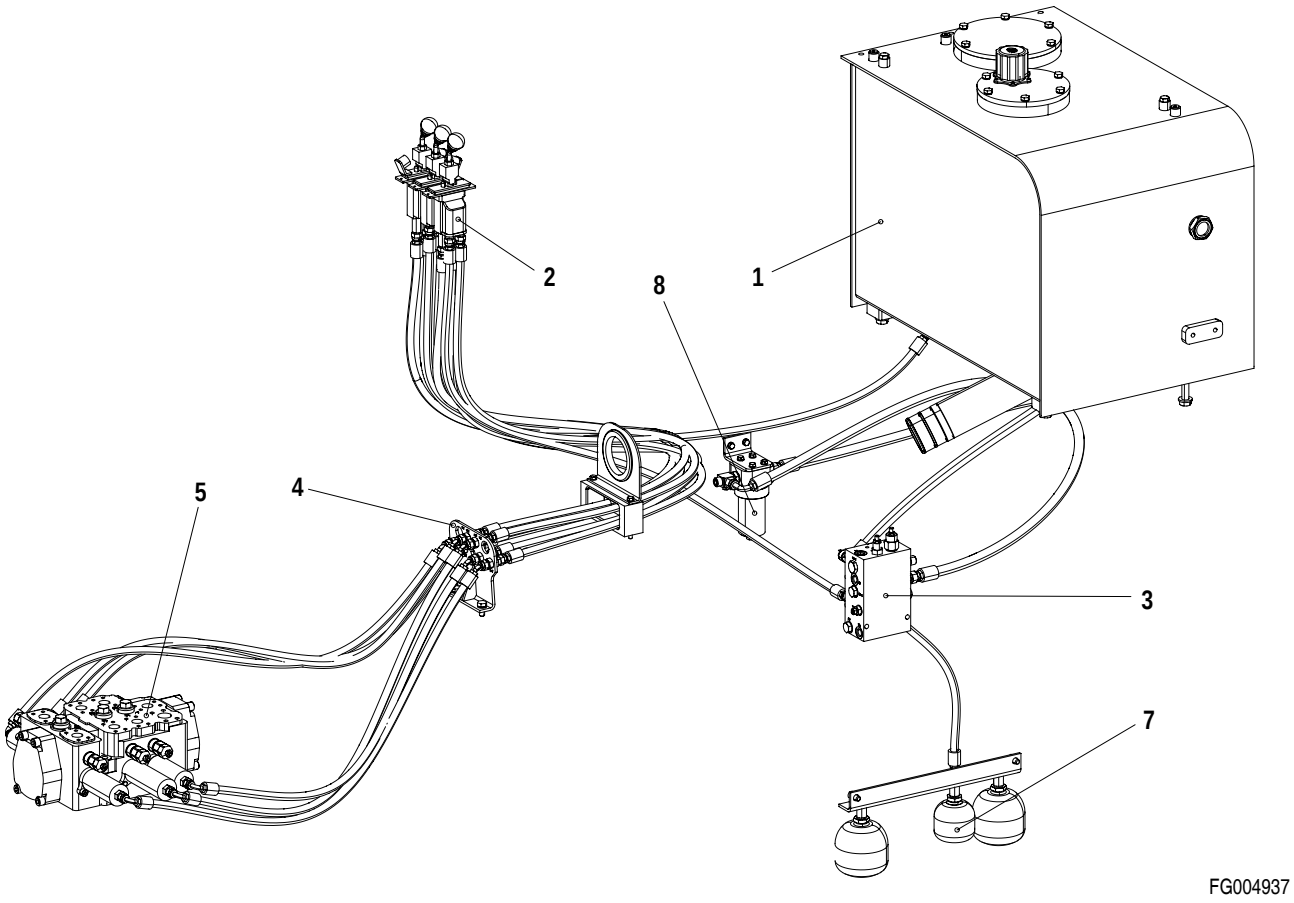

Figure 1

Reference Number	Description
1	Oil Tank
2	Pilot Control Valve
3	Brake & Pilot Supply Valve
4	Pilot Plate

Reference Number	Description
5	Main Control Valve
6	Aux. Control Valve
7	Pilot Accumulator
8	Brake & Pilot Filter

FUNCTION

The pilot system uses low-pressure oil to operate the main control valves. The main components of the pilot system are pump, pressure reducing valve, accumulator, pilot cutoff valve and pilot valves.

With the engine running, oil flows from hydraulic tank to pilot pump. The oil flows from the pump through pressure reducing valve to pilot cutoff valve. The pressure reducing valve maintains pilot system pressure at 28 kg/cm^2 (450 psi).

From the pilot cutoff valve the oil flows into the pilot control valves. Pilot valve is a closed center valve.

The oil cannot flow through the valve when it is in the HOLD position because it is a closed center valve.

When the control lever is moved to the DUMP position, oil flows through oil lines to the ends of the bucket spool of main control valve . This causes the main control valve spool to move. Movement of the spool opens passages for attachment pressure oil to flow to the rod end of the bucket cylinder.

Spool movement also opens a passage for return oil from the head end of the bucket cylinder to flow back to hydraulic tank. Attachment pressure oil acts on the rod end of the bucket cylinder and, because the head end of the cylinder is now vented to tank, the bucket will dump.

When the control lever is moved to the CROWD position, oil flows through oil lines to the ends of the bucket spool of main control valve. This causes the main control valve spool to move in the opposite direction.

Movement of the spool in this direction opens passages for pressure oil to flow to the head end of the tilt cylinder. Spool movement also opens a passage for return oil from the rod end of the tilt cylinder to flow back to the hydraulic tank. Attachment pressure oil acts on head end of the tilt cylinder and because the rod end of the cylinder is now vented to tank, the bucket will crowd.

BLOCK DIAGRAM

Finger-tip 3 Lever + 3 Spool Control Valve

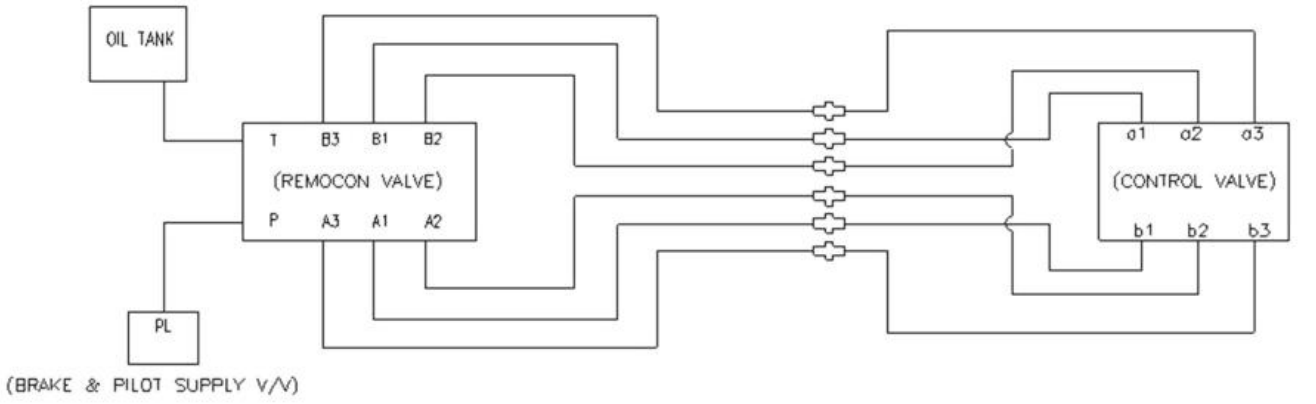

FG005221

Figure 2

Finger-tip 2 Lever + 2 Spool Control Valve

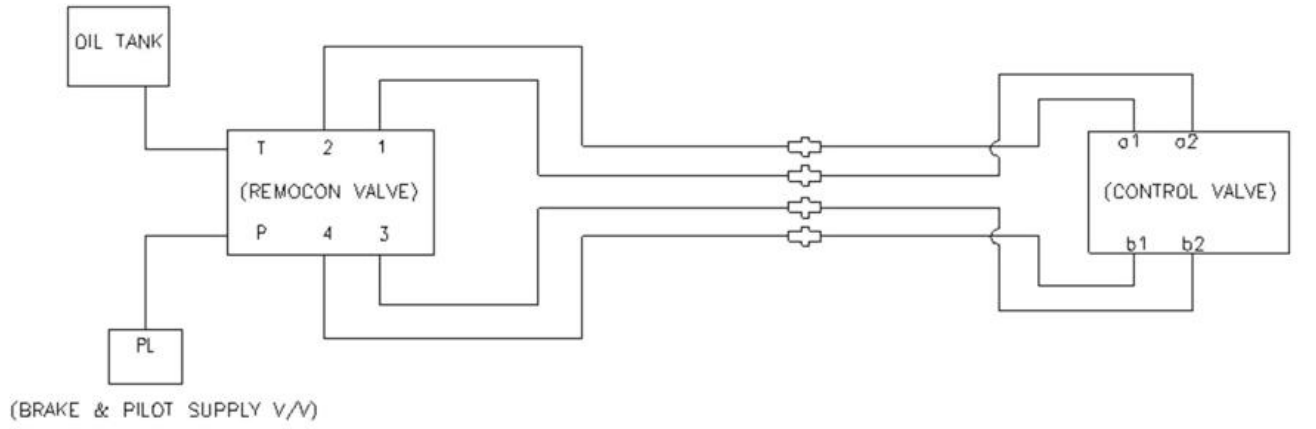

FG005222

Figure 3

FNR Lever + 3 Spool Control Valve

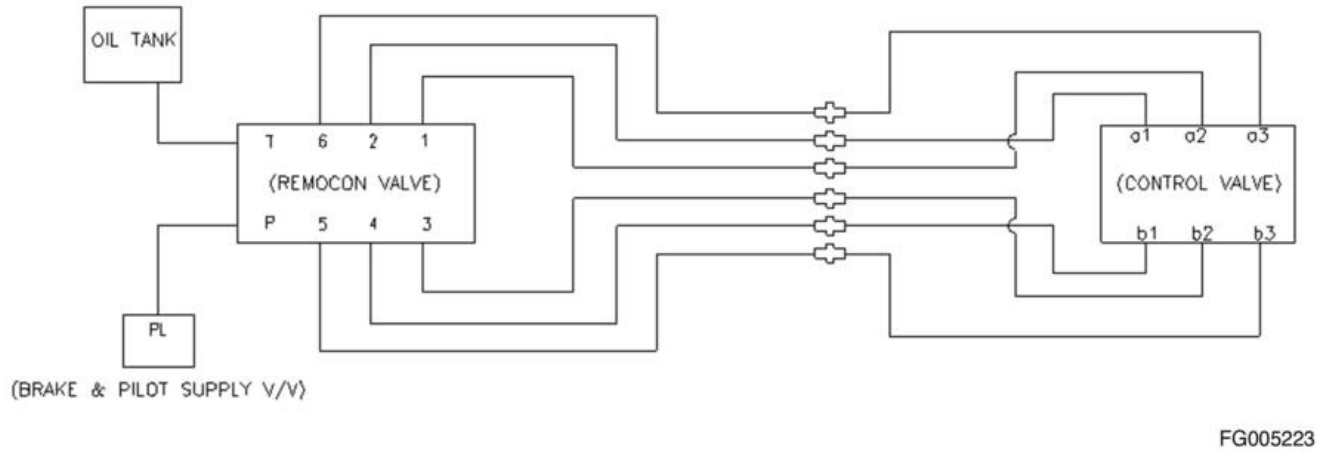

Figure 4

FNR Lever + 2 Spool Control Valve

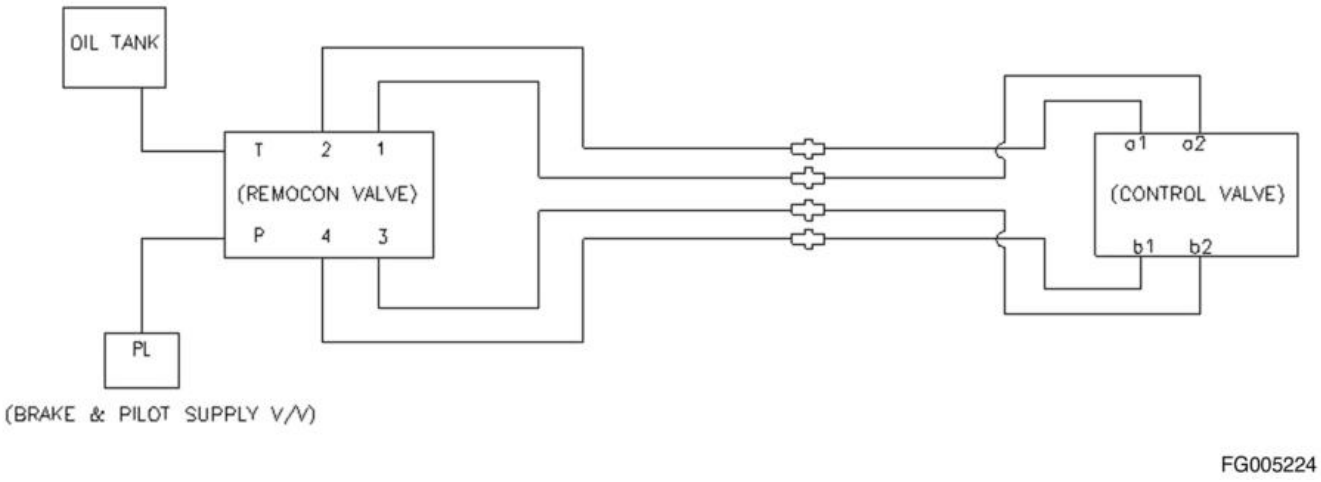

Figure 5

FINGER-TIP JOYSTICK

Specification

Supply Pressure	Max. 100 bar (1450 psi)
Control Pressure	Max. 75 bar (1090 psi)
Breakaway Pressure	1 bar ~ 16 bar
Return-line Pressure	Max. 3 bar (44 psi)
Control Flow	Max. 15 l/min (4 USgpm)
Hysteresis	Max. 0.5 bar (7.3 psi)
Ambient Temperature	-40 ~ +60 °C
Hyd. Oil Temperature	-20 ~ +70 °C
Leakage	Max. 20 cm^3/min
(From pump connection to tank with the spool in neutral position and a supply pressure of 40 bar)	
System Voltage	24V

Reference Number	Description
P	Brake & Pilot Supply Valve ('PL' port)
T	Tank Return
A1	Bucket Dump
A2	Boom Down
A3	Aux. (A port)
B1	Bucket Crowd
B2	Boom Up
B3	Aux. (B port)

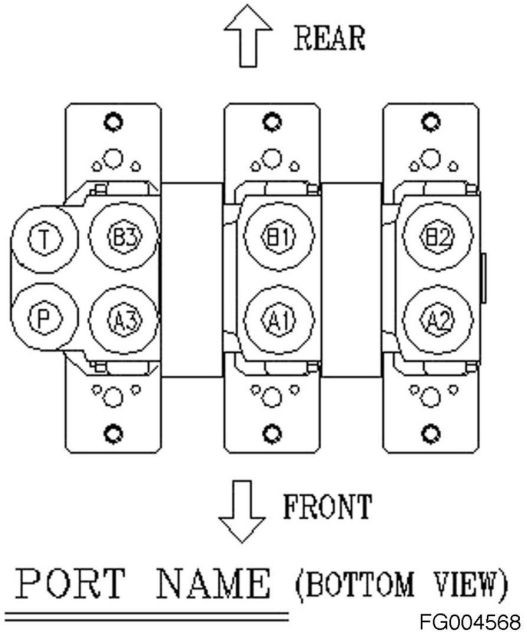

Figure 6

Parts List

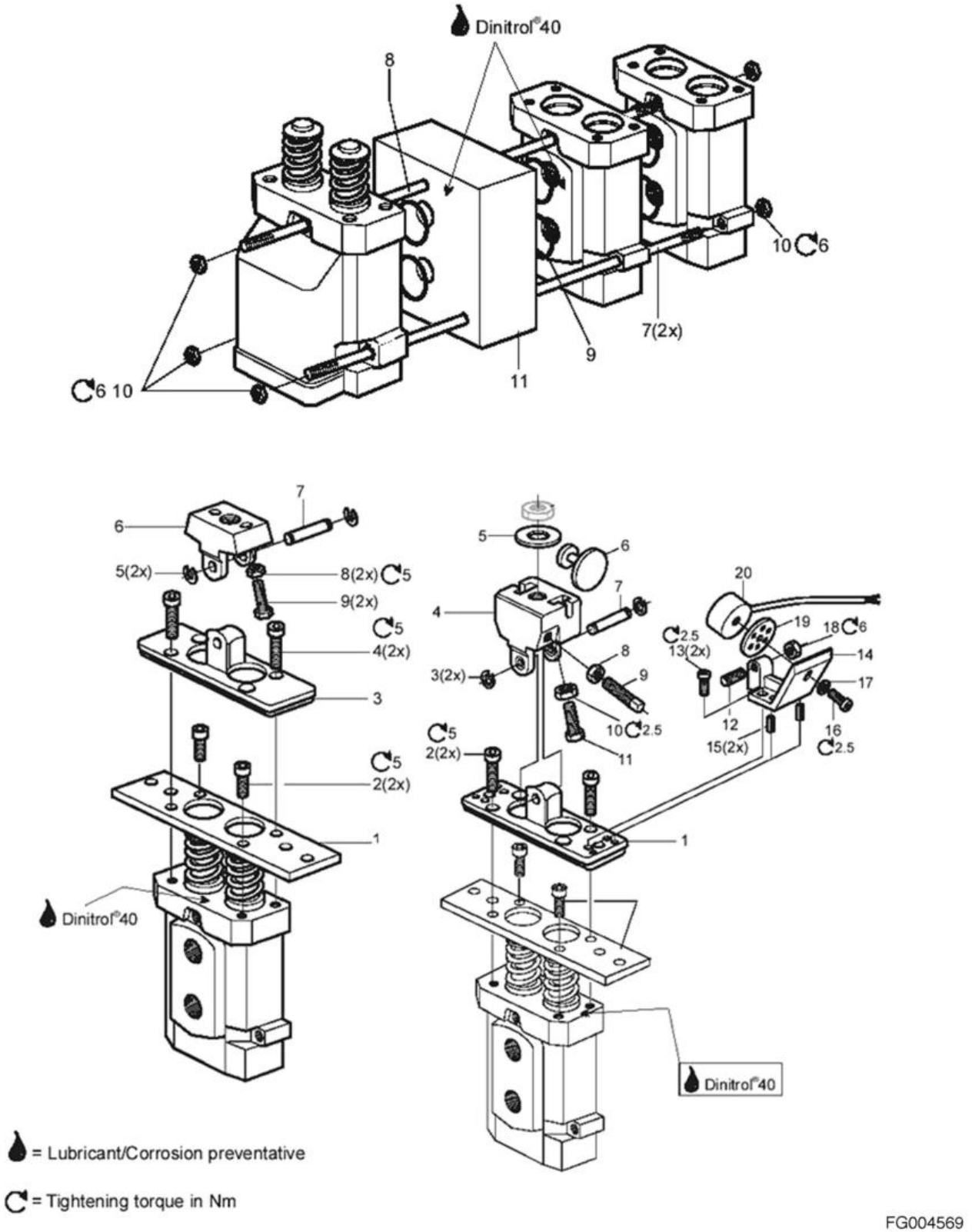

Figure 7

WALVOIL FNR JOYSTICK

Specification

Hydraulic Fluid	ISO VG #46 or SIMILAR
Ambient Temperature	-29 ~ +93 °C
Hyd. Oil Temperature	-20 ~ +100 °C
Vibration	3 -5G/ 30Hz
Shock	10G
Supply Pressure	28 bar (1450 psi)
Supply Flow	42 lpm
Contamination	NAS 9 Grade after Flushing

Reference Number	Description
P	Brake & Pilot Supply Valve (PL port)
T	Tank Return
1	Boom Up
2	Bucket Crowd
3	Boom Down
4	Bucket Dump
5	Option
6	Option

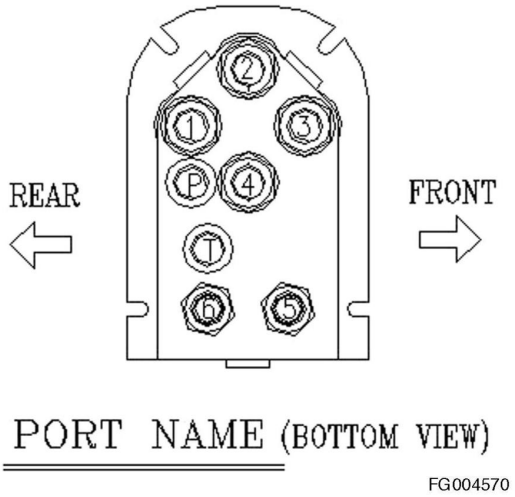

Figure 8

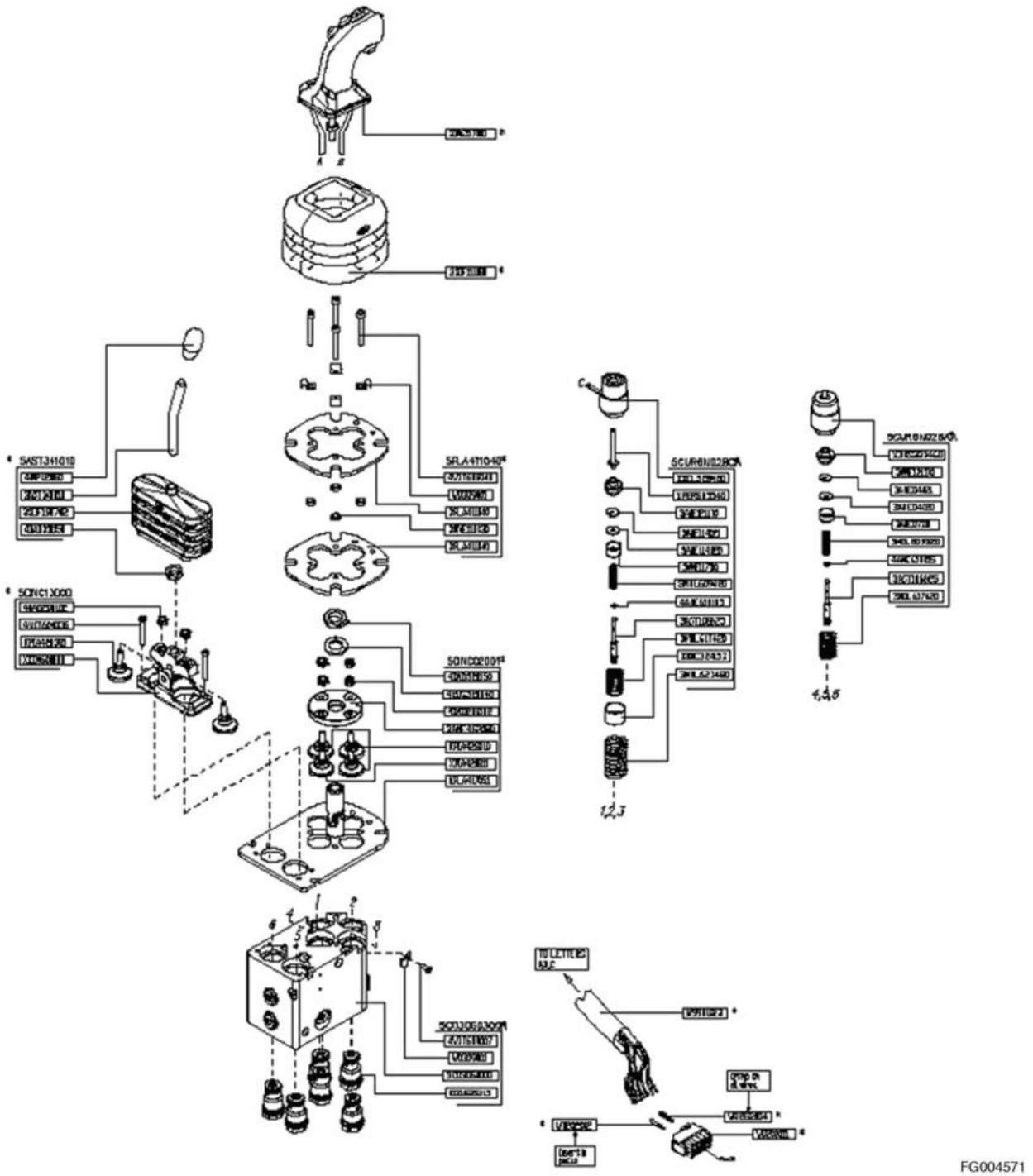

Figure 9

Hydraulic Schematic (DL300)

Edition 1

MEMO

Table of Contents

Hydraulic Schematic (DL300)

Safety Precautions 5
Applicable Models 5
General Description 7
DL300 8

MEMO

SAFETY PRECAUTIONS

CAUTION!

Follow all safety recommendations and safe shop practices outlined in the front of this manual or those contained within this section.

Always use tools and equipment that are in good working order.

Use lifting and hoisting equipment capable of safely handling load.

Remember, that ultimately safety is your own personal responsibility.

APPLICABLE MODELS

The contents of this section apply to the following models and serial number ranges.

MODEL	SERIAL NUMBER RANGE
DL300	5001 and Up

GENERAL DESCRIPTION

Schematic(s) presented in this section are laid out on facing pages.

An overlapping edge has been taken into consideration so that a photocopy can be made and pasted together to make a complete schematic.

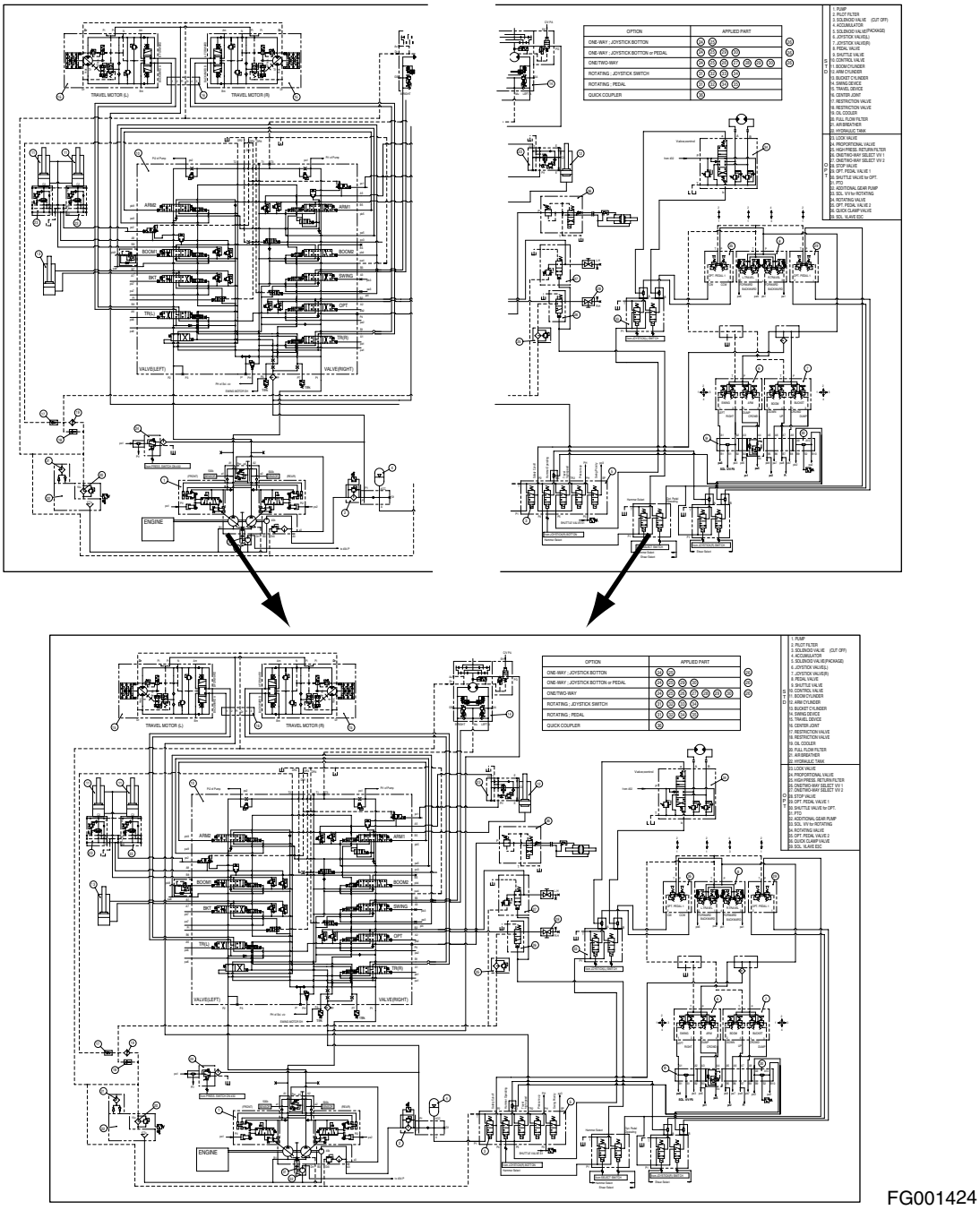

FG001424

Figure 1

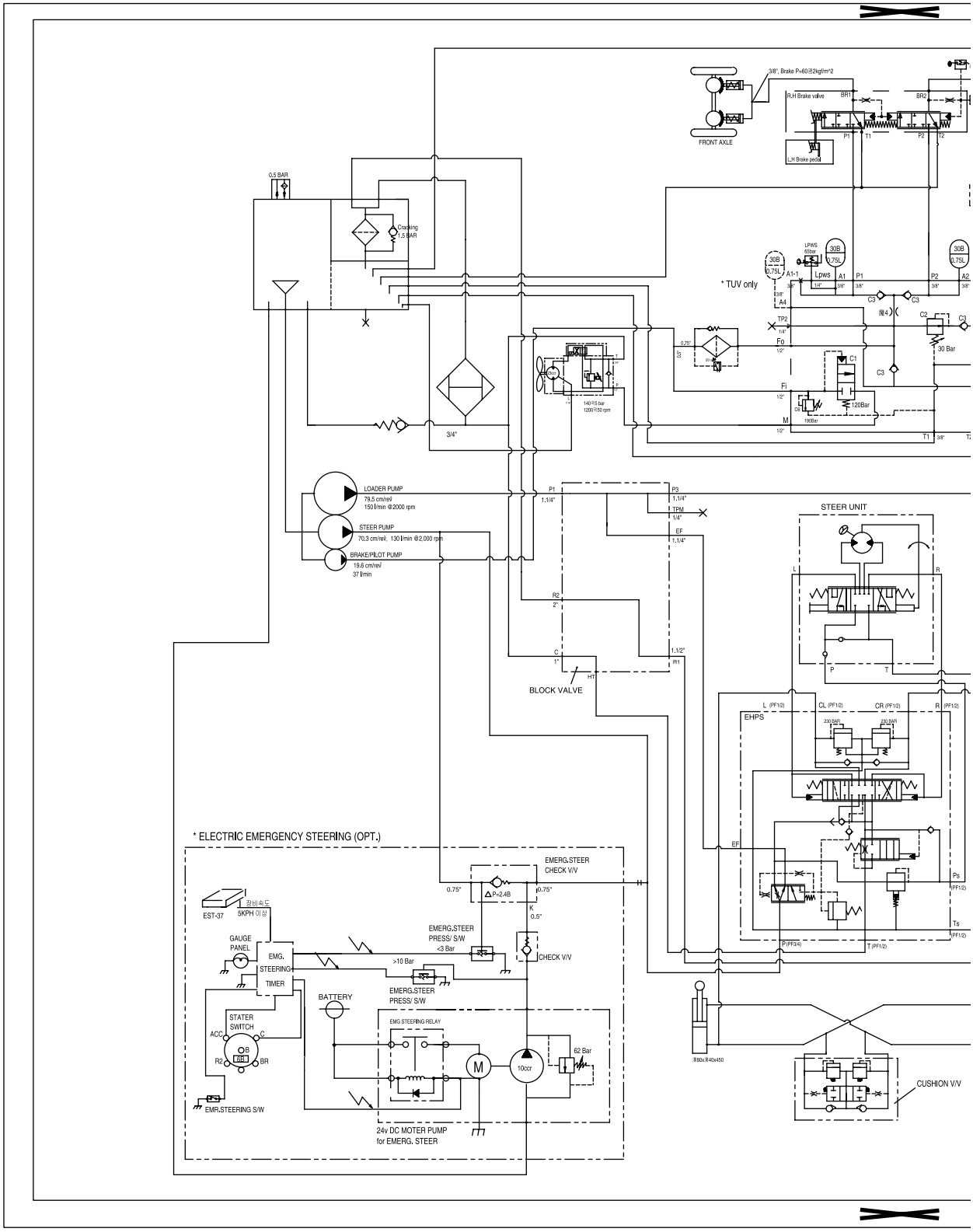
FRONT AXLE
R.H Brake valve
L.H Brake pedal
0.5 BAR
Cracking 1.5 BAR
* TUV only
30 Bar
120Bar
LOADER PUMP
79.5 cm/rev
150 l/min @2000 rpm
STEER PUMP
70.3 cm/rev, 130 l/min @2,000 rpm
BRAKE/PILOT PUMP
19.6 cm/rev
37 l/min
BLOCK VALVE
STEER UNIT
EHPS
* ELECTRIC EMERGENCY STEERING (OPT.)
EMERG.STEER CHECK V/V
EMERG.STEER PRESS/ S/W <3 Bar
EMERG.STEER PRESS/ S/W
CHECK V/V
BATTERY
EMG STEERING RELAY
62 Bar
24v DC MOTER PUMP for EMERG. STEER
EMR.STEERING S/W
CUSHION V/V

Figure 2

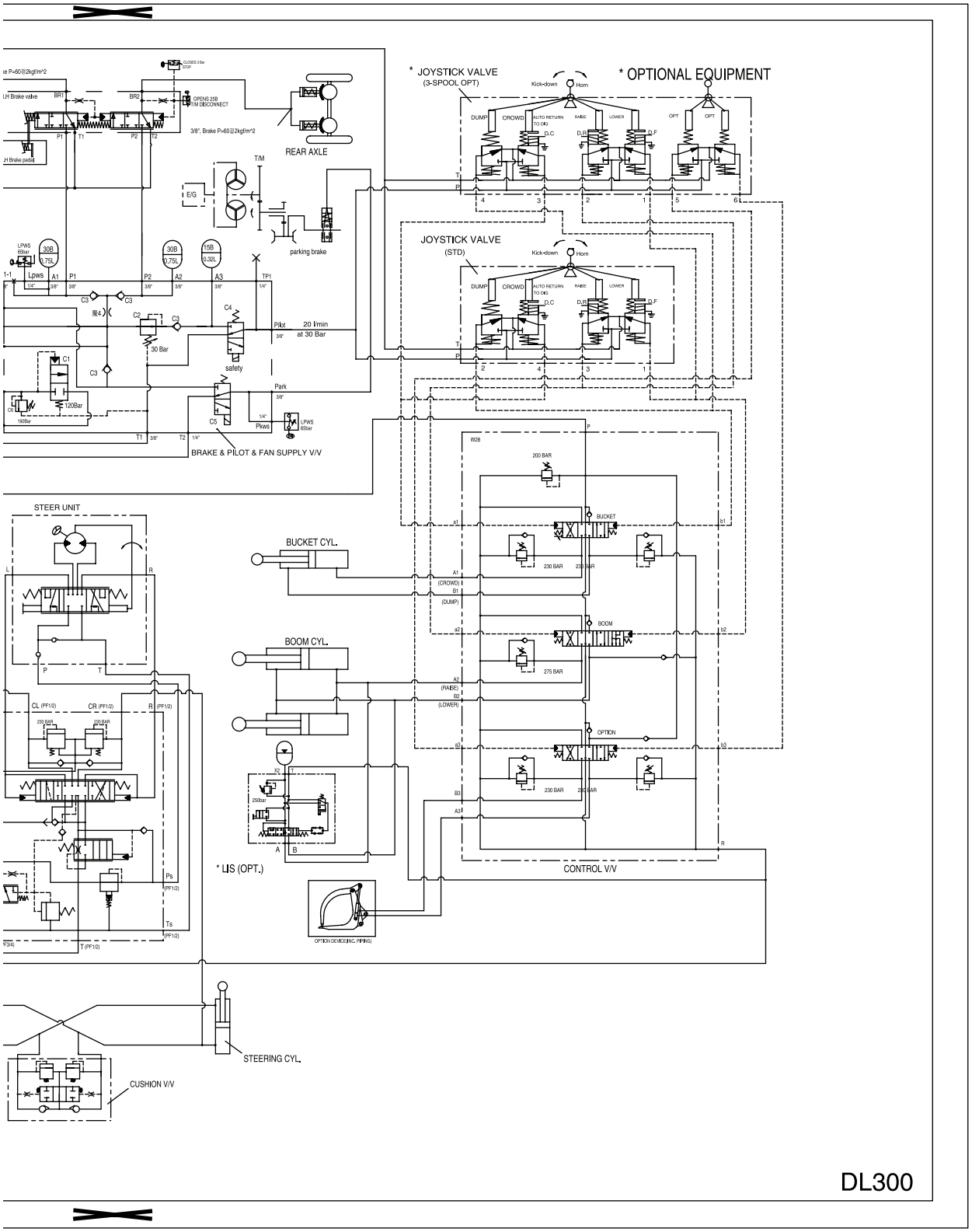
* JOYSTICK VALVE
(3-SPOOL OPT)
* OPTIONAL EQUIPMENT
JOYSTICK VALVE
(STD)
REAR AXLE
parking brake
BRAKE & PILOT & FAN SUPPLY V/V
STEER UNIT
BUCKET CYL.
BOOM CYL.
* LIS (OPT.)
CONTROL V/V
STEERING CYL.
CUSHION V/V
DL300

FG004941

Air Conditioner

Edition 1

Table of Contents

Air Conditioner

Safety Precautions 5
Applicable Models 5
General Description 7
Refrigerant Circulation 10
Control Panel 12
Control Specifications 13
Temperature Level Control and Display 14
Air Discharge According to Path Selection 15
Air-conditioning System Circuit Diagram 18
Troubleshooting 20
Weight of R134a Gas Used In Machines 23
Refrigerant System Repairs 24
- Refrigerant Safe Handling Procedures 24
- Repair and Replacement Procedure 25
- Refrigerant Recovery 27
- Vacuuming Refrigerant System 27
- Leakage Check 28
- Refrigerant Charging 29
- Inspecting System for Leakage 31

MEMO

SAFETY PRECAUTIONS

CAUTION!

Follow all safety recommendations and safe shop practices outlined in the front of this manual or those contained within this section.

Always use tools and equipment that are in good working order.

Use lifting and hoisting equipment capable of safely handling load.

Remember, that ultimately safety is your own personal responsibility.

APPLICABLE MODELS

The contents of this section apply to the following models and serial number ranges.

MODEL	SERIAL NUMBER RANGE
DL400	5001 and Up
DL300	5001 and Up

GENERAL DESCRIPTION

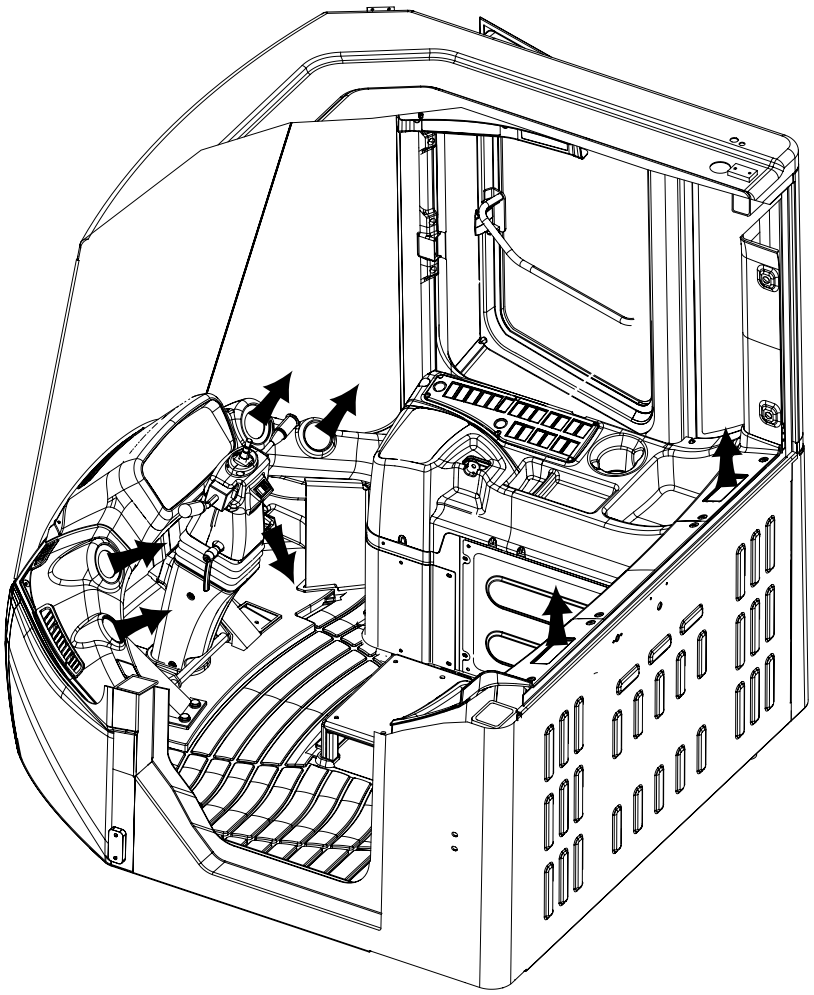

FG004488

Figure 1

The heater and air conditioner are combined into one blower unit in the right control stand of operator's seat. If necessary, the operator can control inner temperature using the operation panel installed in the top of the right side door.

The unit is equipped with an air filtration system which filters out dirt and dust particles from air being circulated into the operator's cab. This filter (1, Figure 2) should be cleaned out at approximately every 500 hours and replaced with a new one every 1,000 hours.

NOTE: *In the event that the unit is being operated in a dusty environment, cleaning and replacement should be performed more frequently.*

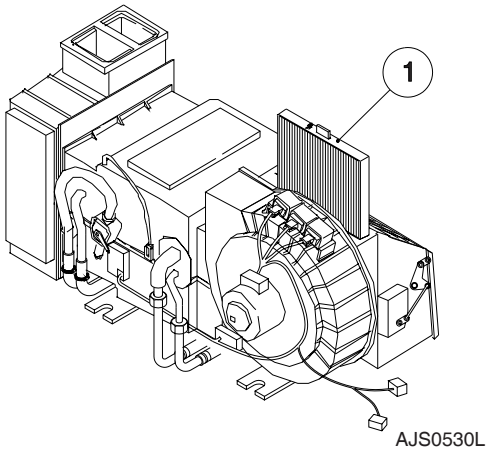

Figure 2

⚠ WARNING!

All service and inspection of the air-conditioning system should be performed with the starter switch in the "O" (OFF) position.

NOTE: *Refer to appropriate operation and maintenance manual for latest service intervals.*

REFRIGERANT CIRCULATION

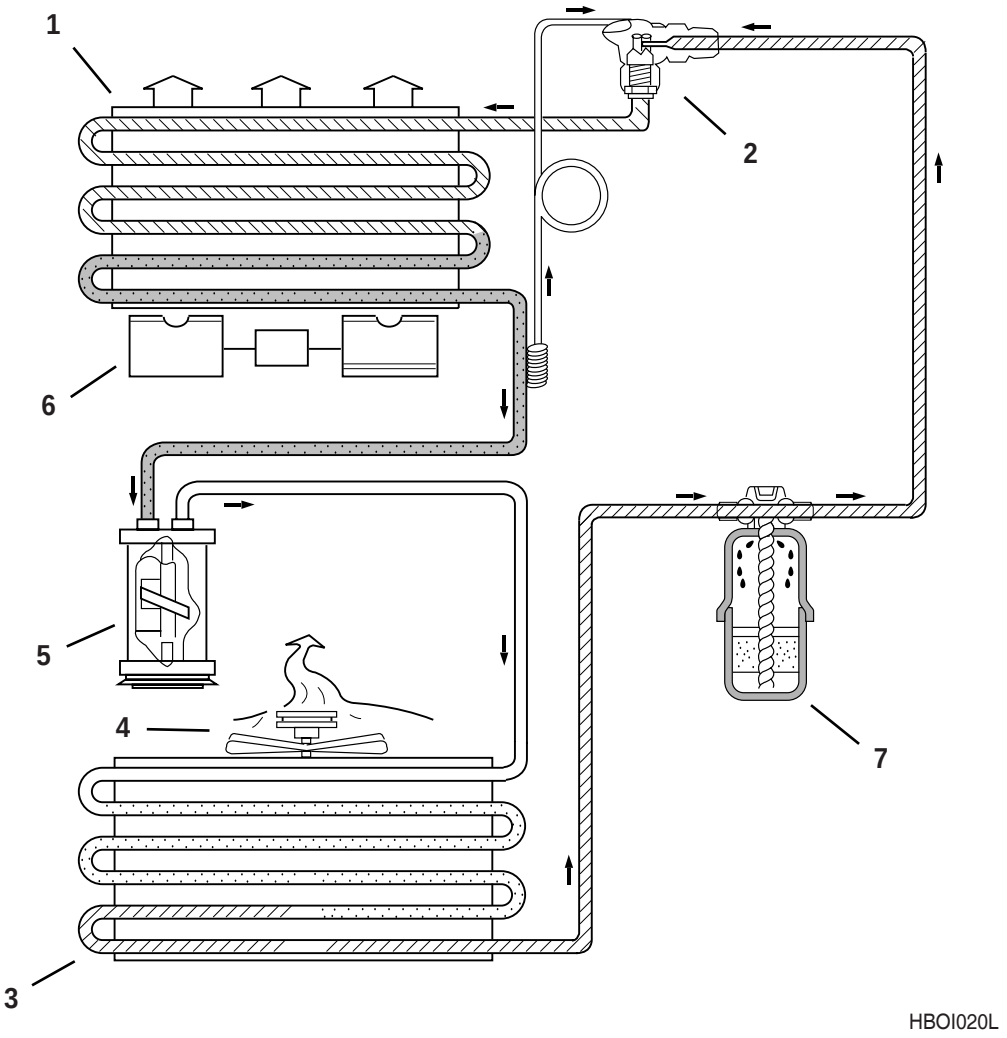

Figure 3

Reference Number	Description
1	Evaporator
2	Expansion Valve
3	Condenser
4	Condenser Fan

Reference Number	Description
5	Compressor
6	Blower Fan
7	Receiver Dryer

Shading	Temperature	Refrigerant State
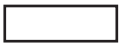	High	High-pressure Gas
	High	High-pressure Liquid
	Low	Low-pressure Liquid
	High	High-pressure Gas/Liquid
	Low	Low-pressure Gas

- Refrigerant (R134a) is compressed to approximately 15 kg/cm^2 (213 psi) within the compressor.
- The compressed refrigerant flows into the condenser at high temperature (approximately 80°C (176°F)).
- The refrigerant in the condenser is cooled to approximately 60° by the condenser fan. At this time the refrigerant changes from the gas to the liquid state, even though the temperature has only been reduced 20°C (68°F). (From 80° - 60°C (176° - 140°F)).
- The refrigerant in its liquid form is injected into the evaporator through the expansion valve. At this time the pressure is reduced by approximately 2 kg/cm^2 (28 psi) and the temperature is also reduced. As a result, the refrigerant absorbs the heat from the air surrounding the evaporator creating a cooling effect and changes from the gas to the liquid state.
- The refrigerant again flows into the compressor in the gaseous state and the process is repeated.

⚠ WARNING!

Refrigerant gas is pressurized and sealed in the air-conditioning system. Special precautions are required for the proper recharging or release of refrigerant. Release of refrigerant into the atmosphere is strictly regulated by law. Make sure that you are in compliance with all mandated federal, state and municipality requirements, before starting any service or repair of the air conditioner. Refrigerant gas used in the system must meet or exceed specifications for R134a refrigerant, or any subsequently issued environmentally mandated standard.

CONTROL PANEL

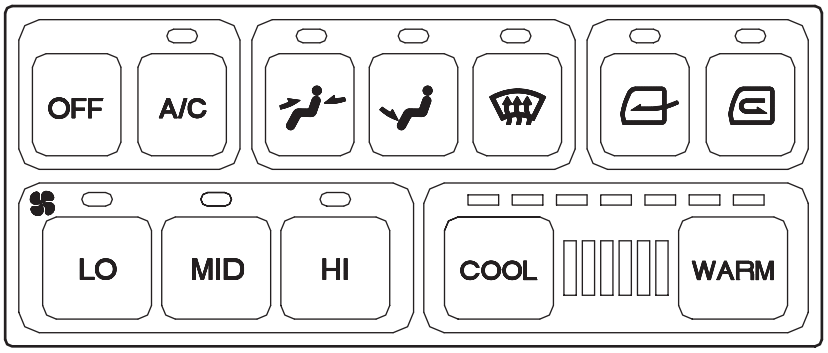

FG004455

Figure 4

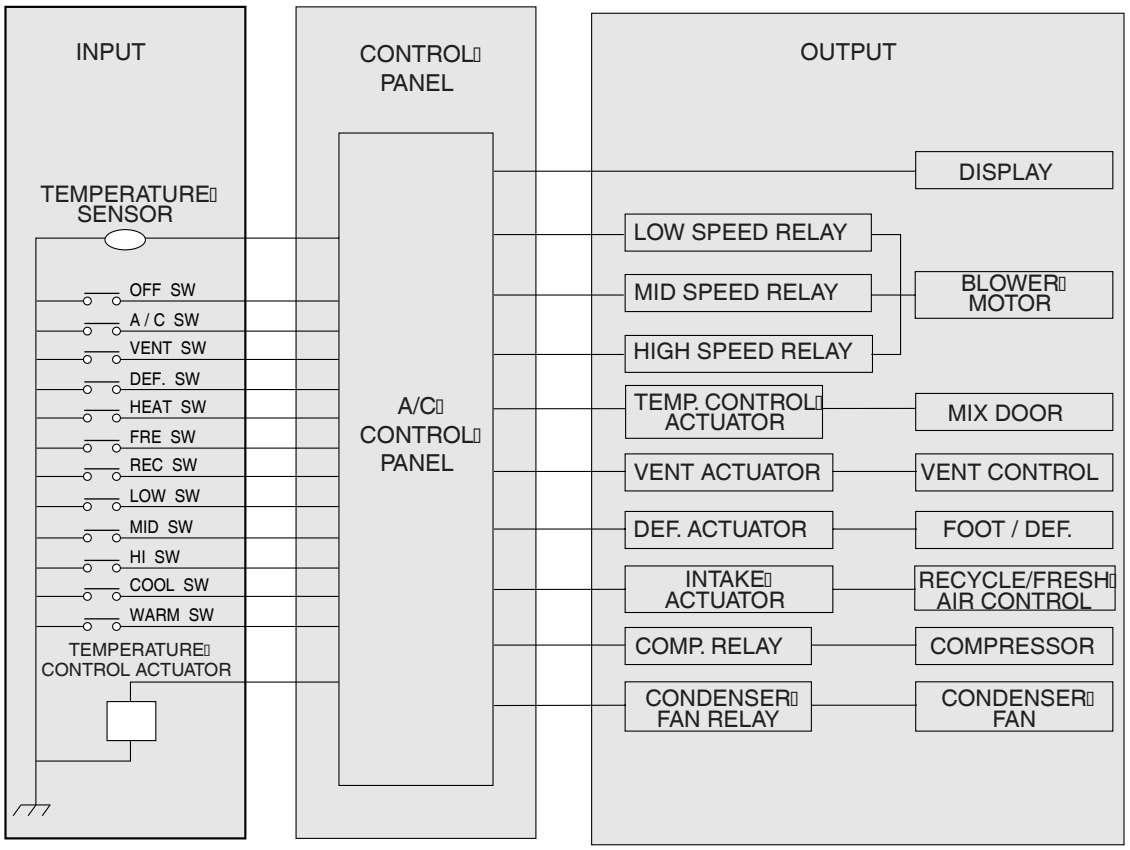

HDA6048L

Figure 5

CONTROL SPECIFICATIONS

Control Item	Control Switch	Control Specifications
Temperature Control	"COOL" Switch "WARM" Switch	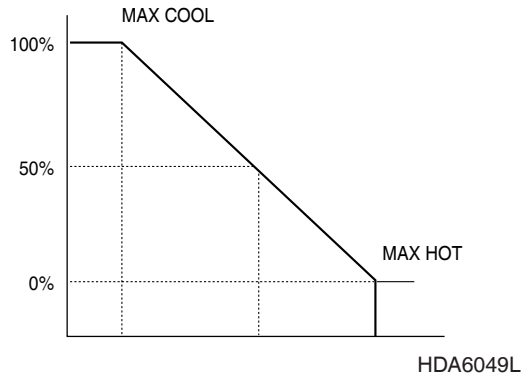 **Figure 6** Temperature control switch consists of a 24 step variable selector. The display uses 7, Green / Red two color LED's to display the selected temperature.
Blower Fan Speed Control	"OFF" Switch "LOW" Switch "MID" Switch "HI" Switch	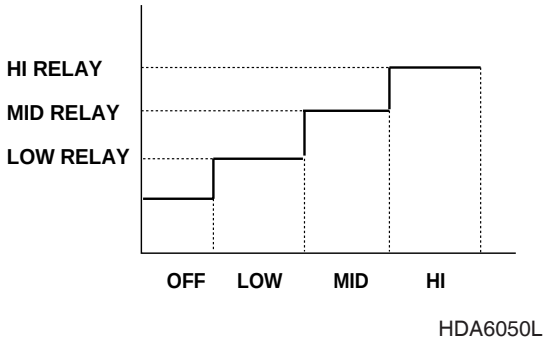 **Figure 7**
Compressor Control	Temperature Sensor	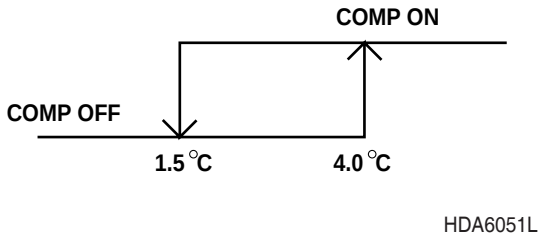 **Figure 8**

TEMPERATURE LEVEL CONTROL AND DISPLAY

Step	LED 1	LED 2	LED 3	LED 4	LED 5	LED 6	LED 7	Position Sensor Voltage	Remark
0	Green	Green	Green	Green	Green	Green	Green	4.50 V ±0.2	MAX. COOL
1	Green	Green	Green	Green	Green	Green	Green	4.33 V ±0.2	
2	Green	Green	Green	Green	Green	Green	Green	4.15 V ±0.2	
3	Red	Green	Green	Green	Green	Green	Green	3.98 V ±0.2	
4	Red	Green	Green	Green	Green	Green	Green	3.80 V ±0.2	
5	Red	Green	Green	Green	Green	Green	Green	3.63 V ±0.2	
6	Red	Red	Green	Green	Green	Green	Green	3.46 V ±0.2	
7	Red	Red	Green	Green	Green	Green	Green	3.28 V ±0.2	
8	Red	Red	Green	Green	Green	Green	Green	3.11 V ±0.2	
9	Red	Red	Red	Green	Green	Green	Green	2.93 V ±0.2	
10	Red	Red	Red	Green	Green	Green	Green	2.76 V ±0.2	
11	Red	Red	Red	Green	Green	Green	Green	2.59 V ±0.2	
12	Red	Red	Red	Red	Green	Green	Green	2.41 V ±0.2	
13	Red	Red	Red	Red	Green	Green	Green	2.24 V ±0.2	
14	Red	Red	Red	Red	Green	Green	Green	2.07 V ±0.2	
15	Red	Red	Red	Red	Red	Green	Green	1.89 V ±0.2	
16	Red	Red	Red	Red	Red	Green	Green	1.72 V ±0.2	
17	Red	Red	Red	Red	Red	Green	Green	1.54 V ±0.2	
18	Red	Red	Red	Red	Red	Red	Green	1.37 V ±0.2	
19	Red	Red	Red	Red	Red	Red	Green	1.20 V ±0.2	
20	Red	Red	Red	Red	Red	Red	Green	1.02 V ±0.2	
21	Red	Red	Red	Red	Red	Red	Red	0.85 V ±0.2	
22	Red	Red	Red	Red	Red	Red	Red	0.67 V ±0.2	
23	Red	Red	Red	Red	Red	Red	Red	0.50 V ±0.2	MAX. HOT

AIR DISCHARGE ACCORDING TO PATH SELECTION

Face + Rear

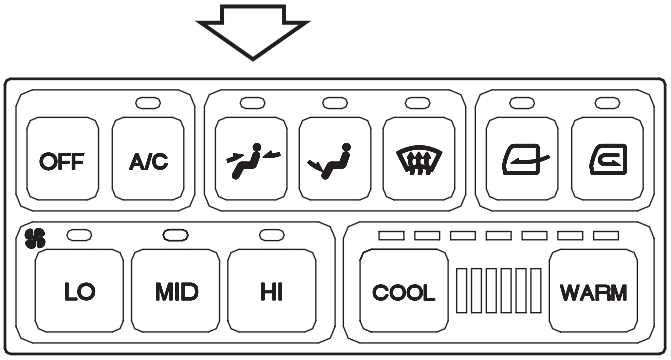

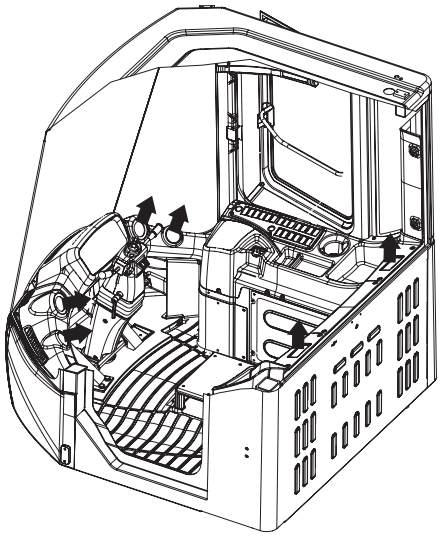

FG004481

Figure 9

Foot + Rear

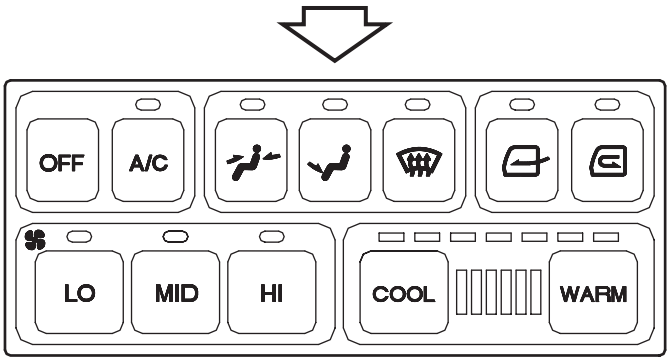

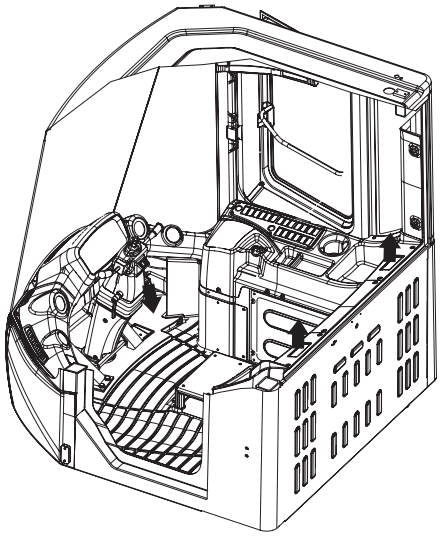

FG004482

Figure 10

Defroster + Rear

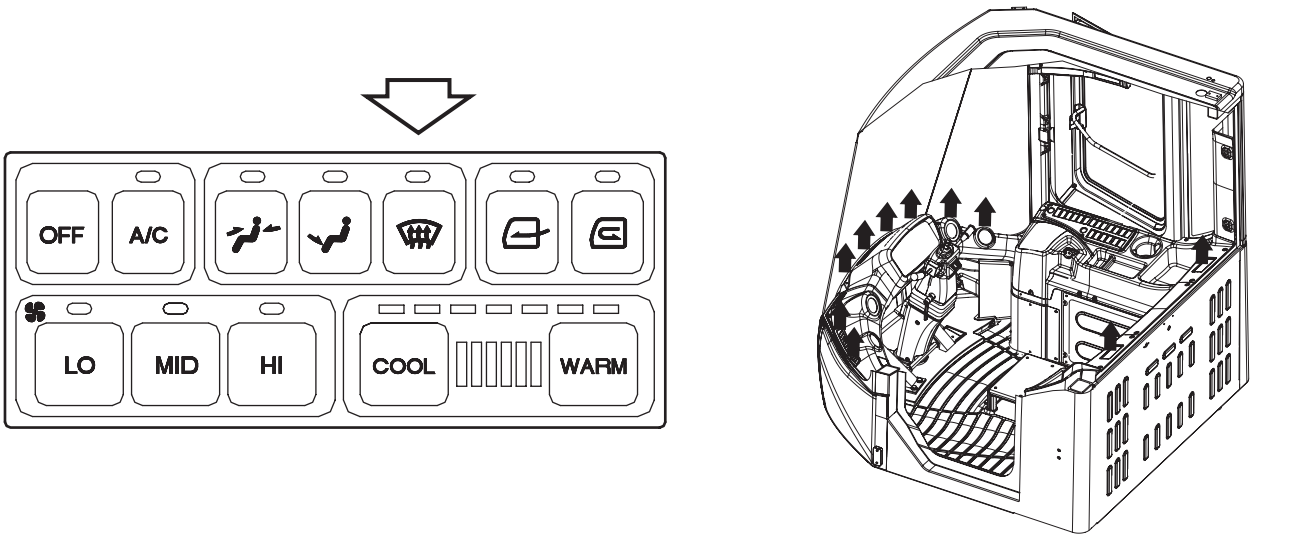

FG004483

Figure 11

AIR-CONDITIONING SYSTEM CIRCUIT DIAGRAM

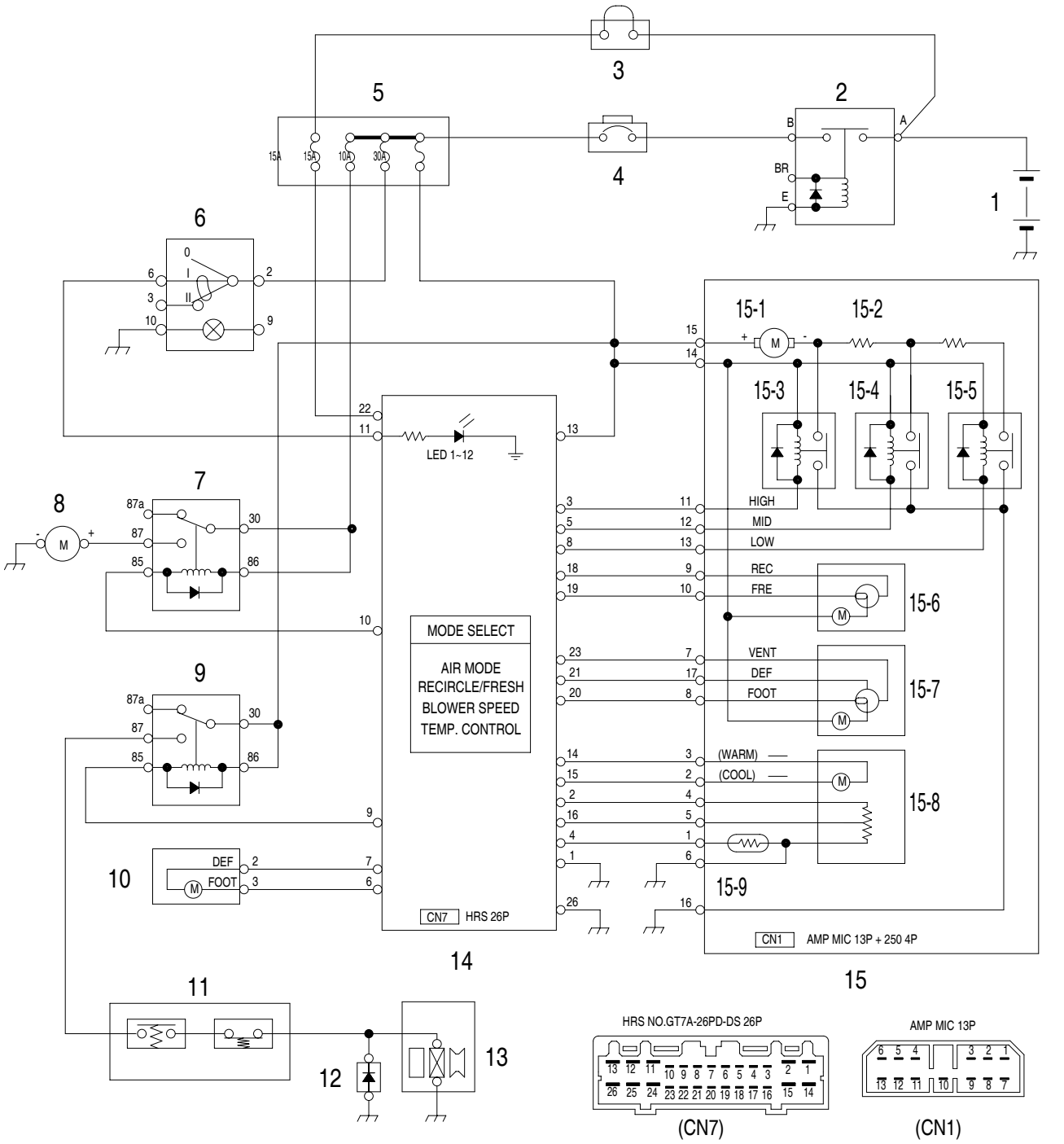

FG004394

Figure 12

Reference Number	Description
1	Battery
2	Battery Relay
3	Fusible Link
4	Circuit Breaker
5	Fuse Box
6	Headlight Switch
7	Condenser Fan Relay
8	Condenser Fan Motor
9	Compressor Relay
10	Foot / Defrost Control Actuator
11	Receiver Drier
12	Diode
13	Compressor

Reference Number	Description
14	A/C Control Panel
15	A/C Unit
15-1	Blower Motor
15-2	Resister
15-3	High Speed Relay
15-4	Mid Speed Relay
15-5	Low Speed Relay
15-6	Recirculate / Fresh Air Control Actuator
15-7	Vent Actuator
15-8	Temperature Control Actuator
15-9	Temperature Sensor (Evaporator)

TROUBLESHOOTING

Refrigerant Pressure Check

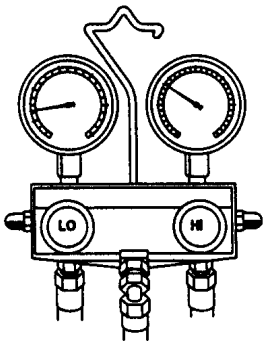

HDA6074L

Figure 13

1. Open all doors and windows.
2. Install manifold gauge set.
3. Start engine and maintain engine speed at 1,800 - 2,000 rpm.
4. Check high / low-pressure of refrigerant.

1	**High-pressure: 8 - 10 kg/cm^2 (114 - 142 psi) Low-pressure: Approximately 1 kg/cm^2 (14 psi)**		
Possible Cause: Low Refrigerant Level			
Step	**Inspection Item**		**Remedy**
1	Check for traces of refrigerant oil.	Yes	Reassemble using correct tightening torque.
		No	Go to next step.
2	Using a leak detection device or soapy water check for refrigerant leakage at all major components and joints.	Yes	Repair leaking component.
		No	Recharge system to correct pressure.

2	**High-pressure: Over 23 kg/cm^2 (327 psi) Low-pressure: Approximately 2.5 - 3 kg/cm^2 (36 - 43 psi)**		
Possible Cause: Overcharge, Frost on condenser			
Step	**Inspection Item**		**Remedy**
1	Check for condenser pin damage or contamination.	Yes	Clean, repair or replace condenser.
		No	Refrigerant overcharge.

3	**High-pressure: Approximately 20 - 25 kg/cm^2 (284 - 356 psi)** **Low-pressure: Approximately 2.5 - 3.5 kg/cm^2 (36 - 50 psi)**
Possible Cause: Air in system.	
1. Recover any remaining refrigerant. 2. Vacuum out system. 3. Recharge system. **NOTE:** *If the system has been exposed to the air for a long period of time, replace the receiver dryer.*	

4	**High-pressure: Over 6 kg/cm^2 (85 psi)** **Low-pressure: Approximately 760 mmHg (Negative Pressure)**		
Possible Cause: Refrigerant does not circulate			
Step	**Inspection Item**		**Remedy**
1	1. Connect manifold gauge and start engine. 2. Turn on air conditioner. 3. Set blower switch to HIGH position. 4. Turn air conditioner OFF and wait 10 minutes. 5. Recheck high / low-pressure readings. High-pressure: 13 - 19 kg/cm^2 (185 - 270 psi) Low-pressure: 1.5 - 3.3 kg/cm^2 (21 - 47 psi)	Yes	Moisture in system, replace receiver dryer.
		No	Contaminated system, replace expansion valve. (Replace evaporator core assembly.)

5	**High-pressure: Over 6 - 18 kg/cm^2 (85 - 256 psi)** **Low-pressure: 500 mmHg (Negative Pressure) - Dial indicator needle unstable.**
Possible Cause: Moisture in system has iced up the expansion valve. **NOTE:** *When the absorbed moisture freezes the pressure readings may look normal. Careful readings should be made to determine whether pressure is in normal range.*	
1. Recover any remaining refrigerant. 2. Vacuum out system. 3. Recharge system. **NOTE:** *If the system has been exposed to the air for a long period of time, replace the receiver dryer.*	

6	**High-pressure: Over 22 - 23 kg/cm^2 (313 - 327 psi)** **Low-pressure: 2.5 kg/cm^2 (36 psi)**		
Possible Cause: Refrigerant pressure problem due to defective expansion valve or temperature sensor.			
Step	**Inspection Item**		**Remedy**
1	Inspect whether the temperature sensor is installed properly.	Yes	Replace expansion valve.
		No	Exchange duct sensor.

7	**High-pressure: Over 7 - 11 kg/cm^2 (100 - 156 psi)** **Low-pressure: 4 - 6 kg/cm^2 (57 - 85 psi)**
Possible Cause: Low refrigerant pressure due to poor compressor compression	
Inspect and replace compressor if necessary.	

WEIGHT OF R134a GAS USED IN MACHINES

Model	Weight of Gas
DX300LC	800 ±20 grams (28 ±0.7 oz)
DX140W	800 ±20 grams (28 ±0.7 oz)
DL300	850 ±20 grams (30 ±0.7 oz)
DL400	850 ±20 grams (30 ±0.7 oz)

REFRIGERANT SYSTEM REPAIRS

⚠ WARNING!

Always wear protective glasses and gloves when handling refrigerant. If refrigerant comes in contact with the skin or eyes, immediately flush with clean, running water and consult a physician.

Select a clean and well ventilated area to work.

The refrigerant container is under high-pressure and should be stored below 40°C (104°F). Be careful not to drop the container from a high location

The contents are under high-pressure and should not be used with compressed air or near an open flame.

Refrigerant Safe Handling Procedures

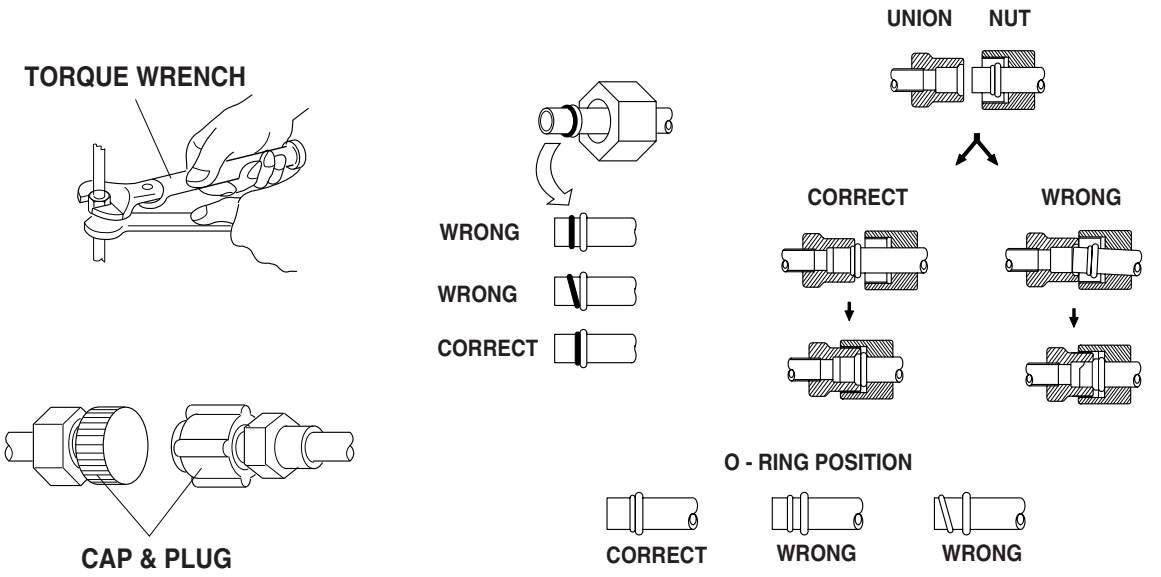

Figure 14

The following procedures should be observed for safe handling of refrigerant during vacuum and charging process.

1. Use an approved recovery / charging device which can safely perform vacuum and charge work simultaneously.
2. The new refrigerant has improved cooling characteristics than the old type and care should be used not to overcharge the system.

3. Do not over tighten connections when working on refrigerant system.
4. The new refrigerant system standards require new tools, equipment and parts. Do not attempt to use equipment use in servicing the old refrigerant system.
5. The new refrigerant oil (PAG type) has a high moisture absorption characteristic. When the refrigerant system vacuum seal has been broken, immediately plug up all openings to prevent moisture from entering into the system.
6. When joining unions which use O-ring seals, lightly coat O-rings with refrigerant oil. Be careful not to drip oil on the threads of the nut.
7. Be certain the O-rings are seated properly on the refrigerant line lip. Always use new O-rings when reassembling parts. Do not reuse old O-rings.
8. Use a vacuum pump to evacuate refrigerant system of air.
9. When charging the refrigerant system with the engine running, do not open the high-pressure valve on the manifold gauge as the reverse flow of high-pressure refrigerant will rupture the hose.
10. When releasing the high-pressure hose after completing the charging process, quickly disconnect the hose to minimize refrigerant released to the air.

Repair and Replacement Procedure

1. Work Procedure.
   A. Before repairing or replacing any refrigerant components first, return all refrigerant oil to the compressor and perform recovery procedures.
2. Operating Condition.
   A. Run engine at maximum engine speed.
   B. Select "HI" blower fan speed and select A/C switch to "ON."
   C. Set the temperature control switch for maximum cooling and leave running for approximately 20 minutes.

   NOTE: *The manifold gauge dial pointer can vary depending on the outdoor temperatures.*

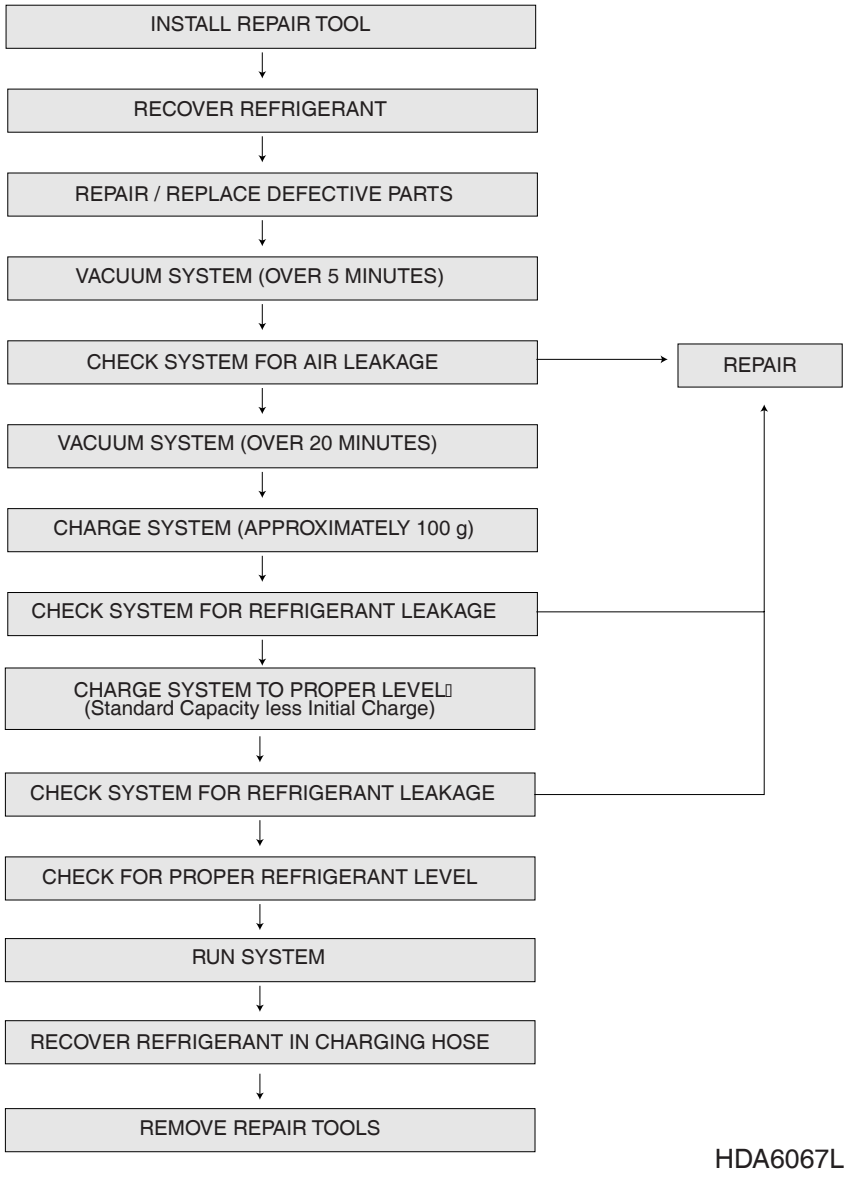
INSTALL REPAIR TOOL
RECOVER REFRIGERANT
REPAIR / REPLACE DEFECTIVE PARTS
VACUUM SYSTEM (OVER 5 MINUTES)
CHECK SYSTEM FOR AIR LEAKAGE
REPAIR
VACUUM SYSTEM (OVER 20 MINUTES)
CHARGE SYSTEM (APPROXIMATELY 100 g)
CHECK SYSTEM FOR REFRIGERANT LEAKAGE
CHARGE SYSTEM TO PROPER LEVEL
(Standard Capacity less Initial Charge)
CHECK SYSTEM FOR REFRIGERANT LEAKAGE
CHECK FOR PROPER REFRIGERANT LEVEL
RUN SYSTEM
RECOVER REFRIGERANT IN CHARGING HOSE
REMOVE REPAIR TOOLS
HDA6067L

Figure 15

Refrigerant Recovery

Reference Number	Description
1	To Compressor
2	Low-pressure Side
3	High-pressure Side
4	From Receiver
5	Refrigerant Recovery Tank

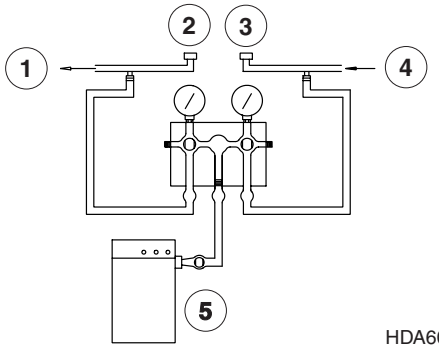

HDA6067L

Figure 16

1. Attach the manifold gauges and the refrigerant recovery unit to the refrigerant lines as shown.

   NOTE: *Be careful not to switch the connections for the low and high-pressure valves.*

2. Open the high-pressure valve slowly to release the refrigerant to the recovery unit.

   NOTE: *Open the valve slowly, while checking to see that refrigerant is not leaking out.*

3. When the manifold gauge dial falls below 3.5 kg/cm^2 (50 psi), slowly open the low-pressure valve.

4. Open both the high and low-pressure valves slowly until the manifold gauge dials indicates 0 kg/cm^2 (0 psi).

Vacuuming Refrigerant System

Reference Number	Description
1	To Compressor
2	Low-pressure Side
3	High-pressure Side
4	From Receiver
5	Vacuum Pump

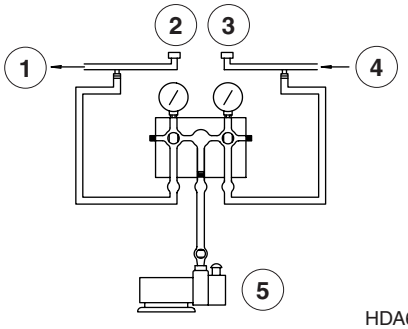

HDA6068L

Figure 17

1. Vacuuming Procedure.

   NOTE: *When the A/C system has been exposed to the air, it must be vacuumed out. Perform vacuum process for 30 minutes for complete moisture and air evacuation.*

   A. Attach the manifold gauges and vacuum pump to the refrigerant system as shown.

   B. Turn on the vacuum pump and open both valves.

   C. When the low-pressure gauge shows approximately 710 mmHg, close both valves and turn off vacuum pump.

2. Check system for vacuum leak.

   Allow system to sit for 10 minutes and check whether the system is holding the pressure. If the pressure has dropped, it must be repaired before proceeding to the next step.

3. Vacuuming Procedure.

   If the system is holding the pressure and it has not changed for 10 minutes, vacuum out the system for an additional 20 minutes.

   A. Turn on the vacuum pump and slowly open both valves.

   B. Allow vacuum pump to run for additional 20 minutes until the low-pressure gauge dial reads approximately 750 mmHg.

   C. Close both valves and stop the vacuum pump.

4. Installation of Refrigerant Container.

Reference Number	Description
1	Handle
2	Hose Connection
3	Mounting Disk

   A. Before mounting valve on the container, make sure the handle is in the counterclockwise most position, with the puncture pin retracted and the mounting disk is in the raised position.

   B. Attach the manifold gauge center hose to the valve assembly.

   C. Turn the disk in the clockwise direction and securely mount valve onto refrigerant container.

   D. Turn the valve handle in the clockwise direction and puncture the container seal with the pin.

   E. Once the can has been punctured, turn the handle in the counterclockwise direction so the refrigerant can flow into the manifold gauge center hose. At this time, do not open the low and high-pressure valves of the manifold gauge.

   F. Press the manifold gauge low side valve to eliminate the trapped air in the hose.

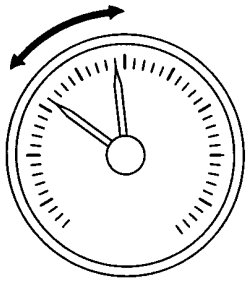

HDA6069L

Figure 18

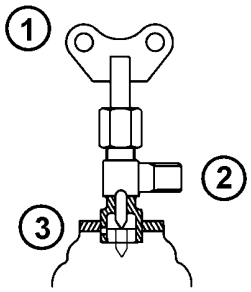

HDA6070L

Figure 19

Leakage Check

NOTE: *Perform the leakage check after completing vacuuming process.*

1. After attaching the manifold gauge, open the high side valve.

2. Charge system until the low side gauge dial indicates a pressure of 1 kg/cm^2 (14 psi) and close the high side valve.
3. Using a refrigerant leak detector or soapy water check each joint for leakage.

Reference Number	Description
1	Refrigerant Leak Detection Device

4. If a leak is detected, check for O-ring damage or correct tightening torque and replace or repair as necessary.
5. If no leaks are detected, proceed with the charging process.

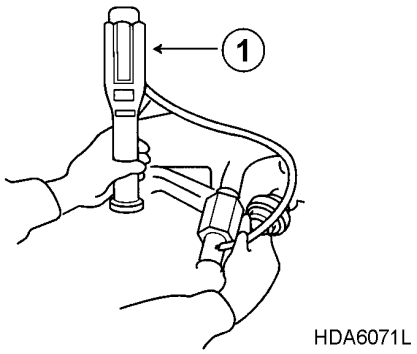

HDA6071L

Figure 20

⚠ WARNING!

For accurate refrigerant leak detection, perform leak detection procedure in a well ventilated area.

Refrigerant Charging

1. Perform the vacuuming procedure, vacuum holding and leaking tests as described in the proceeding headings.

   NOTE: *First charge the refrigerant system with 100 g (3.5 ounces) of refrigerant with the engine off. Then using the manifold gauges as a guide fully charge the system with the engine running.*

   When exchanging refrigerant containers, press the manifold gauge low side valve to eliminate air from the charging hose.

Reference Number	Description
1	To Compressor
2	Low-pressure Side
3	High-pressure Side
4	From Receiver
5	Refrigerant Supply Container

2. Charge the system by opening the manifold gauge low side valve.

   Initial charge amount: 100 g (3.5 ounces).

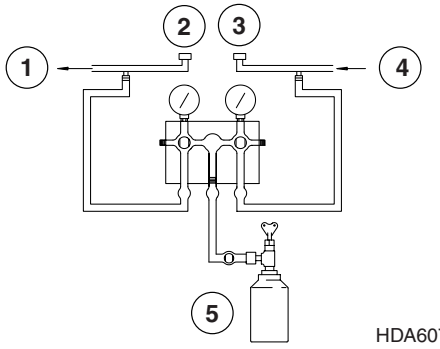

HDA6072L

Figure 21

3. If refrigerant does not flow freely into system, try starting engine first before operating air conditioner.
    - Temperature control switch setting: Maximum Cooling
    - Blower Speed Setting: Hi (3 step)
    - Engine Speed: 1,300 - 1,500 rpm

⚠ WARNING!

When charging refrigerant system with the engine running;

- **Always keep refrigerant supply container in the upright position.**

Never open the high side pressure valve.

4. Open the manifold gauge low side valve and charge system to standard capacity.

Gauge Dial	Standard Reading
High Side Gauge	13 - 20 kg/cm^2 (185 - 285 psi)
Low Side Gauge	1.5 - 3.5 kg/cm^2 (21 - 50 psi)

NOTE: *These standards are for outside temperatures between 30° - 35°C (86° - 95°F). The gauge readings may vary for extreme temperature conditions.*

⚠ WARNING!

- **When outside temperature is low, warm the refrigerant supply container with warm water not exceeding 40°C (104°F). Do not allow water to come in contact with the charging adapter valve handle.**
- **When outside temperature is high, cool off refrigerant supply container and condenser to aid the refrigerant charging process.**

5. Close low-pressure side valve.
6. Shut off engine and close refrigerant supply container adapter valve. Disconnect manifold gauge hoses from vehicle.

Inspecting System for Leakage

After completing charging procedures, clean all joints and connections with a clean dry cloth. Using a refrigerant leak detecting device or soapy water, inspect system for leaks starting from the high-pressure side.

NOTE: *When the refrigerant circulation has been stopped the high-pressure will start to decrease and the low-pressure will start to increase until they are equalized. Starting the inspection from the high side will result in a accurate test.*

Reference Number	Description
1	Pressure
2	High-pressure
3	Low-pressure
4	Compressor Stop

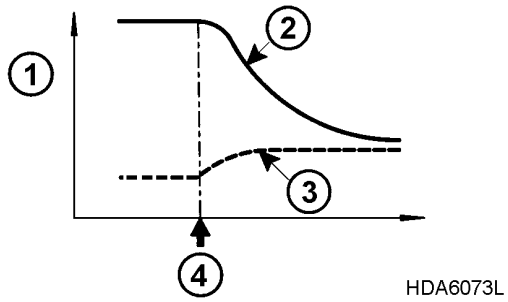

Figure 22

Inspection Procedure

1. High-pressure side.

   Compressor outlet → condenser inlet → receiver dryer inlet → air conditioner unit inlet

2. Low-pressure side.

   Compressor inlet → air conditioner unit outlet

3. Compressor.

   Compressor shaft area, bolt hole area and magnetic clutch area.

4. Receiver dryer.

   Pressure switch and plug area.

5. Connection valve area.

   Inspect all valve areas.

   Verify all valves are capped to prevent leaking.

   Check for foreign material inside of valve cap.

6. Interior of air conditioner unit.

   After stopping engine, insert detector probe into drain hose. (Leave inserted for 10 seconds minimum.)

   NOTE: *When inspecting leakage from the air conditioner unit, perform the inspection in a well ventilated area.*

Electrical System

Edition 1

Table of Contents

Electrical System

Safety Precautions 5
Applicable Models 5
Overview 6
Electric Supply System 7
Engine Starting Circuit 9
- Operation During Start Process 9
- Operation After Start Process 12

Engine Preheating System 15
Engine Stop System 18
Charging System 19
Monitoring System 20
- Instrument Panel 21
- Function Check 22
- Monitoring System Schematic 23
- Operation 25

Windshield Wiper 34
- Front windshield wiper 34
- Rear Windshield wiper 36

Lighting System 38
- Light Circuit 38

ECU System 42
- ECU Electric Circuit 43
- ECU System Component 44

Engine Fault Code 47
Cooling Fan Control System 51
- Outline 51
- Diagram 52
- Electrical Diagram 53
- Parts of Cooling Fan Control System 54
- Operation of Cooling Fan Control System 56

Self Diagnosis and Display of Cooling Fan 58
Failure Indications and Actions 59
Emergency Steering System (Option) 60
Block Diagram 60
Emergency Steering System Components 61
Emergency Steering System Electric Circuit 64
Electric Detent System 65
Electric Circuit 65
Boom Kick-out 66
Return To Dig 66

SAFETY PRECAUTIONS

CAUTION!

Follow all safety recommendations and safe shop practices outlined in the front of this manual or those contained within this section.

Always use tools and equipment that are in good working order.

Use lifting and hoisting equipment capable of safely handling load.

Remember, that ultimately safety is your own personal responsibility.

APPLICABLE MODELS

The contents of this section apply to the following models and serial number ranges.

MODEL	SERIAL NUMBER RANGE
DL300	5001 and Up

OVERVIEW

The electrical system for this equipment is DC 24 volts. The rated voltage for all electric components is 24 volts with the exception of the stereo and the air-conditioning control actuator. The system contains two 12 volt batteries connected in series and a three phase AC generator with a rectifier. The electric wiring used in the system is easily identifiable by the insulator color. The color symbols used in the electrical system are listed in the following chart.

Electric Wire Color

Symbol	Color
W	White
G	Green
Or	Orange
B	Black
L	Blue
Lg	Light green
R	Red
Gr	Gray
P	Pink
Y	Yellow
Br	Brown
V	Violet

NOTE: *RW: Red wire with White stripe*

R - Base Color, W - Stripe Color

NOTE: *0.85G: Nominal sectional area of wire core less insulator = 0.85 mm^2 (0.03 in^2).*

ELECTRIC SUPPLY SYSTEM

The electric power circuit supplies electric current to each electric component. It consists of a battery, battery relay, starter switch, circuit breaker, fusible link and fuse box.

The negative terminal of the battery is grounded to the vehicle body.

Even when the starter switch is in the "OFF" position, electric current is supplied to the following components through battery, to the fusible link, and then to the fuse box.

1. Cabin light, No. 1 terminal of DC-DC converter (back up for stereo memory).
2. "B" terminal of starter switch and No. 22 terminal of air conditioner control panel (back up)
3. No. 23 and No. 68 terminals of transmission controller (back up for memory)
4. "B" terminal of blinker unit (for hazard warning light)
5. The source terminal of electric power of engine control unit (ECU).

When the starter switch (5) is in the "PREHEAT, ON and START" positions, the current flows from the battery (1), to the fusible link (3), to the fuse box (6), to the starter switch (5) "B" terminal/starter switch "BR" terminal, to the diode (8), and then to the battery relay (2) "BR" terminal. which activates the coil of the battery relay (2) and the electric supply system is energized.

When the battery relay's contacts are connected, all electric devices can be operated.

While the engine is not running, the electric power for all electric devices are supplied by the battery. Once the engine is started the power is supplied from the alternator.

STARTER SWITCH CONNECTION

PST \ TML	B	BR	R1	R2	C	ACC
OFF	○					
PREHEAT	○	○	○			
ON	○	○				○
START	○	○		○	○	○

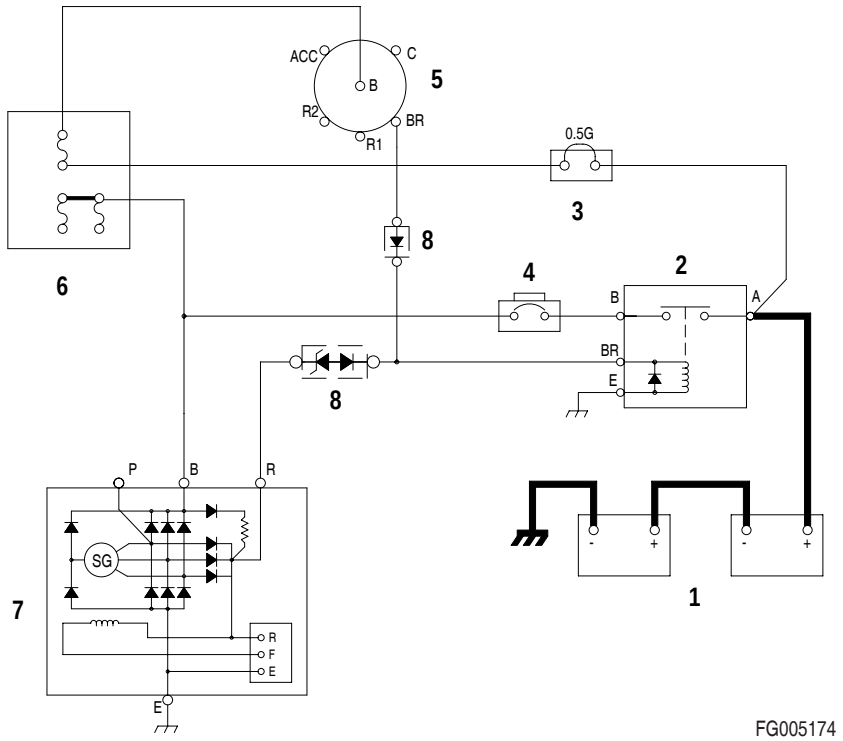

Figure 1 ELECTRICAL POWER CIRCUIT DIAGRAM

Reference Number	Description
1	Battery
2	Battery Relay
3	Fusible Link
4	Circuit Breaker

Reference Number	Description
5	Starter Switch
6	Fuse Box
7	Alternator
8	Diode

ENGINE STARTING CIRCUIT

Operation During Start Process

When the starter switch is turned to the start position, the safety start relay (14) is opened by the current flow from the connected "52" and "67" terminal of the transmission controller (13) and the "S" and "E" terminal of the starter controller (7) are connected. At this time the contacts in the starter relay (8) are closed by the current flow from the battery (1), to the fusible link (3), to the "B" terminal of the starter switch (5), to the "C" terminal of the starter switch (5), to the "C" terminal of the starter relay (8), to the "D" terminal of starter relay (8), to the "S" terminal of starter controller (7), to the "E" terminal of the starter controller, and then to the ground.

The contact point "B" and "PP" of starter relay (8) are connected, the pinion gear of the starter (9) is pushed forward and makes contact with the ring gear of the flywheel and the internal contacts of the starter are connected.

The current flows from the battery (1), to the "A" terminal of the battery relay (2), to the "B" terminal of the battery relay (2), and then to the "B" terminal of the starter (9). The starter motor is rotated and the engine is started.

The engine can be cranked only when the transmission selector switch (11) is the neutral position. If the transmission selector switch (11) is in the forward or reverse, the current that flows the switch (11) to the starter controller (7) opens the path to ground for the starter relay (8). This prevents the start relay (8) from closing.

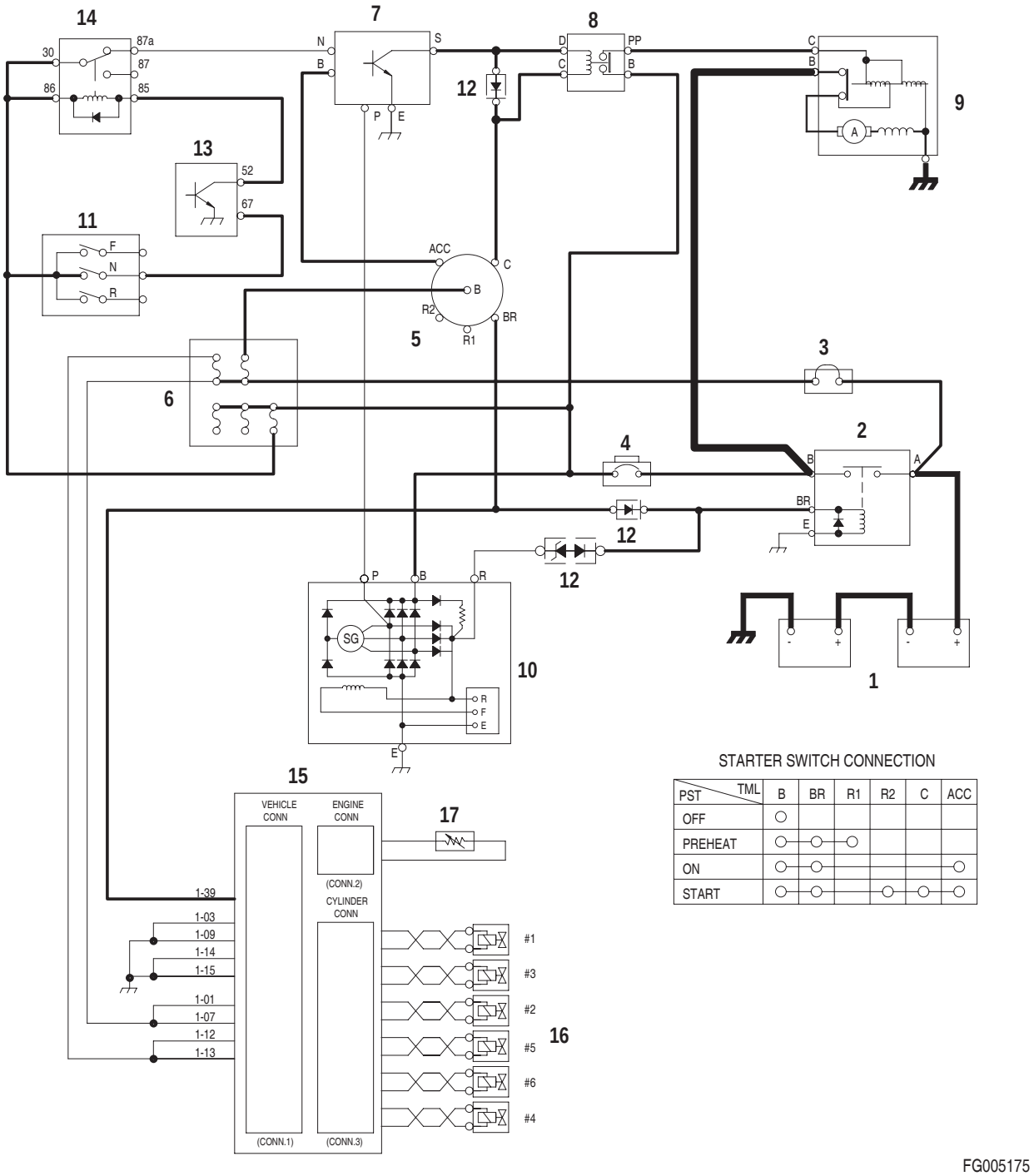

FG005175

Figure 2 STARTER CIRCUIT (1) - WHILE STARTING

Reference Number	Description
1	Battery
2	Battery Relay
3	Fusible Link
4	Circuit Breaker
5	Starter Switch
6	Fuse Box
7	Starter Controller
8	Starter Relay
9	Starter

Reference Number	Description
10	Alternator
11	Transmission Selector Switch
12	Diode
13	Transmission Controller
14	Safety Starter Relay
15	Engine Control Unit (ECU)
16	Injector Solenoid
17	Engine Sensor

Operation After Start Process

Once the engine has been started, the belt driven alternator (10) generates a current. The output generated by the alternator is a square wave pulse voltage through the "P" terminal and the frequency of the pulse voltage is proportional to the rotation of the alternator. The starter controller (7) monitors the frequency of the output current. Once the frequency equivalent to 500 rpm is sensed the connection between "S" and "E" terminals and the connection between "B" and "PP" terminals are opened. As a result the rotation of the starter (9) is stopped. Once the engine is running, the starter (9) will not operate even if the starter switch (5) is moved to the start position, preventing possible damage to the starter (9).

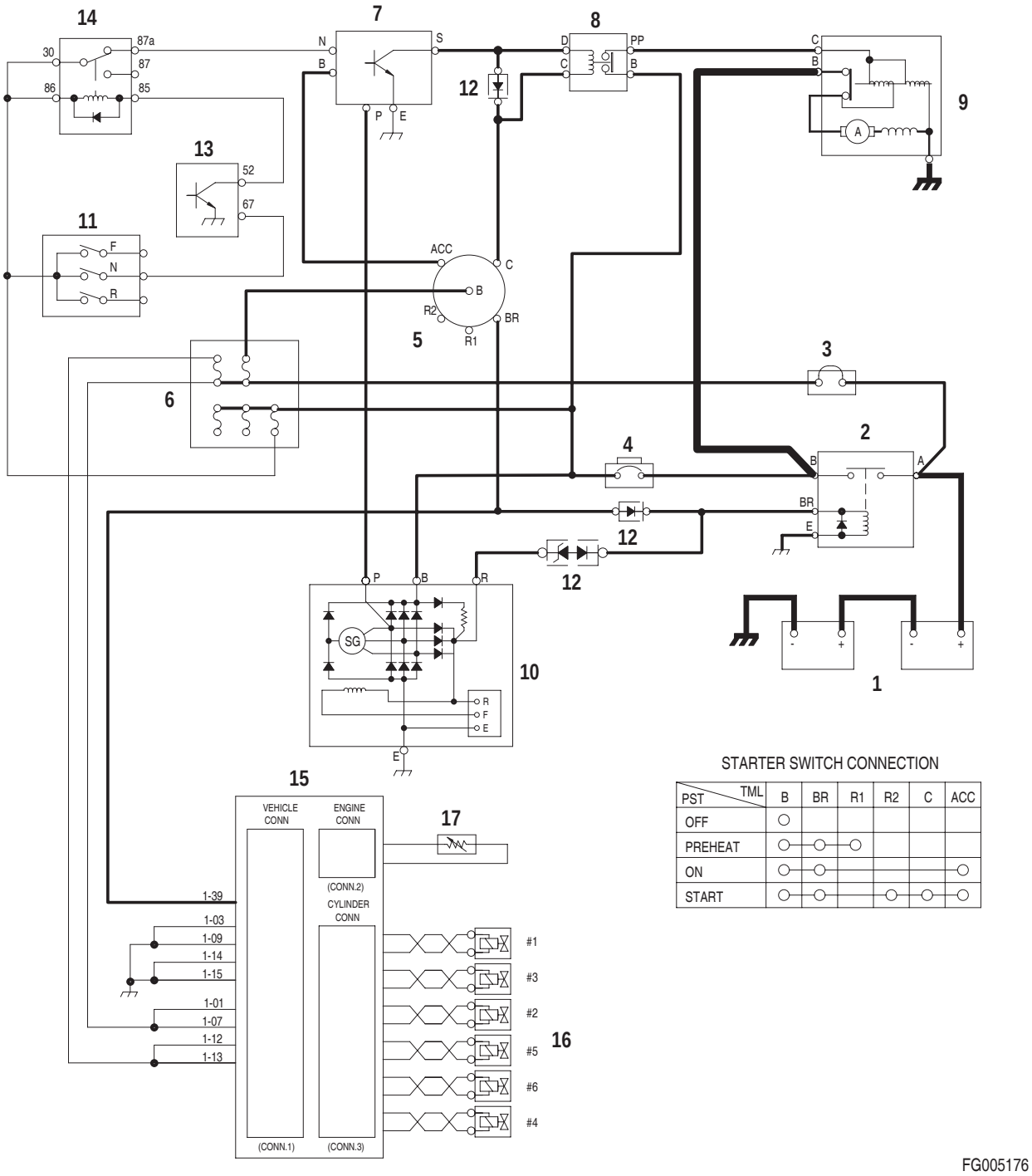

FG005176

Figure 3

Reference Number	Description
1	Battery
2	Battery Relay
3	Fusible Link
4	Circuit Breaker
5	Starter Switch
6	Fuse Box
7	Starter Controller
8	Starter Relay
9	Starter

Reference Number	Description
10	Alternator
11	Transmission Selector Switch
12	Diode
13	Transmission Controller
14	Safety Starter Relay
15	Engine Control Unit (ECU)
16	Injector Solenoid
17	Engine Sensor

ENGINE PREHEATING SYSTEM

Intaking air heaters are implanted at two places. When the starter switch (5) is turned to the "ON" position, resistence equivalent to engine temperature sensor (11) is sent to engine control unit (8).

The engine control unit (8) read the temperature according to the checked resistence. When the temperature is below specified coolant temperature the engine control unit (8) flows current from CN1-16, 1-04 terminals to heater relay (7).

The current from air heater relay (7) through "C" an "D" terminals activate the coil, then current flow sequently from battery (1), to battery relay (2), to "B" and "H" terminal of air heater relay (7), to air heater (10) to finally preaheat the engine.

While the preheating lamp lights on the gauge pannel. Preheating time can be different each time according to the engine temperature.

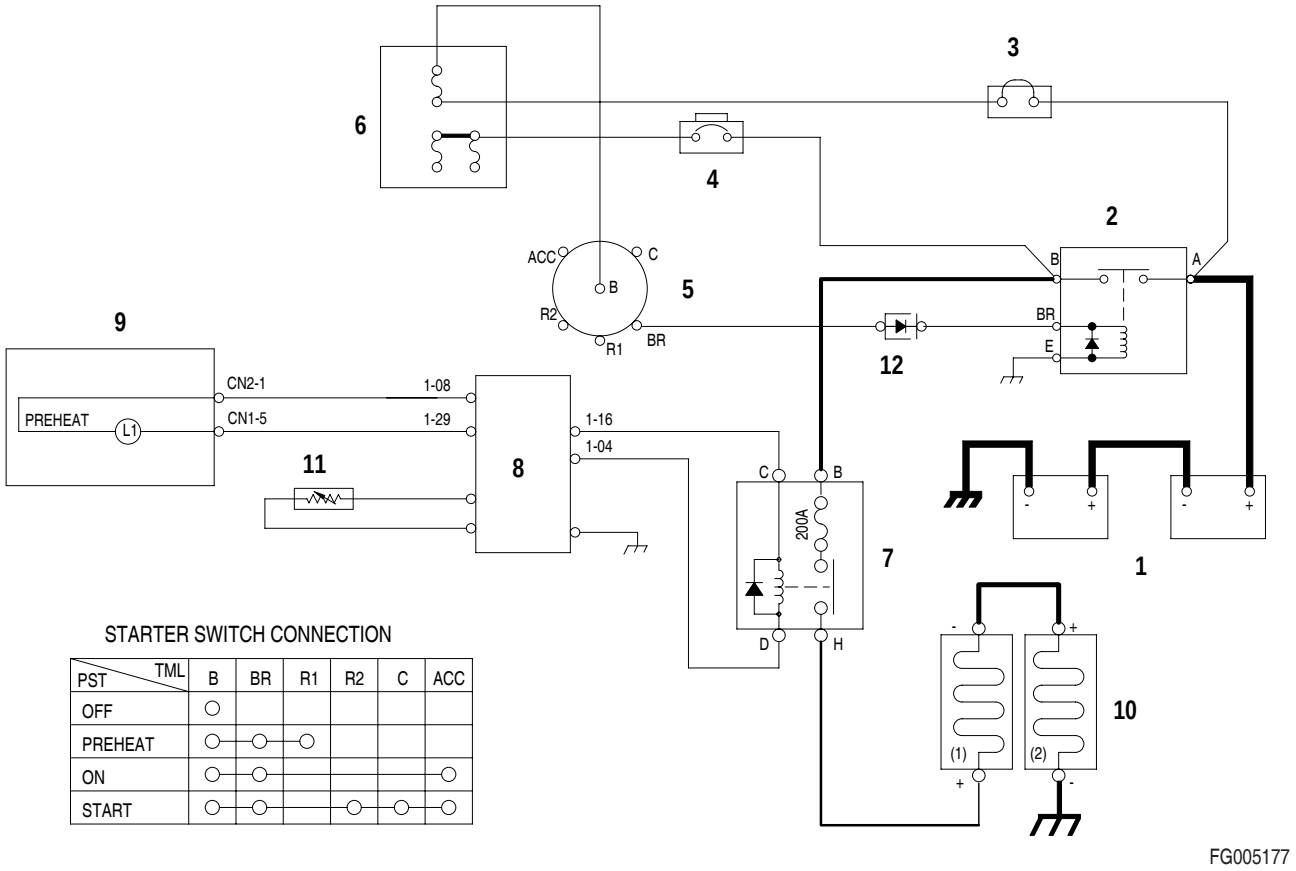

Figure 4 ENGINE PREHEAT CIRCUIT

Reference Number	Description
1	Battery
2	Battery Relay
3	Fusible Link
4	Circuit Breaker
5	Starter Switch
6	Fuse Box

Reference Number	Description
7	Air Heater Relay
8	Engine Control Unit (ECU)
9	Preheat Indicator Light
10	Air Heater
11	Engine Thermo Sensor
12	Diode

ENGINE STOP SYSTEM

This system has no engine stop system for special use like an engine stop motor or a fuel shutoff valve and so stops the engine by shutting off fuel when the fuel injector solenoid(9) controlling engine output acts opening and shutting movement according to the position of the starter switch(5).

When the startor switch(5) is in off position, CN1-39 terminal voltage of engine control unit(8) is shut off, the source of electric power of injector solenoid(9) is shut off, and fuel supplying to engine cylinder is shut off and so the engine is stopped.

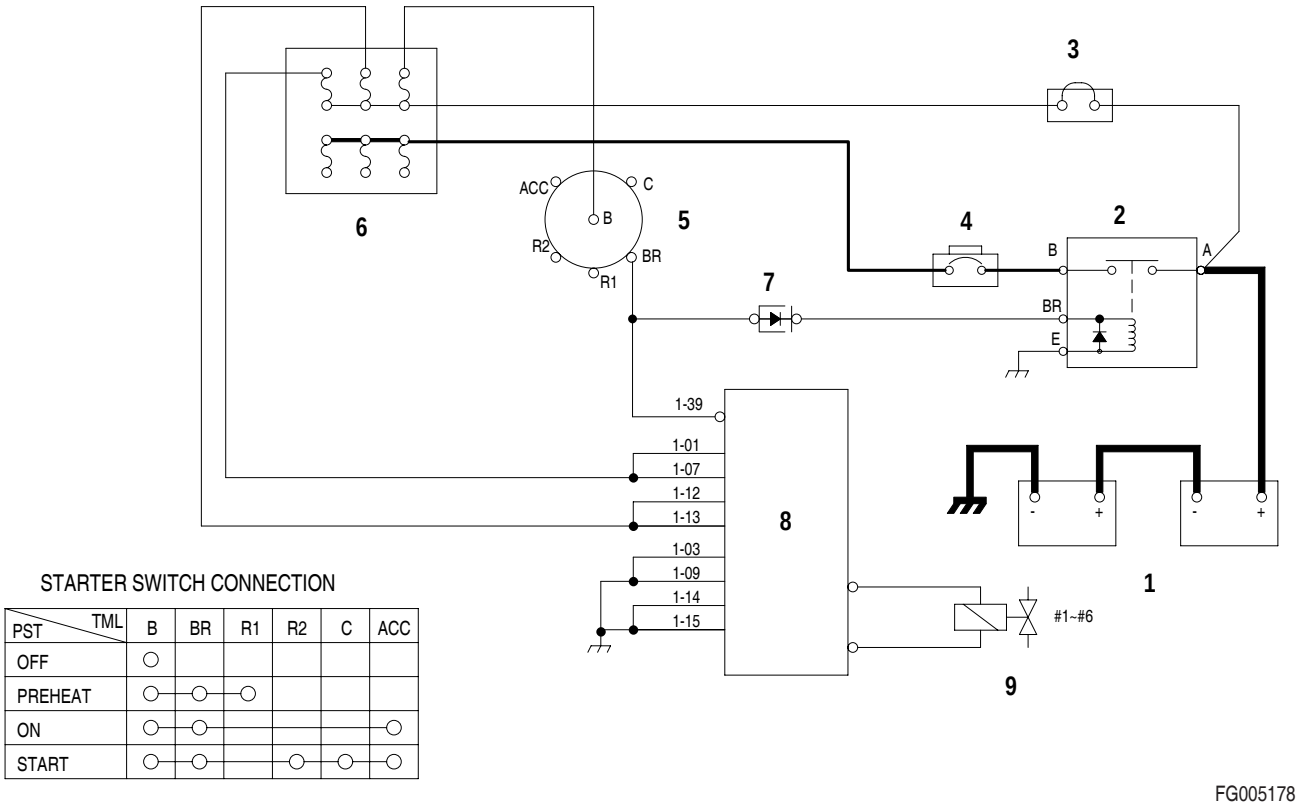

Figure 5 ENGINE STOP CIRCUIT - STOP MODE

Reference Number	Description
1	Battery
2	Battery Relay
3	Fusible Link
4	Circuit Breaker
5	Starter Switch

Reference Number	Description
6	Fuse Box
5	Diode
8	Engine Control Unit (ECU)
9	Injector Solenoid

CHARGING SYSTEM

When the starter switch (5) is turned to the "ON" position, an initial excited current flows to the battery relay(2), to the circuit breaker(4), to the "B" terminal of alternator(7), and to the field coil. When the engine is started from this condition the alternator (7) starts charging. The current flows from the "B" terminal of alternator (7), to the circuit breaker (4), to the battery relay (2), and to the battery (1).

The alternator also supplies electric current to other electrical components. When the alternator (7) starts to operate, a current flows from the "R" terminal of alternator to the diode (8) and then to the battery relay (2) coil securing a path for the charging current to the battery (1). Thus, preventing the possibility of a high voltage build up and possible damage to the electrical system. The current then flows from the "R" terminal of the alternator (7) to the "2" terminal of the control unit (10), cutting power from the control unit terminal "4," and terminal "CN2-5" of gauge panel (9), to turn "OFF" the charging indicator light "L5."

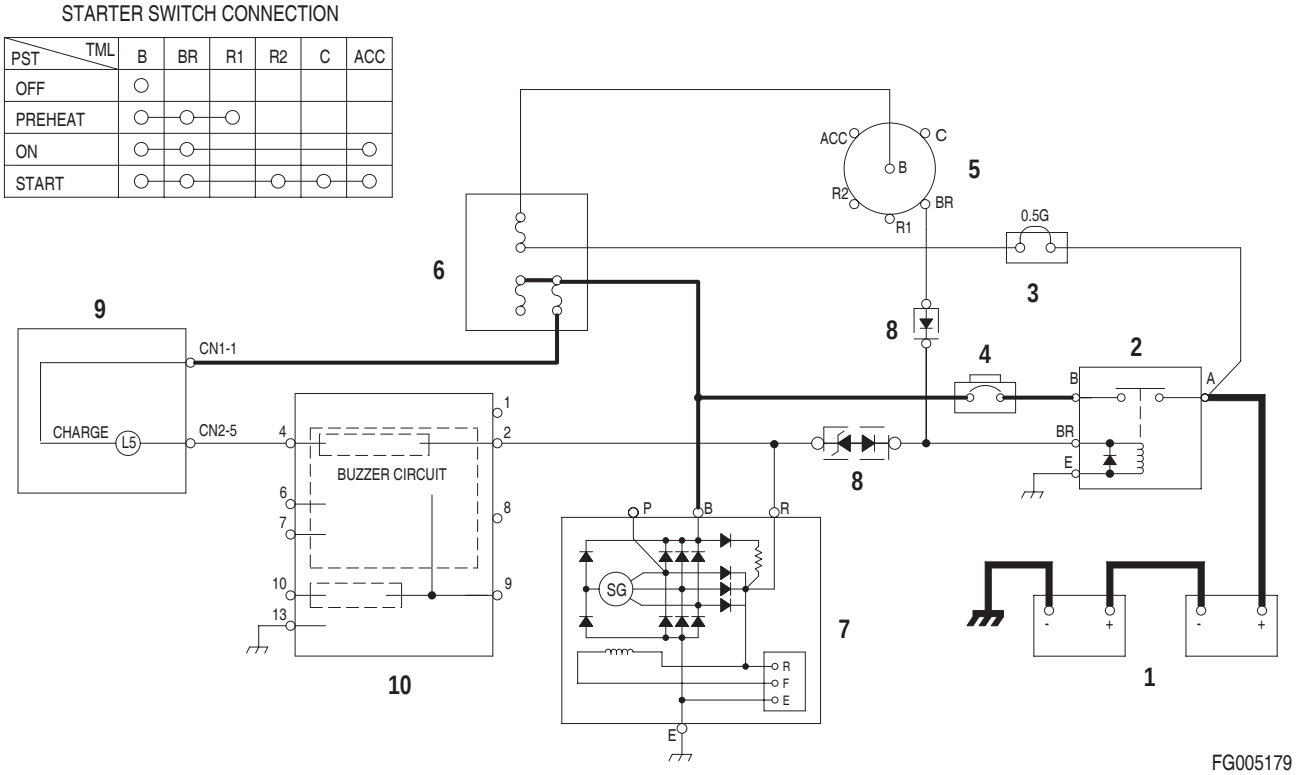

Figure 6 CHARGING CIRCUIT

Reference Number	Description
1	Battery
2	Battery Relay
3	Fusible Link
4	Circuit Breaker
5	Starter Switch

Reference Number	Description
6	Fuse Box
7	Alternator
8	Diode
9	Gauge Panel
10	Control Unit

MONITORING SYSTEM

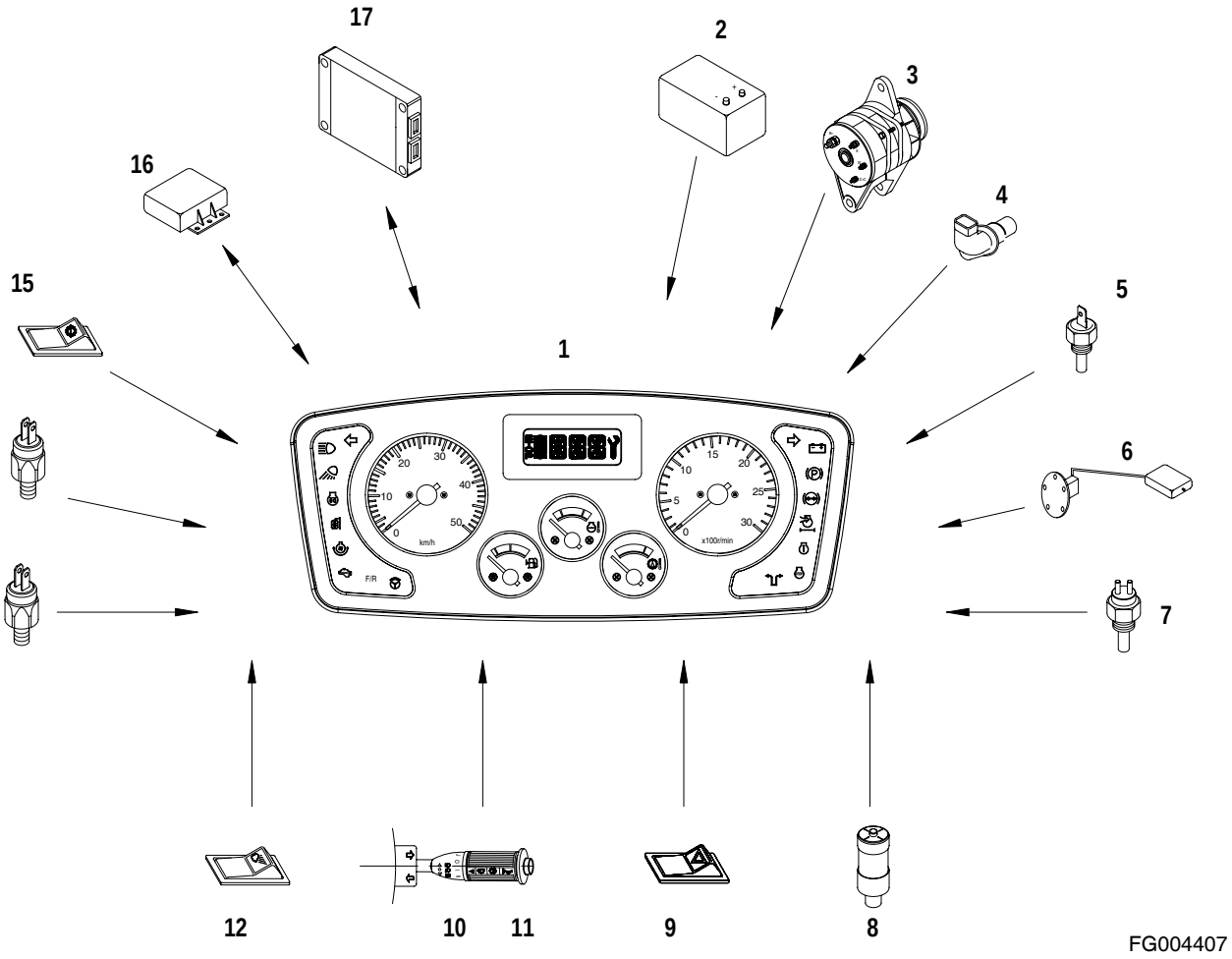

Figure 7

Reference Number	Description
1	Instrument Panel
2	Battery
3	Alternator
4	Speed Sensor
5	Coolant Temperature Sensor
6	Fuel Sensor
7	Transmission Oil Temperature Sensor
8	Air Cleaner Indicator
9	Hazard Warning Light Switch

Reference Number	Description
10	Turn Signal Light Switch
11	High Beam Switch
12	Working Light Switch
13	Brake Oil Pressure Switch
14	Parking Brake Pressure Switch
15	Transmission Cutoff Switch
16	Control unit
17	Engine Control Unit (ECU)

The monitoring system displays the various data and warning signals onto the instrument panel by processing the information gathered from the various sensors throughout the equipment.

Instrument Panel

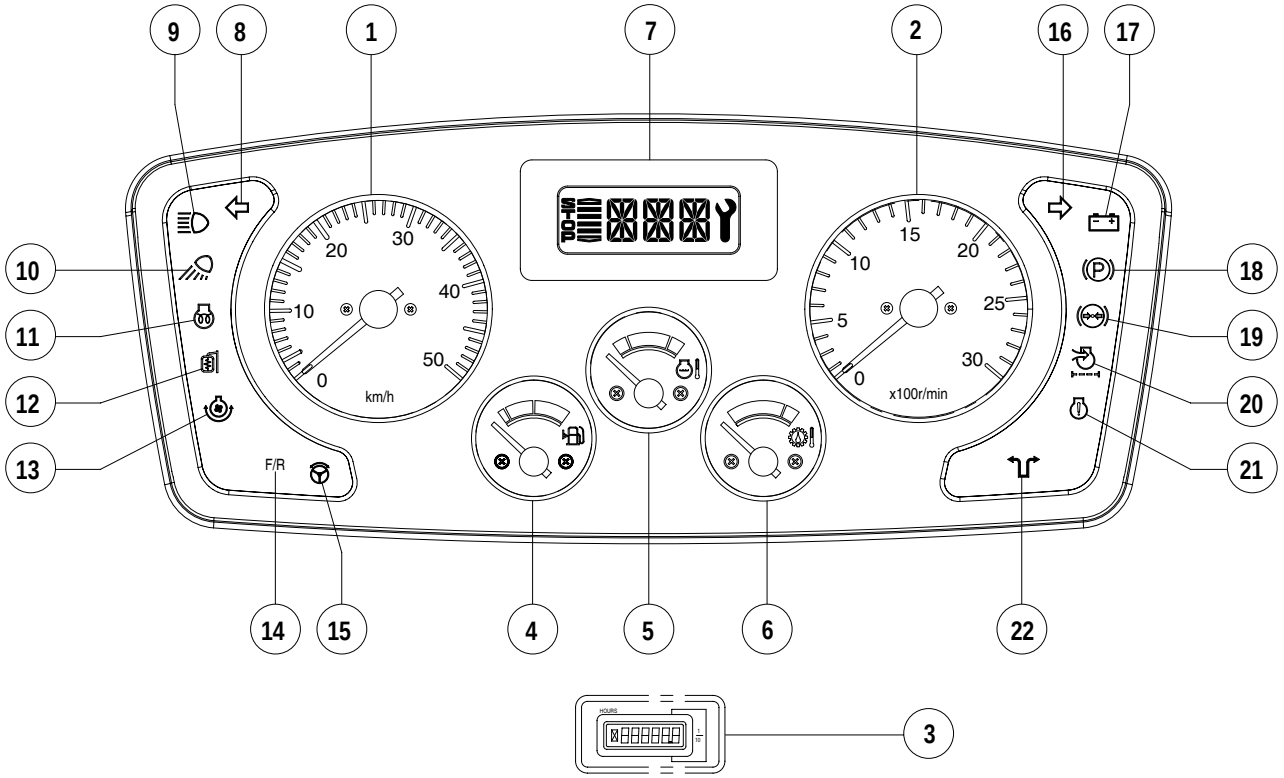

< CONNECTOR AND TERMINAL NO.>

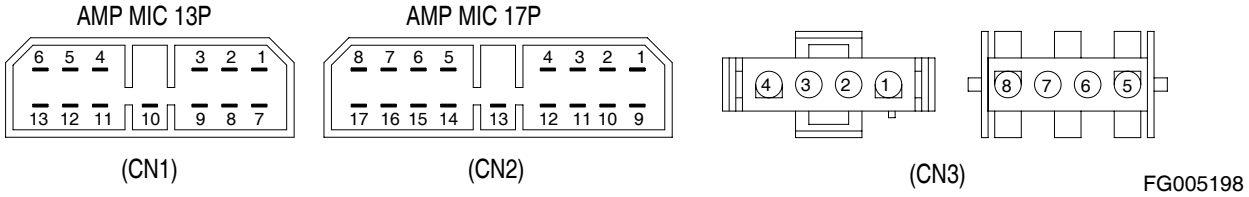

Figure 8

Gauges	Warning Lights	
1. Speed Meter	8. Turn and Hazard Warning Light	16. Turn and Hazard Warning Light
2. Tachometer	9. High Beam Indicator	17. Charging Warning Light
3. Hour Meter	10. Working Light Indicator	18. Parking Brake Indicator Light
4. Fuel Gauge	11. Preheat Completion Indicator	19. Brake Oil Pressure Warning Light
5. Engine Coolant Temperature Gauge	12. Mirror Heater Indicator	20. Air Cleaner Clogged Warning Light
6. Transmission Oil Temperature Gauge	13. Cooling Fan Reverse Indicator	21. Engine Check Warning Light
7. Display	14. Forward / Reverse Indicator Lamp	22. Emergency Steering Indicator Light
	15. Electric Steering Indicator Light	

Function Check

When the starter switch is turned to the "ON" position, all displays, switch lights and warning lights except turn and hazard warning light, high beam indicator, working light indicator and emergency steering indicator will be turned "ON" for two seconds and the warning buzzer will sound. Any lights which do not light up during the function check should be replaced.

Monitoring System Schematic

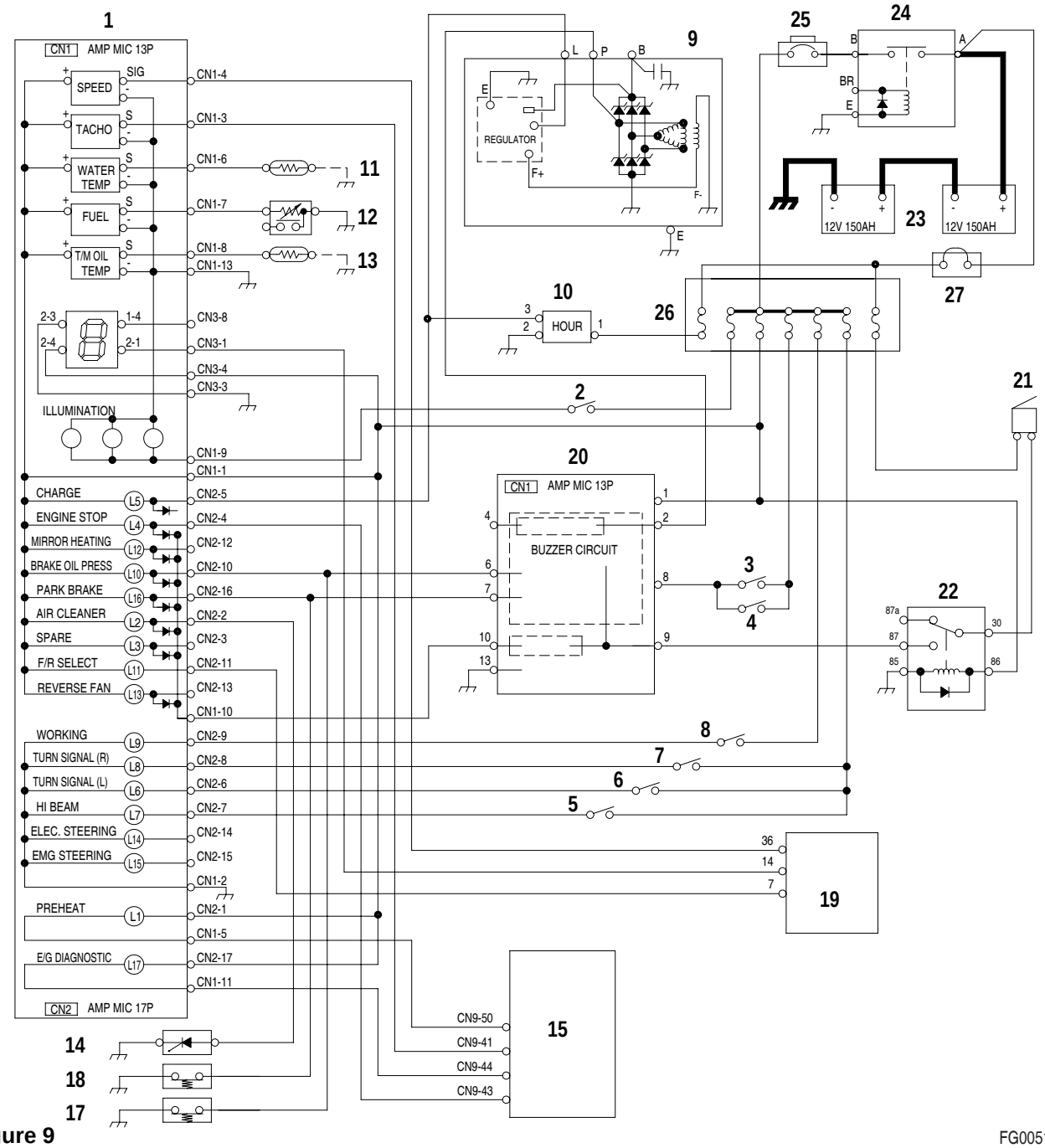

Figure 9

FG005180

Reference Number	Description
1	Instrument Panel
2	Headlight Switch
3	Forward Lever Switch
4	Reverse Lever Switch
5	High Beam Switch
6	Left Turn Signal Switch
7	Right Turn Signal Switch
8	Work Light Switch
9	Alternator
10	Hour Meter
11	Coolant Temperature Sensor
12	Fuel Sensor
13	Transmission Oil Temperature Sensor

Reference Number	Description
14	Air Cleaner Indicator
15	Engine Control Unit (ECU)
17	Brake Oil Pressure Switch
18	Parking Brake Pressure Switch
19	Transmission Controller
20	Control Unit
21	Pilot Buzzer
22	Alarm Relay 2
23	Battery
24	Battery Relay
25	Circuit Breaker
26	Fuse Box 2
27	Fusible Link

Operation

Instruments

Function	Display	Sensor Specification	
		Input Terminal	Input Specification
Speedometer	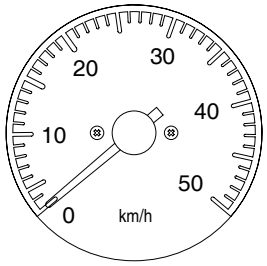	CN1-4 CN1-5	10 km/h- 704 Hz 20 km/h- 1407 Hz 30 km/h- 2111 Hz 40 km/h- 2814 Hz *f = 70.36 V [Hz] f : Frequency of T/M Controller v : Speed [km/h]
Tachometer	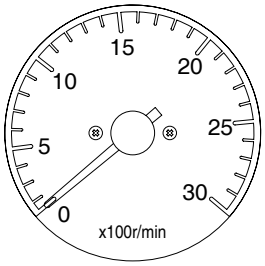	CN1-3	500 rpm - 100 Hz 1000 rpm - 200 Hz 1500 rpm - 300 Hz 2000 rpm - 400 Hz 2500 rpm - 500 Hz *f = 0.2 N [Hz] f: Frequency of alternator "P" terminal N : Engine rpm
Hour Meter	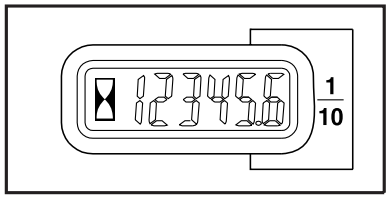 HAOA601L		ALTERNATOR "R" Terminal voltage (24V)
Fuel Level Gauge	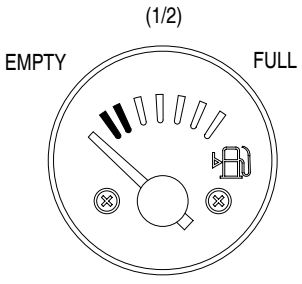	CN1-7	EMPTY - Above 90 Ohm 1/2 - 38 Ohm FULL - Below 10 Ohm

Function	Display	Sensor Specification	
		Input Terminal	Input Specification
Engine Coolant Temperature Gauge	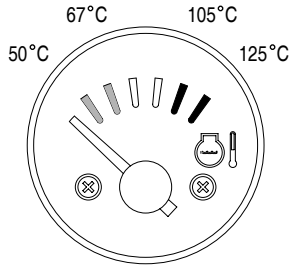	CN1-6	50°C - Above 188.2 Ohm 67°C - 102 Ohm 105°C - 32 Ohm 125°C - Below 19.8 Ohm
Transmission Oil Temperature Gauge	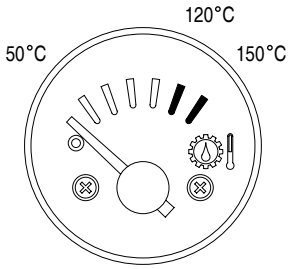	CN1-8	50°C - Above 188 Ohm 120°C - 21 Ohm 150°C - Below 0.7 Ohm

Indicator Lights

Description	Symbol	Input Terminal	Operation	Remarks
Preheating	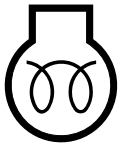	CN2 - 1 CN1 - 5	Lights up while the air heater is heated. (Terminal input is to 24V.)	
Air Cleaner	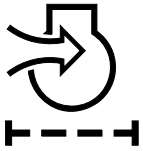	CN2 - 2	Lights up when air cleaner is clogged. (When the terminal input is grounded.)	
Engine Check		CN2 - 17 CN1 - 11	Lights up when the nonfatal system error occurred at the engine itself or peripherals. (Terminal input is to 24V.)	In the diagnostic mode, will flash after the engine stop light completes the three-degit fault code.
Charge	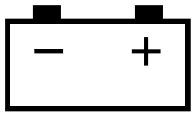 HAOA610L	CN2 - 5	Lights up when not charging. (and "R" terminal output drops below 24V)	Under normal conditions, will turn "ON" before engine start-up and shut off once engine is running.
Left Turn and Hazard Light	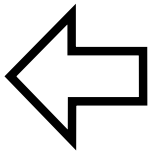	CN2 - 6	Lights up when left turn signal or hazard light is operated. (Terminal input is to 24V)	
Right Turn and Hazard Light	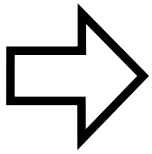	CN2 - 8	Lights up when right turn signal or hazard light is operated. (Terminal input is to 24V)	

Description	Symbol	Input Terminal	Operation	Remarks
High Beam		CN2 - 7	Lights up when high beam is operated. (Terminal input is to 24V)	
Work Light		CN2 - 9	Lights up when work light is operated. (Terminal input is to 24 V)	Light off when the engine is started.
Brake Oil Pressure	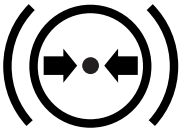	CN2 - 10	Lights off when brake oil pressure increases over 65 kg/cm^2, and light turns "ON" when brake oil pressure drops below 60 kg/cm^2. (When terminal input is connected)	Under normal conditions, will turn "ON" before engine start-up and shut off once engine is running.
Parking Brake		CN2 - 16	Lights up when the parking brake switch is applied and parking brake pressure is above 65 kg/cm^2.	Under any conditions, will be light turns "ON" before engine start-up.
Mirror Heater		CN2 - 12	Lights up when mirror heater is operated. (When the terminal input is grounded.)	
Cooling Fan Reverse	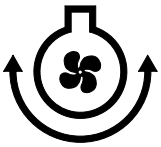	CN2 - 13	Lights up when the cooling fan turns to reverse. (When the terminal input is grounded.)	

Description	Symbol	Input Terminal	Operation	Remarks
Forward / Reverse	F/R	CN2 - 11	Lights up when the F/R switch is "ON"	This is option parts.
Emergency Steering		CN3 - 15	Lights up when the vehicle speed is above 5 km/h and the steering pressure is below 10 kg/cm^2. (When the test switch is applied)	

Initial Operation

Item	Input (Terminal)	Output (Operation and initial setting mode)
Initial Operation	CN 1-1	• All warning lights are turned "ON" and turned "OFF" after 2 seconds. (Except for turn signal indicator, high beam indicator, working light indicator and transmission cutoff indicator and emergency steering indicator. • Warning buzzer is activated and turned "OFF" after 2 seconds. • Monitoring system displays present condition.

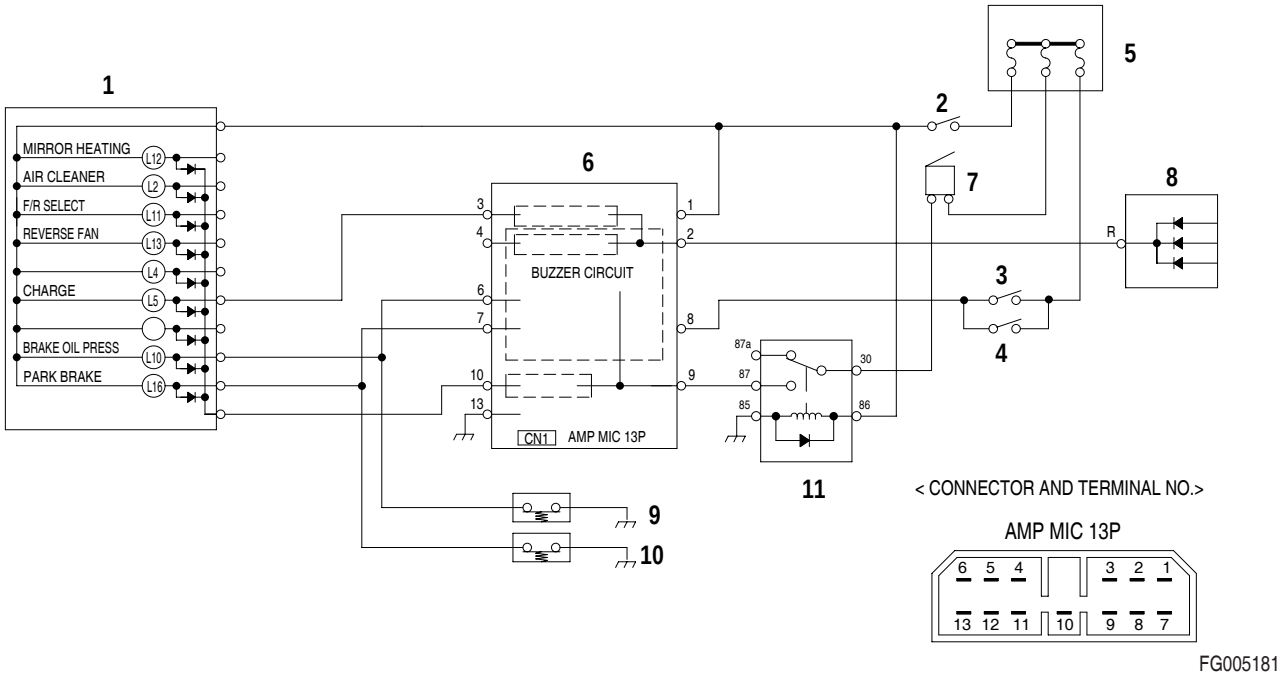

Figure 10

Reference Number	Description
1	Instrument Panel
2	Starter Switch
3	Forward Lever Switch
4	Reverse Lever Switch
5	Fuse Box
6	Control Unit

Reference Number	Description
7	Pilot Buzzer
8	Alternator
9	Brake Oil Pressure Switch
10	Parking Brake Pressure Switch
11	Alarm Relay 2

Characteristic of Operation

	Input		Output
1	When the starter switch is "ON."		All warning lights are turned "ON" and turned "OFF" after 2 - 2.5 seconds.
2	When "R" terminal voltage of alternator	is below 12 ±1 V	Battery warning light turns "ON," L5
		is above 12 ±1 V	Battery warning light turns "OFF," L5
3	When "R" terminal voltage of alternator is above 12 ±1 V	Brake oil pressure switch is "ON."	Warning buzzer sounds immediately
		Forward or Reverse lever switch is "ON" and Parking brake pressure switch is "ON."	Warning buzzer sounds immediately

WINDSHIELD WIPER

Front windshield wiper

You can control windshield wiper by operating wiper washer switch (2).

1. Low speed wiper action (1st).

   Wiper acts in low speed through fuse box (1) to the 15,53 terminal of wiper switch (2) to the L,E terminal of wiper motor (5).

2. High speed wiper action (2nd).

   Wiper acts in high speed through Fuse box (1) to the 15,53b terminal of wiper switch (2) to the H,E terminal of wiper motor (5).

3. When you turn off switch during Low speed wiper action (1st) or High speed wiper action (2nd), electric currents flow through Fuse box (1) to the B,S terminal of wiper motor (5) to the 87a,30 terminal of wiper relay (3) to the 31b,53 terminal of wiper switch (2) - L,E terminal of wiper motor (5). Wiper acts until wiper rotates to the stop position, than the wiper stops.

4. Intermittent wiper action.

   Fuse box (1) to the 15,J terminal of wiper switch (2) to the 1,4 terminal of wiper timer (4) are connected intermittently, and electric current flow into 86,85 terminal of wiper relay (3) than 87 terminal and 30 terminal are connected.

   Therefore, electric current flow through fuse box (1) to the 87,30 terminal of wiper relay (3) to the 31b,53 terminal of wiper switch (2) to the L,E terminal of wiper motor (5), and wiper operates intermittently in low speed.

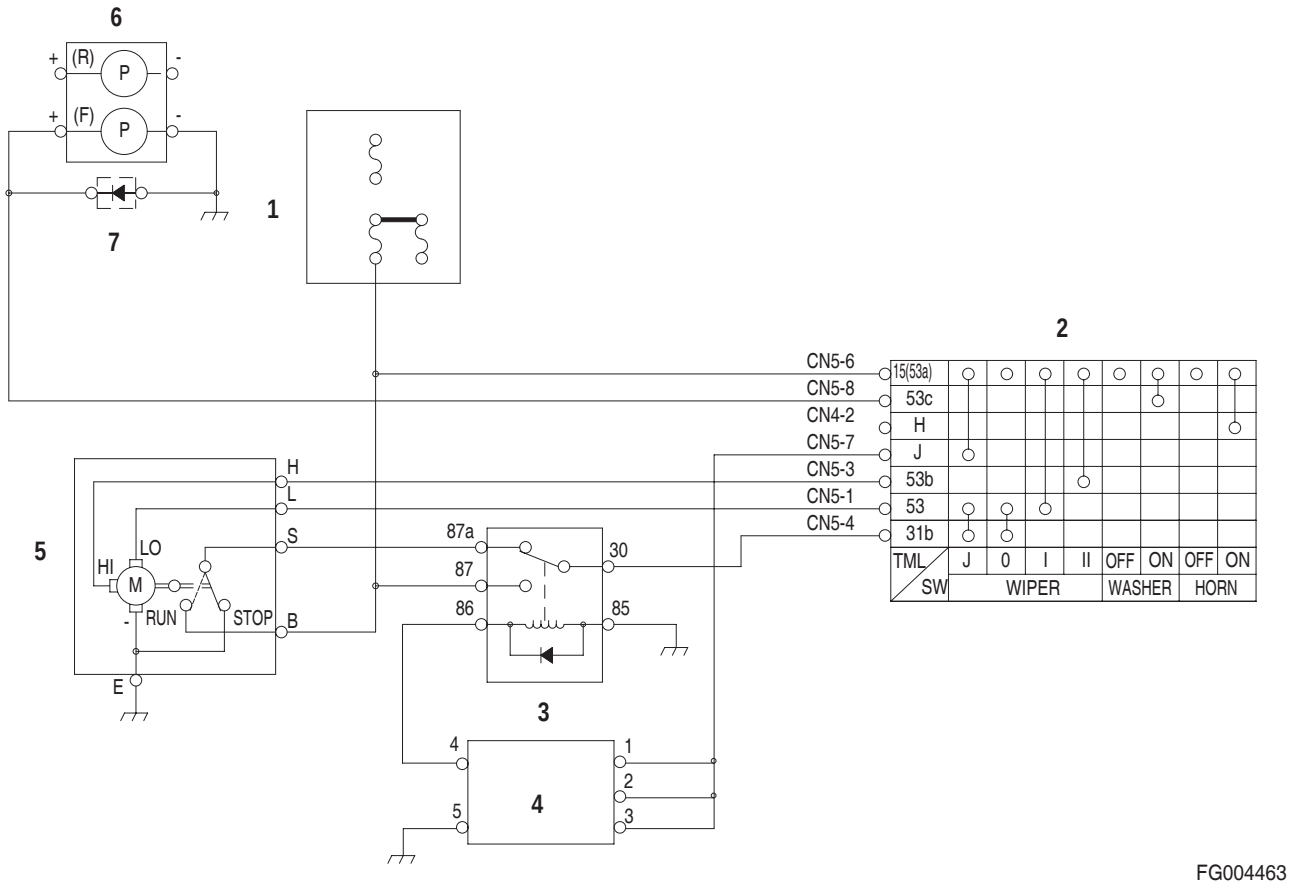

Figure 11

Reference Number	Description
1	Fuse Box 2
2	Wiper Washer Switch
3	Wiper Relay
4	Wiper Timer

Reference Number	Description
5	Wiper Motor
6	Washer Tank
7	Diode

Rear Windshield wiper

You can control rear windshield wiper by pressing wiper washer switch (2) in the switch panel.

1. 1st wiper action (Wiper and washer activate the same time, automatic return).

   Fuse box (1), to the washer tank (4), to the 5,7 terminal of switch (20) are connected, then activates windshield washers. Also fuse box (1), to the B,L terminal of wiper motor (3), to the diode (5), to the 5,7 terminal of switch (2) are connected, then activates wiper.

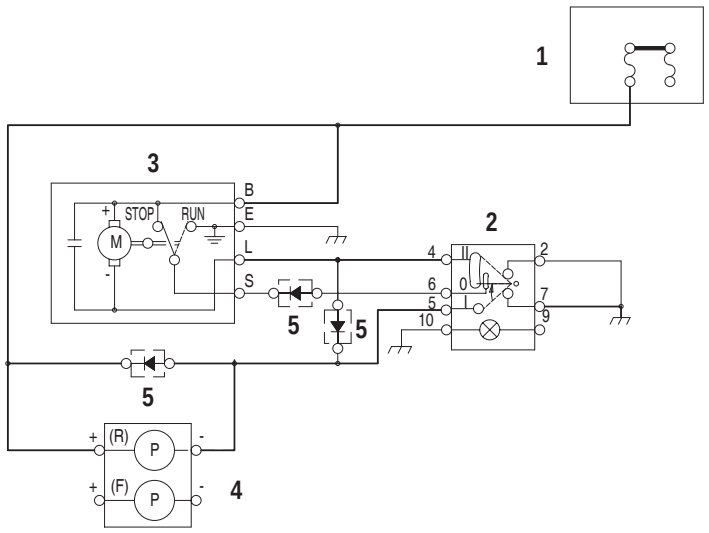

FG004464

Figure 12 REAR WINDSHIELD WIPER 1ST ACTION CIRCUIT

Reference Number	Description
1	Fuse Box 1
2	Wiper/washer Switch
3	Wiper Motor

Reference Number	Description
4	Washer Tank
5	Diode

2. 2nd wiper action (Only wiper action).

   Fuse box (1), to the B,L terminal of wiper motor (3), to the 4,2 terminal of switch (2) are connected, then activates wiper.

3. When you turn off windshield wiper switch in 1st or 2nd position, electric current flows fuse box (1), to the B,L terminal of wiper motor (3), to the 4,6 terminal of wiper switch (2), to the diode (6), to the S,E terminal of wiper motor (3).

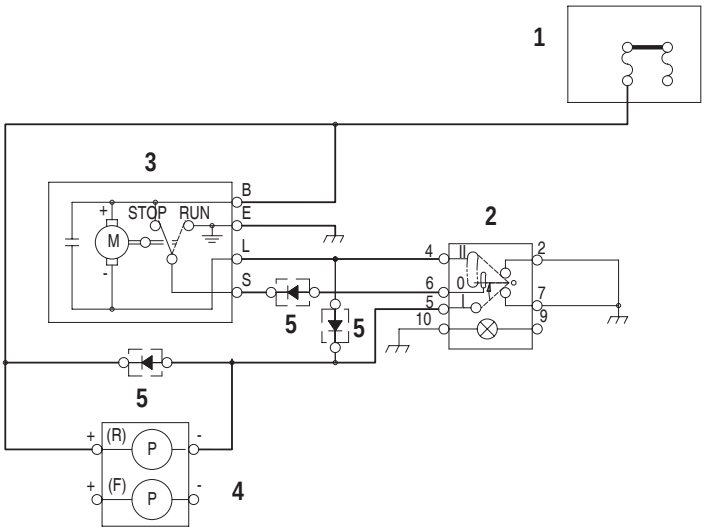

FG004465

Figure 13 REAR WINDSHIELD WIPER STOP CIRCUIT

Reference Number	Description
1	Fuse Box 1
2	Wiper/washer Switch
3	Wiper Motor

Reference Number	Description
4	Washer Tank
5	Diode

LIGHTING SYSTEM

Light Circuit

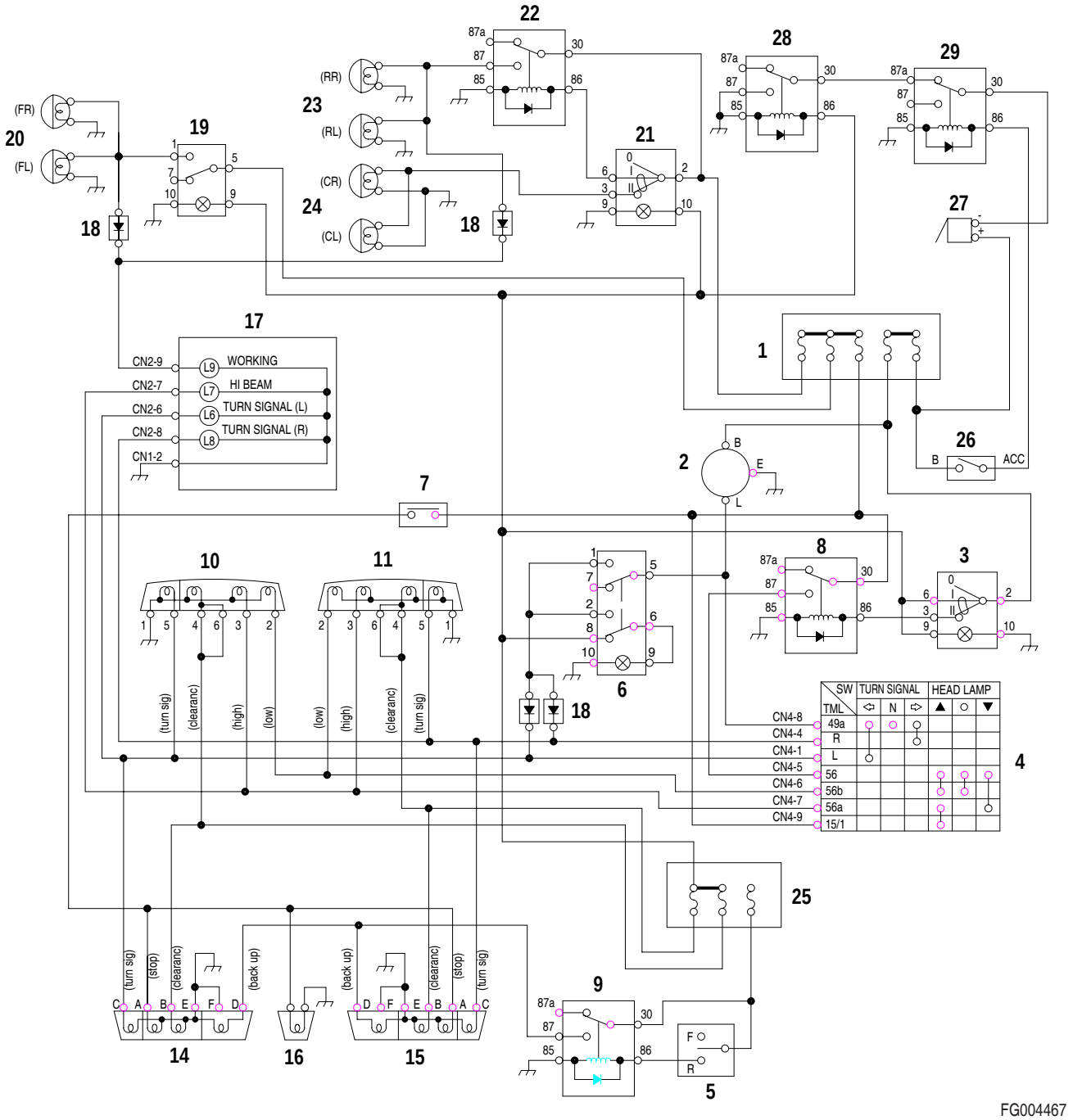

Figure 14 LIGHT CIRCUIT

Reference Number	Description
1	Fuse Box 1
2	Blinker Unit
3	Headlight Switch
4	Combination Switch
5	Shift Lever Switch
6	Hazard Switch
7	Stop Light Switch
8	Headlight Relay
9	Reverse Relay
10	Headlight (L)
11	Headlight (R)
14	Rear Combination Light (L)
15	Rear Combination Light (R)

Reference Number	Description
17	Instrument Panel
18	Diode
19	Front Working Light Switch
20	Front Working Light
21	Rear Working Light Switch
22	Working Light Relay
23	Rear Working Light 1
24	Rear Working Light 2
25	Fuse Box 2
26	Starter Switch
27	Pilot Buzzer
28	Alarm Relay 1
29	Alarm Relay 2

The lighting system consists of the headlight, the position light, the turn signal light, the hazard light, the stop light, the license plate light, the working light, the rotating beacon light (option) and the switches, which are used to turn "ON" the lights.

1. When the headlight switch (3) is in the first step, through the fuse box 1 (1) to the "2," "6" terminal of headlight switch (3), the following lights will be turned "ON."
   A. The headlight (L) (10) and rear combination light (L) through the fuse box 2 (25).
   B. The headlight (R) (11) and rear combination light (R) through the fuse box 2 (25).
   C. The illumination lights through the "9" terminal of all kind of rocker switches include the headlight switch (3), the front working light switch (19), the rear working light (21) and the hazard switch (6).
   D. The license plate light (16).
2. When the headlight switch (3) is in the second step, the current flows through the fuse box 1 (1), to the "2," "3" terminal of headlight switch (3) and to the "86," "85" terminal of headlight relay (8), and the "30," "87" terminal of headlight relay (8) is connected. As a result, through the fuse box 1 (1) to the "30," "87" terminal of headlight relay (8), the voltage is applied to the "56" terminal of combination switch (R) (4).
   A. At this time if the combination switch (4) is in the "0" position, the current flows to the "56b" terminal and it allow the low light, which is in the headlight (L) (10) and the headlight (R) (11), to be light turns "ON."
   B. Also if the combination switch (4) is in the "t " position, the current flows to the "56a" terminal and it allow the high light, which is in the headlight (L) (10)

and the headlight (R) (11), to be light turns "ON." At the same time the current flows to the "CN2-7" terminal of instrument panel (17) and the headlight indicator L7 will be turned "ON."

C. And if the combination switch (4) is in the "s " position, the current flows to the "56b" terminal and it allows the low light, which is in the headlight (L) (10) and the headlight (R) (11), to be light turns "ON."
At the same time another current flows from the fuse box 1 (1) to the "15/1," "56b" terminal of combination switch (4) and the highlight, which is in the headlight (L) (10) and the headlight (R) (11) will be turned "ON," and the other current flows to the "CN2-7" terminal of instrument panel (17) and the headlight indicator will be turned "ON." The combination switch (4) is returned automatically.

3. When the combination switch (4) is in the "←" (or "→")position, the current flows from the fuse box 1 (1), to the blinker unit (2), to the "L" (or "R") terminal through "49a" terminal of combination switch (4), to the "C" terminal of front combination light (L) (12) and the rear combination light (L) (14) (or to the front combination light (R) (13) and the rear combination light (R) (15)). This current makes the turn signal light turn "ON." At the same time the current flows to the "CN2-6" terminal (or to the CN2-8 terminal) of instrument panel and the turn signal light indicator L6 (or L8) will be turned "ON."

4. If you operates the hazard light switch (6), the current flows from to the fuse box 1 (1), to the blinker unit (2), to the "5," "1" terminal of hazard switch (6), to the diode (18), to the front combination light (L) (12) and the front combination light (R) (13), to the "C" terminal of rear combination light (L) (14) and rear combination light (R) (15). This current makes the turn signal light turn "ON." At the same time through the "2," "6" terminal of hazard switch (6), the voltage is applied to the "9" terminal and the indicator light used to light the symbol will be turned "ON." Also the current flows to the "CN2-6," "CN2-8" terminal of instrument panel (17) and the turn signal light indicator "L," "L8" will be turned "ON."

5. When the shift lever switch (5) is in the "R" position, the contact points "30" and "87" of the reverse relay (9) are closed due to current flowing from the fuse box 2 (23), to the shift lever switch (5), to the "86" terminal of reverse relay (9) and to the ground. Thus the current flows from fuse box 2 (23), to the reverse relay (9) and to the "D" terminal of rear combination light (L) (14) and rear combination light (R) (15), and the reverse light will be turned "ON."

6. When the brake pedal is depressed and at the same time the stop light switch (7) is turned "ON," the current flows the from fuse box 1 (1), to the stop light switch (7) and to the "F" terminal of rear combination light (L) (14) and rear

combination light (R) (15), and the stop light will be turned "ON."

7. When the front working light switch (19) is in the "ON" position, the current flows from the fuse box 1 (1), to the "5," "1" terminal of front working light switch (19) and to the front working light (20).

   This current makes the front working lights turn "ON." At the same time the working light indicator, L9," is turned "ON" due to the current flowing from the diode (8) to the "CN2-9" terminal of instrument panel (17).

8. When the rear working light switch (21) is in the second step, the contact points "30" and "87" of the working light relay (22) is closed due to the flowing current from the fuse box 1 (1), to the "2" and "6" terminal of the working light switch (21), to the "86" terminal of the working light relay (22) and to the ground. Thus the current flows from the fuse box 1 (1), to the working light relay (22) and to the rear working light 1 (23) mounted on right/left rear fender. As a result the rear working light (23) light turns "ON." At the same time the working light indicator "L9" light turns "ON" due to the current flowing from the diode (18) to the "CN2-9" terminal of the instrument panel.

9. When the rear working light switch (21) is in the second step, the contact points "30" and "87" of the working light relay (22) is closed due to the flowing current from the fuse box 1 (1), to the "2" and "6" and "3" terminal of the working light switch (21), the rear working (23) is operated like being described above clause "8" and the rear working light (24) mounted on the cabin light turns "ON" at the same time.

10. When the headlight switch (3) is in the first step or in the second step while the starter switch (26) is in the "OFF" position, the contact point "30," "87" of alarm relay 1 (28) is closed due to the excited current, which flows to the coil of alarm relay 1 (28) and the pilot buzzer (27) will sound.
    But when the headlight switch (3) is in the first step or in the second step while the starter switch (26) is in the "ON" position, the contact point "3," "87" of alarm relay 2 (29) is closed due to the excited current, which flows to the coil of alarm relay 2 (29). At the same time the current is not supplied to the "30" terminal of alarm relay 1 (28) and the pilot buzzer will not sound any more.

ECU SYSTEM

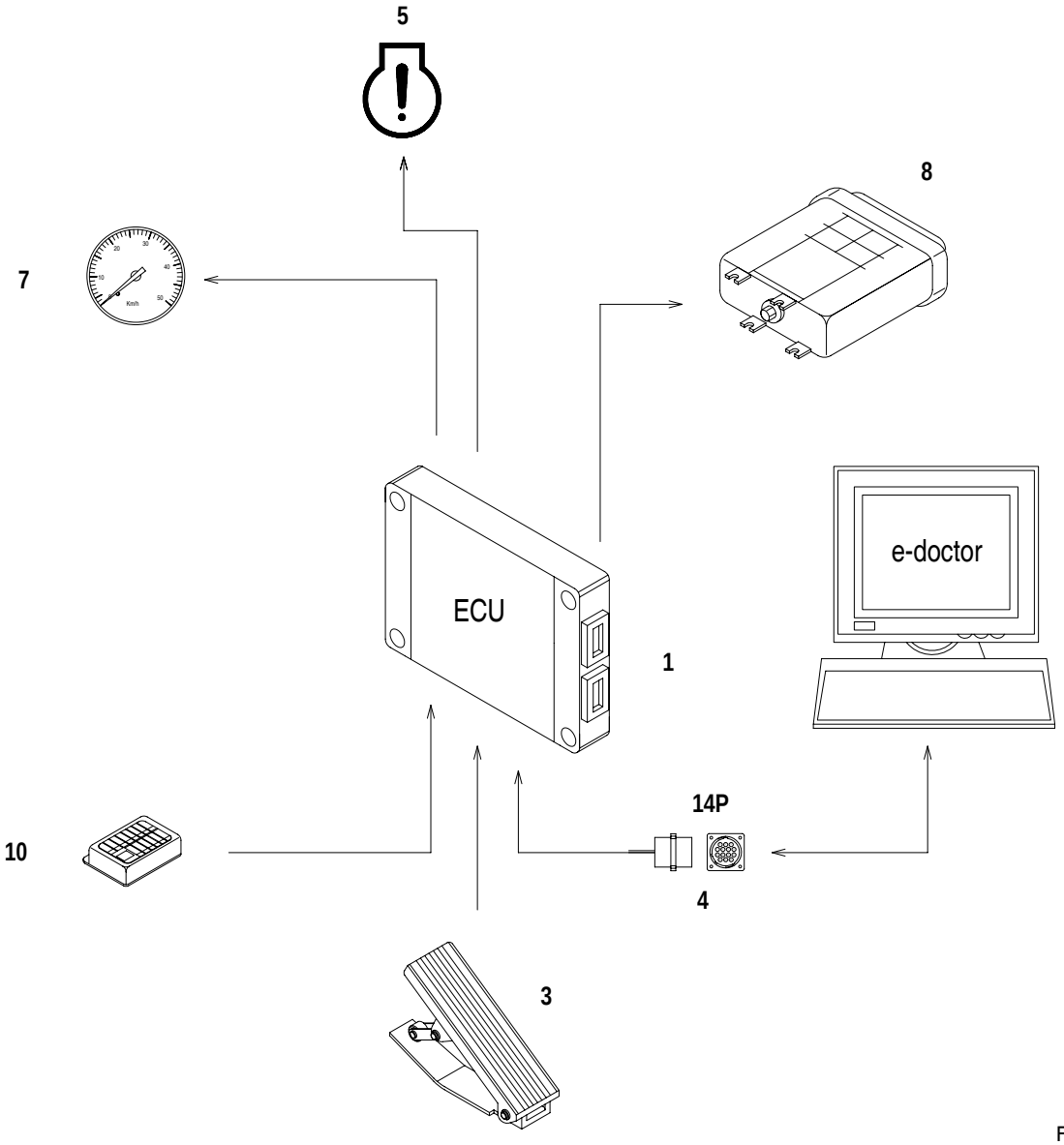

FG005280

Figure 15

Reference Number	Description
1	ECU (Engine Control Unit)
3	Electronic Accelerator Pedal
4	Engine Diagnostic Connector
5	Engine Check Warning Light

Reference Number	Description
7	Tacho Meter
8	Transmission Controller
10	Fuse Box

ECU Electric Circuit

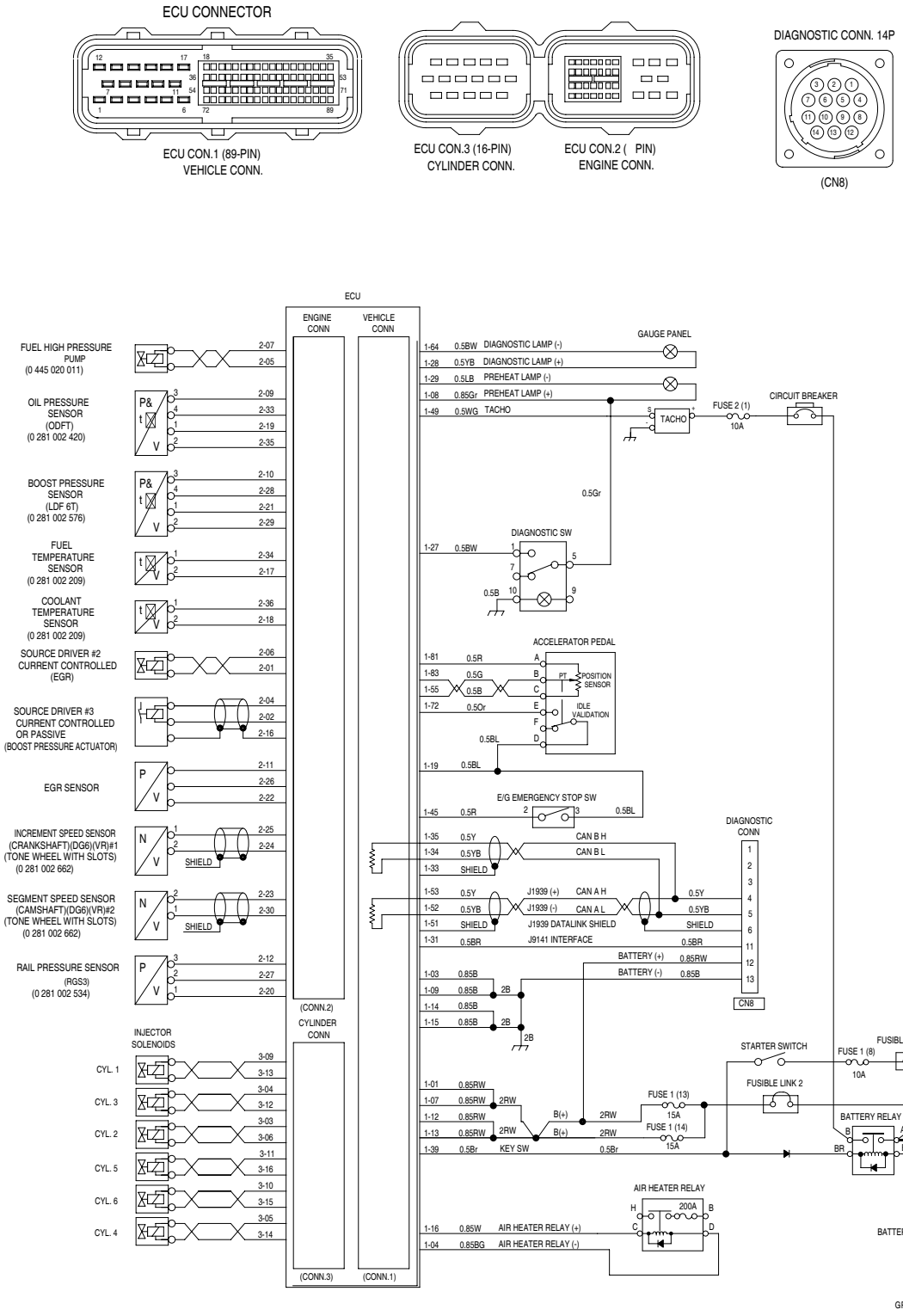

FG005182

Figure 16

ECU System Component

Engine Control Unit (ECU)

1. Engine is automatic controled through all sorts of control devices after receiving all sorts of sensor input signals from engine.
2. ECU is attached to engine and operates sensitively to circumferential temperature.
3. ECU detects the abnormal conditions of engine system and give trouble position by self diagnostic code through a diagnostic lamp or an exclusive use diagnostic device.

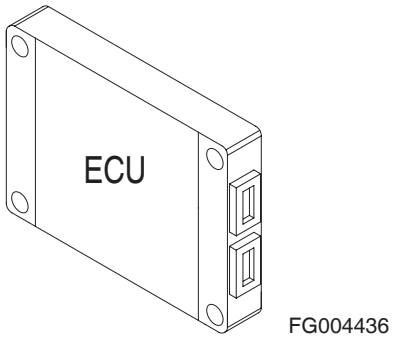

Figure 17

Engine Diagnostic Connector

1. Information stored in ECU can be known through a monitor after connecting ECU and an e-doctor which is a service tool.

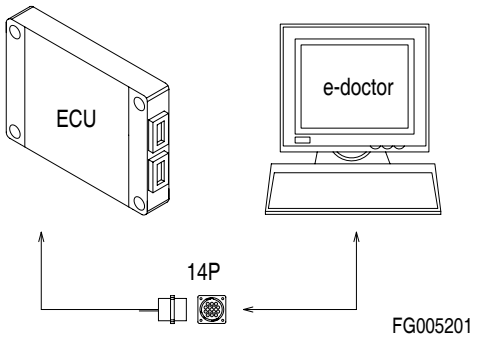

Figure 18

2. The engine diagnostic connector is positioned at the lower part of the left wall side of the electric components box.

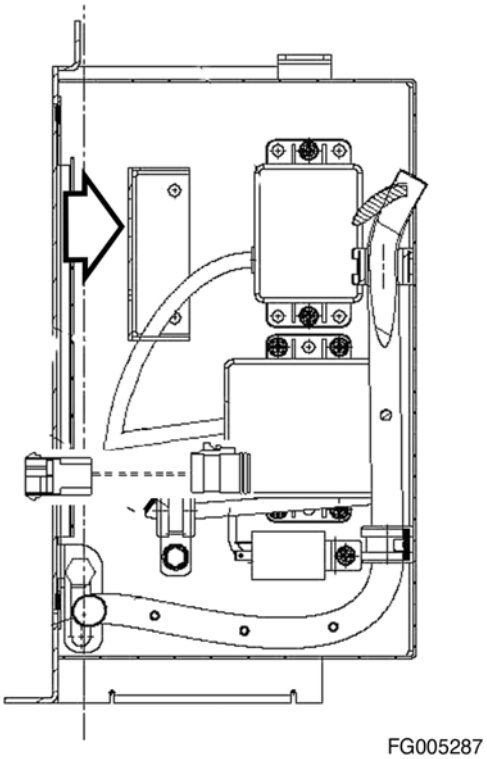

Figure 19

Economic Mode Switch

This economic mode switch allows the operator to switch between 100% throttle torque and droop curve and about an 80% derated torque curve and droop. In the economy mode, fuel consumption is clearly reduced by utilising a reduced-power characteristic map for the engine. This is of benifit with all general loading work.

O. In this position torque switch is set to the "off" position, and 100% torque is permitted for hard digging or driving up sleep inclines.

I. In this position torque switch is turn "ON", which limits engine torque to 80% of maximum.

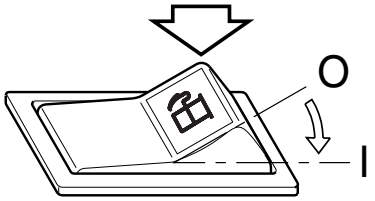

FG004998

Figure 20

Engine Diagnostic Switch

If the engine warning light turns "ON" or "Blinks", when the engine is running. it means a fault code has been recorded. When this occurs, the engine diagnostic switch allows the operator to view the fault codes. The active fault code is started after this switch turns "ON" "OFF", if during the output of the fault code the this switch turns "ON" "OFF" again, the output of the current fault code is interrupted and the next fault code is displayed. Each depression of the diagnostic switch cause the output of a fault code.

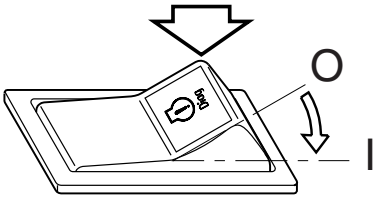

AQO0120L

Figure 21

Engine Warning Light

If a defect is present in the engine system, and it is recognized by the ECU and cause a malfunction in operation, it can be displayed with the engine warning light to indicated a warning to the operator.

- Light turned "ON" :nonfatal error
- Light is "BLINKING" : fatal system error

NOTE: *The engine warning light flashes out the two digit fault code in the diagnostic mode*

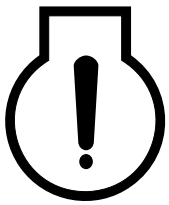

FG005202

Figure 22

Fault Code 35 (example)





FG004339

Figure 23

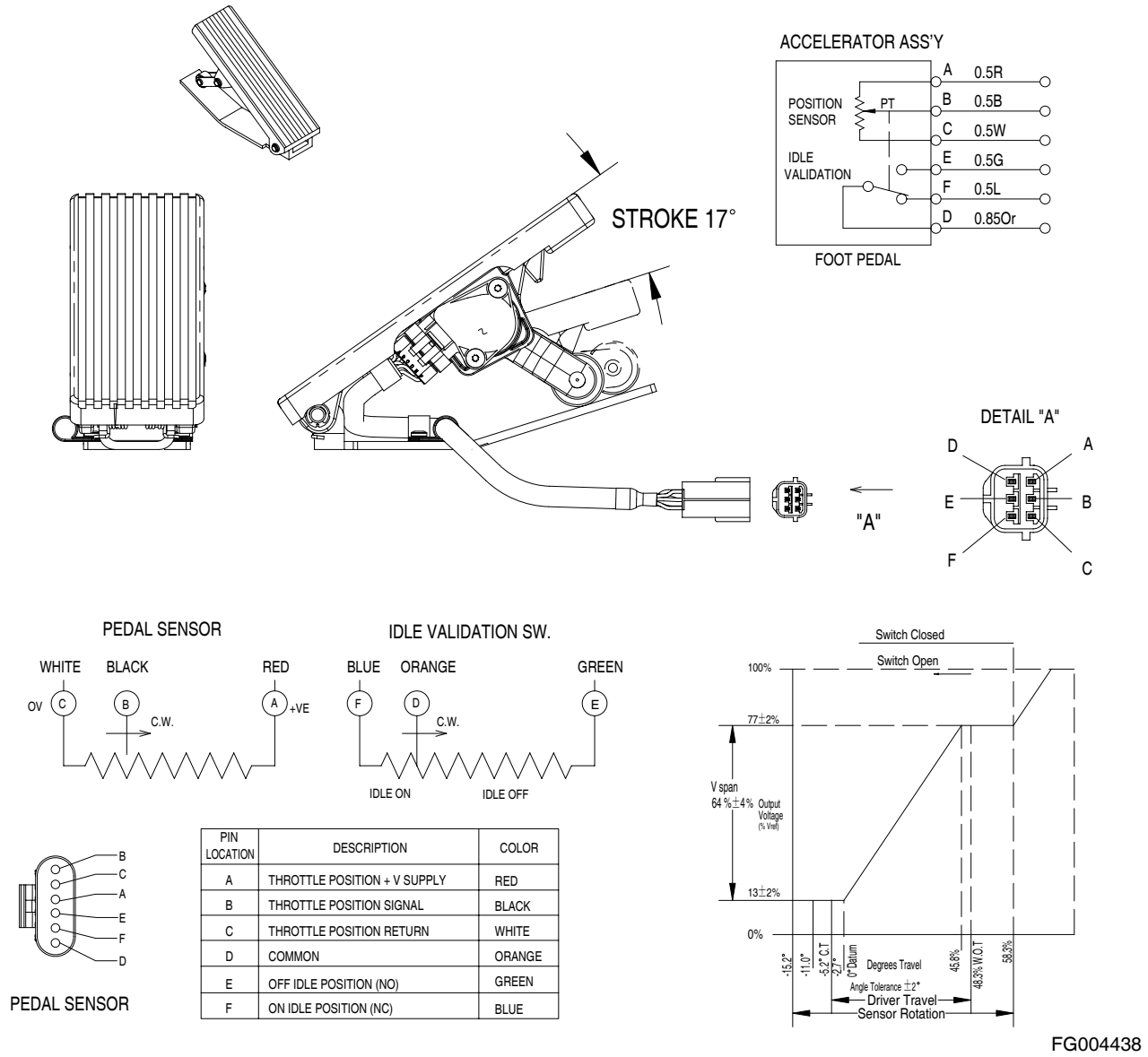

PIN LOCATION	DESCRIPTION	COLOR
A	THROTTLE POSITION + V SUPPLY	RED
B	THROTTLE POSITION SIGNAL	BLACK
C	THROTTLE POSITION RETURN	WHITE
D	COMMON	ORANGE
E	OFF IDLE POSITION (NO)	GREEN
F	ON IDLE POSITION (NC)	BLUE

FG004438

Figure 24

ENGINE FAULT CODE

Blink Type	Blink Code	Failure Component	Measuring Points	Current Value		Remarks
				Active	Passive	
C	11	Coolant Temperature Sensor	2-36 2-18		R=186±5Ω (100°C)	
C	12	Fuel Temperature Sensor	2-34 2-17		R=186±5Ω (100°C)	
C	13	Boost Air Temperature Sensor	2-29 2-21		R=186±5Ω (100°C)	
C	14	Boost Air Pressure Sensor	2-28 2-10	V=1,071±58mV (at 23°C and absolute pressure 1bar)		It has to be measured in engine running state
C	16	Ambient Air Pressure Sensor				
N	17	E/G Oil Temperature Sensor	2-35 2-19		R=186±5Ω (100°C)	
C	18	E/G Oil Pressure Sensor	2-33 2-09	V=2,318±80mV (at 23°C and absolute pressure 3bar)		It has to be measured in engine running state.
C	21	Battery Voltage	1-13 1-15			
B	22	Fuel Pressure Sensor	2-27 2-20	V=1,833±28mV (at 23°C and absolute pressure 300bar)		It has to be measured in engine running state.
B	23	Acceleration Pedal	1-55,1-83 1-81 (1-72)	V=0.45±0.1V (at min. position) V=3.65±0.1V (at max. position)		
B	32	Fuel Pressure Monitoring MPROP	2-7 2-5		R=2.60~3.15Ω (20°C)	
B	34	Fuel Pressure Monitoring MPROP HIGH	2-7 2-5		R=2.60~3.15Ω (20°C)	
N	37	Can Module	(1-53, 1-52) (1-35, 1-34)		R=60±5Ω (20°C)	It is a composite resistance of CAN line.This value has to be measured by connected condition of CAN line.

Blink Type	Blink Code	Failure Component	Measuring Points	Current Value		Remarks
				Active	Passive	
C	38	Engine Over speed				
B	39	Main Relay (ECU)				
N	41	Redundant Shutoff Path				Abnormal engine stop
C	42	Engine Speed Sensor (Crankshaft)	2-25 2-24		R=860±86Ω (20°C)	
C	43	Engine Speed Sensor (Camshaft)	2-23 2-30		R=860±86Ω (20°C)	
C	44	Engine Speed Sensor				Synchronizing error between crank shaft speed sensor and cam shaft speed sensor
C	45	EEPROM				Data storing error when engine stop
C	46	Recovery				
B	47	Monitoring of PRV				When the pressure sensor of common rail or high pressure pump has a defeat.
C	48	Power Supply	1-13 1-15	V=V_batt		
B	49	Booster Voltage C1				
B	51	Booster Voltage C2				
B	58	Solenoid Power stage 1 (Cyl.1)	3-13 3-09		R=0.31~0.42Ω (20°C)	
B	59	Solenoid Power stage 2 (Cyl.2)	3-03 3-06		R=0.31~0.42Ω (20°C)	
B	61	Solenoid Power stage 3 (Cyl.3)	3-04 3-12		R=0.31~0.42Ω (20°C)	
B	62	Solenoid Power stage 4 (Cyl.4)	3-05 3-14		R=0.31~0.42Ω (20°C)	
B	63	Solenoid Power stage 5 (Cyl.5)	3-11 3-16		R=0.31~0.42Ω (20°C)	
B	64	Solenoid Power stage 6 (Cyl.6)	3-10 3-15		R=0.31~0.42Ω (20°C)	
N	66	Preheat Lamp (E/G Lowside Power stage 2)	1-29 1-08			

Blink Type	Blink Code	Failure Component	Measuring Points	Current Value		Remarks
				Active	Passive	
N	71	Diagnostic Lamp (Lowside Power stage 6)	1-28 1-64	V=V_batt		
C	72	Preheat Relay (Highside Power stage 1)	1-16 1-04	V=V_batt	R=40±5Ω (25°C)	Voltage is only measured when after heat function is operating status
C	83	Fuel Hi Pressure Pump (Current Controlled Highside power stage 1 (CP3))				Fuel metering unit error of high pressure pump
N	86	Small Signal Power stage 1 (TD-signal)	1-49 1-15	V=V_batt/2		Abnormal tacho meter signal
N	91	System Startup Test for Shutoff Path				Power supply error engine controller error
C	92	Monitoring of Misfire Cylinder 1				Injector error speed signal error of cam shaft speed sensor or crank shaft speed sensor
C	93	Monitoring of Misfire Cylinder 2				
C	94	Monitoring of Misfire Cylinder 3				
C	95	Monitoring of Misfire Cylinder 4				
C	96	Monitoring of Misfire Cylinder 5				
C	97	Monitoring of Misfire Cylinder 6				
C	98	Mnitoring of Misfire Multiple Cylinder				
C	99	Monitoring of Overrun				
C	101	Engine Speed Redundant				

NOTE: *1. Active value : Starter switch has to be turned "ON"*
Measuring points between component and wire harness have to be connected.

2. Passive value : Starter switch has to be turned "OFF"
Measuring points between component and wire harness have to be dis-connected.

3. Measuring points are engine controller's point and passive value is each component’s value.

4. V_batt : Source power of equipment.

5. Blink type (Diagnostic lamp)

- C : Continuous light

- B : Blink light

- N : No light

COOLING FAN CONTROL SYSTEM

Outline

It controls the speed of cooling fan according to temperature of coolant or transmission oil.

Its reverse rotation function can be used for cleaning.

Information on temperature of coolant and transmission oil are sent to the cooling fan controller via communication line (CAN).

Diagram

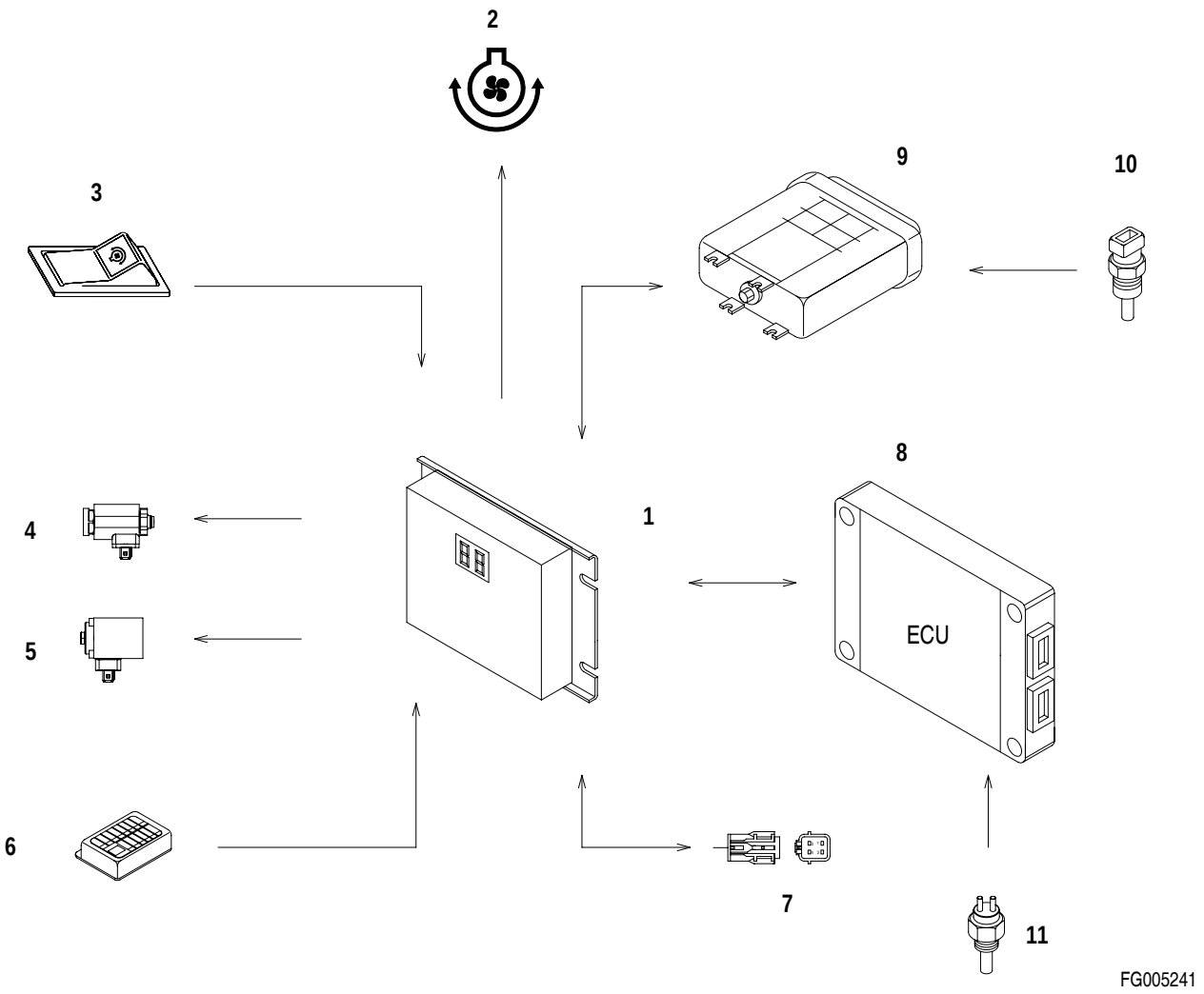

Figure 25

Reference Number	Description
1	Cooling Fan Controller
2	Reverse Rotation Lamp
3	Cooling Fan Reverse Switch
4	Cooling Fan Proportional Valve
5	Reverse Rotation Solenoid
6	Fuse Box

Reference Number	Description
7	Fan Check Connector
8	ECU
9	Transmission Controller (TCU)
10	Transmission Oil Temperature Sensor
11	Coolant Temperature Sensor

Electrical Diagram

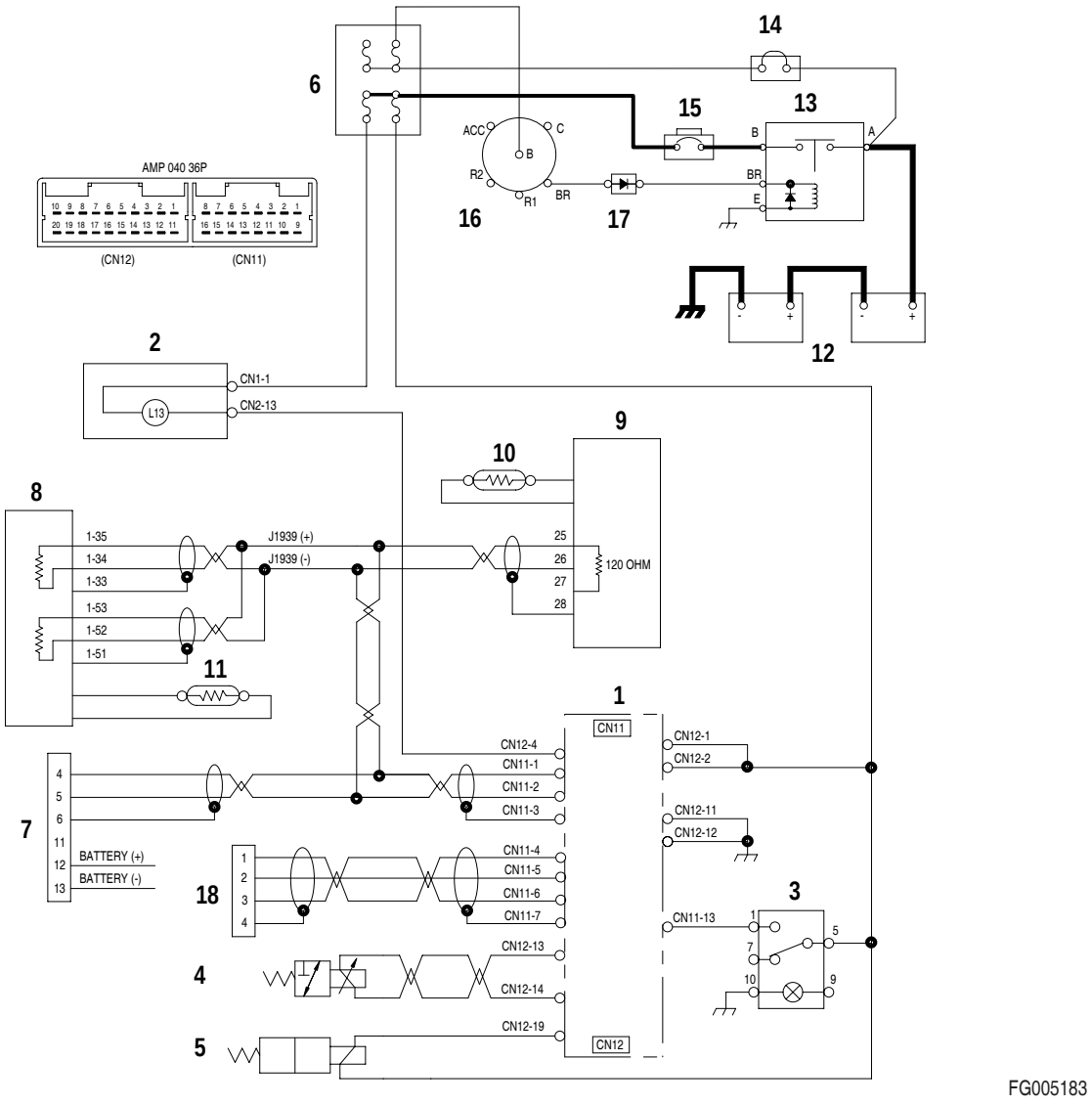

Figure 26

Reference Number	Description
1	Cooling Fan Controller
2	Reverse Rotation Lamp
3	Cooling Fan Reverse Rotation Switch
4	Cooling Fan Proportional Valve
5	Reverse Rotation Solenoid
6	Fuse Box
7	Engine Diagnostic Connector
8	ECU
9	Transmission Controller (TCU)

Reference Number	Description
10	Transmission Oil Temperature Sensor
11	Coolant Temperature Sensor
12	Battery
13	Battery Relay
14	Fuse Lamp Link
15	Circuit Braker
16	Start Switch
17	Diode
18	Fan Check Connector

Parts of Cooling Fan Control System

Cooling Fan Controller

1. It controls the speed of the cooling fan according to temperature of coolant or transmission oil, reversing the rotation of the cooling fan.
2. It is located in the electric box and has a self diagnosis function to check if it operates properly or fails.
3. Refer to “Operation of Cooling Fan Control System” on page 1-56
4. Refer to “Self Diagnosis and Display of Cooling Fan” on page 1-58

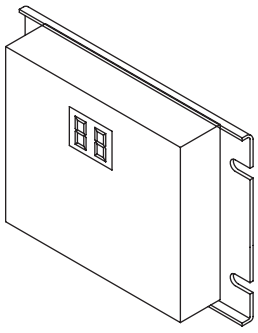

FG004491

Figure 27

Cooling Fan Proportional Valve

1. Nominal current: 680 mA
2. Resistance: 25 Ohm (20°C)

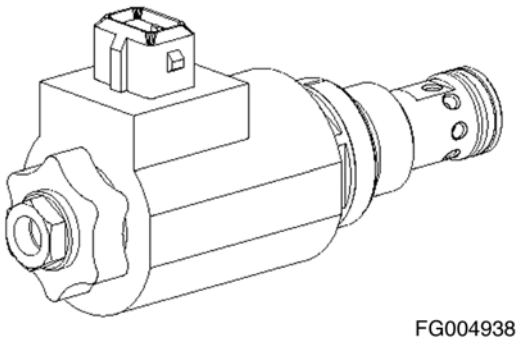

FG004938

Figure 28

Reverse Rotation Solenoid

1. Minimum operation voltage: 20 V
2. Resistance: 25 Ohm (20°C)

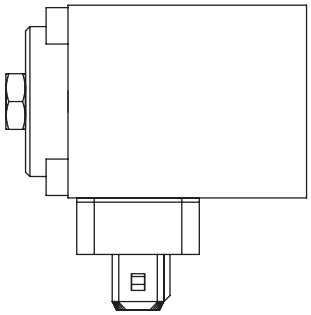

FG004939

Figure 29

Cooling Fan Reverse Rotation Switch

1. It is used to reverse the radiator cooling fan.
2. Pressing the switch reverses the radiator cooling fan, which helps clean the radiator.
3. To do so, put the Start switch OFF → ON and put this switch OFF (0) → ON (1) before starting the engine.
4. To forward rotation, put off the engine, put the cooling fan reverse rotation switch OFF (0), and start the engine.

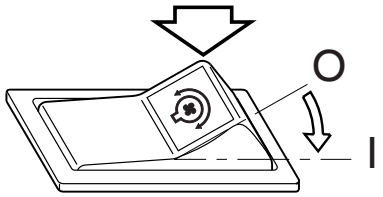

FG004493

Figure 30

Reverse Rotation Lamp

1. It lights up when the cooling fan rotates reversely.

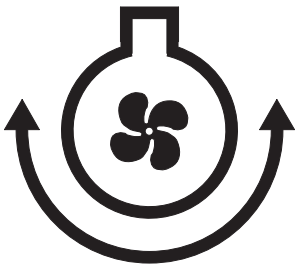

FG004492

Figure 31

Operation of Cooling Fan Control System

Communication Monitoring

1. Communication port
   A. SAE J1939 datalink
   B. CAN H, CAN L, SHIELD
2. Communication failure
   A. E0, E1, or E2 is shown on the controller display.
   B. If there shows no error message, it means normal operation.

Control of Cooling Fan

1. The cooling fan controller controls the speed of the cooling fan according to temperature of transmission oil and coolant. It adjusts current of the proportional valve of hydraulic motor, changing the pressure of the motor to control the speed of fan connected to the hydraulic motor. So, it is more efficient in fuel save and noise reduction comparing to fan operation at a stead speed.
2. Limits of sensor temperature
   A. Transmission oil: Upper and lower limits are 90°C (T1H) and 80°C (T1L), respectively.
   B. Coolant: Upper and lower limits are 93°C (T2H) and 83°C (T2L), respectively.
3. Cooling fan proportional valve outputs
   A. Its control features are shown in the figures below, and it outputs lower current (higher fan rotation) between both curves.

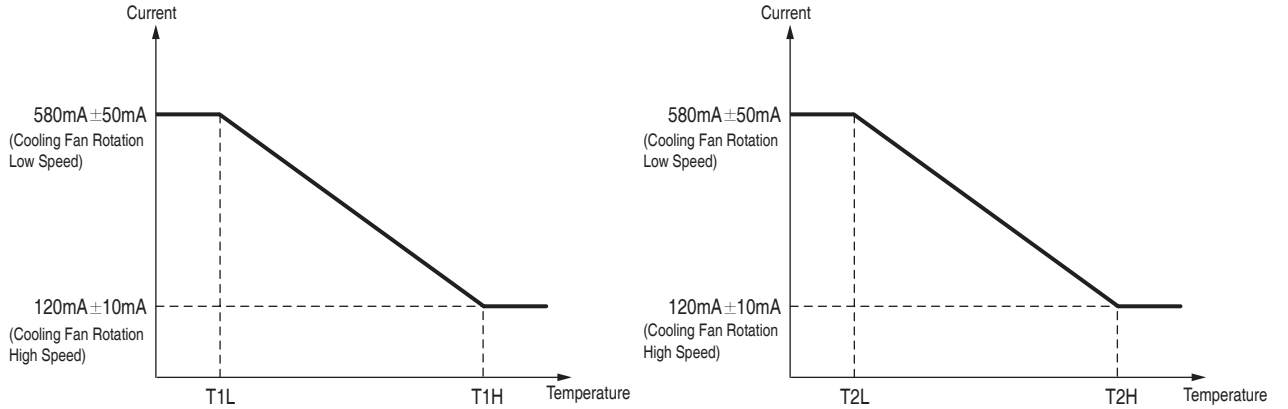

Figure 32

   B. When the temperature sensor is opened: Minimum current is 120mA ± 10mA

C. Fail safe function: When communication fails or temperature pressure is abnormal, minimum current is output (while the cooling fan operates at maximum speed).

4. Fan reverse rotation control

Order of Input	Fan Reverse Rotation Solenoid	Fan Reverse Rotation Warning Lamp	Cooling Fan Proportional Valve Current	Remarks
Start switch ON → Reverse Switch OFF → ON → Start Engine	ON	ON	Minimum current (Max. fan speed)	Max. operation time: 5 min.
Other Conditions	OFF	OFF	Normal control	

NOTE: *When coolant or transmission temperature is overheated reverse rotation is not operated, when overheat occurrs during operating reverse rotation it is changed to regular rotation automatically. And then when reverse rotation operating hour passes 5 minutes it is changed to regular rotation automatically.*

Self Diagnosis and Display of Cooling Fan

Normal Operation Display

1. Operation mode display

Categories		LED Display	System Status
Forward Rotation	LOW	L	Minimumcurrent (cooling fan at high speed)
	Prop. Control	2	20 ~ 24% output of duty
		3	25 ~ 34% output of duty
		4	35 ~ 44% output of duty
		5	45 ~ 54% output of duty
		6	55 ~ 64% output of duty
		7	65 ~ 74% output of duty
		8	75 ~ 84% output of duty
		9	85 ~ 89% output of duty
	High	H	Maximumcurrent (cooling fan at low speed)
Reverse Rotation	ON	⌐	Normal Reverse Operation

Monitoring of Voltage to Controller

Input		LED Display
Voltage of controller input terminal = Vin	18.5±1</= Vin </= 32.5±1V	Decimal point lights up.
	Vin < 18.5±1V or Vin > 32.5±1V	Decimal point is out.

LED

All the segments light up for one second when power is first supplied to the controller.

Failure Indications and Actions

No.	Inputs		Outputs			Detection Criteria
	Fault Location	Fault Status	Displays		Actions	
1	Communication error J1939	ECU / TCU communication fault	E	0	Min. output of proportional valve current	-
2	Communication error TCU	TCU communication fault	E	1	Min. output of proportional valve current	-
3	Communication error ECU	ECU communication fault	E	2	Min. output of proportional valve current	-
4	Cooling fan proportional valve	Circuit Short	E	3	Cutoff of proportional valve current (0 mA)	Resistance of proportional valve below 7 [Ohm]
5	Reverse rotation solenoid	Circuit Short	E	5	Cutoff of solenoid current (0 mA)	Detected current 1.65± 0.2A
6	Reverse rotation solenoid	Circuit Open	E	6	-	Detected current 0.26± 0.1A

EMERGENCY STEERING SYSTEM (OPTION)

Block Diagram

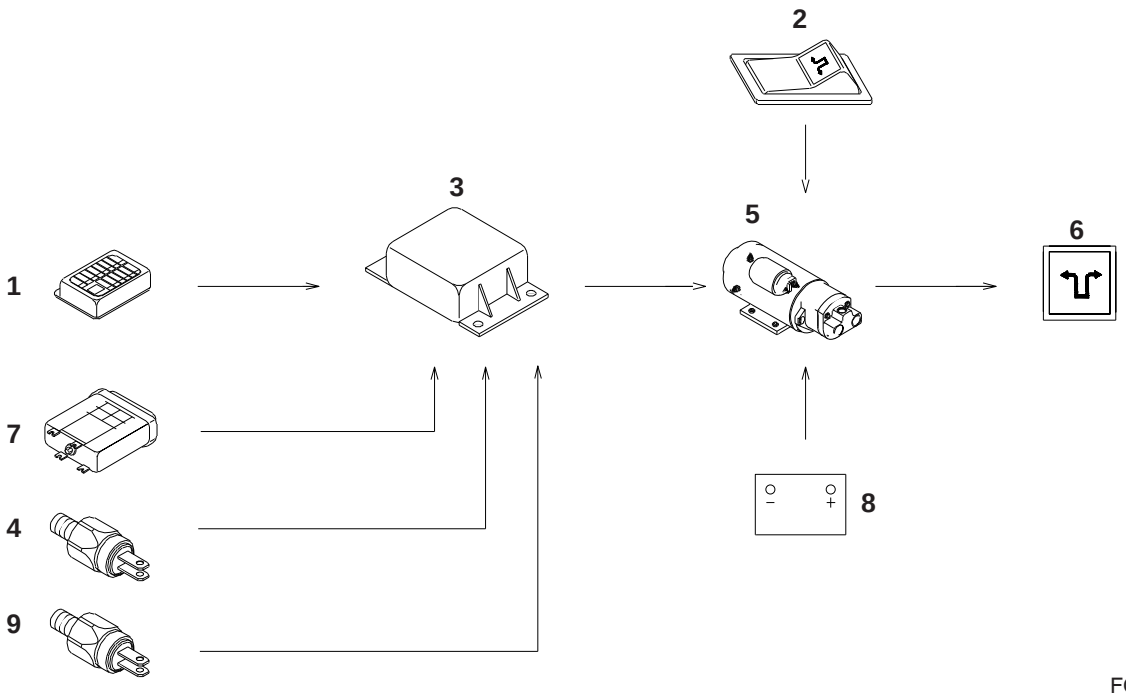

Figure 33 EMERGENCY STEERING SYSTEM BLOCK DIAGRAM

Reference Number	Description
1	Fuse Box
2	Emergency Steering Switch
3	Emergency Steering Timer
4	Emergency Steering Pressure Switch

Reference Number	Description
5	Emergency Steering Pump
6	Emergency Steering Indicator
7	Transmission Controller
8	Battery
9	Main Steering Pressure Switch

When the speed of the vehicle exceeds 5 km/h and the main steering pressure is less than 3 kg/cm^2, an electrically powered hydraulic pump will be operated for a time limited 60 seconds and thus the emergency steering is possible.

This system includes the electrically powered hydraulic pump, which is controlled by the emergency steering timer (3). The emergency steering timer (3) obtains signals from the main steering pressure switch (9) and the transmission controller (7).

When the emergency steering is activated, the emergency steering indicator (6) light turns "ON."

Emergency Steering System Components

Emergency Steering Timer

1. Obtains signals from the main pressure switch (9) and the transmission controller (7), and play a role in operating the emergency steering pump (5).
2. As the frequency signal of the transmission controller is differ from each machine, the reference frequency is 405 Hz which come under about 5 km/h.
3. When the starter switch is "ON," the characteristic of operation is following.

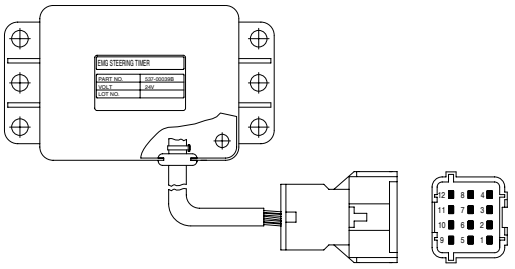

FG004921

Figure 34

Emergency Steering Timer Connector

No.	Wire size and Color
1	0.85 LR
2	0.5 G
3	0.5 WB
4	0.85 W
5	0.85 B
6	0.5 WG
7	0.5 RW
8	0.5 BY
9	0.5 BL

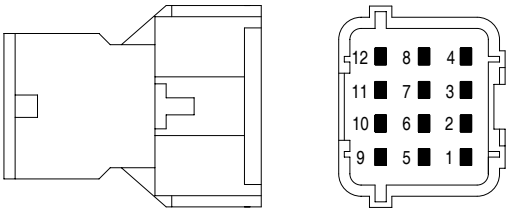

FG004922

Figure 35

Emergency Steering Timer Circuit

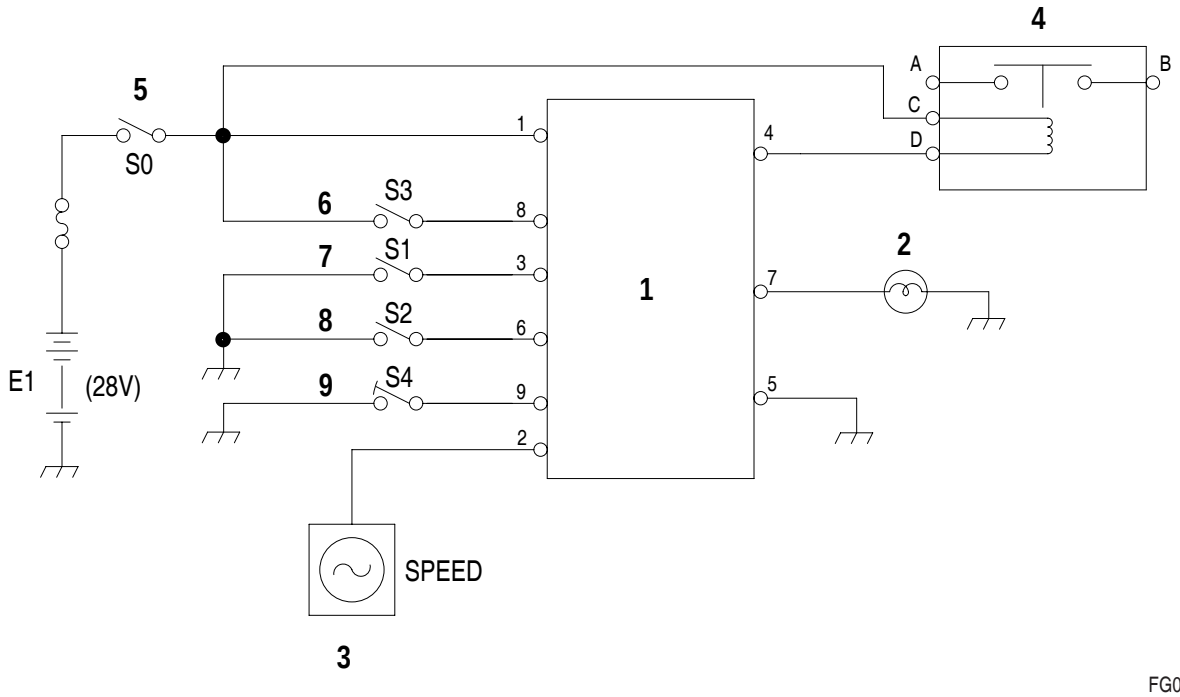

FG004923

Figure 36

Reference Number	Description
1	Emergency Steering Timer
2	Emergency Steering Indicator
3	Transmission Controller (TCU)
4	Emergency Steering Pump
5	Starter Switch "ON"

Reference Number	Description
6	Starter Switch "START"
7	Main Steering Pressure Switch
8	Emergency Steering Pressure Switch
9	Emergency Steering Switch

Test Mode before Emergency Steering Start

Input Condition			Output	
S0	**S3**	**S4**	**Emergency Steering Pump**	**Lamp**
OFF → ON	OFF	OFF	will be operated only one time for 3 seconds and stop.	will be lit only one time for 3 seconds. - will be put out when S2 is "ON" . - wiil be blinked continually when S2 is "OFF"
OFF → ON	ON	OFF	OFF	putting out light
OFF → ON	-	ON	Pump will be operated equally with S4 "ON" time.	Lamp will be lit equally with S4 "ON" time.

Operating Character when Emergency Steering Normal Mode

Input Condition		Output		Remark
S1	**Standard input Frequency**	**Emergency Steering Pump**	**Lamp**	
ON	-	OFF	putting out light	Vp=20±5V Duty Cycle 50% 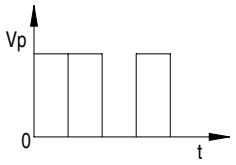
OFF	When above 405±30 Hz	will be operated only one time for 60±10 seconds and stop.	will be lit only one time for 60±10 seconds and put out.	
	When below 405±30 Hz	OFF	putting out light	

Emergency Steering Pump

This is an electrically powered hydraulic pump and includes an emergency steering relay (1, Figure 37), which is excited by the signal of the emergency steering timer.

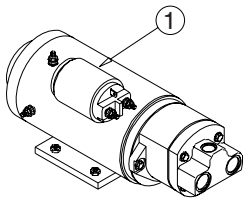

AJS0480L

Figure 37 EMERGENCY STEERING PUMP

Emergency Steering Switch

1. When the switch is in the "I" position, the emergency steering pump and the emergency steering indicator of the instrument panel are activated simultaneously.
2. The basic usage of this switch is testing function whether the emergency steering system is all right or not.

WARNING

Make sure that no persons are near the machine when testing the function of the emergency steering system, there is a risk that someone may be crushed between the front and the rear frame.

3. This returns automatically when not pressed down.

   NOTE: *Because the emergency steering pump consumes high current, it's forbidden to use continuously to avoid discharging of battery and a risk of overheating.*

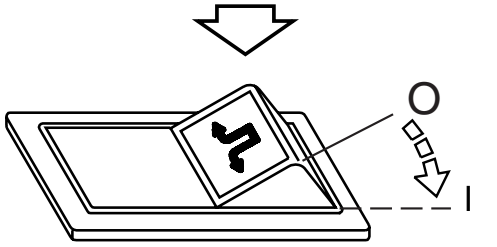

AJO0011L

Figure 38 EMERGENCY STEERING SWITCH

Emergency Steering System Electric Circuit

When the control signal, which is transmitted from the "36" terminal of the transmission controller, is inputted to the "2" terminal of the emergency steering timer (3) and the emergency steering pressure switch (4) is "OFF," the contact points "A" and "B" of the emergency steering pump (5) is closed due to the current flowing from the fuse box (1), to the "C" and "D" coil of the emergency steering pump (5), and to the "4" and "5" terminal of the emergency steering timer (3).

Thus the high current flows from the battery (11) to the "A" and "B" terminal of the emergency steering pump (5), which is operated. At the same time the emergency steering indicator light turns "ON" due to the current flowing from the "B" terminal of the steering pump (5), to the fusible link (7) and to the emergency steering indicator.

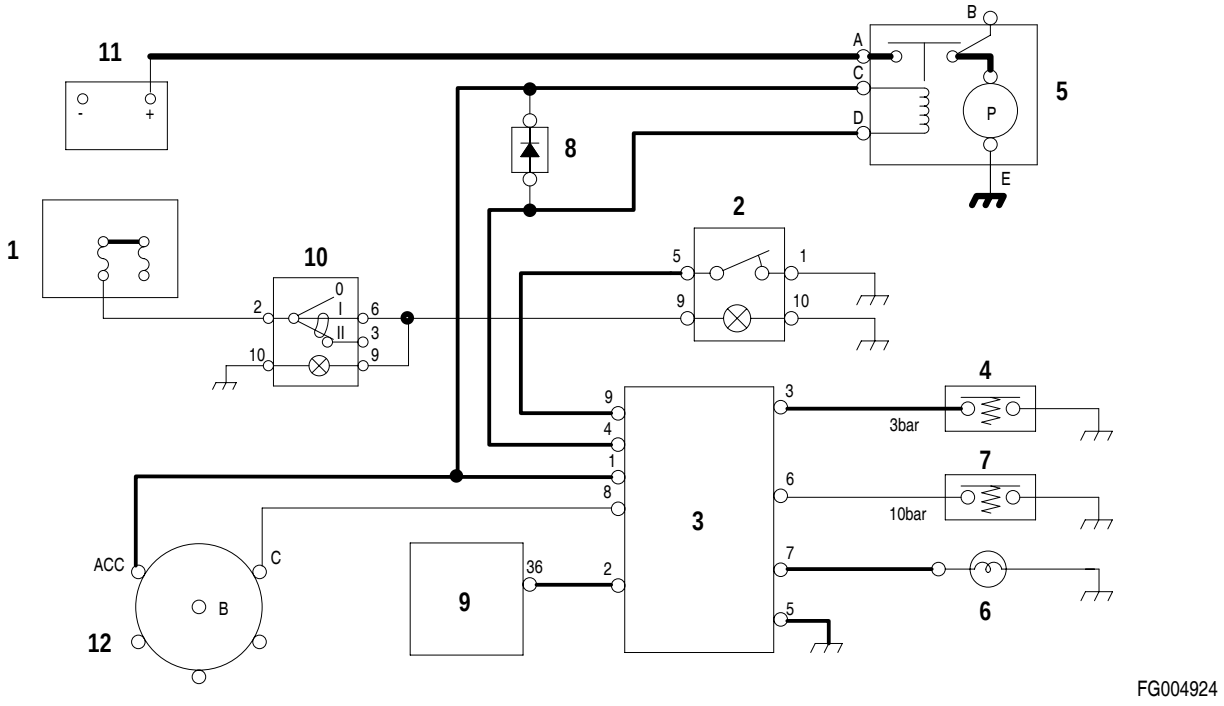

Figure 39 EMERGENCY STEERING SYSTEM CIRCUIT

Reference Number	Description
1	Fuse Box
2	Emergency Steering Switch
3	Emergency Steering Timer
4	Main Steering Pressure Switch
5	Emergency Steering Pump
6	Emergency Steering Indicator
7	Emergency Steering Pressure Switch

Reference Number	Description
8	Diode
9	Transmission Controller
10	Headlight Switch
11	Battery
12	Starter Switch
13	Emergency Steering Pressure Switch

ELECTRIC DETENT SYSTEM

The electric detent system separated into boom kick-out and return to dig.

An each part consists of magnetic locking lever and proximity switch detecting the position of bucket or boom.

Electric Circuit

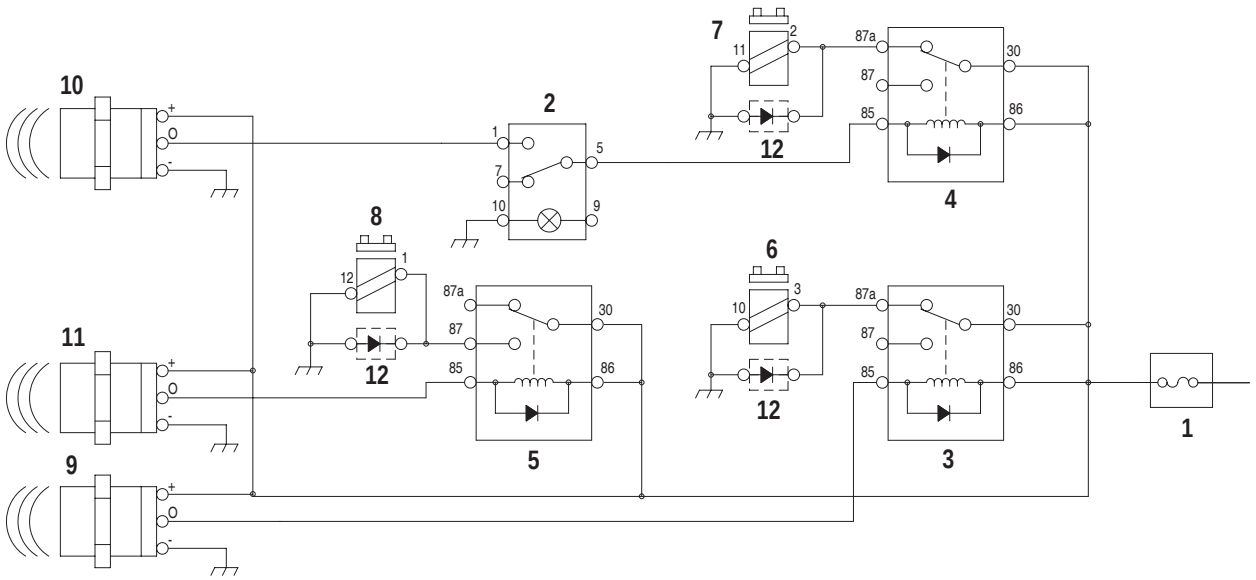

FG004461

Figure 40 ELECTRIC DETENT CIRCUIT

Reference Number	Description
1	Fuse Box 2
2	Float Kick-out Switch
3	Raise Relay
4	Float Relay
5	Return to Dig Relay
6	Raise Magnetic

Reference Number	Description
7	Float Magnetic
8	Return to Dig Magnetic
9	Raise Proximity Switch
10	Float Proximity Switch
11	Return to Dig Proximity Switch
12	Diode 3ea

Boom Kick-out

When the work lever (joystick) is in the "FLOAT" (or "RAISE") position, lever is locked and boom is lowered (or lifted). When the boom is matched to setting position, lever locking is released and lever is returned to "NEUTRAL" position automatically and boom lowering (or lifting) is stopped.

1. Boom Raise Kick-out

   With the raise magnetic (5) is energized and the work lever (joystick) is held in "RAISE," then boom is approaching to the raise proximity switch (8). When the raise proximity switch (8) and the boom are matched, the contact points "30" and "87a" of the raise/float relay (3) is opened due to the current flowing from the fuse box (1), to the coil of the raise relay (3) and to the "0" and "-" terminal of the raise proximity switch (8).

   As a result the magnetic (5) is de-energized and the locked lever is returned to "NEUTRAL" position, boom lifting is stopped.

2. Boom Float Kick-out (Option)

   With the float kick-out switch shown in Figure 41, is in the "I" position and the float magnetic (6) is energized and the work lever (joystick) is held in "FLOAT," then boom is approaching to the float proximity switch (9).

   When the float proximity switch (9) and the boom are matched, the contact points "30" and "87a" of the raise/float relay (3) is opened due to the current flowing from the fuse box (1), to the coil of the raise/float relay (3), to the terminal "5" and "1" of the float kick-out switch (2) and to the "0" and "-" terminal of the raise proximity switch (9). As a result the magnetic (6) is de-energized and the locked lever is returned to "NEUTRAL" position, and boom lowering is stopped.

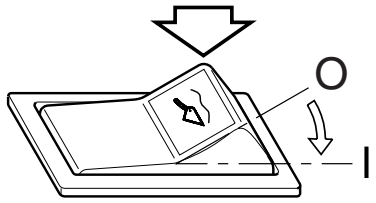

HA0O2027

Figure 41

Return To Dig

After dumping, if the work lever (joystick) is in the "CROWD" position, the work lever (joystick) will be locked and the bucket will be crowded. When the bucket is matched to setting position, the lever is returned to the "NEUTRAL" position and bucket crowding will be stopped. After this operation, if the boom is lowered the bucket is in parallel with ground.

With the return to dig proximity switch (10) and the bucket positioner are matched, the contact points "30" and "87" of the return to dig relay (4) is closed due to the current flowing from fuse box (1), to the coil of the return to dig relay (4) and to the "0" and "-" terminal of the return to dig proximity switch (10).

In this states, if the work lever (joystick) is in the "CROWD" position, the lever is locked and the bucket positioner is approaching out of the return to dig proximity switch (10). That

is, bucket is crowded. If the bucket positioner is out of the return to dig proximity switch (10), the float magnetic (9) is de-energized.
As a result the lever is returned to "NEUTRAL" position and bucket is set to the selected digging angle.

Proximity Switch

- Operating Distance: 10 ±1 mm
- Operation Indicator Light: Lights up when the object is detected.

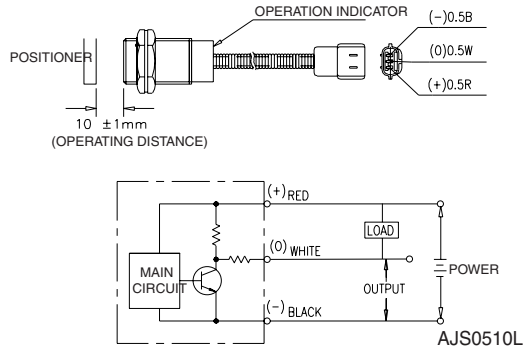

Figure 42

Electrical Schematic (DL300)

Edition 1

MEMO

Table of Contents

Electrical Schematic (DL300)

Safety Precautions 5
Applicable Models 5
General Description 7
DL300 8

MEMO

SAFETY PRECAUTIONS

CAUTION!

Follow all safety recommendations and safe shop practices outlined in the front of this manual or those contained within this section.

Always use tools and equipment that are in good working order.

Use lifting and hoisting equipment capable of safely handling load.

Remember, that ultimately safety is your own personal responsibility.

APPLICABLE MODELS

The contents of this section apply to the following models and serial number ranges.

MODEL	SERIAL NUMBER RANGE
DL300	5001 and Up

GENERAL DESCRIPTION

Schematic(s) presented in this section are laid out on facing pages.

An overlapping edge has been taken into consideration so that a photocopy can be made and pasted together to make a complete schematic.

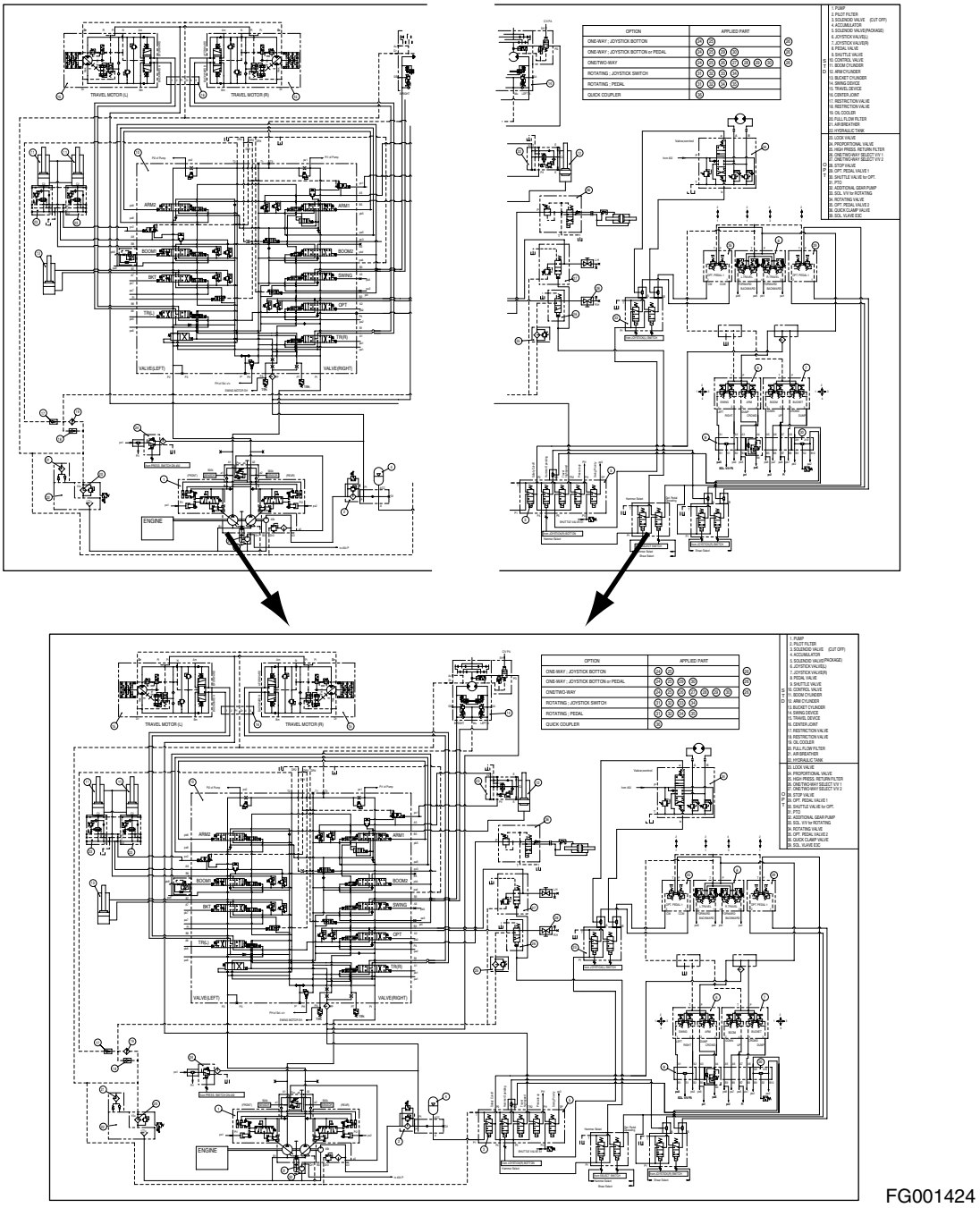

FG001424

Figure 1

Figure 2

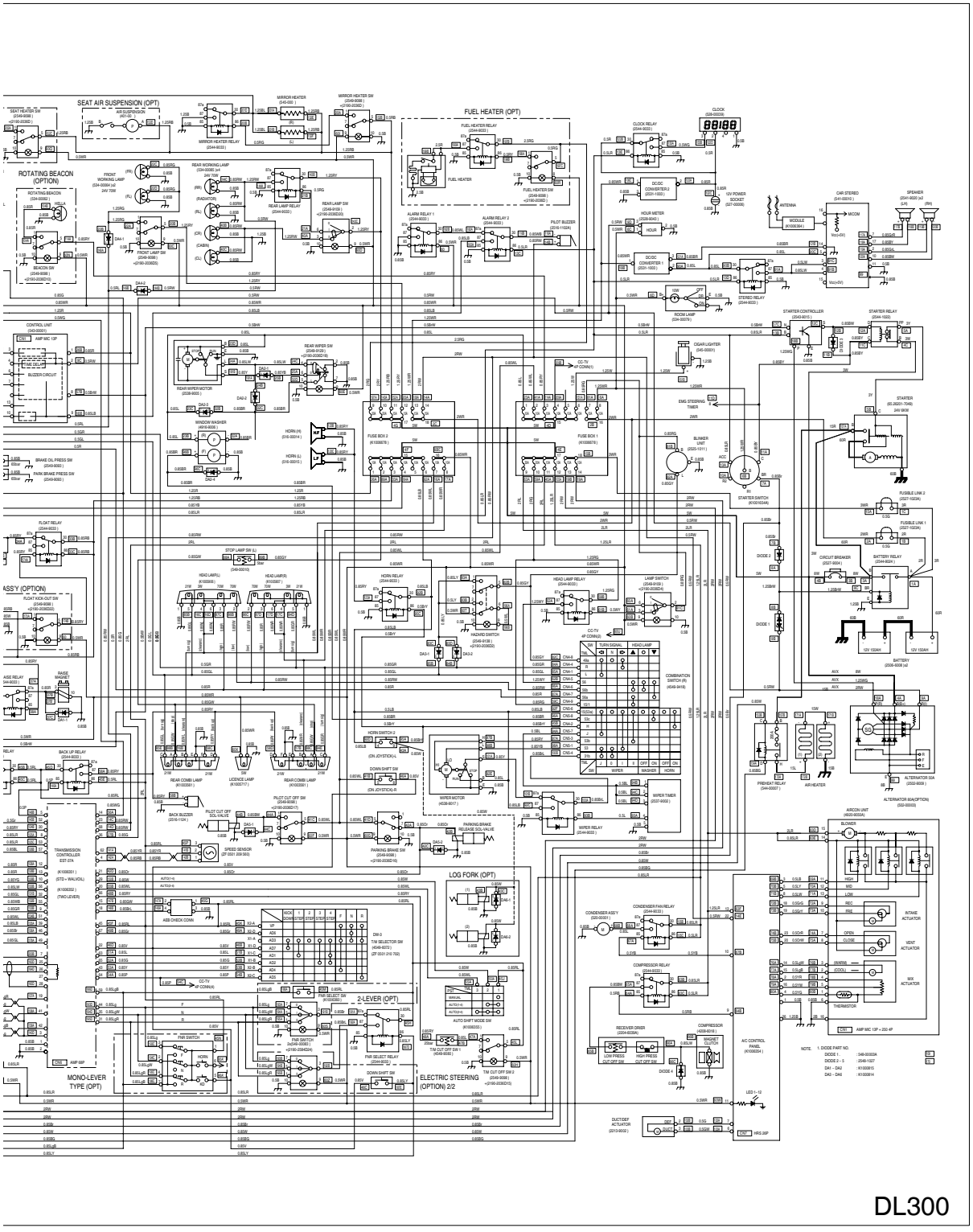
SEAT AIR SUSPENSION (OPT)
FUEL HEATER (OPT)
ROTATING BEACON (OPTION)
CONTROL UNIT
MONO-LEVER TYPE (OPT)
2-LEVER (OPT)
LOG FORK (OPT)
ELECTRIC STEERING (OPTION) 2/2
DL300

FG005203