RUTHZIL TRATOR COMERCIAL DE PEÇAS LTDA 11 97083-6812 ROLANDO CITRANGULO

DOOSAN

DX140LC

Parts Manual

K1027953EF

Serial Number 5001 and Up

April 2, 2007

Doosan reserves the right to improve our products in a continuing process to provide the best possible product to the market place. These improvements can be implemented at any time with no obligation to change materials on previously sold products. It is recommended that consumers periodically contact their distributors for recent documentation on purchased equipment.

This documentation may include attachments and optional equipment that is not available in your machine's package. Please call your distributor for additional items that you may require.

Illustrations used throughout this manual are used only as a representation of the actual piece of equipment, and may vary from the actual item.

Copyright 2007 Doosan

Product Label 

Instructions

Trim Out The Label Along The Lines And Insert Into Pocket On The Binder Spine

DX140LC

Serial Number 5001 and Up

Pub.No. K1027953EF

DOOSAN

Pub. No. K1027953EF

DX140LC

PARTS LIST
LISTE DE PIECES
DETACHEES

N°DE REFERENCE : K1027953EF
HEBJ - 2704

FOREWORD

● This parts list is shown the equipment components parts of 「DOOSAN EXCAVATOR DX140LC」.

1. HOW TO ORDER PARTS.

When ordering parts, please specify the follwing items as shown in the following example.

Ex.	1) Model of Machine	:	DX140LC	(Shown on name plate on the side cover)
	2) Machine Serial No	:	HEBJ0-○○○○	(Shown on nameplate on the bed frame)
	3) Engine Serial No	:	DL06○○○○○○EA	(Shown on Engine cylinder block)
	4) Part No.	:	K1024107A	
	5) Description	:	MAIN PUMP	
	6) Q'ty	:	1	

2. HOW TO USE THIS PARTS LIST.

Key No. : It shows the reference no. on the illustration.

Part No. : It shows the part number of the parts which are included in an illustration.

Description : It shows the name of part. Components of an assembly part are shown with [•] marks and are shown on the line, or lines, below the assembly part. Also if the components with [•] mark is consists of further components part. These further components are shown with the marks [••].

Q'ty : It shows the quantity use for one machine. quantity of components show the quantity for one assembly part.

Service code : Abbreviations in this column have their own meaning as show below.

- B : The parts with this abbreviation shows that the part requires some work on it before installing in the machine.
- D : These parts are not serviceable, In case of the part with this abbreviation is a component of an assembly and is not available independently. The assembly part containing this part should be ordered.
- K : This means that the part is contained in the service part kit.
- M : This means that the part is available only with its mating parts altogether.
- R : The part with this abbreviation shows that the quantity of the part is changed depending on the machine, such as an adjusting shim etc.
- S : This part is specially provided as a service part, which was not provided in the machine before shipping from the factory.

G : This part need grade control and should be requested as the same grade of counter part.

OP : Optional parts.

EX : Specific design parts.

OS : Over-sized parts.

US : Under-sized parts.
(Part with abbreviation "OS" or "US" is described on the line below the standard sized part.)

: The part with this mark is newly added on that page of the equipment.

Serial no. : Serial No. shows the machine serial number which the parts were applied.
As to the engine Serial No. shows only engine serial number which the parts were applied.
Parts without any applicable serial number are used in every machine.

ICA : ICA shows the interchangeability between the original and the improved parts.
Abbreviations used in this column are as follows;

I : Part No. in the column of "Replaceable part" can be used instead of this part but not vice versa.

P : This must not be used for machine. The part No. in the column "Replaceable part" should be used instead.

T : Parts No. those in the column of "Replaceable part" can be used as an assembly instead of this part.

Y : This part and the part in the column of "Replaceable part" are interchangeable with each other.

Blank : This part has no "Repleaceable part"

Replaceable part : Interchangeable parts nos. and their required quantity are shown in this column.
If interchangeable improved parts are provided for the parts which you may order, the improved parts classified as "I", "P" "T" or "Y" may be supplied.

● When repairing, it is recommended to use our standard part.

● Researching the assembling parts from Part No., see the 「Parts Index」 of this parts list.

Apr. 2007

AVANT-PROPOS

● Cette liste de pieces apparait dans le 「DOOSAN EXCAVATEUR DX140LC」.

1. COMMENT COMMANDER LES PICES.

Lorsque vous commanderez les pieces, veuillez specifier les articles suivants comme indiques dans l'exemple ci-dessous:

Ex.	1) Modele de machine	:	DX140LC
	2) Serie de la machine	:	HEBJ0-○○○○
	3) Numero de serie du moteur	:	DL06○○○○○○EA
	4) Numero de la piece	:	K1024107A
	5) Description	:	POMPE
	6) Quantite	:	1

2. COMMENT UTILISER CE RECUEIL DE PIECES DETACHEES.

Numero de la cle : Indique le numero de reference de l'illustration.

Numero de la piece : Indique le numero de piece sur l'illustration.

Description : Nom de la piece. Les pieces composantes des pieces d'assemblage sont indiquees avec une marque [•] en dessous des pieces d'assemblage. Aussi, si les pieces composantes sont marques d'un [•]. Cela indique qu'ily a plusieurs pieces composantes, ces autres pieces composantes sont indiquees par un [••].

Quantite : Quantite, montre la quantite utilisee pour une machine, cependant Q'te des composants de pieces montre la quantite utilisee pour un assemblage de pieces.

Code de Service : L'Abveration est un composant d'un code de service qui a sa propre signification comme indique ci-dessous.

- B : La piece avec cette abreviation indique que la piece exige d'etre travaillee avant d'etre installee dans la machine.
- D : La piece avec cette abreviation est uun composant d'un assemblage et n'est pas diponible toute seule, la d'assemblage contenant cette peece dcvrait ctrc commandee
- K : Cette veut dire que la piece est inclue dans la trousse de pieces de service. "ensemble kit"
- M : Cela signifie que la piece est disponible uniquement avec as peice piece d'accouplement.
- R : La piece avec cette abreviation montre que la quantite de la piece est changee en fonction de la machine.

CONTENT
TABLES DES MATIERES

• ENGINE PARTS

Fig.	011	CYLINDER BLOCK	BLOC CYLINDRE	2
	012	TIMING GEAR CASE	CARTER DE DISTRIBUTION	4
	013	FLYWHEEL HOUSING	CARTER DE VOLANT MOTEUR	6
	014	OIL SEAL	JOINT	8
	015	BREATHER	CONDUIT DE VENTILATION	10
	016	DRIVING SYSTEM	SYSTEME D'CENTRAINEMENT	12
	017	CYLINDER HEAD	CULLASSE	14
	018	CYLINDER HEAD COVER	COUVERTURE DE CULASSE	16
	019	TIMING SYSTEM	SYSTEME DE SYNCHRONISATION	18
	020	OIL PUMP	POMPE A HUILE	22
	021	OIL FILTER & OIL COOLER	FILTRE D'HUILE	24
	022	OIL PAN	CARTER D'HUILE	26
	023	THERMOSTAT	THERMOSTAT	28
	024	WATER PUMP	SYSTEME DE REFROIDSSEMENT	30
	025	COOLING FAN	VENTILATEUR	32
	026	INTAKE & EXHAUST MANIFOLD	D'ADMISSION ET D'ECHAPPEMENT	34
	027	TURBO CHARGER	CHARGEUR DE TURBO	36
	028	INJECTOR	INJECTEUR	38
	029	INJECTION PIPE	PIPE D'INJECTION	40
	030	INJECTION PUMP	POMPE D'INJECTION	42
	031	ENGINE CONTROL	COMMANDE REGIME MOTEUR	44
	032	FUEL SYSTEM	INJECTEUR ET POMPE-INJECTEUR	46
	033	ALTERNATOR MOUNTING	ALTERNATEUR	48
	034	LIFTING HOOK	CROCHET DE LEVAGE	50
	035	STARTER	DEMARREUR	52
	036	SENSOR	CAPTEUR	54
	037	WIRE HARNESS	JAGUE DE NIVEAU	56
	038	ENGINE MOUNTING	SUPPORT DE MOTEUR	58
	039	AIR COMPRESSOR	COMPRESSEUR D'AIR	60
	040	OVERHAUL GASKET KIT - ALL	KIT DE GARNITURE DE REVISION	62
	041	OVERHAUL GASKET KIT - TOP	KIT DE GARNITURE DE REVISION	64

• BODY PARTS

Fig.	1100	MAIN FRAME	ARMATURE PRINCIPALE	66
	1110	COUNTER WEIGHT	MASSE D'EQUILIBRAGE	68
	1120	ENGINE MOUNTING	SUPPORT DE MOTEUR	70
	1130	RADIATOR MOUNTING	SUPPORT DE RADIATEUR	72
	1140	RADIATOR	RADIATEUR	74
	1150	MUFFLER	SILENCIEUX	76
	1160	AIR CLEANER ASS'Y	FILTRE A AIR	78

1170	AIR CLEANER	FILTRE A AIR	80
1180	PUMP INSTALLATION	POMPE	82
1190	SWING DEVICE	SYSTEME D'ORIENTATION	84
1200	FUEL TANK	RESERVOIR DE GAZOLE	86
1210	FUEL PIPING	TUYAUTERIE DE CARBURANT	88
1220	OIL TANK	RESERVOIR D'HUILE	90
1230	OIL COOLER PIPING(1)	CONDUITES DE HUILE	92
1240	OIL COOLER PIPING(2)	CONDUITES DE HUILE	94
1250	OIL COOLER PIPING(3)	CONDUITES DE HUILE	96
1260	MAIN PIPING(1) - PUMP	CONDUITES DE PRINCIPAL	98
1270	MAIN PIPING(2) - BOOM	CONDUITES DE PRINCIPAL	100
1280	MAIN PIPING(3) - SWING & TRAVEL	CONDUITES DE PRINCIPAL	102
1290	MAIN PIPING(4) - ARM & BUCKET	CONDUITES DE PRINCIPAL	104
1300	PILOT PIPING (1)	CONDUITES DE PILOTE	106
1310	PILOT PIPING (2)	CONDUITES DE PILOTE	108
1320	PILOT PIPING (3)	CONDUITES DE PILOTE	110
1330	PILOT PIPING (4)	CONDUITES DE PILOTE	112
1340	PILOT PIPING (5)	CONDUITES DE PILOTE	114
1350	PILOT PIPING (6)	CONDUITES DE PILOTE	116
1360	PILOT PIPING (7)	CONDUITES DE PILOTE	118
1370	PILOT PIPING (8)	CONDUITES DE PILOTE	120
1380	CONTROL STAND - L.H.	CONSOLE DE COMMANDE	122
1390	CONTROL STAND - R.H.	CONSOLE DE COMMANDE	124
1400	SEAT SLIDING PLATE	POSEZ GLISSER LE PLAT	126
1410	SEAT PLATE	POSEZ LE PLAT	128
1420	SEAT MOUNTING	SIEGE LE SUPPORT	130
1430	SEAT	SIEGE	132
1440	DUCT COVER	CONDUITES COUVERCLE	134
1450	HEATER COVER	BOITIES DE CHAUFFAGE	136
1460	CABIN MOUNTING	SUPPORT DE CABINE	138
1470	CABIN(1)	CABINE	140
1480	CABIN(2)	CABINE	144
1490	CABIN(3)	CABINE	148
1500	CABIN(4)	CABINE	152
1510	FLOOR MAT	PLANCHER	156
1520	FLOOR PLATE	TOLE DE PLANCHER	158
1530	HANDLE ASS'Y	HANDLE	160
1540	ROOF COVER	COUVERCLE	162
1550	FOOT REST - L.H.	REPOS DE PIED	164
1560	FOOT REST - R.H.	REPOS DE PIED	166
1570	SUPPORT & BAFFLE(1)	APPUI ET CLOISON	168
1580	SUPPORT & BAFFLE(2)	APPUI ET CLOISON	170
1590	SIDE DOOR - L.H	ENSEMBLE DE PORTE	172
1600	SIDE DOOR - R.H	ENSEMBLE DE PORTE	174
1610	BATTERY COVER	COUVERCLE	176
1620	COVER	COUVERCLE	180

1630	ENGINE COVER	COUVERTURE DE MOTEUR	182
1640	ACOUSTIC FOAM	ENSEMBLE DE EPONGE	184
1650	UNDER COVER	COUVERCLE	186
1660	LUBRICATION PIPING	LUBRIFICATION	188
1670	ELECTRIC BOX ASS'Y	EQUIPMENT ELECTRIQUE	190
1680	ELECTRIC PARTS - CABIN	PIECES ELECTRIQUES	192
1690	ELECTRIC PARTS - CONTROL STAND	PIECES ELECTRIQUES	196
1700	ELECTRIC PARTS - RELATED	EQUIPMENT ELECTRIQUE	198
1710	ELECTRIC PARTS - ENGINE	EQUIPMENT ELECTRIQUE	200
1720	ALTERNATOR MOUNTING	ALTERNATEUR	202
1730	ELECTRIC PARTS - WORKING LAMP	EQUIPMENT ELECTRIQUE	204
1740	ELECTRIC WIRING	CABLAGE ELECTRIQUE	206
1750	HEATER PIPING	TUYAUTERIE DE RECHAUFFEUR	208
1760	AIRCON UNIT	REFRIGERATION	210
1770	AIRCONDITIONER	CLIMATISATION	212

• TRACK PARTS

Fig. 2100	TRACK FRAME	TRAIN DE ROULEMENT	216
2110	TRAVEL DEVICE	SYSTEME D'TRANSLATION	218
2120	IDLER	BARBOTIN	220
2130	TRACK SPRING	TENDEUR DE CHENILLE	222
2140	UPPER ROLLER	GALET SUPERIEUR	224
2150	LOWER ROLLER	GALET INFERIEUR	226
2160	CENTER JOINT	JOINT CENTRAL	228
2170	TRACK SHOE ASS'Y - 600G	MAILLON DE CHAINE	230
2180	TRAVEL PIPING	CONDUITES DE TRANSLATION	232

• FRONT PARTS

Fig. 3100	BOOM - 4.6m	PERCHE	234
3110	ARM - 2.5m	BALANCIER	236
3120	BUCKET - 0.5㎥	GODET	238
3130	BOOM PIPING - BOOM 4.6m	TUYAUTERIE DE PERCHE	240
3140	LUBRICATION PIPING - BOOM 4.6m	TUYAUTERIE DE LUBRIFICATION	242
3150	ARM PIPING - ARM 2.5m	CONDUITES DE BALANCIER	244

• HYDRAULIC COMPONENTS

Fig. 4100	MAIN PUMP	POMPE PRINCIPAL	246
4110	REGULATOR-FRONT	REGULATEUR	250
4120	REGULATOR-REAR	REGULATEUR	254
4130	GEAR PUMP	POMPE DE PIGNON	258
4140	SWING MOTOR	MOTEUR D'ORIENTATION	260
4150	SWING REDUCTION GEAR	REDUCTEUR D'ORIENTATION	264
4160	TRAVEL REDUCTION GEAR	REDUCTION DE TRANSLATION	266
4170	TRAVEL MOTOR	REDEUTEUR DE TRANSLATION	268
4180	CONTROL VALVE	VANNE DE COMMANDE	274
4190	REMOTE CONTROL VALVE	VANNE DE COMMAND A DISTANCE	280
4200	PEDAL VALVE	VANNE	284

4210	SOLENOID VALVE	VANNE	288
4220	BOOM CYLINDER - L.H	VERIN DE FLECHE	290
4230	BOOM CYLINDER - R.H	VERIN DE FLECHE	294
4240	ARM CYLINDER	VERIN DE BALANCIER	298
4250	BUCKET CYLINDER	VERIN DE GODET	302
4260	BOOM CYLINDER - L.H (LOCK VALVE)	VERIN DE FLECHE	306
4270	BOOM CYLINDER - R.H (LOCK VALVE)	VERIN DE FLECHE	310
4280	ARM CYLINDER - LOCK VALVE	VERIN DE BALANCIER	314
4290	PEDAL VALVE	VANNE	318
4300	REMOTE CONTROL VALVE - DOZER	VANNE DE COMMAND A DISTANCE	320
4310	DOZER CYLINDER - L.H	CYLINDRE DE DOZER	322
4320	DOZER CYLINDER - R.H	CYLINDRE DE DOZER	324
4330	CENTER JOINT - DOZER	JOINT TOURNANT	326
4340	BOOM CYLINDER - L.H (ARTI BOOM)	VERIN DE FLECHE	328
4350	BOOM CYLINDER - R.H (ARTI BOOM)	VERIN DE FLECHE	332
4360	ARTI. BOOM CYLINDER	VERIN DE ARTICULAIRE FLECHE	336
4370	ARM CYLINDER - ARM 2.1m (ARTI. BOOM)	VERIN DE BALANCIER	340
4380	ARM CYLINDER - ARM 2.5m (ARTI. BOOM)	VERIN DE BALANCIER	344
4390	BOOM CYLINDER - L.H (LOCK VALVE) ARTI	VERIN DE FLECHE	348
4400	BOOM CYLINDER - R.H (LOCK VALVE) ARTI	VERIN DE FLECHE	352
4410	ARM CYLINDER - ARM 2.1m (ARTI) L/V	VERIN DE BALANCIER	356
4420	ARM CYLINDER - ARM 2.5m (ARTI) L/V	VERIN DE BALANCIER	360
4430	CONTROL VALVE - ROTATING	DISTRIBUTEUR	364
4440	CONTROL VALVE - ARTI BOOM	DISTRIBUTEUR	366
4450	CONTROL VALVE - ROTATING(ARTI)	DISTRIBUTEUR	368

• OTHER PARTS

Fig. 5100	TOOLS	OUTILLAGE	370
5110	SPARE PARTS	PIECES DE RECHANGE	374
5120	NAME PLATE - CABIN(EUROPE)	PLAQUE D'IDENTIFICATION	376
5130	NAME PLATE - EUROPE	PLAQUE D'IDENTIFICATION	378
5140	NAME PLATE - CABIN(EXPORT)	PLAQUE D'IDENTIFICATION	380
5150	NAME PLATE - EXPORT	PLAQUE D'IDENTIFICATION	382

• OPTION PARTS

Fig. 6100	SEAT MOUNTING - HEATER	SIEGE LE SUPPORT	384
6110	SEAT - HEATER	SIEGE	386
6120	FUEL FILLER PUMP ASS'Y	POMPE DE REMPLISSEUR DE CARBURANT	388
6130	ROOF COVER - STEEL	COUVERTURE DE TOIT	390
6140	RAIN SHIELD	BOUCLIER DE PLUIE	392
6150	RAIN SHIELD & LAMP MOUNTING	BOUCLIER ET DE LAMPE DE PLUIE	394
6160	CABIN LOW GUARD	GARDE	396
6170	WINDOW GUARD	GARDE DE FENETRE	398
6180	FOGS GUARD	EMBRUME LA GARDE	400
6190	ALTERNATOR - 80A	ALTERNATEUR	402
6200	CD PLAYER	PLAQUEUR DE CD	404

6210	FUEL HEATER	RECHAUFFEUR DE CARBURANT	406
6220	TRAVEL ALARM	ALARME DE VOYAGE	408
6230	WORKING LAMP(2-LAMP)	LAMPE FONCTIONNANTE	410
6240	WORKING LAMP(4-LAMP)	LAMPE FONCTIONNANTE	412
6250	WORKING LAMP - REAR	AVERTISSEUR RELAIS	414
6260	ROTATING BEACON	FEU DE CIRCULATION	416
6270	ROTATING BEACON MOUNTING	SUPPORT TOURNANT DE BALISE	418
6280	ROTATING BEACON(TELESCOPIC) WITH LAMP	FEU DE CIRCULATION	420
6290	ROTATING BEACON(TELESCOPIC) W/O LAMP	FEU DE CIRCULATION	422
6300	OVERLOAD WARNING	AVERTISSEMENT DE SURCHARGE	424
6310	LOWER WIPER	ABAISSEZ L'ESSUIE-GLACE	426
6320	WORKING LAMP(2-LAMP)	LAMPE FONCTIONNANTE	428
6330	WORKING LAMP(4-LAMP)	LAMPE FONCTIONNANTE	430
6340	ROTATING BEACON - WITH FOGS	FEU DE CIRCULATION	432
6350	MAIN PIPING - ONE WAY	CONDUITES DE PRINCIPAL	434
6360	ONE WAY PIPING - WITH FILTER	CONDUITES DE BALANCIER	436
6370	PILOT PIPING - ONE WAY	CONDUITES DE PILOTE	438
6380	MAIN PIPING - TWO WAY	CONDUITES DE PRINCIPAL	440
6390	TWO WAY PIPING - WITH FILTER	CONDUITES DE BALANCIER	442
6400	PILOT PIPING - TWO WAY(1)	CONDUITES DE PILOTE	444
6410	PILOT PIPING - TWO WAY(2)	CONDUITES DE PILOTE	446
6420	BOOM PIPING - ONE & TWO WAY(BOOM-4.6m)	TUYAUTERIE DE PERCHE	448
6430	ARM PIPING - ONE & TWO WAY(ARM 2.5m)	CONDUITES DE BALANCIER	450
6440	ARM PIPING - CLAMSHELL ARM 2.5m	CONDUITES DE BALANCIER	452
6450	PATTERN CHANGE PIPING (1)	TUYAUTERIE DE CHANGEMENT DE MODELE	454
6460	PATTERN CHANGE PIPING (2)	TUYAUTERIE DE CHANGEMENT DE MODELE	456
6470	SWING ALARM	AVERTISSEUR	458
6480	MAIN PIPING - QUICK FIT	CONDUITES DE PRINCIPAL	460
6490	ELECTRIC PARTS - QUICK CLAMP	BRIDE RAPIDE	462
6500	BOOM PIPING - QUICK CLAMP(BOOM-4.6m)	TUYAUTERIE DE PERCHE	464
6510	ARM PIPING - QUICK CLAMP(ARM 2.5m)	CONDUITES DE BALANCIER	466
6520	MAIN PIPING - ROTATING	CONDUITES DE PRINCIPAL	468
6530	PILOT PIPING(1) - ROTATING	CONDUITES DE PILOTE	470
6540	PILOT PIPING(2) - ROTATING OR ARTI	CONDUITES DE PILOTE	472
6550	PEDAL - ROTATING OR ARTI	PEDALE	474
6560	FLOOR MAT - TWO WAY & ROTATING	PLANCHER	476
6570	BOOM PIPING - BOOM 4.6m(ROTATING)	TUYAUTERIE DE PERCHE	478
6580	ARM PIPING - ARM 2.5m(ROTATING)	CONDUITES DE BALANCIER	480
6590	NOISE KIT - EUROPE	KIT DE BRUIT	482
6600	LOCK VALVE PIPING - BOOM	CONDUITES DE VERROU VANNE	484
6610	BOOM PIPING - LOCK VALVE	TUYAUTERIE DE PERCHE	486
6620	PILOT PIPING - ARM LOCK V/V	CONDUITES DE PILOTE	488
6630	ARM PIPING - LOCK VALVE	CONDUITES DE BALANCIER	490
6640	ARM - 2.1m	BALANCIER	492
6650	ARM PIPING - ARM 2.1m	CONDUITES DE BALANCIER	494
6660	ARM PIPING - ONE & TWO WAY(ARM 2.1m)	CONDUITES DE BALANCIER	496

6670	ARM PIPING - ROTATING(ARM 2.1m)	CONDUITES DE BALANCIER	498
6680	ARM PIPING - QUICK CLAMP(ARM 2.1m)	CONDUITES DE BALANCIER	500
6690	ARM PIPING - CLAMSHELL(ARM 2.1m)	CONDUITES DE BALANCIER	502
6700	ARM - 3.0m	BALANCIER	504
6710	ARM PIPING - ARM 3.0m	CONDUITES DE BALANCIER	506
6720	ARM PIPING - ONE & TWO WAY(ARM 3.0m)	CONDUITES DE BALANCIER	508
6730	ARM PIPING - ROTATING(ARM 3.0m)	CONDUITES DE BALANCIER	510
6740	ARM PIPING - QUICK CLAMP(ARM 3.0m)	CONDUITES DE BALANCIER	512
6750	ARM PIPING - CLAMSHELL(ARM 3.0m)	CONDUITES DE BALANCIER	514
6760	TRACK SHOE ASS'Y - 500G	MAILLON DE CHAINE	516
6770	TRACK SHOE ASS'Y - 700G	MAILLON DE CHAINE	518
6780	MAIN PIPING - DOZER	CONDUITES DE PRINCIPAL	520
6790	PILOT PIPING - DOZER	CONDUITES DE PILOTE	522
6800	TRACK FRAME - DOZER	TRAIN DE ROULEMENT	524
6810	DOZER BLADE - 2490mm	DOZER	526
6820	DOZER BLADE - 2590mm	DOZER	528
6830	DOZER BLADE - 2690mm	DOZER	530
6840	DOZER PIPING	CONDUITES DOZER	532
6850	TRACK FRAME - LONG CRAWLER	TRAIN DE ROULEMENT	534
6860	TRAVEL PIPING - LONG CRAWLER	ARMATURE DE VOYAGE	536
6870	TRACK SHOE ASS'Y - 500G(LONG CRAWLER)	MAILLON DE CHAINE	538
6880	TRACK SHOE ASS'Y - 600G(LONG CRAWLER)	MAILLON DE CHAINE	540
6890	TRACK SHOE ASS'Y - 700G(LONG CRAWLER)	MAILLON DE CHAINE	542
6900	TRACK FRAME - DOZER(LONG)	TRAIN DE ROULEMENT	544
6910	MAIN PIPING - ARTI BOOM	CONDUITES DE PRINCIPAL	546
6920	PILOT PIPING - ARTI BOOM	CONDUITES DE PILOTE	548
6930	ARTI BOOM	PERCHE D'ARTI	550
6940	ARTI BOOM PIPING	TUYAUTERIE DE PERCHE D'ARTI	552
6950	LUBRICATION PIPING - ARTI BOOM	TUYAUTERIE DE LUBRIFICATION	554
6960	MAIN PIPING - ONE WAY (ARTI)	CONDUITES DE PRINCIPAL	556
6970	MAIN PIPING - TWO WAY (ARTI)	CONDUITES DE PRINCIPAL	558
6980	ONE & TWO WAY PIPING - WITH FILTER	CONDUITES DE BALANCIER	560
6990	ARTI BOOM PIPING - ONE & TWO WAY	TUYAUTERIE DE PERCHE D'ARTI	562
7000	MAIN PIPING - ROTATING (ARTI OR DOZER)	CONDUITES DE PRINCIPAL	564
7010	PILOT PIPING - ROTATING (ARTI)	CONDUITES DE PILOTE	566
7020	ARTI BOOM PIPING - ROTATING	TUYAUTERIE DE PERCHE D'ARTI	568
7030	MAIN PIPING - QUICK FIT(ARTI)	CONDUITES DE PRINCIPAL	570
7040	ARTI BOOM PIPING - QUICK CLAMP	TUYAUTERIE DE PERCHE D'ARTI	572
7050	PILOT PIPING - LOCK VALVE(ARTI BOOM)	CONDUITES DE PILOTE	574
7060	ARTI BOOM PIPING - LOCK VALVE	TUYAUTERIE DE PERCHE D'ARTI	576
7070	PILOT PIPING - LOCK VALVE ARM(ARTI)	CONDUITES DE PILOTE	578
7080	ARTI ARM PIPING - LOCK VALVE	CONDUITES DE VERROU VANNE	580
7090	BUCKET - 0.24㎥ (460mm)	GODET	582
7100	BUCKET - 0.39㎥	GODET	584
7110	BUCKET - 0.45㎥	GODET	586
7120	BUCKET - 0.51㎥	GODET	588

7130	BUCKET - 0.64㎥	GODET	590
7140	BUCKET - 0.76㎥	GODET	592
7150	BUCKET ASS'Y - 0.38㎥ (30") - SIDE PIN	ENSEMBLE DE GODET	594
7160	BUCKET ASS'Y - 0.44㎥ (33") - SIDE PIN	ENSEMBLE DE GODET	596
7170	BUCKET ASS'Y - 0.48㎥ (36") - SIDE PIN	ENSEMBLE DE GODET	598
7180	BUCKET ASS'Y - 0.38m³ - DITCH CLEANING	ENSEMBLE DE GODET	600
7190	BUCKET ASS'Y - 0.46m³ - DITCH CLEANING	ENSEMBLE DE GODET	602

- **WORLDWIDE NETWORK**

DATE	APR. 02, 2007
1st EDITION	

Fig. 011 CYLINDER BLOCK
BLOC CYLINDRE

Serial No. ;

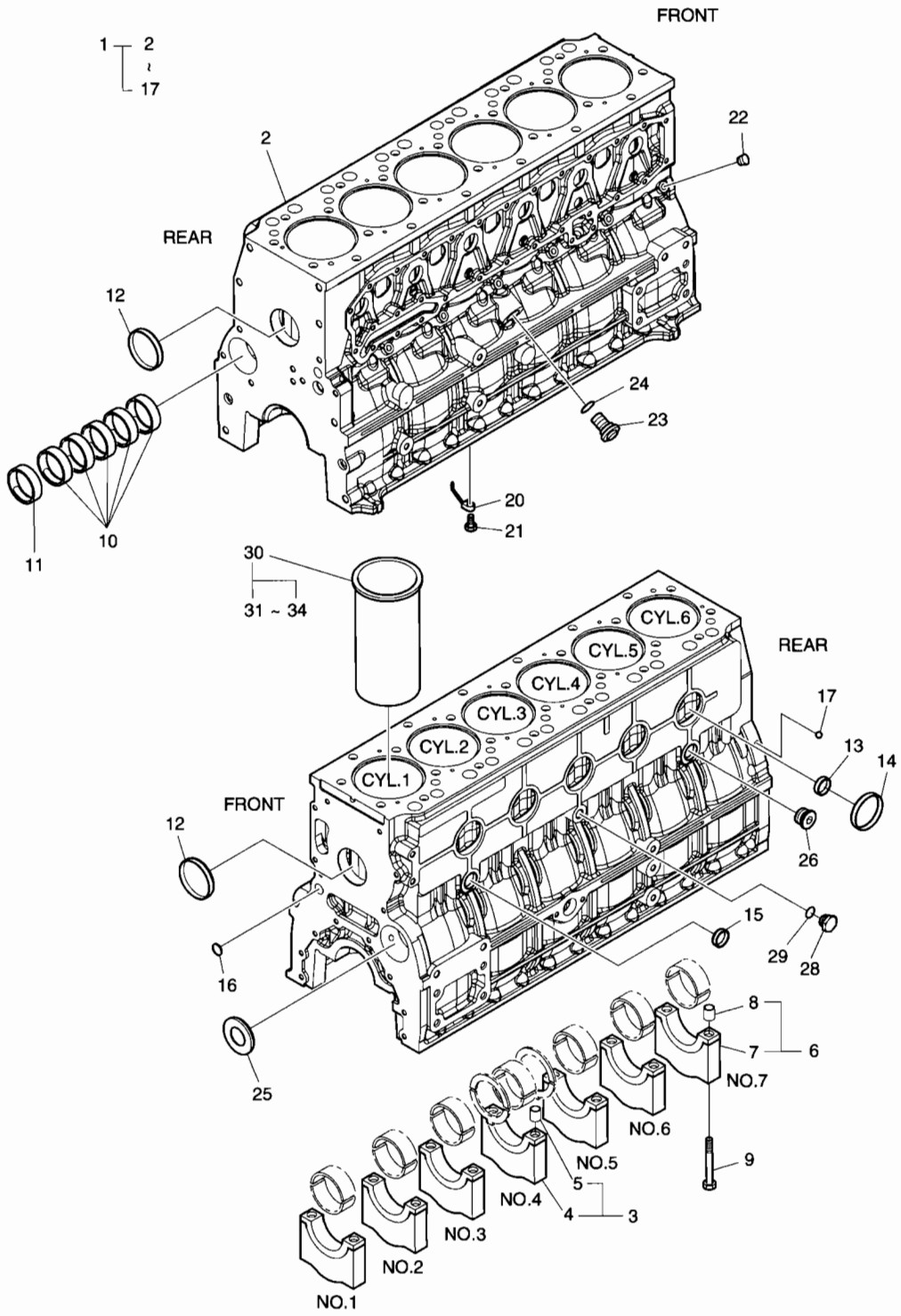

DATE	APR. 02, 2007
1st EDITION	

Fig. 011 CYLINDER BLOCK BLOC CYLINDRE

Serial No. ;

Key No.	Part No.	Description	Description	Q'ty	S.C	Serial No.	ICA	Replaceable part	
								Part No.	Q'ty
011-1	65.01101-6085B	CYLINDER BLOCK ASS'Y	BLOC CYLINDRE	1					
2	65.01101-0054B	. CYLINDER BLOCK	. BLOC CYLINDRE	1	D				
3	65.01105-6005B	. BEARING CAP ASS'Y(No:3)	. CHAPEAU DE PALIER	1	D				
4	65.01105-1051B	.. CAP;BEARING	.. CHAPEAU	1	D				
5	65.91710-0001	.. RING. STOPPER. BRG CAP	.. BAGUE D'ETANCHEITE	2					
6	65.01105-6006B	. BEARING CAP ASS'Y	. CHAPEAU DE PALIER	6	D				
7	65.01105-1052B	.. CAP;BEARING	.. CHAPEAU	1	D				
8	65.91710-0001	.. RING. STOPPER. BRG CAP	.. BAGUE D'ETANCHEITE	2					
9	65.90020-0066A	. BOLT;BRG CAP	. BOULON A 6 PANS	14					
10	65.04410-0021A	. BUSH;CAMSHAFT	. BUISSON	6	B				
11	65.04410-0022	. BUSH;CAMSHAFT	. BUISSON	1	B				
12	65.90302-0009	. PLUG;CORE	. BOUCHON B28D	2					
13	65.90302-0042	. PLUG CORE	. BOUCHON DE	8					
14	65.90302-0034	. PLUG CORE	. BOUCHON DE	5					
15	65.90302-0041	. PLUG CORE	. BOUCHON DE	1					
16	65.91606-0041	. PLUG CORE	. NOYAU DE PRISE	2					
17	06.31641-0618	. BALL;STEEL	. BILLE	1					
20	65.01601-5020	NOZZLE;OIL SPRAY	INJECTEUR	6					
21	65.05401-5031	RELIEF VALVE ASS'Y	SOULAGEMENT VANNE	6					
22	65.90320-0022	PLUG SCREW PT1/8	VIS DE REGLAGE	7					
23	65.05401-5002F	RELIEF VALVE ASSY	SOULAGEMENT VANNE	1					
24	06.56021-0102	O-RING	JOINT TORIQUE	1					
25	65.91605-0002	COVER;CORE HOLE	COUVERCLE	1					
26	65.90310-0134	SCREW;PLUG	VIS	1					
28	65.90310-0135	SCREW;PLUG	BOUCHON A VIS	1					
29	06.56190-0705	RING;SEAL	ENSEMBLE BAGUE	1					
30	65.01201-0075A	CYLINDER LINER - GRADE	VIS DE REGLAGE	6	D				
31	65.01201-0076	. LINER;CYLINDER - 1A	. CHEMISE DE CYLINDRE	6					
32	65.01201-0077	. LINER;CYLINDER - 1B	. CHEMISE DE CYLINDRE	6					
33	65.01201-0078	. LINER;CYLINDER - 2A	. CHEMISE DE CYLINDRE	6					
34	65.01201-0079	. LINER;CYLINDER - 2B	. CHEMISE DE CYLINDRE	6					

Fig. 012 TIMING GEAR CASE
CARTER DE DISTRIBUTION

Serial No. ;

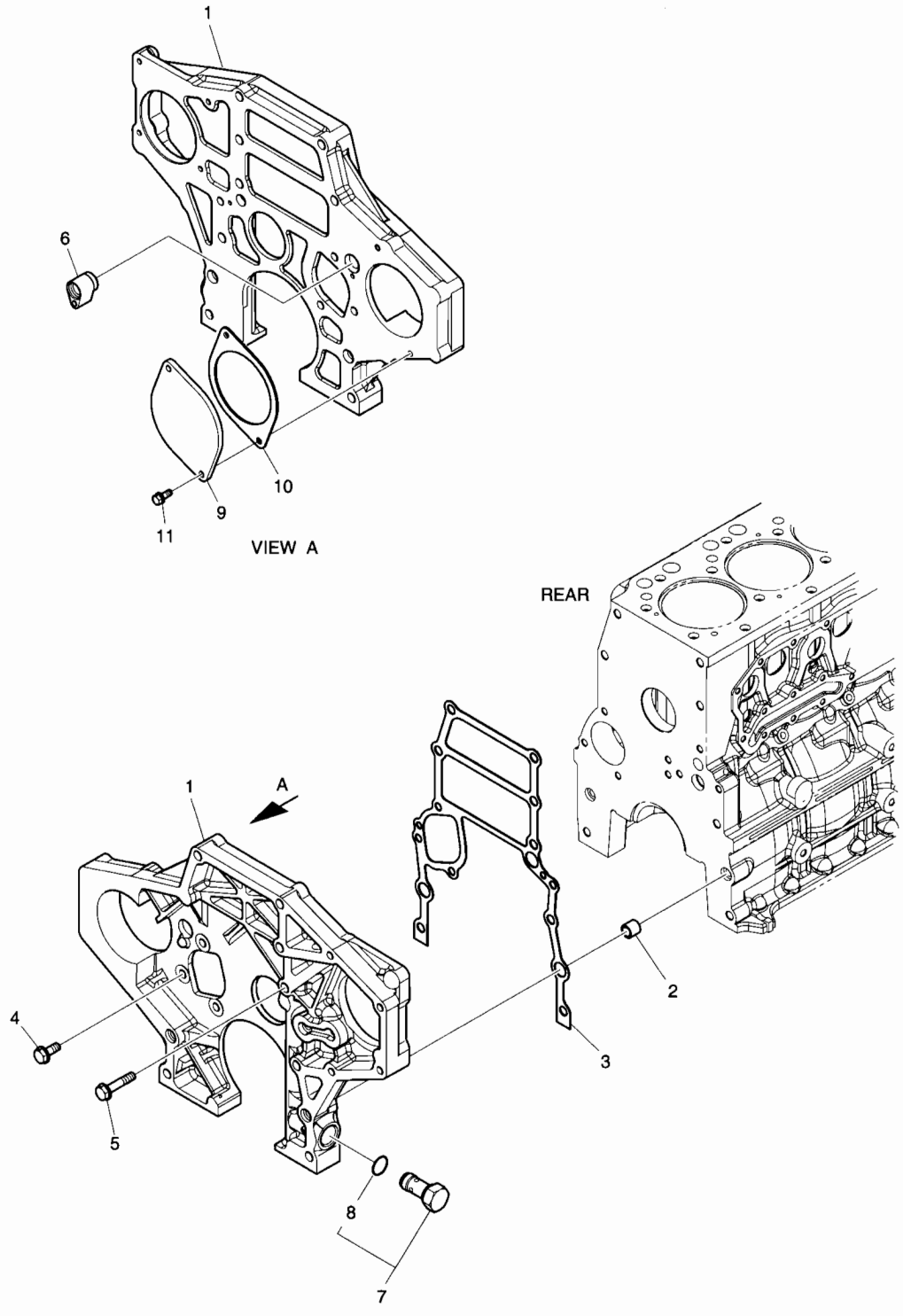

DATE	APR. 02, 2007
1st EDITION	

Fig. 012 TIMING GEAR CASE
CARTER DE DISTRIBUTION

Serial No. ;

Key No.	Part No.	Description	Description	Q'ty	S.C	Serial No.	ICA	Replaceable part	
								Part No.	Q'ty
012-1	65.01304-0029	CASE;TIMING GEAR	CARTER	1					
2	65.91710-0016	RING;STOPPER	RESSORT	2					
3	65.01903-0034	GASKET	JOINT	1					
4	65.90020-0063B	BOLT;HEX M10X25	BOULON A 6 PANS	3					
5	65.90020-0080	BOLT;COLLARED HEX.	BOULON A 6 PANS	1					
6	65.98130-0241	ADAPTER	ADAPTEUR	1					
7	65.05401-5032	RELIEF VALVE ASS'Y	SOULAGEMENT VANNE	1					
8	65.96501-0074	. O-RING	. JOINT TORIQUE	1					
9	65.91601-0011	COVER	COUVERCLE	1					
10	65.38901-0018A	GASKET;PTO	JOINT	1					
11	06.01943-3318	BOLT ASS'Y M12X1.5X35	BOULON A 6 PANS	2					

DATE	APR. 02, 2007
1st EDITION	

Fig. 013 FLYWHEEL HOUSING
CARTER DE VOLANT MOTEUR

Serial No. ;

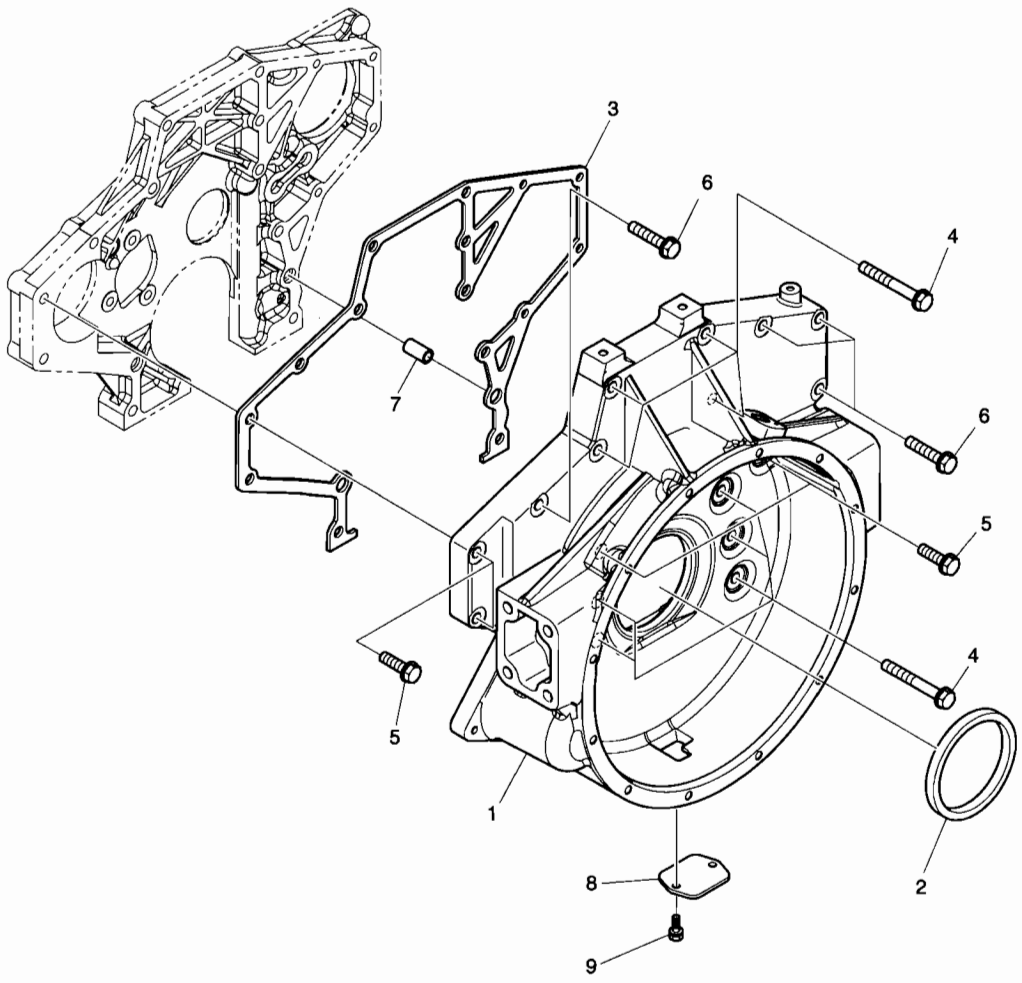

DATE	APR. 02, 2007
1st EDITION	

Fig. 013 FLYWHEEL HOUSING
CARTER DE VOLANT MOTEUR

Serial No. ;

Key No.	Part No.	Description	Description	Q'ty	S.C	Serial No.	ICA	Replaceable part	
								Part No.	Q'ty
013-1	65.01401-0253B	HOUSING;FLYWHEEL	BOITIER	1					
2	65.01510-0040	SEAL;OIL	JOINT D'HUILE	1					
3	65.01904-0032	GASKET	JOINT	1					
4	65.90020-0100	BOLT	BOULON A 6 PANS	9					
5	65.90020-0101	BOLT	BOULON A 6 PANS	4					
6	65.90020-0105	BOLT	BOULON A 6 PANS	4					
7	65.91710-0009	RING;STOPPER	RESSORT	2					
8	65.01414-0004A	COVER;TIMING POINT HOLE	COUVERCLE	1					
9	06.01923-3111	BOLT ASS'Y M8X16	BOULON A 6 PANS	2					

Fig. 014 OIL SEAL JOINT

Serial No. ;

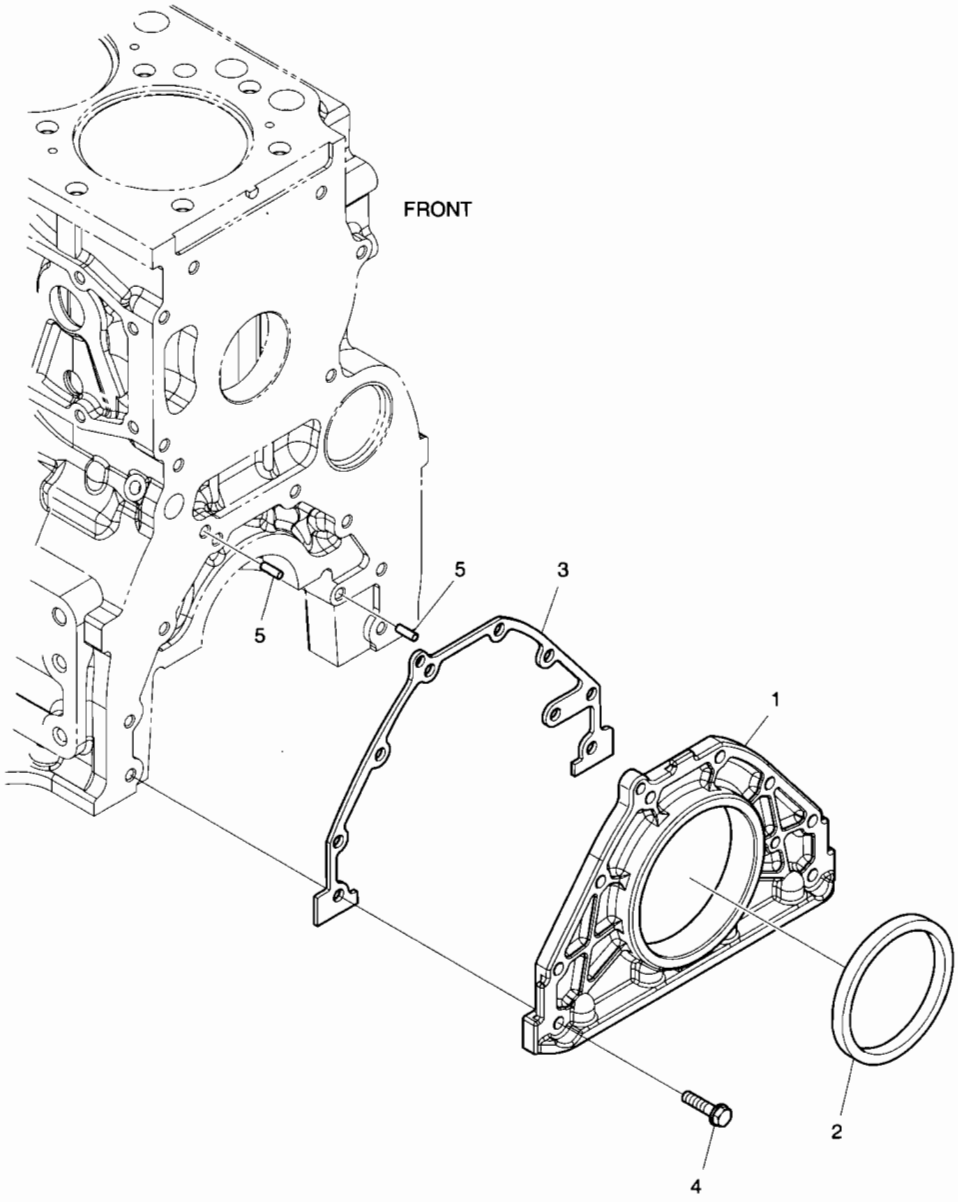

DATE	APR. 02, 2007
1st EDITION	

Fig. 014 OIL SEAL JOINT

Serial No. ;

Key No.	Part No.	Description	Description	Q'ty	S.C	Serial No.	ICA	Replaceable part	
								Part No.	Q'ty
014-1	65.01501-5003A	COVER;SEALING	COUVERCLE	1					
2	65.01510-0157	SEAL;OIL	JOINT D'HUILE	1					
3	65.01905-0009	GASKET	JOINT	1					
4	06.01923-3116	BOLT ASS'Y M8X28	BOULON A 6 PANS	8					
5	06.22022-1063	PIN	GOUJON D'ASSEMBLAGE	2					

Fig. 015 BREATHER
CONDUIT DE VENTILATION

Serial No. ;

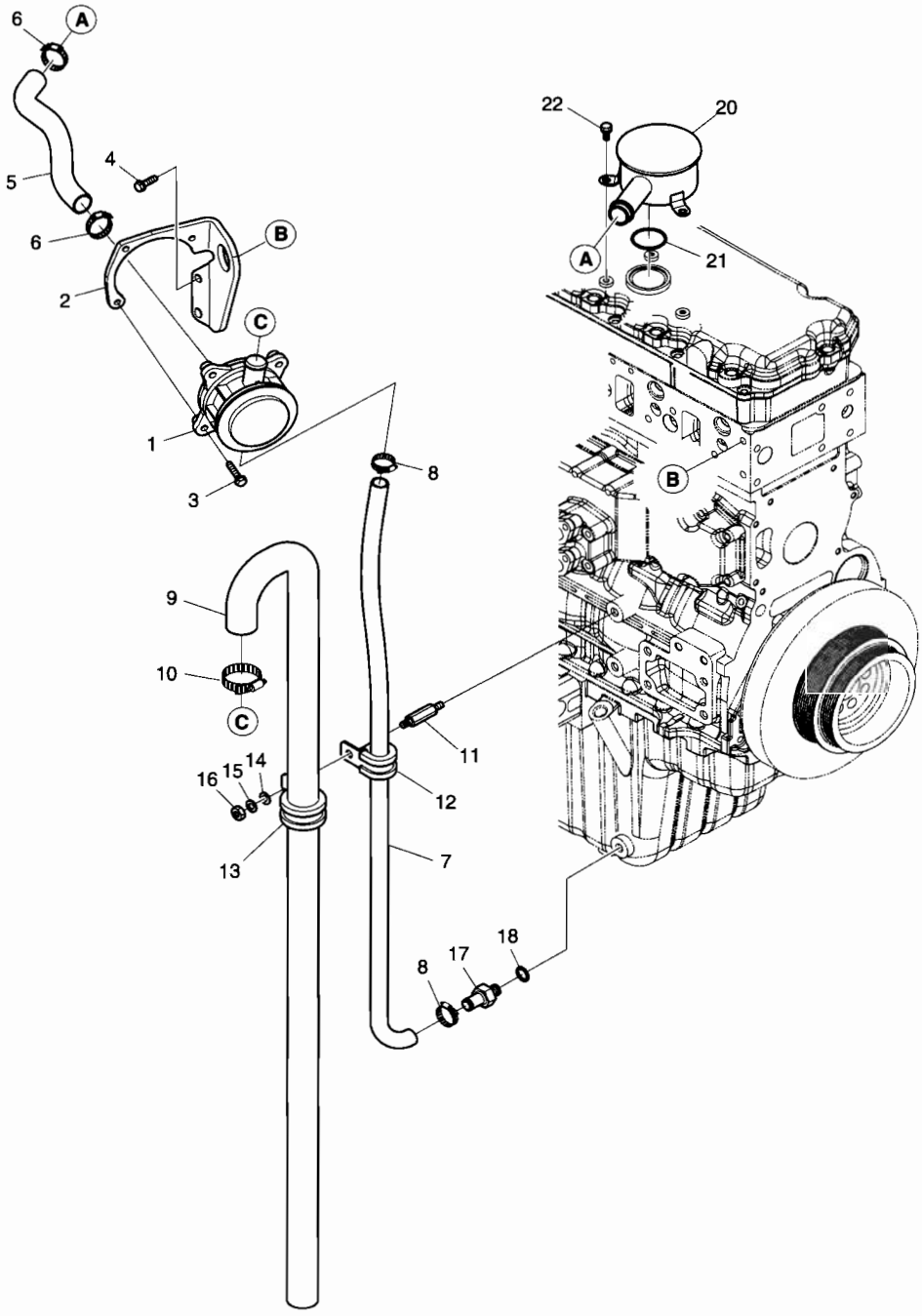

DATE	APR. 02, 2007
1st EDITION	

Fig. 015 BREATHER
CONDUIT DE VENTILATION

Serial No. ;

Key No.	Part No.	Description	Description	Q'ty	S.C	Serial No.	ICA	Replaceable part	
								Part No.	Q'ty
015-1	65.01801-5100	HOUSING;BREATHER	LOGEMENT DE RENIFLARD	1					
2	65.01840-0017	BRACKET;BREATHER PIPE	SUPPORT	1					
3	06.01923-3114	BOLT ASS'Y M8X22	BOULON A 6 PANS	3					
4	06.01924-3217	BOLT ASS'Y M10X30	BOULON A 6PANS	2					
5	65.96301-0478	HOSE;RUBBER	TUYAU FLEXIBLE	1					
6	06.67020-0105	CLAMP	COLLIER	2					
7	65.96301-0456A	HOSE;RUBBER	TUYAU FLEXIBLE	1					
8	65.97440-0005	CLAMP;HOSE	COLLIER	2					
9	65.96301-0464A	HOSE;RUBBER	TUYAU CAOUTCHOUC	1					
10	06.67020-0105	CLAMP	COLLIER	1					
11	65.90201-0122	BOLT;STUD	BOULON A 6 PANS	1					
12	65.97401-5024	CLIP;PIPE	ATTACHE	2					
13	65.97401-5019	CLIP;PIPE	ATTACHE	1					
14	06.15010-2311	WASHER	CALE	1					
15	06.16731-2107	WASHER;SPRING	RONDELLE ELASTIQUE	1					
16	06.11063-8214	NUT	ECROU 6 PANS	1					
17	65.98131-0119	NIPPLE	GRAISSEUR	1					
18	06.56190-0719	SEAL RING	BAGUE D'ETANCHEITE	1					
20	65.01801-5043A	HOUSING;BREATHER	LOGEMENT DE RENIFLARD	1					
21	65.96501-0033B	O-RING	JOINT TORIQUE	1					
22	06.01923-3111	BOLT;HEX. M8X16	BOULON A 6 PANS	3					

DATE	APR. 02, 2007
1st EDITION	

Fig. 016 DRIVING SYSTEM
SYSTEME D'CENTRAINEMENT

Serial No. ;

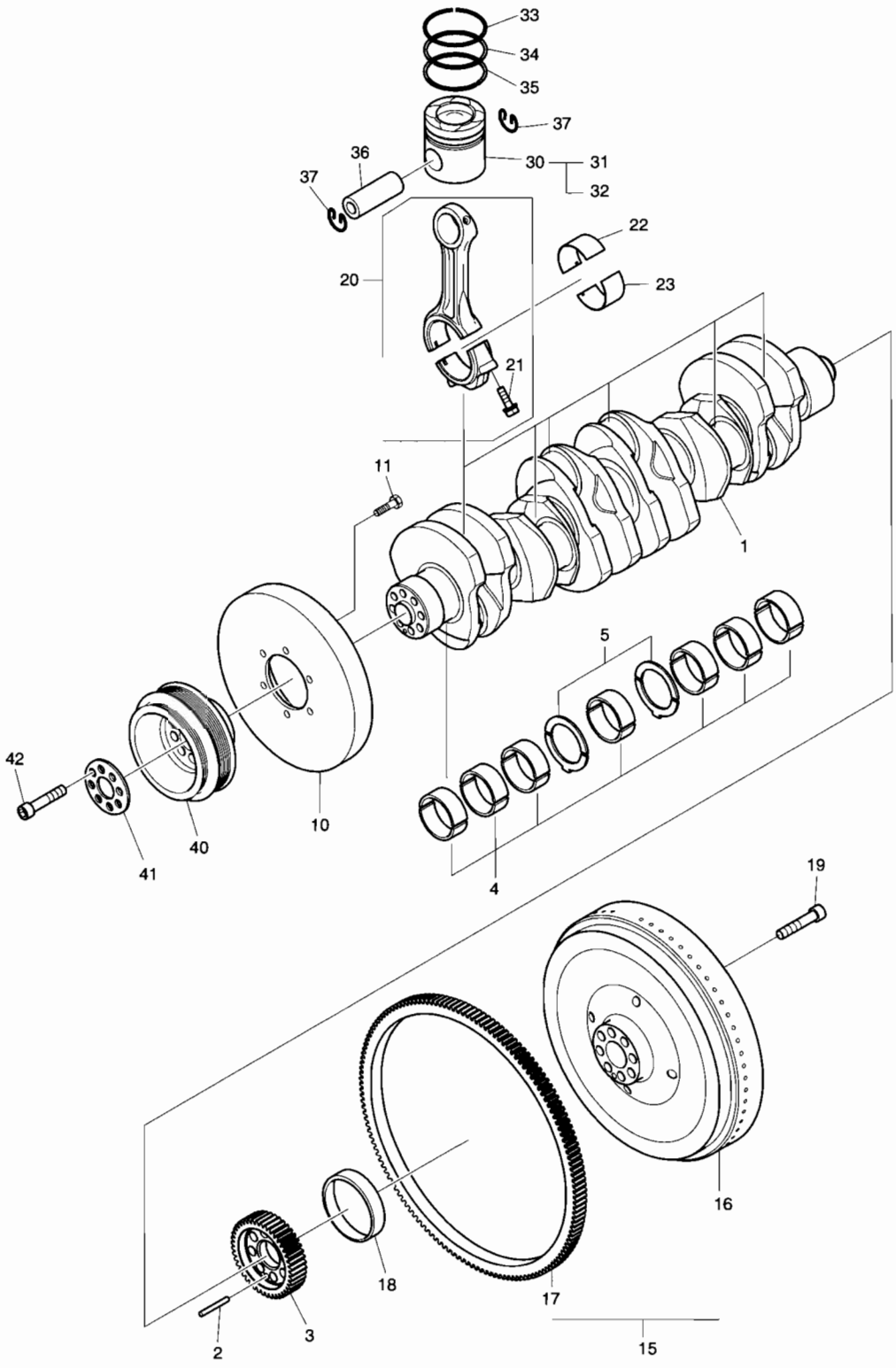

DATE	APR. 02, 2007
1st EDITION	

Fig. 016 DRIVING SYSTEM SYSTEME D'CENTRAINEMENT

Serial No. ;

Key No.	Part No.	Description	Description	Q'ty	S.C	Serial No.	ICA	Replaceable part	
								Part No.	Q'ty
016-1	65.02101-0069A	CRANK SHAFT	VILEBREQUIN	1					
2	06.22022-1018	DOWEL PIN 8M6X45	GOUJON	1					
3	65.02115-0016	GEAR;CRANKSHAFT	PIGNON	1					
4	65.01110-6140	METAL;MAIN	PALIER	7					
5	65.01150-6008	WASHER;THRUST	RONDELLE DE BUTEE	2					
10	65.02201-0002	DAMPER;VIBRATION	AMORTISSEUR DE	1					
11	65.90020-0062B	BOLT;HEX M10X20	BOULON A 6 PANS	6					
15	65.02301-5148A	FLYWHEEL ASS'Y	VOLANT	1					
16	65.02301-0291A	. FLYWHEEL	. ENSEMBLE VOLANT	1					
17	65.02310-0006	. GEAR;RING	. ENGRENAGE	1					
18	65.02130-0004	BUSH;DRIVING	BUISSON	1					
19	65.90020-0123	BOLT;COLLARED HEX.	BOULON A 6 PANS	8					
20	65.02401-6032B	CONNECTING ROD ASS'Y	BIELLE ASS'Y	6					
21	65.02411-0009	. BOLT;CONNECTING ROD	. VIS DE BIELLE	2					
22	65.02410-0040	METAL;CON-ROD(STD)	PALIER	6					
	65.02410-0041	METAL;CON-ROD(0.25)	PALIER	6	US				
	65.02410-0042	METAL;CON-ROD(0.50)	PALIER	6	US				
23	65.02410-0050	METAL;CON-ROD(STD)	PALIER	6					
	65.02410-0051	METAL;CON-ROD(0.25)	PALIER	6	US				
	65.02410-0052	METAL;CON-ROD(0.50)	PALIER	6	US				
30	65.02501-0476	PISTON;GRADE	PISTON	6	D				
31	65.02501-0477	. PISTON;A GRADE	. PISTON	6					
32	65.02501-0478	. PISTON;B GRADE	. PISTON	6					
33	65.02503-0132A	RING;PISTON	BAGUE D'ETANCHEITE	6					
34	65.02503-0133A	RING;PISTON	BAGUE D'ETANCHEITE	6					
35	65.02503-0134	RING;PISTON	BAGUE D'ETANCHEITE	6					
36	65.02502-0017A	PIN;PISTON	AXE DE PISTON	6					
37	06.29020-0125	RING;LOCK	BAGUE	12					
40	65.02601-0225B	PULLEY;V-BELT	POULIE DE COURROIE	1					
41	65.90701-0099	WASHER	CALE	1					
42	06.02106-0723	BOLT;SOCKET	BOULON	8					

DATE	APR. 02, 2007
1st EDITION	

Fig. 017 CYLINDER HEAD CULLASSE

Serial No. ;

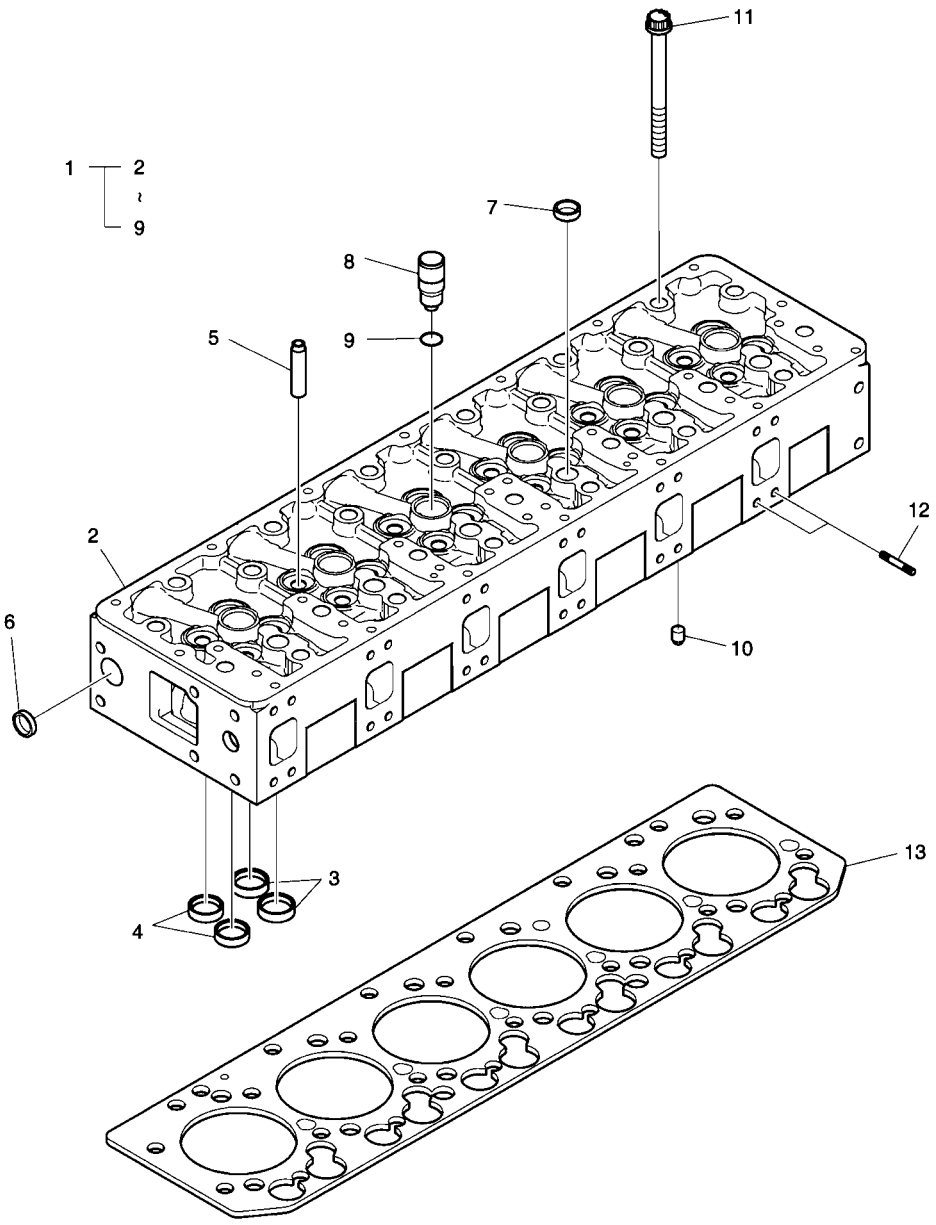

DATE	APR. 02, 2007
1st EDITION	

Fig. 017 CYLINDER HEAD CULLASSE

Serial No. ;

Key No.	Part No.	Description	Description	Q'ty	S.C	Serial No.	ICA	Replaceable part	
								Part No.	Q'ty
017-1	65.03101-6090F	CYLINDER HEAD ASS'Y	CULLASSE	1					
2	65.03101-1068C	. CYLINDER HEAD	. CULLASSE	1	D				
3	65.03203-1062	. SEAT;VALVE	. SIEGE	12	B				
4	65.03203-1063	. SEAT;VALVE	. SIEGE	12	B				
5	65.03201-1016B	. GUIDE;VALVE	. GUIDE-SOUPAPE	24	B				
6	65.90302-0048	. CORE;PLUG	. BOUCHON DE	10					
7	65.90302-0029	. PLUG;CORE	. CONSOLE	21					
8	65.03205-0006A	. BUSH;INJECTION NOZZLE	. COUSSINET	6					
9	65.96501-0088	. O-RING	. JOINT TORIQUE	6					
10	65.91030-0005	PIN;FIX	GOUJON	2					
11	65.90021-0009	BOLT;COLLARED DUO.	BOULON A 6 PANS	26					
12	65.90201-0134	BOLT;STUD	GOUJON	24					
13	65.03901-0071	GASKET;CYLINDER HEAD	JOINT	1					

Fig. 018 CYLINDER HEAD COVER
COUVERTURE DE CULASSE

Serial No. ;

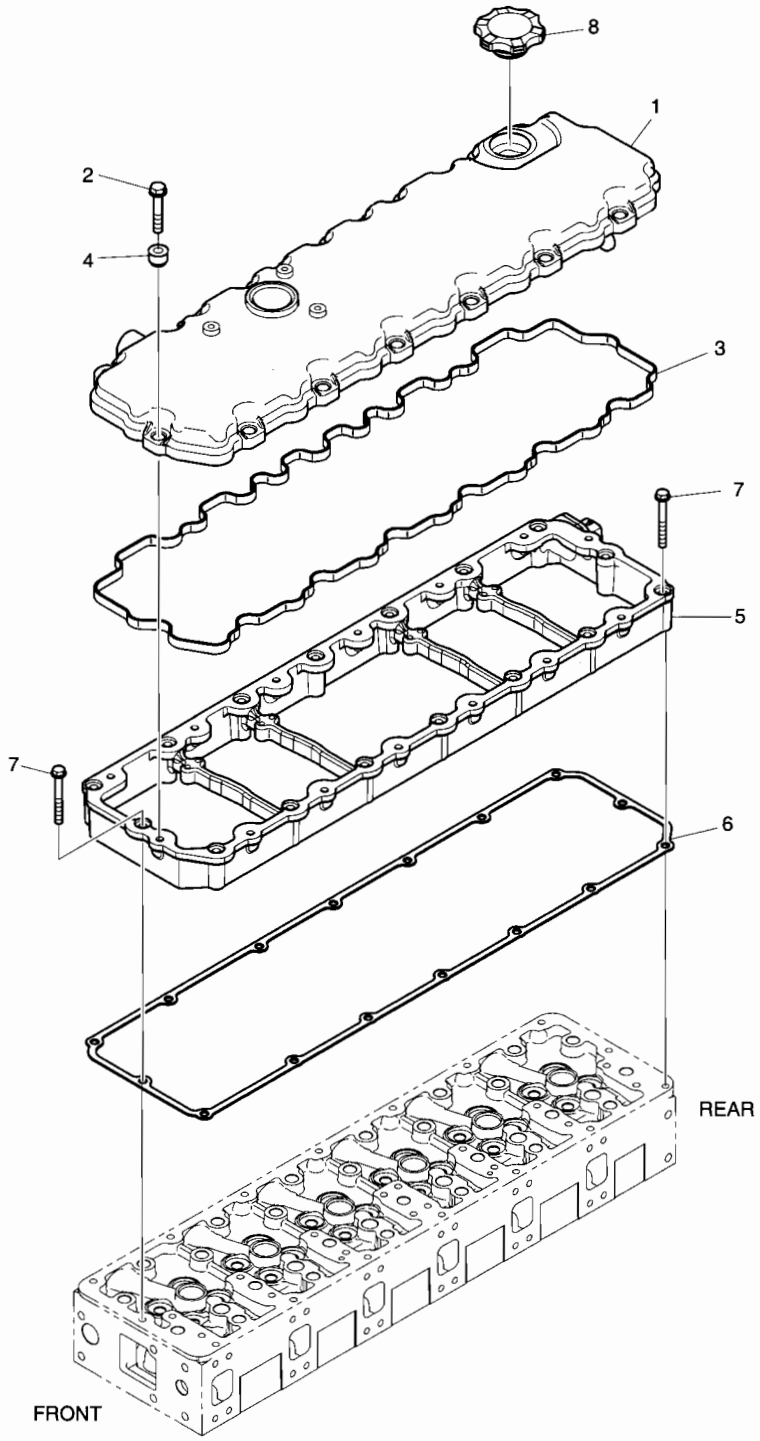

DATE	APR. 02, 2007
1st EDITION	

Fig. 018 CYLINDER HEAD COVER COUVERTURE DE CULASSE

Serial No. ;

Key No.	Part No.	Description	Description	Q'ty	S.C	Serial No.	ICA	Replaceable part	
								Part No.	Q'ty
018-1	65.03401-5010	COVER;CYLINDER HEAD	COUVRE-CULASSE	1					
2	65.90020-0109	BOLT;COLLARED HEX.	BOULON A 6 PANS	14					
3	65.03905-0037A	GASKET;CYL. HEAD COVER	JOINT	1					
4	65.03905-5002	PACKING;CYL. HEAD COVER	JOINT	14					
5	65.03402-0008A	COVER;INTERMEDIATE	COUVERCLE	1					
6	65.03905-0041	GASKET;CYL. HEAD COVER	JOINT	1					
7	65.90020-0138	BOLT;COLLARED HEX.	BOULON A 6 PANS	16					
8	65.01810-5011	CAP;OIL FILLER	VIBREUR	1					

DATE	APR. 02, 2007
1st EDITION	

Fig. 019 TIMING SYSTEM
SYSTEME DE SYNCHRONISATION

Serial No. ;

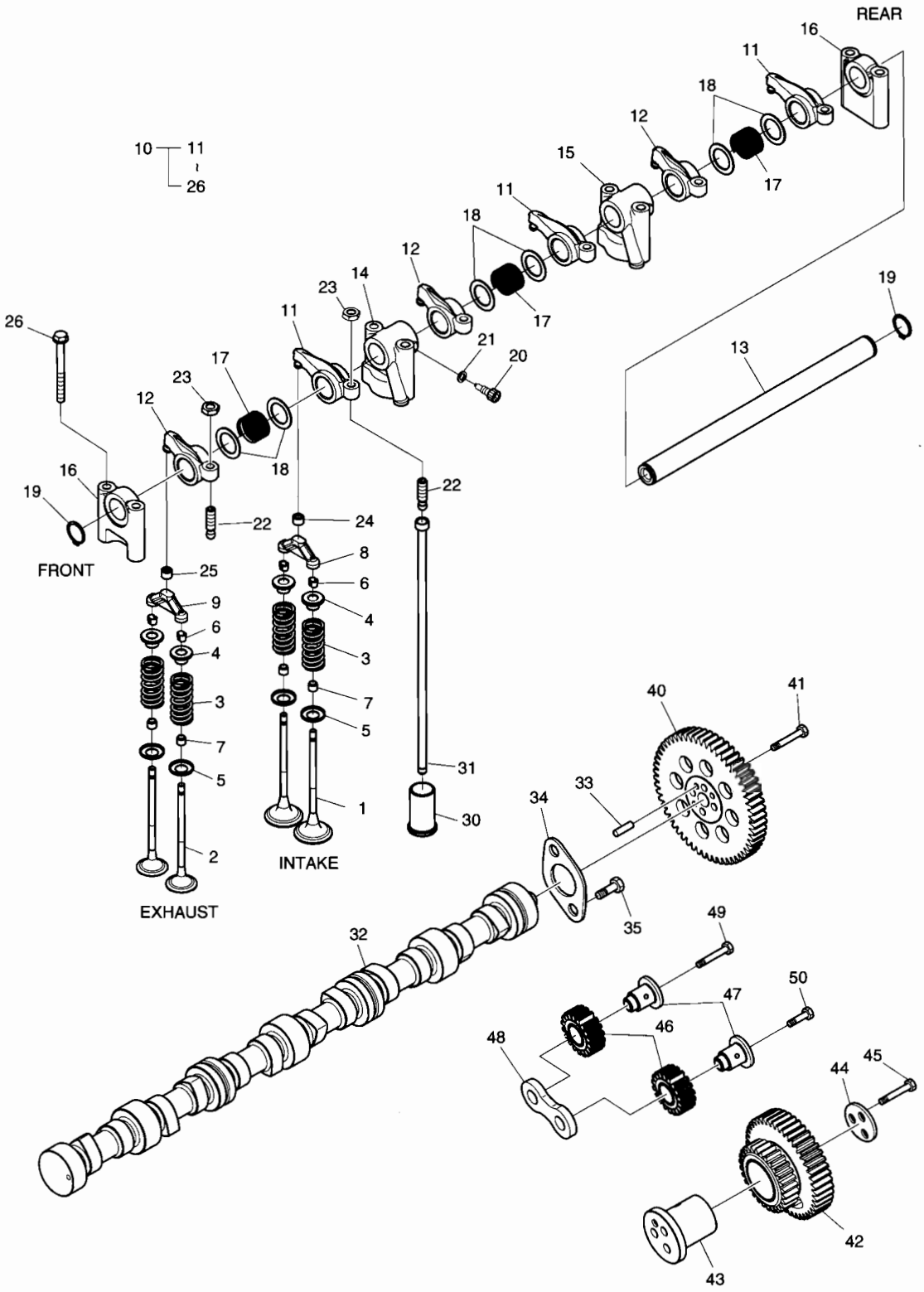

DATE	APR. 02, 2007
1st EDITION	

Fig. 019 TIMING SYSTEM SYSTEME DE SYNCHRONISATION

Serial No. ;

Key No.	Part No.	Description	Description	Q'ty	S.C	Serial No.	ICA	Replaceable part	
								Part No.	Q'ty
019-1	65.04101-0065B	VALVE;INTAKE	SOUPAPE D'ADMISSION	12					
2	65.04101-0066B	VALVE;EXHAUST	VANNE	12					
3	65.04102-0024	SPRING;VALVE	JOINT TORIQUE	24					
4	65.04103-0018	PLATE;VALVE SPRING	PLAQUE	24					
5	65.90701-0098	WASHER	CALE	24					
6	65.04104-0009	COTTER;VALVE	COTTER;VALVE	48					
7	65.04902-0016	SEAL;VALVE STEM	JOINT	24					
8	65.04130-0009A	CALIPER;INTAKE	ETRIER	6					
9	65.04130-0011	CALIPER;EXHAUST	ETRIER	6					
10	65.04200-6038B	ROCKER ARM S/F ASS'Y	AXE DE BRAS DE	2					
11	65.04201-5042B	. ROCKER ARM;INTAKE	. BRAS DE CULBUTEUR	3					
12	65.04201-5043A	. ROCKER ARM;EXHAUST	. BRAS DE CULBUTEUR	3					
13	65.04203-5020A	. SHAFT;ROCKER ARM	. AXE DU CULBUTEUR	1					
14	65.04202-0033	. BRACKET;ROCKER ARM	. SUPPORT	1					
15	65.04202-0034	. BRACKET;ROCKER ARM	. SUPPORT	1					
16	65.04202-0035	. BRACKET;ROCKER ARM	. SUPPORT	2					
17	65.97601-0124	. SPRING;COMPESSION	. RESSORT	3					
18	65.90701-0136B	. WASHER	. RONDELLE	6					
19	06.29010-0120	. RING;SNAP	. CIRCLIP	2					
20	65.90030-0018	. BOLT;SOCKET	. BOULON	1					
21	06.16110-0106	. WASHER	. RONDELLE ELASTIQUE	1					
22	65.04205-0014	. SCREW;ADJUST	. VIS	6					
23	65.90501-0003	. NUT	. ECROU	6					
24	65.04209-0005	. CAP;ADJUST SCREW (INTAKE)	. CHAPEAU	3					
25	65.04209-0006	. CAP;ADJUST SCREW (EX.)	. CHAPEAU	3					
26	65.90020-0120	. BOLT;COLLARED HEX.	. BOULON A 6 PANS	8					
30	65.04301-5003C	TAPPET;VALVE	TRINGLERIE	12					
31	65.04302-5015	ROD;PUSH	POUSSOIR	12					
32	65.04401-0045A	CAMSHAFT	EQUIPAGE MOBILE	1					
33	06.22022-1016	DOWEL PIN	GOUPILLE D'AJUSTAGE	1					
34	65.90720-0032	WASHER;THRUST	RONDELLE DE BUTEE	1					
35	06.01913-2911	BOLT ASS'Y M6X16	BOULON A 6 PANS	2					
40	65.04501-0017	GEAR;CAM SHAFT	PIGNON	1					
41	65.90020-0117	BOLT;COLLARED HEX.	BOULON A 6 PANS	4					
42	65.04505-5018	GEAR;IDLE	PIGNON	1					
43	65.04506-0016	PIN;IDLE GEAR	GOUPILLE	1					
44	65.90720-0034B	WASHER;THRUST	RONDELLE DE BUTEE	1					
45	65.90020-0118	BOLT;COLLARED HEX.	BOULON A 6 PANS	3					

DATE	APR. 02, 2007
1st EDITION	

Fig. 019 TIMING SYSTEM
SYSTEME DE SYNCHRONISATION

Serial No. ;

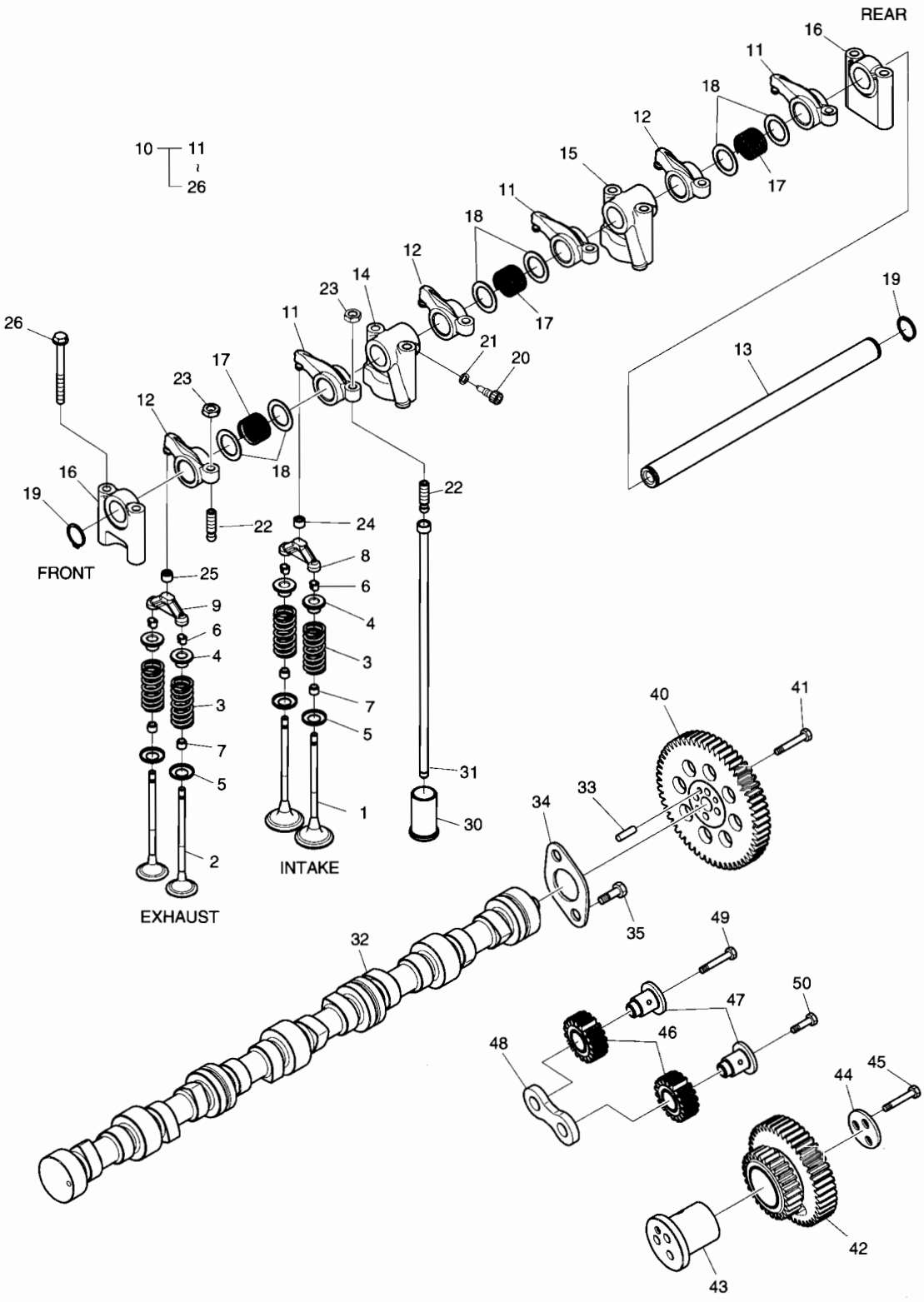

DATE	APR. 02, 2007
1st EDITION	

Fig. 019 TIMING SYSTEM
SYSTEME DE SYNCHRONISATION

Serial No. ;

Key No.	Part No.	Description	Description	Q'ty	S.C	Serial No.	ICA	Replaceable part	
								Part No.	Q'ty
019-46	65.11301-5002	GEAR;DRIVE;INJECTION	PIGNON	2					
47	65.04506-0015	PIN;IDLE GEAR	GOUPILLE	2					
48	65.90720-0033A	WASHER;THRUST	RONDELLE DE BUTEE	1					
49	65.90020-0118	BOLT;COLLARED HEX.	BOULON A 6 PANS	1					
50	65.90020-0119	BOLT;COLLARED HEX.	BOULON A 6 PANS	1					

DATE	APR. 02, 2007
1st EDITION	

Fig. 020 OIL PUMP
POMPE A HUILE

Serial No. ;

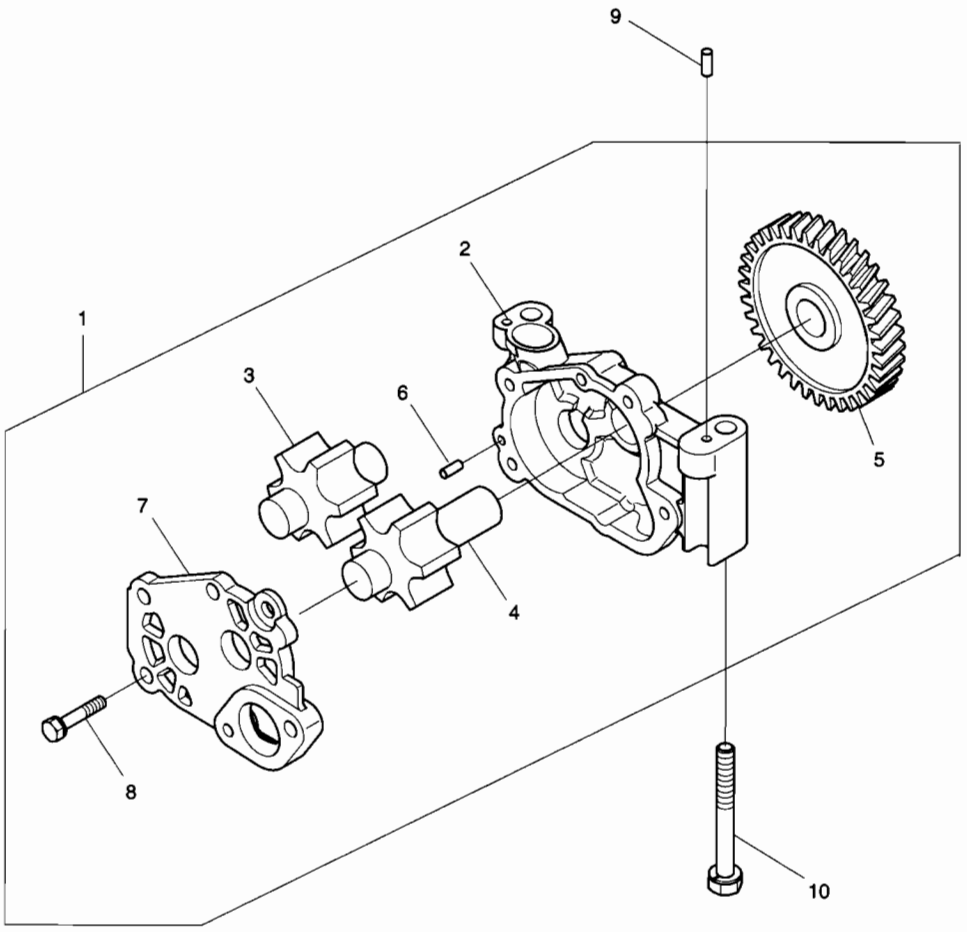

DATE	APR. 02, 2007
1st EDITION	

Fig. 020 OIL PUMP
POMPE A HUILE

Serial No. ;

Key No.	Part No.	Description	Description	Q'ty	S.C	Serial No.	ICA	Replaceable part	
								Part No.	Q'ty
020-1	65.05100-6063	OIL PUMP ASS'Y	ENSEMBLE POMPE A HUILE	1					
2	65.05102-0030	. HOUSING;OIL PUMP	. BOITIER POMPE A HUILE	1	D				
3	65.05104-5014	. GEAR;OIL PUMP	. POMPE A HUILE	1					
4	65.05104-5015	. GEAR;OIL PUMP	. POMPE A HUILE	1					
5	65.05201-0016	. GEAR;DRIVE;OIL PUMP	. PIGNON	1					
6	06.22022-0907	. DOWEL PIN 6M6X10	. GOUPILLE D'AJUSTAGE	1					
7	65.05103-0034	. COVER;OIL PUMP	. COUVERCLE	1					
8	06.01913-3114	. BOLT ASS'Y M8X22	. BOULON A 6 PANS	4					
9	06.22022-0909	PIN DOWEL 6M6X14	GOUPILLE D'AJUSTAGE	2					
10	65.90020-0085	BOLT;COLLARED HEX.	BOULON A 6 PANS	2					

DATE	APR. 02, 2007
1st EDITION	

Fig. 021 OIL FILTER & OIL COOLER
FILTRE D'HUILE

Serial No. ;

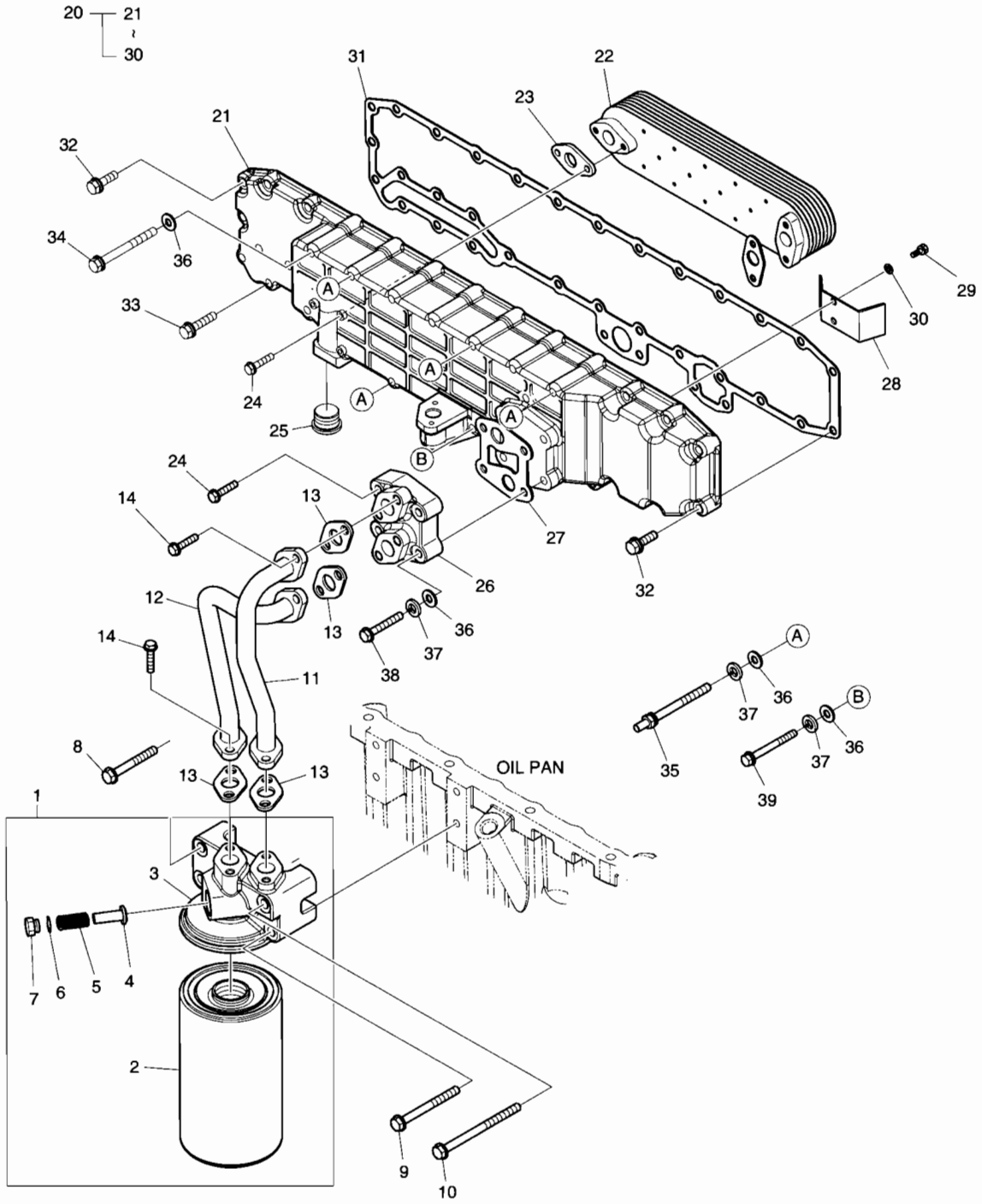

DATE	APR. 02, 2007
1st EDITION	

Fig. 021 OIL FILTER & OIL COOLER FILTRE D'HUILE

Serial No. ;

Key No.	Part No.	Description	Description	Q'ty	S.C	Serial No.	ICA	Replaceable part	
								Part No.	Q'ty
021-1	65.05501-7089	OIL FILTER ASS'Y	FILTRE D'HUILE	1					
2	65.05510-5032	. FILTER;OIL	. FILTRE D'HUILE	1					
3	65.05503-5056	. HEAD;OIL FILTER	. CULASSE	1					
4	65.05518-0006	. VALVE	. VANNE	1					
5	65.97601-0075	. SPRING	. RESSORT	1					
6	06.56190-0726	. SEAL;RING	. BAGUE D'ETANCHEITE	1					
7	65.90310-0065	. SCREW;PLUG	. VIS	1					
8	06.01923-3222	BOLT ASS'Y	BOULON A 6 PANS	2					
9	06.01923-3225	BOLT ASS'Y M10X70	BOULON A 6 PANS	1					
10	06.01923-3228	BOLT ASS'Y M10X85	BOULON A 6 PANS	1					
11	65.05701-5573A	PIPE;OIL	CONDUITES DE HUILE	1					
12	65.05701-5574	PIPE;OIL	CONDUITES DE HUILE	1					
13	65.05903A0001	GASKET	JOINT	4					
14	06.01913-3114	BOLT ASS'Y M8X22	BOULON A 6 PANS	8					
20	65.05601-7079B	OIL COOLER ASS'Y	ENSEMBLE	1					
21	65.05604-0030A	. HOUSING;OIL COOLER	. CARTER	1					
22	65.05606-5032A	. ELEMENT;OIL COOLER	. ELEMENT	1					
23	65.05902-0022	. GASKET;OIL COOLER	. JOINT	2					
24	06.01923-3119	. BOLT ASS'Y M8X40	. BOULON A 6 PANS	6					
25	65.54109-0005A	. SCREW PLUG M22X1.5	. VIS	1					
26	65.05607-5003	. FLANGE;OIL COOLER	. BRIDE	1					
27	65.05901-0031	. GASKET;OIL FILTER	. JOINT	1					
28	65.05610-0007A	. GUIDE;WATER FLOW	. GUIDE	1					
29	06.02097-8306	. BOLT;SOCKET	. BOULON	2					
30	06.16731-2105	. WASHER	. RONDELLE ELASTIQUE	2					
31	65.05902-0023	GASKET;OIL COOLER	JOINT	1					
32	06.01923-3117	BOLT ASS'Y M8X30	BOULON 6 PANS	12					
33	06.01923-3119	BOLT ASS'Y M8X40	BOULON A 6 PANS	8					
34	06.01913-3128	BOLT M8X85	BOULON A 6 PANS	7					
35	65.90201-0135	BOLT;STUD	GOUJON	4					
36	06.15010-2311	WASHER	RONDELLE	14					
37	06.16731-2107	WASHER	RONDELLE ELASTIQUE	7					
38	06.01013-9127	BOLT M8X120	BOULON A 6 PANS	2					
39	06.01913-3129	BOLT ASS'Y M8X90	BOULON A 6 PANS	1					

DATE	APR. 02, 2007
1st EDITION	

Fig. 022 OIL PAN
CARTER D'HUILE

Serial No. ;

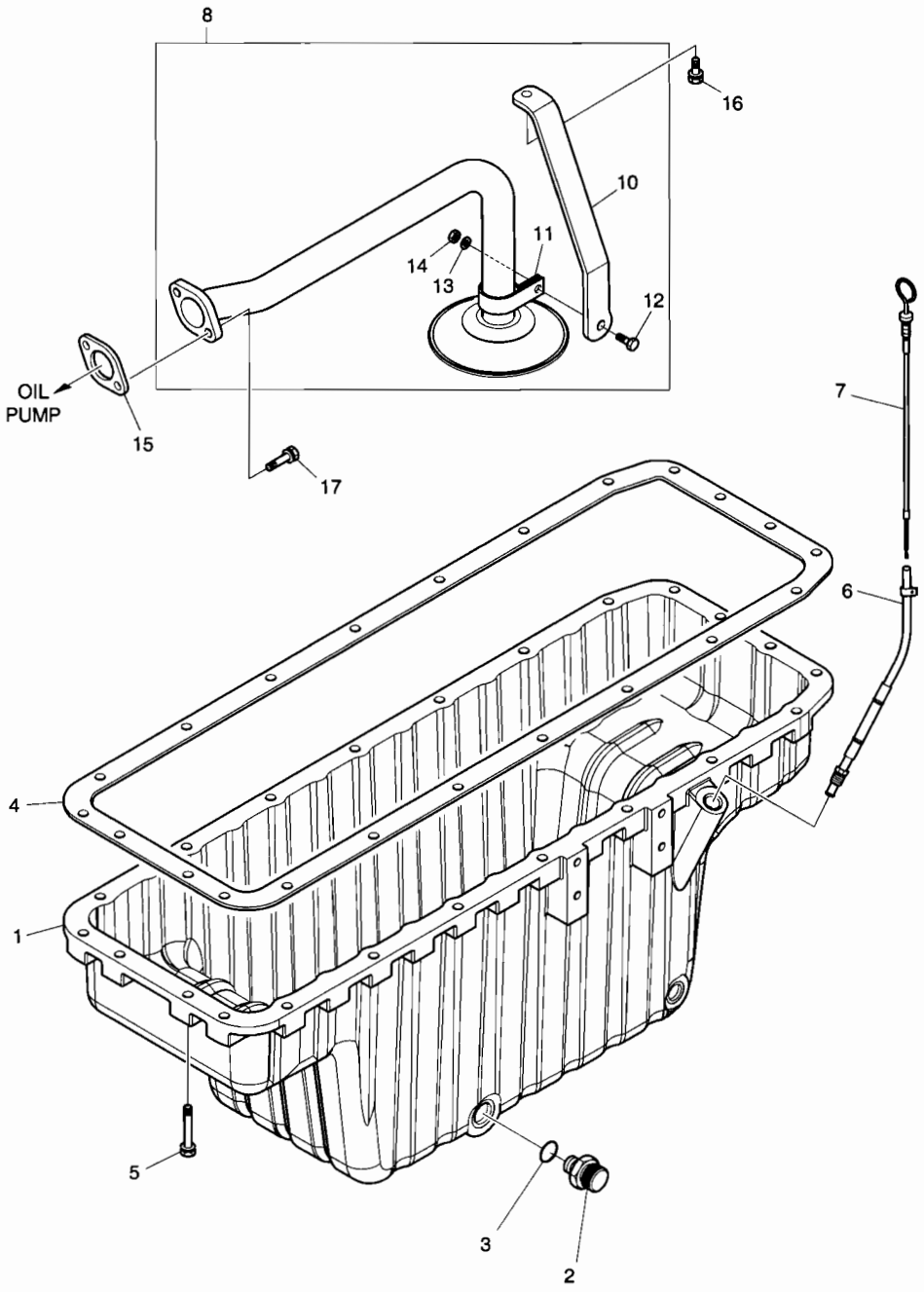

DATE	APR. 02, 2007
1st EDITION	

Fig. 022 OIL PAN
CARTER D'HUILE

Serial No. ;

Key No.	Part No.	Description	Description	Q'ty	S.C	Serial No.	ICA	Replaceable part	
								Part No.	Q'ty
022-1	65.05801-5245	PAN;OIL	CARTER MOTEUR	1					
2	65.98125-5022A	JOINT;DRAIN	JOINT	1					
3	06.56190-0732	SEAL;RING	CONTACT DE NIVEAU	1					
4	65.05904-0035	GASKET;OIL PAN	JOINT	1					
5	06.01923-3120	BOLT ASS'Y M8X45	BOULON A 6 PANS	22					
6	65.05806-5116A	TUBE;OIL LEVEL GAUGE	TUBE	1					
7	65.05805-5236	OIL LEVEL GAUGE	INDICATEUR DE NIVEAU	1					
8	65.05701-6122	OIL PIPE ASS'Y	CONDUITES DE HUILE	1					
10	65.05740-0222	. BRACKET;OIL SUCT.PIPE	. SUPPORT	1					
11	65.97401-0137	. CLIP;PIPE	. ATTACHE	1					
12	06.01283-7115	. BOLT M8X25	. BOULON A 6 PANS	1					
13	06.15010-2311	. WASHER	. RONDELLE	1					
14	65.90510-0012	. NUT	. ECROU DE BLOCAGE	1					
15	65.05901-0032	GASKET	JOINT	1					
16	06.01913-3115	BOLT ASS'Y M8X25	BOULON A 6 PANS	1					
17	06.01913-3119	BOLT ASS'Y M8X40	BOULON A 6 PANS	2					

Fig. 023 THERMOSTAT
THERMOSTAT

Serial No. ;

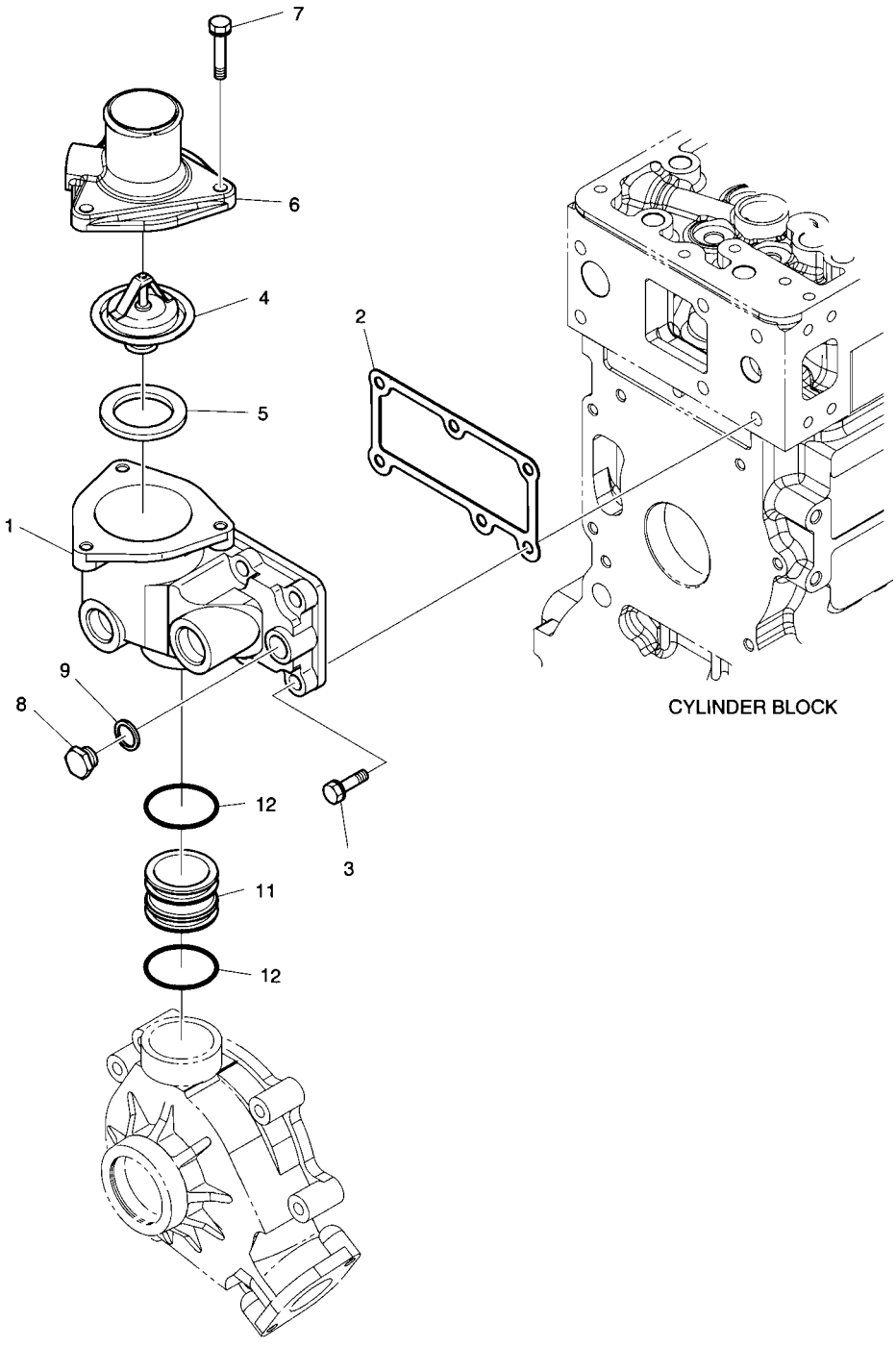

DATE	APR. 02, 2007
1st EDITION	

Fig. 023 THERMOSTAT
THERMOSTAT

Serial No. ;

Key No.	Part No.	Description	Description	Q'ty	S.C	Serial No.	ICA	Replaceable part	
								Part No.	Q'ty
023-1	65.06404-0039A	HOUSING;THERMOSTAT	LOGEMENT	1					
2	65.06904-0020	GASKET;THERMOSTAT	JOINT	1					
3	06.01923-3218	BOLT ASS'Y M10X35	BOULON A 6 PANS	6					
4	65.06402-5015	THERMOSTAT	FILTRE	1					
5	65.06904-0003	GASKET;THERMOSTAT	JOINT	1					
6	65.06405-0039	OUTLET;WATER	SORTIE DE L'EAU	1					
7	06.01923-3114	BOLT ASS'Y M8X22	BOULON A 6 PANS	3					
8	06.08092-2405	PLUG SCREW M16 X 1.5	BOUCHON A VIS	1					
9	06.56190-0709	SEAL;RING	BAGUE D'ETANCHEITE	1					
11	65.06301-0257	PIPE;COOLING WATER	CONDUITE D'EAU DE	1					
12	65.96501-0099A	O-RING	JOINT TORIQUE	2					

DATE	APR. 02, 2007
1st EDITION	

Fig. 024 WATER PUMP
SYSTEME DE REFROIDSSEMENT

Serial No. ;

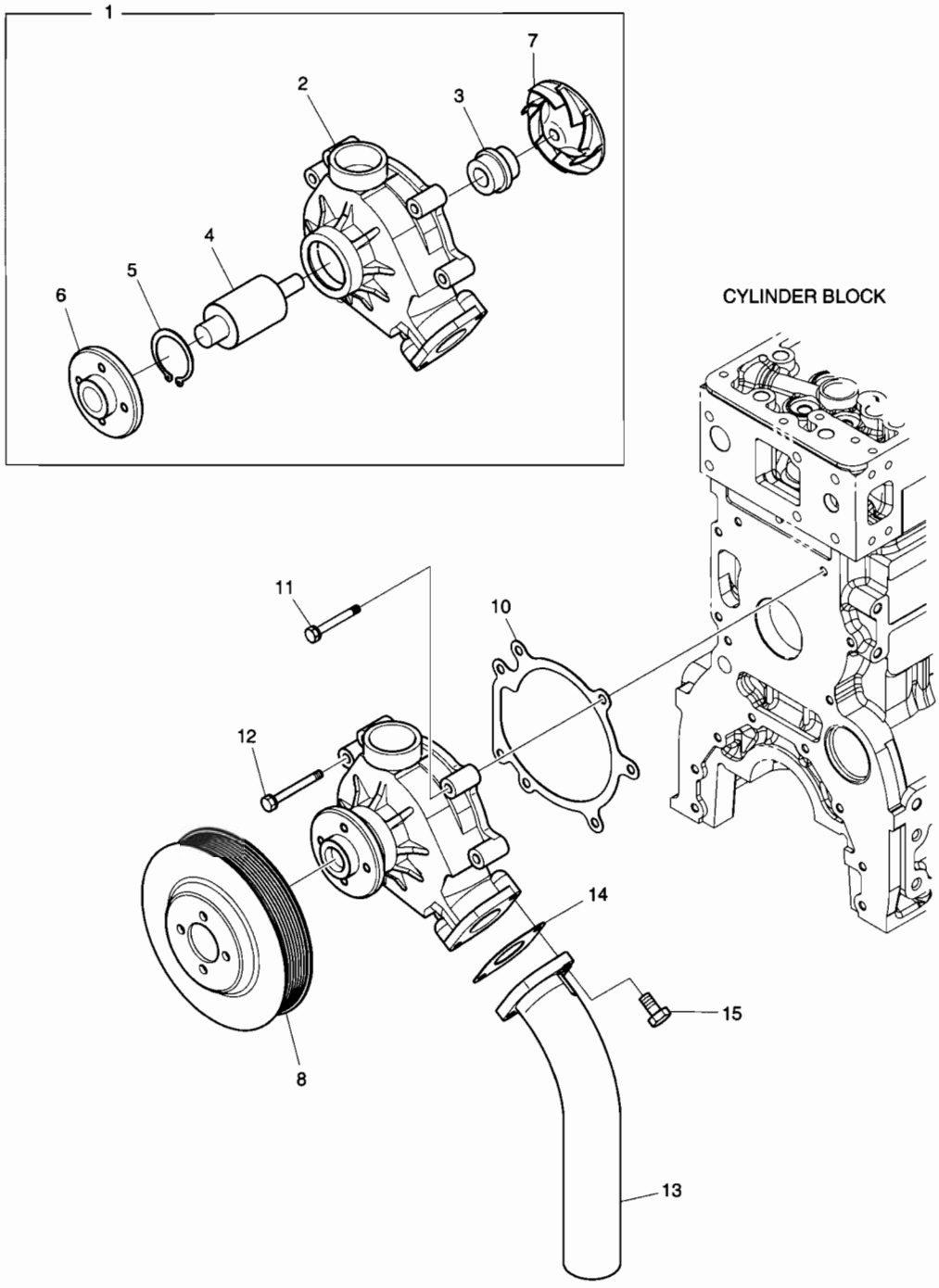

DATE	APR. 02, 2007
1st EDITION	

Fig. 024 WATER PUMP
SYSTEME DE REFROIDSSEMENT

Serial No. ;

Key No.	Part No.	Description	Description	Q'ty	S.C	Serial No.	ICA	Replaceable part	
								Part No.	Q'ty
024-1	65.06500-6271	WATER PUMP ASS'Y	ENSEMBLE POMPE A EAU	1					
2	65.06501-0300	. HOUSING;WATER PUMP	. BOITIER	1	D				
3	65.06520-6007	. SEAL;MECHANICAL	. JOINT	1					
4	65.93410-0027	. BEARING	. PALIER	1					
5	06.29020-0132	. SNAP RING 55X2	. BAGUE ELASTIQUE	1					
6	65.06504-0033	. HUB;V-BELT PULLEY	. MOYEU	1					
7	65.06506-0032	. IMPELLER;WATER PUMP	. TURBINE	1					
8	65.06503-0113	PULLEY;V-BELT	POULIE DE COURROIE	1					
10	65.06901-0042	GASKET;WATER PUMP	JOINT	1					
11	06.01913-3120	BOLT ASS'Y M8X45	BOULON A 6 PANS	5					
12	06.01913-3121	BOLT ASS'Y M8X50	BOULON A 6 PANS	2					
13	65.06301-0258A	PIPE;COOLING WATER	CONDUITE D'EAU DE	1					
14	65.06903-0029	GASKET;WATER PIPE	JOINT	1					
15	06.01913-3117	BOLT ASS'Y M8X30	BOULON A 6 PANS	2					

Fig. 025 COOLING FAN VENTILATEUR

Serial No. ;

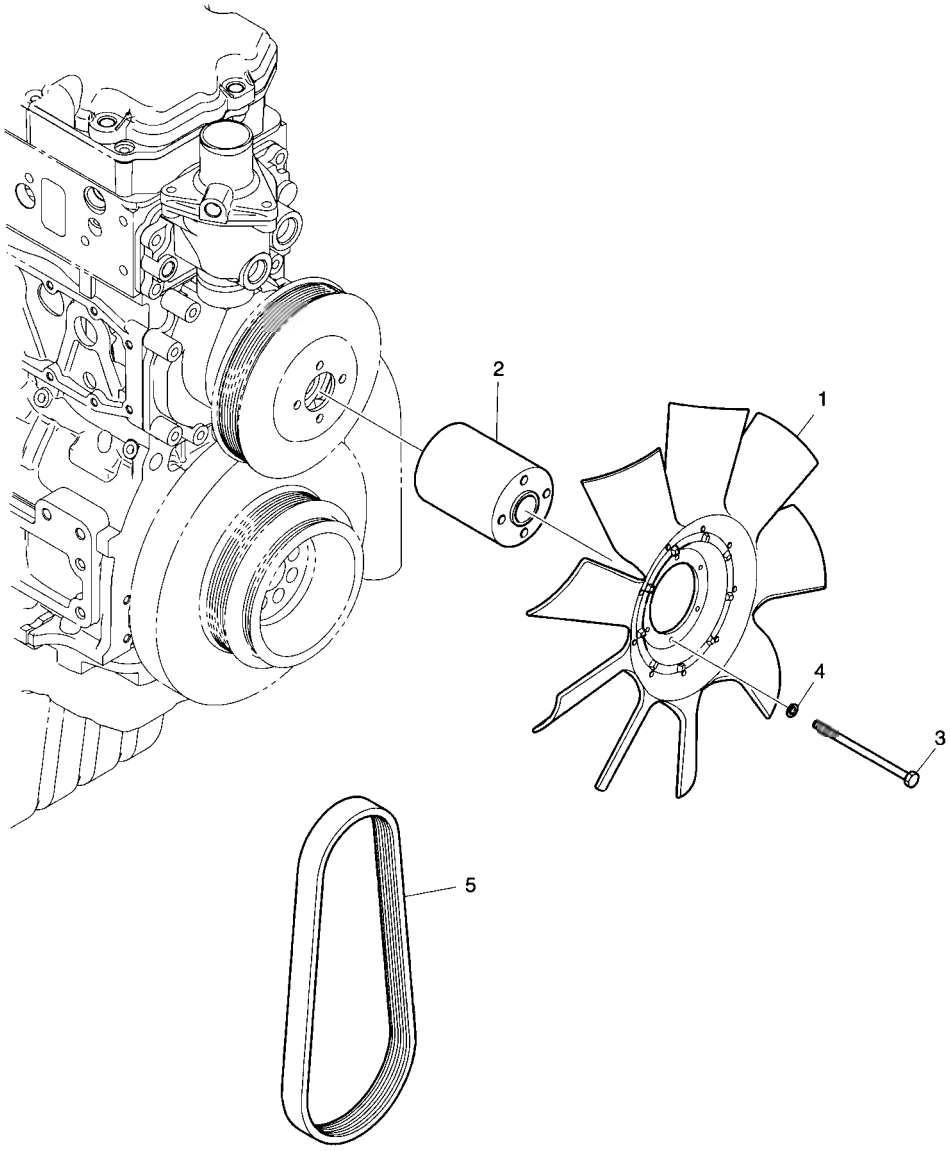

DATE	APR. 02, 2007
1st EDITION	

Fig. 025 COOLING FAN VENTILATEUR

Serial No. ;

Key No.	Part No.	Description	Description	Q'ty	S.C	Serial No.	ICA	Replaceable part	
								Part No.	Q'ty
025-1	65.06601-5076	FAN;COOLING	VENTILATEUR	1					
2	65.06611-0132	FLANGE;FAN	BRIDE	1					
3	06.01013-9130	BOLT M8X150	BOULON A 6 PANS	4					
4	06.16731-2107	WASHER	RONDELLE ELASTIQUE	4					
5	65.96801-0194	BELT	COURROIE	1					

DATE	APR. 02, 2007
1st EDITION	

Fig. 026 INTAKE & EXHAUST MANIFOLD D'ADMISSION ET D'ECHAPPEMENT

Serial No. ;

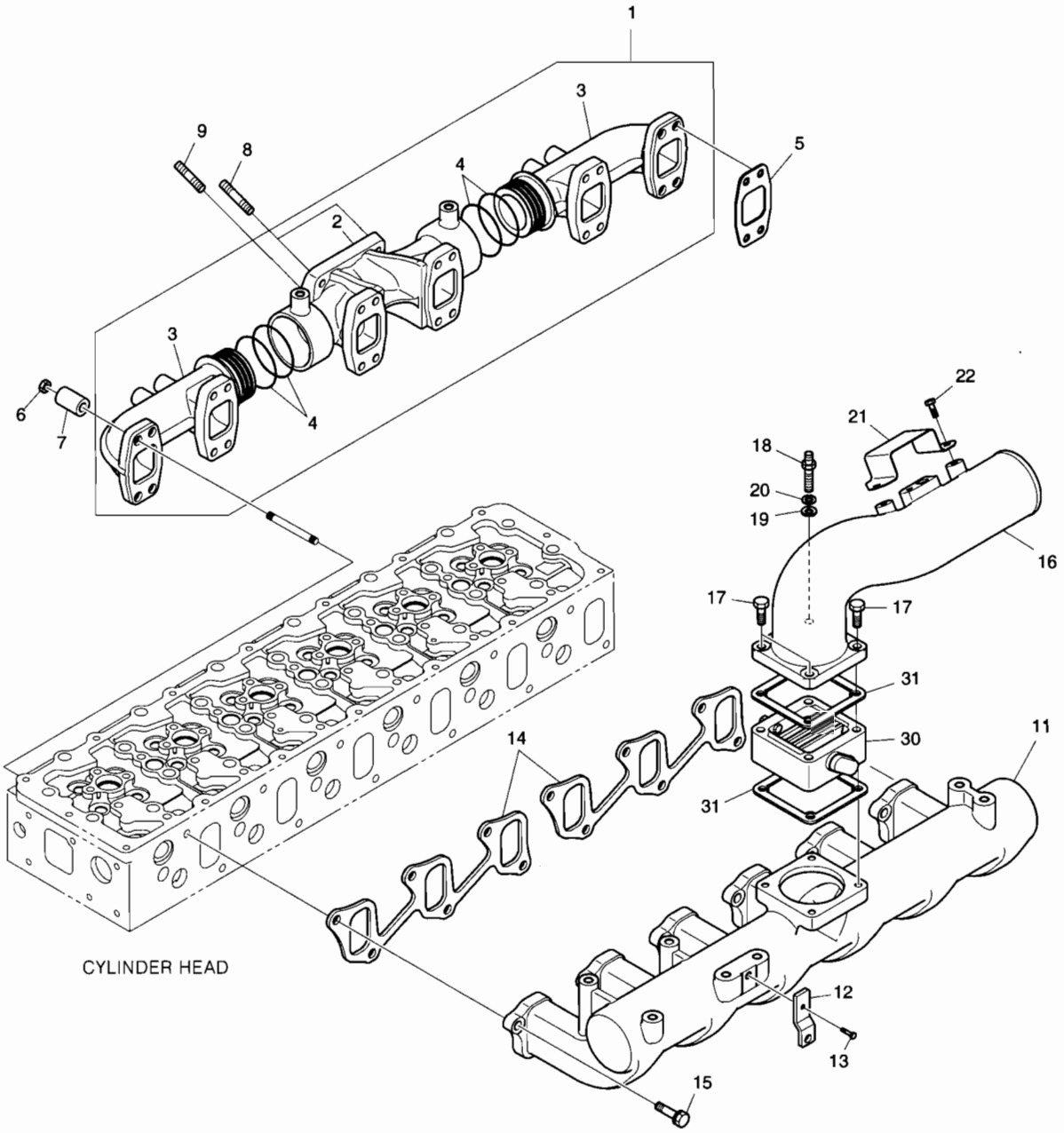

DATE	APR. 02, 2007
1st EDITION	

Fig. 026 INTAKE & EXHAUST MANIFOLD D'ADMISSION ET D'ECHAPPEMENT

Serial No. ;

Key No.	Part No.	Description	Description	Q'ty	S.C	Serial No.	ICA	Replaceable part	
								Part No.	Q'ty
026-1	65.08100-6088A	EXHAUST MANIFOLD ASS'Y	TUBULURE	1					
2	65.08101-0263	. MANIFOLD;EXHAUST	. TUBULURE	1					
3	65.08101-0264	. MANIFOLD;EXHAUST	. TUBULURE	2					
4	65.96507-0059	. RING;SEAL	. BAGUE D'ETANCHEITE	6					
5	65.08901-0045	GASKET;EXHAUST MANIFOLD	JOINT	6					
6	65.90535-0003	NUT	ECROU	24					
7	65.91701-0086	SPACER	BAGUE D'ECARTEMENT	24					
8	65.90201-0076	BOLT;STUD M10X1.25X30	BOULON DE GOUJON	2					
9	65.90201-0073	BOLT;STUD M10X1.25X25	BOULON DE GOUJON	2					
11	65.08201-5075	MANIFOLD;INTAKE	COLLECTEUR	1					
12	65.12303-0009	BRACKET;FUEL PIPE	SUPPORT	1					
13	06.01913-3213	BOLT ASS'Y M10X20	BOULON A 6 PANS	1					
14	65.08902-0030A	GASKET;INTAKE MANIFOLD	JOINT	2					
15	06.01923-3218	BOLT ASS'Y M10X35	BOULON A 6 PANS	12					
16	65.08202-0184	STAKE;INTAKE	TUBULURE D'ADIMISSION	1					
17	06.01923-3125	BOLT ASS'Y M8X70	BOULON A 6 PANS	3					
18	65.90201-0136	BOLT;STUD	GOUJON	1					
19	06.15010-2311	WASHER	RONDELLE	1					
20	06.16731-2107	WASHER	RONDELLE ELASTIQUE	1					
21	65.08204-0004	COVER	COUVERCLE	1					
22	06.01923-2910	BOLT ASS'Y M6X12	BOULON A 6 PANS	2					
30	65.26803-7028B	AIR HEATER	RECHAUFFEUR D'AIR	1					
31	65.09904-0008	GASKET;AIR HEATER	JOINT	2					

DATE	APR. 02, 2007
1st EDITION	

Fig. 027 TURBO CHARGER
CHARGEUR DE TURBO

Serial No. ;

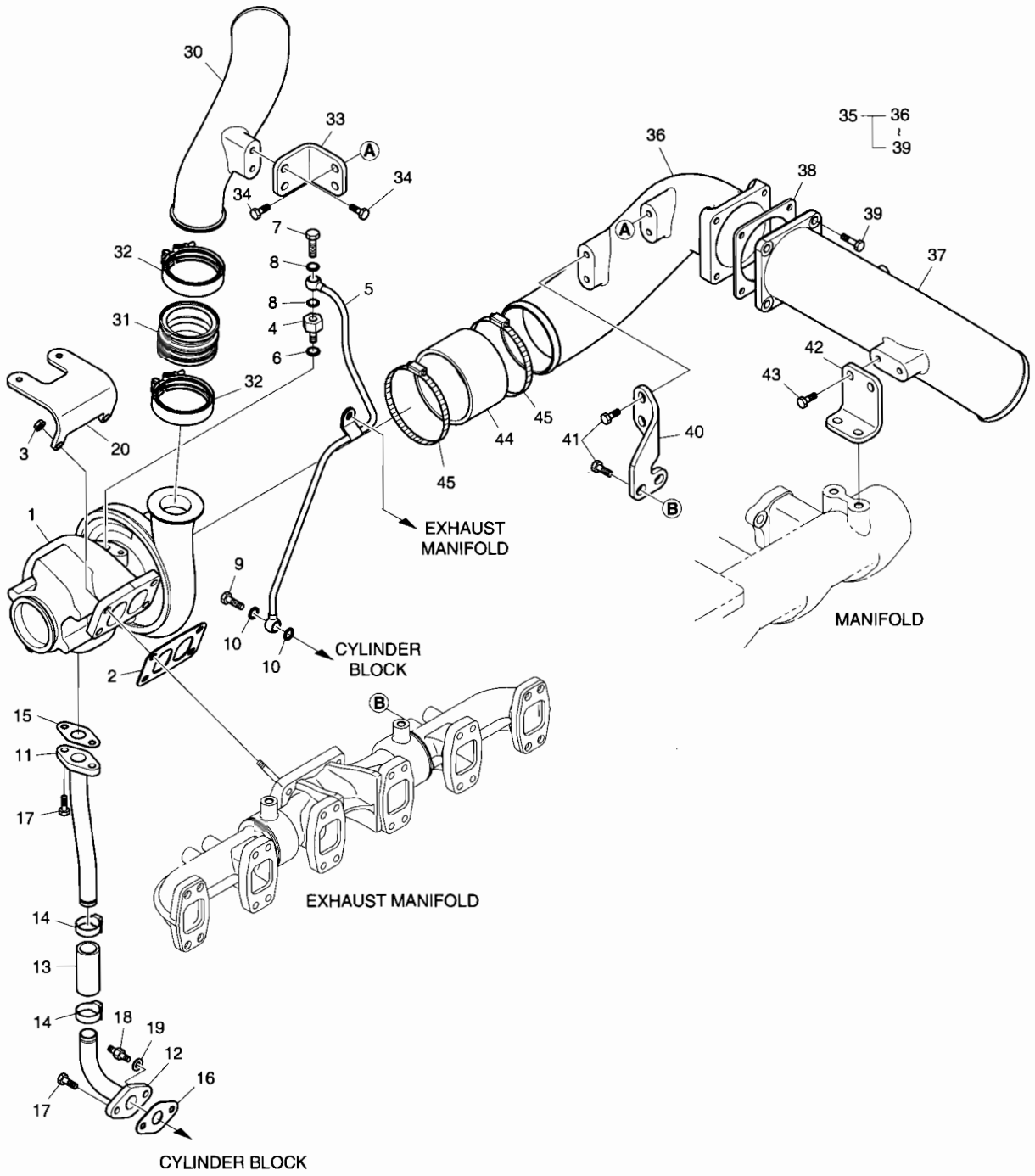

DATE	APR. 02, 2007
1st EDITION	

Fig. 027 TURBO CHARGER
CHARGEUR DE TURBO

Serial No. ;

Key No.	Part No.	Description	Description	Q'ty	S.C	Serial No.	ICA	Replaceable part	
								Part No.	Q'ty
027-1	65.09100-7110	TURBOCHARGER ASS'Y	TURBOCOMPRESSEUR	1					
2	65.09901-0018A	GASKET	JOINT	1					
3	65.90535-0001	NUT	ECROU 6 PANS	4					
4	65.98130-0200A	ADAPTER	ADAPTEUR	1					
5	65.05701-5567	PIPE;OIL	CONDUITES DE HUILE	1					
6	06.56190-0709	SEAL;RING	BAGUE D'ETANCHEITE	1					
7	06.78144-2403	HOLLOW SCREW M12X1.5	VIS CREUSE	1					
8	06.56190-0704	SEAL RING A12X18	BAGUE D'ETANCHEITE	2					
9	06.78144-2403	HOLLOW SCREW M12X1.5	VIS CREUSE	1					
10	06.56190-0704	SEAL RING A12X18	BAGUE D'ETANCHEITE	2					
11	65.05701-5568	PIPE;OIL	CONDUITES DE HUILE	1					
12	65.05701-5569	PIPE;OIL	CONDUITES DE HUILE	1					
13	65.96301-0327A	HOSE;RUBBER	TUYAU	1					
14	06.67020-0104	CLAMP;HOSE	COLLIER	2					
15	65.96601-0067	GASKET;T/C-PIPE	JOINT	1					
16	65.96601-0052	GASKET;PIPE-BLOCK	JOINT	1					
17	06.01913-3114	BOLT ASS'Y M8X22	BOULON A 6 PANS	3					
18	65.90201-0075	BOLT;SPACER	BOUCHON	1					
19	06.16731-2107	WASHER	RONDELLE ELASTIQUE	1					
20	65.09140-0005	BRACKET	SUPPORT	1					
30	65.09411-5095	PIPE;INLET	TUYAU	1					
31	65.96301-6003	HOSE;RUBBER	TUYAU FLEXIBLE	1					
32	65.97450-5003	CLAMP	COLLIER	2					
33	65.09440-0058	BRACKET	SUPPORT	1					
34	06.01923-3215	BOLT ASS'Y M10X25	BOULON A 6 PANS	4					
35	65.09411-7013	INLET PIPE ASS'Y	TUYAU D'ADMISSION	1					
36	65.09411-5104	. INLET	. PRISE	1					
37	65.09411-5103	. INLET	. PRISE	1					
38	65.09904-0009	. GASKET;AIR PIPE	. JOINT	1					
39	06.01923-3218	. BOLT ASS'Y M10X35	. BOULON A 6 PANS	4					
40	65.09440-0057	BRACKET	SUPPORT	1					
41	06.01923-3215	BOLT ASS'Y M10X25	BOULON A 6 PANS	4					
42	65.09440-0056	BRACKET	SUPPORT	1					
43	06.01923-3215	BOLT ASS'Y M10X25	BOULON A 6 PANS	4					
44	65.96301-0035	HOSE;RUBBER	TUYAU FLEXIBLE	1					
45	06.67020-0116	CLAMP;HOSE	TUYAU FLEXIBLE	2					

Fig. 028 INJECTOR
INJECTEUR

Serial No. ;

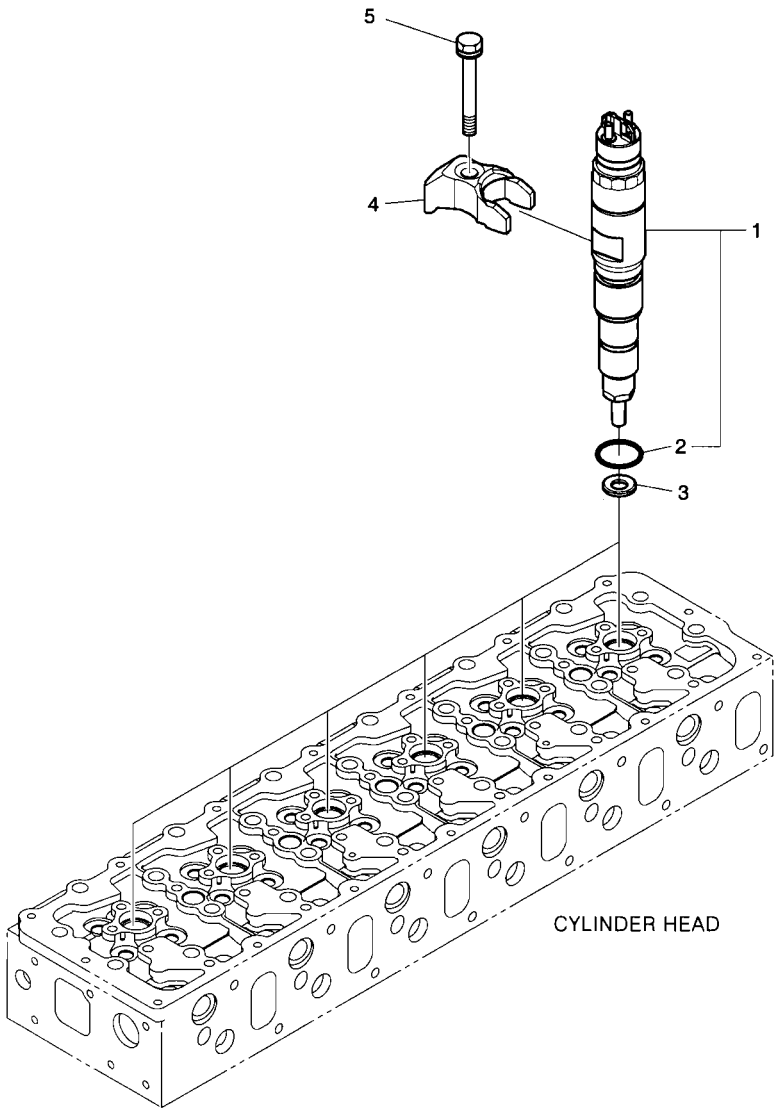

DATE	APR. 02, 2007
1st EDITION	

Fig. 028 INJECTOR INJECTEUR

Serial No. ;

Key No.	Part No.	Description	Description	Q'ty	S.C	Serial No.	ICA	Replaceable part	
								Part No.	Q'ty
028-1	65.10401-7004A	INJECTOR ASS'Y	INDICATEUR	6					
2	65.96501-0437	. O-RING	. JOINT TORIQUE	1					
3	65.96507-0053	RING;SEAL	BAGUE	6					
4	65.10205-0006	FIXTURE	SUPPORT	6					
5	65.90020-0136	BOLT;COLLARED HEX.	BOULON A 6 PANS	6					

DATE	APR. 02, 2007
1st EDITION	

Fig. 029 INJECTION PIPE
PIPE D'INJECTION

Serial No. ;

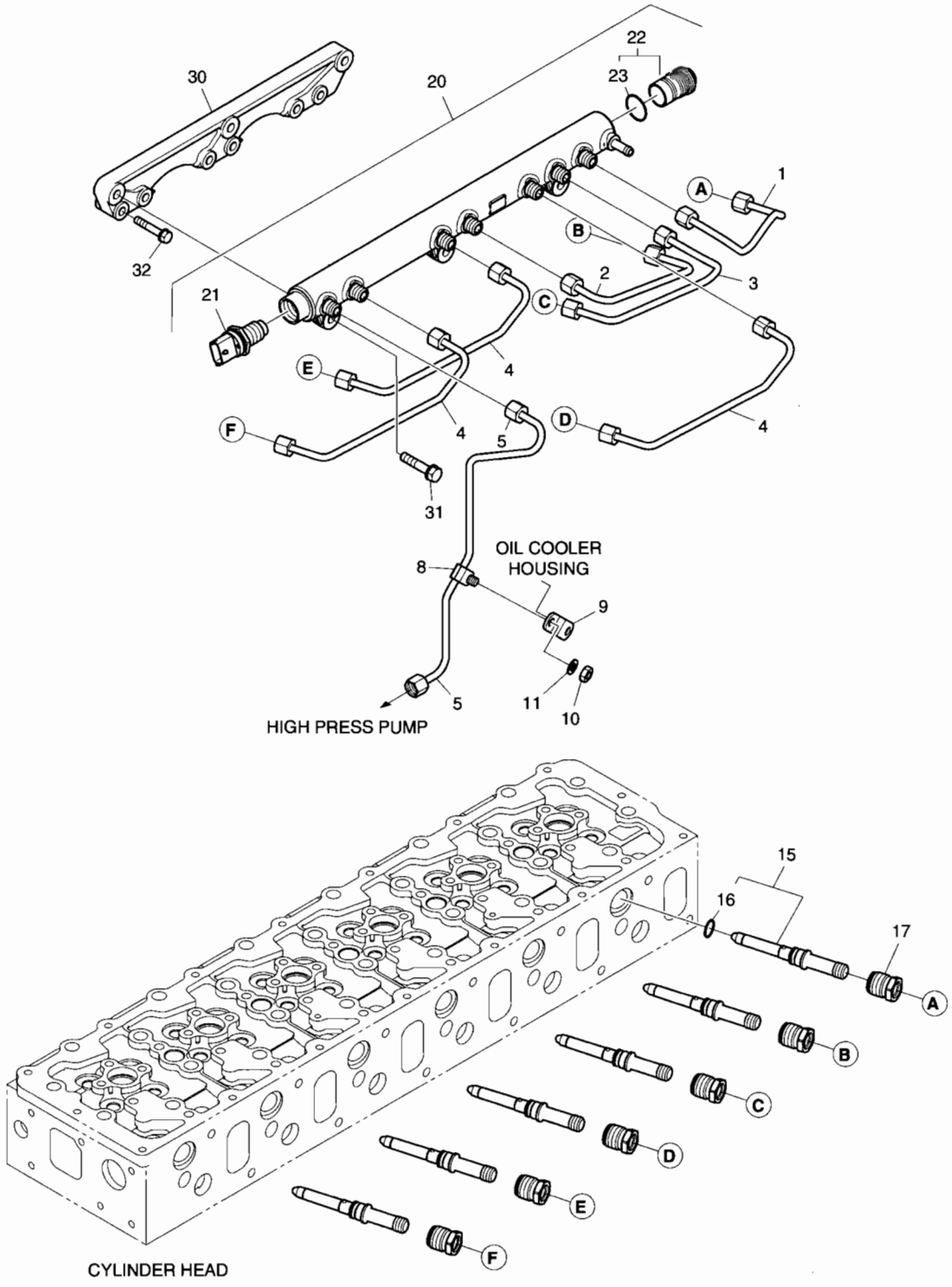

DATE	APR. 02, 2007
1st EDITION	

Fig. 029 INJECTION PIPE
PIPE D'INJECTION

Serial No. ;

Key No.	Part No.	Description	Description	Q'ty	S.C	Serial No.	ICA	Replaceable part	
								Part No.	Q'ty
029-1	65.10301-6191	PIPE;INJECTION	TUYAU D'INJECTEUR	1					
2	65.10301-6192	PIPE;INJECTION	TUYAU D'INJECTEUR	1					
3	65.10301-6193	PIPE;INJECTION	TUYAU D'INJECTEUR	1					
4	65.10301-6194	PIPE;INJECTION	TUYAU D'INJECTEUR	3					
5	65.10301-6195	PIPE;INJECTION	TUYAU D'INJECTEUR	1					
8	65.97401-6039	CLIP;PIPE	CLIP DE FIXATION	1					
9	65.97480-0220	HOLDER	SUPPORT	1					
10	06.11063-8214	NUT	ECROU 6 PANS	1					
11	06.16731-2107	WASHER	RONDELLE ELASTIQUE	1					
15	65.10410-6003A	H.P.CONNECTOR	CONNECTEUR	6					
16	65.96501-0438	. O-RING	. JOINT TORIQUE	1					
17	65.10415-0001	NUT	ECROU	6					
20	65.10601-6004A	COMMON RAIL ASS'Y	CHEMIN DE FER	1					
21	65.27114-5002	. SENSOR;RAIL PRESSURE	. SENSER;RAIL	1					
22	65.52122-6002	. VALVE;PRESSURE LIMITING	. VANNE	1					
23	65.96501-0431	.. O-RING	.. JOINT TORIQUE	1					
30	65.10610-0003	BRACKET;MOUNTING	SUPPORT	1					
31	06.01913-3118	BOLT ASS'Y M8X35	BOULON A 6 PANS	3					
32	06.01913-3119	BOLT ASS'Y M8X40	BOULON A 6 PANS	6					

DATE	APR. 02, 2007
1st EDITION	

Fig. 030 INJECTION PUMP
POMPE D'INJECTION

Serial No. ;

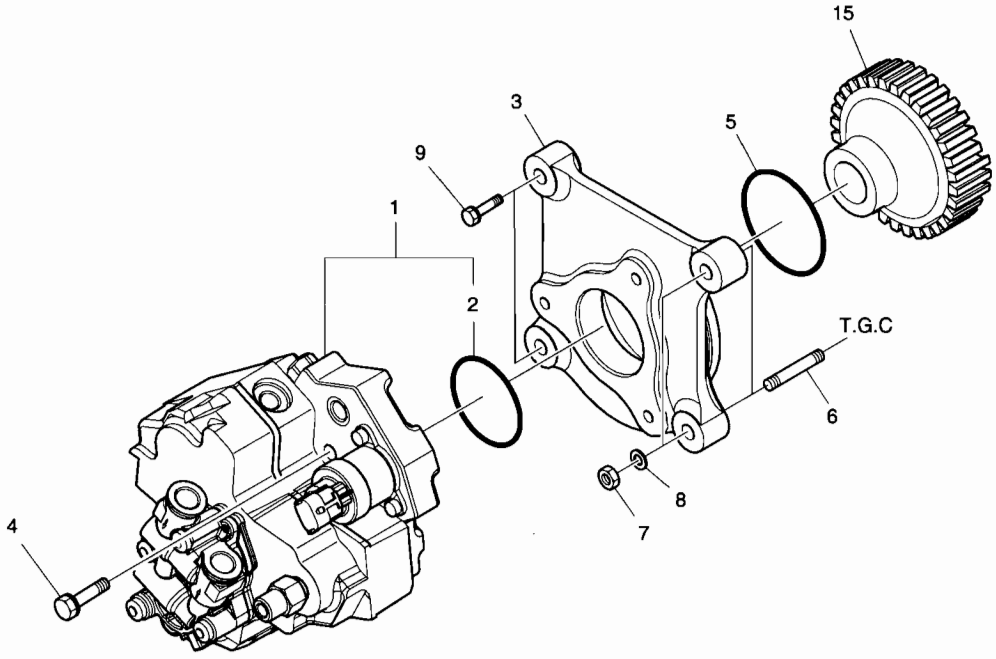

DATE	APR. 02, 2007
1st EDITION	

Fig. 030 INJECTION PUMP POMPE D'INJECTION

Serial No. ;

Key No.	Part No.	Description	Description	Q'ty	S.C	Serial No.	ICA	Replaceable part	
								Part No.	Q'ty
030-1	65.10501-7005A	PUMP;HIGH PRESSURE	POMPE	1					
2	65.96501-0439	. O-RING	. JOINT TORIQUE	1					
3	65.11304-0001	FLANGE;INJECTION PUMP	BRIDE	1					
4	65.90020-0121	BOLT;COLLARED HEX.	BOULON A 6 PANS	3					
5	06.56020-0115	O-RING	JOINT TORIQUE	1					
6	06.06125-8709	STUD BOLT M8X35	GOUJON	2					
7	06.11063-8214	NUT	ECROU 6 PANS	2					
8	06.16731-2107	WASHER	RONDELLE ELASTIQUE	2					
9	06.01923-3118	BOLT ASS'Y M8X35	BOULON 6 PANS	2					
15	65.11301-0038	GEAR;PUMP DRIVE	PIGNON	1					

Fig. 031 ENGINE CONTROL
COMMANDE REGIME MOTEUR

Serial No. ;

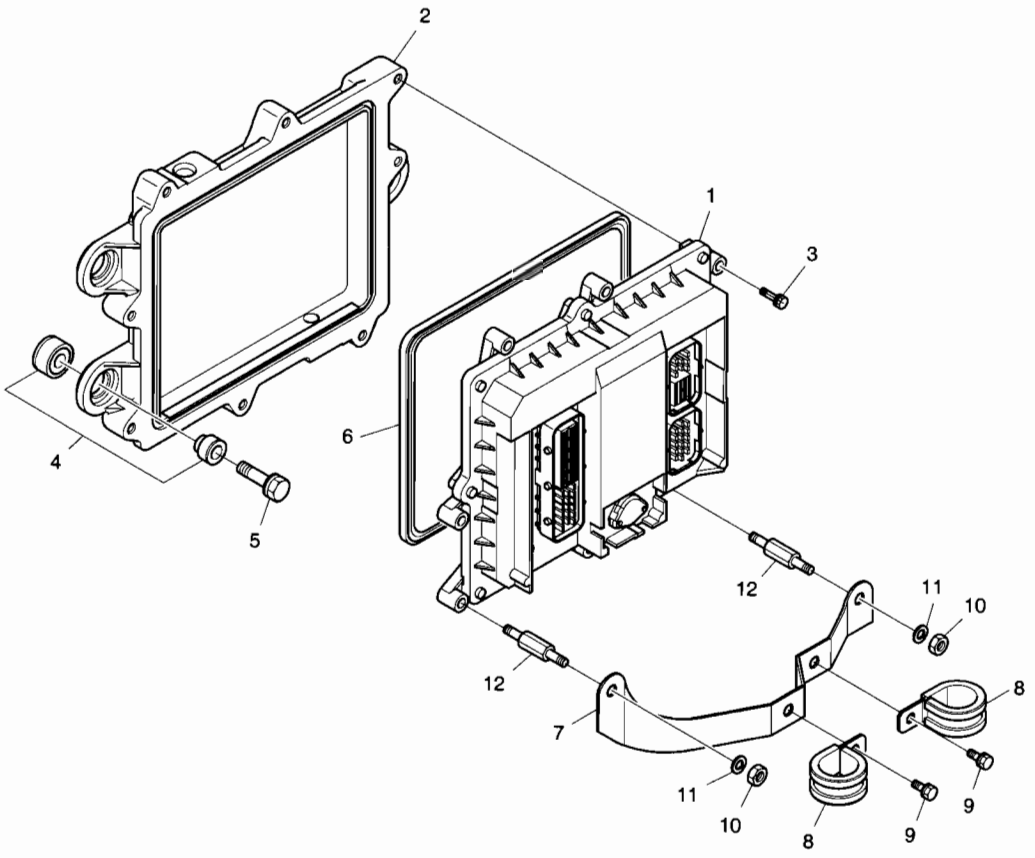

DATE	APR. 02, 2007
1st EDITION	

Fig. 031 ENGINE CONTROL
COMMANDE REGIME MOTEUR

Serial No. ;

Key No.	Part No.	Description	Description	Q'ty	S.C	Serial No.	ICA	Replaceable part	
								Part No.	Q'ty
031-1	65.99497-8674	E.C.U	E.C.U	1					
2	65.11210-0003A	PLATE;ECU	PLAQUE	1					
3	06.01923-2917	BOLT ASS'Y M6X30	BOULON A 6 PANS	6					
4	65.96210-6001A	RUBBER;CUSHION	LE CAOUTCHOUC DE	3					
5	65.90020-0095	BOLT;COLLARED HEX.	BOULON A 6 PANS	3					
6	65.96501-0102	PACKING	RONDELLE D'ETANCHEITE	1					
7	65.29150-5006	BRACKET	SUPPORT	1					
8	65.97401-0188	CLIP;PIPE	ATTACHE	2					
9	06.01923-2911	BOLT ASS'Y M6X16	ENSEMBLE BOULON	2					
10	06.11063-8212	NUT	ECROU 6 PANS M6	2					
11	06.16731-2106	WASHER	RONDELLE ELASTIQUE	2					
12	65.90441-0066	BOLT;SPACER	BOULON A 6 PANS	2					

Fig. 032 FUEL SYSTEM
INJECTEUR ET POMPE-INJECTEUR

Serial No. ;

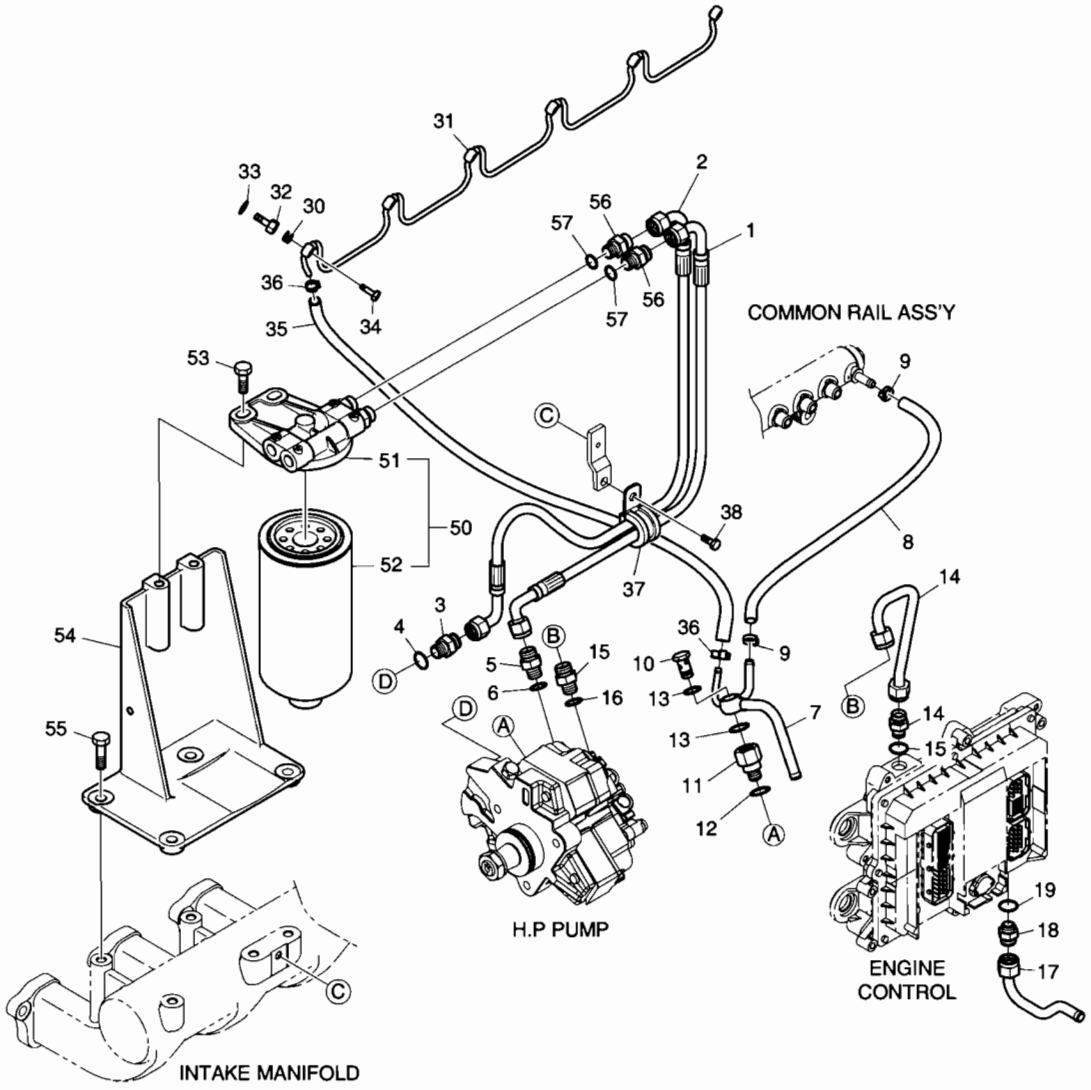

DATE	APR. 02, 2007
1st EDITION	

Fig. 032 FUEL SYSTEM
INJECTEUR ET POMPE-INJECTEUR

Serial No. ;

Key No.	Part No.	Description	Description	Q'ty	S.C	Serial No.	ICA	Replaceable part	
								Part No.	Q'ty
032-1	65.96340-5079	HOSE	TUYAU FLEXIBLE	1					
2	65.96340-5080	HOSE	TUYAU FLEXIBLE	1					
3	65.98130-0211	ADAPTER	ADAPTEUR	1					
4	06.56190-0704	SEAL RING A12X18	BAGUE D'ETANCHEITE	1					
5	65.98130-0229	ADAPTER	RACCORD ADAPTATEUR	1					
6	06.56190-0706	SEAL RING A14X20	BAGUE D'ETANCHEITE	1					
7	65.12301-5291	PIPE;FUEL	CONDUITE	1					
8	65.96330-0018	HOSE;RUBBER;RING JOINT	TUYAU CAOUTCHOUC	1					
9	65.97440-0045	CLAMP;HOSE	COLLIER	2					
10	06.78144-2204	HOLLOW SCREW NW10	VIS CREUSE	1					
11	65.98130-0159A	ADAPTER	ADAPTEUR	1					
12	06.56190-0704	SEAL RING A12X18	BAGUE D'ETANCHEITE	1					
13	06.56190-0706	SEAL RING A14X20	BAGUE D'ETANCHEITE	2					
14	65.12301-5289	PIPE;FUEL	CONDUITE	1					
15	65.98130-0229	ADAPTER	RACCORD ADAPTATEUR	2					
16	06.56190-0706	SEAL RING A14X20	BAGUE D'ETANCHEITE	2					
17	65.12301-5268	PIPE;FUEL	CONDUITE	1					
18	65.98130-0229	ADAPTER	RACCORD ADAPTATEUR	1					
19	06.56190-0706	SEAL RING A14X20	BAGUE D'ETANCHEITE	1					
30	65.96507-0055	RING;SEAL	BAGUE	6					
31	65.12301-5288A	PIPE;FUEL	CONDUITE	1					
32	65.98130-0154	ADAPTER	ADAPTEUR	6					
33	06.56180-0712	RING;SEAL	BAGUE D'ETANCHEITE	6					
34	65.98150-0042A	HOLLOW SCREW	VIS CREUSE	6					
35	65.96301-0462	HOSE;RUBBER	TUYAU FLEXIBLE	1					
36	65.97440-0045	CLAMP;HOSE	COLLIER	2					
37	65.97401-5019	CLIP;PIPE	ATTACHE	1					
38	06.01923-3111	BOLT M8X16	BOULON A 6 PANS	1					
50	65.12501-7042A	FUEL FILTER ASS'Y	ENSEMBLE FILTRE A	1					
51	65.12504-5027	. COVER;FUEL FILTER	. COUVERCLE	1					
52	65.12503-5026	. FILTER;FUEL	. FILTRE A GAZOLE	1					
53	06.01923-3217	BOLT ASS'Y M10X30	BOULON A 6 PANS	2					
54	65.12540-0057C	BRACKET;FUEL FILTER	SUPPORT	1					
55	06.01913-3216	BOLT M10X28	BOULON A 6 PANS	4					
56	65.98130-0229	ADAPTER	RACCORD ADAPTATEUR	2					
57	06.56190-0706	SEAL RING A14X20	BAGUE D'ETANCHEITE	2					

Fig. 033 ALTERNATOR MOUNTING
ALTERNATEUR

Serial No. ;

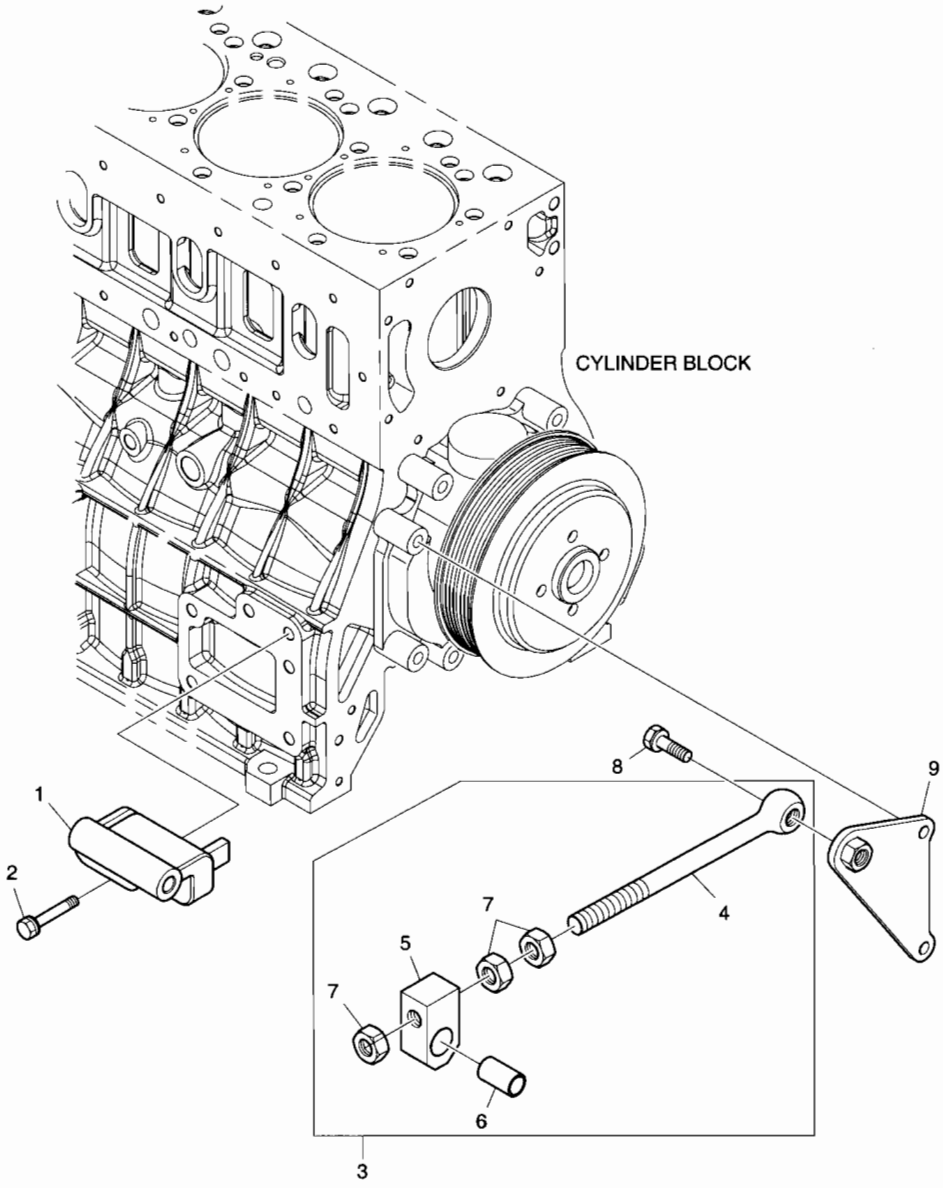

DATE	APR. 02, 2007
1st EDITION	

Fig. 033 ALTERNATOR MOUNTING ALTERNATEUR

Serial No. ;

Key No.	Part No.	Description	Description	Q'ty	S.C	Serial No.	ICA	Replaceable part	
								Part No.	Q'ty
033-1	65.19102-0096	BRACKET;ALTERNATOR	SUPPORT	1					
2	06.01943-3323	BOLT ASS'Y M12X1.5X60	BOULON 6 PANS	2					
3	65.19103-6010A	EYE BOLT ASS'Y	BOULON A 6PANS	1					
4	65.90441-0009A	. EYE BOLT	. BOUCHON A VIS	1	D				
5	65.19107-0001A	. PIECE;GUIDE	. GUIDE	1	D				
6	65.93020-0055	. BUSH	. AMPOULE	1	D				
7	06.11063-9217	. NUT	. ECROU 6 PANS	3					
8	06.01943-3319	BOLT ASS'Y M12X1.5X40	BOULON 6 A PANS	1					
9	65.19103-5049	SUPPORT;ALTERNATOR	SUPPORT D'ALTERNATEUR	1					

DATE	APR. 02, 2007
1st EDITION	

Fig. 034 LIFTING HOOK CROCHET DE LEVAGE

Serial No. ;

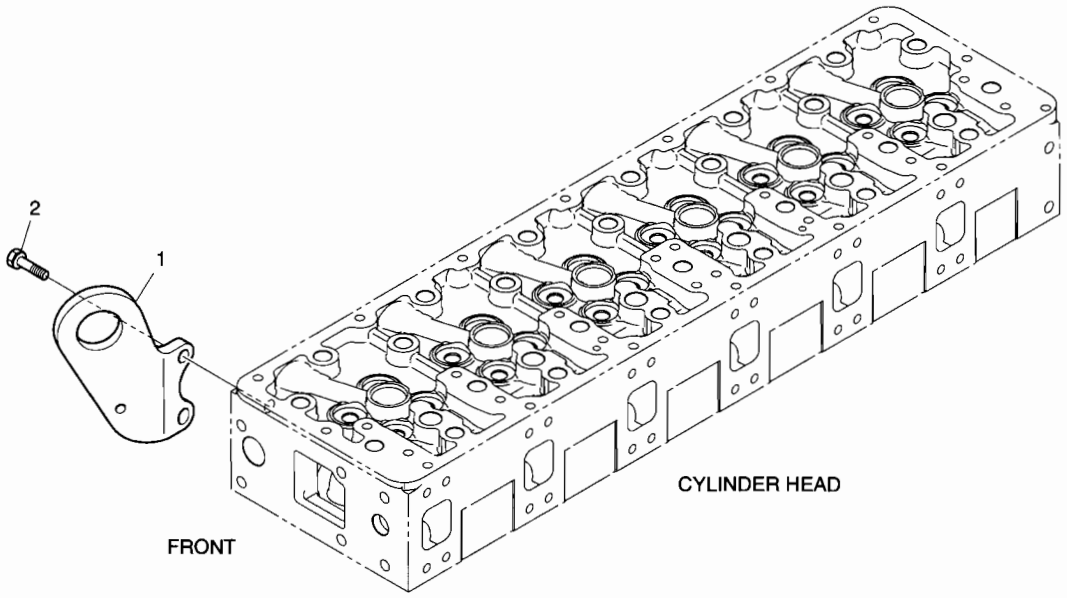

DATE	APR. 02, 2007
1st EDITION	

Fig. 034 LIFTING HOOK CROCHET DE LEVAGE

Serial No. ;

Key No.	Part No.	Description	Description	Q'ty	S.C	Serial No.	ICA	Replaceable part	
								Part No.	Q'ty
034-1	65.19202-0057A	HOOK;LIFTING	CROCHET	1					
2	06.01924-3217	BOLT ASS'Y M10X30	BOULON A 6PANS	2					

Fig. 035 STARTER DEMARREUR

Serial No. ;

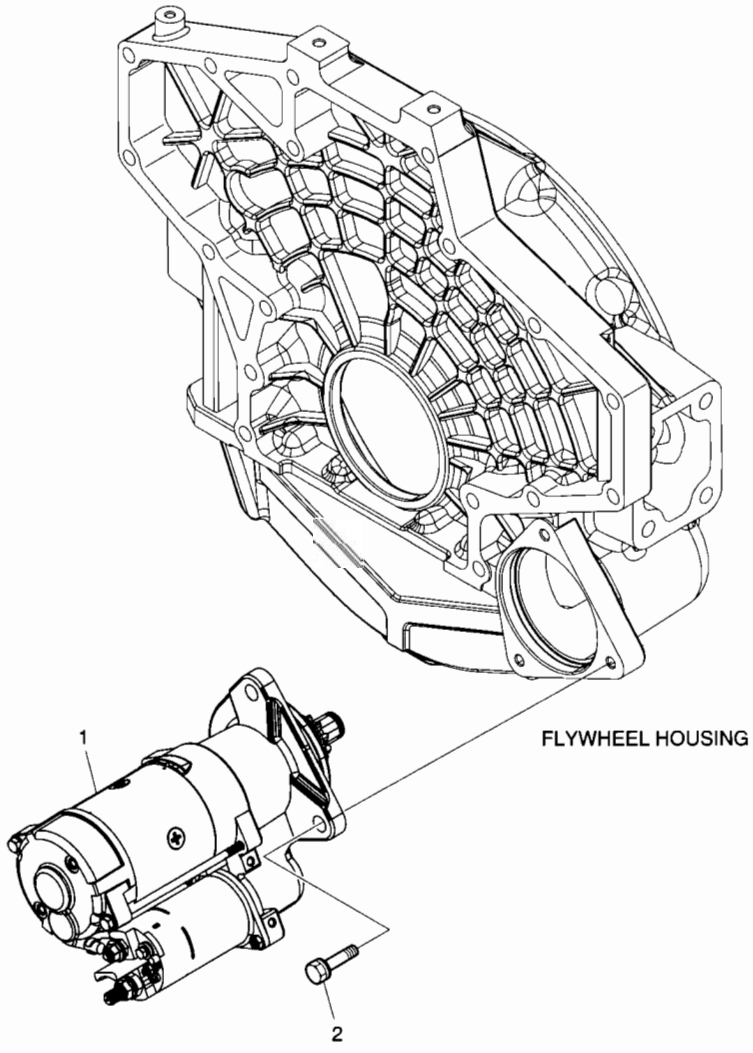

DATE	APR. 02, 2007
1st EDITION	

Fig. 035 STARTER DEMARREUR

Serial No. ;

Key No.	Part No.	Description	Description	Q'ty	S.C	Serial No.	ICA	Replaceable part	
								Part No.	Q'ty
35-1	65.26201-7075A	STARTER	D'MARREUR	1					
2	06.01953-3318	BOLT ASS'Y M12X1.5X35	BOULON A 6 PANS	3					

Fig. 036 SENSOR CAPTEUR

Serial No. ;

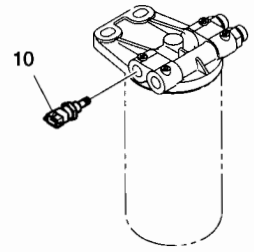

FUEL FILTER

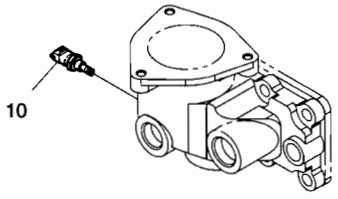

THERMOSTAT HOUSING

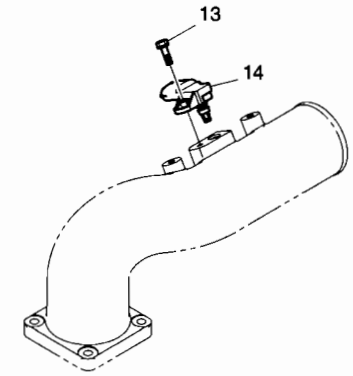

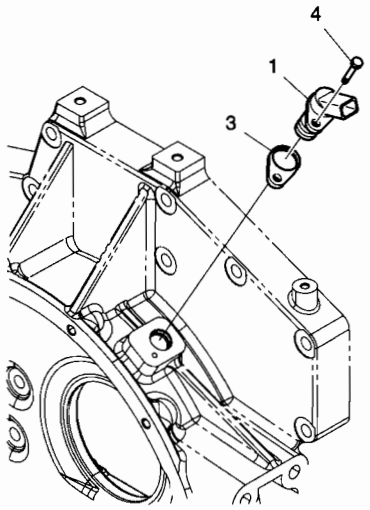

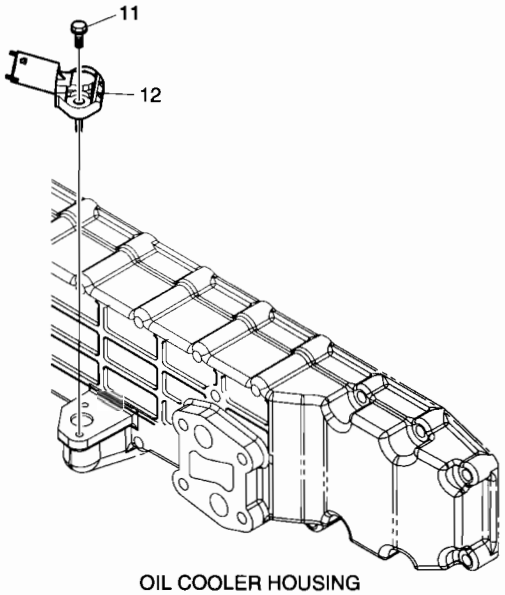

OIL COOLER HOUSING

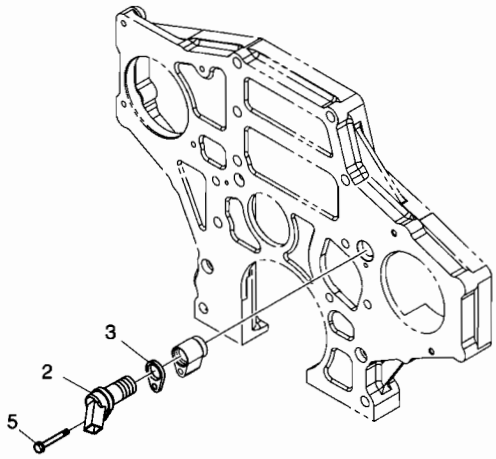

DATE	APR. 02, 2007
1st EDITION	

Fig. 036 SENSOR CAPTEUR

Serial No. ;

Key No.	Part No.	Description	Description	Q'ty	S.C	Serial No.	ICA	Replaceable part	
								Part No.	Q'ty
036-1	65.27103-7014	SENSOR	CAPTEUR	1					
2	65.27103-7014	SENSOR	CAPTEUR	1					
3	65.11308-0005	SHIM	ENTERTOISE	2	R				
	65.11308-0006	SHIM	ENTERTOISE	2	R				
	65.11308-0007	SHIM	ENTERTOISE	2	R				
	65.11308-0008	SHIM	ENTERTOISE	2	R				
4	06.01923-2913	BOLT ASS'Y M6X20	BOULON A 6 PANS	1					
5	06.01923-2919	BOLT ASS'Y M6X40	BOULON A 6 PANS	1					
10	65.27423-7003	SENSOR;WATER TEMP	CAPTEUR	2					
11	06.01923-2913	BOLT ASS'Y M6X20	BOULON A 6 PANS	2					
12	65.27427-7001	SENSOR;OIL PRESSURE	CAPTEUR	1					
13	06.01923-2913	BOLT ASS'Y M6X20	BOULON A 6 PANS	1					
14	65.27444-7001	SENSOR;BOOST PRESSURE	CAPTEUR	1					

Fig. 037 WIRE HARNESS
JAGUE DE NIVEAU

Serial No. ;

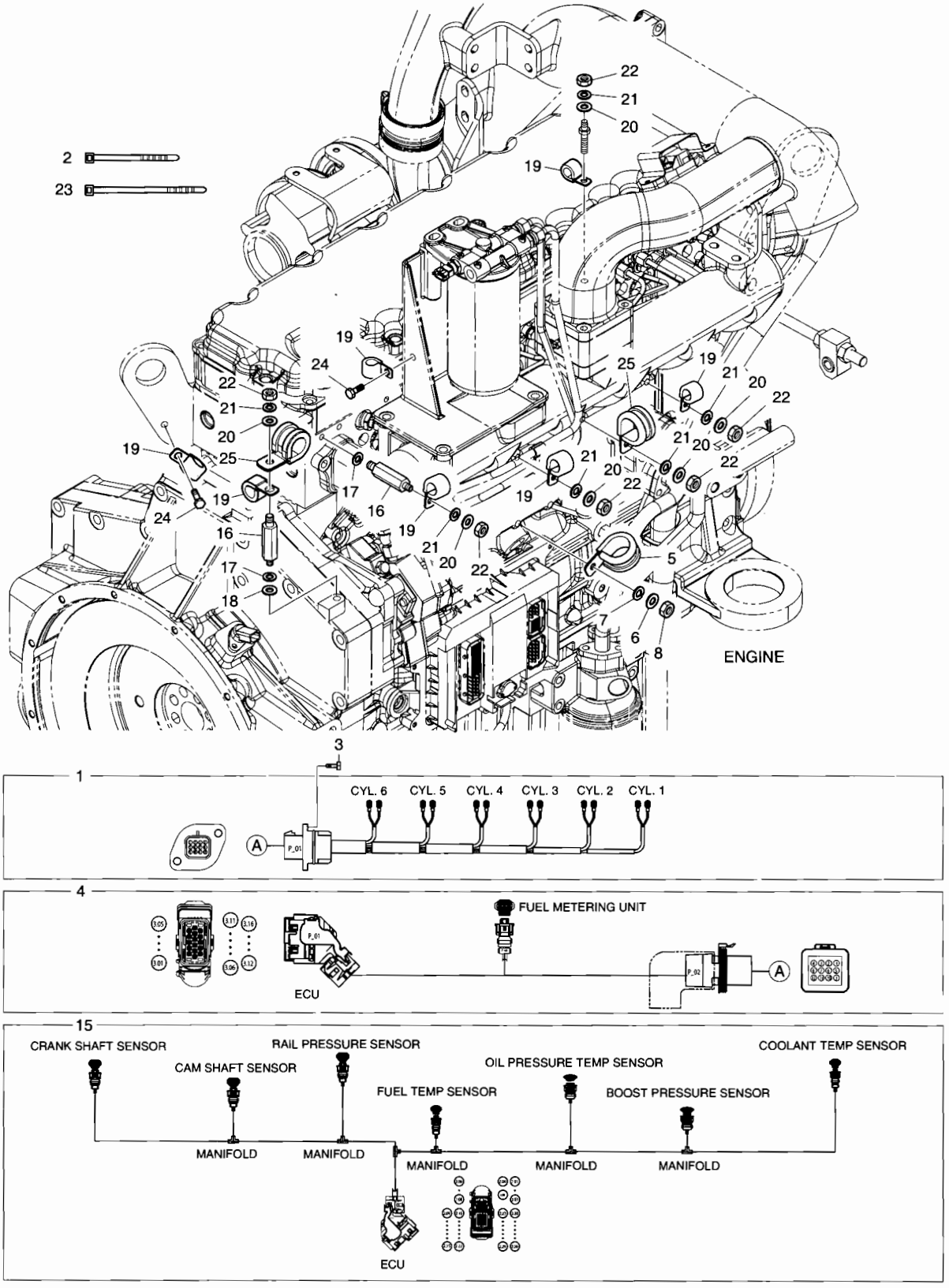

DATE	APR. 02, 2007
1st EDITION	

Fig. 037 WIRE HARNESS
JAGUE DE NIVEAU

Serial No. ;

Key No.	Part No.	Description	Description	Q'ty	S.C	Serial No.	ICA	Replaceable part	
								Part No.	Q'ty
037-1	65.29101-6184B	WIRE;ELECTRIC	FIL	1					
2	65.97460-0008	BAND;TENSION	JAGUE DE NIVEAU	5					
3	06.01913-2911	BOLT ASS'Y M6X16	BOULON A 6 PANS	2					
4	65.29101-6201A	WIRE;ELECTRIC	FIL	1					
5	65.97401-0188	CLIP;PIPE	ATTACHE	1					
6	06.15010-2311	WASHER	RONDELLE	1					
7	06.16731-2107	WASHER	RONDELLE ELASTIQUE	1					
8	06.11063-8214	NUT	ECROU 6 PANS	1					
15	65.29101-6209	WIRE;ELECTRIC	FIL	1					
16	65.90201-0128	BOLT;STUD	BOULON A 6 PANS	2					
17	06.16731-2107	WASHER	RONDELLE ELASTIQUE	2					
18	06.15010-2311	WASHER	RONDELLE	1					
19	65.97401-0196	CLIP;PIPE	CLIP DE FIXATION	7					
20	06.15010-2311	WASHER	RONDELLE	6					
21	06.16731-2107	WASHER	RONDELLE ELASTIQUE	6					
22	06.11063-8214	NUT	ECROU 6 PANS	6					
23	65.97460-0005	BAND;TENSION	ATTACHE DE TUYAU	2					
24	06.01923-3111	BOLT ASS'Y M8X16	BOULON A 6 PANS	2					
25	65.97401-5024	CLIP;PIPE	ATTACHE	2					

Fig. 038 ENGINE MOUNTING
SUPPORT DE MOTEUR

Serial No. ;

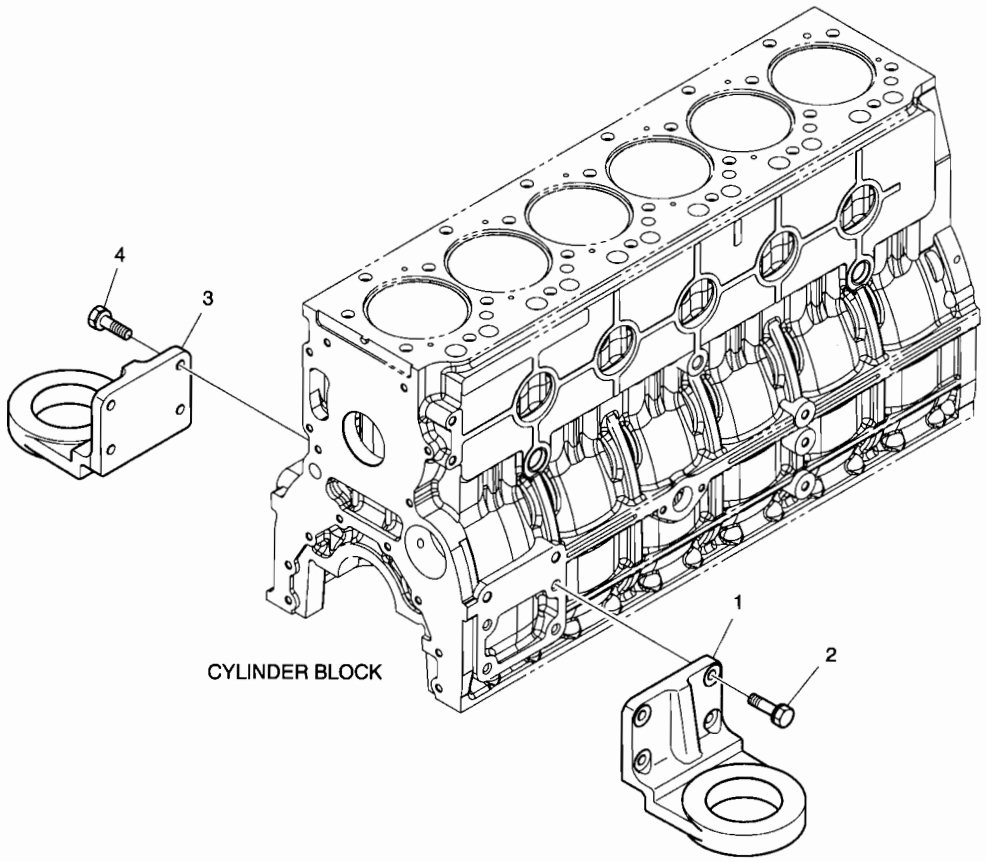

DATE	APR. 02, 2007
1st EDITION	

Fig. 038 ENGINE MOUNTING SUPPORT DE MOTEUR

Serial No. ;

Key No.	Part No.	Description	Description	Q'ty	S.C	Serial No.	ICA	Replaceable part	
								Part No.	Q'ty
038-1	65.41530-0186	BRACKET;FRONT MOUNTING	SUPPORT	1					
2	06.01924-3217	BOLT ASS'Y M10X30	BOULON A 6PANS	4					
3	65.41530-0186	BRACKET;FRONT MOUNTING	SUPPORT	1					
4	06.01924-3217	BOLT ASS'Y M10X30	BOULON A 6PANS	4					

DATE	APR. 02, 2007
1st EDITION	

Fig. 039 AIR COMPRESSOR
COMPRESSEUR D'AIR

Serial No. ;

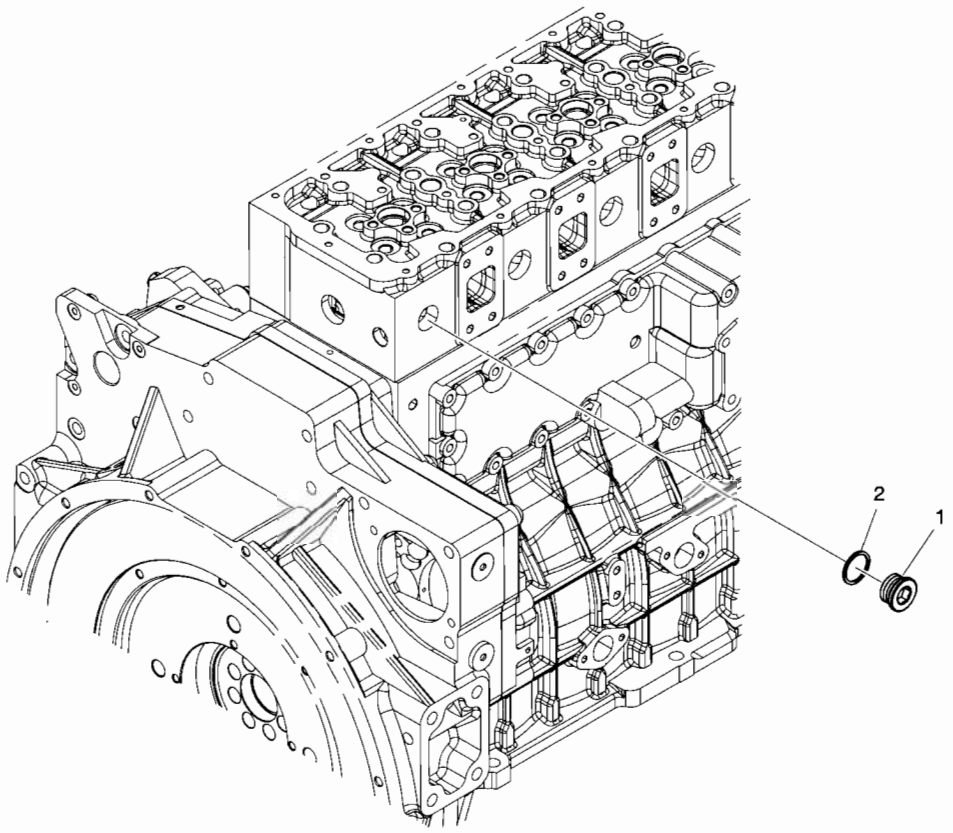

DATE	APR. 02, 2007
1st EDITION	

Fig. 039 AIR COMPRESSOR COMPRESSEUR D'AIR

Serial No. ;

Key No.	Part No.	Description	Description	Q'ty	S.C	Serial No.	ICA	Replaceable part	
								Part No.	Q'ty
039-1	65.90310-0135	PLUG;SCREW	BOUCHON A VIS	1					
2	06.56190-0705	RING;SEAL A14X18	ENSEMBLE BAGUE	1					

DATE	APR. 02, 2007
1st EDITION	

Fig. 040 OVERHAUL GASKET KIT - ALL
KIT DE GARNITURE DE REVISION

Serial No. ;

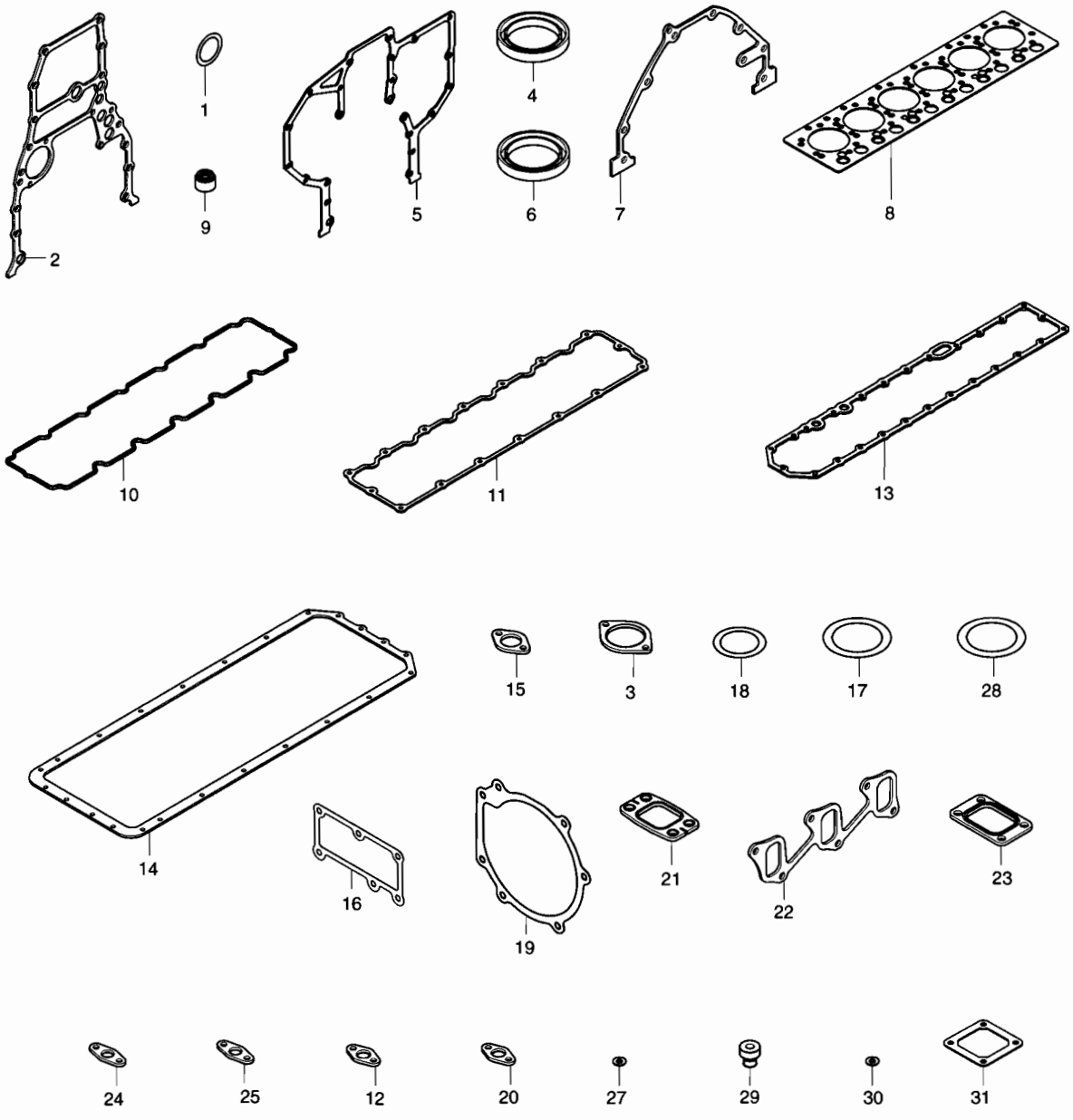

DATE	APR. 02, 2007
1st EDITION	

Fig. 040 OVERHAUL GASKET KIT - ALL
KIT DE GARNITURE DE REVISION

Serial No. ;

Key No.	Part No.	Description	Description	Q'ty	S.C	Serial No.	ICA	Replaceable part	
								Part No.	Q'ty
040--	65.99601-8071	ALL OVERHAUL GASKET KIT	TOUS REVISENT LE KIT DE	1					
1	06.56021-0102	. O-RING	. JOINT TORIQUE	1					
2	65.01903-0034	. GASKET	. JOINT	1					
3	65.38901-0018A	. GASKET;PTO	. JOINT	1					
4	65.01510-0040	. SEAL;OIL	. JOINT D'HUILE	1					
5	65.01904-0032	. GASKET	. JOINT	1					
6	65.01510-0157	. SEAL;OIL	. JOINT D'HUILE	1					
7	65.01905-0009	. GASKET	. JOINT	1					
8	65.03901-0071	. GASKET;CYLINDER HEAD	. JOINT	1					
9	65.03905-5002	. PACKING;CYLHEAD COVER	. JOINT	14					
10	65.03905-0037A	. GASKET;CYLHEAD COVER	. JOINT	1					
11	65.03905-0041	. GASKET;CYLHEAD COVER	. JOINT	1					
12	65.05903A0001	. GASKET	. JOINT	4					
13	65.05902-0023	. GASKET;OIL COOLER	. JOINT	1					
14	65.05904-0035	. GASKET;OIL PAN	. JOINT	1					
15	65.05901-0027	. GASKET;OIL FILTER	. JOINT	1					
16	65.06904-0020	. GASKET;THERMOSTAT	. JOINT	1					
17	65.06904-0003	. GASKET;THERMOSTAT	. JOINT	1					
18	65.96501-0099A	. O-RING	. JOINT TORIQUE	2					
19	65.06901-0042	. GASKET;WATER PUMP	. JOINT	1					
20	65.06903-0029	. GASKET;WATER PIPE	. JOINT	1					
21	65.08901-0045	. GASKET;EXHAUST MANIFOL	. JOINT	6					
22	65.08902-0030A	. GASKET;INTAKE MANIFOLD	. JOINT	2					
23	65.09901-0018A	. GASKET	. JOINT	1					
24	65.96601-0067	. GASKET;T/C OIL RETURN	. JOINT	1					
25	65.96601-0052	. GASKET(M/G OIL COOLER)	. JOINT	1					
27	65.96507-0053	. RING;SEAL	. BAGUE	6					
28	06.56020-0115	. O-RING	. JOINT TORIQUE	1					
29	65.96210-6001A	. RUBBER;CUSHION	. CUSHION;RUBBER	3					
30	06.56180-0712	. RING;SEAL A8X14	. BAGUE D'ETANCHEITE	18					
31	65.09904-0008	. GASKET;AIR HEATER	. JOINT	2					

DATE	APR. 02, 2007
1st EDITION	

Fig. 041 OVERHAUL GASKET KIT - TOP
KIT DE GARNITURE DE REVISION

Serial No. ;

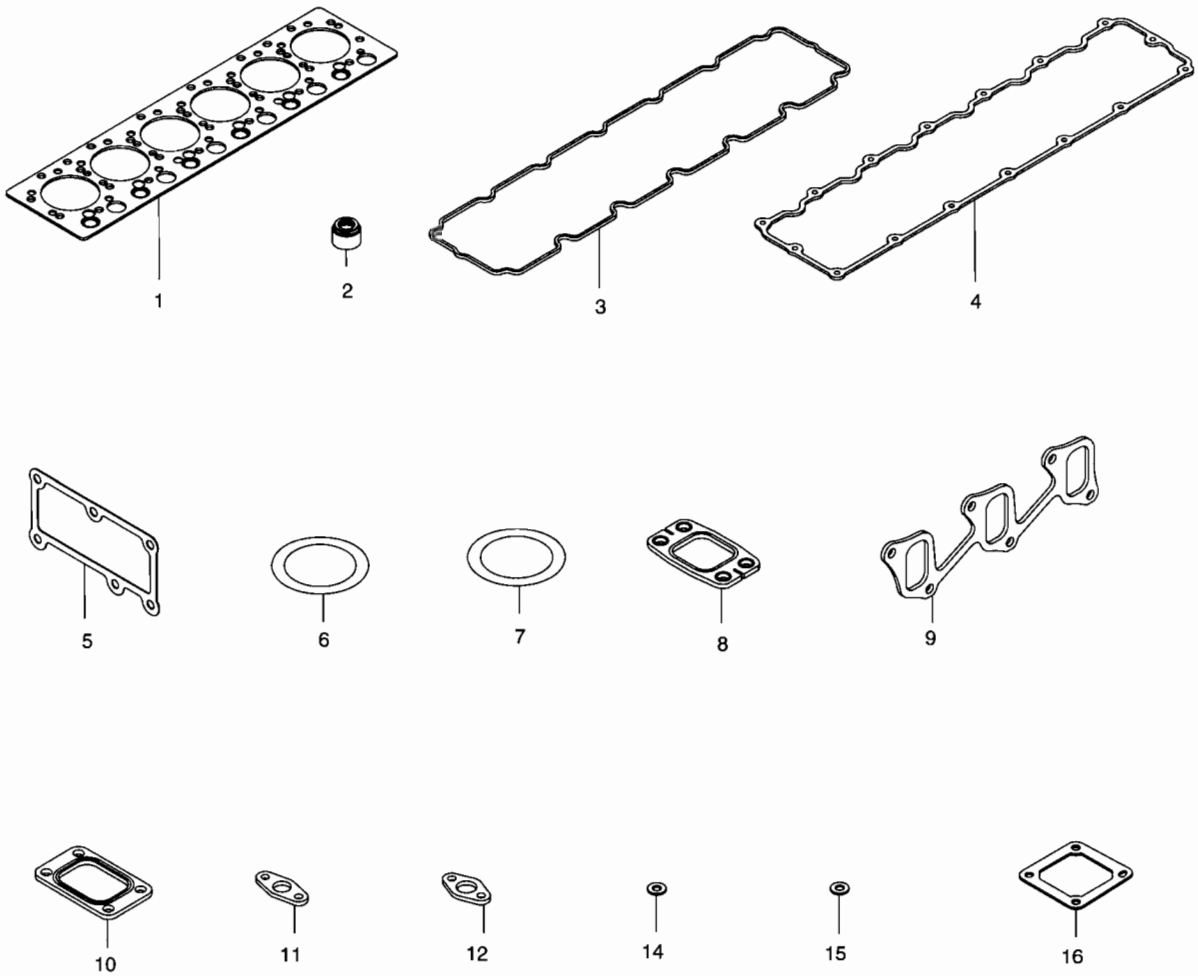

DATE	APR. 02, 2007
1st EDITION	

Fig. 041 OVERHAUL GASKET KIT - TOP
KIT DE GARNITURE DE REVISION

Serial No. ;

Key No.	Part No.	Description	Description	Q'ty	S.C	Serial No.	ICA	Replaceable part	
								Part No.	Q'ty
041--	65.99605-8042	TOP OVERHAUL GASKET KIT	TOUS REVISENT LE KIT DE	1					
1	65.03901-0071	. GASKET;CYLINDER HEAD	. JOINT	1					
2	65.03905-5002	. PACKING;CYLHEAD COVER	. JOINT	14					
3	65.03905-0037A	. GASKET;CYLHEAD COVER	. JOINT	1					
4	65.03905-0041	. GASKET;CYLHEAD COVER	. JOINT	1					
5	65.06904-0020	. GASKET;THERMOSTAT	. JOINT	1					
6	65.06904-0003	. GASKET;THERMOSTAT	. JOINT	1					
7	65.96501-0099A	. O-RING	. JOINT TORIQUE	2					
8	65.08901-0045	. GASKET;EXHAUST MANIFOL	. JOINT	6					
9	65.08902-0030A	. GASKET;INTAKE MANIFOLD	. JOINT	2					
10	65.09901-0018A	. GASKET	. JOINT	1					
11	65.96601-0067	. GASKET;T/C OIL RETURN	. JOINT	1					
12	65.96601-0052	. GASKET(M/G OIL COOLER)	. JOINT	1					
14	65.96507-0053	. RING;SEAL	. BAGUE	6					
15	06.56180-0712	. RING;SEAL A8X14	. BAGUE D'ETANCHEITE	18					
16	65.09904-0008	. GASKET;AIR HEATER	. JOINT	2					

DATE	APR. 02, 2007
1st EDITION	

Fig. 1100 MAIN FRAME
ARMATURE PRINCIPALE

Serial No. ;

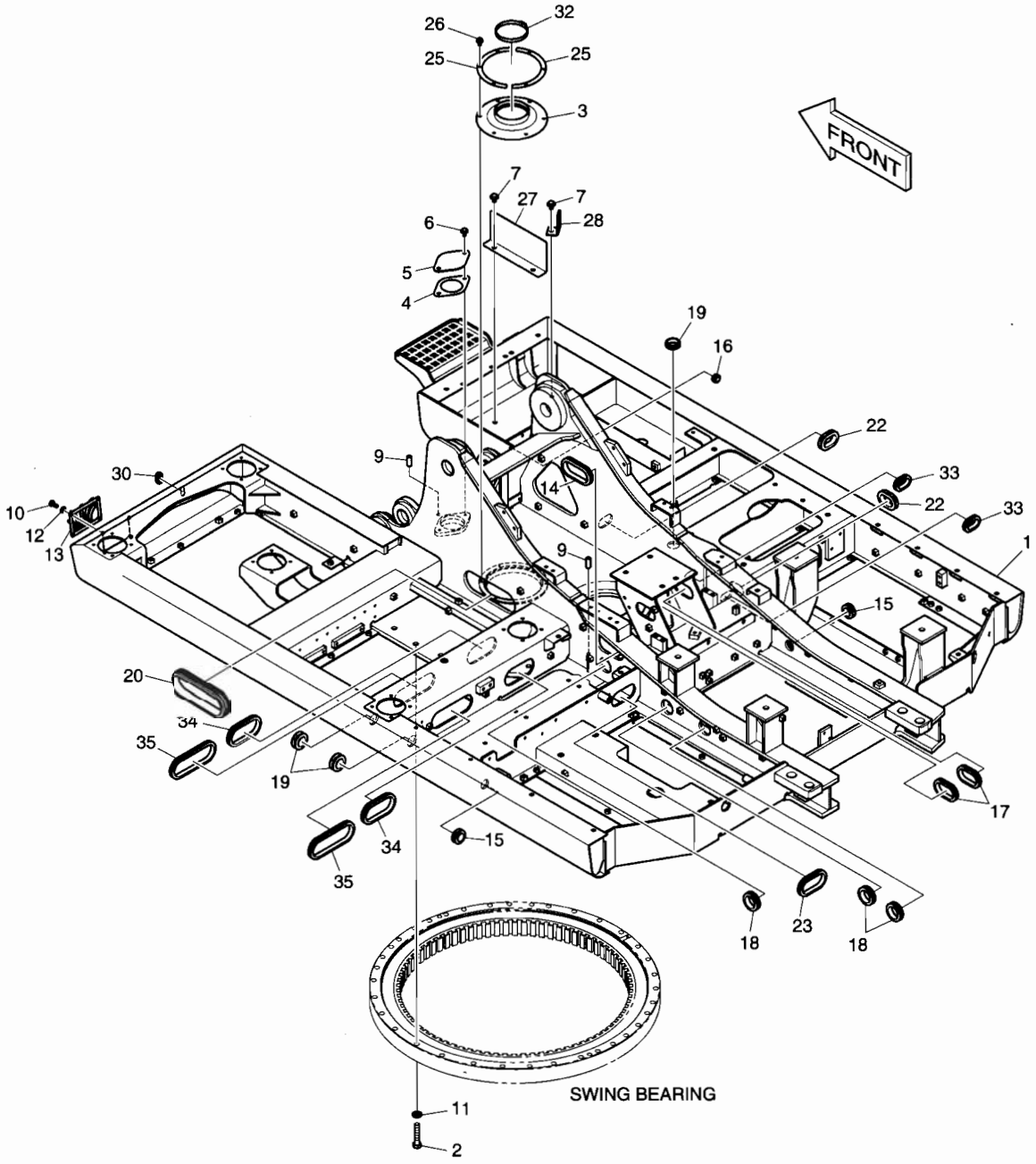

DATE	APR. 02, 2007
1st EDITION	

Fig. 1100 MAIN FRAME ARMATURE PRINCIPALE

Serial No. ;

Key No.	Part No.	Description	Description	Q'ty	S.C	Serial No.	ICA	Replaceable part	
								Part No.	Q'ty
1100--	K1017778E	MAIN FRAME ASS'Y	ARMATURE PRINCIPALE	-	D				
1	K1017779E	FRAME;MAIN	ARMATURE PRINCIPALE	1					
2	S0570866	BOLT	BOULON	36					
3	160-00068	COVER;RUBBER	COUVERCLE	1					
4	180-00463	PACKING	EMBALLAGE	1					
5	621-02938B	COVER	COUVERCLE	1					
6	DS0025023	BOLT;SET	BOULON	2					
7	DS0025015	BOLT;SET	BOULON	3					
9	2123-1107D7	PIN;KNOCK	GOUPILLE	2					
10	S0508866	BOLT	BOULON	4					
11	2114-9012A	WASHER;HARDEN	RONDELLE	36					
12	S5010513	WASHER	RONDELLE	4					
13	621-02800	GUARD;LAMP	GARDE	1					
14	DS7601045	BUSHING;RUBBER	DOUILLE EN CAOUTCHOUC	1					
15	2160-1004D44	BUSHING;RUBBER	DOUILLE EN CAOUTCHOUC	2					
16	2160-1004D48	BUSHING;RUBBER	DOUILLE EN CAOUTCHOUC	1					
17	DS7601031	RUBBER;BUSHING	CAOUTCHOUC	2					
18	2160-1004D34	BUSHING;RUBBER	DOUILLE EN CAOUTCHOUC	3					
19	2160-1004D58	GROMMET	CANON ISOLANT	3					
20	2160-1201D15	BUSHING;RUBBER	DOUILLE EN CAOUTCHOUC	1					
22	DS7601040	BUSHING;RUBBER	DOUILLE EN CAOUTCHOUC	2					
23	DS7601020	BUSHING;RUBBER	DOUILLE EN CAOUTCHOUC	1					
25	191-02990B	PLATE	PLAQUE	2					
26	K1001029	BOLT	BOULON	6					
27	191-02987B	PLATE	PLAQUE	1					
28	195-02623B	BRACKET	SUPPORT	1					
30	160-00081	CAP;RUBBER	CHAPEAU	1					
32	S8470165	CLAMP;HOSE	COLLIER DE LA CONDUITE	1					
33	DS7601047	BUSHING;RUBBER	DOUILLE EN CAOUTCHOUC	2					
34	2160-1201D17	BUSHING;RUBBER	DOUILLE EN CAOUTCHOUC	2					
35	DS7601021	BUSHING;RUBBER	DOUILLE EN CAOUTCHOUC	2					

DATE	APR. 02, 2007
1st EDITION	

Fig. 1110 COUNTER WEIGHT
MASSE D'EQUILIBRAGE

Serial No. ;

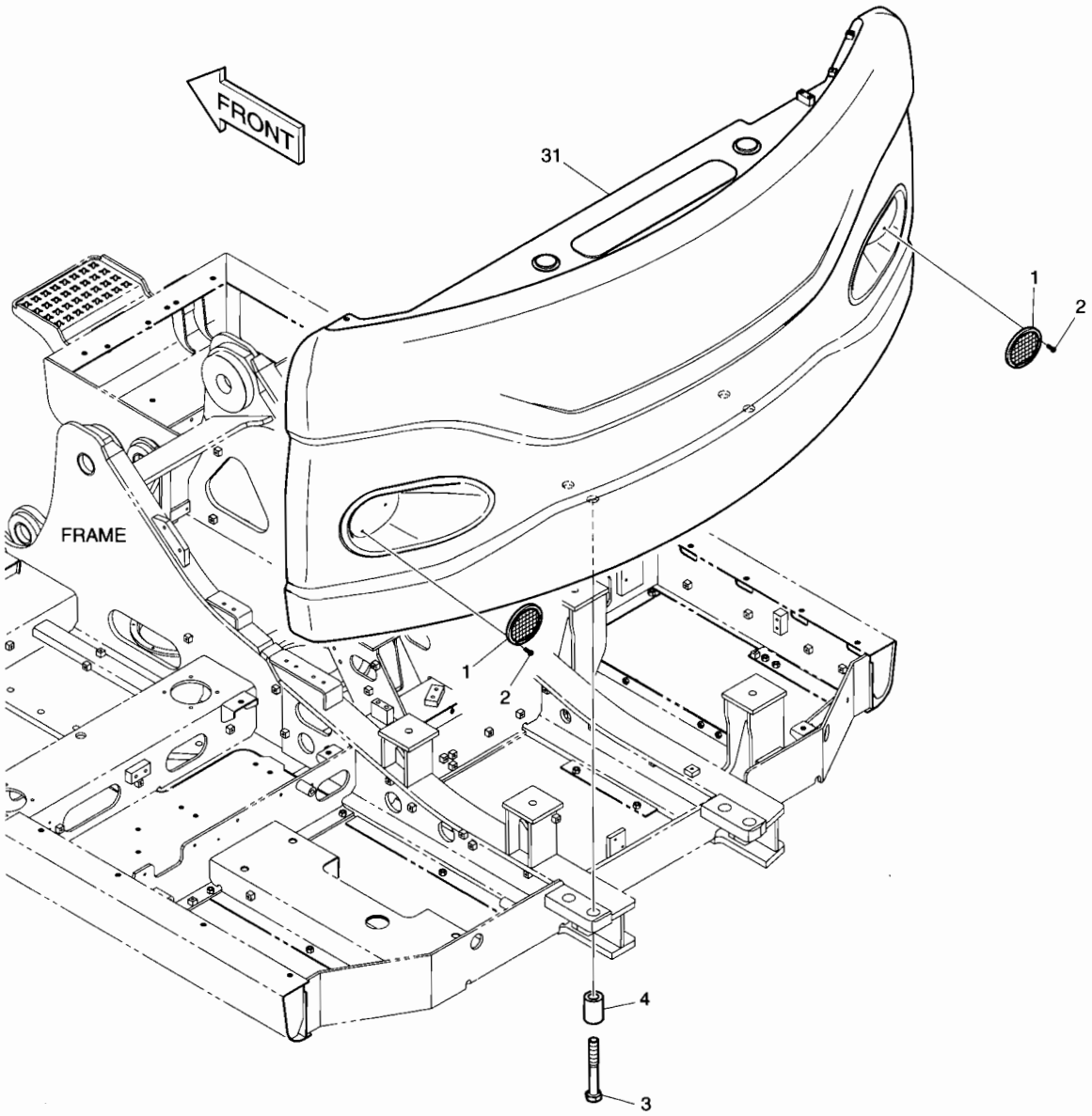

DATE	APR. 02, 2007
1st EDITION	

Fig. 1110 COUNTER WEIGHT MASSE D'EQUILIBRAGE

Serial No. ;

Key No.	Part No.	Description	Description	Q'ty	S.C	Serial No.	ICA	Replaceable part	
								Part No.	Q'ty
1110--	K1017277A	COUNTER WEIGHT ASS'Y	MASSE D'EQUILIBRAGE	-	D				
1	190-01107B	REFLECTOR	REFLECTEUR	2					
2	S3450343	SCREW M3X0.5X10	VIS	6					
3	120-00322A	BOLT	BOULON	4					
4	K1019022	SPACER	DOUILLE D'ECARTEMENT	4					
31	K1017278A	COUNTER WEIGHT	CONTRE- POIDS	1					

DATE	APR. 02, 2007
1st EDITION	

Fig. 1120 ENGINE MOUNTING
SUPPORT DE MOTEUR

Serial No. ;

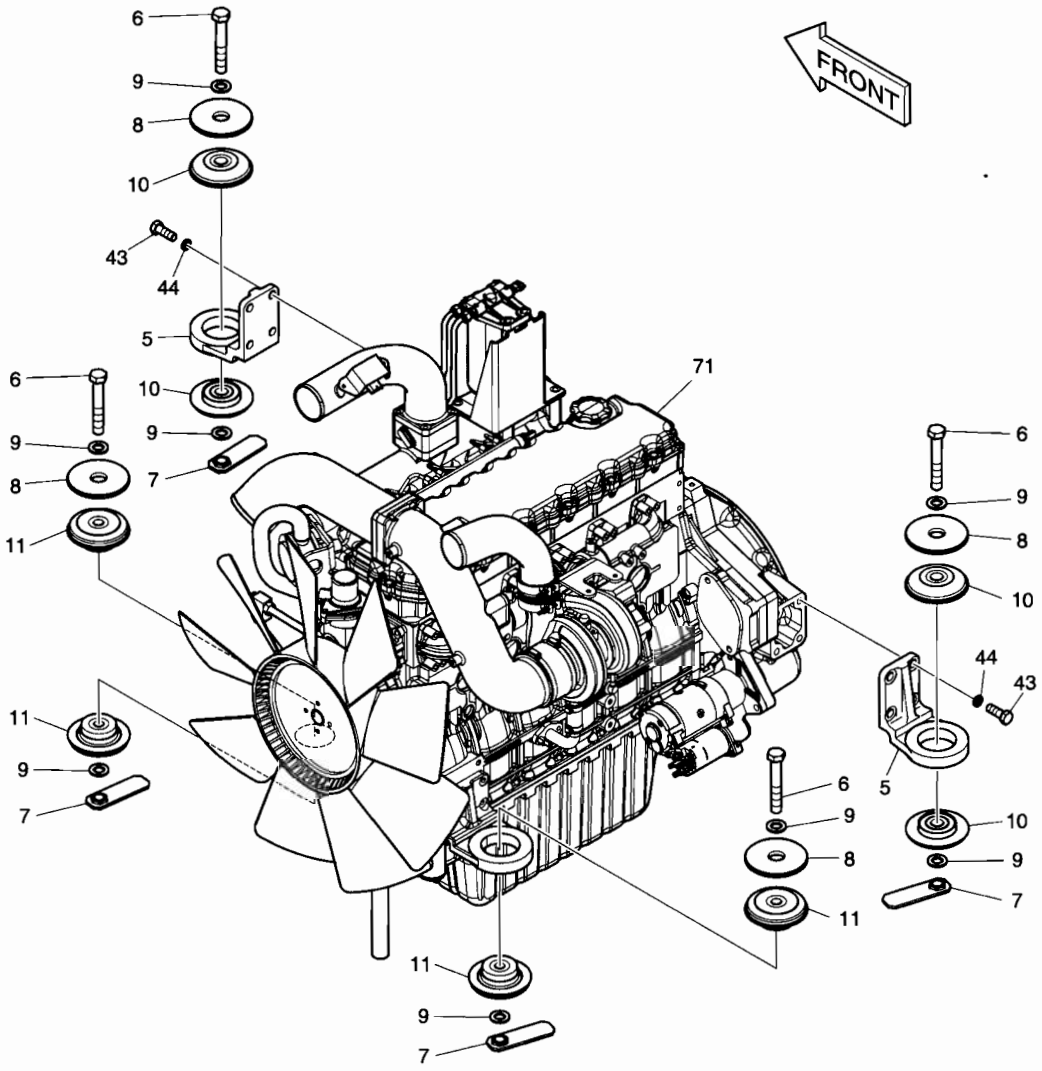

DATE	APR. 02, 2007
1st EDITION	

Fig. 1120 ENGINE MOUNTING SUPPORT DE MOTEUR

Serial No. ;

Key No.	Part No.	Description	Description	Q'ty	S.C	Serial No.	ICA	Replaceable part	
								Part No.	Q'ty
1120--	K1017777C	ENGINE ASS'Y	ENSEMBLE MOTEUR	-	D				
5	K1009639	BRACKET	SUPPORT	2					
6	S0771466	BOLT	BOULON A 6 PANS	4					
7	195-02643C	SUPPORT;NUT	SUPPORT	4					
8	2114-1929	WASHER	CALE	4					
9	2114-9012A	WASHER;HARDEN	RONDELLE	8					
10	161-00548	RUBBER;FRONT	CAOUTCHOUC	4					
11	161-00550	MOUNT RUBBER	LE CAOUTCHOUC DE BATI	4					
43	S0521466	BOLT;HEX.	BOULON A 6 PANS	8					
44	S5102903	WASHER;SPRING	RONDELLE ELASTIQUE	8					
71	K1018305	ENGINE ASS'Y	ENSEMBLE MOTEUR	1					

DATE	APR. 02, 2007
1st EDITION	

Fig. 1130 RADIATOR MOUNTING
SUPPORT DE RADIATEUR

Serial No. ;

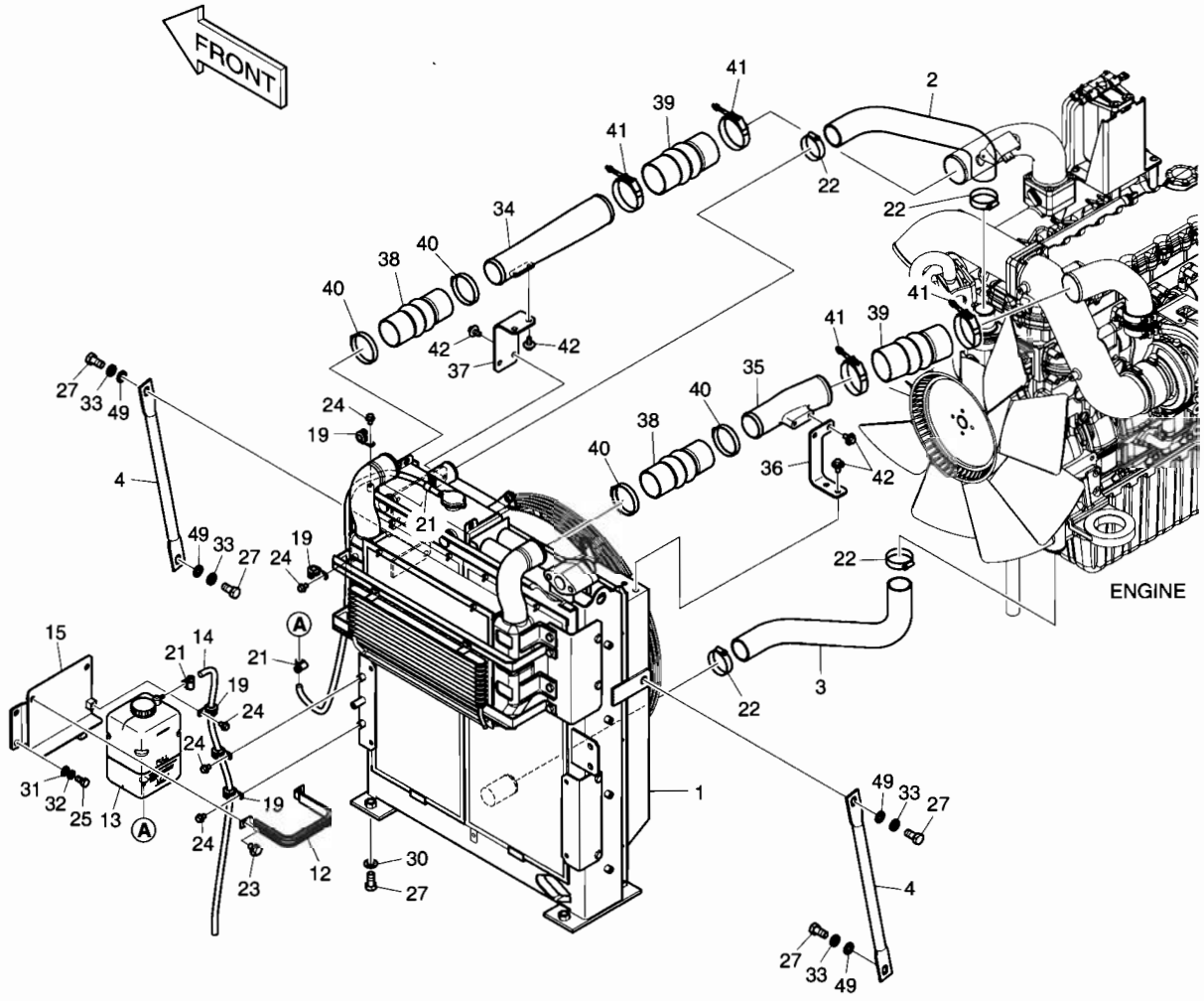

DATE	APR. 02, 2007
1st EDITION	

Fig. 1130 RADIATOR MOUNTING SUPPORT DE RADIATEUR

Serial No. ;

Key No.	Part No.	Description	Description	Q'ty	S.C	Serial No.	ICA	Replaceable part	
								Part No.	Q'ty
1130--	K1017777C	ENGINE ASS'Y	ENSEMBLE MOTEUR	-	D				
1	K1009271B	RADIATOR ASS'Y	ENSEMBLE RADIATEUR	1					
2	K1009160A	HOSE;WATER	TUYAU FLEXIBLE	1					
3	K1009161A	HOSE;WATER	TUYAU FLEXIBLE	1					
4	K1009635	STAY	SEJOUR	2					
12	K1000722A	CLAMP	COLLIER	1					
13	K1003180A	TANK;RESERVE	RESERVOIR	1					
14	K1030756	HOSE	TUYAU FLEXIBLE	1					
15	K1009745A	BRACKET	SUPPORT	1					
19	124-00208D2	CLIP	AGRAFE	4					
21	S8450006	CLAMP;HOSE	COLLIER	3					
22	S8450053	CLAMP;HOSE	COLLIER	4					
23	DS0025014	BOLT;SET	BOULON A 6 PANS	2					
24	K1001029	BOLT	BOULON A 6 PANS	5					
25	S0515066	BOLT	BOULON A 6 PANS	2					
27	S0521366	BOLT	BOULON A 6 PANS	8					
30	2114-1816A	WASHER;HARDEN	RONDELLE	4					
31	S5010713	WASHER	CALE	2					
32	S5102703	WASHER;SPRING	RONDELLE ELASTIQUE	2					
33	S5102903	WASHER;SPRING	RONDELLE ELASTIQUE	4					
34	K1009162	PIPE;AIR	TUYAU	1					
35	K1009163A	PIPE;AIR	TUYAU	1					
36	K1009636A	BRACKET	SUPPORT	1					
37	K1009637	BRACKET	SUPPORT	1					
38	K1012213	HOSE;AIR	TUYAU FLEXIBLE	2					
39	K1012214	HOSE;AIR	TUYAU FLEXIBLE	2					
40	K1000704A	CLAMP	COLLIER	4					
41	124-00194	CLAMP	COLLIER	4					
42	DS0025017	BOLT;SET	BOULON A 6 PANS	8					
49	S5010913	WASHER;PLAIN	RONDELLE	4					

DATE	APR. 02, 2007
1st EDITION	

Fig. 1140 RADIATOR
RADIATEUR

Serial No. ;

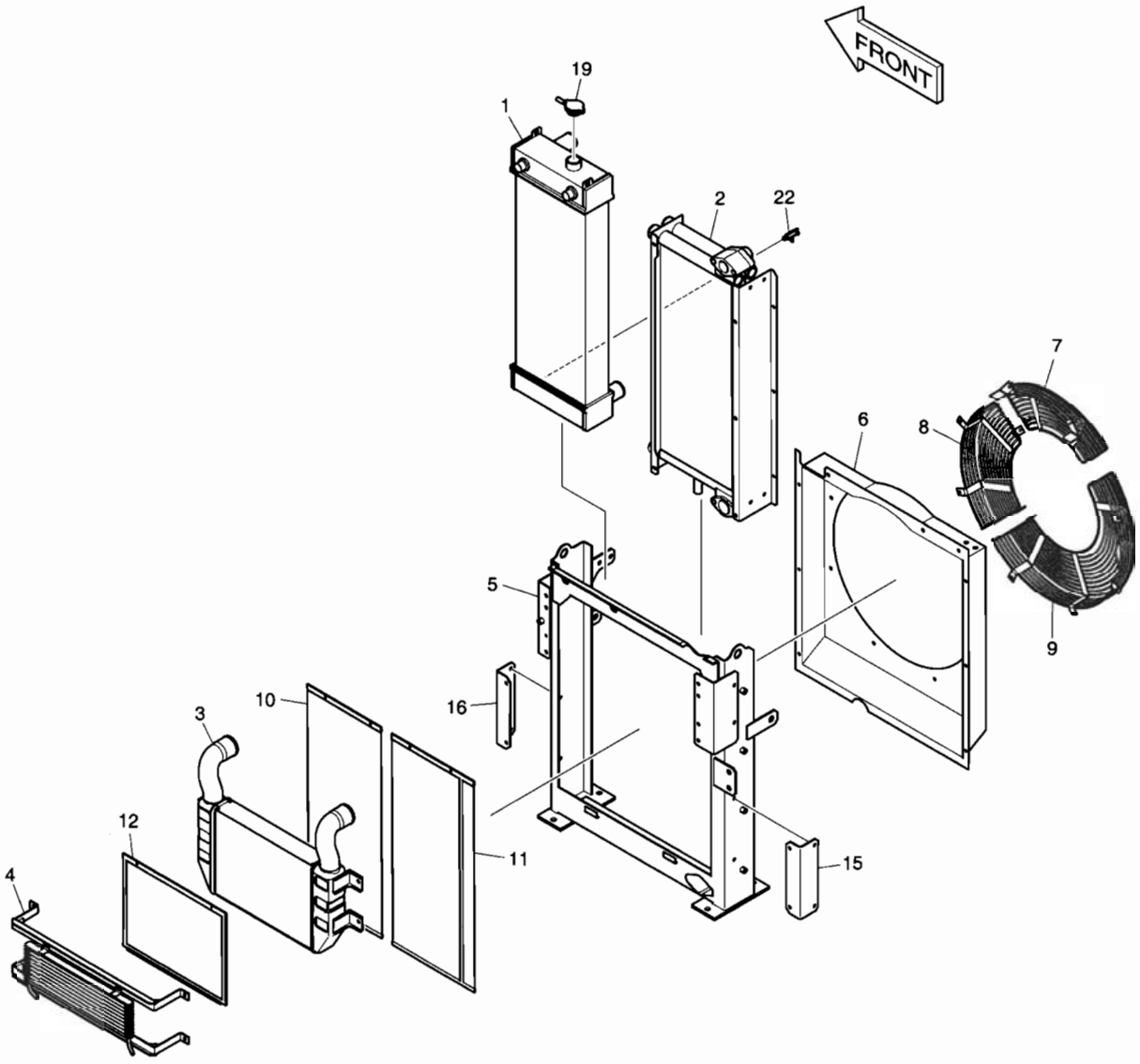

DATE	APR. 02, 2007
1st EDITION	

Fig. 1140 RADIATOR RADIATEUR

Serial No. ;

Key No.	Part No.	Description	Description	Q'ty	S.C	Serial No.	ICA	Replaceable part	
								Part No.	Q'ty
140--	K1009271B	RADIATOR ASS'Y	ENSEMBLE RADIATEUR	1					
1	K9004261	RADIATOR	RADIATEUR	1					
2	K9004262	COOLER;OIL	REFROIDISSEUR	1					
3	K9004263	CAC ASS'Y	CHARGEE	1					
4	K1015210	COOLER;FUEL	REFROIDISSEUR	1					
5	-	FRAME	ARMATURE	1					
6	K9004264	SHROUD	MONTURE	1					
7	K9004265	GUARD;FAN	GARDE	1					
8	K9004266	GUARD;FAN	GARDE	1					
9	K9004267	GUARD;FAN	GARDE	1					
10	K9004268	NET;WIRE	FILET DE FIL	1					
11	K9004269	NET;WIRE	FILET DE FIL	1					
12	K9004270	NET;WIRE	FILET DE FIL	1					
15	K9004271	BRACKET	SUPPORT	1					
16	K9004272	BRACKET	SUPPORT	1					
19	K1010769	CAP;PRESSURE	CHAPEAU	1					
22	K9003878	COCK ASS'Y	ROBINET	1					

Fig. 1150 MUFFLER SILENCIEUX

Serial No. ;

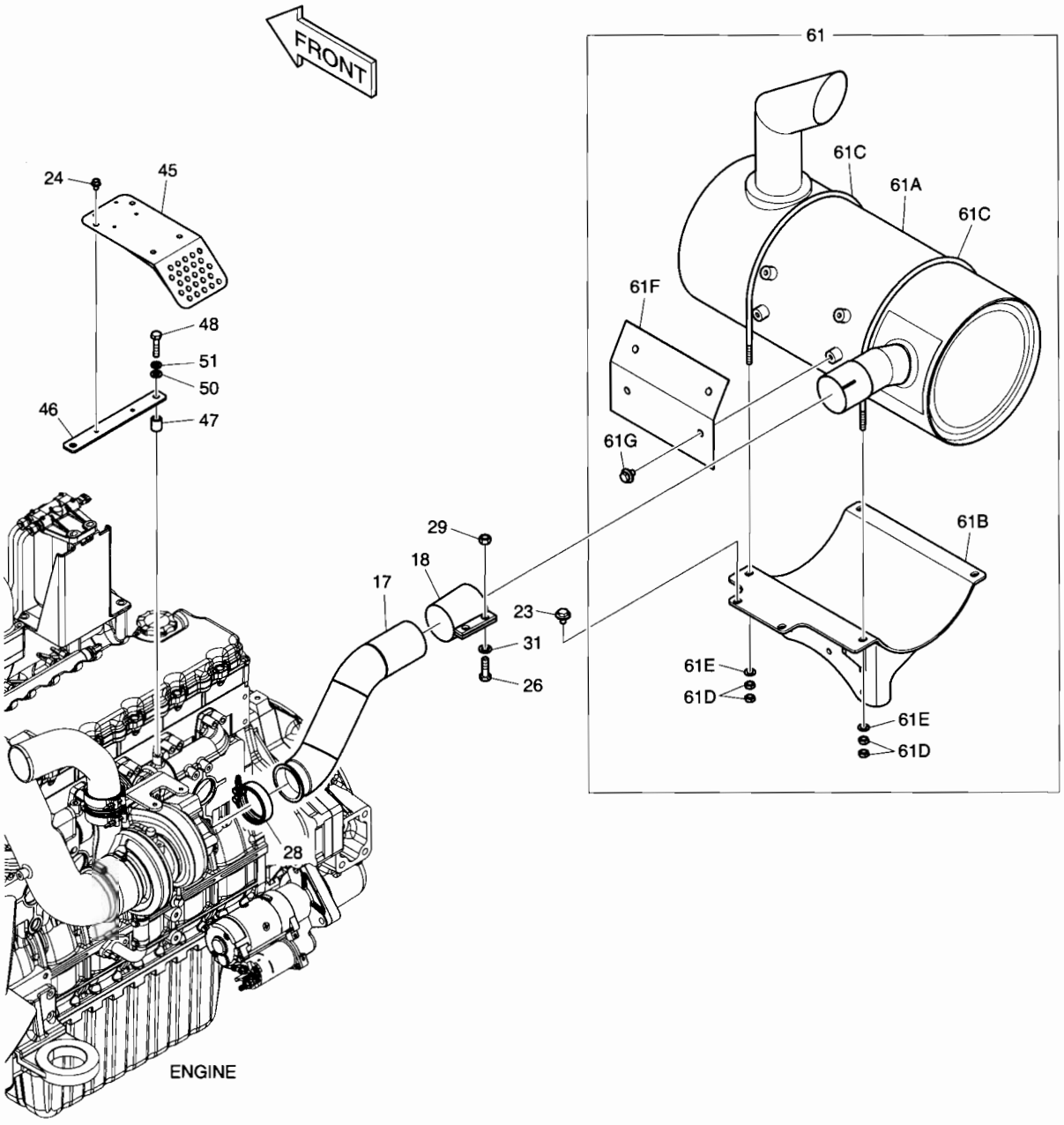

DATE	APR. 02, 2007
1st EDITION	

Fig. 1150 MUFFLER SILENCIEUX

Serial No. ;

Key No.	Part No.	Description	Description	Q'ty	S.C	Serial No.	ICA	Replaceable part	
								Part No.	Q'ty
1150--	K1017777C	ENGINE ASS'Y	ENSEMBLE MOTEUR	-	D				
17	K1026655	PIPE;EXHAUST	TUYAU	1					
18	124-00310A	CLAMP	COLLIER	1					
23	DS0025014	BOLT;SET	BOULON A 6 PANS	2					
24	K1001029	BOLT	BOULON A 6 PANS	4					
26	S0515566	BOLT	BOULON A 6 PANS	2					
28	K1014728	CLAMP	COLLIER	1					
29	S4012733	NUT	ECROU 6 PANS	2					
31	S5010713	WASHER;PLAIN	RONDELLE	2					
45	K1015292A	COVER	COUVERCLE	1					
46	K1015293	PLATE	PLAQUE	1					
47	K1015294	SPACER	BAGUE D'ECARTEMENT	2					
48	S0558466	BOLT	BOULON A 6 PANS	2					
50	S5010613	WASHER;PLAIN	RONDELLE	2					
51	S5102603	WASHER;SPRING	RONDELLE ELASTIQUE	2					
61	K1033234	MUFFLER SUB ASS'Y	SILENCIEUX	1					
61A	K1033219	. MUFFLER	. SILENCIEUX	1					
61B	K1023198C	. BRACKET	. SUPPORT	1					
61C	K1029357	. BOLT;U	. BOULON A 6 PANS	2					
61D	S4012633	. NUT	. ECROU	8					
61E	S5010613	. WASHER;PLAIN	. RONDELLE	4					
61F	K1023194	. INSULATOR	. ISOLATEUR	1					
61G	DS0025013	. BOLT;SET	. BOULON A 6 PANS	4					

DATE	APR. 02, 2007
1st EDITION	

Fig. 1160 AIR CLEANER ASS'Y
FILTRE A AIR

Serial No. ;

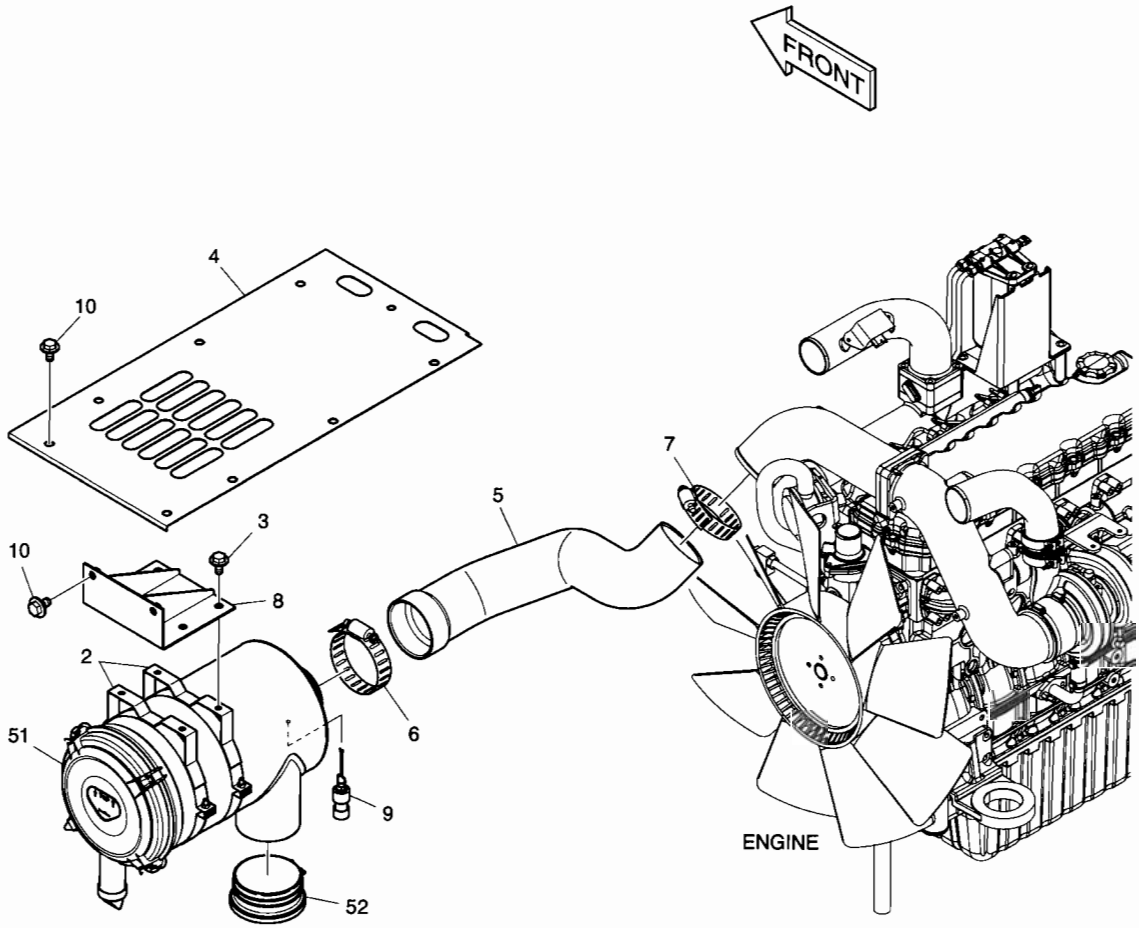

DATE	APR. 02, 2007
1st EDITION	

Fig. 1160 AIR CLEANER ASS'Y FILTRE A AIR

Serial No. ;

Key No.	Part No.	Description	Description	Q'ty	S.C	Serial No.	ICA	Replaceable part	
								Part No.	Q'ty
1160--	K1017627A	AIR CLEANER ASS'Y	ENSEMBLE FILTRE A AIR	-	D				
2	124-00298A	BAND;AIR CLEANER	ATTACHE	2					
3	DS0025017	BOLT;SET	BOULON A 6 PANS	4					
4	K1017628A	COVER;AIR CLEANER	COUVERCLE	1					
5	K1008507	HOSE;AIR	TUYAU FLEXIBLE	1					
6	S8510143	CLAMP;HOSE	COLLIER	1					
7	S8510118	CLAMP;HOSE	COLLIER	1					
8	K1017691A	BRACKET;AIR CLEANER	SUPPORT	1					
9	170-00004	INDICATOR;DUST	INDICATEUR	1					
10	DS0025015	BOLT;SET	BOULON A 6 PANS	11					
51	204-00067	AIR CLEANER ASS'Y	ENSEMBLE FILTRE A AIR	1					
52	K1003618	CAP;RAIN	CHAPEAU	1					

DATE	APR. 02, 2007
1st EDITION	

Fig. 1170 AIR CLEANER
FILTRE A AIR

Serial No. ;

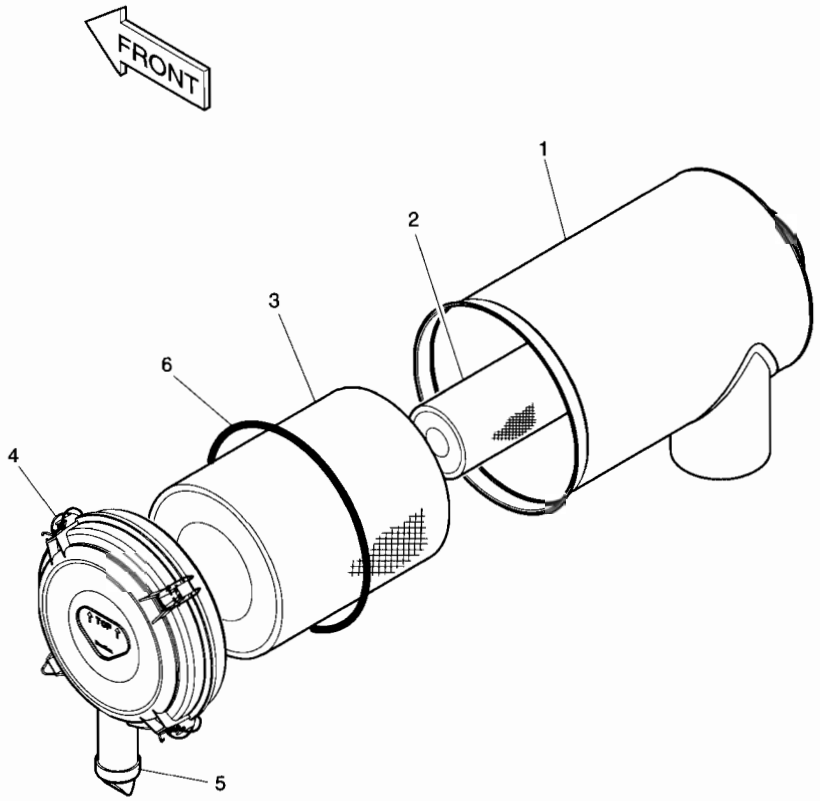

DATE	APR. 02, 2007
1st EDITION	

Fig. 1170 AIR CLEANER FILTRE A AIR

Serial No. ;

Key No.	Part No.	Description	Description	Q'ty	S.C	Serial No.	ICA	Replaceable part	
								Part No.	Q'ty
1170--	204-00067	AIR CLEANER	FILTRE A AIR	1					
1	-	BODY	CARTER	1	D				
2	474-00039	ELEMENT;INNER	ELEMENT	1					
3	474-00040	ELEMENT;OUTER	ELEMENT	1					
4	204-00075	COVER	COUVERCLE	1					
5	204-00070	VALVE;VACUATOR	VANNE	1					
6	-	O-RING	JOINT TORIQUE	1	D				

DATE	APR. 02, 2007
1st EDITION	

Fig. 1180 PUMP INSTALLATION
POMPE

Serial No. ;

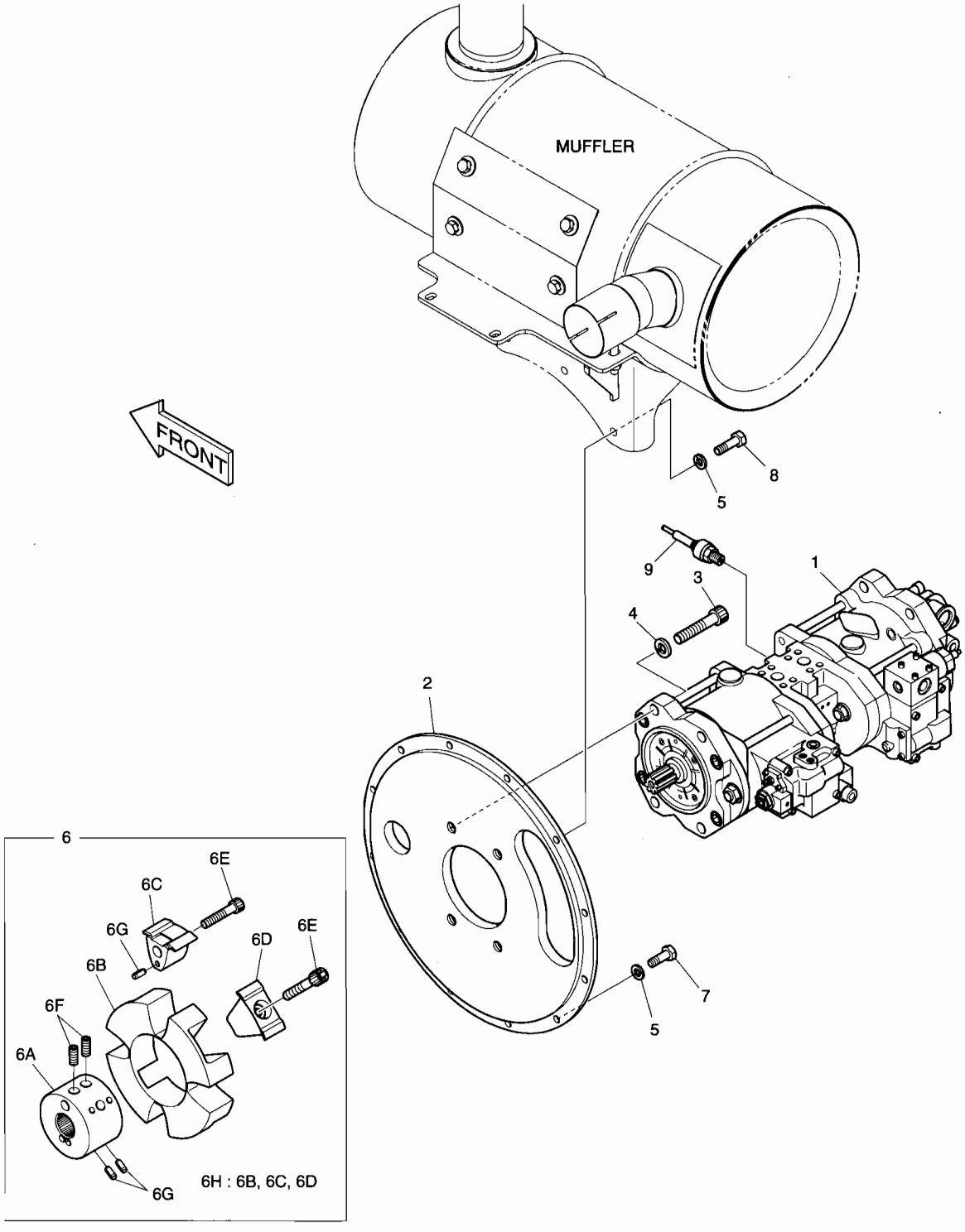

DATE	APR. 02, 2007
1st EDITION	

Fig. 1180 PUMP INSTALLATION POMPE

Serial No. ;

Key No.	Part No.	Description	Description	Q'ty	S.C	Serial No.	ICA	Replaceable part	
								Part No.	Q'ty
1180--	K1019039A	PUMP INSTALLATION	POMPE	-	D				
1	K1024107A	MAIN PUMP	POMPE	1					
2	2229-1063A	COVER	COUVERCLE	1					
3	S2221566	BOLT;SOCKET M16X2.0X45	BOULON A 6 PANS CRUEX	4					
4	S5110903	WASHER;SPRING M16	RONDELLE ELASTIQUE	4					
5	S5102603	WASHER;SPRING M10	RONDELLE ELASTIQUE	12					
6	2414-9009A	COUPLING	FIXATION DE POMPE	1					
6A	-	. HUB	. MOYEU	1	D				
6B	2474-7009	. ELEMENT	. ELEMENT	1					
6C	-	. INSERT(A)	. INSERTION	4	D				
6D	-	. INSERT(R)	. INSERTION	4	D				
6E	K9000422	. SOCKET BOLT SET(8EA)	. BOULON DE PLOT	1					
6F	-	. BOLT;CLAMPING M16X2.0X28	. BOULON	2	D				
6G	-	. PIN;SPRING D5X10	. GOUPILLE	12	D				
6H	2474-7009K	. ELEMENT KIT	. KIT DE ELEMENT	1					
7	S0558166	BOLT	BOULON A 6 PANS	9					
8	S0558266	BOLT	BOULON A 6 PANS	3					
9	2547-9045	SENSOR;PRESSURE	CAPTEUR	2					

DATE	APR. 02, 2007
1st EDITION	

Fig. 1190 SWING DEVICE
SYSTEME D'ORIENTATION

Serial No. ;

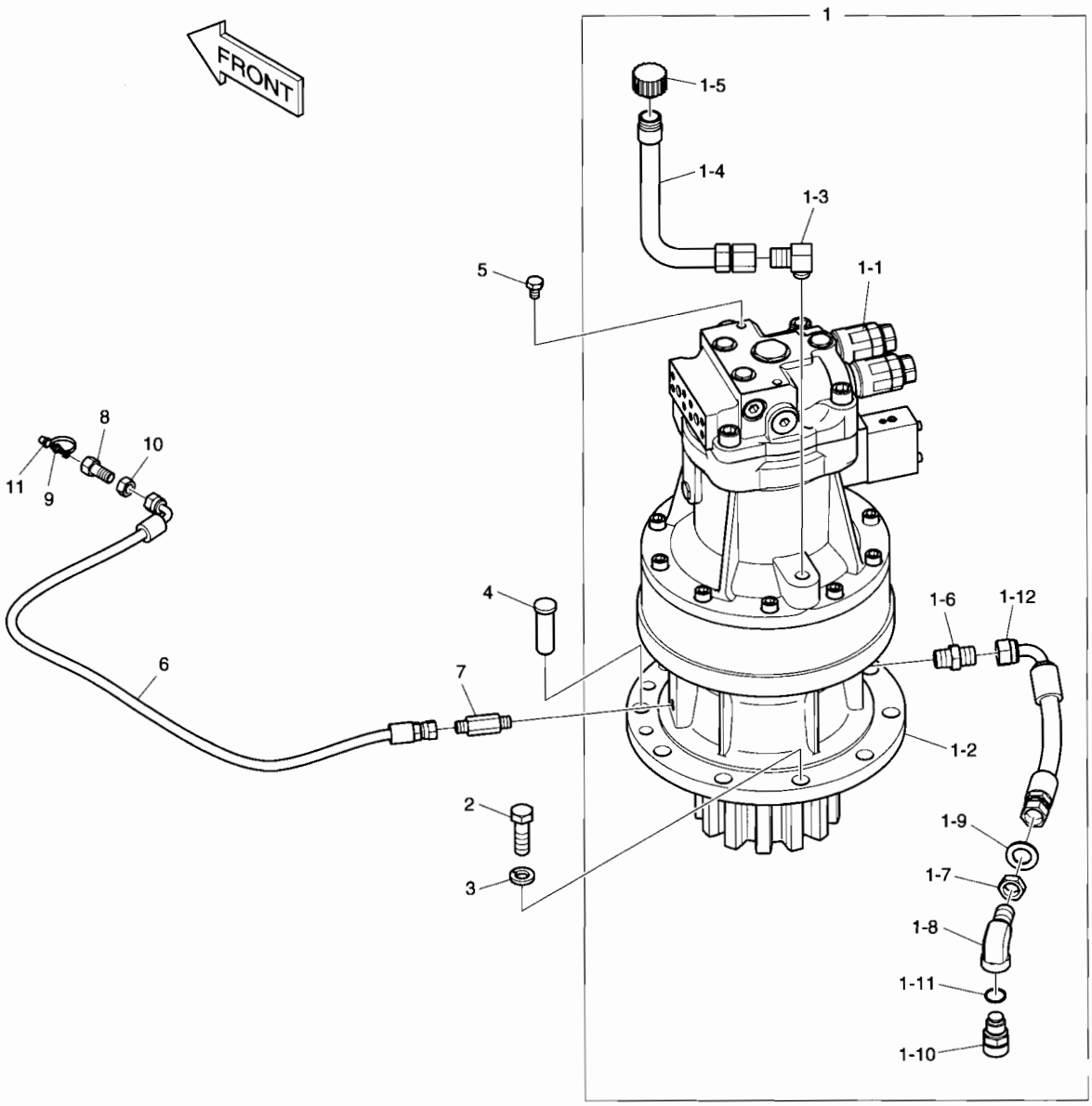

DATE	APR. 02, 2007
1st EDITION	

Fig. 1190 SWING DEVICE SYSTEME D'ORIENTATION

Serial No. ;

Key No.	Part No.	Description	Description	Q'ty	S.C	Serial No.	ICA	Replaceable part	
								Part No.	Q'ty
190--	K1016315C	SWING DEVICE ASS'Y	COMMUTATEUR	-	D				
1	K1016316B	SWING DEVICE SUB ASS'Y	COMMUTATEUR	1					
1-1	K1000101	. MOTOR;SWING	. MOTEUR	1					
1-2	K1007357B	. REDUCTION GEAR;SWING	. BOITE REDUCTEUR	1					
1-3	2181-1111D3	. ELBOW	. COUDE	1					
1-4	2183-3784B	. PIPE	. TUYAU	1					
1-5	2119-1063B	. CAP	. CHAPEAU	1					
1-6	2181-1110D3	. ADAPTER	. ADAPTEUR	1					
1-7	121-00010D3	. NUT	. ECROU	1					
1-8	181-00717	. ELBOW	. COUDE	1					
1-9	S5011113	. WASHER;PLAIN	. RONDELLE	1					
1-10	426-00278	. VALVE;DRAIN	. VANNE	1					
1-11	S8000181	. O-RING	. JOINT TORIQUE	1					
1-12	DS2055933	. HOSE	. TUYAU FLEXIBLE	1					
2	S0765266	BOLT M16X1.5X50	BOULON A 6 PANS	9					
3	S5102903	WASHER;SPRING	RONDELLE ELASTIQUE	9					
4	2123-1458A	PIN;KNOCK	GOUPILLE	1					
5	S0511666	BOLT	BOULON	2					
6	DS2093183	HOSE	TUYAU FLEXIBLE	1					
7	DS2214050	ADAPTER	ADAPTEUR	1					
8	181-00103	REDUCER	REDUCEUR	1					
9	S6710041	NIPPLE;GREASE	MAMELON	1					
10	121-00006	NUT	ECROU	1					
11	160-00020	CAP;GREASE NIPPLE	CHAPEAU	1					

DATE	APR. 02, 2007
1st EDITION	

Fig. 1200 FUEL TANK
RESERVOIR DE GAZOLE

Serial No. ;

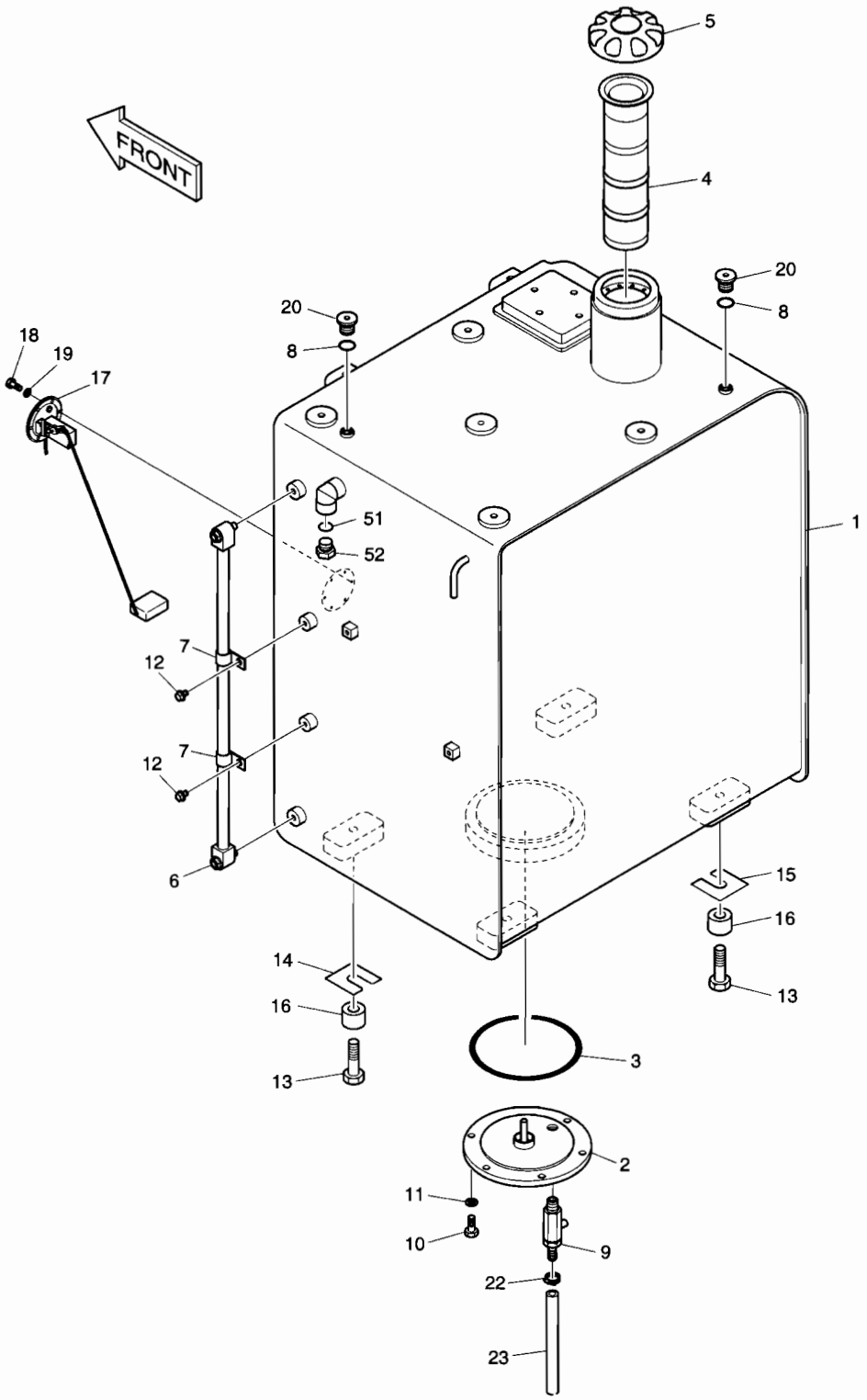

DATE	APR. 02, 2007
1st EDITION	

Fig. 1200 FUEL TANK RESERVOIR DE GAZOLE

Serial No. ;

Key No.	Part No.	Description	Description	Q'ty	S.C	Serial No.	ICA	Replaceable part	
								Part No.	Q'ty
1200--	K1016392C	FUEL TANK ASS'Y	RESERVOIR DE GAZOLE	-	D				
1	K1016393A	TANK;FUEL	RESERVOIR A GAZOLE	1					
2	473-00033	COVER	COUVERCLE	1					
3	S8011450	O-RING	JOINT TORIQUE	1					
4	471-00105A	FILTER;FUEL STRAINER	FILTRE	1					
5	K1004266	CAP;FUEL	CHAPEAU	1					
6	119-00014AD1	GAUGE;LEVEL	INDICATEUR DE NIVEAU	1					
7	DS2802021	CLIP	AGRAFE	2					
8	S8000111	O-RING	JOINT TORIQUE	2					
9	186-00017A	COCK;DRAIN	ROBINET DE PURGE	1					
10	S0512066	BOLT	BOULON A 6 PANS	6					
11	S5102603	WASHER;SPRING	RONDELLE ELASTIQUE	6					
12	K1001029	BOLT	BOULON A 6 PANS	2					
13	S0565466	BOLT	BOULON A 6 PANS	4					
14	2114-1813	SHIM	ENTERTOISE	2					
15	2114-1814	SHIM	ENTERTOISE	2					
16	114-00425	SPACER	BAGUE D'ECARTEMENT	4					
17	547-00026	SENDER;FUEL	SENDER	1					
18	S3450833	BOLT M5X0.8X12	BOULON	6					
19	S5100203	WASHER;SPRING	RONDELLE ELASTIQUE	6					
20	2181-1890D2	PLUG	BOUCHON	2					
22	S8450012	CLAMP;HOSE	COLLIER	1					
23	DS2105053	HOSE;FUEL	TUYAU FLEXIBLE	1					
51	S8000181	O-RING	JOINT TORIQUE	1					
52	2181-1950D7	PLUG	BOUCHON	1					

DATE	APR. 02, 2007
1st EDITION	

Fig. 1210 FUEL PIPING
TUYAUTERIE DE CARBURANT

Serial No. ;

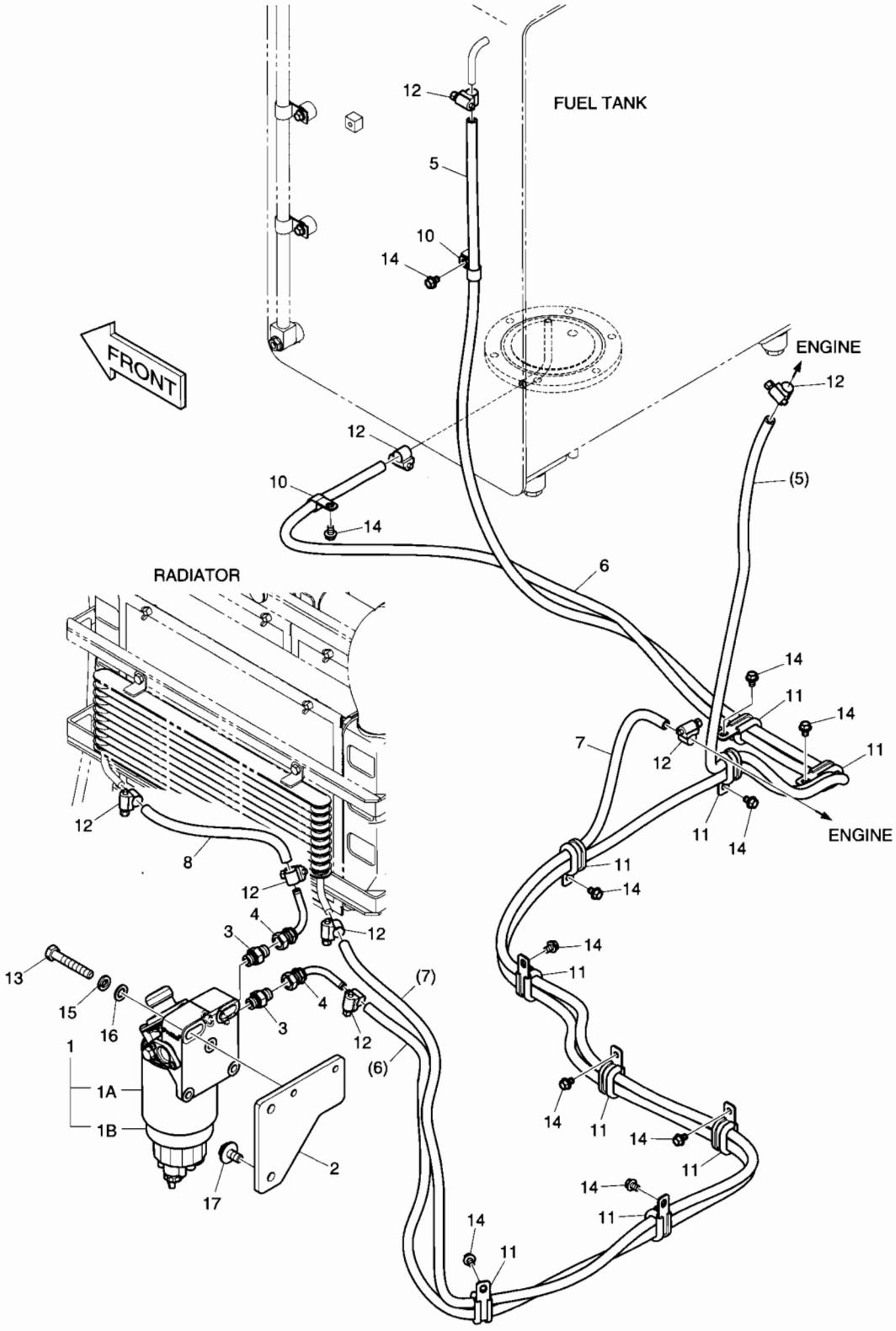

DATE	APR. 02, 2007
1st EDITION	

Fig. 1210 FUEL PIPING TUYAUTERIE DE CARBURANT

Serial No. ;

Key No.	Part No.	Description	Description	Q'ty	S.C	Serial No.	ICA	Replaceable part	
								Part No.	Q'ty
1210--	K1017038A	FUEL PIPING	TUYAUTERIE DE	-	D				
1	K1006520	PRE FUEL FILTER ASS'Y	PRE FILTRE D'ESSENCE	1					
1A	K1006530	. FILTER;PRE FUEL	. FILTRE	1					
1B	K1006973	. BOWL	. CUVETTE	1					
2	K1016092	PLATE	PLAQUE	1					
3	DS2479004	ADAPTER	ADAPTEUR	2					
4	K1002864	ELBOW	COUDE	2					
5	DS2105061	HOSE;FUEL	TUYAU FLEXIBLE	1					
6	DS2105027	HOSE;FUEL	TUYAU FLEXIBLE	1					
7	DS2105084	HOSE;FUEL	TUYAU FLEXIBLE	1					
8	DS2105011	HOSE;FUEL	TUYAU FLEXIBLE	1					
10	2124-1509D2	CLIP	AGRAFE	2					
11	124-00209D1	CLIP	AGRAFE	9					
12	S8470014	CLAMP;HOSE	COLLIER DE LA CONDUITE	8					
13	S0561266	BOLT	BOULON	2					
14	K1001029	BOLT	BOULON	11					
15	S5102703	WASHER;SPRING	RONDELLE ELASTIQUE	2					
16	S5010713	WASHER	RONDELLE	2					
17	DS0025015	BOLT;SET	BOULON	2					

DATE	APR. 02, 2007
1st EDITION	

Fig. 1220 OIL TANK
RESERVOIR D'HUILE

Serial No. ;

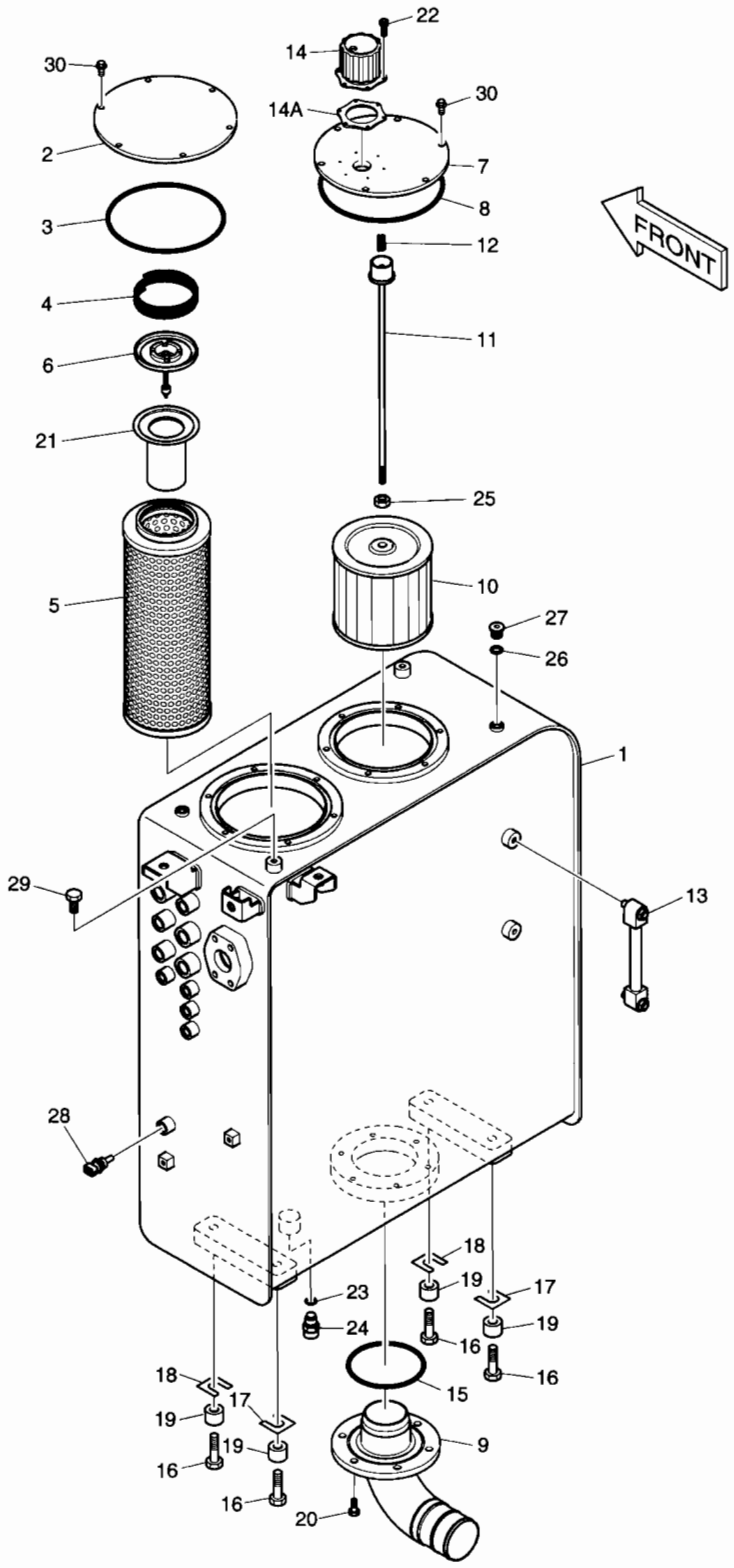

DATE	APR. 02, 2007
1st EDITION	

Fig. 1220 OIL TANK RESERVOIR D'HUILE

Serial No. ;

Key No.	Part No.	Description	Description	Q'ty	S.C	Serial No.	ICA	Replaceable part	
								Part No.	Q'ty
1220--	K1016442B	OIL TANK ASS'Y	ENSEMBLE RESERVOIR	-	D				
1	K1016444B	TANK;OIL	RESERVOIR D'HUILE	1					
2	K1011675	COVER	COUVERCLE	1					
3	S8011850	O-RING	JOINT TORIQUE	1					
4	2129-1393	SPRING	RESSORT	1					
5	474-00055	FILTER;RETURN	FILTRE	1					
6	2426-1175	VALVE;BY-PASS	VANNE BY-PASS	1					
7	473-00052	COVER	COUVERCLE	1					
8	S8011650	O-RING	JOINT TORIQUE	1					
9	K1018902	PIPE;SUCTION	TUYAU	1					
10	2474-9016A	FILTER;SUCTION	FILTRE	1					
11	136-00002	ROD	TIGE	1					
12	2129-1008	SPRING;COMPRESS	RESSORT	1					
13	119-00025B	GAUGE;LEVEL	INDICATEUR DE NIVEAU	1					
14	422-00027A	BREATHER;AIR	RENIFLARD D'AIR	1					
14A	180-00200	. PACKING	. EMBALLAGE	1					
15	S8011200	O-RING	JOINT TORIQUE	1					
16	S0565466	BOLT	BOULON	4					
17	2114-1813	SHIM	CALE	2					
18	2114-1814	SHIM	CALE	2					
19	114-00425	SPACER	DOUILLE D'ECARTEMENT	4					
20	DS0025024	BOLT;SET	BOULON	6					
21	471-00127	STRAINER;BY-PASS	FILTRE	1					
22	2120-2166D41	SCREW	VIS	6					
23	S8000181	O-RING	JOINT TORIQUE	1					
24	426-00278	VALVE;DRAIN	VANNE	1					
25	S4012733	NUT	ECROU	1					
26	S8000111	O-RING	JOINT TORIQUE	2					
27	2181-1890D2	PLUG	BOUCHON	2					
28	K1003296	SENSOR;OIL TEMP	CAPTEUR	1					
29	S0511466	BOLT	BOULON	2					
30	K1007957	BOLT M10x1.5x22	BOULON	12					

DATE	APR. 02, 2007
1st EDITION	

Fig. 1230 OIL COOLER PIPING(1) CONDUITES DE HUILE

Serial No. ;

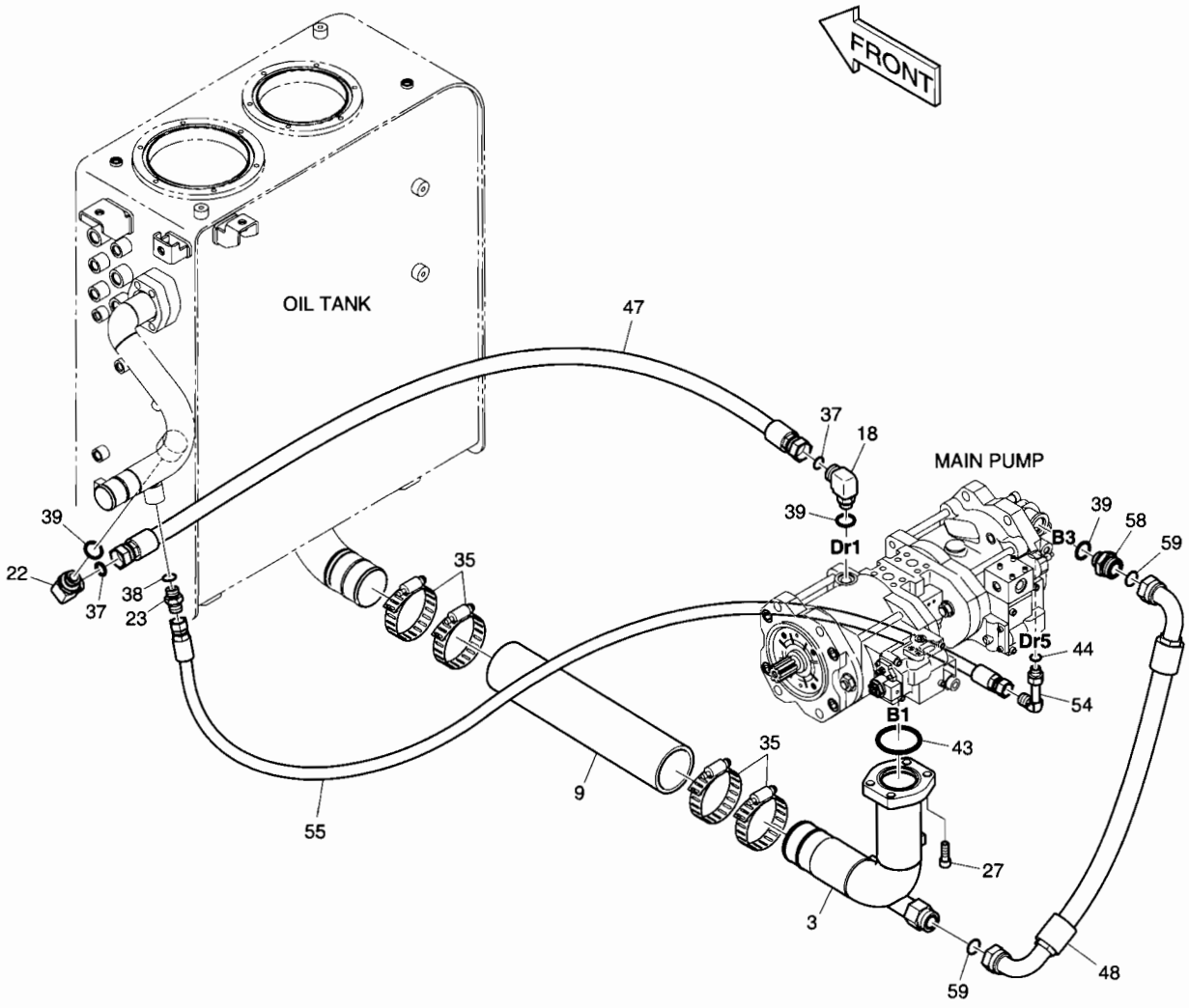

DATE	APR. 02, 2007
1st EDITION	

Fig. 1230 OIL COOLER PIPING(1) CONDUITES DE HUILE

Serial No. ;

Key No.	Part No.	Description	Description	Q'ty	S.C	Serial No.	ICA	Replaceable part	
								Part No.	Q'ty
1230--	K1016458G	OIL COOLER PIPING	CONDUITES DE HUILE	-	D				
3	K1016453B	PIPE;SUCTION	TUYAU	1					
9	2185-1002D93	HOSE	TUYAU FLEXIBLE	1					
18	2181-2294D1	ELBOW	COUDE	1					
22	2181-2294D10	ELBOW	COUDE	1					
23	2181-1126D6	ADAPTER	ADAPTEUR	1					
27	S2215366	BOLT	BOULON	4					
35	S8500105	CLAMP;HOSE	COLLIER DE LA CONDUITE	4					
37	S8030121	O-RING	JOINT TORIQUE	2					
38	S8000181	O-RING	JOINT TORIQUE	1					
39	S8000241	O-RING	JOINT TORIQUE	3					
43	2180-1026D31	O-RING	JOINT TORIQUE	1					
44	S8000141	O-RING	JOINT TORIQUE	1					
47	2184-1196D58	HOSE	TUYAU FLEXIBLE	1					
48	DS2023318	HOSE	TUYAU FLEXIBLE	1					
54	2181-1702D36	ELBOW	COUDE	1					
55	DS2053923	HOSE	TUYAU FLEXIBLE	1					
58	2181-4133D7	ADAPTER	ADAPTEUR	1					
59	S8030161	O-RING	JOINT TORIQUE	2					

DATE	APR. 02, 2007
1st EDITION	

Fig. 1240 OIL COOLER PIPING(2) CONDUITES DE HUILE

Serial No. ;

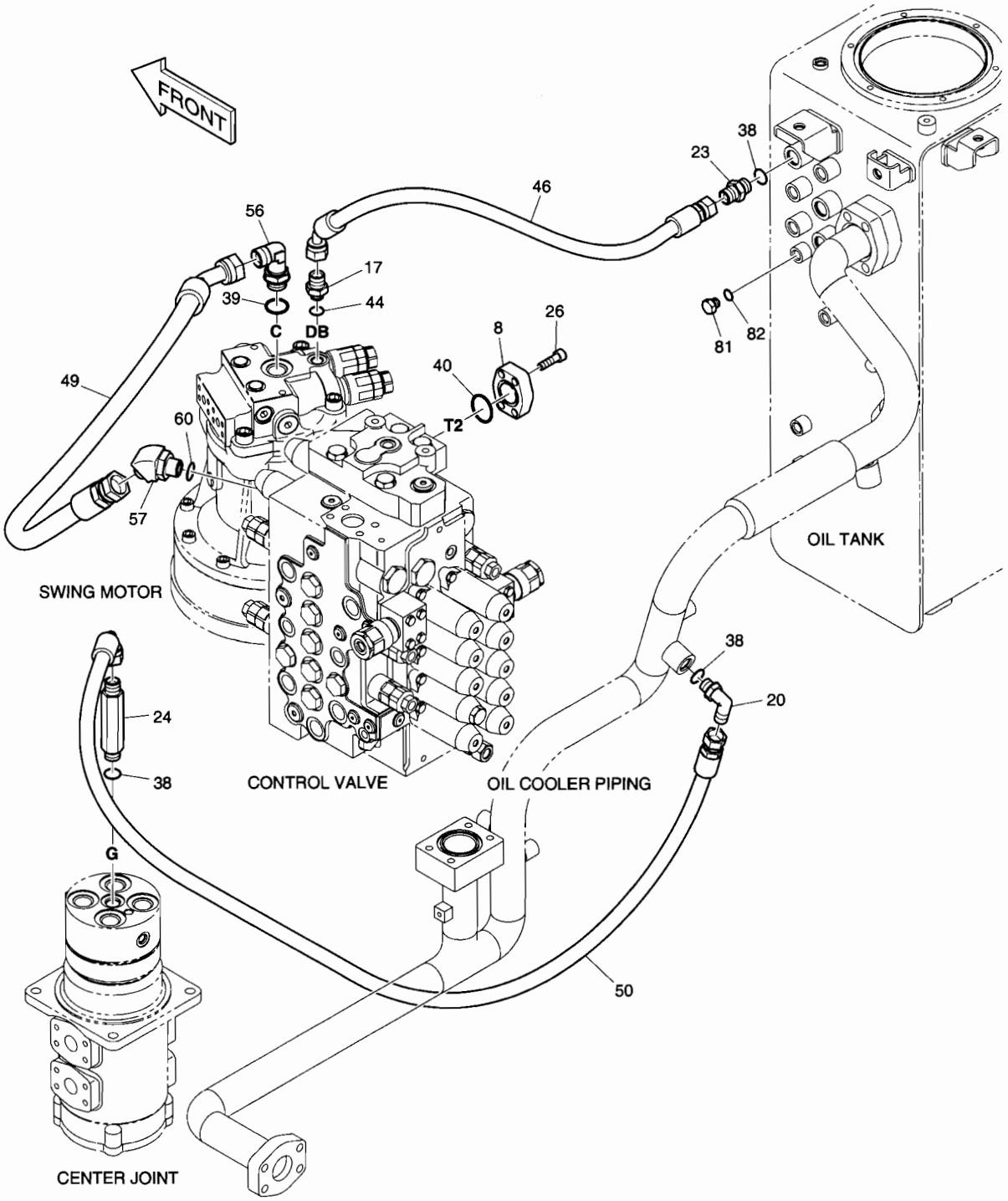

DATE	APR. 02, 2007
1st EDITION	

Fig. 1240 OIL COOLER PIPING(2) CONDUITES DE HUILE

Serial No. ;

Key No.	Part No.	Description	Description	Q'ty	S.C	Serial No.	ICA	Replaceable part	
								Part No.	Q'ty
1240--	K1016458G	OIL COOLER PIPING	CONDUITES DE HUILE	-	D				
8	2181-2157D5	FLANGE;COVER	BRIDE	1					
17	2181-1126D20	ADAPTER	ADAPTEUR	1					
20	2181-1702D2	ELBOW	COUDE	1					
23	2181-1126D6	ADAPTER	ADAPTEUR	1					
24	DS2213167	ADAPTER	ADAPTEUR	1					
26	S2212366	BOLT	BOULON	4					
38	S8000181	O-RING	JOINT TORIQUE	3					
39	S8000241	O-RING	JOINT TORIQUE	1					
40	2180-1026D19	O-RING	JOINT TORIQUE	1					
44	S8000141	O-RING	JOINT TORIQUE	1					
46	DS2054131	HOSE	TUYAU FLEXIBLE	1					
49	DS2054385	HOSE	TUYAU FLEXIBLE	1					
50	DS2055300	HOSE	TUYAU FLEXIBLE	1					
56	2181-1702D49	ELBOW	COUDE	1					
57	2181-2419D5	ELBOW	COUDE	1					
60	S8000231	O-RING	JOINT TORIQUE	1					
81	2181-1950D1	PLUG	BOUCHON	1					
82	S8000111	O-RING	JOINT TORIQUE	1					

DATE	APR. 02, 2007
1st EDITION	

Fig. 1250 OIL COOLER PIPING(3) CONDUITES DE HUILE

Serial No. ;

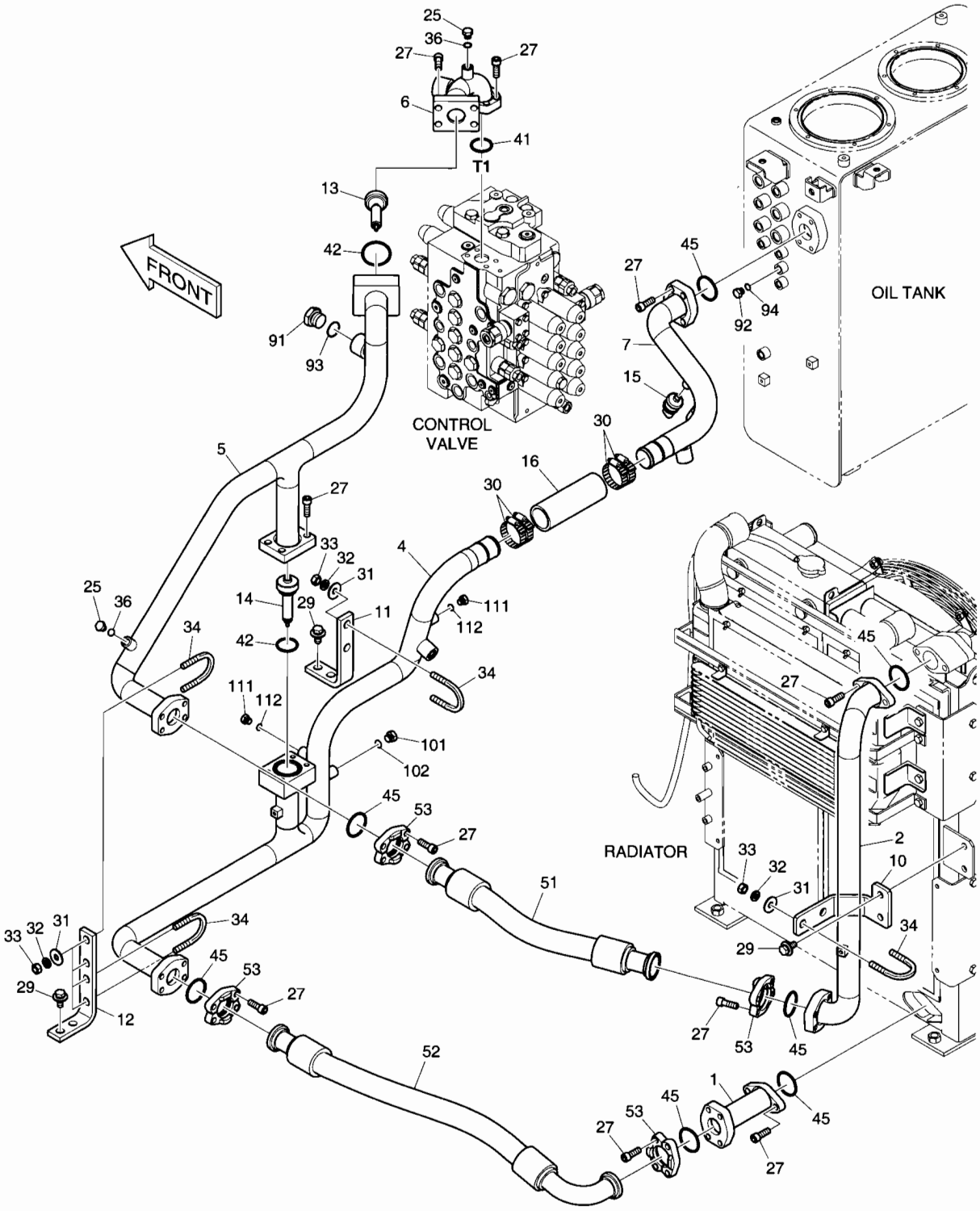

DATE	APR. 02, 2007
1st EDITION	

Fig. 1250 OIL COOLER PIPING(3) CONDUITES DE HUILE

Serial No. ;

Key No.	Part No.	Description	Description	Q'ty	S.C	Serial No.	ICA	Replaceable part	
								Part No.	Q'ty
1250--	K1016458G	OIL COOLER PIPING	CONDUITES DE HUILE	-	D				
1	K1009471	PIPE	TUYAU	1					
2	K1015094	PIPE	TUYAU	1					
4	K1016454C	PIPE	TUYAU	1					
5	K1016455A	PIPE	TUYAU	1					
6	K1016456A	PIPE	TUYAU	1					
7	K1016457B	PIPE	TUYAU	1					
10	K1009510A	PLATE	PLAQUE	1					
11	K1013529	BRACKET;PLATE	SUPPORT	1					
12	K1026736	BRACKET	SUPPORT	1					
13	420-00304	VALVE;BY PASS	VANNE BY-PASS	1					
14	2420-1124B	VALVE:BY PASS	VANNE BY-PASS	1					
15	549-00095	SWITCH;PRESSURE	COMMUTATEUR	1					
16	2185-1776D2	HOSE	TUYAU FLEXIBLE	1					
25	2181-1950D1	PLUG	BOUCHON	2					
27	S2215366	BOLT	BOULON	36					
29	DS0025018	BOLT;SET	BOULON	6					
30	S8500067	CLAMP;HOSE	COLLIER DE LA CONDUITE	4					
31	2114-1058D30	WASHER	RONDELLE	8					
32	S5102703	WASHER	RONDELLE	8					
33	S4012733	NUT	ECROU	8					
34	120-00317	BOLT	BOULON	4					
36	S8000111	O-RING	JOINT TORIQUE	2					
41	2180-1026D23	O-RING	JOINT TORIQUE	1					
42	2180-1026D27	O-RING	JOINT TORIQUE	2					
45	2180-1026D28	O-RING	JOINT TORIQUE	7					
51	DS2038221	HOSE	TUYAU FLEXIBLE	1					
52	DS2040592	HOSE	TUYAU FLEXIBLE	1					
53	4215-1003D5	FLANGE;SPLIT	BRIDE	8					
91	2181-1950D9	PLUG	BOUCHON	1					
92	2181-1950D1	PLUG	BOUCHON	1					
93	S8000291	O-RING	JOINT TORIQUE	1					
94	S8000111	O-RING	JOINT TORIQUE	1					
101	2181-1950D2	PLUG	BOUCHON	1					
102	S8000141	O-RING	JOINT TORIQUE	1					
111	2181-1950D1	PLUG	BOUCHON	2					
112	S8000111	O-RING	JOINT TORIQUE	2					

DATE	APR. 02, 2007
1st EDITION	

Fig. 1260 MAIN PIPING(1) - PUMP
CONDUITES DE PRINCIPAL

Serial No. ;

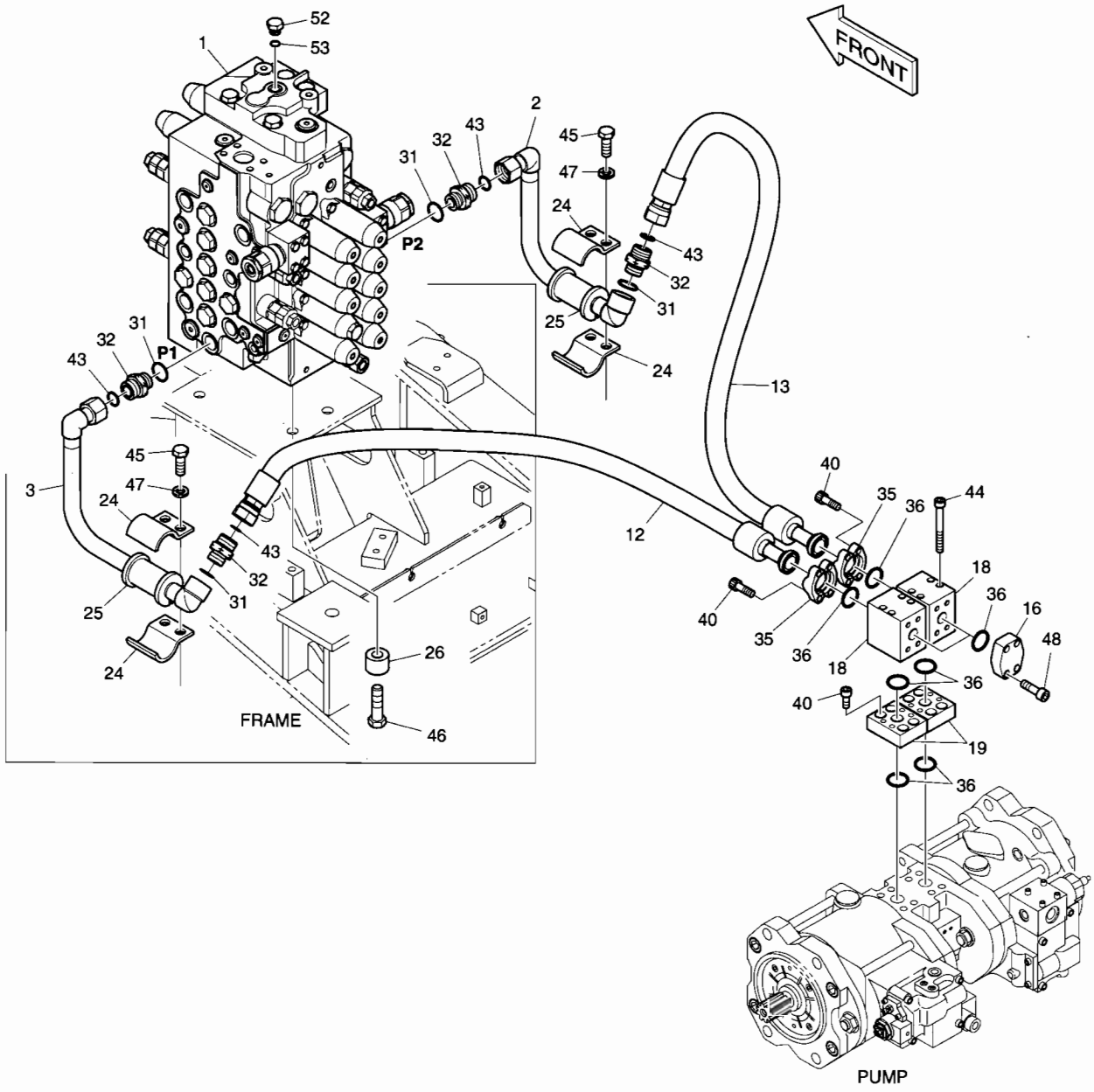

DATE	APR. 02, 2007
1st EDITION	

Fig. 1260 MAIN PIPING(1) - PUMP
CONDUITES DE PRINCIPAL

Serial No. ;

Key No.	Part No.	Description	Description	Q'ty	S.C	Serial No.	ICA	Replaceable part	
								Part No.	Q'ty
1260--	K1016140E	MAIN PIPING	TUYAUTERIE PRINCIPALE	-	D				
1	420-00465B	VALVE;CONTROL	VANNE DE COMMANDE	1					
2	K1016334A	PIPE	TUYAU	1					
3	K1016335	PIPE	TUYAU	1					
12	DS2016112	HOSE	TUYAU FLEXIBLE	1					
13	DS2016113	HOSE	TUYAU FLEXIBLE	1					
16	2181-2157D1	FLANGE	BRIDE	2					
18	K1016115	BLOCK	BLOC	2					
19	K1016117	BLOCK;SPACER	BLOC	2					
24	124-00302	CLAMP;PIPE	COLLIER	4					
25	161-00574	RUBBER	CAOUTCHOUC	2					
26	114-00425	SPACER	DOUILLE D'ECARTEMENT	4					
31	S8000241	O-RING	JOINT TORIQUE	4					
32	2181-2627D1	ADAPTER	ADAPTEUR	4					
35	2181-9079	FLANGE;SPLIT	BRIDE	4					
36	2180-1026D2	O-RING	JOINT TORIQUE	8					
40	S2212066	BOLT	BOULON	16					
43	S8030121	O-RING	JOINT TORIQUE	4					
44	S2213466	BOLT	BOULON	8					
45	S0562766	BOLT	BOULON	4					
46	S0565466	BOLT	BOULON	4					
47	S5102803	WASHER	RONDELLE	4					
48	S2212366	BOLT	BOULON	8					
52	2181-1950D2	PLUG	BOUCHON	1					
53	S8000111	O-RING	JOINT TORIQUE	1					

DATE	APR. 02, 2007
1st EDITION	

Fig. 1270 MAIN PIPING(2) - BOOM
CONDUITES DE PRINCIPAL

Serial No. ;

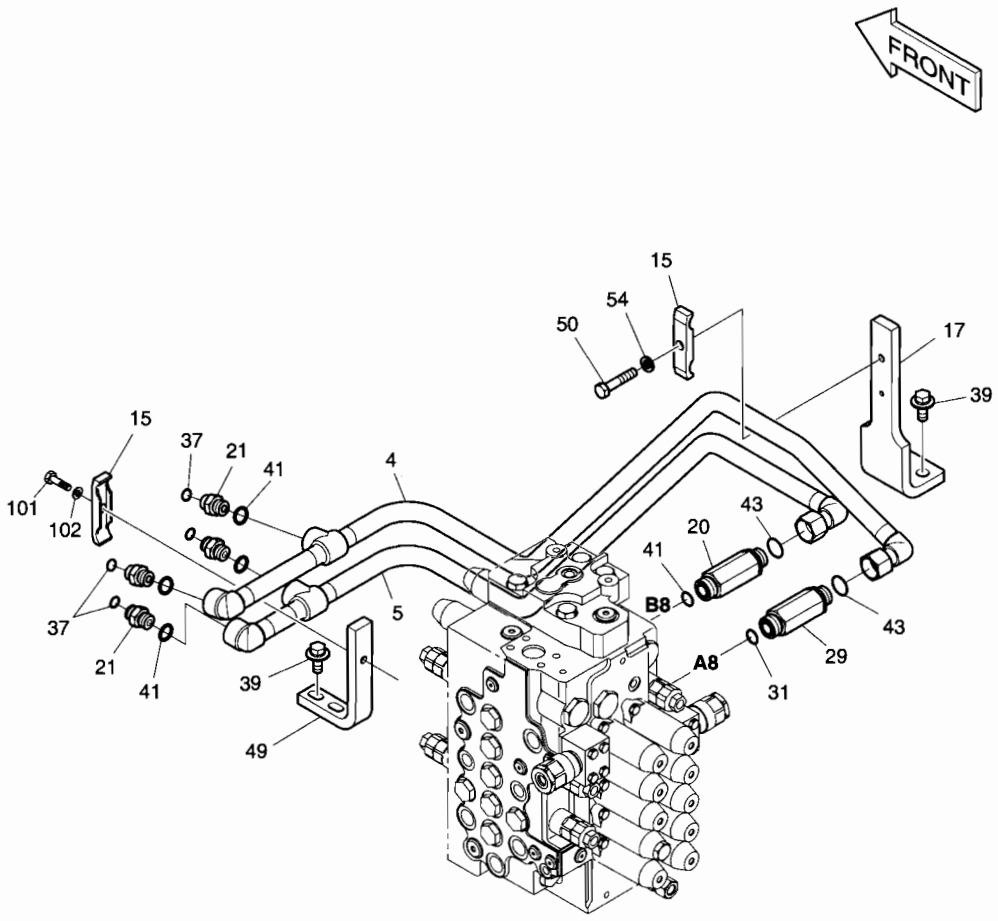

CONTROL VALVE

DATE	APR. 02, 2007
1st EDITION	

Fig. 1270 MAIN PIPING(2) - BOOM CONDUITES DE PRINCIPAL

Serial No. ;

Key No.	Part No.	Description	Description	Q'ty	S.C	Serial No.	ICA	Replaceable part	
								Part No.	Q'ty
270--	K1016140E	MAIN PIPING	TUYAUTERIE PRINCIPALE	-	D				
4	K1016387C	PIPE	TUYAU	1					
5	K1024206B	PIPE	TUYAU	1					
15	2124-1025D6	CLAMP	BRIDE	2					
17	195-02884B	PLATE	PLAQUE	1					
20	DS2257004	ADAPTER	ADAPTEUR	1					
21	2181-4133D3	ADAPTER	ADAPTEUR	4					
29	DS2232124	ADAPTER	ADAPTEUR	1					
31	S8000241	O-RING	JOINT TORIQUE	1					
37	S8030081	O-RING	JOINT TORIQUE	4					
39	DS0025020	BOLT;SET	BOULON	4					
41	S8000181	O-RING	JOINT TORIQUE	5					
43	S8030121	O-RING	JOINT TORIQUE	2					
49	2195-3657	BRACKET	SUPPORT	1					
50	S0560966	BOLT	BOULON	1					
54	S5102703	WASHER;SPRING	RONDELLE ELASTIQUE	1					
101	S0560966	BOLT	BOULON	1					
102	S5102703	WASHER;SPRING	RONDELLE ELASTIQUE	1					

DATE	APR. 02, 2007
1st EDITION	

Fig. 1280 MAIN PIPING(3) - SWING & TRAVEL
CONDUITES DE PRINCIPAL

Serial No. ;

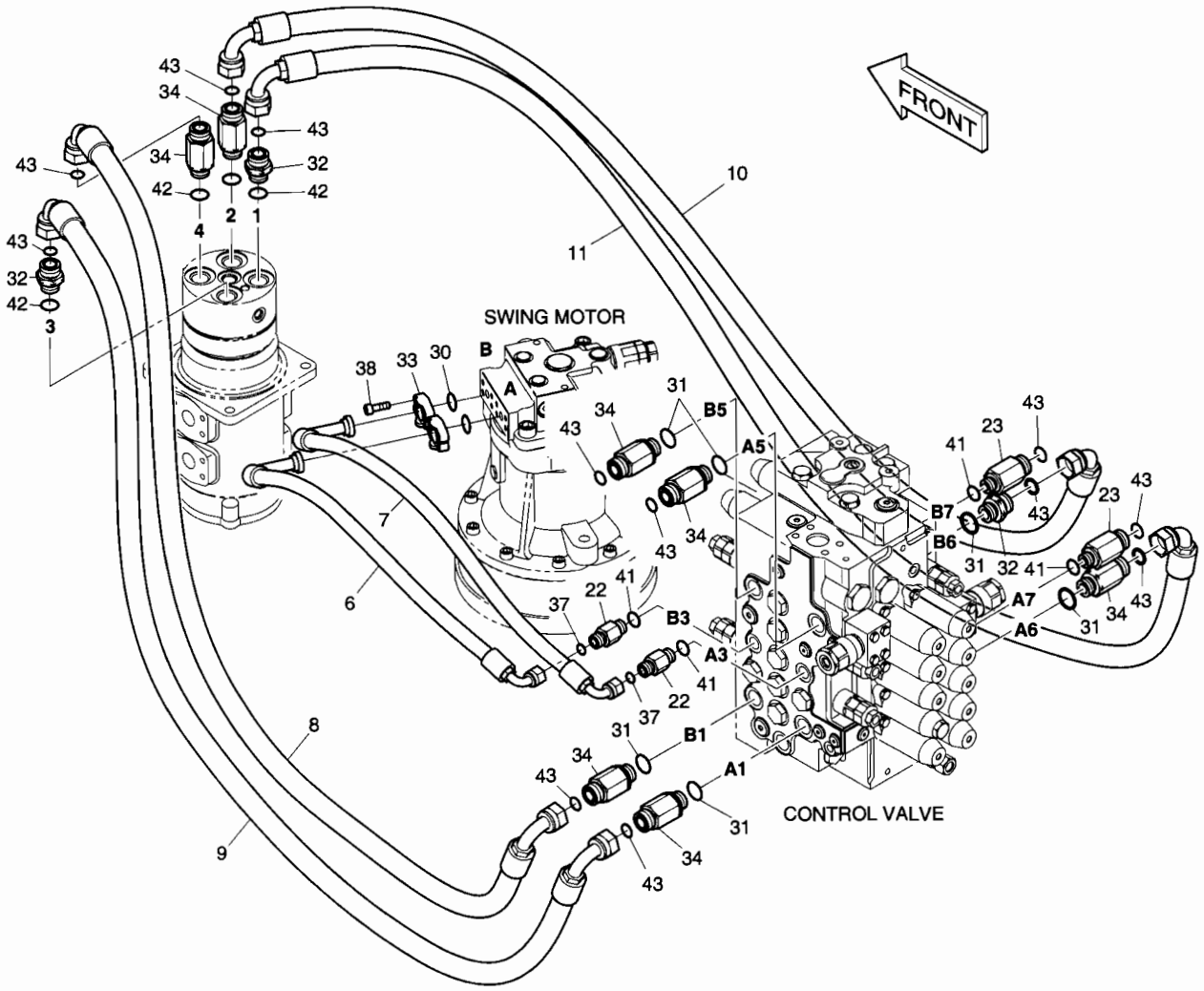

DATE	APR. 02, 2007
1st EDITION	

Fig. 1280 MAIN PIPING(3) - SWING & TRAVEL CONDUITES DE PRINCIPAL

Serial No. ;

Key No.	Part No.	Description	Description	Q'ty	S.C	Serial No.	ICA	Replaceable part	
								Part No.	Q'ty
1280--	K1016140E	MAIN PIPING	TUYAUTERIE PRINCIPALE	-	D				
6	DS2026191	HOSE	TUYAU FLEXIBLE	1					
7	DS2026162	HOSE	TUYAU FLEXIBLE	1					
8	DS2023283	HOSE	TUYAU FLEXIBLE	1					
9	DS2023283	HOSE	TUYAU FLEXIBLE	1					
10	DS2023284	HOSE	TUYAU FLEXIBLE	1					
11	DS2023285	HOSE	TUYAU FLEXIBLE	1					
22	2181-4133D37	ADAPTER	ADAPTEUR	2					
23	DS2257003	ADAPTER	ADAPTEUR	2					
30	2180-1026D30	O-RING	JOINT TORIQUE	2					
31	S8000241	O-RING	JOINT TORIQUE	6					
32	2181-2627D1	ADAPTER	ADAPTEUR	3					
33	2181-9089	FLANGE;SPLIT	BRIDE	4					
34	2181-2627D3	ADAPTER	ADAPTEUR	7					
37	S8030081	O-RING	JOINT TORIQUE	2					
38	S2209066	BOLT	BOULON	8					
41	S8000181	O-RING	JOINT TORIQUE	4					
42	S8000231	O-RING	JOINT TORIQUE	4					
43	S8030121	O-RING	JOINT TORIQUE	11					

Fig. 1290 MAIN PIPING(4) - ARM & BUCKET CONDUITES DE PRINCIPAL

Serial No. ;

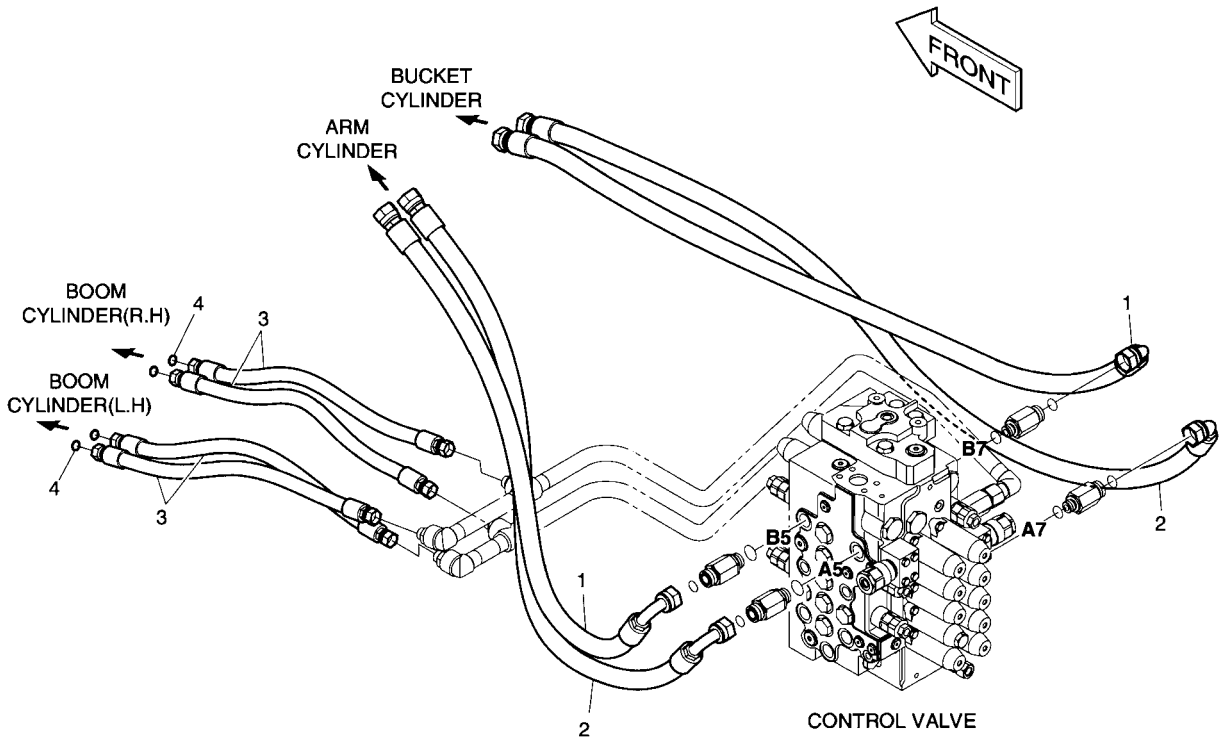

DATE	APR. 02, 2007
1st EDITION	

Fig. 1290 MAIN PIPING(4) - ARM & BUCKET CONDUITES DE PRINCIPAL

Serial No. ;

Key No.	Part No.	Description	Description	Q'ty	S.C	Serial No.	ICA	Replaceable part	
								Part No.	Q'ty
1290--	K1024552A	MAIN PIPING;MONO BOOM	TUYAUTERIE PRINCIPALE	-	D				
1	DS2013318	HOSE	TUYAU FLEXIBLE	2					
2	DS2013197	HOSE	TUYAU FLEXIBLE	2					
3	DS2011605	HOSE	TUYAU FLEXIBLE	4					
4	S8030081	O-RING	JOINT TORIQUE	4					

DATE	APR. 02, 2007
1st EDITION	

Fig. 1300 PILOT PIPING (1)
CONDUITES DE PILOTE

Serial No. ;

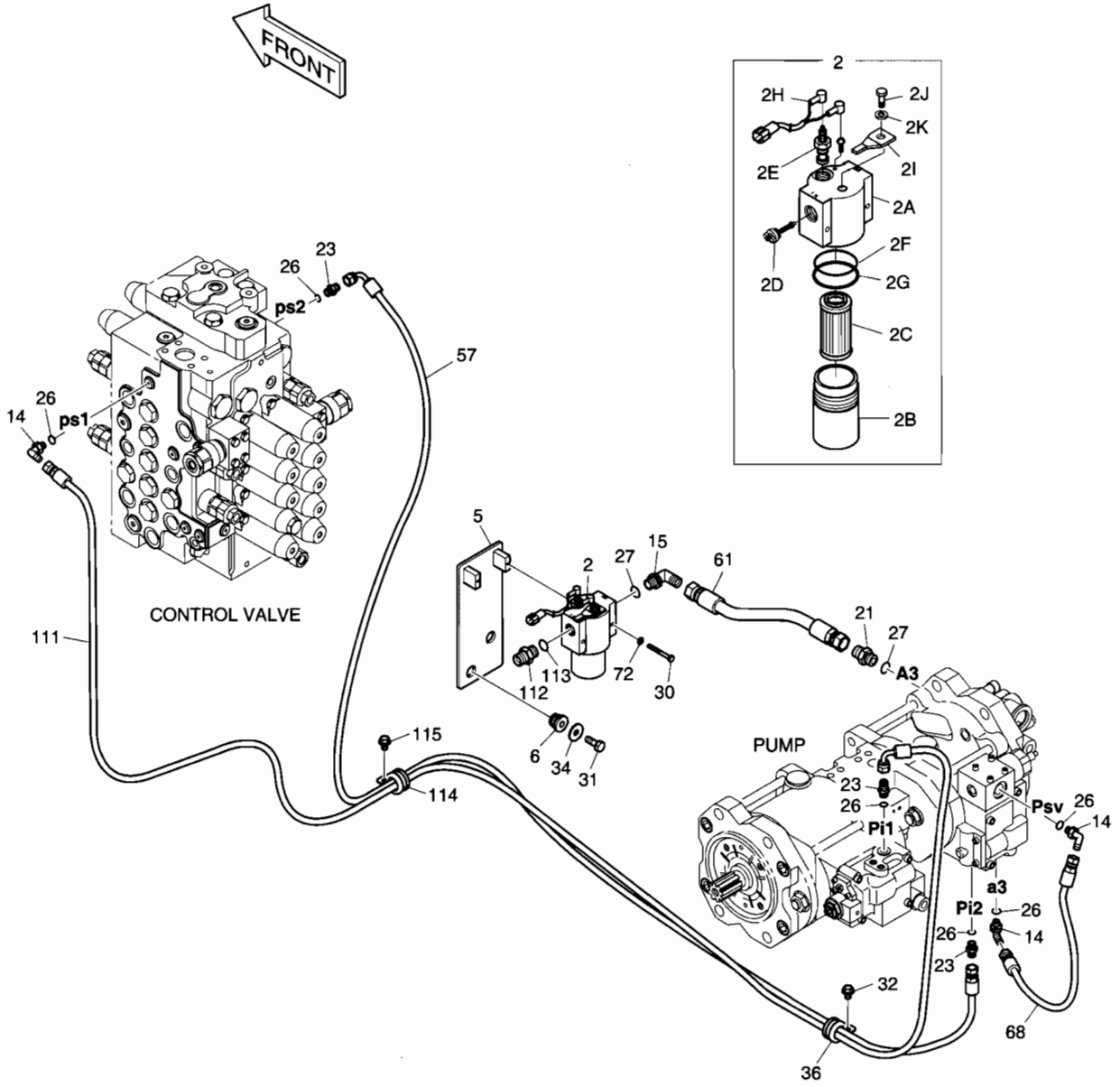

DATE	APR. 02, 2007
1st EDITION	

Fig. 1300 PILOT PIPING (1) CONDUITES DE PILOTE

Serial No. ;

Key No.	Part No.	Description	Description	Q'ty	S.C	Serial No.	ICA	Replaceable part	
								Part No.	Q'ty
1300--	K1017469B	PILOT PIPING	TUYAUTERIE PILOTE	-	D				
2	471-00075A	FILTER;PILOT	FILTRE	1					
2A	-	. HEAD	. TETE	1	D				
2B	2472-7003	. CASE	. CARTER	1					
2C	2471-1154	. ELEMENT;PILOT FILTER	. ELEMENT	1					
2D	2426-1237	. VALVE;BY-PASS	. VANNE BY-PASS	1					
2E	2471-1155A	. INDICATOR	. INDICATEUR	1					
2F	Y-3738-04	. O-RING	. JOINT TORIQUE	1					
2G	Y-3738-05	. RING;BACK UP	. BAGUE	1					
2H	530-00236	. HARNESS;PILOT FILTER	. HARNAIS	1					
2I	2197-1661	. BRACKET	. SUPPORT	1					
2J	S0508653	. BOLT	. BOULON	1					
2K	S5102503	. WASHER;SPRING	. RONDELLE ELASTIQUE	1					
5	195-02716C	BRACKET	SUPPORT	1					
6	198-00016	RUBBER	CAOUTCHOUC	2					
14	2181-1702D4	ELBOW	COUDE	3					
15	2181-1702D2	ELBOW	COUDE	1					
21	2181-1126D6	ADAPTER	ADAPTEUR	1					
23	2181-1126D14	ADAPTER	ADAPTEUR	3					
26	S8000111	O-RING	JOINT TORIQUE	6					
27	S8000181	O-RING	JOINT TORIQUE	2					
30	S0553766	BOLT	BOULON	2					
31	S0512266	BOLT	BOULON	2					
32	K1001029	BOLT	BOULON	1					
34	2114-1058D10	WASHER	RONDELLE	2					
36	124-00208D4	CLIP	AGRAFE	1					
57	DS2093092	HOSE	TUYAU FLEXIBLE	1					
61	DS2053322	HOSE	TUYAU FLEXIBLE	1					
68	DS2094137	HOSE	TUYAU FLEXIBLE	1					
72	S5102303	WASHER	RONDELLE	2					
111	DS2093337	HOSE	TUYAU FLEXIBLE	1					
112	2181-1126D6	ADAPTER	ADAPTEUR	1					
113	S8000181	O-RING	JOINT TORIQUE	1					
114	124-00208D4	CLIP	AGRAFE	1					
115	K1001029	BOLT	BOULON	1					

DATE	APR. 02, 2007
1st EDITION	

Fig. 1310 PILOT PIPING (2) CONDUITES DE PILOTE

Serial No. ;

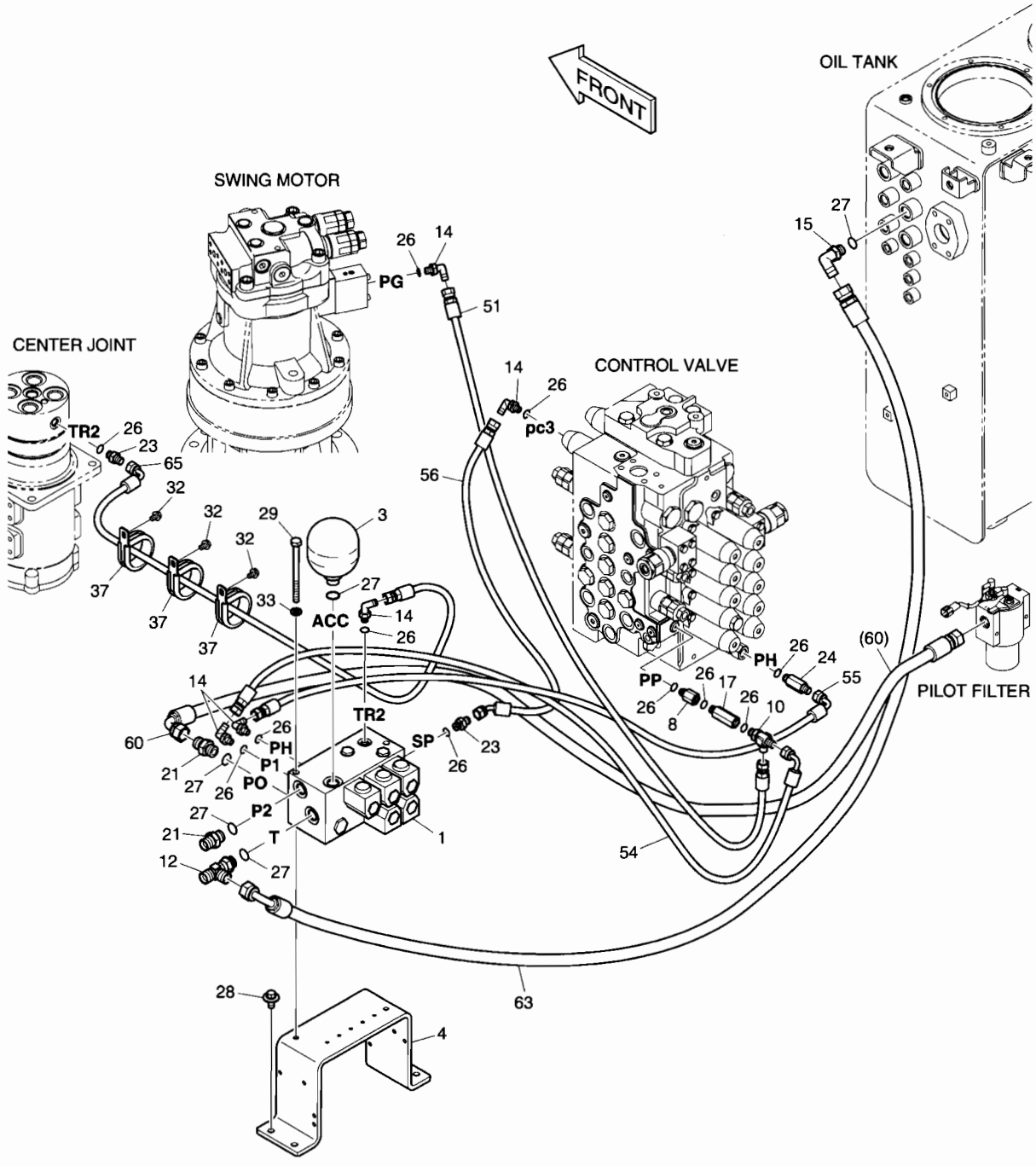

DATE	APR. 02, 2007
1st EDITION	

Fig. 1310 PILOT PIPING (2) CONDUITES DE PILOTE

Serial No. ;

Key No.	Part No.	Description	Description	Q'ty	S.C	Serial No.	ICA	Replaceable part	
								Part No.	Q'ty
1310--	K1017469B	PILOT PIPING	TUYAUTERIE PILOTE	-	D				
1	K1012576	VALVE;SOLENOID	SOUPAPE A SOLENOIDE	1					
3	2460-9057A	ACCUMULATOR	ACCUMULATEUR	1					
4	K1027213	BRACKET	SUPPORT	1					
8	471-00118	REDUCER;FILTER	REDUCTEUR	1					
10	2181-1951D1	TEE	TE	1					
12	2181-1951D5	TEE	TE	1					
14	2181-1702D4	ELBOW	COUDE	5					
15	2181-1702D2	ELBOW	COUDE	1					
17	DS2242022	ADAPTER	ADAPTEUR	1					
21	2181-1126D6	ADAPTER	ADAPTEUR	2					
23	2181-1126D14	ADAPTER	ADAPTEUR	2					
24	2181-1126D34	ADAPTER	ADAPTEUR	1					
26	S8000111	O-RING	JOINT TORIQUE	11					
27	S8000181	O-RING	JOINT TORIQUE	5					
28	DS0025017	BOLT;SET	BOULON	4					
29	S0560066	BOLT	BOULON	2					
32	K1001029	BOLT	BOULON	3					
33	S5102603	WASHER	RONDELLE	2					
37	124-00208D9	CLIP	AGRAFE	3					
51	DS2094077	HOSE	TUYAU FLEXIBLE	1					
54	DS2093080	HOSE	TUYAU FLEXIBLE	1					
55	DS2093006	HOSE	TUYAU FLEXIBLE	1					
56	DS2054029	HOSE	TUYAU FLEXIBLE	1					
60	DS2055982	HOSE	TUYAU FLEXIBLE	1					
63	DS2055986	HOSE	TUYAU FLEXIBLE	1					
65	DS2093025	HOSE	TUYAU FLEXIBLE	1					

DATE	APR. 02, 2007
1st EDITION	

Fig. 1320 PILOT PIPING (3) CONDUITES DE PILOTE

Serial No. ;

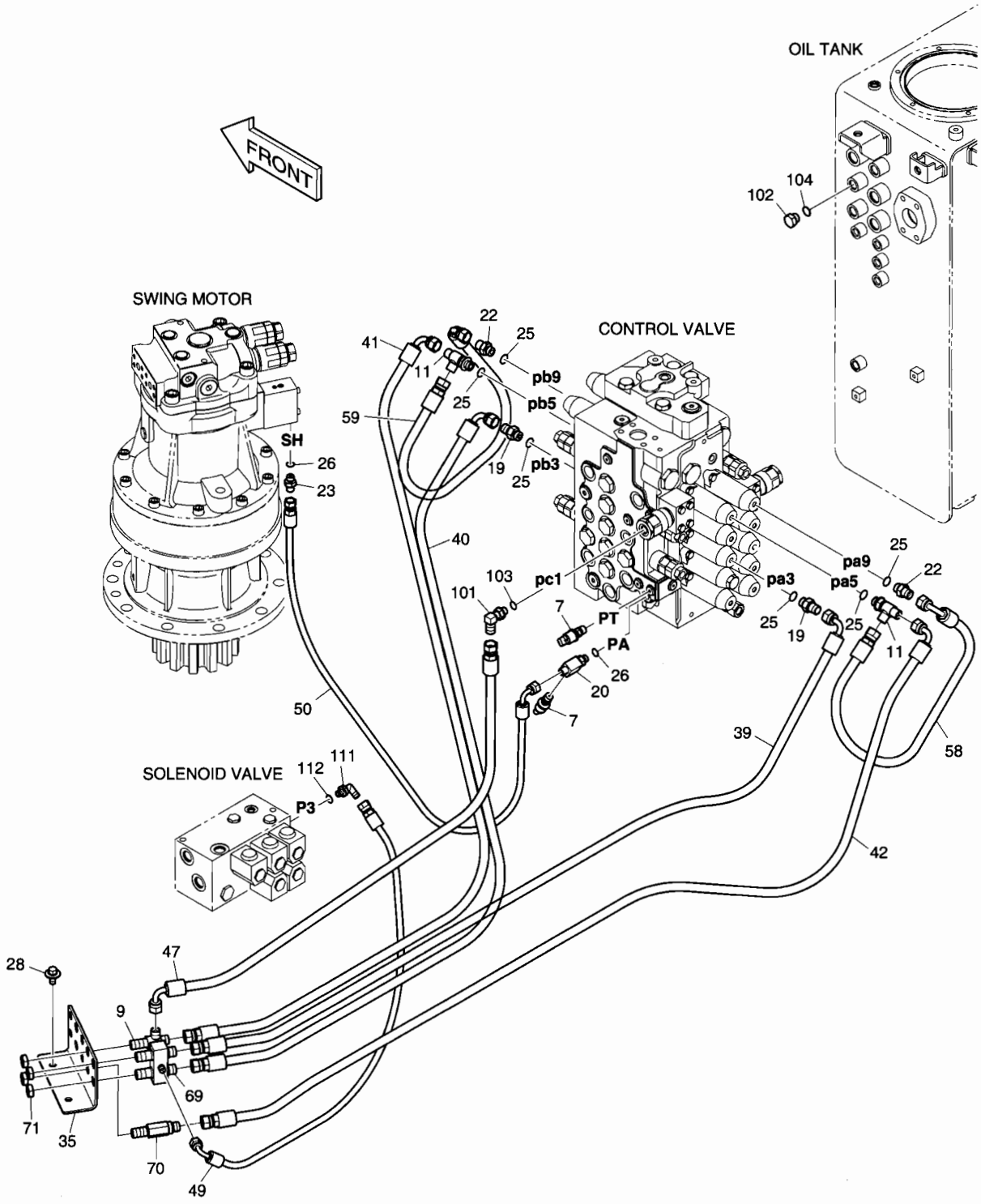

DATE	APR. 02, 2007
1st EDITION	

Fig. 1320 PILOT PIPING (3) CONDUITES DE PILOTE

Serial No. ;

Key No.	Part No.	Description	Description	Q'ty	S.C	Serial No.	ICA	Replaceable part	
								Part No.	Q'ty
1320--	K1017469B	PILOT PIPING	TUYAUTERIE PILOTE	-	D				
7	2549-9112	SWITCH;PRESSURE	COMMUTATEUR	2					
9	181-00086D2	TEE	TE	1					
11	2181-1951D16	TEE	TE	2					
19	181-00144D5	ADAPTER	ADAPTEUR	2					
20	K1024104	TEE	TE	1					
22	2181-1126D7	ADAPTER	ADAPTEUR	2					
23	2181-1126D14	ADAPTER	ADAPTEUR	1					
25	S8000141	O-RING	JOINT TORIQUE	6					
26	S8000111	O-RING	JOINT TORIQUE	2					
28	DS0025017	BOLT;SET	BOULON	2					
35	K1000354	BRACKET;JOINT	SUPPORT	1					
39	DS2093372	HOSE	TUYAU FLEXIBLE	1					
40	DS2093176	HOSE	TUYAU FLEXIBLE	1					
41	DS2093176	HOSE	TUYAU FLEXIBLE	1					
42	DS2093382	HOSE	TUYAU FLEXIBLE	1					
47	DS2093445	HOSE	TUYAU FLEXIBLE	1					
49	DS2093237	HOSE	TUYAU FLEXIBLE	1					
50	DS2093036	HOSE	TUYAU FLEXIBLE	1					
58	DS2093244	HOSE	TUYAU FLEXIBLE	1					
59	DS2093097	HOSE	TUYAU FLEXIBLE	1					
69	420-00307	VALVE;SHUTTLE	VANNE	1					
70	420-00352D1	VALVE;SHOCKLESS	VANNE	1					
71	121-00010D1	NUT	ECROU	4					
101	2181-1702D3	ELBOW	COUDE	1					
102	2181-1950D2	PLUG	BOUCHON	1					
103	S8000111	O-RING	JOINT TORIQUE	1					
104	S8000141	O-RING	JOINT TORIQUE	1					
111	2181-1702D4	ELBOW	COUDE	1					
112	S8000111	O-RING	JOINT TORIQUE	1					

DATE	APR. 02, 2007
1st EDITION	

Fig. 1330 PILOT PIPING (4)
CONDUITES DE PILOTE

Serial No. ;

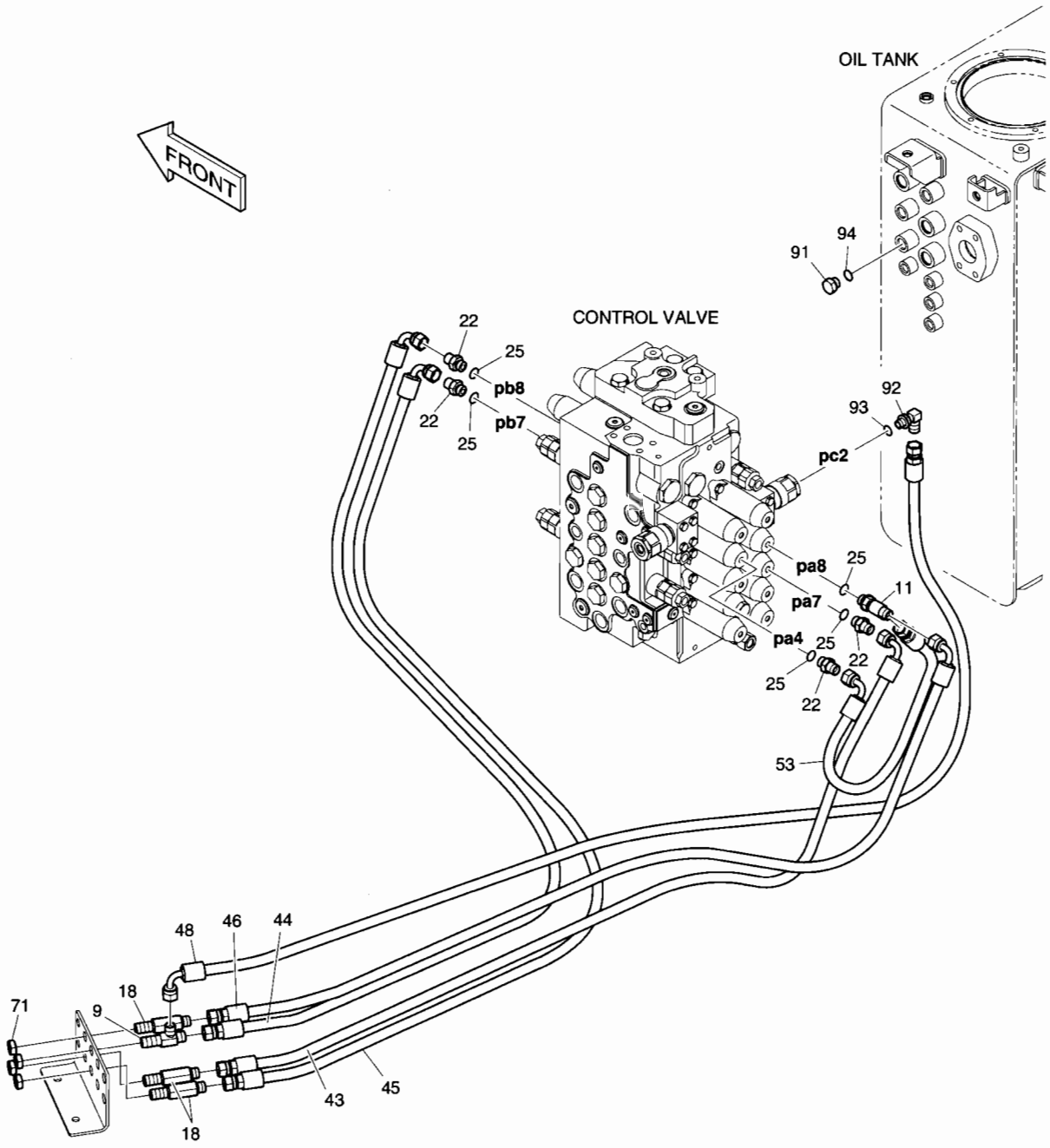

DATE	APR. 02, 2007
1st EDITION	

Fig. 1330 PILOT PIPING (4) CONDUITES DE PILOTE

Serial No. ;

Key No.	Part No.	Description	Description	Q'ty	S.C	Serial No.	ICA	Replaceable part	
								Part No.	Q'ty
330--	K1017469B	PILOT PIPING	TUYAUTERIE PILOTE	-	D				
9	181-00086D2	TEE	TE	1					
11	2181-1951D16	TEE	TE	1					
18	DS2410009	ADAPTER	ADAPTEUR	3					
22	2181-1126D7	ADAPTER	ADAPTEUR	4					
25	S8000141	O-RING	JOINT TORIQUE	5					
43	DS2093244	HOSE	TUYAU FLEXIBLE	1					
44	DS2093066	HOSE	TUYAU FLEXIBLE	1					
45	DS2093320	HOSE	TUYAU FLEXIBLE	1					
46	DS2093444	HOSE	TUYAU FLEXIBLE	1					
48	DS2093245	HOSE	TUYAU FLEXIBLE	1					
53	DS2093097	HOSE	TUYAU FLEXIBLE	1					
71	121-00010D1	NUT	ECROU	4					
91	2181-1950D2	PLUG	BOUCHON	1					
92	2181-1702D3	ELBOW	COUDE	1					
93	S8000111	O-RING	JOINT TORIQUE	1					
94	S8000141	O-RING	JOINT TORIQUE	1					

DATE	APR. 02, 2007
1st EDITION	

Fig. 1340 PILOT PIPING (5)
CONDUITES DE PILOTE

Serial No. ;

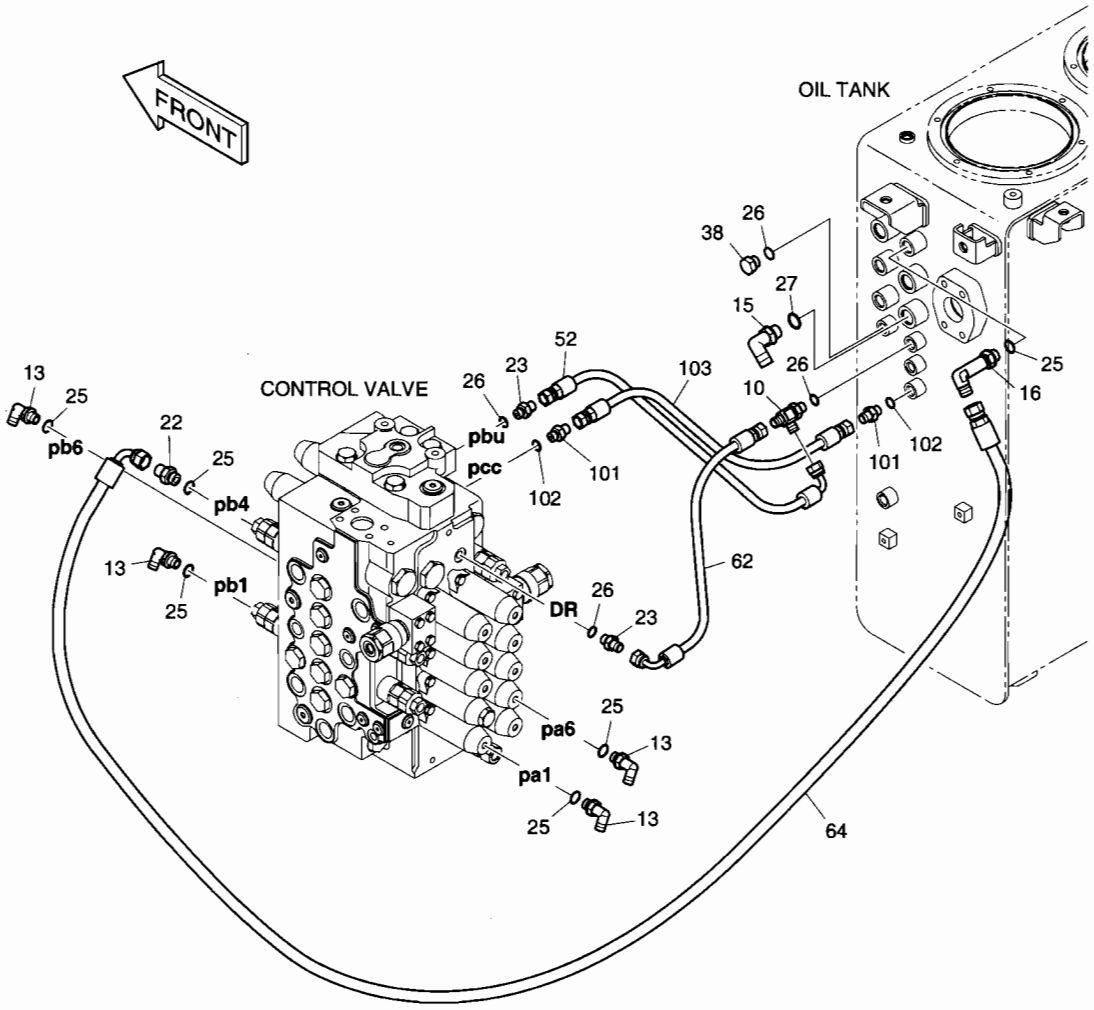

DATE	APR. 02, 2007
1st EDITION	

Fig. 1340 PILOT PIPING (5) CONDUITES DE PILOTE

Serial No. ;

Key No.	Part No.	Description	Description	Q'ty	S.C	Serial No.	ICA	Replaceable part	
								Part No.	Q'ty
1340--	K1017469B	PILOT PIPING	TUYAUTERIE PILOTE	-	D				
10	2181-1951D1	TEE	TE	1					
13	2181-1702D10	ELBOW	COUDE	4					
15	2181-1702D2	ELBOW	COUDE	1					
16	2181-1702D63	ELBOW	COUDE	1					
22	2181-1126D7	ADAPTER	ADAPTEUR	1					
23	2181-1126D14	ADAPTER	ADAPTEUR	2					
25	S8000141	O-RING	JOINT TORIQUE	6					
26	S8000111	O-RING	JOINT TORIQUE	4					
27	S8000181	O-RING	JOINT TORIQUE	1					
38	2181-1950D1	PLUG	BOUCHON	1					
52	DS2093286	HOSE	TUYAU FLEXIBLE	1					
62	DS2093102	HOSE	TUYAU FLEXIBLE	1					
64	DS2093440	HOSE	TUYAU FLEXIBLE	1					
101	2181-1126D14	ADAPTER	ADAPTEUR	2					
102	S8000111	O-RING	JOINT TORIQUE	2					
103	DS2094237	HOSE	TUYAU FLEXIBLE	1					

DATE	APR. 02, 2007
1st EDITION	

Fig. 1350 PILOT PIPING (6)
CONDUITES DE PILOTE

Serial No. ;

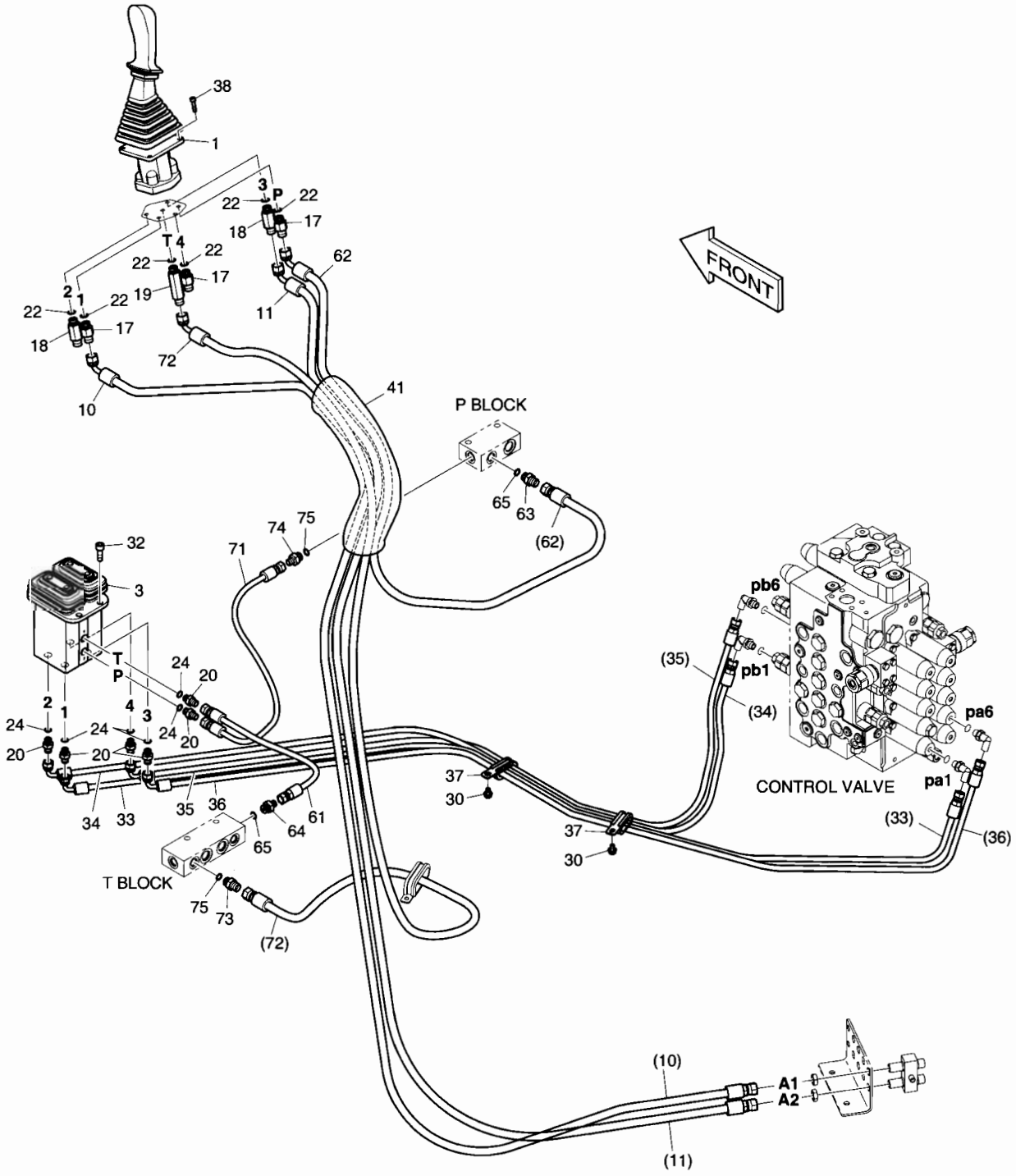

DATE	APR. 02, 2007
1st EDITION	

Fig. 1350 PILOT PIPING (6) CONDUITES DE PILOTE

Serial No. ;

Key No.	Part No.	Description	Description	Q'ty	S.C	Serial No.	ICA	Replaceable part	
								Part No.	Q'ty
1350--	K1017638B	PILOT PIPING	TUYAUTERIE PILOTE	-	D				
1	K1000556G	VALVE;REMOCON(L.H)	VANNE DE COMMANDE	1					
3	420-00467	VALVE;PEDAL	VANNE	1					
10	DS2095002	HOSE	TUYAU FLEXIBLE	1					
11	DS2095002	HOSE	TUYAU FLEXIBLE	1					
17	DS2213165	ADAPTER	ADAPTEUR	3					
18	2181-1126D27	ADAPTER	ADAPTEUR	2					
19	2181-1126D28	ADAPTER	ADAPTEUR	1					
20	2181-1126D14	ADAPTER	ADAPTEUR	6					
22	S8000141	O-RING	JOINT TORIQUE	6					
24	S8000111	O-RING	JOINT TORIQUE	6					
30	K1001029	BOLT	BOULON A 6 PANS	2					
32	S2212266	BOLT	BOULON A 6 PANS	4					
33	DS2093073	HOSE	TUYAU FLEXIBLE	1					
34	DS2093052	HOSE	TUYAU FLEXIBLE	1					
35	DS2093052	HOSE	TUYAU FLEXIBLE	1					
36	DS2093190	HOSE	TUYAU FLEXIBLE	1					
37	124-00209D3	CLIP	AGRAFE	2					
38	S2205066	BOLT	BOULON A 6 PANS	4					
41	K1003945	PROTECTOR	PROTECTEUR	1					
61	DS2094006	HOSE	TUYAU FLEXIBLE	1					
62	DS2095003	HOSE	TUYAU FLEXIBLE	1					
63	2181-1126D7	ADAPTER	ADAPTEUR	1					
64	2181-1126D36	ADAPTER	ADAPTEUR	1					
65	S8000141	O-RING	JOINT TORIQUE	2					
71	DS2094006	HOSE	TUYAU FLEXIBLE	1					
72	DS2095004	HOSE	TUYAU FLEXIBLE	1					
73	2181-1126D7	ADAPTER	ADAPTEUR	1					
74	2181-1126D36	ADAPTER	ADAPTEUR	1					
75	S8000141	O-RING	JOINT TORIQUE	2					

DATE	APR. 02, 2007
1st EDITION	

Fig. 1360 PILOT PIPING (7)
CONDUITES DE PILOTE

Serial No. ;

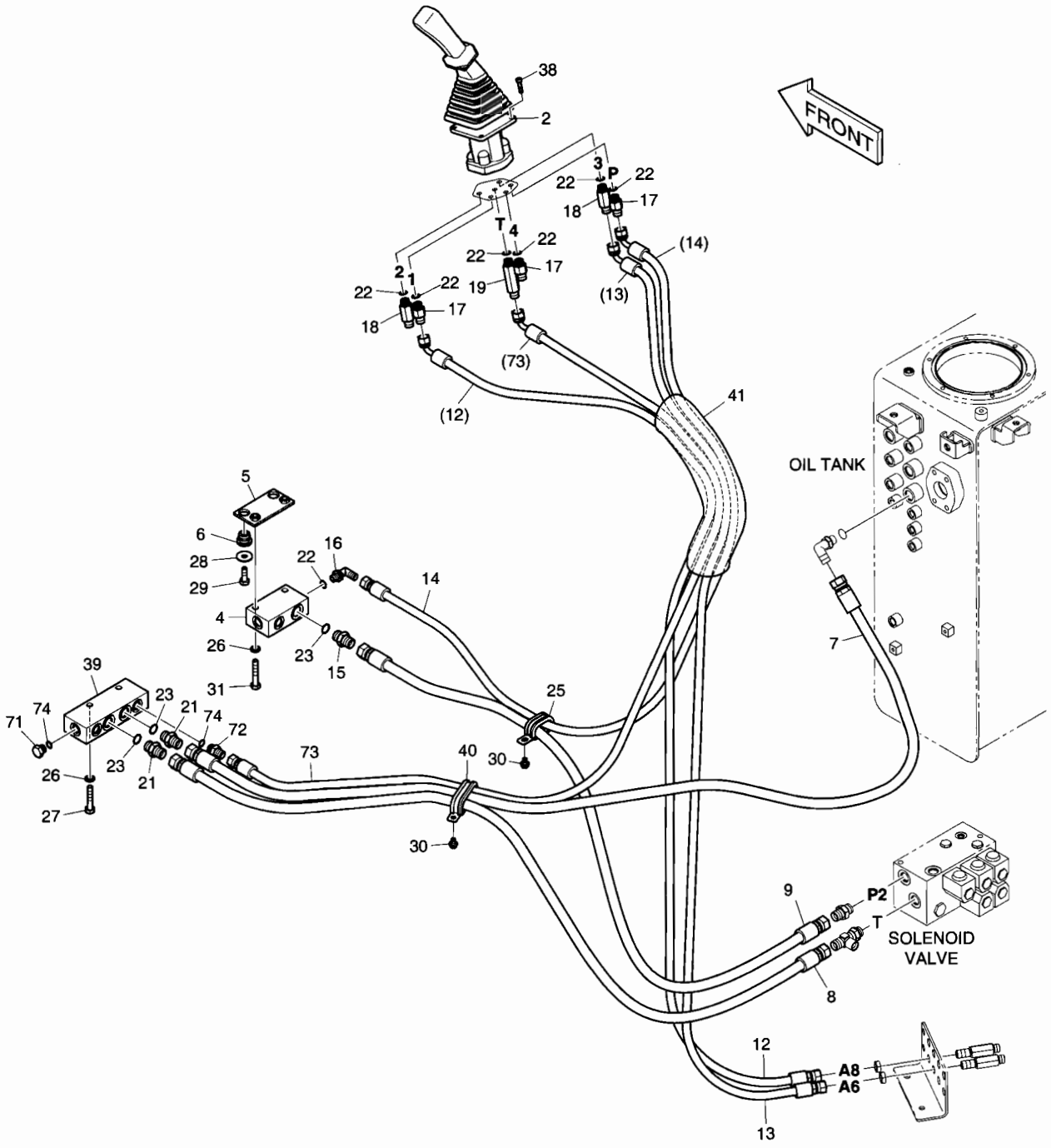

DATE	APR. 02, 2007
1st EDITION	

Fig. 1360 PILOT PIPING (7) CONDUITES DE PILOTE

Serial No. ;

Key No.	Part No.	Description	Description	Q'ty	S.C	Serial No.	ICA	Replaceable part	
								Part No.	Q'ty
1360--	K1017638B	PILOT PIPING	TUYAUTERIE PILOTE	-	D				
2	K1000555G	VALVE;REMOCON(R.H)	VANNE DE COMMANDE	1					
4	2423-1470	BLOCK	BLOC	1					
5	621-02151	PLATE	PLAQUE	1					
6	198-00016	RUBBER	CAOUTCHOUC	2					
7	DS2053897	HOSE	TUYAU FLEXIBLE	1					
8	DS2053399	HOSE	TUYAU FLEXIBLE	1					
9	DS2053852	HOSE	TUYAU FLEXIBLE	1					
12	DS2095001	HOSE	TUYAU FLEXIBLE	1					
13	DS2095001	HOSE	TUYAU FLEXIBLE	1					
14	DS2095002	HOSE	TUYAU FLEXIBLE	1					
15	2471-1135	ADAPTER	ADAPTEUR	1					
16	2181-1702D5	ELBOW	COUDE	1					
17	DS2213165	ADAPTER	ADAPTEUR	3					
18	2181-1126D27	ADAPTER	ADAPTEUR	2					
19	2181-1126D28	ADAPTER	ADAPTEUR	1					
21	2181-1126D6	ADAPTER	ADAPTEUR	2					
22	S8000141	O-RING	JOINT TORIQUE	7					
23	S8000181	O-RING	JOINT TORIQUE	3					
25	124-00209D2	CLIP	AGRAFE	1					
26	2114-2031D5	WASHER;SPRING	RONDELLE ELASTIQUE	4					
27	S0558666	BOLT	BOULON A 6 PANS	2					
28	2114-1058D10	WASHER	CALE	2					
29	S0512266	BOLT	BOULON A 6 PANS	2					
30	K1001029	BOLT	BOULON A 6 PANS	2					
31	S0558766	BOLT	BOULON A 6 PANS	2					
38	S2205066	BOLT	BOULON A 6 PANS	4					
39	K1007042	BLOCK	BLOC	1					
40	124-00209D8	CLIP	AGRAFE	1					
41	K1003945	PROTECTOR	PROTECTEUR	1					
71	2181-1950D2	PLUG	BOUCHON	1					
72	2181-1126D7	ADAPTER	ADAPTEUR	1					
73	DS2095003	HOSE	TUYAU FLEXIBLE	1					
74	S8000141	O-RING	JOINT TORIQUE	2					

DATE	APR. 02, 2007
1st EDITION	

Fig. 1370 PILOT PIPING (8)
CONDUITES DE PILOTE

Serial No. ;

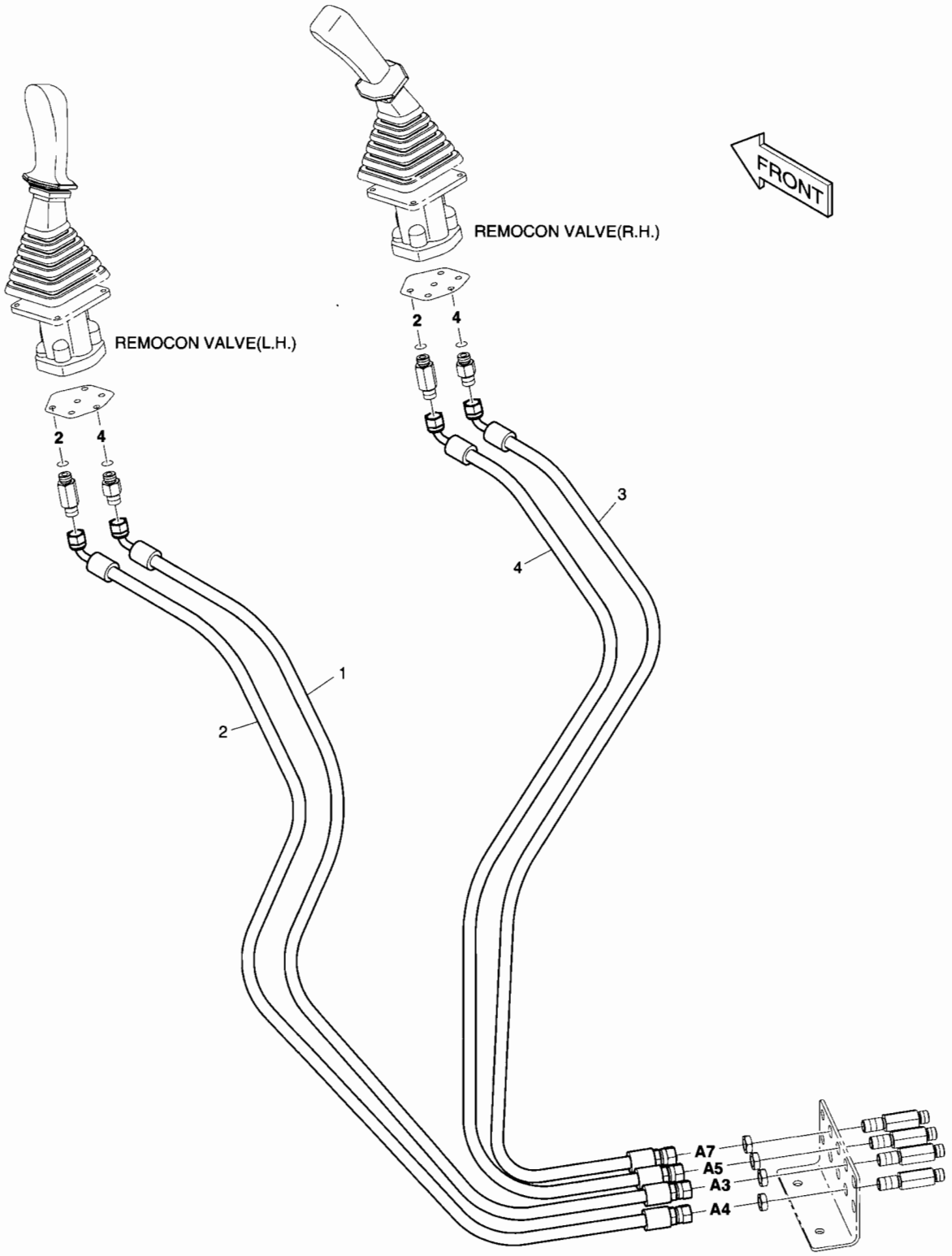

DATE	APR. 02, 2007
1st EDITION	

Fig. 1370 PILOT PIPING (8)
CONDUITES DE PILOTE

Serial No. ;

Key No.	Part No.	Description	Description	Q'ty	S.C	Serial No.	ICA	Replaceable part	
								Part No.	Q'ty
1370--	K1017643A	PILOT PIPING	TUYAUTERIE PILOTE	-	D				
1	DS2095002	HOSE	TUYAU FLEXIBLE	1					
2	DS2095002	HOSE	TUYAU FLEXIBLE	1					
3	DS2095041	HOSE	TUYAU FLEXIBLE	1					
4	DS2095027	HOSE	TUYAU FLEXIBLE	1					

DATE	APR. 02, 2007
1st EDITION	

Fig. 1380 CONTROL STAND - L.H.
CONSOLE DE COMMANDE

Serial No. ;

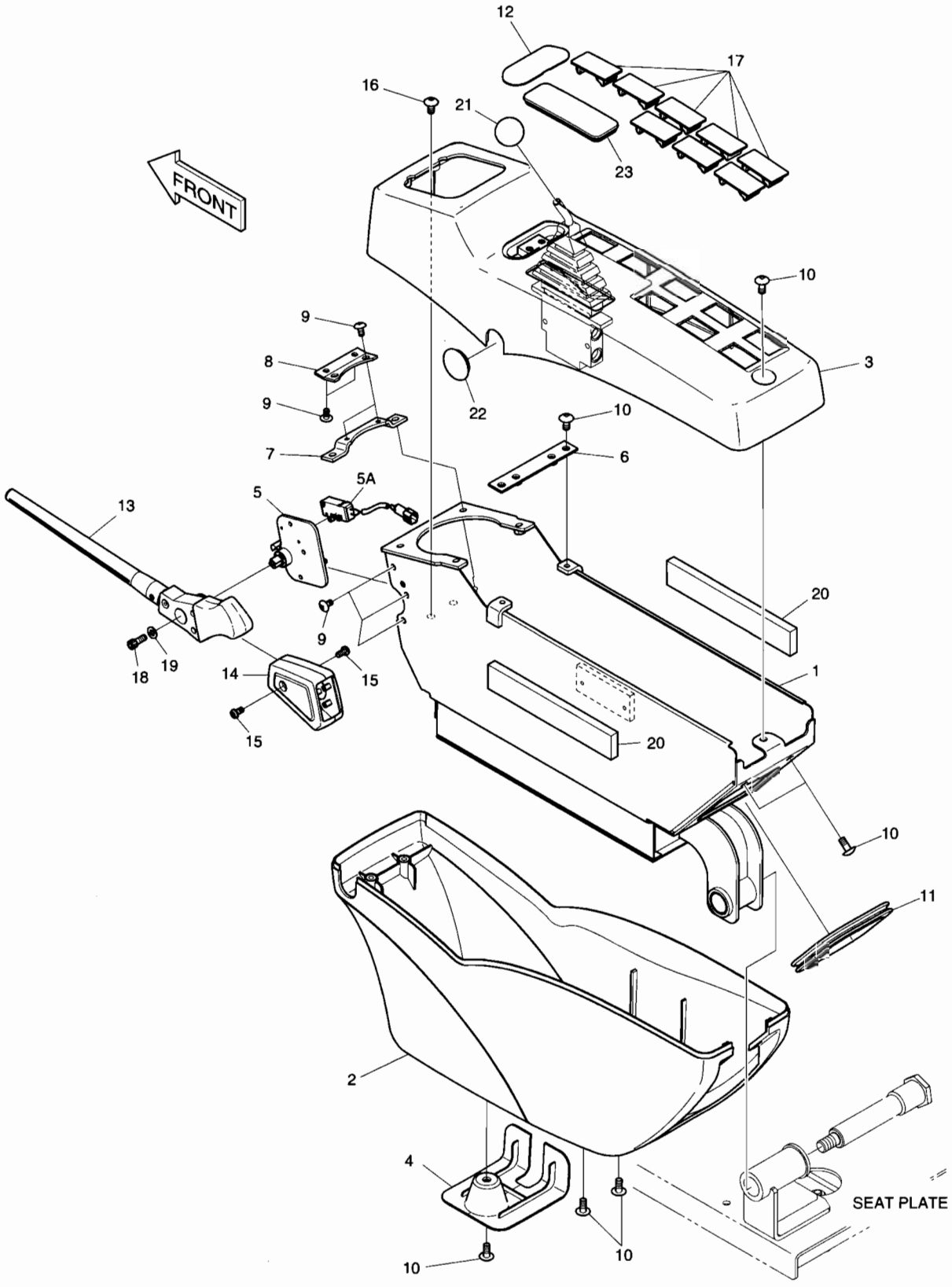

DATE	APR. 02, 2007
1st EDITION	

Fig. 1380 CONTROL STAND - L.H.
CONSOLE DE COMMANDE

Serial No. ;

Key No.	Part No.	Description	Description	Q'ty	S.C	Serial No.	ICA	Replaceable part	
								Part No.	Q'ty
1380--	K1026373	CONTROL STAND L.H.	PANNEAU	-	D				
1	K1015268	BRACKET;STAND LH	SUPPORT	1					
2	621-02901B	COVER;STAND LH LOWER	COUVERCLE	1					
3	621-02899E	COVER;STAND LH UPPER	COUVERCLE	1					
4	621-03014B	COVER;STAND LOW	COUVERCLE	1					
5	195-02868C	BRACKET;SAFETY ASM	SUPPORT	1					
5A	549-00089	. SWITCH;MICRO	. INTERRUPTEUR	1					
6	621-02957A	PLATE;STAND MOUNT	PLAQUE	1					
7	159-00290A	PLATE	PLAQUE	1					
8	159-00287A	PLATE;COVER MOUNT	PLAQUE	1					
9	2120-2166D53	SCREW	VIS	7					
10	2120-2166D10	SCREW	VIS	10					
11	K1001023	STRIP;WEATHER	TAMPON	1					
12	621-03733B	COVER	COUVERCLE	1					
13	K1000840	LEVER	LEVIER	1					
14	K1000842A	COVER	COUVERCLE	1					
15	S3450823	SCREW M5X0.8X10	VIS	2					
16	2120-2166D52	BOLT	BOULON	2					
17	621-02801	COVER;SWITCH	COUVERCLE	8					
18	S2202966	BOLT;SOCKET	BOULON DE PLOT	1					
19	2114-1898D4	WASHER	RONDELLE	1					
20	K1010466	FORM	EPONGE	2					
21	132-00021	GRIP	POIGNEE	1					
22	K1026908	BUSHING;RUBBER	DOUILLE EN CAOUTCHOUC	1					
23	K1026909	BUSHING;RUBBER	DOUILLE EN CAOUTCHOUC	1					

DATE	APR. 02, 2007
1st EDITION	

Fig. 1390 CONTROL STAND - R.H.
CONSOLE DE COMMANDE

Serial No. ;

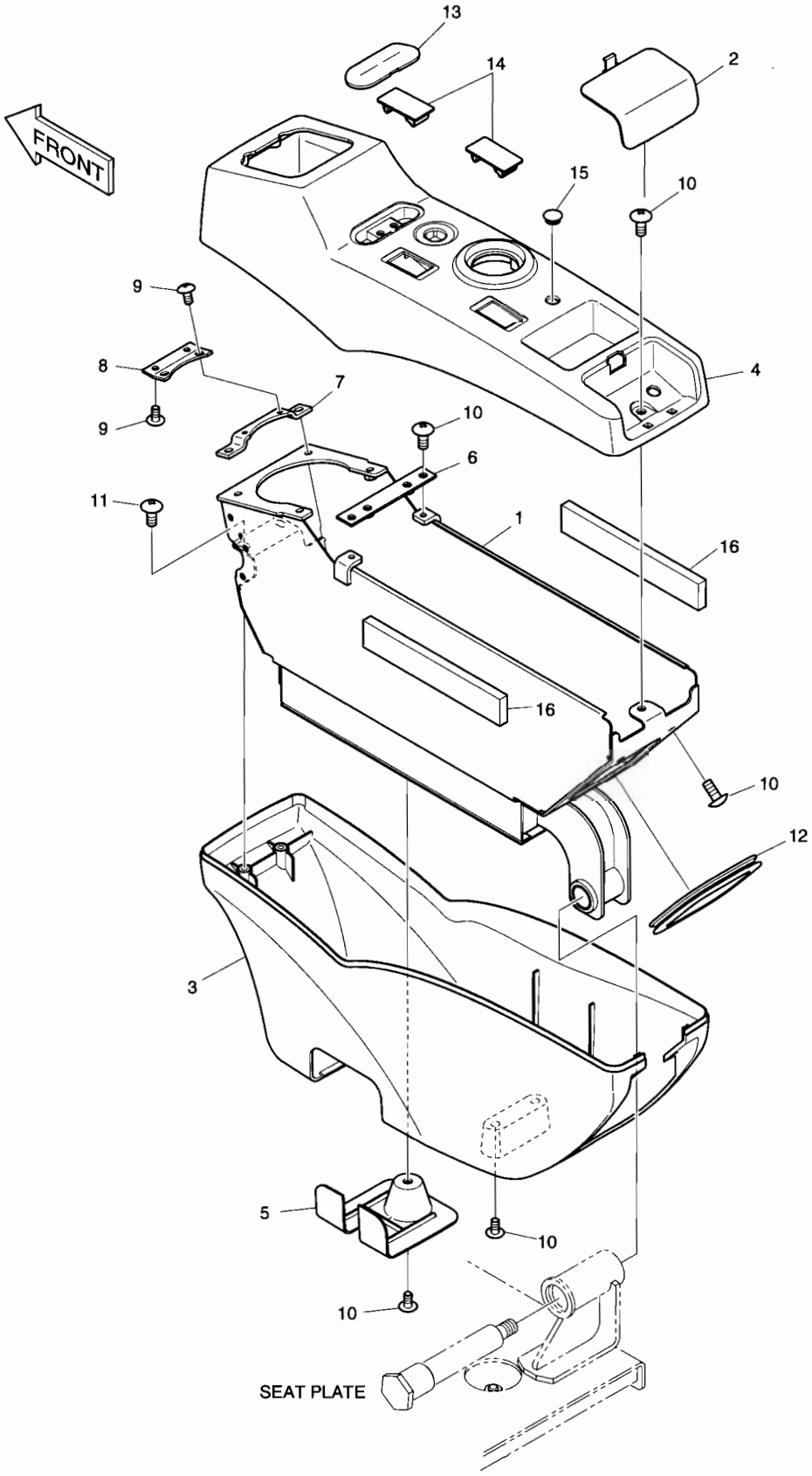

DATE	APR. 02, 2007
1st EDITION	

Fig. 1390 CONTROL STAND - R.H.
CONSOLE DE COMMANDE

Serial No. ;

Key No.	Part No.	Description	Description	Q'ty	S.C	Serial No.	ICA	Replaceable part	
								Part No.	Q'ty
1390--	K1005468B	STAND ASS'Y R.H.	CONSOLE DE COMMANDE	-	D				
1	195-02755C	BRACKET;STAND RH	SUPPORT	1					
2	621-02926C	COVER;SWITCH	COUVERCLE	1					
3	621-02900B	COVER;STAND RH LOWER	COUVERCLE	1					
4	K1005343B	COVER;STAND RH UPPER	COUVERCLE	1					
5	621-03014B	COVER;STAND LOW	COUVERCLE	1					
6	621-02957A	PLATE;STAND MOUNT	PLAQUE	1					
7	159-00290A	PLATE	PLAQUE	1					
8	159-00287A	PLATE;COVER MOUNT	PLAQUE	1					
9	2120-2166D53	BOLT	BOULON	4					
10	2120-2166D10	SCREW	VIS	10					
11	2120-2166D52	BOLT	BOULON	2					
12	K1001023	STRIP;WEATHER	TAMPON	1					
13	621-03733B	COVER	COUVERCLE	1					
14	621-02801	COVER;SWITCH	COUVERCLE	2					
15	K1006995	CAP	CHAPEAU	1					
16	K1010466	FORM	EPONGE	2					

DATE	APR. 02, 2007
1st EDITION	

Fig. 1400 SEAT SLIDING PLATE
POSEZ GLISSER LE PLAT

Serial No. ;

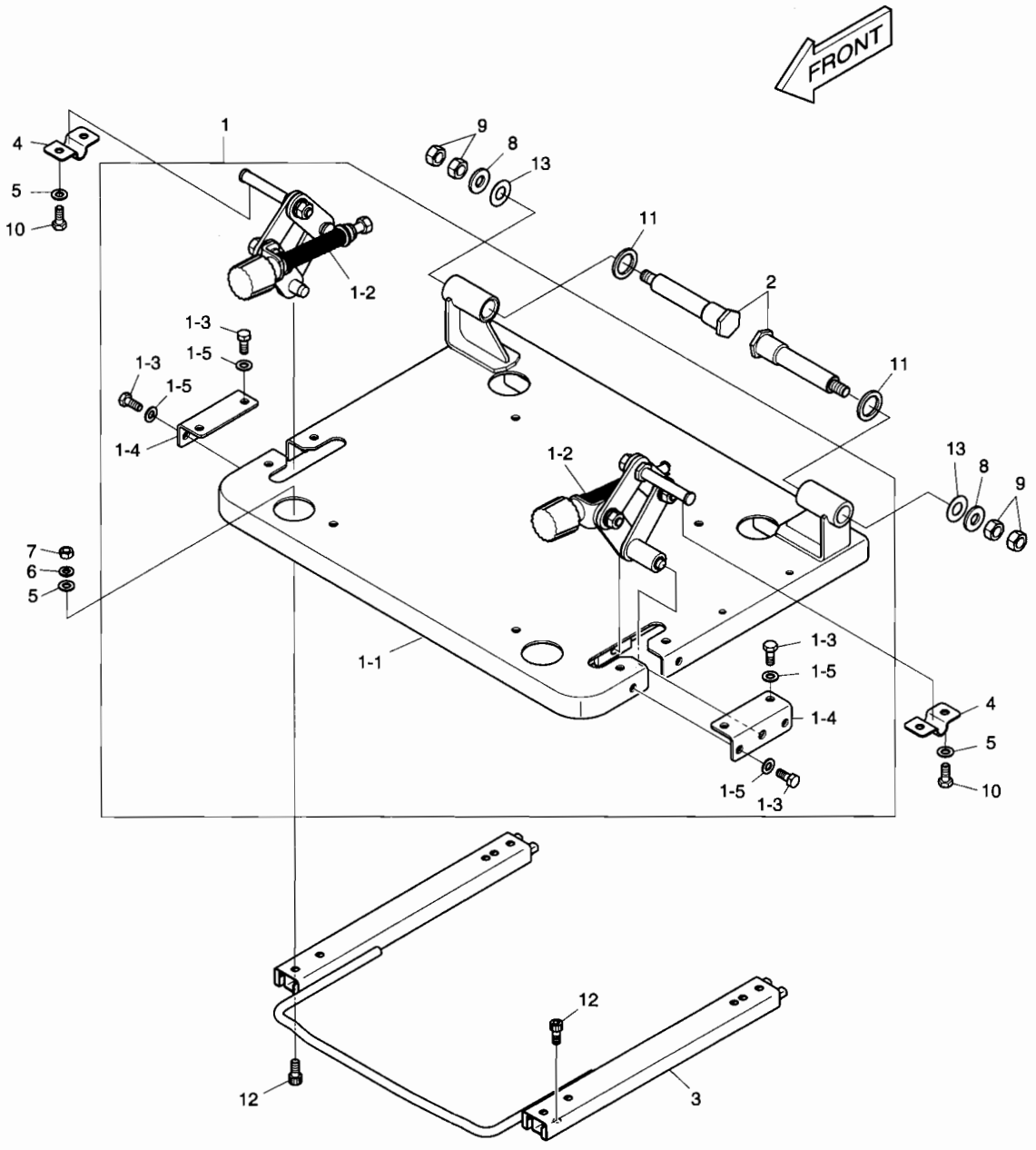

DATE	APR. 02, 2007
1st EDITION	

Fig. 1400 SEAT SLIDING PLATE POSEZ GLISSER LE PLAT

Serial No. ;

Key No.	Part No.	Description	Description	Q'ty	S.C	Serial No.	ICA	Replaceable part	
								Part No.	Q'ty
1400--	K1002204C	SEAT PLATE ASS'Y	SIEGE	-	D				
1	621-03011E	SEAT PLATE ASS'Y	SIEGE	1					
1-1	621-02895C	. PLATE;SEAT MOUNT	. PLAQUE	1					
1-2	195-02904C	. BRACKET ASS'Y;STAND TILT	. ENSEMBLE DE GODET	1					
1-3	2120-2166D5	. BOLT	. BOULON A 6 PANS	8					
1-4	621-02925A	. PLATE	. PLAQUE	2					
1-5	2114-1898D14	. WASHER;PLAIN	. RONDELLE PLATE	8					
2	123-00524B	PIN;TILT STAND	GOUJON	2					
3	K1003381	RAIL	RAIL	1					
4	621-03005A	PLATE	PLAQUE	2					
5	2114-1898D14	WASHER	RONDELLE	8					
6	2114-2031D4	WASHER;SPRING	RONDELLE ELASTIQUE	4					
7	2121-1311D2	NUT	ECROU	4					
8	2114-1898D17	WASHER	RONDELLE	2					
9	2121-1311D1	NUT	ECROU	4					
10	2120-2166D5	BOLT	BOULON	4					
11	2114-1898D18	WASHER	RONDELLE	2					
12	S2208866	BOLT;SOCKET	BOULON DE PLOT	8					
13	114-00590	WASHER	RONDELLE	2					

Fig. 1410 SEAT PLATE
POSEZ LE PLAT

Serial No. ;

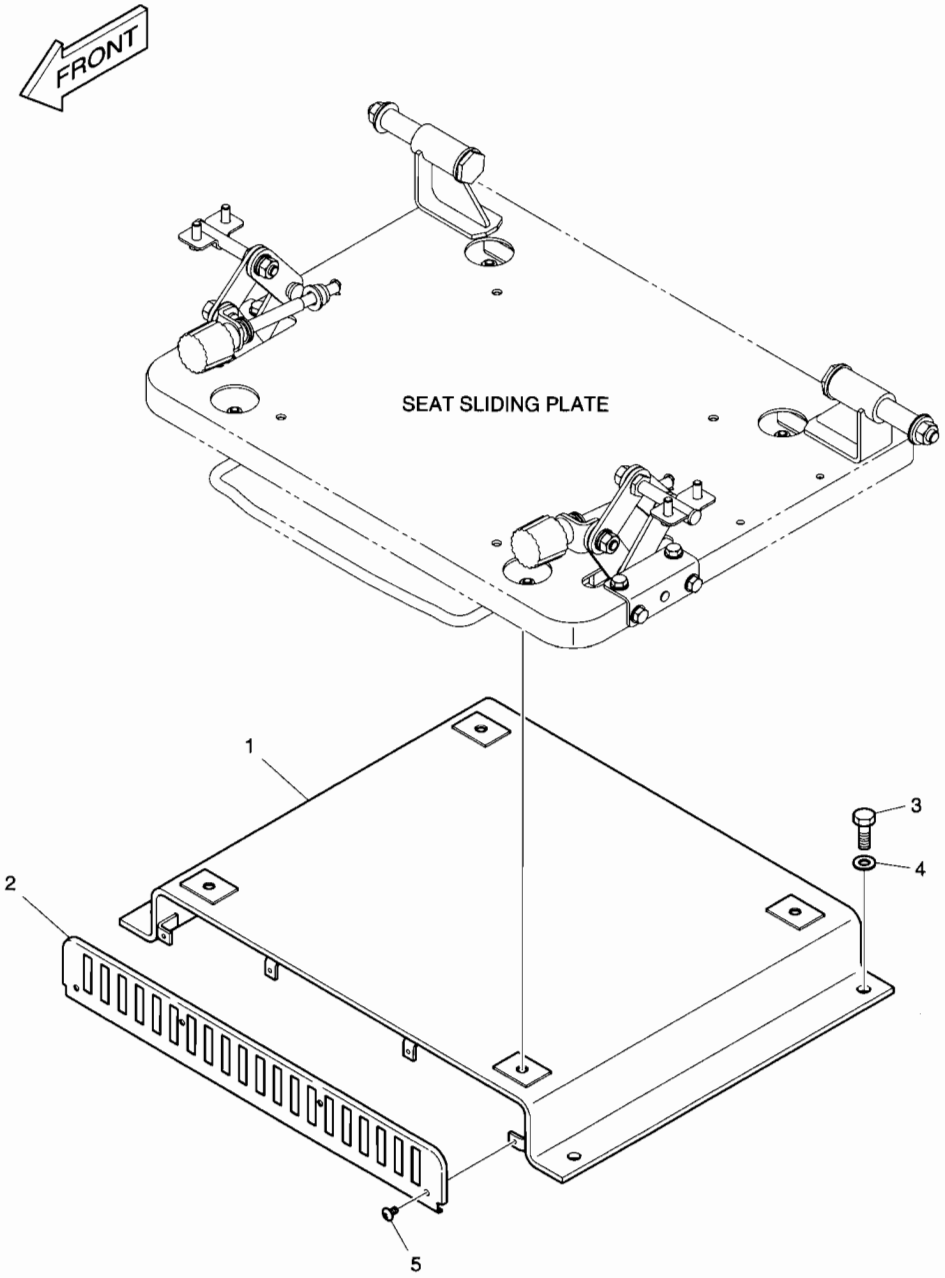

DATE	APR. 02, 2007
1st EDITION	

Fig. 1410 SEAT PLATE POSEZ LE PLAT

Serial No. ;

Key No.	Part No.	Description	Description	Q'ty	S.C	Serial No.	ICA	Replaceable part	
								Part No.	Q'ty
1410--	K1002229A	SEAT PLATE	SIEGE	-	D				
1	K1002230A	BRACKET;SEAT LOWER	SUPPORT	1					
2	K1002231A	PLATE;COVER	PLAQUE	1					
3	2120-2166D10	BOLT	BOULON	4					
4	2114-1898D15	WASHER	RONDELLE	4					
5	2120-2166D53	BOLT	BOULON	4					

DATE	APR. 02, 2007
1st EDITION	

Fig. 1420 SEAT MOUNTING
SIEGE LE SUPPORT

Serial No. ;

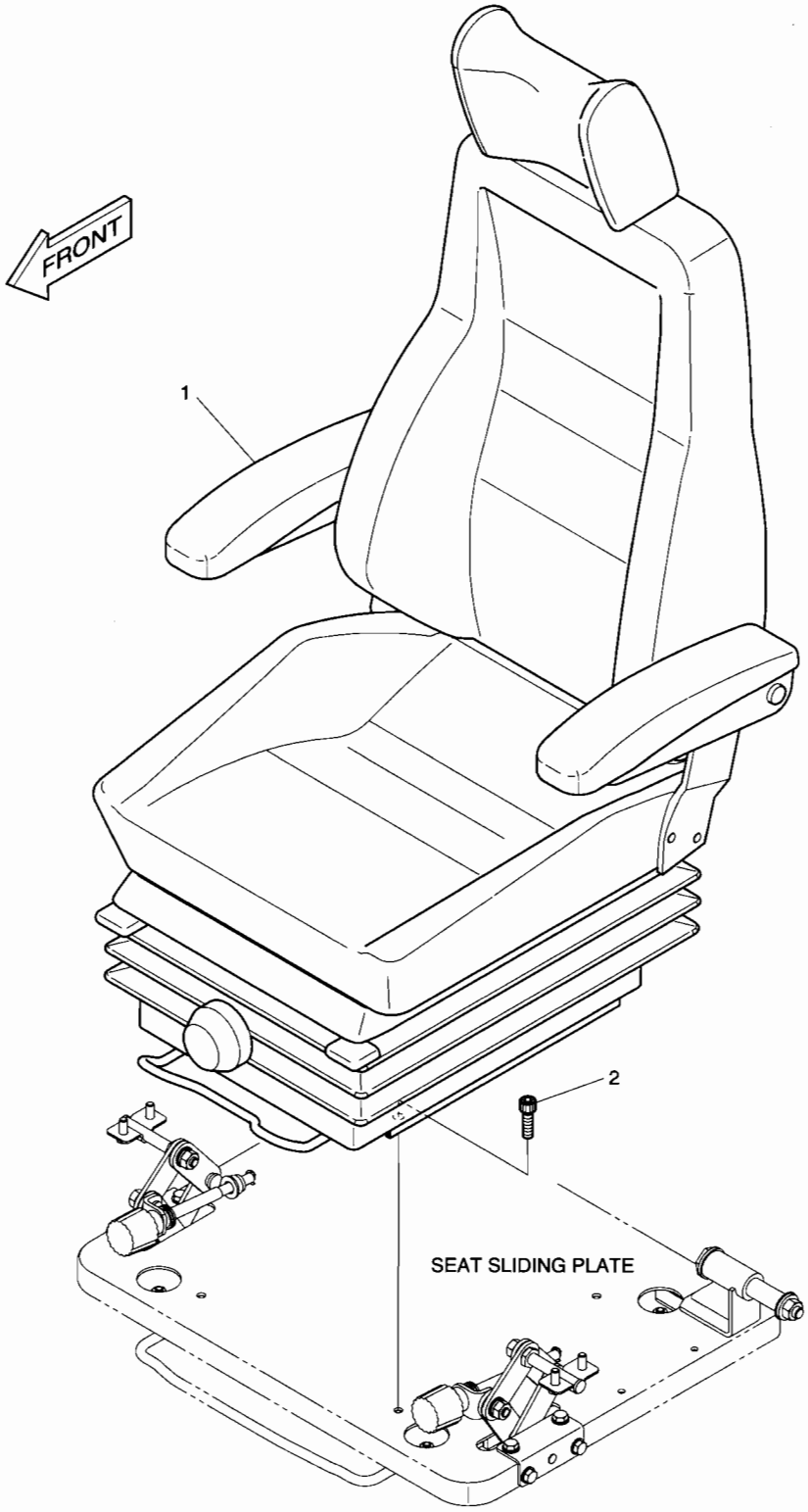

DATE	APR. 02, 2007
1st EDITION	

Fig. 1420 SEAT MOUNTING SIEGE LE SUPPORT

Serial No. ;

Key No.	Part No.	Description	Description	Q'ty	S.C	Serial No.	ICA	Replaceable part	
								Part No.	Q'ty
1420--	K1002084A	SEAT MOUNTING	SIEGE	-	D				
1	901-00045	SEAT	SIEGE	1					
2	S2208866	BOLT;SOCKET	BOULON DE PLOT	4					

DATE	APR. 02, 2007
1st EDITION	

Fig. 1430 SEAT SIEGE

Serial No. ;

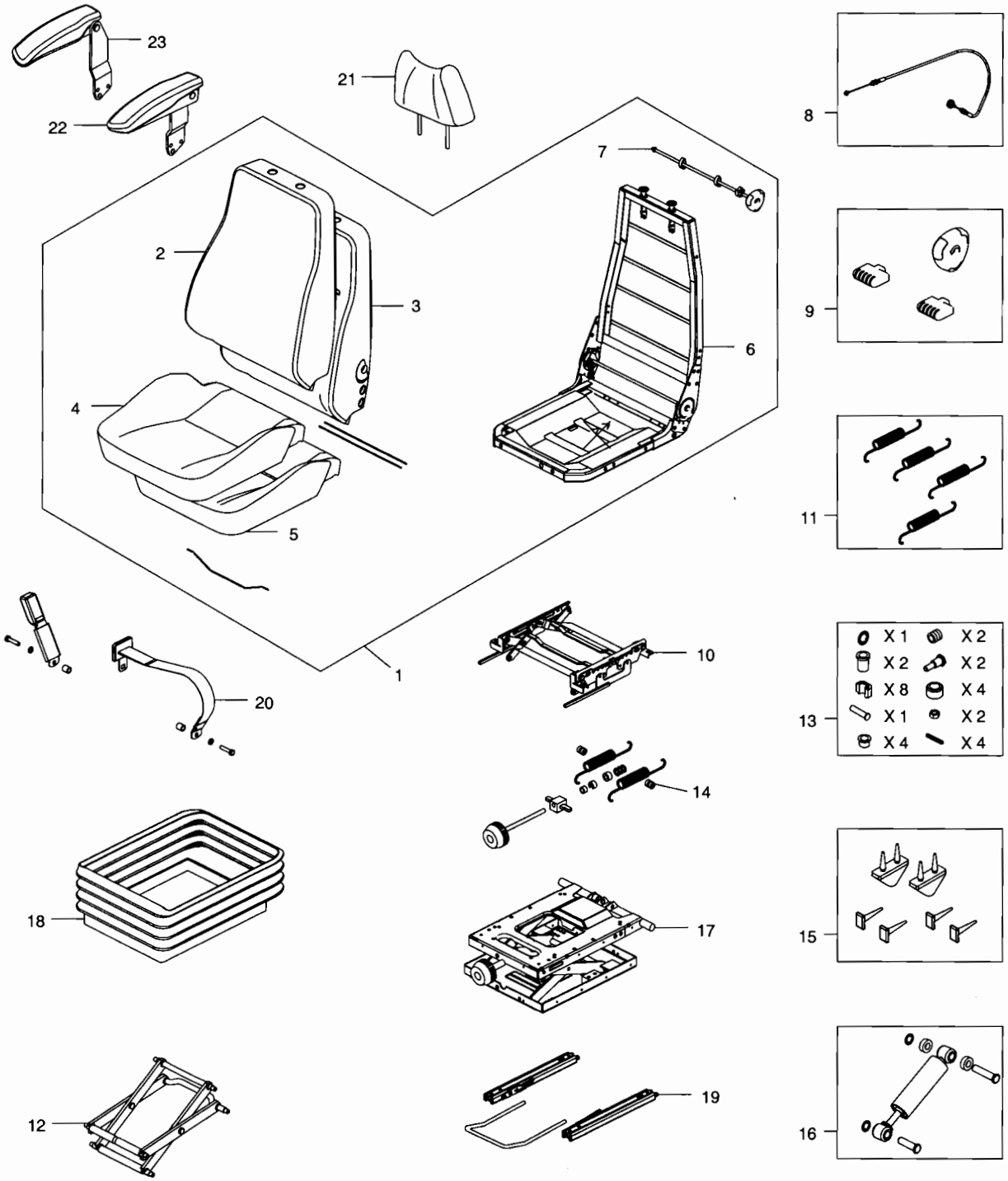

DATE	APR. 02, 2007
1st EDITION	

Fig. 1430 SEAT SIEGE

Serial No. ;

Key No.	Part No.	Description	Description	Q'ty	S.C	Serial No.	ICA	Replaceable part	
								Part No.	Q'ty
1430--	901-00045	SEAT ASS'Y	SIEGE	1					
1	K9001695	UPPER ASS'Y	SUPERIEUR	1					
2	K9001201	BACK COVER	COUVERTURE ARRIERE	1					
3	K9001202	BACK FOAM	MOUSSE ARRIERE	1					
4	K9001203	SEAT COVER	SIEGE	1					
5	K9001204	SEAT FOAM	SIEGE	1					
6	-	FRAME	ARMATURE	1	D				
7	K9001206	LUMBAR KIT	KIT LOMBAIRE	1					
8	K9001207	CABLE;ADJUST	CABLE	1					
9	2.172-00003	HANDLE	POIGNEE	1					
10	K9001208	HEIGHT RISER	RECHAUFFEUR	1					
11	K9001209	HEIGHT RISER SPRING KIT	RECHAUFFEUR	1					
12	K9001210	LEVER/CENTRE PIVOT KIT	LEVIER	1					
13	K9001211	BEARING KIT	PALIER	1					
14	K9001212	WEIGHT ADJUST KIT	LE POIDS AJUSTENT LE KIT	1					
15	K9001213	UPSTOP/BUMPSTOP KIT	KIT DE	1					
16	K9001214	DAMPER KIT	REGISTRE	1					
17	K9001215	SUSPENSION ASS'Y	SUSPENSION	1					
18	K9001216	SUSPENSION COVER	SUSPENSION	1					
19	K9001217	SLIDING RAIL ASS'Y	GLISSEMENT DU RAIL	1					
20	K9001218	BELT;SEAT	COURROIE	1					
21	K9001219	HEAD REST	SIEGE	1					
22	K9001220	ARM REST-L.H	REPOSER	1					
23	K9001221	ARM REST-R.H	REPOSER	1					

DATE	APR. 02, 2007
1st EDITION	

Fig. 1440 DUCT COVER
CONDUITES COUVERCLE

Serial No. ;

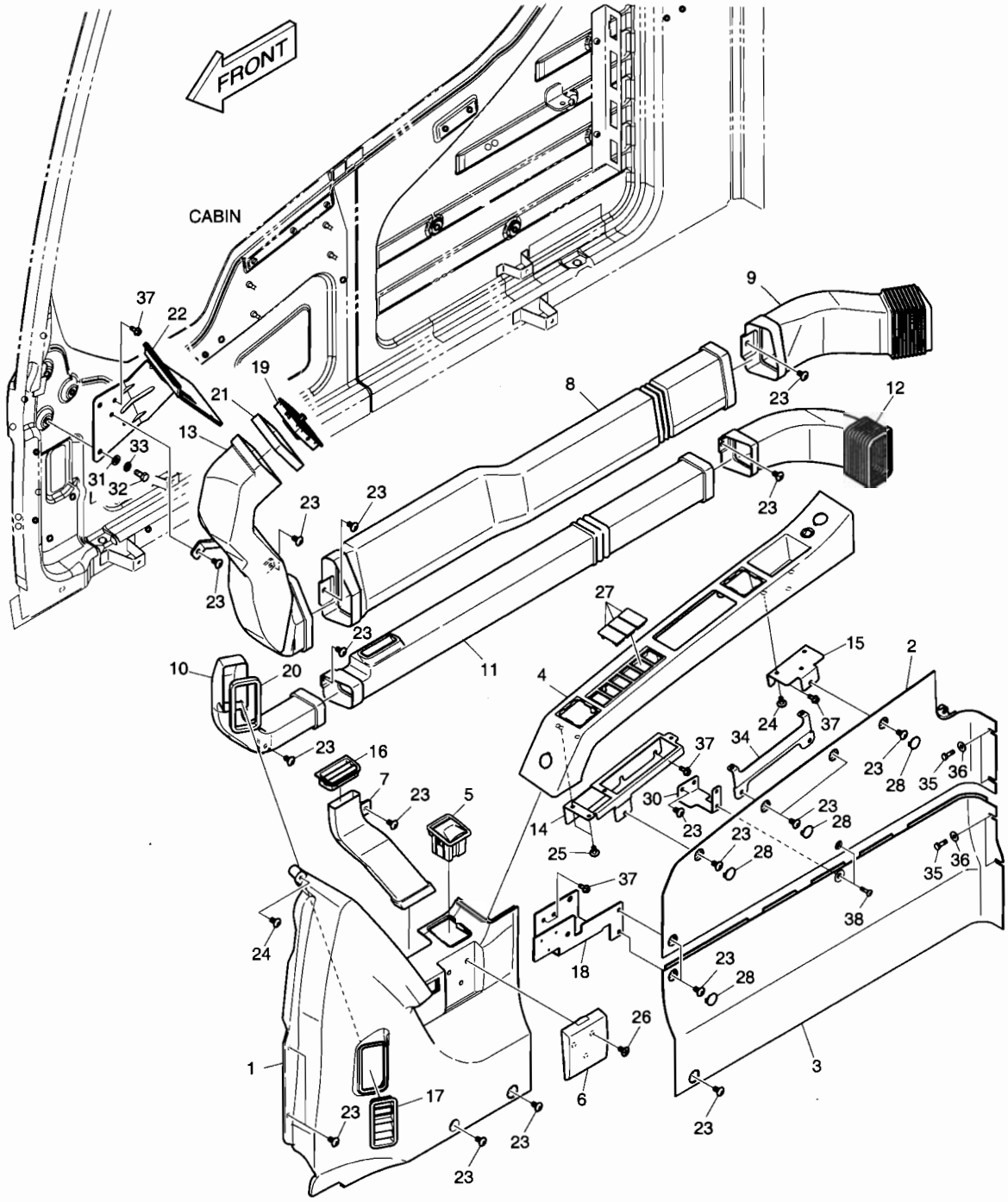

DATE	APR. 02, 2007
1st EDITION	

Fig. 1440 DUCT COVER CONDUITES COUVERCLE

Serial No. ;

Key No.	Part No.	Description	Description	Q'ty	S.C	Serial No.	ICA	Replaceable part	
								Part No.	Q'ty
1440--	621-02902G	SIDE COVER ASS'Y	COUVERCLE	-	D				
1	621-02903C	COVER;SIDE FRONT	COUVERCLE	1					
2	621-02905C	COVER;SIDE UPPER	COUVERCLE	1					
3	621-02904C	COVER;SIDE LOWER	COUVERCLE	1					
4	621-02909E	COVER;SWITCH	COUVERCLE	1					
5	906-00002A	ASHTRAY	CENDRIER	1					
6	621-02908B	CUP HOLDER	POSSESSEUR	1					
7	213-00035B	DUCT;DEFROSTER SIDE	COUVERCLE	1					
8	213-00030B	DUCT;FACE MID	COUVERCLE	1					
9	213-00031E	DUCT;FACE REAR	COUVERCLE	1					
10	213-00032B	DUCT;DEFROSTER FRONT	COUVERCLE	1					
11	213-00033B	DUCT;DEFROSTER MID	COUVERCLE	1					
12	213-00034E	DUCT;DEFROSTER REAR	COUVERCLE	1					
13	213-00029C	DUCT;FACE FRONT	COUVERCLE	1					
14	195-02768C	BRACKET;SWITCH COVER	SUPPORT	1					
15	195-02769C	BRACKET;SWITCH COVER REAR	SUPPORT	1					
16	415-00046B	LOUVER;SIDE	COUVERCLE	1					
17	415-00045B	LOUVER;FRONT	COUVERCLE	1					
18	195-02770C	BRACKET;CUP HOLDER	SUPPORT	1					
19	415-00044B	LOUVER;FACE	COUVERCLE	1					
20	K1001068	FOAM	EPONGE	1					
21	K1001069A	FOAM	EPONGE	1					
22	195-02858C	BRACKET;MONITOR	SUPPORT	1					
23	2120-2166D52	BOLT	BOULON	22					
24	2120-2166D53	BOLT	BOULON	4					
25	S3654523	SCREW	VIS	4					
26	2120-2166D23	SCREW	VIS	3					
27	621-02801	COVER;SWITCH	COUVERCLE	3					
28	621-03734A	COVER	COUVERCLE	6					
30	K1005007A	PLATE	PLAQUE	1					
31	2114-1898D14	WASHER	RONDELLE	3					
32	2120-2166D5	BOLT	BOULON	3					
33	2114-2031D4	WASHER;SPRING	RONDELLE ELASTIQUE	3					
34	K1009627	PLATE	PLAQUE	1					
35	2120-2166D36	BOLT	BOULON	4					
36	2114-1898D5	WASHER	RONDELLE	4					
37	K1010304	BOLT;FLANGE	BOULON A 6 PANS	8					
38	2120-2166D57	BOLT	BOULON	2					

DATE	APR. 02, 2007
1st EDITION	

Fig. 1450 HEATER COVER
BOITIES DE CHAUFFAGE

Serial No. ;

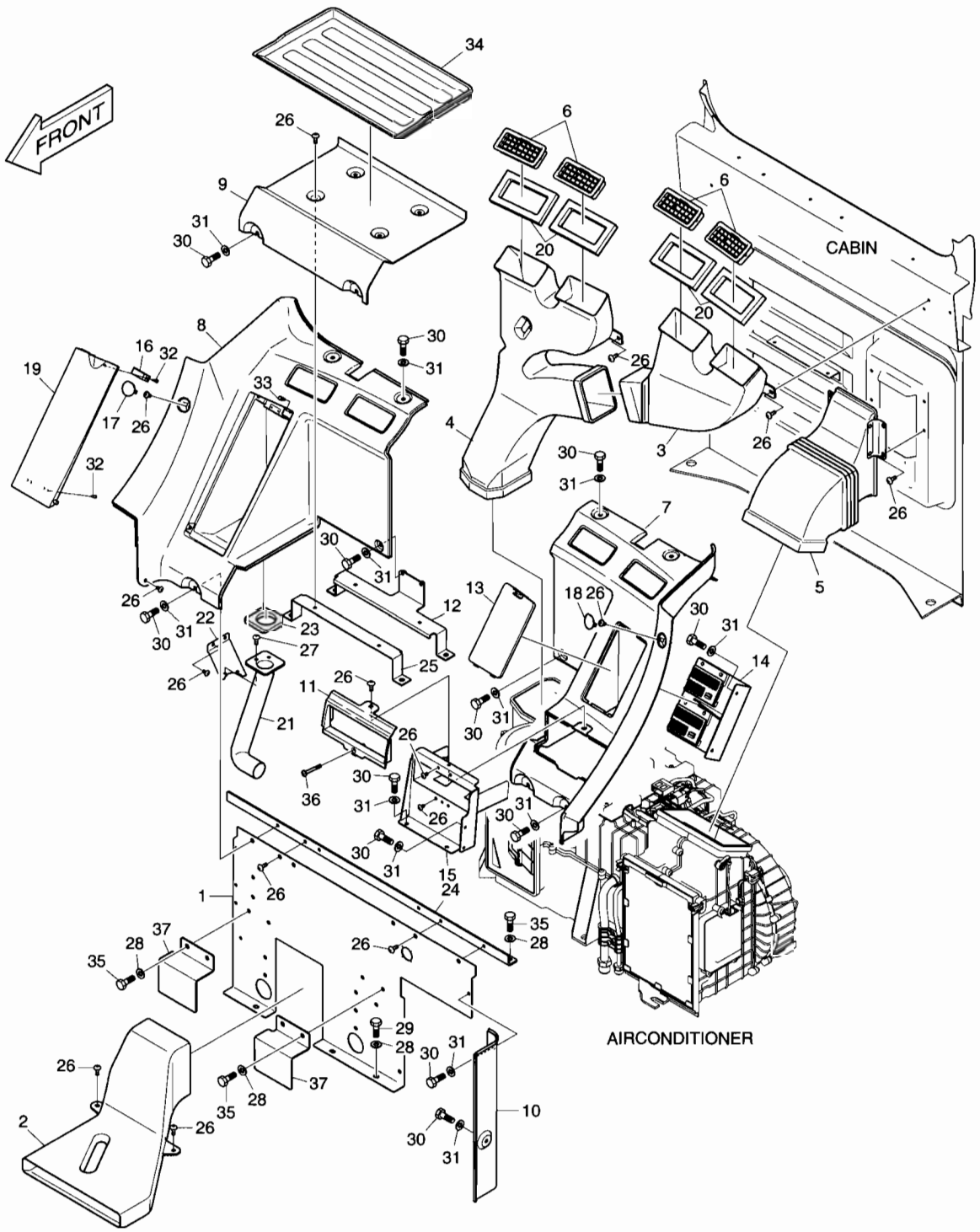

DATE	APR. 02, 2007
1st EDITION	

Fig. 1450 HEATER COVER BOITIES DE CHAUFFAGE

Serial No. ;

Key No.	Part No.	Description	Description	Q'ty	S.C	Serial No.	ICA	Replaceable part	
								Part No.	Q'ty
1450--	621-02896G	HEATER COVER	BOITIES DE CHAUFFAGE	-	D				
1	621-02894E	COVER;REAR LOWER	COUVERCLE	1					
2	213-00036B	DUCT;FOOT	COUVERCLE	1					
3	213-00037B	DUCT;REAR (L.H.)	COUVERCLE	1					
4	213-00038B	DUCT;REAR (R.H.)	COUVERCLE	1					
5	213-00039B	DUCT;AIR INLET	COUVERCLE	1					
6	415-00043B	NOZZLE;REAR	INJECTEUR	4					
7	621-02913C	COVER;REAR (L.H.)	COUVERCLE	1					
8	621-02914C	COVER;REAR (R.H.)	COUVERCLE	1					
9	621-02915B	COVER;REAR CENTER	COUVERCLE	1					
10	621-02907B	COVER;SIDE REAR (L.H.)	COUVERCLE	1					
11	621-02917C	COVER;STEREO UP	COUVERCLE	1					
12	K1001295A	PLATE	PLAQUE	1					
13	621-02919B	COVER;FUSE	COUVERCLE	1					
14	195-02771B	BRACKET;FUSE BOX	SUPPORT	1					
15	195-02772E	BRACKET;STEREO	SUPPORT	1					
16	2125-1095A	CATCH;MAGNETIC	LOQUET	1					
17	K1005344A	COVER	COUVERCLE	1					
18	K1005345A	COVER;HOLE	COUVERCLE	1					
19	621-02920C	COVER;BOX	COUVERCLE	1					
20	K1001310	FOAM	EPONGE	4					
21	213-00040A	DUCT;AIR BOX	COUVERCLE	1					
22	195-02774	BRACKET;AIR DUCT MOUNT	SUPPORT	1					
23	161-00622	FOAM;AIR SEAL	EPONGE	1					
24	195-02785C	BRACKET;CROSS BAR	SUPPORT	1					
25	195-02790B	BRACKET	SUPPORT	1					
26	2120-2166D10	SCREW	VIS	21					
27	2120-2166D53	BOLT	BOULON	2					
28	2114-1898D14	WASHER	RONDELLE	9					
29	2120-2166D12	BOLT	BOULON	3					
30	2120-2166D36	BOLT	BOULON	19					
31	2114-1898D5	WASHER	RONDELLE	19					
32	S3644163	SCREW	VIS	8					
33	K1002385	STOPPER	CHAPEAU	2					
34	161-00624	PAD;FOAM	CAOUTCHOUC	1					
35	2120-2166D5	BOLT	BOULON	6					
36	2120-2166D58	BOLT	BOULON	1					
37	K1017271	PLATE	PLAQUE	2					

Fig. 1460 CABIN MOUNTING
SUPPORT DE CABINE

Serial No. ;

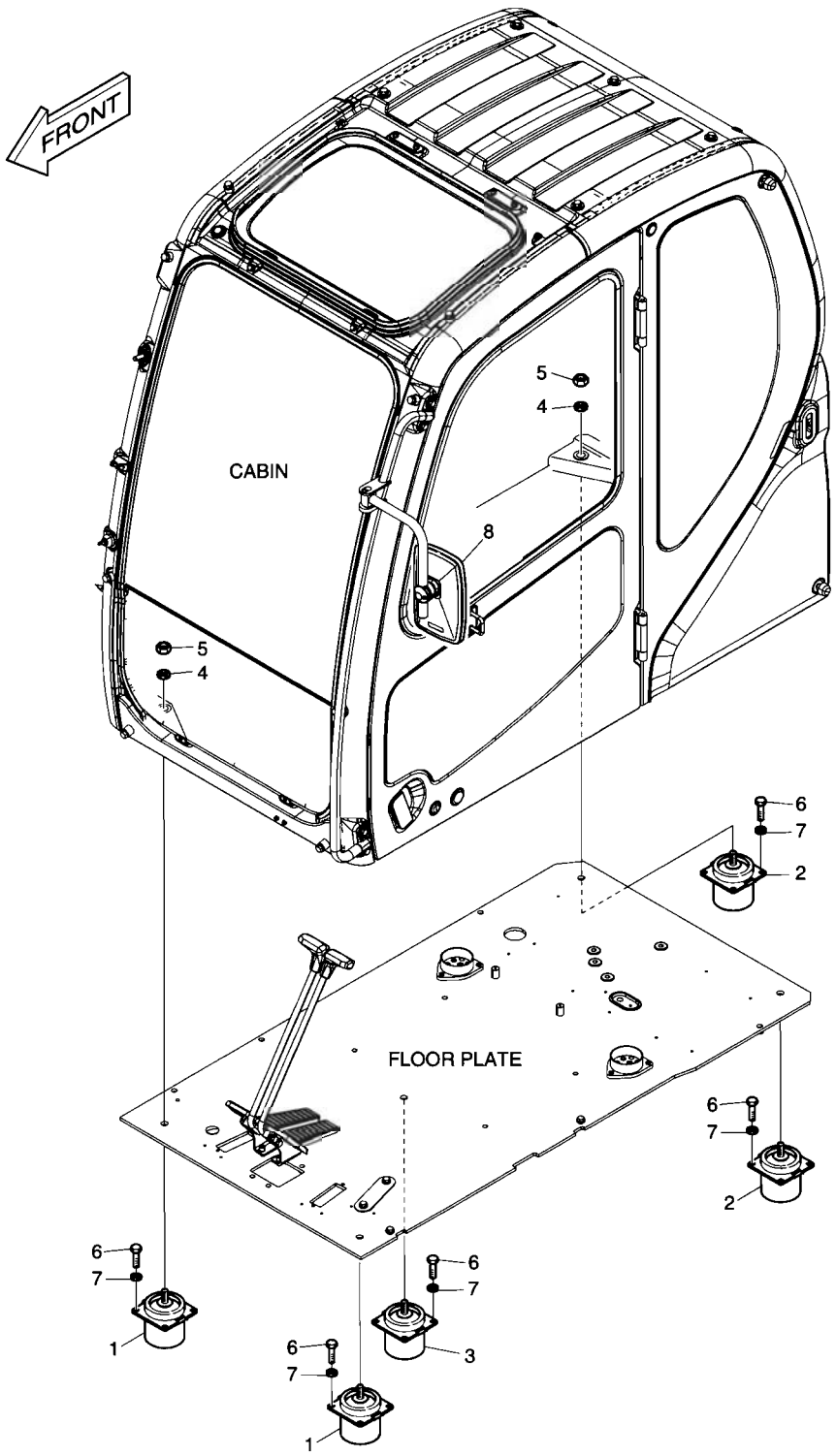

DATE	APR. 02, 2007
1st EDITION	

Fig. 1460 CABIN MOUNTING SUPPORT DE CABINE

Serial No. ;

Key No.	Part No.	Description	Description	Q'ty	S.C	Serial No.	ICA	Replaceable part	
								Part No.	Q'ty
1460--	621-03224	CABIN MOUNT	SUPPORT DE CABINE	-	D				
1	161-00010	RUBBER;MOUNT(FRONT)	CAOUTCHOUC	2					
2	161-00011	RUBBER;MOUNT(REAR)	CAOUTCHOUC	2					
3	K1000043	RUBBER;CABIN MOUNT	CAOUTCHOUC	1					
4	2114-1058D2	WASHER	RONDELLE	5					
5	2121-9007	NUT	ECROU	5					
6	2120-2166D2	BOLT	BOULON	20					
7	2114-1898D1	WASHER	RONDELLE	20					
8	903-00068	MIRROR;SIDE	RETROVISEUR	1					

DATE	APR. 02, 2007
1st EDITION	

Fig. 1470 CABIN(1) CABINE

Serial No. ;

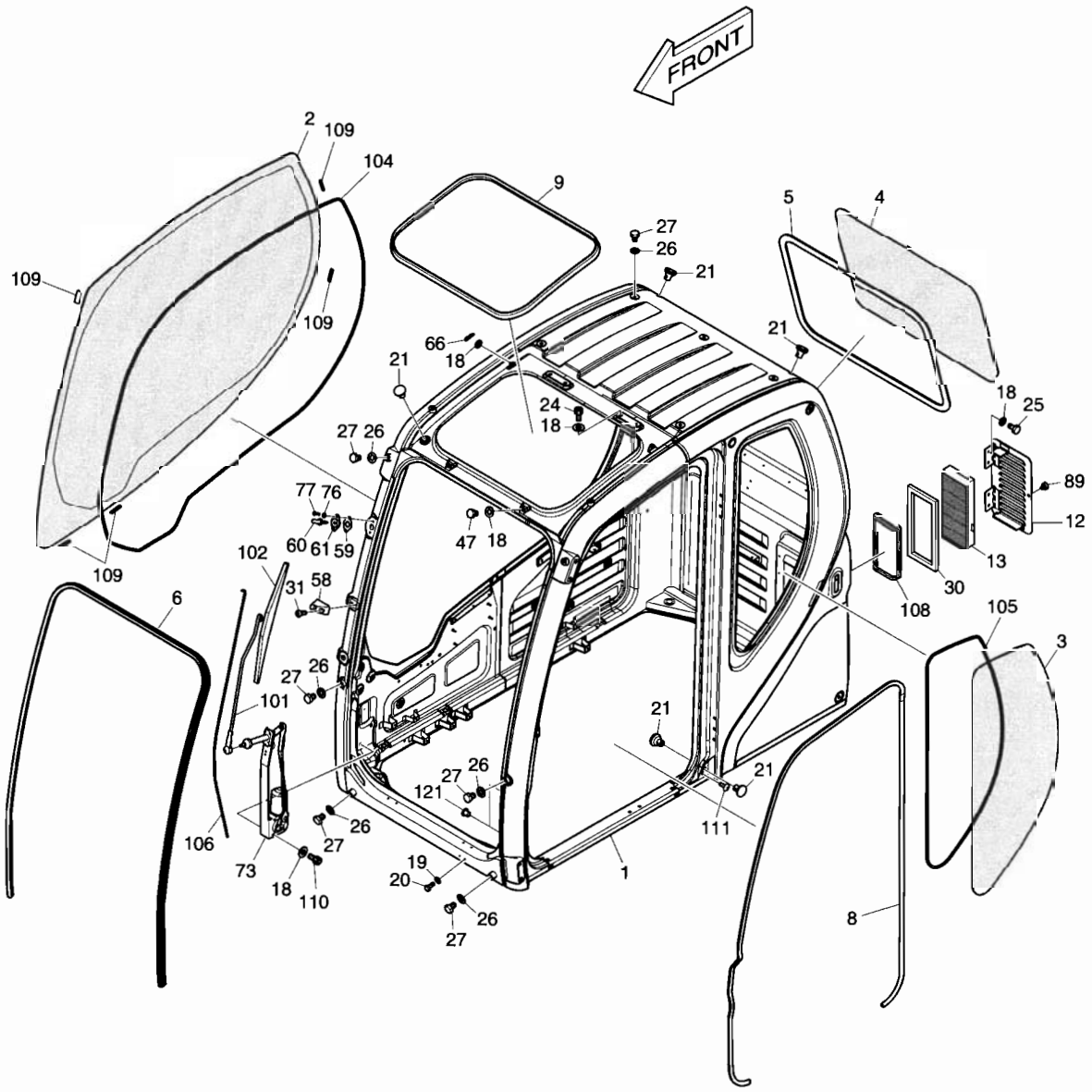

DATE	APR. 02, 2007
1st EDITION	

Fig. 1470 CABIN(1) CABINE

Serial No. ;

Key No.	Part No.	Description	Description	Q'ty	S.C	Serial No.	ICA	Replaceable part	
								Part No.	Q'ty
1470--	622-00351J	CABIN ASS'Y	CABINE	1					
1	-	BODY;CABIN	CARTER	1	D				
2	903-00072A	GLASS;RH	VITRE	1					
3	903-00073A	GLASS;LH REAR	VITRE	1					
4	903-00075	GLASS;REAR	VITRE	1					
5	198-00054A	TRIM;REAR GLASS	CANAL	1					
6	162-00035A	STRIP;WEATHER	TAMPON	1					
8	162-00039A	STRIP;BODY	TAMPON	1					
9	162-00038	TRIM;ROOF	CANAL	1					
12	621-02864	COVER;FRESH AIR ASM	COUVERCLE	1					
13	471-00119	FILTER;FRESH AIR	FILTRE	1					
18	2114-1898D14	WASHER;PLAIN	RONDELLE	15					
19	2114-1898D3	WASHER;PLAIN	RONDELLE	2					
20	2120-2166D28	BOLT	BOULON A 6 PANS	2					
21	2160-1310	RUBBER;BUSHING	CAOUTCHOUC	5					
24	S2208561	BOLT	BOULON A 6 PANS	4					
25	2120-2166D12	BOLT	BOULON A 6 PANS	4					
26	2114-1898D6	WASHER;PLAIN	RONDELLE	13					
27	2120-2166D37	BOLT	BOULON A 6 PANS	13					
30	161-00640A	SPONGE	EPONGE	1					
31	2120-2166D7	SCREW	VIS	2					
47	2120-2166D5	BOLT	BOULON A 6 PANS	2					
58	195-02729	BRACKET;BLADE	SUPPORT	1					
59	161-00598A	RUBBER;WASHER NOZZLE	RUBBER;WASHER NOZZLE	1					
60	554-00005	NOZZLE;WASHER	INJECTEUR	1					
61	621-02837A	COVER;WASHER NOZZLE	COUVERCLE	1					
66	123-00523	PIN;GAS-SPRING	GOUJON	2					
73	538-00011	MOTOR;WIPER	MOTEUR	1					
76	2114-1898D13	WASHER;PLAIN	RONDELLE	2					
77	2120-2166D26	SCREW	VIS	2					
89	K1003427	BOLT;KNOB	BOULON A 6 PANS	1					
101	541-00015	ARM;WIPER	BALANCIER	1					
102	507-00006	BLADE;WIPER	LAME	1					
104	K1002635	DAMPER	AMORTISSEUR	1					
105	K1002636	DAMPER	AMORTISSEUR	1					
106	2185-1660	HOSE	TUYAU FLEXIBLE	1					
108	K1004061	FOAM	EPONGE	1					
109	K1003522	STOPPER	CHAPEAU	5					

DATE	APR. 02, 2007
1st EDITION	

Fig. 1470 CABIN(1) CABINE

Serial No. ;

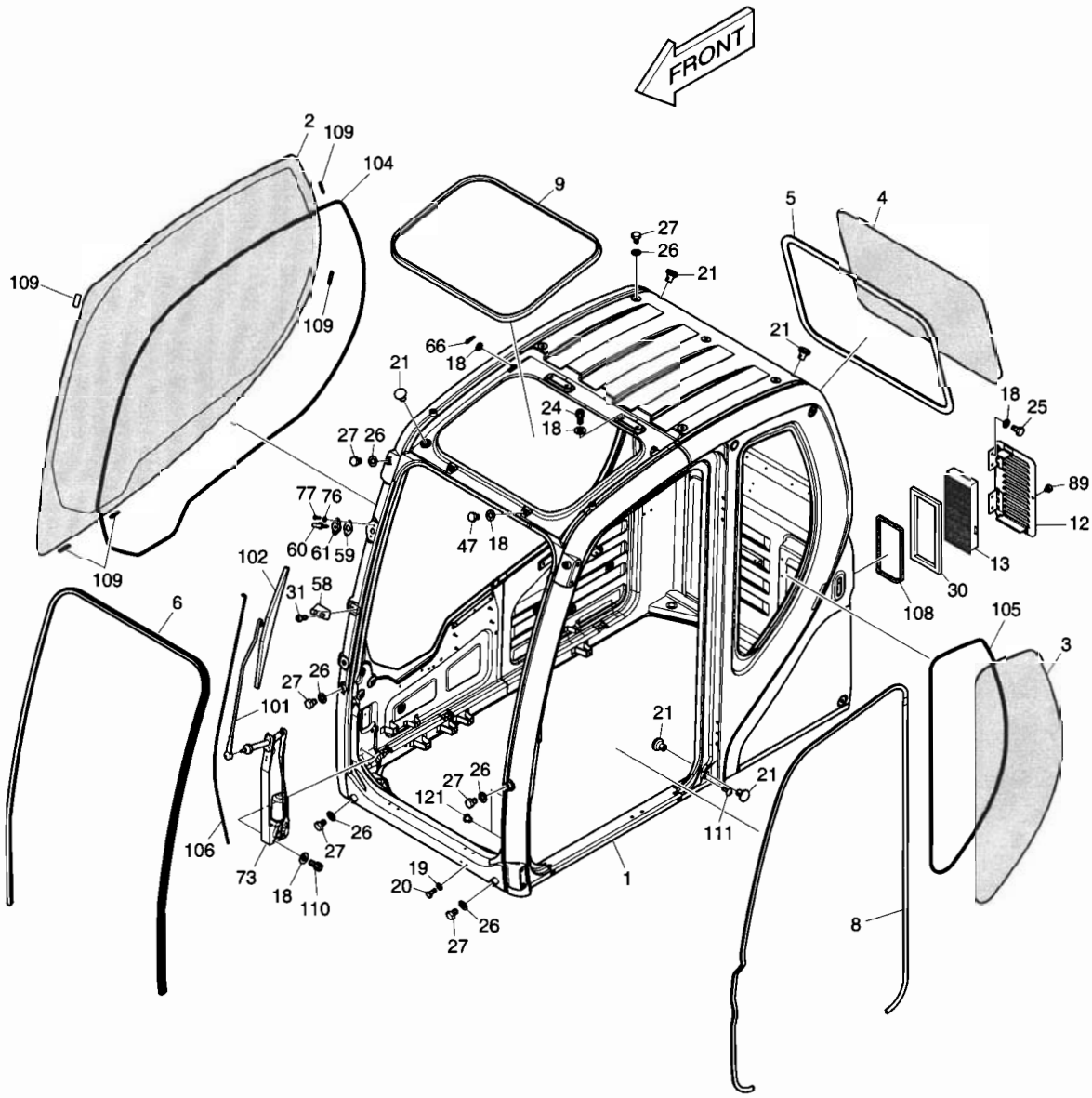

DATE	APR. 02, 2007
1st EDITION	

Fig. 1470 CABIN(1) CABINE

Serial No. ;

Key No.	Part No.	Description	Description	Q'ty	S.C	Serial No.	ICA	Replaceable part	
								Part No.	Q'ty
1470-110	S2208466	BOLT;SOCKET	BOULON	3					
111	2120-2166D53	BOLT	BOULON A 6 PANS	1					
121	160-00074A	CAP	CHAPEAU	2					

DATE	APR. 02, 2007
1st EDITION	

Fig. 1480 CABIN(2) CABINE

Serial No. ;

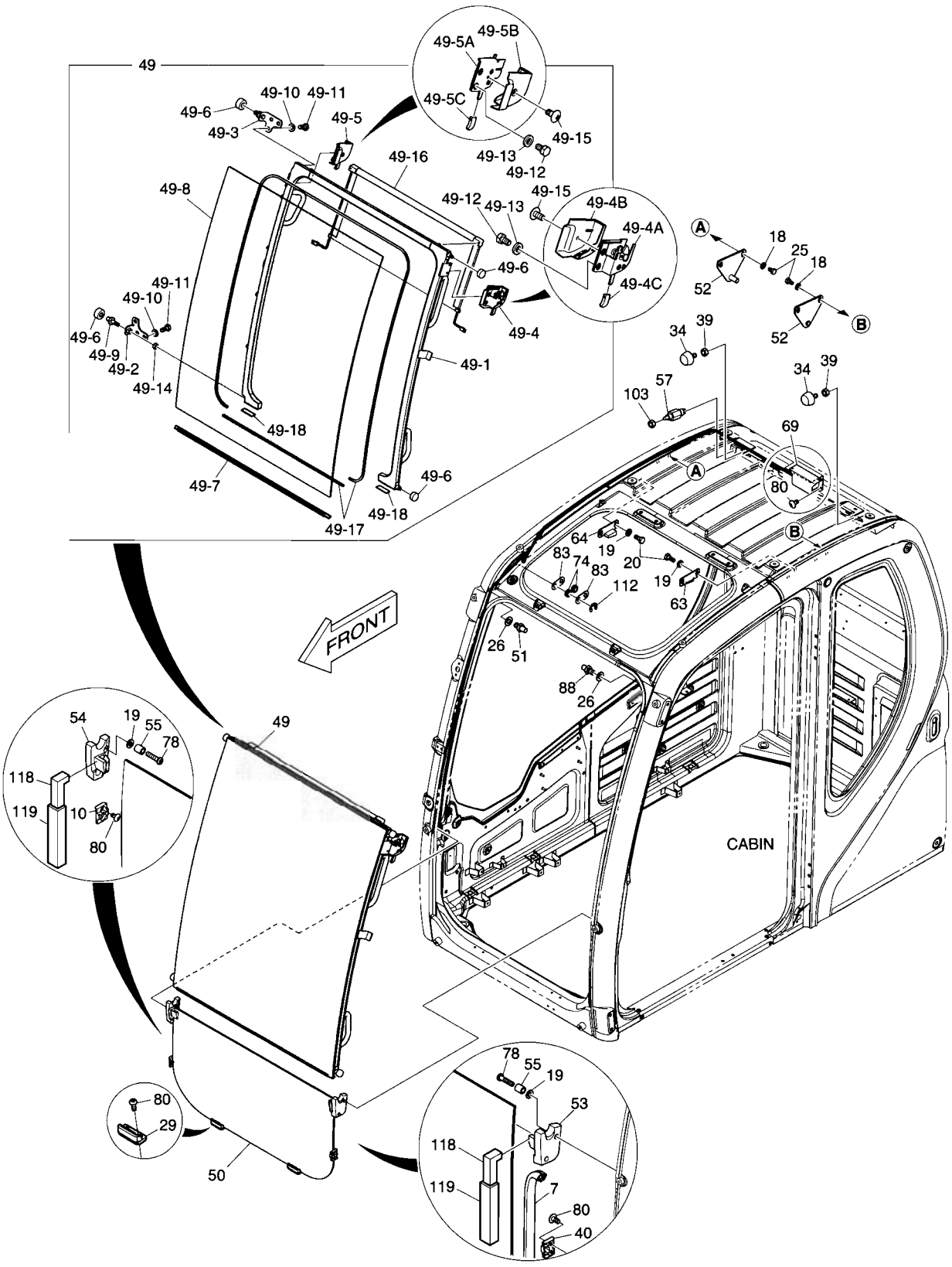

DATE	APR. 02, 2007
1st EDITION	

Fig. 1480 CABIN(2) CABINE

Serial No. ;

Key No.	Part No.	Description	Description	Q'ty	S.C	Serial No.	ICA	Replaceable part	
								Part No.	Q'ty
1480--	622-00351J	CABIN ASS'Y	CABINE	1					
7	162-00034B	STRIP;WEATHER	TAMPON	1					
10	416-00018A	STOPPER;GLASS LOWER RH	TAQUET D'ARRET	1					
18	2114-1898D14	WASHER;PLAIN	RONDELLE	4					
19	2114-1898D3	WASHER;PLAIN	RONDELLE	8					
20	2120-2166D28	BOLT;HEX	BOULON A 6 PANS	4					
25	2120-2166D12	BOLT;HEX	BOULON A 6 PANS	4					
26	2114-1898D6	WASHER;PLAIN	RONDELLE	2					
29	416-00019B	STOPPER;LOWER	TAQUET D'ARRET	2					
34	161-00195	STOPPER;SLIDE DOOR BACK	TAQUET D'ARRET	2					
39	2121-1311D4	NUT	ECROU 6 PANS	2					
40	416-00020	STOPPER;GLASS LOWER LH	TAQUET D'ARRET	1					
49	622-00359J	DOOR;SLIDE	VERROU	1					
49-1	622-00360H	. PANEL ASS'Y	. PANNEAU	1					
49-2	195-02739B	. BRACKET;RH LOWER ROLLER	. SUPPORT	1					
49-3	195-02740C	. BRACKET;RH ROLLER UPPER	. SUPPORT	1					
49-4	125-00096A	. CATCH ASS'Y;SLIDE DOOR LH	. LOQUET	1					
49-4A	125-00073B	.. CATCH;LH	.. LOQUET	1					
49-4B	621-03724	.. COVER;CATCH LH	.. COUVERCLE	1					
49-4C	133-00248	.. KNOB;SLIDE DOOR CATCH	.. BOUTON	1					
49-5	125-00097A	. CATCH ASM;SLIDE DOOR RH	. LOQUET	1					
49-5A	125-00074B	.. CATCH;RH	.. LOQUET	1					
49-5B	621-03725	.. COVER;CATCH RH	.. COUVERCLE	1					
49-5C	133-00248	.. KNOB;SLIDE DOOR CATCH	.. BOUTON	1					
49-6	270-00054B	. ROLLER	. PLAIER	4					
49-7	505-00016B	. BAR	. CAOUTCHOUC	1					
49-8	903-00076B	. GLASS;FRONT UPPER	. VITRE	1					
49-9	123-00522B	. PIN;SLIDE ROLLER RH LOWER	. GOUPILLE	1					
49-10	2114-1898D3	. WASHER;PLAIN	. RONDELLE	6					
49-11	2120-2166D28	. BOLT	. BOULON A 6 PANS	6					
49-12	2120-2166D12	. BOLT	. BOULON A 6 PANS	4					
49-13	2114-1898D2	. WASHER	. RONDELLE	4					
49-14	2121-1311D2	. NUT	. ECROU	1					
49-15	2120-2166D52	. SCREW	. VIS	2					
49-16	474-00044A	. SUN SCREEN;FRONT	. LE SOLEIL	1					
49-17	K1002638A	. DAMPER	. REGISTRE	1					
49-18	K1006368	. RUBBER	. CAOUTCHOUC	2					
50	903-00074A	GLASS;FRONT LOWER	VITRE	1					

DATE	APR. 02, 2007
1st EDITION	

Fig. 1480 CABIN(2) CABINE

Serial No. ;

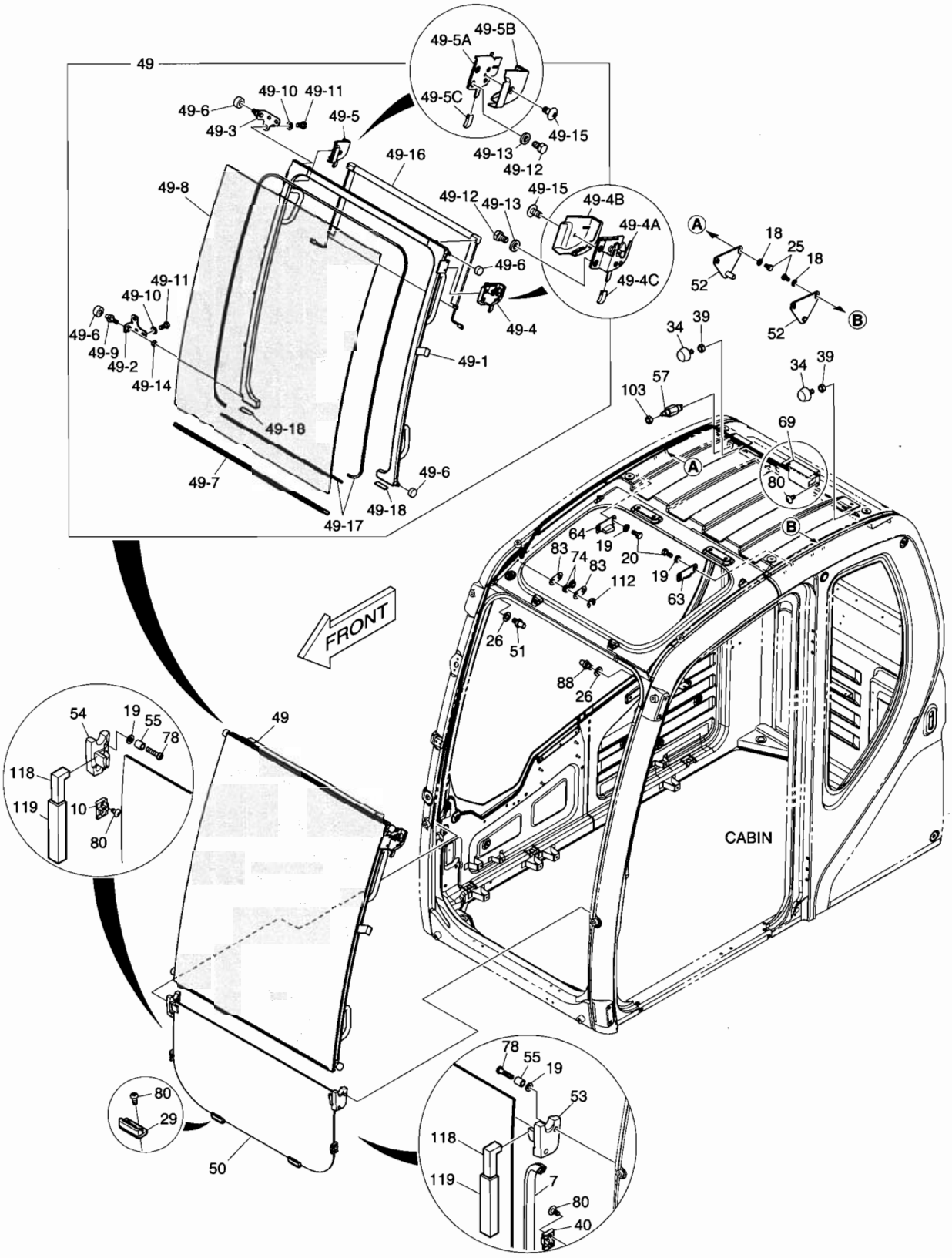

DATE	APR. 02, 2007
1st EDITION	

Fig. 1480 CABIN(2) CABINE

Serial No. ;

Key No.	Part No.	Description	Description	Q'ty	S.C	Serial No.	ICA	Replaceable part	
								Part No.	Q'ty
1480-51	142-00128B	STRIKER;RH	FRAPPER	1					
52	142-00127C	STRIKER;SLIDE DOOR REAR	FRAPPER	2					
53	116-00089B	STOPPER;RUBBER LH	TAQUET D'ARRET	1					
54	116-00090B	STOPPER;RUBBER RH	TAQUET D'ARRET	1					
55	2140-1338	PIPE;SPACER	TUBE D'ENTRETOISE	4					
57	549-00086	SWITCH;SLIDE	INTERRUPTEUR	1					
63	161-00618B	STOPPER;SLIDE DOOR	TAQUET D'ARRET	1					
64	161-00619B	STOPPER;SLIDE DOOR	TAQUET D'ARRET	1					
69	129-00155	SPRING;ASSIST	RESSORT	1					
74	270-00062A	ROLLER;ASSIST CABLE	GALET	2					
78	S3450993	SCREW	VIS	4					
80	2120-2166D52	SCREW	VIS	10					
83	191-03734A	PLATE;WASHER	PLAQUE	2					
88	K1003284	STRIKER;LH	FRAPPER	1					
103	S4034833	NUT	ECROU 6 PANS	1					
112	S6540600	RING;RETAINER	BAGUE	2					
118	K1027768	FOAM	EPONGE	2					
119	K1027769	FOAM	EPONGE	2					

DATE	APR. 02, 2007
1st EDITION	

Fig. 1490 CABIN(3) CABINE

Serial No. ;

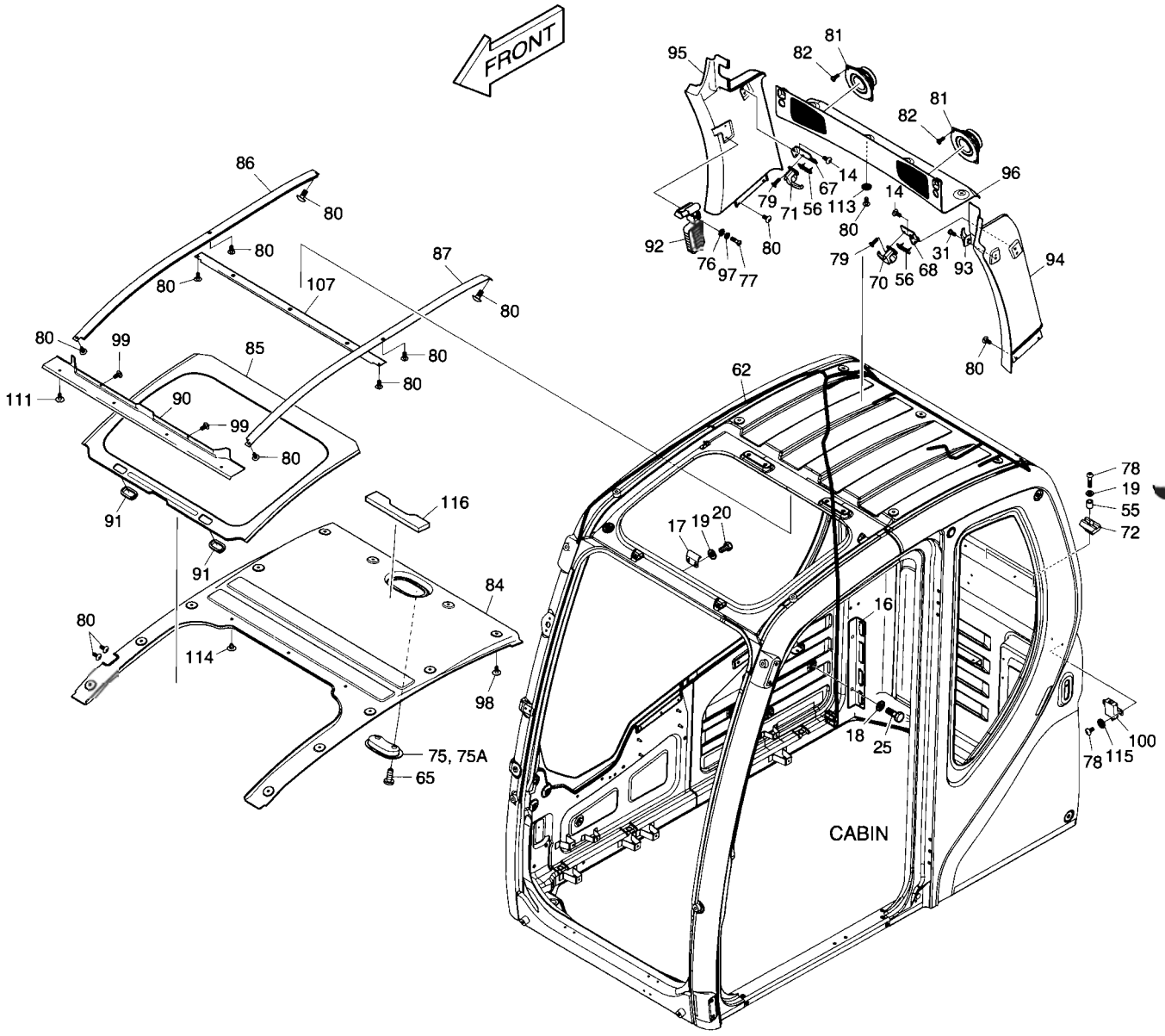

DATE	APR. 02, 2007
1st EDITION	

Fig. 1490 CABIN(3) CABINE

Serial No. ;

Key No.	Part No.	Description	Description	Q'ty	S.C	Serial No.	ICA	Replaceable part	
								Part No.	Q'ty
1490--	622-00351J	CABIN ASS'Y	CABINE	1					
14	2120-2166D10	SCREW	VIS	4					
16	191-03179A	PLATE;CONNECTOR	PLAQUE	1					
17	191-03166C	STRIKER PLATE ROOF	TOIT DE PLAT DE BUTEE	1					
18	2114-1898D14	WASHER;PLAIN	RONDELLE	2					
19	2114-1898D3	WASHER;PLAIN	RONDELLE	4					
20	2120-2166D28	BOLT	BOULON A 6 PANS	2					
25	2120-2166D12	BOLT	BOULON A 6 PANS	2					
31	2120-2166D7	SCREW	VIS	1					
55	2140-1338	PIPE;SPACER	TUBE D'ENTRETOISE	2					
56	K1000794	STOPPER;RUBBER	TAQUET D'ARRET	2					
62	530-00417B	HARNESS;CABIN	FAISCEAU	1					
65	S3458843	SCREW	VIS	2					
67	621-03113B	PLATE;STOPPER (R.H)	TAQUET D'ARRET	1					
68	621-03114B	PLATE;STOPPER (L.H)	TAQUET D'ARRET	1					
70	125-00077	LOCK;REAR GLASS (L.H)	SERRURE	1					
71	125-00078	LOCK;REAR GLASS (R.H)	SERRURE	1					
72	2161-2212	STOPPER;RUBBER	TAQUET D'ARRET	2					
75	534-00079	ROOM LAMP	LAMPE DE PIECE	1					
75A	2515-1021D1	. BULB	. AMPOULE	1					
76	2114-1898D13	WASHER;PLAIN	RONDELLE	2					
77	2120-2166D26	SCREW	VIS	2					
78	S3450993	SCREW	VIS	4					
79	S3452853	SCREW	VIS	4					
80	2120-2166D52	SCREW	VIS	20					
81	2541-9020	SPEAKER	HAUT-PARLEUR	2					
82	S3450833	SCREW	VIS	8					
84	161-00609C	PAD;ROOF REAR	CAOUTCHOUC	1					
85	161-00610E	PAD;ROOF CENTER	CAOUTCHOUC	1					
86	359-00022A	RAIL;ROOF PANEL RH	CHEMIN DE FER	1					
87	359-00021A	RAIL;ROOF PANEL LH	CHEMIN DE FER	1					
90	161-00613B	PAD;ROOF FRONT	CAOUTCHOUC	1					
91	172-00055A	HANDLE;ROOF	POIGNEE	2					
92	2199-9058	HAMMER	MARTEAU	1					
93	2150-1133	HOOK;COAT	CROCHET	1					
94	621-02910C	COVER;PILLAR LH	COUVERCLE	1					
95	621-02911C	COVER;PILLAR RH	COUVERCLE	1					
96	621-02912B	COVER;REAR UPPER	COUVERCLE	1					

DATE	APR. 02, 2007
1st EDITION	

Fig. 1490 CABIN(3) CABINE

Serial No. ;

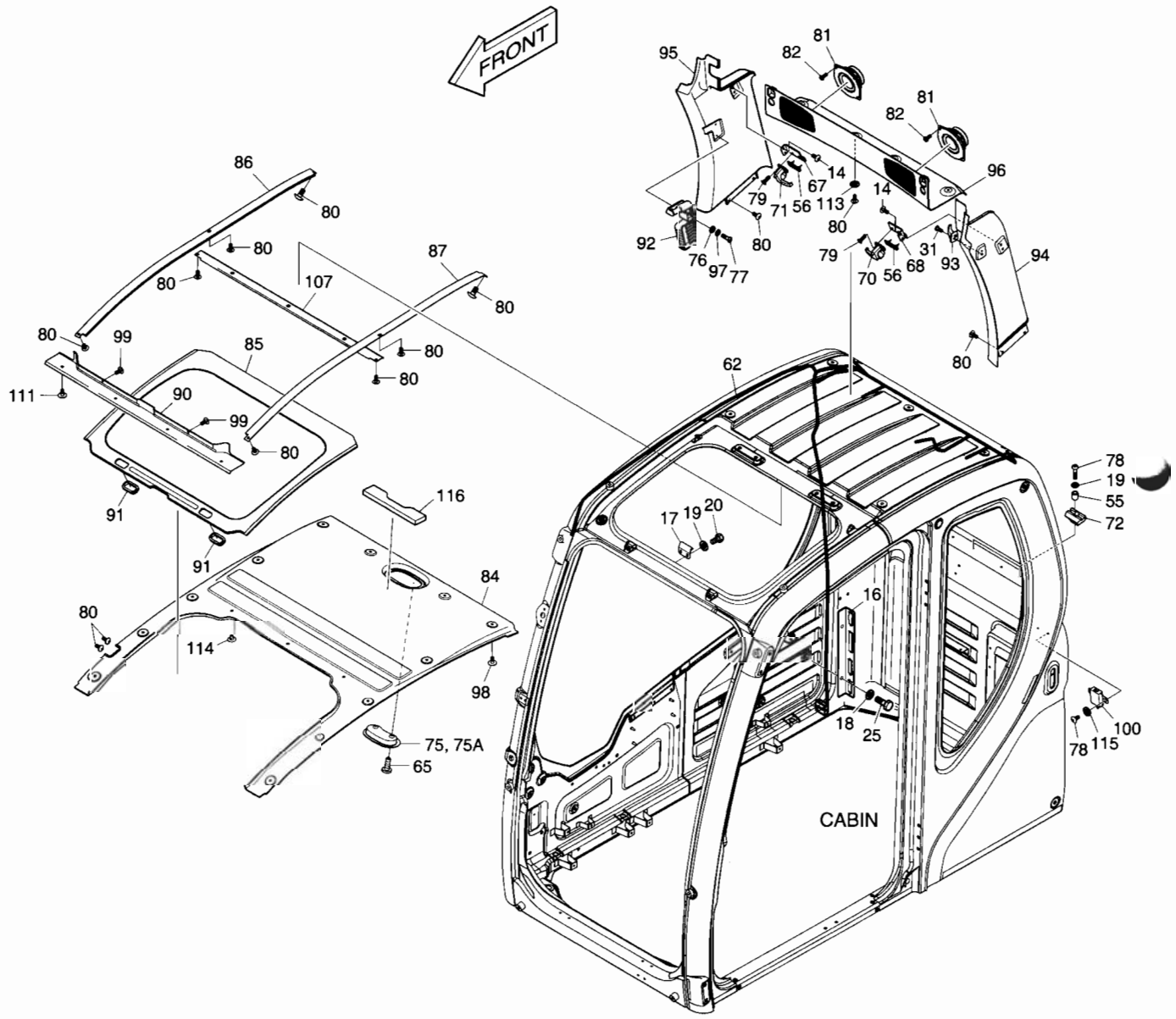

DATE	APR. 02, 2007
1st EDITION	

Fig. 1490 CABIN(3) CABINE

Serial No. ;

Key No.	Part No.	Description	Description	Q'ty	S.C	Serial No.	ICA	Replaceable part	
								Part No.	Q'ty
1490-97	2114-2031D1	WASHER;SPRING	RONDELLE ELASTIQUE	2					
98	K1006936	SCRIVET	RIVET	12					
99	2120-2166D18	SCREW	VIS	2					
100	K1002641	MODULE ASS'Y	MODULE	1					
107	K1003676B	PLATE	PLAQUE	1					
111	2120-2166D53	SCREW	VIS	4					
113	2114-1898D5	WASHER	CALE	4					
114	K1006933	SCRIVET	RIVET	3					
115	S5010313	WASHER	CALE	2					
116	K1010839	FORM	EPONGE	1					

Fig. 1500 CABIN(4) CABINE

Serial No. ;

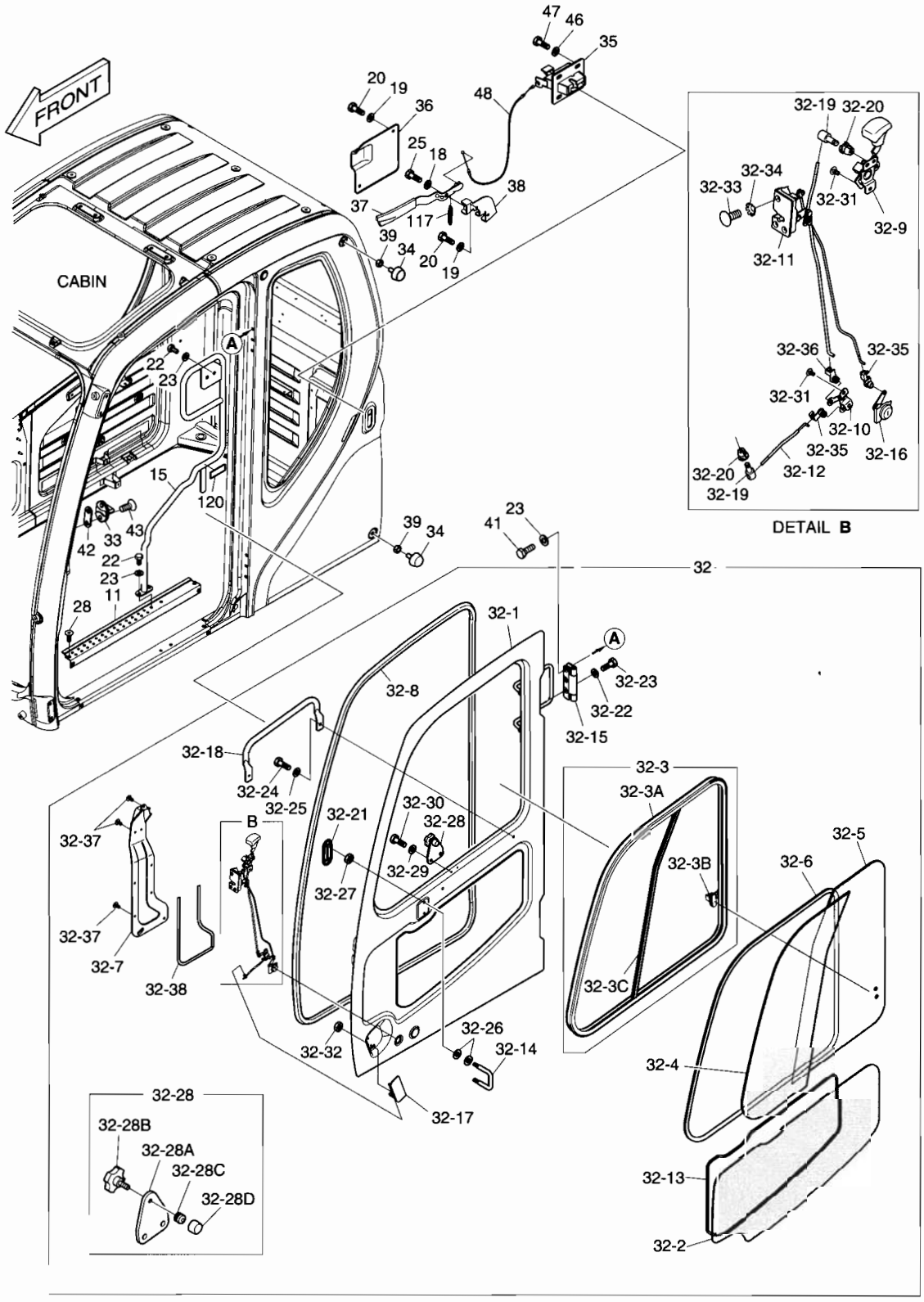

DATE	APR. 02, 2007
1st EDITION	

Fig. 1500 CABIN(4) CABINE

Serial No. ;

Key No.	Part No.	Description	Description	Q'ty	S.C	Serial No.	ICA	Replaceable part	
								Part No.	Q'ty
1500--	622-00351J	CABIN ASS'Y	CABINE	1					
11	625-00159B	STEP;CABIN DOOR	MARCHER	1					
15	172-00052E	HANDLE;INNER	POIGNEE	1					
18	2114-1898D14	WASHER;PLAIN	RONDELLE	1					
19	2114-1898D3	WASHER;PLAIN	RONDELLE	4					
20	2120-2166D28	BOLT	BOULON A 6 PANS	4					
22	2120-2166D4	BOLT	BOULON A 6 PANS	4					
23	2114-1898D15	WASHER;PLAIN	RONDELLE	10					
25	2120-2166D12	BOLT	BOULON A 6 PANS	1					
28	2120-2150D3	SCREW	VIS	4					
32	622-00353G	DOOR ASS'Y	VERROU	1					
32-1	-	. DOOR;BODY	. DIODE	1	D				
32-2	903-00069A	. GLASS;DOOR LOWER	. VITRE	1					
32-3	622-00355A	. SASH ASS'Y	. CHASSIS	1					
32-3A	622-00356	.. FRAME ASS'Y;SASH	.. BATI	1					
32-3B	2123-6119	.. LOCK;SASH	.. VERROU	1					
32-3C	162-00033A	.. BAR;CENTER	.. CAOUTCHOUC	1					
32-4	903-00070B	. GLASS;SASH FRONT	. VITRE	1					
32-5	903-00071B	. GLASS;SASH REAR	. VITRE	1					
32-6	161-00623	. TRIM	. ATTACHE	1					
32-7	621-02869B	. COVER;LOCK	. COUVERCLE	1					
32-8	198-00053A	. RUBBER TRIM;DOOR INNER	. CAOUTCHOUC	1					
32-9	133-00221	. LEVER ASS'Y;INNER HANDLE	. LEVIER	1					
32-10	137-00092	. LINK;DOOR INNER	. PIECE DE JONCTION	1					
32-11	125-00072	. CATCH ASS'Y;DOOR INNER	. LOQUET	1					
32-12	136-00055A	. ROD;OUTER HANDLE TO LINK	. TIGE	1					
32-13	K1002637	. DAMPER	. REGISTRE	1					
32-14	2150-1132A	. HOOK;CATCH DOOR	. CROCHET	1					
32-15	K1027765	. HINGE ASS'Y;DOOR	. PAUMELLE	2					
32-16	K1003900	. KEY ASS'Y;DOOR	. CLE	1					
32-17	2172-9021	. HANDLE;OUTER	. POIGNEE	1					
32-18	145-00124A	. STAY	. ENTRETOISE	1					
32-19	2123-2247	. PIN	. GOUPILLE	2					
32-20	2124-1689A	. SNAP	. RUPTURE	2					
32-21	621-02867A	. COVER;DOOR INNER	. COUVERCLE	1					
32-22	2114-1898D15	. WASHER;PLAIN	. RONDELLE	6					
32-23	2120-2166D1	. BOLT	. BOULON A 6 PANS	6					
32-24	2120-2166D5	. BOLT	. BOULON A 6 PANS	2					

Fig. 1500 CABIN(4) CABINE

Serial No. ;

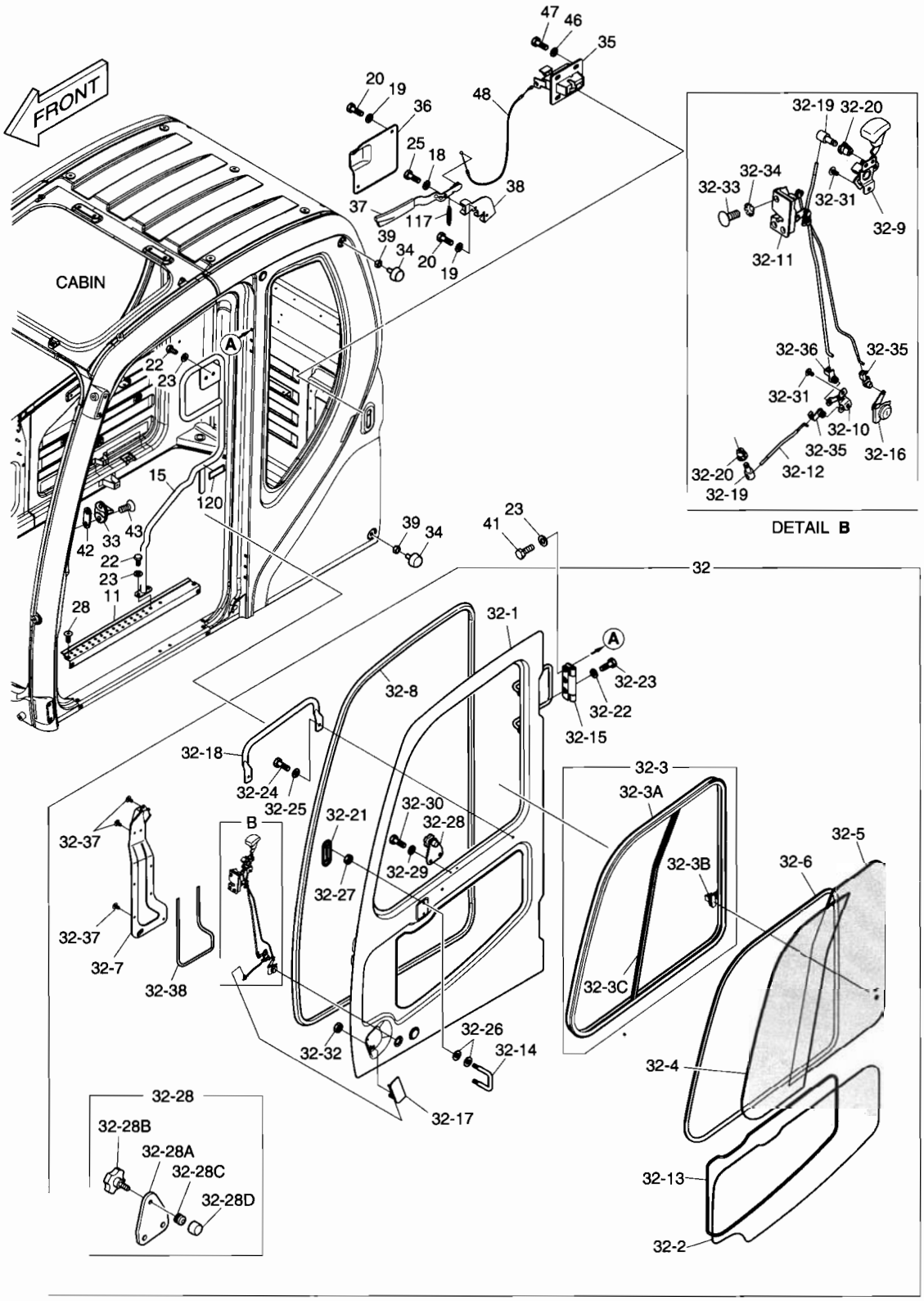

Fig. 1500 CABIN(4) CABINE

Serial No. ;

Key No.	Part No.	Description	Description	Q'ty	S.C	Serial No.	ICA	Replaceable part	
								Part No.	Q'ty
1500-32-25	2114-1898D2	. WASHER	. RONDELLE	2					
32-26	2891-1311	. PLATE	. PLAQUE	4					
32-27	S4012533	. NUT;HEXAGON	. ECROU	2					
32-28	161-00621B	. STOPPER;RUBBER	. TAQUET D'ARRET	1					
32-28	191-03283	.. PLATE;STOPPER	.. TAQUET D'ARRET	1					
32-28	4132-1138	.. KNOB	.. BOUTON	1					
32-28	161-00620	.. RUBBER;STOPPER	.. CAOUTCHOUC	1					
32-28	116-00092A	.. STOPPER	.. TAQUET D'ARRET	1					
32-29	2114-1898D3	. WASHER;PLAIN	. RONDELLE	2					
32-30	2120-2166D28	. BOLT	. BOULON A 6 PANS	2					
32-31	2120-2166D52	. SCREW	. VIS	5					
32-32	S4012333	. NUT	. ECROU	2					
32-33	2120-2150D3	. SCREW	. VIS	3					
32-34	S5210303	. WASHER;TOOTHED	. RONDELLEELASTIQUE	3					
32-35	124-00010	. CLIP;ROD	. ATTACHE	2					
32-36	124-00344	. CLIP;ROD	. ATTACHE	1					
32-37	2120-2166D53	. SCREW	. VIS	8					
32-38	K1006370	. FOAM	. EPONGE	1					
33	2142-9005	STRIKER;DOOR	FRAPPER	1					
34	161-00195	STOPPER;SLIDE DOOR BACK	TAQUET D'ARRET	2					
35	2125-9055	LOCK;BACK	SERRURE	1					
36	621-02849A	COVER;BACK LOCK INNER	COUVERCLE	1					
37	133-00220E	LEVER;BACK LOCK	LEVIER	1					
38	195-02719B	BRACKET;BACK LOCK	SUPPORT	1					
39	2121-1311D4	NUT	ECROU 6 PANS	2					
41	2120-2166D1	BOLT	BOULON A 6 PANS	6					
42	2114-1856	SHIM;STRIKER	CALE	1					
43	2120-2150D1	BOLT	BOULON A 6 PANS	2					
46	2114-1898D2	WASHER	CALE	4					
47	2120-2166D5	BOLT	BOULON A 6 PANS	4					
48	2127-1002A	CABLE;BACK LOCK	CABLE	1					
117	2129-1446	SPRING	RESSORT	1					
120	K1006368	RUBBER	CAOUTCHOUC	1					

DATE	APR. 02, 2007
1st EDITION	

Fig. 1510 FLOOR MAT
PLANCHER

Serial No. ;

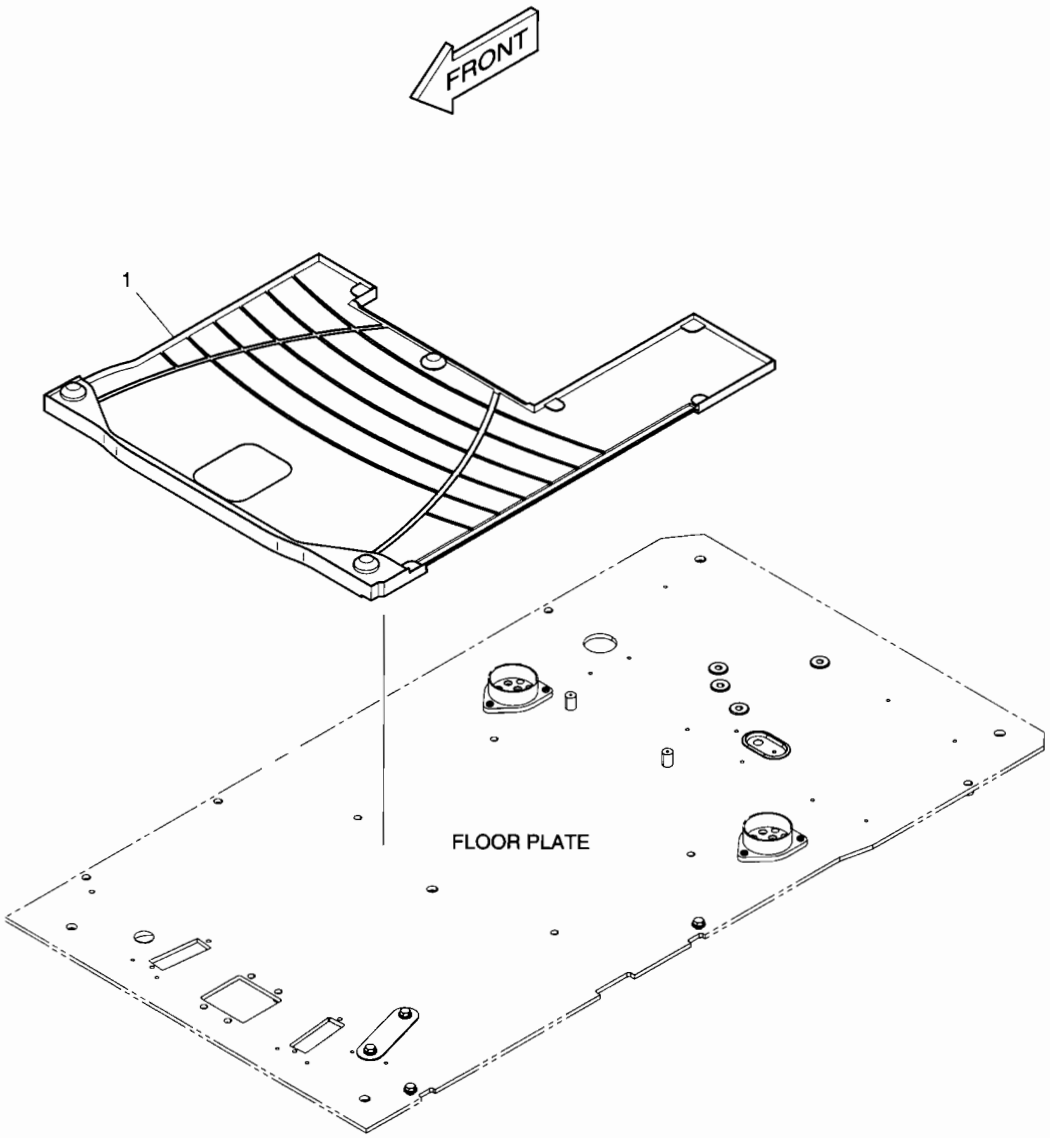

DATE	APR. 02, 2007
1st EDITION	

Fig. 1510 FLOOR MAT PLANCHER

Serial No. ;

Key No.	Part No.	Description	Description	Q'ty	S.C	Serial No.	ICA	Replaceable part	
								Part No.	Q'ty
1510-1	K1002081A	MAT;FLOOR	PLAQUE	1					

DATE	APR. 02, 2007
1st EDITION	

Fig. 1520 FLOOR PLATE
TOLE DE PLANCHER

Serial No. ;

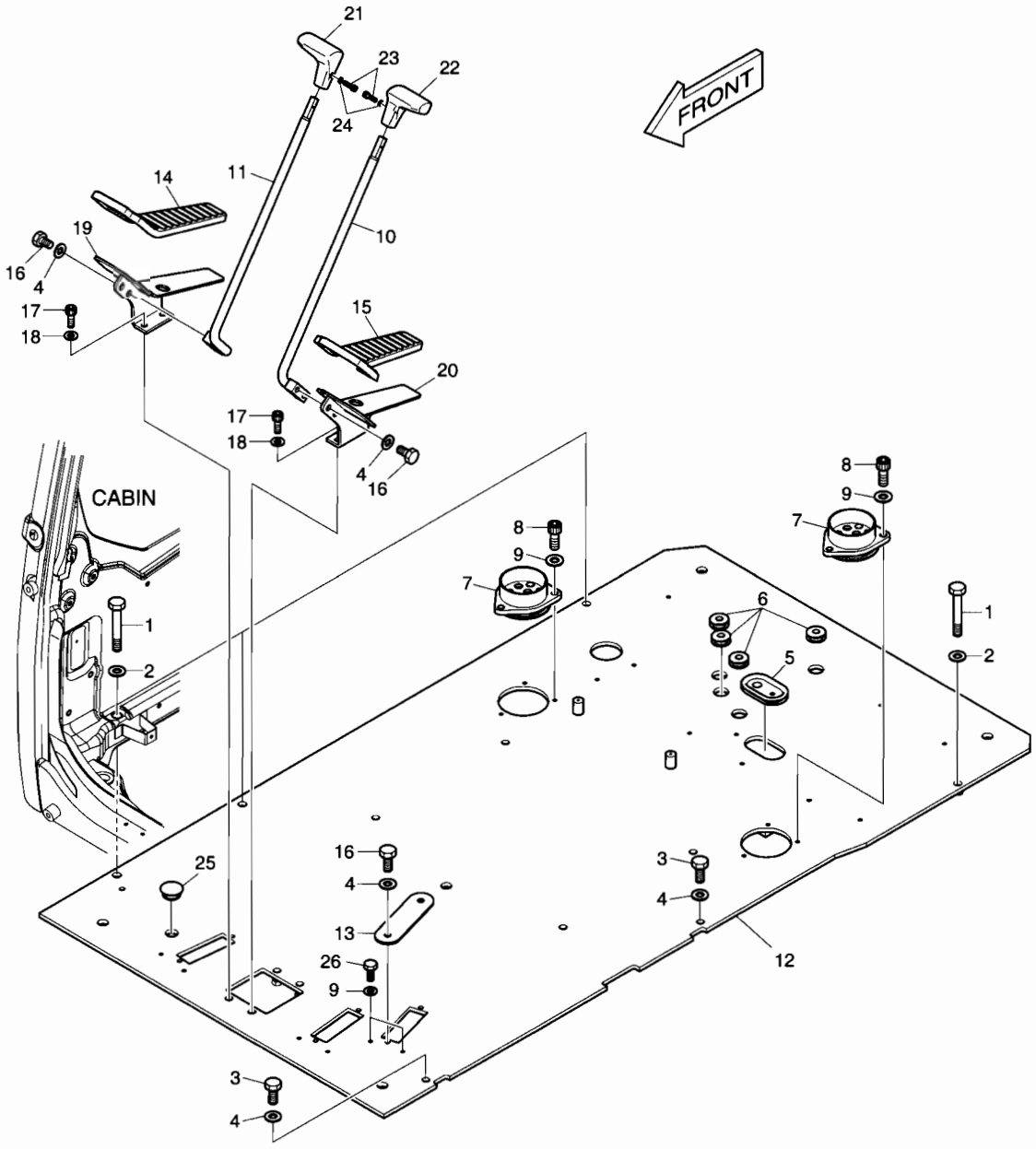

DATE	APR. 02, 2007
1st EDITION	

Fig. 1520 FLOOR PLATE TOLE DE PLANCHER

Serial No. ;

Key No.	Part No.	Description	Description	Q'ty	S.C	Serial No.	ICA	Replaceable part	
								Part No.	Q'ty
1520--	622-00426B	FLOOR PLATE ASS'Y	TOLE DE PLANCHER	-	D				
1	2120-2166D55	BOLT	BOULON	4					
2	2114-1898D17	WASHER	RONDELLE	4					
3	2120-2166D1	BOLT	BOULON	2					
4	2114-1898D1	WASHER	RONDELLE	8					
5	160-00071	BUSHING;RUBBER	DOUILLE EN CAOUTCHOUC	1					
6	160-00072	BUSHING;RUBBER	DOUILLE EN CAOUTCHOUC	4					
7	160-00080A	BUSHING;RUBBER	DOUILLE EN CAOUTCHOUC	2					
8	S2208866	BOLT	BOULON	6					
9	2114-1898D14	WASHER	RONDELLE	8					
10	133-00229A	LEVER;TRAVEL (L.H)	LEVIER	1					
11	133-00230A	LEVER;TRAVEL (R.H)	LEVIER	1					
12	621-02892E	PLATE;FLOOR	PLAQUE	1					
13	621-01507	PLATE	PLAQUE	1					
14	161-00381	RUBBER;PEDAL(R.H)	CAOUTCHOUC	1					
15	161-00382	RUBBER;PEDAL(L.H)	CAOUTCHOUC	1					
16	2120-2166D4	BOLT	BOULON	6					
17	S2211866	BOLT;SOCKET	BOULON DE PLOT	4					
18	S5110603	WASHER	RONDELLE	4					
19	195-01683A	BRACKET;PEDAL(R.H)	SUPPORT	1					
20	195-01684A	BRACKET;PEDAL(L.H)	SUPPORT	1					
21	2132-1134B	GRIP;LEVER(R.H)	POIGNEE	1					
22	2132-1133B	GRIP;LEVER(L.H)	POIGNEE	1					
23	S2201766	BOLT	BOULON	2					
24	S5000113	WASHER;PLAIN	RONDELLE PLATE	2					
25	2161-2487	CAP;RUBBER	CHAPEAU	1					
26	2120-2166D12	BOLT	BOULON	2					

Fig. 1530 HANDLE ASS'Y HANDLE

Serial No. ;

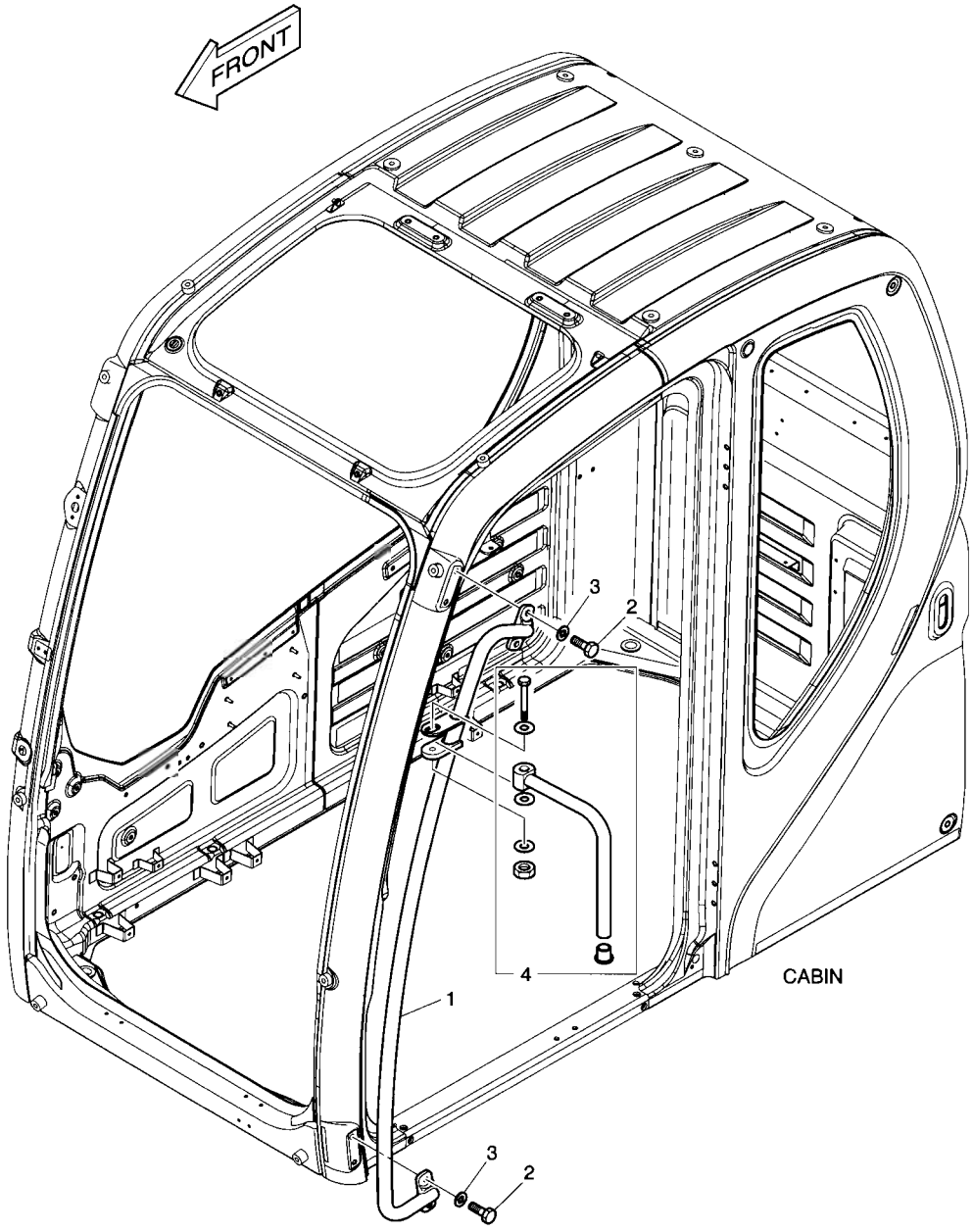

DATE	APR. 02, 2007
1st EDITION	

Fig. 1530 HANDLE ASS'Y HANDLE

Serial No. ;

Key No.	Part No.	Description	Description	Q'ty	S.C	Serial No.	ICA	Replaceable part	
								Part No.	Q'ty
1530--	172-00372A	HANDLE ASS'Y	HANDLE	-	D				
1	172-00053B	HANDLE;OUTER	POIGNEE	1					
2	2120-2166D2	BOLT	BOULON	4					
3	2114-1898D15	WASHER	RONDELLE	4					
4	K1004272	STAY;MIRROR	ENTRETOISE	1					

DATE	APR. 02, 2007
1st EDITION	

Fig. 1540 ROOF COVER COUVERCLE

Serial No. ;

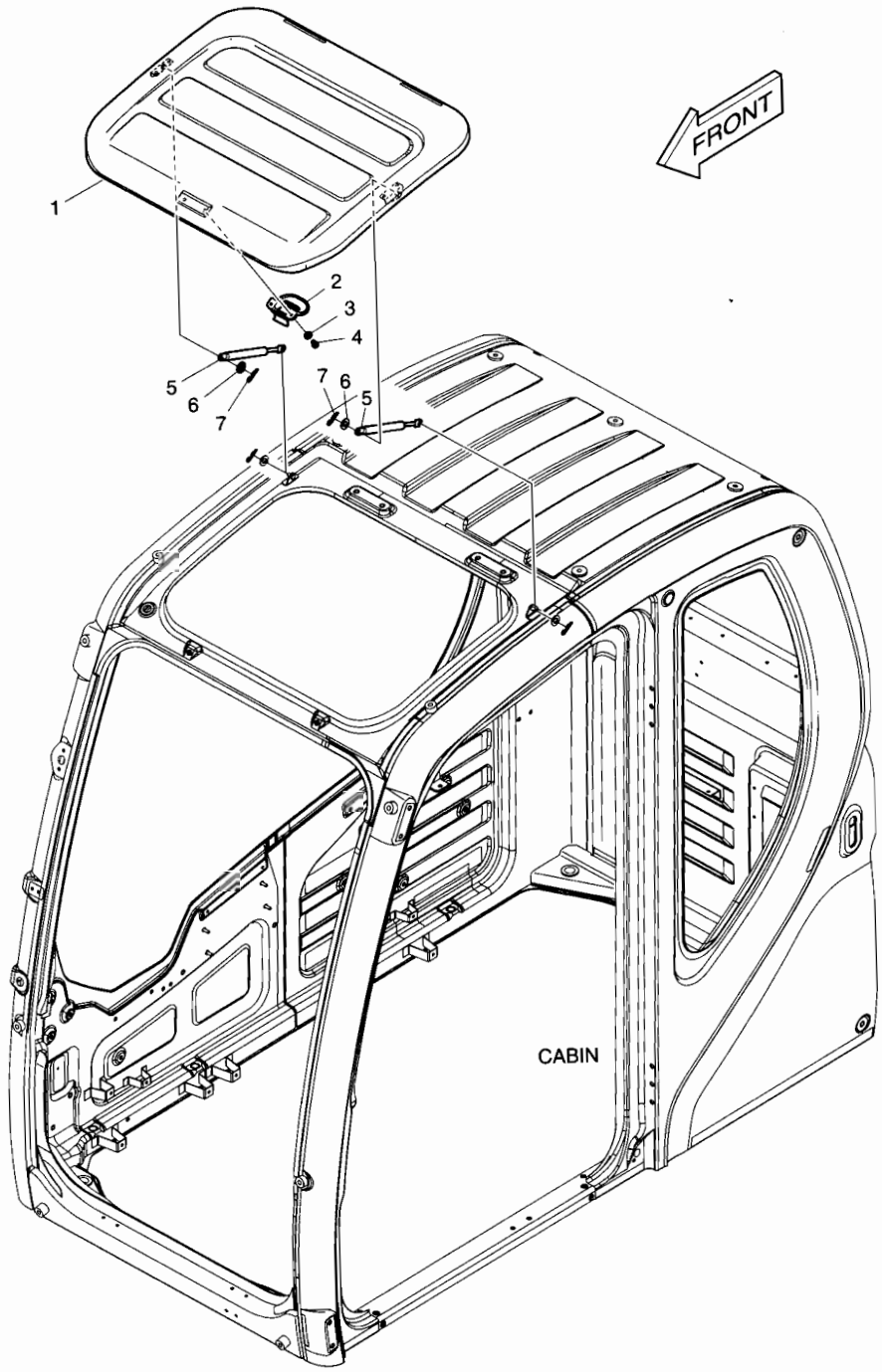

DATE	APR. 02, 2007
1st EDITION	

Fig. 1540 ROOF COVER COUVERCLE

Serial No. ;

Key No.	Part No.	Description	Description	Q'ty	S.C	Serial No.	ICA	Replaceable part	
								Part No.	Q'ty
1540--	621-03732C	ROOF COVER ASS'Y	COUVERCLE	-	D				
1	621-03727B	COVER;ROOF	COUVERCLE	1					
2	123-00516B	LOCK ASS'Y;ROOF COVER	SERRURE	1					
3	2114-1898D3	WASHER	RONDELLE	2					
4	2120-2166D9	SCREW	VIS	2					
5	DS1003009	GAS-SPRING	GOUJON	2					
6	2114-1898D14	WASHER	RONDELLE	2					
7	123-00523	PIN;GAS-SPRING	GOUJON	2					

DATE	APR. 02, 2007
1st EDITION	

Fig. 1550 FOOT REST - L.H.
REPOS DE PIED

Serial No. ;

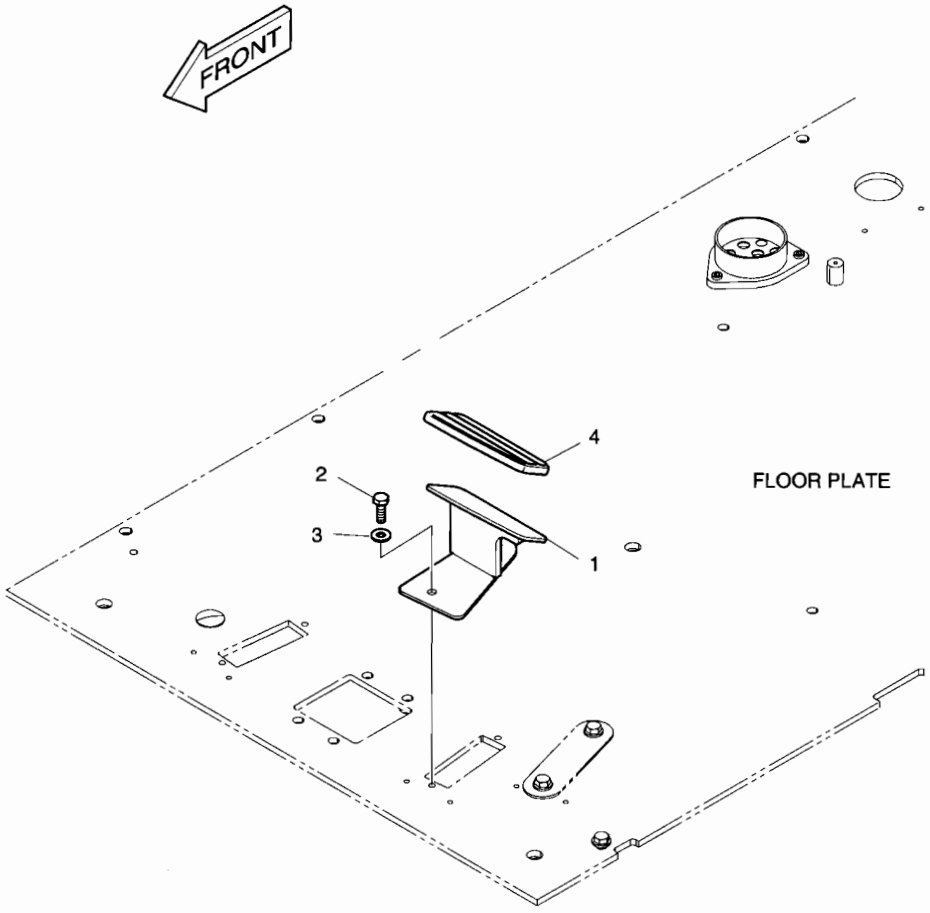

DATE	APR. 02, 2007
1st EDITION	

Fig. 1550 FOOT REST - L.H. REPOS DE PIED

Serial No. ;

Key No.	Part No.	Description	Description	Q'ty	S.C	Serial No.	ICA	Replaceable part	
								Part No.	Q'ty
1550--	K1002082	FOOT REST(L.H)	REPOS DE PIED	-	D				
1	195-02949A	BRACKET;FOOT REST(L.H)	SUPPORT	1					
2	2120-2166D1	BOLT	BOULON	2					
3	2114-1898D1	WASHER	RONDELLE	2					
4	2160-1345	COVER;FOOT REST	COUVERCLE	1					

DATE	APR. 02, 2007
1st EDITION	

Fig. 1560 FOOT REST - R.H.
REPOS DE PIED

Serial No. ;

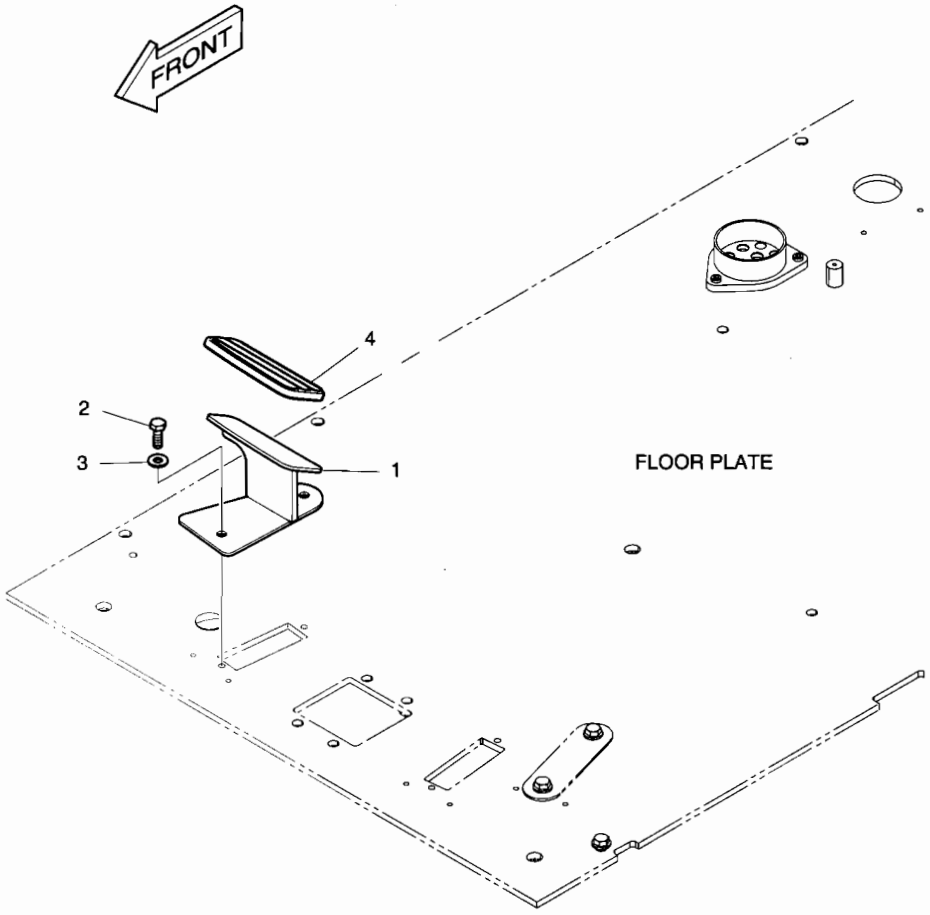

DATE	APR. 02, 2007
1st EDITION	

Fig. 1560 FOOT REST - R.H. REPOS DE PIED

Serial No. ;

Key No.	Part No.	Description	Description	Q'ty	S.C	Serial No.	ICA	Replaceable part	
								Part No.	Q'ty
1560--	K1002083	FOOT REST(R.H)	REPOS DE PIED	-	D				
1	195-02948A	BRACKET;FOOT REST(R.H)	SUPPORT	1					
2	2120-2166D1	BOLT	BOULON	2					
3	2114-1898D1	WASHER	RONDELLE	2					
4	2160-1346	COVER;FOOT REST	COUVERCLE	1					

DATE	APR. 02, 2007
1st EDITION	

Fig. 1570 SUPPORT & BAFFLE(1)
APPUI ET CLOISON

Serial No. ;

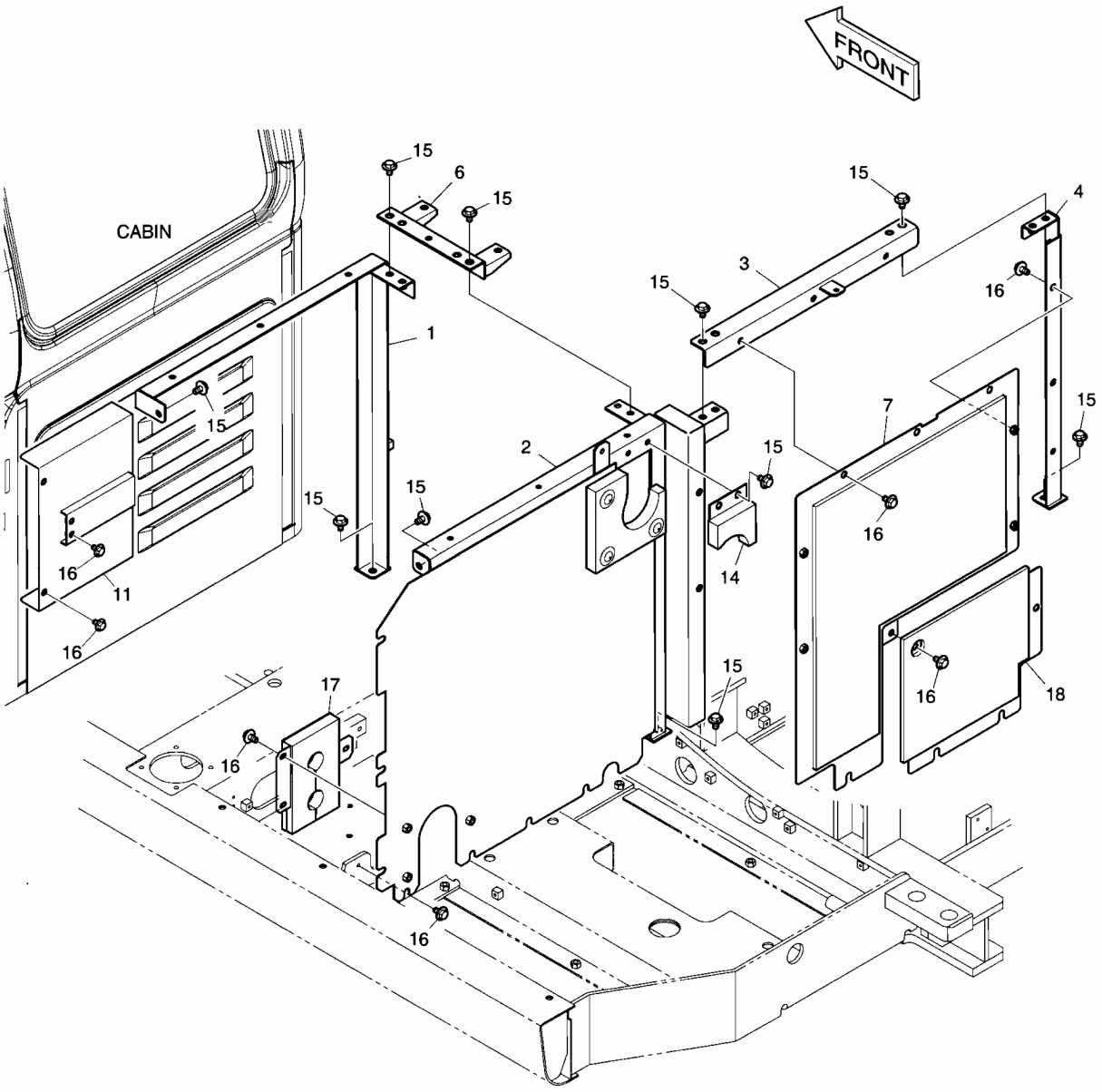

DATE	APR. 02, 2007
1st EDITION	

Fig. 1570 SUPPORT & BAFFLE(1) APPUI ET CLOISON

Serial No. ;

Key No.	Part No.	Description	Description	Q'ty	S.C	Serial No.	ICA	Replaceable part	
								Part No.	Q'ty
1570--	K1016475C	SUPPORT & BAFFLE	SUPPORT	-	D				
1	K1017021A	SUPPORT	LAMPE	1					
2	K1017022C	SUPPORT	LAMPE	1					
3	K1017023A	SUPPORT	LAMPE	1					
4	K1017024A	SUPPORT	LAMPE	1					
6	K1017026A	SUPPORT	LAMPE	1					
7	K1017027A	COVER;BAFFLE	COUVERCLE	1					
11	621-02981E	BOX;DUCT (AIRCON)	BOITE	1					
14	K1017034A	COVER;BAFFLE	COUVERCLE	1					
15	DS0025015	BOLT;SET	BOULON	15					
16	DS0025014	BOLT;SET	BOULON	26					
17	K1029035	COVER;BAFFLE	COUVERCLE	1					
18	K1033243	COVER;BAFFLE	COUVERCLE	1					

DATE	APR. 02, 2007
1st EDITION	

Fig. 1580 SUPPORT & BAFFLE(2)
APPUI ET CLOISON

Serial No. ;

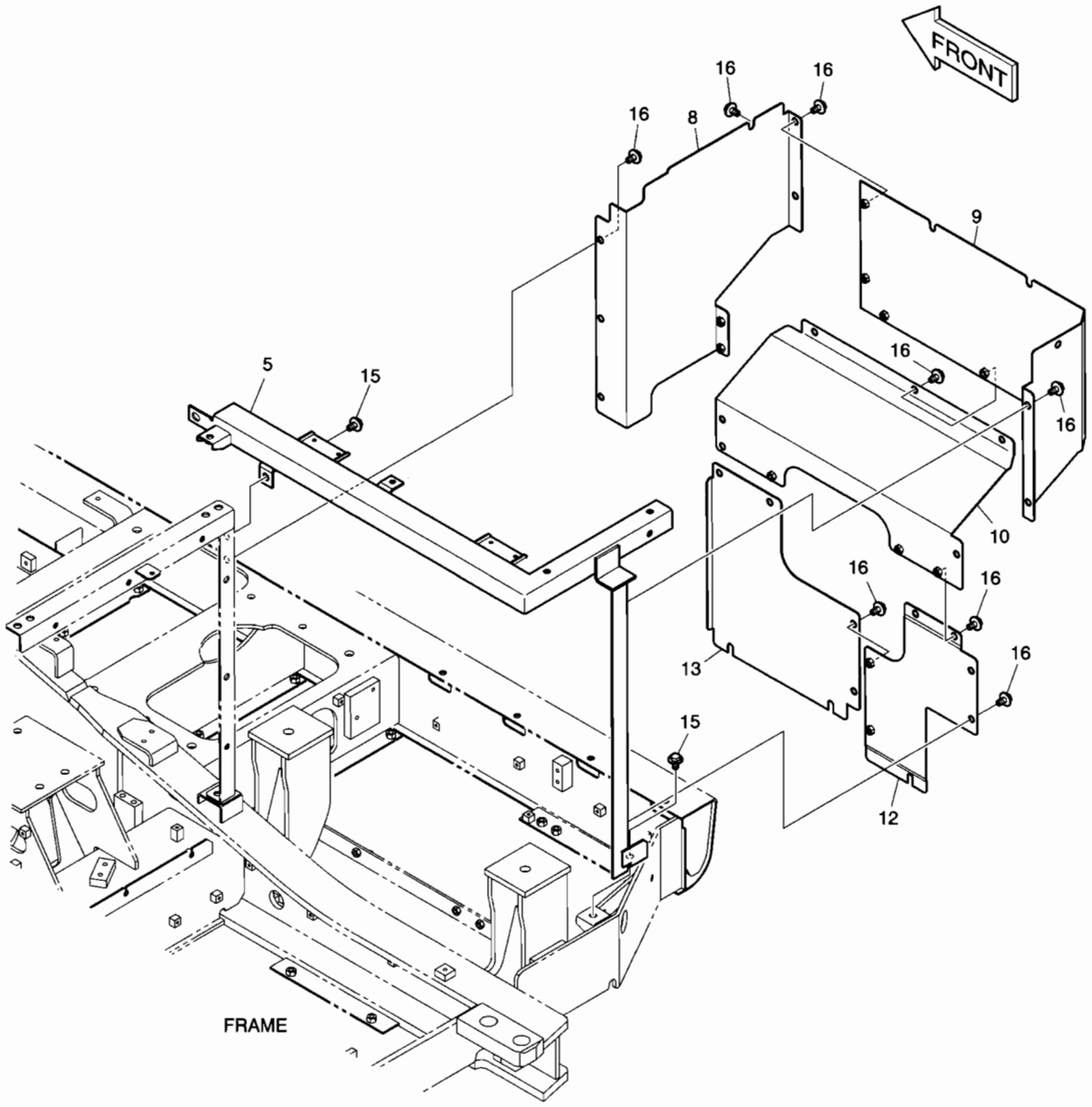

DATE	APR. 02, 2007
1st EDITION	

Fig. 1580 SUPPORT & BAFFLE(2) APPUI ET CLOISON

Serial No. ;

Key No.	Part No.	Description	Description	Q'ty	S.C	Serial No.	ICA	Replaceable part	
								Part No.	Q'ty
1580--	K1016475E	SUPPORT & BAFFLE	SUPPORT	-	D				
5	K1017025B	SUPPORT	LAMPE	1					
8	K1017028B	COVER;BAFFLE	COUVERCLE	1					
9	K1017029B	COVER;BAFFLE	COUVERCLE	1					
10	K1017030B	COVER;BAFFLE	COUVERCLE	1					
12	K1017032C	COVER;BAFFLE	COUVERCLE	1					
13	K1017033B	COVER;BAFFLE	COUVERCLE	1					
15	DS0025015	BOLT;SET	BOULON	3					
16	DS0025014	BOLT;SET	BOULON	28					

DATE	APR. 02, 2007
1st EDITION	

Fig. 1590 SIDE DOOR - L.H
ENSEMBLE DE PORTE

Serial No. ;

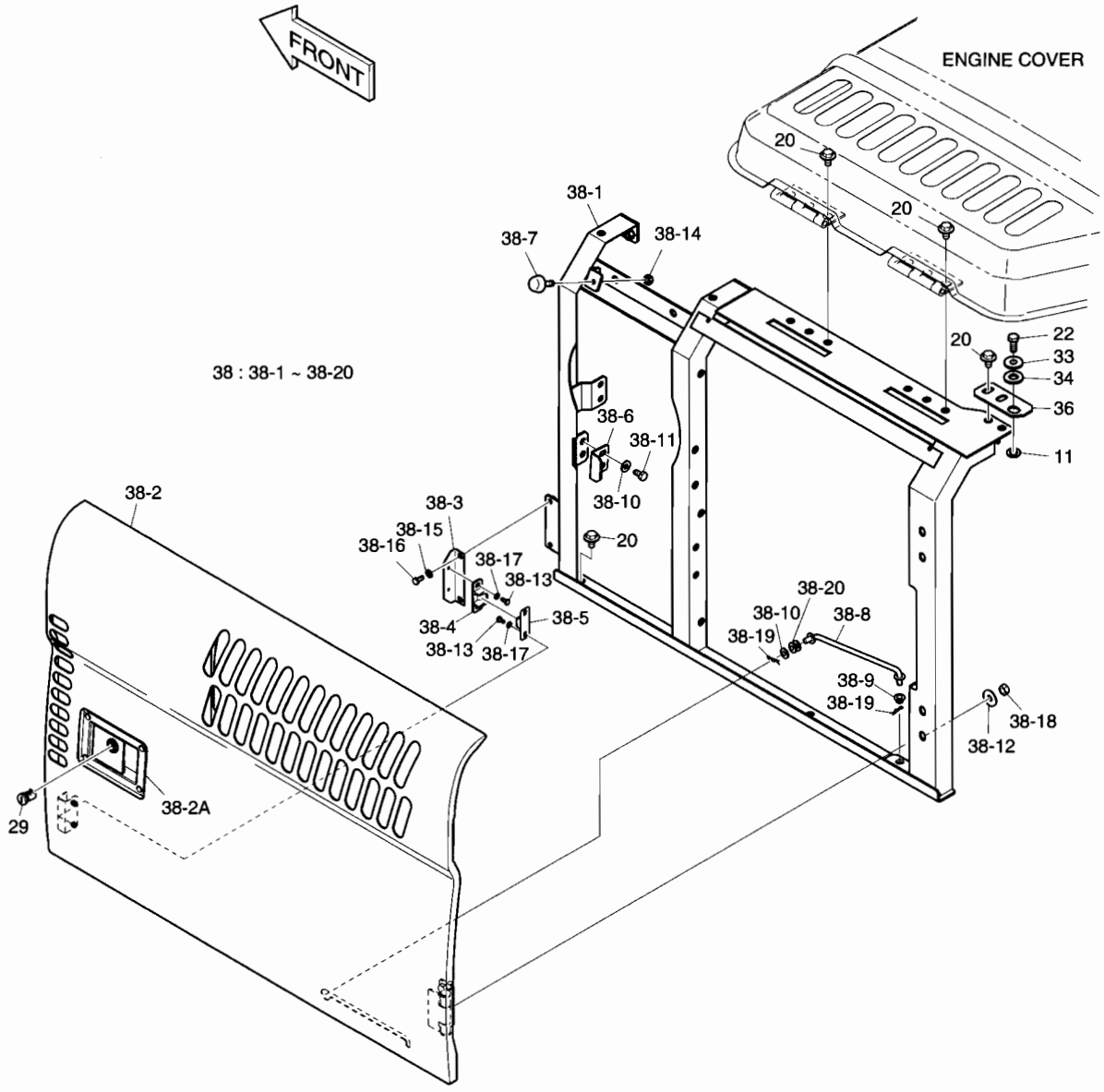

DATE	APR. 02, 2007
1st EDITION	

Fig. 1590 SIDE DOOR - L.H ENSEMBLE DE PORTE

Serial No. ;

Key No.	Part No.	Description	Description	Q'ty	S.C	Serial No.	ICA	Replaceable part	
								Part No.	Q'ty
1590--	K1018020E	COVER ASS'Y	COUVERCLE	-	D				
11	S5010813	WASHER	RONDELLE	1					
20	DS0025015	BOLT;SET	BOULON	12					
22	S0515266	BOLT	BOULON	1					
29	K1004630	CYLINDER;KEY	CYLINDRE	1					
33	K1000892	SPACER	DOUILLE D'ECARTEMENT	1					
34	K1000893	RUBBER	CAOUTCHOUC	1					
36	K1004300A	PLATE	PLAQUE	1					
38	K1027629	SIDE DOOR ASS'Y(L.H)	ENSEMBLE LATERALE DE	1					
38-1	K1027609	. SUPPORT;SIDE DOOR	. ARRET	1					
38-2	621-02743G	. DOOR;SIDE(L.H)	. PORTE	1					
38-2A	125-00035A	.. LOCK	.. SERRURE	1					
38-3	2116-1522	. PLATE	. PLAQUE	1					
38-4	2161-9052	. STOPPER;PLATE	. ARRET	1					
38-5	2161-9053	. STOPPER;RUBBER	. ARRET	1					
38-6	621-02726A	. PLATE;LOCK	. PLAQUE	1					
38-7	K1001260A	. STOPPER;RUBBER	. ARRET	1					
38-8	623-00074B	. STAY	. SEJOUR	1					
38-9	K1000602	. BUSHING	. DOUILLE	1					
38-10	2114-1058D45	. WASHER;PLAIN	. RONDELLE	3					
38-11	S0511866	. BOLT	. BOULON	2					
38-12	2114-1058D30	. WASHER;PLAIN	. RONDELLE	4					
38-13	S0504553	. BOLT	. BOULON	4					
38-14	S4012633	. NUT M10x1.5	. ECROU	1					
38-15	S5010513	. WASHER	. RONDELLE	2					
38-16	S0508766	. BOLT	. BOULON	2					
38-17	S5010313	. WASHER	. RONDELLE	4					
38-18	S4012733	. NUT	. ECROU	4					
38-19	2705-9002	. PIN;LOCK	. GOUPILLE	2					
38-20	K1008335	. BUSHING	. DOUILLE	1					

DATE	APR. 02, 2007
1st EDITION	

Fig. 1600 SIDE DOOR - R.H
ENSEMBLE DE PORTE

Serial No. ;

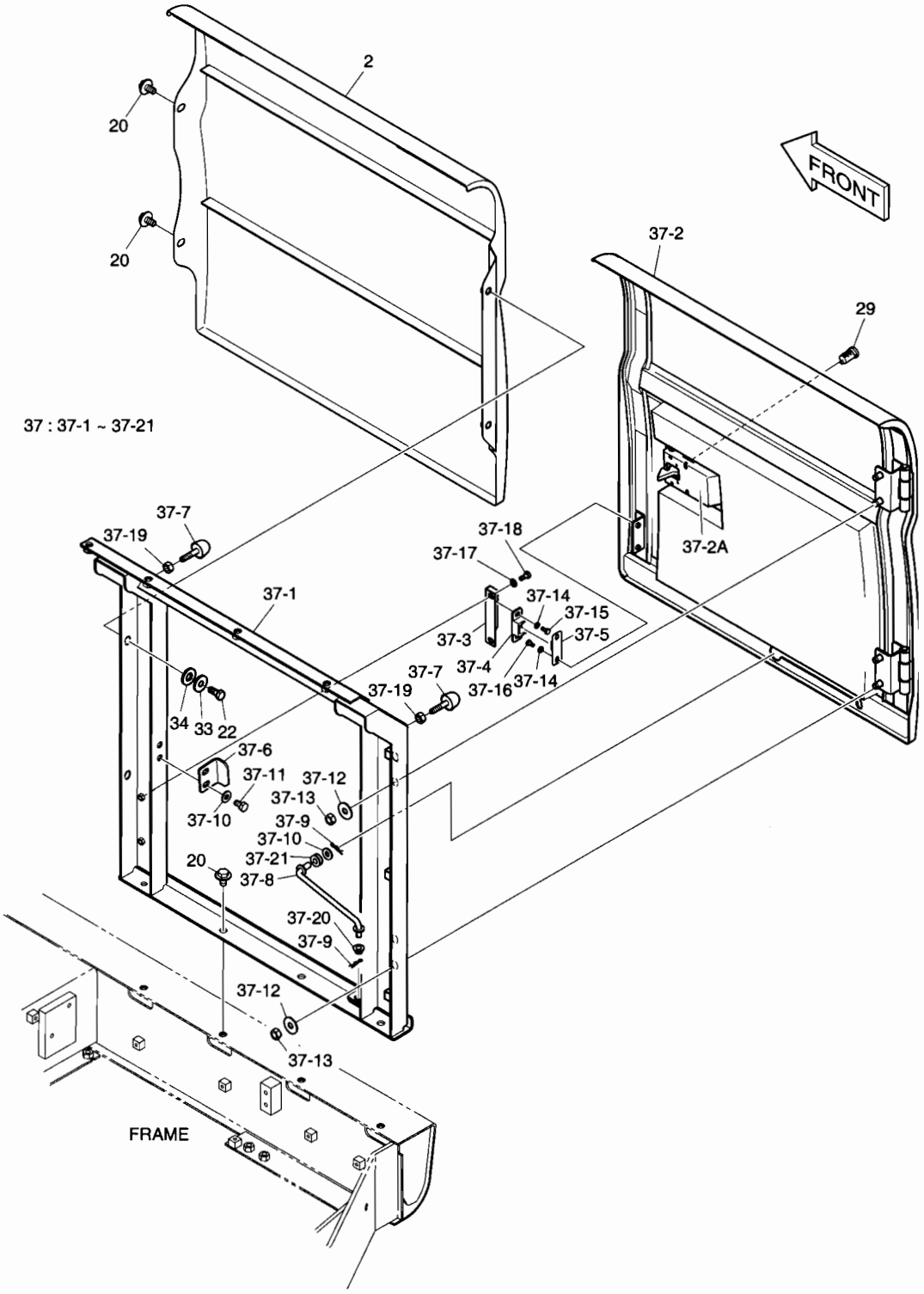

DATE	APR. 02, 2007
1st EDITION	

Fig. 1600 SIDE DOOR - R.H ENSEMBLE DE PORTE

Serial No. ;

Key No.	Part No.	Description	Description	Q'ty	S.C	Serial No.	ICA	Replaceable part	
								Part No.	Q'ty
1600--	K1018020E	COVER ASS'Y	COUVERCLE	-	D				
2	K1018021	COVER;TANK	COUVERCLE	1					
20	DS0025015	BOLT;SET	BOULON	6					
22	S0515266	BOLT	BOULON	2					
29	K1004630	CYLINDER;KEY	CYLINDRE	1					
33	K1000892	SPACER	DOUILLE D'ECARTEMENT	2					
34	K1000893	RUBBER	CAOUTCHOUC	2					
37	K1018099A	SIDE DOOR ASS'Y(R.H)	ENSEMBLE LATERALE DE	1					
37-1	K1018100A	. SUPPORT	. LAMPE	1					
37-2	K1013480A	. DOOR;SIDE(R.H)	. PORTE	1					
37-2A	125-00035A	.. LOCK	.. SERRURE	1					
37-3	2116-1522	. PLATE	. PLAQUE	1					
37-4	2161-9052	. STOPPER;PLATE	. ARRET	1					
37-5	2161-9053	. STOPPER;RUBBER	. ARRET	1					
37-6	621-02726A	. PLATE;LOCK	. PLAQUE	1					
37-7	K1001260A	. STOPPER;RUBBER	. ARRET	2					
37-8	623-00075B	. STAY	. SEJOUR	1					
37-9	2705-9002	. PIN;LOCK	. GOUPILLE	2					
37-10	2114-1058D45	. WASHER;PLAIN	. RONDELLE	3					
37-11	S0511853	. BOLT M10X1.5X20	. BOULON	2					
37-12	2114-1058D30	. WASHER;PLAIN	. RONDELLE	4					
37-13	S4012733	. NUT	. ECROU	4					
37-14	S5010313	. WASHER	. RONDELLE	4					
37-15	S0504553	. BOLT	. BOULON	2					
37-16	S0504453	. BOLT	. BOULON	2					
37-17	S5010513	. WASHER	. RONDELLE	2					
37-18	S0508753	. BOLT M8X1.25X18	. BOULON	2					
37-19	S4012633	. NUT M10x1.5	. ECROU	2					
37-20	K1000602	. BUSHING	. DOUILLE	1					
37-21	K1008335	. BUSHING	. DOUILLE	1					

DATE	APR. 02, 2007
1st EDITION	

Fig. 1610 BATTERY COVER COUVERCLE

Serial No. ;

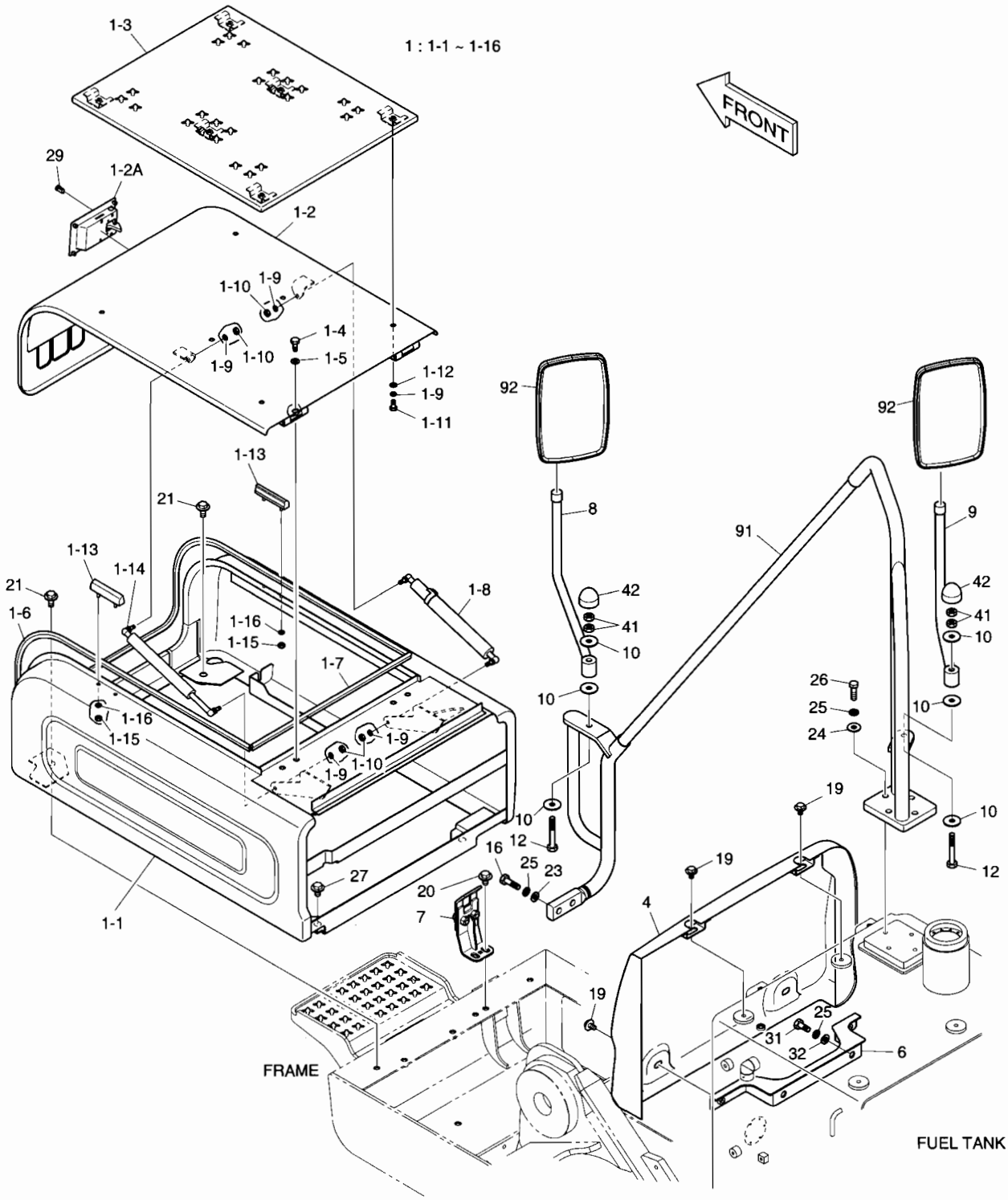

DATE	APR. 02, 2007
1st EDITION	

Fig. 1610 BATTERY COVER COUVERCLE

Serial No. ;

Key No.	Part No.	Description	Description	Q'ty	S.C	Serial No.	ICA	Replaceable part	
								Part No.	Q'ty
1610--	K1018020E	COVER ASS'Y	COUVERCLE	-	D				
1	K1000144G	BATTERY COVER ASS'Y	COUVERCLE	1					
1-1	-	. COVER;BATTERY	. COUVERCLE	1	D				
1-2	K1000146C	. COVER	. COUVERCLE	1					
1-2A	125-00071B	.. LATCH;FRONT	.. VERROU	1					
1-3	K1000147	. COVER	. COUVERCLE	1					
1-4	S0512066	. BOLT	. BOULON	4					
1-5	S5010613	. WASHER;PLAIN(M10)	. RONDELLE	4					
1-6	2160-1217	. RUBBER	. CAOUTCHOUC	1					
1-7	2160-1217	. RUBBER	. CAOUTCHOUC	1					
1-8	K1001968	. CYLINDER;GAS	. CYLINDRE	1					
1-9	S5102503	. WASHER;SPRING	. RONDELLE ELASTIQUE	10					
1-10	S4012533	. NUT	. ECROU	4					
1-11	S0508866	. BOLT	. BOULON	6					
1-12	2114-1058D29	. WASHER	. RONDELLE	6					
1-13	K1005305A	. STOPPER;RUBBER	. ARRET	2					
1-14	DS1001061	. CYLINDER;GAS	. CYLINDRE	1					
1-15	S4012333	. NUT	. ECROU	4					
1-16	S5102303	. WASHER;SPRING	. RONDELLE ELASTIQUE	4					
4	621-03025A	COVER;TANK	COUVERCLE	1					
6	195-02706C	BRACKET	SUPPORT	1					
7	195-02624C	BRACKET	SUPPORT	1					
8	K1013269	STAY;MIRROR	ENTRETOISE	1					
9	K1013290	STAY;MIRROR	ENTRETOISE	1					
10	2114-1058D68	WASHER	RONDELLE	6					
12	S0561466	BOLT	BOULON	2					
16	S0560666	BOLT	BOULON	2					
19	DS0025014	BOLT;SET	BOULON	4					
20	DS0025015	BOLT;SET	BOULON	2					
21	DS0025027	BOLT;SET	BOULON	2					
23	2114-1058D33	WASHER	RONDELLE	2					
24	S5010713	WASHER	RONDELLE	4					
25	S5102703	WASHER	RONDELLE	8					
26	S0560566	BOLT	BOULON	4					
27	DS0025022	BOLT;SET	BOULON	2					
29	K1004630	CYLINDER;KEY	CYLINDRE	1					
31	S0515166	BOLT	BOULON	2					
32	2114-1154	WASHER	RONDELLE	2					

DATE	APR. 02, 2007
1st EDITION	

Fig. 1610 BATTERY COVER COUVERCLE

Serial No. ;

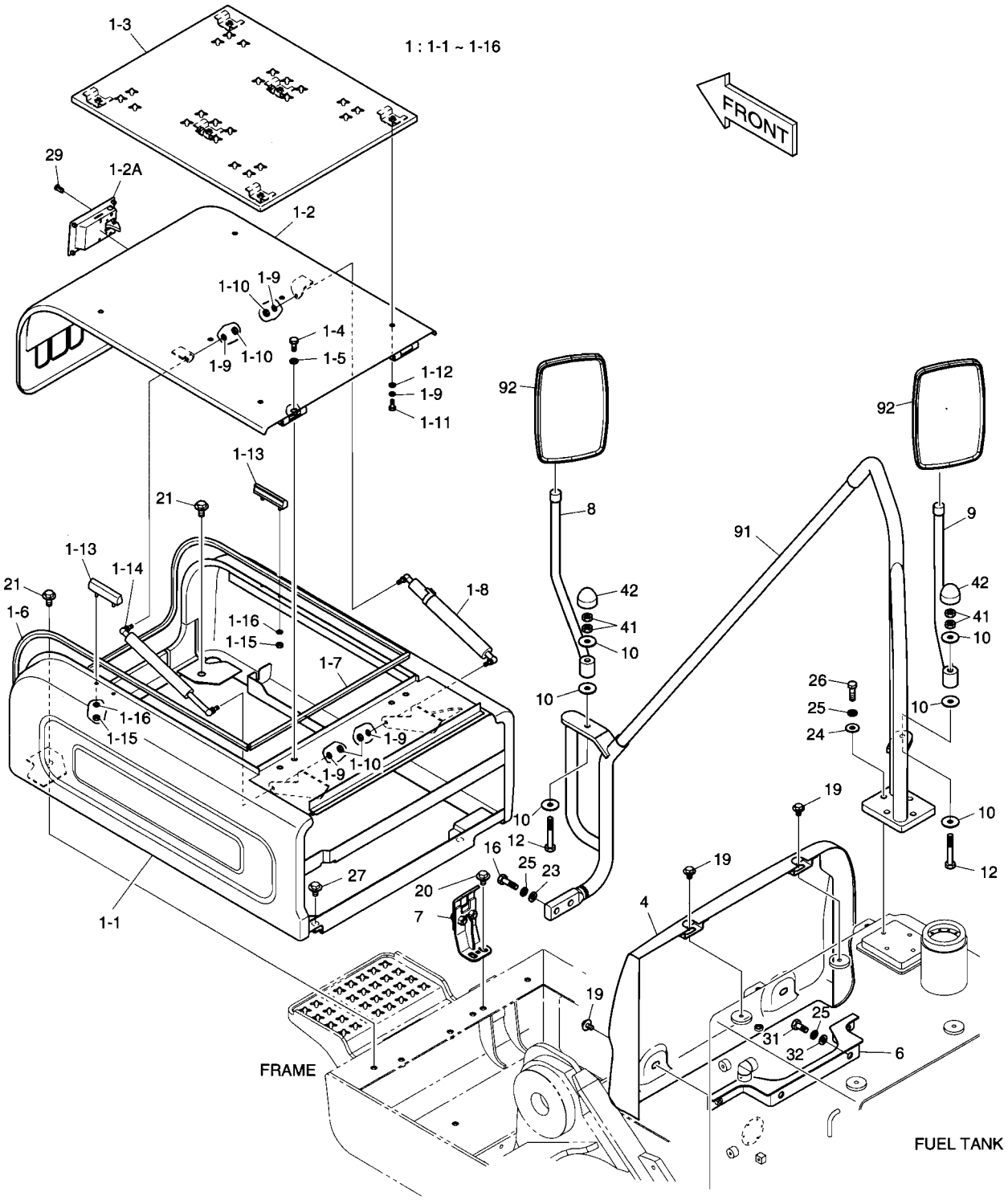

DATE	APR. 02, 2007
1st EDITION	

Fig. 1610 BATTERY COVER COUVERCLE

Serial No. ;

Key No.	Part No.	Description	Description	Q'ty	S.C	Serial No.	ICA	Replaceable part	
								Part No.	Q'ty
1610-41	S4012733	NUT	ECROU	4					
42	161-00580	CAP;RUBBER	CHAPEAU	2					
91	K1024264	STAY	SEJOUR	1					
92	903-00068	MIRROR	MIROIR	2					

Fig. 1620 COVER
COUVERCLE

Serial No. ;

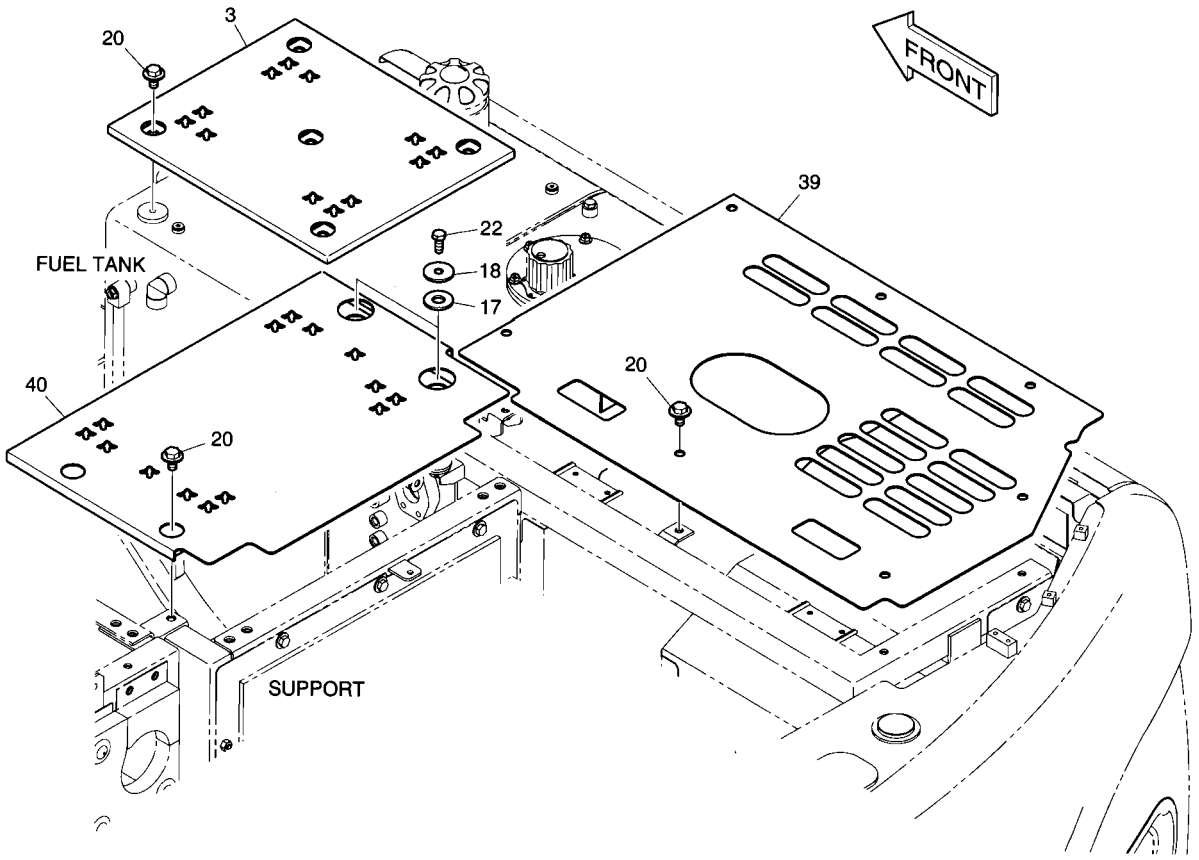

DATE	APR. 02, 2007
1st EDITION	

Fig. 1620 COVER COUVERCLE

Serial No. ;

Key No.	Part No.	Description	Description	Q'ty	S.C	Serial No.	ICA	Replaceable part	
								Part No.	Q'ty
1620--	K1018020E	COVER ASS'Y	COUVERCLE	-	D				
3	K1018247	COVER	COUVERCLE	1					
17	K1002943	RUBBER	CAOUTCHOUC	2					
18	114-00529	SPACER	DOUILLE D'ECARTEMENT	2					
20	DS0025015	BOLT;SET	BOULON	14					
22	S0515266	BOLT	BOULON	2					
39	K1018094B	COVER	COUVERCLE	1					
40	K1018195B	COVER	COUVERCLE	1					

DATE	APR. 02, 2007
1st EDITION	

Fig. 1630 ENGINE COVER
COUVERTURE DE MOTEUR

Serial No. ;

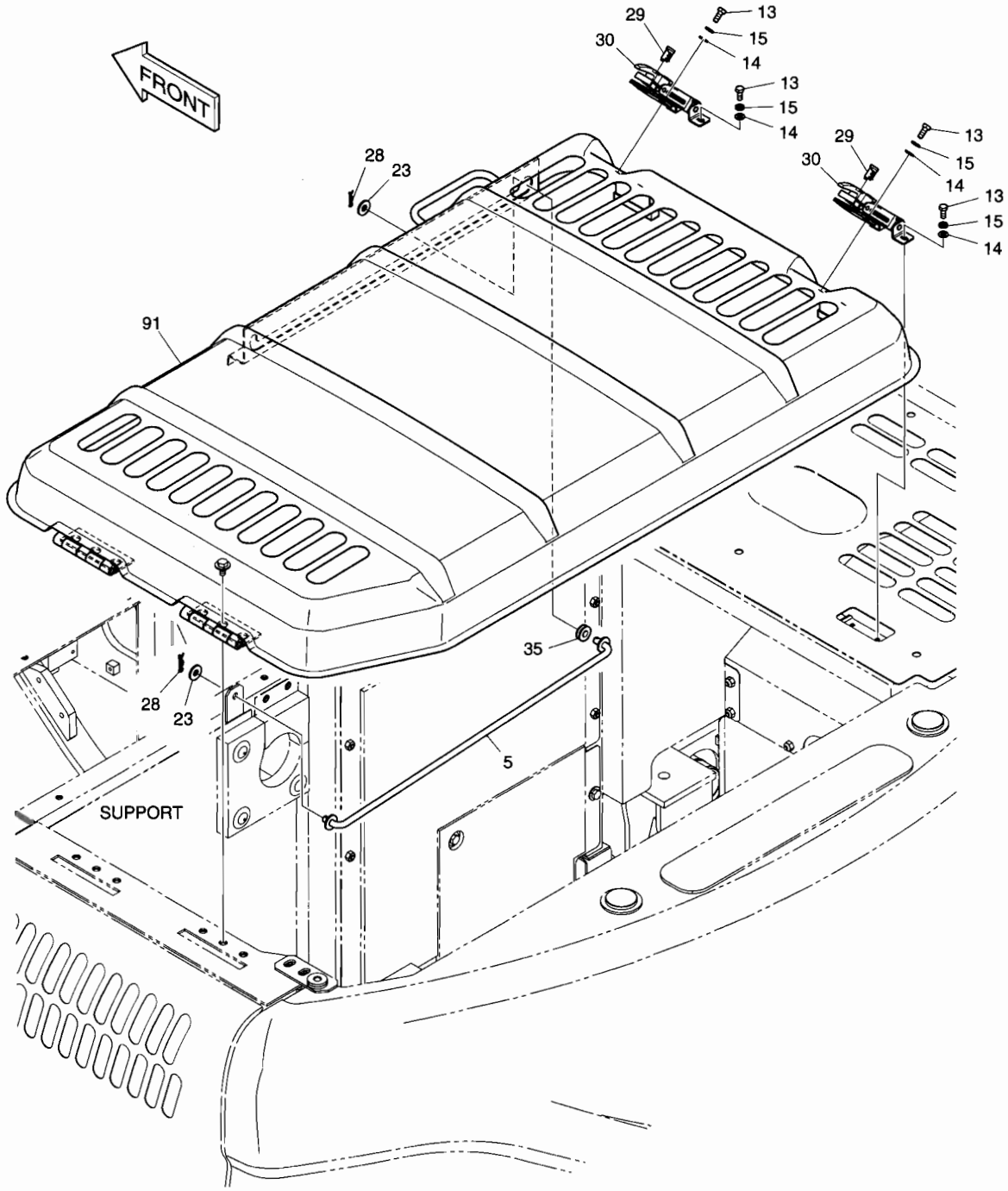

DATE	APR. 02, 2007
1st EDITION	

Fig. 1630 ENGINE COVER COUVERTURE DE MOTEUR

Serial No. ;

Key No.	Part No.	Description	Description	Q'ty	S.C	Serial No.	ICA	Replaceable part	
								Part No.	Q'ty
1630--	K1018020E	COVER ASS'Y	COUVERCLE	-	D				
5	K1009751A	STAY	SEJOUR	1					
13	S0508866	BOLT	BOULON	8					
14	S5010513	WASHER	RONDELLE	8					
15	S5102503	WASHER	RONDELLE	8					
23	2114-1058D33	WASHER	RONDELLE	2					
28	2705-9002	PIN;LOCK	GOUPILLE	2					
29	K1004630	CYLINDER;KEY	CYLINDRE	2					
30	125-00075A	CATCH	CROCHET	2					
35	K1013812	BUSHING	DOUILLE	1					
91	K1009750B	COVER;ENGINE	COUVERCLE	1					

DATE	APR. 02, 2007
1st EDITION	

Fig. 1640 ACOUSTIC FOAM
ENSEMBLE DE EPONGE

Serial No. ;

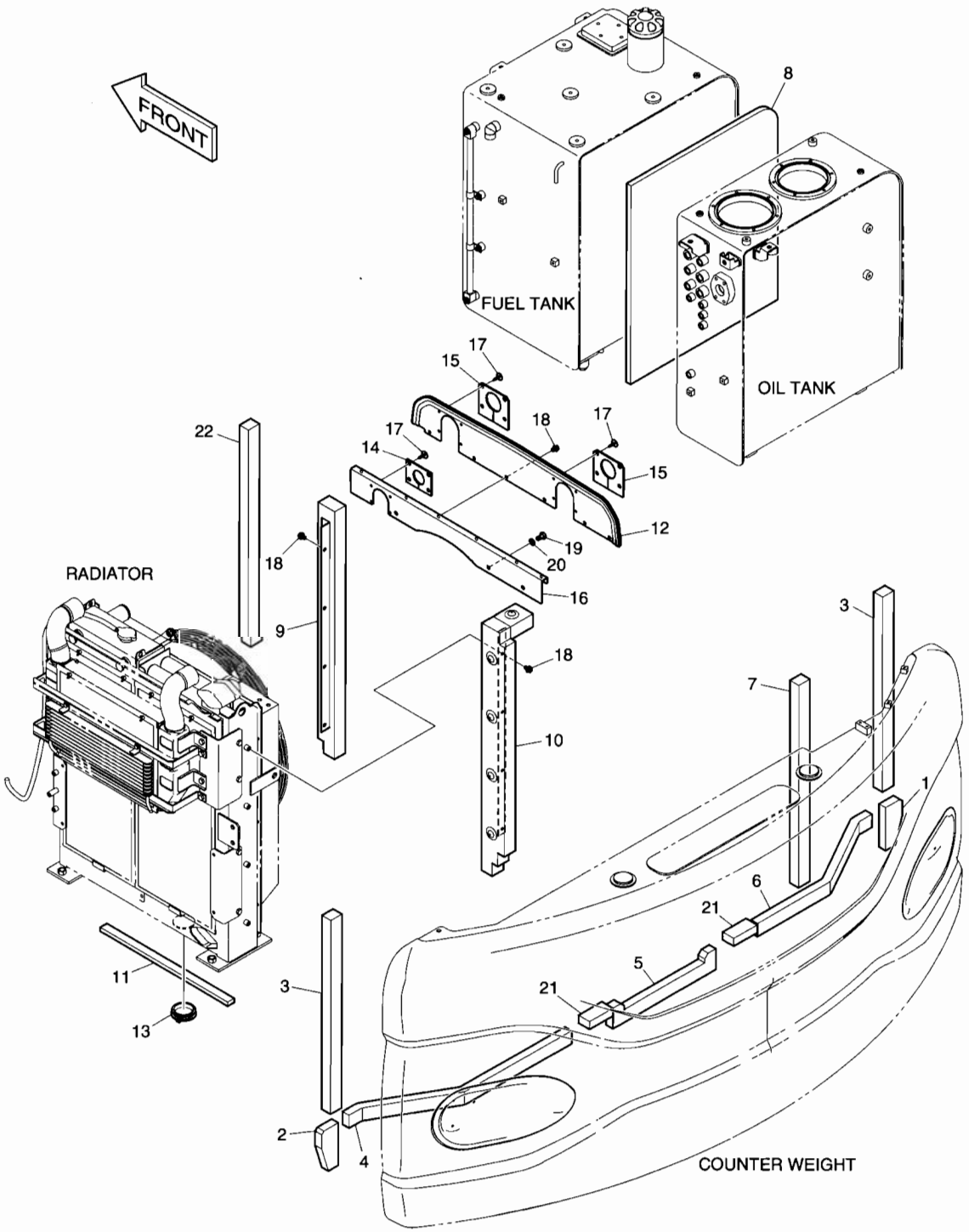

DATE	APR. 02, 2007
1st EDITION	

Fig. 1640 ACOUSTIC FOAM ENSEMBLE DE EPONGE

Serial No. ;

Key No.	Part No.	Description	Description	Q'ty	S.C	Serial No.	ICA	Replaceable part	
								Part No.	Q'ty
1640--	K1018342A	ACOUSTIC FOAM ASS'Y	EPONGE ACOUSTIQUE	-	D				
1	K1012964	FOAM;POLYURETHANE	EPONGE	1					
2	K1012965	FOAM;POLYURETHANE	EPONGE	1					
3	161-00603B	FOAM;POLYURETHANE	EPONGE	2					
4	K1018343A	FOAM;POLYURETHANE	EPONGE	1					
5	K1018344	FOAM;POLYURETHANE	EPONGE	1					
6	K1018345A	FOAM;POLYURETHANE	EPONGE	1					
7	161-00608B	FOAM;POLYURETHANE	EPONGE	1					
8	K1018347	FOAM;POLYURETHANE	EPONGE	1					
9	K1018348A	FOAM;POLYURETHANE	EPONGE	1					
10	K1027289	COVER	COUVERCLE	1					
11	K1009632	FOAM;POLYURETHANE	EPONGE	1					
12	K1009624A	BAFFLE;RADIATOR	CLOISON	1					
13	K1007044	BUSHING	DOUILLE	1					
14	K1014972	WEATHER STRIP	SURVIVEZ A A LA BANDE	1					
15	K1009626	WEATHER STRIP	SURVIVEZ A A LA BANDE	2					
16	K1009625A	BAFFLE;RADIATOR	CLOISON	1					
17	124-00070	CLIP;TREE	AGRAFE	12					
18	K1001029	BOLT	BOULON	14					
19	S0511866	BOLT	BOULON	3					
20	S5102603	WASHER;SPRING	RONDELLE ELASTIQUE	3					
21	K1018990	FOAM	EPONGE	2					
22	K1018991	FOAM	EPONGE	1					

DATE	APR. 02, 2007
1st EDITION	

Fig. 1650 UNDER COVER COUVERCLE

Serial No. ;

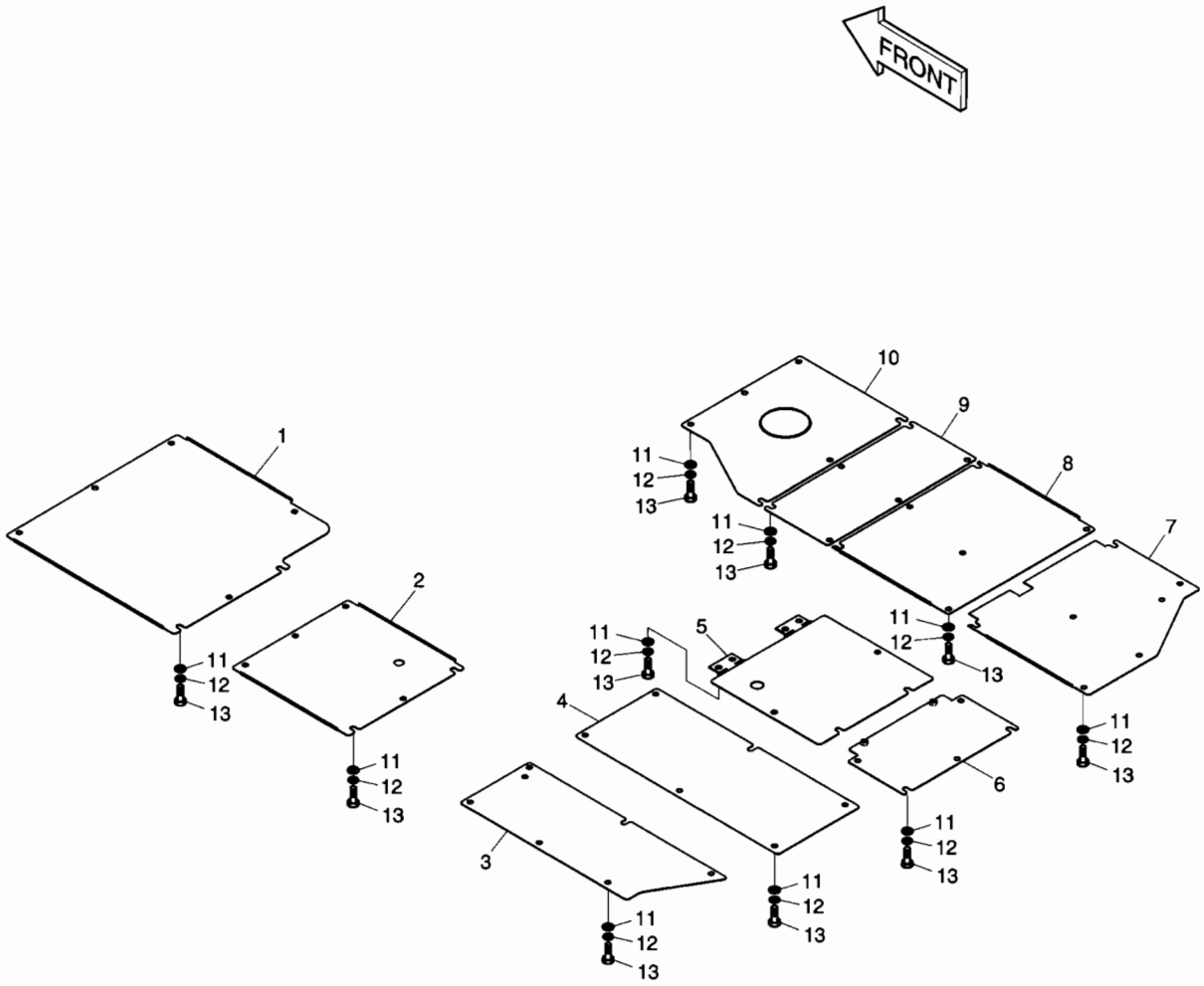

DATE	APR. 02, 2007
1st EDITION	

Fig. 1650 UNDER COVER COUVERCLE

Serial No. ;

Key No.	Part No.	Description	Description	Q'ty	S.C	Serial No.	ICA	Replaceable part	
								Part No.	Q'ty
1650--	K1017579B	UNDER COVER ASS'Y	COUVERCLE	-	D				
1	K1017580A	COVER;UNDER	COUVERCLE	1					
2	K1017581	COVER;UNDER	COUVERCLE	1					
3	K1017582A	COVER;UNDER	COUVERCLE	1					
4	K1017583B	COVER;UNDER	COUVERCLE	1					
5	K1017584A	COVER;UNDER	COUVERCLE	1					
6	K1017585A	COVER;UNDER	COUVERCLE	1					
7	K1017586A	COVER;UNDER	COUVERCLE	1					
8	K1017587	COVER;UNDER	COUVERCLE	1					
9	K1017588	COVER;UNDER	COUVERCLE	1					
10	K1017589A	COVER;UNDER	COUVERCLE	1					
11	DS0401188	WASHER;PLAIN	RONDELLE	62					
12	S5102703	WASHER;SPRING(M12)	RONDELLE ELASTIQUE	62					
13	S0515266	BOLT	BOULON	62					

DATE	APR. 02, 2007
1st EDITION	

Fig. 1660 LUBRICATION PIPING LUBRIFICATION

Serial No. ;

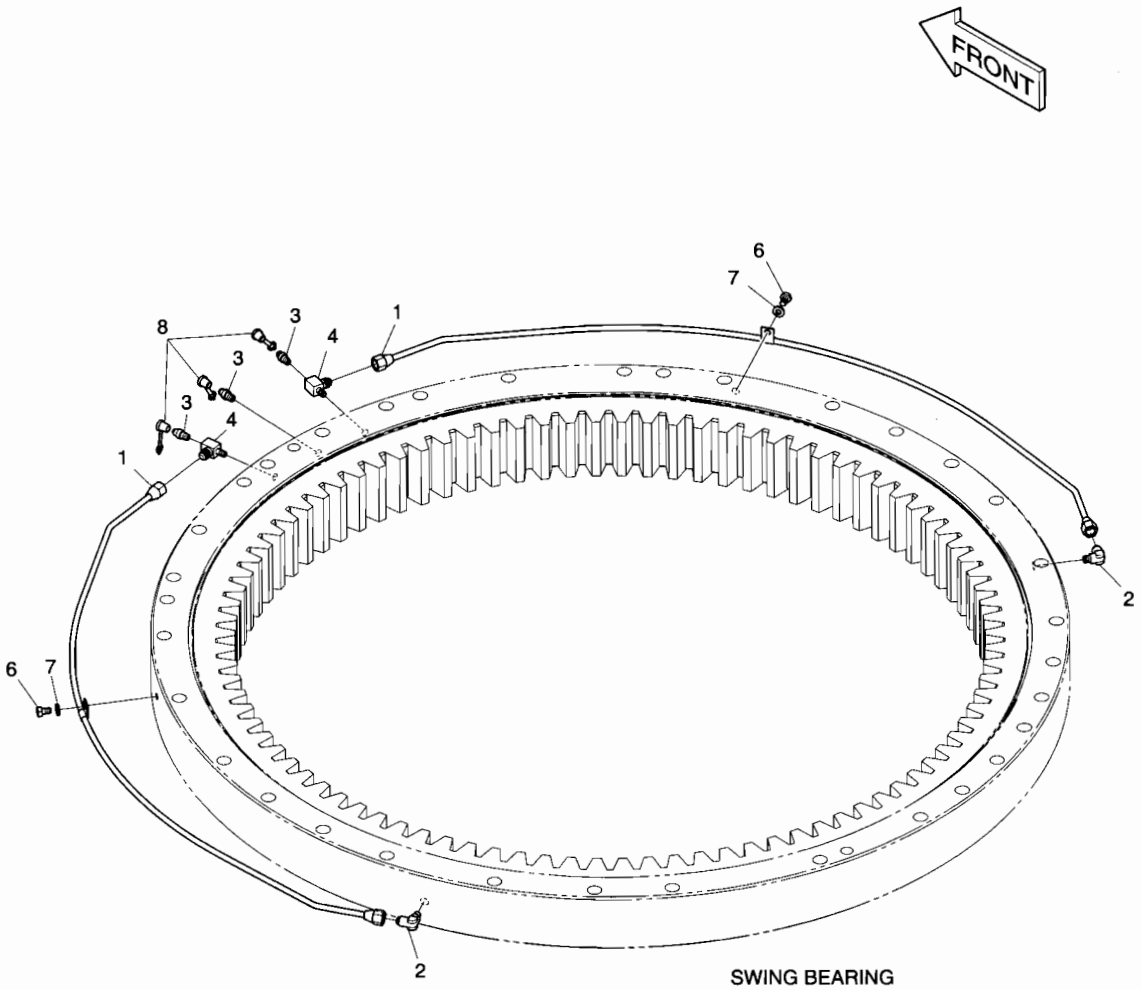

DATE	APR. 02, 2007
1st EDITION	

Fig. 1660 LUBRICATION PIPING LUBRIFICATION

Serial No. ;

Key No.	Part No.	Description	Description	Q'ty	S.C	Serial No.	ICA	Replaceable part	
								Part No.	Q'ty
1660--	K1014859A	LUBRICATION PIPING	LUBRIFICATION	-	D				
1	K1024449	PIPE;GREASE	TUYAU	2					
2	2181-1925	ELBOW	COUDE	2					
3	S6710041	NIPPLE	GRAISSEUR	3					
4	2181-2527	TEE	TE	2					
6	S0504366	BOLT	BOULON A 6 PANS	2					
7	S5102303	WASHER;SPRING	RONDELLE ELASTIQUE	2					
8	160-00020	CAP;GREASE NIPPLE	CHAPEAU	3					

DATE	APR. 02, 2007
1st EDITION	

Fig. 1670 ELECTRIC BOX ASS'Y EQUIPMENT ELECTRIQUE

Serial No. ;

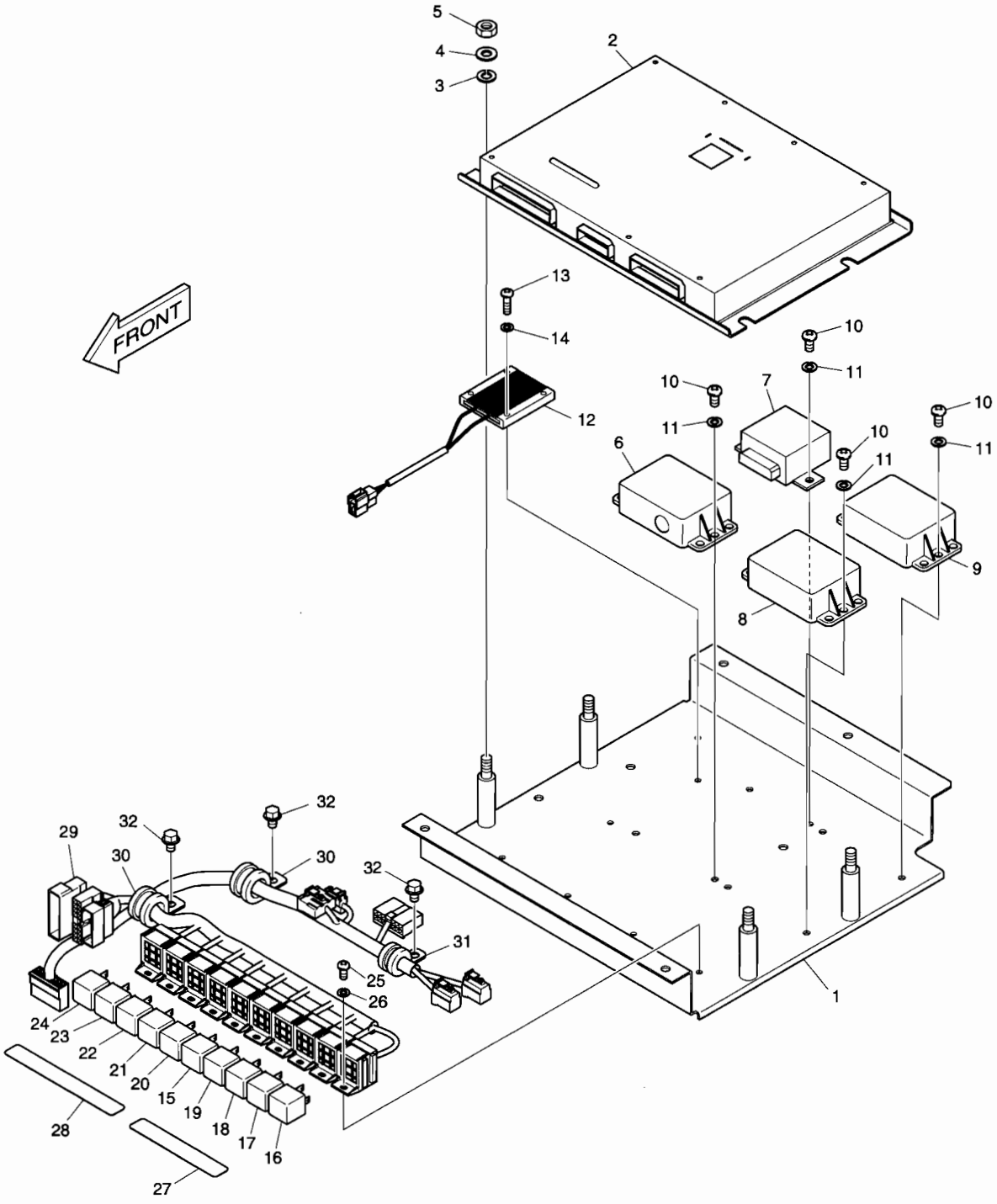

DATE	APR. 02, 2007
1st EDITION	

Fig. 1670 ELECTRIC BOX ASS'Y EQUIPMENT ELECTRIQUE

Serial No. ;

Key No.	Part No.	Description	Description	Q'ty	S.C	Serial No.	ICA	Replaceable part	
								Part No.	Q'ty
1670--	K1027230A	ELECTRIC BOX ASS'Y	EQUIPMENT ELECTRIQUE	1					
1	621-02955B	PLATE;E-BOX	PLAQUE	1					
2	K1026738A	CONTROLLER;EPOS	PANNEAU	1					
3	S5010613	WASHER;PLAIN	RONDELLE	4					
4	S5102603	WASHER;SPRING	RONDELLE ELASTIQUE	4					
5	S4012633	NUT	ECROU 6 PANS	4					
6	2543-9015	CONTROLLER;STARTER	COMMANDE	1					
7	543-00106	CONTROLLER;WIPER	COMMANDE	1					
8	2531-1003	CONVERTER;DC-DC	CONVERTEUR	1					
9	2531-1003	CONVERTER;DC-DC	CONVERTEUR	1					
10	S3450953	SCREW	VIS	8					
11	S5102303	WASHER;SPRING	RONDELLE ELASTIQUE	8					
12	545-00011	RESISTOR;AUXILIARY	RESISTOR;AUXILIARY	1					
13	S3450863	SCREW	VIS	2					
14	S5100203	WASHER;SPRING	RONDELLE ELASTIQUE	2					
15	2544-9033	RELAY	RELAIS	1					
16	2544-9033	RELAY	RELAIS	1					
17	2544-9033	RELAY	RELAIS	1					
18	2544-9033	RELAY	RELAIS	1					
19	2544-9033	RELAY	RELAIS	1					
20	2544-9033	RELAY	RELAIS	1					
21	2544-9033	RELAY	RELAIS	1					
22	2544-9033	RELAY	RELAIS	1					
23	2544-9033	RELAY	RELAIS	1					
24	2544-9033	RELAY	RELAIS	1					
25	S3450833	BOLT	BOULON A 6 PANS	4					
26	S5100203	WASHER;SPRING	RONDELLE ELASTIQUE	4					
27	190-01192D9	PLATE;NAME(RELAY)	PLAQUE D'IDENTIFICATION	1					
28	190-01192D2	PLATE;NAME(RELAY)	PLAQUE D'IDENTIFICATION	1					
29	530-00412G	HARNESS;ELECTRIC BOX	FAISCEAU	1					
30	124-00208D3	CLIP	AGRAFE	2					
31	124-00208D2	CLIP	AGRAFE	1					
32	K1001029	BOLT	BOULON A 6 PANS	3					

Fig. 1680 ELECTRIC PARTS - CABIN
PIECES ELECTRIQUES

Serial No. ;

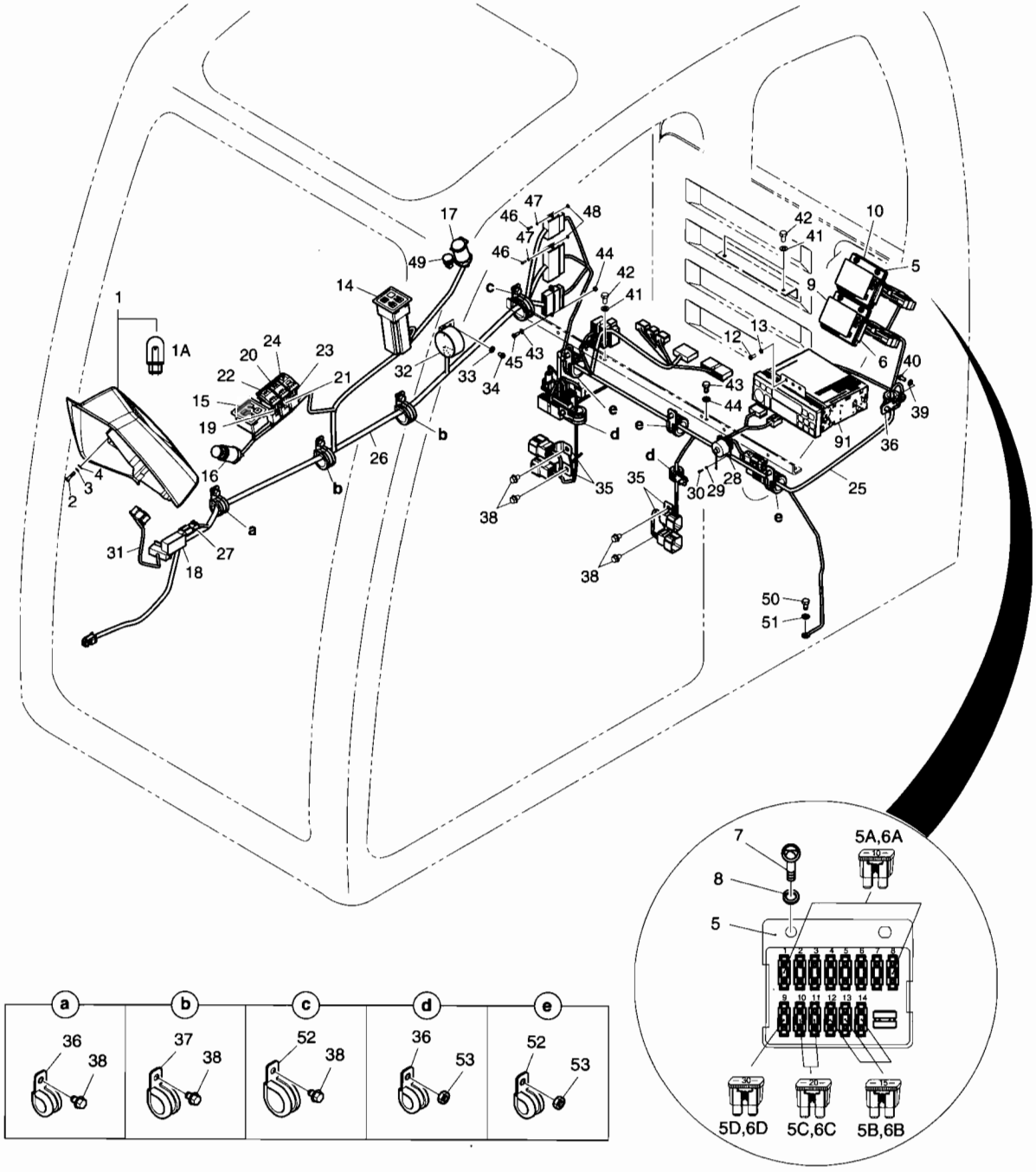

DATE	APR. 02, 2007
1st EDITION	

Fig. 1680 ELECTRIC PARTS - CABIN PIECES ELECTRIQUES

Serial No. ;

Key No.	Part No.	Description	Description	Q'ty	S.C	Serial No.	ICA	Replaceable part	
								Part No.	Q'ty
1680--	K1027231	ELECTRIC PARTS-CABIN	EQUIPMENT ELECTRIQUE	-	D				
1	539-00076C	PANEL;GAUGE	PANNEAU	1					
1A	515-00012A	. BULB	. AMPOULE	6					
2	S3450863	SCREW	VIS	4					
3	S5100203	WASHER;SPRING	RONDELLE ELASTIQUE	4					
4	S5000213	WASHER;PLAIN	RONDELLE	4					
5	K1001263A	FUSE BOX	FUSIBLE	1					
5A	2527-1016	. FUSE;BLADE 10A	. LAME DE FUSIBLE	8					
5B	2527-1017	. FUSE;BLADE 15A	. LAME DE FUSIBLE	3					
5C	2527-1018	. FUSE;BLADE 20A	. LAME DE FUSIBLE	2					
5D	2527-1025	. FUSE;BLADE 30A	. LAME DE FUSIBLE	1					
6	K1001263A	FUSE BOX	FUSIBLE	1					
6A	2527-1016	. FUSE;BLADE 10A	. LAME DE FUSIBLE	8					
6B	2527-1017	. FUSE;BLADE 15A	. LAME DE FUSIBLE	3					
6C	2527-1018	. FUSE;BLADE 20A	. LAME DE FUSIBLE	2					
6D	2527-1025	. FUSE;BLADE 30A	. LAME DE FUSIBLE	1					
7	S3450983	SCREW	VIS	4					
8	S5102303	WASHER;SPRING	RONDELLE ELASTIQUE	4					
9	K1008019D3	PLATE;NAME(1)	PLAQUE D'IDENTIFICATION	1					
10	K1008019D4	PLATE;NAME(2)	PLAQUE D'IDENTIFICATION	1					
12	S3450833	BOLT	BOULON A 6 PANS	4					
13	S5100203	WASHER;SPRING	RONDELLE ELASTIQUE	4					
14	543-00095	PANEL ASS'Y;WIPER CONTROL	PANNEAU	1					
15	543-00096	PANEL ASS'Y;RADIO CONTROL	PANNEAU	1					
16	545-00001	LIGHTER;CIGAR	ALLUMEUR DE CIGARE	1					
17	527-00006	SOCKET;12V POWER	CLE A DOUILLE	1					
18	2528-9040	METER;HOUR	TOTALISATEUR HORAIRE	1					
19	549-00103	SWITCH;ROCKER(2STEP)	INTERRUPTEUR	1					
20	K1002406D11	ACTUATOR;SWITCH	ACTUATOR;SWITCH	1					
21	549-00103	SWITCH;ROCKER(2STEP)	INTERRUPTEUR	1					
22	K1002406D12	ACTUATOR;SWITCH	ACTUATOR;SWITCH	1					
23	K1006572	SWITCH;BREAKER/SHEAR	AVERTISSEUR	1					
24	K1002406D21	ACTUATOR;SWITCH	ACTUATOR;SWITCH	1					
25	530-00411G	HARNESS;CABIN	FAISCEAU	1					
26	530-00413C	HARNESS;SWITCH BOX	FAISCEAU	1					
27	530-00434B	HARNESS;HOUR METER JOINT	FAISCEAU	1					
28	530-00435A	HARNESS;CHECK CONNECTOR	FAISCEAU	1					
29	S5100003	WASHER;SPRING	RONDELLE ELASTIQUE	4					

DATE	APR. 02, 2007
1st EDITION	

Fig. 1680 ELECTRIC PARTS - CABIN
PIECES ELECTRIQUES

Serial No. ;

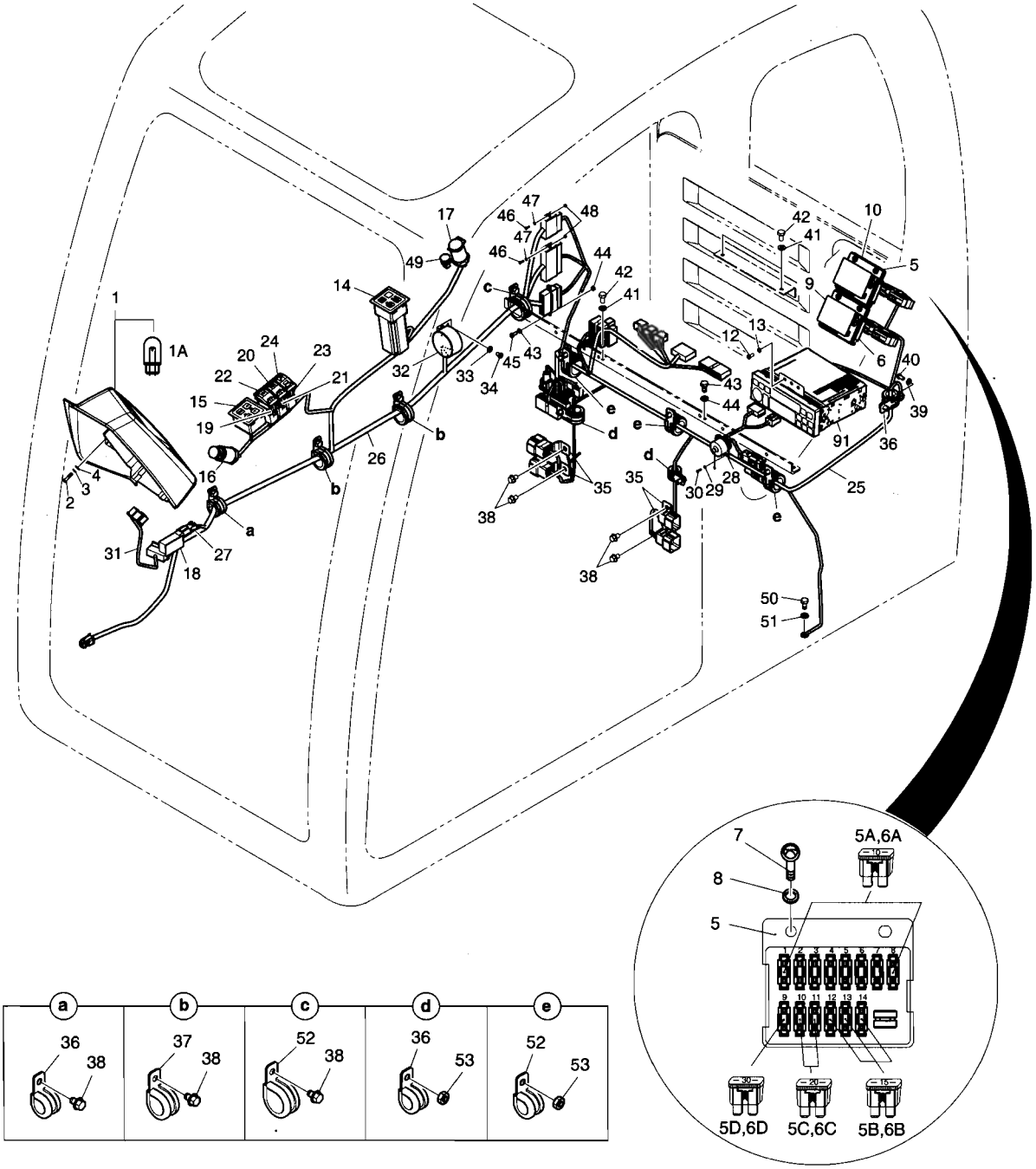

DATE	APR. 02, 2007
1st EDITION	

Fig. 1680 ELECTRIC PARTS - CABIN
PIECES ELECTRIQUES

Serial No. ;

Key No.	Part No.	Description	Description	Q'ty	S.C	Serial No.	ICA	Replaceable part	
								Part No.	Q'ty
1680-30	S3450343	SCREW	VIS	4					
31	530-00416B	HARNESS;GAUGE PANEL JOINT	FAISCEAU	1					
32	2516-1116	BUZZER;PILOT	VIBREUR ARRIERE	1					
33	S5102303	WASHER;SPRING	RONDELLE ELASTIQUE	2					
34	S3450943	SCREW	VIS	2					
35	2197-1661	BRACKET;HOUSING	SUPPORT	4					
36	124-00208D3	CLIP	AGRAFE	4					
37	124-00208D4	CLIP	AGRAFE	2					
38	K1001029	BOLT	BOULON A 6 PANS	8					
39	S5102303	WASHER;SPRING	RONDELLE ELASTIQUE	1					
40	S3450953	SCREW	VIS	1					
41	S5102503	WASHER;SPRING	RONDELLE ELASTIQUE	4					
42	S0508653	BOLT	BOULON A 6 PANS	4					
43	S5100203	WASHER;SPRING	RONDELLE ELASTIQUE	2					
44	S4012203	NUT	ECROU 6 PANS	2					
45	S3450833	BOLT	BOULON A 6 PANS	2					
46	S3450343	SCREW	VIS	4					
47	S5100003	WASHER;SPRING	RONDELLE ELASTIQUE	4					
48	S4012003	NUT	ECROU 6 PANS	4					
49	547-00023	SENSOR;SUN	CAPTEUR	1					
50	S0508653	BOLT	BOULON A 6 PANS	1					
51	S5102503	WASHER;SPRING	RONDELLE ELASTIQUE	1					
52	124-00208D5	CLIP	AGRAFE	4					
53	2121-1305	NUT	ECROU 6 PANS	5					
91	K1026654	STEREO;CAR	RELAIS AVERTISSEUR	1					

DATE	APR. 02, 2007
1st EDITION	

Fig. 1690 ELECTRIC PARTS - CONTROL STAND
PIECES ELECTRIQUES

Serial No. ;

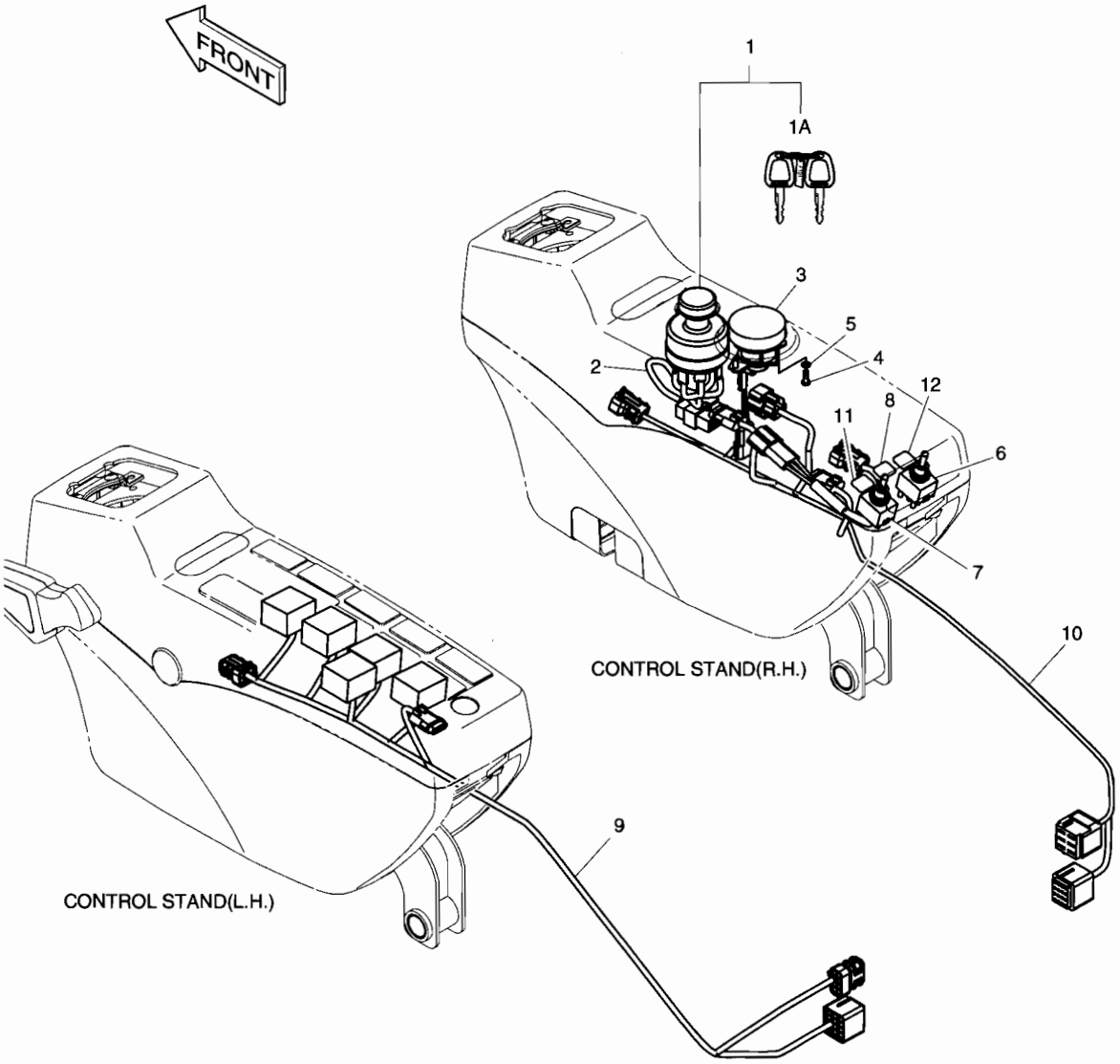

DATE	APR. 02, 2007
1st EDITION	

Fig. 1690 ELECTRIC PARTS - CONTROL STAND
PIECES ELECTRIQUES

Serial No. ;

Key No.	Part No.	Description	Description	Q'ty	S.C	Serial No.	ICA	Replaceable part	
								Part No.	Q'ty
1690--	K1027232	ELECTRIC PARTS-CONTROL	EQUIPMENT ELECTRIQUE	-	D				
1	K1001858A	SWITCH;STARTER	INTERRUPTEUR	1					
1A	K1009605B	. KEY;STARTER	. CLE	2					
2	530-00150	HARNESS;STARTER SWITCH	FAISCEAU	1					
3	K1013846	DIAL;ENGINE CONTROL	CADRAN	1					
4	S3450583	SCREW M4X0.7X12	VIS	2					
5	S5100103	WASHER;SPRING M4	RONDELLE ELASTIQUE	2					
6	549-00090	SWITCH;TOGGLE	INTERRUPTEUR	1					
7	K1001702	SWITCH;TOGGLE	INTERRUPTEUR	1					
8	K1004427	PLATE;NAME	PLAQUE D'IDENTIFICATION	1					
9	530-00415C	HARNESS;STAND(LH)	FAISCEAU	1					
10	530-00414C	HARNESS;STAND(RH)	FAISCEAU	1					
11	K1004425	PLATE;NAME	PLAQUE D'IDENTIFICATION	1					
12	K1004426	PLATE;NAME	PLAQUE D'IDENTIFICATION	1					

Fig. 1700 ELECTRIC PARTS - RELATED EQUIPMENT ELECTRIQUE

Serial No. ;

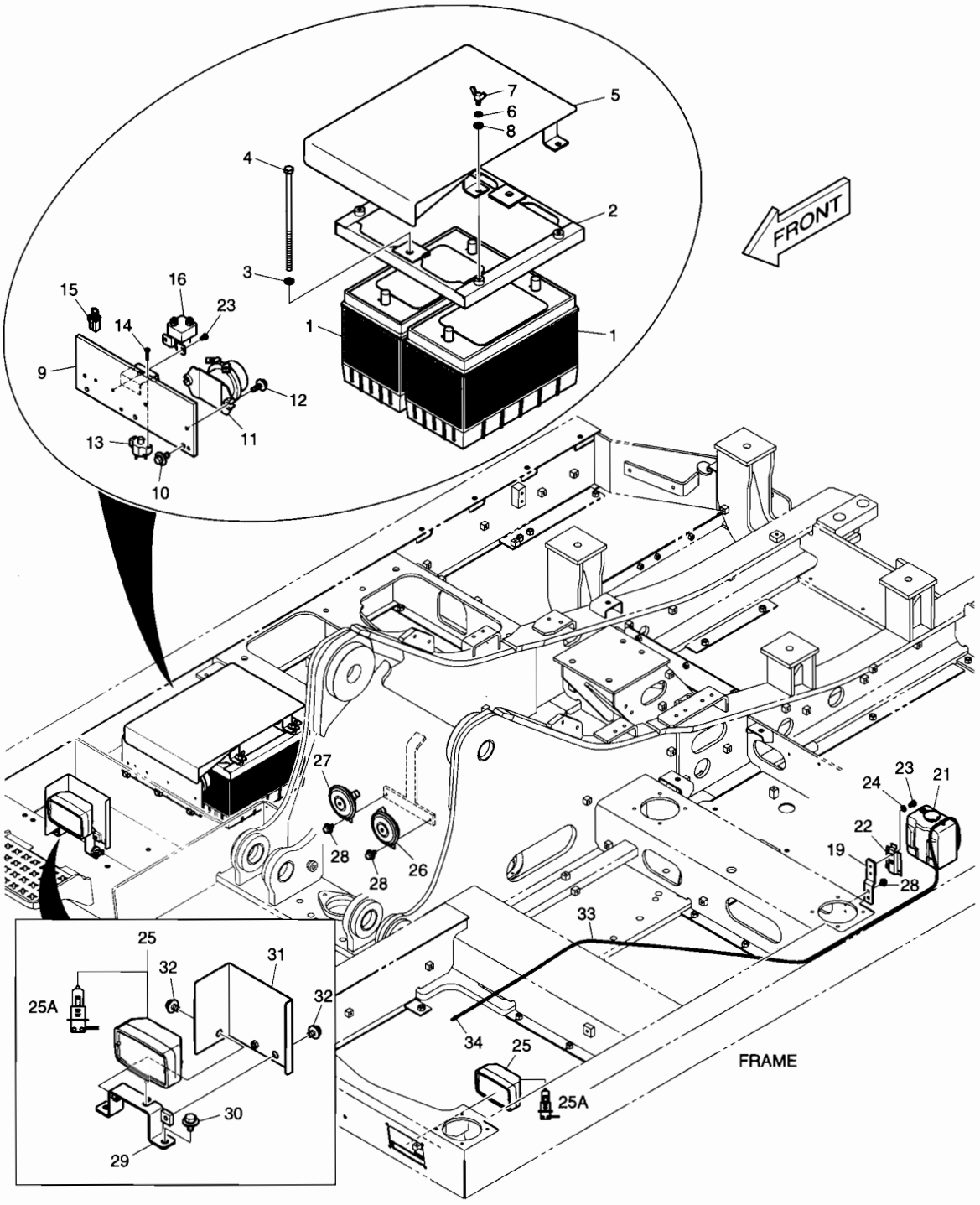

DATE	APR. 02, 2007
1st EDITION	

Fig. 1700 ELECTRIC PARTS - RELATED EQUIPMENT ELECTRIQUE

Serial No. ;

Key No.	Part No.	Description	Description	Q'ty	S.C	Serial No.	ICA	Replaceable part	
								Part No.	Q'ty
1700--	K1027233A	ELECTRIC;CHASSIS	EQUIPMENT ELECTRIQUE	-	D				
1	506-00006	BATTERY	BATTERIE	2					
2	K1010776A	BRACKET	SUPPORT	1					
3	S5102603	WASHER;SPRING	RONDELLE ELASTIQUE	2					
4	DS0001079	BOLT	BOULON	2					
5	K1027222	COVER;BATTERY	COUVERCLE	1					
6	S5102503	WASHER;SPRING	RONDELLE ELASTIQUE	4					
7	S3050863	BOLT;WING	BOULON	4					
8	S5010503	WASHER;PLAIN	RONDELLE	4					
9	K1027221	PLATE	PLAQUE	1					
10	DS0025017	BOLT;SET	BOULON	3					
11	2544-9024	RELAY;BATTERY	RELAIS	1					
12	DS0025039	BOLT;SET	BOULON	2					
13	2527-9004	BREAKER;CIRCUIT	SUPPORT	1					
14	2120-1354	SCREW	VIS	2					
15	2527-1023A	FUSIBLE LINK	LIEN FUSIBLE	1					
16	2544-1022	RELAY	RELAIS	1					
19	K1007668	BRACKET	SUPPORT	1					
21	K1000789	TANK;RESERVE	RESERVOIR	1					
22	2195-1534	BRACKET	SUPPORT	1					
23	S0504366	BOLT	BOULON	4					
24	S5102303	WASHER;SPRING	RONDELLE ELASTIQUE	4					
25	534-00085	LAMP;HEAD	LAMPE	2					
25A	2515-1016D4	. BULB 24V 70W	. AMPOULE	1					
26	516-00014	HORN;HIGH	AVERTISSEUR	1					
27	516-00015	HORN;LOW	AVERTISSEUR	1					
28	DS0025033	BOLT;SET	BOULON	4					
29	195-02622C	BRACKET	SUPPORT	1					
30	DS0025019	BOLT;SET	BOULON	2					
31	621-02643B	PLATE	PLAQUE	1					
32	DS0025013	BOLT;SET	BOULON	2					
33	4185-1777	HOSE;WASHER	TUYAU CALE	1					
34	2415-1018	ADAPTER;HOSE	TUYAU DE ADAPTEUR	1					

Fig. 1710 ELECTRIC PARTS - ENGINE EQUIPMENT ELECTRIQUE

Serial No. ;

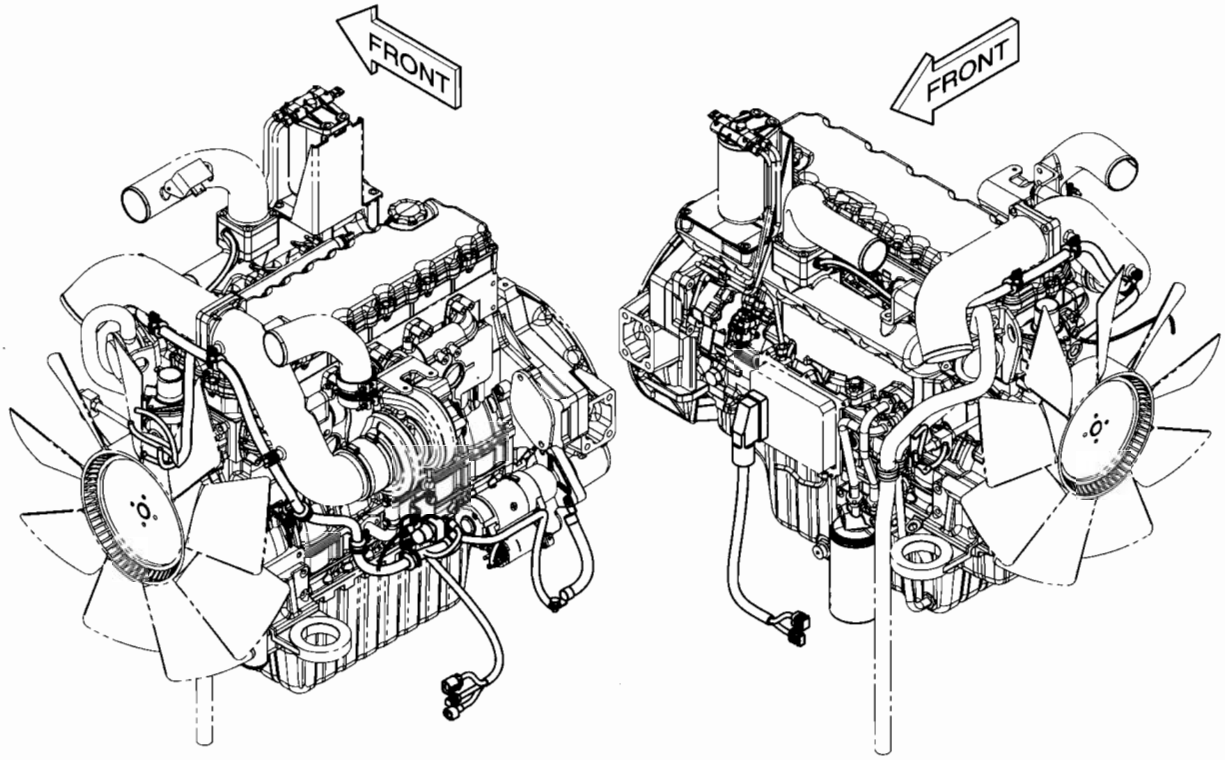

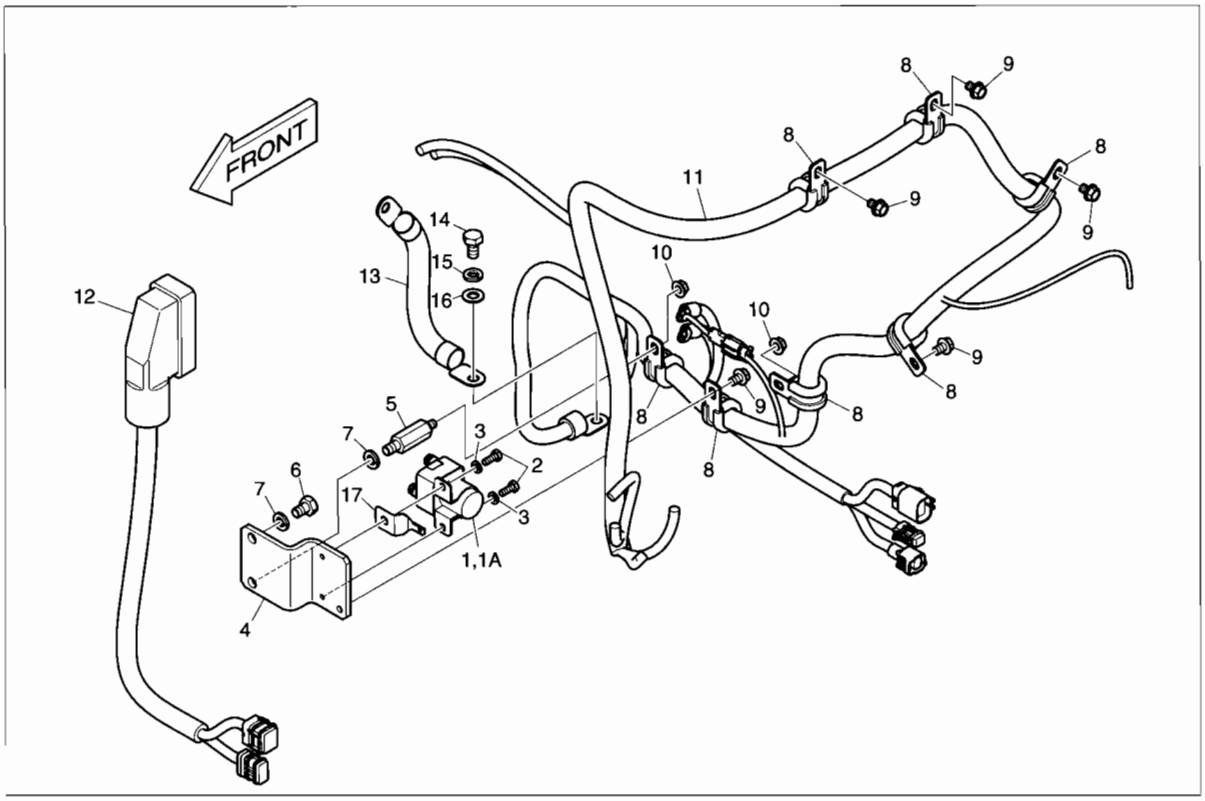

DATE	APR. 02, 2007
1st EDITION	

Fig. 1710 ELECTRIC PARTS - ENGINE EQUIPMENT ELECTRIQUE

Serial No. ;

Key No.	Part No.	Description	Description	Q'ty	S.C	Serial No.	ICA	Replaceable part	
								Part No.	Q'ty
1710--	K1027234	ELECTRIC PARTS;ENGINE	EQUIPMENT ELECTRIQUE	-	D				
1	544-00007	RELAY;PREHEAT	RELAIS	1					
1A	527-00005	. FUSE;PREHEAT RELAY	. FUSIBLE	1					
2	S0504666	BOLT	BOULON	2					
3	S5102303	WASHER;SPRING	RONDELLE ELASTIQUE	2					
4	K1015201	BRACKET	SUPPORT	1					
5	DS0014011	BOLT;STUD	BOULON DE GOUJON	1					
6	S0511666	BOLT	BOULON	1					
7	S5102603	WASHER;SPRING	RONDELLE ELASTIQUE	2					
8	124-00208D3	CLIP	AGRAFE	7					
9	K1001029	BOLT	BOULON	5					
10	2121-1305	NUT	ECROU	2					
11	K1015602A	HARNESS;ENGINE	HARNAIS	1					
12	K1008449A	HARNESS;JOINT(ECU)	HARNAIS	1					
13	553-00001D4	CABLE;ENGINE EARTH	CABLE	1					
14	S0511853	BOLT M10X1.5X20	BOULON	1					
15	S5102603	WASHER;SPRING	RONDELLE ELASTIQUE	1					
16	S5010613	WASHER;PLAIN(M10)	RONDELLE	1					
17	2197-1661	BRACKET;HOUSING	SUPPORT	1					

Fig. 1720 ALTERNATOR MOUNTING
ALTERNATEUR

Serial No. ;

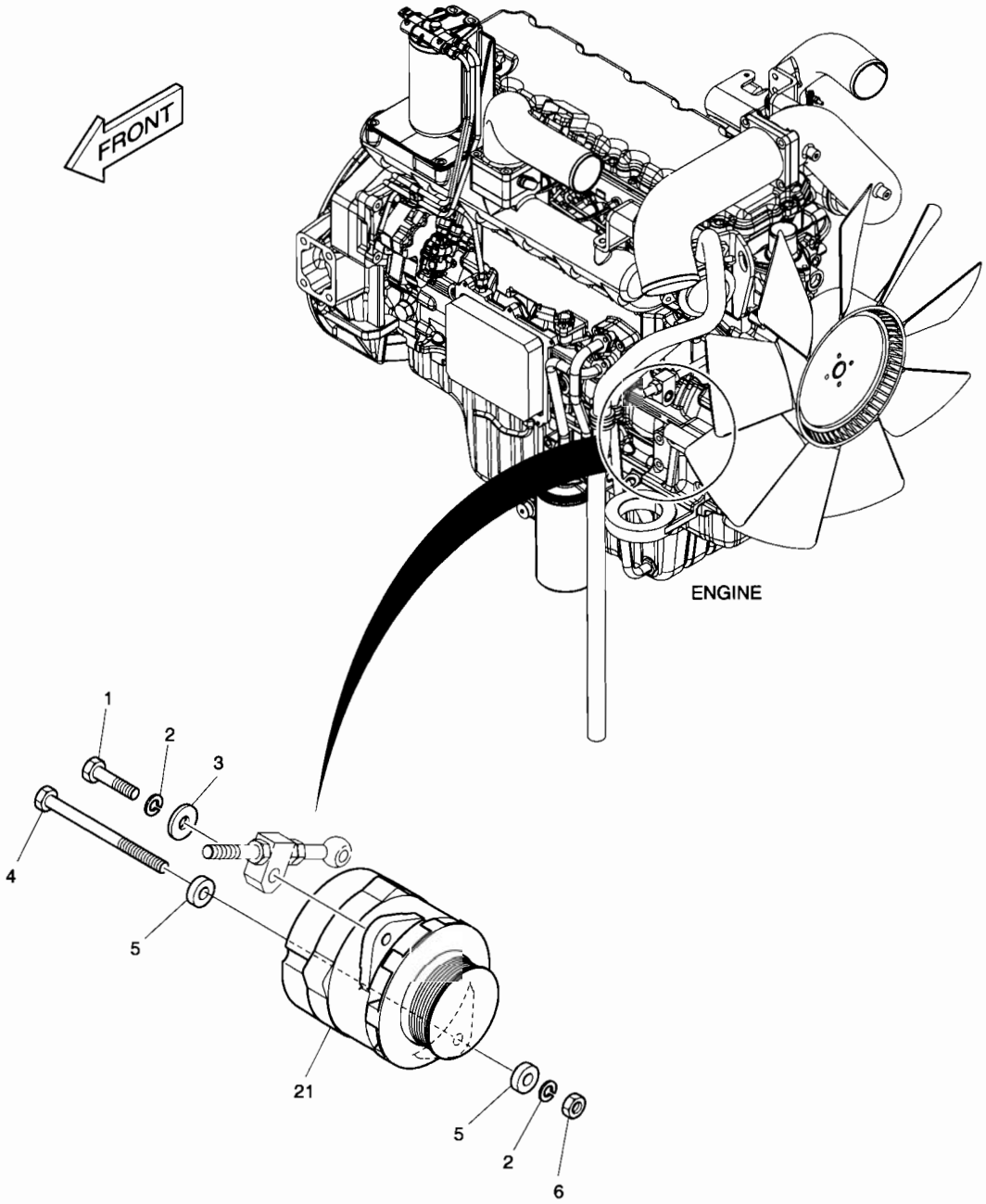

DATE	APR. 02, 2007
1st EDITION	

Fig. 1720 ALTERNATOR MOUNTING ALTERNATEUR

Serial No. ;

Key No.	Part No.	Description	Description	Q'ty	S.C	Serial No.	ICA	Replaceable part	
								Part No.	Q'ty
1720--	K1008713	ALTERNATOR MOUNTING	SUPPORT D'ALTERNATEUR	-	D				
1	S0760853	BOLT	BOULON A 6 PANS	1					
2	S5102703	WASHER;SPRING	RONDELLE ELASTIQUE	2					
3	2114-1058D54	WASHER	CALE	1					
4	S0562653	BOLT	BOULON A 6 PANS	1					
5	2114-1058D70	WASHER;PLAIN	RONDELLE	2					
6	S4012733	NUT	ECROU 6 PANS	1					
21	K1010702	ALTERNATOR	ALTERNATEUR	1					

DATE	APR. 02, 2007
1st EDITION	

Fig. 1730 ELECTRIC PARTS - WORKING LAMP
EQUIPMENT ELECTRIQUE

Serial No. ;

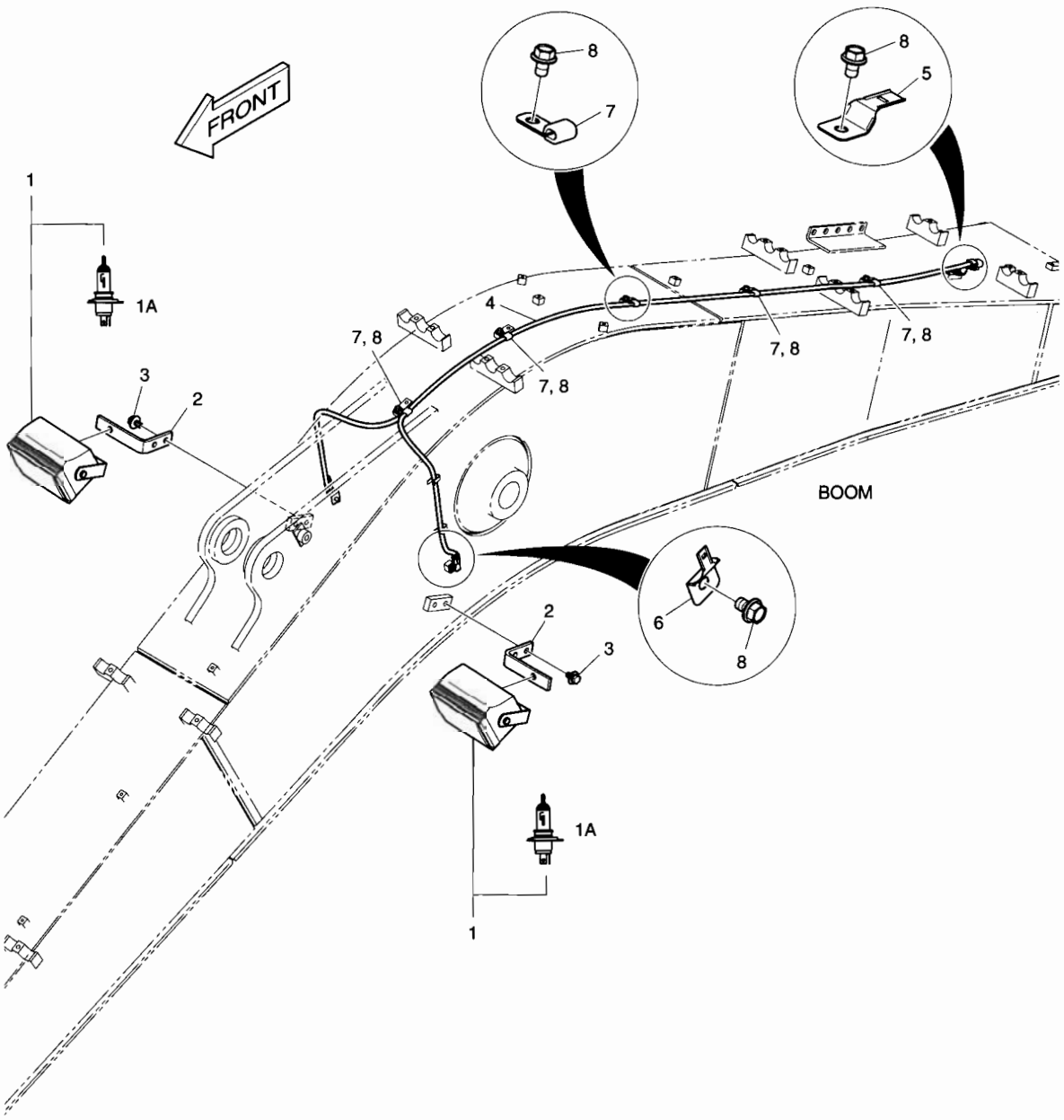

DATE	APR. 02, 2007
1st EDITION	

Fig. 1730 ELECTRIC PARTS - WORKING LAMP EQUIPMENT ELECTRIQUE

Serial No. ;

Key No.	Part No.	Description	Description	Q'ty	S.C	Serial No.	ICA	Replaceable part	
								Part No.	Q'ty
1730--	K1027235	ELECTRIC PARTS;WORKING	EQUIPMENT ELECTRIQUE	-	D				
1	534-00064	LAMP;WORKING	LAMPE	2					
1A	2515-1022D1	. BULB;HALOGEN	. AMPOULE	1					
2	2195-2394B	BRACKET	SUPPORT	2					
3	DS0025019	BOLT;SET	BOULON A 6 PANS	4					
4	530-00418D7	HARNESS;WORKING LAMP	FAISCEAU	1					
5	2197-1660	BRACKET;HOUSING	SUPPORT	1					
6	2197-1661	BRACKET;HOUSING	SUPPORT	2					
7	2124-1509D1	CLIP	AGRAFE	7					
8	K1001029	BOLT	BOULON A 6 PANS	9					

Fig. 1740 ELECTRIC WIRING CABLAGE ELECTRIQUE

Serial No. ;

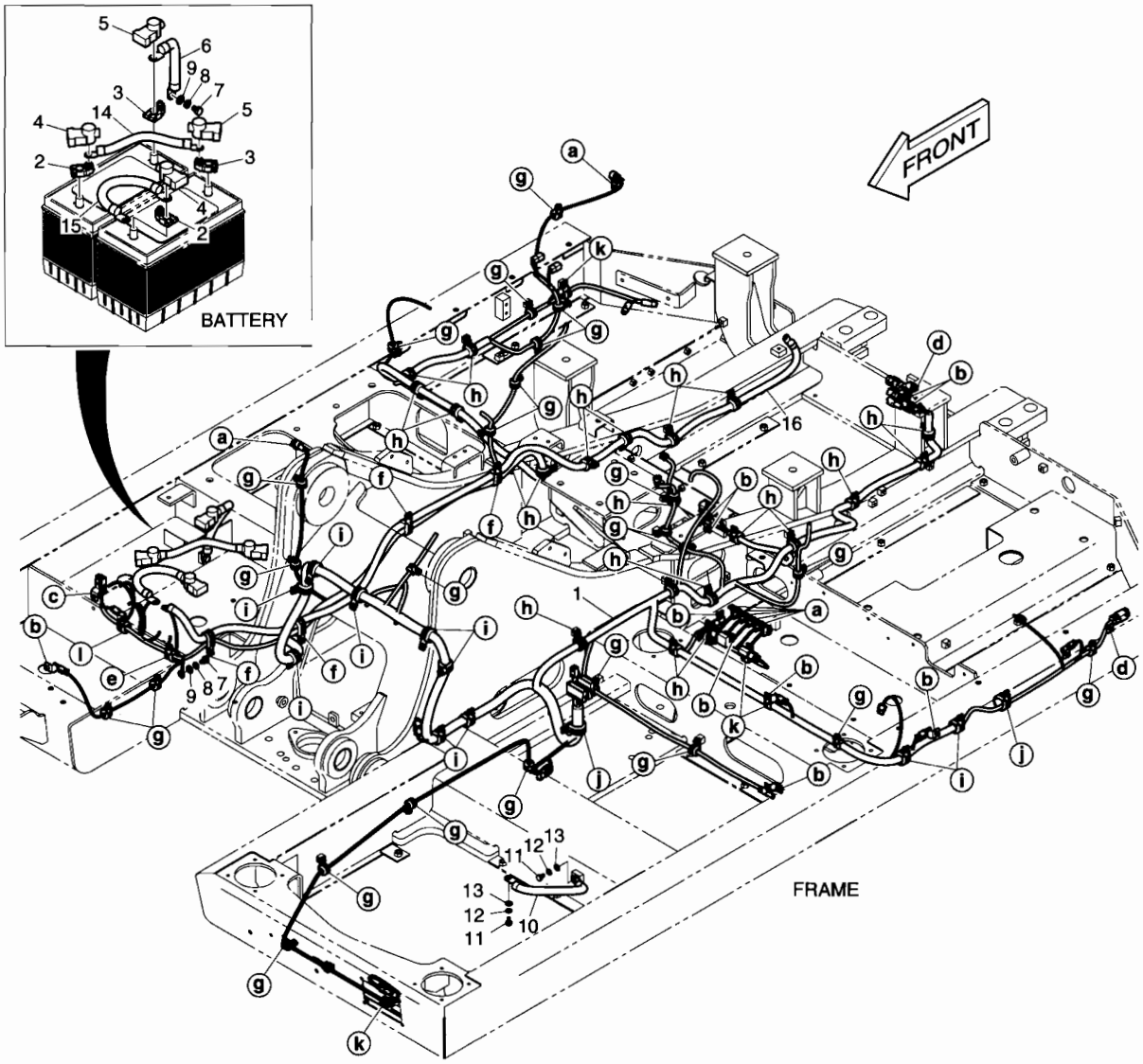

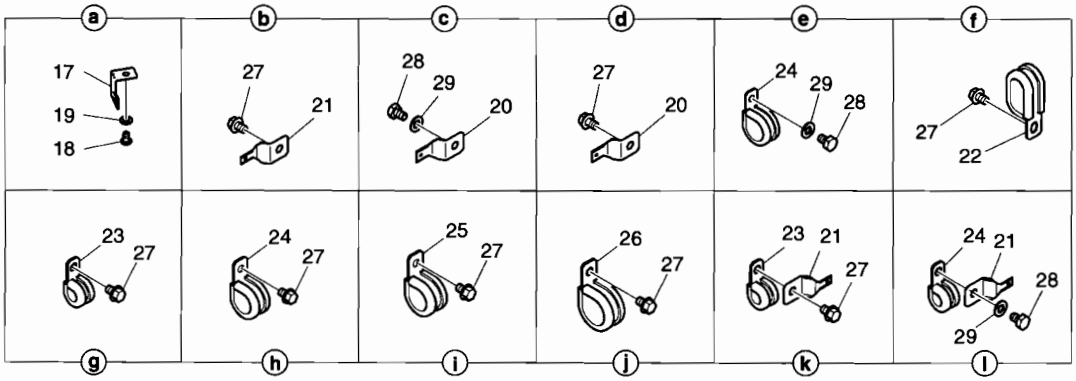

DATE	APR. 02, 2007
1st EDITION	

Fig. 1740 ELECTRIC WIRING CABLAGE ELECTRIQUE

Serial No. ;

Key No.	Part No.	Description	Description	Q'ty	S.C	Serial No.	ICA	Replaceable part	
								Part No.	Q'ty
1740--	K1027236A	ELECTRIC WIRING	CABLAGE ELECTRIQUE	-	D				
1	K1024684A	HARNESS;MAIN	HARNAIS	1					
1A	2548-1027	. DIODE	. DIODE	4					
1B	548-00003A	. DIODE	. DIODE	1					
1C	K1000815	. DIODE	. DIODE	1					
1D	K1000814	. DIODE	. DIODE	1					
2	2550-1014D1	TERMINAL;BATTERY(+)	COSSE DE BATTERIE(+)	2					
3	2550-1014D2	TERMINAL;BATTERY(-)	COSSE DE BATTERIE	2					
4	2160-1212	CAP;BATT. TML (+)	CHAPEAU	2					
5	2160-1213	CAP;BATT. TML (-)	CHAPEAU	2					
6	2553-1275D5	CABLE;BATTERY EARTH	CABLE DE BATTERIE	1					
7	S0511653	BOLT	BOULON	2					
8	S5102603	WASHER;SPRING	RONDELLE ELASTIQUE	2					
9	S5010613	WASHER;PLAIN(M10)	RONDELLE	2					
10	2553-1275D5	CABLE;CABIN EARTH	CABLE	1					
11	S0511653	BOLT	BOULON	2					
12	S5102603	WASHER;SPRING	RONDELLE ELASTIQUE	2					
13	S5010613	WASHER;PLAIN(M10)	RONDELLE	2					
14	2553-1275D46	CABLE;BATTERY-BATTERY	CABLE RELAIS DE	1					
15	2553-1275D69	CABLE;BATTERY RELAY	CABLE	1					
16	2553-1275D8	CABLE;STARTER	CABLE	1					
17	2195-3500	BRACKET;HOUSING	SUPPORT	7					
18	S0504366	BOLT	BOULON	7					
19	S5102303	WASHER;SPRING	RONDELLE ELASTIQUE	7					
20	2197-1660	BRACKET;HOUSING	SUPPORT	3					
21	2197-1661	BRACKET;HOUSING	SUPPORT	15					
22	124-00209D1	CLIP	AGRAFE	4					
23	124-00208D2	CLIP	AGRAFE	28					
24	124-00208D3	CLIP	AGRAFE	23					
25	124-00208D4	CLIP	AGRAFE	10					
26	124-00208D5	CLIP	AGRAFE	2					
27	K1001029	BOLT	BOULON	77					
28	S0508366	BOLT	BOULON	3					
29	S5102503	WASHER;SPRING	RONDELLE ELASTIQUE	3					

DATE	APR. 02, 2007
1st EDITION	

Fig. 1750 HEATER PIPING
TUYAUTERIE DE RECHAUFFEUR

Serial No. ;

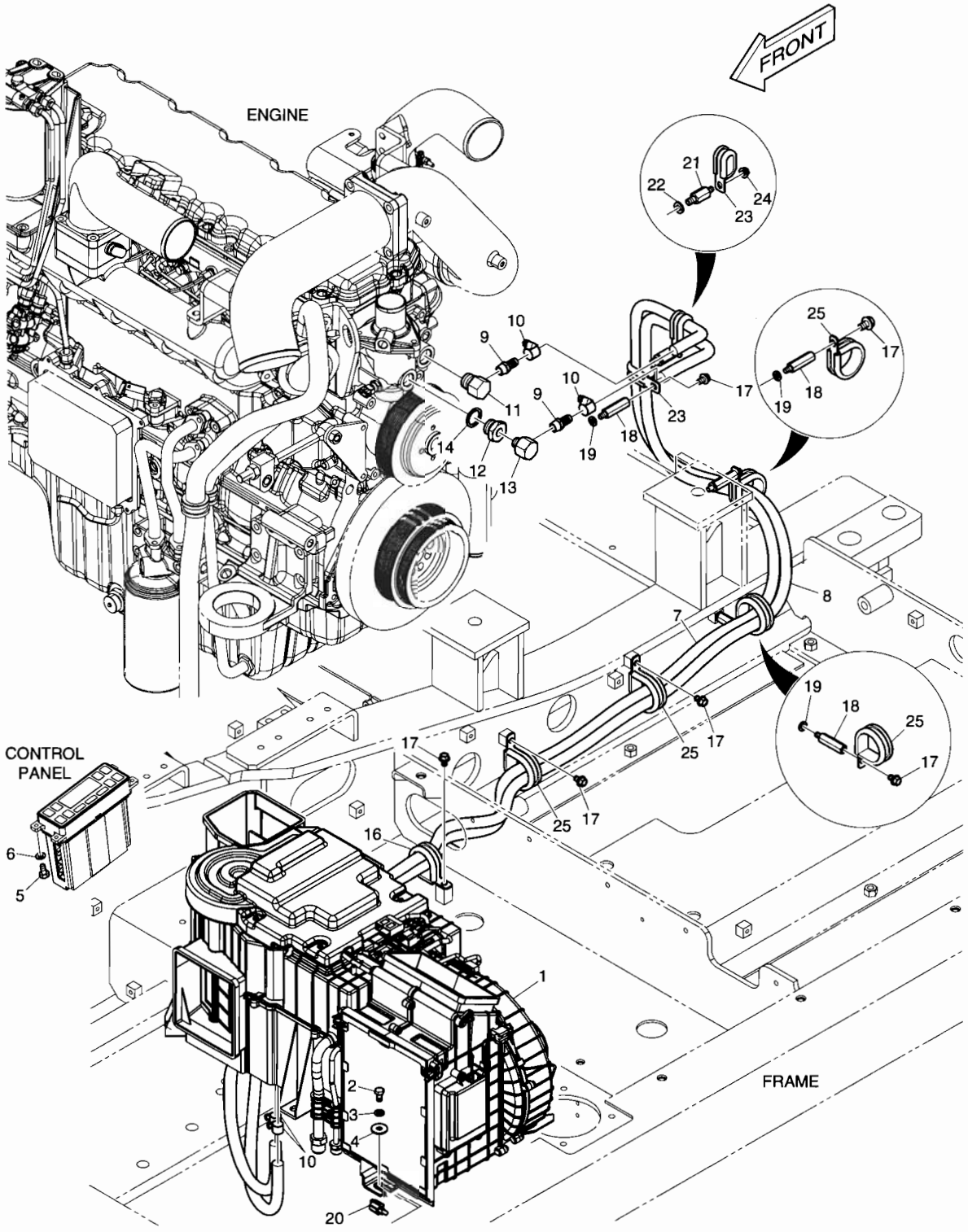

DATE	APR. 02, 2007
1st EDITION	

Fig. 1750 HEATER PIPING
TUYAUTERIE DE RECHAUFFEUR

Serial No. ;

Key No.	Part No.	Description	Description	Q'ty	S.C	Serial No.	ICA	Replaceable part	
								Part No.	Q'ty
1750--	K1027237B	HEATER PIPING	TUYAUTERIE DE	-	D				
1	920-00127A	UNIT;AIR CONDITIONER	CLIMATISEUR	1					
2	S0508653	BOLT	BOULON	6					
3	S5102503	WASHER;SPRING	RONDELLE ELASTIQUE	6					
4	2114-1058D29	WASHER	RONDELLE	6					
5	S3450833	BOLT M5X0.8X12	BOULON	4					
6	S5000213	WASHER	RONDELLE	4					
7	2185-1308D7	HOSE;HEATER	RECHAUFFEUR	1					
8	2185-1308D7	HOSE;HEATER	RECHAUFFEUR	1					
9	2181-2774	NIPPLE;HOSE	MAMELON	2					
10	S8450016	CLAMP;HOSE	COLLIER DE LA CONDUITE	4					
11	2181-1159	ADAPTER	ADAPTEUR	1					
12	K1033714	REDUCER	REDUCEUR	1					
13	2181-1161A	ADAPTER	ADAPTEUR	1					
14	S8180411	SEAL	JOINT	1					
16	124-00208D7	CLIP	AGRAFE	1					
17	K1001029	BOLT	BOULON	6					
18	2120-2187	BOLT;STUD	BOULON DE GOUJON	3					
19	S5102503	WASHER;SPRING	RONDELLE ELASTIQUE	3					
20	547-00024A	SENSOR;AMBENT	CAPTEUR	1					
21	DS0014011	BOLT;STUD	BOULON DE GOUJON	1					
22	S5102603	WASHER;SPRING	RONDELLE ELASTIQUE	1					
23	124-00209D1	CLIP	AGRAFE	2					
24	2121-1305	NUT	ECROU	1					
25	124-00208D11	CLIP	AGRAFE	4					

Fig. 1760 AIRCON UNIT REFRIGERATION

Serial No. ;

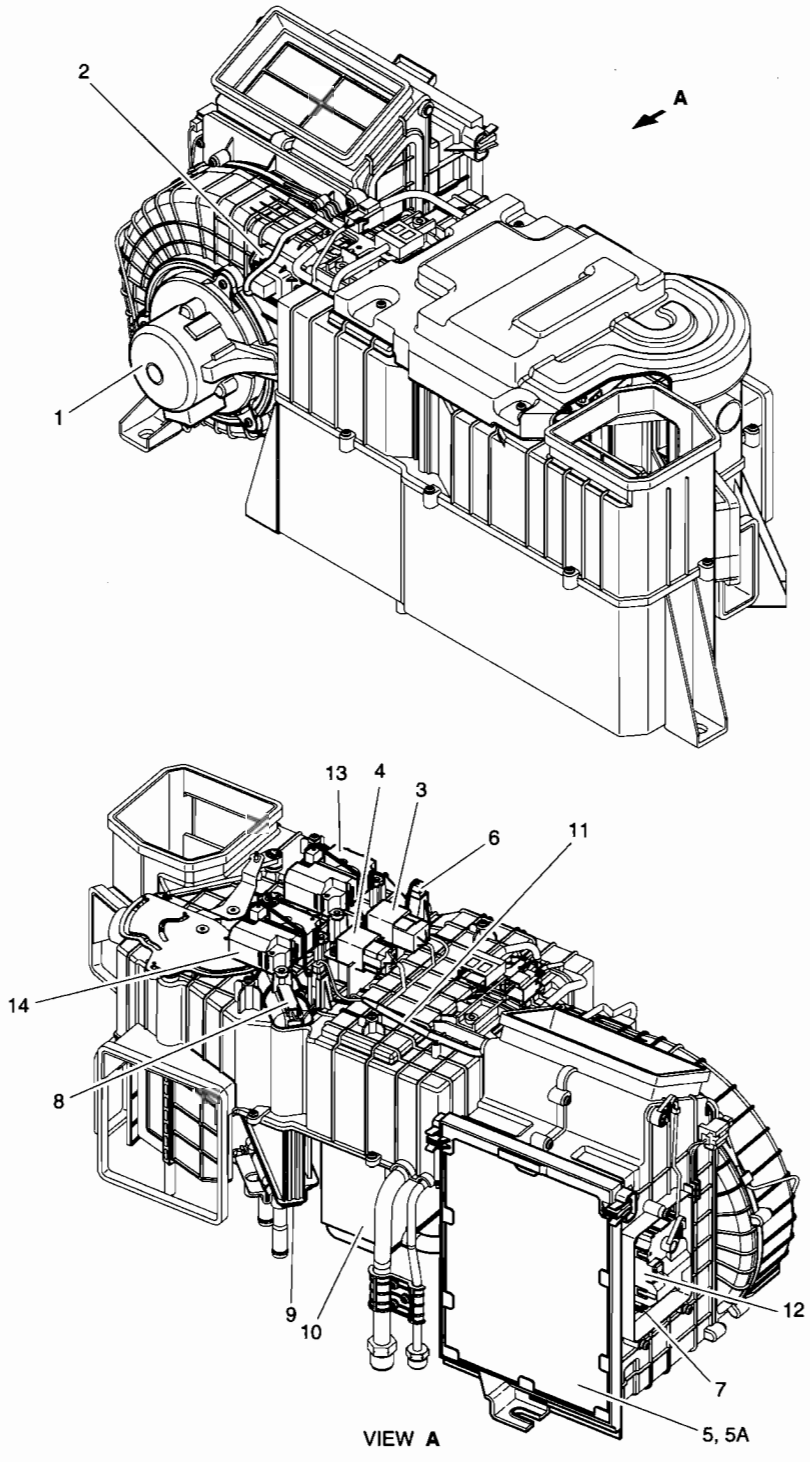

DATE	APR. 02, 2007
1st EDITION	

Fig. 1760 AIRCON UNIT REFRIGERATION

Serial No. ;

Key No.	Part No.	Description	Description	Q'ty	S.C	Serial No.	ICA	Replaceable part	
								Part No.	Q'ty
1760-	920-00127A	AIRCON UNIT	UNITE D'AIRCON	1					
1	K1002206	MOTOR;BLOWER;24V	MOTEUR	1					
2	K1002207	POWER FET	FET DE PUISSANCE	1					
3	K1002208	RELAY;BLOWER 24V	RELAIS	1					
4	K1002209	RELAY;AIRCON 24V	RELAIS	1					
5	K1030288	FILTER ASS'Y (AIRCON)	ENSEMBLE DE FILTRE	1					
5A	K1002210	. FILTER;AIR CON.	. FILTRE	1					
6	K1002211	SENSOR;TEMP EVAPORATOR	CAPTEUR	1					
7	K1002212	SENSOR;TEMPERATURE	CAPTEUR	1					
8	K1002213	SENSOR;WATER TEMPERATURE	CAPTEUR	1					
9	K1002214	CORE;HEATER	CORE;HEATER	1					
10	K1002215	EVAPORATOR	CHAUFFAGE	1					
11	K1002216	HARNESS;AIR CONDITIONER	HARNAIS	1					
12	K1002217	ACTUATOR;INTAKE	DECLENCHEURE	1					
13	K1002218	ACTUATOR;AIR MIX	DECLENCHEURE	1					
14	K1002219	ACTUATOR;MODE	DECLENCHEURE	1					

DATE	APR. 02, 2007
1st EDITION	

Fig. 1770 AIRCONDITIONER CLIMATISATION

Serial No. ;

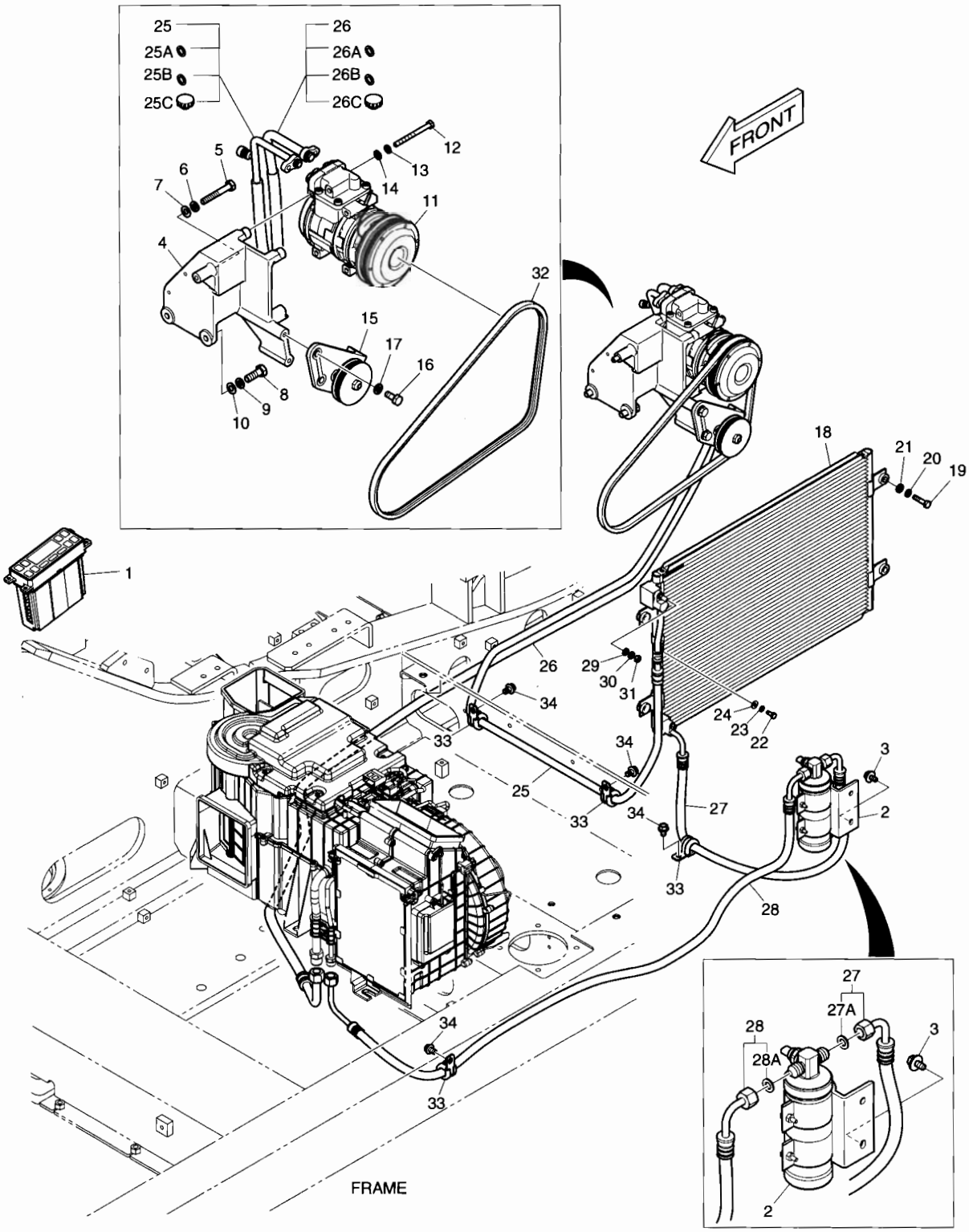

DATE	APR. 02, 2007
1st EDITION	

Fig. 1770 AIRCONDITIONER CLIMATISATION

Serial No. ;

Key No.	Part No.	Description	Description	Q'ty	S.C	Serial No.	ICA	Replaceable part	
								Part No.	Q'ty
1770--	K1027238A	ASSEMBLY;AIR CONDITIONER	CONDITIONNEUR	-	D				
1	543-00107	CONTROL PANEL;AIR CON	PANNEAU	1					
2	2204-6039A	RECEIVER DRIER	RESERVOIR DESSICATEUR	1					
3	DS0025033	BOLT;SET	BOULON	2					
4	K1008482B	BRACKET	SUPPORT	1					
5	S0558966	BOLT	BOULON	1					
6	S5102603	WASHER;SPRING	RONDELLE ELASTIQUE	1					
7	S5010613	WASHER;PLAIN(M10)	RONDELLE	1					
8	S0786366	BOLT	BOULON	2					
9	S5102703	WASHER;SPRING(M12)	RONDELLE ELASTIQUE	2					
10	S5010713	WASHER	RONDELLE	2					
11	2208-6013B	COMPRESSOR	COMPRESSEUR	1					
12	S0557166	BOLT	BOULON	4					
13	S5102503	WASHER;SPRING	RONDELLE ELASTIQUE	4					
14	S5010513	WASHER	RONDELLE	4					
15	2107-6006	PULLEY ASS'Y;IDLE	POULIE	1					
16	S0512066	BOLT	BOULON	2					
17	S5102603	WASHER;SPRING	RONDELLE ELASTIQUE	2					
18	520-00004	CONDENSER;AIR CON	CONDENSER;AIRCON	1					
19	S0509366	BOLT	BOULON	4					
20	S5102503	WASHER;SPRING	RONDELLE ELASTIQUE	4					
21	2114-1058D29	WASHER	RONDELLE	4					
22	S0504666	BOLT	BOULON	1					
23	S5010303	WASHER	RONDELLE	1					
24	2114-1058D52	WASHER	RONDELLE	1					
25	K1027455	HOSE;DISCHARGE	TUYAU FLEXIBLE	1					
25A	2180-6088	. O-RING	. JOINT TORIQUE	1					
25B	K1011384	. O-RING	. JOINT TORIQUE	1					
25C	1.161-00018	. CAP;CHECK PORT	. CHAPEAU	1					
26	K1027456	HOSE;SUCTION	TUYAU FLEXIBLE	1					
26A	2180-6086	. O-RING	. JOINT TORIQUE	1					
26B	K1011385	. O-RING	. JOINT TORIQUE	1					
26C	1.161-00019	. CAP;CHECK PORT	. CHAPEAU	1					
27	K1024686	HOSE;LIQUID(1)	TUYAU FLEXIBLE	1					
27A	K1011388	. O-RING	. JOINT TORIQUE	2					
28	K1015630A	HOSE;LIQUID(2)	TUYAU FLEXIBLE	1					
28A	K1011388	. O-RING	. JOINT TORIQUE	2					
29	S5000313	WASHER;PLAIN	RONDELLE	2					

Fig. 1770 AIRCONDITIONER CLIMATISATION

Serial No. ;

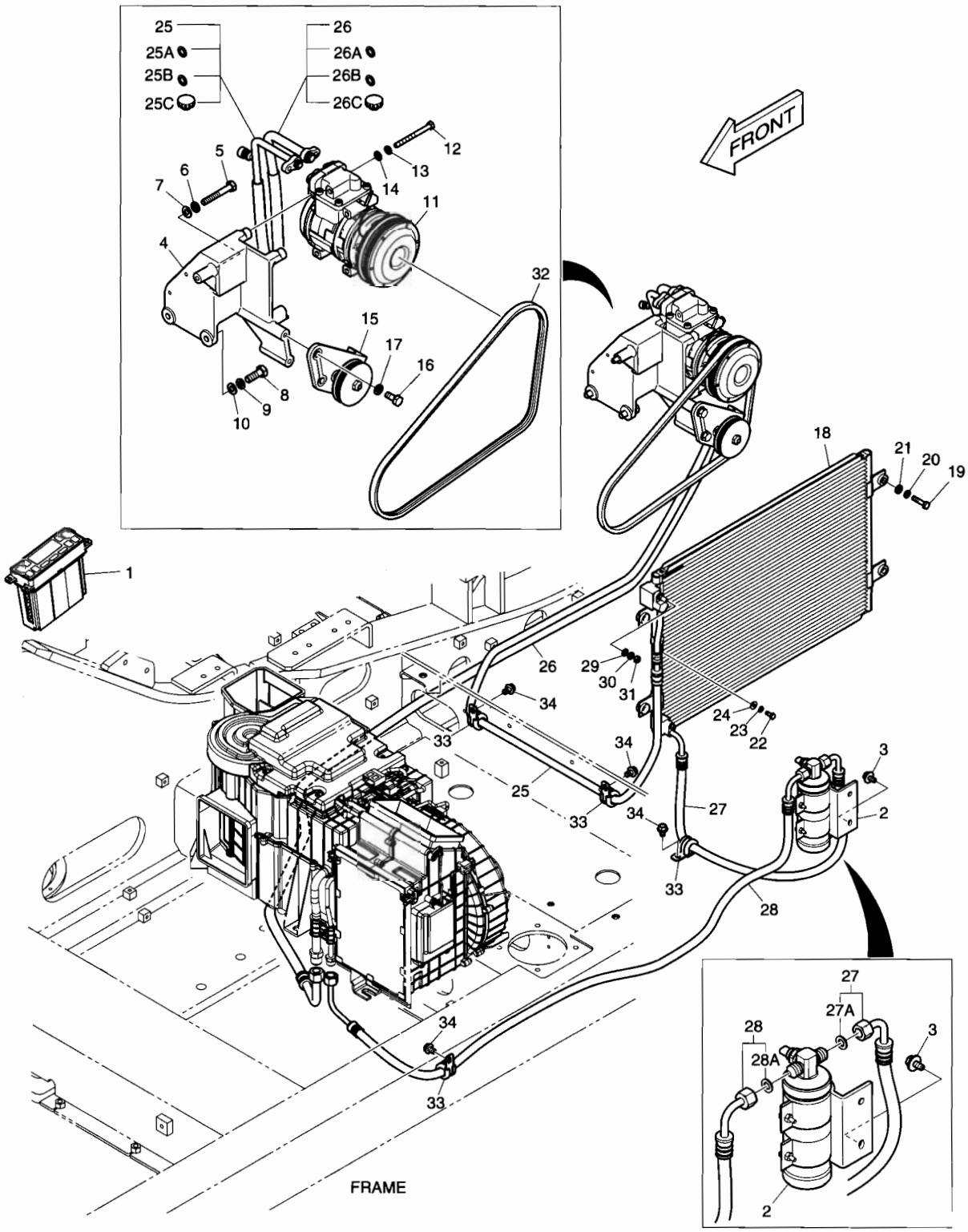

Fig. 1770 AIRCONDITIONER CLIMATISATION

Serial No. ;

Key No.	Part No.	Description	Description	Q'ty	S.C	Serial No.	ICA	Replaceable part	
								Part No.	Q'ty
1770-30	S5102303	WASHER;SPRING	RONDELLE ELASTIQUE	2					
31	S4012303	NUT	ECROU	2					
32	2106-1019D25	V-BELT;POLY 4PK-1210L	COURROIE	1					
33	124-00208D3	CLIP	AGRAFE	4					
34	K1001029	BOLT	BOULON	4					

Fig. 2100 TRACK FRAME
TRAIN DE ROULEMENT

Serial No. ;

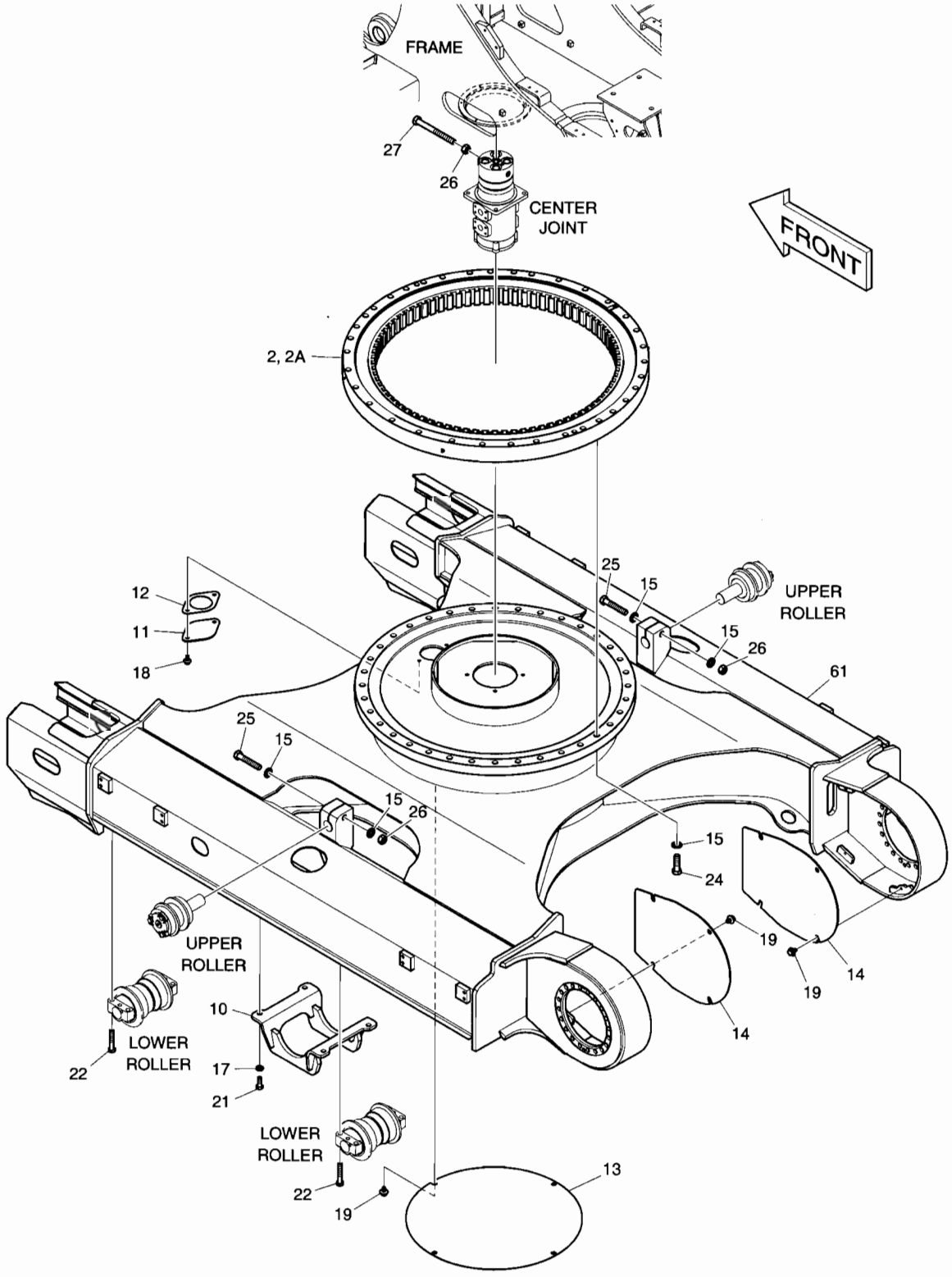

DATE	APR. 02, 2007
1st EDITION	

Fig. 2100 TRACK FRAME TRAIN DE ROULEMENT

Serial No. ;

Key No.	Part No.	Description	Description	Q'ty	S.C	Serial No.	ICA	Replaceable part	
								Part No.	Q'ty
2100--	K1018811E	TRACK FRAME	TRAIN DE ROULEMENT	-	D				
2	K1015198	BEARING;SWING	ROULEMENT	1					
2A	180-00297D3	. SEAL	. JOINT	2					
10	K1015660A	GUARD;TRACK	GARDE	2					
11	621-02938B	COVER	COUVERCLE	1					
12	180-00463	PACKING	EMBALLAGE	1					
13	621-03166	COVER	COUVERCLE	1					
14	K1011872	COVER	COUVERCLE	2					
15	2114-9012A	WASHER;HARD	RONDELLE	40					
17	S5102903	WASHER	RONDELLE	8					
18	DS0025013	BOLT;SET	BOULON	2					
19	DS0025019	BOLT;SET	BOULON	12					
21	S0721466	BOLT	BOULON	8					
22	S0765666	BOLT	BOULON	56					
24	S0770266	BOLT	BOULON	36					
25	S0571166	BOLT	BOULON	2					
26	S4013133	NUT	ECROU	3					
27	S0572166	BOLT	BOULON	1					
61	K1018812E	FRAME;TRACK	ARMATURE	1					

Fig. 2110 TRAVEL DEVICE SYSTEME D'TRANSLATION

Serial No. ;

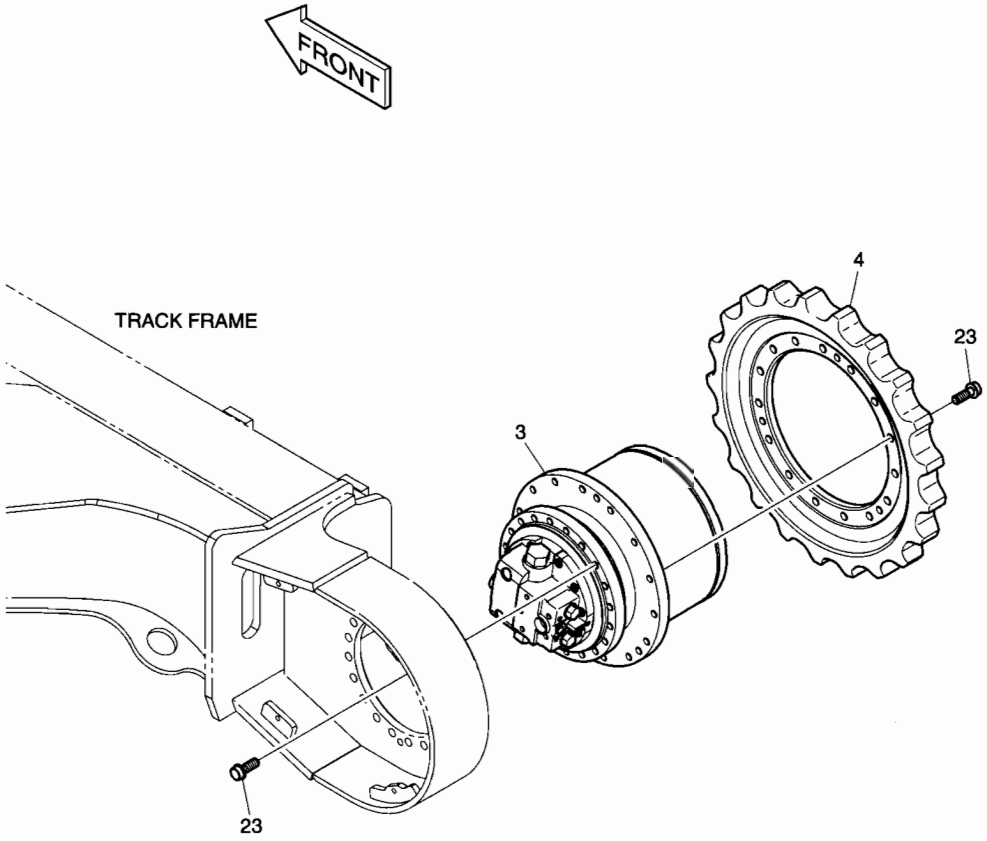

DATE	APR. 02, 2007
1st EDITION	

Fig. 2110 TRAVEL DEVICE SYSTEME D'TRANSLATION

Serial No. ;

Key No.	Part No.	Description	Description	Q'ty	S.C	Serial No.	ICA	Replaceable part	
								Part No.	Q'ty
2110--	K1018811E	TRACK FRAME	TRAIN DE ROULEMENT	-	D				
3	K1014772A	TRAVEL DEVICE	BOITE REDUCTEUR	2					
4	K1018303	SPROCKET	COURONNE DENTEE	2					
23	120-00050B	BOLT	BOULON	70					

DATE	APR. 02, 2007
1st EDITION	

Fig. 2120 IDLER BARBOTIN

Serial No. ;

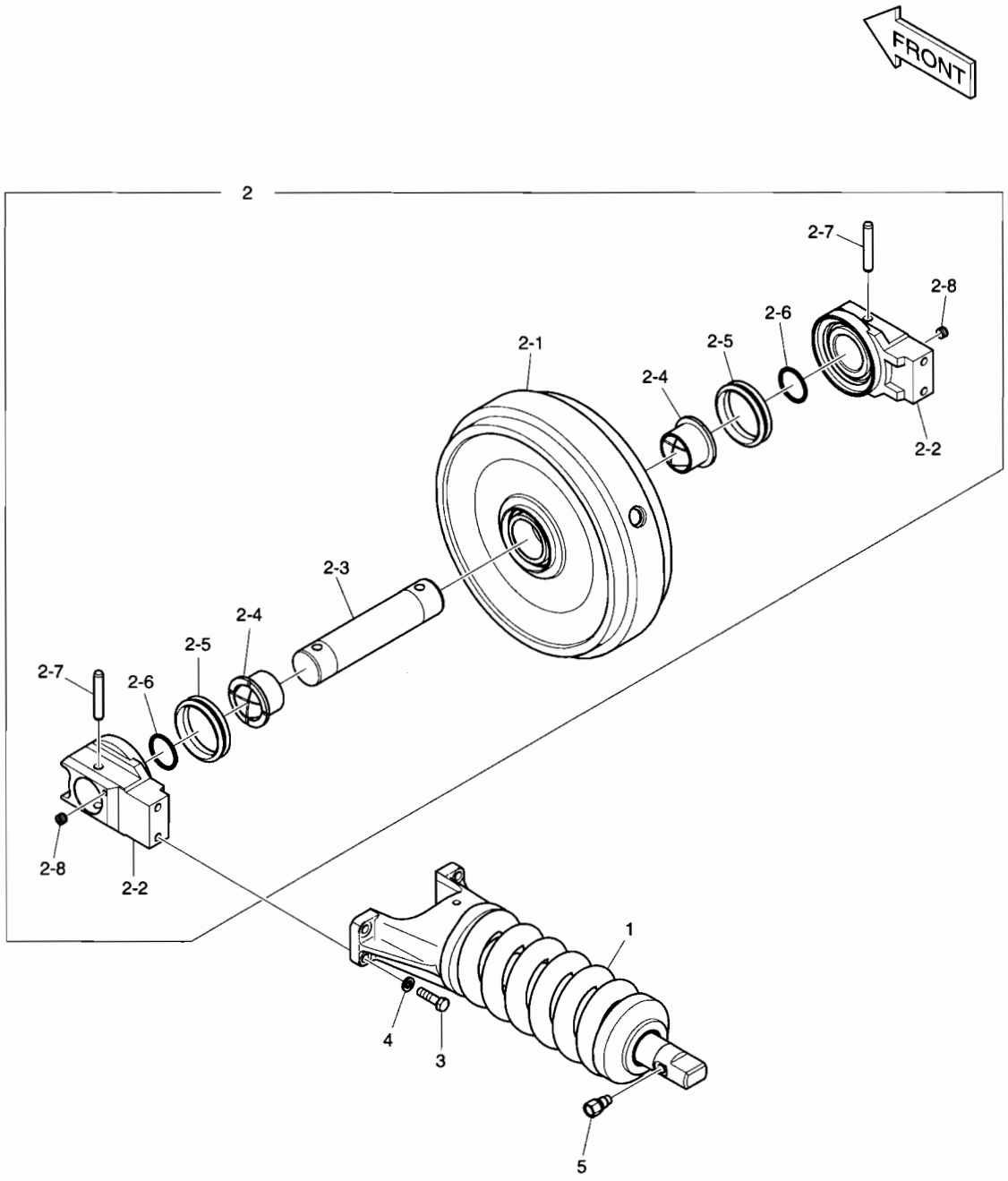

DATE	APR. 02, 2007
1st EDITION	

Fig. 2120 IDLER BARBOTIN

Serial No. ;

Key No.	Part No.	Description	Description	Q'ty	S.C	Serial No.	ICA	Replaceable part	
								Part No.	Q'ty
2120--	K1018548A	IDLER SUB ASS'Y	BARBOTIN	2					
1	K1018532	TRACK SPRING	TENDEUR DE CHENILLE	1					
2	K1018457A	IDLER ASS'Y	ENSEMBLE DE OISIF	1					
2-1	-	. BODY	. CARTER	1	D				
2-2	K1024880A	. SUPPORT	. LAMPE	2					
2-3	K1024764	. SHAFT	. ARBRE	1					
2-4	K1011893	. BUSHING	. DOUILLE	2					
2-5	2180-9020	. SEAL;FLOATING	. JOINT	2					
2-6	S8010700	. O-RING	. JOINT TORIQUE	2					
2-7	K1011895	. PIN	. GOUPILLE	2					
2-8	2181-1116D2	. PLUG	. BOUCHON	2					
3	S0565166	BOLT	BOULON A 6 PANS	4					
4	S5102903	WASHER;SPRING	RONDELLE ELASTIQUE	4					
5	422-00055	VALVE;GREASE	VANNE	1					

Fig. 2130 TRACK SPRING
TENDEUR DE CHENILLE

Serial No. ;

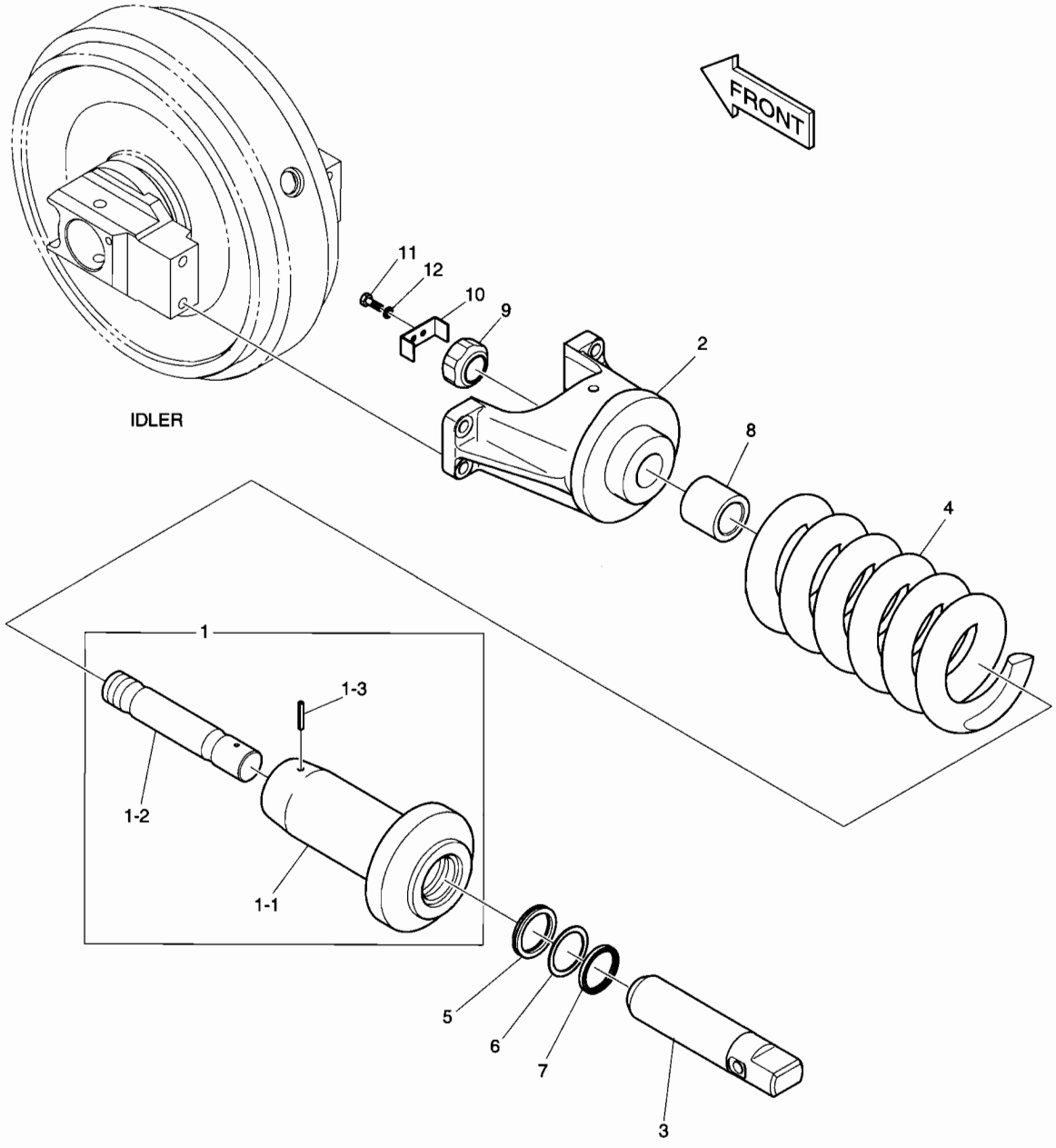

DATE	APR. 02, 2007
1st EDITION	

Fig. 2130 TRACK SPRING TENDEUR DE CHENILLE

Serial No. ;

Key No.	Part No.	Description	Description	Q'ty	S.C	Serial No.	ICA	Replaceable part	
								Part No.	Q'ty
2130--	K1018532	TRACK SPRING	TENDEUR DE CHENILLE	2					
1	K1024759	CYLINDER BODY ASS'Y	CYLINDRE	1					
1-1	K1024761	. BODY	. CARROSSERIE	1					
1-2	K1024773	. SHAFT	. ARBRE	1					
1-3	S5740960	. PIN;SPRING	. GOUJON	1					
2	K1024765	BRACKET	SUPPORT	1					
3	K1024766	ROD;PISTON	TIGE	1					
4	K1024769	SPRING	RESSORT	1					
5	-	PACKING	EMBALLAGE	1	K				
6	-	RING;BACK UP	BAGUE ANTIEXTRUSION	1	K				
7	-	SEAL;DUST	BAGUE D'ETANCHEITE	1	K				
8	K1024770	STOPPER	ARRET	1					
9	K1024772	NUT	ECROU	1					
10	K1024774	PLATE	PLAQUE	1					
11	S0512263	BOLT	BOULON	2					
12	S5102603	WASHER;SPRING	RONDELLE ELASTIQUE	2					
*	K9005356	SEAL KIT;TRACK SPRING	KIT DE JOINT	1					

DATE	APR. 02, 2007
1st EDITION	

Fig. 2140 UPPER ROLLER
GALET SUPERIEUR

Serial No. ;

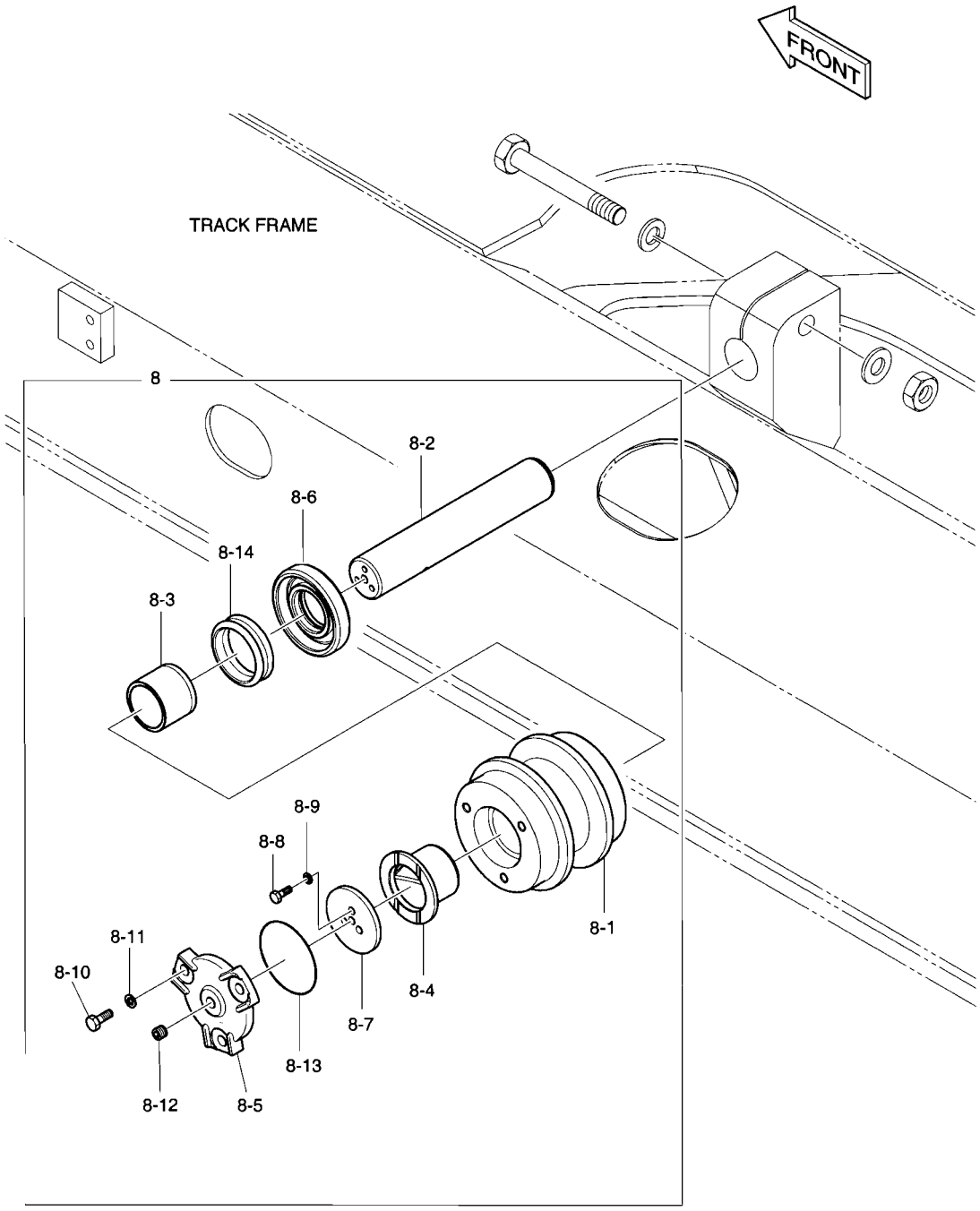

DATE	APR. 02, 2007
1st EDITION	

Fig. 2140 UPPER ROLLER / GALET SUPERIEUR

Serial No. ;

Key No.	Part No.	Description	Description	Q'ty	S.C	Serial No.	ICA	Replaceable part	
								Part No.	Q'ty
2140--	K1018811E	TRACK ASS'Y	TRAIN DE ROULEMENT	-	D				
8	K1011870A	ROLLER;UPPER	ENSEMBLE GALET	2					
8-1	-	BODY	CARTER	1	D				
8-2	K1024747A	SHAFT	ARBRE	1					
8-3	K1029539	BUSHING	DOUILLE	1					
8-4	K1029540	BUSHING	DOUILLE	1					
8-5	K1029201	COVER	COUVERCLE	1					
8-6	K1024748	RING;THRUST	BAGUE	1					
8-7	2114-1379	WASHER	RONDELLE	1					
8-8	S0508861	BOLT	BOULON	3					
8-9	S5102503	WASHER;SPRING	RONDELLE ELASTIQUE	3					
8-10	S0512061	BOLT	BOULON	3					
8-11	S5102603	WASHER;SPRING	RONDELLE ELASTIQUE	3					
8-12	2181-1116D2	PLUG	BOUCHON	1					
8-13	S8010600	O-RING	JOINT TORIQUE	1					
8-14	2180-9087	SEAL;FLOATING	JOINT	2					

DATE	APR. 02, 2007
1st EDITION	

Fig. 2150 LOWER ROLLER
GALET INFERIEUR

Serial No. ;

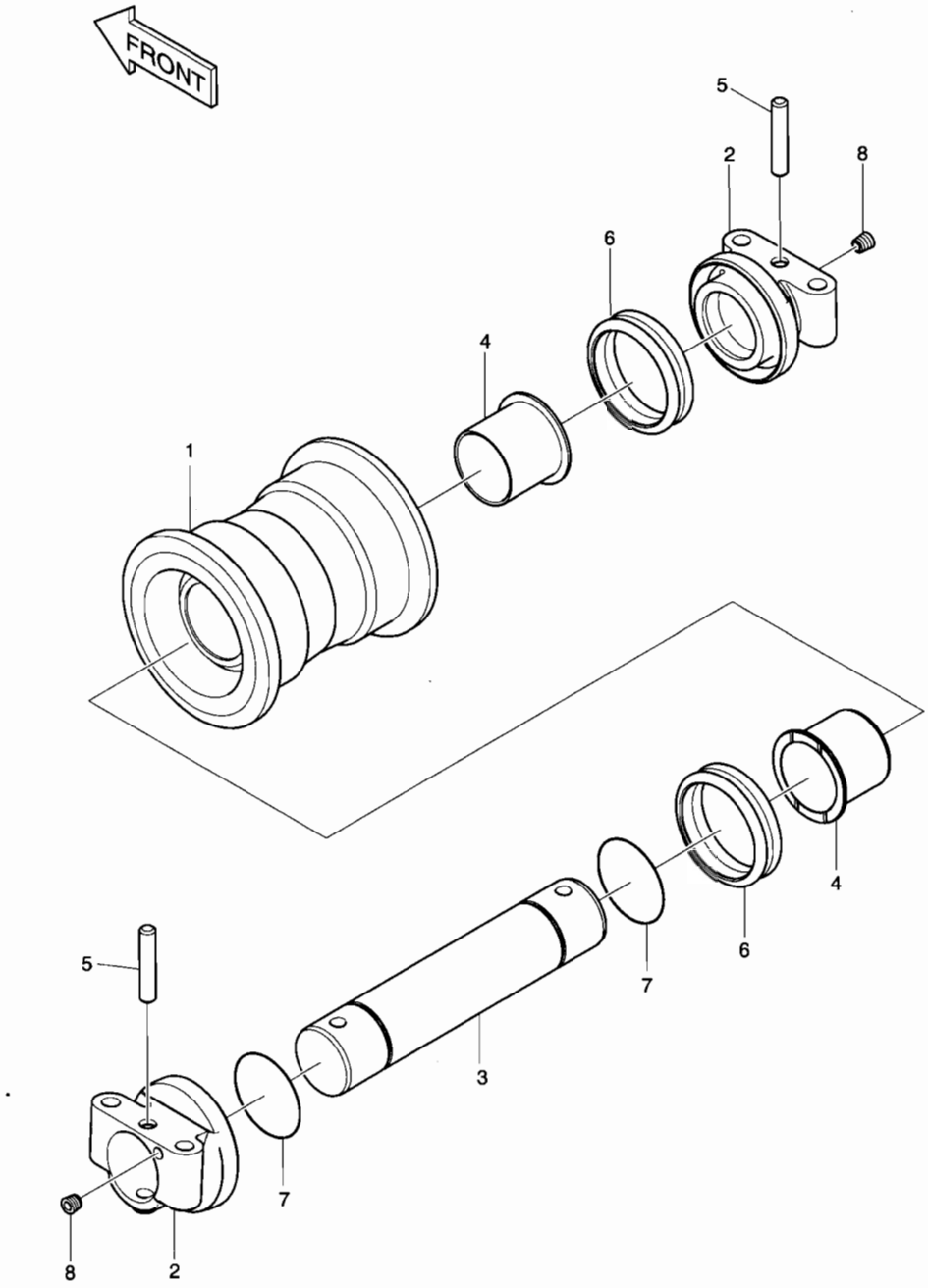

DATE	APR. 02, 2007
1st EDITION	

Fig. 2150 LOWER ROLLER GALET INFERIEUR

Serial No. ;

Key No.	Part No.	Description	Description	Q'ty	S.C	Serial No.	ICA	Replaceable part	
								Part No.	Q'ty
2150--	K1011871A	LOWER ROLLER	GALET INFERIEUR	14					
1	-	BODY	CARTER	1	D				
2	K1029537	COLLAR	COLLIER	2					
3	K1024710	SHAFT	ARBRE	1					
4	K1024742	BUSHING	DOUILLE	2					
5	K1029527	PIN	GOUJON D'ASSEMBLAGE	2					
6	K1029538	SEAL;FLOATING	JOINT	4					
7	S8010450	O-RING	JOINT TORIQUE	2					
8	2181-1116D2	PLUG	BOUCHON	2					

Fig. 2160 CENTER JOINT
JOINT CENTRAL

Serial No. ;

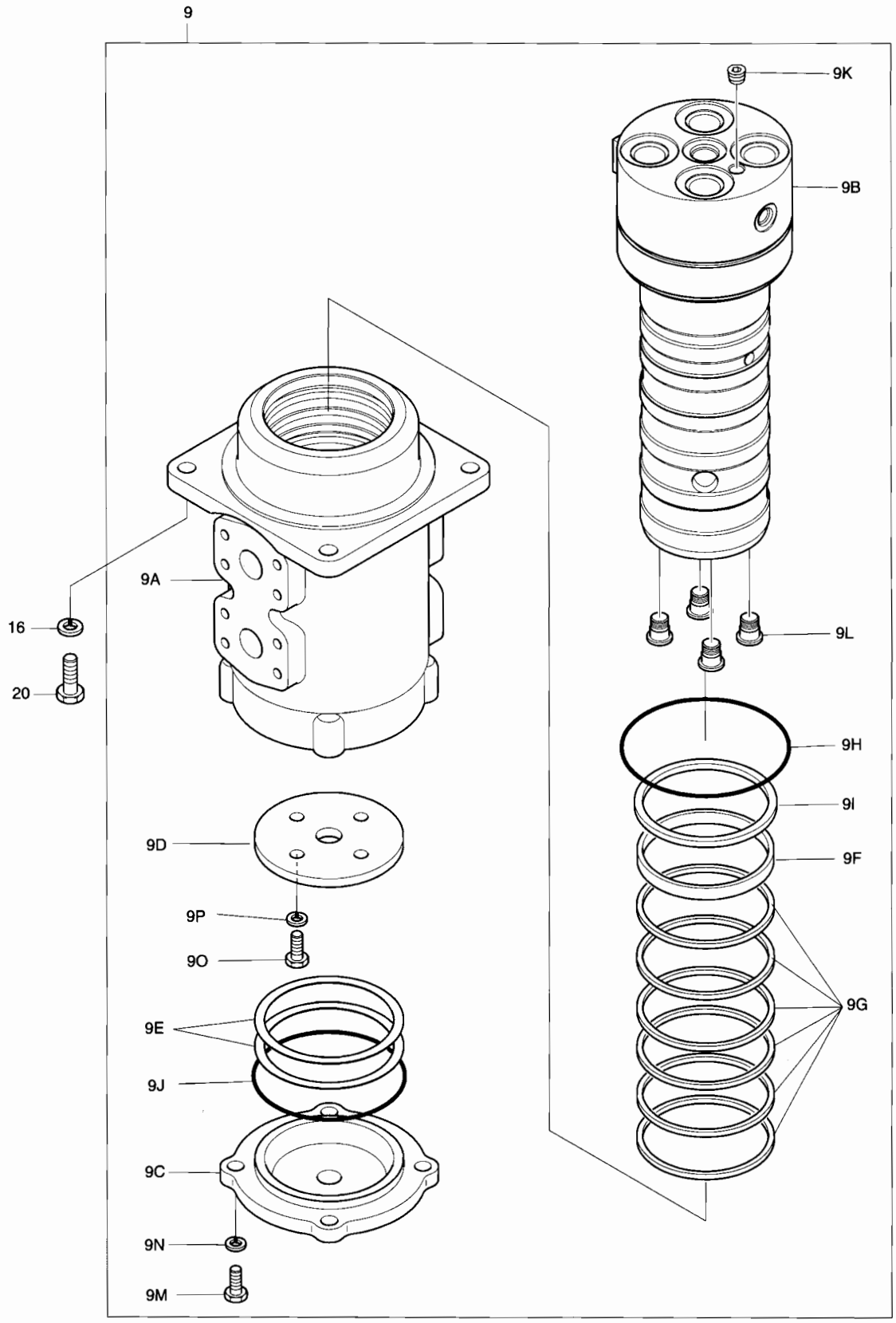

DATE	APR. 02, 2007
1st EDITION	

Fig. 2160 CENTER JOINT
JOINT CENTRAL

Serial No. ;

Key No.	Part No.	Description	Description	Q'ty	S.C	Serial No.	ICA	Replaceable part	
								Part No.	Q'ty
2160--	K1018811E	TRACK ASS'Y	TRAIN	-	D				
9	480-00018C	JOINT;CENTER	JOINT CENTRAL	1					
9A	481-00002	. HUB	. MOYEU	1					
9B	483-00002	. SPINDLE	. TOUPIE	1					
9C	482-00003	. COVER	. COUVERCLE	1					
9D	114-00583	. SPACER	. ENTERTOISE	1					
9E	114-00584	. SHIM	. CALE	2					
9F	-	. RING;WEAR	. SEGMENT D'USURE	1	K				
9G	-	. SEAL;SLIPPER	. PATIN D'ETANCHEITE	6	K				
9H	S8001200	. O-RING	. JOINT TORIQUE	1	K				
9I	S8001001	. O-RING	. JOINT TORIQUE	1	K				
9J	S8011201	. O-RING	. JOINT TORIQUE	1	K				
9K	2181-1116D2	. PLUG;PT	. BOUCHON	1					
9L	-	. PLUG;PF	. BOUCHON	4					
9M	S0515253	. BOLT;HEX	. BOULON A 6 PANS	4					
9N	S5102703	. WASHER;SPRING	. RONDELLE ELASTIQUE	4					
9O	S0512053	. BOLT;HEX	. BOULON A 6 PANS	4					
9P	S5102603	. WASHER;SPRING	. RONDELLE ELASTIQUE	4					
16	S5102703	WASHER;SPRING	RONDELLE ELASTIQUE	4					
20	S0515266	BOLT	BOULON A 6 PANS	4					
*	480-00018KT	SEAL KIT;CENTER JOINT	KIT DE JOINT	1					

DATE	APR. 02, 2007
1st EDITION	

Fig. 2170 TRACK SHOE ASS'Y - 600G
MAILLON DE CHAINE

Serial No. ;

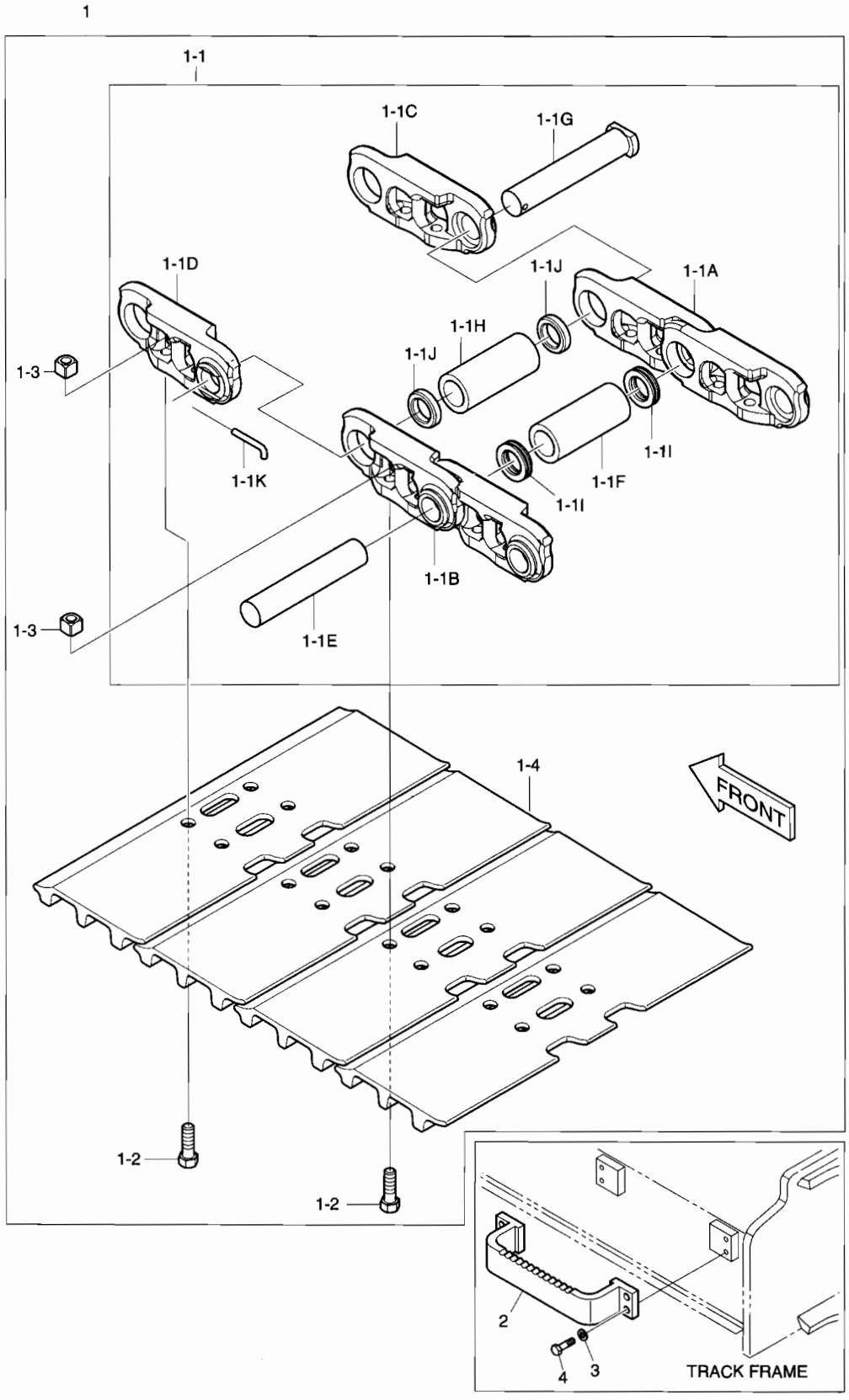

DATE	APR. 02, 2007
1st EDITION	

Fig. 2170 TRACK SHOE ASS'Y - 600G MAILLON DE CHAINE

Serial No. ;

Key No.	Part No.	Description	Description	Q'ty	S.C	Serial No.	ICA	Replaceable part	
								Part No.	Q'ty
2170--	K1018893B	TRACK SHOE ASS'Y	MAILLON DE CHAINE	-	D				
1	K1018895	TRACK SHOE ASS'Y 600G	MAILLON DE CHAINE	2					
1-1	K1018238	. TRACK LINK ASS'Y	. ENSEMBLE MAILLON DE	1					
1-1A	K1018214	.. LINK - R.H	.. ARTICULATION	42					
1-1B	K1018215	.. LINK - L.H	.. ARTICULATION	42					
1-1C	K1018216	.. LINK;MASTER - R.H	.. ARTICULATION	1					
1-1D	K1018217	.. LINK;MASTER - L.H	.. ARTICULATION	1					
1-1E	K1018218	.. PIN;REGULAR	.. GOUPILLE	42					
1-1F	K1018220	.. BUSHING;REGULAR	.. DOUILLE	42					
1-1G	K1018219	.. PIN;MASTER	.. GOUPILLE	1					
1-1H	K1018221	.. BUSHING;MASTER	.. DOUILLE PRINCIPALE	1					
1-1I	K1018222	.. SEAL;DUST	.. JOINT	84					
1-1J	K1018223	.. SPACER	.. DOUILLE D'ECARTEMENT	2					
1-1K	K1018229	.. PIN;CLAMPING	.. GOUPILLE	1					
1-2	K1018234	. BOLT	. BOULON A 6 PANS	172					
1-3	K1018235	. NUT	. ECROU	172					
1-4	K1018242	. SHOE 600mm	. SABOT	43					
2	K1024484D1	STEP	MARCHER	4					
3	S5102703	WASHER;SPRING	RONDELLE ELASTIQUE	16					
4	S0515366	BOLT	BOULON A 6 PANS	16					

DATE	APR. 02, 2007
1st EDITION	

Fig. 2180 TRAVEL PIPING
CONDUITES DE TRANSLATION

Serial No. ;

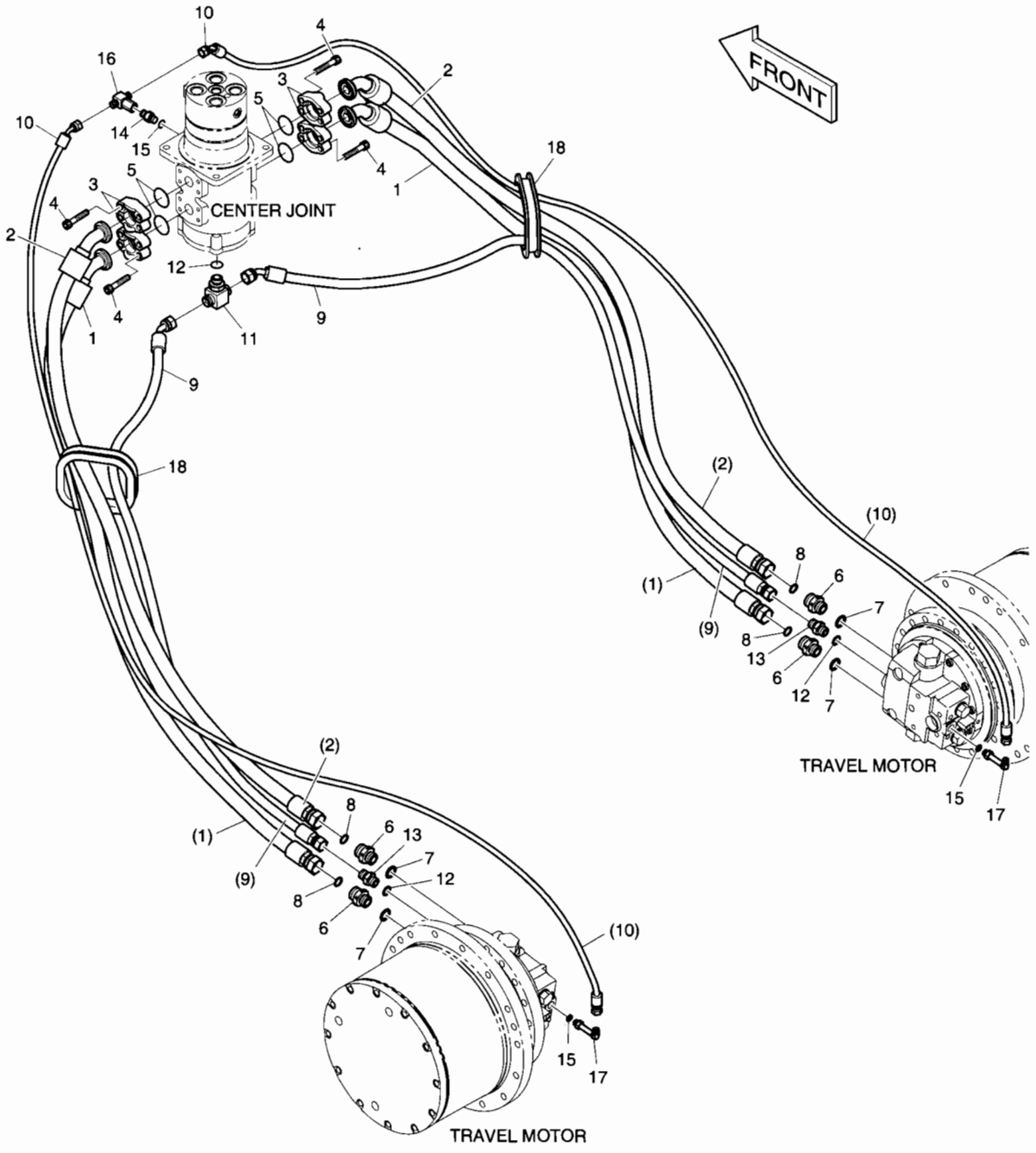

DATE	APR. 02, 2007
1st EDITION	

Fig. 2180 TRAVEL PIPING
CONDUITES DE TRANSLATION

Serial No. ;

Key No.	Part No.	Description	Description	Q'ty	S.C	Serial No.	ICA	Replaceable part	
								Part No.	Q'ty
2180--	K1024110B	UNDER CARRIAGE PIPING	SOUS LA TUYAUTERIE DE	-	D				
1	2184-1222D18	HOSE	TUYAU FLEXIBLE	2					
2	2184-1222D19	HOSE	TUYAU FLEXIBLE	2					
3	2181-9081	FLANGE;SPLIT	BRIDE	8					
4	S2215466	BOLT;SOCKET M12X1.75X40	BOULON A 6 PANS CREUX	16					
5	2180-1026D19	O-RING	JOINT TORIQUE	4					
6	2181-2627D1	ADAPTER	ADAPTEUR	4					
7	S8000231	O-RING	JOINT TORIQUE	4					
8	S8030121	O-RING	JOINT TORIQUE	4					
9	2184-1060D70	HOSE	TUYAU FLEXIBLE	2					
10	DS2054374	HOSE	TUYAU FLEXIBLE	2					
11	2181-2281D10	TEE	TE	1					
12	S8000181	O-RING	JOINT TORIQUE	3					
13	2181-1126D6	ADAPTER	ADAPTEUR	2					
14	2181-1126D14	ADAPTER	ADAPTEUR	1					
15	S8000111	O-RING	JOINT TORIQUE	3					
16	2181-4125	TEE	TE	1					
17	2181-1702D56	ELBOW	COUDE	2					
18	DS7604004	BUSHING;RUBBER	DOUILLE EN CAOUTCHOUC	2					

DATE	APR. 02, 2007
1st EDITION	

Fig. 3100 BOOM - 4.6m PERCHE

Serial No. ;

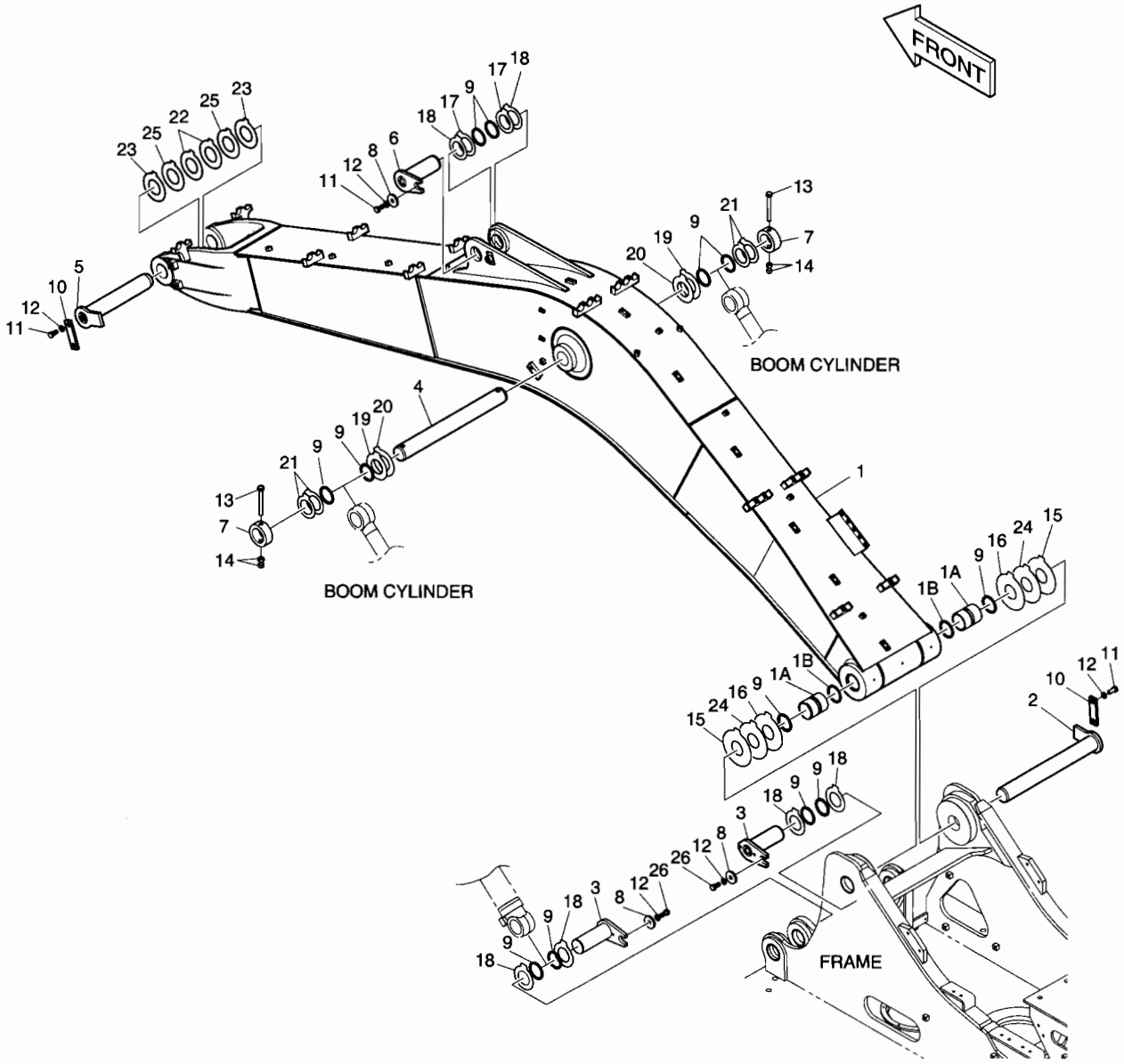

DATE	APR. 02, 2007
1st EDITION	

Fig. 3100 BOOM - 4.6m PERCHE

Serial No. ;

Key No.	Part No.	Description	Description	Q'ty	S.C	Serial No.	ICA	Replaceable part	
								Part No.	Q'ty
3100--	K1026833B	BOOM ASS'Y	ENSEMBLE FLECHE	-	D				
1	701-00558E	BOOM SUB ASS'Y-4.6m	FLECHE	1					
1A	110-00240	. BUSHING	. DOUILLE	2					
1B	2180-1106BD4	. SEAL;DUST	. JOINT	2					
2	123-00671B	PIN	GOUPILLE	1					
3	123-00474	PIN	GOUPILLE	2					
4	K1004508A	PIN	GOUPILLE	1					
5	2123-2207E	PIN	GOUPILLE	1					
6	2123-2209C	PIN	GOUPILLE	1					
7	2116-1532A	STOPPER	ARRET	2					
8	2116-1060D6	STOPPER	ARRET	3					
9	2180-1106BD4	SEAL;DUST	JOINT	12					
10	621-03710A	PLATE;STOPPER	PLAQUE	2					
11	S0521366	BOLT	BOULON	5					
12	S5102906	WASHER;SPRING	RONDELLE ELASTIQUE	7					
13	S0566966	BOLT	BOULON	2					
14	S4012933	NUT	ECROU	4					
15	DS7752023	SHIM	CALE	2					
16	DS7752011	SHIM	CALE	2					
17	DS7752004	SHIM	CALE	4					
18	DS7752005	SHIM	CALE	4					
19	DS7752006	SHIM	CALE	2					
20	DS7752007	SHIM	CALE	2					
21	DS7752003	SHIM	CALE	4					
22	DS7752008	SHIM	CALE	2					
23	DS7752009	SHIM	CALE	2					
24	DS7752089	SHIM	CALE	2					
25	DS7752090	SHIM	CALE	2					
26	S0521266	BOLT	BOULON	2					

DATE	APR. 02, 2007
1st EDITION	

Fig. 3110 ARM - 2.5m BALANCIER

Serial No. ;

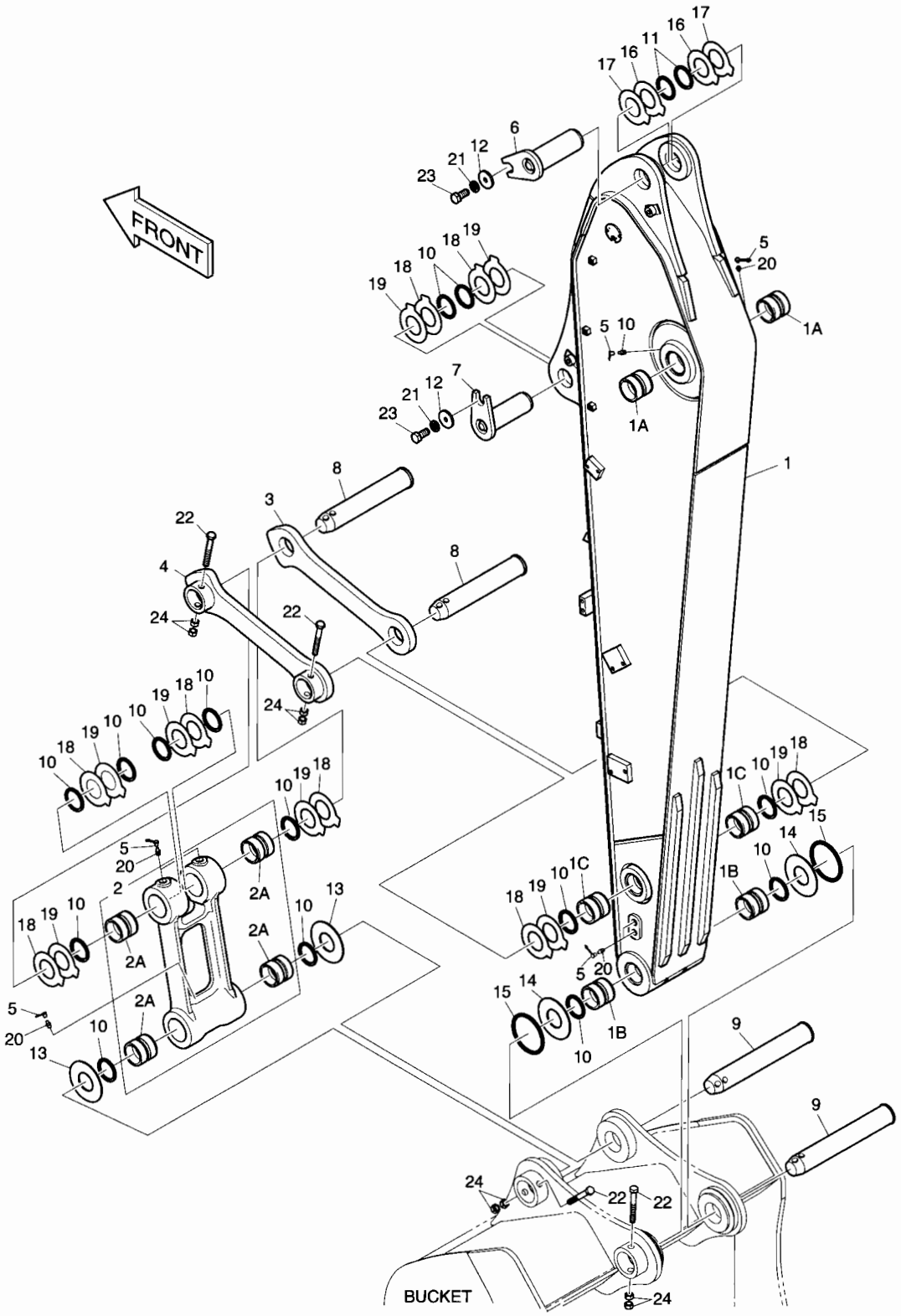

DATE	APR. 02, 2007
1st EDITION	

Fig. 3110 ARM - 2.5m BALANCIER

Serial No. ;

Key No.	Part No.	Description	Description	Q'ty	S.C	Serial No.	ICA	Replaceable part	
								Part No.	Q'ty
3110--	701-00561G	ARM ASS'Y	ENSEMBLE DE BRAS	-	D				
1	701-00562H	ARM SUB ASS'Y-2.5m	BALANCIER	1					
1A	110-00241	. BUSHING	. DOUILLE	2					
1B	110-00242	. BUSHING	. DOUILLE	2					
1C	110-00243	. BUSHING	. DOUILLE	2					
2	155-00061	LINK;PUSH ASS'Y	ARTICULATION	1					
2A	110-00245	. BUSHING	. DOUILLE	4					
3	2155-1306B	LINK;GUIDE(R.H)	ARTICULATION	1					
4	2155-1307B	LINK;GUIDE(L.H)	ARTICULATION	1					
5	160-00020	CAP;GREASE NIPPLE	CHAPEAU	7					
6	2123-2209C	PIN	GOUPILLE	1					
7	2123-2225C	PIN	GOUPILLE	1					
8	K1007038	PIN	GOUPILLE	2					
9	2123-2212C	PIN	GOUPILLE	2					
10	2180-1106BD3	SEAL;DUST	JOINT	14					
11	2180-1106BD4	SEAL;DUST	JOINT	4					
12	2116-1060D6	STOPPER	ARRET	2					
13	2114-1995B	SPACER	DOUILLE D'ECARTEMENT	2					
14	2114-1994B	SPACER	DOUILLE D'ECARTEMENT	2					
15	180-00077D3	O-RING	JOINT TORIQUE	2					
16	DS7752006	SHIM	CALE	2					
17	DS7752007	SHIM	CALE	2					
18	DS7752001	SHIM	CALE	8					
19	DS7752002	SHIM	CALE	8					
20	S6710041	NIPPLE;GREASE	MAMELON	7					
21	S5102906	WASHER;SPRING	RONDELLE ELASTIQUE	2					
22	S0566766	BOLT	BOULON	4					
23	S0521366	BOLT	BOULON	2					
24	S4012933	NUT	ECROU	8					

Fig. 3120 BUCKET - 0.5m³ GODET

Serial No. ;

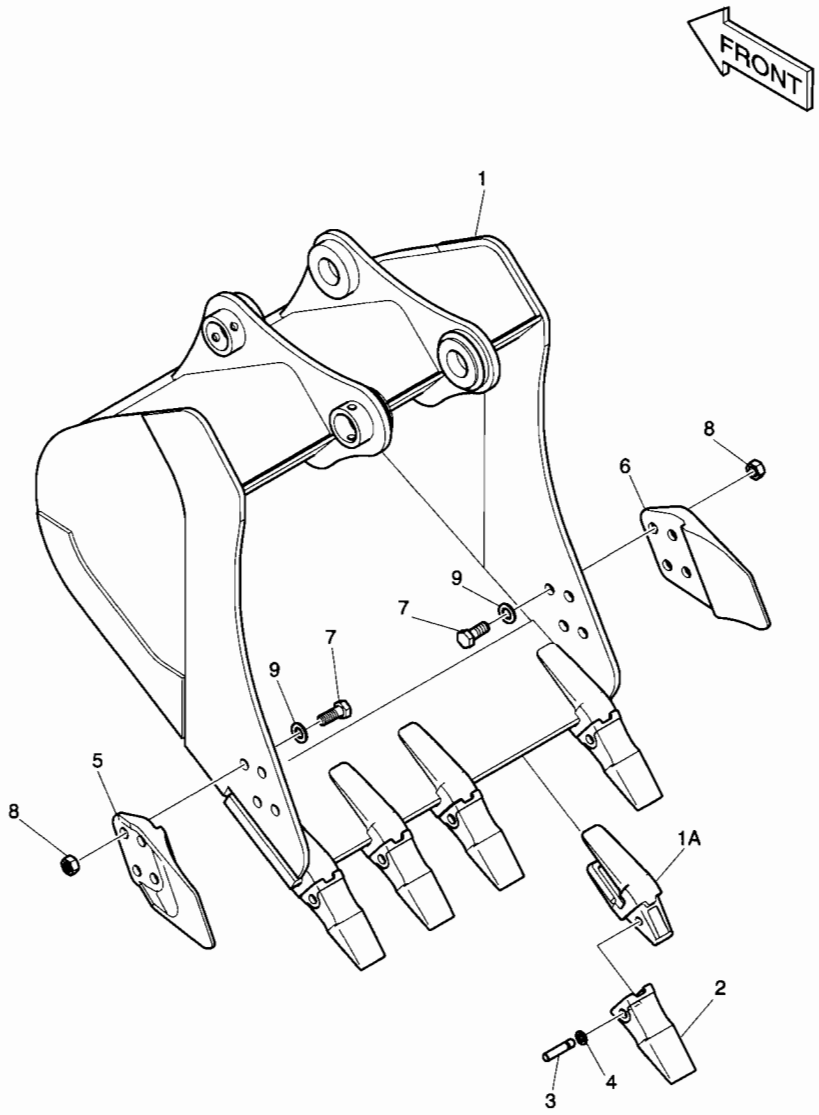

DATE	APR. 02, 2007
1st EDITION	

Fig. 3120 BUCKET - 0.5㎥ GODET

Serial No. ;

Key No.	Part No.	Description	Description	Q'ty	S.C	Serial No.	ICA	Replaceable part	
								Part No.	Q'ty
3120--	K1007673A	BUCKET ASS'Y- 0.5㎥	GODET	1					
1	K1007674A	BUCKET - 0.5㎥	GODET	1					
1A	2713-1222A	. ADAPTER;TOOTH	. DENT DE ADAPTEUR	5					
2	713-00057A	POINT;TOOTH	DENT	5					
3	2705-1022	PIN;LOCKING	GOUPILLE	5					
4	2114-1859	WASHER;LOCKING	RONDELLE	5					
5	2713-1229A	CUTTER;SIDE(L.H)	COIN DE GODET DROIT	1					
6	2713-1228A	CUTTER;SIDE(R.H)	COIN DE GODET DROIT	1					
7	S0574561	BOLT	BOULON	8					
8	S4013333	NUT	ECROU	8					
9	2114-1831A	WASHER;HARDEN	RONDELLE	8					

Fig. 3130 BOOM PIPING - BOOM 4.6m
TUYAUTERIE DE PERCHE

Serial No. ;

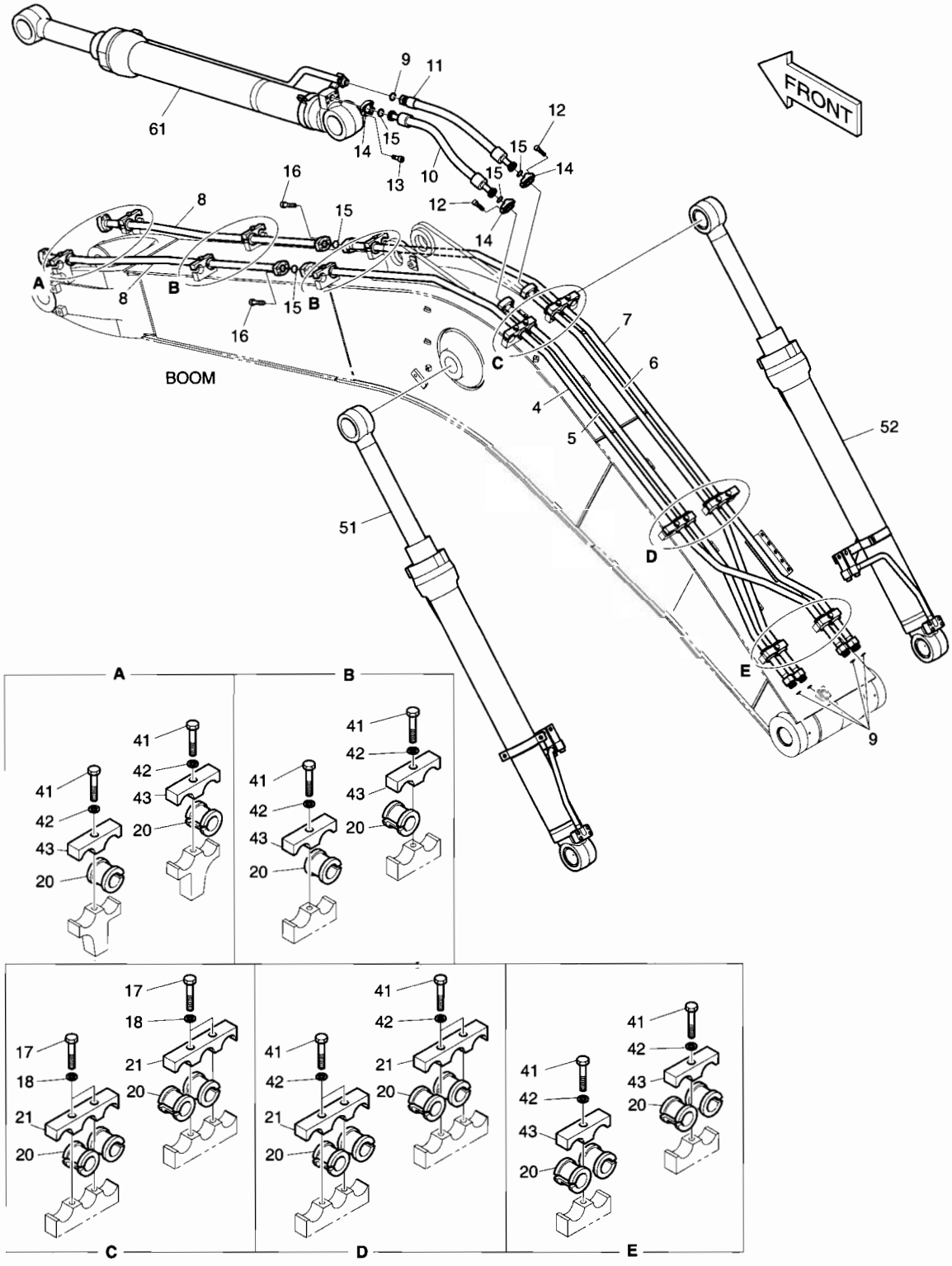

DATE	APR. 02, 2007
1st EDITION	

Fig. 3130 BOOM PIPING - BOOM 4.6m TUYAUTERIE DE PERCHE

Serial No. ;

Key No.	Part No.	Description	Description	Q'ty	S.C	Serial No.	ICA	Replaceable part	
								Part No.	Q'ty
3130--	K1018877	BOOM PIPING	CONDUITES DE FLECHE	-	D				
4	140-01608C	PIPE	TUYAU	1					
5	140-01609C	PIPE	TUYAU	1					
6	140-01610C	PIPE	TUYAU	1					
7	140-01611C	PIPE	TUYAU	1					
8	K1000843A	PIPE	TUYAU	2					
9	S8030121	O-RING	JOINT TORIQUE	5					
10	DS2038186	HOSE	TUYAU FLEXIBLE	1					
11	DS2016061	HOSE	TUYAU FLEXIBLE	1					
12	S2212366	BOLT;SOCKET	BOULON A 6 PANS CREUX	8					
13	S2212266	BOLT;SOCKET	BOULON A 6 PANS CREUX	4					
14	2181-9079	FLANGE;SPLIT	BRIDE	6					
15	2180-1026D2	O-RING	JOINT TORIQUE	5					
16	S2212566	BOLT;SOCKET	BOULON A 6 PANS CREUX	8					
17	S0560866	BOLT	BOULON	4					
18	S5102703	WASHER;SPRING	RONDELLE ELASTIQUE	4					
20	K1000294A	RUBBER	CAOUTCHOUC	18					
21	K1004317	CLAMP;PIPE	COLLIER	4					
41	S0560866	BOLT	BOULON	12					
42	S5102703	WASHER;SPRING	RONDELLE ELASTIQUE	12					
43	K1004316	CLAMP;PIPE	COLLIER	8					
51	K1026243A	CYLINDER;BOOM(L.H)	VERIN DE FLECHE	1					
52	K1026244A	CYLINDER;BOOM(R.H)	VERIN DE FLECHE	1					
61	K1018940	CYLINDER;ARM	VERIN DE BALANCIER	1					

DATE	APR. 02, 2007
1st EDITION	

Fig. 3140 LUBRICATION PIPING - BOOM 4.6m
TUYAUTERIE DE LUBRIFICATION

Serial No. ;

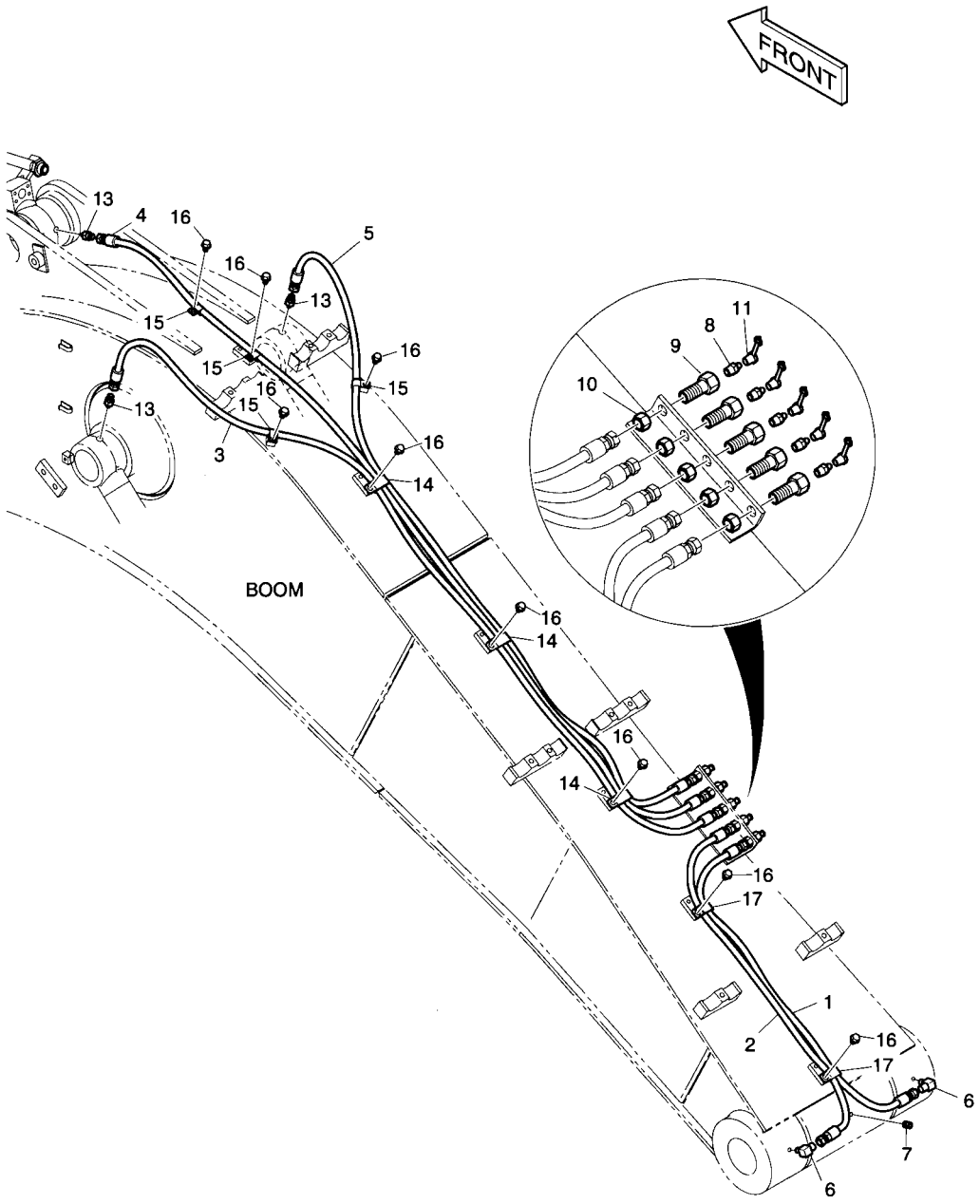

DATE	APR. 02, 2007
1st EDITION	

Fig. 3140 LUBRICATION PIPING - BOOM 4.6m
TUYAUTERIE DE LUBRIFICATION

Serial No. ;

Key No.	Part No.	Description	Description	Q'ty	S.C	Serial No.	ICA	Replaceable part	
								Part No.	Q'ty
3140--	400-01361B	BOOM LUBRICATION PIPING	TUYAUTERIE DE	-	D				
1	DS2053796	HOSE	TUYAU FLEXIBLE	1					
2	2184-1045D165	HOSE	TUYAU FLEXIBLE	1					
3	2184-1045D103	HOSE	TUYAU FLEXIBLE	1					
4	DS2053929	HOSE	TUYAU FLEXIBLE	1					
5	2184-1045D161	HOSE	TUYAU FLEXIBLE	1					
6	2181-1186D12	ELBOW	COUDE	2					
7	S3524403	PLUG	BOUCHON	1					
8	S6710041	NIPPLE;GREASE	MAMELON	5					
9	181-00103	REDUCER	REDUCEUR	5					
10	121-00006	NUT	ECROU	5					
11	160-00020	CAP;GREASE NIPPLE	CHAPEAU	5					
13	2181-4112	ADAPTER	ADAPTEUR	3					
14	124-00199D4	CLIP	AGRAFE	3					
15	2124-1353D2	CLIP	AGRAFE	4					
16	K1001029	BOLT	BOULON	9					
17	124-00199D5	CLIP	AGRAFE	2					

DATE	APR. 02, 2007
1st EDITION	

Fig. 3150 ARM PIPING - ARM 2.5m
CONDUITES DE BALANCIER

Serial No. ;

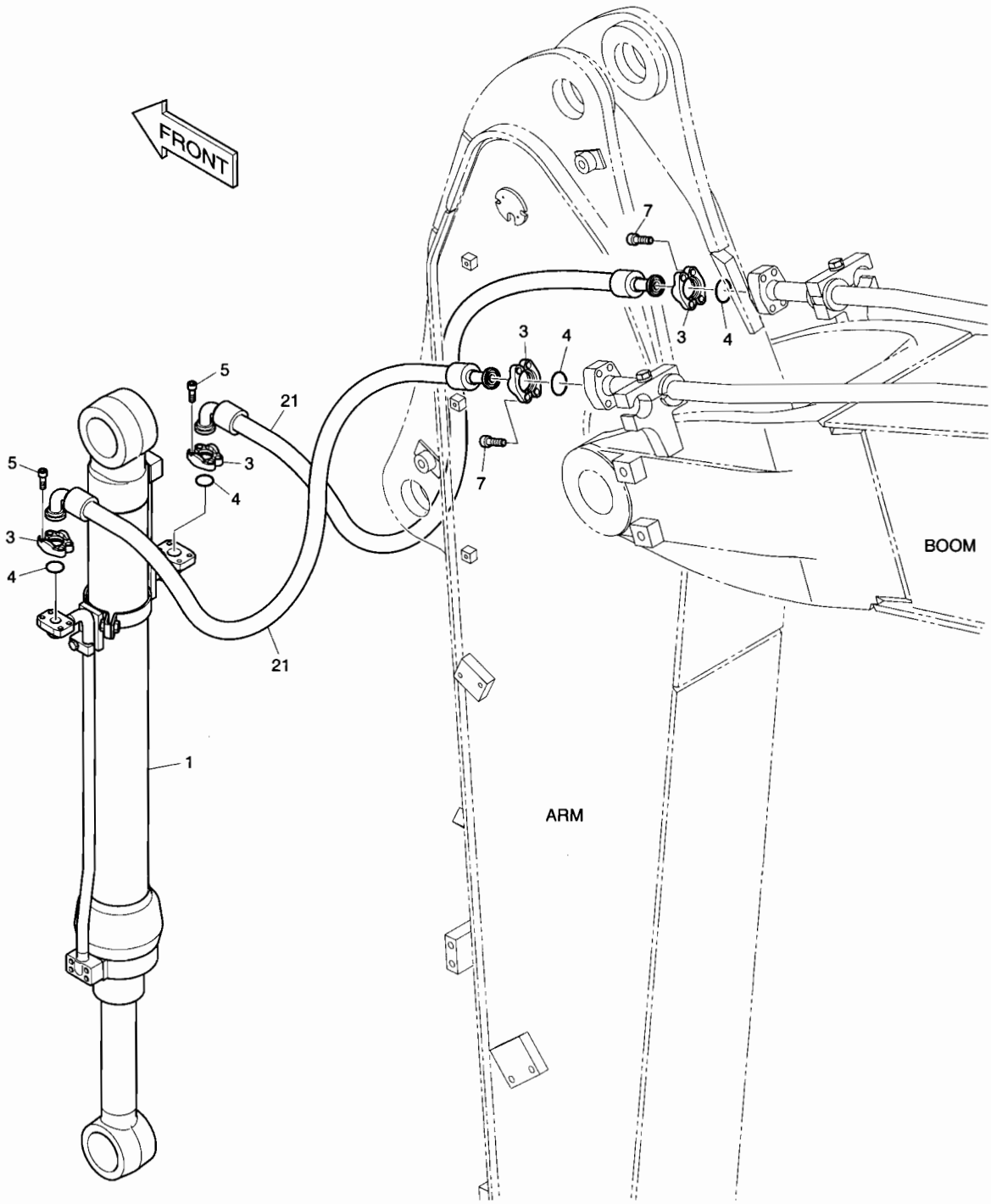

DATE	APR. 02, 2007
1st EDITION	

Fig. 3150 ARM PIPING - ARM 2.5m CONDUITES DE BALANCIER

Serial No. ;

Key No.	Part No.	Description	Description	Q'ty	S.C	Serial No.	ICA	Replaceable part	
								Part No.	Q'ty
3150--	K1027306	ARM PIPING	CONDUITES DE BALANCIER	-	D				
1	K1024712	CYLINDER;BUCKET	VERIN DE GODET	1					
3	2181-9079	FLANGE;SPLIT	BRIDE	8					
4	2180-1026D2	O-RING	JOINT TORIQUE	4					
5	S2212266	BOLT;SOCKET	BOULON A 6 PANS CREUX	8					
7	S2212366	BOLT;SOCKET	BOULON A 6 PANS CREUX	8					
21	2184-1100D237	HOSE	TUYAU FLEXIBLE	2					

DATE	APR. 02, 2007
1st EDITION	

Fig. 4100 MAIN PUMP
POMPE PRINCIPAL

Serial No. ;

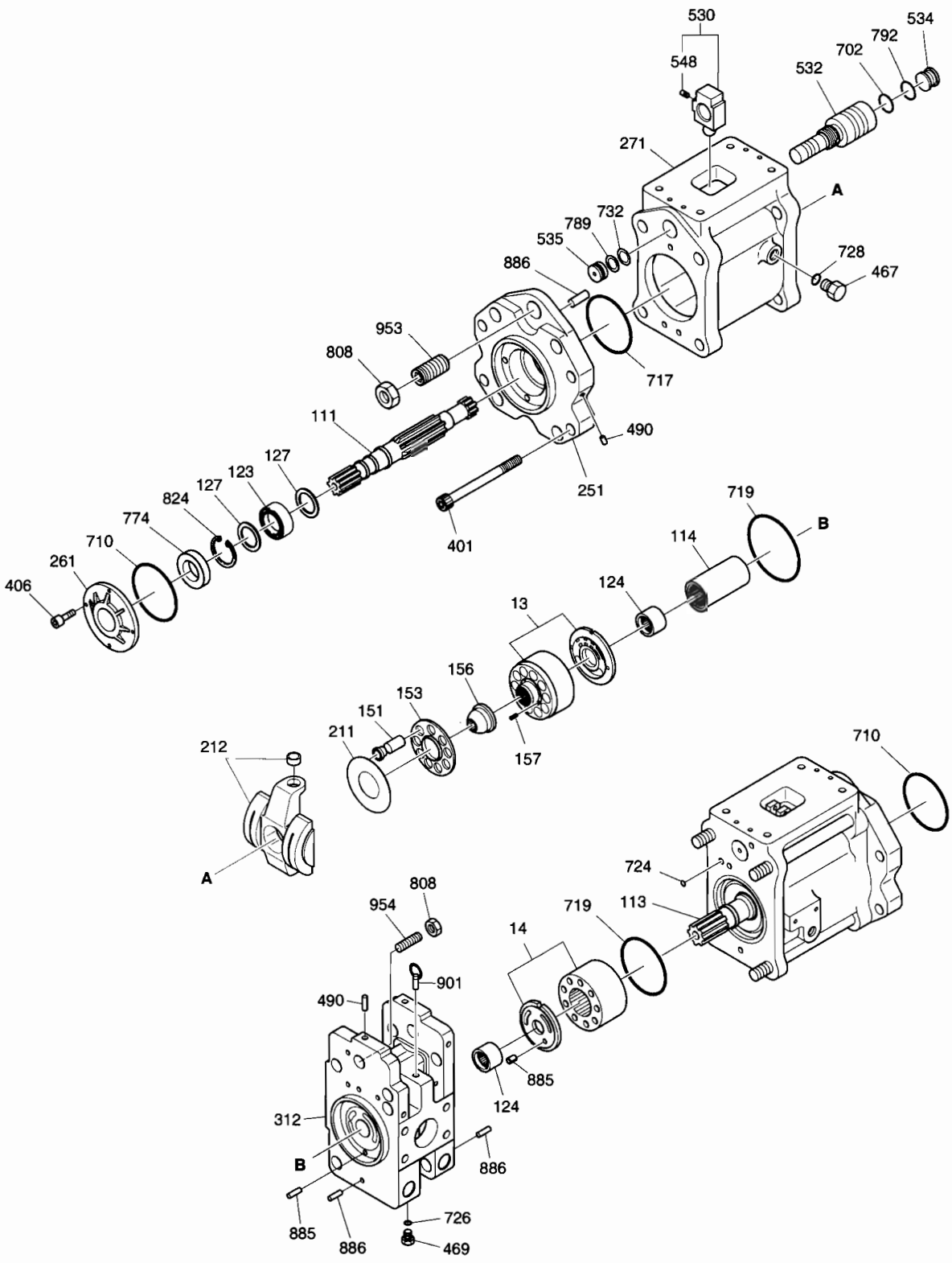

DATE	APR. 02, 2007
1st EDITION	

Fig. 4100 MAIN PUMP POMPE PRINCIPAL

Serial No. ;

Key No.	Part No.	Description	Description	Q'ty	S.C	Serial No.	ICA	Replaceable part	
								Part No.	Q'ty
4100--	K1024107A	MAIN PUMP	POMPE	1					
13	410-00009	CYLINDER BLOCK ASS'Y(R.H)	BLOC-CYLINDRES	1					
14	410-00010	CYLINDER BLOCK ASS'Y(L.H)	BLOC-CYLINDRES	1					
111	K9005440	SHAFT;DRIVE(FRONT)	ARBRE	1					
113	K9005441	SHAFT;DRIVE(REAR)	ARBRE	1					
114	414-00039	COUPLING;SPLINE	ACCOUPLEMENT RAINURE	1					
123	1.109-00075	BEARING;ROLLER	ROULEMENT A BILLES	2					
124	1.109-00048	BEARING;NEEDLE	ROULEMENT A AIGUILLES	2					
127	114-00343	SPACER;BEARING	PALIER ENTRETOISE	4					
151	K9005444	PISTON & SHOE ASS'Y	PISTON & PATIN	2					
153	K9005451	PLATE;PUSH	PLAQUE	2					
156	K9005443	BUSH;SPHERICAL	DOUILLE SPHERIQUE	2					
157	K9005442	SPRING;CYLINDER	RESSORT CYLINDRIQUE	18					
211	1.412-00104	PLATE;SHOE	PLAQUE-SABOT	2					
212	K9005446	SWASH PLATE ASS'Y	PLAQUE OSCILLANT	2					
251	1.197-00012	SUPPORT;SWASH	SUPPORT OSCILLANT	2					
261	462-00025	COVER;SEAL(F)	COUVERCLE ETANCHE	1					
271	1.402-00089	CASING;PUMP	CORPS DE POMPE	2					
312	1.451-00084	BLOCK;VALVE	BLOC VANNE	1					
401	120-00188	BOLT;SOCKET	BOULON A 6 PANS CREUX	8					
406	S2204663	BOLT;SOCKET	BOULON A 6 PANS CREUX	4					
467	2181-1950D3	PLUG;VP	BOUCHON VP	3					
469	1.181-00146	PLUG;VP	BOUCHON	2					
490	181-00519	PLUG	BOUCHON	15					
530	K9005445	TILTING PIN ASS'Y	GOUPILLE	2					
532	409-00044	PISTON;SERVO	SERVO-PISTON	2					
534	416-00010	STOPPER(L)	ARRET	2					
535	416-00011	STOPPER(R)	ARRET	2					
548	1.123-00006	PIN	GOUPILLE	2					
702	S8010305	O-RING 4DG-30	JOINT TORIQUE	2					
710	S8010855	O-RING 1BG-85	JOINT TORIQUE	2					
717	S8011201	O-RING 1BG-120	JOINT TORIQUE	2					
719	S8011151	O-RING 1BG-115	JOINT TORIQUE	2					
724	S8000081	O-RING 1BP-8	JOINT TORIQUE	16					
726	S8000111	O-RING 1BP-11	JOINT TORIQUE	2					
728	S8000181	O-RING 1BP-18	JOINT TORIQUE	3					
732	S8000165	O-RING 4DP-16	JOINT TORIQUE	2					
774	180-00383	SEAL;OIL	JOINT D'HUILE	1					

DATE	APR. 02, 2007
1st EDITION	

Fig. 4100 MAIN PUMP
POMPE PRINCIPAL

Serial No. ;

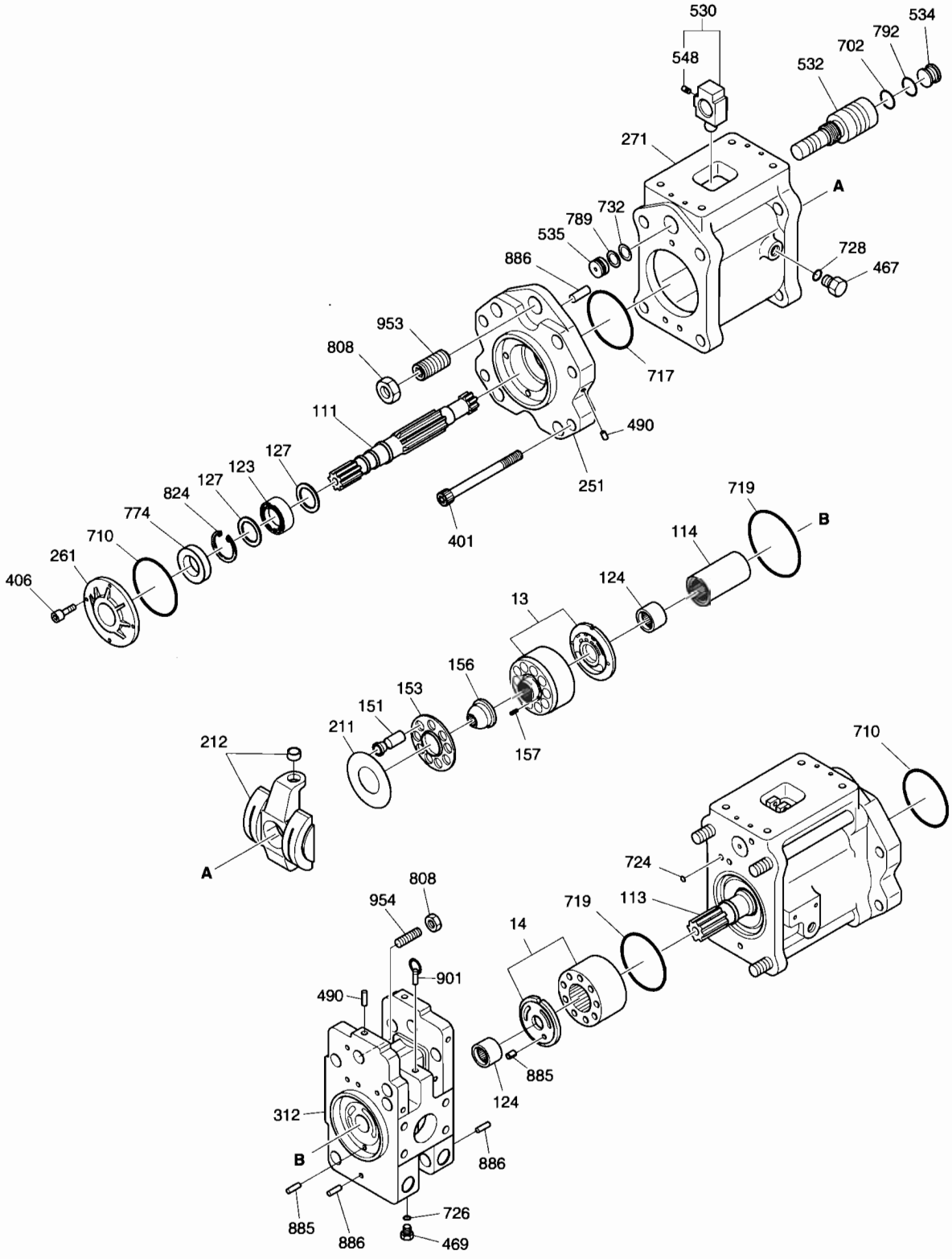

DATE	APR. 02, 2007
1st EDITION	

Fig. 4100 MAIN PUMP POMPE PRINCIPAL

Serial No. ;

Key No.	Part No.	Description	Description	Q'ty	S.C	Serial No.	ICA	Replaceable part	
								Part No.	Q'ty
4100-789	S8060161	RING;BACK-UP	ANNEAU DE SOUTIEN	2					
792	S8060301	RING;BACK-UP	ANNEAU DE SOUTIEN	2					
808	S4012933	NUT;HEX.	ECROU	4					
824	S6500350	RING;STOP	BAGUE D'ARRET	2					
885	S5710881	PIN	GOUPILLE	2					
886	S5740870	PIN;SPRING	GOUPILLE ELASTIQUE	4					
901	S3140025	BOLT;EYE	BOULON A 6 PANS	2					
953	S3527808	SET;SCREW	BOULON A OEIL	2					
954	120-00187	SCREW;ADJUST	VIS REGLAGE	2					
*	2401-9236AKT	SEAL KIT;PUMP	KIT DE JOINT	1					

DATE	APR. 02, 2007
1st EDITION	

Fig. 4110 REGULATOR-FRONT REGULATEUR

Serial No. ;

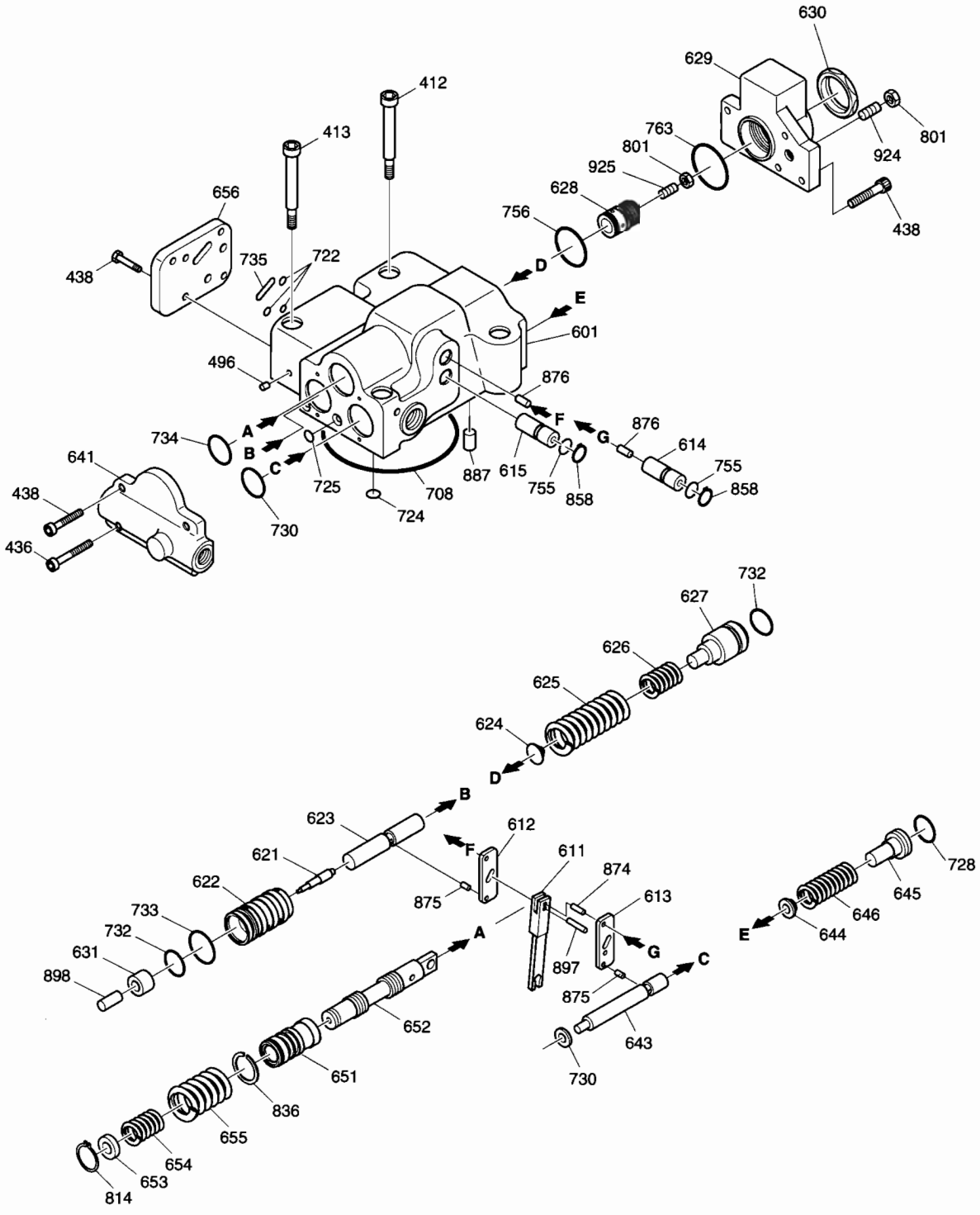

DATE	APR. 02, 2007
1st EDITION	

Fig. 4110 REGULATOR-FRONT REGULATEUR

Serial No. ;

Key No.	Part No.	Description	Description	Q'ty	S.C	Serial No.	ICA	Replaceable part	
								Part No.	Q'ty
4110--	K9005447	REGULATOR ASS'Y(FRONT)	REGULATEUR	1					
412	S2209661	BOLT;SOCKET M8X50L	BOULON A 6 PANS CREUX	2					
413	S2210071	BOLT;SOCKET M8X70L	BOULON A 6 PANS CREUX	2					
436	S2205261	BOLT;SOCKET M6X30L	BOULON A 6 PANS CREUX	2					
438	S2204861	BOLT;SOCKET M6X20L	BOULON A 6 PANS CREUX	10					
496	-	EXPANDER	EXPENDEUR	5	D				
601	-	CASING	BOITIER	1	D				
611	-	LEVER;FEED BACK	LEVIER DE RETOUR	1	D				
612	-	LEVER(1)	LEVIER	1	D				
613	-	LEVER(2)	LEVIER	1	D				
614	-	PLUG;SUPPORT	BOUCHON	1	D				
615	-	PLUG;ADJUST	BOUCHON DE REGLAGE	1	D				
621	-	PISTON;COMPEN	BOUCHON DE	1	D				
622	-	CASE;PISTON	BOITIER A PISTON	1	D				
623	-	ROD;COMPEN	TIGE	1	D				
624	-	SPRING;SEAT	SIEGE DE RESSORT	1	D				
625	-	SPRING;OUTER	RESSORT EXTERIEUR	1	D				
626	-	SPRING;INNER	RESSORT INTERIEUR	1	D				
627	-	STEM;ADJUST(C)	BOUCHON DE REGLAGE	1	D				
628	-	SCREW;ADJUST(C)	VIS DE REGLAGE	1	D				
629	-	COVER(C)	COUVERCLE	1	D				
630	-	NUT;LOCK	ECROU DE BLOCAGE	1	D				
631	-	SLEEVE;PF	MANCHON	1	D				
641	-	COVER;PILOT	COUVERCLE PILOTE	1	D				
643	-	PISTON;PILOT	PISTON PILOTE	1	D				
644	-	SPRING;SEAT(Q)	SIEGE DE RESSORT	1	D				
645	-	RING;ADJUST(Q)	BOUCHON DE REGLAGE	1	D				
646	-	SPRING;PILOT	RESSORT	1	D				
651	-	SLEEVE	MANCHON	1	D				
652	-	SPOOL(A)	BOBINE	1	D				
653	-	SPRING;SEAT	SIEGE DE RESSORT	1	D				
654	-	SPRING;RETURN	RESSORT DE RAPPEL	1	D				
655	-	SPRING;SET	RESSORT DE REGLAGE	1	D				
656	-	COVER	COUVERCLE	1	D				
708	S8010755	O-RING 1BG-75	JOINT TORIQUE	1	K				
722	S8000061	O-RING 1BP-6	JOINT TORIQUE	3	K				
724	S8000081	O-RING 1BP-8	JOINT TORIQUE	9	K				
725	S8000111	O-RING 1BP-10	JOINT TORIQUE	1	K				

DATE	APR. 02, 2007
1st EDITION	

Fig. 4110 REGULATOR-FRONT REGULATEUR

Serial No. ;

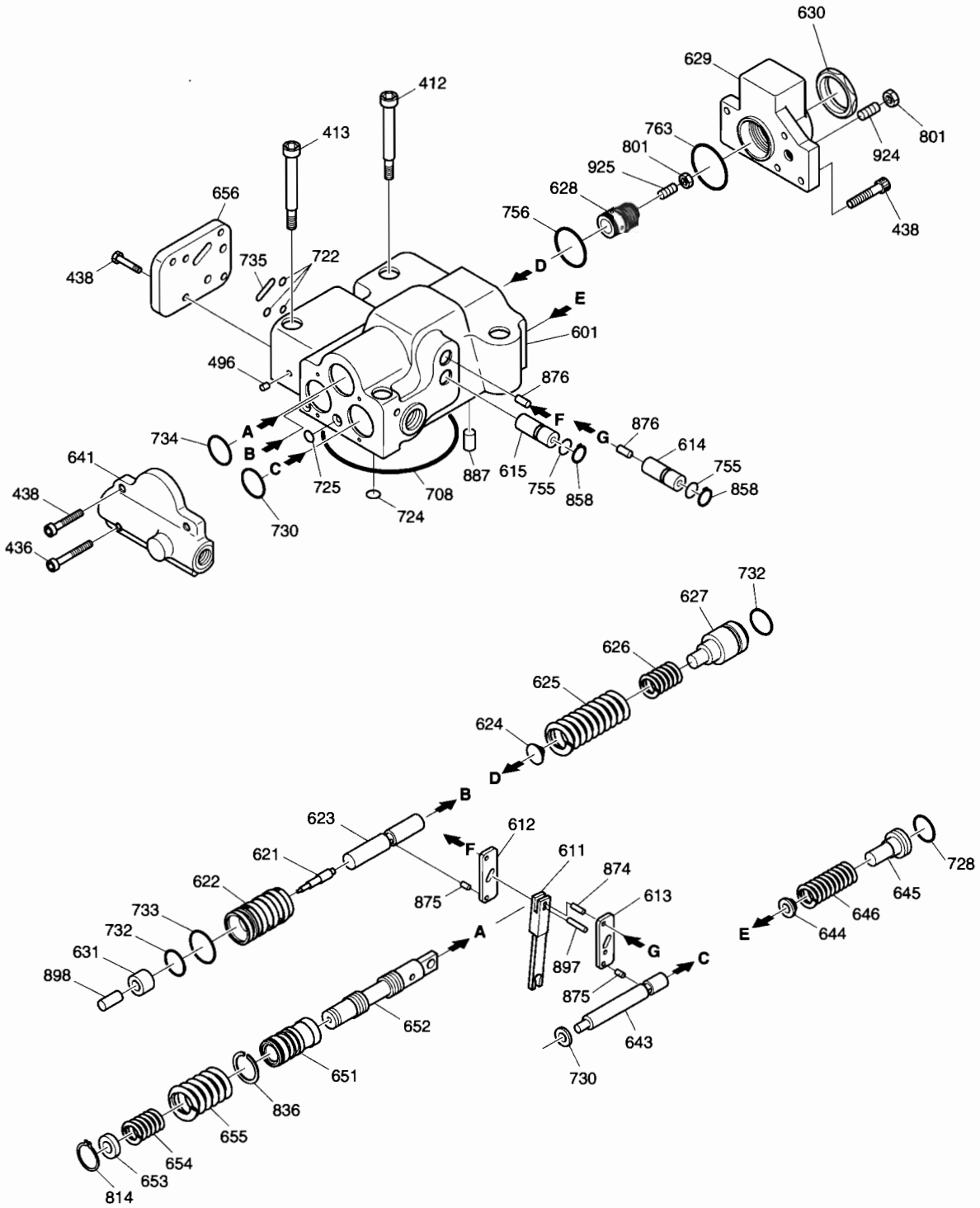

DATE	APR. 02, 2007
1st EDITION	

Fig. 4110 REGULATOR-FRONT REGULATEUR

Serial No. ;

Key No.	Part No.	Description	Description	Q'ty	S.C	Serial No.	ICA	Replaceable part	
								Part No.	Q'ty
4110-728	S8000181	O-RING 1BP-18	JOINT TORIQUE	1	K				
730	S8000221	O-RING 1BP-22	JOINT TORIQUE	1	K				
732	S8000161	O-RING 1BP-16	JOINT TORIQUE	2	K				
733	S8000201	O-RING 1BP-20	JOINT TORIQUE	2	K				
734	S8010251	O-RING 1BG-25	JOINT TORIQUE	1	K				
735	S8002721	O-RING 1BP-12.5	JOINT TORIQUE	1	K				
755	S8000111	O-RING 1BP-11	JOINT TORIQUE	2	K				
756	S8000261	O-RING 1BP-26	JOINT TORIQUE	2	K				
763	S8010351	O-RING 1BG-35	JOINT TORIQUE	1	K				
801	S4012533	NUT	ECROU	2					
814	S6500100	RING;SNAP	BAGUE ELASTIQUE	1					
836	1.115-00366	RING;STOP	BAGUE D'ARRET	1					
858	S6510150	RING;SNAP	BAGUE ELASTIQUE	2					
874	1.123-00017	PIN	GOUPILLE	1					
875	-	PIN	GOUPILLE	2	D				
876	-	PIN	GOUPILLE	2	D				
887	1.123-00009	PIN	GOUPILLE	1					
897	-	PIN	GOUPILLE	1	D				
898	-	PISTON	PISTON DE COUPURE	1	D				
924	S3524008	SCREW;SET	VIS	1					
925	120-00199	SCREW;ADJUST(Qi)	VIS DE REGLAGE	1					

DATE	APR. 02, 2007
1st EDITION	

Fig. 4120 REGULATOR-REAR REGULATEUR

Serial No. ;

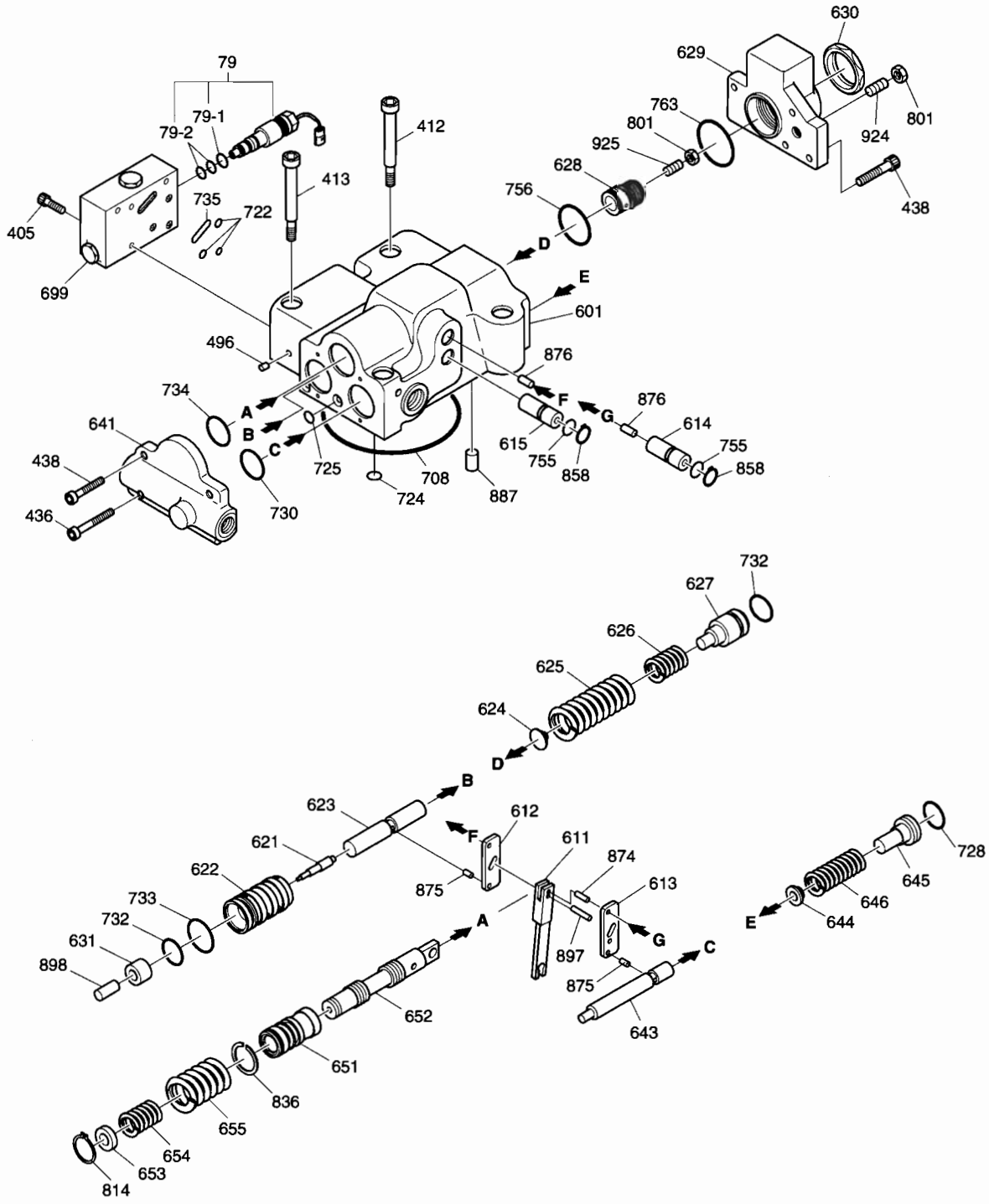

DATE	APR. 02, 2007
1st EDITION	

Fig. 4120 REGULATOR-REAR REGULATEUR

Serial No. ;

Key No.	Part No.	Description	Description	Q'ty	S.C	Serial No.	ICA	Replaceable part	
								Part No.	Q'ty
4120--	K9005448	REGULATOR ASS'Y(REAR)	REGULATEUR	1					
79	K9001362	VALVE;E.P.P.R	VANNE	1					
79-1	2180-1217D15	. O-RING(AS568-015)	. JONT TORIQUE	1	K				
79-2	2180-1217D13	. O-RING(AS568-013)	. JONT TORIQUE	2	K				
405	S2205661	BOLT;SOCKET M6X50L	BOULON A 6 PANS CREUX	4					
412	S2209661	BOLT;SOCKET M8X50L	BOULON A 6 PANS CREUX	2					
413	S2210071	BOLT;SOCKET M8X70L	BOULON A 6 PANS CREUX	2					
436	S2205261	BOLT;SOCKET M6X30L	BOULON A 6 PANS CREUX	2					
438	S2204861	BOLT;SOCKET M6X20L	BOULON A 6 PANS CREUX	6					
496	-	PLUG	BOUCHON	5	D				
601	-	CASING	BOITIER	1	D				
611	-	LEVER;FEED BACK	LEVIER DE RETOUR	1	D				
612	-	LEVER(1)	LEVIER	1	D				
613	-	LEVER(2)	LEVIER	1	D				
614	-	PLUG;SUPPORT	BOUCHON	1	D				
615	-	PLUG;ADJUST	BOUCHON DE REGLAGE	1	D				
621	-	PISTON;COMPEN	BOUCHON DE	1	D				
622	-	CASE;PISTON	BOITIER A PISTON	1	D				
623	-	ROD;COMPEN	TIGE	1	D				
624	-	SPRING;SEAT	SIEGE DE RESSORT	1	D				
625	-	SPRING;OUTER	RESSORT EXTERIEUR	1	D				
626	-	SPRING;INNER	RESSORT INTERIEUR	1	D				
627	-	STEM;ADJUST(C)	BOUCHON DE REGLAGE	1	D				
628	-	SCREW;ADJUST(C)	VIS DE REGLAGE	1	D				
629	-	COVER(C)	COUVERCLE	1	D				
630	-	NUT;LOCK	ECROU DE BLOCAGE	1	D				
631	-	SLEEVE;PF	MANCHON	1	D				
641	-	COVER;PILOT	COUVERCLE PILOTE	1	D				
643	-	PISTON;PILOT	PISTON PILOTE	1	D				
644	-	SPRING;SEAT(Q)	SIEGE DE RESSORT	1	D				
645	-	RING;ADJUST(Q)	BOUCHON DE REGLAGE	1	D				
646	-	SPRING;PILOT	RESSORT	1	D				
651	-	SLEEVE	MANCHON	1	D				
652	-	SPOOL(A)	BOBINE	1	D				
653	-	SPRING;SEAT	SIEGE DE RESSORT	1	D				
654	-	SPRING;RETURN	RESSORT DE RAPPEL	1	D				
655	-	SPRING;SET	RESSORT DE REGLAGE	1	D				
699	-	CASING;VAVLE	CARTER	1	D				

DATE	APR. 02, 2007
1st EDITION	

Fig. 4120 REGULATOR-REAR REGULATEUR

Serial No. ;

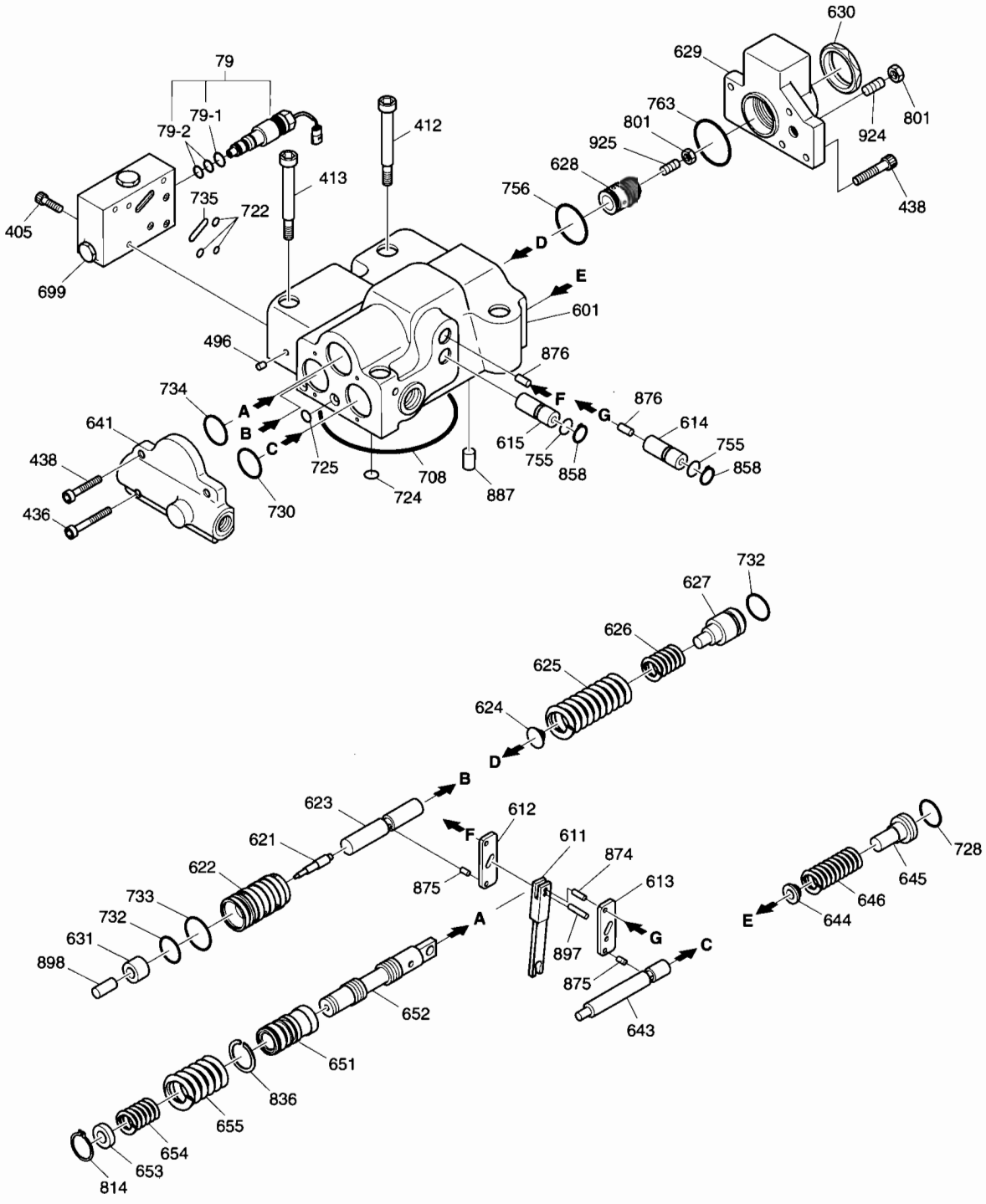

DATE	APR. 02, 2007
1st EDITION	

Fig. 4120 REGULATOR-REAR REGULATEUR

Serial No. ;

Key No.	Part No.	Description	Description	Q'ty	S.C	Serial No.	ICA	Replaceable part	
								Part No.	Q'ty
4120-708	S8010755	O-RING 1BG-75	JOINT TORIQUE	1	K				
722	S8000061	O-RING 1BP-6	JOINT TORIQUE	3	K				
724	S8000085	O-RING 1BP-8	JOINT TORIQUE	9	K				
725	S8000111	O-RING 1BP-10	JOINT TORIQUE	1	K				
728	S8000181	O-RING 1BP-18	JOINT TORIQUE	1	K				
730	S8000221	O-RING 1BP-22	JOINT TORIQUE	1	K				
732	S8000161	O-RING 1BP-16	JOINT TORIQUE	2	K				
733	S8000201	O-RING 1BP-20	JOINT TORIQUE	2	K				
734	S8010251	O-RING 1BG-25	JOINT TORIQUE	1	K				
735	S8002721	O-RING 1BP-12.5	JOINT TORIQUE	1	K				
755	S8000111	O-RING 1BP-11	JOINT TORIQUE	2	K				
756	S8000261	O-RING 1BP-26	JOINT TORIQUE	2	K				
763	S8010351	O-RING 1BG-35	JOINT TORIQUE	1	K				
801	S4012533	NUT	ECROU	2					
814	S6500100	RING;SNAP	BAGUE ELASTIQUE	1					
836	1.115-00366	RING;STOP	BAGUE D'ARRET	1					
858	S6510150	RING;SNAP	BAGUE ELASTIQUE	2					
874	1.123-00007	PIN	GOUPILLE	1					
875	-	PIN	GOUPILLE	2	D				
876	-	PIN	GOUPILLE	2	D				
887	1.123-00009	PIN	GOUPILLE	1					
897	-	PIN	GOUPILLE	1	D				
898	-	PISTON	PISTON DE COUPURE	1	D				
924	S3524008	SCREW;SET	VIS	1					
925	120-00199	SCREW;ADJUST(Qi)	VIS DE REGLAGE	1					

DATE	APR. 02, 2007
1st EDITION	

Fig. 4130 GEAR PUMP
POMPE DE PIGNON

Serial No. ;

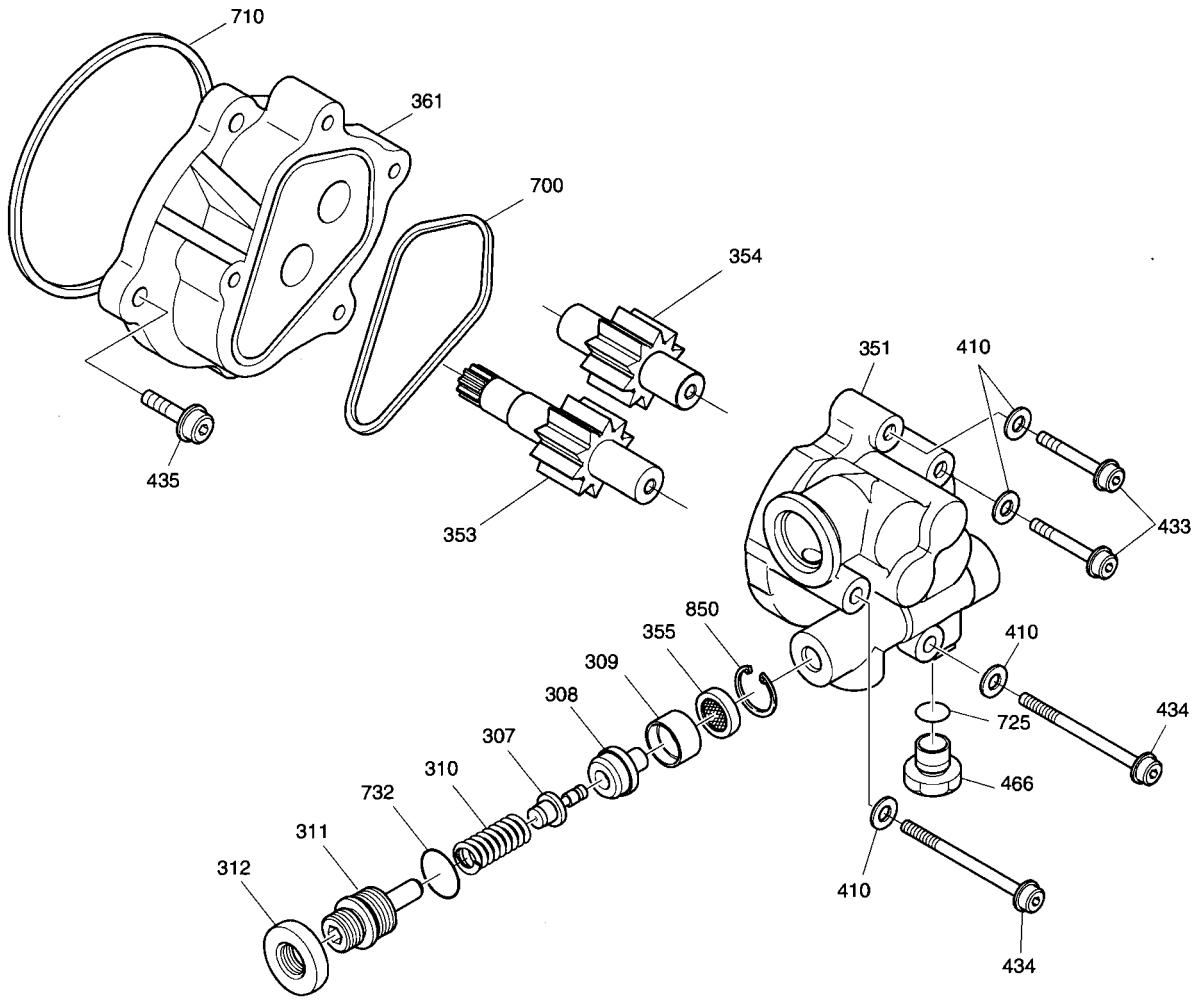

DATE	APR. 02, 2007
1st EDITION	

Fig. 4130 GEAR PUMP POMPE DE PIGNON

Serial No. ;

Key No.	Part No.	Description	Description	Q'ty	S.C	Serial No.	ICA	Replaceable part	
								Part No.	Q'ty
4130--	K9005449	PUMP;GEAR	POMPE	1					
307	1.426-00005	POPPET	POPPET	1					
308	1.427-00002	SEAT	SIEGE	1					
309	411-00017	RING	BAGUE	1					
310	129-00045	SPRING	RESSORT	1					
311	120-00131	ADJUSTING SCREW	VIS	1					
312	121-00038	LOCK NUT	ECROU	1					
351	1.402-00024	CASE;GEAR	CARTER	1					
353	1.403-00037	GEAR;DRIVE	PIGNON MOTEUR	1					
354	1.403-00040	GEAR;DRIVEN	PIGNON ENTRAINE	1					
355	471-00030	FILTER	FILTRE	1					
361	1.402-00014	CASE;FRONT	CARTER	1					
410	S5102503	WASHER;PLAIN	RONDELLE	4					
433	S2209661	BOLT;SOCKET	BOULON A 6 PANS CREUX	2					
434	S2209961	BOLT;SOCKET	BOULON A 6 PANS CREUX	2					
435	181-00574	BOLT;SOCKET	BOULON A 6 PANS CREUX	4					
466	2181-1950D1	PLUG PF1/4	BOUCHON VP	1					
700	115-00043	RING;SQAURE	BAGUE	1	K				
710	S8010851	O-RING 1BG85	JOINT TORIQUE	1	K				
725	S8000111	O-RING 1BP11	JOINT TORIQUE	1	K				
732	S8000161	O-RING 1BP16	JOINT TORIQUE	1	K				
850	S6510180	RING;SNAP	BAGUE	1					
*	K9005450	SEAL KIT;GEAR PUMP	KIT DE JOINT	1					

DATE	APR. 02, 2007
1st EDITION	

Fig. 4140 SWING MOTOR
MOTEUR D'ORIENTATION

Serial No. ;

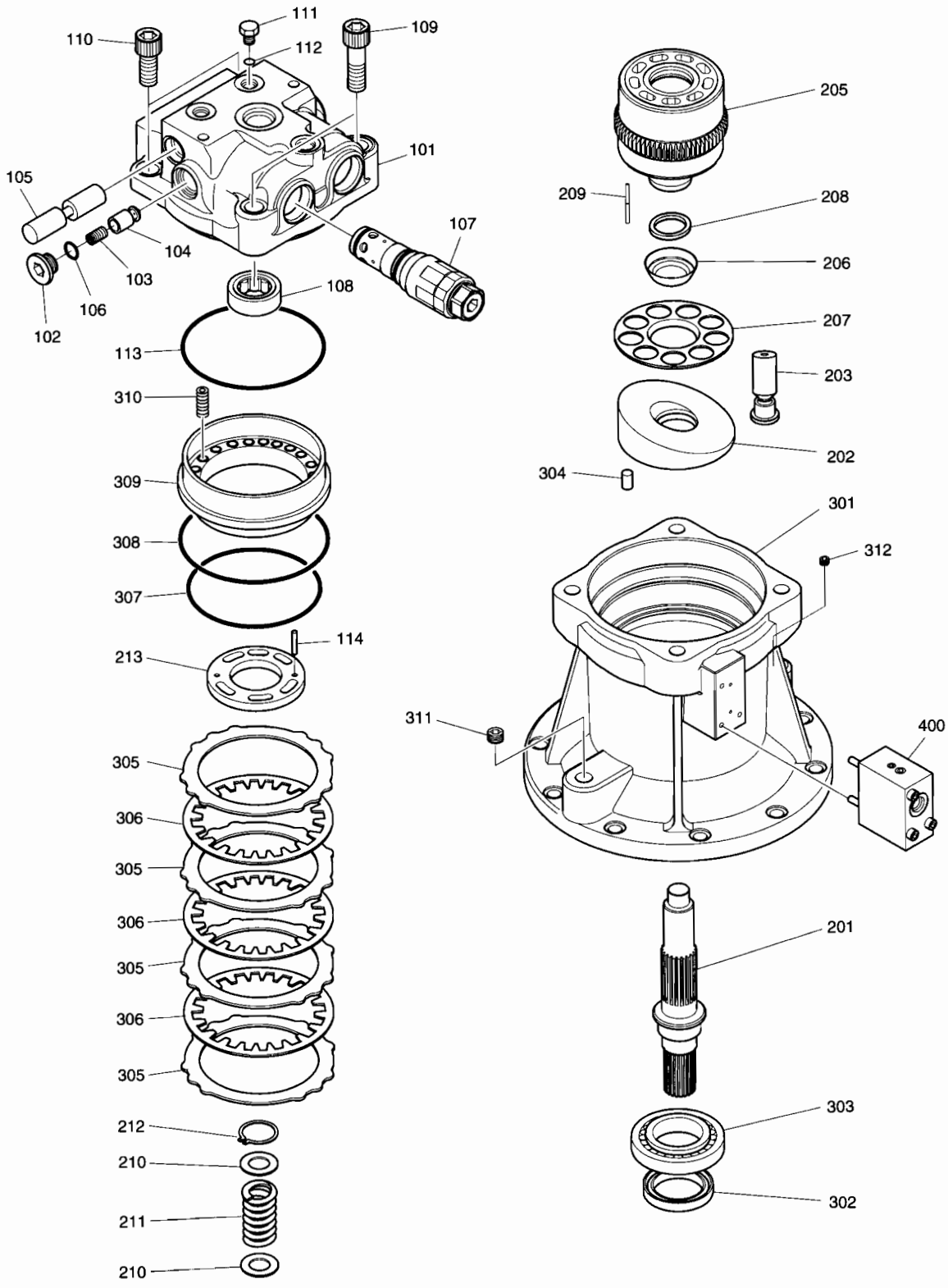

DATE	APR. 02, 2007
1st EDITION	

Fig. 4140 SWING MOTOR MOTEUR D'ORIENTATION

Serial No. ;

Key No.	Part No.	Description	Description	Q'ty	S.C	Serial No.	ICA	Replaceable part	
								Part No.	Q'ty
4140--	K1000101	SWING MOTOR	COMMUTATEUR	1					
101	K9001294	CASING	CARTER	1	D				
102	K9001295	PLUG	BOUCHON	2					
103	K9001296	SPRING	RESSORT	2					
104	K9001297	PLUNGER	PLONGEUR	2					
105	1.420-00016	VALVE;SWING REACTION	VANNE	1					
106	S8000221	O-RING	JOINT TORIQUE	2	K				
107	1.420-00109	VALVE;RELIEF	VANNE	2					
108	S6005040	BEARING;BALL	ROULEMENT	1					
109	S2221961	BOLT;SOCKET	BOULON A 6 PANS CREUX	2					
110	S2221471	BOLT;SOCKET	BOULON A 6 PANS CREUX	2					
111	2181-1950D1	PLUG;VP	BOUCHON	2					
112	S8000111	O-RING	JOINT TORIQUE	2	K				
113	2180-1217D150	O-RING	JOINT TORIQUE	1	K				
114	S5740730	PIN;SPRING	GOUPILLE	2					
201	K9001298	SHAFT;DRIVE	ARBRE MOTEUR	1					
202	K9001299	PLATE;SWASH	PLAQUE	1					
203	K9001300	PISTON & SHOE ASS'Y	PISTON	1					
205	K9001302	BLOCK;CYLINDER	BLOC-CYLINDRES	1					
206	K9001303	BALL;THRUST	BOULE	1					
207	K9001304	PLATE;RETAINER	PLAQUE	1					
208	K9001305	COLLAR	COLLIER	1					
209	K9001306	ROLLER	GALET	5					
210	K9001308	WASHER	RONDELLE	2					
211	K9001309	SPRING	RESSORT	1					
212	S6510500	RING;SNAP	BAGUE D'ARRET	1					
213	K9001310	PLATE;VALVE	PLAQUE	1					
301	K9001311	CASING	CARTER	1					
302	1.180-00518	OIL;SEAL	HUILE DE JOINT	1	K				
303	1.109-00029	BEARING;BALL	ROULEMENT	1					
304	1.123-00053	PIN;PARALLEL	GOUPILLE	1					
305	K9001312	PLATE;SEPARATION	PLAQUE	4					
306	K9001313	PLATE;FRICTION	PLAQUE	3					
307	2180-1217D147	O-RING	JOINT TORIQUE	1	K				
308	2180-1217D149	O-RING	JOINT TORIQUE	1	K				
309	K9001314	PISTON;BRAKE	PISTON	1					
310	K9001315	SPRING;BRAKE	RESSORT	22					
311	2181-1116D5	PLUG;PT	BOUCHON	1					

Fig. 4140 SWING MOTOR
MOTEUR D'ORIENTATION

Serial No. ;

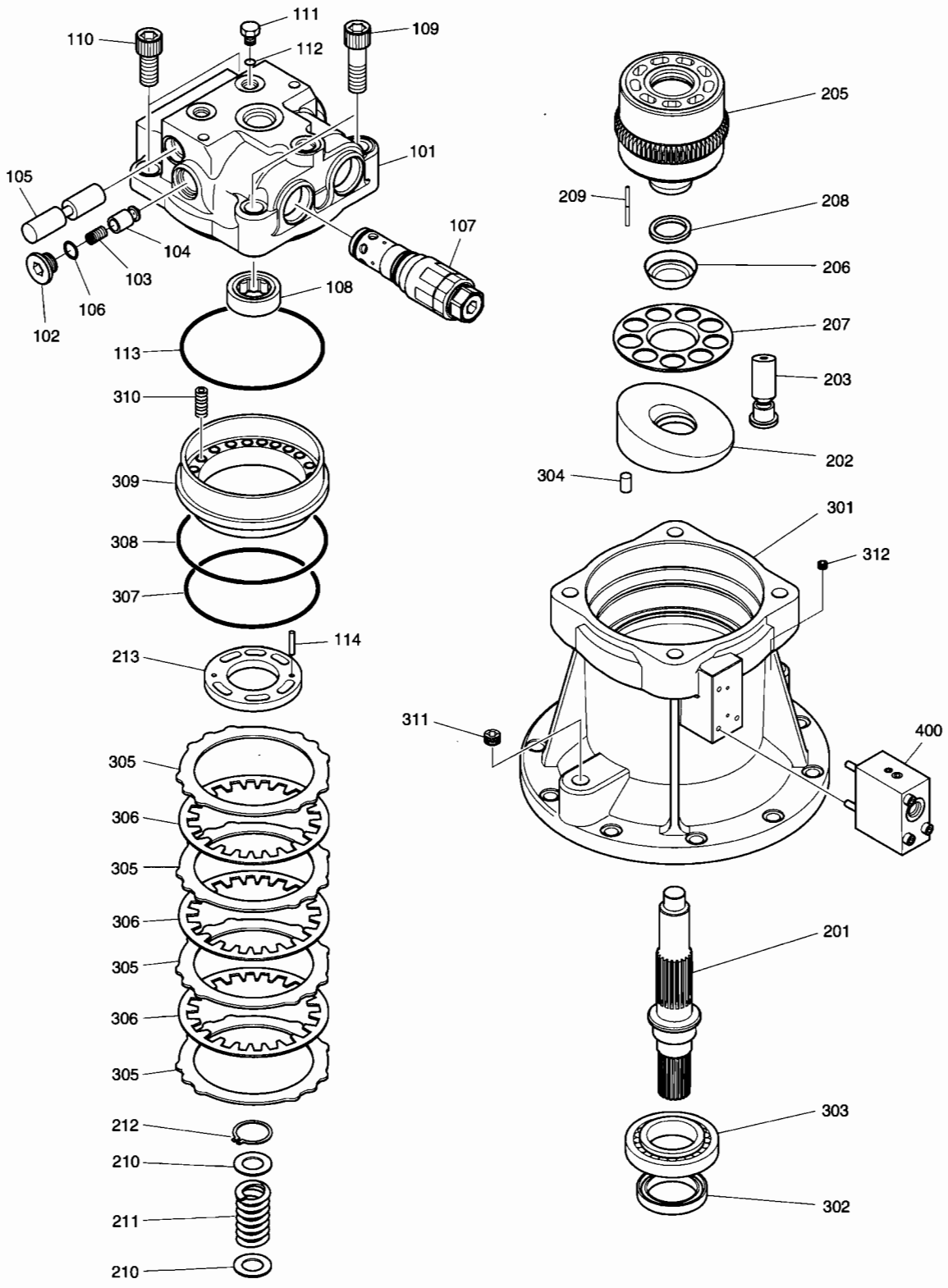

DATE	APR. 02, 2007
1st EDITION	

Fig. 4140 SWING MOTOR MOTEUR D'ORIENTATION

Serial No. ;

Key No.	Part No.	Description	Description	Q'ty	S.C	Serial No.	ICA	Replaceable part	
								Part No.	Q'ty
4140-312	2181-1116D2	PLUG;PT	BOUCHON	1					
400	420-00110	VALVE;BRAKE	VANNE	1					
*	K1000101KT	SEAL KIT;SWING MOTOR	JOINT	1					

DATE	APR. 02, 2007
1st EDITION	

Fig. 4150 SWING REDUCTION GEAR
REDUCTEUR D'ORIENTATION

Serial No. ;

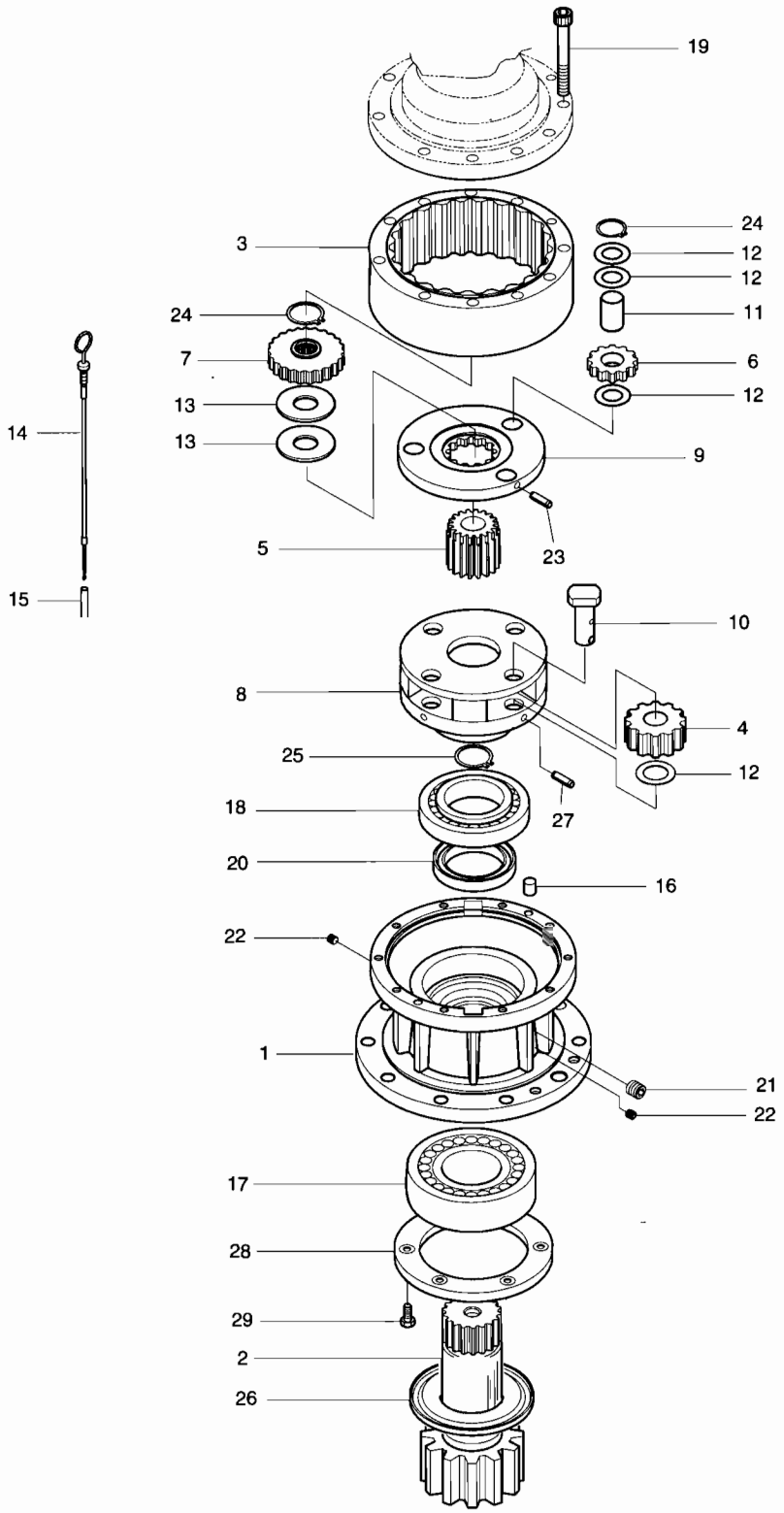

DATE	APR. 02, 2007
1st EDITION	

Fig. 4150 SWING REDUCTION GEAR REDUCTEUR D'ORIENTATION

Serial No. ;

Key No.	Part No.	Description	Description	Q'ty	S.C	Serial No.	ICA	Replaceable part	
								Part No.	Q'ty
4150--	K1007357B	SWING REDUCTION GEAR	REDUCTEUR	1					
1	402-00017	CASING	CARTER	1					
2	405-00006	SHAFT;DRIVE	ARBRE MOTEUR	1					
3	104-00019	GEAR;RING	PIGNON	1					
4	404-00063	GEAR;PLANET NO.2	PIGNON	4					
5	404-00064	GEAR;SUN NO.2	PIGNON	1					
6	404-00065	GEAR;PLANET NO.1	PIGNON	3					
7	404-00066	GEAR;SUN NO.1	PIGNON	1					
8	230-00017	CARRIER NO.2	SUPPORT	1					
9	230-00018	CARRIER NO.1	SUPPORT	1					
10	123-00094	PIN ASS'Y NO.2	GOUPILLE	4					
11	123-00095	PIN ASS'Y NO.1	GOUPILLE	3					
12	2114-1594	WASHER;THRUST(B)	RONDELLE DE BUTEE	13					
13	2114-1592	WASHER;THRUST(A)	RONDELLE DE BUTEE	2					
14	119-00003	BAR;LEVEL	BARRE DE NIVEAU	1					
15	182-00009	PIPE;LEVEL GAUGE	PIPE D'INDICATEUR DE	1					
16	123-00096	PIN;KNOCK	GOUPILLE	2					
17	2109-1041	BEARING;ROLLER	ROULEMENT	1					
18	2109-1042	BEARING;ROLLER	ROULEMENT	1					
19	S2216873	BOLT;SOCKET	BOULON A 6 PANS CREUX	10					
20	180-00179	SEAL;OIL	JOINT	1					
21	2181-1116D4	PLUG(B)	BOUCHON	1					
22	2181-1116D2	PLUG(A)	BOUCHON	2					
23	S5740890	PIN;SPRING	GOUPILLE	3					
24	S6500300	RING;RETAINER	BAGUE	4					
25	S6500650	RING;RETAINER	BAGUE	1					
26	115-00037	RING;NILOS	BAGUE	1					
27	S5740890	PIN;SPRING	GOUPILLE	4					
28	191-00167	PLATE;SUPPORT	PLAQUE	2					
29	S3453116	BOLT;SCREW	BOULON	6					

DATE	APR. 02, 2007
1st EDITION	

Fig. 4160 TRAVEL REDUCTION GEAR
REDUCTION DE TRANSLATION

Serial No. ;

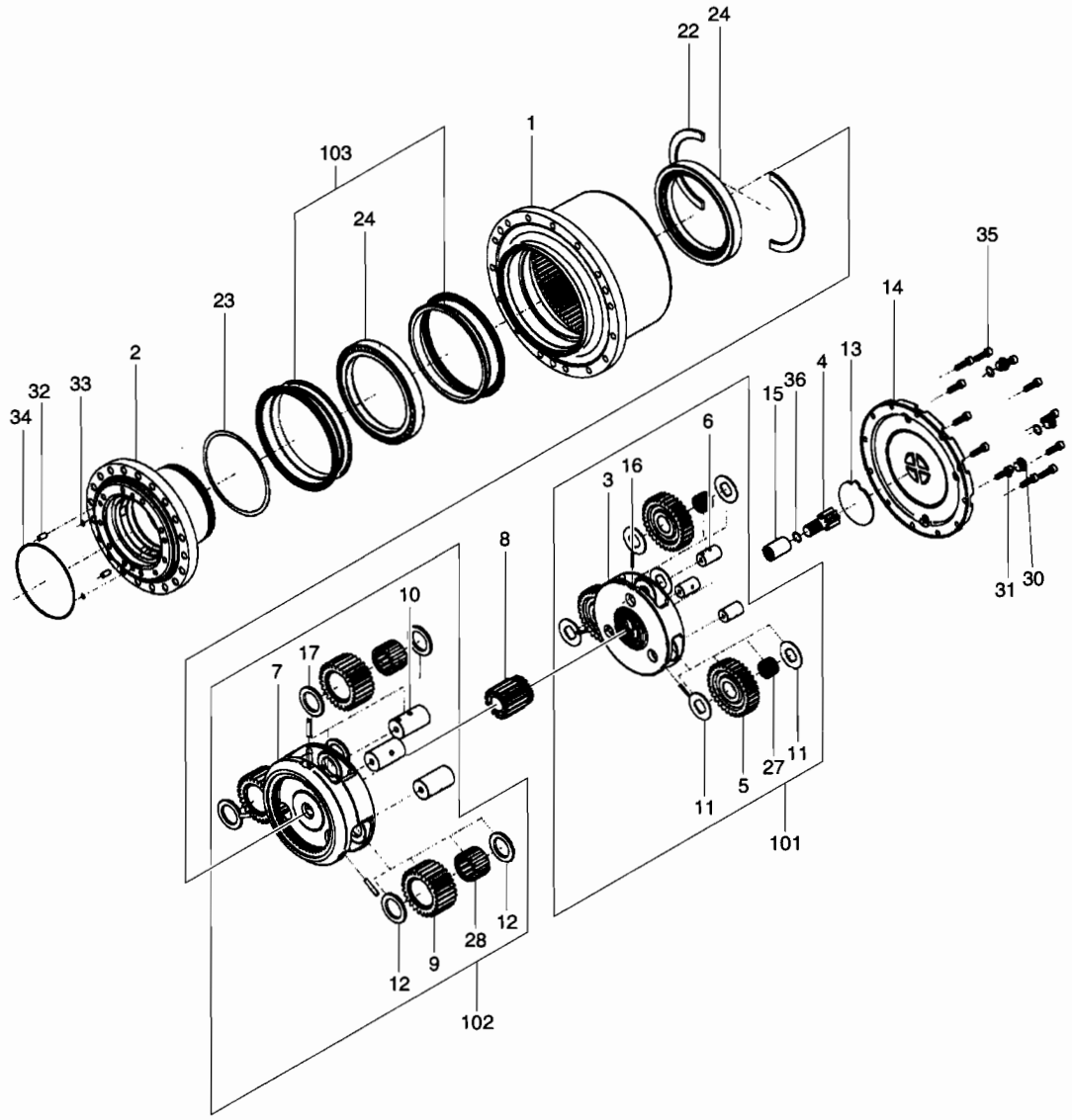

DATE	APR. 02, 2007
1st EDITION	

Fig. 4160 TRAVEL REDUCTION GEAR REDUCTION DE TRANSLATION

Serial No. ;

Key No.	Part No.	Description	Description	Q'ty	S.C	Serial No.	ICA	Replaceable part	
								Part No.	Q'ty
4160--	K9005369	REDUCTION GEAR ASS'Y	REDUCTEUR	1					
101	K9005379	CARRIER ASS'Y(1)	PORTEUR	1					
3	-	. CARRIER(1)	. PORTE-SATELLITES	1	D				
5	-	. GEAR;PLANETARY(1)	. PIGNON	3	D				
6	-	. PIN;CARRIER(1)	. GOUPILLE	3	D				
11	-	. WASHER;THRUST(1)	. RONDELLE DE BUTEE	6	D				
16	-	. PIN;PARALLEL(1)	. GOUPILLE	3	D				
27	-	. BEARING;NEEDLE	. ROULEMENT	3	D				
102	K9005380	CARRIER ASS'Y(2)	PORTEUR	1					
7	-	. CARRIER(2)	. PORTE-SATELLITES	1	D				
9	-	. GEAR;PLANETARY(2)	. PIGNON	3	D				
10	-	. PIN;CARRIER(2)	. GOUPILLE	3	D				
12	-	. WASHER;THRUST(2)	. RONDELLE DE BUTEE	6	D				
17	-	. PIN;PARALLEL(2)	. GOUPILLE	3	D				
28	-	. BEARING;NEEDLE	. ROULEMENT	3	D				
103	K9005407	FLOATING SEAL KIT	JOINT	1					
1	K9005370	HUB	MOYEU	1					
2	K9005371	SPINDLE	TOUPIE	1					
4	K9005372	GEAR;SUN(1)	PIGNON	1					
8	K9005373	GEAR;SUN(2)	PIGNON	1					
13	K9005405	PLATE;THRUST	PLAQUE	1					
14	K9005374	COVER	COUVERCLE	1					
15	K9005375	COUPLING	ACCOUPLEMENT	1					
22	K9005376	WASHER;LOCK	RONDELLE	2					
23	K9005519	SHIM 0.9t	CALE	1	R				
	K9005520	SHIM 1.0t	CALE	1	R				
	K9005521	SHIM 1.1t	CALE	1	R				
	K9005377	SHIM 1.2t	CALE	1	R				
24	K9005378	BEARING;BALL	ROULEMENT	2					
30	2181-1890D4	PLUG	BOUCHON	3					
31	S8000181	O-RING	JOINT TORIQUE	3	K				
32	2180-1216D151	O-RING	JOINT TORIQUE	1	K				
33	S8000071	O-RING	JOINT TORIQUE	2	K				
34	2.123-00169	PIN;PARALLEL	GOUPILLE	2					
35	S2212371	BOLT;SOCKET	BOULON A 6 PANS CREUX	12					
36	S6510220	RING;SNAP	BAGUE D'ARRET	1					

DATE	APR. 02, 2007
1st EDITION	

Fig. 4170 TRAVEL MOTOR REDEUTEUR DE TRANSLATION

Serial No. ;

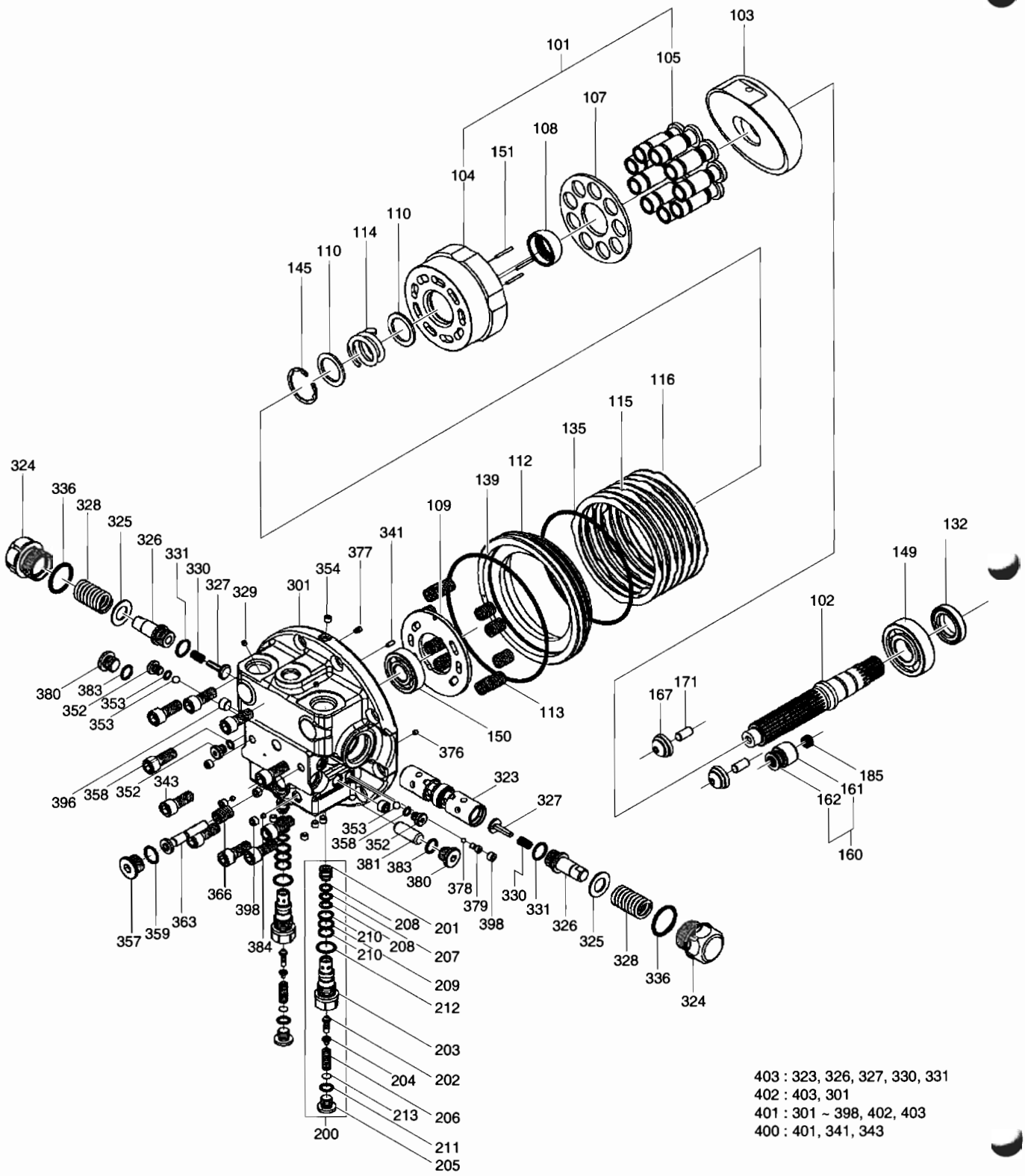

403 : 323, 326, 327, 330, 331
402 : 403, 301
401 : 301 ~ 398, 402, 403
400 : 401, 341, 343

DATE	APR. 02, 2007
1st EDITION	

Fig. 4170 TRAVEL MOTOR REDEUTEUR DE TRANSLATION

Serial No. ;

Key No.	Part No.	Description	Description	Q'ty	S.C	Serial No.	ICA	Replaceable part	
								Part No.	Q'ty
4170--	K9005398	MOTOR;TRAVEL	MOTEUR	1					
101	K9005399	CYLINDER & PISTON KIT	KIT DE CYLINDRE ET DE	1					
104	-	. BLOCK;CYLINDER	. BLOC-CYLINDRES	1	D				
105	-	. PISTON ASS'Y	. ENSEMBLE PISTON	9	D				
160	K9005391	PISTON ASS'Y	ENSEMBLE PISTON	1					
161	-	. PISTON	. PISTON	1	D				
162	-	. SHOE	. SABOT	1	D				
102	K9005381	SHAFT	ARBRE	1					
103	K9005382	PLATE;SWASH	PLAQUE	1					
107	K9005383	PLATE;RETAINER	PLAQUE	1					
108	K9005384	BALL;THRUST	BOULE	1					
109	K9005385	PLATE;TIMING	PLAQUE	1					
110	2.114-00862	WASHER	RONDELLE	2					
112	K9005386	PISTON	PISTON	1					
113	K9005367	SPRING	RESSORT	10					
114	K9005387	SPRING	RESSORT	1					
115	K9005388	PLATE;FRICTION	PLAQUE	3					
116	K9005389	PLATE;MATING	PLAQUE	4					
132	K9005411	OIL;SEAL	HUILE DE JOINT	1	K				
135	K9005368	O-RING	JOINT TORIQUE	1	K				
139	K9005390	O-RING	JOINT TORIQUE	1	K				
145	S6530420	RING;SNAP	BAGUE D'ARRET	1					
149	S6005583	BEARING;BALL	ROULEMENT	1					
150	S6005043	BEARING;BALL	ROULEMENT	1					
151	K9005408	ROLLER;NEEDLE	GALET	3					
167	K9005392	PIVOT	PIVOT	2					
171	2.123-00169	PIN;PARALLEL	GOUPILLE	2					
185	K9005393	SPRING	RESSORT	1					
200	K9005394	RELIEF VALVE ASS'Y	SOULAGEMENT VANNE	2					
201	-	. SEAT;VALVE	. SIEGE DE VANNE	1	D				
202	-	. VALVE	. VANNE	1	D				
203	-	. SLEEVE	. MANCHON	1	D				
204	-	. COLLAR	. COLLIER	1	D				
205	-	. PLUG	. BOUCHON	1	D				
206	-	. SPRING	. RESSORT	1	D				
207	S8002701	. O-RING	. JOINT TORIQUE	1	K				
208	S8060101	. RING;BACK UP	. BAGUE	2	K				
209	S8000141	. O-RING	. JOINT TORIQUE	1	K				

DATE	APR. 02, 2007
1st EDITION	

Fig. 4170 TRAVEL MOTOR
REDEUTEUR DE TRANSLATION

Serial No. ;

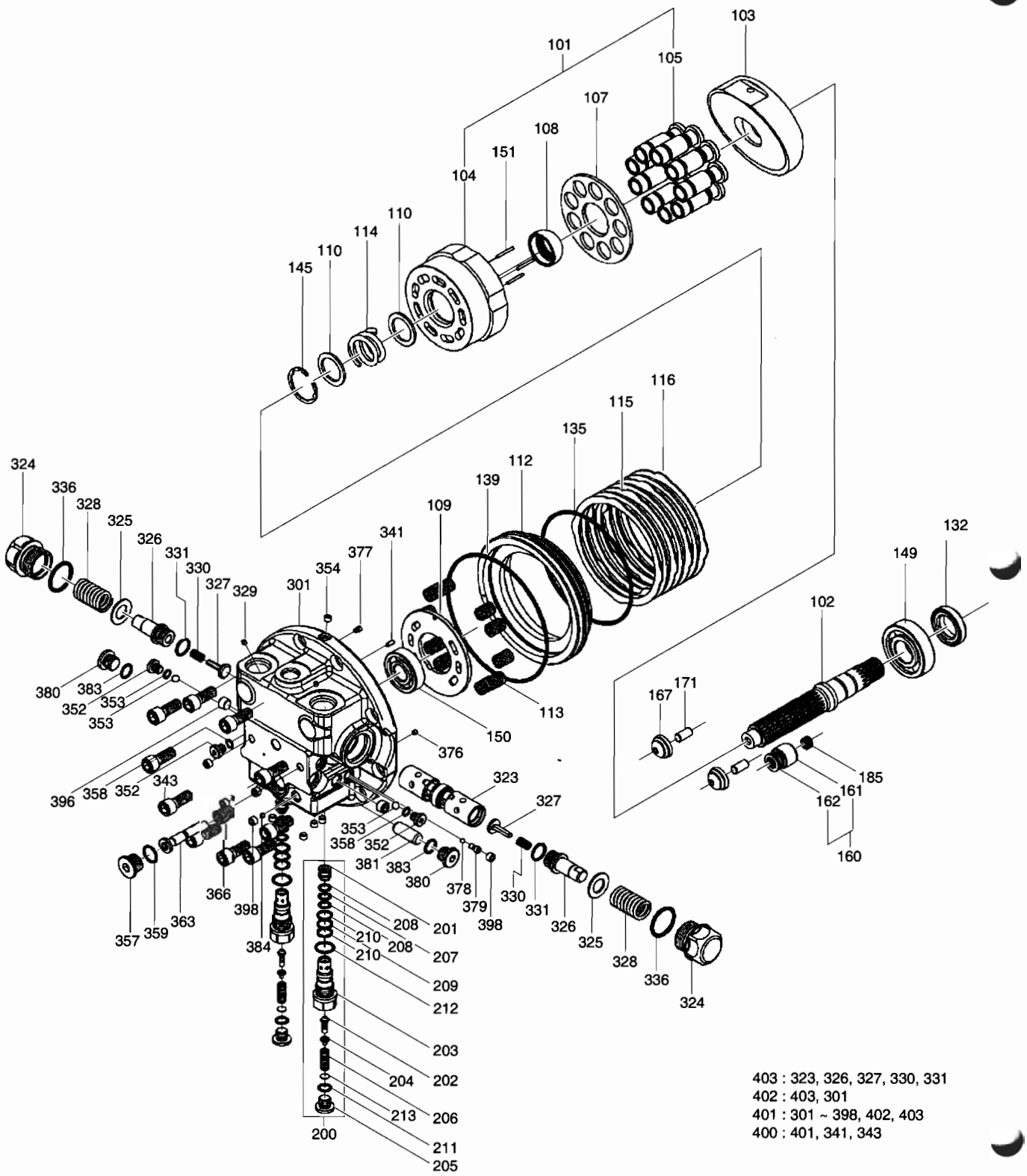

403 : 323, 326, 327, 330, 331
402 : 403, 301
401 : 301 ~ 398, 402, 403
400 : 401, 341, 343

DATE	APR. 02, 2007
1st EDITION	

Fig. 4170 TRAVEL MOTOR REDEUTEUR DE TRANSLATION

Serial No. ;

Key No.	Part No.	Description	Description	Q'ty	S.C	Serial No.	ICA	Replaceable part	
								Part No.	Q'ty
4170-210	S8060141	. RING;BACK UP	. BAGUE	2	K				
211	S8000111	. O-RING	. JOINT TORIQUE	1	K				
212	S8000181	. O-RING	. JOINT TORIQUE	1	K				
213	-	. SHIM	. CALE	1	D				
400	K9005400	VALVE;CONTROL	VANNE DE COMMANDE	1					
401	K9005401	REAR FLANGE ASS'Y	RESERVOIR DESSICATEUR	1					
402	K9005402	. REAR FLANGE KIT	. BRIDE	1					
403	K9005403	.. SPOOL ASS'Y	.. BOBINE	1					
323	-	... SPOOL	... BOBINE	1	D				
326	-	... PLUG	... BOUCHON	2	D				
327	-	... VALVE	... VANNE	2	D				
330	-	... SPRING	... RESSORT	2	D				
331	S8000181	... O-RING	... JOINT TORIQUE	2	K				
301	-	.. FLANGE;REAR	.. BRIDE	1	D				
324	1.181-00059	. PLUG	. BOUCHON	2					
325	K9005395	. WASHER	. RONDELLE	2					
328	1.131-00058	. SPRING	. RESSORT	2					
329	K9005410	. ORIFICE	. ORIFICE	2					
336	S8000321	. O-RING	. JOINT TORIQUE	2	K				
352	K9005365	. PLUG	. BOUCHON	3					
353	S6250161	. BALL;STEEL	. BOULE	2					
354	2.181-00370	. PLUG	. BOUCHON	5					
357	2181-1890D4	. PLUG	. BOUCHON	1					
358	S8000081	. O-RING	. JOINT TORIQUE	3	K				
359	S8000181	. O-RING	. JOINT TORIQUE	1	K				
363	K9005396	. SPOOL	. BOBINE	1					
366	K9005366	. SPRING	. RESSORT	1					
376	2.415-00054	. ORIFICE	. ORIFICE	1					
377	K9005406	. FILTER	. FILTRE	1					
378	S6250121	. BALL;STEEL	. BOULE	1					
379	2.181-00505	. PLUG	. BOUCHON	1					
380	K9005404	. PLUG	. BOUCHON	2					
381	K9005397	. PISTON	. PISTON	1					
383	S8000141	. O-RING	. JOINT TORIQUE	2	K				
384	K9005409	. ORIFICE	. ORIFICE	2					
396	2181-1116D2	. PLUG	. BOUCHON	2					
398	2181-1116D1	. PLUG	. BOUCHON	5					
341	S5700621	. PIN;PARALLEL	. GOUPILLE	1					

DATE	APR. 02, 2007
1st EDITION	

Fig. 4170 TRAVEL MOTOR
REDEUTEUR DE TRANSLATION

Serial No. ;

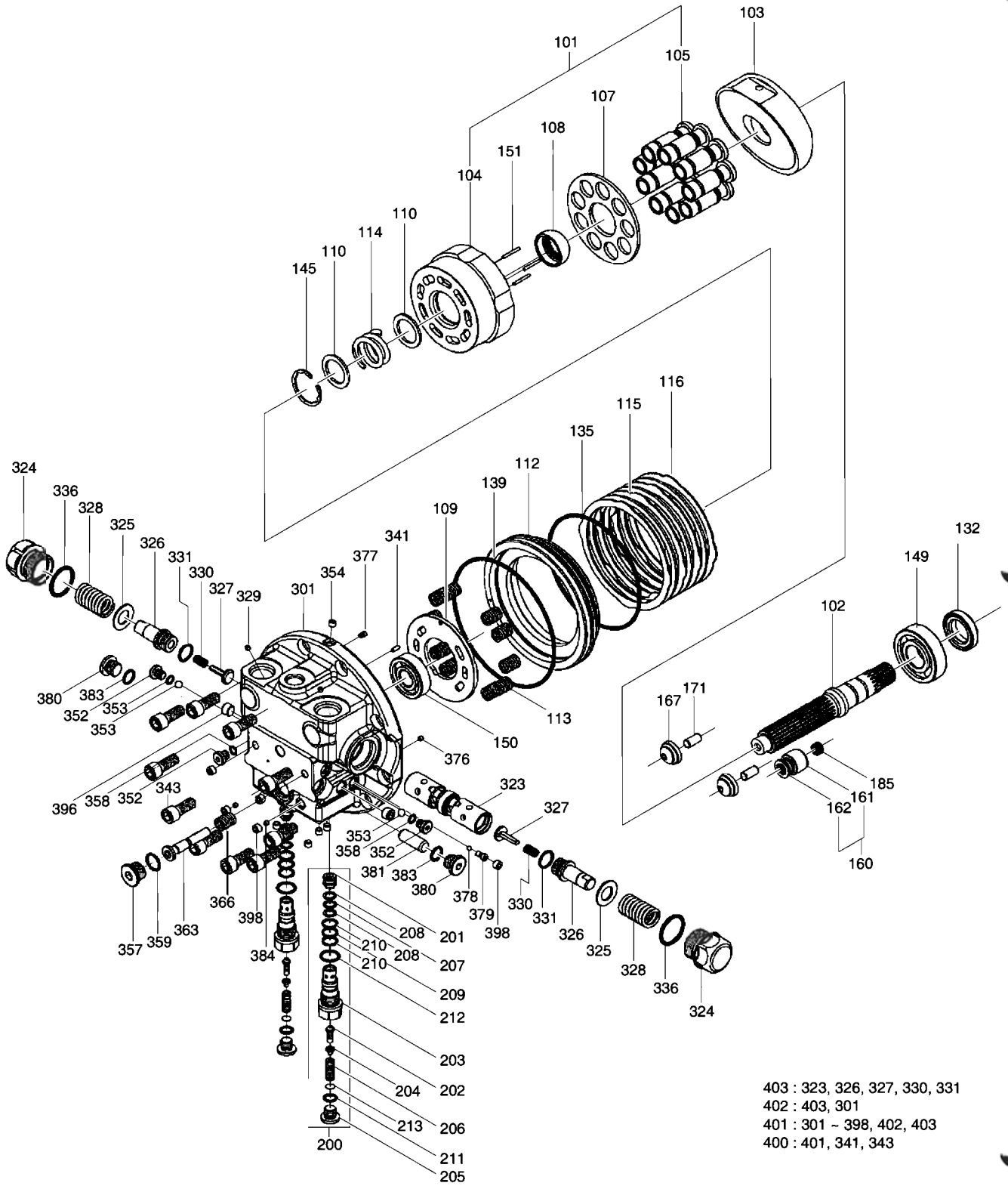

403 : 323, 326, 327, 330, 331
402 : 403, 301
401 : 301 ~ 398, 402, 403
400 : 401, 341, 343

DATE	APR. 02, 2007
1st EDITION	

Fig. 4170 TRAVEL MOTOR REDEUTEUR DE TRANSLATION

Serial No. ;

Key No.	Part No.	Description	Description	Q'ty	S.C	Serial No.	ICA	Replaceable part	
								Part No.	Q'ty
4170-343	S2215271	. BOLT;SOCKET	. BOULON A 6 PANS CREUX	10					
*	K9005438	SEAL KIT;TRAVEL MOTOR	KIT DE JOINT	1					

DATE	APR. 02, 2007
1st EDITION	

Fig. 4180 CONTROL VALVE
VANNE DE COMMANDE

Serial No. ;

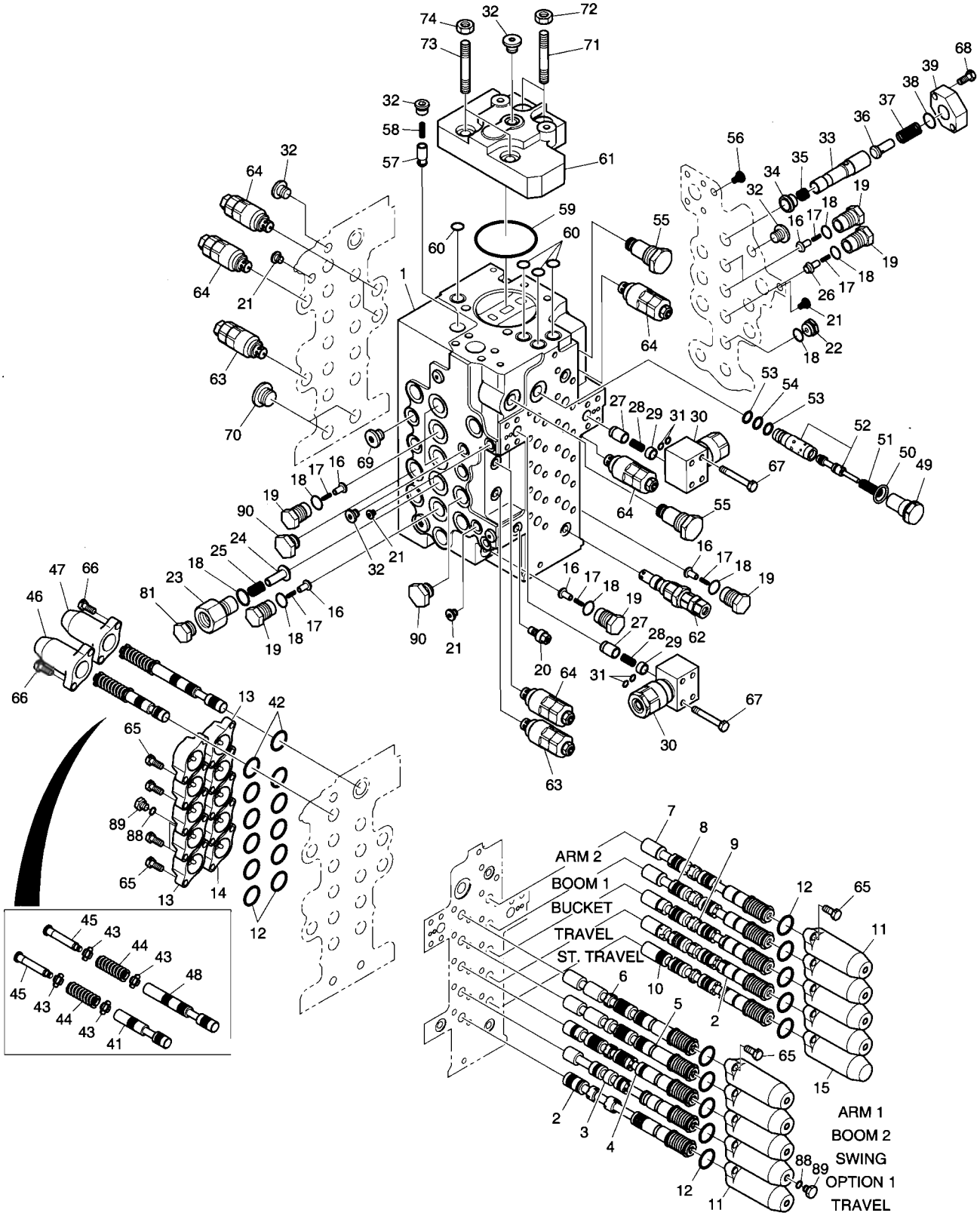

DATE	APR. 02, 2007
1st EDITION	

Fig. 4180 CONTROL VALVE VANNE DE COMMANDE

Serial No. ;

Key No.	Part No.	Description	Description	Q'ty	S.C	Serial No.	ICA	Replaceable part	
								Part No.	Q'ty
4180--	420-00465B	VALVE;CONTROL	VANNE DE COMMANDE	1					
1	-	HOUSING;VALVE	LOGEMENT	1	D				
2	K9005468	SPOOL ASS'Y-TRAVEL	BOBINE	2					
3	K9005469	SPOOL ASS'Y-OPTION	BOBINE	1					
4	K9005470	SPOOL ASS'Y-SWING	BOBINE	1					
5	K9005471	SPOOL ASS'Y-BOOM2	BOBINE	1					
6	K9005472	SPOOL ASS'Y-ARM1	BOBINE	1					
7	K9005473	SPOOL ASS'Y-ARM2	BOBINE	1					
8	K9005474	SPOOL ASS'Y-BOOM1	BOBINE	1					
9	K9005475	SPOOL ASS'Y-BUCKET	BOBINE	1					
10	K9005476	SPOOL ASS'Y-STRAIGHT TRAVEL	BOBINE	1					
11	K9004473	CAP	CHAPEAU	9					
12	S8010351	O-RING	JOINT TORIQUE	20					
13	K9004474	CAP	CHAPEAU	9					
14	K9004471	CAP	CHAPEAU	1					
15	K9004472	CAP	CHAPEAU	1					
16	K9004499	POPPET	POUPEE	8					
17	129-00129	SPRING	RESSORT	9					
18	180-00398	O-RING	JOINT TORIQUE	11					
19	430-00042	PLUG	BOUCHON	9					
20	K9004475	PLUG ASS'Y	BOUCHON	1					
21	K9004467	PLUG ASS'Y	BOUCHON	4					
22	K9004465	PLUG	BOUCHON	1					
23	K9004497	PLUG	BOUCHON	1					
24	K9004502	POPPET	POUPEE	1					
25	K9004508	SPRING	RESSORT	1					
26	K9004500	POPPET	POUPEE	1					
27	K9004504	POPPET	POUPEE	2					
28	K9004506	SPRING	RESSORT	2					
29	K9004491	SPACER ASS'Y	BAGUE D'ECARTEMENT	2					
30	K9004490	VALVE ASS'Y	ENSEMBLE DE VANNE	2					
31	S8000061	O-RING	JOINT TORIQUE	4					
32	181-00561	PLUG ASS'Y	BOUCHON	5					
33	K9005477	SLEEVE	MANCHON	1					
34	K9004503	POPPET	POUPEE	1					
35	K9004468	SPRING	RESSORT	1					
36	K9004501	POPPET	POUPEE	1					
37	K9004505	SPRING	RESSORT	1					

DATE	APR. 02, 2007
1st EDITION	

Fig. 4180 CONTROL VALVE
VANNE DE COMMANDE

Serial No. ;

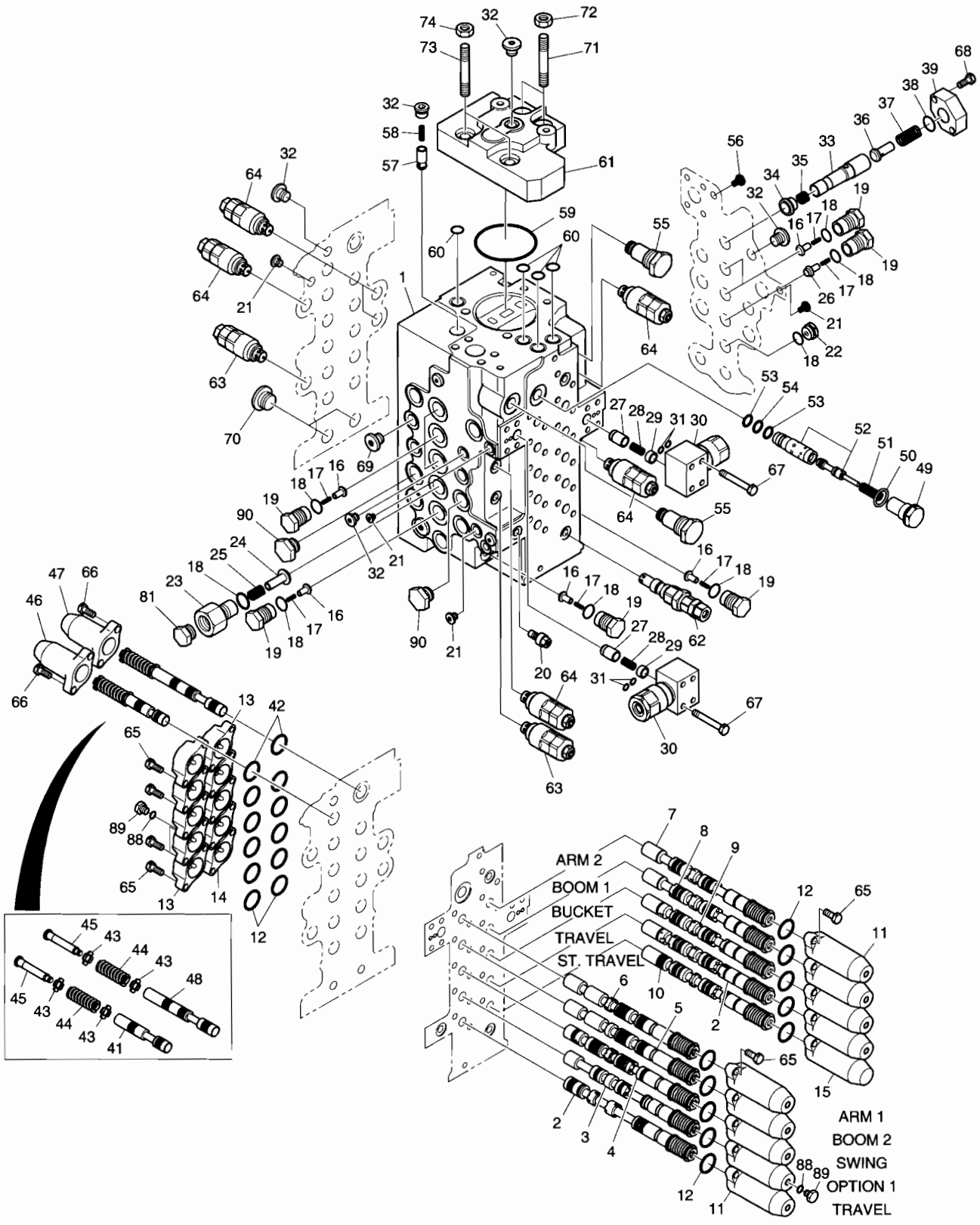

DATE	APR. 02, 2007
1st EDITION	

Fig. 4180 CONTROL VALVE VANNE DE COMMANDE

Serial No. ;

Key No.	Part No.	Description	Description	Q'ty	S.C	Serial No.	ICA	Replaceable part	
								Part No.	Q'ty
4180-38	S8000261	O-RING	JOINT TORIQUE	1					
39	K9004509	FLANGE	BRIDE	1					
41	K9005467	SPOOL	BOBINE	1					
42	S8000261	O-RING	JOINT TORIQUE	2					
43	429-00024	SEAT;SPRING	SIEGE	4					
44	129-00124	SPRING	RESSORT	2					
45	430-00040	SPOOL END	BOBINE	2					
46	K9004469	CAP	CHAPEAU	1					
47	K9004470	CAP	CHAPEAU	1					
48	K9004478	SPOOL	BOBINE	1					
49	K9004496	PLUG	BOUCHON	1					
50	S8000241	O-RING	JOINT TORIQUE	1					
51	K9004507	SPRING	RESSORT	1					
52	K9004479	SPOOL ASS'Y	BOBINE	1					
53	S8060161	RING;BACK-UP	BAGUE	2					
54	S8000161	O-RING	JOINT TORIQUE	1					
55	K9004476	VALVE;RELIEF	VANNE	2					
56	415-00037	PLUG;ORIFICE	BOUCHON	1					
57	426-00168	POPPET	POUPEE	1					
58	129-00126	SPRING	RESSORT	1					
59	S8011001	O-RING	JOINT TORIQUE	1					
60	180-00403	O-RING	JOINT TORIQUE	4					
61	K9004489	OUTLET ASS'Y	SORTIE	1					
62	K9004493	VALVE;RELIEF	VANNE	1					
63	K9002672	VALVE;RELIEF	VANNE	2					
64	K9004492	VALVE;RELIEF	VANNE	6					
65	S2209066	BOLT;SOCKET	BOULON A 6 PANS CREUX	40					
66	S2204866	BOLT;SOCKET	BOULON A 6 PANS CREUX	4					
67	S2209666	BOLT;SOCKET	BOULON A 6 PANS CREUX	8					
68	S2212466	BOLT;SOCKET	BOULON A 6 PANS CREUX	2					
69	181-00563	PLUG ASS'Y	BOUCHON	2					
70	181-00564	PLUG ASS'Y	BOUCHON	2					
71	K9004494	ROD;TIE	TIGE	2					
72	K9001075	NUT	ECROU	2					
73	K9004495	TIE ROD	TIGE DE RENFORT	2					
74	K9001077	NUT	ECROU	2					
81	K9004466	PLUG ASS'Y	BOUCHON	1					
88	S8000141	O-RING	JOINT TORIQUE	2					

DATE	APR. 02, 2007
1st EDITION	

Fig. 4180 CONTROL VALVE
VANNE DE COMMANDE

Serial No. ;

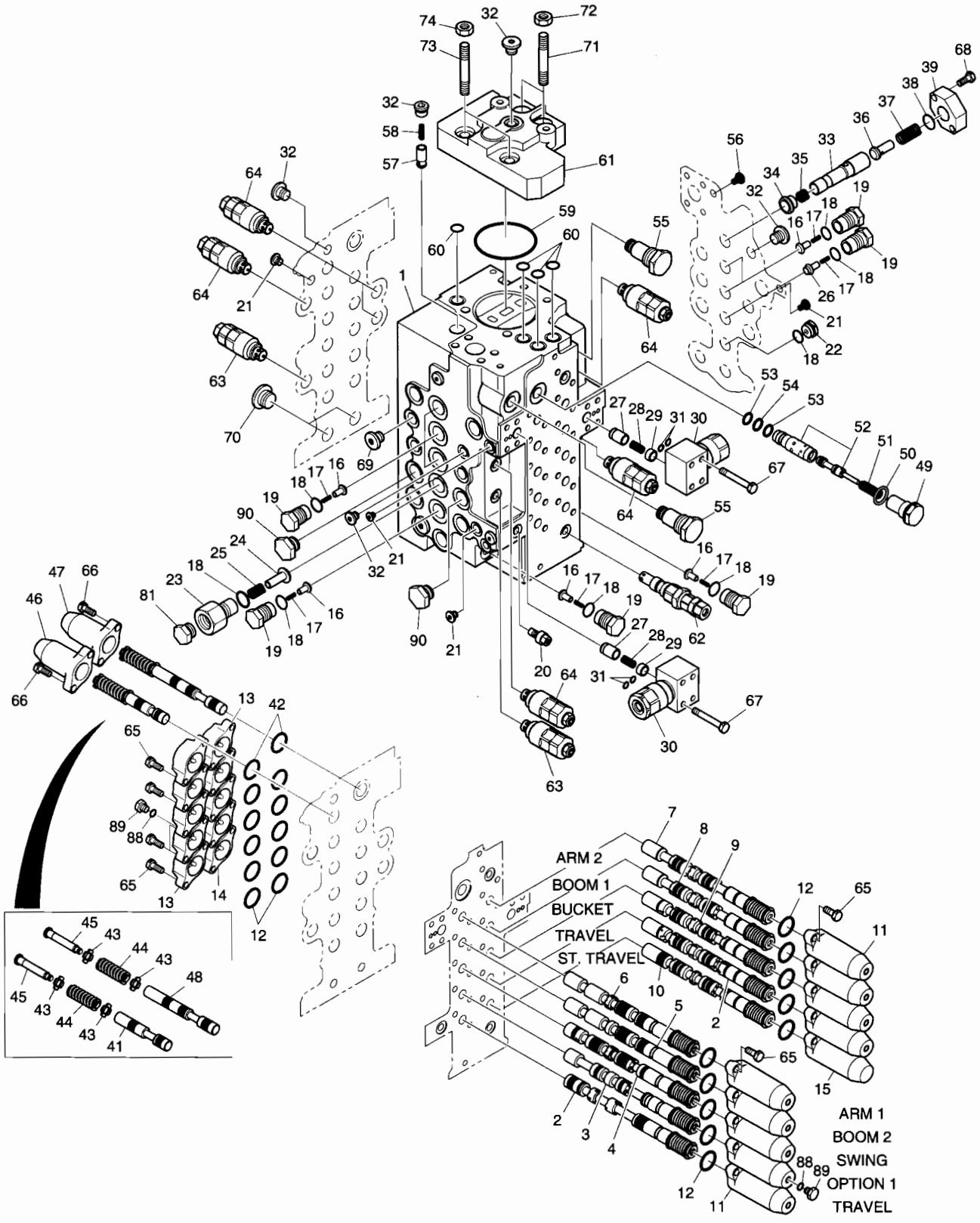

DATE	APR. 02, 2007
1st EDITION	

Fig. 4180 CONTROL VALVE VANNE DE COMMANDE

Serial No. ;

Key No.	Part No.	Description	Description	Q'ty	S.C	Serial No.	ICA	Replaceable part	
								Part No.	Q'ty
4180-89	181-00646	PLUG	BOUCHON	2					
90	181-00647	PLUG ASS'Y	BOUCHON	2					

DATE	APR. 02, 2007
1st EDITION	

Fig. 4190 REMOTE CONTROL VALVE
VANNE DE COMMAND A DISTANCE

Serial No. ;

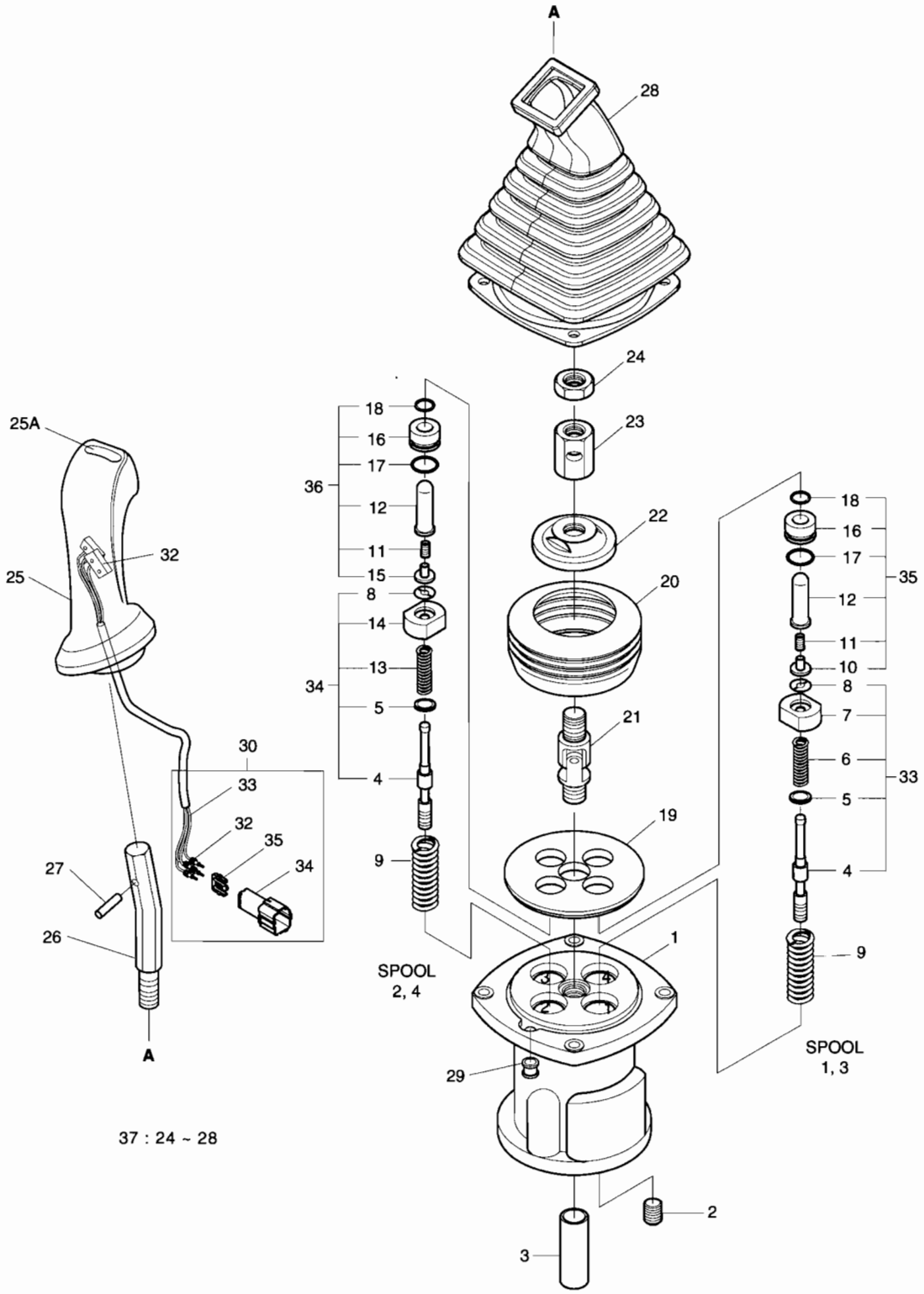

DATE	APR. 02, 2007
1st EDITION	

Fig. 4190 REMOTE CONTROL VALVE VANNE DE COMMAND A DISTANCE

Serial No. ;

Key No.	Part No.	Description	Description	Q'ty	S.C	Serial No.	ICA	Replaceable part	
								Part No.	Q'ty
4190--	K1000556G	REMOTE CONTROL VALVE(L.H)	MANETTE DE CONTROLE	1					
	K1000555G	REMOTE CONTROL VALVE(R.H)	MANETTE DE CONTROLE	1					
1	-	CASE	CARTER	1	D				
2	2181-1116D1	PLUG	BOUCHON	4					
3	K9001115	BUSHING	DOUILLE	1					
4	-	SPOOL	BOBINE	4	D				
5	-	SHIM	ENTERTOISE	1	D				
6	-	SPRING	RESSORT	2	D				
7	-	SEAT;SPRING	SIEGE	2	D				
8	-	STOPPER	CHAPEAU	4	D				
9	K9001119	SPRING	RESSORT	4					
10	-	STOPPER	CHAPEAU	2	D				
11	-	SPRING	RESSORT	4	D				
12	-	ROD;PUSH	POUSSOIR	4	D				
13	-	SPRING	RESSORT	2	D				
14	-	SEAT;SPRING	SIEGE	2	D				
15	-	STOPPER	CHAPEAU	2	D				
16	-	PLUG	BOUCHON	4	D				
17	S8000205	O-RING	JOINT TORIQUE	4					
18	K9001127	SEAL;ROD	TIGE D'ETANCHEITE	4					
19	1.412-00017	PLATE	PLAQUE	1					
20	K9001128	BOOT	BOTTE	1					
21	1.138-00004	JOINT ASS'Y	ENSEMBLE DE JOINT	1					
22	K9001129	PLATE;SWASH	PLAQUE	1					
23	1.121-00028	NUT	ECROU 6 PANS	1					
24	S4012833	NUT	ECROU 6 PANS	1					
25	K9001130	HANDLE ASS'Y(L.H)	HANDLE	1					
	K9001131	HANDLE ASS'Y(R.H)	HANDLE	1					
25A	1.161-00021	. CAP;PEANUT	. CHAPEAU	1					
26	1.178-00004	BAR;HANDLE	JAGUE DE NIVEAU	1					
27	S5740800	PIN;SPRING	GOUPILLE	1					
28	K9001132	BELLOWS	SOUFFLET	1					
29	1.110-00169	BUSHING	DOUILLE	1					
30	K9001133	CONNECTOR ASS'Y	CONNECTOR	1					
32	K9001001	SWITCH ASS'Y	AVERTISSEUR	1					
33	K9003998	KIT;SPOOL(1,3)	KIT DE BOBINE	1					
34	K9003999	KIT;SPOOL(2,4)	KIT DE BOBINE	1					
35	K9004000	KIT;PLUG(1,3)	KIT DE PRISE	1					

DATE	APR. 02, 2007
1st EDITION	

Fig. 4190 REMOTE CONTROL VALVE
VANNE DE COMMAND A DISTANCE

Serial No. ;

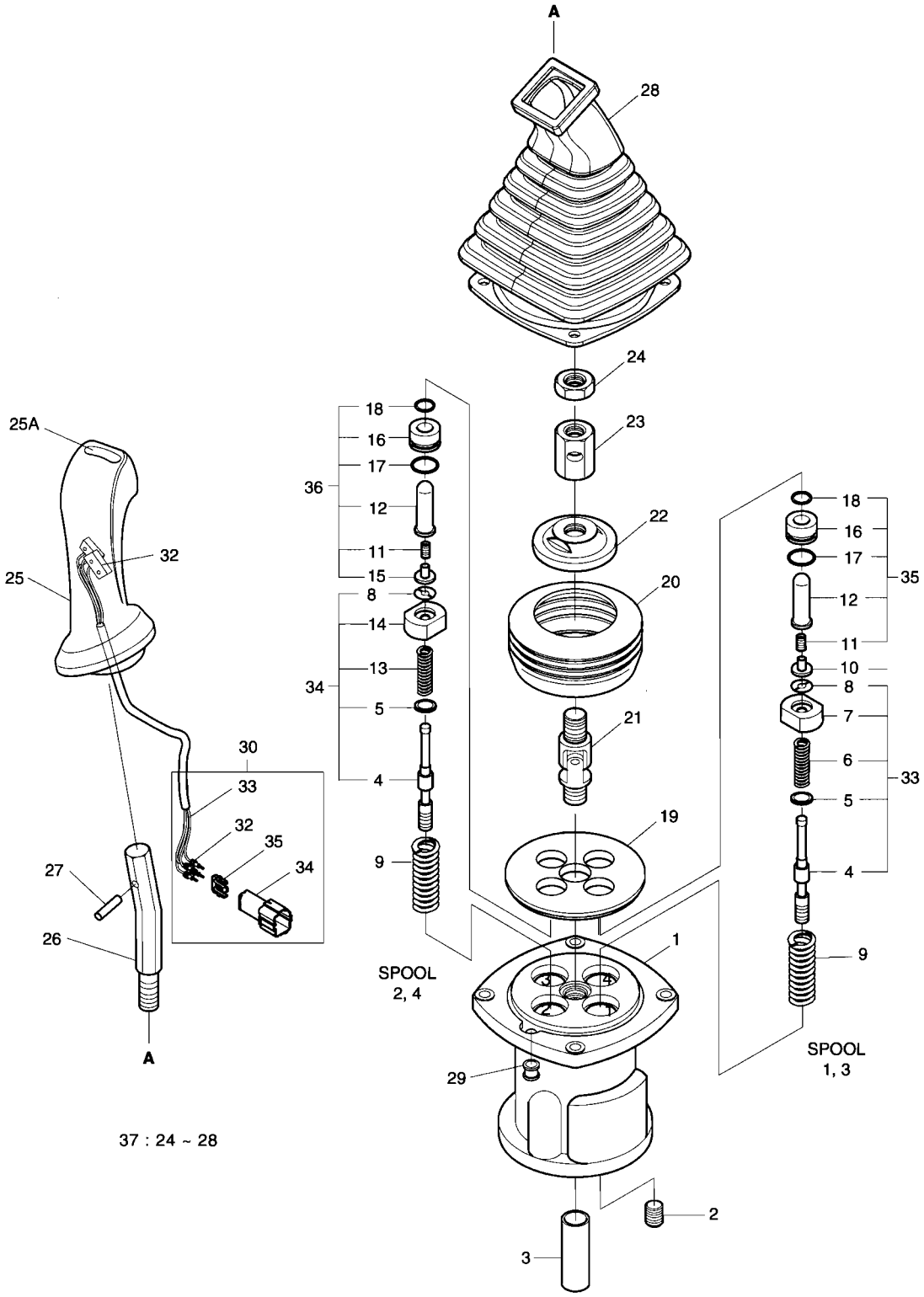

DATE	APR. 02, 2007
1st EDITION	

Fig. 4190 REMOTE CONTROL VALVE VANNE DE COMMAND A DISTANCE

Serial No. ;

Key No.	Part No.	Description	Description	Q'ty	S.C	Serial No.	ICA	Replaceable part	
								Part No.	Q'ty
4190-36	K9004001	KIT;PLUG(2,4)	KIT DE PRISE	1					
37	K9001139	KIT;HANDLE(R.H)	KIT DE POIGN?E	1					
	K9001140	KIT;HANDLE(L.H)	KIT DE POIGN?E	1					

DATE	APR. 02, 2007
1st EDITION	

Fig. 4200 PEDAL VALVE
VANNE

Serial No. ;

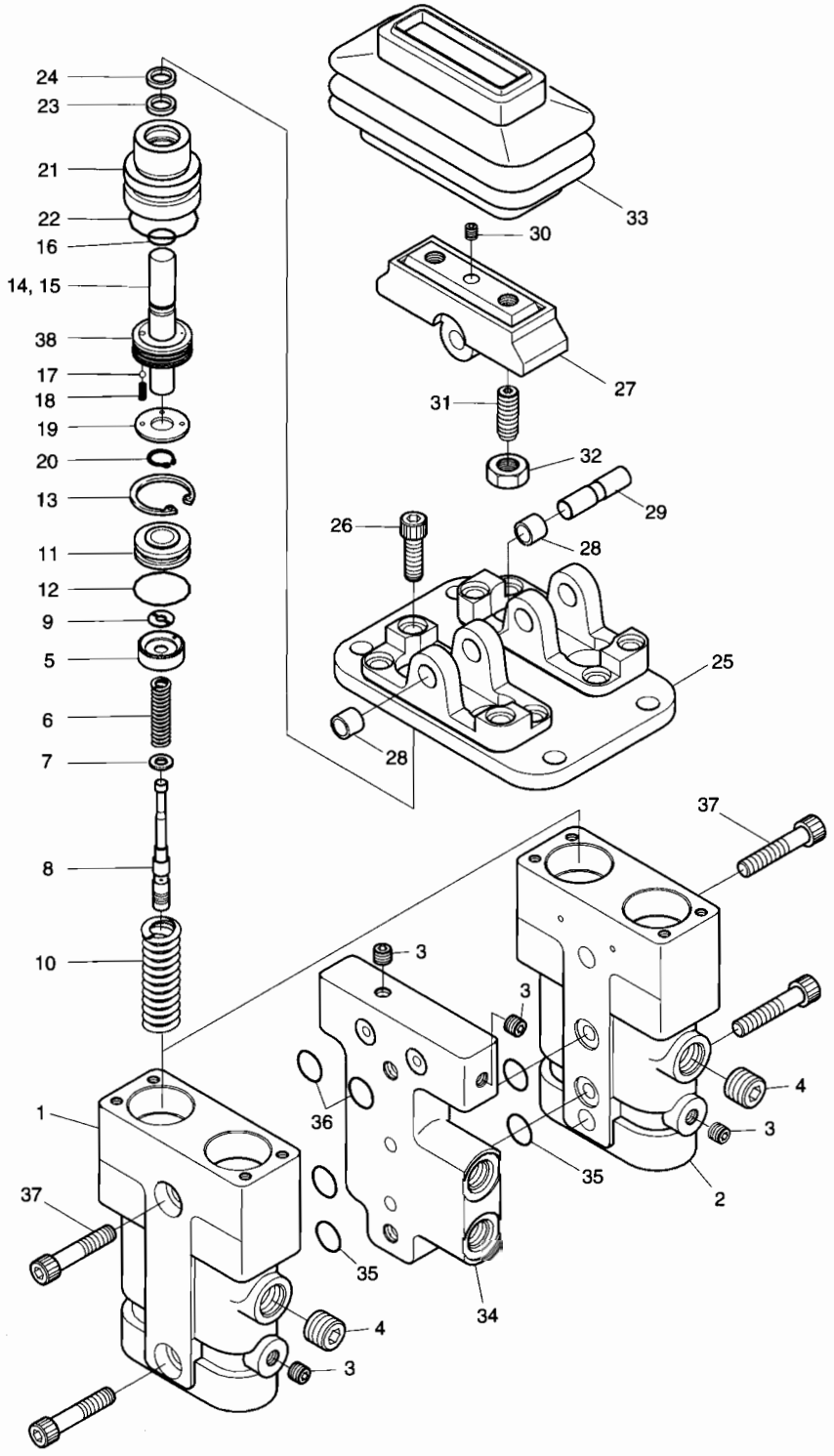

DATE	APR. 02, 2007
1st EDITION	

Fig. 4200 PEDAL VALVE VANNE

Serial No. ;

Key No.	Part No.	Description	Description	Q'ty	S.C	Serial No.	ICA	Replaceable part	
								Part No.	Q'ty
4200--	420-00467	PEDAL VALVE	VANNE DE PEDALE	1					
1	423-00046	BODY(1)	CARTER	1	D				
2	423-00047	BODY(2)	CARTER	1	D				
3	2181-1116D1	PLUG PT1/8	BOUCHON	4					
4	2181-1116D3	PLUG PT3/8	BOUCHON	2					
5	429-00004	SEAT;SPRING	SIEGE	4					
6	K9001141	SPRING	RESSORT	4					
7	429-00005	SEAT;SPRING	SIEGE	4					
8	424-00042	SPOOL	BOBINE	4					
9	161-00080	STOPPER	CHAPEAU	4					
10	129-00042	SPRING	RESSORT	4					
11	429-00006	GUIDE;ROD	GARDE	4					
12	S8000221	O-RING	JOINT TORIQUE	4	K				
13	1.229-00036	RING;SNAP	BAGUE	4					
14	1.454-00001	ROD;PUSH	POUSSOIR	4					
15	S5740480	PIN;SPRING	GOUPILLE	4					
16	180-00197	SEAL	JOINT	4	K				
17	S6250110	BALL;STEEL	BILLE	4					
18	129-00043	SPRING	RESSORT	4					
19	159-00017	PLATE	PLAQUE	4					
20	115-00042	RING;SNAP	BAGUE	4					
21	181-00319	PLUG	BOUCHON	4					
22	S8010251	O-RING	JOINT TORIQUE	4	K				
23	180-00198	SEAL;ROD	TIGE D'ETANCHEITE	4	K				
24	180-00199	SEAL;DUST	JOINT	4	K				
25	K9001142	COVER	COUVERCLE	1					
26	S2205261	BOLT;WRENCH M6X1.0X30	BOULON A 6 PANS	4					
27	354-00002	CAM	CAME	2					
28	2110-1184D7	BUSHING	DOUILLE	4					
29	354-00003	SHAFT;CAM	ARBRE A CAMES	2					
30	S3523608	SCREW;SET	VIS	2					
31	120-00127	SCREW;SET	VIS	4					
32	S4014633	NUT M10	ECROU	4					
33	160-00008	BELLOWS	SOUFFLET	2					
34	114-00225	SPACER	BAGUE D'ECARTEMENT	1					
35	S8000121	O-RING	JOINT TORIQUE	4	K				
36	S8000101	O-RING	JOINT TORIQUE	2	K				
37	S2212461	BOLT;WRENCH M10X1.5X42	BOULON A 6 PANS	4					

DATE	APR. 02, 2007
1st EDITION	

Fig. 4200 PEDAL VALVE VANNE

Serial No. ;

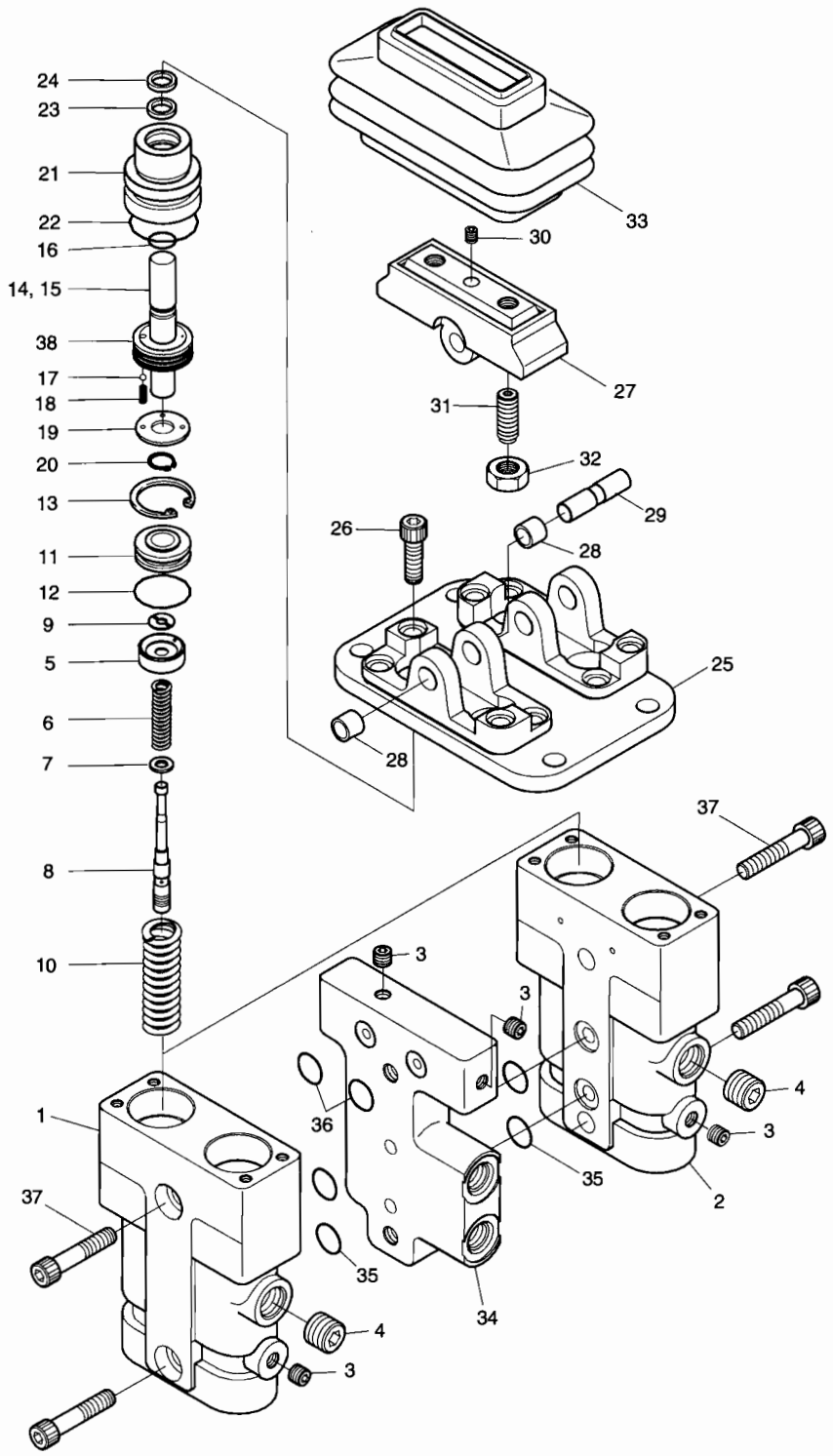

DATE	APR. 02, 2007
1st EDITION	

Fig. 4200 PEDAL VALVE VANNE

Serial No. ;

Key No.	Part No.	Description	Description	Q'ty	S.C	Serial No.	ICA	Replaceable part	
								Part No.	Q'ty
4200-38	1.409-00225	PISTON	PISTON	4					
*	420-00453KT	SEAL KIT;PEDAL VALVE	KIT DE JOINT	1					

DATE	APR. 02, 2007
1st EDITION	

Fig. 4210 SOLENOID VALVE VANNE

Serial No. ;

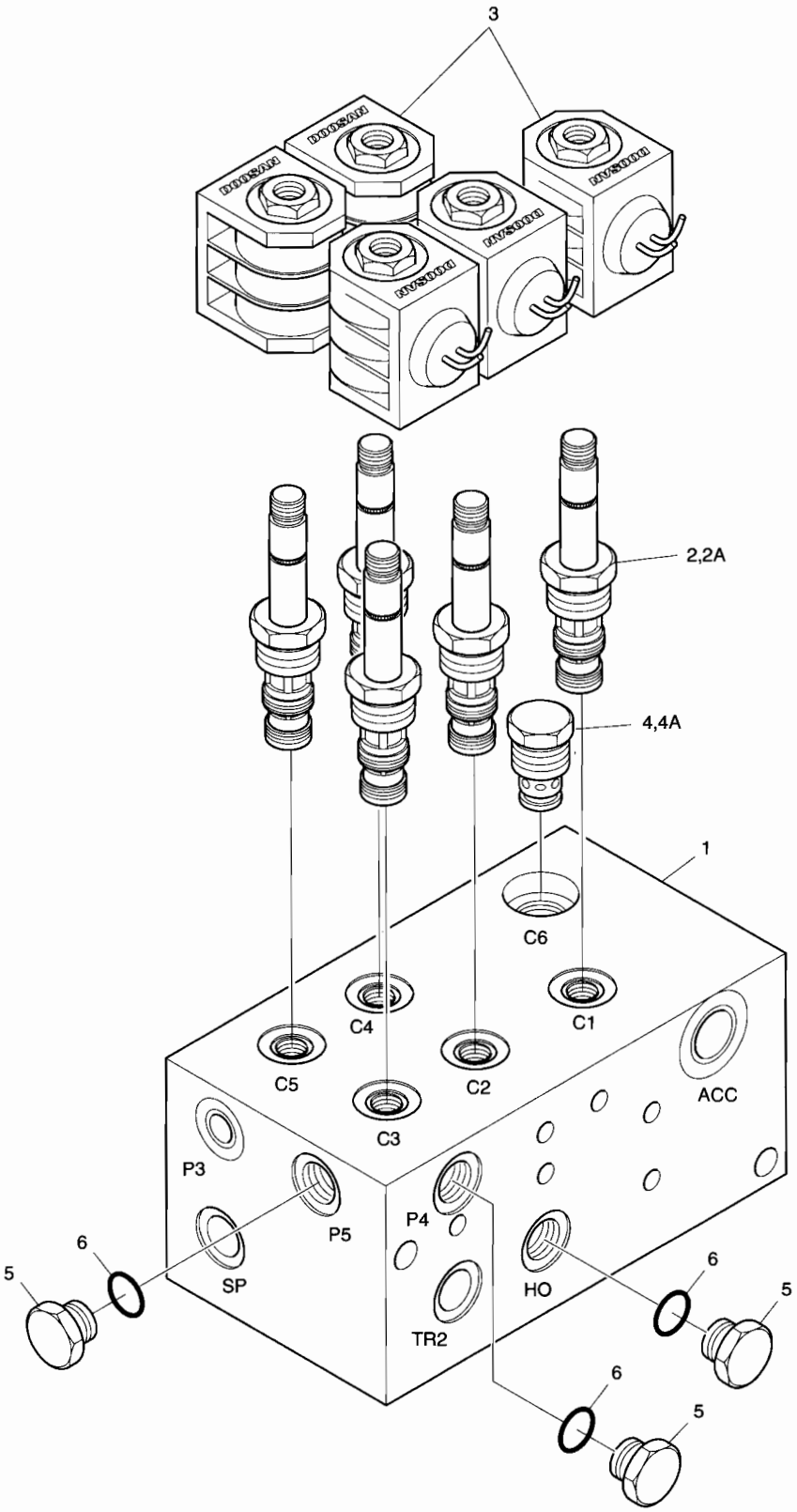

DATE	APR. 02, 2007
1st EDITION	

Fig. 4210 SOLENOID VALVE VANNE

Serial No. ;

Key No.	Part No.	Description	Description	Q'ty	S.C	Serial No.	ICA	Replaceable part	
								Part No.	Q'ty
4210--	K1012576	SOLENOID VALVE	VANNE DE SOLENOIDE	1					
1	-	BLOCK	BLOC	1	D				
2	K9001354	SOLENOID VALVE	VANNE DE SOLENOIDE	5					
2A	K9001943	. SEAL KIT	. KIT D'ETANCHEITE	1					
3	1.519-00001	COIL	ENROULEMENT	5					
4	K9002065	VALVE;CHECK	VANNE	1					
4A	1.180-00447	. SEAL KIT	. KIT D'ETANCHEITE	1					
5	2181-1950D1	PLUG PF1/4	BOUCHON	3					
6	S8000111	O-RING P11	JOINT TORIQUE	3					

DATE	APR. 02, 2007
1st EDITION	

Fig. 4220 BOOM CYLINDER - L.H
VERIN DE FLECHE

Serial No. ;

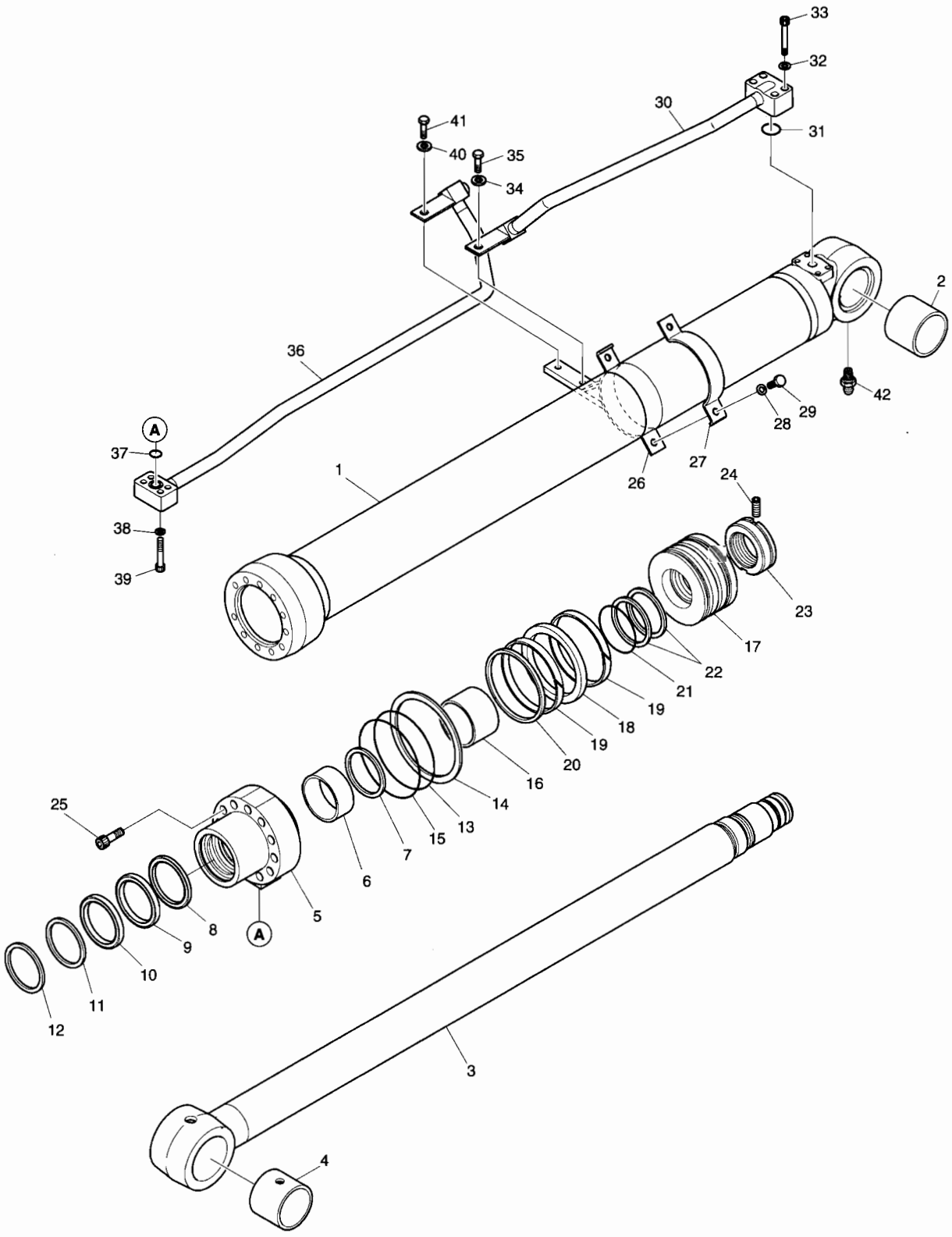

DATE	APR. 02, 2007
1st EDITION	

Fig. 4220 BOOM CYLINDER - L.H VERIN DE FLECHE

Serial No. ;

Key No.	Part No.	Description	Description	Q'ty	S.C	Serial No.	ICA	Replaceable part	
								Part No.	Q'ty
4220--	K1026243A	BOOM CYLINDER(L.H)	VERIN DE FLECHE	1					
1	K9005419	TUBE ASS'Y	TUYAU FLEXIBLE	1					
2	110-00244	BUSH	DOUILLE	1					
3	K9005420	ROD ASS'Y	ENSEMBLE TIGE	1					
4	110-00244	BUSH	DOUILLE	1					
5	K9001384	COVER;ROD	COUVERCLE	1					
6	110-00082	DD-BUSH	COUSSINET	1					
7	115-00052	RING;RETAINING	BAGUE	1					
8	K9001385	SEAL;BUFFER	ETANCHEITE	1	K				
9	K9001386	U-PACKING	JOINT EN U	1	K				
10	K9001396	RING;BACK UP	BAGUE	1	K				
11	115-00060	WIPER;DUST	RACCORD ADAPTATEUR	1	K				
12	115-00050	RING;RETAINING	BAGUE	1					
13	S8011051	O-RING	JOINT TORIQUE	1	K				
14	1.180-00268	RING;BACK UP	BAGUE	1	K				
15	S8011101	O-RING	JOINT TORIQUE	1	K				
16	K9001387	RING;CUSHION	BAGUE	1					
17	K9001388	PISTON	PISTON	1					
18	K9001389	SEAL;SLIPPER	JOINT	1	K				
19	115-00056	RING;WEAR	BAGUE D'USURE	2	K				
20	K9001390	RING;DUST	BAGUE	1	K				
21	180-00247	O-RING	JOINT TORIQUE	1	K				
22	1.180-00269	RING;BACK UP	BAGUE	2	K				
23	121-00043	NUT;PISTION	ECROU	1					
24	1.120-00219	SCREW;SET	VIS	1					
25	S2219071	BOLT;HEX. SOCKET	BOULON A 6 PANS CREUX	11					
26	K9001391	PIPE BAND ASS'Y	ENSEMBLE DE BANDE DE	1					
27	124-00055	BAND;PIPE	ATTACHE	1					
28	S5100603	WASHER;SPRING	RONDELLE ELASTIQUE	2					
29	S0558153	BOLT	BOULON	2					
30	K9005426	PIPE ASS'Y-H(L.H)	ENSEMBLE DE TUYAU	1					
31	S8000281	O-RING	JOINT TORIQUE	1					
32	S5100603	WASHER;SPRING	RONDELLE ELASTIQUE	4					
33	S2212761	BOLT;HEX. SOCKET	BOULON A 6 PANS CREUX	4					
34	S5100603	WASHER;SPRING	RONDELLE ELASTIQUE	1					
35	S0511863	BOLT;HEX.	BOULON A 6 PANS	1					
36	K9005422	PIPE ASS'Y-R(L.H)	ENSEMBLE DE TUYAU	1					
37	S8000201	O-RING	JOINT TORIQUE	1					

DATE	APR. 02, 2007
1st EDITION	

Fig. 4220 BOOM CYLINDER - L.H
VERIN DE FLECHE

Serial No. ;

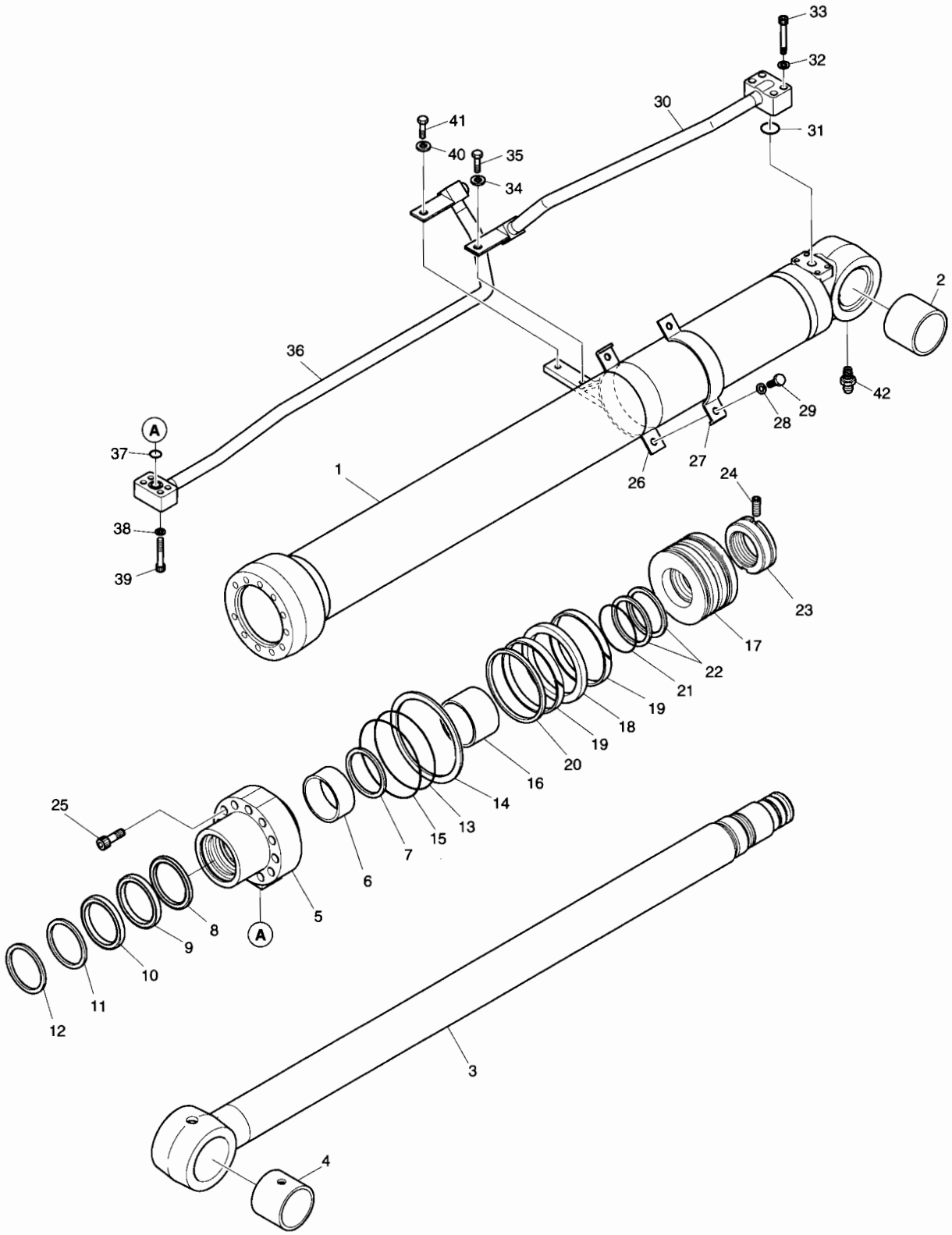

DATE	APR. 02, 2007
1st EDITION	

Fig. 4220 BOOM CYLINDER - L.H
VERIN DE FLECHE

Serial No. ;

Key No.	Part No.	Description	Description	Q'ty	S.C	Serial No.	ICA	Replaceable part	
								Part No.	Q'ty
4220-38	S5100503	WASHER;SPRING	RONDELLE ELASTIQUE	4					
39	S2209561	BOLT;HEX. SOCKET	BOULON A 6 PANS CREUX	4					
40	S5100603	WASHER;SPRING	RONDELLE ELASTIQUE	1					
41	S0511863	BOLT;HEX.	BOULON A 6 PANS	1					
42	S6710032	NIPPLE;GREASE	MAMELON	1					
*	K9002306	SEAL KIT	KIT D'ETANCHEITE	1					

DATE	APR. 02, 2007
1st EDITION	

Fig. 4230 BOOM CYLINDER - R.H
VERIN DE FLECHE

Serial No. ;

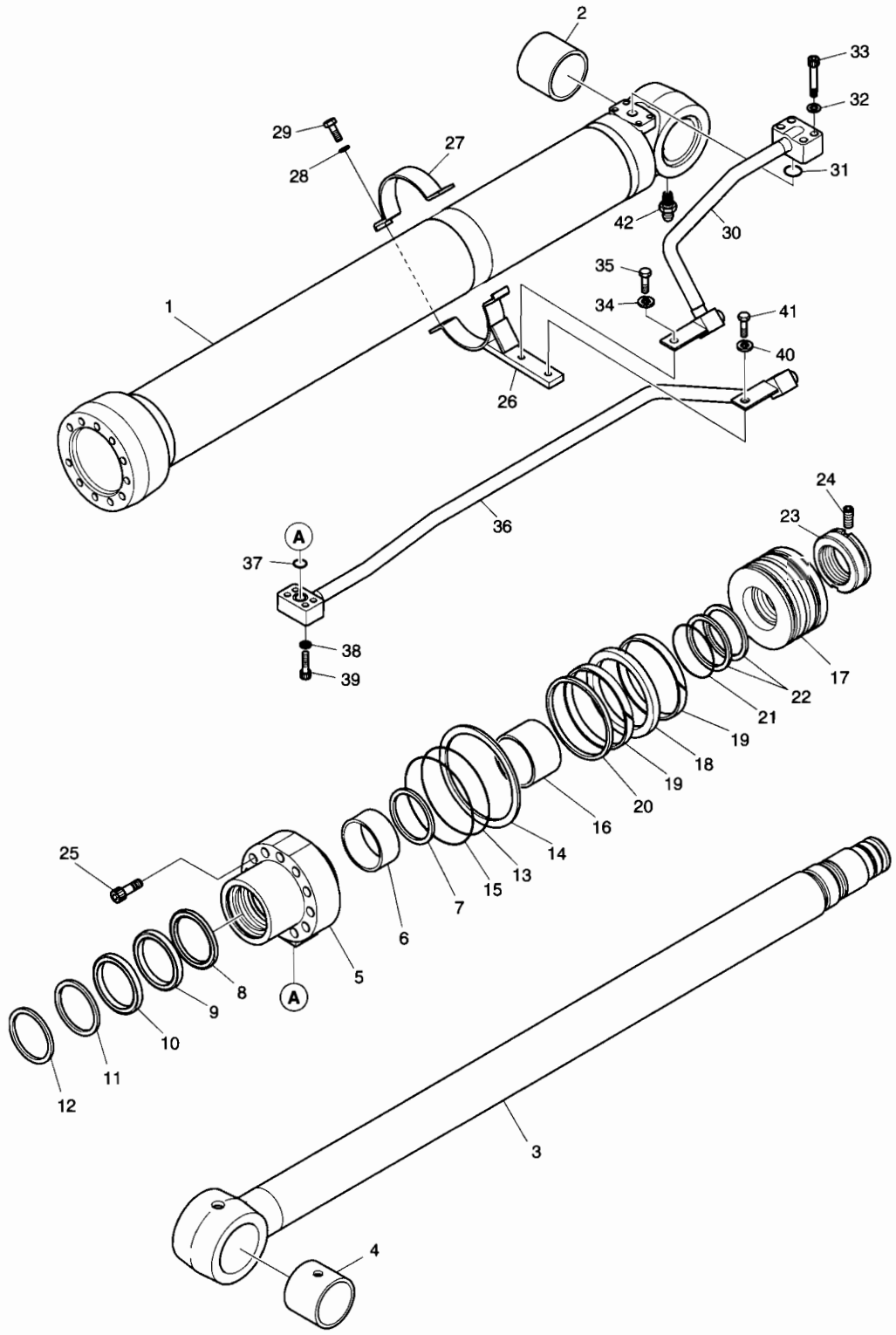

DATE	APR. 02, 2007
1st EDITION	

Fig. 4230 BOOM CYLINDER - R.H VERIN DE FLECHE

Serial No. ;

Key No.	Part No.	Description	Description	Q'ty	S.C	Serial No.	ICA	Replaceable part	
								Part No.	Q'ty
4230--	K1026244A	BOOM CYLINDER(R.H)	VERIN DE FLECHE	1					
1	K9005419	TUBE ASS'Y	TUYAU FLEXIBLE	1					
2	110-00244	BUSH	DOUILLE	1					
3	K9005420	ROD ASS'Y	ENSEMBLE TIGE	1					
4	110-00244	BUSH	DOUILLE	1					
5	K9001384	COVER;ROD	COUVERCLE	1					
6	110-00082	DD-BUSH	COUSSINET	1					
7	115-00052	RING;RETAINING	BAGUE	1					
8	K9001385	SEAL;BUFFER	ETANCHEITE	1	K				
9	K9001386	U-PACKING	JOINT EN U	1	K				
10	K9001396	RING;BACK UP	BAGUE	1	K				
11	115-00060	WIPER;DUST	RACCORD ADAPTATEUR	1	K				
12	115-00050	RING;RETAINING	BAGUE	1					
13	S8011051	O-RING	JOINT TORIQUE	1	K				
14	1.180-00268	RING;BACK UP	BAGUE	1	K				
15	S8011101	O-RING	JOINT TORIQUE	1	K				
16	K9001387	RING;CUSHION	BAGUE	1					
17	K9001388	PISTON	PISTON	1					
18	K9001389	SEAL;SLIPPER	JOINT	1	K				
19	115-00056	RING;WEAR	BAGUE D'USURE	2	K				
20	K9001390	RING;DUST	BAGUE	1	K				
21	180-00247	O-RING	JOINT TORIQUE	1	K				
22	1.180-00269	RING;BACK UP	BAGUE	2	K				
23	121-00043	NUT;PISTION	ECROU	1					
24	1.120-00219	SCREW;SET	VIS	1					
25	S2219071	BOLT;HEX. SOCKET	BOULON A 6 PANS CREUX	11					
26	K9001391	PIPE BAND ASS'Y	ENSEMBLE DE BANDE DE	1					
27	124-00055	BAND;PIPE	ATTACHE	1					
28	S5100603	WASHER;SPRING	RONDELLE ELASTIQUE	2					
29	S0558153	BOLT	BOULON	2					
30	K9005425	PIPE ASS'Y-H(R.H)	ENSEMBLE DE TUYAU	1					
31	S8000281	O-RING	JOINT TORIQUE	1					
32	S5100603	WASHER;SPRING	RONDELLE ELASTIQUE	4					
33	S2212761	BOLT;HEX. SOCKET	BOULON A 6 PANS CREUX	4					
34	S5100603	WASHER;SPRING	RONDELLE ELASTIQUE	1					
35	S0511863	BOLT;HEX.	BOULON A 6 PANS	1					
36	K9005421	PIPE ASS'Y-R(R.H)	ENSEMBLE DE TUYAU	1					
37	S8000201	O-RING	JOINT TORIQUE	1					

DATE	APR. 02, 2007
1st EDITION	

Fig. 4230 BOOM CYLINDER - R.H
VERIN DE FLECHE

Serial No. ;

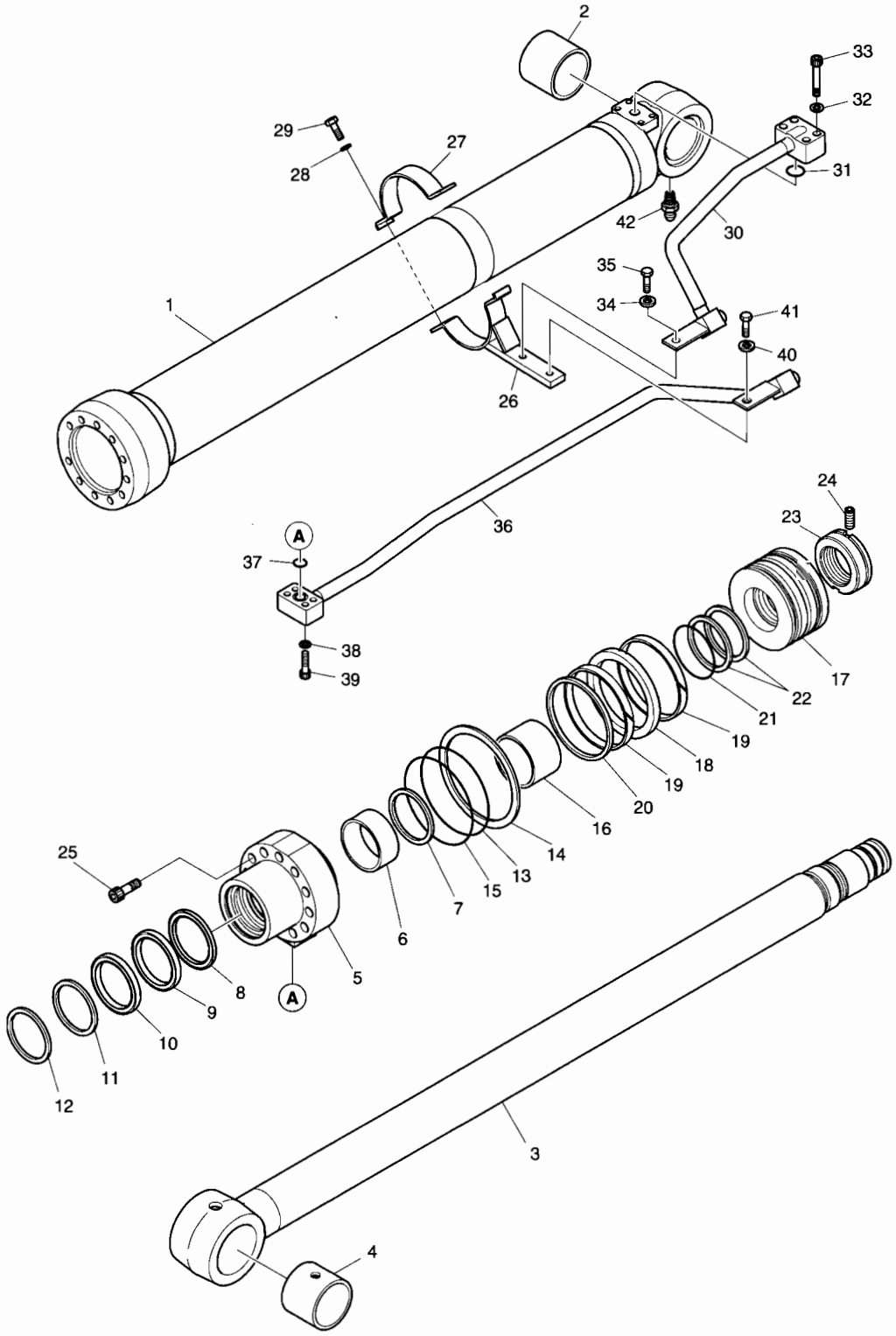

DATE	APR. 02, 2007
1st EDITION	

Fig. 4230 BOOM CYLINDER - R.H
VERIN DE FLECHE

Serial No. ;

Key No.	Part No.	Description	Description	Q'ty	S.C	Serial No.	ICA	Replaceable part	
								Part No.	Q'ty
4230-38	S5100503	WASHER;SPRING	RONDELLE ELASTIQUE	4					
39	S2209561	BOLT;HEX. SOCKET	BOULON A 6 PANS CREUX	4					
40	S5100603	WASHER;SPRING	RONDELLE ELASTIQUE	1					
41	S0511863	BOLT;HEX.	BOULON A 6 PANS	1					
42	S6710032	NIPPLE;GREASE	MAMELON	1					
*	K9002306	SEAL KIT	KIT D'ETANCHEITE	1					

DATE	APR. 02, 2007
1st EDITION	

Fig. 4240 ARM CYLINDER VERIN DE BALANCIER

Serial No. ;

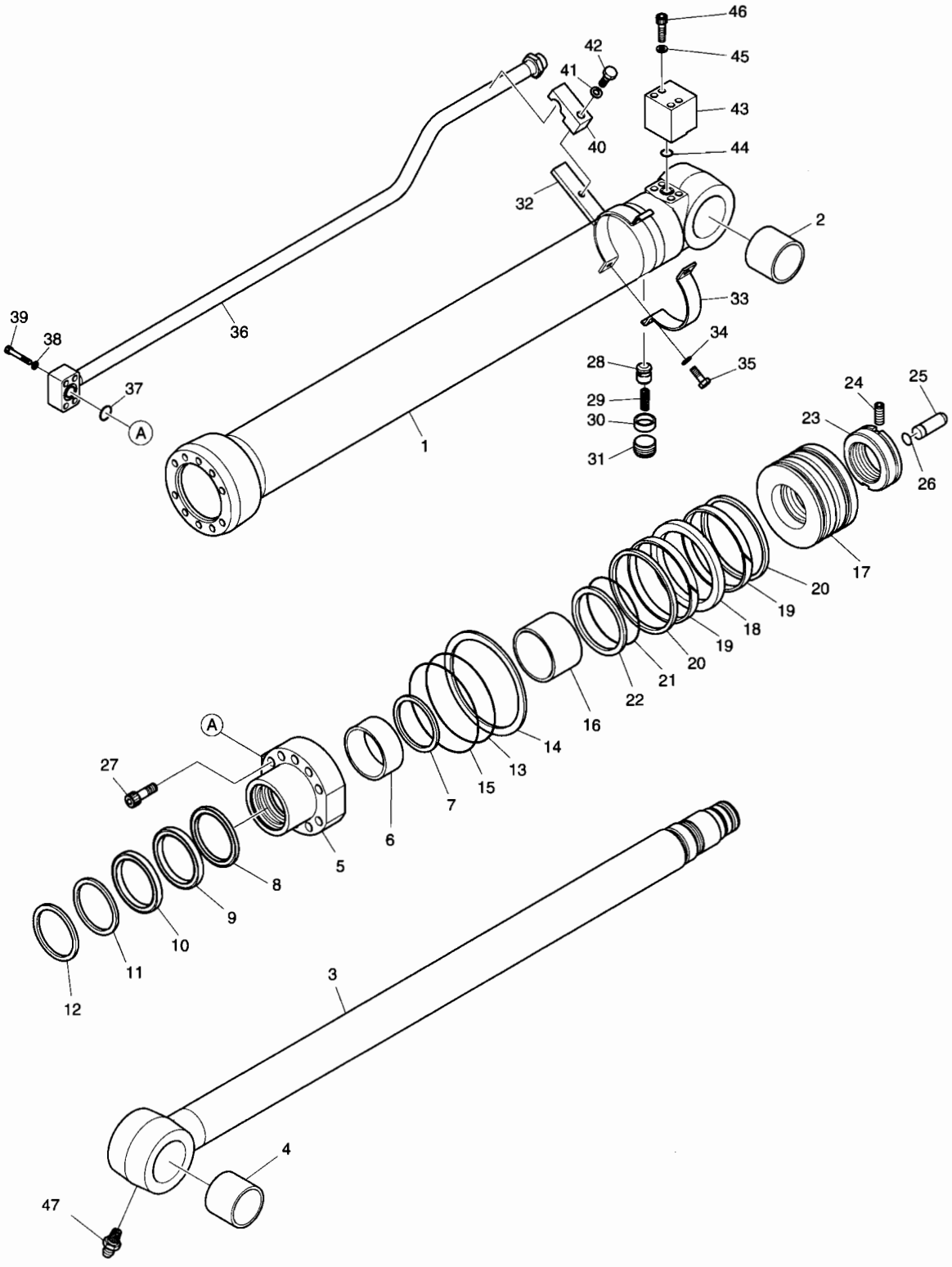

DATE	APR. 02, 2007
1st EDITION	

Fig. 4240 ARM CYLINDER VERIN DE BALANCIER

Serial No. ;

Key No.	Part No.	Description	Description	Q'ty	S.C	Serial No.	ICA	Replaceable part	
								Part No.	Q'ty
4240--	K1018940	ARM CYLINDER	VERIN DE BALANCIER	1					
1	K9005417	TUBE ASS'Y	TUYAU FLEXIBLE	1					
2	110-00241	BUSH	DOUILLE	1					
3	K9001418	ROD ASS'Y	ENSEMBLE TIGE	1					
4	110-00241	BUSH	DOUILLE	1					
5	K9001400	COVER;ROD	COUVERCLE	1					
6	110-00097	DD-BUSH	COUSSINET	1					
7	K9001401	RING;RETAINING	BAGUE	1					
8	K9001402	SEAL;BUFFER	ETANCHEITE	1	K				
9	K9001403	U-PACKING	JOINT EN U	1	K				
10	K9001404	RING;BACK UP	BAGUE	1	K				
11	115-00084	WIPER;DUST	RACCORD ADAPTATEUR	1	K				
12	115-00063	RING;RETAINING	BAGUE	1					
13	S8011101	O-RING	JOINT TORIQUE	1	K				
14	K9001405	RING;BACK UP	BAGUE	1	K				
15	S8011151	O-RING	JOINT TORIQUE	1	K				
16	K9001406	RING;CUSHION	BAGUE	1					
17	K9001407	PISTON	PISTON	1					
18	K9001408	SEAL;SLIPPER	JOINT	1	K				
19	115-00085	RING;WEAR	BAGUE D'USURE	2	K				
20	K9001409	RING;DUST	BAGUE	2	K				
21	180-00276	O-RING	JOINT TORIQUE	1	K				
22	K9001410	RING;BACK UP	BAGUE	2	K				
23	K9001862	NUT;PISTION	ECROU	1					
24	1.120-00219	SCREW;SET	VIS	1					
25	424-00059	PLUNGER;CUSHION	PLONGEUR	1					
26	115-00081	RING;STOP	BAGUE D'ARRET	1					
27	S2222171	BOLT;HEX. SOCKET	BOULON A 6 PANS CREUX	10					
28	1.420-00039	VALVE;CHECK	CAPTEUR	1					
29	1.131-00009	SPRING	RESSORT	1					
30	1.195-00022	SUPPORT;SPRING	SUPPORT	1					
31	2181-1116D3	PLUG;HEX. SOCKET	BOUCHON	1					
32	K9001411	PIPE BAND ASS'Y	ENSEMBLE DE BANDE DE	1					
33	124-00085	BAND;PIPE	ATTACHE	1					
34	S5100603	WASHER;SPRING	RONDELLE ELASTIQUE	2					
35	S0558153	BOLT	BOULON	2					
36	K9005418	PIPE ASS'Y-R	ENSEMBLE DE TUYAU	1					
37	S8000281	O-RING	JOINT TORIQUE	1					

DATE	APR. 02, 2007
1st EDITION	

Fig. 4240 ARM CYLINDER
VERIN DE BALANCIER

Serial No. ;

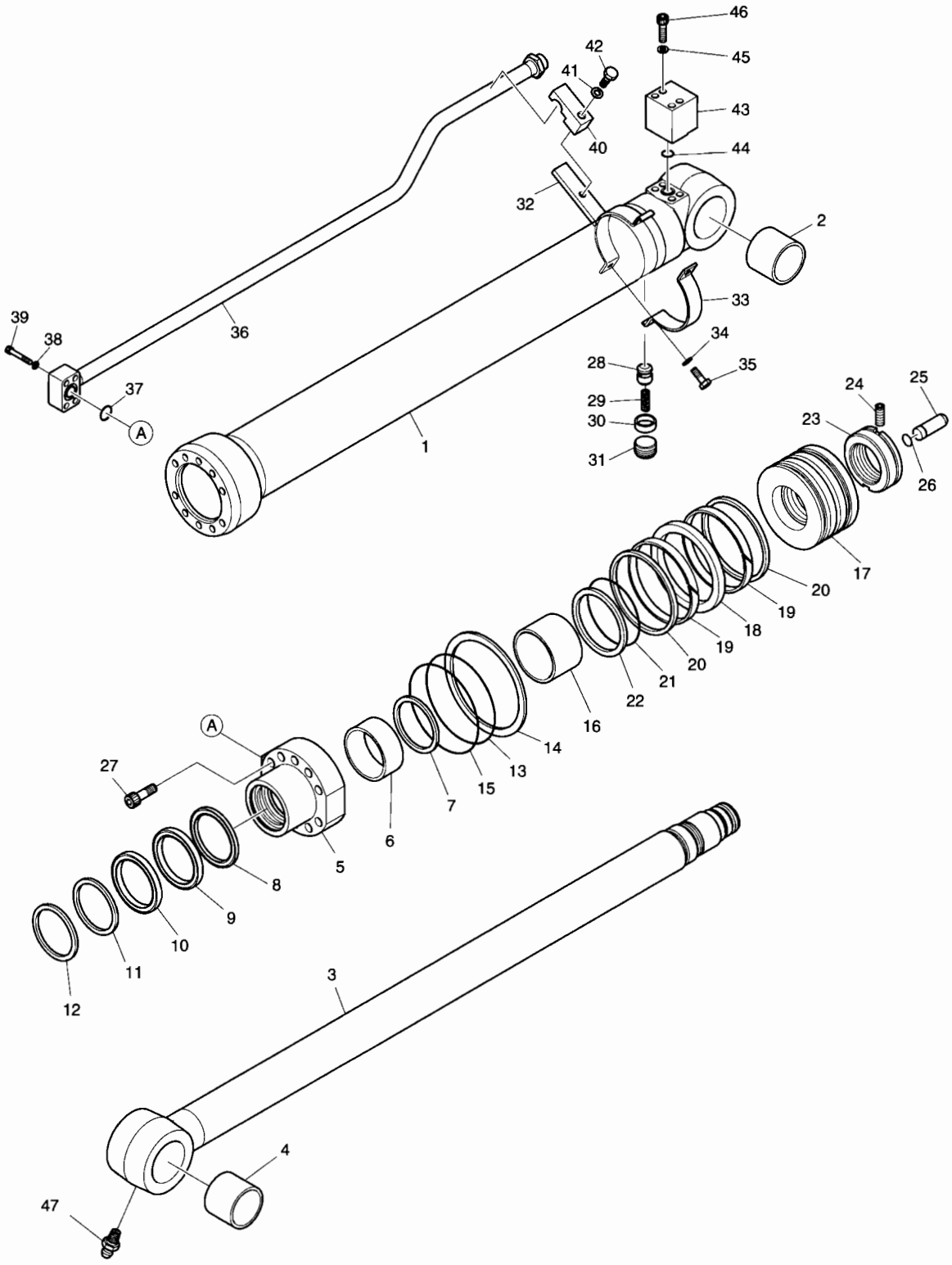

DATE	APR. 02, 2007
1st EDITION	

Fig. 4240 ARM CYLINDER VERIN DE BALANCIER

Serial No. ;

Key No.	Part No.	Description	Description	Q'ty	S.C	Serial No.	ICA	Replaceable part	
								Part No.	Q'ty
4240-38	S5100603	WASHER;SPRING	RONDELLE ELASTIQUE	4					
39	S2212761	BOLT;HEX. SOCKET	BOULON A 6 PANS CREUX	4					
40	K9001413	CLAMP;PIPE	COLLIER	1					
41	S5102903	WASHER;SPRING	RONDELLE ELASTIQUE	1					
42	S0565451	BOLT	BOULON	1					
43	K9001414	PORT;FLANGE	PORT;FLANGE	1					
44	S8000281	O-RING	JOINT TORIQUE	1					
45	S5100603	WASHER;SPRING	RONDELLE ELASTIQUE	4					
46	S2212961	BOLT;HEX. SOCKET	BOULON A 6 PANS CREUX	4					
47	S6710032	NIPPLE;GREASE	MAMELON	1					
*	K9002308	SEAL KIT	KIT D'ETANCHEITE	1					

DATE	APR. 02, 2007
1st EDITION	

Fig. 4250 BUCKET CYLINDER VERIN DE GODET

Serial No. ;

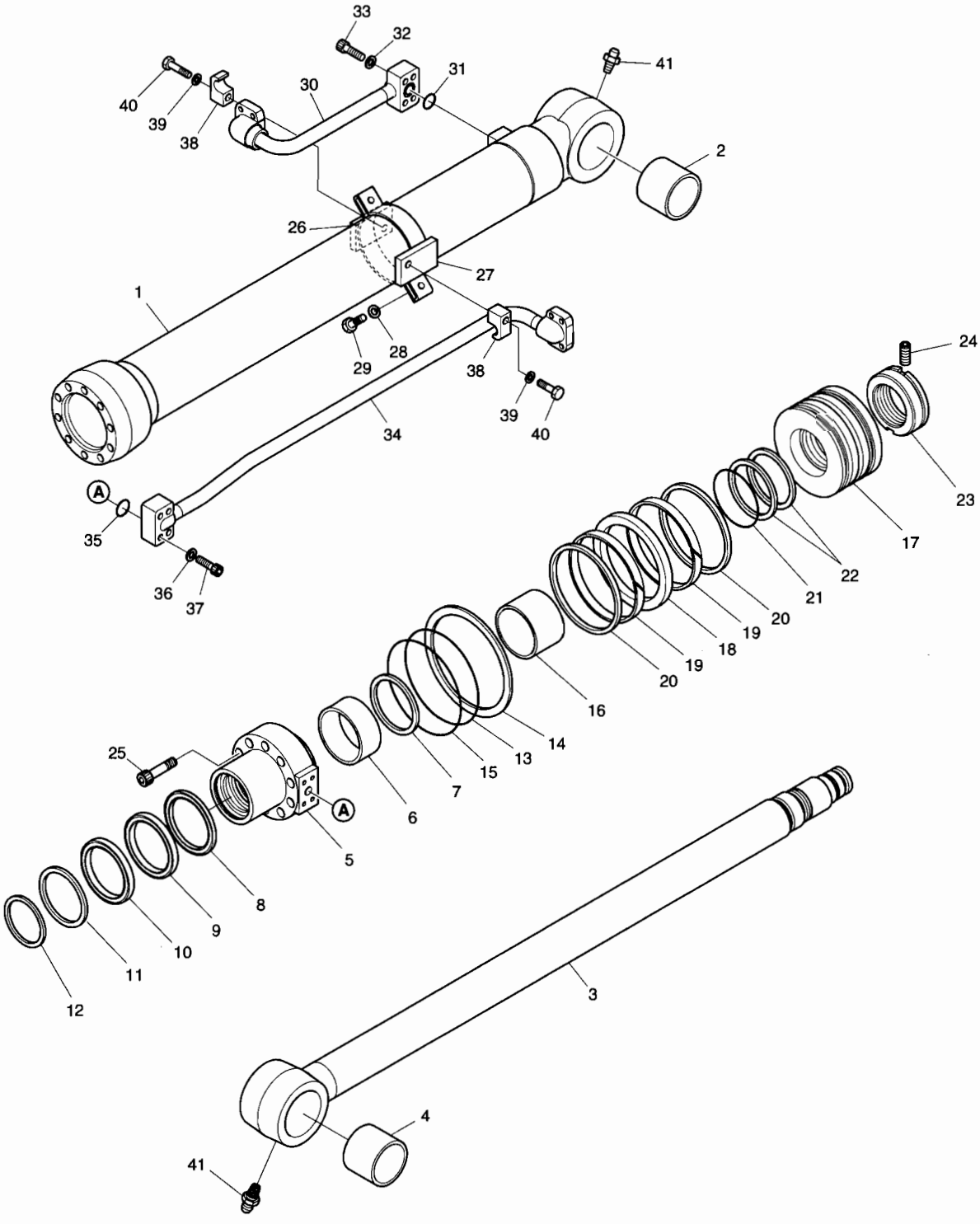

DATE	APR. 02, 2007
1st EDITION	

Fig. 4250 BUCKET CYLINDER VERIN DE GODET

Serial No. ;

Key No.	Part No.	Description	Description	Q'ty	S.C	Serial No.	ICA	Replaceable part	
								Part No.	Q'ty
4250--	K1024712	CYLINDER;BUCKET	VERIN DE GODET	1					
1	K9005416	TUBE ASS'Y	TUYAU FLEXIBLE	1					
2	K1004106	BUSH	DOUILLE	1					
3	K9005413	ROD ASS'Y	ENSEMBLE TIGE	1					
4	110-00245	BUSH	DOUILLE	1					
5	K9005423	COVER;ROD	COUVERCLE	1					
6	1.110-00067	BUSH-DU	DOUILLE	1					
7	115-00104	RING;RETAINING	BAGUE	1					
8	K9005432	SEAL;BUFFER	ETANCHEITE	1	K				
9	K9005431	U-PACKING	JOINT EN U	1	K				
10	K9005433	RING;BACK UP	BAGUE	1	K				
11	1.180-00479	WIPER;DUST	RACCORD ADAPTATEUR	1	K				
12	K9001401	RING;RETAINING	BAGUE	1					
13	S8010951	O-RING	JOINT TORIQUE	1	K				
14	1.180-00273	RING;BACK UP	BAGUE	1	K				
15	S8011001	O-RING	JOINT TORIQUE	1	K				
16	K9005412	RING;CUSHION	BAGUE	1					
17	K9005424	PISTON	PISTON	1					
18	K9005430	SEAL;SLIPPER	JOINT	1	K				
19	1.180-00413	RING;WEAR	BAGUE D'USURE	2	K				
20	K9001373	RING;DUST	BAGUE	2	K				
21	1.180-00116	O-RING	JOINT TORIQUE	1	K				
22	1.180-00264	RING;BACK UP	BAGUE	2	K				
23	K9005429	NUT;PISTON	ECROU	1					
24	S3523836	SET;SCREW	ENSEMBLE DE VIS	1					
25	S2218961	BOLT;HEX SOCKET	BOULON A 6 PANS CREUX	10					
26	K9005427	PIPE BAND ASS'Y-A	ENSEMBLE DE BANDE DE	1					
27	K9005428	PIPE BAND ASS'Y-B	ENSEMBLE DE BANDE DE	1					
28	S5100603	WASHER;SPRING	RONDELLE ELASTIQUE	2					
29	S0558153	BOLT;HEX	BOULON A 6 PANS	2					
30	K9005414	PIPE ASS'Y-H	ENSEMBLE DE TUYAU	1					
31	S8000201	O-RING	JOINT TORIQUE	1					
32	S5100503	WASHER;SPRING	RONDELLE ELASTIQUE	4					
33	S2209561	BOLT;HEX SOCKET	BOULON A 6 PANS CREUX	4					
34	K9005415	PIPE ASS'Y-R	ENSEMBLE DE TUYAU	1					
35	S8000201	O-RING	JOINT TORIQUE	1					
36	S5100503	WASHER;SPRING	RONDELLE ELASTIQUE	4					
37	S2209561	BOLT;HEX SOCKET	BOULON A 6 PANS CREUX	4					

DATE	APR. 02, 2007
1st EDITION	

Fig. 4250 BUCKET CYLINDER VERIN DE GODET

Serial No. ;

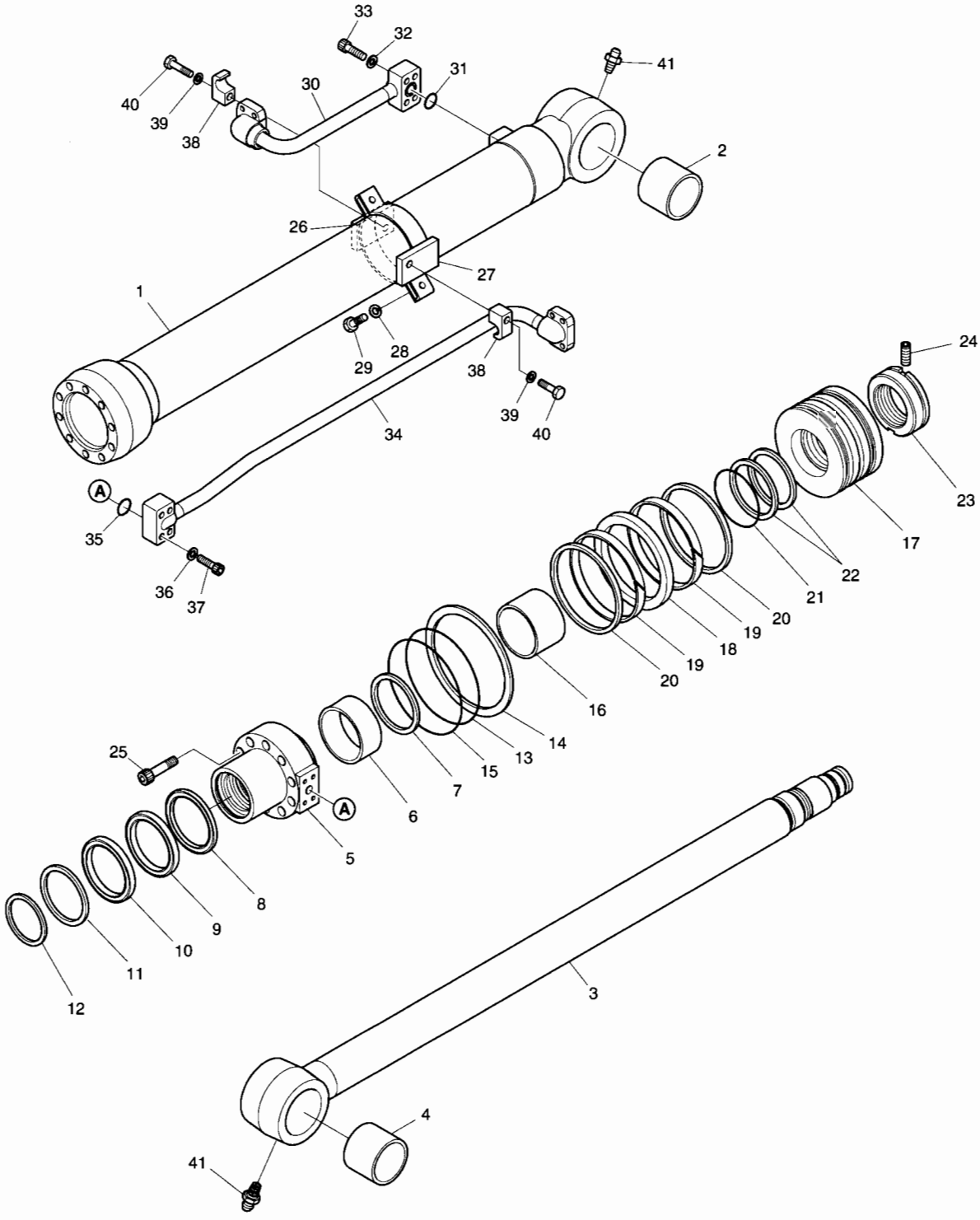

DATE	APR. 02, 2007
1st EDITION	

Fig. 4250 BUCKET CYLINDER VERIN DE GODET

Serial No. ;

Key No.	Part No.	Description	Description	Q'ty	S.C	Serial No.	ICA	Replaceable part	
								Part No.	Q'ty
4250-38	K9001435	CLAMP;PIPE	COLLIER	2					
39	S5100603	WASHER;SPRING	RONDELLE ELASTIQUE	2					
40	S0512553	BOLT;HEX	BOULON A 6 PANS	2					
41	S6710032	NIPPLE;GREASE	MAMELON	2					
*	K9005434	SEAL KIT	KIT D'ETANCHEITE	1					

DATE	APR. 02, 2007
1st EDITION	

Fig. 4260 BOOM CYLINDER - L.H (LOCK VALVE)
VERIN DE FLECHE

Serial No. ;

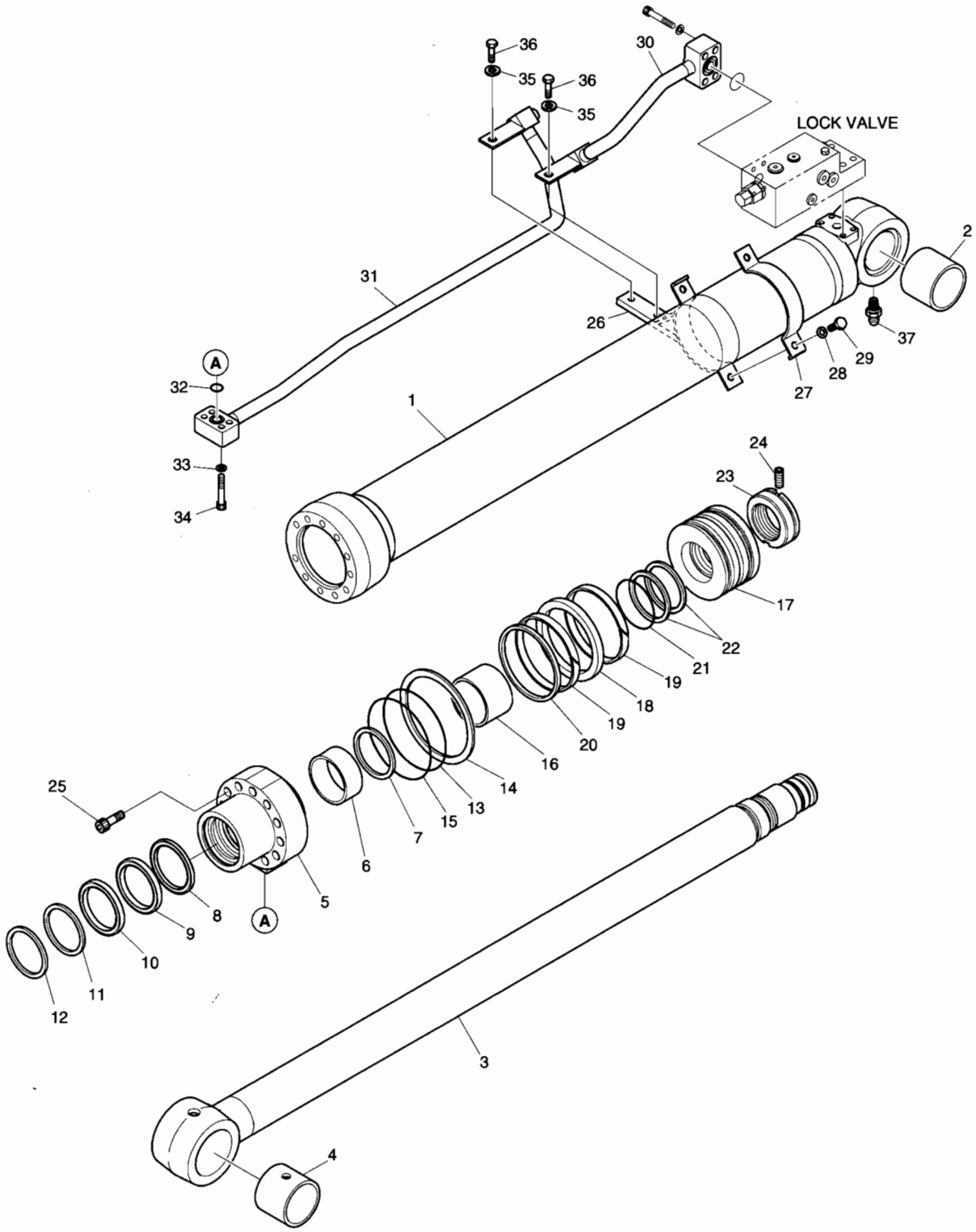

DATE	APR. 02, 2007
1st EDITION	

Fig. 4260 BOOM CYLINDER - L.H (LOCK VALVE) VERIN DE FLECHE

Serial No. ;

Key No.	Part No.	Description	Description	Q'ty	S.C	Serial No.	ICA	Replaceable part	
								Part No.	Q'ty
4260--	K1026247A	BOOM CYLINDER(L.H)	VERIN DE FLECHE	1					
1	K9005419	TUBE ASS'Y	TUYAU FLEXIBLE	1					
2	110-00244	BUSH	DOUILLE	1					
3	K9005420	ROD ASS'Y	ENSEMBLE TIGE	1					
4	110-00244	BUSH	DOUILLE	1					
5	K9001384	COVER;ROD	COUVERCLE	1					
6	110-00082	DD-BUSH	COUSSINET	1					
7	115-00052	RING;RETAINING	BAGUE	1					
8	K9001385	SEAL;BUFFER	ETANCHEITE	1	K				
9	K9001386	U-PACKING	JOINT EN U	1	K				
10	K9001396	RING;BACK UP	BAGUE	1	K				
11	115-00060	WIPER;DUST	RACCORD ADAPTATEUR	1	K				
12	115-00050	RING;RETAINING	BAGUE	1					
13	S8011051	O-RING	JOINT TORIQUE	1	K				
14	1.180-00268	RING;BACK UP	BAGUE	1	K				
15	S8011101	O-RING	JOINT TORIQUE	1	K				
16	K9001387	RING;CUSHION	BAGUE	1					
17	K9001388	PISTON	PISTON	1					
18	K9001389	SEAL;SLIPPER	JOINT	1	K				
19	115-00056	RING;WEAR	BAGUE D'USURE	2	K				
20	K9001390	RING;DUST	BAGUE	1	K				
21	180-00247	O-RING	JOINT TORIQUE	1	K				
22	1.180-00269	RING;BACK UP	BAGUE	2	K				
23	121-00043	NUT;PISTION	ECROU	1					
24	1.120-00219	SCREW;SET	VIS	1					
25	S2219071	BOLT;HEX. SOCKET	BOULON A 6 PANS CREUX	11					
26	K9001391	PIPE BAND ASS'Y	ENSEMBLE DE BANDE DE	1					
27	124-00055	BAND;PIPE	ATTACHE	1					
28	S5100603	WASHER;SPRING	RONDELLE ELASTIQUE	2					
29	S0558153	BOLT	BOULON	2					
30	K9005436	PIPE ASS'Y-H(L.H)	ENSEMBLE DE TUYAU	1					
31	K9005422	PIPE ASS'Y-R(L.H)	ENSEMBLE DE TUYAU	1					
32	S8000201	O-RING	JOINT TORIQUE	1					
33	S5100503	WASHER;SPRING	RONDELLE ELASTIQUE	4					
34	S2209561	BOLT;HEX. SOCKET	BOULON A 6 PANS CREUX	4					
35	S5100603	WASHER;SPRING	RONDELLE ELASTIQUE	2					
36	S0511863	BOLT;HEX.	BOULON A 6 PANS	2					
37	S6710032	NIPPLE;GREASE	MAMELON	1					

DATE	APR. 02, 2007
1st EDITION	

Fig. 4260 BOOM CYLINDER - L.H (LOCK VALVE)
VERIN DE FLECHE

Serial No. ;

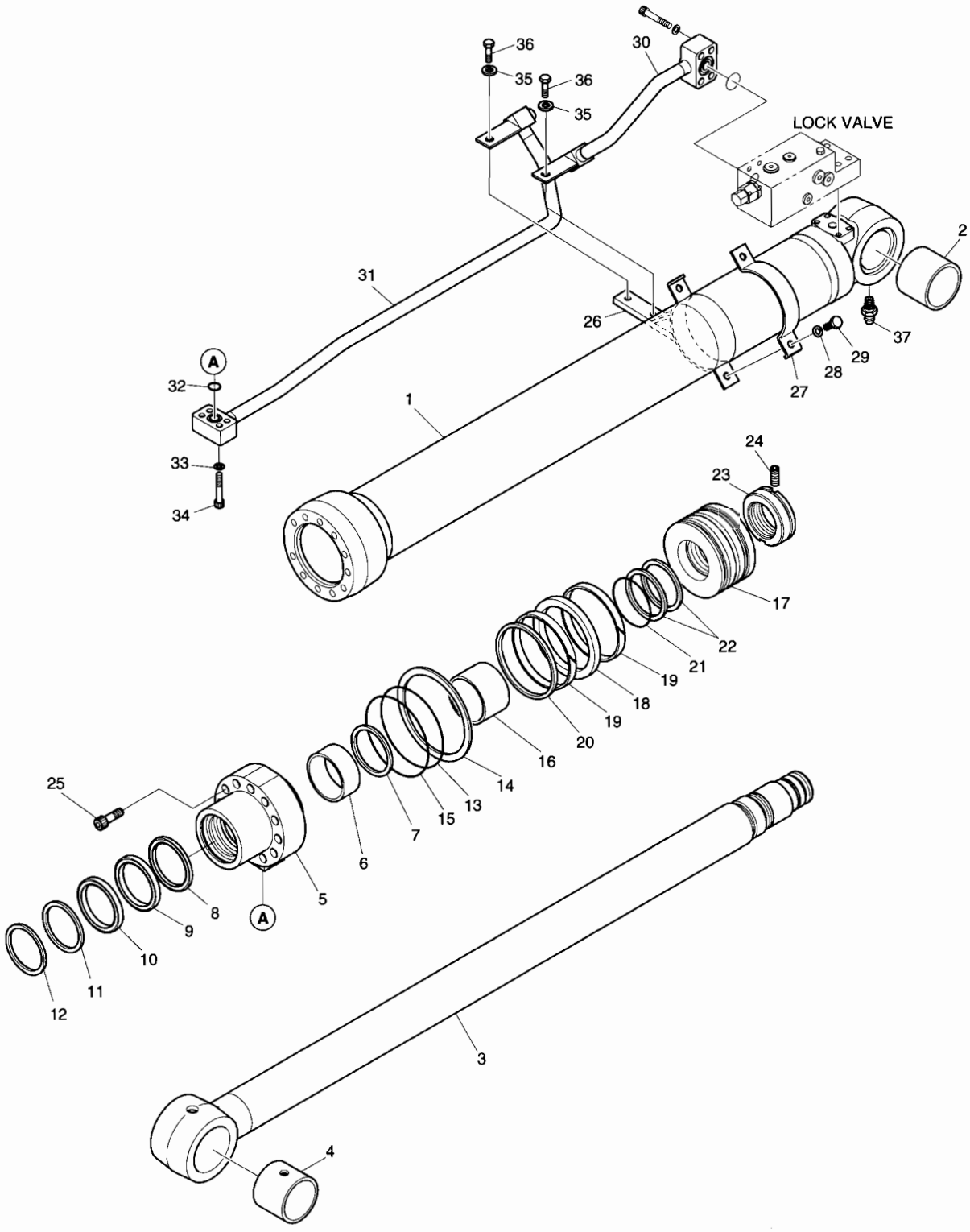

DATE	APR. 02, 2007
1st EDITION	

Fig. 4260 BOOM CYLINDER - L.H (LOCK VALVE) VERIN DE FLECHE

Serial No. ;

Key No.	Part No.	Description	Description	Q'ty	S.C	Serial No.	ICA	Replaceable part	
								Part No.	Q'ty
4260-*	K9002306	SEAL KIT	KIT D'ETANCHEITE	1					

DATE	APR. 02, 2007
1st EDITION	

Fig. 4270 BOOM CYLINDER - R.H (LOCK VALVE)
VERIN DE FLECHE

Serial No. ;

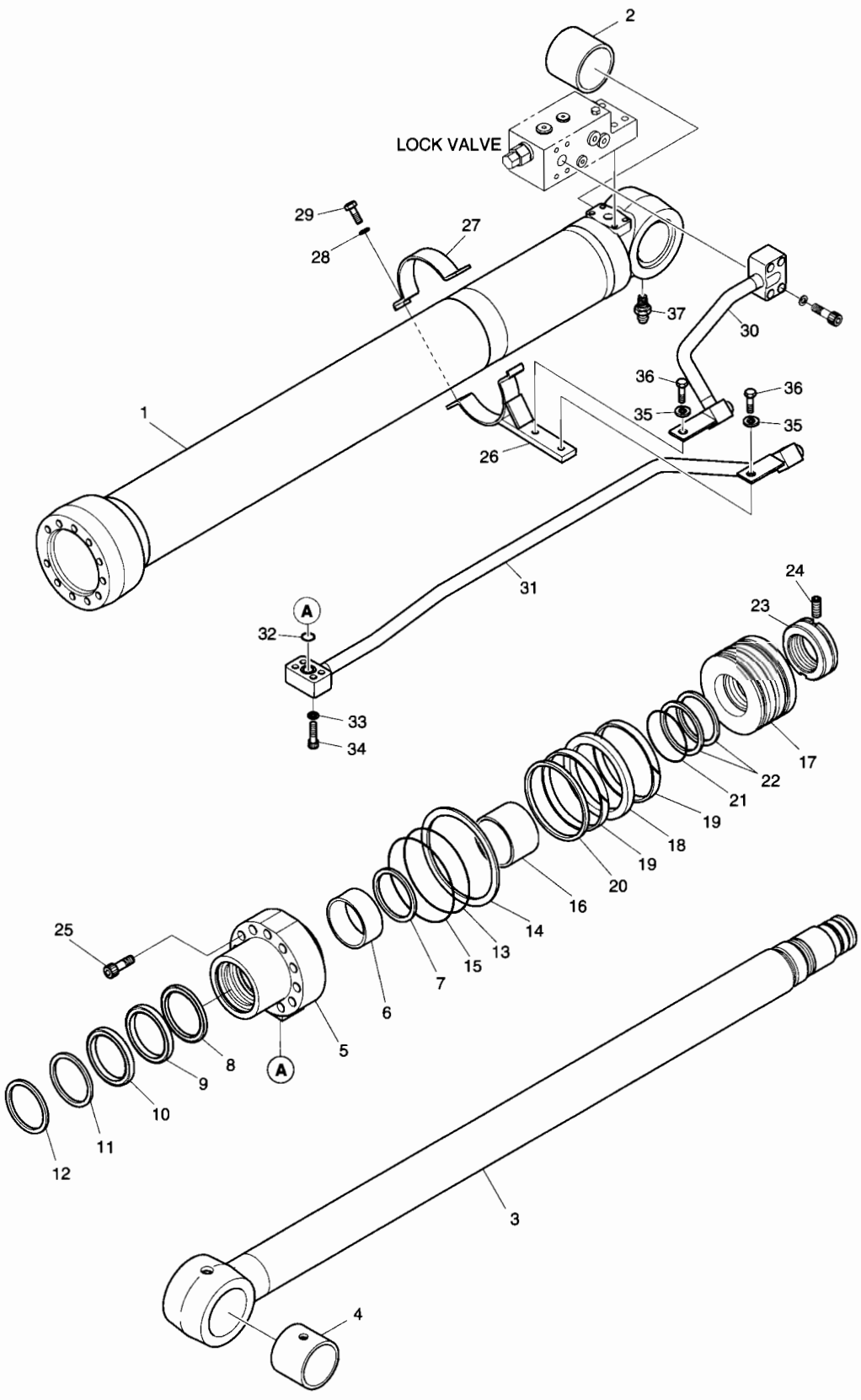

DATE	APR. 02, 2007
1st EDITION	

Fig. 4270 BOOM CYLINDER - R.H (LOCK VALVE) VERIN DE FLECHE

Serial No. ;

Key No.	Part No.	Description	Description	Q'ty	S.C	Serial No.	ICA	Replaceable part	
								Part No.	Q'ty
4270--	K1026248A	BOOM CYLINDER(R.H)	VERIN DE FLECHE	1					
1	K9005419	TUBE ASS'Y	TUYAU FLEXIBLE	1					
2	110-00244	BUSH	DOUILLE	1					
3	K9005420	ROD ASS'Y	ENSEMBLE TIGE	1					
4	110-00244	BUSH	DOUILLE	1					
5	K9001384	COVER;ROD	COUVERCLE	1					
6	110-00082	DD-BUSH	COUSSINET	1					
7	115-00052	RING;RETAINING	BAGUE	1					
8	K9001385	SEAL;BUFFER	ETANCHEITE	1	K				
9	K9001386	U-PACKING	JOINT EN U	1	K				
10	K9001396	RING;BACK UP	BAGUE	1	K				
11	115-00060	WIPER;DUST	RACCORD ADAPTATEUR	1	K				
12	115-00050	RING;RETAINING	BAGUE	1					
13	S8011051	O-RING	JOINT TORIQUE	1	K				
14	1.180-00268	RING;BACK UP	BAGUE	1	K				
15	S8011101	O-RING	JOINT TORIQUE	1	K				
16	K9001387	RING;CUSHION	BAGUE	1					
17	K9001388	PISTON	PISTON	1					
18	K9001389	SEAL;SLIPPER	JOINT	1	K				
19	115-00056	RING;WEAR	BAGUE D'USURE	2	K				
20	K9001390	RING;DUST	BAGUE	1	K				
21	180-00247	O-RING	JOINT TORIQUE	1	K				
22	1.180-00269	RING;BACK UP	BAGUE	2	K				
23	121-00043	NUT;PISTION	ECROU	1					
24	1.120-00219	SCREW;SET	VIS	1					
25	S2219071	BOLT;HEX. SOCKET	BOULON A 6 PANS CREUX	11					
26	K9001391	PIPE BAND ASS'Y	ENSEMBLE DE BANDE DE	1					
27	124-00055	BAND;PIPE	ATTACHE	1					
28	S5100603	WASHER;SPRING	RONDELLE ELASTIQUE	2					
29	S0558153	BOLT	BOULON	2					
30	K9005435	PIPE ASS'Y-H(R.H)	ENSEMBLE DE TUYAU	1					
31	K9005421	PIPE ASS'Y-R(R.H)	ENSEMBLE DE TUYAU	1					
32	S8000201	O-RING	JOINT TORIQUE	1					
33	S5100503	WASHER;SPRING	RONDELLE ELASTIQUE	4					
34	S2209561	BOLT;HEX. SOCKET	BOULON A 6 PANS CREUX	4					
35	S5100603	WASHER;SPRING	RONDELLE ELASTIQUE	2					
36	S0511863	BOLT;HEX.	BOULON A 6 PANS	2					
37	S6710032	NIPPLE;GREASE	MAMELON	1					

DATE	APR. 02, 2007
1st EDITION	

Fig. 4270 BOOM CYLINDER - R.H (LOCK VALVE)
VERIN DE FLECHE

Serial No. ;

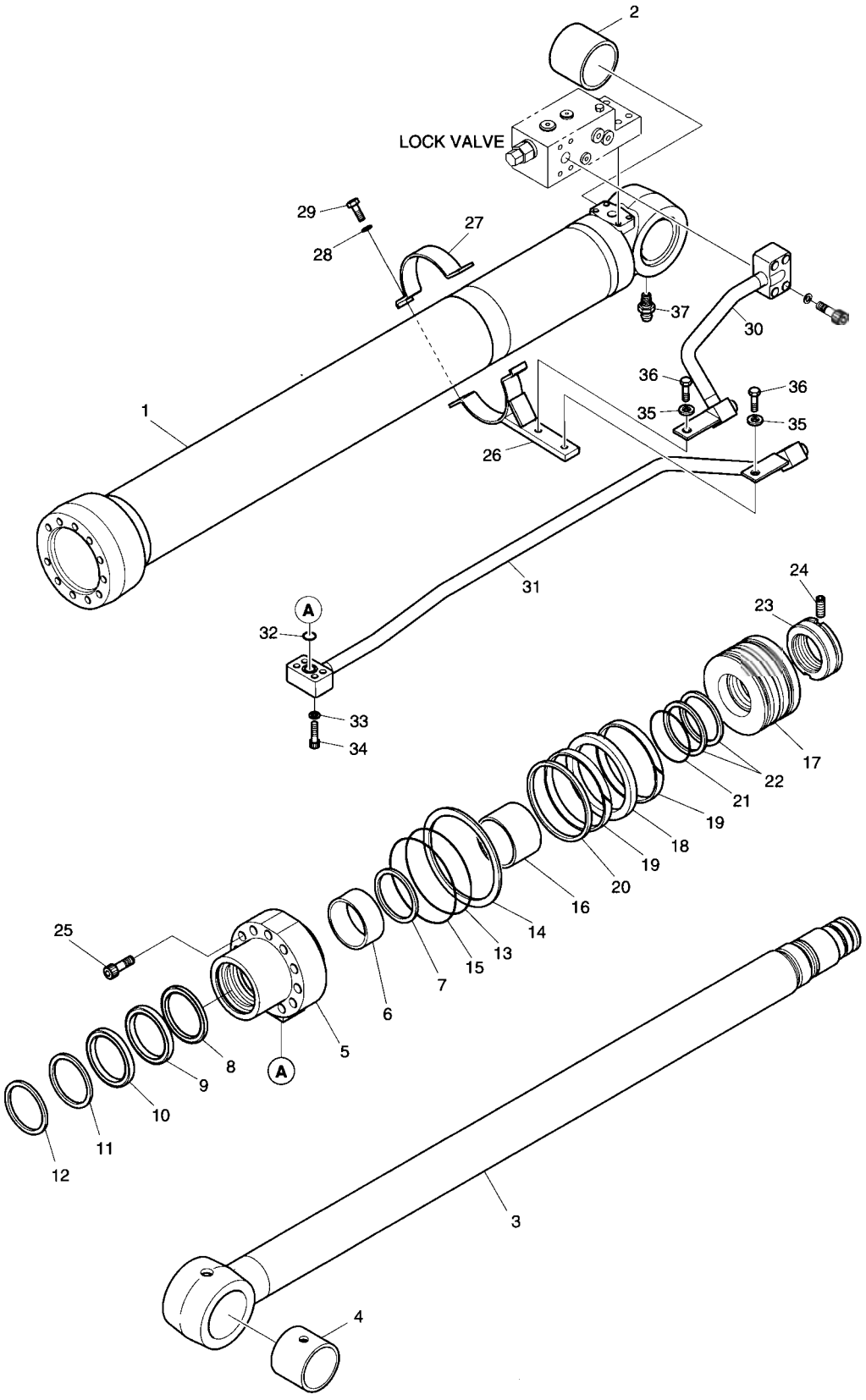

DATE	APR. 02, 2007
1st EDITION	

Fig. 4270 BOOM CYLINDER - R.H (LOCK VALVE) VERIN DE FLECHE

Serial No. ;

Key No.	Part No.	Description	Description	Q'ty	S.C	Serial No.	ICA	Replaceable part	
								Part No.	Q'ty
4270-*	K9002306	SEAL KIT	KIT D'ETANCHEITE	1					

DATE	APR. 02, 2007
1st EDITION	

Fig. 4280 ARM CYLINDER - LOCK VALVE
VERIN DE BALANCIER

Serial No. ;

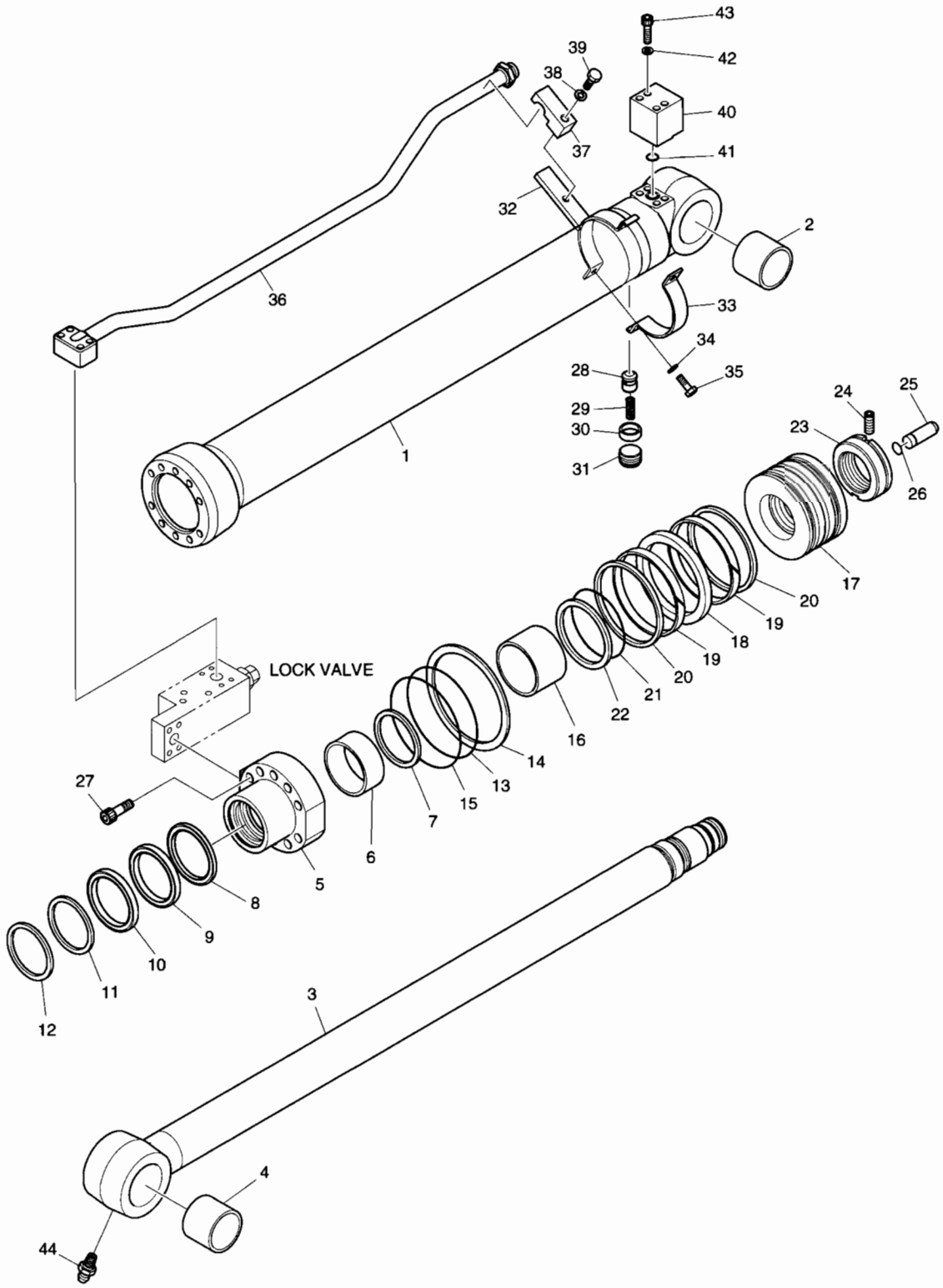

DATE	APR. 02, 2007
1st EDITION	

Fig. 4280 ARM CYLINDER - LOCK VALVE
VERIN DE BALANCIER

Serial No. ;

Key No.	Part No.	Description	Description	Q'ty	S.C	Serial No.	ICA	Replaceable part	
								Part No.	Q'ty
4280--	K1018944	ARM CYLINDER	VERIN DE BALANCIER	1					
1	K9005439	TUBE ASS'Y	TUYAU FLEXIBLE	1					
2	110-00241	BUSH	DOUILLE	1					
3	K9001418	ROD ASS'Y	ENSEMBLE TIGE	1					
4	110-00241	BUSH	DOUILLE	1					
5	K9001400	COVER;ROD	COUVERCLE	1					
6	110-00097	DD-BUSH	COUSSINET	1					
7	K9001401	RING;RETAINING	BAGUE	1					
8	K9001402	SEAL;BUFFER	ETANCHEITE	1	K				
9	K9001403	U-PACKING	JOINT EN U	1	K				
10	K9001404	RING;BACK UP	BAGUE	1	K				
11	115-00084	WIPER;DUST	RACCORD ADAPTATEUR	1	K				
12	115-00063	RING;RETAINING	BAGUE	1					
13	S8011101	O-RING	JOINT TORIQUE	1	K				
14	K9001405	RING;BACK UP	BAGUE	1	K				
15	S8011151	O-RING	JOINT TORIQUE	1	K				
16	K9001406	RING;CUSHION	BAGUE	1					
17	K9001407	PISTON	PISTON	1					
18	K9001408	SEAL;SLIPPER	JOINT	1	K				
19	115-00085	RING;WEAR	BAGUE D'USURE	2	K				
20	K9001409	RING;DUST	BAGUE	2	K				
21	180-00276	O-RING	JOINT TORIQUE	1	K				
22	K9001410	RING;BACK UP	BAGUE	2	K				
23	K9001862	NUT;PISTION	ECROU	1					
24	1.120-00219	SCREW;SET	VIS	1					
25	424-00059	PLUNGER;CUSHION	PLONGEUR	1					
26	115-00081	RING;STOP	BAGUE D'ARRET	1					
27	S2222171	BOLT;HEX. SOCKET	BOULON A 6 PANS CREUX	10					
28	1.420-00039	VALVE;CHECK	CAPTEUR	1					
29	1.131-00009	SPRING	RESSORT	1					
30	1.195-00022	SUPPORT;SPRING	SUPPORT	1					
31	2181-1116D3	PLUG;HEX. SOCKET	BOUCHON	1					
32	K9001411	PIPE BAND ASS'Y	ENSEMBLE DE BANDE DE	1					
33	124-00085	BAND;PIPE	ATTACHE	1					
34	S5100603	WASHER;SPRING	RONDELLE ELASTIQUE	2					
35	S0558153	BOLT	BOULON	2					
36	K9005437	PIPE ASS'Y-R	ENSEMBLE DE TUYAU	1					
37	K9001413	CLAMP;PIPE	COLLIER	1					

DATE	APR. 02, 2007
1st EDITION	

Fig. 4280 ARM CYLINDER - LOCK VALVE
VERIN DE BALANCIER

Serial No. ;

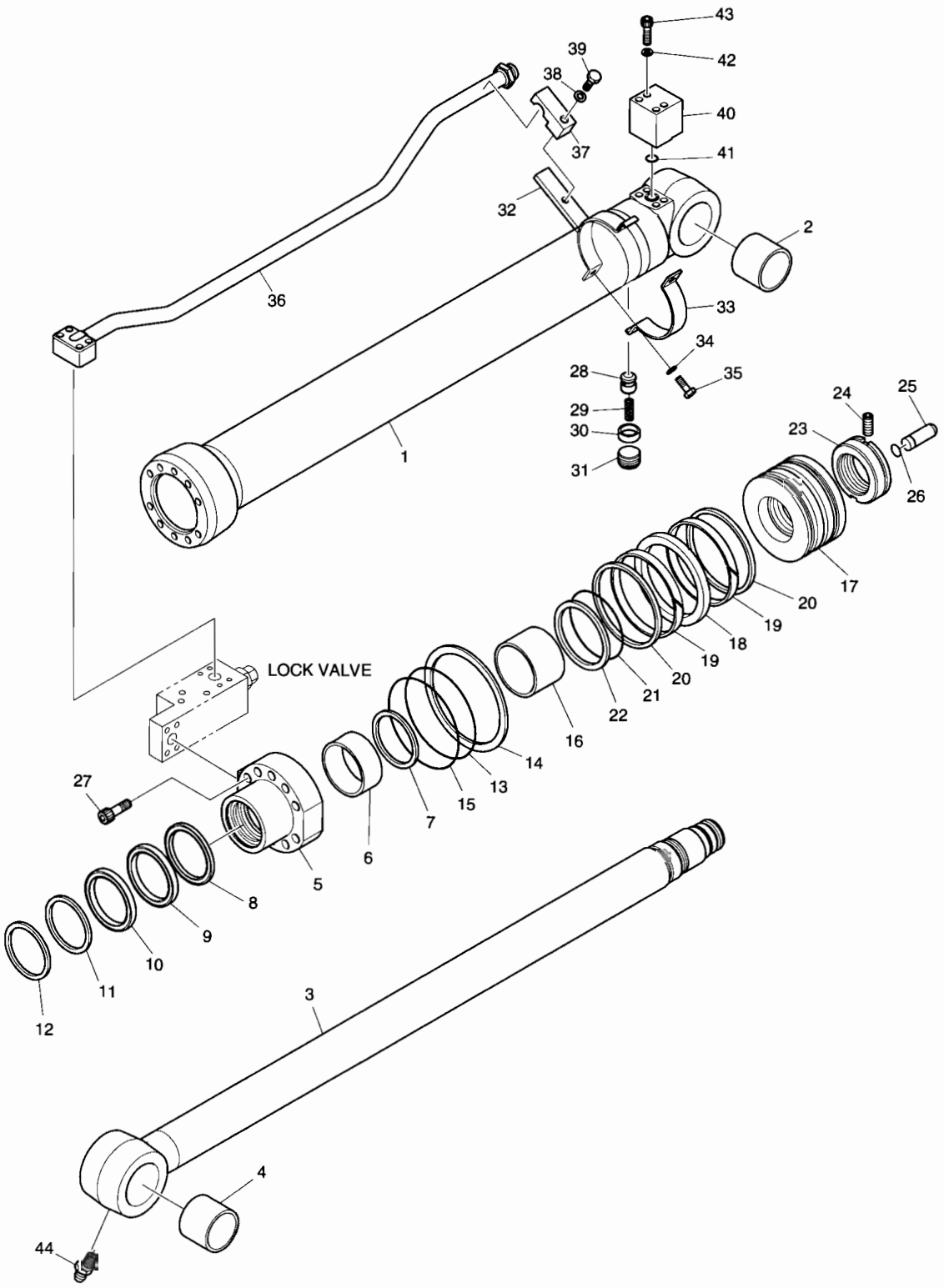

DATE	APR. 02, 2007
1st EDITION	

Fig. 4280 ARM CYLINDER - LOCK VALVE
VERIN DE BALANCIER

Serial No. ;

Key No.	Part No.	Description	Description	Q'ty	S.C	Serial No.	ICA	Replaceable part	
								Part No.	Q'ty
4280-38	S5102903	WASHER;SPRING	RONDELLE ELASTIQUE	1					
39	S0565451	BOLT	BOULON	1					
40	K9001414	PORT;FLANGE	PORT;FLANGE	1					
41	S8000281	O-RING	JOINT TORIQUE	1					
42	S5100603	WASHER;SPRING	RONDELLE ELASTIQUE	4					
43	S2212961	BOLT;HEX. SOCKET	BOULON A 6 PANS CREUX	4					
44	S6710032	NIPPLE;GREASE	MAMELON	1					
*	K9002308	SEAL KIT	KIT D'ETANCHEITE	1					

DATE	APR. 02, 2007
1st EDITION	

Fig. 4290 PEDAL VALVE VANNE

Serial No. ;

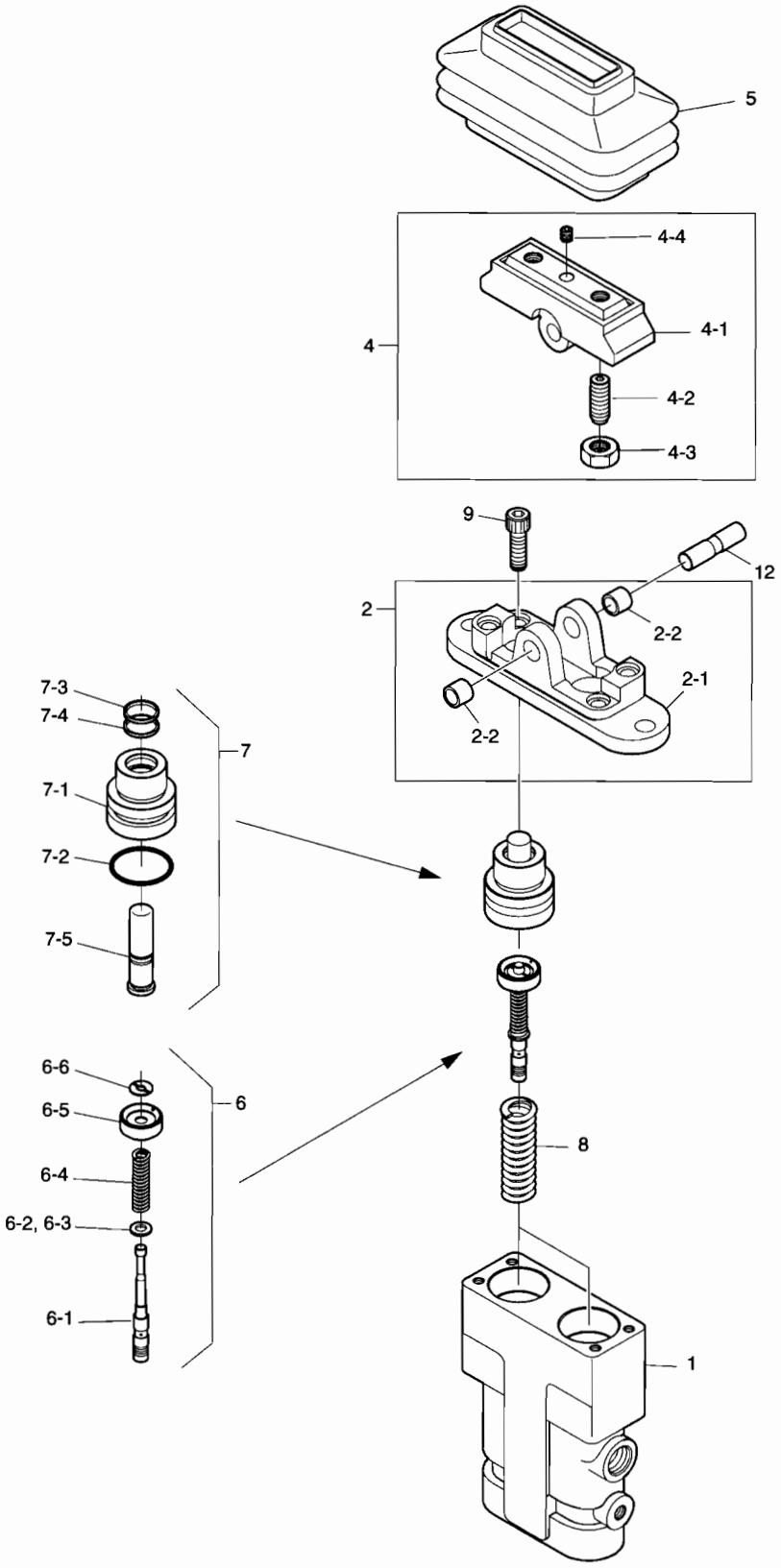

DATE	APR. 02, 2007
1st EDITION	

Fig. 4290 PEDAL VALVE VANNE

Serial No. ;

Key No.	Part No.	Description	Description	Q'ty	S.C	Serial No.	ICA	Replaceable part	
								Part No.	Q'ty
4290--	K1017382	PEDAL VALVE	VANNE DE PEDALE	1					
1	-	CASING	CARTER	1	D				
2	K9002934	COVER KIT	COUVERCLE	1	D				
2-1	-	. COVER	. COUVERCLE	1	D				
2-2	2110-1184D7	. BUSH;DU 10X10	. BAGUE	2					
4	K9003465	CAM KIT	CAME	1	D				
4-1	-	. CAM	. CAME	1	D				
4-2	-	. SCREW;SET	. VIS	2	D				
4-3	S4014633	. NUT M10	. ECROU	2					
4-4	S3523601	. SCREW;SET M8X12	. VIS	1					
5	160-00008	BELLOW	SOUFFLET	1					
6	402-00036	SPOOL ASS'Y	PLUNGEUR	2					
6-1	-	. SPOOL	. PLUNGEUR	1	D				
6-2	-	. SHIM	. CALE	1	R				
6-3	-	. SEAT;SPRING	. SIEGE DE RESSORT	1	D				
6-4	-	. SPRING	. RESSORT	1	D				
6-5	-	. SEAT;SPRING	. SIEGE DE RESSORT	1	D				
6-6	-	. STOPPER	. ARRET	1	D				
7	1.428-00241	PLUG ASS'Y	BOUCHON	2					
7-1	-	. PLUG	. BOUCHON	1	D				
7-2	-	. O-RING	. JOINT TORIQUE	1	D				
7-3	-	. SEAL;DUST	. BAGUE D'ETANCHEITE	1	D				
7-4	-	. SEAL;ROD	. BAGUE D'ETANCHEITE	1	D				
7-5	-	. ROD;PUSH	. TIGE	1	D				
8	K9002935	SPRING	RESSORT	2					
9	S2209261	BOLT;WRENCH M8X30	BOULON A 6 PANS	2					
12	354-00003	SHAFT;CAM	ARBRE A CAMES	1					

DATE	APR. 02, 2007
1st EDITION	

Fig. 4300 REMOTE CONTROL VALVE - DOZER
VANNE DE COMMAND A DISTANCE

Serial No. ;

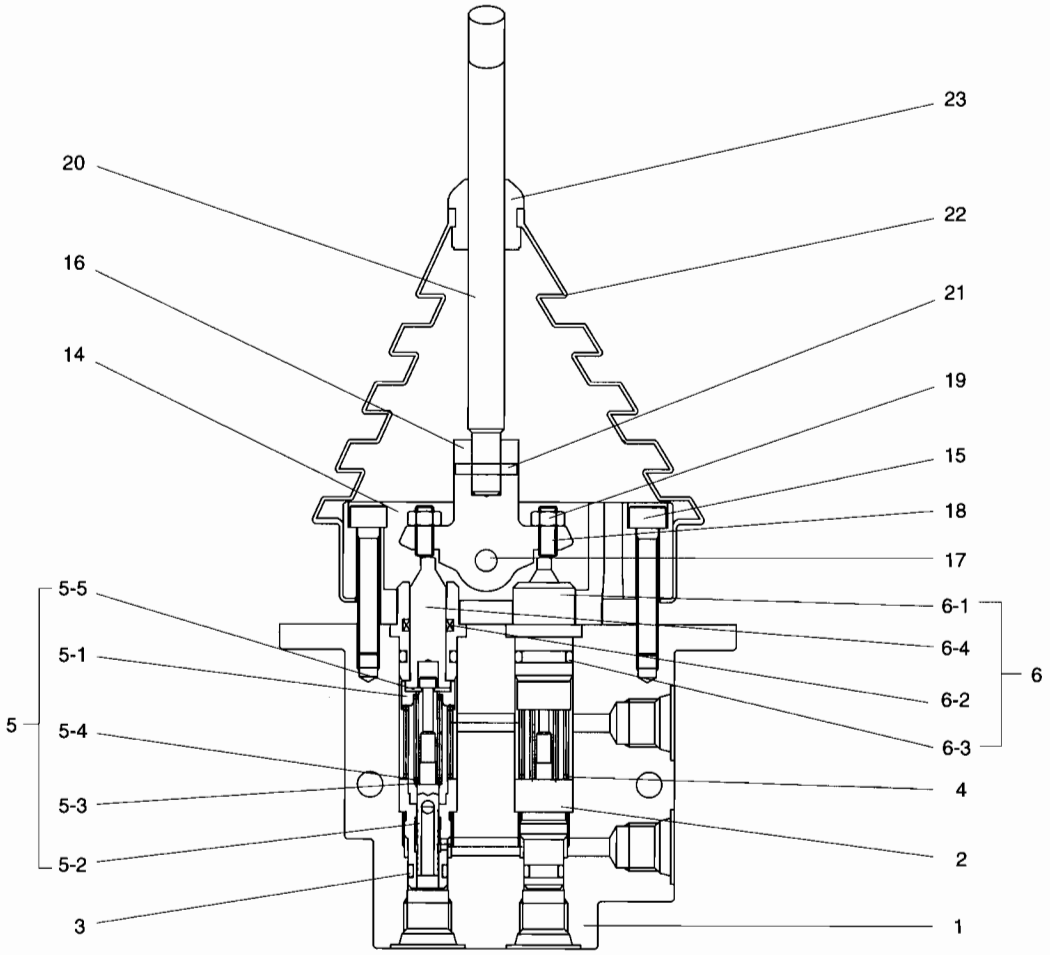

DATE	APR. 02, 2007
1st EDITION	

Fig. 4300 REMOTE CONTROL VALVE - DOZER
VANNE DE COMMAND A DISTANCE

Serial No. ;

Key No.	Part No.	Description	Description	Q'ty	S.C	Serial No.	ICA	Replaceable part	
								Part No.	Q'ty
4300--	420-00490A	DOZER REMOCON VALVE	VANNE DE COMMAND A	1					
1	-	BODY	CARTER	1	D				
2	1.181-00055	PLUG	BOUCHON	2					
3	S8000081	O-RING	JOINT TORIQUE	2	K				
4	1.131-00035	SPRING	RESSORT	2					
5	K9001357	SPOOL KIT	BOBINE	1					
5-1	-	. SEAT;SPRING	. SIEGE	2	D				
5-2	-	. SPOOL	. BOBINE	2	D				
5-3	-	. SEAT;SPRING	. SIEGE	2	D				
5-4	-	. SPRING	. RESSORT	2	D				
5-5	-	. STOPPER	. ARRET	2	D				
6	K9001358	PLUG KIT	BOUCHON	1					
6-1	-	. PLUG	. BOUCHON	2	D				
6-2	-	. SEAL;ROD	. TIGE D'ETANCHEITE	2	K				
6-3	S8000141	. O-RING	. JOINT TORIQUE	2	K				
6-4	-	. ROD;PUSH	. TIGE	2	D				
14	1.430-00025	COVER	COUVERCLE	1					
15	S2205361	BOLT	BOULON	2					
16	1.429-00003	GUIDE	GUIDE	1					
17	1.123-00022	PIN	GOUPILLE	1					
18	1.120-00010	BOLT	BOULON	2					
19	S4014233	NUT	ECROU	2					
20	1.357-00003	LEVER	LEVIER	1					
21	S5740530	PIN;SPRING	GOUPILLE	1					
22	K9001360	BOOT	INITIALISATION	1					
23	1.110-00170	BUSHING	DOUILLE	1					
*	K9001361	SEAL KIT	KIT D'ETANCHEITE	1					

DATE	APR. 02, 2007
1st EDITION	

Fig. 4310 DOZER CYLINDER - L.H
CYLINDRE DE DOZER

Serial No. ;

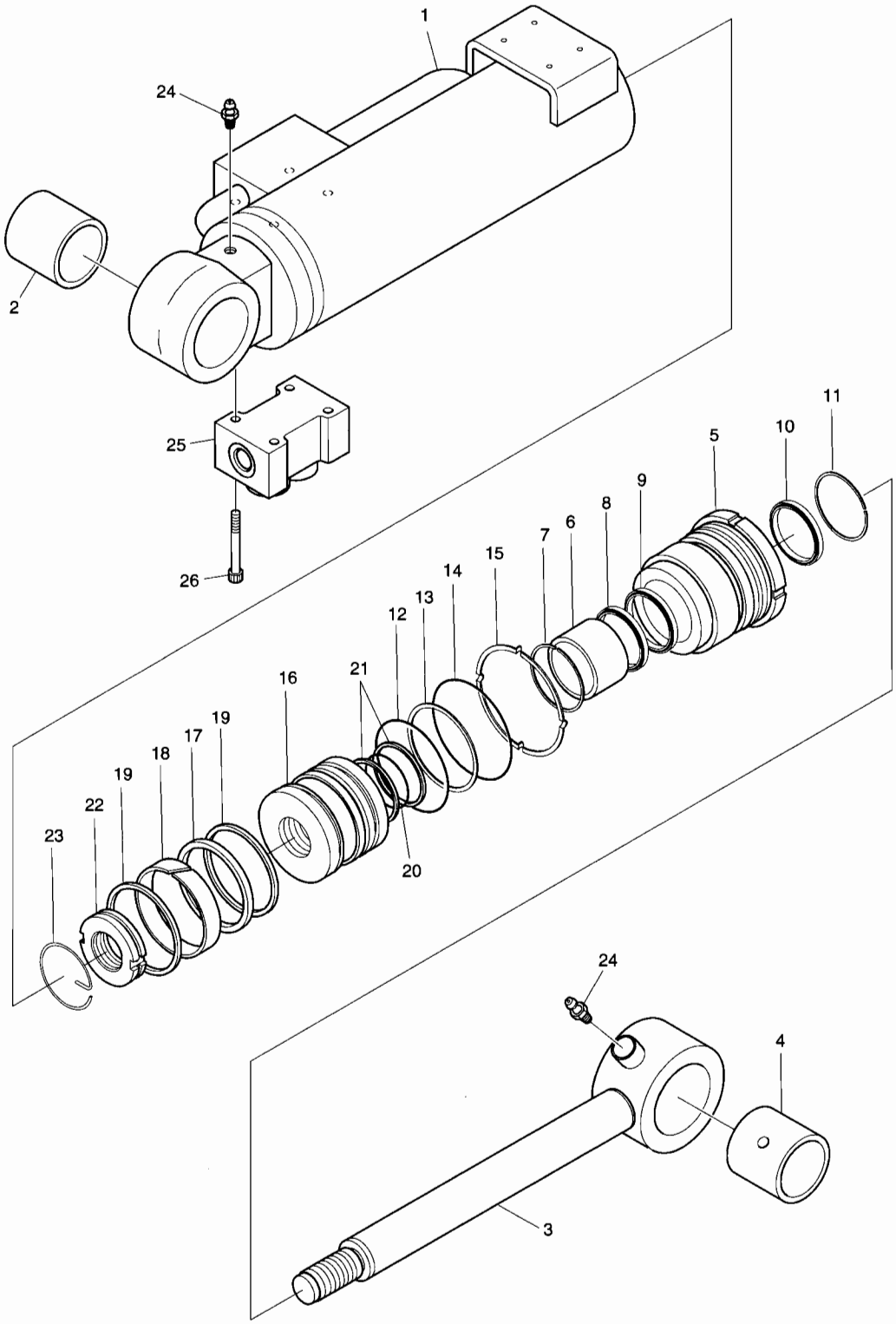

DATE	APR. 02, 2007
1st EDITION	

Fig. 4310 DOZER CYLINDER - L.H
CYLINDRE DE DOZER

Serial No. ;

Key No.	Part No.	Description	Description	Q'ty	S.C	Serial No.	ICA	Replaceable part	
								Part No.	Q'ty
4310--	K1018308	CYLINDER;DOZER(L.H.)	VERIN DE DOZER	1					
1	308-00020	TUBE ASS'Y	ENSEMBLE TUBE	1					
2	110-00115	BUSH;STEEL	DOUILLE	1					
3	454-00023	ROD ASS'Y	ENSEMBLE TIGE	1					
4	110-00115	BUSH;STEEL	DOUILLE	1					
5	621-00951	COVER;ROD	COUVERCLE DE TIGE	1					
6	110-00114	BUSH;DU	DOUILLE DU	1					
7	1.115-00394	RING;RETAINING	ARRET	1					
8	180-00313	SEAL;STEP	ETANCHEITE A GRADINS	1	K				
9	1.180-00632	PACKING;U	JOINT EN U	1	K				
10	115-00107	WIPER;DUST	PARE-POUSSIERE	1	K				
11	115-00104	RING;RETAINING	ARRET	1					
12	S8010951	O-RING 1BG-95	JOINT TORIQUE	1	K				
13	180-00312	RING;BACK UP	ANNEAU DE SOUTIEN	1	K				
14	S8011001	O-RING 1BG-100	JOINT TORIQUE	1	K				
15	114-00311	WASHER	RONDELLE	1					
16	409-00028	PISTON	PISTON	1					
17	180-00314	SEAL;SLIPPER	JOINT	1	K				
18	K9001372	RING;WEAR	SEGMENT D'USURE	1	K				
19	115-00101	RING;DUST	BAGUE DE SOUTIEN	2	K				
20	S8010601	O-RING 1BG-60	JOINT TORIQUE	1	K				
21	180-00315	RING;BACK UP	BAGUE DE SOUTIEN	2	K				
22	1.121-00104	NUT;PISTON	ECROU DE PISTON	1					
23	1.115-00395	RING;LOCK	BAGUE	1					
24	S6710032	NIPPLE;GREASE	GRAISSEUR	2					
25	2426-9021C	VALVE ASS'Y	VANNE	1					
26	S2212971	BOLT	BOULON A 6 PANS	4					
*	2440-9164K	SEAL KIT;DOZER CYL.	KIT DE JOINT	1					

DATE	APR. 02, 2007
1st EDITION	

Fig. 4320 DOZER CYLINDER - R.H
CYLINDRE DE DOZER

Serial No. ;

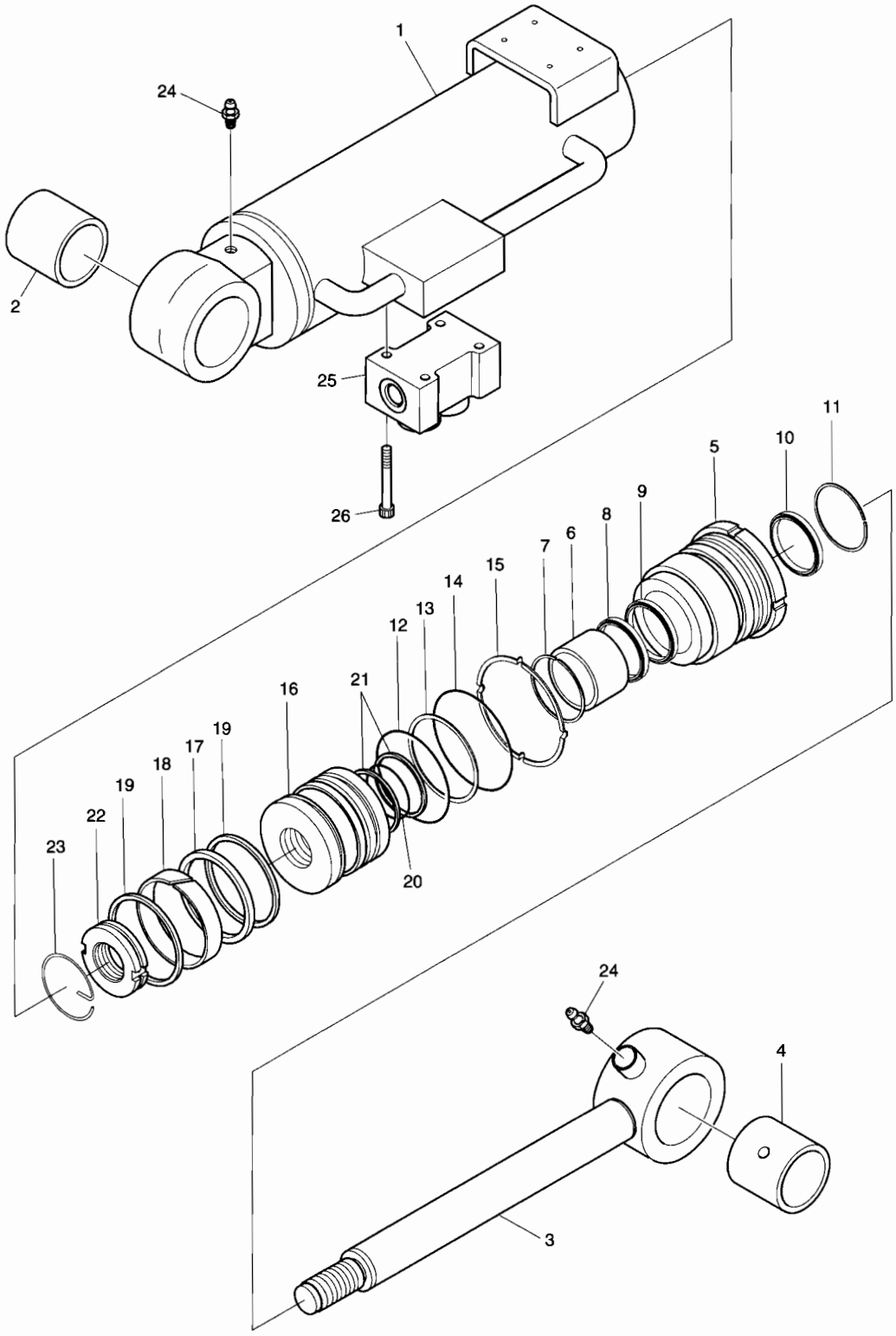

DATE	APR. 02, 2007
1st EDITION	

Fig. 4320 DOZER CYLINDER - R.H
CYLINDRE DE DOZER

Serial No. ;

Key No.	Part No.	Description	Description	Q'ty	S.C	Serial No.	ICA	Replaceable part	
								Part No.	Q'ty
4320--	K1018309	CYLINDER;DOZER(R.H.)	VERIN GAUCHE	1					
1	308-00019	TUBE ASS'Y	ENSEMBLE TUBE	1					
2	110-00115	BUSH;STEEL	DOUILLE	1					
3	454-00023	ROD ASS'Y	ENSEMBLE TIGE	1					
4	110-00115	BUSH;STEEL	DOUILLE	1					
5	621-00951	COVER;ROD	COUVERCLE DE TIGE	1					
6	110-00114	BUSH;DU	DOUILLE DU	1					
7	1.115-00394	RING;RETAINING	ARRET	1					
8	180-00313	SEAL;STEP	ETANCHEITE A GRADINS	1	K				
9	1.180-00632	PACKING;U	JOINT EN U	1	K				
10	115-00107	WIPER;DUST	PARE-POUSSIERE	1	K				
11	115-00104	RING;RETAINING	ARRET	1					
12	S8010951	O-RING 1BG-95	JOINT TORIQUE	1	K				
13	180-00312	RING;BACK UP	ANNEAU DE SOUTIEN	1	K				
14	S8011001	O-RING 1BG-100	JOINT TORIQUE	1	K				
15	114-00311	WASHER	RONDELLE	1					
16	409-00028	PISTON	PISTON	1					
17	180-00314	SEAL;SLIPPER	JOINT	1	K				
18	K9001372	RING;WEAR	SEGMENT D'USURE	1	K				
19	115-00101	RING;DUST	BAGUE DE SOUTIEN	2	K				
20	S8010601	O-RING 1BG-60	JOINT TORIQUE	1	K				
21	180-00315	RING;BACK UP	BAGUE DE SOUTIEN	2	K				
22	1.121-00104	NUT;PISTON	ECROU DE PISTON	1					
23	1.115-00395	RING;LOCK	BAGUE	1					
24	S6710032	NIPPLE;GREASE	GRAISSEUR	2					
25	2426-9021C	VALVE ASS'Y	VANNE	1					
26	S2212971	BOLT	BOULON A 6 PANS	4					
*	2440-9164K	SEAL KIT;DOZER CYL.	KIT DE JOINT	1					

DATE	APR. 02, 2007
1st EDITION	

Fig. 4330 CENTER JOINT - DOZER
JOINT TOURNANT

Serial No. ;

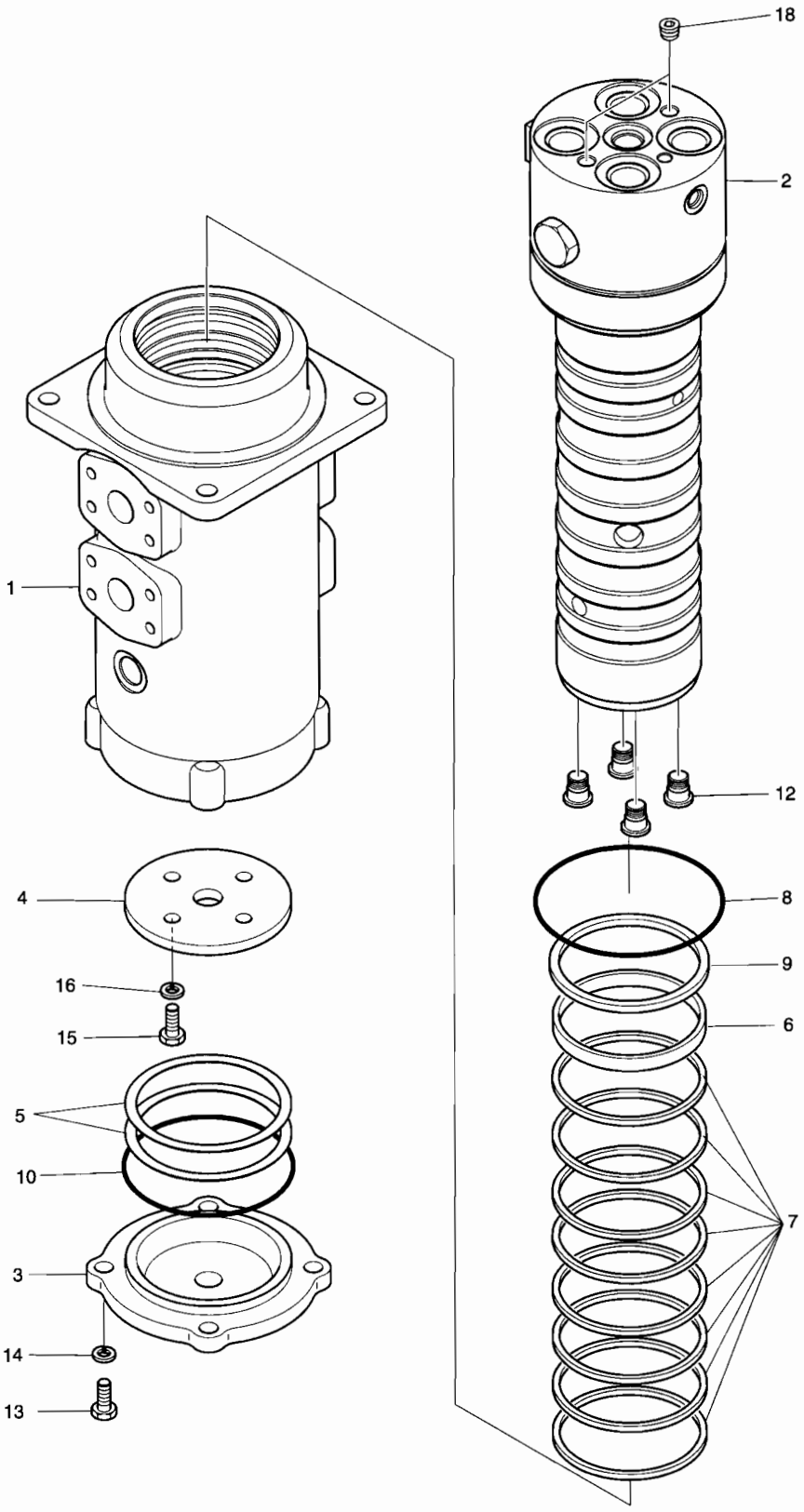

DATE	APR. 02, 2007
1st EDITION	

Fig. 4330 CENTER JOINT - DOZER
JOINT TOURNANT

Serial No. ;

Key No.	Part No.	Description	Description	Q'ty	S.C	Serial No.	ICA	Replaceable part	
								Part No.	Q'ty
4330--	K1011859A	CENTER JOINT	JOINT CENTRAL	1					
1	K1024668	HUB	MOYEU	1					
2	K1024669A	SPINDLE	TOUPIE	1					
3	482-00003	COVER	COUVERCLE	1					
4	114-00583	SPACER	DOUILLE D'ECARTEMENT	1					
5	114-00584	SHIM	CALE	2					
6	-	RING;WEAR	BAGUE D'USURE	1	K				
7	-	SEAL;SLIPPER	JOINT	8	K				
8	S8001200	O-RING	JOINT TORIQUE	1	K				
9	S8001001	O-RING	JOINT TORIQUE	1	K				
10	S8011201	O-RING	JOINT TORIQUE	1	K				
12	-	PLUG	BOUCHON	4					
13	S0515253	BOLT	BOULON	4					
14	S5102703	WASHER;SPRING	RONDELLE ELASTIQUE	4					
15	S0512053	BOLT	BOULON	4					
16	S5102603	WASHER;SPRING	RONDELLE ELASTIQUE	4					
18	-	PLUG	BOUCHON	2					
*	K9005490	SEAL KIT;CENTER JOINT	JOINT CENTRAL	1					

DATE	APR. 02, 2007
1st EDITION	

Fig. 4340 BOOM CYLINDER - L.H (ARTI BOOM)
VERIN DE FLECHE

Serial No. ;

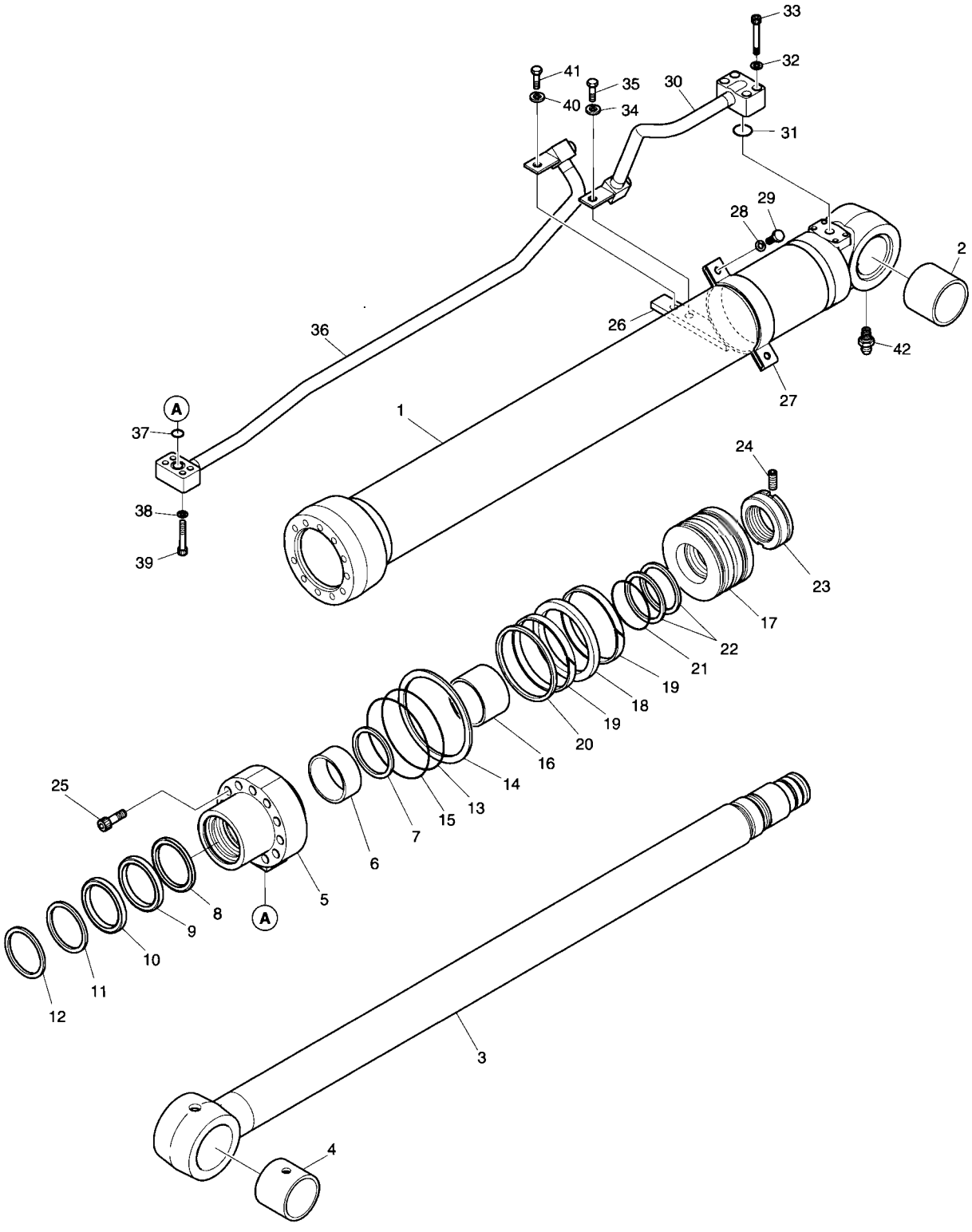

DATE	APR. 02, 2007
1st EDITION	

Fig. 4340 BOOM CYLINDER - L.H (ARTI BOOM) VERIN DE FLECHE

Serial No. ;

Key No.	Part No.	Description	Description	Q'ty	S.C	Serial No.	ICA	Replaceable part	
								Part No.	Q'ty
4340--	K1027313	BOOM CYLINDER(L.H)	VERIN DE FLECHE	1					
1	K9005453	TUBE ASS'Y	TUYAU FLEXIBLE	1					
2	110-00244	BUSH	DOUILLE	1					
3	K9005454	ROD ASS'Y	ENSEMBLE TIGE	1					
4	110-00244	BUSH	DOUILLE	1					
5	K9001384	COVER;ROD	COUVERCLE	1					
6	110-00082	DD-BUSH	COUSSINET	1					
7	115-00052	RING;RETAINING	BAGUE	1					
8	K9001385	SEAL;BUFFER	ETANCHEITE	1	K				
9	K9001386	U-PACKING	JOINT EN U	1	K				
10	K9001396	RING;BACK UP	BAGUE	1	K				
11	115-00060	WIPER;DUST	RACCORD ADAPTATEUR	1	K				
12	115-00050	RING;RETAINING	BAGUE	1					
13	S8011051	O-RING	JOINT TORIQUE	1	K				
14	1.180-00268	RING;BACK UP	BAGUE	1	K				
15	S8011101	O-RING	JOINT TORIQUE	1	K				
16	K9001387	RING;CUSHION	BAGUE	1					
17	K9001388	PISTON	PISTON	1					
18	K9001389	SEAL;SLIPPER	JOINT	1	K				
19	115-00056	RING;WEAR	BAGUE D'USURE	2	K				
20	K9001390	RING;DUST	BAGUE	1	K				
21	180-00247	O-RING	JOINT TORIQUE	1	K				
22	1.180-00269	RING;BACK UP	BAGUE	2	K				
23	121-00043	NUT;PISTION	ECROU	1					
24	1.120-00219	SCREW;SET	VIS	1					
25	S2219071	BOLT;HEX. SOCKET	BOULON A 6 PANS CREUX	11					
26	K9005457	PIPE BAND ASS'Y	ENSEMBLE DE BANDE DE	1					
27	124-00055	BAND;PIPE	ATTACHE	1					
28	S5100603	WASHER;SPRING	RONDELLE ELASTIQUE	2					
29	S0558153	BOLT	BOULON	2					
30	K9005459	PIPE ASS'Y-H(L.H)	ENSEMBLE DE TUYAU	1					
31	S8000281	O-RING	JOINT TORIQUE	1					
32	S5100603	WASHER;SPRING	RONDELLE ELASTIQUE	4					
33	S2212761	BOLT;HEX. SOCKET	BOULON A 6 PANS CREUX	4					
34	S5100603	WASHER;SPRING	RONDELLE ELASTIQUE	1					
35	S0511863	BOLT;HEX.	BOULON A 6 PANS	1					
36	K9005456	PIPE ASS'Y-R(L.H)	ENSEMBLE DE TUYAU	1					
37	S8000201	O-RING	JOINT TORIQUE	1					

DATE	APR. 02, 2007
1st EDITION	

Fig. 4340 BOOM CYLINDER - L.H (ARTI BOOM)
VERIN DE FLECHE

Serial No. ;

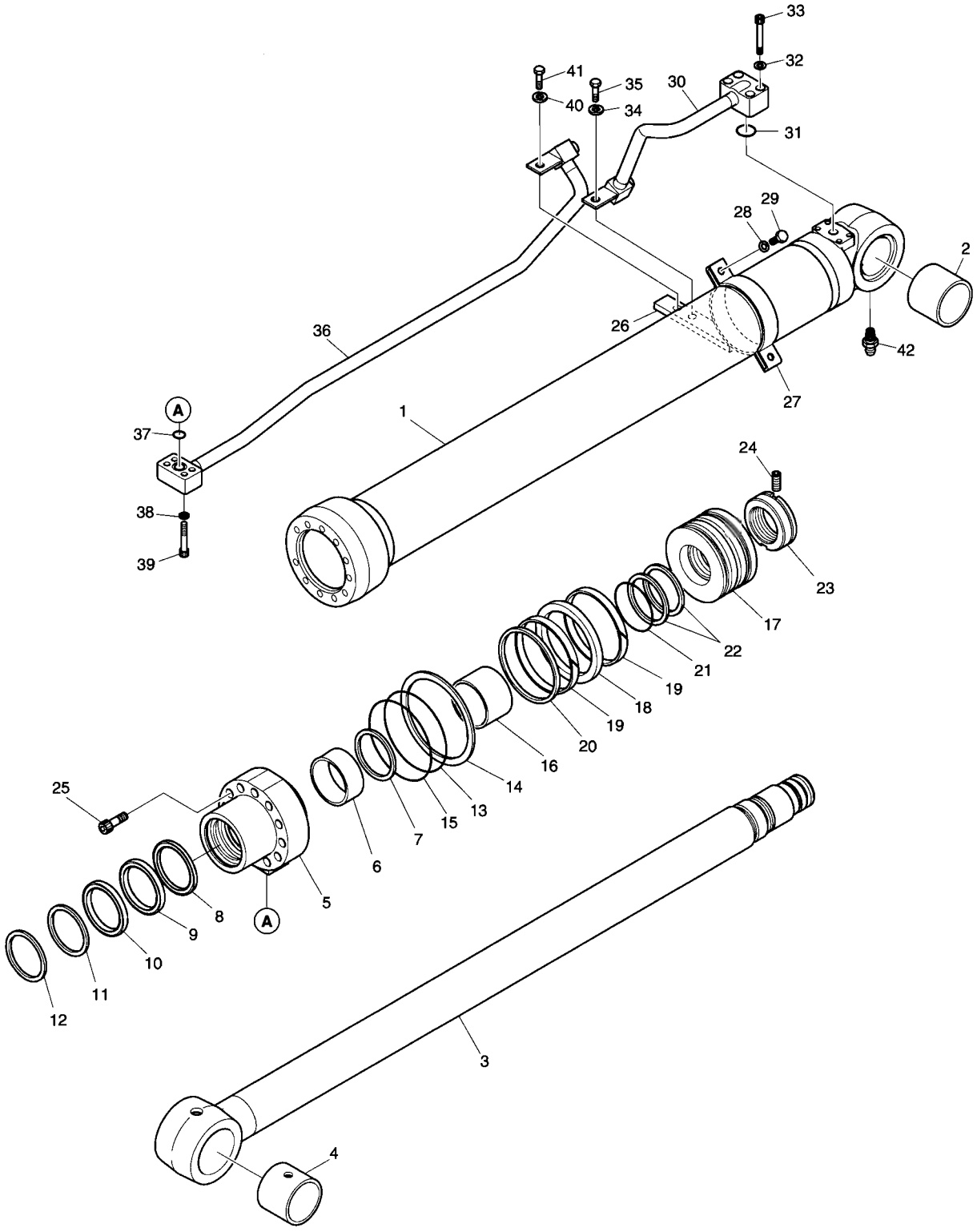

DATE	APR. 02, 2007
1st EDITION	

Fig. 4340 BOOM CYLINDER - L.H (ARTI BOOM) VERIN DE FLECHE

Serial No. ;

Key No.	Part No.	Description	Description	Q'ty	S.C	Serial No.	ICA	Replaceable part	
								Part No.	Q'ty
4340-38	S5100503	WASHER;SPRING	RONDELLE ELASTIQUE	4					
39	S2209561	BOLT;HEX. SOCKET	BOULON A 6 PANS CREUX	4					
40	S5100603	WASHER;SPRING	RONDELLE ELASTIQUE	1					
41	S0511863	BOLT;HEX.	BOULON A 6 PANS	1					
42	S6710032	NIPPLE;GREASE	MAMELON	1					
*	K9002306	SEAL KIT	KIT D'ETANCHEITE	1					

DATE	APR. 02, 2007
1st EDITION	

Fig. 4350 BOOM CYLINDER - R.H (ARTI BOOM) VERIN DE FLECHE

Serial No. ;

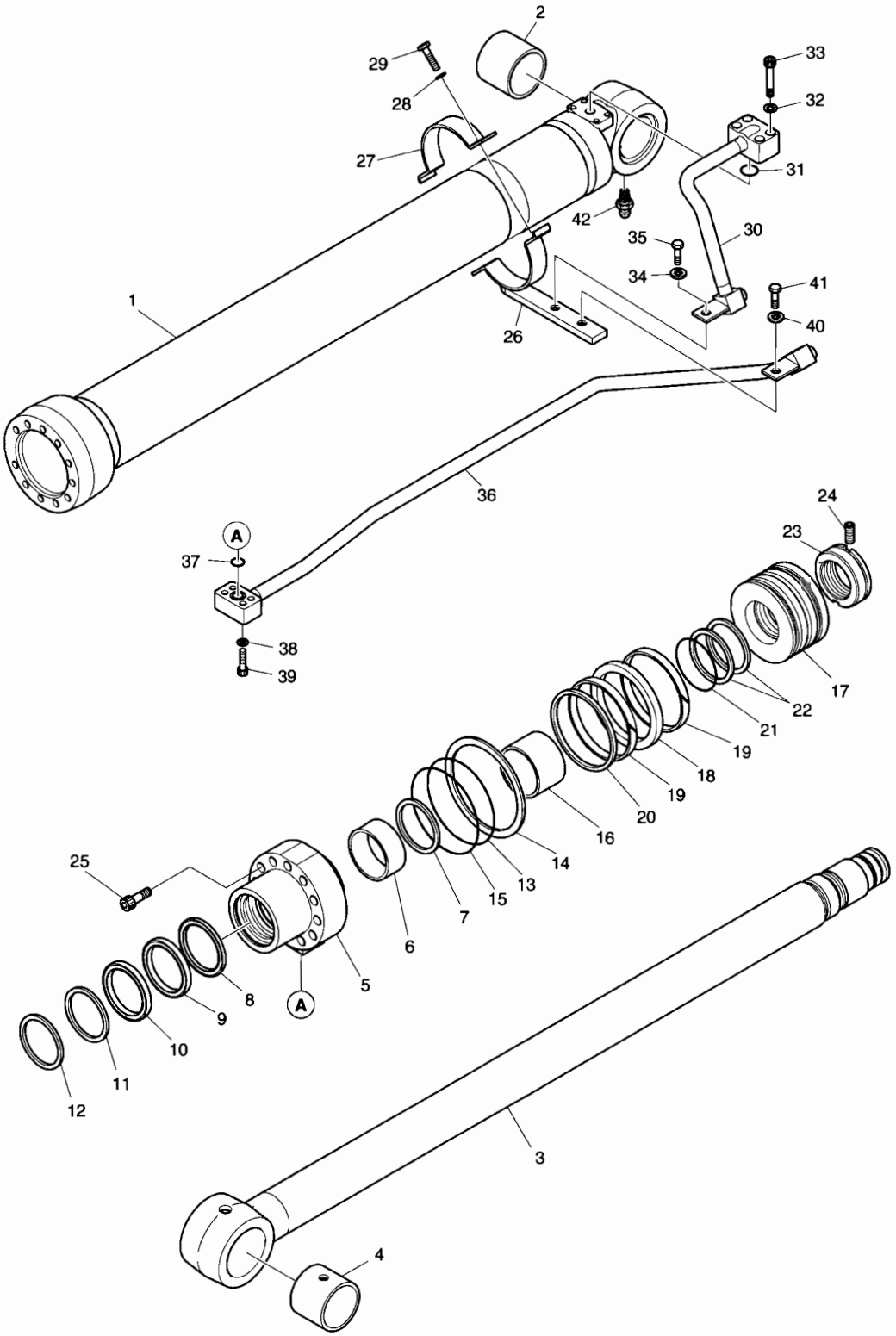

DATE	APR. 02, 2007
1st EDITION	

Fig. 4350 BOOM CYLINDER - R.H (ARTI BOOM) VERIN DE FLECHE

Serial No. ;

Key No.	Part No.	Description	Description	Q'ty	S.C	Serial No.	ICA	Replaceable part	
								Part No.	Q'ty
4350--	K1027314	BOOM CYLINDER(R.H)	VERIN DE FLECHE	1					
1	K9005453	TUBE ASS'Y	TUYAU FLEXIBLE	1					
2	110-00244	BUSH	DOUILLE	1					
3	K9005454	ROD ASS'Y	ENSEMBLE TIGE	1					
4	110-00244	BUSH	DOUILLE	1					
5	K9001384	COVER;ROD	COUVERCLE	1					
6	110-00082	DD-BUSH	COUSSINET	1					
7	115-00052	RING;RETAINING	BAGUE	1					
8	K9001385	SEAL;BUFFER	ETANCHEITE	1	K				
9	K9001386	U-PACKING	JOINT EN U	1	K				
10	K9001396	RING;BACK UP	BAGUE	1	K				
11	115-00060	WIPER;DUST	RACCORD ADAPTATEUR	1	K				
12	115-00050	RING;RETAINING	BAGUE	1					
13	S8011051	O-RING	JOINT TORIQUE	1	K				
14	1.180-00268	RING;BACK UP	BAGUE	1	K				
15	S8011101	O-RING	JOINT TORIQUE	1	K				
16	K9001387	RING;CUSHION	BAGUE	1					
17	K9001388	PISTON	PISTON	1					
18	K9001389	SEAL;SLIPPER	JOINT	1	K				
19	115-00056	RING;WEAR	BAGUE D'USURE	2	K				
20	K9001390	RING;DUST	BAGUE	1	K				
21	180-00247	O-RING	JOINT TORIQUE	1	K				
22	1.180-00269	RING;BACK UP	BAGUE	2	K				
23	121-00043	NUT;PISTION	ECROU	1					
24	1.120-00219	SCREW;SET	VIS	1					
25	S2219071	BOLT;HEX. SOCKET	BOULON A 6 PANS CREUX	11					
26	K9005457	PIPE BAND ASS'Y	ENSEMBLE DE BANDE DE	1					
27	124-00055	BAND;PIPE	ATTACHE	1					
28	S5100603	WASHER;SPRING	RONDELLE ELASTIQUE	2					
29	S0558153	BOLT	BOULON	2					
30	K9005458	PIPE ASS'Y-H(R.H)	ENSEMBLE DE TUYAU	1					
31	S8000281	O-RING	JOINT TORIQUE	1					
32	S5100603	WASHER;SPRING	RONDELLE ELASTIQUE	4					
33	S2212761	BOLT;HEX. SOCKET	BOULON A 6 PANS CREUX	4					
34	S5100603	WASHER;SPRING	RONDELLE ELASTIQUE	1					
35	S0511863	BOLT;HEX.	BOULON A 6 PANS	1					
36	K9005455	PIPE ASS'Y-R(R.H)	ENSEMBLE DE TUYAU	1					
37	S8000201	O-RING	JOINT TORIQUE	1					

DATE	APR. 02, 2007
1st EDITION	

Fig. 4350 BOOM CYLINDER - R.H (ARTI BOOM) VERIN DE FLECHE

Serial No. ;

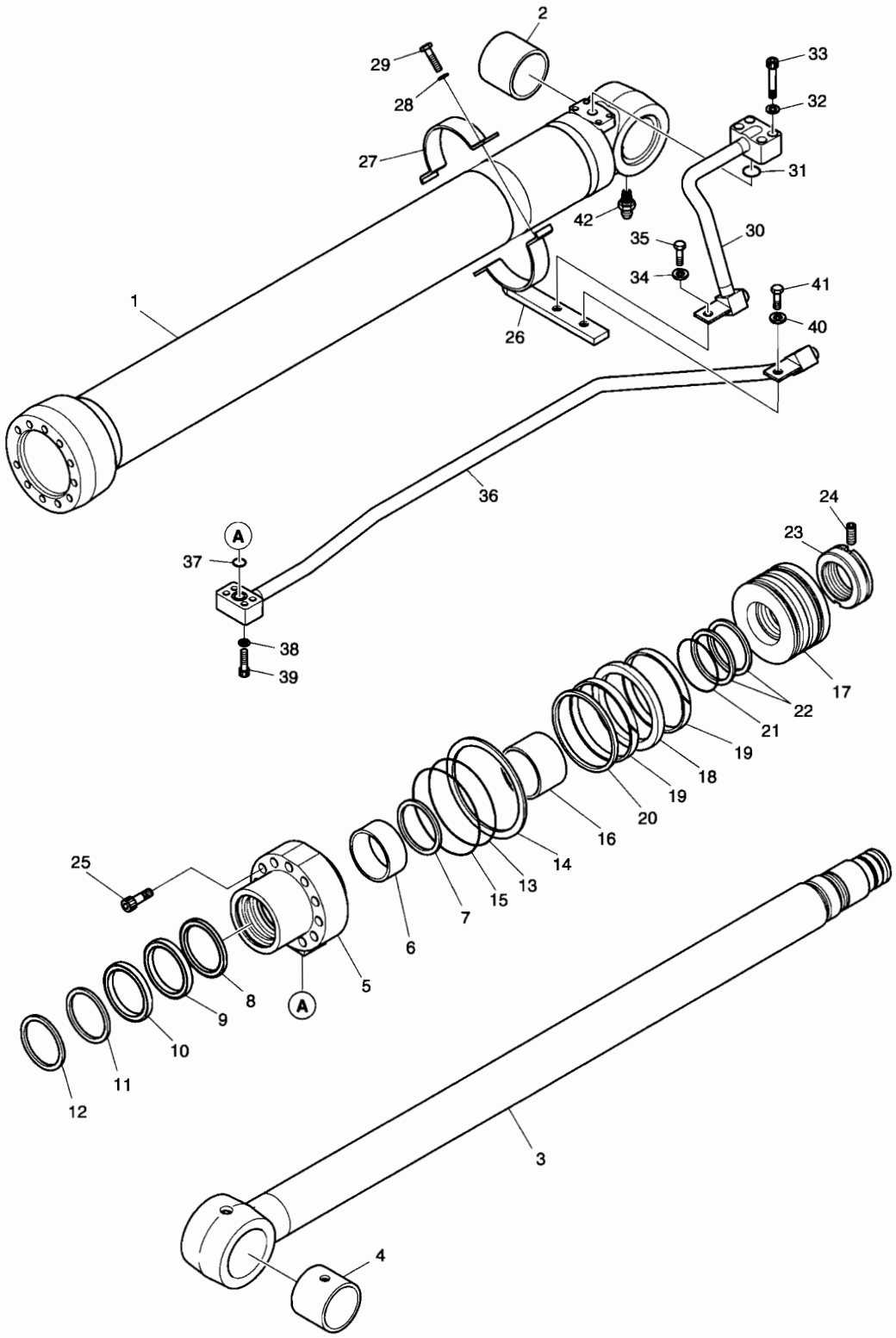

DATE	APR. 02, 2007
1st EDITION	

Fig. 4350 BOOM CYLINDER - R.H (ARTI BOOM) VERIN DE FLECHE

Serial No. ;

Key No.	Part No.	Description	Description	Q'ty	S.C	Serial No.	ICA	Replaceable part	
								Part No.	Q'ty
4350-38	S5100503	WASHER;SPRING	RONDELLE ELASTIQUE	4					
39	S2209561	BOLT;HEX. SOCKET	BOULON A 6 PANS CREUX	4					
40	S5100603	WASHER;SPRING	RONDELLE ELASTIQUE	1					
41	S0511863	BOLT;HEX.	BOULON A 6 PANS	1					
42	S6710032	NIPPLE;GREASE	MAMELON	1					
*	K9002306	SEAL KIT	KIT D'ETANCHEITE	1					

DATE	APR. 02, 2007
1st EDITION	

Fig. 4360 ARTI. BOOM CYLINDER
VERIN DE ARTICULAIRE FLECHE

Serial No. ;

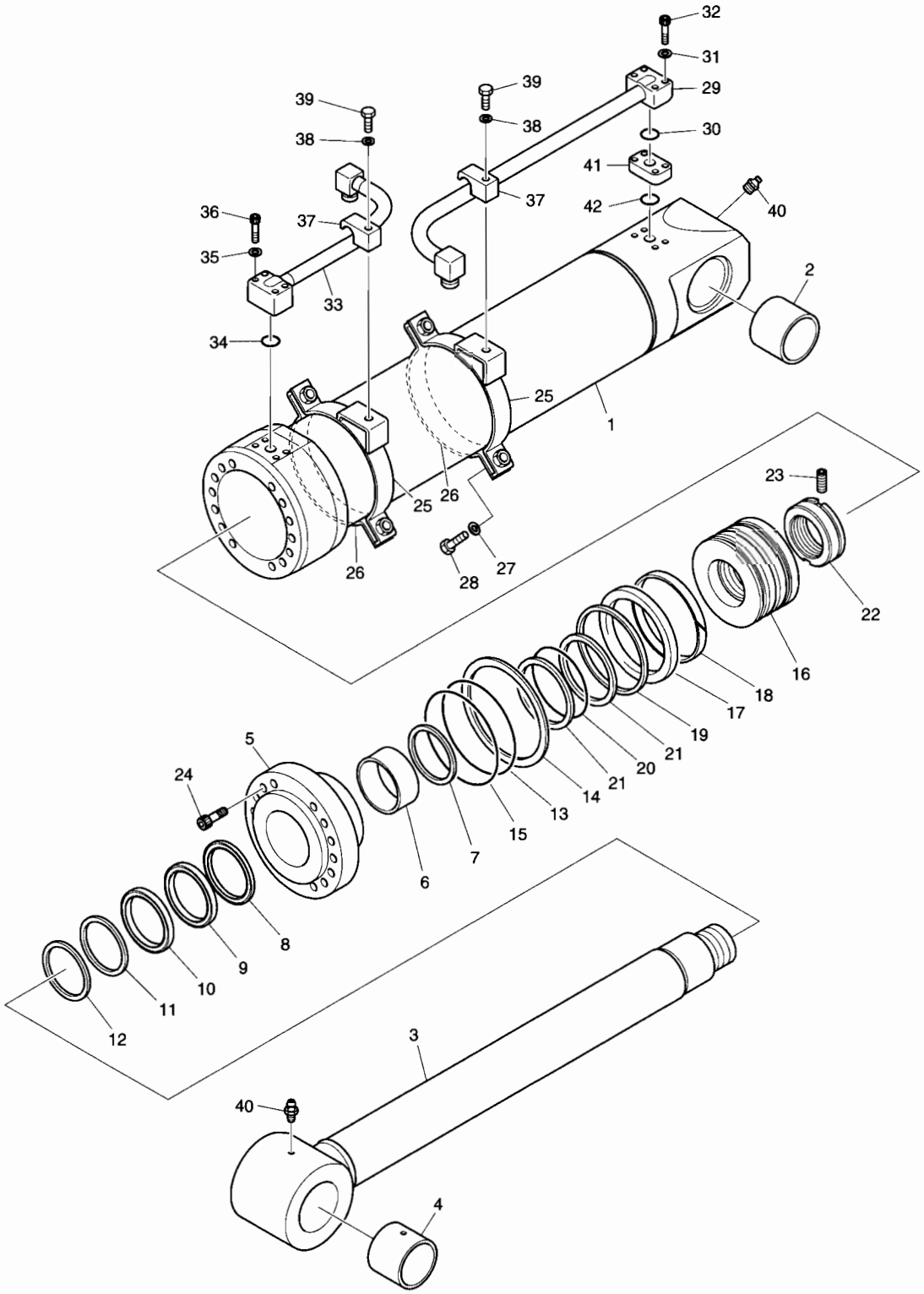

DATE	APR. 02, 2007
1st EDITION	

Fig. 4360 ARTI. BOOM CYLINDER VERIN DE ARTICULAIRE FLECHE

Serial No. ;

Key No.	Part No.	Description	Description	Q'ty	S.C	Serial No.	ICA	Replaceable part	
								Part No.	Q'ty
4360--	K1008737A	CYLINDER;ARTI	VERIN DE ARTICULAIRE	1					
1	K9005060	TUBE ASS'Y	TUYAU FLEXIBLE	1					
2	K1008572	BUSH	DOUILLE	1					
3	K9005061	ROD ASS'Y	ENSEMBLE TIGE	1					
4	K1008572	BUSH	DOUILLE	1					
5	K9005062	COVER;ROD	COUVERCLE	1					
6	110-00080	BUSH;DD	DOUILLE	1					
7	115-00063	RING;RETAINING	BAGUE	1					
8	1.180-00657	SEAL;BUFFER	ETANCHEITE	1	K				
9	K9001153	PACKING;U	EMBALLAGE	1	K				
10	K9001154	RING;BACK UP	BAGUE	1	K				
11	115-00072	WIPER;DUST	RACCORD ADAPTATEUR	1	K				
12	115-00073	RING;RETAINING	BAGUE	1					
13	S8011451	O-RING	JOINT TORIQUE	1	K				
14	K9001164	RING;BACK UP	BAGUE	1	K				
15	180-00363	O-RING	JOINT TORIQUE	1	K				
16	K9005063	PISTON	PISTON	1					
17	180-00360	SEAL;SLIPPER	JOINT	1	K				
18	K9005049	RING;WEAR	BAGUE D'USURE	1	K				
19	115-00122	RING;SLYD	BAGUE	1	K				
20	S8010751	O-RING	JOINT TORIQUE	1	K				
21	1.180-00663	RING;BACK UP	BAGUE	2	K				
22	121-00055	NUT;PISTON	ECROU	1					
23	S3523836	SCREW;SET	VIS	1					
24	S2221873	BOLT;SOCKET	BOULON A 6 PANS CREUX	14					
25	K9005064	PIPE BAND ASS'Y	ENSEMBLE DE BANDE DE	2					
26	124-00157	BAND;PIPE	ATTACHE	2					
27	S5100603	WASHER;SPRING	RONDELLE ELASTIQUE	4					
28	S0558153	BOLT;HEX	BOULON A 6 PANS	4					
29	K9005065	PIPE ASS'Y-H	ENSEMBLE DE TUYAU	1					
30	S8000281	O-RING	JOINT TORIQUE	1					
31	S5100603	WASHER;SPRING	RONDELLE ELASTIQUE	4					
32	S2212861	BOLT;SOCKET	BOULON A 6 PANS CREUX	4					
33	K9005066	PIPE ASS'Y-R	ENSEMBLE DE TUYAU	1					
34	S8000281	O-RING	JOINT TORIQUE	1					
35	S5100603	WASHER;SPRING	RONDELLE ELASTIQUE	4					
36	S2212761	BOLT;SOCKET	BOULON A 6 PANS CREUX	4					
37	K9001413	CLAMP;PIPE	COLLIER	2					

Fig. 4360 ARTI. BOOM CYLINDER
VERIN DE ARTICULAIRE FLECHE

Serial No. ;

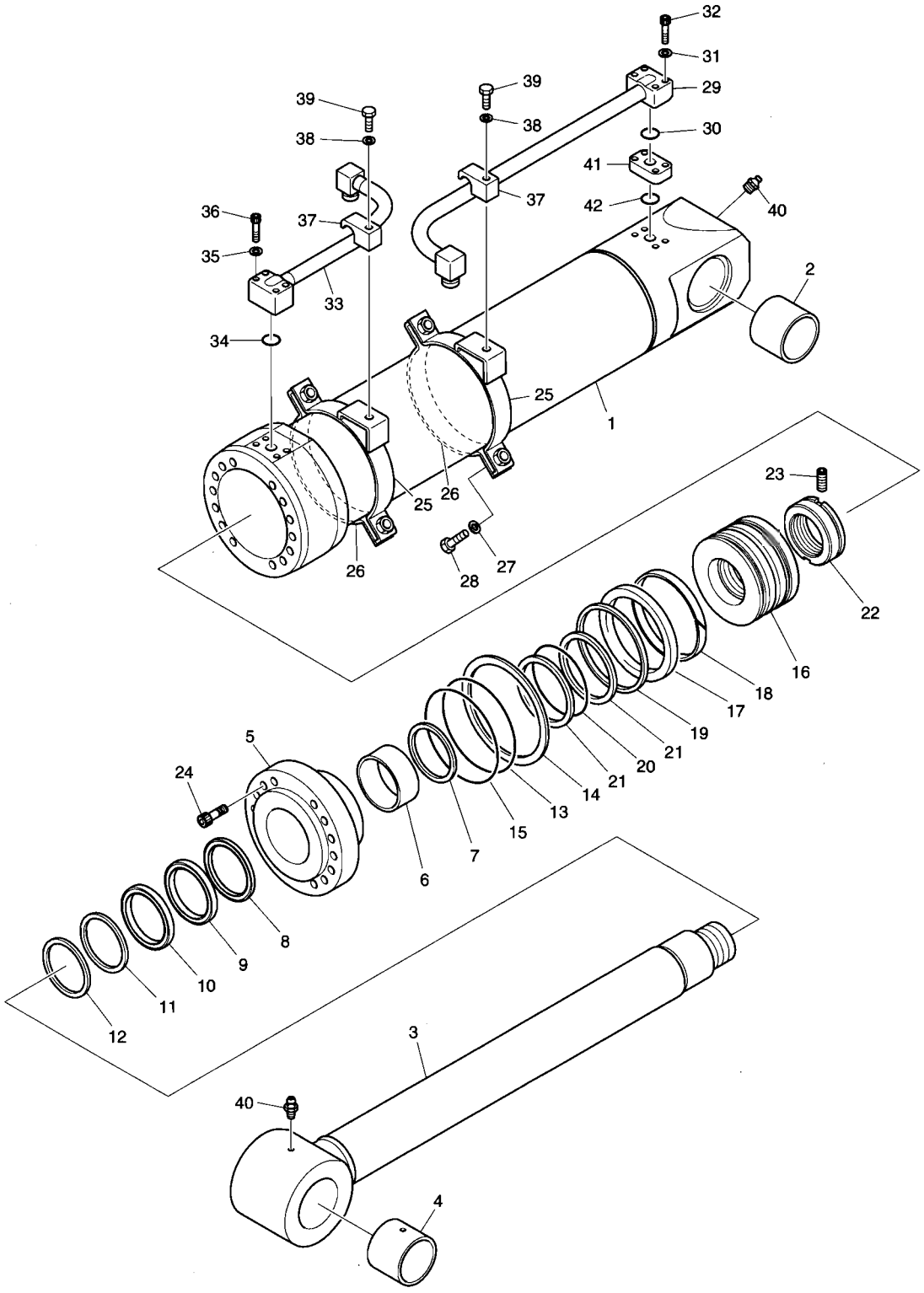

DATE	APR. 02, 2007
1st EDITION	

Fig. 4360 ARTI. BOOM CYLINDER VERIN DE ARTICULAIRE FLECHE

Serial No. ;

Key No.	Part No.	Description	Description	Q'ty	S.C	Serial No.	ICA	Replaceable part	
								Part No.	Q'ty
4360-38	S5102903	WASHER;SPRING	RONDELLE ELASTIQUE	2					
39	S0565451	BOLT;HEX	BOULON A 6 PANS	2					
40	S6710032	NIPPLE;GREASE	MAMELON	2					
41	114-00292	SPACER	DOUILLE D'ECARTEMENT	1					
42	S8000281	O-RING	JOINT TORIQUE	1					
*	K9005072	SEAL KIT	KIT D'ETANCHEITE	1					

DATE	APR. 02, 2007
1st EDITION	

Fig. 4370 ARM CYLINDER - ARM 2.1m (ARTI. BOOM)
VERIN DE BALANCIER

Serial No. ;

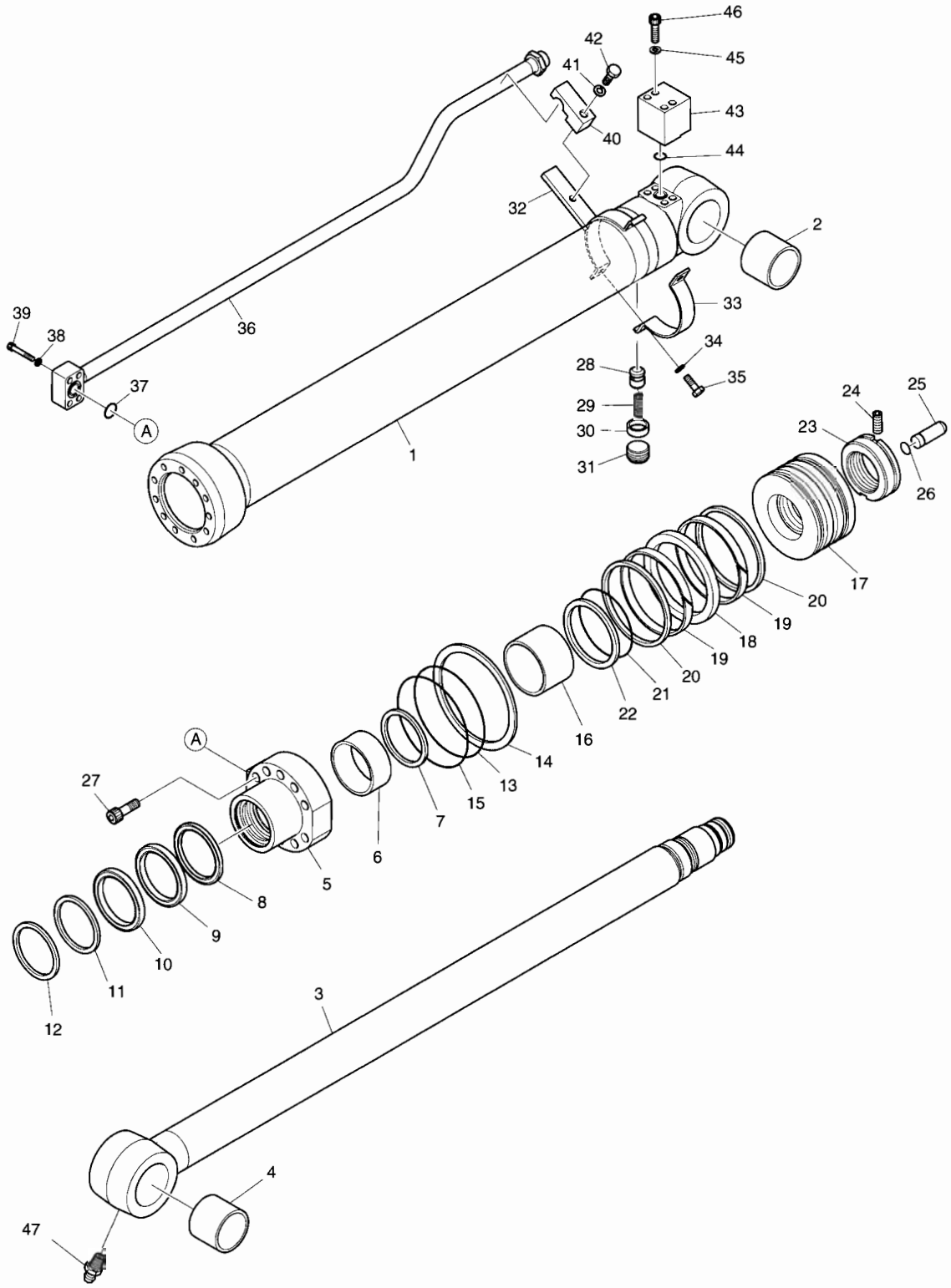

DATE	APR. 02, 2007
1st EDITION	

Fig. 4370 ARM CYLINDER - ARM 2.1m (ARTI. BOOM) VERIN DE BALANCIER

Serial No. ;

Key No.	Part No.	Description	Description	Q'ty	S.C	Serial No.	ICA	Replaceable part	
								Part No.	Q'ty
4370--	K1008738	ARM CYLINDER 2.1m (ARTI)	VERIN DE BALANCIER	1					
1	K9005054	TUBE ASS'Y	TUYAU FLEXIBLE	1					
2	110-00241	BUSH	DOUILLE	1					
3	K9005055	ROD ASS'Y	ENSEMBLE TIGE	1					
4	110-00241	BUSH	DOUILLE	1					
5	K9004320	COVER;ROD	COUVERCLE	1					
6	110-00082	BUSH	DOUILLE	1					
7	115-00052	RING;RETAINING	BAGUE	1					
8	K9001385	SEAL;BUFFER	ETANCHEITE	1	K				
9	K9001386	U-PACKING	JOINT EN U	1	K				
10	K9001396	RING;BACK UP	BAGUE	1	K				
11	115-00060	WIPER;DUST	RACCORD ADAPTATEUR	1	K				
12	115-00050	RING;RETAINING	BAGUE	1					
13	S8011051	O-RING	JOINT TORIQUE	1	K				
14	1.180-00268	RING;BACK UP	BAGUE	1	K				
15	S8011101	O-RING	JOINT TORIQUE	1	K				
16	K9001387	RING;CUSHION	BAGUE	1					
17	K9004321	PISTON	PISTON	1					
18	K9001389	SEAL;SLIPPER	JOINT	1	K				
19	115-00056	RING;WEAR	BAGUE D'USURE	2	K				
20	K9001390	RING;DUST	BAGUE	2	K				
21	180-00247	O-RING	JOINT TORIQUE	1	K				
22	1.180-00269	RING;BACK-UP	BAGUE	2	K				
23	121-00043	NUT;PISTON	ECROU	1					
24	S3523836	SET;SCREW	ROUE	1					
25	424-00059	PLUNGER;CUSHION	PLONGEUR	1					
26	115-00081	RING;STOP	BAGUE D'ARRET	1					
27	S2219071	BOLT;HEX SOCKET	BOULON A 6 PANS CREUX	10					
28	1.420-00039	VALVE;CHECK	CAPTEUR	1					
29	1.131-00009	SPRING	RESSORT	1					
30	1.195-00022	SUPPORT;SPRING	SUPPORT	1					
31	2181-1116D3	PLUG;HEX SOCKET	BOUCHON	1					
32	K9005056	PIPE BAND ASS'Y	ENSEMBLE DE BANDE DE	1					
33	K9005048	BAND;PIPE	ATTACHE	1					
34	S5100603	WASHER;SPRING	RONDELLE ELASTIQUE	2					
35	S0558153	BOLT;HEX	BOULON A 6 PANS	2					
36	K9005057	PIPE ASS'Y	ENSEMBLE DE TUYAU	1					
37	S8000281	O-RING	JOINT TORIQUE	1					

DATE	APR. 02, 2007
1st EDITION	

Fig. 4370 ARM CYLINDER - ARM 2.1m (ARTI. BOOM)
VERIN DE BALANCIER

Serial No. ;

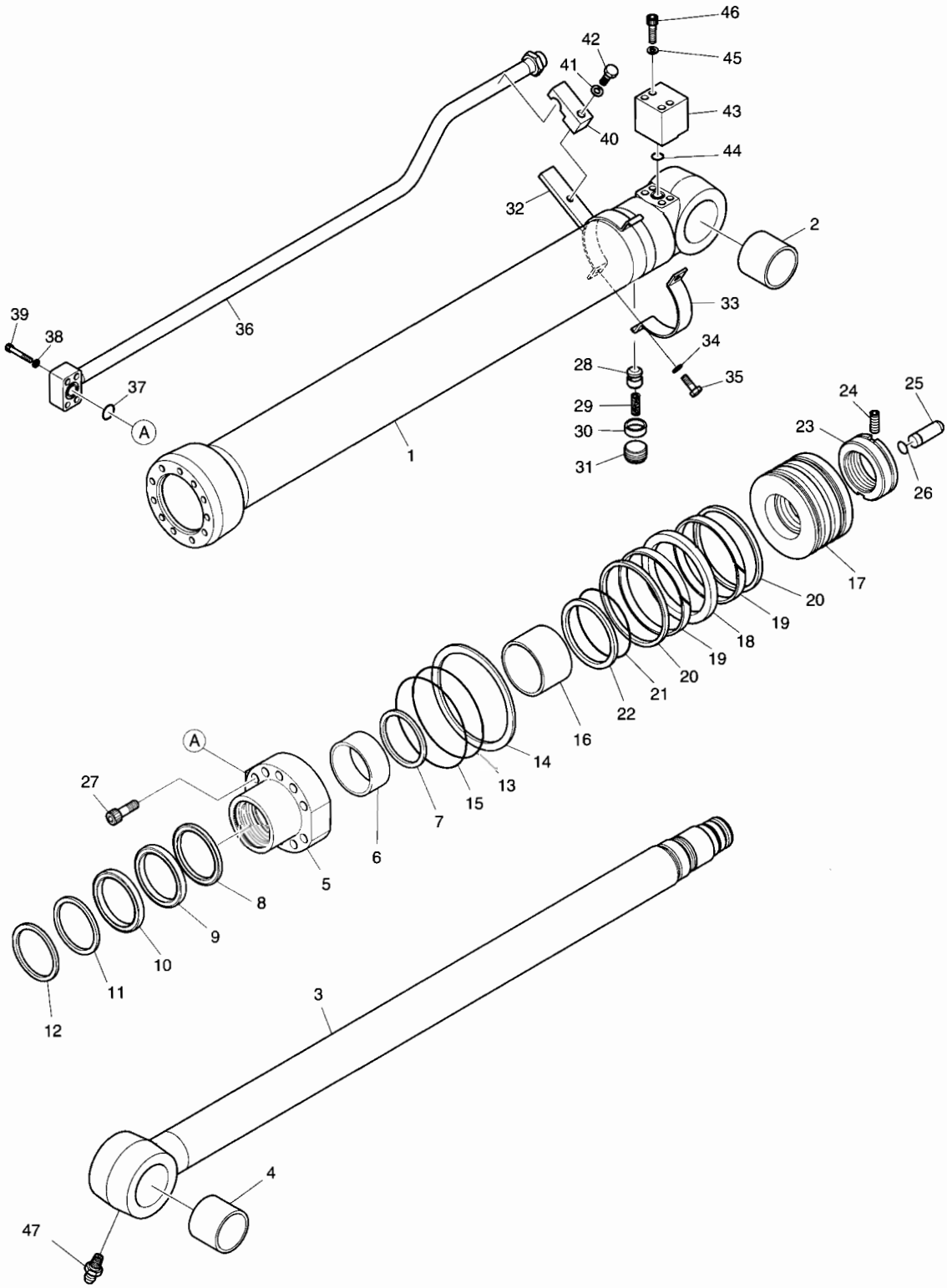

DATE	APR. 02, 2007
1st EDITION	

Fig. 4370 ARM CYLINDER - ARM 2.1m (ARTI. BOOM) VERIN DE BALANCIER

Serial No. ;

Key No.	Part No.	Description	Description	Q'ty	S.C	Serial No.	ICA	Replaceable part	
								Part No.	Q'ty
4370-38	S5100603	WASHER;SPRING	RONDELLE ELASTIQUE	4					
39	S2212761	BOLT;HEX SOCKET	BOULON A 6 PANS CREUX	4					
40	K9001413	CLAMP;PIPE	COLLIER	1					
41	S5102903	WASHER;SPRING	RONDELLE ELASTIQUE	1					
42	S0565451	BOLT;HEX	BOULON A 6 PANS	1					
43	K9001414	PORT;FLANGE	PORT;FLANGE	1					
44	S8000281	O-RING	JOINT TORIQUE	1					
45	S5100603	WASHER;SPRING	RONDELLE ELASTIQUE	4					
46	S2212961	BOLT;HEX SOCKET	BOULON A 6 PANS CREUX	4					
47	S6710032	NIPPLE;GREASE	MAMELON	1					
*	K9002306	SEAL KIT	KIT D'ETANCHEITE	1					

DATE	APR. 02, 2007
1st EDITION	

Fig. 4380 ARM CYLINDER - ARM 2.5m (ARTI. BOOM)
VERIN DE BALANCIER

Serial No. ;

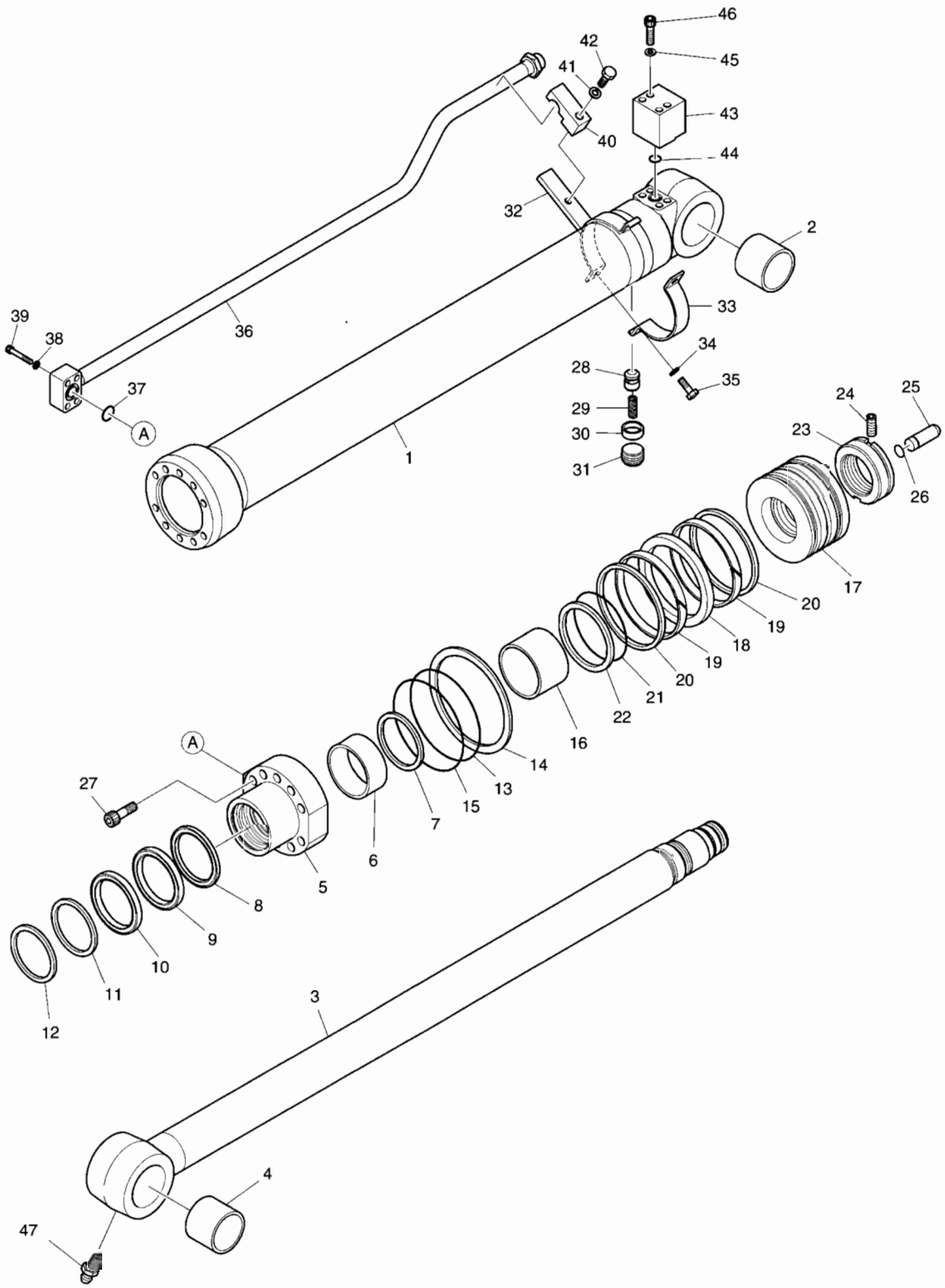

DATE	APR. 02, 2007
1st EDITION	

Fig. 4380 ARM CYLINDER - ARM 2.5m (ARTI. BOOM) VERIN DE BALANCIER

Serial No. ;

Key No.	Part No.	Description	Description	Q'ty	S.C	Serial No.	ICA	Replaceable part	
								Part No.	Q'ty
4380--	K1008740	ARM CYLINDER-2.5m ARM	VERIN DE BALANCIER	1					
1	K9005073	TUBE ASS'Y	TUYAU FLEXIBLE	1					
2	110-00241	BUSH	DOUILLE	1					
3	K9005074	ROD ASS'Y	ENSEMBLE TIGE	1					
4	110-00241	BUSH	DOUILLE	1					
5	K9001400	COVER;ROD	COUVERCLE	1					
6	110-00097	DD-BUSH	COUSSINET	1					
7	K9001401	RING;RETAINING	BAGUE	1					
8	K9001402	SEAL;BUFFER	ETANCHEITE	1	K				
9	K9001403	U-PACKING	JOINT EN U	1	K				
10	K9001404	RING;BACK UP	BAGUE	1	K				
11	115-00084	WIPER;DUST	RACCORD ADAPTATEUR	1	K				
12	115-00063	RING;RETAINING	BAGUE	1					
13	S8011101	O-RING	JOINT TORIQUE	1	K				
14	K9001405	RING;BACK UP	BAGUE	1	K				
15	S8011151	O-RING	JOINT TORIQUE	1	K				
16	K9001406	RING;CUSHION	BAGUE	1					
17	K9001407	PISTON	PISTON	1					
18	K9001408	SEAL;SLIPPER	JOINT	1	K				
19	115-00085	RING;WEAR	BAGUE D'USURE	2	K				
20	K9001409	RING;DUST	BAGUE	2	K				
21	180-00276	O-RING	JOINT TORIQUE	1	K				
22	K9001410	RING;BACK UP	BAGUE	2	K				
23	K9004601	NUT;PISTION	ECROU	1					
24	1.120-00219	SCREW;SET	VIS	1					
25	424-00059	PLUNGER;CUSHION	PLONGEUR	1					
26	115-00081	RING;STOP	BAGUE D'ARRET	1					
27	S2222171	BOLT;HEX. SOCKET	BOULON A 6 PANS CREUX	10					
28	1.420-00039	VALVE;CHECK	CAPTEUR	1					
29	1.131-00009	SPRING	RESSORT	1					
30	1.195-00022	SUPPORT;SPRING	SUPPORT	1					
31	2181-1116D3	PLUG;HEX. SOCKET	BOUCHON	1					
32	K9001411	PIPE BAND ASS'Y	ENSEMBLE DE BANDE DE	1					
33	124-00085	BAND;PIPE	ATTACHE	1					
34	S5100603	WASHER;SPRING	RONDELLE ELASTIQUE	2					
35	S0558153	BOLT	BOULON	2					
36	K9005075	PIPE ASS'Y-R	ENSEMBLE DE TUYAU	1					
37	S8000281	O-RING	JOINT TORIQUE	1					

DATE	APR. 02, 2007
1st EDITION	

Fig. 4390 BOOM CYLINDER - L.H (LOCK VALVE) ARTI VERIN DE FLECHE

Serial No. ;

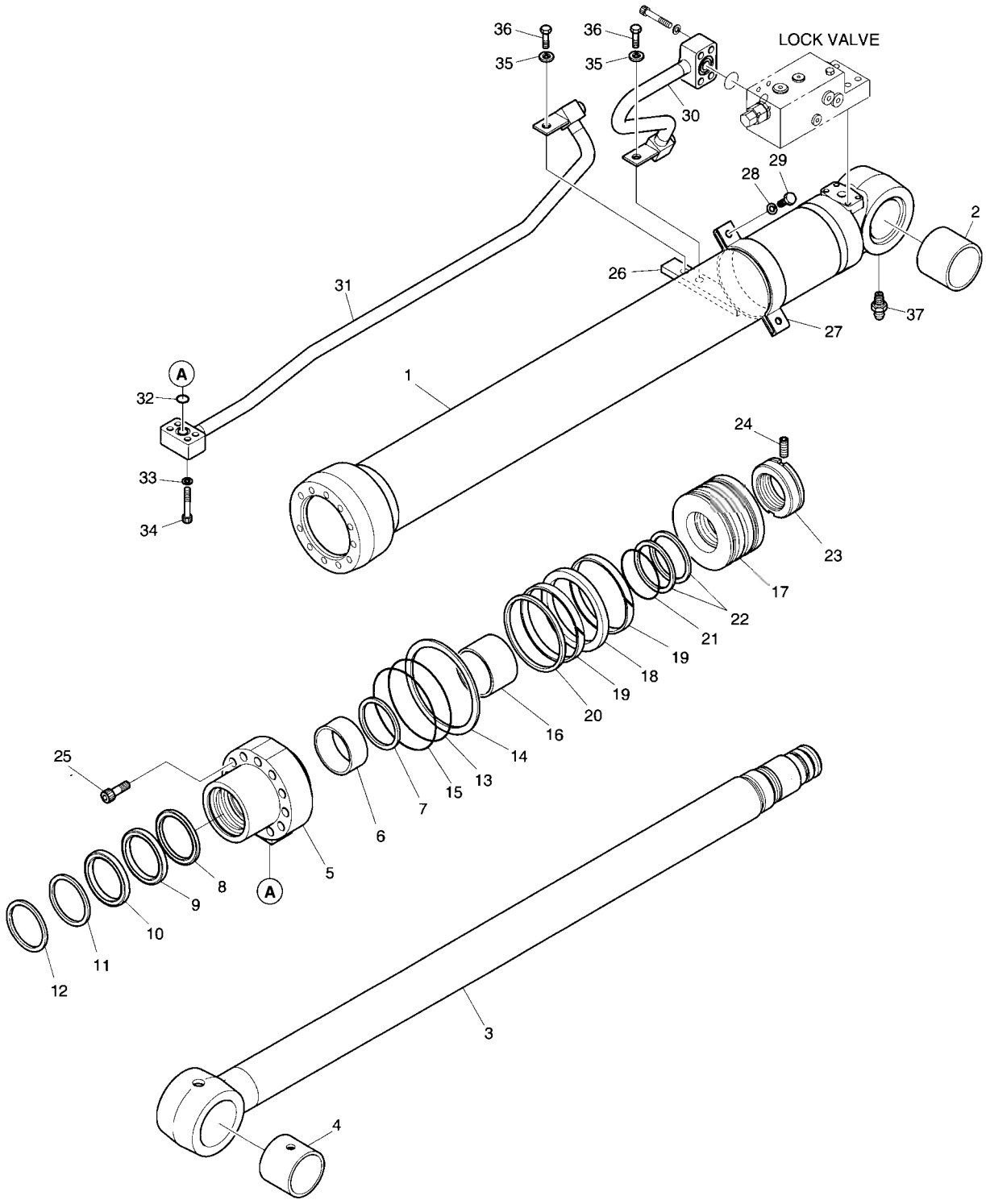

DATE	APR. 02, 2007
1st EDITION	

Fig. 4390 BOOM CYLINDER - L.H (LOCK VALVE) ARTI VERIN DE FLECHE

Serial No. ;

Key No.	Part No.	Description	Description	Q'ty	S.C	Serial No.	ICA	Replaceable part	
								Part No.	Q'ty
4390--	K1027317	BOOM CYLINDER(L.H)	VERIN DE FLECHE	1					
1	K9005453	TUBE ASS'Y	TUYAU FLEXIBLE	1					
2	110-00244	BUSH	DOUILLE	1					
3	K9005454	ROD ASS'Y	ENSEMBLE TIGE	1					
4	110-00244	BUSH	DOUILLE	1					
5	K9001384	COVER;ROD	COUVERCLE	1					
6	110-00082	DD-BUSH	COUSSINET	1					
7	115-00052	RING;RETAINING	BAGUE	1					
8	K9001385	SEAL;BUFFER	ETANCHEITE	1	K				
9	K9001386	U-PACKING	JOINT EN U	1	K				
10	K9001396	RING;BACK UP	BAGUE	1	K				
11	115-00060	WIPER;DUST	RACCORD ADAPTATEUR	1	K				
12	115-00050	RING;RETAINING	BAGUE	1					
13	S8011051	O-RING	JOINT TORIQUE	1	K				
14	1.180-00268	RING;BACK UP	BAGUE	1	K				
15	S8011101	O-RING	JOINT TORIQUE	1	K				
16	K9001387	RING;CUSHION	BAGUE	1					
17	K9001388	PISTON	PISTON	1					
18	K9001389	SEAL;SLIPPER	JOINT	1	K				
19	115-00056	RING;WEAR	BAGUE D'USURE	2	K				
20	K9001390	RING;DUST	BAGUE	1	K				
21	180-00247	O-RING	JOINT TORIQUE	1	K				
22	1.180-00269	RING;BACK UP	BAGUE	2	K				
23	121-00043	NUT;PISTION	ECROU	1					
24	1.120-00219	SCREW;SET	VIS	1					
25	S2219071	BOLT;HEX. SOCKET	BOULON A 6 PANS CREUX	11					
26	K9005457	PIPE BAND ASS'Y	ENSEMBLE DE BANDE DE	1					
27	124-00055	BAND;PIPE	ATTACHE	1					
28	S5100603	WASHER;SPRING	RONDELLE ELASTIQUE	2					
29	S0558153	BOLT	BOULON	2					
30	K9005461	PIPE ASS'Y-H(L.H)	ENSEMBLE DE TUYAU	1					
31	K9005456	PIPE ASS'Y-R(L.H)	ENSEMBLE DE TUYAU	1					
32	S8000201	O-RING	JOINT TORIQUE	1					
33	S5100503	WASHER;SPRING	RONDELLE ELASTIQUE	4					
34	S2209561	BOLT;HEX. SOCKET	BOULON A 6 PANS CREUX	4					
35	S5100603	WASHER;SPRING	RONDELLE ELASTIQUE	2					
36	S0511863	BOLT;HEX.	BOULON A 6 PANS	2					
37	S6710032	NIPPLE;GREASE	MAMELON	1					

Fig. 4390 BOOM CYLINDER - L.H (LOCK VALVE) ARTI VERIN DE FLECHE

Serial No. ;

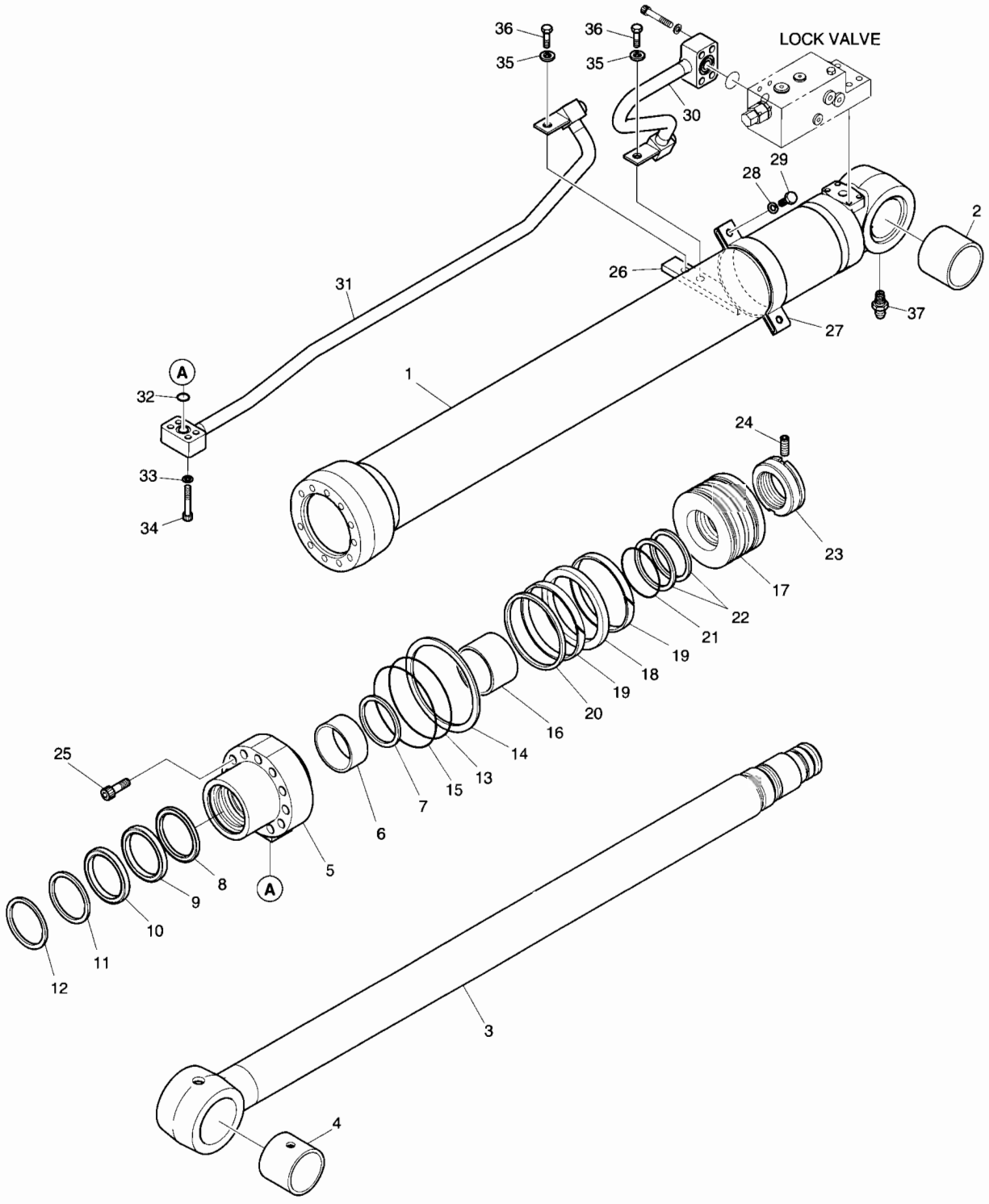

DATE	APR. 02, 2007
1st EDITION	

Fig. 4390 BOOM CYLINDER - L.H (LOCK VALVE) ARTI VERIN DE FLECHE

Serial No. ;

Key No.	Part No.	Description	Description	Q'ty	S.C	Serial No.	ICA	Replaceable part	
								Part No.	Q'ty
4390-*	K9002306	SEAL KIT	KIT D'ETANCHEITE	1					

Fig. 4400 BOOM CYLINDER - R.H (LOCK VALVE) ARTI VERIN DE FLECHE

Serial No. ;

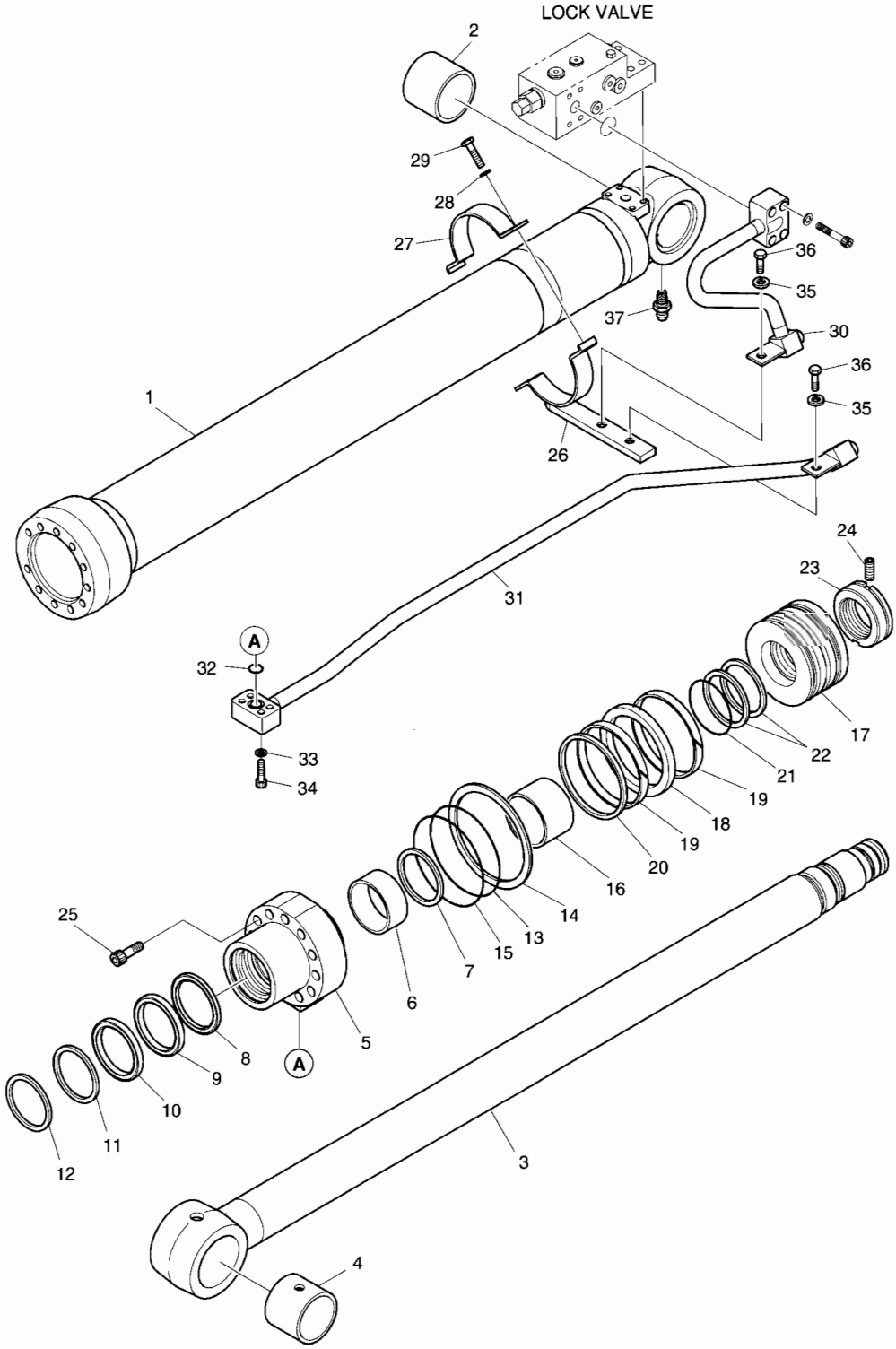

DATE	APR. 02, 2007
1st EDITION	

Fig. 4400 BOOM CYLINDER - R.H (LOCK VALVE) ARTI VERIN DE FLECHE

Serial No. ;

Key No.	Part No.	Description	Description	Q'ty	S.C	Serial No.	ICA	Replaceable part	
								Part No.	Q'ty
4400--	K1027318	BOOM CYLINDER(R.H)	VERIN DE FLECHE	1					
1	K9005453	TUBE ASS'Y	TUYAU FLEXIBLE	1					
2	110-00244	BUSH	DOUILLE	1					
3	K9005454	ROD ASS'Y	ENSEMBLE TIGE	1					
4	110-00244	BUSH	DOUILLE	1					
5	K9001384	COVER;ROD	COUVERCLE	1					
6	110-00082	DD-BUSH	COUSSINET	1					
7	115-00052	RING;RETAINING	BAGUE	1					
8	K9001385	SEAL;BUFFER	ETANCHEITE	1	K				
9	K9001386	U-PACKING	JOINT EN U	1	K				
10	K9001396	RING;BACK UP	BAGUE	1	K				
11	115-00060	WIPER;DUST	RACCORD ADAPTATEUR	1	K				
12	115-00050	RING;RETAINING	BAGUE	1					
13	S8011051	O-RING	JOINT TORIQUE	1	K				
14	1.180-00268	RING;BACK UP	BAGUE	1	K				
15	S8011101	O-RING	JOINT TORIQUE	1	K				
16	K9001387	RING;CUSHION	BAGUE	1					
17	K9001388	PISTON	PISTON	1					
18	K9001389	SEAL;SLIPPER	JOINT	1	K				
19	115-00056	RING;WEAR	BAGUE D'USURE	2	K				
20	K9001390	RING;DUST	BAGUE	1	K				
21	180-00247	O-RING	JOINT TORIQUE	1	K				
22	1.180-00269	RING;BACK UP	BAGUE	2	K				
23	121-00043	NUT;PISTION	ECROU	1					
24	1.120-00219	SCREW;SET	VIS	1					
25	S2219071	BOLT;HEX. SOCKET	BOULON A 6 PANS CREUX	11					
26	K9005457	PIPE BAND ASS'Y	ENSEMBLE DE BANDE DE	1					
27	124-00055	BAND;PIPE	ATTACHE	1					
28	S5100603	WASHER;SPRING	RONDELLE ELASTIQUE	2					
29	S0558153	BOLT	BOULON	2					
30	K9005460	PIPE ASS'Y-H(R.H)	ENSEMBLE DE TUYAU	1					
31	K9005455	PIPE ASS'Y-R(R.H)	ENSEMBLE DE TUYAU	1					
32	S8000201	O-RING	JOINT TORIQUE	1					
33	S5100503	WASHER;SPRING	RONDELLE ELASTIQUE	4					
34	S2209561	BOLT;HEX. SOCKET	BOULON A 6 PANS CREUX	4					
35	S5100603	WASHER;SPRING	RONDELLE ELASTIQUE	2					
36	S0511863	BOLT;HEX.	BOULON A 6 PANS	2					
37	S6710032	NIPPLE;GREASE	MAMELON	1					

DATE	APR. 02, 2007
1st EDITION	

Fig. 4400 BOOM CYLINDER - R.H (LOCK VALVE) ARTI VERIN DE FLECHE

Serial No. ;

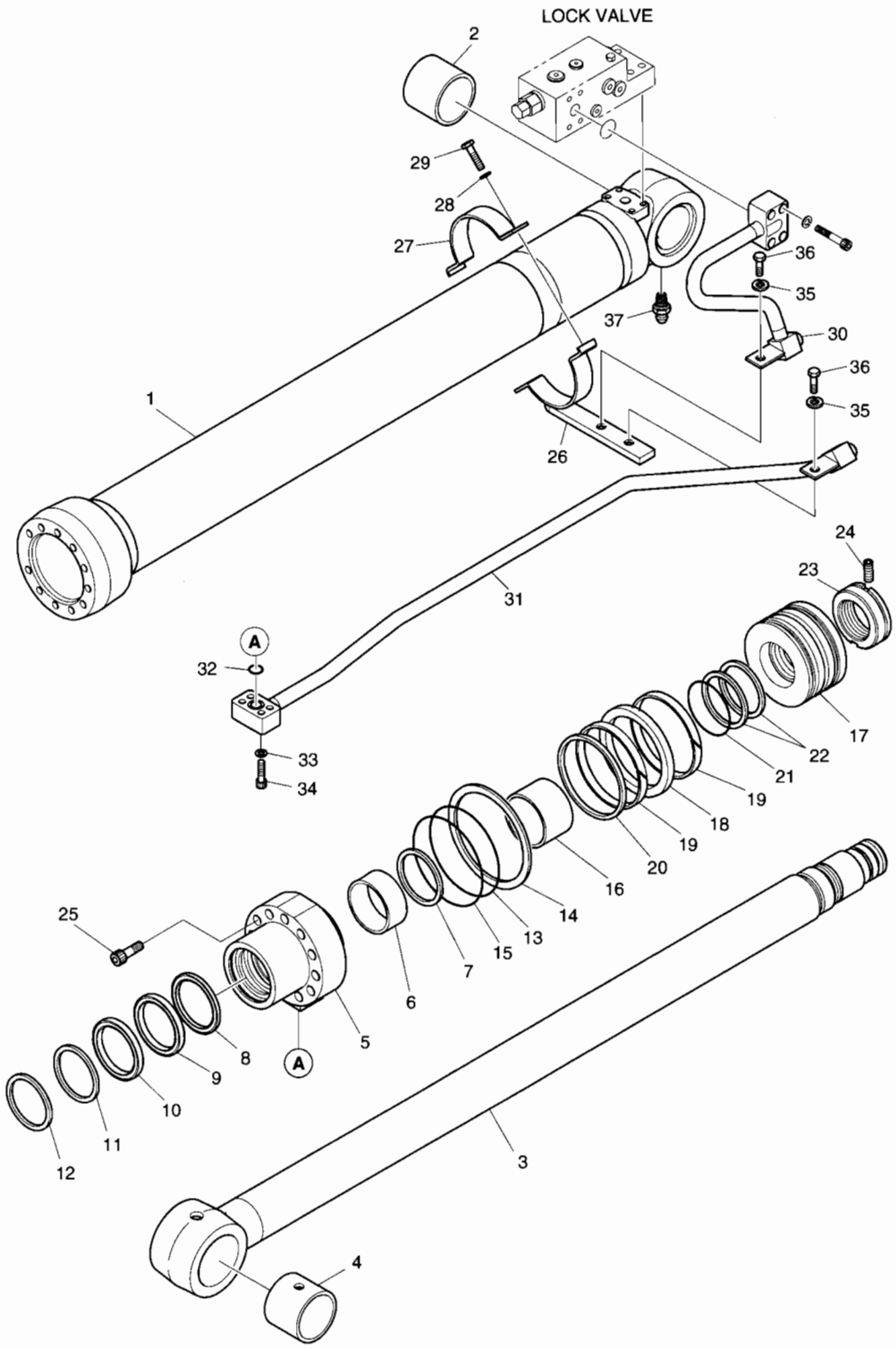

DATE	APR. 02, 2007
1st EDITION	

Fig. 4400 BOOM CYLINDER - R.H (LOCK VALVE) ARTI VERIN DE FLECHE

Serial No. ;

Key No.	Part No.	Description	Description	Q'ty	S.C	Serial No.	ICA	Replaceable part	
								Part No.	Q'ty
4400-*	K9002306	SEAL KIT	KIT D'ETANCHEITE	1					

DATE	APR. 02, 2007
1st EDITION	

Fig. 4410 ARM CYLINDER - ARM 2.1m (ARTI) L/V
VERIN DE BALANCIER

Serial No. ;

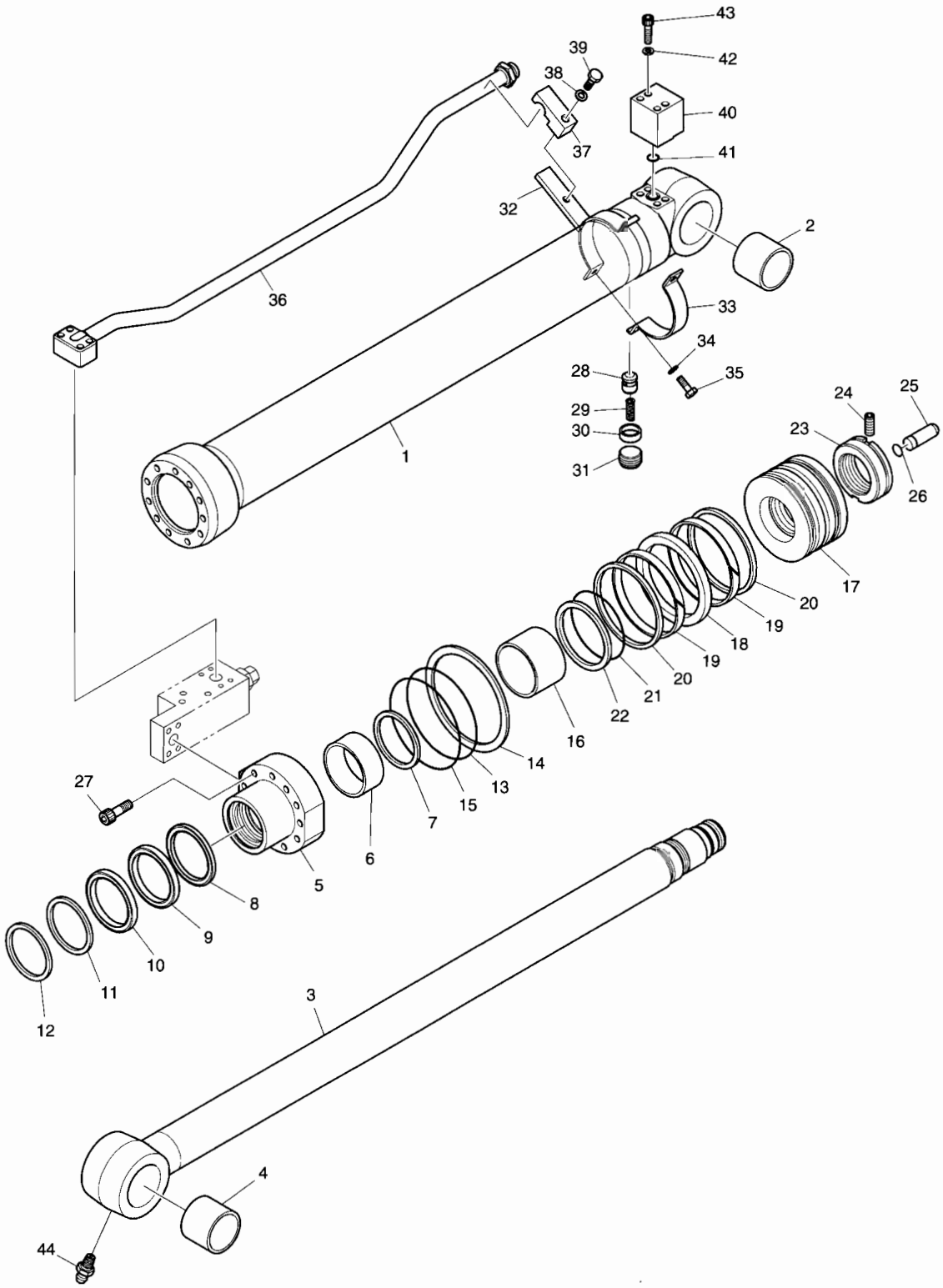

DATE	APR. 02, 2007
1st EDITION	

Fig. 4410 ARM CYLINDER - ARM 2.1m (ARTI) L/V VERIN DE BALANCIER

Serial No. ;

Key No.	Part No.	Description	Description	Q'ty	S.C	Serial No.	ICA	Replaceable part	
								Part No.	Q'ty
4410--	K1008752	ARM CYLINDER-2.1m (ARTI)	VERIN DE BALANCIER	1					
1	K9005076	TUBE ASS'Y	TUYAU FLEXIBLE	1					
2	110-00241	BUSH	DOUILLE	1					
3	K9005055	ROD ASS'Y	ENSEMBLE TIGE	1					
4	110-00241	BUSH	DOUILLE	1					
5	K9004320	COVER;ROD	COUVERCLE	1					
6	110-00082	BUSH	DOUILLE	1					
7	115-00052	RING;RETAINING	BAGUE	1					
8	K9001385	SEAL;BUFFER	ETANCHEITE	1	K				
9	K9001386	U-PACKING	JOINT EN U	1	K				
10	K9001396	RING;BACK UP	BAGUE	1	K				
11	115-00060	WIPER;DUST	RACCORD ADAPTATEUR	1	K				
12	115-00050	RING;RETAINING	BAGUE	1					
13	S8011051	O-RING	JOINT TORIQUE	1	K				
14	1.180-00268	RING;BACK UP	BAGUE	1	K				
15	S8011101	O-RING	JOINT TORIQUE	1	K				
16	K9001387	RING;CUSHION	BAGUE	1					
17	K9004321	PISTON	PISTON	1					
18	K9001389	SEAL;SLIPPER	JOINT	1	K				
19	115-00056	RING;WEAR	BAGUE D'USURE	2	K				
20	K9001390	RING;DUST	BAGUE	2	K				
21	180-00247	O-RING	JOINT TORIQUE	1	K				
22	1.180-00269	RING;BACK-UP	BAGUE	2	K				
23	121-00043	NUT;PISTON	ECROU	1					
24	S3523836	SET;SCREW	ROUE	1					
25	424-00059	PLUNGER;CUSHION	PLONGEUR	1					
26	115-00081	RING;STOP	BAGUE D'ARRET	1					
27	S2219071	BOLT;HEX SOCKET	BOULON A 6 PANS CREUX	11					
28	1.420-00039	VALVE;CHECK	CAPTEUR	1					
29	1.131-00009	SPRING	RESSORT	1					
30	1.195-00022	SUPPORT;SPRING	SUPPORT	1					
31	2181-1116D3	PLUG;HEX SOCKET	BOUCHON	1					
32	K9005056	PIPE BAND ASS'Y	ENSEMBLE DE BANDE DE	1					
33	K9005048	BAND;PIPE	ATTACHE	1					
34	S5100603	WASHER;SPRING	RONDELLE ELASTIQUE	2					
35	S0558153	BOLT;HEX	BOULON A 6 PANS	2					
36	K9005077	PIPE ASS'Y	ENSEMBLE DE TUYAU	1					
37	K9001413	CLAMP;PIPE	COLLIER	1					

DATE	APR. 02, 2007
1st EDITION	

Fig. 4410 ARM CYLINDER - ARM 2.1m (ARTI) L/V
VERIN DE BALANCIER

Serial No. ;

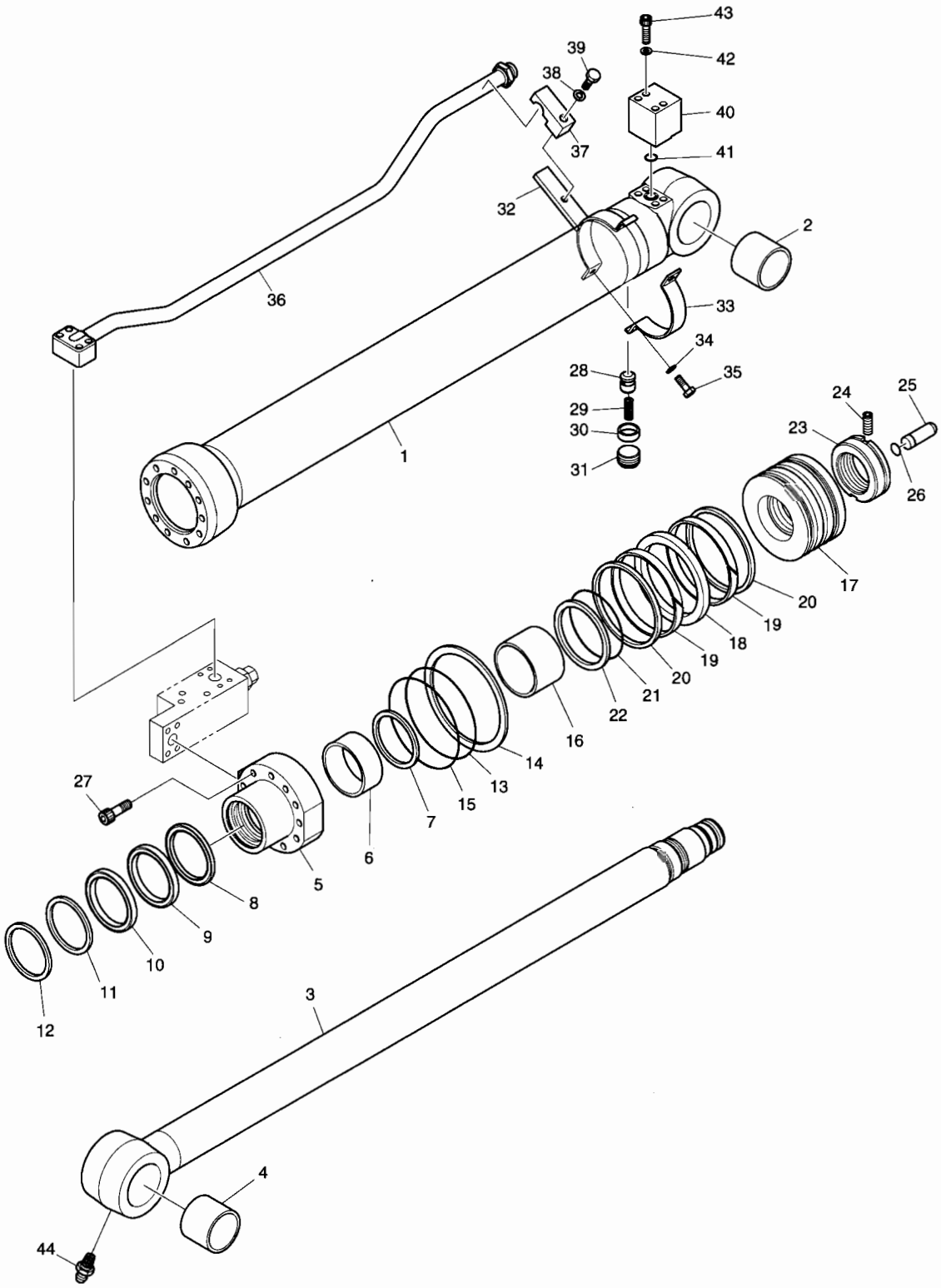

DATE	APR. 02, 2007
1st EDITION	

Fig. 4410 ARM CYLINDER - ARM 2.1m (ARTI) L/V
VERIN DE BALANCIER

Serial No. ;

Key No.	Part No.	Description	Description	Q'ty	S.C	Serial No.	ICA	Replaceable part	
								Part No.	Q'ty
4410-38	S5102903	WASHER;SPRING	RONDELLE ELASTIQUE	1					
39	S0565451	BOLT;HEX	BOULON A 6 PANS	1					
40	K9001414	PORT;FLANGE	PORT;FLANGE	1					
41	S8000281	O-RING	JOINT TORIQUE	1					
42	S5100603	WASHER;SPRING	RONDELLE ELASTIQUE	4					
43	S2212961	BOLT;HEX SOCKET	BOULON A 6 PANS CREUX	4					
44	S6710032	NIPPLE;GREASE	MAMELON	1					
*	K9002306	SEAL KIT	KIT D'ETANCHEITE	1					

DATE	APR. 02, 2007
1st EDITION	

Fig. 4420 ARM CYLINDER - ARM 2.5m (ARTI) L/V
VERIN DE BALANCIER

Serial No. ;

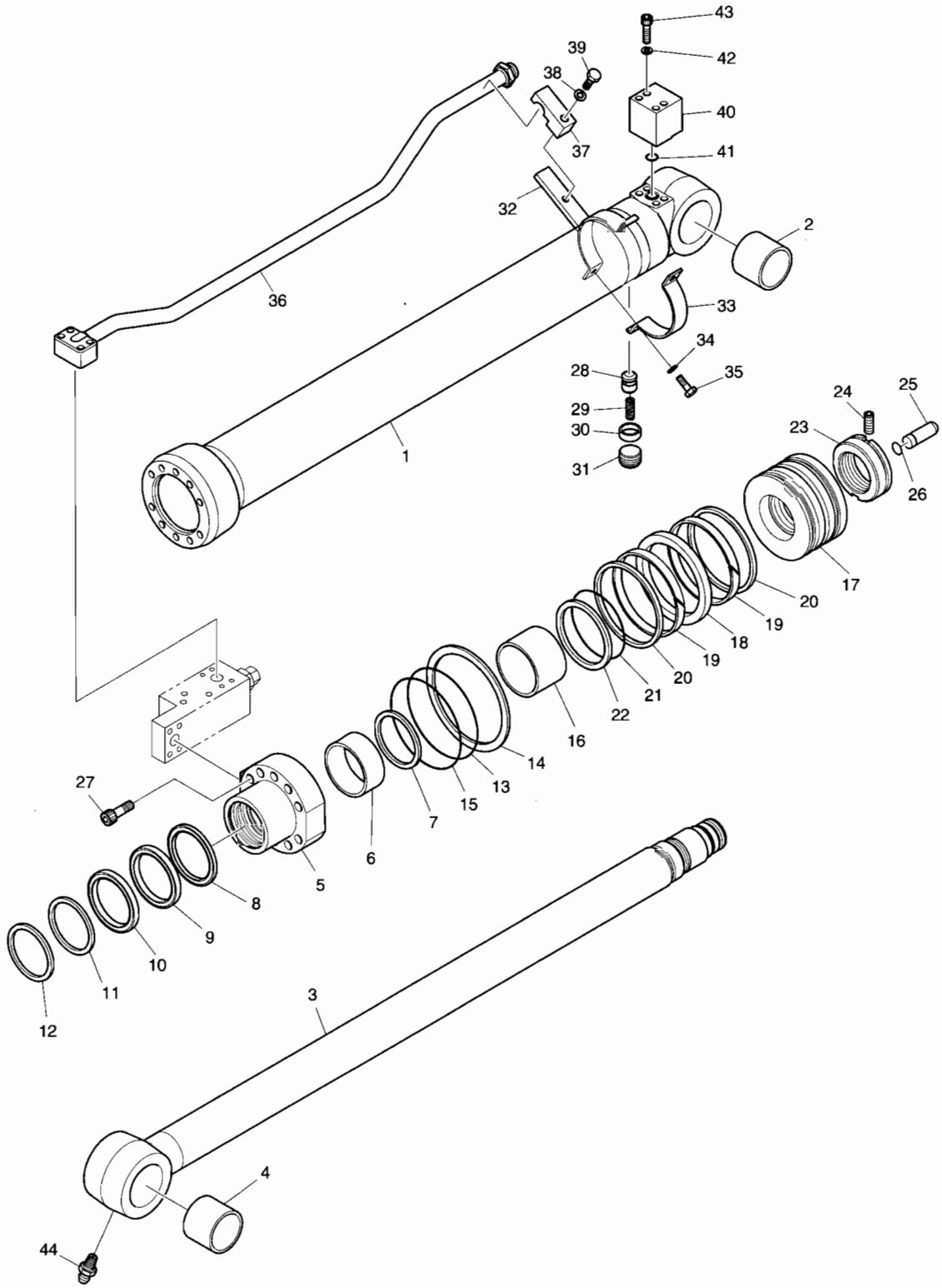

DATE	APR. 02, 2007
1st EDITION	

Fig. 4420 ARM CYLINDER - ARM 2.5m (ARTI) L/V VERIN DE BALANCIER

Serial No. ;

Key No.	Part No.	Description	Description	Q'ty	S.C	Serial No.	ICA	Replaceable part	
								Part No.	Q'ty
4420--	K1008753	ARM CYLINDER-2.5m ARM	VERIN DE BALANCIER	1					
1	K9005078	TUBE ASS'Y	TUYAU FLEXIBLE	1					
2	110-00241	BUSH	DOUILLE	1					
3	K9005074	ROD ASS'Y	ENSEMBLE TIGE	1					
4	110-00241	BUSH	DOUILLE	1					
5	K9001400	COVER;ROD	COUVERCLE	1					
6	110-00097	DD-BUSH	COUSSINET	1					
7	K9001401	RING;RETAINING	BAGUE	1					
8	K9001402	SEAL;BUFFER	ETANCHEITE	1	K				
9	K9001403	U-PACKING	JOINT EN U	1	K				
10	K9001404	RING;BACK UP	BAGUE	1	K				
11	115-00084	WIPER;DUST	RACCORD ADAPTATEUR	1	K				
12	115-00063	RING;RETAINING	BAGUE	1					
13	S8011101	O-RING	JOINT TORIQUE	1	K				
14	K9001405	RING;BACK UP	BAGUE	1	K				
15	S8011151	O-RING	JOINT TORIQUE	1	K				
16	K9001406	RING;CUSHION	BAGUE	1					
17	K9001407	PISTON	PISTON	1					
18	K9001408	SEAL;SLIPPER	JOINT	1	K				
19	115-00085	RING;WEAR	BAGUE D'USURE	2	K				
20	K9001409	RING;DUST	BAGUE	2	K				
21	180-00276	O-RING	JOINT TORIQUE	1	K				
22	K9001410	RING;BACK UP	BAGUE	2	K				
23	K9004601	NUT;PISTION	ECROU	1					
24	1.120-00219	SCREW;SET	VIS	1					
25	424-00059	PLUNGER;CUSHION	PLONGEUR	1					
26	115-00081	RING;STOP	BAGUE D'ARRET	1					
27	S2222171	BOLT;HEX. SOCKET	BOULON A 6 PANS CREUX	10					
28	1.420-00039	VALVE;CHECK	CAPTEUR	1					
29	1.131-00009	SPRING	RESSORT	1					
30	1.195-00022	SUPPORT;SPRING	SUPPORT	1					
31	2181-1116D3	PLUG;HEX. SOCKET	BOUCHON	1					
32	K9001411	PIPE BAND ASS'Y	ENSEMBLE DE BANDE DE	1					
33	124-00085	BAND;PIPE	ATTACHE	1					
34	S5100603	WASHER;SPRING	RONDELLE ELASTIQUE	2					
35	S0558153	BOLT	BOULON	2					
36	K9005079	PIPE ASS'Y-R	ENSEMBLE DE TUYAU	1					
37	K9001413	CLAMP;PIPE	COLLIER	1					

DATE	APR. 02, 2007
1st EDITION	

Fig. 4420 ARM CYLINDER - ARM 2.5m (ARTI) L/V
VERIN DE BALANCIER

Serial No. ;

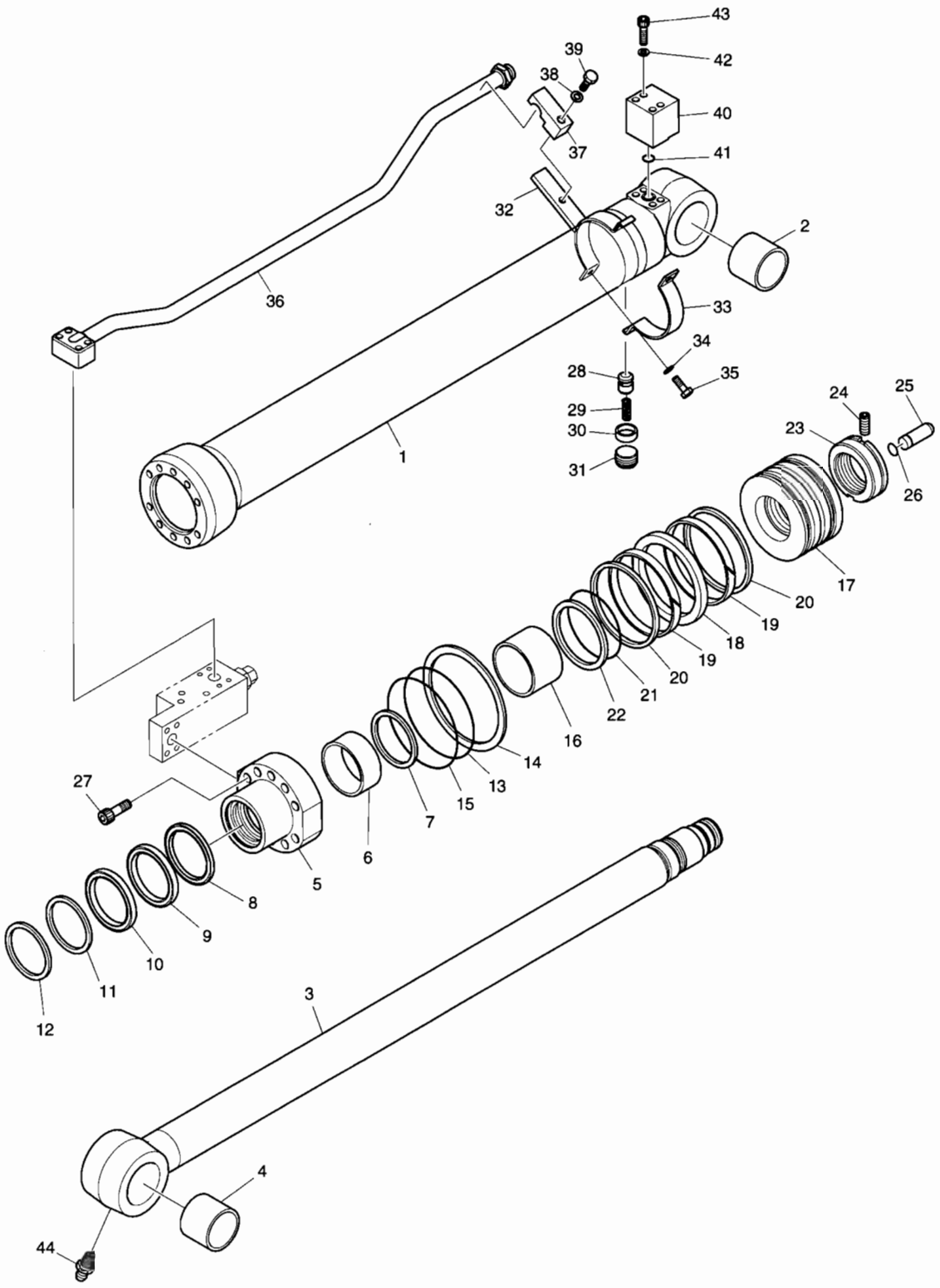

DATE	APR. 02, 2007
1st EDITION	

Fig. 4420 ARM CYLINDER - ARM 2.5m (ARTI) L/V
VERIN DE BALANCIER

Serial No. ;

Key No.	Part No.	Description	Description	Q'ty	S.C	Serial No.	ICA	Replaceable part	
								Part No.	Q'ty
4420-38	S5102903	WASHER;SPRING	RONDELLE ELASTIQUE	1					
39	S0565451	BOLT	BOULON	1					
40	K9001414	PORT;FLANGE	PORT;FLANGE	1					
41	S8000281	O-RING	JOINT TORIQUE	1					
42	S5100603	WASHER;SPRING	RONDELLE ELASTIQUE	4					
43	S2212961	BOLT;HEX. SOCKET	BOULON A 6 PANS CREUX	4					
44	S6710032	NIPPLE;GREASE	MAMELON	1					
*	K9002308	SEAL KIT	KIT D'ETANCHEITE	1					

Fig. 4430 CONTROL VALVE - ROTATING DISTRIBUTEUR

Serial No. ;

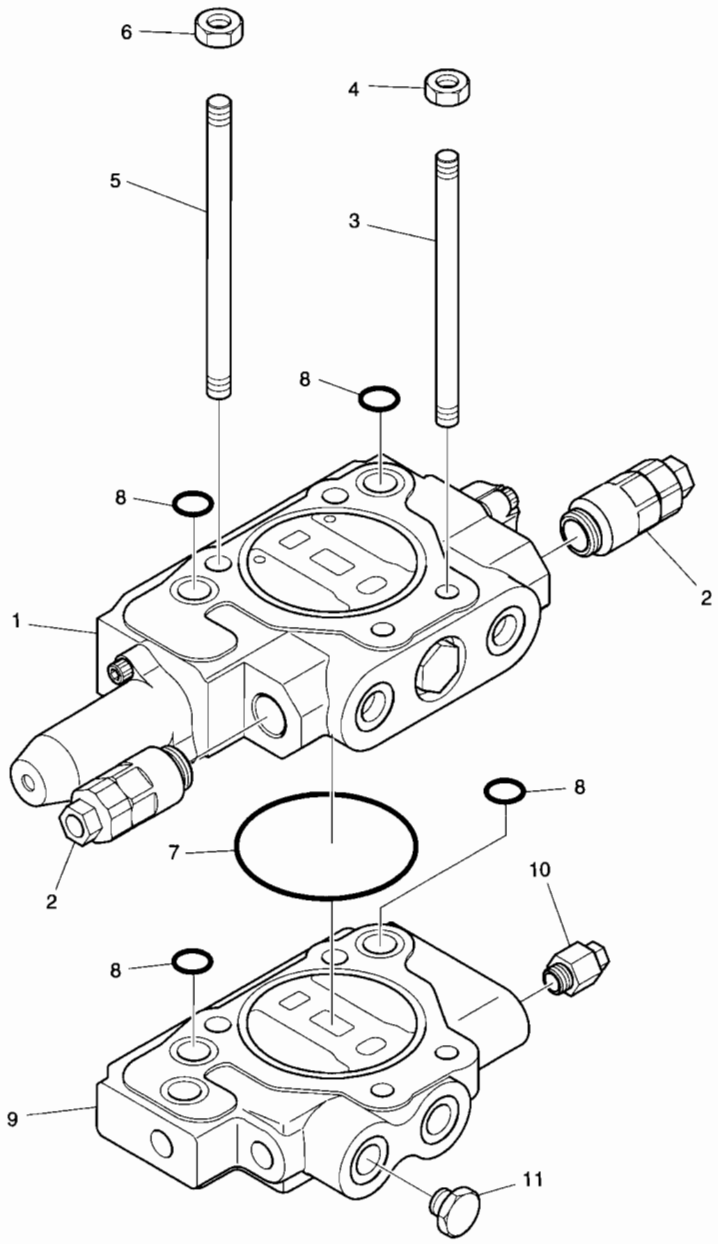

DATE	APR. 02, 2007
1st EDITION	

Fig. 4430 CONTROL VALVE - ROTATING DISTRIBUTEUR

Serial No. ;

Key No.	Part No.	Description	Description	Q'ty	S.C	Serial No.	ICA	Replaceable part	
								Part No.	Q'ty
4430--	K1013538	CONTROL VALVE(ROTATING)	DISTRIBUTEUR	1					
1	K9004514	SPOOL SECTION ASS'Y	BOBINE	1					
2	420-00258	RELIEF VALVE	SOULAGEMENT VANNE	2					
3	K9004518	ROD;TIE	TIGE	2					
4	K9001075	NUT	ECROU 6 PANS	2					
5	K9004521	ROD;TIE	TIGE	2					
6	K9001077	NUT	ECROU 6 PANS	2					
7	S8011001	O-RING	JOINT TORIQUE	1					
8	180-00403	O-RING	JOINT TORIQUE	4					
9	K9004516	INLET SECTION ASS'Y	SECTION D'ADMISSION	1					
10	K9004515	RELIEF VALVE	SOULAGEMENT VANNE	1					
11	181-00563	PLUG ASS'Y	BOUCHON	1					

DATE	APR. 02, 2007
1st EDITION	

Fig. 4440 CONTROL VALVE - ARTI BOOM
DISTRIBUTEUR

Serial No. ;

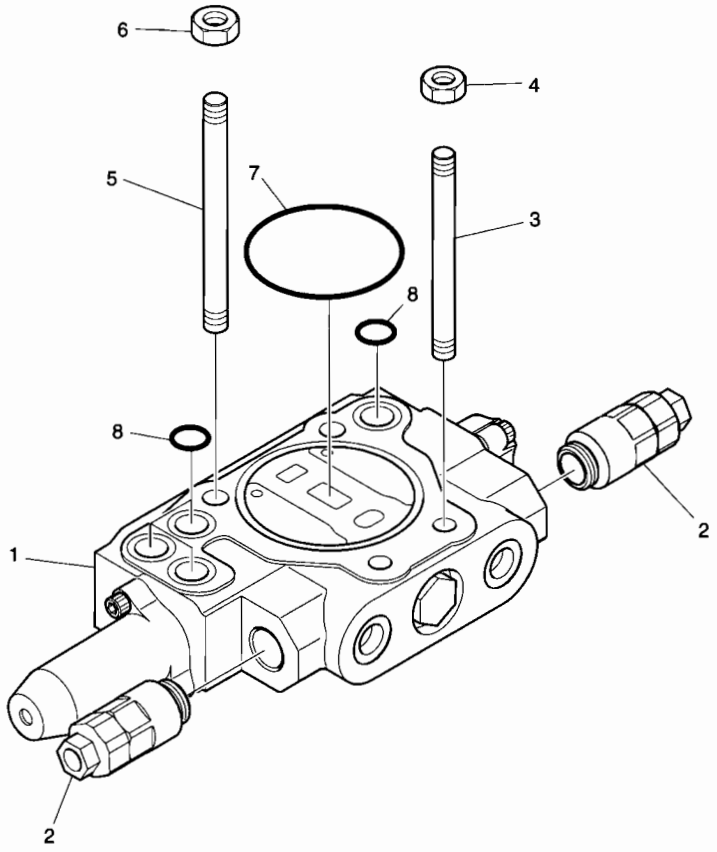

DATE	APR. 02, 2007
1st EDITION	

Fig. 4440 CONTROL VALVE - ARTI BOOM DISTRIBUTEUR

Serial No. ;

Key No.	Part No.	Description	Description	Q'ty	S.C	Serial No.	ICA	Replaceable part	
								Part No.	Q'ty
4440--	K1013536	CONTROL VALVE(ARTI)	DISTRIBUTEUR	1					
1	K9004517	SPOOL SECTION ASS'Y	BOBINE	1					
2	420-00258	RELIEF VALVE	SOULAGEMENT VANNE	2					
3	K9004520	ROD;TIE	TIGE	2					
4	K9001075	NUT	ECROU 6 PANS	2					
5	K9004523	ROD;TIE	TIGE	2					
6	K9001077	NUT	ECROU 6 PANS	2					
7	S8011001	O-RING	JOINT TORIQUE	1					
8	180-00403	O-RING	JOINT TORIQUE	4					

DATE	APR. 02, 2007
1st EDITION	

Fig. 4450 CONTROL VALVE - ROTATING(ARTI) DISTRIBUTEUR

Serial No. ;

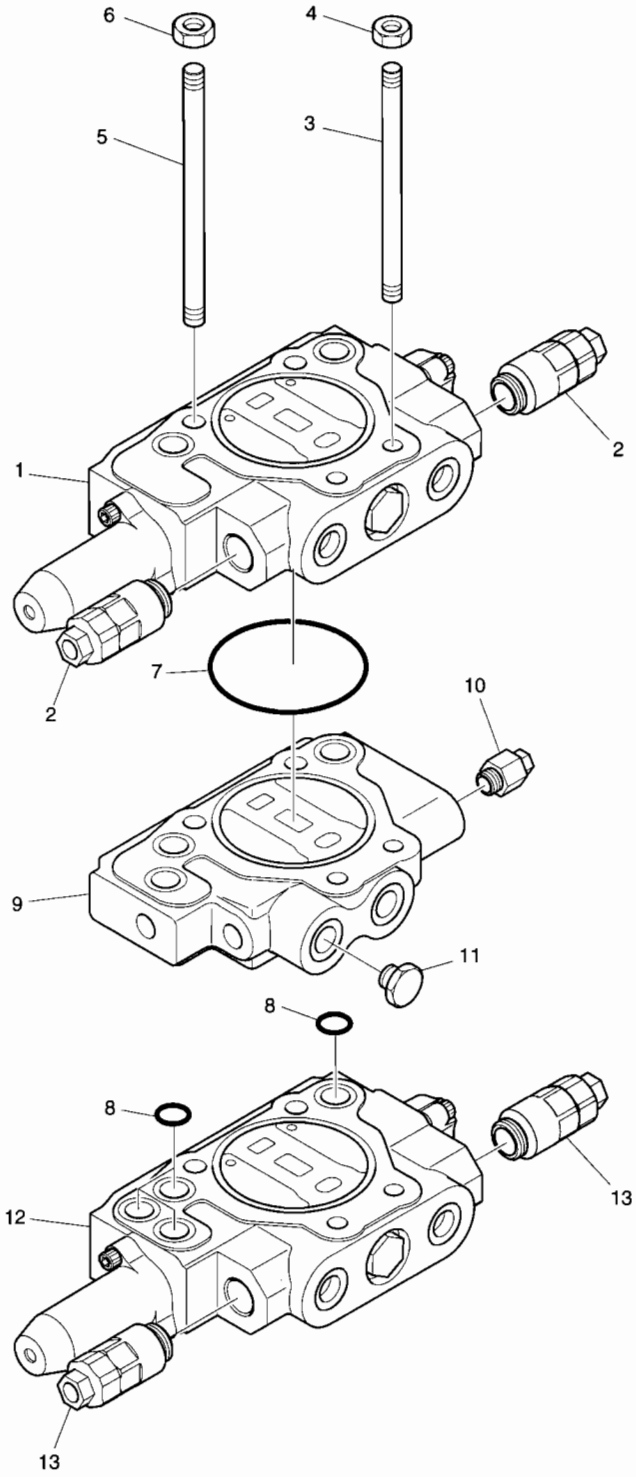

DATE	APR. 02, 2007
1st EDITION	

Fig. 4450 CONTROL VALVE - ROTATING(ARTI) DISTRIBUTEUR

Serial No. ;

Key No.	Part No.	Description	Description	Q'ty	S.C	Serial No.	ICA	Replaceable part	
								Part No.	Q'ty
4450--	K1013539	CONTROL	DISTRIBUTEUR	1					
1	K9004514	SPOOL SECTION ASS'Y	BOBINE	1					
2	420-00258	RELIEF VALVE	SOULAGEMENT VANNE	2					
3	K9004519	ROD;TIE	TIGE	2					
4	K9001075	NUT	ECROU 6 PANS	2					
5	K9004522	ROD;TIE	TIGE	2					
6	K9001077	NUT	ECROU 6 PANS	2					
7	S8011001	O-RING	JOINT TORIQUE	1					
8	180-00403	O-RING	JOINT TORIQUE	4					
9	K9004516	INLET SECTION ASS'Y	SECTION D'ADMISSION	1					
10	K9004515	RELIEF VALVE	SOULAGEMENT VANNE	1					
11	181-00563	PLUG ASS'Y	BOUCHON	1					
12	K9004517	SPOOL SECTION ASS'Y	BOBINE	1					
13	420-00258	RELIEF VALVE	SOULAGEMENT VANNE	2					

Fig. 5100 TOOLS OUTILLAGE

Serial No. ;

1

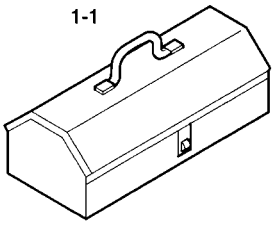
1-1


1-2, 1-3

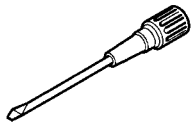
1-4, 1-5

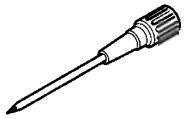
1-6, 1-7


1-8

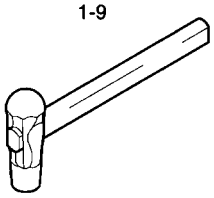
1-9

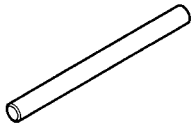
1-10

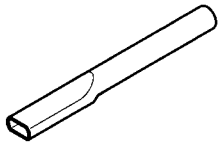
1-11

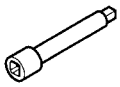
1-12, 1-13

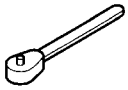
1-14


1-15

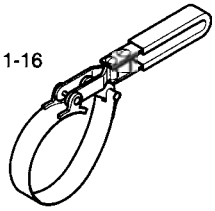
1-16


1-17 ~ 1-22

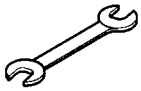
1-23 ~ 1-32

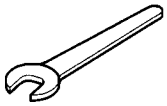
1-33


1-34 ~ 1-40

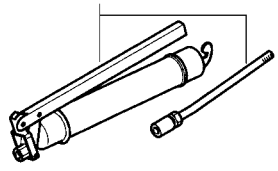
2

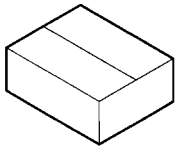
3

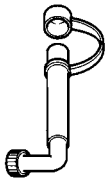
4

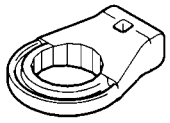
5

DATE	APR. 02, 2007
1st EDITION	

Fig. 5100 TOOLS OUTILLAGE

Serial No. ;

Key No.	Part No.	Description	Description	Q'ty	S.C	Serial No.	ICA	Replaceable part	
								Part No.	Q'ty
5100--	K1024422	ASSEMBLY;TOOLS	ENSEMBLE OUTILLAGE	-	D				
1	2199-1063F34A	TOOL ASS'Y	OUTILLAGE	1					
1-1	2199-9043	. BOX;TOOL	. BOITE	1	D				
1-2	T6580008	. WRENCH:ADJUST	. CLE A MOLETTE	1	D				
1-3	T6580020	. WRENCH;ADJUST	. CLE A MOLETTE	1	D				
1-4	T7050003	. DRIVER (-)	. TOURNEVIS(-)	1	D				
1-5	T7050013	. DRIVER	. TOURNEVIS	1	D				
1-6	T7050021	. DRIVER - 6 100MM	. TOURNEVIS	1	D				
1-7	T7050022	. DRIVER 8X150	. TOURNEVIS	1	D				
1-8	T7500004	. PILER;COMBI 8	. GERBEUR COMBI	1	D				
1-9	T7260057	. HAMMER 2 L/B	. MARTEAU	1	D				
1-10	2199-1004	. BAR	. CAOUTCHOUC	1					
1-11	2199-1005	. PIPE	. CONDUITE	1					
1-12	T6690012	. BAR;EXTENSION	. RALLONGE	1	D				
1-13	T6690013	. BAR;EXTENSION	. RALLONGE	1	D				
1-14	T6750003	. HANDLE;RATCHET	. POIGNEE A CLIQUET	1	D				
1-15	2199-9009	. CLIP;DRIVER 13	. ATTACHE	1					
1-16	K1008167	. WRENCH;FILTER	. CLE A FILTRE	1					
1-17	T6550005	. L-WRENCH 4	. CLE MALE	1	D				
1-18	T6550006	. L-WRENCH 5	. CLE MALE	1	D				
1-19	T6550007	. L-WRENCH 6	. CLE MALE	1	D				
1-20	T6550009	. L-WRENCH	. CLE MALE	1	D				
1-21	T6550011	. L-WRENCH	. CLE MALE	1	D				
1-22	T6550018	. L-WRENCH	. CLE MALE	1	D				
1-23	T6510062	. SPANNER	. CLE PLATE	1	D				
1-24	T6510066	. SPANNER	. CLE PLATE	1	D				
1-25	T6510070	. SPANNER	. CLE PLATE	1	D				
1-26	T6510072	. SPANNER	. CLE PLATE	1	D				
1-27	T6510075	. SPANNER	. CLE PLATE	1	D				
1-28	T6510081	. SPANNER 10X12	. CLE PLATE	1	D				
1-29	T6510085	. SPANNER	. CLE PLATE	1	D				
1-30	T6510089	. SPANNER	. CLE PLATE	1	D				
1-31	T6510091	. SPANNER	. CLE PLATE	1	D				
1-32	T6510018	. SPANNER	. CLE PLATE	1	D				
1-33	T6510027	. SPANNER	. CLE PLATE	1	D				
1-34	T6600183	. WRENCH	. CLE PLATE	1	D				
1-35	T6600189	. WRENCH;SOCKET	. CLE PLATE	1	D				
1-36	T6600197	. SOCKET;WRENCH	. CLE PLATE	1	D				

Fig. 5100 TOOLS OUTILLAGE

Serial No. ;

1

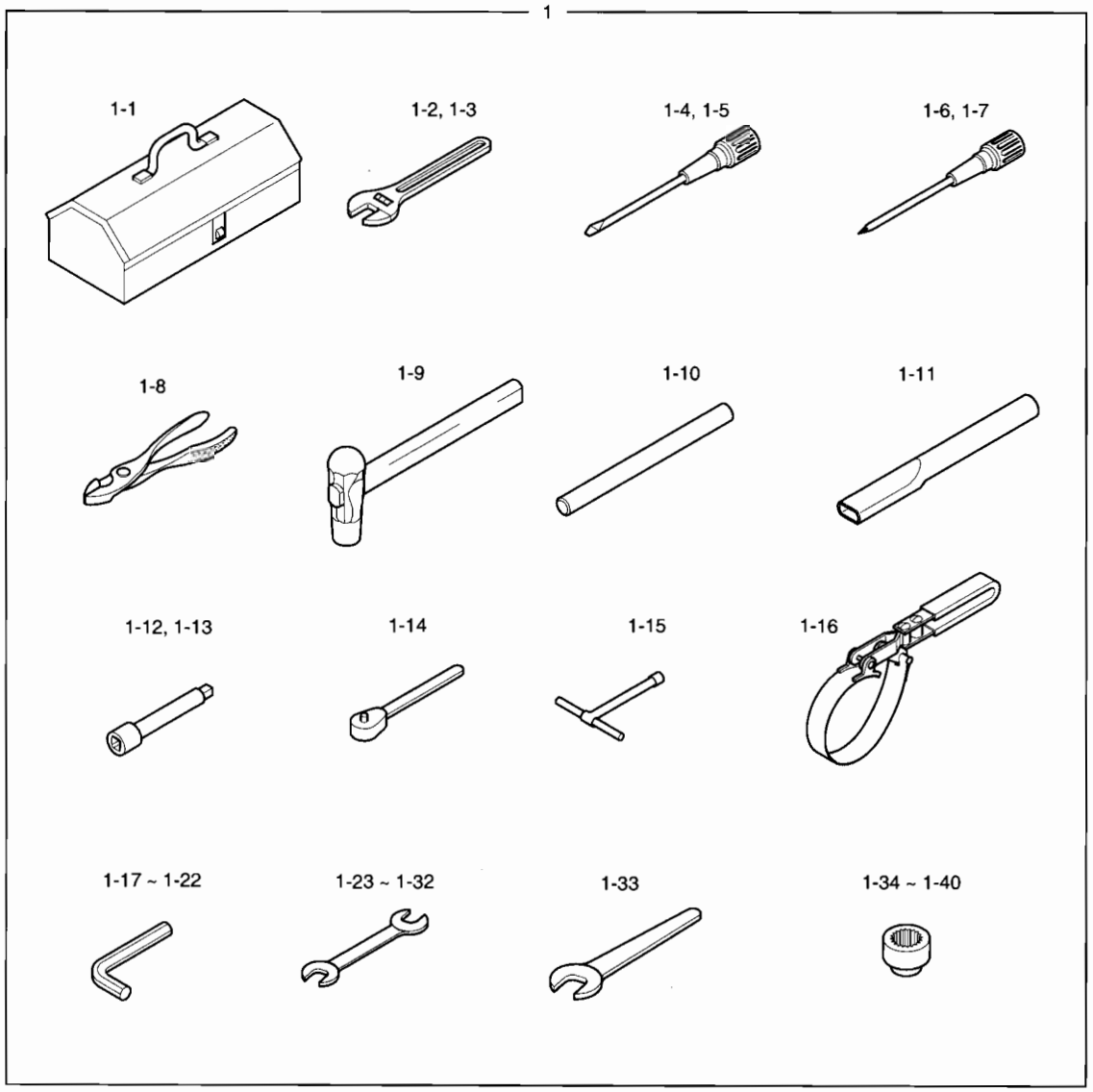

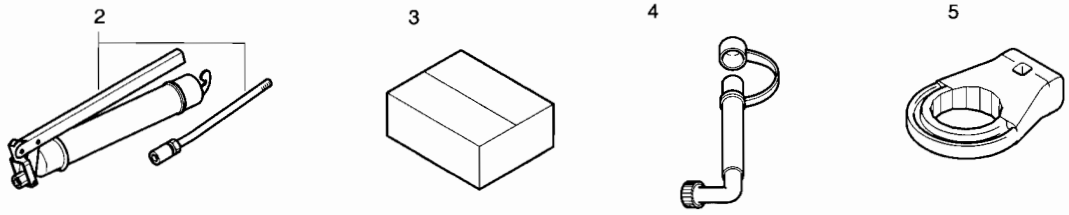

Fig. 5100 TOOLS OUTILLAGE

Serial No. ;

Key No.	Part No.	Description	Description	Q'ty	S.C	Serial No.	ICA	Replaceable part	
								Part No.	Q'ty
5100-1-37	T6600201	. SOCKET;WRENCH	. CLE PLATE	1	D				
1-38	T6600211	. SOCKET;WRENCH	. CLE PLATE	1	D				
1-39	T6600223	. SOCKET;WRENCH	. CLE PLATE	1	D				
1-40	T6600217	. SOCKET;WRENCH	. CLE PLATE	1	D				
2	2199-9008	GREASE GUN	PISTOLET DE GRAISSAGE	1					
3	2199-9007	BOX	BOITE	1					
4	K1007669	HOSE;DRAIN OIL	TUYAU FLEXIBLE	1					
5	K1006586	WRENCH;PRE FUEL FILTER	FILTRE D'ESSENCE	1					

Fig. 5110 SPARE PARTS PIECES DE RECHANGE

Serial No. ;

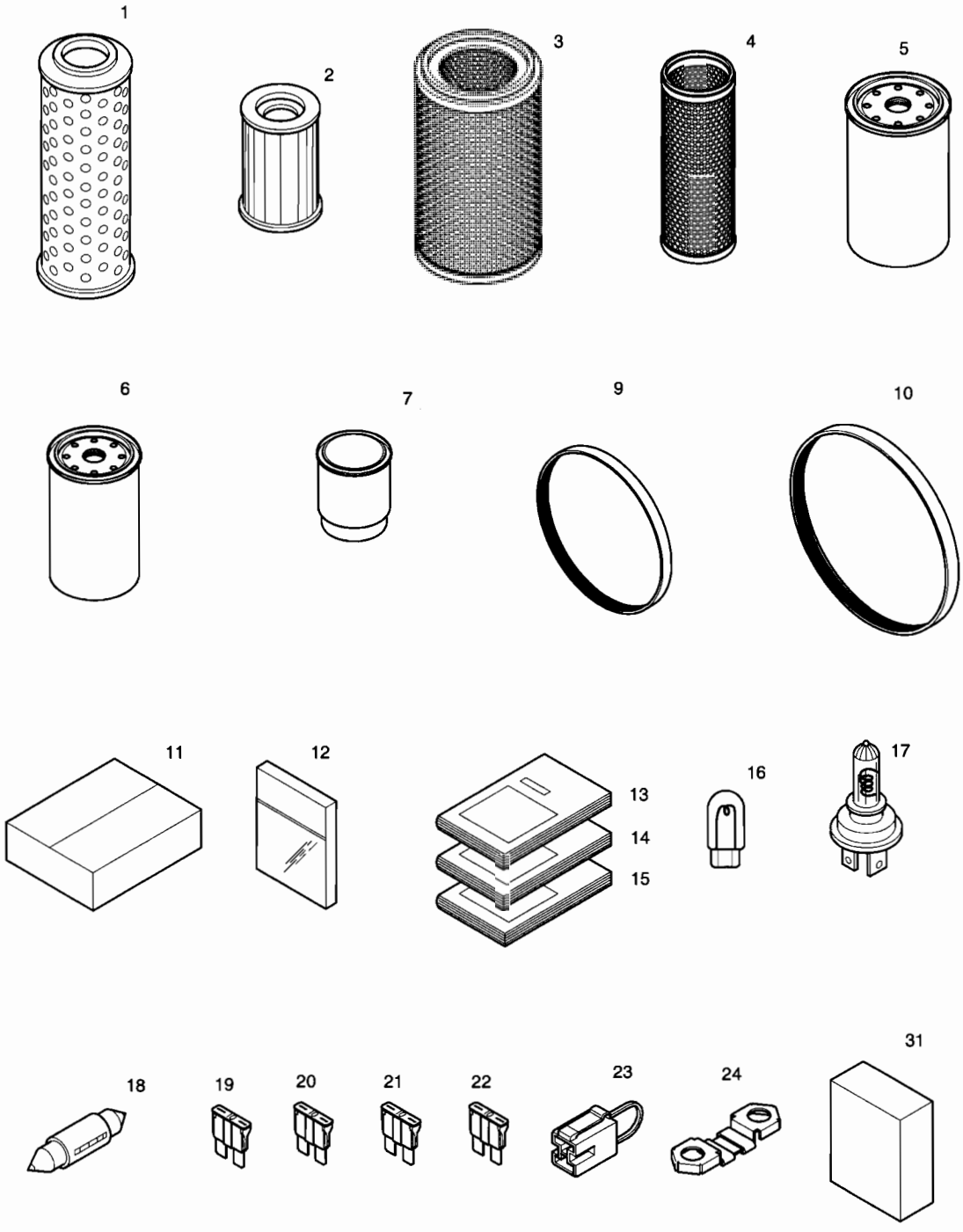

DATE	APR. 02, 2007
1st EDITION	

Fig. 5110 SPARE PARTS PIECES DE RECHANGE

Serial No. ;

Key No.	Part No.	Description	Description	Q'ty	S.C	Serial No.	ICA	Replaceable part	
								Part No.	Q'ty
5110--	K1027656	SPARE PARTS	BAGUE D'ECARTEMENT	-	D				
1	474-00055	FILTER;RETURN	FILTRE A GAZOLE	1					
2	2471-1154	ELEMENT;FILTER(PILOT)	ELEMENT	1					
3	474-00040	ELEMENT;OUTER	ELEMENT	1					
4	474-00039	ELEMENT;INNER	ELEMENT	1					
5	65.05510-5032	FILTER;E/G OIL	FILTRE D'HUILE	1					
6	65.12503-5026	FILTER;E/G FUEL	FILTRE A GAZOLE	1					
7	K1006530	FILTER;PRE FUEL	FILTRE	1					
9	2106-1019D25	BELT(AIRCON)	COURROIE	1					
10	65.96801-0194	BELT(FAN) 8PK-1230L	COURROIE	1					
11	2512-1095D1	BOX;SPARE PARTS	BOITE	1					
12	2180-9153	O-RING KIT	JOINT TORIQUE	1					
13	K1027953EF	PARTS BOOK	MANUEL DE PIECES	1					
14	K1027954E	OPERATION MANUAL	MANUEL D'UTILISATION	1					
15	K1027955E	SHOP MANUAL	MANUEL DE MAGASIN	1					
16	515-00012A	BULB	AMPOULE	2					
17	2515-1022D1	BULB;HALOGEN	AMPOULE	1					
18	2515-1016D4	BULB	AMPOULE	1					
19	2527-1016	FUSE;BLADE	LAME DE FUSIBLE	2					
20	2527-1017	FUSE;BLADE	LAME DE FUSIBLE	2					
21	2527-1018	FUSE;BLADE	LAME DE FUSIBLE	1					
22	2527-1025	FUSE;BLADE	LAME DE FUSIBLE	1					
23	2527-1023A	FUSIBLE LINK	FUSIBLE	1					
24	527-00005	FUSE;PREHEAT RELAY	FUSIBLE	1					
31	K1006854	OIL;ENGINE(TIER-III)	RESERVOIR D'HUILE	6					

Fig. 5120 NAME PLATE - CABIN(EUROPE)
PLAQUE D'IDENTIFICATION

Serial No. ;

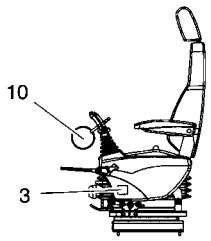

LEFT SIDE VIEW OF
LEFT CONTROL STAND

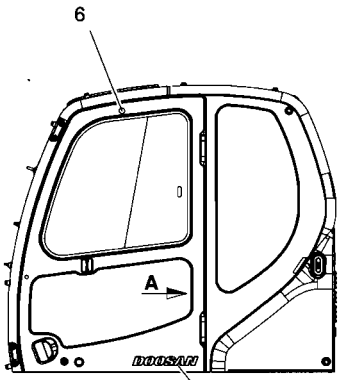

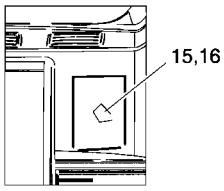

VIEW **A**

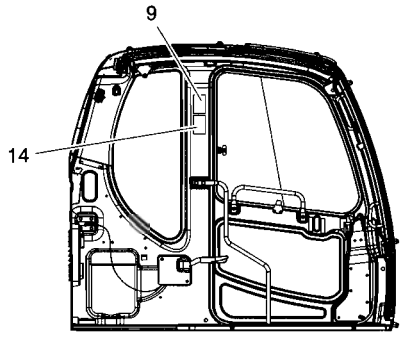

LEFT SIDE VIEW
OF CABIN INSIDE

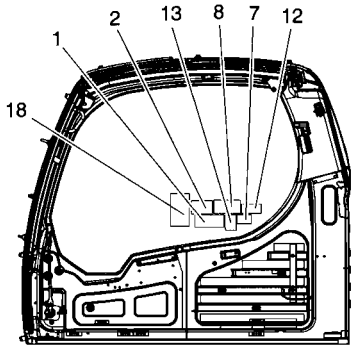

RIGHT SIDE VIEW
OF CABIN INSIDE

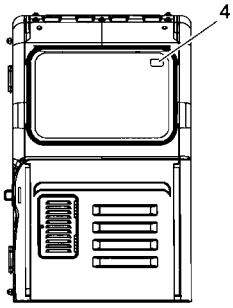

DATE	APR. 02, 2007
1st EDITION	

Fig. 5120 NAME PLATE - CABIN(EUROPE) PLAQUE D'IDENTIFICATION

Serial No. ;

Key No.	Part No.	Description	Description	Q'ty	S.C	Serial No.	ICA	Replaceable part	
								Part No.	Q'ty
5120--	K1008464E	NAME PLATE ASS'Y	PLAQUE D'IDENTIFICATION	-	D				
1	K1034001	PLATE;NAME	PLAQUE D'IDENTIFICATION	1					
2	2190-3297	PLATE;NAME	PLAQUE D'IDENTIFICATION	1					
3	K1005909	PLATE;NAME	PLAQUE D'IDENTIFICATION	1					
4	190-00101	PLATE;NAME	PLAQUE D'IDENTIFICATION	1					
6	2116-9003	PLATE	PLAQUE	1					
7	2190-2524	PLATE;NAME	PLAQUE D'IDENTIFICATION	1					
8	190-00096	PLATE;NAME	PLAQUE D'IDENTIFICATION	1					
9	190-00093	PLATE;NAME	PLAQUE D'IDENTIFICATION	1					
10	190-00098A	PLATE;NAME	PLAQUE D'IDENTIFICATION	1					
12	190-00102	PLATE;NAME	PLAQUE D'IDENTIFICATION	1					
13	190-00094	PLATE;NAME	PLAQUE D'IDENTIFICATION	1					
14	190-00521	PLATE;NAME	PLAQUE D'IDENTIFICATION	1					
15	K1008019D3	PLATE;NAME	PLAQUE D'IDENTIFICATION	1					
16	K1008019D4	PLATE;NAME	PLAQUE D'IDENTIFICATION	1					
17	K1011743D6	PLATE;NAME	PLAQUE D'IDENTIFICATION	1					
18	K1016614	PLATE;NAME	PLAQUE D'IDENTIFICATION	1					

DATE	APR. 02, 2007
1st EDITION	

Fig. 5130 NAME PLATE - EUROPE
PLAQUE D'IDENTIFICATION

Serial No. ;

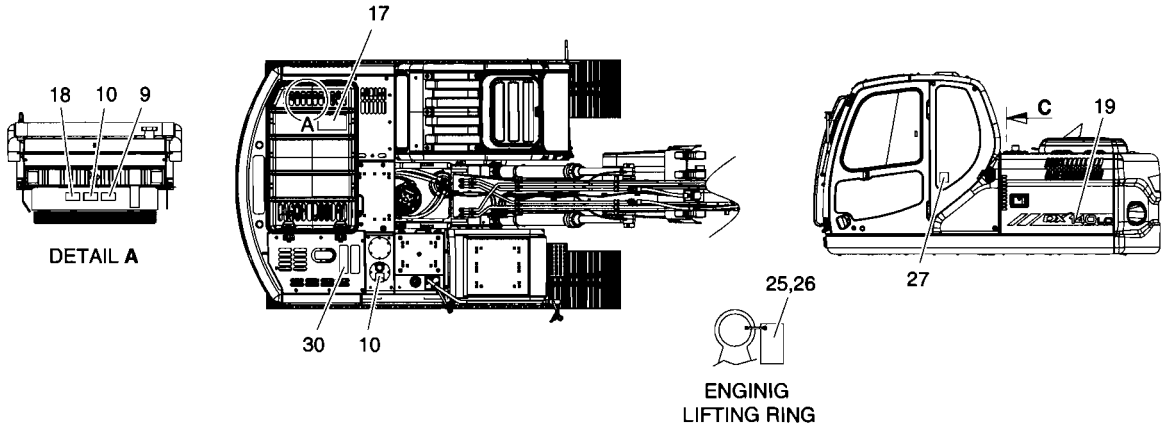

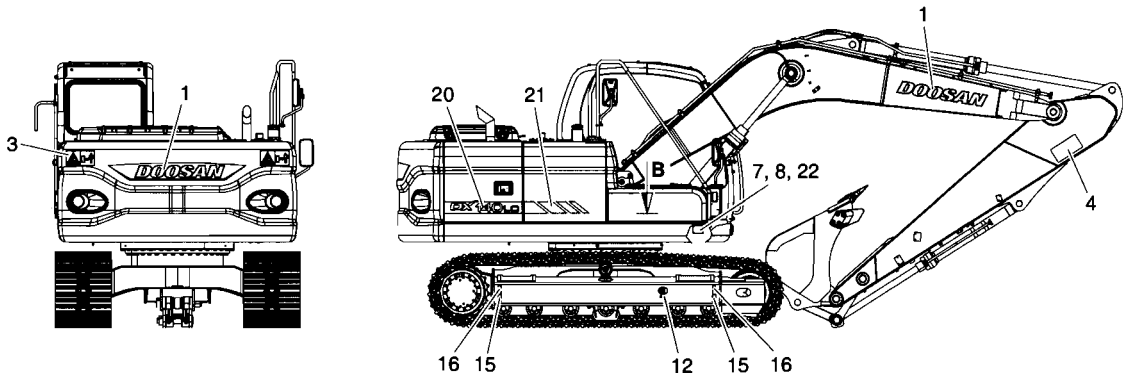

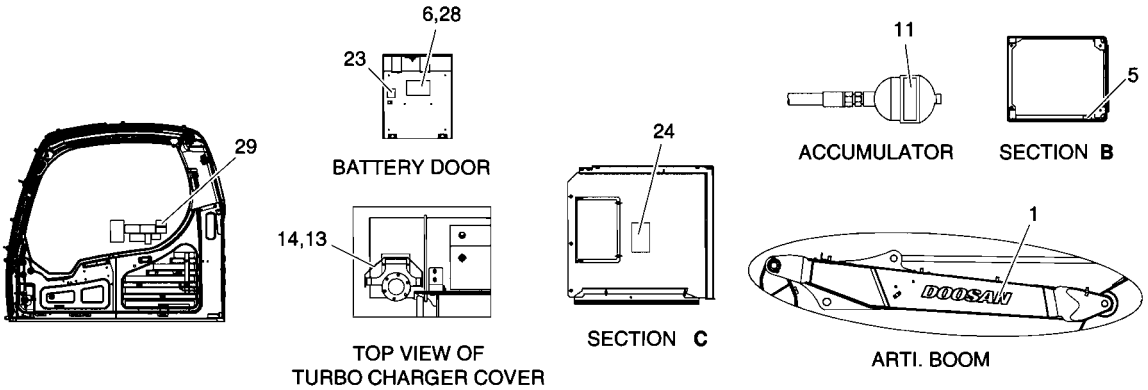

DATE	APR. 02, 2007
1st EDITION	

Fig. 5130 NAME PLATE - EUROPE PLAQUE D'IDENTIFICATION

Serial No. ;

Key No.	Part No.	Description	Description	Q'ty	S.C	Serial No.	ICA	Replaceable part	
								Part No.	Q'ty
5130--	K1030132A	NAME PLATE ASS'Y	PLAQUE D'IDENTIFICATION	-	D				
1	K1011645D5	DECAL	DECALQUE	3					
3	K1008571	DECAL	DECALQUE	2					
4	190-00652	PLATE;NAME	PLAQUE	2					
5	190-00100	PLATE;NAME(BATTERY)	PLAQUE	1					
6	K1030473	DECAL	DECALQUE	1					
7	K1012204A	DECAL	DECALQUE	1					
8	2122-1002D2	RIVET	RIVET	4					
9	190-00095	PLATE;NAME(FAN BELT)	PLAQUE	1					
10	190-00097	PLATE;NAME(HOT WATER)	PLAQUE	2					
11	190-00099	PLATE;NAME(ACC)	PLAQUE	1					
12	190-00122	PLATE;NAME(TRACK ADJ)	PLAQUE	2					
13	190-00648A	PLATE;NAME	PLAQUE	1					
14	2122-1002D4	RIVET	RIVET	4					
15	2190-2476	PLATE;NAME(TIE DOWN)	PLAQUE	4					
16	2190-2477	PLATE;NAME(LIFTING)	PLAQUE	4					
17	190-00522	PLATE;NAME	PLAQUE	1					
18	190-00557	PLATE;NAME(FAN)	PLAQUE	1					
19	K1030118	DECAL	DECALQUE	1					
20	K1030117	DECAL	DECALQUE	1					
21	K1011002	DECAL	DECALQUE	1					
22	K1012205A	DECAL	DECALQUE	1					
23	K1016102	DECAL	DECALQUE	1					
24	K1016614	DECAL	DECALQUE	1					
25	190-00509BD25	PLATE;NAME(E/G EMI)	PLAQUE	1					
26	2124-1622D1	CLIP;BAND	AGRAFE	1					
27	190-01059D12	PLATE;NAME(SOUND)	PLAQUE	1					
28	K1030462	DECAL	DECALQUE	1					
29	190-00123	PLATE;NAME(ARTI.BOOM)	PLAQUE	1					
30	2190-2314D2	TAPE;ANTI-SKID	PLAQUE ANTI-DERAPANTE	2					

DATE	APR. 02, 2007
1st EDITION	

Fig. 5140 NAME PLATE - CABIN(EXPORT) PLAQUE D'IDENTIFICATION

Serial No. ;

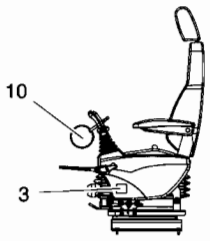

LEFT SIDE VIEW OF
LEFT CONTROL STAND

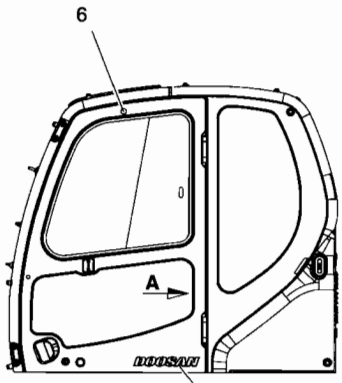

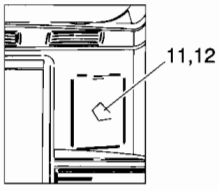

VIEW **A**

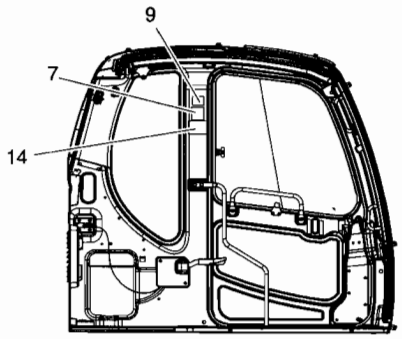

LEFT SIDE VIEW
OF CABIN INSIDE

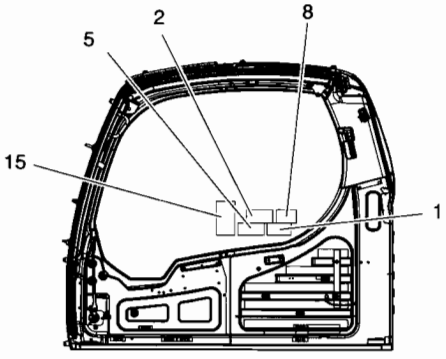

RIGHT SIDE VIEW
OF CABIN INSIDE

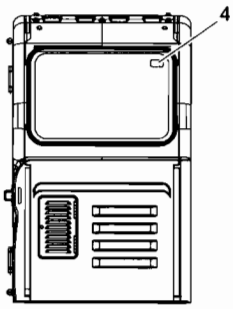

DATE	APR. 02, 2007
1st EDITION	

Fig. 5140 NAME PLATE - CABIN(EXPORT) PLAQUE D'IDENTIFICATION

Serial No. ;

Key No.	Part No.	Description	Description	Q'ty	S.C	Serial No.	ICA	Replaceable part	
								Part No.	Q'ty
5140--	K1007342H	NAME PLATE ASS'Y	PLAQUE D'IDENTIFICATION	-	D				
1	K1034000	PLATE;NAME	PLAQUE D'IDENTIFICATION	1					
2	2190-3297	PLATE;NAME	PLAQUE D'IDENTIFICATION	1					
3	K1005909	PLATE;NAME	PLAQUE D'IDENTIFICATION	1					
4	2190-2480	PLATE;NAME	PLAQUE D'IDENTIFICATION	1					
5	2190-3386A	PLATE;NAME	PLAQUE D'IDENTIFICATION	1					
6	2116-9003	PLATE	PLAQUE	1					
7	190-00693	PLATE;NAME	PLAQUE D'IDENTIFICATION	1					
8	190-00689	PLATE;NAME	PLAQUE D'IDENTIFICATION	1					
9	2190-3388	PLATE;NAME	PLAQUE D'IDENTIFICATION	1					
10	190-00695A	PLATE;NAME	PLAQUE D'IDENTIFICATION	1					
11	K1008019D3	PLATE;NAME	PLAQUE D'IDENTIFICATION	1					
12	K1008019D4	PLATE;NAME	PLAQUE D'IDENTIFICATION	1					
13	K1011743D6	PLATE;NAME	PLAQUE D'IDENTIFICATION	1					
14	K1012583	PLATE;NAME	PLAQUE D'IDENTIFICATION	1					
15	K1016614	PLATE;NAME	PLAQUE D'IDENTIFICATION	1					

DATE	APR. 02, 2007
1st EDITION	

Fig. 5150 NAME PLATE - EXPORT
PLAQUE D'IDENTIFICATION

Serial No. ;

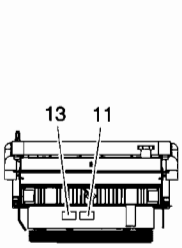

DETAIL **A**

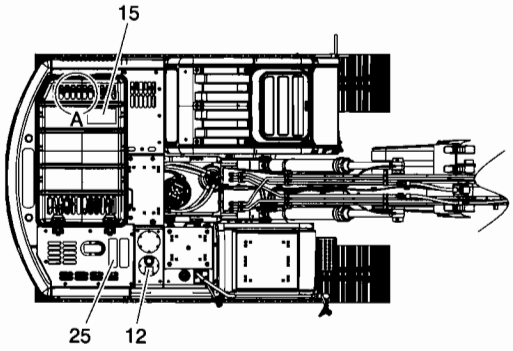

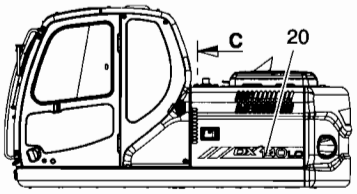

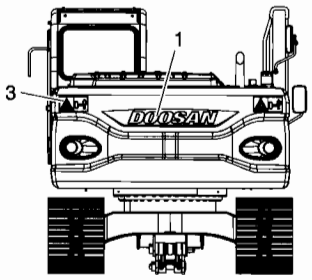

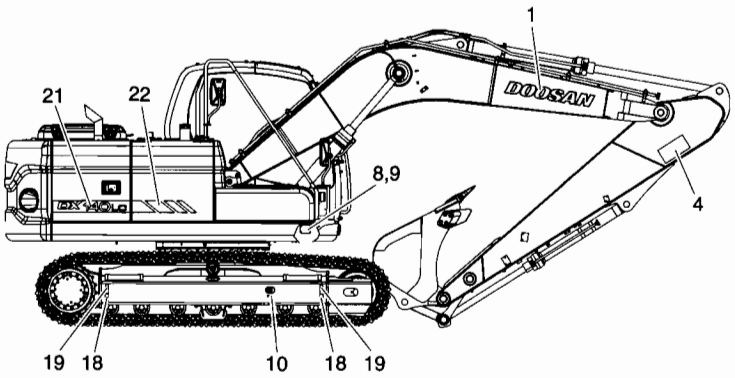

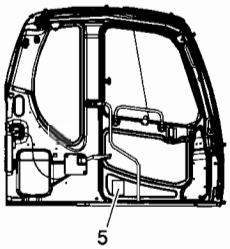

LEFT SIDE VIEW
OF CABIN INSIDE

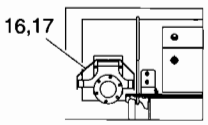

TOP VIEW OF
TURBO CHARGER COVER

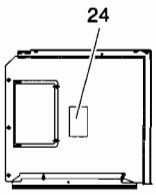

SECTION **C**

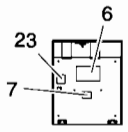

BATTERY DOOR

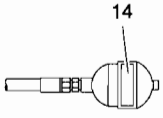

ACCUMULATOR

DATE	APR. 02, 2007
1st EDITION	

Fig. 5150 NAME PLATE - EXPORT PLAQUE D'IDENTIFICATION

Serial No. ;

Key No.	Part No.	Description	Description	Q'ty	S.C	Serial No.	ICA	Replaceable part	
								Part No.	Q'ty
5150--	K1030481A	NAME PLATE ASS'Y	PLAQUE D'IDENTIFICATION	-	D				
1	K1011645D5	DECAL	DECALQUE	3					
3	2190-3379A	PLATE;NAME	PLAQUE	2					
4	190-00652	PLATE;NAME	PLAQUE	2					
5	2190-2556D158	PLATE;NAME(SPEC)	PLAQUE	1					
6	K1030494	DECAL	DECALQUE	1					
7	2190-2533A	PLATE;NAME(BATTERY)	PLAQUE	1					
8	K1011647B	DECAL(SERIAL)	DECALQUE	1					
9	2122-1002D2	RIVET	RIVET	4					
10	190-00122	PLATE;NAME(TRACK ADJ)	PLAQUE	2					
11	190-00694	PLATE;NAME(FAN BELT)	PLAQUE	1					
12	190-00691	PLATE;NAME(HOT OIL)	PLAQUE	1					
13	190-00692	PLATE;NAME(HOT WATER)	PLAQUE	1					
14	190-00703	PLATE;NAME(ACC)	PLAQUE	1					
15	190-00522A	PLATE;NAME	PLAQUE	1					
16	190-00648A	PLATE;NAME	PLAQUE	1					
17	2122-1002D4	RIVET	RIVET	4					
18	2190-2476	PLATE;NAME(TIE DOWN)	PLAQUE	4					
19	2190-2477	PLATE;NAME(LIFTING)	PLAQUE	4					
20	K1030118	DECAL	DECALQUE	1					
21	K1030117	DECAL	DECALQUE	1					
22	K1011002	DECAL	DECALQUE	1					
23	K1016102	DECAL(BATTERY COVER)	DECALQUE	1					
24	K1016614	DECAL	DECALQUE	1					
25	2190-2314D2	TAPE;ANTI-SKID	PLAQUE ANTI-DERAPANTE	2					

DATE	APR. 02, 2007
1st EDITION	

Fig. 6100 SEAT MOUNTING - HEATER
SIEGE LE SUPPORT

Serial No. ;

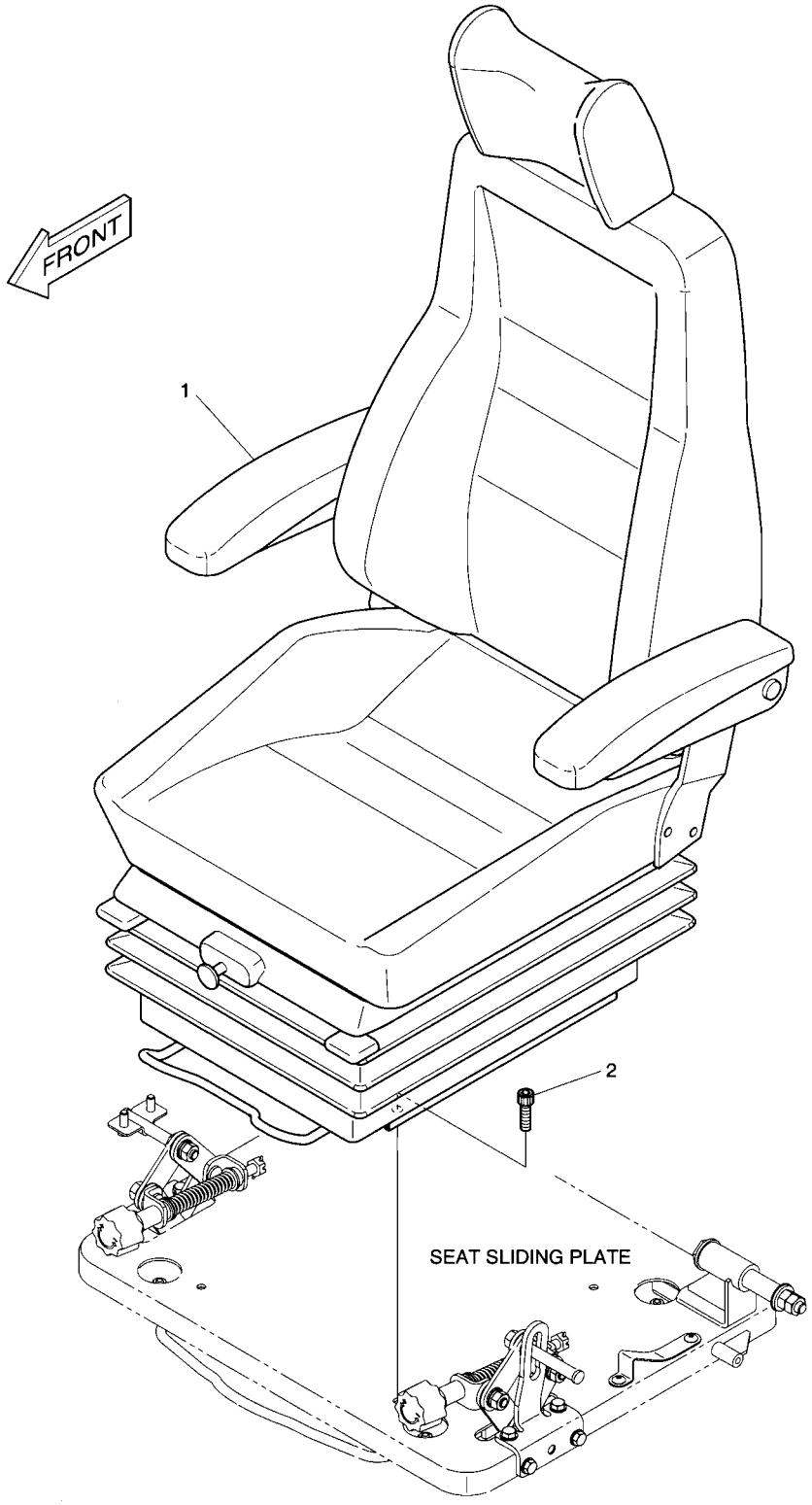

DATE	APR. 02, 2007
1st EDITION	

Fig. 6100 SEAT MOUNTING - HEATER SIEGE LE SUPPORT

Serial No. ;

Key No.	Part No.	Description	Description	Q'ty	S.C	Serial No.	ICA	Replaceable part	
								Part No.	Q'ty
6100--	K1002085	SEAT MOUNTING	SIEGE	-	D				
1	901-00047	SEAT;AIR SUSPENSION	SIEGE	1					
2	S2208866	BOLT	BOULON A 6 PANS	4					

Fig. 6110 SEAT - HEATER SIEGE

Serial No. ;

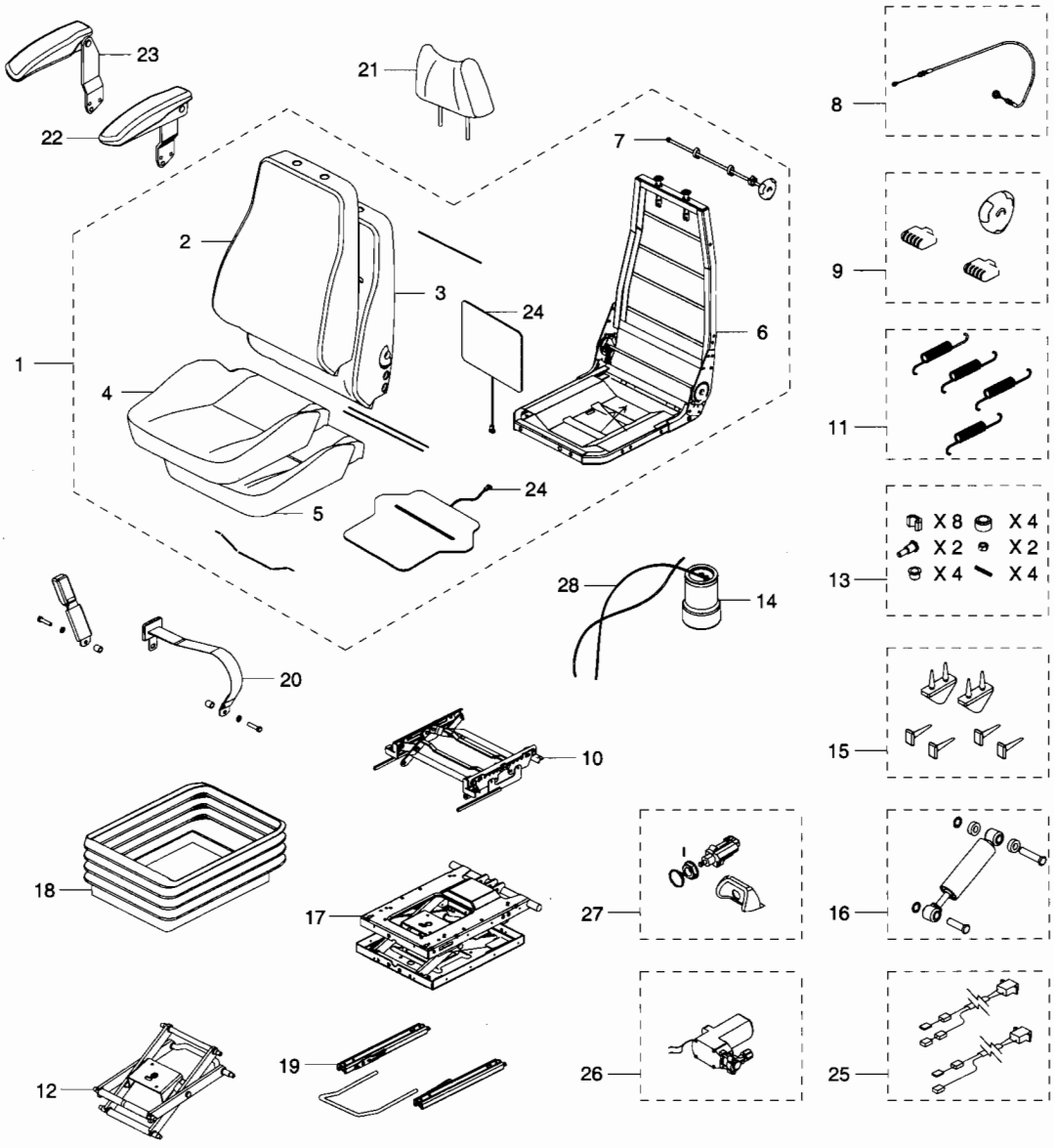

DATE	APR. 02, 2007
1st EDITION	

Fig. 6110 SEAT - HEATER SIEGE

Serial No. ;

Key No.	Part No.	Description	Description	Q'ty	S.C	Serial No.	ICA	Replaceable part	
								Part No.	Q'ty
6110--	901-00047	SEAT ASS'Y	SIEGE	1					
1	K9001200	UPPER ASS'Y	SUPERIEUR	1					
2	K9001201	BACK COVER	COUVERTURE ARRIERE	1					
3	K9001202	BACK FOAM	MOUSSE ARRIERE	1					
4	K9001203	SEAT COVER	SIEGE	1					
5	K9001204	SEAT FOAM	SIEGE	1					
6	K9001205	FRAME	ARMATURE	1					
7	K9001206	LUMBAR KIT	KIT LOMBAIRE	1					
8	K9001207	CABLE;ADJUST	CABLE	1					
9	2.172-00003	HANDLE	POIGNEE	1					
10	K9001208	HEIGHT RISER	RECHAUFFEUR	1					
11	K9001209	HEIGHT RISER SPRING KIT	RECHAUFFEUR	1					
12	K9001673	LEVER/CENTRE PIVOT KIT	LEVIER	1					
13	K9001674	BEARING KIT	PALIER	1					
14	K9001675	AIR SPRING KIT	KIT DE RESSORT D'AIR	1					
15	K9001213	UPSTOP/BUMP STOP KIT	KIT	1					
16	K9001676	DAMPER KIT	REGISTRE	1					
17	K9001677	SUSPENSION ASS'Y	SUSPENSION	1					
18	K9001678	SUSPENSION COVER	SUSPENSION	1					
19	K9001217	SLIDING RAIL ASS'Y	GLISSEMENT DU RAIL	1					
20	K9001218	BELT;SEAT	COURROIE	1					
21	K9001219	HEAD REST	SIEGE	1					
22	K9001220	ARM REST-L.H	REPOSER	1					
23	K9001221	ARM REST-R.H	REPOSER	1					
24	K9001223	HEATER ASS'Y	RECHAUFFEUR	1					
25	K9001679	HARNESS ASS'Y	HARNAIS	1					
26	K9001680	COMPRESSOR KIT	KIT DE COMPRESSEUR	1					
27	K9001681	AIR VALVE KIT	KIT DE SOUPAPE A AIR	1					
28	K9001682	PIPE KIT	KIT DE PIPE	1					

DATE	APR. 02, 2007
1st EDITION	

Fig. 6120 FUEL FILLER PUMP ASS'Y
POMPE DE REMPLISSEUR DE CARBURANT

Serial No. ;

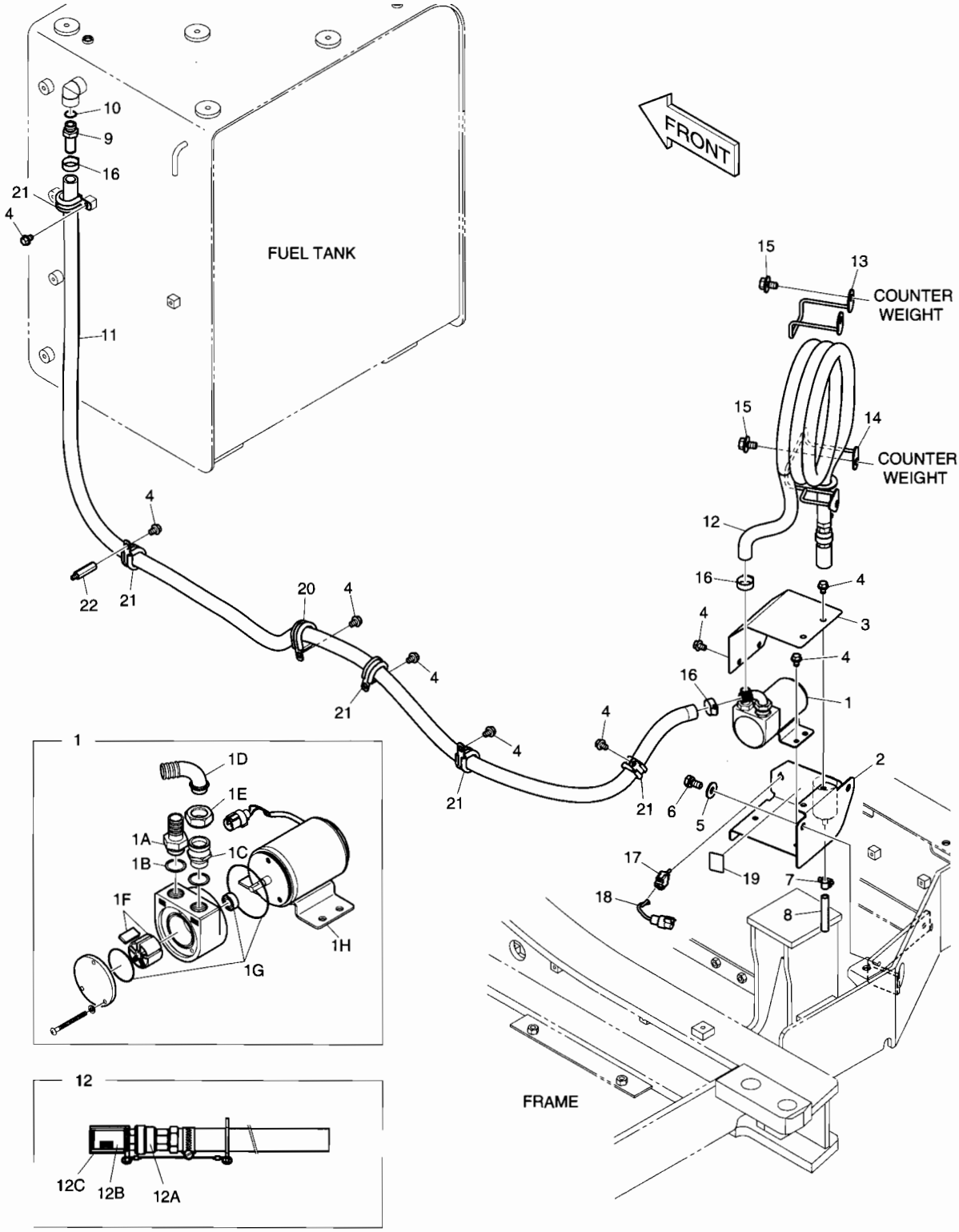

DATE	APR. 02, 2007
1st EDITION	

Fig. 6120 FUEL FILLER PUMP ASS'Y
POMPE DE REMPLISSEUR DE CARBURANT

Serial No. ;

Key No.	Part No.	Description	Description	Q'ty	S.C	Serial No.	ICA	Replaceable part	
								Part No.	Q'ty
6120--	K1017215C	FUEL FILLER PUMP ASS'Y	REMPLISSEUR DE	-	D				
1	401-00449	PUMP;FUEL TRANSFER	POMPE DE GAZOLE	1					
1A	2181-2755B	. ADAPTER	. ADAPTEUR	1					
1B	S8180321	. SEAL;WASHER	. BAGUE D'ETANCHEITE	2					
1C	181-00809	. ADAPTER	. ADAPTEUR	1					
1D	181-00810	. ELBOW	. COUDE	1					
1E	121-00085	. NUT	. ECROU	1					
1F	407-00001	. VANE KIT	. PALETTE	1					
1G	2401-1276KT	. SEAL KIT	. KIT D'ETANCHEITE	1					
1H	523-00012	. MOTOR;FUEL TRANS. PUMP	. MOTEUR	1					
2	195-02662B	BRACKET	SUPPORT	1					
3	621-02739B	COVER	COUVERCLE	1					
4	K1001029	BOLT	BOULON	12					
5	2114-1058D72	WASHER;PLAIN	RONDELLE	2					
6	DS0025021	BOLT;SET	BOULON	2					
7	S8470014	CLAMP;HOSE	COLLIER DE LA CONDUITE	1					
8	DS2079153	HOSE	TUYAU FLEXIBLE	1					
9	2181-2104D6	ADAPTER	ADAPTEUR	1					
10	S8000181	O-RING	JOINT TORIQUE	1					
11	DS2079171	HOSE	TUYAU FLEXIBLE	1					
12	185-00167D3	HOSE ASS'Y	TUYAU FLEXIBLE	1					
12A	2420-1258	. VALVE;CHECK	. CAPTEUR	1					
12B	2471-1152	. STRAINER	. FILTRE	1					
12C	2160-1336	. CAP;SERAINER	. CHAPEAU	1					
13	K1014330A	BRACKET	SUPPORT	1					
14	K1014331	BRACKET	SUPPORT	1					
15	DS0025019	BOLT;SET	BOULON	4					
16	S8470032	CLAMP;HOSE	COLLIER DE LA CONDUITE	3					
17	549-00093	SWITCH;TOGGLE	COMMUTATEUR	1					
18	530-00214A	HARNESS;TOGGLE SWITCH	HARNAIS	1					
19	190-01172	PLATE;NAME(FUEL PUMP)	PLAQUE	1					
20	124-00208D6	CLIP	AGRAFE	1					
21	124-00208D5	CLIP	AGRAFE	5					
22	2120-2187	BOLT;STUD	BOULON DE GOUJON	1					

DATE	APR. 02, 2007
1st EDITION	

Fig. 6130 ROOF COVER - STEEL
COUVERTURE DE TOIT

Serial No. ;

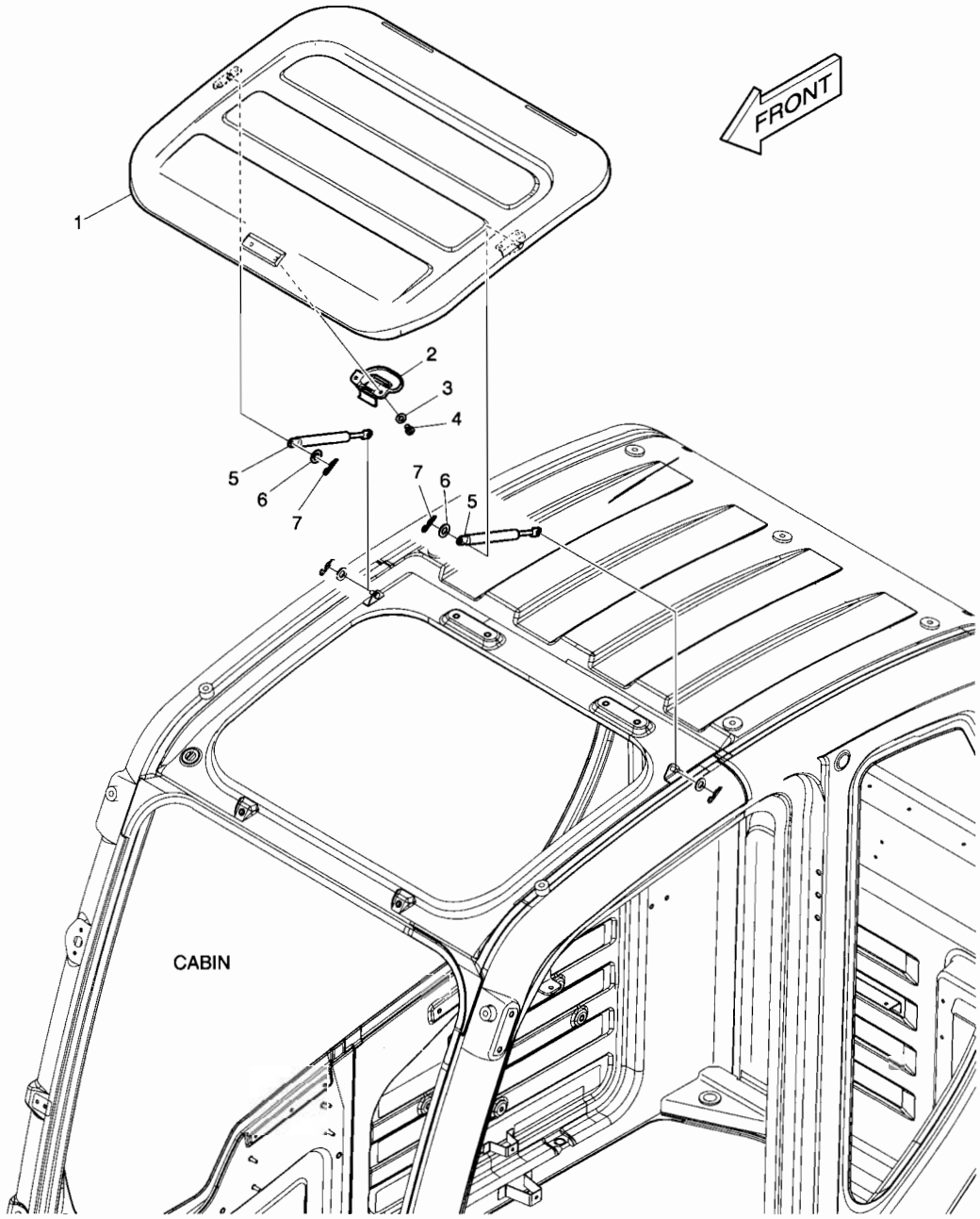

DATE	APR. 02, 2007
1st EDITION	

Fig. 6130 ROOF COVER - STEEL COUVERTURE DE TOIT

Serial No. ;

Key No.	Part No.	Description	Description	Q'ty	S.C	Serial No.	ICA	Replaceable part	
								Part No.	Q'ty
6130--	621-03732C	ROOF COVER ASS'Y	COUVERCLE	-	D				
1	621-03727B	COVER;ROOF	COUVERCLE	1					
2	123-00516B	LOCK ASS'Y;ROOF COVER	SERRURE	1					
3	2114-1898D3	WASHER	CALE	2					
4	2120-2166D9	SCREW	VIS	2					
5	DS1003009	GAS-SPRING	GOUJON	2					
6	2114-1898D14	WASHER	CALE	2					
7	123-00523	PIN;GAS-SPRING	GOUJON	2					

Fig. 6140 RAIN SHIELD
BOUCLIER DE PLUIE

Serial No. ;

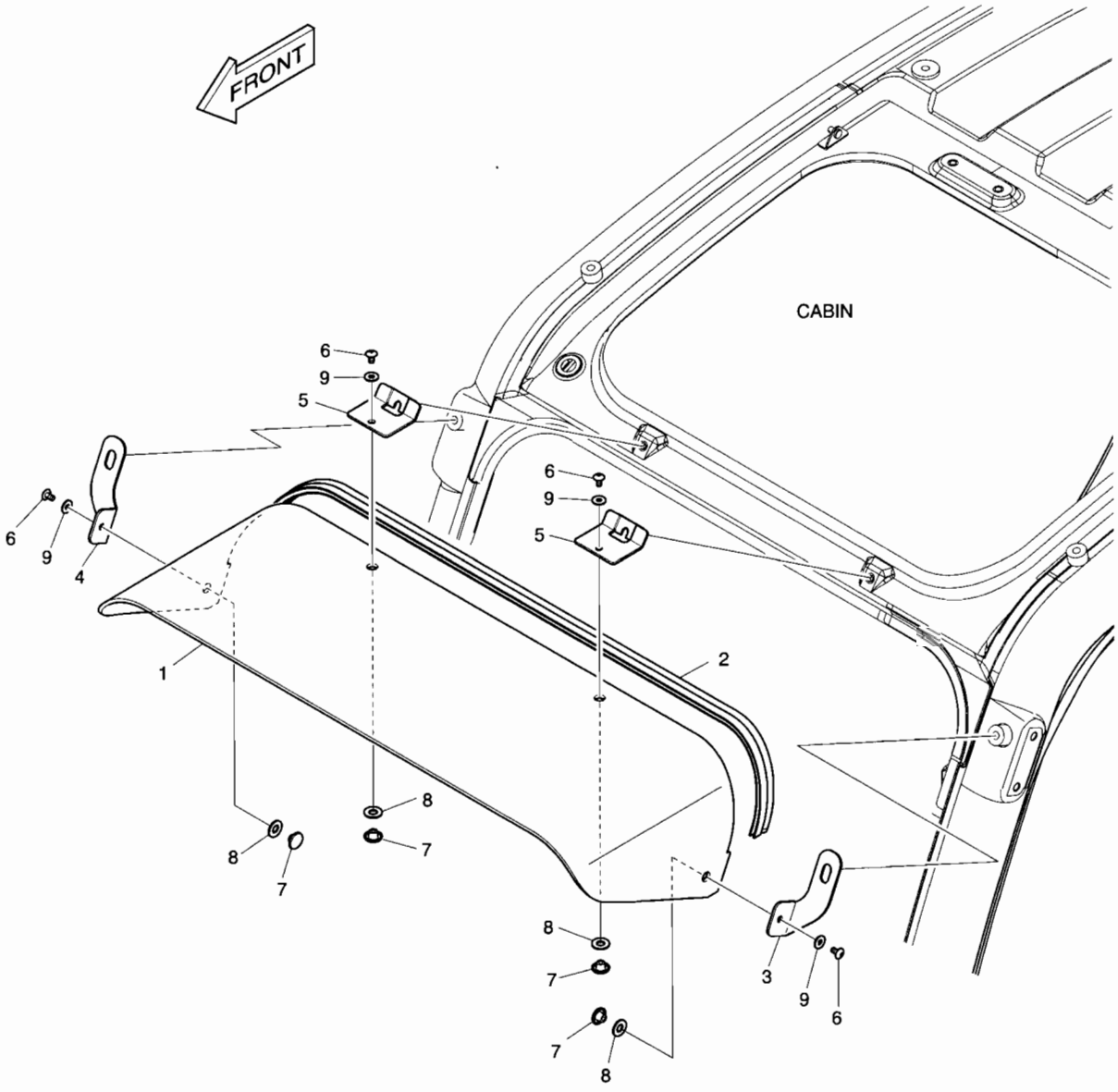

DATE	APR. 02, 2007
1st EDITION	

Fig. 6140 RAIN SHIELD BOUCLIER DE PLUIE

Serial No. ;

Key No.	Part No.	Description	Description	Q'ty	S.C	Serial No.	ICA	Replaceable part	
								Part No.	Q'ty
6140--	K1002561A	RAIN SHIELD	BOUCLIER DE PLUIE	-	D				
1	159-00294B	COVER;RAIN SHIELD	COUVERCLE	1					
2	162-00040A	STRIP;WEATHER	TAMPON	1					
3	K1002574A	BRACKET(L.H)	SUPPORT	1					
4	K1002575A	BRACKET(R.H)	SUPPORT	1					
5	195-03374B	BRACKET;RAIN SHIELD	SUPPORT	2					
6	2120-2166D52	BOLT M6x1.0x12	BOULON A 6 PANS	4					
7	621-03103	COVER;ROOF HANDLE	COUVERCLE	4					
8	161-00639	RUBBER;ROOF HANDLE	CAOUTCHOUC	4					
9	2114-1898D5	WASHER M6	RONDELLE	4					

Fig. 6150 RAIN SHIELD & LAMP MOUNTING
BOUCLIER ET DE LAMPE DE PLUIE

Serial No. ;

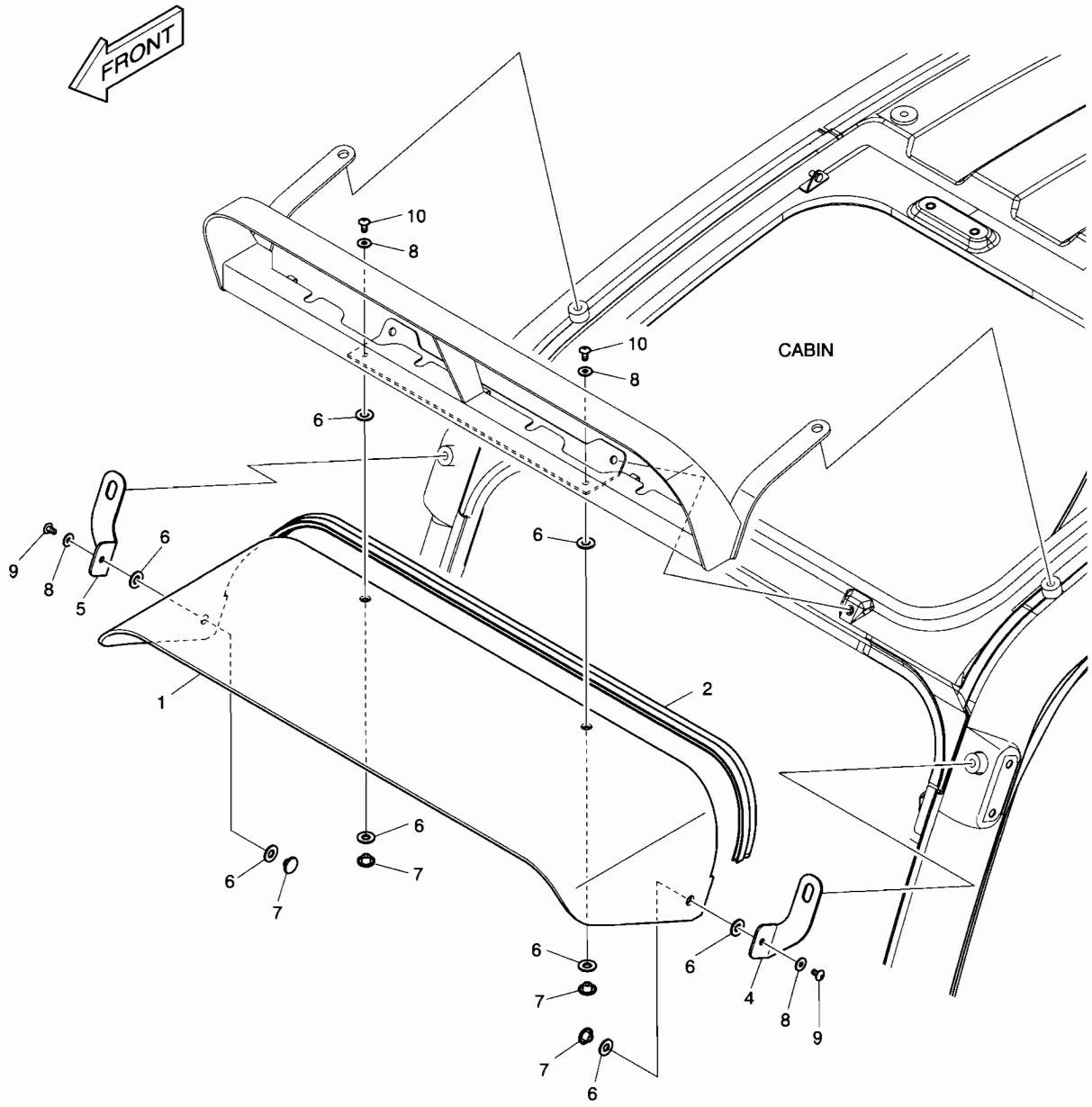

DATE	APR. 02, 2007
1st EDITION	

Fig. 6150 RAIN SHIELD & LAMP MOUNTING BOUCLIER ET DE LAMPE DE PLUIE

Serial No. ;

Key No.	Part No.	Description	Description	Q'ty	S.C	Serial No.	ICA	Replaceable part	
								Part No.	Q'ty
150--	534-00117A	RAIN SHIELD & LAMP ASSY	BOUCLIER DE PLUIE	-	D				
1	159-00294B	COVER;RAIN SHIELD	COUVERCLE	1					
2	162-00040A	STRIP;WEATHER	TAMPON	1					
4	K1002574A	BRACKET(L.H)	SUPPORT	1					
5	K1002575A	BRACKET(R.H)	SUPPORT	1					
6	161-00639	RUBBER;ROOF HANDLE	CAOUTCHOUC	8					
7	621-03103	COVER;ROOF HANDLE	COUVERCLE	4					
8	2114-1898D5	WASHER M6	RONDELLE	4					
9	2120-2166D52	SCREW M6X1.0X12	VIS	2					
10	2120-2166D10	SCREW M6X1.0X14	BOULON A 6 PANS	2					

DATE	APR. 02, 2007
1st EDITION	

Fig. 6160 CABIN LOW GUARD GARDE

Serial No. ;

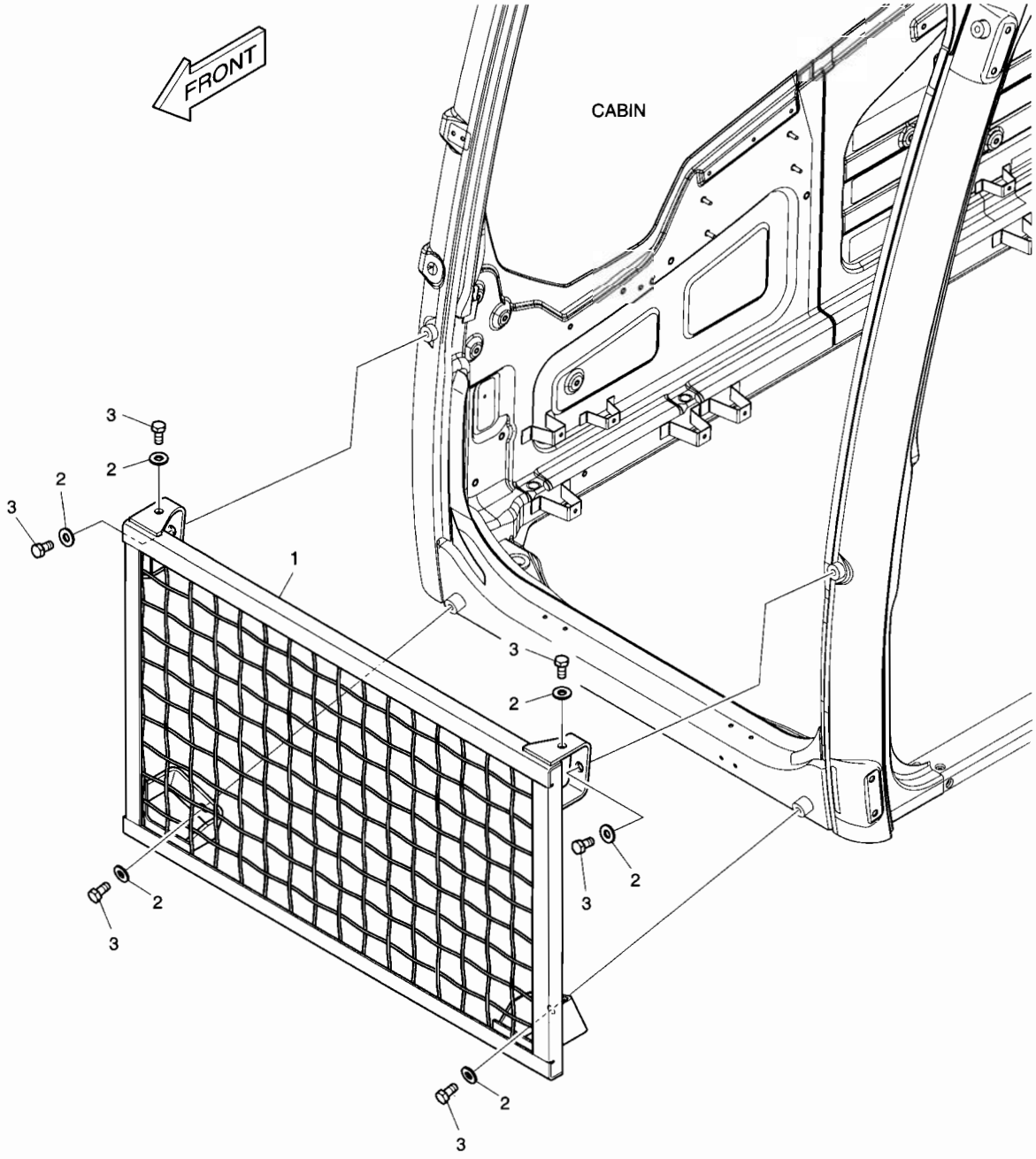

DATE	APR. 02, 2007
1st EDITION	

Fig. 6160 CABIN LOW GUARD GARDE

Serial No. ;

Key No.	Part No.	Description	Description	Q'ty	S.C	Serial No.	ICA	Replaceable part	
								Part No.	Q'ty
6160--	623-00086	GUARD;FRONT LOWER	GARDE	-	D				
1	623-00085A	GUARD;FRONT	GARDE	1					
2	2114-1898D17	WASHER M12	RONDELLE	6					
3	2120-2166D27	BOLT	BOULON A 6 PANS	6					

DATE	APR. 02, 2007
1st EDITION	

Fig. 6170 WINDOW GUARD
GARDE DE FENETRE

Serial No. ;

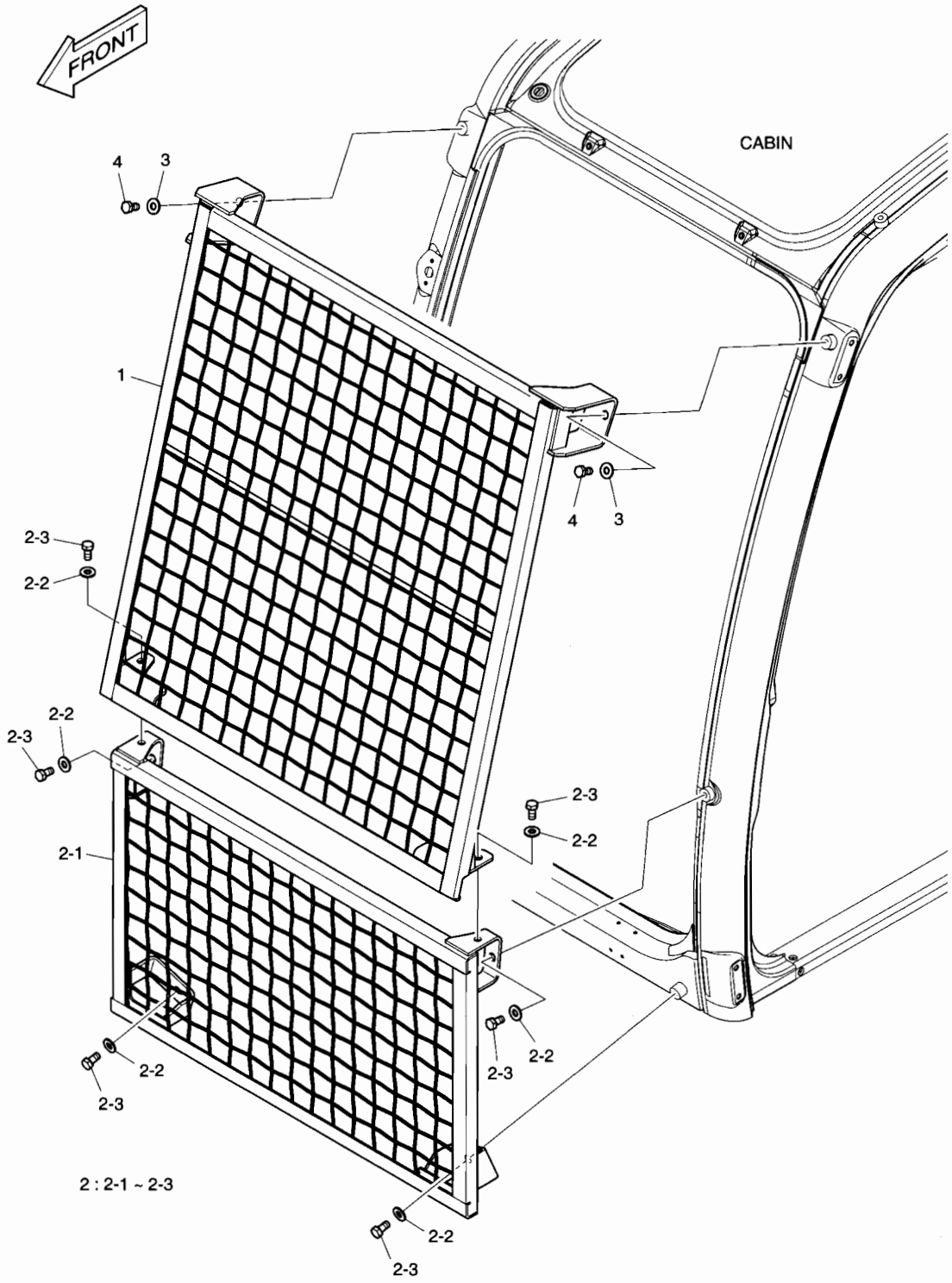

DATE	APR. 02, 2007
1st EDITION	

Fig. 6170 WINDOW GUARD GARDE DE FENETRE

Serial No. ;

Key No.	Part No.	Description	Description	Q'ty	S.C	Serial No.	ICA	Replaceable part	
								Part No.	Q'ty
6170--	K1002771	WINDOW GUARD	GARDE	-	D				
1	K1002759A	GUARD;FRONT UPPER	GARDE	1					
2	623-00086	GUARD;FRONT LOWER	GARDE	1	D				
2-1	623-00085A	. GUARD;FRONT LOWER	. VITRE	1					
2-2	2114-1898D17	. WASHER	. RONDELLE	6					
2-3	2120-2166D27	. BOLT	. BOULON A 6 PANS	6					
3	2114-1898D17	WASHER M12	RONDELLE	2					
4	2120-2166D27	BOLT	BOULON A 6 PANS	2					

DATE	APR. 02, 2007
1st EDITION	

Fig. 6180 FOGS GUARD
EMBRUME LA GARDE

Serial No. ;

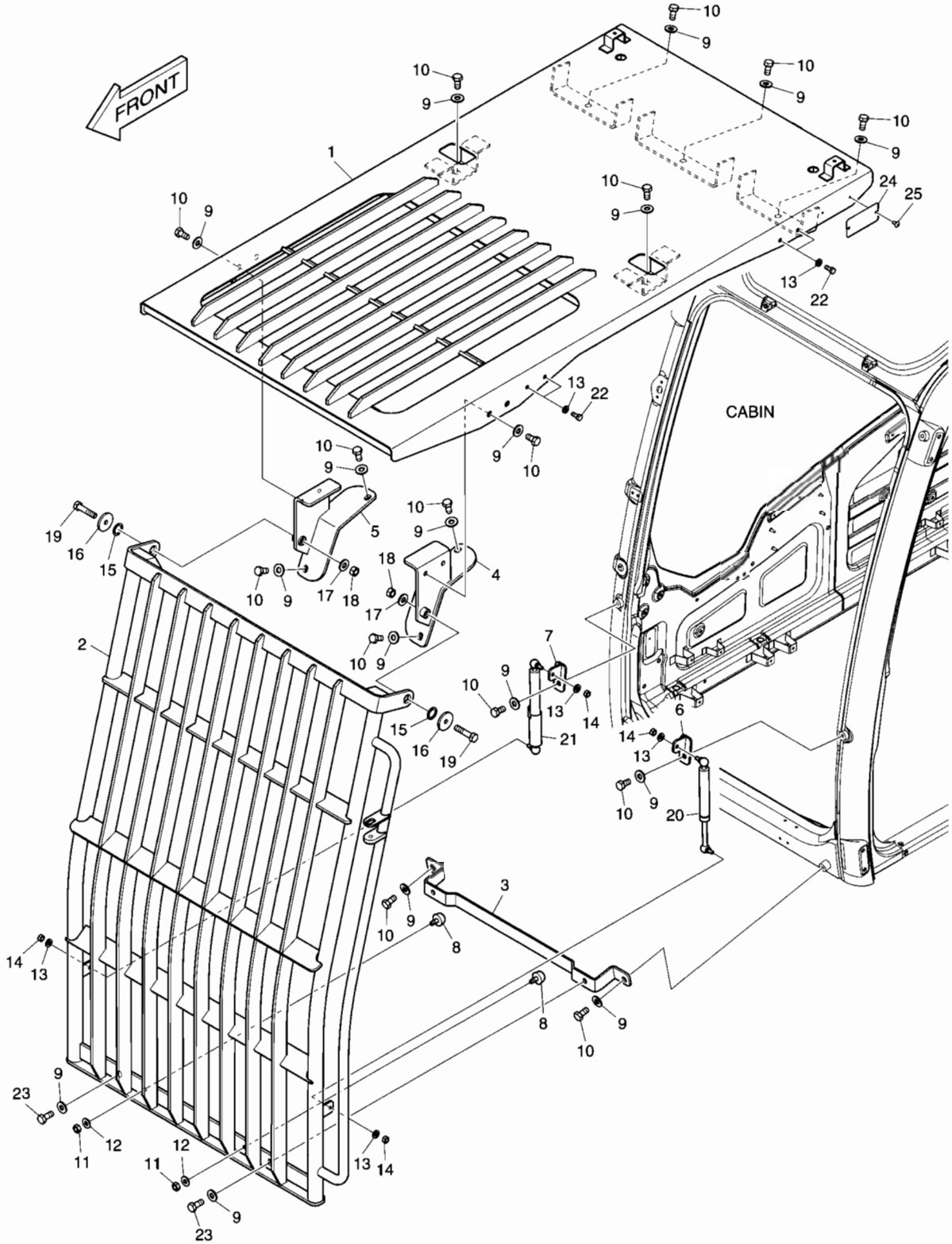

DATE	APR. 02, 2007
1st EDITION	

Fig. 6180 FOGS GUARD EMBRUME LA GARDE

Serial No. ;

Key No.	Part No.	Description	Description	Q'ty	S.C	Serial No.	ICA	Replaceable part	
								Part No.	Q'ty
6180--	K1002883	FOGS GUARD ASS'Y	EMBRUME LA GARDE	-	D				
1	K1002811A	GUARD;ROOF	GARDE	1					
2	K1002846	GUARD;FRONT	GARDE	1					
3	K1002842A	BRACKET	SUPPORT	1					
4	K1002838	BRACKET(L.H)	SUPPORT	1					
5	K1002839A	BRACKET(R.H)	SUPPORT	1					
6	K1002840	BRACKET(L.H)	SUPPORT	1					
7	K1002841	BRACKET(R.H)	SUPPORT	1					
8	161-00195	STOPPER;RUBBER	TAQUET D'ARRET	2					
9	2114-1898D17	WASHER M12	RONDELLE	19					
10	2120-2166D27	BOLT	BOULON A 6 PANS	17					
11	2121-1311D4	NUT M10X1.5	ECROU	2					
12	2114-1898D1	WASHER	CALE	2					
13	2114-1898D2	WASHER	CALE	8					
14	2121-1311D2	NUT M8X1.25	ECROU	4					
15	2114-1058D31	WASHER	CALE	2					
16	2114-1898D10	WASHER M12	RONDELLE	2					
17	2114-1898D6	WASHER M12	RONDELLE	2					
18	2121-1311D1	NUT M12X1.75	ECROU	2					
19	S0515766	BOLT M12X1.75X55	BOULON A 6 PANS	2					
20	K1005823	CYLINDER;GAS	CYLINDRE	1					
21	K1005822	CYLINDER;GAS	CYLINDRE	1					
22	2120-2166D5	BOLT M8X1.25X20	BOULON A 6 PANS	4					
23	2120-2166D32	BOLT M12x1.75x30	BOULON A 6 PANS	2					
24	K1007231	NAME;PLATE	PLAQUE D'IDENTIFICATION	1					
25	2120-2166D52	BOLT	BOULON A 6 PANS	2					

DATE	APR. 02, 2007
1st EDITION	

Fig. 6190 ALTERNATOR - 80A
ALTERNATEUR

Serial No. ;

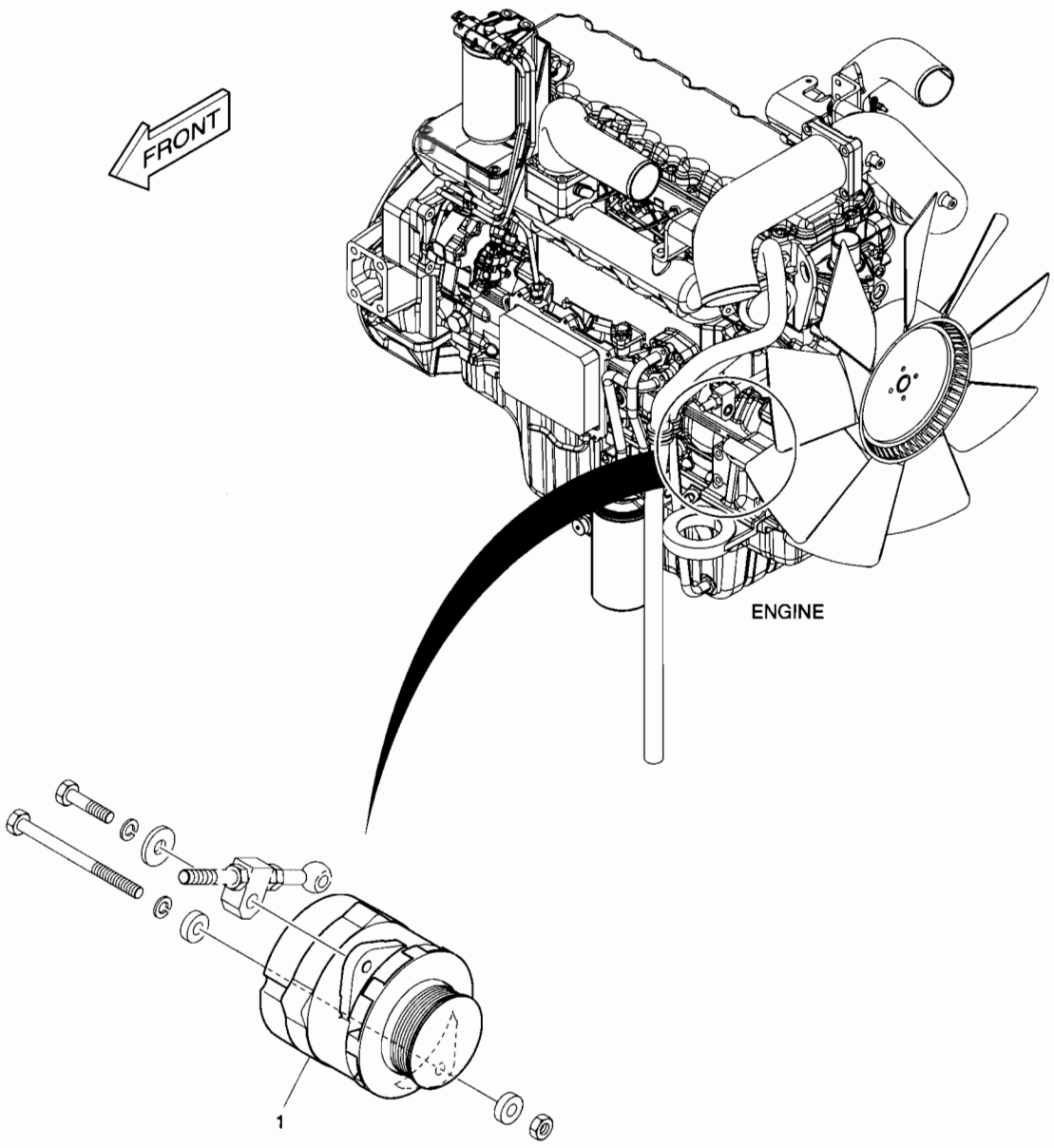

DATE	APR. 02, 2007
1st EDITION	

Fig. 6190 ALTERNATOR - 80A ALTERNATEUR

Serial No. ;

Key No.	Part No.	Description	Description	Q'ty	S.C	Serial No.	ICA	Replaceable part	
								Part No.	Q'ty
6190--	K1008715	ALTERNATOR MOUNTING	SUPPORT D'ALTERNATEUR	-	D				
1	K1010703	ALTERNATOR 80A	ALTERNATEUR	1					

DATE	APR. 02, 2007
1st EDITION	

Fig. 6200 CD PLAYER
PLAQUEUR DE CD

Serial No. ;

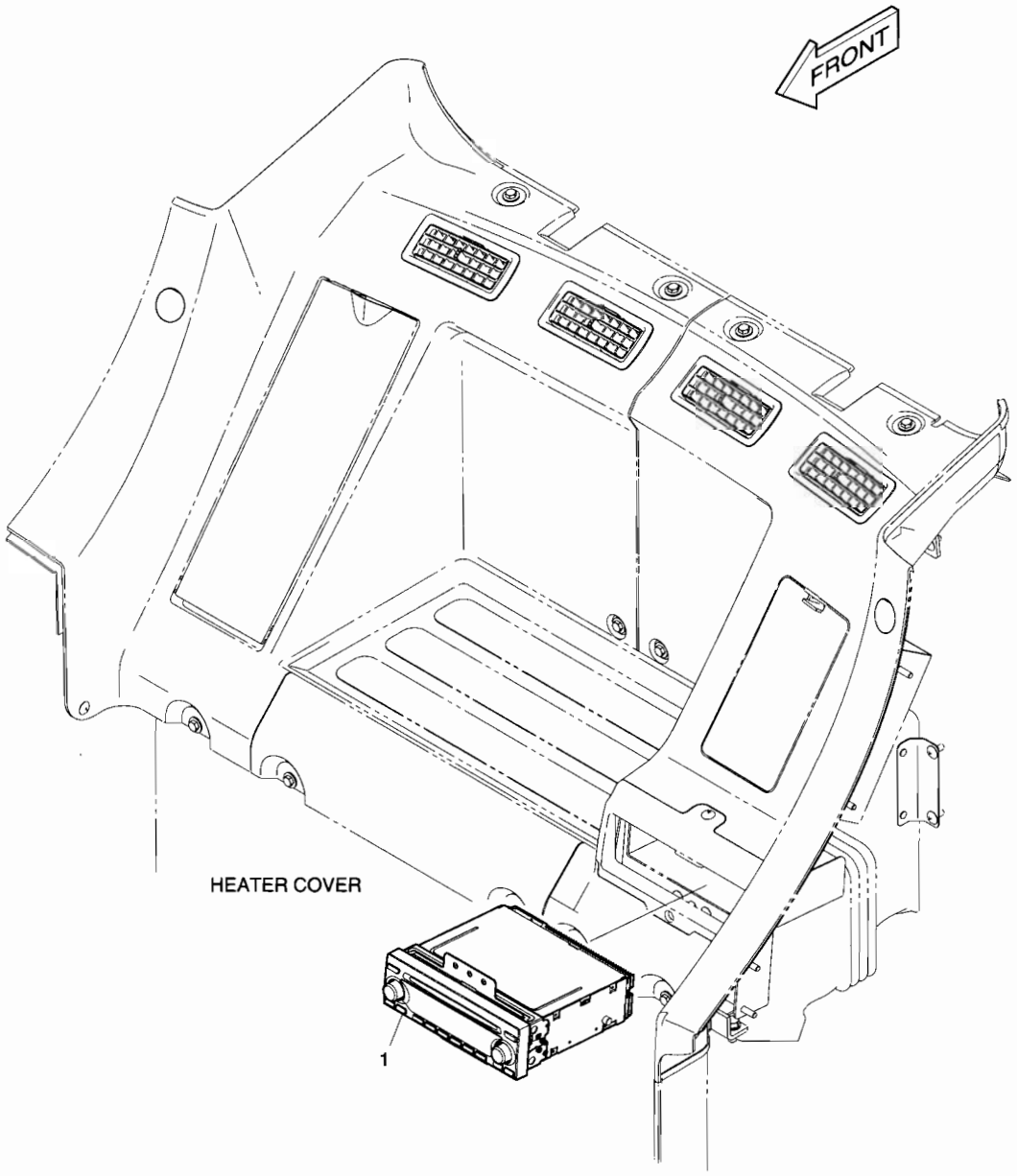

DATE	APR. 02, 2007
1st EDITION	

Fig. 6200 CD PLAYER PLAQUEUR DE CD

Serial No. ;

Key No.	Part No.	Description	Description	Q'ty	S.C	Serial No.	ICA	Replaceable part	
								Part No.	Q'ty
6200--	K1003350	CD PLAYER	PLAQUEUR DE CD	-	D				
1	K1000982	CD PLAYER	PLAQUEUR DE CD	1					

DATE	APR. 02, 2007
1st EDITION	

Fig. 6210 FUEL HEATER
RECHAUFFEUR DE CARBURANT

Serial No. ;

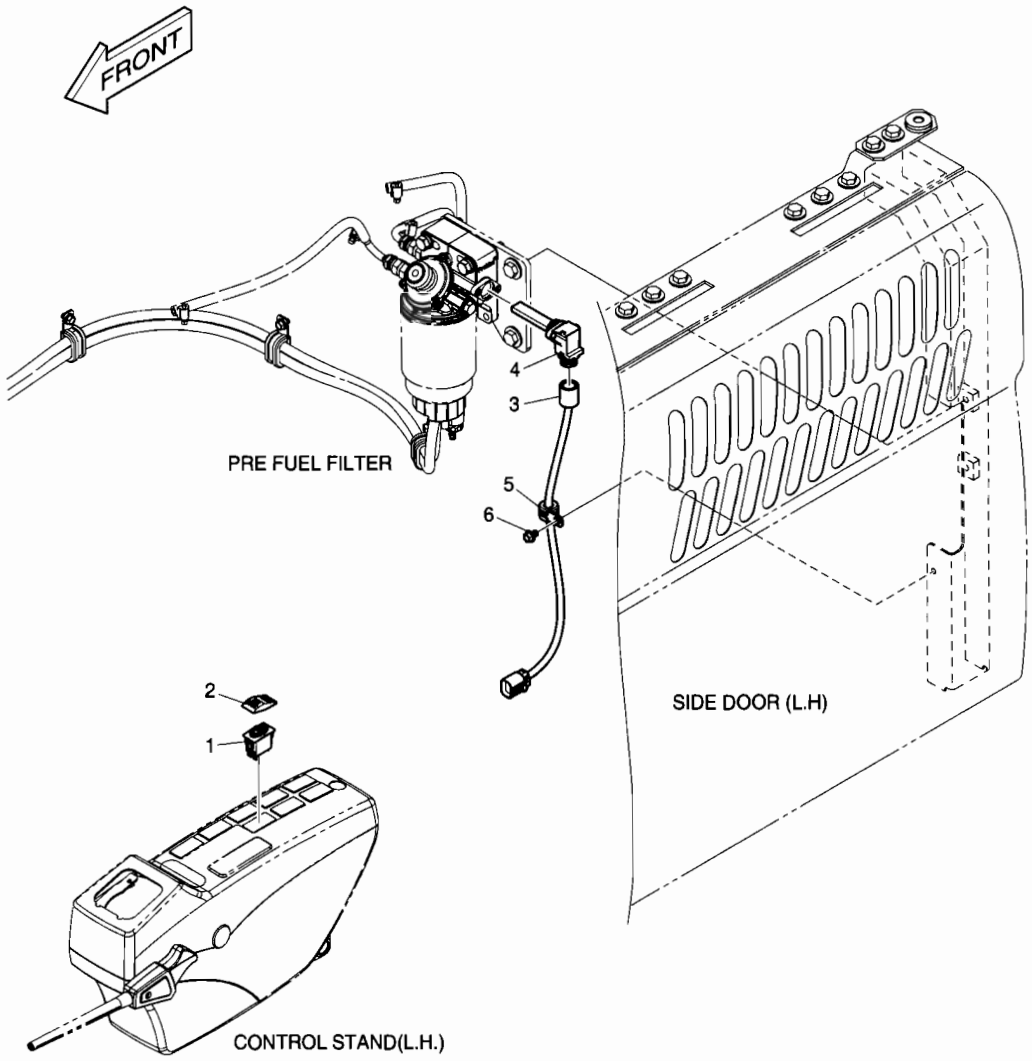

DATE	APR. 02, 2007
1st EDITION	

Fig. 6210 FUEL HEATER
RECHAUFFEUR DE CARBURANT

Serial No. ;

Key No.	Part No.	Description	Description	Q'ty	S.C	Serial No.	ICA	Replaceable part	
								Part No.	Q'ty
6210--	K1027239	FUEL HEATER	RECHAUFFEUR DE	-	D				
1	549-00101	SWITCH;ROCKER	INTERRUPTEUR	1					
2	K1002406D2	ACTUATOR;SWITCH	ACTUATOR;SWITCH	1					
3	K1006668	HARNESS;JOINT	FAISCEAU	1					
4	K1004716	HEATER;FUEL	RECHAUFFEUR	1					
5	124-00208D2	CLIP	AGRAFE	1					
6	K1001029	BOLT	BOULON A 6 PANS	1					

DATE	APR. 02, 2007
1st EDITION	

Fig. 6220 TRAVEL ALARM
ALARME DE VOYAGE

Serial No. ;

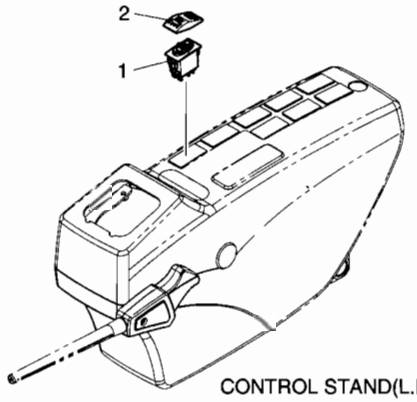

CONTROL STAND(L.H.)



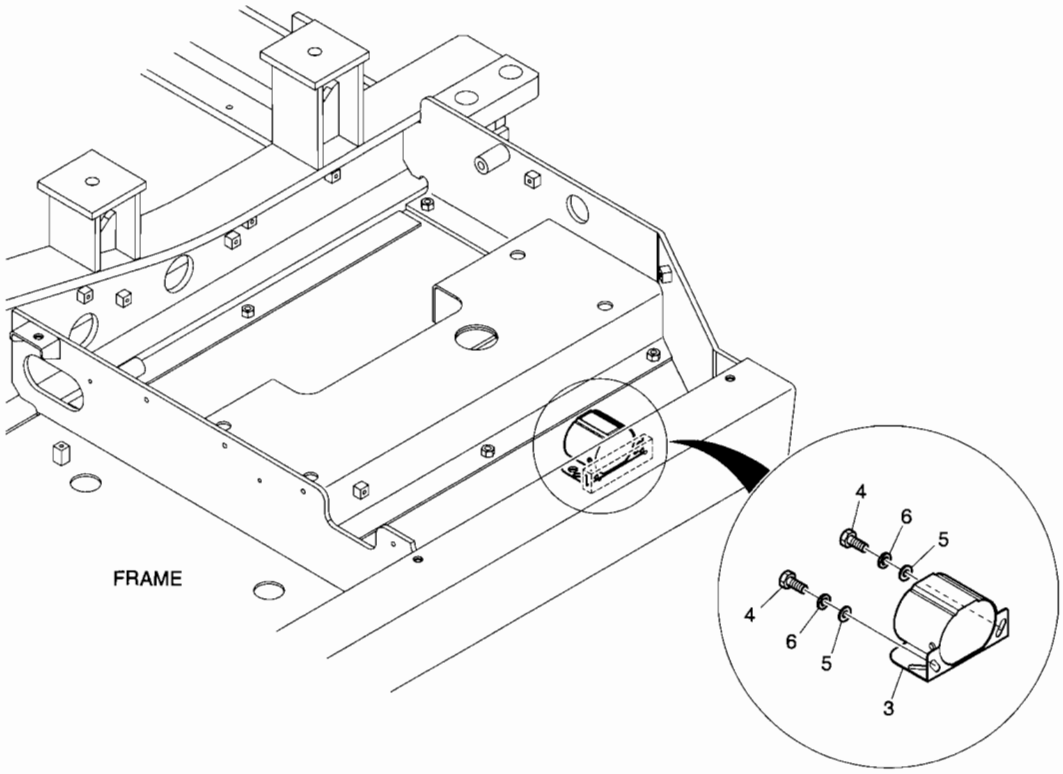

FRAME

DATE	APR. 02, 2007
1st EDITION	

Fig. 6220 TRAVEL ALARM ALARME DE VOYAGE

Serial No. ;

Key No.	Part No.	Description	Description	Q'ty	S.C	Serial No.	ICA	Replaceable part	
								Part No.	Q'ty
6220--	K1027240	TRAVEL ALARM	ALARME DE VOYAGE	-	D				
1	549-00103	SWITCH;ROCKER	INTERRUPTEUR	1					
2	K1002406D14	ACTUATOR;SWITCH	DECLENCHEUR DE	1					
3	516-00011	BUZZER;BACK-UP	VIBREUR DE SECOURS	1					
4	S0508666	BOLT	BOULON A 6 PANS	2					
5	S5010513	WASHER;PLAIN	RONDELLE	2					
6	S5102503	WASHER;SPRING	RONDELLE ELASTIQUE	2					

Fig. 6230 WORKING LAMP(2-LAMP) LAMPE FONCTIONNANTE

Serial No. ;

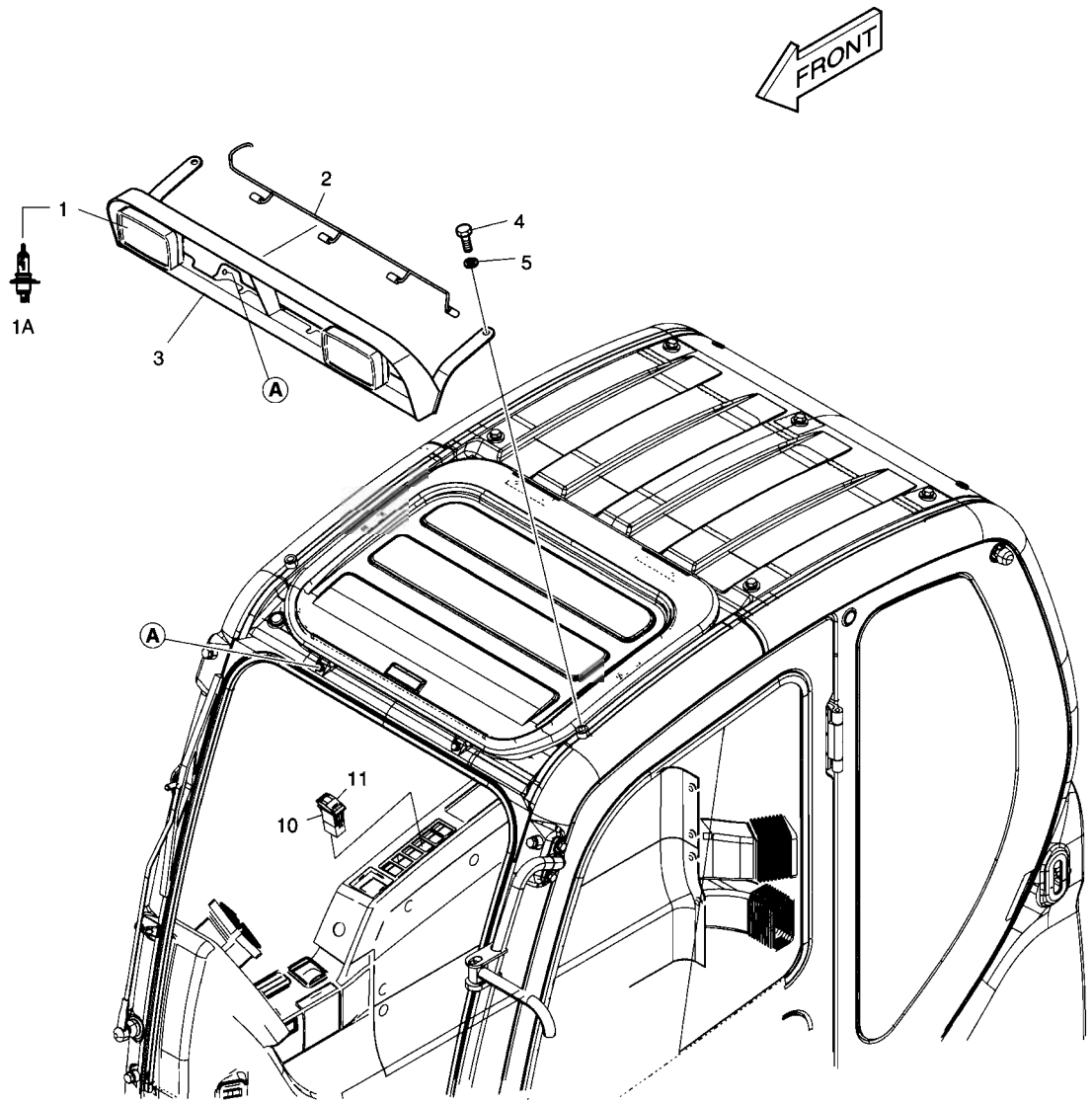

CABIN

DATE	APR. 02, 2007
1st EDITION	

Fig. 6230 WORKING LAMP(2-LAMP) LAMPE FONCTIONNANTE

Serial No. ;

Key No.	Part No.	Description	Description	Q'ty	S.C	Serial No.	ICA	Replaceable part	
								Part No.	Q'ty
6230--	500-00302A	WORKING LAMP-2 LAMP	LAMPE FONCTIONNANTE	-	D				
1	534-00085	LAMP;CABIN	LAMPE;CABIN	2					
1A	2515-1016D4	. BULB 24V 70W	. AMPOULE	1					
2	530-00430A	HARNESS;FRONT LAMP	FAISCEAU	1					
3	195-02908C	BRACKET;FRONT LAMP	SUPPORT	1					
4	2120-2166D54	BOLT	BOULON A 6 PANS	2					
5	2114-1898D6	WASHER;PLAIN	RONDELLE	2					
10	549-00103	SWITCH	COMMUTATEUR	1					
11	K1002406D13	ACTUATOR	DECLENCHEURE	1					

DATE	APR. 02, 2007
1st EDITION	

Fig. 6240 WORKING LAMP(4-LAMP) LAMPE FONCTIONNANTE

Serial No. ;

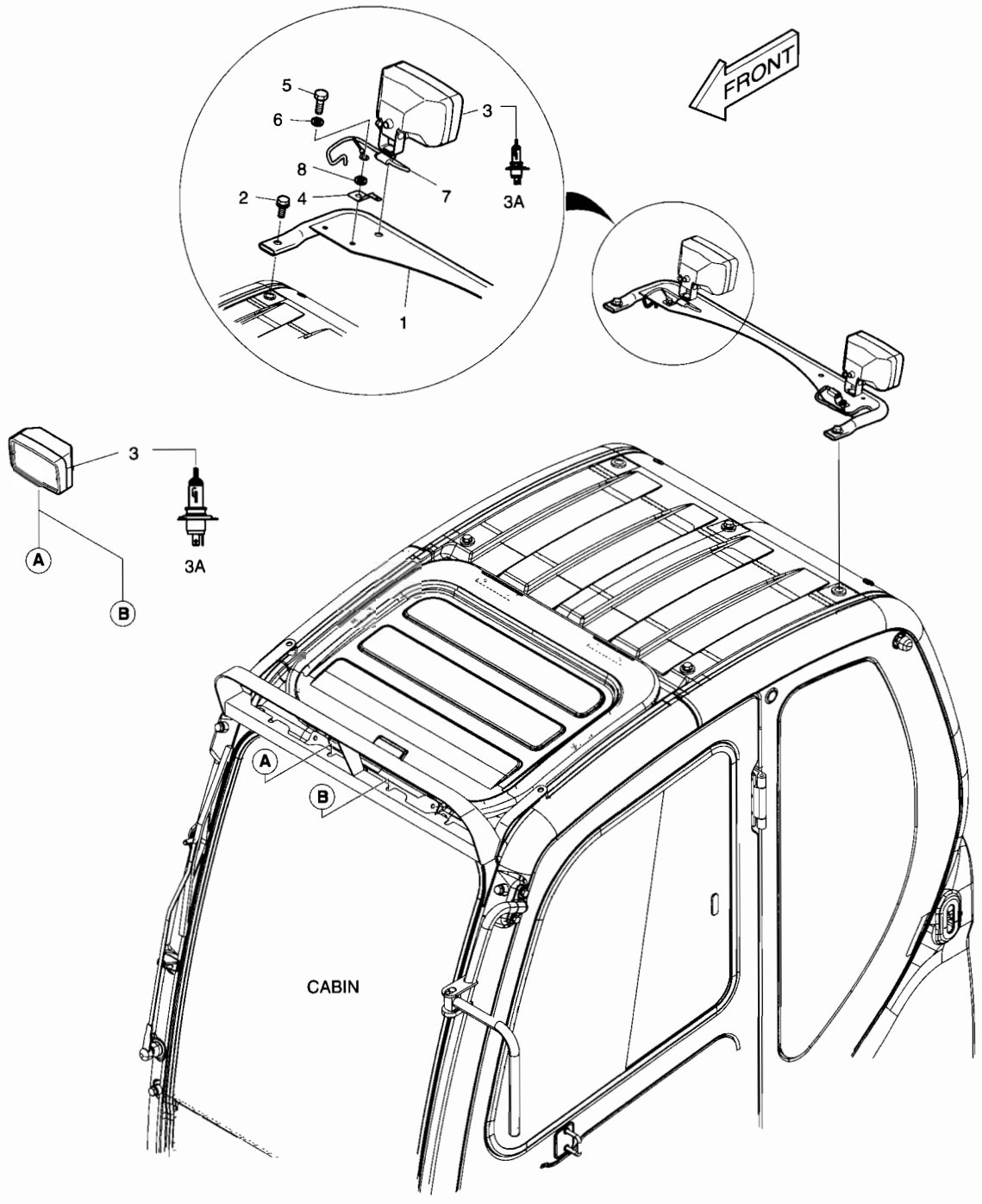

DATE	APR. 02, 2007
1st EDITION	

Fig. 6240 WORKING LAMP(4-LAMP) LAMPE FONCTIONNANTE

Serial No. ;

Key No.	Part No.	Description	Description	Q'ty	S.C	Serial No.	ICA	Replaceable part	
								Part No.	Q'ty
6240--	500-00303	WORKING LAMP	LAMPE FONCTIONNANTE	-	D				
1	195-02910A	BRACKET	SUPPORT	1					
2	2120-2166D54	BOLT	BOULON A 6 PANS	2					
3	534-00085	LAMP;CABIN	LAMPE;CABIN	4					
3A	2515-1016D4	. BULB 24V 70W	. AMPOULE	1					
4	2197-1661	BRACKET;HOUSING	SUPPORT	2					
5	S0508853	BOLT	BOULON A 6 PANS	2					
6	S5102503	WASHER;SPRING	RONDELLE ELASTIQUE	2					
7	530-00463A	HARNESS;REAR LAMP	FAISCEAU	2					
8	2114-1898D6	WASHER	CALE	2					

Fig. 6250 WORKING LAMP - REAR AVERTISSEUR RELAIS

Serial No. ;

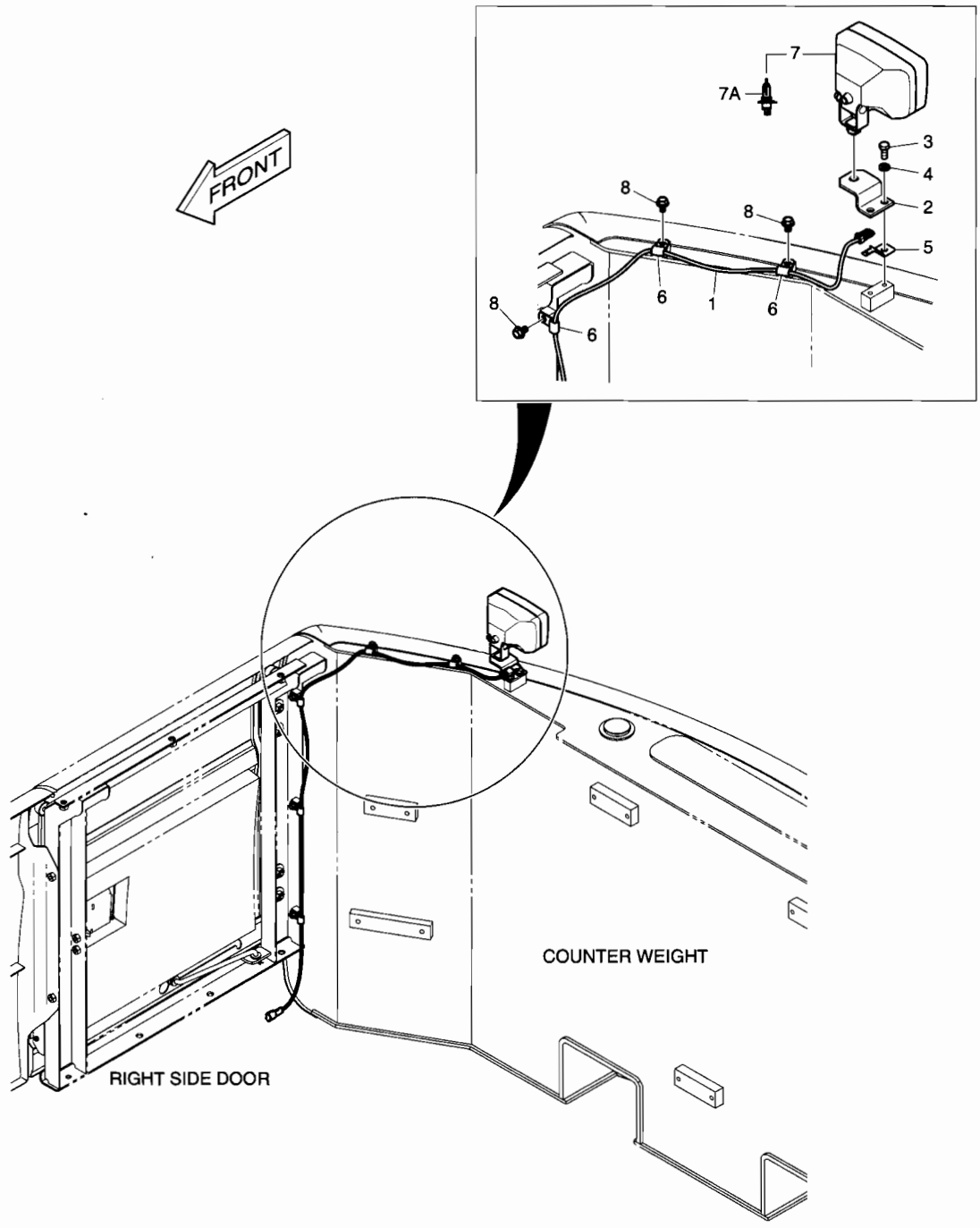

DATE	APR. 02, 2007
1st EDITION	

Fig. 6250 WORKING LAMP - REAR AVERTISSEUR RELAIS

Serial No. ;

Key No.	Part No.	Description	Description	Q'ty	S.C	Serial No.	ICA	Replaceable part	
								Part No.	Q'ty
6250--	K1027241	WORKING LAMP-REAR	AVERTISSEUR RELAIS	-	D				
1	530-00431	HARNESS;REAR LAMP	FAISCEAU	1					
2	195-02775A	PLATE	PLAQUE	1					
3	S0508866	BOLT	BOULON A 6 PANS	2					
4	S5102503	WASHER;SPRING	RONDELLE ELASTIQUE	2					
5	2197-1661	BRACKET;HOUSING	SUPPORT	1					
6	2124-1509D1	CLIP;BAND	ATTACHE	5					
7	534-00085	LAMP	LAMPE	1					
7A	2515-1016D4	. BULB 24V 70W	. AMPOULE	1					
8	K1001029	BOLT	BOULON A 6 PANS	5					

DATE	APR. 02, 2007
1st EDITION	

Fig. 6260 ROTATING BEACON
FEU DE CIRCULATION

Serial No. ;

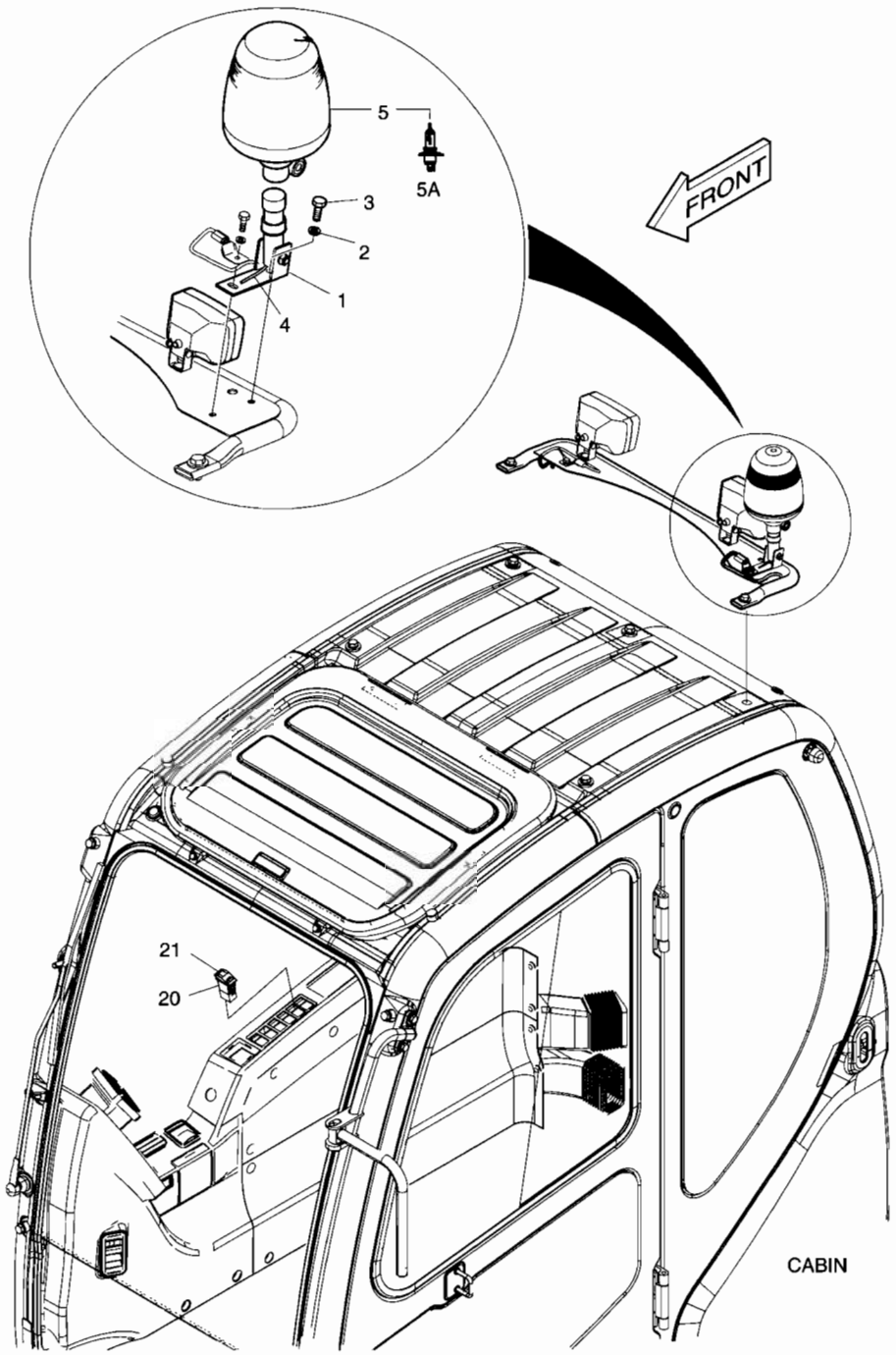

DATE	APR. 02, 2007
1st EDITION	

Fig. 6260 ROTATING BEACON FEU DE CIRCULATION

Serial No. ;

Key No.	Part No.	Description	Description	Q'ty	S.C	Serial No.	ICA	Replaceable part	
								Part No.	Q'ty
6260--	500-00307	ROTATING BEACON	FEU DE CIRCULATION	-	D				
1	160-00061	BUSH;MOUNTING	MANCHON	1					
2	S5102503	WASHER;SPRING	RONDELLE ELASTIQUE	1					
3	S0508853	BOLT	BOULON A 6 PANS	1					
4	530-00464	HARNESS;ROTATING BEACON	FAISCEAU	1					
5	534-00062	ROTATING BEACON	FEU DE CIRCULATION	1					
5A	515-00013	. BULB;HALOGEN 24V 70W	. AMPOULE	1					
20	549-00101	SWITCH	COMMUTATEUR	1					
21	K1002406D3	ACTUATOR	DECLENCHEURE	1					

DATE	APR. 02, 2007
1st EDITION	

Fig. 6270 ROTATING BEACON MOUNTING SUPPORT TOURNANT DE BALISE

Serial No. ;

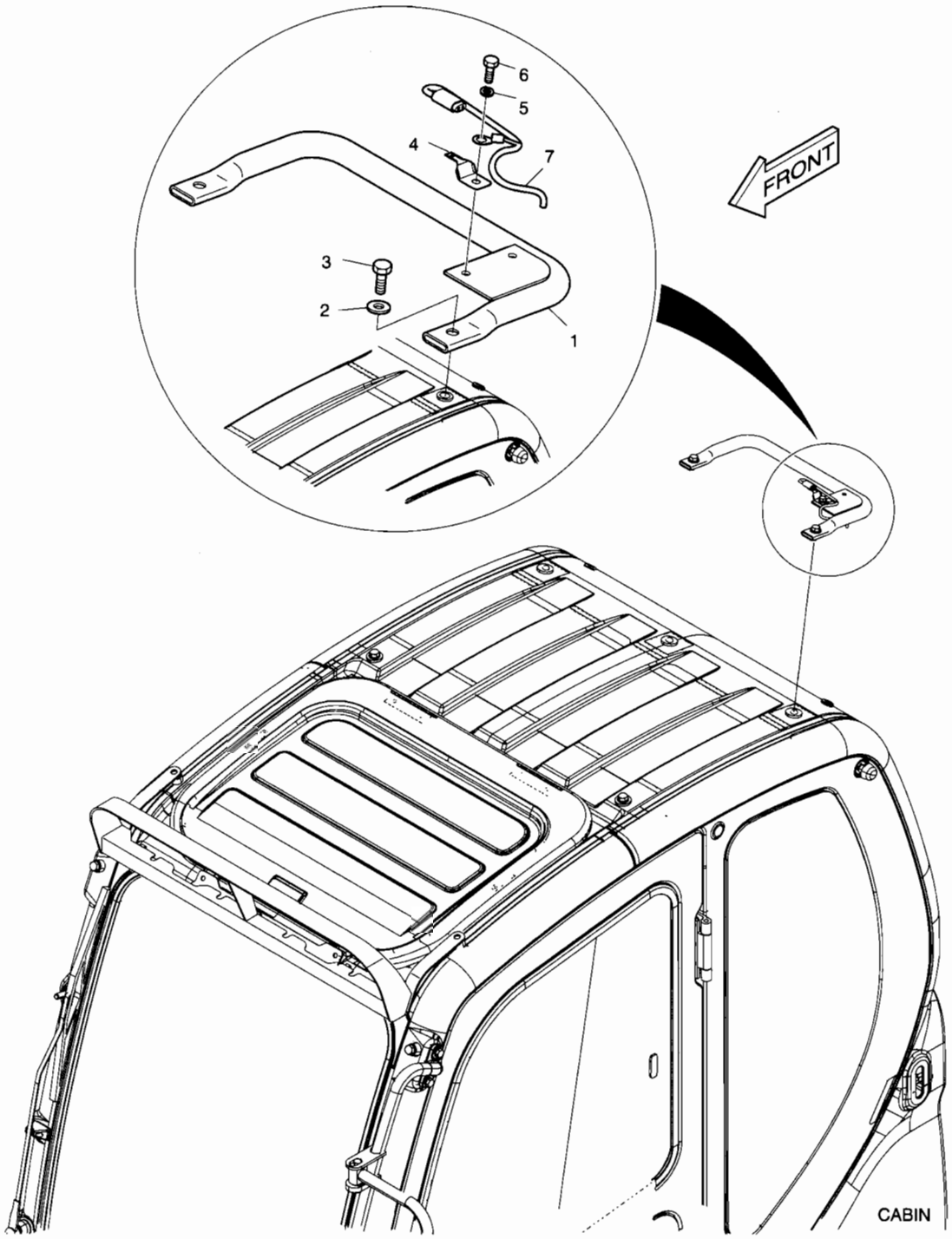

DATE	APR. 02, 2007
1st EDITION	

Fig. 6270 ROTATING BEACON MOUNTING SUPPORT TOURNANT DE BALISE

Serial No. ;

Key No.	Part No.	Description	Description	Q'ty	S.C	Serial No.	ICA	Replaceable part	
								Part No.	Q'ty
6270--	500-00308	ROTATING BEACON MOUNTING	SUPPORT TOURNANT DE B	-	D				
1	195-02909A	BRACKET;BEACON	SUPPORT	1					
2	2114-1898D1	WASHER	CALE	2					
3	S0512053	BOLT	BOULON A 6 PANS	2					
4	2197-1661	BRACKET;HOUSING	SUPPORT	1					
5	S5102503	WASHER;SPRING	RONDELLE ELASTIQUE	1					
6	S0508853	BOLT	BOULON A 6 PANS	1					
7	530-00463A	HARNESS	HARNAIS	1					

DATE	APR. 02, 2007
1st EDITION	

Fig. 6280 ROTATING BEACON(TELESCOPIC) WITH LAMP FEU DE CIRCULATION

Serial No. ;

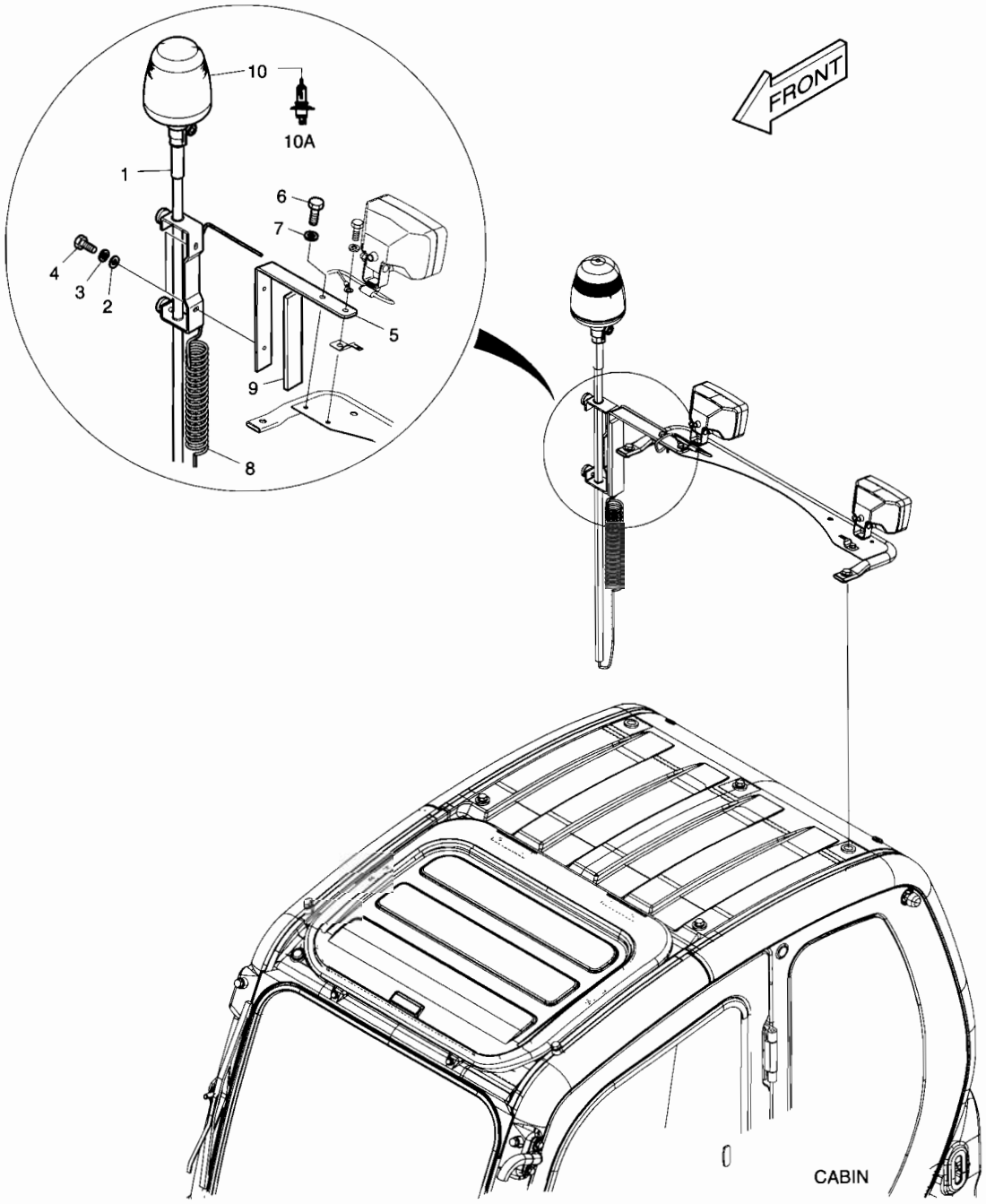

DATE	APR. 02, 2007
1st EDITION	

Fig. 6280 ROTATING BEACON(TELESCOPIC) WITH LAMP FEU DE CIRCULATION

Serial No. ;

Key No.	Part No.	Description	Description	Q'ty	S.C	Serial No.	ICA	Replaceable part	
								Part No.	Q'ty
6280--	500-00309	ROTATING BEACON	FEU DE CIRCULATION	-	D				
1	195-01805	SUPPORT;BEACON	SUPPORT	1					
2	S5010513	WASHER;PLAIN	RONDELLE	2					
3	S5102503	WASHER;SPRING	RONDELLE ELASTIQUE	2					
4	S0508653	BOLT	BOULON A 6 PANS	2					
5	195-02925	BRACKET	SUPPORT	1					
6	S0508853	BOLT	BOULON A 6 PANS	1					
7	S5102503	WASHER;SPRING	RONDELLE ELASTIQUE	1					
8	K1010065	HARNESS;JOINT	FAISCEAU	1					
9	161-00404	RUBBER	CAOUTCHOUC	1					
10	534-00062	LAMP;ROTATING BEACON	BALISE DE LAMP;ROTATI	1					
10A	515-00013	. BULB;HALOGEN 24V 70W	. AMPOULE	1					

DATE	APR. 02, 2007
1st EDITION	

Fig. 6290 ROTATING BEACON(TELESCOPIC) W/O LAMP FEU DE CIRCULATION

Serial No. ;

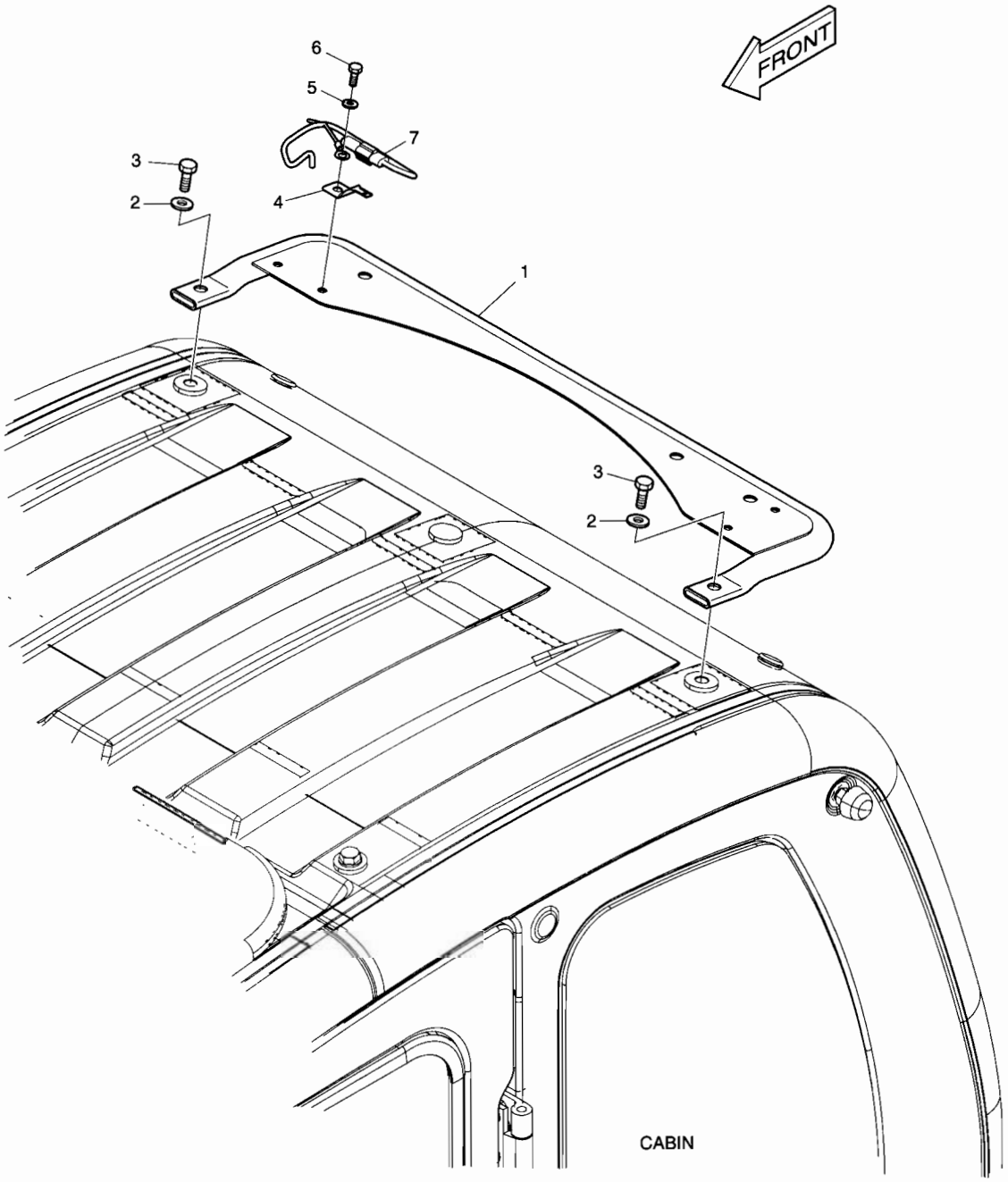

DATE	APR. 02, 2007
1st EDITION	

Fig. 6290 ROTATING BEACON(TELESCOPIC) W/O LAMP FEU DE CIRCULATION

Serial No. ;

Key No.	Part No.	Description	Description	Q'ty	S.C	Serial No.	ICA	Replaceable part	
								Part No.	Q'ty
6290--	500-00310	ROTATING BEACON-TELESCOPIC	FEU DE CIRCULATION	-	D				
1	195-02910A	BRACKET	SUPPORT	1					
2	2114-1898D6	WASHER	CALE	2					
3	2120-2166D54	BOLT	BOULON A 6 PANS	2					
4	2197-1661	BRACKET;HOUSING	SUPPORT	1					
5	S5102503	WASHER;SPRING	RONDELLE ELASTIQUE	1					
6	S0508853	BOLT	BOULON A 6 PANS	1					
7	530-00463A	HARNESS	HARNAIS	1					

Fig. 6300 OVERLOAD WARNING AVERTISSEMENT DE SURCHARGE

Serial No. ;

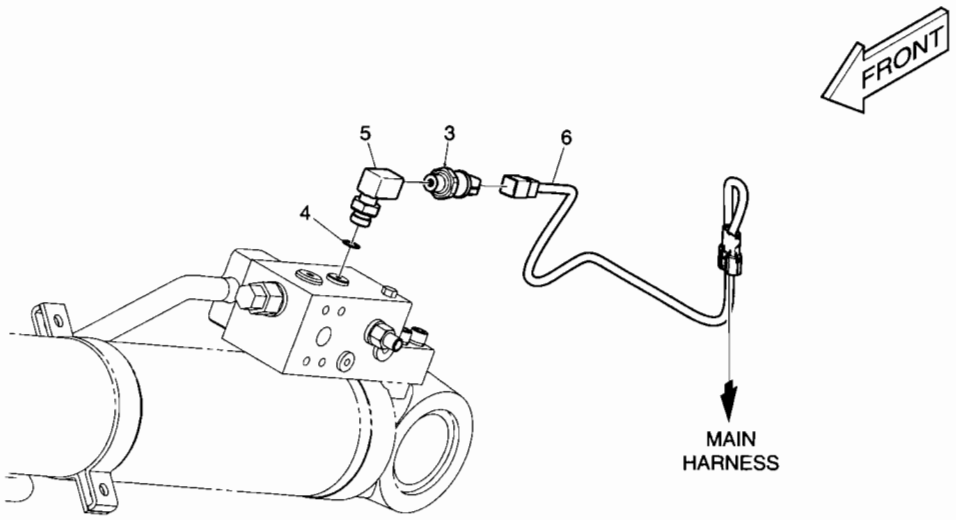

BOOM CYLINDER(L.H)

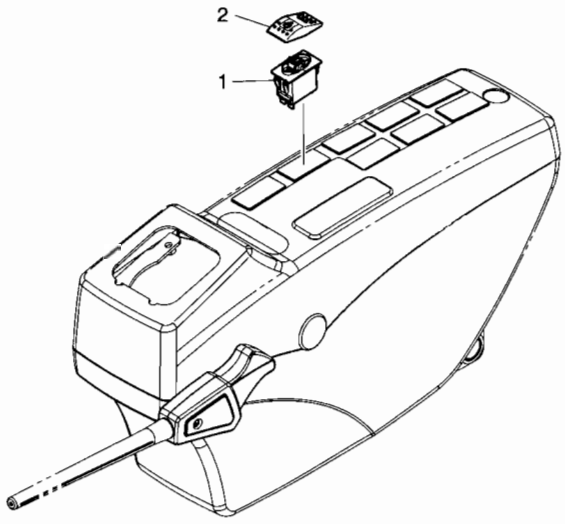

CONTROL STAND (L.H)

DATE	APR. 02, 2007
1st EDITION	

Fig. 6300 OVERLOAD WARNING AVERTISSEMENT DE SURCHARGE

Serial No. ;

Key No.	Part No.	Description	Description	Q'ty	S.C	Serial No.	ICA	Replaceable part	
								Part No.	Q'ty
6300--	K1027242	OVER LOAD WARNING	AVERTISSEMENT DE SURC	-	D				
1	549-00102	SWITCH	COMMUTATEUR	1					
2	K1002406D4	ACTUATOR	DECLENCHEURE	1					
3	2547-9045	SENSOR;PRESSURE	CAPTEUR	1					
4	S8000121	O-RING	JOINT TORIQUE	1					
5	DS2308022	ELBOW	COUDE	1					
6	K1002153	HARNESS;JOINT	FAISCEAU	1					

Fig. 6310 LOWER WIPER
ABAISSEZ L'ESSUIE-GLACE

Serial No. ;

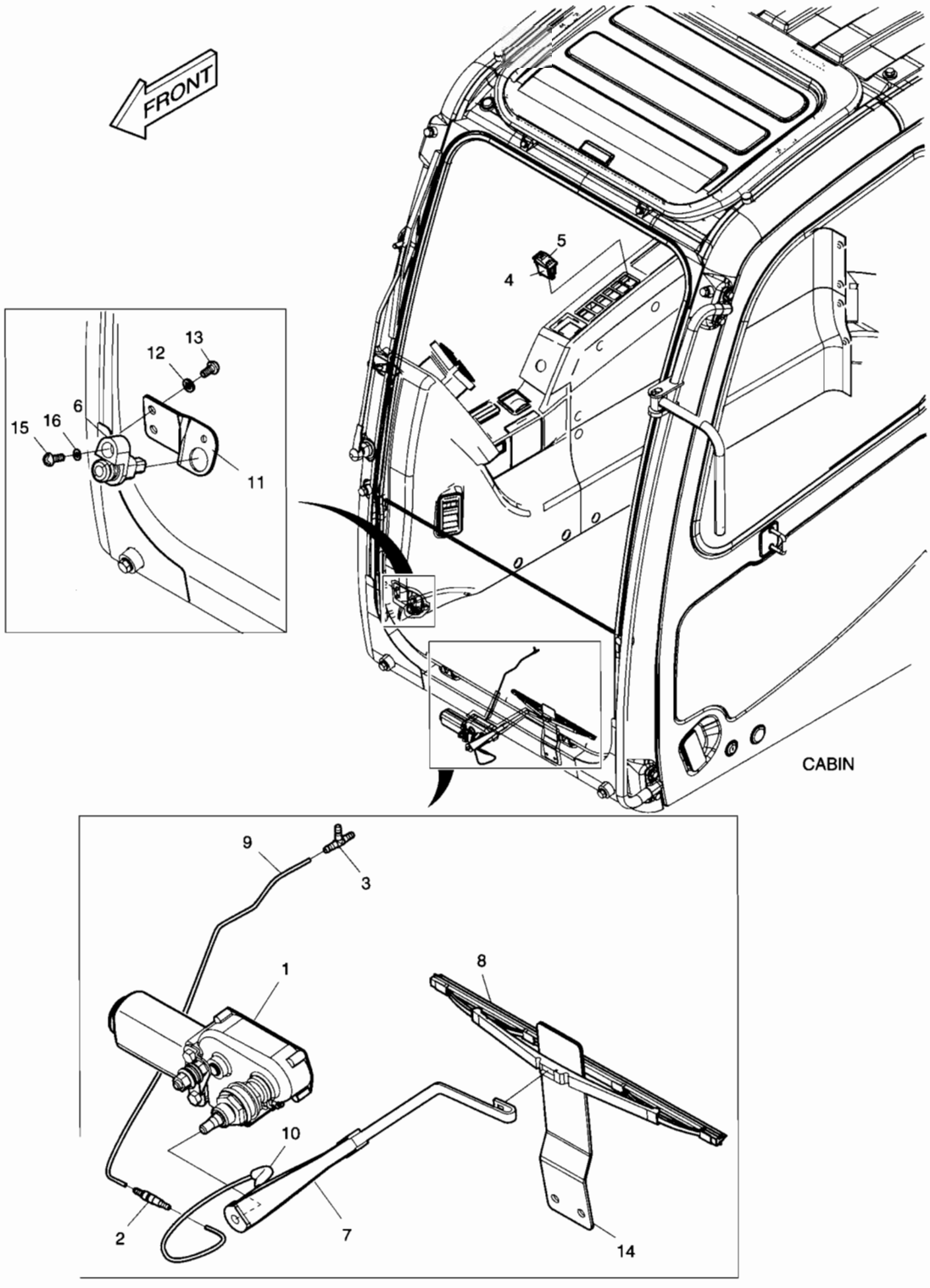

DATE	APR. 02, 2007
1st EDITION	

Fig. 6310 LOWER WIPER ABAISSEZ L'ESSUIE-GLACE

Serial No. ;

Key No.	Part No.	Description	Description	Q'ty	S.C	Serial No.	ICA	Replaceable part	
								Part No.	Q'ty
6310--	K1027243	LOWER WIPER ASS'Y	ABAISSEZ L'ESSUIE-GLA	-	D				
1	538-00012	MOTOR;WIPER	MOTEUR	1					
2	426-00282	VALVE;LOWER WIPER CHECK	VANNE	1					
3	181-00804	TEE	TE	1					
4	549-00101	SWITCH	COMMUTATEUR	1					
5	K1002406D5	ACTUATOR	DECLENCHEURE	1					
6	549-00077	SWITCH	COMMUTATEUR	1					
7	541-00016	ARM;WIPER	BALANCIER	1					
8	507-00007	BLADE;WIPER	LAME	1					
9	K1002866	HOSE	TUYAU FLEXIBLE	1					
10	K1002867D1	TUBE	DOUILLE ACIER	1					
11	195-03444	BRACKET;SWITCH	SUPPORT	1					
12	2114-1898D3	WASHER;PLAIN	RONDELLE	2					
13	2120-2166D9	SCREW	VIS	2					
14	191-03736E	PLATE;STOPPER	PLAQUE	1					
15	S3450833	SCREW	VIS	1					
16	S5100203	WASHER SPRING	RONDELLE	1					

Fig. 6320 WORKING LAMP(2-LAMP) LAMPE FONCTIONNANTE

Serial No. ;

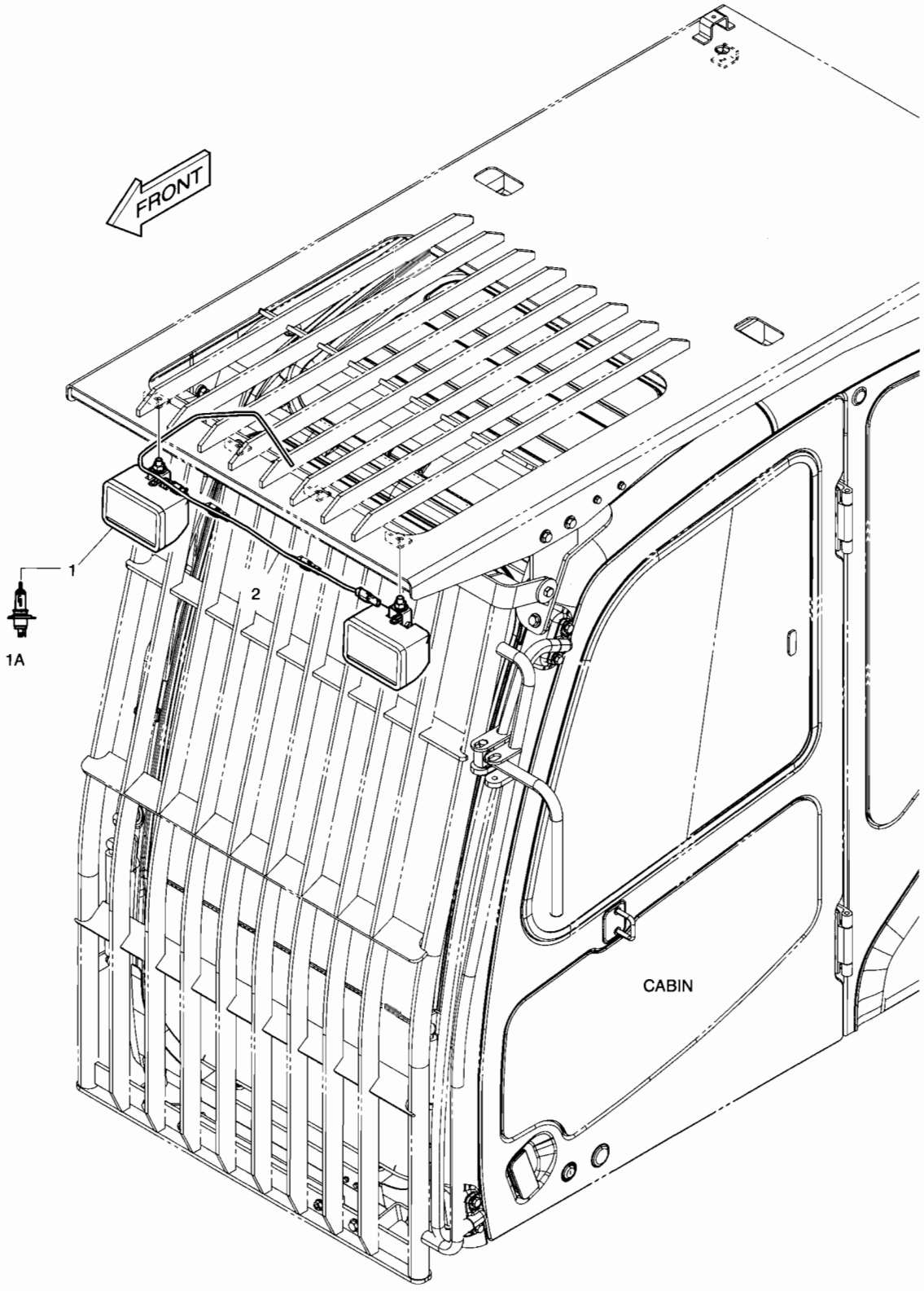

DATE	APR. 02, 2007
1st EDITION	

Fig. 6320 WORKING LAMP(2-LAMP) LAMPE FONCTIONNANTE

Serial No. ;

Key No.	Part No.	Description	Description	Q'ty	S.C	Serial No.	ICA	Replaceable part	
								Part No.	Q'ty
6320--	K1006801	WORKING LAMP ASS'Y	LAMPE FONCTIONNANTE	-	D				
1	534-00085	LAMP;WORKING	LAMPE	2					
1A	2515-1016D4	. BULB 24V 70W	. AMPOULE	1					
2	K1006663	HARNESS;JOINT	FAISCEAU	1					

Fig. 6330 WORKING LAMP(4-LAMP) LAMPE FONCTIONNANTE

Serial No. ;

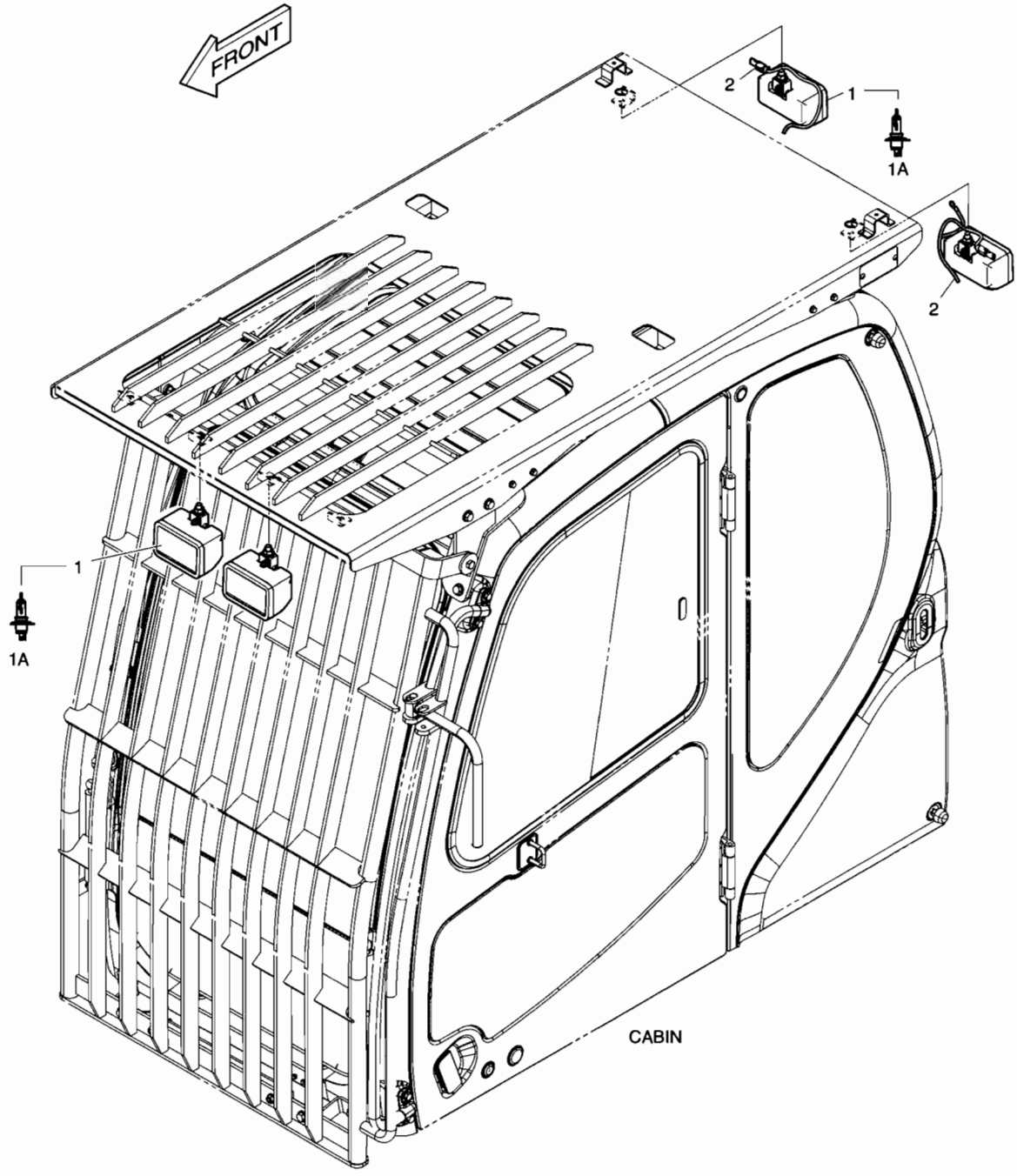

DATE	APR. 02, 2007
1st EDITION	

Fig. 6330 WORKING LAMP(4-LAMP) LAMPE FONCTIONNANTE

Serial No. ;

Key No.	Part No.	Description	Description	Q'ty	S.C	Serial No.	ICA	Replaceable part	
								Part No.	Q'ty
6330--	K1006802	WORKING LAMP ASS'Y	LAMPE FONCTIONNANTE	-	D				
1	534-00085	LAMP;WORKING	LAMPE	4					
1A	2515-1016D4	. BULB 24V 70W	. AMPOULE	1					
2	530-00463A	HARNESS;JOINT	FAISCEAU	2					

DATE	APR. 02, 2007
1st EDITION	

Fig. 6340 ROTATING BEACON - WITH FOGS
FEU DE CIRCULATION

Serial No. ;

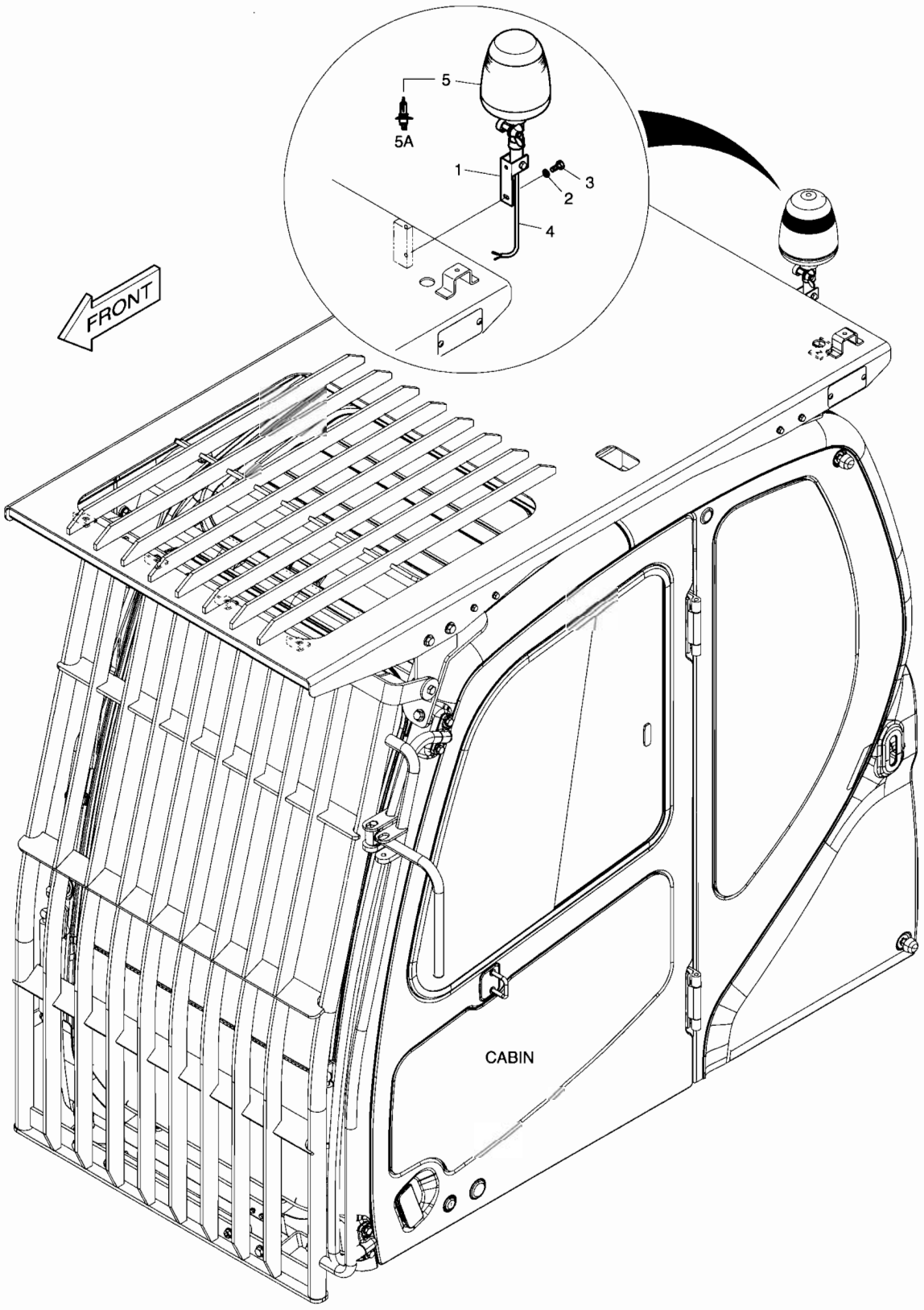

DATE	APR. 02, 2007
1st EDITION	

Fig. 6340 ROTATING BEACON - WITH FOGS FEU DE CIRCULATION

Serial No. ;

Key No.	Part No.	Description	Description	Q'ty	S.C	Serial No.	ICA	Replaceable part	
								Part No.	Q'ty
6340--	K1006803	ROTATING BEACON	FEU DE CIRCULATION	-	D				
1	160-00061	BUSH;MOUNTING	MANCHON	1					
2	S5102503	WASHER;SPRING	RONDELLE ELASTIQUE	2					
3	S0508853	BOLT	BOULON A 6 PANS	2					
4	530-00464	HARNESS;JOINT	FAISCEAU	1					
5	534-00062	LAMP;ROTATING BEACON	BALISE DE LAMP;ROTATI	1					
5A	515-00013	. BULB;HALOGEN 24V 70W	. AMPOULE	1					

DATE	APR. 02, 2007
1st EDITION	

Fig. 6350 MAIN PIPING - ONE WAY
CONDUITES DE PRINCIPAL

Serial No. ;

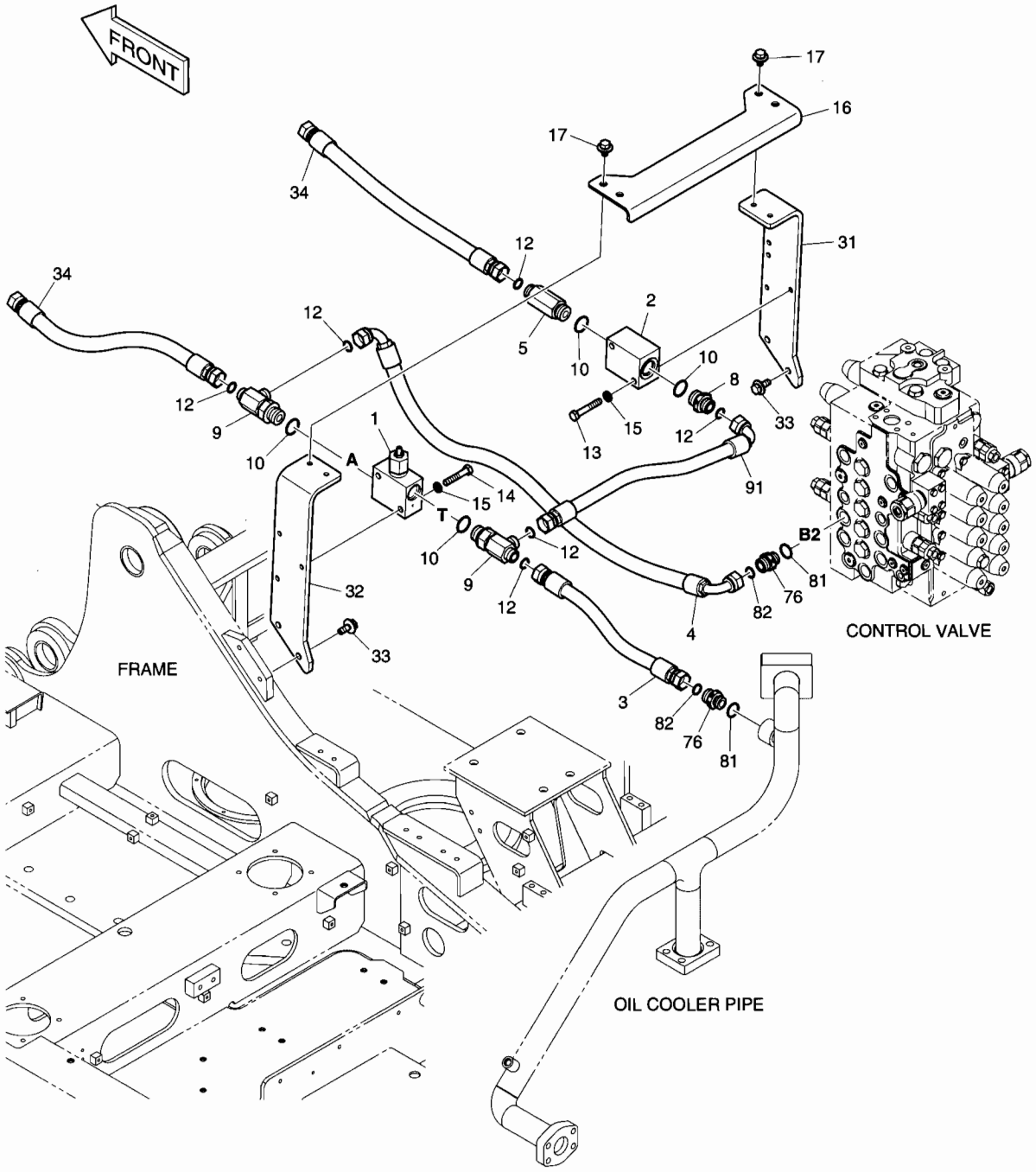

DATE	APR. 02, 2007
1st EDITION	

Fig. 6350 MAIN PIPING - ONE WAY
CONDUITES DE PRINCIPAL

Serial No. ;

Key No.	Part No.	Description	Description	Q'ty	S.C	Serial No.	ICA	Replaceable part	
								Part No.	Q'ty
6350--	K1027397B	MAIN PIPING;ONE WAY	TUYAUTERIE PRINCIPALE	-	D				
1	426-00267A	VALVE;RELIEF	VANNE	1					
2	423-00193B	BLOCK	BLOC	1					
3	DS2011606	HOSE	TUYAU FLEXIBLE	1					
4	DS2023325	HOSE 1 3/16"-670L	TUYAU FLEXIBLE	1					
5	DS2232121	ADAPTER	ADAPTEUR	1					
8	2181-2627D15	ADAPTER	ADAPTEUR	1					
9	2181-2293D2	TEE	TE	2					
10	S8000291	O-RING	JOINT TORIQUE	4					
12	S8030121	O-RING	JOINT TORIQUE	5					
13	S0561266	BOLT	BOULON	2					
14	S0561066	BOLT	BOULON	2					
15	S5102703	WASHER;SPRING(M12)	RONDELLE ELASTIQUE	4					
16	K1016101	BRACKET	SUPPORT	1					
17	DS0025019	BOLT;SET	BOULON	4					
31	K1027077	BRACKET	SUPPORT	1					
32	K1027078	BRACKET	SUPPORT	1					
33	DS0025020	BOLT;SET	BOULON	4					
34	DS2011687	HOSE	TUYAU FLEXIBLE	2					
76	2181-2627D1	ADAPTER	ADAPTEUR	2					
81	S8000241	O-RING	JOINT TORIQUE	2					
82	S8030121	O-RING	JOINT TORIQUE	2					
91	DS2013126	HOSE	TUYAU FLEXIBLE	1					

DATE	APR. 02, 2007
1st EDITION	

Fig. 6360 ONE WAY PIPING - WITH FILTER
CONDUITES DE BALANCIER

Serial No. ;

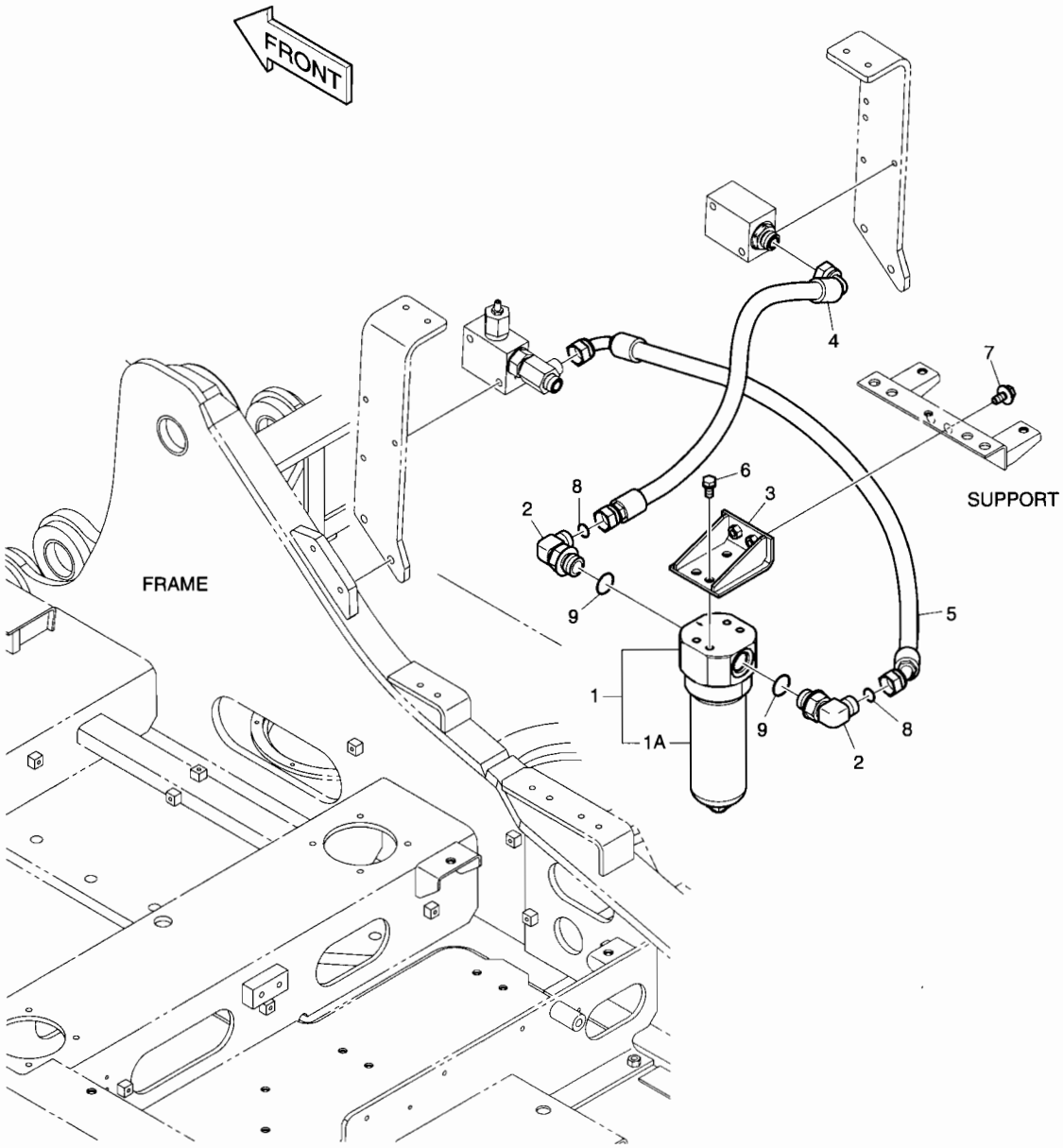

DATE	APR. 02, 2007
1st EDITION	

Fig. 6360 ONE WAY PIPING - WITH FILTER CONDUITES DE BALANCIER

Serial No. ;

Key No.	Part No.	Description	Description	Q'ty	S.C	Serial No.	ICA	Replaceable part	
								Part No.	Q'ty
6360--	K1027421	BREAKER FILTER;ONE WAY	CONDUITES DE BALANCIER	-	D				
1	471-00114	FILTER;BREAKER	FILTRE	1					
1A	474-00046	. ELEMENT;BREAKER FILTER	. ELEMENT	1					
2	2181-2294D6	ELBOW	COUDE	2					
3	K1024909	BRACKET	SUPPORT	1					
4	DS2013352	HOSE	TUYAU FLEXIBLE	1					
5	DS2021181	HOSE	TUYAU FLEXIBLE	1					
6	DS0025021	BOLT;SET	BOULON A 6 PANS	4					
7	DS0025018	BOLT;SET	BOULON A 6 PANS	2					
8	S8030121	O-RING	JOINT TORIQUE	2					
9	S8000291	O-RING	JOINT TORIQUE	2					

DATE	APR. 02, 2007
1st EDITION	

Fig. 6370 PILOT PIPING - ONE WAY
CONDUITES DE PILOTE

Serial No. ;

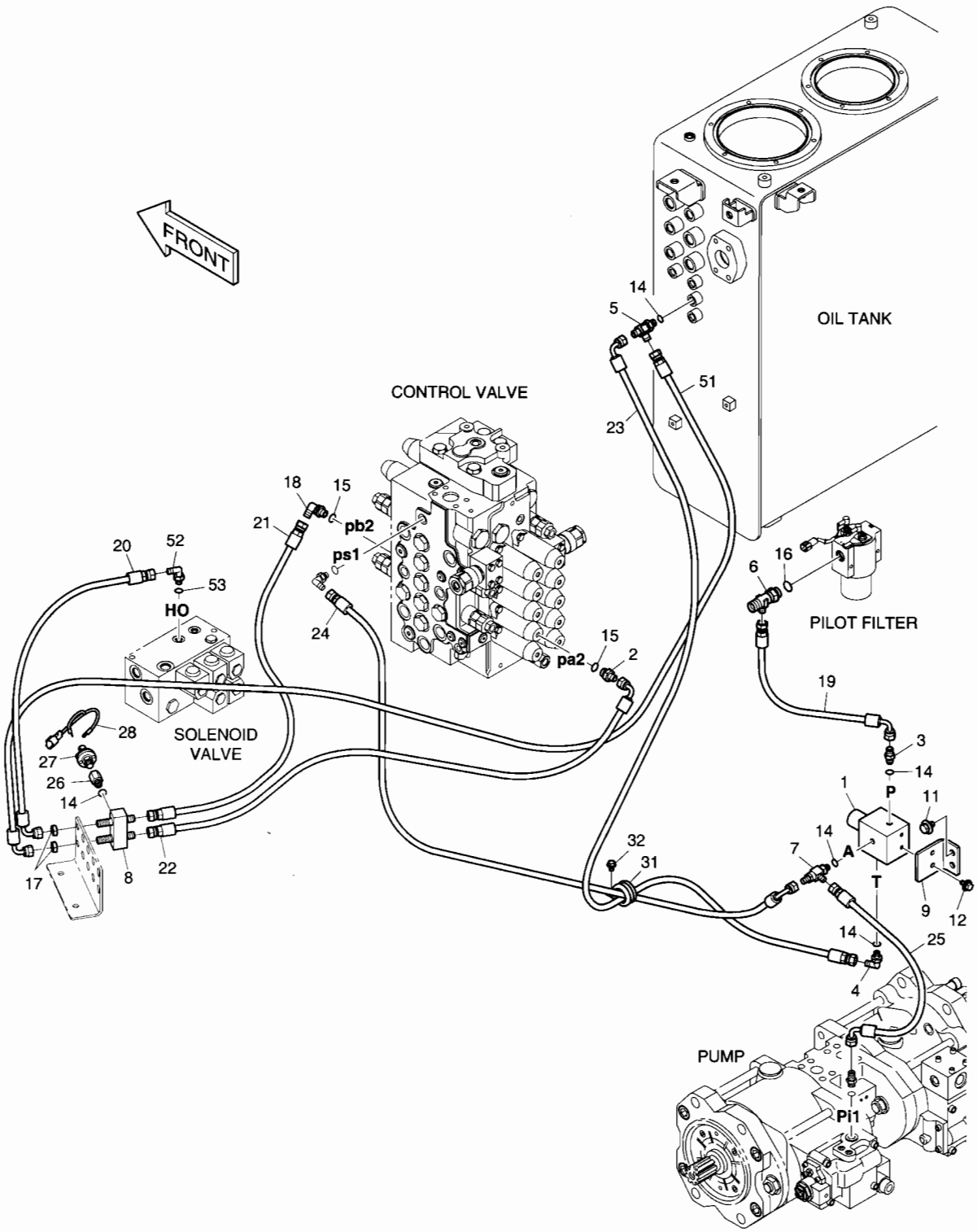

DATE	APR. 02, 2007
1st EDITION	

Fig. 6370 PILOT PIPING - ONE WAY
CONDUITES DE PILOTE

Serial No. ;

Key No.	Part No.	Description	Description	Q'ty	S.C	Serial No.	ICA	Replaceable part	
								Part No.	Q'ty
6370--	K1017476B	PILOT PIPING;ONE WAY(PE3C)	TUYAUTERIE PILOTE	-	D				
1	426-00266	VALVE;EPPR	VANNE	1					
2	2181-1126D36	ADAPTER	ADAPTEUR	1					
3	2471-1133	FILTER;ADAPTER	FILTRE	1					
4	2181-1702D4	ELBOW	COUDE	1					
5	2181-1951D1	TEE	TE	1					
6	2181-1951D19	TEE	TE	1					
7	181-00779	TEE;SHUTTLE	TE	1					
8	420-00476	VALVE;SHUTTLE	VANNE	1					
9	195-02711B	BRACKET	SUPPORT	1					
11	DS0025013	BOLT;SET	BOULON	2					
12	DS0025033	BOLT;SET	BOULON	2					
14	S8000111	O-RING	JOINT TORIQUE	5					
15	S8000141	O-RING	JOINT TORIQUE	2					
16	S8000181	O-RING	JOINT TORIQUE	1					
17	121-00010D7	NUT	ECROU	2					
18	2181-1702D10	ELBOW	COUDE	1					
19	DS2093123	HOSE	TUYAU FLEXIBLE	1					
20	DS2093430	HOSE	TUYAU FLEXIBLE	1					
21	DS2094184	HOSE	TUYAU FLEXIBLE	1					
22	DS2093193	HOSE	TUYAU FLEXIBLE	1					
23	DS2093142	HOSE	TUYAU FLEXIBLE	1					
24	DS2093126	HOSE	TUYAU FLEXIBLE	1					
25	DS2093006	HOSE	TUYAU FLEXIBLE	1					
26	DS2242017	REDUCER	REDUCEUR	1					
27	549-00010	SWITCH;PRESSURE	COMMUTATEUR	1					
28	530-00067	HARNESS;PRESS. S/W	HARNAIS	1					
31	124-00208D5	CLIP	AGRAFE	1					
32	K1001029	BOLT	BOULON	1					
51	DS2093117	HOSE	TUYAU FLEXIBLE	1					
52	2181-1702D4	ELBOW	COUDE	1					
53	S8000111	O-RING	JOINT TORIQUE	1					

Fig. 6380 MAIN PIPING - TWO WAY
CONDUITES DE PRINCIPAL

Serial No. ;

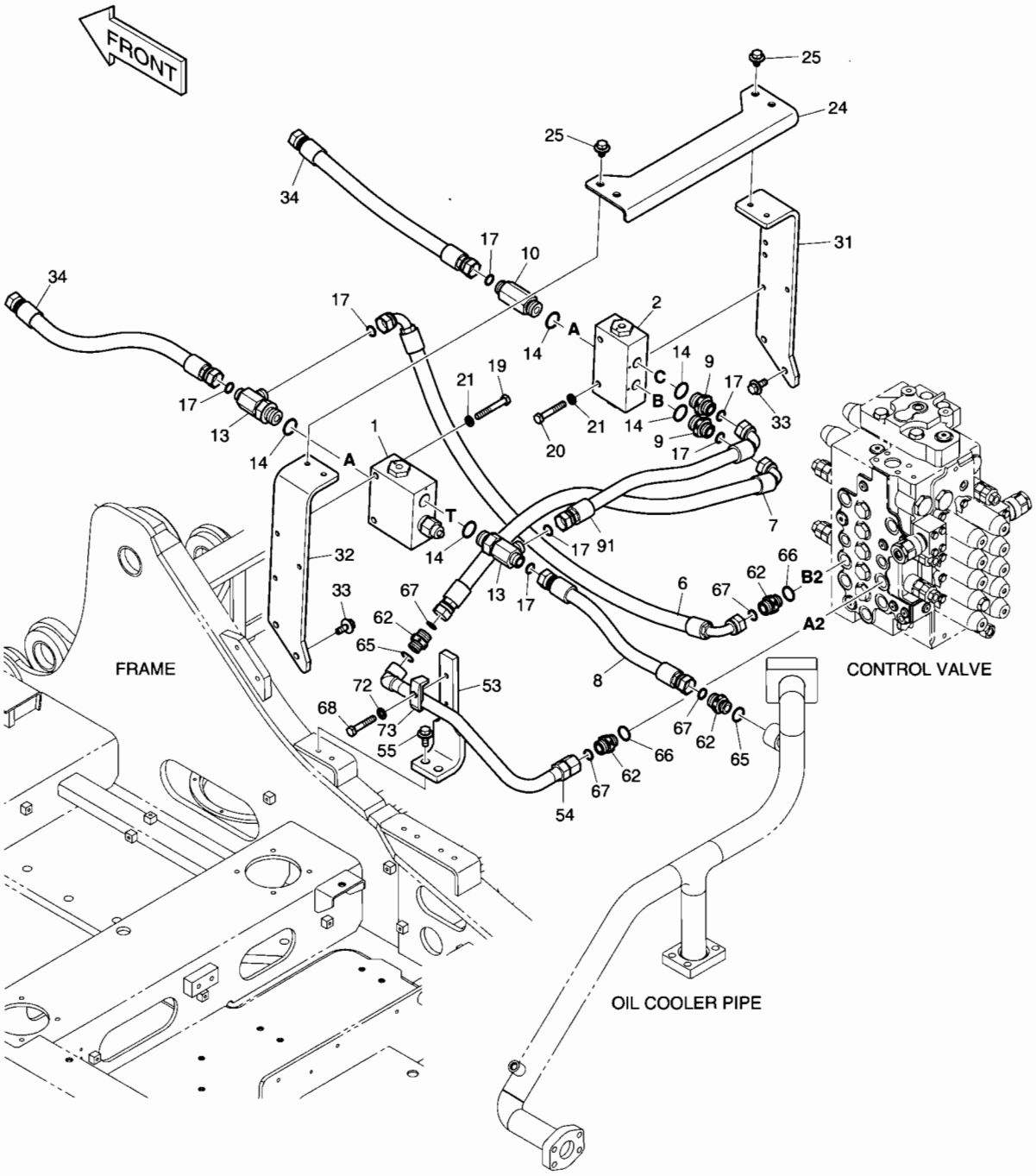

DATE	APR. 02, 2007
1st EDITION	

Fig. 6380 MAIN PIPING - TWO WAY CONDUITES DE PRINCIPAL

Serial No. ;

Key No.	Part No.	Description	Description	Q'ty	S.C	Serial No.	ICA	Replaceable part	
								Part No.	Q'ty
6380--	K1027395A	MAIN PIPING;PE3C	TUYAUTERIE PRINCIPALE	-	D				
1	426-00248A	VALVE;SELECT	VANNE	1					
2	426-00249A	VALVE;SELECT	VANNE	1					
6	DS2023325	HOSE 1 3/16"-670L	TUYAU FLEXIBLE	1					
7	DS2013914	HOSE	TUYAU FLEXIBLE	1					
8	DS2011538	HOSE	TUYAU FLEXIBLE	1					
9	2181-2627D15	ADAPTER	ADAPTEUR	2					
10	DS2232121	ADAPTER	ADAPTEUR	1					
13	2181-2293D2	TEE	TE	2					
14	S8000291	O-RING	JOINT TORIQUE	5					
17	S8030121	O-RING	JOINT TORIQUE	7					
19	S0561466	BOLT	BOULON	2					
20	S0561266	BOLT	BOULON	2					
21	S5102703	WASHER;SPRING(M12)	RONDELLE ELASTIQUE	4					
24	K1016101	BRACKET	SUPPORT	1					
25	DS0025019	BOLT;SET	BOULON	4					
31	K1027077	BRACKET	SUPPORT	1					
32	K1027078	BRACKET	SUPPORT	1					
33	DS0025020	BOLT;SET	BOULON	4					
34	DS2011687	HOSE	TUYAU FLEXIBLE	2					
53	K1013578	BRACKET	SUPPORT	1					
54	K1016390A	PIPE	TUYAU	1					
55	DS0025020	BOLT;SET	BOULON	2					
62	2181-2627D1	ADAPTER	ADAPTEUR	4					
65	S8000231	O-RING	JOINT TORIQUE	2					
66	S8000241	O-RING	JOINT TORIQUE	2					
67	S8030121	O-RING	JOINT TORIQUE	4					
68	S0561066	BOLT	BOULON	1					
72	S5010713	WASHER	RONDELLE	1					
73	2124-1026D2	CLAMP;PIPE	COLLIER	1					
91	DS2013915	HOSE	TUYAU FLEXIBLE	1					

DATE	APR. 02, 2007
1st EDITION	

Fig. 6390 TWO WAY PIPING - WITH FILTER
CONDUITES DE BALANCIER

Serial No. ;

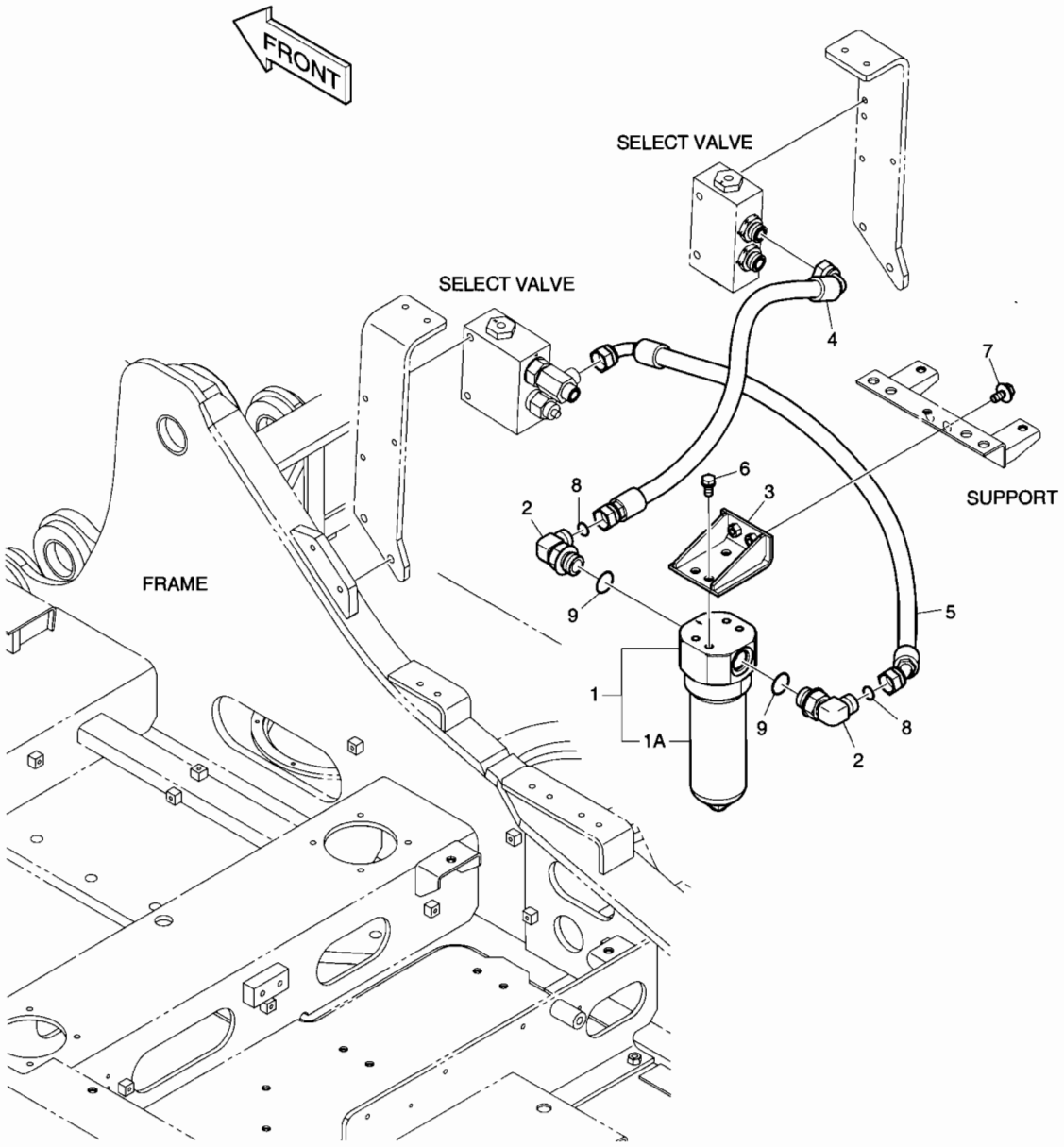

DATE	APR. 02, 2007
1st EDITION	

Fig. 6390 TWO WAY PIPING - WITH FILTER CONDUITES DE BALANCIER

Serial No. ;

Key No.	Part No.	Description	Description	Q'ty	S.C	Serial No.	ICA	Replaceable part	
								Part No.	Q'ty
6390--	K1027419	BREAKER FILTER;ONE WAY	CONDUITES DE BALANCIER	-	D				
1	471-00114	FILTER;BREAKER	FILTRE	1					
1A	474-00046	. ELEMENT;BREAKER FILTER	. ELEMENT	1					
2	2181-2294D6	ELBOW	COUDE	2					
3	K1024909	BRACKET	SUPPORT	1					
4	DS2013352	HOSE	TUYAU FLEXIBLE	1					
5	DS2021178	HOSE	TUYAU FLEXIBLE	1					
6	DS0025021	BOLT;SET	BOULON A 6 PANS	4					
7	DS0025018	BOLT;SET	BOULON A 6 PANS	2					
8	S8030121	O-RING	JOINT TORIQUE	2					
9	S8000291	O-RING	JOINT TORIQUE	2					

DATE	APR. 02, 2007
1st EDITION	

Fig. 6400 PILOT PIPING - TWO WAY(1)
CONDUITES DE PILOTE

Serial No. ;

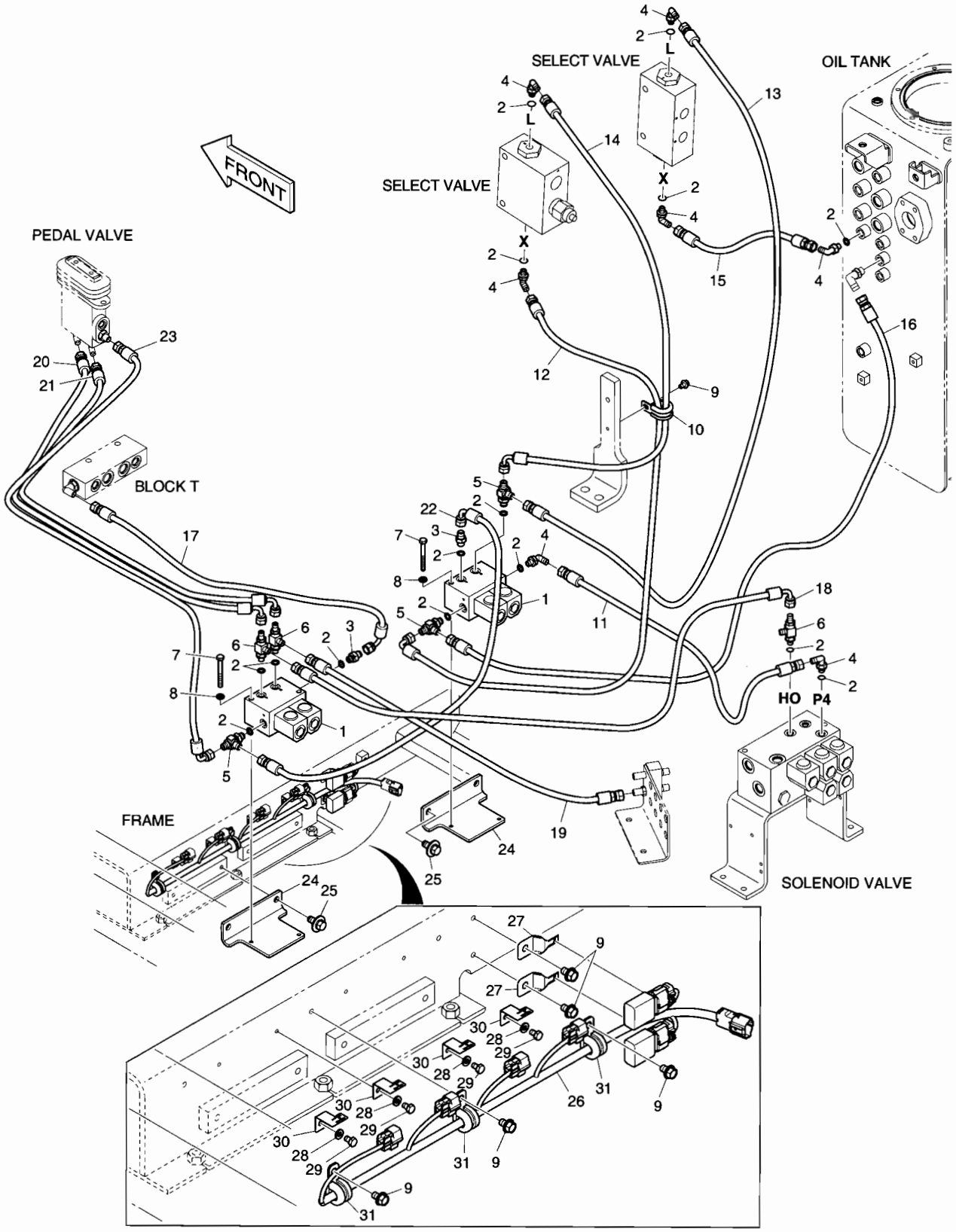

DATE	APR. 02, 2007
1st EDITION	

Fig. 6400 PILOT PIPING - TWO WAY(1) CONDUITES DE PILOTE

Serial No. ;

Key No.	Part No.	Description	Description	Q'ty	S.C	Serial No.	ICA	Replaceable part	
								Part No.	Q'ty
6400--	K1017480B	PILOT PIPING;PE3C	CONDUITES DE PILOTE	-	D				
1	426-00247A	VALVE;SOLENOID	SOUPAPE A SOLENOIDE	2					
2	S8000111	O-RING	JOINT TORIQUE	15					
3	2181-1126D14	ADAPTER	ADAPTEUR	2					
4	2181-1702D4	ELBOW	COUDE	7					
5	2181-1951D1	TEE	TE	3					
6	181-00779	TEE;SHUTTLE	TE	3					
7	S0556766	BOLT	BOULON A 6 PANS	4					
8	S5102503	WASHER;SPRING	RONDELLE ELASTIQUE	4					
9	K1001029	BOLT	BOULON A 6 PANS	6					
10	124-00208D4	CLIP	AGRAFE	1					
11	DS2094086	HOSE	TUYAU FLEXIBLE	1					
12	DS2093373	HOSE	TUYAU FLEXIBLE	1					
13	DS2094240	HOSE	TUYAU FLEXIBLE	1					
14	DS2093037	HOSE	TUYAU FLEXIBLE	1					
15	DS2094073	HOSE	TUYAU FLEXIBLE	1					
16	DS2094106	HOSE	TUYAU FLEXIBLE	1					
17	DS2093080	HOSE	TUYAU FLEXIBLE	1					
18	DS2093358	HOSE	TUYAU FLEXIBLE	1					
19	DS2094169	HOSE	TUYAU FLEXIBLE	1					
20	DS2093055	HOSE	TUYAU FLEXIBLE	1					
21	DS2093056	HOSE	TUYAU FLEXIBLE	1					
22	DS2093027	HOSE	TUYAU FLEXIBLE	1					
23	DS2093060	HOSE	TUYAU FLEXIBLE	1					
24	K1014268	BRACKET	SUPPORT	2					
25	DS0025017	BOLT;SET	BOULON A 6 PANS	4					
26	K1024685	HARNESS;JOINT	HARNAIS	1					
27	2197-1661	BRACKET;HOUSING	SUPPORT	2					
28	S5102303	WASHER;SPRING	RONDELLE ELASTIQUE	4					
29	S0504366	BOLT	BOULON A 6 PANS	4					
30	2195-3500	BRACKET;HOUSING	SUPPORT	4					
31	124-00208D2	CLIP	AGRAFE	3					

DATE	APR. 02, 2007
1st EDITION	

Fig. 6410 PILOT PIPING - TWO WAY(2)
CONDUITES DE PILOTE

Serial No. ;

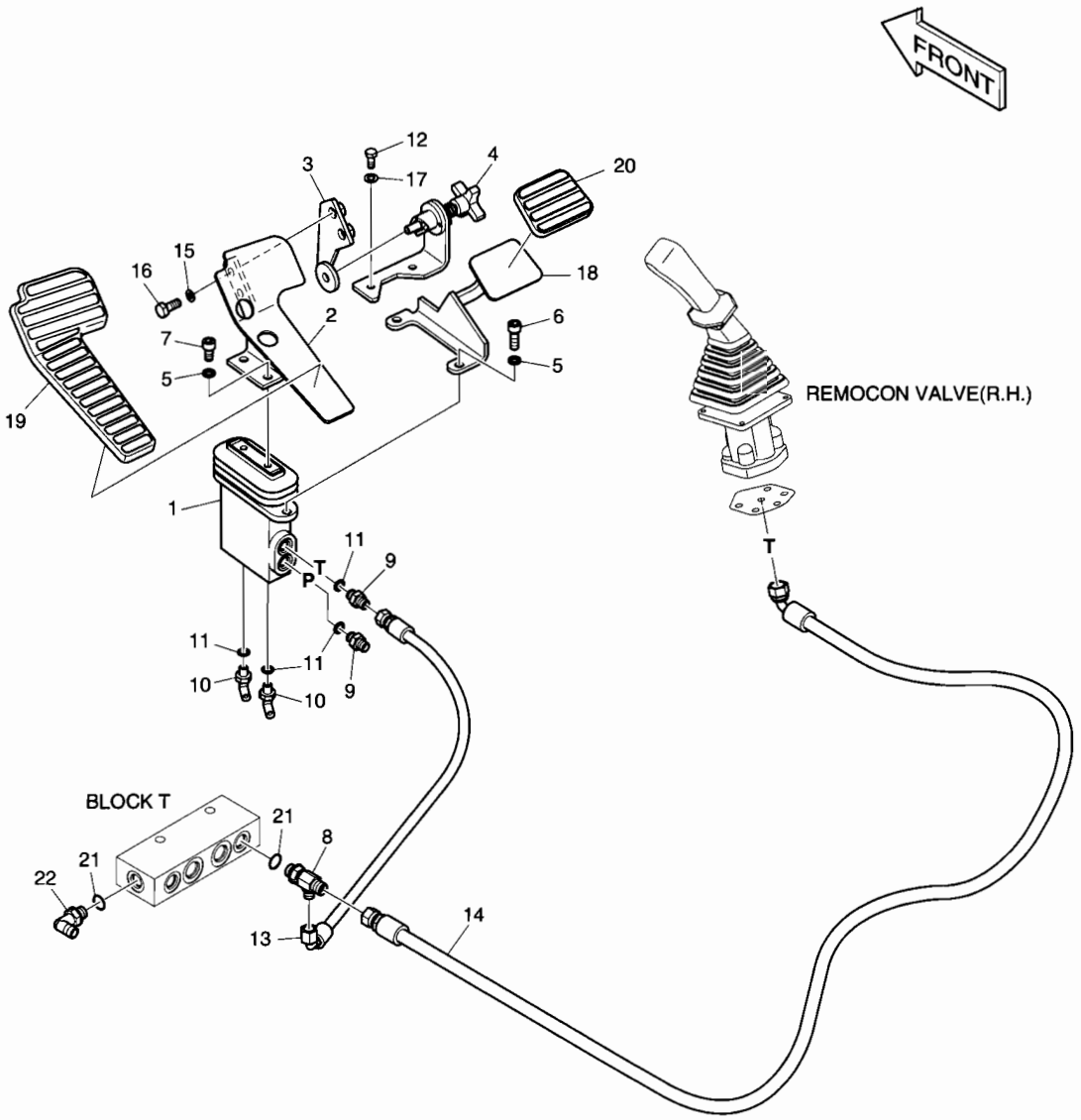

DATE	APR. 02, 2007
1st EDITION	

Fig. 6410 PILOT PIPING - TWO WAY(2) CONDUITES DE PILOTE

Serial No. ;

Key No.	Part No.	Description	Description	Q'ty	S.C	Serial No.	ICA	Replaceable part	
								Part No.	Q'ty
6410--	K1017646	PILOT PIPING-TWO WAY(2)	CIRCUIT DE PILOTE	-	D				
1	K1017382	VALVE;PEDAL	VANNE	1					
2	195-01683A	BRACKET;PEDAL(R.H)	SUPPORT	1					
3	K1000695A	PLATE	PLAQUE	1					
4	K1000696C	LOCK ASS'Y	SERRURE	1					
5	S5110603	WASHER;SPRING	RONDELLE ELASTIQUE	4					
6	S2212266	BOLT;SOCKET	BOULON	2					
7	S2211866	BOLT;SOCKET	BOULON	2					
8	2181-1951D6	TEE	TE	1					
9	2181-1126D14	ADAPTER	ADAPTEUR	2					
10	2181-1702D4	ELBOW	COUDE	2					
11	S8000111	O-RING	JOINT TORIQUE	4					
12	S0508866	BOLT	BOULON A 6 PANS	2					
13	DS2093200	HOSE	TUYAU FLEXIBLE	1					
14	DS2095020	HOSE	TUYAU FLEXIBLE	1					
15	S5102603	WASHER;SPRING	RONDELLE ELASTIQUE	2					
16	S0512066	BOLT	BOULON A 6 PANS	2					
17	S5102503	WASHER;SPRING	RONDELLE ELASTIQUE	2					
18	K1003947A	FOOT REST	REPOS DE PIED	1					
19	161-00381	RUBBER;PEDAL(R.H)	CAOUTCHOUC	1					
20	K1006656	RUBBER	CAOUTCHOUC	1					
21	S8000141	O-RING	JOINT TORIQUE	2					
22	2181-1702D10	ELBOW	COUDE	1					

DATE	APR. 02, 2007
1st EDITION	

Fig. 6420 BOOM PIPING - ONE & TWO WAY(BOOM-4.6m)
TUYAUTERIE DE PERCHE

Serial No. ;

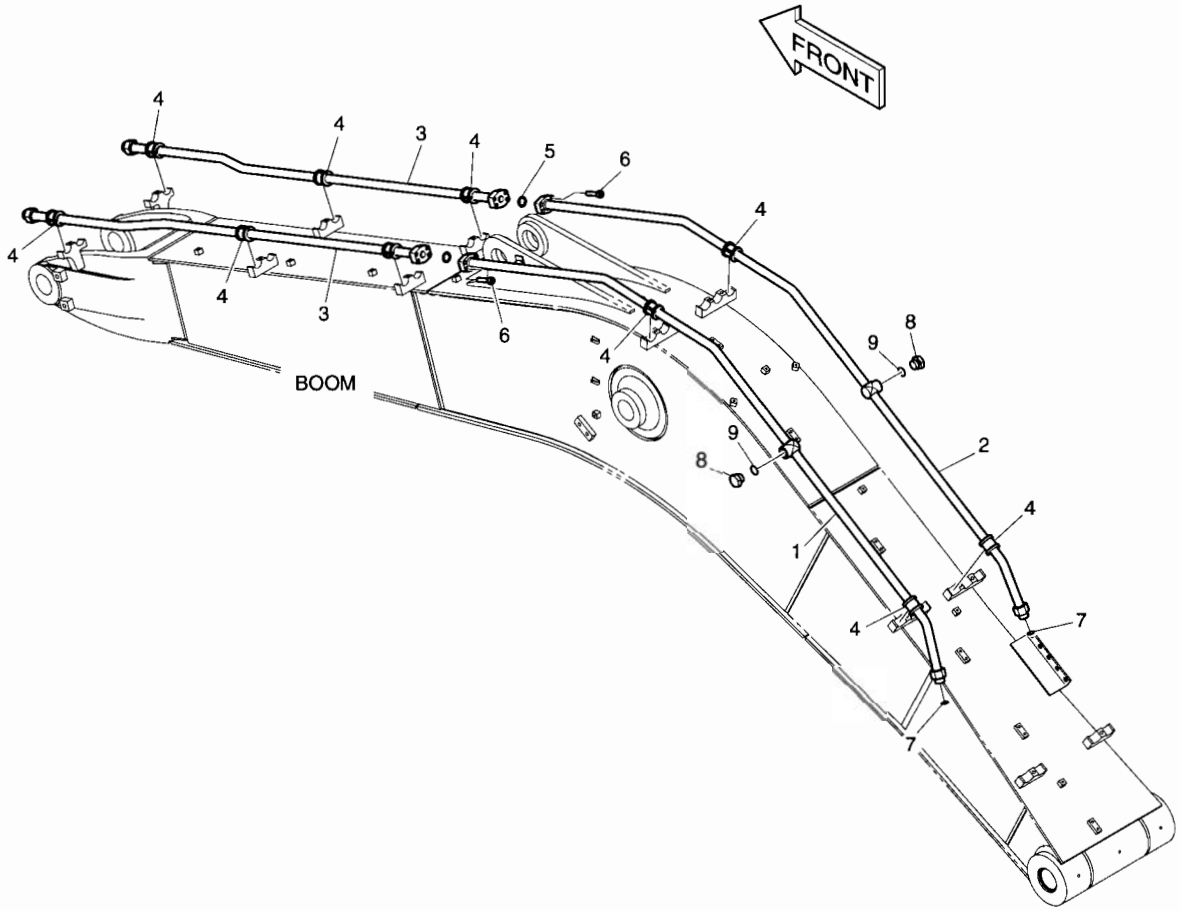

DATE	APR. 02, 2007
1st EDITION	

Fig. 6420 BOOM PIPING - ONE & TWO WAY(BOOM-4.6m) TUYAUTERIE DE PERCHE

Serial No. ;

Key No.	Part No.	Description	Description	Q'ty	S.C	Serial No.	ICA	Replaceable part	
								Part No.	Q'ty
6420--	K1018951A	BOOM PIPING-ONE & TWO WAY	CONDUITES DE FLECHE	-	D				
1	K1026887	PIPE	TUYAU	1					
2	K1026889	PIPE	TUYAU	1					
3	K1004330	PIPE	TUYAU	2					
4	K1000294A	RUBBER	CAOUTCHOUC	10					
5	2180-1026D2	O-RING	JOINT TORIQUE	2					
6	S2212566	BOLT;SOCKET	BOULON A 6 PANS CREUX	8					
7	S8030121	O-RING	JOINT TORIQUE	2					
8	2181-1950D15	PLUG	BOUCHON	2					
9	S8000231	O-RING	JOINT TORIQUE	2					

Fig. 6430 ARM PIPING - ONE & TWO WAY(ARM 2.5m)
CONDUITES DE BALANCIER

Serial No. ;

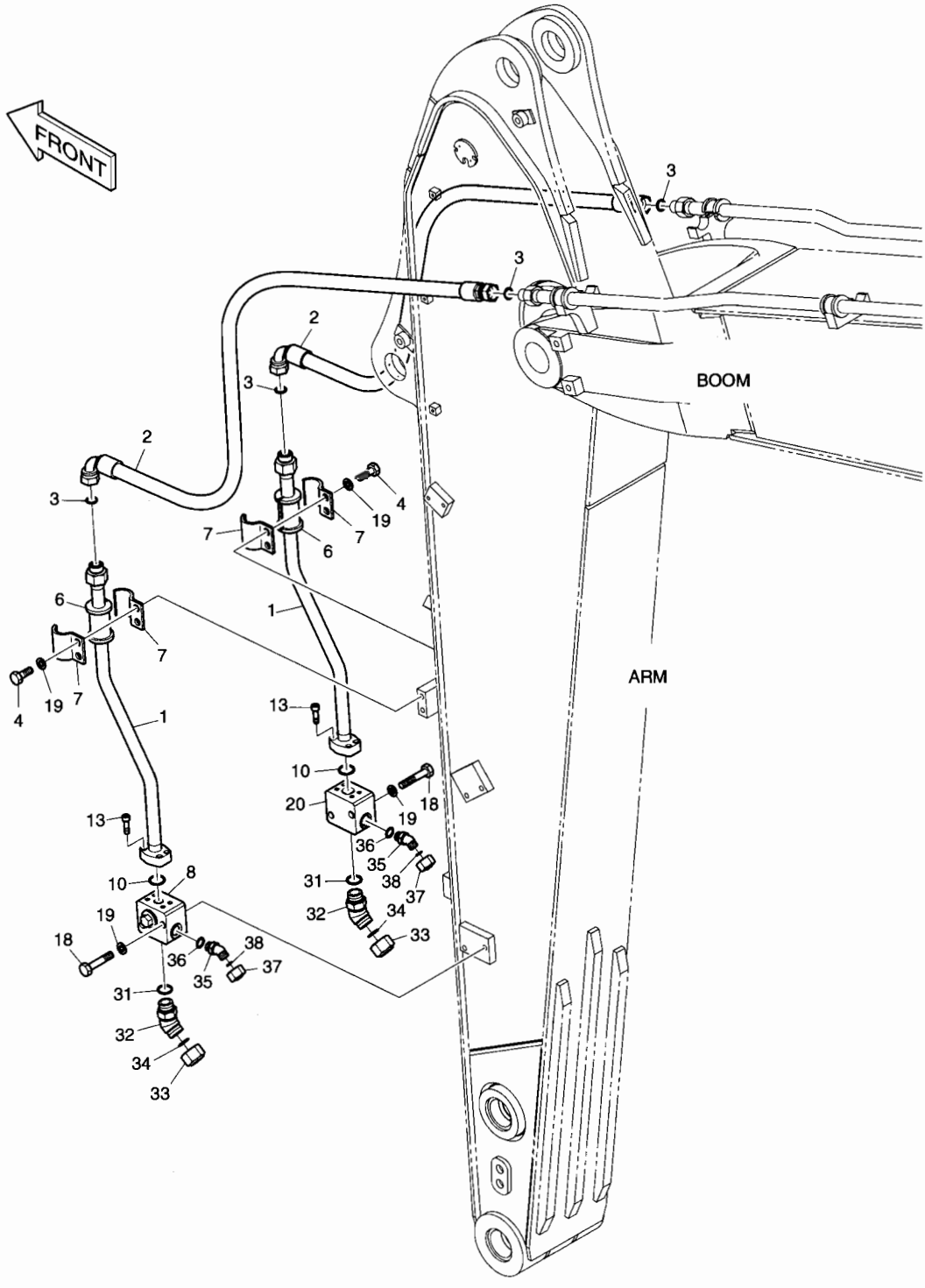

DATE	APR. 02, 2007
1st EDITION	

Fig. 6430 ARM PIPING - ONE & TWO WAY(ARM 2.5m) CONDUITES DE BALANCIER

Serial No. ;

Key No.	Part No.	Description	Description	Q'ty	S.C	Serial No.	ICA	Replaceable part	
								Part No.	Q'ty
5430--	400-01347A	ARM PIPING-ONE & TWO WAY	CONDUITES DE BALANCIER	-	D				
1	140-01615A	PIPE	TUYAU	2					
2	2184-1197D24	HOSE	TUYAU FLEXIBLE	2					
3	S8030121	O-RING	JOINT TORIQUE	4					
4	S0562766	BOLT	BOULON	4					
6	161-00574	RUBBER	CAOUTCHOUC	2					
7	124-00302	CLAMP;PIPE	COLLIER	4					
8	420-00511B	VALVE;STOP(L.H)	VANNE	1					
10	2180-1026D2	O-RING	JOINT TORIQUE	2					
13	S2212366	BOLT;SOCKET	BOULON A 6 PANS CREUX	8					
18	S0563466	BOLT	BOULON	4					
19	S5102803	WASHER;SPRING	RONDELLE ELASTIQUE	8					
20	420-00517B	VALVE;STOP(R.H)	VANNE	1					
31	S8000231	O-RING	JOINT TORIQUE	2					
32	2181-2816D1	ELBOW	COUDE	2					
33	2181-2817D1	CAP	CHAPEAU	2					
34	S8030121	O-RING	JOINT TORIQUE	2					
35	2181-2816D4	ELBOW	COUDE	2					
36	S8000181	O-RING	JOINT TORIQUE	2					
37	2181-2817D4	CAP	CHAPEAU	2					
38	S8030081	O-RING	JOINT TORIQUE	2					

DATE	APR. 02, 2007
1st EDITION	

Fig. 6440 ARM PIPING - CLAMSHELL ARM 2.5m
CONDUITES DE BALANCIER

Serial No. ;

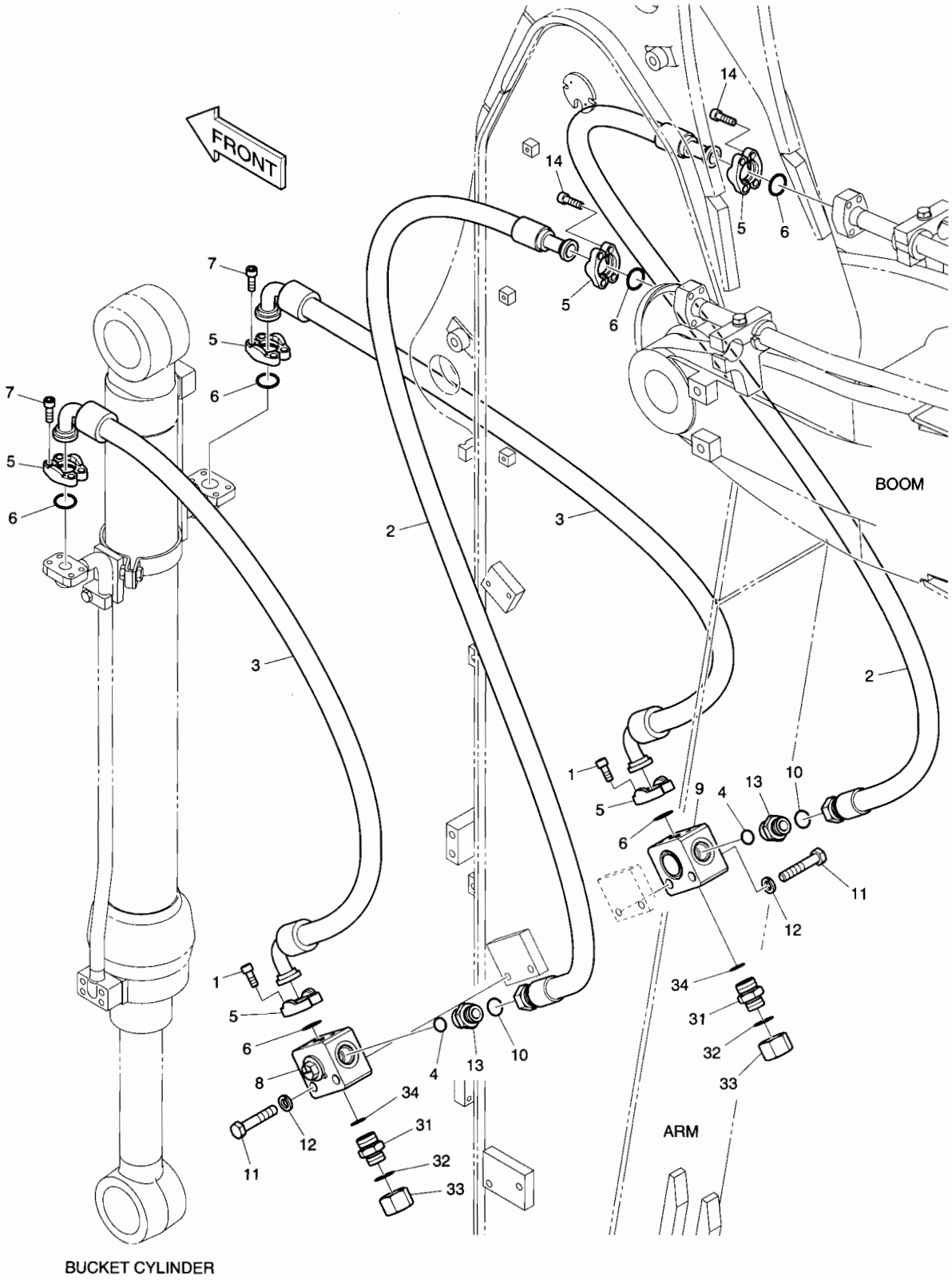

DATE	APR. 02, 2007
1st EDITION	

Fig. 6440 ARM PIPING - CLAMSHELL ARM 2.5m CONDUITES DE BALANCIER

Serial No. ;

Key No.	Part No.	Description	Description	Q'ty	S.C	Serial No.	ICA	Replaceable part	
								Part No.	Q'ty
6440--	K1027341A	CLAMSHELL PIPING	CONDUITES DE BALANCIER	-	D				
1	S2212066	BOLT;SOCKET	BOULON A 6 PANS CREUX	8					
2	DS2016048	HOSE	TUYAU FLEXIBLE	2					
3	DS2045403	HOSE	TUYAU FLEXIBLE	2					
4	S8030121	O-RING	JOINT TORIQUE	2					
5	2181-9079	FLANGE	BRIDE	12					
6	2180-1026D2	O-RING	JOINT TORIQUE	6					
7	S2212266	BOLT;SOCKET M10X1.5X30	BOULON A 6 PANS CREUX	8					
8	K1002939	VALVE;SWITCH(L.H)	VANNE	1					
9	K1002940	VALVE;SWITCH(R.H)	VANNE	1					
10	S8000231	O-RING	JOINT TORIQUE	2					
11	S0563466	BOLT	BOULON	4					
12	S5102803	WASHER;SPRING	RONDELLE ELASTIQUE	4					
13	2181-4133D5	ADAPTER	ADAPTEUR	2					
14	S2212366	BOLT;SOCKET M10X1.5X35	BOULON A 6 PANS CREUX	8					
31	2181-4133D5	ADAPTER	ADAPTEUR	2					
32	S8000231	O-RING	JOINT TORIQUE	2					
33	2181-2817D1	CAP	CHAPEAU	2					
34	S8030121	O-RING	JOINT TORIQUE	2					

DATE	APR. 02, 2007
1st EDITION	

Fig. 6450 PATTERN CHANGE PIPING (1)
TUYAUTERIE DE CHANGEMENT DE MODELE

Serial No. ;

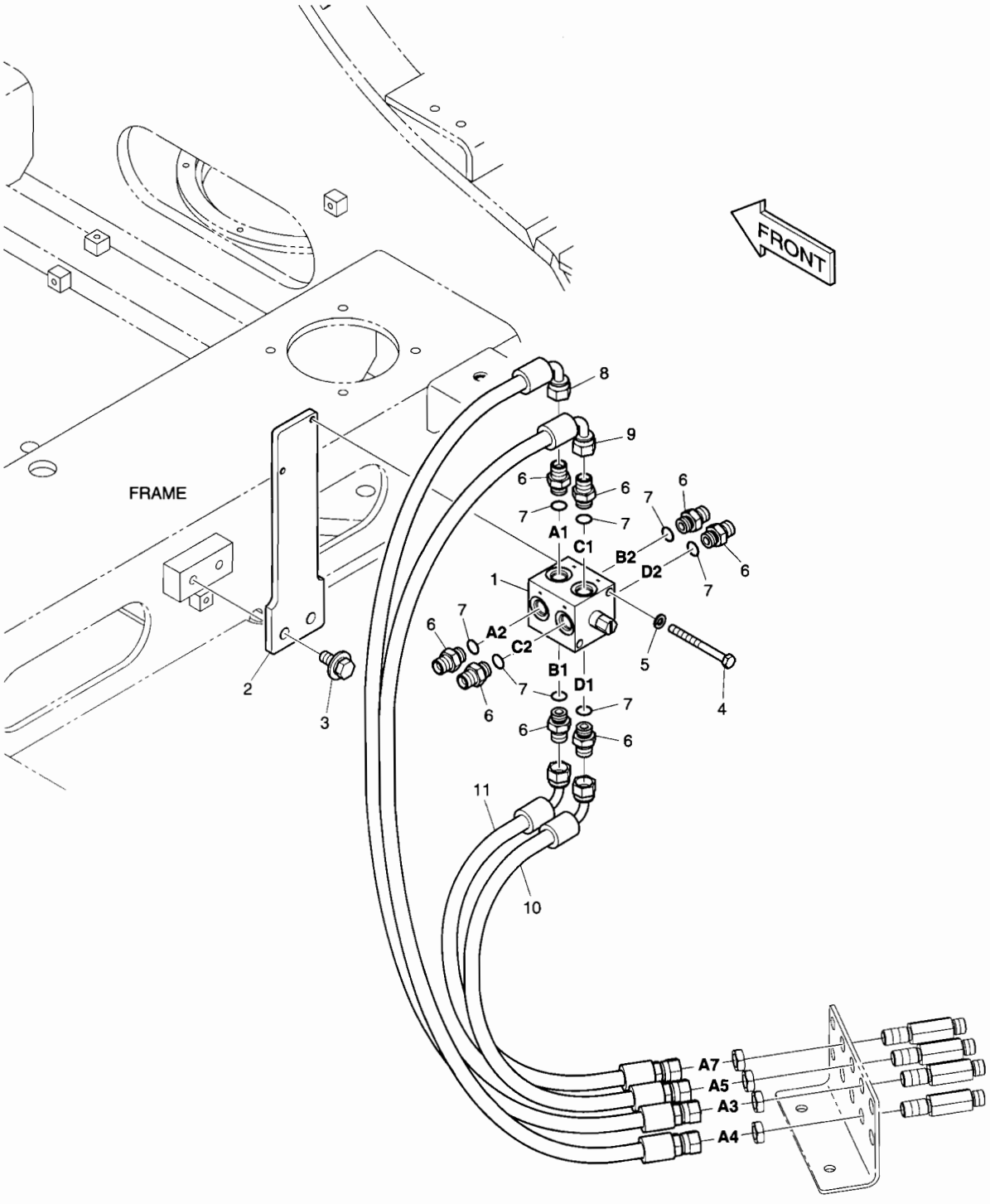

DATE	APR. 02, 2007
1st EDITION	

Fig. 6450 PATTERN CHANGE PIPING (1)
TUYAUTERIE DE CHANGEMENT DE MODELE

Serial No. ;

Key No.	Part No.	Description	Description	Q'ty	S.C	Serial No.	ICA	Replaceable part	
								Part No.	Q'ty
6450--	K1025173A	PILOT PIPING;PATTERN CHANGE	TUYAUTERIE DE	-	D				
1	K1014874	VALVE;SELECTOR	CLAPET SELECTEUR	1					
2	K1014921	PLATE	PLAQUE	1					
3	DS0025018	BOLT;SET	BOULON A 6 PANS	2					
4	S0557066	BOLT	BOULON A 6 PANS	2					
5	S5100503	WASHER;SPRING	RONDELLE ELASTIQUE	2					
6	2181-1126D7	ADAPTER	ADAPTEUR	8					
7	S8000141	O-RING	JOINT TORIQUE	8					
8	DS2093368	HOSE	TUYAU FLEXIBLE	1					
9	DS2093368	HOSE	TUYAU FLEXIBLE	1					
10	DS2093001	HOSE	TUYAU FLEXIBLE	1					
11	DS2093001	HOSE	TUYAU FLEXIBLE	1					

DATE	APR. 02, 2007
1st EDITION	

Fig. 6460 PATTERN CHANGE PIPING (2)
TUYAUTERIE DE CHANGEMENT DE MODELE

Serial No. ;

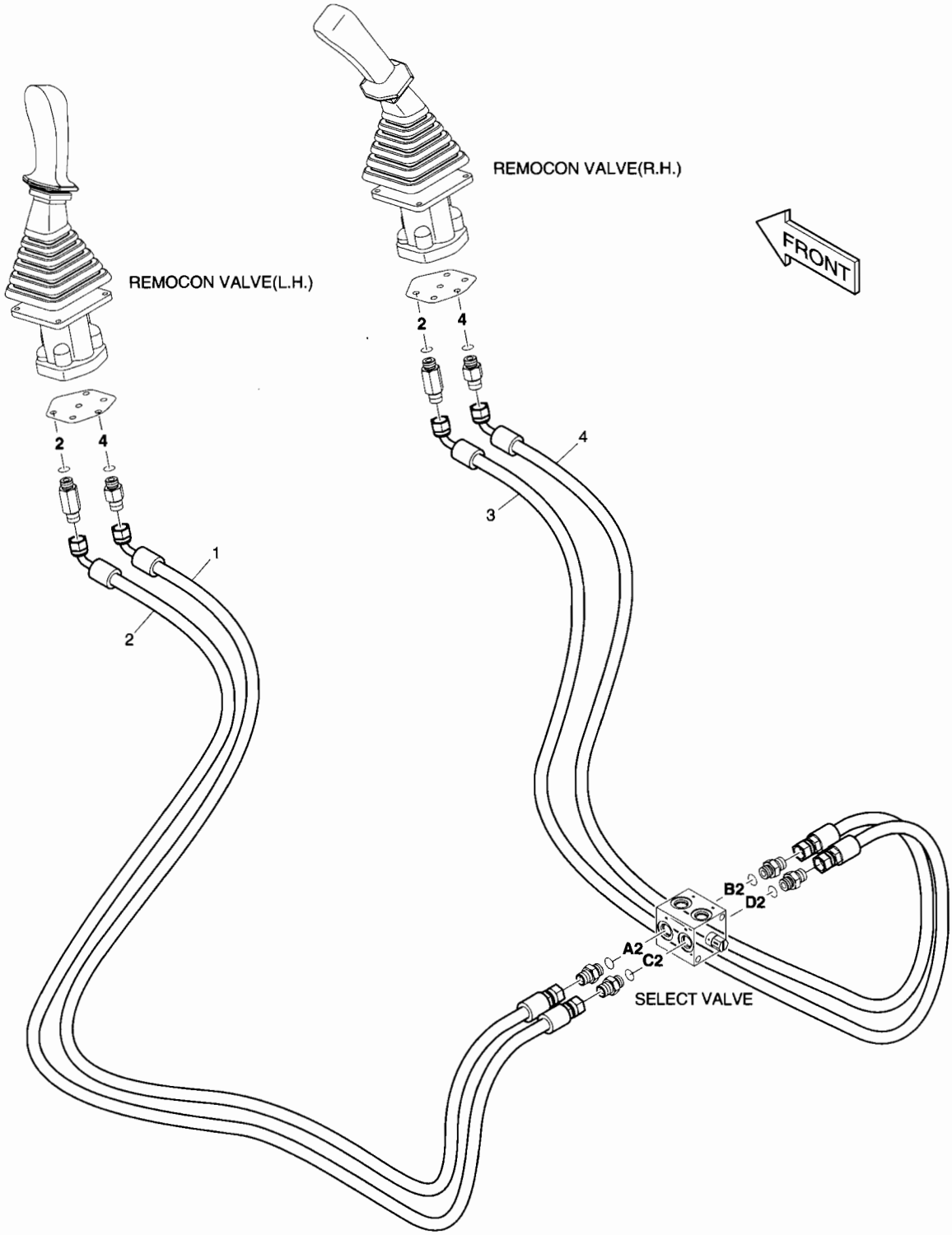

DATE	APR. 02, 2007
1st EDITION	

Fig. 6460 PATTERN CHANGE PIPING (2)
TUYAUTERIE DE CHANGEMENT DE MODELE

Serial No. ;

Key No.	Part No.	Description	Description	Q'ty	S.C	Serial No.	ICA	Replaceable part	
								Part No.	Q'ty
6460--	K1017644	PILOT PIPING;PATTERN CHANGE	TUYAUTERIE DE	-	D				
1	DS2095036	HOSE	TUYAU FLEXIBLE	1					
2	DS2095030	HOSE	TUYAU FLEXIBLE	1					
3	DS2095029	HOSE	TUYAU FLEXIBLE	1					
4	DS2095029	HOSE	TUYAU FLEXIBLE	1					

DATE	APR. 02, 2007
1st EDITION	

Fig. 6470 SWING ALARM AVERTISSEUR

Serial No. ;

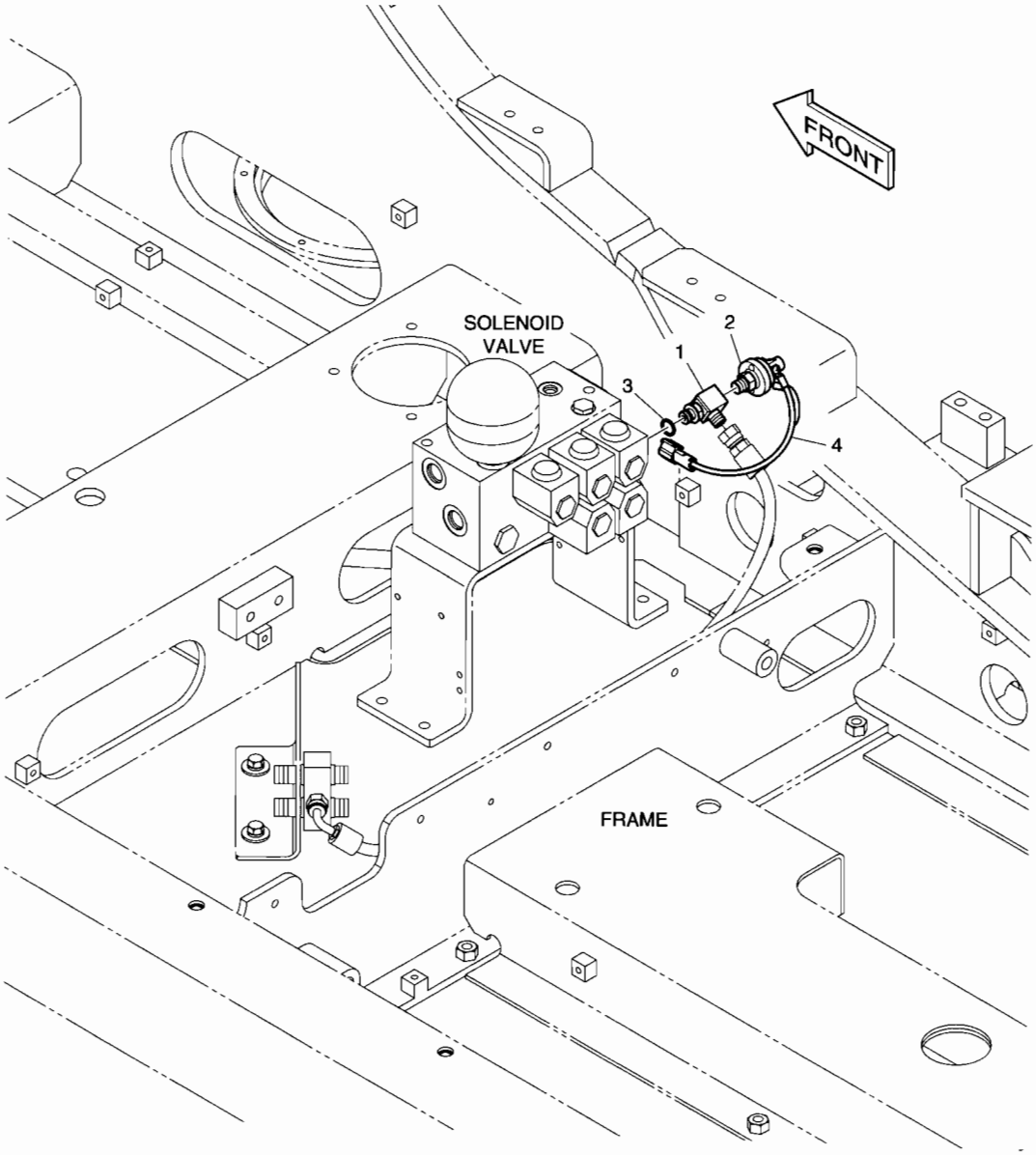

DATE	APR. 02, 2007
1st EDITION	

Fig. 6470 SWING ALARM AVERTISSEUR

Serial No. ;

Key No.	Part No.	Description	Description	Q'ty	S.C	Serial No.	ICA	Replaceable part	
								Part No.	Q'ty
6470--	K1017479A	ASSEMBLY;SWING ALARM	ALARME D'OSCILLATION	-	D				
1	K1002158	TEE	TE	1					
2	549-00010	SWITCH;PRESSURE	COMMUTATEUR	1					
3	S8000111	O-RING	JOINT TORIQUE	1					
4	530-00067	HARNESS;PRESS.SWITCH	FAISCEAU	1					

DATE	APR. 02, 2007
1st EDITION	

Fig. 6480 MAIN PIPING - QUICK FIT
CONDUITES DE PRINCIPAL

Serial No. ;

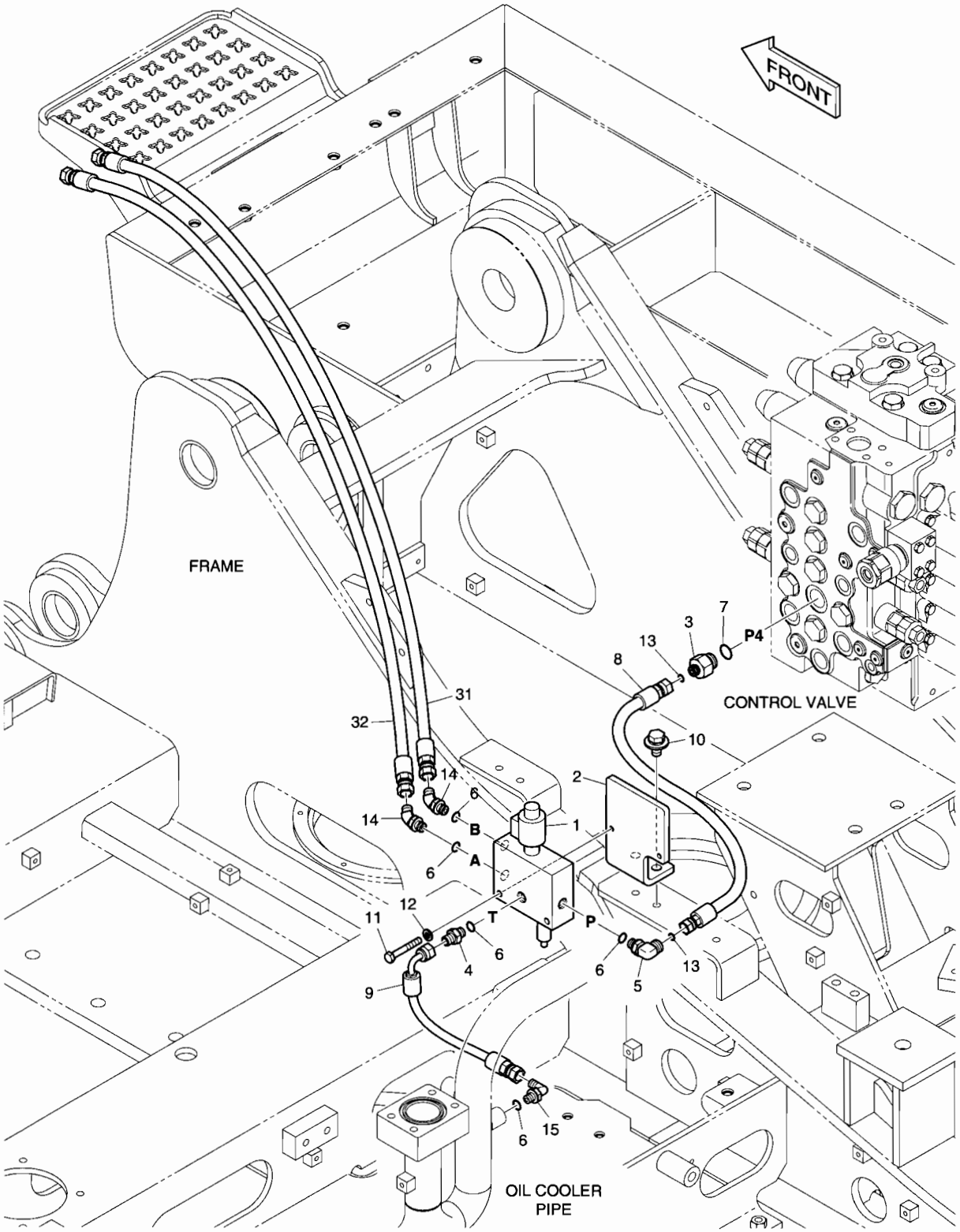

DATE	APR. 02, 2007
1st EDITION	

Fig. 6480 MAIN PIPING - QUICK FIT
CONDUITES DE PRINCIPAL

Serial No. ;

Key No.	Part No.	Description	Description	Q'ty	S.C	Serial No.	ICA	Replaceable part	
								Part No.	Q'ty
6480--	K1016147A	MAIN PIPING;QUICK FIT	TUYAUTERIE PRINCIPALE	-	D				
1	426-00287	VALVE;QUICK-FIT	VANNE	1					
2	K1013581	BRACKET	SUPPORT	1					
3	DS2232127	ADAPTER	ADAPTEUR	1					
4	2181-1126D14	ADAPTER	ADAPTEUR	1					
5	DS2304009	ELBOW	COUDE	1					
6	S8000111	O-RING	JOINT TORIQUE	5					
7	S8000181	O-RING	JOINT TORIQUE	1					
8	DS2011602	HOSE	TUYAU FLEXIBLE	1					
9	DS2093130	HOSE	TUYAU FLEXIBLE	1					
10	DS0025019	BOLT;SET	BOULON	2					
11	S0556466	BOLT	BOULON	2					
12	S5102503	WASHER;SPRING	RONDELLE ELASTIQUE	2					
13	S8030041	O-RING	JOINT TORIQUE	2					
14	2181-2419D1	ELBOW	COUDE	2					
15	2181-1702D4	ELBOW	COUDE	1					
31	DS2094122	HOSE	TUYAU FLEXIBLE	1					
32	DS2094122	HOSE	TUYAU FLEXIBLE	1					

DATE	APR. 02, 2007
1st EDITION	

Fig. 6490 ELECTRIC PARTS - QUICK CLAMP BRIDE RAPIDE

Serial No. ;

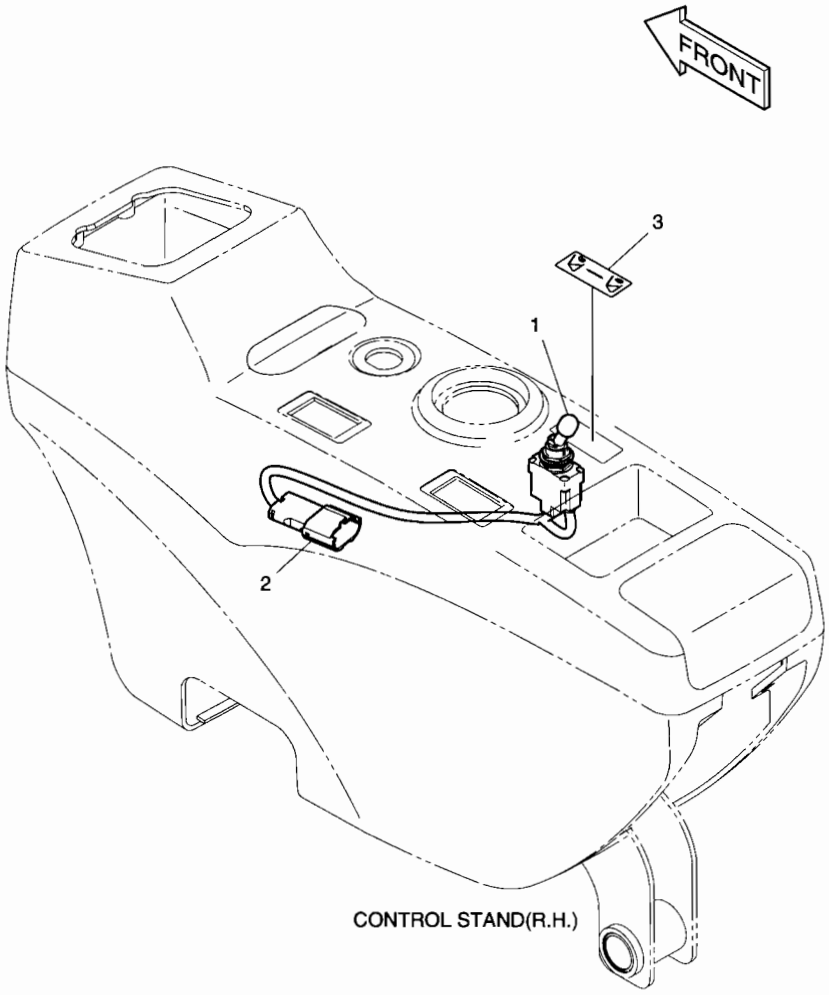

DATE	APR. 02, 2007
1st EDITION	

Fig. 6490 ELECTRIC PARTS - QUICK CLAMP BRIDE RAPIDE

Serial No. ;

Key No.	Part No.	Description	Description	Q'ty	S.C	Serial No.	ICA	Replaceable part	
								Part No.	Q'ty
6490--	500-00317	QUICK CLAMP	BRIDE RAPIDE	-	D				
1	549-00092	SWITCH;LOCKOUT TOGGLE	INTERRUPTEUR	1					
2	530-00432A	HARNESS;JOINT	FAISCEAU	1					
3	K1005776	PLATE;NAME	PLAQUE D'IDENTIFICATION	1					

DATE	APR. 02, 2007
1st EDITION	

Fig. 6500 BOOM PIPING - QUICK CLAMP(BOOM-4.6m) TUYAUTERIE DE PERCHE

Serial No. ;

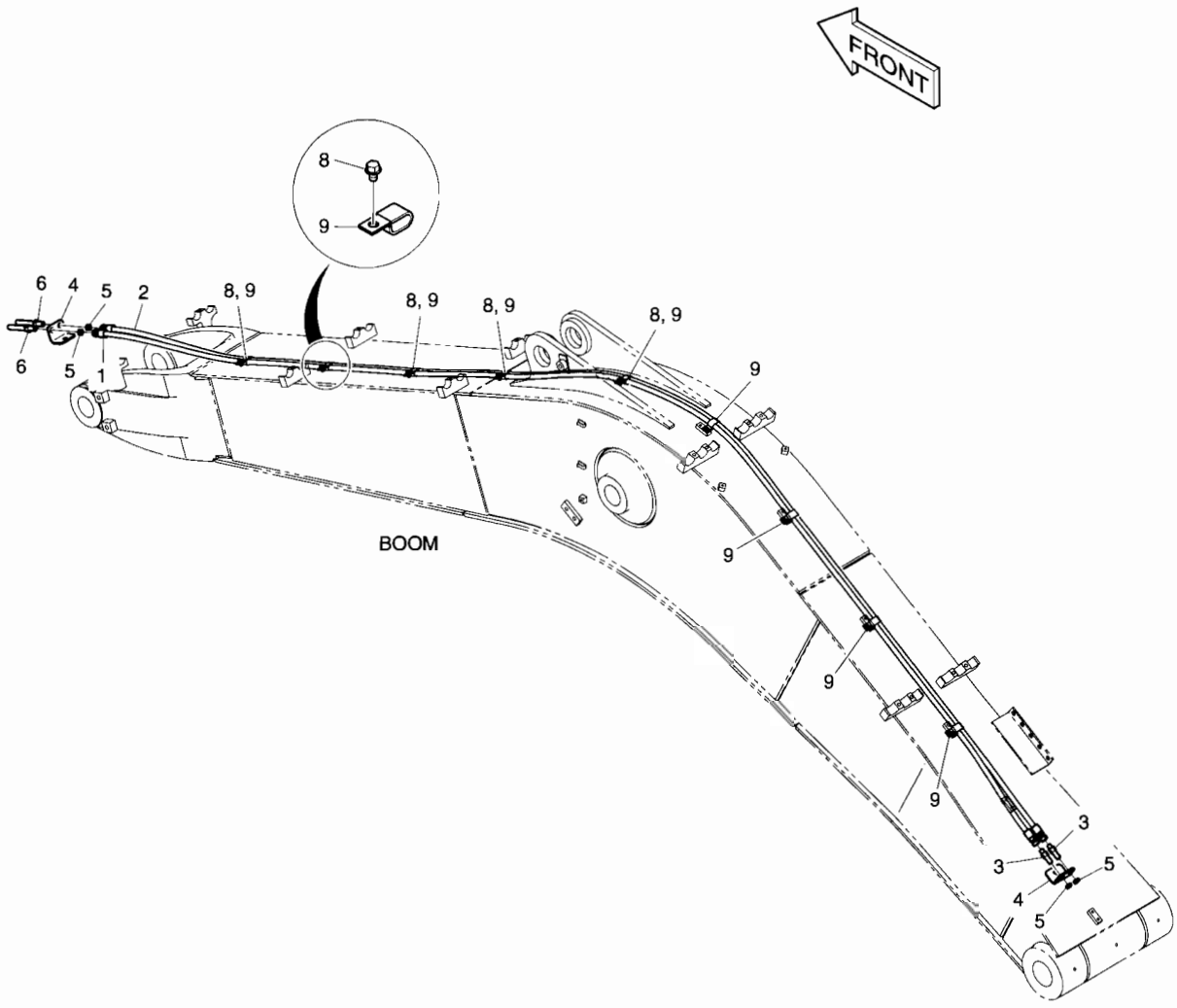

DATE	APR. 02, 2007
1st EDITION	

Fig. 6500 BOOM PIPING - QUICK CLAMP(BOOM-4.6m) TUYAUTERIE DE PERCHE

Serial No. ;

Key No.	Part No.	Description	Description	Q'ty	S.C	Serial No.	ICA	Replaceable part	
								Part No.	Q'ty
6500--	400-01392B	BOOM PIPING-QUICK CLAMP	CONDUITES DE FLECHE	-	D				
1	DS2053799	HOSE	TUYAU FLEXIBLE	1					
2	DS2053931	HOSE	TUYAU FLEXIBLE	1					
3	DS2410007	ADAPTER	ADAPTEUR	2					
4	K1006957	BRACKET	SUPPORT	2					
5	121-00010D7	NUT	ECROU	4					
6	K1000356	ADAPTER	ADAPTEUR	2					
8	K1001029	BOLT	BOULON	4					
9	DS2805009	CLIP	AGRAFE	9					

DATE	APR. 02, 2007
1st EDITION	

Fig. 6510 ARM PIPING - QUICK CLAMP(ARM 2.5m)
CONDUITES DE BALANCIER

Serial No. ;

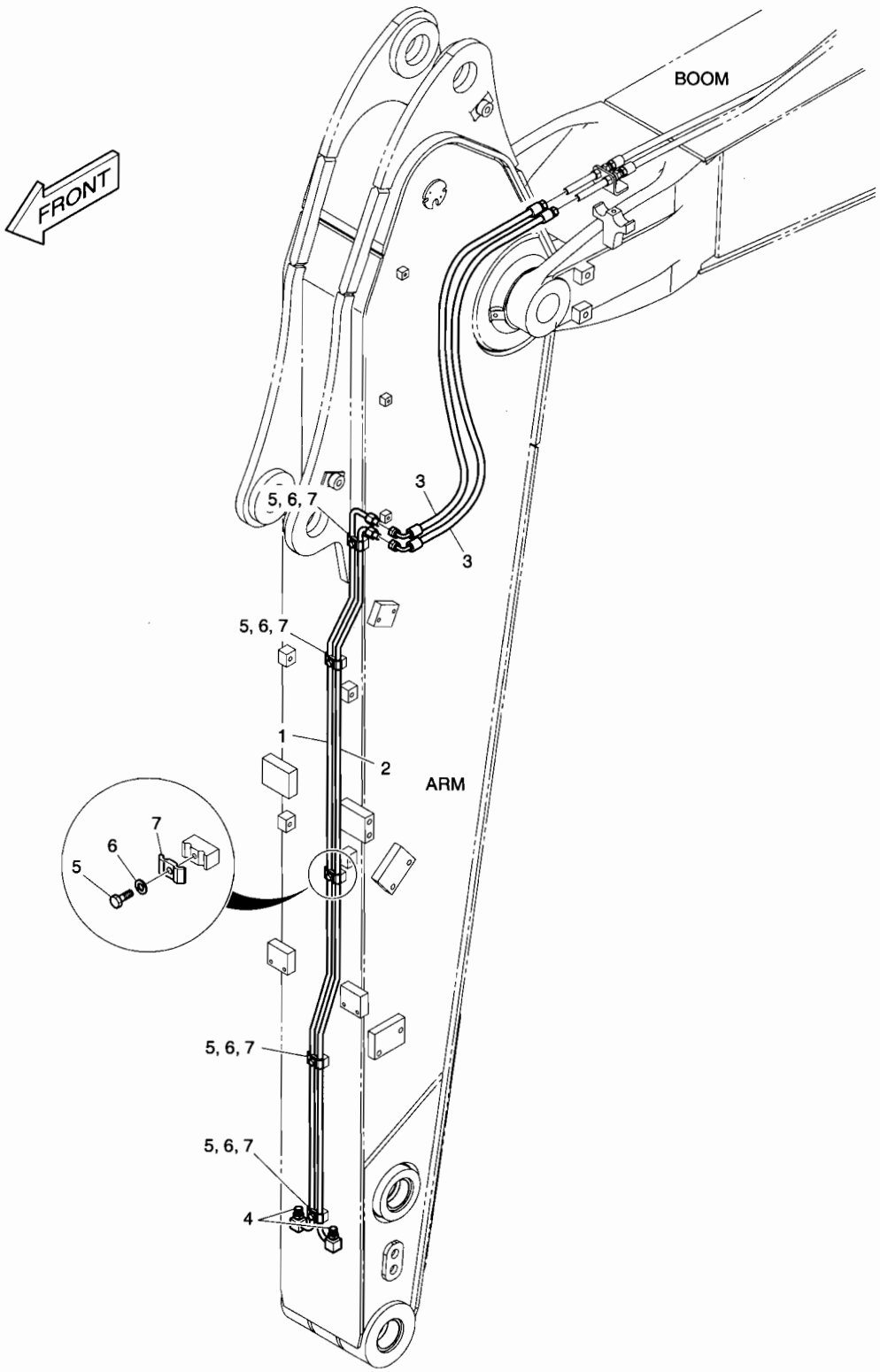

DATE	APR. 02, 2007
1st EDITION	

Fig. 6510 ARM PIPING - QUICK CLAMP(ARM 2.5m) CONDUITES DE BALANCIER

Serial No. ;

Key No.	Part No.	Description	Description	Q'ty	S.C	Serial No.	ICA	Replaceable part	
								Part No.	Q'ty
6510--	400-01393B	ARM PIPING-QUICK CLAMP	CONDUITES DE BALANCIER	-	D				
1	K1027308	PIPE	TUYAU	1					
2	K1027309	PIPE	TUYAU	1					
3	DS2055988	HOSE	TUYAU FLEXIBLE	2					
4	2181-2820D1	PLUG	BOUCHON	2					
5	S0508866	BOLT	BOULON	5					
6	S5102503	WASHER;SPRING	RONDELLE ELASTIQUE	5					
7	K1004011	CLAMP;PIPE	COLLIER	5					

DATE	APR. 02, 2007
1st EDITION	

Fig. 6520 MAIN PIPING - ROTATING
CONDUITES DE PRINCIPAL

Serial No. ;

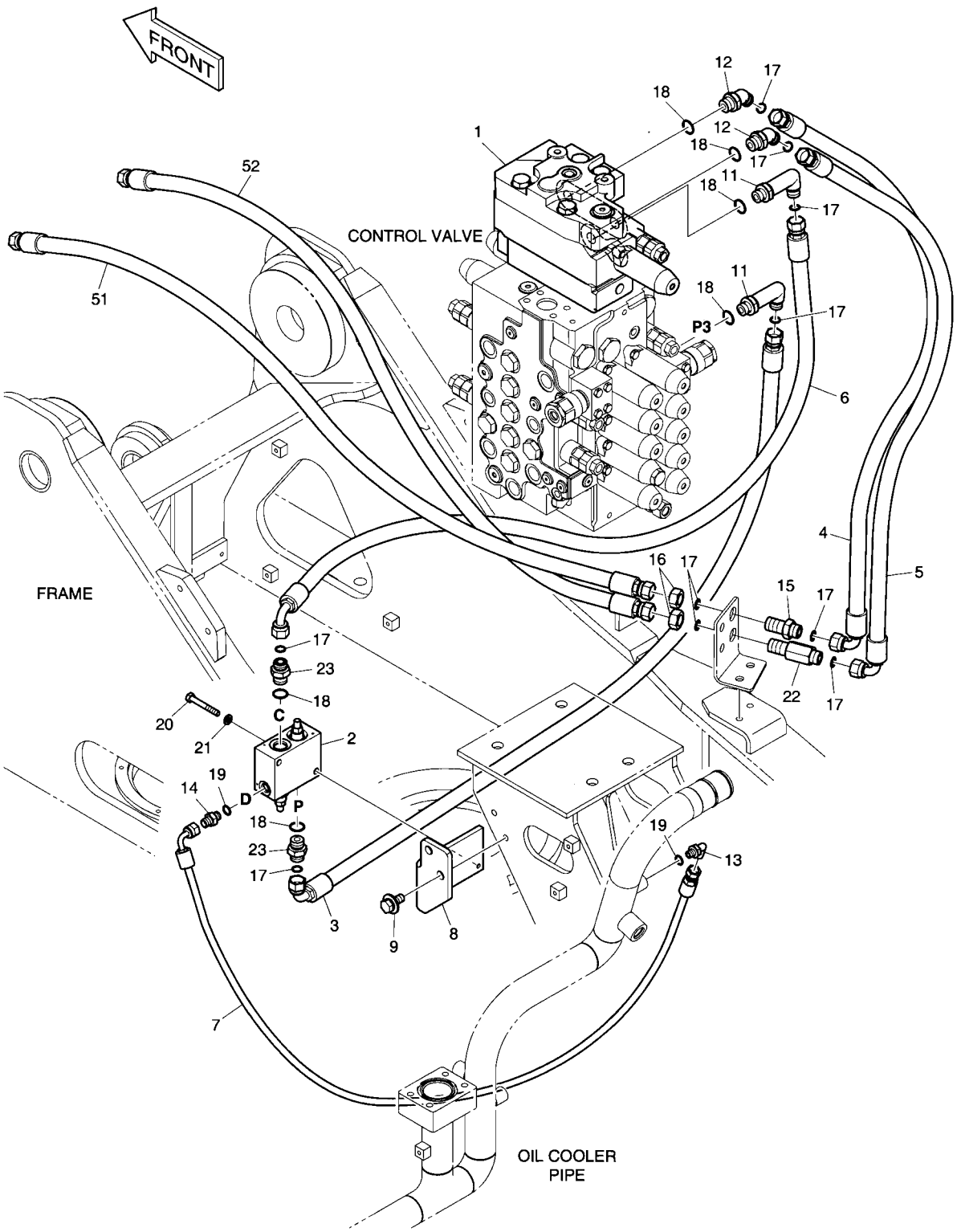

DATE	APR. 02, 2007
1st EDITION	

Fig. 6520 MAIN PIPING - ROTATING
CONDUITES DE PRINCIPAL

Serial No. ;

Key No.	Part No.	Description	Description	Q'ty	S.C	Serial No.	ICA	Replaceable part	
								Part No.	Q'ty
6520--	K1016146B	MAIN PIPING;PERO	TUYAUTERIE PRINCIPALE	-	D				
1	K1013538	VALVE;CONTROL(ROTATING)	VANNE	1					
2	426-00028	VALVE;PACKAGE	VANNE	1					
3	DS2013924	HOSE	TUYAU FLEXIBLE	1					
4	DS2013930	HOSE	TUYAU FLEXIBLE	1					
5	DS2013892	HOSE	TUYAU FLEXIBLE	1					
6	DS2013325	HOSE	TUYAU FLEXIBLE	1					
7	DS2093212	HOSE	TUYAU FLEXIBLE	1					
8	K1027378A	BRACKET	SUPPORT	1					
9	DS0025018	BOLT;SET	BOULON	2					
11	2181-2815D11	ELBOW	COUDE	2					
12	2181-2816D4	ELBOW	COUDE	2					
13	2181-1702D4	ELBOW	COUDE	1					
14	2181-1126D14	ADAPTER	ADAPTEUR	1					
15	181-00128D3	ADAPTER;CONNECTOR	ADAPTEUR	1					
16	121-00010D5	NUT	ECROU	2					
17	S8030081	O-RING	JOINT TORIQUE	10					
18	S8000181	O-RING	JOINT TORIQUE	6					
19	S8000111	O-RING	JOINT TORIQUE	2					
20	S0556566	BOLT	BOULON	2					
21	S5102503	WASHER;SPRING	RONDELLE ELASTIQUE	2					
22	DS2415014	ADAPTER	ADAPTEUR	1					
23	2181-4133D3	ADAPTER	ADAPTEUR	2					
51	DS2011603	HOSE	TUYAU FLEXIBLE	1					
52	DS2011292	HOSE	TUYAU FLEXIBLE	1					

DATE	APR. 02, 2007
1st EDITION	

Fig. 6530 PILOT PIPING(1) - ROTATING
CONDUITES DE PILOTE

Serial No. ;

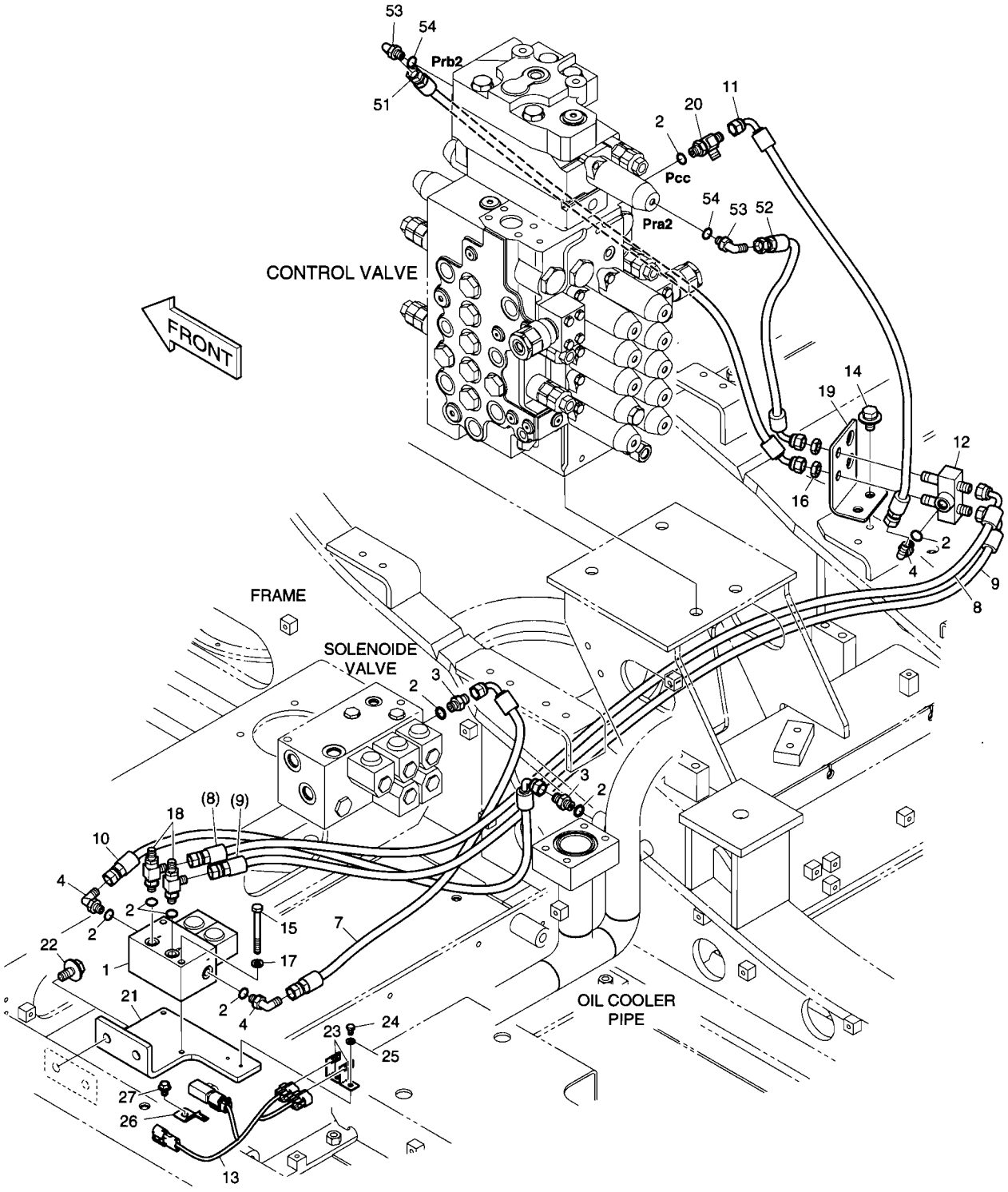

DATE	APR. 02, 2007
1st EDITION	

Fig. 6530 PILOT PIPING(1) - ROTATING
CONDUITES DE PILOTE

Serial No. ;

Key No.	Part No.	Description	Description	Q'ty	S.C	Serial No.	ICA	Replaceable part	
								Part No.	Q'ty
6530--	K1017478B	PILOT PIPING;PERO	TUYAUTERIE PILOTE	-	D				
1	426-00247A	VALVE;SOLENOID	SOUPAPE A SOLENOIDE	1					
2	S8000111	O-RING	JOINT TORIQUE	8					
3	2181-1126D14	ADAPTER	ADAPTEUR	2					
4	2181-1702D4	ELBOW	COUDE	3					
7	DS2093080	HOSE	TUYAU FLEXIBLE	1					
8	DS2093420	HOSE	TUYAU FLEXIBLE	1					
9	DS2093101	HOSE	TUYAU FLEXIBLE	1					
10	DS2093012	HOSE	TUYAU FLEXIBLE	1					
11	DS2093261	HOSE	TUYAU FLEXIBLE	1					
12	420-00476	VALVE;SHUTTLE	VANNE	1					
13	K1000817	HARNESS;JOINT	HARNAIS	1					
14	DS0025019	BOLT;SET	BOULON	2					
15	S0556866	BOLT	BOULON	2					
16	121-00010D7	NUT	ECROU	2					
17	S5102503	WASHER;SPRING	RONDELLE ELASTIQUE	2					
18	181-00779	TEE;SHUTTLE	TE	2					
19	K1014174	BRACKET	SUPPORT	1					
20	2181-1951D1	TEE	TE	1					
21	K1027072	BRACKET	SUPPORT	1					
22	DS0025018	BOLT;SET	BOULON	2					
23	2195-3500	BRACKET;HOUSING	SUPPORT	2					
24	S0504366	BOLT	BOULON	2					
25	S5102303	WASHER;SPRING	RONDELLE ELASTIQUE	2					
26	2197-1661	BRACKET;HOUSING	SUPPORT	1					
27	K1001029	BOLT	BOULON	1					
51	DS2092023	HOSE	TUYAU FLEXIBLE	1					
52	DS2093115	HOSE	TUYAU FLEXIBLE	1					
53	2181-1702D4	ELBOW	COUDE	2					
54	S8000111	O-RING	JOINT TORIQUE	2					

Fig. 6540 PILOT PIPING(2) - ROTATING OR ARTI CONDUITES DE PILOTE

Serial No. ;

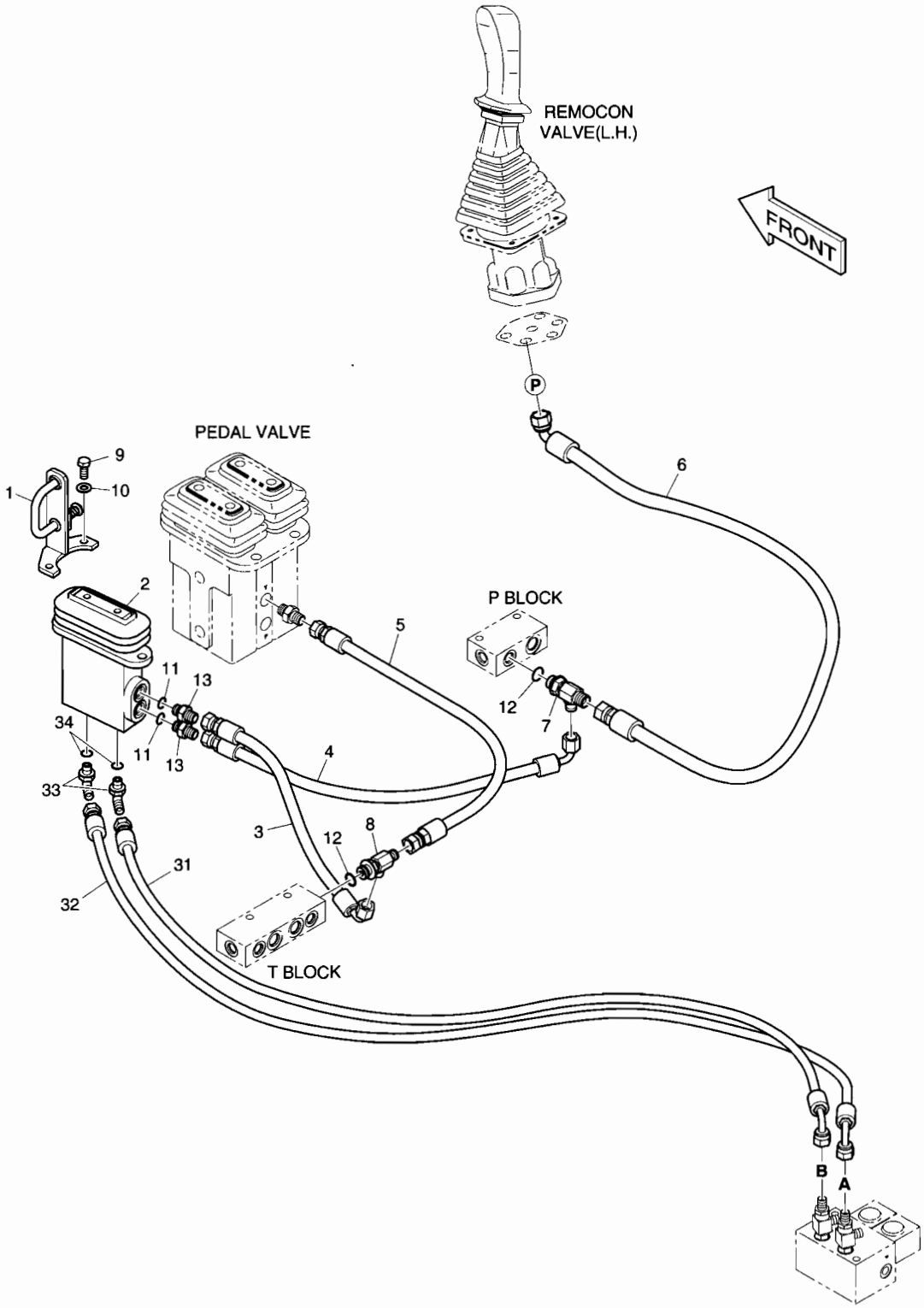

DATE	APR. 02, 2007
1st EDITION	

Fig. 6540 PILOT PIPING(2) - ROTATING OR ARTI CONDUITES DE PILOTE

Serial No. ;

Key No.	Part No.	Description	Description	Q'ty	S.C	Serial No.	ICA	Replaceable part	
								Part No.	Q'ty
6540--	K1024564A	PILOT PIPING-ROTATING	CIRCUIT DE PILOTE	-	D				
1	K1001873A	LOCK;PEDAL(L.H)	LOCK;PEDAL	1					
2	K1017382	VALVE;PEDAL	VANNE	1					
3	DS2093130	HOSE	TUYAU FLEXIBLE	1					
4	DS2093202	HOSE	TUYAU FLEXIBLE	1					
5	DS2094006	HOSE	TUYAU FLEXIBLE	1					
6	DS2095003	HOSE	TUYAU FLEXIBLE	1					
7	2181-1951D6	TEE	TE	1					
8	2181-1951D7	TEE	TE	1					
9	S0508866	BOLT	BOULON A 6 PANS	2					
10	S5102503	WASHER	CALE	2					
11	S8000111	O-RING	JOINT TORIQUE	2					
12	S8000141	O-RING	JOINT TORIQUE	2					
13	2181-1126D14	ADAPTER	ADAPTEUR	2					
31	DS2093114	HOSE	TUYAU FLEXIBLE	1					
32	DS2093394	HOSE	TUYAU FLEXIBLE	1					
33	2181-1702D4	ELBOW	COUDE	2					
34	S8000111	O-RING	JOINT TORIQUE	2					

Fig. 6550 PEDAL - ROTATING OR ARTI PEDALE

Serial No. ;

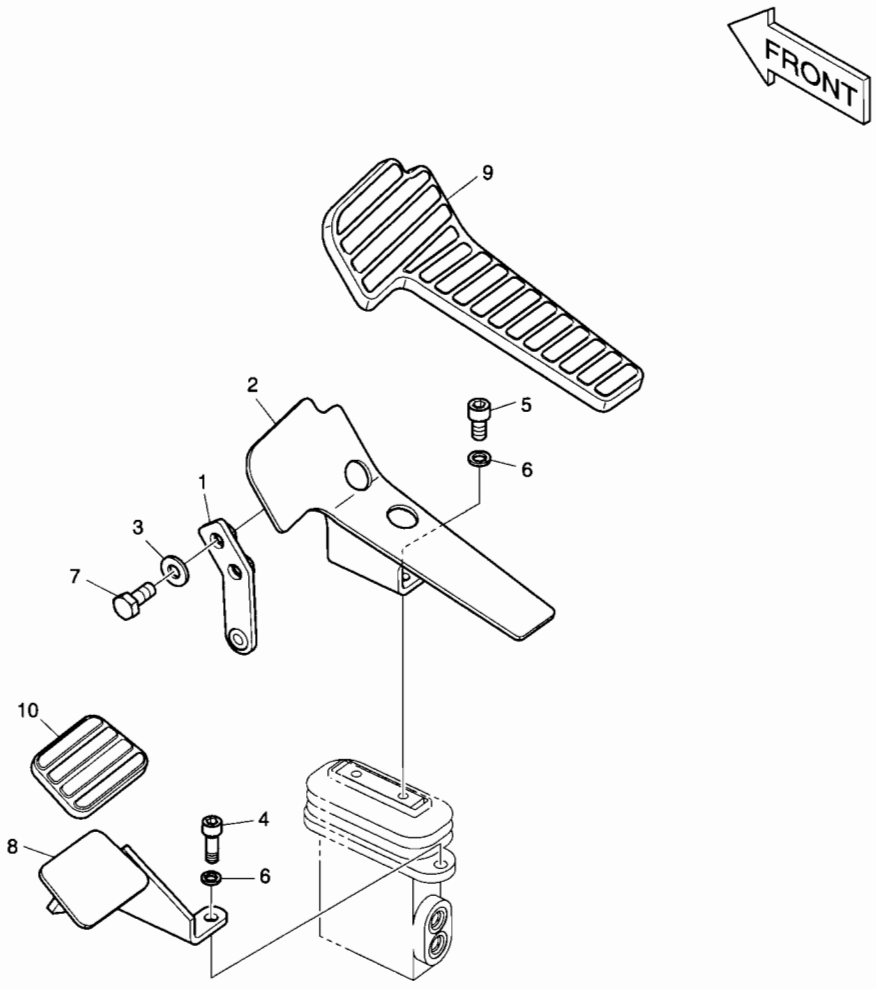

PEDAL VALVE

DATE	APR. 02, 2007
1st EDITION	

Fig. 6550 PEDAL - ROTATING OR ARTI PEDALE

Serial No. ;

Key No.	Part No.	Description	Description	Q'ty	S.C	Serial No.	ICA	Replaceable part	
								Part No.	Q'ty
6550--	K1024568	SINGLE PEDAL	PEDALE	-	D				
1	K1001871B	PLATE	PLAQUE	1					
2	195-01684A	BRACKET;PEDAL(L)	SUPPORT	1					
3	S5102603	WASHER;SPRING	RONDELLE ELASTIQUE	2					
4	S2212266	BOLT;SOCKET M10X1.5X30	BOULON A 6 PANS CREUX	2					
5	S2211866	BOLT;SOCKET	BOULON	2					
6	S5110603	WASHER	CALE	4					
7	S0512066	BOLT	BOULON A 6 PANS	2					
8	K1003948A	FOOT REST	REPOS DE PIED	1					
9	161-00382	RUBBER;PEDAL	CAOUTCHOUC	1					
10	K1006656	RUBBER;PEDAL	CAOUTCHOUC	1					

DATE	APR. 02, 2007
1st EDITION	

Fig. 6560 FLOOR MAT - TWO WAY & ROTATING PLANCHER

Serial No. ;

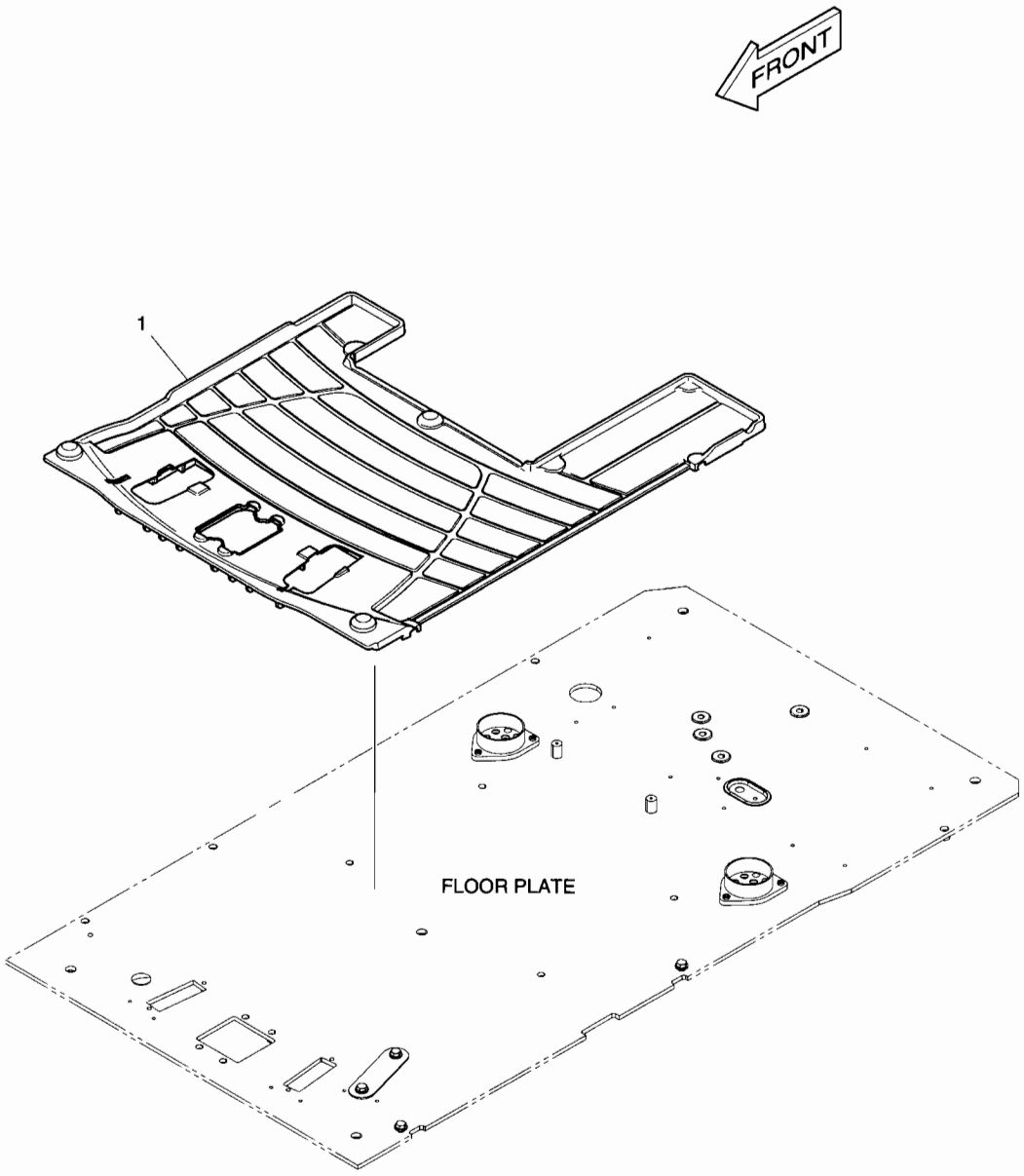

DATE	APR. 02, 2007
1st EDITION	

Fig. 6560 FLOOR MAT - TWO WAY & ROTATING PLANCHER

Serial No. ;

Key No.	Part No.	Description	Description	Q'ty	S.C	Serial No.	ICA	Replaceable part	
								Part No.	Q'ty
6560-1	K1007094A	MAT;FLOOR	PLAQUE	1					

DATE	APR. 02, 2007
1st EDITION	

Fig. 6570 BOOM PIPING - BOOM 4.6m(ROTATING)
TUYAUTERIE DE PERCHE

Serial No. ;

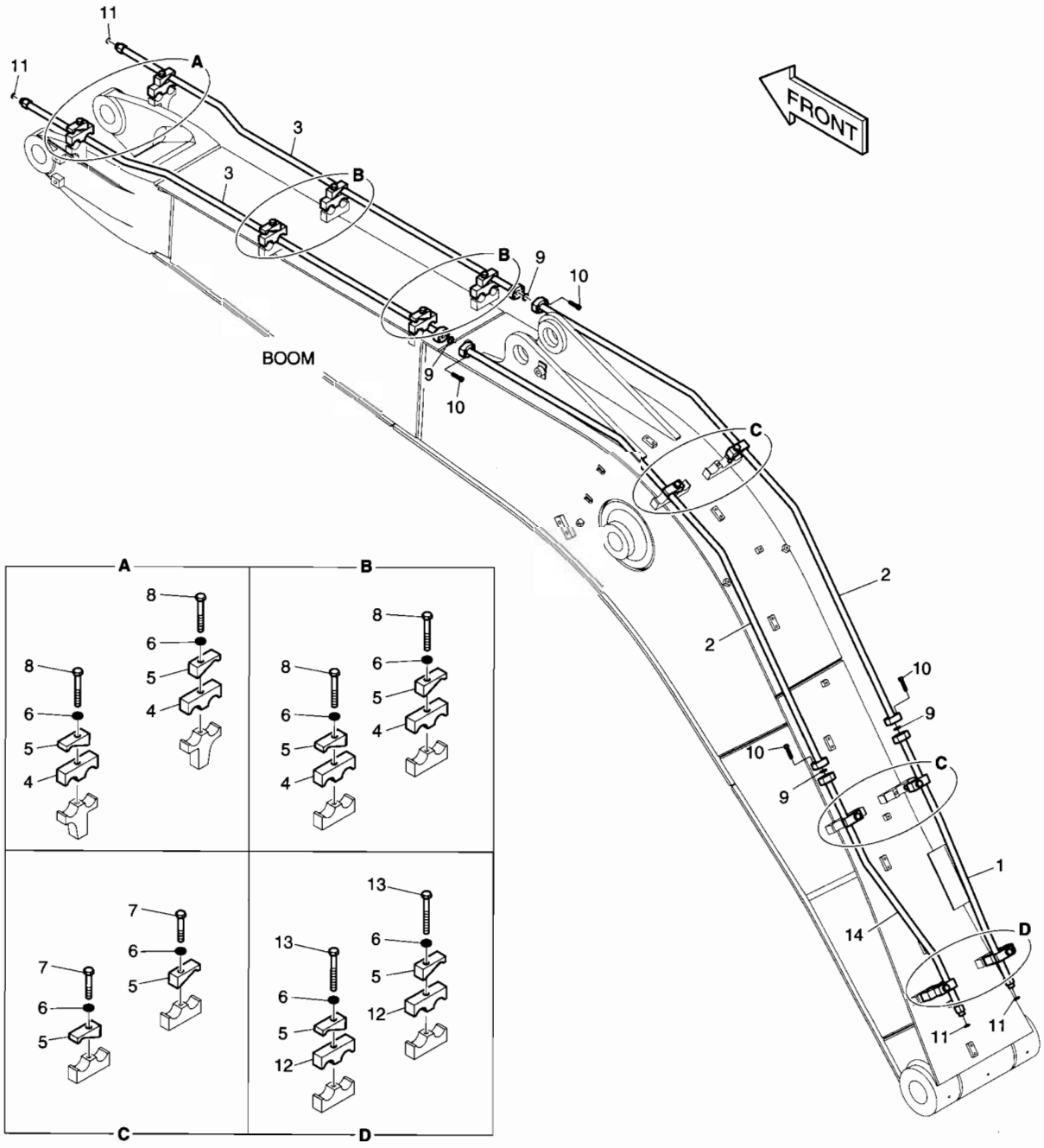

DATE	APR. 02, 2007
1st EDITION	

Fig. 6570 BOOM PIPING - BOOM 4.6m(ROTATING) TUYAUTERIE DE PERCHE

Serial No. ;

Key No.	Part No.	Description	Description	Q'ty	S.C	Serial No.	ICA	Replaceable part	
								Part No.	Q'ty
6570--	400-01365	BOOM PIPING(ROTATION)	CONDUITES DE FLECHE	-	D				
1	140-01533C	PIPE	TUYAU	1					
2	140-01616	PIPE	TUYAU	2					
3	140-01535	PIPE	TUYAU	2					
4	K1004348	CLAMP;PIPE	COLLIER	8					
5	K1004349	CLAMP;PIPE	COLLIER	14					
6	S5102703	WASHER;SPRING(M12)	RONDELLE ELASTIQUE	10					
7	S0561366	BOLT	BOULON	4					
8	S0561566	BOLT	BOULON	4					
9	2180-1026D30	O-RING	JOINT TORIQUE	4					
10	S2209466	BOLT;SOCKET	BOULON A 6 PANS CREUX	16					
11	S8030081	O-RING	JOINT TORIQUE	4					
12	K1000845A	CLAMP;PIPE	COLLIER	2					
13	S0561766	BOLT	BOULON	2					
14	K1000844	PIPE	TUYAU	1					

DATE	APR. 02, 2007
1st EDITION	

Fig. 6580 ARM PIPING - ARM 2.5m(ROTATING)
CONDUITES DE BALANCIER

Serial No. ;

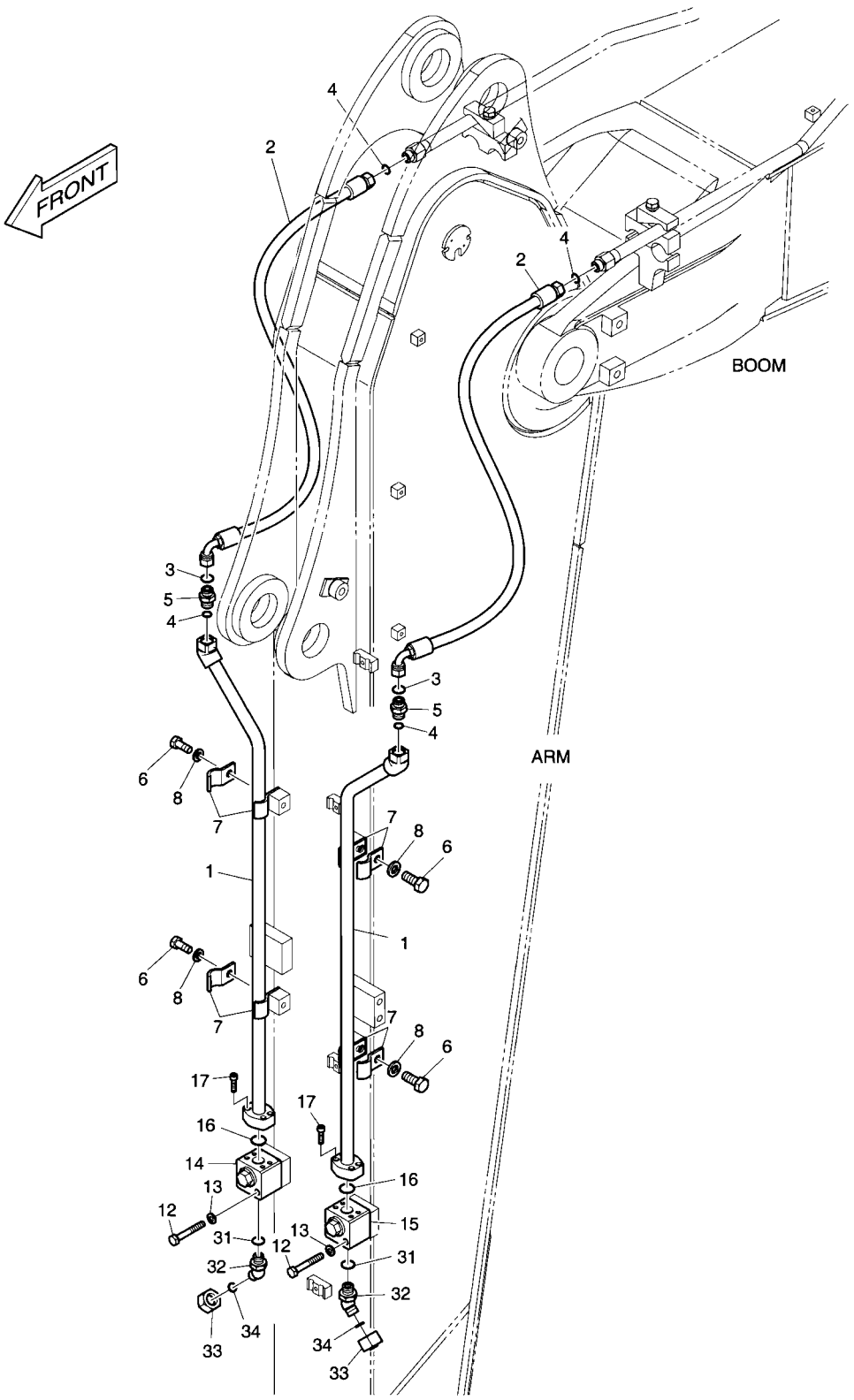

DATE	APR. 02, 2007
1st EDITION	

Fig. 6580 ARM PIPING - ARM 2.5m(ROTATING) CONDUITES DE BALANCIER

Serial No. ;

Key No.	Part No.	Description	Description	Q'ty	S.C	Serial No.	ICA	Replaceable part	
								Part No.	Q'ty
6580--	K1036641	ARM PIPING;2.5m ARM	CONDUITES DE BALANCIER	-	D				
1	140-01555H	PIPE	TUYAU	2					
2	DS2013518	HOSE	TUYAU FLEXIBLE	2					
3	S8000181	O-RING	JOINT TORIQUE	4					
4	S8030081	O-RING	JOINT TORIQUE	2					
5	2181-4133D3	ADAPTER	ADAPTEUR	2					
6	S0515266	BOLT	BOULON	4					
7	124-00299A	CLAMP;PIPE	COLLIER	8					
8	S5102703	WASHER;SPRING(M12)	RONDELLE ELASTIQUE	4					
12	S0558966	BOLT	BOULON	4					
13	S5102603	WASHER;SPRING(M10)	RONDELLE ELASTIQUE	4					
14	K1006227	VALVE;SWITCH(R.H)	VANNE	1					
15	K1006228	VALVE;SWITCH(L.H)	VANNE	1					
16	2180-1026D30	O-RING	JOINT TORIQUE	2					
17	S2209266	BOLT;SOCKET	BOULON A 6 PANS CREUX	8					
31	S8000181	O-RING	JOINT TORIQUE	2					
32	2181-2816D4	ELBOW	COUDE	2					
33	2181-2817D4	CAP	CHAPEAU	2					
34	S8030081	O-RING	JOINT TORIQUE	2					

DATE	APR. 02, 2007
1st EDITION	

Fig. 6590 NOISE KIT - EUROPE
KIT DE BRUIT

Serial No. ;

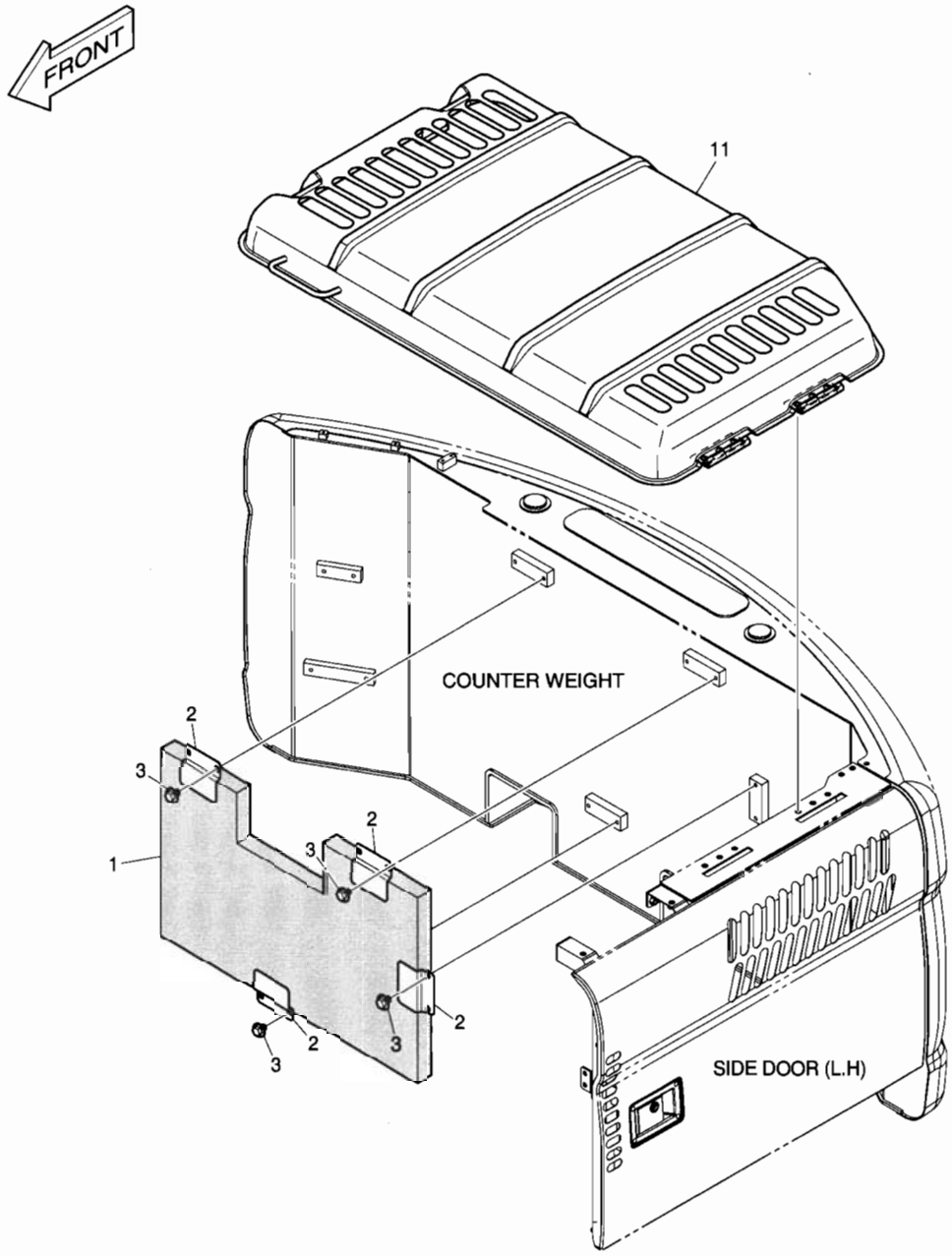

DATE	APR. 02, 2007
1st EDITION	

Fig. 6590 NOISE KIT - EUROPE KIT DE BRUIT

Serial No. ;

Key No.	Part No.	Description	Description	Q'ty	S.C	Serial No.	ICA	Replaceable part	
								Part No.	Q'ty
6590--	K1033066A	ACOUSTIC FOAM;LOW NOISE	KIT DE BRUIT	-	D				
1	K1018983A	FOAM	EPONGE	1					
2	K1004119	BRACKET	SUPPORT	4					
3	DS0025022	BOLT;SET	BOULON A 6 PANS	8					
11	K1026657	COVER;ENGINE	COUVERCLE	1					

DATE	APR. 02, 2007
1st EDITION	

Fig. 6600 LOCK VALVE PIPING - BOOM
CONDUITES DE VERROU VANNE

Serial No. ;

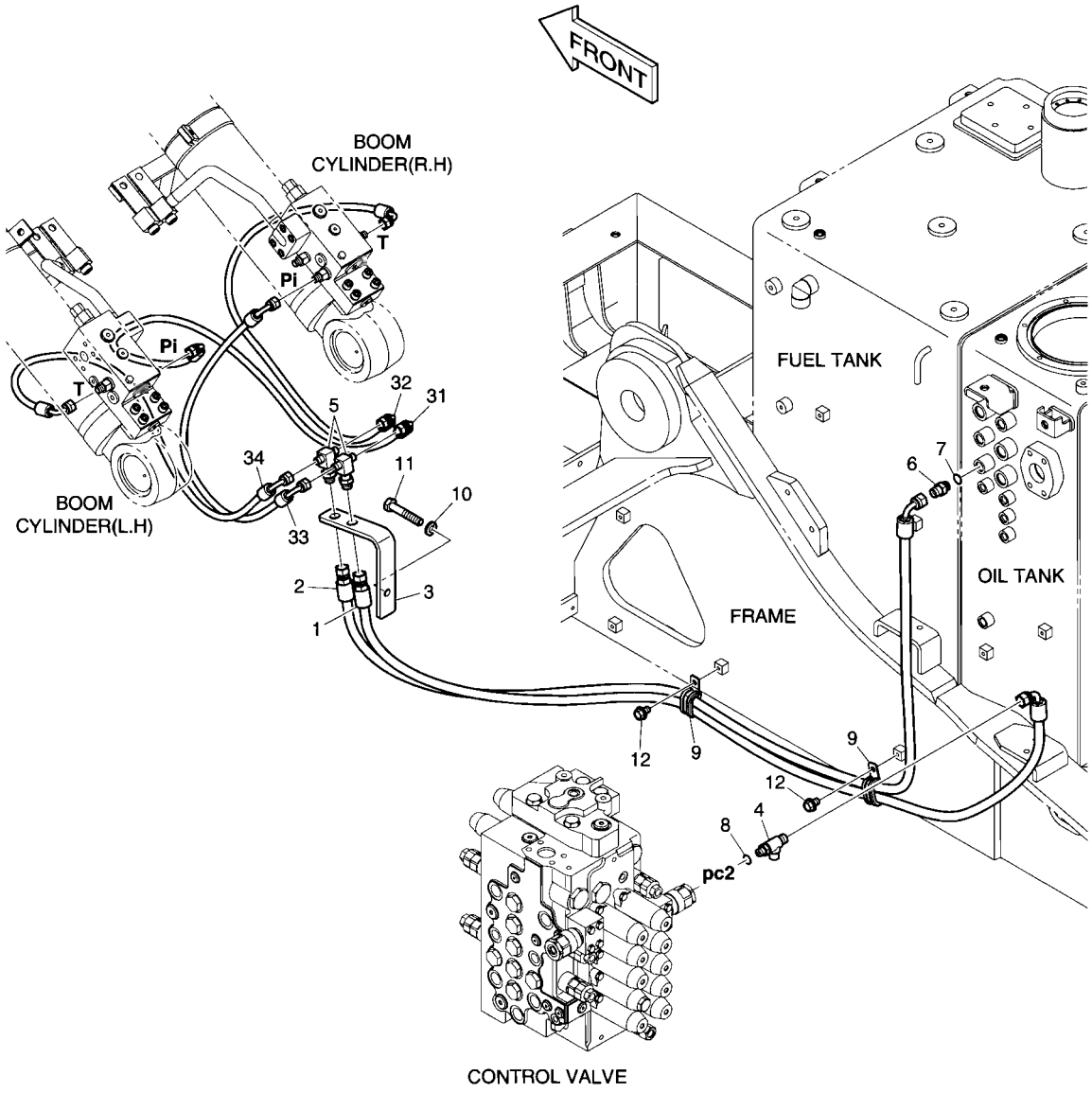

DATE	APR. 02, 2007
1st EDITION	

Fig. 6600 LOCK VALVE PIPING - BOOM
CONDUITES DE VERROU VANNE

Serial No. ;

Key No.	Part No.	Description	Description	Q'ty	S.C	Serial No.	ICA	Replaceable part	
								Part No.	Q'ty
6600--	K1017471A	LOCK VALVE PIPING;BOOM	FERMEZ LA TUYAUTERIE A	-	D				
1	DS2093042	HOSE	TUYAU FLEXIBLE	1					
2	DS2093136	HOSE	TUYAU FLEXIBLE	1					
3	K1024204	BRACKET	SUPPORT	1					
4	2181-2375D7	TEE	TE	1					
5	181-00008	TEE	TE	2					
6	2181-1126D7	ADAPTER	ADAPTEUR	1					
7	S8000141	O-RING	JOINT TORIQUE	1					
8	S8000111	O-RING	JOINT TORIQUE	1					
9	124-00209D1	CLIP	AGRAFE	2					
10	S5102703	WASHER;SPRING	RONDELLE ELASTIQUE	1					
11	S0561166	BOLT	BOULON A 6 PANS	1					
12	120-00276	BOLT	BOULON A 6 PANS	2					
31	DS2091082	HOSE	TUYAU FLEXIBLE	1					
32	DS2091083	HOSE	TUYAU FLEXIBLE	1					
33	DS2091082	HOSE	TUYAU FLEXIBLE	1					
34	DS2091083	HOSE	TUYAU FLEXIBLE	1					

DATE	APR. 02, 2007
1st EDITION	

Fig. 6610 BOOM PIPING - LOCK VALVE
TUYAUTERIE DE PERCHE

Serial No. ;

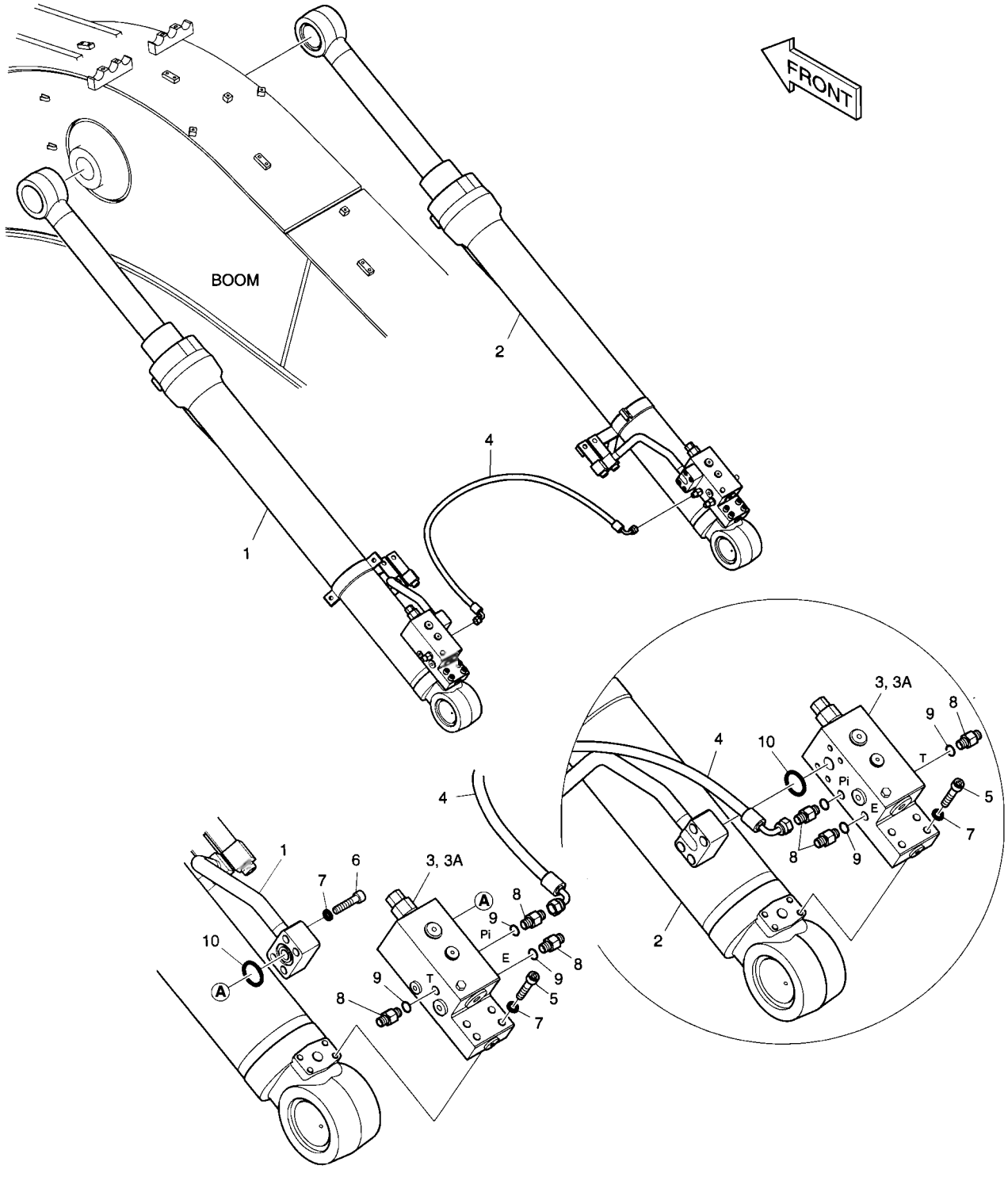

DATE	APR. 02, 2007
1st EDITION	

Fig. 6610 BOOM PIPING - LOCK VALVE TUYAUTERIE DE PERCHE

Serial No. ;

Key No.	Part No.	Description	Description	Q'ty	S.C	Serial No.	ICA	Replaceable part	
								Part No.	Q'ty
6610--	K1018954B	BOOM PIPING;LOCK VALVE	CONDUITES DE FLECHE	-	D				
1	K1026247A	CYLINDER;BOOM(L.H);LOCK V/V	CYLINDRE DE PERCHE	1					
2	K1026248A	CYLINDER;BOOM(R.H);LOCK V/V	CYLINDRE DE PERCHE	1					
3	420-00003A	VALVE;LOCK	VANNE	2					
3A	K9000998	. SEAL KIT	. KIT D'ETANCHEITE	1					
4	DS2059383	HOSE	TUYAU FLEXIBLE	1					
5	S2212666	BOLT;SOCKET M10X1.5X50	BOULON A 6 PANS CREUX	8					
6	S2212566	BOLT;SOCKET M10X1.5X45	BOULON A 6 PANS CREUX	8					
7	S5110601	WASHER;SPRING	RONDELLE ELASTIQUE	16					
8	2181-1126D102	ADAPTER	ADAPTEUR	6					
9	S8000111	O-RING	JOINT TORIQUE	6					
10	S8000281	O-RING	JOINT TORIQUE	2					

Fig. 6620 PILOT PIPING - ARM LOCK V/V
CONDUITES DE PILOTE

Serial No. ;

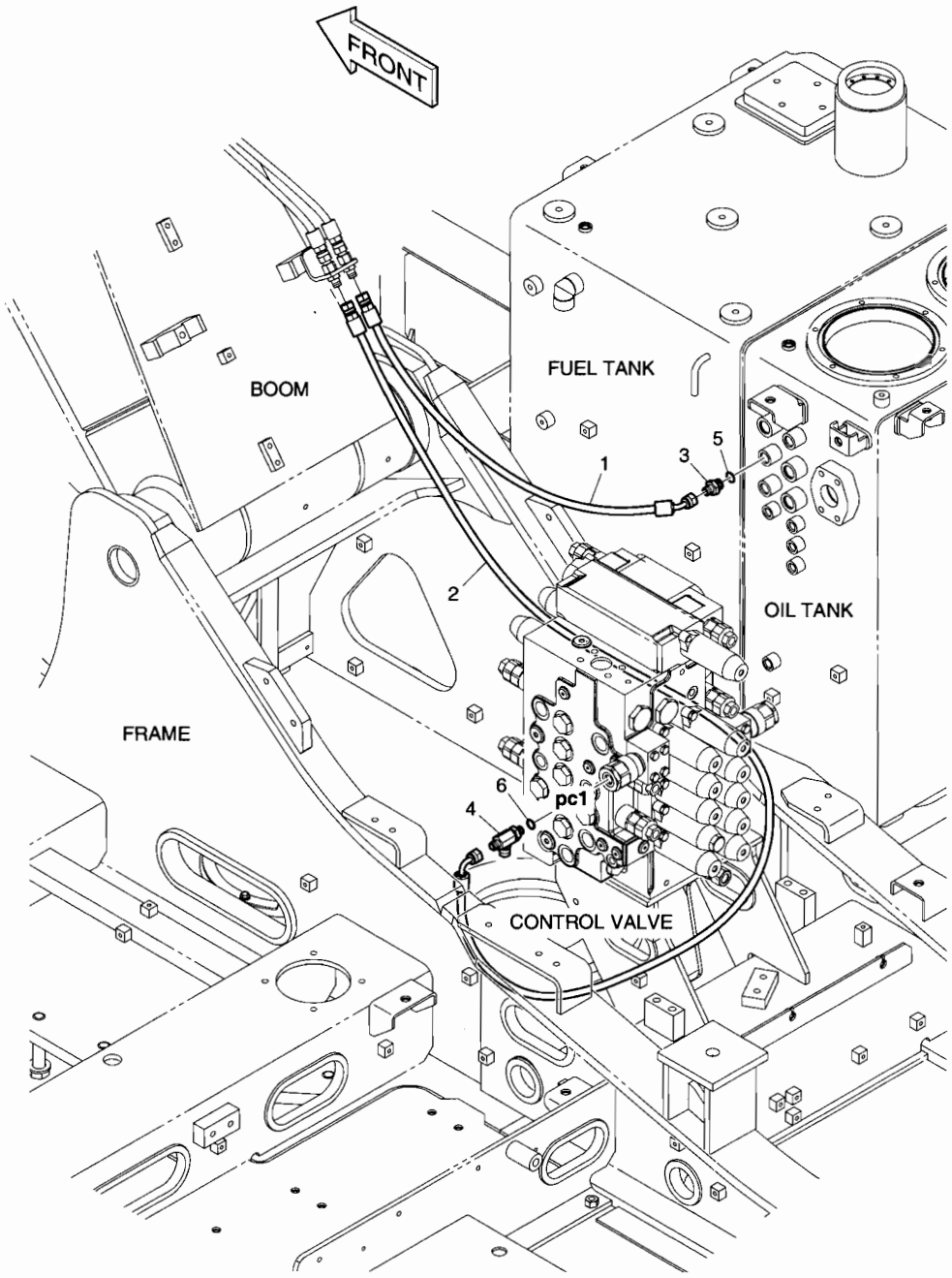

DATE	APR. 02, 2007
1st EDITION	

Fig. 6620 PILOT PIPING - ARM LOCK V/V
CONDUITES DE PILOTE

Serial No. ;

Key No.	Part No.	Description	Description	Q'ty	S.C	Serial No.	ICA	Replaceable part	
								Part No.	Q'ty
6620--	K1017470A	LOCK VALVE PIPING;ARM	FERMEZ LA TUYAUTERIE A	-	D				
1	DS2092095	HOSE	TUYAU FLEXIBLE	1					
2	DS2093144	HOSE	TUYAU FLEXIBLE	1					
3	2181-1126D36	ADAPTER	ADAPTEUR	1					
4	2181-1951D14	TEE	TE	1					
5	S8000141	O-RING	JOINT TORIQUE	1					
6	S8000111	O-RING	JOINT TORIQUE	1					

DATE	APR. 02, 2007
1st EDITION	

Fig. 6630 ARM PIPING - LOCK VALVE
CONDUITES DE BALANCIER

Serial No. ;

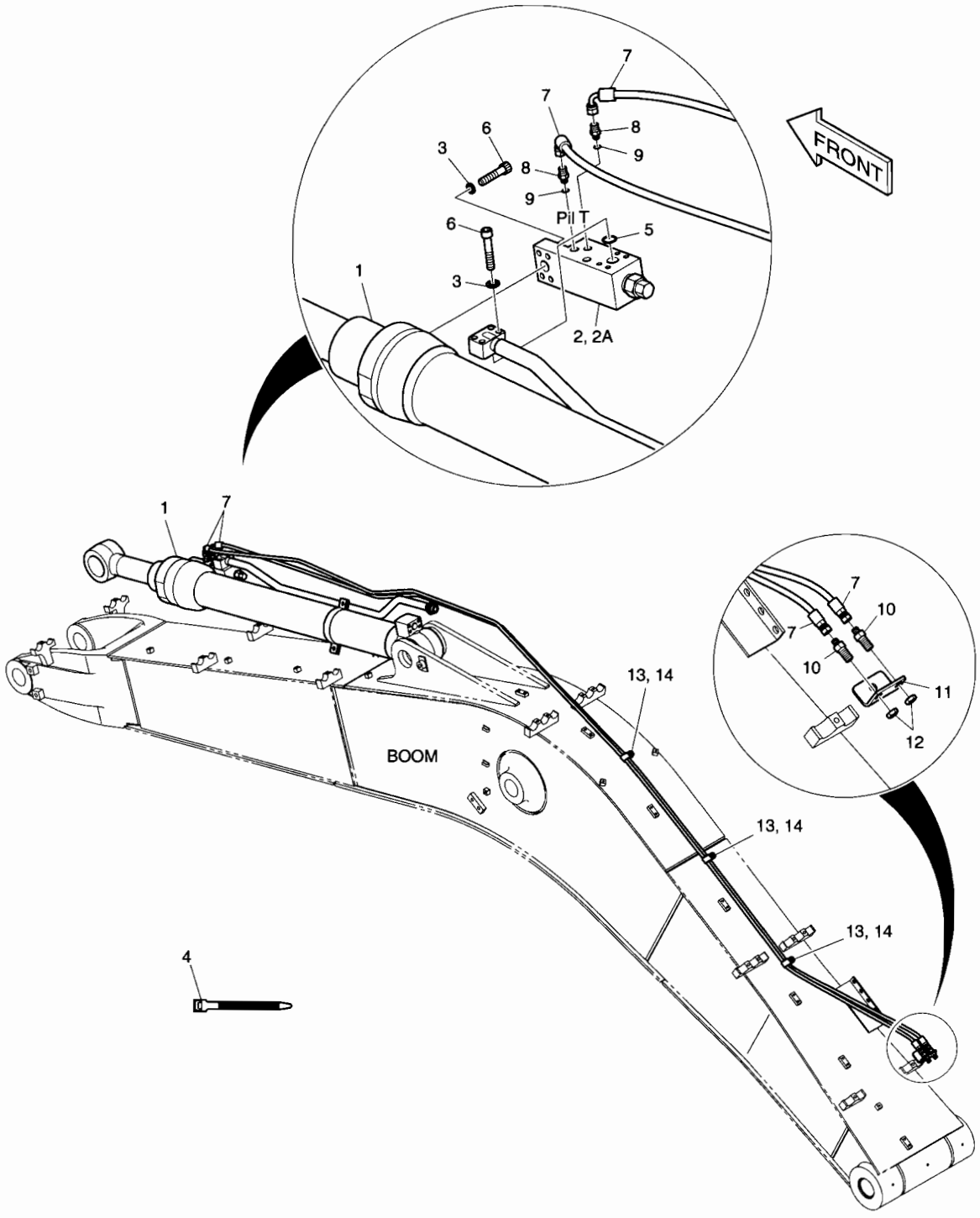

DATE	APR. 02, 2007
1st EDITION	

Fig. 6630 ARM PIPING - LOCK VALVE
CONDUITES DE BALANCIER

Serial No. ;

Key No.	Part No.	Description	Description	Q'ty	S.C	Serial No.	ICA	Replaceable part	
								Part No.	Q'ty
6630--	K1018955A	BOOM PIPING;ARM LOCK VALVE	CONDUITES DE FLECHE	-	D				
1	K1018944	ARM CYLINDERARM;LOCK V/V	VERIN DE BALANCIER	1					
2	420-00003A	VALVE;LOCK	VANNE	1					
2A	K9000998	. SEAL KIT	. KIT D'ETANCHEITE	1					
3	S5110601	WASHER;SPRING	RONDELLE ELASTIQUE	8					
4	2124-1084D2	CLIP;BAND	AGRAFE	15					
5	S8000281	O-RING	JOINT TORIQUE	1					
6	S2212666	BOLT;SOCKET M10X1.5X50	BOULON A 6 PANS CREUX	8					
7	DS2055981	HOSE	TUYAU FLEXIBLE	2					
8	2181-1126D14	ADAPTER	ADAPTEUR	2					
9	S8000111	O-RING	JOINT TORIQUE	2					
10	DS2410007	ADAPTER	ADAPTEUR	2					
11	K1006957	BRACKET	SUPPORT	1					
12	121-00010D7	NUT	ECROU	2					
13	124-00199D5	CLIP	AGRAFE	3					
14	K1001029	BOLT	BOULON	3					

DATE	APR. 02, 2007
1st EDITION	

Fig. 6640 ARM - 2.1m BALANCIER

Serial No. ;

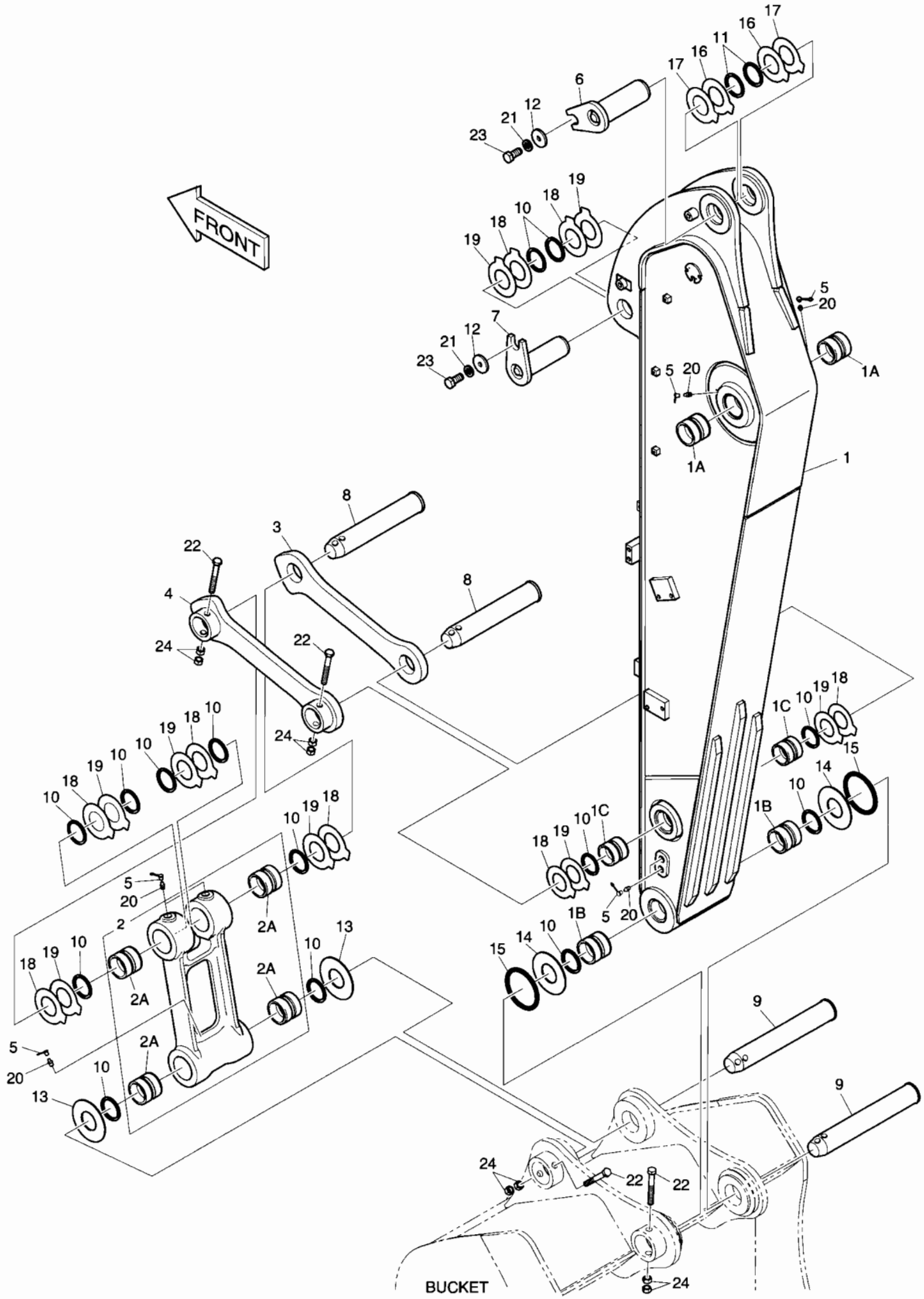

DATE	APR. 02, 2007
1st EDITION	

Fig. 6640 ARM - 2.1m BALANCIER

Serial No. ;

Key No.	Part No.	Description	Description	Q'ty	S.C	Serial No.	ICA	Replaceable part	
								Part No.	Q'ty
6640--	701-00544E	ARM ASS'Y	ENSEMBLE DE BRAS	-	D				
1	701-00545E	ARM SUB ASS'Y-2.1m	BALANCIER	1					
1A	110-00241	. BUSHING	. DOUILLE	2					
1B	110-00242	. BUSHING	. DOUILLE	2					
1C	110-00243	. BUSHING	. DOUILLE	2					
2	155-00061	LINK;PUSH ASS'Y	ARTICULATION	1					
2A	110-00245	. BUSHING	. DOUILLE	4					
3	2155-1306B	LINK;GUIDE(R.H)	ARTICULATION	1					
4	2155-1307B	LINK;GUIDE(L.H)	ARTICULATION	1					
5	160-00020	CAP;GREASE NIPPLE	CHAPEAU	7					
6	2123-2209C	PIN	GOUPILLE	1					
7	2123-2225C	PIN	GOUPILLE	1					
8	K1007038	PIN	GOUPILLE	2					
9	2123-2212C	PIN	GOUPILLE	2					
10	2180-1106BD3	SEAL;DUST	JOINT	14					
11	2180-1106BD4	SEAL;DUST	JOINT	4					
12	2116-1060D6	STOPPER	ARRET	2					
13	2114-1995B	SPACER	DOUILLE D'ECARTEMENT	2					
14	2114-1994B	SPACER	DOUILLE D'ECARTEMENT	2					
15	180-00077D3	O-RING	JOINT TORIQUE	2					
16	DS7752006	SHIM	CALE	2					
17	DS7752007	SHIM	CALE	2					
18	DS7752001	SHIM	CALE	8					
19	DS7752002	SHIM	CALE	8					
20	S6710041	NIPPLE;GREASE	MAMELON	7					
21	S5102906	WASHER;SPRING	RONDELLE ELASTIQUE	2					
22	S0566766	BOLT	BOULON	4					
23	S0521366	BOLT	BOULON	2					
24	S4012933	NUT	ECROU	8					

Fig. 6650 ARM PIPING - ARM 2.1m
CONDUITES DE BALANCIER

Serial No. ;

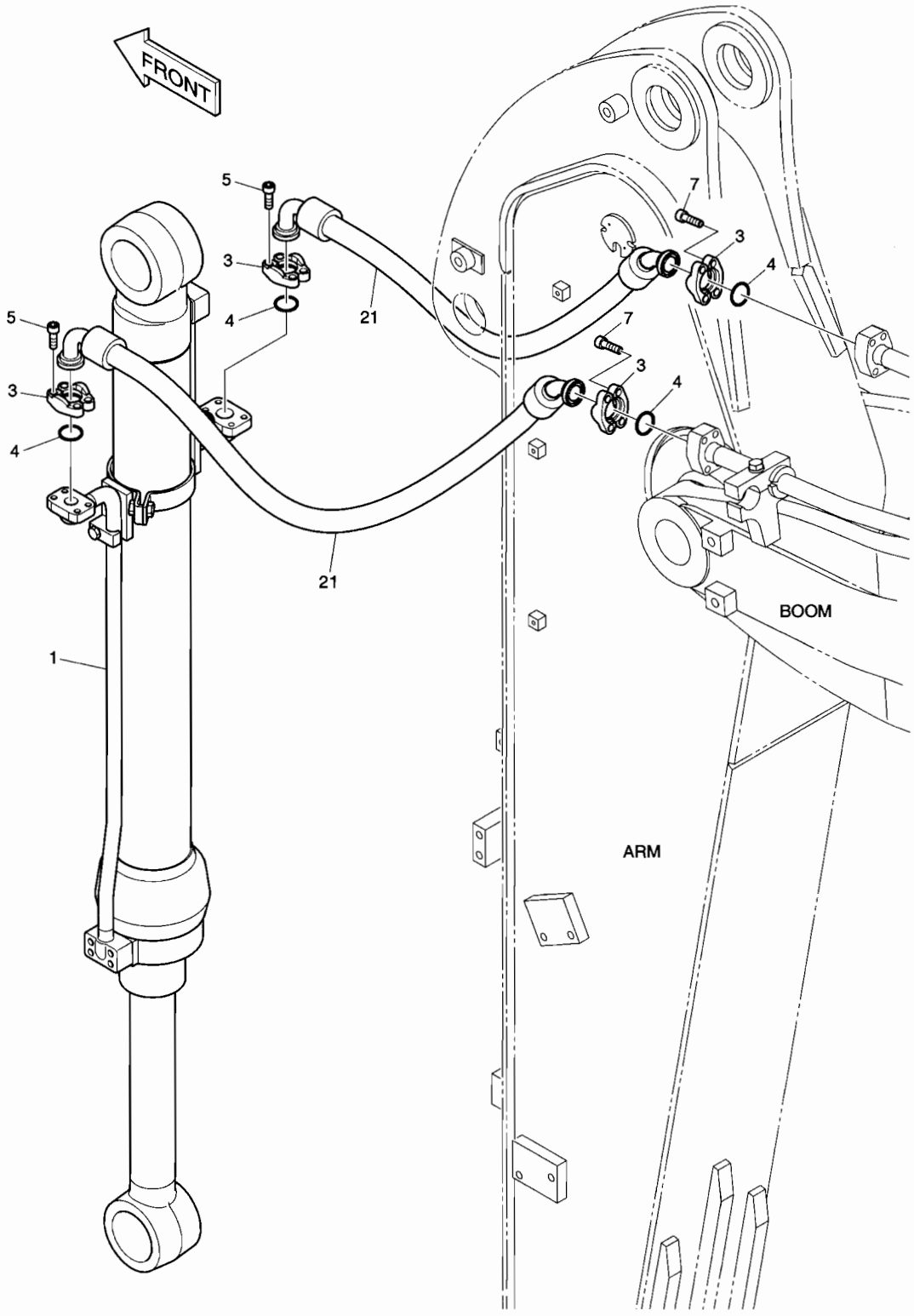

DATE	APR. 02, 2007
1st EDITION	

Fig. 6650 ARM PIPING - ARM 2.1m CONDUITES DE BALANCIER

Serial No. ;

Key No.	Part No.	Description	Description	Q'ty	S.C	Serial No.	ICA	Replaceable part	
								Part No.	Q'ty
6650--	K1027288	ARM PIPING	CONDUITES DE BALANCIER	-	D				
1	K1024712	CYLINDER;BUCKET	VERIN DE GODET	1					
3	2181-9079	FLANGE;SPLIT	BRIDE	8					
4	2180-1026D2	O-RING	JOINT TORIQUE	4					
5	S2212266	BOLT;SOCKET	BOULON A 6 PANS CREUX	8					
7	S2212366	BOLT;SOCKET	BOULON A 6 PANS CREUX	8					
21	DS2043111	HOSE	TUYAU FLEXIBLE	2					

DATE	APR. 02, 2007
1st EDITION	

Fig. 6660 ARM PIPING - ONE & TWO WAY(ARM 2.1m)
CONDUITES DE BALANCIER

Serial No. ;

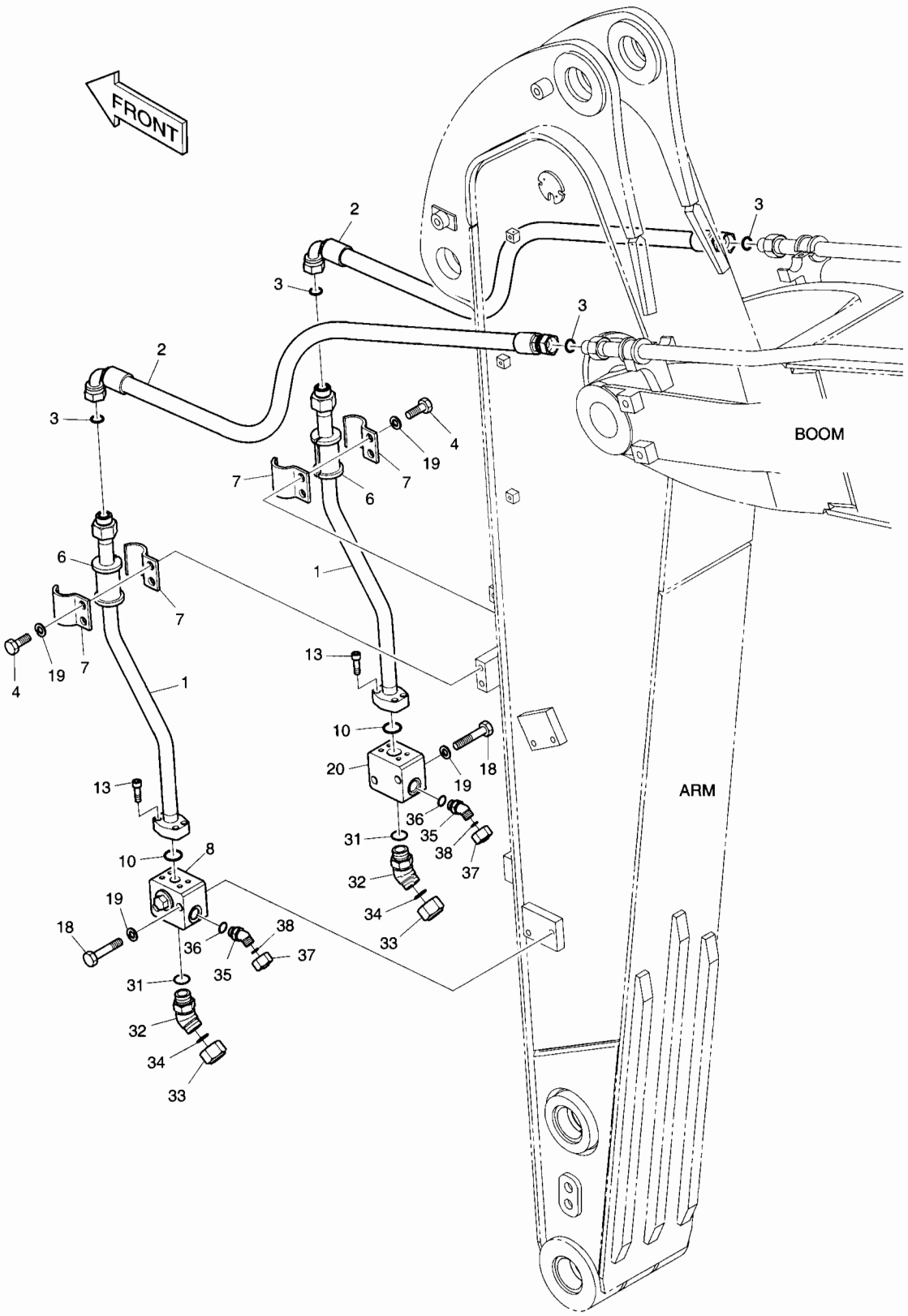

DATE	APR. 02, 2007
1st EDITION	

Fig. 6660 ARM PIPING - ONE & TWO WAY(ARM 2.1m) CONDUITES DE BALANCIER

Serial No. ;

Key No.	Part No.	Description	Description	Q'ty	S.C	Serial No.	ICA	Replaceable part	
								Part No.	Q'ty
6660--	400-01355A	ARM PIPING-ONE & TWO WAY	CONDUITES DE BALANCIER	-	D				
1	140-01543A	PIPE	TUYAU	2					
2	2184-1197D12	HOSE	TUYAU FLEXIBLE	2					
3	S8030121	O-RING	JOINT TORIQUE	4					
4	S0562766	BOLT	BOULON	4					
6	161-00574	RUBBER	CAOUTCHOUC	2					
7	124-00302	CLAMP;PIPE	COLLIER	4					
8	420-00511B	VALVE;STOP(L.H)	VANNE	1					
10	2180-1026D2	O-RING	JOINT TORIQUE	2					
13	S2212366	BOLT;SOCKET	BOULON A 6 PANS CREUX	8					
18	S0563466	BOLT	BOULON	4					
19	S5102803	WASHER;SPRING	RONDELLE ELASTIQUE	8					
20	420-00517B	VALVE;STOP(R.H)	VANNE	1					
31	S8000231	O-RING	JOINT TORIQUE	2					
32	2181-2816D1	ELBOW	COUDE	2					
33	2181-2817D1	CAP	CHAPEAU	2					
34	S8030121	O-RING	JOINT TORIQUE	2					
35	2181-2816D4	ELBOW	COUDE	2					
36	S8000181	O-RING	JOINT TORIQUE	2					
37	2181-2817D4	CAP	CHAPEAU	2					
38	S8030081	O-RING	JOINT TORIQUE	2					

DATE	APR. 02, 2007
1st EDITION	

Fig. 6670 ARM PIPING - ROTATING(ARM 2.1m)
CONDUITES DE BALANCIER

Serial No. ;

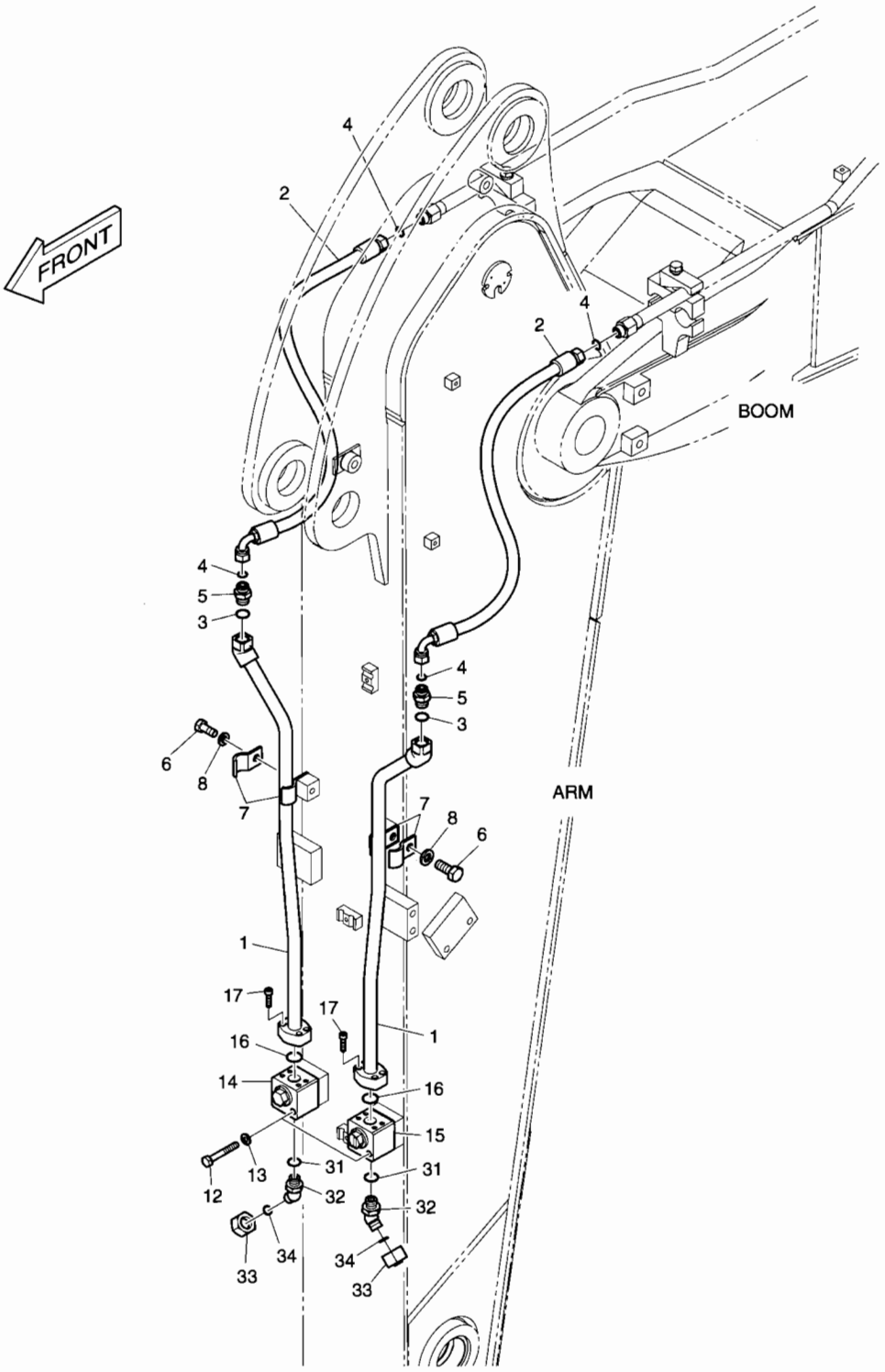

DATE	APR. 02, 2007
1st EDITION	

Fig. 6670 ARM PIPING - ROTATING(ARM 2.1m) CONDUITES DE BALANCIER

Serial No. ;

Key No.	Part No.	Description	Description	Q'ty	S.C	Serial No.	ICA	Replaceable part	
								Part No.	Q'ty
6670--	400-01366B	ARM PIPING;2.1m_ARM	CONDUITES DE BALANCIER	-	D				
1	140-01553E	PIPE	TUYAU	2					
2	DS2013388	HOSE	TUYAU FLEXIBLE	2					
3	S8000181	O-RING	JOINT TORIQUE	2					
4	S8030081	O-RING	JOINT TORIQUE	4					
5	2181-4133D3	ADAPTER	ADAPTEUR	2					
6	S0515266	BOLT	BOULON	2					
7	124-00299A	CLAMP;PIPE	COLLIER	4					
8	S5102703	WASHER;SPRING(M12)	RONDELLE ELASTIQUE	2					
12	S0558966	BOLT	BOULON	4					
13	S5102603	WASHER;SPRING(M10)	RONDELLE ELASTIQUE	4					
14	K1006227	VALVE;SWITCH(R.H)	VANNE	1					
15	K1006228	VALVE;SWITCH(L.H)	VANNE	1					
16	2180-1026D30	O-RING	JOINT TORIQUE	2					
17	S2209266	BOLT;SOCKET	BOULON A 6 PANS CREUX	8					
31	S8000181	O-RING	JOINT TORIQUE	2					
32	2181-2816D4	ELBOW	COUDE	2					
33	2181-2817D4	CAP	CHAPEAU	2					
34	S8030081	O-RING	JOINT TORIQUE	2					

Fig. 6680 ARM PIPING - QUICK CLAMP(ARM 2.1m)
CONDUITES DE BALANCIER

Serial No. ;

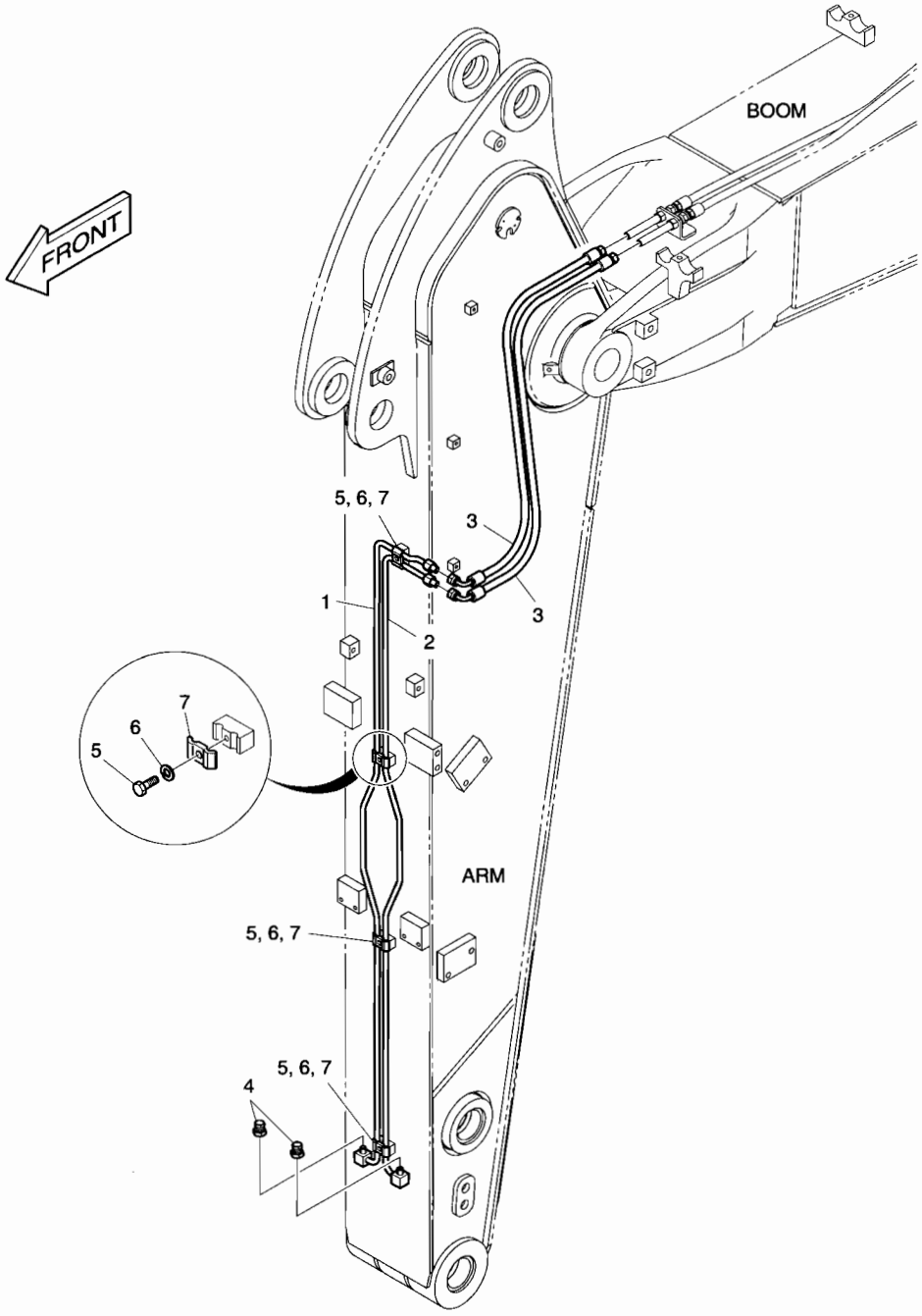

DATE	APR. 02, 2007
1st EDITION	

Fig. 6680 ARM PIPING - QUICK CLAMP(ARM 2.1m) CONDUITES DE BALANCIER

Serial No. ;

Key No.	Part No.	Description	Description	Q'ty	S.C	Serial No.	ICA	Replaceable part	
								Part No.	Q'ty
6680--	400-01390A	ARM PIPING-QUICK CLAMP	CONDUITES DE BALANCIER	-	D				
1	140-01562C	PIPE	TUYAU	1					
2	140-01563C	PIPE	TUYAU	1					
3	DS2055867	HOSE	TUYAU FLEXIBLE	2					
4	2181-2820D1	PLUG	BOUCHON	2					
5	S0508866	BOLT	BOULON	4					
6	S5102503	WASHER;SPRING	RONDELLE ELASTIQUE	4					
7	K1004011	CLAMP;PIPE	COLLIER	4					

DATE	APR. 02, 2007
1st EDITION	

Fig. 6690 ARM PIPING - CLAMSHELL(ARM 2.1m)
CONDUITES DE BALANCIER

Serial No. ;

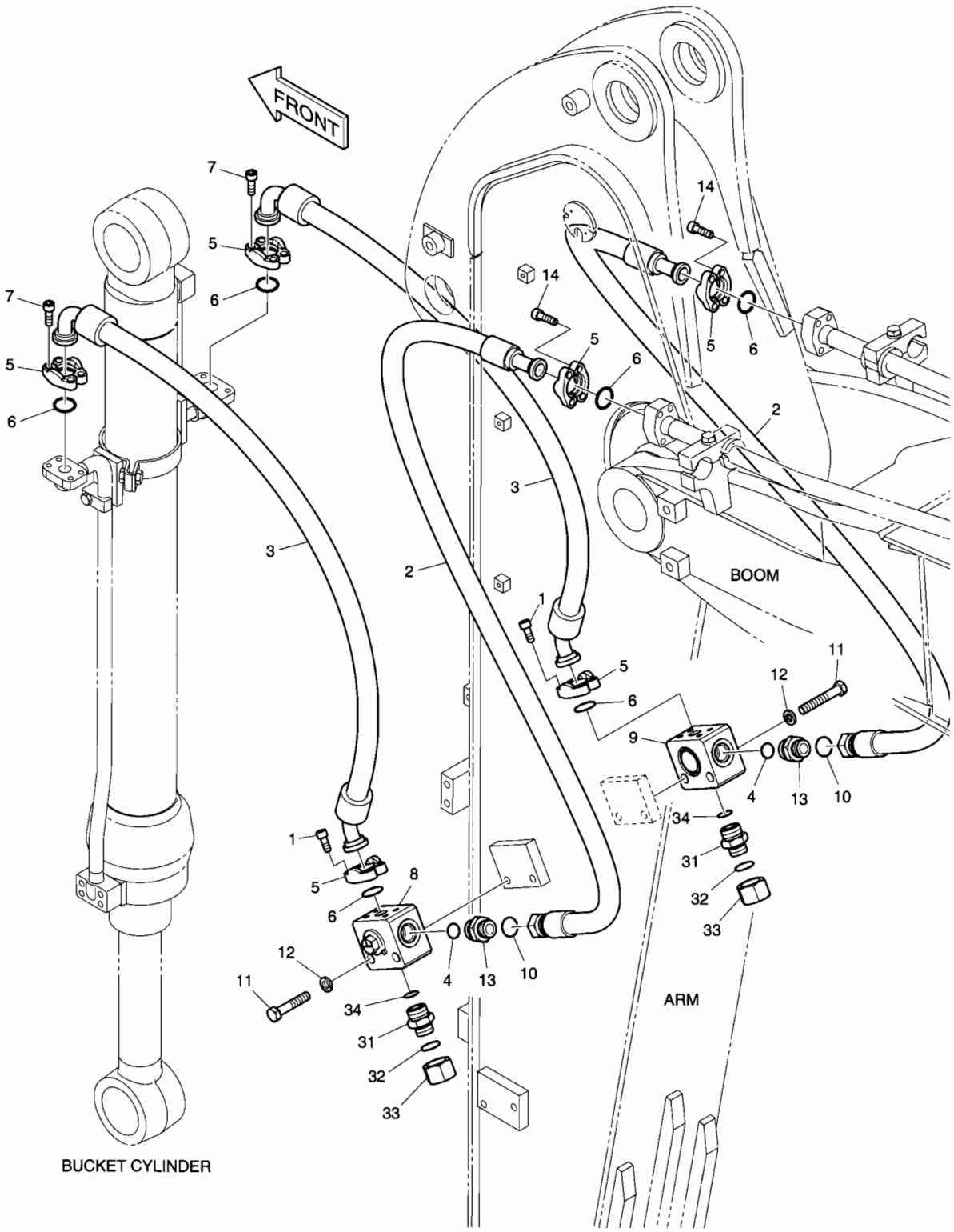

DATE	APR. 02, 2007
1st EDITION	

Fig. 6690 ARM PIPING - CLAMSHELL(ARM 2.1m) CONDUITES DE BALANCIER

Serial No. ;

Key No.	Part No.	Description	Description	Q'ty	S.C	Serial No.	ICA	Replaceable part	
								Part No.	Q'ty
6690--	K1027294	CLAMSHELL PIPING	CONDUITES DE BALANCIER	-	D				
1	S2212066	BOLT;SOCKET	BOULON A 6 PANS CREUX	8					
2	DS2016045	HOSE	TUYAU FLEXIBLE	2					
3	DS2043112	HOSE	TUYAU FLEXIBLE	2					
4	S8030121	O-RING	JOINT TORIQUE	2					
5	2181-9079	FLANGE	BRIDE	12					
6	2180-1026D2	O-RING	JOINT TORIQUE	6					
7	S2212266	BOLT;SOCKET M10X1.5X30	BOULON A 6 PANS CREUX	8					
8	K1002939	VALVE;SWITCH(L.H)	VANNE	1					
9	K1002940	VALVE;SWITCH(R.H)	VANNE	1					
10	S8000231	O-RING	JOINT TORIQUE	2					
11	S0563466	BOLT	BOULON	4					
12	S5102803	WASHER;SPRING	RONDELLE ELASTIQUE	4					
13	2181-4133D5	ADAPTER	ADAPTEUR	2					
14	S2212366	BOLT;SOCKET M10X1.5X35	BOULON A 6 PANS CREUX	8					
31	2181-4133D5	ADAPTER	ADAPTEUR	2					
32	S8000231	O-RING	JOINT TORIQUE	2					
33	2181-2817D1	CAP	CHAPEAU	2					
34	S8030121	O-RING	JOINT TORIQUE	2					

Fig. 6700 ARM - 3.0m BALANCIER

Serial No. ;

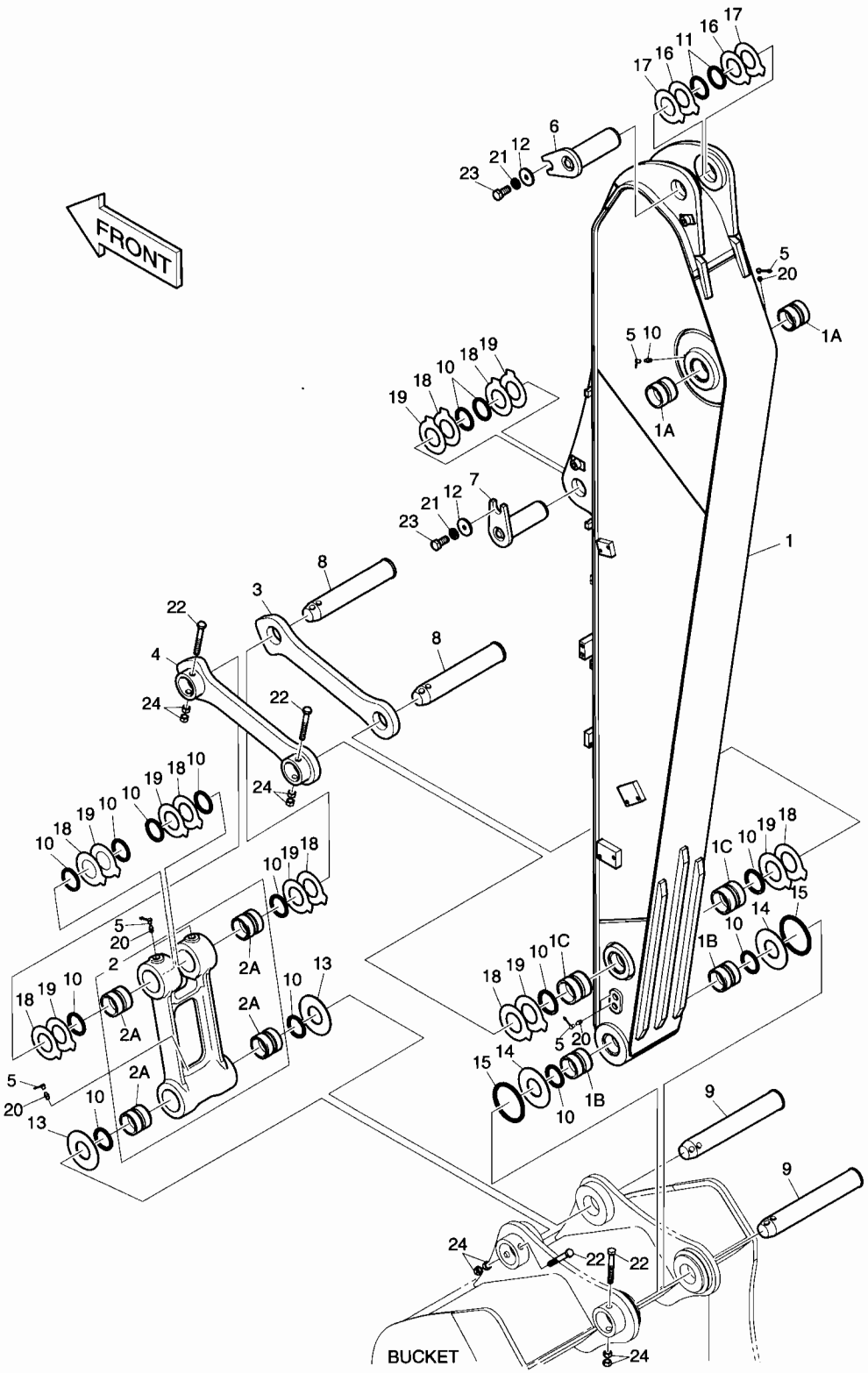

DATE	APR. 02, 2007
1st EDITION	

Fig. 6700 ARM - 3.0m BALANCIER

Serial No. ;

Key No.	Part No.	Description	Description	Q'ty	S.C	Serial No.	ICA	Replaceable part	
								Part No.	Q'ty
6700--	K1015586A	ARM ASS'Y	ENSEMBLE DE BRAS	-	D				
1	K1015587A	ARM SUB ASS'Y-3.0m	BALANCIER	1					
1A	110-00241	. BUSHING	. DOUILLE	2					
1B	110-00242	. BUSHING	. DOUILLE	2					
1C	110-00243	. BUSHING	. DOUILLE	2					
2	155-00061	LINK;PUSH ASS'Y	ARTICULATION	1					
2A	110-00245	. BUSHING	. DOUILLE	4					
3	2155-1306B	LINK;GUIDE(R.H)	ARTICULATION	1					
4	2155-1307B	LINK;GUIDE(L.H)	ARTICULATION	1					
5	160-00020	CAP;GREASE NIPPLE	CHAPEAU	7					
6	2123-2209C	PIN	GOUPILLE	1					
7	2123-2225C	PIN	GOUPILLE	1					
8	K1007038	PIN	GOUPILLE	2					
9	2123-2212C	PIN	GOUPILLE	2					
10	2180-1106BD3	SEAL;DUST	JOINT	14					
11	2180-1106BD4	SEAL;DUST	JOINT	4					
12	2116-1060D6	STOPPER	ARRET	2					
13	2114-1995B	SPACER	DOUILLE D'ECARTEMENT	2					
14	2114-1994B	SPACER	DOUILLE D'ECARTEMENT	2					
15	180-00077D3	O-RING	JOINT TORIQUE	2					
16	DS7752006	SHIM	CALE	2					
17	DS7752007	SHIM	CALE	2					
18	DS7752001	SHIM	CALE	8					
19	DS7752002	SHIM	CALE	8					
20	S6710041	NIPPLE;GREASE	MAMELON	7					
21	S5102906	WASHER;SPRING	RONDELLE ELASTIQUE	2					
22	S0566766	BOLT	BOULON	4					
23	S0521366	BOLT	BOULON	2					
24	S4012933	NUT	ECROU	8					

Fig. 6710 ARM PIPING - ARM 3.0m
CONDUITES DE BALANCIER

Serial No. ;

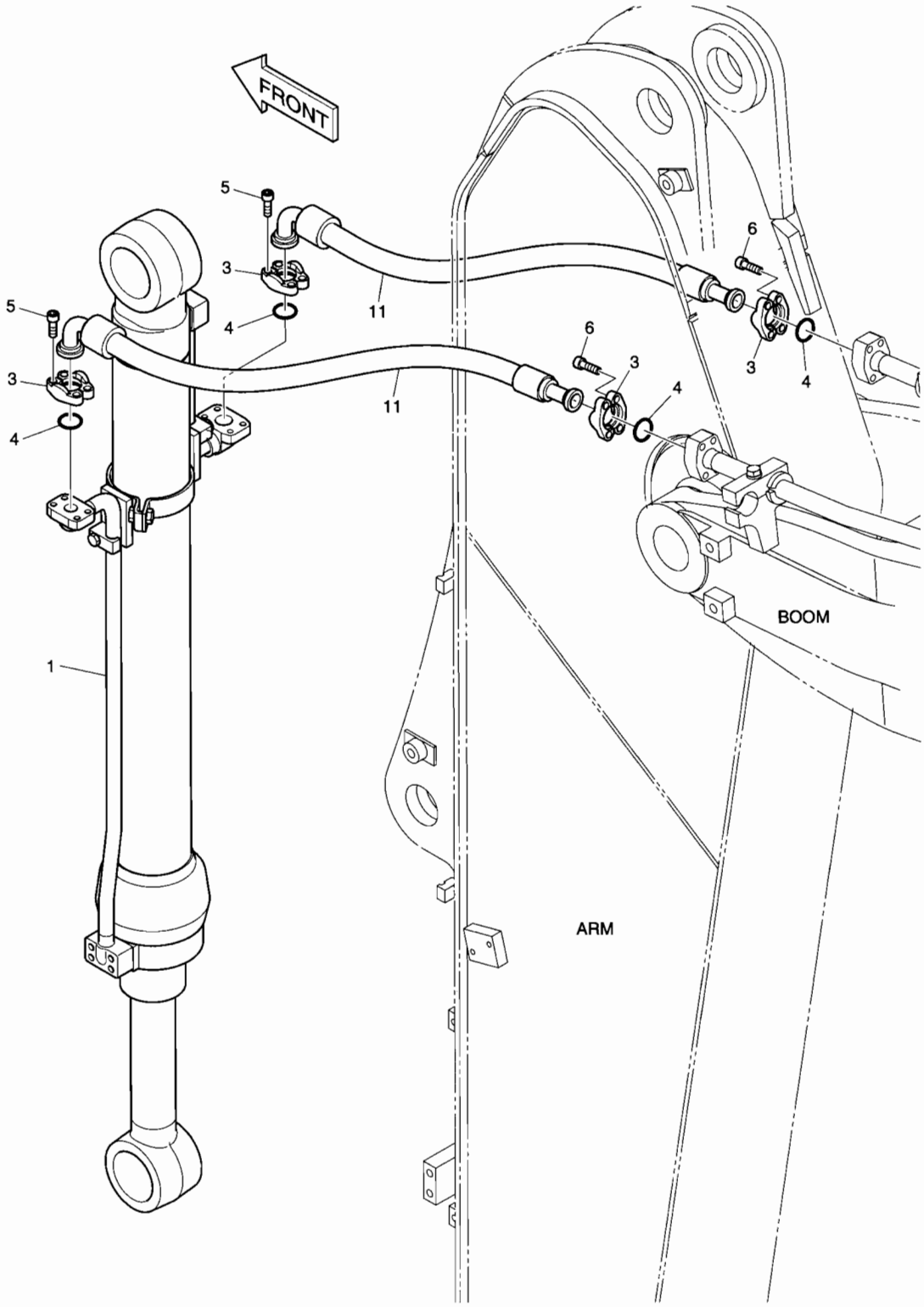

DATE	APR. 02, 2007
1st EDITION	

Fig. 6710 ARM PIPING - ARM 3.0m CONDUITES DE BALANCIER

Serial No. ;

Key No.	Part No.	Description	Description	Q'ty	S.C	Serial No.	ICA	Replaceable part	
								Part No.	Q'ty
6710--	K1018957A	ARM PIPING	CONDUITES DE BALANCIER	-	D				
1	K1024712	CYLINDER;BUCKET	VERIN DE GODET	1					
3	2181-9079	FLANGE;SPLIT	BRIDE	8					
4	2180-1026D2	O-RING	JOINT TORIQUE	4					
5	S2212266	BOLT;SOCKET	BOULON A 6 PANS CREUX	8					
6	S2212366	BOLT;SOCKET	BOULON A 6 PANS CREUX	8					
11	DS2039130	HOSE	TUYAU FLEXIBLE	2					

DATE	APR. 02, 2007
1st EDITION	

Fig. 6720 ARM PIPING - ONE & TWO WAY(ARM 3.0m) CONDUITES DE BALANCIER

Serial No. ;

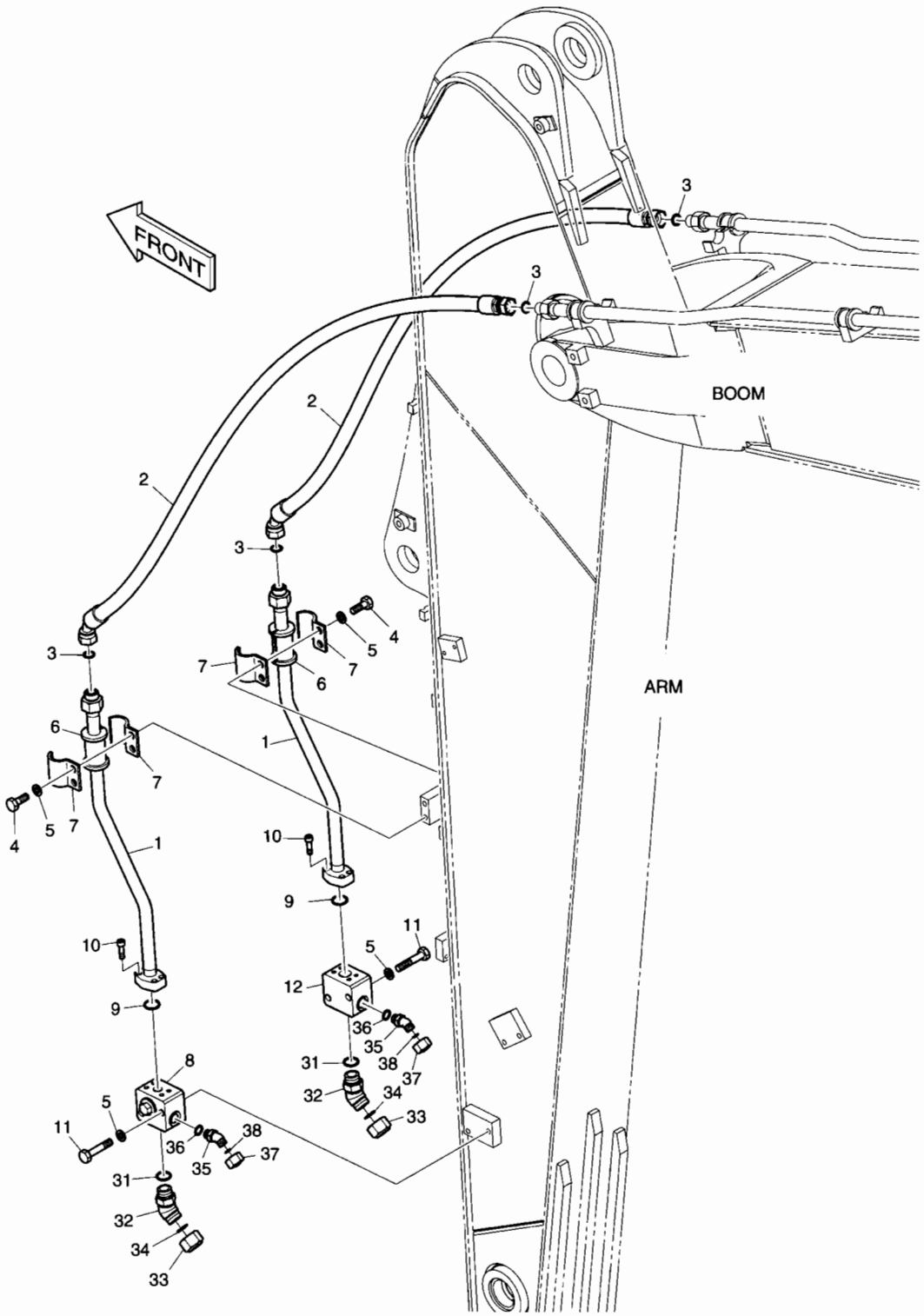

DATE	APR. 02, 2007
1st EDITION	

Fig. 6720 ARM PIPING - ONE & TWO WAY(ARM 3.0m) CONDUITES DE BALANCIER

Serial No. ;

Key No.	Part No.	Description	Description	Q'ty	S.C	Serial No.	ICA	Replaceable part	
								Part No.	Q'ty
6720--	K1018959A	ARM PIPING-ONE & TWO WAY	CONDUITES DE BALANCIER	-	D				
1	K1018972A	PIPE	TUYAU	2					
2	DS2012426	HOSE	TUYAU FLEXIBLE	2					
3	S8030121	O-RING	JOINT TORIQUE	4					
4	S0562766	BOLT	BOULON	4					
5	S5102803	WASHER;SPRING	RONDELLE ELASTIQUE	8					
6	161-00574	RUBBER	CAOUTCHOUC	2					
7	124-00302	CLAMP;PIPE	COLLIER	4					
8	420-00511B	VALVE;STOP(L.H)	VANNE	1					
9	2180-1026D2	O-RING	JOINT TORIQUE	2					
10	S2212366	BOLT;SOCKET	BOULON A 6 PANS CREUX	8					
11	S0563466	BOLT	BOULON	4					
12	420-00517B	VALVE;STOP(R.H)	VANNE	1					
31	S8000231	O-RING	JOINT TORIQUE	2					
32	2181-2816D1	ELBOW	COUDE	2					
33	2181-2817D1	CAP	CHAPEAU	2					
34	S8030121	O-RING	JOINT TORIQUE	2					
35	2181-2816D4	ELBOW	COUDE	2					
36	S8000181	O-RING	JOINT TORIQUE	2					
37	2181-2817D4	CAP	CHAPEAU	2					
38	S8030081	O-RING	JOINT TORIQUE	2					

DATE	APR. 02, 2007
1st EDITION	

Fig. 6730 ARM PIPING - ROTATING(ARM 3.0m)
CONDUITES DE BALANCIER

Serial No. ;

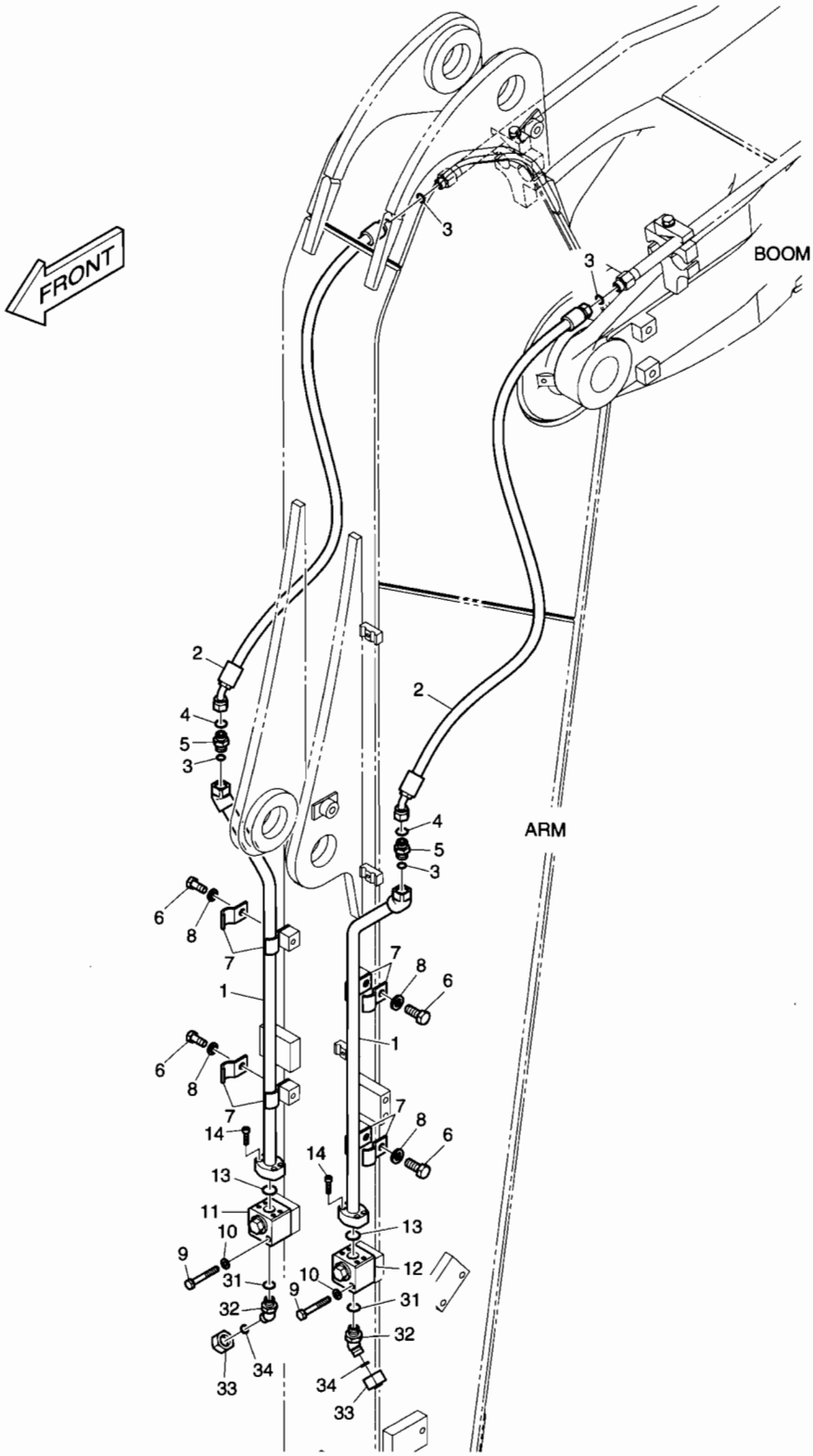

DATE	APR. 02, 2007
1st EDITION	

Fig. 6730 ARM PIPING - ROTATING(ARM 3.0m) CONDUITES DE BALANCIER

Serial No. ;

Key No.	Part No.	Description	Description	Q'ty	S.C	Serial No.	ICA	Replaceable part	
								Part No.	Q'ty
6730--	K1018963A	ARM PIPING;2.5m ARM	CONDUITES DE BALANCIER	-	D				
1	K1018973A	PIPE	TUYAU	2					
2	DS2012427	HOSE	TUYAU FLEXIBLE	2					
3	S8000181	O-RING	JOINT TORIQUE	4					
4	S8030081	O-RING	JOINT TORIQUE	2					
5	2181-4133D3	ADAPTER	ADAPTEUR	2					
6	S0515266	BOLT	BOULON	4					
7	124-00299A	CLAMP;PIPE	COLLIER	8					
8	S5102703	WASHER;SPRING(M12)	RONDELLE ELASTIQUE	4					
9	S0558966	BOLT	BOULON	4					
10	S5102603	WASHER;SPRING(M10)	RONDELLE ELASTIQUE	4					
11	K1006227	VALVE;SWITCH(R.H)	VANNE	1					
12	K1006228	VALVE;SWITCH(L.H)	VANNE	1					
13	2180-1026D30	O-RING	JOINT TORIQUE	2					
14	S2209266	BOLT;SOCKET	BOULON A 6 PANS CREUX	8					
31	S8000181	O-RING	JOINT TORIQUE	2					
32	2181-2816D4	ELBOW	COUDE	2					
33	2181-2817D4	CAP	CHAPEAU	2					
34	S8030081	O-RING	JOINT TORIQUE	2					

Fig. 6740 ARM PIPING - QUICK CLAMP(ARM 3.0m)
CONDUITES DE BALANCIER

Serial No. ;

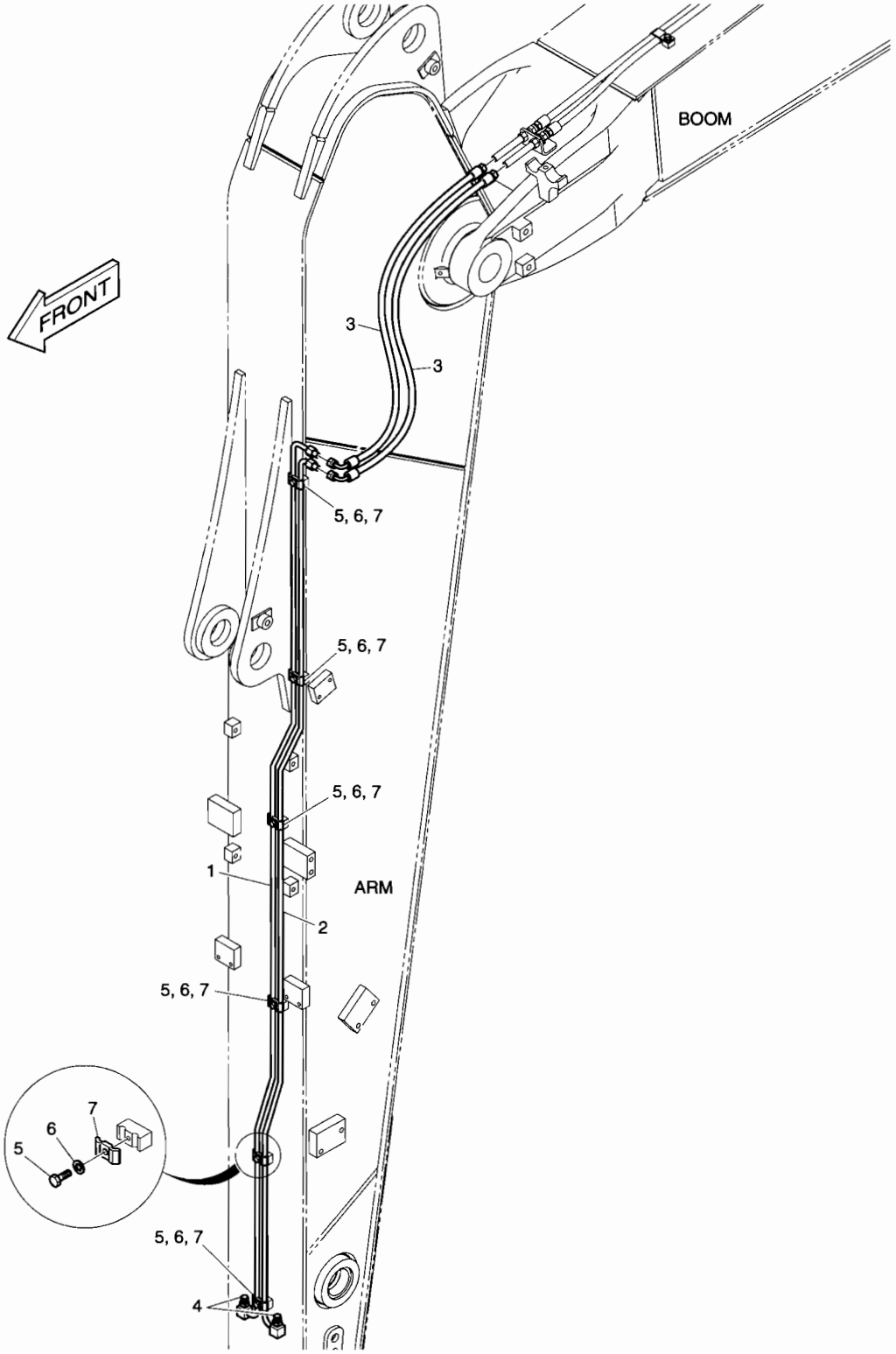

DATE	APR. 02, 2007
1st EDITION	

Fig. 6740 ARM PIPING - QUICK CLAMP(ARM 3.0m) CONDUITES DE BALANCIER

Serial No. ;

Key No.	Part No.	Description	Description	Q'ty	S.C	Serial No.	ICA	Replaceable part	
								Part No.	Q'ty
6740--	K1018967A	ARM PIPING-QUICK CLAMP	CONDUITES DE BALANCIER	-	D				
1	K1018974A	PIPE	TUYAU	1					
2	K1018975A	PIPE	TUYAU	1					
3	DS2055867	HOSE	TUYAU FLEXIBLE	2					
4	2181-2820D1	PLUG	BOUCHON	2					
5	S0508866	BOLT	BOULON	6					
6	S5102503	WASHER;SPRING	RONDELLE ELASTIQUE	6					
7	K1004011	CLAMP;PIPE	COLLIER	6					

DATE	APR. 02, 2007
1st EDITION	

Fig. 6750 ARM PIPING - CLAMSHELL(ARM 3.0m)
CONDUITES DE BALANCIER

Serial No. ;

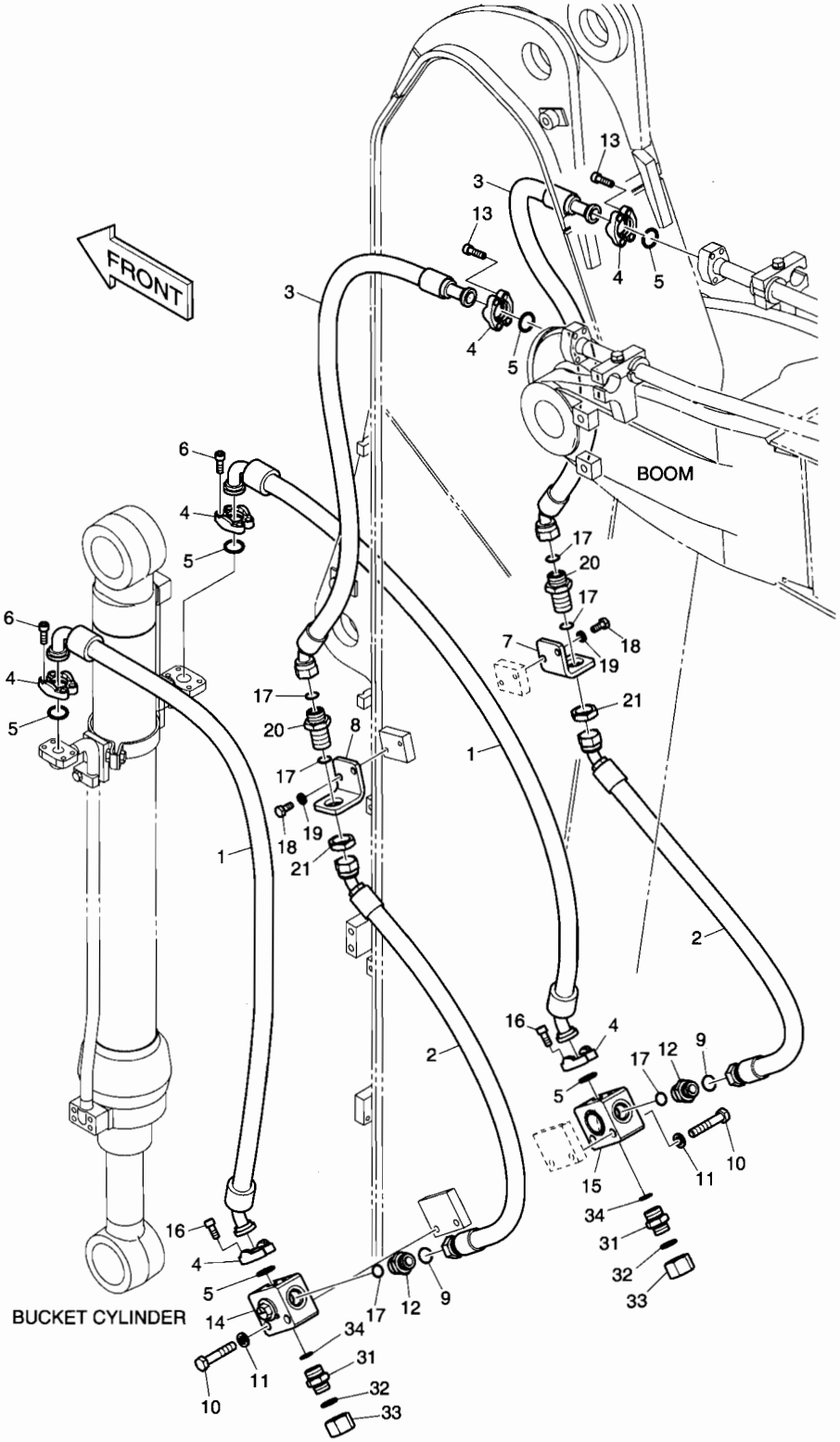

DATE	APR. 02, 2007
1st EDITION	

Fig. 6750 ARM PIPING - CLAMSHELL(ARM 3.0m) CONDUITES DE BALANCIER

Serial No. ;

Key No.	Part No.	Description	Description	Q'ty	S.C	Serial No.	ICA	Replaceable part	
								Part No.	Q'ty
5750--	K1018969A	CLAMSHELL PIPING;3.0m ARM	TUYAUTERIE DE BLOC	-	D				
1	DS2043107	HOSE	TUYAU FLEXIBLE	2					
2	DS2020047	HOSE	TUYAU FLEXIBLE	2					
3	DS2082020	HOSE	TUYAU FLEXIBLE	2					
4	2181-9079	FLANGE	BRIDE	12					
5	2180-1026D2	O-RING	JOINT TORIQUE	6					
6	S2212266	BOLT;SOCKET M10X1.5X30	BOULON A 6 PANS CREUX	8					
7	K1015093	BRACKET	SUPPORT	1					
8	K1014759	BRACKET	SUPPORT	1					
9	S8000231	O-RING	JOINT TORIQUE	2					
10	S0563466	BOLT	BOULON	4					
11	S5102803	WASHER;SPRING	RONDELLE ELASTIQUE	4					
12	2181-4133D5	ADAPTER	ADAPTEUR	2					
13	S2212366	BOLT;SOCKET M10X1.5X35	BOULON A 6 PANS CREUX	8					
14	K1002939	VALVE;SWITCH(L.H)	VANNE	1					
15	K1002940	VALVE;SWITCH(R.H)	VANNE	1					
16	S2212066	BOLT;SOCKET	BOULON A 6 PANS CREUX	8					
17	S8030121	O-RING	JOINT TORIQUE	6					
18	S0512066	BOLT	BOULON	4					
19	S5102603	WASHER;SPRING	RONDELLE ELASTIQUE	4					
20	DS2415007	ADAPTER	ADAPTEUR	2					
21	121-00010D8	NUT	ECROU	2					
31	2181-4133D5	ADAPTER	ADAPTEUR	2					
32	S8000231	O-RING	JOINT TORIQUE	2					
33	2181-2817D1	CAP	CHAPEAU	2					
34	S8030121	O-RING	JOINT TORIQUE	2					

DATE	APR. 02, 2007
1st EDITION	

Fig. 6760 TRACK SHOE ASS'Y - 500G
MAILLON DE CHAINE

Serial No. ;

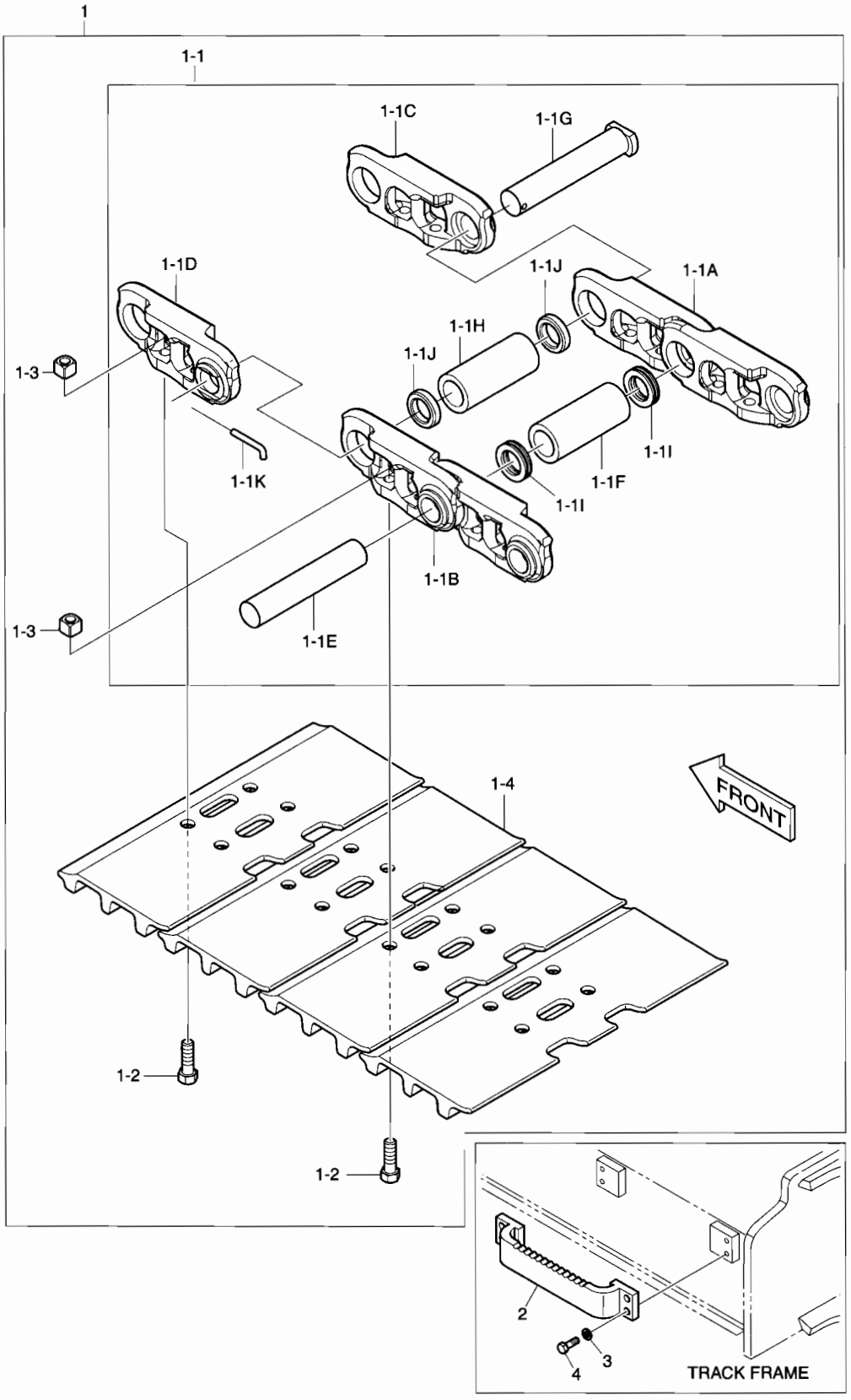

DATE	APR. 02, 2007
1st EDITION	

Fig. 6760 TRACK SHOE ASS'Y - 500G
MAILLON DE CHAINE

Serial No. ;

Key No.	Part No.	Description	Description	Q'ty	S.C	Serial No.	ICA	Replaceable part	
								Part No.	Q'ty
6760--	K1024577B	TRACK SHOE ASS'Y	MAILLON DE CHAINE	-	D				
1	K1024584	TRACK SHOE ASS'Y 500G	MAILLON DE CHAINE	2					
1-1	K1018238	. TRACK LINK ASS'Y	. ENSEMBLE MAILLON DE	1					
1-1A	K1018214	.. LINK - R.H	.. ARTICULATION	42					
1-1B	K1018215	.. LINK - L.H	.. ARTICULATION	42					
1-1C	K1018216	.. LINK;MASTER - R.H	.. ARTICULATION	1					
1-1D	K1018217	.. LINK;MASTER - L.H	.. ARTICULATION	1					
1-1E	K1018218	.. PIN;REGULAR	.. GOUPILLE	42					
1-1F	K1018220	.. BUSHING;REGULAR	.. DOUILLE	42					
1-1G	K1018219	.. PIN;MASTER	.. GOUPILLE	1					
1-1H	K1018221	.. BUSHING;MASTER	.. DOUILLE PRINCIPALE	1					
1-1I	K1018222	.. SEAL;DUST	.. JOINT	84					
1-1J	K1018223	.. SPACER	.. DOUILLE D'ECARTEMENT	2					
1-1K	K1018229	.. PIN;CLAMPING	.. GOUPILLE	1					
1-2	K1018234	. BOLT	. BOULON A 6 PANS	172					
1-3	K1018235	. NUT	. ECROU	172					
1-4	K1018236	. SHOE 500mm	. SABOT	43					
2	K1024484D2	STEP	MARCHER	4					
3	S5102703	WASHER;SPRING	RONDELLE ELASTIQUE	16					
4	S0515366	BOLT	BOULON A 6 PANS	16					

Fig. 6770 TRACK SHOE ASS'Y - 700G
MAILLON DE CHAINE

Serial No. ;

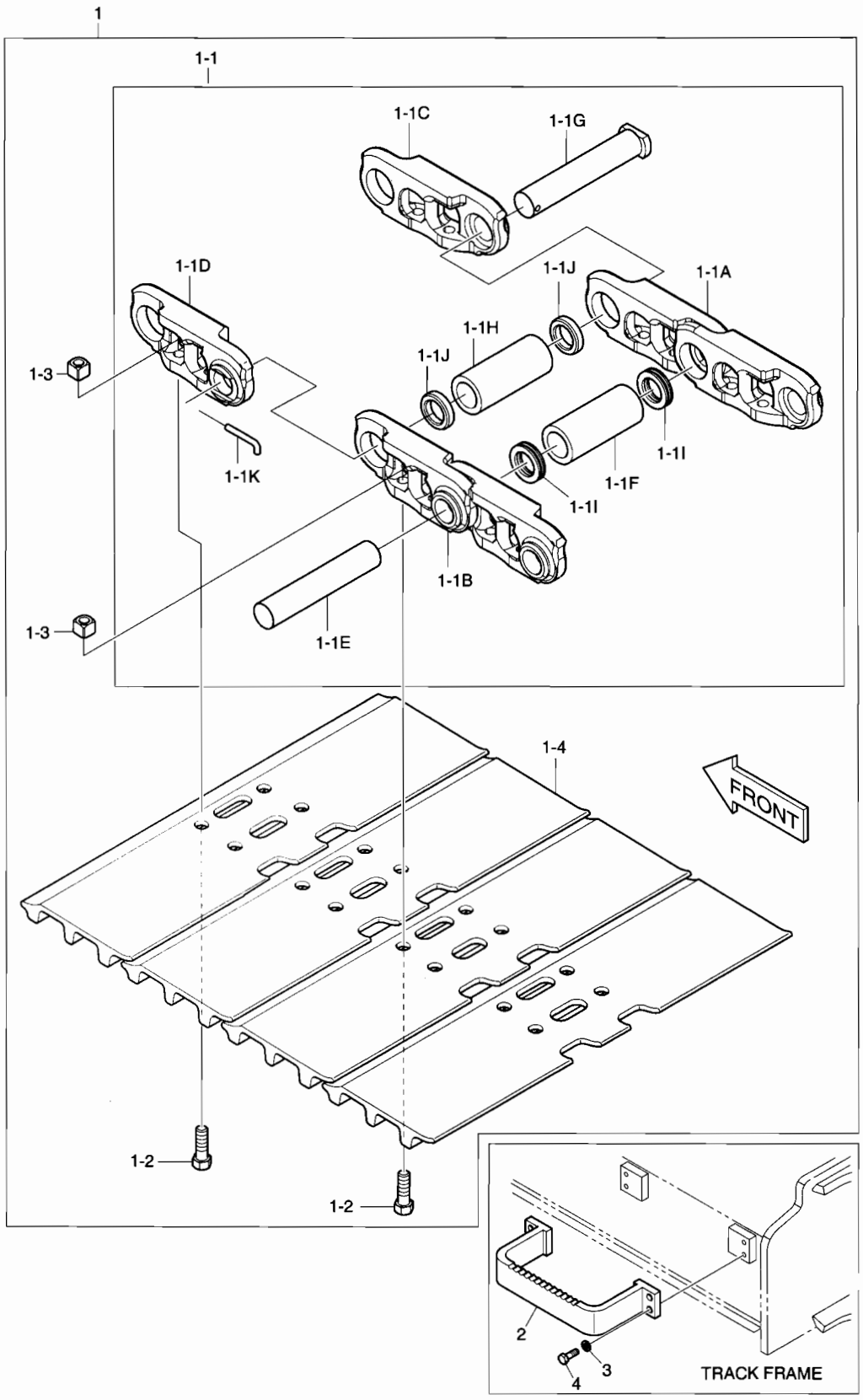

DATE	APR. 02, 2007
1st EDITION	

Fig. 6770 TRACK SHOE ASS'Y - 700G MAILLON DE CHAINE

Serial No. ;

Key No.	Part No.	Description	Description	Q'ty	S.C	Serial No.	ICA	Replaceable part	
								Part No.	Q'ty
6770--	K1024581B	TRACK SHOE ASS'Y	MAILLON DE CHAINE	-	D				
1	K1024585	TRACK SHOE ASS'Y 700G	MAILLON DE CHAINE	2					
1-1	K1018238	. TRACK LINK ASS'Y	. ENSEMBLE MAILLON DE	1					
1-1A	K1018214	.. LINK - R.H	.. ARTICULATION	42					
1-1B	K1018215	.. LINK - L.H	.. ARTICULATION	42					
1-1C	K1018216	.. LINK;MASTER - R.H	.. ARTICULATION	1					
1-1D	K1018217	.. LINK;MASTER - L.H	.. ARTICULATION	1					
1-1E	K1018218	.. PIN;REGULAR	.. GOUPILLE	42					
1-1F	K1018220	.. BUSHING;REGULAR	.. DOUILLE	42					
1-1G	K1018219	.. PIN;MASTER	.. GOUPILLE	1					
1-1H	K1018221	.. BUSHING;MASTER	.. DOUILLE PRINCIPALE	1					
1-1I	K1018222	.. SEAL;DUST	.. JOINT	84					
1-1J	K1018223	.. SPACER	.. DOUILLE D'ECARTEMENT	2					
1-1K	K1018229	.. PIN;CLAMPING	.. GOUPILLE	1					
1-2	K1018234	. BOLT	. BOULON A 6 PANS	172					
1-3	K1018235	. NUT	. ECROU	172					
1-4	K1018243	. SHOE 700mm	. SABOT	43					
2	K1024484D3	STEP	MARCHER	4					
3	S5102703	WASHER;SPRING	RONDELLE ELASTIQUE	16					
4	S0515366	BOLT	BOULON A 6 PANS	16					

Fig. 6780 MAIN PIPING - DOZER
CONDUITES DE PRINCIPAL

Serial No. ;

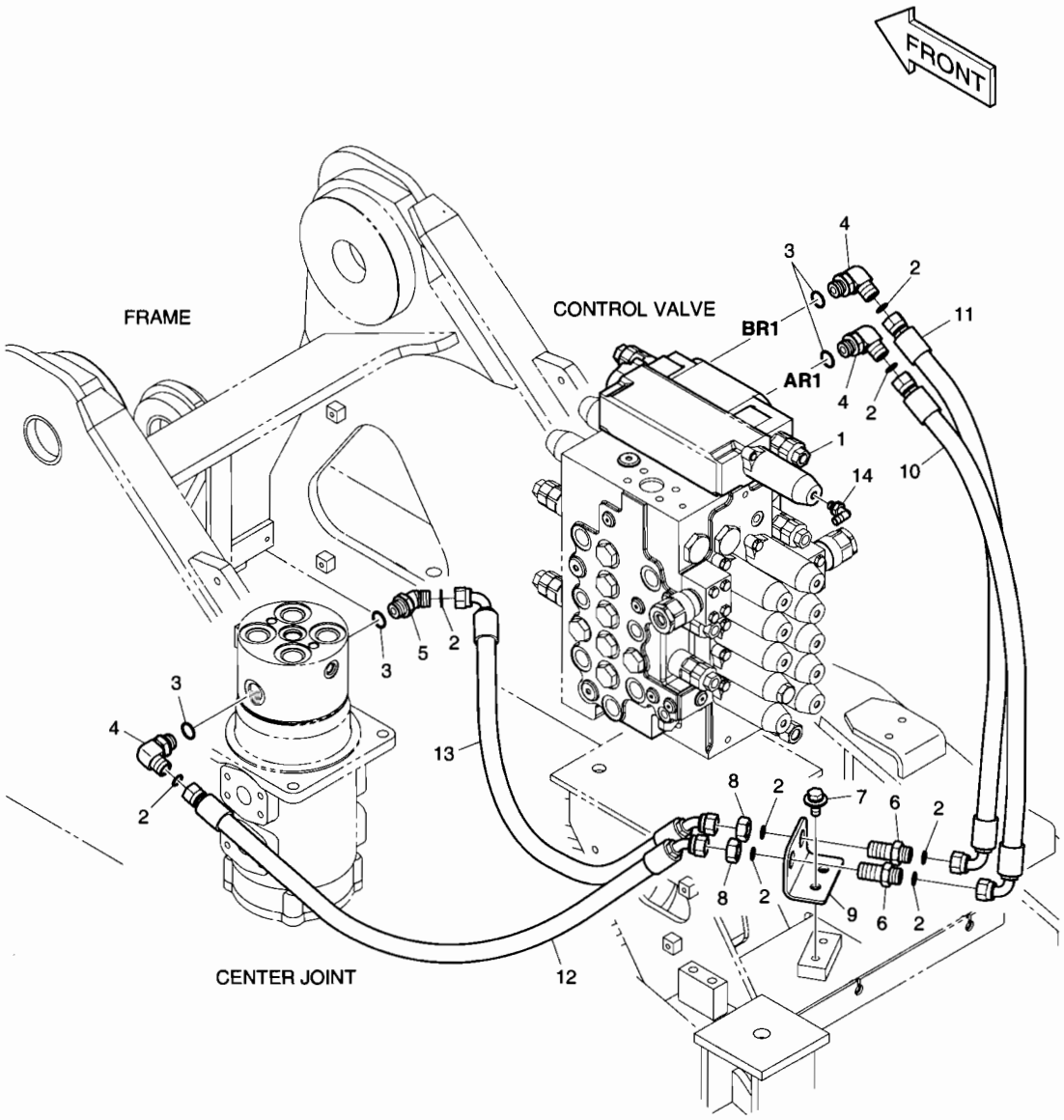

DATE	APR. 02, 2007
1st EDITION	

Fig. 6780 MAIN PIPING - DOZER
CONDUITES DE PRINCIPAL

Serial No. ;

Key No.	Part No.	Description	Description	Q'ty	S.C	Serial No.	ICA	Replaceable part	
								Part No.	Q'ty
6780--	K1024565C	MAIN PIPING;DOZER	TUYAUTERIE PRINCIPALE	-	D				
1	K1013536	VALVE;CONTROL;ARTI OR	VANNE	1					
2	S8030081	O-RING	JOINT TORIQUE	8					
3	S8000181	O-RING	JOINT TORIQUE	4					
4	2181-2815D3	ELBOW	COUDE	3					
5	2181-2816D4	ELBOW	COUDE	1					
6	181-00128D3	ADAPTER;CONNECTOR	ADAPTEUR	2					
7	DS0025019	BOLT;SET	BOULON	2					
8	121-00010D5	NUT	ECROU	2					
9	K1027214	BRACKET	SUPPORT	1					
10	DS2013922	HOSE	TUYAU FLEXIBLE	1					
11	DS2013921	HOSE	TUYAU FLEXIBLE	1					
12	DS2012472	HOSE 13/16"-16UN-2B	TUYAU FLEXIBLE	1					
13	DS2021182	HOSE	TUYAU FLEXIBLE	1					
14	2181-1702D4	ELBOW	COUDE	1					

DATE	APR. 02, 2007
1st EDITION	

Fig. 6790 PILOT PIPING - DOZER
CONDUITES DE PILOTE

Serial No. ;

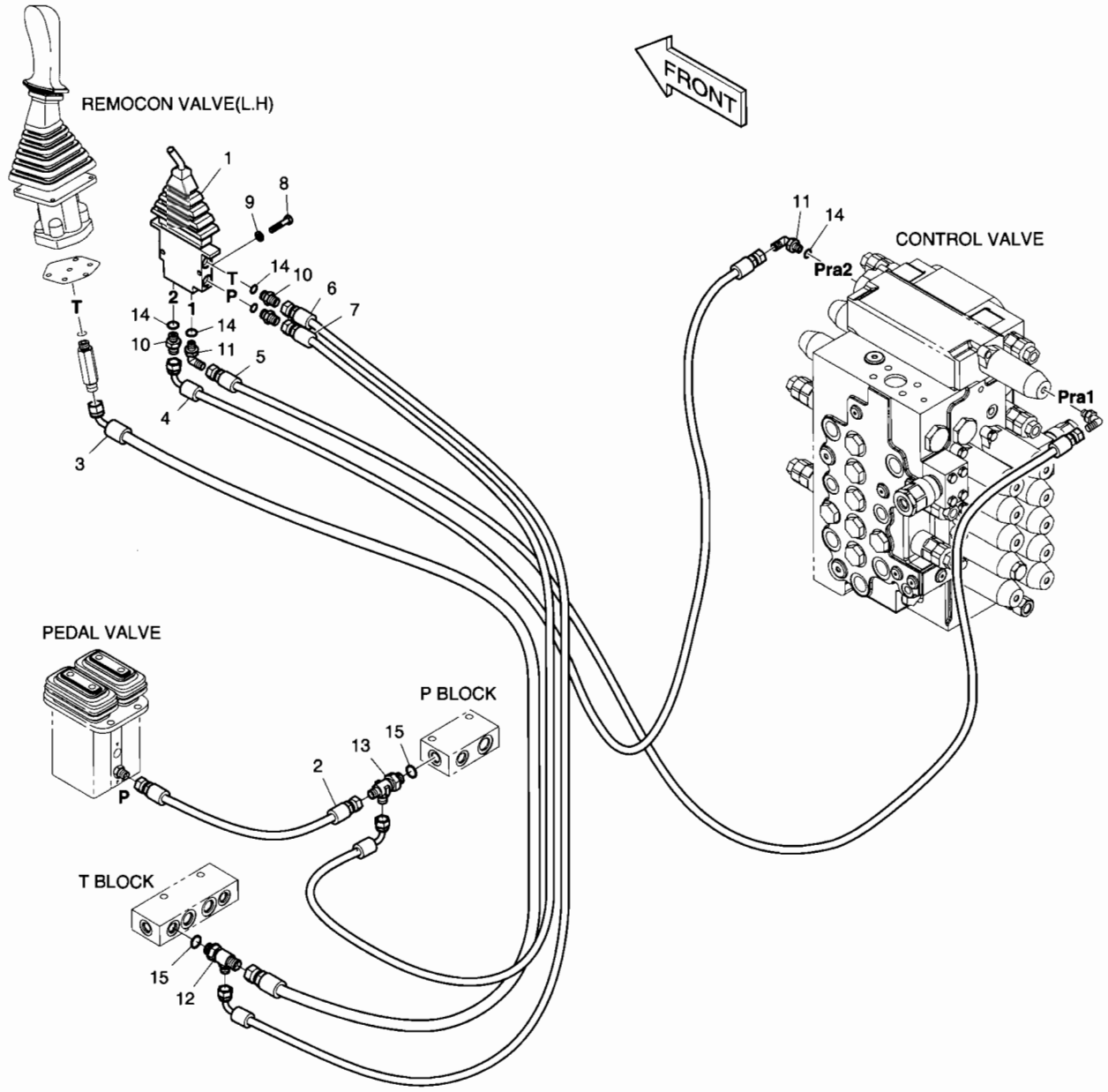

DATE	APR. 02, 2007
1st EDITION	

Fig. 6790 PILOT PIPING - DOZER CONDUITES DE PILOTE

Serial No. ;

Key No.	Part No.	Description	Description	Q'ty	S.C	Serial No.	ICA	Replaceable part	
								Part No.	Q'ty
6790--	K1017639B	PILOT PIPING;DOZER	TUYAUTERIE PILOTE	-	D				
1	420-00490A	VALVE;DOZER REMOCON	VANNE	1					
2	DS2094080	HOSE	TUYAU FLEXIBLE	1					
3	DS2095004	HOSE	TUYAU FLEXIBLE	1					
4	DS2093388	HOSE	TUYAU FLEXIBLE	1					
5	DS2094236	HOSE	TUYAU FLEXIBLE	1					
6	DS2093044	HOSE	TUYAU FLEXIBLE	1					
7	DS2093101	HOSE	TUYAU FLEXIBLE	1					
8	S0505266	BOLT	BOULON	2					
9	S5102303	WASHER;SPRING	RONDELLE ELASTIQUE	2					
10	2181-1126D14	ADAPTER	ADAPTEUR	3					
11	2181-1702D4	ELBOW	COUDE	2					
12	2181-1951D6	TEE	TE	1					
13	2181-1951D7	TEE	TE	1					
14	S8000111	O-RING	JOINT TORIQUE	5					
15	S8000141	O-RING	JOINT TORIQUE	2					

DATE	APR. 02, 2007
1st EDITION	

Fig. 6800 TRACK FRAME - DOZER
TRAIN DE ROULEMENT

Serial No. ;

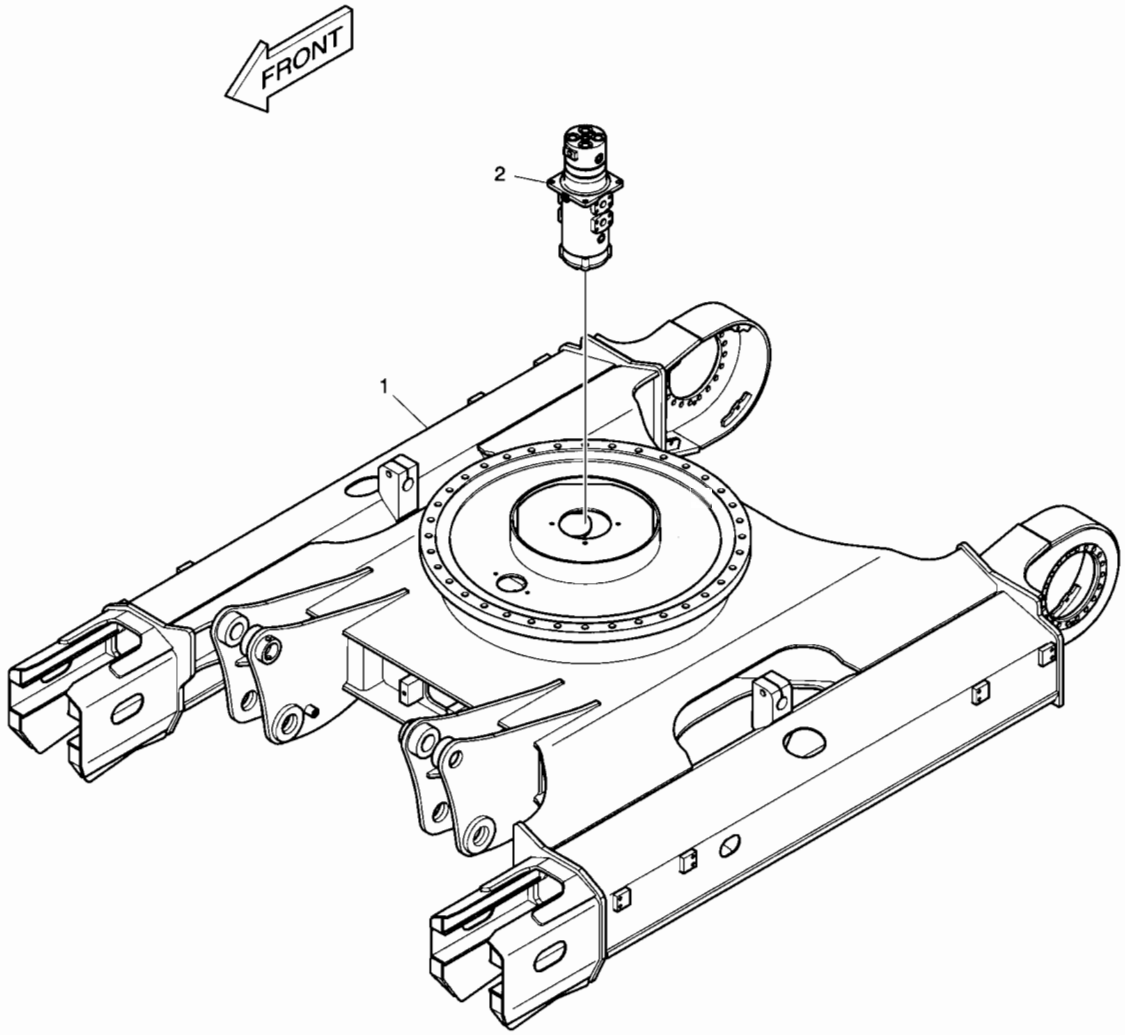

DATE	APR. 02, 2007
1st EDITION	

Fig. 6800 TRACK FRAME - DOZER TRAIN DE ROULEMENT

Serial No. ;

Key No.	Part No.	Description	Description	Q'ty	S.C	Serial No.	ICA	Replaceable part	
								Part No.	Q'ty
6800-1	K1018916E	FRAME;TRACK(DOZER)	ARMATURE	1					
2	K1011859A	CENTER JOINT	JOINT TOURNANT	1					

Fig. 6810 DOZER BLADE - 2490mm DOZER

Serial No. ;

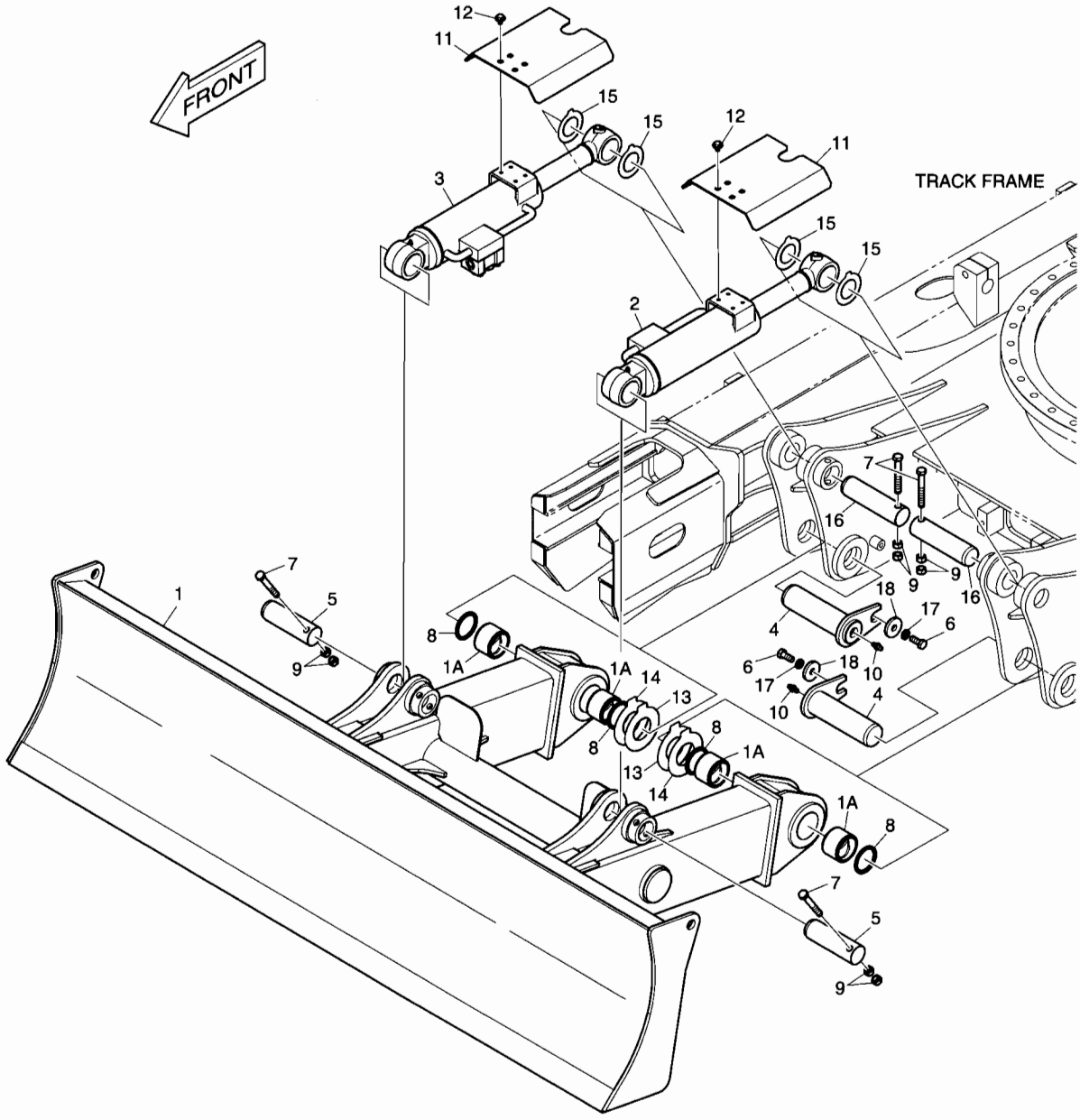

DATE	APR. 02, 2007
1st EDITION	

Fig. 6810 DOZER BLADE - 2490mm DOZER

Serial No. ;

Key No.	Part No.	Description	Description	Q'ty	S.C	Serial No.	ICA	Replaceable part	
								Part No.	Q'ty
6810--	K1027143A	DOZER ASS'Y(2490mm)	ENSEMBLE DOZER	-	D				
1	K1027142A	BLADE;DOZER(2490mm)	LAME DE DOZER	1					
1A	110-00021	. BUSH	. DOUILLE	4					
2	K1018308	CYLINDER;DOZER(L.H)	CYLINDRE DE DOZER	1					
3	K1018309	CYLINDER;DOZER(R.H)	CYLINDRE DE DOZER	1					
4	K1027008	PIN	GOUPILLE	2					
5	123-00172A	PIN	GOUPILLE	2					
6	S0565066	BOLT	BOULON	2					
7	S0566666	BOLT	BOULON	4					
8	2180-1106BD4	SEAL;DUST	JOINT	4					
9	S4012933	NUT M16X2.0	ECROU	8					
10	S6710043	NIPPLE;GREASE	MAMELON	2					
11	K1018310A	COVER	COUVERCLE	2					
12	DS0025014	BOLT;SET	BOULON	8					
13	DS7752008	SHIM	CALE	2					
14	DS7752009	SHIM	CALE	2					
15	DS7752040	SHIM;POLYMER	CALE	4					
16	123-00336A	PIN	GOUPILLE	2					
17	S5102901	WASHER;SPRING	RONDELLE ELASTIQUE	2					
18	2116-1060D6	STOPPER	ARRET	2					

DATE	APR. 02, 2007
1st EDITION	

Fig. 6820 DOZER BLADE - 2590mm DOZER

Serial No. ;

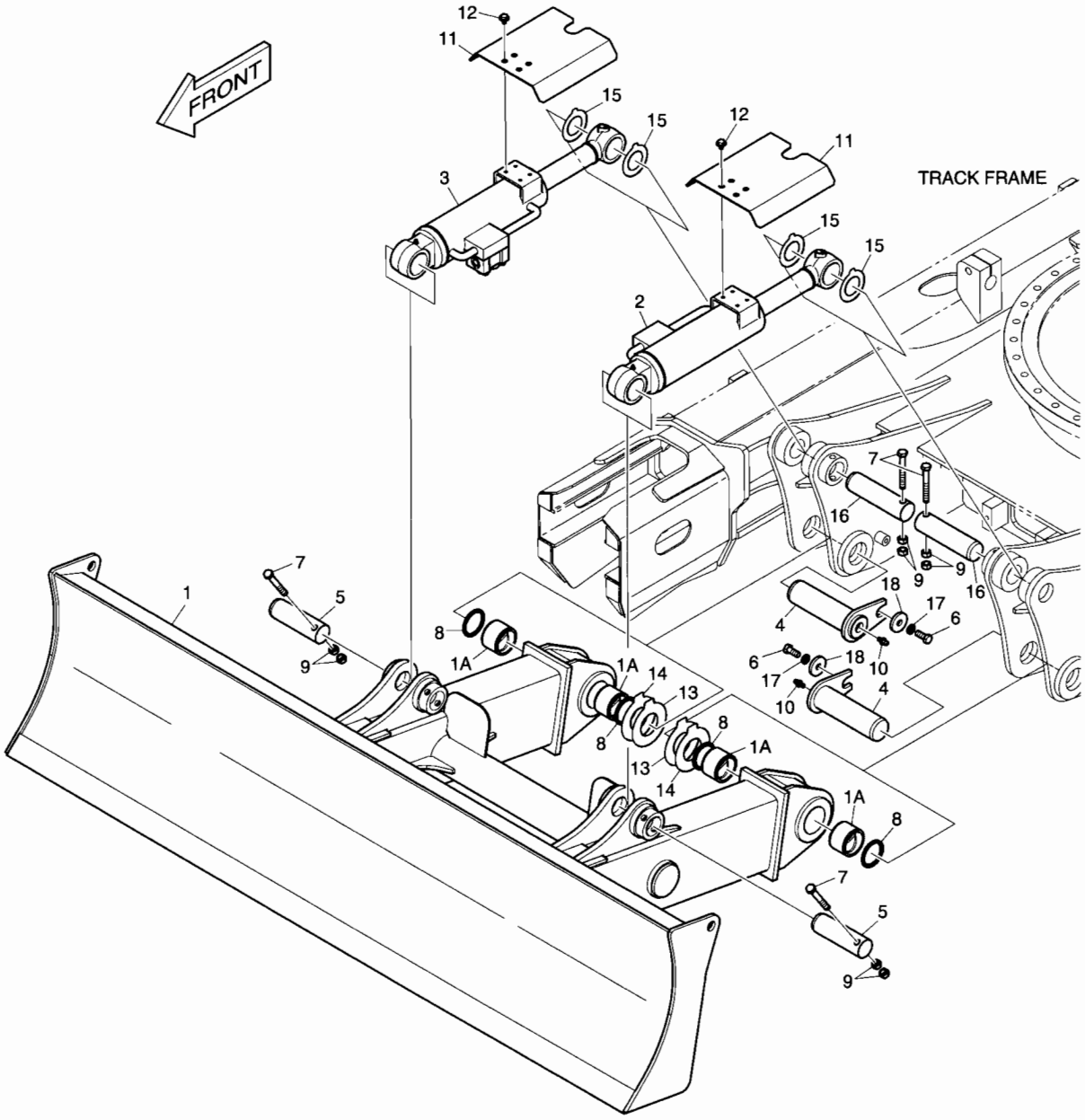

DATE	APR. 02, 2007
1st EDITION	

Fig. 6820 DOZER BLADE - 2590mm DOZER

Serial No. ;

Key No.	Part No.	Description	Description	Q'ty	S.C	Serial No.	ICA	Replaceable part	
								Part No.	Q'ty
6820--	K1018306B	DOZER ASS'Y(2590mm)	ENSEMBLE DOZER	-	D				
1	K1016404A	BLADE;DOZER(2590mm)	LAME DE DOZER	1					
1A	110-00021	. BUSH	. DOUILLE	4					
2	K1018308	CYLINDER;DOZER(L.H)	CYLINDRE DE DOZER	1					
3	K1018309	CYLINDER;DOZER(R.H)	CYLINDRE DE DOZER	1					
4	K1027008	PIN	GOUPILLE	2					
5	123-00172A	PIN	GOUPILLE	2					
6	S0565066	BOLT	BOULON	2					
7	S0566666	BOLT	BOULON	4					
8	2180-1106BD4	SEAL;DUST	JOINT	4					
9	S4012933	NUT M16X2.0	ECROU	8					
10	S6710043	NIPPLE;GREASE	MAMELON	2					
11	K1018310A	COVER	COUVERCLE	2					
12	DS0025014	BOLT;SET	BOULON	8					
13	DS7752008	SHIM	CALE	2					
14	DS7752009	SHIM	CALE	2					
15	DS7752040	SHIM;POLYMER	CALE	4					
16	123-00336A	PIN	GOUPILLE	2					
17	S5102901	WASHER;SPRING	RONDELLE ELASTIQUE	2					
18	2116-1060D6	STOPPER	ARRET	2					

DATE	APR. 02, 2007
1st EDITION	

Fig. 6830 DOZER BLADE - 2690mm DOZER

Serial No. ;

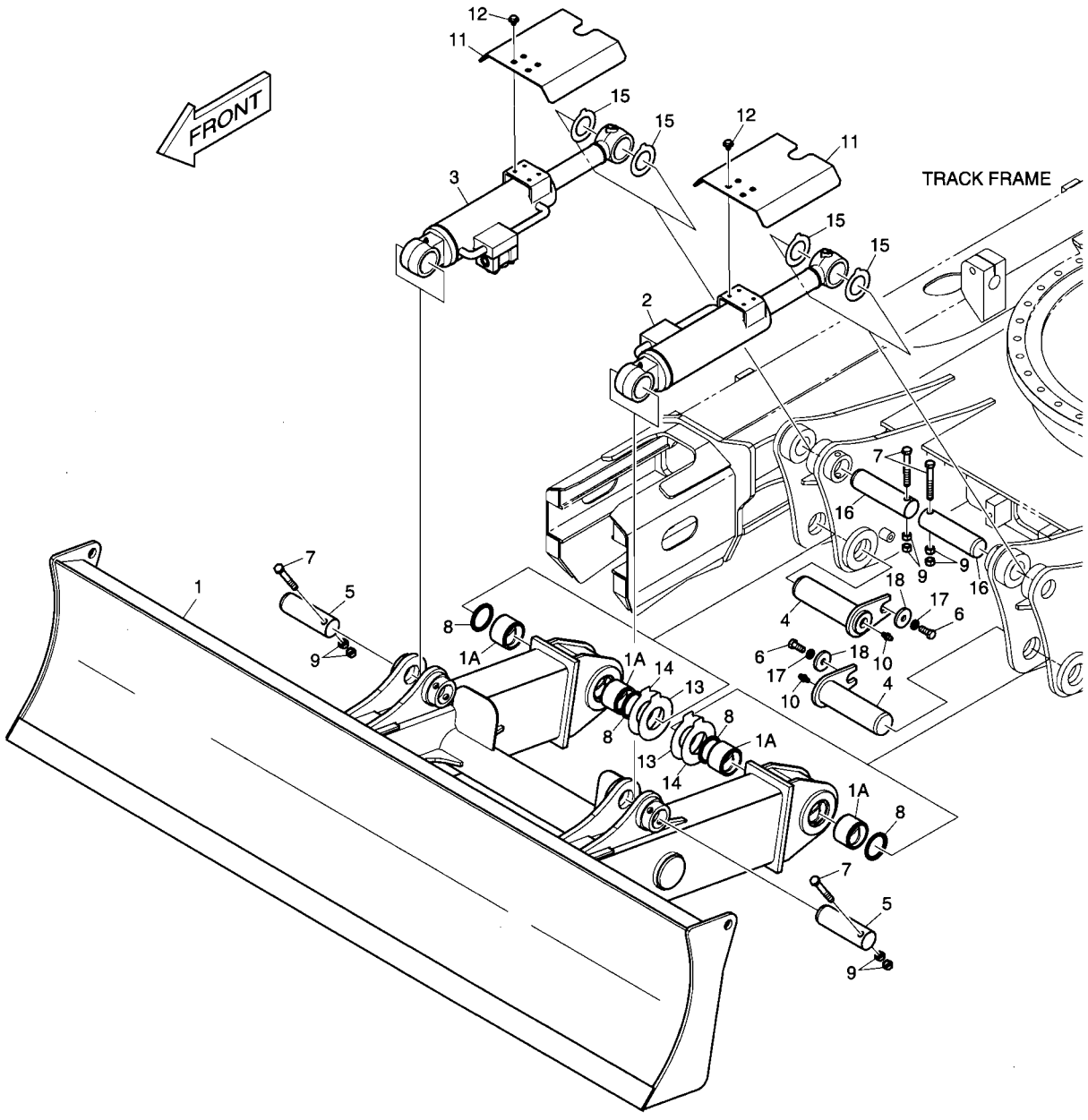

DATE	APR. 02, 2007
1st EDITION	

Fig. 6830 DOZER BLADE - 2690mm DOZER

Serial No. ;

Key No.	Part No.	Description	Description	Q'ty	S.C	Serial No.	ICA	Replaceable part	
								Part No.	Q'ty
6830--	K1018307B	DOZER ASS'Y(2690mm)	ENSEMBLE DOZER	-	D				
1	K1016403A	BLADE;DOZER(2690mm)	LAME DE DOZER	1					
1A	110-00021	. BUSH	. DOUILLE	4					
2	K1018308	CYLINDER;DOZER(L.H)	CYLINDRE DE DOZER	1					
3	K1018309	CYLINDER;DOZER(R.H)	CYLINDRE DE DOZER	1					
4	K1027008	PIN	GOUPILLE	2					
5	123-00172A	PIN	GOUPILLE	2					
6	S0565066	BOLT	BOULON	2					
7	S0566666	BOLT	BOULON	4					
8	2180-1106BD4	SEAL;DUST	JOINT	4					
9	S4012933	NUT M16X2.0	ECROU	8					
10	S6710043	NIPPLE;GREASE	MAMELON	2					
11	K1018310A	COVER	COUVERCLE	2					
12	DS0025014	BOLT;SET	BOULON	8					
13	DS7752008	SHIM	CALE	2					
14	DS7752009	SHIM	CALE	2					
15	DS7752040	SHIM;POLYMER	CALE	4					
16	123-00336A	PIN	GOUPILLE	2					
17	S5102901	WASHER;SPRING	RONDELLE ELASTIQUE	2					
18	2116-1060D6	STOPPER	ARRET	2					

DATE	APR. 02, 2007
1st EDITION	

Fig. 6840 DOZER PIPING
CONDUITES DOZER

Serial No. ;

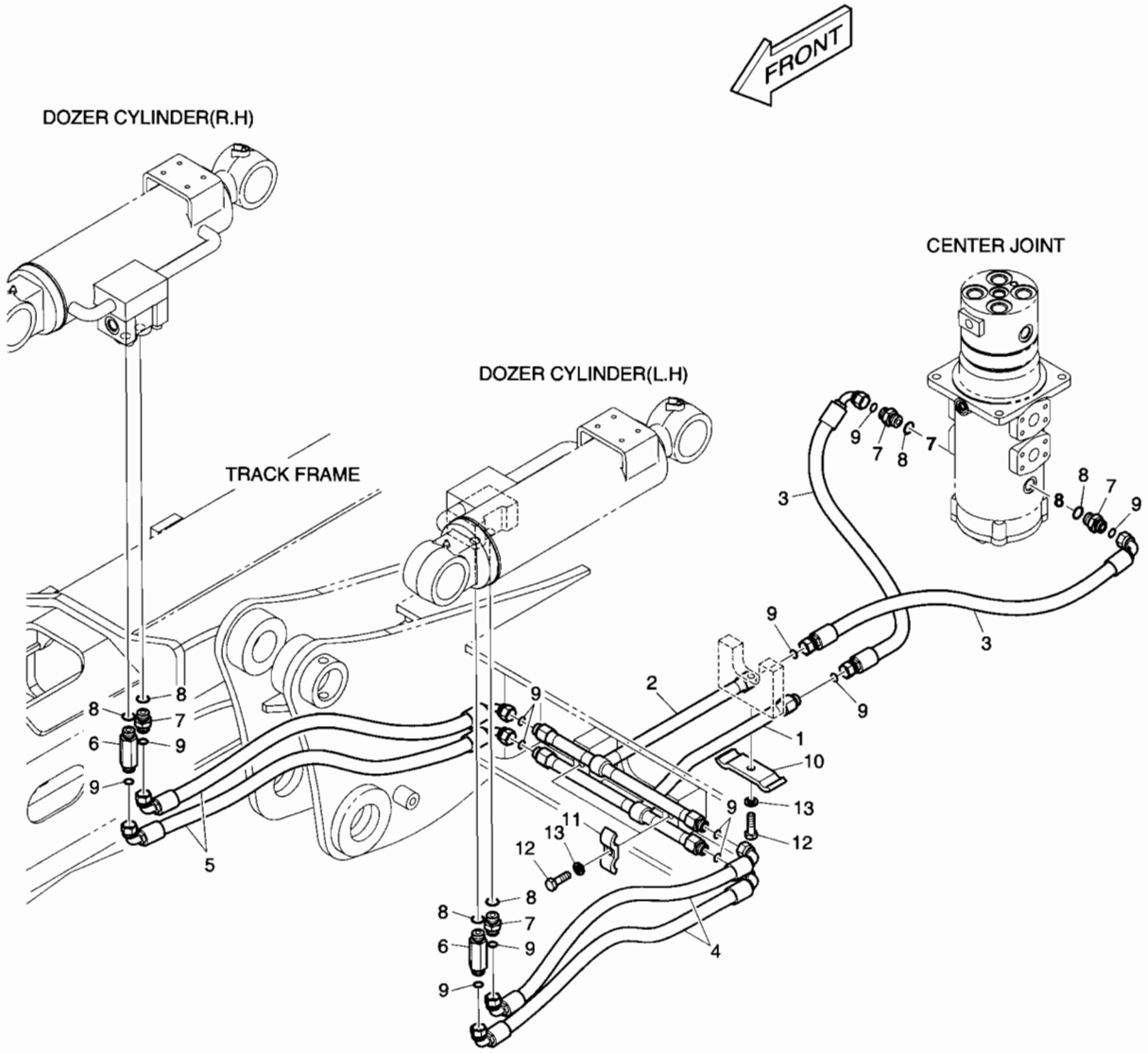

DATE	APR. 02, 2007
1st EDITION	

Fig. 6840 DOZER PIPING CONDUITES DOZER

Serial No. ;

Key No.	Part No.	Description	Description	Q'ty	S.C	Serial No.	ICA	Replaceable part	
								Part No.	Q'ty
6840--	K1018313B	BLADE PIPING	TUYAUTERIE DE LAME	-	D				
1	K1018337B	PIPE	TUYAU	1					
2	K1018338B	PIPE	TUYAU	1					
3	DS2013798	HOSE	TUYAU FLEXIBLE	2					
4	DS2023076	HOSE	TUYAU FLEXIBLE	2					
5	DS2023074	HOSE	TUYAU FLEXIBLE	2					
6	2181-4133D46	ADAPTER	ADAPTEUR	2					
7	2181-4133D3	ADAPTER	ADAPTEUR	4					
8	S8000181	O-RING	JOINT TORIQUE	6					
9	S8030081	O-RING	JOINT TORIQUE	12					
10	2124-1340D9	CLAMP;PIPE	COLLIER	1					
11	2124-1340D3	CLAMP;PIPE	COLLIER	2					
12	S0560566	BOLT	BOULON	3					
13	S5102703	WASHER;SPRING(M12)	RONDELLE ELASTIQUE	3					

DATE	APR. 02, 2007
1st EDITION	

Fig. 6850 TRACK FRAME - LONG CRAWLER
TRAIN DE ROULEMENT

Serial No. ;

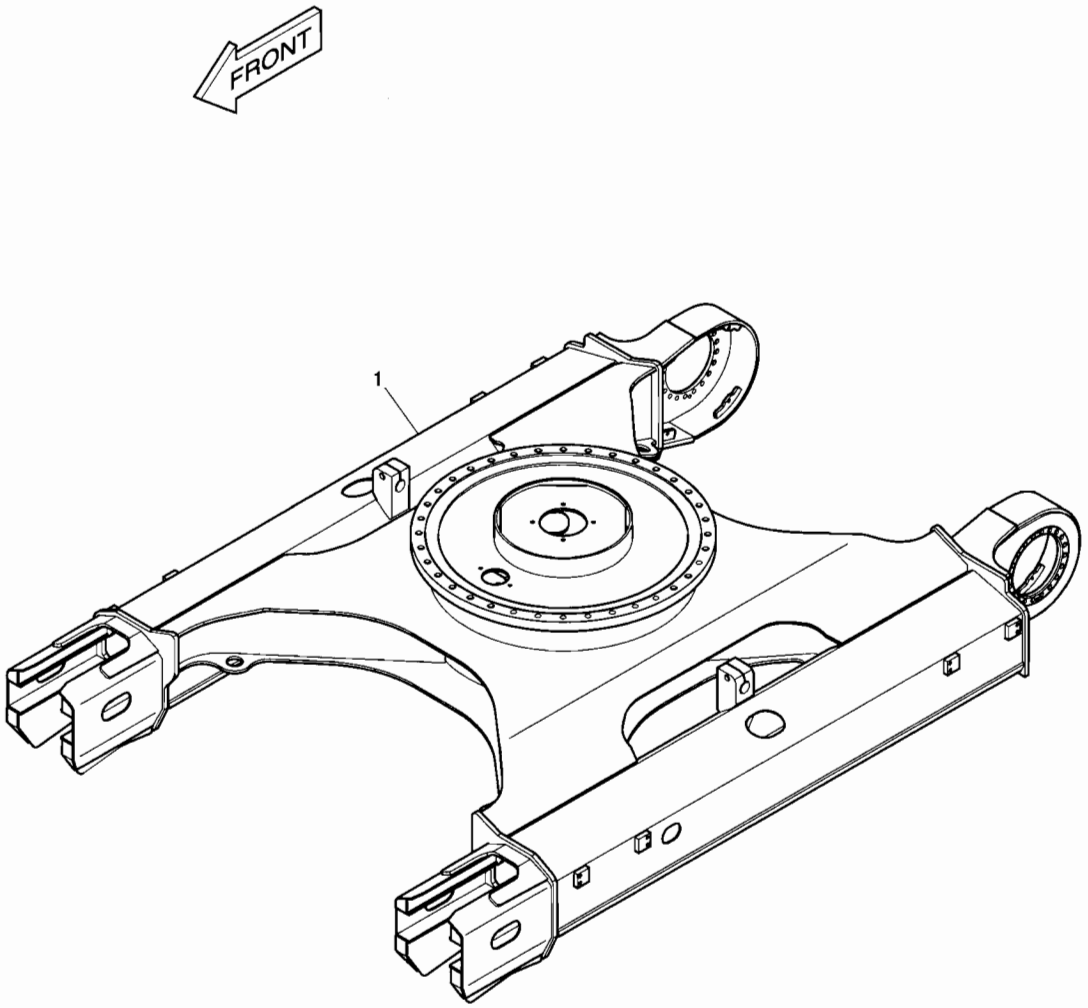

DATE	APR. 02, 2007
1st EDITION	

Fig. 6850 TRACK FRAME - LONG CRAWLER
TRAIN DE ROULEMENT

Serial No. ;

Key No.	Part No.	Description	Description	Q'ty	S.C	Serial No.	ICA	Replaceable part	
								Part No.	Q'ty
6850-1	K1011799E	FRAME;TRACK	ARMATURE	1					

DATE	APR. 02, 2007
1st EDITION	

Fig. 6860 TRAVEL PIPING - LONG CRAWLER
ARMATURE DE VOYAGE

Serial No. ;

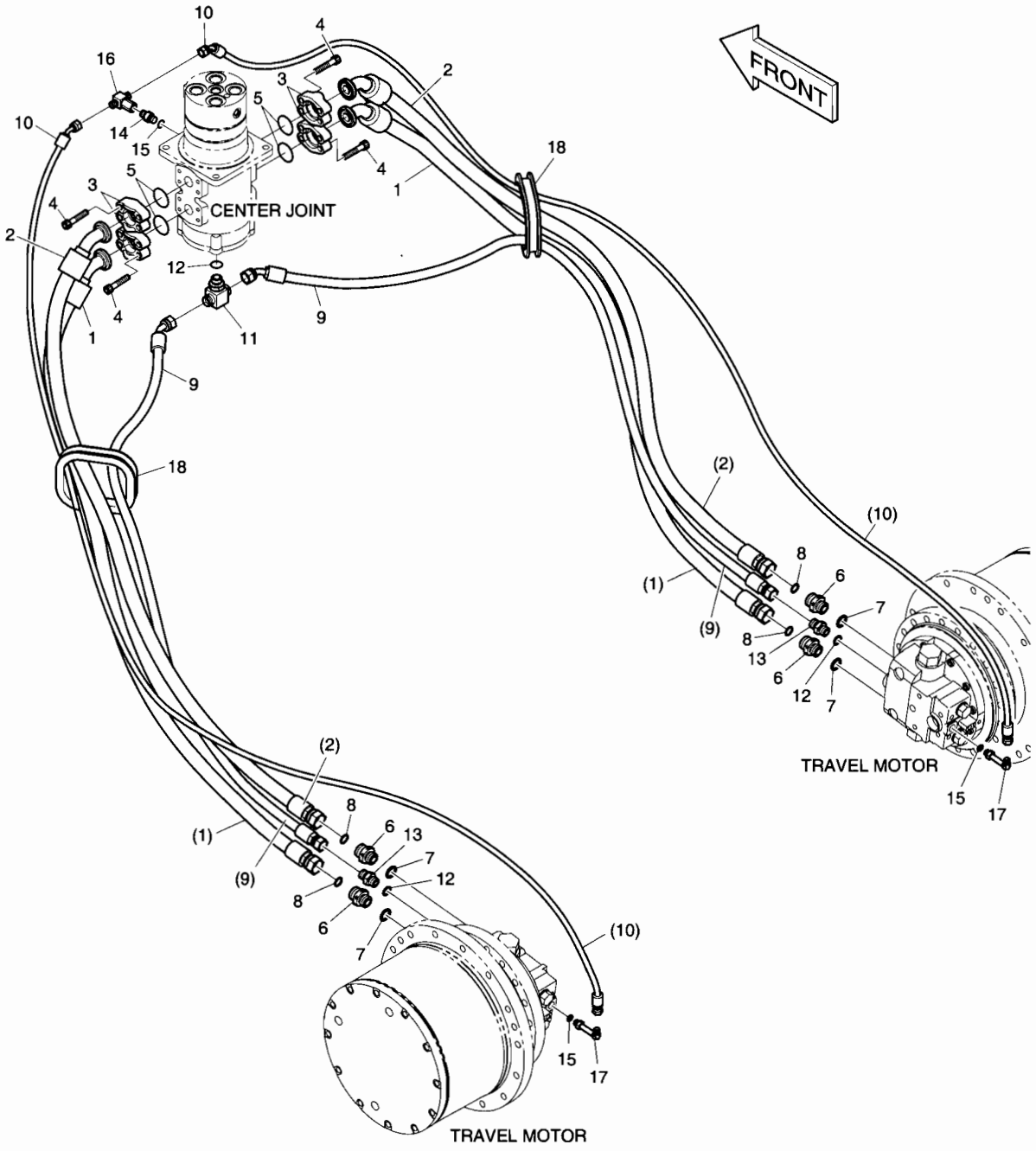

DATE	APR. 02, 2007
1st EDITION	

Fig. 6860 TRAVEL PIPING - LONG CRAWLER
ARMATURE DE VOYAGE

Serial No. ;

Key No.	Part No.	Description	Description	Q'ty	S.C	Serial No.	ICA	Replaceable part	
								Part No.	Q'ty
6860--	K1017486B	UNDER CARRIAGE PIPING	SOUS LA TUYAUTERIE DE	-	D				
1	2184-1222D13	HOSE	TUYAU FLEXIBLE	2					
2	DS2017052	HOSE	TUYAU FLEXIBLE	2					
3	2181-9081	FLANGE;SPLIT	BRIDE	8					
4	S2215466	BOLT;SOCKET M12X1.75X40	BOULON A 6 PANS CREUX	16					
5	2180-1026D19	O-RING	JOINT TORIQUE	4					
6	2181-2627D1	ADAPTER	ADAPTEUR	4					
7	S8000231	O-RING	JOINT TORIQUE	4					
8	S8030121	O-RING	JOINT TORIQUE	4					
9	2184-1060D160	HOSE	TUYAU FLEXIBLE	2					
10	DS2054375	HOSE	TUYAU FLEXIBLE	2					
11	2181-2281D10	TEE	TE	1					
12	S8000181	O-RING	JOINT TORIQUE	3					
13	2181-1126D6	ADAPTER	ADAPTEUR	2					
14	2181-1126D14	ADAPTER	ADAPTEUR	1					
15	S8000111	O-RING	JOINT TORIQUE	3					
16	2181-4125	TEE	TE	1					
17	2181-1702D56	ELBOW	COUDE	2					
18	DS7604004	BUSHING;RUBBER	DOUILLE EN CAOUTCHOUC	2					

DATE	APR. 02, 2007
1st EDITION	

Fig. 6870 TRACK SHOE ASS'Y - 500G(LONG CRAWLER) MAILLON DE CHAINE

Serial No. ;

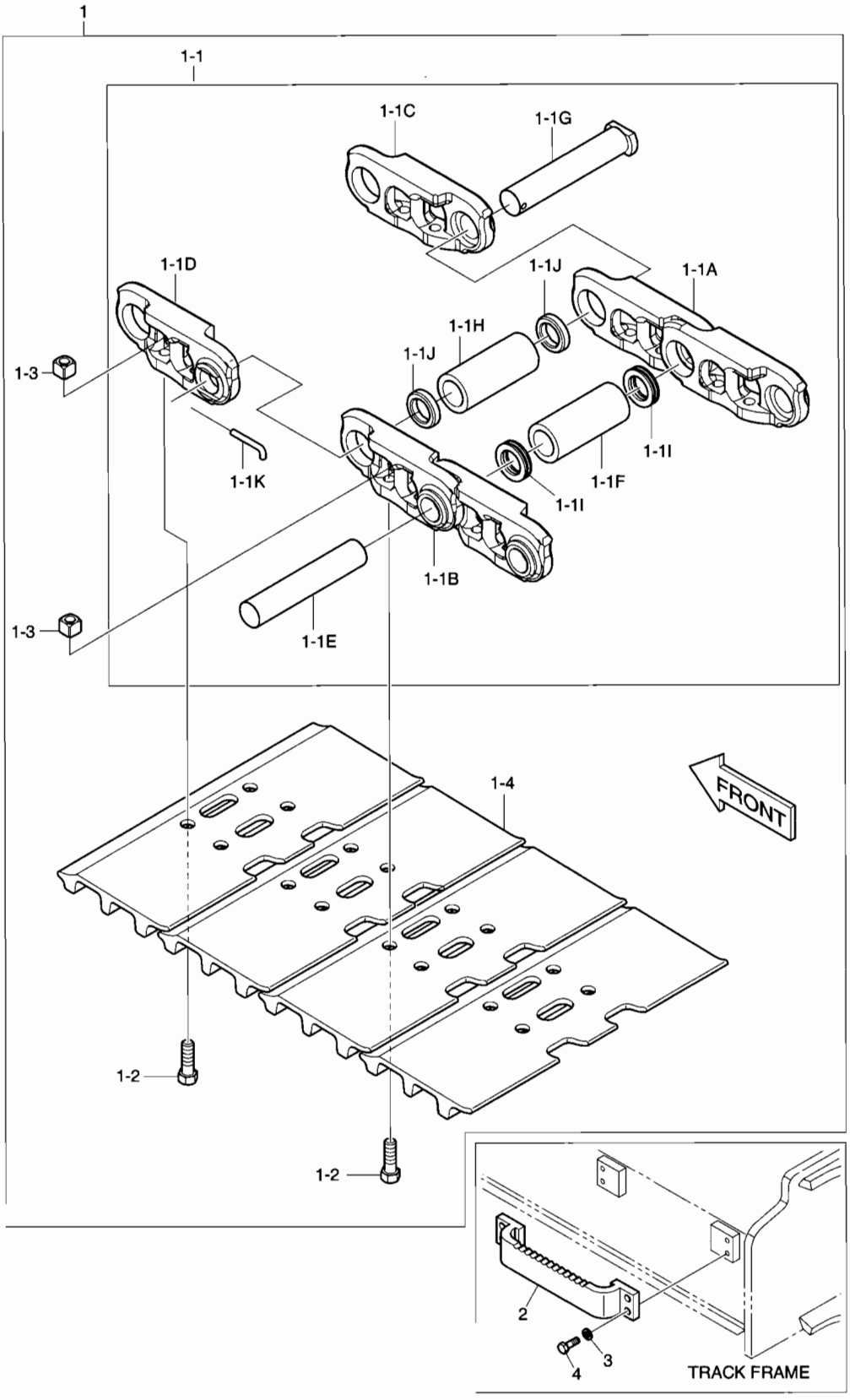

DATE	APR. 02, 2007
1st EDITION	

Fig. 6870 TRACK SHOE ASS'Y - 500G(LONG CRAWLER) MAILLON DE CHAINE

Serial No. ;

Key No.	Part No.	Description	Description	Q'ty	S.C	Serial No.	ICA	Replaceable part	
								Part No.	Q'ty
6870--	K1024575B	TRACK SHOE ASS'Y	MAILLON DE CHAINE	-	D				
1	K1024582	TRACK SHOE ASS'Y 500G	MAILLON DE CHAINE	2					
1-1	K1018230	. TRACK LINK ASS'Y	. ENSEMBLE MAILLON DE	1					
1-1A	K1018214	.. LINK - R.H	.. ARTICULATION	45					
1-1B	K1018215	.. LINK - L.H	.. ARTICULATION	45					
1-1C	K1018216	.. LINK;MASTER - R.H	.. ARTICULATION	1					
1-1D	K1018217	.. LINK;MASTER - L.H	.. ARTICULATION	1					
1-1E	K1018218	.. PIN;REGULAR	.. GOUPILLE	45					
1-1F	K1018220	.. BUSHING;REGULAR	.. DOUILLE	45					
1-1G	K1018219	.. PIN;MASTER	.. GOUPILLE	1					
1-1H	K1018221	.. BUSHING;MASTER	.. DOUILLE PRINCIPALE	1					
1-1I	K1018222	.. SEAL;DUST	.. JOINT	90					
1-1J	K1018223	.. SPACER	.. DOUILLE D'ECARTEMENT	2					
1-1K	K1018229	.. PIN;CLAMPING	.. GOUPILLE	1					
1-2	K1018234	. BOLT	. BOULON A 6 PANS	184					
1-3	K1018235	. NUT	. ECROU	184					
1-4	K1018236	. SHOE 500mm	. SABOT	46					
2	K1024484D2	STEP	MARCHER	4					
3	S5102703	WASHER;SPRING	RONDELLE ELASTIQUE	16					
4	S0515366	BOLT	BOULON A 6 PANS	16					

Fig. 6880 TRACK SHOE ASS'Y - 600G(LONG CRAWLER) MAILLON DE CHAINE

Serial No. ;

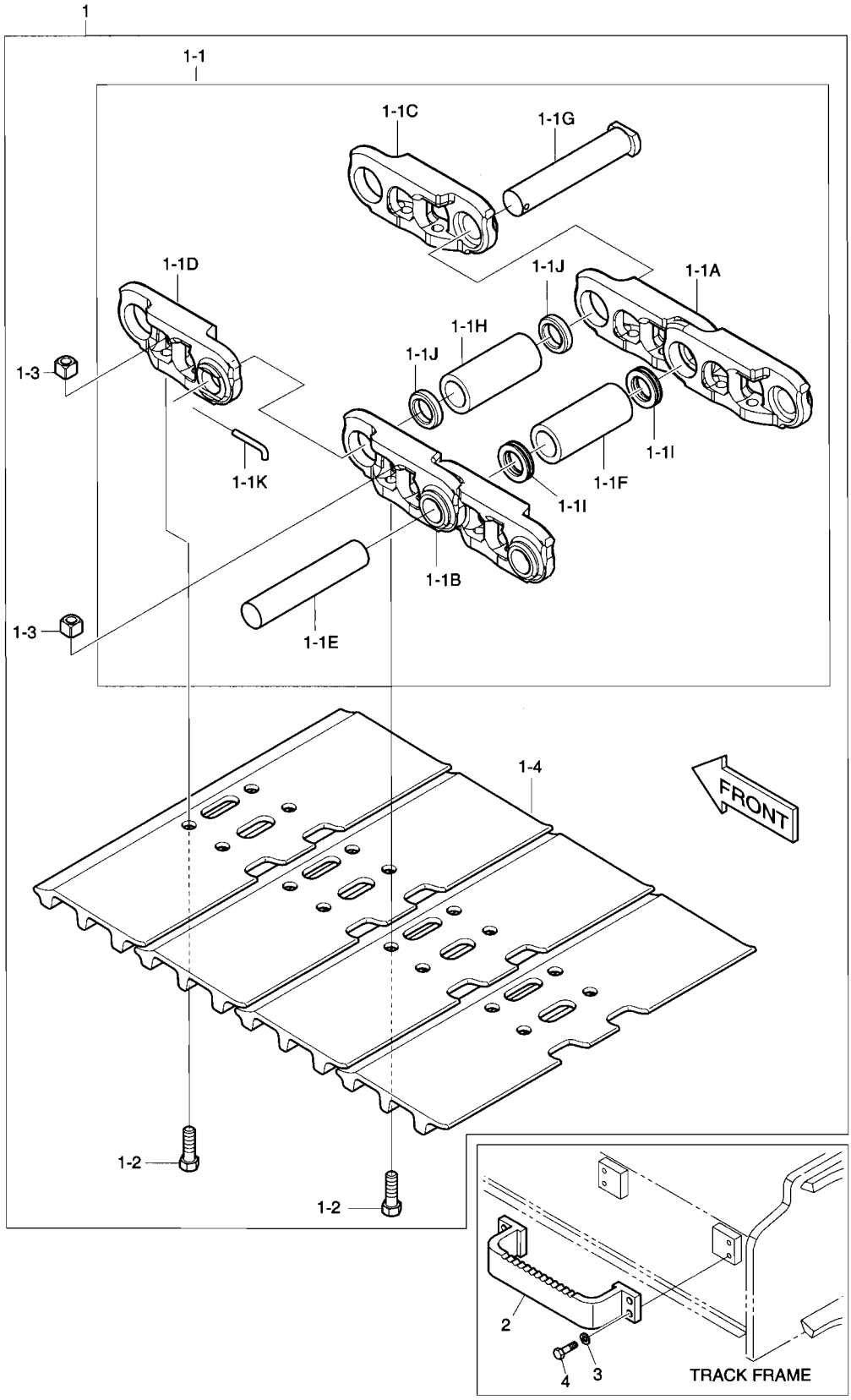

DATE	APR. 02, 2007
1st EDITION	

Fig. 6880 TRACK SHOE ASS'Y - 600G(LONG CRAWLER) MAILLON DE CHAINE

Serial No. ;

Key No.	Part No.	Description	Description	Q'ty	S.C	Serial No.	ICA	Replaceable part	
								Part No.	Q'ty
6880--	K1015214B	TRACK SHOE ASS'Y	MAILLON DE CHAINE	-	D				
1	K1015317	TRACK SHOE ASS'Y 600G	MAILLON DE CHAINE	2					
1-1	K1018230	. TRACK LINK ASS'Y	. ENSEMBLE MAILLON DE	1					
1-1A	K1018214	.. LINK - R.H	.. ARTICULATION	45					
1-1B	K1018215	.. LINK - L.H	.. ARTICULATION	45					
1-1C	K1018216	.. LINK;MASTER - R.H	.. ARTICULATION	1					
1-1D	K1018217	.. LINK;MASTER - L.H	.. ARTICULATION	1					
1-1E	K1018218	.. PIN;REGULAR	.. GOUPILLE	45					
1-1F	K1018220	.. BUSHING;REGULAR	.. DOUILLE	45					
1-1G	K1018219	.. PIN;MASTER	.. GOUPILLE	1					
1-1H	K1018221	.. BUSHING;MASTER	.. DOUILLE PRINCIPALE	1					
1-1I	K1018222	.. SEAL;DUST	.. JOINT	90					
1-1J	K1018223	.. SPACER	.. DOUILLE D'ECARTEMENT	2					
1-1K	K1018229	.. PIN;CLAMPING	.. GOUPILLE	1					
1-2	K1018234	. BOLT	. BOULON A 6 PANS	184					
1-3	K1018235	. NUT	. ECROU	184					
1-4	K1018242	. SHOE 600mm	. SABOT	46					
2	K1024484D1	STEP	MARCHER	4					
3	S5102703	WASHER;SPRING	RONDELLE ELASTIQUE	16					
4	S0515366	BOLT	BOULON A 6 PANS	16					

Fig. 6890 TRACK SHOE ASS'Y - 700G(LONG CRAWLER) MAILLON DE CHAINE

Serial No. ;

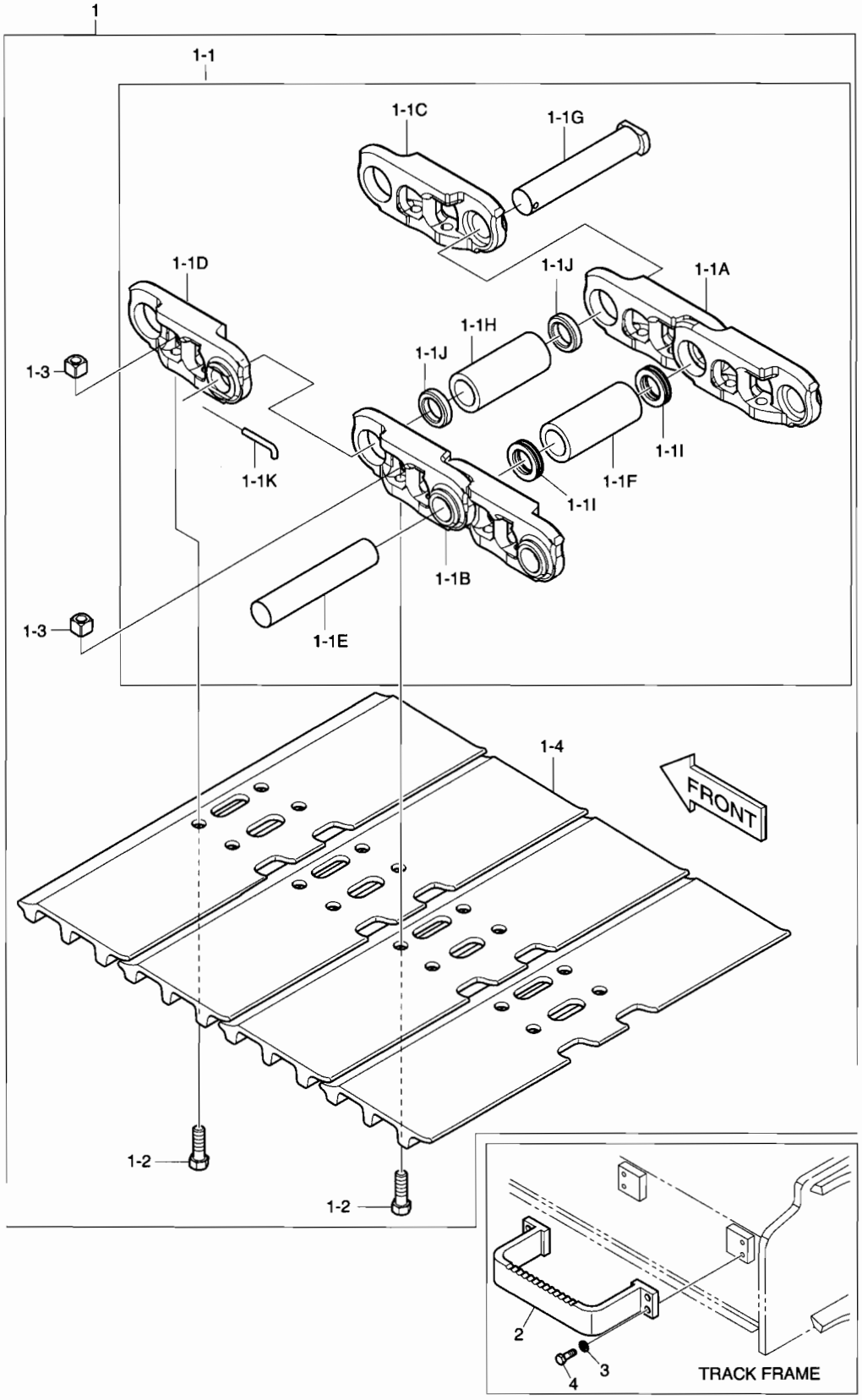

DATE	APR. 02, 2007
1st EDITION	

Fig. 6890 TRACK SHOE ASS'Y - 700G(LONG CRAWLER) MAILLON DE CHAINE

Serial No. ;

Key No.	Part No.	Description	Description	Q'ty	S.C	Serial No.	ICA	Replaceable part	
								Part No.	Q'ty
6890--	K1024576B	TRACK SHOE ASS'Y	MAILLON DE CHAINE	-	D				
1	K1024583	TRACK SHOE ASS'Y 700G	MAILLON DE CHAINE	2					
1-1	K1018230	. TRACK LINK ASS'Y	. ENSEMBLE MAILLON DE	1					
1-1A	K1018214	.. LINK - R.H	.. ARTICULATION	45					
1-1B	K1018215	.. LINK - L.H	.. ARTICULATION	45					
1-1C	K1018216	.. LINK;MASTER - R.H	.. ARTICULATION	1					
1-1D	K1018217	.. LINK;MASTER - L.H	.. ARTICULATION	1					
1-1E	K1018218	.. PIN;REGULAR	.. GOUPILLE	45					
1-1F	K1018220	.. BUSHING;REGULAR	.. DOUILLE	45					
1-1G	K1018219	.. PIN;MASTER	.. GOUPILLE	1					
1-1H	K1018221	.. BUSHING;MASTER	.. DOUILLE PRINCIPALE	1					
1-1I	K1018222	.. SEAL;DUST	.. JOINT	90					
1-1J	K1018223	.. SPACER	.. DOUILLE D'ECARTEMENT	2					
1-1K	K1018229	.. PIN;CLAMPING	.. GOUPILLE	1					
1-2	K1018234	. BOLT	. BOULON A 6 PANS	184					
1-3	K1018235	. NUT	. ECROU	184					
1-4	K1018243	. SHOE 700mm	. SABOT	46					
2	K1024484D3	STEP	MARCHER	4					
3	S5102703	WASHER;SPRING	RONDELLE ELASTIQUE	16					
4	S0515366	BOLT	BOULON A 6 PANS	16					

DATE	APR. 02, 2007
1st EDITION	

Fig. 6900 TRACK FRAME - DOZER(LONG)
TRAIN DE ROULEMENT

Serial No. ;

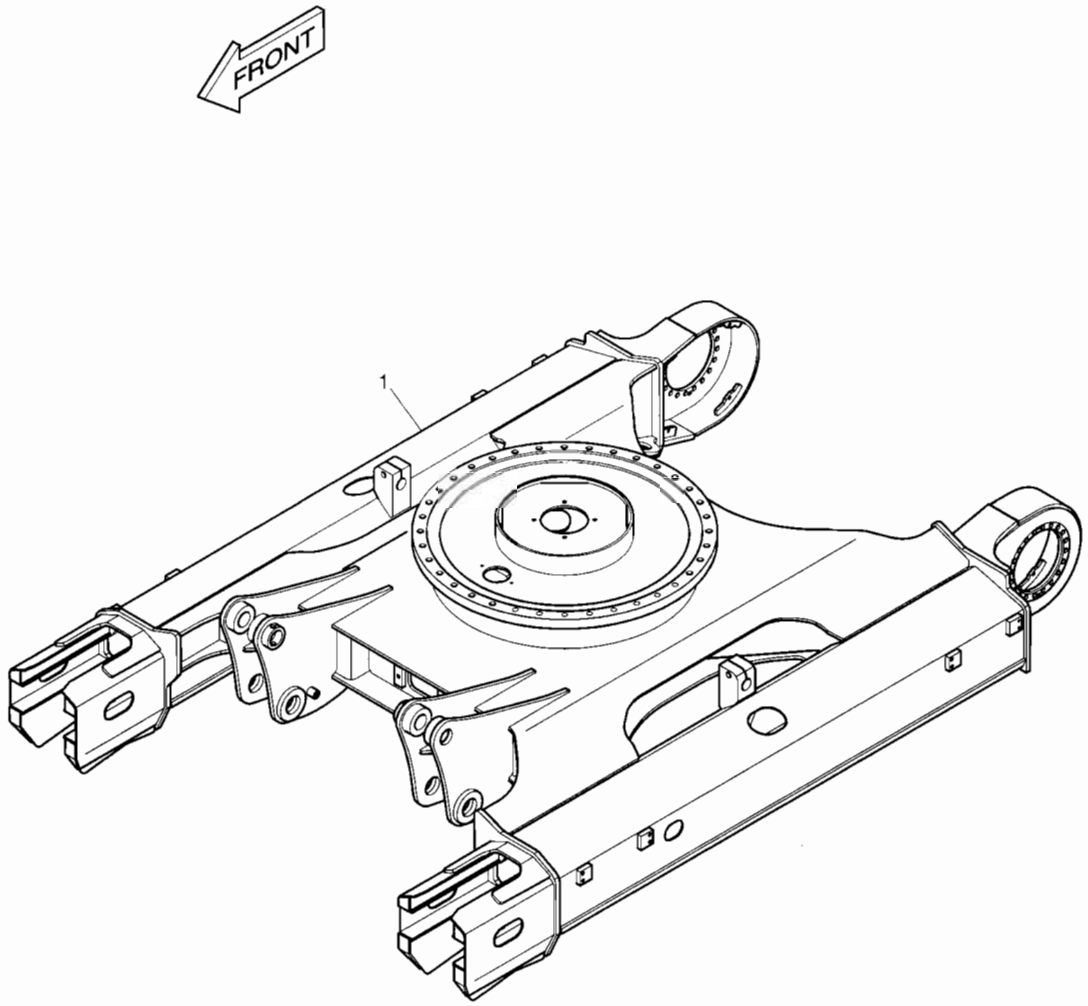

DATE	APR. 02, 2007
1st EDITION	

Fig. 6900 TRACK FRAME - DOZER(LONG) TRAIN DE ROULEMENT

Serial No. ;

Key No.	Part No.	Description	Description	Q'ty	S.C	Serial No.	ICA	Replaceable part	
								Part No.	Q'ty
6900-1	K1015818E	FRAME;TRACK(DOZER)	ARMATURE	1					

Fig. 6910 MAIN PIPING - ARTI BOOM
CONDUITES DE PRINCIPAL

Serial No. ;

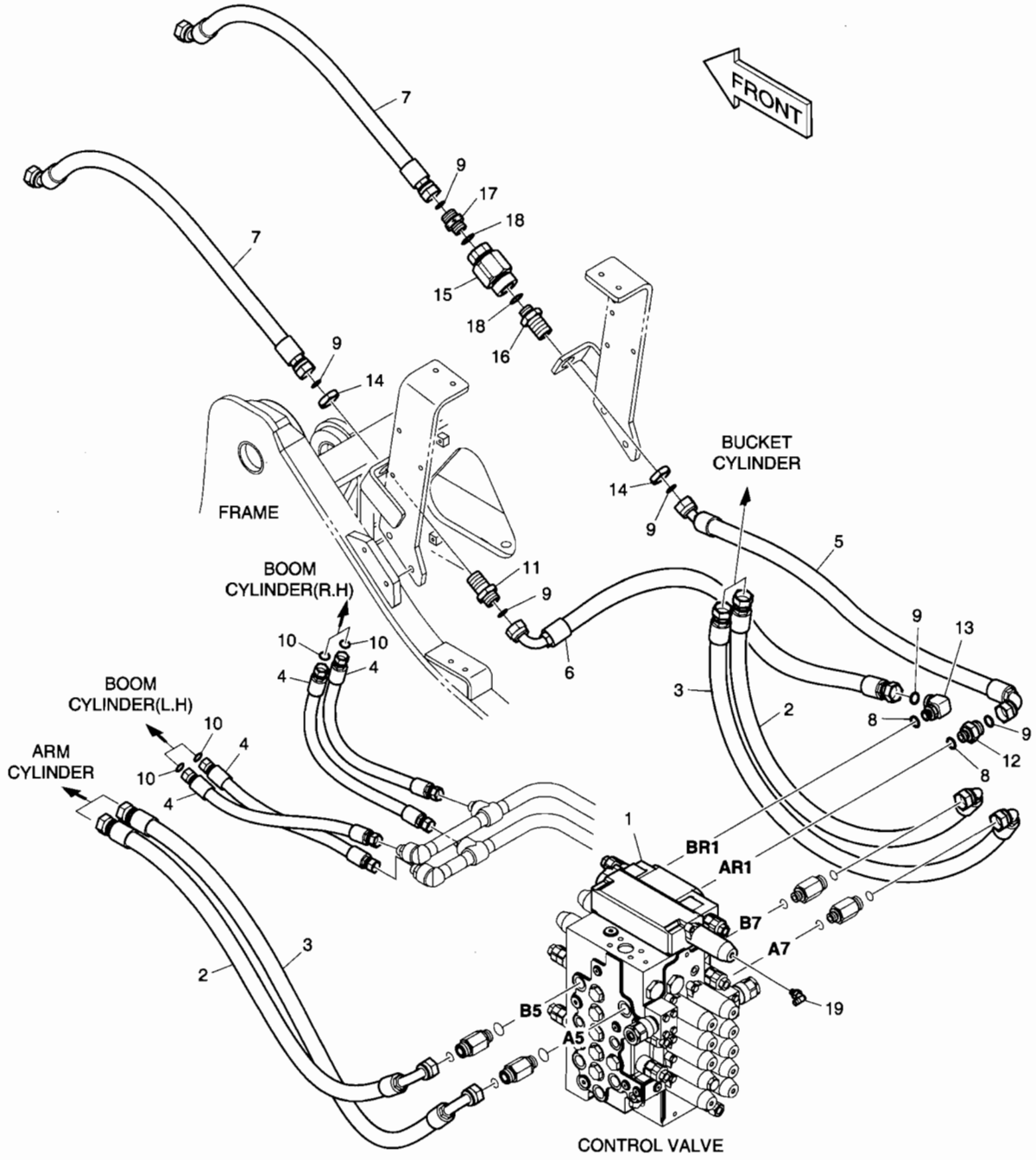

DATE	APR. 02, 2007
1st EDITION	

Fig. 6910 MAIN PIPING - ARTI BOOM CONDUITES DE PRINCIPAL

Serial No. ;

Key No.	Part No.	Description	Description	Q'ty	S.C	Serial No.	ICA	Replaceable part	
								Part No.	Q'ty
6910--	K1016150B	MAIN PIPING;ARTI BOOM	TUYAUTERIE PRINCIPALE	-	D				
1	K1013536	VALVE;CONTROL;ARTI OR	VANNE	1					
2	DS2013318	HOSE	TUYAU FLEXIBLE	2					
3	DS2013197	HOSE	TUYAU FLEXIBLE	2					
4	DS2011630	HOSE	TUYAU FLEXIBLE	4					
5	DS2021176	HOSE	TUYAU FLEXIBLE	1					
6	DS2013792	HOSE	TUYAU FLEXIBLE	1					
7	DS2012375	HOSE	TUYAU FLEXIBLE	2					
8	S8000181	O-RING	JOINT TORIQUE	2					
9	S8030121	O-RING	JOINT TORIQUE	6					
10	S8030081	O-RING	JOINT TORIQUE	4					
11	DS2415007	ADAPTER	ADAPTEUR	1					
12	DS2257002	ADAPTER	ADAPTEUR	1					
13	2181-2294D1	ELBOW	COUDE	1					
14	121-00010D8	NUT	ECROU	2					
15	2420-9101A	VALVE;SLOW RETURN	VANNE	1					
16	DS2465018	ADAPTER	ADAPTEUR	1					
17	2181-2627D1	ADAPTER	ADAPTEUR	1					
18	S8000241	O-RING	JOINT TORIQUE	2					
19	2181-1702D4	ELBOW	COUDE	1					

DATE	APR. 02, 2007
1st EDITION	

Fig. 6920 PILOT PIPING - ARTI BOOM
CONDUITES DE PILOTE

Serial No. ;

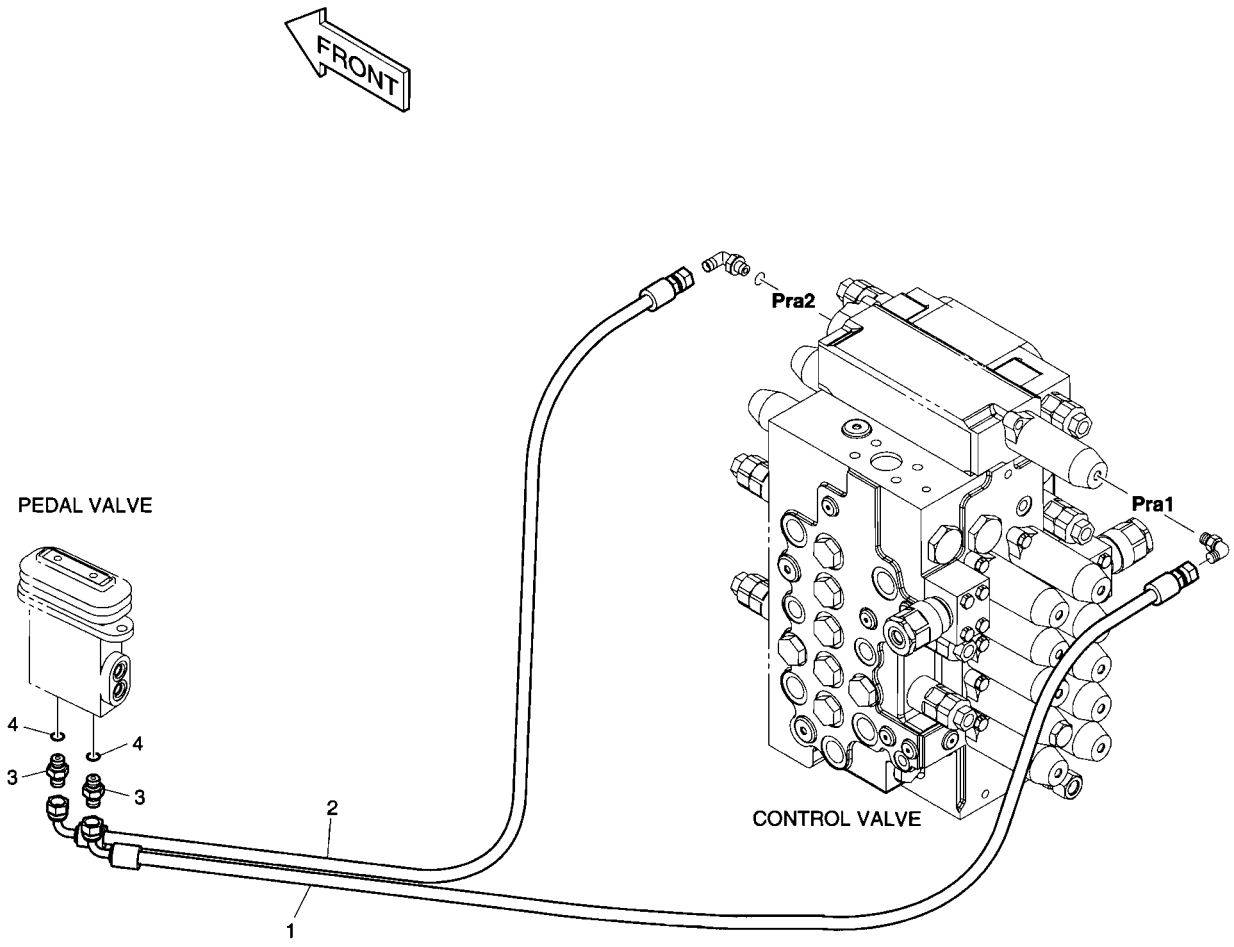

DATE	APR. 02, 2007
1st EDITION	

Fig. 6920 PILOT PIPING - ARTI BOOM
CONDUITES DE PILOTE

Serial No. ;

Key No.	Part No.	Description	Description	Q'ty	S.C	Serial No.	ICA	Replaceable part	
								Part No.	Q'ty
6920--	K1024567A	PILOT PIPING;ARTI	CONDUITES DE PILOTE	-	D				
1	DS2093105	HOSE	TUYAU FLEXIBLE	1					
2	DS2093255	HOSE	TUYAU FLEXIBLE	1					
3	2181-1126D14	ADAPTER	ADAPTEUR	2					
4	S8000111	O-RING	JOINT TORIQUE	2					

DATE	APR. 02, 2007
1st EDITION	

Fig. 6930 ARTI BOOM
PERCHE D'ARTI

Serial No. ;

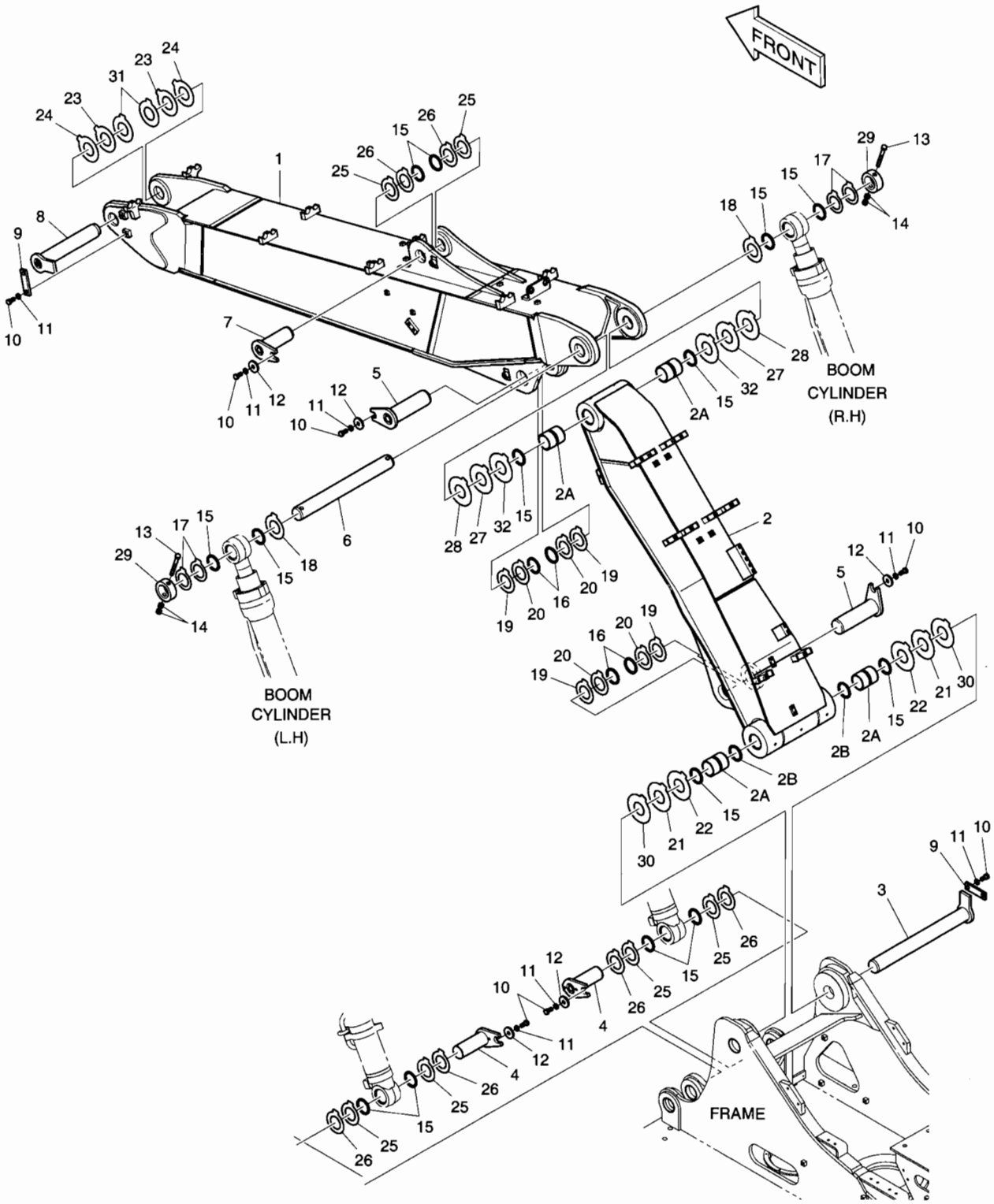

DATE	APR. 02, 2007
1st EDITION	

Fig. 6930 ARTI BOOM PERCHE D'ARTI

Serial No. ;

Key No.	Part No.	Description	Description	Q'ty	S.C	Serial No.	ICA	Replaceable part	
								Part No.	Q'ty
6930--	K1008201B	ARTI BOOM	PERCHE D'ARTI	-	D				
1	K1008202A	BOOM;UPPER	FLECHE	1					
2	K1008232A	BOOM;LOWER	FLECHE	1					
2A	110-00240	. BUSH	. DOUILLE	4					
2B	2180-1106BD4	. SEAL;DUST	. JOINT	2					
3	123-00671B	PIN	GOUPILLE	1					
4	123-00474	PIN	GOUPILLE	2					
5	K1008227	PIN	GOUPILLE	2					
6	K1004508A	PIN	GOUPILLE	1					
7	2123-2209C	PIN	GOUPILLE	1					
8	2123-2207E	PIN	GOUPILLE	1					
9	621-03710A	PLATE;STOPPER	PLAQUE	2					
10	S0521366	BOLT M16X2.0X35	BOULON	9					
11	S5102903	WASHER;SPRING	RONDELLE ELASTIQUE	9					
12	2116-1060D6	STOPPER	ARRET	5					
13	S0566966	BOLT M16X2.0X140	BOULON	2					
14	S4012933	NUT M16X2.0	ECROU	4					
15	2180-1106BD4	SEAL;DUST	JOINT	14					
16	2180-1106BD24	SEAL;DUST	JOINT	4					
17	DS7752003	SHIM	CALE	4					
18	DS7752006	SHIM 1.0mm	CALE	2					
19	DS7752026	SHIM 1.0mm	CALE	4					
20	DS7752027	SHIM 1.6mm	CALE	4					
21	DS7752011	SHIM	CALE	2					
22	DS7752023	SHIM	CALE	2					
23	DS7752008	SHIM	CALE	2					
24	DS7752009	SHIM	CALE	2					
25	DS7752004	SHIM	CALE	6					
26	DS7752005	SHIM	CALE	6					
27	DS7752059	SHIM 1.0t	CALE	2					
28	DS7752060	SHIM 1.6t	CALE	2					
29	2116-1532A	STOPPER	ARRET	2					
30	DS7752089	SHIM 1.3mm	CALE	2					
31	DS7752090	SHIM 1.3mm	CALE	2					
32	DS7752091	SHIM	CALE	2					

DATE	APR. 02, 2007
1st EDITION	

Fig. 6940 ARTI BOOM PIPING
TUYAUTERIE DE PERCHE D'ARTI

Serial No. ;

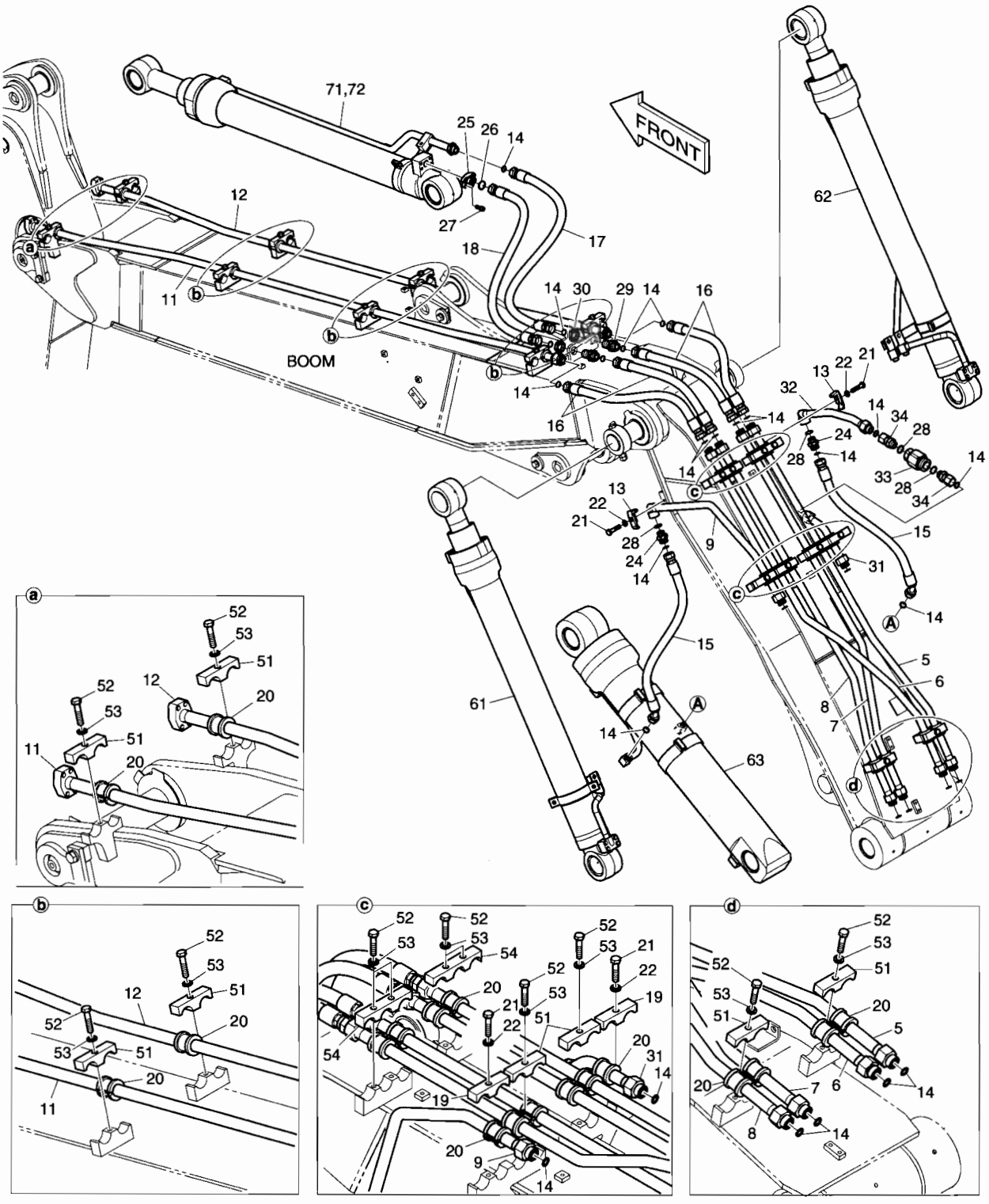

DATE	APR. 02, 2007
1st EDITION	

Fig. 6940 ARTI BOOM PIPING
TUYAUTERIE DE PERCHE D'ARTI

Serial No. ;

Key No.	Part No.	Description	Description	Q'ty	S.C	Serial No.	ICA	Replaceable part	
								Part No.	Q'ty
6940--	K1008262C	ARTI BOOM PIPING	PERCHE ASS'Y D'ARTI	-	D				
5	K1008263	PIPE	TUYAU	1					
6	K1008264	PIPE	TUYAU	1					
7	K1008265	PIPE	TUYAU	1					
8	K1008266	PIPE	TUYAU	1					
9	K1008267B	PIPE	TUYAU	1					
11	K1008269	PIPE	TUYAU	1					
12	K1008739	PIPE	TUYAU	1					
13	2124-1026D2	CLAMP;PIPE	COLLIER	2					
14	S8030121	O-RING	JOINT TORIQUE	23					
15	DS2012316	HOSE	TUYAU FLEXIBLE	2					
16	DS2011504	HOSE	TUYAU FLEXIBLE	4					
17	DS2011505	HOSE	TUYAU FLEXIBLE	1					
18	DS2016070	HOSE	TUYAU FLEXIBLE	1					
19	K1004316	CLAMP;PIPE	COLLIER	2					
20	K1000294A	RUBBER	CAOUTCHOUC	22					
21	S0560866	BOLT	BOULON	4					
22	S5102703	WASHER;SPRING(M12)	RONDELLE ELASTIQUE	4					
24	2181-2627D1	ADAPTER	ADAPTEUR	2					
25	2181-9079	FLANGE;SPLIT	BRIDE	2					
26	2180-1026D2	O-RING	JOINT TORIQUE	1					
27	S2212266	BOLT;SOCKET M10X1.5X30	BOULON A 6 PANS CREUX	4					
28	S8000231	O-RING	JOINT TORIQUE	4					
29	DS2415007	ADAPTER	ADAPTEUR	2					
30	121-00010D8	NUT	ECROU	2					
31	K1026623A	PIPE	TUYAU	1					
32	K1026624A	PIPE	TUYAU	1					
33	K1025252	VALVE;SLOW RETURN	VANNE	1					
34	2181-2566D10	ADAPTER	ADAPTEUR	2					
51	K1004316	CLAMP;PIPE	COLLIER	12					
52	S0560866	BOLT	BOULON	16					
53	S5102703	WASHER;SPRING(M12)	RONDELLE ELASTIQUE	16					
54	K1004317	CLAMP;PIPE	COLLIER	2					
61	K1027313	CYLINDER;BOOM(L.H)	VERIN DE FLECHE	1					
62	K1027314	CYLINDER;BOOM(R.H)	VERIN DE FLECHE	1					
63	K1008737A	CYLINDER;ARTI BOOM	CYLINDRE	1					
71	K1008738	CYLINDER;ARM 2.1m	VERIN DE BALANCIER	1					
72	K1008740	CYLINDER;ARM 2.5m	VERIN DE BALANCIER	1					

DATE	APR. 02, 2007
1st EDITION	

Fig. 6950 LUBRICATION PIPING - ARTI BOOM
TUYAUTERIE DE LUBRIFICATION

Serial No. ;

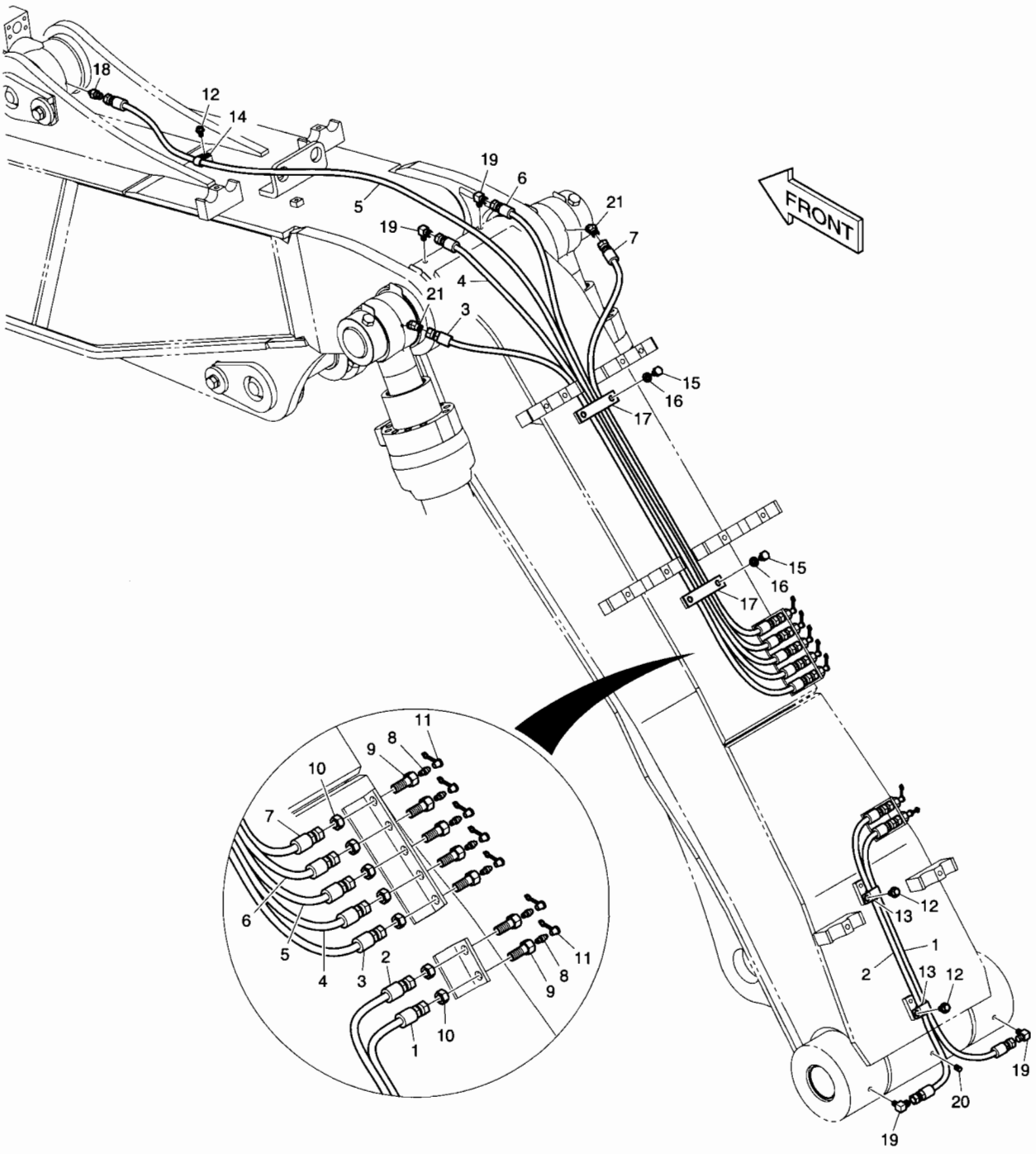

DATE	APR. 02, 2007
1st EDITION	

Fig. 6950 LUBRICATION PIPING - ARTI BOOM
TUYAUTERIE DE LUBRIFICATION

Serial No. ;

Key No.	Part No.	Description	Description	Q'ty	S.C	Serial No.	ICA	Replaceable part	
								Part No.	Q'ty
6950--	K1008261C	LUBRICATION PIPING;ARTI BOOM	LUBRIFICATION	-	D				
1	2184-1045D66	HOSE	TUYAU FLEXIBLE	1					
2	2184-1045D200	HOSE	TUYAU FLEXIBLE	1					
3	DS2053955	HOSE	TUYAU FLEXIBLE	1					
4	DS2053942	HOSE	TUYAU FLEXIBLE	1					
5	DS2053883	HOSE	TUYAU FLEXIBLE	1					
6	DS2053773	HOSE	TUYAU FLEXIBLE	1					
7	2184-1045D190	HOSE	TUYAU FLEXIBLE	1					
8	S6710041	NIPPLE;GREASE	MAMELON	7					
9	181-00103	REDUCER	REDUCEUR	7					
10	121-00006	NUT	ECROU	7					
11	160-00020	CAP;GREASE NIPPLE	CHAPEAU	7					
12	K1001029	BOLT	BOULON	3					
13	124-00199D5	CLIP	AGRAFE	2					
14	2124-1353D2	CLIP	AGRAFE	1					
15	S0511566	BOLT	BOULON	4					
16	S5102603	WASHER;SPRING(M10)	RONDELLE ELASTIQUE	4					
17	K1008754	CLAMP;PIPE	COLLIER	2					
18	2181-4112	ADAPTER	ADAPTEUR	1					
19	2181-1186D12	ELBOW	COUDE	4					
20	S3524403	PLUG;DRAIN	BOUCHON	1					
21	DS2331015	ELBOW	COUDE	2					

DATE	APR. 02, 2007
1st EDITION	

Fig. 6960 MAIN PIPING - ONE WAY (ARTI) CONDUITES DE PRINCIPAL

Serial No. ;

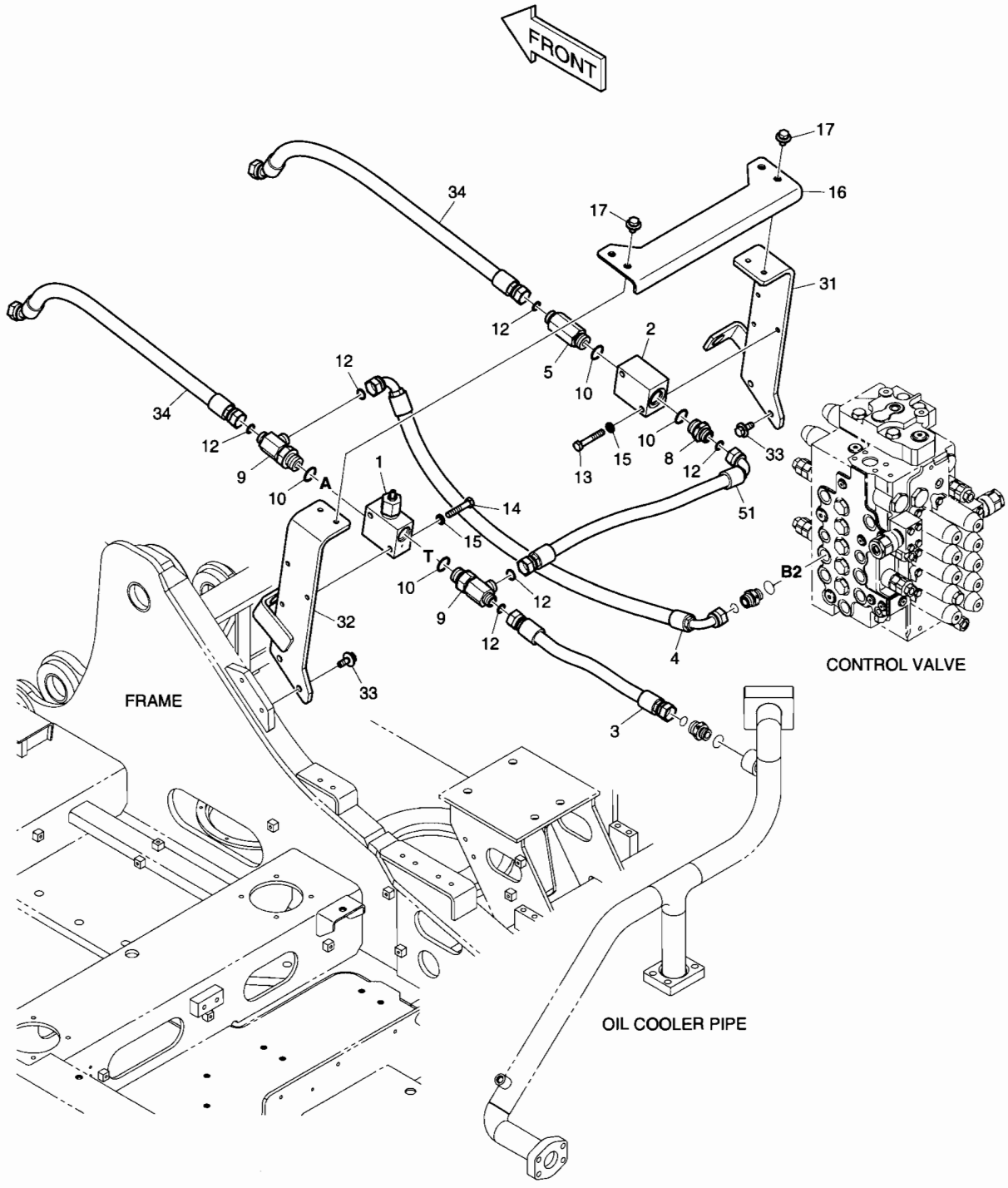

DATE	APR. 02, 2007
1st EDITION	

Fig. 6960 MAIN PIPING - ONE WAY (ARTI) CONDUITES DE PRINCIPAL

Serial No. ;

Key No.	Part No.	Description	Description	Q'ty	S.C	Serial No.	ICA	Replaceable part	
								Part No.	Q'ty
6960--	K1027398A	MAIN PIPING;ONE WAY ARTI	TUYAUTERIE PRINCIPALE	-	D				
1	426-00267A	VALVE;RELIEF	VANNE	1					
2	423-00193B	BLOCK	BLOC	1					
3	DS2011608	HOSE	TUYAU FLEXIBLE	1					
4	DS2023325	HOSE 1 3/16"-670L	TUYAU FLEXIBLE	1					
5	DS2232121	ADAPTER	ADAPTEUR	1					
8	2181-2627D15	ADAPTER	ADAPTEUR	1					
9	2181-2293D2	TEE	TE	2					
10	S8000291	O-RING	JOINT TORIQUE	4					
12	S8030121	O-RING	JOINT TORIQUE	6					
13	S0561266	BOLT	BOULON	2					
14	S0561066	BOLT	BOULON	2					
15	S5102703	WASHER;SPRING(M12)	RONDELLE ELASTIQUE	4					
16	K1016101	BRACKET	SUPPORT	1					
17	DS0025019	BOLT;SET	BOULON	4					
31	K1023924	BRACKET	SUPPORT	1					
32	K1023923	BRACKET	SUPPORT	1					
33	DS0025020	BOLT;SET	BOULON	4					
34	DS2012373	HOSE	TUYAU FLEXIBLE	2					
51	DS2013626	HOSE	TUYAU FLEXIBLE	1					

DATE	APR. 02, 2007
1st EDITION	

Fig. 6970 MAIN PIPING - TWO WAY (ARTI) CONDUITES DE PRINCIPAL

Serial No. ;

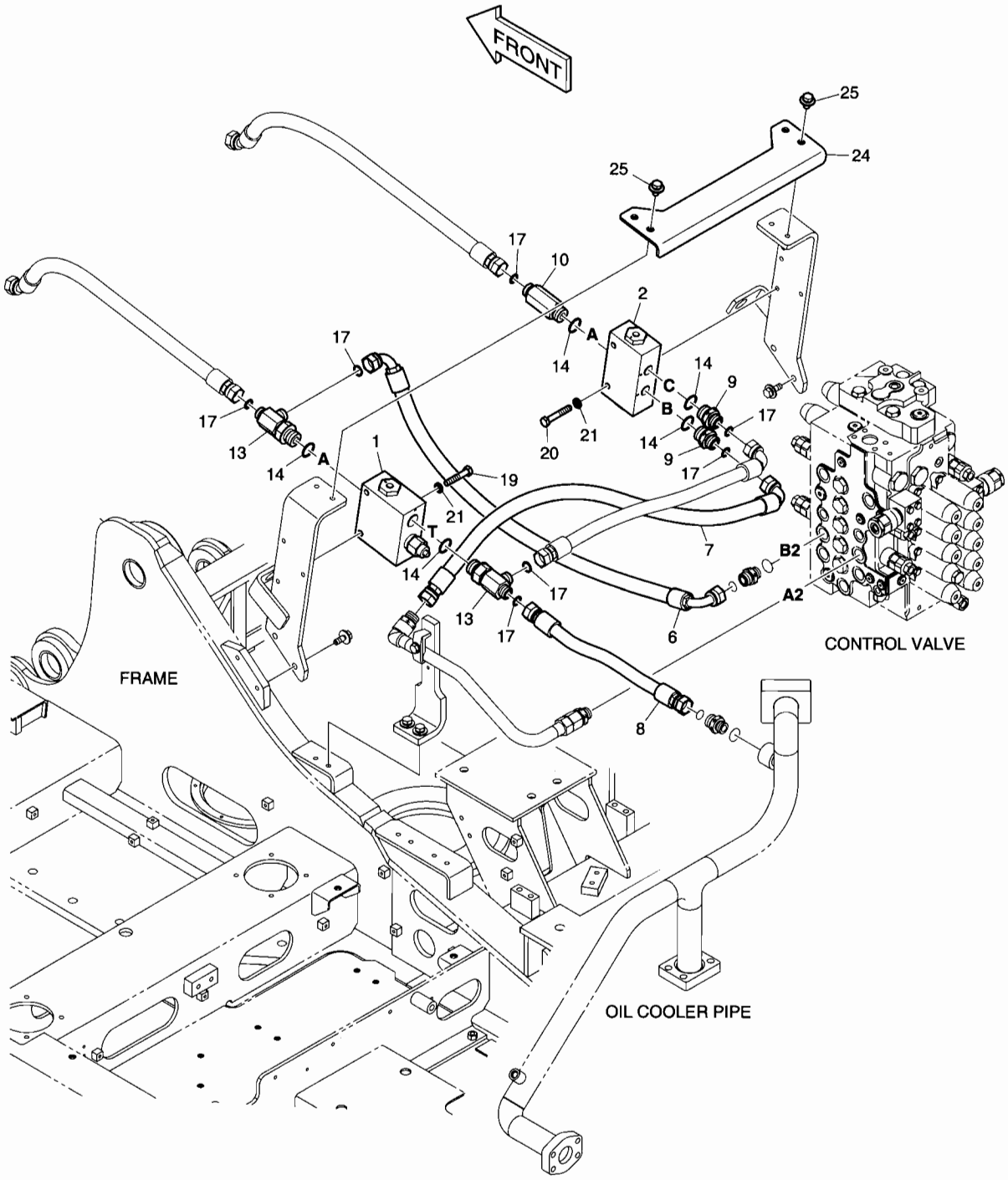

DATE	APR. 02, 2007
1st EDITION	

Fig. 6970 MAIN PIPING - TWO WAY (ARTI)
CONDUITES DE PRINCIPAL

Serial No. ;

Key No.	Part No.	Description	Description	Q'ty	S.C	Serial No.	ICA	Replaceable part	
								Part No.	Q'ty
6970--	K1027396A	MAIN PIPING;PE3C(ARTI)	TUYAUTERIE PRINCIPALE	-	D				
1	426-00248A	VALVE;SELECT	VANNE	1					
2	426-00249A	VALVE;SELECT	VANNE	1					
6	DS2023325	HOSE 1 3/16"-670L	TUYAU FLEXIBLE	1					
7	DS2013914	HOSE	TUYAU FLEXIBLE	1					
8	DS2011606	HOSE	TUYAU FLEXIBLE	1					
9	2181-2627D15	ADAPTER	ADAPTEUR	2					
10	DS2232121	ADAPTER	ADAPTEUR	1					
13	2181-2293D2	TEE	TE	2					
14	S8000291	O-RING	JOINT TORIQUE	5					
17	S8030121	O-RING	JOINT TORIQUE	7					
19	S0561466	BOLT	BOULON	2					
20	S0561266	BOLT	BOULON	2					
21	S5102703	WASHER;SPRING(M12)	RONDELLE ELASTIQUE	4					
24	K1016101	BRACKET	SUPPORT	1					
25	DS0025019	BOLT;SET	BOULON	4					

Fig. 6980 ONE & TWO WAY PIPING - WITH FILTER
CONDUITES DE BALANCIER

Serial No. ;

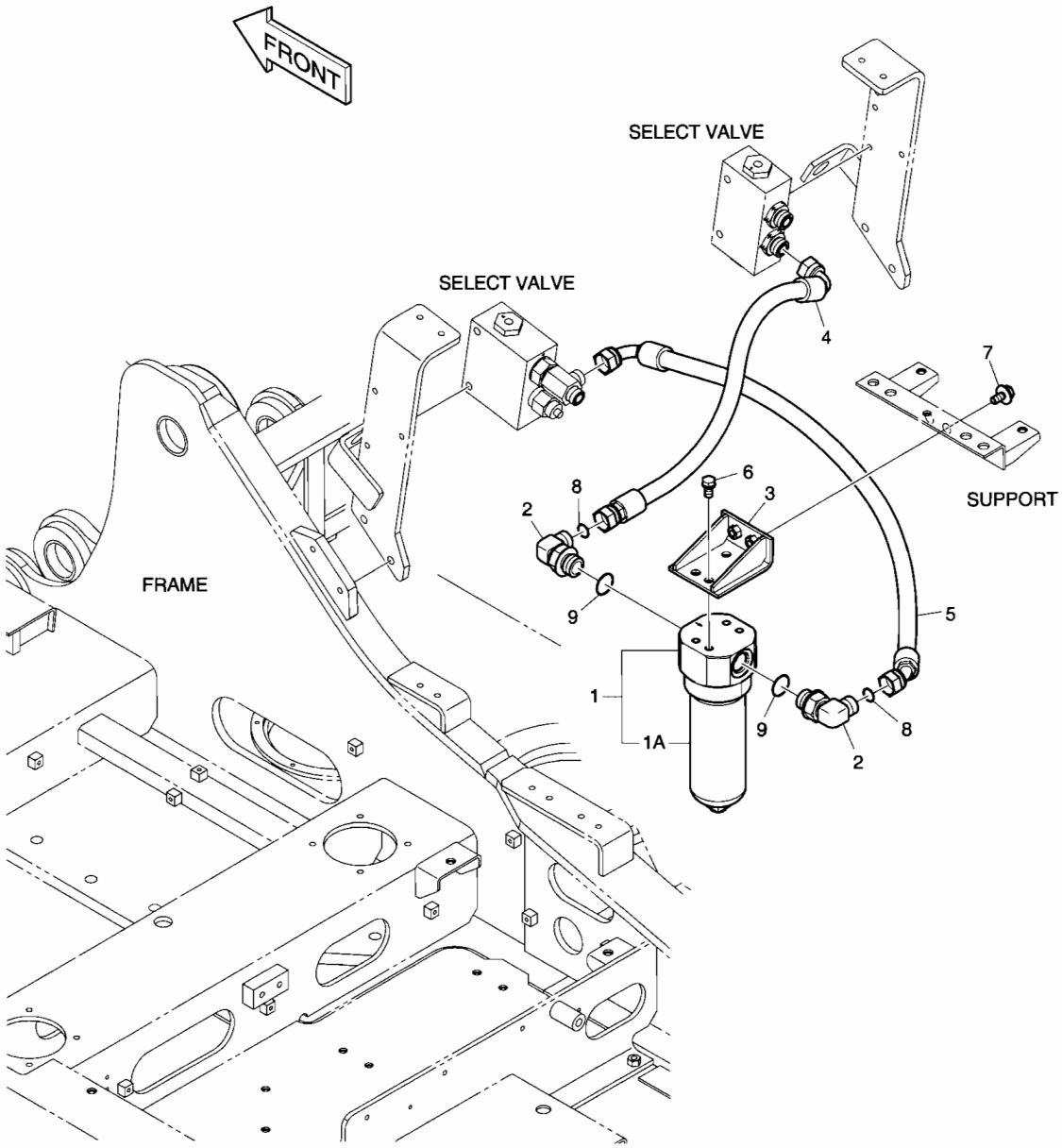

DATE	APR. 02, 2007
1st EDITION	

Fig. 6980 ONE & TWO WAY PIPING - WITH FILTER CONDUITES DE BALANCIER

Serial No. ;

Key No.	Part No.	Description	Description	Q'ty	S.C	Serial No.	ICA	Replaceable part	
								Part No.	Q'ty
980--	K1016094	BREAKER FILTER;ONE WAY	CONDUITES DE BALANCIER	-	D				
1	471-00114	FILTER;BREAKER	FILTRE	1					
1A	474-00046	. ELEMENT;BREAKER FILTER	. ELEMENT	1					
2	2181-2294D6	ELBOW	COUDE	2					
3	K1024909	BRACKET	SUPPORT	1					
4	DS2013687	HOSE	TUYAU FLEXIBLE	1					
5	DS2021178	HOSE	TUYAU FLEXIBLE	1					
6	DS0025021	BOLT;SET	BOULON A 6 PANS	4					
7	DS0025018	BOLT;SET	BOULON A 6 PANS	2					
8	S8030161	O-RING	JOINT TORIQUE	2					
9	S8000291	O-RING	JOINT TORIQUE	2					

DATE	APR. 02, 2007
1st EDITION	

Fig. 6990 ARTI BOOM PIPING - ONE & TWO WAY
TUYAUTERIE DE PERCHE D'ARTI

Serial No. ;

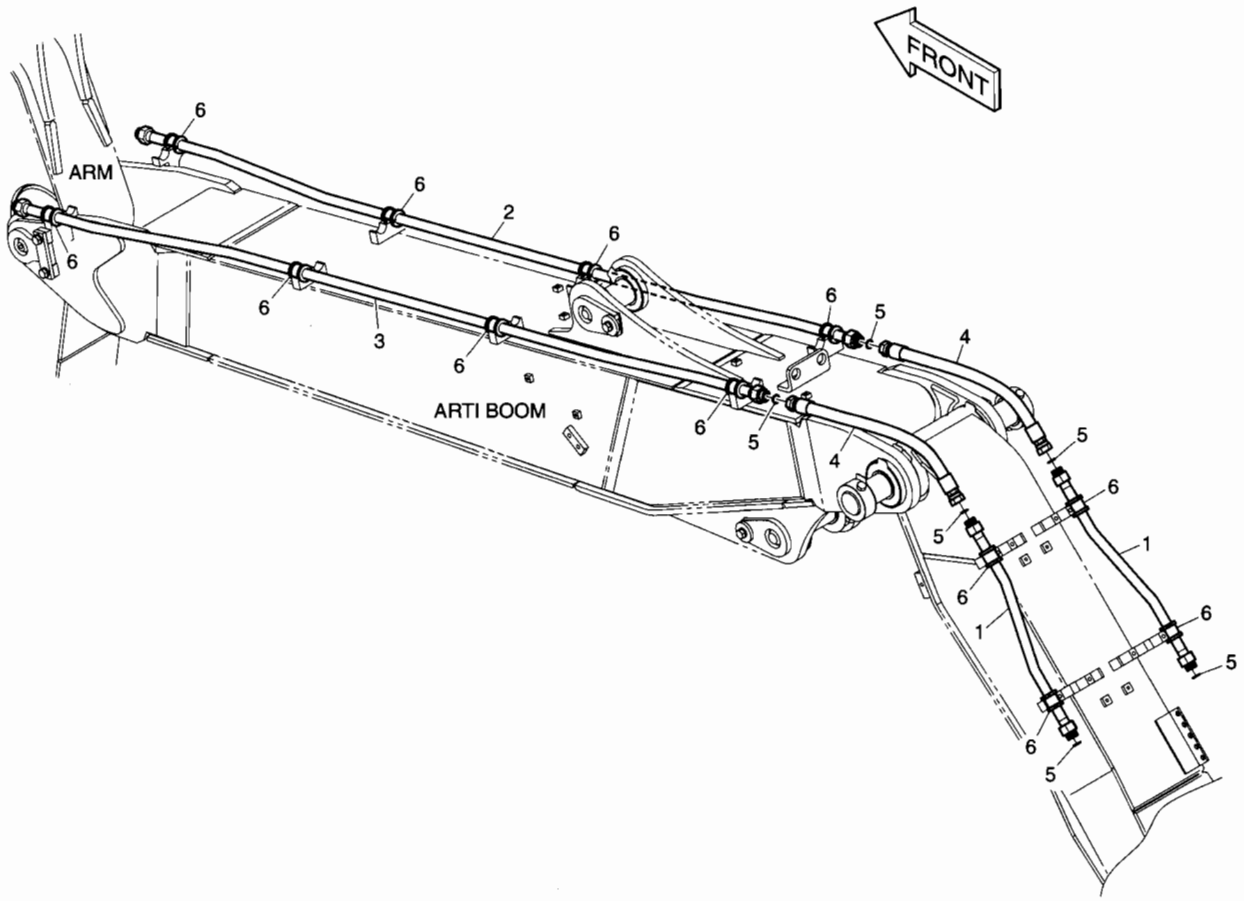

DATE	APR. 02, 2007
1st EDITION	

Fig. 6990 ARTI BOOM PIPING - ONE & TWO WAY TUYAUTERIE DE PERCHE D'ARTI

Serial No. ;

Key No.	Part No.	Description	Description	Q'ty	S.C	Serial No.	ICA	Replaceable part	
								Part No.	Q'ty
6990--	K1008250A	ONE & TWO WAY PIPING	TUYAUTERIE DE PERCHE	-	D				
1	K1008251A	PIPE	TUYAU	2					
2	K1008252	PIPE	TUYAU	1					
3	K1008254	PIPE	TUYAU	1					
4	DS2011504	HOSE	TUYAU FLEXIBLE	2					
5	S8030121	O-RING	JOINT TORIQUE	6					
6	K1000294A	RUBBER	CAOUTCHOUC	12					

DATE	APR. 02, 2007
1st EDITION	

Fig. 7000 MAIN PIPING - ROTATING (ARTI OR DOZER) CONDUITES DE PRINCIPAL

Serial No. ;

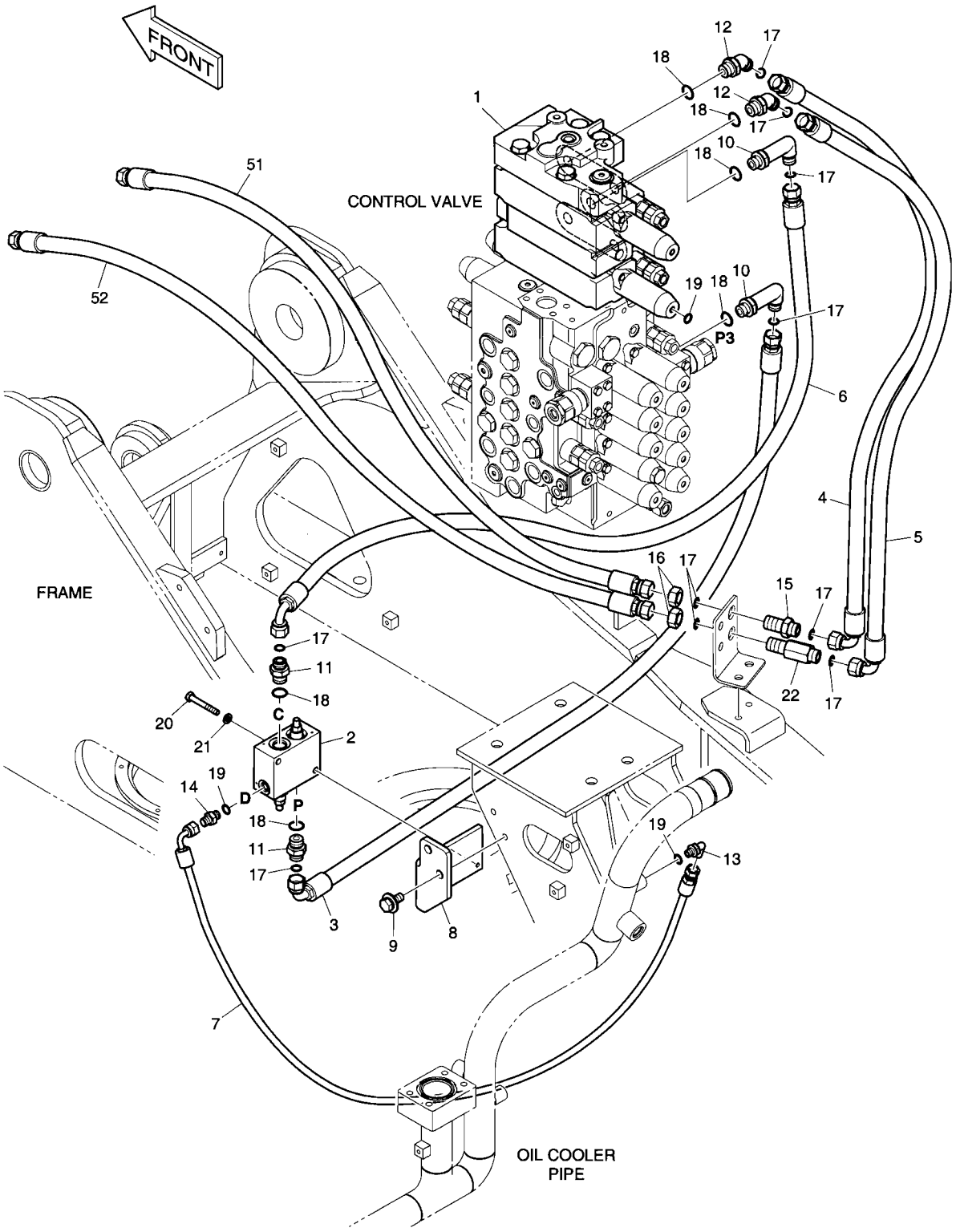

DATE	APR. 02, 2007
1st EDITION	

Fig. 7000 MAIN PIPING - ROTATING (ARTI OR DOZER) CONDUITES DE PRINCIPAL

Serial No. ;

Key No.	Part No.	Description	Description	Q'ty	S.C	Serial No.	ICA	Replaceable part	
								Part No.	Q'ty
7000--	K1016148B	MAIN PIPING;PERO & (DO OR	TUYAUTERIE PRINCIPALE	-	D				
1	K1013539	VALVE;CONTROL;ARTI OR	VANNE	1					
2	426-00028	VALVE;PACKAGE	VANNE	1					
3	DS2013924	HOSE	TUYAU FLEXIBLE	1					
4	DS2013919	HOSE	TUYAU FLEXIBLE	1					
5	DS2013919	HOSE	TUYAU FLEXIBLE	1					
6	DS2013925	HOSE	TUYAU FLEXIBLE	1					
7	DS2093146	HOSE	TUYAU FLEXIBLE	1					
8	K1027378A	BRACKET	SUPPORT	1					
9	DS0025018	BOLT;SET	BOULON	2					
10	2181-2815D11	ELBOW	COUDE	2					
11	2181-4133D3	ADAPTER	ADAPTEUR	2					
12	2181-2816D4	ELBOW	COUDE	2					
13	2181-1702D4	ELBOW	COUDE	1					
14	2181-1126D14	ADAPTER	ADAPTEUR	1					
15	181-00128D3	ADAPTER;CONNECTOR	ADAPTEUR	1					
16	121-00010D5	NUT	ECROU	2					
17	S8030081	O-RING	JOINT TORIQUE	10					
18	S8000181	O-RING	JOINT TORIQUE	6					
19	S8000111	O-RING	JOINT TORIQUE	3					
20	S0556566	BOLT	BOULON	2					
21	S5102503	WASHER;SPRING	RONDELLE ELASTIQUE	2					
22	DS2415014	ADAPTER	ADAPTEUR	1					
51	DS2011292	HOSE	TUYAU FLEXIBLE	1					
52	DS2011311	HOSE	TUYAU FLEXIBLE	1					

DATE	APR. 02, 2007
1st EDITION	

Fig. 7010 PILOT PIPING - ROTATING (ARTI) CONDUITES DE PILOTE

Serial No. ;

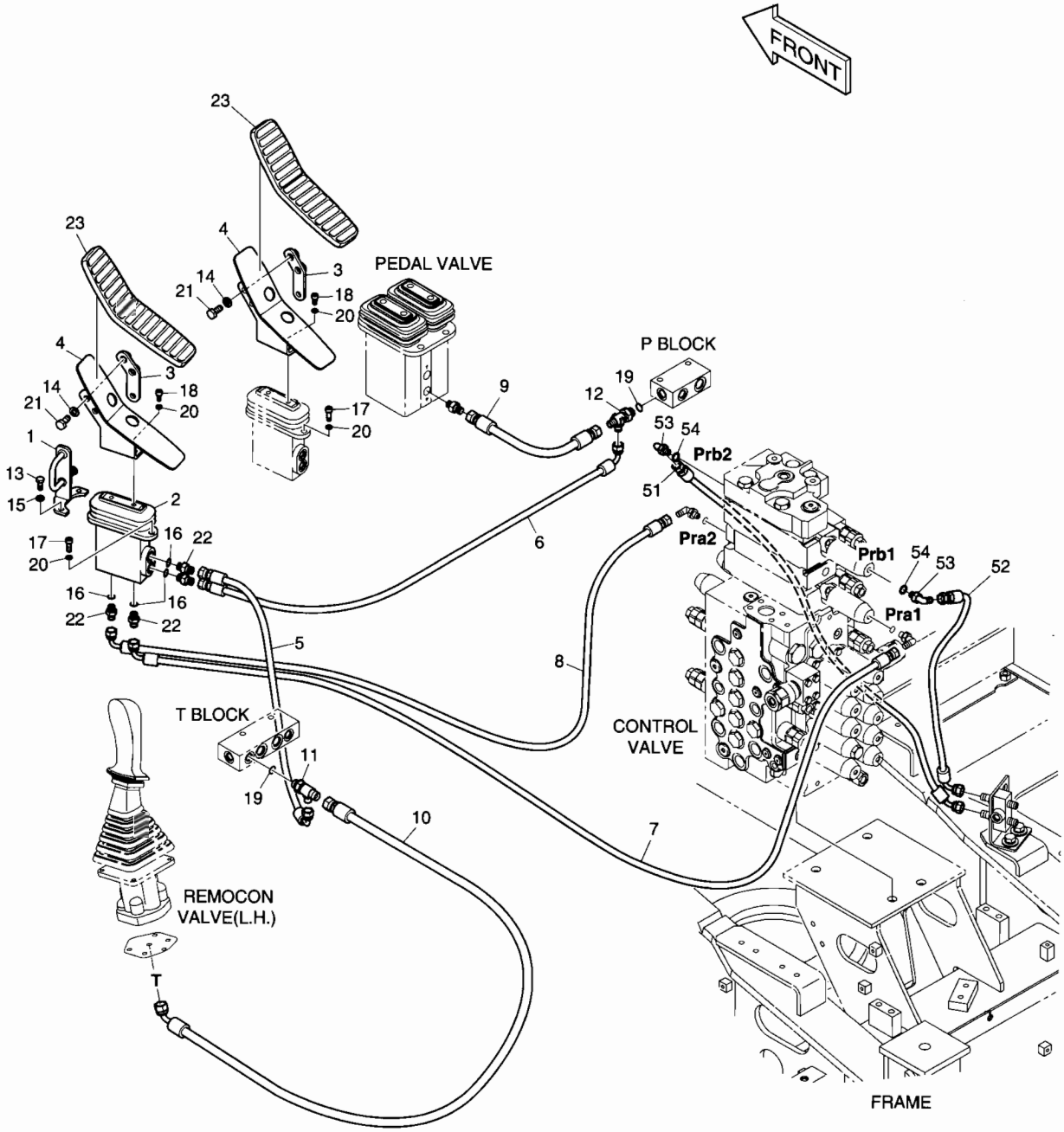

DATE	APR. 02, 2007
1st EDITION	

Fig. 7010 PILOT PIPING - ROTATING (ARTI) CONDUITES DE PILOTE

Serial No. ;

Key No.	Part No.	Description	Description	Q'ty	S.C	Serial No.	ICA	Replaceable part	
								Part No.	Q'ty
7010--	K1024566	PILOT PIPING;PERO & ARTI	TUYAUTERIE PILOTE	-	D				
1	K1001873A	PLATE	PLAQUE	1					
2	K1017382	VALVE;PEDAL	VANNE	1					
3	K1001871B	PLATE	PLAQUE	2					
4	K1015404	BRACKET	SUPPORT	2					
5	DS2093130	HOSE	TUYAU FLEXIBLE	1					
6	DS2093102	HOSE	TUYAU FLEXIBLE	1					
7	DS2093105	HOSE	TUYAU FLEXIBLE	1					
8	DS2093255	HOSE	TUYAU FLEXIBLE	1					
9	DS2094006	HOSE	TUYAU FLEXIBLE	1					
10	DS2095004	HOSE	TUYAU FLEXIBLE	1					
11	2181-1951D6	TEE	TE	1					
12	2181-1951D7	TEE	TE	1					
13	S0508866	BOLT	BOULON	2					
14	S5102603	WASHER;SPRING	RONDELLE ELASTIQUE	4					
15	S5102503	WASHER;SPRING	RONDELLE ELASTIQUE	2					
16	S8000111	O-RING	JOINT TORIQUE	4					
17	S2212066	BOLT;SOCKET	BOULON A 6 PANS CREUX	4					
18	S2211866	BOLT;SOCKET	BOULON A 6 PANS CREUX	4					
19	S8000141	O-RING	JOINT TORIQUE	2					
20	S5110603	WASHER	RONDELLE	8					
21	S0512066	BOLT	BOULON	4					
22	2181-1126D14	ADAPTER	ADAPTEUR	4					
23	161-00386	RUBBER;PEDAL	CAOUTCHOUC	2					
51	DS2092091	HOSE	TUYAU FLEXIBLE	1					
52	DS2093157	HOSE	TUYAU FLEXIBLE	1					
53	2181-1702D4	ELBOW	COUDE	2					
54	S8000111	O-RING	JOINT TORIQUE	2					

DATE	APR. 02, 2007
1st EDITION	

Fig. 7020 ARTI BOOM PIPING - ROTATING
TUYAUTERIE DE PERCHE D'ARTI

Serial No. ;

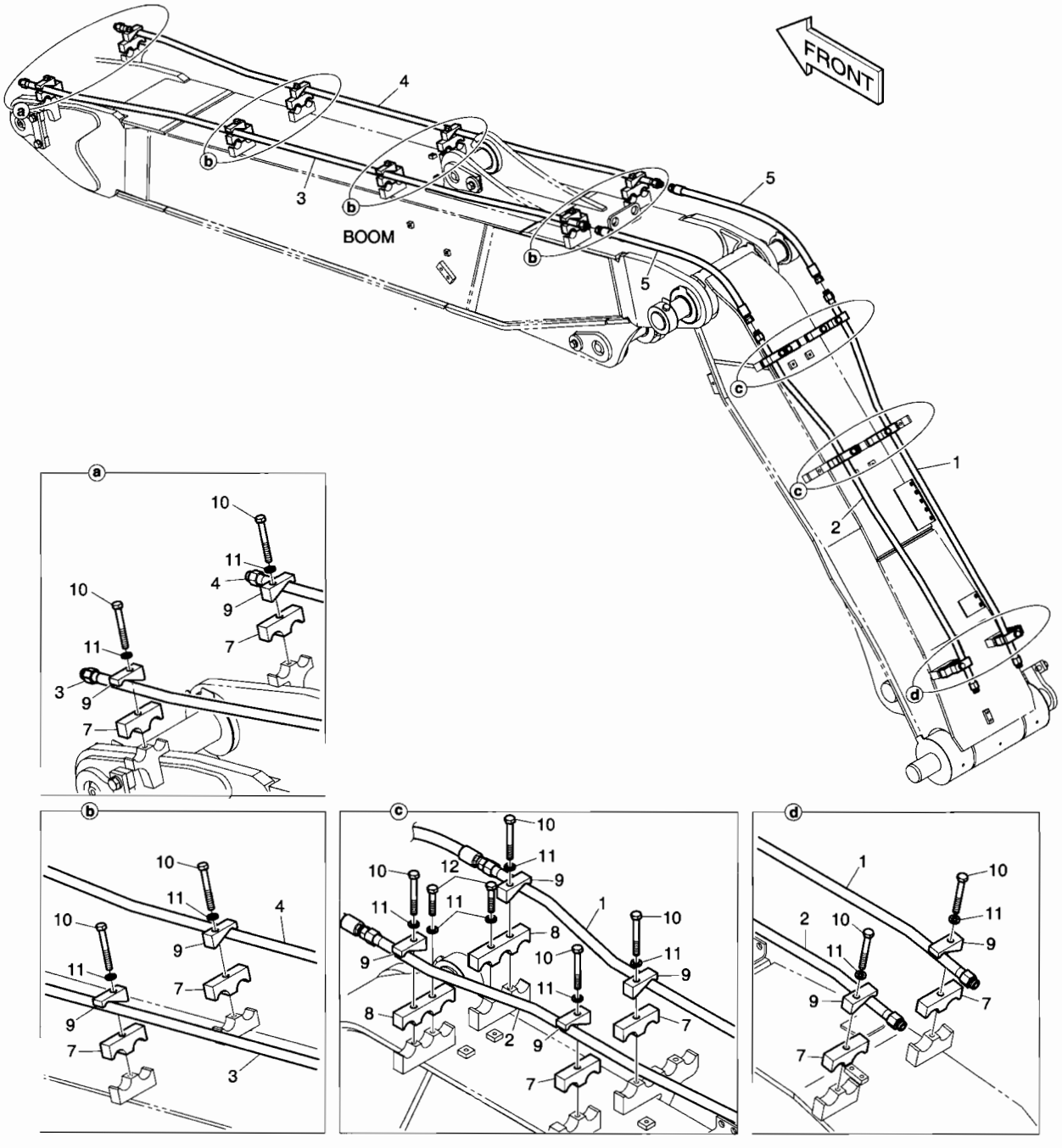

DATE	APR. 02, 2007
1st EDITION	

Fig. 7020 ARTI BOOM PIPING - ROTATING
TUYAUTERIE DE PERCHE D'ARTI

Serial No. ;

Key No.	Part No.	Description	Description	Q'ty	S.C	Serial No.	ICA	Replaceable part	
								Part No.	Q'ty
7020--	K1008255A	ROTATION PIPING;ARTI BOOM	TUYAUTERIE DE ROTATION	-	D				
1	K1008256A	PIPE	TUYAU	1					
2	K1008257A	PIPE	TUYAU	1					
3	K1008258	PIPE	TUYAU	1					
4	K1008741	PIPE	TUYAU	1					
5	DS2011506	HOSE	TUYAU FLEXIBLE	2					
7	K1004348	CLAMP;PIPE	COLLIER	12					
8	K1008742	CLAMP;PIPE	COLLIER	2					
9	K1004349	CLAMP;PIPE	COLLIER	14					
10	S0561666	BOLT;HEX	BOULON A 6 PANS	14					
11	S5102703	WASHER;SPRING(M12)	RONDELLE ELASTIQUE	16					
12	S0560966	BOLT	BOULON	2					

DATE	APR. 02, 2007
1st EDITION	

Fig. 7030 MAIN PIPING - QUICK FIT(ARTI)
CONDUITES DE PRINCIPAL

Serial No. ;

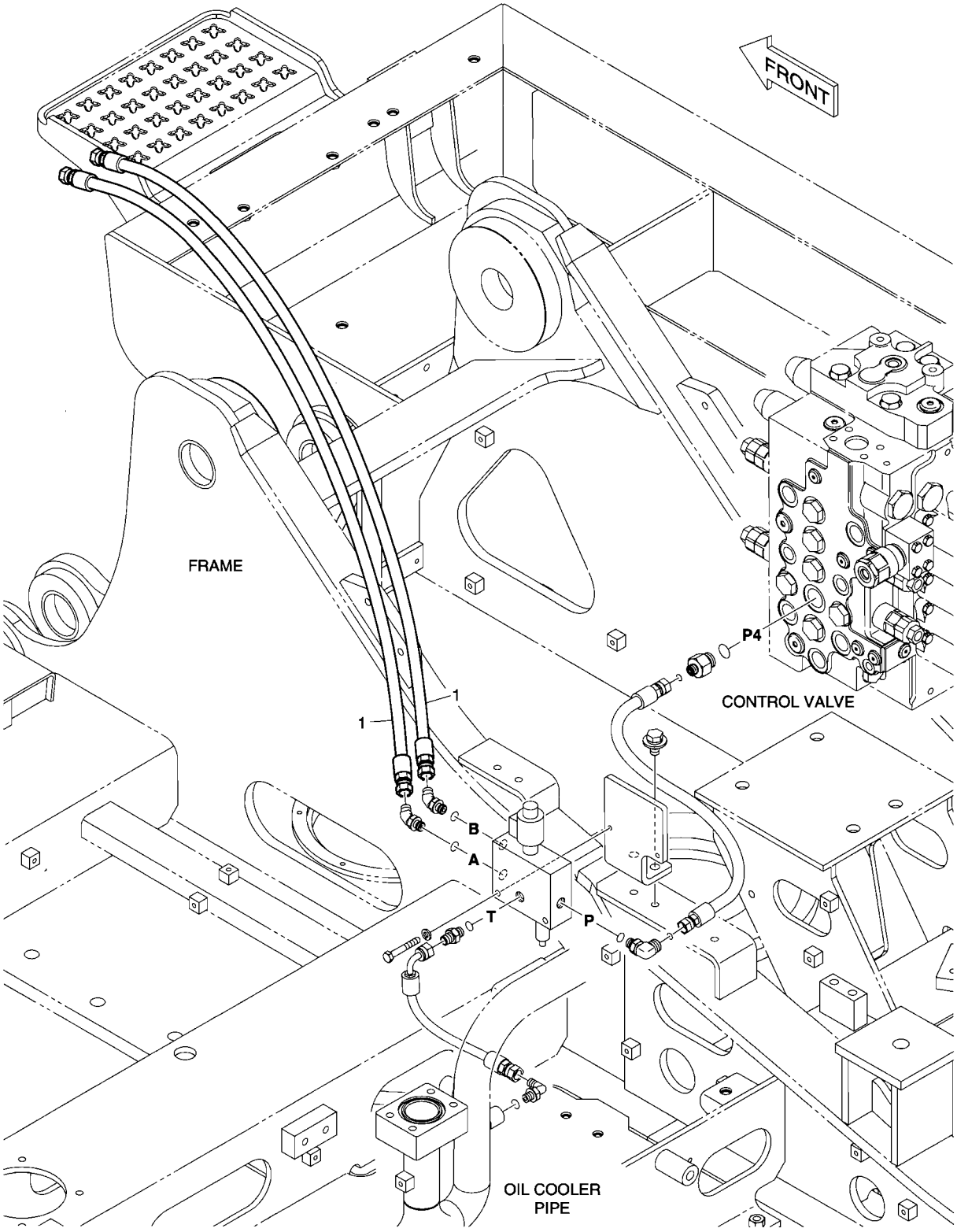

DATE	APR. 02, 2007
1st EDITION	

Fig. 7030 MAIN PIPING - QUICK FIT(ARTI)
CONDUITES DE PRINCIPAL

Serial No. ;

Key No.	Part No.	Description	Description	Q'ty	S.C	Serial No.	ICA	Replaceable part	
								Part No.	Q'ty
7030--	K1024558A	MAIN PIPING;QUICK FIT	TUYAUTERIE PRINCIPALE	-	D				
1	DS2094239	HOSE	TUYAU FLEXIBLE	2					

DATE	APR. 02, 2007
1st EDITION	

Fig. 7040 ARTI BOOM PIPING - QUICK CLAMP
TUYAUTERIE DE PERCHE D'ARTI

Serial No. ;

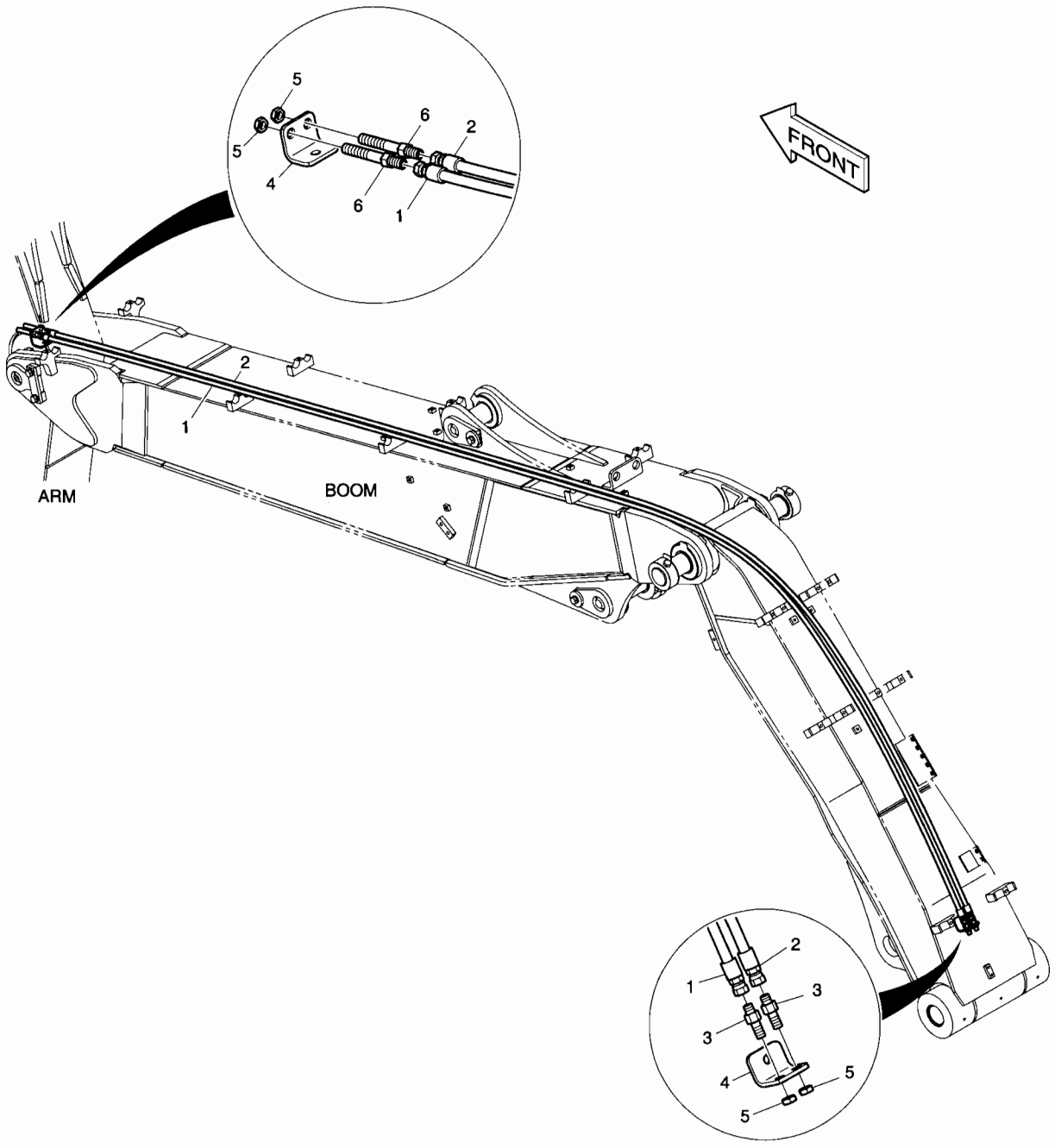

DATE	APR. 02, 2007
1st EDITION	

Fig. 7040 ARTI BOOM PIPING - QUICK CLAMP
TUYAUTERIE DE PERCHE D'ARTI

Serial No. ;

Key No.	Part No.	Description	Description	Q'ty	S.C	Serial No.	ICA	Replaceable part	
								Part No.	Q'ty
7040--	K1008260A	QUICK CLAMP PIPING;ARTI BOOM	TUYAUTERIE DE PERCHE	-	D				
1	DS2053854	HOSE	TUYAU FLEXIBLE	1					
2	DS2053878	HOSE	TUYAU FLEXIBLE	1					
3	DS2410007	ADAPTER	ADAPTEUR	2					
4	K1006957	BRACKET	SUPPORT	2					
5	121-00010D7	NUT	ECROU	4					
6	K1000356	ADAPTER	ADAPTEUR	2					

DATE	APR. 02, 2007
1st EDITION	

Fig. 7050 PILOT PIPING - LOCK VALVE(ARTI BOOM) CONDUITES DE PILOTE

Serial No. ;

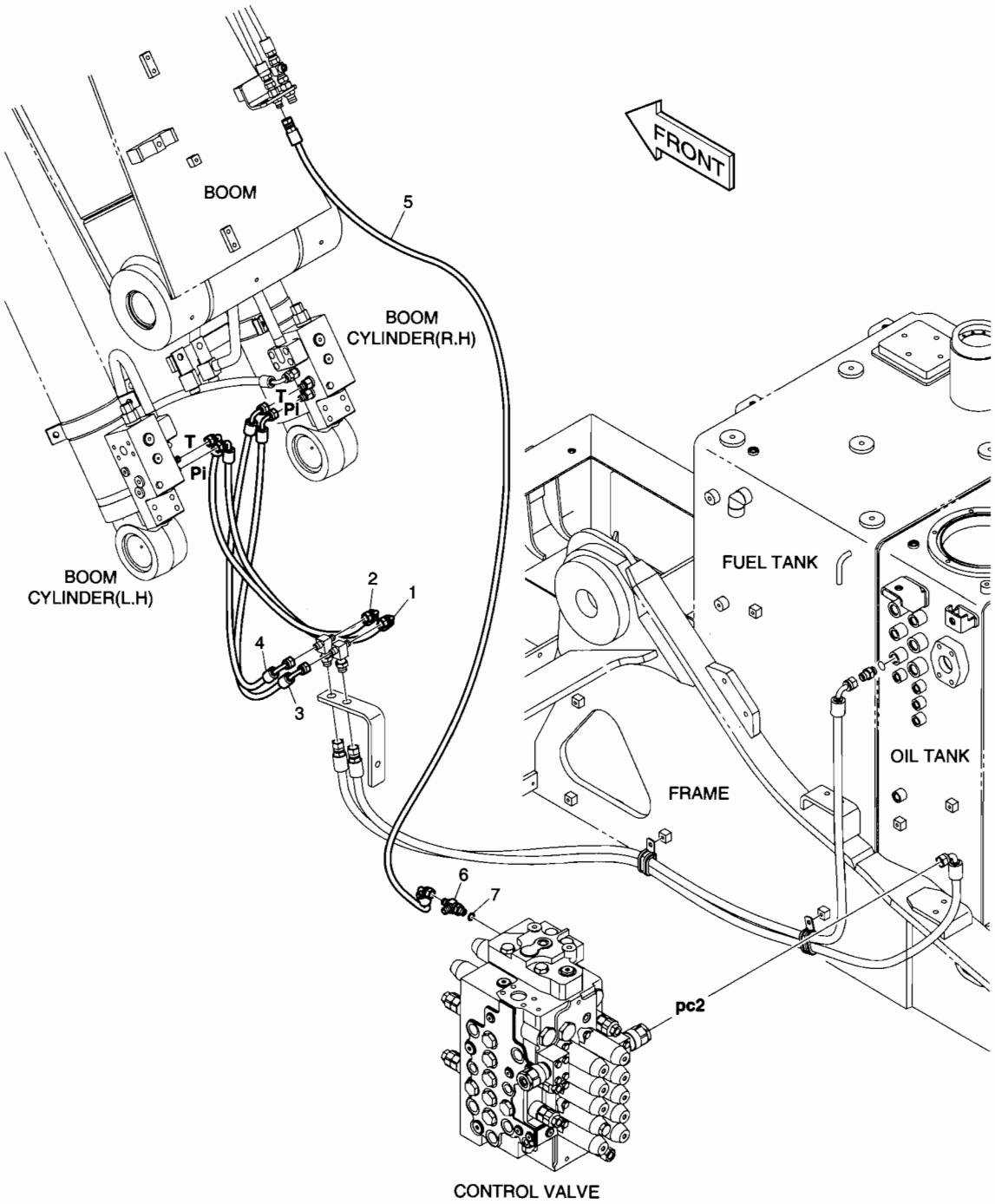

DATE	APR. 02, 2007
1st EDITION	

Fig. 7050 PILOT PIPING - LOCK VALVE(ARTI BOOM)
CONDUITES DE PILOTE

Serial No. ;

Key No.	Part No.	Description	Description	Q'ty	S.C	Serial No.	ICA	Replaceable part	
								Part No.	Q'ty
7050--	K1024561A	PILOT PIPING;LOCK VALVE BOOM	TUYAUTERIE PILOTE	-	D				
1	DS2091082	HOSE	TUYAU FLEXIBLE	1					
2	DS2091083	HOSE	TUYAU FLEXIBLE	1					
3	DS2091082	HOSE	TUYAU FLEXIBLE	1					
4	DS2091083	HOSE	TUYAU FLEXIBLE	1					
5	DS2093355	HOSE	TUYAU FLEXIBLE	1					
6	2181-1951D1	TEE	TE	1					
7	S8000111	O-RING	JOINT TORIQUE	1					

DATE	APR. 02, 2007
1st EDITION	

Fig. 7060 ARTI BOOM PIPING - LOCK VALVE
TUYAUTERIE DE PERCHE D'ARTI

Serial No. ;

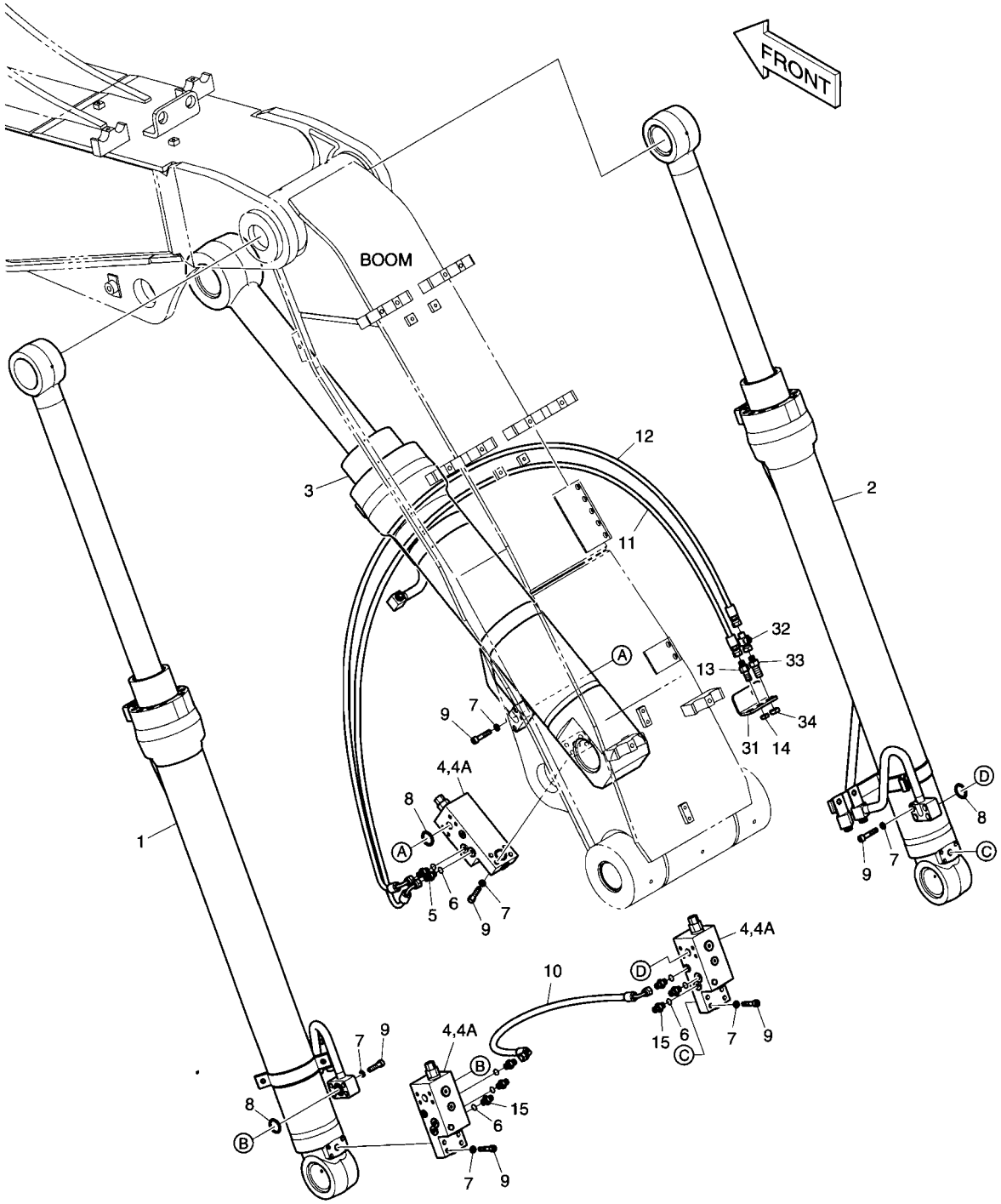

DATE	APR. 02, 2007
1st EDITION	

Fig. 7060 ARTI BOOM PIPING - LOCK VALVE TUYAUTERIE DE PERCHE D'ARTI

Serial No. ;

Key No.	Part No.	Description	Description	Q'ty	S.C	Serial No.	ICA	Replaceable part	
								Part No.	Q'ty
60--	K1027591	ARTI BOOM PIPING;LOCK V/V	PERCHE ASS'Y D'ARTI	-	D				
1	K1027317	CYLINDER;BOOM(L.H);LOCK	CYLINDRE	1					
2	K1027318	CYLINDER;BOOM(R.H);LOCK	CYLINDRE	1					
3	K1008751A	CYLINDER;ARTI LOCK V/V	CYLINDRE D'ARTI	1					
4	420-00003A	VALVE;LOCK	VANNE	3					
4A	K9000998	. SEAL KIT	. KIT D'ETANCHEITE	1					
5	2181-1126D14	ADAPTER	ADAPTEUR	2					
6	S8000111	O-RING	JOINT TORIQUE	8					
7	S5110601	WASHER;SPRING	RONDELLE ELASTIQUE	24					
8	S8000281	O-RING	JOINT TORIQUE	3					
9	S2212666	BOLT;SOCKET M10X1.5X50	BOULON A 6 PANS CREUX	24					
10	2184-1096D8	HOSE	TUYAU FLEXIBLE	1					
11	2184-1046D216	HOSE	TUYAU FLEXIBLE	1					
12	2184-1046D216	HOSE	TUYAU FLEXIBLE	1					
13	DS2410007	ADAPTER	ADAPTEUR	1					
14	121-00010D7	NUT	ECROU	1					
15	2181-1126D102	ADAPTER	ADAPTEUR	6					
31	K1008271A	BRACKET	SUPPORT	1					
32	181-00673D1	TEE;UNION	TE	1					
33	181-00078D5	ADAPTER	ADAPTEUR	1					
34	121-00010D1	NUT	ECROU	1					

DATE	APR. 02, 2007
1st EDITION	

Fig. 7070 PILOT PIPING - LOCK VALVE ARM(ARTI)
CONDUITES DE PILOTE

Serial No. ;

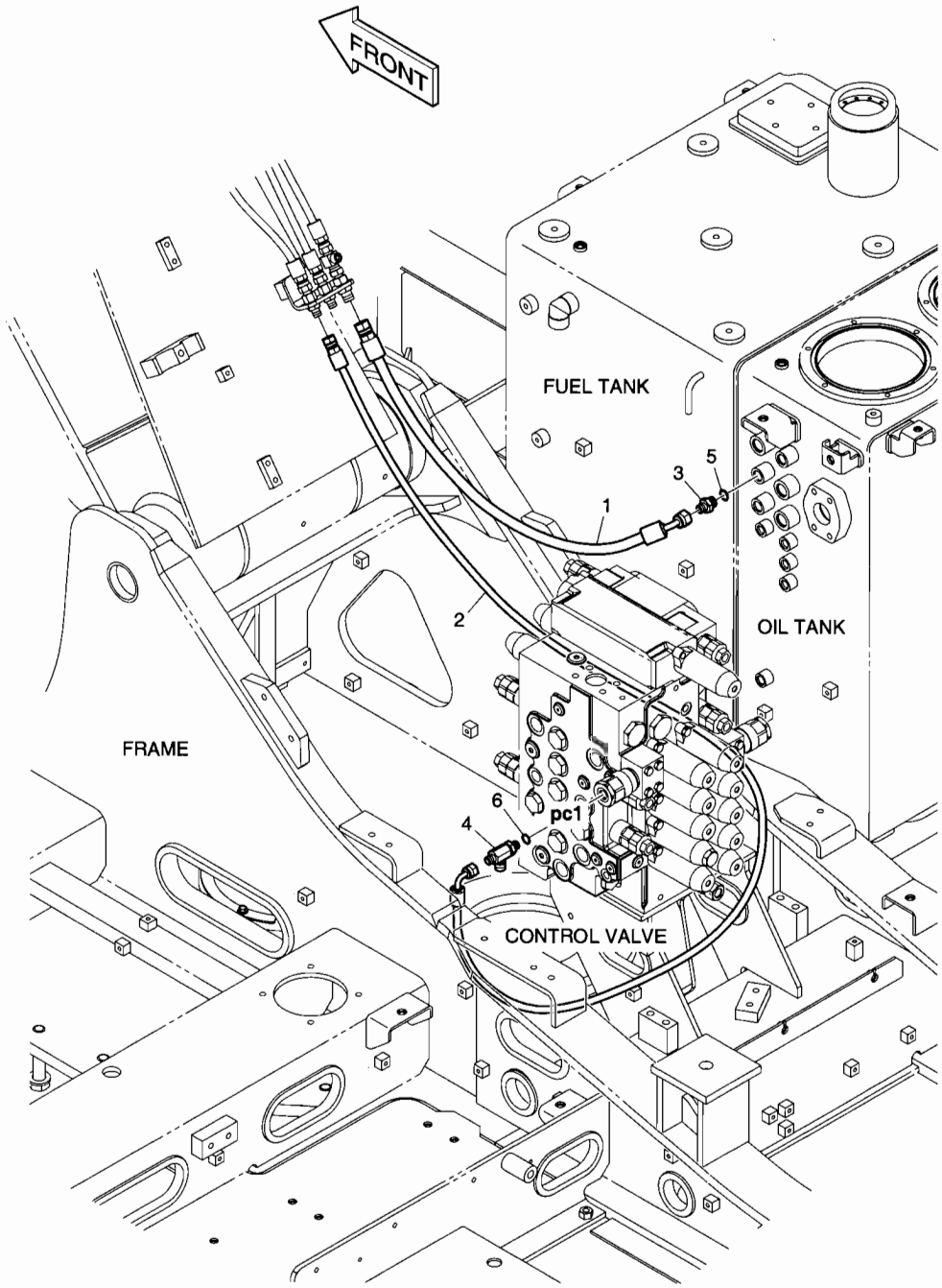

DATE	APR. 02, 2007
1st EDITION	

Fig. 7070 PILOT PIPING - LOCK VALVE ARM(ARTI) CONDUITES DE PILOTE

Serial No. ;

Key No.	Part No.	Description	Description	Q'ty	S.C	Serial No.	ICA	Replaceable part	
								Part No.	Q'ty
7070--	K1024562	PILOT PIPING;LOCK VALVE ARM	TUYAUTERIE PILOTE	-	D				
1	DS2092036	HOSE	TUYAU FLEXIBLE	1					
2	DS2093129	HOSE	TUYAU FLEXIBLE	1					
3	2181-1126D7	ADAPTER	ADAPTEUR	1					
4	2181-1951D14	TEE	TE	1					
5	S8000141	O-RING	JOINT TORIQUE	1					
6	S8000111	O-RING	JOINT TORIQUE	1					

DATE	APR. 02, 2007
1st EDITION	

Fig. 7080 ARTI ARM PIPING - LOCK VALVE
CONDUITES DE VERROU VANNE

Serial No. ;

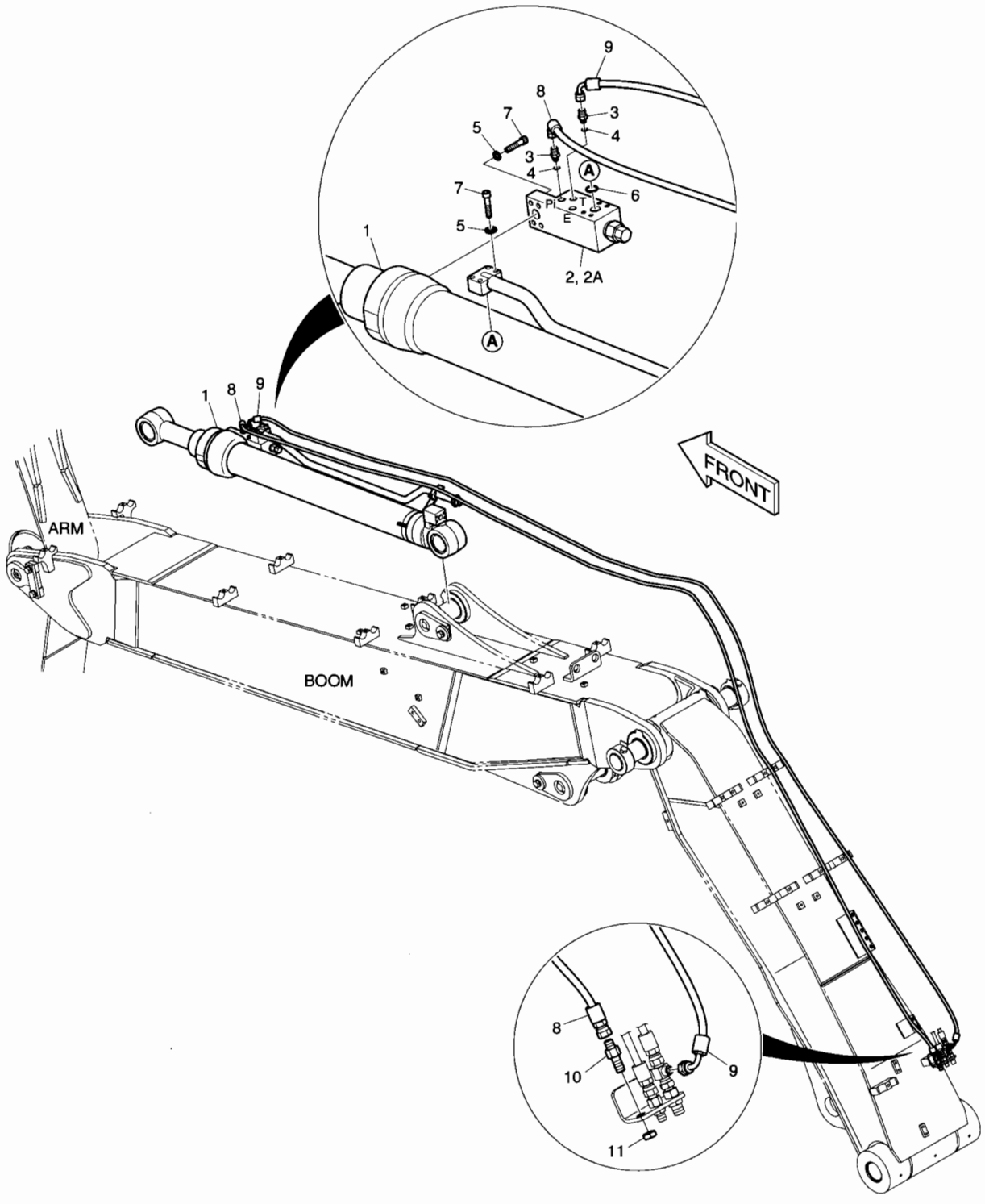

DATE	APR. 02, 2007
1st EDITION	

Fig. 7080 ARTI ARM PIPING - LOCK VALVE CONDUITES DE VERROU VANNE

Serial No. ;

Key No.	Part No.	Description	Description	Q'ty	S.C	Serial No.	ICA	Replaceable part	
								Part No.	Q'ty
7080--	K1015195	ARM LOCK VALVE PIPING	TUYAUTERIE DE SERRURE	-	D				
1	K1008752	CYLINDER;ARM 2.1m(LOCK V/V)	VERIN DE BALANCIER	1					
	K1008753	CYLINDER;ARM 2.5m(LOCK V/V)	VERIN DE BALANCIER	1					
2	420-00003A	VALVE;LOCK	VANNE	1					
2A	K9000998	. SEAL KIT	. KIT D'ETANCHEITE	1					
3	2181-1126D14	ADAPTER	ADAPTEUR	2					
4	S8000111	O-RING	JOINT TORIQUE	2					
5	S5110601	WASHER;SPRING	RONDELLE ELASTIQUE	8					
6	S8000281	O-RING	JOINT TORIQUE	1					
7	S2212666	BOLT;SOCKET M10X1.5X50	BOULON A 6 PANS CREUX	8					
8	DS2055880	HOSE	TUYAU FLEXIBLE	1					
9	DS2059496	HOSE	TUYAU FLEXIBLE	1					
10	DS2410007	ADAPTER	ADAPTEUR	1					
11	121-00010D7	NUT	ECROU	1					

DATE	APR. 02, 2007
1st EDITION	

Fig. 7090 BUCKET - 0.24m³ (460mm) GODET

Serial No. ;

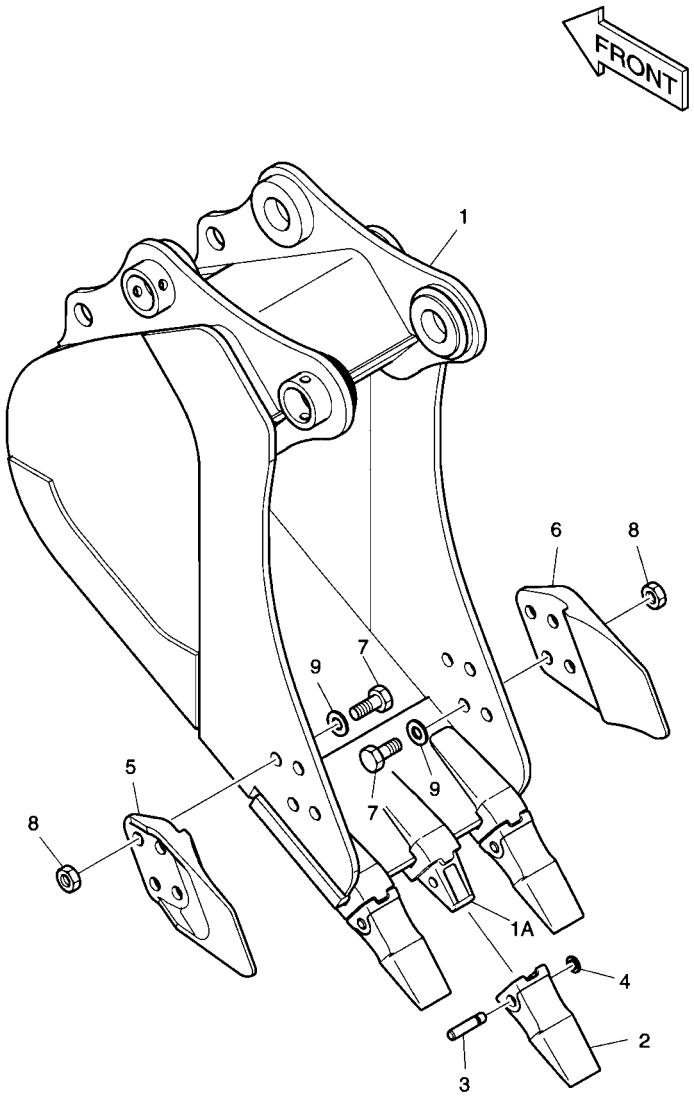

DATE	APR. 02, 2007
1st EDITION	

Fig. 7090 BUCKET - 0.24㎥(460mm) GODET

Serial No. ;

Key No.	Part No.	Description	Description	Q'ty	S.C	Serial No.	ICA	Replaceable part	
								Part No.	Q'ty
7090--	K1007633B	BUCKET ASS'Y- 0.24㎥	ENSEMBLE DE GODET	1					
1	K1007634B	BUCKET - 0.24㎥	GODET	1					
1A	2713-1222A	. ADAPTER;TOOTH	. DENT DE ADAPTEUR	3					
2	713-00057A	POINT;TOOTH	DENT	3					
3	2705-1022	PIN;LOCKING	GOUPILLE	3					
4	2114-1859	WASHER;LOCKING	RONDELLE	3					
5	2713-1229A	CUTTER;SIDE(L.H)	COIN DE GODET DROIT	1					
6	2713-1228A	CUTTER;SIDE(R.H)	COIN DE GODET DROIT	1					
7	S0574561	BOLT	BOULON	8					
8	S4013333	NUT	ECROU	8					
9	2114-1831A	WASHER;HARDEN	RONDELLE	8					

Fig. 7100 BUCKET - 0.39m³ GODET

Serial No. ;

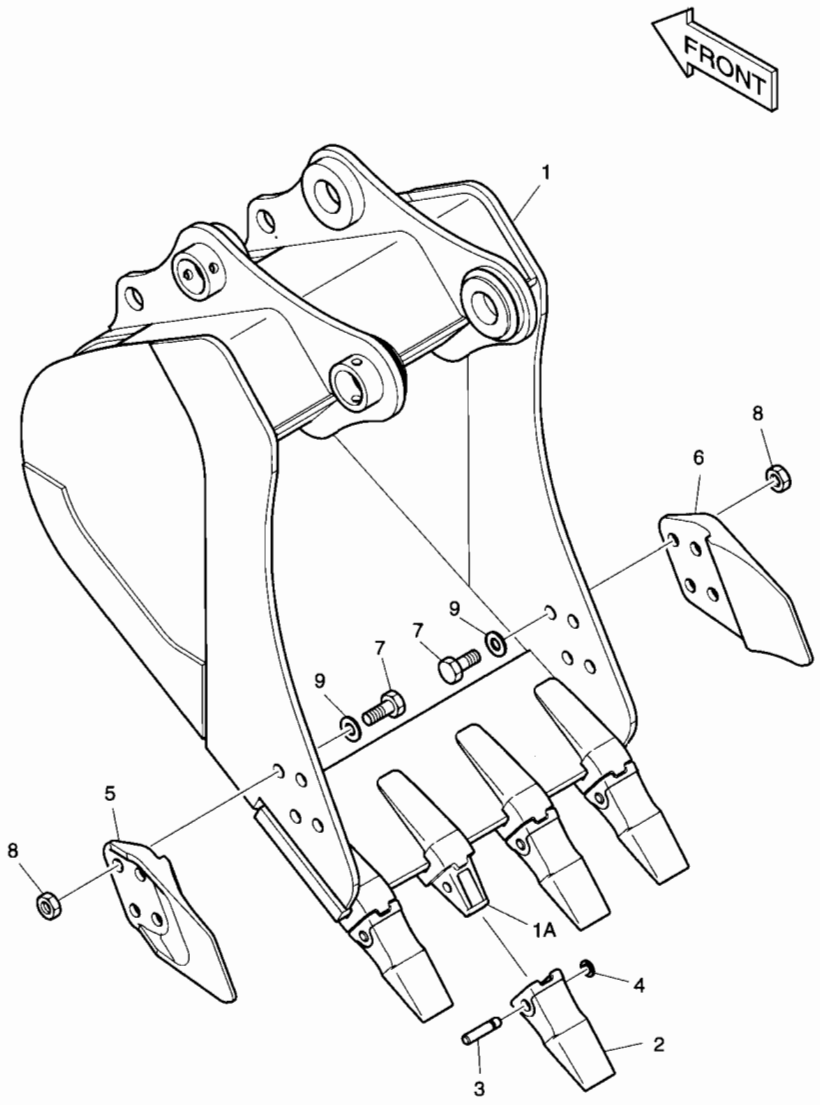

DATE	APR. 02, 2007
1st EDITION	

Fig. 7100 BUCKET - 0.39㎥ GODET

Serial No. ;

Key No.	Part No.	Description	Description	Q'ty	S.C	Serial No.	ICA	Replaceable part	
								Part No.	Q'ty
7100--	K1007635B	BUCKET ASS'Y- 0.39㎥	ENSEMBLE DE GODET	1					
1	K1007636B	BUCKET - 0.39㎥	GODET	1					
1A	2713-1222A	. ADAPTER;TOOTH	. DENT DE ADAPTEUR	4					
2	713-00057A	POINT;TOOTH	DENT	4					
3	2705-1022	PIN;LOCKING	GOUPILLE	4					
4	2114-1859	WASHER;LOCKING	RONDELLE	4					
5	2713-1229A	CUTTER;SIDE(L.H)	COIN DE GODET DROIT	1					
6	2713-1228A	CUTTER;SIDE(R.H)	COIN DE GODET DROIT	1					
7	S0574561	BOLT	BOULON	8					
8	S4013333	NUT	ECROU	8					
9	2114-1831A	WASHER;HARDEN	RONDELLE	8					

DATE	APR. 02, 2007
1st EDITION	

Fig. 7110 BUCKET - 0.45m³ GODET

Serial No. ;

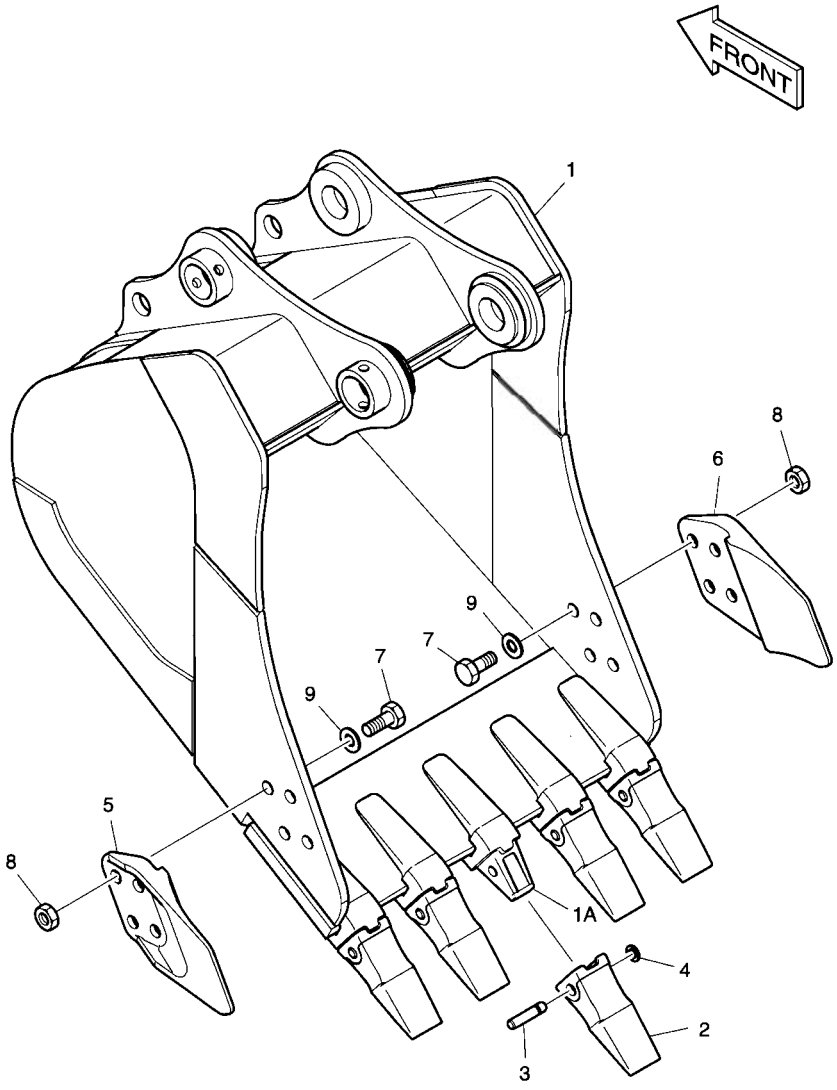

DATE	APR. 02, 2007
1st EDITION	

Fig. 7110 BUCKET - 0.45㎥ GODET

Serial No. ;

Key No.	Part No.	Description	Description	Q'ty	S.C	Serial No.	ICA	Replaceable part	
								Part No.	Q'ty
7110--	704-00289C	BUCKET ASS'Y- 0.45㎥	ENSEMBLE DE GODET	1					
1	704-00290C	BUCKET - 0.45㎥	GODET	1					
1A	2713-1222A	. ADAPTER;TOOTH	. DENT DE ADAPTEUR	5					
2	713-00057A	POINT;TOOTH	DENT	5					
3	2705-1022	PIN;LOCKING	GOUPILLE	5					
4	2114-1859	WASHER;LOCKING	RONDELLE	5					
5	2713-1229A	CUTTER;SIDE(L.H)	COIN DE GODET DROIT	1					
6	2713-1228A	CUTTER;SIDE(R.H)	COIN DE GODET DROIT	1					
7	S0574561	BOLT	BOULON	8					
8	S4013333	NUT	ECROU	8					
9	2114-1831A	WASHER;HARDEN	RONDELLE	8					

DATE	APR. 02, 2007
1st EDITION	

Fig. 7120 BUCKET - 0.51m³ GODET

Serial No. ;

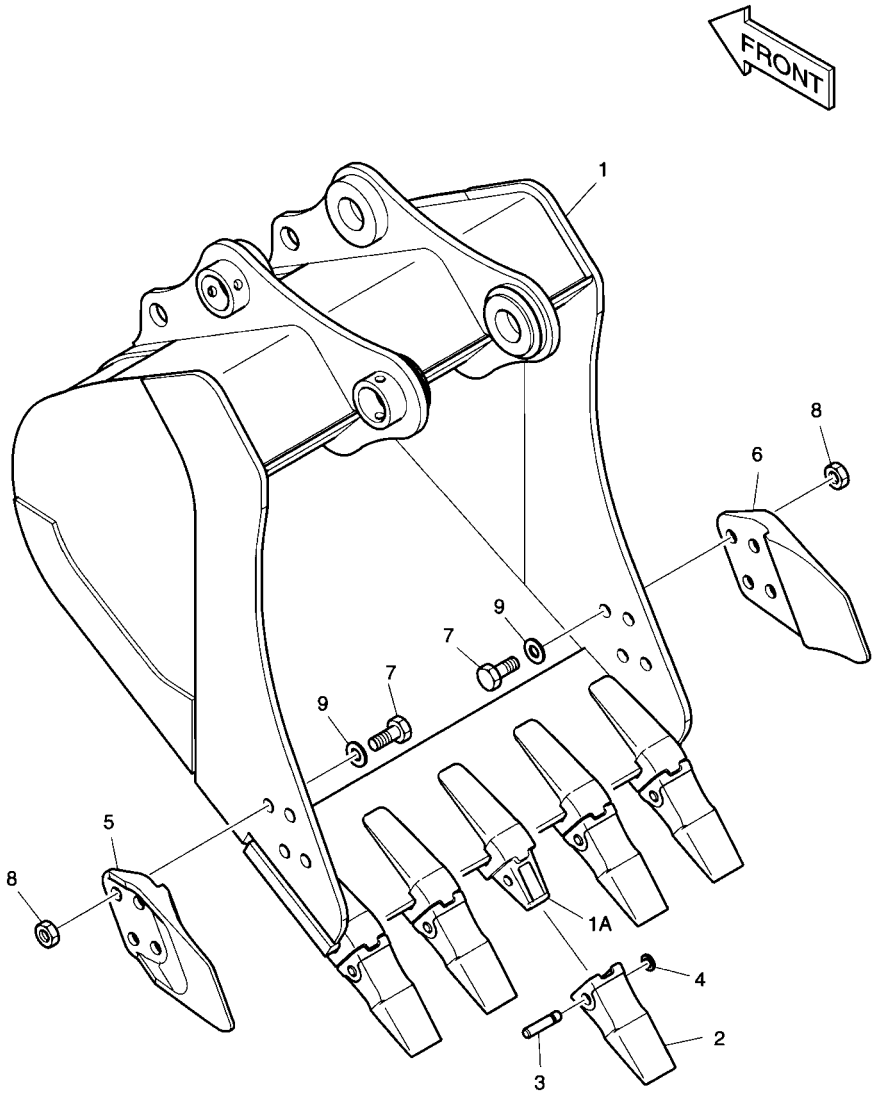

DATE	APR. 02, 2007
1st EDITION	

Fig. 7120 BUCKET - 0.51 m³ GODET

Serial No. ;

Key No.	Part No.	Description	Description	Q'ty	S.C	Serial No.	ICA	Replaceable part	
								Part No.	Q'ty
7120--	K1007637B	BUCKET ASS'Y- 0.51 m³	ENSEMBLE DE GODET	1					
1	K1007638B	BUCKET - 0.51 m³	GODET	1					
1A	2713-1222A	. ADAPTER;TOOTH	. DENT DE ADAPTEUR	5					
2	713-00057A	POINT;TOOTH	DENT	5					
3	2705-1022	PIN;LOCKING	GOUPILLE	5					
4	2114-1859	WASHER;LOCKING	RONDELLE	5					
5	2713-1229A	CUTTER;SIDE(L.H)	COIN DE GODET DROIT	1					
6	2713-1228A	CUTTER;SIDE(R.H)	COIN DE GODET DROIT	1					
7	S0574561	BOLT	BOULON	8					
8	S4013333	NUT	ECROU	8					
9	2114-1831A	WASHER;HARDEN	RONDELLE	8					

DATE	APR. 02, 2007
1st EDITION	

Fig. 7130 BUCKET - 0.64m³ GODET

Serial No. ;

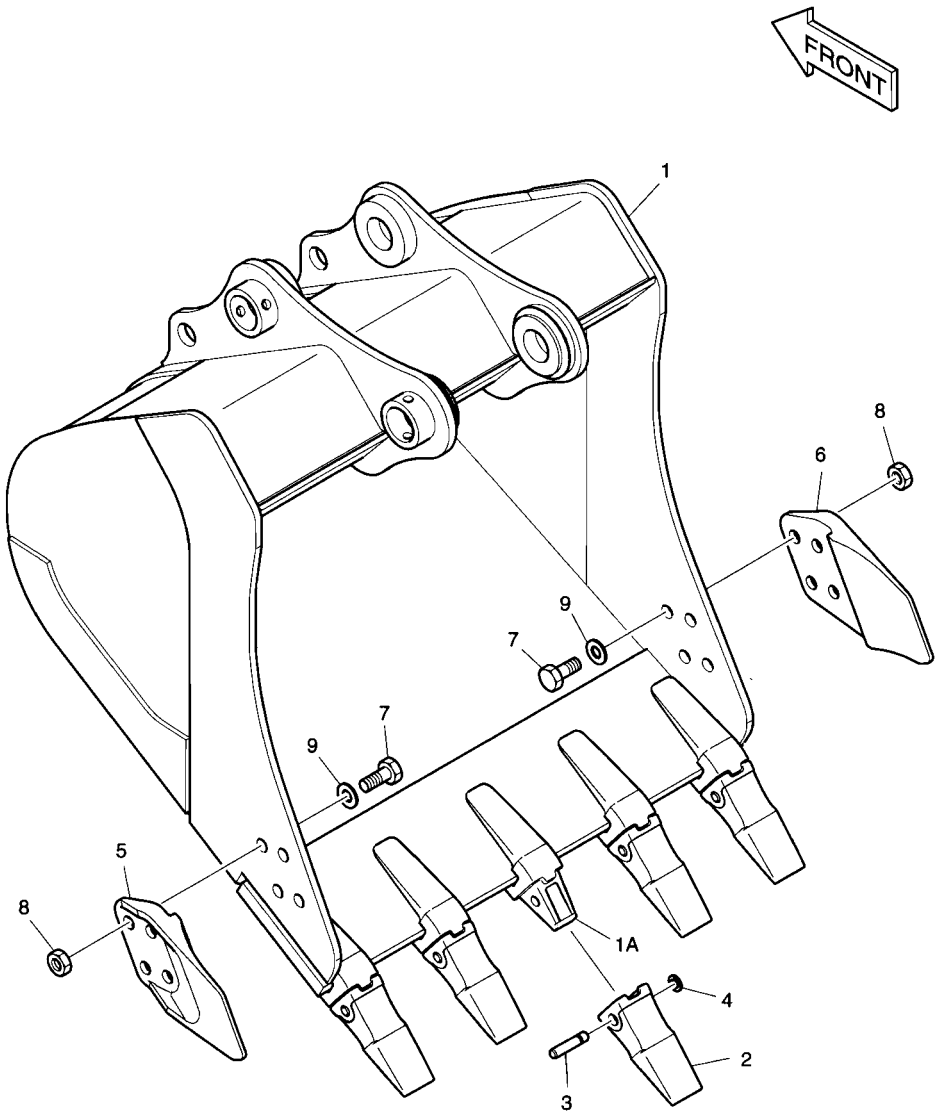

DATE	APR. 02, 2007
1st EDITION	

Fig. 7130 BUCKET - 0.64㎥ GODET

Serial No. ;

Key No.	Part No.	Description	Description	Q'ty	S.C	Serial No.	ICA	Replaceable part	
								Part No.	Q'ty
7130--	K1007639B	BUCKET ASS'Y- 0.64㎥	ENSEMBLE DE GODET	1					
1	K1007640B	BUCKET - 0.64㎥	GODET	1					
1A	2713-1222A	. ADAPTER;TOOTH	. DENT DE ADAPTEUR	5					
2	713-00057A	POINT;TOOTH	DENT	5					
3	2705-1022	PIN;LOCKING	GOUPILLE	5					
4	2114-1859	WASHER;LOCKING	RONDELLE	5					
5	2713-1229A	CUTTER;SIDE(L.H)	COIN DE GODET DROIT	1					
6	2713-1228A	CUTTER;SIDE(R.H)	COIN DE GODET DROIT	1					
7	S0574561	BOLT	BOULON	8					
8	S4013333	NUT	ECROU	8					
9	2114-1831A	WASHER;HARDEN	RONDELLE	8					

DATE	APR. 02, 2007
1st EDITION	

Fig. 7140 BUCKET - 0.76m³ GODET

Serial No. ;

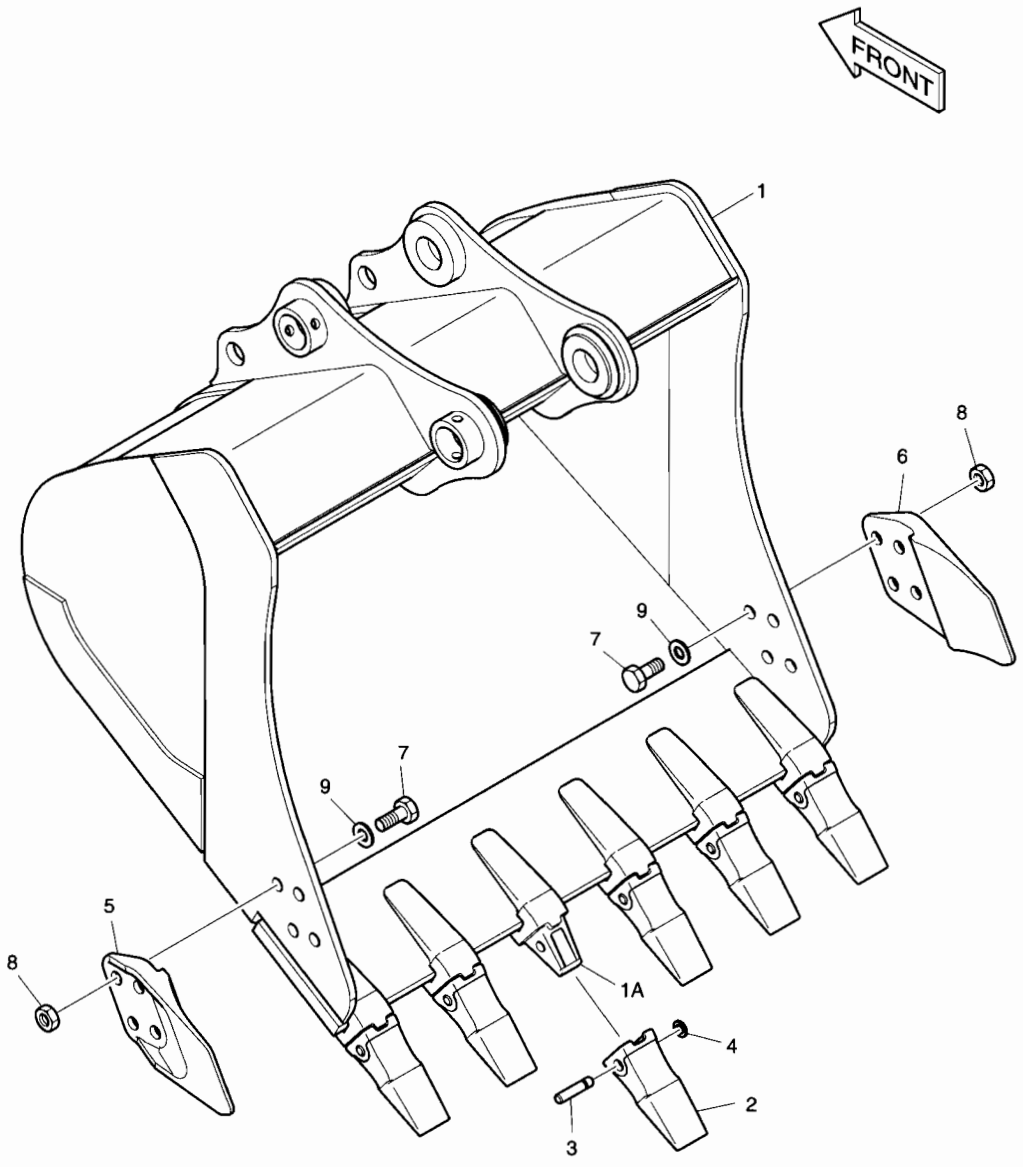

DATE	APR. 02, 2007
1st EDITION	

Fig. 7140 BUCKET - 0.76㎥ GODET

Serial No. ;

Key No.	Part No.	Description	Description	Q'ty	S.C	Serial No.	ICA	Replaceable part	
								Part No.	Q'ty
140--	K1007641B	BUCKET ASS'Y- 0.76㎥	ENSEMBLE DE GODET	1					
1	K1007642B	BUCKET - 0.76㎥	GODET	1					
1A	2713-1222A	. ADAPTER;TOOTH	. DENT DE ADAPTEUR	6					
2	713-00057A	POINT;TOOTH	DENT	6					
3	2705-1022	PIN;LOCKING	GOUPILLE	6					
4	2114-1859	WASHER;LOCKING	RONDELLE	6					
5	2713-1229A	CUTTER;SIDE(L.H)	COIN DE GODET DROIT	1					
6	2713-1228A	CUTTER;SIDE(R.H)	COIN DE GODET DROIT	1					
7	S0574561	BOLT	BOULON	8					
8	S4013333	NUT	ECROU	8					
9	2114-1831A	WASHER;HARDEN	RONDELLE	8					

Fig. 7150 BUCKET ASS'Y - 0.38m³ (30") - SIDE PIN
ENSEMBLE DE GODET

Serial No. ;

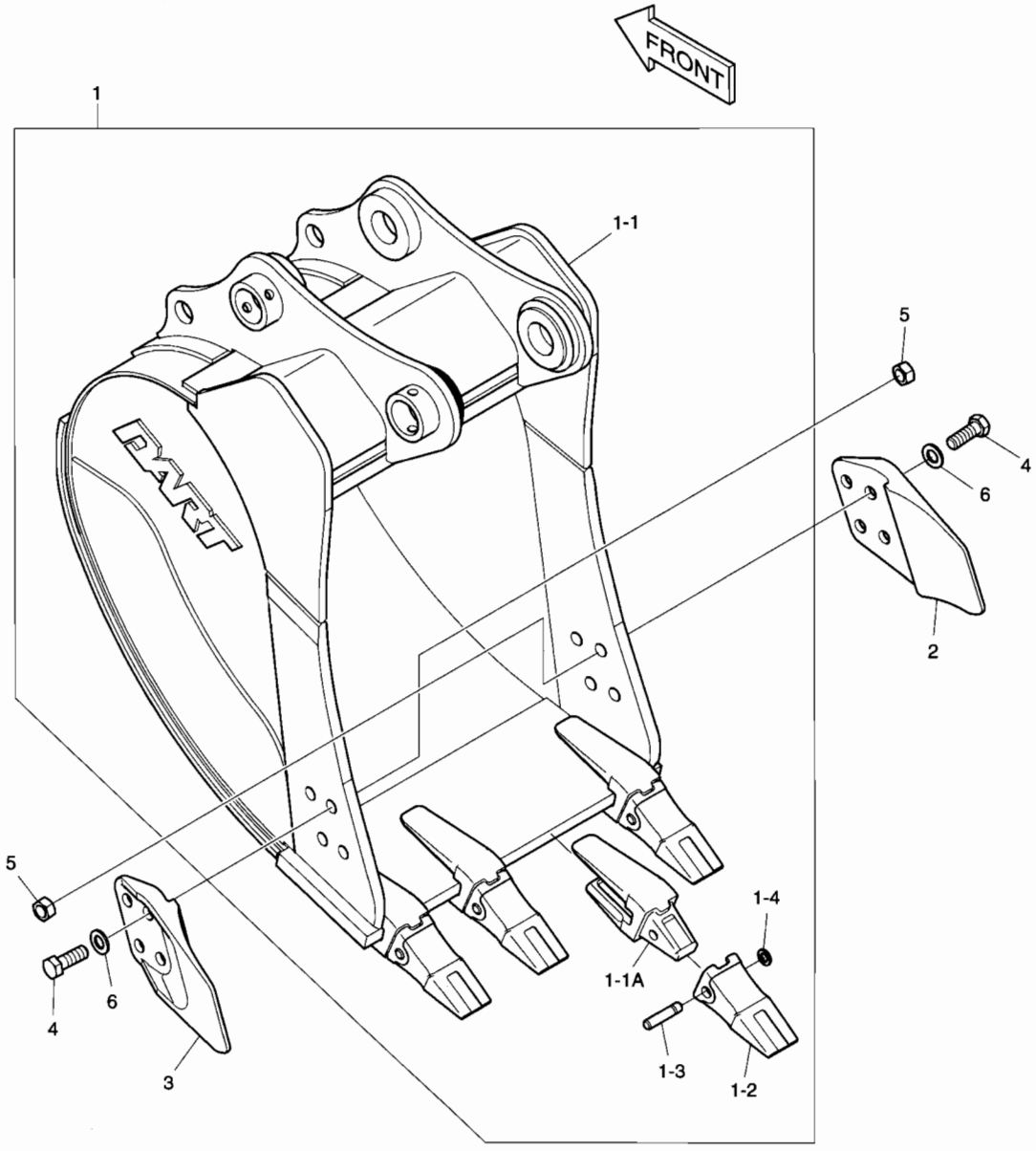

DATE	APR. 02, 2007
1st EDITION	

Fig. 7150 BUCKET ASS'Y - 0.38m³ (30") - SIDE PIN ENSEMBLE DE GODET

Serial No. ;

Key No.	Part No.	Description	Description	Q'ty	S.C	Serial No.	ICA	Replaceable part	
								Part No.	Q'ty
7150--	K1013144	BUCKET ASS'Y-0.38m³	ENSEMBLE DE GODET	1					
1	K1013145	BUCKET ASS'Y	ENSEMBLE DE GODET	1	D				
1-1	K1013146	. BUCKET;WELD	. GODET	1					
1-1A	2713-1222A	.. ADAPTER;TOOTH	.. DENT DE ADAPTEUR	4					
1-2	713-00022	. POINT;TOOTH	. DENT	4					
1-3	2705-1022	. PIN;LOCKING	. GOUPILLE	4					
1-4	2114-1859	. WASHER;LOCKING	. RONDELLE	4					
2	2713-1228A	CUTTER;SIDE(R.H)	COIN DE GODET DROIT	1					
3	2713-1229A	CUTTER;SIDE(L.H)	COIN DE GODET DROIT	1					
4	S0574761	BOLT	BOULON	8					
5	S4013333	NUT	ECROU	8					
6	2114-1831A	WASHER;HARD	RONDELLE	8					

DATE	APR. 02, 2007
1st EDITION	

Fig. 7160 BUCKET ASS'Y - 0.44m³ (33") - SIDE PIN
ENSEMBLE DE GODET

Serial No. ;

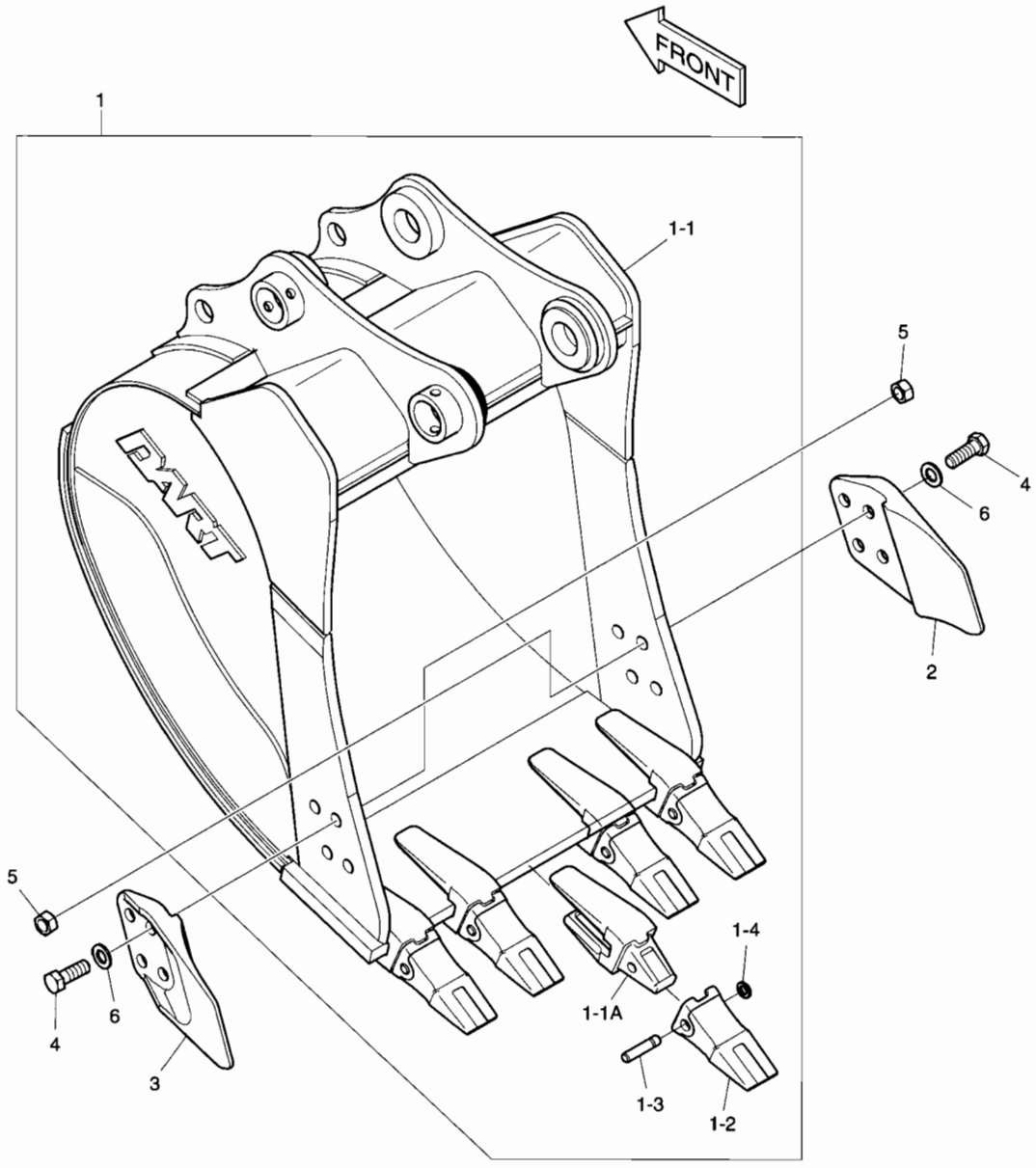

DATE	APR. 02, 2007
1st EDITION	

Fig. 7160 BUCKET ASS'Y - 0.44㎥ (33") - SIDE PIN ENSEMBLE DE GODET

Serial No. ;

Key No.	Part No.	Description	Description	Q'ty	S.C	Serial No.	ICA	Replaceable part	
								Part No.	Q'ty
60--	K1013147	BUCKET ASS'Y-0.44㎥	ENSEMBLE DE GODET	1					
1	K1013148	BUCKET ASS'Y	ENSEMBLE DE GODET	1	D				
1-1	K1013151	. BUCKET;WELD	. GODET	1					
1-1A	2713-1222A	.. ADAPTER;TOOTH	.. DENT DE ADAPTEUR	5					
1-2	713-00022	. POINT;TOOTH	. DENT	5					
1-3	2705-1022	. PIN;LOCKING	. GOUPILLE	5					
1-4	2114-1859	. WASHER;LOCKING	. RONDELLE	5					
2	2713-1228A	CUTTER;SIDE(R.H)	COIN DE GODET DROIT	1					
3	2713-1229A	CUTTER;SIDE(L.H)	COIN DE GODET DROIT	1					
4	S0574761	BOLT	BOULON	8					
5	S4013333	NUT	ECROU	8					
6	2114-1831A	WASHER;HARD	RONDELLE	8					

DATE	APR. 02, 2007
1st EDITION	

Fig. 7170 BUCKET ASS'Y - 0.48m³ (36") - SIDE PIN
ENSEMBLE DE GODET

Serial No. ;

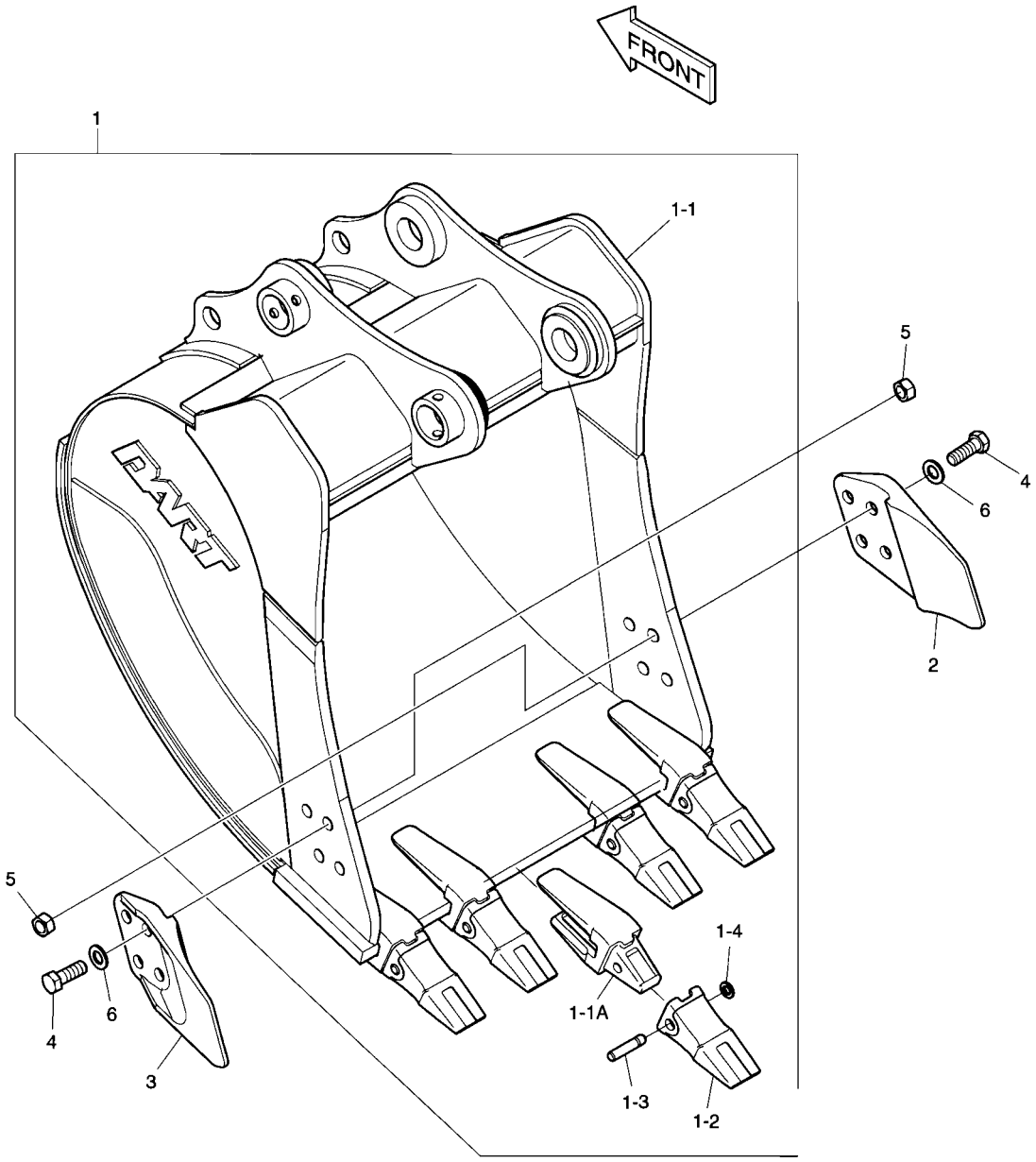

DATE	APR. 02, 2007
1st EDITION	

Fig. 7170 BUCKET ASS'Y - 0.48㎥ (36") - SIDE PIN
ENSEMBLE DE GODET

Serial No. ;

Key No.	Part No.	Description	Description	Q'ty	S.C	Serial No.	ICA	Replaceable part	
								Part No.	Q'ty
7170--	K1013152	BUCKET ASS'Y-0.48㎥	ENSEMBLE DE GODET	1					
1	K1013153	BUCKET ASS'Y	ENSEMBLE DE GODET	1	D				
1-1	K1013154	. BUCKET;WELD	. GODET	1					
1-1A	2713-1222A	.. ADAPTER;TOOTH	.. DENT DE ADAPTEUR	5					
1-2	713-00022	. POINT;TOOTH	. DENT	5					
1-3	2705-1022	. PIN;LOCKING	. GOUPILLE	5					
1-4	2114-1859	. WASHER;LOCKING	. RONDELLE	5					
2	2713-1228A	CUTTER;SIDE(R.H)	COIN DE GODET DROIT	1					
3	2713-1229A	CUTTER;SIDE(L.H)	COIN DE GODET DROIT	1					
4	S0574761	BOLT	BOULON	8					
5	S4013333	NUT	ECROU	8					
6	2114-1831A	WASHER;HARD	RONDELLE	8					

DATE	APR. 02, 2007
1st EDITION	

Fig. 7180 BUCKET ASS'Y - 0.38m³ - DITCH CLEANING
ENSEMBLE DE GODET

Serial No. ;

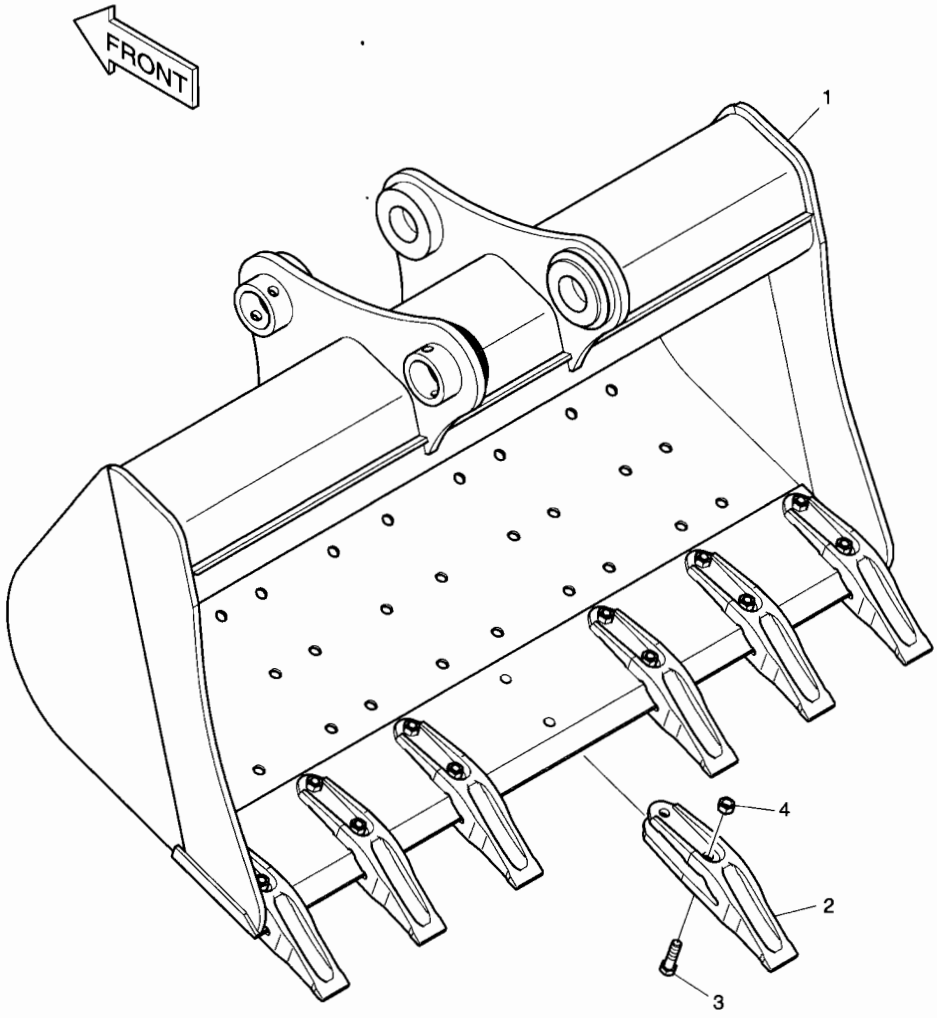

DATE	APR. 02, 2007
1st EDITION	

Fig. 7180 BUCKET ASS'Y - 0.38m³ - DITCH CLEANING ENSEMBLE DE GODET

Serial No. ;

Key No.	Part No.	Description	Description	Q'ty	S.C	Serial No.	ICA	Replaceable part	
								Part No.	Q'ty
7180--	K1010821A	BUCKET ASS'Y-0.38㎥	ENSEMBLE DE GODET	1					
1	K1010822A	BUCKET-0.38㎥	GODET	1					
2	4713-4004A	TOOTH	OUTILLAGE	7					
3	S0565466	BOLT	BOULON A 6 PANS	14					
4	S4012933	NUT	ECROU	14					

DATE	APR. 02, 2007
1st EDITION	

Fig. 7190 BUCKET ASS'Y - 0.46m³ - DITCH CLEANING ENSEMBLE DE GODET

Serial No. ;

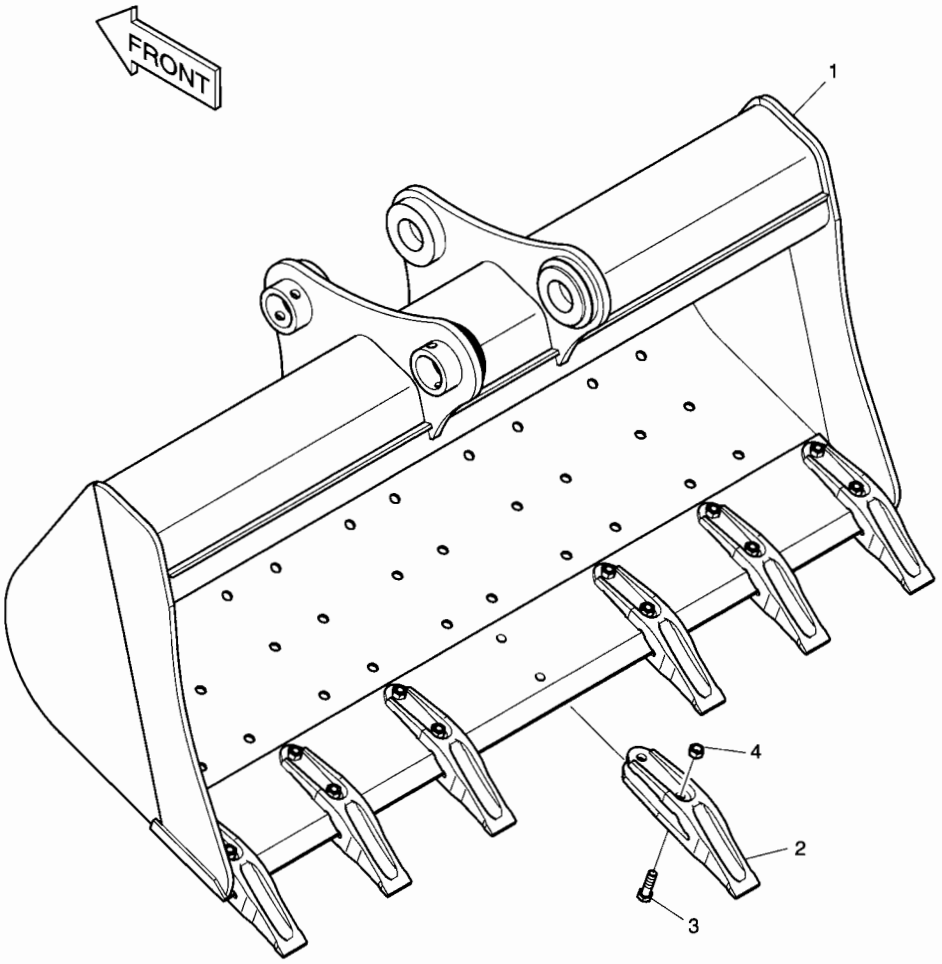

DATE	APR. 02, 2007
1st EDITION	

Fig. 7190 BUCKET ASS'Y - 0.46m³ - DITCH CLEANING ENSEMBLE DE GODET

Serial No. ;

Key No.	Part No.	Description	Description	Q'ty	S.C	Serial No.	ICA	Replaceable part	
								Part No.	Q'ty
7190--	K1010823A	BUCKET ASS'Y-0.46㎥	ENSEMBLE DE GODET	1					
1	K1010824A	BUCKET-0.46㎥	GODET	1					
2	4713-4004A	TOOTH	OUTILLAGE	7					
3	S0565466	BOLT	BOULON A 6 PANS	14					
4	S4012933	NUT	ECROU	14					

INDEX

PART NO.	FIG NO.	KEY NO.
06.01013-9127	021	38
06.01013-9130	025	3
06.01283-7115	022	12
06.01913-2911	019	35
	037	3
06.01913-3114	020	8
	021	14
	027	17
06.01913-3115	022	16
06.01913-3117	024	15
06.01913-3118	029	31
06.01913-3119	022	17
	029	32
06.01913-3120	024	11
06.01913-3121	024	12
06.01913-3128	021	34
06.01913-3129	021	39
06.01913-3213	026	13
06.01913-3216	032	55
06.01923-2910	026	22
06.01923-2911	031	9
06.01923-2913	036	4
	036	11
	036	13
06.01923-2917	031	3
06.01923-2919	036	5
06.01923-3111	013	9
	015	22
	032	38
	037	24
06.01923-3114	015	3
	023	7
06.01923-3116	014	4
06.01923-3117	021	32
06.01923-3118	030	9
06.01923-3119	021	24
	021	33
06.01923-3120	022	5
06.01923-3125	026	17
06.01923-3215	027	34
	027	41
	027	43
06.01923-3217	032	53
06.01923-3218	023	3
	026	15
	027	39
06.01923-3222	021	8
06.01923-3225	021	9
06.01923-3228	021	10
06.01924-3217	015	4
06.01924-3217	034	2
	038	2
	038	4
06.01943-3318	012	11
06.01943-3319	033	8
06.01943-3323	033	2
06.01953-3318	035	2
06.02097-8306	021	29
06.02106-0723	016	42
06.06125-8709	030	6
06.08092-2405	023	8
06.11063-8212	031	10
06.11063-8214	015	16
	029	10
	030	7
	037	8
	037	22
06.11063-9217	033	7
06.15010-2311	015	14
	021	36
	022	13
	026	19
	037	6
	037	18
	037	20
06.16110-0106	019	21
06.16731-2105	021	30
06.16731-2106	031	11
06.16731-2107	015	15
	021	37
	025	4
	026	20
	027	19
	029	11
	030	8
	037	7
	037	17
	037	21
06.22022-0907	020	6
06.22022-0909	020	9
06.22022-1016	019	33
06.22022-1018	016	2
06.22022-1063	014	5
06.29010-0120	019	19
06.29020-0125	016	37
06.29020-0132	024	5
06.31641-0618	011	17
06.56020-0115	030	5
	040	28
06.56021-0102	011	24
06.56021-0102	040	1
06.56180-0712	032	33
	040	30
	041	15
06.56190-0704	027	8
	027	10
	032	4
	032	12
06.56190-0705	011	29
	039	2
06.56190-0706	032	6
	032	13
	032	16
	032	19
	032	57
06.56190-0709	023	9
	027	6
06.56190-0719	015	18
06.56190-0726	021	6
06.56190-0732	022	3
06.67020-0104	027	14
06.67020-0105	015	6
	015	10
06.67020-0116	027	45
06.78144-2204	032	10
06.78144-2403	027	7
	027	9
1.109-00029	4140	303
1.109-00048	4100	124
1.109-00075	4100	123
1.110-00067	4250	6
1.110-00169	4190	29
1.110-00170	4300	23
1.115-00366	4110	836
	4120	836
1.115-00394	4310	7
	4320	7
1.115-00395	4310	23
	4320	23
1.120-00010	4300	18
1.120-00219	4220	24
	4230	24
	4240	24
	4260	24
	4270	24
	4280	24
	4340	24
	4350	24
	4380	24
	4390	24

PART NO.	FIG NO.	KEY NO.
1.120-00219	4400	24
	4420	24
1.121-00028	4190	23
1.121-00104	4310	22
	4320	22
1.123-00006	4100	548
1.123-00007	4120	874
1.123-00009	4110	887
	4120	887
1.123-00017	4110	874
1.123-00022	4300	17
1.123-00053	4140	304
1.131-00009	4240	29
	4280	29
	4370	29
	4380	29
	4410	29
	4420	29
1.131-00035	4300	4
1.131-00058	4170	328
1.138-00004	4190	21
1.161-00018	1770	25C
1.161-00019	1770	26C
1.161-00021	4190	25A
1.178-00004	4190	26
1.180-00116	4250	21
1.180-00264	4250	22
1.180-00268	4220	14
	4230	14
	4260	14
	4270	14
	4340	14
	4350	14
	4370	14
	4390	14
	4400	14
	4410	14
1.180-00269	4220	22
	4230	22
	4260	22
	4270	22
	4340	22
	4350	22
	4370	22
	4390	22
	4400	22
	4410	22
1.180-00273	4250	14
1.180-00413	4250	19
1.180-00447	4210	4A
1.180-00479	4250	11
1.180-00518	4140	302
1.180-00632	4310	9
	4320	9
1.180-00657	4360	8
1.180-00663	4360	21
1.181-00055	4300	2
1.181-00059	4170	324
1.181-00146	4100	469
1.195-00022	4240	30
	4280	30
	4370	30
	4380	30
	4410	30
	4420	30
1.197-00012	4100	251
1.229-00036	4200	13
1.357-00003	4300	20
1.402-00014	4130	361
1.402-00024	4130	351
1.402-00089	4100	271
1.403-00037	4130	353
1.403-00040	4130	354
1.409-00225	4200	38
1.412-00017	4190	19
1.412-00104	4100	211
1.420-00016	4140	105
1.420-00039	4240	28
	4280	28
	4370	28
	4380	28
	4410	28
	4420	28
1.420-00109	4140	107
1.426-00005	4130	307
1.427-00002	4130	308
1.428-00241	4290	7
1.429-00003	4300	16
1.430-00025	4300	14
1.451-00084	4100	312
1.454-00001	4200	14
1.519-00001	4210	3
104-00019	4150	3
110-00021	6810	1A
	6820	1A
	6830	1A
110-00080	4360	6
110-00082	4220	6
	4230	6
	4260	6
110-00082	4270	6
	4340	6
	4350	6
	4370	6
	4390	6
	4400	6
	4410	6
110-00097	4240	6
	4280	6
	4380	6
	4420	6
110-00114	4310	6
	4320	6
110-00115	4310	2
	4310	4
	4320	2
	4320	4
110-00240	3100	1A
	6930	2A
110-00241	3110	1A
	4240	2
	4240	4
	4280	2
	4280	4
	4370	2
	4370	4
	4380	2
	4380	4
	4410	2
	4410	4
	4420	2
	4420	4
	6640	1A
	6700	1A
110-00242	3110	1B
	6640	1B
	6700	1B
110-00243	3110	1C
	6640	1C
	6700	1C
110-00244	4220	2
	4220	4
	4230	2
	4230	4
	4260	2
	4260	4
	4270	2
	4270	4
	4340	2
	4340	4

PART NO.	FIG NO.	KEY NO.
110-00244	4350	2
	4350	4
	4390	2
	4390	4
	4400	2
	4400	4
110-00245	3110	2A
	4250	4
	6640	2A
	6700	2A
114-00225	4200	34
114-00292	4360	41
114-00311	4310	15
	4320	15
114-00343	4100	127
114-00425	1200	16
	1220	19
	1260	26
114-00529	1620	18
114-00583	2160	9D
	4330	4
114-00584	2160	9E
	4330	5
114-00590	1400	13
115-00037	4150	26
115-00042	4200	20
115-00043	4130	700
115-00050	4220	12
	4230	12
	4260	12
	4270	12
	4340	12
	4350	12
	4370	12
	4390	12
	4400	12
	4410	12
115-00052	4220	7
	4230	7
	4260	7
	4270	7
	4340	7
	4350	7
	4370	7
	4390	7
	4400	7
	4410	7
115-00056	4220	19
	4230	19
	4260	19
115-00056	4270	19
	4340	19
	4350	19
	4370	19
	4390	19
	4400	19
	4410	19
115-00060	4220	11
	4230	11
	4260	11
	4270	11
	4340	11
	4350	11
	4370	11
	4390	11
	4400	11
	4410	11
115-00063	4240	12
	4280	12
	4360	7
	4380	12
	4420	12
115-00072	4360	11
115-00073	4360	12
115-00081	4240	26
	4280	26
	4370	26
	4380	26
	4410	26
	4420	26
115-00084	4240	11
	4280	11
	4380	11
	4420	11
115-00085	4240	19
	4280	19
	4380	19
	4420	19
115-00101	4310	19
	4320	19
115-00104	4250	7
	4310	11
	4320	11
115-00107	4310	10
	4320	10
115-00122	4360	19
116-00089B	1480	53
116-00090B	1480	54
116-00092A	1500	32-28D
119-00003	4150	14
119-00014AD1	1200	6
119-00025B	1220	13
120-00050B	2110	23
120-00127	4200	31
120-00131	4130	311
120-00187	4100	954
120-00188	4100	401
120-00199	4110	925
	4120	925
120-00276	6600	12
120-00317	1250	34
120-00322A	1110	3
121-00006	1190	10
	3140	10
	6950	10
121-00010D1	1320	71
	1330	71
	7060	34
121-00010D3	1190	1-7
121-00010D5	6520	16
	6780	8
	7000	16
121-00010D7	6370	17
	6500	5
	6530	16
	6630	12
	7040	5
	7060	14
	7080	11
121-00010D8	6750	21
	6910	14
	6940	30
121-00038	4130	312
121-00043	4220	23
	4230	23
	4260	23
	4270	23
	4340	23
	4350	23
	4370	23
	4390	23
	4400	23
	4410	23
121-00055	4360	22
121-00085	6120	1E
123-00094	4150	10
123-00095	4150	11
123-00096	4150	16
123-00172A	6810	5
	6820	5

PART NO.	FIG NO.	KEY NO.
123-00172A	6830	5
123-00336A	6810	16
	6820	16
	6830	16
123-00474	3100	3
	6930	4
123-00516B	1540	2
	6130	2
123-00522B	1480	49-9
123-00523	1470	66
	1540	7
	6130	7
123-00524B	1400	2
123-00671B	3100	2
	6930	3
124-00010	1500	32-35
124-00055	4220	27
	4230	27
	4260	27
	4270	27
	4340	27
	4350	27
	4390	27
	4400	27
124-00070	1640	17
124-00085	4240	33
	4280	33
	4380	33
	4420	33
124-00157	4360	26
124-00194	1130	41
124-00199D4	3140	14
124-00199D5	3140	17
	6630	13
	6950	13
124-00208D11	1750	25
124-00208D2	1130	19
	1670	31
	1740	23
	6210	5
	6400	31
124-00208D3	1670	30
	1680	36
	1710	8
	1740	24
	1770	33
124-00208D4	1300	36
	1300	114
	1680	37
	1740	25
124-00208D4	6400	10
124-00208D5	1680	52
	1740	26
	6120	21
	6370	31
124-00208D6	6120	20
124-00208D7	1750	16
124-00208D9	1310	37
124-00209D1	1210	11
	1740	22
	1750	23
	6600	9
124-00209D2	1360	25
124-00209D3	1350	37
124-00209D8	1360	40
124-00298A	1160	2
124-00299A	6580	7
	6670	7
	6730	7
124-00302	1260	24
	6430	7
	6660	7
	6720	7
124-00310A	1150	18
124-00344	1500	32-36
125-00035A	1590	38-2A
	1600	37-2A
125-00071B	1610	1-2A
125-00072	1500	32-11
125-00073B	1480	49-4A
125-00074B	1480	49-5A
125-00075A	1630	30
125-00077	1490	70
125-00078	1490	71
125-00096A	1480	49-4
125-00097A	1480	49-5
129-00042	4200	10
129-00043	4200	18
129-00045	4130	310
129-00124	4180	44
129-00126	4180	58
129-00129	4180	17
129-00155	1480	69
132-00021	1380	21
133-00220E	1500	37
133-00221	1500	32-9
133-00229A	1520	10
133-00230A	1520	11
133-00248	1480	49-4C
	1480	49-5C
136-00002	1220	11
136-00055A	1500	32-12
137-00092	1500	32-10
140-01533C	6570	1
140-01535	6570	3
140-01543A	6660	1
140-01553E	6670	1
140-01555H	6580	1
140-01562C	6680	1
140-01563C	6680	2
140-01608C	3130	4
140-01609C	3130	5
140-01610C	3130	6
140-01611C	3130	7
140-01615A	6430	1
140-01616	6570	2
142-00127C	1480	52
142-00128B	1480	51
145-00124A	1500	32-18
155-00061	3110	2
	6640	2
	6700	2
159-00017	4200	19
159-00287A	1380	8
	1390	8
159-00290A	1380	7
	1390	7
159-00294B	6140	1
	6150	1
160-00008	4200	33
	4290	5
160-00020	1190	11
	1660	8
	3110	5
	3140	11
	6640	5
	6700	5
	6950	11
160-00061	6260	1
	6340	1
160-00068	1100	3
160-00071	1520	5
160-00072	1520	6
160-00074A	1470	121
160-00080A	1520	7
160-00081	1100	30
161-00010	1460	1
161-00011	1460	2
161-00080	4200	9
161-00195	1480	34

PART NO.	FIG NO.	KEY NO.
161-00195	1500	34
	6180	8
161-00381	1520	14
	6410	19
161-00382	1520	15
	6550	9
161-00386	7010	23
161-00404	6280	9
161-00548	1120	10
161-00550	1120	11
161-00574	1260	25
	6430	6
	6660	6
	6720	6
161-00580	1610	42
161-00598A	1470	59
161-00603B	1640	3
161-00608B	1640	7
161-00609C	1490	84
161-00610E	1490	85
161-00613B	1490	90
161-00618B	1480	63
161-00619B	1480	64
161-00620	1500	32-28C
161-00621B	1500	32-28
161-00622	1450	23
161-00623	1500	32-6
161-00624	1450	34
161-00639	6140	8
	6150	6
161-00640A	1470	30
162-00033A	1500	32-3C
162-00034B	1480	7
162-00035A	1470	6
162-00038	1470	9
162-00039A	1470	8
162-00040A	6140	2
	6150	2
170-00004	1160	9
172-00052E	1500	15
172-00053B	1530	1
172-00055A	1490	91
172-00372A	1530	-
180-00077D3	3110	15
	6640	15
	6700	15
180-00179	4150	20
180-00197	4200	16
180-00198	4200	23
180-00199	4200	24
180-00200	1220	14A
180-00247	4220	21
	4230	21
	4260	21
	4270	21
	4340	21
	4350	21
	4370	21
	4390	21
	4400	21
	4410	21
180-00276	4240	21
	4280	21
	4380	21
	4420	21
180-00297D3	2100	2A
180-00312	4310	13
	4320	13
180-00313	4310	8
	4320	8
180-00314	4310	17
	4320	17
180-00315	4310	21
	4320	21
180-00360	4360	17
180-00363	4360	15
180-00383	4100	774
180-00398	4180	18
180-00403	4180	60
	4430	8
	4440	8
	4450	8
180-00463	1100	4
	2100	12
181-00008	6600	5
181-00078D5	7060	33
181-00086D2	1320	9
	1330	9
181-00103	1190	8
	3140	9
	6950	9
181-00128D3	6520	15
	6780	6
	7000	15
181-00144D5	1320	19
181-00319	4200	21
181-00519	4100	490
181-00561	4180	32
181-00563	4180	69
	4430	11
181-00563	4450	11
181-00564	4180	70
181-00574	4130	435
181-00646	4180	89
181-00647	4180	90
181-00673D1	7060	32
181-00717	1190	1-8
181-00779	6370	7
	6400	6
	6530	18
181-00804	6310	3
181-00809	6120	1C
181-00810	6120	1D
182-00009	4150	15
185-00167D3	6120	12
186-00017A	1200	9
190-00093	5120	9
190-00094	5120	13
190-00095	5130	9
190-00096	5120	8
190-00097	5130	10
190-00098A	5120	10
190-00099	5130	11
190-00100	5130	5
190-00101	5120	4
190-00102	5120	12
190-00122	5130	12
	5150	10
190-00123	5130	29
190-00509BD25	5130	25
190-00521	5120	14
190-00522	5130	17
190-00522A	5150	15
190-00557	5130	18
190-00648A	5130	13
	5150	16
190-00652	5130	4
	5150	4
190-00689	5140	8
190-00691	5150	12
190-00692	5150	13
190-00693	5140	7
190-00694	5150	11
190-00695A	5140	10
190-00703	5150	14
190-01059D12	5130	27
190-01107B	1110	1
190-01172	6120	19
190-01192D2	1670	28
190-01192D9	1670	27

PART NO.	FIG NO.	KEY NO.
191-00167	4150	28
191-02987B	1100	27
191-02990B	1100	25
191-03166C	1490	17
191-03179A	1490	16
191-03283	1500	32-28A
191-03734A	1480	83
191-03736E	6310	14
195-01683A	1520	19
	6410	2
195-01684A	1520	20
	6550	2
195-01805	6280	1
195-02622C	1700	29
195-02623B	1100	28
195-02624C	1610	7
195-02643C	1120	7
195-02662B	6120	2
195-02706C	1610	6
195-02711B	6370	9
195-02716C	1300	5
195-02719B	1500	38
195-02729	1470	58
195-02739B	1480	49-2
195-02740C	1480	49-3
195-02755C	1390	1
195-02768C	1440	14
195-02769C	1440	15
195-02770C	1440	18
195-02771B	1450	14
195-02772E	1450	15
195-02774	1450	22
195-02775A	6250	2
195-02785C	1450	24
195-02790B	1450	25
195-02858C	1440	22
195-02868C	1380	5
195-02884B	1270	17
195-02904C	1400	1-2
195-02908C	6230	3
195-02909A	6270	1
195-02910A	6240	1
	6290	1
195-02925	6280	5
195-02948A	1560	1
195-02949A	1550	1
195-03374B	6140	5
195-03444	6310	11
198-00016	1300	6
	1360	6
198-00053A	1500	32-8
198-00054A	1470	5
2.114-00862	4170	110
2.123-00169	4160	34
	4170	171
2.172-00003	1430	9
	6110	9
2.181-00370	4170	354
2.181-00505	4170	379
2.415-00054	4170	376
204-00067	1160	51
	1170	-
204-00070	1170	5
204-00075	1170	4
2106-1019D25	1770	32
	5110	9
2107-6006	1770	15
2109-1041	4150	17
2109-1042	4150	18
2110-1184D7	4200	28
	4290	2-2
2114-1058D10	1300	34
	1360	28
2114-1058D2	1460	4
2114-1058D29	1610	1-12
	1750	4
	1770	21
2114-1058D30	1250	31
	1590	38-12
	1600	37-12
2114-1058D31	6180	15
2114-1058D33	1610	23
	1630	23
2114-1058D45	1590	38-10
	1600	37-10
2114-1058D52	1770	24
2114-1058D54	1720	3
2114-1058D68	1610	10
2114-1058D70	1720	5
2114-1058D72	6120	5
2114-1154	1610	32
2114-1379	2140	8-7
2114-1592	4150	13
2114-1594	4150	12
2114-1813	1200	14
	1220	17
2114-1814	1200	15
	1220	18
2114-1816A	1130	30
2114-1831A	3120	9
2114-1831A	7090	9
	7100	9
	7110	9
	7120	9
	7130	9
	7140	9
	7150	6
	7160	6
	7170	6
2114-1856	1500	42
2114-1859	3120	4
	7090	4
	7100	4
	7110	4
	7120	4
	7130	4
	7140	4
	7150	1-4
	7160	1-4
	7170	1-4
2114-1898D1	1460	7
	1520	4
	1550	3
	1560	3
	6180	12
	6270	2
2114-1898D10	6180	16
2114-1898D13	1470	76
	1490	76
2114-1898D14	1400	1-5
	1400	5
	1440	31
	1450	28
	1470	18
	1480	18
	1490	18
	1500	18
	1520	9
	1540	6
	6130	6
2114-1898D15	1410	4
	1500	23
	1500	32-22
	1530	3
2114-1898D17	1400	8
	1520	2
	6160	2
	6170	2-2
	6170	3
	6180	9

PART NO.	FIG NO.	KEY NO.
2114-1898D18	1400	11
2114-1898D2	1480	49-13
	1500	32-25
	1500	46
	6180	13
2114-1898D3	1470	19
	1480	19
	1480	49-10
	1490	19
	1500	19
	1500	32-29
	1540	3
	6130	3
	6310	12
2114-1898D4	1380	19
2114-1898D5	1440	36
	1450	31
	1490	113
	6140	9
	6150	8
2114-1898D6	1470	26
	1480	26
	6180	17
	6230	5
	6240	8
	6290	2
2114-1929	1120	8
2114-1994B	3110	14
	6640	14
	6700	14
2114-1995B	3110	13
	6640	13
	6700	13
2114-2031D1	1490	97
2114-2031D4	1400	6
	1440	33
2114-2031D5	1360	26
2114-9012A	1100	11
	1120	9
	2100	15
2116-1060D6	3100	8
	3110	12
	6640	12
	6700	12
	6810	18
	6820	18
	6830	18
	6930	12
2116-1522	1590	38-3
	1600	37-3
2116-1532A	3100	7
	6930	29
2116-9003	5120	6
	5140	6
2119-1063B	1190	1-5
2120-1354	1700	14
2120-2150D1	1500	43
2120-2150D3	1500	28
	1500	32-33
2120-2166D1	1500	32-23
	1500	41
	1520	3
	1550	2
	1560	2
2120-2166D10	1380	10
	1390	10
	1410	3
	1450	26
	1490	14
	6150	10
2120-2166D12	1450	29
	1470	25
	1480	25
	1480	49-12
	1490	25
	1500	25
	1520	26
2120-2166D18	1490	99
2120-2166D2	1460	6
	1530	2
2120-2166D23	1440	26
2120-2166D26	1470	77
	1490	77
2120-2166D27	6160	3
	6170	2-3
	6170	4
	6180	10
2120-2166D28	1470	20
	1480	20
	1480	49-11
	1490	20
	1500	20
	1500	32-30
2120-2166D32	6180	23
2120-2166D36	1440	35
	1450	30
2120-2166D37	1470	27
2120-2166D4	1500	22
	1520	16
2120-2166D41	1220	22
2120-2166D5	1400	1-3
	1400	10
	1440	32
	1450	35
	1470	47
	1500	32-24
	1500	47
	6180	22
2120-2166D52	1380	16
	1390	11
	1440	23
	1480	49-15
	1480	80
	1490	80
	1500	32-31
	6140	6
	6150	9
	6180	25
2120-2166D53	1380	9
	1390	9
	1410	5
	1440	24
	1450	27
	1470	111
	1490	111
	1500	32-37
2120-2166D54	6230	4
	6240	2
	6290	3
2120-2166D55	1520	1
2120-2166D57	1440	38
2120-2166D58	1450	36
2120-2166D7	1470	31
	1490	31
2120-2166D9	1540	4
	6130	4
	6310	13
2120-2187	1750	18
	6120	22
2121-1305	1680	53
	1710	10
	1750	24
2121-1311D1	1400	9
	6180	18
2121-1311D2	1400	7
	1480	49-14
	6180	14
2121-1311D4	1480	39
	1500	39
	6180	11

PART NO.	FIG NO.	KEY NO.
2121-9007	1460	5
2122-1002D2	5130	8
	5150	9
2122-1002D4	5130	14
	5150	17
2123-1107D7	1100	9
2123-1458A	1190	4
2123-2207E	3100	5
	6930	8
2123-2209C	3100	6
	3110	6
	6640	6
	6700	6
	6930	7
2123-2212C	3110	9
	6640	9
	6700	9
2123-2225C	3110	7
	6640	7
	6700	7
2123-2247	1500	32-19
2123-6119	1500	32-3B
2124-1025D6	1270	15
2124-1026D2	6380	73
	6940	13
2124-1084D2	6630	4
2124-1340D3	6840	11
2124-1340D9	6840	10
2124-1353D2	3140	15
	6950	14
2124-1509D1	1730	7
	6250	6
2124-1509D2	1210	10
2124-1622D1	5130	26
2124-1689A	1500	32-20
2125-1095A	1450	16
2125-9055	1500	35
2127-1002A	1500	48
2129-1008	1220	12
2129-1393	1220	4
2129-1446	1500	117
213-00029C	1440	13
213-00030B	1440	8
213-00031E	1440	9
213-00032B	1440	10
213-00033B	1440	11
213-00034E	1440	12
213-00035B	1440	7
213-00036B	1450	2
213-00037B	1450	3
213-00038B	1450	4
213-00039B	1450	5
213-00040A	1450	21
2132-1133B	1520	22
2132-1134B	1520	21
2140-1338	1480	55
	1490	55
2142-9005	1500	33
2150-1132A	1500	32-14
2150-1133	1490	93
2155-1306B	3110	3
	6640	3
	6700	3
2155-1307B	3110	4
	6640	4
	6700	4
2160-1004D34	1100	18
2160-1004D44	1100	15
2160-1004D48	1100	16
2160-1004D58	1100	19
2160-1201D15	1100	20
2160-1201D17	1100	34
2160-1212	1740	4
2160-1213	1740	5
2160-1217	1610	1-6
	1610	1-7
2160-1310	1470	21
2160-1336	6120	12C
2160-1345	1550	4
2160-1346	1560	4
2161-2212	1490	72
2161-2487	1520	25
2161-9052	1590	38-4
	1600	37-4
2161-9053	1590	38-5
	1600	37-5
2172-9021	1500	32-17
2180-1026D19	1240	40
	2180	5
	6860	5
2180-1026D2	1260	36
	3130	15
	3150	4
	6420	5
	6430	10
	6440	6
	6650	4
	6660	10
	6690	6
	6710	4
2180-1026D2	6720	9
	6750	5
	6940	26
2180-1026D23	1250	41
2180-1026D27	1250	42
2180-1026D28	1250	45
2180-1026D30	1280	30
	6570	9
	6580	16
	6670	16
	6730	13
2180-1026D31	1230	43
2180-1106BD24	6930	16
2180-1106BD3	3110	10
	6640	10
	6700	10
2180-1106BD4	3100	1B
	3100	9
	3110	11
	6640	11
	6700	11
	6810	8
	6820	8
	6830	8
	6930	2B
	6930	15
2180-1216D151	4160	32
2180-1217D13	4120	79-2
2180-1217D147	4140	307
2180-1217D149	4140	308
2180-1217D15	4120	79-1
2180-1217D150	4140	113
2180-6086	1770	26A
2180-6088	1770	25A
2180-9020	2120	2-5
2180-9087	2140	8-14
2180-9153	5110	12
2181-1110D3	1190	1-6
2181-1111D3	1190	1-3
2181-1116D1	4170	398
	4190	2
	4200	3
2181-1116D2	2120	2-8
	2140	8-12
	2150	8
	2160	9K
	4140	312
	4150	22
	4170	396
2181-1116D3	4200	4

PART NO.	FIG NO.	KEY NO.
2181-1116D3	4240	31
	4280	31
	4370	31
	4380	31
	4410	31
	4420	31
2181-1116D4	4150	21
2181-1116D5	4140	311
2181-1126D102	6610	8
	7060	15
2181-1126D14	1300	23
	1310	23
	1320	23
	1340	23
	1340	101
	1350	20
	2180	14
	6400	3
	6410	9
	6480	4
	6520	14
	6530	3
	6540	13
	6630	8
	6790	10
	6860	14
	6920	3
	7000	14
	7010	22
	7060	5
	7080	3
2181-1126D20	1240	17
2181-1126D27	1350	18
	1360	18
2181-1126D28	1350	19
	1360	19
2181-1126D34	1310	24
2181-1126D36	1350	64
	1350	74
	6370	2
	6620	3
2181-1126D6	1230	23
	1240	23
	1300	21
	1300	112
	1310	21
	1360	21
	2180	13
	6860	13
2181-1126D7	1320	22

PART NO.	FIG NO.	KEY NO.
2181-1126D7	1330	22
	1340	22
	1350	63
	1350	73
	1360	72
	6450	6
	6600	6
	7070	3
2181-1159	1750	11
2181-1161A	1750	13
2181-1186D12	3140	6
	6950	19
2181-1702D10	1340	13
	6370	18
	6410	22
2181-1702D2	1240	20
	1300	15
	1310	15
	1340	15
2181-1702D3	1320	101
	1330	92
2181-1702D36	1230	54
2181-1702D4	1300	14
	1310	14
	1320	111
	6370	4
	6370	52
	6400	4
	6410	10
	6480	15
	6520	13
	6530	4
	6530	53
	6540	33
	6780	14
	6790	11
	6910	19
	7000	13
	7010	53
2181-1702D49	1240	56
2181-1702D5	1360	16
2181-1702D56	2180	17
	6860	17
2181-1702D63	1340	16
2181-1890D2	1200	20
	1220	27
2181-1890D4	4160	30
	4170	357
2181-1925	1660	2
2181-1950D1	1240	81

PART NO.	FIG NO.	KEY NO.
2181-1950D1	1250	25
	1250	92
	1250	111
	1340	38
	4130	466
	4140	111
	4210	5
2181-1950D15	6420	8
2181-1950D2	1250	101
	1260	52
	1320	102
	1330	91
	1360	71
2181-1950D3	4100	467
2181-1950D7	1200	52
2181-1950D9	1250	91
2181-1951D1	1310	10
	1340	10
	6370	5
	6400	5
	6530	20
	7050	6
2181-1951D14	6620	4
	7070	4
2181-1951D16	1320	11
	1330	11
2181-1951D19	6370	6
2181-1951D5	1310	12
2181-1951D6	6410	8
	6540	7
	6790	12
	7010	11
2181-1951D7	6540	8
	6790	13
	7010	12
2181-2104D6	6120	9
2181-2157D1	1260	16
2181-2157D5	1240	8
2181-2281D10	2180	11
	6860	11
2181-2293D2	6350	9
	6380	13
	6960	9
	6970	13
2181-2294D1	1230	18
	6910	13
2181-2294D10	1230	22
2181-2294D6	6360	2
	6390	2
	6980	2

PART NO.	FIG NO.	KEY NO.
2181-2375D7	6600	4
2181-2419D1	6480	14
2181-2419D5	1240	57
2181-2527	1660	4
2181-2566D10	6940	34
2181-2627D1	1260	32
	1280	32
	2180	6
	6350	76
	6380	62
	6860	6
	6910	17
	6940	24
2181-2627D15	6350	8
	6380	9
	6960	8
	6970	9
2181-2627D3	1280	34
2181-2755B	6120	1A
2181-2774	1750	9
2181-2815D11	6520	11
	7000	10
2181-2815D3	6780	4
2181-2816D1	6430	32
	6660	32
	6720	32
2181-2816D4	6430	35
	6520	12
	6580	32
	6660	35
	6670	32
	6720	35
	6730	32
	6780	5
	7000	12
2181-2817D1	6430	33
	6440	33
	6660	33
	6690	33
	6720	33
	6750	33
2181-2817D4	6430	37
	6580	33
	6660	37
	6670	33
	6720	37
	6730	33
2181-2820D1	6510	4
	6680	4
	6740	4
2181-4112	3140	13
	6950	18
2181-4125	2180	16
	6860	16
2181-4133D3	1270	21
	6520	23
	6580	5
	6670	5
	6730	5
	6840	7
	7000	11
2181-4133D37	1280	22
2181-4133D46	6840	6
2181-4133D5	6440	13
	6440	31
	6690	13
	6690	31
	6750	12
	6750	31
2181-4133D7	1230	58
2181-9079	1260	35
	3130	14
	3150	3
	6440	5
	6650	3
	6690	5
	6710	3
	6750	4
	6940	25
2181-9081	2180	3
	6860	3
2181-9089	1280	33
2183-3784B	1190	1-4
2184-1045D103	3140	3
2184-1045D161	3140	5
2184-1045D165	3140	2
2184-1045D190	6950	7
2184-1045D200	6950	2
2184-1045D66	6950	1
2184-1046D216	7060	11
	7060	12
2184-1060D160	6860	9
2184-1060D70	2180	9
2184-1096D8	7060	10
2184-1100D237	3150	21
2184-1196D58	1230	47
2184-1197D12	6660	2
2184-1197D24	6430	2
2184-1222D13	6860	1
2184-1222D18	2180	1
2184-1222D19	2180	2
2185-1002D93	1230	9
2185-1308D7	1750	7
	1750	8
2185-1660	1470	106
2185-1776D2	1250	16
2190-2314D2	5130	30
	5150	25
2190-2476	5130	15
	5150	18
2190-2477	5130	16
	5150	19
2190-2480	5140	4
2190-2524	5120	7
2190-2533A	5150	7
2190-2556D158	5150	5
2190-3297	5120	2
	5140	2
2190-3379A	5150	3
2190-3386A	5140	5
2190-3388	5140	9
2195-1534	1700	22
2195-2394B	1730	2
2195-3500	1740	17
	6400	30
	6530	23
2195-3657	1270	49
2197-1660	1730	5
	1740	20
2197-1661	1300	2I
	1680	35
	1710	17
	1730	6
	1740	21
	6240	4
	6250	5
	6270	4
	6290	4
	6400	27
	6530	26
2199-1004	5100	1-10
2199-1005	5100	1-11
2199-1063F34A	5100	1
2199-9007	5100	3
2199-9008	5100	2
2199-9009	5100	1-15
2199-9043	5100	1-1
2199-9058	1490	92
2204-6039A	1770	2
2208-6013B	1770	11

PART NO.	FIG NO.	KEY NO.
2229-1063A	1180	2
230-00017	4150	8
230-00018	4150	9
2401-1276KT	6120	1G
2401-9236AKT	4100	*
2414-9009A	1180	6
2415-1018	1700	34
2420-1124B	1250	14
2420-1258	6120	12A
2420-9101A	6910	15
2423-1470	1360	4
2426-1175	1220	6
2426-1237	1300	2D
2426-9021C	4310	25
	4320	25
2440-9164K	4310	*
	4320	*
2460-9057A	1310	3
2471-1133	6370	3
2471-1135	1360	15
2471-1152	6120	12B
2471-1154	1300	2C
	5110	2
2471-1155A	1300	2E
2472-7003	1300	2B
2474-7009	1180	6B
2474-7009K	1180	6H
2474-9016A	1220	10
2512-1095D1	5110	11
2515-1016D4	1700	25A
	5110	18
	6230	1A
	6240	3A
	6250	7A
	6320	1A
	6330	1A
2515-1021D1	1490	75A
2515-1022D1	1730	1A
	5110	17
2516-1116	1680	32
2527-1016	1680	5A
	1680	6A
	5110	19
2527-1017	1680	5B
	1680	6B
	5110	20
2527-1018	1680	5C
	1680	6C
	5110	21
2527-1023A	1700	15
2527-1023A	5110	23
2527-1025	1680	5D
	1680	6D
	5110	22
2527-9004	1700	13
2528-9040	1680	18
2531-1003	1670	8
	1670	9
2541-9020	1490	81
2543-9015	1670	6
2544-1022	1700	16
2544-9024	1700	11
2544-9033	1670	15
	1670	16
	1670	17
	1670	18
	1670	19
	1670	20
	1670	21
	1670	22
	1670	23
	1670	24
2547-9045	1180	9
	6300	3
2548-1027	1740	1A
2549-9112	1320	7
2550-1014D1	1740	2
2550-1014D2	1740	3
2553-1275D46	1740	14
2553-1275D5	1740	6
	1740	10
2553-1275D69	1740	15
2553-1275D8	1740	16
270-00054B	1480	49-6
270-00062A	1480	74
2705-1022	3120	3
	7090	3
	7100	3
	7110	3
	7120	3
	7130	3
	7140	3
	7150	1-3
	7160	1-3
	7170	1-3
2705-9002	1590	38-19
	1600	37-9
	1630	28
2713-1222A	3120	1A
	7090	1A
2713-1222A	7100	1A
	7110	1A
	7120	1A
	7130	1A
	7140	1A
	7150	1-1A
	7160	1-1A
	7170	1-1A
2713-1228A	3120	6
	7090	6
	7100	6
	7110	6
	7120	6
	7130	6
	7140	6
	7150	2
	7160	2
	7170	2
2713-1229A	3120	5
	7090	5
	7100	5
	7110	5
	7120	5
	7130	5
	7140	5
	7150	3
	7160	3
	7170	3
2891-1311	1500	32-26
308-00019	4320	1
308-00020	4310	1
354-00002	4200	27
354-00003	4200	29
	4290	12
359-00021A	1490	87
359-00022A	1490	86
400-01347A	6430	-
400-01355A	6660	-
400-01361B	3140	-
400-01365	6570	-
400-01366B	6670	-
400-01390A	6680	-
400-01392B	6500	-
400-01393B	6510	-
401-00449	6120	1
402-00017	4150	1
402-00036	4290	6
404-00063	4150	4
404-00064	4150	5
404-00065	4150	6

PART NO.	FIG NO.	KEY NO.
404-00066	4150	7
405-00006	4150	2
407-00001	6120	1F
409-00028	4310	16
	4320	16
409-00044	4100	532
410-00009	4100	13
410-00010	4100	14
411-00017	4130	309
4132-1138	1500	32-28B
414-00039	4100	114
415-00037	4180	56
415-00043B	1450	6
415-00044B	1440	19
415-00045B	1440	17
415-00046B	1440	16
416-00010	4100	534
416-00011	4100	535
416-00018A	1480	10
416-00019B	1480	29
416-00020	1480	40
4185-1777	1700	33
420-00003A	6610	3
	6630	2
	7060	4
	7080	2
420-00110	4140	400
420-00258	4430	2
	4440	2
	4450	2
	4450	13
420-00304	1250	13
420-00307	1320	69
420-00352D1	1320	70
420-00453KT	4200	*
420-00465B	1260	1
	4180	-
420-00467	1350	3
	4200	-
420-00476	6370	8
	6530	12
420-00490A	4300	-
	6790	1
420-00511B	6430	8
	6660	8
	6720	8
420-00517B	6430	20
	6660	20
	6720	12
4215-1003D5	1250	53
422-00027A	1220	14
422-00055	2120	5
423-00046	4200	1
423-00047	4200	2
423-00193B	6350	2
	6960	2
424-00042	4200	8
424-00059	4240	25
	4280	25
	4370	25
	4380	25
	4410	25
	4420	25
426-00028	6520	2
	7000	2
426-00168	4180	57
426-00247A	6400	1
	6530	1
426-00248A	6380	1
	6970	1
426-00249A	6380	2
	6970	2
426-00266	6370	1
426-00267A	6350	1
	6960	1
426-00278	1190	1-10
	1220	24
426-00282	6310	2
426-00287	6480	1
429-00004	4200	5
429-00005	4200	7
429-00006	4200	11
429-00024	4180	43
430-00040	4180	45
430-00042	4180	19
454-00023	4310	3
	4320	3
462-00025	4100	261
471-00030	4130	355
471-00075A	1300	2
471-00105A	1200	4
471-00114	6360	1
	6390	1
	6980	1
471-00118	1310	8
471-00119	1470	13
471-00127	1220	21
4713-4004A	7180	2
	7190	2
473-00033	1200	2
473-00052	1220	7
474-00039	1170	2
	5110	4
474-00040	1170	3
	5110	3
474-00044A	1480	49-16
474-00046	6360	1A
	6390	1A
	6980	1A
474-00055	1220	5
	5110	1
480-00018C	2160	9
480-00018KT	2160	*
481-00002	2160	9A
482-00003	2160	9C
	4330	3
483-00002	2160	9B
500-00302A	6230	-
500-00303	6240	-
500-00307	6260	-
500-00308	6270	-
500-00309	6280	-
500-00310	6290	-
500-00317	6490	-
505-00016B	1480	49-7
506-00006	1700	1
507-00006	1470	102
507-00007	6310	8
515-00012A	1680	1A
	5110	16
515-00013	6260	5A
	6280	10A
	6340	5A
516-00011	6220	3
516-00014	1700	26
516-00015	1700	27
520-00004	1770	18
523-00012	6120	1H
527-00005	1710	1A
	5110	24
527-00006	1680	17
530-00067	6370	28
	6470	4
530-00150	1690	2
530-00214A	6120	18
530-00236	1300	2H
530-00411G	1680	25
530-00412G	1670	29
530-00413C	1680	26
530-00414C	1690	10

PART NO.	FIG NO.	KEY NO.
530-00415C	1690	9
530-00416B	1680	31
530-00417B	1490	62
530-00418D7	1730	4
530-00430A	6230	2
530-00431	6250	1
530-00432A	6490	2
530-00434B	1680	27
530-00435A	1680	28
530-00463A	6240	7
	6270	7
	6290	7
	6330	2
530-00464	6260	4
	6340	4
534-00062	6260	5
	6280	10
	6340	5
534-00064	1730	1
534-00079	1490	75
534-00085	1700	25
	6230	1
	6240	3
	6250	7
	6320	1
	6330	1
534-00117A	6150	-
538-00011	1470	73
538-00012	6310	1
539-00076C	1680	1
541-00015	1470	101
541-00016	6310	7
543-00095	1680	14
543-00096	1680	15
543-00106	1670	7
543-00107	1770	1
544-00007	1710	1
545-00001	1680	16
545-00011	1670	12
547-00023	1680	49
547-00024A	1750	20
547-00026	1200	17
548-00003A	1740	1B
549-00010	6370	27
	6470	2
549-00077	6310	6
549-00086	1480	57
549-00089	1380	5A
549-00090	1690	6
549-00092	6490	1
549-00093	6120	17
549-00095	1250	15
549-00101	6210	1
	6260	20
	6310	4
549-00102	6300	1
549-00103	1680	19
	1680	21
	6220	1
	6230	10
553-00001D4	1710	13
554-00005	1470	60
621-00951	4310	5
	4320	5
621-01507	1520	13
621-02151	1360	5
621-02643B	1700	31
621-02726A	1590	38-6
	1600	37-6
621-02739B	6120	3
621-02743G	1590	38-2
621-02800	1100	13
621-02801	1380	17
	1390	14
	1440	27
621-02837A	1470	61
621-02849A	1500	36
621-02864	1470	12
621-02867A	1500	32-21
621-02869B	1500	32-7
621-02892E	1520	12
621-02894E	1450	1
621-02895C	1400	1-1
621-02896G	1450	-
621-02899E	1380	3
621-02900B	1390	3
621-02901B	1380	2
621-02902G	1440	-
621-02903C	1440	1
621-02904C	1440	3
621-02905C	1440	2
621-02907B	1450	10
621-02908B	1440	6
621-02909E	1440	4
621-02910C	1490	94
621-02911C	1490	95
621-02912B	1490	96
621-02913C	1450	7
621-02914C	1450	8
621-02915B	1450	9
621-02917C	1450	11
621-02919B	1450	13
621-02920C	1450	19
621-02925A	1400	1-4
621-02926C	1390	2
621-02938B	1100	5
	2100	11
621-02955B	1670	1
621-02957A	1380	6
	1390	6
621-02981E	1570	11
621-03005A	1400	4
621-03011E	1400	1
621-03014B	1380	4
	1390	5
621-03025A	1610	4
621-03103	6140	7
	6150	7
621-03113B	1490	67
621-03114B	1490	68
621-03166	2100	13
621-03224	1460	-
621-03710A	3100	10
	6930	9
621-03724	1480	49-4B
621-03725	1480	49-5B
621-03727B	1540	1
	6130	1
621-03732C	1540	-
	6130	-
621-03733B	1380	12
	1390	13
621-03734A	1440	28
622-00351J	1470	-
	1480	-
	1490	-
	1500	-
622-00353G	1500	32
622-00355A	1500	32-3
622-00356	1500	32-3A
622-00359J	1480	49
622-00360H	1480	49-1
622-00426B	1520	-
623-00074B	1590	38-8
623-00075B	1600	37-8
623-00085A	6160	1
	6170	2-1
623-00086	6160	-
	6170	2
625-00159B	1500	11

PART NO.	FIG NO.	KEY NO.
65.01101-0054B	011	2
65.01101-6085B	011	1
65.01105-1051B	011	4
65.01105-1052B	011	7
65.01105-6005B	011	3
65.01105-6006B	011	6
65.01110-6140	016	4
65.01150-6008	016	5
65.01201-0075A	011	30
65.01201-0076	011	31
65.01201-0077	011	32
65.01201-0078	011	33
65.01201-0079	011	34
65.01304-0029	012	1
65.01401-0253B	013	1
65.01414-0004A	013	8
65.01501-5003A	014	1
65.01510-0040	013	2
	040	4
65.01510-0157	014	2
	040	6
65.01601-5020	011	20
65.01801-5043A	015	20
65.01801-5100	015	1
65.01810-5011	018	8
65.01840-0017	015	2
65.01903-0034	012	3
	040	2
65.01904-0032	013	3
	040	5
65.01905-0009	014	3
	040	7
65.02101-0069A	016	1
65.02115-0016	016	3
65.02130-0004	016	18
65.02201-0002	016	10
65.02301-0291A	016	16
65.02301-5148A	016	15
65.02310-0006	016	17
65.02401-6032B	016	20
65.02410-0040	016	22
65.02410-0041	016	22
65.02410-0042	016	22
65.02410-0050	016	23
65.02410-0051	016	23
65.02410-0052	016	23
65.02411-0009	016	21
65.02501-0476	016	30
65.02501-0477	016	31
65.02501-0478	016	32
65.02502-0017A	016	36
65.02503-0132A	016	33
65.02503-0133A	016	34
65.02503-0134	016	35
65.02601-0225B	016	40
65.03101-1068C	017	2
65.03101-6090F	017	1
65.03201-1016B	017	5
65.03203-1062	017	3
65.03203-1063	017	4
65.03205-0006A	017	8
65.03401-5010	018	1
65.03402-0008A	018	5
65.03901-0071	017	13
	040	8
	041	1
65.03905-0037A	018	3
	040	10
	041	3
65.03905-0041	018	6
	040	11
	041	4
65.03905-5002	018	4
	040	9
	041	2
65.04101-0065B	019	1
65.04101-0066B	019	2
65.04102-0024	019	3
65.04103-0018	019	4
65.04104-0009	019	6
65.04130-0009A	019	8
65.04130-0011	019	9
65.04200-6038B	019	10
65.04201-5042B	019	11
65.04201-5043A	019	12
65.04202-0033	019	14
65.04202-0034	019	15
65.04202-0035	019	16
65.04203-5020A	019	13
65.04205-0014	019	22
65.04209-0005	019	24
65.04209-0006	019	25
65.04301-5003C	019	30
65.04302-5015	019	31
65.04401-0045A	019	32
65.04410-0021A	011	10
65.04410-0022	011	11
65.04501-0017	019	40
65.04505-5018	019	42
65.04506-0015	019	47
65.04506-0016	019	43
65.04902-0016	019	7
65.05100-6063	020	1
65.05102-0030	020	2
65.05103-0034	020	7
65.05104-5014	020	3
65.05104-5015	020	4
65.05201-0016	020	5
65.05401-5002F	011	23
65.05401-5031	011	21
65.05401-5032	012	7
65.05501-7089	021	1
65.05503-5056	021	3
65.05510-5032	021	2
	5110	5
65.05518-0006	021	4
65.05601-7079B	021	20
65.05604-0030A	021	21
65.05606-5032A	021	22
65.05607-5003	021	26
65.05610-0007A	021	28
65.05701-5567	027	5
65.05701-5568	027	11
65.05701-5569	027	12
65.05701-5573A	021	11
65.05701-5574	021	12
65.05701-6122	022	8
65.05740-0222	022	10
65.05801-5245	022	1
65.05805-5236	022	7
65.05806-5116A	022	6
65.05901-0027	040	15
65.05901-0031	021	27
65.05901-0032	022	15
65.05902-0022	021	23
65.05902-0023	021	31
	040	13
65.05903A0001	021	13
	040	12
65.05904-0035	022	4
	040	14
65.06301-0257	023	11
65.06301-0258A	024	13
65.06402-5015	023	4
65.06404-0039A	023	1
65.06405-0039	023	6
65.06500-6271	024	1
65.06501-0300	024	2
65.06503-0113	024	8
65.06504-0033	024	6

PART NO.	FIG NO.	KEY NO.
65.06506-0032	024	7
65.06520-6007	024	3
65.06601-5076	025	1
65.06611-0132	025	2
65.06901-0042	024	10
	040	19
65.06903-0029	024	14
	040	20
65.06904-0003	023	5
	040	17
	041	6
65.06904-0020	023	2
	040	16
	041	5
65.08100-6088A	026	1
65.08101-0263	026	2
65.08101-0264	026	3
65.08201-5075	026	11
65.08202-0184	026	16
65.08204-0004	026	21
65.08901-0045	026	5
	040	21
	041	8
65.08902-0030A	026	14
	040	22
	041	9
65.09100-7110	027	1
65.09140-0005	027	20
65.09411-5095	027	30
65.09411-5103	027	37
65.09411-5104	027	36
65.09411-7013	027	35
65.09440-0056	027	42
65.09440-0057	027	40
65.09440-0058	027	33
65.09901-0018A	027	2
	040	23
	041	10
65.09904-0008	026	31
	040	31
	041	16
65.09904-0009	027	38
65.10205-0006	028	4
65.10301-6191	029	1
65.10301-6192	029	2
65.10301-6193	029	3
65.10301-6194	029	4
65.10301-6195	029	5
65.10401-7004A	028	1
65.10410-6003A	029	15
65.10415-0001	029	17
65.10501-7005A	030	1
65.10601-6004A	029	20
65.10610-0003	029	30
65.11210-0003A	031	2
65.11301-0038	030	15
65.11301-5002	019	46
65.11304-0001	030	3
65.11308-0005	036	3
65.11308-0006	036	3
65.11308-0007	036	3
65.11308-0008	036	3
65.12301-5268	032	17
65.12301-5288A	032	31
65.12301-5289	032	14
65.12301-5291	032	7
65.12303-0009	026	12
65.12501-7042A	032	50
65.12503-5026	032	52
	5110	6
65.12504-5027	032	51
65.12540-0057C	032	54
65.19102-0096	033	1
65.19103-5049	033	9
65.19103-6010A	033	3
65.19107-0001A	033	5
65.19202-0057A	034	1
65.26201-7075A	035	1
65.26803-7028B	026	30
65.27103-7014	036	1
	036	2
65.27114-5002	029	21
65.27423-7003	036	10
65.27427-7001	036	12
65.27444-7001	036	14
65.29101-6184B	037	1
65.29101-6201A	037	4
65.29101-6209	037	15
65.29150-5006	031	7
65.38901-0018A	012	10
	040	3
65.41530-0186	038	1
	038	3
65.52122-6002	029	22
65.54109-0005A	021	25
65.90020-0062B	016	11
65.90020-0063B	012	4
65.90020-0066A	011	9
65.90020-0080	012	5
65.90020-0085	020	10
65.90020-0095	031	5
65.90020-0100	013	4
65.90020-0101	013	5
65.90020-0105	013	6
65.90020-0109	018	2
65.90020-0117	019	41
65.90020-0118	019	45
	019	49
65.90020-0119	019	50
65.90020-0120	019	26
65.90020-0121	030	4
65.90020-0123	016	19
65.90020-0136	028	5
65.90020-0138	018	7
65.90021-0009	017	11
65.90030-0018	019	20
65.90201-0073	026	9
65.90201-0075	027	18
65.90201-0076	026	8
65.90201-0122	015	11
65.90201-0128	037	16
65.90201-0134	017	12
65.90201-0135	021	35
65.90201-0136	026	18
65.90302-0009	011	12
65.90302-0029	017	7
65.90302-0034	011	14
65.90302-0041	011	15
65.90302-0042	011	13
65.90302-0048	017	6
65.90310-0065	021	7
65.90310-0134	011	26
65.90310-0135	011	28
	039	1
65.90320-0022	011	22
65.90441-0009A	033	4
65.90441-0066	031	12
65.90501-0003	019	23
65.90510-0012	022	14
65.90535-0001	027	3
65.90535-0003	026	6
65.90701-0098	019	5
65.90701-0099	016	41
65.90701-0136B	019	18
65.90720-0032	019	34
65.90720-0033A	019	48
65.90720-0034B	019	44
65.91030-0005	017	10
65.91601-0011	012	9
65.91605-0002	011	25

PART NO.	FIG NO.	KEY NO.
65.91606-0041	011	16
65.91701-0086	026	7
65.91710-0001	011	5
	011	8
65.91710-0009	013	7
65.91710-0016	012	2
65.93020-0055	033	6
65.93410-0027	024	4
65.96210-6001A	031	4
	040	29
65.96301-0035	027	44
65.96301-0327A	027	13
65.96301-0456A	015	7
65.96301-0462	032	35
65.96301-0464A	015	9
65.96301-0478	015	5
65.96301-6003	027	31
65.96330-0018	032	8
65.96340-5079	032	1
65.96340-5080	032	2
65.96501-0033B	015	21
65.96501-0074	012	8
65.96501-0088	017	9
65.96501-0099A	023	12
	040	18
	041	7
65.96501-0102	031	6
65.96501-0431	029	23
65.96501-0437	028	2
65.96501-0438	029	16
65.96501-0439	030	2
65.96507-0053	028	3
	040	27
	041	14
65.96507-0055	032	30
65.96507-0059	026	4
65.96601-0052	027	16
	040	25
	041	12
65.96601-0067	027	15
	040	24
	041	11
65.96801-0194	025	5
	5110	10
65.97401-0137	022	11
65.97401-0188	031	8
	037	5
65.97401-0196	037	19
65.97401-5019	015	13
	032	37
65.97401-5024	015	12
	037	25
65.97401-6039	029	8
65.97440-0005	015	8
65.97440-0045	032	9
	032	36
65.97450-5003	027	32
65.97460-0005	037	23
65.97460-0008	037	2
65.97480-0220	029	9
65.97601-0075	021	5
65.97601-0124	019	17
65.98125-5022A	022	2
65.98130-0154	032	32
65.98130-0159A	032	11
65.98130-0200A	027	4
65.98130-0211	032	3
65.98130-0229	032	5
	032	15
	032	18
	032	56
65.98130-0241	012	6
65.98131-0119	015	17
65.98150-0042A	032	34
65.99497-8674	031	1
65.99601-8071	040	-
65.99605-8042	041	-
701-00544E	6640	-
701-00545E	6640	1
701-00558E	3100	1
701-00561G	3110	-
701-00562H	3110	1
704-00289C	7110	-
704-00290C	7110	1
713-00022	7150	1-2
	7160	1-2
	7170	1-2
713-00057A	3120	2
	7090	2
	7100	2
	7110	2
	7120	2
	7130	2
	7140	2
901-00045	1420	1
	1430	-
901-00047	6100	1
	6110	-
903-00068	1460	8
	1610	92
903-00069A	1500	32-2
903-00070B	1500	32-4
903-00071B	1500	32-5
903-00072A	1470	2
903-00073A	1470	3
903-00074A	1480	50
903-00075	1470	4
903-00076B	1480	49-8
906-00002A	1440	5
920-00127A	1750	1
	1760	
DS0001079	1700	4
DS0014011	1710	5
	1750	21
DS0025013	1150	61G
	1700	32
	2100	18
	6370	11
DS0025014	1130	23
	1150	23
	1570	16
	1580	16
	1610	19
	6810	12
	6820	12
	6830	12
DS0025015	1100	7
	1160	10
	1210	17
	1570	15
	1580	15
	1590	20
	1600	20
	1610	20
	1620	20
DS0025017	1130	42
	1160	3
	1310	28
	1320	28
	1700	10
	6400	25
DS0025018	1250	29
	6360	7
	6390	7
	6450	3
	6520	9
	6530	22
	6980	7
	7000	9
DS0025019	1700	30

PART NO.	FIG NO.	KEY NO.
DS0025019	1730	3
	2100	19
	6120	15
	6350	17
	6380	25
	6480	10
	6530	14
	6780	7
	6960	17
	6970	25
DS0025020	1270	39
	6350	33
	6380	33
	6380	55
	6960	33
DS0025021	6120	6
	6360	6
	6390	6
	6980	6
DS0025022	1610	27
	6590	3
DS0025023	1100	6
DS0025024	1220	20
DS0025027	1610	21
DS0025033	1700	28
	1770	3
	6370	12
DS0025039	1700	12
DS0401188	1650	11
DS1001061	1610	1-14
DS1003009	1540	5
	6130	5
DS2011292	6520	52
	7000	51
DS2011311	7000	52
DS2011504	6940	16
	6990	4
DS2011505	6940	17
DS2011506	7020	5
DS2011538	6380	8
DS2011602	6480	8
DS2011603	6520	51
DS2011605	1290	3
DS2011606	6350	3
	6970	8
DS2011608	6960	3
DS2011630	6910	4
DS2011687	6350	34
	6380	34
DS2012316	6940	15
DS2012373	6960	34
DS2012375	6910	7
DS2012426	6720	2
DS2012427	6730	2
DS2012472	6780	12
DS2013126	6350	91
DS2013197	1290	2
	6910	3
DS2013318	1290	1
	6910	2
DS2013325	6520	6
DS2013352	6360	4
	6390	4
DS2013388	6670	2
DS2013518	6580	2
DS2013626	6960	51
DS2013687	6980	4
DS2013792	6910	6
DS2013798	6840	3
DS2013892	6520	5
DS2013914	6380	7
	6970	7
DS2013915	6380	91
DS2013919	7000	4
	7000	5
DS2013921	6780	11
DS2013922	6780	10
DS2013924	6520	3
	7000	3
DS2013925	7000	6
DS2013930	6520	4
DS2016045	6690	2
DS2016048	6440	2
DS2016061	3130	11
DS2016070	6940	18
DS2016112	1260	12
DS2016113	1260	13
DS2017052	6860	2
DS2020047	6750	2
DS2021176	6910	5
DS2021178	6390	5
	6980	5
DS2021181	6360	5
DS2021182	6780	13
DS2023074	6840	5
DS2023076	6840	4
DS2023283	1280	8
	1280	9
DS2023284	1280	10
DS2023285	1280	11
DS2023318	1230	48
DS2023325	6350	4
	6380	6
	6960	4
	6970	6
DS2026162	1280	7
DS2026191	1280	6
DS2038186	3130	10
DS2038221	1250	51
DS2039130	6710	11
DS2040592	1250	52
DS2043107	6750	1
DS2043111	6650	21
DS2043112	6690	3
DS2045403	6440	3
DS2053322	1300	61
DS2053399	1360	8
DS2053773	6950	6
DS2053796	3140	1
DS2053799	6500	1
DS2053852	1360	9
DS2053854	7040	1
DS2053878	7040	2
DS2053883	6950	5
DS2053897	1360	7
DS2053923	1230	55
DS2053929	3140	4
DS2053931	6500	2
DS2053942	6950	4
DS2053955	6950	3
DS2054029	1310	56
DS2054131	1240	46
DS2054374	2180	10
DS2054375	6860	10
DS2054385	1240	49
DS2055300	1240	50
DS2055867	6680	3
	6740	3
DS2055880	7080	8
DS2055933	1190	1-12
DS2055981	6630	7
DS2055982	1310	60
DS2055986	1310	63
DS2055988	6510	3
DS2059383	6610	4
DS2059496	7080	9
DS2079153	6120	8
DS2079171	6120	11
DS2082020	6750	3
DS2091082	6600	31

PART NO.	FIG NO.	KEY NO.
DS2091082	6600	33
	7050	1
	7050	3
DS2091083	6600	32
	6600	34
	7050	2
	7050	4
DS2092023	6530	51
DS2092036	7070	1
DS2092091	7010	51
DS2092095	6620	1
DS2093001	6450	10
	6450	11
DS2093006	1310	55
	6370	25
DS2093012	6530	10
DS2093025	1310	65
DS2093027	6400	22
DS2093036	1320	50
DS2093037	6400	14
DS2093042	6600	1
DS2093044	6790	6
DS2093052	1350	34
	1350	35
DS2093055	6400	20
DS2093056	6400	21
DS2093060	6400	23
DS2093066	1330	44
DS2093073	1350	33
DS2093080	1310	54
	6400	17
	6530	7
DS2093092	1300	57
DS2093097	1320	59
	1330	53
DS2093101	6530	9
	6790	7
DS2093102	1340	62
	7010	6
DS2093105	6920	1
	7010	7
DS2093114	6540	31
DS2093115	6530	52
DS2093117	6370	51
DS2093123	6370	19
DS2093126	6370	24
DS2093129	7070	2
DS2093130	6480	9
	6540	3
	7010	5
DS2093136	6600	2
DS2093142	6370	23
DS2093144	6620	2
DS2093146	7000	7
DS2093157	7010	52
DS2093176	1320	40
	1320	41
DS2093183	1190	6
DS2093190	1350	36
DS2093193	6370	22
DS2093200	6410	13
DS2093202	6540	4
DS2093212	6520	7
DS2093237	1320	49
DS2093244	1320	58
	1330	43
DS2093245	1330	48
DS2093255	6920	2
	7010	8
DS2093261	6530	11
DS2093286	1340	52
DS2093320	1330	45
DS2093337	1300	111
DS2093355	7050	5
DS2093358	6400	18
DS2093368	6450	8
	6450	9
DS2093372	1320	39
DS2093373	6400	12
DS2093382	1320	42
DS2093388	6790	4
DS2093394	6540	32
DS2093420	6530	8
DS2093430	6370	20
DS2093440	1340	64
DS2093444	1330	46
DS2093445	1320	47
DS2094006	1350	61
	1350	71
	6540	5
	7010	9
DS2094073	6400	15
DS2094077	1310	51
DS2094080	6790	2
DS2094086	6400	11
DS2094106	6400	16
DS2094122	6480	31
	6480	32
DS2094137	1300	68
DS2094169	6400	19
DS2094184	6370	21
DS2094236	6790	5
DS2094237	1340	103
DS2094239	7030	1
DS2094240	6400	13
DS2095001	1360	12
	1360	13
DS2095002	1350	10
	1350	11
	1360	14
	1370	1
	1370	2
DS2095003	1350	62
	1360	73
	6540	6
DS2095004	1350	72
	6790	3
	7010	10
DS2095020	6410	14
DS2095027	1370	4
DS2095029	6460	3
	6460	4
DS2095030	6460	2
DS2095036	6460	1
DS2095041	1370	3
DS2105011	1210	8
DS2105027	1210	6
DS2105053	1200	23
DS2105061	1210	5
DS2105084	1210	7
DS2213165	1350	17
	1360	17
DS2213167	1240	24
DS2214050	1190	7
DS2232121	6350	5
	6380	10
	6960	5
	6970	10
DS2232124	1270	29
DS2232127	6480	3
DS2242017	6370	26
DS2242022	1310	17
DS2257002	6910	12
DS2257003	1280	23
DS2257004	1270	20
DS2304009	6480	5
DS2308022	6300	5
DS2331015	6950	21
DS2410007	6500	3
	6630	10

PART NO.	FIG NO.	KEY NO.
DS2410007	7040	3
	7060	13
	7080	10
DS2410009	1330	18
DS2415007	6750	20
	6910	11
	6940	29
DS2415014	6520	22
	7000	22
DS2465018	6910	16
DS2479004	1210	3
DS2802021	1200	7
DS2805009	6500	9
DS7601020	1100	23
DS7601021	1100	35
DS7601031	1100	17
DS7601040	1100	22
DS7601045	1100	14
DS7601047	1100	33
DS7604004	2180	18
	6860	18
DS7752001	3110	18
	6640	18
	6700	18
DS7752002	3110	19
	6640	19
	6700	19
DS7752003	3100	21
	6930	17
DS7752004	3100	17
	6930	25
DS7752005	3100	18
	6930	26
DS7752006	3100	19
	3110	16
	6640	16
	6700	16
	6930	18
DS7752007	3100	20
	3110	17
	6640	17
	6700	17
DS7752008	3100	22
	6810	13
	6820	13
	6830	13
	6930	23
DS7752009	3100	23
	6810	14
	6820	14
DS7752009	6830	14
	6930	24
DS7752011	3100	16
	6930	21
DS7752023	3100	15
	6930	22
DS7752026	6930	19
DS7752027	6930	20
DS7752040	6810	15
	6820	15
	6830	15
DS7752059	6930	27
DS7752060	6930	28
DS7752089	3100	24
	6930	30
DS7752090	3100	25
	6930	31
DS7752091	6930	32
K1000043	1460	3
K1000101	1190	1-1
	4140	-
K1000101KT	4140	*
K1000144G	1610	1
K1000146C	1610	1-2
K1000147	1610	1-3
K1000294A	3130	20
	6420	4
	6940	20
	6990	6
K1000354	1320	35
K1000356	6500	6
	7040	6
K1000555G	1360	2
	4190	-
K1000556G	1350	1
	4190	-
K1000602	1590	38-9
	1600	37-20
K1000695A	6410	3
K1000696C	6410	4
K1000704A	1130	40
K1000722A	1130	12
K1000789	1700	21
K1000794	1490	56
K1000814	1740	1D
K1000815	1740	1C
K1000817	6530	13
K1000840	1380	13
K1000842A	1380	14
K1000843A	3130	8
K1000844	6570	14
K1000845A	6570	12
K1000892	1590	33
	1600	33
K1000893	1590	34
	1600	34
K1000982	6200	1
K1001023	1380	11
	1390	12
K1001029	1100	26
	1130	24
	1150	24
	1200	12
	1210	14
	1300	32
	1300	115
	1310	32
	1350	30
	1360	30
	1640	18
	1670	32
	1680	38
	1710	9
	1730	8
	1740	27
	1750	17
	1770	34
	3140	16
	6120	4
	6210	6
	6250	8
	6370	32
	6400	9
	6500	8
	6530	27
	6630	14
	6950	12
K1001068	1440	20
K1001069A	1440	21
K1001260A	1590	38-7
	1600	37-7
K1001263A	1680	5
	1680	6
K1001295A	1450	12
K1001310	1450	20
K1001702	1690	7
K1001858A	1690	1
K1001871B	6550	1
	7010	3
K1001873A	6540	1

PART NO.	FIG NO.	KEY NO.
K1001873A	7010	1
K1001968	1610	1-8
K1002081A	1510	1
K1002082	1550	-
K1002083	1560	-
K1002084A	1420	-
K1002085	6100	-
K1002153	6300	6
K1002158	6470	1
K1002204C	1400	-
K1002206	1760	1
K1002207	1760	2
K1002208	1760	3
K1002209	1760	4
K1002210	1760	5A
K1002211	1760	6
K1002212	1760	7
K1002213	1760	8
K1002214	1760	9
K1002215	1760	10
K1002216	1760	11
K1002217	1760	12
K1002218	1760	13
K1002219	1760	14
K1002229A	1410	-
K1002230A	1410	1
K1002231A	1410	2
K1002385	1450	33
K1002406D11	1680	20
K1002406D12	1680	22
K1002406D13	6230	11
K1002406D14	6220	2
K1002406D2	6210	2
K1002406D21	1680	24
K1002406D3	6260	21
K1002406D4	6300	2
K1002406D5	6310	5
K1002561A	6140	-
K1002574A	6140	3
	6150	4
K1002575A	6140	4
	6150	5
K1002635	1470	104
K1002636	1470	105
K1002637	1500	32-13
K1002638A	1480	49-17
K1002641	1490	100
K1002759A	6170	1
K1002771	6170	-
K1002811A	6180	1
K1002838	6180	4
K1002839A	6180	5
K1002840	6180	6
K1002841	6180	7
K1002842A	6180	3
K1002846	6180	2
K1002864	1210	4
K1002866	6310	9
K1002867D1	6310	10
K1002883	6180	-
K1002939	6440	8
	6690	8
	6750	14
K1002940	6440	9
	6690	9
	6750	15
K1002943	1620	17
K1003180A	1130	13
K1003284	1480	88
K1003296	1220	28
K1003350	6200	-
K1003381	1400	3
K1003427	1470	89
K1003522	1470	109
K1003618	1160	52
K1003676B	1490	107
K1003900	1500	32-16
K1003945	1350	41
	1360	41
K1003947A	6410	18
K1003948A	6550	8
K1004011	6510	7
	6680	7
	6740	7
K1004061	1470	108
K1004106	4250	2
K1004119	6590	2
K1004266	1200	5
K1004272	1530	4
K1004300A	1590	36
K1004316	3130	43
	6940	19
	6940	51
K1004317	3130	21
	6940	54
K1004330	6420	3
K1004348	6570	4
	7020	7
K1004349	6570	5
	7020	9
K1004425	1690	11
K1004426	1690	12
K1004427	1690	8
K1004508A	3100	4
	6930	6
K1004630	1590	29
	1600	29
	1610	29
	1630	29
K1004716	6210	4
K1005007A	1440	30
K1005305A	1610	1-13
K1005343B	1390	4
K1005344A	1450	17
K1005345A	1450	18
K1005468B	1390	-
K1005776	6490	3
K1005822	6180	21
K1005823	6180	20
K1005909	5120	3
	5140	3
K1006227	6580	14
	6670	14
	6730	11
K1006228	6580	15
	6670	15
	6730	12
K1006368	1480	49-18
	1500	120
K1006370	1500	32-38
K1006520	1210	1
K1006530	1210	1A
	5110	7
K1006572	1680	23
K1006586	5100	5
K1006656	6410	20
	6550	10
K1006663	6320	2
K1006668	6210	3
K1006801	6320	-
K1006802	6330	-
K1006803	6340	-
K1006854	5110	31
K1006933	1490	114
K1006936	1490	98
K1006957	6500	4
	6630	11
	7040	4
K1006973	1210	1B
K1006995	1390	15

PART NO.	FIG NO.	KEY NO.
K1007038	3110	8
	6640	8
	6700	8
K1007042	1360	39
K1007044	1640	13
K1007094A	6560	1
K1007231	6180	24
K1007342H	5140	-
K1007357B	1190	1-2
	4150	-
K1007633B	7090	-
K1007634B	7090	1
K1007635B	7100	-
K1007636B	7100	1
K1007637B	7120	-
K1007638B	7120	1
K1007639B	7130	-
K1007640B	7130	1
K1007641B	7140	-
K1007642B	7140	1
K1007668	1700	19
K1007669	5100	4
K1007673A	3120	-
K1007674A	3120	1
K1007957	1220	30
K1008019D3	1680	9
	5120	15
	5140	11
K1008019D4	1680	10
	5120	16
	5140	12
K1008167	5100	1-16
K1008201B	6930	-
K1008202A	6930	1
K1008227	6930	5
K1008232A	6930	2
K1008250A	6990	-
K1008251A	6990	1
K1008252	6990	2
K1008254	6990	3
K1008255A	7020	-
K1008256A	7020	1
K1008257A	7020	2
K1008258	7020	3
K1008260A	7040	-
K1008261C	6950	-
K1008262C	6940	-
K1008263	6940	5
K1008264	6940	6
K1008265	6940	7
K1008266	6940	8
K1008267B	6940	9
K1008269	6940	11
K1008271A	7060	31
K1008335	1590	38-20
	1600	37-21
K1008449A	1710	12
K1008464E	5120	-
K1008482B	1770	4
K1008507	1160	5
K1008571	5130	3
K1008572	4360	2
	4360	4
K1008713	1720	-
K1008715	6190	-
K1008737A	4360	-
	6940	63
K1008738	4370	-
	6940	71
K1008739	6940	12
K1008740	4380	-
	6940	72
K1008741	7020	4
K1008742	7020	8
K1008751A	7060	3
K1008752	4410	-
	7080	1
K1008753	4420	-
	7080	1
K1008754	6950	17
K1009160A	1130	2
K1009161A	1130	3
K1009162	1130	34
K1009163A	1130	35
K1009271B	1130	1
	1140	-
K1009471	1250	1
K1009510A	1250	10
K1009605B	1690	1A
K1009624A	1640	12
K1009625A	1640	16
K1009626	1640	15
K1009627	1440	34
K1009632	1640	11
K1009635	1130	4
K1009636A	1130	36
K1009637	1130	37
K1009639	1120	5
K1009745A	1130	15
K1009750B	1630	91
K1009751A	1630	5
K1010065	6280	8
K1010304	1440	37
K1010466	1380	20
	1390	16
K1010702	1720	21
K1010703	6190	1
K1010769	1140	19
K1010776A	1700	2
K1010821A	7180	-
K1010822A	7180	1
K1010823A	7190	-
K1010824A	7190	1
K1010839	1490	116
K1011002	5130	21
	5150	22
K1011384	1770	25B
K1011385	1770	26B
K1011388	1770	27A
	1770	28A
K1011645D5	5130	1
	5150	1
K1011647B	5150	8
K1011675	1220	2
K1011743D6	5120	17
	5140	13
K1011799E	6850	1
K1011859A	4330	-
	6800	2
K1011870A	2140	8
K1011871A	2150	-
K1011872	2100	14
K1011893	2120	2-4
K1011895	2120	2-7
K1012204A	5130	7
K1012205A	5130	22
K1012213	1130	38
K1012214	1130	39
K1012576	1310	1
	4210	-
K1012583	5140	14
K1012964	1640	1
K1012965	1640	2
K1013144	7150	-
K1013145	7150	1
K1013146	7150	1-1
K1013147	7160	-
K1013148	7160	1
K1013151	7160	1-1
K1013152	7170	-

PART NO.	FIG NO.	KEY NO.
K1013153	7170	1
K1013154	7170	1-1
K1013269	1610	8
K1013290	1610	9
K1013480A	1600	37-2
K1013529	1250	11
K1013536	4440	-
	6780	1
	6910	1
K1013538	4430	-
	6520	1
K1013539	4450	-
	7000	1
K1013578	6380	53
K1013581	6480	2
K1013812	1630	35
K1013846	1690	3
K1014174	6530	19
K1014268	6400	24
K1014330A	6120	13
K1014331	6120	14
K1014728	1150	28
K1014759	6750	8
K1014772A	2110	3
K1014859A	1660	-
K1014874	6450	1
K1014921	6450	2
K1014972	1640	14
K1015093	6750	7
K1015094	1250	2
K1015195	7080	-
K1015198	2100	2
K1015201	1710	4
K1015210	1140	4
K1015214B	6880	-
K1015268	1380	1
K1015292A	1150	45
K1015293	1150	46
K1015294	1150	47
K1015317	6880	1
K1015404	7010	4
K1015586A	6700	-
K1015587A	6700	1
K1015602A	1710	11
K1015630A	1770	28
K1015660A	2100	10
K1015818E	6900	1
K1016092	1210	2
K1016094	6980	-
K1016101	6350	16
K1016101	6380	24
	6960	16
	6970	24
K1016102	5130	23
	5150	23
K1016115	1260	18
K1016117	1260	19
K1016140E	1260	-
	1270	-
	1280	-
K1016146B	6520	-
K1016147A	6480	-
K1016148B	7000	-
K1016150B	6910	-
K1016315C	1190	-
K1016316B	1190	1
K1016334A	1260	2
K1016335	1260	3
K1016387C	1270	4
K1016390A	6380	54
K1016392C	1200	-
K1016393A	1200	1
K1016403A	6830	1
K1016404A	6820	1
K1016442B	1220	-
K1016444B	1220	1
K1016453B	1230	3
K1016454C	1250	4
K1016455A	1250	5
K1016456A	1250	6
K1016457B	1250	7
K1016458G	1230	-
	1240	-
	1250	-
K1016475C	1570	-
K1016475E	1580	-
K1016614	5120	18
	5130	24
	5140	15
	5150	24
K1017021A	1570	1
K1017022C	1570	2
K1017023A	1570	3
K1017024A	1570	4
K1017025B	1580	5
K1017026A	1570	6
K1017027A	1570	7
K1017028B	1580	8
K1017029B	1580	9
K1017030B	1580	10
K1017032C	1580	12
K1017033B	1580	13
K1017034A	1570	14
K1017038A	1210	-
K1017215C	6120	-
K1017271	1450	37
K1017277A	1110	-
K1017278A	1110	31
K1017382	4290	-
	6410	1
	6540	2
	7010	2
K1017469B	1300	-
	1310	-
	1320	-
	1330	-
	1340	-
K1017470A	6620	-
K1017471A	6600	-
K1017476B	6370	-
K1017478B	6530	-
K1017479A	6470	-
K1017480B	6400	-
K1017486B	6860	-
K1017579B	1650	-
K1017580A	1650	1
K1017581	1650	2
K1017582A	1650	3
K1017583B	1650	4
K1017584A	1650	5
K1017585A	1650	6
K1017586A	1650	7
K1017587	1650	8
K1017588	1650	9
K1017589A	1650	10
K1017627A	1160	-
K1017628A	1160	4
K1017638B	1350	-
	1360	-
K1017639B	6790	-
K1017643A	1370	-
K1017644	6460	-
K1017646	6410	-
K1017691A	1160	8
K1017777C	1120	-
	1130	-
	1150	-
K1017778E	1100	-
K1017779E	1100	1
K1018020E	1590	-

PART NO.	FIG NO.	KEY NO.
K1018020E	1600	-
	1610	-
	1620	-
	1630	-
K1018021	1600	2
K1018094B	1620	39
K1018099A	1600	37
K1018100A	1600	37-1
K1018195B	1620	40
K1018214	2170	1-1A
	6760	1-1A
	6770	1-1A
	6870	1-1A
	6880	1-1A
	6890	1-1A
K1018215	2170	1-1B
	6760	1-1B
	6770	1-1B
	6870	1-1B
	6880	1-1B
	6890	1-1B
K1018216	2170	1-1C
	6760	1-1C
	6770	1-1C
	6870	1-1C
	6880	1-1C
	6890	1-1C
K1018217	2170	1-1D
	6760	1-1D
	6770	1-1D
	6870	1-1D
	6880	1-1D
	6890	1-1D
K1018218	2170	1-1E
	6760	1-1E
	6770	1-1E
	6870	1-1E
	6880	1-1E
	6890	1-1E
K1018219	2170	1-1G
	6760	1-1G
	6770	1-1G
	6870	1-1G
	6880	1-1G
	6890	1-1G
K1018220	2170	1-1F
	6760	1-1F
	6770	1-1F
	6870	1-1F
	6880	1-1F

PART NO.	FIG NO.	KEY NO.
K1018220	6890	1-1F
K1018221	2170	1-1H
	6760	1-1H
	6770	1-1H
	6870	1-1H
	6880	1-1H
	6890	1-1H
K1018222	2170	1-1I
	6760	1-1I
	6770	1-1I
	6870	1-1I
	6880	1-1I
	6890	1-1I
K1018223	2170	1-1J
	6760	1-1J
	6770	1-1J
	6870	1-1J
	6880	1-1J
	6890	1-1J
K1018229	2170	1-1K
	6760	1-1K
	6770	1-1K
	6870	1-1K
	6880	1-1K
	6890	1-1K
K1018230	6870	1-1
	6880	1-1
	6890	1-1
K1018234	2170	1-2
	6760	1-2
	6770	1-2
	6870	1-2
	6880	1-2
	6890	1-2
K1018235	2170	1-3
	6760	1-3
	6770	1-3
	6870	1-3
	6880	1-3
	6890	1-3
K1018236	6760	1-4
	6870	1-4
K1018238	2170	1-1
	6760	1-1
	6770	1-1
K1018242	2170	1-4
	6880	1-4
K1018243	6770	1-4
	6890	1-4
K1018247	1620	3

PART NO.	FIG NO.	KEY NO.
K1018303	2110	4
K1018305	1120	71
K1018306B	6820	-
K1018307B	6830	-
K1018308	4310	-
	6810	2
	6820	2
	6830	2
K1018309	4320	-
	6810	3
	6820	3
	6830	3
K1018310A	6810	11
	6820	11
	6830	11
K1018313B	6840	-
K1018337B	6840	1
K1018338B	6840	2
K1018342A	1640	-
K1018343A	1640	4
K1018344	1640	5
K1018345A	1640	6
K1018347	1640	8
K1018348A	1640	9
K1018457A	2120	2
K1018532	2120	1
	2130	-
K1018548A	2120	-
K1018811E	2100	-
	2110	-
	2140	-
	2160	-
K1018812E	2100	61
K1018877	3130	-
K1018893B	2170	-
K1018895	2170	1
K1018902	1220	9
K1018916E	6800	1
K1018940	3130	61
	4240	-
K1018944	4280	-
	6630	1
K1018951A	6420	-
K1018954B	6610	-
K1018955A	6630	-
K1018957A	6710	-
K1018959A	6720	-
K1018963A	6730	-
K1018967A	6740	-
K1018969A	6750	-

PART NO.	FIG NO.	KEY NO.
K1018972A	6720	1
K1018973A	6730	1
K1018974A	6740	1
K1018975A	6740	2
K1018983A	6590	1
K1018990	1640	21
K1018991	1640	22
K1019022	1110	4
K1019039A	1180	-
K1023194	1150	61F
K1023198C	1150	61B
K1023923	6960	32
K1023924	6960	31
K1024104	1320	20
K1024107A	1180	1
	4100	-
K1024110B	2180	-
K1024204	6600	3
K1024206B	1270	5
K1024264	1610	91
K1024422	5100	-
K1024449	1660	1
K1024484D1	2170	2
	6880	2
K1024484D2	6760	2
	6870	2
K1024484D3	6770	2
	6890	2
K1024552A	1290	-
K1024558A	7030	-
K1024561A	7050	-
K1024562	7070	-
K1024564A	6540	-
K1024565C	6780	-
K1024566	7010	-
K1024567A	6920	-
K1024568	6550	-
K1024575B	6870	-
K1024576B	6890	-
K1024577B	6760	-
K1024581B	6770	-
K1024582	6870	1
K1024583	6890	1
K1024584	6760	1
K1024585	6770	1
K1024668	4330	1
K1024669A	4330	2
K1024684A	1740	1
K1024685	6400	26
K1024686	1770	27
K1024710	2150	3
K1024712	3150	1
	4250	-
	6650	1
	6710	1
K1024742	2150	4
K1024747A	2140	8-2
K1024748	2140	8-6
K1024759	2130	1
K1024761	2130	1-1
K1024764	2120	2-3
K1024765	2130	2
K1024766	2130	3
K1024769	2130	4
K1024770	2130	8
K1024772	2130	9
K1024773	2130	1-2
K1024774	2130	10
K1024880A	2120	2-2
K1024909	6360	3
	6390	3
	6980	3
K1025173A	6450	-
K1025252	6940	33
K1026243A	3130	51
	4220	-
K1026244A	3130	52
	4230	-
K1026247A	4260	-
	6610	1
K1026248A	4270	-
	6610	2
K1026373	1380	-
K1026623A	6940	31
K1026624A	6940	32
K1026654	1680	91
K1026655	1150	17
K1026657	6590	11
K1026736	1250	12
K1026738A	1670	2
K1026833B	3100	-
K1026887	6420	1
K1026889	6420	2
K1026908	1380	22
K1026909	1380	23
K1027008	6810	4
	6820	4
	6830	4
K1027072	6530	21
K1027077	6350	31
K1027077	6380	31
K1027078	6350	32
	6380	32
K1027142A	6810	1
K1027143A	6810	-
K1027213	1310	4
K1027214	6780	9
K1027221	1700	9
K1027222	1700	5
K1027230A	1670	-
K1027231	1680	-
K1027232	1690	-
K1027233A	1700	-
K1027234	1710	-
K1027235	1730	-
K1027236A	1740	-
K1027237B	1750	-
K1027238A	1770	-
K1027239	6210	-
K1027240	6220	-
K1027241	6250	-
K1027242	6300	-
K1027243	6310	-
K1027288	6650	-
K1027289	1640	10
K1027294	6690	-
K1027306	3150	-
K1027308	6510	1
K1027309	6510	2
K1027313	4340	-
	6940	61
K1027314	4350	-
	6940	62
K1027317	4390	-
	7060	1
K1027318	4400	-
	7060	2
K1027341A	6440	-
K1027378A	6520	8
	7000	8
K1027395A	6380	-
K1027396A	6970	-
K1027397B	6350	-
K1027398A	6960	-
K1027419	6390	-
K1027421	6360	-
K1027455	1770	25
K1027456	1770	26
K1027591	7060	-
K1027609	1590	38-1

PART NO.	FIG NO.	KEY NO.
K1027629	1590	38
K1027656	5110	-
K1027765	1500	32-15
K1027768	1480	118
K1027769	1480	119
K1027953EF	5110	13
K1027954E	5110	14
K1027955E	5110	15
K1029035	1570	17
K1029201	2140	8-5
K1029357	1150	61C
K1029527	2150	5
K1029537	2150	2
K1029538	2150	6
K1029539	2140	8-3
K1029540	2140	8-4
K1030117	5130	20
	5150	21
K1030118	5130	19
	5150	20
K1030132A	5130	-
K1030288	1760	5
K1030462	5130	28
K1030473	5130	6
K1030481A	5150	-
K1030494	5150	6
K1030756	1130	14
K1033066A	6590	-
K1033219	1150	61A
K1033234	1150	61
K1033243	1570	18
K1033714	1750	12
K1034000	5140	1
K1034001	5120	1
K1036641	6580	-
K9000422	1180	6E
K9000998	6610	3A
	6630	2A
	7060	4A
	7080	2A
K9001001	4190	32
K9001075	4180	72
	4430	4
	4440	4
	4450	4
K9001077	4180	74
	4430	6
	4440	6
	4450	6
K9001115	4190	3
K9001119	4190	9
K9001127	4190	18
K9001128	4190	20
K9001129	4190	22
K9001130	4190	25
K9001131	4190	25
K9001132	4190	28
K9001133	4190	30
K9001139	4190	37
K9001140	4190	37
K9001141	4200	6
K9001142	4200	25
K9001153	4360	9
K9001154	4360	10
K9001164	4360	14
K9001200	6110	1
K9001201	1430	2
	6110	2
K9001202	1430	3
	6110	3
K9001203	1430	4
	6110	4
K9001204	1430	5
	6110	5
K9001205	6110	6
K9001206	1430	7
	6110	7
K9001207	1430	8
	6110	8
K9001208	1430	10
	6110	10
K9001209	1430	11
	6110	11
K9001210	1430	12
K9001211	1430	13
K9001212	1430	14
K9001213	1430	15
	6110	15
K9001214	1430	16
K9001215	1430	17
K9001216	1430	18
K9001217	1430	19
	6110	19
K9001218	1430	20
	6110	20
K9001219	1430	21
	6110	21
K9001220	1430	22
	6110	22
K9001221	1430	23
K9001221	6110	23
K9001223	6110	24
K9001294	4140	101
K9001295	4140	102
K9001296	4140	103
K9001297	4140	104
K9001298	4140	201
K9001299	4140	202
K9001300	4140	203
K9001302	4140	205
K9001303	4140	206
K9001304	4140	207
K9001305	4140	208
K9001306	4140	209
K9001308	4140	210
K9001309	4140	211
K9001310	4140	213
K9001311	4140	301
K9001312	4140	305
K9001313	4140	306
K9001314	4140	309
K9001315	4140	310
K9001354	4210	2
K9001357	4300	5
K9001358	4300	6
K9001360	4300	22
K9001361	4300	*
K9001362	4120	79
K9001372	4310	18
	4320	18
K9001373	4250	20
K9001384	4220	5
	4230	5
	4260	5
	4270	5
	4340	5
	4350	5
	4390	5
	4400	5
K9001385	4220	8
	4230	8
	4260	8
	4270	8
	4340	8
	4350	8
	4370	8
	4390	8
	4400	8
	4410	8
K9001386	4220	9

PART NO.	FIG NO.	KEY NO.
K9001386	4230	9
	4260	9
	4270	9
	4340	9
	4350	9
	4370	9
	4390	9
	4400	9
	4410	9
K9001387	4220	16
	4230	16
	4260	16
	4270	16
	4340	16
	4350	16
	4370	16
	4390	16
	4400	16
	4410	16
K9001388	4220	17
	4230	17
	4260	17
	4270	17
	4340	17
	4350	17
	4390	17
	4400	17
K9001389	4220	18
	4230	18
	4260	18
	4270	18
	4340	18
	4350	18
	4370	18
	4390	18
	4400	18
	4410	18
K9001390	4220	20
	4230	20
	4260	20
	4270	20
	4340	20
	4350	20
	4370	20
	4390	20
	4400	20
	4410	20
K9001391	4220	26
	4230	26
	4260	26
K9001391	4270	26
K9001396	4220	10
	4230	10
	4260	10
	4270	10
	4340	10
	4350	10
	4370	10
	4390	10
	4400	10
	4410	10
K9001400	4240	5
	4280	5
	4380	5
	4420	5
K9001401	4240	7
	4250	12
	4280	7
	4380	7
	4420	7
K9001402	4240	8
	4280	8
	4380	8
	4420	8
K9001403	4240	9
	4280	9
	4380	9
	4420	9
K9001404	4240	10
	4280	10
	4380	10
	4420	10
K9001405	4240	14
	4280	14
	4380	14
	4420	14
K9001406	4240	16
	4280	16
	4380	16
	4420	16
K9001407	4240	17
	4280	17
	4380	17
	4420	17
K9001408	4240	18
	4280	18
	4380	18
	4420	18
K9001409	4240	20
	4280	20
K9001409	4380	20
	4420	20
K9001410	4240	22
	4280	22
	4380	22
	4420	22
K9001411	4240	32
	4280	32
	4380	32
	4420	32
K9001413	4240	40
	4280	37
	4360	37
	4370	40
	4380	40
	4410	37
	4420	37
K9001414	4240	43
	4280	40
	4370	43
	4380	43
	4410	40
	4420	40
K9001418	4240	3
	4280	3
K9001435	4250	38
K9001673	6110	12
K9001674	6110	13
K9001675	6110	14
K9001676	6110	16
K9001677	6110	17
K9001678	6110	18
K9001679	6110	25
K9001680	6110	26
K9001681	6110	27
K9001682	6110	28
K9001695	1430	1
K9001862	4240	23
	4280	23
K9001943	4210	2A
K9002065	4210	4
K9002306	4220	*
	4230	*
	4260	*
	4270	*
	4340	*
	4350	*
	4370	*
	4390	*
	4400	*

PART NO.	FIG NO.	KEY NO.
K9002306	4410	*
K9002308	4240	*
	4280	*
	4380	*
	4420	*
K9002672	4180	63
K9002934	4290	2
K9002935	4290	8
K9003465	4290	4
K9003878	1140	22
K9003998	4190	33
K9003999	4190	34
K9004000	4190	35
K9004001	4190	36
K9004261	1140	1
K9004262	1140	2
K9004263	1140	3
K9004264	1140	6
K9004265	1140	7
K9004266	1140	8
K9004267	1140	9
K9004268	1140	10
K9004269	1140	11
K9004270	1140	12
K9004271	1140	15
K9004272	1140	16
K9004320	4370	5
	4410	5
K9004321	4370	17
	4410	17
K9004465	4180	22
K9004466	4180	81
K9004467	4180	21
K9004468	4180	35
K9004469	4180	46
K9004470	4180	47
K9004471	4180	14
K9004472	4180	15
K9004473	4180	11
K9004474	4180	13
K9004475	4180	20
K9004476	4180	55
K9004478	4180	48
K9004479	4180	52
K9004489	4180	61
K9004490	4180	30
K9004491	4180	29
K9004492	4180	64
K9004493	4180	62
K9004494	4180	71
K9004495	4180	73
K9004496	4180	49
K9004497	4180	23
K9004499	4180	16
K9004500	4180	26
K9004501	4180	36
K9004502	4180	24
K9004503	4180	34
K9004504	4180	27
K9004505	4180	37
K9004506	4180	28
K9004507	4180	51
K9004508	4180	25
K9004509	4180	39
K9004514	4430	1
	4450	1
K9004515	4430	10
	4450	10
K9004516	4430	9
	4450	9
K9004517	4440	1
	4450	12
K9004518	4430	3
K9004519	4450	3
K9004520	4440	3
K9004521	4430	5
K9004522	4450	5
K9004523	4440	5
K9004601	4380	23
	4420	23
K9005048	4370	33
	4410	33
K9005049	4360	18
K9005054	4370	1
K9005055	4370	3
	4410	3
K9005056	4370	32
	4410	32
K9005057	4370	36
K9005060	4360	1
K9005061	4360	3
K9005062	4360	5
K9005063	4360	16
K9005064	4360	25
K9005065	4360	29
K9005066	4360	33
K9005072	4360	*
K9005073	4380	1
K9005074	4380	3
	4420	3
K9005075	4380	36
K9005076	4410	1
K9005077	4410	36
K9005078	4420	1
K9005079	4420	36
K9005356	2130	*
K9005365	4170	352
K9005366	4170	366
K9005367	4170	113
K9005368	4170	135
K9005369	4160	-
K9005370	4160	1
K9005371	4160	2
K9005372	4160	4
K9005373	4160	8
K9005374	4160	14
K9005375	4160	15
K9005376	4160	22
K9005377	4160	23
K9005378	4160	24
K9005379	4160	101
K9005380	4160	102
K9005381	4170	102
K9005382	4170	103
K9005383	4170	107
K9005384	4170	108
K9005385	4170	109
K9005386	4170	112
K9005387	4170	114
K9005388	4170	115
K9005389	4170	116
K9005390	4170	139
K9005391	4170	160
K9005392	4170	167
K9005393	4170	185
K9005394	4170	200
K9005395	4170	325
K9005396	4170	363
K9005397	4170	381
K9005398	4170	-
K9005399	4170	101
K9005400	4170	400
K9005401	4170	401
K9005402	4170	402
K9005403	4170	403
K9005404	4170	380
K9005405	4160	13
K9005406	4170	377
K9005407	4160	103
K9005408	4170	151

PART NO.	FIG NO.	KEY NO.
K9005409	4170	384
K9005410	4170	329
K9005411	4170	132
K9005412	4250	16
K9005413	4250	3
K9005414	4250	30
K9005415	4250	34
K9005416	4250	1
K9005417	4240	1
K9005418	4240	36
K9005419	4220	1
	4230	1
	4260	1
	4270	1
K9005420	4220	3
	4230	3
	4260	3
	4270	3
K9005421	4230	36
	4270	31
K9005422	4220	36
	4260	31
K9005423	4250	5
K9005424	4250	17
K9005425	4230	30
K9005426	4220	30
K9005427	4250	26
K9005428	4250	27
K9005429	4250	23
K9005430	4250	18
K9005431	4250	9
K9005432	4250	8
K9005433	4250	10
K9005434	4250	*
K9005435	4270	30
K9005436	4260	30
K9005437	4280	36
K9005438	4170	*
K9005439	4280	1
K9005440	4100	111
K9005441	4100	113
K9005442	4100	157
K9005443	4100	156
K9005444	4100	151
K9005445	4100	530
K9005446	4100	212
K9005447	4110	-
K9005448	4120	-
K9005449	4130	-
K9005450	4130	*
K9005451	4100	153
K9005453	4340	1
	4350	1
	4390	1
	4400	1
K9005454	4340	3
	4350	3
	4390	3
	4400	3
K9005455	4350	36
	4400	31
K9005456	4340	36
	4390	31
K9005457	4340	26
	4350	26
	4390	26
	4400	26
K9005458	4350	30
K9005459	4340	30
K9005460	4400	30
K9005461	4390	30
K9005467	4180	41
K9005468	4180	2
K9005469	4180	3
K9005470	4180	4
K9005471	4180	5
K9005472	4180	6
K9005473	4180	7
K9005474	4180	8
K9005475	4180	9
K9005476	4180	10
K9005477	4180	33
K9005490	4330	*
K9005519	4160	23
K9005520	4160	23
K9005521	4160	23
S0504366	1660	6
	1700	23
	1740	18
	6400	29
	6530	24
S0504453	1600	37-16
S0504553	1590	38-13
	1600	37-15
S0504666	1710	2
	1770	22
S0505266	6790	8
S0508366	1740	28
S0508653	1300	2J
	1680	42
S0508653	1680	50
	1750	2
	6280	4
S0508666	6220	4
S0508753	1600	37-18
S0508766	1590	38-16
S0508853	6240	5
	6260	3
	6270	6
	6280	6
	6290	6
	6340	3
S0508861	2140	8-8
S0508866	1100	10
	1610	1-11
	1630	13
	6250	3
	6410	12
	6510	5
	6540	9
	6680	5
	6740	5
	7010	13
S0509366	1770	19
S0511466	1220	29
S0511566	6950	15
S0511653	1740	7
	1740	11
S0511666	1190	5
	1710	6
S0511853	1600	37-11
	1710	14
S0511863	4220	35
	4220	41
	4230	35
	4230	41
	4260	36
	4270	36
	4340	35
	4340	41
	4350	35
	4350	41
	4390	36
	4400	36
S0511866	1590	38-11
	1640	19
S0512053	2160	9O
	4330	15
	6270	3
S0512061	2140	8-10

PART NO.	FIG NO.	KEY NO.
S0512066	1200	10
	1610	1-4
	1770	16
	6410	16
	6550	7
	6750	18
	7010	21
S0512263	2130	11
S0512266	1300	31
	1360	29
S0512553	4250	40
S0515066	1130	25
S0515166	1610	31
S0515253	2160	9M
	4330	13
S0515266	1590	22
	1600	22
	1620	22
	1650	13
	2160	20
	6580	6
	6670	6
	6730	6
S0515366	2170	4
	6760	4
	6770	4
	6870	4
	6880	4
	6890	4
S0515566	1150	26
S0515766	6180	19
S0521266	3100	26
S0521366	1130	27
	3100	11
	3110	23
	6640	23
	6700	23
	6930	10
S0521466	1120	43
S0553766	1300	30
S0556466	6480	11
S0556566	6520	20
	7000	20
S0556766	6400	7
S0556866	6530	15
S0557066	6450	4
S0557166	1770	12
S0558153	4220	29
	4230	29
	4240	35
S0558153	4250	29
	4260	29
	4270	29
	4280	35
	4340	29
	4350	29
	4360	28
	4370	35
	4380	35
	4390	29
	4400	29
	4410	35
	4420	35
S0558166	1180	7
S0558266	1180	8
S0558466	1150	48
S0558666	1360	27
S0558766	1360	31
S0558966	1770	5
	6580	12
	6670	12
	6730	9
S0560066	1310	29
S0560566	1610	26
	6840	12
S0560666	1610	16
S0560866	3130	17
	3130	41
	6940	21
	6940	52
S0560966	1270	50
	1270	101
	7020	12
S0561066	6350	14
	6380	68
	6960	14
S0561166	6600	11
S0561266	1210	13
	6350	13
	6380	20
	6960	13
	6970	20
S0561366	6570	7
S0561466	1610	12
	6380	19
	6970	19
S0561566	6570	8
S0561666	7020	10
S0561766	6570	13
S0562653	1720	4
S0562766	1260	45
	6430	4
	6660	4
	6720	4
S0563466	6430	18
	6440	11
	6660	18
	6690	11
	6720	11
	6750	10
S0565066	6810	6
	6820	6
	6830	6
S0565166	2120	3
S0565451	4240	42
	4280	39
	4360	39
	4370	42
	4380	42
	4410	39
	4420	39
S0565466	1200	13
	1220	16
	1260	46
	7180	3
	7190	3
S0566666	6810	7
	6820	7
	6830	7
S0566766	3110	22
	6640	22
	6700	22
S0566966	3100	13
	6930	13
S0570866	1100	2
S0571166	2100	25
S0572166	2100	27
S0574561	3120	7
	7090	7
	7100	7
	7110	7
	7120	7
	7130	7
	7140	7
S0574761	7150	4
	7160	4
	7170	4
S0721466	2100	21
S0760853	1720	1
S0765266	1190	2

PART NO.	FIG NO.	KEY NO.
S0765666	2100	22
S0770266	2100	24
S0771466	1120	6
S0786366	1770	8
S2201766	1520	23
S2202966	1380	18
S2204663	4100	406
S2204861	4110	438
	4120	438
S2204866	4180	66
S2205066	1350	38
	1360	38
S2205261	4110	436
	4120	436
	4200	26
S2205361	4300	15
S2205661	4120	405
S2208466	1470	110
S2208561	1470	24
S2208866	1400	12
	1420	2
	1520	8
	6100	2
S2209066	1280	38
	4180	65
S2209261	4290	9
S2209266	6580	17
	6670	17
	6730	14
S2209466	6570	10
S2209561	4220	39
	4230	39
	4250	33
	4250	37
	4260	34
	4270	34
	4340	39
	4350	39
	4390	34
	4400	34
S2209661	4110	412
	4120	412
	4130	433
S2209666	4180	67
S2209961	4130	434
S2210071	4110	413
	4120	413
S2211866	1520	17
	6410	7
	6550	5
S2211866	7010	18
S2212066	1260	40
	6440	1
	6690	1
	6750	16
	7010	17
S2212266	1350	32
	3130	13
	3150	5
	6410	6
	6440	7
	6550	4
	6650	5
	6690	7
	6710	5
	6750	6
	6940	27
S2212366	1240	26
	1260	48
	3130	12
	3150	7
	6430	13
	6440	14
	6650	7
	6660	13
	6690	14
	6710	6
	6720	10
	6750	13
S2212371	4160	35
S2212461	4200	37
S2212466	4180	68
S2212566	3130	16
	6420	6
	6610	6
S2212666	6610	5
	6630	6
	7060	9
	7080	7
S2212761	4220	33
	4230	33
	4240	39
	4340	33
	4350	33
	4360	36
	4370	39
	4380	39
S2212861	4360	32
S2212961	4240	46
	4280	43
S2212961	4370	46
	4380	46
	4410	43
	4420	43
S2212971	4310	26
	4320	26
S2213466	1260	44
S2215271	4170	343
S2215366	1230	27
	1250	27
S2215466	2180	4
	6860	4
S2216873	4150	19
S2218961	4250	25
S2219071	4220	25
	4230	25
	4260	25
	4270	25
	4340	25
	4350	25
	4370	27
	4390	25
	4400	25
	4410	27
S2221471	4140	110
S2221566	1180	3
S2221873	4360	24
S2221961	4140	109
S2222171	4240	27
	4280	27
	4380	27
	4420	27
S3050863	1700	7
S3140025	4100	901
S3450343	1110	2
	1680	30
	1680	46
S3450583	1690	4
S3450823	1380	15
S3450833	1200	18
	1490	82
	1670	25
	1680	12
	1680	45
	1750	5
	6310	15
S3450863	1670	13
	1680	2
S3450943	1680	34
S3450953	1670	10

PART NO.	FIG NO.	KEY NO.
S3450953	1680	40
S3450983	1680	7
S3450993	1480	78
	1490	78
S3452853	1490	79
S3453116	4150	29
S3458843	1490	65
S3523601	4290	4-4
S3523608	4200	30
S3523836	4250	24
	4360	23
	4370	24
	4410	24
S3524008	4110	924
	4120	924
S3524403	3140	7
	6950	20
S3527808	4100	953
S3644163	1450	32
S3654523	1440	25
S4012003	1680	48
S4012203	1680	44
S4012303	1770	31
S4012333	1500	32-32
	1610	1-15
S4012533	1500	32-27
	1610	1-10
	4110	801
	4120	801
S4012633	1150	61D
	1590	38-14
	1600	37-19
	1670	5
S4012733	1150	29
	1220	25
	1250	33
	1590	38-18
	1600	37-13
	1610	41
	1720	6
S4012833	4190	24
S4012933	3100	14
	3110	24
	4100	808
	6640	24
	6700	24
	6810	9
	6820	9
	6830	9
	6930	14
S4012933	7180	4
	7190	4
S4013133	2100	26
S4013333	3120	8
	7090	8
	7100	8
	7110	8
	7120	8
	7130	8
	7140	8
	7150	5
	7160	5
	7170	5
S4014233	4300	19
S4014633	4200	32
	4290	4-3
S4034833	1480	103
S5000113	1520	24
S5000213	1680	4
	1750	6
S5000313	1770	29
S5010303	1770	23
S5010313	1490	115
	1590	38-17
	1600	37-14
S5010503	1700	8
S5010513	1100	12
	1590	38-15
	1600	37-17
	1630	14
	1770	14
	6220	5
	6280	2
S5010613	1150	50
	1150	61E
	1610	1-5
	1670	3
	1710	16
	1740	9
	1740	13
	1770	7
S5010713	1130	31
	1150	31
	1210	16
	1610	24
	1770	10
	6380	72
S5010813	1590	11
S5010913	1130	49
S5011113	1190	1-9
S5100003	1680	29
	1680	47
S5100103	1690	5
S5100203	1200	19
	1670	14
	1670	26
	1680	3
	1680	13
	1680	43
	6310	16
S5100503	4220	38
	4230	38
	4250	32
	4250	36
	4260	33
	4270	33
	4340	38
	4350	38
	4390	33
	4400	33
	6450	5
S5100603	4220	28
	4220	32
	4220	34
	4220	40
	4230	28
	4230	32
	4230	34
	4230	40
	4240	34
	4240	38
	4240	45
	4250	28
	4250	39
	4260	28
	4260	35
	4270	28
	4270	35
	4280	34
	4280	42
	4340	28
	4340	32
	4340	34
	4340	40
	4350	28
	4350	32
	4350	34
	4350	40
	4360	27
	4360	31

PART NO.	FIG NO.	KEY NO.
S5100603	4360	35
	4370	34
	4370	38
	4370	45
	4380	34
	4380	38
	4380	45
	4390	28
	4390	35
	4400	28
	4400	35
	4410	34
	4410	42
	4420	34
	4420	42
S5102303	1300	72
	1610	1-16
	1660	7
	1670	11
	1680	8
	1680	33
	1680	39
	1700	24
	1710	3
	1740	19
	1770	30
	6400	28
	6530	25
	6790	9
S5102503	1300	2K
	1610	1-9
	1630	15
	1680	41
	1680	51
	1700	6
	1740	29
	1750	3
	1750	19
	1770	13
	1770	20
	2140	8-9
	4130	410
	6220	6
	6240	6
	6250	4
	6260	2
	6270	5
	6280	3
	6280	7
	6290	5

PART NO.	FIG NO.	KEY NO.
S5102503	6340	2
	6400	8
	6410	17
	6480	12
	6510	6
	6520	21
	6530	17
	6540	10
	6680	6
	6740	6
	7000	21
	7010	15
S5102603	1150	51
	1180	5
	1200	11
	1310	33
	1640	20
	1670	4
	1700	3
	1710	7
	1710	15
	1740	8
	1740	12
	1750	22
	1770	6
	1770	17
	2130	12
	2140	8-11
	2160	9P
	4330	16
	6410	15
	6550	3
	6580	13
	6670	13
	6730	10
	6750	19
	6950	16
	7010	14
S5102703	1130	32
	1210	15
	1250	32
	1270	54
	1270	102
	1610	25
	1650	12
	1720	2
	1770	9
	2160	9N
	2160	16
	2170	3

PART NO.	FIG NO.	KEY NO.
S5102703	3130	18
	3130	42
	4330	14
	6350	15
	6380	21
	6570	6
	6580	8
	6600	10
	6670	8
	6730	8
	6760	3
	6770	3
	6840	13
	6870	3
	6880	3
	6890	3
	6940	22
	6940	53
	6960	15
	6970	21
	7020	11
S5102803	1260	47
	6430	19
	6440	12
	6660	19
	6690	12
	6720	5
	6750	11
S5102901	6810	17
	6820	17
	6830	17
S5102903	1120	44
	1130	33
	1190	3
	2100	17
	2120	4
	4240	41
	4280	38
	4360	38
	4370	41
	4380	41
	4410	38
	4420	38
	6930	11
S5102906	3100	12
	3110	21
	6640	21
	6700	21
S5110601	6610	7
	6630	3

PART NO.	FIG NO.	KEY NO.
S5110601	7060	7
	7080	5
S5110603	1520	18
	6410	5
	6550	6
	7010	20
S5110903	1180	4
S5210303	1500	32-34
S5700621	4170	341
S5710881	4100	885
S5740480	4200	15
S5740530	4300	21
S5740730	4140	114
S5740800	4190	27
S5740870	4100	886
S5740890	4150	23
	4150	27
S5740960	2130	1-3
S6005040	4140	108
S6005043	4170	150
S6005583	4170	149
S6250110	4200	17
S6250121	4170	378
S6250161	4170	353
S6500100	4110	814
	4120	814
S6500300	4150	24
S6500350	4100	824
S6500650	4150	25
S6510150	4110	858
	4120	858
S6510180	4130	850
S6510220	4160	36
S6510500	4140	212
S6530420	4170	145
S6540600	1480	112
S6710032	4220	42
	4230	42
	4240	47
	4250	41
	4260	37
	4270	37
	4280	44
	4310	24
	4320	24
	4340	42
	4350	42
	4360	40
	4370	47
	4380	47

PART NO.	FIG NO.	KEY NO.
S6710032	4390	37
	4400	37
	4410	44
	4420	44
S6710041	1190	9
	1660	3
	3110	20
	3140	8
	6640	20
	6700	20
	6950	8
S6710043	6810	10
	6820	10
	6830	10
S8000061	4110	722
	4120	722
	4180	31
S8000071	4160	33
S8000081	4100	724
	4110	724
	4170	358
	4300	3
S8000085	4120	724
S8000101	4200	36
S8000111	1200	8
	1220	26
	1240	82
	1250	36
	1250	94
	1250	112
	1260	53
	1300	26
	1310	26
	1320	26
	1320	103
	1320	112
	1330	93
	1340	26
	1340	102
	1350	24
	2180	15
	4100	726
	4110	725
	4110	755
	4120	725
	4120	755
	4130	725
	4140	112
	4170	211
	4210	6

PART NO.	FIG NO.	KEY NO.
S8000111	6370	14
	6370	53
	6400	2
	6410	11
	6470	3
	6480	6
	6520	19
	6530	2
	6530	54
	6540	11
	6540	34
	6600	8
	6610	9
	6620	6
	6630	9
	6790	14
	6860	15
	6920	4
	7000	19
	7010	16
	7010	54
	7050	7
	7060	6
	7070	6
	7080	4
S8000121	4200	35
	6300	4
S8000141	1230	44
	1240	44
	1250	102
	1320	25
	1320	104
	1330	25
	1330	94
	1340	25
	1350	22
	1350	65
	1350	75
	1360	22
	1360	74
	4170	209
	4170	383
	4180	88
	4300	6-3
	6370	15
	6410	21
	6450	7
	6540	12
	6600	7
	6620	5

PART NO.	FIG NO.	KEY NO.
S8000141	6790	15
	7010	19
	7070	5
S8000161	4110	732
	4120	732
	4130	732
	4180	54
S8000165	4100	732
S8000181	1190	1-11
	1200	51
	1220	23
	1230	38
	1240	38
	1270	41
	1280	41
	1300	27
	1300	113
	1310	27
	1340	27
	1360	23
	2180	12
	4100	728
	4110	728
	4120	728
	4160	31
	4170	212
	4170	331
	4170	359
	6120	10
	6370	16
	6430	36
	6480	7
	6520	18
	6580	3
	6580	31
	6660	36
	6670	3
	6670	31
	6720	36
	6730	3
	6730	31
	6780	3
	6840	8
	6860	12
	6910	8
	7000	18
S8000201	4110	733
	4120	733
	4220	37
	4230	37

PART NO.	FIG NO.	KEY NO.
S8000201	4250	31
	4250	35
	4260	32
	4270	32
	4340	37
	4350	37
	4390	32
	4400	32
S8000205	4190	17
S8000221	4110	730
	4120	730
	4140	106
	4200	12
S8000231	1240	60
	1280	42
	2180	7
	6380	65
	6420	9
	6430	31
	6440	10
	6440	32
	6660	31
	6690	10
	6690	32
	6720	31
	6750	9
	6750	32
	6860	7
	6940	28
S8000241	1230	39
	1240	39
	1260	31
	1270	31
	1280	31
	4180	50
	6350	81
	6380	66
	6910	18
S8000261	4110	756
	4120	756
	4180	38
	4180	42
S8000281	4220	31
	4230	31
	4240	37
	4240	44
	4280	41
	4340	31
	4350	31
	4360	30

PART NO.	FIG NO.	KEY NO.
S8000281	4360	34
	4360	42
	4370	37
	4370	44
	4380	37
	4380	44
	4410	41
	4420	41
	6610	10
	6630	5
	7060	8
	7080	6
S8000291	1250	93
	6350	10
	6360	9
	6380	14
	6390	9
	6960	10
	6970	14
	6980	9
S8000321	4170	336
S8001001	2160	9I
	4330	9
S8001200	2160	9H
	4330	8
S8002701	4170	207
S8002721	4110	735
	4120	735
S8010251	4110	734
	4120	734
	4200	22
S8010305	4100	702
S8010351	4110	763
	4120	763
	4180	12
S8010450	2150	7
S8010600	2140	8-13
S8010601	4310	20
	4320	20
S8010700	2120	2-6
S8010751	4360	20
S8010755	4110	708
	4120	708
S8010851	4130	710
S8010855	4100	710
S8010951	4250	13
	4310	12
	4320	12
S8011001	4180	59
	4250	15

PART NO.	FIG NO.	KEY NO.
S8011001	4310	14
	4320	14
	4430	7
	4440	7
	4450	7
S8011051	4220	13
	4230	13
	4260	13
	4270	13
	4340	13
	4350	13
	4370	13
	4390	13
	4400	13
	4410	13
S8011101	4220	15
	4230	15
	4240	13
	4260	15
	4270	15
	4280	13
	4340	15
	4350	15
	4370	15
	4380	13
	4390	15
	4400	15
	4410	15
	4420	13
S8011151	4100	719
	4240	15
	4280	15
	4380	15
	4420	15
S8011200	1220	15
S8011201	2160	9J
	4100	717
	4330	10
S8011450	1200	3
S8011451	4360	13
S8011650	1220	8
S8011850	1220	3
S8030041	6480	13
S8030081	1270	37
	1280	37
	1290	4
	6430	38
	6520	17
	6570	11
	6580	4

PART NO.	FIG NO.	KEY NO.
S8030081	6580	34
	6660	38
	6670	4
	6670	34
	6720	38
	6730	4
	6730	34
	6780	2
	6840	9
	6910	10
	7000	17
S8030121	1230	37
	1260	43
	1270	43
	1280	43
	2180	8
	3130	9
	6350	12
	6350	82
	6360	8
	6380	17
	6380	67
	6390	8
	6420	7
	6430	3
	6430	34
	6440	4
	6440	34
	6660	3
	6660	34
	6690	4
	6690	34
	6720	3
	6720	34
	6750	17
	6750	34
	6860	8
	6910	9
	6940	14
	6960	12
	6970	17
	6990	5
S8030161	1230	59
	6980	8
S8060101	4170	208
S8060141	4170	210
S8060161	4100	789
	4180	53
S8060301	4100	792
S8180321	6120	1B

PART NO.	FIG NO.	KEY NO.
S8180411	1750	14
S8450006	1130	21
S8450012	1200	22
S8450016	1750	10
S8450053	1130	22
S8470014	1210	12
	6120	7
S8470032	6120	16
S8470165	1100	32
S8500067	1250	30
S8500105	1230	35
S8510118	1160	7
S8510143	1160	6
T6510018	5100	1-32
T6510027	5100	1-33
T6510062	5100	1-23
T6510066	5100	1-24
T6510070	5100	1-25
T6510072	5100	1-26
T6510075	5100	1-27
T6510081	5100	1-28
T6510085	5100	1-29
T6510089	5100	1-30
T6510091	5100	1-31
T6550005	5100	1-17
T6550006	5100	1-18
T6550007	5100	1-19
T6550009	5100	1-20
T6550011	5100	1-21
T6550018	5100	1-22
T6580008	5100	1-2
T6580020	5100	1-3
T6600183	5100	1-34
T6600189	5100	1-35
T6600197	5100	1-36
T6600201	5100	1-37
T6600211	5100	1-38
T6600217	5100	1-40
T6600223	5100	1-39
T6690012	5100	1-12
T6690013	5100	1-13
T6750003	5100	1-14
T7050003	5100	1-4
T7050013	5100	1-5
T7050021	5100	1-6
T7050022	5100	1-7
T7260057	5100	1-9
T7500004	5100	1-8
Y-3738-04	1300	2F
Y-3738-05	1300	2G