RUTHZIL TRATOR COMERCIAL DE PEÇAS LTDA 11 97083-6812 ROLANDO CITRANGULO

DX140W/DX160W

PARTS LIST
LISTE DE PIECES
DETACHEES

N°DE REFERENCE : K1025589BEF
HEED - 2807

DOOSAN Excavator DX140W



Filter		Interval(hr)
E/g oil filter	65.05510-5032A	500
E/g fuel filter	65.12503-5026	500
Element-inner(air cleaner)	474-00039	2000
Element-outer(air cleaner)	474-00040	2000
Suction filter-oil tank	2474-9016A	2000
Return filter-oil tank	474-00055	1000
Element-pilot filter	2471-1154	1000
Aircon filter	K1002210	1000
Element-Brake filter	474-00009	1000
Element-Air Breather	K1029257	1000

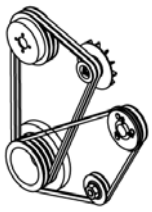

Belt		
Aircon Belt	2106-1019D25	990L
Fan Belt	65.96801-0194	1230L

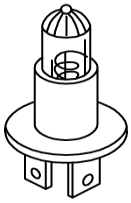

Bulb	
Bulb 24V 2W	515-00012A
Bulb-halogen 24V 10W	2515-1021D1
Bulb 24V 75/70W	515-00006

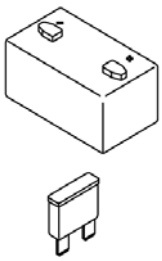

Battery / fuse / relay	
Battery	506-00006
Fuse 10A	2527-1016
Fuse 15A	2527-1017
Fuse 20A	2527-1018
Fuse 30A	2527-1025
Fusible link 27A	2527-1023A
Relay	2544-9033
Battery relay	2544-9024



Teeth / adapter / side cutter		
Teeth	713-00057A	5001-5013
	713-00057B	5014-
Adpater	2713-1222A	
Side cutter(RH)	2713-1228A	
Side cutter(LH)	2713-1229A	



Seal kit	
Seal kit-boom	K9002306
Seal kit-arm	K9002308
Seal kit-bucket	K9002307
Seal kit-center joint(Not Inde)	K9001443
Seal kit-center joint(Inde)	K9004009
Seal kit-dozer	K9002309
Seal kit-chocking	K9003707
Seal kit-Swing motor	K1000101KT
Seal kit-dozer joystick	K9001361
Seal kit-outrigger cyl	440-00077KT
Seal kit-arti boom	K9005072
Seal kit-gear pump(rotating)	K9001457

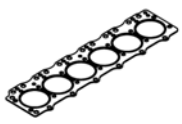

Engine Gasket kit	
Top overhaul gasket kit	65.99605-8042
All overhaul gasket kit	65.99601-8071

FOREWORD

● This parts list is shown the equipment components parts of

「DOOSAN WHEEL EXCAVATOR DX140W」.

1. HOW TO ORDER PARTS.

When ordering parts, please specify the follwing items as shown in the following example.

Ex.	1) Model of Machine	:	DX140W	(Shown on name plate on the side cover)
	2) Machine Serial No	:	HEED0-○○○○	(Shown on nameplate on the bed frame)
	3) Engine Serial No	:	DL06-○○○○○○	(Shown on Engine cylinder block)
	4) Part No.	:	401-00476A	
	5) Description	:	MAIN PUMP	
	6) Q'ty	:	1	

2. HOW TO USE THIS PARTS LIST.

Key No. : It shows the reference no. on the illustration.

Part No. : It shows the part number of the parts which are included in an illustration.

Description : It shows the name of part. Components of an assembly part are shown with [•] marks and are shown on the line, or lines, below the assembly part. Also if the components with [•] mark is consists of further components part. These further components are shown with the marks [••].

Q'ty : It shows the quantity use for one machine. quantity of components show the quantity for one assembly part.

Service code : Abbreviations in this column have their own meaning as show below.

- B : The parts with this abbreviation shows that the part requires some work on it before installing in the machine.
- D : These parts are not serviceable, In case of the part with this abbreviation is a component of an assembly and is not available independently. The assembly part containing this part should be ordered.
- K : This means that the part is contained in the service part kit.
- M : This means that the part is available only with its mating parts altogether.
- R : The part with this abbreviation shows that the quantity of the part is changed depending on the machine, such as an adjusting shim etc.
- S : This part is specially provided as a service part, which was not provided in the machine before shipping from the factory.

G : This part need grade control and should be requested as the same grade of counter part.

OP : Optional parts.

EX : Specific design parts.

OS : Over-sized parts.

US : Under-sized parts.
(Part with abbreviation "OS" or "US" is described on the line below the standard sized part.)

: The part with this mark is newly added on that page of the equipment.

Serial no. : Serial No. shows the machine serial number which the parts were applied.
As to the engine Serial No. shows only engine serial number which the parts were applied.
Parts without any applicable serial number are used in every machine.

ICA : ICA shows the interchangeability between the original and the improved parts.
Abbreviations used in this column are as follows;

I : Part No. in the column of "Replaceable part" can be used instead of this part but not vice versa.

P : This must not be used for machine. The part No. in the column "Replaceable part" should be used instead.

T : Parts No. those in the column of "Replaceable part" can be used as an assembly instead of this part.

Y : This part and the part in the column of "Replaceable part" are interchangeable with each other.

Blank : This part has no "Repleaceable part"

Replaceable part : Interchangeable parts nos. and their required quantity are shown in this column.
If interchangeable improved parts are provided for the parts which you may order, the improved parts classified as "I", "P" "T" or "Y" may be supplied.

● When repairing, it is recommended to use our standard part.

● Researching the assembling parts from Part No., see the 「Parts Index」 of this parts list.

Dec. 2006

AVANT-PROPOS

● Cette liste de pieces apparait dans le 「DOOSAN EXCAVATRICE DE ROUE DX140W」.

1. COMMENT COMMANDER LES PICES.

Lorsque vous commanderez les pieces, veuillez specifier les articles suivants comme indiques dans l'exemple ci-dessous:

Ex.	1) Modele de machine	:	DX140W
	2) Serie de la machine	:	HEED0-○○○○
	3) Numero de serie du moteur	:	DL06-○○○○○○
	4) Numero de la piece	:	401-00476A
	5) Description	:	POMPE
	6) Quantite	:	1

2. COMMENT UTILISER CE RECUEIL DE PIECES DETACHEES.

Numero de la cle : Indique le numero de reference de l'illustration.

Numero de la piece : Indique le numero de piece sur l'illustration.

Description : Nom de la piece. Les pieces composantes des pieces d'assemblage sont indiquees avec une marque [•] en dessous des pieces d'assemblage. Aussi, si les pieces composantes sont marques d'un [•]. Cela indique qu'ily a plusieurs pieces composantes, ces autres pieces composantes sont indiquees par un [••].

Quantite : Quantite, montre la quantite utilisee pour une machine, cependant Q'te des composants de pieces montre la quantite utilisee pour un assemblage de pieces.

Code de Service : L'Abveration est un composant d'un code de service qui a sa propre signification comme indique ci-dessous.

- B : La piece avec cette abreviation indique que la piece exige d'etre travaillee avant d'etre installee dans la machine.
- D : La piece avec cette abreviation est uun composant d'un assemblage et n'est pas diponible toute seule, la d'assemblage contenant cette peece dcvrait ctrc commandee
- K : Cette veut dire que la piece est inclue dans la trousse de pieces de service. "ensemble kit"
- M : Cela signifie que la piece est disponible uniquement avec as peice piece d'accouplement.
- R : La piece avec cette abreviation montre que la quantite de la piece est changee en fonction de la machine.

S : Cette piece est specialement approvisionnee en tant que piece de service, qui n'a pas ete livree dans la machine lors du depart de l'usine.

G : Cette piece a besoin d'on degerde controle et doit etre commande avec un niveau de degre equivalent.

OP : Prieces facultatives

EX : Pieces specifiquement dessinees

OS : Pieces demesurees

US : Pieces uop petites
La piece avec abreviation OS-US est decrite sur la ligne en dessous de la piece standard

: La piece avec cette marque vient d'ent d'etre rajoutee sur la page de l'equipement.

Numero de serie : Numero de serie indique le numero de serie de la machine avcc lesquels les pieces etaient appliquees.
En ce qui conceme le numero de serie du moteur. Celui-ci indique seulement le numero de serie du moteur sur lesquels les pieces etaient appliquess.
Les pieces qui n'ont aucun numero de serie applicable sont utilisees dans toutes les machines.

ICA : Indique l'interchangeabilite entre la piece originale et les piece ameliorees.
Les abreviations utilisees dans cette colonne sont les suivantes:

I : Piece numero dans la colonne de piece de piece de remplacement peut etre utilisee au lieu de cette piece mais pas l'inverse.

P : Ceci ne peut etrc utilise pour la machine. Le numero de piece dans colonne pieces remplacable devrait etre utilise a la place.

T : Numcros de pieces, ceux dans la colonne piece de remplacement' peuvent etre utilisees en tant qu'assemblage au lieu de cette piece.

Y : Cette piece et la piece dans la colonne piece de remplacement'sont.

Piece de rechange : Numeros de pieces interchangeables et leurs quantites requises sont indiques sur cette colonne. Si les pieces ameliorees interchangeables sont fournies, les pieces que vous pouvez commander sont classees de la facon suivante "I", "P", "T" ou "Y" peuvent etre fournies.

- Lors de reparation. il est recommande d'utiliser notre piece standard.
- Recherche de pieces d'assemblage a partir des numeros de pieces
  Regarder l'index des pieces qui se trouvent a la fin du livre.

Dec. 2006

CONTENTS
TABLES DES MATIERES

● ENGINE PARTS

Fig.				
	011	CYLINDER BLOCK	BLOC CYLINDER	2
	012	TIMING GEAR CASE	COUVERCLE	4
	013	FLY WHEEL HOUSING	LOGEMENT DE VOLANT	6
	014	OIL SEAL	JOINT D'HUILE	8
	015	BREATHER	CONDUIT DE VENTILATION	10
	016	DRIVING SYSTEM	SYSTEME D'ENTRAINEMENT	12
	017	CYLINDER HEAD	CULLASSE	14
	018	CYLINDER HEAD COVER	COUVRE-CULASSE	16
	019	TIMING SYSTEM	SYSTEME DE SYNCHRONISATION	18
	020	OIL PUMP	POMPE D'HUILE	22
	021	OIL FILTER & OIL COOLER	RADIATEUR D'HUILE DE FILTRE D'HUILE	24
	022	OIL PAN	CARTER D'HUILE	26
	023	THERMOSTAT	THERMOSTAT	28
	024	WATER PUMP	SYSTEME DE REFROIDSSEMENT	30
	025	COOLING FAN	VENTILATEUR	32
	026	INTAKE & EXHAUST MANIFOLD	TUBULURE ET COLLECTEUR	34
	027	TURBO CHARGER	TURBO CHARGER	36
	028	INJECTOR	INJECTIEUR	38
	029	INJECTION PIPE	PIPE D'INJECTION	40
	030	INJECTION PUMP	POMPE D'INJECTION	42
	031	ENGINE CONTROL	LE MOTEUR SE RELIENT	44
	032	FUEL SYSTEM	SYSTEME DE GAZOLE	46
	033	ALTERNATOR MOUNTING	ALTERNATEUR ET SUPPORT	48
	034	LIFTING HOOK	CROCHET DE LEVAGE	50
	035	STARTER	STARTEUR	52
	036	SENSOR	CAPTEUR	54
	037	WIRE HARNESS	JAGUE DE NIVEAU	56
	038	ENGINE MOUNTING	SUPPORT DE MOTEUR	58
	039	AIR COMPRESSOR	COMPRESSEUR D'AIR	60
	040	OVERHAUL GASKET KIT - ALL	KIT DE GARNITURE DE REVISION	62
	041	OVERHAUL GASKET KIT - TOP	KIT DE GARNITURE DE REVISION	64

● BODY PARTS

Fig.				
	1100	MAIN FRAME	ARMATURE PRINCIPALE	66
	1110	COUNTER WEIGHT	MASSE D'EQUILIBRAGE	68
	1120	ENGINE MOUNTING	SUPPORT DE MOTEUR	70
	1130	RADIATOR MOUNTING	SUPPORT DE RADIATEUR	72
	1140	RADIATOR	RADIATEUR	74
	1150	MUFFLER	SILENCIEUX	76
	1160	CAC PIPING	CHARGEE DE REFROIDISSEUR D'CAIR	78

1170	AIR CLEANER ASS'Y	FILTRE A AIR	80
1180	AIR CLEANER	FILTRE A AIR	82
1190	PUMP INSTALLATION	INSTALLATION DE POMPE	84
1200	SWING DEVICE	SYSTEME D'ORIENTATION	86
1210	FUEL TANK	RESERVOIR D'GAZOLE	88
1220	FUEL PIPING	TUYAUTERIE DE CARBURANT	90
1230	OIL TANK	RESERVOIR D'HUILE	92
1240	OIL COOLER PIPING(1)	CONDUITES DE HUILE	94
1250	OIL COOLER PIPING(2)	CONDUITES DE HUILE	96
1260	OIL COOLER PIPING(3)	CONDUITES DE HUILE	98
1270	MAIN PIPING(1) - PUMP, SWING	CONDUITES DE PRINCIPAL	100
1280	MAIN PIPING(2) - BOOM	CONDUITES DE PRINCIPAL	102
1290	MAIN PIPING(3) - ARM, BUCKET	CONDUITES DE PRINCIPAL	104
1300	MAIN PIPING(4) - TRAVEL	CONDUITES DE PRINCIPAL	106
1310	PILOT PIPING(1)	CONDUITES DE PILOTE	108
1320	PILOT PIPING(2)	CONDUITES DE PILOTE	110
1330	PILOT PIPING(3)	CONDUITES DE PILOTE	112
1340	PILOT PIPING(4)	CONDUITES DE PILOTE	114
1350	PILOT PIPING(5)	CONDUITES DE PILOTE	116
1360	PILOT PIPING(6)	CONDUITES DE PILOTE	118
1370	PILOT PIPING(7)	CONDUITES DE PILOTE	120
1380	PILOT PIPING(8)	CONDUITES DE PILOTE	122
1390	PILOT PIPING(9)	CONDUITES DE PILOTE	124
1400	PILOT PIPING(10)	CONDUITES DE PILOTE	126
1410	PILOT PIPING(11)	CONDUITES DE PILOTE	128
1420	PILOT PIPING - EPPR	CONDUITES DE PILOTE	130
1430	BRAKE PIPING(1)	TUYAUTERIE DE FREIN	132
1440	BRAKE PIPING(2)	TUYAUTERIE DE FREIN	134
1450	STEERING PIPING	TUYAUTERIE DE DIRECTION	138
1460	STEERING WHEEL ASS'Y	ROUE DE DIRECTION	142
1470	STEERING COLUMN ASS'Y	COLONNE DE DIRECTION	144
1480	COLUMN ASS'Y	COLONNE	146
1490	CONTROL STAND - L.H.	CONSOLE DE COMMANDE	148
1500	CONTROL STAND - R.H.	CONSOLE DE COMMANDE	152
1510	SEAT SLIDING PLATE	POSEZ GLISSER LE PLAT	154
1520	SEAT PLATE - EUROPE & U.S.A	POSEZ LE PLAT	156
1530	SEAT PLATE	POSEZ LE PLAT	158
1540	SEAT MOUNTING	SIEGE LE SUPPORT	160
1550	SEAT	SIEGE	162
1560	DUCT COVER	CONDUITES COUVERCLE	164
1570	HEATER COVER	BOITIES DE CHAUFFAGE	168
1580	CABIN MOUNTING	SUPPORT DE CABINE	170
1590	CABIN(1)	CABINE	172
1600	CABIN(2)	CABINE	176
1610	CABIN(3)	CABINE	180
1620	CABIN(4)	CABINE	184

1625	HANDLE - CABIN	HANDLE	187-1
1630	FLOOR MAT	PLANCHER	188
1640	FLOOR PLATE	TOLE DE PLANCHER	190
1650	HANDLE ASS'Y	HANDLE	192
1660	HANDLE	HANDLE	194
1670	SUN ROOF COVER	COUVERTURE DE TOIT DU SOLEIL	196
1680	FOOT REST - L.H.	REPOS DE PIED	198
1690	ROOM MIRROR	MIROIR DE PIECE	200
1700	SUPPORT	SUPPORTS	202
1710	SIDE DOOR - L.H.	ENSEMBLE DE PORTE	204
1720	SIDE DOOR - R.H.	ENSEMBLE DE PORTE	206
1730	BATTERY COVER	COUVERCLE	208
1740	ENGINE COVER	COUVERTURE DE MOTEUR	212
1750	COVER	COUVERCLE	214
1760	HANDRAIL	BALUSTRADE	216
1770	BAFFLE ASS'Y(1)	ENSEMBLE DE CLOISON	218
1780	BAFFLE ASS'Y(2)	ENSEMBLE DE CLOISON	220
1790	FOAM ASS'Y	ENSEMBLE DE EPONGE	222
1800	UNDER COVER	COUVERCLE	224
1810	LUBRICATOR PIPING	LUBRIFICATION	226
1820	ELECTRIC BOX ASS'Y	EQUIPMENT ELECTRIQUE	228
1830	ELECTRIC PARTS - CABIN	PIECES ELECTRIQUES	232
1840	ELECTRIC PARTS - CONTROL STAND	PIECES ELECTRIQUES	236
1850	ELECTRIC PARTS - RELATED(1)	PIECES ELECTRIQUES	238
1860	ELECTRIC PARTS - RELATED(2)	EQUIPMENT ELECTRIQUE	242
1870	ELECTRIC PARTS - ENGINE	PIECES ELECTRIQUES	244
1880	ALTERNATOR MOUNTING	ALTERNATEUR	246
1890	ELECTRIC PARTS - WORK LAMP	PIECES ELECTRIQUES	248
1900	ELECTRIC WIRING	CABLAGE ELECTRIQUE	250
1910	SWITCH - REAR DOZER	COMMUTATEUR	254
1920	HEATER PIPING	CONDUITES DE CHAUFFAGE	256
1930	AIRCON UNIT	REFRIGERATION	258
1940	AIR CONDITIONER	CLIMATISATION	260

● POWER TRAIN

Fig.	2100	CHASSIS FRAME	ARMATURE DE CHASSIS	264
	2110	CRADLE	BERCEAU	266
	2120	POWER TRAIN - AXLE	SYSTEME DE COMMANDE	268
	2130	POWER TRAIN - TIRE	SYSTEME DE COMMANDE	270
	2140	POWER TRAIN - SHAFT	SYSTEME DE COMMANDE	272
	2150	CHASSIS COMPONENTS(1)	COMPOSANTS DE CHASSIS	274
	2160	CHASSIS COMPONENTS(2)	COMPOSANTS DE CHASSIS	276
	2170	BRAKE PIPING	CANALISATIONS DE FREIN	278
	2180	STEER & CHOCKING PIPING	BOEUF ET CALAGE	280
	2190	PROPELLING PIPING	TUYAUTERIE DE PROPULSION	282
	2200	PROPELLING PIPING - SWIVEL JOINT	TUYAUTERIE DE PROPULSION	284

	2210	BLADE	DOZER	286
	2220	BLADE PIPING	CONDUITES DE DOZER	288
	2230	BLADE PIPING - REAR DOZER ONLY	CONDUITES DE DOZER	290

● FRONT PARTS

Fig.	3100	BOOM - 4.3m	FLECHE	292
	3110	ARM - 2.1m	BALANCIER	294
	3120	BUCKET - 0.5㎥	GODET	296
	3130	BOOM PIPING - 4.3m	TUYAUTERIE DE PERCHE	298
	3140	LUBRICATION PIPING - BOOM 4.3m	LUBRIFICATION	300
	3150	ARM PIPING - 2.1m	CONDUITES DE BALANCIER	302

● HYDRAULIC COMPONENTS

Fig.	4100	MAIN PUMP	POMPE PRINCIPAL	304
	4110	MAIN PUMP - ROTARY GROUP	POMPE PRINCIPAL	306
	4120	MAIN PUMP - CONTROL	POMPE PRINCIPAL	312
	4130	MAIN PUMP - COVER	POMPE PRINCIPAL	316
	4140	SWING MOTOR	MOTEUR D'ORIENTATION	318
	4150	SWING REDUCTION GEAR	REDUCTEUR D'ORIENTATION	322
	4160	TRAVEL MOTOR	REDEUTEUR DE TRANSLATION	324
	4170	TRAVEL MOTOR - ROTARY GROUP	REDEUTEUR DE TRANSLATION	326
	4180	TRAVEL MOTOR - CONTROL PARTS	MOTEUR DE TRANSLATION	328
	4190	TRAVEL MOTOR - CONTROL PART	MOTEUR DE TRANSLATION	330
	4200	TRAVEL MOTOR - STROKE LIMITER	MOTEUR DE TRANSLATION	332
	4210	TRAVEL MOTOR - COUNTER BALANCE VALVE	MOTEUR DE TRANSLATION	334
	4220	CONTROL VALVE	TIROIR DE COMMANDE	336
	4230	SOLENOID VALVE	VANNE DE SOLENOIDE	342
	4240	REMOTE CONTROL VALVE	VANNE DE COMMANDE A DISTANCE	344
	4250	REMOTE CONTROL VALVE - DOZER	VANNE DE COMMAND A DISTANCE	348
	4260	BRAKE SUPPLY VALVE	SOUPAPE DE DISTRIBUTION DE FREINAGE	350
	4270	SOLENOID VALVE	VANNE DE SOLENOIDE	352
	4280	QUICK CLAMP VALVE	VANNE RAPIDE DE BRIDE	354
	4290	CENTER JOINT - NOT INDE.	JOINT TOURNANT	356
	4300	CENTER JOINT - INDEPENDENT ATTACH	JOINT TOURNANT	358
	4310	BOOM CYLINDER - L.H.	VERIN DE FLECHE	360
	4320	BOOM CYLINDER - R.H.	VERIN DE FLECHE	364
	4330	ARM CYLINDER - ARM 2.1m	VERIN DE BALANCIER	368
	4340	ARM CYLINDER - ARM 2.5m	VERIN DE BALANCIER	372
	4350	BUCKET CYLINDER	VERIN DE GODET	376
	4360	DOZER CYLINDER - L.H.	CYLINDRE DE DOZER	380
	4370	DOZER CYLINDER - R.H.	CYLINDRE DE DOZER	382
	4380	CHOCKING CYLINDER - L.H.	CYLINDRE DE CALAGE	384
	4390	CHOCKING CYLINDER - R.H.	CYLINDRE DE CALAGE	386
	4400	OUTRIGGER CYLINDER - L.H.	CYLINDRE DE TANGON	388
	4410	OUTRIGGER CYLINDER - R.H.	CYLINDRE DE TANGON	390
	4420	BOOM CYLINDER - L.H.(LOCK VALVE)	VERIN DE FLECHE	392

4430	BOOM CYLINDER - R.H.(LOCK VALVE)	VERIN DE FLECHE	394
4440	ARM CYLINDER - ARM 2.1m(LOCK VALVE)	VERIN DE BALANCIER	396
4450	ARM CYLINDER - ARM 2.5m(LOCK VALVE)	VERIN DE BALANCIER	400
4460	BOOM CYLINDER - L.H.(ARTI BOOM)	VERIN DE FLECHE	404
4470	BOOM CYLINDER - R.H.(ARTI BOOM)	VERIN DE FLECHE	408
4480	ARTI. BOOM CYLINDER	VERIN DE ARTICULAIRE FLECHE	412
4490	ARM CYLINDER - ARM 2.1m (ARTI. BOOM)	VERIN DE BALANCIER	416
4500	ARM CYLINDER - ARM 2.5m (ARTI. BOOM)	VERIN DE BALANCIER	420
4510	BOOM CYLINDER - L.H. (LOCK VALVE) ARTI.	VERIN DE FLECHE	424
4520	BOOM CYLINDER - R.H. (LOCK VALVE) ARTI.	VERIN DE FLECHE	428
4530	ARTI. BOOM CYLINDER - LOCK VALVE	VERIN DE ARTICULAIRE FLECHE	432
4540	ARM CYLINDER - ARM 2.1m (ARTI) L/V	VERIN DE BALANCIER	436
4550	ARM CYLINDER - ARM 2.5m (ARTI) L/V	VERIN DE BALANCIER	440
4560	CONTROL VALVE - LOCK VALVE & ARTI	TIROIR DE COMMANDE	444
4570	GEAR PUMP-ROTATION	POMPE	450
4580	CONTROL VALVE - ARTI. BOOM	SOUPAPE DE COMMANDE	452
4590	PEDAL VALVE	VANNE	454
4600	INPUT - FRONT AXLE	ENTREE	456
4610	DIFFERENTIAL GEAR - FRONT AXLE	ENGRENAGE DIFFERENTIEL	460
4620	AXLE CASING - FRONT AXLE	ENVELOPPE D'AXE	462
4630	JOINT HOUSING - FRONT AXLE	LOGEMENT COMMUN	466
4640	STEERING CYLINDER - FRONT AXLE	VERIN D'ORIENTATION DE TRAIN AVANT	470
4650	OUTPUT - FRONT AXLE	RENDEMENT	472
4660	DIFFERENTIAL GEAR - REAR AXLE	ENGRENAGE DIFFERENTIEL	476
4670	AXLE CASING - REAR AXLE	ENVELOPPE D'AXE	478
4680	HUB CARRIER - REAR AXLE	PORTEUR DE MOYEU	482
4690	OUTPUT - REAR AXLE	RENDEMENT	484
4700	INPUT - MISSION	ENTREE	488
4710	HOUSING - MISSION	LOGEMENT	490
4720	MIDDLE DISC - MISSION	DISQUE MOYEN	492
4730	COUPLING - MISSION	ACCOUPLEMENT	494
4740	PLANETARY GEAR - MISSION	VITESSE PLANETAIRE	496
4750	OUTPUT - MISSION	RENDEMENT	498
4760	GEAR SHIFT SYSTEM - MISSION	SYSTEME DE CHANGEMENT DE VITESSE	504
4770	OIL PIPE - MISSION	PIPE D'HUILE	508

● OTHER PARTS

Fig. 5100	TOOLS	OUTILLAGE	510
5110	SPARE PARTS	PIECES DE RECHANGE	514
5120	DECAL - CABIN(EXPORT)	DECALQUE	516
5130	DECAL - EXPORT	DECALQUE	518
5140	DECAL - CABIN(EUROPE)	DECALQUE	520
5150	DECAL - EUROPE	DECALQUE	522
5160	DECAL - GERMAN/ITALY	DECALQUE	524

● OPTION PARTS

Fig.				
	6100	SEAT MOUNTING - HEATER	SIEGE LE SUPPORT	526
	6110	SEAT - HEATER	SIEGE	528
	6120	FUEL FILLER PUMP	POMPE A GAZOLE	530
	6130	ROOF COVER - STEEL	COUVERTURE DE TOIT	532
	6140	RAIN SHIELD	BOUCLIER DE PLUIE	534
	6150	RAIN SHIELD & LAMP MOUNTING	BOUCLIER ET DE LAMPE DE PLUIE	536
	6160	CABIN LOW GUARD	GARDE	538
	6170	WINDOW GUARD	GARDE DE FENETRE	540
	6180	FOGS GUARD	EMBRUME LA GARDE	542
	6190	SINGLE TIRE	PNEU SIMPLE	544
	6200	TIRE 10.0X16PR	PNEU	546
	6210	ALTERNATOR - 80A	ALTERNATEUR	548
	6220	STEREO - CD PLAYER	STEREO	550
	6230	FUEL HEATER	RECHAUFFEUR DE CARBURANT	552
	6240	WORKING LAMP SWITCH	AVERTISSEUR RELAIS	554
	6250	WORKING LAMP - 2 LAMP	AVERTISSEUR RELAIS	556
	6260	WORKING LAMP - 4 LAMP	AVERTISSEUR RELAIS	558
	6270	WORKING LAMP - REAR LAMP	AVERTISSEUR RELAIS	560
	6280	ROTATING BEACON	FEU DE CIRCULATION	562
	6290	ROTATING BEACON MOUNTING	SUPPORT TOURNANT DE BALISE	564
	6300	ROTATING BEACON(TELESCOPIC) WITH LAMP	FEU DE CIRCULATION	566
	6310	ROTATING BEACON(TELESCOPIC) W/O LAMP	FEU DE CIRCULATION	568
	6320	OVERLOAD WARNING	AVERTISSEMENT DE SURCHARGE	570
	6330	LOWER WIPER	ABAISSEZ L'ESSUIE-GLACE	572
	6340	WORKING LAMP - 2 LAMP	AVERTISSEUR RELAIS	574
	6350	WORKING LAMP - 4 LAMP	AVERTISSEUR RELAIS	576
	6360	ROTATING BEACON - WITH FOGS	FEU DE CIRCULATION	578
	6370	FLOOR MAT - ONE & TWO WAY	PLANCHER	580
	6380	MAIN PIPING - ONE WAY	CONDUITES DE PRINCIPAL	582
	6390	PILOT PIPING(1) - ONE WAY	CONDUITES DE PILOTE	584
	6400	PILOT PIPING(2) - ONE WAY	CONDUITES DE PILOTE	586
	6410	MAIN PIPING - TWO WAY	CONDUITES DE PRINCIPAL	588
	6420	PILOT PIPING(1) - TWO WAY	CONDUITES DE PILOTE	590
	6430	PILOT PIPING(2) - TWO WAY	CONDUITES DE PILOTE	594
	6440	BOOM PIPING - ONE & TWO WAY(BOOM-4.3m)	TUYAUTERIE DE PERCHE	596
	6450	ARM PIPING - ONE & TWO WAY(ARM-2.1m)	CONDUITES DE BALANCIER	598
	6460	ARM PIPING - ARM 2.1m(CLAMSHELL)	CONDUITES DE BALANCIER	600
	6470	MAIN PIPING - QUICK CLAMP	CONDUITES DE PRINCIPAL	602
	6480	ELECTRIC PARTS - QUICK CLAMP	BRIDE RAPIDE	604
	6490	BOOM PIPING - QUICK CLAMP(BOOM-4.3m)	TUYAUTERIE DE PERCHE	606
	6500	ARM PIPING - QUICK CLAMP(ARM-2.1m)	CONDUITES DE BALANCIER	608
	6510	MAIN PIPING - ROTATING	CONDUITES DE PRINCIPAL	610
	6520	PILOT PIPING - ROTATING(1)	CONDUITES DE PILOTE	612
	6530	PILOT PIPING - ROTATING(2)	CONDUITES DE PILOTE	614
	6540	PILOT PIPING - TWO WAY + ROTATING	CONDUITES DE PILOTE	616
	6550	FLOOR MAT - TWO PEDAL	PLANCHER	620

6560	BOOM PIPING - BOOM 4.3m (ROTATING)	TUYAUTERIE DE PERCHE	622
6570	ARM PIPING - ARM 2.1m (ROTATING)	CONDUITES DE BALANCIER	624
6580	MAIN PIPING - LOCK VALVE	CONDUITES DE PRINCIPAL	626
6590	PILOT PIPING - LOCK VALVE	CONDUITES DE PILOTE	628
6600	BOOM PIPING - LOCK VALVE	TUYAUTERIE DE PERCHE	630
6610	ARM LOCK VALVE PIPING - BOOM 4.3m	TUYAUTERIE DE VALVE DE SERRURE	632
6620	BOOM - 4.6m	PERCHE	634
6630	BOOM PIPING - BOOM 4.6m	TUYAUTERIE DE PERCHE	636
6640	LUBRICATION PIPING - BOOM 4.6m	TUYAUTERIE DE LUBRIFICATION	638
6650	BOOM PIPING - ONE & TWO WAY(BOOM-4.6m)	TUYAUTERIE DE PERCHE	640
6660	BOOM PIPING - QUICK CLAMP(BOM-4.6m)	TUYAUTERIE DE PERCHE	642
6670	BOOM PIPING - BOOM 4.6m(ROTATION)	TUYAUTERIE DE PERCHE	644
6680	ARM LOCK VALVE PIPING - BOOM 4.6m	TUYAUTERIE DE VALVE DE SERRURE	646
6690	ARM - 2.5m	BALANCIER	648
6700	ARM PIPING - ARM 2.5m	CONDUITES DE BALANCIER	650
6710	ARM PIPING - ONE & TWO WAY(ARM 2.5m)	CONDUITES DE BALANCIER	652
6720	ARM PIPING - ARM 2.5m(CLAMSHELL)	CONDUITES DE BALANCIER	654
6730	ARM PIPING - QUICK CLAMP(ARM 2.5m)	CONDUITES DE BALANCIER	656
6740	ARM PIPING - 2.5m(ROTATING)	CONDUITES DE BALANCIER	658
6750	BUCKET - 0.24㎥ (460mm)	GODET	660
6760	BUCKET - 0.39㎥	GODET	662
6770	BUCKET - 0.45㎥	GODET	664
6780	BUCKET - 0.51㎥	GODET	666
6790	BUCKET - 0.64㎥	GODET	668
6800	BUCKET - 0.76㎥	GODET	670
6810	BUCKET ASS'Y - 0.38㎥ (30") - SIDE PIN	ENSEMBLE DE GODET	672
6820	BUCKET ASS'Y - 0.44㎥ (33") - SIDE PIN	ENSEMBLE DE GODET	674
6830	BUCKET ASS'Y - 0.48㎥ (36") - SIDE PIN	ENSEMBLE DE GODET	676
6840	PILOT PIPING - FRONT ATTACH	CONDUITES DE PILOTE	678
6850	UNDER CARRIAGE PIPING - NOT INDE	SOUS LA TUYAUTERIE DE CHARIOT	680
6860	FRONT DOZER	DOZER AVANT	682
6870	FRONT DOZER PIPING	CONDUITES DE DOZER	684
6880	SWITCH - FRONT DOZER	COMMUTATEUR	686
6890	REAR OUTRIGGER	TANGON ARRIERE	688
6900	FRONT/REAR OUTRIGGER PIPING	TUYAUTERIE DE TANGON	692
6910	SWITCH - FRONT OUTRIGGER(NOT INDE)	COMMUTATEUR	694
6920	FRONT OUTRIGGER	BEQUILLES	696
6930	PILOT PIPING - INDEPENDENT	CONDUITES DE PILOTE	700
6940	ELECTRIC PARTS - INDEPENDENT OUTRIGGER	PIECES ELECTRIQUES	702
6950	FRONT DOZER & REAR OUTRI. PIPING(INDE)	TUYAUTERIE DE TANGON	704
6960	SLIP RING	BAGUE COLLECTRICE	706
6970	FRONT OUTRI. & REAR DOZER PIPING(INDE)	TUYAUTERIE DE TANGON	708
6980	4 OUTRIGGER PIPING - INDE	TUYAUTERIE DE TANGON	710
6990	FRONT / REAR OUTRIGGER PIPING - INDE	TUYAUTERIE DE TANGON	712
7000	SWITCH - FRONT OUTRIGGER(INDE)	COMMUTATEUR	714
7010	SWITCH - REAR OUTRIGGER(INDE)	COMMUTATEUR	716

7020	MAIN PIPING - ARTI. BOOM	CONDUITES DE PRINCIPAL	718
7030	PILOT PIPING(1) - ARTI. BOOM	CONDUITES DE PILOTE	720
7040	PILOT PIPING(2) - ARTI. BOOM	CONDUITES DE PILOTE	722
7050	ARTI BOOM	PERCHE D'ARTI	724
7060	ARTI BOOM PIPING	TUYAUTERIE DE PERCHE D'ARTI	726
7070	LUBRICATION PIPING - ARTI BOOM	TUYAUTERIE DE LUBRIFICATION	728
7080	MAIN PIPING - ONE WAY(ARTI. BOOM)	CONDUITES DE PRINCIPAL	730
7090	MAIN PIPING - TWO WAY(ARTI. BOOM)	CONDUITES DE PRINCIPAL	732
7100	PILOT PIPING - PE3C & ARTI	CONDUITES DE PILOTE	734
7110	ARTI BOOM PIPING - ONE & TWO WAY	TUYAUTERIE DE PERCHE D'ARTI	738
7120	MAIN PIPING - ROTATING (ARTI)	CONDUITES DE PRINCIPAL	740
7130	PILOT PIPING - ARTI & PERO	CONDUITES DE PILOTE	742
7140	FLOOR MAT - ARTI+PE3C+PERO	PLANCHER	746
7150	PILOT PIPING - PE3C&PERO&ARTI.	CONDUITES DE PILOTE	748
7160	ARTI BOOM PIPING - ROTATING	TUYAUTERIE DE PERCHE D'ARTI	752
7170	MAIN PIPING - LOCK VALVE(ARTI.)	CONDUITES DE PRINCIPAL	754
7180	PILOT PIPING - LOCK VALVE(ARTI)	CONDUITES DE PILOTE	756
7190	ARTI BOOM PIPING - LOCK VALVE	TUYAUTERIE DE PERCHE D'ARTI	758
7200	ARTI ARM PIPING - LOCK VALVE	CONDUITES DE VERROU VANNE	760
7210	MAIN PIPING - QUICK CLAMP(ARTI)	CONDUITES DE PRINCIPAL	762
7220	ARTI BOOM PIPING - QUICK CLAMP	TUYAUTERIE DE PERCHE D'ARTI	764
7230	WORKING LAMP - ARTI. BOOM	AVERTISSEUR RELAIS	766
7240	COUNTER WEIGHT - BOOM 4.6m / ARTI	MASSE D'EQUILIBRAGE	768
7250	RADIO	RADIO	770
7260	TROPICAL PARTS	PIECES TROPICALES	772

● WORLDWIDE NETWORK

DATE	JUN. 30, 2007
REV.NO.	EXB07-06

Fig. 011 CYLINDER BLOCK
BLOC CYLINDER

Serial No. ;

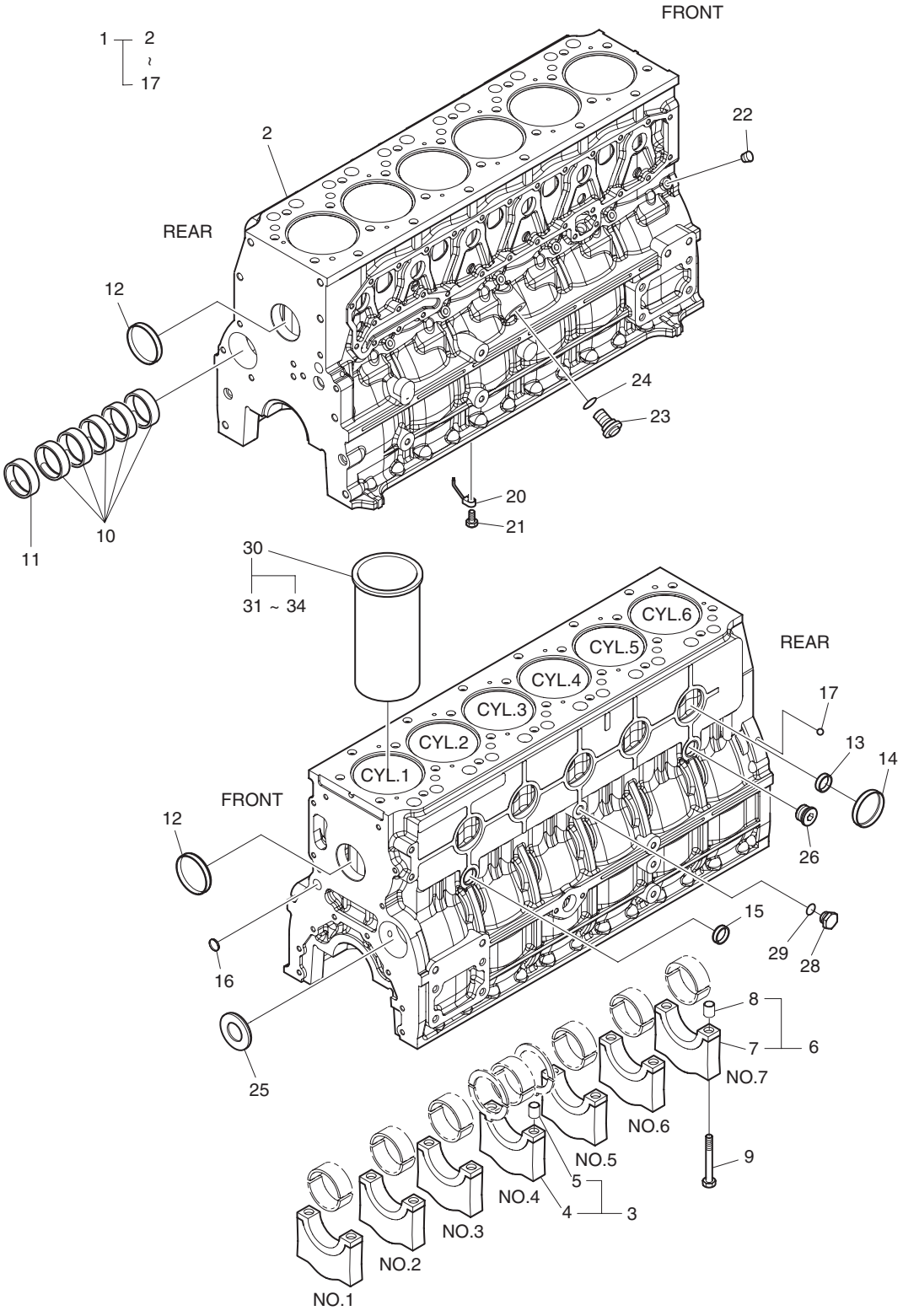

DATE	JUN. 30, 2007
REV. NO.	EXB07-06

Fig. 011 CYLINDER BLOCK BLOC CYLINDER

Serial No. ;

Key No.	Part No.	Description	Description	Q'ty	S.C	Serial No.	ICA	Replaceable part	
								Part No.	Q'ty
011-1	65.01101-6085B	CYLINDER BLOCK ASS'Y	ENSEMBLE DE BLOC	1		~070611	I	65.01101-6092A	1
	65.01101-6092A	**CYLINDER BLOCK ASS'Y**	ENSEMBLE DE BLOC	1		070612~			
2	65.01101-0054	. CYLINDER BLOCK	. BLOC CYLINDRE	1	D	~070611			
	65.01101-0056A	**. CYLINDER BLOCK**	. BLOC CYLINDRE	1	D	070612~			
3	65.01105-6005B	. BEARING CAP ASS'Y(No:3)	. ROULEMENT	1	D				
4	65.01105-1051B	.. CAP;BEARING	.. CHAPEAU	1	D				
5	65.91710-0001	.. RING. STOPPER. BRG CAP	.. BAGUE	2					
6	65.01105-6006B	. BEARING CAP ASS'Y	. ROULEMENT	6	D				
7	65.01105-1052B	.. CAP;BEARING	.. CHAPEAU	1	D				
8	65.91710-0001	.. RING. STOPPER. BRG CAP	.. BAGUE	2					
9	65.90020-0066A	. BOLT;BRG CAP	. BOULON	14					
10	65.04410-0021A	. BUSH;CAMSHAFT	. DOUILLE	6	B				
11	65.04410-0022	. BUSH;CAMSHAFT	. DOUILLE	1	B				
12	65.90302-0009	. PLUG;CORE	. BOUCHON	2					
13	65.90302-0042	. PLUG CORE	. BOUCHON	8					
14	65.90302-0034	. PLUG CORE	. BOUCHON	5					
15	65.90302-0041	. PLUG CORE	. BOUCHON	1					
16	65.91606-0041	. PLUG CORE	. BOUCHON	2					
17	06.31641-0618	. BALL;STEEL	. BOULE	1					
20	65.01601-5020	NOZZLE;OIL SPRAY	INJECTEUR	6					
21	65.05401-5031	RELIEF VALVE ASS'Y	SOULAGEMENT VANNE	6					
22	65.90320-0022	PLUG SCREW PT1/8	BOUCHON	7					
23	65.05401-5002F	RELIEF VALVE ASSY	SOULAGEMENT VANNE	1		~070416	Y	65.05401-5002G	1
	65.05401-5002G	**RELIEF VALVE ASSY**	SOULAGEMENT VANNE	1		070417~			
24	06.56021-0102	O-RING	JOINT TORIQUE	1					
25	65.91605-0002	COVER;CORE HOLE	COUVERCLE	1					
26	65.90310-0134	SCREW;PLUG	VIS	1					
28	65.90310-0135	SCREW;PLUG	VIS	1					
29	06.56190-0705	RING;SEAL	BAGUE D'ETANCHEITE	1					
30	65.01201-0075A	CYLINDER LINER - GRADE	VIS DE REGLAGE	6	D				
31	65.01201-0076	LINER;CYLINDER - 1A	RECOUVREMENT	6					
32	65.01201-0077	LINER;CYLINDER - 1B	RECOUVREMENT	6					
33	65.01201-0078	LINER;CYLINDER - 2A	RECOUVREMENT	6					
34	65.01201-0079	LINER;CYLINDER - 2B	RECOUVREMENT	6					

DATE	JUN. 30, 2007
REV.NO.	EXB07-06

Fig. 012 TIMING GEAR CASE COUVERCLE

Serial No. ;

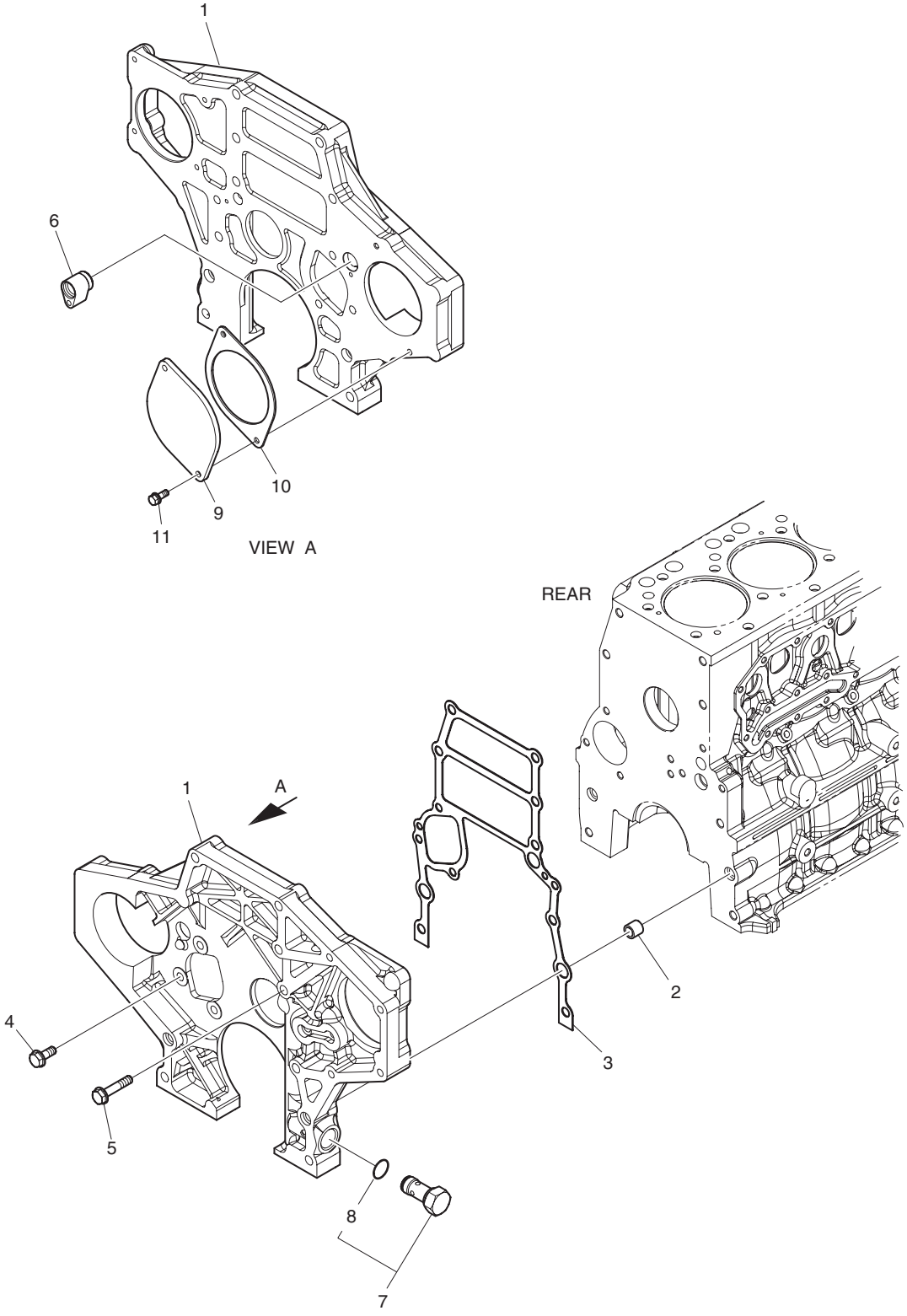

DATE	JUN. 30, 2007
REV. NO.	EXB07-06

Fig. 012 TIMING GEAR CASE COUVERCLE

Serial No. ;

Key No.	Part No.	Description	Description	Q'ty	S.C	Serial No.	ICA	Replaceable part	
								Part No.	Q'ty
012-1	65.01304-0029	CASE;TIMING GEAR	CARTER	1		~070515	Y	65.01304-0029A	1
	65.01304-0029A	**CASE;TIMING GEAR**	CARTER	1		070516~			
2	65.91710-0016	RING;STOPPER	BAGUE D'ARRET	2					
3	65.01903-0034	GASKET	JOINT	1					
4	65.90020-0063B	BOLT;HEX M10X25	BOULON A 6 PANS	3					
5	65.90020-0080	BOLT;COLLARED HEX.	BOULON	1					
6	65.98130-0241	ADAPTER	ADAPTEUR	1					
7	65.05401-5032	RELIEF VALVE ASS'Y	SOULAGEMENT VANNE	1					
8	65.96501-0074	. O-RING	. JOINT TORIQUE	1					
9	65.91601-0009	COVER	COUVERCLE	1					
10	65.38901-0018A	GASKET;PTO	JOINT	1					
11	06.01943-3317	BOLT ASS'Y M12X1.5X30	BOULON	2					

DATE	JUN. 30, 2007
REV.NO.	EXB07-06

Fig. 013 FLY WHEEL HOUSING LOGEMENT DE VOLANT

Serial No. ;

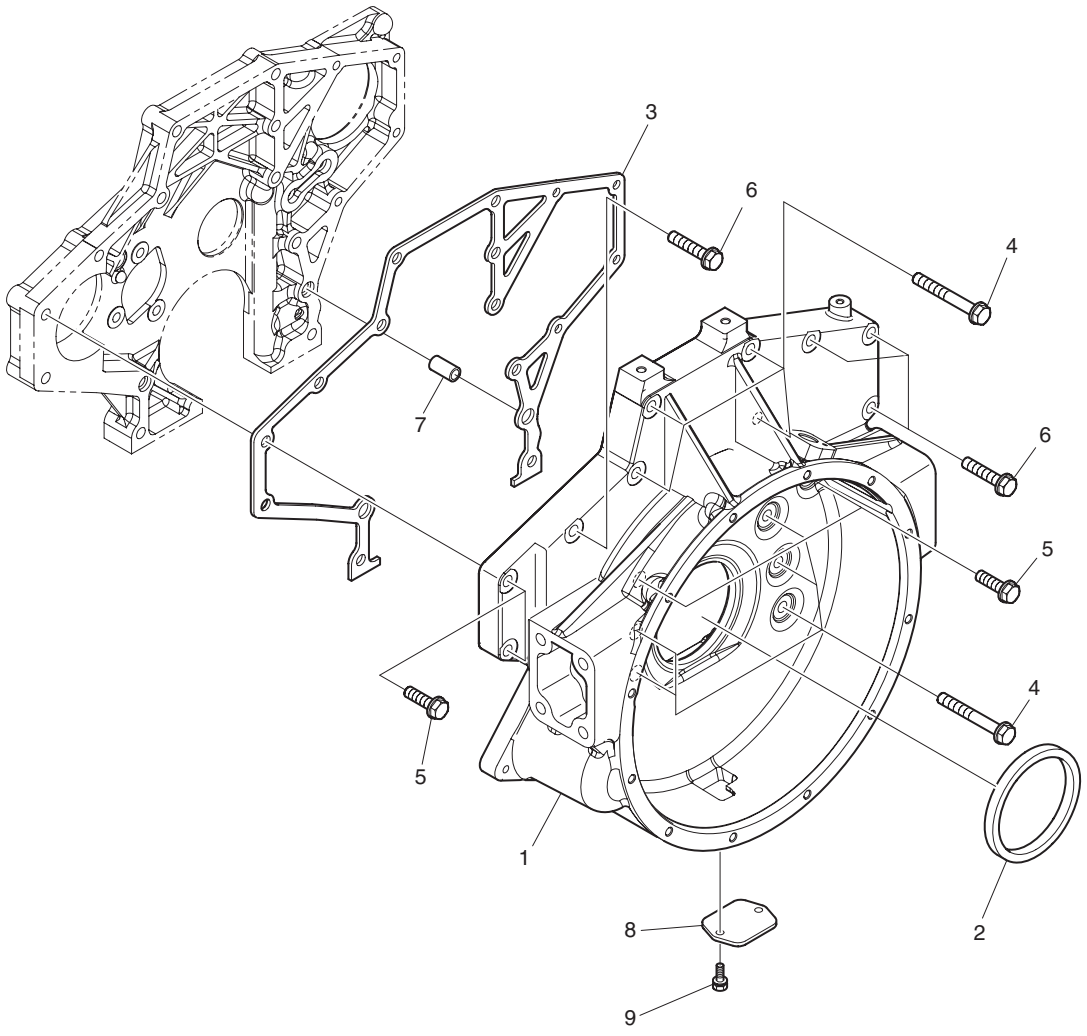

DATE	JUN. 30, 2007
REV. NO.	EXB07-06

Fig. 013 FLY WHEEL HOUSING LOGEMENT DE VOLANT

Serial No. ;

Key No.	Part No.	Description	Description	Q'ty	S.C	Serial No.	ICA	Replaceable part	
								Part No.	Q'ty
013-1	65.01401-0253A	HOUSING;FLYWHEEL	LOGEMENT	1		~070312	Y	65.01401-0253B	1
	65.01401-0253B	**HOUSING;FLYWHEEL**	LOGEMENT	1		070313~			
2	65.01510-0040	SEAL;OIL	JOINT	1					
3	65.01904-0032	GASKET	JOINT	1					
4	65.90020-0100	BOLT	BOULON	9					
5	65.90020-0101	BOLT	BOULON	4					
6	65.90020-0105	BOLT	BOULON	4					
7	65.91710-0009	RING;STOPPER	BAGUE D'ARRET	2					
8	65.01414-0004A	COVER;TIMING POINT HOLE	COUVERCLE	1					
9	06.01923-3111	BOLT ASS'Y M8X16	BOULON	2					

DATE	DEC. 26, 2006
1st EDITION	

Fig. 014 OIL SEAL
JOINT D'HUILE

Serial No. ;

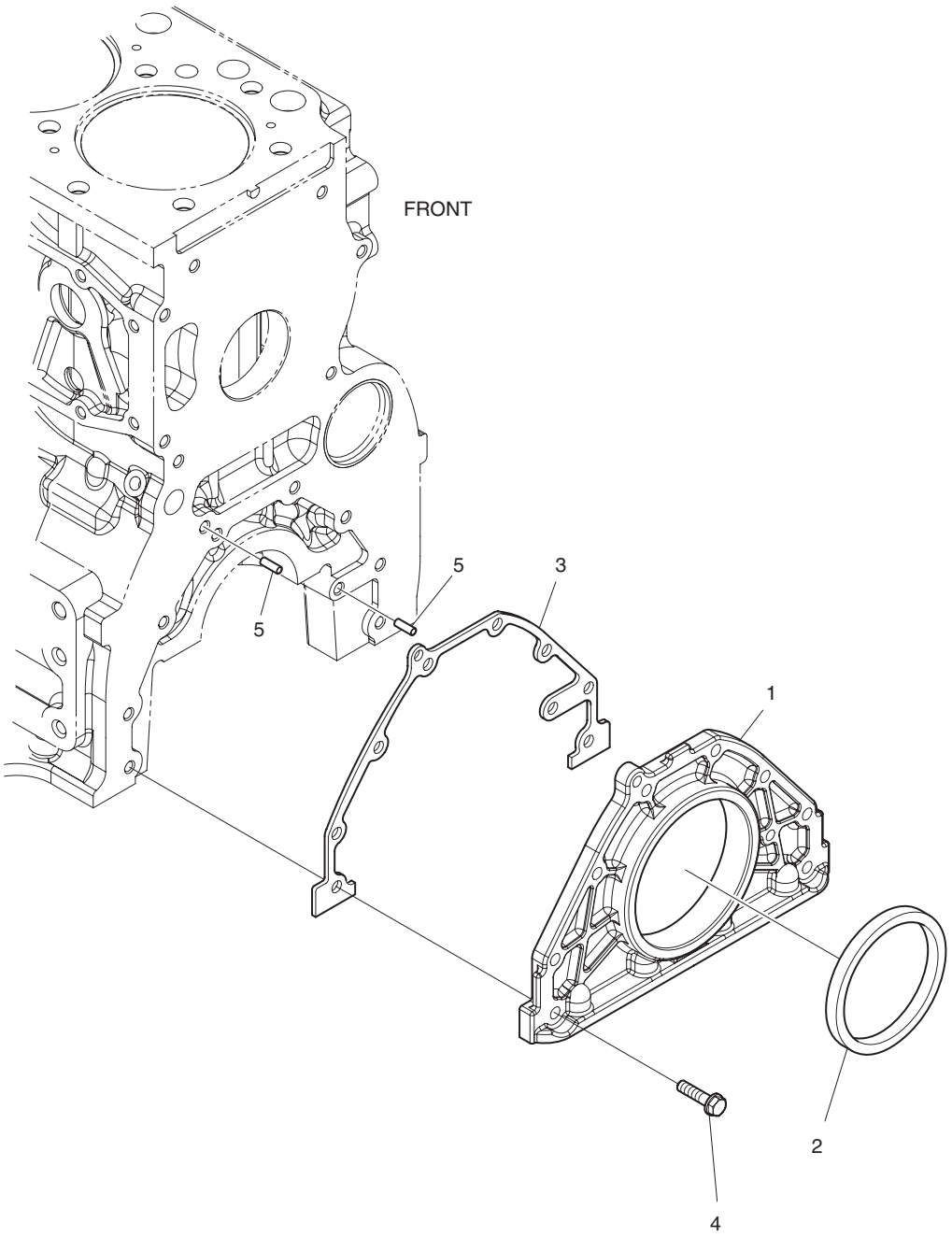

DATE	DEC. 26, 2006
1st EDITION	

Fig. 014 OIL SEAL JOINT D'HUILE

Serial No. ;

Key No.	Part No.	Description	Description	Q'ty	S.C	Serial No.	ICA	Replaceable part	
								Part No.	Q'ty
014-1	65.01501-5003A	COVER;SEALING	COUVERCLE	1					
2	65.01510-0157	SEAL;OIL	JOINT	1					
3	65.01905-0009	GASKET	JOINT	1					
4	06.01923-3116	BOLT ASS'Y M8X28	BOULON	8					
5	06.22022-1063	PIN	GOUPILLE	2					

DATE	JUN. 30, 2007
REV.NO.	EXB07-06

Fig. 015 BREATHER
CONDUIT DE VENTILATION

Serial No. ;

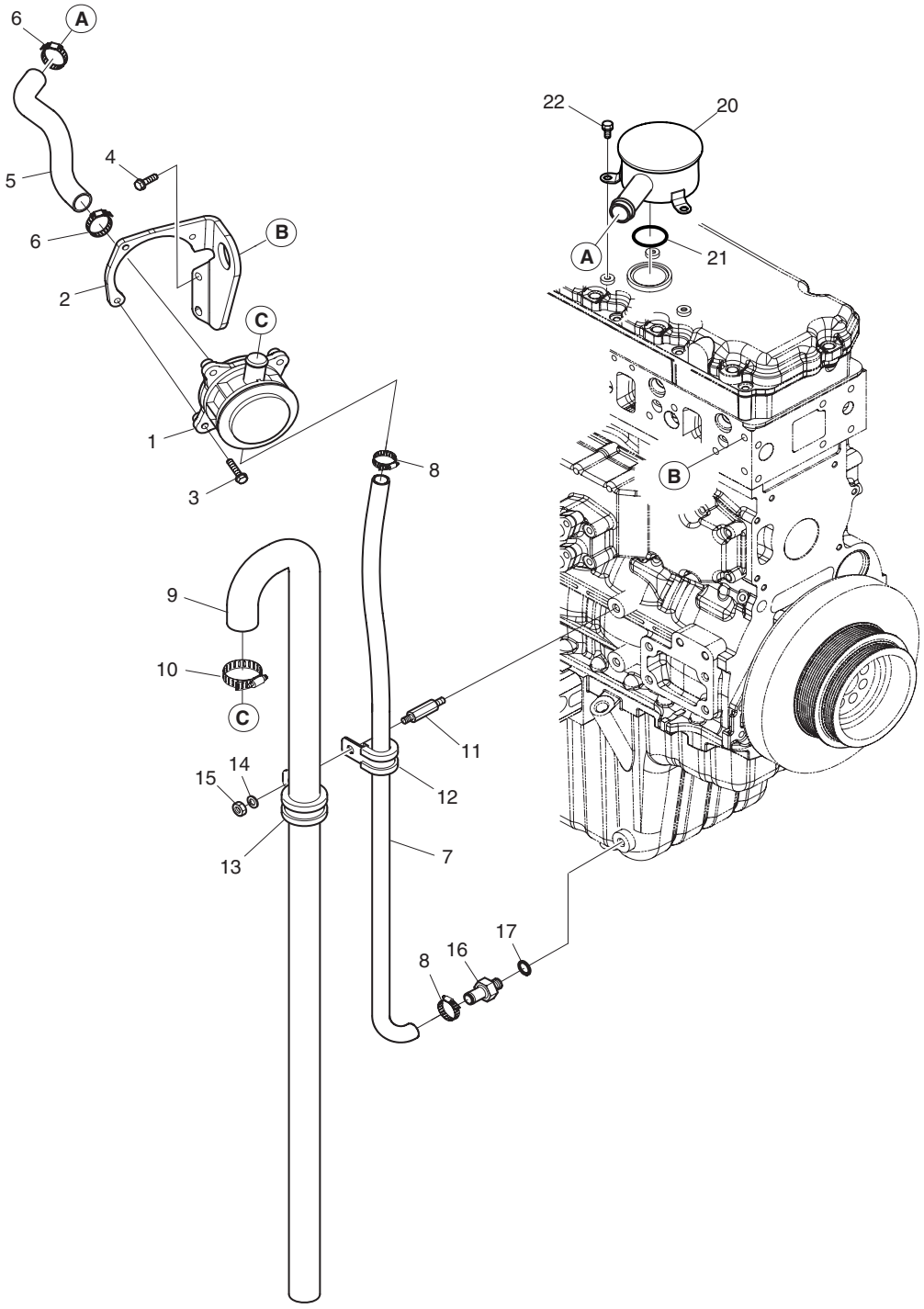

DATE	JUN. 30, 2007
REV. NO.	EXB07-06

Fig. 015 BREATHER
CONDUIT DE VENTILATION

Serial No. ;

Key No.	Part No.	Description	Description	Q'ty	S.C	Serial No.	ICA	Replaceable part	
								Part No.	Q'ty
015-1	65.01801-5100	HOUSING;BREATHER	LOGEMENT	1					
2	65.01840-0017	BRACKET;BREATHER PIPE	SUPPORT	1					
3	06.01923-3114	BOLT ASS'Y M8X22	BOULON	3					
4	06.01924-3217	BOLT ASS'Y M10X30	BOULON	2					
5	65.96301-0478	HOSE;RUBBER	TUYAU FLEXIBLE	1					
6	06.67020-0105	CLAMP	BRIDE	2					
7	65.96301-0456A	HOSE;RUBBER	TUYAU FLEXIBLE	1					
8	65.97440-0005	CLAMP;HOSE	COLLIER DE LA CONDUITE	2		~071119	Y	65.97402-0025	2
	65.97402-0025	**CLAMP;HOSE**	COLLIER DE LA CONDUITE	2		071120~			
9	65.96301-0464A	HOSE;RUBBER	TUYAU FLEXIBLE	1					
10	06.67020-0105	CLAMP	BRIDE	1					
11	65.90201-0122	BOLT;STUD	BOULON DE GOUJON	1					
12	65.97401-5024	CLIP;PIPE	AGRAFE	2					
13	65.97401-5019	CLIP;PIPE	AGRAFE	1					
14	06.16731-2107	WASHER;SPRING	RONDELLE ELASTIQUE	1					
15	06.11063-8214	NUT	ECROU	1					
16	65.98131-0119	NIPPLE	MAMELON	1					
17	06.56190-0719	SEAL RING	ANNEAU DU JOINT	1					
20	65.01801-5043A	HOUSING;BREATHER	LOGEMENT	1					
21	65.96501-0033B	O-RING	JOINT TORIQUE	1					
22	06.01923-3111	BOLT;HEX. M8X16	BOULON	3					

DATE	JUN. 30, 2007
REV.NO.	EXB07-06

Fig. 016 DRIVING SYSTEM
SYSTEME D'ENTRAINEMENT

Serial No. ;

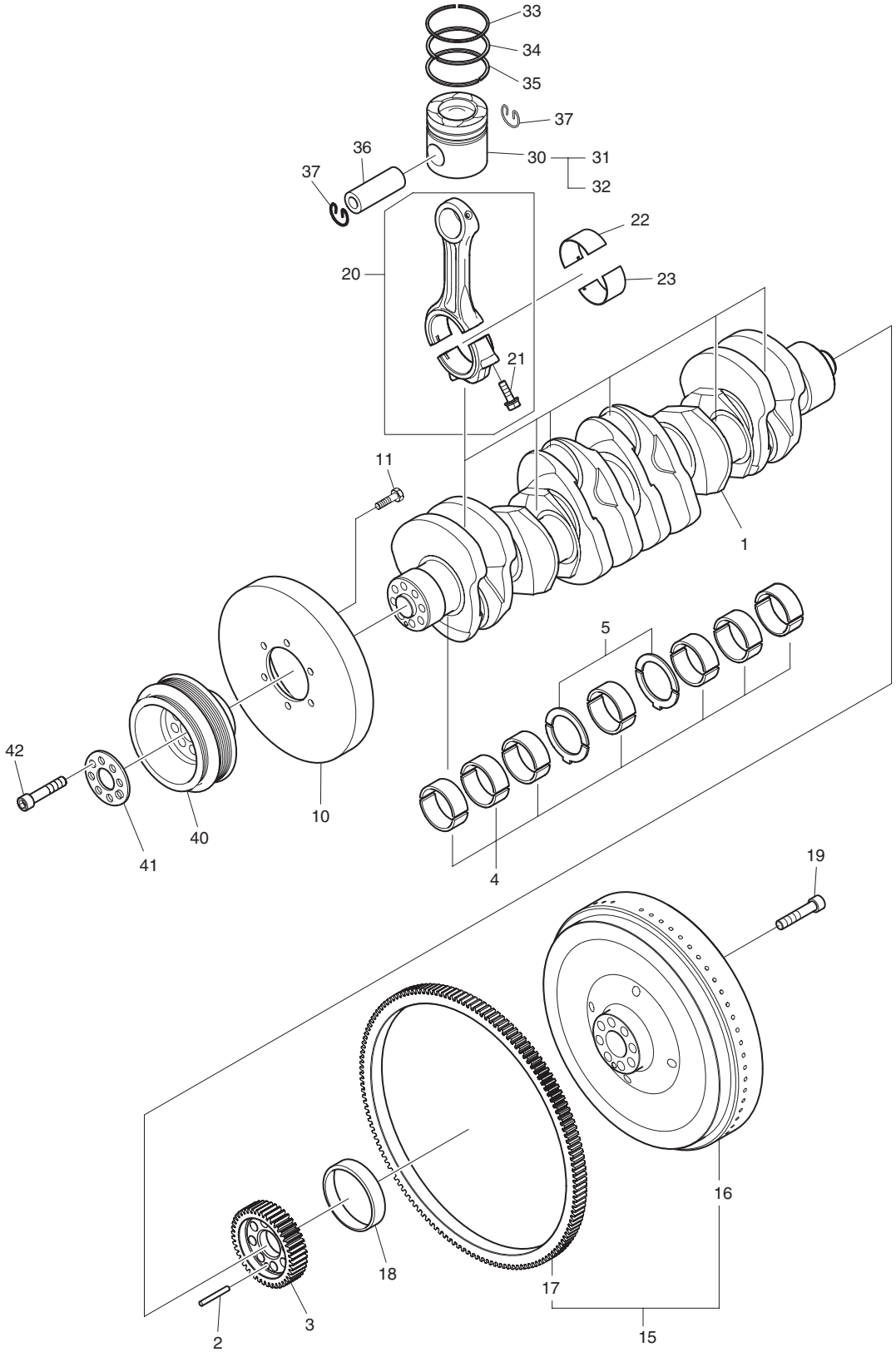

DATE	JUN. 30, 2007
REV. NO.	EXB07-06

Fig. 016 DRIVING SYSTEM SYSTEME D'ENTRAINEMENT

Serial No. ;

Key No.	Part No.	Description	Description	Q'ty	S.C	Serial No.	ICA	Replaceable part	
								Part No.	Q'ty
016-1	65.02101-0069A	CRANK SHAFT	AXE DETRAQUE	1					
2	06.22022-1018	DOWEL PIN 8M6X45	GOUJON	1					
3	65.02115-0016	GEAR;CRANKSHAFT	PIGNON	1					
4	65.01110-6140	METAL;MAIN	METAL	7		~070316	Y	65.01110-6140A	7
	65.01110-6140A	**METAL;MAIN**	METAL	7		070317~			
5	65.01150-6008	WASHER;THRUST	RONDELLE DE BUTEE	2					
10	65.02201-0002	DAMPER;VIBRATION	AMORTISSEUR DE	1					
11	65.90020-0062B	BOLT;HEX M10X20	BOULON A 6 PANS	6					
15	65.02301-5148A	FLYWHEEL ASS'Y	ENSEMBLE VOLANT	1					
16	65.02301-0291A	. FLYWHEEL	. VOLANT	1					
17	65.02310-0006	. GEAR;RING	. PIGNON	1					
18	65.02130-0004	BUSH;DRIVING	DOUILLE	1					
19	65.90020-0123	BOLT;COLLARED HEX.	BOULON	8		~071120	Y	65.90020-0140A	8
	65.90020-0140A	**BOLT;COLLARED HEX.**	BOULON	8		071121~			
20	65.02401-6032B	CONNECTING ROD ASS'Y	BIELLE ASS'Y	6					
21	65.02411-0009	. BOLT;CONNECTING ROD	. BOULON	2					
22	65.02410-0040	METAL;CON-ROD(STD)	METAL	6					
	65.02410-0041	METAL;CON-ROD(0.25)	METAL	6	US				
	65.02410-0042	METAL;CON-ROD(0.50)	METAL	6	US				
23	65.02410-0050	METAL;CON-ROD(STD)	METAL	6					
	65.02410-0051	METAL;CON-ROD(0.25)	METAL	6	US				
	65.02410-0052	METAL;CON-ROD(0.50)	METAL	6	US				
30	65.02501-0476	PISTON - GRADE	PISTON	6	D				
31	65.02501-0477	. PISTON;A GRADE	. PISTON	6					
32	65.02501-0478	. PISTON;B GRADE	. PISTON	6					
33	65.02503-0132A	RING;PISTON	BAGUE	6					
34	65.02503-0133A	RING;PISTON	BAGUE	6					
35	65.02503-0134	RING;PISTON	BAGUE	6					
36	65.02502-0017A	PIN;PISTON	GOUPILLE	6					
37	06.29020-0125	RING;LOCK	BAGUE	12					
40	65.02601-0225B	PULLEY;V-BELT	POULIE	1					
41	65.90701-0099	WASHER	RONDELLE	1					
42	06.02106-0723	BOLT;SOCKET	BOULON A 6 PANS CREUX	8					

DATE	DEC. 26, 2006
1st EDITION	

Fig. 017 CYLINDER HEAD CULLASSE

Serial No. ;

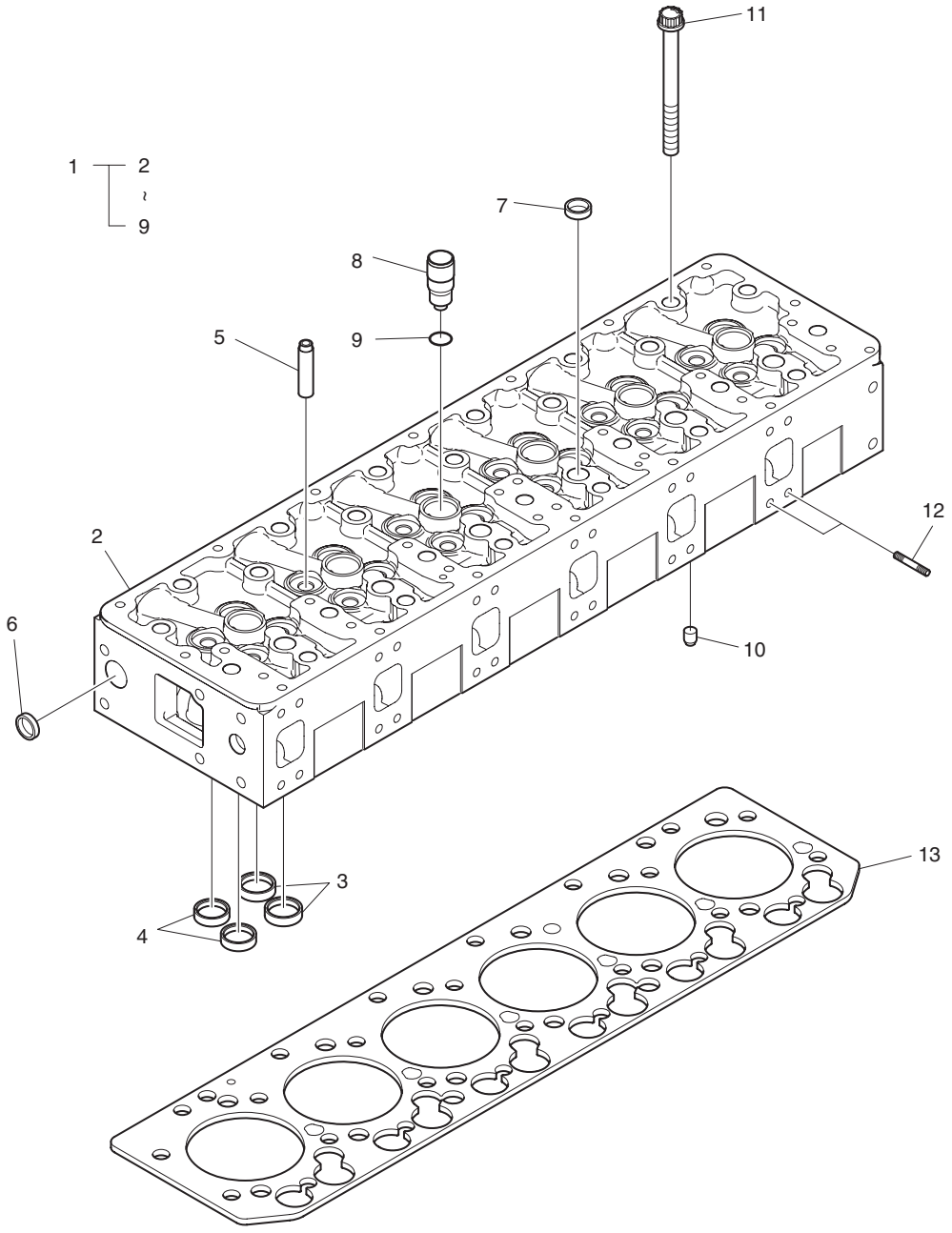

DATE	DEC. 26, 2006
1st EDITION	

Fig. 017 CYLINDER HEAD CULLASSE

Serial No. ;

Key No.	Part No.	Description	Description	Q'ty	S.C	Serial No.	ICA	Replaceable part	
								Part No.	Q'ty
017-1	65.03101-6090F	CYLINDER HEAD ASS'Y	CULLASSE	1					
2	65.03101-1068C	. CYLINDER HEAD	. CULLASSE	1	D				
3	65.03203-1062	. SEAT;VALVE	. SIEGE DE VANNE	12	B				
4	65.03203-1063	. SEAT;VALVE	. SIEGE DE VANNE	12	B				
5	65.03201-1016B	. GUIDE;VALVE	. GUIDE	24	B				
6	65.90302-0048	. CORE;PLUG	. NOYAU DE PRISE	10					
7	65.90302-0029	. PLUG;CORE	. BOUCHON	21					
8	65.03205-0006A	. BUSH;INJECTION NOZZLE	. DOUILLE	6					
9	65.96501-0088	. O-RING	. JOINT TORIQUE	6					
10	65.91030-0005	PIN;FIX	GOUPILLE	2					
11	65.90021-0009	BOLT;COLLARED DUO.	BOULON	26					
12	65.90201-0134	BOLT;STUD	BOULON DE GOUJON	24					
13	65.03901-0071	GASKET;CYLINDER HEAD	JOINT	1					

DATE	JUN. 30, 2007
REV.NO.	EXB07-06

Fig. 018 CYLINDER HEAD COVER COUVRE-CULASSE

Serial No. ;

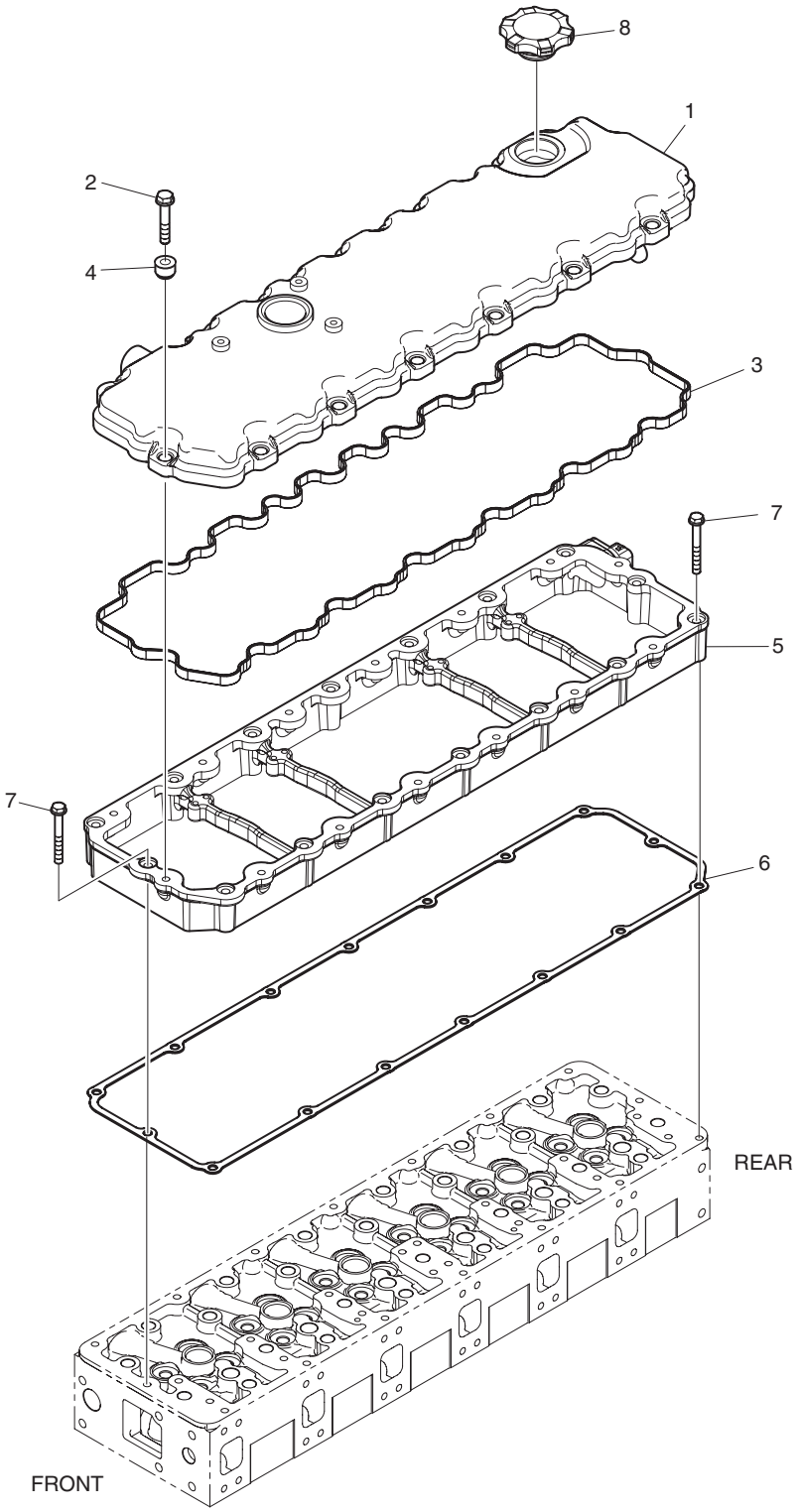

DATE	JUN. 30, 2007
REV. NO.	EXB07-06

Fig. 018 CYLINDER HEAD COVER COUVRE-CULASSE

Serial No. ;

Key No.	Part No.	Description	Description	Q'ty	S.C	Serial No.	ICA	Replaceable part	
								Part No.	Q'ty
018-1	65.03401-5010	COVER;CYLINDER HEAD	COUVERCLE	1		~070705	Y	65.03401-5010B	1
	65.03401-5010B	**COVER;CYLINDER HEAD**	COUVERCLE	1		070706~			
2	65.90020-0109	BOLT;COLLARED HEX.	BOULON	14					
3	65.03905-0037A	GASKET;CYL. HEAD COVER	JOINT	1					
4	65.03905-5002	PACKING;CYL. HEAD COVER	JOINT	14					
5	65.03402-0008A	COVER;INTERMEDIATE	COUVERCLE	1		~070326	Y	65.03402-0008B	1
	65.03402-0008B	**COVER;INTERMEDIATE**	COUVERCLE	1		070327~			
6	65.03905-0041	GASKET;CYL. HEAD COVER	JOINT	1					
7	65.90020-0138	BOLT;COLLARED HEX.	BOULON	16					
8	65.01810-5011	CAP;OIL FILLER	REMPLISSEUR CAP	1					

DATE	JUN. 30, 2007
REV.NO.	EXB07-06

Fig. 019 TIMING SYSTEM
SYSTEME DE SYNCHRONISATION

Serial No. ;

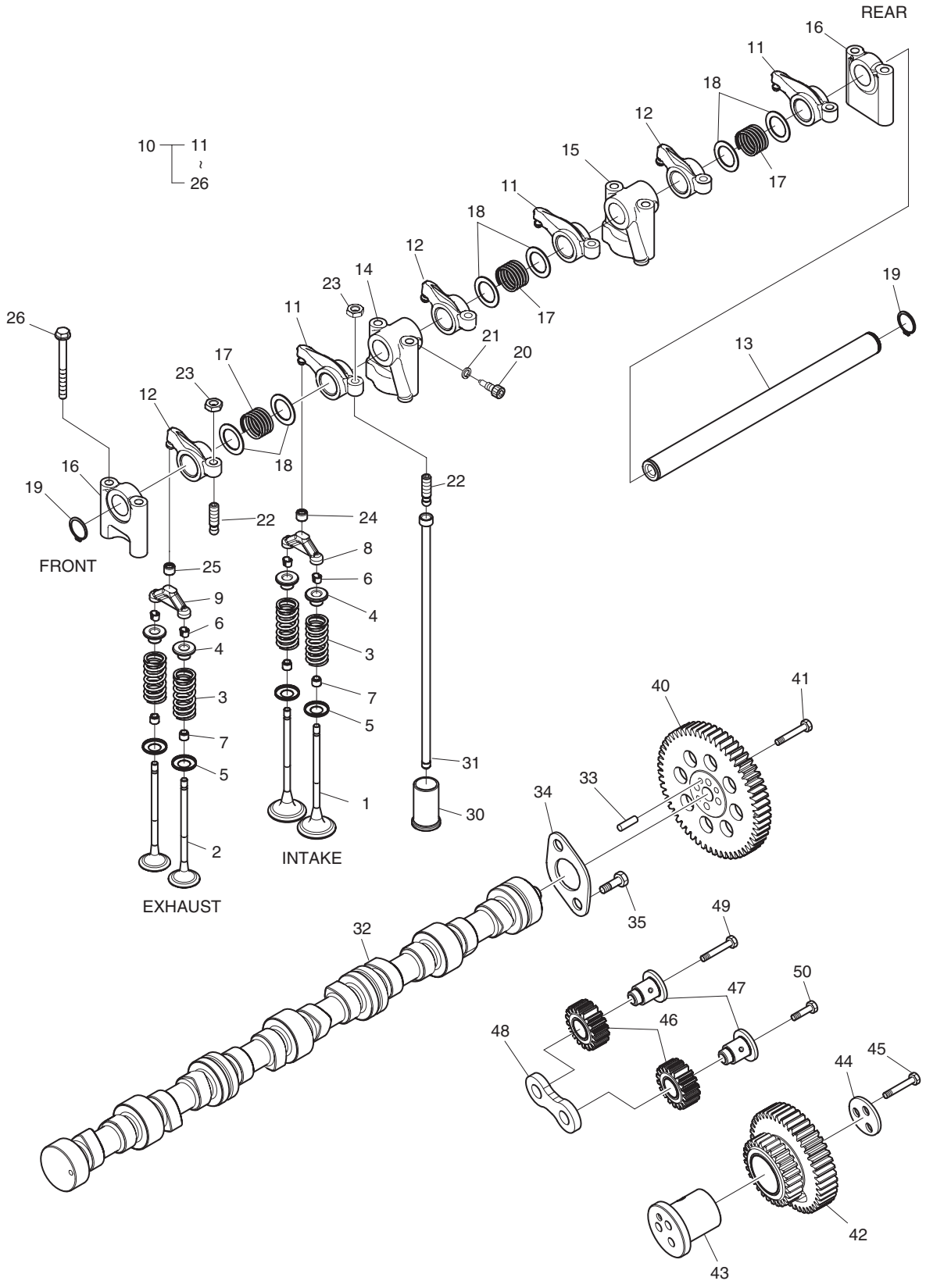

DATE	JUN. 30, 2007
REV. NO.	EXB07-06

Fig. 019 TIMING SYSTEM SYSTEME DE SYNCHRONISATION

Serial No. ;

Key No.	Part No.	Description	Description	Q'ty	S.C	Serial No.	ICA	Replaceable part	
								Part No.	Q'ty
019-1	65.04101-0065B	VALVE;INTAKE	SOUPAPE D'ADMISSION	12					
2	65.04101-0066B	VALVE;EXHAUST	VANNE	12					
3	65.04102-0024	SPRING;VALVE	RESSORT	24					
4	65.04103-0018	PLATE;VALVE SPRING	PLAQUE	24					
5	65.90701-0098	WASHER	RONDELLE	24					
6	65.04104-0009	COTTER;VALVE	CLAVETTE DE VANNE	48					
7	65.04902-0016	SEAL;VALVE STEM	JOINT	24					
8	65.04130-0009A	CALIPER;INTAKE	ETRIER	6					
9	65.04130-0011	CALIPER;EXHAUST	ETRIER	6					
10	65.04200-6038B	ROCKER ARM S/F ASS'Y	BRAS DE CULBUTEUR	2		~071121	Y	65.04200-6038C	2
	65.04200-6038C	**ROCKER ARM S/F ASS'Y**	BRAS DE CULBUTEUR	2		071122~			
11	65.04201-5042B	. ROCKER ARM;INTAKE	. BRAS DE CULBUTEUR	3		~071121	Y	65.04201-5042C	3
	65.04201-5042C	**. ROCKER ARM;INTAKE**	. BRAS DE CULBUTEUR	3		071122~			
12	65.04201-5043B	. ROCKER ARM;EXHAUST	. BRAS DE CULBUTEUR	3		~071121	Y	65.04201-5043C	3
	65.04201-5043C	**. ROCKER ARM;EXHAUST**	. BRAS DE CULBUTEUR	3		071122~			
13	65.04203-5020A	. SHAFT;ROCKER ARM	. ARBRE	1					
14	65.04202-0033	. BRACKET;ROCKER ARM	. SUPPORT	1					
15	65.04202-0034	. BRACKET;ROCKER ARM	. SUPPORT	1					
16	65.04202-0035	. BRACKET;ROCKER ARM	. SUPPORT	2					
17	65.97601-0124	. SPRING;COMPESSION	. RESSORT	3					
18	65.90701-0136B	. WASHER	. RONDELLE	6					
19	06.29010-0120	. RING;SNAP	. BAGUE D'ARRET	2					
20	65.90030-0018	. BOLT;SOCKET	. BOULON A 6 PANS CREUX	1					
21	06.16110-0106	. WASHER	. RONDELLE	1					
22	65.04205-0014	. SCREW;ADJUST	. VIS	6					
23	65.90501-0003	. NUT	. ECROU	6					
24	65.04209-0005	. CAP;INTAKE	. CHAPEAU	3		~071121	I	65.04209-5001	3
	65.04209-5001	**. CAP;INTAKE**	. CHAPEAU	3		071122~			
25	65.04209-0006	. CAP;EXHAUST	. CHAPEAU	3					
26	65.90020-0120	. BOLT;COLLARED HEX.	. BOULON	8					
30	65.04301-5003B	TAPPET;VALVE	TRINGLERIE	12		~070226	Y	65.04301-5003C	12
	65.04301-5003C	**TAPPET;VALVE**	TRINGLERIE	12		070227~			
31	65.04302-5015	ROD;PUSH	TIGE	12					
32	65.04401-0045A	CAMSHAFT	ARBRE A CAMES	1					
33	06.22022-1016	DOWEL PIN	GOUPILLE D'AJUSTAGE	1					
34	65.90720-0032	WASHER;THRUST	RONDELLE DE BUTEE	1					
35	06.01913-2911	BOLT ASS'Y M6X16	BOULON	2					
40	65.04501-0017	GEAR;CAM SHAFT	PIGNON	1					

DATE	JUN. 30, 2007
REV.NO.	EXB07-06

Fig. 019 TIMING SYSTEM
SYSTEME DE SYNCHRONISATION

Serial No. ;

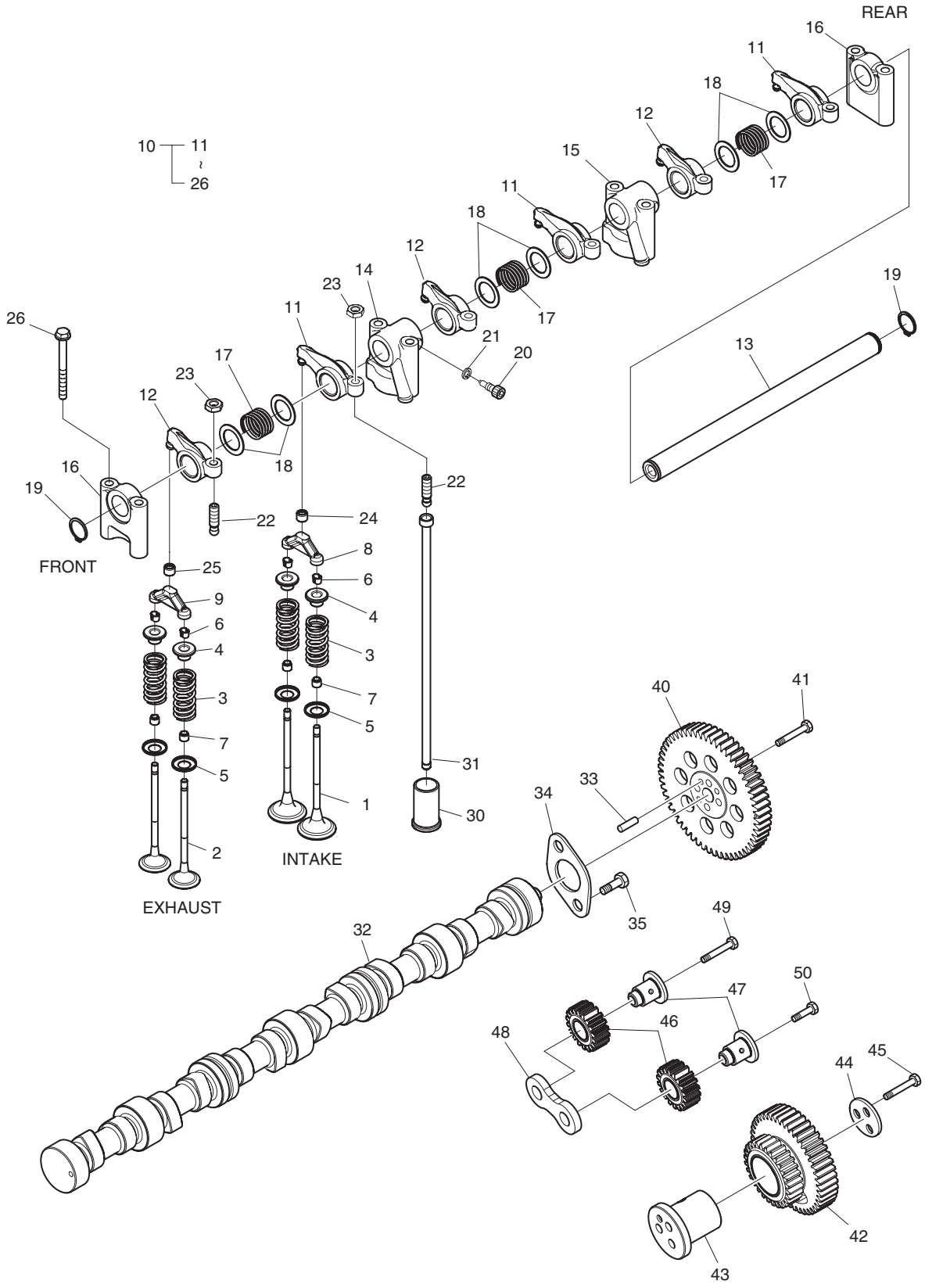

DATE	JUN. 30, 2007
REV. NO.	EXB07-06

Fig. 019 TIMING SYSTEM
SYSTEME DE SYNCHRONISATION

Serial No. ;

Key No.	Part No.	Description	Description	Q'ty	S.C	Serial No.	ICA	Replaceable part	
								Part No.	Q'ty
019-41	65.90020-0117	BOLT;COLLARED HEX.	BOULON	4					
42	65.04505-5018	GEAR;IDLE	PIGNON	1					
43	65.04506-0016	PIN;IDLE GEAR	GOUPILLE	1					
44	65.90720-0034B	WASHER;THRUST	RONDELLE DE BUTEE	1					
45	65.90020-0118	BOLT;COLLARED HEX.	BOULON	3					
46	65.11301-5002	GEAR;DRIVE;INJECTION	PIGNON	2					
47	65.04506-0015	PIN;IDLE GEAR	GOUPILLE	2					
48	65.90720-0033A	WASHER;THRUST	RONDELLE DE BUTEE	1					
49	65.90020-0118	BOLT;COLLARED HEX.	BOULON	1					
50	65.90020-0119	BOLT;COLLARED HEX.	BOULON	1					

DATE	JUN. 30, 2007
REV.NO.	EXB07-06

Fig. 020 OIL PUMP
POMPE D'HUILE

Serial No. ;

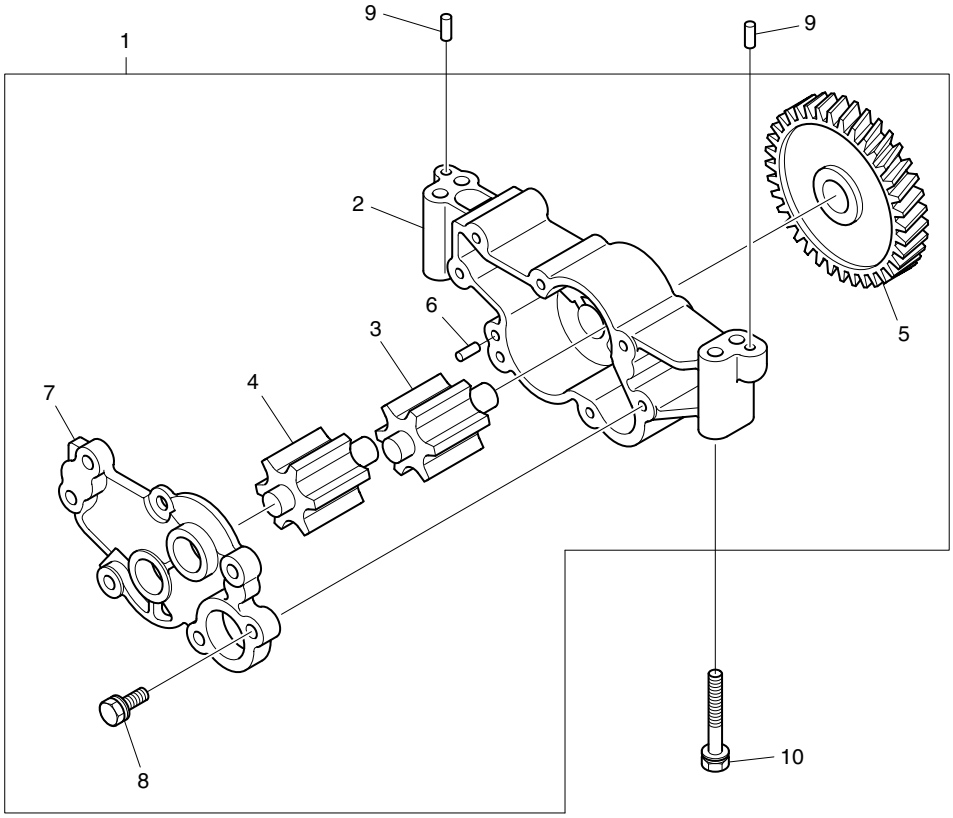

DATE	JUN. 30, 2007
REV. NO.	EXB07-06

Fig. 020 OIL PUMP POMPE D'HUILE

Serial No. ;

Key No.	Part No.	Description	Description	Q'ty	S.C	Serial No.	ICA	Replaceable part	
								Part No.	Q'ty
020-1	65.05100-6063	OIL PUMP ASS'Y	ENSEMBLE POMPE A HUILE	1		~071108	Y	65.05100-6063A	1
	65.05100-6063A	**OIL PUMP ASS'Y**	ENSEMBLE POMPE A HUILE	1		071109~			
2	65.05102-0030	. HOUSING;OIL PUMP	. LOGEMENT	1	D				
3	65.05104-0022	. GEAR;OIL PUMP	. PIGNON	1					
4	65.05104-0023	. GEAR;OIL PUMP	. PIGNON	1					
5	65.05201-0016	. GEAR;DRIVE;OIL PUMP	. PIGNON	1					
6	06.22022-0907	. DOWEL PIN 6M6X10	. GOUPILLE D'AJUSTAGE	1					
7	65.05103-0034	. COVER;OIL PUMP	. COUVERCLE	1					
8	06.01913-3114	. BOLT ASS'Y M8X22	. BOULON	3					
9	06.22022-0909	PIN DOWEL 6M6X14	GOUPILLE	2					
10	65.90020-0085	BOLT;COLLARED HEX.	BOULON	2					

DATE	JUN. 30, 2007
REV.NO.	EXB07-06

Fig. 021 OIL FILTER & OIL COOLER
RADIATEUR D'HUILE DE FILTRE D'HUILE

Serial No. ;

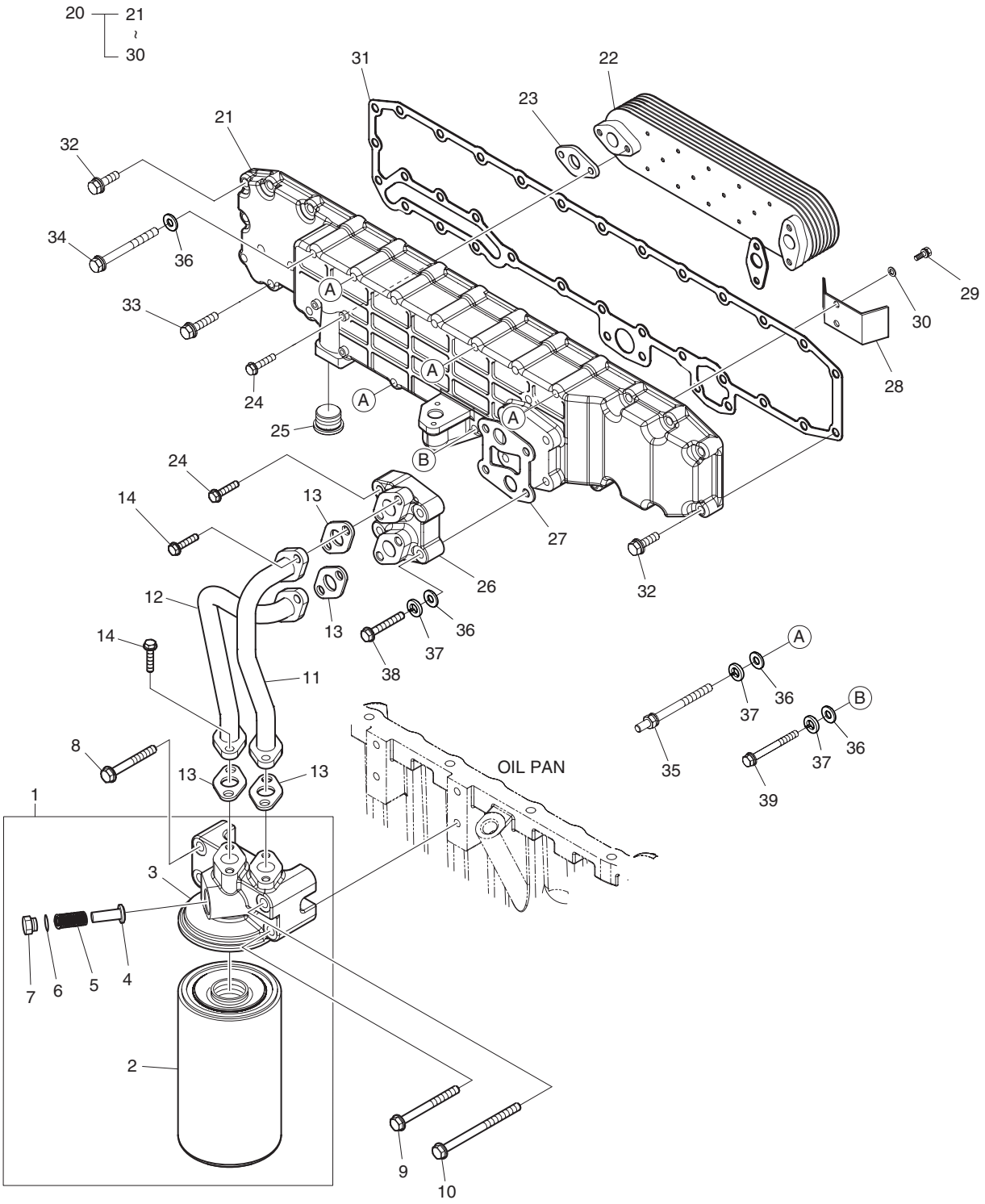

DATE	JUN. 30, 2007
REV. NO.	EXB07-06

Fig. 021 OIL FILTER & OIL COOLER
RADIATEUR D'HUILE DE FILTRE D'HUILE

Serial No. ;

Key No.	Part No.	Description	Description	Q'ty	S.C	Serial No.	ICA	Replaceable part	
								Part No.	Q'ty
021-1	65.05501-7089	OIL FILTER ASS'Y	FILTRE D'HUILE	1		~071119	Y	65.05501-7089A	1
	65.05501-7089A	**OIL FILTER ASS'Y**	FILTRE D'HUILE	1		071120~			
2	65.05510-5032	. FILTER;OIL	. FILTRE	1		~071119	Y	65.05510-5032A	1
	65.05510-5032A	**. FILTER;OIL**	. FILTRE	1		071120~			
3	65.05503-5056	. HEAD;OIL FILTER	. TETE	1					
4	65.05518-0006	. VALVE	. VANNE	1					
5	65.97601-0075	. SPRING	. RESSORT	1					
6	06.56190-0726	. SEAL;RING	. BAGUE	1					
7	65.90310-0065	. SCREW;PLUG	. VIS	1					
8	06.01923-3222	BOLT ASS'Y	BOULON	2					
9	06.01923-3225	BOLT ASS'Y M10X70	BOULON	1					
10	06.01923-3228	BOLT ASS'Y M10X85	BOULON	1					
11	65.05701-5573A	PIPE;OIL	TUYAU	1		~070416	Y	65.05701-5573B	1
	65.05701-5573B	**PIPE;OIL**	TUYAU	1		070417~			
12	65.05701-5574	PIPE;OIL	TUYAU	1					
13	65.05903A0001	GASKET	JOINT	4					
14	06.01913-3114	BOLT ASS'Y M8X22	BOULON	8					
20	65.05601-7079B	OIL COOLER ASS'Y	REFROIDISSEMENT DE	1					
21	65.05604-0030A	. HOUSING;OIL COOLER	. LOGEMENT	1					
22	65.05606-5032A	. ELEMENT;OIL COOLER	. ELEMENT	1					
23	65.05902-0022	. GASKET;OIL COOLER	. JOINT	2					
24	06.01923-3119	. BOLT ASS'Y M8X40	. BOULON	6					
25	65.54109-0005A	. SCREW PLUG M22X1.5	. VIS	1					
26	65.05607-5003	. FLANGE;OIL COOLER	. BRIDE	1					
27	65.05901-0031	. GASKET;OIL FILTER	. JOINT	1					
28	65.05610-0007A	. GUIDER;WATER FLOW	. GUIDE	1					
29	06.02097-8306	. BOLT;SOCKET	. BOULON A 6 PANS CREUX	2					
30	06.16731-2105	. WASHER	. RONDELLE	2					
31	65.05902-0023	GASKET;OIL COOLER	JOINT	1					
32	06.01923-3117	BOLT ASS'Y M8X30	BOULON	12					
33	06.01923-3119	BOLT ASS'Y M8X40	BOULON	8					
34	06.01913-3128	BOLT M8X85	BOULON	7					
35	65.90201-0135	BOLT;STUD	BOULON DE GOUJON	4					
36	06.15010-2311	WASHER	RONDELLE	14					
37	06.16731-2107	WASHER	RONDELLE	7					
38	06.01013-9127	BOLT M8X120	BOULON	2					
39	06.01913-3129	BOLT ASS'Y M8X90	BOULON	1					

DATE	JUN. 30, 2007
REV.NO.	EXB07-06

Fig. 022 OIL PAN
CARTER D'HUILE

Serial No. ;

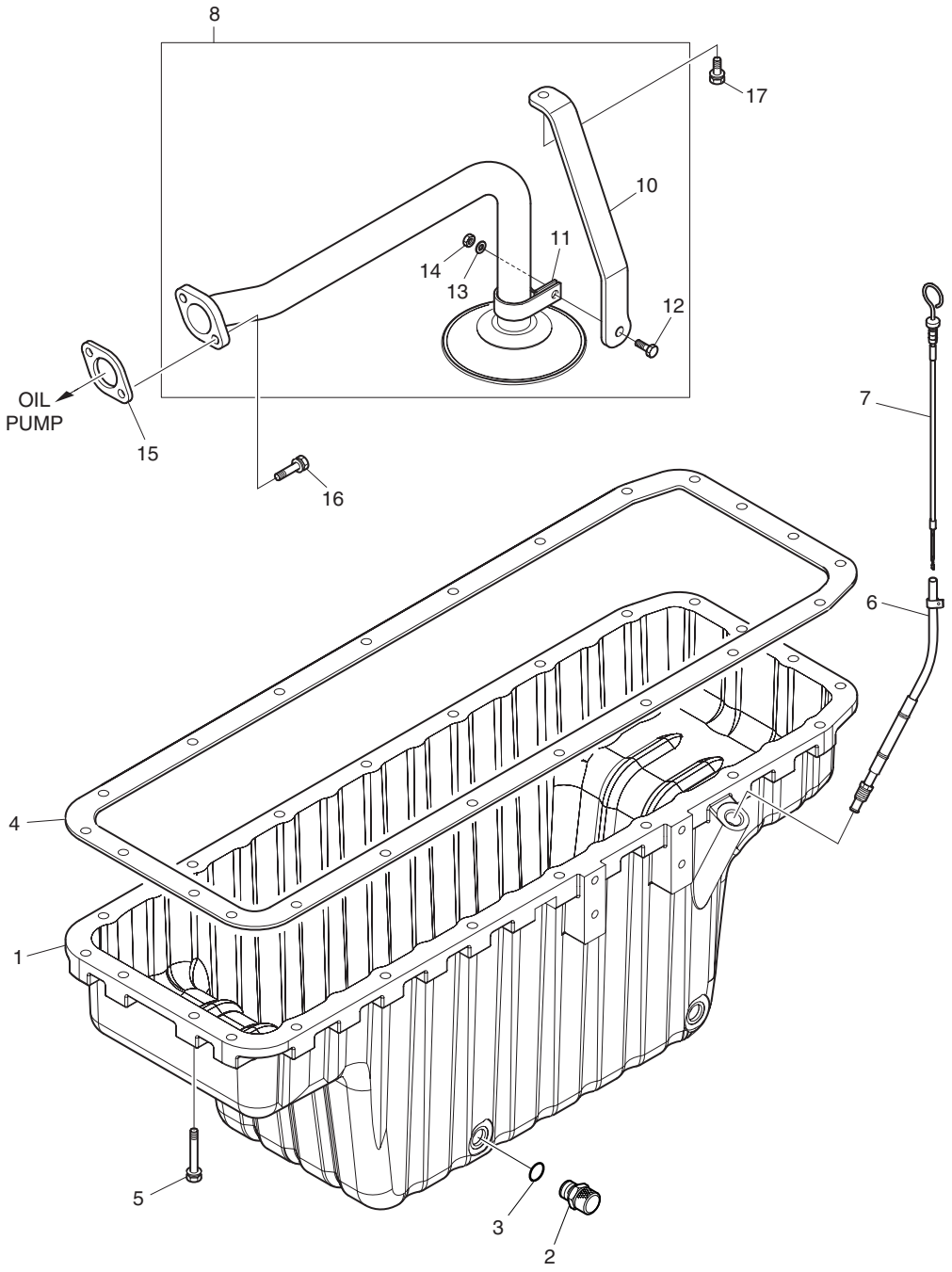

DATE	JUN. 30, 2007
REV. NO.	EXB07-06

Fig. 022 OIL PAN
CARTER D'HUILE

Serial No. ;

Key No.	Part No.	Description	Description	Q'ty	S.C	Serial No.	ICA	Replaceable part	
								Part No.	Q'ty
022-1	65.05801-5245	PAN;OIL	CAOUTCHOUC	1					
2	65.98125-5022A	JOINT;DRAIN	JOINT	1					
3	06.56190-0732	SEAL;RING	BAGUE	1					
4	65.05904-0035	GASKET;OIL PAN	JOINT	1					
5	06.01923-3120	BOLT ASS'Y M8X45	BOULON	22					
6	65.05806-5116	TUBE;OIL LEVEL GAUGE	TUYAU FLEXIBLE	1		~070201	Y	65.05806-5116A	1
	65.05806-5116A	**TUBE;OIL LEVEL GAUGE**	TUYAU FLEXIBLE	1		070202~			
7	65.05805-5236	OIL LEVEL GAUGE	INDICATEUR DE NIVEAU	1		~070201	Y	65.05805-5236A	1
	65.05805-5236A	**OIL LEVEL GAUGE**	INDICATEUR DE NIVEAU	1		070202~			
8	65.05701-6122	OIL PIPE ASS'Y	CONDUITES DE HUILE	1					
10	65.05740-0222	. BRACKET;OIL SUCT.PIPE	. SUPPORT	1					
11	65.97401-0137	. CLIP;PIPE	. AGRAFE	1					
12	06.01283-7115	. BOLT M8X25	. BOULON	1					
13	06.15010-2311	. WASHER	. RONDELLE	1					
14	65.90510-0012	. NUT	. ECROU	1					
15	65.05901-0032	GASKET	JOINT	1					
16	06.01913-3115	BOLT ASS'Y M8X25	BOULON	2					
17	06.01913-3119	BOLT ASS'Y M8X40	BOULON	1					

DATE	JUN. 30, 2007
REV.NO.	EXB07-06

Fig. 023 THERMOSTAT
THERMOSTAT

Serial No. ;

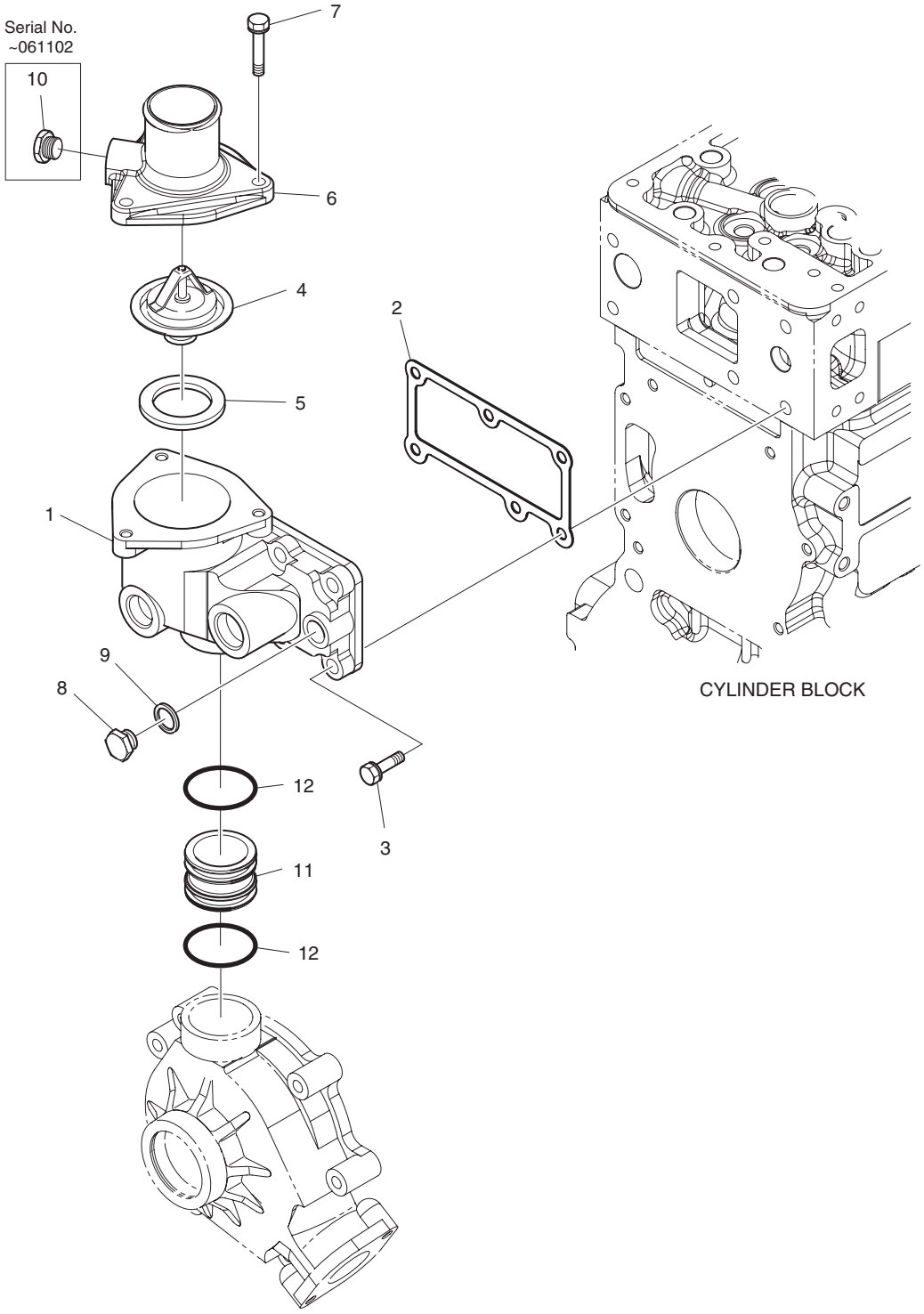

DATE	JUN. 30, 2007
REV. NO.	EXB07-06

Fig. 023 THERMOSTAT
THERMOSTAT

Serial No. ;

Key No.	Part No.	Description	Description	Q'ty	S.C	Serial No.	ICA	Replaceable part	
								Part No.	Q'ty
023-1	65.06404-0039A	HOUSING;THERMOSTAT	LOGEMENT	1					
2	65.06904-0020	GASKET;THERMOSTAT	JOINT	1		~070315	I	65.06904-0021	1
	65.06904-0021	**GASKET;THERMOSTAT**	JOINT	1		070316~			
3	06.01923-3218	BOLT ASS'Y M10X35	BOULON	6					
4	65.06402-5015	THERMOSTAT	THERMOSTAT	1					
5	65.06904-0003	GASKET;THERMOSTAT	JOINT	1					
6	65.06405-0012A	OUTLET;WATER	SORTIE DE L'EAU	1		~061102	Y	65.06405-0039	1
	65.06405-0039	**OUTLET;WATER**	SORTIE DE L'EAU	1		061103~			
7	06.01923-3114	BOLT ASS'Y M8X22	BOULON	3					
8	06.08092-2405	PLUG SCREW M16 X 1.5	BOUCHON	1					
9	06.56190-0709	SEAL;RING	BAGUE	1					
10	65.90320-0019	PLUG SCREW PT3/8	BOUCHON	1					
11	**65.06301-0257**	**PIPE;COOLING WATER**	TUYAU	1		~061102			
12	65.96501-0099A	O-RING	JOINT TORIQUE	2					

DATE	JUN. 30, 2007
REV.NO.	EXB07-06

Fig. 024 WATER PUMP
SYSTEME DE REFROIDSSEMENT

Serial No. ;

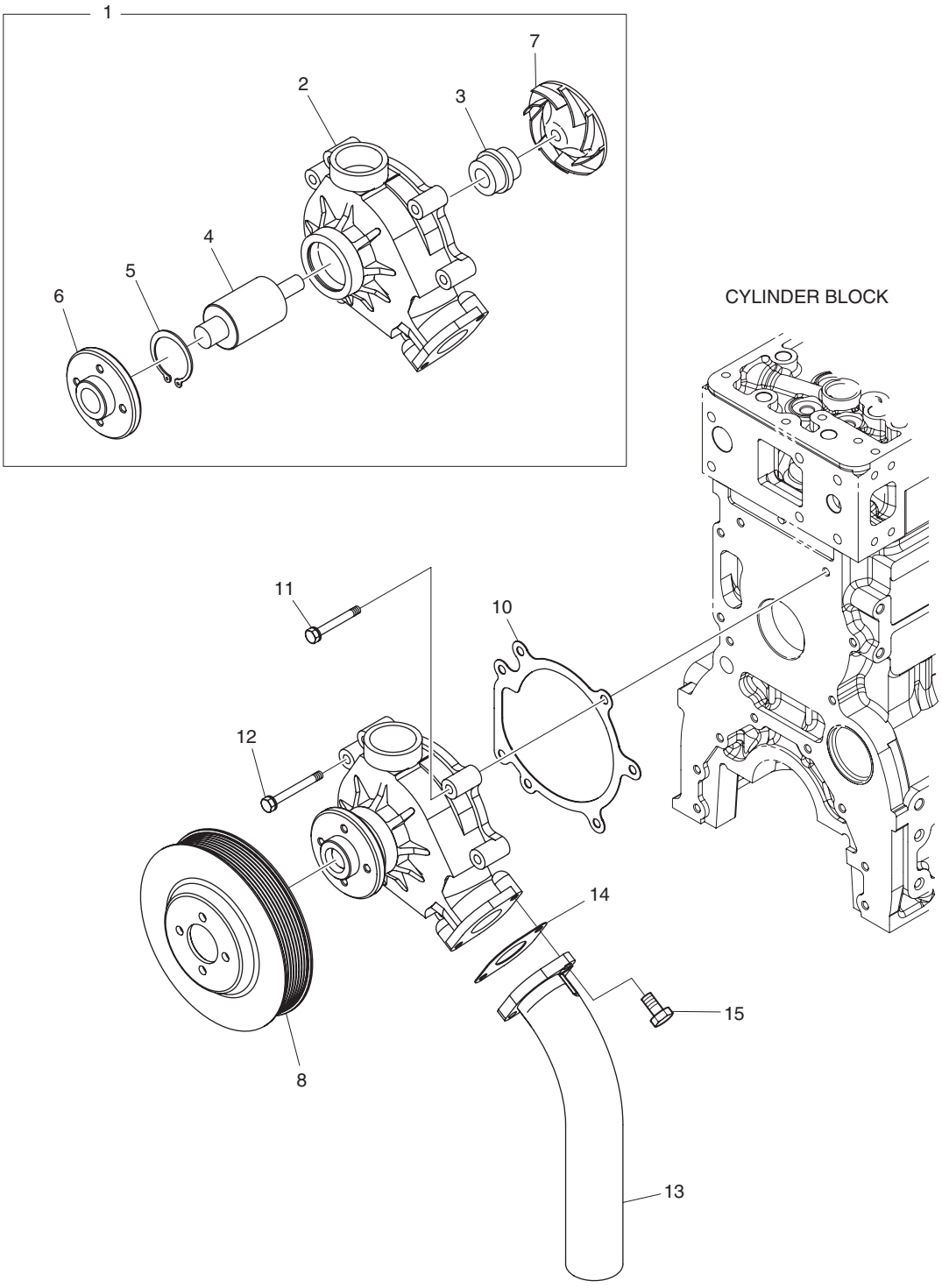

DATE	JUN. 30, 2007
REV. NO.	EXB07-06

Fig. 024 WATER PUMP
SYSTEME DE REFROIDSSEMENT

Serial No. ;

Key No.	Part No.	Description	Description	Q'ty	S.C	Serial No.	ICA	Replaceable part	
								Part No.	Q'ty
024-1	65.06500-6178B	WATER PUMP ASS'Y	ENSEMBLE POMPE A EAU	1		~070227	I	65.06500-6271A	1
	65.06500-6271A	**WATER PUMP ASS'Y**	ENSEMBLE POMPE A EAU	1		070228~			
2	65.06501-0099A	. HOUSING;WATER PUMP	. LOGEMENT	1	D	~070227			
	65.06501-0300	**. HOUSING;WATER PUMP**	. LOGEMENT	1	D	070228~			
3	65.06520-6007	. SEAL;MECHANICAL	. JOINT	1		~070227			
	65.06520-6008	**. SEAL;MECHANICAL**	. JOINT	1		070228~			
4	65.93410-0027	. BEARING	. ROULEMENT	1					
5	06.29020-0132	. SNAP RING 55X2	. BAGUE ELASTIQUE	1					
6	65.06504-0033	. HUB;V-BELT PULLEY	. MOYEU	1					
7	65.06506-0029A	. IMPELLER;WATER PUMP	. TURBINE	1		~070227			
	65.06506-0032	**. IMPELLER;WATER PUMP**	. TURBINE	1		070228~			
8	65.06503-0113	PULLEY;V-BELT	POULIE	1					
10	65.06901-0042	GASKET;WATER PUMP	JOINT	1					
11	06.01913-3120	BOLT ASS'Y M8X45	BOULON	5					
12	06.01913-3121	BOLT ASS'Y M8X50	BOULON	2					
13	65.06301-0258A	PIPE;COOLING WATER	TUYAU	1					
14	65.06903-0029	GASKET;WATER PIPE	JOINT	1					
15	06.01913-3117	BOLT ASS'Y M8X30	BOULON	2					

DATE	DEC. 26, 2006
1st EDITION	

Fig. 025 COOLING FAN VENTILATEUR

Serial No. ;

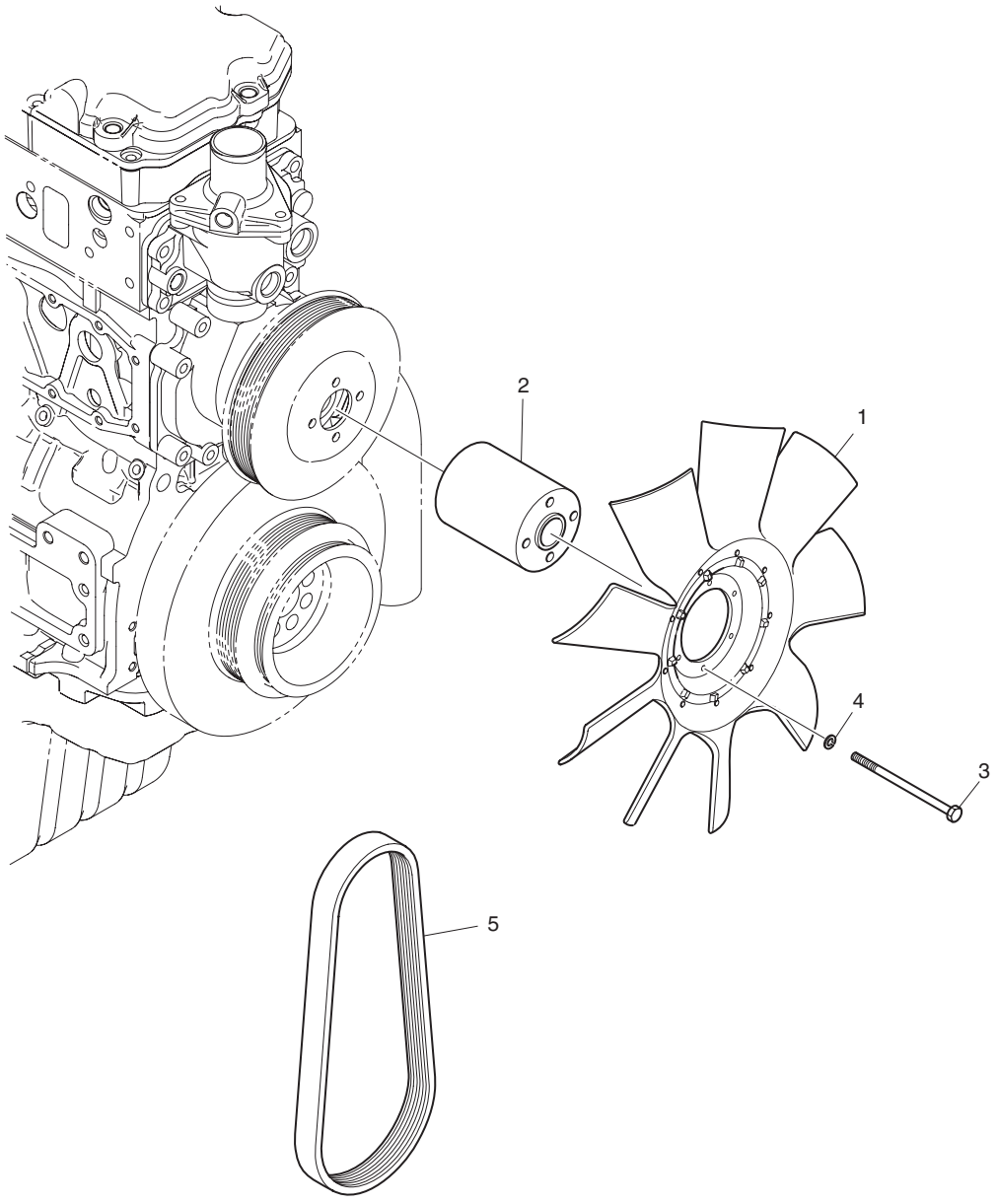

DATE	DEC. 26, 2006
1st EDITION	

Fig. 025 COOLING FAN VENTILATEUR

Serial No. ;

Key No.	Part No.	Description	Description	Q'ty	S.C	Serial No.	ICA	Replaceable part	
								Part No.	Q'ty
025-1	65.06601-5071	FAN;COOLING	VENTILATEUR	1					
2	65.06611-0137	FLANGE;FAN	BRIDE	1					
3	06.01013-9127	BOLT M8X120	BOULON	4					
4	06.16731-2107	WASHER	RONDELLE	4					
5	65.96801-0194	BELT	COURROIE	1					

DATE	JUN. 30, 2007
REV.NO.	EXB07-06

Fig. 026 INTAKE & EXHAUST MANIFOLD TUBULURE ET COLLECTEUR

Serial No. ;

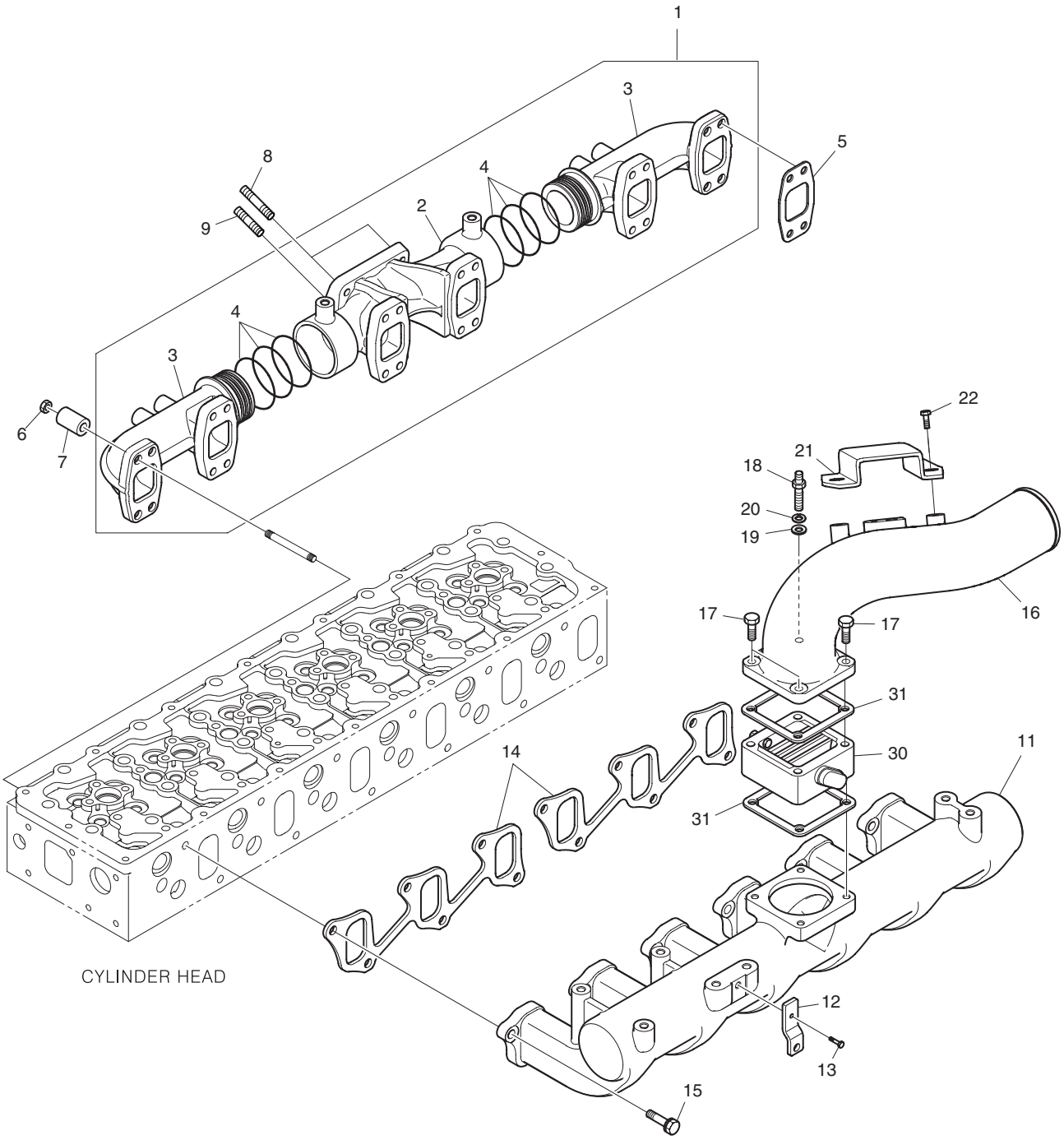

DATE	JUN. 30, 2007
REV. NO.	EXB07-06

Fig. 026 INTAKE & EXHAUST MANIFOLD TUBULURE ET COLLECTEUR

Serial No. ;

Key No.	Part No.	Description	Description	Q'ty	S.C	Serial No.	ICA	Replaceable part	
								Part No.	Q'ty
026-1	65.08100-6088A	EXHAUST MANIFOLD ASS'Y	TUBULURE	1		~070418	I	65.08100-6088B	1
	65.08100-6088B	**EXHAUST MANIFOLD ASS'Y**	TUBULURE	1		070419~			
2	65.08101-0263	. MANIFOLD;EXHAUST	. COLLECTEUR	1					
3	65.08101-0264	. MANIFOLD;EXHAUST	. COLLECTEUR	2		~070418	T	65.08101-0264A	2
								65.96507-0059	8
	65.08101-0264A	**. MANIFOLD;EXHAUST**	. COLLECTEUR	2		070419~			
4	65.96507-0059	. RING;SEAL	. BAGUE D'ETANCHEITE	6		~070418			
	65.96507-0059	**. RING;SEAL**	. BAGUE D'ETANCHEITE	8		070419~			
5	65.08901-0045	GASKET;EXHAUST MANIFOLD	JOINT	6					
6	65.90535-0003	NUT	ECROU	24					
7	65.91701-0086	SPACER	DOUILLE D'ECARTEMENT	24					
8	65.90201-0076	BOLT;STUD	BOULON DE GOUJON	2					
9	65.90201-0073	BOLT;STUD	BOULON DE GOUJON	2					
11	65.08201-5075	MANIFOLD;INTAKE	COLLECTEUR	1					
12	65.12303-0009	BRACKET;FUEL PIPE	SUPPORT	1					
13	06.01913-3213	BOLT ASS'Y M10X20	BOULON	1					
14	65.08902-0030A	GASKET;INTAKE MANIFOLD	JOINT	2					
15	06.01923-3218	BOLT ASS'Y M10X35	BOULON	12					
16	65.08202-0184	STAKE;INTAKE	PIEU DE PRISE	1					
17	06.01923-3125	BOLT ASS'Y M8X70	BOULON	3					
18	65.90201-0136	BOLT;STUD	BOULON DE GOUJON	1					
19	06.15010-2311	WASHER	RONDELLE	1					
20	06.16731-2107	WASHER	RONDELLE	1					
21	65.08204-0004A	COVER	COUVERCLE	1					
22	06.01923-2910	BOLT ASS'Y M6X12	BOULON	2					
30	65.26803-7028B	AIR HEATER	RECHAUFFEUR D'AIR	1					
31	65.09904-0008	GASKET;AIR HEATER	JOINT	2					

DATE	DEC. 26, 2006
1st EDITION	

Fig. 027 TURBO CHARGER
TURBO CHARGER

Serial No. ;

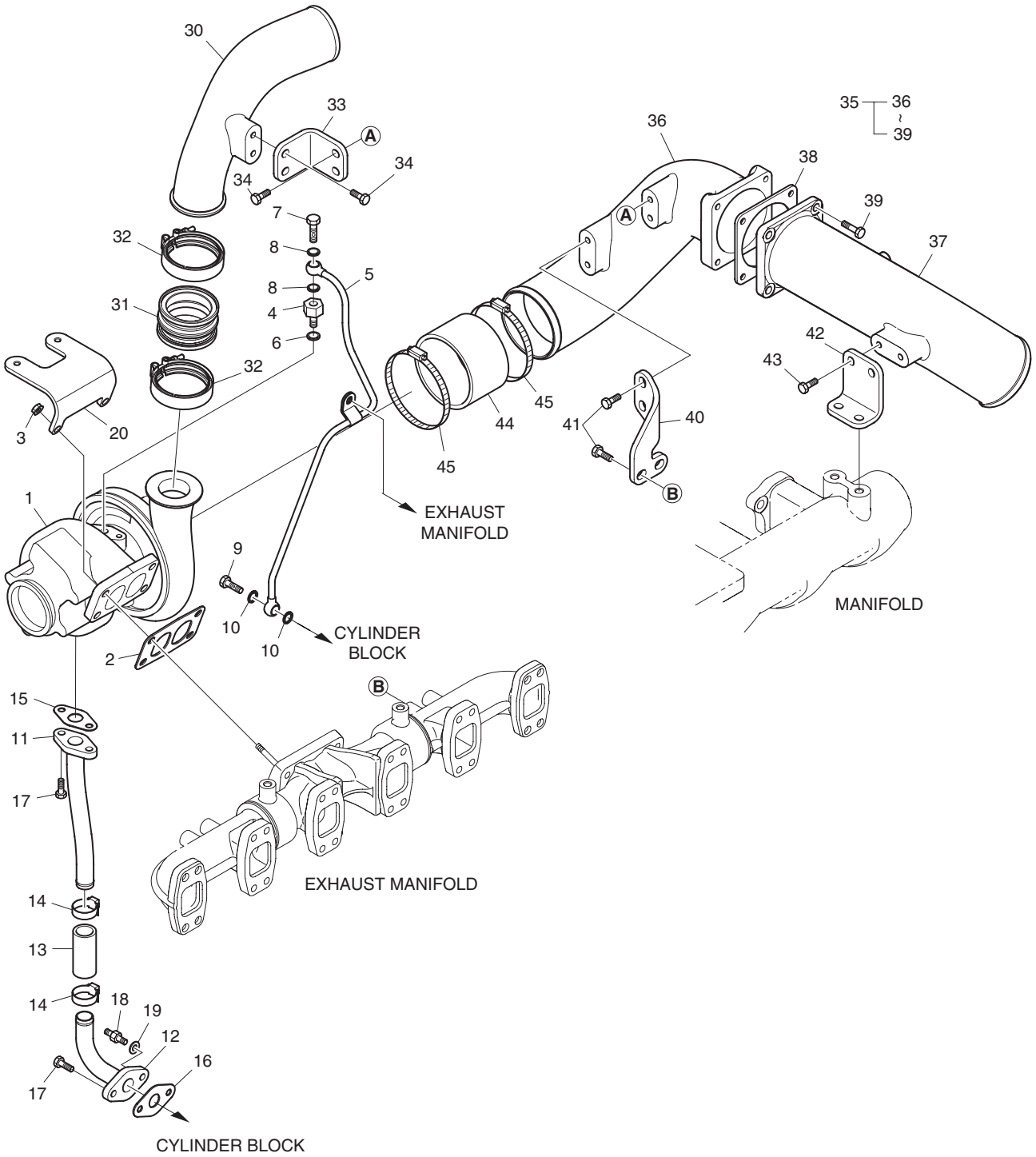

DATE	DEC. 26, 2006
1st EDITION	

Fig. 027 TURBO CHARGER
TURBO CHARGER

Serial No. ;

Key No.	Part No.	Description	Description	Q'ty	S.C	Serial No.	ICA	Replaceable part	
								Part No.	Q'ty
027-1	65.09100-7110	TURBOCHARGER ASS'Y	TURBOCOMPRESSEUR	1					
2	65.09901-0018A	GASKET	JOINT	1					
3	65.90535-0001	NUT	ECROU	4					
4	65.98130-0200A	ADAPTER	ADAPTEUR	1					
5	65.05701-5567	PIPE;OIL	TUYAU	1					
6	06.56190-0709	SEAL;RING	BAGUE	1					
7	06.78144-2403	HOLLOW SCREW M12X1.5	VIS CREUSE	1					
8	06.56190-0704	SEAL RING A12X18	ANNEAU DU JOINT	2					
9	06.78144-2403	HOLLOW SCREW M12X1.5	VIS CREUSE	1					
10	06.56190-0704	SEAL RING A12X18	ANNEAU DU JOINT	2					
11	65.05701-5568	PIPE;OIL	TUYAU	1					
12	65.05701-5569	PIPE;OIL	TUYAU	1					
13	65.96301-0327A	HOSE;RUBBER	TUYAU FLEXIBLE	1					
14	06.67020-0104	CLAMP;HOSE	COLLIER DE LA CONDUITE	2					
15	65.96601-0067	GASKET;T/C-PIPE	JOINT	1					
16	65.96601-0052	GASKET;PIPE-BLOCK	JOINT	1					
17	06.01913-3114	BOLT ASS'Y M8X22	BOULON	3					
18	65.90201-0075	BOLT;SPACER	BOULON D'ENTRETOISE	1					
19	06.16731-2107	WASHER	RONDELLE	1					
20	65.09140-0005	BRACKET	SUPPORT	1					
30	65.09411-5095	PIPE;INLET	TUYAU	1					
31	65.96301-6003	HOSE;RUBBER	TUYAU FLEXIBLE	1					
32	65.97450-5003	CLAMP	BRIDE	2					
33	65.09440-0058	BRACKET	SUPPORT	1					
34	06.01923-3215	BOLT ASS'Y M10X25	BOULON	4					
35	65.09411-7013	INLET PIPE ASS'Y	TUYAU D'ADMISSION	1					
36	65.09411-5104	. INLET	. PRISE	1					
37	65.09411-5103	. INLET	. PRISE	1					
38	65.09904-0009	. GASKET;AIR PIPE	. JOINT	1					
39	06.01923-3218	. BOLT ASS'Y M10X35	. BOULON	4					
40	65.09440-0057	BRACKET	SUPPORT	1					
41	06.01923-3215	BOLT ASS'Y M10X25	BOULON	4					
42	65.09440-0056	BRACKET	SUPPORT	1					
43	06.01923-3215	BOLT ASS'Y M10X25	BOULON	4					
44	65.96301-0035	HOSE;RUBBER	TUYAU FLEXIBLE	1					
45	06.67020-0116	CLAMP;HOSE	COLLIER DE LA CONDUITE	2					

DATE	JUN. 30, 2007
REV.NO.	EXB07-06

Fig. 028 INJECTOR INJECTIEUR

Serial No. ;

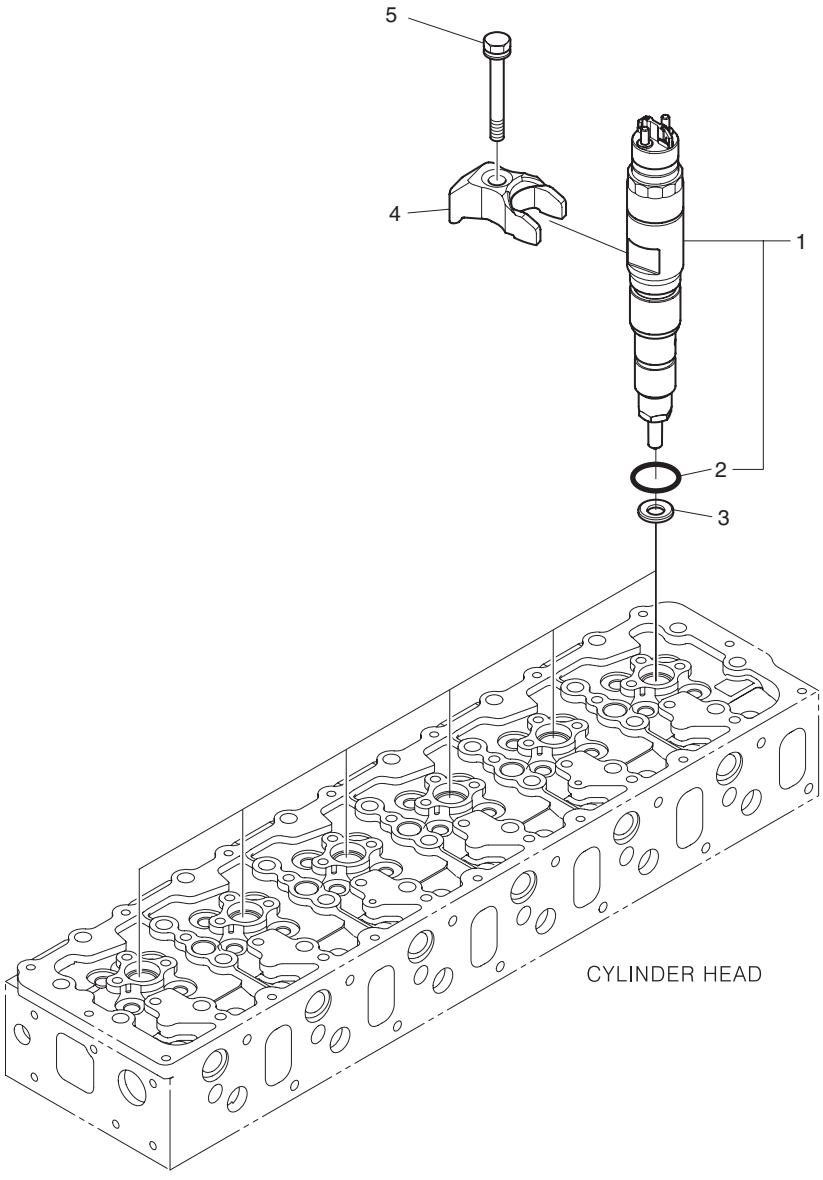

DATE	JUN. 30, 2007
REV. NO.	EXB07-06

Fig. 028 INJECTOR INJECTIEUR

Serial No. ;

Key No.	Part No.	Description	Description	Q'ty	S.C	Serial No.	ICA	Replaceable part	
								Part No.	Q'ty
028-1	65.10401-7004A	INJECTOR ASS'Y	INDICATEUR	6					
2	65.96501-0437	. O-RING	. JOINT TORIQUE	1					
3	65.96507-0053	RING;SEAL	BAGUE D'ETANCHEITE	6					
4	65.10205-0006	FIXTURE	SUPPORT	6		~070611	Y	65.10205-0006A	6
	65.10205-0006A	**FIXTURE**	SUPPORT	6		070612~			
5	65.90020-0136	BOLT;COLLARED HEX.	BOULON	6					

DATE	DEC. 26, 2006
1st EDITION	

Fig. 029 INJECTION PIPE
PIPE D'INJECTION

Serial No. ;

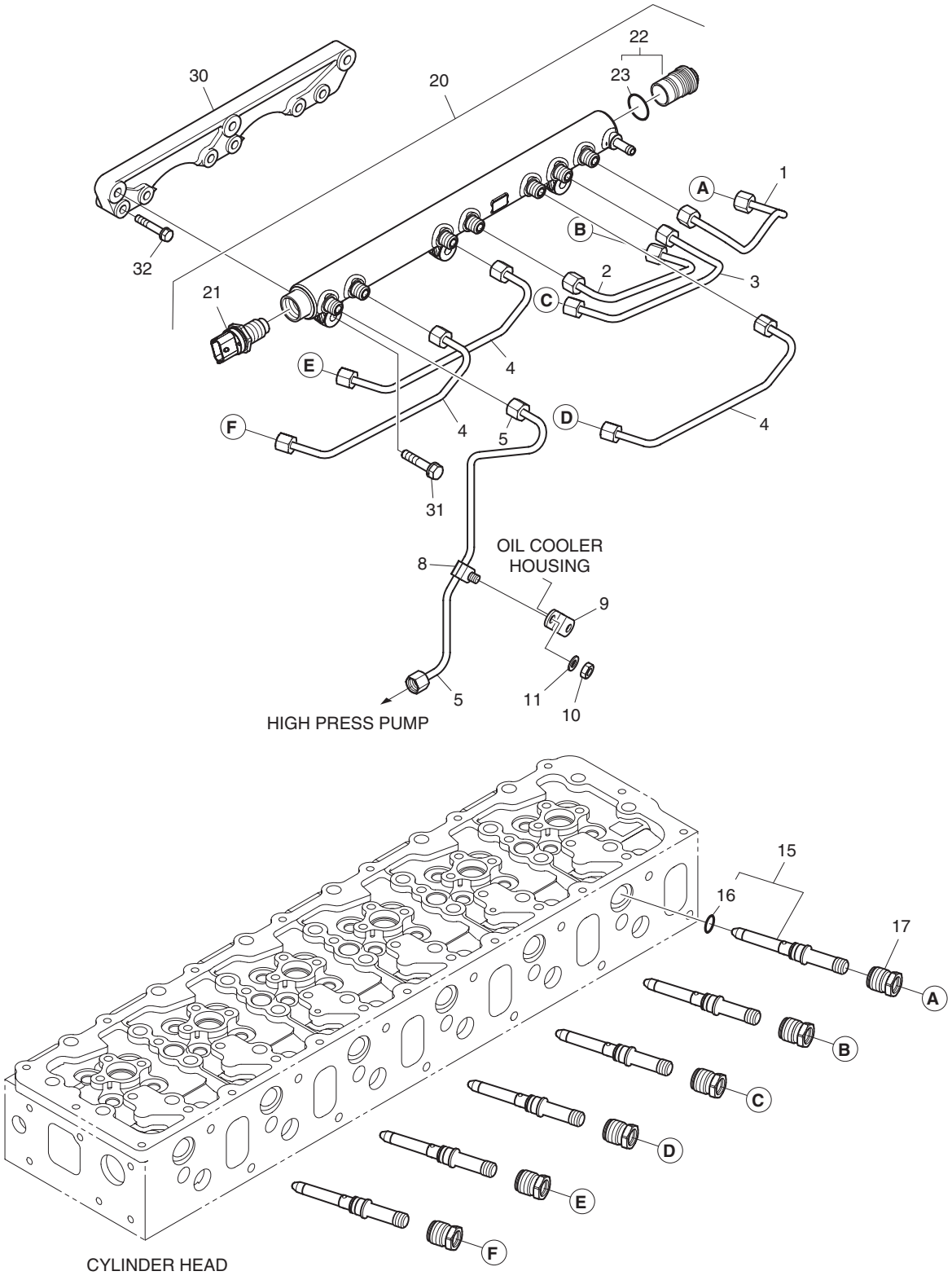

DATE	DEC. 26, 2006
1st EDITION	

Fig. 029 INJECTION PIPE
PIPE D'INJECTION

Serial No. ;

Key No.	Part No.	Description	Description	Q'ty	S.C	Serial No.	ICA	Replaceable part	
								Part No.	Q'ty
029-1	65.10301-6191	PIPE;INJECTION	TUYAU	1					
2	65.10301-6192	PIPE;INJECTION	TUYAU	1					
3	65.10301-6193	PIPE;INJECTION	TUYAU	1					
4	65.10301-6194	PIPE;INJECTION	TUYAU	3					
5	65.10301-6195	PIPE;INJECTION	TUYAU	1					
8	65.97401-6039	CLIP;PIPE	AGRAFE	1					
9	65.97480-0220	HOLDER	SUPPORT	1					
10	06.11063-8214	NUT	ECROU	1					
11	06.16731-2107	WASHER	RONDELLE	1					
15	65.10410-6003A	H.P.CONNECTOR	CONNECTEUR	6					
16	65.96501-0438	. O-RING	. JOINT TORIQUE	1					
17	65.10415-0001	NUT	ECROU	6					
20	65.10601-6004A	COMMON RAIL ASS'Y	CHEMIN DE FER	1					
21	65.27114-5002	. SENSOR;RAIL PRESSURE	. CAPTEUR	1					
22	65.52122-6002	. VALVE;PRESSURE LIMITING	. VANNE	1					
23	65.96501-0431	.. O-RING	.. JOINT TORIQUE	1					
30	65.10610-0003	BRACKET;MOUNTING	SUPPORT	1					
31	06.01913-3118	BOLT ASS'Y M8X35	BOULON	3					
32	06.01913-3119	BOLT ASS'Y M8X40	BOULON	6					

DATE	DEC. 26, 2006
1st EDITION	

Fig. 030 INJECTION PUMP
POMPE D'INJECTION

Serial No. ;

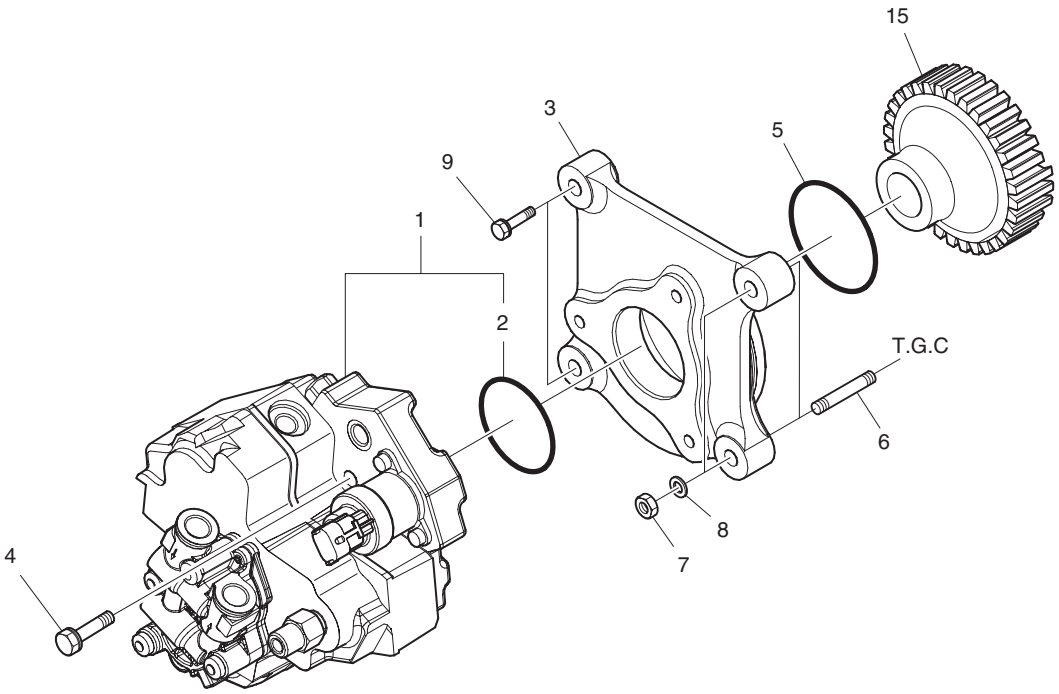

DATE	DEC. 26, 2006
1st EDITION	

Fig. 030 INJECTION PUMP POMPE D'INJECTION

Serial No. ;

Key No.	Part No.	Description	Description	Q'ty	S.C	Serial No.	ICA	Replaceable part	
								Part No.	Q'ty
030-1	65.10501-7005A	PUMP;HIGH PRESSURE	POMPE	1					
2	65.96501-0439	. O-RING	. JOINT TORIQUE	0					
3	65.11304-0001	FLANGE;INJECTION PUMP	BRIDE	1					
4	65.90020-0121	BOLT;COLLARED HEX.	BOULON	3					
5	06.56020-0115	O-RING	JOINT TORIQUE	1					
6	06.06125-8709	STUD BOLT M8X35	GOUJON	2					
7	06.11063-8214	NUT	ECROU	2					
8	06.16731-2107	WASHER	RONDELLE	2					
9	06.01923-3118	BOLT ASS'Y M8X35	BOULON	2					
15	65.11301-0038	GEAR;PUMP DRIVE	PIGNON	1					

DATE	JUN. 30, 2007
REV.NO.	EXB07-06

Fig. 031 ENGINE CONTROL
LE MOTEUR SE RELIENT

Serial No. ;

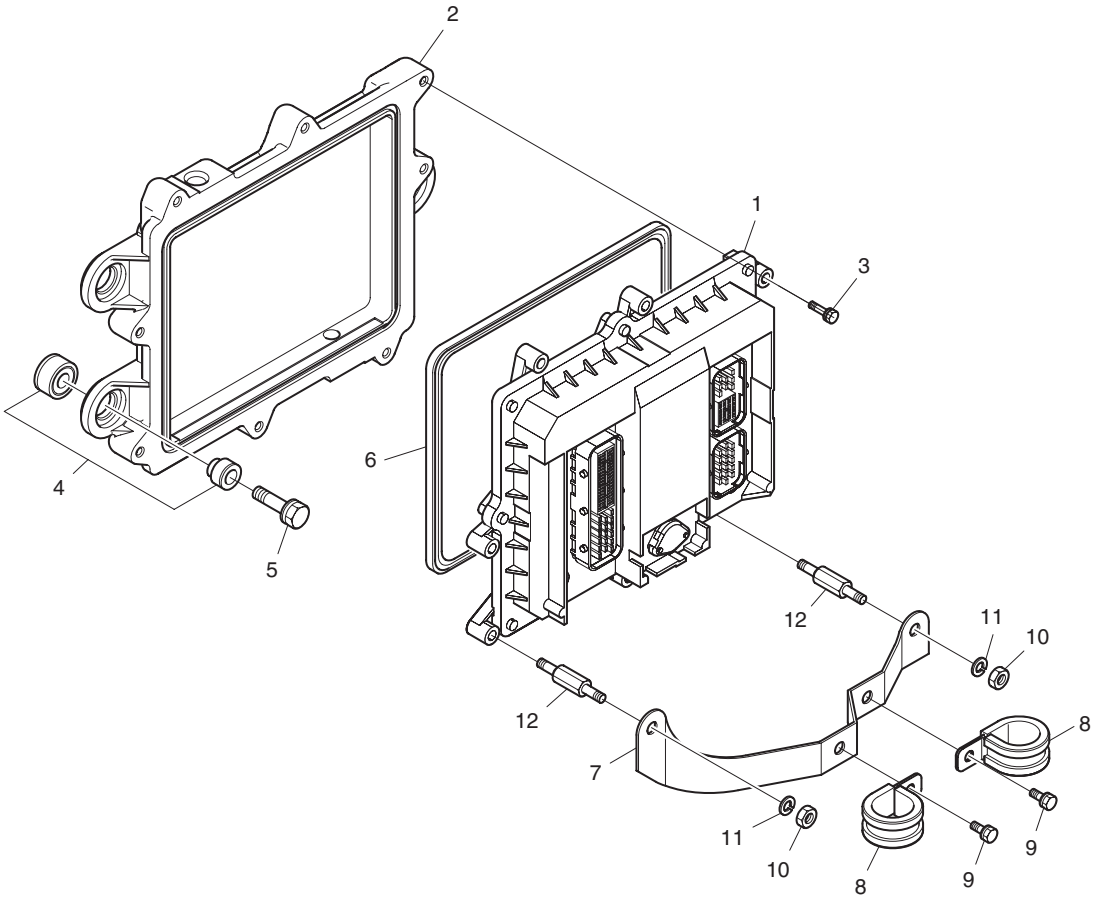

DATE	JUN. 30, 2007
REV. NO.	EXB07-06

Fig. 031 ENGINE CONTROL
LE MOTEUR SE RELIENT

Serial No. ;

Key No.	Part No.	Description	Description	Q'ty	S.C	Serial No.	ICA	Replaceable part	
								Part No.	Q'ty
031-1	65.99497-8640	E.C.U	E.C.U	1					
2	65.11210-0003A	PLATE;ECU	PLAQUE	1		~071023	Y	65.11210-0003B	1
	65.11210-0003B	**PLATE;ECU**	PLAQUE	1		071024~			
3	06.01923-2917	BOLT ASS'Y M6X30	BOULON	6					
4	65.96210-6001A	RUBBER;CUSHION	CAOUTCHOUC	3					
5	65.90020-0095	BOLT;COLLARED HEX.	BOULON	3					
6	65.96501-0102	PACKING	EMBALLAGE	1					
7	65.29150-5006	BRACKET	SUPPORT	1					
8	65.97401-0188	CLIP;PIPE	AGRAFE	2					
9	06.01923-2911	BOLT ASS'Y M6X16	BOULON	2					
10	06.11063-8212	NUT	ECROU	2					
11	06.16731-2106	WASHER	RONDELLE	2					
12	65.90441-0066	BOLT;SPACER	BOULON D'ENTRETOISE	2					

DATE	JUN. 30, 2008
REV.NO.	EXB08-06

Fig. 032 FUEL SYSTEM
SYSTEME DE GAZOLE

Serial No. ;

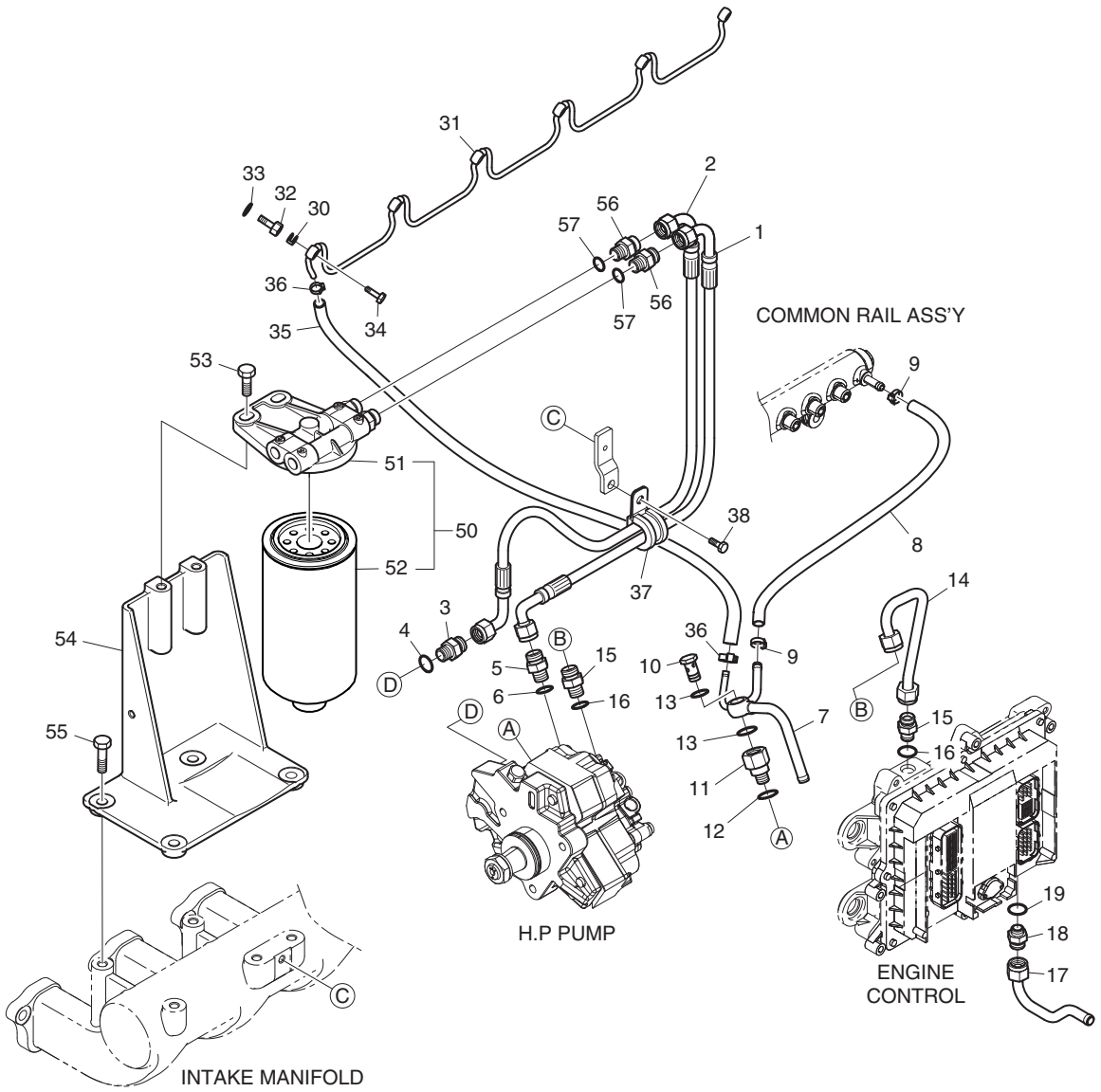

DATE	JUN. 30, 2008
REV. NO.	EXB08-06

Fig. 032 FUEL SYSTEM SYSTEME DE GAZOLE

Serial No. ;

Key No.	Part No.	Description	Description	Q'ty	S.C	Serial No.	ICA	Replaceable part	
								Part No.	Q'ty
032-1	65.96340-5079	HOSE;FUEL	TUYAU FLEXIBLE	1					
2	65.96340-5080	HOSE;FUEL	TUYAU FLEXIBLE	1					
3	65.98130-0211	ADAPTER	ADAPTEUR	1					
4	06.56190-0704	SEAL RING A12X18	ANNEAU DU JOINT	1					
5	65.98130-0229	ADAPTER	ADAPTEUR	1					
6	06.56190-0706	SEAL RING A14X20	ANNEAU DU JOINT	1		~061213	I	65.96507-0043	1
	65.96507-0043	**SEAL RING A14X20**	ANNEAU DU JOINT	1		061214~			
7	65.12301-5291	PIPE;FUEL	TUYAU	1					
8	65.96330-0018	HOSE;RUBBER;RING JOIN	TUYAU FLEXIBLE	1					
9	65.97440-0045	CLAMP;HOSE	COLLIER DE LA CONDUITE	2					
10	06.78144-2204	HOLLOW SCREW NW10	VIS CREUSE	1					
11	65.98130-0159A	ADAPTER	ADAPTEUR	1					
12	06.56190-0704	SEAL RING A12X18	ANNEAU DU JOINT	1					
13	06.56190-0706	SEAL RING A14X20	ANNEAU DU JOINT	2		~061213	I	65.96507-0043	2
	65.96507-0043	**SEAL RING A14X20**	ANNEAU DU JOINT	2		061214~			
14	65.12301-5289	PIPE;FUEL	TUYAU	1					
15	65.98130-0229	ADAPTER	ADAPTEUR	2					
16	06.56190-0706	SEAL RING A14X20	ANNEAU DU JOINT	2		~061213	I	65.96507-0043	2
	65.96507-0043	**SEAL RING A14X20**	ANNEAU DU JOINT	2		061214~			
17	65.12301-5268	PIPE;FUEL	TUYAU	1					
18	65.98130-0229	ADAPTER	ADAPTEUR	1					
19	06.56190-0706	SEAL RING A14X20	ANNEAU DU JOINT	1		~061213	I	65.96507-0043	1
	65.96507-0043	**SEAL RING A14X20**	ANNEAU DU JOINT	1		061214~			
30	65.96507-0055	RING;SEAL	BAGUE D'ETANCHEITE	6					
31	65.12301-5288A	PIPE;FUEL	TUYAU	1		~070316	Y	65.12301-5288B	1
	65.12301-5288B	PIPE;FUEL	TUYAU	1		070317~			
32	65.98130-0154	ADAPTER	ADAPTEUR	6					
33	06.56180-0712	RING;SEAL	BAGUE D'ETANCHEITE	6					
34	65.98150-0042A	HOLLOW SCREW	VIS CREUSE	6					
35	65.96301-0462	HOSE;RUBBER	TUYAU FLEXIBLE	1					
36	65.97440-0045	CLAMP;HOSE	COLLIER DE LA CONDUITE	2		~071025	Y	65.97402-0003	2
	65.97402-0003	CLAMP;HOSE	COLLIER DE LA CONDUITE	2		071026~			
37	65.97401-5019	CLIP;PIPE	AGRAFE	1					
38	06.01923-3111	BOLT M8X16	BOULON	1					
50	65.12501-7042A	FUEL FILTER ASS'Y	REMPLISSEUR DE	1		~071130	Y	65.12501-7042B	1
	65.12501-7042B	FUEL FILTER ASS'Y	REMPLISSEUR DE	1		071131~			
51	65.12504-5027	. HEAD;FUEL FILTER	. COUVERCLE	1		~071130	I	65.12504-5028	1
	65.12504-5028	. HEAD;FUEL FILTER	. COUVERCLE	1		071131~			

DATE	JUN. 30, 2008
REV.NO.	EXB08-06

Fig. 032 FUEL SYSTEM
SYSTEME DE GAZOLE

Serial No. ;

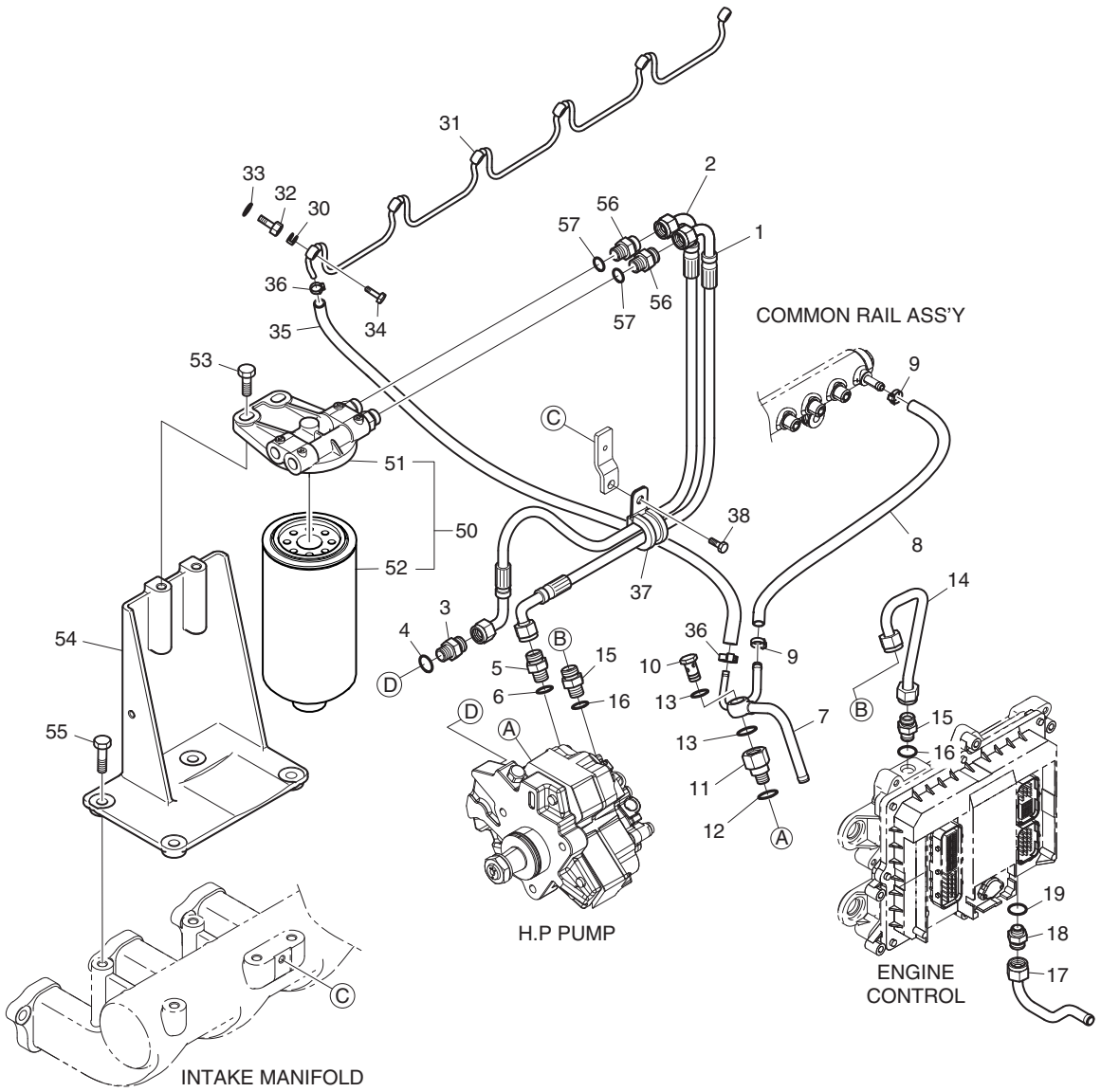

DATE	JUN. 30, 2008
REV. NO.	EXB08-06

Fig. 032 FUEL SYSTEM SYSTEME DE GAZOLE

Serial No. ;

Key No.	Part No.	Description	Description	Q'ty	S.C	Serial No.	ICA	Replaceable part	
								Part No.	Q'ty
032-52	65.12503-5026	. FILTER;FUEL	. FILTRE	1					
53	06.01923-3217	BOLT ASS'Y M10X30	BOULON	2					
54	65.12540-0057C	BRACKET;FUEL FILTER	SUPPORT	1		~070324	T	65.12540-0061	1
								06.01913-3217	4
	65.12540-0061	BRACKET;FUEL FILTER	SUPPORT	1		070325~			
55	06.01913-3216	BOLT M10X28	BOULON	4		~070324			
	06.01913-3217	BOLT M10X30	BOULON	4		070325~			
56	65.98130-0229	ADAPTER	ADAPTEUR	2					
57	06.56190-0706	SEAL RING A14X20	ANNEAU DU JOINT	2					

DATE	JUN. 30, 2007
REV.NO.	EXB07-06

Fig. 033 ALTERNATOR MOUNTING ALTERNATEUR ET SUPPORT

Serial No. ;

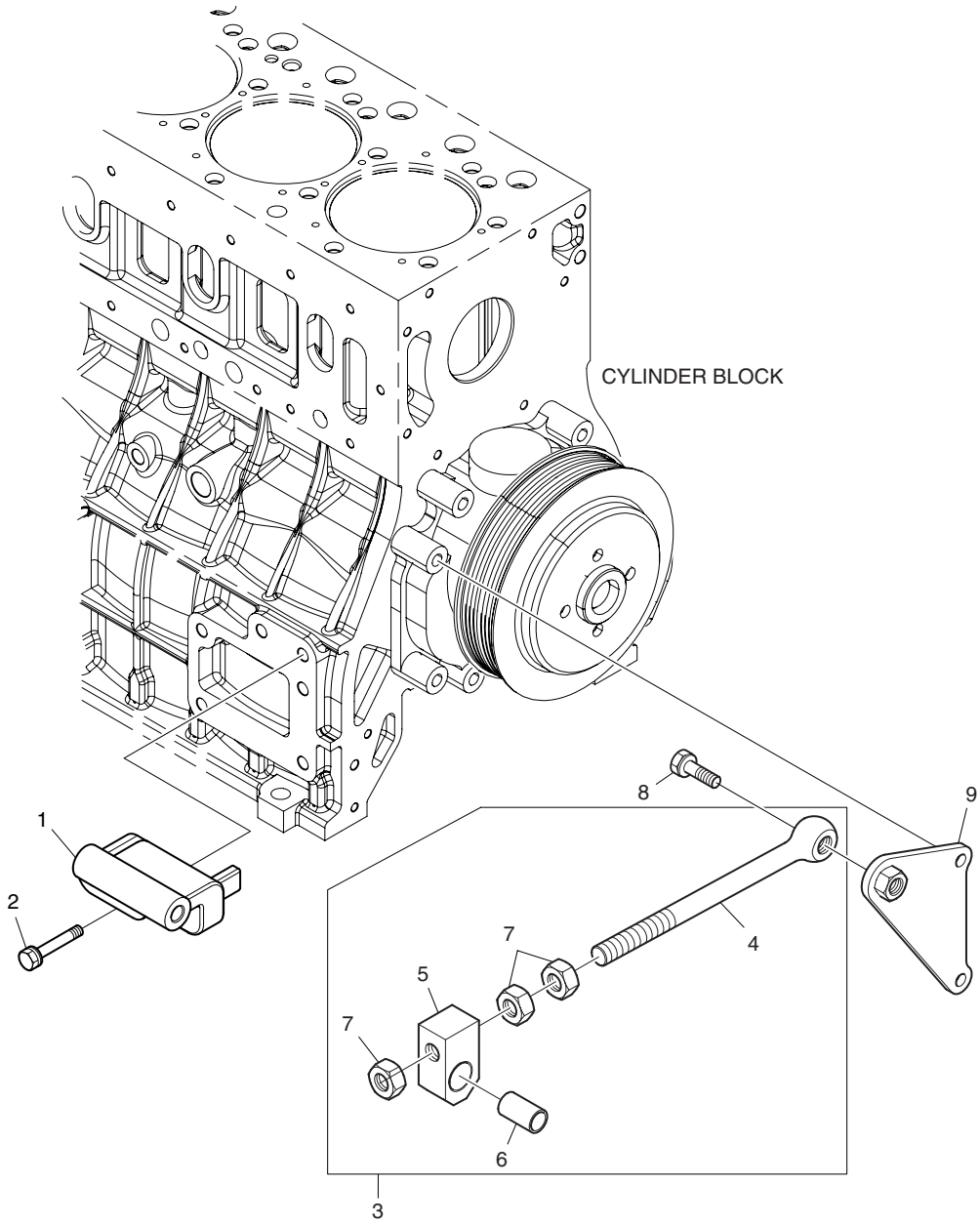

DATE	JUN. 30, 2007
REV. NO.	EXB07-06

Fig. 033 ALTERNATOR MOUNTING ALTERNATEUR ET SUPPORT

Serial No. ;

Key No.	Part No.	Description	Description	Q'ty	S.C	Serial No.	ICA	Replaceable part	
								Part No.	Q'ty
033-1	65.19102-0096	BRACKET;ALTERNATOR	SUPPORT	1		~071220	Y	65.19102-0103	1
	65.19102-0103	**BRACKET;ALTERNATOR**	SUPPORT	1		071221~			
2	06.01943-3323	BOLT ASS'Y M12X1.5X60	BOULON	2					
3	65.19103-6010A	EYE BOLT ASS'Y	BOULON D'OEIL	1					
4	65.90441-0009A	. EYE BOLT	. BOULON D'OEIL	1	D				
5	65.19107-0001A	. PIECE;GUIDE	. GUIDE	1	D				
6	65.93020-0055	. BUSH	. DOUILLE	1	D				
7	06.11063-9217	. NUT	. ECROU	3					
8	06.01943-3319	BOLT ASS'Y M12X1.5X40	BOULON	1					
9	65.19103-5049	SUPPORT;ALTERNATOR	SUPPORT	1					

DATE	DEC. 26, 2006
1st EDITION	

Fig. 034 LIFTING HOOK CROCHET DE LEVAGE

Serial No. ;

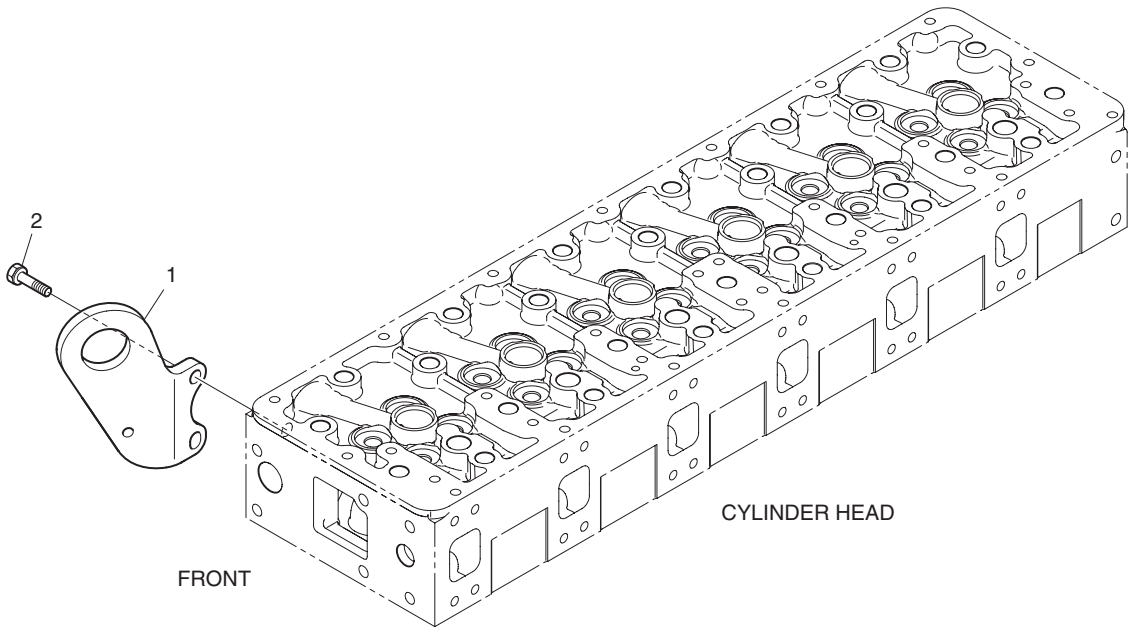

DATE	DEC. 26, 2006
1st EDITION	

Fig. 034 LIFTING HOOK CROCHET DE LEVAGE

Serial No. ;

Key No.	Part No.	Description	Description	Q'ty	S.C	Serial No.	ICA	Replaceable part	
								Part No.	Q'ty
034-1	65.19202-0057A	HOOK;LIFTING	CROCHET	1					
2	06.01924-3217	BOLT ASS'Y M10X30	BOULON	2					

DATE	JUN. 30, 2007
REV.NO.	EXB07-06

Fig. 035 STARTER STARTEUR

Serial No. ;

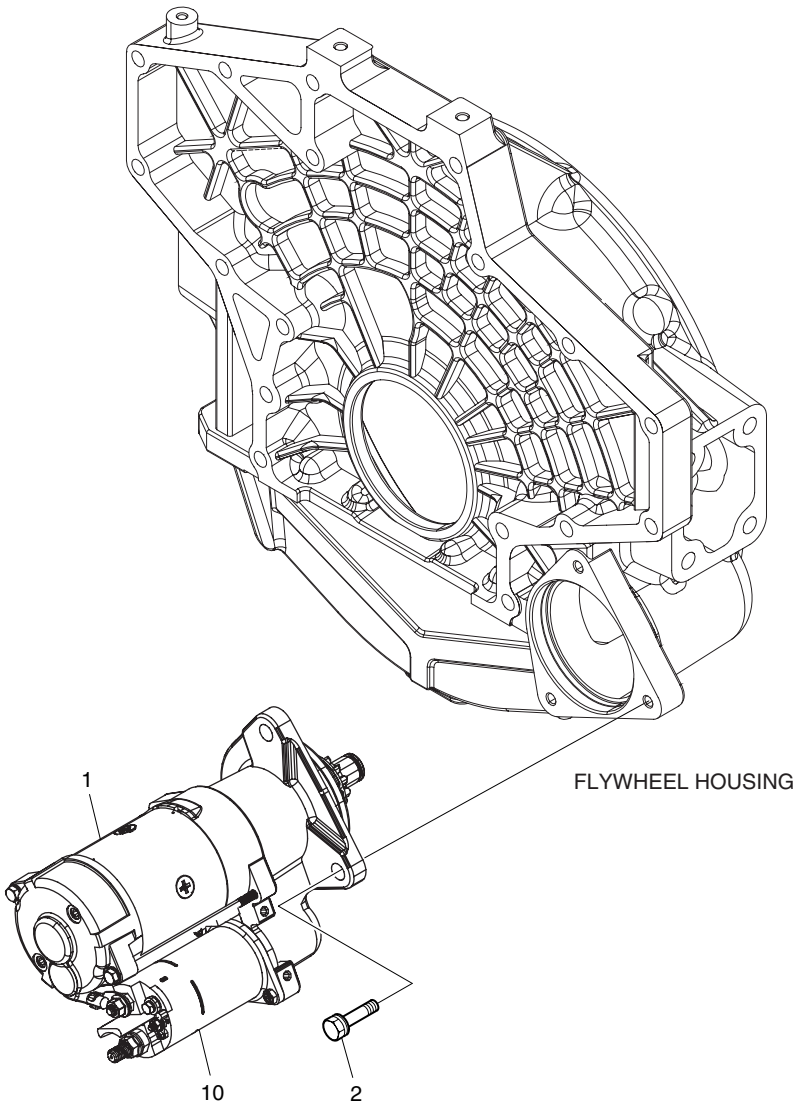

DATE	JUN. 30, 2007
REV. NO.	EXB07-06

Fig. 035 STARTER STARTEUR

Serial No. ;

Key No.	Part No.	Description	Description	Q'ty	S.C	Serial No.	ICA	Replaceable part	
								Part No.	Q'ty
035-1	65.26201-7075A	STARTER	DEMARREUR	1					
2	06.01953-3318	BOLT ASS'Y M12X1.5X35	BOULON	3					
10	**65.26214-0004**	**SWITCH;MAGNETIC**	COMMUTEZ MAGNETIQUE	1		071130~			

Fig. 036 SENSOR CAPTEUR

Serial No. ;

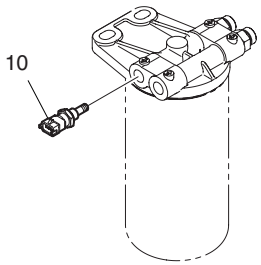

FUEL FILTER

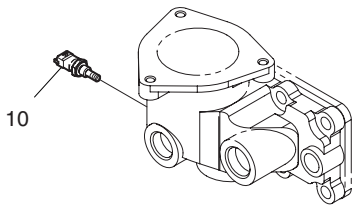

THERMOSTAT HOUSING

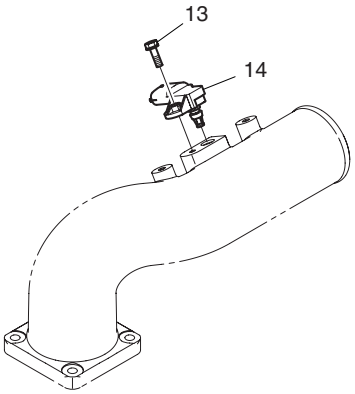

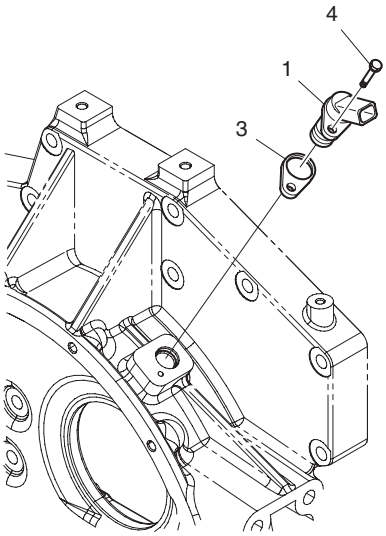

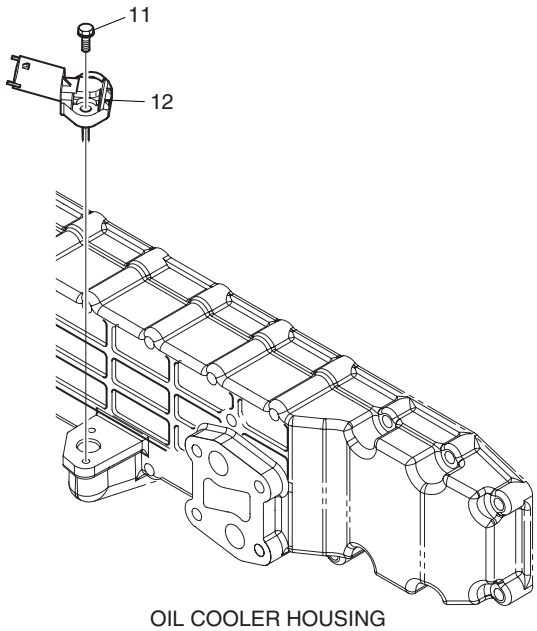

OIL COOLER HOUSING

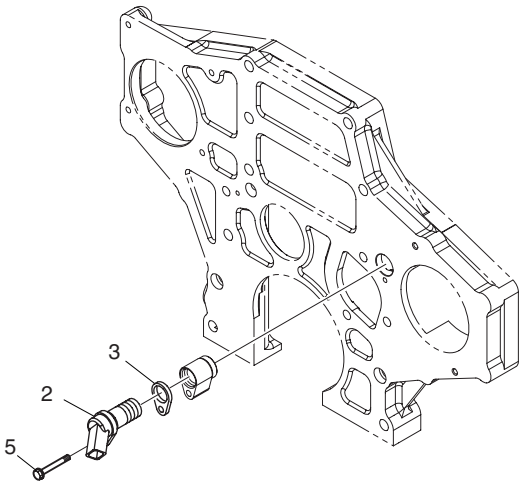

DATE	JUN. 30, 2007
REV. NO.	EXB07-06

Fig. 036 SENSOR CAPTEUR

Serial No. ;

Key No.	Part No.	Description	Description	Q'ty	S.C	Serial No.	ICA	Replaceable part	
								Part No.	Q'ty
036-1	65.27103-7014	SENSOR	CAPTEUR	1					
2	65.27103-7014	SENSOR	CAPTEUR	1					
3	65.11308-0005	SHIM	CALE	2	R				
	65.11308-0006	SHIM	CALE	2	R				
	65.11308-0007	SHIM	CALE	2	R				
	65.11308-0008	SHIM	CALE	2	R				
4	06.01923-2913	BOLT ASS'Y M6X20	BOULON	1					
5	06.01923-2919	BOLT ASS'Y M6X40	BOULON	1					
10	65.27423-7003	SENSOR;WATER TEMP	CAPTEUR	2					
11	06.01923-2913	BOLT ASS'Y M6X20	BOULON	2					
12	65.27427-7001	SENSOR;OIL PRESSURE	CAPTEUR	1					
13	06.01923-2913	BOLT ASS'Y M6X20	BOULON	1					
14	65.27444-7001	SENSOR;BOOST PRESSURE	CAPTEUR	1					

DATE	JUN. 30, 2007
REV.NO.	EXB07-06

Fig. 037 WIRE HARNESS
JAGUE DE NIVEAU

Serial No. ;

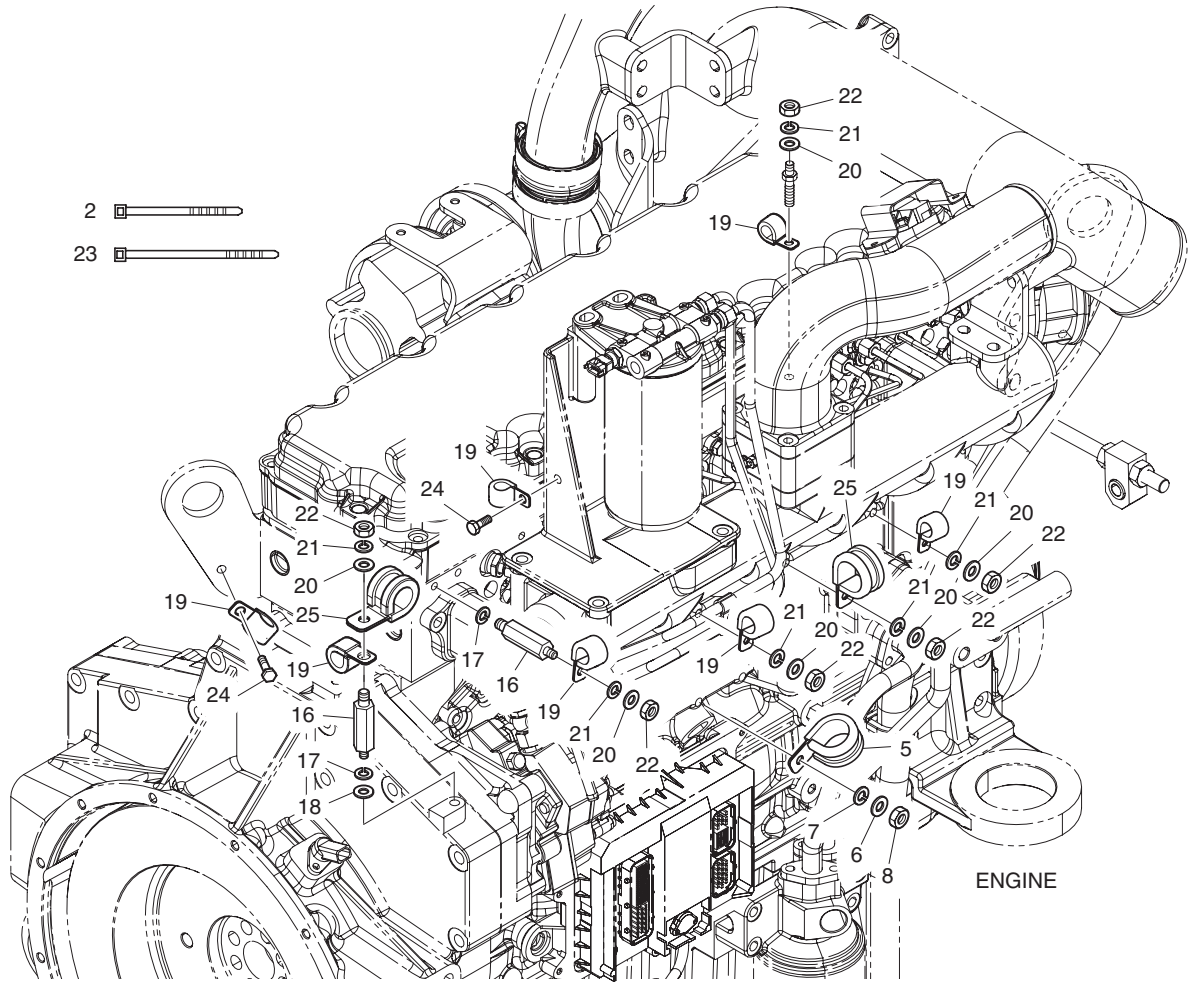

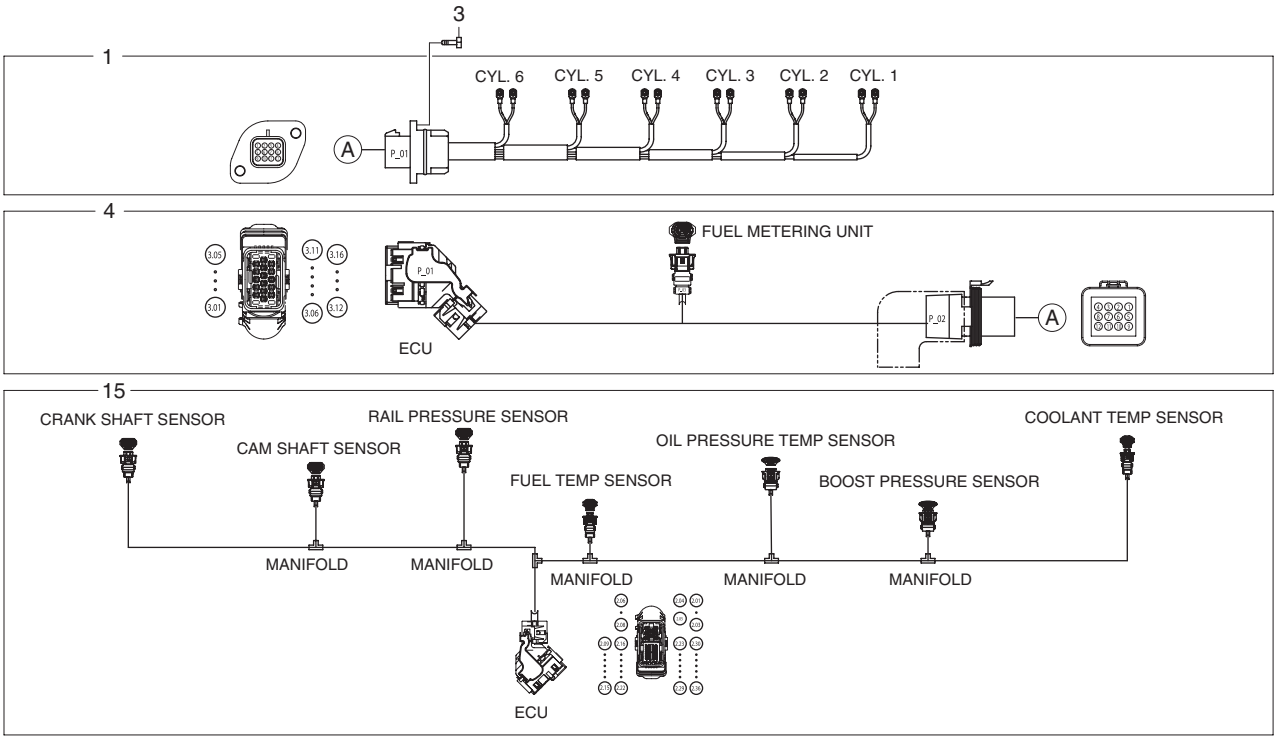

DATE	JUN. 30, 2007
REV. NO.	EXB07-06

Fig. 037 WIRE HARNESS JAGUE DE NIVEAU

Serial No. ;

Key No.	Part No.	Description	Description	Q'ty	S.C	Serial No.	ICA	Replaceable part	
								Part No.	Q'ty
037-1	65.29101-6184B	WIRE;ELECTRIC	FIL	1		~070512	Y	65.29101-6184C	1
	65.29101-6184C	**WIRE;ELECTRIC**	FIL	1		070513~			
2	65.97460-0008	BAND;TENSION	ATTACHE	5					
3	06.01913-2911	BOLT ASS'Y M6X16	BOULON	2					
4	65.29101-6201A	WIRE;ELECTRIC	FIL	1					
5	65.97401-0188	CLIP;PIPE	AGRAFE	1					
6	06.15010-2311	WASHER	RONDELLE	1					
7	06.16731-2107	WASHER	RONDELLE	1					
8	06.11063-8214	NUT	ECROU	1					
15	65.29101-6209	WIRE;ELECTRIC	FIL	1					
16	65.90201-0128	BOLT;STUD	BOULON DE GOUJON	2					
17	06.16731-2107	WASHER	RONDELLE	2					
18	06.15010-2311	WASHER	RONDELLE	1					
19	65.97401-0196	CLIP;PIPE	AGRAFE	7					
20	06.15010-2311	WASHER	RONDELLE	6					
21	06.16731-2107	WASHER	RONDELLE	6					
22	06.11063-8214	NUT	ECROU	6					
23	65.97460-0005	BAND;TENSION	ATTACHE	2					
24	06.01923-3111	BOLT ASS'Y M8X16	BOULON	2					
25	65.97401-5024	CLIP;PIPE	AGRAFE	2					

DATE	DEC. 26, 2006
1st EDITION	

Fig. 038 ENGINE MOUNTING SUPPORT DE MOTEUR

Serial No. ;

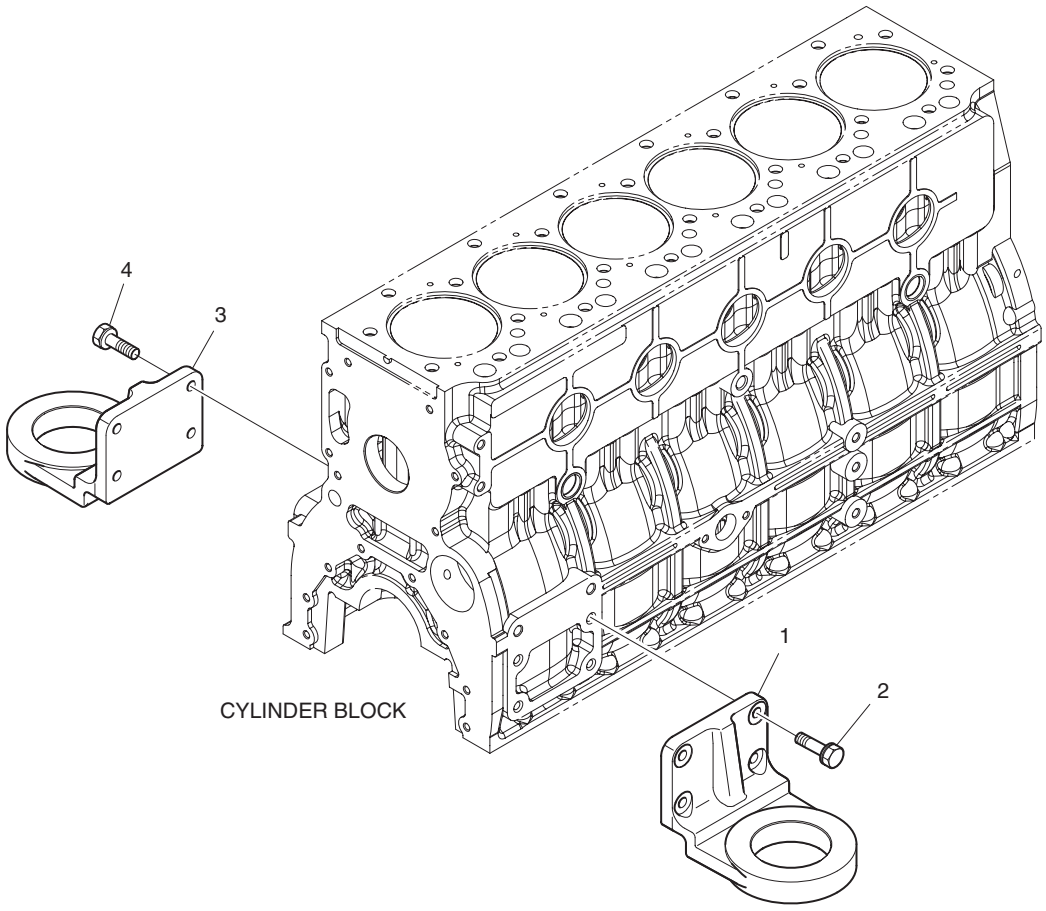

DATE	DEC. 26, 2006
1st EDITION	

Fig. 038 ENGINE MOUNTING SUPPORT DE MOTEUR

Serial No. ;

Key No.	Part No.	Description	Description	Q'ty	S.C	Serial No.	ICA	Replaceable part	
								Part No.	Q'ty
038-1	65.41530-0186	BRACKET;FRONT MOUNTING	SUPPORT	1					
2	06.01924-3217	BOLT ASS'Y M10X30	BOULON	4					
3	65.41530-0186	BRACKET;FRONT MOUNTING	SUPPORT	1					
4	06.01924-3217	BOLT ASS'Y M10X30	BOULON	4					

DATE	DEC. 26, 2006
1st EDITION	

Fig. 039 AIR COMPRESSOR COMPRESSEUR D'AIR

Serial No. ;

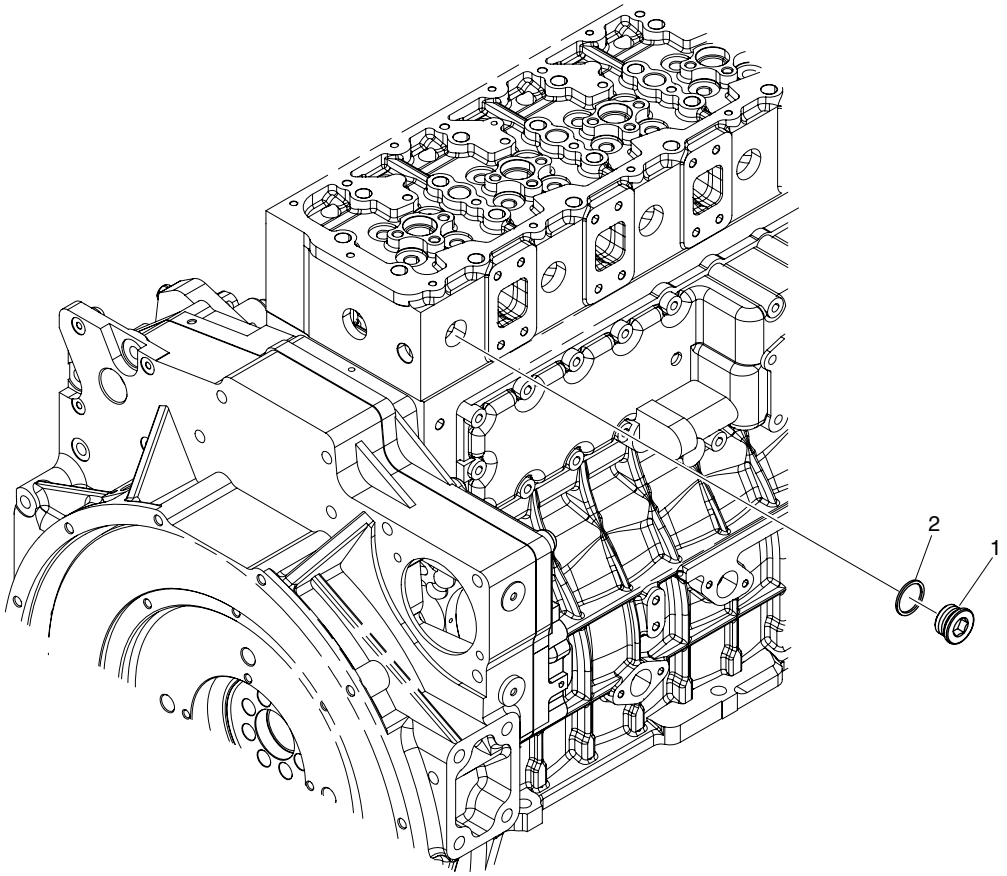

DATE	DEC. 26, 2006
1st EDITION	

Fig. 039 AIR COMPRESSOR COMPRESSEUR D'AIR

Serial No. ;

Key No.	Part No.	Description	Description	Q'ty	S.C	Serial No.	ICA	Replaceable part	
								Part No.	Q'ty
039-1	65.90310-0135	PLUG;SCREW	BOUCHON	1					
2	06.56190-0705	RING;SEAL A14X18	BAGUE D'ETANCHEITE	1					

DATE	JUN. 30, 2007
REV.NO.	EXB07-06

Fig. 040 OVERHAUL GASKET KIT - ALL
KIT DE GARNITURE DE REVISION

Serial No. ;

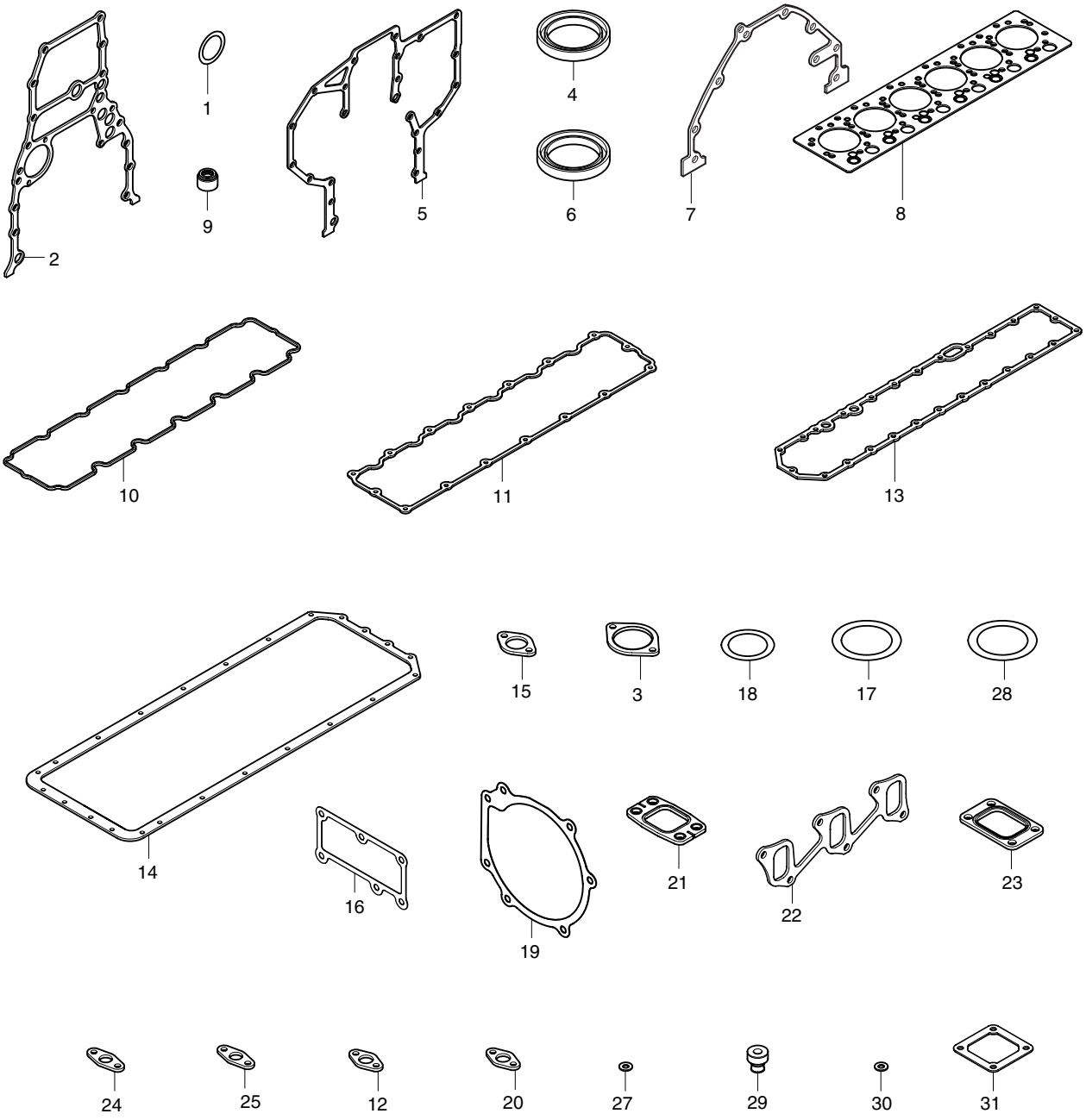

DATE	JUN. 30, 2007
REV. NO.	EXB07-06

Fig. 040 OVERHAUL GASKET KIT - ALL
KIT DE GARNITURE DE REVISION

Serial No. ;

Key No.	Part No.	Description	Description	Q'ty	S.C	Serial No.	ICA	Replaceable part	
								Part No.	Q'ty
040--	65.99601-8071	ALL OVERHAUL GASKET KIT	TOUS REVISENT LE KIT DE	1					
1	06.56021-0102	. O-RING	. JOINT TORIQUE	1					
2	65.01903-0034	. GASKET	. JOINT	1					
3	65.38901-0018A	. GASKET;PTO	. JOINT	1					
4	65.01510-0040	. SEAL;OIL	. JOINT	1					
5	65.01904-0032	. GASKET	. JOINT	1					
6	65.01510-0157	. SEAL;OIL	. JOINT	1					
7	65.01905-0009	. GASKET	. JOINT	1					
8	65.03901-0071	. GASKET;CYLINDER HEAD	. JOINT	1					
9	65.03905-5002	. PACKING;CYLHEAD COVER	. EMBALLAGE	14					
10	65.03905-0037A	. GASKET;CYLHEAD COVER	. JOINT	1					
11	65.03905-0041	. GASKET;CYLHEAD COVER	. JOINT	1					
12	65.05903A0001	. GASKET	. JOINT	4					
13	65.05902-0023	. GASKET;OIL COOLER	. JOINT	1					
14	65.05904-0035	. GASKET;OIL PAN	. JOINT	1					
15	65.05901-0032	. GASKET	. JOINT	1					
16	65.06904-0020	. GASKET;THERMOSTAT	. JOINT	1		~070315	I	65.06904-0021	1
	65.06904-0021	**. GASKET;THERMOSTAT**	. JOINT	1		070316~			
17	65.06904-0003	. GASKET;THERMOSTAT	. JOINT	1					
18	65.96501-0099A	. O-RING	. JOINT TORIQUE	2					
19	65.06901-0042	. GASKET;WATER PUMP	. JOINT	1					
20	65.06903-0029	. GASKET;WATER PIPE	. JOINT	1					
21	65.08901-0045	. GASKET;EXHAUST MANIFOL	. JOINT	6					
22	65.08902-0030A	. GASKET;INTAKE MANIFOLD	. JOINT	2					
23	65.09901-0018A	. GASKET	. JOINT	1					
24	65.96601-0067	. GASKET;T/C OIL RETURN	. JOINT	1					
25	65.96601-0052	. GASKET(M/G OIL COOLER)	. JOINT	1					
27	65.96507-0053	. RING;SEAL	. BAGUE D'ETANCHEITE	6					
28	06.56020-0115	. O-RING	. JOINT TORIQUE	1					
29	65.96210-6001A	. RUBBER;CUSHION	. CAOUTCHOUC	3					
30	06.56180-0712	. RING;SEAL A8X14	. BAGUE D'ETANCHEITE	18					
31	65.09904-0008	. GASKET;AIR HEATER	. JOINT	2					

DATE	JUN. 30, 2007
REV.NO.	EXB07-06

Fig. 041 OVERHAUL GASKET KIT - TOP
KIT DE GARNITURE DE REVISION

Serial No. ;

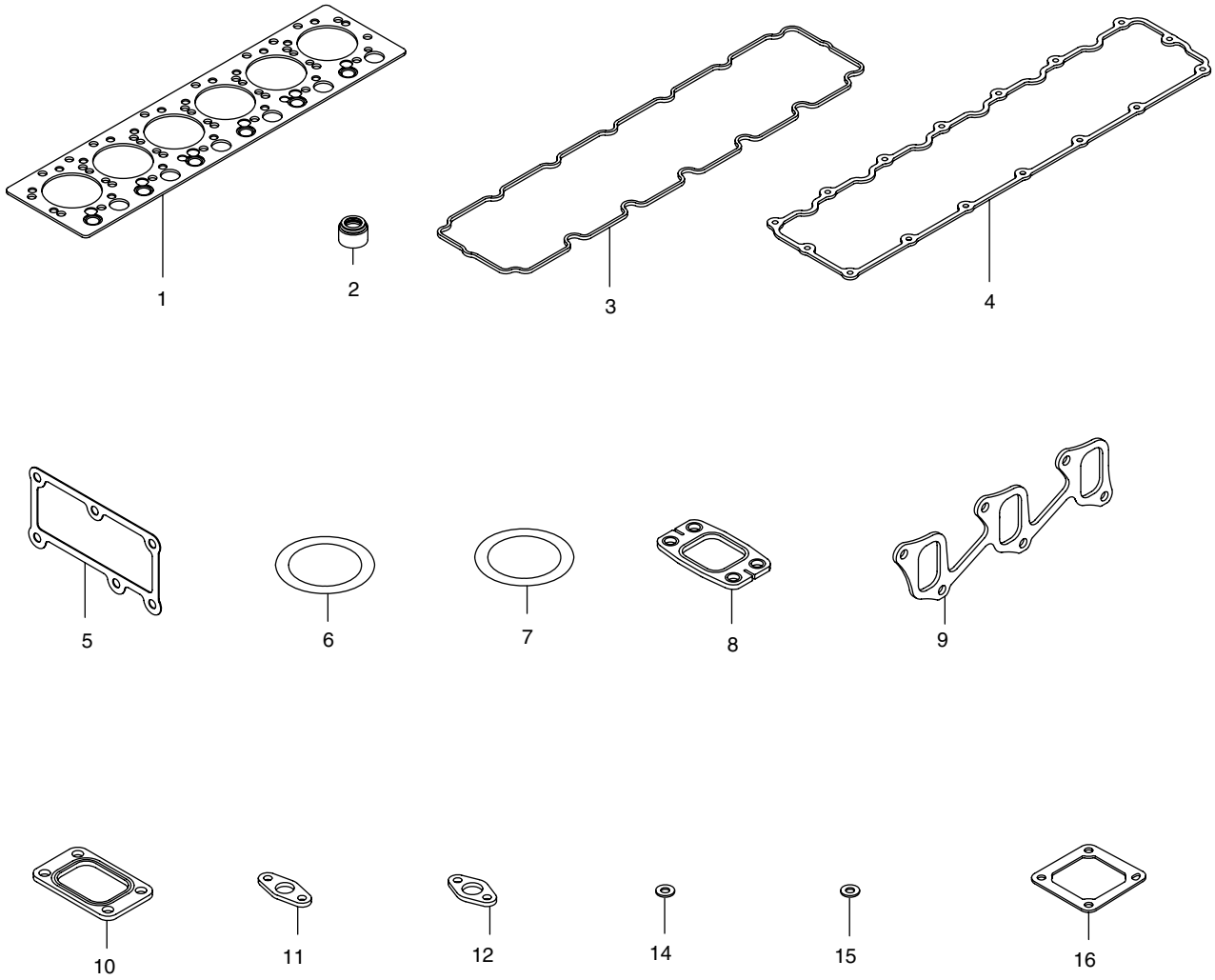

DATE	JUN. 30, 2007
REV. NO.	EXB07-06

Fig. 041 OVERHAUL GASKET KIT - TOP
KIT DE GARNITURE DE REVISION

Serial No. ;

Key No.	Part No.	Description	Description	Q'ty	S.C	Serial No.	ICA	Replaceable part	
								Part No.	Q'ty
041--	65.99605-8042	TOP OVERHAUL GASKET KIT	TOUS REVISENT LE KIT DE	1					
1	65.03901-0071	. GASKET;CYLINDER HEAD	. JOINT	1					
2	65.03905-5002	. PACKING;CYLHEAD COVER	. EMBALLAGE	14					
3	65.03905-0037A	. GASKET;CYLHEAD COVER	. JOINT	1					
4	65.03905-0041	. GASKET;CYLHEAD COVER	. JOINT	1					
5	65.06904-0020	. GASKET;THERMOSTAT	. JOINT	1		~070315	I	65.06904-0021	1
	65.06904-0021	**. GASKET;THERMOSTAT**	. JOINT	1		070316~			
6	65.06904-0003	. GASKET;THERMOSTAT	. JOINT	1					
7	65.96501-0099A	. O-RING	. JOINT TORIQUE	2					
8	65.08901-0045	. GASKET;EXHAUST MANIFOL	. JOINT	6					
9	65.08902-0030A	. GASKET;INTAKE MANIFOLD	. JOINT	2					
10	65.09901-0018A	. GASKET	. JOINT	1					
11	65.96601-0067	. GASKET;T/C OIL RETURN	. JOINT	1					
12	65.96601-0052	. GASKET(M/G OIL COOLER)	. JOINT	1					
14	65.96507-0053	. RING;SEAL	. BAGUE D'ETANCHEITE	6					
15	06.56180-0712	. RING;SEAL A8X14	. BAGUE D'ETANCHEITE	18					
16	65.09904-0008	. GASKET;AIR HEATER	. JOINT	2					

DATE	JUN. 30, 2007
REV.NO.	EXB07-06

Fig. 1100 MAIN FRAME ARMATURE PRINCIPALE

Serial No. ;

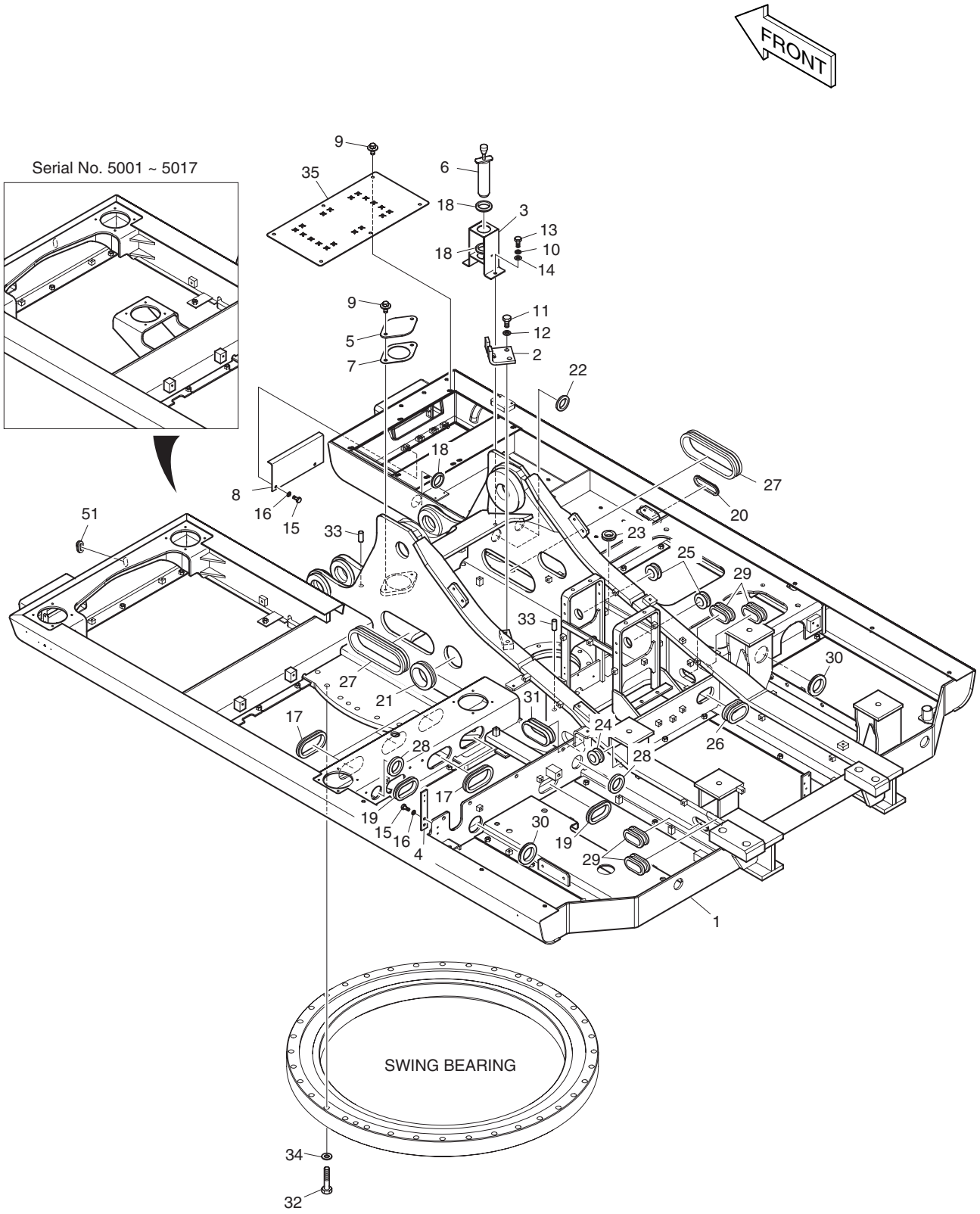

DATE	JUN. 30, 2007
REV. NO.	EXB07-06

Fig. 1100 MAIN FRAME ARMATURE PRINCIPALE

Serial No. ;

Key No.	Part No.	Description	Description	Q'ty	S.C	Serial No.	ICA	Replaceable part	
								Part No.	Q'ty
1100--	**K1008724E**	**MAIN FRAME ASS'Y**	ARMATURE PRINCIPALE	-	D				
1	K1008677B	FRAME;MAIN	ARMATURE PRINCIPALE	1		5001–5017			
	K1008677G	**FRAME;MAIN**	ARMATURE PRINCIPALE	1		**5018–**			
2	191-03000B	PLATE	PLAQUE	1					
3	191-03094C	PLATE	PLAQUE	1					
4	191-03270B	PLATE	PLAQUE	1					
5	621-02938B	COVER	COUVERCLE	1					
6	2123-1902B	PIN;KNOCK	GOUPILLE	1					
7	180-00463	PACKING	EMBALLAGE	1					
8	K1004521A	PLATE	PLAQUE	1					
9	DS0025023	BOLT;SET	BOULON	8					
10	S5102603	WASHER;SPRING	RONDELLE ELASTIQUE	2					
11	S0521366	BOLT	BOULON	2					
12	S5102901	WASHER;SPRING	RONDELLE ELASTIQUE	2					
13	S0512066	BOLT	BOULON	2					
14	S5010613	WASHER;PLAIN	RONDELLE	2					
15	S0508866	BOLT	BOULON	4					
16	S5102503	WASHER;SPRING	RONDELLE ELASTIQUE	4					
17	DS7601020	BUSHING;RUBBER	DOUILLE EN CAOUTCHOUC	5					
18	DS7603052	BUSHING;RUBBER	DOUILLE EN CAOUTCHOUC	3					
19	DS7601031	RUBBER;BUSHING	CAOUTCHOUC	2					
20	DS7601026	BUSHING;RUBBER	DOUILLE EN CAOUTCHOUC	1					
21	2160-1004D23	BUSHING;RUBBER	DOUILLE EN CAOUTCHOUC	1					
22	2160-1004D28	BUSHING;RUBBER	DOUILLE EN CAOUTCHOUC	2					
23	2160-1004D33	BUSHING;RUBBER	DOUILLE EN CAOUTCHOUC	1					
24	2160-1004D38	BUSHING;RUBBER	DOUILLE EN CAOUTCHOUC	1					
25	2160-1004D51	BUSHING;RUBBER	DOUILLE EN CAOUTCHOUC	2					
26	2160-1201D14	BUSHING;RUBBER	DOUILLE EN CAOUTCHOUC	1					
27	2160-1201D15	BUSHING;RUBBER	DOUILLE EN CAOUTCHOUC	2					
28	2160-1004D3	BUSHING;RUBBER	DOUILLE EN CAOUTCHOUC	2					
29	2160-1201D27	BUSHING;RUBBER	DOUILLE EN CAOUTCHOUC	4					
30	2160-1004D26	GROMMET	CANON ISOLANT	2					
31	2160-1201D26	BUSHING;RUBBER	DOUILLE EN CAOUTCHOUC	1					
32	S0570866	BOLT	BOULON	35					
33	2123-1107D7	PIN;KNOCK	GOUPILLE	2					
34	2114-9012A	WASHER;HARDEN	RONDELLE	35					
35	K1024910	PLATE;ANTI-SKID	PLAQUE	1					
51	160-00081	CAP	CHAPEAU	1					

DATE	DEC. 26, 2006
1st EDITION	

Fig. 1110 COUNTER WEIGHT
MASSE D'EQUILIBRAGE

Serial No. ;

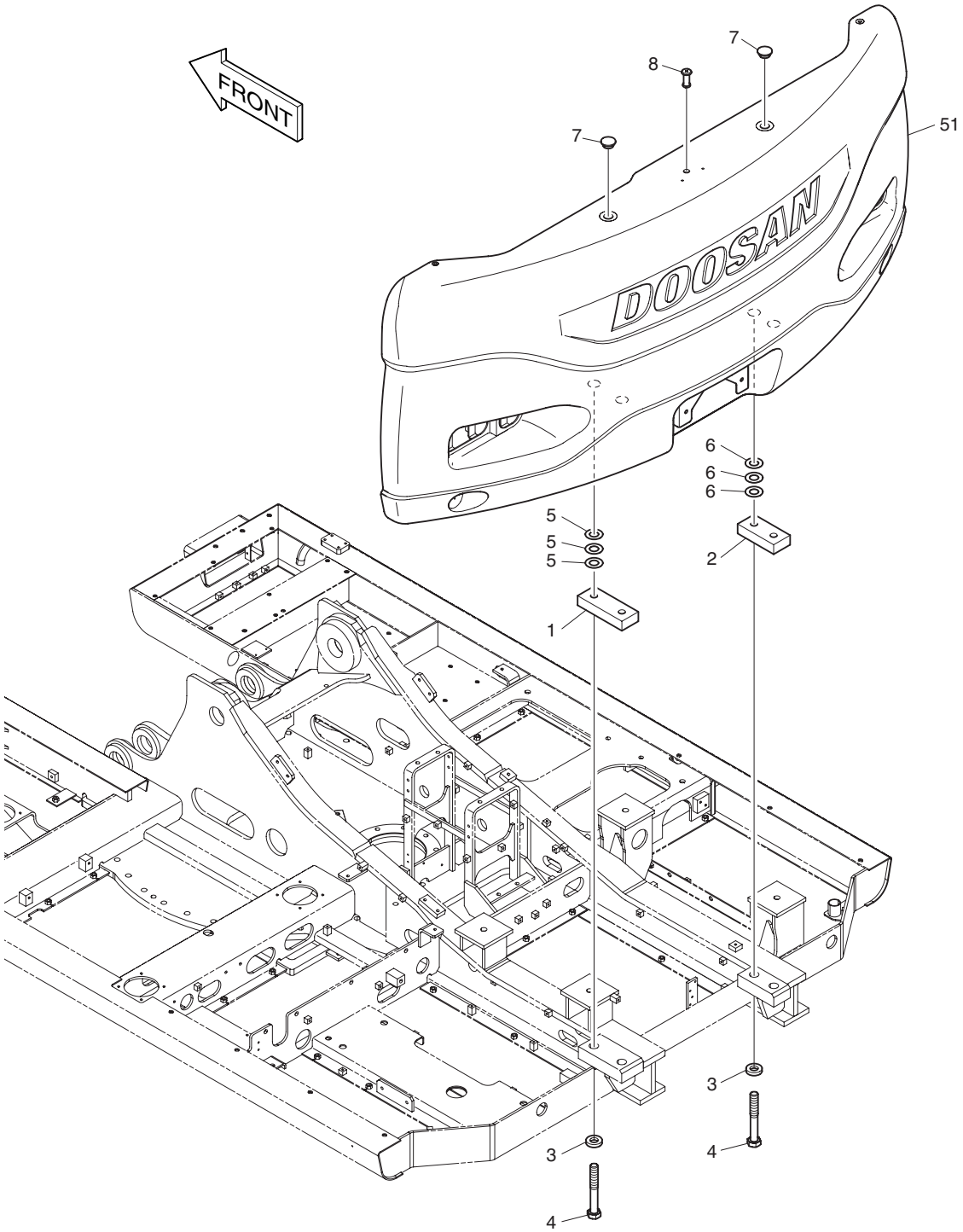

DATE	DEC. 26, 2006
1st EDITION	

Fig. 1110 COUNTER WEIGHT
MASSE D'EQUILIBRAGE

Serial No. ;

Key No.	Part No.	Description	Description	Q'ty	S.C	Serial No.	ICA	Replaceable part	
								Part No.	Q'ty
1110--	624-00088A	COUNTER WEIGHT	CONTRE- POIDS	-	D				
1	191-03429B	BLOCK	BLOC	1					
2	191-03430B	BLOCK	BLOC	1					
3	2114-1370	WASHER	RONDELLE	4					
4	120-00322A	BOLT	BOULON	4					
5	2114-1059D229	SHIM	CALE	5					
6	2114-1059D224	SHIM	CALE	5					
7	2160-9011	CAP	CHAPEAU	2					
8	K1006982A	GROMMET	CANON ISOLANT	1					
51	624-00082E	COUNTER WEIGHT	CONTRE- POIDS	1					

DATE	DEC. 26, 2006
1st EDITION	

Fig. 1120 ENGINE MOUNTING SUPPORT DE MOTEUR

Serial No. ;

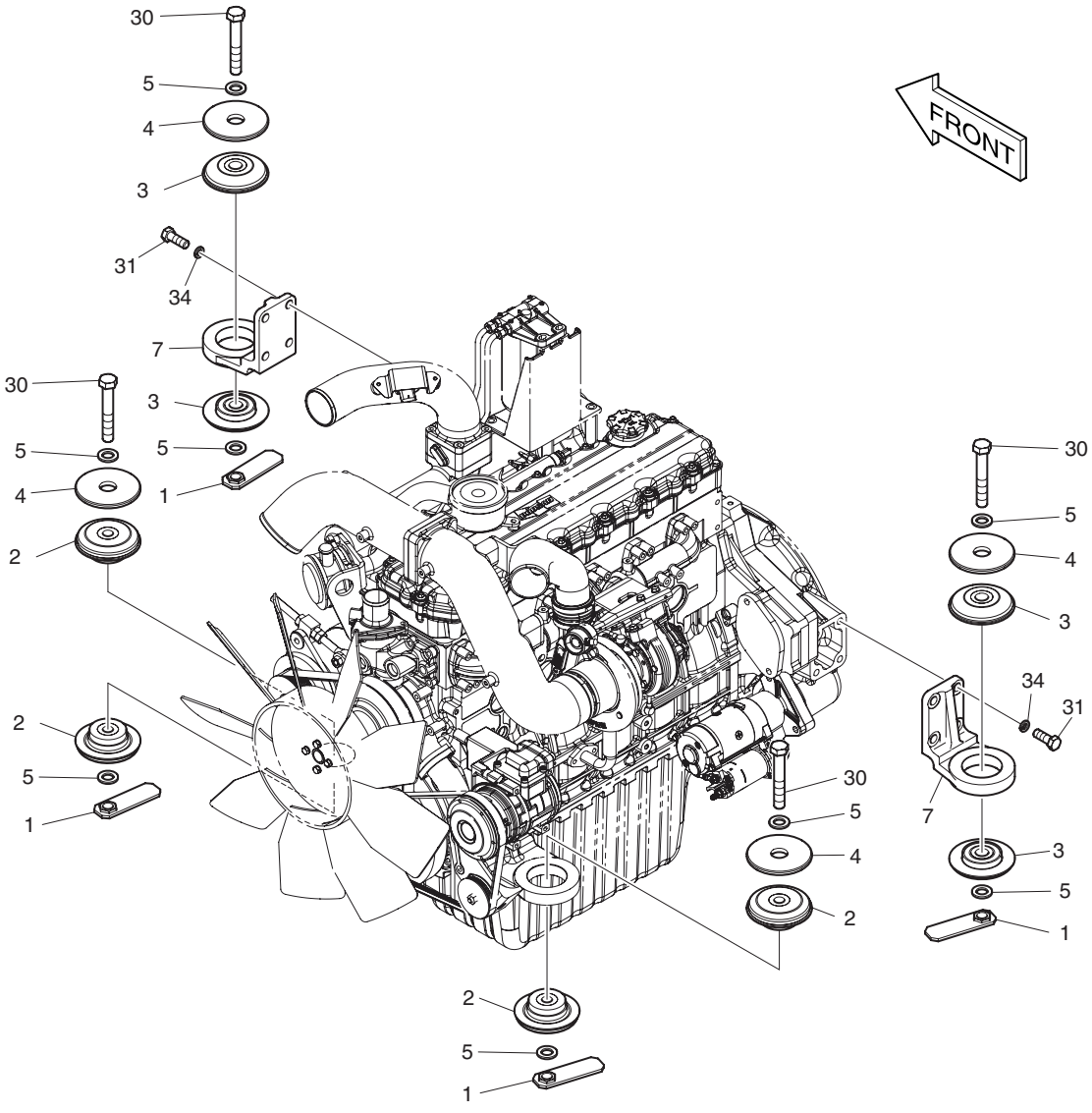

DATE	DEC. 26, 2006
1st EDITION	

Fig. 1120 ENGINE MOUNTING SUPPORT DE MOTEUR

Serial No. ;

Key No.	Part No.	Description	Description	Q'ty	S.C	Serial No.	ICA	Replaceable part	
								Part No.	Q'ty
1120--	K1013130B	ENGINE MOUNTING	SUPPORT DE MOTEUR	-	D				
1	195-02643C	SUPPORT;NUT	SUPPORT	4					
2	161-00550	RUBBER	CAOUTCHOUC	4					
3	161-00548	RUBBER	CAOUTCHOUC	4					
4	2114-1929	WASHER	RONDELLE	4					
5	2114-9012A	WASHER;HARD	RONDELLE	8					
7	K1009639	BRACKET;ENGINE MOUNTING	SUPPORT	2					
30	S0771466	BOLT	BOULON	4					
31	S0521566	BOLT	BOULON	8					
34	S5102903	WASHER	RONDELLE	8					

DATE	JUN. 30, 2007
REV.NO.	EXB07-06

Fig. 1130 RADIATOR MOUNTING
SUPPORT DE RADIATEUR

Serial No. ;

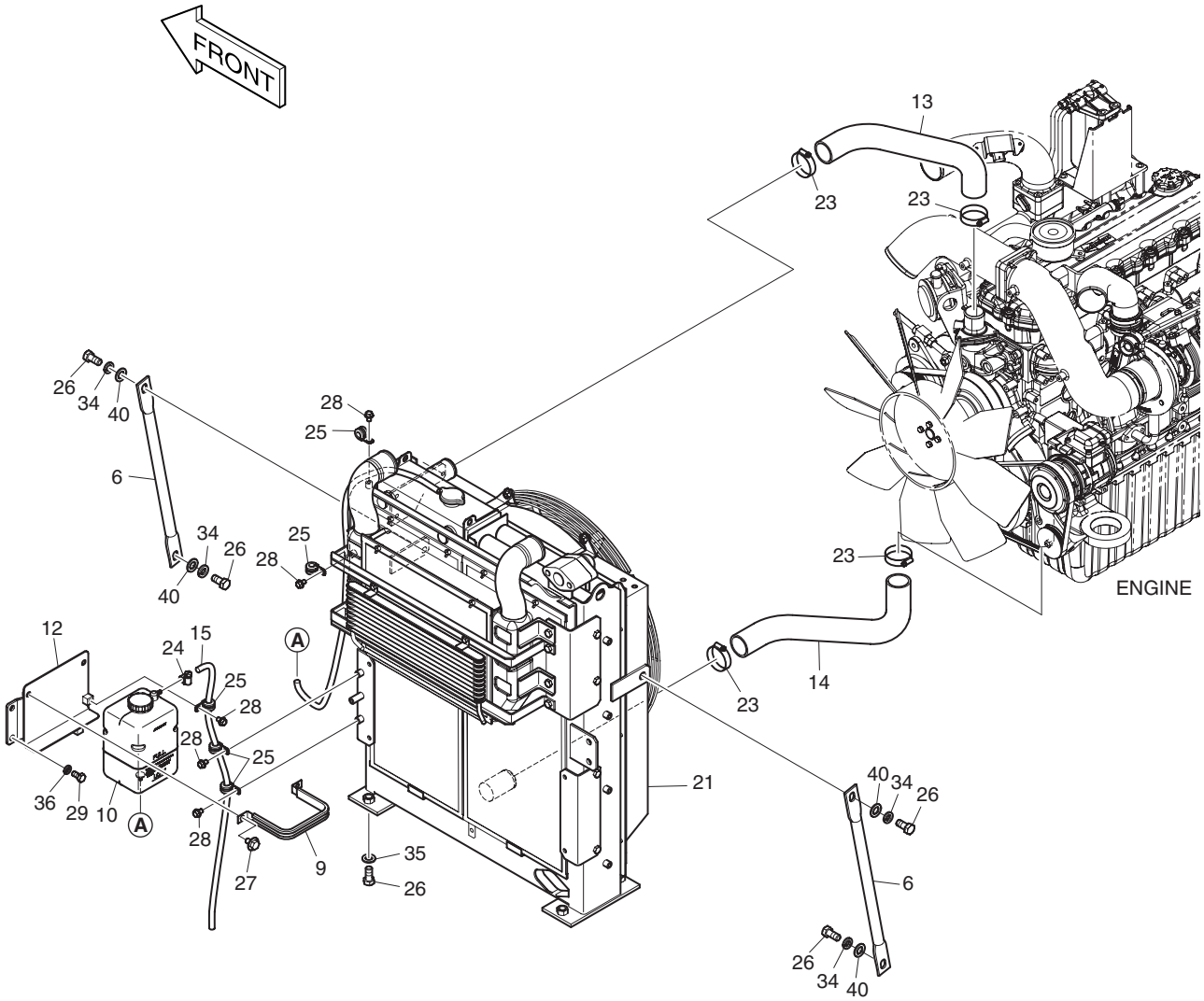

DATE	JUN. 30, 2007
REV. NO.	EXB07-06

Fig. 1130 RADIATOR MOUNTING SUPPORT DE RADIATEUR

Serial No. ;

Key No.	Part No.	Description	Description	Q'ty	S.C	Serial No.	ICA	Replaceable part	
								Part No.	Q'ty
1130--	**K1013130C**	**ENGINE MOUNTING**	SUPPORT DE MOTEUR	-	D				
6	K1009635	STAY	SEJOUR	2					
9	K1000722A	CLAMP	BRIDE	1					
10	K1003180A	TANK;RESERVE	RESERVOIR	1					
12	K1009745A	BRACKET	SUPPORT	1					
13	K1009160A	HOSE;WATER	TUYAU FLEXIBLE	1					
14	K1009161A	HOSE;WATER	TUYAU FLEXIBLE	1					
15	2185-1247D142	HOSE	TUYAU FLEXIBLE	1					
21	K1009271B	RADIATOR ASS'Y	ENSEMBLE RADIATEUR	1		5001–5014	I	K1009271C	1
	K1009271C	**RADIATOR ASS'Y**	ENSEMBLE RADIATEUR	1		**5015–**			
23	S8470075	CLAMP;HOSE	COLLIER DE LA CONDUITE	4					
24	S8450006	CLAMP;HOSE	COLLIER DE LA CONDUITE	1					
25	124-00208D2	CLIP	AGRAFE	5					
26	S0521366	BOLT	BOULON	8					
27	DS0025014	BOLT;SET	BOULON	2					
28	K1001029	BOLT	BOULON	5					
29	S0515066	BOLT M12X25	BOULON	2					
34	S5102903	WASHER	RONDELLE	4					
35	2114-1816A	WASHER;PLAIN	RONDELLE	4					
36	S5102703	WASHER	RONDELLE	2					
40	S5010913	WASHER	RONDELLE	4					

DATE	JUN. 30, 2007
REV.NO.	EXB07-06

Fig. 1140 RADIATOR
RADIATEUR

Serial No. ;

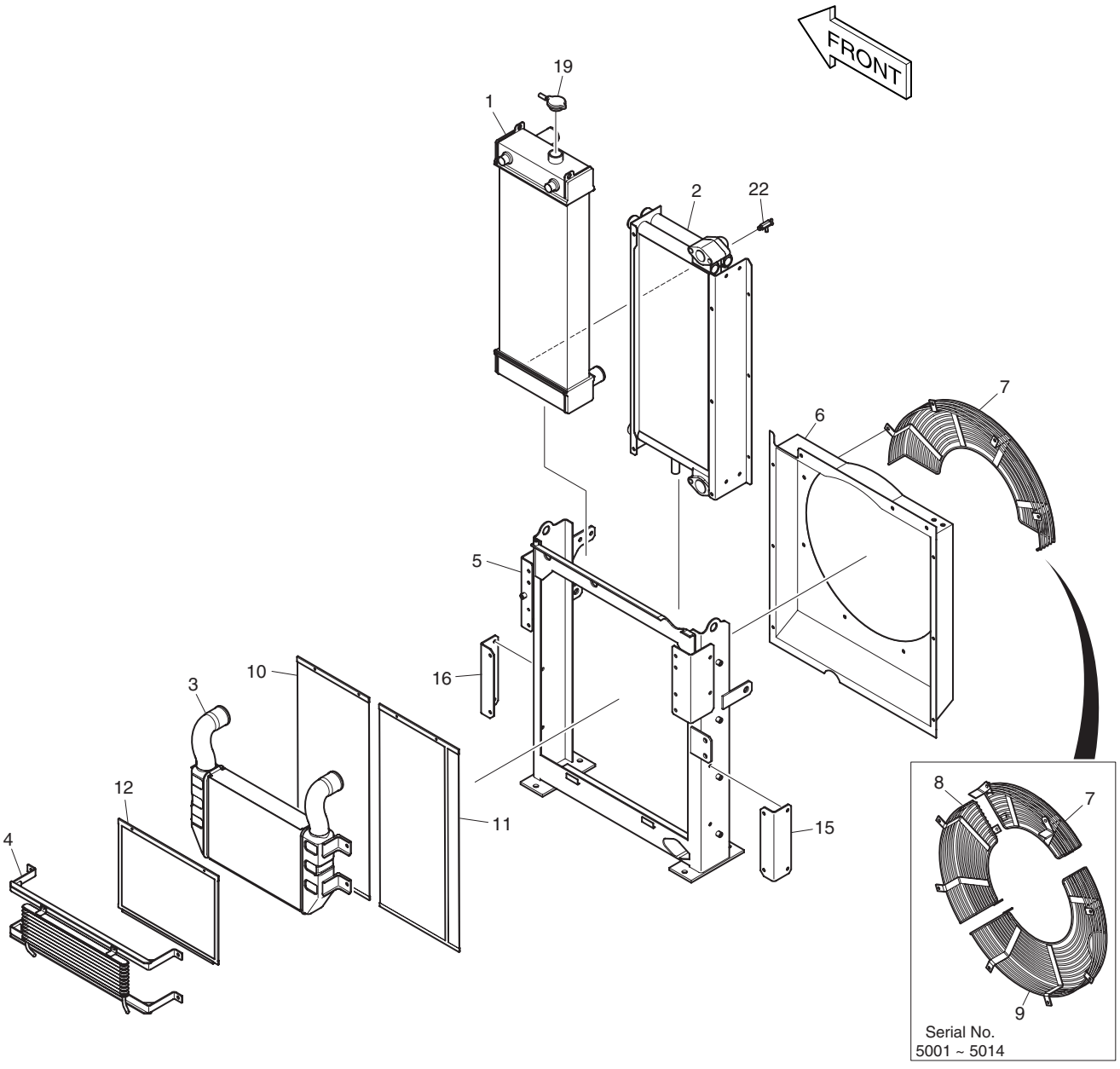

DATE	JUN. 30, 2007
REV. NO.	EXB07-06

Fig. 1140 RADIATOR RADIATEUR

Serial No. ;

Key No.	Part No.	Description	Description	Q'ty	S.C	Serial No.	ICA	Replaceable part	
								Part No.	Q'ty
1140--	K1009271B	RADIATOR ASS'Y	ENSEMBLE RADIATEUR	1		5001–5014	I	K1009271C	1
	K1009271C	**RADIATOR ASS'Y**	ENSEMBLE RADIATEUR	1		**5015–**			
1	K9004261	RADIATOR	RADIATEUR	1					
2	K9004262	COOLER;OIL	REFROIDISSEUR	1					
3	K9004263	CAC ASS'Y	CHARGEE	1		5001–5014	I	K9004263A	1
	K9004263A	**CAC ASS'Y**	CHARGEE	1		**5015–**			
4	K1015210	COOLER;FUEL	REFROIDISSEUR	1					
5	-	FRAME	ARMATURE	1					
6	K9004264	SHROUD	MONTURE	1					
7	K9004265	GUARD;FAN	GARDE	1		5001–5014			
	K9004265A	**GUARD;FAN**	GARDE	1		**5015–**			
8	**K9004266**	**GUARD;FAN**	GARDE	1		**5001–5014**			
9	**K9004267**	**GUARD;FAN**	GARDE	1		**5001–5014**			
10	K9004268	NET;WIRE	FILET DE FIL	1					
11	K9004269	NET;WIRE	FILET DE FIL	1					
12	K9004270	NET;WIRE	FILET DE FIL	1					
15	K9004271	BRACKET	SUPPORT	1					
16	K9004272	BRACKET	SUPPORT	1					
19	K1010769	CAP;PRESSURE	CHAPEAU	1					
22	K9003878	COCK ASS'Y	ROBINET	1					

DATE	JUN. 30, 2007
REV.NO.	EXB07-06

Fig. 1150 MUFFLER SILENCIEUX

Serial No. ;

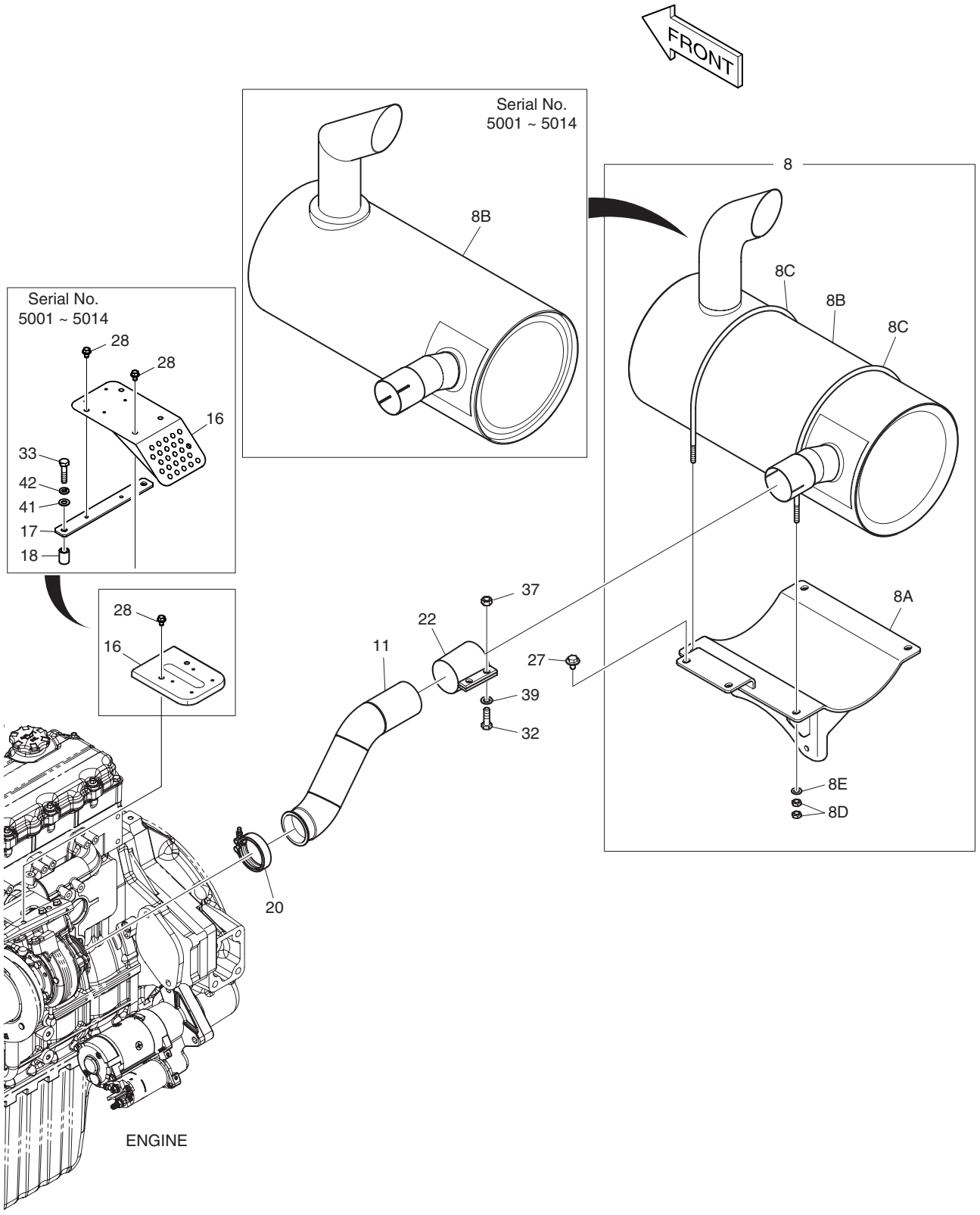

DATE	JUN. 30, 2007
REV. NO.	EXB07-06

Fig. 1150 MUFFLER SILENCIEUX

Serial No. ;

Key No.	Part No.	Description	Description	Q'ty	S.C	Serial No.	ICA	Replaceable part	
								Part No.	Q'ty
1150--	**K1013130C**	**ENGINE MOUNTING**	SUPPORT DE MOTEUR	-	D				
8	K1009642C	MUFFLER SUB ASS'Y	SILENCIEUX	1		5001–5014	I	K1009642E	1
	K1009642E	**MUFFLER SUB ASS'Y**	SILENCIEUX	1		**5015–**			
8A	K1009641B	. BRACKET;MUFFLER	. SUPPORT	1					
8B	K1023869A	. MUFFLER	. SILENCIEUX	1		5001–5014	I	K1023869B	1
	K1023869B	**. MUFFLER**	. SILENCIEUX	1		**5015–**			
8C	2120-2135A	. BOLT;U	. BOULON	2					
8D	S4012633	. NUT	. ECROU	8					
8E	S5010613	. WASHER	. RONDELLE	4					
11	K1009721A	PIPE;EXHAUST	TUYAU	1					
16	K1015292A	COVER;TURBO CHARGER	COUVERCLE	1		5001–5014			
	K1037930	**COVER;TURBO CHARGER**	COUVERCLE	1		**5015–**			
17	**K1015293**	**PLATE**	PLAQUE	1		**5001–5014**			
18	**K1015294**	**SPACER**	DOUILLE D'ECARTEMENT	2		**5001–5014**			
20	K1024182	CLAMP;HOSE	COLLIER DE LA CONDUITE	1					
22	124-00310A	CLAMP	BRIDE	1					
27	DS0025014	BOLT;SET	BOULON	2					
28	K1001029	BOLT	BOULON	4		5001–5014			
	K1001029	**BOLT**	BOULON	2		**5015–**			
32	S0515866	BOLT	BOULON	2					
33	**S0558466**	**BOLT**	BOULON	2		**5001–5014**			
37	S4012733	NUT	ECROU	2					
39	S5010713	WASHER	RONDELLE	2					
41	**S5010613**	**WASHER**	RONDELLE	2		**5001–5014**			
42	**S5102603**	**WASHER**	RONDELLE	2		**5001–5014**			

DATE	JUN. 30, 2008
REV.NO.	EXB08-06

Fig. 1160 CAC PIPING
CHARGEE DE REFROIDISSEUR D'CAIR

Serial No. ;

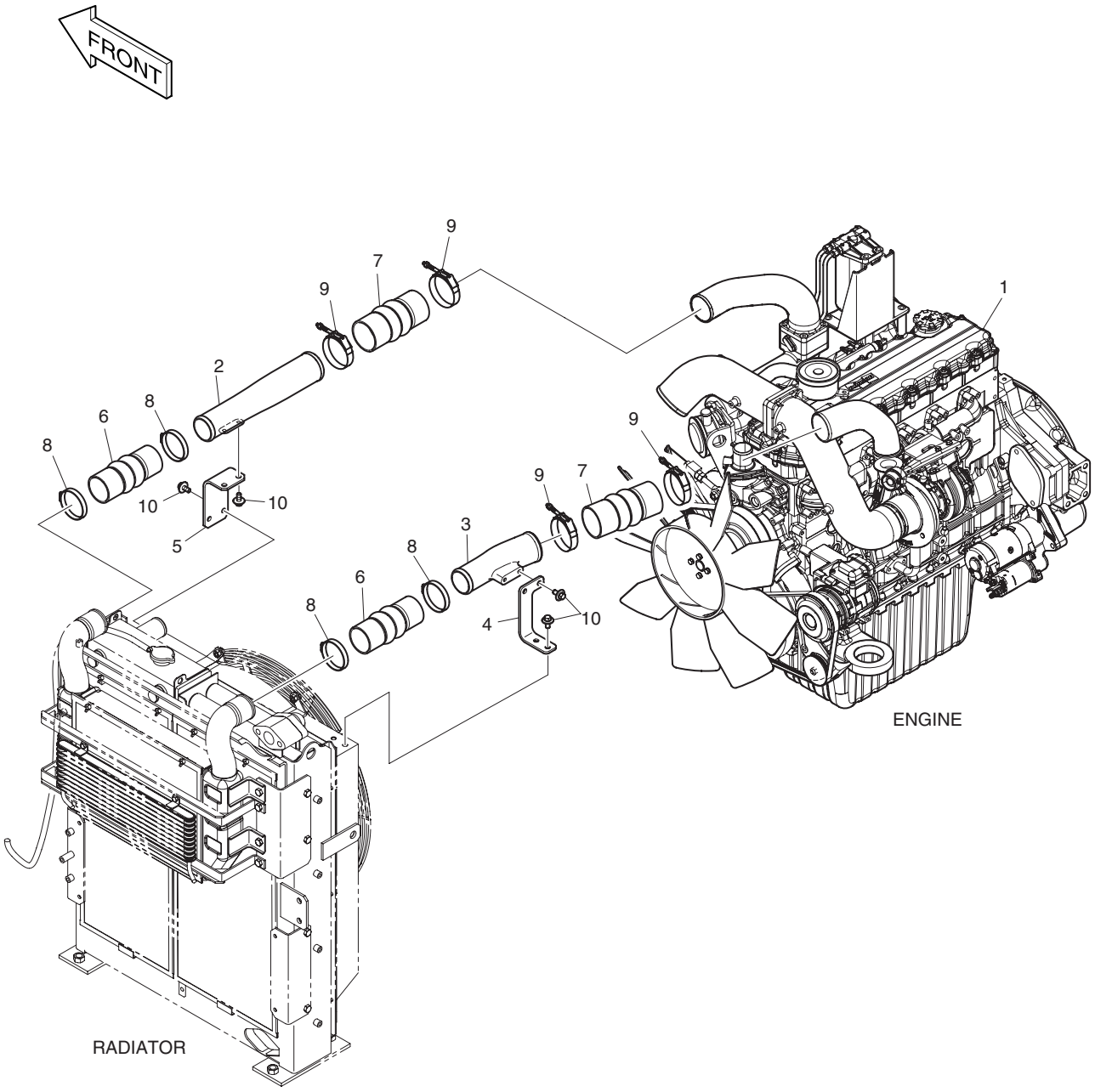

DATE	JUN. 30, 2008
REV. NO.	EXB08-06

Fig. 1160 CAC PIPING
CHARGEE DE REFROIDISSEUR D'CAIR

Serial No. ;

Key No.	Part No.	Description	Description	Q'ty	S.C	Serial No.	ICA	Replaceable part	
								Part No.	Q'ty
1160--	K1017753A	CAC PIPING	CHARGEE DE	-	D				
1	K1009634	ENGINE ASS'Y(Tier-III)	ENSEMBLE MOTEUR	1					
2	K1009162	PIPE;AIR	TUYAU	1					
3	K1009163A	PIPE;AIR	TUYAU	1					
4	K1009636A	BRACKET;CAC PIPE	SUPPORT	1					
5	K1009637	BRACKET;CAC PIPE	SUPPORT	1					
6	K1012213	HOSE;AIR	TUYAU FLEXIBLE	2		5001–5019	I	K1038558	2
	K1038558	**HOSE;AIR**	TUYAU FLEXIBLE	2		**5020–**			
7	K1012214	HOSE;AIR	TUYAU FLEXIBLE	2		5001–5019	I	K1038559	2
	K1038559	**HOSE;AIR**	TUYAU FLEXIBLE	2		**5020–**			
8	K1000704A	CLAMP	BRIDE	4					
9	124-00194	CLAMP	BRIDE	4					
10	DS0025017	BOLT;SET	BOULON	8					

DATE	DEC. 26, 2006
1st EDITION	

Fig. 1170 AIR CLEANER ASS'Y
FILTRE A AIR

Serial No. ;

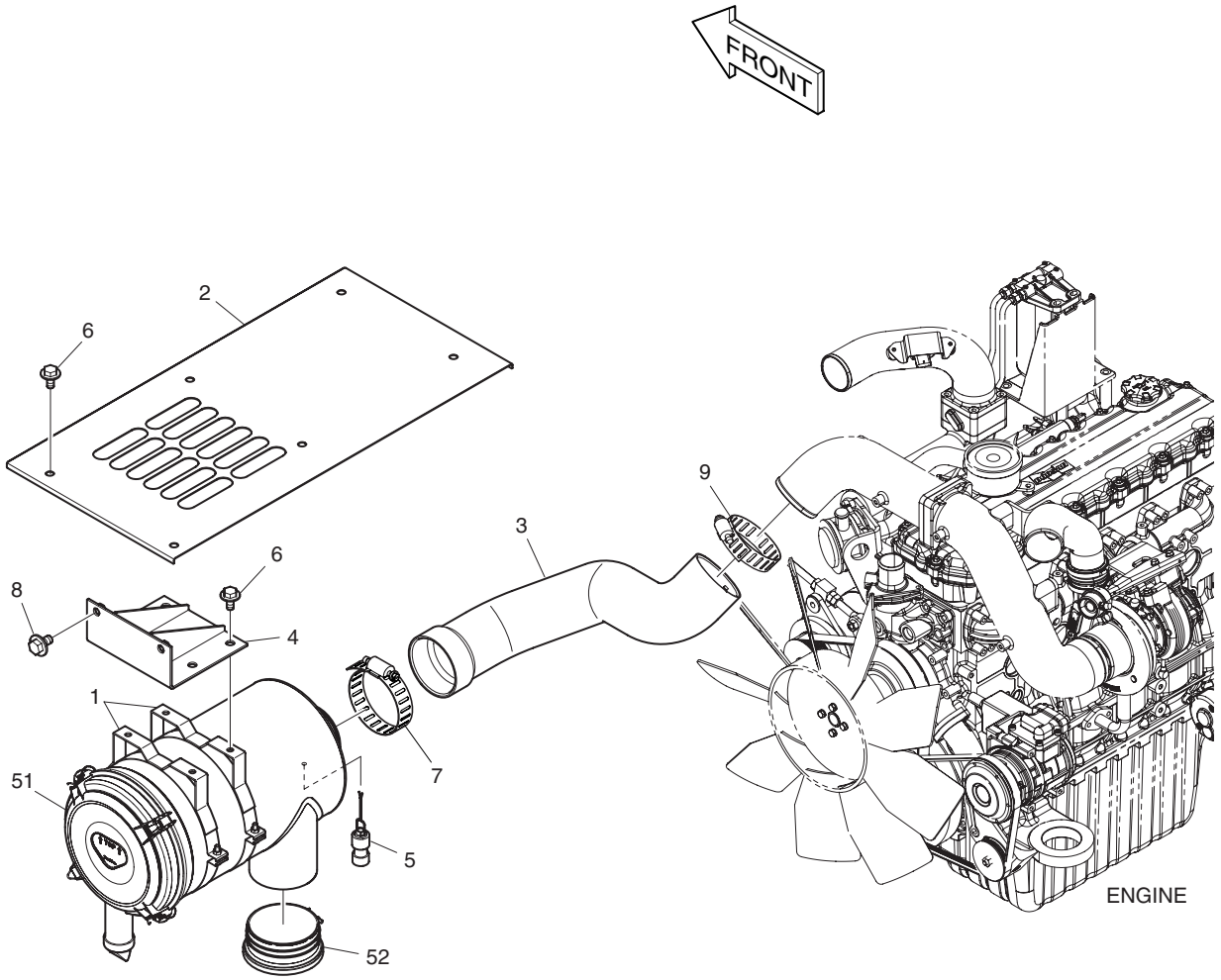

DATE	DEC. 26, 2006
1st EDITION	

Fig. 1170 AIR CLEANER ASS'Y
FILTRE A AIR

Serial No. ;

Key No.	Part No.	Description	Description	Q'ty	S.C	Serial No.	ICA	Replaceable part	
								Part No.	Q'ty
1170--	K1008909	AIR CLEANER ASS'Y	ENSEMBLE FILTRE A AIR	-	D				
1	124-00298A	BAND;AIR CLEANER	ATTACHE	2					
2	621-02799B	COVER;AIR CLEANER	COUVERCLE	1					
3	K1008507	HOSE;AIR	TUYAU FLEXIBLE	1					
4	195-02780A	BRACKET;AIR CLEANER	SUPPORT	1					
5	170-00004	INDICATOR;DUST	INDICATEUR	1					
6	DS0025023	BOLT;SET	BOULON A 6 PANS	10					
7	S8510143	CLAMP;HOSE	COLLIER	1					
8	DS0025013	BOLT;SET	BOULON	2					
9	S8510118	CLAMP;HOSE	COLLIER	1					
51	204-00067	AIR CLEANER ASS'Y	ENSEMBLE FILTRE A AIR	1					
52	K1003618	CAP;RAIN	CHAPEAU	1					

DATE	DEC. 26, 2006
1st EDITION	

Fig. 1180 AIR CLEANER
FILTRE A AIR

Serial No. ;

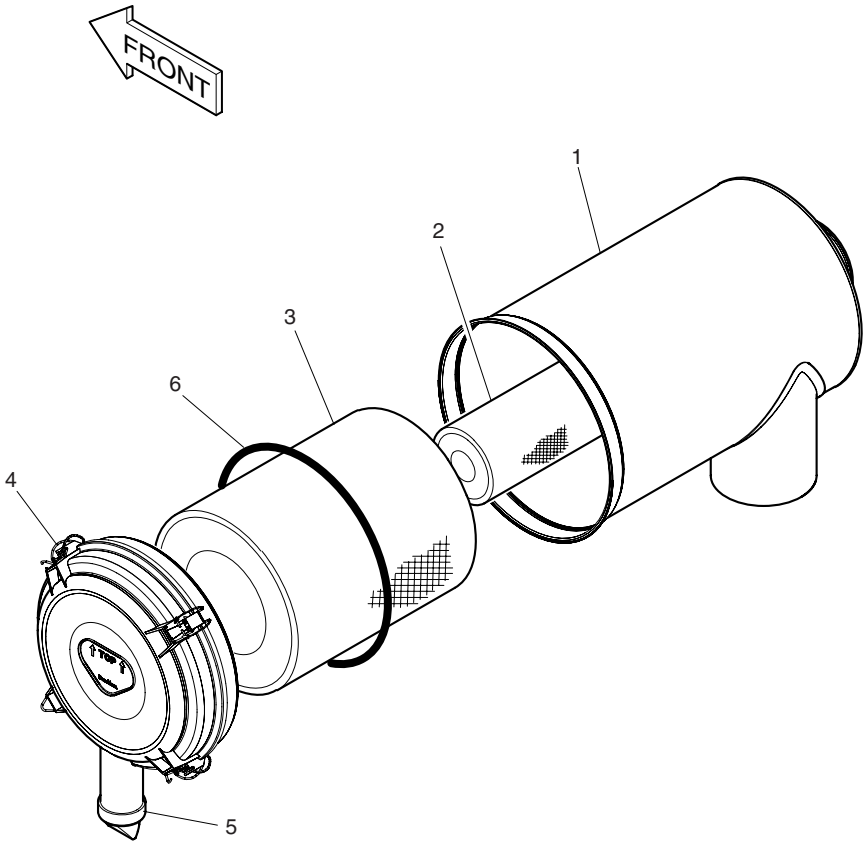

DATE	DEC. 26, 2006
1st EDITION	

Fig. 1180 AIR CLEANER FILTRE A AIR

Serial No. ;

Key No.	Part No.	Description	Description	Q'ty	S.C	Serial No.	ICA	Replaceable part	
								Part No.	Q'ty
1180--	204-00067	AIR CLEANER	FILTRE A AIR	1					
1	-	BODY	CARTER	1	D				
2	474-00039	ELEMENT;INNER	ELEMENT	1					
3	474-00040	ELEMENT;OUTER	ELEMENT	1					
4	204-00075	COVER	COUVERCLE	1					
5	204-00070	VALVE;VACUATOR	VANNE	1					
6	-	O-RING	JOINT TORIQUE	1	D				

DATE	JUN. 30, 2007
REV.NO.	EXB07-06

Fig. 1190 PUMP INSTALLATION
INSTALLATION DE POMPE

Serial No. ;

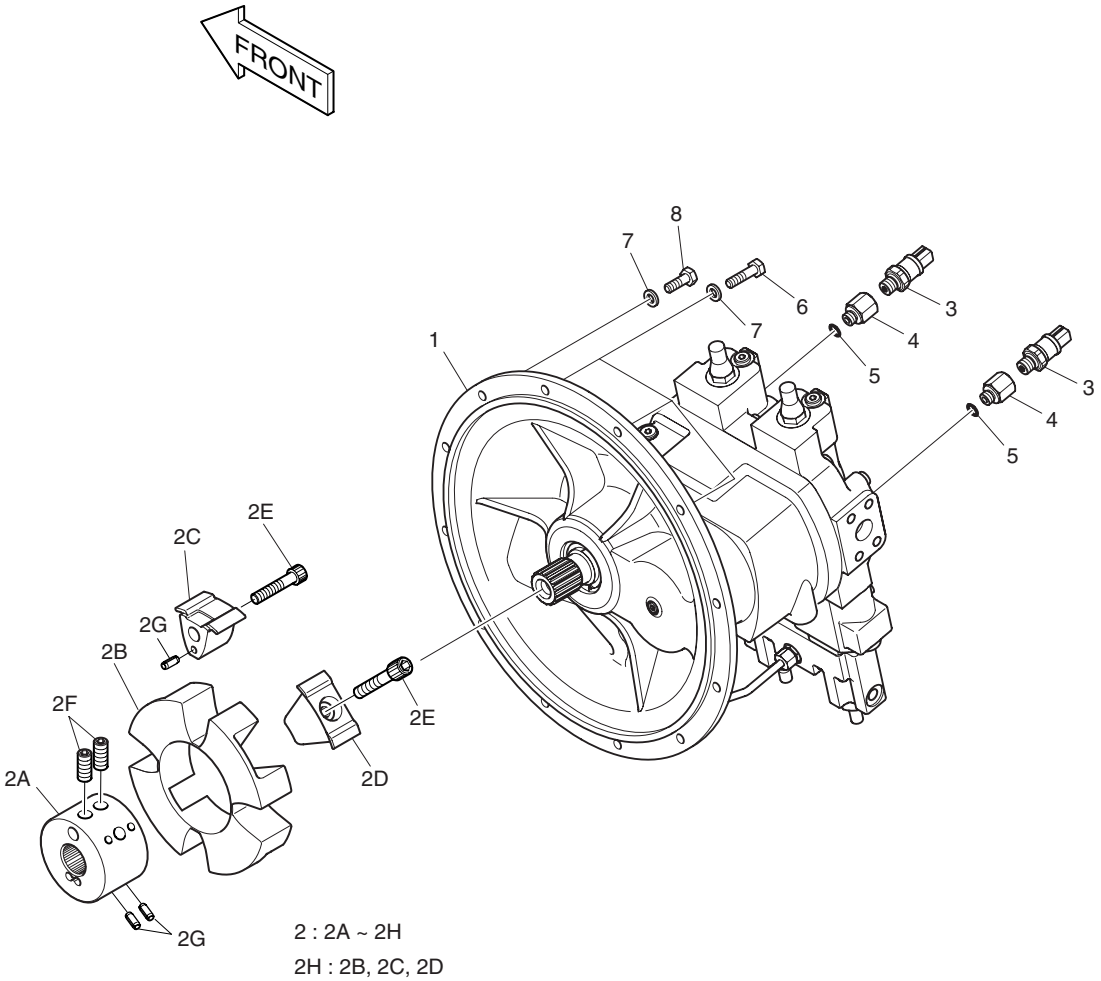

2 : 2A ~ 2H

2H : 2B, 2C, 2D

DATE	JUN. 30, 2007
REV. NO.	EXB07-06

Fig. 1190 PUMP INSTALLATION
INSTALLATION DE POMPE

Serial No. ;

Key No.	Part No.	Description	Description	Q'ty	S.C	Serial No.	ICA	Replaceable part	
								Part No.	Q'ty
1190--	**401-00467E**	**PUMP INSTALLATION**	INSTALLATION DE POMPE	-	D				
1	401-00476A	PUMP;MAIN	POMPE	1					
2	K1013823	COUPLING;PUMP	ACCOUPLEMENT	1					
2A	-	. HUB	. MOYEU	1	D				
2B	2474-7009	. ELEMENT	. ELEMENT	1					
2C	-	. INSERT(A)	. INSERTION	4	D				
2D	-	. INSERT(R)	. INSERTION	4	D				
2E	K9000422	. SET;SOCKET BOLT	. BOULON A 6 PANS CREUX	1					
2F	-	. BOLT;CLAMPING	. BOULON	2	D				
2G	-	. PIN;SPRING	. GOUPILLE	12	D				
2H	2474-7009K	. ELEMENT KIT	. ELEMENT	1					
3	2547-9045	SENSOR;PRESSURE	CAPTEUR	2					
4	K1025341	ADAPTER	ADAPTEUR	2		5001–5019	I	K1025341A	2
	K1025341A	**ADAPTER**	ADAPTEUR	2		**5020–**			
5	S8040061	O-RING	JOINT TORIQUE	2					
6	S0558366	BOLT	BOULON	3					
7	S5102603	WASHER;SPRING	RONDELLE ELASTIQUE	12					
8	S0558166	BOLT	BOULON	9					

DATE	JUN. 30, 2008
REV.NO.	EXB08-06

Fig. 1200 SWING DEVICE
SYSTEME D'ORIENTATION

Serial No. ;

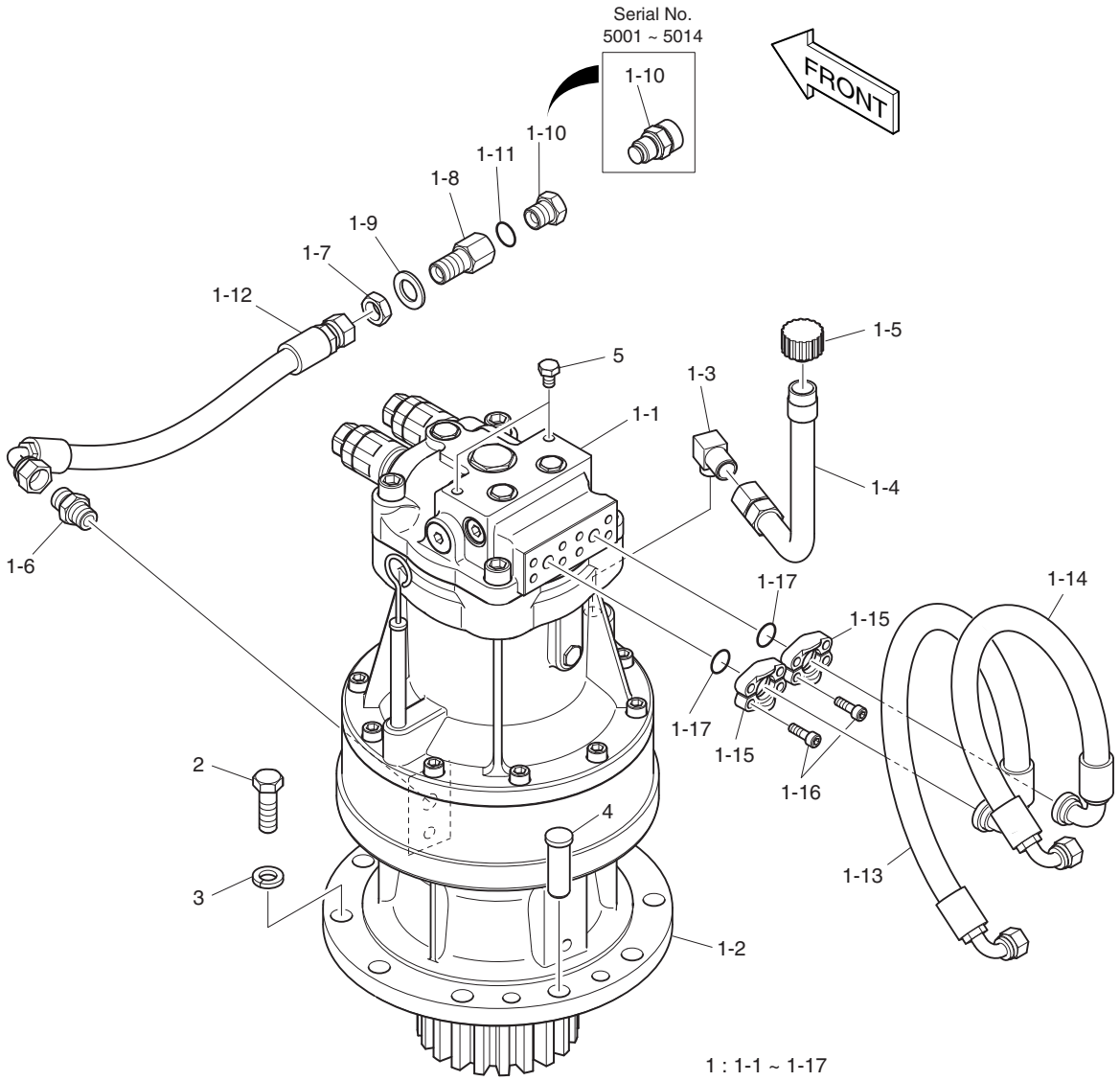

DATE	JUN. 30, 2008
REV. NO.	EXB08-06

Fig. 1200 SWING DEVICE SYSTEME D'ORIENTATION

Serial No. ;

Key No.	Part No.	Description	Description	Q'ty	S.C	Serial No.	ICA	Replaceable part	
								Part No.	Q'ty
1200--	**401-00463E**	**SWING DEVICE ASS'Y**	COMMUTATEUR	-	D				
1	401-00462J	SWING DEVICE SUB ASS'Y	COMMUTATEUR	1		5001–5014	I	401-00462K	1
	401-00462K	SWING DEVICE SUB ASS'Y	COMMUTATEUR	1		5015–5041	I	401-00462L	1
	401-00462L	**SWING DEVICE SUB ASS'Y**	COMMUTATEUR	1		**5042–**			
1-1	K1000101	. MOTOR;SWING	. MOTEUR	1					
1-2	K1007357B	. GEAR;REDUCTION	. PIGNON	1					
1-3	2181-1111D3	. ELBOW	. COUDE	1					
1-4	K1016398	. PIPE	. TUYAU	1					
1-5	2119-1063B	. CAP	. CHAPEAU	1					
1-6	2181-1110D3	. ADAPTER	. ADAPTEUR	1					
1-7	121-00010D3	. NUT	. ECROU	1					
1-8	181-00698	. REDUCER	. REDUCEUR	1					
1-9	S5011113	. WASHER;PLAIN	. RONDELLE	1					
1-10	426-00278	. VALVE;DRAIN	. VANNE	1		5001–5014			
	2181-1950D7	. PLUG	. BOUCHON	1		5015–			
1-11	S8000181	. O-RING	. JOINT TORIQUE	1					
1-12	2184-1036D303	. HOSE	. TUYAU FLEXIBLE	1					
1-13	DS2026119	. HOSE	. TUYAU FLEXIBLE	1		5001–5041			
	DS2026204	**. HOSE**	. TUYAU FLEXIBLE	1		**5042–**			
1-14	DS2026125	. HOSE	. TUYAU FLEXIBLE	1		5001–5041			
	DS2026205	**. HOSE**	. TUYAU FLEXIBLE	1		**5042–**			
1-15	2181-9089	. FLANGE;SPLIT	. BRIDE	4					
1-16	S2209066	. BOLT;SOCKET	. BOULON A 6 PANS CREUX	8					
1-17	2180-1026D30	. O-RING	. JOINT TORIQUE	2					
2	S0765266	BOLT	BOULON	9					
3	S5102903	WASHER;SPRING	RONDELLE ELASTIQUE	9					
4	2123-1458	PIN;LOCK	GOUPILLE	1					
5	S0511666	BOLT	BOULON	2					

DATE	JUN. 30, 2007
REV.NO.	EXB07-06

Fig. 1210 FUEL TANK
RESERVOIR D'GAZOLE

Serial No. ;

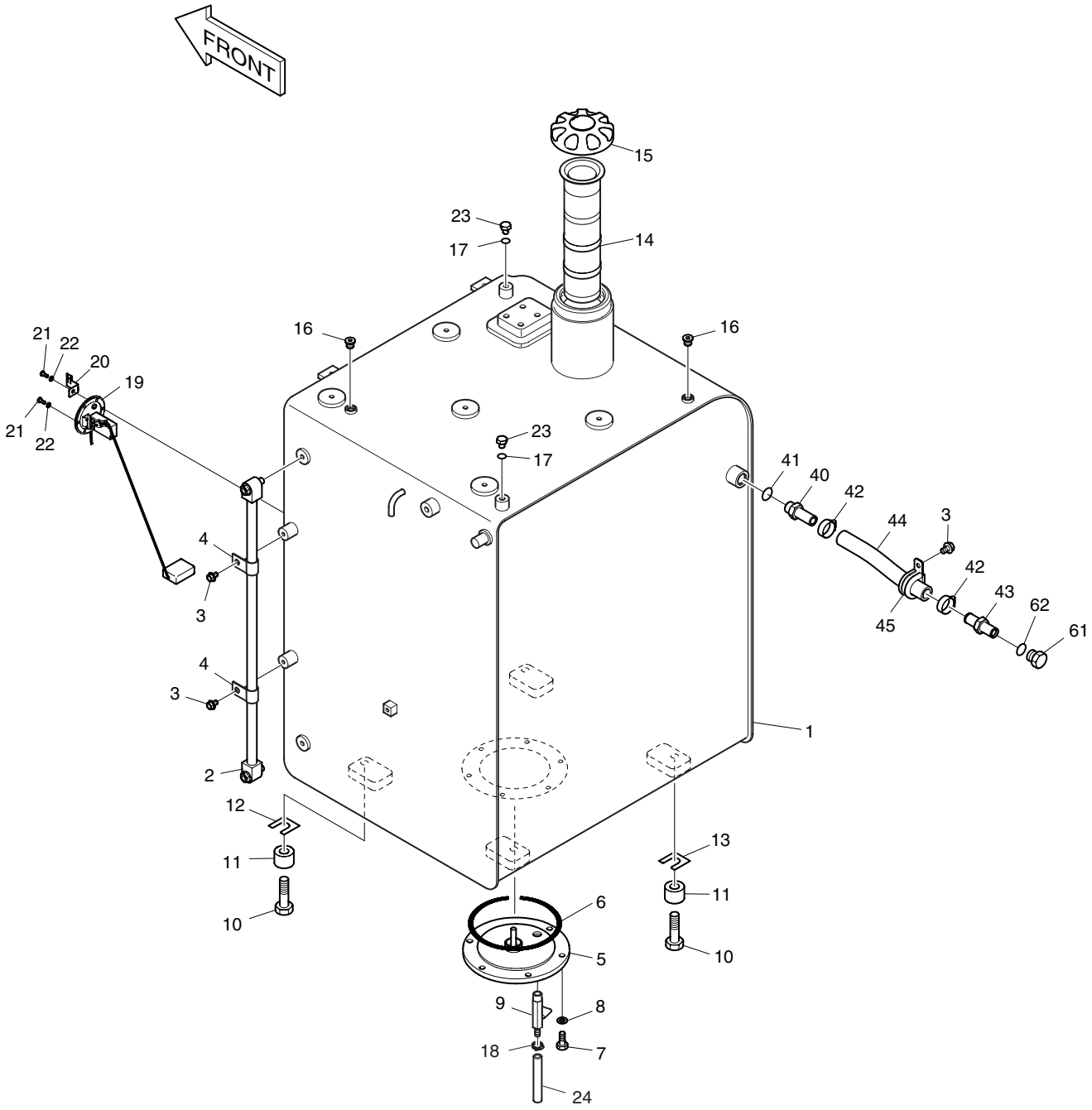

DATE	JUN. 30, 2007
REV. NO.	EXB07-06

Fig. 1210 FUEL TANK RESERVOIR D'GAZOLE

Serial No. ;

Key No.	Part No.	Description	Description	Q'ty	S.C	Serial No.	ICA	Replaceable part	
								Part No.	Q'ty
1210--	**K1017269C**	**FUEL TANK ASS'Y**	RESERVOIR D'GAZOLE	-	D				
1	470-00166H	TANK;FUEL	RESERVOIR A GAZOLE	1		5001–5014	I	470-00166J	1
	470-00166J	**TANK;FUEL**	RESERVOIR A GAZOLE	1		**5015–**			
2	119-00014AD1	GAUGE;LEVEL	INDICATEUR DE NIVEAU	1					
3	K1001029	BOLT	BOULON	3					
4	DS2802021	CLIP	AGRAFE	2					
5	473-00033	COVER	COUVERCLE	1					
6	S8011450	O-RING	JOINT TORIQUE	1					
7	S0512066	BOLT	BOULON	6					
8	S5102603	WASHER;SPRING(M10)	RONDELLE ELASTIQUE	6					
9	186-00017A	COCK;DRAIN	ROBINET DE PURGE	1					
10	S0565466	BOLT	BOULON	4					
11	114-00425	SPACER	DOUILLE D'ECARTEMENT	4					
12	2114-1813	SHIM	CALE	2					
13	2114-1814	SHIM	CALE	2					
14	471-00105A	FILTER;FUEL STRAINER	FILTRE	1					
15	K1004266	CAP;FUEL	CHAPEAU	1					
16	2181-1890D2	PLUG	BOUCHON	2					
17	S8000111	O-RING	JOINT TORIQUE	2					
18	S8450012	CLAMP;HOSE	COLLIER DE LA CONDUITE	1					
19	547-00026	SENDER;FUEL	SENDER	1					
20	2195-3500	BRACKET;HOUSING	SUPPORT	1					
21	S3450833	BOLT M5X0.8X12	BOULON	6					
22	S5100203	WASHER;SPRING	RONDELLE ELASTIQUE	6					
23	S0514666	BOLT M12X1.75x16	BOULON	2					
24	DS2105006	HOSE;FUEL	TUYAU FLEXIBLE	1					
40	2181-2104D6	ADAPTER	ADAPTEUR	1					
41	S8000181	O-RING	JOINT TORIQUE	1					
42	S8470032	CLAMP;HOSE	COLLIER DE LA CONDUITE	2					
43	K1019027	ADAPTER;FUEL FILLER PUMP	ADAPTEUR	1					
44	DS2079193	HOSE	TUYAU FLEXIBLE	1					
45	124-00208D5	CLIP	AGRAFE	1					
61	2181-1950D1	PLUG	BOUCHON	1					
62	S8000111	O-RING	JOINT TORIQUE	1					

DATE	JUN. 30, 2007
REV.NO.	EXB07-06

Fig. 1220 FUEL PIPING
TUYAUTERIE DE CARBURANT

Serial No. ;

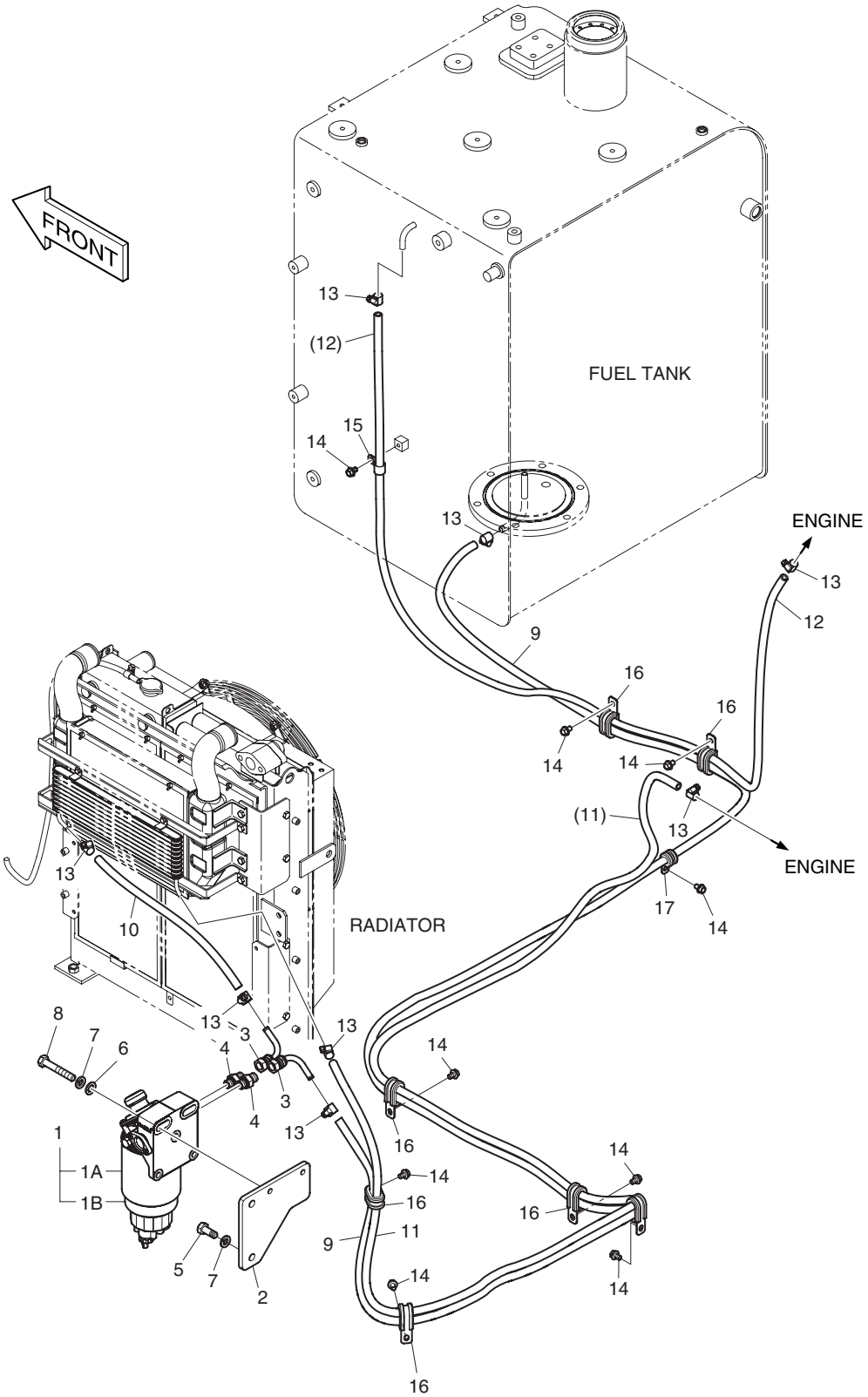

DATE	JUN. 30, 2007
REV. NO.	EXB07-06

Fig. 1220 FUEL PIPING
TUYAUTERIE DE CARBURANT

Serial No. ;

Key No.	Part No.	Description	Description	Q'ty	S.C	Serial No.	ICA	Replaceable part	
								Part No.	Q'ty
1220--	K1008922B	FUEL PIPING	TUYAUTERIE DE	-	D				
1	K1006520	PRE FUEL FILTER ASS'Y	PRE FILTRE D'ESSENCE	1					
1A	K1006530	. FILTER;PRE FUEL	. FILTRE	1					
1B	K1006973	. BOWL	. CUVETTE	1					
2	K1016092	PLATE	PLAQUE	1					
3	K1002864	ELBOW	COUDE	2					
4	DS2479003	ADAPTER	ADAPTEUR	2		5001–5019			
	DS2479004	**ADAPTER**	ADAPTEUR	2		**5020–**			
5	S0515266	BOLT	BOULON	2					
6	S5010713	WASHER	RONDELLE	2					
7	S5102703	WASHER;SPRING	RONDELLE ELASTIQUE	4					
8	S0561066	BOLT	BOULON	2					
9	DS2105079	HOSE;FUEL	TUYAU FLEXIBLE	1					
10	DS2105076	HOSE;FUEL	TUYAU FLEXIBLE	1					
11	DS2105022	HOSE;FUEL	TUYAU FLEXIBLE	1					
12	DS2105078	HOSE;FUEL	TUYAU FLEXIBLE	1					
13	S8450012	CLAMP;HOSE	COLLIER DE LA CONDUITE	8					
14	K1001029	BOLT	BOULON	9					
15	2124-1509D2	CLIP	AGRAFE	1					
16	124-00209D1	CLIP	AGRAFE	7					
17	124-00208D2	CLIP	AGRAFE	1					

DATE	JUN. 30, 2007
REV.NO.	EXB07-06

Fig. 1230 OIL TANK
RESERVOIR D'HUILE

Serial No. ;

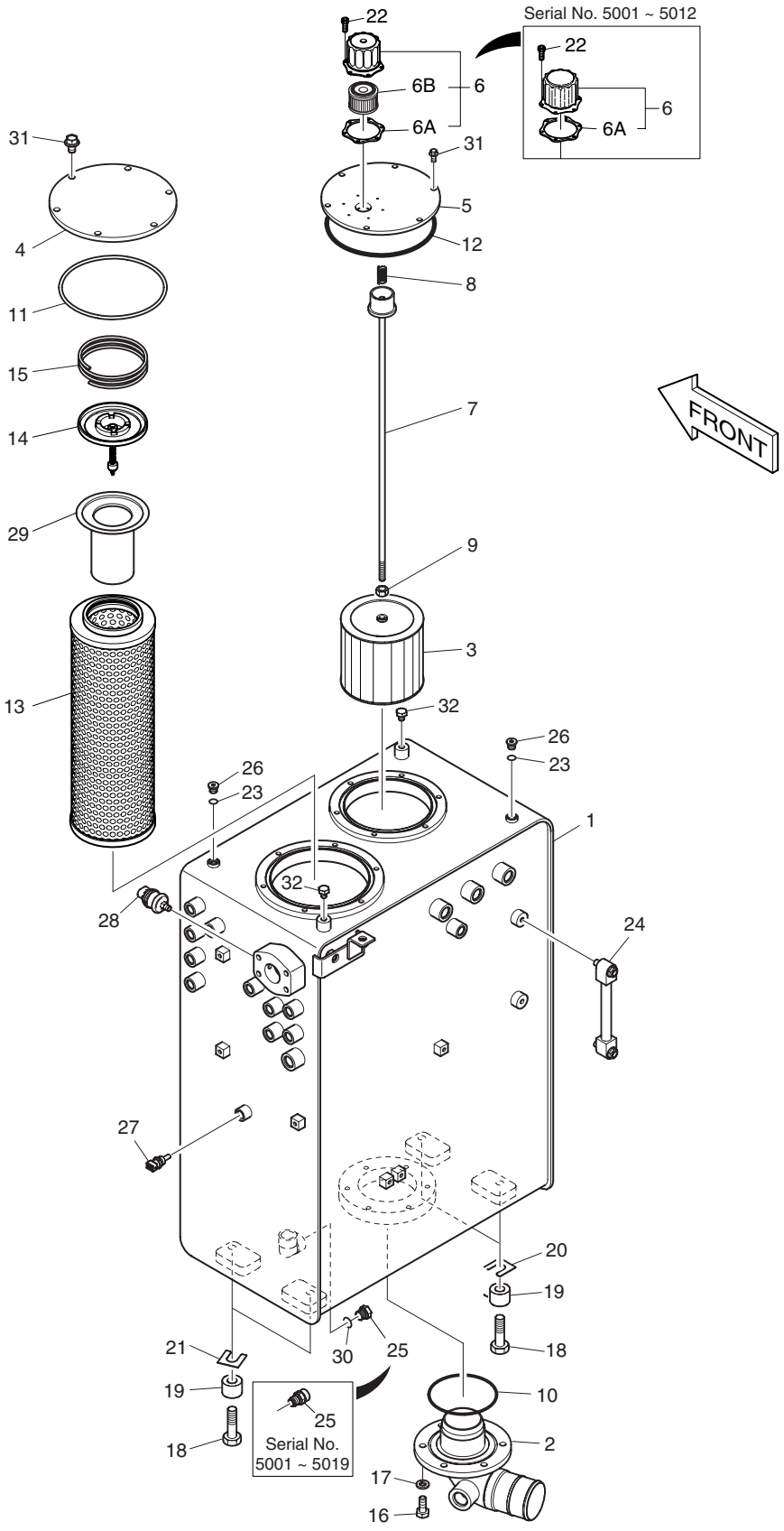

DATE	JUN. 30, 2007
REV. NO.	EXB07-06

Fig. 1230 OIL TANK RESERVOIR D'HUILE

Serial No. ;

Key No.	Part No.	Description	Description	Q'ty	S.C	Serial No.	ICA	Replaceable part	
								Part No.	Q'ty
1230--	**K1017270E**	**OIL TANK ASS'Y**	ENSEMBLE RESERVOIR	-	D				
1	K1009701B	TANK;OIL	RESERVOIR D'HUILE	1					
2	140-01453B	PIPE;SUCTION	TUYAU	1					
3	2474-9016A	FILTER;SUCTION	FILTRE	1					
4	K1011675	COVER	COUVERCLE	1		5001–5014	I	K1011675A	1
	K1011675A	**COVER**	COUVERCLE	1		**5015–**			
5	473-00052	COVER	COUVERCLE	1					
6	**422-00027A**	**BREATHER;AIR**	RENIFLARD D'AIR	1		**5001–5012**	I	K1012685A	1
6A	**180-00200**	**. PACKING**	. EMBALLAGE	1		**5001–5012**	I	K9005662	1
6	**K1012685A**	**BREATHER;AIR**	RENIFLARD D'AIR	1		**5013–**			
6A	**K9005662**	**. GASKET**	. JOINT	1		**5013–**			
6B	**K1029257**	**. ELEMENT;AIR BREATHER**	. ELEMENT	1		**5013–**			
7	2136-1434	ROD	TIGE	1					
8	2129-1008	SPRING;COMPRESS	RESSORT	1					
9	S4012733	NUT	ECROU	1					
10	S8011200	O-RING	JOINT TORIQUE	1					
11	S8011850	O-RING	JOINT TORIQUE	1					
12	S8011650	O-RING	JOINT TORIQUE	1					
13	474-00055	ELEMENT;RETURN FILTER	ELEMENT	1					
14	2426-1175	VALVE;BY-PASS	VANNE BY-PASS	1					
15	2129-1393	SPRING	RESSORT	1					
16	S0512066	BOLT	BOULON	6					
17	S5102603	WASHER;SPRING	RONDELLE ELASTIQUE	6					
18	S0565466	BOLT	BOULON	4					
19	114-00425	SPACER	DOUILLE D'ECARTEMENT	4					
20	2114-1813	SHIM	CALE	2					
21	2114-1814	SHIM	CALE	2					
22	S2202766	BOLT	BOULON	6					
23	S8000111	O-RING	JOINT TORIQUE	2					
24	119-00025B	GAUGE;LEVEL	INDICATEUR DE NIVEAU	1					
25	426-00278	VALVE;DRAIN	VANNE	1		5001–5019			
	2181-1950D7	**PLUG**	BOUCHON	1		**5020–**			
26	2181-1890D2	PLUG	BOUCHON	2					
27	K1003296	SENSOR;HYD. OIL TEMP	CAPTEUR	1					
28	549-00095	SWITCH;PRESSURE	COMMUTATEUR	1					
29	471-00127	STRAINER;BY-PASS	FILTRE	1					
30	S8000181	O-RING	JOINT TORIQUE	1					
31	K1007957	BOLT;SET	BOULON	12					

DATE	JUN. 30, 2007
REV.NO.	EXB07-06

Fig. 1230 OIL TANK
RESERVOIR D'HUILE

Serial No. ;

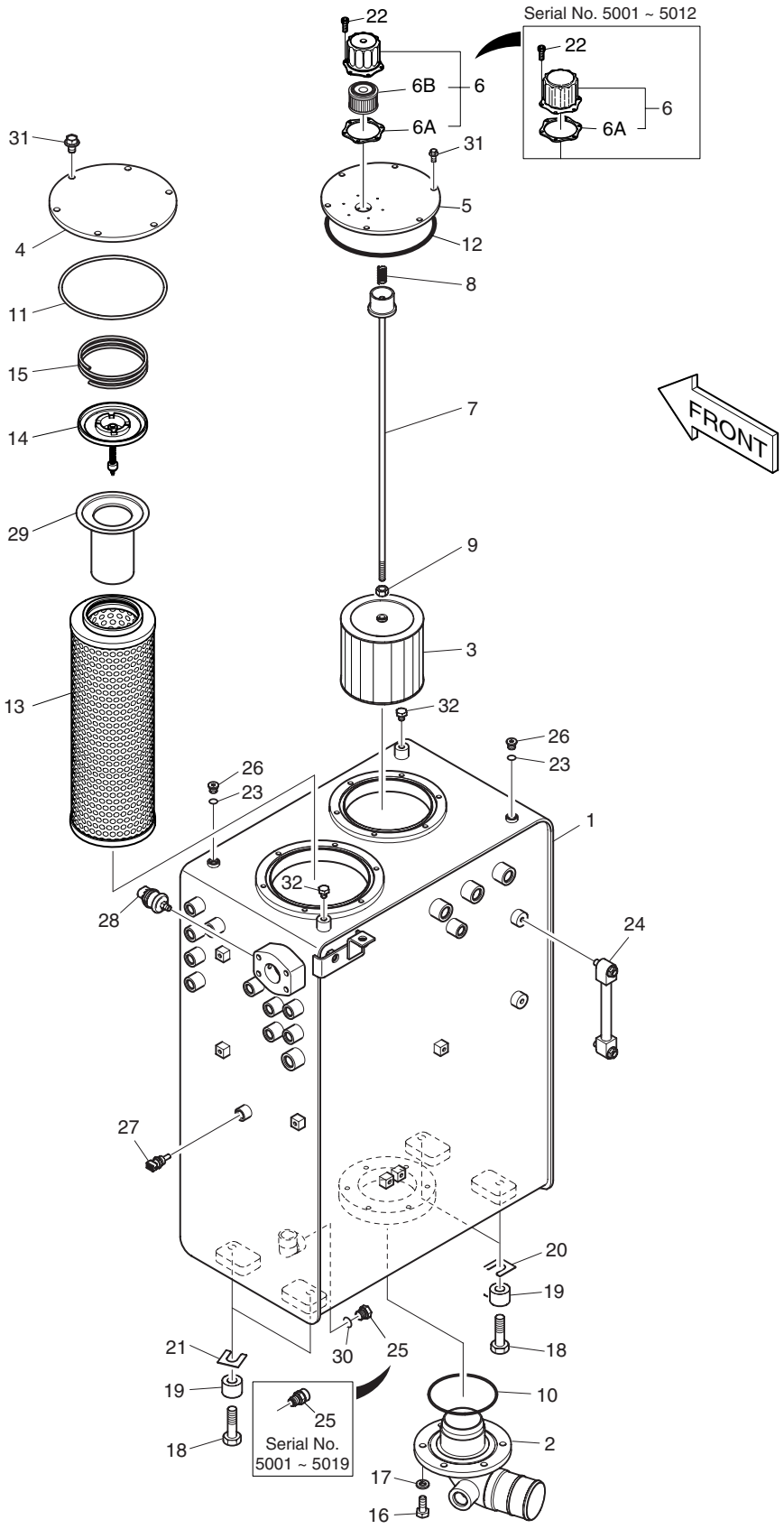

DATE	JUN. 30, 2007
REV. NO.	EXB07-06

Fig. 1230 OIL TANK RESERVOIR D'HUILE

Serial No. ;

Key No.	Part No.	Description	Description	Q'ty	S.C	Serial No.	ICA	Replaceable part	
								Part No.	Q'ty
1230-32	S0514666	BOLT	BOULON	2					

DATE	DEC. 26, 2006
1st EDITION	

Fig. 1240 OIL COOLER PIPING(1) CONDUITES DE HUILE

Serial No. ;

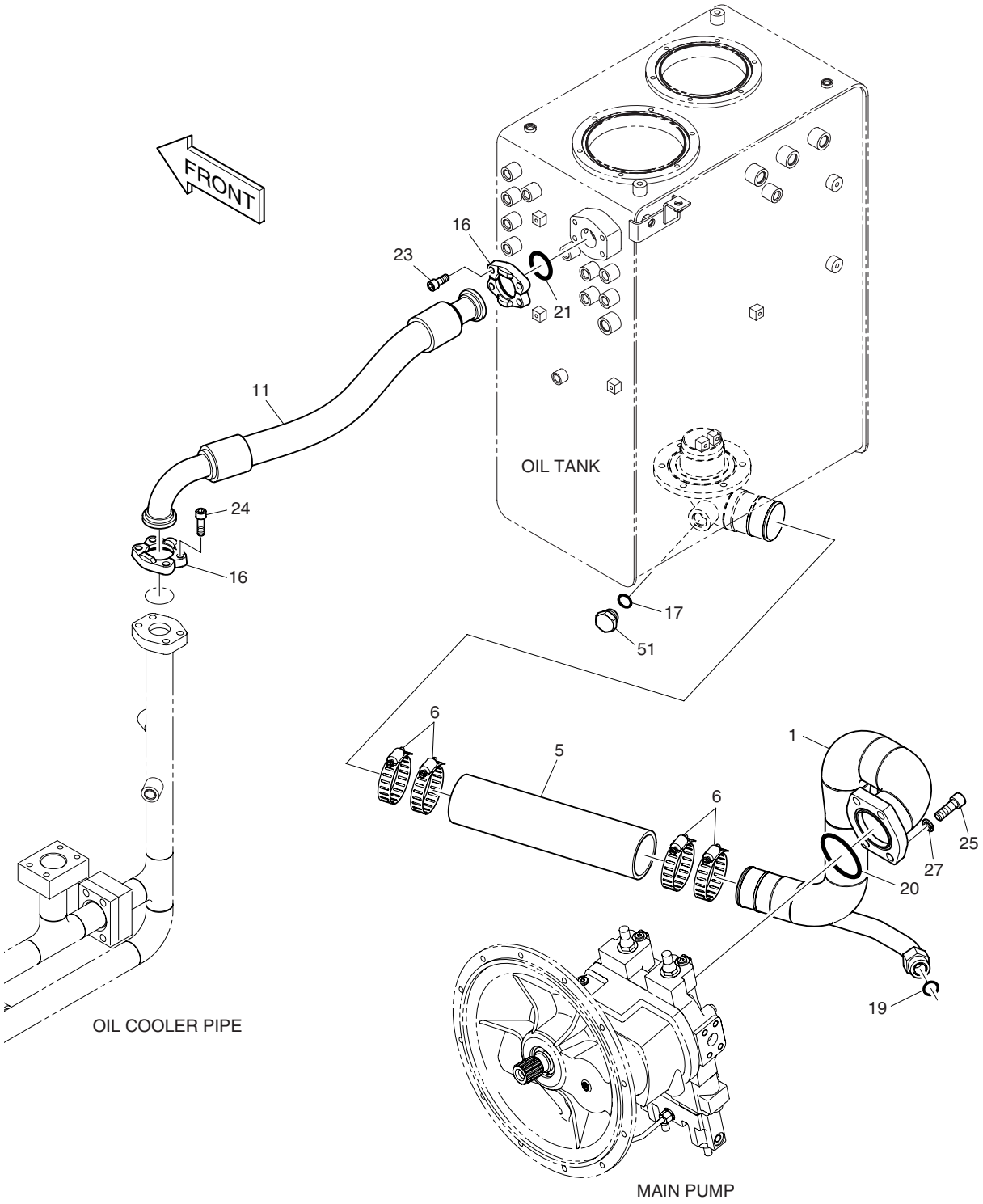

DATE	DEC. 26, 2006
1st EDITION	

Fig. 1240 OIL COOLER PIPING(1) CONDUITES DE HUILE

Serial No. ;

Key No.	Part No.	Description	Description	Q'ty	S.C	Serial No.	ICA	Replaceable part	
								Part No.	Q'ty
1240--	K1013373C	OIL COOLER PIPING	CONDUITES	-	D				
1	K1008794	PIPE;SUCTION	TUYAU	1					
5	2185-1002D105	HOSE	TUYAU FLEXIBLE	1					
6	S8500105	CLAMP	BRIDE	4					
11	DS2040442	HOSE	TUYAU FLEXIBLE	1					
16	4215-1003D5	FLANGE	BRIDE	4					
17	S8000231	O-RING	JOINT TORIQUE	1					
19	S8030161	O-RING	JOINT TORIQUE	1					
20	2180-1026D32	O-RING	JOINT TORIQUE	1					
21	2180-1026D28	O-RING	JOINT TORIQUE	1					
23	S2215266	BOLT;SOCKET	BOULON A 6 PANS CREUX	4					
24	S2215466	BOLT;SOCKET	BOULON A 6 PANS CREUX	4					
25	S2221566	BOLT;HEX.	BOULON A 6 PANS	4					
27	S5110903	WASHER	RONDELLE	4					
51	2181-1950D15	PLUG	BOUCHON	1					

DATE	JUN. 30, 2007
REV.NO.	EXB07-06

Fig. 1250 OIL COOLER PIPING(2) CONDUITES DE HUILE

Serial No. ;

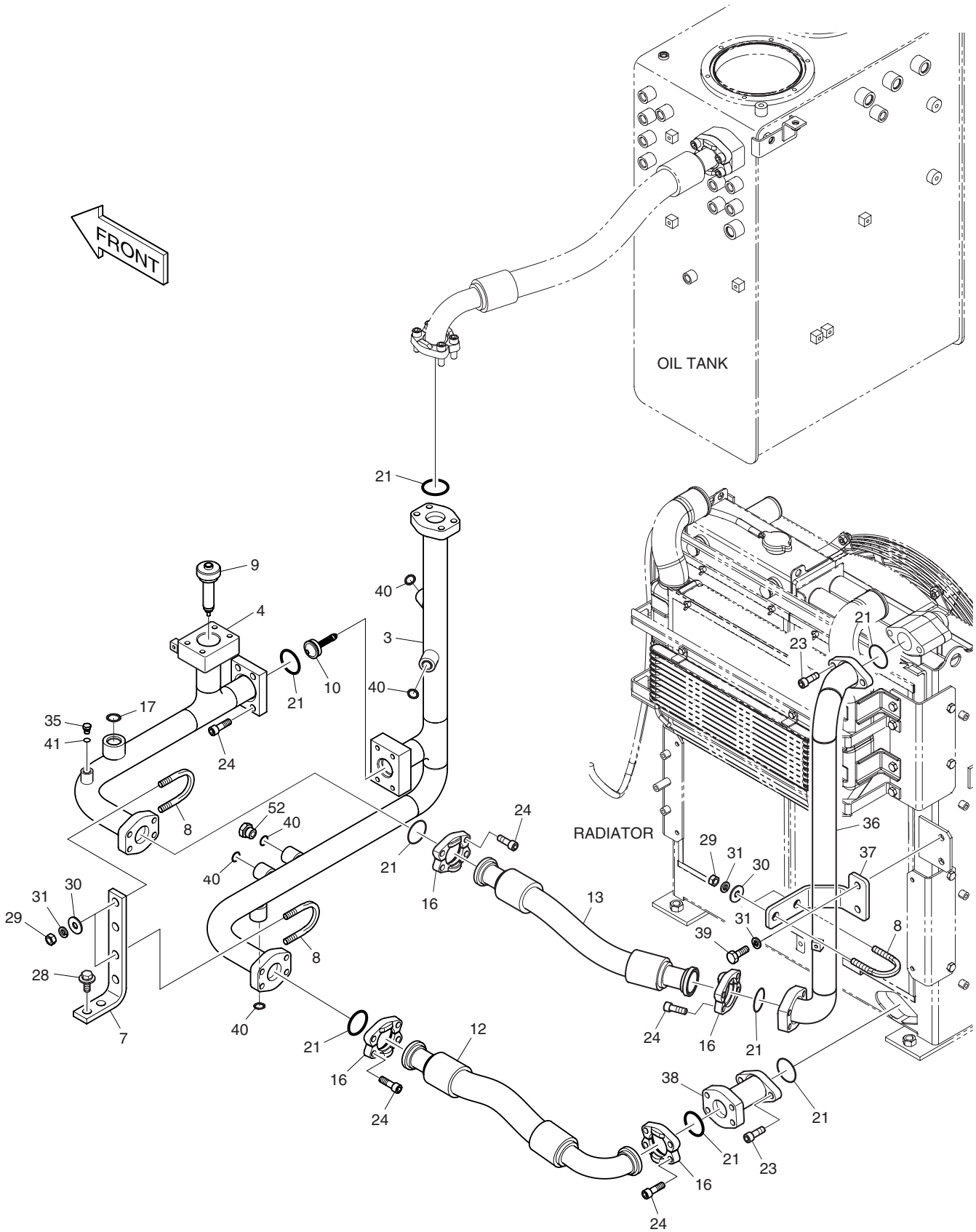

DATE	JUN. 30, 2007
REV. NO.	EXB07-06

Fig. 1250 OIL COOLER PIPING(2) CONDUITES DE HUILE

Serial No. ;

Key No.	Part No.	Description	Description	Q'ty	S.C	Serial No.	ICA	Replaceable part	
								Part No.	Q'ty
1250--	**K1013373E**	**OIL COOLER PIPING**	CONDUITES	-	D				
3	K1009512A	PIPE	TUYAU	1					
4	K1009469A	PIPE	TUYAU	1					
7	195-02725A	BRACKET	SUPPORT	1					
8	120-00317	BOLT;U	BOULON	3					
9	K1017740A	VALVE;BY-PASS	VANNE BY-PASS	1					
10	K1017741	VALVE;BY-PASS	VANNE BY-PASS	1		5001–5019	I	K1017741B	1
	K1017741B	**VALVE;BY-PASS**	VANNE BY-PASS	1		**5020–**			
12	DS2040537	HOSE	TUYAU FLEXIBLE	1					
13	DS2038221	HOSE	TUYAU FLEXIBLE	1					
16	4215-1003D5	FLANGE	BRIDE	8					
17	S8000231	O-RING	JOINT TORIQUE	1					
21	2180-1026D28	O-RING	JOINT TORIQUE	8					
23	S2215266	BOLT;SOCKET	BOULON A 6 PANS CREUX	4					
24	S2215466	BOLT;SOCKET	BOULON A 6 PANS CREUX	20					
28	DS0025020	BOLT;SET	BOULON	2					
29	S4012733	NUT	ECROU	6					
30	2114-1058D30	WASHER;PLAIN	RONDELLE	6					
31	S5102703	WASHER;SPRING	RONDELLE ELASTIQUE	8					
35	2181-1950D1	PLUG	BOUCHON	1					
36	K1009470A	PIPE	TUYAU	1					
37	K1009510A	PLATE	PLAQUE	1					
38	K1009471	PIPE	TUYAU	1					
39	S0515266	BOLT	BOULON	2					
40	S8000181	O-RING	JOINT TORIQUE	5					
41	S8000111	O-RING	JOINT TORIQUE	1					
52	2181-1950D3	PLUG	BOUCHON	1					

DATE	DEC. 26, 2006
1st EDITION	

Fig. 1260 OIL COOLER PIPING(3) CONDUITES DE HUILE

Serial No. ;

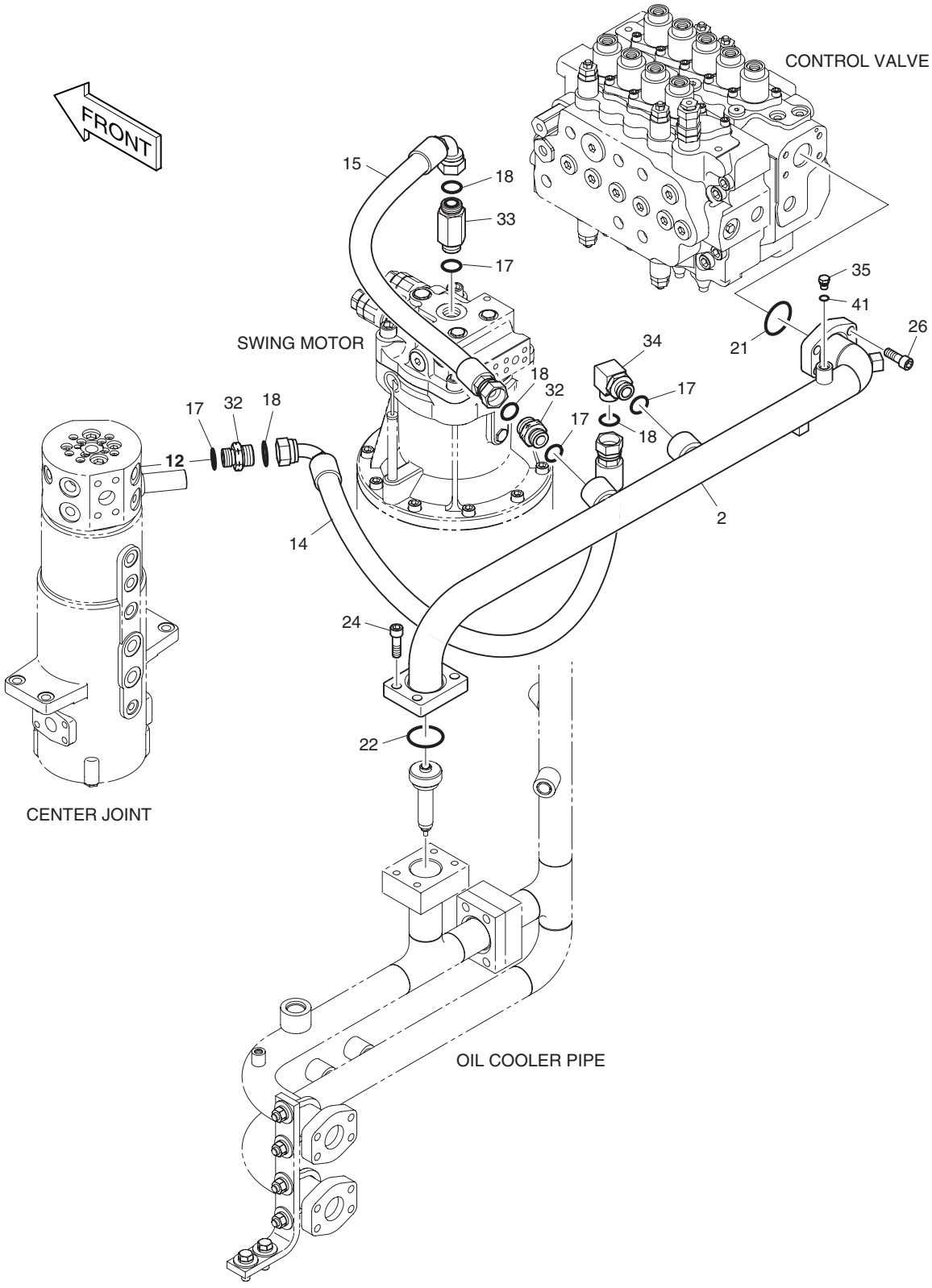

DATE	DEC. 26, 2006
1st EDITION	

Fig. 1260 OIL COOLER PIPING(3) CONDUITES DE HUILE

Serial No. ;

Key No.	Part No.	Description	Description	Q'ty	S.C	Serial No.	ICA	Replaceable part	
								Part No.	Q'ty
1260--	K1013373C	OIL COOLER PIPING	CONDUITES	-	D				
2	140-01411J	PIPE	TUYAU	1					
14	DS2013587	HOSE	TUYAU FLEXIBLE	1					
15	2184-1197D35	HOSE	TUYAU FLEXIBLE	1					
17	S8000231	O-RING	JOINT TORIQUE	4					
18	S8030121	O-RING	JOINT TORIQUE	4					
21	2180-1026D28	O-RING	JOINT TORIQUE	1					
22	2180-1026D27	O-RING	JOINT TORIQUE	1					
24	S2215466	BOLT;SOCKET	BOULON A 6 PANS CREUX	4					
26	S2215366	BOLT	BOULON	4					
32	2181-2627D1	ADAPTER	ADAPTEUR	2					
33	2181-4133D13	ADAPTER	ADAPTEUR	1					
34	2181-2628D1	ELBOW	COUDE	1					
35	2181-1950D1	PLUG	BOUCHON	1					
41	S8000111	O-RING	JOINT TORIQUE	1					

DATE	JUN. 30, 2007
REV.NO.	EXB07-06

Fig. 1270 MAIN PIPING(1) - PUMP, SWING
CONDUITES DE PRINCIPAL

Serial No. ;

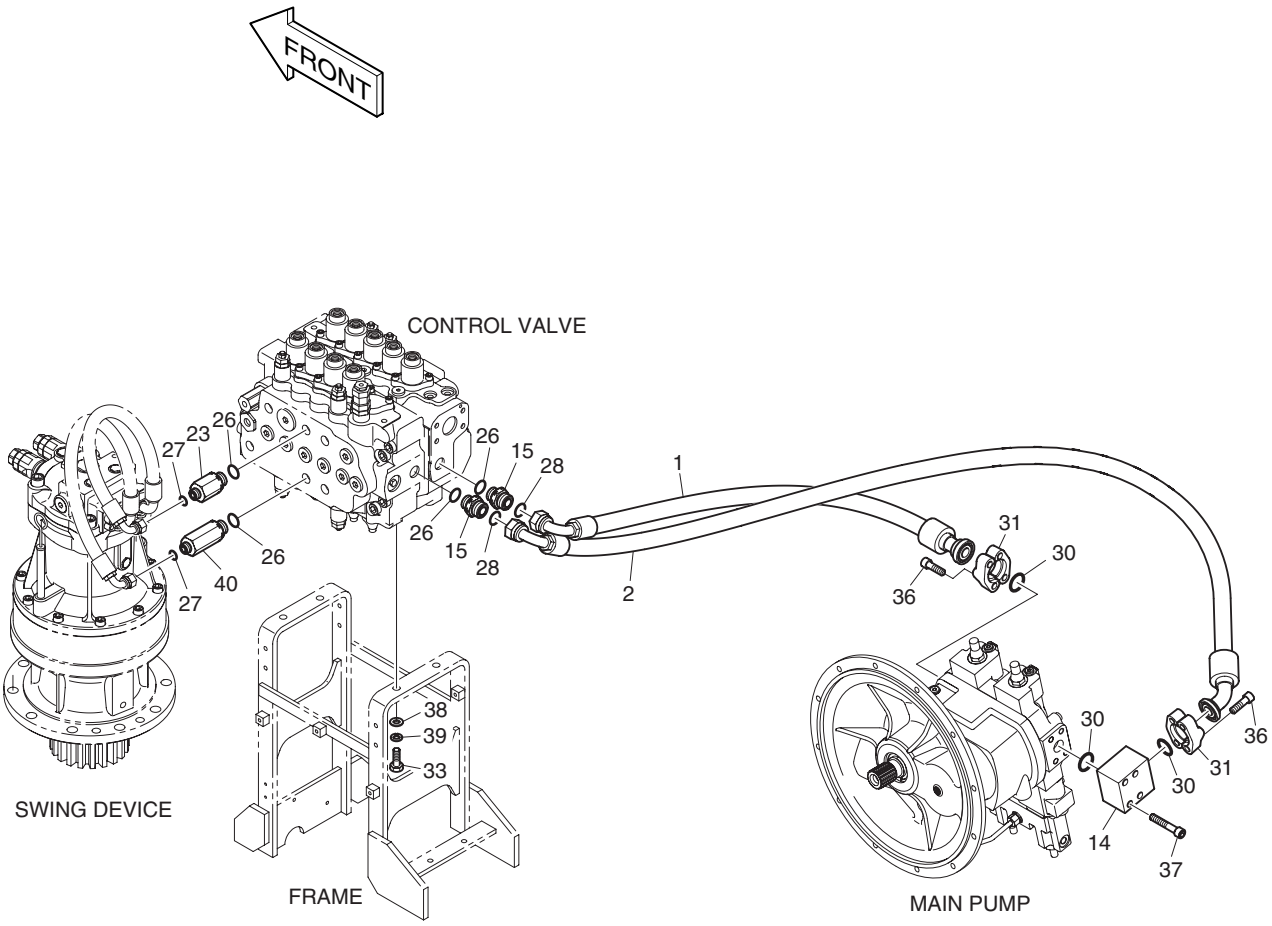

DATE	JUN. 30, 2007
REV. NO.	EXB07-06

Fig. 1270 MAIN PIPING(1) - PUMP, SWING
CONDUITES DE PRINCIPAL

Serial No. ;

Key No.	Part No.	Description	Description	Q'ty	S.C	Serial No.	ICA	Replaceable part	
								Part No.	Q'ty
1270--	K1018179B	MAIN PIPING	TUYAUTERIE PRINCIPALE	-	D				
1	DS2025049	HOSE	TUYAU FLEXIBLE	1		5001–5011			
	DS2025101	**HOSE**	TUYAU FLEXIBLE	1		**5012–**			
2	DS2027032	HOSE	TUYAU FLEXIBLE	1		5001–5011			
	DS2027037	**HOSE**	TUYAU FLEXIBLE	1		**5012–**			
14	423-00194	BLOCK	BLOC	1					
15	2181-2627D1	ADAPTER	ADAPTEUR	2					
23	DS2404009	ADAPTER	ADAPTEUR	1					
26	S8000231	O-RING	JOINT TORIQUE	4					
27	S8030081	O-RING	JOINT TORIQUE	2					
28	S8030121	O-RING	JOINT TORIQUE	2					
30	2180-1026D19	O-RING	JOINT TORIQUE	3					
31	2181-9081	FLANGE;SPLIT	BRIDE	4					
33	S0515366	BOLT	BOULON	4					
36	S2215466	BOLT;SOCKET	BOULON A 6 PANS CREUX	8					
37	S2216066	BOLT;SOCKET	BOULON A 6 PANS CREUX	4					
38	S5010713	WASHER;PLAIN	RONDELLE	4					
39	S5102703	WASHER;SPRING	RONDELLE ELASTIQUE	4					
40	2181-2627D8	ADAPTER	ADAPTEUR	1					

DATE	DEC. 15, 2006
REV.NO.	EXB06-13

Fig. 1280 MAIN PIPING(2) - BOOM
CONDUITES DE PRINCIPAL

Serial No. ;

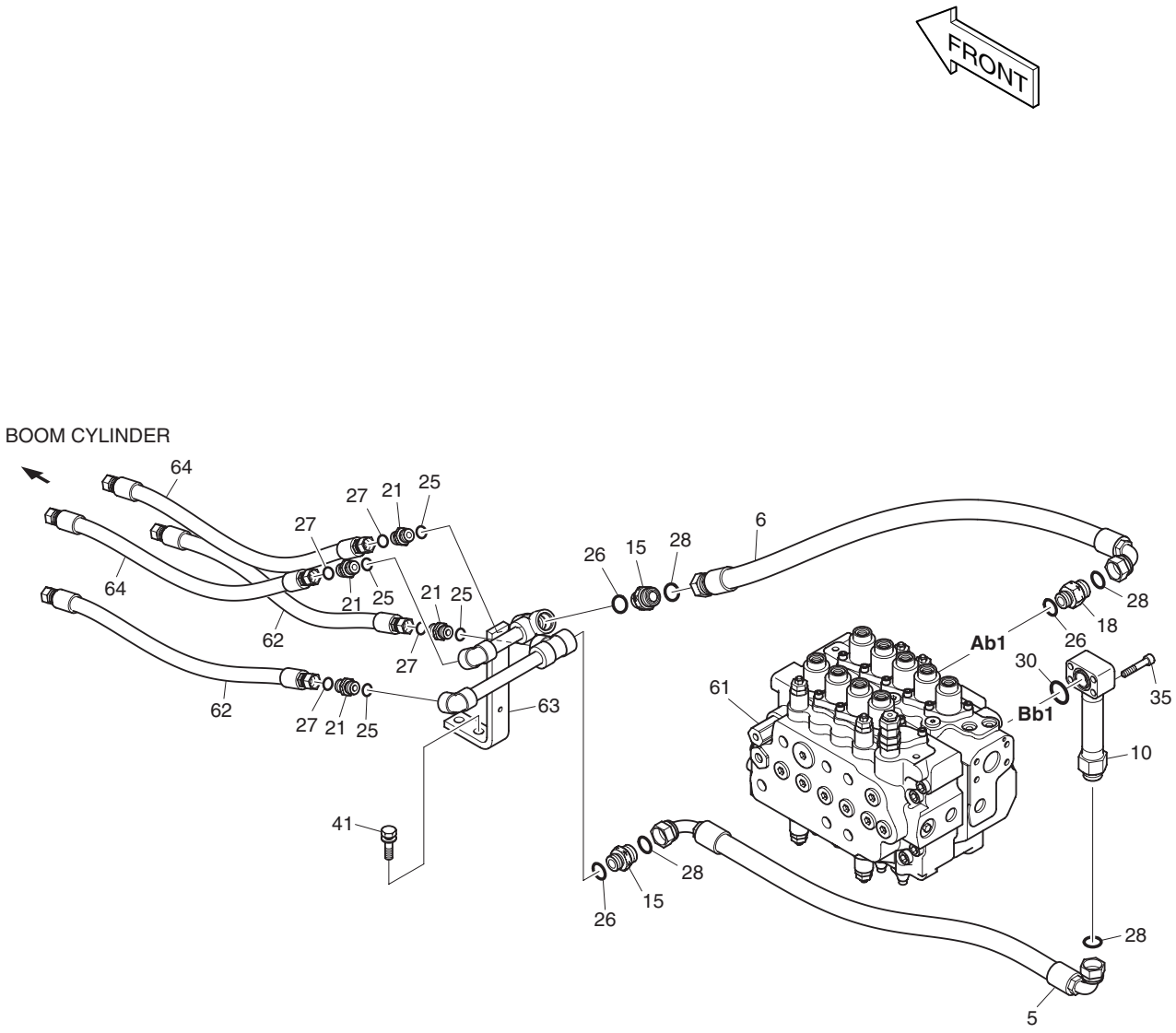

DATE	DEC. 15, 2006
REV. NO.	EXB06-13

Fig. 1280 MAIN PIPING(2) - BOOM
CONDUITES DE PRINCIPAL

Serial No. ;

Key No.	Part No.	Description	Description	Q'ty	S.C	Serial No.	ICA	Replaceable part	
								Part No.	Q'ty
1280--	K1018179B	MAIN PIPING	TUYAUTERIE PRINCIPALE	-	D				
5	DS2023236	HOSE	TUYAU FLEXIBLE	1					
6	DS2013556	HOSE	TUYAU FLEXIBLE	1					
10	K1002370A	PIPE	TUYAU	1					
15	2181-2627D1	ADAPTER	ADAPTEUR	2					
18	2181-2627D7	ADAPTER	ADAPTEUR	1					
21	2181-4133D3	ADAPTER	ADAPTEUR	4					
25	S8000181	O-RING	JOINT TORIQUE	4					
26	S8000231	O-RING	JOINT TORIQUE	3					
27	S8030081	O-RING	JOINT TORIQUE	4					
28	S8030121	O-RING	JOINT TORIQUE	4					
30	2180-1026D19	O-RING	JOINT TORIQUE	1					
35	S2212766	BOLT;SOCKET	BOULON A 6 PANS CREUX	4					
41	DS0025020	BOLT;SET	BOULON	2					
61	K1003637F	VALVE;CONTROL	VANNE DE COMMANDE	1		5001–5010			
	K1003637G	**VALVE;CONTROL**	VANNE DE COMMANDE	1		**5011**–			
62	DS2011489	HOSE	TUYAU FLEXIBLE	2					
63	140-01585C	PIPE ASS'Y	ENSEMBLE DE TUYAU	1					
64	DS2011488	HOSE	TUYAU FLEXIBLE	2					

DATE	DEC. 26, 2006
1st EDITION	

Fig. 1290 MAIN PIPING(3) - ARM, BUCKET
CONDUITES DE PRINCIPAL

Serial No. ;

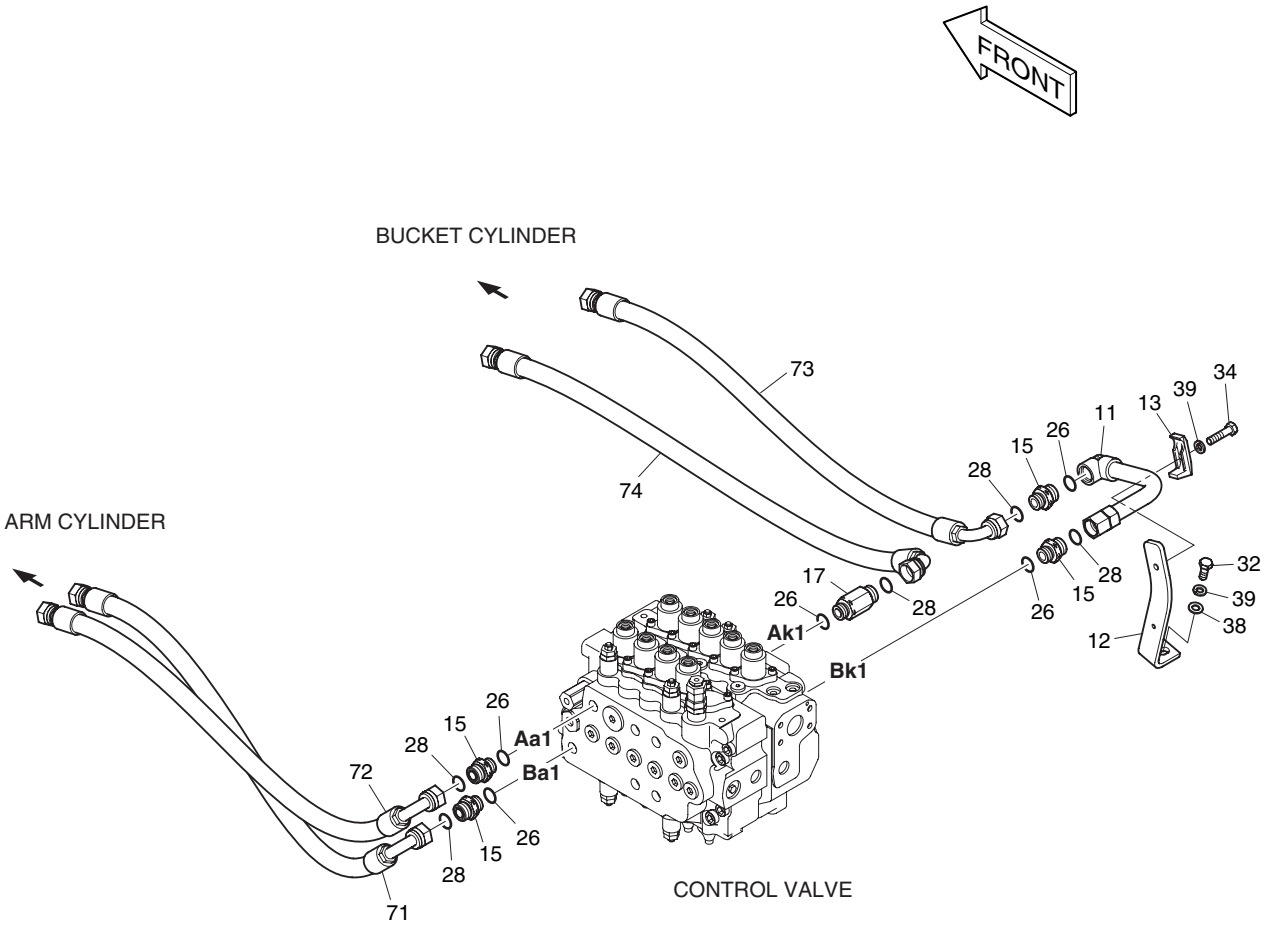

DATE	DEC. 26, 2006
1st EDITION	

Fig. 1290 MAIN PIPING(3) - ARM, BUCKET
CONDUITES DE PRINCIPAL

Serial No. ;

Key No.	Part No.	Description	Description	Q'ty	S.C	Serial No.	ICA	Replaceable part	
								Part No.	Q'ty
1290--	K1018179B	MAIN PIPING	TUYAUTERIE PRINCIPALE	-	D				
11	K1002886A	PIPE	TUYAU	1					
12	K1002909B	BRACKET	SUPPORT	1					
13	2124-1026D2	CLAMP	BRIDE	1					
15	2181-2627D1	ADAPTER	ADAPTEUR	4					
17	2181-2627D11	ADAPTER	ADAPTEUR	1					
26	S8000231	O-RING	JOINT TORIQUE	5					
28	S8030121	O-RING	JOINT TORIQUE	5					
32	S0515266	BOLT	BOULON	1					
34	S0560766	BOLT	BOULON	1					
38	S5010713	WASHER;PLAIN	RONDELLE	1					
39	S5102703	WASHER;SPRING	RONDELLE ELASTIQUE	2					
71	DS2013555	HOSE	TUYAU FLEXIBLE	1					
72	DS2013554	HOSE	TUYAU FLEXIBLE	1					
73	DS2013552	HOSE	TUYAU FLEXIBLE	1					
74	DS2013553	HOSE	TUYAU FLEXIBLE	1					

DATE	DEC. 26, 2006
1st EDITION	

Fig. 1300 MAIN PIPING(4) - TRAVEL
CONDUITES DE PRINCIPAL

Serial No. ;

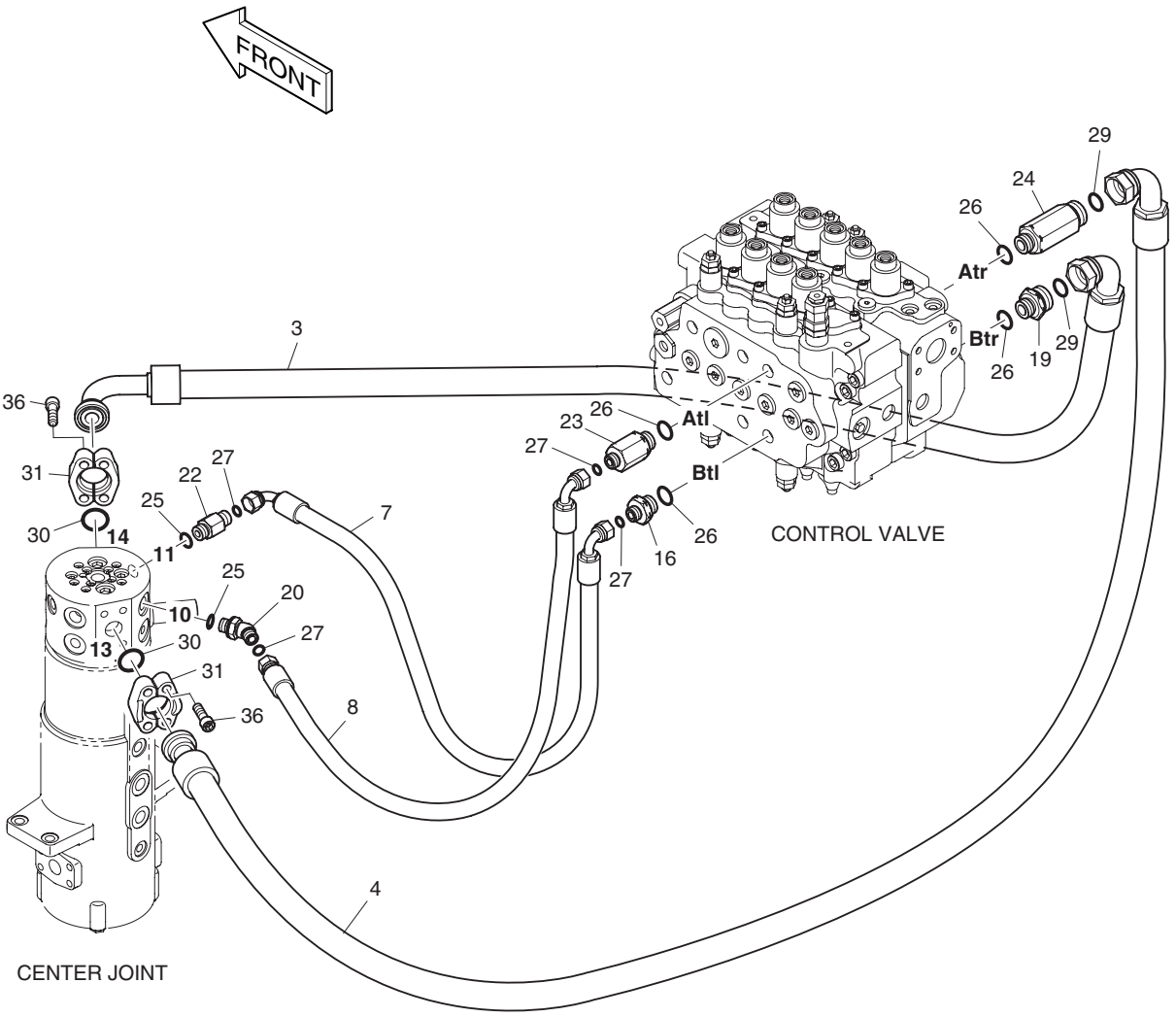

DATE	DEC. 26, 2006
1st EDITION	

Fig. 1300 MAIN PIPING(4) - TRAVEL
CONDUITES DE PRINCIPAL

Serial No. ;

Key No.	Part No.	Description	Description	Q'ty	S.C	Serial No.	ICA	Replaceable part	
								Part No.	Q'ty
1300--	K1018179B	MAIN PIPING	TUYAUTERIE PRINCIPALE	-	D				
3	DS2026122	HOSE	TUYAU FLEXIBLE	1					
4	DS2025048	HOSE	TUYAU FLEXIBLE	1					
7	DS2023198	HOSE	TUYAU FLEXIBLE	1					
8	DS2013557	HOSE	TUYAU FLEXIBLE	1					
16	2181-2627D2	ADAPTER	ADAPTEUR	1					
19	2181-2627D13	ADAPTER	ADAPTEUR	1					
20	2181-2816D4	ELBOW	COUDE	1					
22	2181-4133D37	ADAPTER	ADAPTEUR	1					
23	DS2404009	ADAPTER	ADAPTEUR	1					
24	DS2404022	ADAPTER	ADAPTEUR	1					
25	S8000181	O-RING	JOINT TORIQUE	2					
26	S8000231	O-RING	JOINT TORIQUE	4					
27	S8030081	O-RING	JOINT TORIQUE	4					
29	S8030161	O-RING	JOINT TORIQUE	2					
30	2180-1026D19	O-RING	JOINT TORIQUE	2					
31	2181-9081	FLANGE;SPLIT	BRIDE	4					
36	S2215466	BOLT;SOCKET	BOULON A 6 PANS CREUX	8					

DATE	DEC. 26, 2006
1st EDITION	

Fig. 1310 PILOT PIPING(1)
CONDUITES DE PILOTE

Serial No. ;

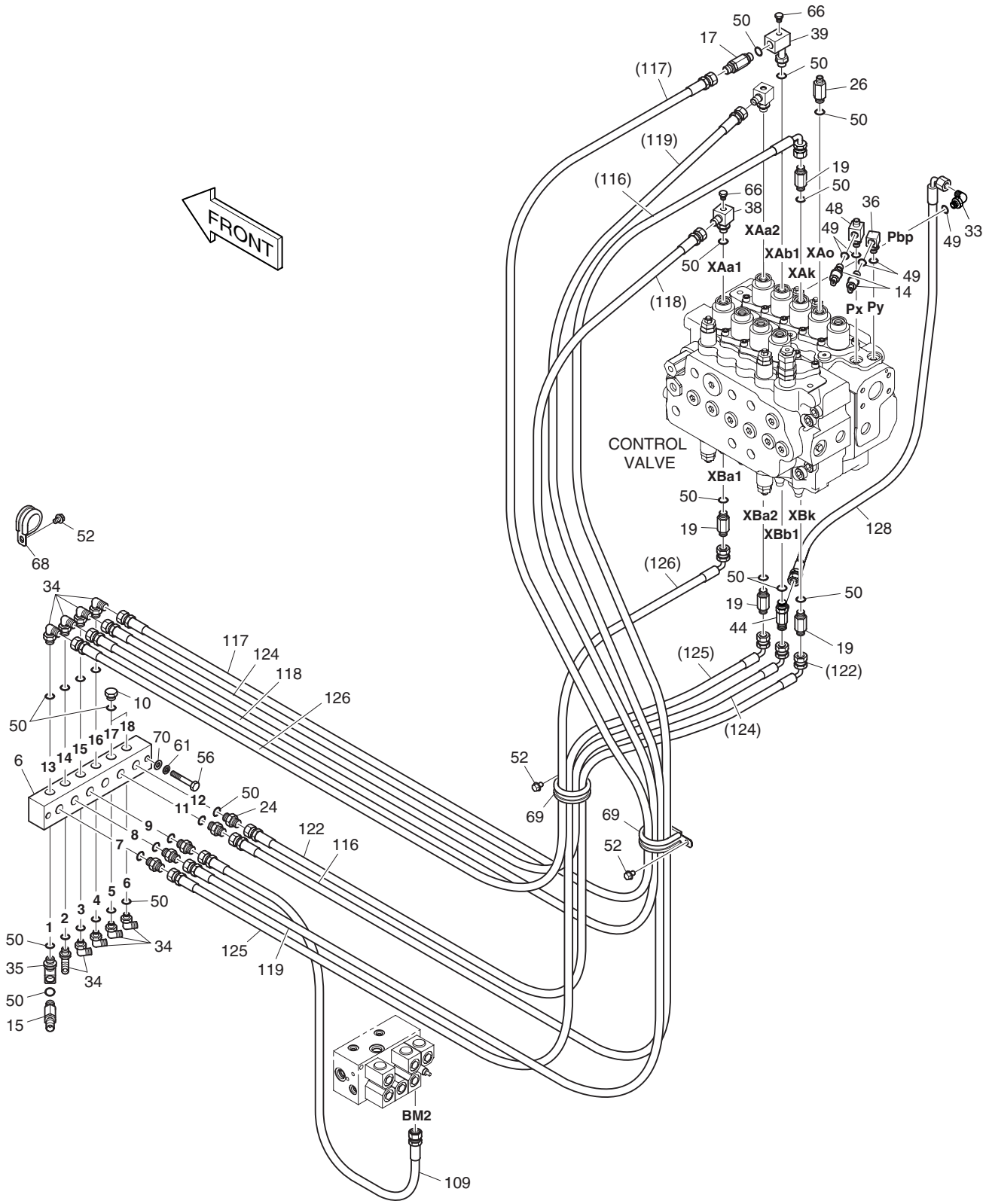

DATE	DEC. 26, 2006
1st EDITION	

Fig. 1310 PILOT PIPING(1) CONDUITES DE PILOTE

Serial No. ;

Key No.	Part No.	Description	Description	Q'ty	S.C	Serial No.	ICA	Replaceable part	
								Part No.	Q'ty
1310--	K1013261C	PILOT PIPING	TUYAUTERIE PILOTE	-	D				
6	2423-1550	BLOCK	BLOC	1					
10	2181-1950D2	PLUG	BOUCHON	2					
14	2549-9112	SWITCH;PRESSURE	COMMUTATEUR	2					
15	420-00352D6	VALVE;SHOCKLESS	VANNE	1					
17	K1003664D1	VALVE;SHOCKLESS	VANNE	1					
19	2181-1126D27	ADAPTER	ADAPTEUR	4					
24	2181-1126D7	ADAPTER	ADAPTEUR	5					
26	2181-1126D96	ADAPTER	ADAPTEUR	1					
33	2181-1702D4	ELBOW	COUDE	1					
34	2181-1702D5	ELBOW	COUDE	9					
35	2181-2295D12	ELBOW	COUDE	1					
36	2181-2295D4	ELBOW	COUDE	1					
38	2181-2590D2	ELBOW	COUDE	1					
39	DS2459001	ELBOW	COUDE	1					
44	2181-1951D6	TEE	TE	1					
48	2181-2635	TEE	TE	1					
49	S8000111	O-RING	JOINT TORIQUE	5					
50	S8000141	O-RING	JOINT TORIQUE	29					
52	K1001029	BOLT	BOULON	3					
56	S0512966	BOLT	BOULON	2					
61	S5102603	WASHER;SPRING	RONDELLE ELASTIQUE	2					
66	2181-2047A	PLUG	BOUCHON	2					
68	124-00208D5	CLIP	AGRAFE	1					
69	124-00208D9	CLIP	AGRAFE	2					
70	S5010613	WASHER;PLAIN	RONDELLE	2					
109	DS2094094	HOSE	TUYAU FLEXIBLE	1					
116	DS2093218	HOSE	TUYAU FLEXIBLE	1					
117	DS2094068	HOSE	TUYAU FLEXIBLE	1					
118	DS2094066	HOSE	TUYAU FLEXIBLE	1					
119	DS2094067	HOSE	TUYAU FLEXIBLE	1					
122	DS2093217	HOSE	TUYAU FLEXIBLE	1					
124	DS2093216	HOSE	TUYAU FLEXIBLE	1					
125	DS2093215	HOSE	TUYAU FLEXIBLE	1					
126	DS2093214	HOSE	TUYAU FLEXIBLE	1					
128	DS2093280	HOSE	TUYAU FLEXIBLE	1					

DATE	DEC. 26, 2006
1st EDITION	

Fig. 1320 PILOT PIPING(2)
CONDUITES DE PILOTE

Serial No. ;

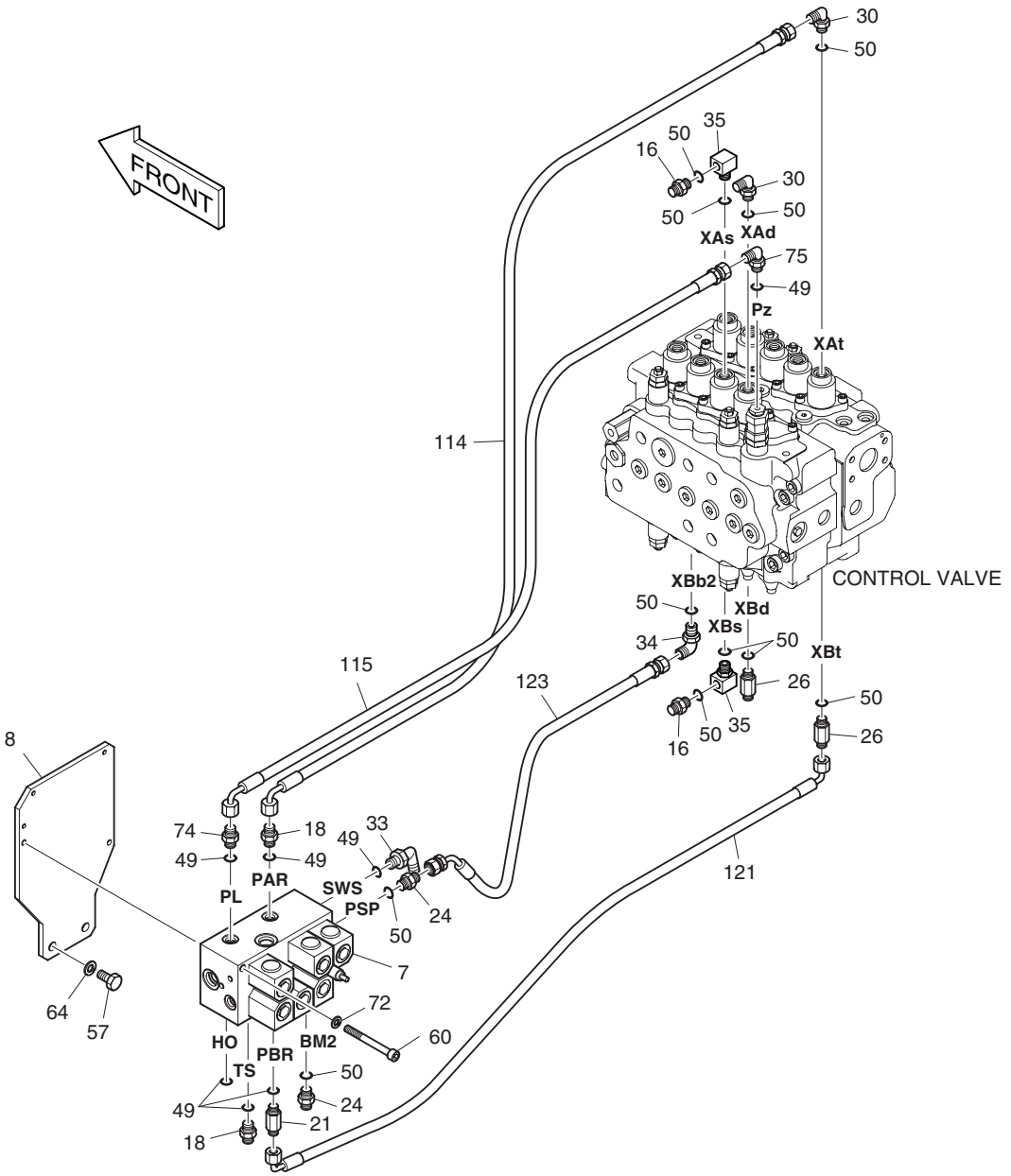

DATE	DEC. 26, 2006
1st EDITION	

Fig. 1320 PILOT PIPING(2) CONDUITES DE PILOTE

Serial No. ;

Key No.	Part No.	Description	Description	Q'ty	S.C	Serial No.	ICA	Replaceable part	
								Part No.	Q'ty
1320--	K1013261C	PILOT PIPING	TUYAUTERIE PILOTE	-	D				
7	K1002819	VALVE;SOLENOID	SOUPAPE A SOLENOIDE	1					
8	195-02721J	BRACKET	SUPPORT	1					
16	181-00144D41	ADAPTER	ADAPTEUR	2					
18	2181-1126D14	ADAPTER	ADAPTEUR	2					
21	2181-1126D34	ADAPTER	ADAPTEUR	1					
24	2181-1126D7	ADAPTER	ADAPTEUR	2					
26	2181-1126D96	ADAPTER	ADAPTEUR	2					
30	2181-1702D10	ELBOW	COUDE	2					
33	2181-1702D4	ELBOW	COUDE	1					
34	2181-1702D5	ELBOW	COUDE	1					
35	2181-2295D12	ELBOW	COUDE	2					
49	S8000111	O-RING	JOINT TORIQUE	7					
50	S8000141	O-RING	JOINT TORIQUE	11					
57	S0515066	BOLT	BOULON	2					
60	S2213566	BOLT;SOCKET	BOULON A 6 PANS CREUX	2					
64	S5102703	WASHER;SPRING	RONDELLE ELASTIQUE	2					
72	S5110603	WASHER;SPRING	RONDELLE ELASTIQUE	2					
74	2181-1126D39	ADAPTER	ADAPTEUR	1					
75	2181-1702D3	ELBOW	COUDE	1					
114	DS2093207	HOSE	TUYAU FLEXIBLE	1					
115	DS2093015	HOSE	TUYAU FLEXIBLE	1					
121	DS2091030	HOSE	TUYAU FLEXIBLE	1					
123	DS2092048	HOSE	TUYAU FLEXIBLE	1					

DATE	DEC. 26, 2006
1st EDITION	

Fig. 1330 PILOT PIPING(3)
CONDUITES DE PILOTE

Serial No. ;

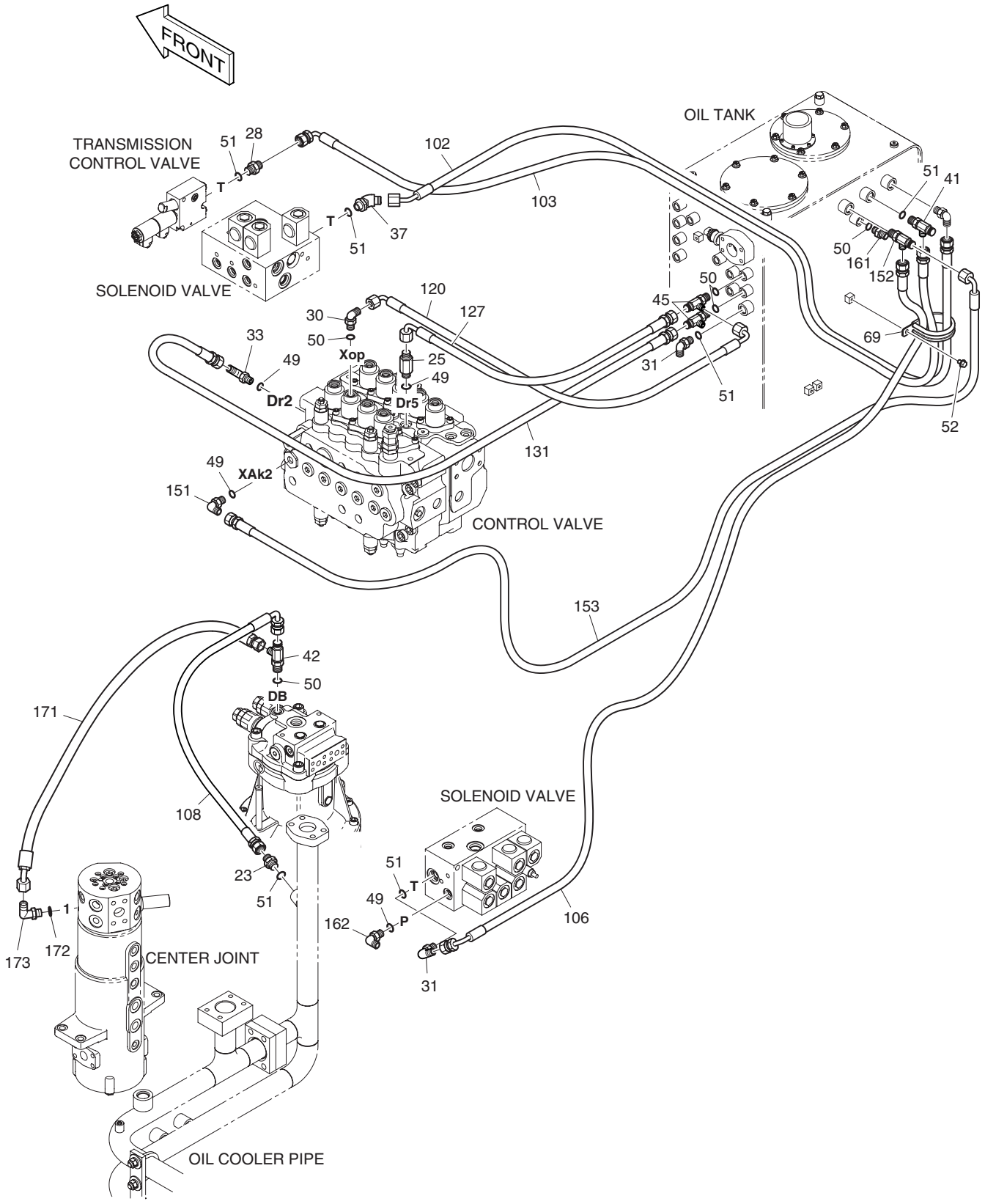

DATE	DEC. 26, 2006
1st EDITION	

Fig. 1330 PILOT PIPING(3) CONDUITES DE PILOTE

Serial No. ;

Key No.	Part No.	Description	Description	Q'ty	S.C	Serial No.	ICA	Replaceable part	
								Part No.	Q'ty
1330--	K1013261C	PILOT PIPING	TUYAUTERIE PILOTE	-	D				
23	2181-1126D6	ADAPTER	ADAPTEUR	2					
25	2181-1126D75	ADAPTER	ADAPTEUR	1					
28	2181-1126D30	ADAPTER	ADAPTEUR	1					
30	2181-1702D10	ELBOW	COUDE	1					
31	2181-1702D2	ELBOW	COUDE	2					
33	2181-1702D4	ELBOW	COUDE	1					
37	2181-2419D3	ELBOW	COUDE	1					
41	2181-1951D23	TEE	TE	1					
42	2181-1951D38	TEE	TE	1					
45	2181-1951D7	TEE	TE	1					
49	S8000111	O-RING	JOINT TORIQUE	4					
50	S8000141	O-RING	JOINT TORIQUE	4					
51	S8000181	O-RING	JOINT TORIQUE	7					
52	K1001029	BOLT	BOULON	1					
69	124-00208D9	CLIP	AGRAFE	1					
102	DS2054327	HOSE	TUYAU FLEXIBLE	1					
103	DS2093213	HOSE	TUYAU FLEXIBLE	1					
106	DS2055987	HOSE	TUYAU FLEXIBLE	1					
108	DS2055851	HOSE	TUYAU FLEXIBLE	1					
120	DS2091011	HOSE	TUYAU FLEXIBLE	1					
127	DS2093071	HOSE	TUYAU FLEXIBLE	1					
131	DS2094123	HOSE	TUYAU FLEXIBLE	1					
151	2181-1702D4	ELBOW	COUDE	1					
152	2181-1951D8	TEE	TE	1					
153	DS2093078	HOSE	TUYAU FLEXIBLE	1					
161	2181-1126D36	ADAPTER	ADAPTEUR	1					
162	2181-1702D4	ELBOW	COUDE	1					
171	DS2054371	HOSE	TUYAU FLEXIBLE	1					
172	S8000181	O-RING	JOINT TORIQUE	1					
173	2181-1702D2	ELBOW	COUDE	1					

DATE	DEC. 26, 2006
1st EDITION	

Fig. 1340 PILOT PIPING(4)
CONDUITES DE PILOTE

Serial No. ;

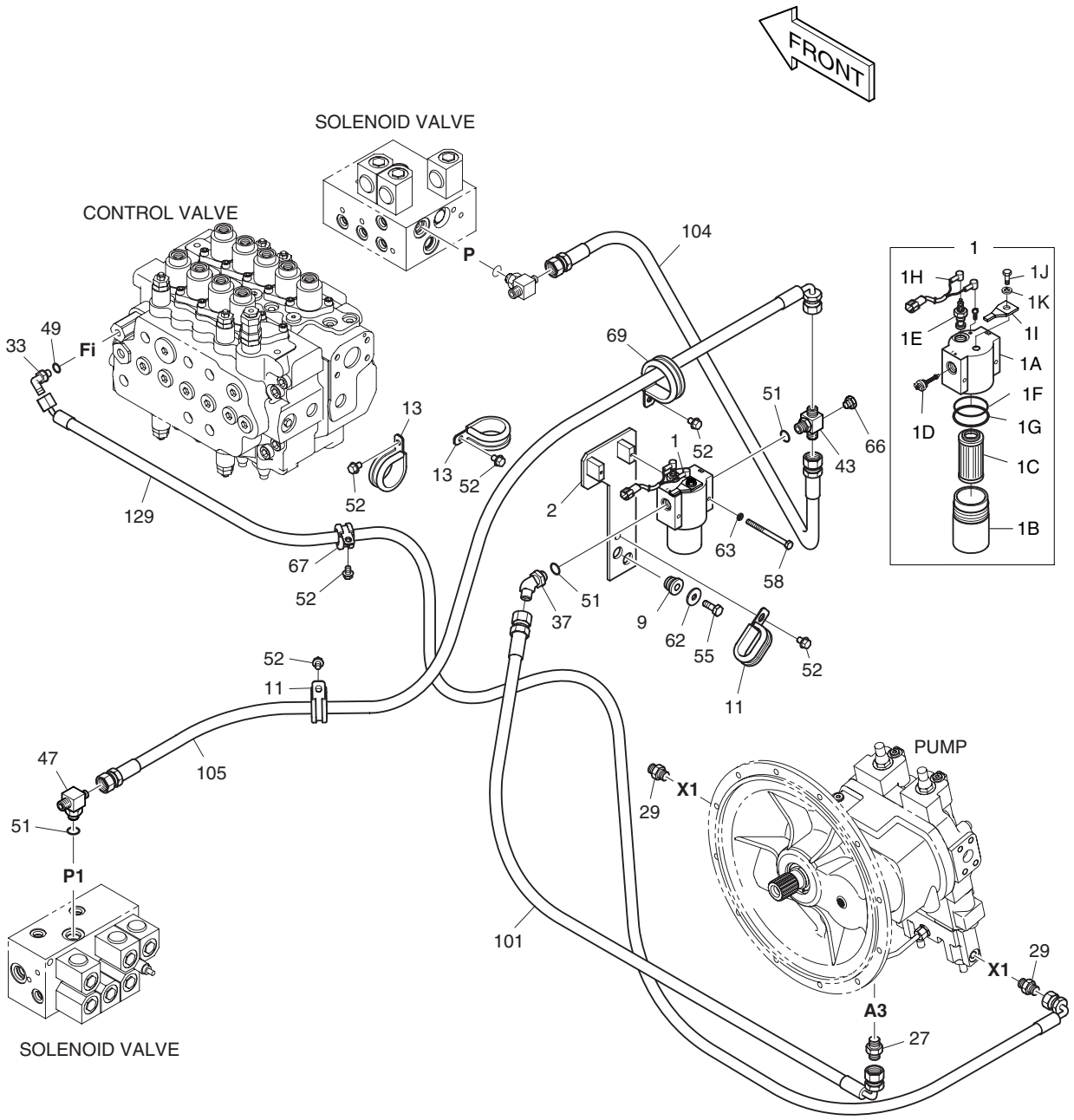

DATE	DEC. 26, 2006
1st EDITION	

Fig. 1340 PILOT PIPING(4)
CONDUITES DE PILOTE

Serial No. ;

Key No.	Part No.	Description	Description	Q'ty	S.C	Serial No.	ICA	Replaceable part	
								Part No.	Q'ty
1340--	K1013261C	PILOT PIPING	TUYAUTERIE PILOTE	-	D				
1	471-00075A	FILTER;PILOT	FILTRE	1					
1A	-	. HEAD	. TETE	1	D				
1B	2472-7003	. CASE	. CARTER	1					
1C	2471-1154	. ELEMENT;PILOT FILTER	. ELEMENT	1					
1D	2426-1237	. VALVE;BY-PASS	. VANNE BY-PASS	1					
1E	2471-1155A	. INDICATOR	. INDICATEUR	1					
1F	Y-3738-04	. O-RING	. JOINT TORIQUE	1					
1G	Y-3738-05	. RING;BACK UP	. BAGUE	1					
1H	530-00236	. HARNESS;PILOT FILTER	. HARNAIS	1					
1I	2197-1661	. BRACKET	. SUPPORT	1					
1J	S0508653	. BOLT	. BOULON	1					
1K	S5102503	. WASHER;SPRING	. RONDELLE ELASTIQUE	1					
2	195-02787G	BRACKET	SUPPORT	1					
9	198-00016	RUBBER	CAOUTCHOUC	2					
11	124-00209D2	CLIP	AGRAFE	2					
13	124-00208D7	CLIP	AGRAFE	2					
27	DS2479001	ADAPTER	ADAPTEUR	1					
29	DS2479002	ADAPTER	ADAPTEUR	2					
33	2181-1702D4	ELBOW	COUDE	1					
37	2181-2419D3	ELBOW	COUDE	1					
43	K1025342	TEE	TE	1					
47	2181-2281D15	TEE	TE	1					
49	S8000111	O-RING	JOINT TORIQUE	1					
51	S8000181	O-RING	JOINT TORIQUE	3					
52	K1001029	BOLT	BOULON	6					
55	S0512466	BOLT	BOULON	2					
58	S0553766	BOLT	BOULON	2					
62	2114-1058D10	WASHER;PLAIN	RONDELLE	2					
63	S5102303	WASHER;SPRING	RONDELLE ELASTIQUE	2					
66	2181-2047A	PLUG	BOUCHON	1					
67	124-00208D4	CLIP	AGRAFE	1					
69	124-00208D9	CLIP	AGRAFE	1					
101	DS2055317	HOSE	TUYAU FLEXIBLE	1					
104	DS2053399	HOSE	TUYAU FLEXIBLE	1					
105	DS2055950	HOSE	TUYAU FLEXIBLE	1					
129	DS2090015	HOSE	TUYAU FLEXIBLE	1					

DATE	JUN. 30, 2007
REV.NO.	EXB07-06

Fig. 1350 PILOT PIPING(5)
CONDUITES DE PILOTE

Serial No. ;

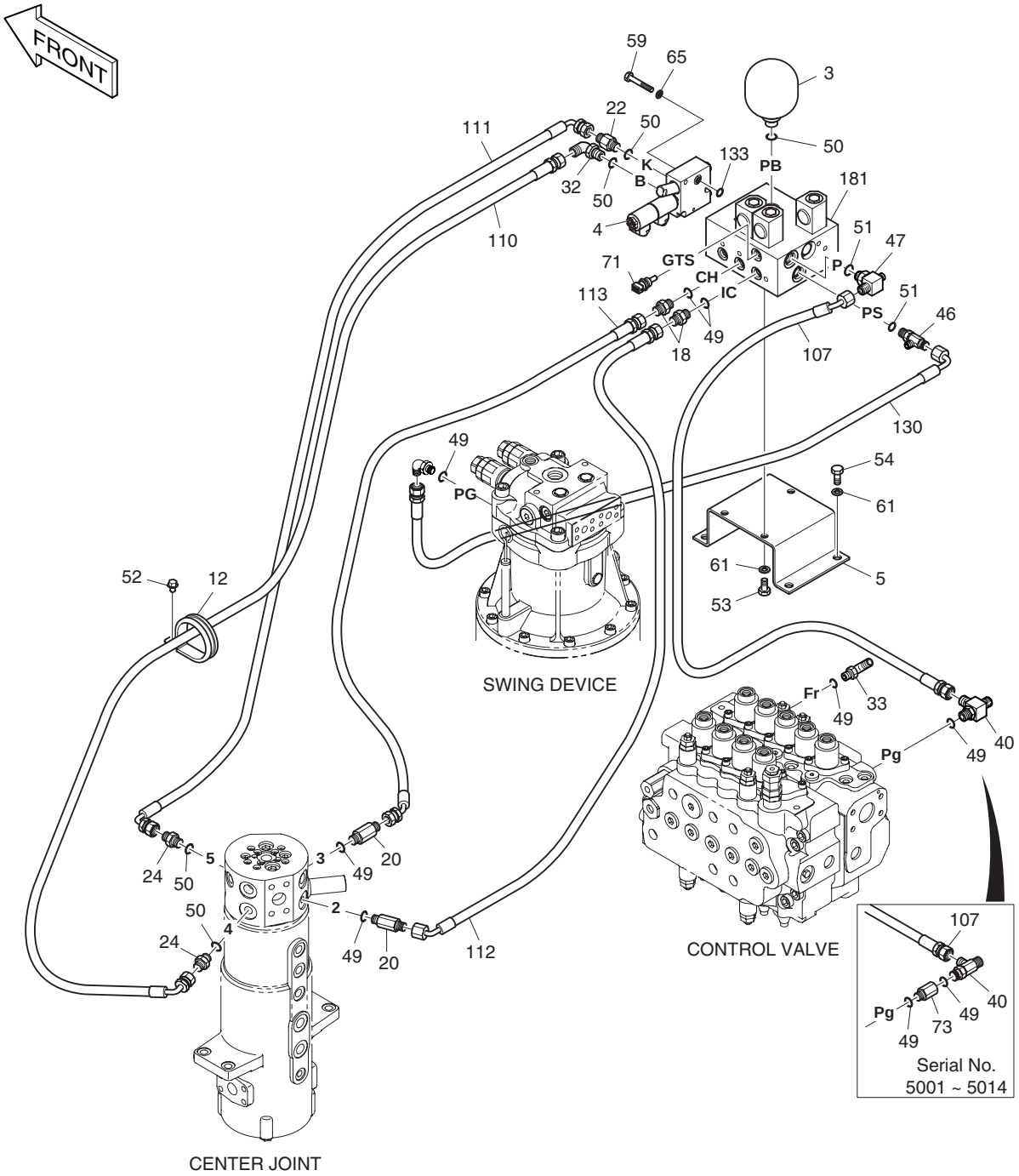

DATE	JUN. 30, 2007
REV. NO.	EXB07-06

Fig. 1350 PILOT PIPING(5) CONDUITES DE PILOTE

Serial No. ;

Key No.	Part No.	Description	Description	Q'ty	S.C	Serial No.	ICA	Replaceable part	
								Part No.	Q'ty
1350--	**K1013261H**	**PILOT PIPING**	TUYAUTERIE PILOTE	-	D				
3	2460-9054	ACCUMULATOR	ACCUMULATEUR	1					
4	421-00021A	VALVE;T/M CONTROL	VANNE	1					
5	195-02730C	BRACKET	SUPPORT	1					
12	124-00208D8	CLIP	AGRAFE	1					
18	2181-1126D14	ADAPTER	ADAPTEUR	2					
20	2181-1126D103	ADAPTER	ADAPTEUR	2					
22	2181-1126D108	ADAPTER	ADAPTEUR	1					
24	2181-1126D7	ADAPTER	ADAPTEUR	2					
32	2181-1702D25	ELBOW	COUDE	1					
33	2181-1702D4	ELBOW	COUDE	1					
40	2181-1951D1	TEE	TE	1		5001–5014			
	K1038032	**TEE**	TE	1		**5015–**			
46	2181-1951D8	TEE	TE	1					
47	2181-2281D15	TEE	TE	1					
49	S8000111	O-RING	JOINT TORIQUE	8		5001–5014			
	S8000111	**O-RING**	JOINT TORIQUE	7		**5015–**			
50	S8000141	O-RING	JOINT TORIQUE	5					
51	S8000181	O-RING	JOINT TORIQUE	2					
52	K1001029	BOLT	BOULON	1					
53	S0511866	BOLT	BOULON	3					
54	S0512066	BOLT	BOULON	4					
59	S0556466	BOLT	BOULON	2					
61	S5102603	WASHER;SPRING	RONDELLE ELASTIQUE	7					
65	S5102503	WASHER;SPRING	RONDELLE ELASTIQUE	2					
71	547-00001	SENSOR;PRESSURE	CAPTEUR	1					
73	**471-00118**	**FILTER;REDUCER**	FILTRE	1		**5001–5014**			
107	DS2092013	HOSE	TUYAU FLEXIBLE	1					
110	DS2093054	HOSE	TUYAU FLEXIBLE	1					
111	DS2091007	HOSE	TUYAU FLEXIBLE	1					
112	DS2092059	HOSE	TUYAU FLEXIBLE	1					
113	DS2092047	HOSE	TUYAU FLEXIBLE	1					
130	DS2093096	HOSE	TUYAU FLEXIBLE	1					
133	**K1041294**	**O-RING**	JOINT TORIQUE	1		**5020–**			
181	K1002820	VALVE;SOLENOID	SOUPAPE A SOLENOIDE	1					

DATE	JUN. 30, 2008
REV.NO.	EXB08-06

Fig. 1360 PILOT PIPING(6)
CONDUITES DE PILOTE

Serial No. ;

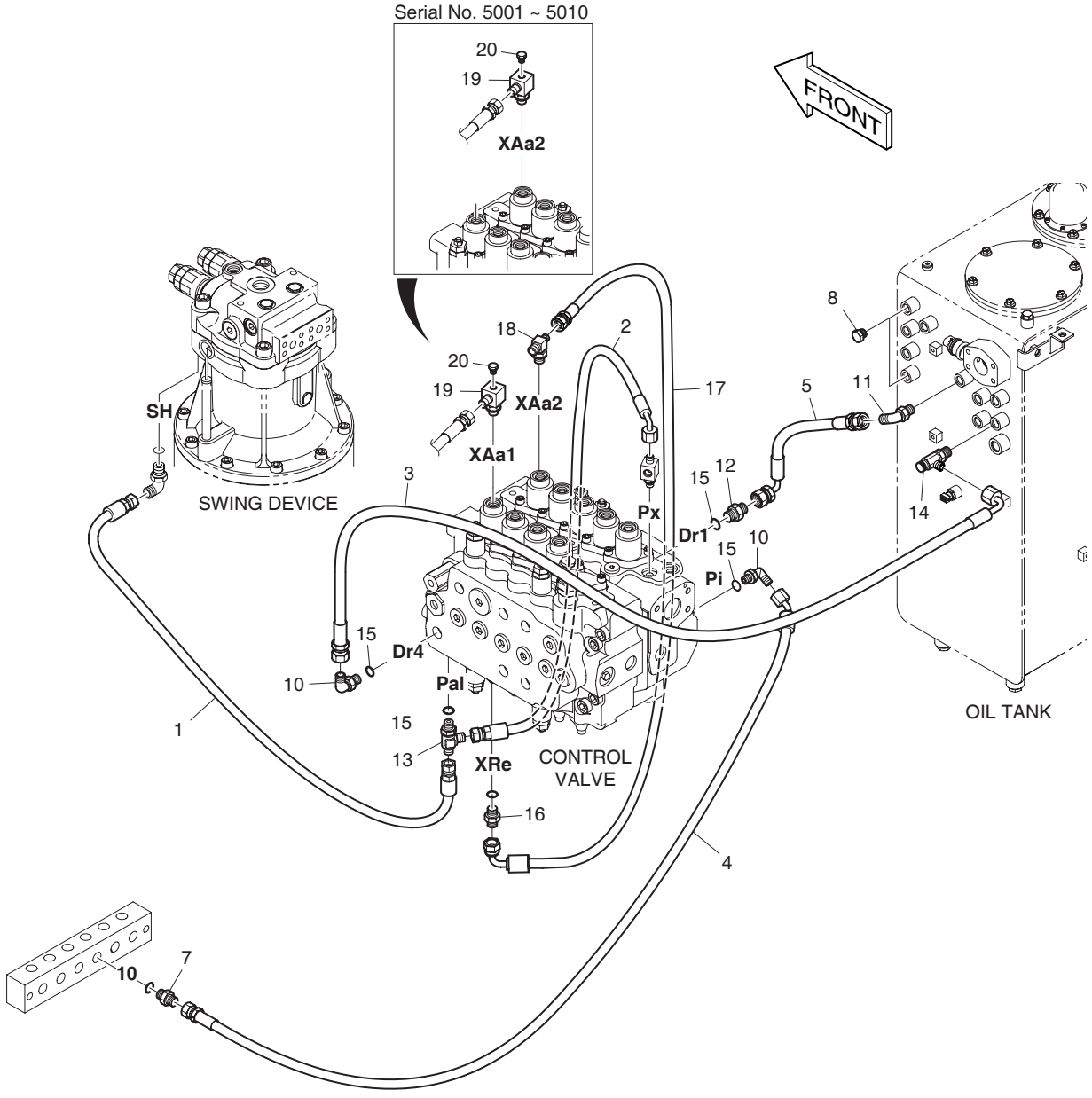

DATE	JUN. 30, 2008
REV. NO.	EXB08-06

Fig. 1360 PILOT PIPING(6) CONDUITES DE PILOTE

Serial No. ;

Key No.	Part No.	Description	Description	Q'ty	S.C	Serial No.	ICA	Replaceable part	
								Part No.	Q'ty
1360--	K1018162B	PILOT PIPING;LOCK V/V NOT	TUYAUTERIE PILOTE	-	D				
1	DS2094062	HOSE	TUYAU FLEXIBLE	1					
2	DS2093211	HOSE	TUYAU FLEXIBLE	1					
3	DS2093158	HOSE	TUYAU FLEXIBLE	1					
4	DS2092067	HOSE	TUYAU FLEXIBLE	1					
5	DS2093210	HOSE	TUYAU FLEXIBLE	1					
7	2181-1126D36	ADAPTER	ADAPTEUR	1					
8	2181-1950D2	PLUG	BOUCHON	2					
10	2181-1702D4	ELBOW	COUDE	2					
11	2181-1702D5	ELBOW	COUDE	1					
12	2181-1126D85	ADAPTER	ADAPTEUR	1					
13	2181-1951D1	TEE	TE	1					
14	2181-1951D7	TEE	TE	1					
15	S8000111	O-RING	JOINT TORIQUE	4					
16	2181-1126D14	ADAPTER	ADAPTEUR	1		5011–			
17	2181-2281D3	TEE	TE	1		5011–			
18	DS2093028	HOSE	TUYAU FLEXIBLE	1		5011–			
19	2181-2590D2	ADAPTER	ADAPTEUR	1					
20	2181-2047A	PLUG	BOUCHON	1					

DATE	JUN. 30, 2008
REV.NO.	EXB08-06

Fig. 1370 PILOT PIPING(7)
CONDUITES DE PILOTE

Serial No. ;

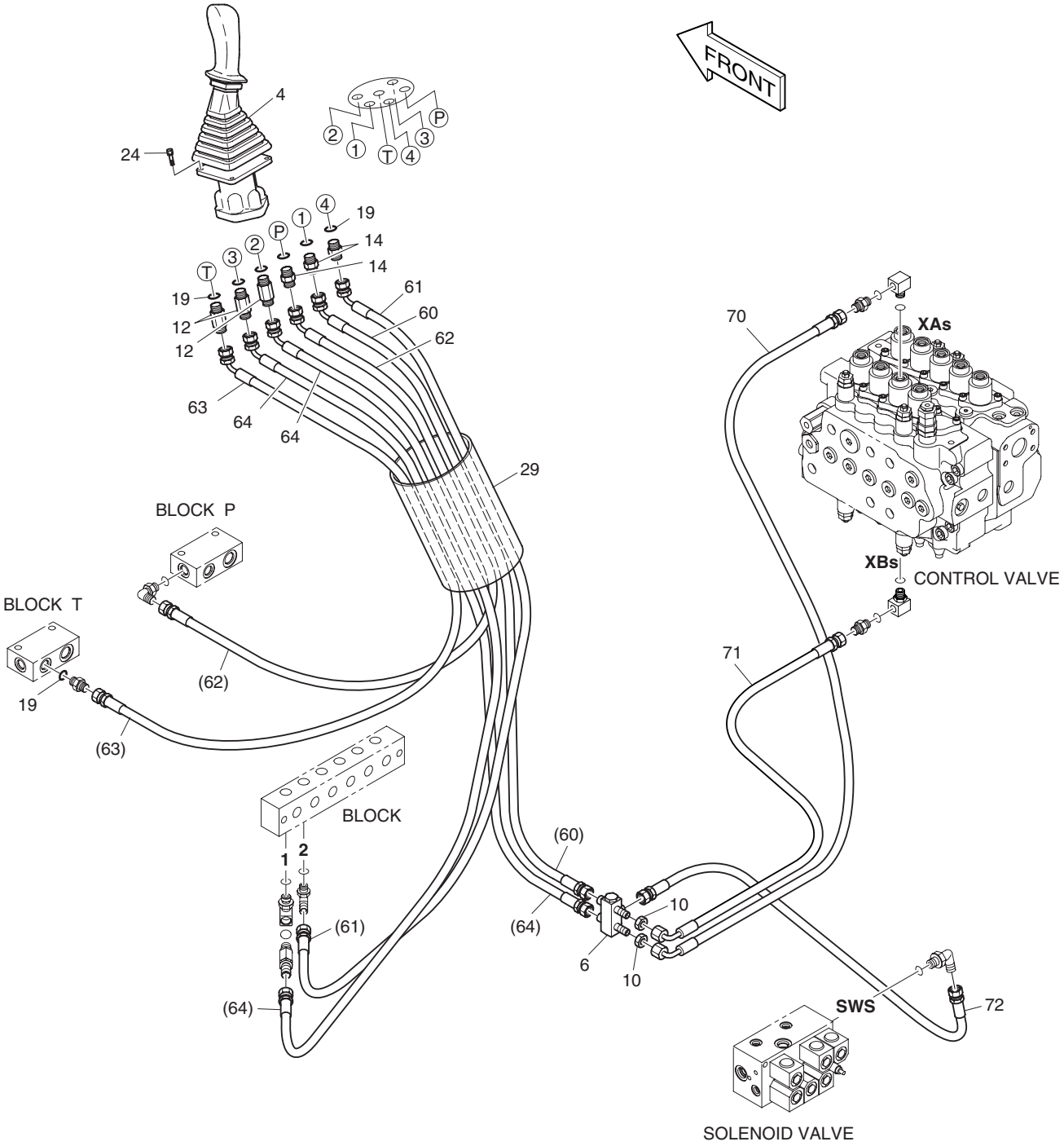

DATE	JUN. 30, 2008
REV. NO.	EXB08-06

Fig. 1370 PILOT PIPING(7) CONDUITES DE PILOTE

Serial No. ;

Key No.	Part No.	Description	Description	Q'ty	S.C	Serial No.	ICA	Replaceable part	
								Part No.	Q'ty
1370--	K1018146B	PILOT PIPING	TUYAUTERIE PILOTE	-	D				
4	K1000556G	VALVE;REMOCON(L.H)	VANNE DE COMMANDE	1		5001–5019	I	K1000556H	1
	K1000556H	**VALVE;REMOCON(L.H)**	VANNE DE COMMANDE	1		**5020–**			
6	420-00475	VALVE;SHUTTLE	VANNE	1					
10	121-00010D7	NUT	ECROU	2					
12	2181-1126D27	ADAPTER	ADAPTEUR	3					
14	2181-1126D7	ADAPTER	ADAPTEUR	3					
19	S8000141	O-RING	JOINT TORIQUE	7					
24	S2205066	BOLT;SOCKET	BOULON A 6 PANS CREUX	4					
29	K1003945	PROTECTOR	PROTECTEUR	1					
60	DS2095017	HOSE	TUYAU FLEXIBLE	1					
61	DS2095015	HOSE	TUYAU FLEXIBLE	1					
62	DS2095013	HOSE	TUYAU FLEXIBLE	1					
63	DS2095014	HOSE	TUYAU FLEXIBLE	1					
64	DS2095016	HOSE	TUYAU FLEXIBLE	2					
70	DS2093219	HOSE	TUYAU FLEXIBLE	1					
71	DS2093186	HOSE	TUYAU FLEXIBLE	1					
72	DS2094169	HOSE	TUYAU FLEXIBLE	1					

DATE	JUN. 30, 2008
REV.NO.	EXB08-06

Fig. 1380 PILOT PIPING(8)
CONDUITES DE PILOTE

Serial No. ;

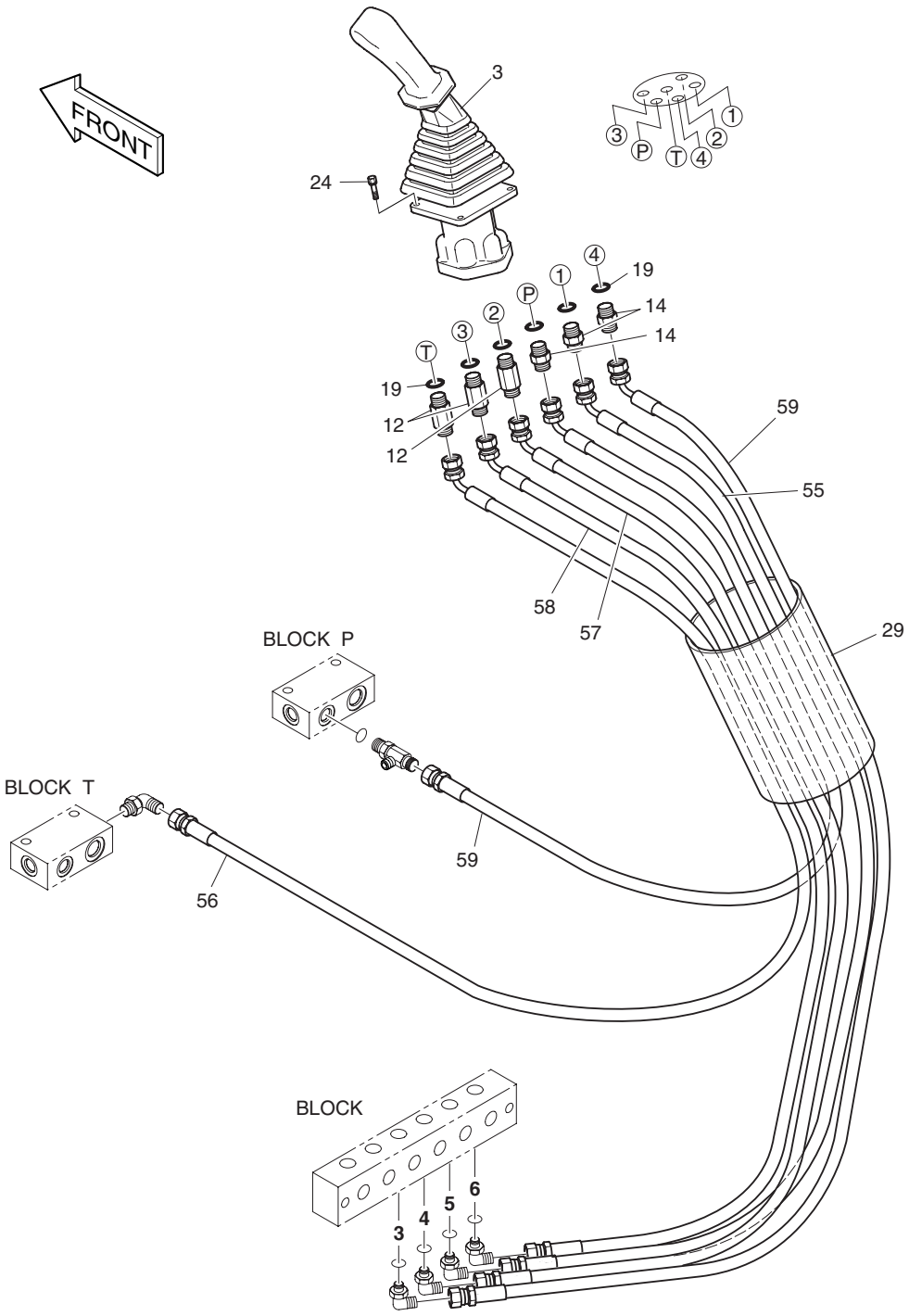

DATE	JUN. 30, 2008
REV. NO.	EXB08-06

Fig. 1380 PILOT PIPING(8) CONDUITES DE PILOTE

Serial No. ;

Key No.	Part No.	Description	Description	Q'ty	S.C	Serial No.	ICA	Replaceable part	
								Part No.	Q'ty
1380--	K1018146B	PILOT PIPING	TUYAUTERIE PILOTE	-	D				
3	K1000555G	VALVE;REMOCON(R.H)	VANNE DE COMMANDE	1		5001–5019	I	K1000555H	1
	K1000555H	**VALVE;REMOCON(R.H)**	VANNE DE COMMANDE	1		**5020–**			
12	2181-1126D27	ADAPTER	ADAPTEUR	3					
14	2181-1126D7	ADAPTER	ADAPTEUR	3					
19	S8000141	O-RING	JOINT TORIQUE	6					
24	S2205066	BOLT;SOCKET	BOULON A 6 PANS CREUX	4					
29	K1003945	PROTECTOR	PROTECTEUR	1					
55	DS2095005	HOSE	TUYAU FLEXIBLE	1					
56	DS2095006	HOSE	TUYAU FLEXIBLE	1					
57	DS2095018	HOSE	TUYAU FLEXIBLE	1					
58	DS2095026	HOSE	TUYAU FLEXIBLE	1					
59	DS2095010	HOSE	TUYAU FLEXIBLE	2					

DATE	DEC. 26, 2006
1st EDITION	

Fig. 1390 PILOT PIPING(9)
CONDUITES DE PILOTE

Serial No. ;

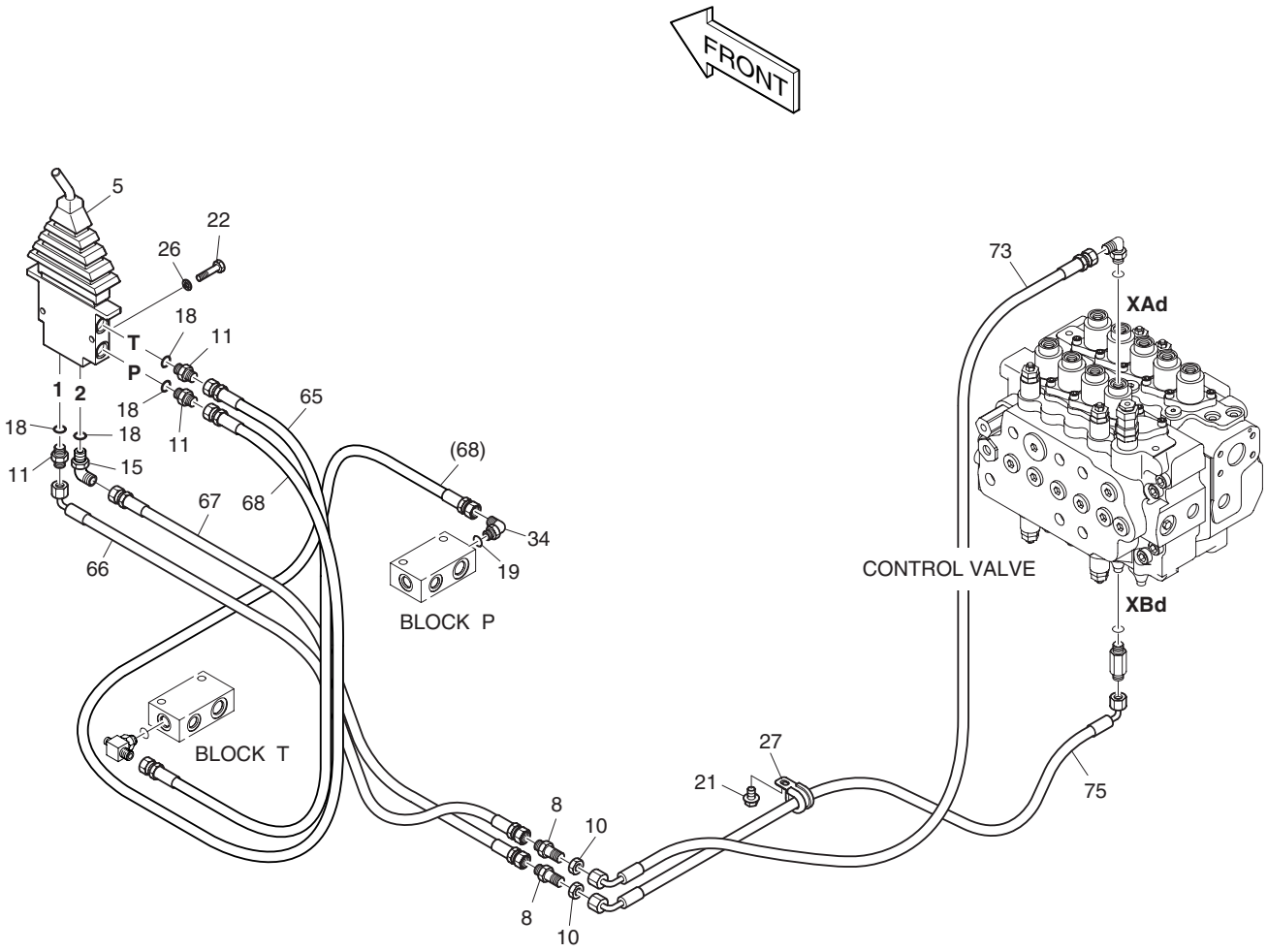

DATE	DEC. 26, 2006
1st EDITION	

Fig. 1390 PILOT PIPING(9) CONDUITES DE PILOTE

Serial No. ;

Key No.	Part No.	Description	Description	Q'ty	S.C	Serial No.	ICA	Replaceable part	
								Part No.	Q'ty
1390--	K1018146B	PILOT PIPING	TUYAUTERIE PILOTE	-	D				
5	420-00490A	VALVE;REMOCON(DOZER)	VANNE DE COMMANDE	1					
8	2181-2178	ADAPTER	ADAPTEUR	2					
10	121-00010D7	NUT	ECROU	2					
11	2181-1126D14	ADAPTER	ADAPTEUR	3					
15	2181-1702D4	ELBOW	COUDE	1					
18	S8000111	O-RING	JOINT TORIQUE	4					
19	S8000141	O-RING	JOINT TORIQUE	1					
21	K1001029	BOLT	BOULON	1					
22	S0505266	BOLT	BOULON	2					
26	S5102303	WASHER;SPRING	RONDELLE ELASTIQUE	2					
27	124-00208D3	CLIP	AGRAFE	1					
34	2181-1702D10	ELBOW	COUDE	1					
66	DS2093053	HOSE	TUYAU FLEXIBLE	1					
67	DS2094011	HOSE	TUYAU FLEXIBLE	1					
65	DS2094033	HOSE	TUYAU FLEXIBLE	1					
68	DS2094092	HOSE	TUYAU FLEXIBLE	1					
73	DS2093220	HOSE	TUYAU FLEXIBLE	1					
75	DS2091031	HOSE	TUYAU FLEXIBLE	1					

DATE	DEC. 26, 2006
1st EDITION	

Fig. 1400 PILOT PIPING(10)
CONDUITES DE PILOTE

Serial No. ;

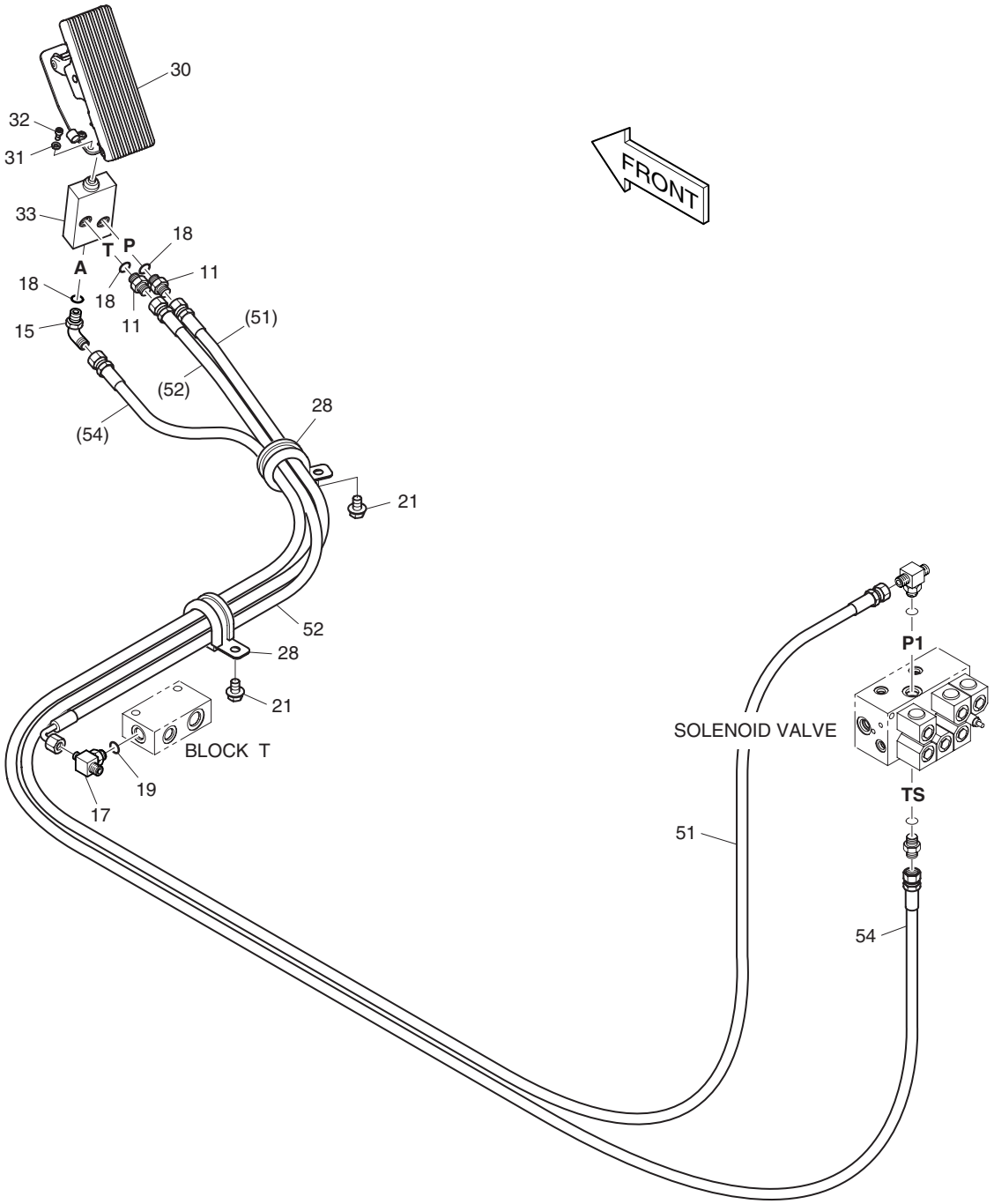

DATE	DEC. 26, 2006
1st EDITION	

Fig. 1400 PILOT PIPING(10)
CONDUITES DE PILOTE

Serial No. ;

Key No.	Part No.	Description	Description	Q'ty	S.C	Serial No.	ICA	Replaceable part	
								Part No.	Q'ty
1400--	K1018146B	PILOT PIPING	TUYAUTERIE PILOTE	-	D				
11	2181-1126D14	ADAPTER	ADAPTEUR	2					
15	2181-1702D4	ELBOW	COUDE	1					
17	2181-2281D4	TEE	TE	1					
18	S8000111	O-RING	JOINT TORIQUE	3					
19	S8000141	O-RING	JOINT TORIQUE	1					
21	K1001029	BOLT	BOULON	2					
28	124-00208D5	CLIP	AGRAFE	2					
30	K1007119	PEDAL;ACCELERATOR	PEDALE	1					
31	S5110303	WASHER;SPRING	RONDELLE ELASTIQUE	5					
32	S2204566	BOLT;SOCKET	BOULON A 6 PANS CREUX	5					
33	K1016405	VALVE;PEDAL	VANNE	1					
51	DS2094093	HOSE	TUYAU FLEXIBLE	1					
52	DS2093260	HOSE	TUYAU FLEXIBLE	1					
54	DS2094106	HOSE	TUYAU FLEXIBLE	1					

DATE	DEC. 26, 2006
1st EDITION	

Fig. 1410 PILOT PIPING(11) CONDUITES DE PILOTE

Serial No. ;

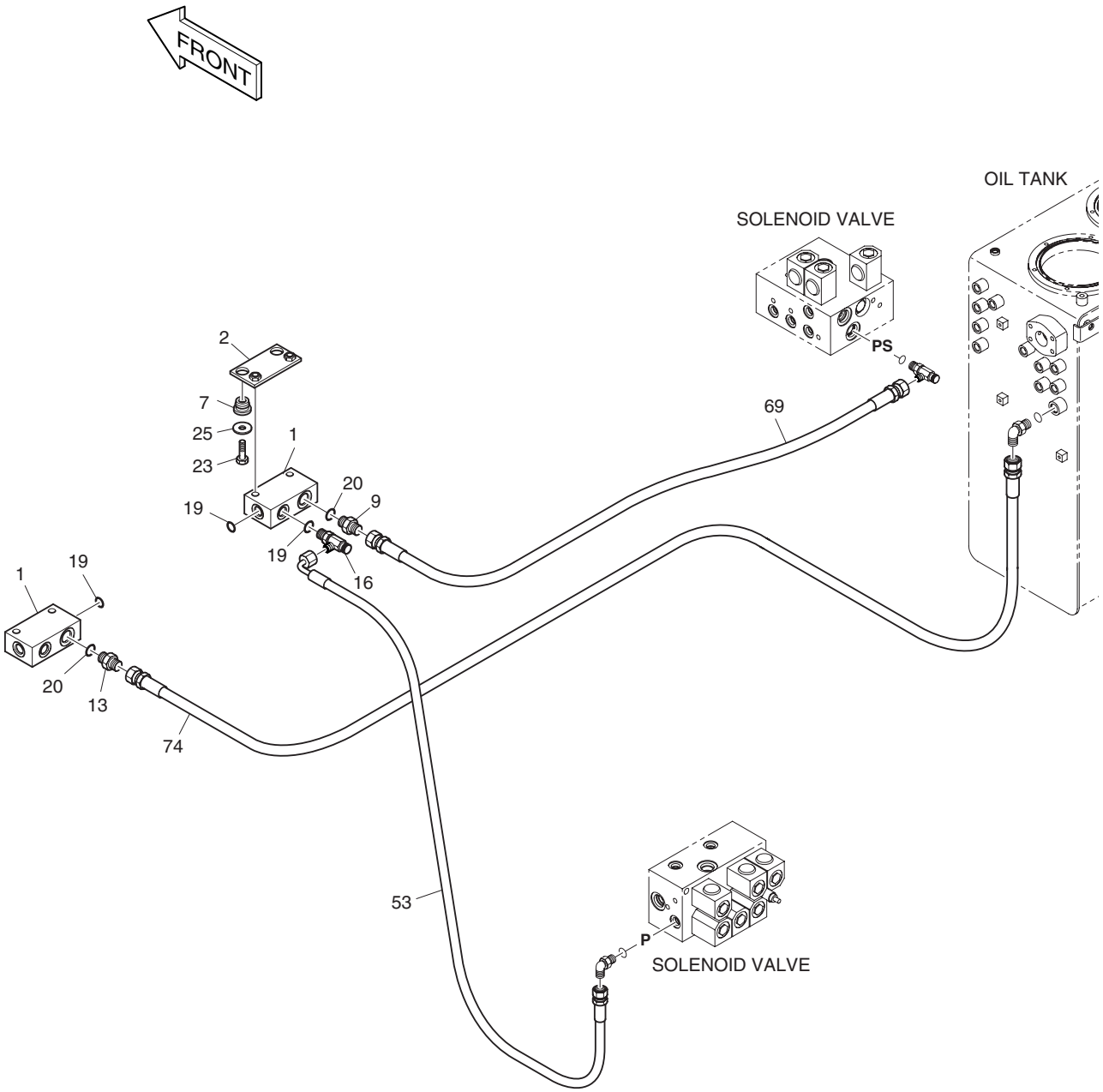

DATE	DEC. 26, 2006
1st EDITION	

Fig. 1410 PILOT PIPING(11)
CONDUITES DE PILOTE

Serial No. ;

Key No.	Part No.	Description	Description	Q'ty	S.C	Serial No.	ICA	Replaceable part	
								Part No.	Q'ty
1410--	K1018146B	PILOT PIPING	TUYAUTERIE PILOTE	-	D				
1	2423-1470	BLOCK	BLOC	2					
2	621-02151	PLATE	PLAQUE	1					
7	198-00016	RUBBER	CAOUTCHOUC	2					
9	2471-1135	FILTER;ADAPTER	FILTRE	1					
13	2181-1126D6	ADAPTER	ADAPTEUR	1					
16	2181-1951D6	TEE	TE	1					
19	S8000141	O-RING	JOINT TORIQUE	3					
20	S8000181	O-RING	JOINT TORIQUE	2					
23	S0512366	BOLT	BOULON	2					
25	2114-1058D10	WASHER;PLAIN	RONDELLE	2					
53	DS2093110	HOSE	TUYAU FLEXIBLE	1					
69	DS2053824	HOSE	TUYAU FLEXIBLE	1					
74	DS2053833	HOSE	TUYAU FLEXIBLE	1					

DATE	JUN. 30, 2007
REV.NO.	EXB07-06

Fig. 1420 PILOT PIPING - EPPR
CONDUITES DE PILOTE

Serial No. ;

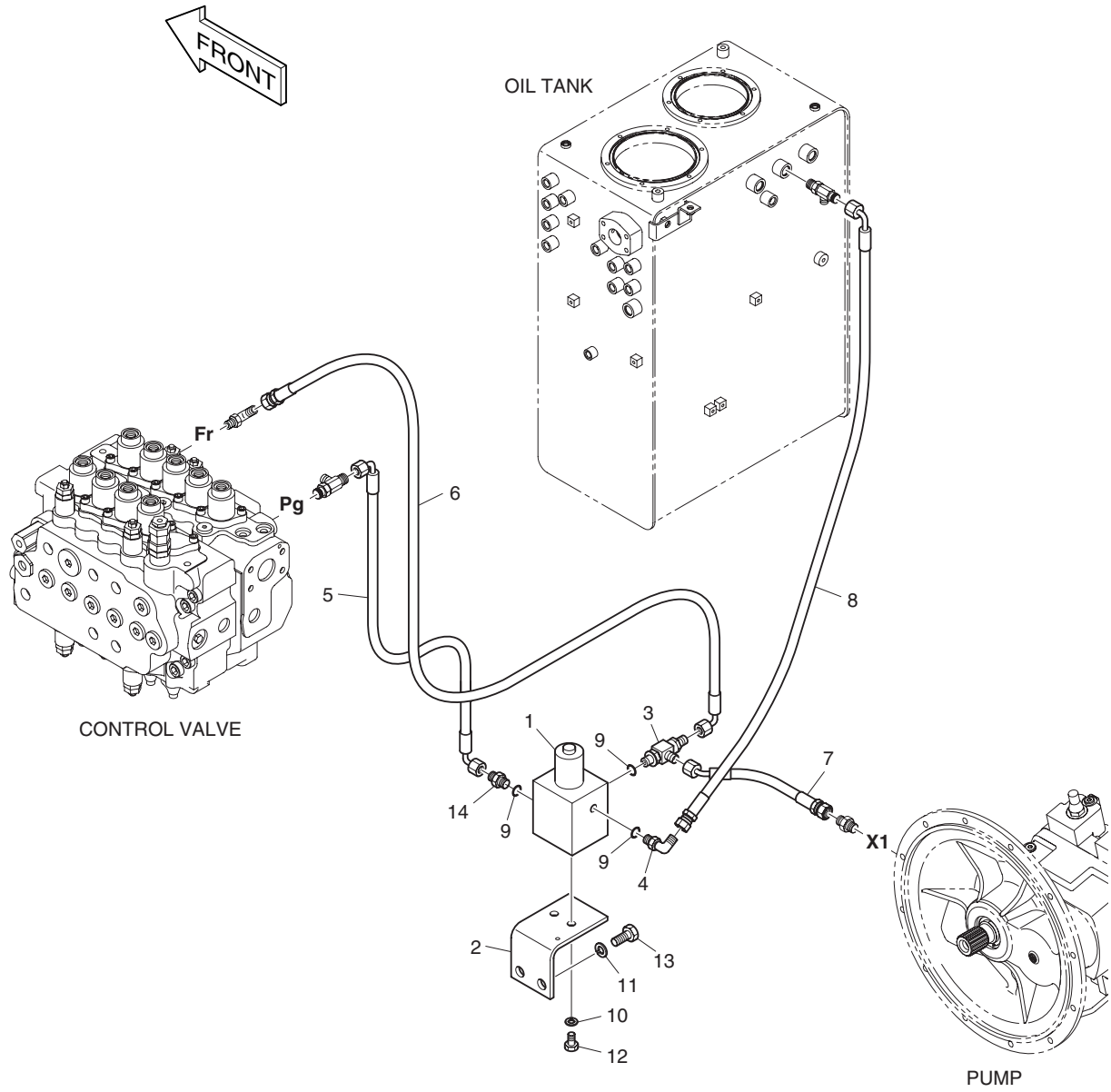

DATE	JUN. 30, 2007
REV. NO.	EXB07-06

Fig. 1420 PILOT PIPING - EPPR CONDUITES DE PILOTE

Serial No. ;

Key No.	Part No.	Description	Description	Q'ty	S.C	Serial No.	ICA	Replaceable part	
								Part No.	Q'ty
1420--	**K1003371B**	**PILOT PIPING(EPPR)**	TUYAUTERIE PILOTE	-	D				
1	426-00266	VALVE;EPPR	VANNE	1					
2	195-02807C	BRACKET	SUPPORT	1		5001–5011	I	195-02807E	1
	195-02807E	**BRACKET**	SUPPORT	1		**5012–**			
3	181-00779	TEE;SHUTTLE	TE	1					
4	2181-1702D4	ELBOW	COUDE	1					
5	DS2091086	HOSE	TUYAU FLEXIBLE	1					
6	DS2093110	HOSE	TUYAU FLEXIBLE	1					
7	DS2092024	HOSE	TUYAU FLEXIBLE	1					
8	DS2093012	HOSE	TUYAU FLEXIBLE	1					
9	S8000111	O-RING	JOINT TORIQUE	3					
10	S5102503	WASHER;SPRING	RONDELLE ELASTIQUE	2					
11	S5102603	WASHER;SPRING	RONDELLE ELASTIQUE	2					
12	S0508666	BOLT	BOULON	2					
13	S0512066	BOLT	BOULON	2					
14	2471-1133	ADAPTER;FILTER	FILTRE DE ADAPTEUR	1					

DATE	DEC. 26, 2006
1st EDITION	

Fig. 1430 BRAKE PIPING(1) TUYAUTERIE DE FREIN

Serial No. ;

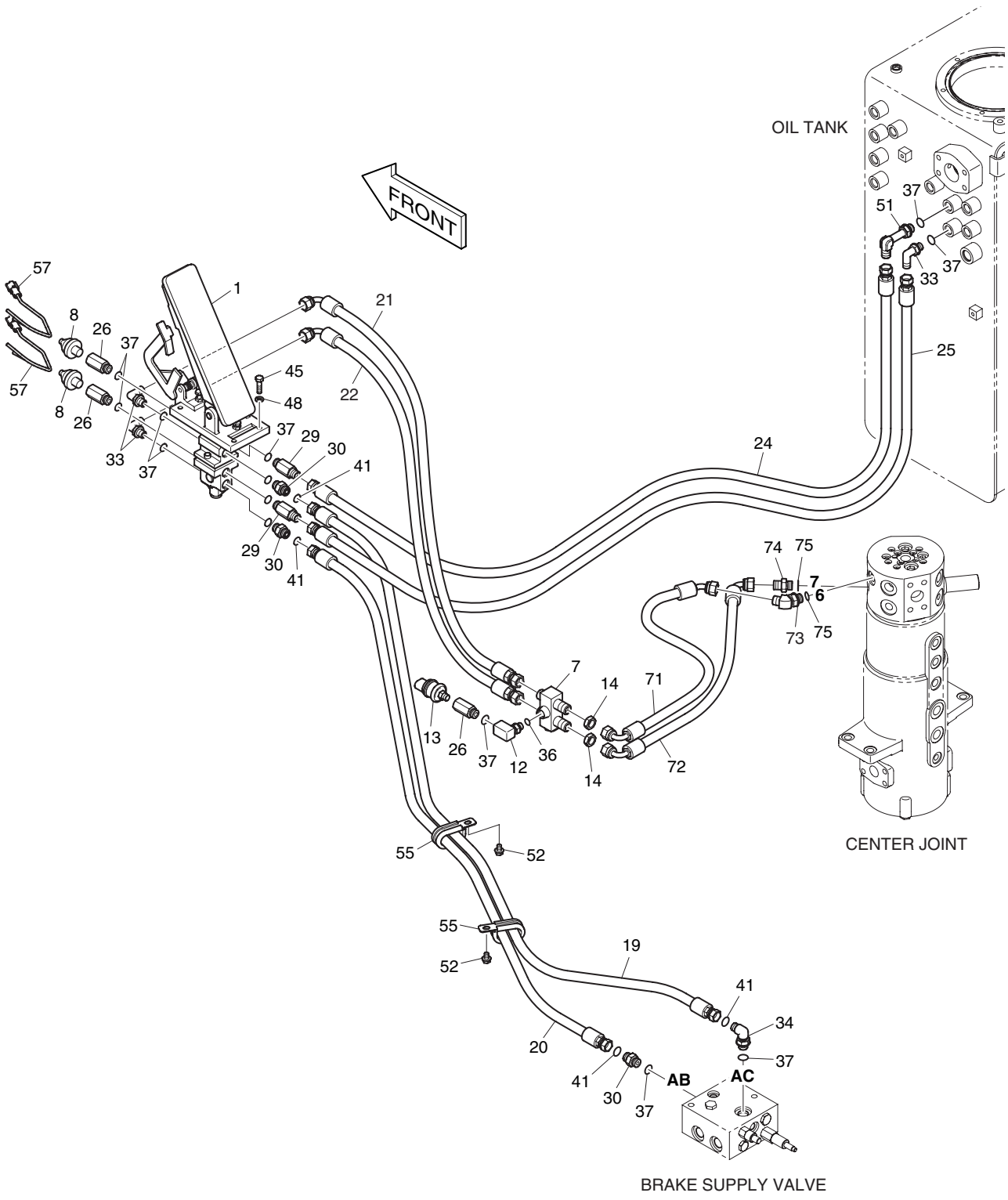

DATE	DEC. 26, 2006
1st EDITION	

Fig. 1430 BRAKE PIPING(1) TUYAUTERIE DE FREIN

Serial No. ;

Key No.	Part No.	Description	Description	Q'ty	S.C	Serial No.	ICA	Replaceable part	
								Part No.	Q'ty
1430--	K1012833A	BRAKE PIPING ASS'Y	TUYAUTERIE DE FREIN	-	D				
1	420-00470A	VALVE;FOOT BRAKE	VANNE	1					
7	420-00282	VALVE;SHUTTLE	VANNE	1					
8	549-00010	SWITCH;PRESSURE	COMMUTATEUR	2					
12	DS2308018	ELBOW	COUDE	1					
13	549-00107	SWITCH;RAM LOCK PRESSURE	COMMUTATEUR	1					
14	121-00010D1	NUT	ECROU	2					
19	DS2011486	HOSE	TUYAU FLEXIBLE	1					
20	DS2011485	HOSE	TUYAU FLEXIBLE	1					
21	DS2093049	HOSE	TUYAU FLEXIBLE	1					
22	DS2093279	HOSE	TUYAU FLEXIBLE	1					
24	DS2094057	HOSE	TUYAU FLEXIBLE	1					
25	DS2094056	HOSE	TUYAU FLEXIBLE	1					
26	181-00182	REDUCER	REDUCTEUR	3					
29	2181-1126D27	ADAPTER	ADAPTEUR	2					
30	2181-4133D2	ADAPTER	ADAPTEUR	3					
33	2181-1702D5	ELBOW	COUDE	3					
34	2181-2815D6	ELBOW	COUDE	1					
36	S8000111	O-RING	JOINT TORIQUE	1					
37	S8000141	O-RING	JOINT TORIQUE	13					
41	S8030061	O-RING	JOINT TORIQUE	4					
45	S0555966	BOLT;HEX.	BOULON A 6 PANS	4					
48	S5102503	WASHER;SPRING	RONDELLE ELASTIQUE	4					
51	2181-1702D51	ELBOW	COUDE	1					
52	K1001029	BOLT	BOULON A 6 PANS	2					
55	124-00209D2	CLIP	AGRAFE	2					
57	530-00067	HARNESS;STOP LAMP SW.	FAISCEAU	2					
71	DS2090016	HOSE	TUYAU FLEXIBLE	1					
72	DS2091033	HOSE	TUYAU FLEXIBLE	1					
74	2181-1126D7	ADAPTER	ADAPTEUR	1					
73	2181-2419D2	ELBOW	COUDE	1					
75	S8000141	O-RING	JOINT TORIQUE	2					

DATE	JUN. 30, 2007
REV.NO.	EXB07-06

Fig. 1440 BRAKE PIPING(2)
TUYAUTERIE DE FREIN

Serial No. ;

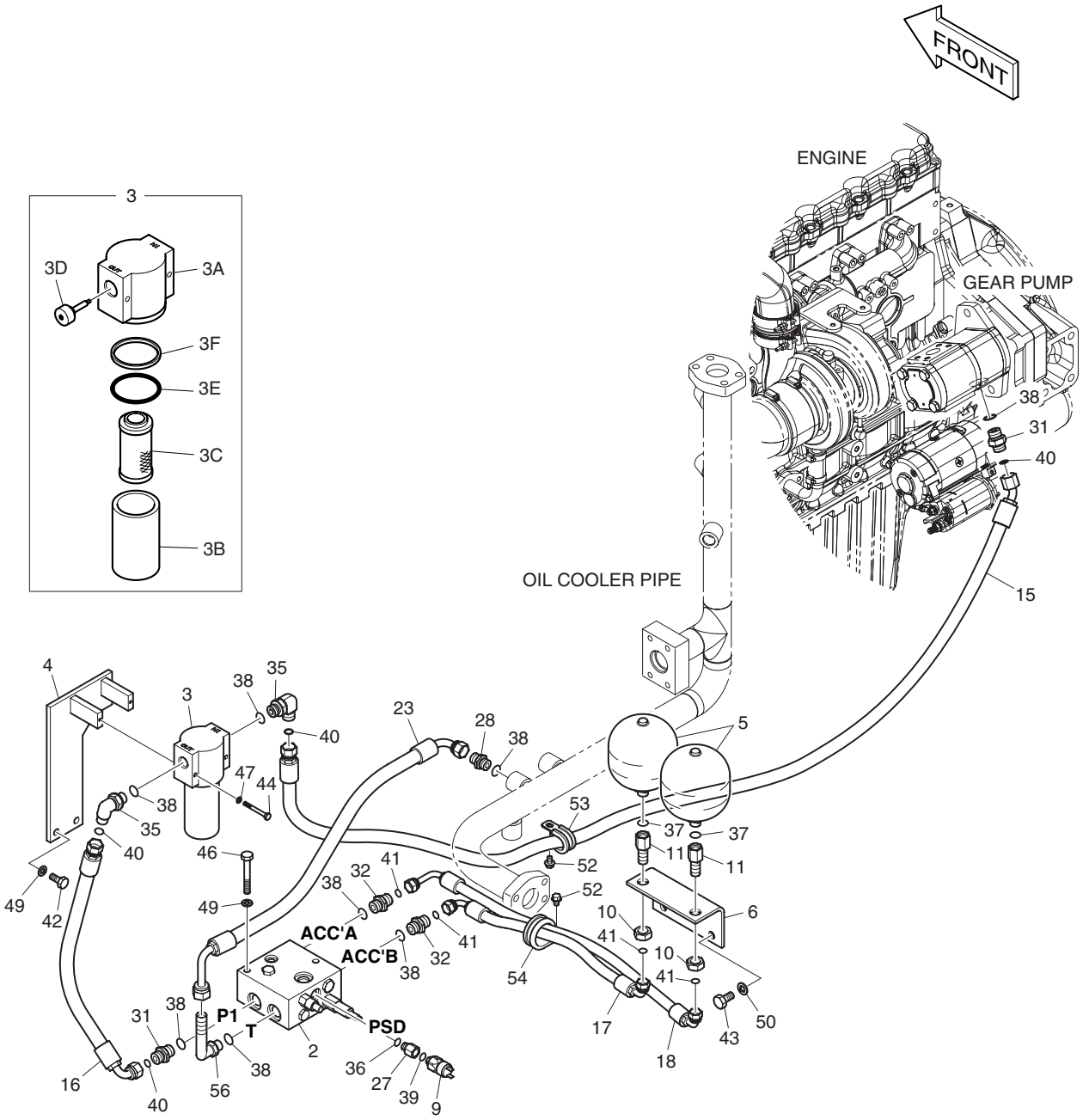

DATE	JUN. 30, 2007
REV. NO.	EXB07-06

Fig. 1440 BRAKE PIPING(2) TUYAUTERIE DE FREIN

Serial No. ;

Key No.	Part No.	Description	Description	Q'ty	S.C	Serial No.	ICA	Replaceable part	
								Part No.	Q'ty
1440--	**K1012833E**	**BRAKE PIPING ASS'Y**	TUYAUTERIE DE FREIN	-	D				
2	2420-9325A	VALVE;BRAKE SUPPLY	VANNE	1					
3	471-00061	FILTER;BRAKE	FILTRE DE FREIN	1					
3A	-	. HEAD	. COUVERCLE	1	D				
3B	-	. CASE	. CARTER	1	D				
3C	474-00009	. ELEMENT;FILTER	. ELEMENT	1					
3D	426-00059	. VALVE;BY-PASS	. VANNE	1					
3E	Y-3738-05	. O-RING	. JOINT TORIQUE	1					
3F	Y-3738-04	. RING;BACK UP	. BAGUE ANTIEXTRUSION	1					
4	195-02806E	BRACKET	SUPPORT	1					
5	2460-9055	ACCUMULATOR	RESERVOIR	2					
6	195-02568E	BRACKET	SUPPORT	1					
9	2549-9093	SWITCH;LOW PRESSURE	COMMUTATEUR	1					
10	121-00025	NUT	ECROU	2					
11	181-00141	REDUCER	REDUCTEUR	2					
15	DS2012399	HOSE	TUYAU FLEXIBLE	1					
16	DS2013615	HOSE	TUYAU FLEXIBLE	1		5001–5010			
	DS20131040	**HOSE**	TUYAU FLEXIBLE	1		**5011–**			
17	DS2023211	HOSE	TUYAU FLEXIBLE	1		5001–5010			
	DS2023328	**HOSE**	TUYAU FLEXIBLE	1		**5011–**			
18	DS2023214	HOSE	TUYAU FLEXIBLE	1		5001–5010			
	DS2023329	**HOSE**	TUYAU FLEXIBLE	1		**5011–**			
23	DS2059507	HOSE	TUYAU FLEXIBLE	1					
27	2181-2180	REDUCER	REDUCTEUR	1					
28	2181-1126D6	ADAPTER	ADAPTEUR	1					
31	2181-4133D3	ADAPTER	ADAPTEUR	2					
32	2181-4133D39	ADAPTER	ADAPTEUR	2					
35	2181-2815D3	ELBOW	COUDE	2					
36	S8000111	O-RING	JOINT TORIQUE	1					
37	S8000141	O-RING	JOINT TORIQUE	2					
38	S8000181	O-RING	JOINT TORIQUE	8					
39	S8180211	SEAL;RING	JOINT D'ANNEAU	1					
40	S8030081	O-RING	JOINT TORIQUE	4					
41	S8030061	O-RING	JOINT TORIQUE	4					
42	S0512066	BOLT	BOULON A 6 PANS	2					
43	S0515066	BOLT	BOULON A 6 PANS	2					
44	S0553766	BOLT	BOULON A 6 PANS	2					
46	S0559066	BOLT	BOULON A 6 PANS	2					

DATE	JUN. 30, 2007
REV.NO.	EXB07-06

Fig. 1440 BRAKE PIPING(2)
TUYAUTERIE DE FREIN

Serial No. ;

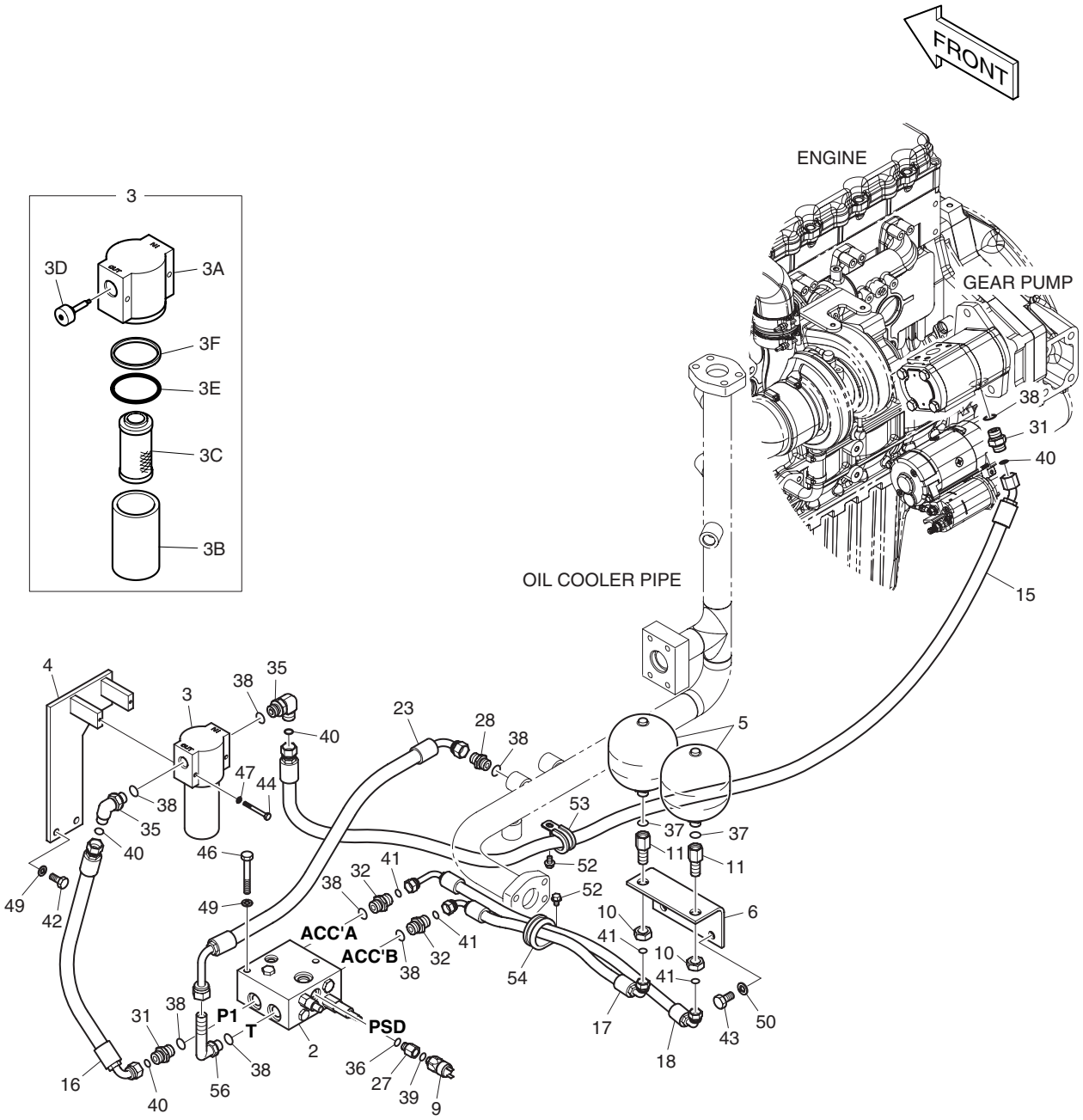

DATE	JUN. 30, 2007
REV. NO.	EXB07-06

Fig. 1440 BRAKE PIPING(2) TUYAUTERIE DE FREIN

Serial No. ;

Key No.	Part No.	Description	Description	Q'ty	S.C	Serial No.	ICA	Replaceable part	
								Part No.	Q'ty
1440-47	S5102303	WASHER;SPRING	RONDELLE ELASTIQUE	2					
49	S5102603	WASHER;SPRING	RONDELLE ELASTIQUE	4					
50	S5102703	WASHER;SPRING	RONDELLE ELASTIQUE	2					
52	K1001029	BOLT	BOULON A 6 PANS	2					
53	124-00208D4	CLIP	AGRAFE	1					
54	124-00208D7	CLIP	AGRAFE	1					
56	DS2281102	ELBOW	COUDE	1					

DATE	JUN. 30, 2008
REV.NO.	EXB08-06

Fig. 1450 STEERING PIPING
TUYAUTERIE DE DIRECTION

Serial No. ;

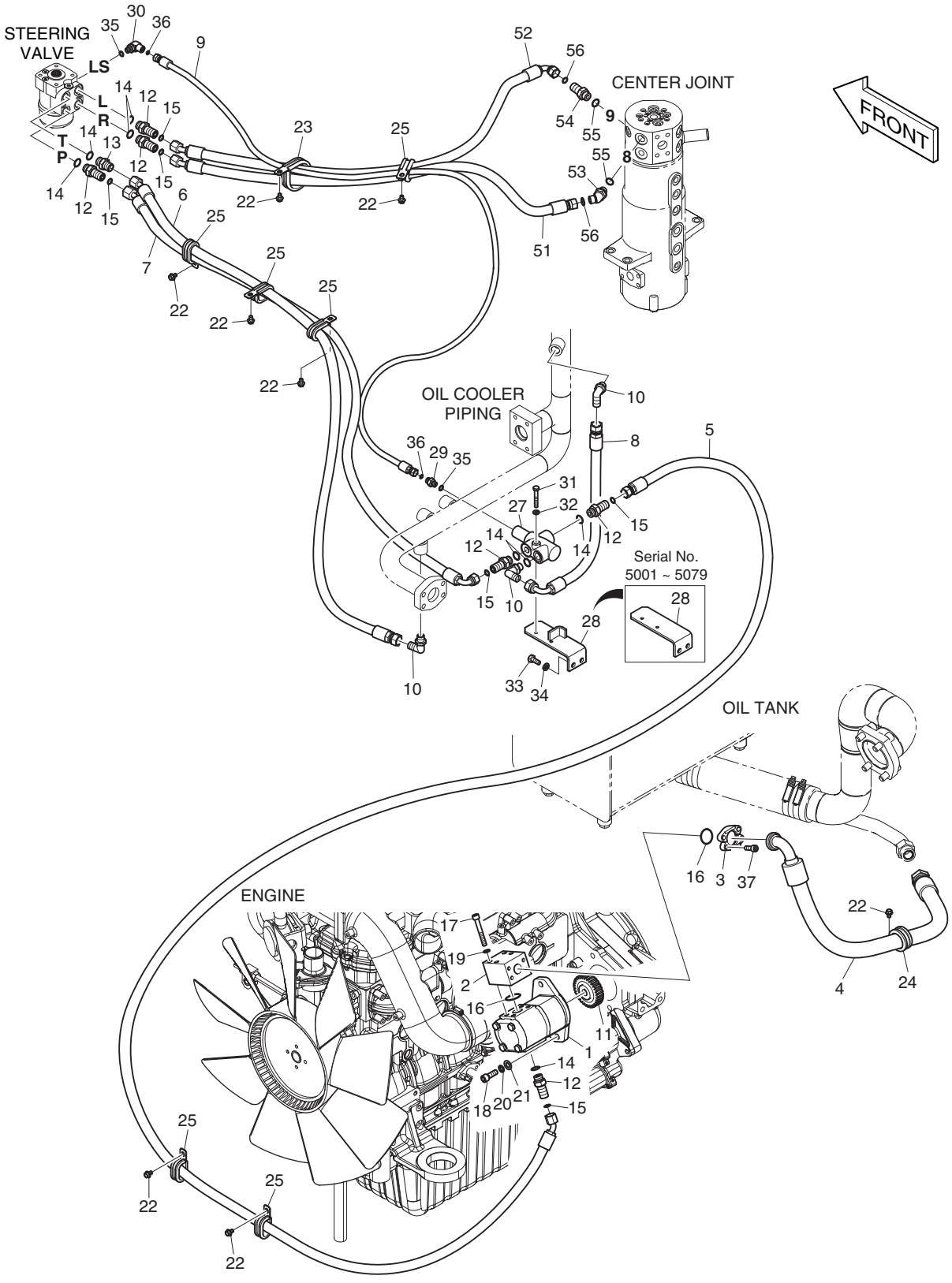

DATE	JUN. 30, 2008
REV. NO.	EXB08-06

Fig. 1450 STEERING PIPING TUYAUTERIE DE DIRECTION

Serial No. ;

Key No.	Part No.	Description	Description	Q'ty	S.C	Serial No.	ICA	Replaceable part	
								Part No.	Q'ty
1450--	**K1010555C**	**STEERING PIPING**	CANALISATION DE	-	D				
1	K1007382	PUMP;GEAR	POMPE DE PIGNON	1					
2	K1013590	BLOCK	BLOC	1					
3	2181-9078	FLANGE	BRIDE	2					
4	DS2018124	HOSE	TUYAU FLEXIBLE	1					
5	DS2012317	HOSE	TUYAU FLEXIBLE	1					
6	DS2098001	HOSE	TUYAU FLEXIBLE	1					
7	DS2102003	HOSE	TUYAU FLEXIBLE	1					
8	DS2055636	HOSE	TUYAU FLEXIBLE	1					
9	DS2011495	HOSE	TUYAU FLEXIBLE	1					
10	2181-1702D2	ELBOW	COUDE	3					
11	K1005830	GEAR	PIGNON	1					
12	2181-4133D3	ADAPTER	ADAPTEUR	6					
13	2181-1126D6	ADAPTER	ADAPTEUR	1					
14	S8000181	O-RING	JOINT TORIQUE	8					
15	S8030081	O-RING	JOINT TORIQUE	6					
16	2180-1026D19	O-RING	JOINT TORIQUE	2					
17	S2213166	BOLT;SOCKET	BOULON A 6 PANS CREUX	4					
18	K1015363	BOLT;SOCKET	BOULON A 6 PANS CREUX	2					
19	S5110603	WASHER	CALE	4					
20	S5110703	WASHER;SPRING	RONDELLE ELASTIQUE M8	2					
21	S5010713	WASHER	CALE	2					
22	K1001029	BOLT	BOULON A 6 PANS	8					
23	124-00208D8	CLIP	AGRAFE	1					
24	124-00208D6	CLIP	AGRAFE	1					
25	124-00209D2	CLIP	AGRAFE	6					
27	K1007896	VALVE;PRIORITY	VANNE	1					
28	K1008733A	PLATE	PLAQUE	1		5001–5079	I	K1008733B	1
	K1008733B	**PLATE**	PLAQUE	1		**5080–**			
29	2181-4133D1	ADAPTER	ADAPTEUR	1					
30	2181-2815D4	ELBOW	COUDE	1					
31	S0556466	BOLT	BOULON A 6 PANS	1					
32	S5102503	WASHER;SPRING	RONDELLE ELASTIQUE M8	1					
33	S0512066	BOLT	BOULON A 6 PANS	2					
34	S5102603	WASHER;SPRING(M10)	RONDELLE ELASTIQUE M10	2					
35	S8000111	O-RING	JOINT TORIQUE	2					
36	S8030041	O-RING	JOINT TORIQUE	2					
37	S2212266	BOLT;SOCKET M10X1.5X30	BOULON A 6 PANS CREUX	4					

DATE	JUN. 30, 2008
REV.NO.	EXB08-06

Fig. 1450 STEERING PIPING
TUYAUTERIE DE DIRECTION

Serial No. ;

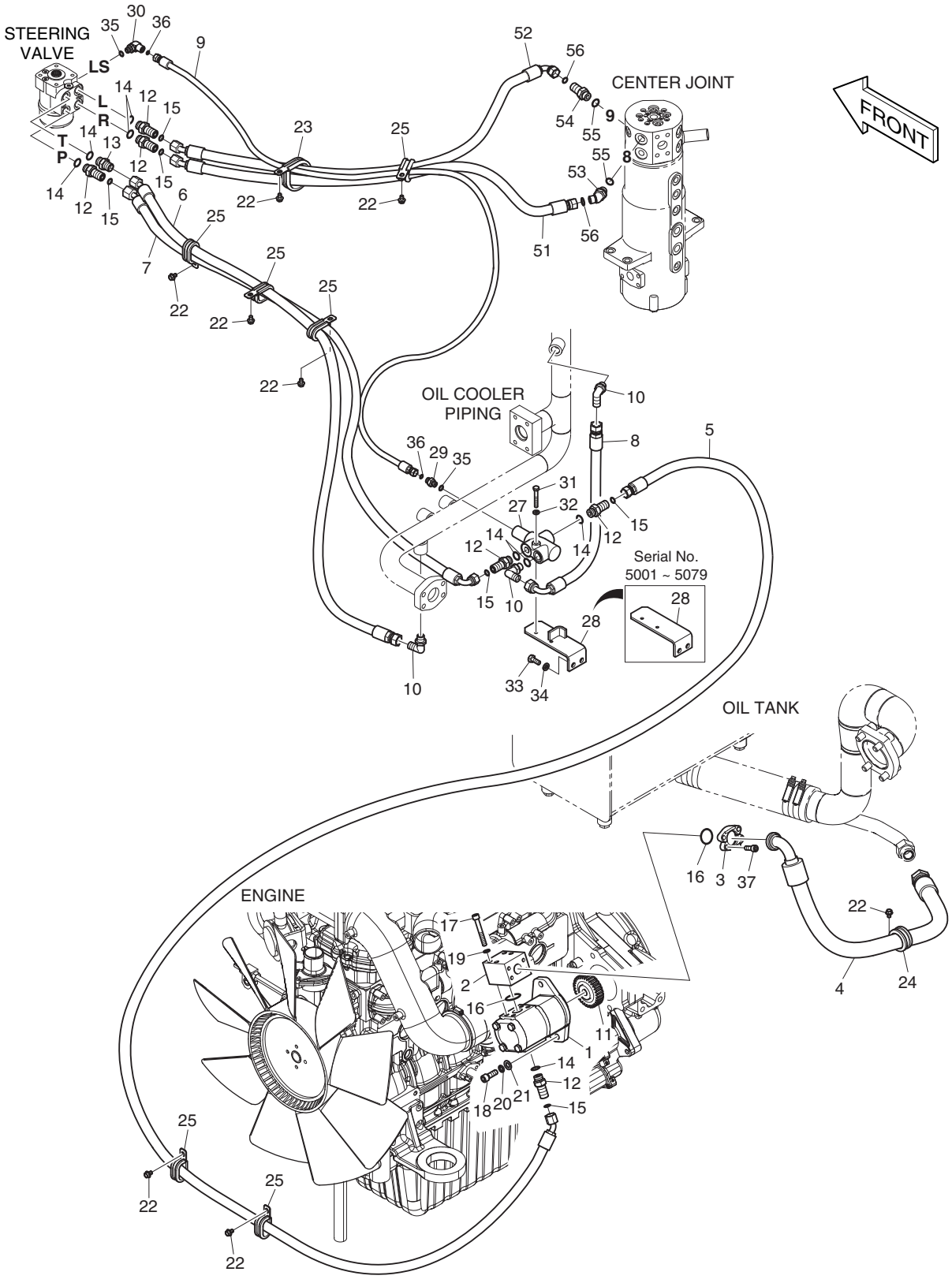

DATE	JUN. 30, 2008
REV. NO.	EXB08-06

Fig. 1450 STEERING PIPING TUYAUTERIE DE DIRECTION

Serial No. ;

Key No.	Part No.	Description	Description	Q'ty	S.C	Serial No.	ICA	Replaceable part	
								Part No.	Q'ty
1450-51	DS2104002	HOSE	TUYAU FLEXIBLE	1					
52	DS2102001	HOSE	TUYAU FLEXIBLE	1		5001–5011			
	DS2102002	HOSE	TUYAU FLEXIBLE	1		5012–			
53	2181-2816D4	ELBOW	COUDE	1					
54	2181-4133D3	ADAPTER	ADAPTEUR	1					
55	S8000181	O-RING	JOINT TORIQUE	2					
56	S8030081	O-RING	JOINT TORIQUE	2					

DATE	DEC. 26, 2006
1st EDITION	

Fig. 1460 STEERING WHEEL ASS'Y
ROUE DE DIRECTION

Serial No. ;

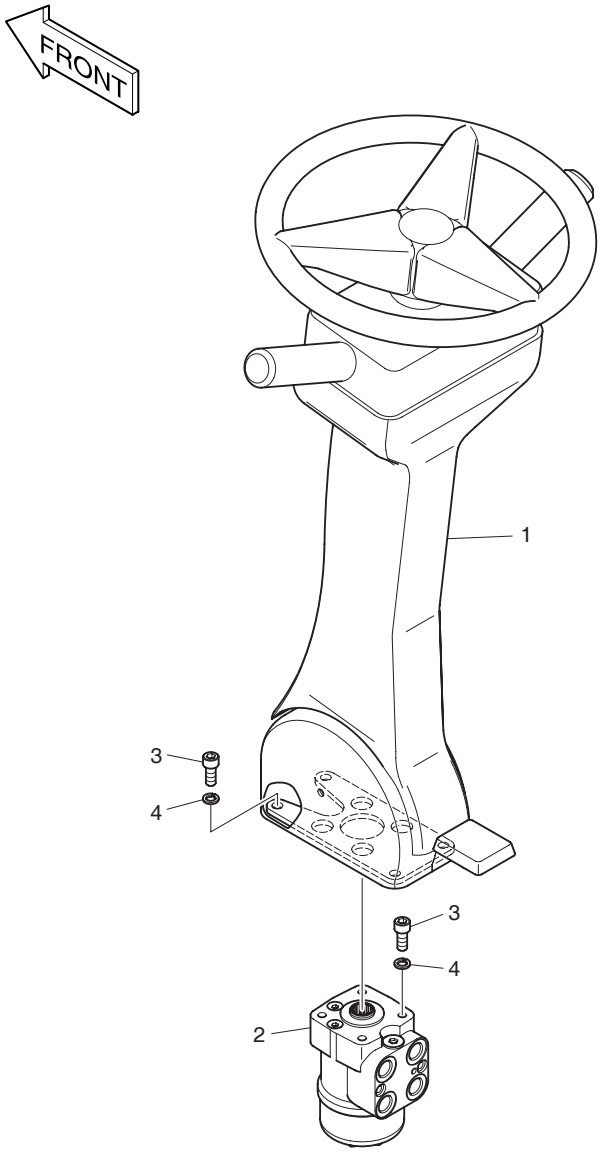

DATE	DEC. 26, 2006
1st EDITION	

Fig. 1460 STEERING WHEEL ASS'Y ROUE DE DIRECTION

Serial No. ;

Key No.	Part No.	Description	Description	Q'ty	S.C	Serial No.	ICA	Replaceable part	
								Part No.	Q'ty
1460--	K1013689	STEERING WHEEL ASS'Y	ROUE DE DIRECTION	-	D				
1	303-00024	COLUMN;STEERING	COLONNE	1					
2	K1008168	VALVE;STEERING	VANNE DE DIRECTION	1					
3	S2212066	BOLT;SOCKET	BOULON	8					
4	S5110603	WASHER	CALE	8					

DATE	DEC. 26, 2006
1st EDITION	

Fig. 1470 STEERING COLUMN ASS'Y COLONNE DE DIRECTION

Serial No. ;

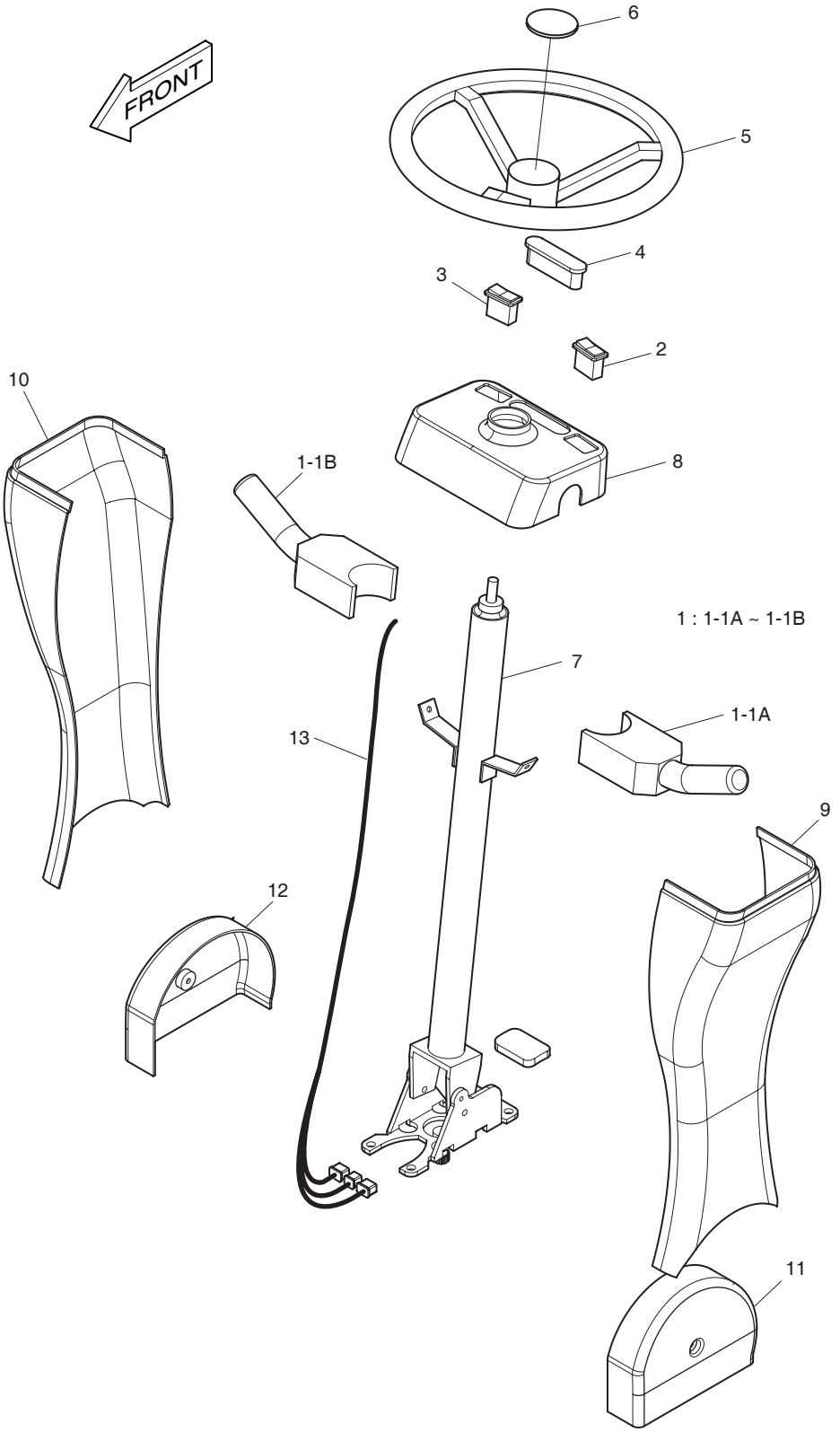

DATE	DEC. 26, 2006
1st EDITION	

Fig. 1470 STEERING COLUMN ASS'Y COLONNE DE DIRECTION

Serial No. ;

Key No.	Part No.	Description	Description	Q'ty	S.C	Serial No.	ICA	Replaceable part	
								Part No.	Q'ty
1470--	303-00024	STEERING COLUMN ASS'Y	CANALISATION	1					
1	K1002657	STEERING COLUMN SWITCH	CANALISATION	1					
1-1A	K1013213	. SWITCH;COMBINATION	. MANOSTAT	1					
1-1B	K1013214	. SWITCH;FRONT & REAR	. MANOSTAT	1					
2	549-00025	SWITCH;ROCKER	INTERRUPTEUR	1					
3	549-00026	SWITCH;ROCKER	INTERRUPTEUR	1					
4	K1002662	MULTIPLE WARNING LIGHTS	VOYANTS D'ALARME	1					
5	K1002663	WHEEL;STEERING	RIM	1					
6	K1002664	CAP	CHAPEAU	1					
7	K1002656	COLUMN;STEERING	COLONNE	1					
8	K1002665	DASHBOARD	TABLEAU DE BORD	1					
9	K1002666	COVER;FRONT	COUVERCLE	1					
10	K1002667	COVER;REAR	COUVERCLE	1					
11	K1013215	COVER;LEFT	COUVERCLE	1					
12	K1002668	COVER;RIGHT	COUVERCLE	1					
13	K1002669	HARNESS	HARNAIS	1					

DATE	DEC. 26, 2006
1st EDITION	

Fig. 1480 COLUMN ASS'Y COLONNE

Serial No. ;

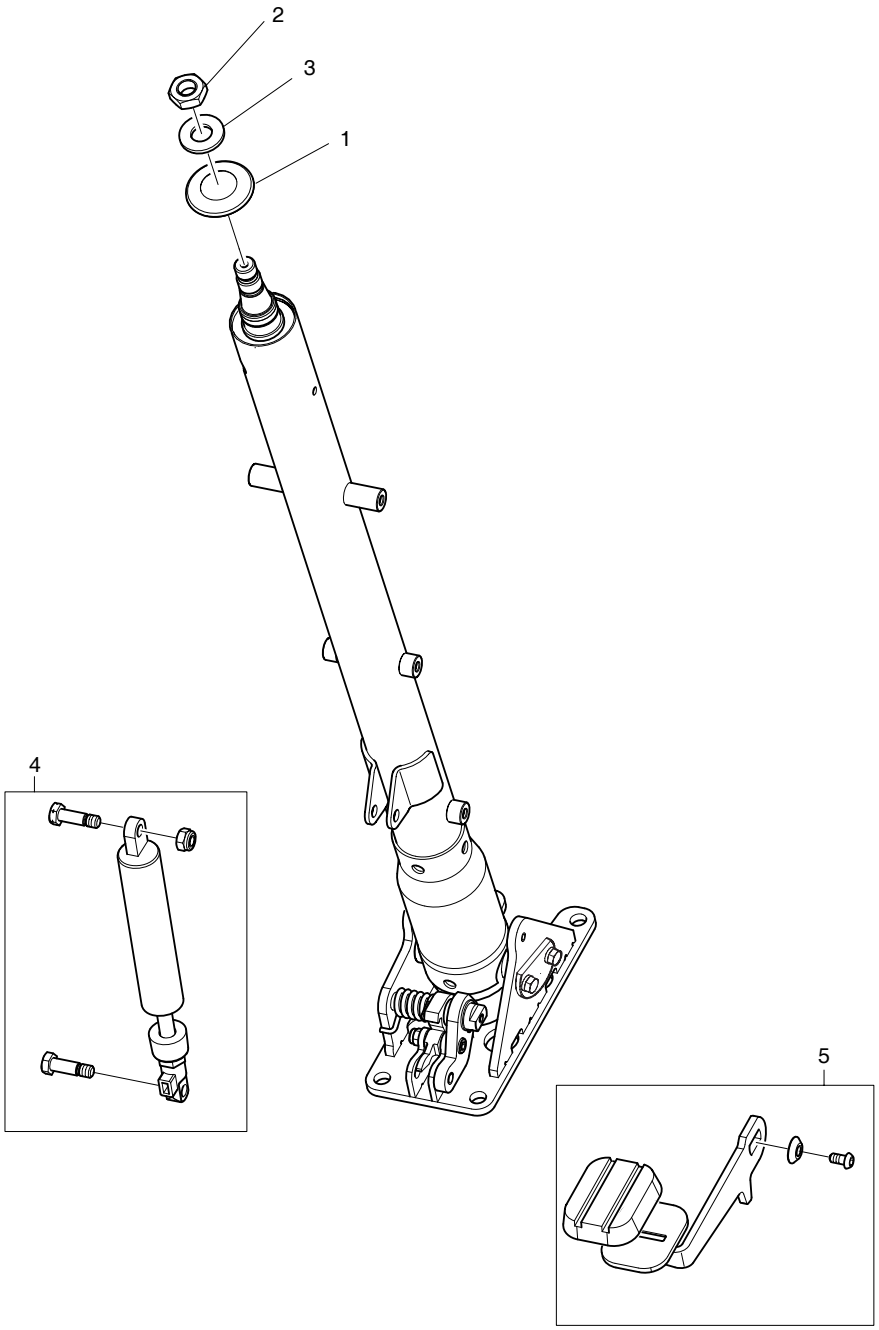

DATE	DEC. 26, 2006
1st EDITION	

Fig. 1480 COLUMN ASS'Y COLONNE

Serial No. ;

Key No.	Part No.	Description	Description	Q'ty	S.C	Serial No.	ICA	Replaceable part	
								Part No.	Q'ty
1480--	K1002656	COLUMN;STEERING	COLONNE	1					
1	K9002296	CUSHION;PROTECTON	COUSSIN	1					
2	K9002298	NUT	ECROU 6 PANS M8	1					
3	K9002299	WASHER	CALE	1					
4	K9002957	SHOCK ABSORBER KIT	KIT D'AMORTISSEUR	1					
5	K9002958	PEDAL	PEDALE	1					

DATE	JUN. 30, 2007
REV.NO.	EXB07-06

Fig. 1490 CONTROL STAND - L.H.
CONSOLE DE COMMANDE

Serial No. ;

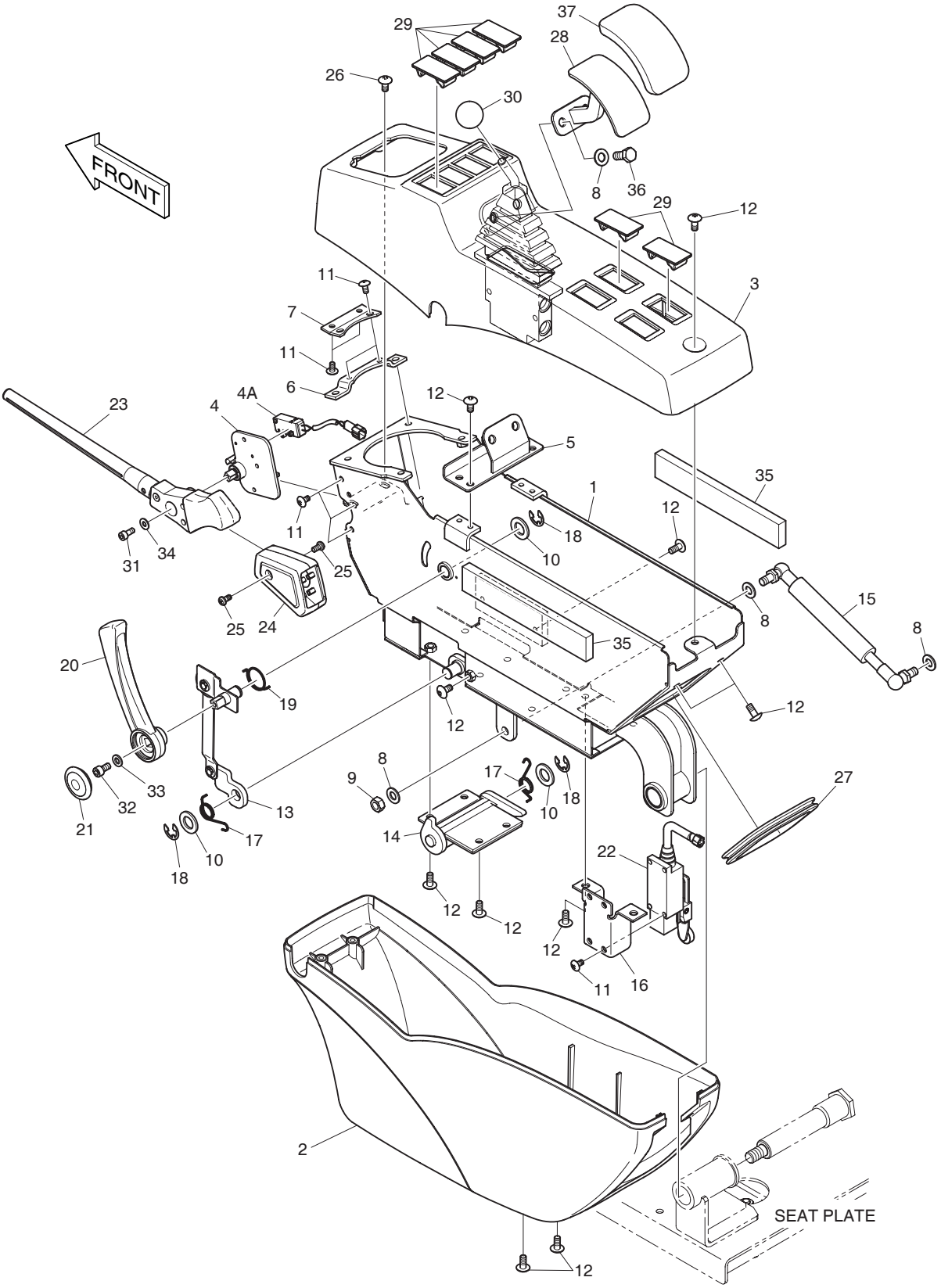

DATE	JUN. 30, 2007
REV. NO.	EXB07-06

Fig. 1490 CONTROL STAND - L.H.
CONSOLE DE COMMANDE

Serial No. ;

Key No.	Part No.	Description	Description	Q'ty	S.C	Serial No.	ICA	Replaceable part	
								Part No.	Q'ty
1490--	**K1024062B**	**CONTROL STAND;L.H.**	CONSOLE DE COMMANDE	-	D				
1	K1017689	BRACKET;L.H.	SUPPORT	1					
2	621-03013C	COVER	COUVERCLE	1					
3	K1023602	COVER	COUVERCLE	1		5001–5012			
	K1023602A	**COVER**	COUVERCLE	1		**5013–**			
4	195-02868C	BRACKET;SAFETY	SUPPORT	1					
4A	549-00089	. SWITCH;MICRO	. INTERRUPTEUR	1					
5	K1017770	BRACKET	SUPPORT	1					
6	159-00290A	PLATE	PLAQUE	1					
7	159-00287A	PLATE;COVER MOUNT	PLAQUE	1					
8	2114-1898D14	WASHER	CALE	5					
9	2121-1311D2	NUT	ECROU 6 PANS M8	1					
10	2114-1898D6	WASHER	CALE	3					
11	2120-2166D53	BOLT	BOULON A 6 PANS	11					
12	2120-2166D10	SCREW	VIS	17					
13	195-02921E	BRACKET;LOCKER	SUPPORT	1		5001–5012	I	195-02921G	1
	195-02921G	**BRACKET;LOCKER**	SUPPORT	1		**5013–**			
14	195-02920A	BRACKET;LOCKER	SUPPORT	1		5001–5012	I	195-02920B	1
	195-02920B	**BRACKET;LOCKER**	SUPPORT	1		**5013–**			
15	DS1001045	GAS SPRING	AMORTISSEUR	1					
16	621-01951	COVER;MICRO S/W	COUVERCLE	1					
17	129-00157	SPRING;COIL	RESSORT	2					
18	S6541000	RING;RETAINING	ANNEAU DE SOUTIEN	3					
19	K1001437A	SPRING	RESSORT	1					
20	K1000839A	LEVER	LEVIER	1					
21	K1000841	COVER	COUVERCLE	1					
22	549-00046	SWITCH;PILOT CUT OFF	MANOSTAT	1					
23	K1000840	LEVER	LEVIER	1					
24	K1000842A	COVER	COUVERCLE	1					
25	S3450823	SCREW	VIS	2					
26	2120-2166D52	BOLT	BOULON A 6 PANS	2					
27	K1001023	STRIP;WEATHER	TAMPON	1					
28	K1017771	BRACKET	SUPPORT	1					
29	621-02801	COVER;SWITCH	COUVERCLE	6					
30	132-00021	GRIP	ECROU	1					
31	S2202966	BOLT;SOCKET	BOULON	1					
32	S2204466	BOLT	BOULON A 6 PANS	1					
33	2114-1898D3	WASHER	CALE	1					

DATE	JUN. 30, 2007
REV.NO.	EXB07-06

Fig. 1490 CONTROL STAND - L.H.
CONSOLE DE COMMANDE

Serial No. ;

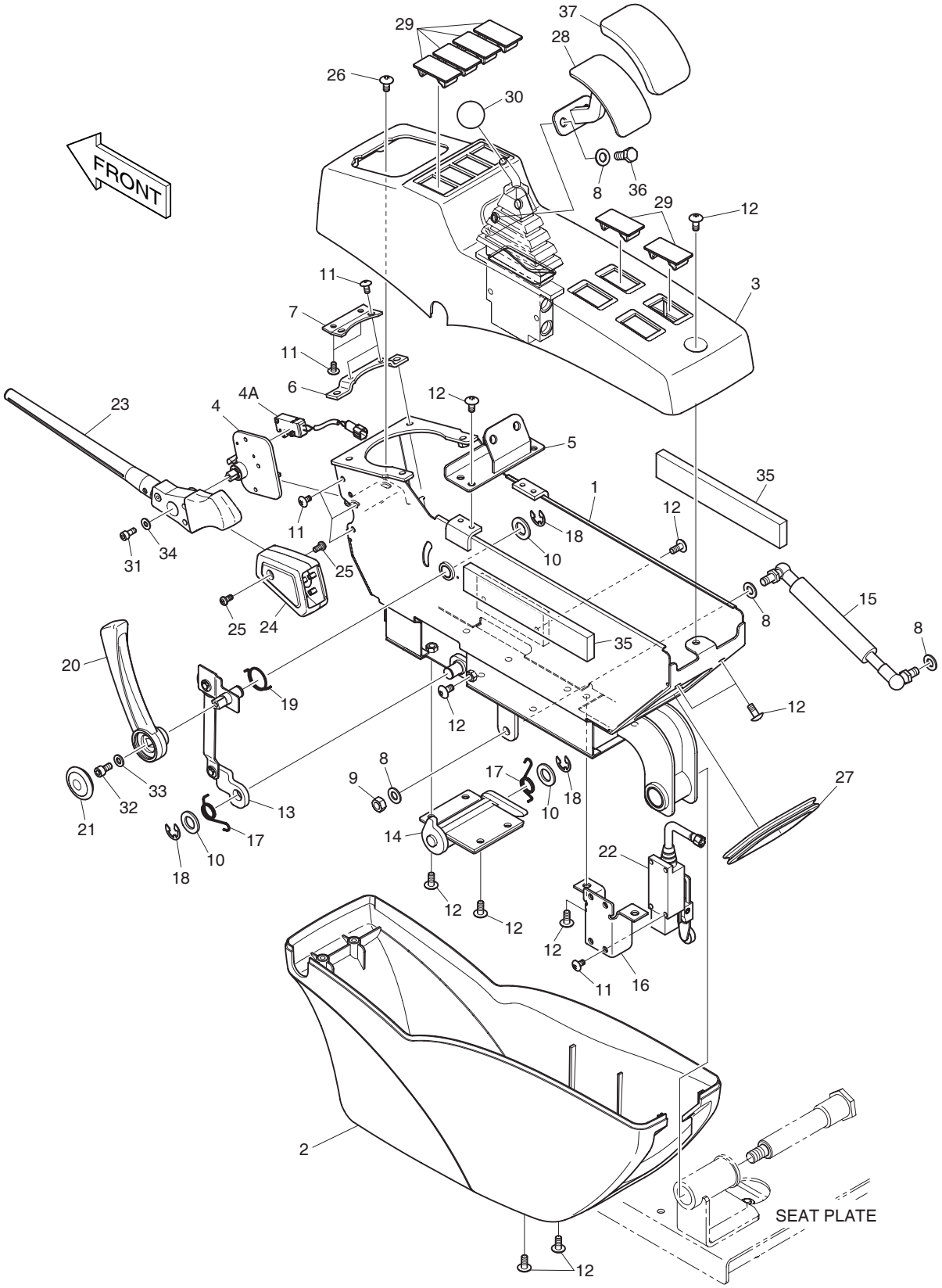

DATE	JUN. 30, 2007
REV. NO.	EXB07-06

Fig. 1490 CONTROL STAND - L.H.
CONSOLE DE COMMANDE

Serial No. ;

Key No.	Part No.	Description	Description	Q'ty	S.C	Serial No.	ICA	Replaceable part	
								Part No.	Q'ty
1490-34	2114-1898D4	WASHER	CALE	1					
35	K1010466	FOAM	EPONGE	2					
36	2120-2166D5	BOLT	BOULON A 6 PANS	2					
37	K1023960	RUBBER	CAOUTCHOUC	1					

DATE	JUN. 30, 2007
REV.NO.	EXB07-06

Fig. 1500 CONTROL STAND - R.H.
CONSOLE DE COMMANDE

Serial No. ;

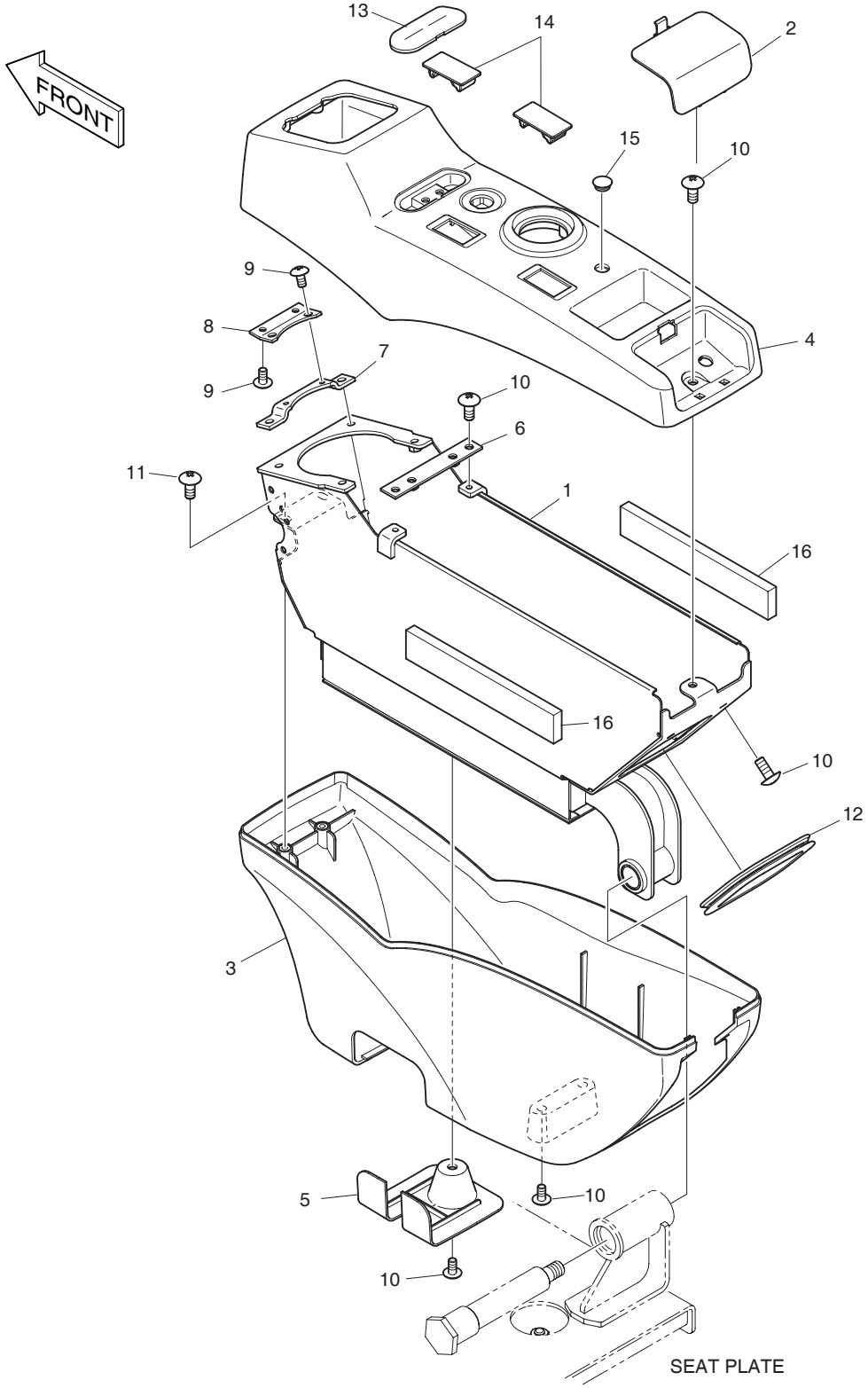

DATE	JUN. 30, 2007
REV. NO.	EXB07-06

Fig. 1500 CONTROL STAND - R.H.
CONSOLE DE COMMANDE

Serial No. ;

Key No.	Part No.	Description	Description	Q'ty	S.C	Serial No.	ICA	Replaceable part	
								Part No.	Q'ty
1500--	**K1005468C**	**CONTROL STAND-R.H.**	CONSOLE DE COMMANDE	-	D				
1	195-02755C	BRACKET;R.H.	SUPPORT	1					
2	621-02926C	COVER;SWITCH	COUVERCLE	1		5001–5012			
	621-02926E	**COVER;SWITCH**	COUVERCLE	1		**5013**–			
3	621-02900B	COVER;STAND LOWER	COUVERCLE	1					
4	K1005343B	COVER	COUVERCLE	1		5001–5012			
	K1005343C	**COVER**	COUVERCLE	1		**5013**–			
5	621-03014B	COVER;STAND LOW	COUVERCLE	1					
6	621-02957A	PLATE;STAND MOUNT	PLAQUE	1					
7	159-00290A	PLATE	PLAQUE	1					
8	159-00287A	PLATE;COVER MOUNT	PLAQUE	1					
9	2120-2166D53	BOLT	BOULON A 6 PANS	4					
10	2120-2166D10	SCREW	VIS	10					
11	2120-2166D52	BOLT	BOULON A 6 PANS	2					
12	K1001023	STRIP;WEATHER	TAMPON	1					
13	621-03733B	COVER	COUVERCLE	1		5001–5012			
	621-03733C	**COVER**	COUVERCLE	1		**5013**–			
14	621-02801	COVER;SWITCH	COUVERCLE	2					
15	K1006995	CAP	CHAPEAU	1					
16	K1010466	FOAM	EPONGE	2					

DATE	DEC. 26, 2006
1st EDITION	

Fig. 1510 SEAT SLIDING PLATE
POSEZ GLISSER LE PLAT

Serial No. ;

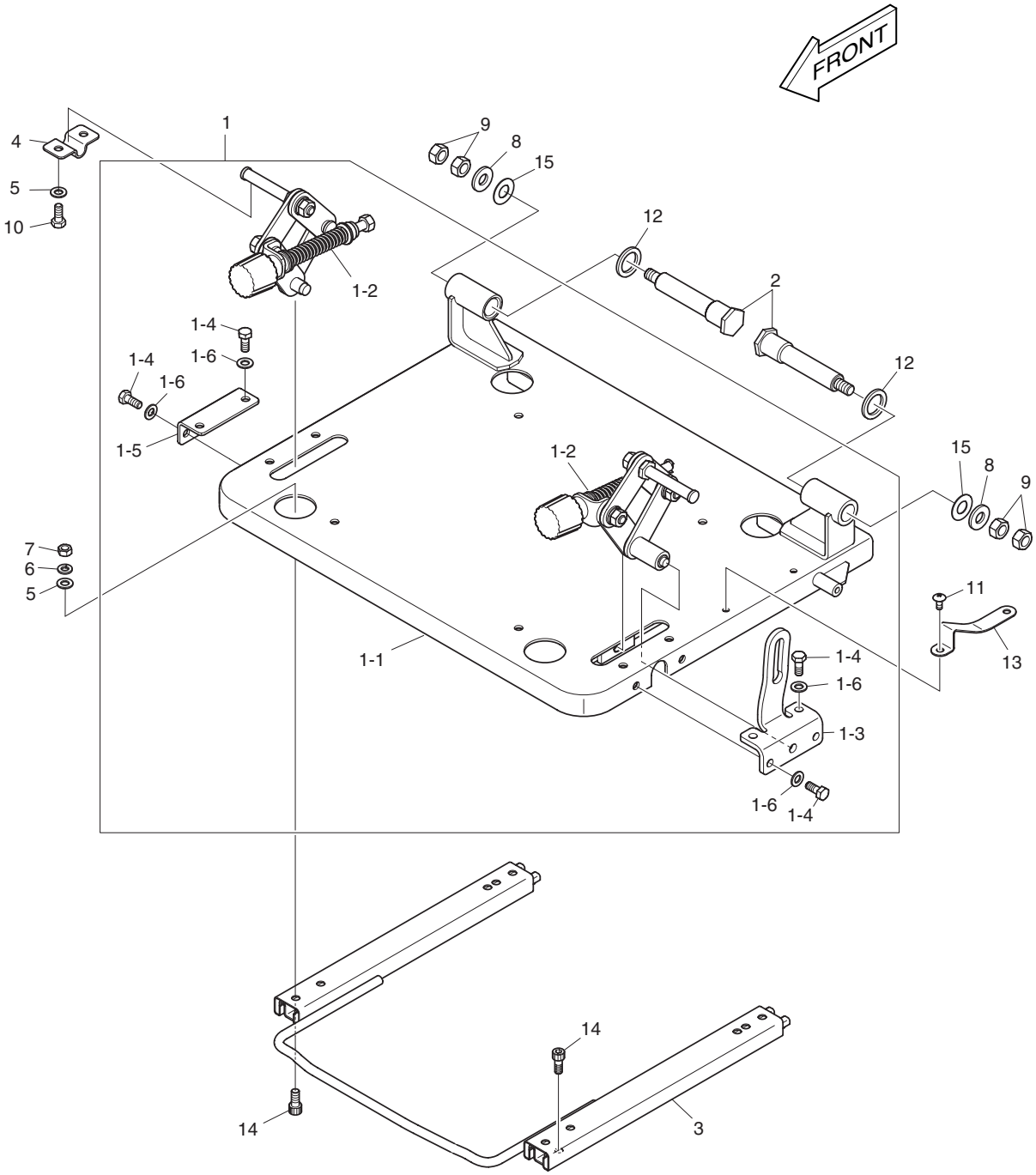

DATE	DEC. 26, 2006
1st EDITION	

Fig. 1510 SEAT SLIDING PLATE
POSEZ GLISSER LE PLAT

Serial No. ;

Key No.	Part No.	Description	Description	Q'ty	S.C	Serial No.	ICA	Replaceable part	
								Part No.	Q'ty
1510--	K1002164C	SEAT SLIDING PLATE	POSEZ GLISSER LE PLAT	-	D				
1	621-03055E	SEAT PLATE ASM	POSEZ GLISSER LE PLAT	1					
1-1	621-03069C	. PLATE;SEAT MOUNT	. PLAQUE	1					
1-2	195-02904C	. STAND TILT BRACKET ASS'Y	. PARENTHESE	1					
1-3	K1001022	. PLATE	. PLAQUE	1					
1-4	2120-2166D5	. BOLT	. BOULON A 6 PANS	8					
1-5	621-02925A	. PLATE	. PLAQUE	1					
1-6	2114-1898D14	. WASHER;PLAIN	. RONDELLE PLATE	8					
2	123-00524B	PIN;TILT STAND	GOUJON	2					
3	K1003381	RAIL	RAIL	1					
4	621-03005A	PLATE	PLAQUE	1					
5	2114-1898D14	WASHER	CALE	6					
6	2114-2031D4	WASHER;SPRING	RONDELLE ELASTIQUE	4					
7	2121-1311D2	NUT	ECROU 6 PANS M8	4					
8	2114-1898D17	WASHER	CALE	2					
9	2121-1311D1	NUT	ECROU 6 PANS M8	4					
10	2120-2166D5	BOLT	BOULON A 6 PANS	2					
11	2120-2166D10	SCREW	VIS	2					
12	2114-1898D18	WASHER	CALE	2					
13	159-00114	PLATE;MICRO	PLAT MICRO	1					
14	S2208866	BOLT	BOULON A 6 PANS	8					
15	114-00590	WASHER	CALE	2					

DATE	DEC. 26, 2006
1st EDITION	

Fig. 1520 SEAT PLATE - EUROPE & U.S.A
POSEZ LE PLAT

Serial No. ;

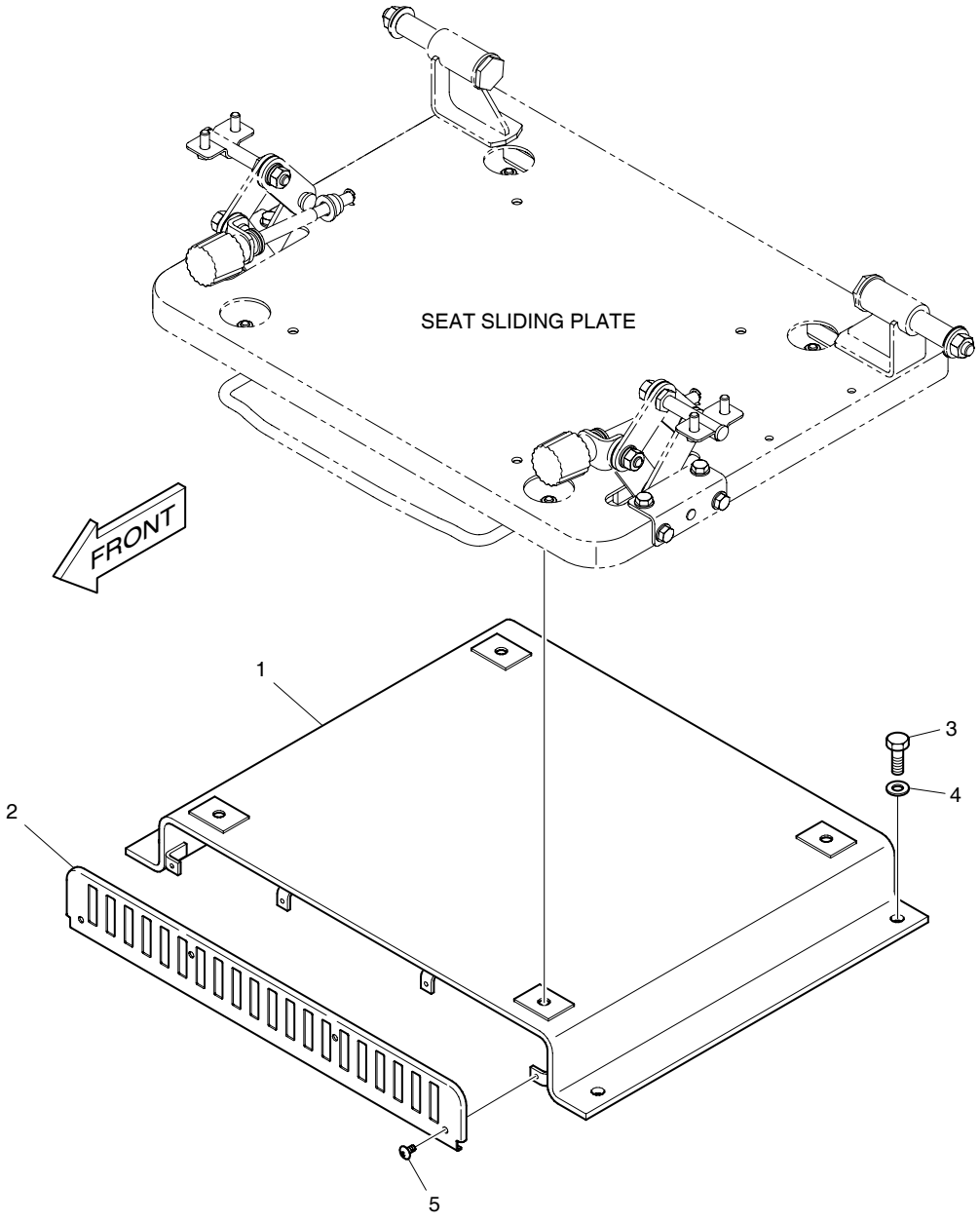

DATE	DEC. 26, 2006
1st EDITION	

Fig. 1520 SEAT PLATE - EUROPE & U.S.A
POSEZ LE PLAT

Serial No. ;

Key No.	Part No.	Description	Description	Q'ty	S.C	Serial No.	ICA	Replaceable part	
								Part No.	Q'ty
1520--	K1002229A	SEAT PLATE	SIEGE	-	D				
1	K1002230A	BRACKET;SEAT LOWER	SUPPORT	1					
2	K1002231A	PLATE;COVER	PLAQUE	1					
3	2120-2166D10	BOLT	BOULON A 6 PANS	4					
4	2114-1898D15	WASHER	CALE	4					
5	2120-2166D53	BOLT	BOULON A 6 PANS	4					

DATE	DEC. 26, 2006
1st EDITION	

Fig. 1530 SEAT PLATE
POSEZ LE PLAT

Serial No. ;

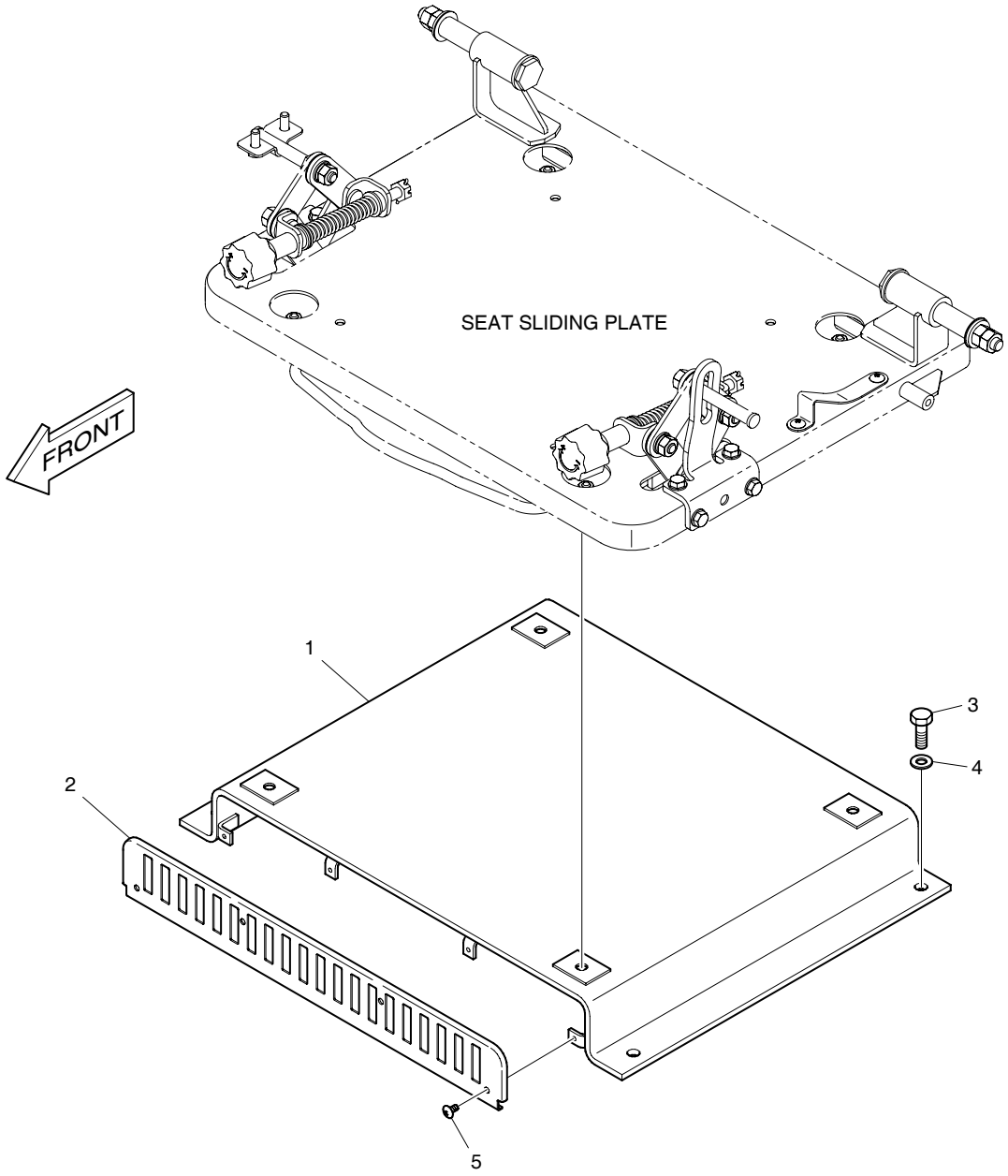

DATE	DEC. 26, 2006
1st EDITION	

Fig. 1530 SEAT PLATE
POSEZ LE PLAT

Serial No. ;

Key No.	Part No.	Description	Description	Q'ty	S.C	Serial No.	ICA	Replaceable part	
								Part No.	Q'ty
1530--	K1002228A	SEAT PLATE	SIEGE	-	D				
1	195-02754B	BRACKET;SEAT LOWER	SUPPORT	1					
2	159-00281B	PLATE;COVER	PLAQUE	1					
3	2120-2166D1	BOLT	BOULON A 6 PANS	4					
4	2114-1898D15	WASHER	CALE	4					
5	2120-2166D53	BOLT	BOULON A 6 PANS	4					

Fig. 1540 SEAT MOUNTING
SIEGE LE SUPPORT

Serial No. ;

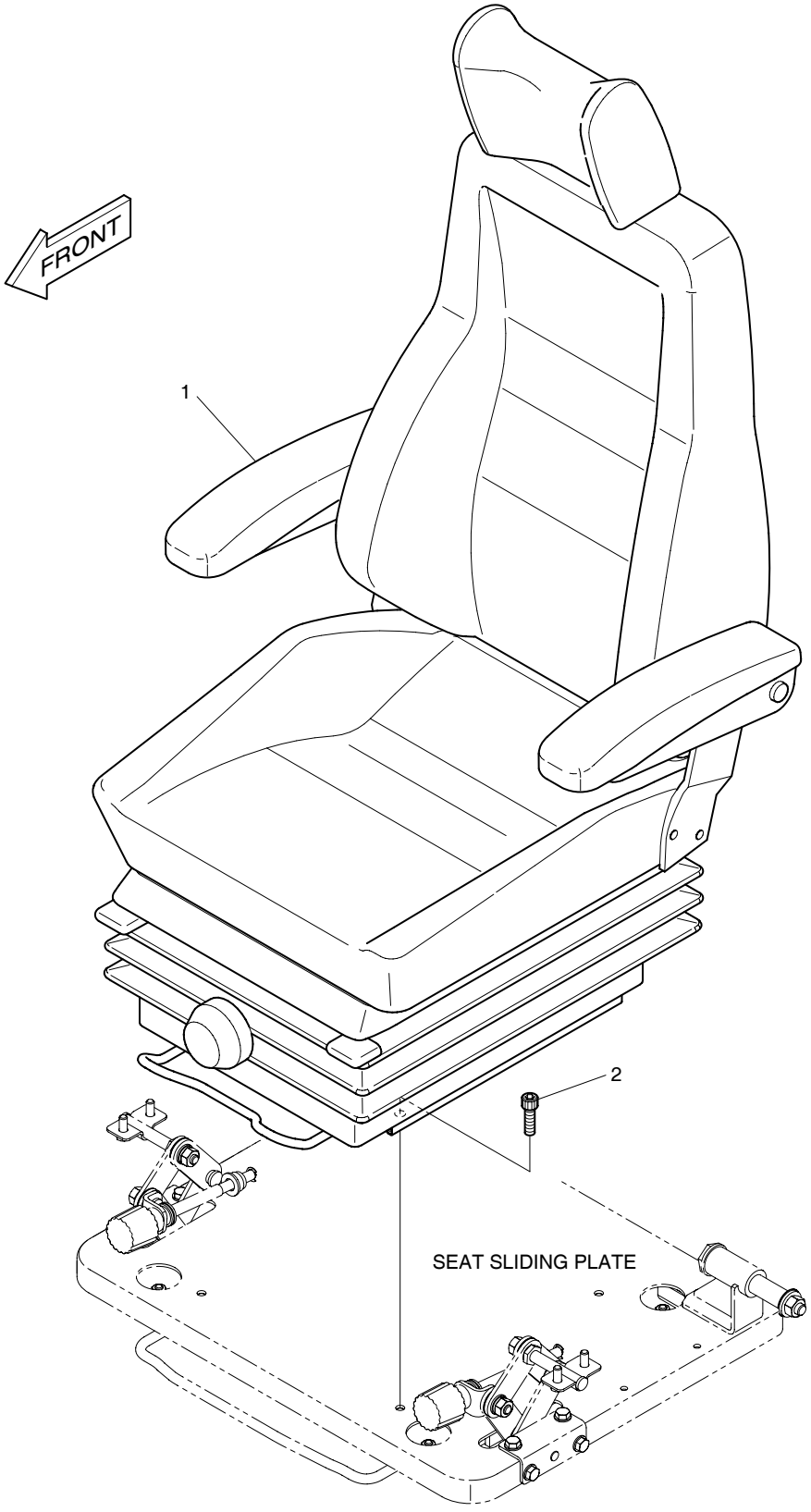

DATE	DEC. 26, 2006
1st EDITION	

Fig. 1540 SEAT MOUNTING SIEGE LE SUPPORT

Serial No. ;

Key No.	Part No.	Description	Description	Q'ty	S.C	Serial No.	ICA	Replaceable part	
								Part No.	Q'ty
1540--	K1002084A	SEAT MOUNTING	SIEGE	-	D				
1	901-00045	SEAT	SIEGE	1					
2	S2208866	BOLT;SOCKET	BOULON	4					

DATE	DEC. 26, 2006
1st EDITION	

Fig. 1550 SEAT SIEGE

Serial No. ;

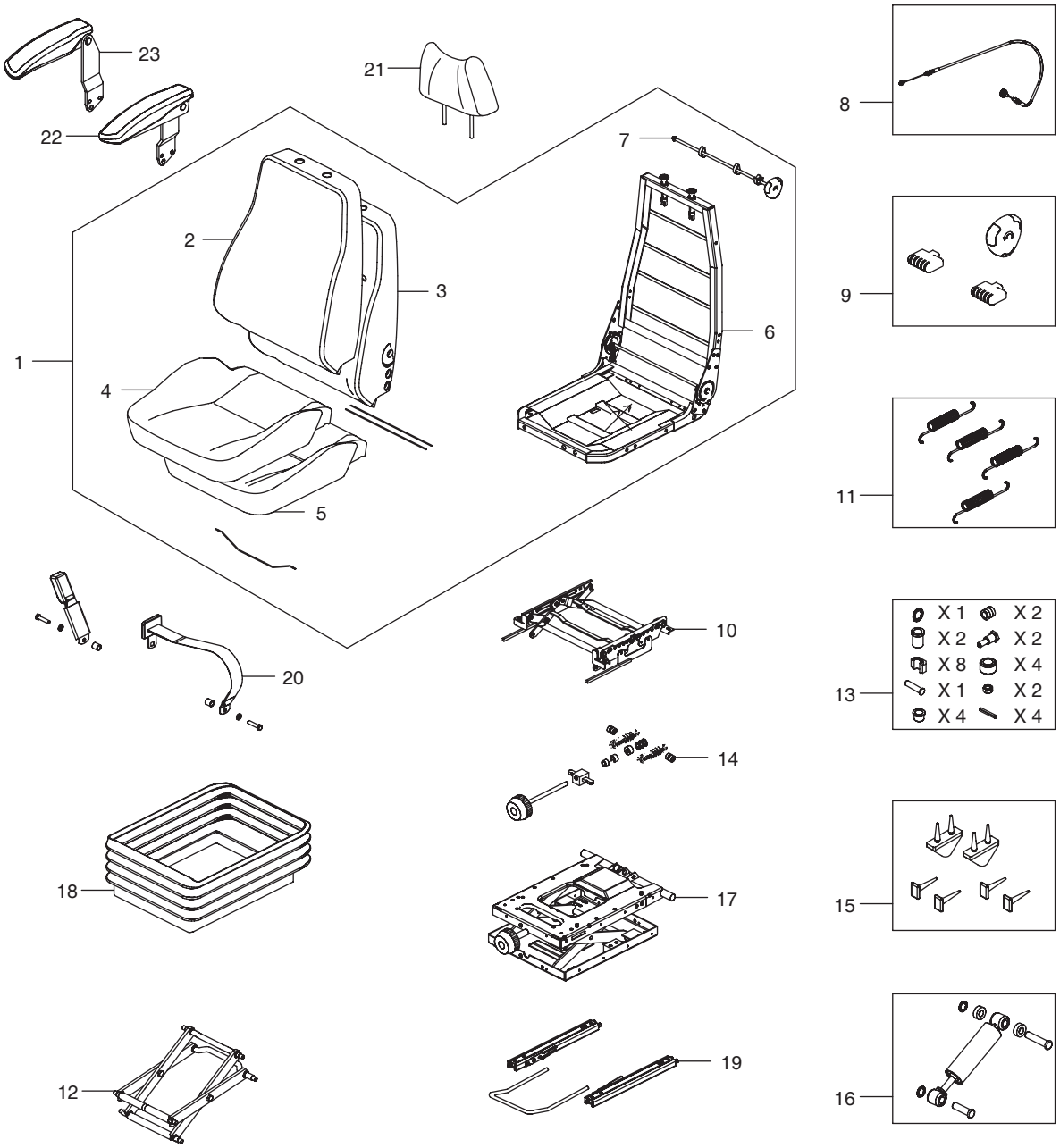

DATE	DEC. 26, 2006
1st EDITION	

Fig. 1550 SEAT SIEGE

Serial No. ;

Key No.	Part No.	Description	Description	Q'ty	S.C	Serial No.	ICA	Replaceable part	
								Part No.	Q'ty
1550--	901-00045	SEAT ASS'Y	SIEGE	1					
1	K9001695	UPPER ASS'Y	SUPERIEUR	1					
2	K9001201	BACK COVER	COUVERTURE ARRIERE	1					
3	K9001202	BACK FOAM	MOUSSE ARRIERE	1					
4	K9001203	SEAT COVER	SIEGE	1					
5	K9001204	SEAT FOAM	SIEGE	1					
6	K9001205	FRAME	ARMATURE	1					
7	K9001206	LUMBAR KIT	KIT LOMBAIRE	1					
8	K9001207	CABLE;ADJUST	CABLE	1					
9	2.172-00003	HANDLE	POIGNEE	1					
10	K9001208	HEIGHT RISER	RECHAUFFEUR	1					
11	K9001209	HEIGHT RISER SPRING KIT	RECHAUFFEUR	1					
12	K9001210	LEVER/CENTRE PIVOT KIT	LEVIER	1					
13	K9001211	BEARING KIT	PALIER	1					
14	K9001212	WEIGHT ADJUST KIT	LE POIDS AJUSTENT LE KIT	1					
15	K9001213	UPSTOP/BUMPSTOP KIT	KIT	1					
16	K9001214	DAMPER KIT	REGISTRE	1					
17	K9001215	SUSPENSION ASS'Y	SUSPENSION	1					
18	K9001216	SUSPENSION COVER	SUSPENSION	1					
19	K9001217	SLIDING RAIL ASS'Y	GLISSEMENT DU RAIL	1					
20	K9001218	BELT;SEAT	COURROIE	1					
21	K9001219	HEAD REST	SIEGE	1					
22	K9001220	ARM REST-L.H	REPOSER	1					
23	K9001221	ARM REST-R.H	REPOSER	1					

DATE	JUN. 30, 2007
REV.NO.	EXB07-06

Fig. 1560 DUCT COVER
CONDUITES COUVERCLE

Serial No. ;

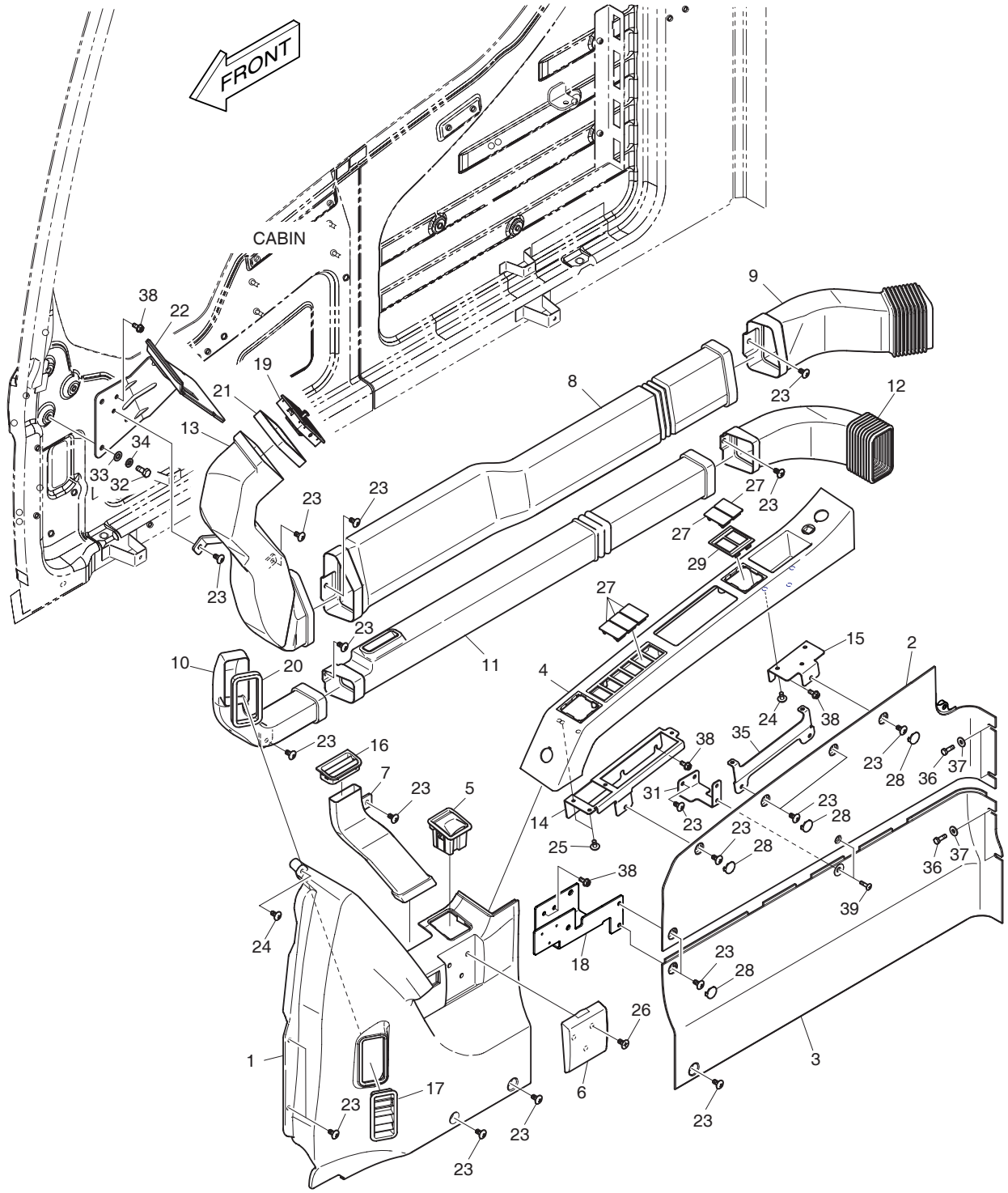

DATE	JUN. 30, 2007
REV. NO.	EXB07-06

Fig. 1560 DUCT COVER
CONDUITES COUVERCLE

Serial No. ;

Key No.	Part No.	Description	Description	Q'ty	S.C	Serial No.	ICA	Replaceable part	
								Part No.	Q'ty
1560--	**K1002371G**	**DUCT COVER ASS'Y**	COUVERTURE DE CONDUIT	-	D				
1	621-02903C	COVER;SIDE FRONT	COUVERCLE	1					
2	621-02905C	COVER;SIDE MID UPPER	COUVERCLE	1					
3	621-02904C	COVER;SIDE MID LOWER	COUVERCLE	1					
4	621-02909E	COVER;SWITCH	COUVERCLE	1		5001–5012			
	621-02909G	**COVER;SWITCH**	COUVERCLE	1		**5013–**			
5	906-00002A	ASHTRAY ASM	CENDRIER	1					
6	621-02908B	HOLDER;CUP	SUPPORT	1					
7	213-00035B	DUCT;DEFROSTER SIDE	COUVERCLE	1					
8	213-00030B	DUCT;FACE MID	COUVERCLE	1					
9	213-00031E	DUCT;FACE REAR	COUVERCLE	1					
10	213-00032B	DUCT;DEFROSTER FRONT	COUVERCLE	1					
11	213-00033B	DUCT;DEFROSTER MID	COUVERCLE	1					
12	213-00034E	DUCT;DEFROSTER REAR	COUVERCLE	1					
13	213-00029C	DUCT;FACE FRONT	COUVERCLE	1					
14	195-02768C	BRACKET;SWITCH COVER	SUPPORT	1					
15	195-02769C	BRACKET;SWITCH COVER REAR	SUPPORT	1					
16	415-00046B	LOUVER DEF SIDE	COTE DE L'AUVENT DEF	1					
17	415-00045B	LOUVER DEF FRONT	AVANT DE L'AUVENT DEF	1					
18	195-02770C	BRACKET;CUP HOLDER	SUPPORT	1					
19	415-00044B	LOUVER FACE	VISAGE D'AUVENT	1					
20	K1001068	FOAM	EPONGE	1					
21	K1001069A	FOAM	EPONGE	1					
22	195-02858C	BRACKET;MONITOR	SUPPORT	1					
23	2120-2166D52	BOLT	BOULON A 6 PANS	22					
24	2120-2166D53	BOLT;GREEN	BOULON A 6 PANS	4					
25	S3654523	SCREW	VIS	4					
26	2120-2166D23	SCREW	VIS	3					
27	621-02801	COVER;SWITCH	COUVERCLE	5					
28	621-03734A	COVER	COUVERCLE	6					
29	621-02982B	COVER;SWITCH	COUVERCLE	1		5001–5012			
	621-02982C	**COVER;SWITCH**	COUVERCLE	1		**5013–**			
31	K1005007A	PLATE	PLAQUE	1					
32	2120-2166D5	BOLT	BOULON A 6 PANS	3					
33	2114-1898D14	WASHER	CALE	3					
34	2114-2031D4	WASHER;SPRING	RONDELLE ELASTIQUE	3					
35	K1009627	PLATE	PLAQUE	1					
36	2120-2166D36	BOLT	BOULON A 6 PANS	4					

Fig. 1560 DUCT COVER
CONDUITES COUVERCLE

Serial No. ;

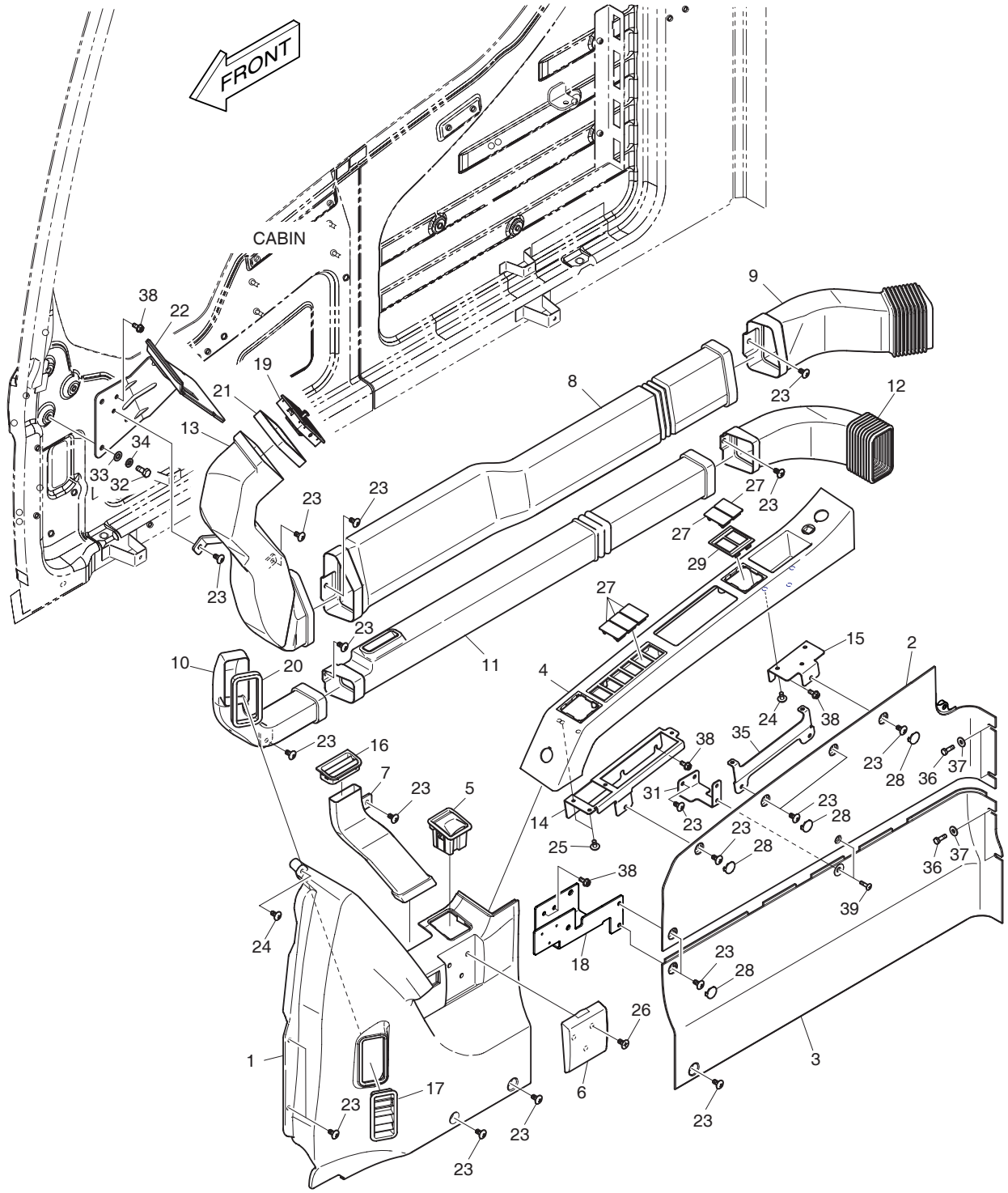

DATE	JUN. 30, 2007
REV. NO.	EXB07-06

Fig. 1560 DUCT COVER
CONDUITES COUVERCLE

Serial No. ;

Key No.	Part No.	Description	Description	Q'ty	S.C	Serial No.	ICA	Replaceable part	
								Part No.	Q'ty
1560-37	2114-1898D5	WASHER	CALE	4					
38	K1010304	BOLT;FLANGE	BOULON A 6 PANS	8					
39	2120-2166D57	BOLT;GREEN	BOULON A 6 PANS	2					

DATE	JUN. 30, 2008
REV.NO.	EXB08-06

Fig. 1570 HEATER COVER
BOITIES DE CHAUFFAGE

Serial No. ;

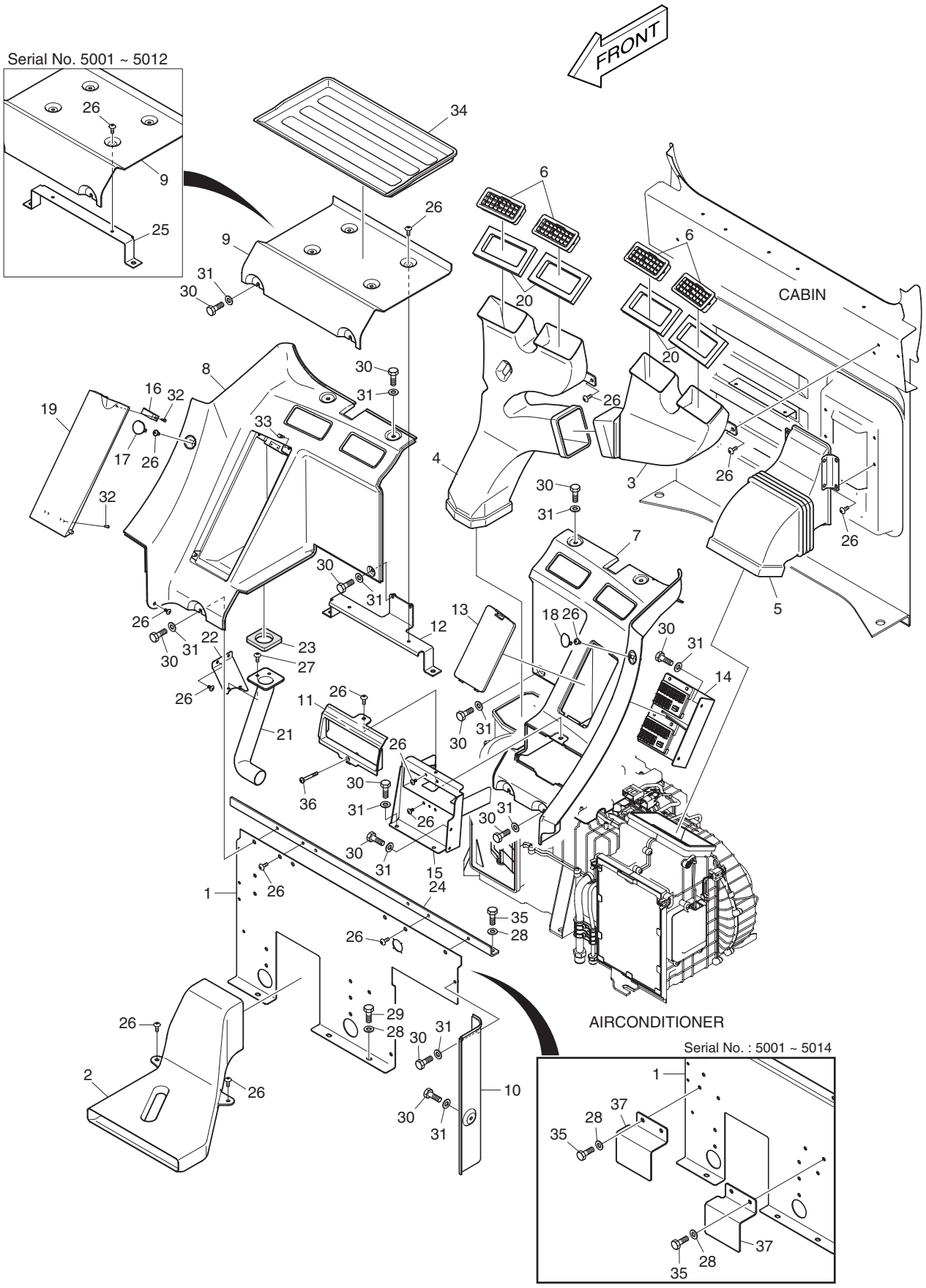

DATE	JUN. 30, 2008
REV. NO.	EXB08-06

Fig. 1570 HEATER COVER BOITIES DE CHAUFFAGE

Serial No. ;

Key No.	Part No.	Description	Description	Q'ty	S.C	Serial No.	ICA	Replaceable part	
								Part No.	Q'ty
1570--	621-02896J	HEATER COVER	BOITIES DE CHAUFFAGE	-	D				
1	621-02894E	COVER;REAR LOWER	COUVERCLE	1		5001–5014			
	621-02894G	**COVER;REAR LOWER**	COUVERCLE	1		**5015–**			
2	213-00036B	DUCT;FOOT	COUVERCLE	1					
3	213-00037B	DUCT;REAR(L.H.)	COUVERCLE	1					
4	213-00038B	DUCT;REAR(R.H.)	COUVERCLE	1					
5	213-00039B	DUCT;AIR INLET	COUVERCLE	1					
6	415-00043B	NOZZLE;REAR	INJECTEUR	4					
7	621-02913C	COVER;REAR(L.H.)	COUVERCLE	1					
8	621-02914C	COVER;REAR(R.H.)	COUVERCLE	1					
9	621-02915B	COVER;REAR CENTER	COUVERCLE	1					
10	621-02907B	COVER;SIDE REAR(L.H.)	COUVERCLE	1					
11	621-02917C	COVER;STEREO UP	COUVERCLE	1					
12	K1001295A	PLATE	PLAQUE	1					
13	621-02919B	COVER;FUSE	COUVERCLE	1					
14	195-02771B	BRACKET;FUSE BOX	SUPPORT	1					
15	195-02772E	BRACKET;STEREO	SUPPORT	1					
16	2125-1095A	CATCH;MAGNETIC	LOQUET	1					
17	K1005344A	COVER	COUVERCLE	1					
18	K1005345A	COVER;HOLE	COUVERCLE	1					
19	621-02920C	COVER;BOX	COUVERCLE	1					
20	K1001310	FOAM	EPONGE	4					
21	213-00040A	DUCT;AIR BOX	COUVERCLE	1					
22	195-02774	BRACKET;AIR DUCT MOUNT	SUPPORT	1					
23	161-00622	FOAM;AIR SEAL	EPONGE	1					
24	195-02785C	BRACKET;CROSS BAR	SUPPORT	1					
25	195-02790B	BRACKET	SUPPORT	1		5001–5012			
26	2120-2166D10	SCREW	VIS	21		5001–5012			
	2120-2166D10	SCREW	VIS	19		5013–			
27	2120-2166D53	BOLT	BOULON A 6 PANS	2					
28	2114-1898D14	WASHER	CALE	9		5001–5014			
	2114-1898D14	**WASHER**	CALE	5		**5015–**			
29	2120-2166D12	BOLT	BOULON A 6 PANS	3					
30	2120-2166D36	BOLT	BOULON A 6 PANS	19					
31	2114-1898D5	WASHER	CALE	19					
32	S3644163	SCREW	VIS	8					
33	K1002385	STOPPER	CHAPEAU	2					
34	161-00624	PAD;FOAM	CAOUTCHOUC	1					

DATE	JUN. 30, 2008
REV.NO.	EXB08-06

Fig. 1570 HEATER COVER
BOITIES DE CHAUFFAGE

Serial No. ;

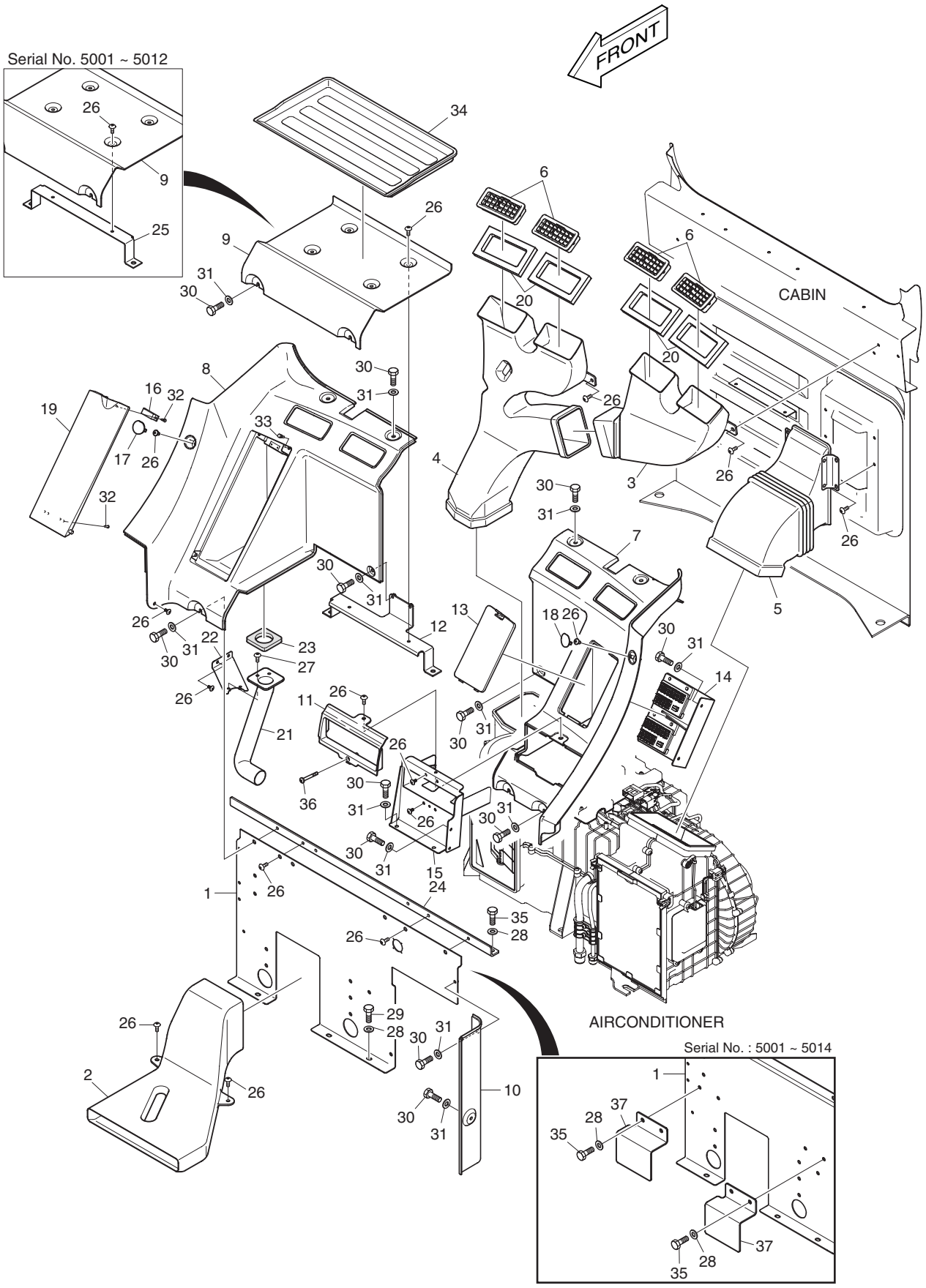

DATE	JUN. 30, 2008
REV. NO.	EXB08-06

Fig. 1570 HEATER COVER BOITIES DE CHAUFFAGE

Serial No. ;

Key No.	Part No.	Description	Description	Q'ty	S.C	Serial No.	ICA	Replaceable part	
								Part No.	Q'ty
1570-35	2120-2166D5	BOLT	BOULON A 6 PANS	6		5001–5014			
	2120-2166D5	**BOLT**	BOULON A 6 PANS	2		**5015–**			
36	2120-2166D58	BOLT	BOULON A 6 PANS	1					
37	**K1017271**	**PLATE**	PLAQUE	2		**5001–5014**			

DATE	JUN. 30, 2007
REV.NO.	EXB07-06

Fig. 1580 CABIN MOUNTING
SUPPORT DE CABINE

Serial No. ;

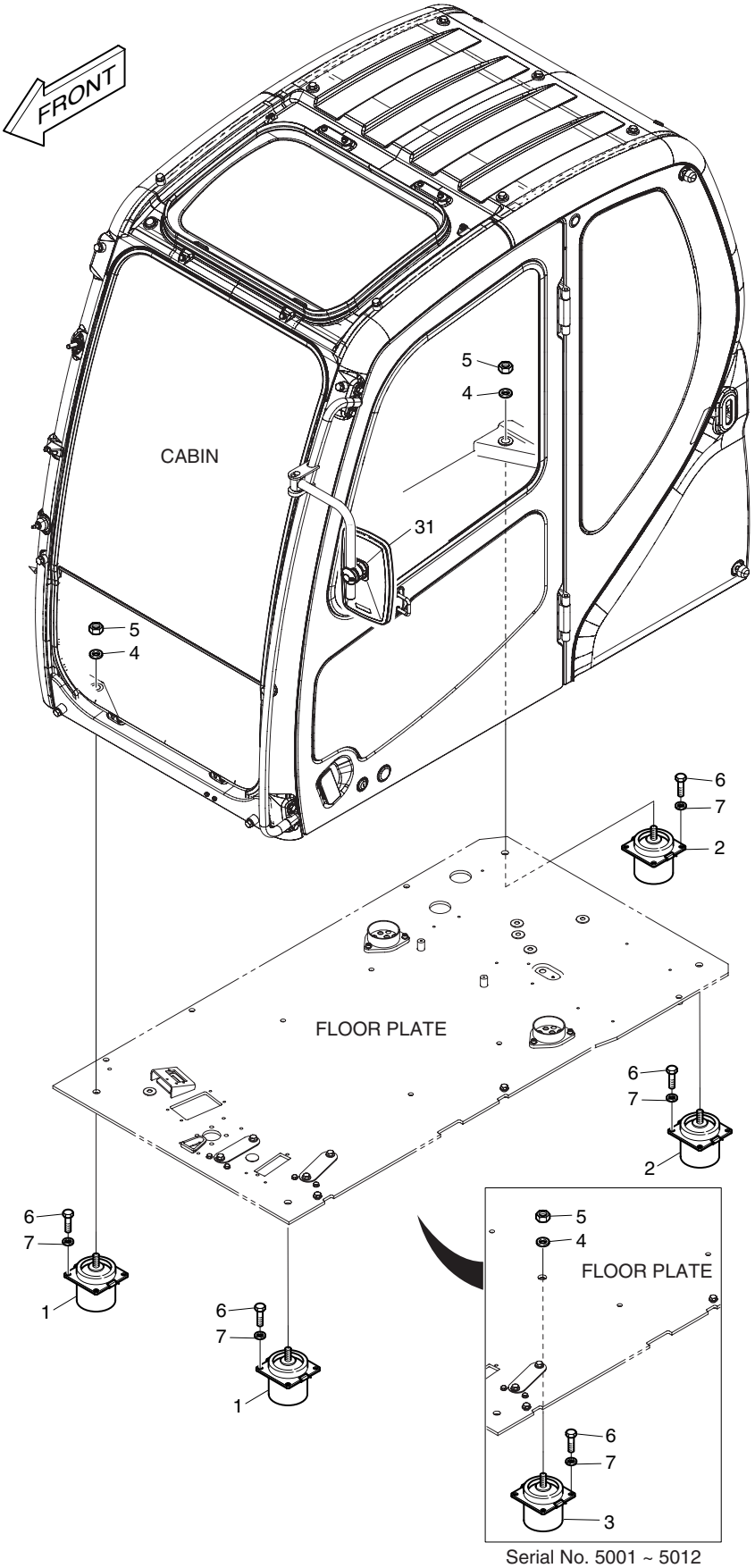

Serial No. 5001 ~ 5012

DATE	JUN. 30, 2007
REV. NO.	EXB07-06

Fig. 1580 CABIN MOUNTING SUPPORT DE CABINE

Serial No. ;

Key No.	Part No.	Description	Description	Q'ty	S.C	Serial No.	ICA	Replaceable part	
								Part No.	Q'ty
1580--	621-03223A	CABIN MOUNT	SUPPORT DE CABINE	-	D				
1	2161-9057	RUBBER;MOUNT(FRONT)	CAOUTCHOUC	2					
2	2161-9058	RUBBER;MOUNT(REAR)	CAOUTCHOUC	2					
3	**K1000043**	**RUBBER;CABIN MOUNT**	CAOUTCHOUC	1		**5001–5012**			
4	2114-1058D2	WASHER	RONDELLE	5		5001–5012			
	2114-1058D2	**WASHER**	RONDELLE	4		**5013–**			
5	2121-9007	NUT	ECROU	5		5001–5012			
	2121-9007	**NUT**	ECROU	4		**5013–**			
6	2120-2166D2	BOLT	BOULON	20		5001–5012			
	2120-2166D2	**BOLT**	BOULON	16		**5013–**			
7	2114-1898D1	WASHER	RONDELLE	20		5001–5012			
	2114-1898D1	**WASHER**	RONDELLE	16		**5013–**			
31	903-00068	MIRROR;SIDE	RETROVISEUR	1		5001–5015	I	K1040606	1
	K1040606	**MIRROR;SIDE**	RETROVISEUR	1		**5016–**			

DATE	JUN. 30, 2007
REV.NO.	EXB07-06

Fig. 1590 CABIN(1) CABINE

Serial No. ;

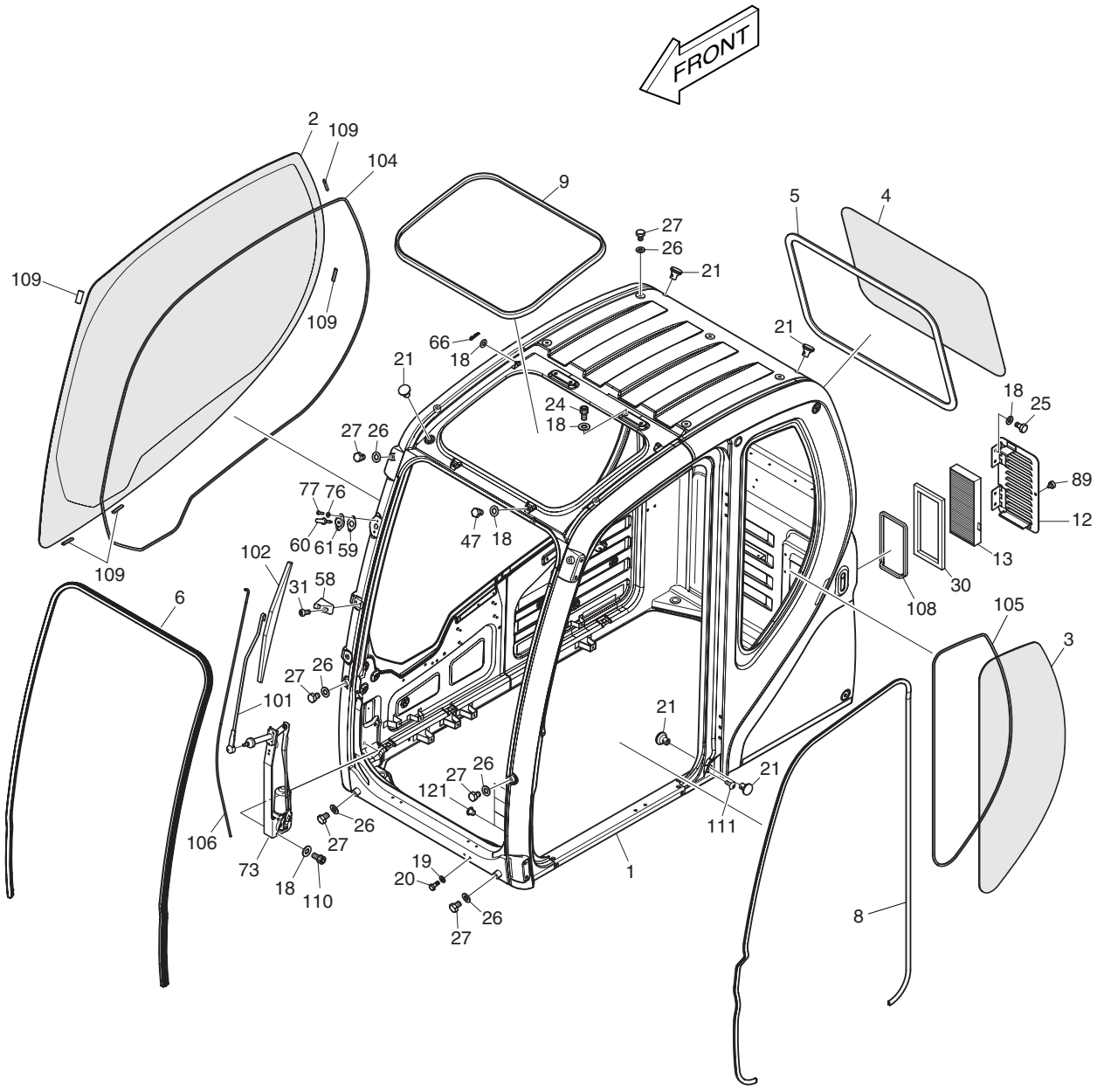

DATE	JUN. 30, 2007
REV. NO.	EXB07-06

Fig. 1590 CABIN(1) CABINE

Serial No. ;

Key No.	Part No.	Description	Description	Q'ty	S.C	Serial No.	ICA	Replaceable part	
								Part No.	Q'ty
1590--	622-00351H	CABIN ASS'Y	CABINE	1		5001–5010	I	622-00351J	1
	622-00351J	**CABIN ASS'Y**	CABINE	1		**5011–5013**	I	622-00351K	1
	622-00351K	**CABIN ASS'Y**	CABINE	1		**5014–**			
1	-	BODY;CABIN	CARTER	1	D				
2	903-00072A	GLASS;RH	VITRE	1					
3	903-00073A	GLASS;LH REAR	VITRE	1					
4	903-00075	GLASS;REAR	VITRE	1					
5	198-00054A	TRIM;REAR GLASS	CANAL	1					
6	162-00035A	STRIP;WEATHER	TAMPON	1					
8	162-00039A	STRIP;BODY	TAMPON	1					
9	162-00038	TRIM;ROOF	CANAL	1					
12	621-02864	COVER;FRESH AIR ASM	COUVERCLE	1					
13	471-00119	FILTER;FRESH AIR	FILTRE	1					
18	2114-1898D14	WASHER;PLAIN	RONDELLE	15					
19	2114-1898D3	WASHER;PLAIN	RONDELLE	2					
20	2120-2166D28	BOLT	BOULON A 6 PANS	2					
21	2160-1310	RUBBER;BUSHING	CAOUTCHOUC	5					
24	S2208561	BOLT	BOULON A 6 PANS	4					
25	2120-2166D12	BOLT	BOULON A 6 PANS	4					
26	2114-1898D6	WASHER;PLAIN	RONDELLE	13					
27	2120-2166D37	BOLT	BOULON A 6 PANS	13					
30	161-00640A	SPONGE	EPONGE	1					
31	2120-2166D7	SCREW	VIS	2					
47	2120-2166D5	BOLT	BOULON A 6 PANS	2					
58	195-02729	BRACKET;BLADE	SUPPORT	1					
59	161-00598A	RUBBER;WASHER NOZZLE	RUBBER;WASHER NOZZLE	1					
60	554-00005	NOZZLE;WASHER	INJECTEUR	1					
61	621-02837A	COVER;WASHER NOZZLE	COUVERCLE	1					
66	123-00523	PIN;GAS-SPRING	GOUJON	2					
73	538-00011	MOTOR;WIPER	MOTEUR	1					
76	2114-1898D13	WASHER;PLAIN	RONDELLE	2					
77	2120-2166D26	SCREW	VIS	2					
89	K1003427	BOLT;KNOB	BOULON A 6 PANS	1					
101	541-00015	ARM;WIPER	BALANCIER	1					
102	507-00006	BLADE;WIPER	LAME	1					
104	K1002635	DAMPER	AMORTISSEUR	1					
105	K1002636	DAMPER	AMORTISSEUR	1					
106	2185-1660	HOSE	TUYAU FLEXIBLE	1					

DATE	JUN. 30, 2007
REV.NO.	EXB07-06

Fig. 1590 CABIN(1) CABINE

Serial No. ;

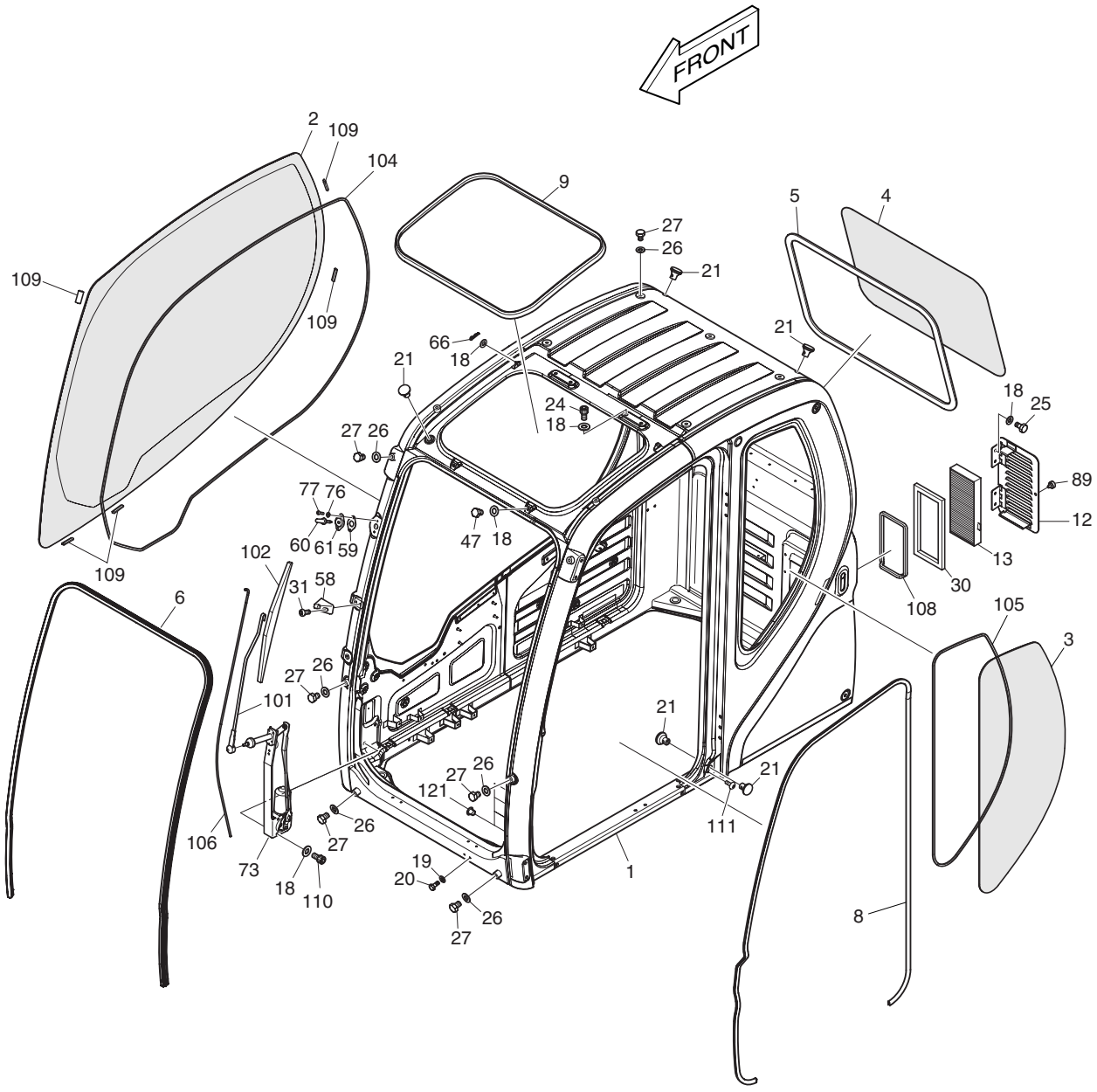

DATE	JUN. 30, 2007
REV. NO.	EXB07-06

Fig. 1590 CABIN(1) CABINE

Serial No. ;

Key No.	Part No.	Description	Description	Q'ty	S.C	Serial No.	ICA	Replaceable part	
								Part No.	Q'ty
1590-108	K1004061	FOAM	EPONGE	1					
109	K1003522	STOPPER	CHAPEAU	5					
110	S2208466	BOLT;SOCKET	BOULON	3					
111	2120-2166D53	BOLT	BOULON A 6 PANS	1					
121	160-00074A	CAP	CHAPEAU	4		5001–5010			
	160-00074A	**CAP**	CHAPEAU	2		**5011–**			

DATE	JUN. 30, 2007
REV.NO.	EXB07-06

Fig. 1600 CABIN(2) CABINE

Serial No. ;

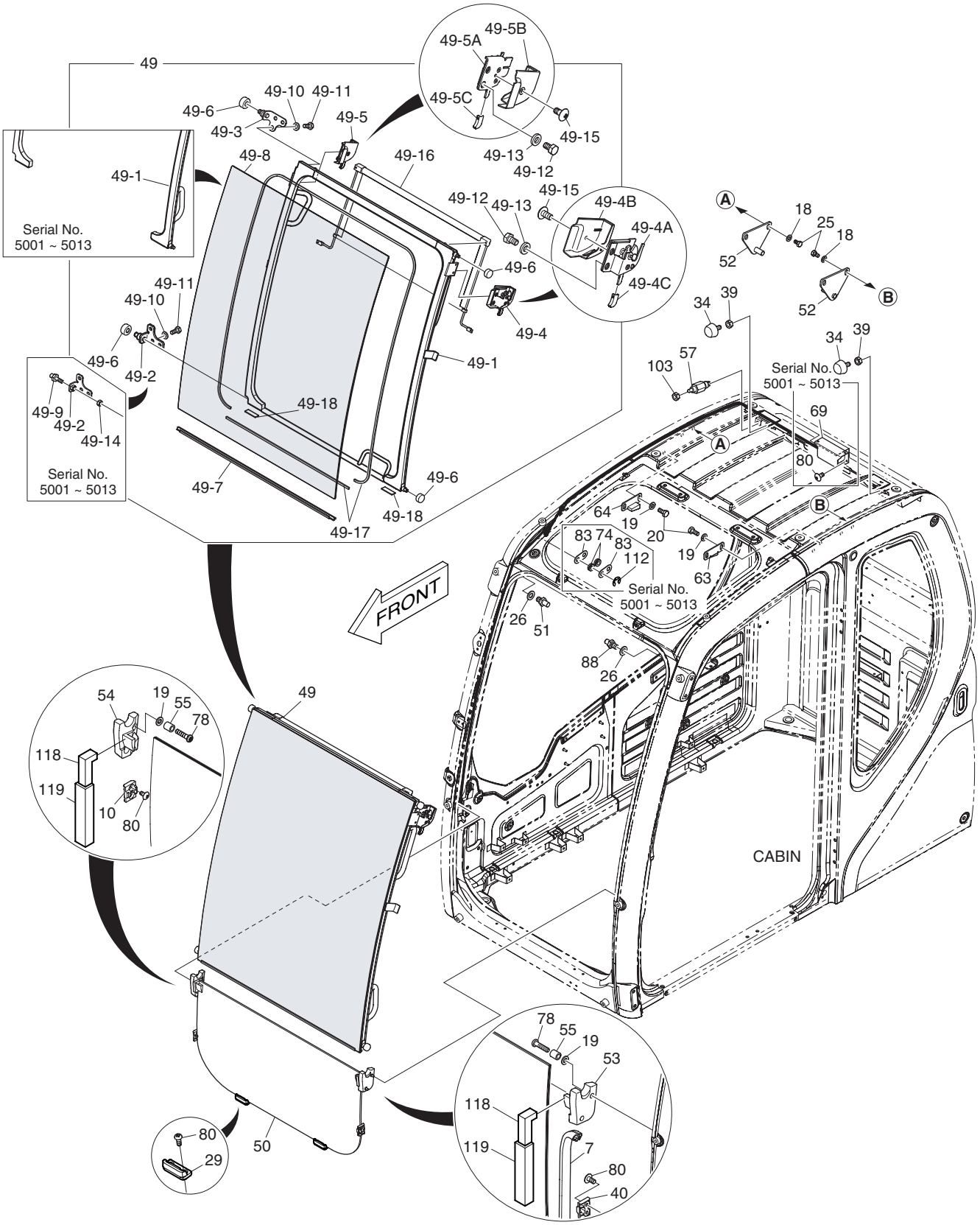

DATE	JUN. 30, 2007
REV. NO.	EXB07-06

Fig. 1600 CABIN(2) CABINE

Serial No. ;

Key No.	Part No.	Description	Description	Q'ty	S.C	Serial No.	ICA	Replaceable part	
								Part No.	Q'ty
1600--	622-00351H	CABIN ASS'Y	CABINE	1		5001–5010	I	622-00351J	1
	622-00351J	**CABIN ASS'Y**	CABINE	1		**5011–5013**	I	622-00351K	1
	622-00351K	**CABIN ASS'Y**	CABINE	1		**5014–**			
7	162-00034B	STRIP;WEATHER	TAMPON	1					
10	416-00018A	STOPPER;GLASS LOWER RH	TAQUET D'ARRET	1					
18	2114-1898D14	WASHER;PLAIN	RONDELLE	4					
19	2114-1898D3	WASHER;PLAIN	RONDELLE	8					
20	2120-2166D28	BOLT;HEX	BOULON A 6 PANS	4					
25	2120-2166D12	BOLT;HEX	BOULON A 6 PANS	4					
26	2114-1898D6	WASHER;PLAIN	RONDELLE	2					
29	416-00019B	STOPPER;LOWER	TAQUET D'ARRET	2					
34	161-00195	STOPPER;SLIDE DOOR BACK	TAQUET D'ARRET	2					
39	2121-1311D4	NUT	ECROU 6 PANS	2					
40	416-00020	STOPPER;GLASS LOWER LH	TAQUET D'ARRET	1					
49	622-00359H	DOOR;SLIDE	VERROU	1		5001–5010	I	622-00359J	1
	622-00359J	**DOOR;SLIDE**	VERROU	1		**5011–5013**	I	622-00359K	1
	622-00359K	**DOOR;SLIDE**	VERROU	1		**5014–**			
49-1	622-00360G	. PANEL ASS'Y	. PANNEAU	1		5001–5010	I	622-00360H	1
	622-00360H	**. PANEL ASS'Y**	. PANNEAU	1		**5011–5013**			
	K1033991	**. PANEL ASS'Y**	. PANNEAU	1		**5014–**			
49-2	195-02739B	. BRACKET;RH LOWER ROLLER	. SUPPORT	1		5001–5013	I	195-02739C	1
	195-02739C	**. BRACKET;RH LOWER**	. SUPPORT	1		**5014–**			
49-3	195-02740C	. BRACKET;RH ROLLER UPPER	. SUPPORT	1		5001–5013	I	195-02740E	1
	195-02740E	**. BRACKET;RH ROLLER**	. SUPPORT	1		**5014–**			
49-4	125-00096A	. CATCH ASS'Y;SLIDE DOOR LH	. LOQUET	1					
49-4A	125-00073B	.. CATCH;LH	.. LOQUET	1					
49-4B	621-03724	.. COVER;CATCH LH	.. COUVERCLE	1					
49-4C	133-00248	.. KNOB;SLIDE DOOR CATCH	.. BOUTON	1					
49-5	125-00097A	. CATCH ASM;SLIDE DOOR RH	. LOQUET	1					
49-5A	125-00074B	.. CATCH;RH	.. LOQUET	1					
49-5B	621-03725	.. COVER;CATCH RH	.. COUVERCLE	1					
49-5C	133-00248	.. KNOB;SLIDE DOOR CATCH	.. BOUTON	1					
49-6	270-00054B	. ROLLER	. PLAIER	4					
49-7	505-00016B	. BAR	. CAOUTCHOUC	1		5001–5013			
	K1036331	**. BAR**	. CAOUTCHOUC	1		**5014–**			
49-8	903-00076B	. GLASS;FRONT UPPER	. VITRE	1		5001–5013	I	K1033880	1
	K1033880	**. GLASS;FRONT UPPER**	. VITRE	1		**5014–**			
49-9	**123-00522B**	**. PIN;SLIDE ROLLER RH**	. GOUPILLE	1		**5001–5013**			

DATE	JUN. 30, 2007
REV.NO.	EXB07-06

Fig. 1600 CABIN(2)
CABINE

Serial No. ;

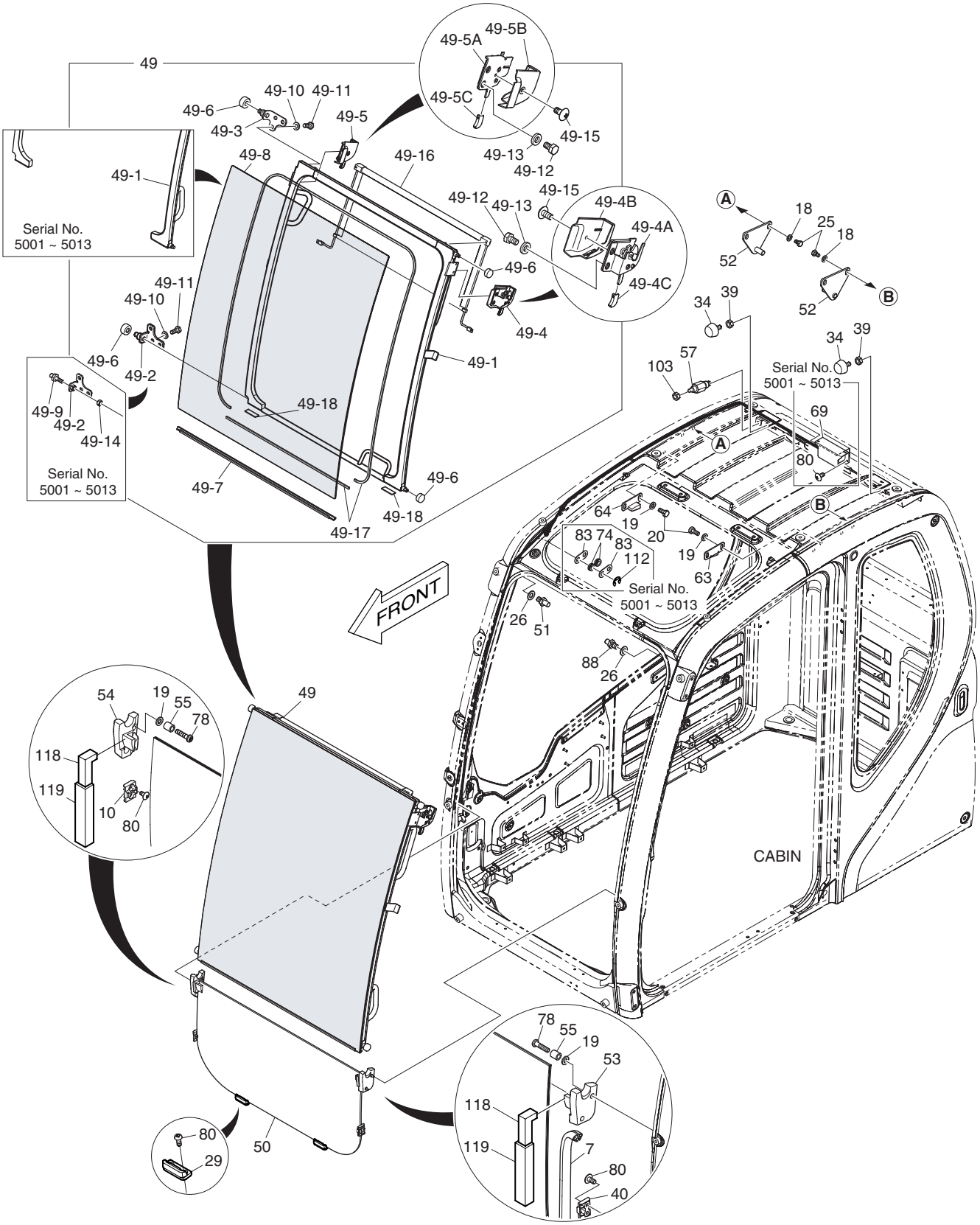

DATE	JUN. 30, 2007
REV. NO.	EXB07-06

Fig. 1600 CABIN(2) CABINE

Serial No. ;

Key No.	Part No.	Description	Description	Q'ty	S.C	Serial No.	ICA	Replaceable part	
								Part No.	Q'ty
1600-49-10	2114-1898D3	. WASHER;PLAIN	. RONDELLE	6					
49-11	2120-2166D28	. BOLT	. BOULON A 6 PANS	6					
49-12	2120-2166D12	. BOLT	. BOULON A 6 PANS	4					
49-13	2114-1898D2	. WASHER	. RONDELLE	4					
49-14	**2121-1311D2**	**. NUT**	. ECROU	1		**5001–5013**			
49-15	2120-2166D52	. SCREW	. VIS	2					
49-16	474-00044A	. SUN SCREEN;FRONT	. LE SOLEIL	1					
49-17	K1002638A	. DAMPER	. REGISTRE	1		5001–5013	I	K1036967	1
	K1036967	**. DAMPER**	. REGISTRE	1		**5014–**			
49-18	K1006368	. RUBBER	. CAOUTCHOUC	2					
50	903-00074A	GLASS;FRONT LOWER	VITRE	1					
51	142-00128B	STRIKER;RH	FRAPPER	1					
52	142-00127C	STRIKER;SLIDE DOOR REAR	FRAPPER	2					
53	116-00089B	STOPPER;RUBBER LH	TAQUET D'ARRET	1					
54	116-00090B	STOPPER;RUBBER RH	TAQUET D'ARRET	1					
55	2140-1338	PIPE;SPACER	TUBE D'ENTRETOISE	4					
57	549-00086	SWITCH;SLIDE	INTERRUPTEUR	1					
63	161-00618B	STOPPER;SLIDE DOOR	TAQUET D'ARRET	1					
64	161-00619B	STOPPER;SLIDE DOOR	TAQUET D'ARRET	1					
69	**129-00155**	**SPRING;ASSIST**	RESSORT	1		**5001–5013**			
74	**270-00062A**	**ROLLER;ASSIST CABLE**	GALET	2		**5001–5013**			
78	S3450993	SCREW	VIS	4					
80	2120-2166D52	SCREW	VIS	10		5001–5013			
	2120-2166D52	**SCREW**	VIS	8		**5014–**			
83	**191-03734A**	**PLATE;WASHER**	PLAQUE	2		**5001–5013**			
88	K1003284	STRIKER;LH	FRAPPER	1					
103	S4034833	NUT	ECROU 6 PANS	1					
112	**S6540600**	**RING;RETAINER**	BAGUE	2		**5001–5013**			
118	K1027768	FOAM	EPONGE	2					
119	K1027769	FOAM	EPONGE	2					

DATE	JUN. 30, 2007
REV.NO.	EXB07-06

Fig. 1610 CABIN(3) CABINE

Serial No. ;

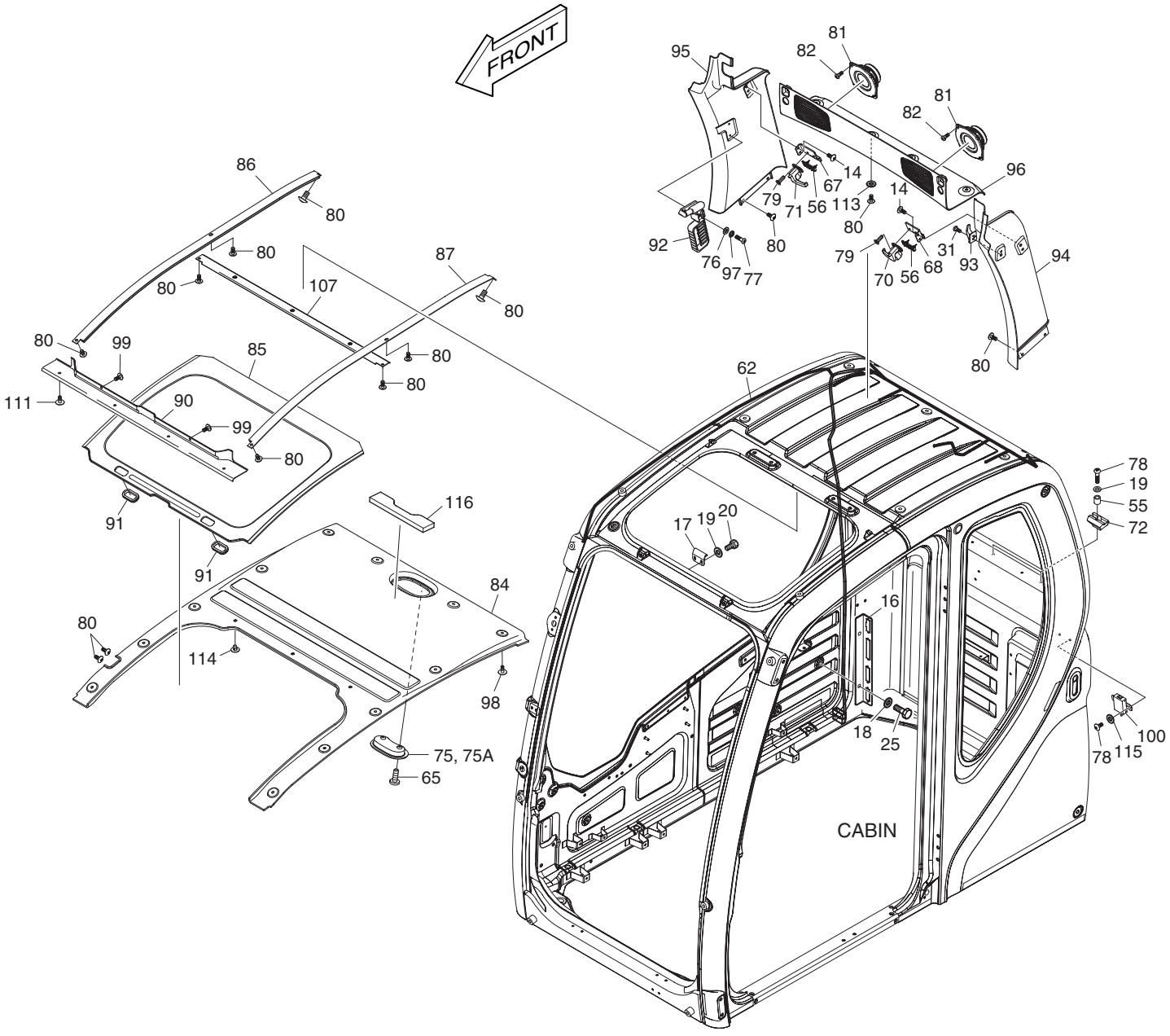

DATE	JUN. 30, 2007
REV. NO.	EXB07-06

Fig. 1610 CABIN(3) CABINE

Serial No. ;

Key No.	Part No.	Description	Description	Q'ty	S.C	Serial No.	ICA	Replaceable part	
								Part No.	Q'ty
1610--	622-00351H	CABIN ASS'Y	CABINE	1		5001–5010	I	622-00351J	1
	622-00351J	**CABIN ASS'Y**	CABINE	1		**5011–5013**	I	622-00351K	1
	622-00351K	**CABIN ASS'Y**	CABINE	1		**5014–**			
14	2120-2166D10	SCREW	VIS	4					
16	191-03179A	PLATE;CONNECTOR	PLAQUE	1					
17	191-03166C	STRIKER PLATE ROOF	TOIT DE PLAT DE BUTEE	1					
18	2114-1898D14	WASHER;PLAIN	RONDELLE	2					
19	2114-1898D3	WASHER;PLAIN	RONDELLE	4					
20	2120-2166D28	BOLT	BOULON A 6 PANS	2					
25	2120-2166D12	BOLT	BOULON A 6 PANS	2					
31	2120-2166D7	SCREW	VIS	1					
55	2140-1338	PIPE;SPACER	TUBE D'ENTRETOISE	2					
56	K1000794	STOPPER;RUBBER	TAQUET D'ARRET	2					
62	530-00417B	HARNESS;CABIN	FAISCEAU	1					
65	S3458843	SCREW	VIS	2					
67	621-03113B	PLATE;STOPPER (R.H)	TAQUET D'ARRET	1					
68	621-03114B	PLATE;STOPPER (L.H)	TAQUET D'ARRET	1					
70	125-00077	LOCK;REAR GLASS (L.H)	SERRURE	1					
71	125-00078	LOCK;REAR GLASS (R.H)	SERRURE	1					
72	2161-2212	STOPPER;RUBBER	TAQUET D'ARRET	2					
75	534-00079	ROOM LAMP	LAMPE DE PIECE	1					
75A	2515-1021D1	. BULB	. AMPOULE	1					
76	2114-1898D13	WASHER;PLAIN	RONDELLE	2					
77	2120-2166D26	SCREW	VIS	2					
78	S3450993	SCREW	VIS	4					
79	S3452853	SCREW	VIS	4					
80	2120-2166D52	SCREW	VIS	20					
81	2541-9020	SPEAKER	HAUT-PARLEUR	2					
82	S3450833	SCREW	VIS	8					
84	161-00609C	PAD;ROOF REAR	CAOUTCHOUC	1		5001–5013			
	161-00609E	**PAD;ROOF REAR**	CAOUTCHOUC	1		**5014–**			
85	161-00610C	PAD;ROOF CENTER	CAOUTCHOUC	1		5001–5010	I	161-00610E	1
	161-00610E	**PAD;ROOF CENTER**	CAOUTCHOUC	1		**5011–**			
86	359-00022A	RAIL;ROOF PANEL RH	CHEMIN DE FER	1					
87	359-00021A	RAIL;ROOF PANEL LH	CHEMIN DE FER	1					
90	161-00613B	PAD;ROOF FRONT	CAOUTCHOUC	1					
91	172-00055A	HANDLE;ROOF	POIGNEE	2					
92	2199-9058	HAMMER	MARTEAU	1					

DATE	JUN. 30, 2007
REV.NO.	EXB07-06

Fig. 1610 CABIN(3)
CABINE

Serial No. ;

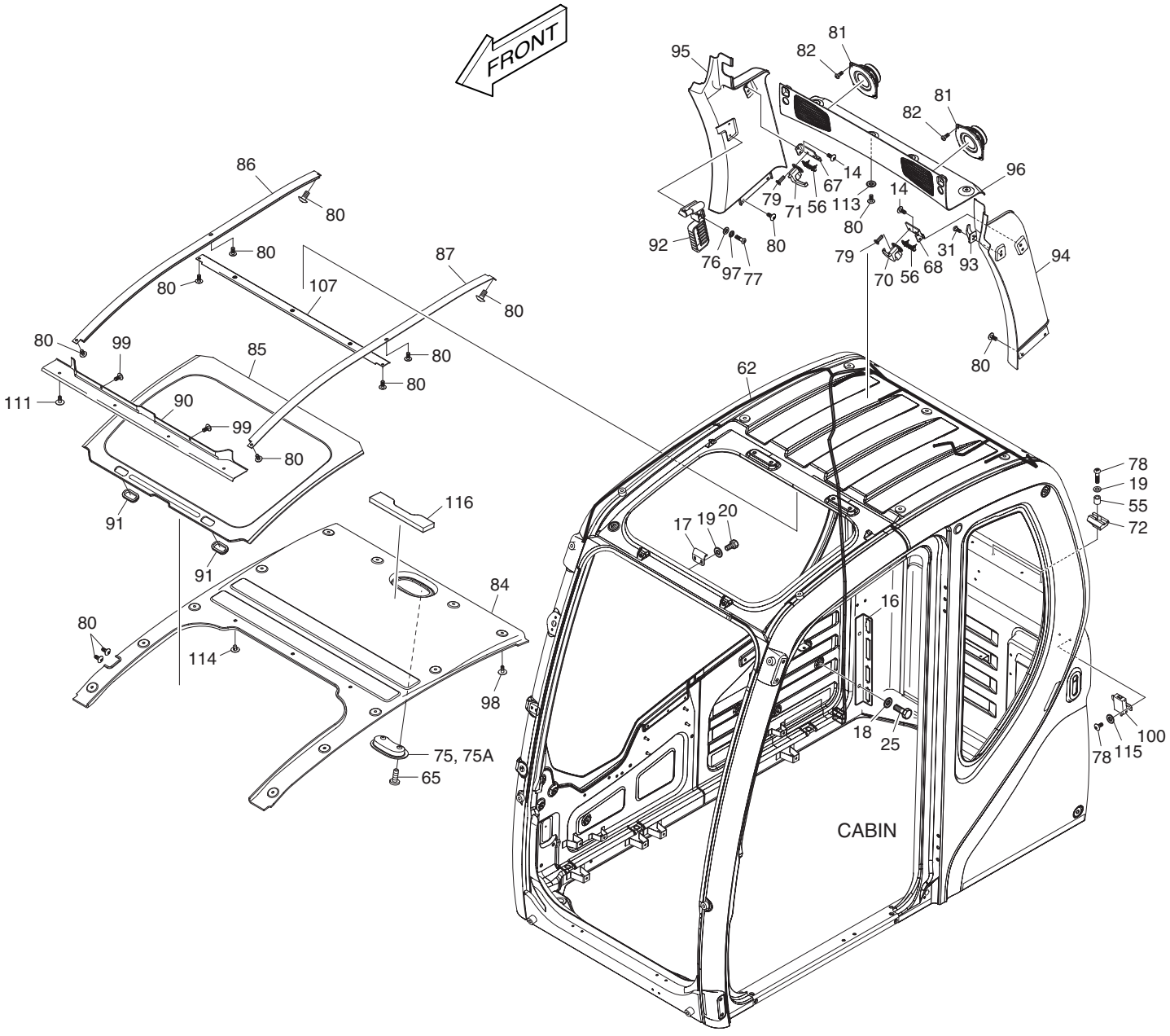

DATE	JUN. 30, 2007
REV. NO.	EXB07-06

Fig. 1610 CABIN(3) CABINE

Serial No. ;

Key No.	Part No.	Description	Description	Q'ty	S.C	Serial No.	ICA	Replaceable part	
								Part No.	Q'ty
1610-93	2150-1133	HOOK;COAT	CROCHET	1					
94	621-02910C	COVER;PILLAR LH	COUVERCLE	1					
95	621-02911C	COVER;PILLAR RH	COUVERCLE	1					
96	621-02912B	COVER;REAR UPPER	COUVERCLE	1					
97	2114-2031D1	WASHER;SPRING	RONDELLE ELASTIQUE	2					
98	K1006936	SCRIVET	RIVET	12					
99	2120-2166D18	SCREW	VIS	2					
100	K1002641	MODULE ASS'Y	MODULE	1					
107	K1003676B	PLATE	PLAQUE	1					
111	2120-2166D53	SCREW	VIS	4					
113	2114-1898D5	WASHER	CALE	4					
114	K1006933	SCRIVET	RIVET	3					
115	S5010313	WASHER	CALE	2					
116	K1010839	FORM	EPONGE	1					

DATE	JUN. 30, 2007
REV.NO.	EXB07-06

Fig. 1620 CABIN(4) CABINE

Serial No. ;

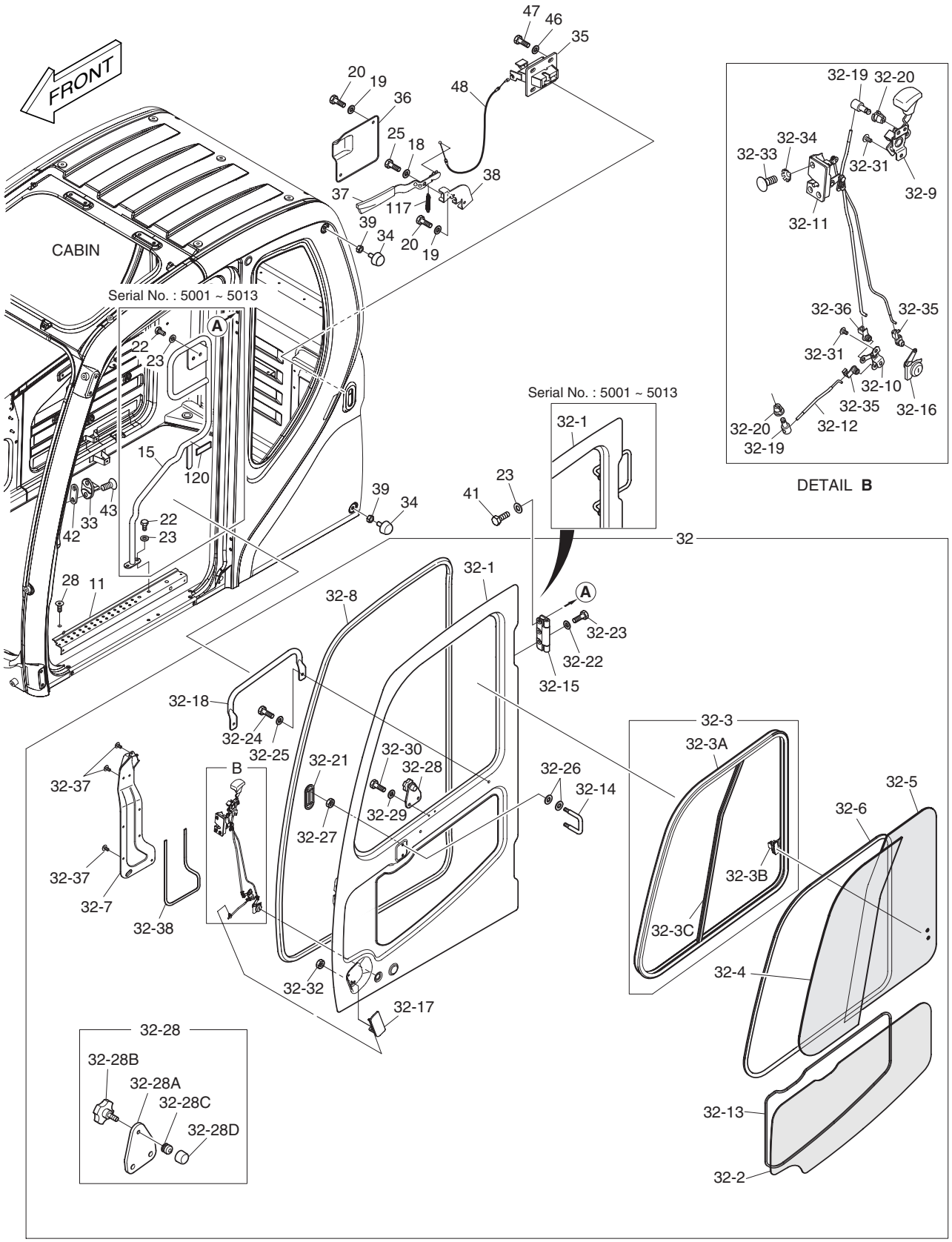

DATE	JUN. 30, 2007
REV. NO.	EXB07-06

Fig. 1620 CABIN(4) CABINE

Serial No. ;

Key No.	Part No.	Description	Description	Q'ty	S.C	Serial No.	ICA	Replaceable part	
								Part No.	Q'ty
1620--	622-00351H	CABIN ASS'Y	CABINE	1		5001–5010	I	622-00351J	1
	622-00351J	**CABIN ASS'Y**	CABINE	1		**5011–5013**	I	622-00351K	1
	622-00351K	**CABIN ASS'Y**	CABINE	1		**5014–**			
11	625-00159B	STEP;CABIN DOOR	MARCHER	1					
15	**172-00052E**	**HANDLE;INNER**	POIGNEE	1		**5001–5013**			
18	2114-1898D14	WASHER;PLAIN	RONDELLE	1					
19	2114-1898D3	WASHER;PLAIN	RONDELLE	4					
20	2120-2166D28	BOLT	BOULON A 6 PANS	4					
22	**2120-2166D4**	**BOLT**	BOULON A 6 PANS	4		**5001–5013**			
23	2114-1898D15	WASHER;PLAIN	RONDELLE	10		5001–5013			
	2114-1898D15	**WASHER;PLAIN**	RONDELLE	6		**5014–**			
25	2120-2166D12	BOLT	BOULON A 6 PANS	1					
28	2120-2150D3	SCREW	VIS	4					
32	622-00353G	DOOR ASS'Y	VERROU	1		5001–5013	I	622-00353H	1
	622-00353H	**DOOR ASS'Y**	VERROU	1		**5014–**			
32-1	-	. DOOR;BODY	. DIODE	1	D				
32-2	903-00069A	. GLASS;DOOR LOWER	. VITRE	1					
32-3	622-00355A	. SASH ASS'Y	. CHASSIS	1					
32-3A	622-00356	.. FRAME ASS'Y;SASH	.. BATI	1					
32-3B	2123-6119	.. LOCK;SASH	.. VERROU	1					
32-3C	162-00033A	.. BAR;CENTER	.. CAOUTCHOUC	1					
32-4	903-00070B	. GLASS;SASH FRONT	. VITRE	1					
32-5	903-00071B	. GLASS;SASH REAR	. VITRE	1					
32-6	161-00623	. TRIM	. ATTACHE	1					
32-7	621-02869B	. COVER;LOCK	. COUVERCLE	1					
32-8	198-00053A	. RUBBER TRIM;DOOR INNER	. CAOUTCHOUC	1					
32-9	133-00221	. LEVER ASS'Y;INNER HANDLE	. LEVIER	1					
32-10	137-00092	. LINK;DOOR INNER	. PIECE DE JONCTION	1					
32-11	125-00072	. CATCH ASS'Y;DOOR INNER	. LOQUET	1					
32-12	136-00055A	. ROD;OUTER HANDLE TO LINK	. TIGE	1					
32-13	K1002637	. DAMPER	. REGISTRE	1					
32-14	2150-1132A	. HOOK;CATCH DOOR	. CROCHET	1					
32-15	K1027765	. HINGE ASS'Y;DOOR	. PAUMELLE	2					
32-16	K1003900	. KEY ASS'Y;DOOR	. CLE	1					
32-17	2172-9021	. HANDLE;OUTER	. POIGNEE	1					
32-18	145-00124A	. STAY	. ENTRETOISE	1					
32-19	2123-2247	. PIN	. GOUPILLE	2					
32-20	2124-1689A	. SNAP	. RUPTURE	2					

DATE	JUN. 30, 2007
REV.NO.	EXB07-06

Fig. 1620 CABIN(4)
CABINE

Serial No. ;

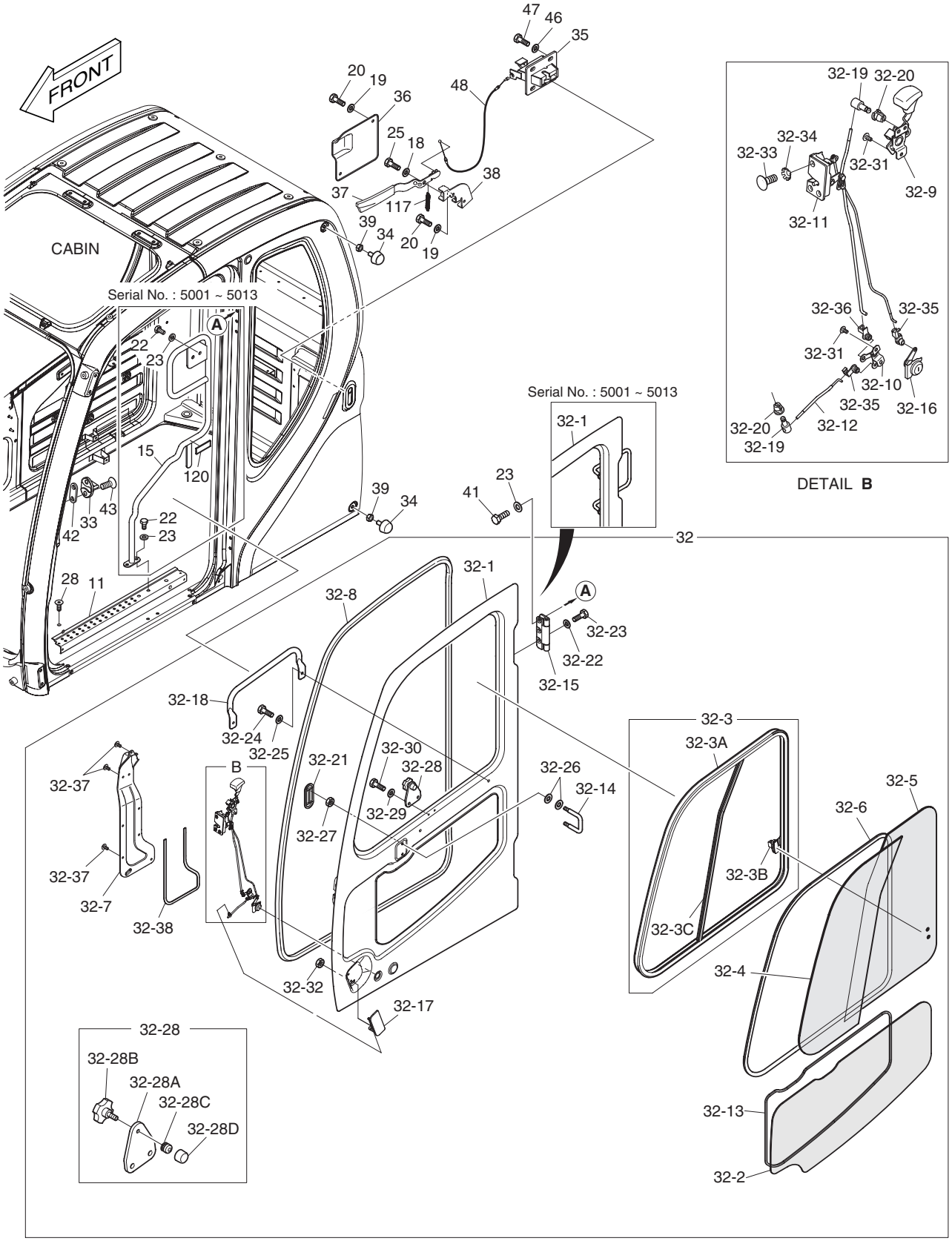

DATE	JUN. 30, 2007
REV. NO.	EXB07-06

Fig. 1620 CABIN(4) CABINE

Serial No. ;

Key No.	Part No.	Description	Description	Q'ty	S.C	Serial No.	ICA	Replaceable part	
								Part No.	Q'ty
1620-32-21	621-02867A	. COVER;DOOR INNER	. COUVERCLE	1					
32-22	2114-1898D15	. WASHER;PLAIN	. RONDELLE	6					
32-23	2120-2166D1	. BOLT	. BOULON A 6 PANS	6					
32-24	2120-2166D5	. BOLT	. BOULON A 6 PANS	2					
32-25	2114-1898D2	. WASHER	. RONDELLE	2					
32-26	2891-1311	. PLATE	. PLAQUE	4					
32-27	S4012533	. NUT;HEXAGON	. ECROU	2					
32-28	161-00621B	. STOPPER;RUBBER	. TAQUET D'ARRET	1					
32-28	191-03283	.. PLATE;STOPPER	.. TAQUET D'ARRET	1					
32-28	4132-1138	.. KNOB	.. BOUTON	1					
32-28	161-00620	.. RUBBER;STOPPER	.. CAOUTCHOUC	1					
32-28	116-00092A	.. STOPPER	.. TAQUET D'ARRET	1					
32-29	2114-1898D3	. WASHER;PLAIN	. RONDELLE	2					
32-30	2120-2166D28	. BOLT	. BOULON A 6 PANS	2					
32-31	2120-2166D52	. SCREW	. VIS	5					
32-32	S4012333	. NUT	. ECROU	2					
32-33	2120-2150D3	. SCREW	. VIS	3					
32-34	S5210303	. WASHER;TOOTHED	. RONDELLEELASTIQUE	3					
32-35	124-00010	. CLIP;ROD	. ATTACHE	2					
32-36	124-00344	. CLIP;ROD	. ATTACHE	1					
32-37	2120-2166D53	. SCREW	. VIS	8					
32-38	K1006370	. FOAM	. EPONGE	1					
33	2142-9005	STRIKER;DOOR	FRAPPER	1					
34	161-00195	STOPPER;SLIDE DOOR BACK	TAQUET D'ARRET	2					
35	2125-9055	LOCK;BACK	SERRURE	1					
36	621-02849A	COVER;BACK LOCK INNER	COUVERCLE	1					
37	133-00220E	LEVER;BACK LOCK	LEVIER	1					
38	195-02719B	BRACKET;BACK LOCK	SUPPORT	1					
39	2121-1311D4	NUT	ECROU 6 PANS	2					
41	2120-2166D1	BOLT	BOULON A 6 PANS	6					
42	2114-1856	SHIM;STRIKER	CALE	1					
43	2120-2150D1	BOLT	BOULON A 6 PANS	2					
46	2114-1898D2	WASHER	CALE	4					
47	2120-2166D5	BOLT	BOULON A 6 PANS	4					
48	2127-1002A	CABLE;BACK LOCK	CABLE	1					
117	2129-1446	SPRING	RESSORT	1					
120	**K1006368**	**RUBBER**	CAOUTCHOUC	1		**5001–5013**			

DATE	JUN. 30, 2007
REV.NO.	EXB07-06

Fig. 1625 HANDLE - CABIN HANDLE

Serial No. ; 5014 ~

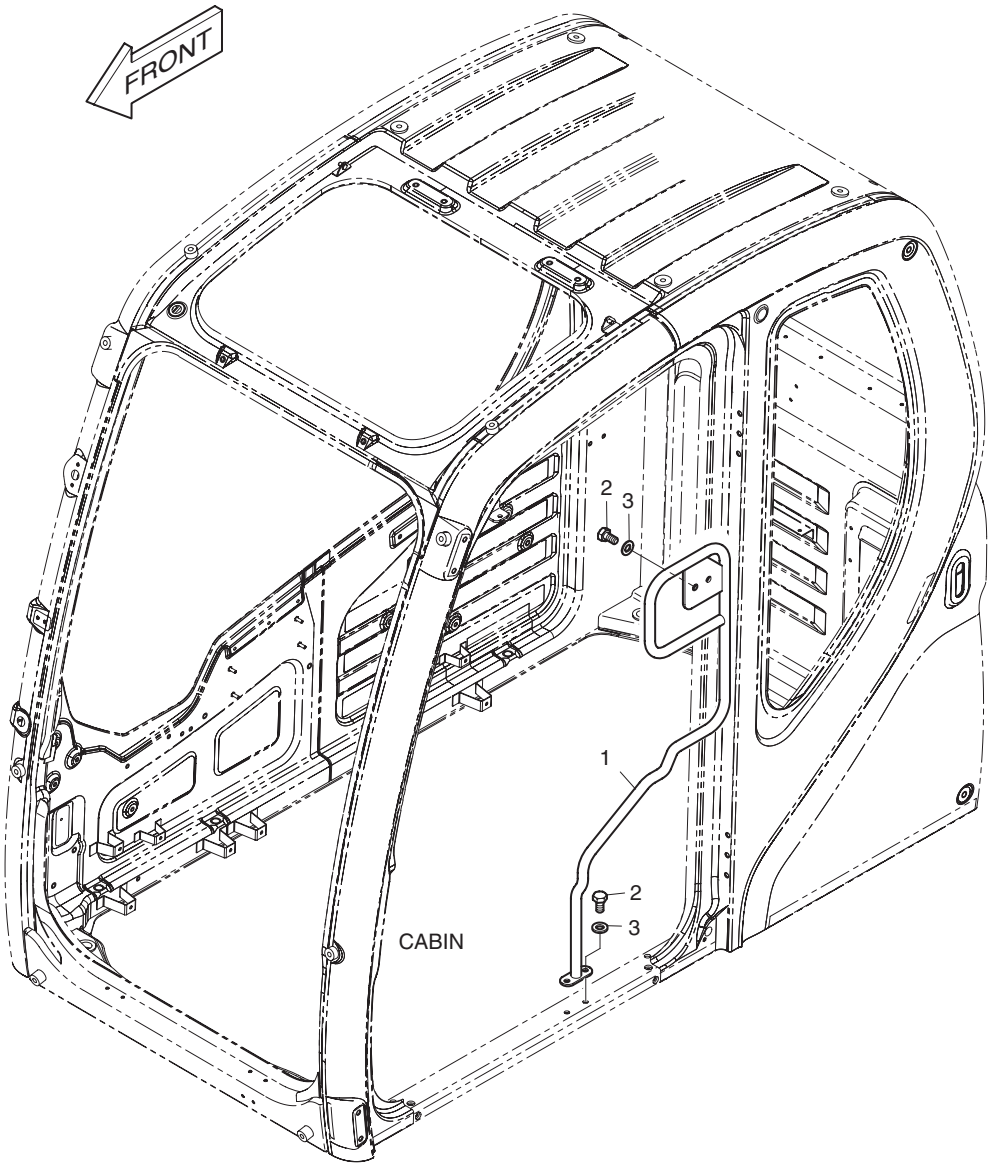

DATE	JUN. 30, 2007
REV. NO.	EXB07-06

Fig. 1625 HANDLE - CABIN HANDLE

Serial No. ; 5014 ~

Key No.	Part No.	Description	Description	Q'ty	S.C	Serial No.	ICA	Replaceable part	
								Part No.	Q'ty
1625--	**K1038244**	**HANDLE ASS'Y**	HANDLE	-	D	**5014–**			
1	172-00052G	HANDLE	HANDLE	1					
2	2120-2166D4	BOLT	BOULON A 6 PANS	4					
3	2114-1898D15	WASHER	CALE	4					

DATE	DEC. 26, 2006
1st EDITION	

Fig. 1630 FLOOR MAT PLANCHER

Serial No. ;

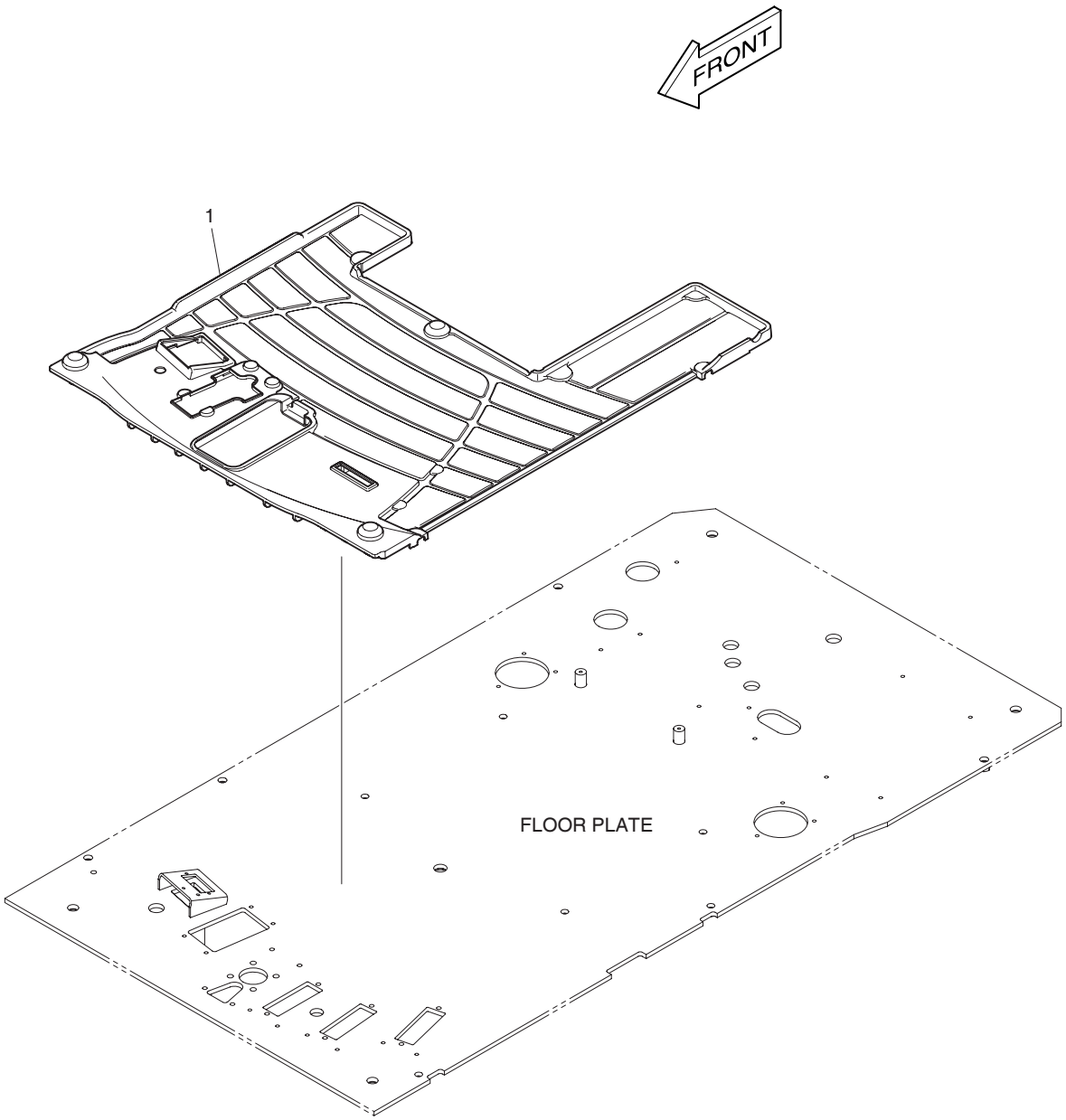

DATE	DEC. 26, 2006
1st EDITION	

Fig. 1630 FLOOR MAT PLANCHER

Serial No. ;

Key No.	Part No.	Description	Description	Q'ty	S.C	Serial No.	ICA	Replaceable part	
								Part No.	Q'ty
1630-1	K1017237A	MAT;FLOOR	PLAQUE	1					

DATE	JUN. 30, 2007
REV.NO.	EXB07-06

Fig. 1640 FLOOR PLATE
TOLE DE PLANCHER

Serial No. ;

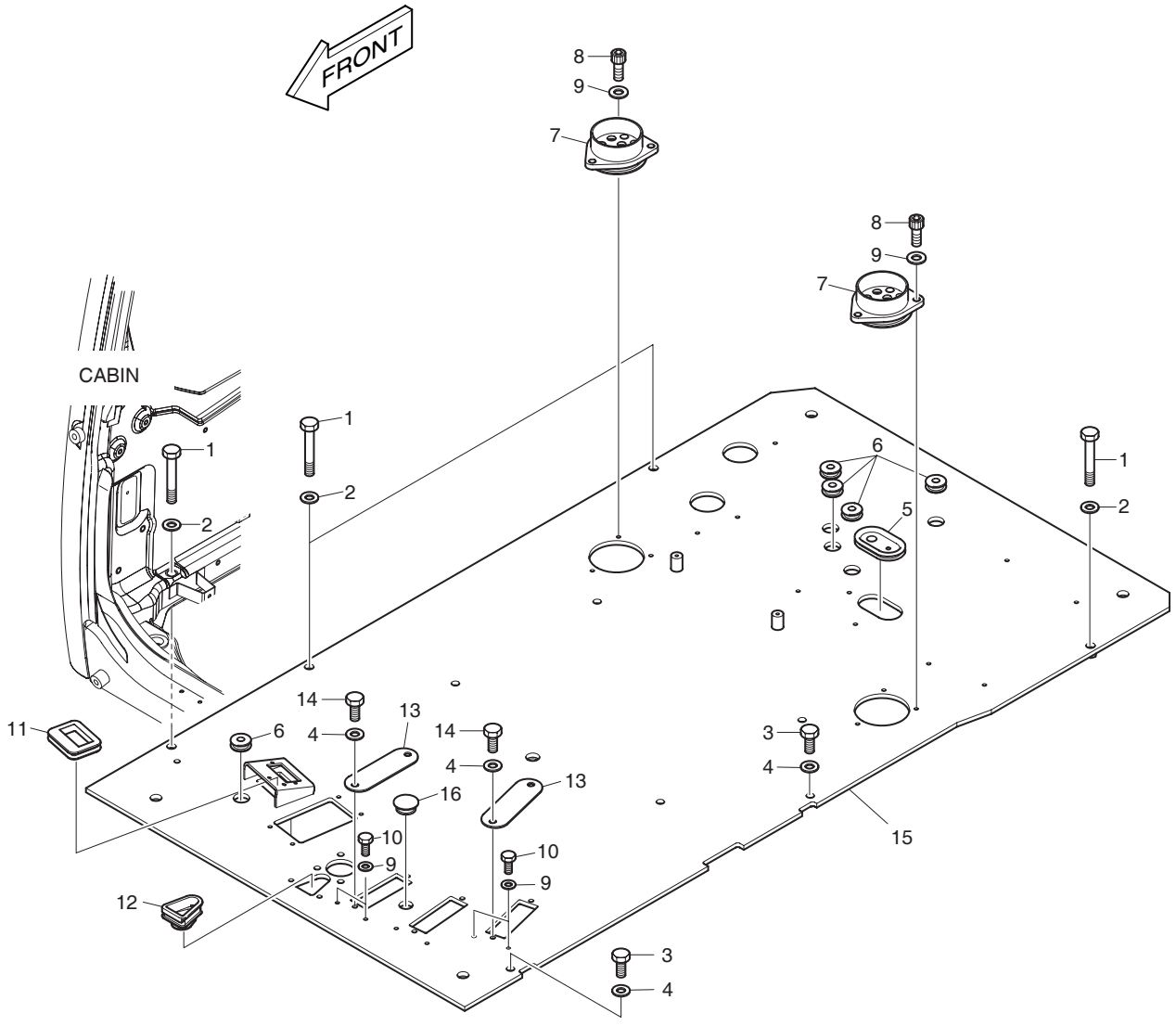

DATE	JUN. 30, 2007
REV. NO.	EXB07-06

Fig. 1640 FLOOR PLATE TOLE DE PLANCHER

Serial No. ;

Key No.	Part No.	Description	Description	Q'ty	S.C	Serial No.	ICA	Replaceable part	
								Part No.	Q'ty
1640--	**K1016286B**	**FLOOR PLATE**	PLAT DE PLANCHER	-	D				
1	2120-2166D55	BOLT	BOULON A 6 PANS	4					
2	2114-1898D17	WASHER	CALE	4					
3	2120-2166D1	BOLT	BOULON A 6 PANS	2					
4	2114-1898D1	WASHER	CALE	6					
5	160-00071	BUSHING;RUBBER	DOUILLE EN CAOUTCHOUC	1					
6	160-00072	BUSHING;RUBBER	DOUILLE EN CAOUTCHOUC	5					
7	160-00080A	BUSHING;RUBBER	DOUILLE EN CAOUTCHOUC	2					
8	S2208866	BOLT	BOULON A 6 PANS	6					
9	2114-1898D14	WASHER	CALE	10					
10	2120-2166D12	BOLT	BOULON A 6 PANS	4					
11	K1001273	GROMMET	MANCHON CAOUTCHOUC	1					
12	K1001274A	GROMMET	MANCHON CAOUTCHOUC	1					
13	621-01507	PLATE	PLAQUE	2					
14	2120-2166D4	BOLT	BOULON A 6 PANS	4					
15	K1009033A	PLATE;FLOOR	PLAQUE	1		5001–5012			
	K1009033B	**PLATE;FLOOR**	PLAQUE	1		**5013–**			
16	2161-2487	CAP;RUBBER	CHAPEAU	1					

DATE	DEC. 26, 2006
1st EDITION	

Fig. 1650 HANDLE ASS'Y HANDLE

Serial No. ;

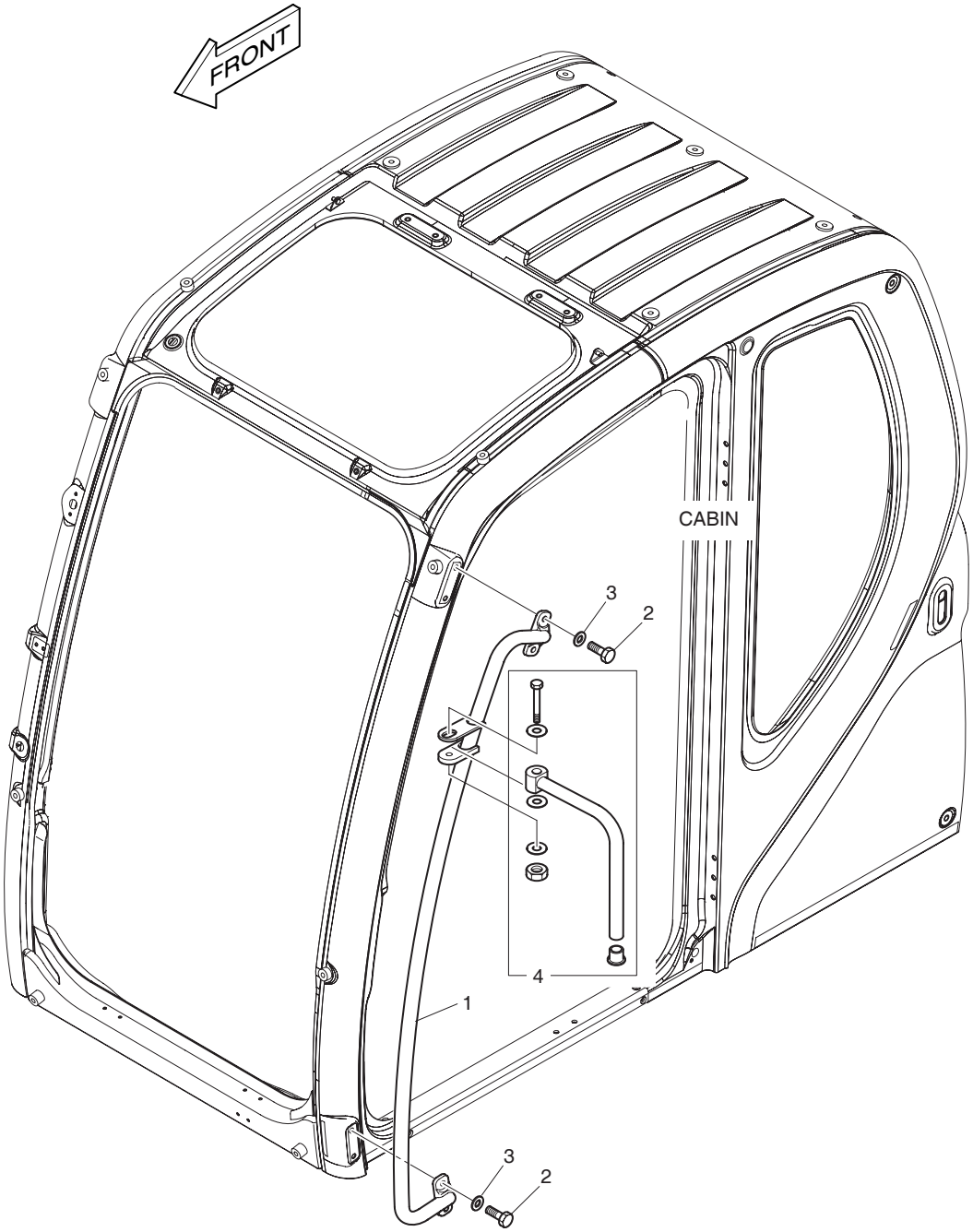

DATE	DEC. 26, 2006
1st EDITION	

Fig. 1650 HANDLE ASS'Y HANDLE

Serial No. ;

Key No.	Part No.	Description	Description	Q'ty	S.C	Serial No.	ICA	Replaceable part	
								Part No.	Q'ty
1650--	172-00372A	HANDLE ASS'Y	HANDLE	-	D				
1	172-00053B	HANDLE;OUTER	POIGNEE	1					
2	2120-2166D2	BOLT	BOULON A 6 PANS	4					
3	2114-1898D15	WASHER	CALE	4					
4	K1004272	STAY;MIRROR	ENTRETOISE	1					

DATE	DEC. 26, 2006
1st EDITION	

Fig. 1660 HANDLE
HANDLE

Serial No. ;

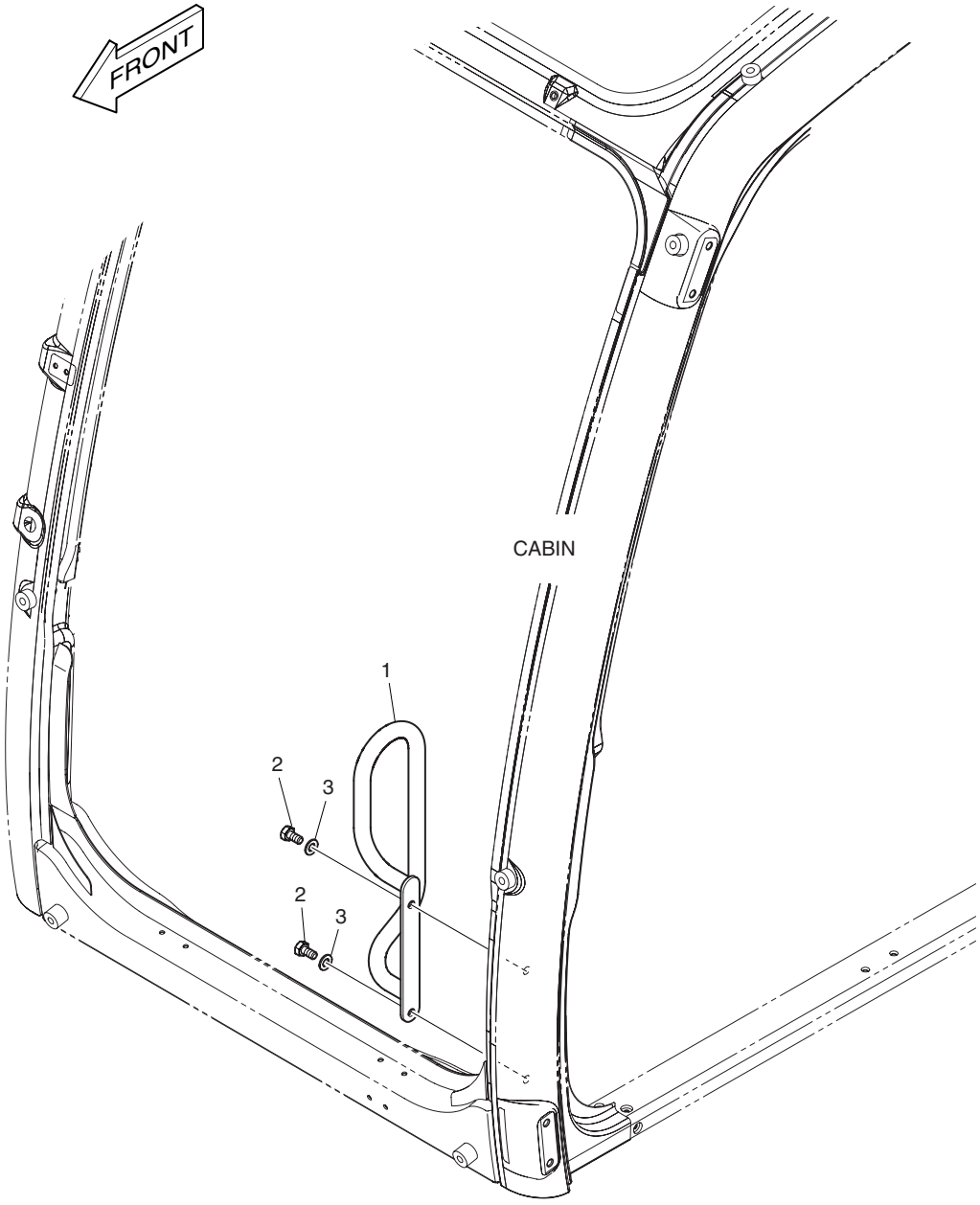

DATE	DEC. 26, 2006
1st EDITION	

Fig. 1660 HANDLE
HANDLE

Serial No. ;

Key No.	Part No.	Description	Description	Q'ty	S.C	Serial No.	ICA	Replaceable part	
								Part No.	Q'ty
1660--	K1027770A	HANDLE ASS'Y	HANDLE	-	D				
1	K1025530B	HANDLE;INNER	POIGNEE	1					
2	2120-2166D4	BOLT	BOULON A 6 PANS	4					
3	2114-1898D15	WASHER	CALE	4					

DATE	DEC. 26, 2006
1st EDITION	

Fig. 1670 SUN ROOF COVER
COUVERTURE DE TOIT DU SOLEIL

Serial No. ;

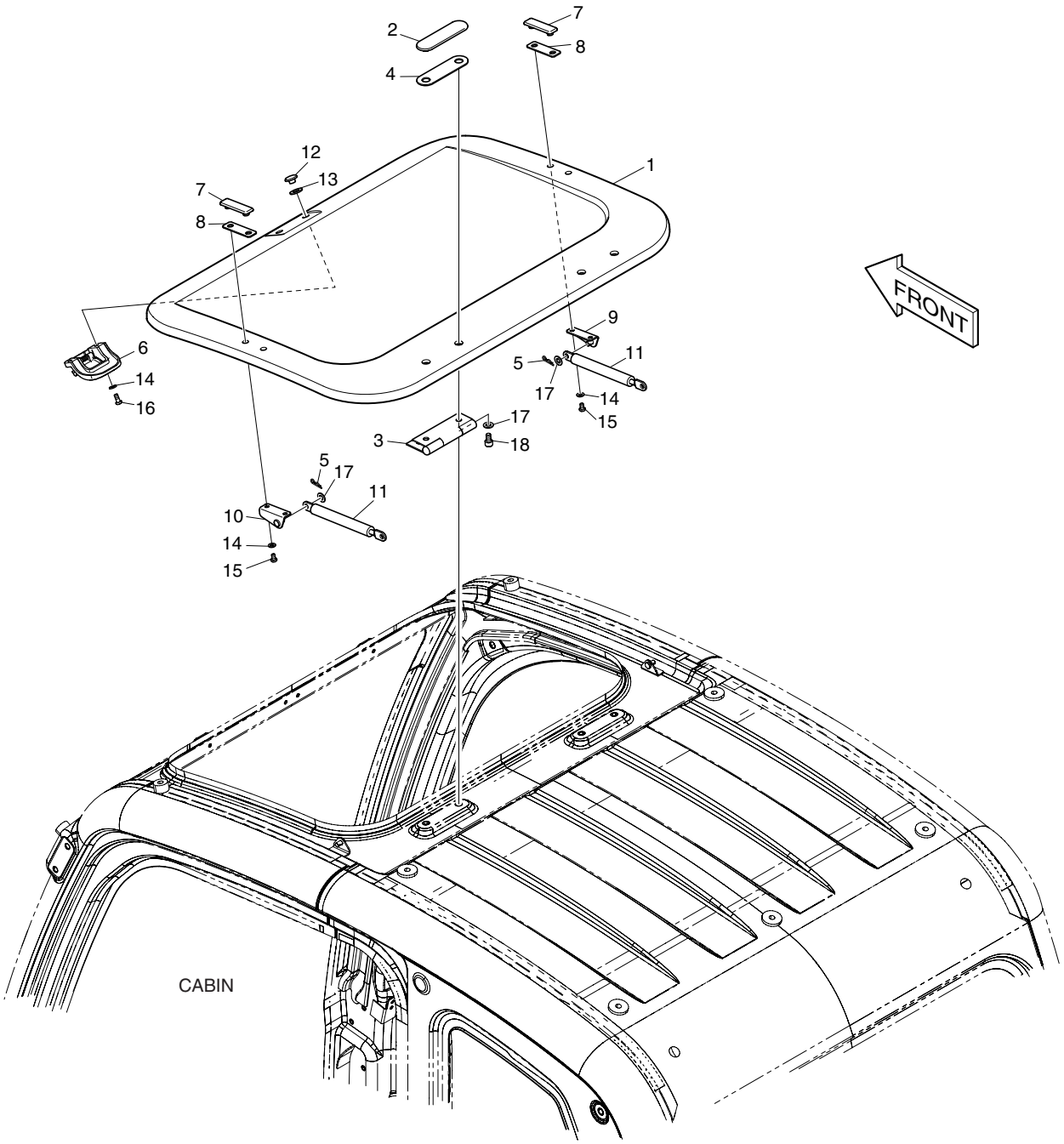

DATE	DEC. 26, 2006
1st EDITION	

Fig. 1670 SUN ROOF COVER
COUVERTURE DE TOIT DU SOLEIL

Serial No. ;

Key No.	Part No.	Description	Description	Q'ty	S.C	Serial No.	ICA	Replaceable part	
								Part No.	Q'ty
1670--	621-02870C	SUN ROOF COVER	LE SOLEIL	-	D				
1	621-02871B	COVER;SUN ROOF	COUVERCLE	1					
2	621-02872	COVER;ROOF HINGE	COUVERCLE	2					
3	171-00060A	HINGE;ROOF COVER	CHARNIERE	2					
4	161-00599	PAD;RUBBER	CAOUTCHOUC	2					
5	123-00523	PIN;GAS-SPRING	GOUJON	2					
6	123-00516B	LOCK ASS'Y;ROOF COVER	SERRURE	1					
7	621-02873	COVER;ROOF GAS-CYLINDER	COUVERCLE	2					
8	161-00600	PAD;RUBBER	CAOUTCHOUC	2					
9	191-03279A	PLATE;ROOF GAS-SPRING RH	PLAQUE	1					
10	191-03280A	PLATE;ROOF GAS-SPRING LH	PLAQUE	1					
11	DS1003008	GAS-SPRING	GOUJON	2					
12	621-03103	COVER;ROOF HANDLE	COUVERCLE	2					
13	161-00639	RUBBER;ROOF HANDLE	CAOUTCHOUC	2					
14	2114-1898D3	WASHER	CALE	6					
15	S3450943	SCREW	VIS	4					
16	2120-2166D7	SCREW	VIS	2					
17	2114-1898D14	WASHER	CALE	6					
18	S2208561	BOLT;SOCKET	BOULON	4					

DATE	DEC. 26, 2006
1st EDITION	

Fig. 1680 FOOT REST - L.H.
REPOS DE PIED

Serial No. ;

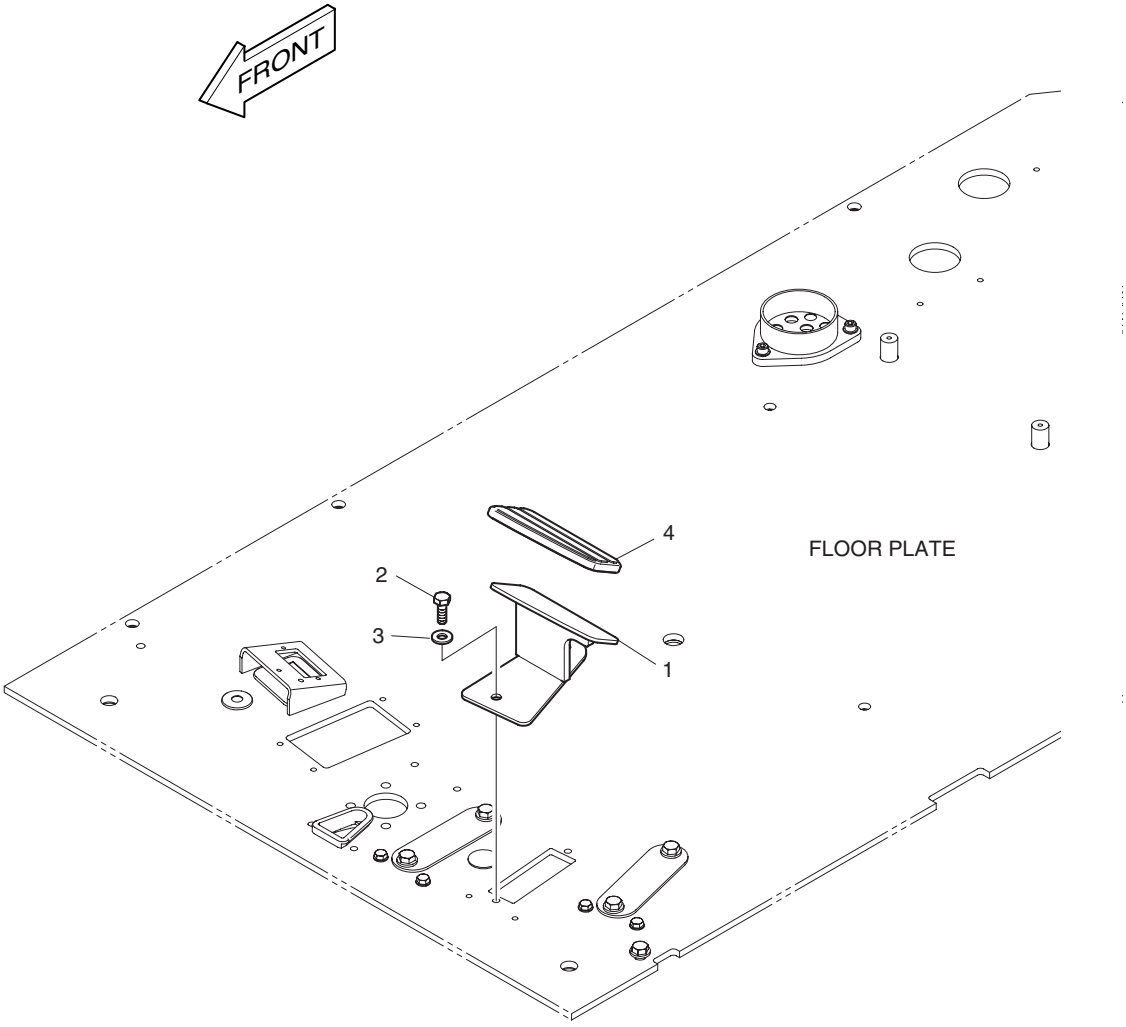

DATE	DEC. 26, 2006
1st EDITION	

Fig. 1680 FOOT REST - L.H. REPOS DE PIED

Serial No. ;

Key No.	Part No.	Description	Description	Q'ty	S.C	Serial No.	ICA	Replaceable part	
								Part No.	Q'ty
1680--	K1002082	FOOT REST(L.H)	REPOS DE PIED	-	D				
1	195-02949A	BRACKET;FOOT REST(L.H)	SUPPORT	1					
2	2120-2166D1	BOLT	BOULON A 6 PANS	2					
3	2114-1898D1	WASHER	CALE	2					
4	2160-1345	COVER;FOOT REST	COUVERCLE	1					

DATE	DEC. 26, 2006
1st EDITION	

Fig. 1690 ROOM MIRROR
MIROIR DE PIECE

Serial No. ;

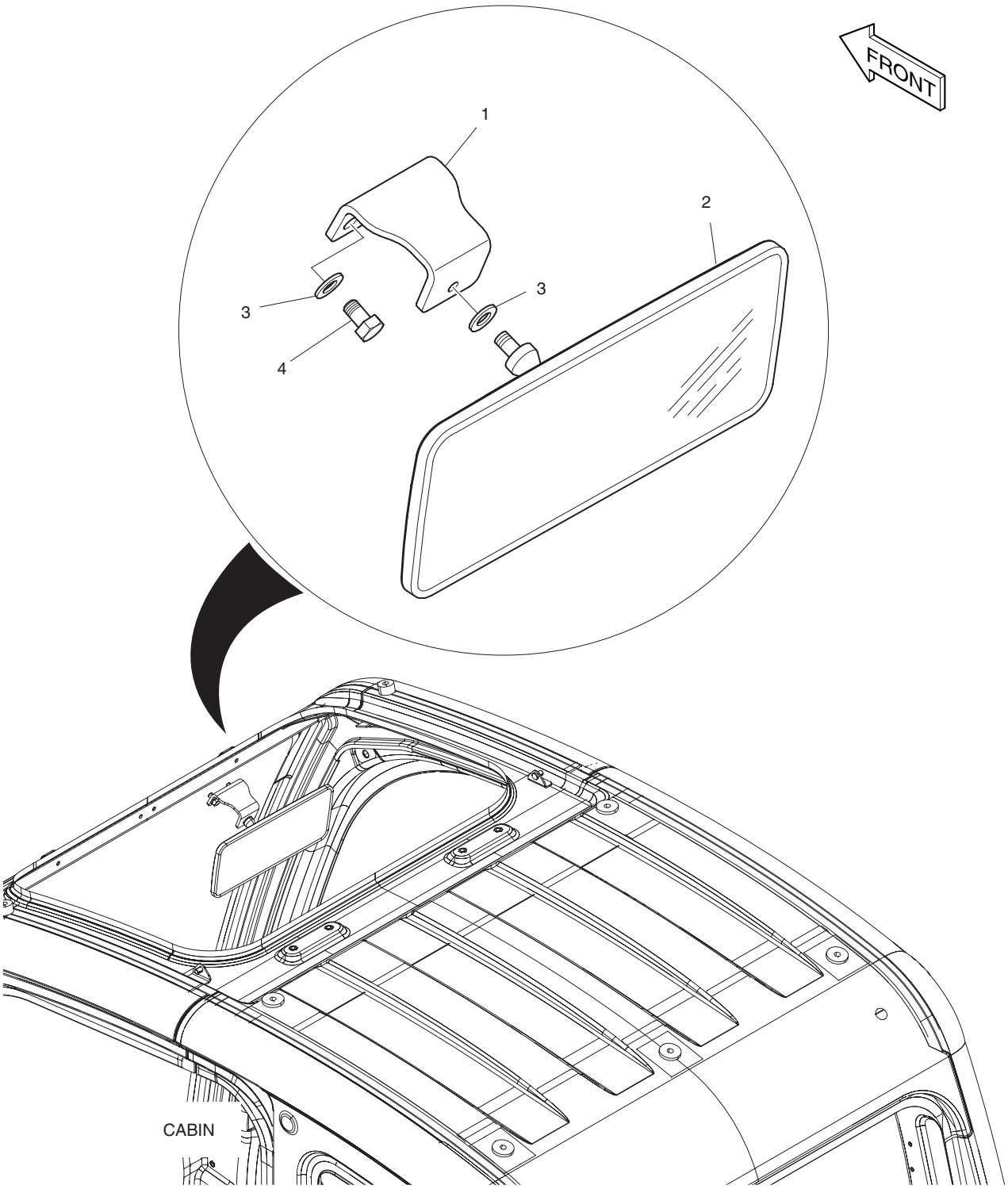

DATE	DEC. 26, 2006
1st EDITION	

Fig. 1690 ROOM MIRROR
MIROIR DE PIECE

Serial No. ;

Key No.	Part No.	Description	Description	Q'ty	S.C	Serial No.	ICA	Replaceable part	
								Part No.	Q'ty
1690--	903-00077	ROOM MIRROR ASS'Y	MIROIR DE PIECE	-	D				
1	195-03340B	BRACKET	SUPPORT	1					
2	2903-6006	MIRROR;ROOM	RETROVISEUR	1					
3	2114-1898D14	WASHER	CALE	3					
4	2120-2166D12	BOLT	BOULON A 6 PANS	2					

DATE	DEC. 26, 2006
1st EDITION	

Fig. 1700 SUPPORT SUPPORTS

Serial No. ;

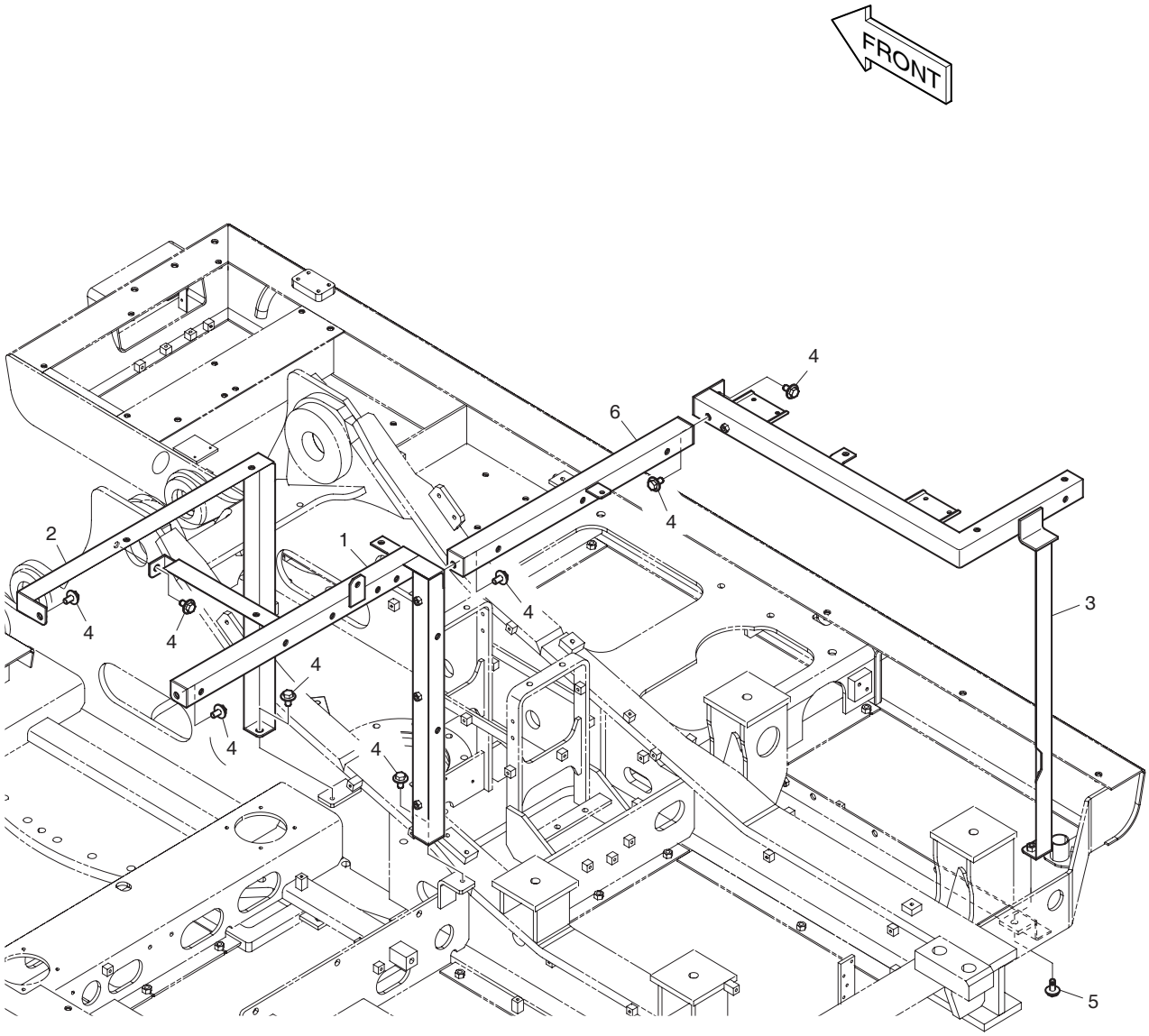

FRAME

DATE	DEC. 26, 2006
1st EDITION	

Fig. 1700 SUPPORT SUPPORTS

Serial No. ;

Key No.	Part No.	Description	Description	Q'ty	S.C	Serial No.	ICA	Replaceable part	
								Part No.	Q'ty
1700--	K1008903A	SUPPORT ASS'Y	SUPPORT	-	D				
1	K1009752A	SUPPORT	LAMPE	1					
2	K1008902A	SUPPORT	LAMPE	1					
3	K1005053A	SUPPORT	LAMPE	1					
4	DS0025015	BOLT;SET	BOULON	8					
5	DS0025025	BOLT;SET	BOULON	1					
6	K1008889B	SUPPORT	LAMPE	1					

DATE	JUN. 30, 2008
REV.NO.	EXB08-06

Fig. 1710 SIDE DOOR - L.H.
ENSEMBLE DE PORTE

Serial No. ;

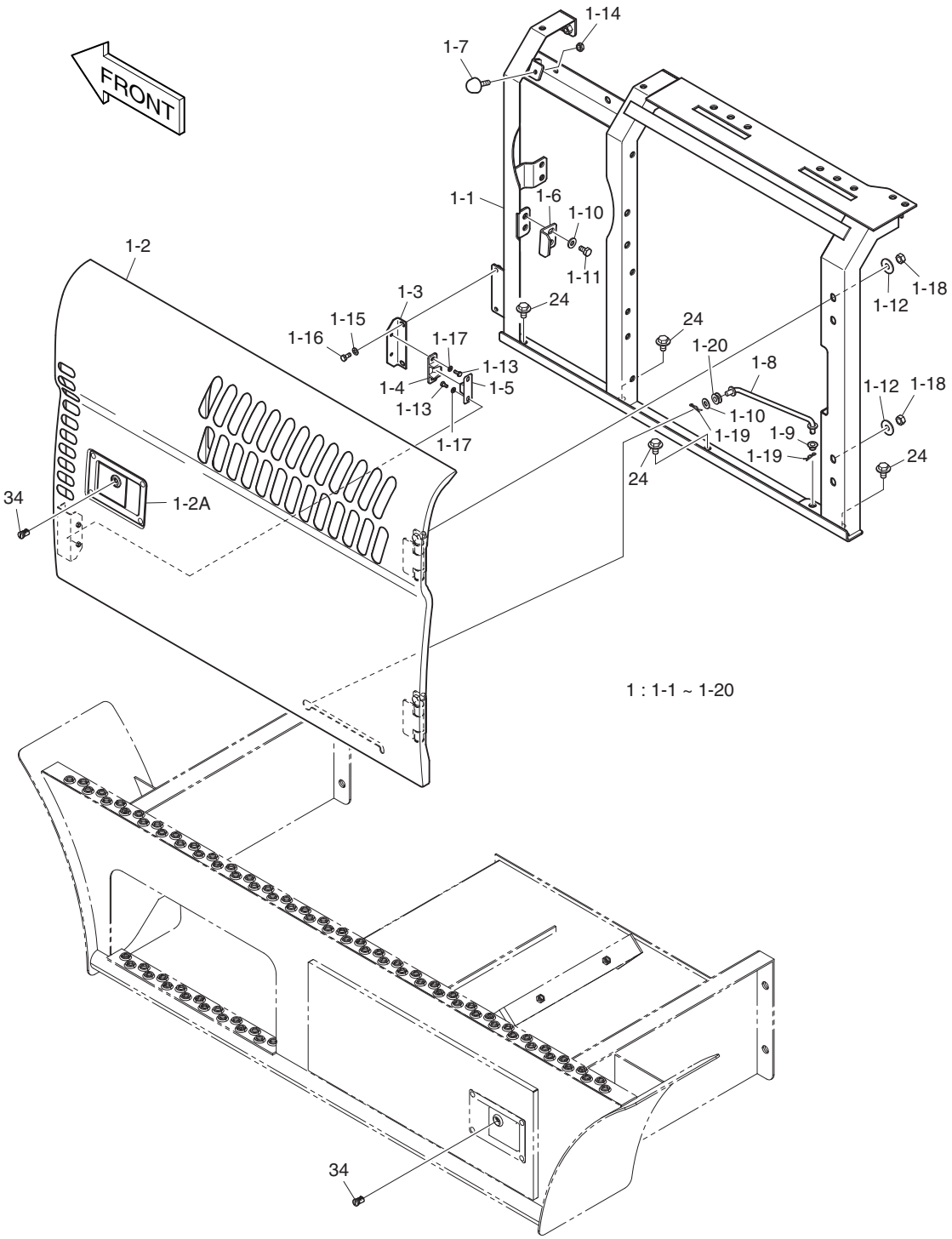

DATE	JUN. 30, 2008
REV. NO.	EXB08-06

Fig. 1710 SIDE DOOR - L.H. ENSEMBLE DE PORTE

Serial No. ;

Key No.	Part No.	Description	Description	Q'ty	S.C	Serial No.	ICA	Replaceable part	
								Part No.	Q'ty
1710--	**K1013490H**	**COVER ASS'Y**	COUVERCLE	-	D				
1	K1010117A	SIDE DOOR ASS'Y(L.H)	ENSEMBLE LATERALE DE	1		5001–5041	I	K1010117C	1
	K1010117C	**SIDE DOOR ASS'Y(L.H)**	ENSEMBLE LATERALE DE	1		**5042–**			
1-1	K1009975A	. SUPPORT	. LAMPE	1					
1-2	621-02743E	. DOOR;SIDE	. PORTE	1		5001–5041	I	621-02743H	1
	621-02743H	**. DOOR;SIDE**	. PORTE	1		**5042–**			
1-2A	125-00035A	.. LOCK	.. SERRURE	1					
1-3	2116-1522	. PLATE	. PLAQUE	1					
1-4	2161-9052	. STOPPER;PLATE	. ARRET	1					
1-5	2161-9053	. STOPPER;RUBBER	. ARRET	1					
1-6	621-02726A	. PLATE;LOCK	. PLAQUE	1					
1-7	K1001260A	. RUBBER;STOPPER	. CAOUTCHOUC	1					
1-8	623-00074B	. STAY	. SEJOUR	1					
1-9	K1000602	. BUSHING	. DOUILLE	1					
1-10	2114-1058D45	. WASHER	. RONDELLE	3					
1-11	S0511866	. BOLT	. BOULON	2					
1-12	2114-1058D30	. WASHER	. RONDELLE	4					
1-13	S0504553	. BOLT	. BOULON	4					
1-14	S4012633	. NUT	. ECROU	1					
1-15	S5010513	. WASHER	. RONDELLE	2					
1-16	S0508766	. BOLT	. BOULON	2					
1-17	S5010313	. WASHER	. RONDELLE	4					
1-18	S4012733	. NUT	. ECROU	4					
1-19	2705-9002	. PIN;LOCK	. GOUPILLE	2					
1-20	K1008335	. BUSHING	. DOUILLE	1					
24	DS0025015	BOLT;SET	BOULON	4					
34	K1004630	KEY;CYLINDER	CLE	2					

DATE	JUN. 30, 2007
REV.NO.	EXB07-06

Fig. 1720 SIDE DOOR - R.H.
ENSEMBLE DE PORTE

Serial No. ;

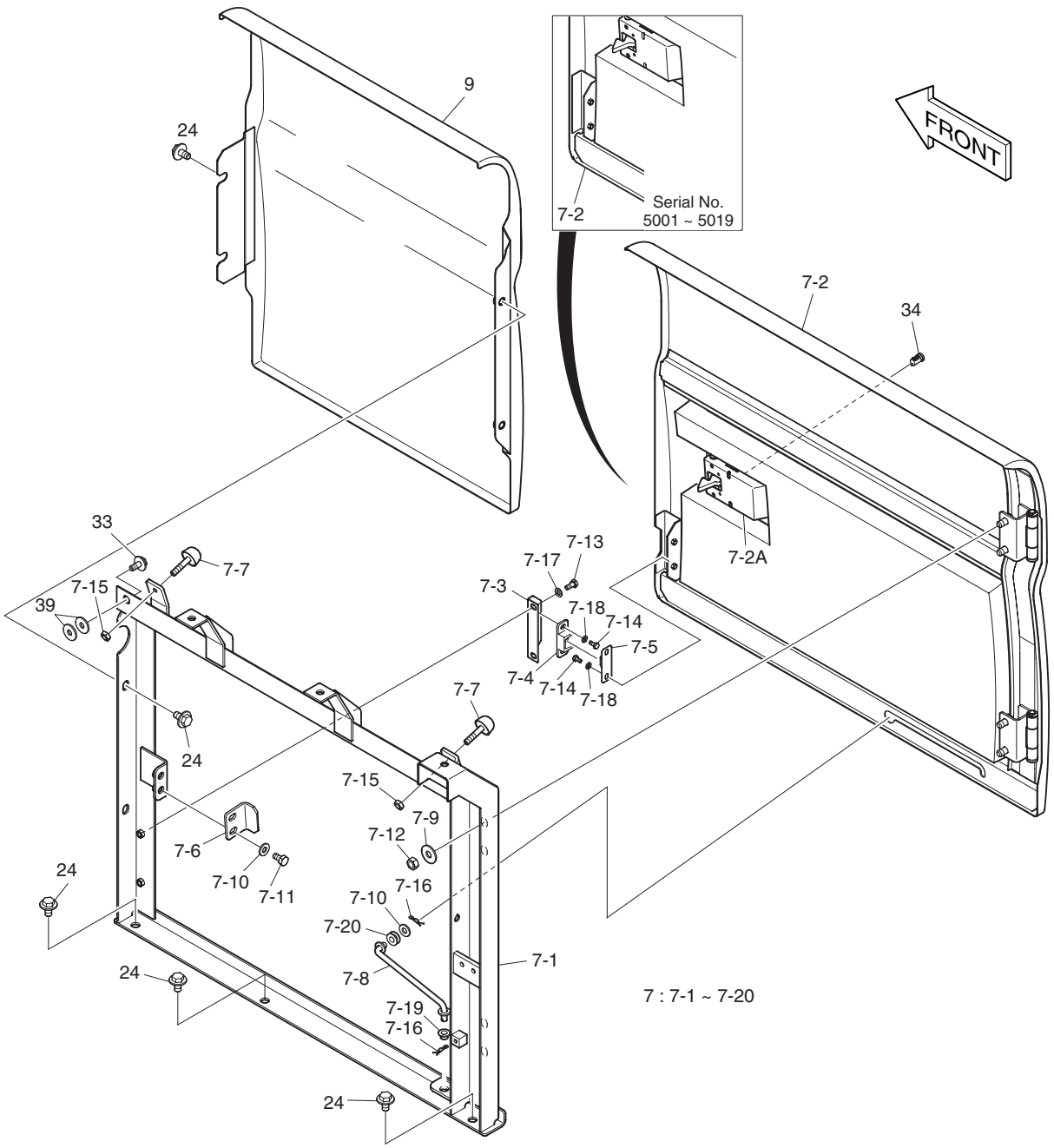

DATE	JUN. 30, 2007
REV. NO.	EXB07-06

Fig. 1720 SIDE DOOR - R.H. ENSEMBLE DE PORTE

Serial No. ;

Key No.	Part No.	Description	Description	Q'ty	S.C	Serial No.	ICA	Replaceable part	
								Part No.	Q'ty
1720--	**K1013490E**	**COVER ASS'Y**	COUVERCLE	-	D				
7	621-02751H	SIDE DOOR ASS'Y(R.H)	ENSEMBLE LATERALE DE	1		5001–5019	I	621-02751K	1
	621-02751K	**SIDE DOOR ASS'Y(R.H)**	ENSEMBLE LATERALE DE	1		**5020–**			
7-1	195-02678H	. SUPPORT	. LAMPE	1					
7-2	621-02750E	. DOOR;SIDE(R.H)	. PORTE	1		5001–5019	I	621-02750H	1
	621-02750H	**. DOOR;SIDE(R.H)**	. PORTE	1		**5020–**			
7-2A	125-00034A	.. LOCK	.. SERRURE	1					
7-3	2116-1522	. PLATE	. PLAQUE	1					
7-4	2161-9052	. STOPPER;PLATE	. ARRET	1					
7-5	2161-9053	. STOPPER;RUBBER	. ARRET	1					
7-6	621-02726A	. PLATE;LOCK	. PLAQUE	1					
7-7	K1001260A	. RUBBER;STOPPER	. CAOUTCHOUC	2					
7-8	623-00075B	. STAY	. SEJOUR	1					
7-9	2114-1058D30	. WASHER	. RONDELLE	4					
7-10	2114-1058D45	. WASHER	. RONDELLE	3					
7-11	S0511866	. BOLT	. BOULON	2					
7-12	S4012733	. NUT	. ECROU	4					
7-13	S0508766	. BOLT	. BOULON	2					
7-14	S0504553	. BOLT	. BOULON	4					
7-15	S4012633	. NUT	. ECROU	2					
7-16	2705-9002	. PIN;LOCK	. GOUPILLE	2					
7-17	S5010513	. WASHER	. RONDELLE	2					
7-18	S5010313	. WASHER	. RONDELLE	4					
7-19	K1000602	. BUSHING	. DOUILLE	1					
7-20	K1008335	. BUSHING	. DOUILLE	1					
9	621-02748B	COVER;TANK	COUVERCLE	1					
24	DS0025015	BOLT;SET	BOULON	7					
33	DS0025023	BOLT;SET	BOULON	1					
34	K1004630	KEY;CYLINDER	CLE	1					
39	2114-1058D10	WASHER;PLAIN	RONDELLE	2					

DATE	JUN. 30, 2007
REV.NO.	EXB07-06

Fig. 1730 BATTERY COVER COUVERCLE

Serial No. ;

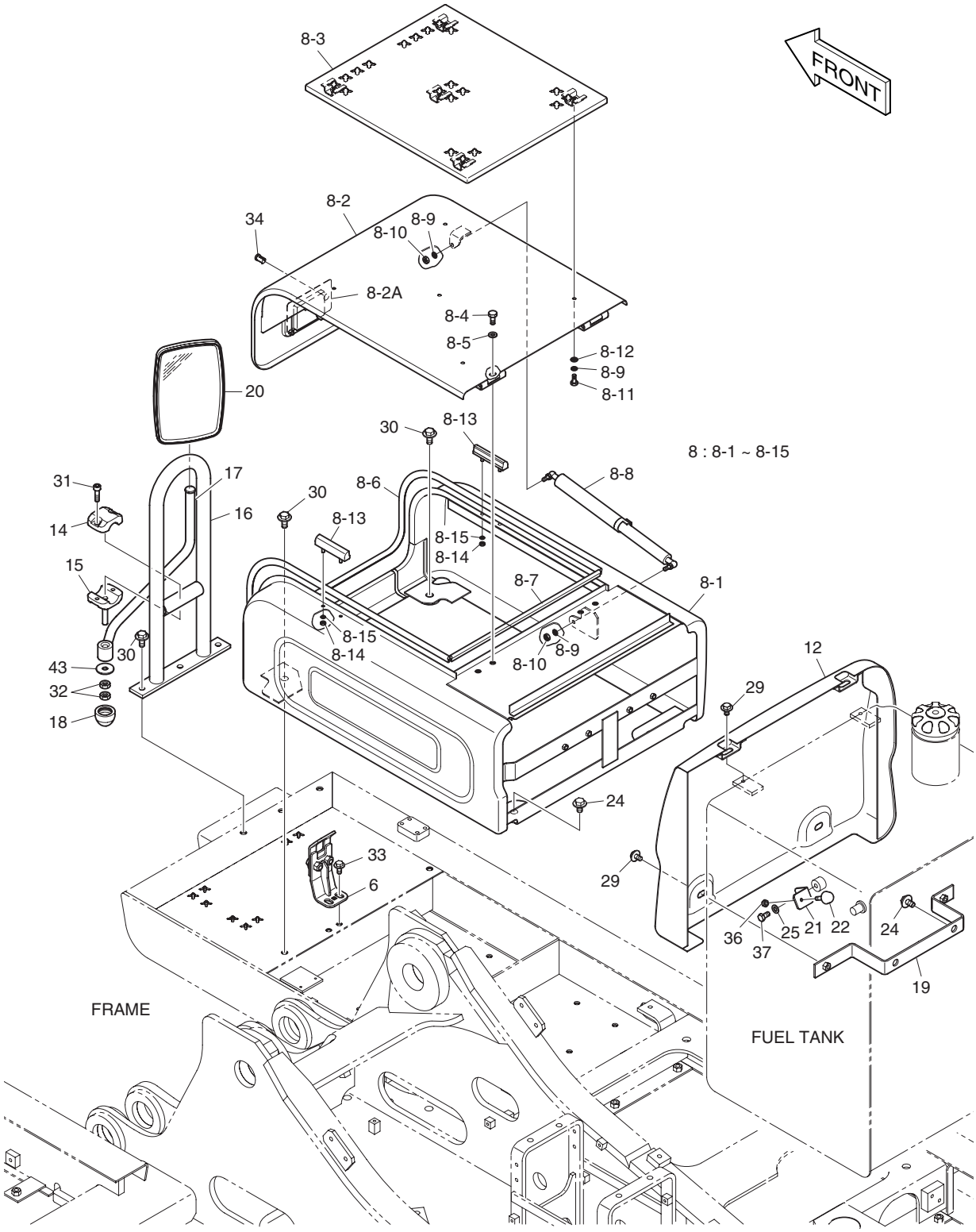

DATE	JUN. 30, 2007
REV. NO.	EXB07-06

Fig. 1730 BATTERY COVER COUVERCLE

Serial No. ;

Key No.	Part No.	Description	Description	Q'ty	S.C	Serial No.	ICA	Replaceable part	
								Part No.	Q'ty
1730--	**K1013490E**	**COVER ASS'Y**	ENSEMBLE CAPOT	-	D				
6	K1004417B	BRACKET	SUPPORT	1					
8	621-02951C	COVER;BATTERY	COUVERCLE	1		5001–5019	I	621-02951E	1
	621-02951E	**COVER;BATTERY**	COUVERCLE	1		**5020–**			
8-1	621-02950B	. COVER;BATTERY	. COUVERCLE	1					
8-2	621-02952B	. COVER	. COUVERCLE	1					
8-2A	125-00071A	.. LATCH;FRONT	.. LATCH;FRONT	1					
8-3	621-02954A	.. COVER	.. COUVERCLE	1					
8-4	S0512066	. BOLT	. BOULON A 6 PANS	4					
8-5	S5010613	. WASHER;PLAIN	. RONDELLE	4					
8-6	-	. BUSHING;RUBBER	. DOUILLE	1					
8-7	-	. BUSHING;RUBBER	. DOUILLE	1					
8-8	K1006977	. CYLINDER;GAS	. CYLINDRE	1		5001–5019	I	K1040636	1
	K1040636	**. CYLINDER;GAS**	. CYLINDRE	1		**5020–**			
8-9	S5102503	. WASHER;SPRING	. RONDELLE ELASTIQUE	7					
8-10	S4012533	. NUT	. ECROU	2					
8-11	S0508866	. BOLT	. BOULON A 6 PANS	5					
8-12	S5010513	. WASHER	. RONDELLE	5					
8-13	K1005305	. STOPPER;RUBBER	. TAQUET D'ARRET	2					
8-14	S4012333	. NUT	. ECROU	4					
8-15	S5102303	. WASHER;SPRING	. RONDELLE ELASTIQUE	4					
12	621-02940A	COVER;TANK	COUVERCLE	1					
14	124-00306A	CLAMP	COLLIER	1					
15	124-00307B	CLAMP;MIRROR STAY	COLLIER	1					
16	145-00110A	STAY	ENTRETOISE	1					
17	145-00106B	STAY;DOOR INNER	SEJOUR INTERIEUR DE	1					
18	161-00580	CAP;RUBBER	CHAPEAU DE	1					
19	195-02813A	BRACKET	SUPPORT	1					
20	903-00068	MIRROR;SIDE	RETROVISEUR	1		5001–5015	I	K1040606	1
	K1040606	**MIRROR;SIDE**	RETROVISEUR	1		**5016–**			
21	K1012283	PLATE	PLAQUE	1					
22	K1001260A	STOPPER;RUBBER	ARRET	1					
24	DS0025015	BOLT;SET	BOULON A 6 PANS	4					
25	S5010713	WASHER	CALE	1					
29	DS0025014	BOLT;SET	BOULON A 6 PANS	4					
30	DS0025025	BOLT;SET	BOULON A 6 PANS	5					
31	S2212366	BOLT;SOCKET	BOULON A 6 PANS CREUX	2					
32	S4012733	NUT	ECROU	2					

DATE	JUN. 30, 2007
REV.NO.	EXB07-06

Fig. 1730 BATTERY COVER COUVERCLE

Serial No. ;

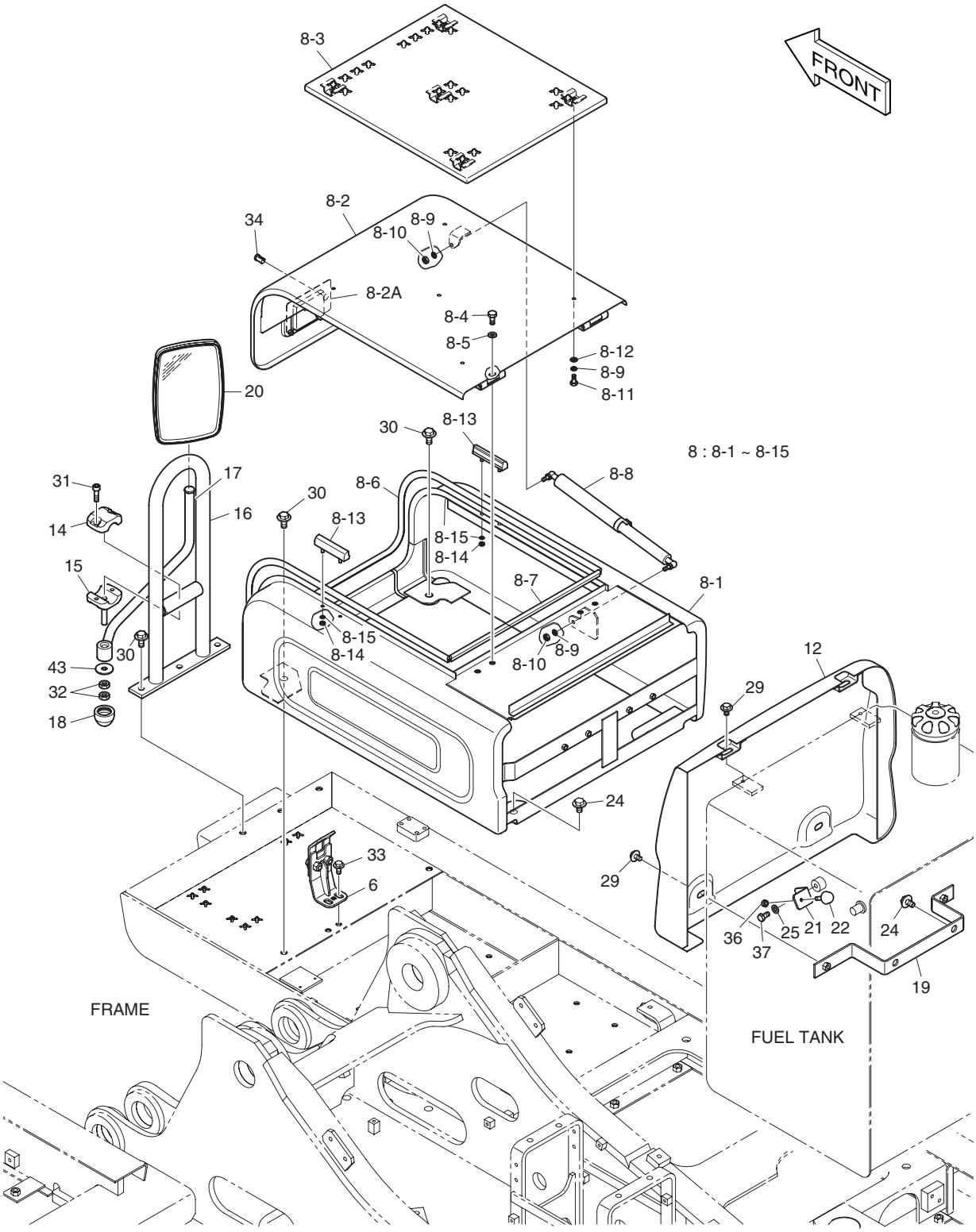

DATE	JUN. 30, 2007
REV. NO.	EXB07-06

Fig. 1730 BATTERY COVER COUVERCLE

Serial No. ;

Key No.	Part No.	Description	Description	Q'ty	S.C	Serial No.	ICA	Replaceable part	
								Part No.	Q'ty
1730-33	DS0025023	BOLT;SET	BOULON A 6 PANS	2					
34	K1004630	CYLINDER;KEY	CLE	1					
36	S4012633	NUT	ECROU	1					
37	S0515066	BOLT	BOULON A 6 PANS	1					
43	2114-1058D68	WASHER	CALE	1					

DATE	DEC. 26, 2006
1st EDITION	

Fig. 1740 ENGINE COVER
COUVERTURE DE MOTEUR

Serial No. ;

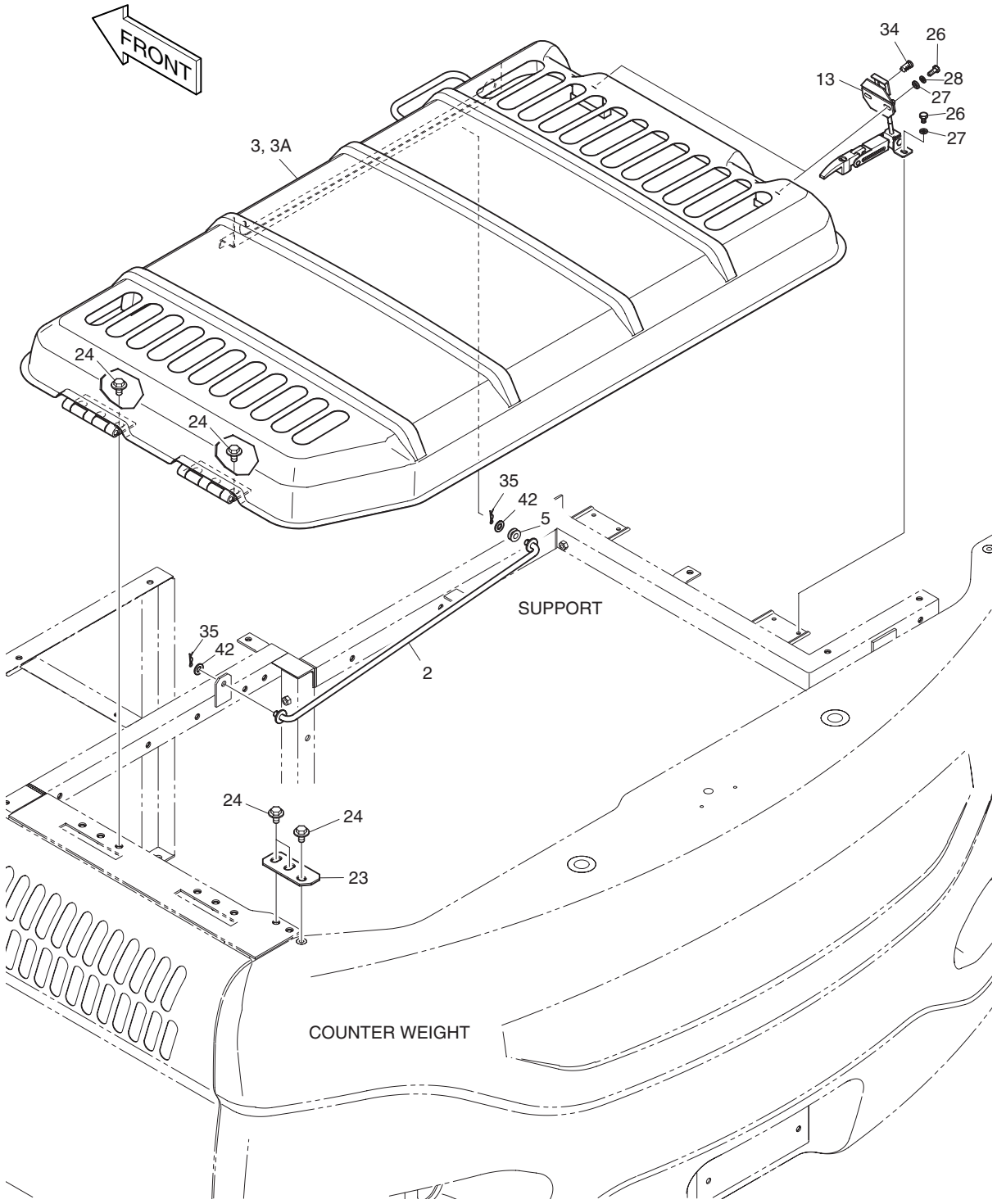

DATE	DEC. 26, 2006
1st EDITION	

Fig. 1740 ENGINE COVER
COUVERTURE DE MOTEUR

Serial No. ;

Key No.	Part No.	Description	Description	Q'ty	S.C	Serial No.	ICA	Replaceable part	
								Part No.	Q'ty
1740--	K1013490A	COVER ASS'Y	COUVERCLE	-	D				
2	K1009751A	STAY	SEJOUR	1					
3	K1009750A	COVER;ENGINE	COUVERCLE	1					
3A	1.162-00001	. RUBBER;CUSHION	. CAOUTCHOUC	1					
5	K1013812	BUSHING	DOUILLE	1					
13	125-00075A	CATCH	CROCHET	2					
23	K1004300	SUPPORT	LAMPE	1					
24	DS0025015	BOLT;SET	BOULON	9					
26	S0508866	BOLT	BOULON	8					
27	S5010513	WASHER	RONDELLE	8					
28	S5102503	WASHER;SPRING	RONDELLE ELASTIQUE	4					
34	K1004630	KEY;CYLINDER	CLE	2					
35	2705-9002	PIN;LOCK	GOUPILLE	2					
42	2114-1058D33	WASHER	RONDELLE	2					

DATE	JUN. 30, 2007
REV.NO.	EXB07-06

Fig. 1750 COVER
COUVERCLE

Serial No. ;

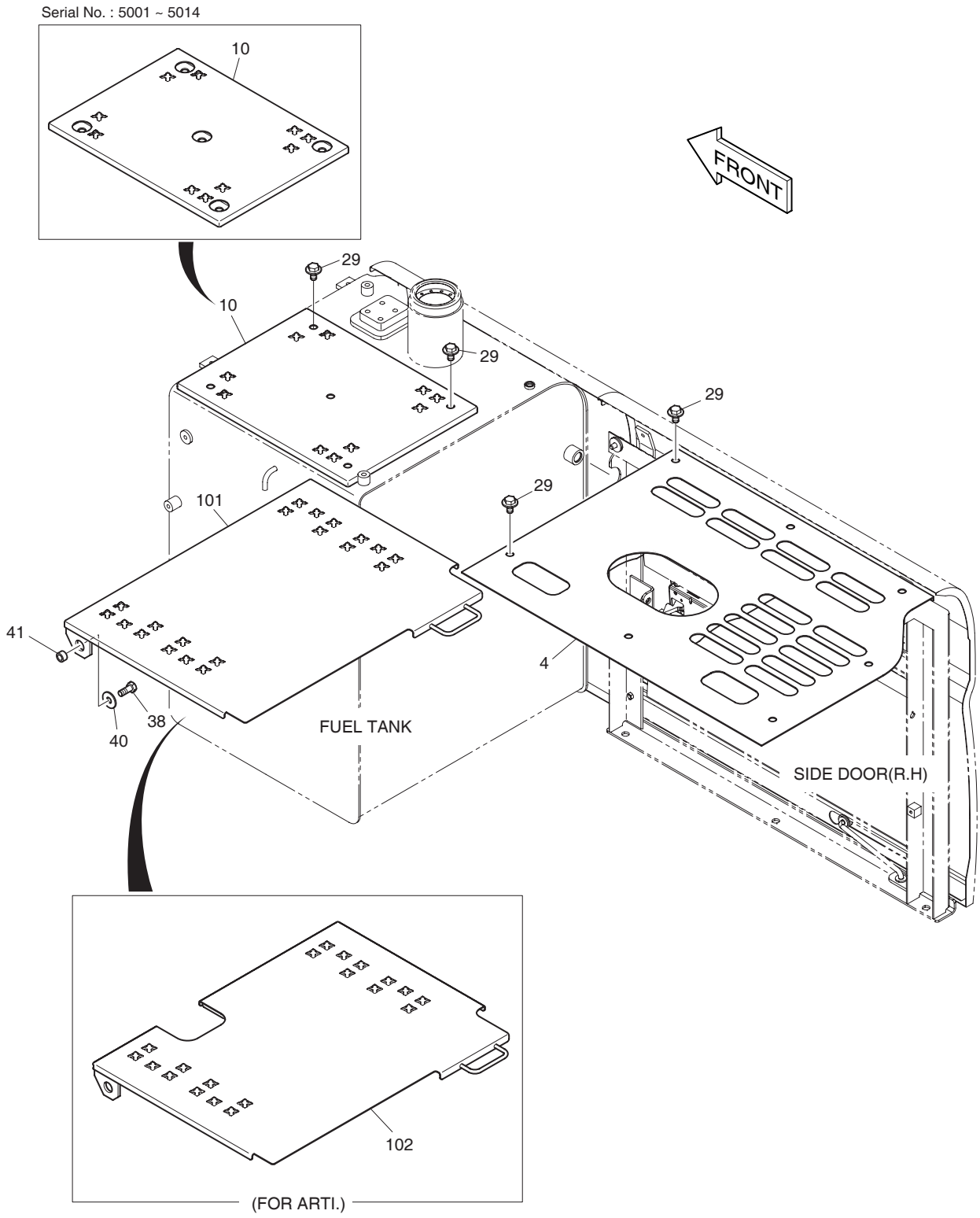

DATE	JUN. 30, 2007
REV. NO.	EXB07-06

Fig. 1750 COVER COUVERCLE

Serial No. ;

Key No.	Part No.	Description	Description	Q'ty	S.C	Serial No.	ICA	Replaceable part	
								Part No.	Q'ty
1750--	**K1013490C**	**COVER ASS'Y**	COUVERCLE	-	D				
4	K1009957A	COVER	COUVERCLE	1					
10	621-02797A	COVER	COUVERCLE	1		5001–5014	I	621-02797B	1
	621-02797B	**COVER**	COUVERCLE	1		**5015–**			
29	DS0025014	BOLT;SET	BOULON	12					
38	S0515266	BOLT	BOULON	1					
40	2114-1058D30	WASHER	RONDELLE	1					
41	2114-1183D13	COLLAR	COLLIER	1					
101	621-02796C	COVER	COUVERCLE	1					
102	K1015410	COVER(FOR ARTI.)	COUVERCLE	1					

DATE	JUN. 30, 2008
REV.NO.	EXB08-06

Fig. 1760 HANDRAIL BALUSTRADE

Serial No. ;

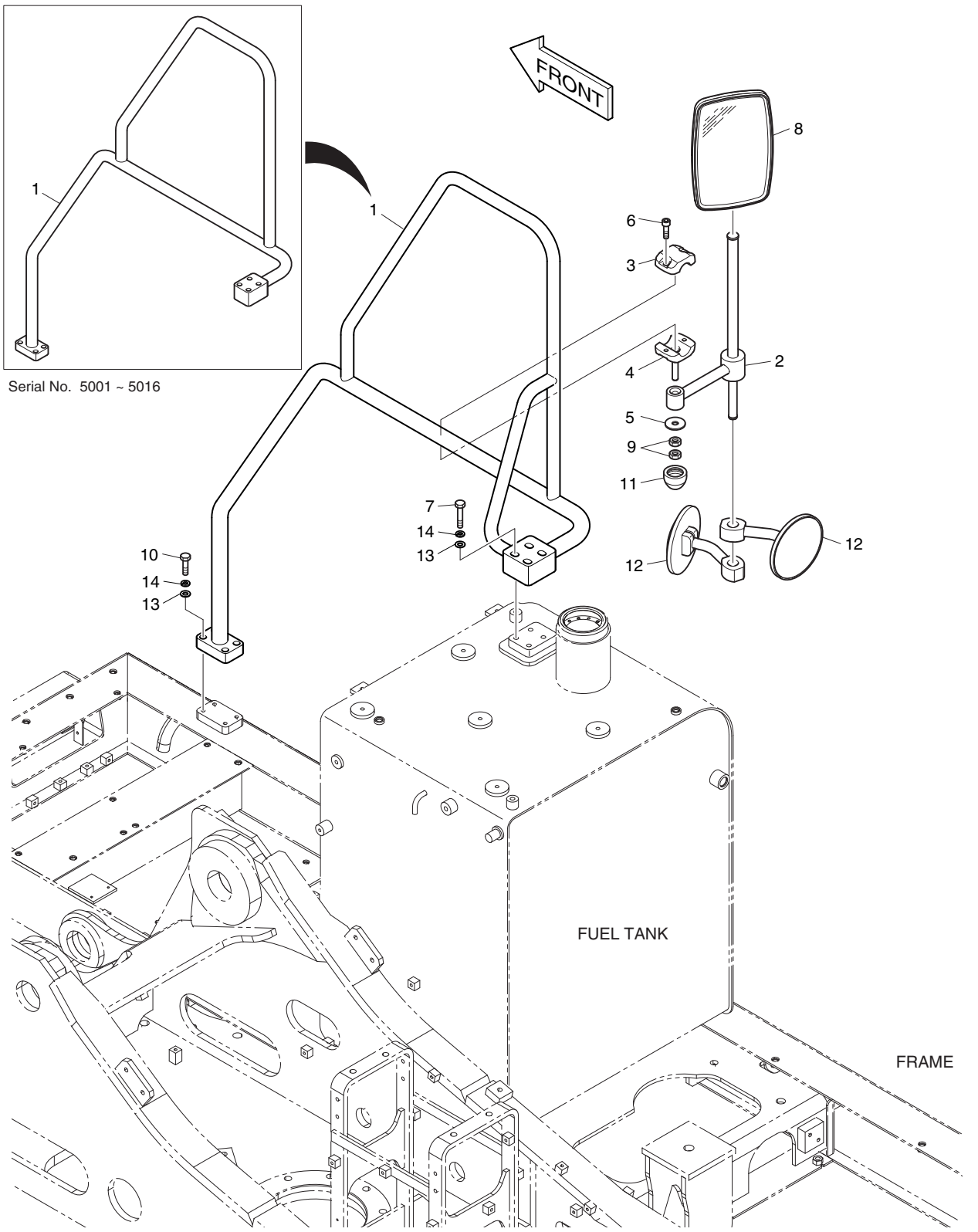

DATE	JUN. 30, 2008
REV. NO.	EXB08-06

Fig. 1760 HANDRAIL BALUSTRADE

Serial No. ;

Key No.	Part No.	Description	Description	Q'ty	S.C	Serial No.	ICA	Replaceable part	
								Part No.	Q'ty
1760--	621-03045G	HANDRAIL ASS'Y	BALUSTRADE	-	D				
1	K1012004A	HANDRAIL	BALUSTRADE	1		5001–5106	I	K1042758A	1
	K1042758A	**HANDRAIL**	BALUSTRADE	1		**5107–**			
2	145-00105B	STAY;MIRROR	ENTRETOISE	1					
3	124-00306A	CLAMP	COLLIER	1					
4	124-00307B	CLAMP;MIRROR STAY	COLLIER	1					
5	2114-1058D68	WASHER	CALE	1					
6	S2212366	BOLT;SOCKET	BOULON	2					
7	S0516066	BOLT	BOULON A 6 PANS	4					
8	903-00068	MIRROR;SIDE	RETROVISEUR	1		5001–5015	I	K1040606	1
	K1040606	MIRROR;SIDE	RETROVISEUR	1		5016–			
9	S4012733	NUT	ECROU 6 PANS M8	2					
10	S0515566	BOLT	BOULON A 6 PANS	4					
11	161-00580	CAP;RUBBER	CHAPEAU	1					
12	2903-6005	MIRROR;UNDER	RETROVISEUR	2					
13	S5010713	WASHER	CALE	8					
14	S5102703	WASHER;SPRING	RONDELLE ELASTIQUE	8					

DATE	DEC. 26, 2006
1st EDITION	

Fig. 1770 BAFFLE ASS'Y(1) ENSEMBLE DE CLOISON

Serial No. ;

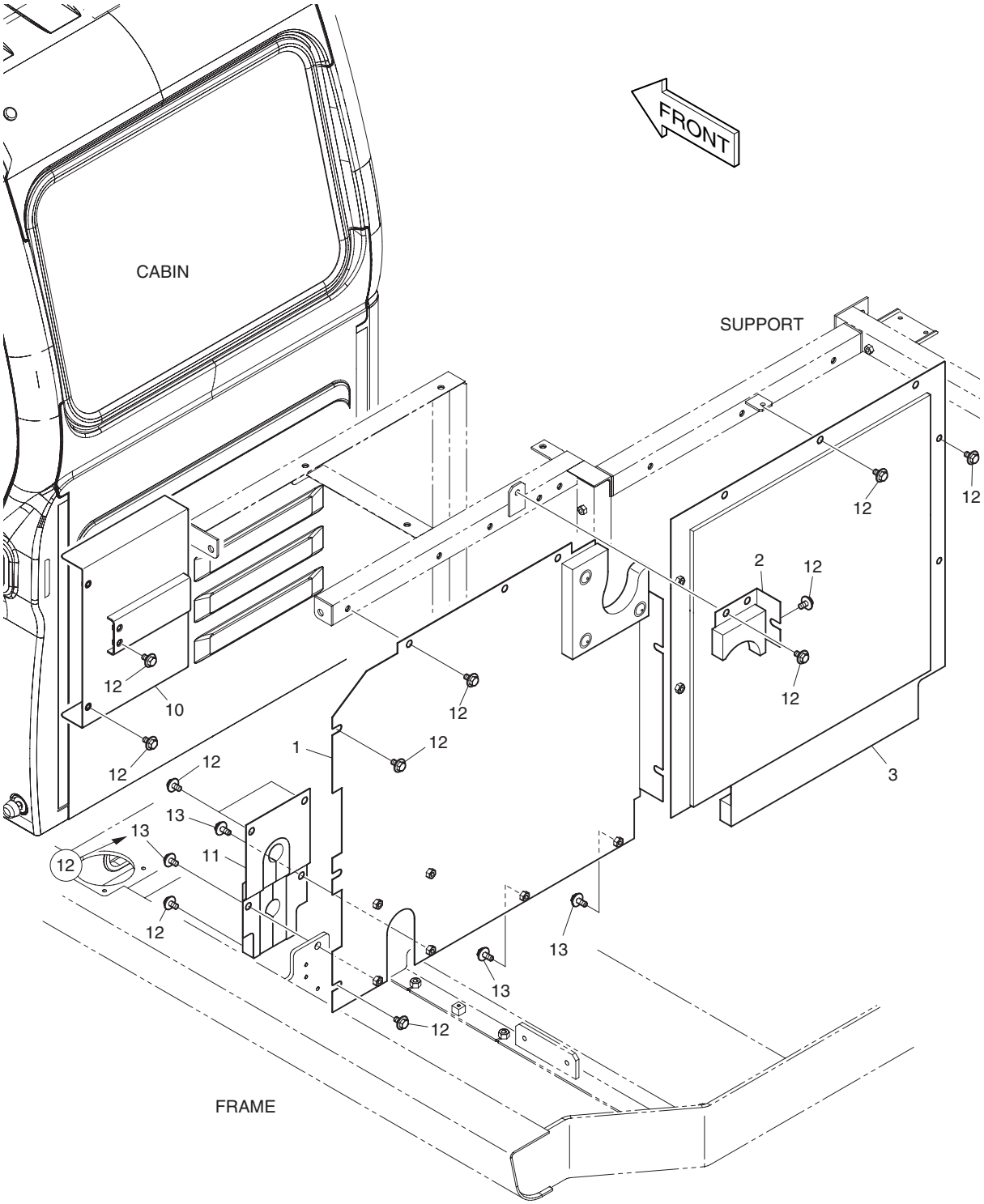

DATE	DEC. 26, 2006
1st EDITION	

Fig. 1770 BAFFLE ASS'Y(1)
ENSEMBLE DE CLOISON

Serial No. ;

Key No.	Part No.	Description	Description	Q'ty	S.C	Serial No.	ICA	Replaceable part	
								Part No.	Q'ty
1770--	K1008908A	BAFFLE ASS'Y	CLOISON	-	D				
1	K1009833B	COVER;BAFFLE	COUVERCLE	1					
2	621-02757A	COVER;BAFFLE	COUVERCLE	1					
3	K1013613	COVER;BAFFLE	COUVERCLE	1					
10	621-02981E	BOX;AIRCON DUCT	BOITE DE CONDUIT	1					
11	K1004281B	BAFFLE	CLOISON	1					
12	DS0025014	BOLT;SET	BOULON	22					
13	DS0025023	BOLT;SET	BOULON	4					

DATE	DEC. 26, 2006
1st EDITION	

Fig. 1780 BAFFLE ASS'Y(2) ENSEMBLE DE CLOISON

Serial No. ;

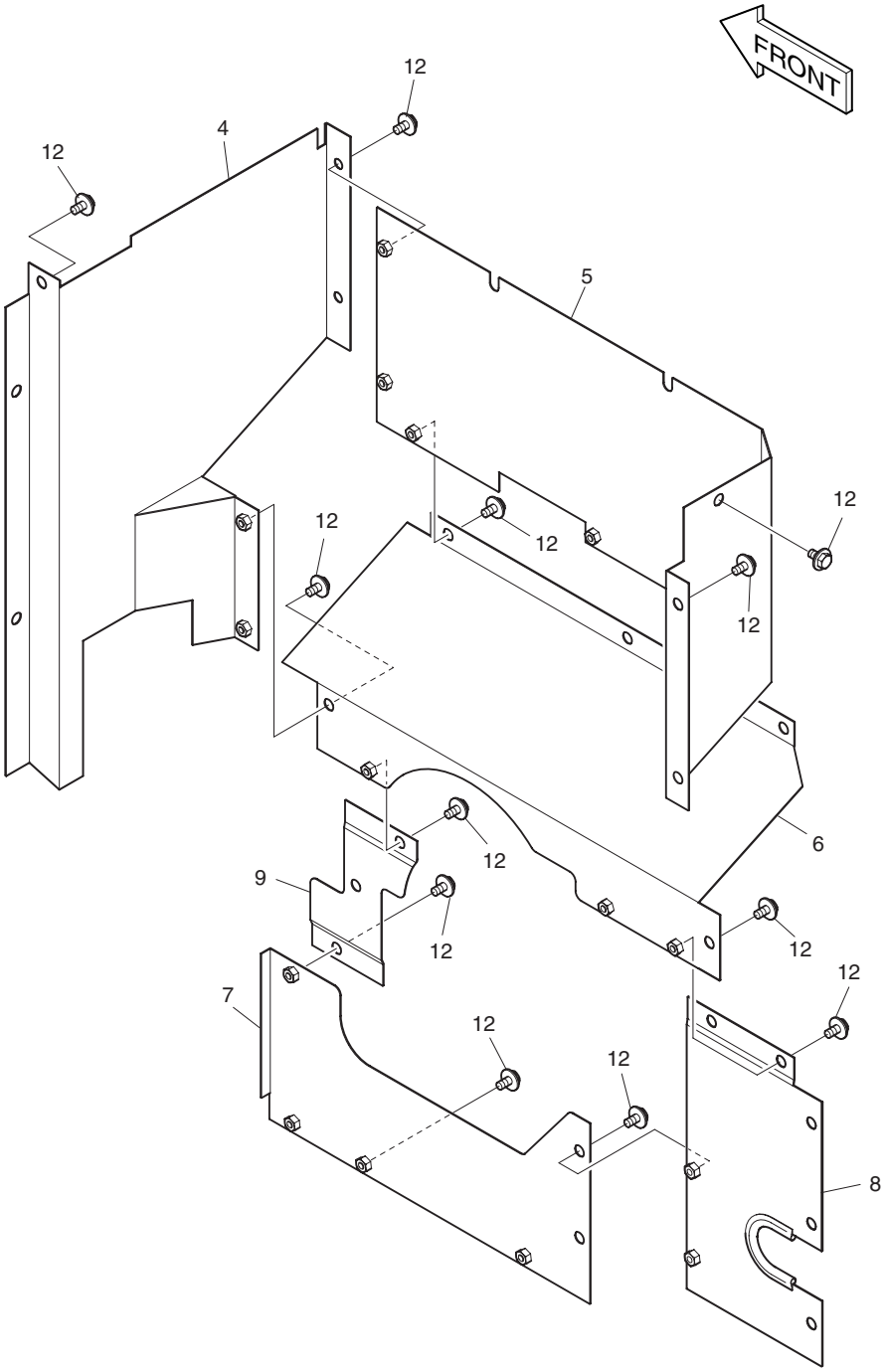

DATE	DEC. 26, 2006
1st EDITION	

Fig. 1780 BAFFLE ASS'Y(2)
ENSEMBLE DE CLOISON

Serial No. ;

Key No.	Part No.	Description	Description	Q'ty	S.C	Serial No.	ICA	Replaceable part	
								Part No.	Q'ty
1780--	K1008908A	BAFFLE ASS'Y	CLOISON	-	D				
4	K1008907B	COVER;BAFFLE	COUVERCLE	1					
5	621-02760B	COVER;BAFFLE	COUVERCLE	1					
6	621-03037C	COVER;BAFFLE	COUVERCLE	1					
7	621-03038E	COVER;BAFFLE	COUVERCLE	1					
8	K1013619A	COVER;BAFFLE	COUVERCLE	1					
9	K1002348C	COVER;BAFFLE	COUVERCLE	1					
12	DS0025014	BOLT;SET	BOULON	28					

DATE	DEC. 26, 2006
1st EDITION	

Fig. 1790 FOAM ASS'Y
ENSEMBLE DE EPONGE

Serial No. ;

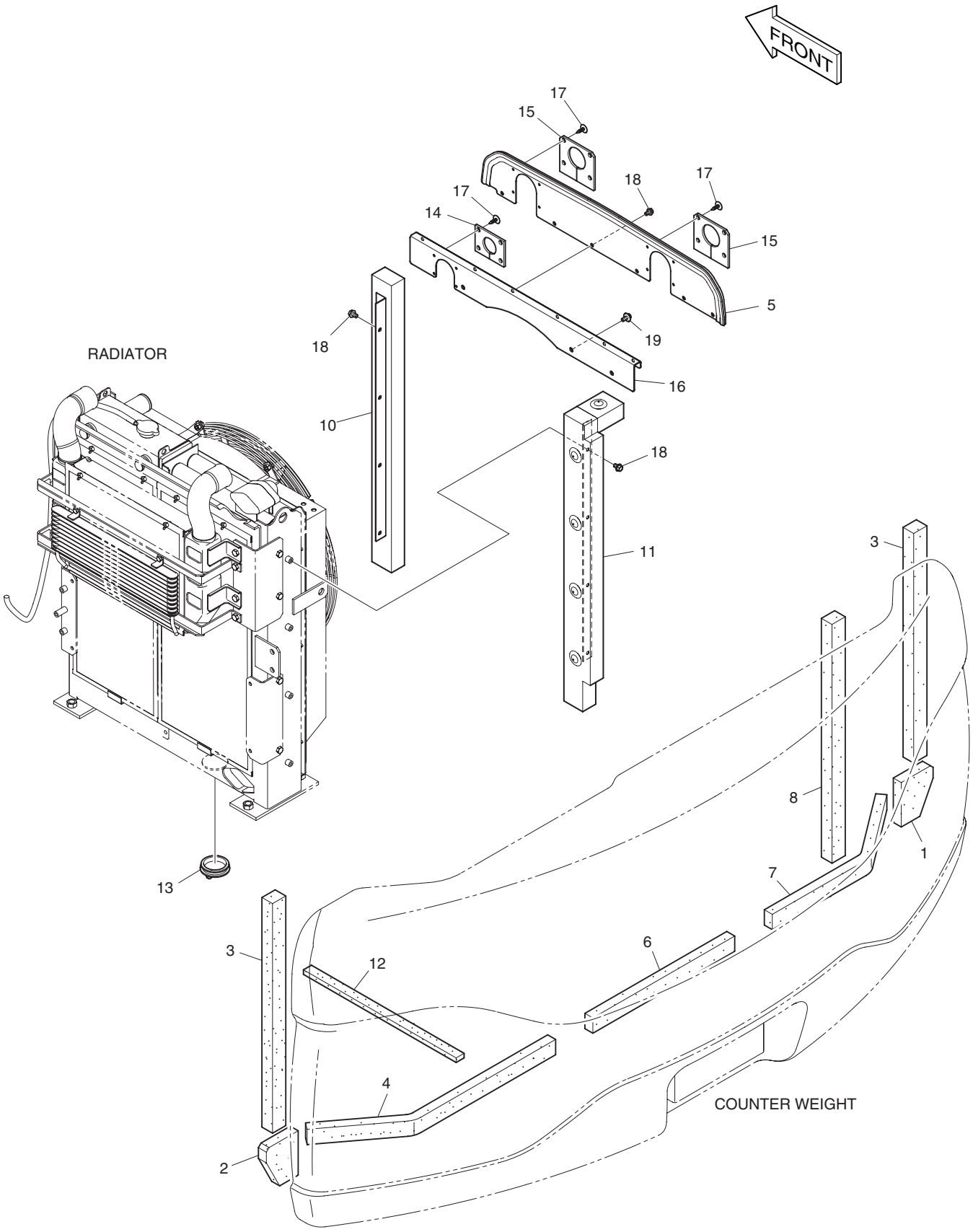

DATE	DEC. 26, 2006
1st EDITION	

Fig. 1790 FOAM ASS'Y
ENSEMBLE DE EPONGE

Serial No. ;

Key No.	Part No.	Description	Description	Q'ty	S.C	Serial No.	ICA	Replaceable part	
								Part No.	Q'ty
1790--	K1013237A	ACOUSTIC FOAM ASS'Y	ENSEMBLE DE EPONGE	-	D				
1	161-00601A	FOAM;POLYURETHANE	EPONGE	1					
2	161-00602A	FOAM;POLYURETHANE	EPONGE	1					
3	161-00603B	FOAM;POLYURETHANE	EPONGE	2					
4	161-00604B	FOAM;POLYURETHANE	EPONGE	1					
5	K1009624A	BAFFLE;RADIATOR	CLOISON DE RADIATEUR	1					
6	161-00606C	FOAM;POLYURETHANE	EPONGE	1					
7	161-00607B	FOAM;POLYURETHANE	EPONGE	1					
8	161-00608B	FOAM;POLYURETHANE	EPONGE	1					
10	K1009623A	FOAM;POLYURETHANE	EPONGE	1					
11	K1009622A	FOAM;POLYURETHANE	EPONGE	1					
12	K1009632	FOAM;POLYURETHANE	EPONGE	1					
13	K1007044	BUSHING	DOUILLE	1					
14	K1014972	STRIP;WEATHER	SURVIVEZ DE BANDE	1					
15	K1009626	STRIP;WEATHER	SURVIVEZ DE BANDE	2					
16	K1009625A	BAFFLE;RADIATOR	CLOISON DE RADIATEUR	1					
17	124-00070	CLIP;TREE	AGRAFE	12					
18	K1001029	BOLT	BOULON	14					
19	DS0025033	BOLT;SET	BOULON	3					

DATE	DEC. 26, 2006
1st EDITION	

Fig. 1800 UNDER COVER
COUVERCLE

Serial No. ;

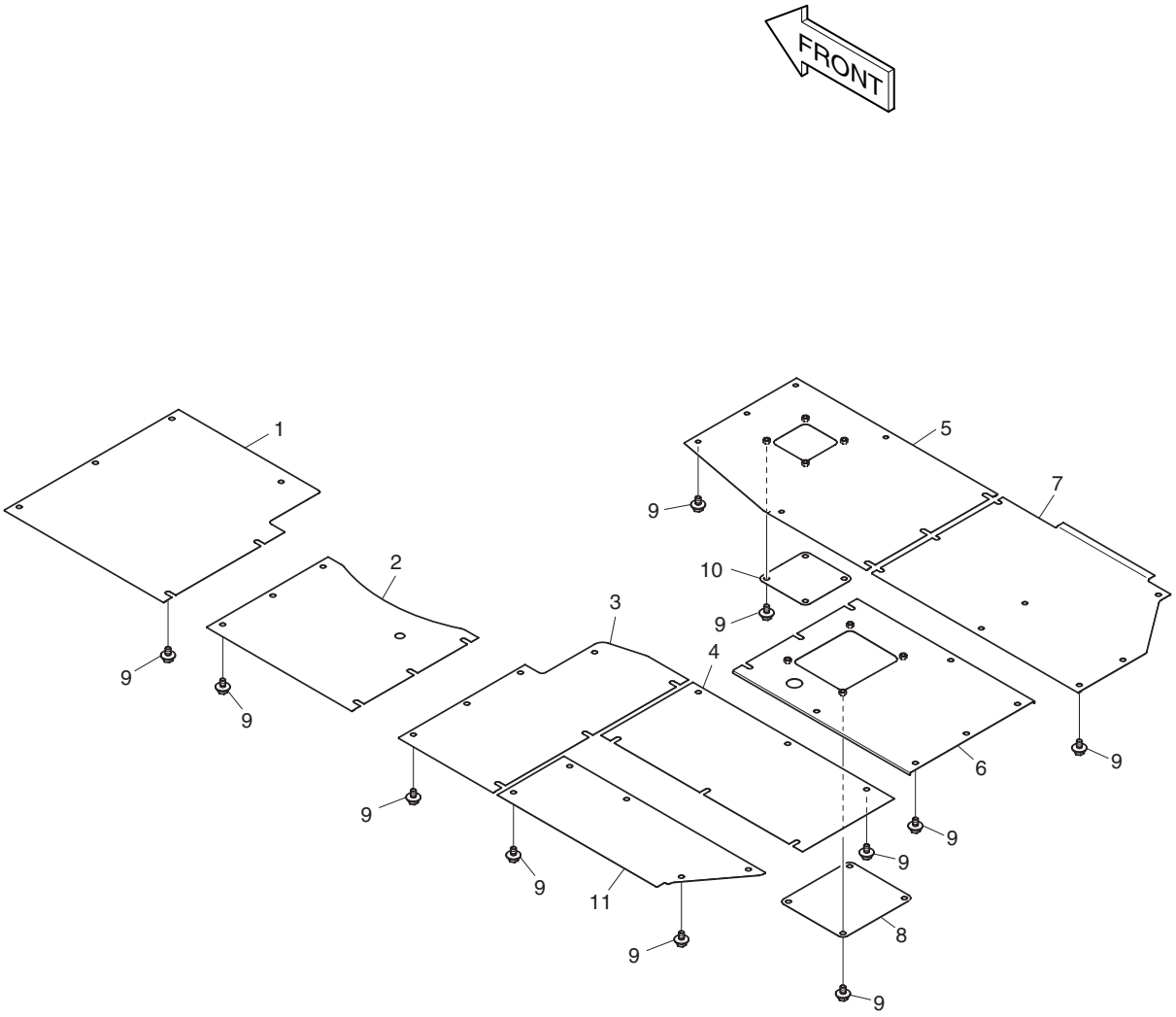

DATE	DEC. 26, 2006
1st EDITION	

Fig. 1800 UNDER COVER COUVERCLE

Serial No. ;

Key No.	Part No.	Description	Description	Q'ty	S.C	Serial No.	ICA	Replaceable part	
								Part No.	Q'ty
1800--	K1010147A	UNDER COVER ASS'Y	COUVERCLE	-	D				
1	621-02814C	COVER;UNDER	COUVERCLE	1					
2	621-02816B	COVER;UNDER	COUVERCLE	1					
3	621-02817B	COVER;UNDER	COUVERCLE	1					
4	K1010136A	COVER;UNDER	COUVERCLE	1					
5	621-02819C	COVER;UNDER	COUVERCLE	1					
6	K1010140A	COVER;UNDER	COUVERCLE	1					
7	621-02822C	COVER;UNDER	COUVERCLE	1					
8	K1010144	COVER;UNDER	COUVERCLE	1					
9	DS0025019	BOLT;SET	BOULON	63					
10	K1002944A	COVER;UNDER	COUVERCLE	1					
11	K1010138	COVER;UNDER	COUVERCLE	1					

DATE	JUN. 30, 2008
REV.NO.	EXB08-06

Fig. 1810 LUBRICATOR PIPING LUBRIFICATION

Serial No. ;

Serial No. 5001~5014

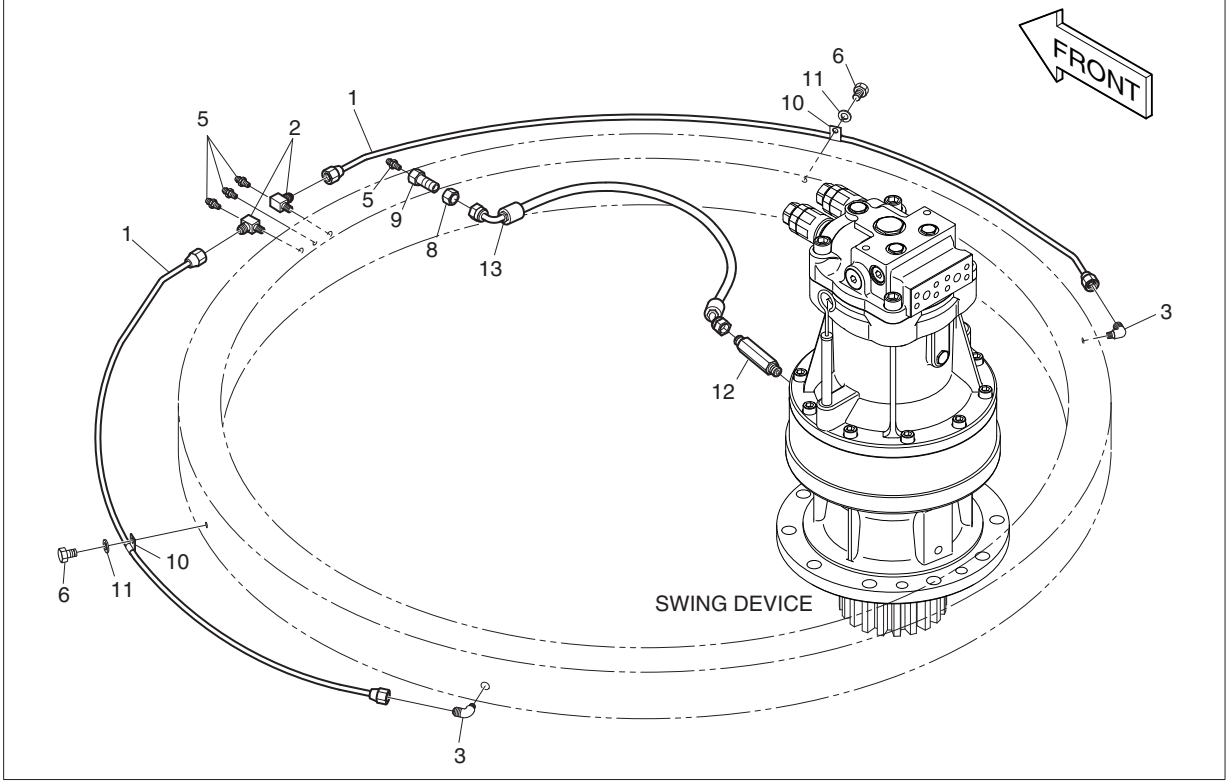

Serial No. 5015~

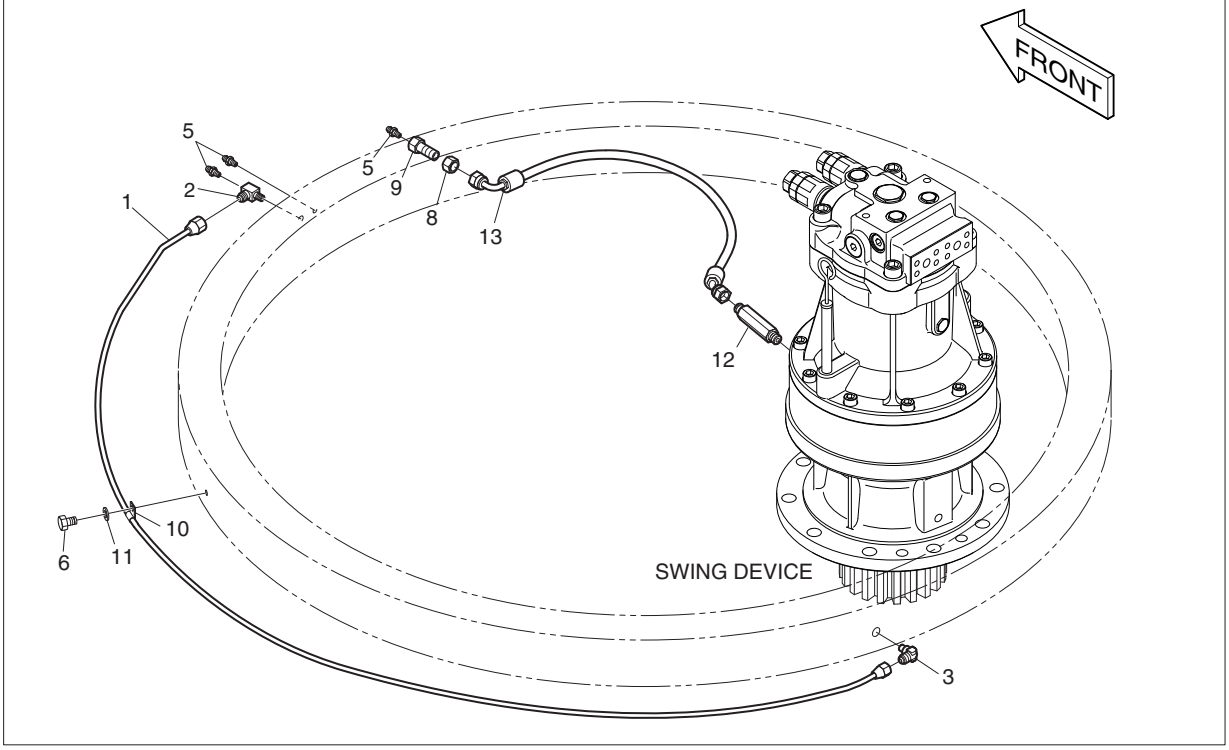

DATE	JUN. 30, 2008
REV. NO.	EXB08-06

Fig. 1810 LUBRICATOR PIPING LUBRIFICATION

Serial No. ;

Key No.	Part No.	Description	Description	Q'ty	S.C	Serial No.	ICA	Replaceable part	
								Part No.	Q'ty
1810--	**400-01489E**	**LUBRICATOR PIPING**	LUBRIFICATION	-	D				
1	2182-1820	PIPE	TUYAU	2		5001–5014			
	K1038805	PIPE	TUYAU	1		5015–5041	I	K1043189	1
	K1043189	**PIPE**	TUYAU	1		**5042**–			
2	2181-2527	TEE	TE	2		5001–5014			
	2181-2527	TEE	TE	1		5015–			
3	2181-1925	ELBOW	COUDE	2		5001–5014			
	2181-1925	ELBOW	COUDE	1		5015–			
5	S6710041	NIPPLE;GREASE	MAMELON	4		5001–5014			
	S6710041	NIPPLE;GREASE	MAMELON	3		5015–			
6	S0504366	BOLT	BOULON	2		5001–5014			
	S0504366	BOLT	BOULON	1		5015–			
8	121-00006	NUT	ECROU	1					
9	181-00103	REDUCER	REDUCEUR	1					
10	2124-1027D2	CLIP;PIPE	AGRAFE	2		5001–5014			
	2124-1027D2	CLIP;PIPE	AGRAFE	1		5015–			
11	S5102303	WASHER;SPRING	RONDELLE ELASTIQUE	2		5001–5014			
	S5102303	WASHER;SPRING	RONDELLE ELASTIQUE	1		5015–			
12	DS2214051	ADAPTER	ADAPTEUR	1					
13	DS2090027	HOSE	TUYAU FLEXIBLE	1					

DATE	JUN. 30, 2008
REV.NO.	EXB08-06

Fig. 1820 ELECTRIC BOX ASS'Y
EQUIPMENT ELECTRIQUE

Serial No. ;

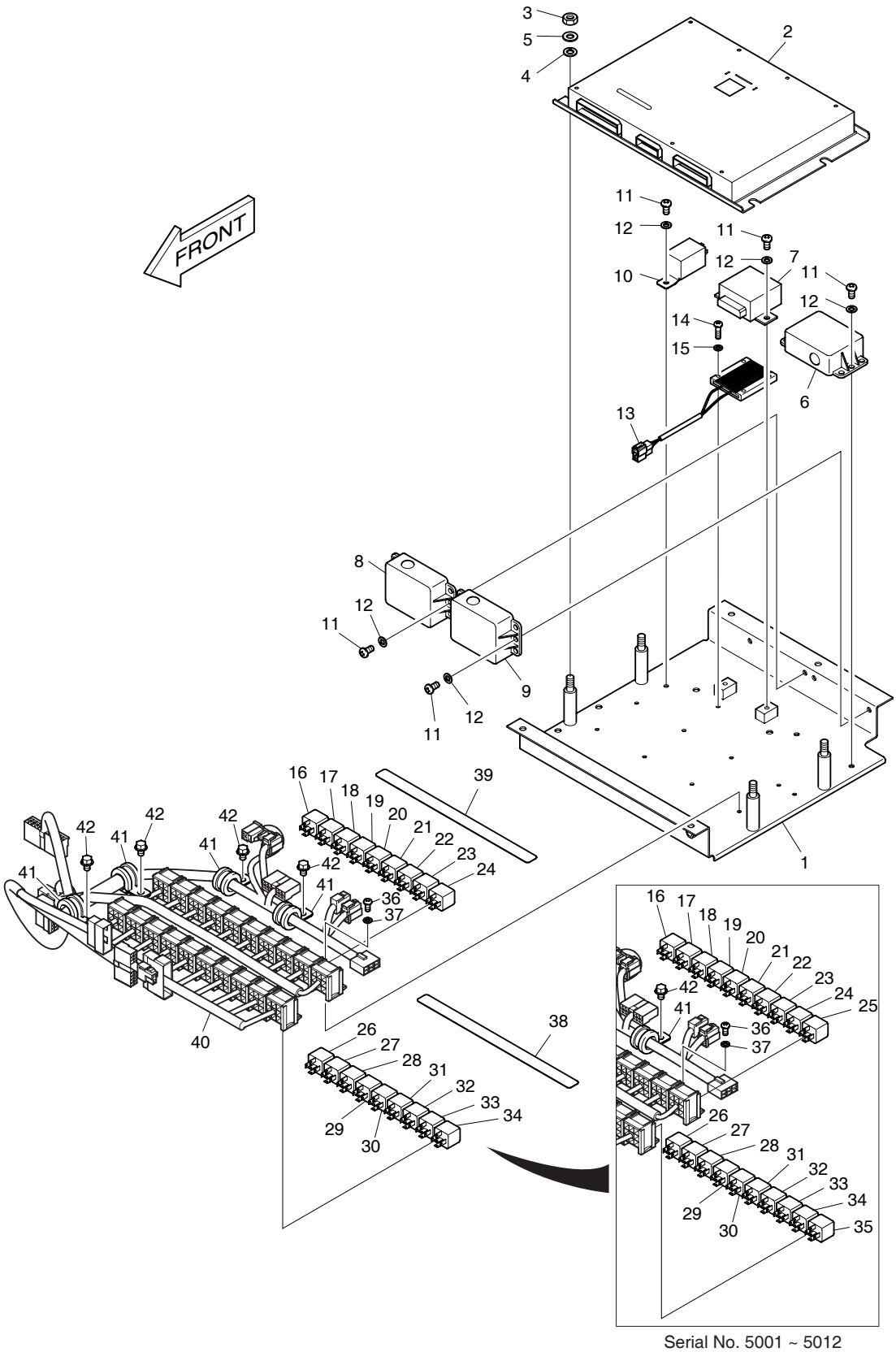

DATE	JUN. 30, 2008
REV. NO.	EXB08-06

Fig. 1820 ELECTRIC BOX ASS'Y EQUIPMENT ELECTRIQUE

Serial No. ;

Key No.	Part No.	Description	Description	Q'ty	S.C	Serial No.	ICA	Replaceable part	
								Part No.	Q'ty
1820--	K1009016A	ELECTRIC ASS'Y-ELEC BOX	ELECTRIQUE	1		5001–5010			
	K1009016B	ELECTRIC ASS'Y-ELEC BOX	ELECTRIQUE	1		5011–5012			
	K1009016C	ELECTRIC ASS'Y-ELEC BOX	ELECTRIQUE	1		5013–5019			
	K1009016E	**ELECTRIC ASS'Y-ELEC BOX**	ELECTRIQUE	1		**5020–**			
1	K1002280A	PLATE;ELECTRIC BOX	PLAQUE	1		5001–5012	I	K1002280B	1
	K1002280B	PLATE;ELECTRIC BOX	PLAQUE	1		5013–			
2	K1017933	CONTROLLER;E-EPOS	COMMANDE	1		5001–5010			
	K1017933A	CONTROLLER;E-EPOS	COMMANDE	1		5011–5019			
	K1017933B	**CONTROLLER;E-EPOS**	COMMANDE	1		**5020–**			
3	S4012633	NUT	ECROU 6 PANS M8	4					
4	S5102603	WASHER;SPRING	RONDELLE ELASTIQUE	4					
5	S5010613	WASHER;PLAIN	RONDELLE PLATE	4					
6	2543-9015	CONTROLLER;STARTER	COMMANDE	1					
7	543-00106	CONTROLLER;WIPER	COMMANDE	1					
8	2531-1003	CONVERTER;DC-DC	CONVERTEUR	1					
9	2531-1003	CONVERTER;DC-DC	CONVERTEUR	1					
10	2525-1011	UNIT;BLINKER	UNITE DE CLIGNOTANTS	1					
11	S3450953	SCREW	VIS	9					
12	S5102303	WASHER;SPRING	RONDELLE ELASTIQUE	9					
13	545-00011	RESISTOR;AUXILIARY	RESISTOR;AUXILIARY	1					
14	S3450863	SCREW	VIS	2					
15	S5100203	WASHER;SPRING	RONDELLE ELASTIQUE	2					
16	2544-9033	RELAY	RELAIS	1					
17	2544-9033	RELAY	RELAIS	1					
18	2544-9033	RELAY	RELAIS	1					
19	2544-9033	RELAY	RELAIS	1					
20	2544-9033	RELAY	RELAIS	1					
21	2544-9033	RELAY	RELAIS	1					
22	2544-9033	RELAY	RELAIS	1					
23	2544-9033	RELAY	RELAIS	1					
24	2544-9033	RELAY	RELAIS	1					
25	2544-9033	RELAY	RELAIS	1		5001–5012			
26	2544-9033	RELAY	RELAIS	1					
27	2544-9033	RELAY	RELAIS	1					
28	2544-9033	RELAY	RELAIS	1					
29	2544-9033	RELAY	RELAIS	1					
30	2544-9033	RELAY	RELAIS	1					
31	2544-9033	RELAY	RELAIS	1					

DATE	JUN. 30, 2008
REV.NO.	EXB08-06

Fig. 1820 ELECTRIC BOX ASS'Y
EQUIPMENT ELECTRIQUE

Serial No. ;

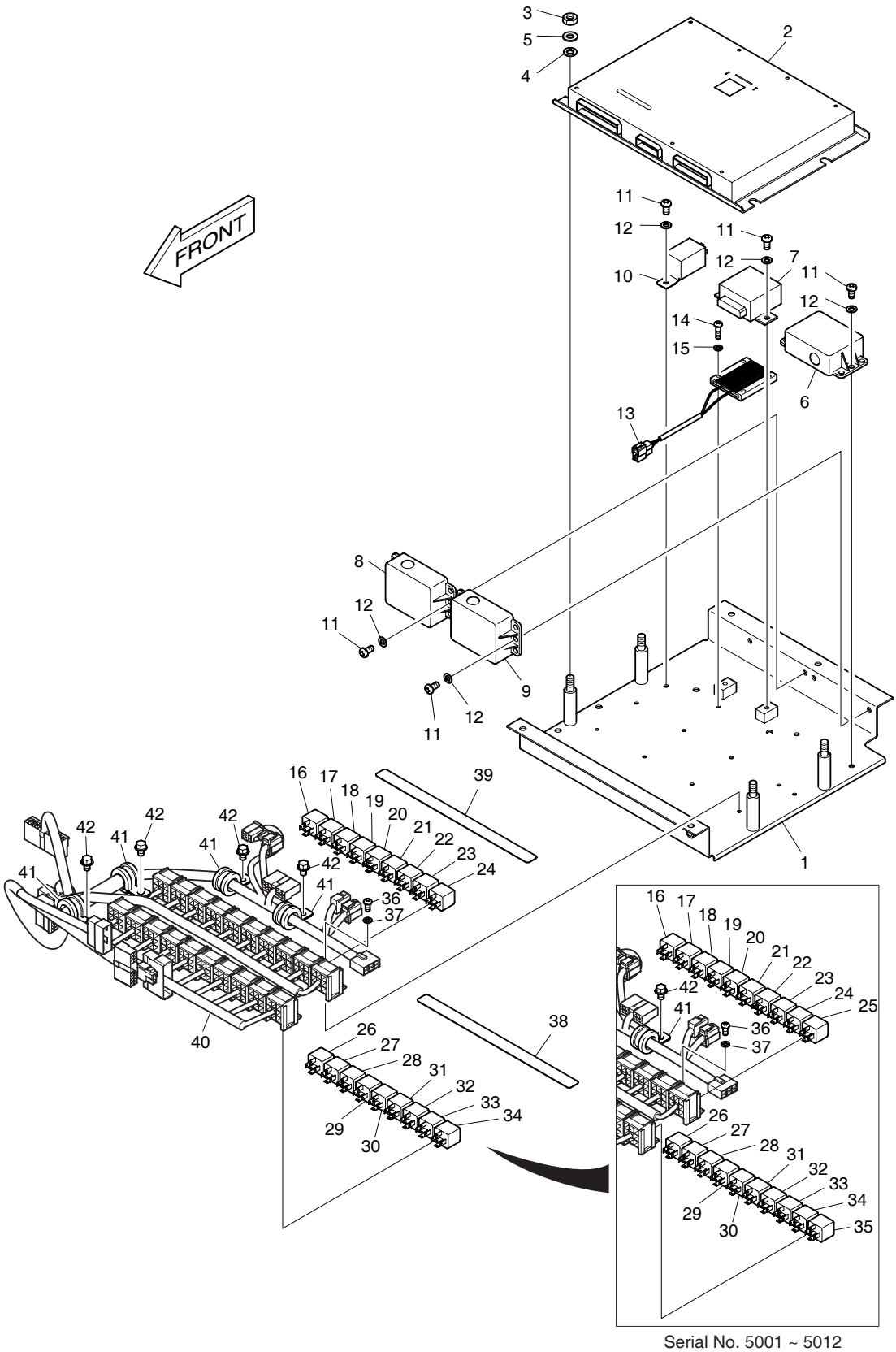

DATE	JUN. 30, 2008
REV. NO.	EXB08-06

Fig. 1820 ELECTRIC BOX ASS'Y
EQUIPMENT ELECTRIQUE

Serial No. ;

Key No.	Part No.	Description	Description	Q'ty	S.C	Serial No.	ICA	Replaceable part	
								Part No.	Q'ty
1820-32	2544-9033	RELAY	RELAIS	1					
33	2544-9033	RELAY	RELAIS	1					
34	2544-9033	RELAY	RELAIS	1					
35	2544-9033	RELAY	RELAIS	1		5001–5012			
36	S3450823	SCREW	VIS	8					
37	S5100203	WASHER;SPRING	RONDELLE ELASTIQUE	8					
38	190-01198D4	PLATE;NAME	PLAQUE D'IDENTIFICATION	1					
39	190-01198D5	PLATE;NAME	PLAQUE D'IDENTIFICATION	1					
40	K1009039B	HARNESS;ELECTRIC BOX	HARNAIS	1		5001–5019			
	K1009039C	**HARNESS;ELECTRIC BOX**	HARNAIS	1		**5020**–			
41	124-00208D3	CLIP	CLIP	4					
42	K1001029	BOLT	BOULON A 6 PANS	4					

Fig. 1830 ELECTRIC PARTS - CABIN
PIECES ELECTRIQUES

Serial No. ;

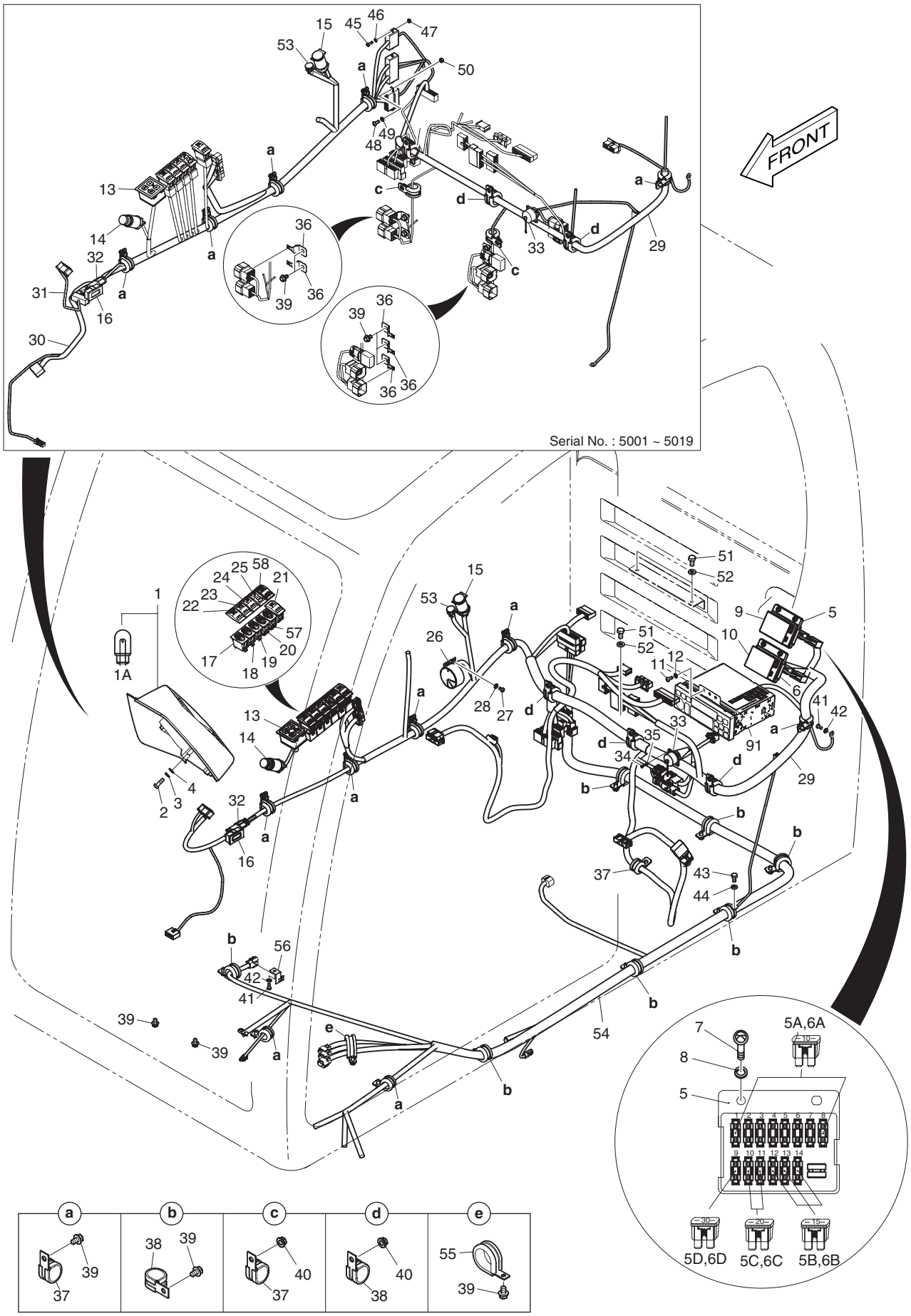

DATE	JUN. 30, 2008
REV. NO.	EXB08-06

Fig. 1830 ELECTRIC PARTS - CABIN PIECES ELECTRIQUES

Serial No. ;

Key No.	Part No.	Description	Description	Q'ty	S.C	Serial No.	ICA	Replaceable part	
								Part No.	Q'ty
1830--	K1009017E	ELECTRIC ASS'Y-CABIN	PIECES ELECTRIQUES	-	D				
1	539-00078C	PANEL;GAUGE	PANNEAU	1		5001–5012	I	539-00078E	1
	539-00078E	PANEL;GAUGE	PANNEAU	1		5013–			
1A	515-00012A	. BULB	. AMPOULE	6					
2	S3450853	SCREW	VIS	4					
3	S5100203	WASHER;SPRING	RONDELLE ELASTIQUE	4					
4	S5000213	WASHER;PLAIN	RONDELLE PLATE	4					
5	K1001263A	BOX;FUSE	BOITE	1					
5A	2527-1016	. FUSE;BLADE	. FUSIBLE	8					
5B	2527-1017	. FUSE;BLADE	. FUSIBLE	3					
5C	2527-1018	. FUSE;BLADE	. FUSIBLE	2					
5D	2527-1025	. FUSE;BLADE	. FUSIBLE	1					
6	K1001263A	BOX;FUSE	BOITE	1					
6A	2527-1016	. FUSE;BLADE	. FUSIBLE	8					
6B	2527-1017	. FUSE;BLADE	. FUSIBLE	3					
6C	2527-1018	. FUSE;BLADE	. FUSIBLE	2					
6D	2527-1025	. FUSE;BLADE	. FUSIBLE	1					
7	S3450983	SCREW	VIS	4					
8	S5102303	WASHER;SPRING	RONDELLE ELASTIQUE	4					
9	K1008019D7	PLATE;NAME	PLAQUE D'IDENTIFICATION	1					
10	K1008019D8	PLATE;NAME	PLAQUE D'IDENTIFICATION	1					
11	S3450833	BOLT	BOULON A 6 PANS	4					
12	S5100203	WASHER;SPRING	RONDELLE ELASTIQUE	4					
13	543-00096	RADIO CONTROL PANEL ASS'Y	PANNEAU DE COMMANDE	1					
14	545-00001	LIGHTER;CIGAR	ALLUMEUR DE CIGARE	1					
15	527-00006	SOCKET;12V POWER	CLE A DOUILLE	1					
16	2528-9040	METER;HOUR	TOTALISATEUR HORAIRE	1					
17	549-00101	SWITCH;ROCKER(1STEP)	INTERRUPTEUR	1					
18	549-00103	SWITCH;ROCKER(2STEP)	INTERRUPTEUR	1					
19	549-00101	SWITCH;ROCKER(1STEP)	INTERRUPTEUR	1					
20	K1006572	SWITCH;BREAKER/SHEAR	AVERTISSEUR	1					
21	549-00106	SWITCH;ROCKER(LOCK TYPE)	INTERRUPTEUR	1					
22	K1002406D15	ACTUATOR;SWITCH	ACTUATOR;SWITCH	1					
23	K1002406D11	ACTUATOR;SWITCH	ACTUATOR;SWITCH	1					
24	K1002406D8	ACTUATOR;SWITCH	ACTUATOR;SWITCH	1					
25	K1002406D21	ACTUATOR;SWITCH	ACTUATOR;SWITCH	1					
26	2516-1116	BUZZER;PILOT	VIBREUR ARRIERE	1					
27	S3450943	SCREW	VIS	2					

DATE	JUN. 30, 2008
REV.NO.	EXB08-06

Fig. 1830 ELECTRIC PARTS - CABIN
PIECES ELECTRIQUES

Serial No. ;

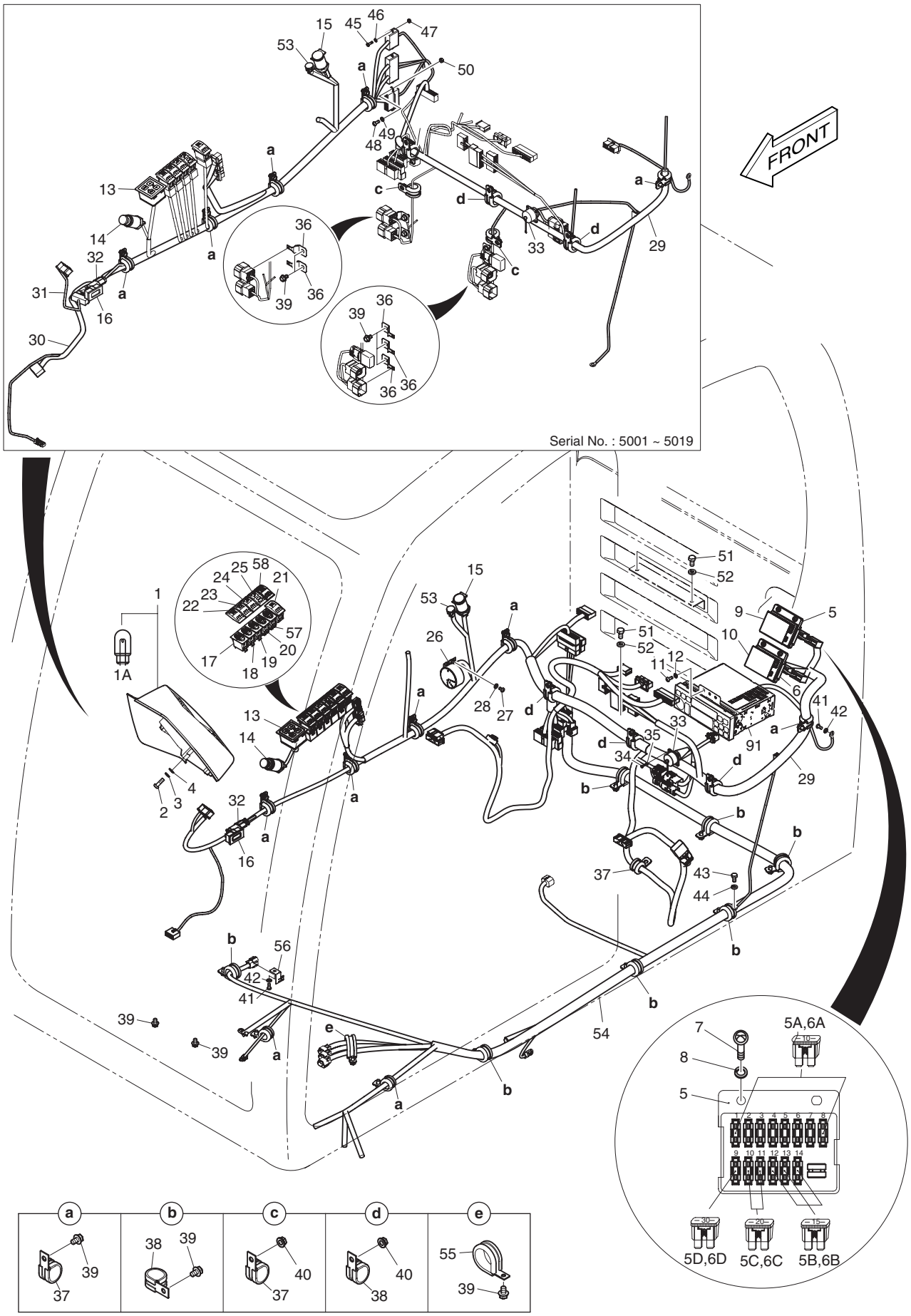

DATE	JUN. 30, 2008
REV. NO.	EXB08-06

Fig. 1830 ELECTRIC PARTS - CABIN
PIECES ELECTRIQUES

Serial No. ;

Key No.	Part No.	Description	Description	Q'ty	S.C	Serial No.	ICA	Replaceable part	
								Part No.	Q'ty
1830-28	S5102303	WASHER;SPRING	RONDELLE ELASTIQUE	2					
29	K1009038B	HARNESS;CABIN	HARNAIS	1		5001–5019			
	K1042329	**HARNESS;CABIN**	HARNAIS	1		**5020–**			
30	**K1009040A**	**HARNESS;SWITCH BOX**	HARNAIS	1		**5001–5019**			
31	**530-00416B**	**HARNESS;GAUGE PANEL**	HARNAIS	1		**5001–5019**			
32	530-00434B	HARNESS;HOUR METER JOINT	HARNAIS	1					
33	530-00435A	HARNESS;CHECK CONNECTOR	HARNAIS	1		5001–5012	I	530-00435B	1
	530-00435B	HARNESS;CHECK CONNECTOR	HARNAIS	1		5013–			
34	S3450343	SCREW	VIS	4					
35	S5100003	WASHER;SPRING	RONDELLE ELASTIQUE	4					
36	**2197-1661**	**BRACKET;HOUSING**	SUPPORT	5		**5001–5019**			
37	124-00208D3	CLIP	CLIP	8		5001–5019			
	124-00208D3	**CLIP**	CLIP	6		**5020–**			
38	124-00208D4	CLIP	CLIP	10					
39	K1001029	BOLT	BOULON A 6 PANS	21		5001–5019			
	K1001029	**BOLT**	BOULON A 6 PANS	16		**5020–**			
40	2121-1305	NUT	ECROU 6 PANS M8	5		5001–5019			
	2121-1305	**NUT**	ECROU 6 PANS M8	3		**5020–**			
41	S3450953	SCREW	VIS	2					
42	S5102303	WASHER;SPRING	RONDELLE ELASTIQUE	2					
43	S0508653	BOLT	BOULON A 6 PANS	1					
44	S5102503	WASHER;SPRING	RONDELLE ELASTIQUE	1					
45	**S3450343**	**SCREW**	VIS	4		**5001–5019**			
46	**S5100003**	**WASHER;SPRING**	RONDELLE ELASTIQUE	4		**5001–5019**			
47	**S4012003**	**NUT**	ECROU 6 PANS M8	4		**5001–5019**			
48	**S3450833**	**BOLT**	BOULON A 6 PANS	2		**5001–5019**			
49	S5100003	WASHER;SPRING	RONDELLE ELASTIQUE	2		5001–5019			
	S5100003	**WASHER;SPRING**	RONDELLE ELASTIQUE	1		**5020–**			
50	**S4012003**	**NUT**	ECROU 6 PANS M8	2		**5001–5019**			
51	S0508666	BOLT	BOULON A 6 PANS	4					
52	S5102503	WASHER;SPRING	RONDELLE ELASTIQUE	4					
53	547-00023	SENSOR;SUN	CAPTEUR	1					
54	K1009048B	HARNESS;FLOOR PLATE	HARNAIS	1					
55	124-00208D6	CLIP	CLIP	1					
56	2195-3500	BRACKET	SUPPORT	1					
57	**549-00101**	**SWITCH;ROCKER**	INTERRUPTEUR	1		**5020–**			
58	**K1002406D25**	**ACTUATOR;SWITCH**	ACTUATOR;SWITCH	1		**5020–**			
91	K1026654	CAR STEREO	STEREO DE VOITURE	1					

DATE	JUN. 30, 2008
REV.NO.	EXB08-06

Fig. 1840 ELECTRIC PARTS - CONTROL STAND
PIECES ELECTRIQUES

Serial No. ;

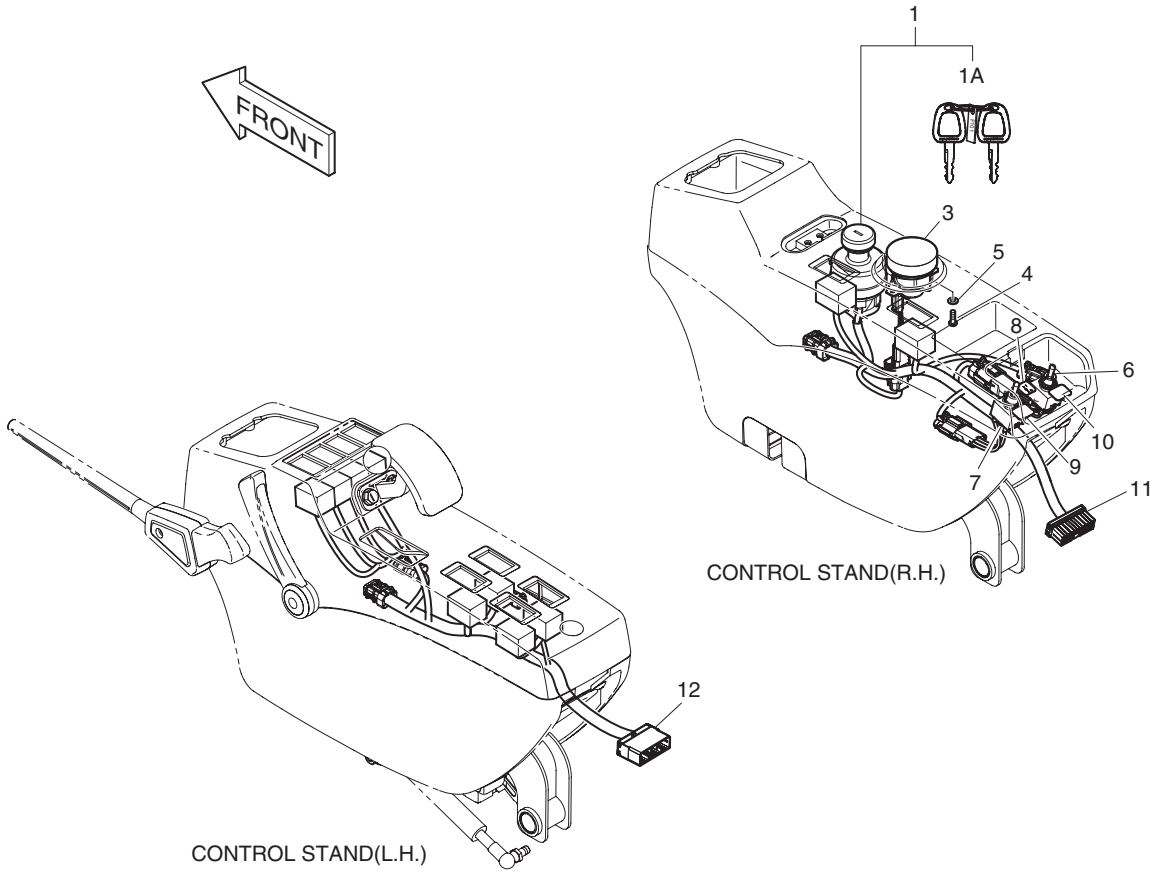

Serial No. : 5001 ~ 5019

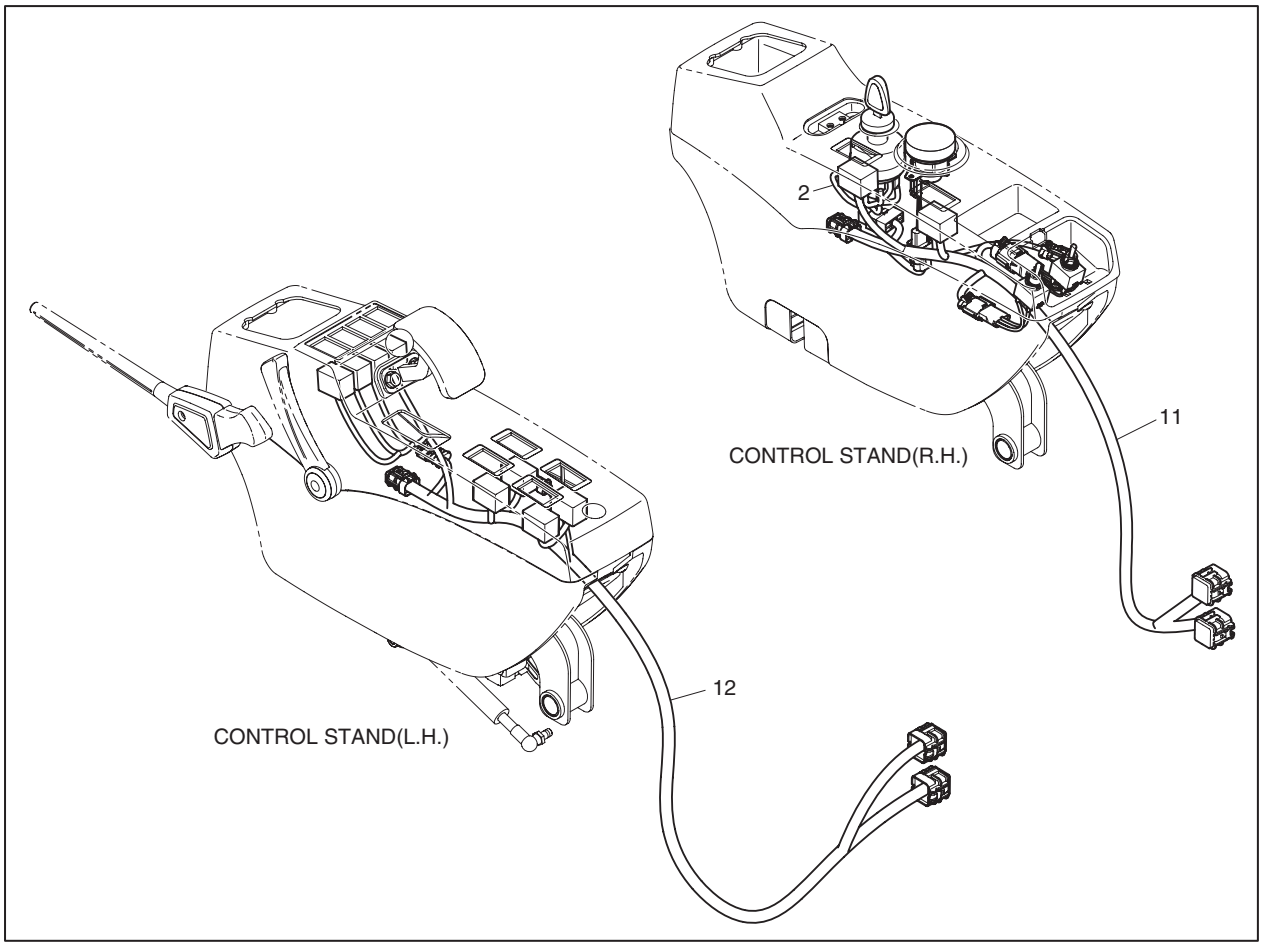

DATE	JUN. 30, 2008
REV. NO.	EXB08-06

Fig. 1840 ELECTRIC PARTS - CONTROL STAND
PIECES ELECTRIQUES

Serial No. ;

Key No.	Part No.	Description	Description	Q'ty	S.C	Serial No.	ICA	Replaceable part	
								Part No.	Q'ty
1840--	K1009018C	ELECTRIC PARTS-CONTROL	EQUIPMENT ELECTRIQUE	-	D				
1	K1001858A	SWITCH;STARTER	INTERRUPTEUR	1					
1A	K1009605B	. KEY;STARTER	. CLE	2					
2	**530-00150**	**HARNESS;STARTER SWITCH**	HARNAIS	1		**5001–5019**			
3	K1013846	DIAL;ENGINE CONTROL	CADRAN	1					
4	S3450583	SCREW M4X0.7X12	VIS	2					
5	S5100103	WASHER;SPRING M4	RONDELLE ELASTIQUE	2					
6	549-00090	SWITCH;TOGGLE	INTERRUPTEUR	1		5001–5012	I	549-00090A	1
	549-00090A	SWITCH;TOGGLE	INTERRUPTEUR	1		5013–			
7	K1001702	SWITCH;TOGGLE	INTERRUPTEUR	1		5001–5012	I	K1001702A	1
	K1001702A	SWITCH;TOGGLE	INTERRUPTEUR	1		5013–			
8	K1004427	PLATE;NAME	PLAQUE D'IDENTIFICATION	1					
9	K1004425	PLATE;NAME	PLAQUE D'IDENTIFICATION	1					
10	K1004426	PLATE;NAME	PLAQUE D'IDENTIFICATION	1					
11	K1009041	HARNESS;STAND(RH)	HARNAIS	1		5001–5019			
	K1009041A	**HARNESS;STAND(RH)**	HARNAIS	1		**5020–**			
12	K1009042B	HARNESS;STAND(LH)	HARNAIS	1		5001–5019			
	K1009042C	**HARNESS;STAND(LH)**	HARNAIS	1		**5020–**			

DATE	JUN. 30, 2008
REV.NO.	EXB08-06

Fig. 1850 ELECTRIC PARTS - RELATED(1)
PIECES ELECTRIQUES

Serial No. ;

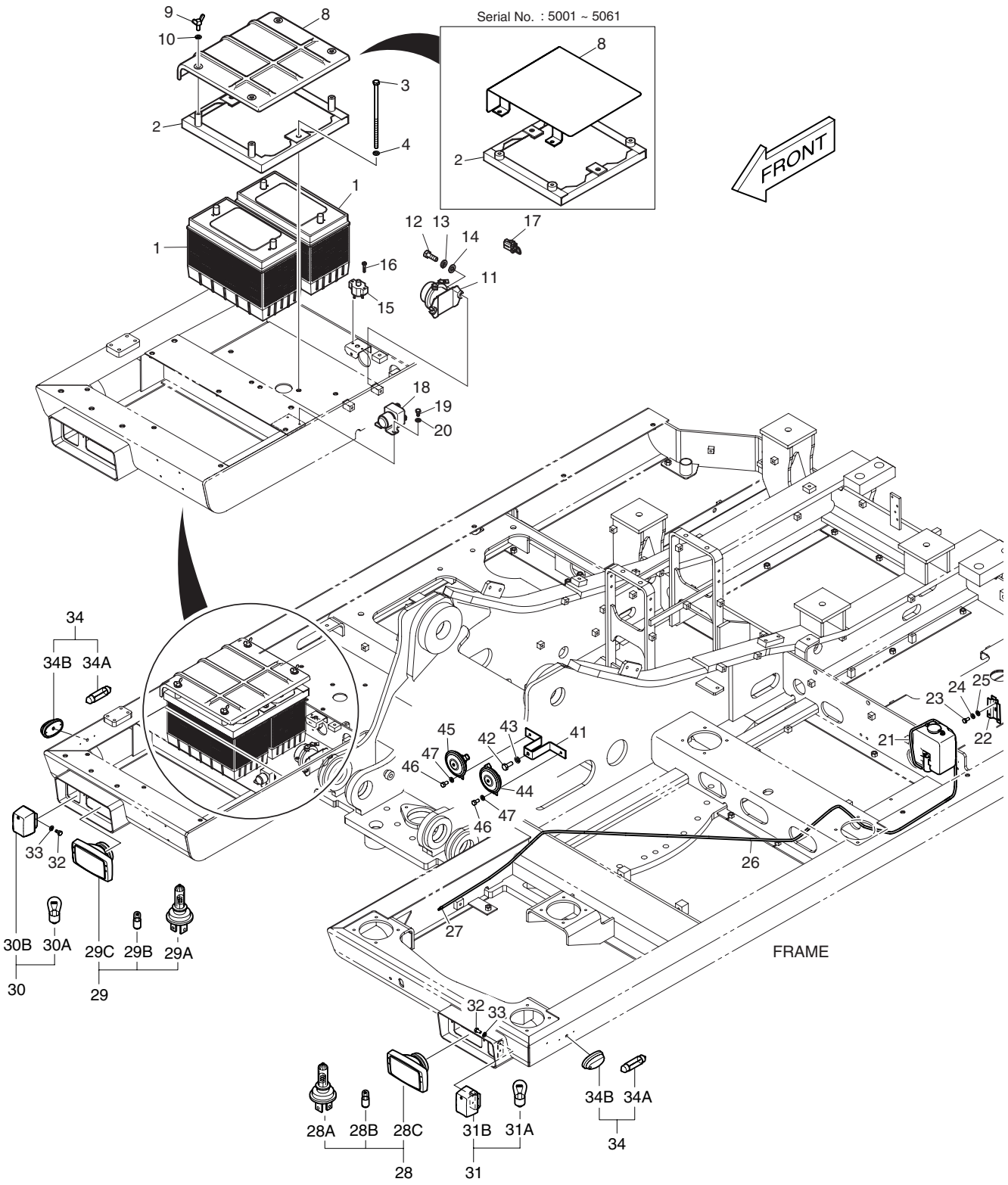

DATE	JUN. 30, 2008
REV. NO.	EXB08-06

Fig. 1850 ELECTRIC PARTS - RELATED(1) PIECES ELECTRIQUES

Serial No. ;

Key No.	Part No.	Description	Description	Q'ty	S.C	Serial No.	ICA	Replaceable part	
								Part No.	Q'ty
1850--	K1009109A	ELECTRIC PARTS-RELATED	PIECES ELECTRIQUES	-	D				
1	506-00006	BATTERY	BATTERIE	2					
2	K1010776A	BRACKET	SUPPORT	1		5001–5061			
	K1039521A	**BRACKET**	SUPPORT	1		**5062–**			
3	DS0001079	BOLT	BOULON A 6 PANS	2					
4	S5102603	WASHER	CALE	2					
8	K1010777	COVER	COUVERCLE	1		5001–5061			
	K1039068	**COVER**	COUVERCLE	1		**5062–**			
9	S3050863	BOLT;WING	BOULON A 6 PANS	4					
10	S5102503	WASHER	CALE	4					
11	2544-9024	RELAY;BATTERY	RELAIS	1					
12	S0509066	BOLT	BOULON A 6 PANS	2					
13	S5102503	WASHER	CALE	2					
14	S5010503	WASHER	CALE	2					
15	2527-9004	BREAKER;CIRCUIT	SUPPORT	1					
16	2120-1354	SCREW	VIS	2					
17	2527-1023A	LINK;FUSIBLE	FUSIBLE	1					
18	2544-1022	STARTER	D'MARREUR	1					
19	S0504666	BOLT	BOULON A 6 PANS	2					
20	S5102303	WASHER	CALE	2					
21	K1000789	TANK;RESERVE	RESERVOIR DE RESEVE	1					
22	2195-1534	BRACKET	SUPPORT	1					
23	S0504453	BOLT	BOULON A 6 PANS	2					
24	S5102303	WASHER	CALE	2					
25	S5010313	WASHER	CALE	2					
26	4185-1777	HOSE;WATER	TUYAU FLEXIBLE	1					
27	2415-1018	ADAPTER;HOSE	ADAPTEUR	1					
28	534-00110A	LAMP;HEAD	LAMPE	1					
28A	515-00006	. BULB	. AMPOULE	1					
28B	515-00005	. BULB	. AMPOULE	1					
28C	534-00111	. CASE;LAMP	. CARTER	1					
29	534-00110A	LAMP;HEAD	LAMPE	1					
29A	515-00006	. BULB	. AMPOULE	1					
29B	515-00005	. BULB	. AMPOULE	1					
29C	534-00111	. CASE;LAMP	. CARTER	1					
30	534-00112B	LAMP;FRONT TURN SIGNAL	LAMPE	1					
30A	515-00015	. BULB	. AMPOULE	1					
30B	534-00012	. CASE;LAMP	. CARTER	1					

DATE	JUN. 30, 2008
REV.NO.	EXB08-06

Fig. 1850 ELECTRIC PARTS - RELATED(1)
PIECES ELECTRIQUES

Serial No. ;

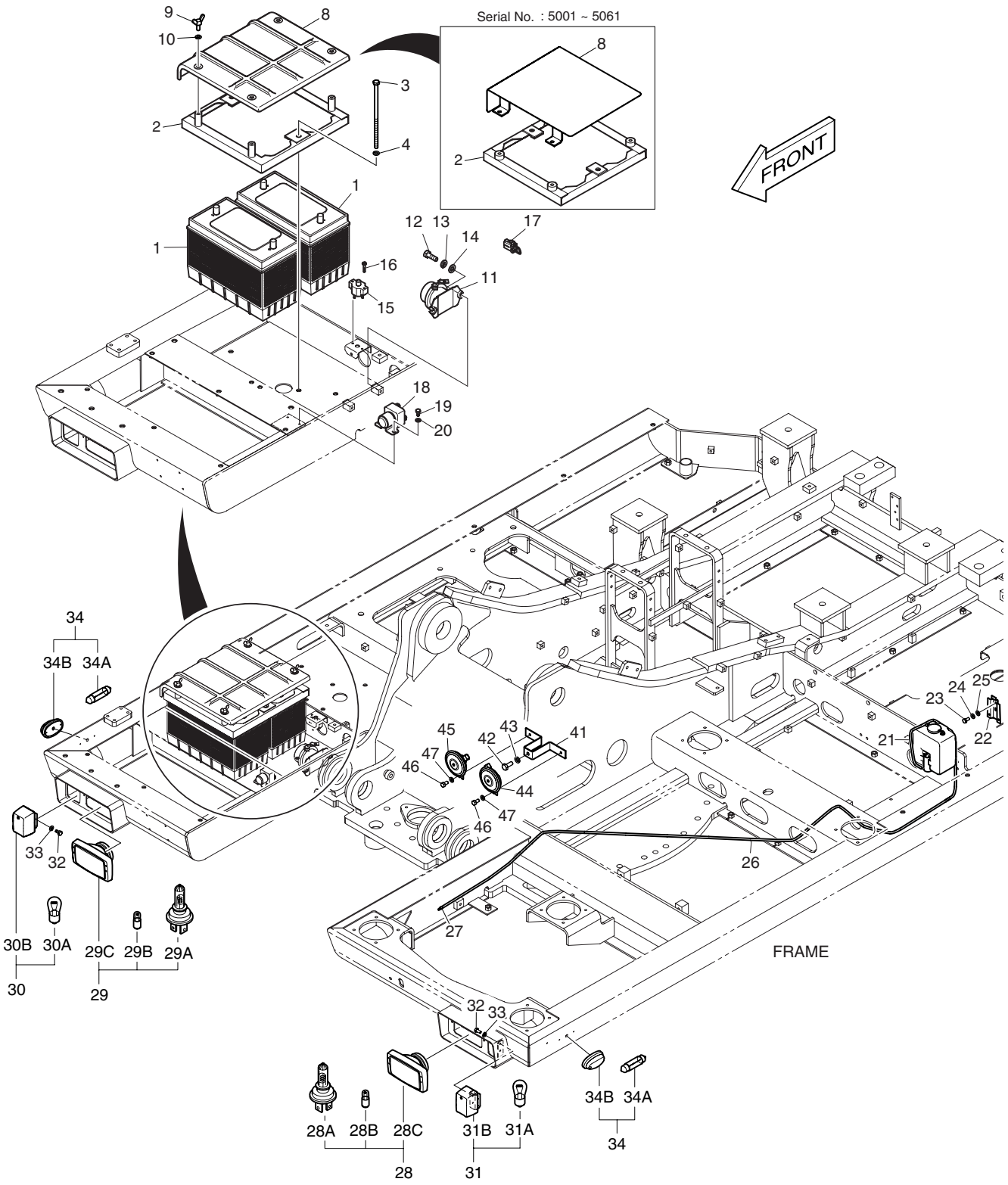

DATE	JUN. 30, 2008
REV. NO.	EXB08-06

Fig. 1850 ELECTRIC PARTS - RELATED(1) PIECES ELECTRIQUES

Serial No. ;

Key No.	Part No.	Description	Description	Q'ty	S.C	Serial No.	ICA	Replaceable part	
								Part No.	Q'ty
1850-31	534-00112B	LAMP;FRONT TURN SIGNAL	LAMPE	1					
31A	515-00015	. BULB	. AMPOULE	1					
31B	534-00012	. CASE;LAMP	. CARTER	1					
32	S0504453	BOLT	BOULON A 6 PANS	4					
33	S5102303	WASHER	CALE	4					
34	2534-9069	LAMP;SIDE TURN SIGNAL	LAMPE	2					
34A	2515-1021D5	. BULB	. AMPOULE	1					
34B	2534-6030	. CASE;LAMP	. CARTER	1					
41	K1003634C	BRACKET	SUPPORT	1					
42	S0512066	BOLT	BOULON	1					
43	S5102603	WASHER	RONDELLE	1					
44	516-00014	HORN;HIGH	AVERTISSEUR	1					
45	516-00015	HORN;LOW	AVERTISSEUR	1					
46	S0508666	BOLT	BOULON A 6 PANS	2					
47	S5102503	WASHER	CALE	2					

Fig. 1860 ELECTRIC PARTS - RELATED(2)
EQUIPMENT ELECTRIQUE

Serial No. ;

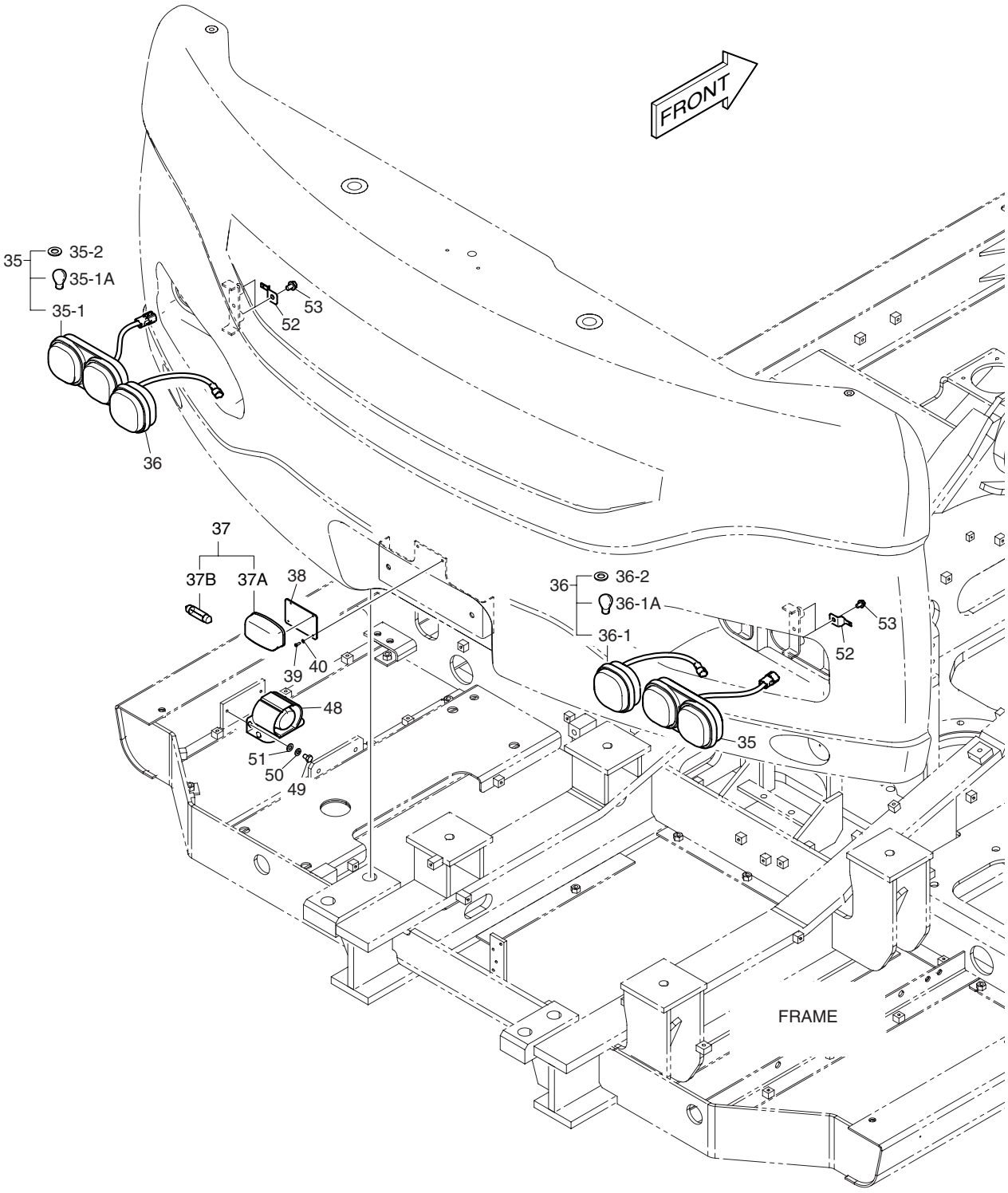

DATE	DEC. 26, 2006
1st EDITION	

Fig. 1860 ELECTRIC PARTS - RELATED(2)
EQUIPMENT ELECTRIQUE

Serial No. ;

Key No.	Part No.	Description	Description	Q'ty	S.C	Serial No.	ICA	Replaceable part	
								Part No.	Q'ty
1860--	K1009019A	ELECTRIC PARTS-RELATED	EQUIPMENT ELECTRIQUE	-	D				
35	534-00115A	LAMP;REAR COMBI.	LAMPE	2					
35-1	534-00120	. LAMP	. LAMPE	1					
35-1A	515-00015	.. BULB	.. AMPOULE	2					
35-2	S5102303	. WASHER	. RONDELLE	2					
36	534-00116A	LAMP;REVERSING	LAMPE S'INVERSANTE	2					
36-1	534-00121	. LAMP	. LAMPE	1					
36-1A	515-00015	.. BULB	.. AMPOULE	1					
36-2	S5102303	. WASHER	. RONDELLE	1					
37	K1005717	LAMP;REGISTRATION PLATE	LAMPE	1					
37A	2534-6019	. CASE;LAMP	. CARTER	1					
37B	2515-1021D5	. BULB 24V 5W	. AMPOULE	1					
38	195-02927B	BRACKET	SUPPORT	1					
39	S3450583	SCREW	VIS	2					
40	S5100103	WASHER;SPRING	RONDELLE ELASTIQUE	2					
48	516-00011	BUZZER;ALARM	VIBREUR D'ALARME	1					
49	S0508466	BOLT	BOULON	2					
50	S5102503	WASHER;SPRING	RONDELLE ELASTIQUE	2					
51	S5010513	WASHER;PLAIN	RONDELLE	2					
52	2197-1661	BRACKET;HOUSING	SUPPORT	4					
53	K1001029	BOLT	BOULON	4					

Fig. 1870 ELECTRIC PARTS - ENGINE
PIECES ELECTRIQUES

Serial No. ;

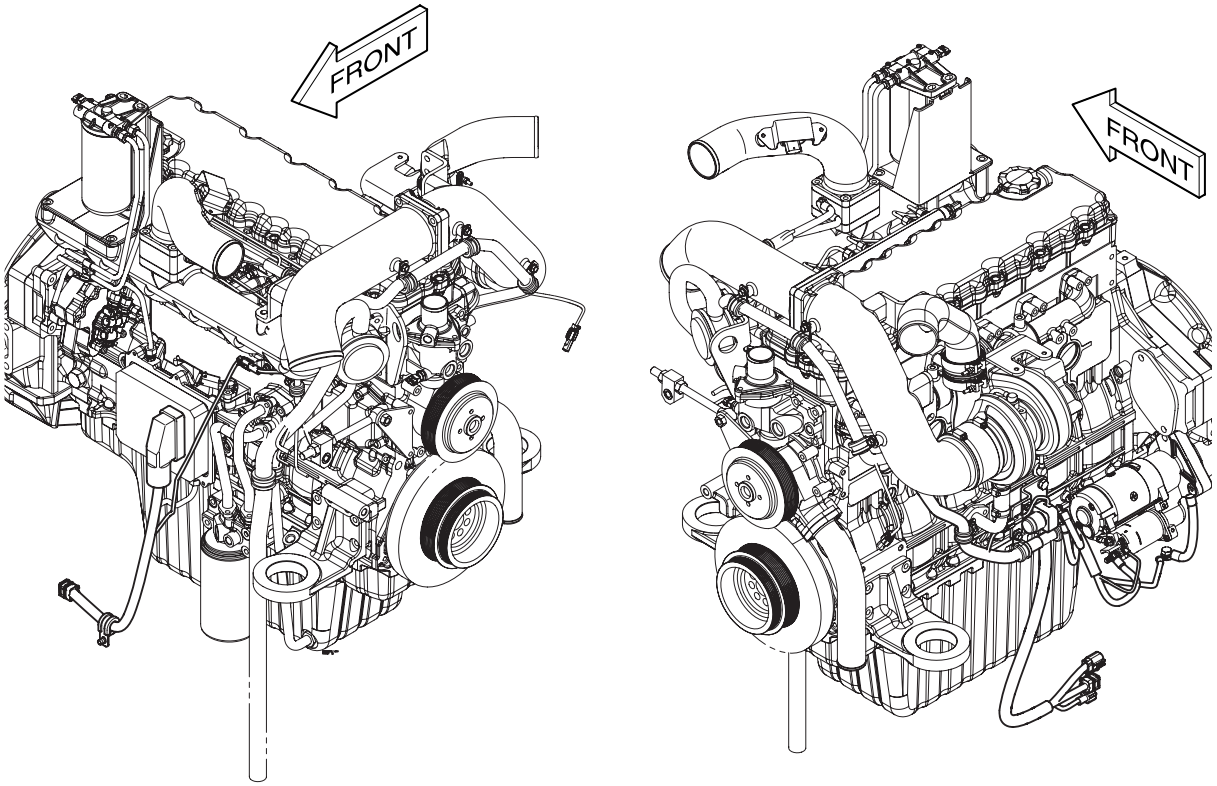

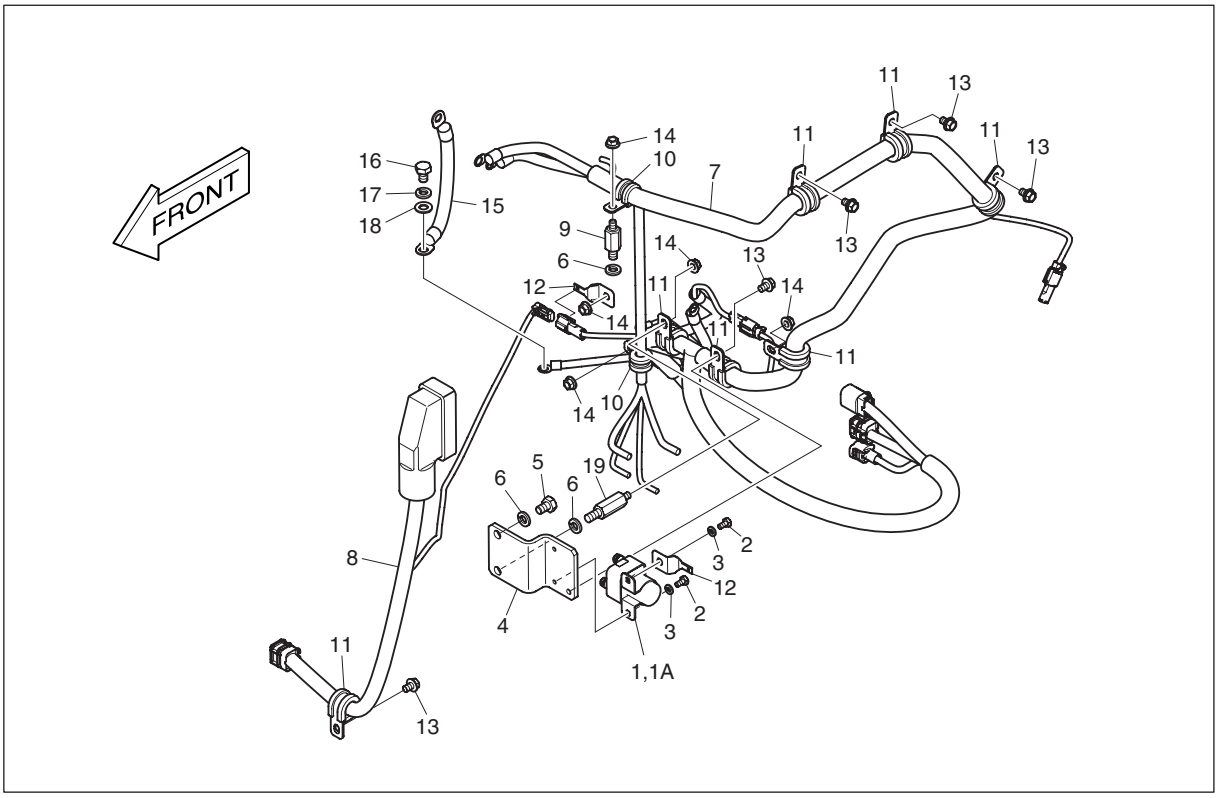

DATE	DEC. 26, 2006
1st EDITION	

Fig. 1870 ELECTRIC PARTS - ENGINE PIECES ELECTRIQUES

Serial No. ;

Key No.	Part No.	Description	Description	Q'ty	S.C	Serial No.	ICA	Replaceable part	
								Part No.	Q'ty
1870--	K1009020B	ELECTRIC PARTS-ENGINE	EQUIPMENT ELECTRIQUE	-	D				
1	544-00007	RELAY;PREHEAT	RELAIS	1					
1A	527-00005	. FUSE;PREHEAT RELAY	. FUSIBLE	1					
2	S0504453	BOLT	BOULON A 6 PANS	2					
3	S5102303	WASHER;SPRING	RONDELLE ELASTIQUE	2					
4	K1015201	BRACKET;PREHEAT RELAY	SUPPORT	1					
5	S0511666	BOLT	BOULON A 6 PANS	1					
6	S5102603	WASHER;SPRING	RONDELLE ELASTIQUE	3					
7	K1009037B	HARNESS;ENGINE	HARNAIS	1					
8	K1009728B	HARNESS;ECU JOINT	HARNAIS	1					
9	2120-2235	BOLT;STUD	BOULON A 6 PANS	1					
10	124-00208D2	CLIP	CLIP	2					
11	124-00208D3	CLIP	CLIP	7					
12	2197-1661	BRACKET;HOUSING	SUPPORT	2					
13	K1001029	BOLT	BOULON A 6 PANS	5					
14	2121-1305	NUT	ECROU 6 PANS M8	5					
15	553-00001D4	CABLE;E/G EARTH	CABLE	1					
16	S0511653	BOLT	BOULON A 6 PANS	1					
17	S5102603	WASHER;SPRING	RONDELLE ELASTIQUE	1					
18	S5010613	WASHER;PLAIN	RONDELLE PLATE	1					
19	2120-2172	BOLT;STUD	BOULON A 6 PANS	1					

DATE	DEC. 26, 2006
1st EDITION	

Fig. 1880 ALTERNATOR MOUNTING
ALTERNATEUR

Serial No. ;

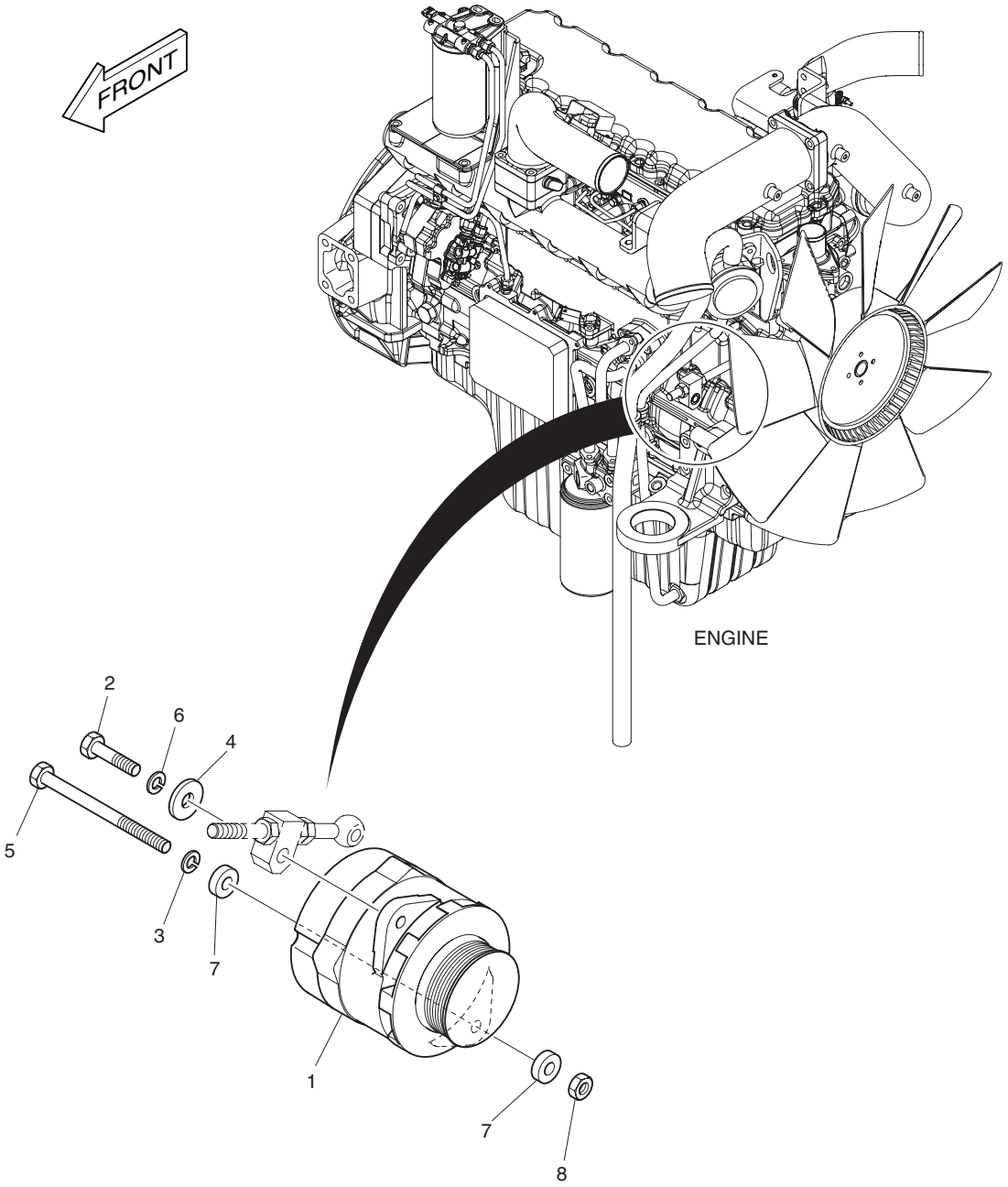

DATE	DEC. 26, 2006
1st EDITION	

Fig. 1880 ALTERNATOR MOUNTING ALTERNATEUR

Serial No. ;

Key No.	Part No.	Description	Description	Q'ty	S.C	Serial No.	ICA	Replaceable part	
								Part No.	Q'ty
1880--	K1015418	ALTERNATOR MOUNTING	SUPPORT D'ALTERNATEUR	-	D				
1	K1010702	ALTERNATOR 60A	SUPPORT D'ALTERNATEUR	1					
2	S0760853	BOLT	BOULON A 6 PANS	1					
3	S5102703	WASHER;SPRING	RONDELLE ELASTIQUE	1					
4	2114-1058D54	WASHER	CALE	1					
5	S0562666	BOLT	BOULON A 6 PANS	1					
6	S5102703	WASHER;SPRING	RONDELLE ELASTIQUE	1					
7	S5010713	WASHER;PLAIN	RONDELLE PLATE	2					
8	S4012733	NUT	ECROU 6 PANS M8	1					

DATE	DEC. 26, 2006
1st EDITION	

Fig. 1890 ELECTRIC PARTS - WORK LAMP
PIECES ELECTRIQUES

Serial No. ;

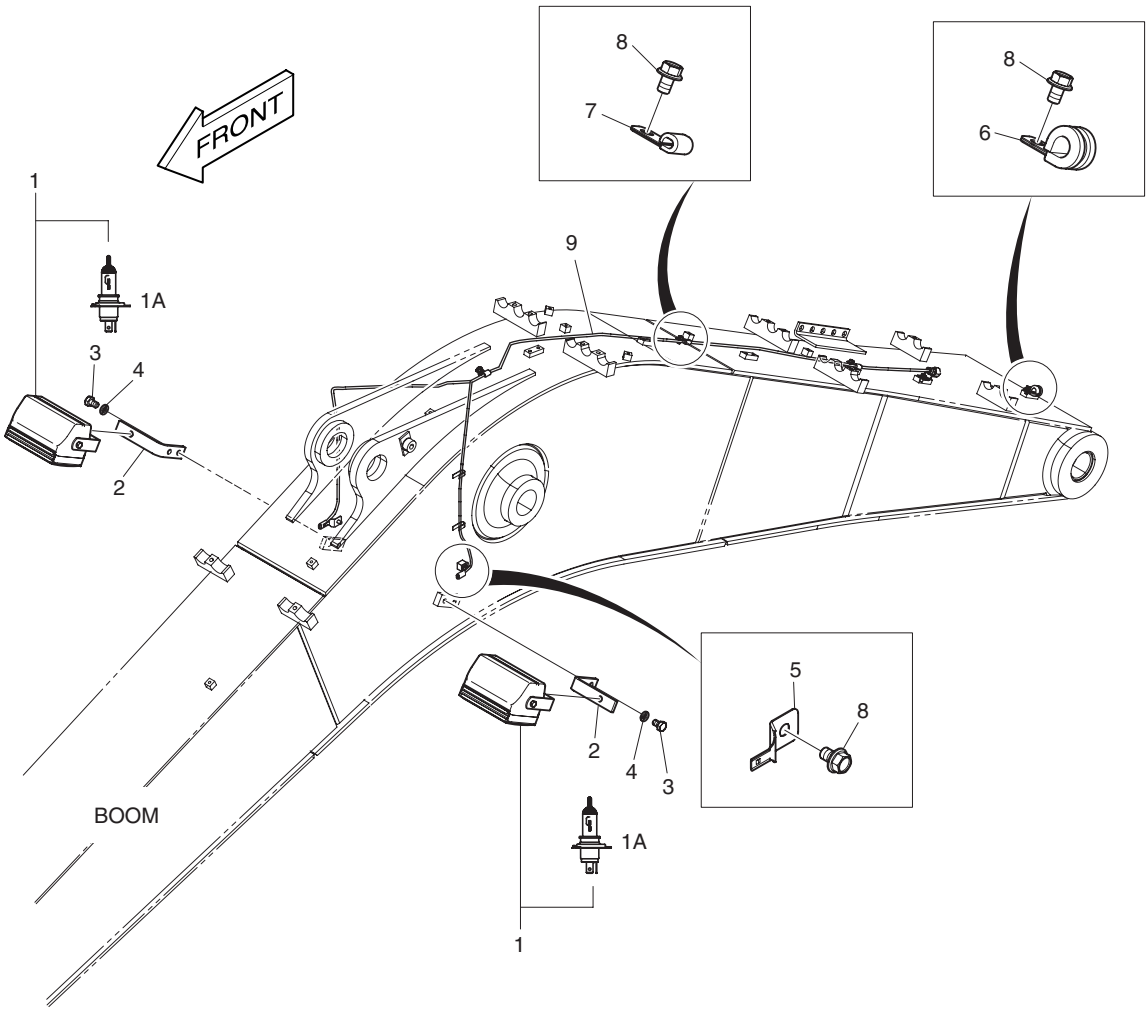

DATE	DEC. 26, 2006
1st EDITION	

Fig. 1890 ELECTRIC PARTS - WORK LAMP
PIECES ELECTRIQUES

Serial No. ;

Key No.	Part No.	Description	Description	Q'ty	S.C	Serial No.	ICA	Replaceable part	
								Part No.	Q'ty
1890--	K1027578	ELECTRIC PARTS-WORK LAMP	PIECES ELECTRIQUES	-	D				
1	534-00064	LAMP ASSY;WORKING	LAMPE	2					
1A	2515-1022D1	. BULB;HALOGEN	. AMPOULE	1					
2	2195-2394B	BRACKET	SUPPORT	2					
3	S0514853	BOLT	BOULON A 6 PANS	4					
4	S5102703	WASHER;SPRING	RONDELLE ELASTIQUE	4					
5	2197-1661	BRACKET;HOUSING	SUPPORT	2					
6	124-00208D2	CLIP	CLIP	1					
7	2124-1509D1	CLIP	CLIP	4					
8	K1001029	BOLT	BOULON A 6 PANS	7					
9	K1027577	HARNESS;WORK LAMP	HARNAIS	1					

DATE	JUN. 30, 2008
REV.NO.	EXB08-06

Fig. 1900 ELECTRIC WIRING
CABLAGE ELECTRIQUE

Serial No. ;

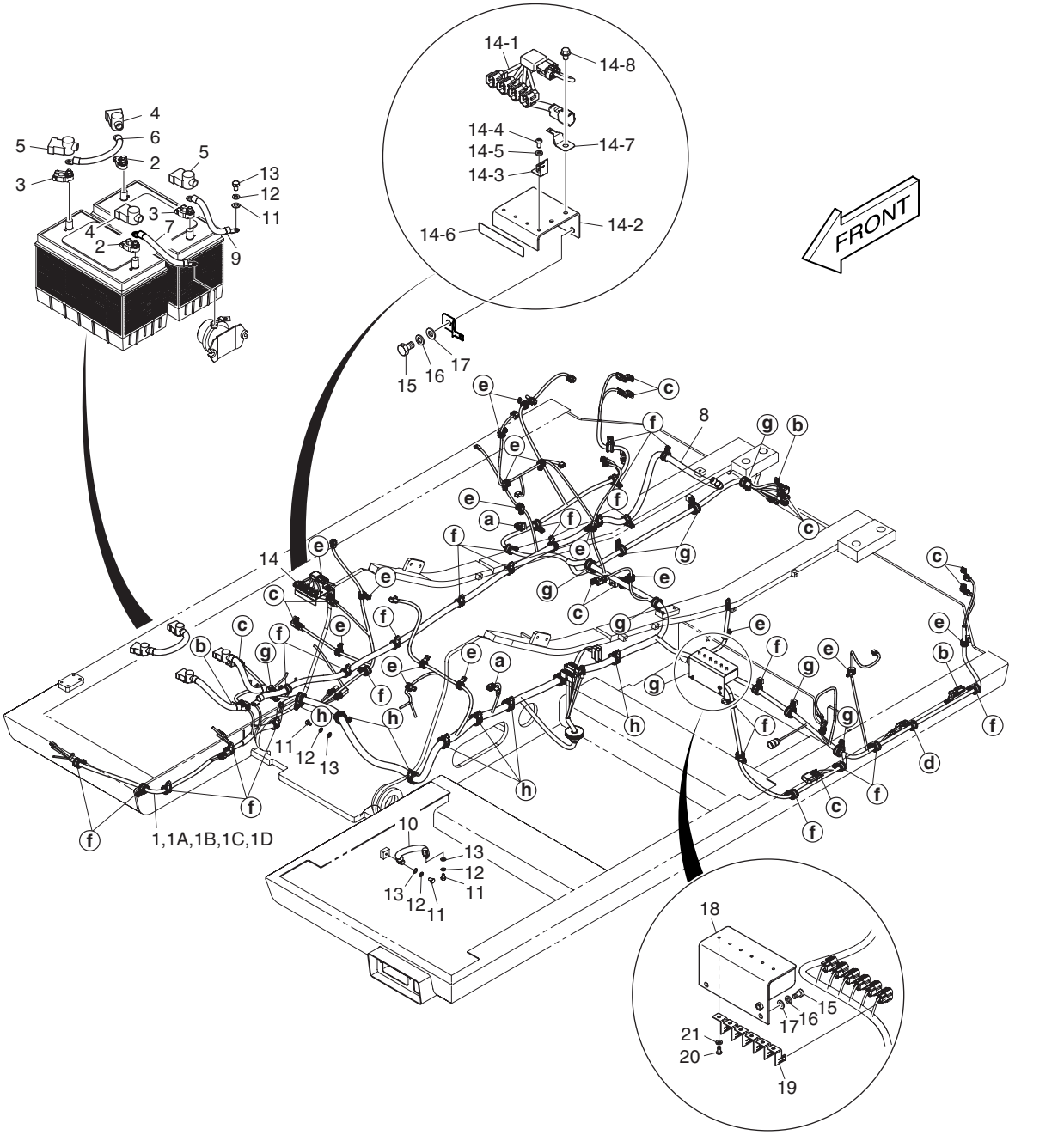

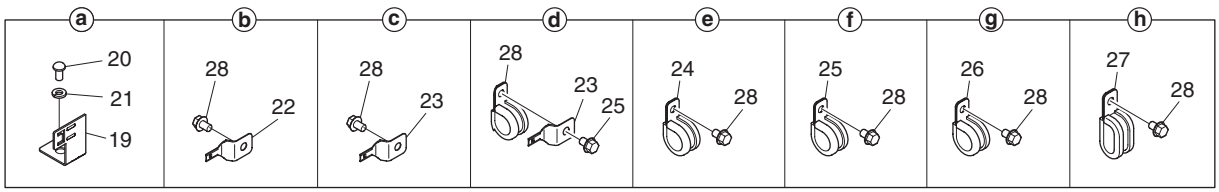

DATE	JUN. 30, 2008
REV. NO.	EXB08-06

Fig. 1900 ELECTRIC WIRING CABLAGE ELECTRIQUE

Serial No. ;

Key No.	Part No.	Description	Description	Q'ty	S.C	Serial No.	ICA	Replaceable part	
								Part No.	Q'ty
1900--	K1009022E	ELECTRIC WIRING	CABLAGE ELECTRIQUE	-	D				
1	K1009035C	HARNESS;MAIN	HARNAIS	1		5001–5019	I	K1009035E	1
	K1009035E	**HARNESS;MAIN**	HARNAIS	1		**5020–**			
1A	2548-1027	. DIODE	. DIODE	3					
1B	548-00003A	. DIODE	. DIODE	1					
1C	K1000814	. DIODE	. DIODE	2					
1D	K1000815	. DIODE	. DIODE	2					
2	2550-1014D1	TERMINAL;BATTERY(+)	COSSE DE BATTERIE(+)	2					
3	2550-1014D2	TERMINAL;BATTERY(-)	COSSE DE BATTERIE	2					
4	2160-1212	CAP;BATT. TML (+)	CHAPEAU	2					
5	2160-1213	CAP;BATT. TML (-)	CHAPEAU	2					
6	2553-1275D6	CABLE;BATT-BATT	CABLE	1					
7	2553-1275D54	CABLE:BATT -BATT. RELAY	CABLE	1					
8	2553-1275D88	CABLE;BATT RY-STARTER	CABLE	1					
9	2553-1275D82	CABLE;BATT EARTH	CABLE	1					
10	2553-1275D82	CABLE;EARTH	CABLE	1		5001–5012			
	2553-1275D39	CABLE;EARTH	CABLE	1		5013–			
11	S0511653	BOLT	BOULON	4					
12	S5102603	WASHER;SPRING(M10)	RONDELLE ELASTIQUE	5					
13	S5010613	WASHER;PLAIN(M10)	RONDELLE	5					
14	500-00405B	SOL V/V ELECTRIC ASS'Y	VANNE SOLENOIDE	1	D				
14-1	K1007428B	. HARNESS;JOINT	. HARNAIS	1					
14-2	K1003652	. PLATE	. PLAQUE	1					
14-3	2195-3500	. BRACKET;HOUSING	. SUPPORT	4					
14-4	S3450953	. SCREW M6X1.0X12	. VIS	4					
14-5	S5102303	. WASHER;SPRING	. RONDELLE ELASTIQUE	4					
14-6	K1011186	. DECAL	. DECALQUE	1					
14-7	2197-1661	. BRACKET;HOUSING	. SUPPORT	1					
14-8	K1001029	. BOLT	. BOULON	1					
15	S0508666	BOLT	BOULON	4					
16	S5102503	WASHER;SPRING	RONDELLE ELASTIQUE	4					
17	S5010513	WASHER	RONDELLE	4					
18	K1007437A	COVER	COUVERCLE	1					
19	2195-3500	BRACKET;HOUSING	SUPPORT	8					
20	S3450953	SCREW M6X1.0X12	VIS	8					
21	S5102303	WASHER;SPRING	RONDELLE ELASTIQUE	8					
22	2197-1660	BRACKET;HOUSING	SUPPORT	3					
23	2197-1661	BRACKET;HOUSING	SUPPORT	14					

DATE	JUN. 30, 2008
REV.NO.	EXB08-06

Fig. 1900 ELECTRIC WIRING
CABLAGE ELECTRIQUE

Serial No. ;

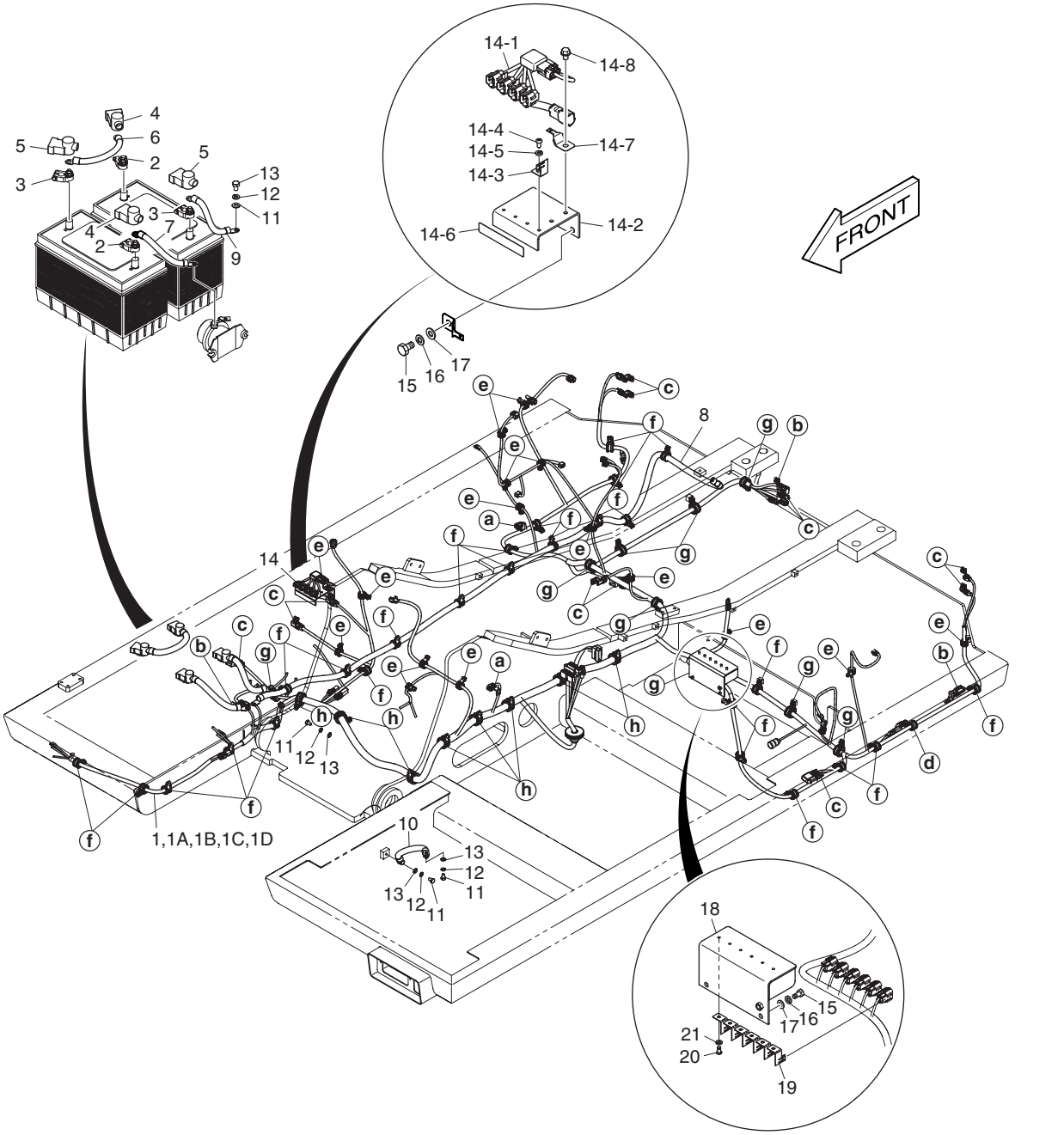

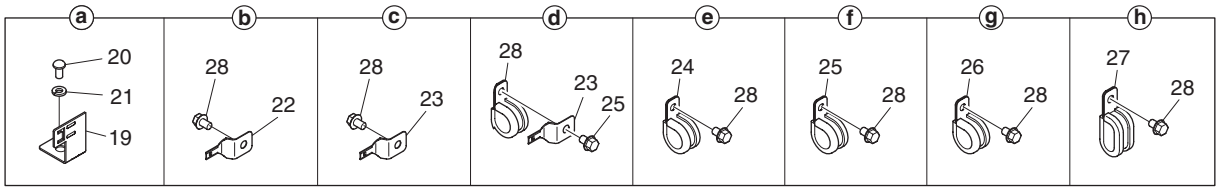

DATE	JUN. 30, 2008
REV. NO.	EXB08-06

Fig. 1900 ELECTRIC WIRING CABLAGE ELECTRIQUE

Serial No. ;

Key No.	Part No.	Description	Description	Q'ty	S.C	Serial No.	ICA	Replaceable part	
								Part No.	Q'ty
1900-24	124-00208D2	CLIP	AGRAFE	16					
25	124-00208D3	CLIP	AGRAFE	27					
26	124-00208D4	CLIP	AGRAFE	9					
27	124-00208D5	CLIP	AGRAFE	8					
28	K1001029	BOLT	BOULON	73					

DATE	DEC. 26, 2006
1st EDITION	

Fig. 1910 SWITCH - REAR DOZER COMMUTATEUR

Serial No. ;

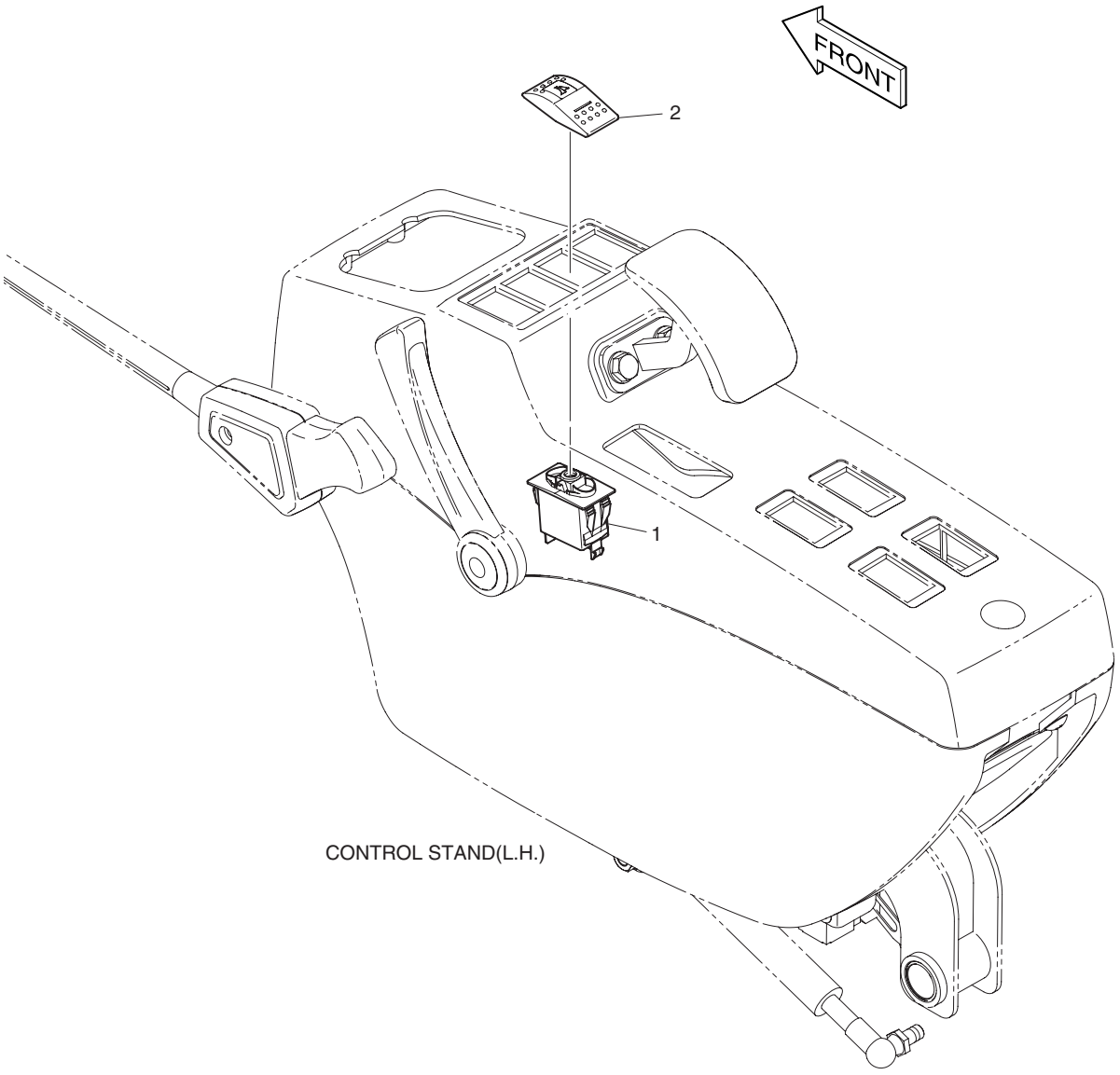

DATE	DEC. 26, 2006
1st EDITION	

Fig. 1910 SWITCH - REAR DOZER COMMUTATEUR

Serial No. ;

Key No.	Part No.	Description	Description	Q'ty	S.C	Serial No.	ICA	Replaceable part	
								Part No.	Q'ty
1910--	K1023315A	SWITCH ASS'Y	AVERTISSEUR	-	D				
1	549-00101	SWITCH;ROCKER(1STEP)	INTERRUPTEUR	1					
2	K1002406D20	ACTUATOR;SWITCH	ACTUATOR;SWITCH	1					

DATE	JUN. 30, 2007
REV.NO.	EXB07-06

Fig. 1920 HEATER PIPING
CONDUITES DE CHAUFFAGE

Serial No. ;

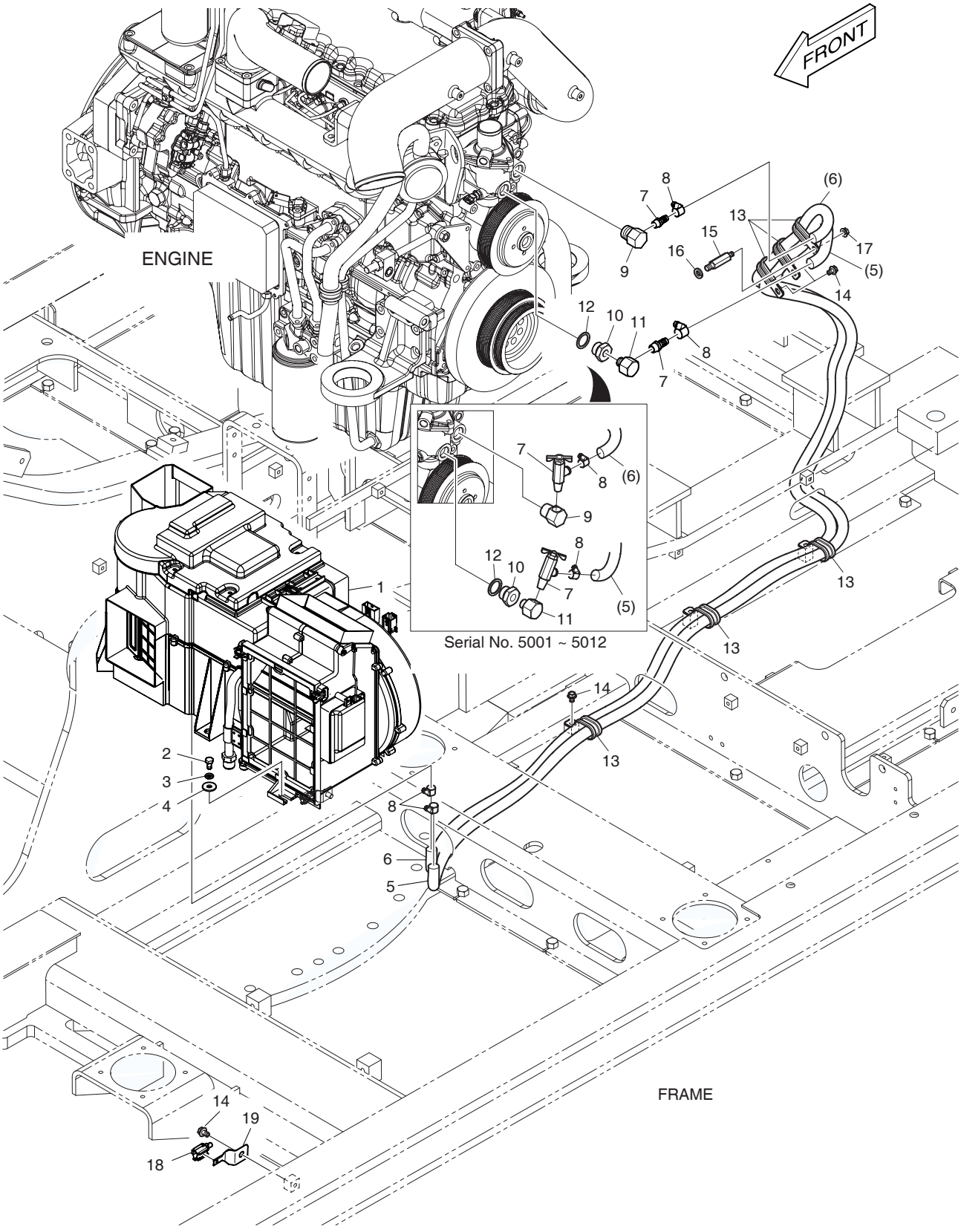

DATE	JUN. 30, 2007
REV. NO.	EXB07-06

Fig. 1920 HEATER PIPING
CONDUITES DE CHAUFFAGE

Serial No. ;

Key No.	Part No.	Description	Description	Q'ty	S.C	Serial No.	ICA	Replaceable part	
								Part No.	Q'ty
1920--	K1009023B	AIR CONDITIONER(1)	REFRIGERATION	-	D				
1	920-00127A	UNIT;AIR CON. & HEATING	UNITE	1					
2	S0508653	BOLT	BOULON A 6 PANS	6					
3	S5102503	WASHER;SPRING	RONDELLE ELASTIQUE	6					
4	2114-1058D29	WASHER	CALE	6					
5	2185-1308D10	HOSE	TUYAU FLEXIBLE	1					
6	2185-1308D10	HOSE	TUYAU FLEXIBLE	1					
7	2186-9003	VALVE	VANNE	2		5001–5012			
	2181-2774	**NIPPLE;HOSE**	MAMELON	2		**5013–**			
8	S8450016	CLAMP;HOSE	COLLIER	4					
9	2181-1159	ADAPTER	ADAPTEUR	1					
10	2181-1160A	ADAPTER	ADAPTEUR	1					
11	2181-1161A	ADAPTER	ADAPTEUR	1					
12	S8180411	SEAL;COPPER	BAGUE D'ETANCHEITE	1					
13	124-00209D1	CLIP	CLIP	6					
14	K1001029	BOLT	BOULON A 6 PANS	4					
15	120-00246	BOLT;STUD	BOULON A 6 PANS	1					
16	S5102603	WASHER;SPRING	RONDELLE ELASTIQUE	1					
17	2121-1305	NUT	ECROU 6 PANS M8	1					
18	547-00024A	SENSOR;AMBENT	CAPTEUR	1					
19	2197-1661	BRACKET;HOUSING	SUPPORT	1					

DATE	JUN. 30, 2007
REV.NO.	EXB07-06

Fig. 1930 AIRCON UNIT REFRIGERATION

Serial No. ;

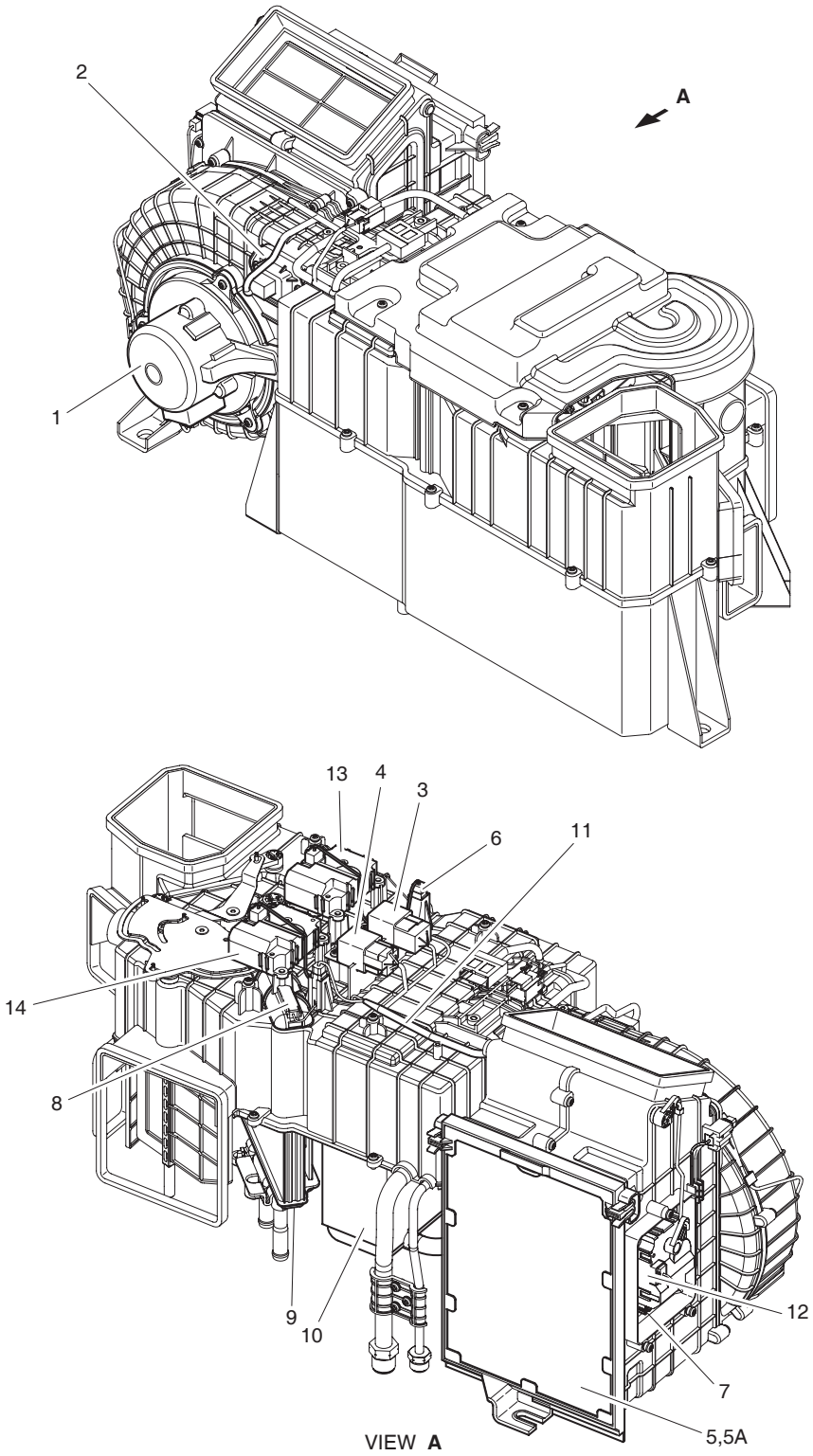

DATE	JUN. 30, 2007
REV. NO.	EXB07-06

Fig. 1930 AIRCON UNIT REFRIGERATION

Serial No. ;

Key No.	Part No.	Description	Description	Q'ty	S.C	Serial No.	ICA	Replaceable part	
								Part No.	Q'ty
1930--	920-00127A	AIRCON UNIT	UNITE D'AIRCON	1					
1	K1002206	MOTOR;BLOWER;24V	MOTEUR	1					
2	K1002207	POWER FET	FET DE PUISSANCE	1					
3	K1002208	RELAY;BLOWER 24V	RELAIS	1					
4	K1002209	RELAY;AIRCON 24V	RELAIS	1					
5	**K1030288**	**FILTER ASS'Y (AIRCON)**	FILTRE A GAZOLE	1					
5A	K1002210	. FILTER;AIR CON.	. FILTRE A GAZOLE	1					
6	K1002211	SENSOR;TEMP EVAPORATOR	CAPTEUR	1					
7	K1002212	SENSOR;TEMPERATURE	CAPTEUR	1					
8	K1002213	SENSOR;WATER TEMPERATURE	CAPTEUR	1					
9	K1002214	CORE;HEATER	CORE;HEATER	1					
10	K1002215	EVAPORATOR	CHAUFFAGE	1					
11	K1002216	HARNESS;AIR CONDITIONER	HARNAIS	1					
12	K1002217	ACTUATOR;INTAKE	DECLENCHEURE	1					
13	K1002218	ACTUATOR;AIR MIX	DECLENCHEURE	1					
14	K1002219	ACTUATOR;MODE	DECLENCHEURE	1					

DATE	JUN. 30, 2008
REV.NO.	EXB08-06

Fig. 1940 AIR CONDITIONER CLIMATISATION

Serial No. ;

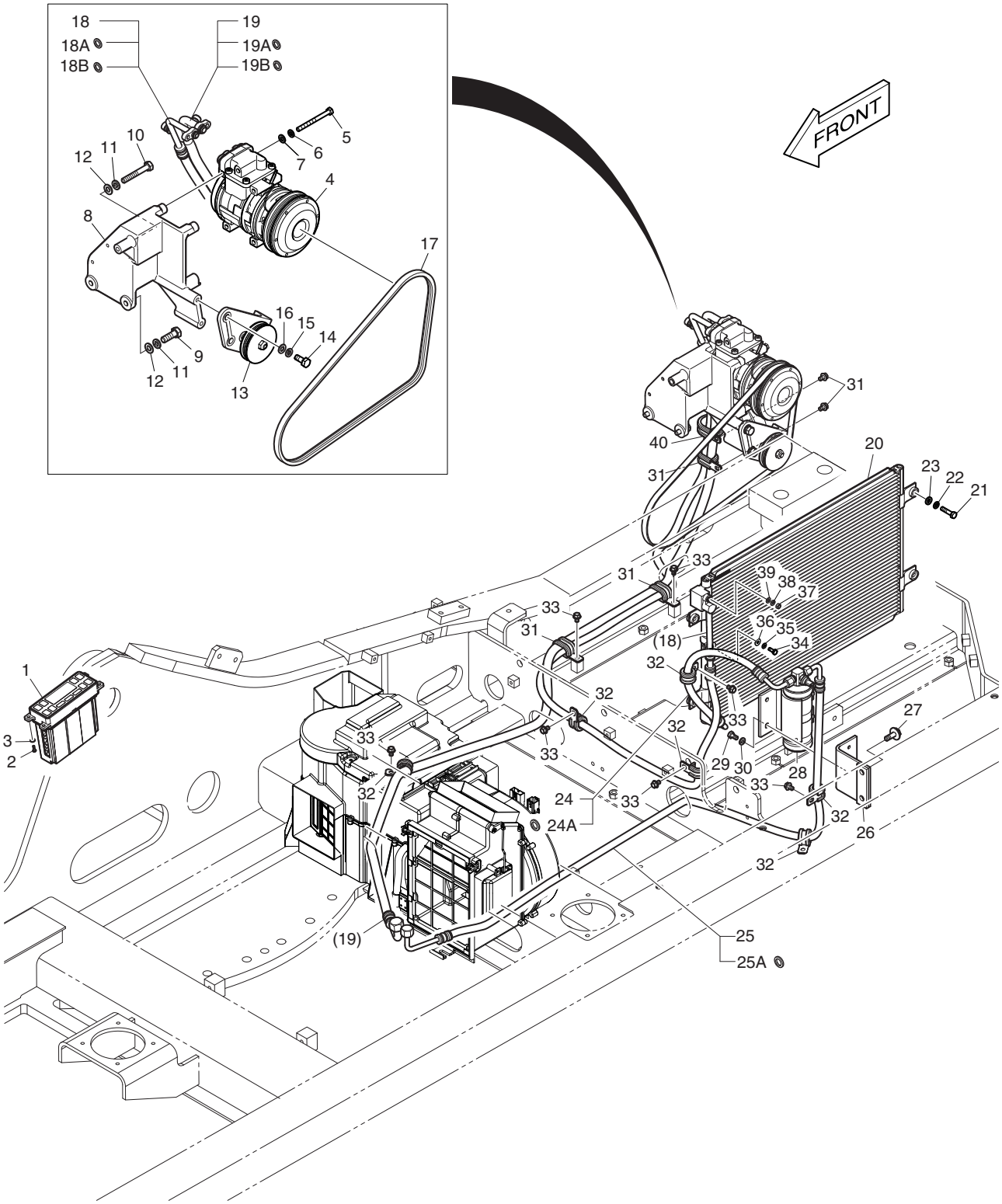

DATE	JUN. 30, 2008
REV. NO.	EXB08-06

Fig. 1940 AIR CONDITIONER CLIMATISATION

Serial No. ;

Key No.	Part No.	Description	Description	Q'ty	S.C	Serial No.	ICA	Replaceable part	
								Part No.	Q'ty
1940--	K1009024B	AIR CONDITIONER(2)	CLIMATISEUR	-	D				
1	543-00107	CONTROL PANEL;AIR CON	PANNEAU	1					
2	S3450583	SCREW	VIS	4					
3	S5000113	WASHER;PLAIN	RONDELLE PLATE	4					
4	2208-6013B	COMPRESSOR	COMPRESSEUR	1					
5	S0557166	BOLT	BOULON A 6 PANS	4					
6	S5102503	WASHER;SPRING	RONDELLE ELASTIQUE	4					
7	S5010513	WASHER	CALE	4					
8	K1008482B	BRACKET;COMPRESSOR	SUPPORT	1		5001–5063	I	K1037356A	1
	K1037356A	**BRACKET;COMPRESSOR**	SUPPORT	1		**5064–**			
9	S0512266	BOLT	BOULON A 6 PANS	2					
10	S0558966	BOLT	BOULON A 6 PANS	1					
11	S5102603	WASHER;SPRING	RONDELLE ELASTIQUE	3					
12	S5010613	WASHER;PLAIN	RONDELLE PLATE	3					
13	2107-6006	PULLEY ASS'Y;IDLE	POULIE	1					
14	S0512066	BOLT	BOULON A 6 PANS	2					
15	S5102603	WASHER;SPRING	RONDELLE ELASTIQUE	2					
16	S5010613	WASHER;PLAIN	RONDELLE PLATE	2					
17	2106-1019D25	V-BELT;POLY(4PK-1210L)	V-BELT	1					
18	K1009940B	HOSE;DISCHARGE	TUYAU FLEXIBLE	1					
18A	2180-6088	. O-RING;DISCHARGE(COMP)	. JOINT TORIQUE	1					
18B	K1011384	. O-RING;CONDENSER	. JOINT TORIQUE	1					
19	K1009941A	HOSE;SUCTION	TUYAU FLEXIBLE	1					
19A	2180-6086	. O-RING;SUCTION(COMP)	. JOINT TORIQUE	1					
19B	K1011385	. O-RING;EVAPORATOR	. JOINT TORIQUE	1					
20	520-00004	CONDENSER;AIR CON	CONDENSER;AIRCON	1					
21	S0509366	BOLT	BOULON A 6 PANS	4					
22	S5102503	WASHER;SPRING	RONDELLE ELASTIQUE	4					
23	S5010513	WASHER	CALE	4					
24	K1009942A	HOSE;LIQUID(1)	TUYAU FLEXIBLE	1					
24A	K1011388	. O-RING	. JOINT TORIQUE	2					
25	185-00407B	HOSE;LIQUID(2)	TUYAU FLEXIBLE	1					
25A	K1011388	. O-RING	. JOINT TORIQUE	2					
26	K1003547C	BRACKET	SUPPORT	1					
27	DS0025029	BOLT;SET	BOULON	2					
28	2204-6039A	RECEIVER DRIER	RESERVOIR DESSICATEUR	1					
29	S0508666	BOLT	BOULON A 6 PANS	2					
30	S5102503	WASHER;SPRING	RONDELLE ELASTIQUE	2					

DATE	JUN. 30, 2008
REV.NO.	EXB08-06

Fig. 1940 AIR CONDITIONER CLIMATISATION

Serial No. ;

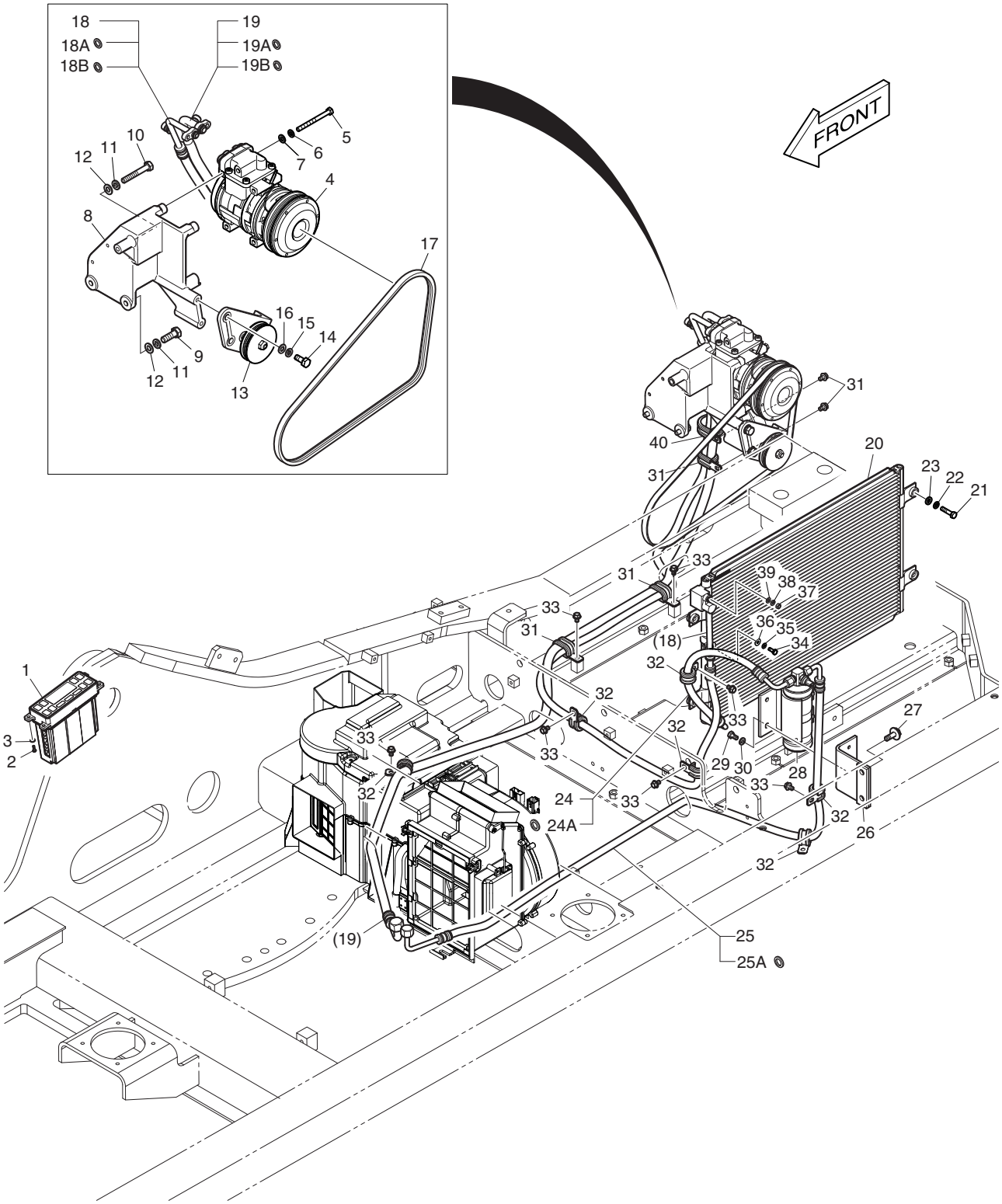

DATE	JUN. 30, 2008
REV. NO.	EXB08-06

Fig. 1940 AIR CONDITIONER CLIMATISATION

Serial No. ;

Key No.	Part No.	Description	Description	Q'ty	S.C	Serial No.	ICA	Replaceable part	
								Part No.	Q'ty
1940-31	124-00209D1	CLIP	CLIP	3					
32	124-00208D3	CLIP	CLIP	6					
33	K1001029	BOLT	BOULON A 6 PANS	9					
34	S0504653	BOLT	BOULON A 6 PANS	1					
35	S5010303	WASHER	CALE	1					
36	2114-1058D52	WASHER	CALE	1					
37	S4012303	NUT	ECROU 6 PANS M8	2					
38	S5102303	WASHER;SPRING	RONDELLE ELASTIQUE	2					
39	S5000313	WASHER;PLAIN	RONDELLE PLATE	2					
40	124-00208D7	CLIP	CLIP	1					

DATE	JUN. 30, 2007
REV.NO.	EXB07-06

Fig. 2100 CHASSIS FRAME
ARMATURE DE CHASSIS

Serial No. ;

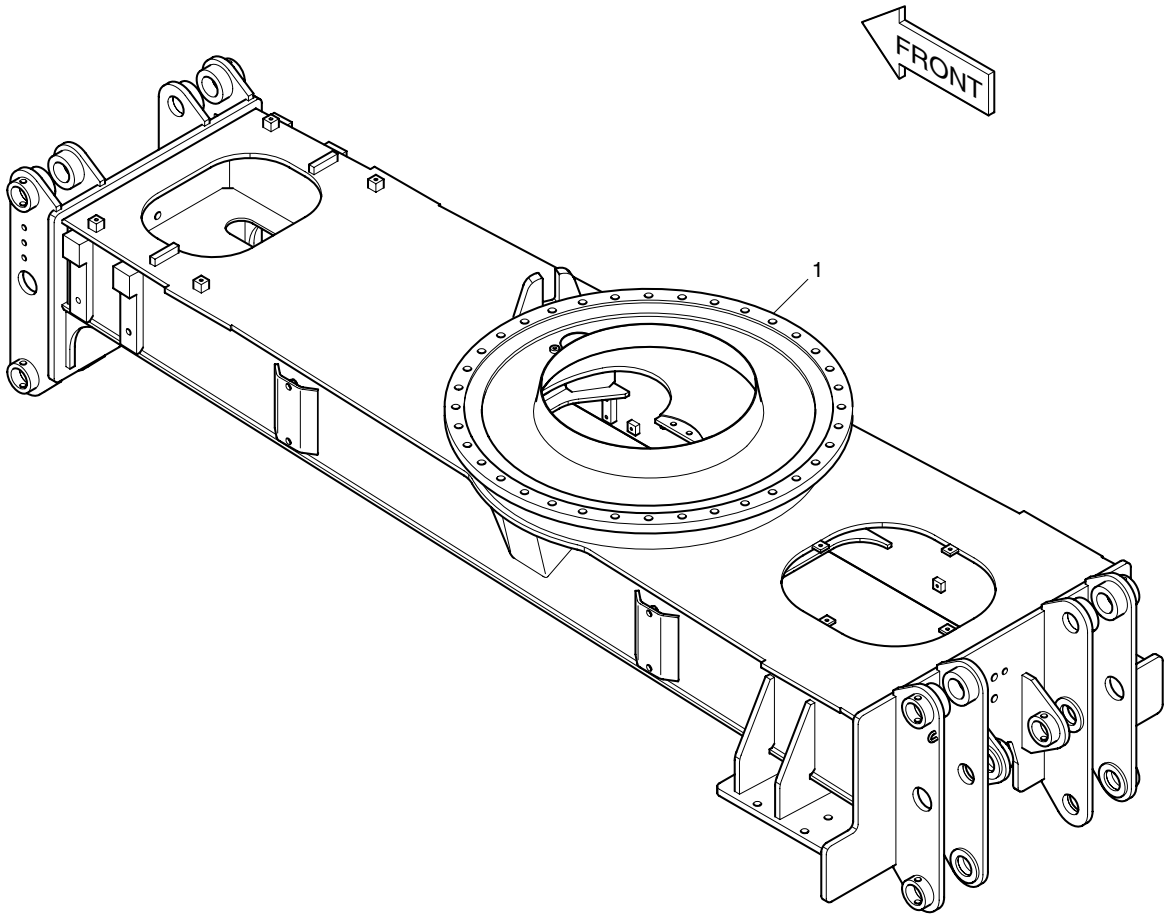

DATE	JUN. 30, 2007
REV. NO.	EXB07-06

Fig. 2100 CHASSIS FRAME ARMATURE DE CHASSIS

Serial No. ;

Key No.	Part No.	Description	Description	Q'ty	S.C	Serial No.	ICA	Replaceable part	
								Part No.	Q'ty
2100--	**K1017787C**	**CHASSIS FRAME ASS'Y**	ARMATURE DE CHASSIS	-	D				
1	603-00370G	CHASSIS;FRAME	ARMATURE DE CHASSIS	1		5001–5019			
	603-00370J	**CHASSIS;FRAME**	ARMATURE DE CHASSIS	1		**5020–**			

DATE	DEC. 26, 2006
1st EDITION	

Fig. 2110 CRADLE BERCEAU

Serial No. ;

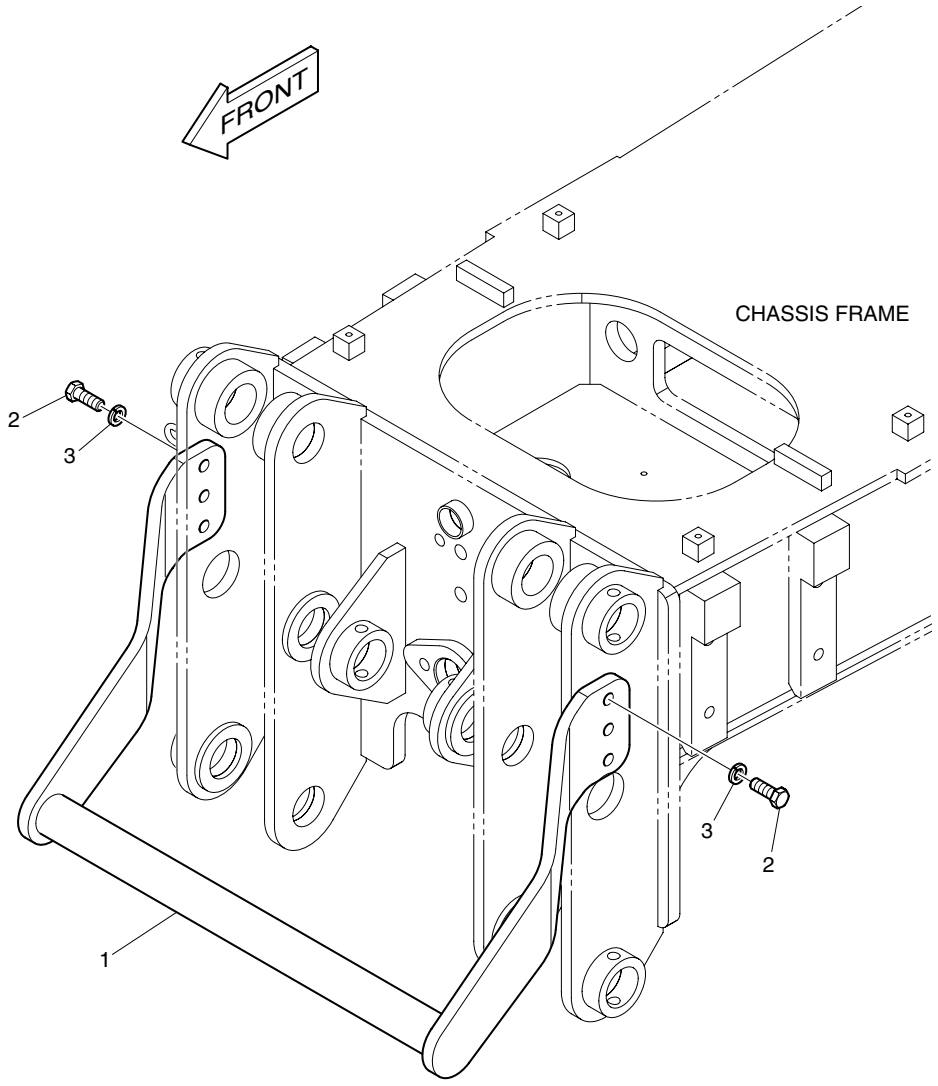

DATE	DEC. 26, 2006
1st EDITION	

Fig. 2110 CRADLE BERCEAU

Serial No. ;

Key No.	Part No.	Description	Description	Q'ty	S.C	Serial No.	ICA	Replaceable part	
								Part No.	Q'ty
2110--	K1017371	UNDERCARRIAGE;CRADLE	BERCEAU	-	D				
1	195-02723B	CRADLE;CLAMSHELL	BERCEAU	1					
2	S0565166	BOLT M16X2.0X45	BOULON	6					
3	S5102903	WASHER;SPRING	RONDELLE ELASTIQUE	6					

DATE	JUN. 30, 2007
REV.NO.	EXB07-06

Fig. 2120 POWER TRAIN - AXLE
SYSTEME DE COMMANDE

Serial No. ;

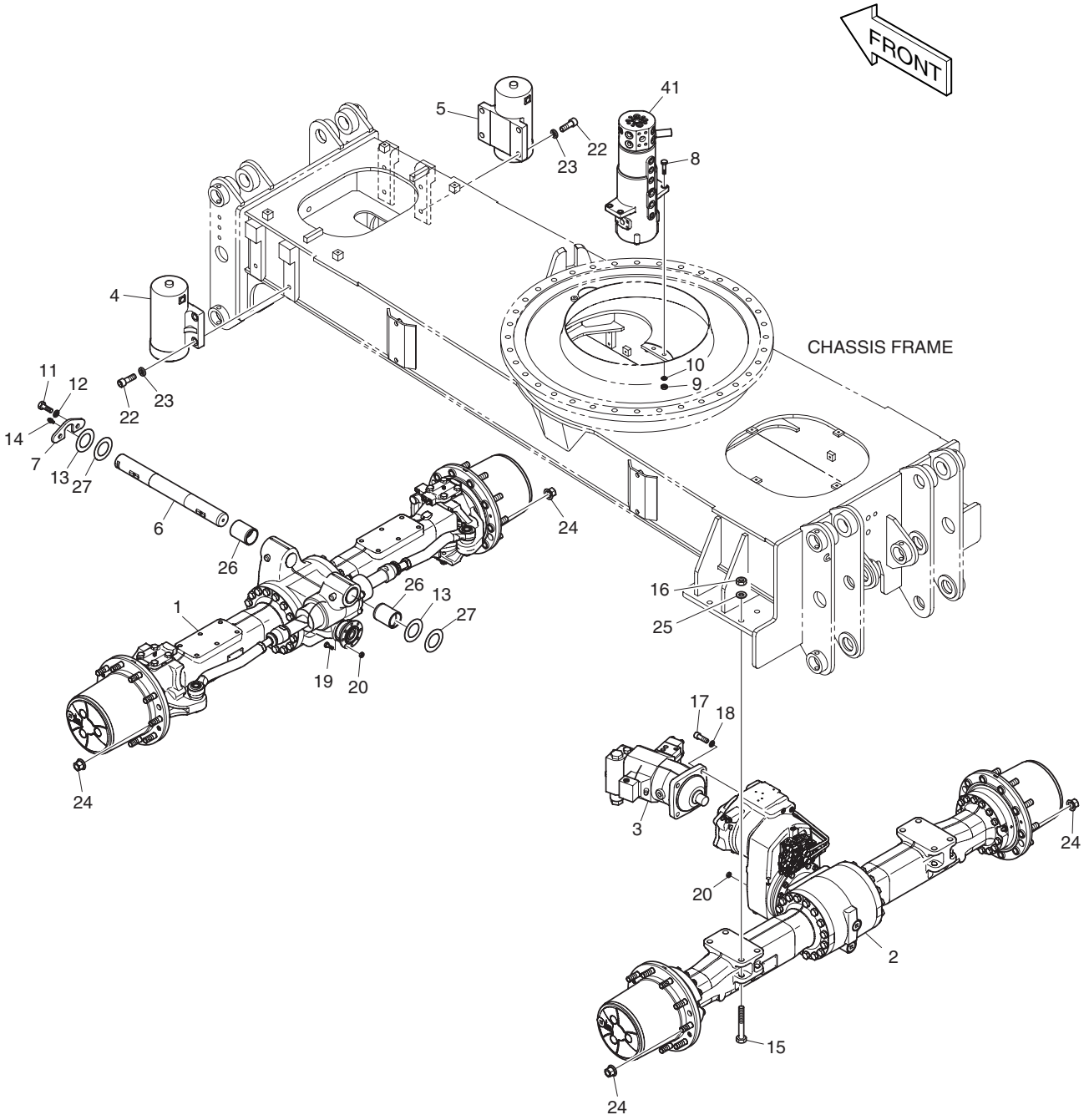

DATE	JUN. 30, 2007
REV. NO.	EXB07-06

Fig. 2120 POWER TRAIN - AXLE SYSTEME DE COMMANDE

Serial No. ;

Key No.	Part No.	Description	Description	Q'ty	S.C	Serial No.	ICA	Replaceable part	
								Part No.	Q'ty
2120--	**200-00032J**	**POWER TRAIN**	MOTEUR	-	D				
1	211-00159A	AXLE;FRONT	AXE	1					
2	211-00160A	AXLE;REAR	AXE	1					
3	401-00452B	MOTOR;TRAVEL	MOTEUR	1					
4	440-00457B	CYLINDER;CHOCK(L.H)	CYLINDRE DE CALE	1					
5	440-00458B	CYLINDER;CHOCK(R.H)	CYLINDRE DE CALE	1					
6	123-00514	PIN	GOUPILLE	1					
7	191-03146B	PLATE	PLAQUE	1					
8	S0560766	BOLT	BOULON	4					
9	S4012733	NUT	ECROU	4					
10	S5102703	WASHER;SPRING	RONDELLE ELASTIQUE	4					
11	S0565266	BOLT	BOULON	2					
12	S5102903	WASHER;SPRING	RONDELLE ELASTIQUE	2					
13	2114-1879	SHIM	CALE	2					
14	S6710041	NIPPLE;GREASE	MAMELON	1					
15	S0771666	BOLT	BOULON	8					
16	S4033133	NUT	ECROU	8					
17	S2221666	BOLT;SOCKET	BOULON A 6 PANS CREUX	4					
18	S5110903	WASHER	RONDELLE	4					
19	K1006985	BOLT	BOULON	8					
20	2121-1251A	NUT	ECROU	16					
22	S2227866	BOLT;SOCKET	BOULON A 6 PANS CREUX	8					
23	S5103103	WASHER;SPRING	RONDELLE ELASTIQUE	8					
24	K1002433	NUT;WHEEL	ECROU	40					
25	2114-9012A	WASHER;HARD	RONDELLE	8					
26	K1008942	BUSHING	DOUILLE	2					
27	**K1040599**	**SHIM**	CALE	2		**5020–**			
41	480-00016B	JOINT;CENTER	JOINT CENTRAL	1		5001–5011	I	480-00016C	1
	480-00016C	**JOINT;CENTER**	JOINT CENTRAL	1		**5012–**			

Fig. 2130 POWER TRAIN - TIRE
SYSTEME DE COMMANDE

Serial No. ;

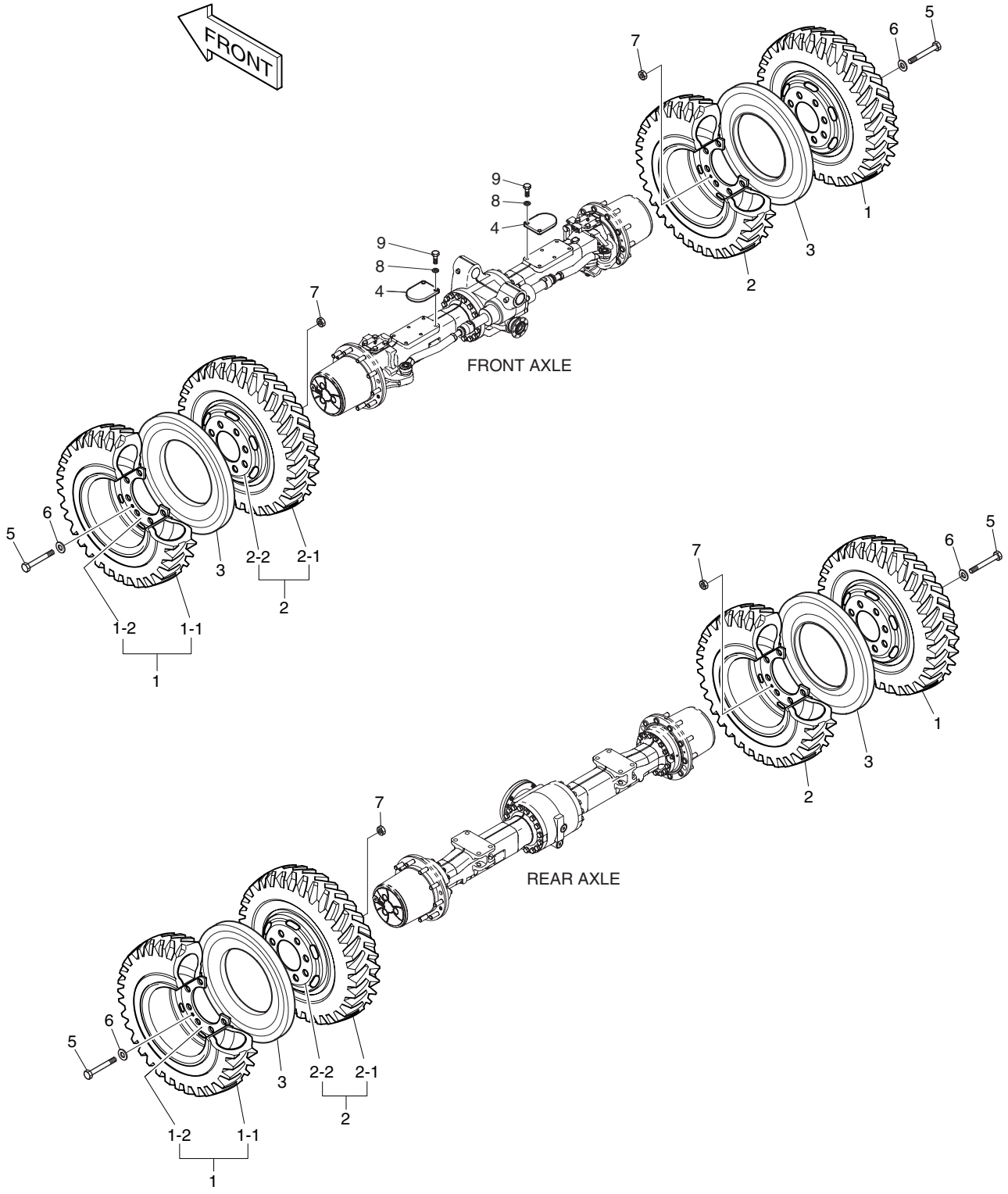

DATE	DEC. 26, 2006
1st EDITION	

Fig. 2130 POWER TRAIN - TIRE
SYSTEME DE COMMANDE

Serial No. ;

Key No.	Part No.	Description	Description	Q'ty	S.C	Serial No.	ICA	Replaceable part	
								Part No.	Q'ty
2130--	200-00036C	TRIE ASS'Y(10" TIRE)	PNEU	-	D				
1	276-00154A	TIRE;OUTSIDE	PNEU	4	D				
1-1	2276-9005A	. TIRE	. PNEU	1					
1-2	278-00096B	. RIM	. JANTE	1					
2	276-00155A	TIRE;INSIDE	PNEU	4	D				
2-1	2276-9005A	. TIRE	. PNEU	1					
2-2	278-00096B	. RIM	. JANTE	1					
3	161-00616E	SPACER;RUBBER	ENTERTOISE	4					
4	191-03701B	PLATE;CHOCK PAD	PLAQUE	2					
5	S0516066	BOLT	BOULON	8					
6	4114-1792A	WASHER;HARD	RONDELLE	8					
7	S4012733	NUT	ECROU	8					
8	S5102903	WASHER;SPRING	RONDELLE ELASTIQUE	4					
9	S0521466	BOLT	BOULON	4					

DATE	JUN. 30, 2008
REV.NO.	EXB08-06

Fig. 2140 POWER TRAIN - SHAFT
SYSTEME DE COMMANDE

Serial No. ;

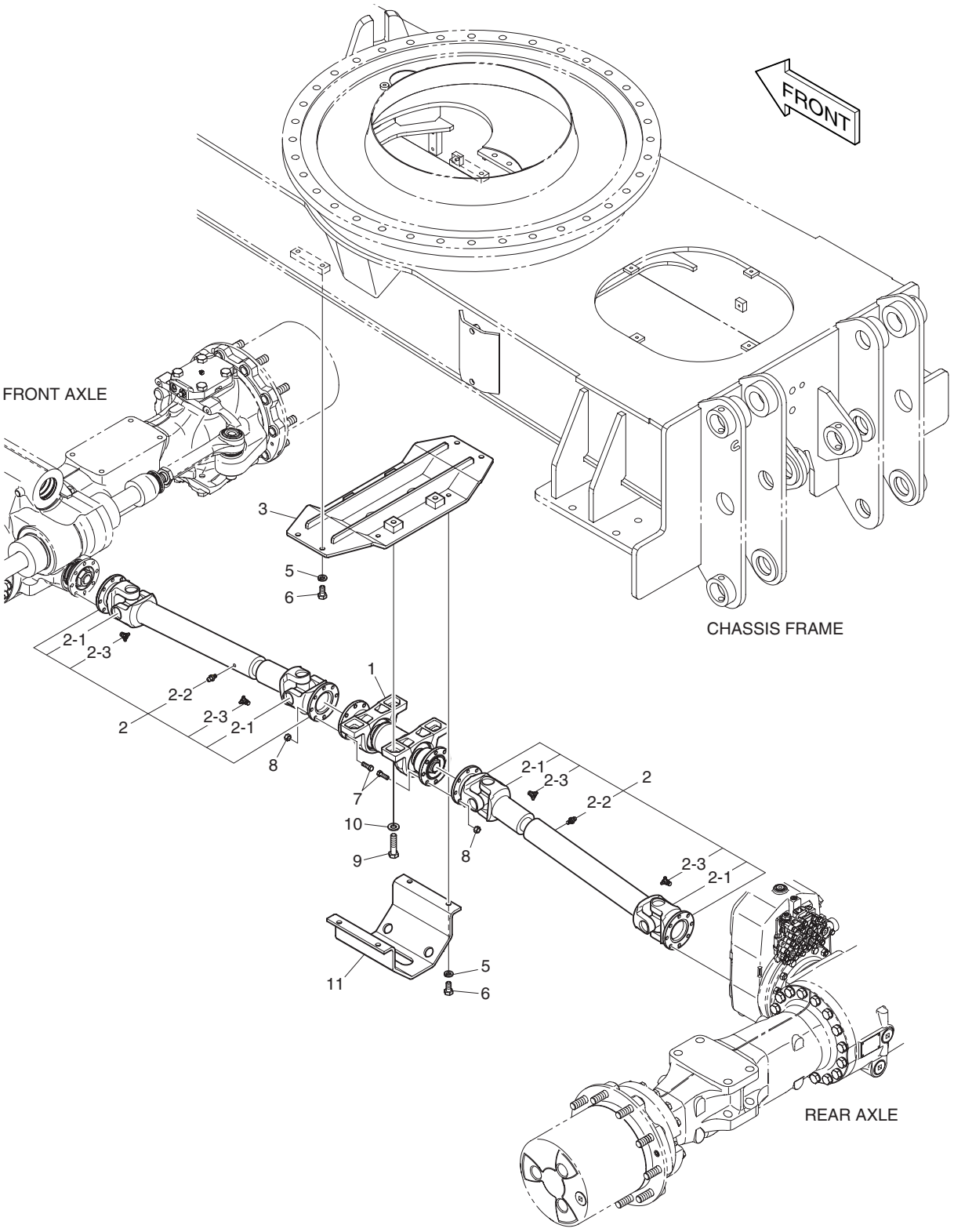

DATE	JUN. 30, 2008
REV. NO.	EXB08-06

Fig. 2140 POWER TRAIN - SHAFT
SYSTEME DE COMMANDE

Serial No. ;

Key No.	Part No.	Description	Description	Q'ty	S.C	Serial No.	ICA	Replaceable part	
								Part No.	Q'ty
2140--	K1026967C	PROPELLER SHAFT	AXE DE PROPULSEUR	-	D				
1	K1006944	SHAFT;PROPELLER(CENTER)	ARBRE	1		5001–5019	I	K1040074	1
	K1040074	SHAFT;PROPELLER(CENTER)	ARBRE	1		5020–5108	I	K1040074A	1
	K1040074A	**SHAFT;PROPELLER(CENTER)**	ARBRE	1		**5109**–			
2	K1005881	SHAFT;PROPELLER	ARBRE	2					
2-1	K9002679	. JOINT;UNIVERSAL	. UNIVERSEL JOINT	2					
2-2	S6710041	. NIPPLE;GREASE	. MAMELON	1					
2-3	1.181-00009	. NIPPLE	. MAMELON	2					
3	K1006987C	BRACKET	SUPPORT	1					
5	S5102703	WASHER;SPRING	RONDELLE ELASTIQUE	8					
6	S0515066	BOLT	BOULON	8					
7	K1006985	BOLT	BOULON	16					
8	2121-1251A	NUT	ECROU	16					
9	S0565566	BOLT	BOULON	4					
10	2114-1816A	WASHER;HARD	RONDELLE	4					
11	K1029263A	COVER	COUVERCLE	1		5001–5010	I	K1029263B	1
	K1029263B	COVER	COUVERCLE	1		5011–			

DATE	JUN. 30, 2007
REV.NO.	EXB07-06

Fig. 2150 CHASSIS COMPONENTS(1) COMPOSANTS DE CHASSIS

Serial No. ;

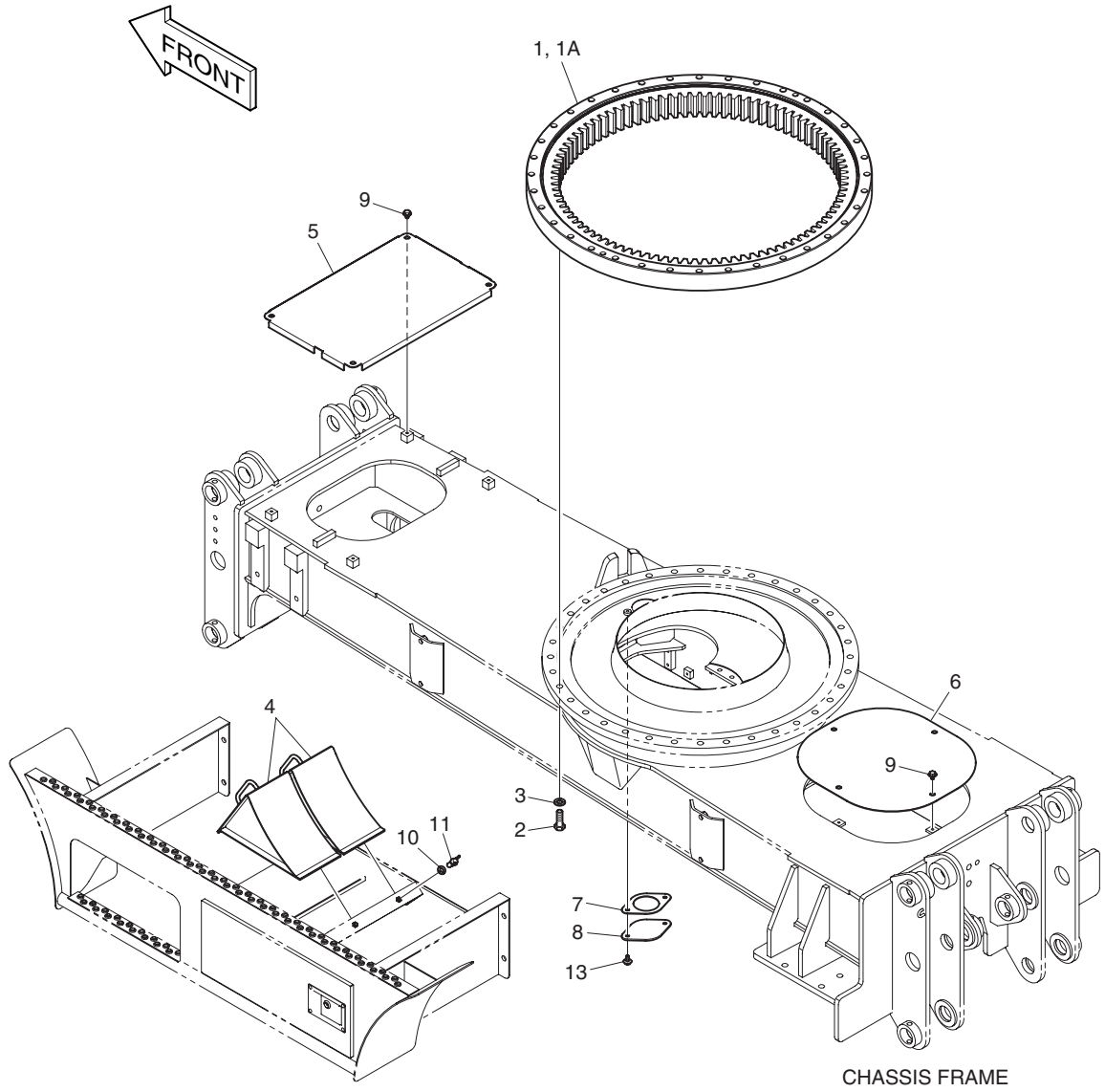

DATE	JUN. 30, 2007
REV. NO.	EXB07-06

Fig. 2150 CHASSIS COMPONENTS(1) COMPOSANTS DE CHASSIS

Serial No. ;

Key No.	Part No.	Description	Description	Q'ty	S.C	Serial No.	ICA	Replaceable part	
								Part No.	Q'ty
2150--	**230-00071E**	**CHASSIS COMPONENTS**	COMPOSANTS DE CHASSIS	-	D				
1	109-00165	BEARING;SWING	ROULEMENT	1		5001–5014			
	109-00165A	**BEARING;SWING**	ROULEMENT	1		**5015–**			
1A	180-00297D2	. SEAL	. JOINT	2					
2	S0770066	BOLT	BOULON	36					
3	2114-9012A	WASHER;HARD	RONDELLE	37					
4	K1000867	CHOCK;WHEEL	D'APPUI	2					
5	621-02815A	COVER	COUVERCLE	1					
6	621-02825A	COVER	COUVERCLE	1					
7	180-00463	PACKING	EMBALLAGE	1					
8	621-02938B	COVER	COUVERCLE	1					
9	DS0025014	BOLT;SET	BOULON	8					
10	S5102603	WASHER;SPRING	RONDELLE ELASTIQUE	4					
11	S3056203	BOLT;WING	BOULON	2					
13	DS0025023	BOLT;SET	BOULON	2					

DATE	DEC. 26, 2006
1st EDITION	

Fig. 2160 CHASSIS COMPONENTS(2) COMPOSANTS DE CHASSIS

Serial No. ;

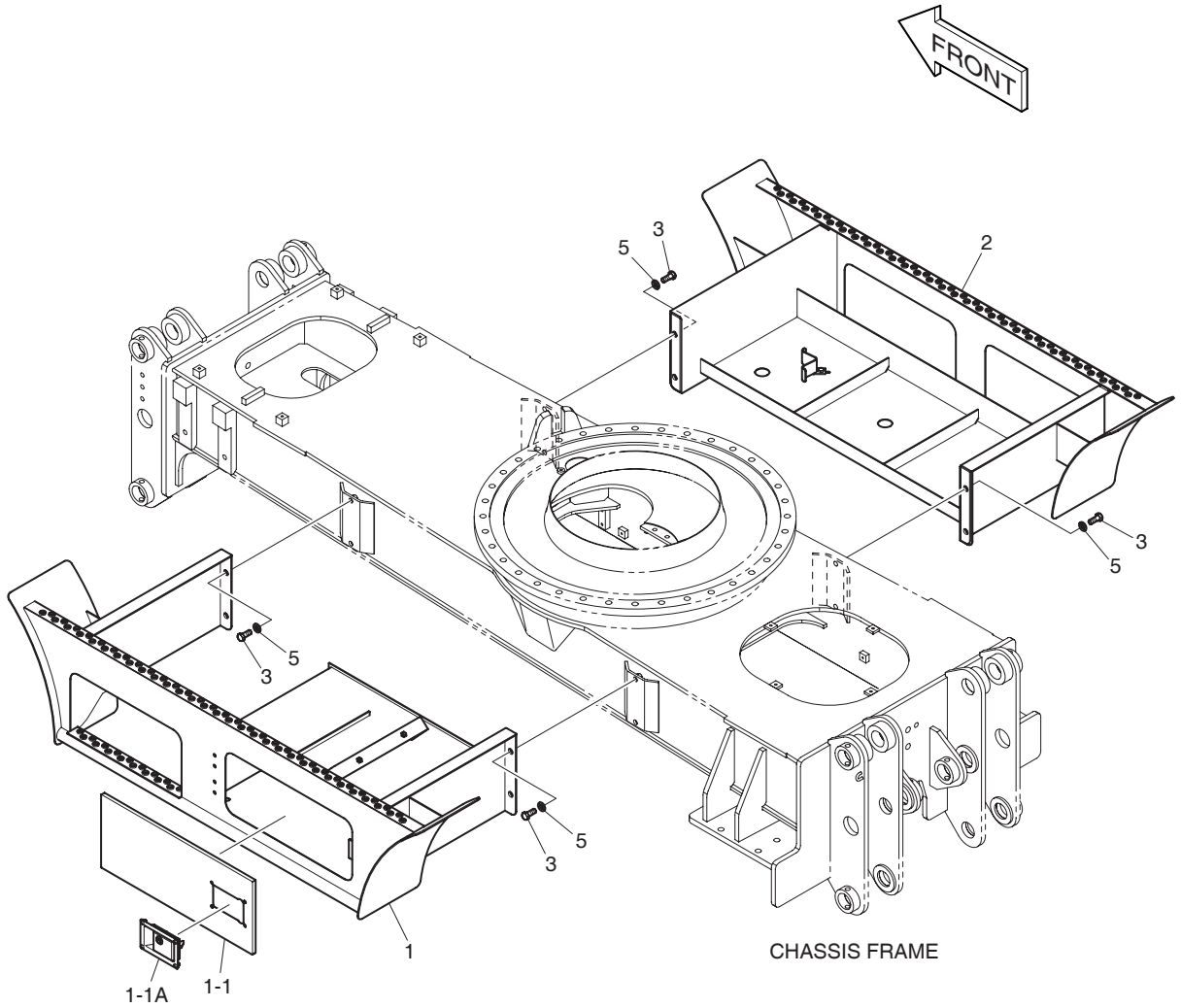

DATE	DEC. 26, 2006
1st EDITION	

Fig. 2160 CHASSIS COMPONENTS(2) COMPOSANTS DE CHASSIS

Serial No. ;

Key No.	Part No.	Description	Description	Q'ty	S.C	Serial No.	ICA	Replaceable part	
								Part No.	Q'ty
2160--	230-00074C	CHASSIS COMPONENTS	COMPOSANTS DE CHASSIS	-	D				
1	625-00154E	STEP;L.H	MARCHER	1					
1-1	K1015471A	. DOOR	. PORTE	1					
1-1A	K1017130	.. CATCH;DOOR	.. CROCHET	1					
2	625-00155E	STEP;R.H	MARCHER	1					
3	S0565066	BOLT	BOULON	8					
5	2114-1816A	WASHER;HARD	RONDELLE	8					

DATE	JUN. 30, 2007
REV.NO.	EXB07-06

Fig. 2170 BRAKE PIPING
CANALISATIONS DE FREIN

Serial No. ;

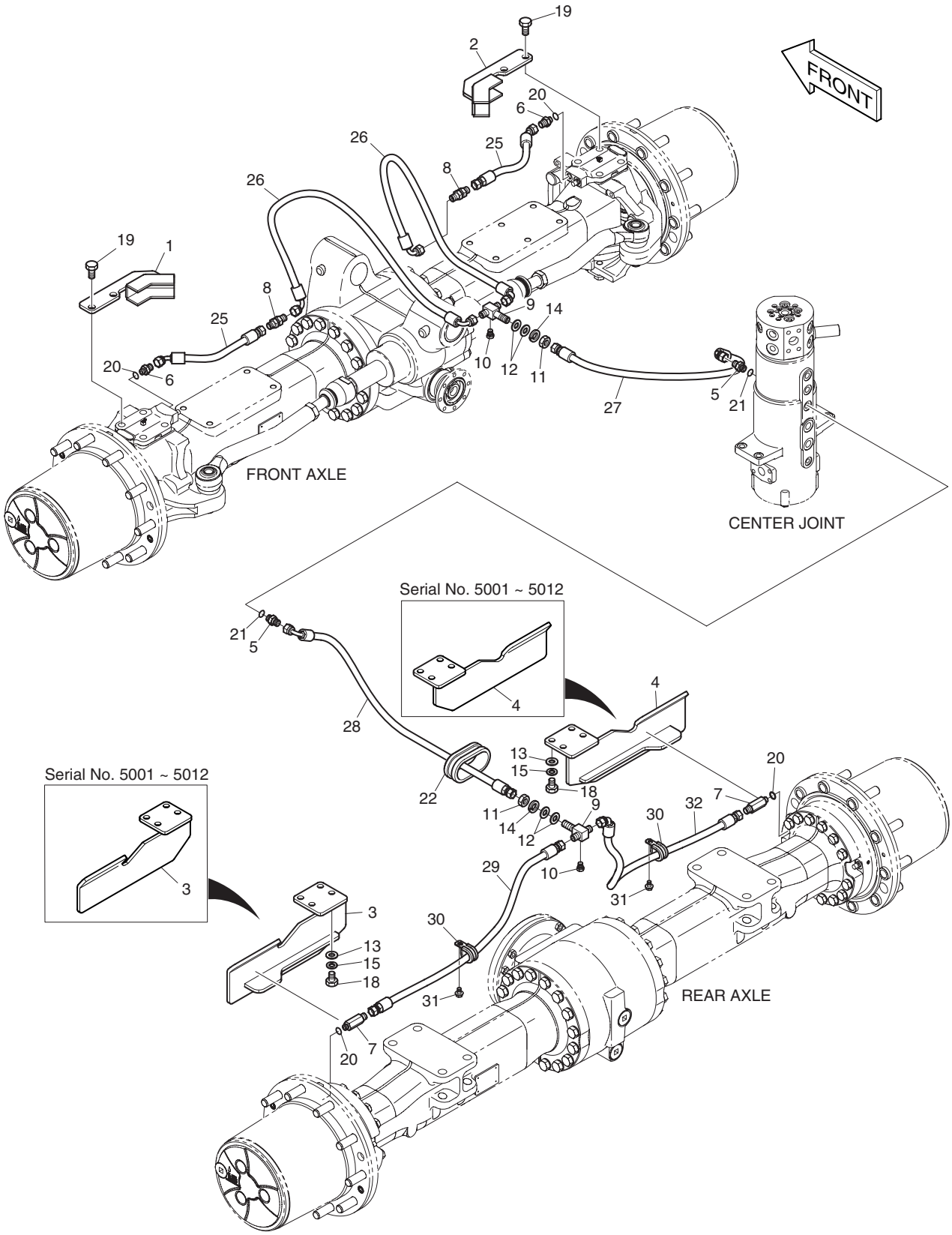

DATE	JUN. 30, 2007
REV. NO.	EXB07-06

Fig. 2170 BRAKE PIPING CANALISATIONS DE FREIN

Serial No. ;

Key No.	Part No.	Description	Description	Q'ty	S.C	Serial No.	ICA	Replaceable part	
								Part No.	Q'ty
2170--	**K1013649E**	**BRAKE PIPING**	CANALISATION DE FREIN	-	D				
1	621-02854A	COVER;FRONT(L.H)	COUVERCLE	1					
2	621-02855A	COVER;FRONT(R.H)	COUVERCLE	1					
3	621-02856C	COVER;REAR(L.H)	COUVERCLE	1		5001–5012	I	621-02856E	1
	621-02856E	**COVER;REAR(L.H)**	COUVERCLE	1		**5013–**			
4	621-02857C	COVER;REAR(R.H)	COUVERCLE	1		5001–5012	I	621-02857E	1
	621-02857E	**COVER;REAR(R.H)**	COUVERCLE	1		**5013–**			
5	2181-1126D7	ADAPTER	ADAPTEUR	2					
6	2181-1126D55	ADAPTER	ADAPTEUR	2					
7	2181-1126D104	ADAPTER	ADAPTEUR	2		5001–5012			
	DS2227062	**ADAPTER**	ADAPTEUR	2		**5013–5014**			
	DS2213184	**ADAPTER**	ADAPTEUR	2		**5015–**			
8	2181-2718	ADAPTER	ADAPTEUR	2					
9	2181-2300	TEE	TE	2					
10	2181-2047A	PLUG	BOUCHON	2					
11	2121-1284	NUT	ECROU	2					
12	S5010913	WASHER	RONDELLE	4					
13	S5010713	WASHER;PLAIN	RONDELLE	8					
14	S5103001	WASHER;SPRING	RONDELLE ELASTIQUE	2					
15	S5102703	WASHER;SPRING	RONDELLE ELASTIQUE	8					
18	S0515266	BOLT	BOULON	8					
19	S0521466	BOLT	BOULON	4					
20	S8000121	O-RING	JOINT TORIQUE	4					
21	S8000141	O-RING	JOINT TORIQUE	2					
22	DS7601023	BUSHING;RUBBER	DOUILLE EN CAOUTCHOUC	1					
25	DS2092127	HOSE	TUYAU FLEXIBLE	2					
26	DS2091024	HOSE	TUYAU FLEXIBLE	2					
27	DS2093009	HOSE	TUYAU FLEXIBLE	1					
28	DS2093010	HOSE	TUYAU FLEXIBLE	1					
29	DS2094114	HOSE	TUYAU FLEXIBLE	1					
30	124-00208D4	CLIP	AGRAFE	2					
31	K1001029	BOLT	BOULON	2					
32	DS2093292	HOSE	TUYAU FLEXIBLE	1					

DATE	DEC. 26, 2006
1st EDITION	

Fig. 2180 STEER & CHOCKING PIPING BOEUF ET CALAGE

Serial No. ;

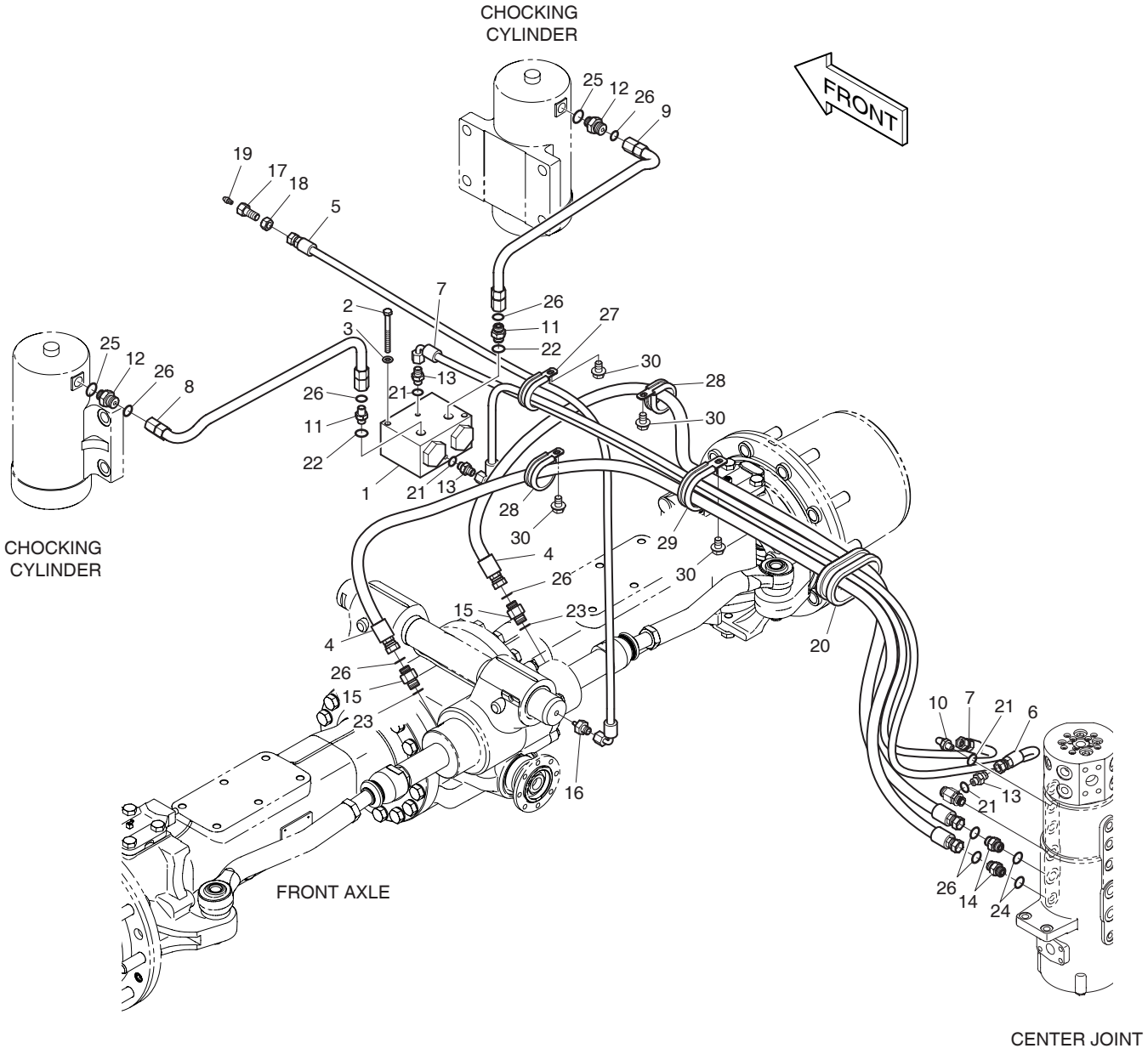

DATE	DEC. 26, 2006
1st EDITION	

Fig. 2180 STEER & CHOCKING PIPING BOEUF ET CALAGE

Serial No. ;

Key No.	Part No.	Description	Description	Q'ty	S.C	Serial No.	ICA	Replaceable part	
								Part No.	Q'ty
2180--	400-01476C	STEER & CHOCKING PIPING	BOEUF ET CALAGE	-	D				
1	2423-9007A	VALVE;CHOCKING	VANNE DE CALAGE	1					
2	S0557066	BOLT	BOULON A 6 PANS	2					
3	S5102503	WASHER;SPRING	RONDELLE ELASTIQUE	2					
4	DS2011484	HOSE	TUYAU FLEXIBLE	2					
5	DS2093006	HOSE	TUYAU FLEXIBLE	1					
6	DS2093007	HOSE	TUYAU FLEXIBLE	1					
7	DS2093083	HOSE	TUYAU FLEXIBLE	1					
8	140-01568C	PIPE(L.H)	TUBULURE	1					
9	140-01569C	PIPE(R.H)	TUBULURE	1					
10	2181-1702D4	ELBOW	COUDE	1					
11	2181-4133D2	ADAPTER	ADAPTEUR	2					
12	2181-4133D33	ADAPTER	ADAPTEUR	2					
13	2181-1126D14	ADAPTER	ADAPTEUR	3					
14	2181-4133D39	ADAPTER	ADAPTEUR	2					
15	2181-4133D47	ADAPTER	ADAPTEUR	2					
16	2181-1110D30	ADAPTER	ADAPTEUR	1					
17	181-00103	REDUCER	REDUCTEUR	1					
18	121-00006	NUT	ECROU	1					
19	S6710041	NIPPLE;GREASE	MAMELON DE GRAISSE	1					
20	DS7601023	BUSHING;RUBBER	MANCHON CAOUTCHOUC	1					
21	S8000111	O-RING	JOINT TORIQUE	4					
22	S8000141	O-RING	JOINT TORIQUE	2					
23	S8000161	O-RING	JOINT TORIQUE	2					
24	S8000181	O-RING	JOINT TORIQUE	2					
25	2180-1026D13	O-RING	JOINT TORIQUE	2					
26	S8030061	O-RING	JOINT TORIQUE	8					
27	124-00208D4	CLIP	AGRAFE	1					
28	124-00208D7	CLIP	AGRAFE	2					
29	124-00208D9	CLIP	AGRAFE	1					
30	K1001029	BOLT	BOULON A 6 PANS	4					

Fig. 2190 PROPELLING PIPING
TUYAUTERIE DE PROPULSION

Serial No. ;

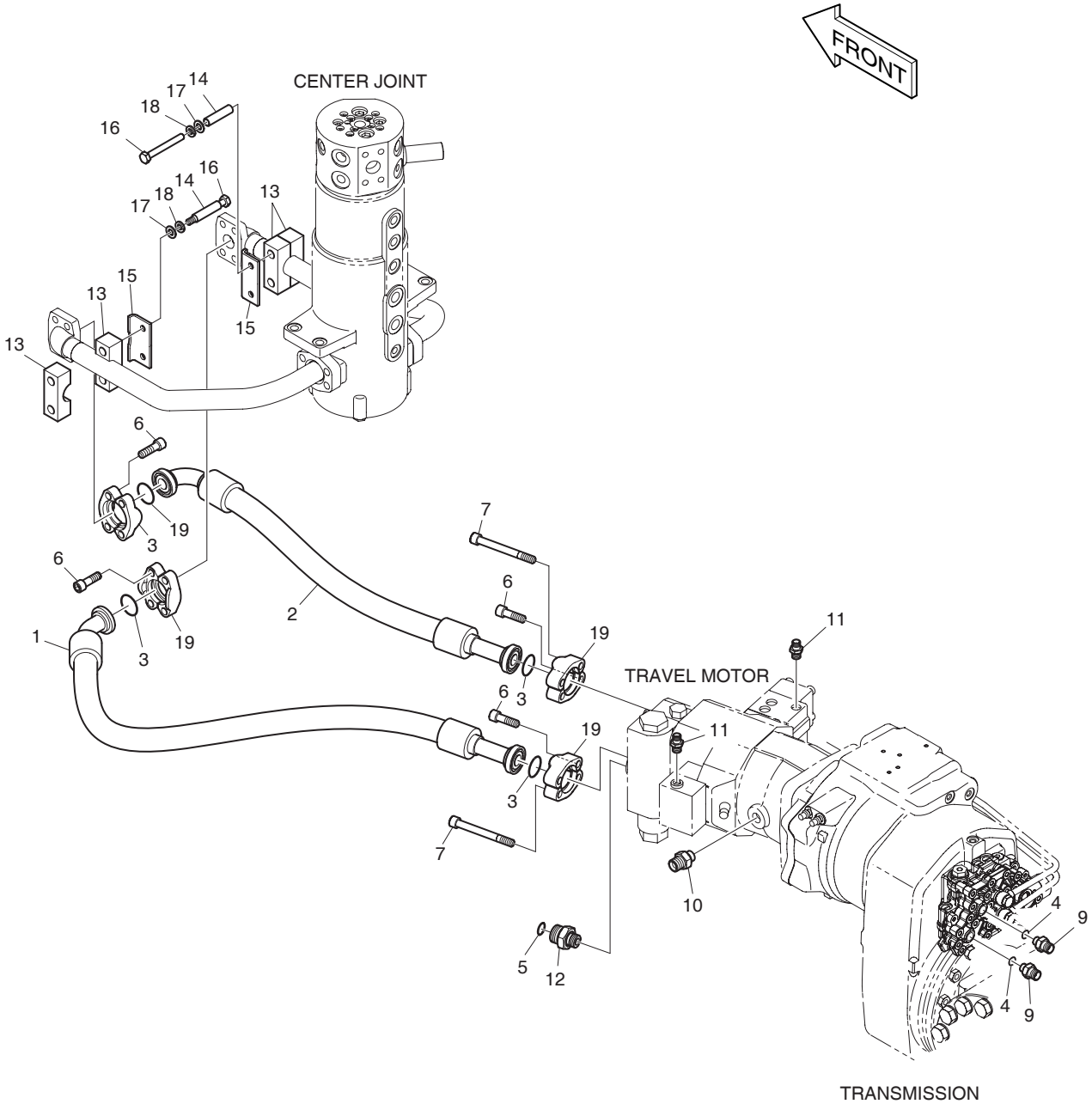

DATE	DEC. 26, 2006
1st EDITION	

Fig. 2190 PROPELLING PIPING TUYAUTERIE DE PROPULSION

Serial No. ;

Key No.	Part No.	Description	Description	Q'ty	S.C	Serial No.	ICA	Replaceable part	
								Part No.	Q'ty
2190--	400-01473E	PROPELLING PIPING	TUYAUTERIE DE	-	D				
1	DS2040430	HOSE	TUYAU FLEXIBLE	1					
2	DS2039088	HOSE	TUYAU FLEXIBLE	1					
3	2180-1026D19	O-RING	JOINT TORIQUE	4					
4	S8000121	O-RING	JOINT TORIQUE	2					
	S8000141	O-RING	JOINT TORIQUE	2					
5	S8030121	O-RING	JOINT TORIQUE	1					
6	S2215466	BOLT;SOCKET	BOULON A 6 PANS CREUX	10					
7	S2216766	BOLT;SOCKET	BOULON A 6 PANS CREUX	6					
9	2181-1126D55	ADAPTER	ADAPTEUR	2					
10	DS2479001	ADAPTER	ADAPTEUR	1					
11	DS2479002	ADAPTER	ADAPTEUR	2					
12	DS2495001	ADAPTER	ADAPTEUR	1					
13	124-00285	CLAMP;RUBBER	COLLIER	4					
14	K1002091	SPACER	DOUILLE D'ECARTEMENT	4					
15	K1002092	PLATE	PLAQUE	2					
16	S0559266	BOLT	BOULON	4					
17	S5010613	WASHER	RONDELLE	4					
18	S5102603	WASHER;SPRING	RONDELLE ELASTIQUE	4					
19	2181-9081	FLANGE;SPLIT	BRIDE	8					

DATE	DEC. 26, 2006
1st EDITION	

Fig. 2200 PROPELLING PIPING - SWIVEL JOINT
TUYAUTERIE DE PROPULSION

Serial No. ;

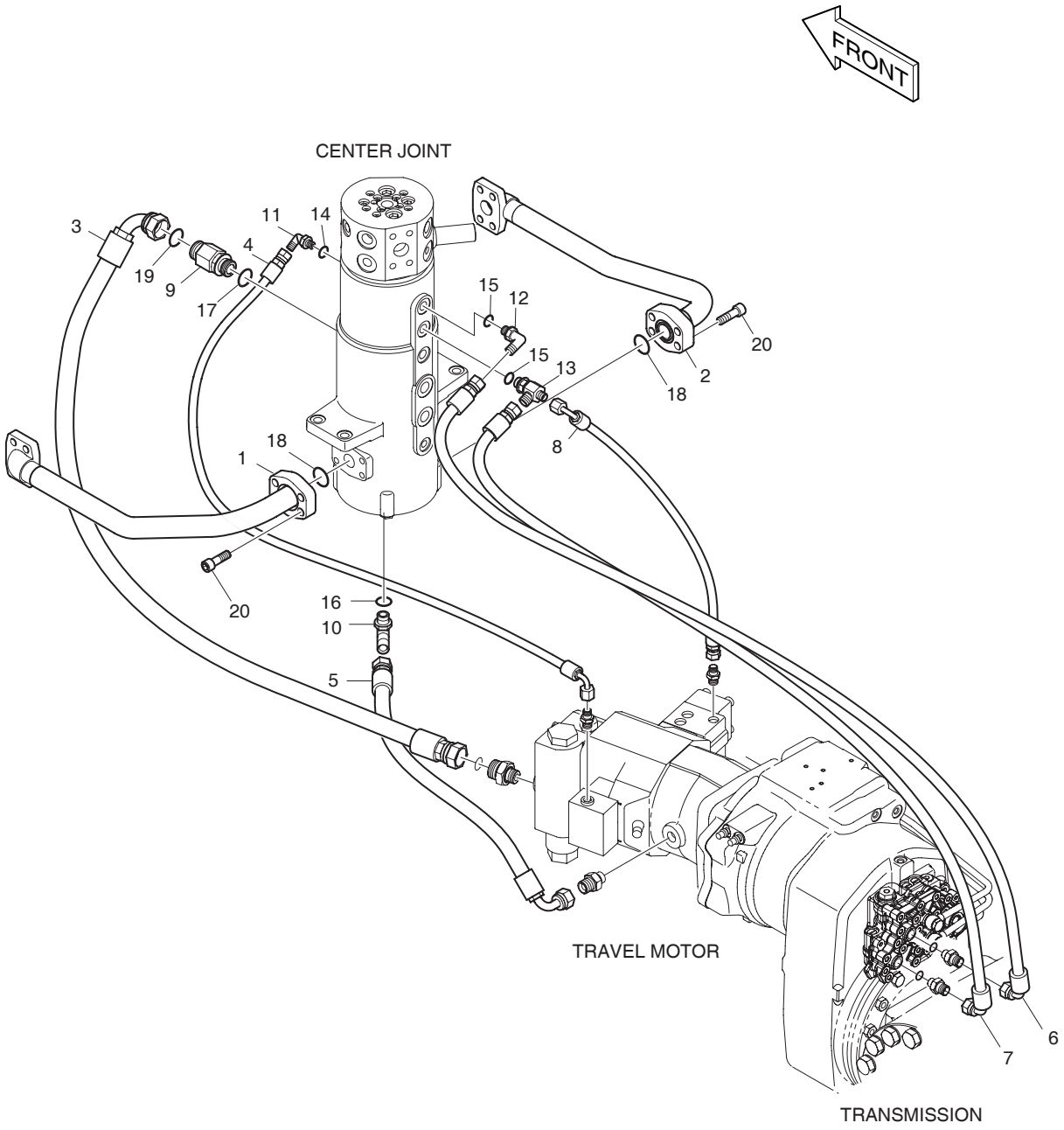

DATE	DEC. 26, 2006
1st EDITION	

Fig. 2200 PROPELLING PIPING - SWIVEL JOINT
TUYAUTERIE DE PROPULSION

Serial No. ;

Key No.	Part No.	Description	Description	Q'ty	S.C	Serial No.	ICA	Replaceable part	
								Part No.	Q'ty
2200--	400-01475B	PROPELLING PIPING	TUYAUTERIE DE	-	D				
1	140-01583B	PIPE	TUYAU	1					
2	140-01584B	PIPE	TUYAU	1					
3	DS2013528	HOSE	TUYAU FLEXIBLE	1					
4	DS2093002	HOSE	TUYAU FLEXIBLE	1					
5	2184-1036D15	HOSE	TUYAU FLEXIBLE	1					
6	DS2093003	HOSE	TUYAU FLEXIBLE	1					
7	DS2093004	HOSE	TUYAU FLEXIBLE	1					
8	DS2093005	HOSE	TUYAU FLEXIBLE	1					
9	2181-2701A	TEE	TE	1					
10	2181-1702D2	ELBOW	COUDE	1					
11	2181-1702D4	ELBOW	COUDE	1					
12	2181-1702D5	ELBOW	COUDE	1					
13	2181-1951D11	TEE	TE	1					
14	S8000111	O-RING	JOINT TORIQUE	1					
15	S8000141	O-RING	JOINT TORIQUE	2					
16	S8000181	O-RING	JOINT TORIQUE	1					
17	S8000231	O-RING	JOINT TORIQUE	1					
18	2180-1026D19	O-RING	JOINT TORIQUE	2					
19	S8030121	O-RING	JOINT TORIQUE	1					
20	S2215466	BOLT;SOCKET	BOULON A 6 PANS CREUX	8					

DATE	JUN. 30, 2008
REV.NO.	EXB08-06

Fig. 2210 BLADE DOZER

Serial No. ;

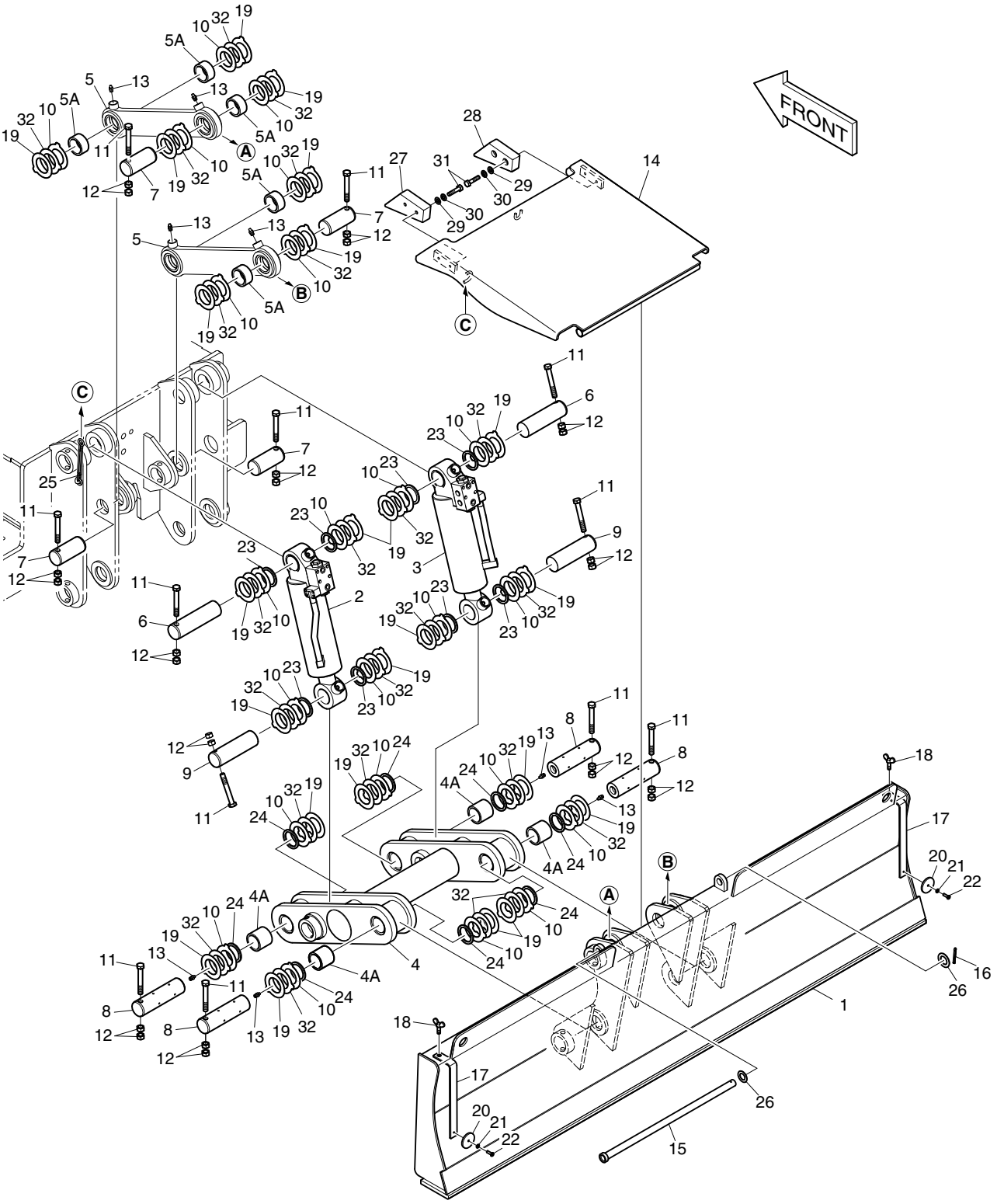

DATE	JUN. 30, 2008
REV. NO.	EXB08-06

Fig. 2210 BLADE DOZER

Serial No. ;

Key No.	Part No.	Description	Description	Q'ty	S.C	Serial No.	ICA	Replaceable part	
								Part No.	Q'ty
2210--	608-00043C	DOZER ASS'Y	ENSEMBLE DOZER	-	D				
1	608-00039A	DOZER;BLADE	DOZER	1					
2	440-00448B	CYLINDER;DOZER(L.H)	CYLINDRE DE DOZER	1		5001–5019	I	440-00448C	1
	440-00448C	CYLINDER;DOZER(L.H)	CYLINDRE DE DOZER	1		5020–			
3	440-00449B	CYLINDER;DOZER(R.H)	CYLINDRE DE DOZER	1		5001–5019	I	440-00449C	1
	440-00449C	CYLINDER;DOZER(R.H)	CYLINDRE DE DOZER	1		5020–			
4	155-00058A	LINK	ARTICULATION	1					
4A	110-00264	. BUSHING	. DOUILLE	4					
5	155-00059B	LINK	ARTICULATION	2					
5A	110-00266	. BUSHING	. DOUILLE	2					
6	2123-1833B	PIN	GOUPILLE	2		5001–5041	I	2123-1833C	2
	2123-1833C	**PIN**	GOUPILLE	2		**5042–**			
7	2123-1529B	PIN	GOUPILLE	4					
8	2123-1835	PIN	GOUPILLE	4					
9	2123-1530B	PIN	GOUPILLE	2					
10	DS7752040	SHIM	CALE	24					
11	S0566666	BOLT	BOULON	12					
12	S4012933	NUT	ECROU	24					
13	S6710043	NIPPLE;GREASE	MAMELON	8					
14	K1004077A	COVER;DOZER PROTECT	COUVERCLE	1					
15	K1004079	PIN	GOUPILLE	1					
16	S5735751	PIN;SPLIT	GOUPILLE	1					
17	K1000813	BRACKET	SUPPORT	2					
18	S3051201	BOLT;WING	BOULON	2					
19	DS7752041	SHIM	CALE	24					
20	190-00078	REFLECTOR	REFLECTEUR	2					
21	S5102203	WASHER;SPRING	RONDELLE ELASTIQUE	2					
22	S3450853	SCREW	VIS	2					
23	DS5501033	SEAL;DUST	JOINT	8					
24	2180-1106BD9	SEAL;DUST	JOINT	8					
25	K1012305	CHAIN	CHAINE	1					
26	DS0401189	WASHER;PLAIN	RONDELLE	2					
27	K1003383A	RUBBER	CAOUTCHOUC	1					
28	K1003405A	RUBBER	CAOUTCHOUC	1					
29	S5010613	WASHER;PLAIN	RONDELLE	4					
30	S5102603	WASHER;SPRING	RONDELLE ELASTIQUE	4					
31	S0512566	BOLT	BOULON	4					
32	DS7752079	SHIM	CALE	24					

DATE	DEC. 26, 2006
1st EDITION	

Fig. 2220 BLADE PIPING
CONDUITES DE DOZER

Serial No. ;

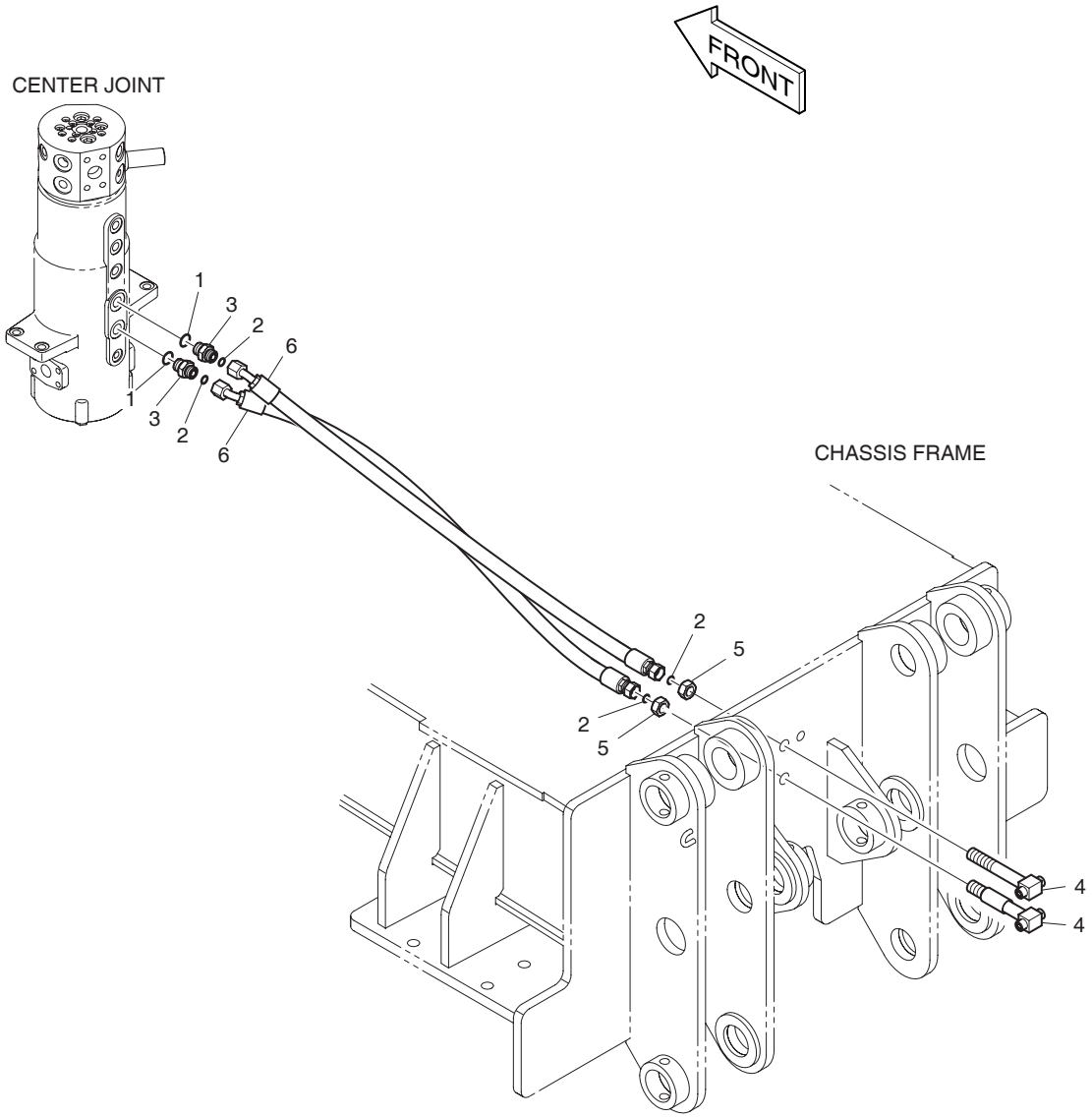

DATE	DEC. 26, 2006
1st EDITION	

Fig. 2220 BLADE PIPING CONDUITES DE DOZER

Serial No. ;

Key No.	Part No.	Description	Description	Q'ty	S.C	Serial No.	ICA	Replaceable part	
								Part No.	Q'ty
2220--	400-01484A	BALDE PIPING	CONDUITES DE DOZER	-	D				
1	S8000181	O-RING	JOINT TORIQUE	2					
2	S8030081	O-RING	JOINT TORIQUE	4					
3	2181-4133D3	ADAPTER	ADAPTEUR	2					
4	K1006248	TEE;SET	TE	2					
5	121-00010D5	NUT	ECROU	2					
6	DS2012250	HOSE	TUYAU FLEXIBLE	2					

DATE	DEC. 26, 2006
1st EDITION	

Fig. 2230 BLADE PIPING - REAR DOZER ONLY CONDUITES DE DOZER

Serial No. ;

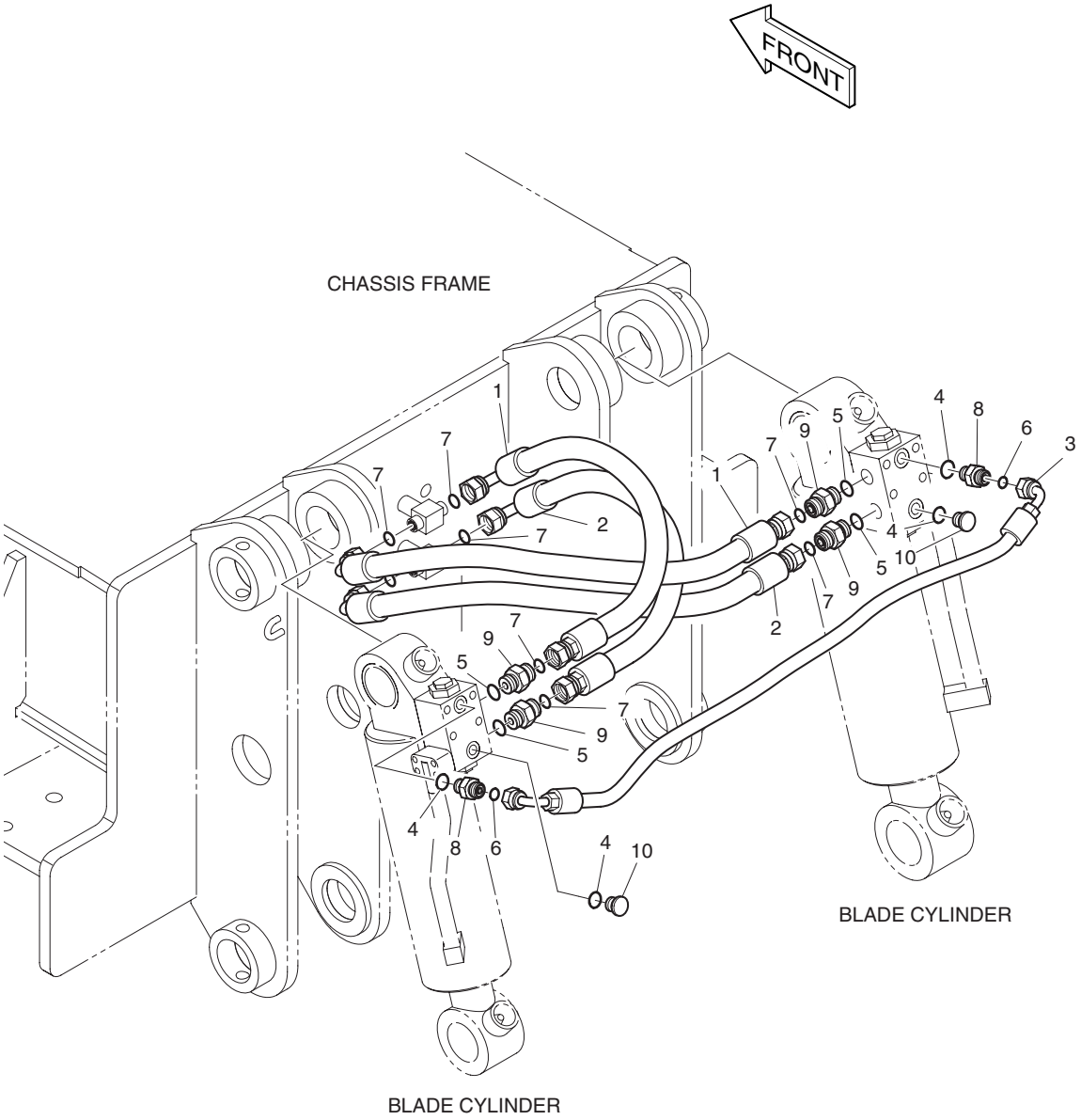

DATE	DEC. 26, 2006
1st EDITION	

Fig. 2230 BLADE PIPING - REAR DOZER ONLY CONDUITES DE DOZER

Serial No. ;

Key No.	Part No.	Description	Description	Q'ty	S.C	Serial No.	ICA	Replaceable part	
								Part No.	Q'ty
2230--	K1017307	BALDE PIPING	CONDUITES DE DOZER	-	D				
1	DS2013695	HOSE	TUYAU FLEXIBLE	2					
2	DS2013696	HOSE	TUYAU FLEXIBLE	2					
3	DS2023242	HOSE	TUYAU FLEXIBLE	1					
4	S8000111	O-RING	JOINT TORIQUE	4					
5	S8000141	O-RING	JOINT TORIQUE	4					
6	S8030041	O-RING	JOINT TORIQUE	2					
7	S8030061	O-RING	JOINT TORIQUE	8					
8	2181-4133D1	ADAPTER	ADAPTEUR	2					
9	2181-4133D2	ADAPTER	ADAPTEUR	4					
10	2181-1950D1	PLUG	BOUCHON	2					

DATE	JUN. 30, 2008
REV.NO.	EXB08-06

Fig. 3100 BOOM - 4.3m FLECHE

Serial No. ;

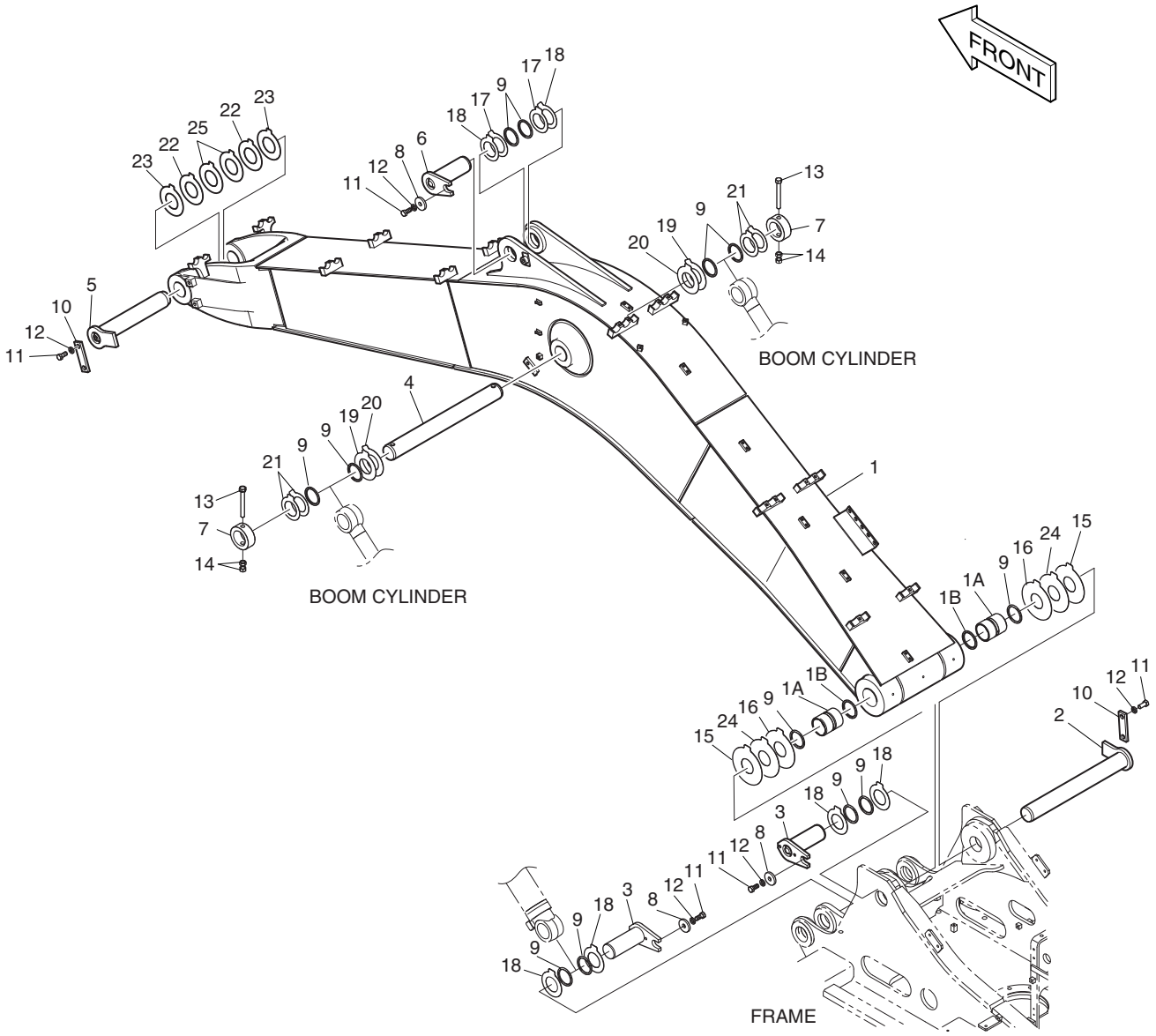

DATE	JUN. 30, 2008
REV. NO.	EXB08-06

Fig. 3100 BOOM - 4.3m FLECHE

Serial No. ;

Key No.	Part No.	Description	Description	Q'ty	S.C	Serial No.	ICA	Replaceable part	
								Part No.	Q'ty
3100--	**701-00540J**	**BOOM ASS'Y**	ENSEMBLE FLECHE	-	D				
1	701-00541C	BOOM SUB ASS'Y-4.3m	FLECHE	1					
1A	110-00240	. BUSHING	. DOUILLE	2					
1B	2180-1106BD4	. SEAL;DUST	. JOINT	2					
2	123-00671A	PIN	GOUPILLE	1		5001–5012	I	123-00671B	1
	123-00671B	PIN	GOUPILLE	1		5013–			
3	123-00474	PIN	GOUPILLE	2		5001–5014	I	K1038739	2
	K1038739	PIN	GOUPILLE	2		5015–			
4	K1004508	PIN	GOUPILLE	1		5001–5012	I	K1004508A	1
	K1004508A	PIN	GOUPILLE	1		5013–5016	I	K1004508C	1
	K1004508C	**PIN**	GOUPILLE	1		**5017**–			
5	2123-2207E	PIN	GOUPILLE	1		5001–5014	I	K1038740	1
	K1038740	PIN	GOUPILLE	1		5015–			
6	2123-2209C	PIN	GOUPILLE	1		5001–5014	I	K1038741	1
	K1038741	PIN	GOUPILLE	1		5015–			
7	2116-1532A	STOPPER	ARRET	2					
8	2116-1060D6	STOPPER	ARRET	3					
9	2180-1106BD4	SEAL;DUST	JOINT	12					
10	621-03710A	PLATE;STOPPER	PLAQUE	2					
11	S0521366	BOLT	BOULON	7					
12	S5102906	WASHER;SPRING	RONDELLE ELASTIQUE	7					
13	S0566966	BOLT	BOULON	2					
14	S4012933	NUT	ECROU	4					
15	DS7752023	SHIM	CALE	2					
16	DS7752011	SHIM	CALE	2					
17	DS7752004	SHIM	CALE	4					
18	DS7752005	SHIM	CALE	4					
19	DS7752006	SHIM	CALE	2					
20	DS7752007	SHIM	CALE	2					
21	DS7752003	SHIM	CALE	4					
22	DS7752008	SHIM	CALE	2					
23	DS7752009	SHIM	CALE	2					
24	DS7752089	SHIM	CALE	2					
25	DS7752090	SHIM	CALE	2					

DATE	JUN. 30, 2007
REV.NO.	EXB07-06

Fig. 3110 ARM - 2.1m BALANCIER

Serial No. ;

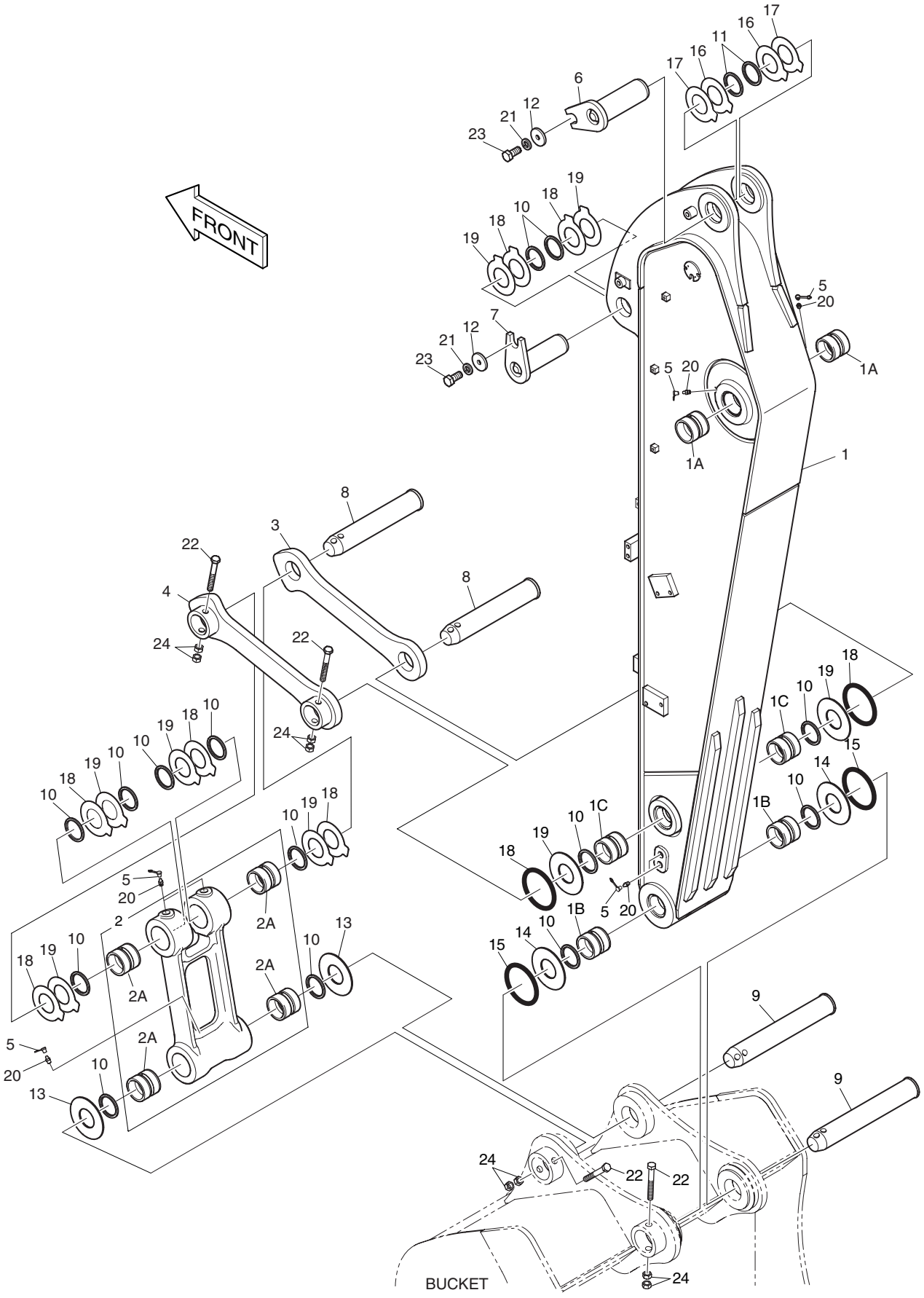

DATE	JUN. 30, 2007
REV. NO.	EXB07-06

Fig. 3110 ARM - 2.1m BALANCIER

Serial No. ;

Key No.	Part No.	Description	Description	Q'ty	S.C	Serial No.	ICA	Replaceable part	
								Part No.	Q'ty
3110--	**701-00544G**	**ARM ASS'Y**	ENSEMBLE DE BRAS	-	D				
1	701-00545E	ARM SUB ASS'Y-2.1m	BALANCIER	1		5001–5014	I	701-00545G	1
	701-00545G	**ARM SUB ASS'Y-2.1m**	BALANCIER	1		**5015–**			
1A	110-00241	. BUSHING	. DOUILLE	2					
1B	110-00242	. BUSHING	. DOUILLE	2					
1C	110-00243	. BUSHING	. DOUILLE	2					
2	155-00061	LINK;PUSH ASS'Y	ARTICULATION	1					
2A	110-00245	. BUSHING	. DOUILLE	4					
3	2155-1306B	LINK;GUIDE(R.H)	ARTICULATION	1					
4	2155-1307B	LINK;GUIDE(L.H)	ARTICULATION	1					
5	160-00020	CAP;GREASE NIPPLE	CHAPEAU	7					
6	2123-2209C	PIN	GOUPILLE	1		5001–5014	I	K1038741	1
	K1038741	**PIN**	GOUPILLE	1		**5015–**			
7	2123-2225C	PIN	GOUPILLE	1		5001–5014	I	K1038743	1
	K1038743	**PIN**	GOUPILLE	1		**5015–**			
8	K1007038	PIN	GOUPILLE	2		5001–5014	I	K1007038A	2
	K1007038A	**PIN**	GOUPILLE	2		**5015–**			
9	2123-2212C	PIN	GOUPILLE	2		5001–5014	I	K1038517	2
	K1038517	**PIN**	GOUPILLE	2		**5015–**			
10	2180-1106BD3	SEAL;DUST	JOINT	14					
11	2180-1106BD4	SEAL;DUST	JOINT	4					
12	2116-1060D6	STOPPER	ARRET	2					
13	2114-1995B	SPACER	DOUILLE D'ECARTEMENT	2					
14	2114-1994B	SPACER	DOUILLE D'ECARTEMENT	2					
15	180-00077D3	O-RING	JOINT TORIQUE	2					
16	DS7752006	SHIM	CALE	2					
17	DS7752007	SHIM	CALE	2					
18	DS7752001	SHIM	CALE	8					
19	DS7752002	SHIM	CALE	8					
20	S6710041	NIPPLE;GREASE	MAMELON	7					
21	S5102906	WASHER;SPRING	RONDELLE ELASTIQUE	2					
22	S0566766	BOLT	BOULON	4					
23	S0521366	BOLT	BOULON	2					
24	S4012933	NUT	ECROU	8					

Fig. 3120 BUCKET - 0.5m³ GODET

Serial No. ;

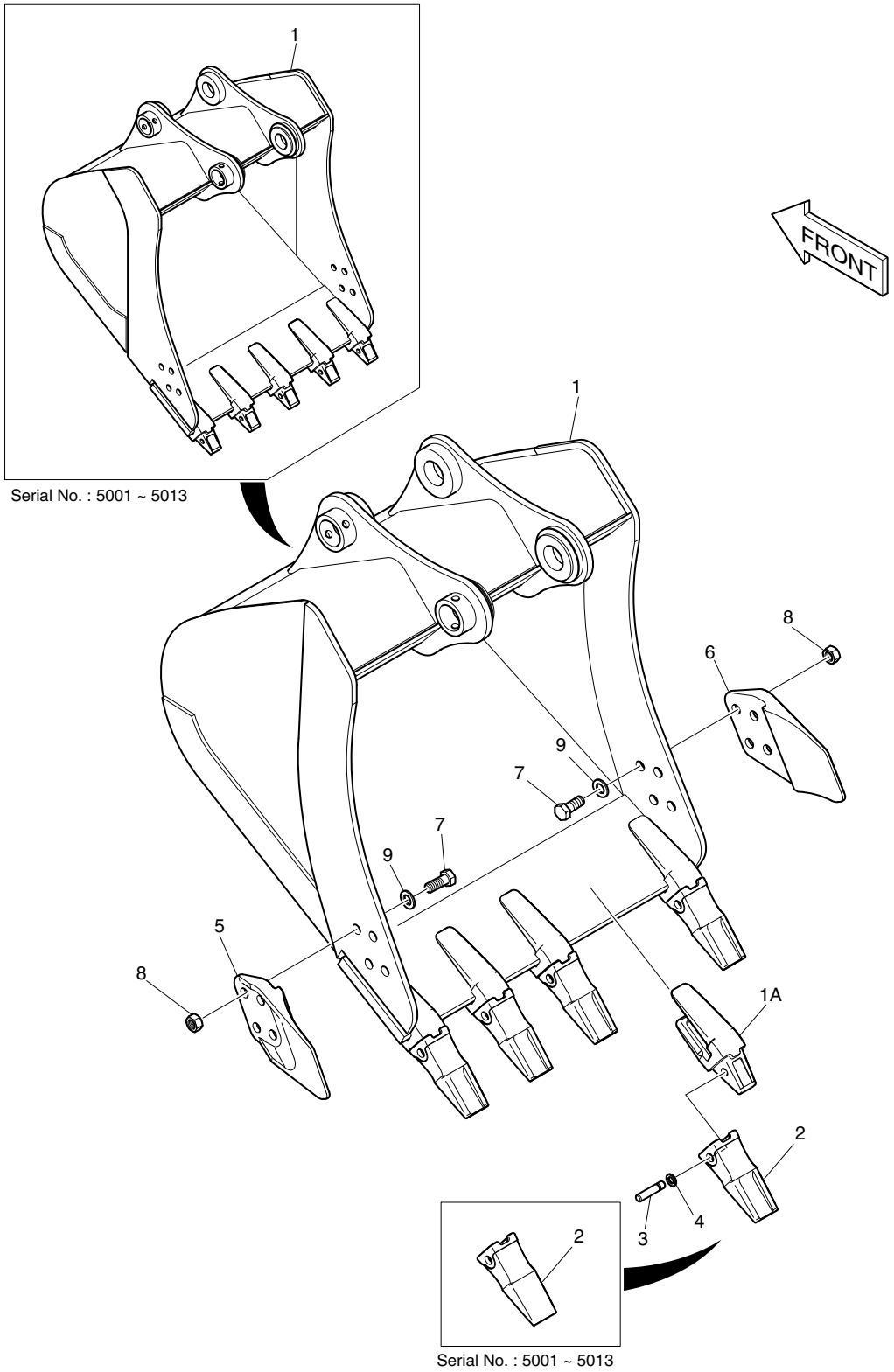

DATE	JUN. 30, 2007
REV. NO.	EXB07-06

Fig. 3120 BUCKET - 0.5㎥ GODET

Serial No. ;

Key No.	Part No.	Description	Description	Q'ty	S.C	Serial No.	ICA	Replaceable part	
								Part No.	Q'ty
3120--	K1007673A	BUCKET ASS'Y- 0.5㎥	GODET	1		5001–5012	I	K1007673B	1
	K1007673B	**BUCKET ASS'Y- 0.5㎥**	GODET	1		**5013–5013**	I	K1007673C	1
	K1007673C	**BUCKET ASS'Y- 0.5㎥**	GODET	1		**5014–**			
1	K1007674A	BUCKET - 0.5㎥	GODET	1		5001–5012	I	K1007674B	1
	K1007674B	**BUCKET - 0.5㎥**	GODET	1		**5013–5013**	I	K1007674C	1
	K1007674C	**BUCKET - 0.5㎥**	GODET	1		**5014–**			
1A	2713-1222A	. ADAPTER;TOOTH	. DENT DE ADAPTEUR	5					
2	713-00057A	POINT;TOOTH	DENT	5		5001–5013			
	713-00057B	**POINT;TOOTH**	DENT	5		**5014–**			
3	2705-1022	PIN;LOCKING	GOUPILLE	5					
4	2114-1859	WASHER;LOCKING	RONDELLE	5					
5	2713-1229A	CUTTER;SIDE(L.H)	COIN DE GODET DROIT	1					
6	2713-1228A	CUTTER;SIDE(R.H)	COIN DE GODET DROIT	1					
7	S0574561	BOLT	BOULON	8					
8	S4013333	NUT	ECROU	8					
9	2114-1831A	WASHER;HARDEN	RONDELLE	8					

DATE	JUN. 30, 2007
REV.NO.	EXB07-06

Fig. 3130 BOOM PIPING - 4.3m
TUYAUTERIE DE PERCHE

Serial No. ;

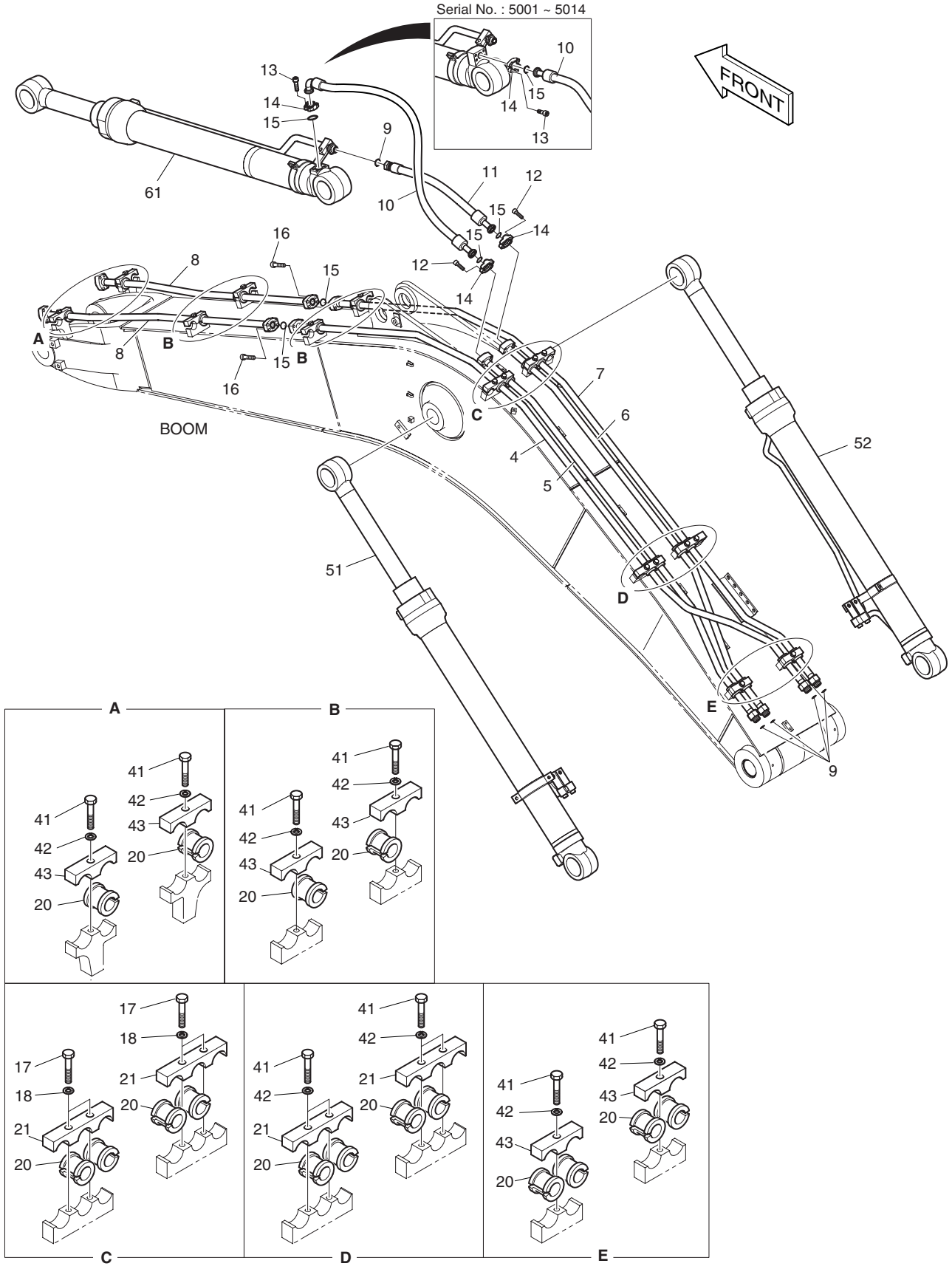

DATE	JUN. 30, 2007
REV. NO.	EXB07-06

Fig. 3130 BOOM PIPING - 4.3m TUYAUTERIE DE PERCHE

Serial No. ;

Key No.	Part No.	Description	Description	Q'ty	S.C	Serial No.	ICA	Replaceable part	
								Part No.	Q'ty
3130--	**K1018872A**	**BOOM PIPING**	CONDUITES DE FLECHE	-	D				
4	140-01522E	PIPE	TUYAU	1					
5	140-01536B	PIPE	TUYAU	1					
6	140-01537B	PIPE	TUYAU	1					
7	140-01538E	PIPE	TUYAU	1					
8	K1000843A	PIPE	TUYAU	2					
9	S8030121	O-RING	JOINT TORIQUE	5					
10	DS2038186	HOSE	TUYAU FLEXIBLE	1		5001–5014			
	DS2040643	**HOSE**	TUYAU FLEXIBLE	1		**5015–**			
11	DS2016061	HOSE	TUYAU FLEXIBLE	1					
12	S2212366	BOLT;SOCKET	BOULON A 6 PANS CREUX	8					
13	S2212266	BOLT;SOCKET	BOULON A 6 PANS CREUX	4					
14	2181-9079	FLANGE;SPLIT	BRIDE	6					
15	2180-1026D2	O-RING	JOINT TORIQUE	5					
16	S2212566	BOLT;SOCKET	BOULON A 6 PANS CREUX	8					
17	S0560866	BOLT	BOULON	4					
18	S5102703	WASHER;SPRING	RONDELLE ELASTIQUE	4					
20	K1000294A	RUBBER	CAOUTCHOUC	18					
21	K1004317	CLAMP;PIPE	COLLIER	4					
41	S0560866	BOLT	BOULON	12					
42	S5102703	WASHER;SPRING	RONDELLE ELASTIQUE	12					
43	K1004316	CLAMP;PIPE	COLLIER	8					
51	440-00408B	CYLINDER;BOOM(L.H)	VERIN DE FLECHE	1					
52	440-00409B	CYLINDER;BOOM(R.H)	VERIN DE FLECHE	1					
61	440-00410A	CYLINDER;ARM	VERIN DE BALANCIER	1		5001–5014			
	440-00410B	**CYLINDER;ARM**	VERIN DE BALANCIER	1		**5015–**			

DATE	DEC. 26, 2006
1st EDITION	

Fig. 3140 LUBRICATION PIPING - BOOM 4.3m
LUBRIFICATION

Serial No. ;

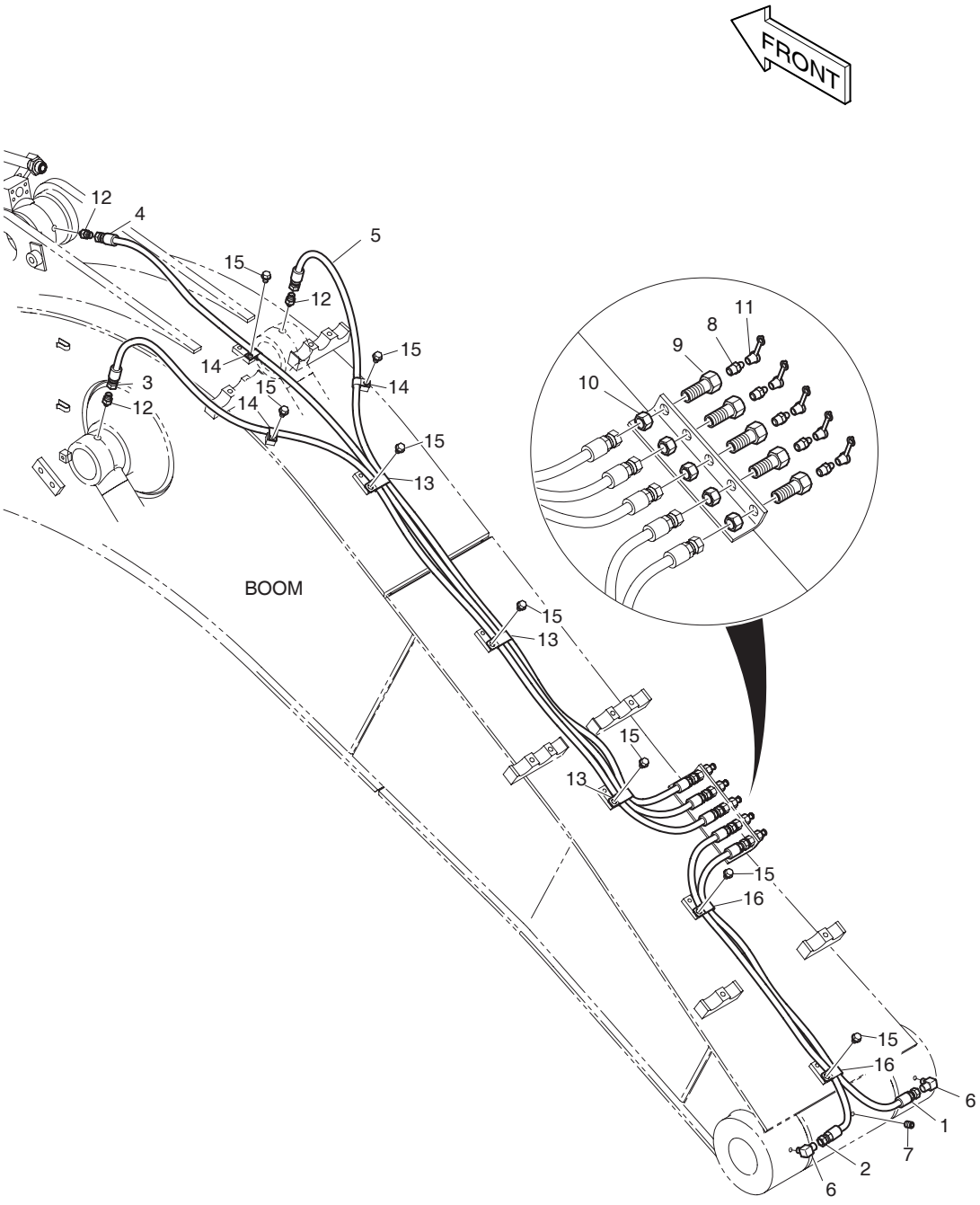

DATE	DEC. 26, 2006
1st EDITION	

Fig. 3140 LUBRICATION PIPING - BOOM 4.3m LUBRIFICATION

Serial No. ;

Key No.	Part No.	Description	Description	Q'ty	S.C	Serial No.	ICA	Replaceable part	
								Part No.	Q'ty
3140--	400-01360A	BOOM LUBRICATION PIPING	LUBRIFICATION	-	D				
1	2184-1045D65	HOSE	TUYAU FLEXIBLE	1					
2	2184-1045D48	HOSE	TUYAU FLEXIBLE	1					
3	2184-1045D161	HOSE	TUYAU FLEXIBLE	1					
4	2184-1045D254	HOSE	TUYAU FLEXIBLE	1					
5	2184-1045D123	HOSE	TUYAU FLEXIBLE	1					
6	2181-1186D12	ELBOW	COUDE	2					
7	S3524403	PLUG	BOUCHON	1					
8	S6710041	NIPPLE;GREASE	MAMELON	5					
9	181-00103	REDUCER	REDUCEUR	5					
10	121-00006	NUT	ECROU	5					
11	160-00020	CAP;GREASE NIPPLE	CHAPEAU	5					
12	2181-4112	ADAPTER	ADAPTEUR	3					
13	124-00199D4	CLIP	AGRAFE	3					
14	2124-1353D2	CLIP	AGRAFE	3					
15	K1001029	BOLT	BOULON	8					
16	124-00199D5	CLIP	AGRAFE	2					

DATE	JUN. 30, 2007
REV.NO.	EXB07-06

Fig. 3150 ARM PIPING - 2.1m
CONDUITES DE BALANCIER

Serial No. ;

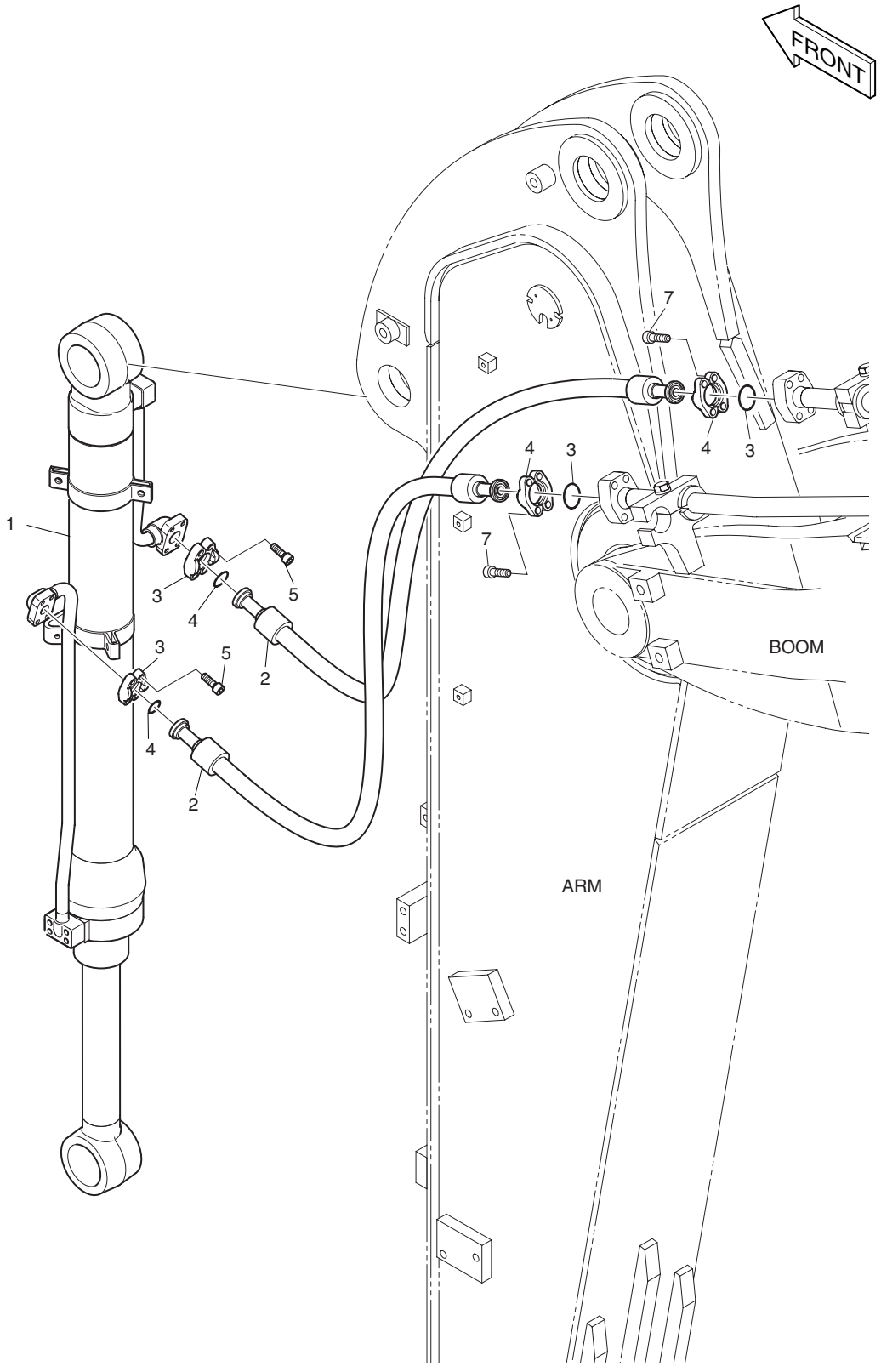

DATE	JUN. 30, 2007
REV. NO.	EXB07-06

Fig. 3150 ARM PIPING - 2.1m CONDUITES DE BALANCIER

Serial No. ;

Key No.	Part No.	Description	Description	Q'ty	S.C	Serial No.	ICA	Replaceable part	
								Part No.	Q'ty
3150--	**400-01350A**	**ARM PIPING**	CONDUITES DE BALANCIER	-	D				
1	440-00411A	CYLINDER;BUCKET	VERIN DE GODET	1		5001–5013	I	440-00411B	1
	440-00411B	**CYLINDER;BUCKET**	VERIN DE GODET	1		**5014–**			
2	2184-1081D50	HOSE	TUYAU FLEXIBLE	2					
3	2181-9079	FLANGE;SPLIT	BRIDE	8					
4	2180-1026D2	O-RING	JOINT TORIQUE	4					
5	S2212266	BOLT;SOCKET	BOULON A 6 PANS CREUX	8					
7	S2212366	BOLT;SOCKET	BOULON A 6 PANS CREUX	8					

DATE	JUN. 30, 2007
REV.NO.	EXB07-06

Fig. 4100 MAIN PUMP
POMPE PRINCIPAL

Serial No. ;

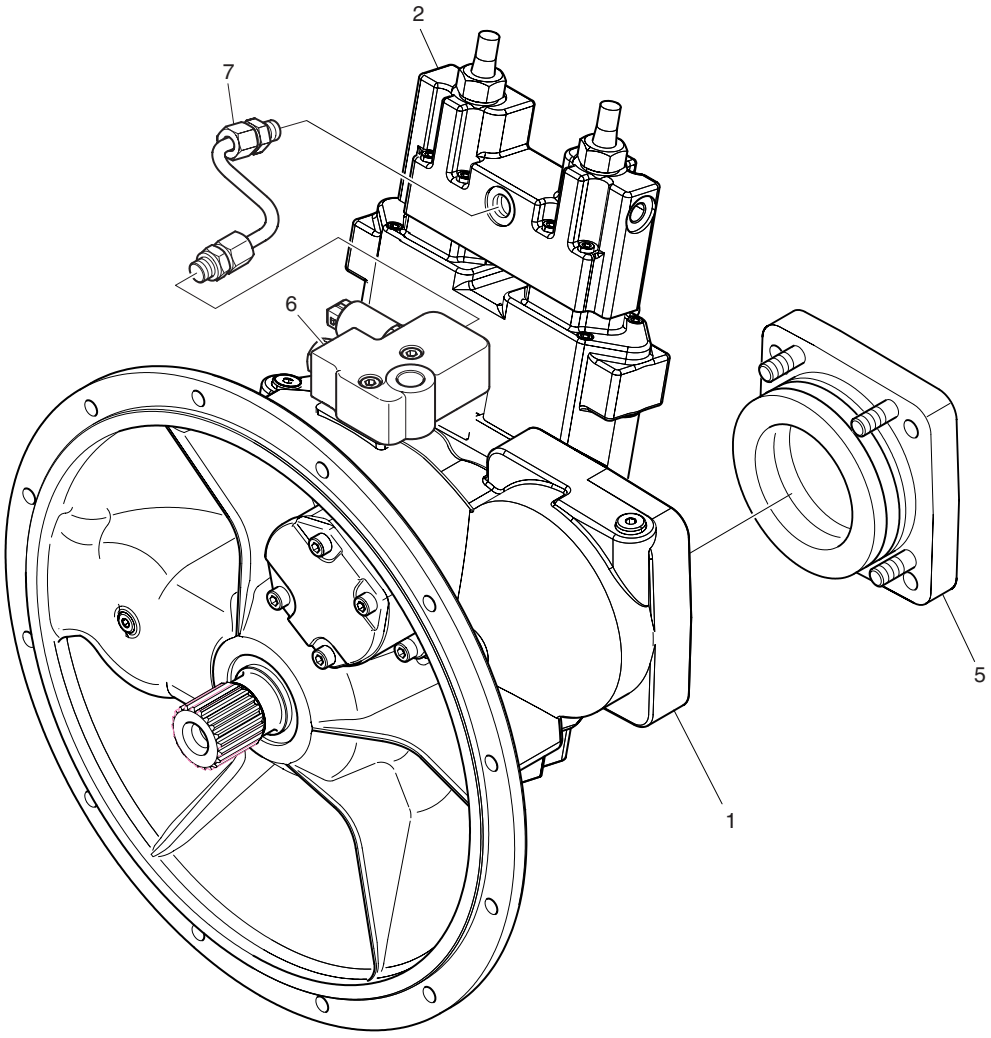

DATE	JUN. 30, 2007
REV. NO.	EXB07-06

Fig. 4100 MAIN PUMP POMPE PRINCIPAL

Serial No. ;

Key No.	Part No.	Description	Description	Q'ty	S.C	Serial No.	ICA	Replaceable part	
								Part No.	Q'ty
4100--	401-00476A	PUMP;MAIN	POMPE	1					
1	-	PUMP	POMPE	1	D				
2	K9001719	CONTROL	ENSEMBLE COMMANDE	1					
5	2.430-00205	COVER	COUVERCLE	1					
6	K9001906	PORT PLATE WITH VALVES	PLAT GAUCHE AVEC DES	1					
7	K9004414	PIPE ASS'Y	ENSEMBLE DE TUYAU	1					

DATE	JUN. 30, 2007
REV.NO.	EXB07-06

Fig. 4110 MAIN PUMP - ROTARY GROUP
POMPE PRINCIPAL

Serial No. ;

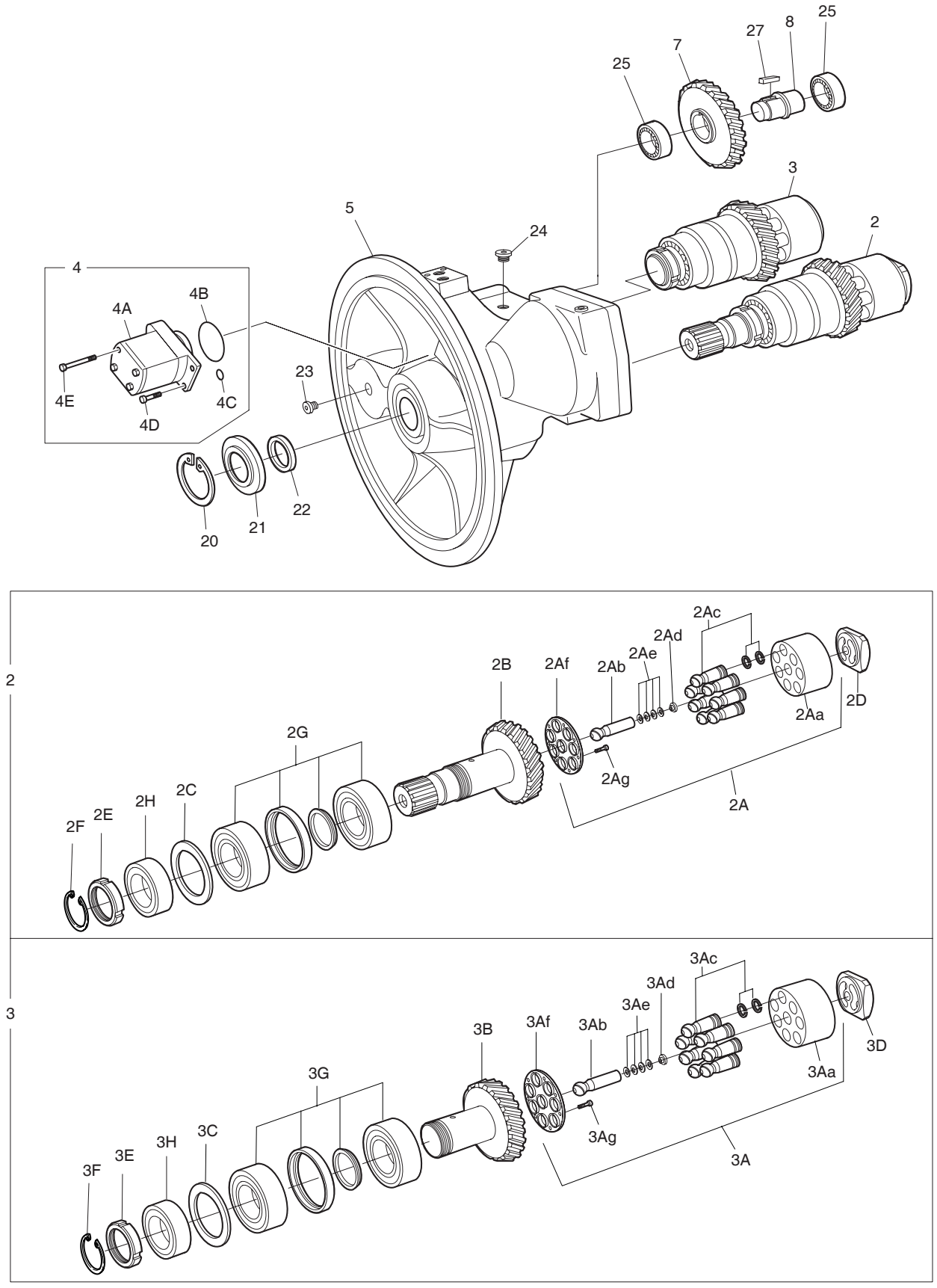

DATE	JUN. 30, 2007
REV. NO.	EXB07-06

Fig. 4110 MAIN PUMP - ROTARY GROUP POMPE PRINCIPAL

Serial No. ;

Key No.	Part No.	Description	Description	Q'ty	S.C	Serial No.	ICA	Replaceable part	
								Part No.	Q'ty
4110-2	2.410-00087	ROTARY GROUP	GROUPE ROTATIF	1					
2A	2.410-00088	. ROTARY GROUP. HYDR.	. GROUPE ROTATIF	1					
2Aa	2.410-00133	.. CYLINDER	.. CYLINDRES	1					
2Ab	2.123-00114	.. PIN;CENTER	.. GOUPILLE	1					
2Ac	2.409-00116	.. PISTON & PISTON RINGS	.. PISTON & BAGUE	7					
2Ad	2.114-00032	.. COLLAR;SPRING	.. COLLIER DE RESSORT	1					
	2.114-00033	.. COLLAR;SPRING	.. COLLIER DE RESSORT	1	R				
	2.114-00034	.. COLLAR;SPRING	.. COLLIER DE RESSORT	1	R				
	2.114-00035	.. COLLAR;SPRING	.. COLLIER DE RESSORT	1	R				
	2.114-00036	.. COLLAR;SPRING	.. COLLIER DE RESSORT	1	R				
	2.114-00037	.. COLLAR;SPRING	.. COLLIER DE RESSORT	1	R				
	2.114-00038	.. COLLAR;SPRING	.. COLLIER DE RESSORT	1	R				
2Ae	2.453-00023	.. CUP SPRING	.. RESSORT	4					
2Af	2.412-00221	.. PLATE;RETAINING	.. PLAQUE	1					
2Ag	K9001722	.. SCREW;PAN HEAD	.. VIS	14					
2B	2.405-00107	. SHAFT;DRIVE	. ARBRE MOTEUR	1					
2C	2.114-00147	. SHIM 2.7T	. CALE	1	R				
	2.114-00148	. SHIM 2.8T	. CALE	1	R				
	2.114-00149	. SHIM 2.9T	. CALE	1	R				
	2.114-00150	. SHIM 3.0T	. CALE	1	R				
	2.114-00151	. SHIM 3.1T	. CALE	1	R				
2D	2.412-00130	. CONTROL LENS;RIGHT-HAND	. COMMANDEZ L'OBJECTIF	1					
2E	2.180-00988	. PLATE;BACK-UP	. PLAQUE	1	R				
	2.180-00989	. PLATE;BACK-UP	. PLAQUE	1	R				
	2.180-00990	. PLATE;BACK-UP	. PLAQUE	1	R				
	2.180-00991	. PLATE;BACK-UP	. PLAQUE	1	R				
	2.180-00992	. PLATE;BACK-UP	. PLAQUE	1	R				
	2.180-00993	. PLATE;BACK-UP	. PLAQUE	1	R				
	2.180-00994	. PLATE;BACK-UP	. PLAQUE	1	R				
	2.180-00995	. PLATE;BACK-UP	. PLAQUE	1	R				
	2.180-00996	. PLATE;BACK-UP	. PLAQUE	1	R				
	2.180-00997	. PLATE;BACK-UP	. PLAQUE	1	R				
	2.180-00998	. PLATE;BACK-UP	. PLAQUE	1	R				
2F	2.115-00302	. RING;RETAINING	. BAGUE	1					
2G	2.109-00262	. BEARING;UNIT	. ROULEMENT	1					
2H	2.109-00244	. BEARING;TAPERED-ROLLER	. ROULEMENT	1					
3	2.410-00089	ROTARY GROUP	GROUPE ROTATIF	1					
3A	2.410-00088	. ROTARY GROUP. HYDR.	. GROUPE ROTATIF	1					

DATE	JUN. 30, 2007
REV.NO.	EXB07-06

Fig. 4110 MAIN PUMP - ROTARY GROUP
POMPE PRINCIPAL

Serial No. ;

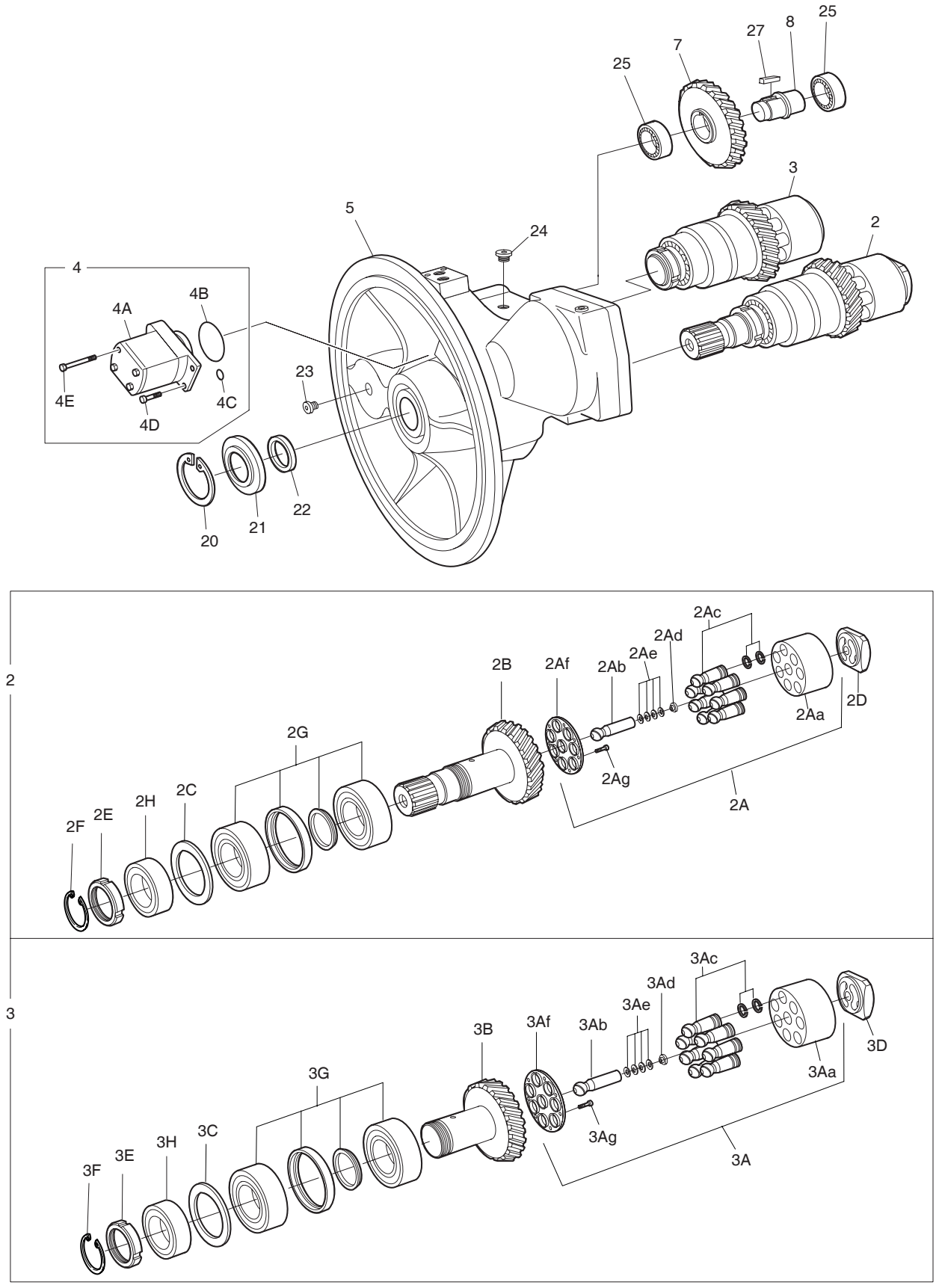

DATE	JUN. 30, 2007
REV. NO.	EXB07-06

Fig. 4110 MAIN PUMP - ROTARY GROUP
POMPE PRINCIPAL

Serial No. ;

Key No.	Part No.	Description	Description	Q'ty	S.C	Serial No.	ICA	Replaceable part	
								Part No.	Q'ty
4110-3Aa	2.410-00133	.. CYLINDER	.. CYLINDRES	1					
3Ab	2.123-00114	.. PIN;CENTER	.. GOUPILLE	1					
3Ac	2.409-00116	.. PISTON & PISTON RINGS	.. PISTON & BAGUE	7					
3Ad	2.114-00032	.. COLLAR;SPRING	.. COLLIER DE RESSORT	1	R				
	2.114-00033	.. COLLAR;SPRING	.. COLLIER DE RESSORT	1	R				
	2.114-00034	.. COLLAR;SPRING	.. COLLIER DE RESSORT	1	R				
	2.114-00035	.. COLLAR;SPRING	.. COLLIER DE RESSORT	1	R				
	2.114-00036	.. COLLAR;SPRING	.. COLLIER DE RESSORT	1	R				
	2.114-00037	.. COLLAR;SPRING	.. COLLIER DE RESSORT	1	R				
	2.114-00038	.. COLLAR;SPRING	.. COLLIER DE RESSORT	1	R				
3Ae	2.453-00023	.. CUP SPRING	.. RESSORT	4					
3Af	2.412-00221	.. PLATE;RETAINING	.. PLAQUE	1					
3Ag	K9001722	.. SCREW;PAN HEAD	.. VIS	14					
3B	2.405-00108	. SHAFT;DRIVE	. ARBRE MOTEUR	1					
3C	2.114-00147	. SHIM 2.7T	. CALE	1	R				
	2.114-00148	. SHIM 2.8T	. CALE	1	R				
	2.114-00149	. SHIM 2.9T	. CALE	1	R				
	2.114-00150	. SHIM 3.0T	. CALE	1	R				
	2.114-00151	. SHIM 3.1T	. CALE	1	R				
3D	2.412-00127	. CONTROL LENS;LEFT-HAND	. COMMANDEZ L'OBJECTIF	1					
3E	2.180-00988	. PLATE;BACK-UP	. PLAQUE	1	R				
	2.180-00989	. PLATE;BACK-UP	. PLAQUE	1	R				
	2.180-00990	. PLATE;BACK-UP	. PLAQUE	1	R				
	2.180-00991	. PLATE;BACK-UP	. PLAQUE	1	R				
	2.180-00992	. PLATE;BACK-UP	. PLAQUE	1	R				
	2.180-00993	. PLATE;BACK-UP	. PLAQUE	1	R				
	2.180-00994	. PLATE;BACK-UP	. PLAQUE	1	R				
	2.180-00995	. PLATE;BACK-UP	. PLAQUE	1	R				
	2.180-00996	. PLATE;BACK-UP	. PLAQUE	1	R				
	2.180-00997	. PLATE;BACK-UP	. PLAQUE	1	R				
	2.180-00998	. PLATE;BACK-UP	. PLAQUE	1	R				
3F	2.115-00302	. RING;RETAINING	. BAGUE	1					
3G	2.109-00262	. BEARING;UNIT	. ROULEMENT	1					
3H	2.109-00244	. BEARING;TAPERED-ROLLER	. ROULEMENT	1					
4	2.241-00045	GEAR PUMP ASS'Y	POMPE DE PIGNON	1					
4A	2.241-00046	. PUMP;GEAR	. POMPE DE PIGNON	1					
4B	2180-1217D76	. O-RING	. JOINT TORIQUE	1					
4C	2180-1217D16	. O-RING	. JOINT TORIQUE	1					

DATE	JUN. 30, 2007
REV.NO.	EXB07-06

Fig. 4110 MAIN PUMP - ROTARY GROUP
POMPE PRINCIPAL

Serial No. ;

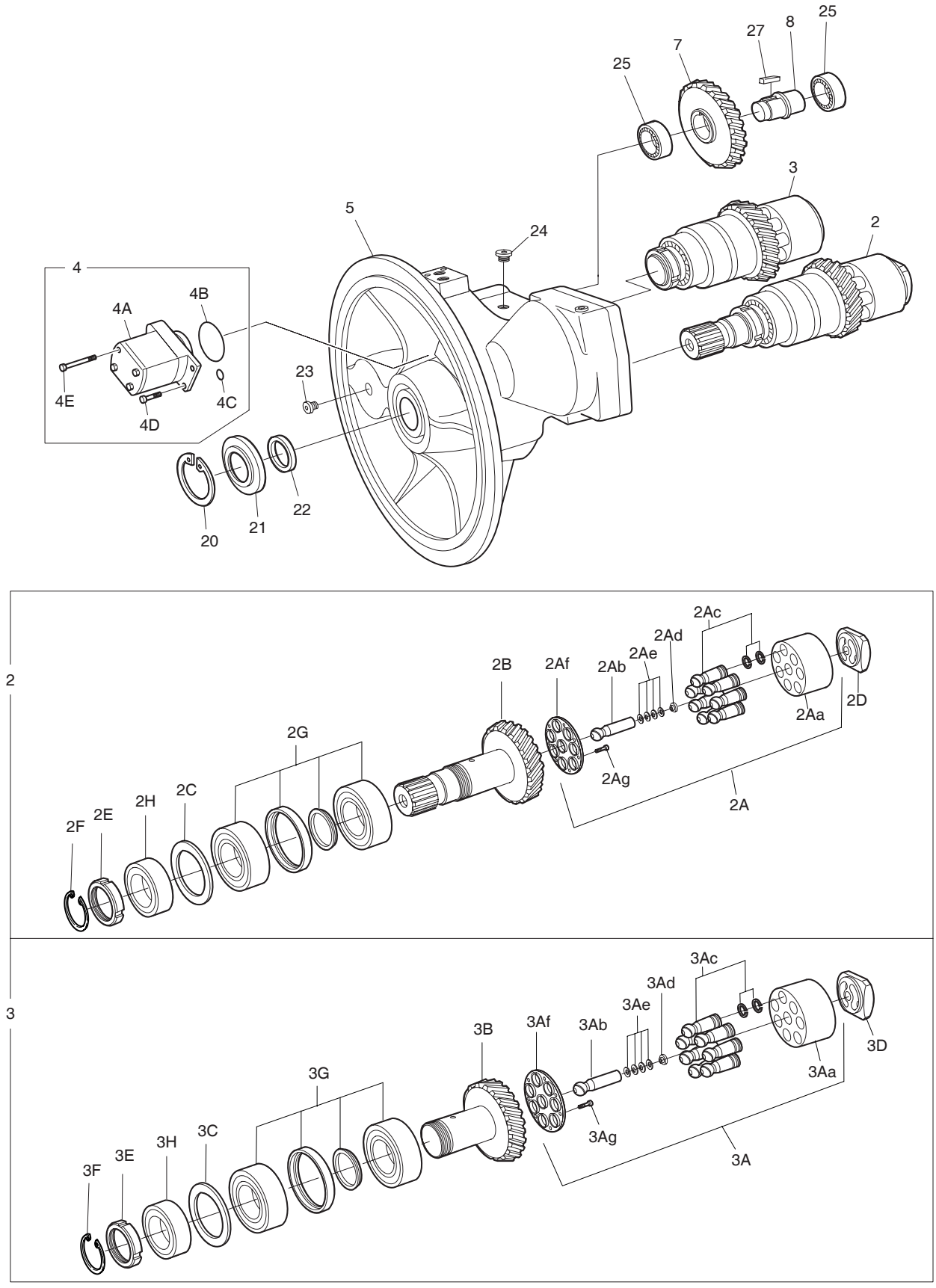

DATE	JUN. 30, 2007
REV. NO.	EXB07-06

Fig. 4110 MAIN PUMP - ROTARY GROUP
POMPE PRINCIPAL

Serial No. ;

Key No.	Part No.	Description	Description	Q'ty	S.C	Serial No.	ICA	Replaceable part	
								Part No.	Q'ty
4110-4D	2.120-00822	. SCREW;SOCKET M8X20	. VIS	2					
4E	2.120-00674	. SCREW;SOCKET M8X75	. VIS	2					
5	2.402-00263	HOUSING;PUMP	LOGEMENT	1	D				
7	2.403-00018	GEAR	PIGNON	1					
8	2.405-00180	SHAFT;STUB	ARBRE	1					
20	2.115-00303	RING;RETAINING	ANNEAU DE SOUTIEN	1					
21	2.115-00325	RING;SHAFT SEAL	BAGUE	1					
22	2.114-00154	SHIM	CALE	1					
23	2.120-00611	SCREW;LOCKING	VIS	1					
24	2.120-00612	SCREW;LOCKING	VIS	3					
25	K9004413	BEARING;ROLLER	ROULEMENT	2					
27	2.113-00014	KEY;SHAFT	CLEF	1					

DATE	JUN. 30, 2007
REV.NO.	EXB07-06

Fig. 4120 MAIN PUMP - CONTROL
POMPE PRINCIPAL

Serial No. ;

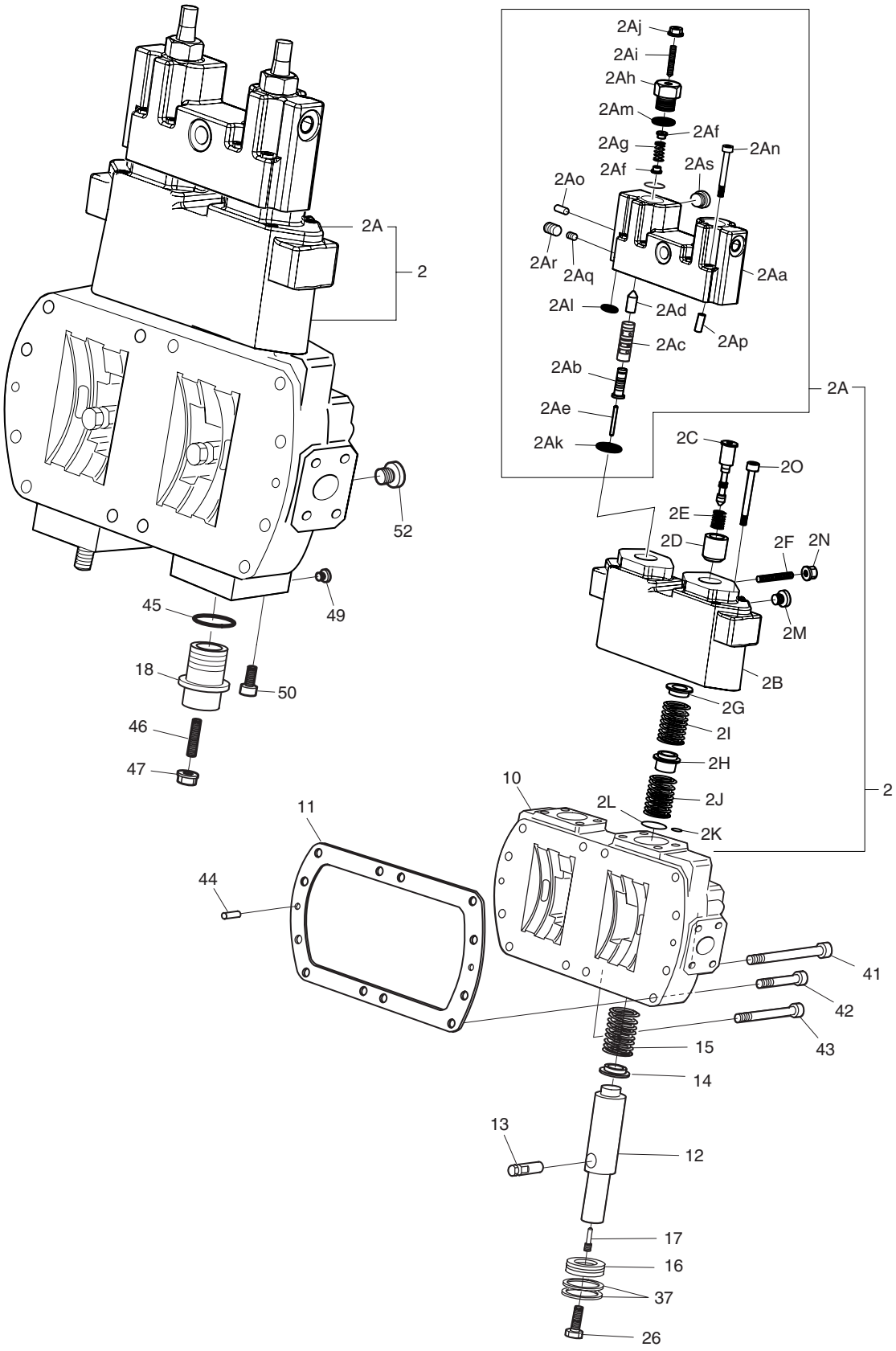

DATE	JUN. 30, 2007
REV. NO.	EXB07-06

Fig. 4120 MAIN PUMP - CONTROL POMPE PRINCIPAL

Serial No. ;

Key No.	Part No.	Description	Description	Q'ty	S.C	Serial No.	ICA	Replaceable part	
								Part No.	Q'ty
4120-2	K9001723	CONTROL MODULE	MODULE DE COMMANDE	1					
2A	2.421-00130	. CONTROL MODULE	. MODULE DE COMMANDE	1					
2Aa	2.402-00211	.. HOUSING;CONTROL	.. LOGEMENT	1	D				
2Ab	2.409-00179	.. PISTON;CONTROL	.. PISTON	2					
2Ac	2.408-00065	.. BUSH;CONTROL	.. DOUILLE	2					
2Ad	2.409-00202	.. PISTON;POSITIONING	.. PISTON	2					
2Ae	2.123-00066	.. PIN	.. GOUPILLE	2					
2Af	2.114-00039	.. COLLAR;SPRING	.. COLLIER DE RESSORT	4					
2Ag	2.131-00415	.. SPRING;PRESSURE	.. RESSORT	2					
2Ah	2.120-00613	.. SCREW;LOCKING	.. VIS	2					
2Ai	2.123-00235	.. PIN;THREADED	.. GOUPILLE	2					
2Aj	2.121-00202	.. NUT;SEAL LOCK	.. ECROU	2					
2Ak	2.180-01191	.. O-RING	.. JOINT TORIQUE	2					
2Al	2.180-00471	.. O-RING	.. JOINT TORIQUE	2					
2Am	2.180-01181	.. O-RING	.. JOINT TORIQUE	2					
2An	2.120-00826	.. SCREW;SOCKET-HEAD	.. VIS	6					
2Ao	2.123-00288	.. PIN;DOUBLE BREAK-OFF	.. GOUPILLE	5					
2Ap	2.123-00131	.. PIN;CYLINDER	.. GOUPILLE	2					
2Aq	2.123-00300	.. PIN;DOUBLE BREAK-OFF	.. GOUPILLE	1					
2Ar	2.181-00262	.. PLUG	.. BOUCHON	1					
2As	2.120-00612	.. SCREW;LOCKING	.. VIS	1					
2B	2.402-00212	. HOUSING;CONTROL	. LOGEMENT	1	D				
2C	2.409-00180	. PISTON;CONTROL	. PISTON	2					
2D	2.408-00083	. BUSH;SPRING	. DOUILLE	2					
2E	2.131-00418	. SPRING;PRESSURE	. RESSORT	2					
2F	2.123-00238	. PIN;THREADED	. GOUPILLE	2					
2G	2.114-00041	. COLLAR;SPRING	. COLLIER DE RESSORT	2					
2H	2.114-00042	. COLLAR;SPRING	. COLLIER DE RESSORT	2					
2I	K9001724	. SPRING;PRESSURE	. RESSORT	2					
2J	K9001725	. SPRING;PRESSURE	. RESSORT	2					
2K	2.180-00471	. O-RING	. JOINT TORIQUE	4					
2L	2180-1217D66	. O-RING	. JOINT TORIQUE	2					
2M	2.120-00611	. SCREW;LOCKING	. VIS	2					
2N	2.121-00202	. NUT;SEAL LOCK	. ECROU	2					
2O	2.120-00675	. SCREW;SOCKET-HEAD	. VIS	6					
10	2.402-00210	HOUSING;CONTROL	LOGEMENT	1	D				
11	2.180-00084	GASKET	JOINT	1					
12	2.409-00201	PISTON;POSITIONING	PISTON	2					

DATE	JUN. 30, 2007
REV.NO.	EXB07-06

Fig. 4120 MAIN PUMP - CONTROL
POMPE PRINCIPAL

Serial No. ;

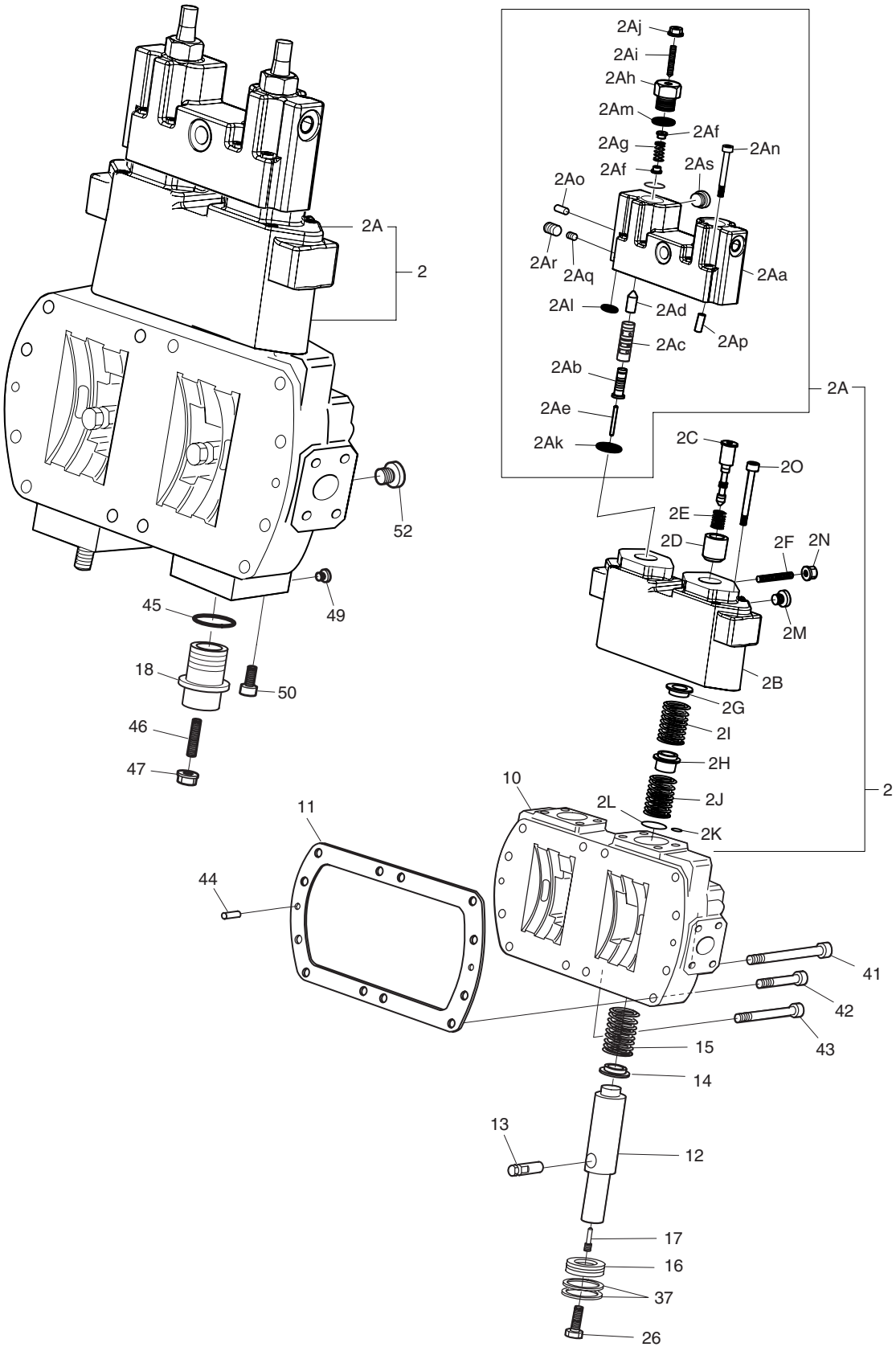

DATE	JUN. 30, 2007
REV. NO.	EXB07-06

Fig. 4120 MAIN PUMP - CONTROL
POMPE PRINCIPAL

Serial No. ;

Key No.	Part No.	Description	Description	Q'ty	S.C	Serial No.	ICA	Replaceable part	
								Part No.	Q'ty
4120-13	2.428-00062	TRUNNION;POSITIONING	ANNEAU DE SOUTIEN	2					
14	K9005523	COLLAR;SPRING	COLLIER DE RESSORT	2					
15	2.131-00416	SPRING;PRESSURE	RESSORT	2					
16	2.409-00068	PISTON	PISTON	2					
17	2.123-00236	PIN;THREADED	GOUPILLE	2					
18	2.120-00614	SCREW;LOCKING	VIS	2					
26	2.120-00575	SCREW;HEX	VIS	2					
37	K9001727	RING;STEEL SEALING	BAGUE D'ETANCHEITE	4					
41	2.120-00824	SCREW;SOCKET M10X70	VIS	4					
42	2.120-00823	SCREW;SOCKET M10X45	VIS	6					
43	2.120-00821	SCREW;SOCKET M10X60	VIS	2					
44	2.123-00132	PIN;CYLINDER	GOUPILLE	2					
45	2180-1217D57	O-RING	JOINT TORIQUE	2					
46	2.123-00239	PIN;THREADED M10X50	GOUPILLE	2					
47	2.121-00203	NUT;SEAL LOCK	ECROU	2					
49	2.123-00288	PIN;DOUBLE BREAK-OFF	GOUPILLE	1					
50	2.120-00615	SCREW	VIS	2					
52	2.120-00616	SCREW	VIS	2					

DATE	JUN. 30, 2007
REV.NO.	EXB07-06

Fig. 4130 MAIN PUMP - COVER
POMPE PRINCIPAL

Serial No. ;

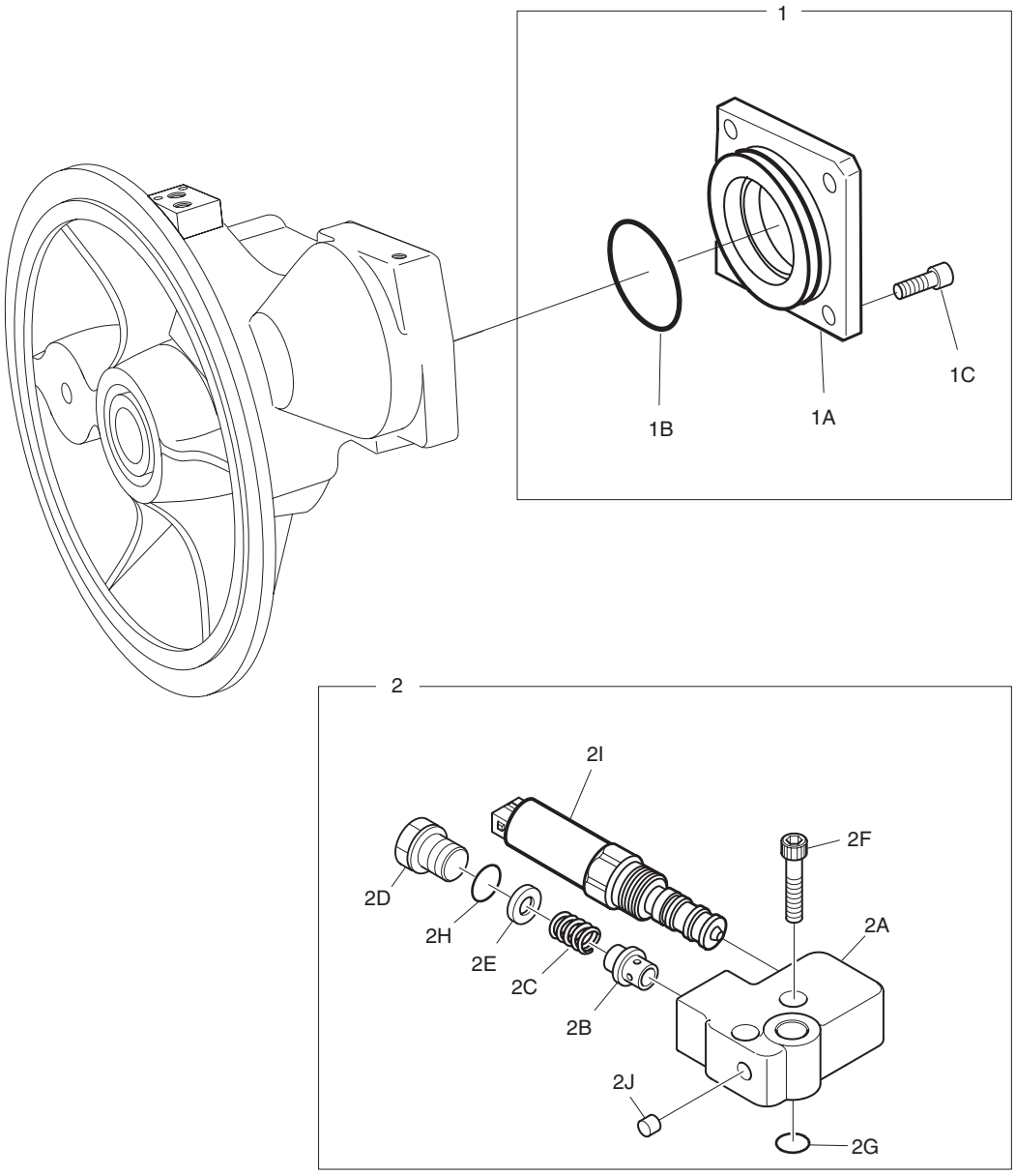

DATE	JUN. 30, 2007
REV. NO.	EXB07-06

Fig. 4130 MAIN PUMP - COVER
POMPE PRINCIPAL

Serial No. ;

Key No.	Part No.	Description	Description	Q'ty	S.C	Serial No.	ICA	Replaceable part	
								Part No.	Q'ty
4130-1	2.430-00205	COVER	COUVERCLE	1					
1A	2.430-00206	. COVER	. COUVERCLE	1					
1B	2.180-01199	. O-RING	. JOINT TORIQUE	1					
1C	2.120-00832	. BOLT;SOCKET	. BOULON A 6 PANS CREUX	4					
2	K9001906	PORT PLATE WITH VALVES	PLAT GAUCHE AVEC DES	1					
2A	-	. PLATE;PORT	. PLAQUE	1	D				
2B	2.409-00216	. PISTON;VALVE	. PISTON	1					
2C	2.131-00417	. SPRING;PRESSURE	. RESSORT	1					
2D	2.120-00617	. SCREW;LOCKING	. VIS	1					
2E	2.114-00877	. WASHER	. RONDELLE	1					
2F	K9001729	. SCREW;SOCKET-HEAD	. VIS	2					
2G	2.180-01180	. O-RING	. JOINT TORIQUE	2					
2H	2.180-01182	. O-RING	. JOINT TORIQUE	1					
2I	K9001933	. VALVE	. VANNE	1					
2J	2.123-00138	. PIN;DOUBLE BREAK-OFF	. GOUPILLE	1					

DATE	SEP. 01, 2008
REV.NO.	EXB08-12

Fig. 4140 SWING MOTOR
MOTEUR D'ORIENTATION

Serial No. ;

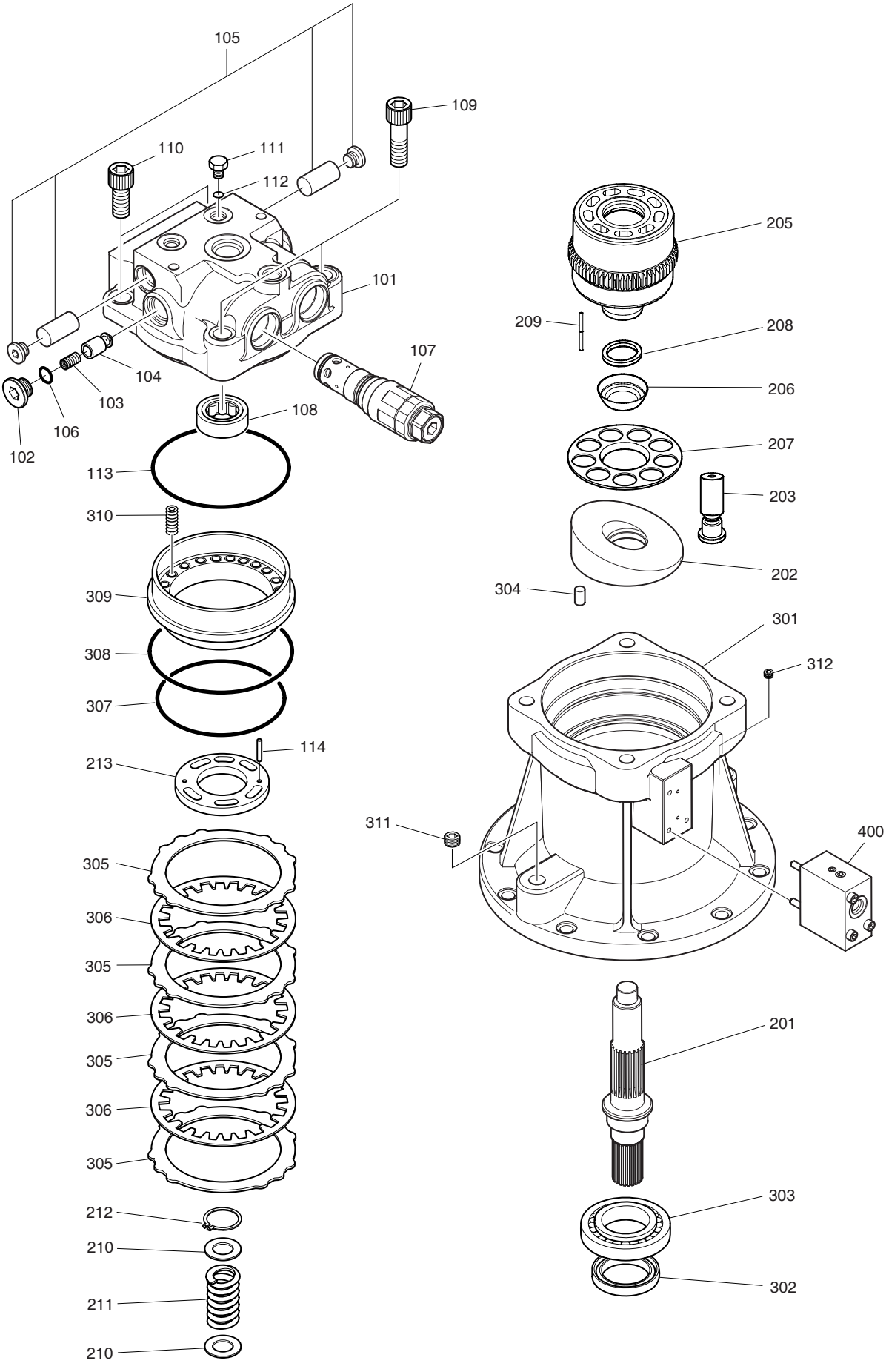

DATE	SEP. 01, 2008
REV. NO.	EXB08-12

Fig. 4140 SWING MOTOR MOTEUR D'ORIENTATION

Serial No. ;

Key No.	Part No.	Description	Description	Q'ty	S.C	Serial No.	ICA	Replaceable part	
								Part No.	Q'ty
4140--	K1000101	SWING MOTOR	COMMUTATEUR	1					
101	K9001294	CASING	CARTER	1	D				
102	K9001295	PLUG	BOUCHON	2					
103	K9001296	SPRING	RESSORT	2					
104	K9001297	PLUNGER	PLONGEUR	2					
105	1.420-00016	VALVE;SWING REACTION	VANNE	1					
106	S8000221	O-RING	JOINT TORIQUE	2	K				
107	1.420-00109	VALVE;RELIEF	VANNE	2					
108	S6005040	BEARING;BALL	ROULEMENT	1					
109	S2221961	BOLT;SOCKET	BOULON A 6 PANS CREUX	2					
110	S2221471	BOLT;SOCKET	BOULON A 6 PANS CREUX	2					
111	2181-1950D1	PLUG;VP	BOUCHON	2					
112	S8000111	O-RING	JOINT TORIQUE	2	K				
113	2180-1217D150	O-RING	JOINT TORIQUE	1	K				
114	S5740730	PIN;SPRING	GOUPILLE	2					
201	K9001298	SHAFT;DRIVE	ARBRE MOTEUR	1					
202	K9001299	PLATE;SWASH	PLAQUE	1					
203	K9001300	PISTON & SHOE ASS'Y	PISTON	1					
205	K9001302	BLOCK;CYLINDER	BLOC-CYLINDRES	1					
206	K9001303	BALL;THRUST	BOULE	1					
207	K9001304	PLATE;RETAINER	PLAQUE	1					
208	K9001305	COLLAR	COLLIER	1					
209	K9001306	ROLLER	GALET	5					
210	K9001308	WASHER	RONDELLE	2					
211	K9001309	SPRING	RESSORT	1					
212	S6510500	RING;SNAP	BAGUE D'ARRET	1					
213	K9001310	PLATE;VALVE	PLAQUE	1					
301	K9001311	CASING	CARTER	1					
302	1.180-00518	OIL;SEAL	HUILE DE JOINT	1	K				
303	1.109-00029	BEARING;BALL	ROULEMENT	1					
304	1.123-00053	PIN;PARALLEL	GOUPILLE	1					
305	K9001312	PLATE;SEPARATION	PLAQUE	4					
306	K9001313	PLATE;FRICTION	PLAQUE	3					
307	2180-1217D147	O-RING	JOINT TORIQUE	1	K				
308	2180-1217D149	O-RING	JOINT TORIQUE	1	K				
309	K9001314	PISTON;BRAKE	PISTON	1					
310	K9001315	SPRING;BRAKE	RESSORT	22					
311	2181-1116D5	PLUG;PT	BOUCHON	1					

DATE	SEP. 01, 2008
REV.NO.	EXB08-12

Fig. 4140 SWING MOTOR
MOTEUR D'ORIENTATION

Serial No. ;

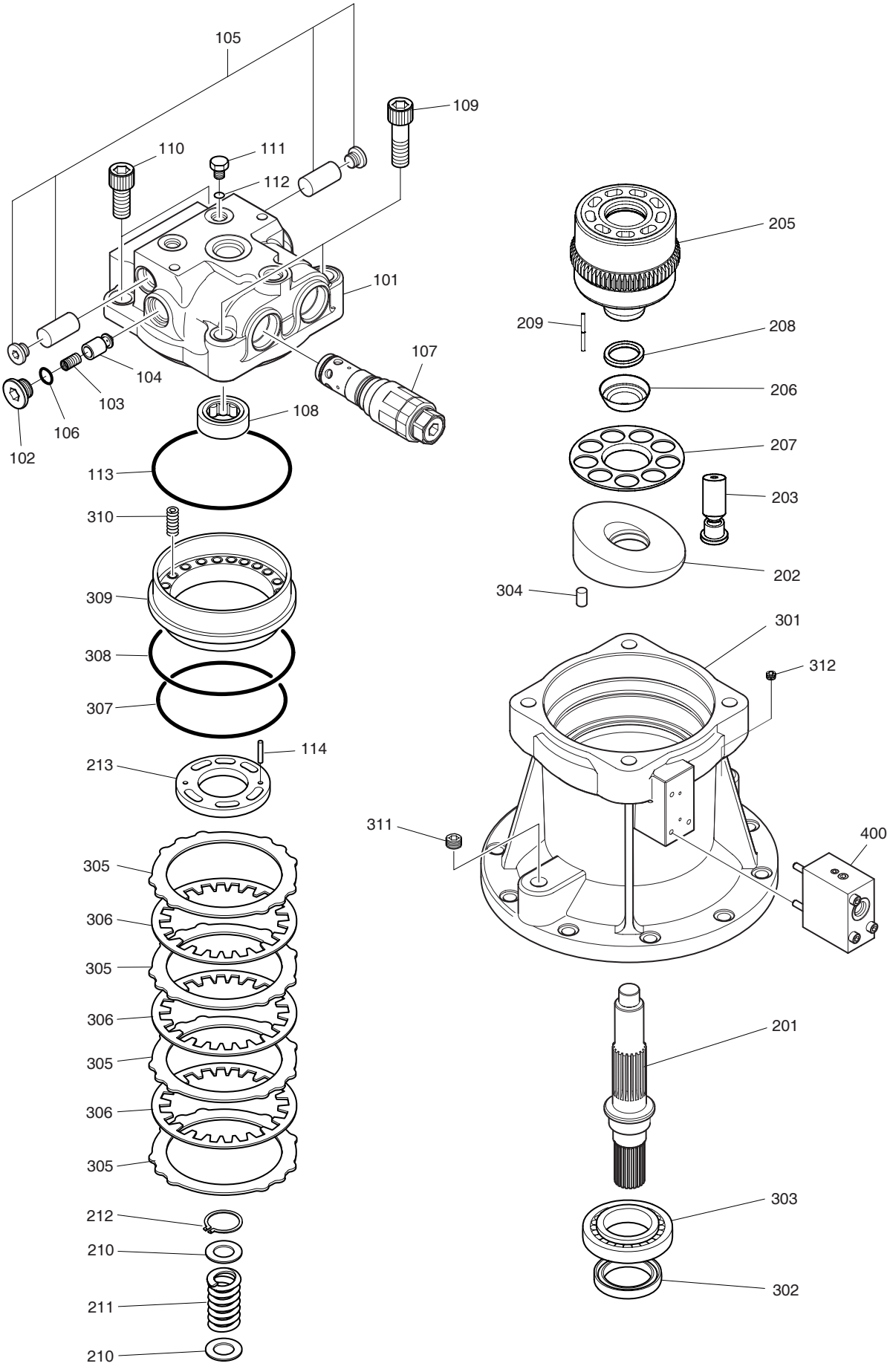

DATE	SEP. 01, 2008
REV. NO.	EXB08-12

Fig. 4140 SWING MOTOR MOTEUR D'ORIENTATION

Serial No. ;

Key No.	Part No.	Description	Description	Q'ty	S.C	Serial No.	ICA	Replaceable part	
								Part No.	Q'ty
4140-312	2181-1116D2	PLUG;PT	BOUCHON	1					
400	420-00110	VALVE;BRAKE	VANNE	1					
*	K1000101KT	SEAL KIT;SWING MOTOR	JOINT	1					

Fig. 4150 SWING REDUCTION GEAR
REDUCTEUR D'ORIENTATION

Serial No. ;

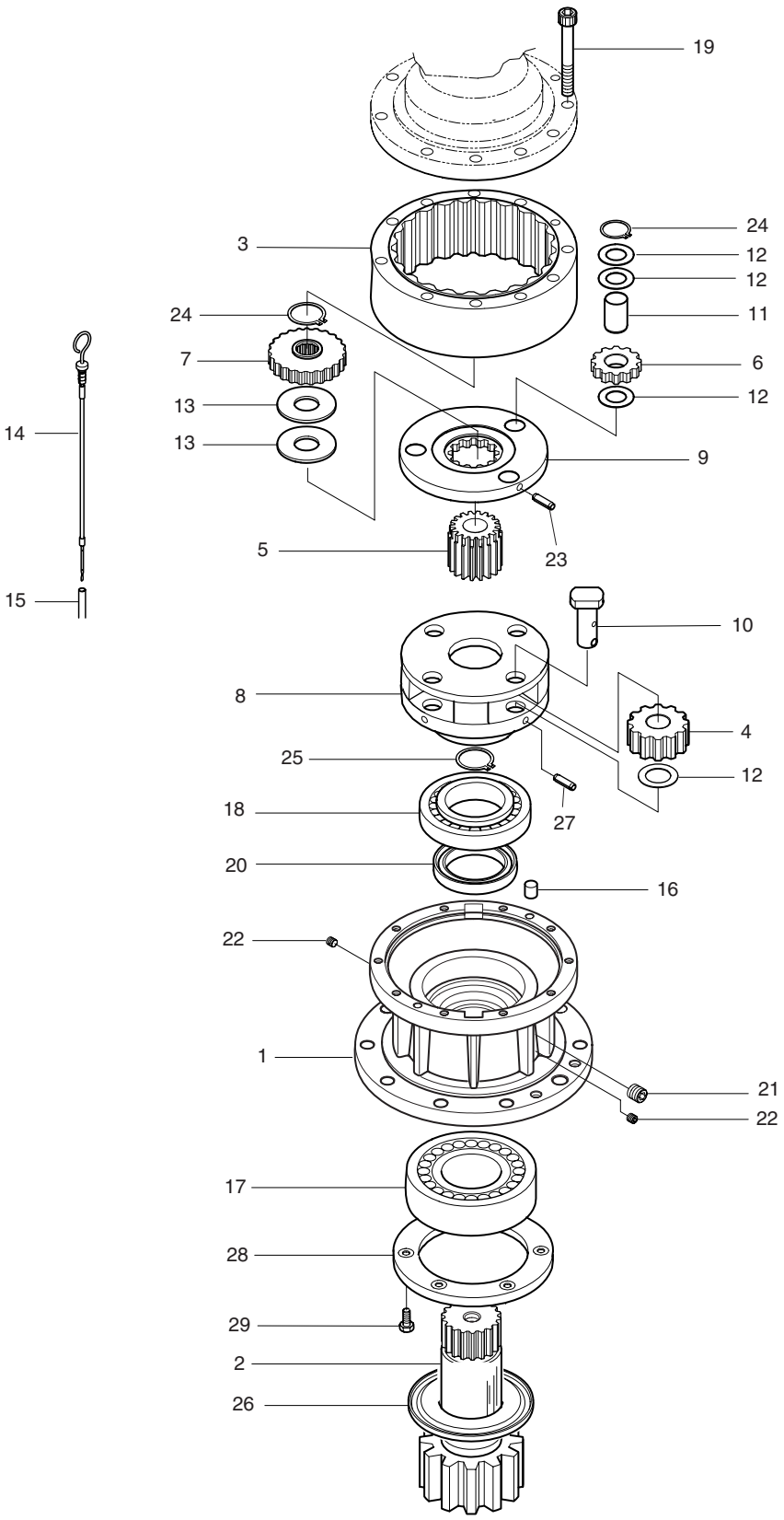

DATE	DEC. 26, 2006
1st EDITION	

Fig. 4150 SWING REDUCTION GEAR REDUCTEUR D'ORIENTATION

Serial No. ;

Key No.	Part No.	Description	Description	Q'ty	S.C	Serial No.	ICA	Replaceable part	
								Part No.	Q'ty
4150--	K1007357B	SWING REDUCTION GEAR	REDUCTEUR	1					
1	402-00017	CASING	CARTER	1					
2	405-00006	SHAFT;DRIVE	ARBRE MOTEUR	1					
3	104-00019	GEAR;RING	PIGNON	1					
4	404-00063	GEAR;PLANET NO.2	PIGNON	4					
5	404-00064	GEAR;SUN NO.2	PIGNON	1					
6	404-00065	GEAR;PLANET NO.1	PIGNON	3					
7	404-00066	GEAR;SUN NO.1	PIGNON	1					
8	230-00017	CARRIER NO.2	SUPPORT	1					
9	230-00018	CARRIER NO.1	SUPPORT	1					
10	123-00094	PIN ASS'Y NO.2	GOUPILLE	4					
11	123-00095	PIN ASS'Y NO.1	GOUPILLE	3					
12	2114-1594	WASHER;THRUST(B)	RONDELLE DE BUTEE	13					
13	2114-1592	WASHER;THRUST(A)	RONDELLE DE BUTEE	2					
14	119-00003	BAR;LEVEL	BARRE DE NIVEAU	1					
15	182-00009	PIPE;LEVEL GAUGE	PIPE D'INDICATEUR DE	1					
16	123-00096	PIN;KNOCK	GOUPILLE	2					
17	2109-1041	BEARING;ROLLER	ROULEMENT	1					
18	2109-1042	BEARING;ROLLER	ROULEMENT	1					
19	S2216873	BOLT;SOCKET	BOULON A 6 PANS CREUX	10					
20	180-00179	SEAL;OIL	JOINT	1					
21	2181-1116D4	PLUG(B)	BOUCHON	1					
22	2181-1116D2	PLUG(A)	BOUCHON	2					
23	S5740890	PIN;SPRING	GOUPILLE	3					
24	S6500300	RING;RETAINER	BAGUE	4					
25	S6500650	RING;RETAINER	BAGUE	1					
26	115-00037	RING;NILOS	BAGUE	1					
27	S5740890	PIN;SPRING	GOUPILLE	4					
28	191-00167	PLATE;SUPPORT	PLAQUE	2					
29	S3453116	BOLT;SCREW	BOULON	6					

DATE	DEC. 26, 2006
1st EDITION	

Fig. 4160 TRAVEL MOTOR
REDEUTEUR DE TRANSLATION

Serial No. ;

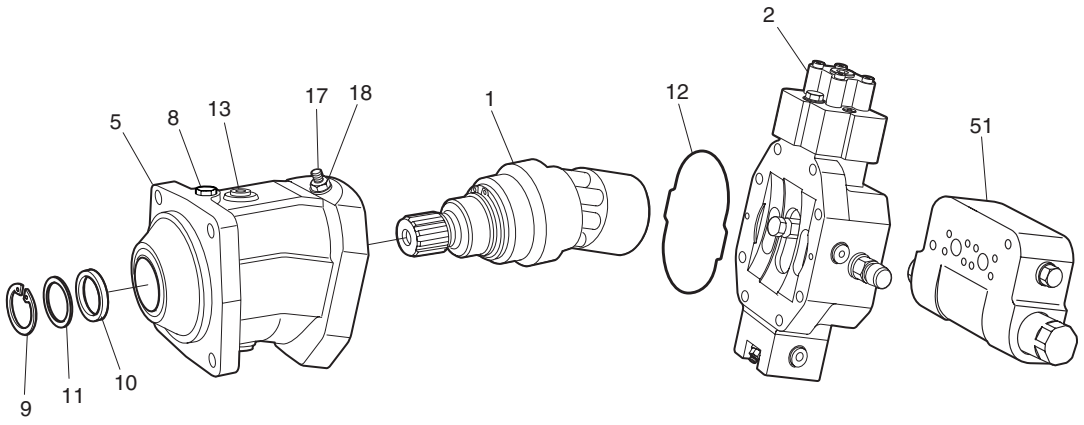

DATE	DEC. 26, 2006
1st EDITION	

Fig. 4160 TRAVEL MOTOR REDEUTEUR DE TRANSLATION

Serial No. ;

Key No.	Part No.	Description	Description	Q'ty	S.C	Serial No.	ICA	Replaceable part	
								Part No.	Q'ty
4160--	401-00452B	TRAVEL MOTOR	MOTEUR DE TRANSLATION	1					
1	K9001771	ROTARY GROUP	GROUPE ROTATIF	1					
2	K9005039	CONTROL GROUP	GROUPE DE COMMANDE	1					
5	K9001773	HOUSING;PUMP	LOGEMENT	1					
8	2.120-00816	PLUG	BOUCHON	1					
9	S6510800	RING;RETAINING	BAGUE	1					
10	2.115-00327	SEAL;OIL	JOINT	1					
11	K9001774	SHIM	CALE	1					
12	2180-1216D150	O-RING	JOINT TORIQUE	1					
13	2.120-00816	PLUG	BOUCHON	1					
17	2.123-00297	BOLT;STUD	BOULON DE GOUJON	2					
18	2.121-00263	NUT;LOCK	ECROU	2					
51	K9001775	COUNTER BALANCE VALVE	SOUPAPE	1					

Fig. 4170 TRAVEL MOTOR - ROTARY GROUP
REDEUTEUR DE TRANSLATION

Serial No. ;

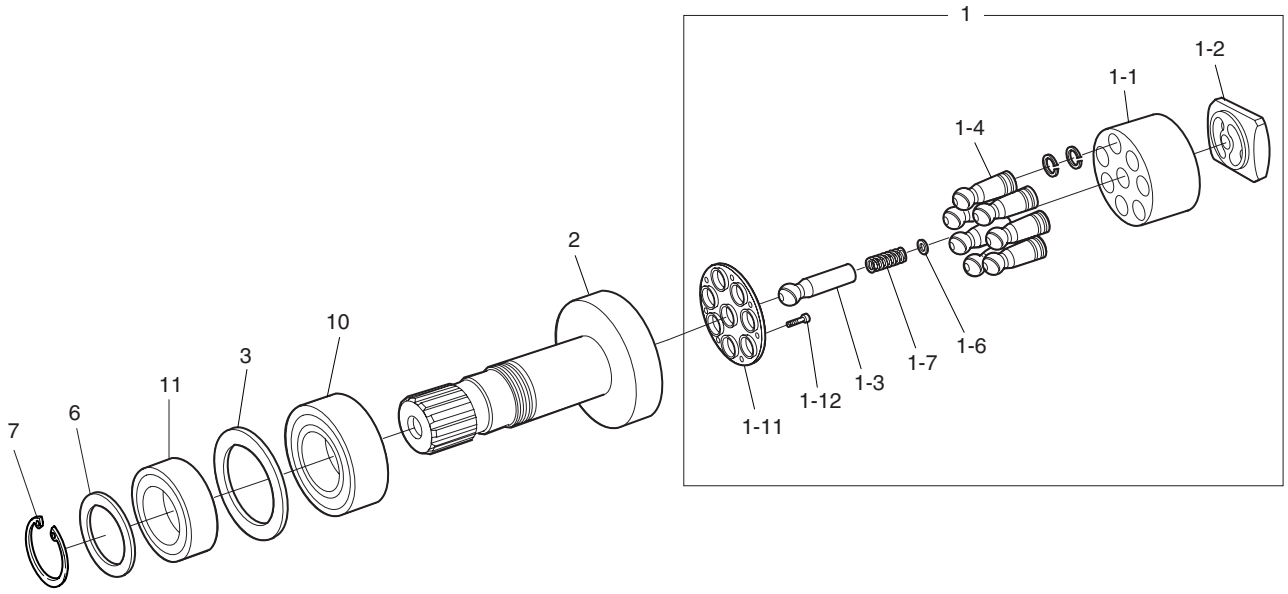

DATE	DEC. 26, 2006
1st EDITION	

Fig. 4170 TRAVEL MOTOR - ROTARY GROUP
REDEUTEUR DE TRANSLATION

Serial No. ;

Key No.	Part No.	Description	Description	Q'ty	S.C	Serial No.	ICA	Replaceable part	
								Part No.	Q'ty
4170--	K9001771	ROTARY GROUP	GROUPE ROTATIF	1					
1	K9001777	CYLINDER BLOCK ASS'Y	ENSEMBLE DE BLOC	1					
1-1	K9001778	. BLOCK;CYLINDER	. BLOC-CYLINDRES	1	D				
1-2	K9001779	. PLATE;CONTROL	. PLAQUE	1					
1-3	K9001780	. PIN;CENTER	. GOUPILLE	1					
1-4	K9001781	. PISTON ASS'Y	. ENSEMBLE PISTON	1					
1-6	K9001782	. SHIM 3.3t	. CALE	1					
	K9001783	. SHIM 3.4t	. CALE	1					
	K9001784	. SHIM 3.5t	. CALE	1					
1-7	K9001785	. SPRING	. RESSORT	1					
1-11	K9001786	. PLATE	. PLAQUE	1					
1-12	K9004228	. BOLT	. BOULON	14					
2	K9001788	SHAFT;DRIVE	ARBRE MOTEUR	1					
3	K9001789	PIECE;DISTANCE	GUIDE	1					
6	K9001790	SHIM 3.1t	CALE	1					
	K9001816	SHIM 3.5t	CALE	1					
	K9001817	SHIM 3.45t	CALE	1					
7	S6510650	RING;RETAINING	BAGUE	1					
10	K9001818	BEARING;TAPER ROLLER	ROULEMENT	1					
11	K9001819	BEARING;TAPER ROLLER	ROULEMENT	1					

DATE	DEC. 26, 2006
1st EDITION	

Fig. 4180 TRAVEL MOTOR - CONTROL PARTS
MOTEUR DE TRANSLATION

Serial No. ;

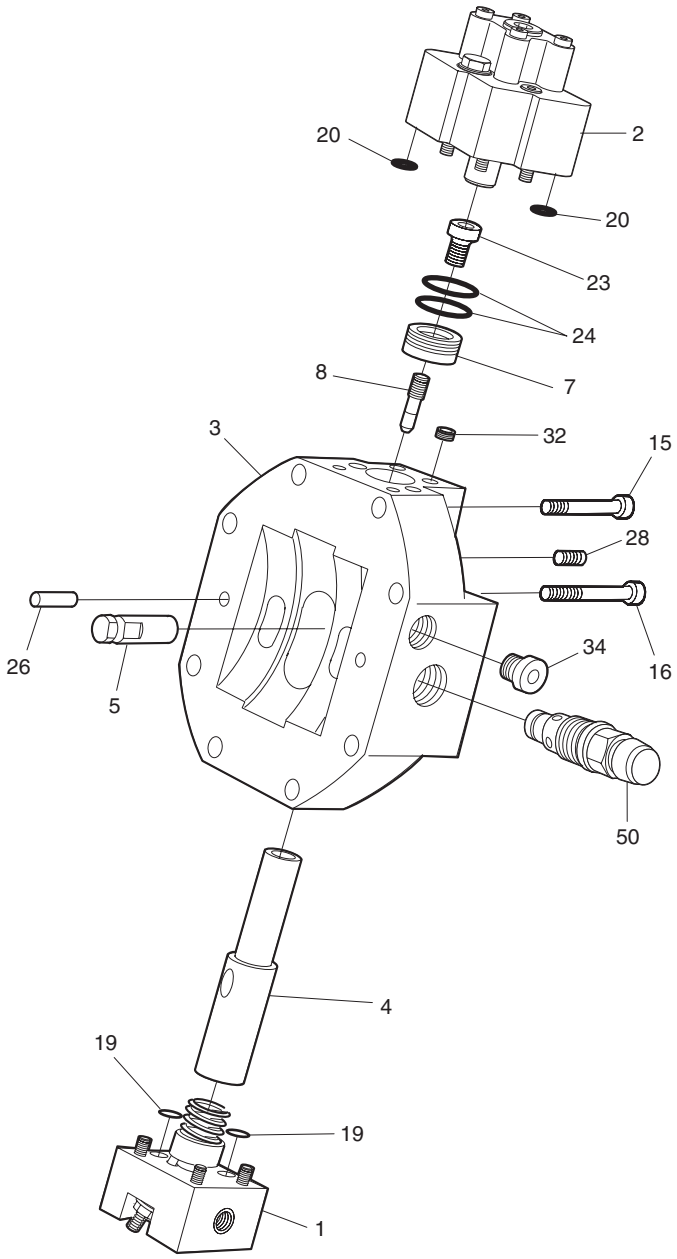

DATE	DEC. 26, 2006
1st EDITION	

Fig. 4180 TRAVEL MOTOR - CONTROL PARTS
MOTEUR DE TRANSLATION

Serial No. ;

Key No.	Part No.	Description	Description	Q'ty	S.C	Serial No.	ICA	Replaceable part	
								Part No.	Q'ty
4180-1	K9001820	REGULLATOR;CONROL PART	REGULLATOR	1					
2	K9005040	STROKE LIMITER ASS'Y	LIMITEUR DE COURSE	1					
3	K9001822	PLATE;PORT	PLAQUE	1					
4	K9001823	PISTON ASS'Y	ENSEMBLE PISTON	1					
5	K9001824	ROD	TIGE	1					
7	K9001825	BARREL	BARIL	1					
8	2.123-00250	SCREW;SOCKET	VIS	1					
15	S2215361	BOLT;SOCKET	BOULON A 6 PANS CREUX	4					
16	S2216673	BOLT;SOCKET	BOULON A 6 PANS CREUX	4					
19	K9000961	O-RING	JOINT TORIQUE	2					
20	2.180-01187	O-RING	JOINT TORIQUE	2					
23	2.120-00839	BOLT;SOCKET	BOULON A 6 PANS CREUX	1					
24	K9001826	RING;PISTON	BAGUE	2					
26	2.123-00132	PIN;CYLINDER	GOUPILLE	2					
28	2.181-00183	PLUG	BOUCHON	2					
32	2.181-00184	PLUG	BOUCHON	1					
34	2.120-00816	PLUG	BOUCHON	2					
50	K9000957	RELIEF VALVE;PRESSURE	SOULAGEMENT VANNE	2					

DATE	DEC. 26, 2006
1st EDITION	

Fig. 4190 TRAVEL MOTOR - CONTROL PART
MOTEUR DE TRANSLATION

Serial No. ;

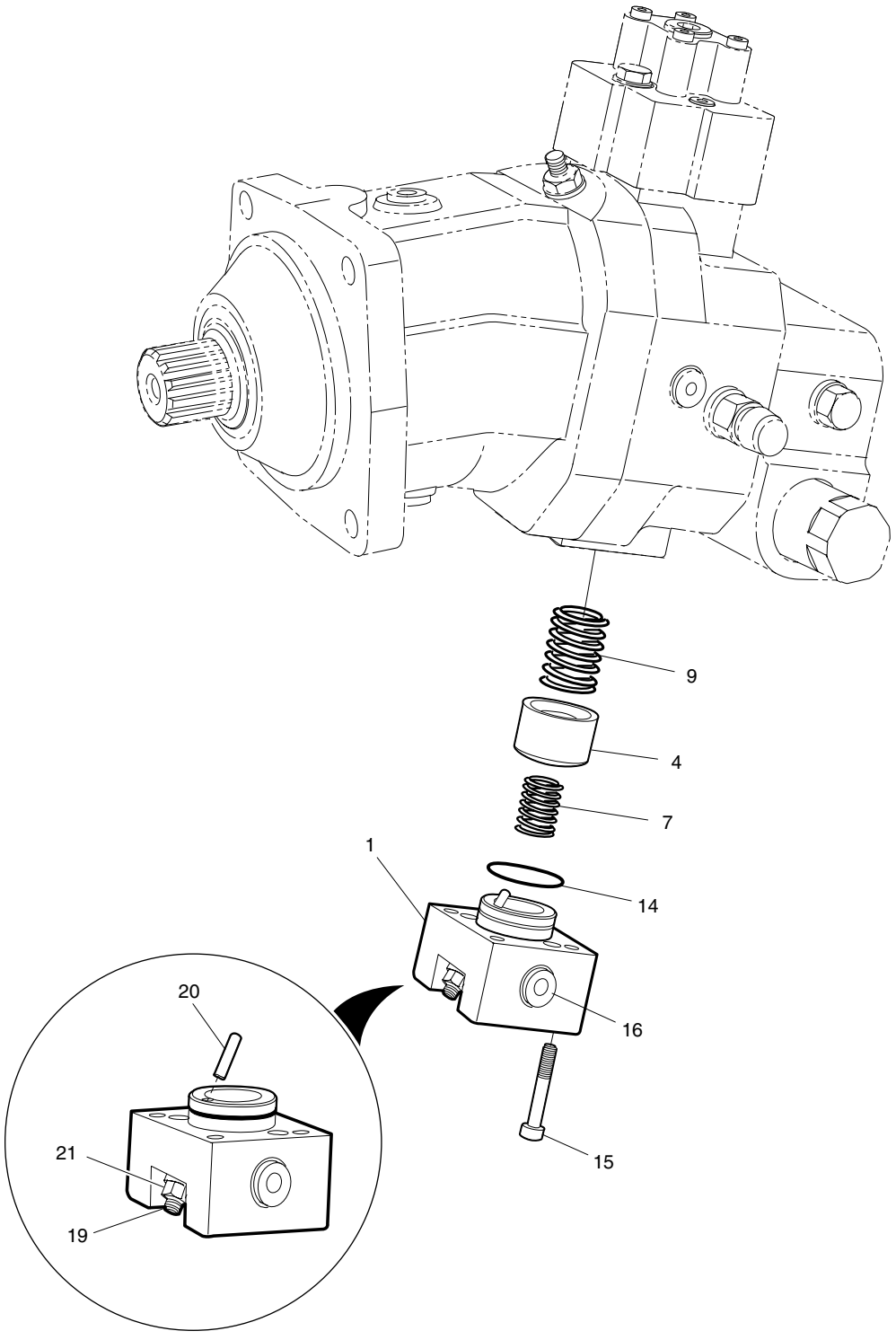

DATE	DEC. 26, 2006
1st EDITION	

Fig. 4190 TRAVEL MOTOR - CONTROL PART
MOTEUR DE TRANSLATION

Serial No. ;

Key No.	Part No.	Description	Description	Q'ty	S.C	Serial No.	ICA	Replaceable part	
								Part No.	Q'ty
4190--	K9001820	REGULLATOR;CONROL PART	REGULLATOR	1					
1	2.402-00213	HOUSING;CONTROL	LOGEMENT	1	D				
4	2.408-00109	SEAT;SPRING	SIEGE	1					
7	2.131-00421	SPRING	RESSORT	1					
9	2.131-00422	SPRING	RESSORT	1					
14	K9000978	O-RING	JOINT TORIQUE	1					
15	S2209661	BOLT	BOULON	4					
16	2.120-00813	PLUG	BOUCHON	1					
19	2.123-00247	SCREW;SET	VIS	1					
20	S5710671	PIN;PARALLEL	GOUPILLE	1					
21	2.121-00202	NUT;SEAL LOCK	ECROU	1					

DATE	DEC. 26, 2006
1st EDITION	

Fig. 4200 TRAVEL MOTOR - STROKE LIMITER
MOTEUR DE TRANSLATION

Serial No. ;

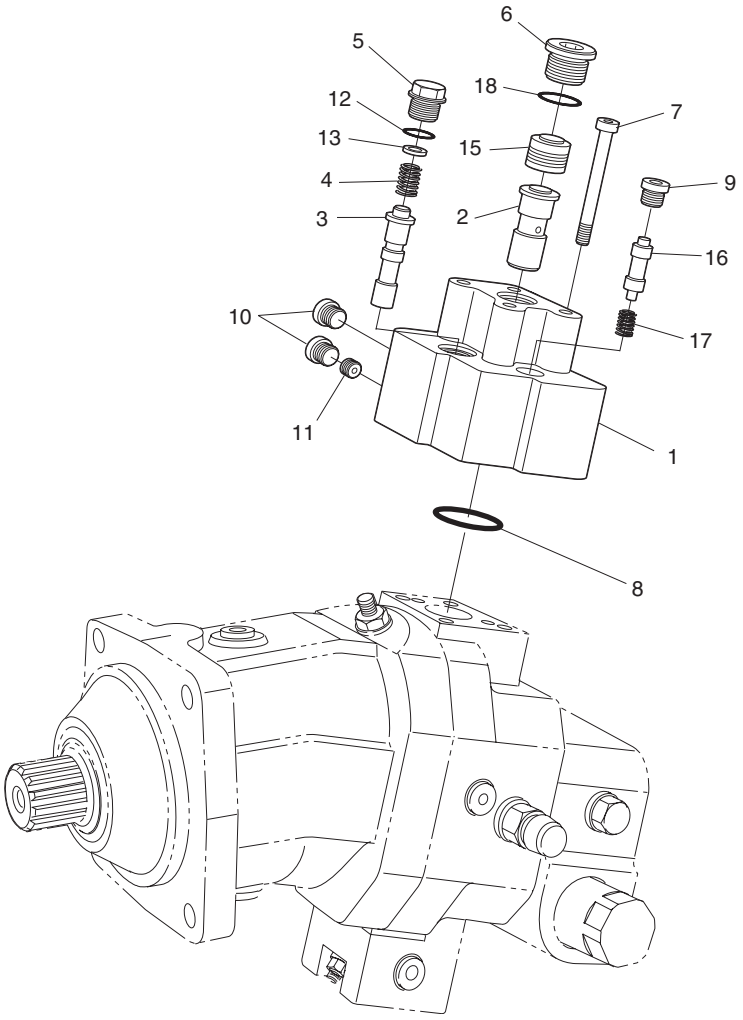

DATE	DEC. 26, 2006
1st EDITION	

Fig. 4200 TRAVEL MOTOR - STROKE LIMITER
MOTEUR DE TRANSLATION

Serial No. ;

Key No.	Part No.	Description	Description	Q'ty	S.C	Serial No.	ICA	Replaceable part	
								Part No.	Q'ty
4200--	K9005040	STROKE LIMITER ASS'Y	LIMITEUR DE COURSE	1					
1	K9001827	HOUSING	LOGEMENT	1	D				
2	K9005041	PISTON	PISTON	1					
3	2.409-00182	PISTON;CONTROL	PISTON	1	D				
4	2.131-00423	SPRING	RESSORT	1					
5	2.120-00620	PLUG	BOUCHON	1					
6	2.120-00621	PLUG	BOUCHON	1					
7	S2214061	BOLT;SOCKET	BOULON A 6 PANS CREUX	4					
8	2.180-01188	O-RING	JOINT TORIQUE	1					
9	2.120-00622	PLUG	BOUCHON	1					
10	2.120-00814	PLUG	BOUCHON	2					
11	2.415-00033	ORIFICE	ORIFICE	1	D				
12	2.180-01195	O-RING	JOINT TORIQUE	1					
13	2.114-00155	SHIM	CALE	1					
15	2.409-00072	PISTON	PISTON	1	D				
16	2.409-00183	PISTON;CONTROL	PISTON	1	D				
17	K9004058	SPRING	RESSORT	1					
18	K9001829	O-RING	JOINT TORIQUE	1					

DATE	DEC. 26, 2006
1st EDITION	

Fig. 4210 TRAVEL MOTOR - COUNTER BALANCE VALVE
MOTEUR DE TRANSLATION

Serial No. ;

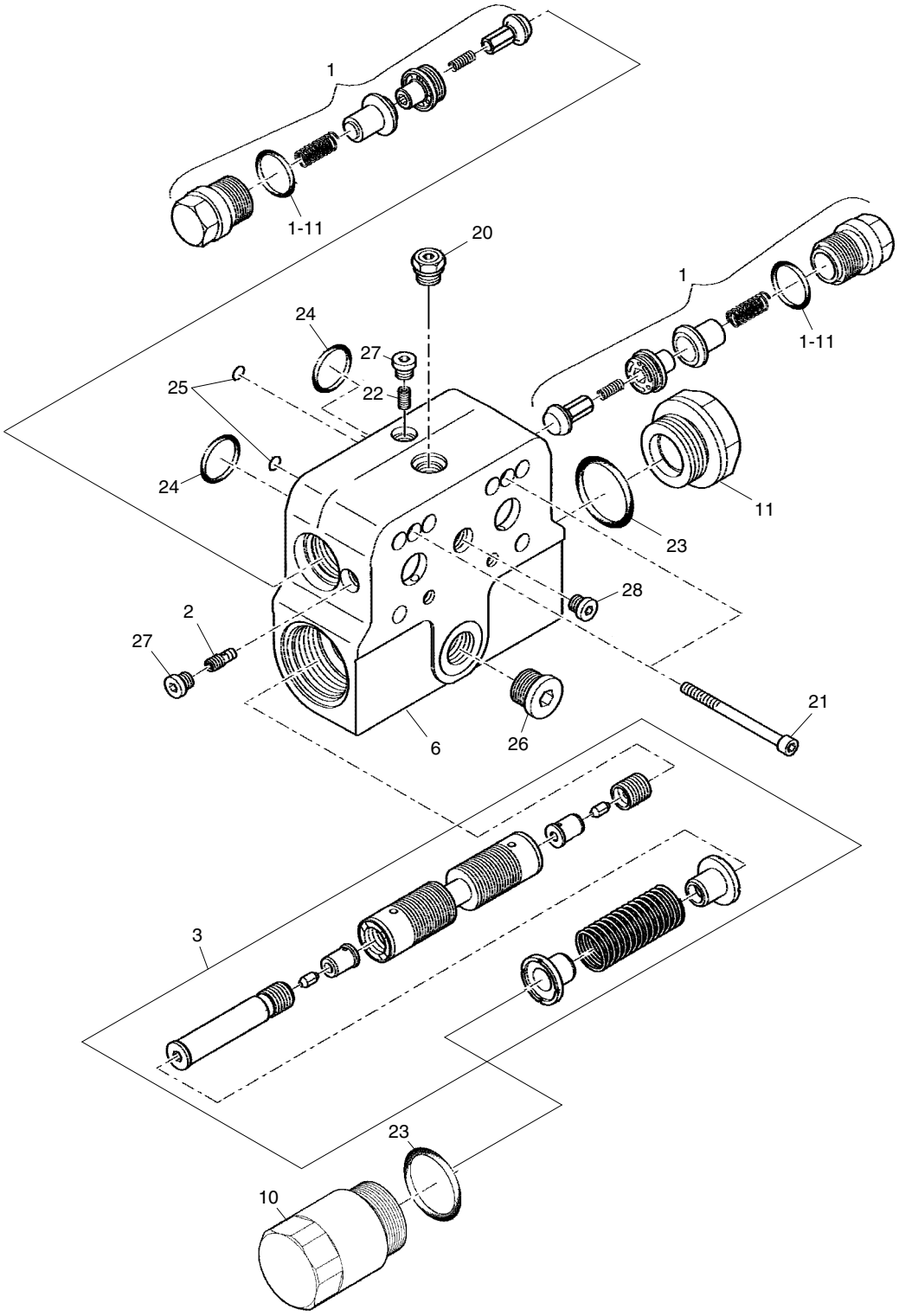

DATE	DEC. 26, 2006
1st EDITION	

Fig. 4210 TRAVEL MOTOR - COUNTER BALANCE VALVE MOTEUR DE TRANSLATION

Serial No. ;

Key No.	Part No.	Description	Description	Q'ty	S.C	Serial No.	ICA	Replaceable part	
								Part No.	Q'ty
4210--	K9001775	VALVE;COUNTER BALANCE	VANNE	1					
1	K9001830	VALVE	VANNE	2					
1-11	2.180-01202	. O-RING	. JOINT TORIQUE	1					
2	2.421-00378	VALVE;SHUTTLE	VANNE	1					
3	K9001831	VALVE;BRAKE	VANNE	1					
6	K9001832	HOUSING	LOGEMENT	1	D				
10	2.120-00805	PLUG	BOUCHON	1					
11	2.120-00806	PLUG	BOUCHON	1					
20	2.120-00815	PLUG	BOUCHON	1					
21	2.120-00840	BOLT;SOCKET	BOULON A 6 PANS CREUX	2					
22	2.181-00507	PLUG	BOUCHON	1					
23	2.180-01198	O-RING	JOINT TORIQUE	2					
24	2.180-01188	O-RING	JOINT TORIQUE	2					
25	2.180-01179	O-RING	JOINT TORIQUE	2					
26	2.120-00618	PLUG	BOUCHON	1					
27	2.120-00811	PLUG	BOUCHON	2					
28	2.123-00138	SCREW	VIS	1					

DATE	DEC. 15, 2006
REV.NO.	EXB06-13

Fig. 4220 CONTROL VALVE TIROIR DE COMMANDE

Serial No. ;

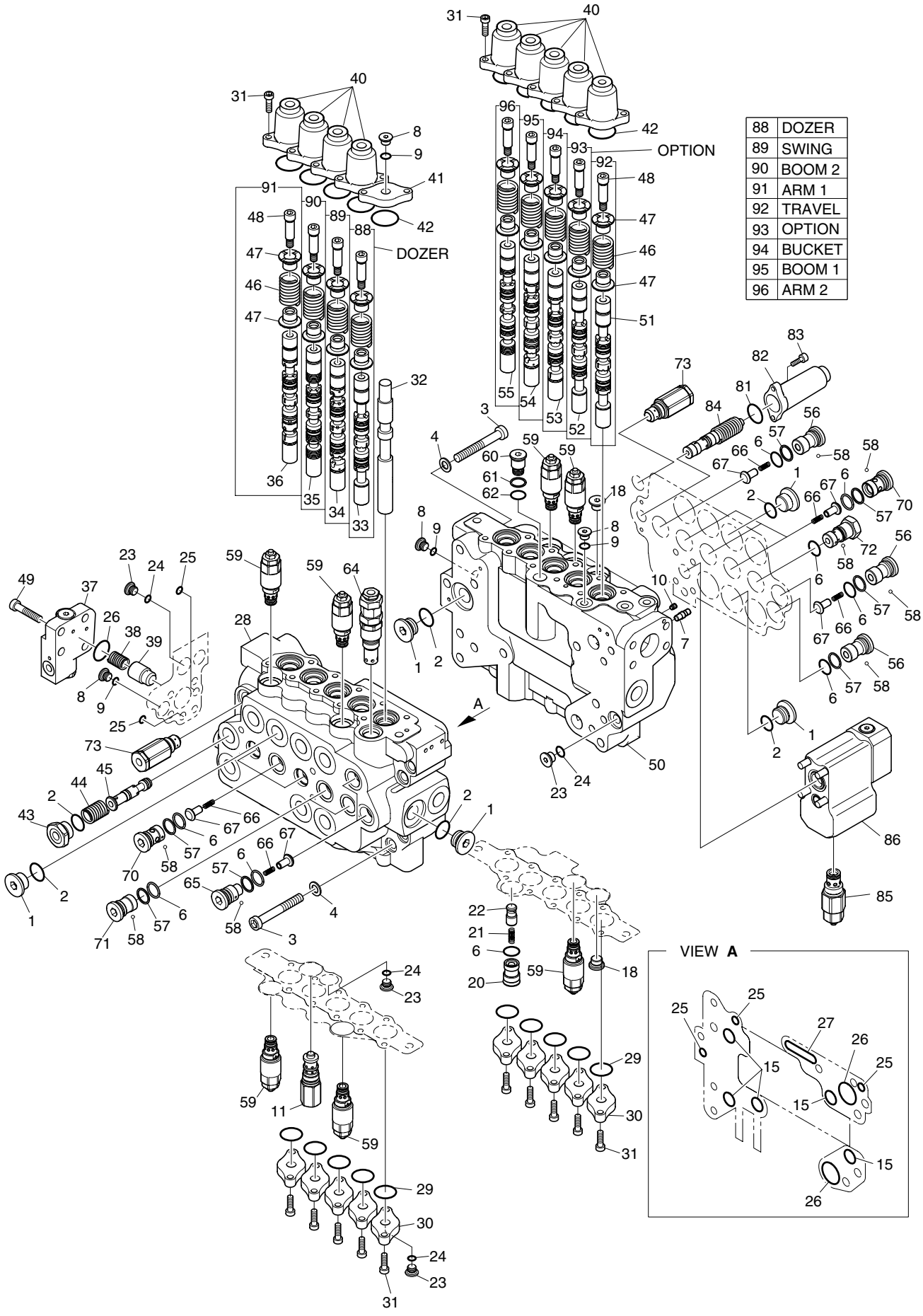

DATE	DEC. 15, 2006
REV. NO.	EXB06-13

Fig. 4220 CONTROL VALVE TIROIR DE COMMANDE

Serial No. ;

Key No.	Part No.	Description	Description	Q'ty	S.C	Serial No.	ICA	Replaceable part	
								Part No.	Q'ty
4220--	K1003637F	CONTROL VALVE ASS'Y	TIROIR DE COMMANDE	1		5001–5010			
	K1003637G	**CONTROL VALVE ASS'Y**	TIROIR DE COMMANDE	1		**5011–**			
1	2430-1067	CAP	CHAPEAU	5					
2	S8000231	O-RING	JOINT TORIQUE	6					
3	S2266461	BOLT;SOCKET	BOULON A 6 PANS CREUX	8					
4	S5110701	WASHER;SPRING	RONDELLE ELASTIQUE	8					
6	S8000211	O-RING	JOINT TORIQUE	17					
7	2415-1012A	ORIFICE	ORIFICE	1					
8	2430-1051	CAP	CHAPEAU	4					
9	S8000111	O-RING	JOINT TORIQUE	4					
10	2181-2432	EXPANDER	XTENSEUR	6					
11	K1003715	REGENERATION VALVE ASS'Y	VANNE DE REGENERATION	1		5001–5010			
	2420-1229	**REGENERATION VALVE**	VANNE DE REGENERATION	1		**5011–**			
15	S8000181	O-RING	JOINT TORIQUE	5					
18	181-00111	OVER LOAD PLUG ASS'Y	PRISE FINIE DE CHARGE	2					
20	2430-1083	CAP	CHAPEAU	1					
21	2129-1373	SPRING	RESSORT	2					
22	2420-1175	CHECK	CONTROLE	1					
23	2430-1058	CAP	CHAPEAU	4					
24	S8000141	O-RING	JOINT TORIQUE	4					
25	S8000101	O-RING	JOINT TORIQUE	5					
26	S8000291	O-RING	JOINT TORIQUE	3					
27	2180-1223	O-RING	JOINT TORIQUE	1					
28	423-00124A	HOUSING;LEFT	LOGEMENT	1					
29	2180-1222	O-RING	JOINT TORIQUE	10					
30	2229-1065	RETAINER	ARRETOIR	10					
31	S2209061	BOLT;SOCKET	BOULON A 6 PANS CREUX	40					
32	2424-1139	SPOOL	BOBINE	1					
33	K1027246	PLUNGER;D	PLONGEUR	1					
34	424-00136	PLUNGER;T61	PLONGEUR	1					
35	K1003725	SPOOL;BOOM 2	BOBINE	1					
36	K1003723	SPOOL;ARM 1	BOBINE	1		5001–5010	I	K1030229	1
	K1030229	**SPOOL;ARM 1**	BOBINE	1		**5011–**			
37	2430-1064A	ARM HOLDING V/V ASS'Y	BRAS TENANT LA VALVE	1					
38	2129-1397	SPRING	RESSORT	1					
39	2426-1173	POPPET	POUPEE	1					
40	2430-1107	COVER	COUVERCLE	9					
41	2229-1031	RETAINER	ARRETOIR	1					

DATE	DEC. 15, 2006
REV.NO.	EXB06-13

Fig. 4220 CONTROL VALVE TIROIR DE COMMANDE

Serial No. ;

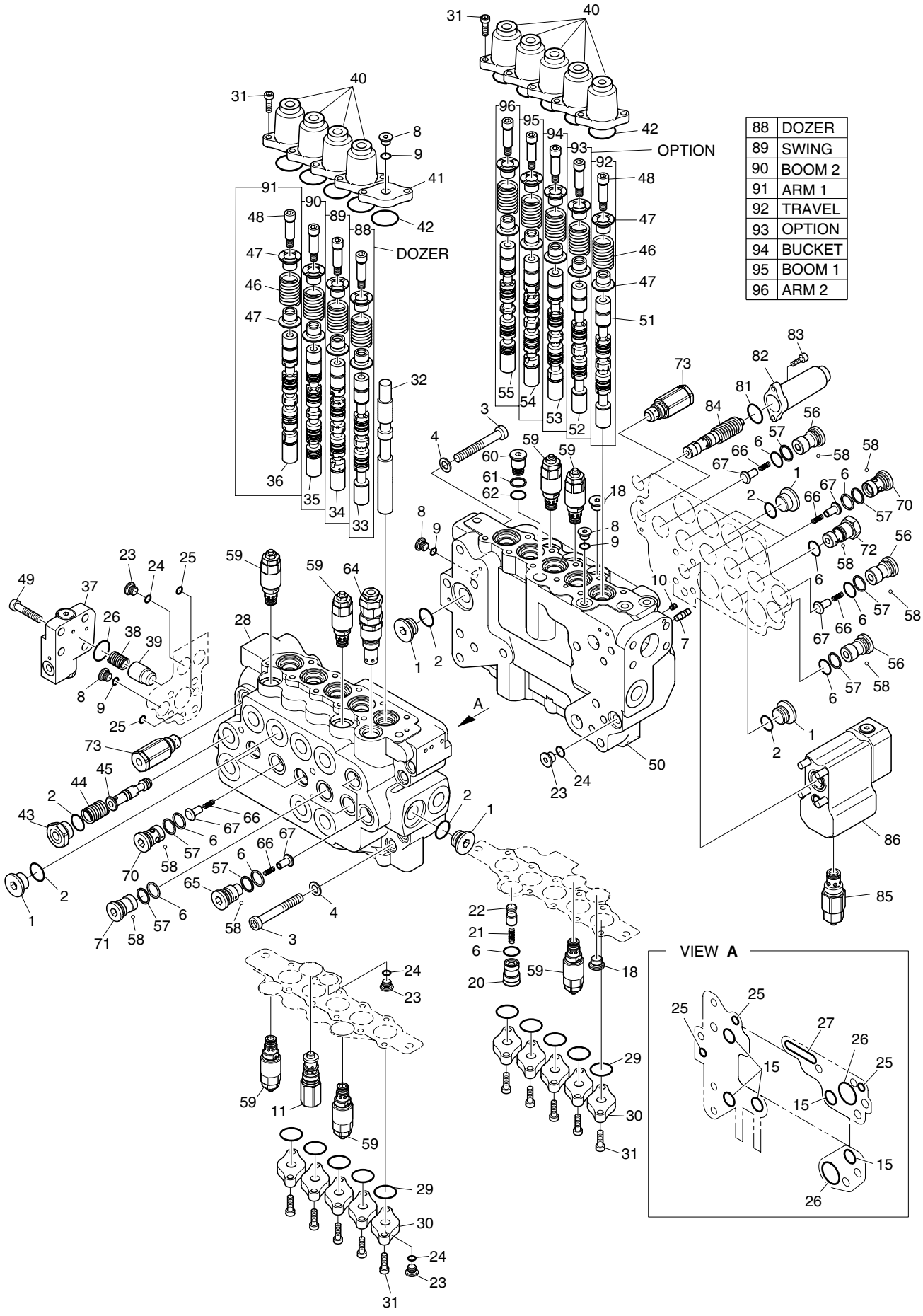

DATE	DEC. 15, 2006
REV. NO.	EXB06-13

Fig. 4220 CONTROL VALVE TIROIR DE COMMANDE

Serial No. ;

Key No.	Part No.	Description	Description	Q'ty	S.C	Serial No.	ICA	Replaceable part	
								Part No.	Q'ty
4220-42	2180-1217D63	O-RING	JOINT TORIQUE	10					
43	2430-1081	CAP	CHAPEAU	1					
44	2129-1401	SPRING	RESSORT	1					
45	2424-1170A	SPOOL;BC FULL CUT	BOBINE	1					
46	2129-1469	SPRING;PL	RESSORT	9					
47	2429-1047	GUIDE;SP	GUIDE	18					
48	2430-1106	CAP;PL	CHAPEAU	9					
49	S2215261	BOLT;SOCKET	BOULON A 6 PANS CREUX	4					
50	2423-1529B	HOUSING;RIGHT	LOGEMENT	1					
51	2424-1351A	PLUNGER;M3	PLONGEUR	1					
52	2424-1135	PLUNGER;D	PLONGEUR	1					
53	2424-1257	PLUNGER;C7	PLONGEUR	1					
54	K1003721	SPOOL;BOOM 1 SUB	BOBINE	1					
55	424-00209	PLUNGER; ARM2	PLONGEUR	1					
56	2430-1040A	CAP	CHAPEAU	3					
57	S8060211	RING;BACK UP	BAGUE	14					
58	2420-1138	CHIP;NYLON	MORCEAU EN NYLON	11					
59	2420-1220	O/L RELIEF ASS'Y	SOULAGEMENT	7					
60	2430-1059	CAP	CHAPEAU	1					
61	S8000121	O-RING	JOINT TORIQUE	1					
62	S8060121	RING;BACK UP	BAGUE	1					
64	2420-1225A	MAIN RELIEF ASS'Y	ENSEMBLE BATI PRINCIPAL	1					
65	2430-1085A	CAP	CHAPEAU	2					
66	2129-1374	SPRING	RESSORT	10					
67	K1003726	CHECK;LOAD	CONTROLE DE CHARGE	10					
70	2430-1086A	CAP	CHAPEAU	6					
71	2430-1084	CAP	CHAPEAU	2					
72	K1012206	CAP	CHAPEAU	1					
73	2420-1131	FOOT RELIEF AS	SOULAGEMENT DE PIED AS	2					
81	2180-1217D24	O-RING	JOINT TORIQUE	1					
82	2430-1056A	CAP	CHAPEAU	1					
83	S2204861	BOLT	BOULON	2					
84	K1003716	VALVE;BOOM PRIORITY	VANNE	1					
85	2420-1226	O/L RELIEF ASS'Y	SOULAGEMENT	1					
86	2420-1209A	BM HOLDING VALVE ASS'Y	PERCHE TENANT LA VALVE	1					
88	K1027247	PLUNGER ASS'Y(DOZER)	PLONGEUR	1					
89	2424-1281B	PLUNGER;T61 ASS'Y(SWING)	PLONGEUR	1					
90	2424-1277E	PLUNGER;D75 ASS'Y(BOOM2)	PLONGEUR	1					

DATE	DEC. 15, 2006
REV.NO.	EXB06-13

Fig. 4220 CONTROL VALVE TIROIR DE COMMANDE

Serial No. ;

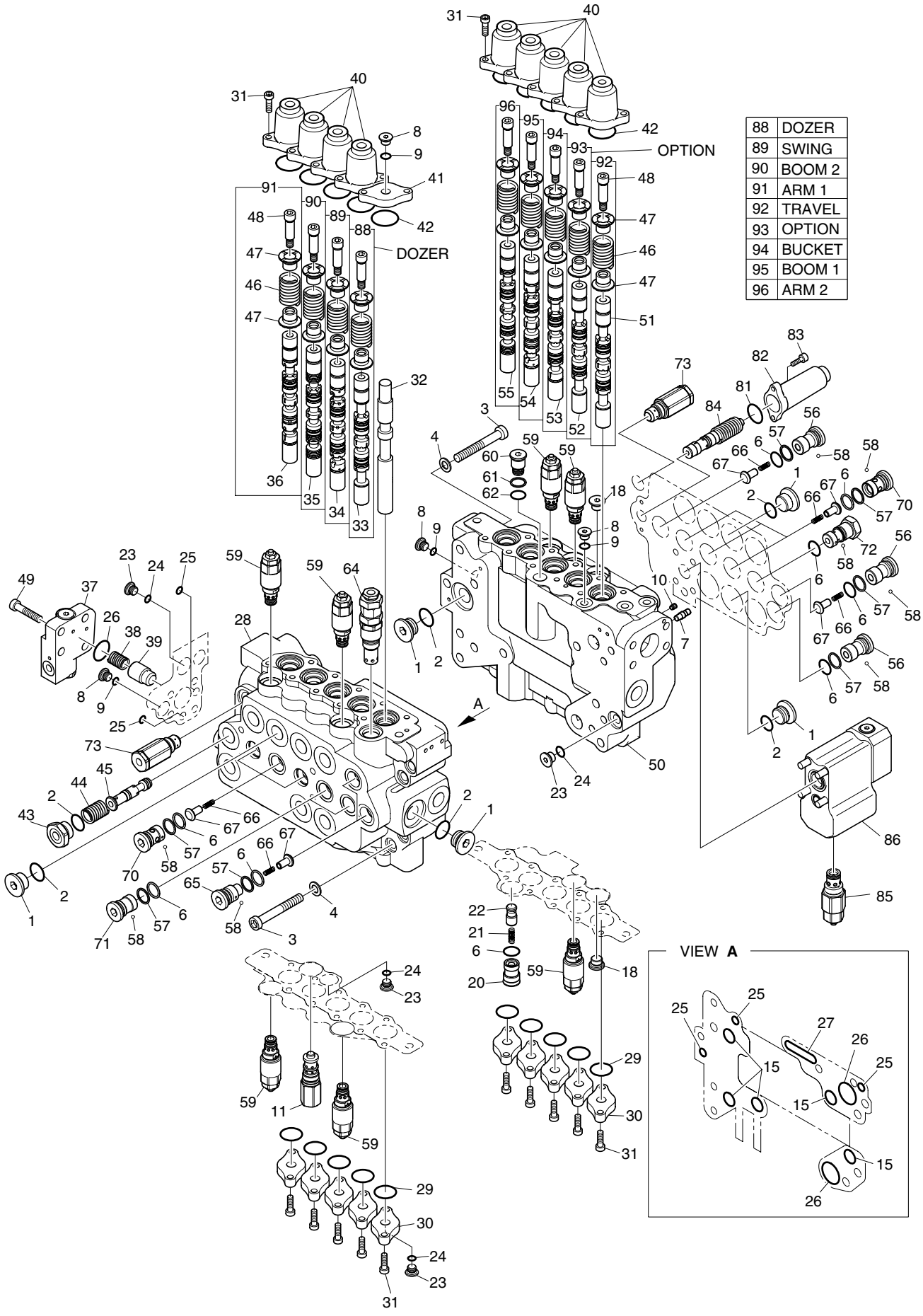

DATE	DEC. 15, 2006
REV. NO.	EXB06-13

Fig. 4220 CONTROL VALVE TIROIR DE COMMANDE

Serial No. ;

Key No.	Part No.	Description	Description	Q'ty	S.C	Serial No.	ICA	Replaceable part	
								Part No.	Q'ty
4220-91	2424-1278E	PLUNGER;A73 ASSY(ARM1)	PLONGEUR	1		5001–5010	I	K1030230	1
	K1030230	**PLUNGER;A73 ASSY(ARM1)**	PLONGEUR	1		**5011–**			
92	2424-1283	PLUNGER;M3 ASS'Y(TRAVEL)	PLONGEUR	1					
93	2424-1282	PLUNGER;D ASS'Y(OPTION)	PLONGEUR	1					
94	2424-1280	PLUNGER;C7 ASS'Y(BUCKET)	PLONGEUR	1					
95	2424-1276F	PLUNGER;B75 ASSY(BOOM1)	PLONGEUR	1					
96	2424-1279C	PLUNGER;A72 ASSY(ARM2)	PLONGEUR	1					

DATE	DEC. 26, 2006
1st EDITION	

Fig. 4230 SOLENOID VALVE
VANNE DE SOLENOIDE

Serial No. ;

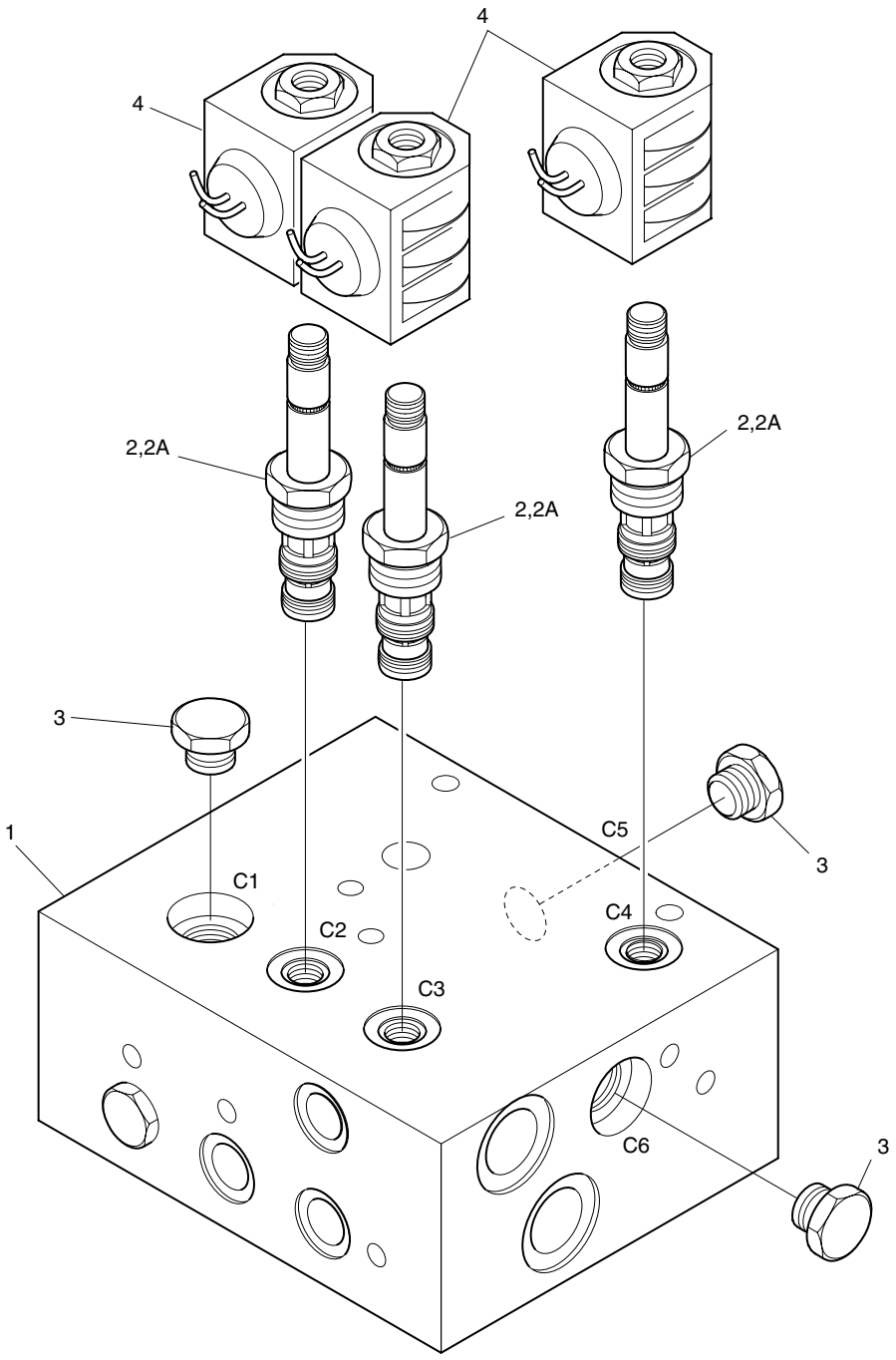

DATE	DEC. 26, 2006
1st EDITION	

Fig. 4230 SOLENOID VALVE VANNE DE SOLENOIDE

Serial No. ;

Key No.	Part No.	Description	Description	Q'ty	S.C	Serial No.	ICA	Replaceable part	
								Part No.	Q'ty
4230--	K1002820	SOLENOID VALVE	VALVE DE SOLENOIDE	1					
1	-	BODY	CARTER	1	D				
2	K9001354	SPOOL;SOLENOID	BOBINE	3					
2A	K9001943	. SEAL KIT	. KIT D'ETANCHEITE	1					
3	K9001355	CHECK	CONTROLE	2					
4	1.519-00001	COIL	ENROULEMENT	3					

DATE	JUN. 30, 2008
REV.NO.	EXB08-06

Fig. 4240 REMOTE CONTROL VALVE
VANNE DE COMMANDE A DISTANCE

Serial No. ;

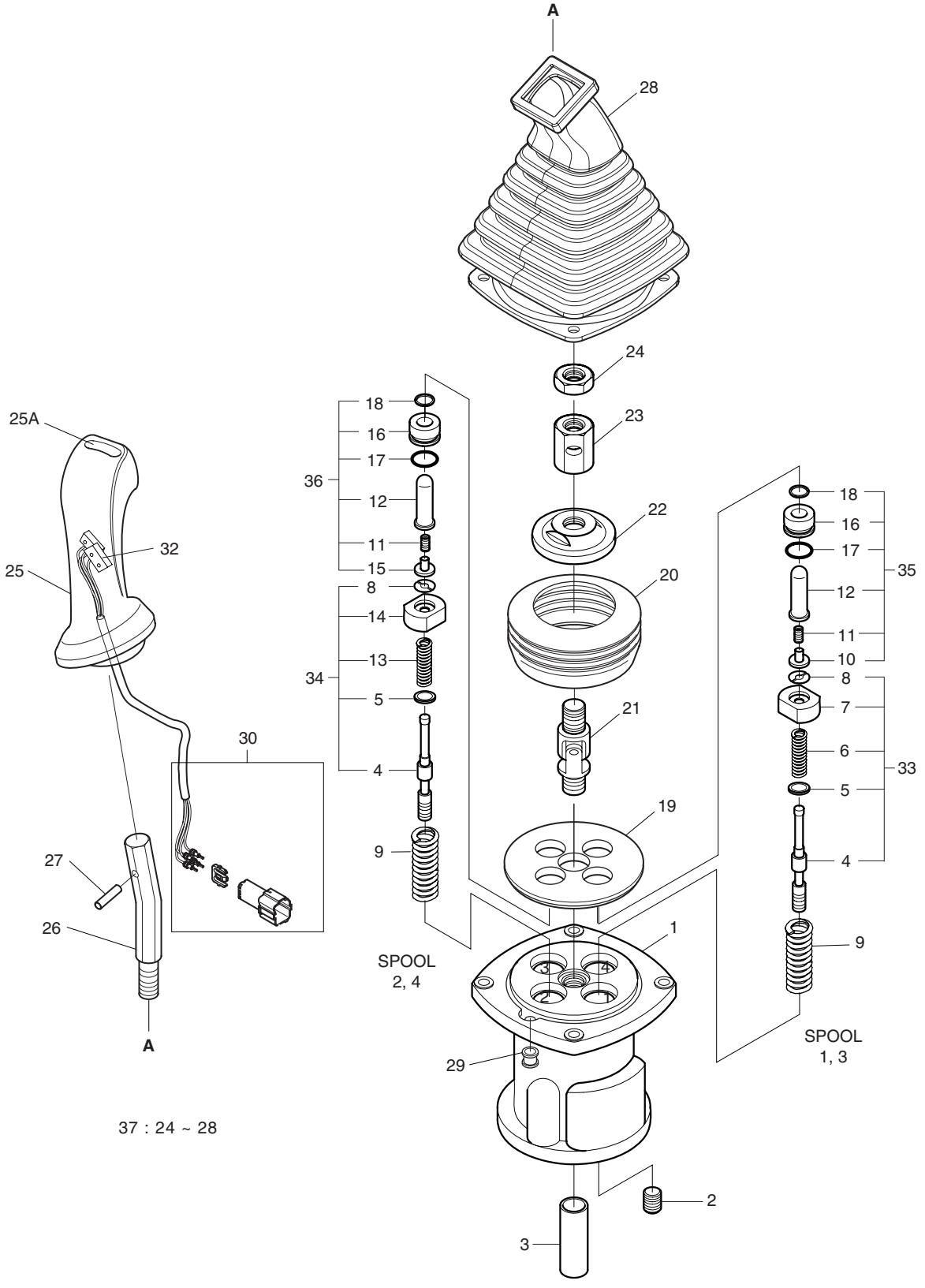

DATE	JUN. 30, 2008
REV. NO.	EXB08-06

Fig. 4240 REMOTE CONTROL VALVE VANNE DE COMMANDE A DISTANCE

Serial No. ;

Key No.	Part No.	Description	Description	Q'ty	S.C	Serial No.	ICA	Replaceable part	
								Part No.	Q'ty
4240--	K1000556G	REMOTE CONTROL VALVE(L.H)	MANETTE DE CONTROLE	1		5001–5019	I	K1000556H	1
	K1000556H	**REMOTE CONTROL**	MANETTE DE CONTROLE	1		**5020–**			
	K1000555G	REMOTE CONTROL VALVE(R.H)	MANETTE DE CONTROLE	1		5001–5019	I	K1000555H	1
	K1000555H	**REMOTE CONTROL**	MANETTE DE CONTROLE	1		**5020–**			
1	-	CASE	CARTER	1	D				
2	2181-1116D1	PLUG	BOUCHON	4					
3	K9001115	BUSHING	DOUILLE	1					
4	-	SPOOL	BOBINE	4	D				
5	-	SHIM	CALE	1	D				
6	-	SPRING	RESSORT	2	D				
7	-	SEAT;SPRING	SIEGE	2	D				
8	-	STOPPER	ARRET	4	D				
9	K9001119	SPRING	RESSORT	4					
10	-	STOPPER	ARRET	2	D				
11	-	SPRING	RESSORT	4	D				
12	-	ROD;PUSH	TIGE	4	D				
13	-	SPRING	RESSORT	2	D				
14	-	SEAT;SPRING	SIEGE	2	D				
15	-	STOPPER	ARRET	2	D				
16	-	PLUG	BOUCHON	4	D				
17	S8000205	O-RING	JOINT TORIQUE	4					
18	K9001127	SEAL;ROD	TIGE D'ETANCHEITE	4					
19	1.412-00017	PLATE	PLAQUE	1					
20	K9001128	BOOT	INITIALISATION	1					
21	1.138-00004	JOINT ASS'Y	ENSEMBLE DE JOINT	1					
22	K9001129	PLATE;SWASH	PLAQUE	1		5001–5019	I	K9001129A	1
	K9001129A	**PLATE;SWASH**	PLAQUE	1		**5020–**			
23	1.121-00028	NUT	ECROU	1					
24	S4012833	NUT	ECROU	1					
25	K9001130	HANDLE ASS'Y(L.H)	POIGNEE	1					
	K9001131	HANDLE ASS'Y(R.H)	POIGNEE	1					
25A	1.161-00021	. CAP;PEANUT	. CHAPEAU	1					
26	1.178-00004	BAR;HANDLE	BARRE DE POIGNEE	1					
27	S5740800	PIN;SPRING	GOUPILLE	1					
28	K9001132	BELLOWS	SOUFFLET	1					
29	1.110-00169	BUSHING	DOUILLE	1					
30	K9001133	CONNECTOR ASS'Y	CONNECTOR	1					
32	K9001001	SWITCH ASS'Y	COMMUTATEUR	1					

DATE	JUN. 30, 2008
REV.NO.	EXB08-06

Fig. 4240 REMOTE CONTROL VALVE
VANNE DE COMMANDE A DISTANCE

Serial No. ;

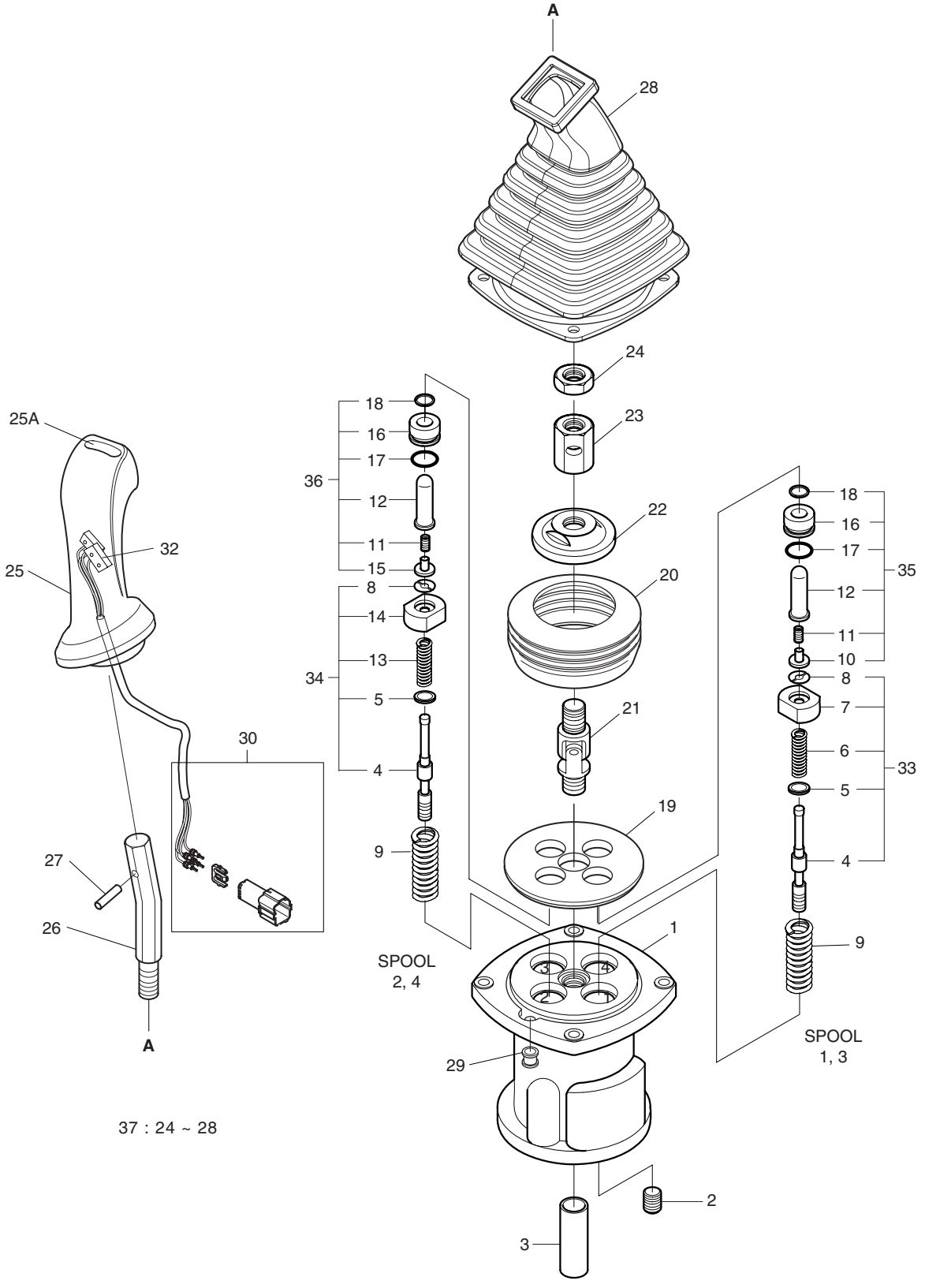

DATE	JUN. 30, 2008
REV. NO.	EXB08-06

Fig. 4240 REMOTE CONTROL VALVE
VANNE DE COMMANDE A DISTANCE

Serial No. ;

Key No.	Part No.	Description	Description	Q'ty	S.C	Serial No.	ICA	Replaceable part	
								Part No.	Q'ty
4240-33	K9003998	KIT;SPOOL(1,3)	KIT DE BOBINE	1					
34	K9003999	KIT;SPOOL(2,4)	KIT DE BOBINE	1					
35	K9004000	KIT;PLUG(1,3)	KIT DE PRISE	1		5001–5019	I	K9006480	1
	K9006480	**KIT;PLUG(1,3)**	KIT DE PRISE	1		**5020–**			
36	K9004001	KIT;PLUG(2,4)	KIT DE PRISE	1		5001–5019	I	K9006481	1
	K9006481	**KIT;PLUG(2,4)**	KIT DE PRISE	1		**5020–**			
37	K9001139	KIT;HANDLE(R.H)	KIT DE POIGN?E	1					
	K9001140	KIT;HANDLE(L.H)	KIT DE POIGN?E	1					

DATE	DEC. 26, 2006
1st EDITION	

Fig. 4250 REMOTE CONTROL VALVE - DOZER
VANNE DE COMMAND A DISTANCE

Serial No. ;

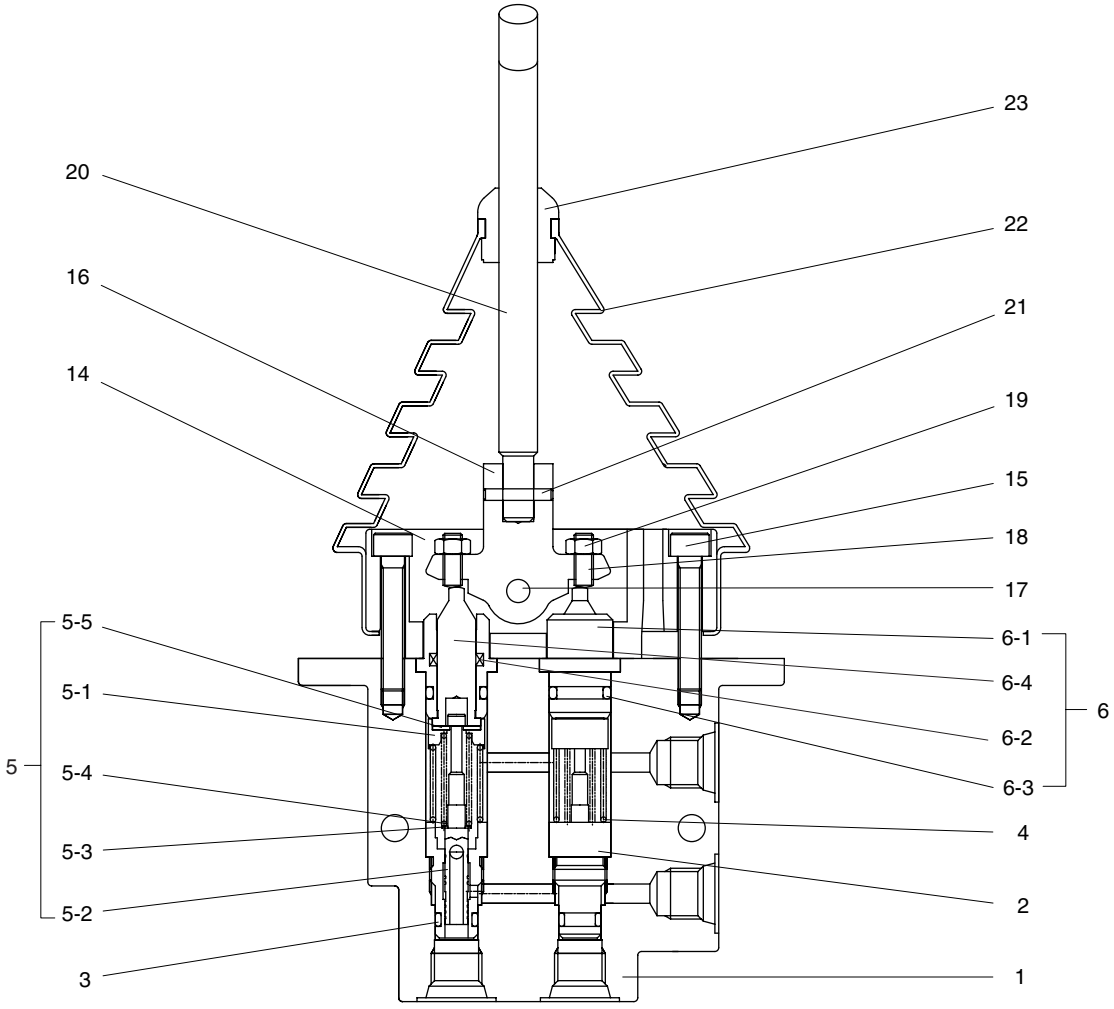

DATE	DEC. 26, 2006
1st EDITION	

Fig. 4250 REMOTE CONTROL VALVE - DOZER
VANNE DE COMMAND A DISTANCE

Serial No. ;

Key No.	Part No.	Description	Description	Q'ty	S.C	Serial No.	ICA	Replaceable part	
								Part No.	Q'ty
4250--	420-00490A	DOZER REMOCON VALVE	VANNE DE COMMAND A	1					
1	-	BODY	CARTER	1	D				
2	1.181-00055	PLUG	BOUCHON	2					
3	S8000081	O-RING	JOINT TORIQUE	2	K				
4	1.131-00035	SPRING	RESSORT	2					
5	K9001357	SPOOL KIT	BOBINE	1					
5-1	-	. SEAT;SPRING	. SIEGE	2	D				
5-2	-	. SPOOL	. BOBINE	2	D				
5-3	-	. SEAT;SPRING	. SIEGE	2	D				
5-4	-	. SPRING	. RESSORT	2	D				
5-5	-	. STOPPER	. ARRET	2	D				
6	K9001358	PLUG KIT	BOUCHON	1					
6-1	-	. PLUG	. BOUCHON	2	D				
6-2	-	. SEAL;ROD	. TIGE D'ETANCHEITE	2	K				
6-3	S8000141	. O-RING	. JOINT TORIQUE	2	K				
6-4	-	. ROD;PUSH	. TIGE	2	D				
14	1.430-00025	COVER	COUVERCLE	1					
15	S2205361	BOLT	BOULON	2					
16	1.429-00003	GUIDE	GUIDE	1					
17	1.123-00022	PIN	GOUPILLE	1					
18	1.120-00010	BOLT	BOULON	2					
19	S4014233	NUT	ECROU	2					
20	1.357-00003	LEVER	LEVIER	1					
21	S5740530	PIN;SPRING	GOUPILLE	1					
22	K9001360	BOOT	INITIALISATION	1					
23	1.110-00170	BUSHING	DOUILLE	1					
*	K9001361	SEAL KIT	KIT D'ETANCHEITE	1					

DATE	DEC. 26, 2006
1st EDITION	

Fig. 4260 BRAKE SUPPLY VALVE
SOUPAPE DE DISTRIBUTION DE FREINAGE

Serial No. ;

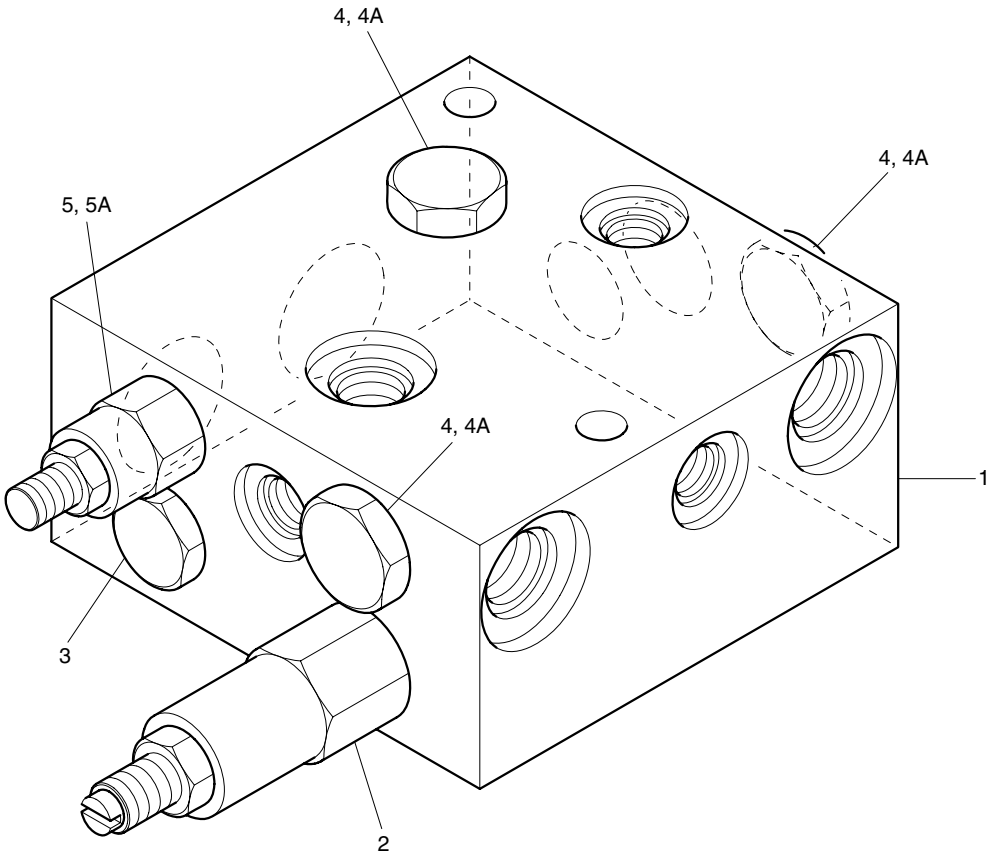

DATE	DEC. 26, 2006
1st EDITION	

Fig. 4260 BRAKE SUPPLY VALVE
SOUPAPE DE DISTRIBUTION DE FREINAGE

Serial No. ;

Key No.	Part No.	Description	Description	Q'ty	S.C	Serial No.	ICA	Replaceable part	
								Part No.	Q'ty
4260--	2420-9325A	BRAKE SUPPLY VALVE	VALVE	1					
1	-	BLOCK	BLOC	1	D				
2	1.420-00112	VALVE;RELIEF	VANNE	1					
3	1.420-00069	VALVE;LOGIC	VANNE	1					
4	1.420-00035	VALVE;CHECK	CAPTEUR	3					
4A	1.180-00447	. KIT;SEAL	. KIT DE REPARATION	1					
5	1.420-00153	VALVE;UNLOADING	VANNE	1					
5A	1.180-00448	. KIT;SEAL	. KIT DE REPARATION	1					

DATE	DEC. 26, 2006
1st EDITION	

Fig. 4270 SOLENOID VALVE
VANNE DE SOLENOIDE

Serial No. ;

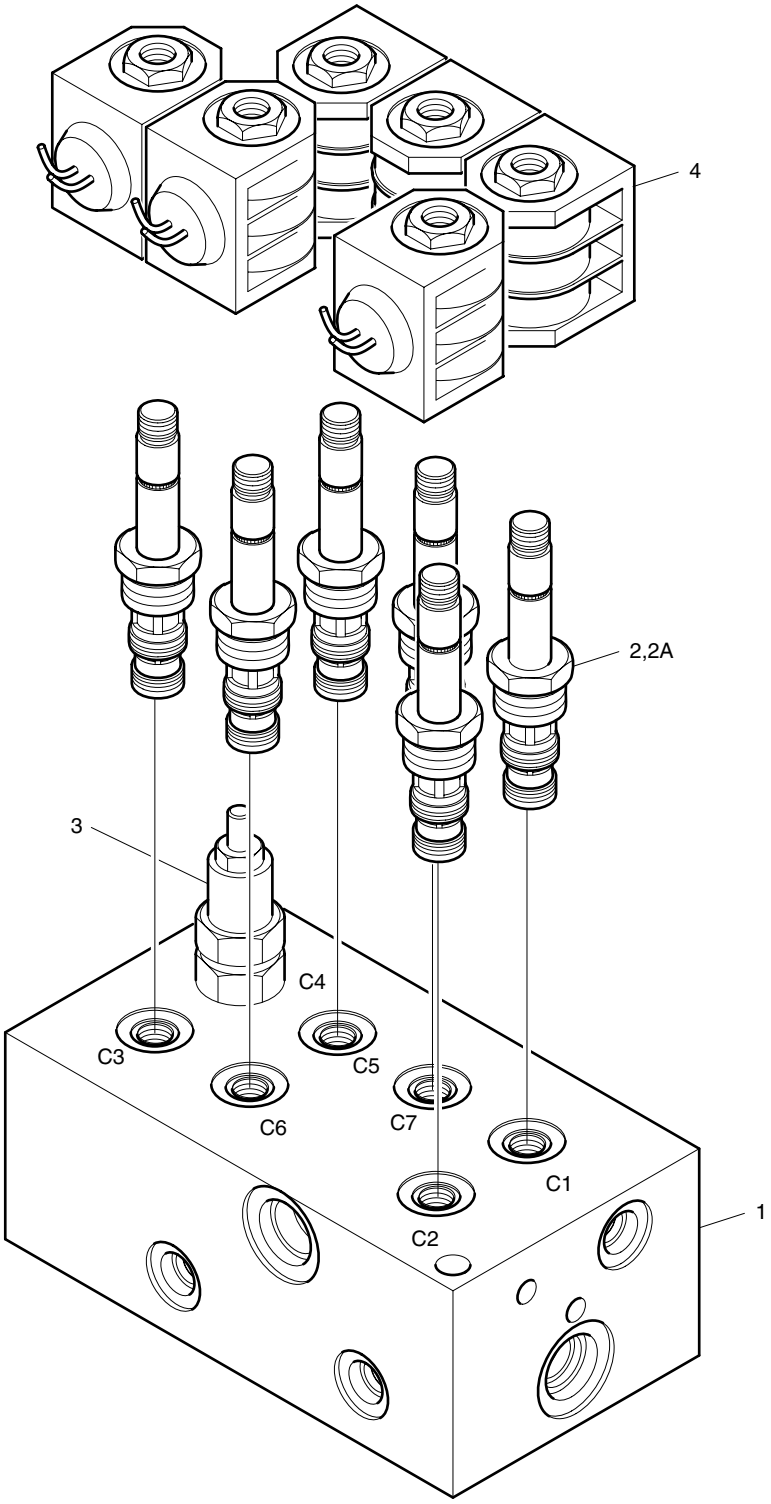

DATE	DEC. 26, 2006
1st EDITION	

Fig. 4270 SOLENOID VALVE VANNE DE SOLENOIDE

Serial No. ;

Key No.	Part No.	Description	Description	Q'ty	S.C	Serial No.	ICA	Replaceable part	
								Part No.	Q'ty
4270--	K1002819	PILOT SOLENOID VALVE	VALVE DE SOLENOIDE	1					
1	-	BODY	CARTER	1	D				
2	K9001354	VALVE;SOLENOID	SOUPAPE A SOLENOIDE	6					
2A	K9001243	. SEAL KIT	. KIT D'ETANCHEITE	1					
3	2.421-00208	VALVE;PILOT SHIFT	DECALAGE PILOTE	1					
4	1.519-00001	COIL	ENROULEMENT	6					

DATE	DEC. 26, 2006
1st EDITION	

Fig. 4280 QUICK CLAMP VALVE
VANNE RAPIDE DE BRIDE

Serial No. ;

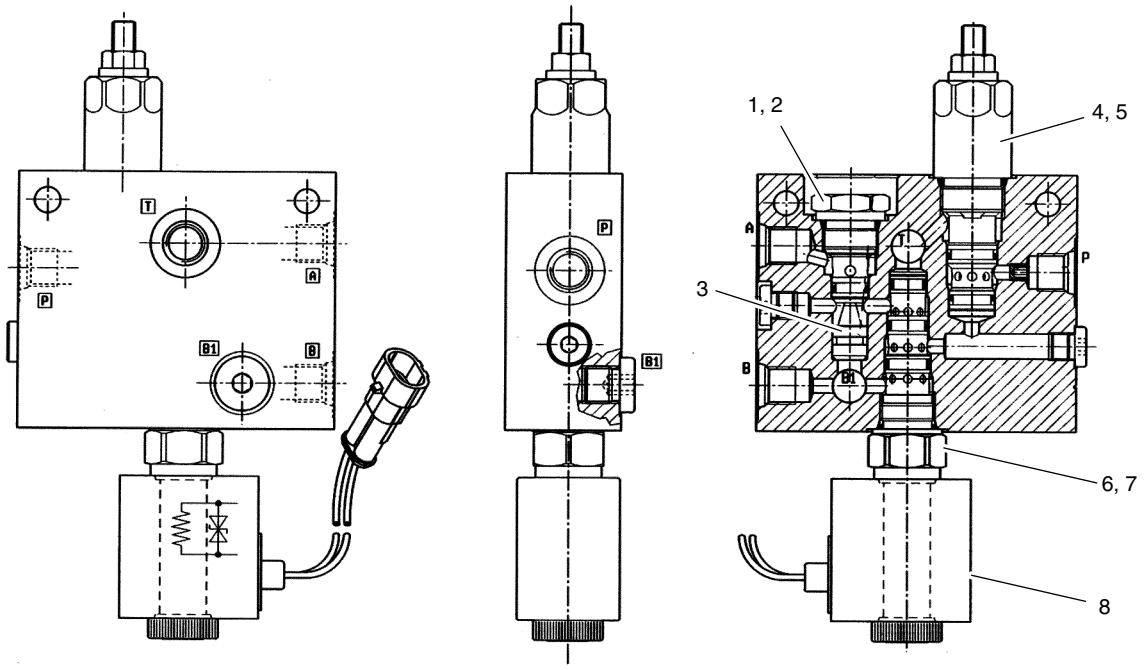

DATE	DEC. 26, 2006
1st EDITION	

Fig. 4280 QUICK CLAMP VALVE
VANNE RAPIDE DE BRIDE

Serial No. ;

Key No.	Part No.	Description	Description	Q'ty	S.C	Serial No.	ICA	Replaceable part	
								Part No.	Q'ty
4280--	426-00287	VALVE;QUICK-FIT	VANNE	1					
1	K9001346	CARTRIDGE;CHECK VALVE	CARTOUCHE	1					
2	K9001347	SEAL KIT;EXTERNAL FOR POS.1	KIT D'ETANCHEITE	1					
3	-	PISTON;PILOT	PISTON	1	D				
4	K9001349	CARTRIDGE;PRESSURE	CARTOUCHE	1					
5	K9001350	SEAL KIT; EXTERNAL FOR POS.3	KIT D'ETANCHEITE	1					
6	K9001351	CARTRIDGE;SOLENOID	CARTOUCHE	1					
7	K9001352	SEAL KIT;EXTERNAL FOR POS.4	KIT D'ETANCHEITE	1					
8	K9001353	COIL	ENROULEMENT	1					

DATE	DEC. 26, 2006
1st EDITION	

Fig. 4290 CENTER JOINT - NOT INDE.
JOINT TOURNANT

Serial No. ;

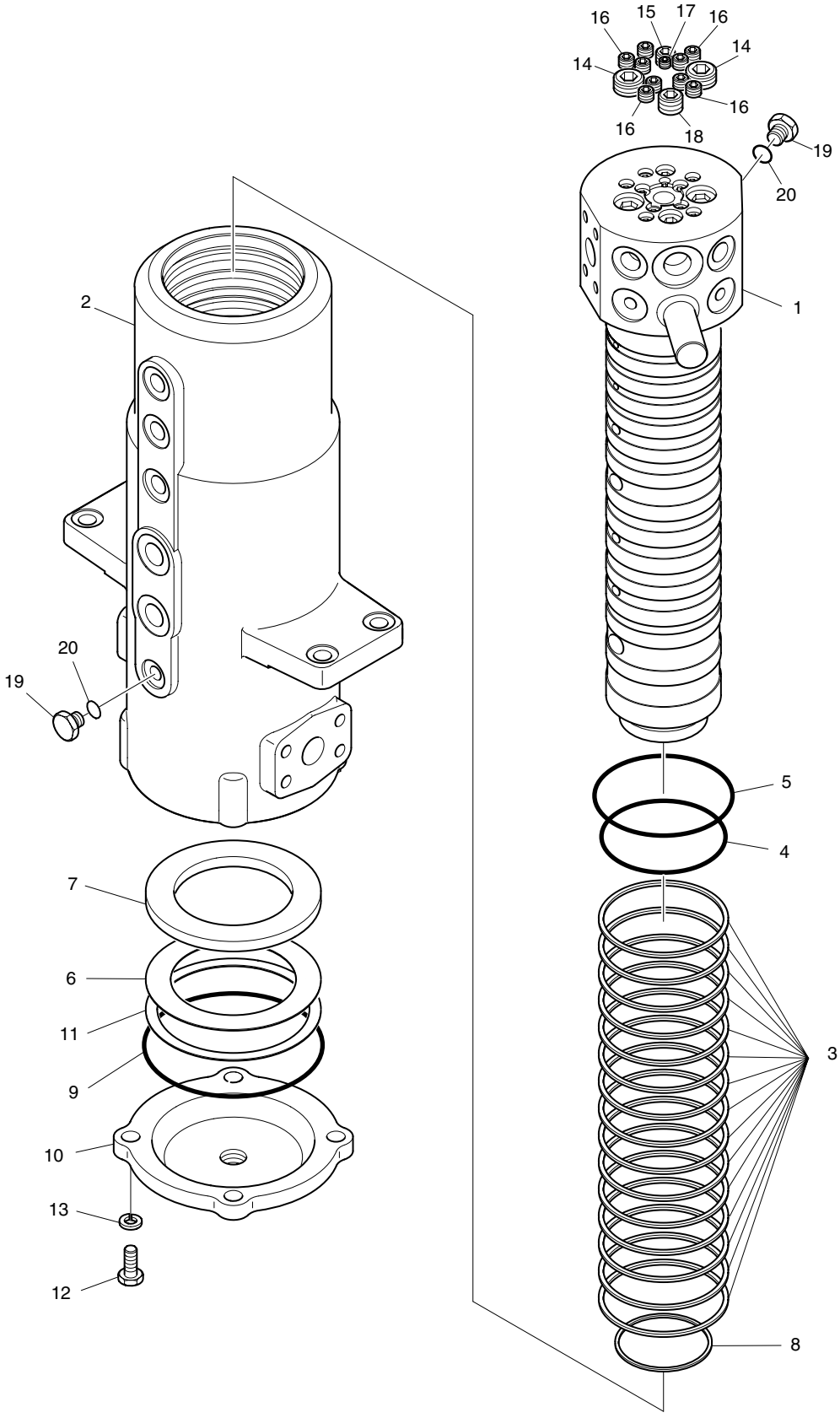

DATE	DEC. 26, 2006
1st EDITION	

Fig. 4290 CENTER JOINT - NOT INDE.
JOINT TOURNANT

Serial No. ;

Key No.	Part No.	Description	Description	Q'ty	S.C	Serial No.	ICA	Replaceable part	
								Part No.	Q'ty
4290--	480-00015C	CENTER JOINT	JOINT TOURNANT	1					
1	K9001436	SPINDLE ASS'Y	TOUPIE	1					
2	-	BODY	CARTER	1	D				
3	K9001438	SEAL;ROTARY	JOINT	15	K				
4	S8001001	O-RING	JOINT TORIQUE	1	K				
5	S8001151	O-RING	JOINT TORIQUE	1	K				
6	K9001439	SHIM;A	CALE	1					
7	K9001440	PLATE;THRUST	PLAQUE	1					
8	S6500700	RING;RETAINING	BAGUE	1					
9	S8011251	O-RING	JOINT TORIQUE	1	K				
10	K9001441	COVER	COUVERCLE	1					
11	K9001442	SHIM;B	CALE	1					
12	S0558261	BOLT	BOULON	4					
13	S5100603	WASHER;SPRING	RONDELLE ELASTIQUE	4					
14	2181-1116D5	PLUG	BOUCHON	2					
15	2181-1116D3	PLUG	BOUCHON	1					
16	2181-1116D2	PLUG	BOUCHON	10					
17	2181-1116D1	PLUG	BOUCHON	5					
18	2181-1116D4	PLUG	BOUCHON	1					
19	2181-1950D1	PLUG	BOUCHON	2					
20	S8000111	O-RING	JOINT TORIQUE	2					
*	K9001443	SEAL KIT;CENTER JOINT	JOINT CENTRAL	1					

DATE	JUN. 30, 2007
REV.NO.	EXB07-06

Fig. 4300 CENTER JOINT - INDEPENDENT ATTACH JOINT TOURNANT

Serial No. ;

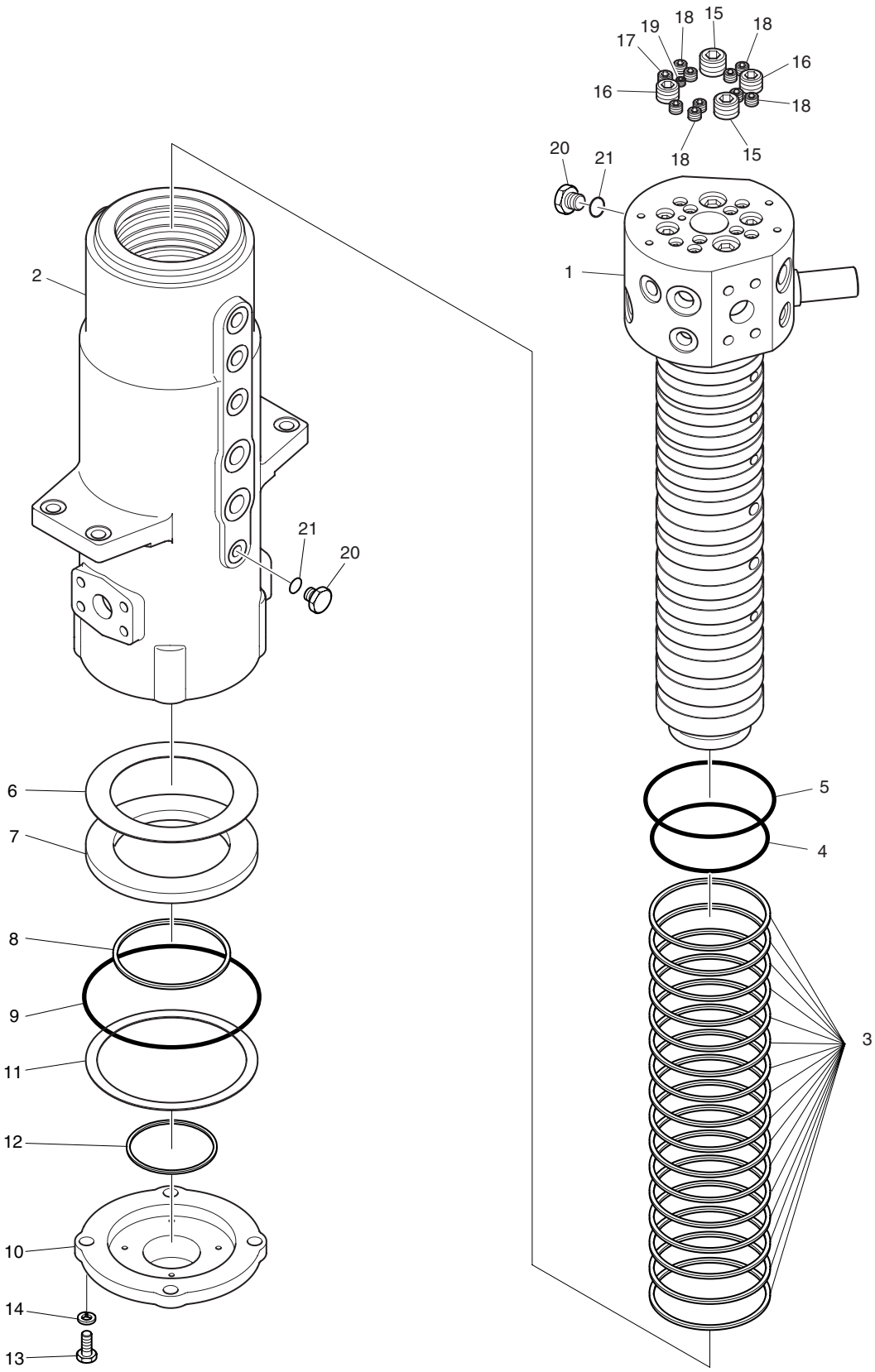

DATE	JUN. 30, 2007
REV. NO.	EXB07-06

Fig. 4300 CENTER JOINT - INDEPENDENT ATTACH JOINT TOURNANT

Serial No. ;

Key No.	Part No.	Description	Description	Q'ty	S.C	Serial No.	ICA	Replaceable part	
								Part No.	Q'ty
4300--	480-00016B	CENTER JOINT ASS'Y	JOINT CENTRAL	1		5001–5011	I	480-00016C	1
	480-00016C	**CENTER JOINT ASS'Y**	JOINT CENTRAL	1		**5012–**			
1	K9004002	SPINDLE ASS'Y	TOUPIE	1					
2	-	BODY	CARTER	1	D				
3	K9004004	SEAL;ROTARY	JOINT	16	K				
4	S8001101	O-RING	JOINT TORIQUE	1	K				
5	S8001251	O-RING	JOINT TORIQUE	1	K				
6	K9004005	SHIM	CALE	1					
7	K9004006	PLATE;THRUST	PLAQUE	1					
8	S6500800	RING;RETAINING	BAGUE	1					
9	S8011351	O-RING	JOINT TORIQUE	1	K				
10	K9004007	COVER	COUVERCLE	1					
11	K9004008	SHIM	CALE	1					
12	S8000551	O-RING	JOINT TORIQUE	1	K				
13	S0558266	BOLT	BOULON	4					
14	S5100603	WASHER;SPRING	RONDELLE ELASTIQUE	4					
15	2181-1116D5	PLUG	BOUCHON	2					
16	2181-1116D4	PLUG	BOUCHON	2					
17	2181-1116D3	PLUG	BOUCHON	1					
18	2181-1116D2	PLUG	BOUCHON	10					
19	2181-1116D1	PLUG	BOUCHON	5					
20	2181-1950D1	PLUG	BOUCHON	2					
21	S8000111	O-RING	JOINT TORIQUE	2					
*	K9004009	SEAL KIT;CENTER JOINT	JOINT CENTRAL	1					

DATE	DEC. 26, 2006
1st EDITION	

Fig. 4310 BOOM CYLINDER - L.H.
VERIN DE FLECHE

Serial No. ;

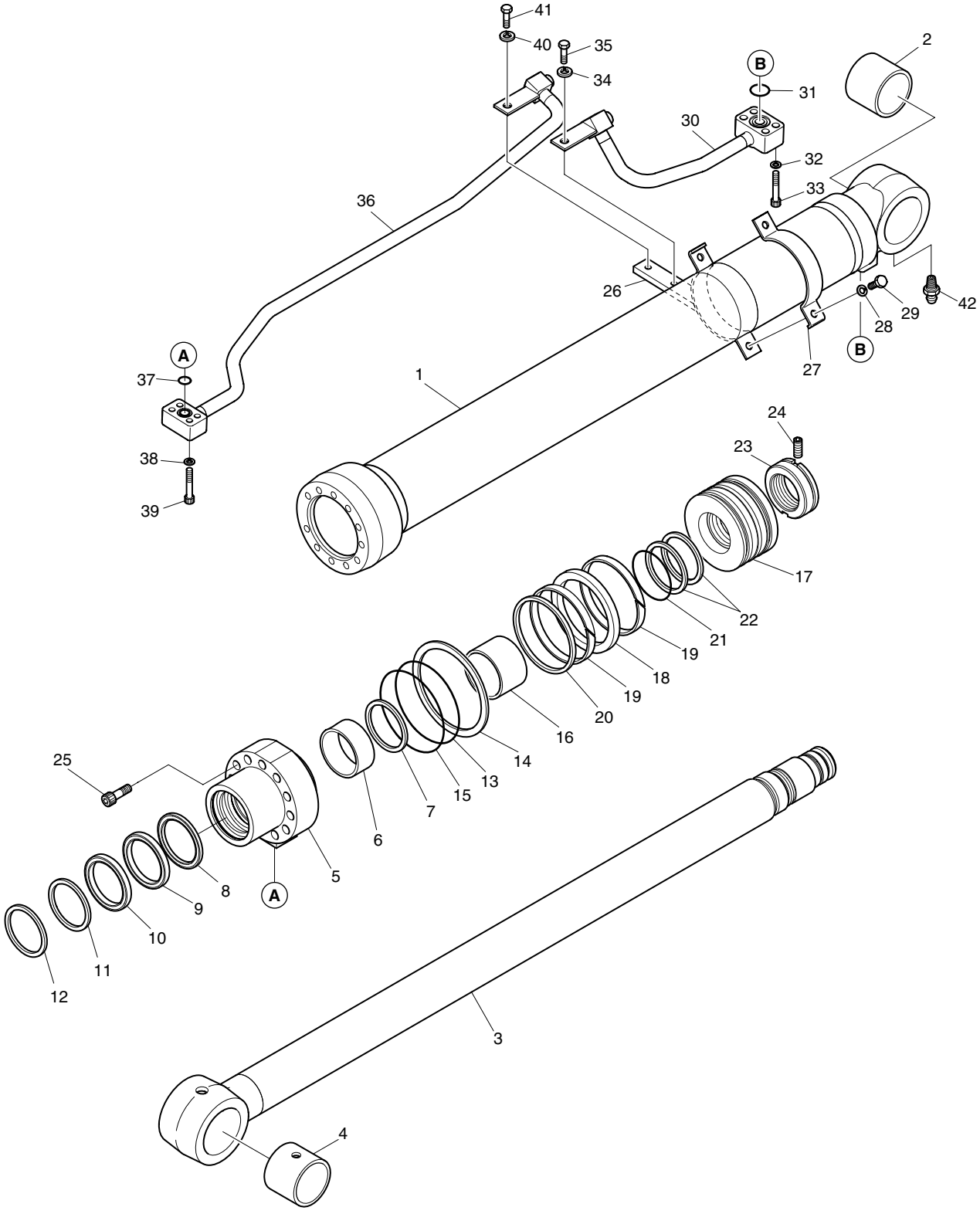

DATE	DEC. 26, 2006
1st EDITION	

Fig. 4310 BOOM CYLINDER - L.H. VERIN DE FLECHE

Serial No. ;

Key No.	Part No.	Description	Description	Q'ty	S.C	Serial No.	ICA	Replaceable part	
								Part No.	Q'ty
4310--	440-00408B	BOOM CYLINDER(L.H)	VERIN DE FLECHE	1					
1	K9001381	TUBE ASS'Y	TUYAU FLEXIBLE	1					
2	110-00244	BUSH	DOUILLE	1					
3	K9001383	ROD ASS'Y	ENSEMBLE TIGE	1					
4	110-00244	BUSH	DOUILLE	1					
5	K9001384	COVER;ROD	COUVERCLE	1					
6	110-00082	DD-BUSH	COUSSINET	1					
7	115-00052	RING;RETAINING	BAGUE	1					
8	K9001385	SEAL;BUFFER	ETANCHEITE	1	K				
9	K9001386	U-PACKING	JOINT EN U	1	K				
10	K9001396	RING;BACK UP	BAGUE	1	K				
11	115-00060	WIPER;DUST	RACCORD ADAPTATEUR	1	K				
12	115-00050	RING;RETAINING	BAGUE	1					
13	S8011051	O-RING	JOINT TORIQUE	1	K				
14	1.180-00268	RING;BACK UP	BAGUE	1	K				
15	S8011101	O-RING	JOINT TORIQUE	1	K				
16	K9001387	RING;CUSHION	BAGUE	1					
17	K9001388	PISTON	PISTON	1					
18	K9001389	SEAL;SLIPPER	JOINT	1	K				
19	115-00056	RING;WEAR	BAGUE D'USURE	2	K				
20	K9001390	RING;DUST	BAGUE	1	K				
21	180-00247	O-RING	JOINT TORIQUE	1	K				
22	1.180-00269	RING;BACK UP	BAGUE	2	K				
23	121-00043	NUT;PISTION	ECROU	1					
24	1.120-00219	SCREW;SET	VIS	1					
25	S2219071	BOLT;HEX. SOCKET	BOULON A 6 PANS CREUX	11					
26	K9001391	PIPE BAND ASS'Y	ENSEMBLE DE BANDE DE	1					
27	124-00055	BAND;PIPE	ATTACHE	1					
28	S5100603	WASHER;SPRING	RONDELLE ELASTIQUE	2					
29	S0558153	BOLT	BOULON	2					
30	K9001392	PIPE ASS'Y-H(L.H)	ENSEMBLE DE TUYAU	1					
31	S8000281	O-RING	JOINT TORIQUE	1					
32	S5100603	WASHER;SPRING	RONDELLE ELASTIQUE	4					
33	S2212761	BOLT;HEX. SOCKET	BOULON A 6 PANS CREUX	4					
34	S5100603	WASHER;SPRING	RONDELLE ELASTIQUE	1					
35	S0511863	BOLT;HEX.	BOULON A 6 PANS	1					
36	K9001393	PIPE ASS'Y-R(L.H)	ENSEMBLE DE TUYAU	1					
37	S8000201	O-RING	JOINT TORIQUE	1					

DATE	DEC. 26, 2006
1st EDITION	

Fig. 4310 BOOM CYLINDER - L.H.
VERIN DE FLECHE

Serial No. ;

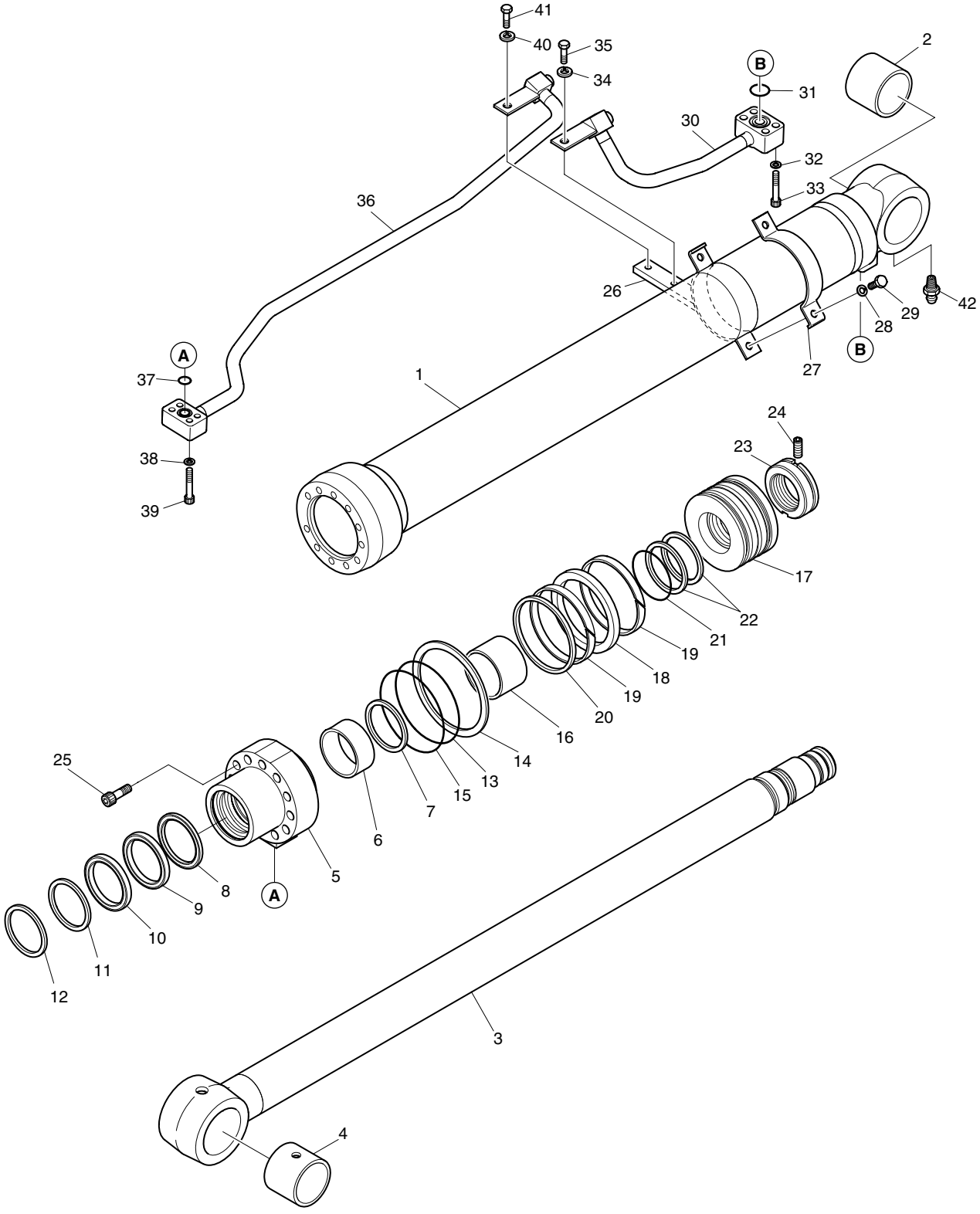

DATE	DEC. 26, 2006
1st EDITION	

Fig. 4310 BOOM CYLINDER - L.H.
VERIN DE FLECHE

Serial No. ;

Key No.	Part No.	Description	Description	Q'ty	S.C	Serial No.	ICA	Replaceable part	
								Part No.	Q'ty
4310-38	S5100503	WASHER;SPRING	RONDELLE ELASTIQUE	4					
39	S2209561	BOLT;HEX. SOCKET	BOULON A 6 PANS CREUX	4					
40	S5100603	WASHER;SPRING	RONDELLE ELASTIQUE	1					
41	S0511863	BOLT;HEX.	BOULON A 6 PANS	1					
42	S6710032	NIPPLE;GREASE	MAMELON	1					
*	K9002306	SEAL KIT	KIT D'ETANCHEITE	1					

DATE	DEC. 26, 2006
1st EDITION	

Fig. 4320 BOOM CYLINDER - R.H.
VERIN DE FLECHE

Serial No. ;

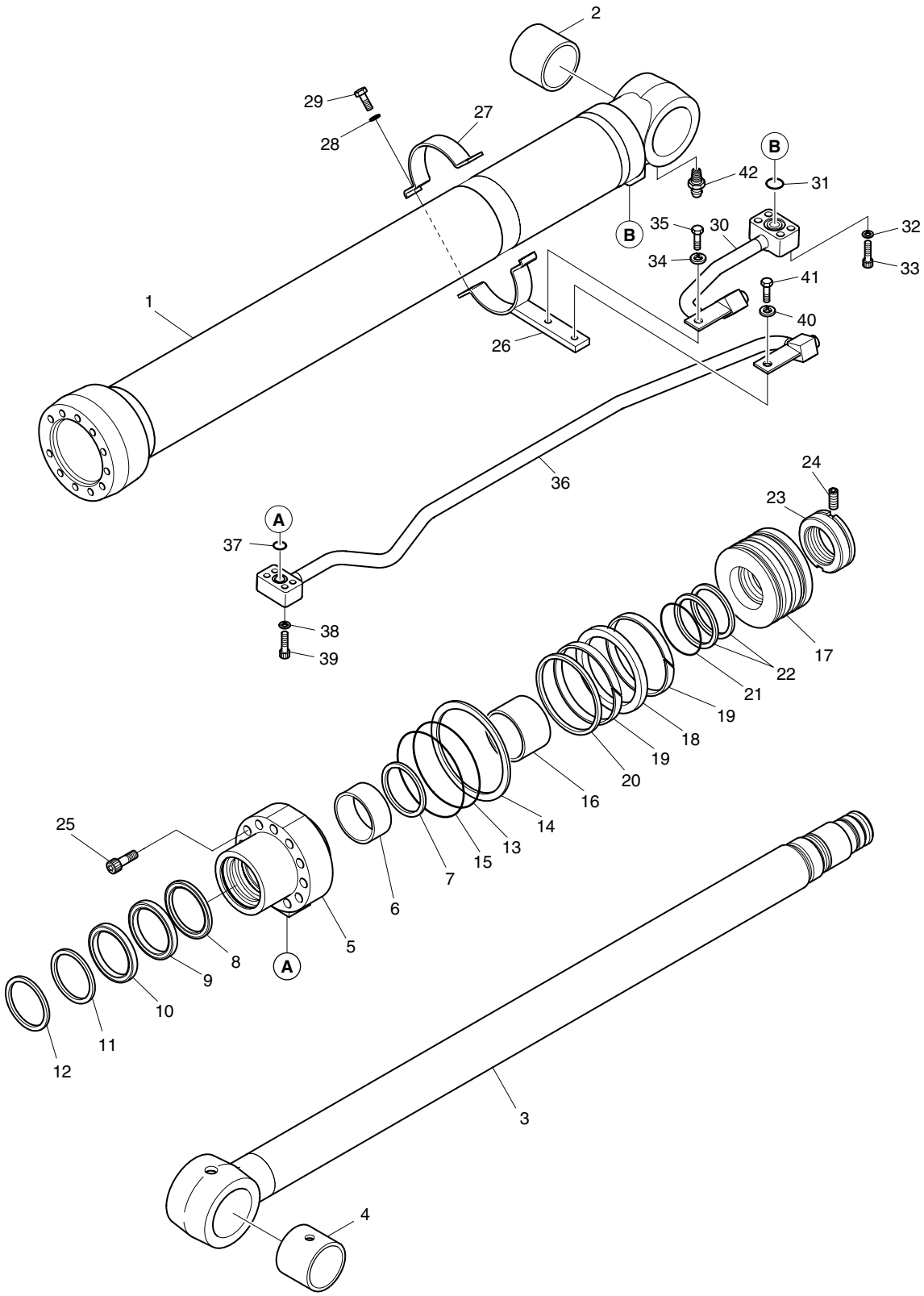

DATE	DEC. 26, 2006
1st EDITION	

Fig. 4320 BOOM CYLINDER - R.H. VERIN DE FLECHE

Serial No. ;

Key No.	Part No.	Description	Description	Q'ty	S.C	Serial No.	ICA	Replaceable part	
								Part No.	Q'ty
4320--	440-00409B	BOOM CYLINDER(R.H)	VERIN DE FLECHE	1					
1	K9001381	TUBE ASS'Y	TUYAU FLEXIBLE	1					
2	110-00244	BUSH	DOUILLE	1					
3	K9001383	ROD ASS'Y	ENSEMBLE TIGE	1					
4	110-00244	BUSH	DOUILLE	1					
5	K9001384	COVER;ROD	COUVERCLE	1					
6	110-00082	DD-BUSH	COUSSINET	1					
7	115-00052	RING;RETAINING	BAGUE	1					
8	K9001385	SEAL;BUFFER	ETANCHEITE	1	K				
9	K9001386	U-PACKING	JOINT EN U	1	K				
10	K9001396	RING;BACK UP	BAGUE	1	K				
11	115-00060	WIPER;DUST	RACCORD ADAPTATEUR	1	K				
12	115-00050	RING;RETAINING	BAGUE	1					
13	S8011051	O-RING	JOINT TORIQUE	1	K				
14	1.180-00268	RING;BACK UP	BAGUE	1	K				
15	S8011101	O-RING	JOINT TORIQUE	1	K				
16	K9001387	RING;CUSHION	BAGUE	1					
17	K9001388	PISTON	PISTON	1					
18	K9001389	SEAL;SLIPPER	JOINT	1	K				
19	115-00056	RING;WEAR	BAGUE D'USURE	2	K				
20	K9001390	RING;DUST	BAGUE	1	K				
21	180-00247	O-RING	JOINT TORIQUE	1	K				
22	1.180-00269	RING;BACK UP	BAGUE	2	K				
23	121-00043	NUT;PISTION	ECROU	1					
24	1.120-00219	SCREW;SET	VIS	1					
25	S2219071	BOLT;HEX. SOCKET	BOULON A 6 PANS CREUX	11					
26	K9001391	PIPE BAND ASS'Y	ENSEMBLE DE BANDE DE	1					
27	124-00055	BAND;PIPE	ATTACHE	1					
28	S5100603	WASHER;SPRING	RONDELLE ELASTIQUE	2					
29	S0558153	BOLT	BOULON	2					
30	K9001394	PIPE ASS'Y-H(R.H)	ENSEMBLE DE TUYAU	1					
31	S8000281	O-RING	JOINT TORIQUE	1					
32	S5100603	WASHER;SPRING	RONDELLE ELASTIQUE	4					
33	S2212761	BOLT;HEX. SOCKET	BOULON A 6 PANS CREUX	4					
34	S5100603	WASHER;SPRING	RONDELLE ELASTIQUE	1					
35	S0511863	BOLT;HEX.	BOULON A 6 PANS	1					
36	K9001395	PIPE ASS'Y-R(R.H)	ENSEMBLE DE TUYAU	1					
37	S8000201	O-RING	JOINT TORIQUE	1					

DATE	DEC. 26, 2006
1st EDITION	

Fig. 4320 BOOM CYLINDER - R.H.
VERIN DE FLECHE

Serial No. ;

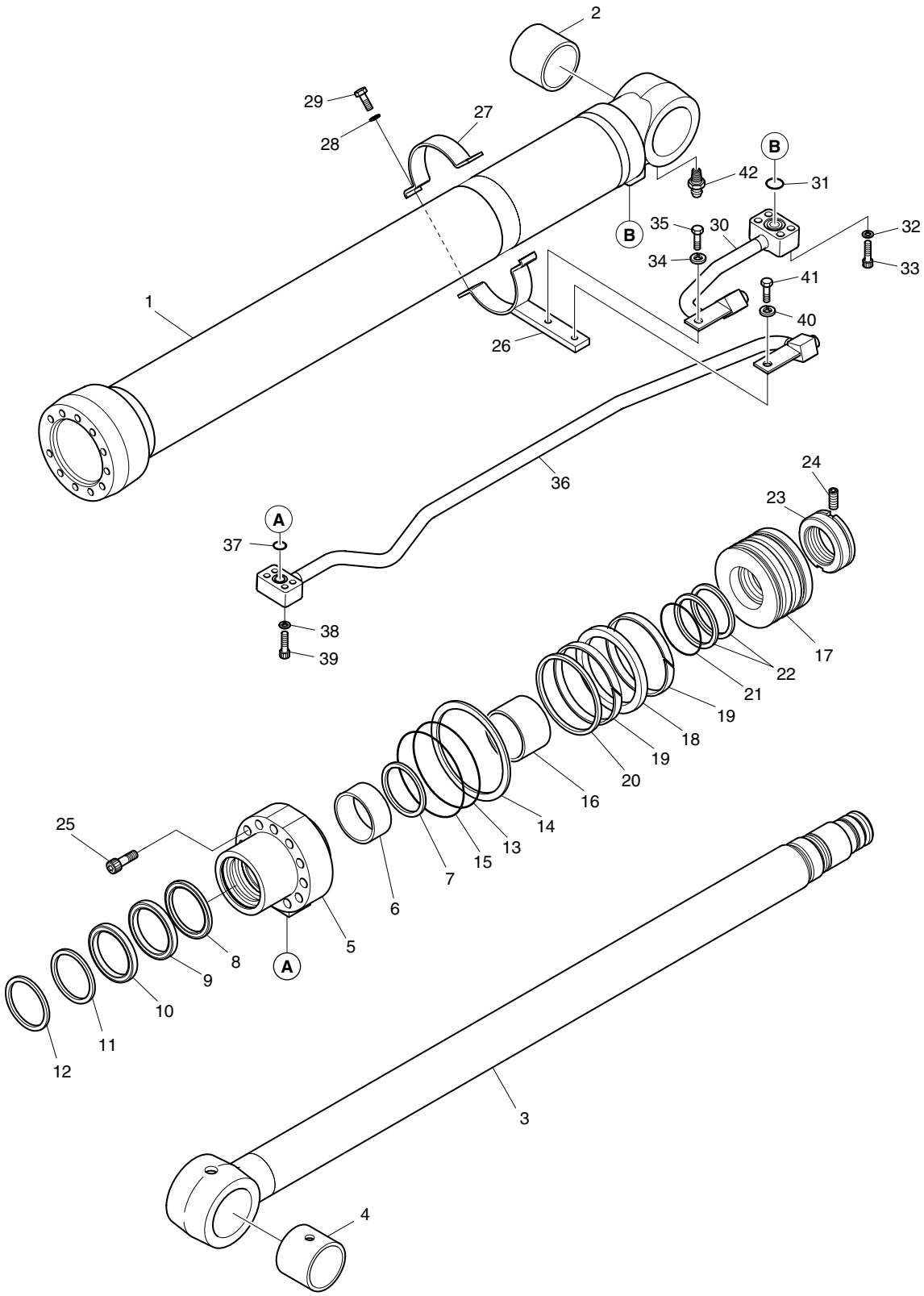

DATE	DEC. 26, 2006
1st EDITION	

Fig. 4320 BOOM CYLINDER - R.H.
VERIN DE FLECHE

Serial No. ;

Key No.	Part No.	Description	Description	Q'ty	S.C	Serial No.	ICA	Replaceable part	
								Part No.	Q'ty
4320-38	S5100503	WASHER;SPRING	RONDELLE ELASTIQUE	4					
39	S2209561	BOLT;HEX. SOCKET	BOULON A 6 PANS CREUX	4					
40	S5100603	WASHER;SPRING	RONDELLE ELASTIQUE	1					
41	S0511863	BOLT;HEX.	BOULON A 6 PANS	1					
42	S6710032	NIPPLE;GREASE	MAMELON	1					
*	K9002306	SEAL KIT	KIT D'ETANCHEITE	1					

DATE	JUN. 30, 2007
REV.NO.	EXB07-06

Fig. 4330 ARM CYLINDER - ARM 2.1m
VERIN DE BALANCIER

Serial No. ;

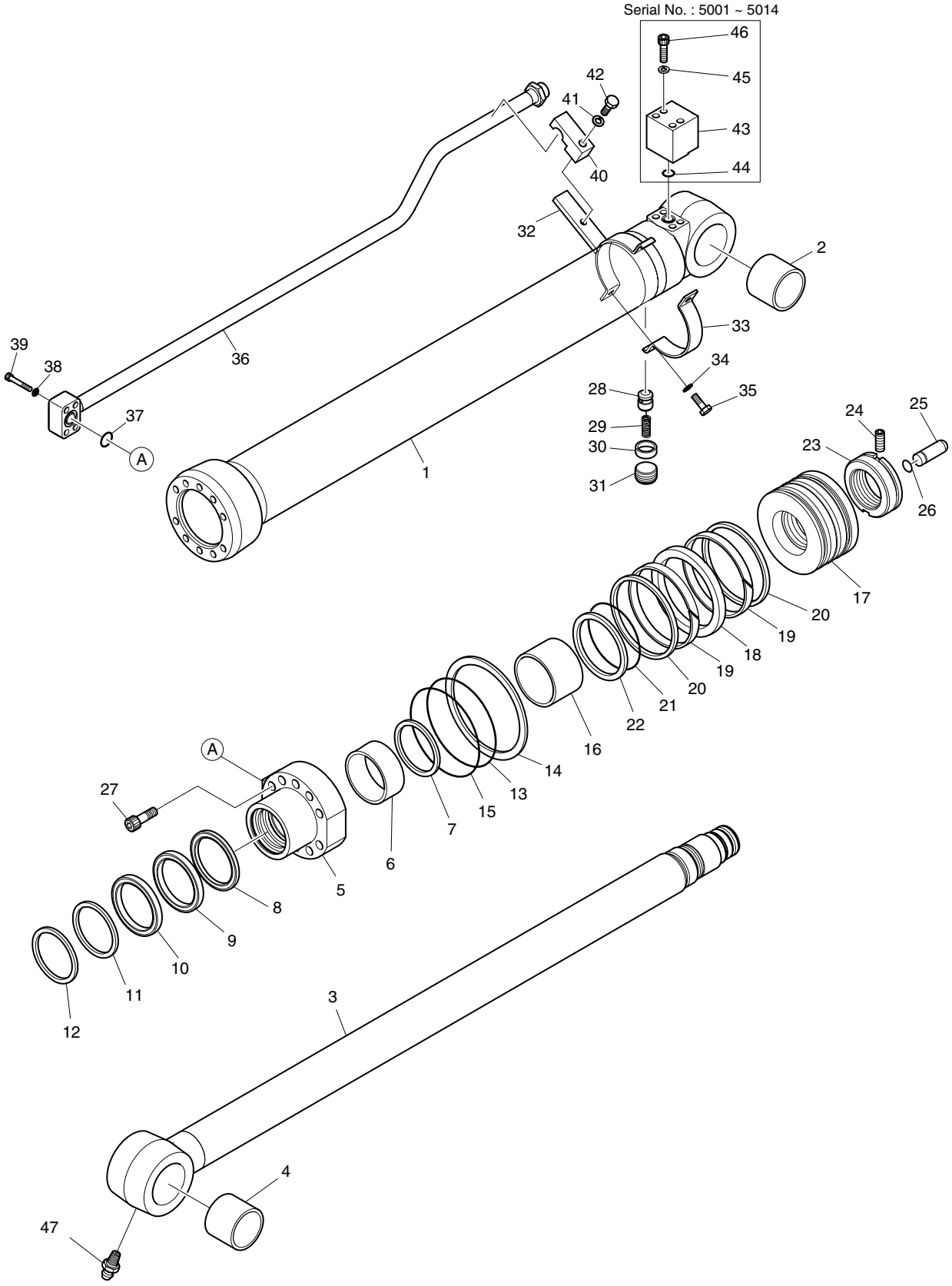

DATE	JUN. 30, 2007
REV. NO.	EXB07-06

Fig. 4330 ARM CYLINDER - ARM 2.1m VERIN DE BALANCIER

Serial No. ;

Key No.	Part No.	Description	Description	Q'ty	S.C	Serial No.	ICA	Replaceable part	
								Part No.	Q'ty
4330--	440-00410A	ARM CYLINDER-2.1m	VERIN DE BALANCIER	1		5001–5014			
	440-00410B	**ARM CYLINDER-2.1m**	VERIN DE BALANCIER	1		**5015–**			
1	K9001397	TUBE ASS'Y	TUYAU FLEXIBLE	1					
2	110-00241	BUSH	DOUILLE	1					
3	K9001399	ROD ASS'Y	ENSEMBLE TIGE	1					
4	110-00241	BUSH	DOUILLE	1					
5	K9001400	COVER;ROD	COUVERCLE	1					
6	110-00097	DD-BUSH	COUSSINET	1					
7	K9001401	RING;RETAINING	BAGUE	1					
8	K9001402	SEAL;BUFFER	ETANCHEITE	1	K				
9	K9001403	U-PACKING	JOINT EN U	1	K				
10	K9001404	RING;BACK UP	BAGUE	1	K				
11	115-00084	WIPER;DUST	RACCORD ADAPTATEUR	1	K				
12	115-00063	RING;RETAINING	BAGUE	1					
13	S8011101	O-RING	JOINT TORIQUE	1	K				
14	K9001405	RING;BACK UP	BAGUE	1	K				
15	S8011151	O-RING	JOINT TORIQUE	1	K				
16	K9001406	RING;CUSHION	BAGUE	1					
17	K9001407	PISTON	PISTON	1					
18	K9001408	SEAL;SLIPPER	JOINT	1	K				
19	115-00085	RING;WEAR	BAGUE D'USURE	2	K				
20	K9001409	RING;DUST	BAGUE	2	K				
21	180-00276	O-RING	JOINT TORIQUE	1	K				
22	K9001410	RING;BACK UP	BAGUE	2	K				
23	121-00046	NUT;PISTION	ECROU	1					
24	1.120-00219	SCREW;SET	VIS	1					
25	424-00059	PLUNGER;CUSHION	PLONGEUR	1					
26	115-00081	RING;STOP	BAGUE D'ARRET	1					
27	S2222171	BOLT;HEX. SOCKET	BOULON A 6 PANS CREUX	10					
28	1.420-00039	VALVE;CHECK	CAPTEUR	1					
29	1.131-00009	SPRING	RESSORT	1					
30	1.195-00022	SUPPORT;SPRING	SUPPORT	1					
31	2181-1116D3	PLUG;HEX. SOCKET	BOUCHON	1					
32	K9001411	PIPE BAND ASS'Y	ENSEMBLE DE BANDE DE	1					
33	124-00085	BAND;PIPE	ATTACHE	1					
34	S5100603	WASHER;SPRING	RONDELLE ELASTIQUE	2					
35	S0558153	BOLT	BOULON	2					
36	K9001412	PIPE ASS'Y-R	ENSEMBLE DE TUYAU	1					

DATE	JUN. 30, 2007
REV.NO.	EXB07-06

Fig. 4330 ARM CYLINDER - ARM 2.1m
VERIN DE BALANCIER

Serial No. ;

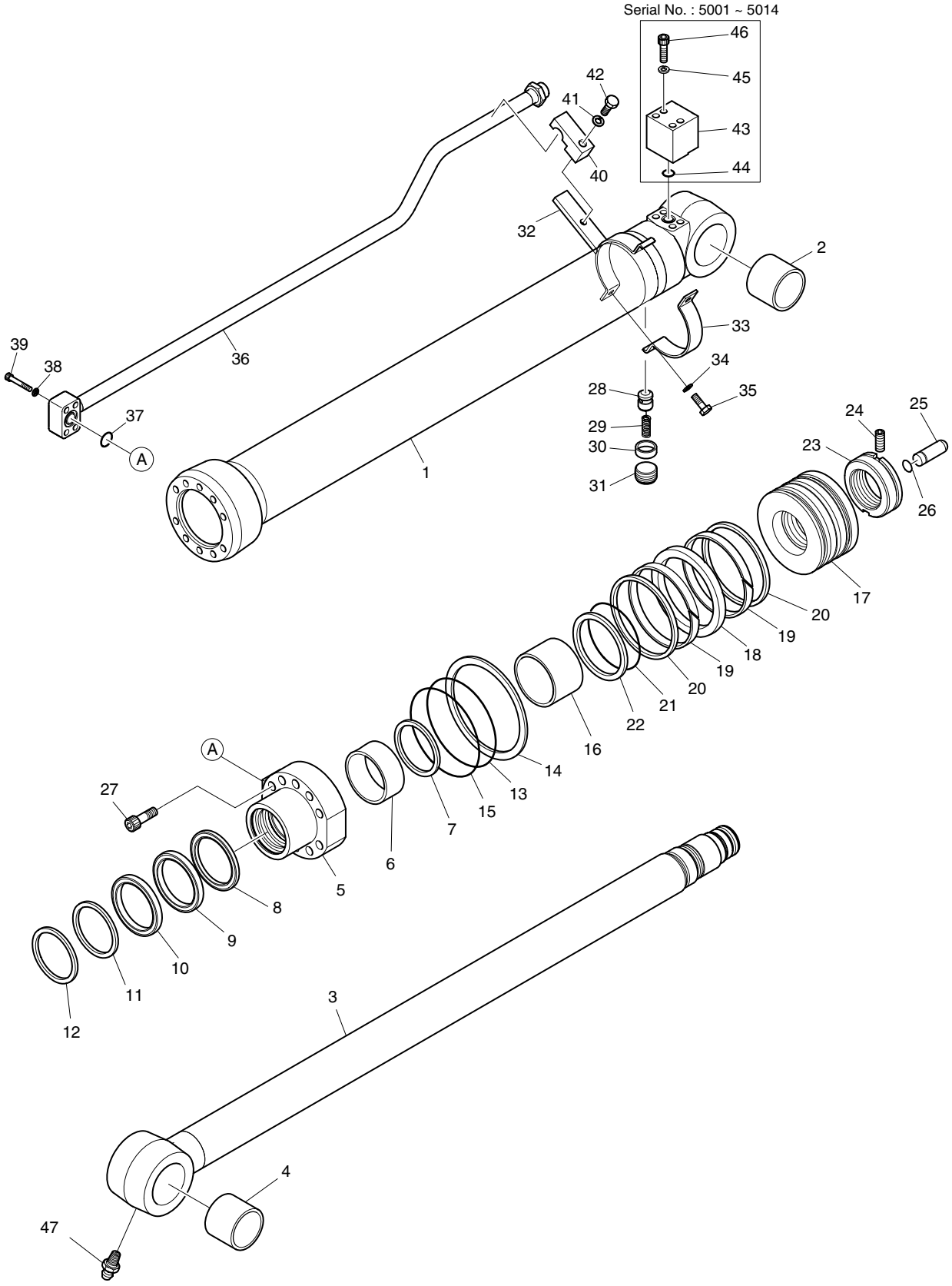

DATE	JUN. 30, 2007
REV. NO.	EXB07-06

Fig. 4330 ARM CYLINDER - ARM 2.1m VERIN DE BALANCIER

Serial No. ;

Key No.	Part No.	Description	Description	Q'ty	S.C	Serial No.	ICA	Replaceable part	
								Part No.	Q'ty
4330-37	S8000281	O-RING	JOINT TORIQUE	1					
38	S5100603	WASHER;SPRING	RONDELLE ELASTIQUE	4					
39	S2212761	BOLT;HEX. SOCKET	BOULON A 6 PANS CREUX	4					
40	K9001413	CLAMP;PIPE	COLLIER	1					
41	S5102903	WASHER;SPRING	RONDELLE ELASTIQUE	1					
42	S0565451	BOLT	BOULON	1					
43	**K9001414**	**PORT;FLANGE**	PORT;FLANGE	1		**5001–5014**			
44	**S8000281**	**O-RING**	JOINT TORIQUE	1		**5001–5014**			
45	**S5100603**	**WASHER;SPRING**	RONDELLE ELASTIQUE	4		**5001–5014**			
46	**S2212961**	**BOLT;HEX. SOCKET**	BOULON A 6 PANS CREUX	4		**5001–5014**			
47	S6710032	NIPPLE;GREASE	MAMELON	1					
*	K9002308	SEAL KIT	KIT D'ETANCHEITE	1					

DATE	JUN. 30, 2007
REV.NO.	EXB07-06

Fig. 4340 ARM CYLINDER - ARM 2.5m
VERIN DE BALANCIER

Serial No. ;

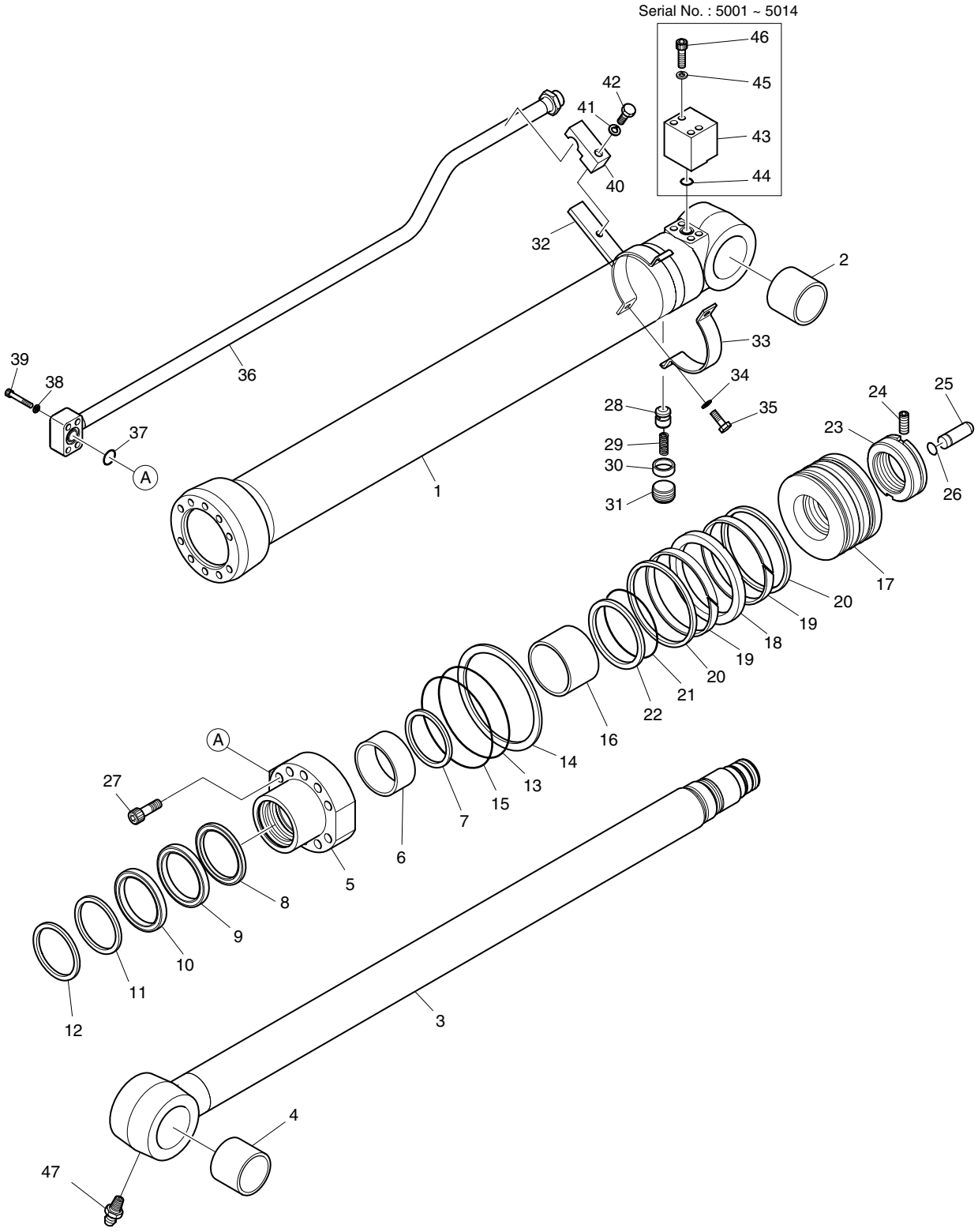

DATE	JUN. 30, 2007
REV. NO.	EXB07-06

Fig. 4340 ARM CYLINDER - ARM 2.5m VERIN DE BALANCIER

Serial No. ;

Key No.	Part No.	Description	Description	Q'ty	S.C	Serial No.	ICA	Replaceable part	
								Part No.	Q'ty
4340--	440-00425A	ARM CYLINDER-2.5m ARM	VERIN DE BALANCIER	1		5001–5014			
	440-00425B	**ARM CYLINDER-2.5m ARM**	VERIN DE BALANCIER	1		**5015–**			
1	K9001417	TUBE ASS'Y	TUYAU FLEXIBLE	1					
2	110-00241	BUSH	DOUILLE	1					
3	K9001418	ROD ASS'Y	ENSEMBLE TIGE	1					
4	110-00241	BUSH	DOUILLE	1					
5	K9001400	COVER;ROD	COUVERCLE	1					
6	110-00097	DD-BUSH	COUSSINET	1					
7	K9001401	RING;RETAINING	BAGUE	1					
8	K9001402	SEAL;BUFFER	ETANCHEITE	1	K				
9	K9001403	U-PACKING	JOINT EN U	1	K				
10	K9001404	RING;BACK UP	BAGUE	1	K				
11	115-00084	WIPER;DUST	RACCORD ADAPTATEUR	1	K				
12	115-00063	RING;RETAINING	BAGUE	1					
13	S8011101	O-RING	JOINT TORIQUE	1	K				
14	K9001405	RING;BACK UP	BAGUE	1	K				
15	S8011151	O-RING	JOINT TORIQUE	1	K				
16	K9001406	RING;CUSHION	BAGUE	1					
17	K9001407	PISTON	PISTON	1					
18	K9001408	SEAL;SLIPPER	JOINT	1	K				
19	115-00085	RING;WEAR	BAGUE D'USURE	2	K				
20	K9001409	RING;DUST	BAGUE	2	K				
21	180-00276	O-RING	JOINT TORIQUE	1	K				
22	K9001410	RING;BACK UP	BAGUE	2	K				
23	121-00046	NUT;PISTION	ECROU	1					
24	1.120-00219	SCREW;SET	VIS	1					
25	424-00059	PLUNGER;CUSHION	PLONGEUR	1					
26	115-00081	RING;STOP	BAGUE D'ARRET	1					
27	S2222171	BOLT;HEX. SOCKET	BOULON A 6 PANS CREUX	10					
28	1.420-00039	VALVE;CHECK	CAPTEUR	1					
29	1.131-00009	SPRING	RESSORT	1					
30	1.195-00022	SUPPORT;SPRING	SUPPORT	1					
31	2181-1116D3	PLUG;HEX. SOCKET	BOUCHON	1					
32	K9001411	PIPE BAND ASS'Y	ENSEMBLE DE BANDE DE	1					
33	124-00085	BAND;PIPE	ATTACHE	1					
34	S5100603	WASHER;SPRING	RONDELLE ELASTIQUE	2					
35	S0558153	BOLT	BOULON	2					
36	K9001412	PIPE ASS'Y-R	ENSEMBLE DE TUYAU	1					

DATE	JUN. 30, 2007
REV.NO.	EXB07-06

Fig. 4340 ARM CYLINDER - ARM 2.5m
VERIN DE BALANCIER

Serial No. ;

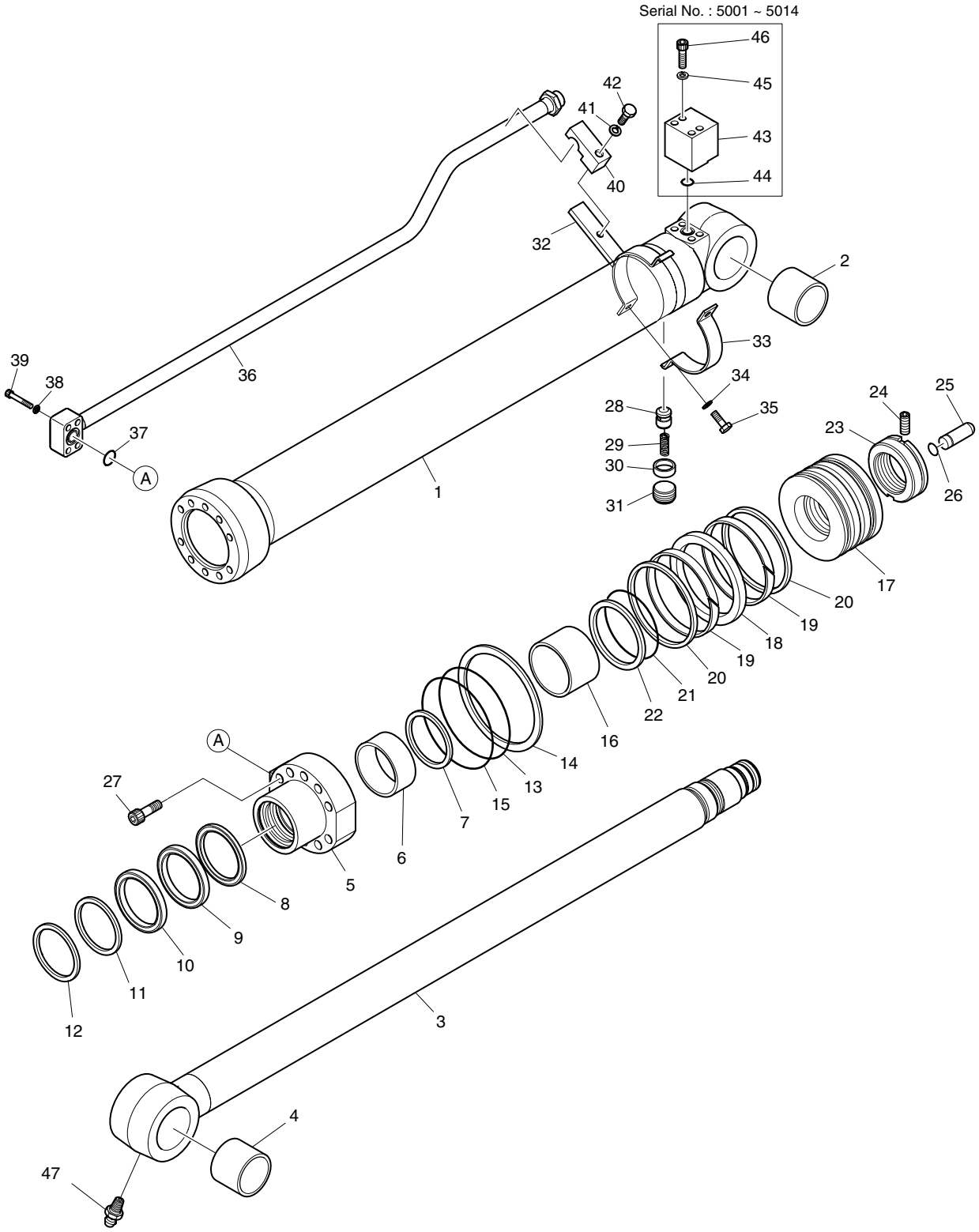

DATE	JUN. 30, 2007
REV. NO.	EXB07-06

Fig. 4340 ARM CYLINDER - ARM 2.5m VERIN DE BALANCIER

Serial No. ;

Key No.	Part No.	Description	Description	Q'ty	S.C	Serial No.	ICA	Replaceable part	
								Part No.	Q'ty
4340-37	S8000281	O-RING	JOINT TORIQUE	1					
38	S5100603	WASHER;SPRING	RONDELLE ELASTIQUE	4					
39	S2212761	BOLT;HEX. SOCKET	BOULON A 6 PANS CREUX	4					
40	K9001413	CLAMP;PIPE	COLLIER	1					
41	S5102903	WASHER;SPRING	RONDELLE ELASTIQUE	1					
42	S0565451	BOLT	BOULON	1					
43	**K9001414**	**PORT;FLANGE**	PORT;FLANGE	1		**5001–5014**			
44	**S8000281**	**O-RING**	JOINT TORIQUE	1		**5001–5014**			
45	**S5100603**	**WASHER;SPRING**	RONDELLE ELASTIQUE	4		**5001–5014**			
46	**S2212961**	**BOLT;HEX. SOCKET**	BOULON A 6 PANS CREUX	4		**5001–5014**			
47	S6710032	NIPPLE;GREASE	MAMELON	1					
*	K9002308	SEAL KIT	KIT D'ETANCHEITE	1					

DATE	JUN. 30, 2007
REV.NO.	EXB07-06

Fig. 4350 BUCKET CYLINDER VERIN DE GODET

Serial No. ;

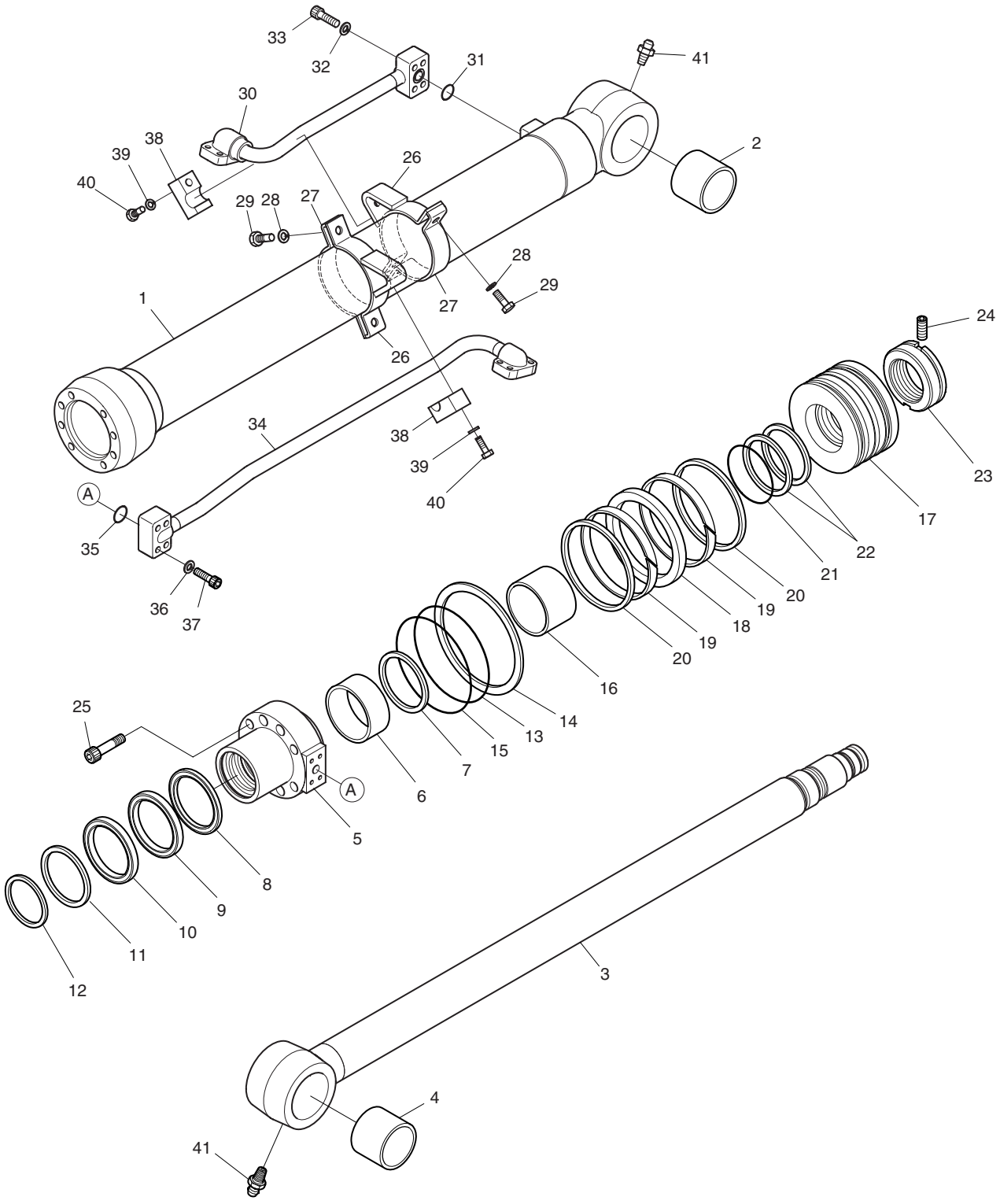

DATE	JUN. 30, 2007
REV. NO.	EXB07-06

Fig. 4350 BUCKET CYLINDER VERIN DE GODET

Serial No. ;

Key No.	Part No.	Description	Description	Q'ty	S.C	Serial No.	ICA	Replaceable part	
								Part No.	Q'ty
4350--	440-00411A	BUCKET CYLINDER	VERIN DE GODET	1		5001–5013	I	440-00411B	1
	440-00411B	**BUCKET CYLINDER**	VERIN DE GODET	1		**5014–**			
1	K9001419	TUBE ASS'Y	TUYAU FLEXIBLE	1					
2	K1004106	BUSH;ROLLED	DOUILLE	1					
3	K9001421	ROD ASS'Y	ENSEMBLE TIGE	1		5001–5013	I	K9001421A	1
	K9001421A	**ROD ASS'Y**	ENSEMBLE TIGE	1		**5014–**			
4	110-00245	BUSH;ROLLED	DOUILLE	1		5001–5013	I	K1004106	1
	K1004106	**BUSH;ROLLED**	DOUILLE	1		**5014–**			
5	K9001423	COVER;ROD	COUVERCLE	1					
6	1.110-00068	DD-BUSH	COUSSINET	1					
7	1.115-00032	RING;RETAINING	BAGUE	1					
8	K9001424	SEAL;BUFFER	ETANCHEITE	1	K				
9	K9001425	U-PACKING	JOINT EN U	1	K				
10	K9001426	RING;BACK UP	BAGUE	1	K				
11	1.180-00496	WIPER;DUST	RACCORD ADAPTATEUR	1	K				
12	115-00052	RING;RETAINING	BAGUE	1					
13	S8010901	O-RING	JOINT TORIQUE	1	K				
14	K9001427	RING;BACK UP	BAGUE	1	K				
15	S8010951	O-RING	JOINT TORIQUE	1	K				
16	K9001428	RING;CUSHION	BAGUE	1					
17	K9001429	PISTON	PISTON	1					
18	K9001430	SEAL;SLIPPER	JOINT	1	K				
19	1.180-00415	RING;WEAR	BAGUE D'USURE	2	K				
20	K9001431	RING;DUST	BAGUE	2	K				
21	1.180-00117	O-RING	JOINT TORIQUE	1	K				
22	K9001374	RING;BACK UP	BAGUE	2	K				
23	1.121-00076	NUT;PISTON	ECROU	1					
24	1.120-00219	SCREW;SET	VIS	1					
25	S2218961	BOLT	BOULON	8					
26	K9001432	PIPE BAND ASS'Y	ENSEMBLE DE BANDE DE	2					
27	1.124-00010	BAND;PIPE	ATTACHE	2					
28	S5100603	WASHER;SPRING	RONDELLE ELASTIQUE	4					
29	S0558153	BOLT	BOULON	4					
30	K9001433	PIPE ASS'Y-H	ENSEMBLE DE TUYAU	1					
31	S8000201	O-RING	JOINT TORIQUE	1					
32	S5100503	WASHER;SPRING	RONDELLE ELASTIQUE	4					
33	S2209561	BOLT	BOULON	4					
34	K9001434	PIPE ASS'Y-R	ENSEMBLE DE TUYAU	1					

DATE	JUN. 30, 2007
REV.NO.	EXB07-06

Fig. 4350 BUCKET CYLINDER VERIN DE GODET

Serial No. ;

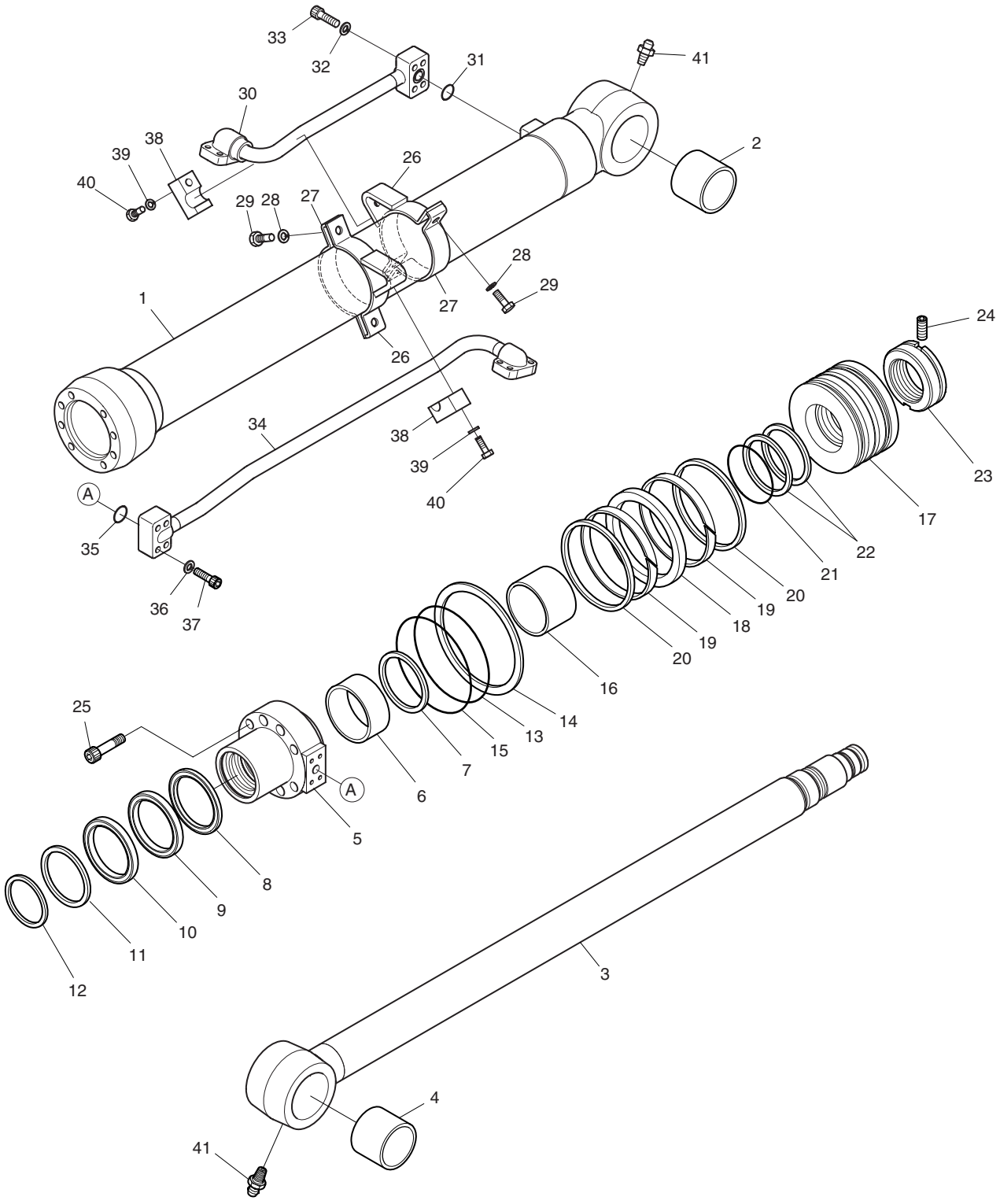

DATE	JUN. 30, 2007
REV. NO.	EXB07-06

Fig. 4350 BUCKET CYLINDER VERIN DE GODET

Serial No. ;

Key No.	Part No.	Description	Description	Q'ty	S.C	Serial No.	ICA	Replaceable part	
								Part No.	Q'ty
4350-35	S8000201	O-RING	JOINT TORIQUE	1					
36	S5100503	WASHER;SPRING	RONDELLE ELASTIQUE	4					
37	S2209561	BOLT	BOULON	4					
38	K9001435	CLAMP;PIPE	COLLIER	2					
39	S5100603	WASHER;SPRING	RONDELLE ELASTIQUE	2					
40	S0558553	BOLT;HEX,	BOULON A 6 PANS	2					
41	S6710032	NIPPLE;GREASE	MAMELON	2					
*	K9002307	SEAL KIT	KIT D'ETANCHEITE	1					

DATE	JUN. 30, 2007
REV.NO.	EXB07-06

Fig. 4360 DOZER CYLINDER - L.H.
CYLINDRE DE DOZER

Serial No. ;

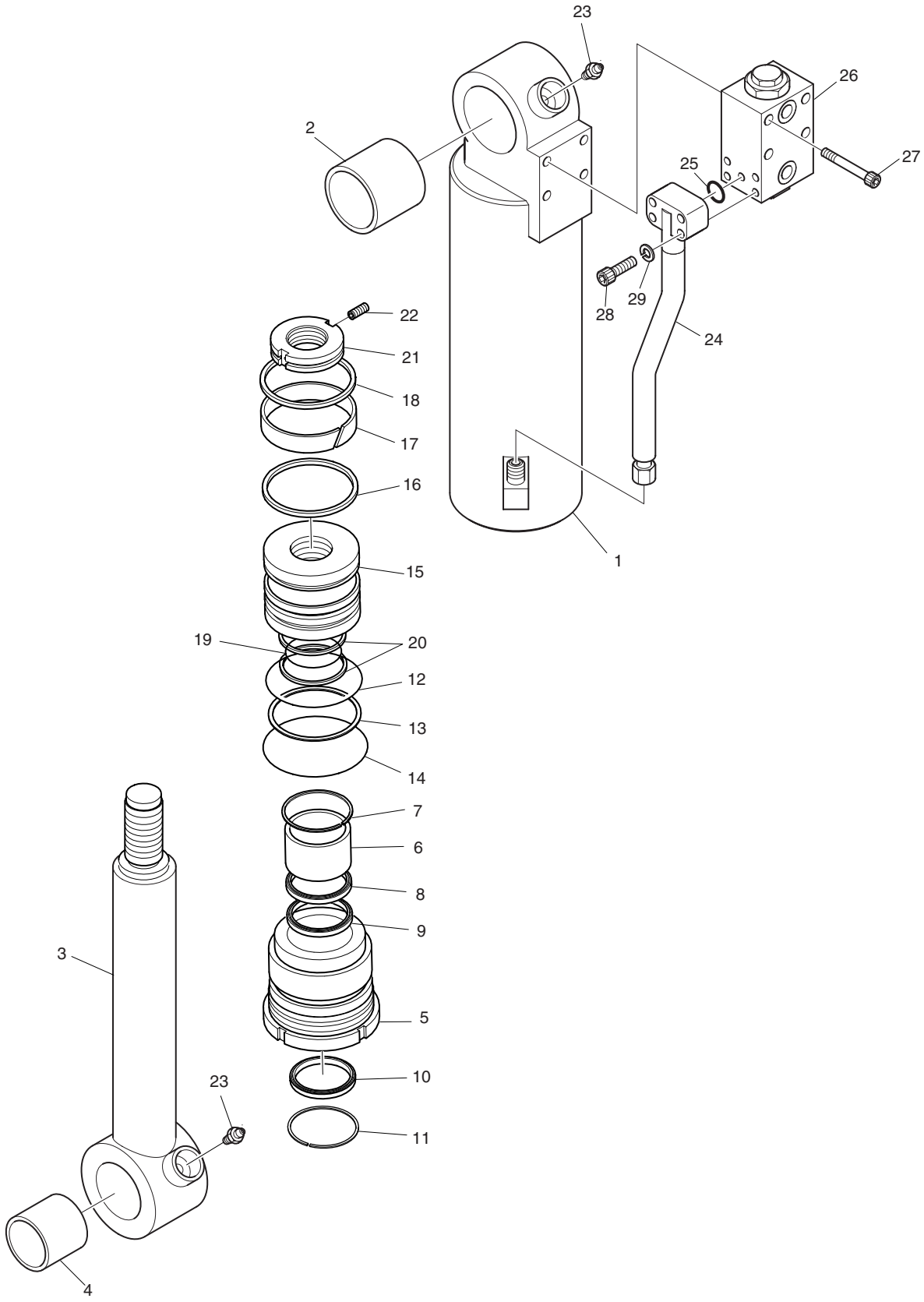

DATE	JUN. 30, 2007
REV. NO.	EXB07-06

Fig. 4360 DOZER CYLINDER - L.H. CYLINDRE DE DOZER

Serial No. ;

Key No.	Part No.	Description	Description	Q'ty	S.C	Serial No.	ICA	Replaceable part	
								Part No.	Q'ty
4360--	440-00448B	DOZER CYLINDER(L.H)	CYLINDRE DE DOZER	1		5001–5019	I	440-00448C	1
	440-00448C	**DOZER CYLINDER(L.H)**	CYLINDRE DE DOZER	1		**5020–**			
1	K9001366	TUBE ASS'Y	TUYAU FLEXIBLE	1					
2	110-00269	BUSH;ROLLED	DOUILLE	1		5001–5019	I	110-00269A	1
	110-00269A	**BUSH;ROLLED**	DOUILLE	1		**5020–**			
3	K9001368	ROD ASS'Y	ENSEMBLE TIGE	1					
4	110-00269	BUSH;ROLLED	DOUILLE	1		5001–5019	I	110-00269A	1
	110-00269A	**BUSH;ROLLED**	DOUILLE	1		**5020–**			
5	K9001369	COVER;ROD	COUVERCLE	1					
6	110-00114	DU-BUSH	DOUILLE DU	1					
7	1.115-00394	RING;RETAINING	BAGUE	1					
8	1.180-00470	SEAL;BUFFER	ETANCHEITE	1	K				
9	1.180-00632	U-PACKING	JOINT EN U	1	K				
10	115-00107	WIPER;DUST	RACCORD ADAPTATEUR	1	K				
11	115-00104	RING;RETAINING	BAGUE	1					
12	S8010951	O-RING	JOINT TORIQUE	1	K				
13	180-00312	RING;BACK UP	BAGUE	1	K				
14	S8011001	O-RING	JOINT TORIQUE	1	K				
15	K9001370	PISTON	PISTON	1					
16	180-00314	SEAL;SLIPPER	JOINT	1	K				
17	K9001372	RING;WEAR	BAGUE D'USURE	1	K				
18	K9001373	RING;DUST	BAGUE	1	K				
19	1.180-00117	O-RING	JOINT TORIQUE	1	K				
20	K9001374	RING;BACK UP	BAGUE	2	K				
21	K9001375	NUT;PISTION	ECROU	1					
22	1.120-00219	SCREW;SET	VIS	1					
23	S6710032	NIPPLE;GREASE	MAMELON	2					
24	K9001376	PIPE ASS'Y(L.H)	ENSEMBLE DE TUYAU	1					
25	S8000201	O-RING	JOINT TORIQUE	1					
26	420-00460A	VALVE ASS'Y(L.H)	ENSEMBLE DE VANNE	1					
27	S2212961	BOLT;HEX. SOCKET	BOULON A 6 PANS CREUX	4					
28	S2209461	BOLT;HEX. SOCKET	BOULON A 6 PANS CREUX	4					
29	S5100503	WASHER	RONDELLE	4					
*	K9002309	SEAL KIT	KIT D'ETANCHEITE	1					

DATE	JUN. 30, 2007
REV.NO.	EXB07-06

Fig. 4370 DOZER CYLINDER - R.H.
CYLINDRE DE DOZER

Serial No. ;

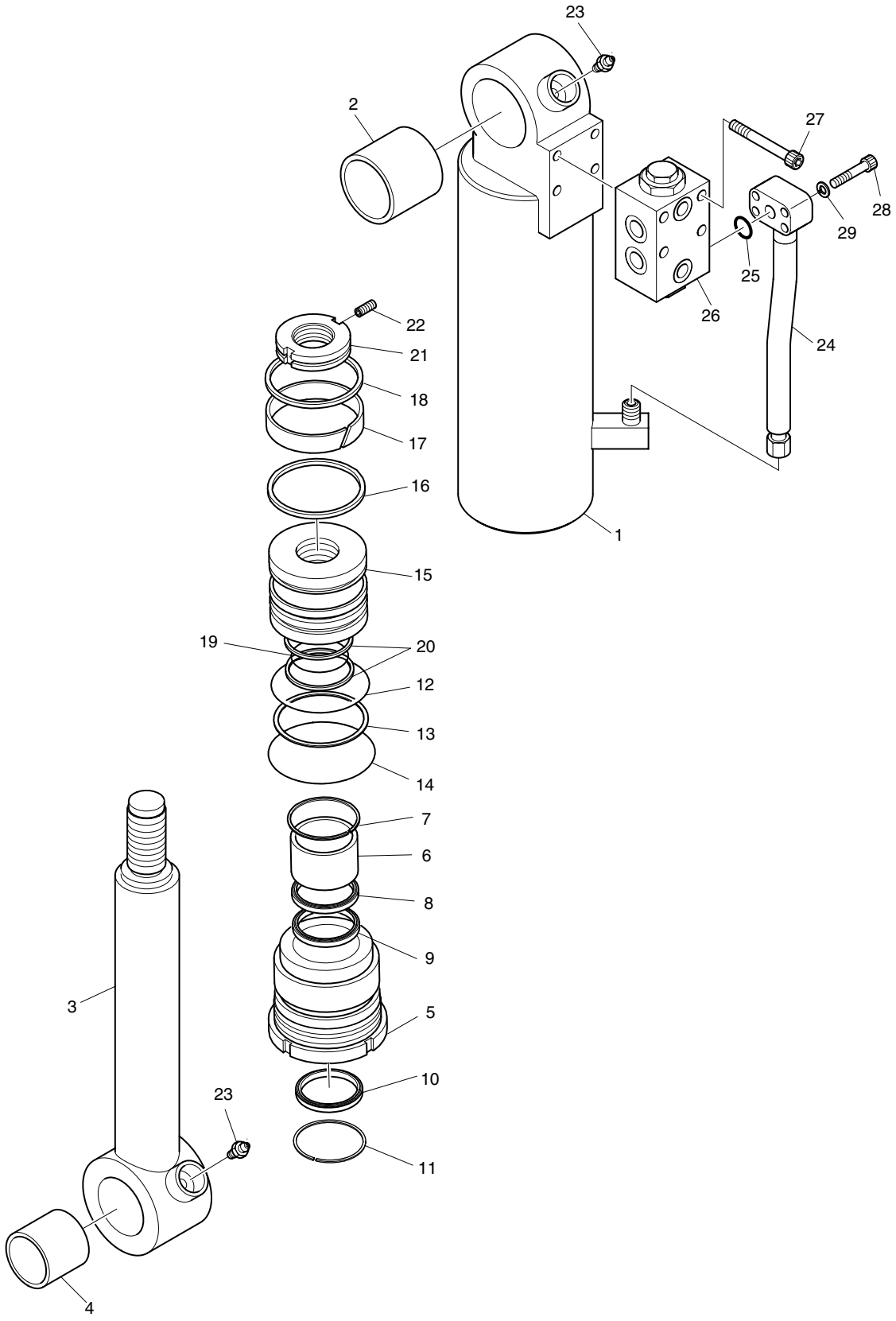

DATE	JUN. 30, 2007
REV. NO.	EXB07-06

Fig. 4370 DOZER CYLINDER - R.H.
CYLINDRE DE DOZER

Serial No. ;

Key No.	Part No.	Description	Description	Q'ty	S.C	Serial No.	ICA	Replaceable part	
								Part No.	Q'ty
4370--	440-00449B	DOZER CYLINDER(R.H)	CYLINDRE DE DOZER	1		5001–5019	I	440-00449C	1
	440-00449C	**DOZER CYLINDER(R.H)**	CYLINDRE DE DOZER	1		**5020–**			
1	K9001378	TUBE ASS'Y	TUYAU FLEXIBLE	1					
2	110-00269	BUSH;ROLLED	DOUILLE	1		5001–5019	I	110-00269A	1
	110-00269A	**BUSH;ROLLED**	DOUILLE	1		**5020–**			
3	K9001368	ROD ASS'Y	ENSEMBLE TIGE	1					
4	110-00269	BUSH;ROLLED	DOUILLE	1		5001–5019	I	110-00269A	1
	110-00269A	**BUSH;ROLLED**	DOUILLE	1		**5020–**			
5	K9001369	COVER;ROD	COUVERCLE	1					
6	110-00114	DU-BUSH	DOUILLE DU	1					
7	1.115-00394	RING;RETAINING	BAGUE	1					
8	1.180-00470	SEAL;BUFFER	ETANCHEITE	1	K				
9	1.180-00632	U-PACKING	JOINT EN U	1	K				
10	115-00107	WIPER;DUST	RACCORD ADAPTATEUR	1	K				
11	115-00104	RING;RETAINING	BAGUE	1					
12	S8010951	O-RING	JOINT TORIQUE	1	K				
13	180-00312	RING;BACK UP	BAGUE	1	K				
14	S8011001	O-RING	JOINT TORIQUE	1	K				
15	K9001370	PISTON	PISTON	1					
16	180-00314	SEAL;SLIPPER	JOINT	1	K				
17	K9001372	RING;WEAR	BAGUE D'USURE	1	K				
18	K9001373	RING;DUST	BAGUE	1	K				
19	1.180-00117	O-RING	JOINT TORIQUE	1	K				
20	K9001374	RING;BACK UP	BAGUE	2	K				
21	K9001375	NUT;PISTION	ECROU	1					
22	1.120-00219	SCREW;SET	VIS	1					
23	S6710032	NIPPLE;GREASE	MAMELON	2					
24	K9001380	PIPE ASS'Y(R.H)	ENSEMBLE DE TUYAU	1					
25	S8000201	O-RING	JOINT TORIQUE	1					
26	420-00461A	VALVE ASS'Y(R.H)	ENSEMBLE DE VANNE	1					
27	S2212961	BOLT;HEX. SOCKET	BOULON A 6 PANS CREUX	4					
28	S2209461	BOLT;HEX. SOCKET	BOULON A 6 PANS CREUX	4					
29	S5100503	WASHER	RONDELLE	4					
*	K9002309	SEAL KIT	KIT D'ETANCHEITE	1					

DATE	DEC. 26, 2006
1st EDITION	

Fig. 4380 CHOCKING CYLINDER - L.H.
CYLINDRE DE CALAGE

Serial No. ;

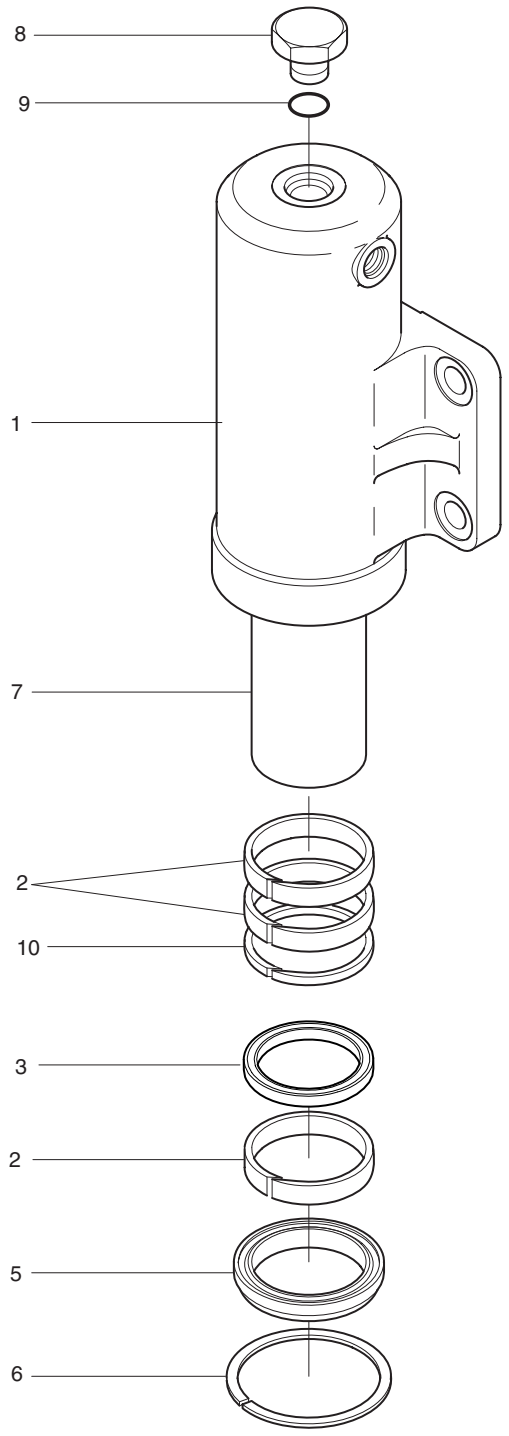

DATE	DEC. 26, 2006
1st EDITION	

Fig. 4380 CHOCKING CYLINDER - L.H.
CYLINDRE DE CALAGE

Serial No. ;

Key No.	Part No.	Description	Description	Q'ty	S.C	Serial No.	ICA	Replaceable part	
								Part No.	Q'ty
4380--	440-00457B	CYLINDER;CHOCKING(L.H)	CYLINDRE DE CALAGE	1					
1	-	BODY	CARTER	1	D				
2	K9001758	RING;WEAR	BAGUE D'USURE	3	K				
3	115-00076	U-PACKING	JOINT EN U	1	K				
5	115-00077	WIPER;DUST	RACCORD ADAPTATEUR	1	K				
6	115-00078	RING;RETAINING	BAGUE	1					
7	1.428-00008	ROD	TIGE	1					
8	2181-1950D9	PLUG	BOUCHON	1					
9	S8000141	O-RING	JOINT TORIQUE	1					
10	180-00269	SEAL;BUFFER	ETANCHEITE	1	K				
*	K9003707	KIT;SEAL	KIT DE REPARATION	1					

DATE	DEC. 26, 2006
1st EDITION	

Fig. 4390 CHOCKING CYLINDER - R.H.
CYLINDRE DE CALAGE

Serial No. ;

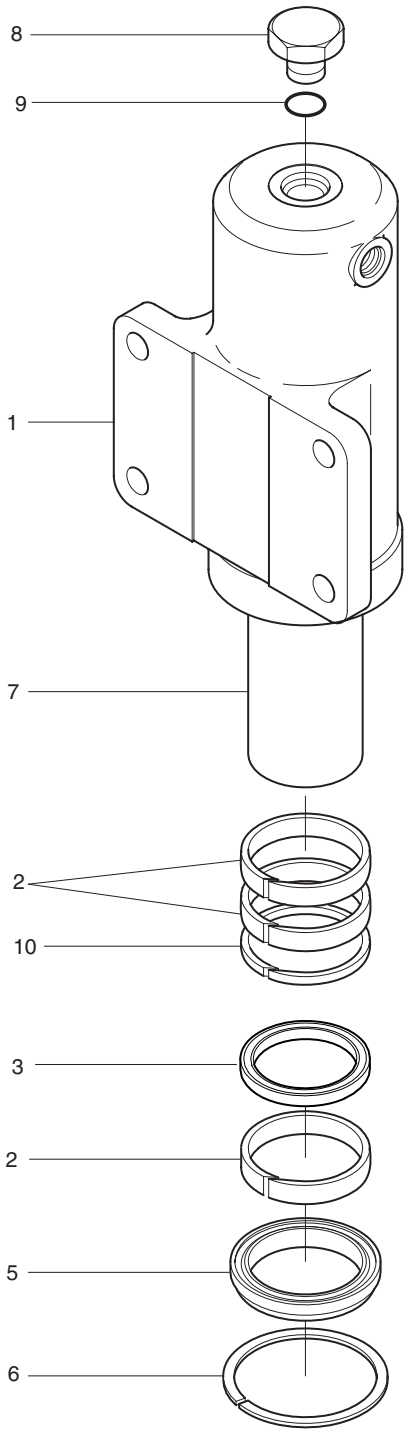

DATE	DEC. 26, 2006
1st EDITION	

Fig. 4390 CHOCKING CYLINDER - R.H.
CYLINDRE DE CALAGE

Serial No. ;

Key No.	Part No.	Description	Description	Q'ty	S.C	Serial No.	ICA	Replaceable part	
								Part No.	Q'ty
4390--	440-00458B	CYLINDER;CHOCKING(R.H)	CYLINDRE DE CALAGE	1					
1	-	BODY	CARTER	1	D				
2	K9001758	RING;WEAR	BAGUE D'USURE	3	K				
3	115-00076	U-PACKING	JOINT EN U	1	K				
5	115-00077	WIPER;DUST	RACCORD ADAPTATEUR	1	K				
6	115-00078	RING;RETAINING	BAGUE	1					
7	1.428-00008	ROD	TIGE	1					
8	2181-1950D9	PLUG	BOUCHON	1					
9	S8000141	O-RING	JOINT TORIQUE	1					
10	180-00269	SEAL;BUFFER	ETANCHEITE	1	K				
*	K9003707	KIT;SEAL	KIT DE REPARATION	1					

DATE	DEC. 26, 2006
1st EDITION	

Fig. 4400 OUTRIGGER CYLINDER - L.H.
CYLINDRE DE TANGON

Serial No. ;

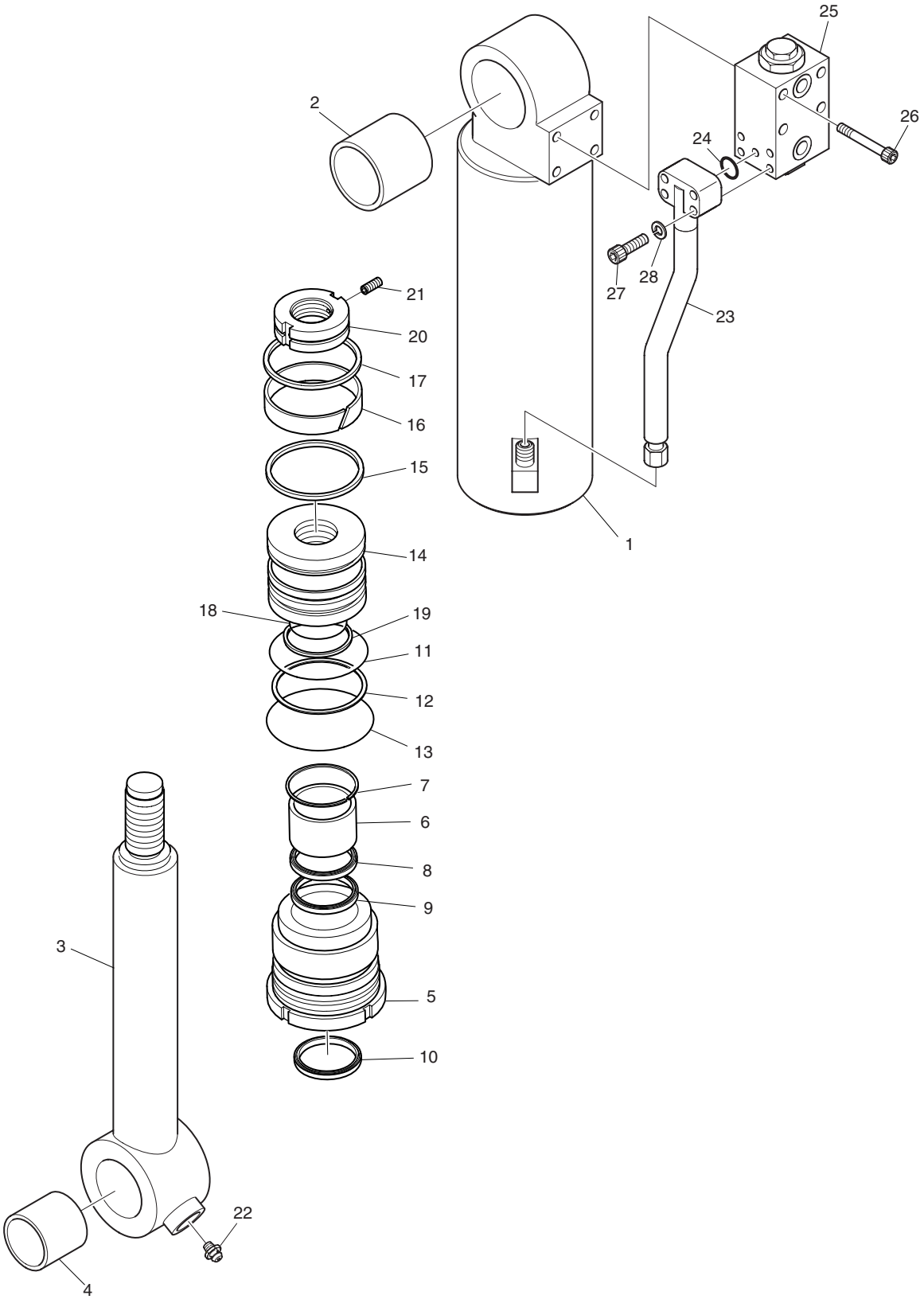

DATE	DEC. 26, 2006
1st EDITION	

Fig. 4400 OUTRIGGER CYLINDER - L.H.
CYLINDRE DE TANGON

Serial No. ;

Key No.	Part No.	Description	Description	Q'ty	S.C	Serial No.	ICA	Replaceable part	
								Part No.	Q'ty
4400--	440-00450B	CYLINDER;OUTRIGGER(L.H)	VERIN DE BEQUILLES	1					
1	K9005046	TUBE ASS'Y(L.H)	TUYAU	1					
2	110-00265	BUSH;STEEL	COUSSINET	1					
3	K9005050	ROD ASS'Y	TIGE	1					
4	110-00265	BUSH;STEEL	COUSSINET	1					
5	K9005053	COVER;ROD	COUVERCLE DE TIGE	1					
6	110-00147	DU-BUSH	DOUILLE DU	1					
7	115-00104	RING;RETAINING	ARRET	1					
8	180-00379	SEAL;BUFFER	JOINT	1	K				
9	1.180-00665	U-PACKING	JOINT EN U	1	K				
10	115-00126	WIPER;DUST	PARE-POUSSIERE	1	K				
11	S8011051-90	O-RING	JOINT TORIQUE	1	K				
12	1.180-00225	RING;BACK UP	BAGUE ANTIEXTRUSION	1	K				
13	S8011101	O-RING	JOINT TORIQUE	1	K				
14	409-00042	PISTON	PISTON	1					
15	180-00255	SEAL;SLIPPER	JOINT	1	K				
16	1.180-00634	RING;WEAR	JOINT EN U	1	K				
17	K9001390	RING;DUST	BAGUE	1	K				
18	180-00247	O-RING	JOINT TORIQUE	1	K				
19	1.180-00269	RING;BACK UP	BAGUE ANTIEXTRUSION	1	K				
20	121-00043	NUT;PISTON	ECROU DE PISTON	1					
21	S3523836	SCREW;SET	VIS	1					
22	S6710032	NIPPLE;GREASE	GRAISSEUR	1					
23	K9005052	PIPE ASS'Y(L.H)	ENSEMBLE DE TUYAU	1					
24	S8000201	O-RING	JOINT TORIQUE	1					
25	420-00460A	VALVE ASS'Y(L.H)	ENSEMBLE DE VANNE	1					
26	S2213261	BOLT;SOCKET	BOULON A 6 PANS CREUX	4					
27	S2209461	BOLT;SOCKET	BOULON A 6 PANS CREUX	4					
28	S5100503	WASHER;SPRING	RONDELLE ELASTIQUE	4					
*	440-00077KT	SEAL KIT;OUTRIGGER	KIT DE JOINT	1					

DATE	DEC. 26, 2006
1st EDITION	

Fig. 4410 OUTRIGGER CYLINDER - R.H.
CYLINDRE DE TANGON

Serial No. ;

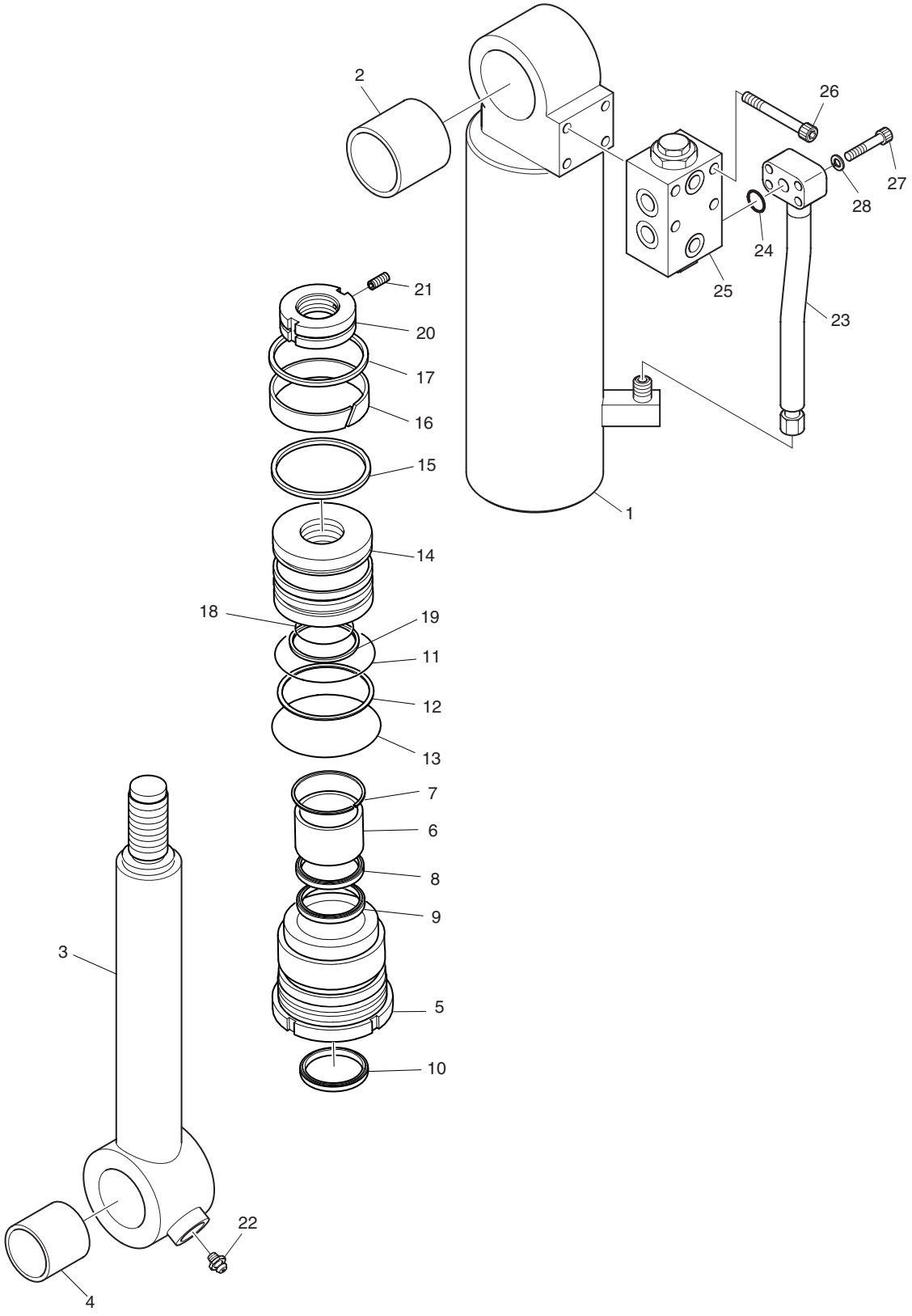

DATE	DEC. 26, 2006
1st EDITION	

Fig. 4410 OUTRIGGER CYLINDER - R.H.
CYLINDRE DE TANGON

Serial No. ;

Key No.	Part No.	Description	Description	Q'ty	S.C	Serial No.	ICA	Replaceable part	
								Part No.	Q'ty
4410--	440-00451B	CYLINDER;OUTRIGGER(R.H)	VERIN DE BEQUILLES	1					
1	K9005047	TUBE ASS'Y(R.H)	TUYAU	1					
2	110-00265	BUSH;STEEL	COUSSINET	1					
3	K9005050	ROD ASS'Y	TIGE	1					
4	110-00265	BUSH;STEEL	COUSSINET	1					
5	K9005053	COVER;ROD	COUVERCLE DE TIGE	1					
6	110-00147	DU-BUSH	DOUILLE DU	1					
7	115-00104	RING;RETAINING	ARRET	1					
8	180-00379	SEAL;BUFFER	JOINT	1	K				
9	1.180-00665	U-PACKING	JOINT EN U	1	K				
10	115-00126	WIPER;DUST	PARE-POUSSIERE	1	K				
11	S8011051-90	O-RING	JOINT TORIQUE	1	K				
12	1.180-00225	RING;BACK UP	BAGUE ANTIEXTRUSION	1	K				
13	S8011101	O-RING	JOINT TORIQUE	1	K				
14	409-00042	PISTON	PISTON	1					
15	180-00255	SEAL;SLIPPER	JOINT	1	K				
16	1.180-00634	RING;WEAR	JOINT EN U	1	K				
17	K9001390	RING;DUST	BAGUE	1	K				
18	180-00247	O-RING	JOINT TORIQUE	1	K				
19	1.180-00269	RING;BACK UP	BAGUE ANTIEXTRUSION	1	K				
20	121-00043	NUT;PISTON	ECROU DE PISTON	1					
21	S3523836	SCREW;SET	VIS	1					
22	S6710032	NIPPLE;GREASE	GRAISSEUR	1					
23	K9005051	PIPE ASS'Y(R.H)	ENSEMBLE DE TUYAU	1					
24	S8000201	O-RING	JOINT TORIQUE	1					
25	420-00461A	VALVE ASS'Y(R.H)	ENSEMBLE DE VANNE	1					
26	S2213261	BOLT;SOCKET	BOULON A 6 PANS CREUX	4					
27	S2209461	BOLT;SOCKET	BOULON A 6 PANS CREUX	4					
28	S5100503	WASHER;SPRING	RONDELLE ELASTIQUE	4					
*	440-00077KT	SEAL KIT;OUTRIGGER	KIT DE JOINT	1					

DATE	DEC. 26, 2006
1st EDITION	

Fig. 4420 BOOM CYLINDER - L.H.(LOCK VALVE) VERIN DE FLECHE

Serial No. ;

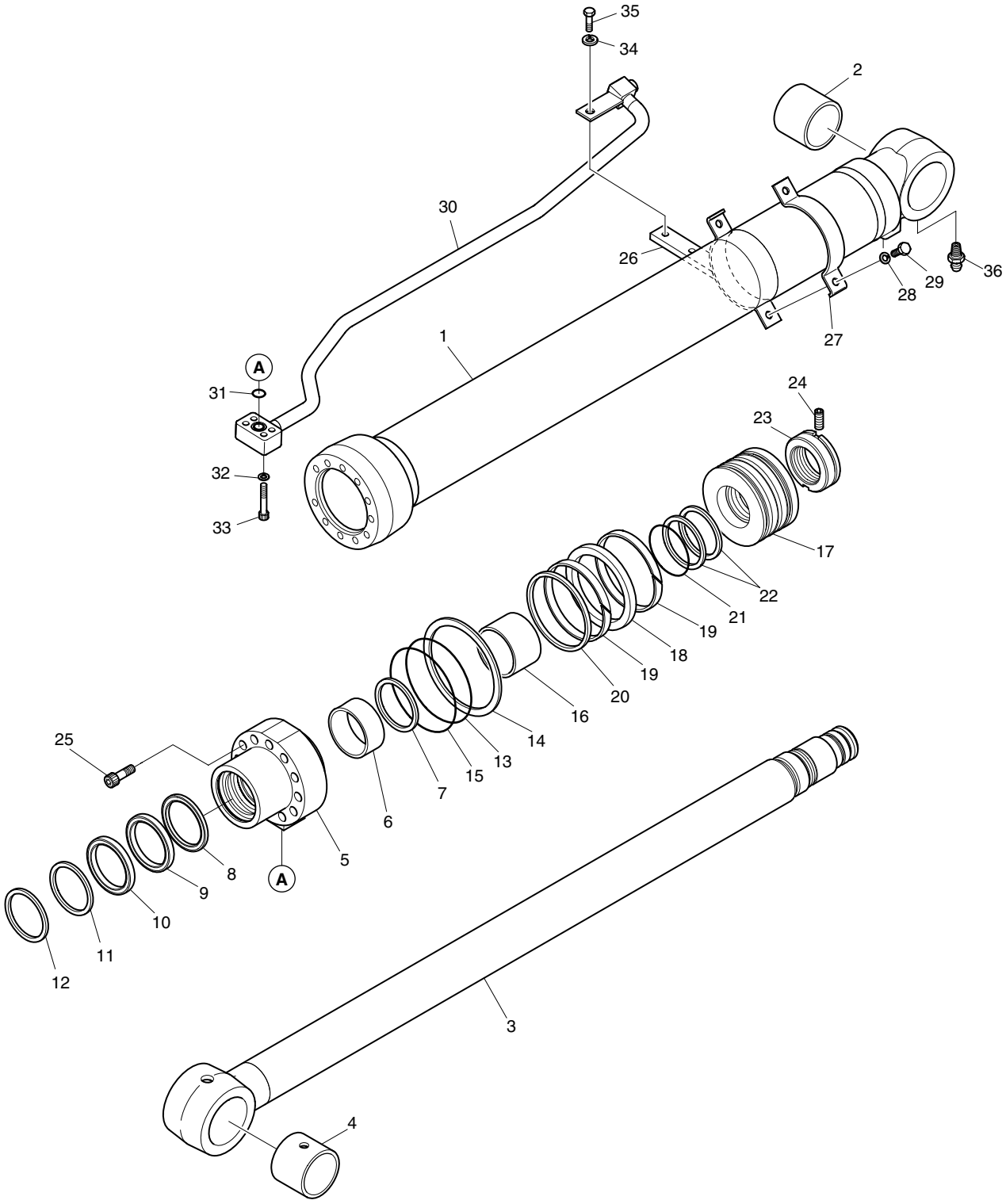

DATE	DEC. 26, 2006
1st EDITION	

Fig. 4420 BOOM CYLINDER - L.H.(LOCK VALVE) VERIN DE FLECHE

Serial No. ;

Key No.	Part No.	Description	Description	Q'ty	S.C	Serial No.	ICA	Replaceable part	
								Part No.	Q'ty
4420--	440-00484B	BOOM CYLINDER(L.H)	VERIN DE FLECHE	1					
1	K9001381	TUBE ASS'Y	TUYAU FLEXIBLE	1					
2	110-00244	BUSH	DOUILLE	1					
3	K9001383	ROD ASS'Y	ENSEMBLE TIGE	1					
4	110-00244	BUSH	DOUILLE	1					
5	K9001384	COVER;ROD	COUVERCLE	1					
6	110-00082	DD-BUSH	COUSSINET	1					
7	115-00052	RING;RETAINING	BAGUE	1					
8	K9001385	SEAL;BUFFER	ETANCHEITE	1	K				
9	K9001386	U-PACKING	JOINT EN U	1	K				
10	K9001396	RING;BACK UP	BAGUE	1	K				
11	115-00060	WIPER;DUST	RACCORD ADAPTATEUR	1	K				
12	115-00050	RING;RETAINING	BAGUE	1					
13	S8011051	O-RING	JOINT TORIQUE	1	K				
14	1.180-00268	RING;BACK UP	BAGUE	1	K				
15	S8011101	O-RING	JOINT TORIQUE	1	K				
16	K9001387	RING;CUSHION	BAGUE	1					
17	K9001388	PISTON	PISTON	1					
18	K9001389	SEAL;SLIPPER	JOINT	1	K				
19	115-00056	RING;WEAR	BAGUE D'USURE	2	K				
20	K9001390	RING;DUST	BAGUE	1	K				
21	180-00247	O-RING	JOINT TORIQUE	1	K				
22	1.180-00269	RING;BACK UP	BAGUE	2	K				
23	121-00043	NUT;PISTION	ECROU	1					
24	1.120-00219	SCREW;SET	VIS	1					
25	S2219071	BOLT;HEX. SOCKET	BOULON A 6 PANS CREUX	11					
26	K9001391	PIPE BAND ASS'Y	ENSEMBLE DE BANDE DE	1					
27	124-00055	BAND;PIPE	ATTACHE	1					
28	S5100603	WASHER;SPRING	RONDELLE ELASTIQUE	2					
29	S0558153	BOLT	BOULON	2					
30	K9001393	PIPE ASS'Y-R(L.H)	ENSEMBLE DE TUYAU	1					
31	S8000201	O-RING	JOINT TORIQUE	1					
32	S5100503	WASHER;SPRING	RONDELLE ELASTIQUE	4					
33	S2209561	BOLT;HEX. SOCKET	BOULON A 6 PANS CREUX	4					
34	S5100603	WASHER;SPRING	RONDELLE ELASTIQUE	1					
35	S0511863	BOLT;HEX.	BOULON A 6 PANS	1					
36	S6710032	NIPPLE;GREASE	MAMELON	1					
*	K9002306	SEAL KIT	KIT D'ETANCHEITE	1					

DATE	DEC. 26, 2006
1st EDITION	

Fig. 4430 BOOM CYLINDER - R.H.(LOCK VALVE) VERIN DE FLECHE

Serial No. ;

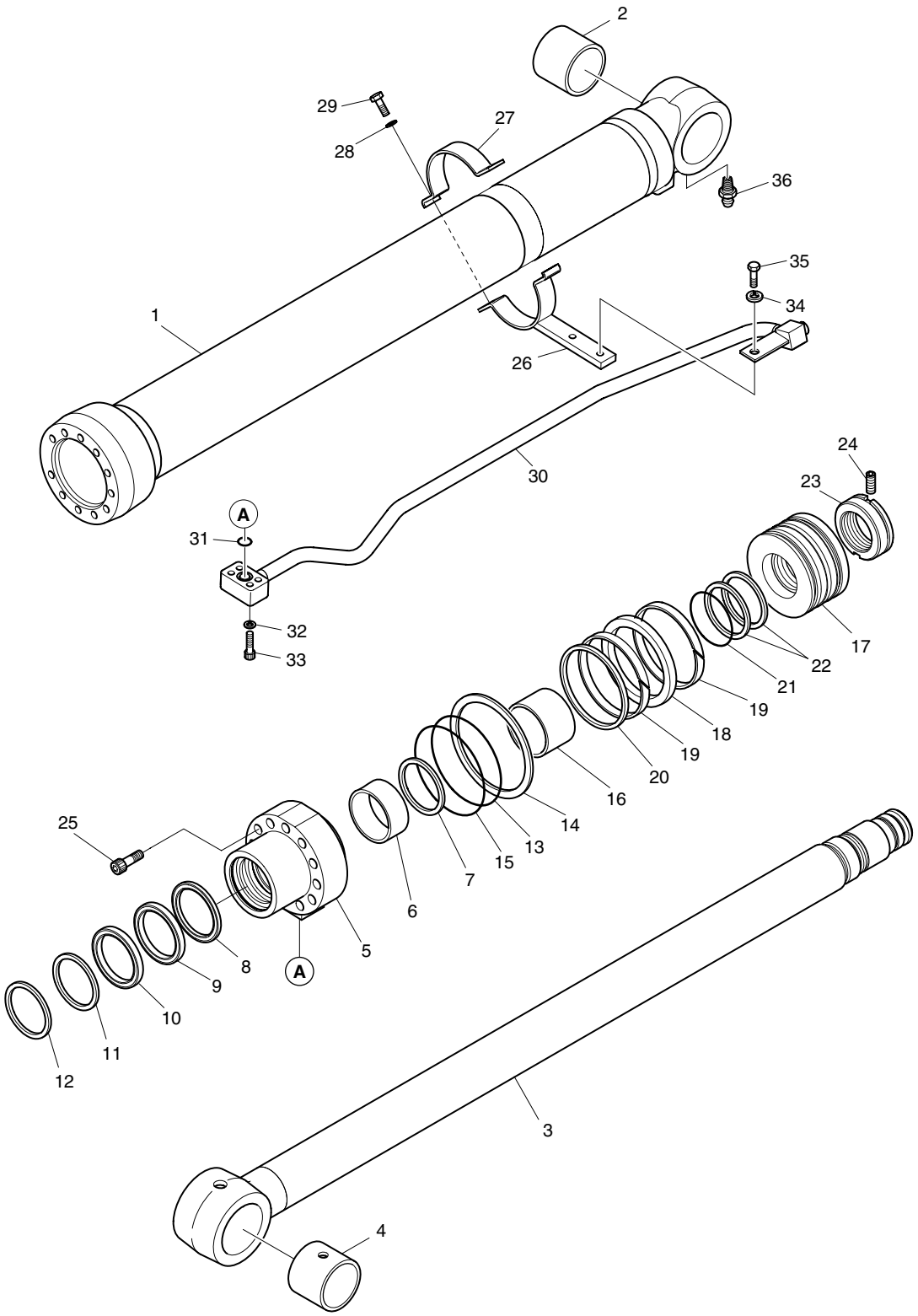

DATE	DEC. 26, 2006
1st EDITION	

Fig. 4430 BOOM CYLINDER - R.H.(LOCK VALVE) VERIN DE FLECHE

Serial No. ;

Key No.	Part No.	Description	Description	Q'ty	S.C	Serial No.	ICA	Replaceable part	
								Part No.	Q'ty
4430--	440-00485B	BOOM CYLINDER(R.H)	VERIN DE FLECHE	1					
1	K9001381	TUBE ASS'Y	TUYAU FLEXIBLE	1					
2	110-00244	BUSH	DOUILLE	1					
3	K9001383	ROD ASS'Y	ENSEMBLE TIGE	1					
4	110-00244	BUSH	DOUILLE	1					
5	K9001384	COVER;ROD	COUVERCLE	1					
6	110-00082	DD-BUSH	COUSSINET	1					
7	115-00052	RING;RETAINING	BAGUE	1					
8	K9001385	SEAL;BUFFER	ETANCHEITE	1	K				
9	K9001386	U-PACKING	JOINT EN U	1	K				
10	K9001396	RING;BACK UP	BAGUE	1	K				
11	115-00060	WIPER;DUST	RACCORD ADAPTATEUR	1	K				
12	115-00050	RING;RETAINING	BAGUE	1					
13	S8011051	O-RING	JOINT TORIQUE	1	K				
14	1.180-00268	RING;BACK UP	BAGUE	1	K				
15	S8011101	O-RING	JOINT TORIQUE	1	K				
16	K9001387	RING;CUSHION	BAGUE	1					
17	K9001388	PISTON	PISTON	1					
18	K9001389	SEAL;SLIPPER	JOINT	1	K				
19	115-00056	RING;WEAR	BAGUE D'USURE	2	K				
20	K9001390	RING;DUST	BAGUE	1	K				
21	180-00247	O-RING	JOINT TORIQUE	1	K				
22	1.180-00269	RING;BACK UP	BAGUE	2	K				
23	121-00043	NUT;PISTION	ECROU	1					
24	1.120-00219	SCREW;SET	VIS	1					
25	S2219071	BOLT;HEX. SOCKET	BOULON A 6 PANS CREUX	11					
26	K9001391	PIPE BAND ASS'Y	ENSEMBLE DE BANDE DE	1					
27	124-00055	BAND;PIPE	ATTACHE	1					
28	S5100603	WASHER;SPRING	RONDELLE ELASTIQUE	2					
29	S0558153	BOLT	BOULON	2					
30	K9001395	PIPE ASS'Y-R(R.H)	ENSEMBLE DE TUYAU	1					
31	S8000201	O-RING	JOINT TORIQUE	1					
32	S5100503	WASHER;SPRING	RONDELLE ELASTIQUE	4					
33	S2209561	BOLT;HEX. SOCKET	BOULON A 6 PANS CREUX	4					
34	S5100603	WASHER;SPRING	RONDELLE ELASTIQUE	1					
35	S0511863	BOLT;HEX.	BOULON A 6 PANS	1					
36	S6710032	NIPPLE;GREASE	MAMELON	1					
*	K9002306	SEAL KIT	KIT D'ETANCHEITE	1					

DATE	JUN. 30, 2007
REV.NO.	EXB07-06

Fig. 4440 ARM CYLINDER - ARM 2.1m(LOCK VALVE)
VERIN DE BALANCIER

Serial No. ;

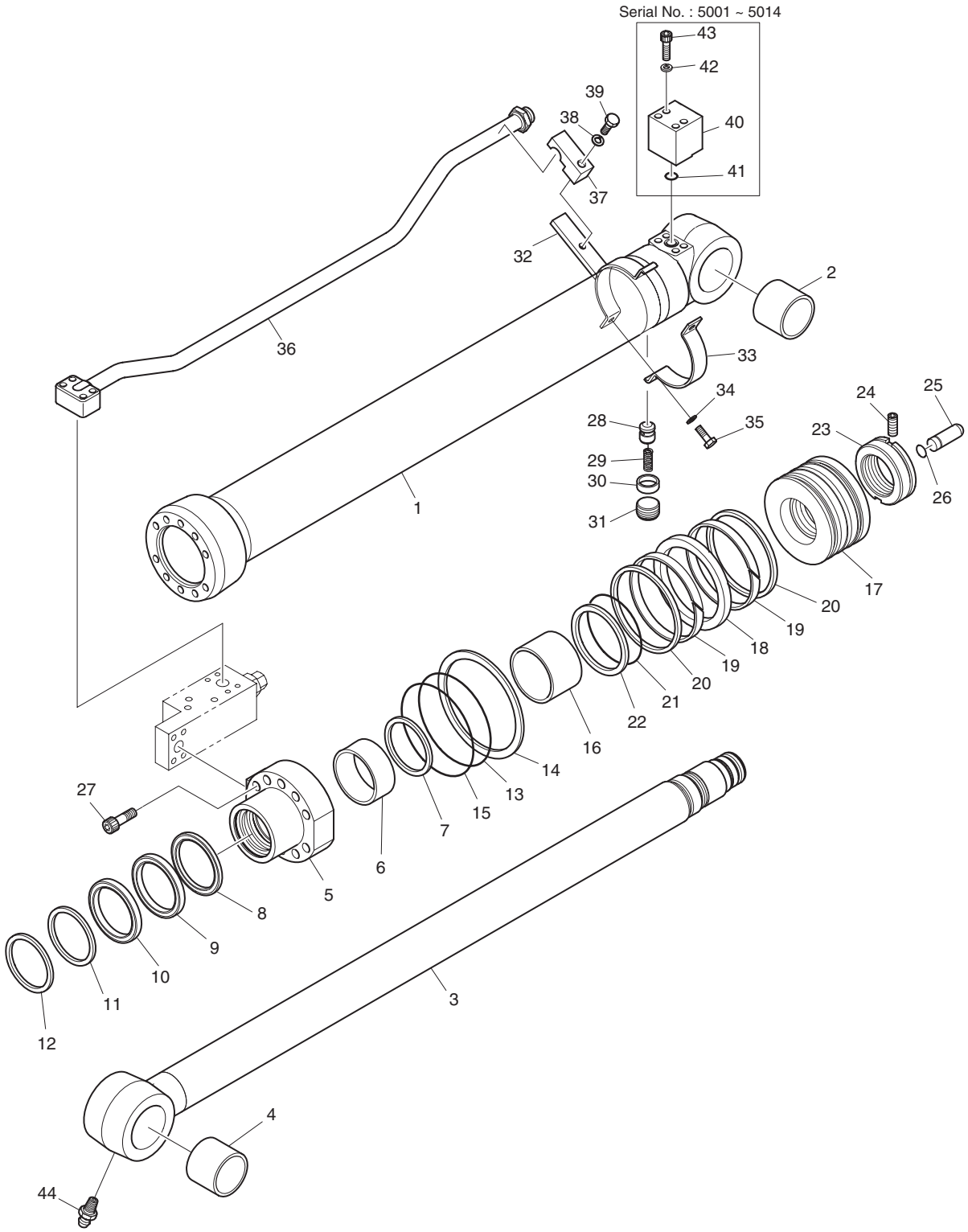

DATE	JUN. 30, 2007
REV. NO.	EXB07-06

Fig. 4440 ARM CYLINDER - ARM 2.1m(LOCK VALVE) VERIN DE BALANCIER

Serial No. ;

Key No.	Part No.	Description	Description	Q'ty	S.C	Serial No.	ICA	Replaceable part	
								Part No.	Q'ty
4440--	440-00486A	ARM CYLINDER-2.1m	VERIN DE BALANCIER	1		5001–5014			
	440-00486B	**ARM CYLINDER-2.1m**	VERIN DE BALANCIER	1		**5015–**			
1	K9001415	TUBE ASS'Y	TUYAU FLEXIBLE	1					
2	110-00241	BUSH	DOUILLE	1					
3	K9001399	ROD ASS'Y	ENSEMBLE TIGE	1					
4	110-00241	BUSH	DOUILLE	1					
5	K9001400	COVER;ROD	COUVERCLE	1					
6	110-00097	DD-BUSH	COUSSINET	1					
7	K9001401	RING;RETAINING	BAGUE	1					
8	K9001402	SEAL;BUFFER	ETANCHEITE	1	K				
9	K9001403	U-PACKING	JOINT EN U	1	K				
10	K9001404	RING;BACK UP	BAGUE	1	K				
11	115-00084	WIPER;DUST	RACCORD ADAPTATEUR	1	K				
12	115-00063	RING;RETAINING	BAGUE	1					
13	S8011101	O-RING	JOINT TORIQUE	1	K				
14	K9001405	RING;BACK UP	BAGUE	1	K				
15	S8011151	O-RING	JOINT TORIQUE	1	K				
16	K9001406	RING;CUSHION	BAGUE	1					
17	K9001407	PISTON	PISTON	1					
18	K9001408	SEAL;SLIPPER	JOINT	1	K				
19	115-00085	RING;WEAR	BAGUE D'USURE	2	K				
20	K9001409	RING;DUST	BAGUE	2	K				
21	180-00276	O-RING	JOINT TORIQUE	1	K				
22	K9001410	RING;BACK UP	BAGUE	2	K				
23	121-00046	NUT;PISTION	ECROU	1					
24	1.120-00219	SCREW;SET	VIS	1					
25	424-00059	PLUNGER;CUSHION	PLONGEUR	1					
26	115-00081	RING;STOP	BAGUE D'ARRET	1					
27	S2222171	BOLT;HEX. SOCKET	BOULON A 6 PANS CREUX	10					
28	1.420-00039	VALVE;CHECK	CAPTEUR	1					
29	1.131-00009	SPRING	RESSORT	1					
30	1.195-00022	SUPPORT;SPRING	SUPPORT	1					
31	2181-1116D3	PLUG;HEX. SOCKET	BOUCHON	1					
32	K9001411	PIPE BAND ASS'Y	ENSEMBLE DE BANDE DE	1					
33	124-00085	BAND;PIPE	ATTACHE	1					
34	S5100603	WASHER;SPRING	RONDELLE ELASTIQUE	2					
35	S0558153	BOLT	BOULON	2					
36	K9001416	PIPE ASS'Y-R	ENSEMBLE DE TUYAU	1					

DATE	JUN. 30, 2007
REV.NO.	EXB07-06

Fig. 4440 ARM CYLINDER - ARM 2.1m(LOCK VALVE)
VERIN DE BALANCIER

Serial No. ;

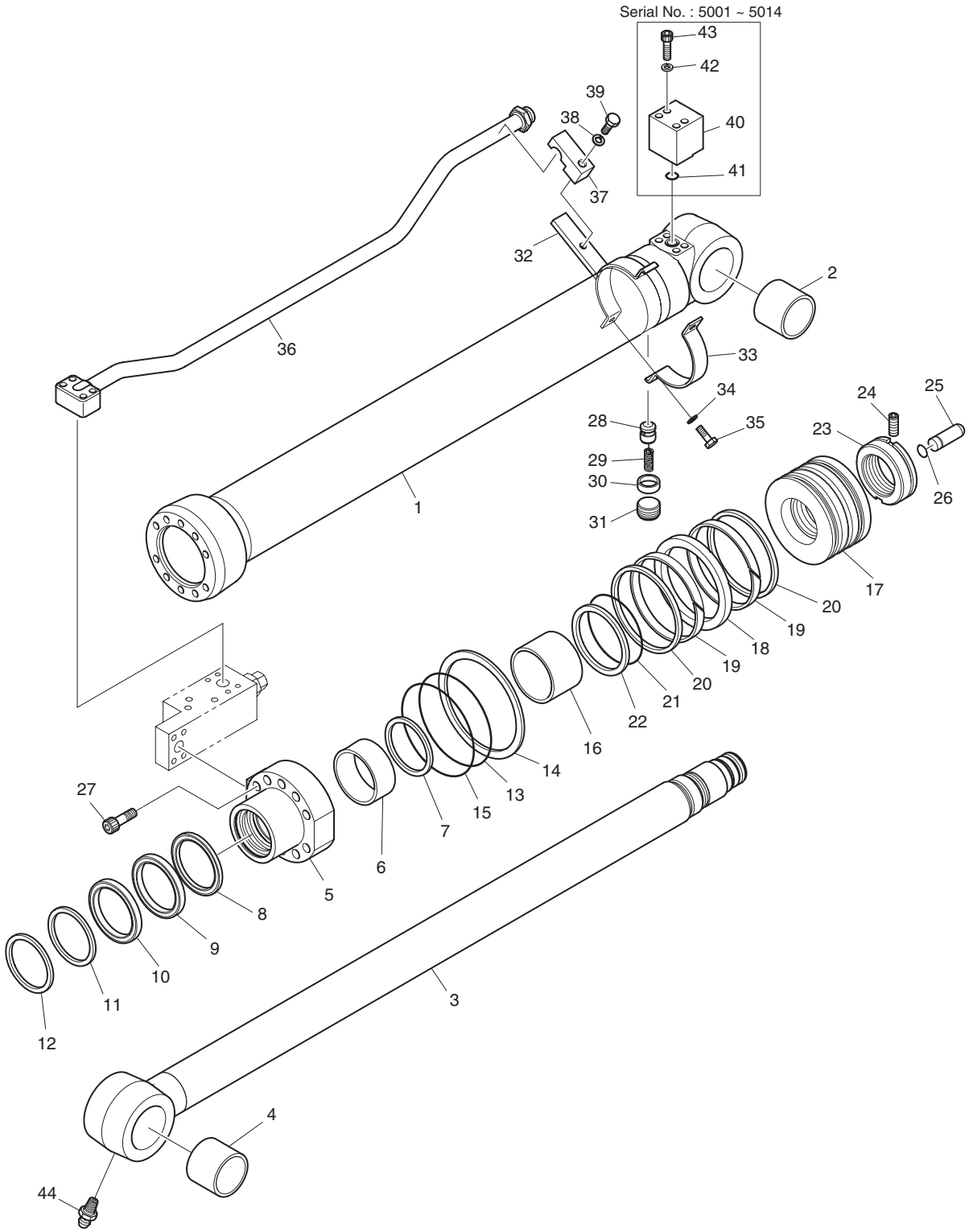

DATE	JUN. 30, 2007
REV. NO.	EXB07-06

Fig. 4440 ARM CYLINDER - ARM 2.1m(LOCK VALVE) VERIN DE BALANCIER

Serial No. ;

Key No.	Part No.	Description	Description	Q'ty	S.C	Serial No.	ICA	Replaceable part	
								Part No.	Q'ty
4440-37	K9001413	CLAMP;PIPE	COLLIER	1					
38	S5102903	WASHER;SPRING	RONDELLE ELASTIQUE	1					
39	S0565451	BOLT	BOULON	1					
40	**K9001414**	**PORT;FLANGE**	PORT;FLANGE	1		**5001–5014**			
41	**S8000281**	**O-RING**	JOINT TORIQUE	1		**5001–5014**			
42	**S5100603**	**WASHER;SPRING**	RONDELLE ELASTIQUE	4		**5001–5014**			
43	**S2212961**	**BOLT;HEX. SOCKET**	BOULON A 6 PANS CREUX	4		**5001–5014**			
44	S6710032	NIPPLE;GREASE	MAMELON	1					
*	K9002308	SEAL KIT	KIT D'ETANCHEITE	1					

DATE	JUN. 30, 2007
REV.NO.	EXB07-06

Fig. 4450 ARM CYLINDER - ARM 2.5m(LOCK VALVE)
VERIN DE BALANCIER

Serial No. ;

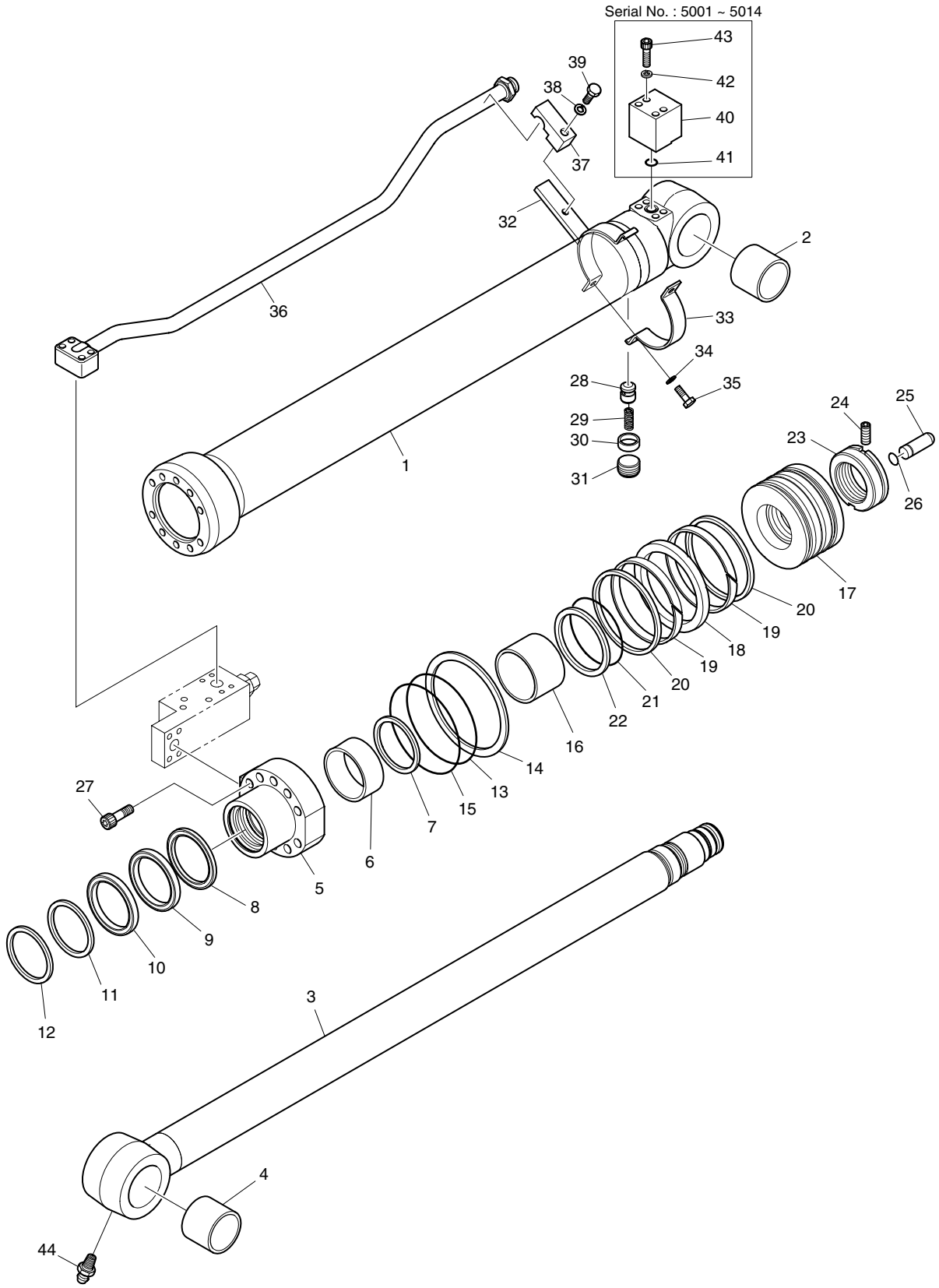

DATE	JUN. 30, 2007
REV. NO.	EXB07-06

Fig. 4450 ARM CYLINDER - ARM 2.5m(LOCK VALVE) VERIN DE BALANCIER

Serial No. ;

Key No.	Part No.	Description	Description	Q'ty	S.C	Serial No.	ICA	Replaceable part	
								Part No.	Q'ty
4450--	440-00487A	ARM CYLINDER-2.5M ARM	VERIN DE BALANCIER	1		5001–5014			
	440-00487B	**ARM CYLINDER-2.5M ARM**	VERIN DE BALANCIER	1		**5015–**			
1	K9001415	TUBE ASS'Y	TUYAU FLEXIBLE	1					
2	110-00241	BUSH	DOUILLE	1					
3	K9001418	ROD ASS'Y	ENSEMBLE TIGE	1					
4	110-00241	BUSH	DOUILLE	1					
5	K9001400	COVER;ROD	COUVERCLE	1					
6	110-00097	DD-BUSH	COUSSINET	1					
7	K9001401	RING;RETAINING	BAGUE	1					
8	K9001402	SEAL;BUFFER	ETANCHEITE	1	K				
9	K9001403	U-PACKING	JOINT EN U	1	K				
10	K9001404	RING;BACK UP	BAGUE	1	K				
11	115-00084	WIPER;DUST	RACCORD ADAPTATEUR	1	K				
12	115-00063	RING;RETAINING	BAGUE	1					
13	S8011101	O-RING	JOINT TORIQUE	1	K				
14	K9001405	RING;BACK UP	BAGUE	1	K				
15	S8011151	O-RING	JOINT TORIQUE	1	K				
16	K9001406	RING;CUSHION	BAGUE	1					
17	K9001407	PISTON	PISTON	1					
18	K9001408	SEAL;SLIPPER	JOINT	1	K				
19	115-00085	RING;WEAR	BAGUE D'USURE	2	K				
20	K9001409	RING;DUST	BAGUE	2	K				
21	180-00276	O-RING	JOINT TORIQUE	1	K				
22	K9001410	RING;BACK UP	BAGUE	2	K				
23	121-00046	NUT;PISTION	ECROU	1					
24	1.120-00219	SCREW;SET	VIS	1					
25	424-00059	PLUNGER;CUSHION	PLONGEUR	1					
26	115-00081	RING;STOP	BAGUE D'ARRET	1					
27	S2222171	BOLT;HEX. SOCKET	BOULON A 6 PANS CREUX	10					
28	1.420-00039	VALVE;CHECK	CAPTEUR	1					
29	1.131-00009	SPRING	RESSORT	1					
30	1.195-00022	SUPPORT;SPRING	SUPPORT	1					
31	2181-1116D3	PLUG;HEX. SOCKET	BOUCHON	1					
32	K9001411	PIPE BAND ASS'Y	ENSEMBLE DE BANDE DE	1					
33	124-00085	BAND;PIPE	ATTACHE	1					
34	S5100603	WASHER;SPRING	RONDELLE ELASTIQUE	2					
35	S0558153	BOLT	BOULON	2					
36	K9001416	PIPE ASS'Y-R	ENSEMBLE DE TUYAU	1					

DATE	JUN. 30, 2007
REV.NO.	EXB07-06

Fig. 4450 ARM CYLINDER - ARM 2.5m(LOCK VALVE)
VERIN DE BALANCIER

Serial No. ;

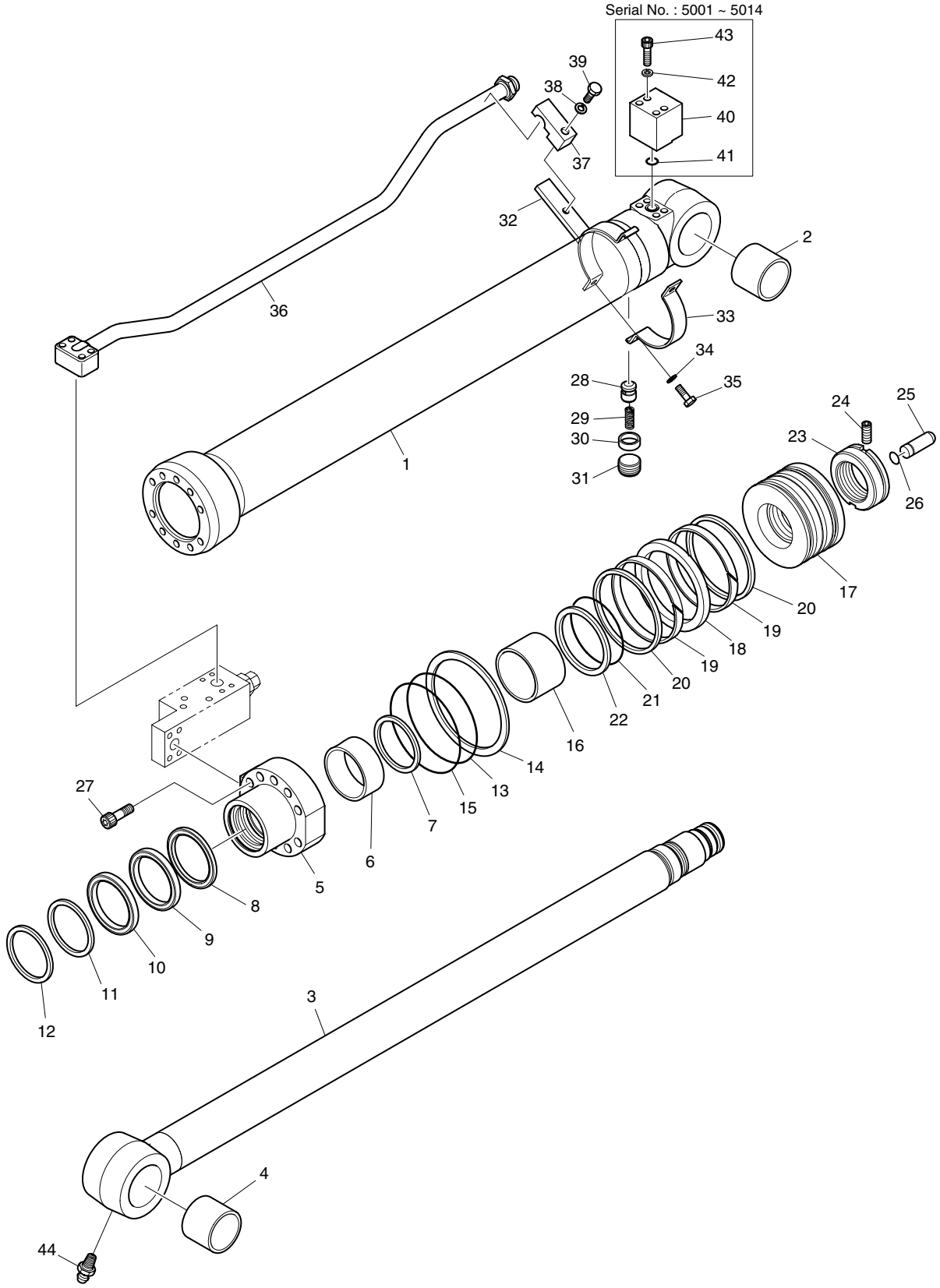

DATE	JUN. 30, 2007
REV. NO.	EXB07-06

Fig. 4450 ARM CYLINDER - ARM 2.5m(LOCK VALVE) VERIN DE BALANCIER

Serial No. ;

Key No.	Part No.	Description	Description	Q'ty	S.C	Serial No.	ICA	Replaceable part	
								Part No.	Q'ty
4450-37	K9001413	CLAMP;PIPE	COLLIER	1					
38	S5102903	WASHER;SPRING	RONDELLE ELASTIQUE	1					
39	S0565451	BOLT	BOULON	1					
40	**K9001414**	**PORT;FLANGE**	PORT;FLANGE	1		**5001–5014**			
41	**S8000281**	**O-RING**	JOINT TORIQUE	1		**5001–5014**			
42	**S5100603**	**WASHER;SPRING**	RONDELLE ELASTIQUE	4		**5001–5014**			
43	**S2212961**	**BOLT;HEX. SOCKET**	BOULON A 6 PANS CREUX	4		**5001–5014**			
44	S6710032	NIPPLE;GREASE	MAMELON	1					
*	K9002308	SEAL KIT	KIT D'ETANCHEITE	1					

DATE	DEC. 26, 2006
1st EDITION	

Fig. 4460 BOOM CYLINDER - L.H.(ARTI BOOM) VERIN DE FLECHE

Serial No. ;

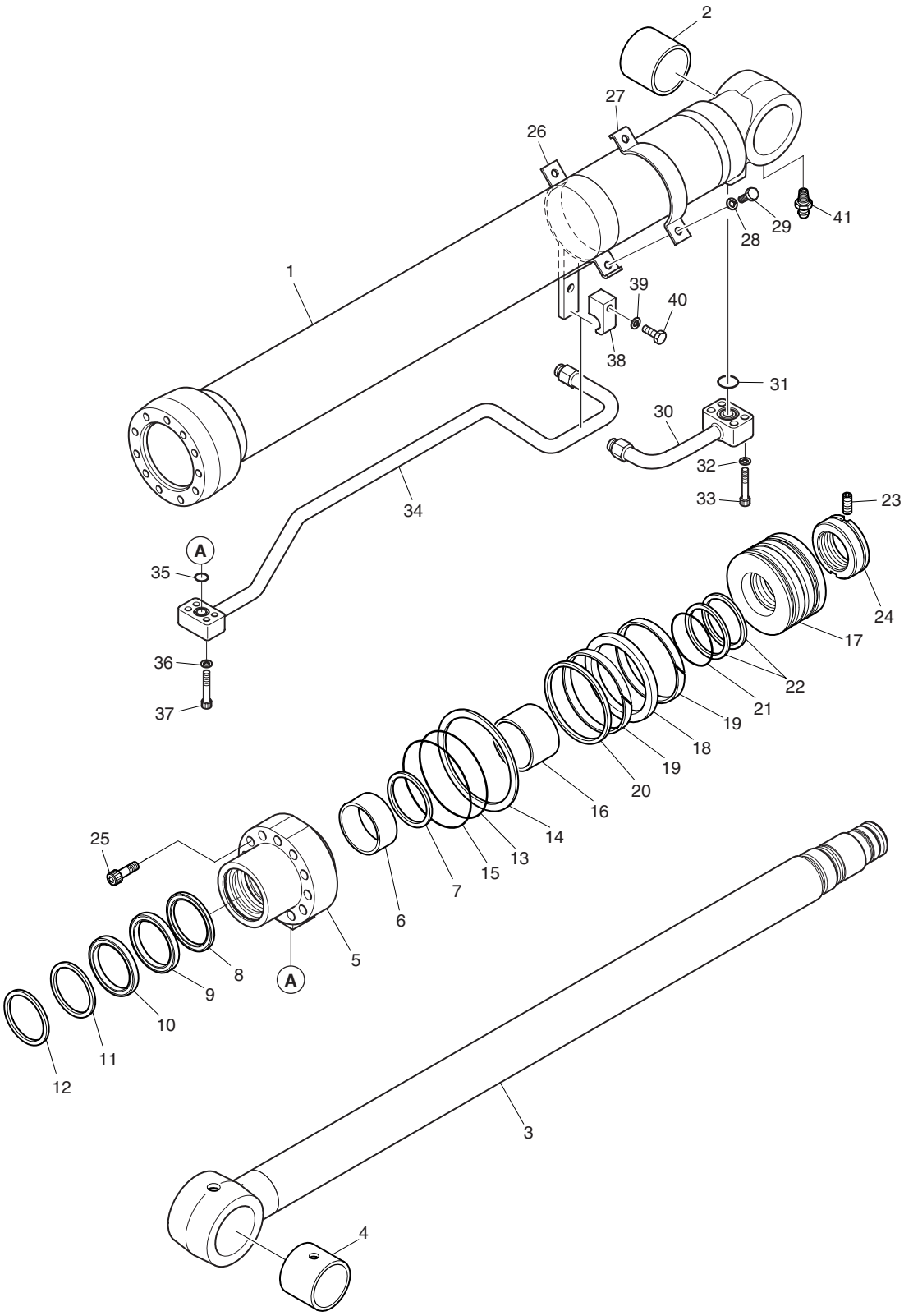

DATE	DEC. 26, 2006
1st EDITION	

Fig. 4460 BOOM CYLINDER - L.H.(ARTI BOOM) VERIN DE FLECHE

Serial No. ;

Key No.	Part No.	Description	Description	Q'ty	S.C	Serial No.	ICA	Replaceable part	
								Part No.	Q'ty
4460--	K1008735B	CYLINDER;ARTI.BOOM-L.H	VERIN DE FLECHE	1					
1	K9005058	TUBE ASS'Y	TUYAU FLEXIBLE	1					
2	110-00244	BUSH	DOUILLE	1					
3	K9005059	ROD ASS'Y	ENSEMBLE TIGE	1					
4	110-00244	BUSH	DOUILLE	1					
5	K9001384	COVER;ROD	COUVERCLE	1					
6	110-00082	BUSH;DD	DOUILLE	1					
7	115-00052	RING;RETAINING	BAGUE	1					
8	K9001385	SEAL;BUFFER	ETANCHEITE	1	K				
9	K9001386	PACKING;U	EMBALLAGE	1	K				
10	K9001396	RING;BACK UP	BAGUE	1	K				
11	115-00060	WIPER;DUST	RACCORD ADAPTATEUR	1	K				
12	115-00050	RING;RETAINING	BAGUE	1					
13	S8011051	O-RING	JOINT TORIQUE	1	K				
14	1.180-00268	RING;BACK UP	BAGUE	1	K				
15	S8011101	O-RING	JOINT TORIQUE	1	K				
16	K9001387	RING;CUSHION	BAGUE	1					
17	K9001388	PISTON	PISTON	1					
18	K9001389	SEAL;SLIPPER	JOINT	1	K				
19	115-00056	RING;WEAR	BAGUE D'USURE	2	K				
20	K9001390	RING;SLYD	BAGUE	1	K				
21	180-00247	O-RING	JOINT TORIQUE	1	K				
22	1.180-00269	RING;BACK UP	BAGUE	2	K				
23	121-00043	NUT;PISTON	ECROU	1					
24	S3523836	SCREW;SET	VIS	1					
25	S2219071	BOLT;SOCKET	BOULON A 6 PANS CREUX	11					
26	K9005067	PIPE BAND ASS'Y	ENSEMBLE DE BANDE DE	1					
27	124-00055	BAND;PIPE	ATTACHE	1					
28	S5100603	WASHER;SPRING	RONDELLE ELASTIQUE	2					
29	S0558153	BOLT;HEX	BOULON A 6 PANS	2					
30	K9005071	PIPE ASS'Y-H(L.H)	ENSEMBLE DE TUYAU	1					
31	S8000281	O-RING	JOINT TORIQUE	1					
32	S5100603	WASHER;SPRING	RONDELLE ELASTIQUE	4					
33	S2212761	BOLT;SOCKET	BOULON A 6 PANS CREUX	4					
34	K9005069	PIPE ASS'Y-R(L.H)	ENSEMBLE DE TUYAU	1					
35	S8000201	O-RING	JOINT TORIQUE	1					
36	S5100503	WASHER;SPRING	RONDELLE ELASTIQUE	4					
37	S2209561	BOLT;SOCKET	BOULON A 6 PANS CREUX	4					

DATE	DEC. 26, 2006
1st EDITION	

Fig. 4460 BOOM CYLINDER - L.H.(ARTI BOOM) VERIN DE FLECHE

Serial No. ;

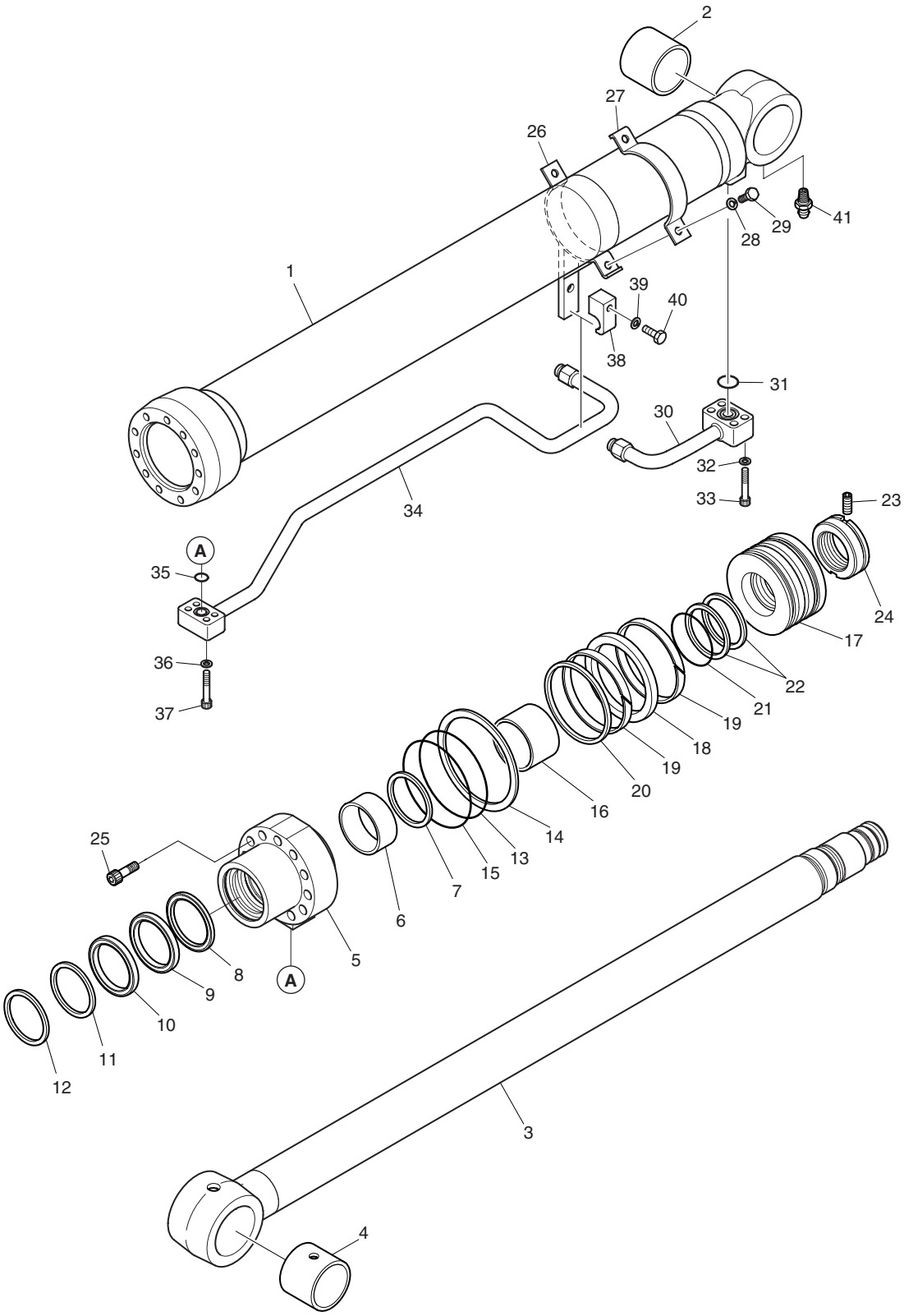

DATE	DEC. 26, 2006
1st EDITION	

Fig. 4460 BOOM CYLINDER - L.H.(ARTI BOOM) VERIN DE FLECHE

Serial No. ;

Key No.	Part No.	Description	Description	Q'ty	S.C	Serial No.	ICA	Replaceable part	
								Part No.	Q'ty
4460-38	K9001435	CLAMP;PIPE	COLLIER	1					
39	S5100603	WASHER;SPRING	RONDELLE ELASTIQUE	1					
40	S0558463	BOLT;HEX	BOULON A 6 PANS	1					
41	S6710032	NIPPLE;GREASE	MAMELON	1					
*	K9002306	SEAL KIT	KIT D'ETANCHEITE	1					

DATE	DEC. 26, 2006
1st EDITION	

Fig. 4470 BOOM CYLINDER - R.H.(ARTI BOOM) VERIN DE FLECHE

Serial No. ;

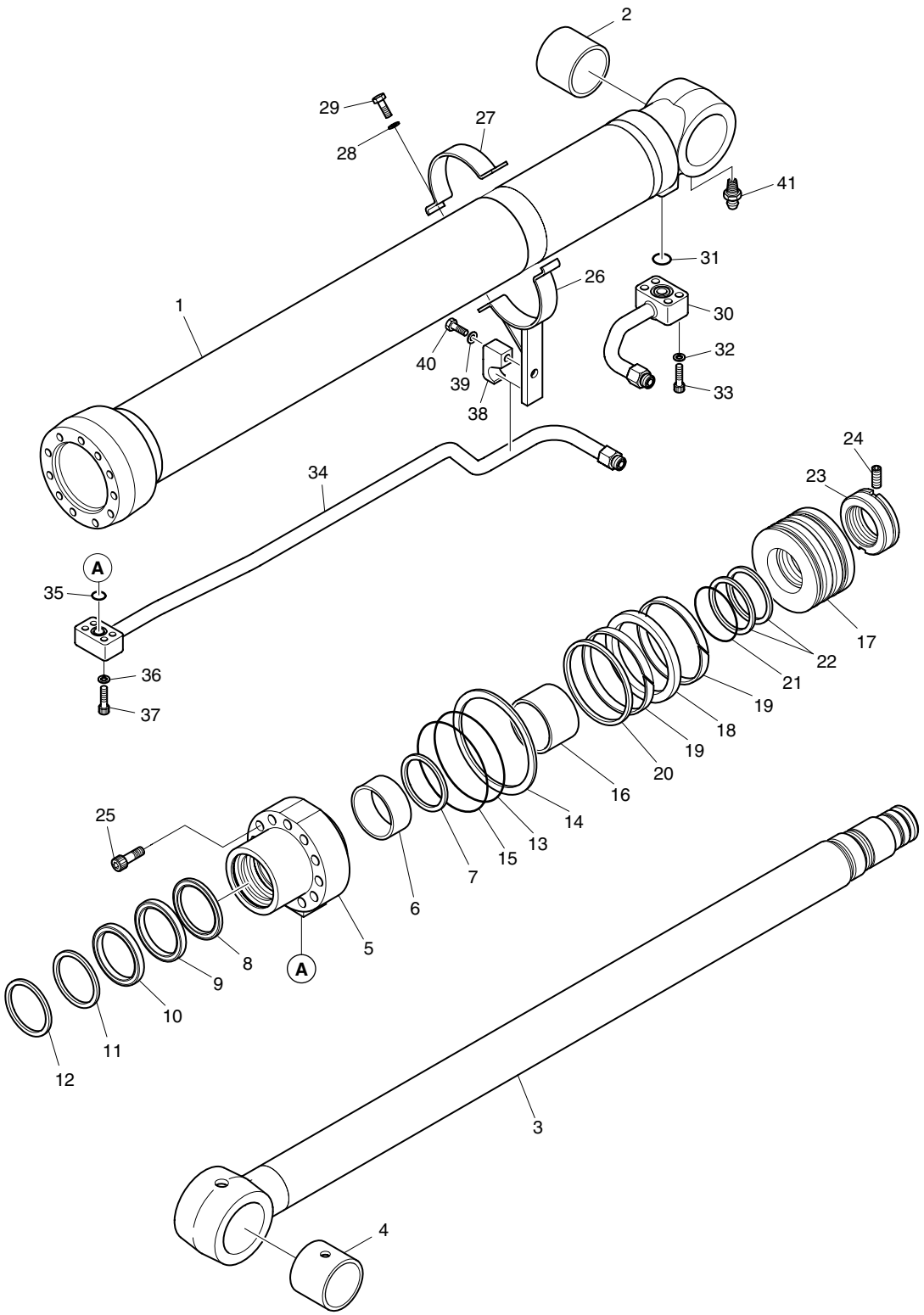

DATE	DEC. 26, 2006
1st EDITION	

Fig. 4470 BOOM CYLINDER - R.H.(ARTI BOOM) VERIN DE FLECHE

Serial No. ;

Key No.	Part No.	Description	Description	Q'ty	S.C	Serial No.	ICA	Replaceable part	
								Part No.	Q'ty
4470--	K1008736B	CYLINDER;ARTI.BOOM-R.H	VERIN DE FLECHE	1					
1	K9005058	TUBE ASS'Y	TUYAU FLEXIBLE	1					
2	110-00244	BUSH	DOUILLE	1					
3	K9005059	ROD ASS'Y	ENSEMBLE TIGE	1					
4	110-00244	BUSH	DOUILLE	1					
5	K9001384	COVER;ROD	COUVERCLE	1					
6	110-00082	BUSH;DD	DOUILLE	1					
7	115-00052	RING;RETAINING	BAGUE	1					
8	K9001385	SEAL;BUFFER	ETANCHEITE	1	K				
9	K9001386	PACKING;U	EMBALLAGE	1	K				
10	K9001396	RING;BACK UP	BAGUE	1	K				
11	115-00060	WIPER;DUST	RACCORD ADAPTATEUR	1	K				
12	115-00050	RING;RETAINING	BAGUE	1					
13	S8011051	O-RING	JOINT TORIQUE	1	K				
14	1.180-00268	RING;BACK UP	BAGUE	1	K				
15	S8011101	O-RING	JOINT TORIQUE	1	K				
16	K9001387	RING;CUSHION	BAGUE	1					
17	K9001388	PISTON	PISTON	1					
18	K9001389	SEAL;SLIPPER	JOINT	1	K				
19	115-00056	RING;WEAR	BAGUE D'USURE	2	K				
20	K9001390	RING;SLYD	BAGUE	1	K				
21	180-00247	O-RING	JOINT TORIQUE	1	K				
22	1.180-00269	RING;BACK UP	BAGUE	2	K				
23	121-00043	NUT;PISTON	ECROU	1					
24	S3523836	SCREW;SET	VIS	1					
25	S2219071	BOLT;SOCKET	BOULON A 6 PANS CREUX	11					
26	K9005067	PIPE BAND ASS'Y	ENSEMBLE DE BANDE DE	1					
27	124-00055	BAND;PIPE	ATTACHE	1					
28	S5100603	WASHER;SPRING	RONDELLE ELASTIQUE	2					
29	S0558153	BOLT;HEX	BOULON A 6 PANS	2					
30	K9005070	PIPE ASS'Y-H(R.H)	ENSEMBLE DE TUYAU	1					
31	S8000281	O-RING	JOINT TORIQUE	1					
32	S5100603	WASHER;SPRING	RONDELLE ELASTIQUE	4					
33	S2212761	BOLT;SOCKET	BOULON A 6 PANS CREUX	4					
34	K9005068	PIPE ASS'Y-R(R.H)	ENSEMBLE DE TUYAU	1					
35	S8000201	O-RING	JOINT TORIQUE	1					
36	S5100503	WASHER;SPRING	RONDELLE ELASTIQUE	4					
37	S2209561	BOLT;SOCKET	BOULON A 6 PANS CREUX	4					

DATE	DEC. 26, 2006
1st EDITION	

Fig. 4470 BOOM CYLINDER - R.H.(ARTI BOOM) VERIN DE FLECHE

Serial No. ;

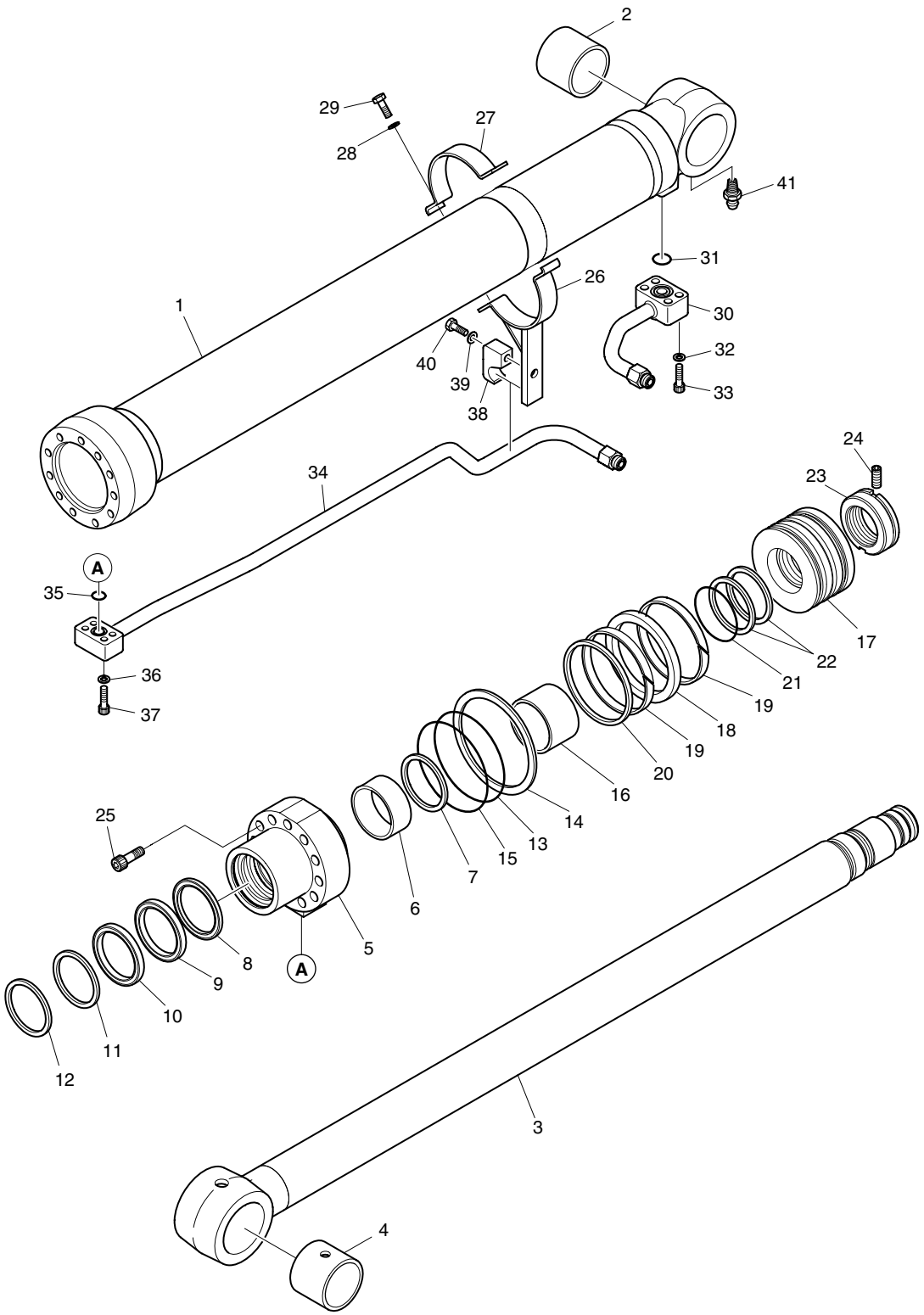

DATE	DEC. 26, 2006
1st EDITION	

Fig. 4470 BOOM CYLINDER - R.H.(ARTI BOOM) VERIN DE FLECHE

Serial No. ;

Key No.	Part No.	Description	Description	Q'ty	S.C	Serial No.	ICA	Replaceable part	
								Part No.	Q'ty
4470-38	K9001435	CLAMP;PIPE	COLLIER	1					
39	S5100603	WASHER;SPRING	RONDELLE ELASTIQUE	1					
40	S0558463	BOLT;HEX	BOULON A 6 PANS	1					
41	S6710032	NIPPLE;GREASE	MAMELON	1					
*	K9002306	SEAL KIT	KIT D'ETANCHEITE	1					

DATE	DEC. 26, 2006
1st EDITION	

Fig. 4480 ARTI. BOOM CYLINDER
VERIN DE ARTICULAIRE FLECHE

Serial No. ;

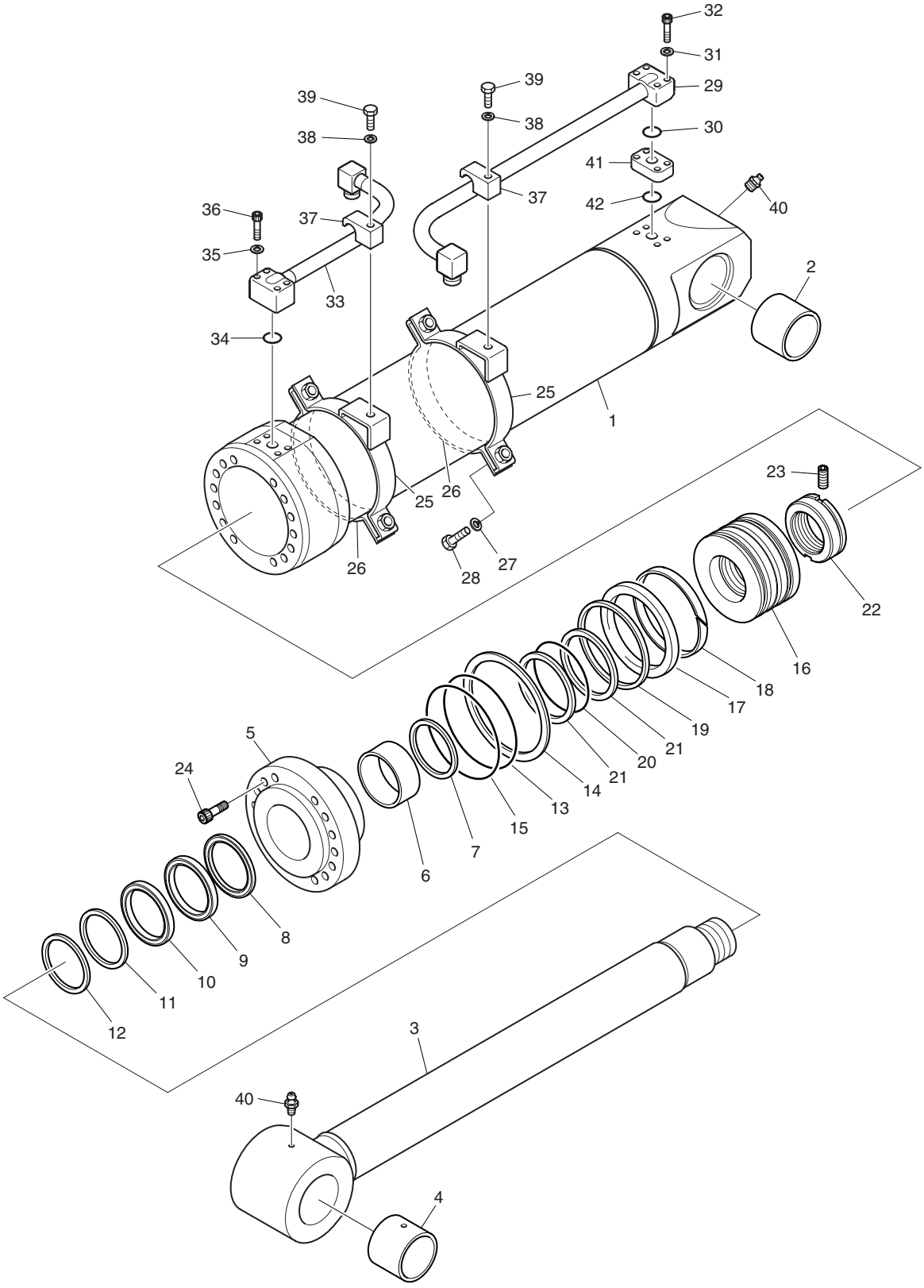

DATE	DEC. 26, 2006
1st EDITION	

Fig. 4480 ARTI. BOOM CYLINDER VERIN DE ARTICULAIRE FLECHE

Serial No. ;

Key No.	Part No.	Description	Description	Q'ty	S.C	Serial No.	ICA	Replaceable part	
								Part No.	Q'ty
4480--	K1008737A	CYLINDER;ARTI	VERIN DE ARTICULAIRE	1					
1	K9005060	TUBE ASS'Y	TUYAU FLEXIBLE	1					
2	K1008572	BUSH	DOUILLE	1					
3	K9005061	ROD ASS'Y	ENSEMBLE TIGE	1					
4	K1008572	BUSH	DOUILLE	1					
5	K9005062	COVER;ROD	COUVERCLE	1					
6	110-00080	BUSH;DD	DOUILLE	1					
7	115-00063	RING;RETAINING	BAGUE	1					
8	1.180-00657	SEAL;BUFFER	ETANCHEITE	1	K				
9	K9001153	PACKING;U	EMBALLAGE	1	K				
10	K9001154	RING;BACK UP	BAGUE	1	K				
11	115-00072	WIPER;DUST	RACCORD ADAPTATEUR	1	K				
12	115-00073	RING;RETAINING	BAGUE	1					
13	S8011451	O-RING	JOINT TORIQUE	1	K				
14	K9001164	RING;BACK UP	BAGUE	1	K				
15	180-00363	O-RING	JOINT TORIQUE	1	K				
16	K9005063	PISTON	PISTON	1					
17	180-00360	SEAL;SLIPPER	JOINT	1	K				
18	K9005049	RING;WEAR	BAGUE D'USURE	1	K				
19	115-00122	RING;SLYD	BAGUE	1	K				
20	S8010751	O-RING	JOINT TORIQUE	1	K				
21	1.180-00663	RING;BACK UP	BAGUE	2	K				
22	121-00055	NUT;PISTON	ECROU	1					
23	S3523836	SCREW;SET	VIS	1					
24	S2221873	BOLT;SOCKET	BOULON A 6 PANS CREUX	14					
25	K9005064	PIPE BAND ASS'Y	ENSEMBLE DE BANDE DE	2					
26	124-00157	BAND;PIPE	ATTACHE	2					
27	S5100603	WASHER;SPRING	RONDELLE ELASTIQUE	4					
28	S0558153	BOLT;HEX	BOULON A 6 PANS	4					
29	K9005065	PIPE ASS'Y-H	ENSEMBLE DE TUYAU	1					
30	S8000281	O-RING	JOINT TORIQUE	1					
31	S5100603	WASHER;SPRING	RONDELLE ELASTIQUE	4					
32	S2212861	BOLT;SOCKET	BOULON A 6 PANS CREUX	4					
33	K9005066	PIPE ASS'Y-R	ENSEMBLE DE TUYAU	1					
34	S8000281	O-RING	JOINT TORIQUE	1					
35	S5100603	WASHER;SPRING	RONDELLE ELASTIQUE	4					
36	S2212761	BOLT;SOCKET	BOULON A 6 PANS CREUX	4					
37	K9001413	CLAMP;PIPE	COLLIER	2					

DATE	DEC. 26, 2006
1st EDITION	

Fig. 4480 ARTI. BOOM CYLINDER
VERIN DE ARTICULAIRE FLECHE

Serial No. ;

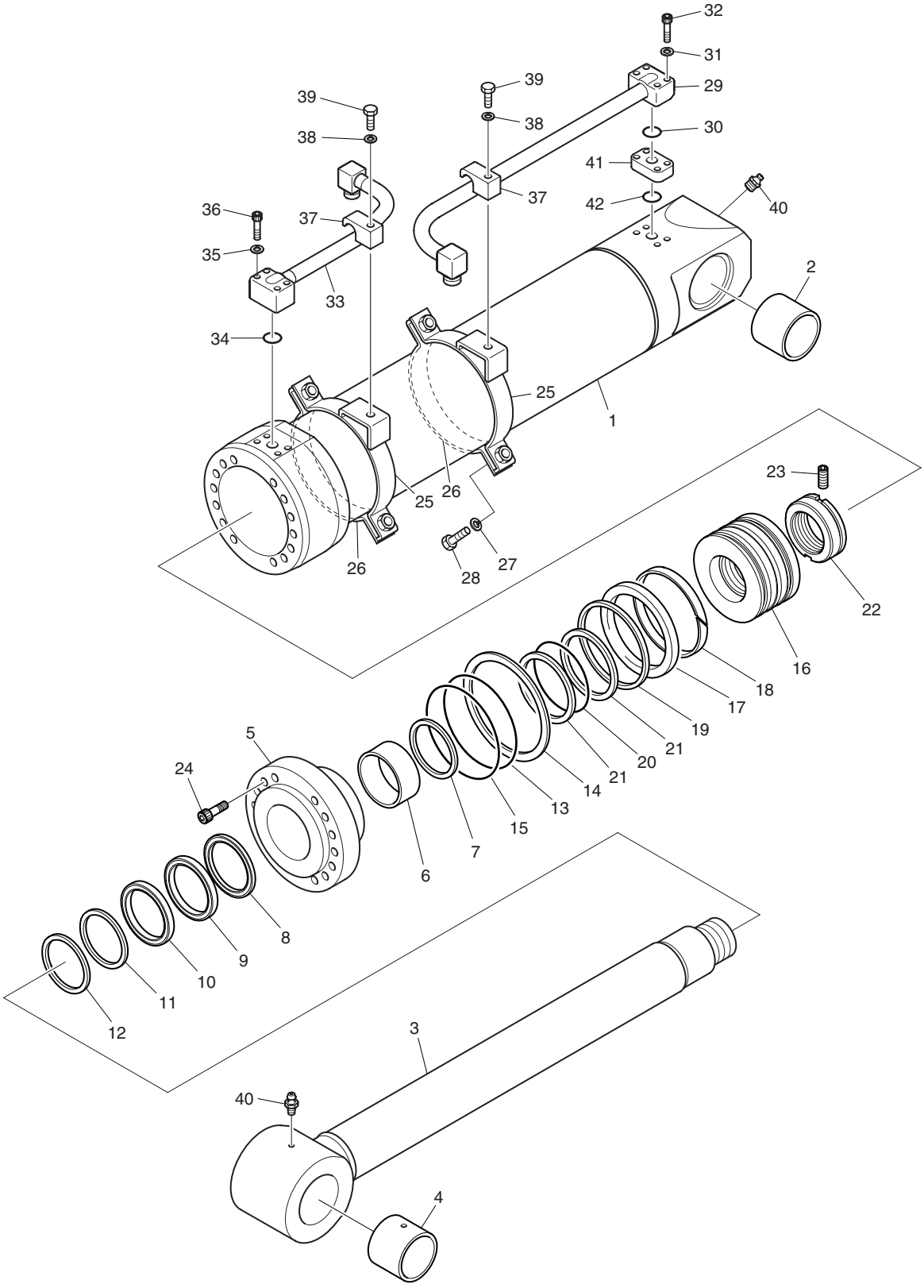

DATE	DEC. 26, 2006
1st EDITION	

Fig. 4480 ARTI. BOOM CYLINDER VERIN DE ARTICULAIRE FLECHE

Serial No. ;

Key No.	Part No.	Description	Description	Q'ty	S.C	Serial No.	ICA	Replaceable part	
								Part No.	Q'ty
4480-38	S5102903	WASHER;SPRING	RONDELLE ELASTIQUE	2					
39	S0565451	BOLT;HEX	BOULON A 6 PANS	2					
40	S6710032	NIPPLE;GREASE	MAMELON	2					
41	114-00292	SPACER	DOUILLE D'ECARTEMENT	1					
42	S8000281	O-RING	JOINT TORIQUE	1					
*	K9005072	SEAL KIT	KIT D'ETANCHEITE	1					

DATE	DEC. 26, 2006
1st EDITION	

Fig. 4490 ARM CYLINDER - ARM 2.1m (ARTI. BOOM) VERIN DE BALANCIER

Serial No. ;

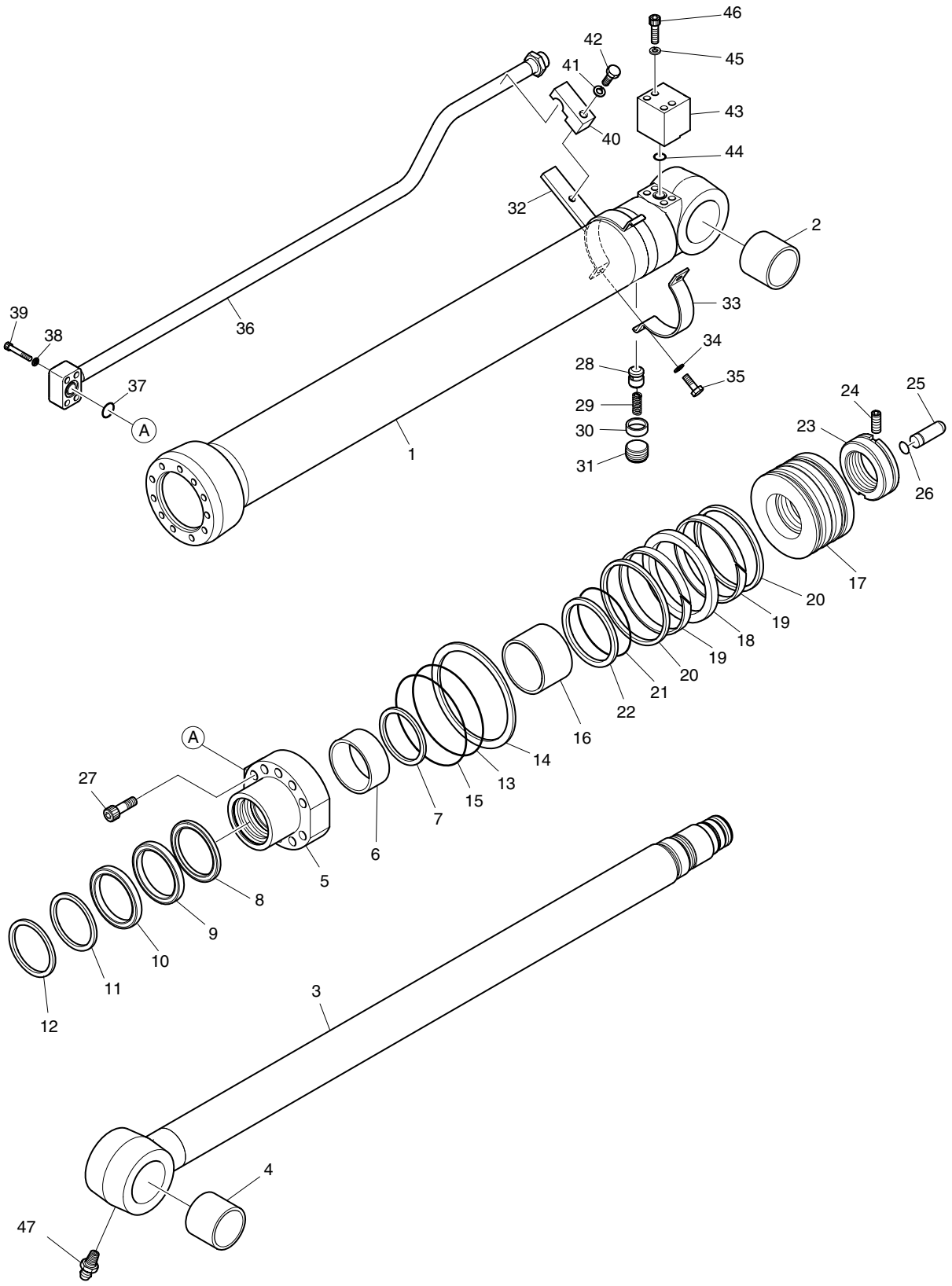

DATE	DEC. 26, 2006
1st EDITION	

Fig. 4490 ARM CYLINDER - ARM 2.1m (ARTI. BOOM) VERIN DE BALANCIER

Serial No. ;

Key No.	Part No.	Description	Description	Q'ty	S.C	Serial No.	ICA	Replaceable part	
								Part No.	Q'ty
4490--	K1008738	ARM CYLINDER 2.1m (ARTI)	VERIN DE BALANCIER	1					
1	K9005054	TUBE ASS'Y	TUYAU FLEXIBLE	1					
2	110-00241	BUSH	DOUILLE	1					
3	K9005055	ROD ASS'Y	ENSEMBLE TIGE	1					
4	110-00241	BUSH	DOUILLE	1					
5	K9004320	COVER;ROD	COUVERCLE	1					
6	110-00082	BUSH	DOUILLE	1					
7	115-00052	RING;RETAINING	BAGUE	1					
8	K9001385	SEAL;BUFFER	ETANCHEITE	1	K				
9	K9001386	U-PACKING	JOINT EN U	1	K				
10	K9001396	RING;BACK UP	BAGUE	1	K				
11	115-00060	WIPER;DUST	RACCORD ADAPTATEUR	1	K				
12	115-00050	RING;RETAINING	BAGUE	1					
13	S8011051	O-RING	JOINT TORIQUE	1	K				
14	1.180-00268	RING;BACK UP	BAGUE	1	K				
15	S8011101	O-RING	JOINT TORIQUE	1	K				
16	K9001387	RING;CUSHION	BAGUE	1					
17	K9004321	PISTON	PISTON	1					
18	K9001389	SEAL;SLIPPER	JOINT	1	K				
19	115-00056	RING;WEAR	BAGUE D'USURE	2	K				
20	K9001390	RING;DUST	BAGUE	2	K				
21	180-00247	O-RING	JOINT TORIQUE	1	K				
22	1.180-00269	RING;BACK-UP	BAGUE	2	K				
23	121-00043	NUT;PISTON	ECROU	1					
24	S3523836	SET;SCREW	ROUE	1					
25	424-00059	PLUNGER;CUSHION	PLONGEUR	1					
26	115-00081	RING;STOP	BAGUE D'ARRET	1					
27	S2219071	BOLT;HEX SOCKET	BOULON A 6 PANS CREUX	10					
28	1.420-00039	VALVE;CHECK	CAPTEUR	1					
29	1.131-00009	SPRING	RESSORT	1					
30	1.195-00022	SUPPORT;SPRING	SUPPORT	1					
31	2181-1116D3	PLUG;HEX SOCKET	BOUCHON	1					
32	K9005056	PIPE BAND ASS'Y	ENSEMBLE DE BANDE DE	1					
33	K9005048	BAND;PIPE	ATTACHE	1					
34	S5100603	WASHER;SPRING	RONDELLE ELASTIQUE	2					
35	S0558153	BOLT;HEX	BOULON A 6 PANS	2					
36	K9005057	PIPE ASS'Y	ENSEMBLE DE TUYAU	1					
37	S8000281	O-RING	JOINT TORIQUE	1					

DATE	DEC. 26, 2006
1st EDITION	

Fig. 4490 ARM CYLINDER - ARM 2.1m (ARTI. BOOM) VERIN DE BALANCIER

Serial No. ;

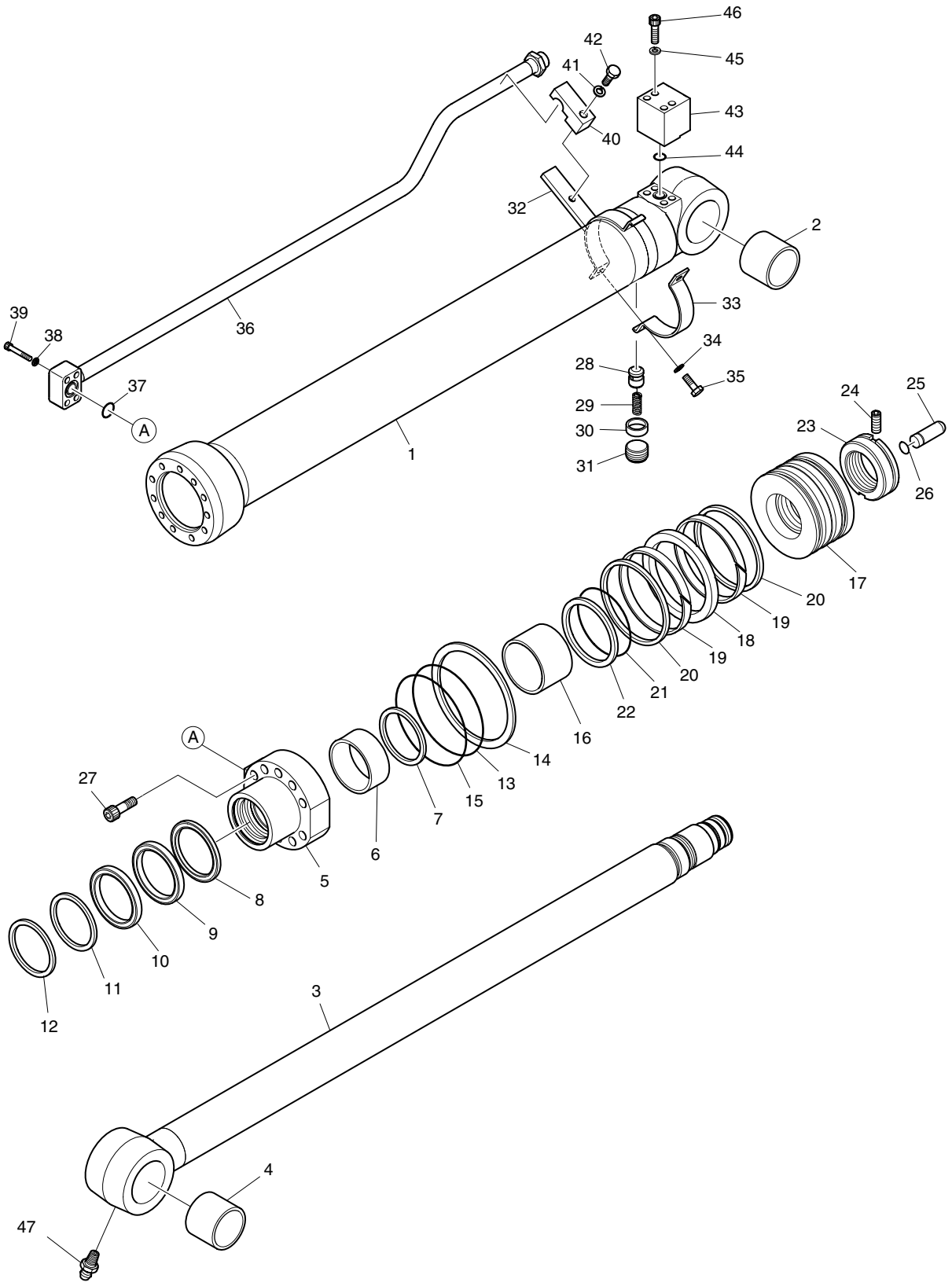

DATE	DEC. 26, 2006
1st EDITION	

Fig. 4490 ARM CYLINDER - ARM 2.1m (ARTI. BOOM)
VERIN DE BALANCIER

Serial No. ;

Key No.	Part No.	Description	Description	Q'ty	S.C	Serial No.	ICA	Replaceable part	
								Part No.	Q'ty
4490-38	S5100603	WASHER;SPRING	RONDELLE ELASTIQUE	4					
39	S2212761	BOLT;HEX SOCKET	BOULON A 6 PANS CREUX	4					
40	K9001413	CLAMP;PIPE	COLLIER	1					
41	S5102903	WASHER;SPRING	RONDELLE ELASTIQUE	1					
42	S0565451	BOLT;HEX	BOULON A 6 PANS	1					
43	K9001414	PORT;FLANGE	PORT;FLANGE	1					
44	S8000281	O-RING	JOINT TORIQUE	1					
45	S5100603	WASHER;SPRING	RONDELLE ELASTIQUE	4					
46	S2212961	BOLT;HEX SOCKET	BOULON A 6 PANS CREUX	4					
47	S6710032	NIPPLE;GREASE	MAMELON	1					
*	K9002306	SEAL KIT	KIT D'ETANCHEITE	1					

DATE	DEC. 26, 2006
1st EDITION	

Fig. 4500 ARM CYLINDER - ARM 2.5m (ARTI. BOOM) VERIN DE BALANCIER

Serial No. ;

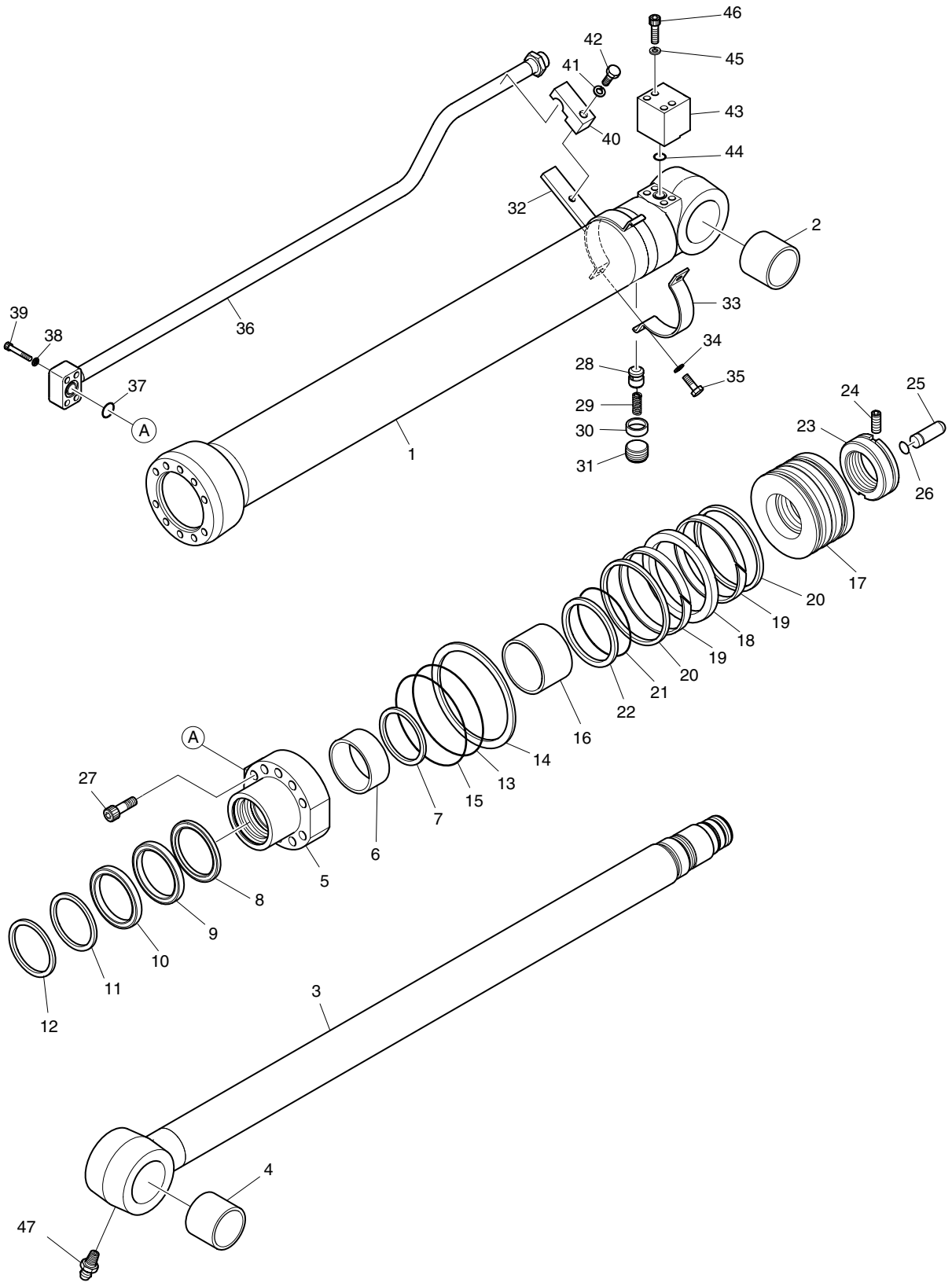

DATE	DEC. 26, 2006
1st EDITION	

Fig. 4500 ARM CYLINDER - ARM 2.5m (ARTI. BOOM) VERIN DE BALANCIER

Serial No. ;

Key No.	Part No.	Description	Description	Q'ty	S.C	Serial No.	ICA	Replaceable part	
								Part No.	Q'ty
4500--	K1008740	ARM CYLINDER-2.5m ARM	VERIN DE BALANCIER	1					
1	K9005073	TUBE ASS'Y	TUYAU FLEXIBLE	1					
2	110-00241	BUSH	DOUILLE	1					
3	K9005074	ROD ASS'Y	ENSEMBLE TIGE	1					
4	110-00241	BUSH	DOUILLE	1					
5	K9001400	COVER;ROD	COUVERCLE	1					
6	110-00097	DD-BUSH	COUSSINET	1					
7	K9001401	RING;RETAINING	BAGUE	1					
8	K9001402	SEAL;BUFFER	ETANCHEITE	1	K				
9	K9001403	U-PACKING	JOINT EN U	1	K				
10	K9001404	RING;BACK UP	BAGUE	1	K				
11	115-00084	WIPER;DUST	RACCORD ADAPTATEUR	1	K				
12	115-00063	RING;RETAINING	BAGUE	1					
13	S8011101	O-RING	JOINT TORIQUE	1	K				
14	K9001405	RING;BACK UP	BAGUE	1	K				
15	S8011151	O-RING	JOINT TORIQUE	1	K				
16	K9001406	RING;CUSHION	BAGUE	1					
17	K9001407	PISTON	PISTON	1					
18	K9001408	SEAL;SLIPPER	JOINT	1	K				
19	115-00085	RING;WEAR	BAGUE D'USURE	2	K				
20	K9001409	RING;DUST	BAGUE	2	K				
21	180-00276	O-RING	JOINT TORIQUE	1	K				
22	K9001410	RING;BACK UP	BAGUE	2	K				
23	K9004601	NUT;PISTION	ECROU	1					
24	1.120-00219	SCREW;SET	VIS	1					
25	424-00059	PLUNGER;CUSHION	PLONGEUR	1					
26	115-00081	RING;STOP	BAGUE D'ARRET	1					
27	S2222171	BOLT;HEX. SOCKET	BOULON A 6 PANS CREUX	10					
28	1.420-00039	VALVE;CHECK	CAPTEUR	1					
29	1.131-00009	SPRING	RESSORT	1					
30	1.195-00022	SUPPORT;SPRING	SUPPORT	1					
31	2181-1116D3	PLUG;HEX. SOCKET	BOUCHON	1					
32	K9001411	PIPE BAND ASS'Y	ENSEMBLE DE BANDE DE	1					
33	124-00085	BAND;PIPE	ATTACHE	1					
34	S5100603	WASHER;SPRING	RONDELLE ELASTIQUE	2					
35	S0558153	BOLT	BOULON	2					
36	K9005075	PIPE ASS'Y-R	ENSEMBLE DE TUYAU	1					
37	S8000281	O-RING	JOINT TORIQUE	1					

DATE	DEC. 26, 2006
1st EDITION	

Fig. 4500 ARM CYLINDER - ARM 2.5m (ARTI. BOOM) VERIN DE BALANCIER

Serial No. ;

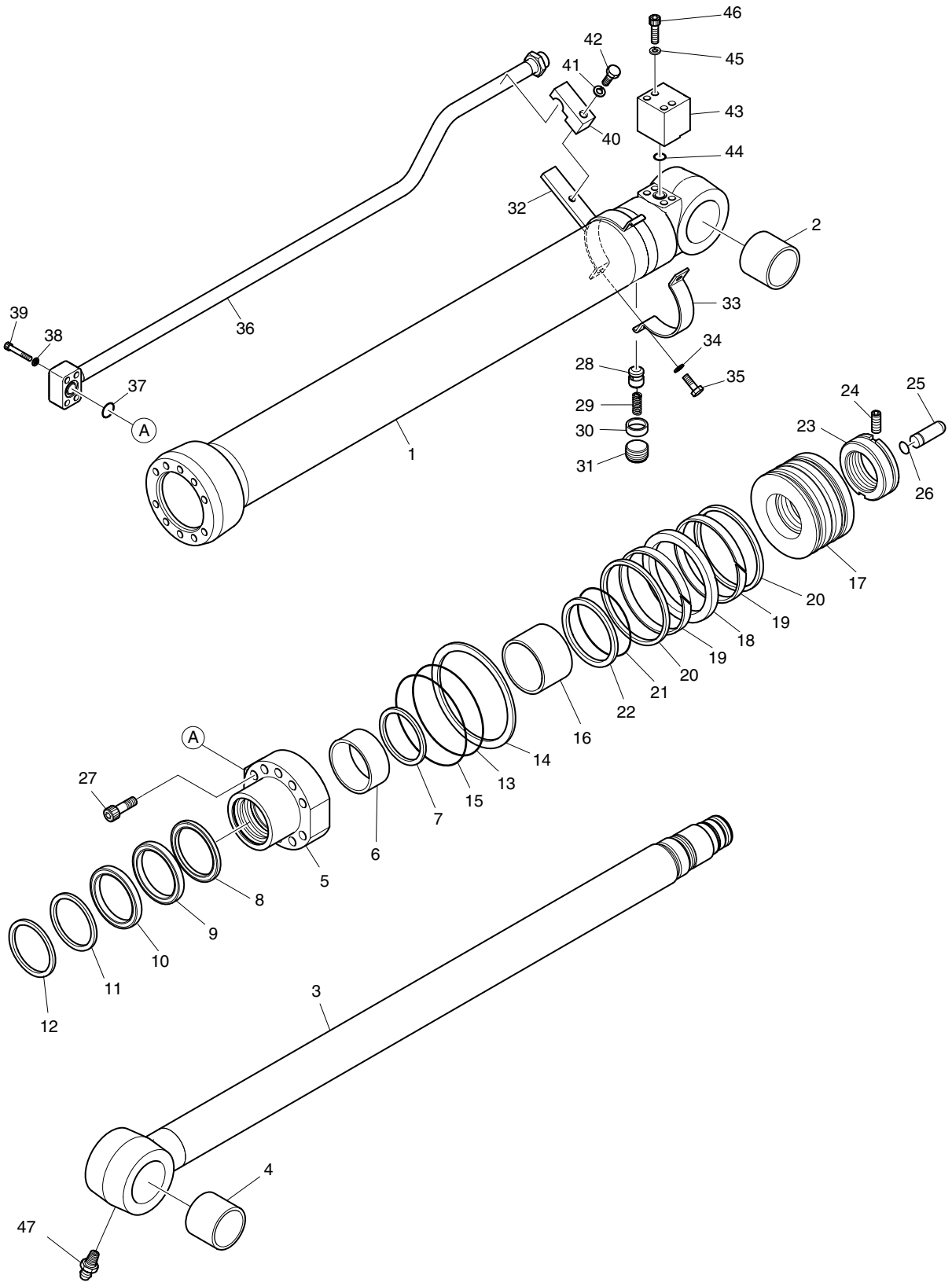

DATE	DEC. 26, 2006
1st EDITION	

Fig. 4500 ARM CYLINDER - ARM 2.5m (ARTI. BOOM) VERIN DE BALANCIER

Serial No. ;

Key No.	Part No.	Description	Description	Q'ty	S.C	Serial No.	ICA	Replaceable part	
								Part No.	Q'ty
4500-38	S5100603	WASHER;SPRING	RONDELLE ELASTIQUE	4					
39	S2212761	BOLT;HEX. SOCKET	BOULON A 6 PANS CREUX	4					
40	K9001413	CLAMP;PIPE	COLLIER	1					
41	S5102903	WASHER;SPRING	RONDELLE ELASTIQUE	1					
42	S0565451	BOLT	BOULON	1					
43	K9001414	PORT;FLANGE	PORT;FLANGE	1					
44	S8000281	O-RING	JOINT TORIQUE	1					
45	S5100603	WASHER;SPRING	RONDELLE ELASTIQUE	4					
46	S2212961	BOLT;HEX. SOCKET	BOULON A 6 PANS CREUX	4					
47	S6710032	NIPPLE;GREASE	MAMELON	1					
*	K9002308	SEAL KIT	KIT D'ETANCHEITE	1					

DATE	DEC. 26, 2006
1st EDITION	

Fig. 4510 BOOM CYLINDER - L.H. (LOCK VALVE) ARTI. VERIN DE FLECHE

Serial No. ;

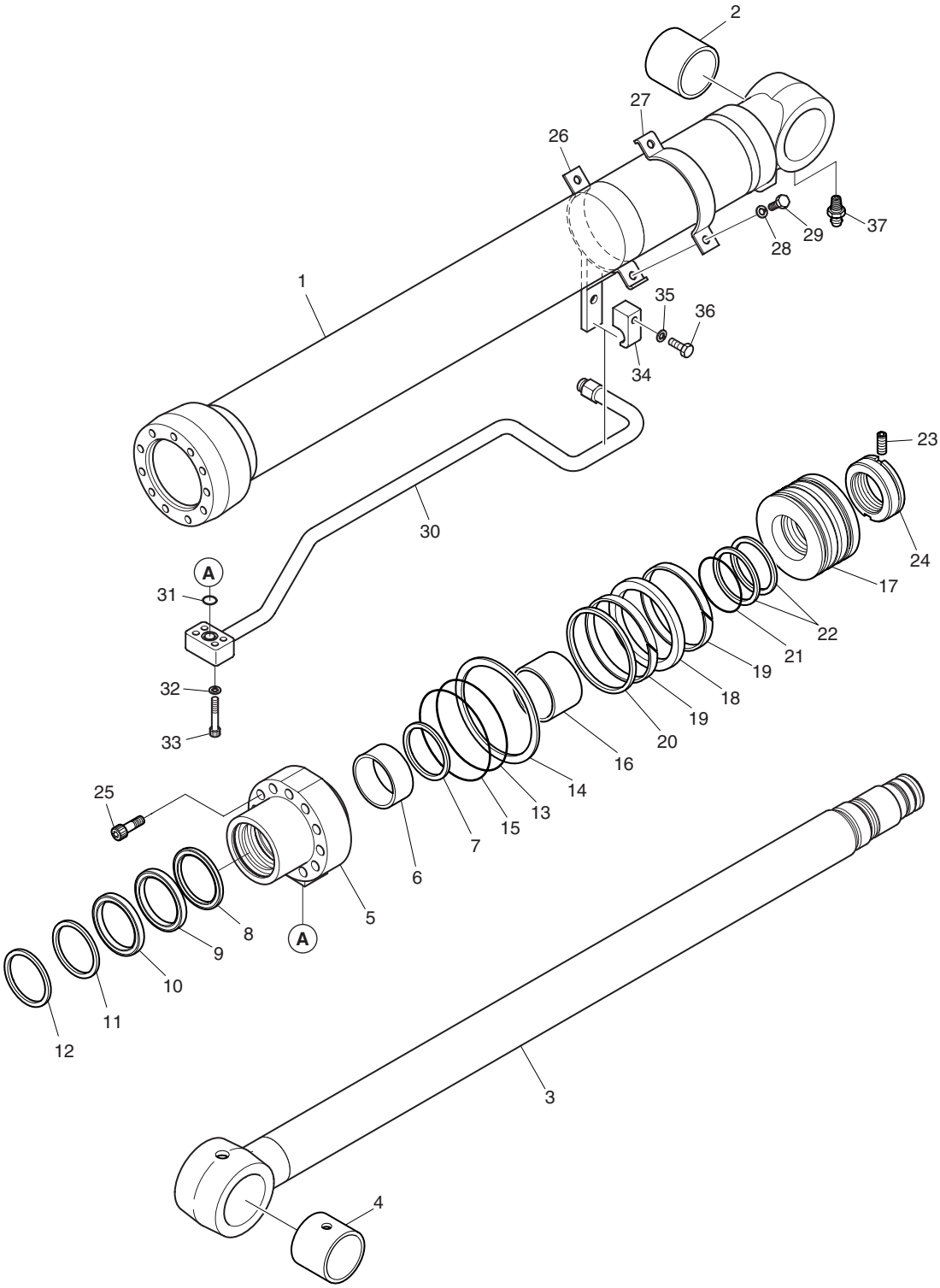

DATE	DEC. 26, 2006
1st EDITION	

Fig. 4510 BOOM CYLINDER - L.H. (LOCK VALVE) ARTI. VERIN DE FLECHE

Serial No. ;

Key No.	Part No.	Description	Description	Q'ty	S.C	Serial No.	ICA	Replaceable part	
								Part No.	Q'ty
4510--	K1008749B	CYLINDER;ARTI.BOOM-L.H	VERIN DE FLECHE	1					
1	K9005058	TUBE ASS'Y	TUYAU FLEXIBLE	1					
2	110-00244	BUSH	DOUILLE	1					
3	K9005059	ROD ASS'Y	ENSEMBLE TIGE	1					
4	110-00244	BUSH	DOUILLE	1					
5	K9001384	COVER;ROD	COUVERCLE	1					
6	110-00082	BUSH;DD	DOUILLE	1					
7	115-00052	RING;RETAINING	BAGUE	1					
8	K9001385	SEAL;BUFFER	ETANCHEITE	1	K				
9	K9001386	PACKING;U	EMBALLAGE	1	K				
10	K9001396	RING;BACK UP	BAGUE	1	K				
11	115-00060	WIPER;DUST	RACCORD ADAPTATEUR	1	K				
12	115-00050	RING;RETAINING	BAGUE	1					
13	S8011051	O-RING	JOINT TORIQUE	1	K				
14	1.180-00268	RING;BACK UP	BAGUE	1	K				
15	S8011101	O-RING	JOINT TORIQUE	1	K				
16	K9001387	RING;CUSHION	BAGUE	1					
17	K9001388	PISTON	PISTON	1					
18	K9001389	SEAL;SLIPPER	JOINT	1	K				
19	115-00056	RING;WEAR	BAGUE D'USURE	2	K				
20	K9001390	RING;SLYD	BAGUE	1	K				
21	180-00247	O-RING	JOINT TORIQUE	1	K				
22	1.180-00269	RING;BACK UP	BAGUE	2	K				
23	121-00043	NUT;PISTON	ECROU	1					
24	S3523836	SCREW;SET	VIS	1					
25	S2219071	BOLT;SOCKET	BOULON A 6 PANS CREUX	11					
26	K9005067	PIPE BAND ASS'Y	ENSEMBLE DE BANDE DE	1					
27	124-00055	BAND;PIPE	ATTACHE	1					
28	S5100603	WASHER;SPRING	RONDELLE ELASTIQUE	2					
29	S0558153	BOLT;HEX	BOULON A 6 PANS	2					
30	K9005069	PIPE ASS'Y-R(L.H)	ENSEMBLE DE TUYAU	1					
31	S8000201	O-RING	JOINT TORIQUE	1					
32	S5100503	WASHER;SPRING	RONDELLE ELASTIQUE	4					
33	S2209561	BOLT;SOCKET	BOULON A 6 PANS CREUX	4					
34	K9001435	CLAMP;PIPE	COLLIER	1					
35	S5100603	WASHER;SPRING	RONDELLE ELASTIQUE	1					
36	S0558463	BOLT;HEX	BOULON A 6 PANS	1					
37	S6710032	NIPPLE;GREASE	MAMELON	1					

DATE	DEC. 26, 2006
1st EDITION	

Fig. 4510 BOOM CYLINDER - L.H. (LOCK VALVE) ARTI. VERIN DE FLECHE

Serial No. ;

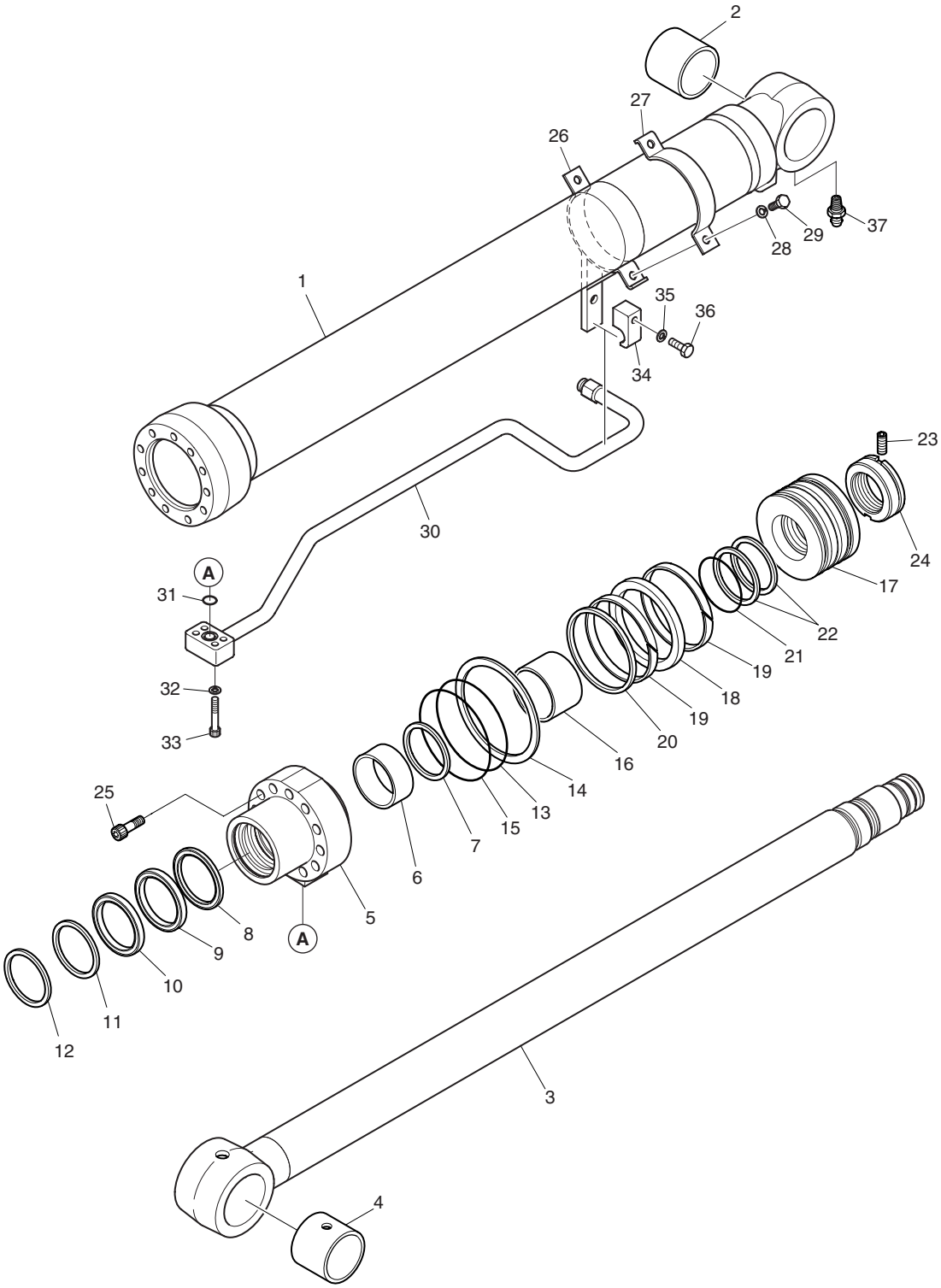

DATE	DEC. 26, 2006
1st EDITION	

Fig. 4510 BOOM CYLINDER - L.H. (LOCK VALVE) ARTI. VERIN DE FLECHE

Serial No. ;

Key No.	Part No.	Description	Description	Q'ty	S.C	Serial No.	ICA	Replaceable part	
								Part No.	Q'ty
4510-*	K9002306	SEAL KIT	KIT D'ETANCHEITE	1					

DATE	DEC. 26, 2006
1st EDITION	

Fig. 4520 BOOM CYLINDER - R.H. (LOCK VALVE) ARTI. VERIN DE FLECHE

Serial No. ;

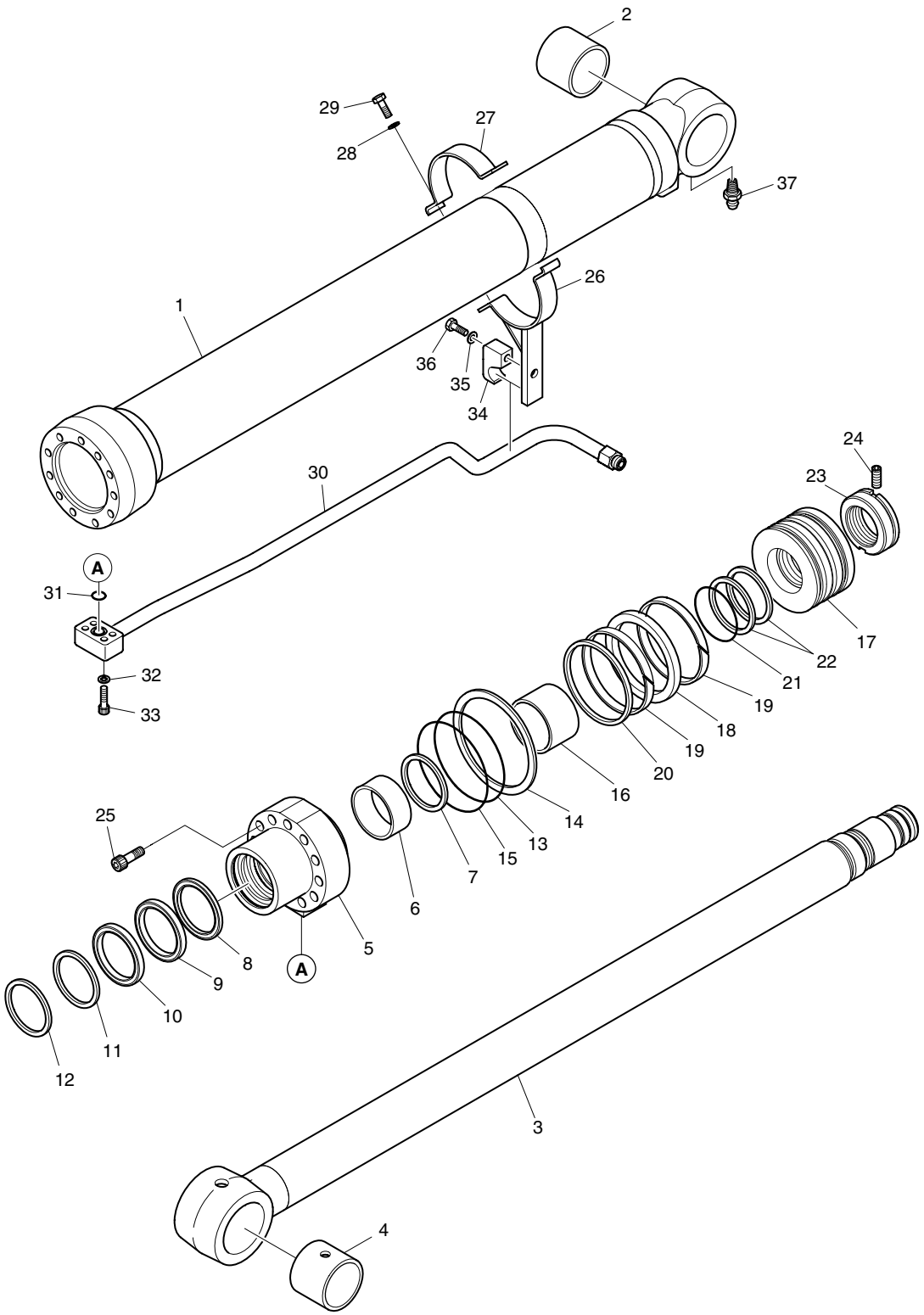

DATE	DEC. 26, 2006
1st EDITION	

Fig. 4520 BOOM CYLINDER - R.H. (LOCK VALVE) ARTI. VERIN DE FLECHE

Serial No. ;

Key No.	Part No.	Description	Description	Q'ty	S.C	Serial No.	ICA	Replaceable part	
								Part No.	Q'ty
4520--	K1008750B	CYLINDER;ARTI.BOOM-R.H	VERIN DE FLECHE	1					
1	K9005058	TUBE ASS'Y	TUYAU FLEXIBLE	1					
2	110-00244	BUSH	DOUILLE	1					
3	K9005059	ROD ASS'Y	ENSEMBLE TIGE	1					
4	110-00244	BUSH	DOUILLE	1					
5	K9001384	COVER;ROD	COUVERCLE	1					
6	110-00082	BUSH;DD	DOUILLE	1					
7	115-00052	RING;RETAINING	BAGUE	1					
8	K9001385	SEAL;BUFFER	ETANCHEITE	1	K				
9	K9001386	PACKING;U	EMBALLAGE	1	K				
10	K9001396	RING;BACK UP	BAGUE	1	K				
11	115-00060	WIPER;DUST	RACCORD ADAPTATEUR	1	K				
12	115-00050	RING;RETAINING	BAGUE	1					
13	S8011051	O-RING	JOINT TORIQUE	1	K				
14	1.180-00268	RING;BACK UP	BAGUE	1	K				
15	S8011101	O-RING	JOINT TORIQUE	1	K				
16	K9001387	RING;CUSHION	BAGUE	1					
17	K9001388	PISTON	PISTON	1					
18	K9001389	SEAL;SLIPPER	JOINT	1	K				
19	115-00056	RING;WEAR	BAGUE D'USURE	2	K				
20	K9001390	RING;SLYD	BAGUE	1	K				
21	180-00247	O-RING	JOINT TORIQUE	1	K				
22	1.180-00269	RING;BACK UP	BAGUE	2	K				
23	121-00043	NUT;PISTON	ECROU	1					
24	S3523836	SCREW;SET	VIS	1					
25	S2219071	BOLT;SOCKET	BOULON A 6 PANS CREUX	11					
26	K9005067	PIPE BAND ASS'Y	ENSEMBLE DE BANDE DE	1					
27	124-00055	BAND;PIPE	ATTACHE	1					
28	S5100603	WASHER;SPRING	RONDELLE ELASTIQUE	2					
29	S0558153	BOLT;HEX	BOULON A 6 PANS	2					
30	K9005068	PIPE ASS'Y-R(R.H)	ENSEMBLE DE TUYAU	1					
31	S8000201	O-RING	JOINT TORIQUE	1					
32	S5100503	WASHER;SPRING	RONDELLE ELASTIQUE	4					
33	S2209561	BOLT;SOCKET	BOULON A 6 PANS CREUX	4					
34	K9001435	CLAMP;PIPE	COLLIER	1					
35	S5100603	WASHER;SPRING	RONDELLE ELASTIQUE	1					
36	S0558463	BOLT;HEX	BOULON A 6 PANS	1					
37	S6710032	NIPPLE;GREASE	MAMELON	1					

DATE	DEC. 26, 2006
1st EDITION	

Fig. 4520 BOOM CYLINDER - R.H. (LOCK VALVE) ARTI. VERIN DE FLECHE

Serial No. ;

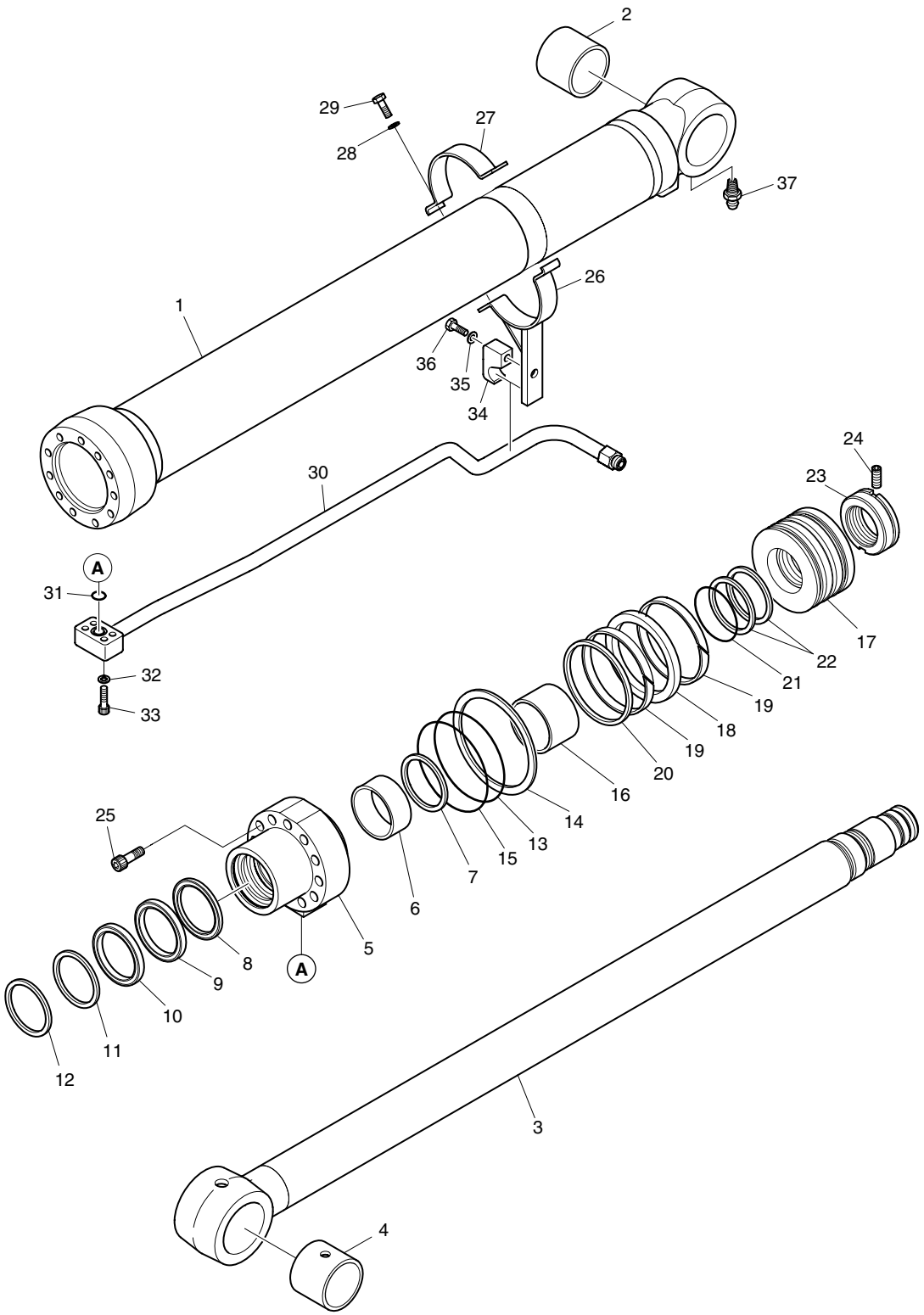

DATE	DEC. 26, 2006
1st EDITION	

Fig. 4520 BOOM CYLINDER - R.H. (LOCK VALVE) ARTI. VERIN DE FLECHE

Serial No. ;

Key No.	Part No.	Description	Description	Q'ty	S.C	Serial No.	ICA	Replaceable part	
								Part No.	Q'ty
4520-*	K9002306	SEAL KIT	KIT D'ETANCHEITE	1					

DATE	DEC. 26, 2006
1st EDITION	

Fig. 4530 ARTI. BOOM CYLINDER - LOCK VALVE
VERIN DE ARTICULAIRE FLECHE

Serial No. ;

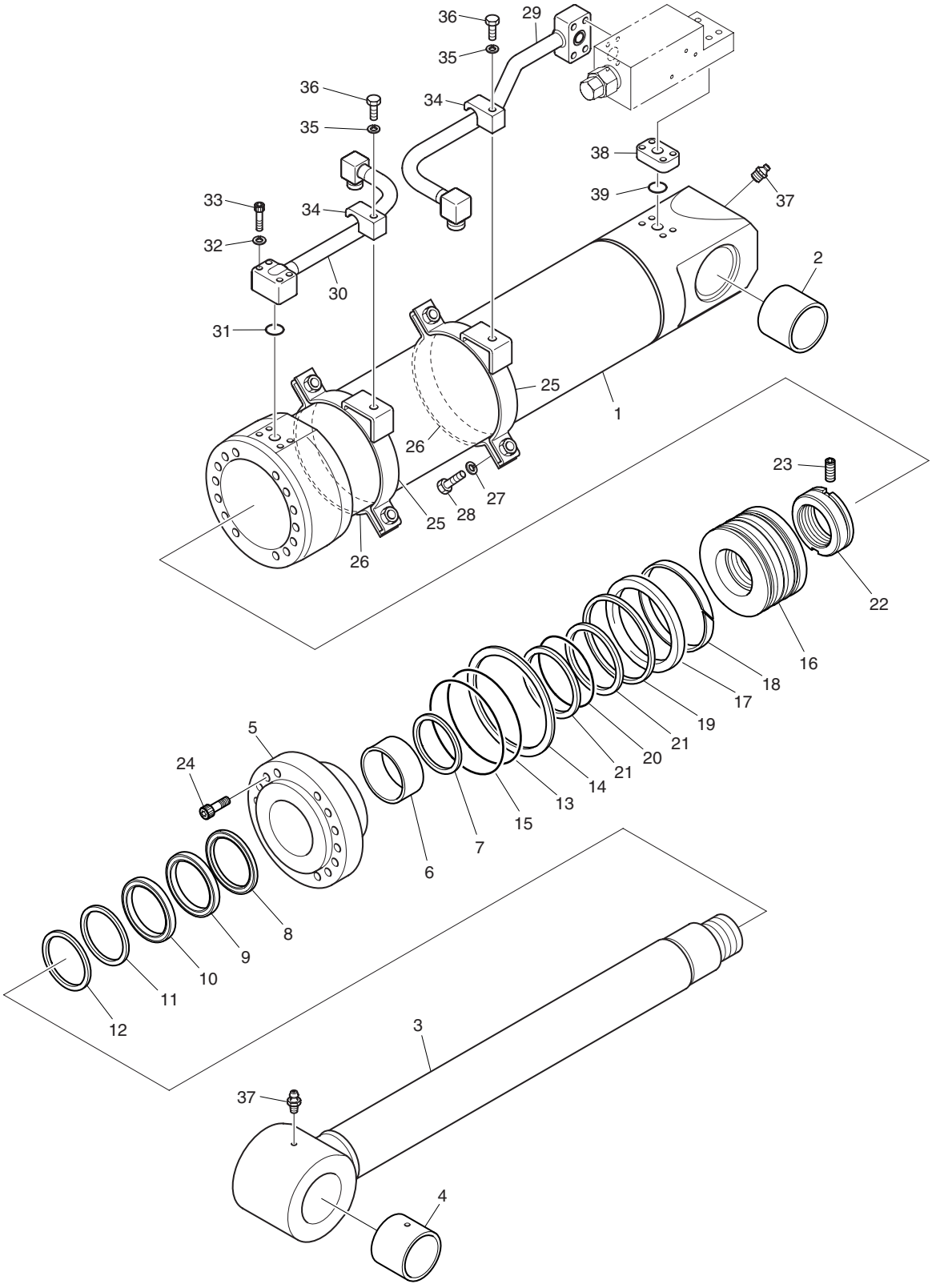

DATE	DEC. 26, 2006
1st EDITION	

Fig. 4530 ARTI. BOOM CYLINDER - LOCK VALVE
VERIN DE ARTICULAIRE FLECHE

Serial No. ;

Key No.	Part No.	Description	Description	Q'ty	S.C	Serial No.	ICA	Replaceable part	
								Part No.	Q'ty
4530--	K1008751A	CYLINDER;ARTI(LOCK VALVE)	VERIN DE FLECHE	1					
1	K9005060	TUBE ASS'Y	TUYAU FLEXIBLE	1					
2	K1008572	BUSH	DOUILLE	1					
3	K9005061	ROD ASS'Y	ENSEMBLE TIGE	1					
4	K1008572	BUSH	DOUILLE	1					
5	K9005062	COVER;ROD	COUVERCLE	1					
6	110-00080	BUSH;DD	DOUILLE	1					
7	115-00063	RING;RETAINING	BAGUE	1					
8	1.180-00657	SEAL;BUFFER	ETANCHEITE	1	K				
9	K9001153	PACKING;U	EMBALLAGE	1	K				
10	K9001154	RING;BACK UP	BAGUE	1	K				
11	115-00072	WIPER;DUST	RACCORD ADAPTATEUR	1	K				
12	115-00073	RING;RETAINING	BAGUE	1					
13	S8011451	O-RING	JOINT TORIQUE	1	K				
14	K9001164	RING;BACK UP	BAGUE	1	K				
15	180-00363	O-RING	JOINT TORIQUE	1	K				
16	K9005063	PISTON	PISTON	1					
17	180-00360	SEAL;SLIPPER	JOINT	1	K				
18	K9005049	RING;WEAR	BAGUE D'USURE	1	K				
19	115-00122	RING;SLYD	BAGUE	1	K				
20	S8010751	O-RING	JOINT TORIQUE	1	K				
21	1.180-00663	RING;BACK UP	BAGUE	2	K				
22	121-00055	NUT;PISTON	ECROU	1					
23	S3523836	SCREW;SET	VIS	1					
24	S2221873	BOLT;SOCKET	BOULON A 6 PANS CREUX	14					
25	K9005064	PIPE BAND ASS'Y	ENSEMBLE DE BANDE DE	2					
26	124-00157	BAND;PIPE	ATTACHE	2					
27	S5100603	WASHER;SPRING	RONDELLE ELASTIQUE	4					
28	S0558153	BOLT;HEX	BOULON A 6 PANS	4					
29	K9005080	PIPE ASS'Y-H	ENSEMBLE DE TUYAU	1					
30	K9005066	PIPE ASS'Y-R	ENSEMBLE DE TUYAU	1					
31	S8000281	O-RING	JOINT TORIQUE	1					
32	S5100603	WASHER;SPRING	RONDELLE ELASTIQUE	4					
33	S2212761	BOLT;SOCKET	BOULON A 6 PANS CREUX	4					
34	K9001413	CLAMP;PIPE	COLLIER	2					
35	S5102903	WASHER;SPRING	RONDELLE ELASTIQUE	2					
36	S0565451	BOLT;HEX	BOULON A 6 PANS	2					
37	S6710032	NIPPLE;GREASE	MAMELON	2					

DATE	DEC. 26, 2006
1st EDITION	

Fig. 4530 ARTI. BOOM CYLINDER - LOCK VALVE
VERIN DE ARTICULAIRE FLECHE

Serial No. ;

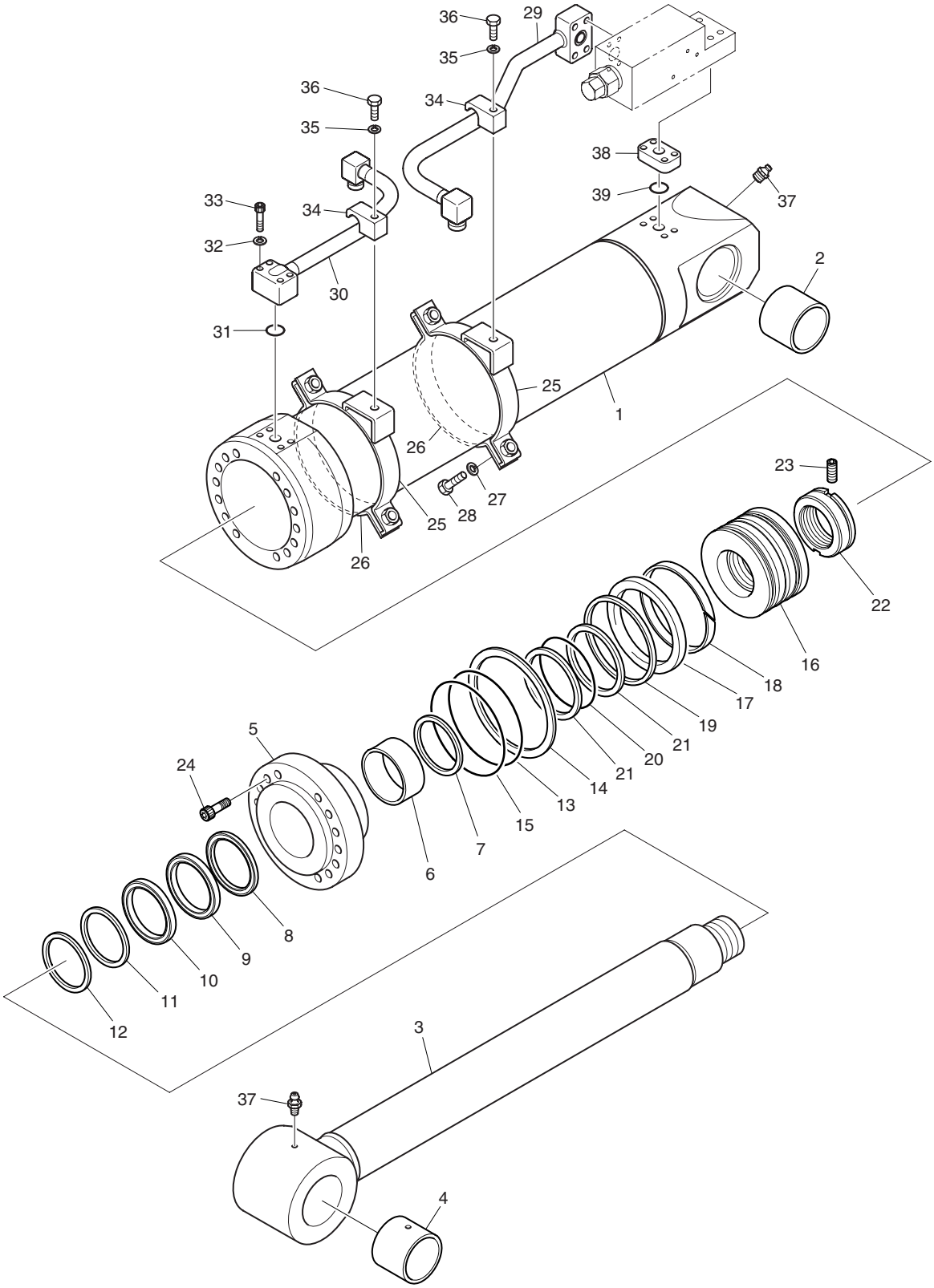

DATE	DEC. 26, 2006
1st EDITION	

Fig. 4530 ARTI. BOOM CYLINDER - LOCK VALVE
VERIN DE ARTICULAIRE FLECHE

Serial No. ;

Key No.	Part No.	Description	Description	Q'ty	S.C	Serial No.	ICA	Replaceable part	
								Part No.	Q'ty
4530-38	114-00292	SPACER	DOUILLE D'ECARTEMENT	1					
39	S8000281	O-RING	JOINT TORIQUE	1					
*	K9005072	SEAL KIT	KIT D'ETANCHEITE	1					

DATE	DEC. 26, 2006
1st EDITION	

Fig. 4540 ARM CYLINDER - ARM 2.1m (ARTI) L/V
VERIN DE BALANCIER

Serial No. ;

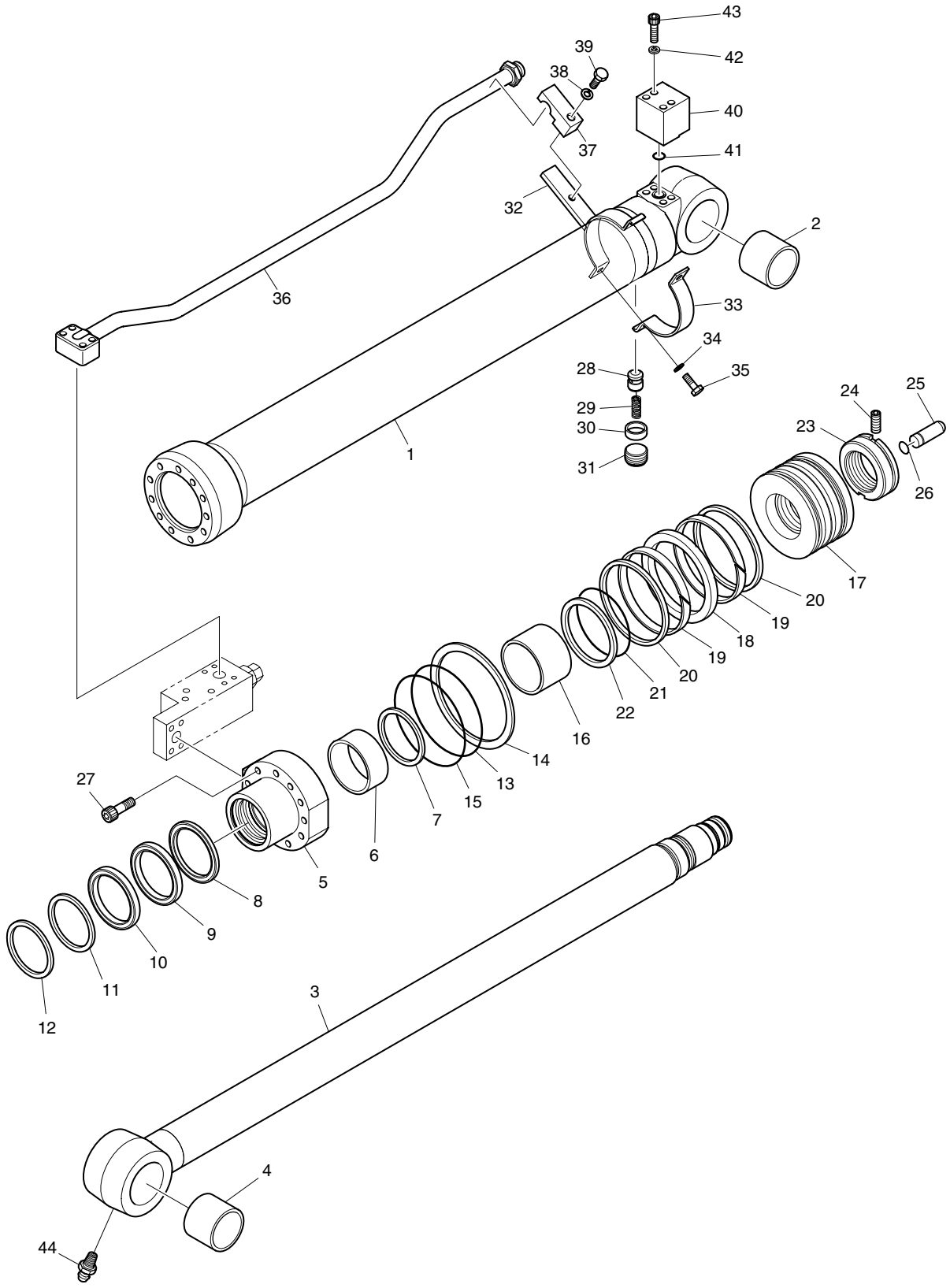

DATE	DEC. 26, 2006
1st EDITION	

Fig. 4540 ARM CYLINDER - ARM 2.1m (ARTI) L/V
VERIN DE BALANCIER

Serial No. ;

Key No.	Part No.	Description	Description	Q'ty	S.C	Serial No.	ICA	Replaceable part	
								Part No.	Q'ty
4540--	K1008752	ARM CYLINDER-2.1m (ARTI)	VERIN DE BALANCIER	1					
1	K9005076	TUBE ASS'Y	TUYAU FLEXIBLE	1					
2	110-00241	BUSH	DOUILLE	1					
3	K9005055	ROD ASS'Y	ENSEMBLE TIGE	1					
4	110-00241	BUSH	DOUILLE	1					
5	K9004320	COVER;ROD	COUVERCLE	1					
6	110-00082	BUSH	DOUILLE	1					
7	115-00052	RING;RETAINING	BAGUE	1					
8	K9001385	SEAL;BUFFER	ETANCHEITE	1	K				
9	K9001386	U-PACKING	JOINT EN U	1	K				
10	K9001396	RING;BACK UP	BAGUE	1	K				
11	115-00060	WIPER;DUST	RACCORD ADAPTATEUR	1	K				
12	115-00050	RING;RETAINING	BAGUE	1					
13	S8011051	O-RING	JOINT TORIQUE	1	K				
14	1.180-00268	RING;BACK UP	BAGUE	1	K				
15	S8011101	O-RING	JOINT TORIQUE	1	K				
16	K9001387	RING;CUSHION	BAGUE	1					
17	K9004321	PISTON	PISTON	1					
18	K9001389	SEAL;SLIPPER	JOINT	1	K				
19	115-00056	RING;WEAR	BAGUE D'USURE	2	K				
20	K9001390	RING;DUST	BAGUE	2	K				
21	180-00247	O-RING	JOINT TORIQUE	1	K				
22	1.180-00269	RING;BACK-UP	BAGUE	2	K				
23	121-00043	NUT;PISTON	ECROU	1					
24	S3523836	SET;SCREW	ROUE	1					
25	424-00059	PLUNGER;CUSHION	PLONGEUR	1					
26	115-00081	RING;STOP	BAGUE D'ARRET	1					
27	S2219071	BOLT;HEX SOCKET	BOULON A 6 PANS CREUX	11					
28	1.420-00039	VALVE;CHECK	CAPTEUR	1					
29	1.131-00009	SPRING	RESSORT	1					
30	1.195-00022	SUPPORT;SPRING	SUPPORT	1					
31	2181-1116D3	PLUG;HEX SOCKET	BOUCHON	1					
32	K9005056	PIPE BAND ASS'Y	ENSEMBLE DE BANDE DE	1					
33	K9005048	BAND;PIPE	ATTACHE	1					
34	S5100603	WASHER;SPRING	RONDELLE ELASTIQUE	2					
35	S0558153	BOLT;HEX	BOULON A 6 PANS	2					
36	K9005077	PIPE ASS'Y	ENSEMBLE DE TUYAU	1					
37	K9001413	CLAMP;PIPE	COLLIER	1					

DATE	DEC. 26, 2006
1st EDITION	

Fig. 4540 ARM CYLINDER - ARM 2.1m (ARTI) L/V
VERIN DE BALANCIER

Serial No. ;

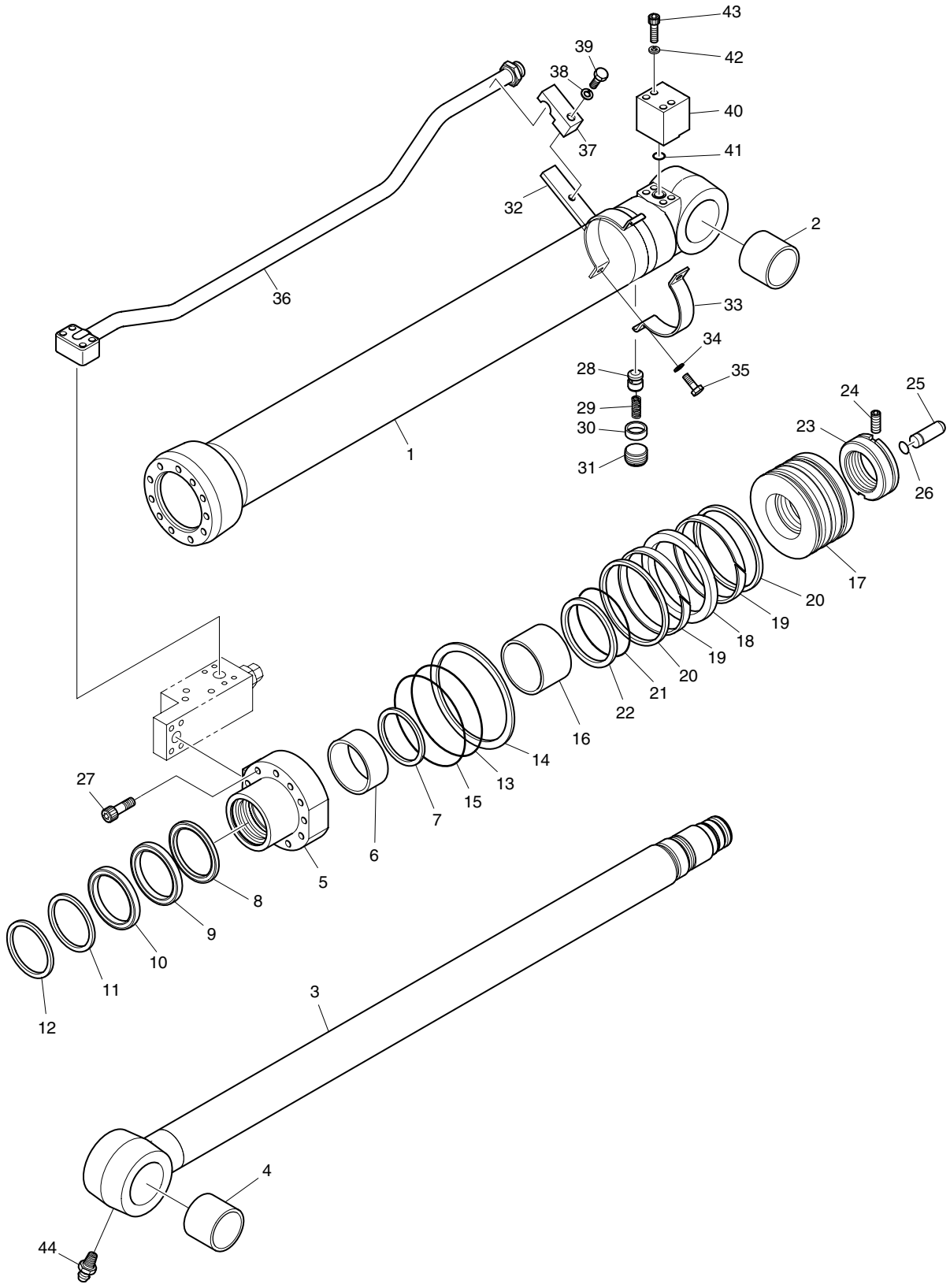

DATE	DEC. 26, 2006
1st EDITION	

Fig. 4540 ARM CYLINDER - ARM 2.1m (ARTI) L/V
VERIN DE BALANCIER

Serial No. ;

Key No.	Part No.	Description	Description	Q'ty	S.C	Serial No.	ICA	Replaceable part	
								Part No.	Q'ty
4540-38	S5102903	WASHER;SPRING	RONDELLE ELASTIQUE	1					
39	S0565451	BOLT;HEX	BOULON A 6 PANS	1					
40	K9001414	PORT;FLANGE	PORT;FLANGE	1					
41	S8000281	O-RING	JOINT TORIQUE	1					
42	S5100603	WASHER;SPRING	RONDELLE ELASTIQUE	4					
43	S2212961	BOLT;HEX SOCKET	BOULON A 6 PANS CREUX	4					
44	S6710032	NIPPLE;GREASE	MAMELON	1					
*	K9002306	SEAL KIT	KIT D'ETANCHEITE	1					

DATE	DEC. 26, 2006
1st EDITION	

Fig. 4550 ARM CYLINDER - ARM 2.5m (ARTI) L/V
VERIN DE BALANCIER

Serial No. ;

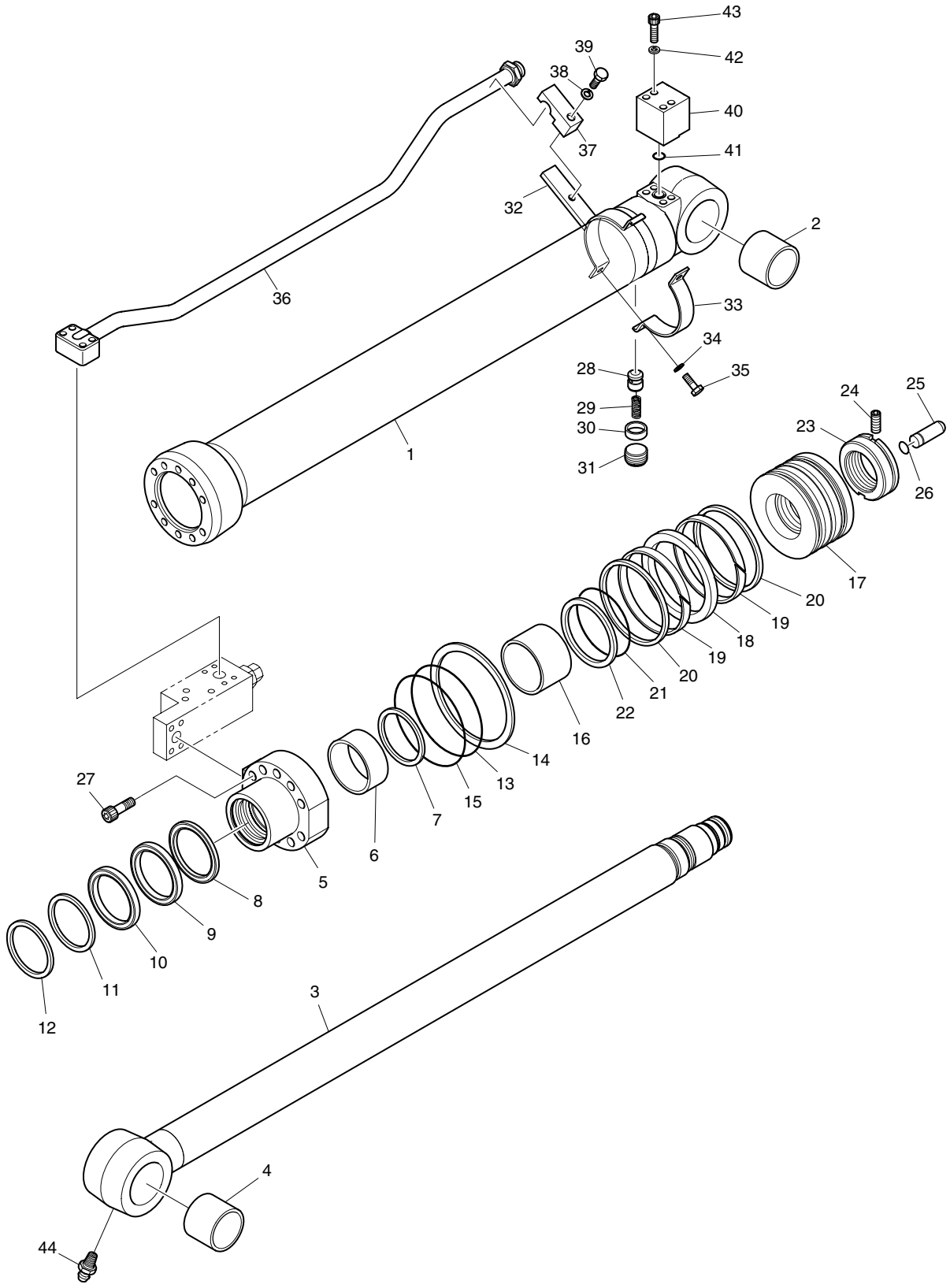

DATE	DEC. 26, 2006
1st EDITION	

Fig. 4550 ARM CYLINDER - ARM 2.5m (ARTI) L/V
VERIN DE BALANCIER

Serial No. ;

Key No.	Part No.	Description	Description	Q'ty	S.C	Serial No.	ICA	Replaceable part	
								Part No.	Q'ty
4550--	K1008753	ARM CYLINDER-2.5m ARM	VERIN DE BALANCIER	1					
1	K9005078	TUBE ASS'Y	TUYAU FLEXIBLE	1					
2	110-00241	BUSH	DOUILLE	1					
3	K9005074	ROD ASS'Y	ENSEMBLE TIGE	1					
4	110-00241	BUSH	DOUILLE	1					
5	K9001400	COVER;ROD	COUVERCLE	1					
6	110-00097	DD-BUSH	COUSSINET	1					
7	K9001401	RING;RETAINING	BAGUE	1					
8	K9001402	SEAL;BUFFER	ETANCHEITE	1	K				
9	K9001403	U-PACKING	JOINT EN U	1	K				
10	K9001404	RING;BACK UP	BAGUE	1	K				
11	115-00084	WIPER;DUST	RACCORD ADAPTATEUR	1	K				
12	115-00063	RING;RETAINING	BAGUE	1					
13	S8011101	O-RING	JOINT TORIQUE	1	K				
14	K9001405	RING;BACK UP	BAGUE	1	K				
15	S8011151	O-RING	JOINT TORIQUE	1	K				
16	K9001406	RING;CUSHION	BAGUE	1					
17	K9001407	PISTON	PISTON	1					
18	K9001408	SEAL;SLIPPER	JOINT	1	K				
19	115-00085	RING;WEAR	BAGUE D'USURE	2	K				
20	K9001409	RING;DUST	BAGUE	2	K				
21	180-00276	O-RING	JOINT TORIQUE	1	K				
22	K9001410	RING;BACK UP	BAGUE	2	K				
23	K9004601	NUT;PISTION	ECROU	1					
24	1.120-00219	SCREW;SET	VIS	1					
25	424-00059	PLUNGER;CUSHION	PLONGEUR	1					
26	115-00081	RING;STOP	BAGUE D'ARRET	1					
27	S2222171	BOLT;HEX. SOCKET	BOULON A 6 PANS CREUX	10					
28	1.420-00039	VALVE;CHECK	CAPTEUR	1					
29	1.131-00009	SPRING	RESSORT	1					
30	1.195-00022	SUPPORT;SPRING	SUPPORT	1					
31	2181-1116D3	PLUG;HEX. SOCKET	BOUCHON	1					
32	K9001411	PIPE BAND ASS'Y	ENSEMBLE DE BANDE DE	1					
33	124-00085	BAND;PIPE	ATTACHE	1					
34	S5100603	WASHER;SPRING	RONDELLE ELASTIQUE	2					
35	S0558153	BOLT	BOULON	2					
36	K9005079	PIPE ASS'Y-R	ENSEMBLE DE TUYAU	1					
37	K9001413	CLAMP;PIPE	COLLIER	1					

DATE	DEC. 26, 2006
1st EDITION	

Fig. 4550 ARM CYLINDER - ARM 2.5m (ARTI) L/V
VERIN DE BALANCIER

Serial No. ;

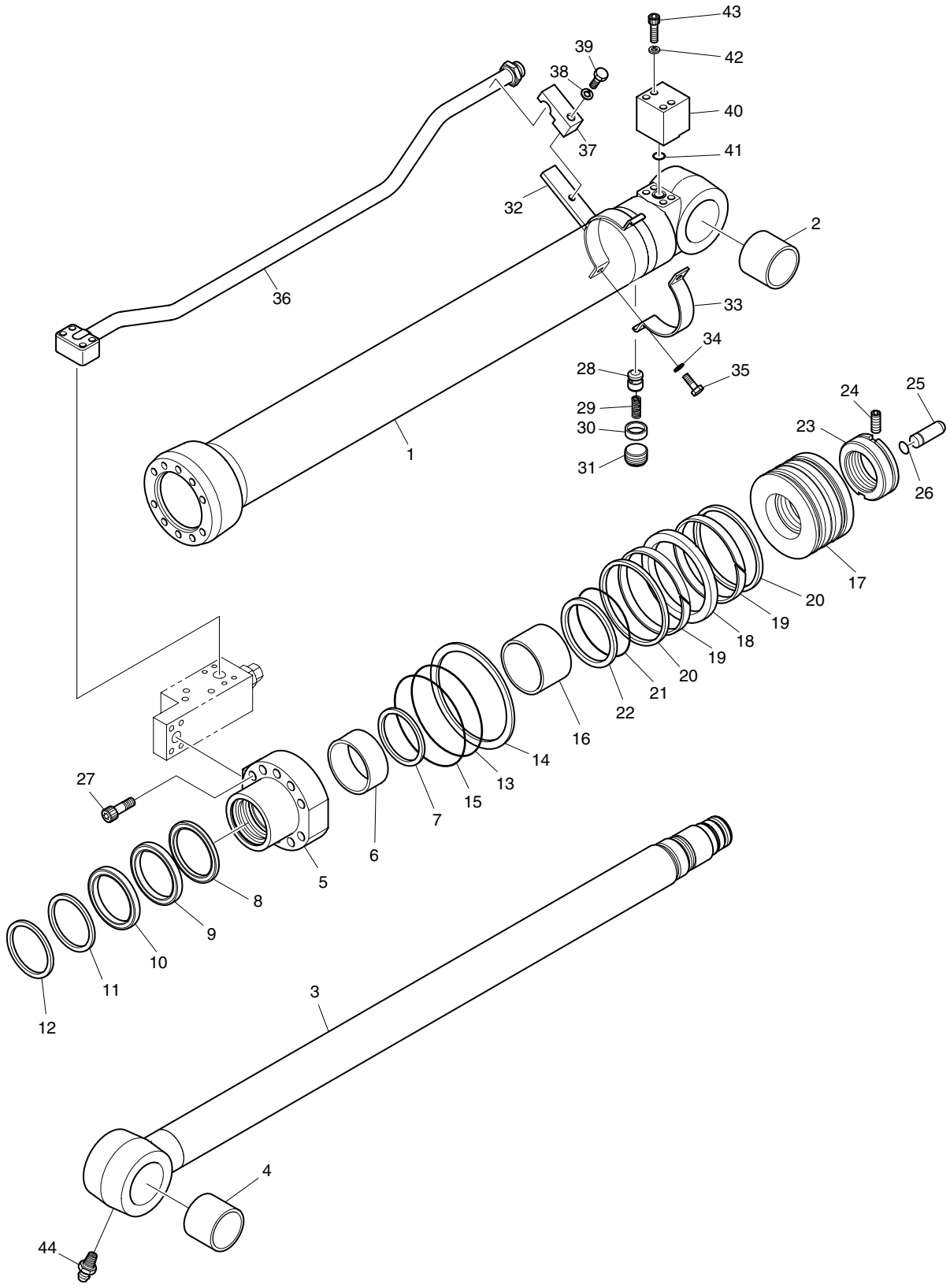

DATE	DEC. 26, 2006
1st EDITION	

Fig. 4550 ARM CYLINDER - ARM 2.5m (ARTI) L/V
VERIN DE BALANCIER

Serial No. ;

Key No.	Part No.	Description	Description	Q'ty	S.C	Serial No.	ICA	Replaceable part	
								Part No.	Q'ty
4550-38	S5102903	WASHER;SPRING	RONDELLE ELASTIQUE	1					
39	S0565451	BOLT	BOULON	1					
40	K9001414	PORT;FLANGE	PORT;FLANGE	1					
41	S8000281	O-RING	JOINT TORIQUE	1					
42	S5100603	WASHER;SPRING	RONDELLE ELASTIQUE	4					
43	S2212961	BOLT;HEX. SOCKET	BOULON A 6 PANS CREUX	4					
44	S6710032	NIPPLE;GREASE	MAMELON	1					
*	K9002308	SEAL KIT	KIT D'ETANCHEITE	1					

DATE	DEC. 15, 2006
REV.NO.	EXB06-13

Fig. 4560 CONTROL VALVE - LOCK VALVE & ARTI
TIROIR DE COMMANDE

Serial No. ;

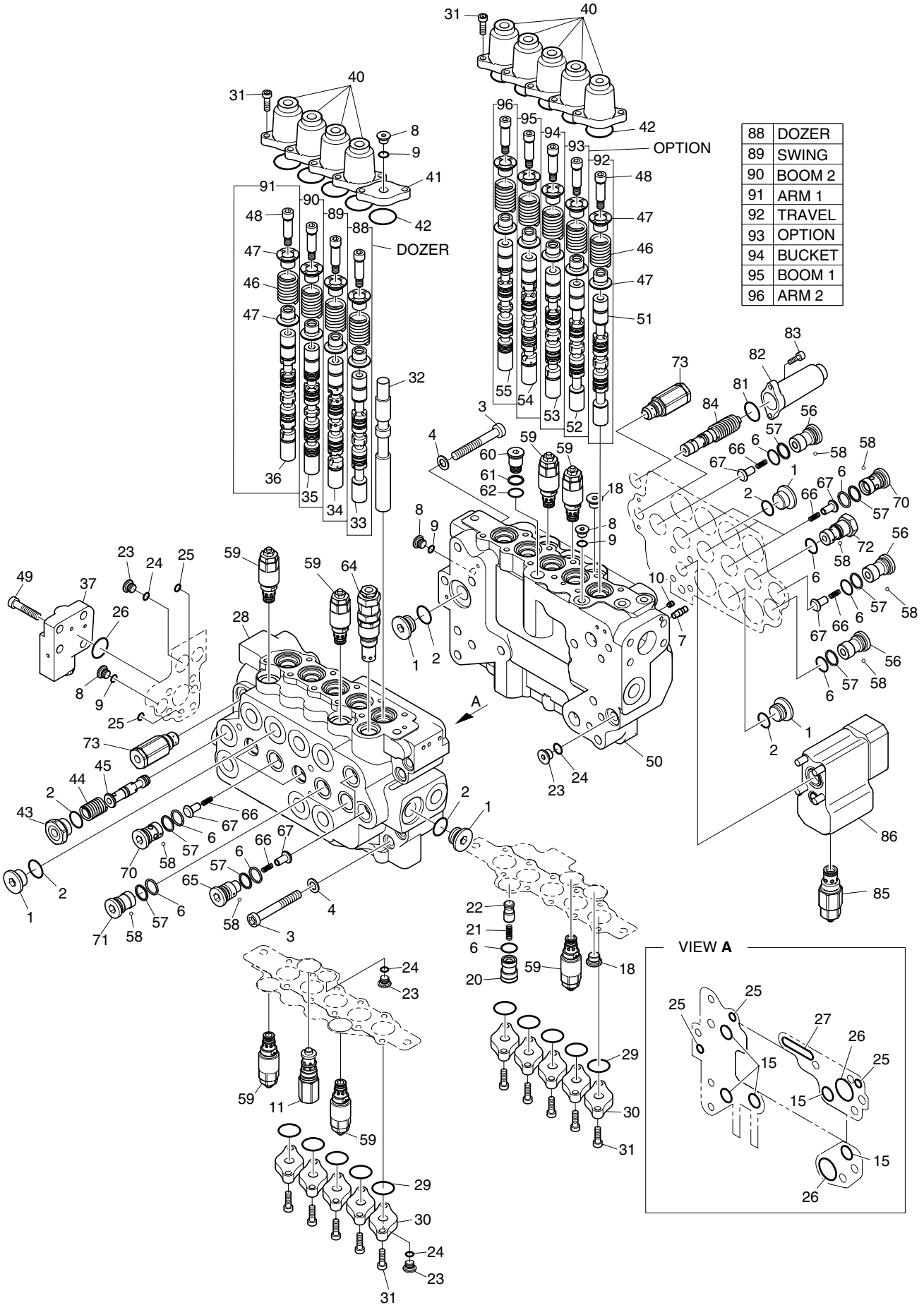

88	DOZER
89	SWING
90	BOOM 2
91	ARM 1
92	TRAVEL
93	OPTION
94	BUCKET
95	BOOM 1
96	ARM 2

DATE	DEC. 15, 2006
REV. NO.	EXB06-13

Fig. 4560 CONTROL VALVE - LOCK VALVE & ARTI TIROIR DE COMMANDE

Serial No. ;

Key No.	Part No.	Description	Description	Q'ty	S.C	Serial No.	ICA	Replaceable part	
								Part No.	Q'ty
4560--	K1015269A	CONTROL VALVE ASS'Y	SOUPAPE DE COMMANDE	1		5001–5010			
	K1015269B	**CONTROL VALVE ASS'Y**	SOUPAPE DE COMMANDE	1		**5011–**			
1	2430-1067	CAP	CHAPEAU	5					
2	S8000231	O-RING	JOINT TORIQUE	6					
3	S2266461	BOLT;SOCKET	BOULON A 6 PANS CREUX	8					
4	S5110701	WASHER;SPRING	RONDELLE ELASTIQUE	8					
6	S8000211	O-RING	JOINT TORIQUE	17					
7	2415-1012A	ORIFICE	ORIFICE	1					
8	2430-1051	CAP	CHAPEAU	4					
9	S8000111	O-RING	JOINT TORIQUE	4					
10	2181-2432	EXPANDER	XTENSEUR	6					
11	K1003715	REGENERATION VALVE ASS'Y	VANNE DE REGENERATION	1		5001–5010			
	2420-1229	**REGENERATION VALVE**	VANNE DE REGENERATION	1		**5011–**			
15	S8000181	O-RING	JOINT TORIQUE	5					
18	181-00111	OVER LOAD PLUG ASS'Y	PRISE FINIE DE CHARGE	2					
20	2430-1083	CAP	CHAPEAU	1					
21	2129-1373	SPRING	RESSORT	2					
22	2420-1175	CHECK	CONTROLE	1					
23	2430-1058	CAP	CHAPEAU	4					
24	S8000141	O-RING	JOINT TORIQUE	4					
25	S8000101	O-RING	JOINT TORIQUE	5					
26	S8000291	O-RING	JOINT TORIQUE	3					
27	2180-1223	O-RING	JOINT TORIQUE	1					
28	423-00124A	HOUSING;LEFT	LOGEMENT	1					
29	2180-1222	O-RING	JOINT TORIQUE	10					
30	2229-1065	RETAINER	ARRETOIR	10					
31	S2209061	BOLT;SOCKET	BOULON A 6 PANS CREUX	40					
32	2424-1139	SPOOL	BOBINE	1					
33	K1027246	PLUNGER;D	PLONGEUR	1					
34	424-00136	PLUNGER;T61	PLONGEUR	1					
35	K1003725	SPOOL;BOOM 2	BOBINE	1					
36	**K1003723**	**SPOOL;ARM 1**	BOBINE	1					
37	430-00053	COVER	COUVERCLE	1					
40	2430-1107	COVER	COUVERCLE	9					
41	2229-1031	RETAINER	ARRETOIR	1					
42	2180-1217D63	O-RING	JOINT TORIQUE	10					
43	2430-1081	CAP	CHAPEAU	1					
44	2129-1401	SPRING	RESSORT	1					

DATE	DEC. 15, 2006
REV.NO.	EXB06-13

Fig. 4560 CONTROL VALVE - LOCK VALVE & ARTI
TIROIR DE COMMANDE

Serial No. ;

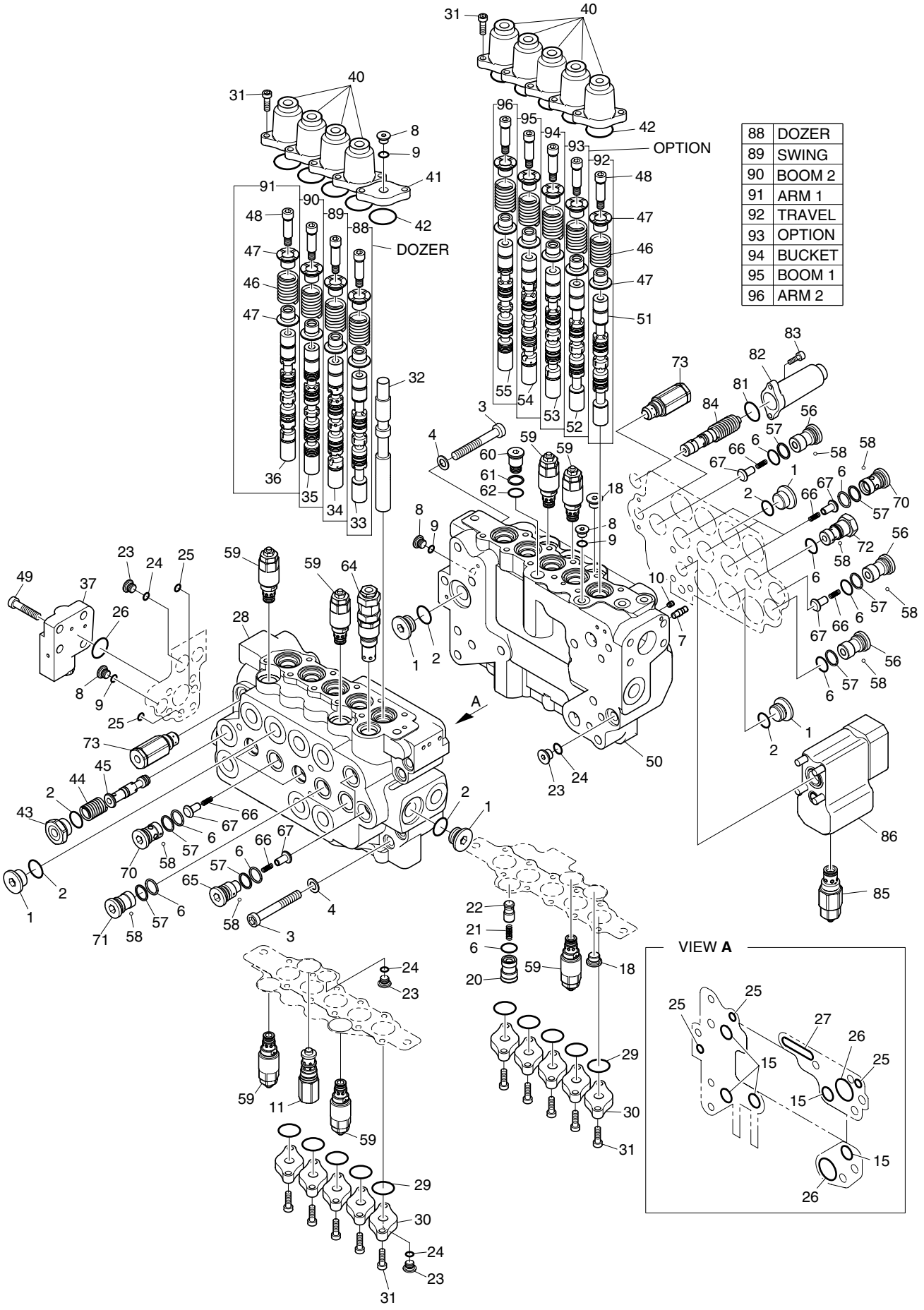

DATE	DEC. 15, 2006
REV. NO.	EXB06-13

Fig. 4560 CONTROL VALVE - LOCK VALVE & ARTI
TIROIR DE COMMANDE

Serial No. ;

Key No.	Part No.	Description	Description	Q'ty	S.C	Serial No.	ICA	Replaceable part	
								Part No.	Q'ty
4560-45	2424-1170A	SPOOL;BC FULL CUT	BOBINE	1					
46	2129-1469	SPRING;PL	RESSORT	9					
47	2429-1047	GUIDE;SP	GUIDE	18					
48	2430-1106	CAP;PL	CHAPEAU	9					
49	S2215261	BOLT;SOCKET	BOULON A 6 PANS CREUX	4					
50	2423-1529B	HOUSING;RIGHT	LOGEMENT	1					
51	2424-1351A	PLUNGER;M3	PLONGEUR	1					
52	2424-1135	PLUNGER;D	PLONGEUR	1					
53	2424-1257	PLUNGER;C7	PLONGEUR	1					
54	K1003721	SPOOL;BOOM 1 SUB	BOBINE	1					
55	424-00209	PLUNGER; ARM2	PLONGEUR	1					
56	2430-1040A	CAP	CHAPEAU	3					
57	S8060211	RING;BACK UP	BAGUE	14					
58	2420-1138	CHIP;NYLON	MORCEAU EN NYLON	11					
59	2420-1220	O/L RELIEF ASS'Y	SOULAGEMENT	7					
60	2430-1059	CAP	CHAPEAU	1					
61	S8000121	O-RING	JOINT TORIQUE	1					
62	S8060121	RING;BACK UP	BAGUE	1					
64	2420-1225A	MAIN RELIEF ASS'Y	ENSEMBLE BATI PRINCIPAL	1					
65	2430-1085A	CAP	CHAPEAU	2					
66	2129-1374	SPRING	RESSORT	10					
67	K1003726	CHECK;LOAD	CONTROLE DE CHARGE	10					
70	2430-1086A	CAP	CHAPEAU	6					
71	2430-1084	CAP	CHAPEAU	2					
72	K1012206	CAP	CHAPEAU	1					
73	2420-1131	FOOT RELIEF AS	SOULAGEMENT DE PIED AS	2					
81	2180-1217D24	O-RING	JOINT TORIQUE	1					
82	2430-1056A	CAP	CHAPEAU	1					
83	S2204861	BOLT	BOULON	2					
84	K1003716	VALVE;BOOM PRIORITY	VANNE	1					
85	2420-1226	O/L RELIEF ASS'Y	SOULAGEMENT	1					
86	420-00459	BM HOLDING VALVE ASS'Y	PERCHE TENANT LA VALVE	1					
88	K1027247	PLUNGER ASS'Y(DOZER)	PLONGEUR	1					
89	2424-1281B	PLUNGER;T61 ASS'Y(SWING)	PLONGEUR	1					
90	2424-1277E	PLUNGER;D75 ASS'Y(BOOM2)	PLONGEUR	1					
91	2424-1278E	PLUNGER;A73 ASSY(ARM1)	PLONGEUR	1					
92	2424-1283	PLUNGER;M3 ASS'Y(TRAVEL)	PLONGEUR	1					
93	2424-1282	PLUNGER;D ASS'Y(OPTION)	PLONGEUR	1					

DATE	DEC. 15, 2006
REV.NO.	EXB06-13

Fig. 4560 CONTROL VALVE - LOCK VALVE & ARTI
TIROIR DE COMMANDE

Serial No. ;

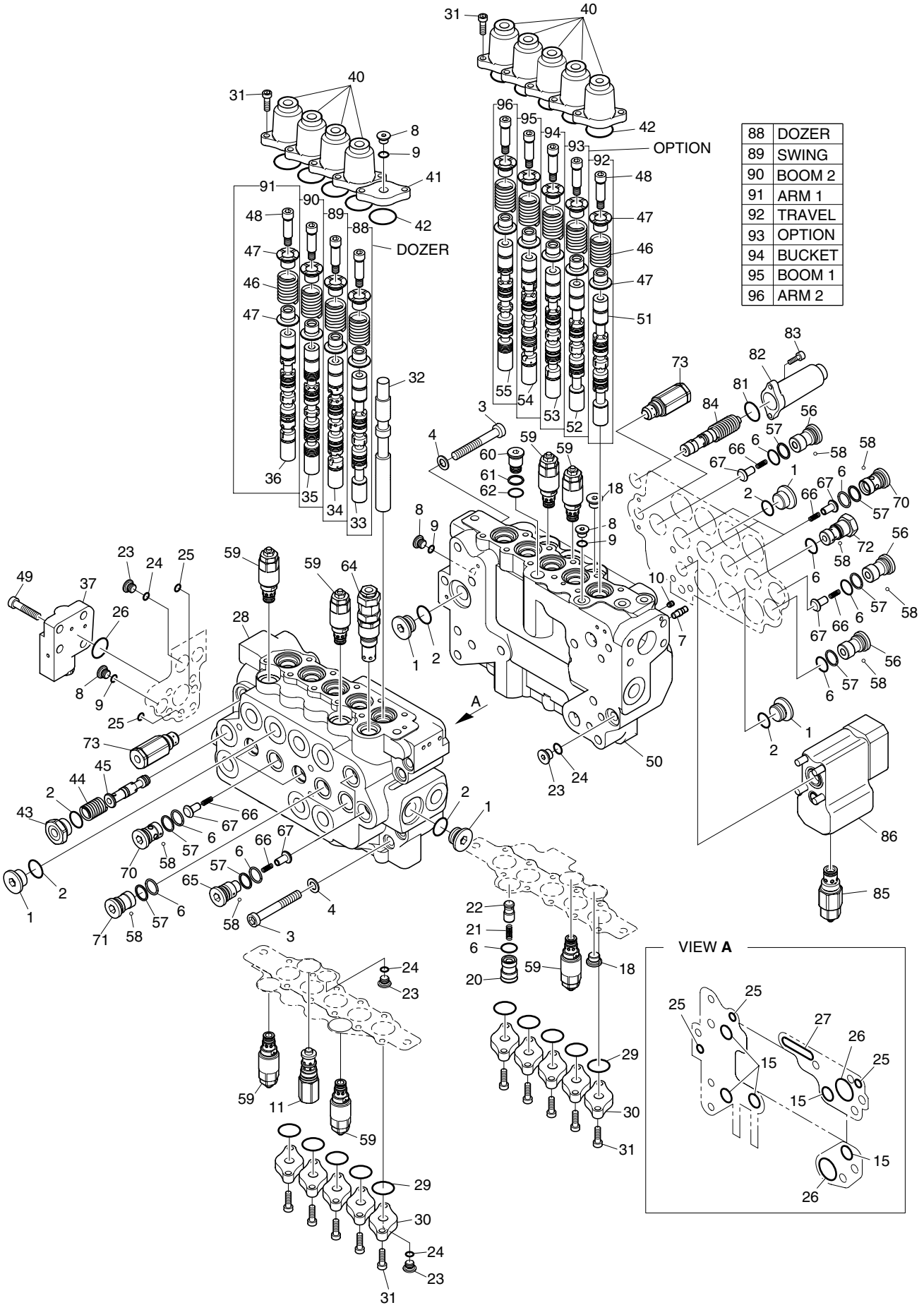

DATE	DEC. 15, 2006
REV. NO.	EXB06-13

Fig. 4560 CONTROL VALVE - LOCK VALVE & ARTI
TIROIR DE COMMANDE

Serial No. ;

Key No.	Part No.	Description	Description	Q'ty	S.C	Serial No.	ICA	Replaceable part	
								Part No.	Q'ty
4560-94	2424-1280	PLUNGER;C7 ASS'Y(BUCKET)	PLONGEUR	1					
95	2424-1276F	PLUNGER;B75 ASSY(BOOM1)	PLONGEUR	1					
96	2424-1279C	PLUNGER;A72 ASSY(ARM2)	PLONGEUR	1					

DATE	DEC. 26, 2006
1st EDITION	

Fig. 4570 GEAR PUMP-ROTATION
POMPE

Serial No. ;

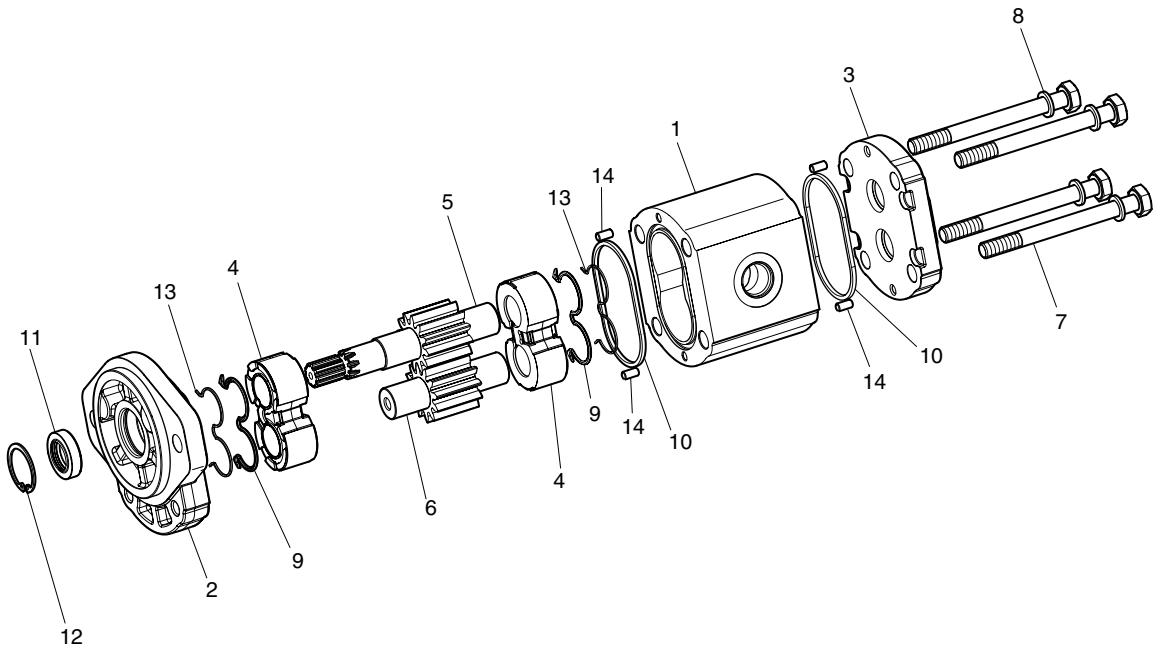

DATE	DEC. 26, 2006
1st EDITION	

Fig. 4570 GEAR PUMP-ROTATION POMPE

Serial No. ;

Key No.	Part No.	Description	Description	Q'ty	S.C	Serial No.	ICA	Replaceable part	
								Part No.	Q'ty
4570--	K1000410	GEAR PUMP	POMPE A ENGRENAGES	1					
1	-	BODY	CARTER	1	D				
2	-	COVER;FRONT	COUVERCLE	1	D				
3	-	COVER;REAR	COUVERCLE	1	D				
4	-	PLATE;THRUST	PLAQUE	2	D				
5	-	SHAFT;DRIVE	ARBRE	1	D				
6	-	GEAR;DRIVEN	PIGNON	1	D				
7	S0559553	BOLT	BOULON	4					
8	S5102603	WASHER	RONDELLE	4					
9	-	SEAL	JOINT	2	K				
10	-	SEAL	JOINT	2	K				
11	-	SEAL;SHAFT	JOINT	1	K				
12	-	RING;SNAP	BAGUE	1	D				
13	-	RING;BACK UP	BAGUE ANTIEXTRUSION	2	K				
14	-	PIN;DOWEL	GOUJON	4	D				
*	K9001457	SEAL KIT;GEAR PUMP	KIT DE JOINT	1					

Fig. 4580 CONTROL VALVE - ARTI. BOOM
SOUPAPE DE COMMANDE

Serial No. ;

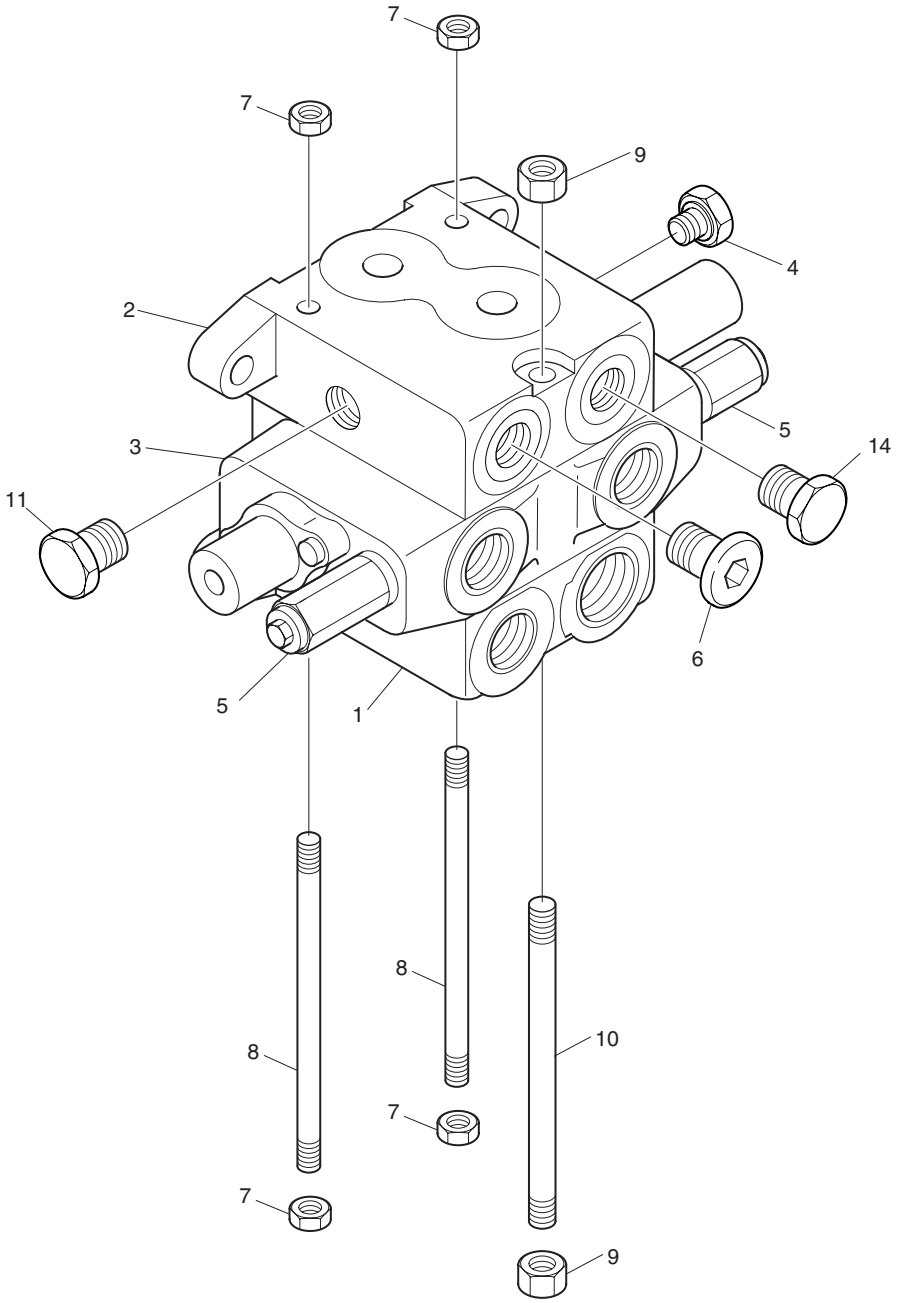

DATE	DEC. 26, 2006
1st EDITION	

Fig. 4580 CONTROL VALVE - ARTI. BOOM
SOUPAPE DE COMMANDE

Serial No. ;

Key No.	Part No.	Description	Description	Q'ty	S.C	Serial No.	ICA	Replaceable part	
								Part No.	Q'ty
4580--	K1004312	CONTROL VALVE	PANNEAU	1					
1	K9001070	INLET SECTION ASS'Y	SECTION D'ADMISSION	1					
2	K9001071	OUTLET SECTION ASS'Y	SECTION DE SORTIE	1					
3	K9001072	SPOOL SECTION ASS'Y	SECTION DE BOBINE	1					
4	K9001073	PLUG ASS'Y	BOUCHON	1					
5	420-00258	RELIEF VALVE	VANNE	2					
6	2.181-00321	PLUG ASS'Y	BOUCHON	1					
7	K9001075	NUT	ECROU 6 PANS M8	4					
8	K9001076	BOLT;STUD	BOULON A 6 PANS	2					
9	K9001077	NUT	ECROU 6 PANS M8	2					
10	K9001078	BOLT;STUD	BOULON A 6 PANS	1					
11	K9001079	PLUG ASS'Y	BOUCHON	1					
14	K9001080	PLUG	BOUCHON	1					

DATE	JUN. 30, 2008
REV.NO.	EXB08-06

Fig. 4590 PEDAL VALVE VANNE

Serial No. ;

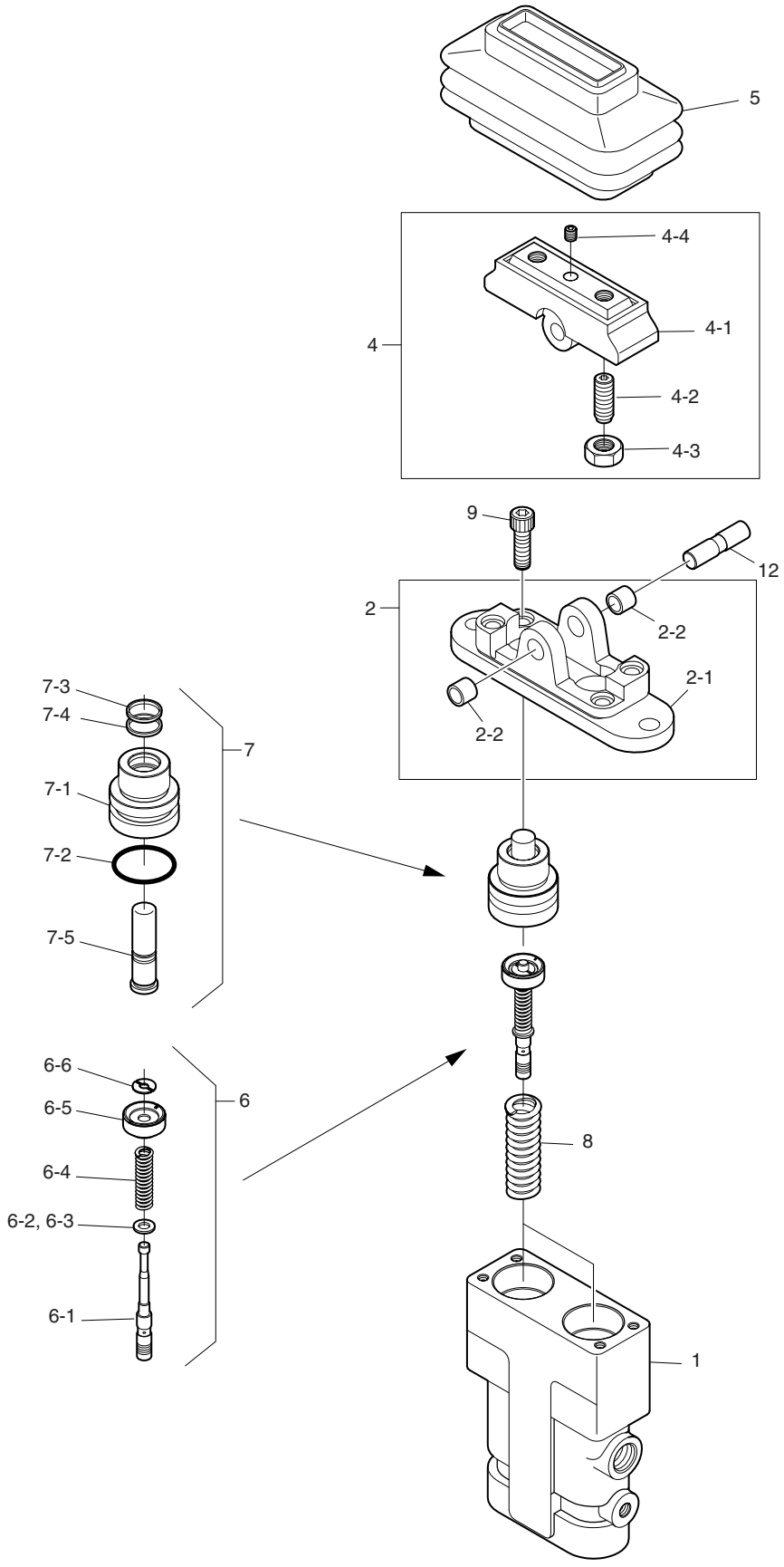

DATE	JUN. 30, 2008
REV. NO.	EXB08-06

Fig. 4590 PEDAL VALVE VANNE

Serial No. ;

Key No.	Part No.	Description	Description	Q'ty	S.C	Serial No.	ICA	Replaceable part	
								Part No.	Q'ty
4590--	K1017382	PEDAL VALVE	VANNE DE PEDALE	1		5001–5014	I	K1017382A	1
	K1017382A	**PEDAL VALVE**	VANNE DE PEDALE	1		**5015–**			
1	-	CASING	CARTER	1	D				
2	K9002934	COVER KIT	COUVERCLE	1					
2-1	-	. COVER	. COUVERCLE	1	D				
2-2	2110-1184D7	. BUSH;DU 10X10	. BAGUE	2					
4	K9003465	CAM KIT	CAME	1					
4-1	-	. CAM	. CAME	1	D				
4-2	-	. SCREW;SET	. VIS	2	D				
4-3	S4014633	. NUT M10	. ECROU	2					
4-4	S3523601	. SCREW;SET M8X12	. VIS	1					
5	160-00008	BELLOW	SOUFFLET	1					
6	402-00036	SPOOL ASS'Y	PLUNGEUR	2					
6-1	-	. SPOOL	. PLUNGEUR	1	D				
6-2	-	. SHIM	. CALE	1	R				
6-3	-	. SEAT;SPRING	. SIEGE DE RESSORT	1	D				
6-4	-	. SPRING	. RESSORT	1	D				
6-5	-	. SEAT;SPRING	. SIEGE DE RESSORT	1	D				
6-6	-	. STOPPER	. ARRET	1	D				
7	1.428-00241	PLUG ASS'Y	BOUCHON	2		5001–5014	I	1.428-00241A	2
	1.428-00241A	**PLUG ASS'Y**	BOUCHON	2		**5015–**			
7-1	-	. PLUG	. BOUCHON	1	D				
7-2	-	. O-RING	. JOINT TORIQUE	1	D				
7-3	-	. SEAL;DUST	. BAGUE D'ETANCHEITE	1	D				
7-4	-	. SEAL;ROD	. BAGUE D'ETANCHEITE	1	D				
7-5	-	. ROD;PUSH	. TIGE	1	D				
8	K9002935	SPRING	RESSORT	2					
9	S2209261	BOLT;WRENCH M8X30	BOULON A 6 PANS	2					
12	354-00003	SHAFT;CAM	ARBRE A CAMES	1					

DATE	DEC. 26, 2006
1st EDITION	

Fig. 4600 INPUT - FRONT AXLE ENTREE

Serial No. ;

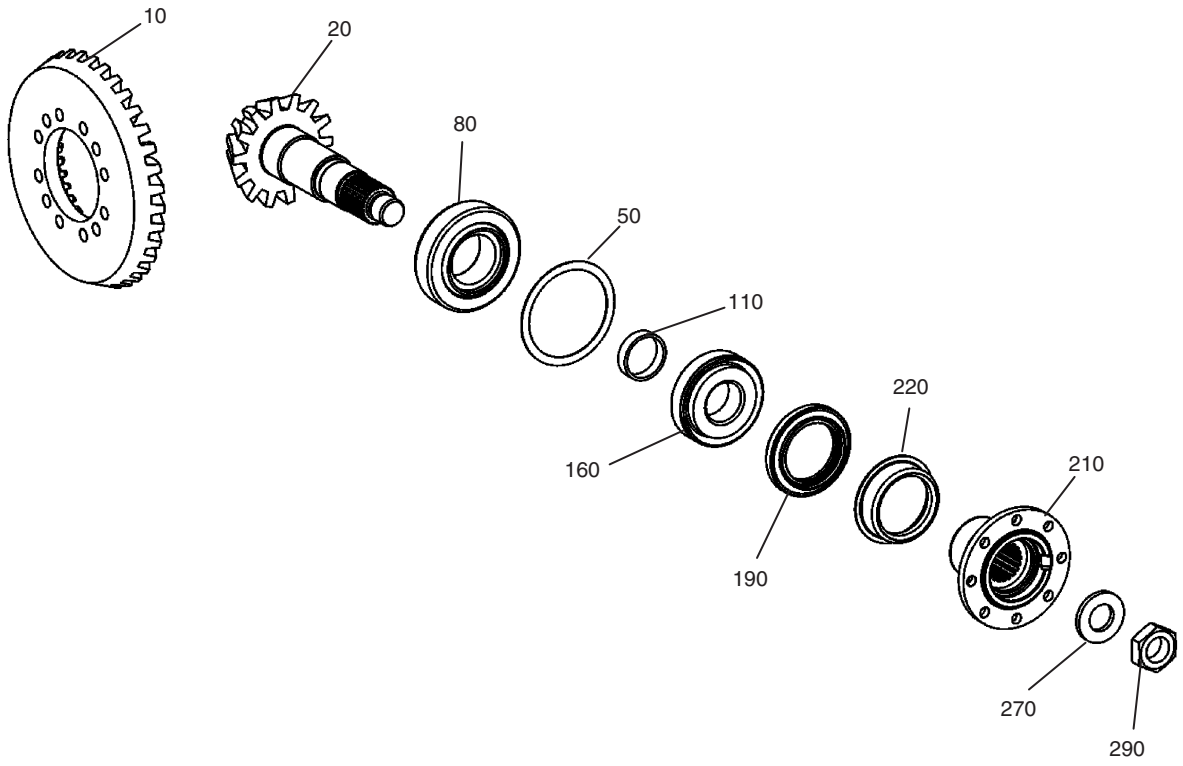

DATE	DEC. 26, 2006
1st EDITION	

Fig. 4600 INPUT - FRONT AXLE ENTREE

Serial No. ;

Key No.	Part No.	Description	Description	Q'ty	S.C	Serial No.	ICA	Replaceable part	
								Part No.	Q'ty
4600-10	K9001469	GEAR;BEVEL	PIGNON	1					
20	K9001470	GEAR;PINION	PIGNON	1					
50	2.114-01052	WASHER 1.5t	RONDELLE	1					
	2.114-01032	WASHER 0.9t	RONDELLE	1					
	2.114-01034	WASHER 0.95t	RONDELLE	1					
	2.114-01035	WASHER 1.0t	RONDELLE	1					
	2.114-01037	WASHER 1.05t	RONDELLE	1					
	2.114-01039	WASHER 1.1t	RONDELLE	1					
	2.114-01041	WASHER 1.15t	RONDELLE	1					
	2.114-01043	WASHER 1.2t	RONDELLE	1					
	2.114-01045	WASHER 1.25t	RONDELLE	1					
	2.114-01047	WASHER 1.3t	RONDELLE	1					
	2.114-01027	WASHER 0.7t	RONDELLE	1					
	2.114-01029	WASHER 0.75t	RONDELLE	1					
	2.114-01030	WASHER 0.8t	RONDELLE	1					
	2.114-01081	WASHER 0.85t	RONDELLE	1					
80	2.109-00210	BEARING;ROLLER	ROULEMENT	1					
110	2.115-00131	RING S=11.30	BAGUE	1					
	2.115-00132	RING S=11.33	BAGUE	1					
	2.115-00133	RING S=11.36	BAGUE	1					
	2.115-00134	RING S=11.39	BAGUE	1					
	2.115-00135	RING S=11.42	BAGUE	1					
	2.115-00136	RING S=11.45	BAGUE	1					
	2.115-00137	RING S=11.48	BAGUE	1					
	2.115-00138	RING S=11.51	BAGUE	1					
	2.115-00139	RING S=11.54	BAGUE	1					
	2.115-00140	RING S=11.57	BAGUE	1					
	2.115-00141	RING S=11.60	BAGUE	1					
	2.115-00142	RING S=11.63	BAGUE	1					
	2.115-00143	RING S=11.66	BAGUE	1					
	2.115-00144	RING S=11.69	BAGUE	1					
	2.115-00145	RING S=11.72	BAGUE	1					
	2.115-00146	RING S=11.75	BAGUE	1					
	2.115-00147	RING S=11.78	BAGUE	1					
	2.115-00148	RING S=11.81	BAGUE	1					
	2.115-00149	RING S=11.84	BAGUE	1					
	2.115-00150	RING S=11.87	BAGUE	1					
	2.115-00151	RING S=11.9	BAGUE	1					

DATE	DEC. 26, 2006
1st EDITION	

Fig. 4600 INPUT - FRONT AXLE ENTREE

Serial No. ;

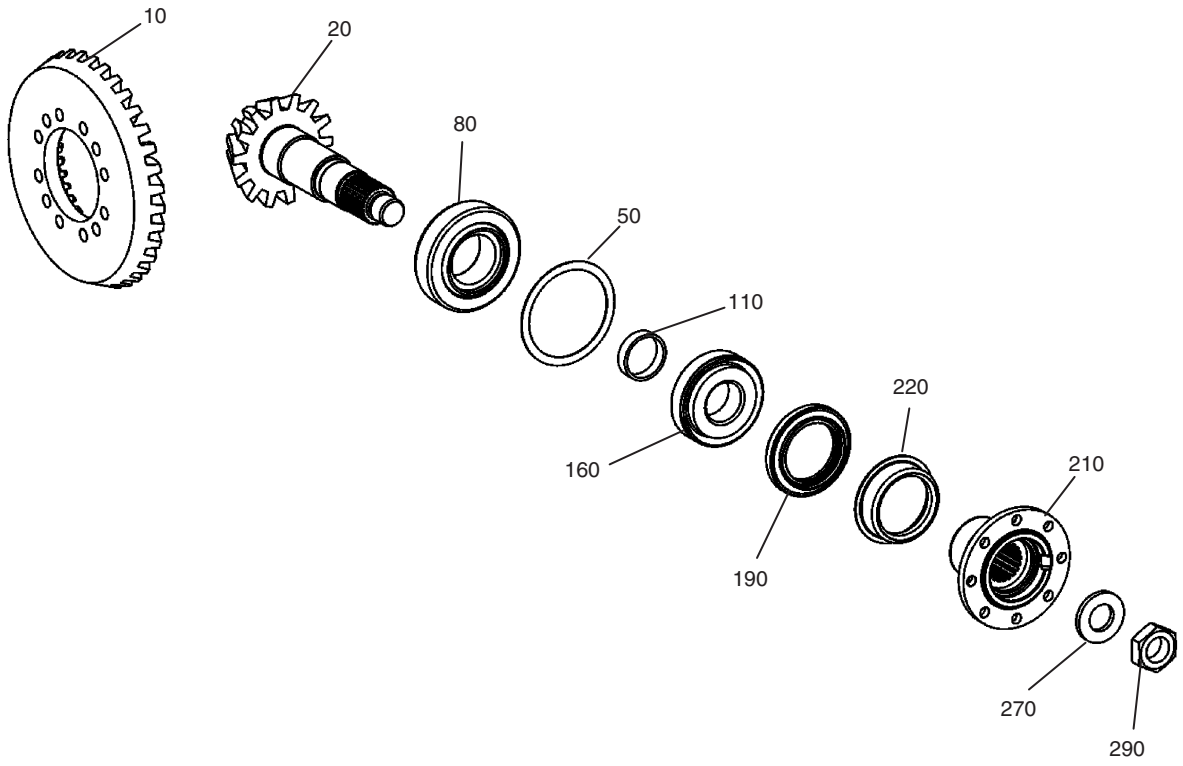

DATE	DEC. 26, 2006
1st EDITION	

Fig. 4600 INPUT - FRONT AXLE ENTREE

Serial No. ;

Key No.	Part No.	Description	Description	Q'ty	S.C	Serial No.	ICA	Replaceable part	
								Part No.	Q'ty
4600-110	2.115-00152	RING S=11.93	BAGUE	1					
	2.115-00153	RING S=11.96	BAGUE	1					
	2.115-00154	RING S=11.99	BAGUE	1					
	2.115-00155	RING S=12.02	BAGUE	1					
	2.115-00156	RING S=12.05	BAGUE	1					
	2.115-00157	RING S=12.08	BAGUE	1					
	2.115-00158	RING S=12.11	BAGUE	1					
	2.115-00159	RING S=12.14	BAGUE	1					
	2.115-00160	RING S=12.17	BAGUE	1					
	2.115-00161	RING S=12.2	BAGUE	1					
	2.115-00162	RING S=12.23	BAGUE	1					
	2.115-00163	RING S=12.26	BAGUE	1					
	2.115-00164	RING S=12.29	BAGUE	1					
	2.115-00165	RING S=12.32	BAGUE	1					
	2.115-00166	RING S=12.35	BAGUE	1					
	2.115-00167	RING S=12.38	BAGUE	1					
	2.115-00130	RING S=11.27	BAGUE	1					
	2.115-00129	RING S=11.3	BAGUE	1					
	2.115-00128	RING S=11.33	BAGUE	1					
	2.115-00127	RING S=11.36	BAGUE	1					
	2.115-00126	RING S=11.39	BAGUE	1					
	1.115-00149	RING S=11.42	BAGUE	1					
	1.115-00148	RING S=11.45	BAGUE	1					
	1.115-00147	RING S=11.48	BAGUE	1					
	1.115-00146	RING S=11.51	BAGUE	1					
	1.115-00145	RING S=11.54	BAGUE	1					
	1.115-00144	RING S=10.97	BAGUE	1					
	1.115-00143	RING S=10.94	BAGUE	1					
160	1.109-00083	BEARING;ROLLER	ROULEMENT	1					
190	K9001471	SEAL;SHAFT	BAGUE ENTRET	1					
210	1.229-00013	FLANGE;INPUT	BRIDE	1					
220	K9001472	SHEET;SCREEN	FEUILLE	1					
270	2.114-00866	WASHER	RONDELLE	1					
290	1.121-00036	NUT	ECROU	1					

DATE	DEC. 26, 2006
1st EDITION	

Fig. 4610 DIFFERENTIAL GEAR - FRONT AXLE
ENGRENAGE DIFFERENTIEL

Serial No. ;

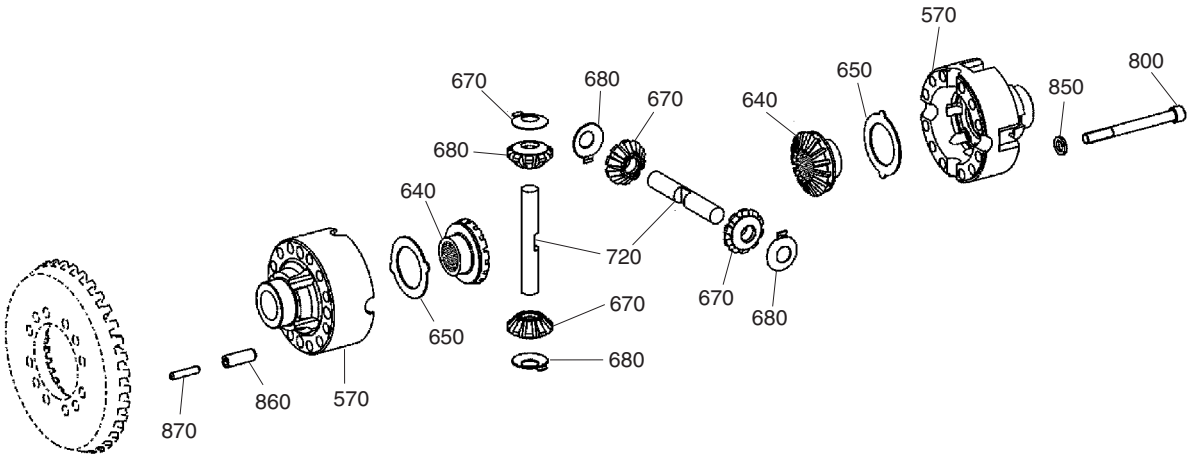

DATE	DEC. 26, 2006
1st EDITION	

Fig. 4610 DIFFERENTIAL GEAR - FRONT AXLE
ENGRENAGE DIFFERENTIEL

Serial No. ;

Key No.	Part No.	Description	Description	Q'ty	S.C	Serial No.	ICA	Replaceable part	
								Part No.	Q'ty
4610-570	K9001473	CASE;DIFFERENTIAL	CARTER	1					
640	1.403-00016	GEAR;AXLEBEVEL	PIGNON	2					
650	1.114-00505	WASHER;THRUST	RONDELLE DE BUTEE	2					
670	1.403-00029	GEAR;DIFF.BEVEL	PIGNON	4					
680	2.114-01155	WASHER;THRUST	RONDELLE DE BUTEE	4					
720	K9001474	AXLE;DIFFERENTIAL	AXE	2					
800	K9001475	SCREW;CAP	VIS	12					
850	1.121-00087	WASHER	RONDELLE	12					
860	2.123-00203	PIN;SLOT.	GOUPILLE	4					
870	2.123-00198	PIN;SLOT.	GOUPILLE	4					

DATE	DEC. 26, 2006
1st EDITION	

Fig. 4620 AXLE CASING - FRONT AXLE
ENVELOPPE D'AXE

Serial No. ;

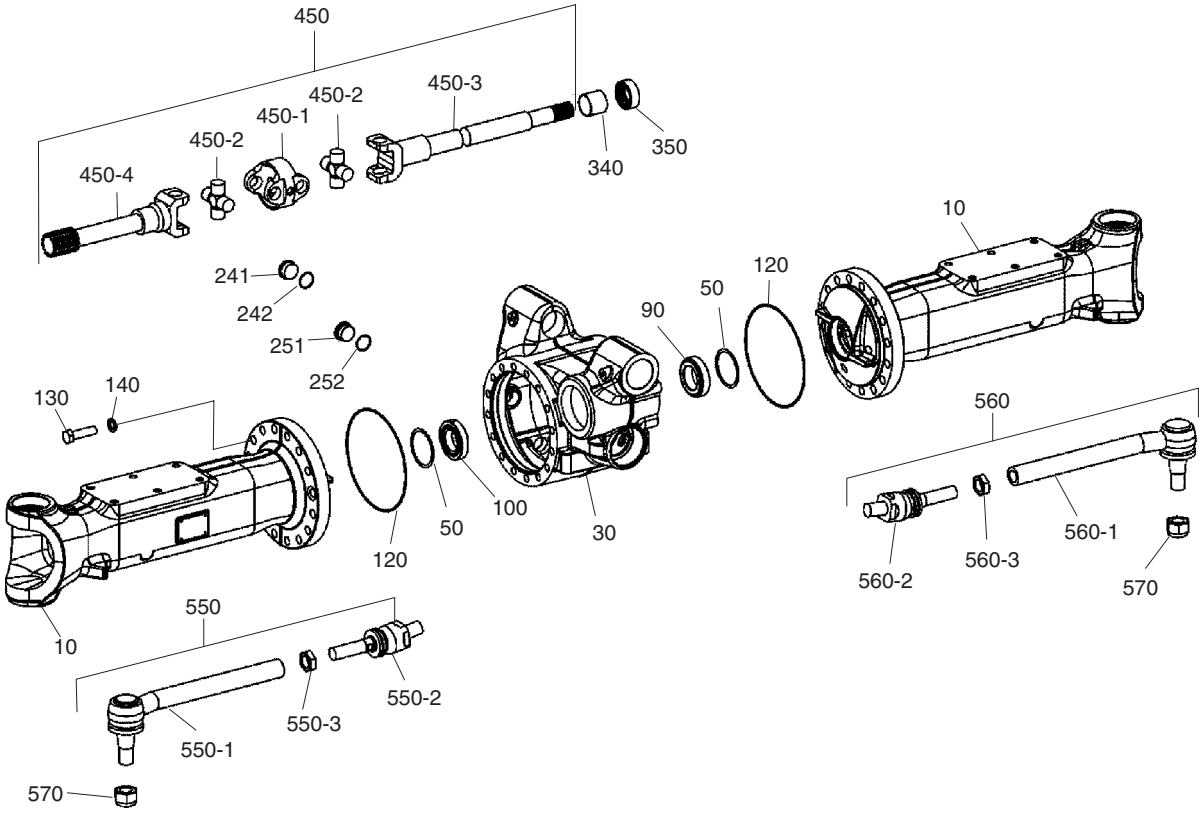

DATE	DEC. 26, 2006
1st EDITION	

Fig. 4620 AXLE CASING - FRONT AXLE ENVELOPPE D'AXE

Serial No. ;

Key No.	Part No.	Description	Description	Q'ty	S.C	Serial No.	ICA	Replaceable part	
								Part No.	Q'ty
4620-10	K9001480	CASING;AXLE	CARTER	2					
30	K9001481	HOUSING;DIFFERENTIAL	LOGEMENT	1					
50	1.114-00060	SHIM A=0.1	CALE	2					
	1.114-00061	SHIM A=0.15	CALE	2					
	2.114-00571	SHIM A=0.2	CALE	2					
	1.114-00063	SHIM A=0.25	CALE	2					
	1.114-00065	SHIM A=0.3	CALE	2					
	1.114-00066	SHIM A=0.35	CALE	2					
	2.114-00572	SHIM A=0.4	CALE	2					
	2.114-00573	SHIM A=0.45	CALE	2					
	2.114-00574	SHIM A=0.5	CALE	2					
	2.114-00575	SHIM A=0.55	CALE	2					
	2.114-00576	SHIM A=0.6	CALE	2					
	1.114-00068	SHIM A=0.65	CALE	2					
	1.114-00069	SHIM A=0.7	CALE	2					
	1.114-00070	SHIM A=0.75	CALE	2					
	2.114-00577	SHIM A=0.8	CALE	2					
	1.114-00071	SHIM A=0.85	CALE	2					
	1.114-00073	SHIM A=0.9	CALE	2					
	1.114-00074	SHIM A=0.95	CALE	2					
	2.114-00579	SHIM A=1	CALE	2					
	1.114-00079	SHIM A=1.05	CALE	2					
	1.114-00083	SHIM A=1.1	CALE	2					
	1.114-00085	SHIM A=1.15	CALE	2					
	2.114-00580	SHIM A=1.2	CALE	2					
	1.114-00091	SHIM A=1.25	CALE	2					
	1.114-00095	SHIM A=1.3	CALE	2					
	1.114-00097	SHIM A=1.35	CALE	2					
	1.114-00101	SHIM A=1.4	CALE	2					
	1.114-00103	SHIM A=1.45	CALE	2					
	1.114-00108	SHIM A=1.5	CALE	2					
	1.114-00110	SHIM A=1.55	CALE	2					
	1.114-00113	SHIM A=1.6	CALE	2					
	1.114-00114	SHIM A=1.65	CALE	2					
	1.114-00125	SHIM A=2	CALE	2					
	1.114-00198	SHIM A=1.47	CALE	2					
	1.114-00202	SHIM A=1.63	CALE	2					
	1.114-00204	SHIM A=1.75	CALE	2					

DATE	DEC. 26, 2006
1st EDITION	

Fig. 4620 AXLE CASING - FRONT AXLE
ENVELOPPE D'AXE

Serial No. ;

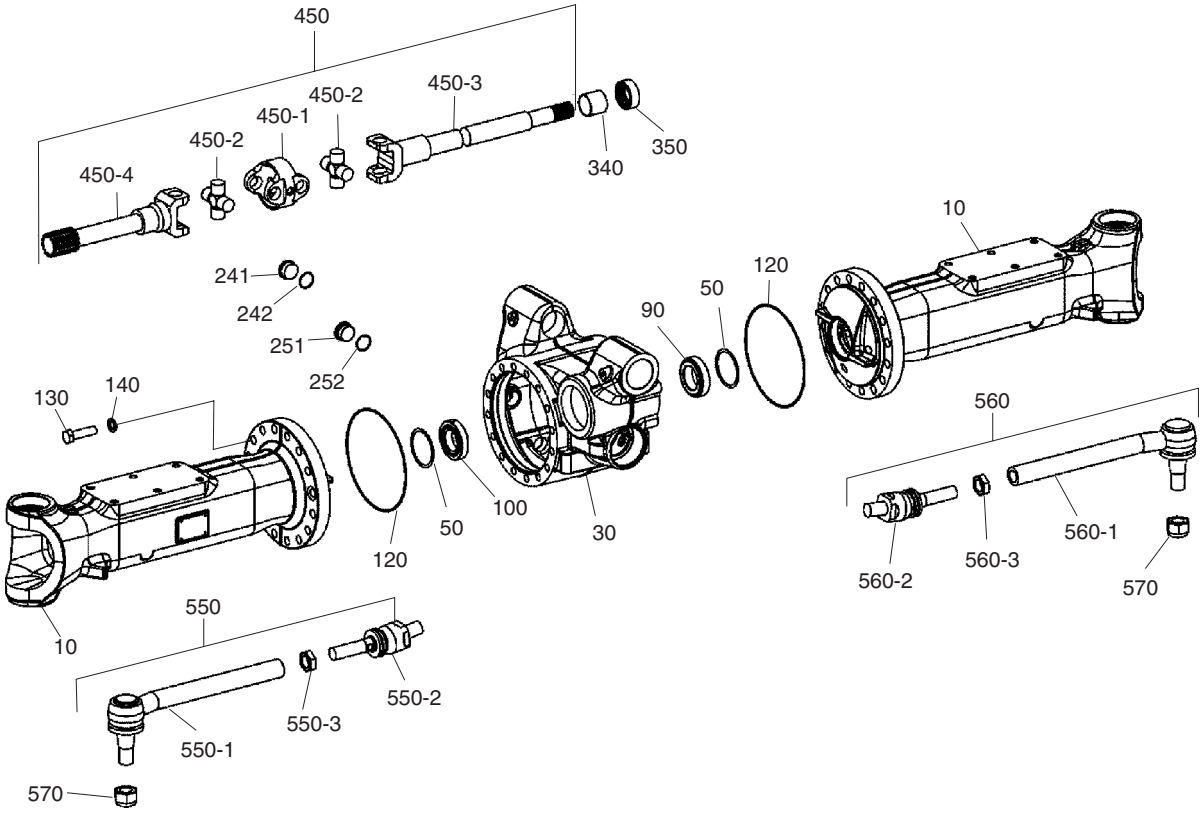

DATE	DEC. 26, 2006
1st EDITION	

Fig. 4620 AXLE CASING - FRONT AXLE ENVELOPPE D'AXE

Serial No. ;

Key No.	Part No.	Description	Description	Q'ty	S.C	Serial No.	ICA	Replaceable part	
								Part No.	Q'ty
4620-50	1.114-00203	SHIM A=1.7	CALE	2					
	1.114-00207	SHIM A=1.8	CALE	2					
	1.114-00208	SHIM A=1.85	CALE	2					
	1.114-00209	SHIM A=1.9	CALE	2					
	1.114-00057	SHIM A=1.95	CALE	2					
90	K9001476	BEARING;TA.ROLL.	ROULEMENT	1					
100	K9000114	BEARING;ROLLER	ROULEMENT	1					
120	2.180-00450	O-RING	JOINT TORIQUE	2					
130	K9001477	SCREW	VIS	32					
140	2.114-00867	WASHER	RONDELLE	32					
241	K9001478	PLUG;SCREW	BOUCHON	1					
242	1.180-00135	O-RING	JOINT TORIQUE	1					
251	K9001479	PLUG;SCREW	BOUCHON	1					
252	1.180-00135	O-RING	JOINT TORIQUE	1					
340	1.110-00039	BUSH	DOUILLE	2					
350	K9001482	SEAL;SHAFT	BAGUE ENTRET	2					
450	K9001484	SHAFT;UNIVERSAL	ARBRE	2					
450-1	K9001485	. FORK;SHIFT	. DECALEZ LA	1					
450-2	K9001486	. JOINT;CROSS	. JOINT EN TRAVERS	2					
450-3	K9001487	. FORK;JOINT	. FOURCHETTE	1					
450-4	K9001488	. FORK;JOINT	. FOURCHETTE	1					
550	K9001490	ROD;TRACK(L.H)	TIGE	1					
550-1	K9001491	. JOINT;BALL	. JOINT	1					
550-2	K9001492	. JOINT;AXIAL	. JOINT	1					
550-3	K9001493	. NUT	. ECROU	1					
560	K9001494	ROD;TRACK(R.H)	TIGE	1					
560-1	K9001495	. JOINT;BALL	. JOINT	1					
560-2	K9001492	. JOINT;AXIAL	. JOINT	1					
560-3	K9001493	. NUT	. ECROU	1					
570	1.121-00022	NUT	ECROU	2					

DATE	JUN. 30, 2008
REV.NO.	EXB08-06

Fig. 4630 JOINT HOUSING - FRONT AXLE
LOGEMENT COMMUN

Serial No. ;

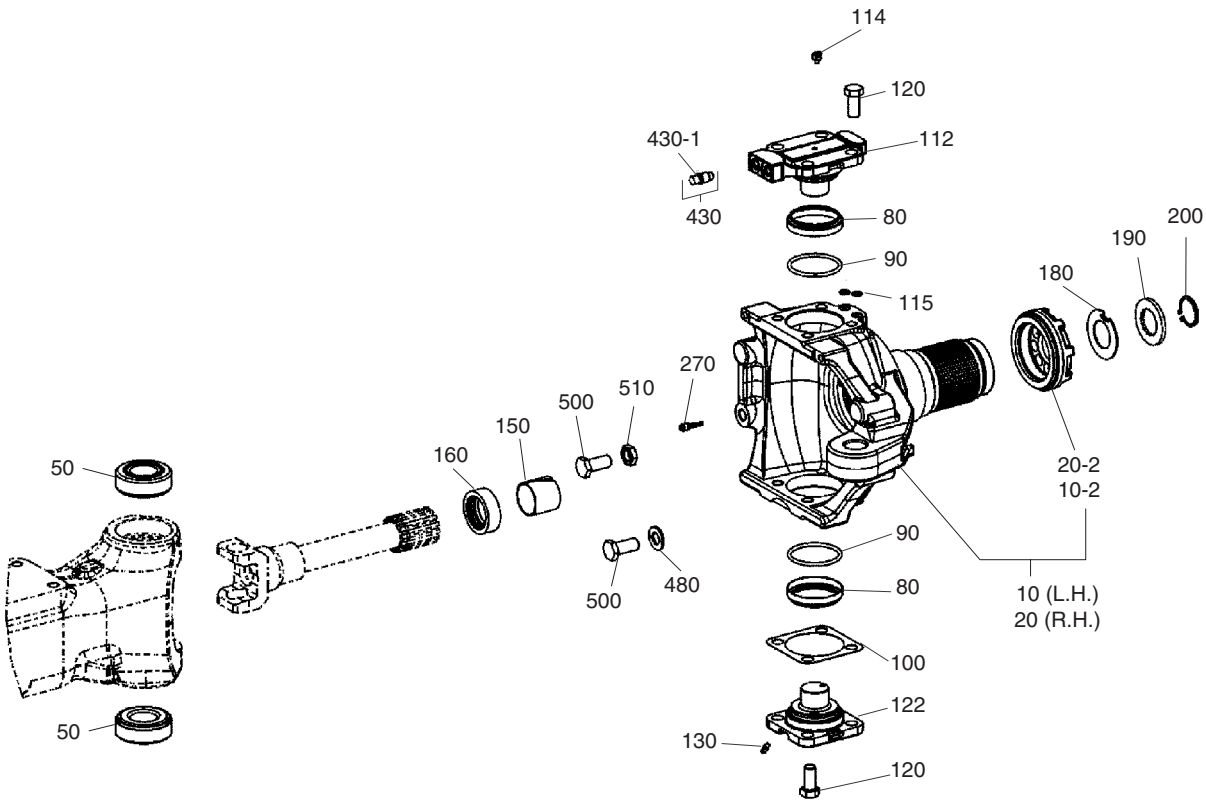

DATE	JUN. 30, 2008
REV. NO.	EXB08-06

Fig. 4630 JOINT HOUSING - FRONT AXLE
LOGEMENT COMMUN

Serial No. ;

Key No.	Part No.	Description	Description	Q'ty	S.C	Serial No.	ICA	Replaceable part	
								Part No.	Q'ty
4630-10	K9001496	HOUSING;JOINT(L.H)	LOGEMENT	1					
10-2	K9001497	. NUT	. ECROU	1					
20	K9001498	HOUSING;JOINT(R.H)	LOGEMENT	1					
20-2	K9001497	. NUT	. ECROU	1					
50	K9001499	BEARING;ROLLER	ROULEMENT	4					
80	K9001500	CAP;SEALING	CHAPEAU	4					
90	K9001501	O-RING	JOINT TORIQUE	4					
100	K9001502	SHIM A=0.6	CALE	2					
	K9001503	SHIM A=0.8	CALE	2					
	K9001504	SHIM A=1.0	CALE	2					
112	K9001510	PIN;BEARING	GOUPILLE	2					
114	1.181-00013	NIPPLE;GREASE	MAMELON	2					
115	K9001511	O-RING	JOINT TORIQUE	4					
120	1.120-00144	SCREW	VIS	16			I	K9006476	16
	K9006476	BOLT	BOULON	16					
122	K9001512	PIN;BEARING	GOUPILLE	2					
130	1.181-00014	NIPPLE;LUBRIC.	MAMELON	2					
150	1.110-00039	BUSH	DOUILLE	2					
160	K9001482	SEAL;SHAFT	BAGUE ENTRET	2					
180	K9001513	WASHER;THRUST	RONDELLE DE BUTEE	2					
190	K9001514	WASHER;THRUST	RONDELLE DE BUTEE	2					
200	K9001515	RING;RETAINING	BAGUE	2					
270	K9001516	PLUG	BOUCHON	4					
430	1.420-00157	VALVE;VENT	VANNE	2					
430-1	K9000167	. CAP;DUST	. CHAPEAU	2					
480	2.114-01131	WASHER;STOP S=6.0	RONDELLE	2					
	2.114-01132	WASHER;STOP S=6.5	RONDELLE	2					
	2.114-01127	WASHER;STOP S=4.0	RONDELLE	2					
	2.114-01129	WASHER;STOP S=5.0	RONDELLE	2					
	2.114-01130	WASHER;STOP S=5.5	RONDELLE	2					
	2.114-01128	WASHER;STOP S=4.5	RONDELLE	2					
	2.114-01126	WASHER;STOP S=2.0	RONDELLE	2					
	1.114-00481	WASHER;STOP S=3.0	RONDELLE	2					
	1.114-00482	WASHER;STOP S=8.0	RONDELLE	2					
	1.114-00483	WASHER;STOP S=9.0	RONDELLE	2					
	1.114-00476	WASHER;STOP S=10.0	RONDELLE	2					
	1.114-00477	WASHER;STOP S=11.0	RONDELLE	2					
	1.114-00478	WASHER;STOP S=12.0	RONDELLE	2					

DATE	JUN. 30, 2008
REV.NO.	EXB08-06

Fig. 4630 JOINT HOUSING - FRONT AXLE LOGEMENT COMMUN

Serial No. ;

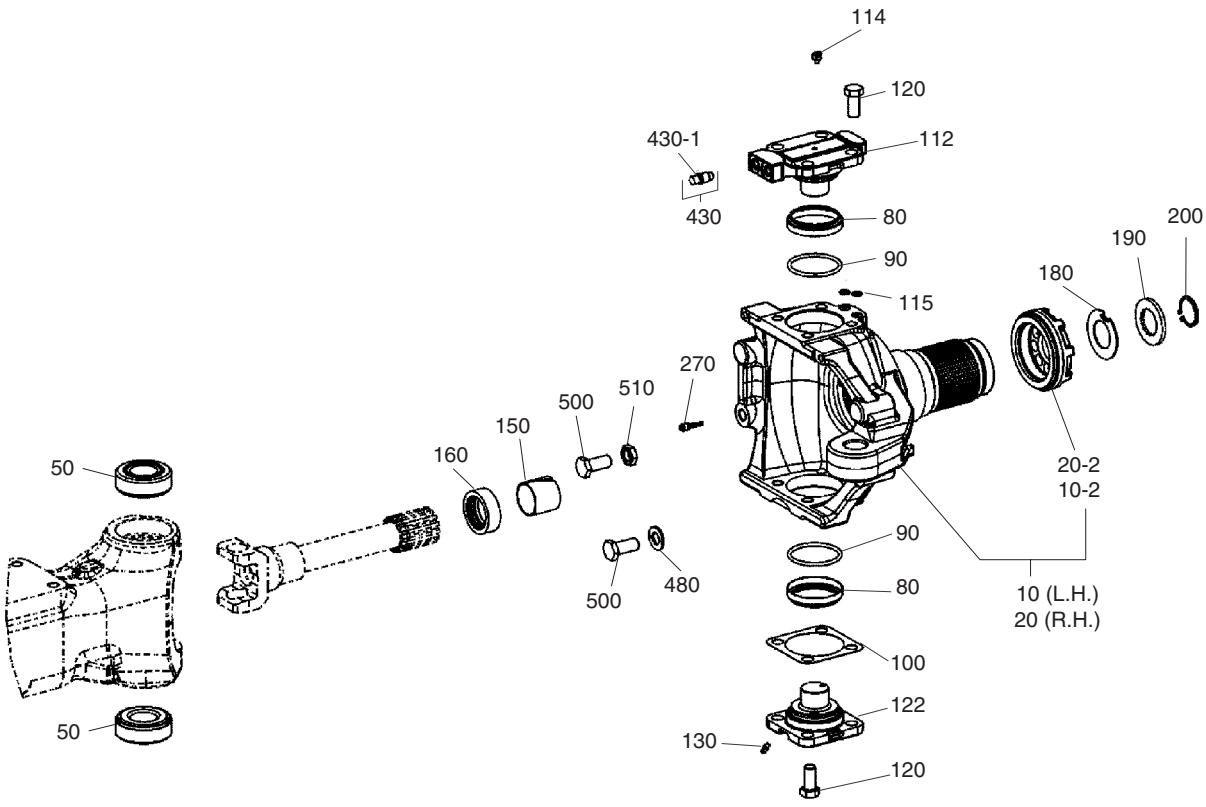

DATE	JUN. 30, 2008
REV. NO.	EXB08-06

Fig. 4630 JOINT HOUSING - FRONT AXLE
LOGEMENT COMMUN

Serial No. ;

Key No.	Part No.	Description	Description	Q'ty	S.C	Serial No.	ICA	Replaceable part	
								Part No.	Q'ty
4630-480	1.114-00479	WASHER;STOP S=13.0	RONDELLE	2					
	1.114-00480	WASHER;STOP S=14.0	RONDELLE	2					
500	K9001517	SCREW;STOP	VIS	4					
510	K9001518	NUT	ECROU	2					

DATE	DEC. 26, 2006
1st EDITION	

Fig. 4640 STEERING CYLINDER - FRONT AXLE
VERIN D'ORIENTATION DE TRAIN AVANT

Serial No. ;

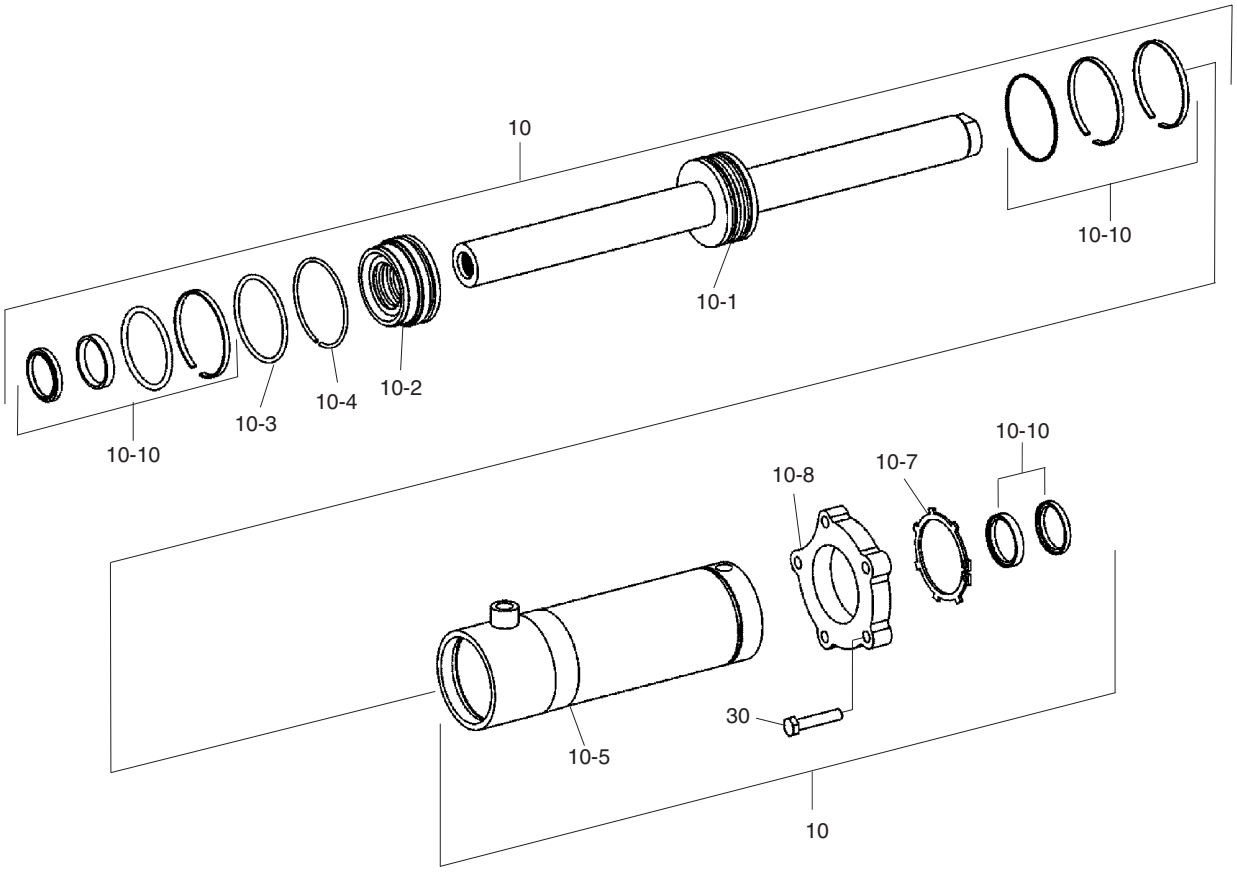

DATE	DEC. 26, 2006
1st EDITION	

Fig. 4640 STEERING CYLINDER - FRONT AXLE
VERIN D'ORIENTATION DE TRAIN AVANT

Serial No. ;

Key No.	Part No.	Description	Description	Q'ty	S.C	Serial No.	ICA	Replaceable part	
								Part No.	Q'ty
4640-10	K9001519	CYLINDER;STEER.	CYLINDRE	1					
10-1	K9001520	. ROD;PISTON	. TIGE	1					
10-2	K9001521	. HEAD;BRAKE	. TETE DE FREIN	1					
10-3	K9001522	. RING;SEEGER	. BAGUE	1					
10-4	K9001523	. RING;RETAINING	. BAGUE	1					
10-5	K9001524	. CYLINDER;STEERING	. VERIN DE DIRECTION	1	D				
10-7	K9001525	. RING;RETAINING	. BAGUE	1					
10-8	K9001526	. FLANGE	. BRIDE	1					
10-10	K9001527	. SEAL KIT	. KIT D'ETANCHEITE	1					
30	K9001528	SCREW	VIS	5					

DATE	DEC. 26, 2006
1st EDITION	

Fig. 4650 OUTPUT - FRONT AXLE RENDEMENT

Serial No. ;

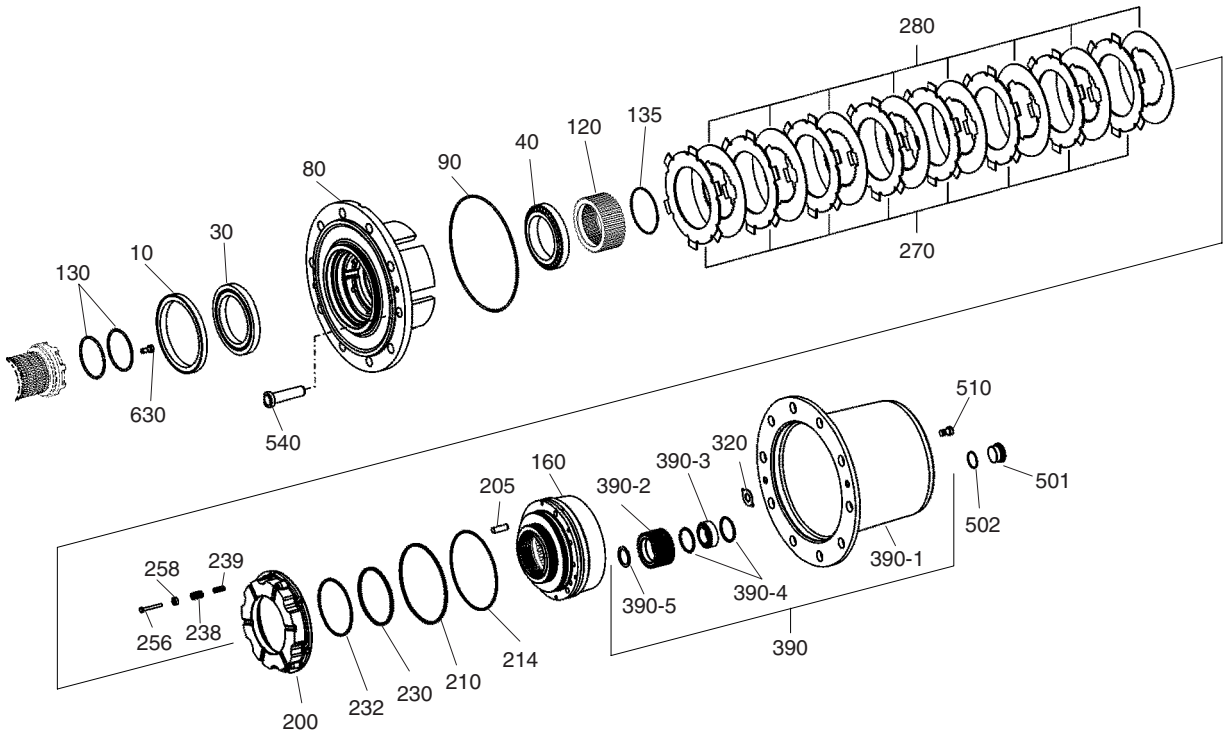

DATE	DEC. 26, 2006
1st EDITION	

Fig. 4650 OUTPUT - FRONT AXLE RENDEMENT

Serial No. ;

Key No.	Part No.	Description	Description	Q'ty	S.C	Serial No.	ICA	Replaceable part	
								Part No.	Q'ty
4650-10	K9001529	SEAL;SHAFT	BAGUE ENTRET	2					
30	1.109-00093	BEARING;ROLLER	ROULEMENT	2					
40	K9001530	BEARING;ROLLER	ROULEMENT	2					
80	K9001531	HUB	MOYEU	2					
90	1.180-00136	O-RING	JOINT TORIQUE	2					
120	K9001532	CARRIER;DISC	PORTE DISQUES	2					
130	K9001533	O-RING	JOINT TORIQUE	4					
135	K9001534	O-RING	JOINT TORIQUE	2					
160	K9001535	RING;GEAR	BAGUE	2					
200	K9001536	PISTON	PISTON	2					
205	K9001537	PIN;CYLINDRICAL	GOUPILLE	6					
210	1.180-00371	U-RING	BAGUE DE U	2					
214	1.115-00113	RING;SUPPORT	BAGUE DE SOUTIEN	2					
230	K9001538	U-RING	BAGUE DE U	2					
232	K9001539	RING;SUPPORT	BAGUE DE SOUTIEN	2					
238	1.131-00110	SPRING;COMPR.	RESSORT	12					
239	K9001540	SPRING;COMPR.	RESSORT	12					
256	1.120-00148	SCREW	VIS	12					
258	1.425-00019	SLEEVE;SPRING	MANCHON	12					
270	K9001541	DISC;O.CLUTCH	DISQUE	16					
280	K9001542	DISC;I.CLUTCH S=2.0	DISQUE	16					
	K9001543	DISC;I.CLUTCH S=2.5	DISQUE	16					
	K9001544	DISC;I.CLUTCH S=3.0	DISQUE	16					
320	1.114-00517	WASHER;THRUST S=1.5	RONDELLE DE BUTEE	2	R				
	1.114-00519	WASHER;THRUST S=2.0	RONDELLE DE BUTEE	2	R				
	1.114-00521	WASHER;THRUST S=2.5	RONDELLE DE BUTEE	2	R				
	1.114-00523	WASHER;THRUST S=3.0	RONDELLE DE BUTEE	2	R				
	1.114-00518	WASHER;THRUST S=1.7	RONDELLE DE BUTEE	2	R				
	1.114-00520	WASHER;THRUST S=2.2	RONDELLE DE BUTEE	2	R				
	1.114-00522	WASHER;THRUST S=2.7	RONDELLE DE BUTEE	2	R				
390	K9001545	CARRIER ASS'Y;PLANET	PORTEUR	2					
390-1	K9001546	. CARRIER;PLANET	. PORTEUR DE PLANETE	1	D				
390-2	K9001547	. GEAR;PLANET	. PIGNON	3					
390-3	1.109-00089	. BEARING;ROLLER	. ROULEMENT	3					
390-4	1.115-00178	. RING	. BAGUE	6					
390-5	1.115-00038	. RING;RETAINING	. BAGUE	3					
501	K9001478	PLUG;SCREW	BOUCHON	2					
502	1.180-00135	O-RING	JOINT TORIQUE	4					

DATE	DEC. 26, 2006
1st EDITION	

Fig. 4650 OUTPUT - FRONT AXLE RENDEMENT

Serial No. ;

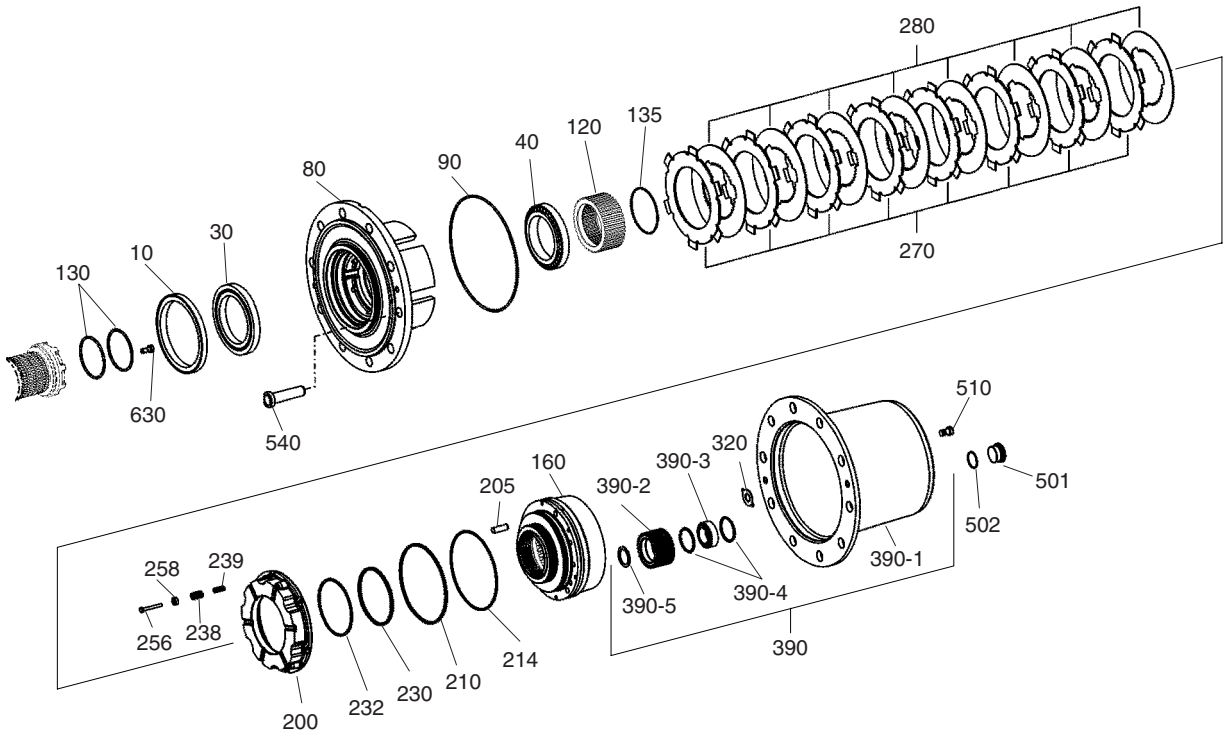

DATE	DEC. 26, 2006
1st EDITION	

Fig. 4650 OUTPUT - FRONT AXLE RENDEMENT

Serial No. ;

Key No.	Part No.	Description	Description	Q'ty	S.C	Serial No.	ICA	Replaceable part	
								Part No.	Q'ty
4650-510	1.120-00109	SCREW;CAP	VIS	4					
630	1.120-00103	SCREW;CAP	VIS	2					
540	K9001548	BOLT;WHEEL	BOULON	20					

DATE	DEC. 26, 2006
1st EDITION	

Fig. 4660 DIFFERENTIAL GEAR - REAR AXLE ENGRENAGE DIFFERENTIEL

Serial No. ;

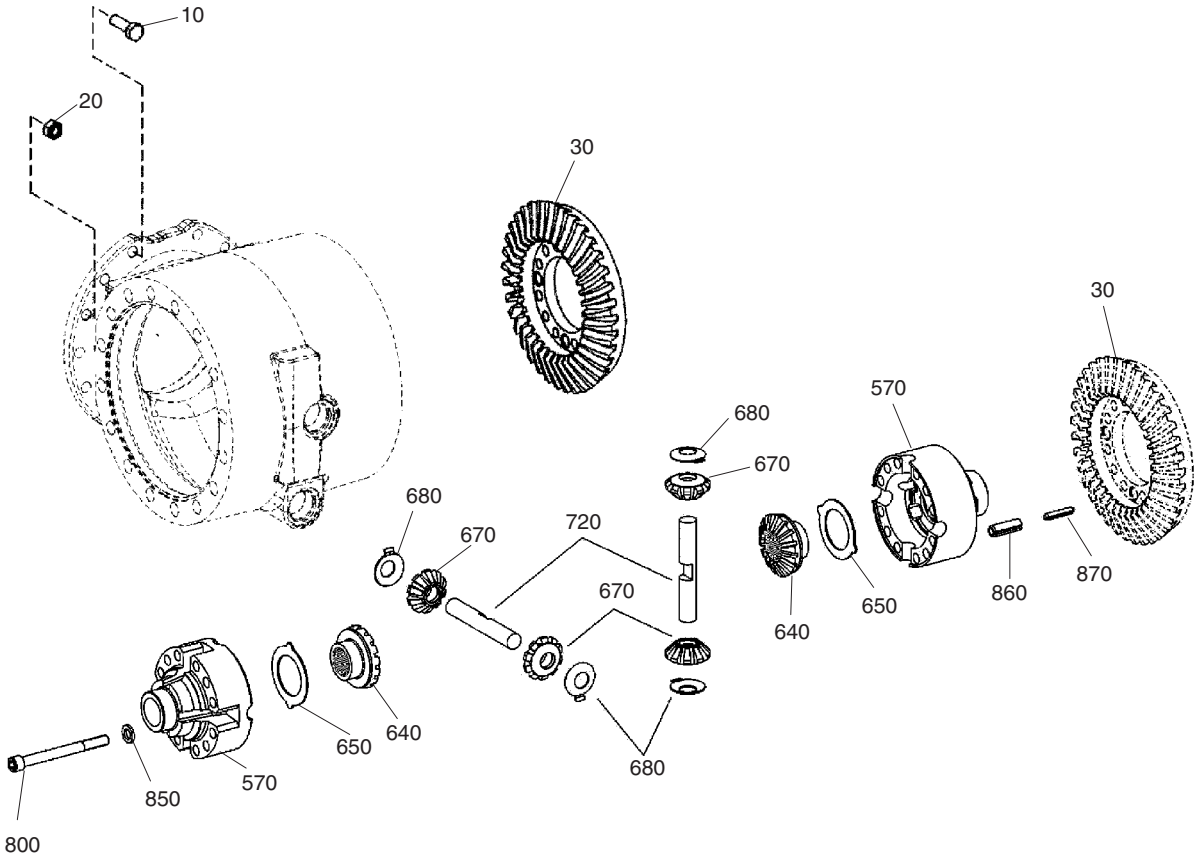

DATE	DEC. 26, 2006
1st EDITION	

Fig. 4660 DIFFERENTIAL GEAR - REAR AXLE
ENGRENAGE DIFFERENTIEL

Serial No. ;

Key No.	Part No.	Description	Description	Q'ty	S.C	Serial No.	ICA	Replaceable part	
								Part No.	Q'ty
4660-10	1.120-00116	SCREW	VIS	4					
20	K9001759	NUT	ECROU	10					
30	K9001469	GEAR;BEVEL	PIGNON	1					
570	K9001473	CASE;DIFFERENTIAL	CARTER	1					
640	1.403-00016	GEAR;AXLE BEVEL	PIGNON	2					
650	1.114-00505	WASHER;THRUST	RONDELLE DE BUTEE	2					
670	1.403-00029	GEAR;DIFF. BEVEL	PIGNON	4					
680	2.114-01155	WASHER;THRUST	RONDELLE DE BUTEE	4					
720	K9001474	AXLE;DIFFERENTIAL	AXE	2					
800	K9001475	SCREW;CAP	VIS	12					
850	1.121-00087	WASHER	RONDELLE	12					
860	2.123-00203	PIN;SLOT	GOUPILLE	4					
870	2.123-00198	PIN;SLOT	GOUPILLE	4					

DATE	DEC. 26, 2006
1st EDITION	

Fig. 4670 AXLE CASING - REAR AXLE
ENVELOPPE D'AXE

Serial No. ;

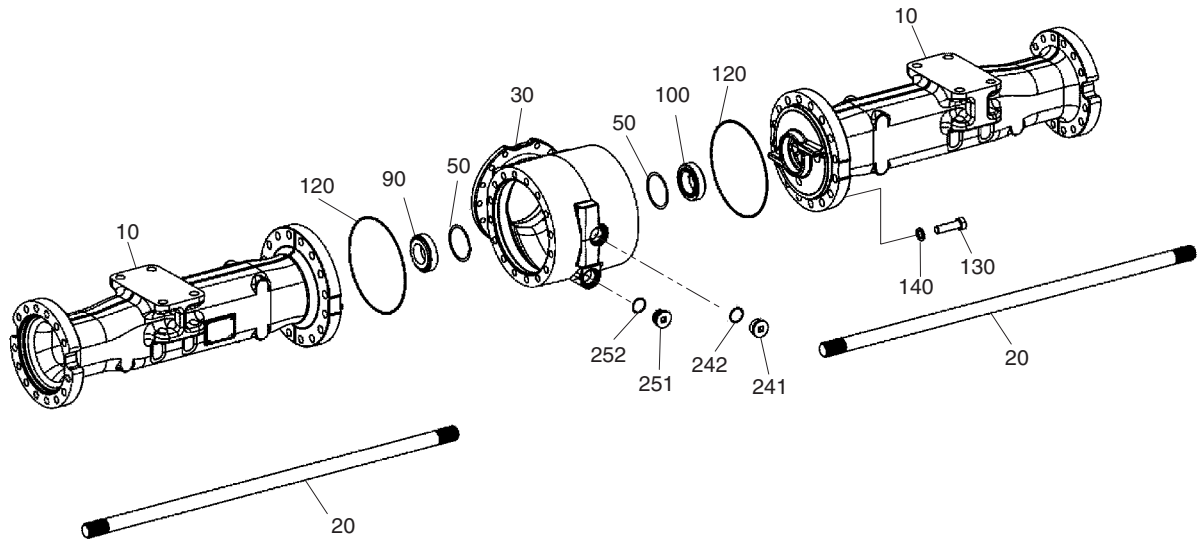

DATE	DEC. 26, 2006
1st EDITION	

Fig. 4670 AXLE CASING - REAR AXLE ENVELOPPE D'AXE

Serial No. ;

Key No.	Part No.	Description	Description	Q'ty	S.C	Serial No.	ICA	Replaceable part	
								Part No.	Q'ty
4670-50	1.114-00060	SHIM A=0.1	CALE	2	R				
	1.114-00061	SHIM A=0.15	CALE	2	R				
	2.114-00571	SHIM A=0.2	CALE	2	R				
	1.114-00063	SHIM A=0.25	CALE	2	R				
	1.114-00065	SHIM A=0.3	CALE	2	R				
	1.114-00066	SHIM A=0.35	CALE	2	R				
	2.114-00572	SHIM A=0.4	CALE	2	R				
	2.114-00573	SHIM A=0.45	CALE	2	R				
	2.114-00574	SHIM A=0.5	CALE	2	R				
	2.114-00575	SHIM A=0.55	CALE	2	R				
	2.114-00576	SHIM A=0.6	CALE	2	R				
	1.114-00068	SHIM A=0.65	CALE	2	R				
	1.114-00069	SHIM A=0.70	CALE	2	R				
	1.114-00070	SHIM A=0.75	CALE	2	R				
	2.114-00577	SHIM A=0.8	CALE	2	R				
	1.114-00071	SHIM A=0.85	CALE	2	R				
	1.114-00073	SHIM A=0.90	CALE	2	R				
	1.114-00074	SHIM A=0.95	CALE	2	R				
	2.114-00579	SHIM A=1.0	CALE	2	R				
	1.114-00079	SHIM A=1.05	CALE	2	R				
	1.114-00083	SHIM A=1.10	CALE	2	R				
	1.114-00085	SHIM A=1.15	CALE	2	R				
	2.114-00580	SHIM A=1.2	CALE	2	R				
	1.114-00091	SHIM A=1.25	CALE	2	R				
	1.114-00095	SHIM A=1.30	CALE	2	R				
	1.114-00097	SHIM A=1.35	CALE	2	R				
	1.114-00101	SHIM A=1.4	CALE	2	R				
	1.114-00103	SHIM A=1.45	CALE	2	R				
	1.114-00108	SHIM A=1.50	CALE	2	R				
	1.114-00110	SHIM A=1.55	CALE	2	R				
	1.114-00113	SHIM A=1.60	CALE	2	R				
	1.114-00114	SHIM A=1.65	CALE	2	R				
	1.114-00125	SHIM A=2.0	CALE	2	R				
	1.114-00198	SHIM A=1.47	CALE	2	R				
	1.114-00202	SHIM A=1.63	CALE	2	R				
	1.114-00204	SHIM A=1.75	CALE	2	R				
	1.114-00203	SHIM A=1.70	CALE	2	R				
	1.114-00207	SHIM A=1.80	CALE	2	R				

DATE	DEC. 26, 2006
1st EDITION	

Fig. 4670 AXLE CASING - REAR AXLE ENVELOPPE D'AXE

Serial No. ;

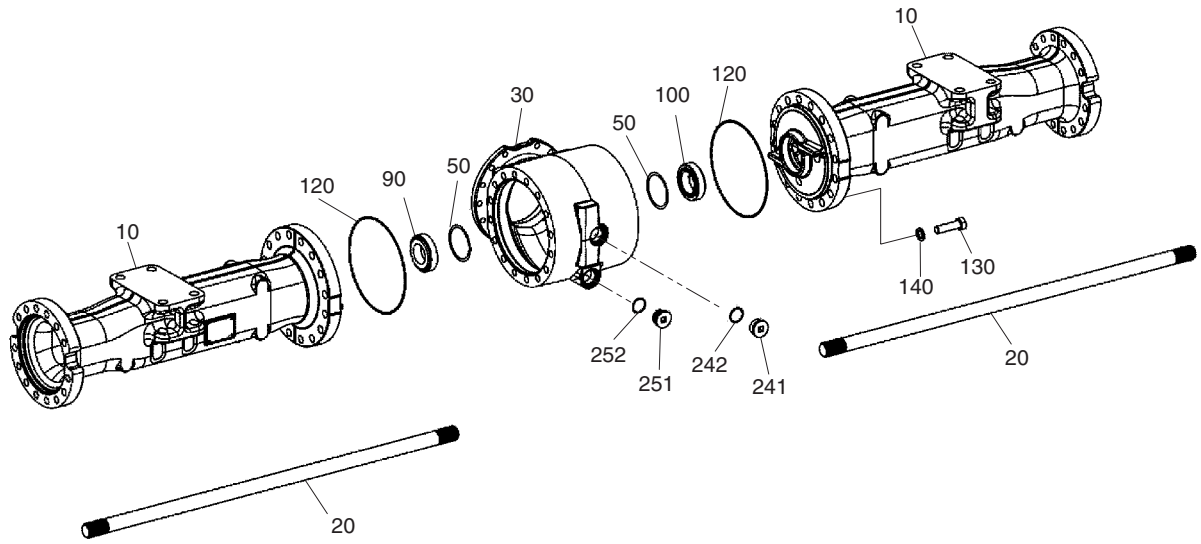

DATE	DEC. 26, 2006
1st EDITION	

Fig. 4670 AXLE CASING - REAR AXLE ENVELOPPE D'AXE

Serial No. ;

Key No.	Part No.	Description	Description	Q'ty	S.C	Serial No.	ICA	Replaceable part	
								Part No.	Q'ty
4670-50	1.114-00208	SHIM A=1.85	CALE	2	R				
	1.114-00209	SHIM A=1.90	CALE	2	R				
	1.114-00057	SHIM A=1.95	CALE	2	R				
90	K9001476	BEARING;TA.ROLL.	ROULEMENT	1					
100	K9000114	BEARING;ROLLER	ROULEMENT	1					
120	2.180-00450	O-RING	JOINT TORIQUE	2					
130	K9001477	SCREW	VIS	32					
140	2.114-00867	WASHER	RONDELLE	32					
241	K9001478	PLUG;SCREW	BOUCHON	1					
242	1.180-00135	O-RING	JOINT TORIQUE	1					
251	K9001479	PLUG;SCREW	BOUCHON	1					
252	1.180-00135	O-RING	JOINT TORIQUE	1					
10	K9001549	CASING;AXLE	CARTER	2					
20	K9001550	SHAFT;STUB	ARBRE	2					
30	K9001551	HOUSING;AXLE	LOGEMENT	1					

DATE	DEC. 26, 2006
1st EDITION	

Fig. 4680 HUB CARRIER - REAR AXLE
PORTEUR DE MOYEU

Serial No. ;

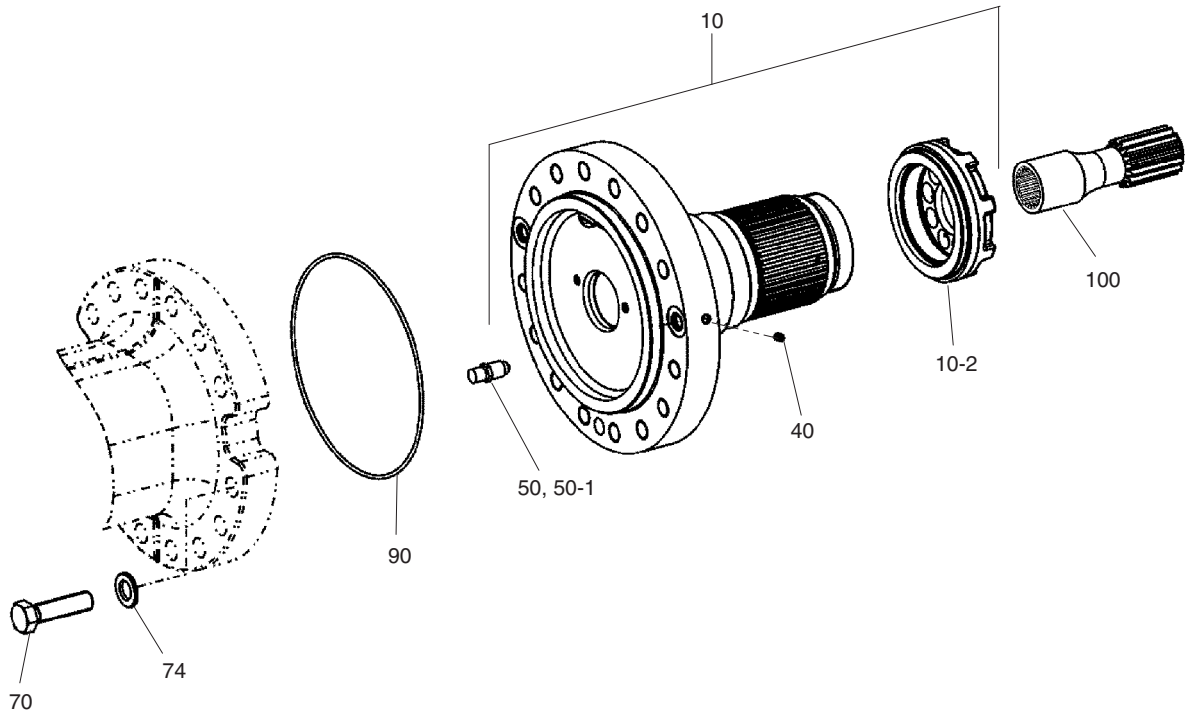

DATE	DEC. 26, 2006
1st EDITION	

Fig. 4680 HUB CARRIER - REAR AXLE PORTEUR DE MOYEU

Serial No. ;

Key No.	Part No.	Description	Description	Q'ty	S.C	Serial No.	ICA	Replaceable part	
								Part No.	Q'ty
4680-10	K9001552	CARRIER;HUB	PORTEUR	2					
10-2	K9001497	. NUT;SLOTTED	. ECROU	2					
40	K9001516	PLUG	BOUCHON	8					
50	1.420-00157	VALVE;VENT	VANNE	2					
50-1	K9000167	. CAP;DUST	. CHAPEAU	2					
70	K9001553	SCREW	VIS	28					
74	K9001554	WASHER	RONDELLE	28					
90	K9001555	O-RING	JOINT TORIQUE	2					
100	K9001556	SHAFT;SUNGEAR	ARBRE	2					

DATE	DEC. 26, 2006
1st EDITION	

Fig. 4690 OUTPUT - REAR AXLE RENDEMENT

Serial No. ;

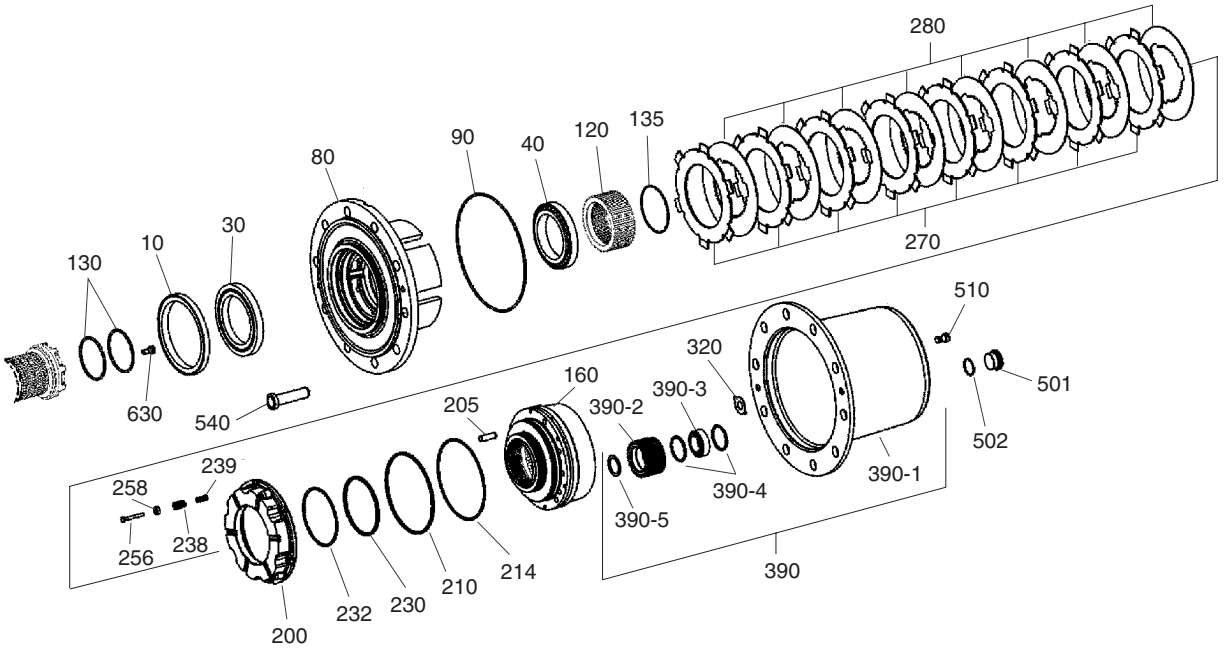

DATE	DEC. 26, 2006
1st EDITION	

Fig. 4690 OUTPUT - REAR AXLE RENDEMENT

Serial No. ;

Key No.	Part No.	Description	Description	Q'ty	S.C	Serial No.	ICA	Replaceable part	
								Part No.	Q'ty
4690-10	K9001529	SEAL;SHAFT	BAGUE ENTRET	2					
30	1.109-00093	BEARING;ROLLER	ROULEMENT	2					
40	K9001530	BEARING;ROLLER	ROULEMENT	2					
80	K9001531	HUB	MOYEU	2					
90	1.180-00136	O-RING	JOINT TORIQUE	2					
120	K9001532	CARRIER;DISC	PORTE DISQUES	2					
130	K9001533	O-RING	JOINT TORIQUE	4					
135	K9001534	O-RING	JOINT TORIQUE	2					
160	K9001535	RING;GEAR	BAGUE	2					
200	K9001536	PISTON	PISTON	2					
205	K9001537	PIN;CYLINDRICAL	GOUPILLE	6					
210	1.180-00371	U-RING	BAGUE DE U	2					
214	1.115-00113	RING;SUPPORT	BAGUE DE SOUTIEN	2					
230	K9001538	U-RING	BAGUE DE U	2					
232	K9001539	RING;SUPPORT	BAGUE DE SOUTIEN	2					
238	1.131-00110	SPRING;COMPR.	RESSORT	12					
239	K9001540	SPRING;COMPR.	RESSORT	12					
256	1.120-00148	SCREW	VIS	12					
258	1.425-00019	SLEEVE;SPRING	MANCHON	12					
270	K9001541	DISC;O.CLUTCH	DISQUE	16					
280	K9001542	DISC;I.CLUTCH S=2.0	DISQUE	16					
	K9001543	DISC;I.CLUTCH S=2.5	DISQUE	16					
	K9001544	DISC;I.CLUTCH S=3.0	DISQUE	16					
320	1.114-00517	WASHER;THRUST S=1.5	RONDELLE DE BUTEE	2	R				
	1.114-00519	WASHER;THRUST S=2.0	RONDELLE DE BUTEE	2	R				
	1.114-00521	WASHER;THRUST S=2.5	RONDELLE DE BUTEE	2	R				
	1.114-00523	WASHER;THRUST S=3.0	RONDELLE DE BUTEE	2	R				
	1.114-00518	WASHER;THRUST S=1.7	RONDELLE DE BUTEE	2	R				
	1.114-00520	WASHER;THRUST S=2.2	RONDELLE DE BUTEE	2	R				
	1.114-00522	WASHER;THRUST S=2.7	RONDELLE DE BUTEE	2	R				
390	K9001545	PLANET CARRIER ASS'Y	PORTEUR DE PLANETE	2					
390-1	K9001546	. CARRIER;PLANET	. PORTEUR DE PLANETE	1	D				
390-2	K9001547	. GEAR;PLANET	. PIGNON	3					
390-3	1.109-00089	. BEARING;ROLLER	. ROULEMENT	3					
390-4	1.115-00178	. RING	. BAGUE	6					
390-5	1.115-00038	. RING;RETAINING	. BAGUE	3					
501	K9001478	PLUG;SCREW	BOUCHON	2					
502	1.180-00135	O-RING	JOINT TORIQUE	2					

DATE	DEC. 26, 2006
1st EDITION	

Fig. 4690 OUTPUT - REAR AXLE RENDEMENT

Serial No. ;

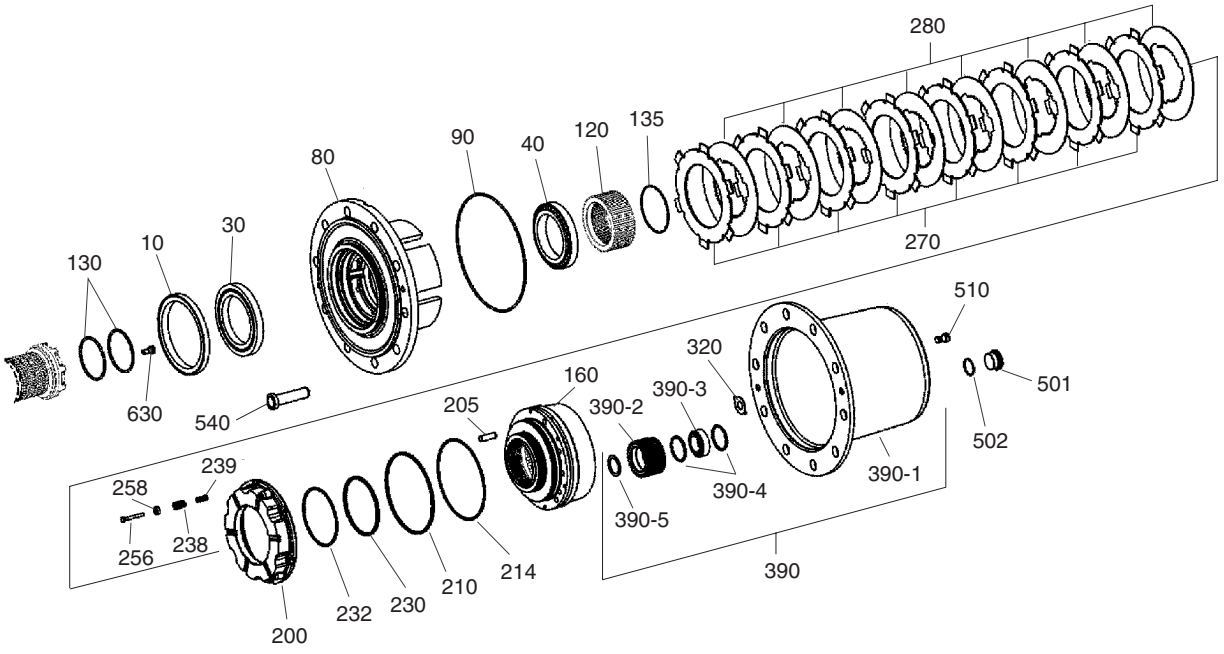

DATE	DEC. 26, 2006
1st EDITION	

Fig. 4690 OUTPUT - REAR AXLE RENDEMENT

Serial No. ;

Key No.	Part No.	Description	Description	Q'ty	S.C	Serial No.	ICA	Replaceable part	
								Part No.	Q'ty
4690-510	1.120-00109	SCREW;CAP	VIS	4					
540	K9001548	BOLT	BOULON	20					
630	1.120-00103	SCREW;CAP	VIS	2					

DATE	DEC. 26, 2006
1st EDITION	

Fig. 4700 INPUT - MISSION ENTREE

Serial No. ;

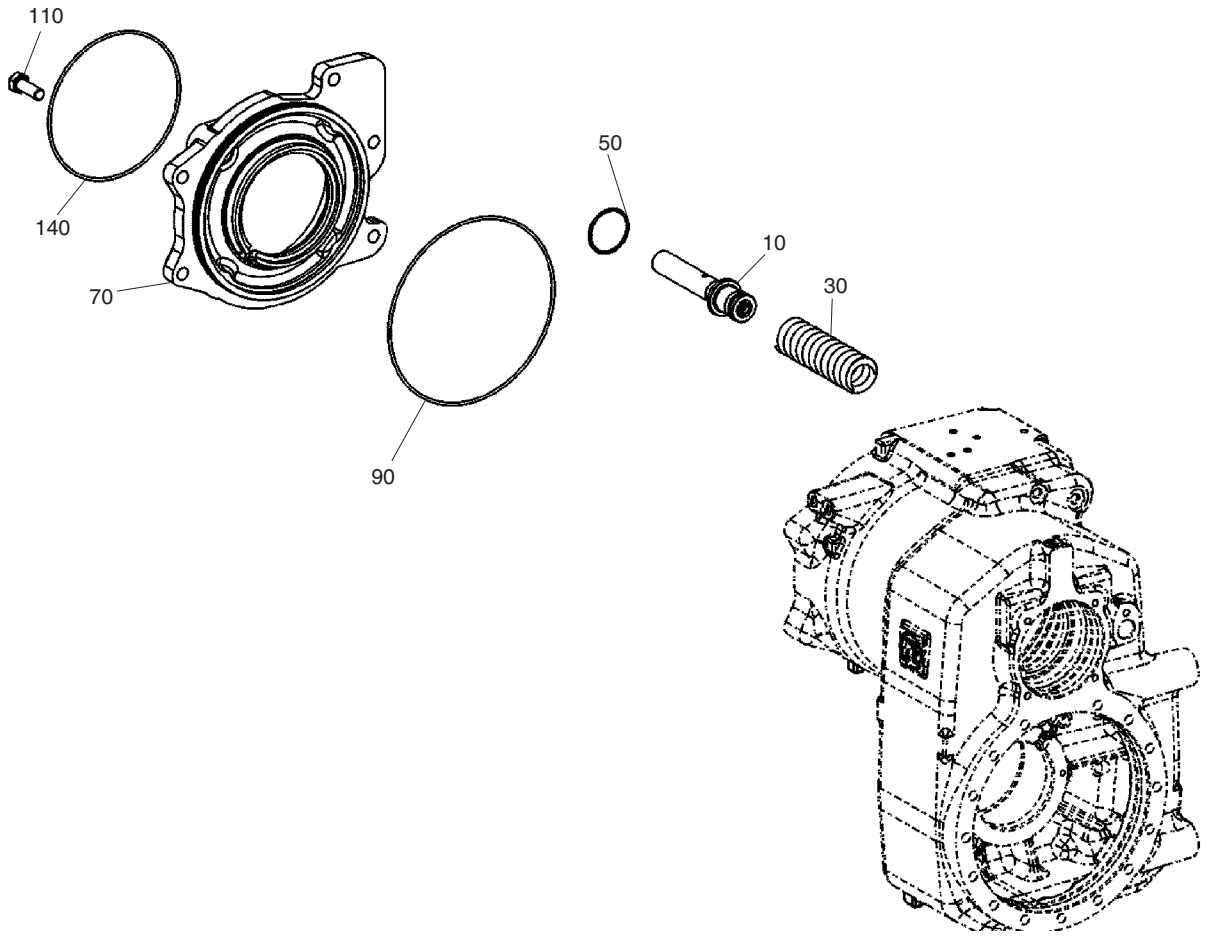

DATE	DEC. 26, 2006
1st EDITION	

Fig. 4700 INPUT - MISSION ENTREE

Serial No. ;

Key No.	Part No.	Description	Description	Q'ty	S.C	Serial No.	ICA	Replaceable part	
								Part No.	Q'ty
4700-10	K9001557	PISTON	PISTON	1					
30	K9001558	SPRING;COMPR.	RESSORT	1					
50	K9001559	O-RING	JOINT TORIQUE	1					
70	K9001560	HOUSING;INPUT	ENTREE DE LOGEMENT	1					
90	2.180-00436	O-RING	JOINT TORIQUE	1					
110	K9001561	SCREW	VIS	5					
140	2.180-00443	O-RING	JOINT TORIQUE	1					

DATE	DEC. 26, 2006
1st EDITION	

Fig. 4710 HOUSING - MISSION LOGEMENT

Serial No. ;

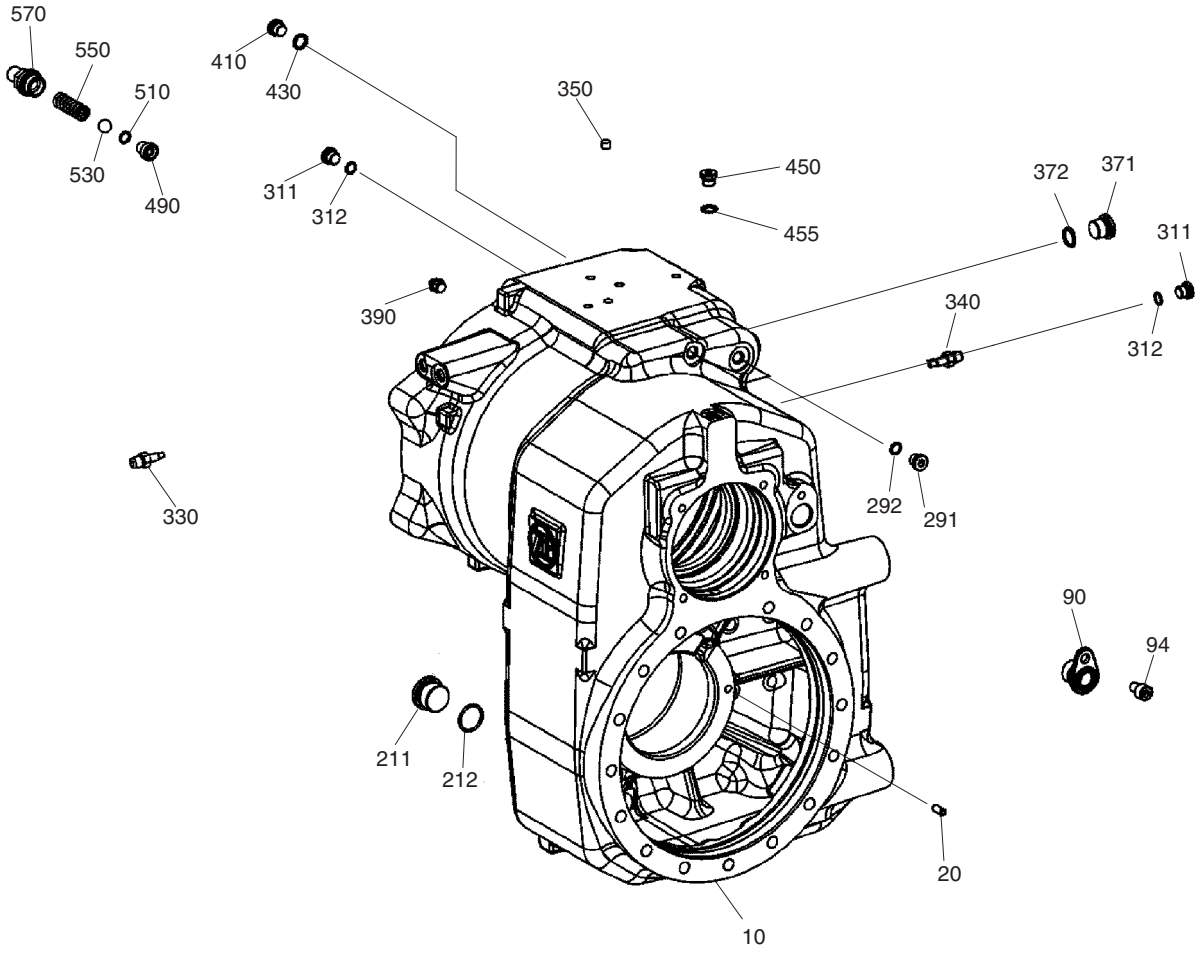

DATE	DEC. 26, 2006
1st EDITION	

Fig. 4710 HOUSING - MISSION LOGEMENT

Serial No. ;

Key No.	Part No.	Description	Description	Q'ty	S.C	Serial No.	ICA	Replaceable part	
								Part No.	Q'ty
4710-10	K9001564	HOUSING	LOGEMENT	1	D				
20	K9001565	PIN;SLOT.	GOUPILLE	1					
90	K9001566	CAP	CHAPEAU	1					
94	2.120-00718	SCREW;CAP	VIS	1					
211	K9000164	PLUG;SCREW	BOUCHON	2					
212	1.180-00137	O-RING	JOINT TORIQUE	2					
291	1.120-00172	PLUG	BOUCHON	2					
292	180-00408	O-RING	JOINT TORIQUE	2					
311	1.120-00172	PLUG	BOUCHON	3					
312	180-00408	O-RING	JOINT TORIQUE	3					
330	1.420-00158	VALVE;VENT	VANNE	2					
340	1.420-00158	VALVE;VENT	VANNE	1					
350	K9001567	PLUG	BOUCHON	8					
371	1.120-00182	PLUG;SCREW	BOUCHON	2					
372	1.180-00103	O-RING	JOINT TORIQUE	2					
390	K9001568	NIPPLE;LUBRIC.	MAMELON	1					
410	1.120-00172	PLUG	BOUCHON	1					
430	2.180-01051	RING;SEALING	BAGUE D'ETANCHEITE	1					
450	1.120-00172	PLUG	BOUCHON	1					
455	2.180-01051	SEALING RING	BAGUE D'ETOUPAGE	1					
490	K9001569	THREADED PIECE	MORCEAU FILETE	1					
510	K9001570	O-RING	JOINT TORIQUE	1					
530	K9001571	BALL	BOULE	1					
550	K9001572	SPRING;COMPR.	RESSORT	1					
570	K9001573	BREATHER	RENIFLARD	1					

DATE	DEC. 26, 2006
1st EDITION	

Fig. 4720 MIDDLE DISC - MISSION
DISQUE MOYEN

Serial No. ;

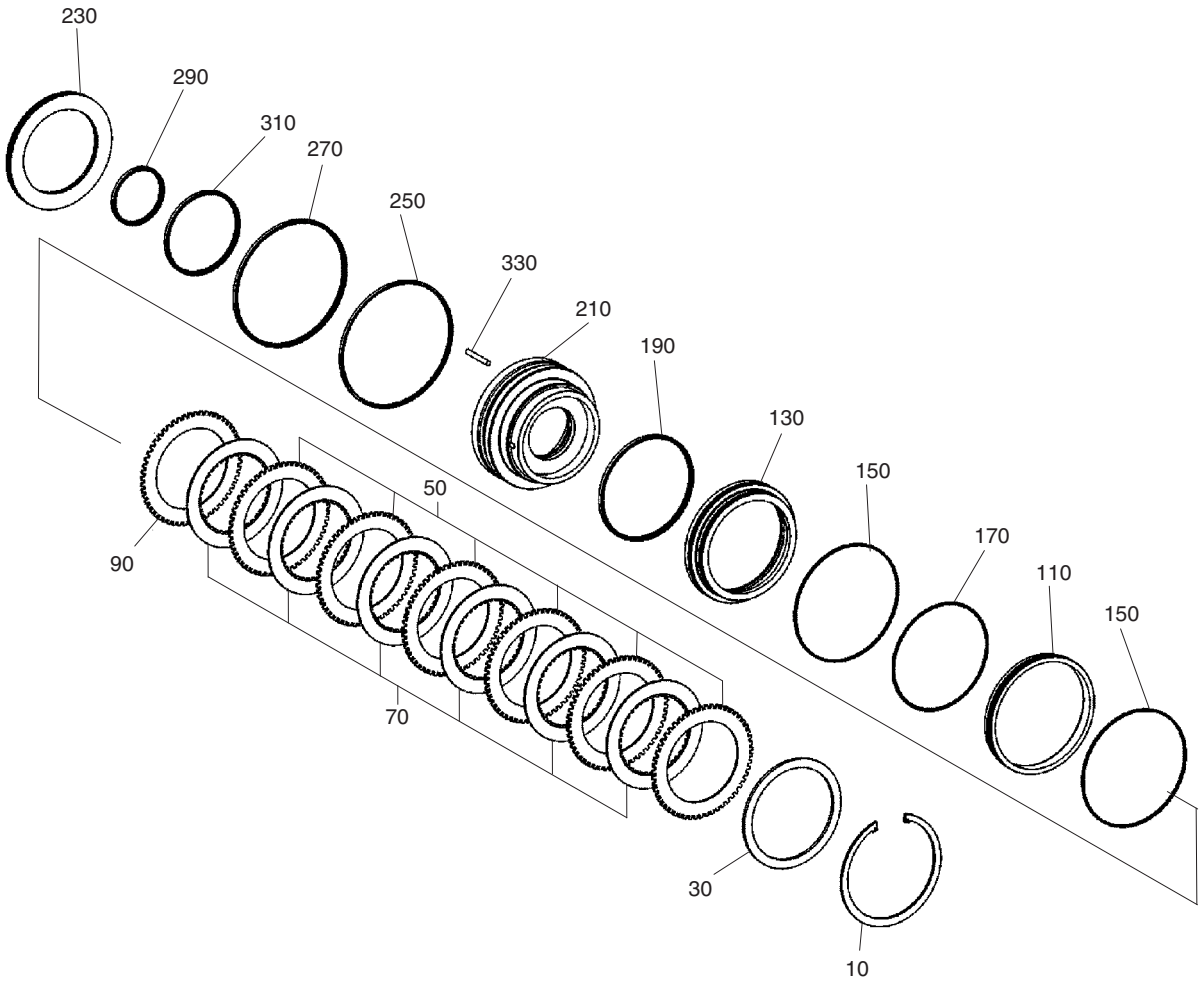

DATE	DEC. 26, 2006
1st EDITION	

Fig. 4720 MIDDLE DISC - MISSION
DISQUE MOYEN

Serial No. ;

Key No.	Part No.	Description	Description	Q'ty	S.C	Serial No.	ICA	Replaceable part	
								Part No.	Q'ty
4720-10	1.115-00042	RING;RETAINING	BAGUE	1					
30	2.114-00619	SHIM	CALE	1					
50	1.222-00042	DISC;O.CLUTCH S=2.9	DISQUE	6					
70	1.222-00030	DISC;I.CLUTCH	DISQUE INT.	6					
90	1.222-00043	DISC;O.CLUTCH B=3.0	DISQUE	1	R				
	1.222-00052	DISC;O.CLUTCH S=3.3	DISQUE	1	R				
	1.222-00042	DISC;O.CLUTCH S=2.9	DISQUE	1	R				
	2.222-00049	DISC;O.CLUTCH S=2.8	DISQUE	1	R				
	2.222-00051	DISC;O.CLUTCH B=3.5	DISQUE	1	R				
	2.222-00050	DISC;O.CLUTCH S=3.4	DISQUE	1	R				
	1.222-00053	DISC;O.CLUTCH B=3.7	DISQUE	1	R				
110	K9001574	RING	BAGUE	1					
130	K9001575	RING;PRESSURE	BAGUE	1					
150	K9001576	O-RING	JOINT TORIQUE	2					
170	1.180-00147	O-RING	JOINT TORIQUE	1					
190	K9001577	GASKET	JOINT	1					
210	K9001578	PISTON	PISTON	1					
230	K9001579	SPRING;SET	RESSORT	1					
250	K9001580	GASKET	JOINT	1					
270	K9001581	GASKET	JOINT	1					
290	K9001582	GASKET	JOINT	1					
310	K9001583	GASKET	JOINT	1					
330	K9001584	PIN	GOUPILLE	2					

DATE	DEC. 26, 2006
1st EDITION	

Fig. 4730 COUPLING - MISSION ACCOUPLEMENT

Serial No. ;

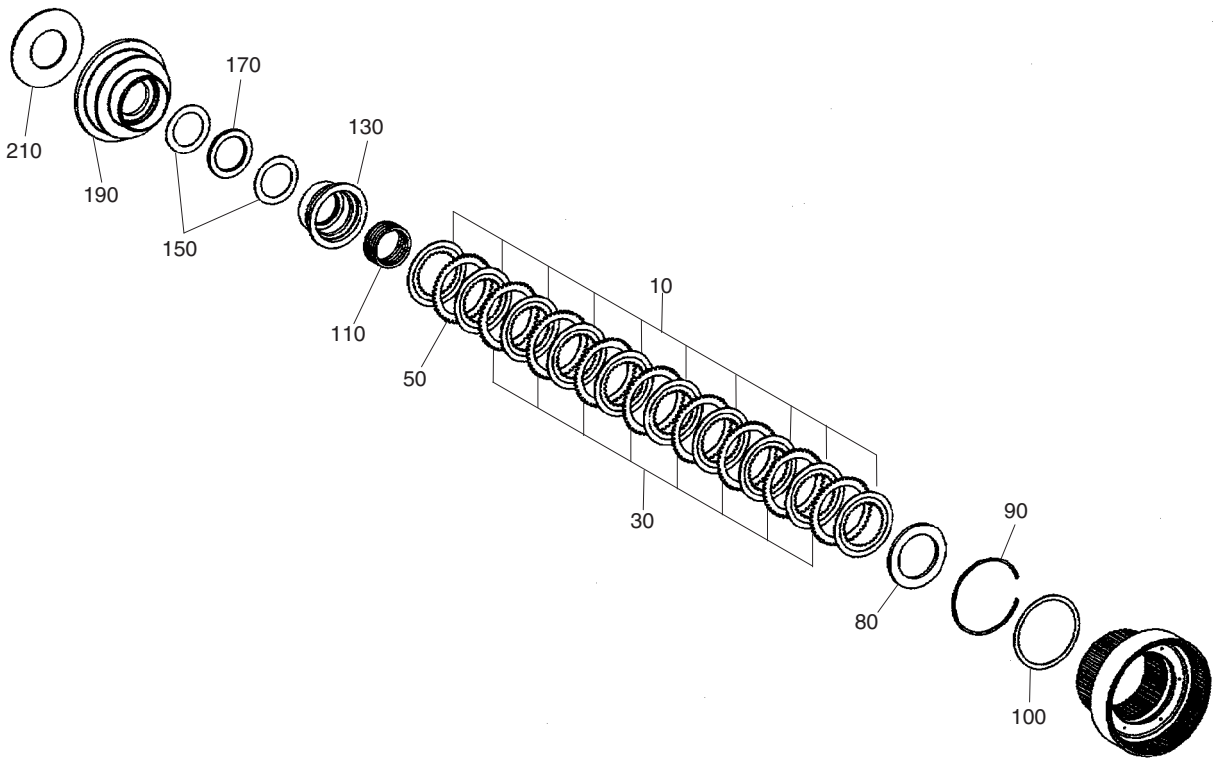

DATE	DEC. 26, 2006
1st EDITION	

Fig. 4730 COUPLING - MISSION ACCOUPLEMENT

Serial No. ;

Key No.	Part No.	Description	Description	Q'ty	S.C	Serial No.	ICA	Replaceable part	
								Part No.	Q'ty
4730-10	K9001585	DISC;LIN.CLUTCH	DISQUE	10					
30	K9001586	DISC;O.CLUTCH A=1.4	DISQUE	8					
50	K9001587	DISC;O.CLUTCH A=1.2	DISQUE	1	R				
	K9001586	DISC;O.CLUTCH A=1.4	DISQUE	1	R				
	K9001588	DISC;O.CLUTCH A=1.6	DISQUE	1	R				
80	K9001589	WASHER	RONDELLE	1					
90	K9001590	RING;SNAP	BAGUE D'ARRET	1					
100	K9001591	SHIM	CALE	1					
110	K9001592	SPRING;COMPR.	RESSORT	1					
130	K9001593	PRESSUREPIECE	POUSSOIR	1					
150	1.114-00384	WASHER;AXIAL	RONDELLE	2					
170	K9001594	CAGE;ROLLER	PIGNON	1					
190	K9001595	PISTON	PISTON	1					
210	K9001596	SPRING;SET	RESSORT	1					

DATE	DEC. 26, 2006
1st EDITION	

Fig. 4740 PLANETARY GEAR - MISSION VITESSE PLANETAIRE

Serial No. ;

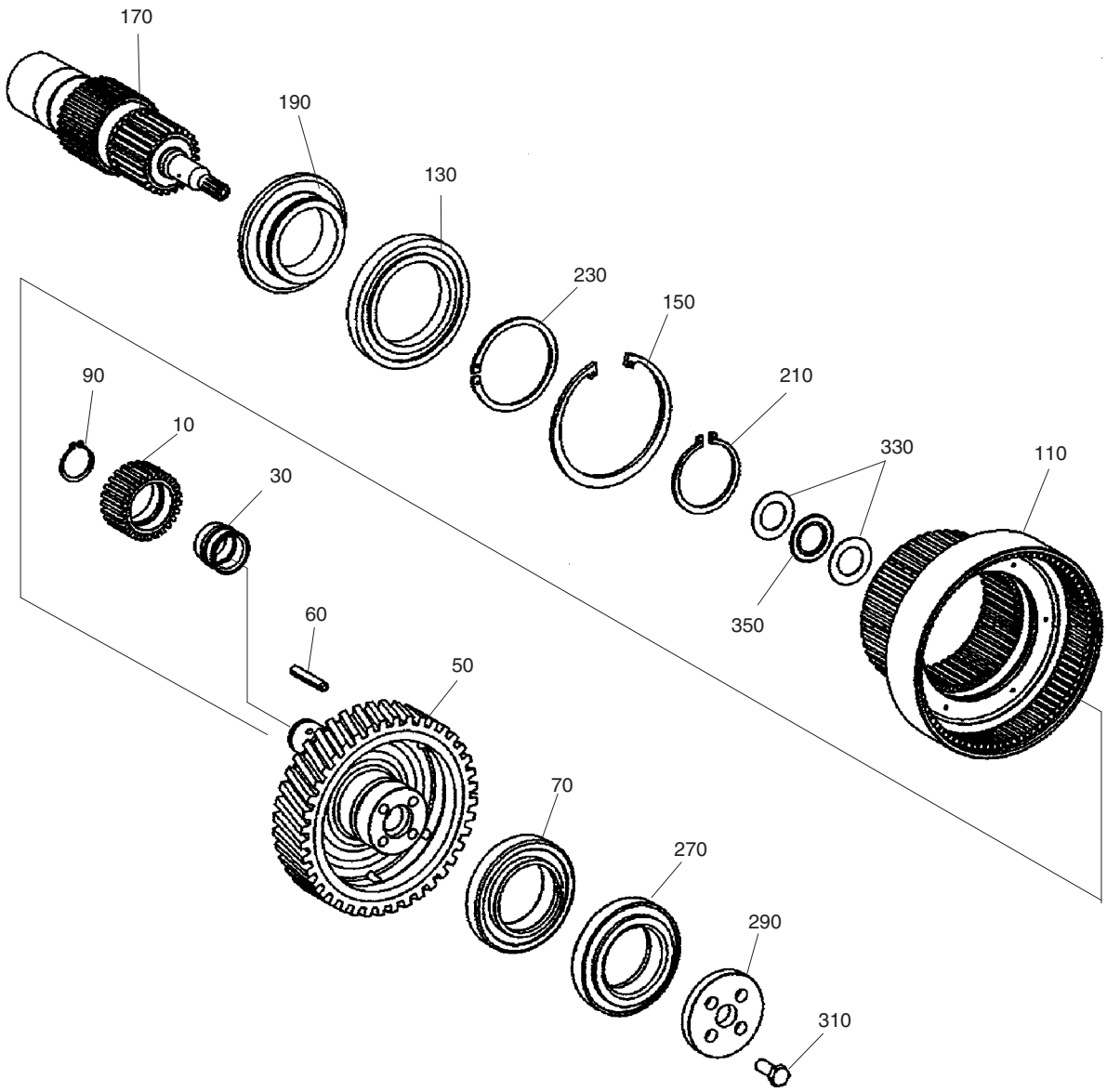

DATE	DEC. 26, 2006
1st EDITION	

Fig. 4740 PLANETARY GEAR - MISSION
VITESSE PLANETAIRE

Serial No. ;

Key No.	Part No.	Description	Description	Q'ty	S.C	Serial No.	ICA	Replaceable part	
								Part No.	Q'ty
4740-10	K9001597	GEAR;PLANET	PIGNON	3					
30	K9001598	BEARING;ROLLER	ROULEMENT	3					
50	K9001608	CARRIER;PLANET	PORTEUR DE PLANETE	1					
60	K9000174	PIN;SLOT	GOUPILLE	6					
70	K9001599	BEARING;TAPER ROLLER	ROULEMENT	1					
90	K9001600	RING;RETAINING	BAGUE	3					
110	K9001601	GEAR;RING	PIGNON	1					
130	K9001602	BEARING;BALL	ROULEMENT	1					
150	1.115-00066	RING;RETAINING	BAGUE	1					
170	K9001609	SHAFT;INPUT	ARBRE	1					
190	K9001603	DISC;CENTERING	DISQUE	1					
210	K9001604	RING;RETAINING	BAGUE	1					
230	K9001605	RING;RETAINING	BAGUE	1					
270	K9001599	BEARING;TAPER ROLLER	ROULEMENT	1					
290	K9001606	WASHER	RONDELLE	1					
310	2.120-00597	SCREW	VIS	4					
330	K9001607	WASHER	RONDELLE	2					
350	1.216-00002	NEEDLE	AIGUILLE	1					

DATE	DEC. 26, 2006
1st EDITION	

Fig. 4750 OUTPUT - MISSION RENDEMENT

Serial No. ;

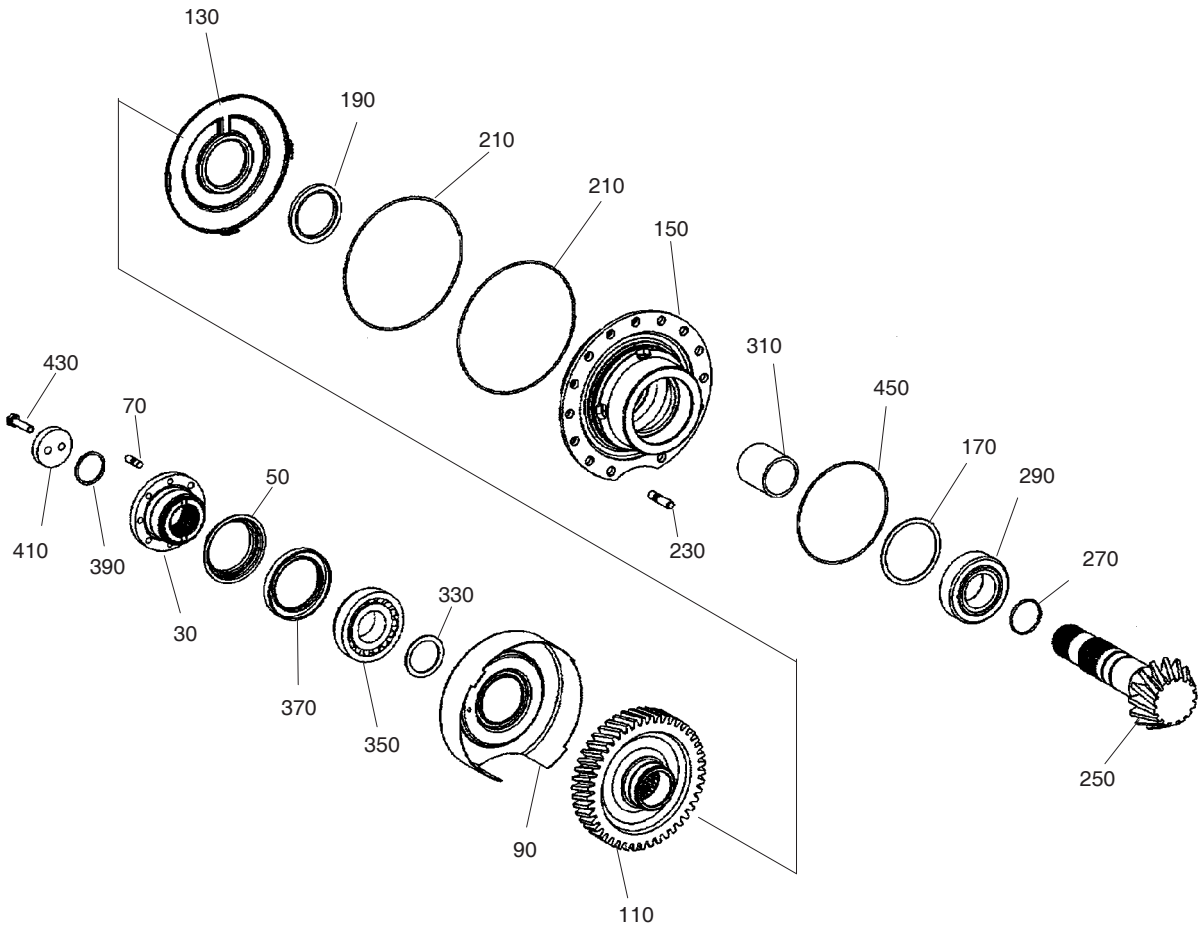

DATE	DEC. 26, 2006
1st EDITION	

Fig. 4750 OUTPUT - MISSION RENDEMENT

Serial No. ;

Key No.	Part No.	Description	Description	Q'ty	S.C	Serial No.	ICA	Replaceable part	
								Part No.	Q'ty
4750-30	2.181-00075	FLANGE;OUTPUT	BRIDE	1					
50	K9001658	SHEET	FEUILLE	1					
70	2.120-00328	STUD	BOULON	8					
90	K9001610	SHEET;SCREEN	FEUILLE	1					
110	K9001611	GEAR;OUTPUT	PIGNON	1					
130	K9001612	OIL;DEFLECTOR	DEFLECTEUR	1					
150	K9001613	COVER;BEARING	COUVERCLE	1					
170	2.114-00677	WASHER S=2.0	RONDELLE	1	R				
	2.114-00671	WASHER S=1.8	RONDELLE	1	R				
	2.114-00662	WASHER S=1.5	RONDELLE	1	R				
	1.114-00190	WASHER S=1.2	RONDELLE	1	R				
	1.114-00158	WASHER S=1.9	RONDELLE	1	R				
	1.114-00159	WASHER S=1.7	RONDELLE	1	R				
	1.114-00160	WASHER S=1.6	RONDELLE	1	R				
	1.114-00161	WASHER S=1.4	RONDELLE	1	R				
	K9001614	WASHER S=1.3	RONDELLE	1	R				
	K9001615	WASHER S=1.0	RONDELLE	1	R				
	K9001616	WASHER S=0.9	RONDELLE	1	R				
	K9001617	WASHER S=0.8	RONDELLE	1	R				
	K9001618	WASHER S=0.7	RONDELLE	1	R				
	K9001619	WASHER S=0.6	RONDELLE	1	R				
	K9001620	WASHER S=0.5	RONDELLE	1	R				
	K9001621	WASHER S=0.3	RONDELLE	1	R				
	K9001622	WASHER S=0.2	RONDELLE	1	R				
	K9001623	WASHER S=0.1	RONDELLE	1	R				
	K9001624	WASHER S=0.75	RONDELLE	1	R				
	K9001625	WASHER S=0.65	RONDELLE	1	R				
	K9001626	WASHER S=1.25	RONDELLE	1	R				
	K9001627	WASHER S=1.35	RONDELLE	1	R				
	K9001628	WASHER S=1.45	RONDELLE	1	R				
	K9001629	WASHER S=1.55	RONDELLE	1	R				
	K9001630	WASHER S=1.65	RONDELLE	1	R				
	K9001631	WASHER S=1.75	RONDELLE	1	R				
	K9001632	WASHER S=1.85	RONDELLE	1	R				
190	1.180-00538	SEAL;SHAFT	BAGUE ENTRET	1					
210	2.180-00436	O-RING	JOINT TORIQUE	2					
230	K9001633	STUD	BOULON	10					
250	K9001659	GEAR;PINION	PIGNON	1					

DATE	DEC. 26, 2006
1st EDITION	

Fig. 4750 OUTPUT - MISSION RENDEMENT

Serial No. ;

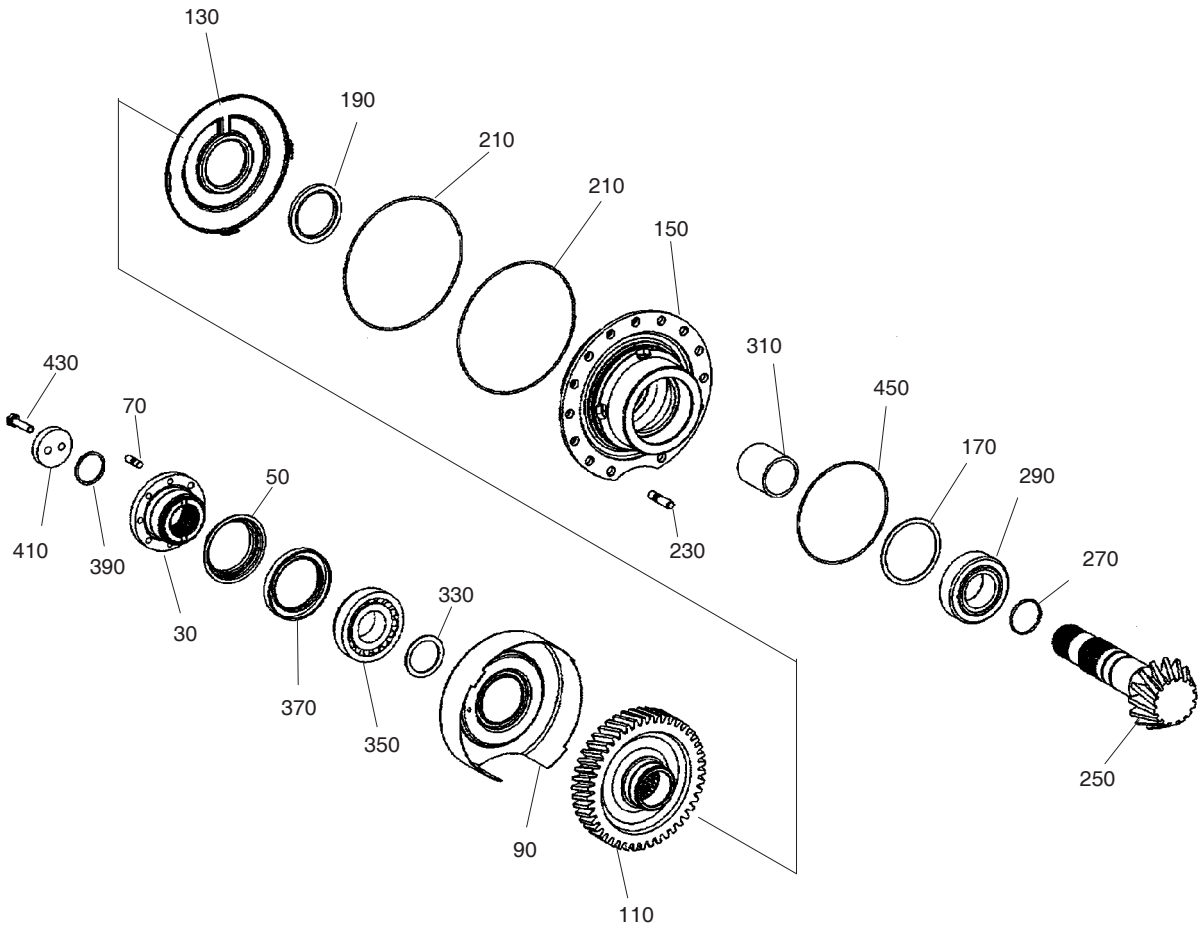

DATE	DEC. 26, 2006
1st EDITION	

Fig. 4750 OUTPUT - MISSION RENDEMENT

Serial No. ;

Key No.	Part No.	Description	Description	Q'ty	S.C	Serial No.	ICA	Replaceable part	
								Part No.	Q'ty
4750-270	1.180-00132	O-RING	JOINT TORIQUE	1					
290	1.109-00074	BEARING;ROLLER	ROULEMENT	1					
310	K9001634	BUSH	DOUILLE	1					
330	1.114-00393	RING S=2.0	BAGUE	1	R				
	1.114-00394	RING S=2.05	BAGUE	1	R				
	1.114-00395	RING S=2.1	BAGUE	1	R				
	1.114-00396	RING S=2.15	BAGUE	1	R				
	1.114-00397	RING S=2.2	BAGUE	1	R				
	1.114-00398	RING S=2.25	BAGUE	1	R				
	1.114-00399	RING S=2.3	BAGUE	1	R				
	1.114-00400	RING S=2.35	BAGUE	1	R				
	1.114-00401	RING S=2.40	BAGUE	1	R				
	1.114-00402	RING S=2.45	BAGUE	1	R				
	1.114-00403	RING S=2.50	BAGUE	1	R				
	1.114-00404	RING S=2.55	BAGUE	1	R				
	1.114-00405	RING S=2.60	BAGUE	1	R				
	1.114-00406	RING S=2.65	BAGUE	1	R				
	1.114-00388	RING S=2.75	BAGUE	1	R				
	1.114-00389	RING S=2.80	BAGUE	1	R				
	1.114-00390	RING S=2.85	BAGUE	1	R				
	K9001635	RING S=2.90	BAGUE	1	R				
	K9001636	RING S=2.93	BAGUE	1	R				
	K9001637	RING S=2.96	BAGUE	1	R				
	K9001638	RING S=2.99	BAGUE	1	R				
	K9001639	RING S=3.02	BAGUE	1	R				
	K9001640	RING S=2.07	BAGUE	1	R				
	K9001641	RING S=2.13	BAGUE	1	R				
	K9001642	RING S=2.17	BAGUE	1	R				
	K9001643	RING S=2.23	BAGUE	1	R				
	K9001644	RING S=2.27	BAGUE	1	R				
	K9001645	RING S=2.33	BAGUE	1	R				
	K9001646	RING S=2.37	BAGUE	1	R				
	K9001647	RING S=2.43	BAGUE	1	R				
	K9001648	RING S=2.47	BAGUE	1	R				
	K9001649	RING S=2.53	BAGUE	1	R				
	K9001650	RING S=2.57	BAGUE	1	R				
	K9001651	RING S=2.63	BAGUE	1	R				
	K9001652	RING S=2.67	BAGUE	1	R				

DATE	DEC. 26, 2006
1st EDITION	

Fig. 4750 OUTPUT - MISSION RENDEMENT

Serial No. ;

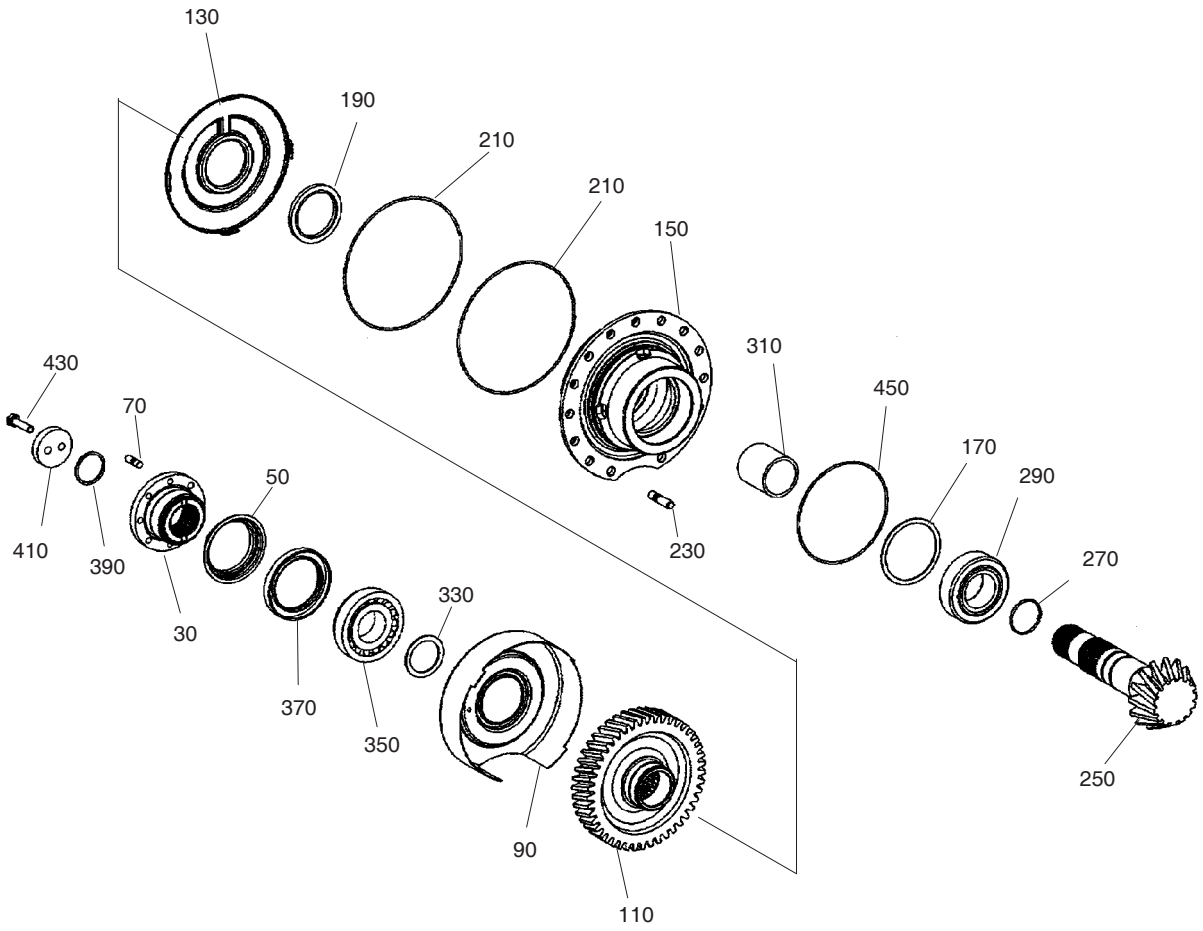

DATE	DEC. 26, 2006
1st EDITION	

Fig. 4750 OUTPUT - MISSION RENDEMENT

Serial No. ;

Key No.	Part No.	Description	Description	Q'ty	S.C	Serial No.	ICA	Replaceable part	
								Part No.	Q'ty
4750-330	K9001653	RING S=2.73	BAGUE	1	R				
	K9001654	RING S=2.77	BAGUE	1	R				
	K9001655	RING S=2.83	BAGUE	1	R				
350	1.109-00091	BEARING;ROLLER	ROULEMENT	1					
370	K9001656	SEAL;SHAFT	BAGUE ENTRET	1					
390	1.180-00131	O-RING	JOINT TORIQUE	1					
410	2.114-00871	WASHER	RONDELLE	1					
430	1.120-00142	SCREW	VIS	2					
450	K9001657	O-RING	JOINT TORIQUE	1					

DATE	JUN. 30, 2007
REV.NO.	EXB07-06

Fig. 4760 GEAR SHIFT SYSTEM - MISSION
SYSTEME DE CHANGEMENT DE VITESSE

Serial No. ;

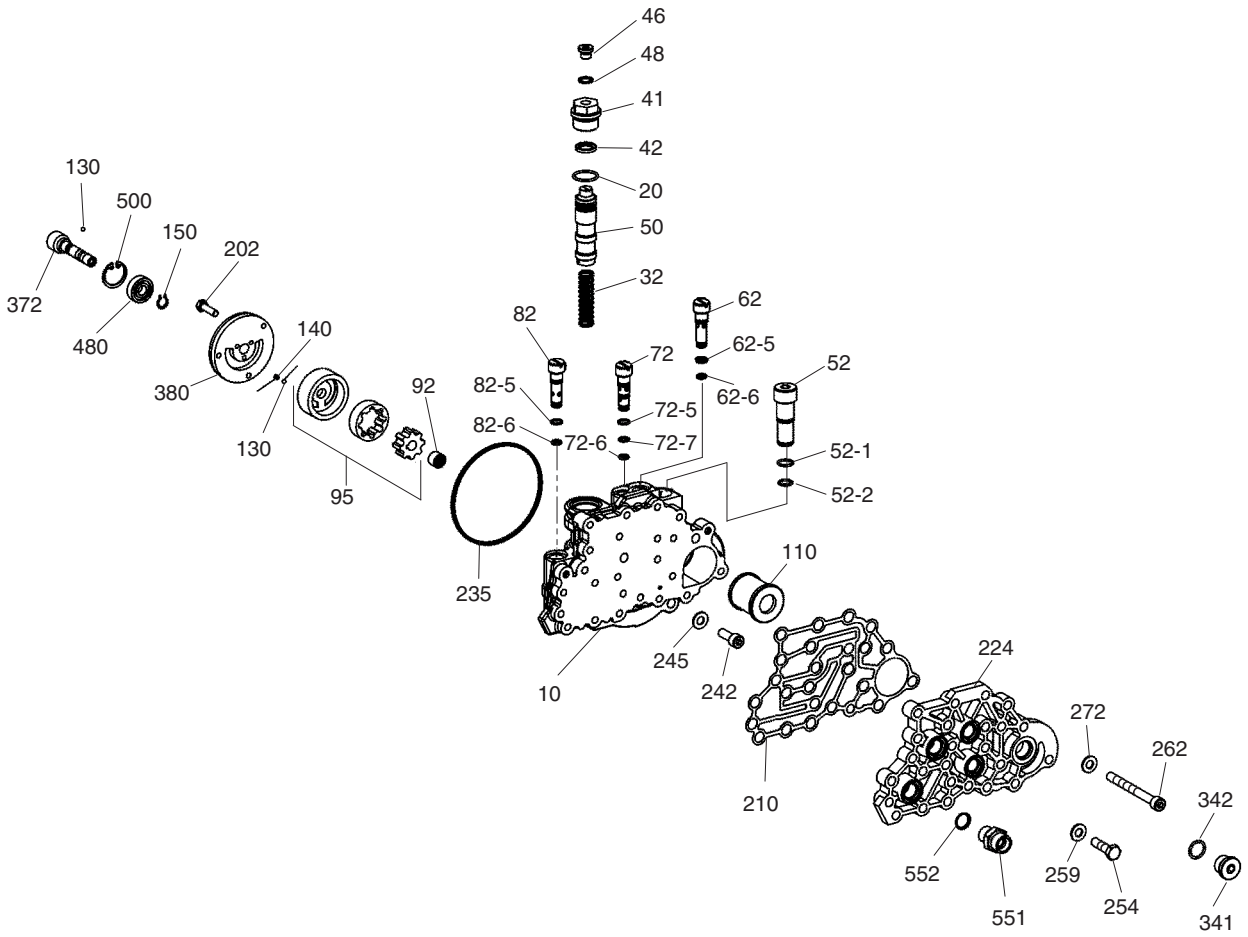

DATE	JUN. 30, 2007
REV. NO.	EXB07-06

Fig. 4760 GEAR SHIFT SYSTEM - MISSION
SYSTEME DE CHANGEMENT DE VITESSE

Serial No. ;

Key No.	Part No.	Description	Description	Q'ty	S.C	Serial No.	ICA	Replaceable part	
								Part No.	Q'ty
4760--	**K9005736**	**GOVERNOR ASS'Y**	GOVERNEUR	-	D				
10	K9001660	HOUSING	LOGEMENT	1					
20	2.180-00081	GASKET	JOINT	1					
32	1.131-00091	SPRING;COMPR.	RESSORT	1					
41	1.181-00127	PLUG;SCREW	BOUCHON	1					
42	1.180-00137	O-RING	JOINT TORIQUE	1					
46	1.120-00172	PLUG	BOUCHON	1					
48	2.180-01051	RING;SEALING	BAGUE D'ETANCHEITE	1					
50	1.409-00084	PISTON	PISTON	1					
52	1.420-00085	RELIEF VALVE	SOULAGEMENT VANNE	1					
52-1	2180-1216D14	. O-RING	. JOINT TORIQUE	1					
52-2	1.180-00148	. O-RING	. JOINT TORIQUE	1					
62	1.420-00043	VALVE;CHECK	CAPTEUR	1					
62-5	1.180-00139	. O-RING	. JOINT TORIQUE	1					
62-6	1.180-00140	. O-RING	. JOINT TORIQUE	1					
72	1.420-00044	VALVE;CHECK	CAPTEUR	1					
72-5	1.180-00139	. O-RING	. JOINT TORIQUE	1					
72-6	1.180-00140	. O-RING	. JOINT TORIQUE	1					
72-7	180-00408	. O-RING	. JOINT TORIQUE	1					
82	1.420-00045	VALVE;CHECK	CAPTEUR	1					
82-5	1.180-00139	O-RING	JOINT TORIQUE	1					
82-6	1.180-00140	O-RING	JOINT TORIQUE	1					
92	1.109-00062	NEEDLE;SLEEVE	AIGUILLE	1					
95	K9001661	SET;ROTOR	JEU DE ROTORS	1					
110	1.471-00004	FILTER;SCREEN	FILTRE	1					
130	1.148-00008	BALL	BOULE	4					
140	1.131-00111	SPRING;COMPR.	RESSORT	3					
150	1.115-00049	RING;RETAINING	BAGUE	1					
202	1.120-00139	SCREW	VIS	3					
210	1.180-00044	GASKET	JOINT	1					
224	1.430-00026	COVER	COUVERCLE	1					
235	1.180-00130	O-RING	JOINT TORIQUE	2					
242	1.120-00107	SCREW;CAP	VIS	1					
245	1.114-00285	WASHER	RONDELLE	1					
254	1.120-00140	SCREW	VIS	23					
259	1.114-00285	WASHER	RONDELLE	23					
262	1.120-00108	SCREW;CAP	VIS	2					
272	1.114-00285	WASHER	RONDELLE	2					

DATE	JUN. 30, 2007
REV.NO.	EXB07-06

Fig. 4760 GEAR SHIFT SYSTEM - MISSION
SYSTEME DE CHANGEMENT DE VITESSE

Serial No. ;

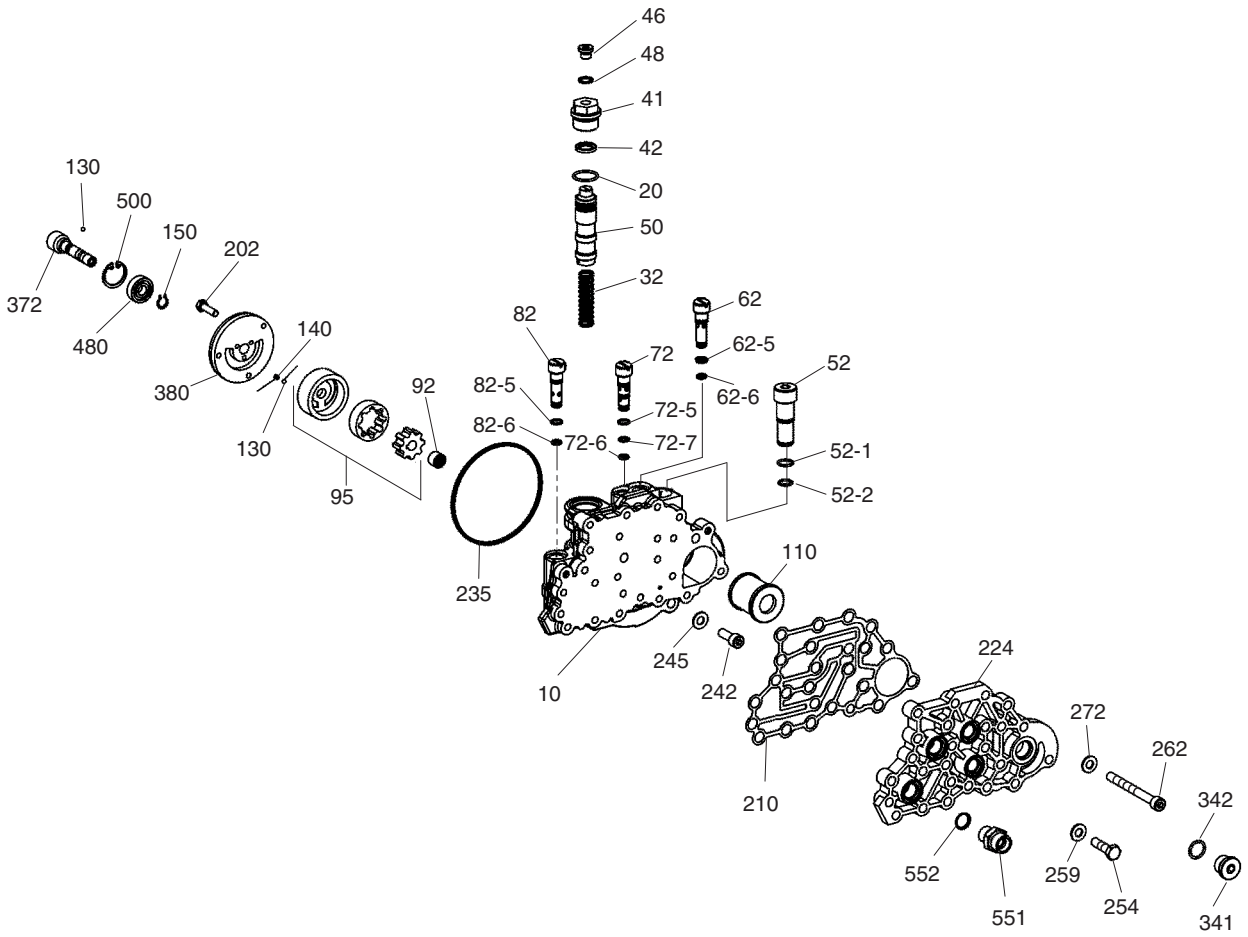

DATE	JUN. 30, 2007
REV. NO.	EXB07-06

Fig. 4760 GEAR SHIFT SYSTEM - MISSION
SYSTEME DE CHANGEMENT DE VITESSE

Serial No. ;

Key No.	Part No.	Description	Description	Q'ty	S.C	Serial No.	ICA	Replaceable part	
								Part No.	Q'ty
4760-341	1.120-00173	PLUG;SCREW	BOUCHON	1					
342	1.180-00060	O-RING	JOINT TORIQUE	1					
372	K9001662	SHAFT;PUMP	ARBRE	1					
380	1.430-00069	COVER;PUMP	COUVERCLE	1					
480	1.109-00020	BEARING;BALL	ROULEMENT	1					
500	1.115-00050	RING;RETAINING	BAGUE	1					
551	2.181-00438	SOCKET	CLE A DOUILLE	2					
552	1.180-00103	O-RING	JOINT TORIQUE	2					

DATE	DEC. 26, 2006
1st EDITION	

Fig. 4770 OIL PIPE - MISSION
PIPE D'HUILE

Serial No. ;

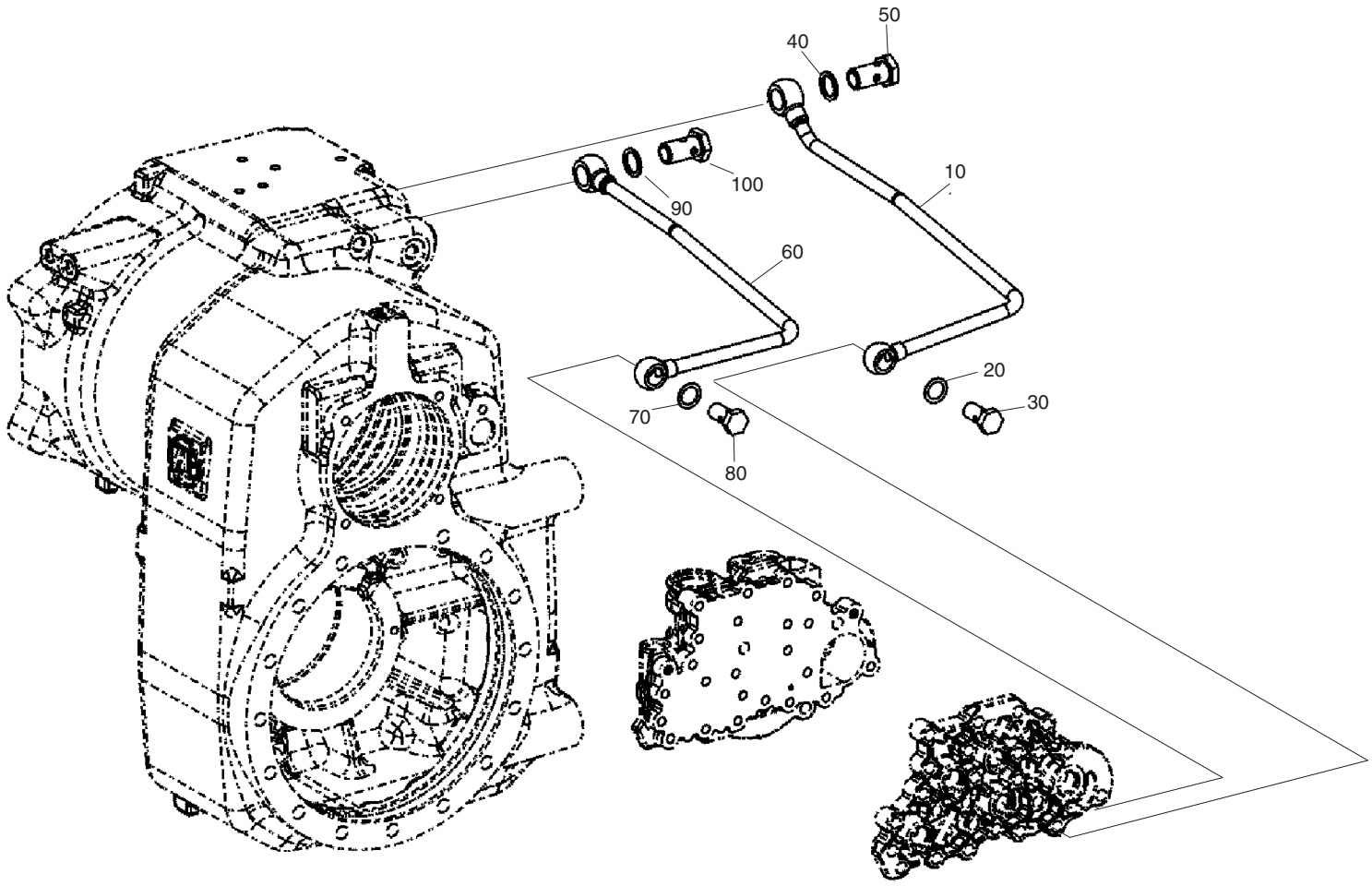

DATE	DEC. 26, 2006
1st EDITION	

Fig. 4770 OIL PIPE - MISSION
PIPE D'HUILE

Serial No. ;

Key No.	Part No.	Description	Description	Q'ty	S.C	Serial No.	ICA	Replaceable part	
								Part No.	Q'ty
4770-10	K9001663	PIPE	TUYAU	1					
20	K9001664	RING;SEALING	BAGUE D'ETANCHEITE	2					
30	K9001665	SCREW;UNION	VIS	1					
40	K9000622	RING;SEALING	BAGUE D'ETANCHEITE	2					
50	K9001666	SCREW;UNION	VIS	1					
60	K9001667	PIPE	TUYAU	1					
70	K9001664	RING;SEALING	BAGUE D'ETANCHEITE	2					
80	K9001665	SCREW;UNION	VIS	1					
90	K9000622	RING;SEALING	BAGUE D'ETANCHEITE	2					
100	K9001666	SCREW;UNION	VIS	1					

Fig. 5100 TOOLS OUTILLAGE

Serial No. ;

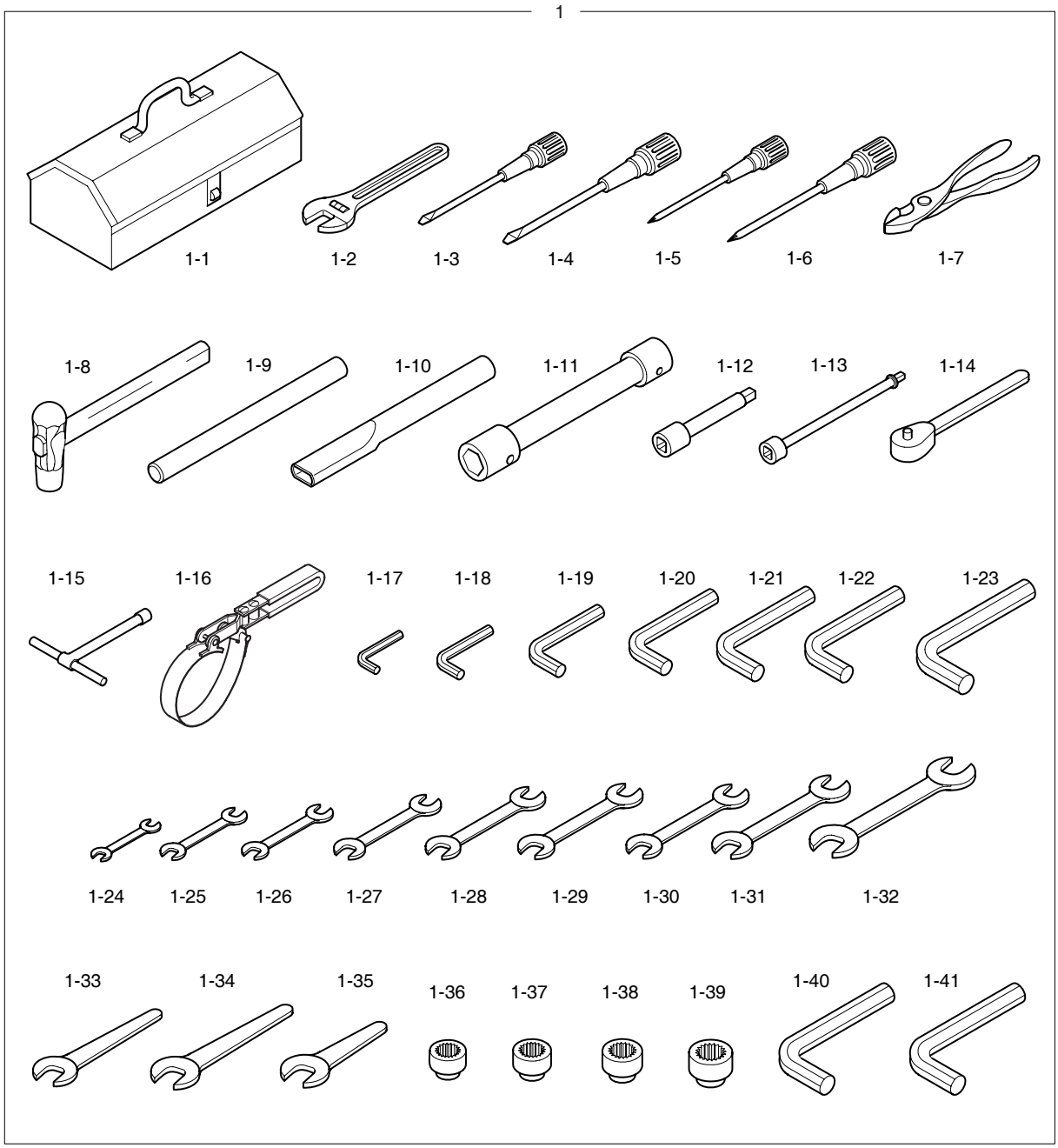

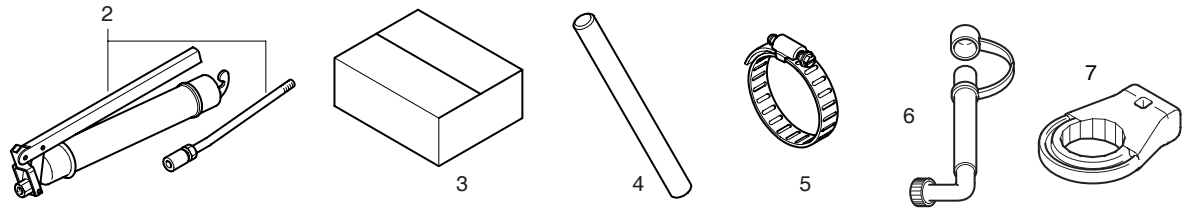

DATE	DEC. 26, 2006
1st EDITION	

Fig. 5100 TOOLS OUTILLAGE

Serial No. ;

Key No.	Part No.	Description	Description	Q'ty	S.C	Serial No.	ICA	Replaceable part	
								Part No.	Q'ty
5100--	K1026516	TOOLS	OUTILLAGE	-	D				
1	2199-1063F35A	TOOL ASS'Y	OUTILLAGE	1					
1-1	2199-9043	. BOX;TOOL	. BOITE	1					
1-2	T6580016	. WRENCH;ADJUST	. CLE A MOLETTE	1					
1-3	T7050003	. DRIVER(-)	. TOURNEVIS	1					
1-4	T7050013	. DRIVER	. TOURNEVIS	1					
1-5	T7050021	. DRIVER	. TOURNEVIS	1					
1-6	T7050022	. DRIVER	. TOURNEVIS	1					
1-7	T7500004	. PILER;COMBI	. GERBEUR	1					
1-8	T7260057	. HAMMER	. MARTEAU	1					
1-9	2199-1004	. BAR	. CAOUTCHOUC	1					
1-10	2199-1005	. PIPE	. CONDUITE	1					
1-11	199-00002	. WRENCH	. CLE PLATE	1					
1-12	T6690012	. BAR;EXTENSION	. RALLONGE	1					
1-13	T6690013	. BAR;EXTENSION	. RALLONGE	1					
1-14	T6750003	. HANDLE;RATCHET	. POIGNEE A CLIQUET	1					
1-15	2199-9009	. CLIP;DRIVER	. AGRAFE	1					
1-16	K1008167	. WRENCH;FILTER	. CLE A FILTRE	1					
1-17	T6550005	. L-WRENCH	. CLE MALE	1					
1-18	T6550007	. L-WRENCH	. CLE MALE	1					
1-19	T6550009	. L-WRENCH	. CLE MALE	1					
1-20	T6550011	. L-WRENCH	. CLE MALE	1					
1-21	T6550013	. L-WRENCH	. CLE MALE	1					
1-22	T6550015	. WRENCH;HEX	. PAPIER ONDULE	1					
1-23	T6550020	. L-WRENCH	. CLE MALE	1					
1-24	T6510062	. SPANNER	. CLE PLATE	1					
1-25	T6510066	. SPANNER	. CLE PLATE	1					
1-26	T6510070	. SPANNER	. CLE PLATE	1					
1-27	T6510072	. SPANNER	. CLE PLATE	1					
1-28	T6510075	. SPANNER	. CLE PLATE	1					
1-29	T6510079	. SPANNER	. CLE PLATE	1					
1-30	T6510081	. SPANNER	. CLE PLATE	1					
1-31	T6510087	. SPANNER	. CLE PLATE	1					
1-32	T6510091	. SPANNER	. CLE PLATE	1					
1-33	T6510023	. SPANNER	. CLE PLATE	1					
1-34	T6510025	. SPANNER	. CLE PLATE	1					
1-35	T6510027	. SPANNER	. CLE PLATE	1					
1-36	T6600197	. SOCKET;WRENCH	. CLE PLATE	1					

DATE	DEC. 26, 2006
1st EDITION	

Fig. 5100 TOOLS OUTILLAGE

Serial No. ;

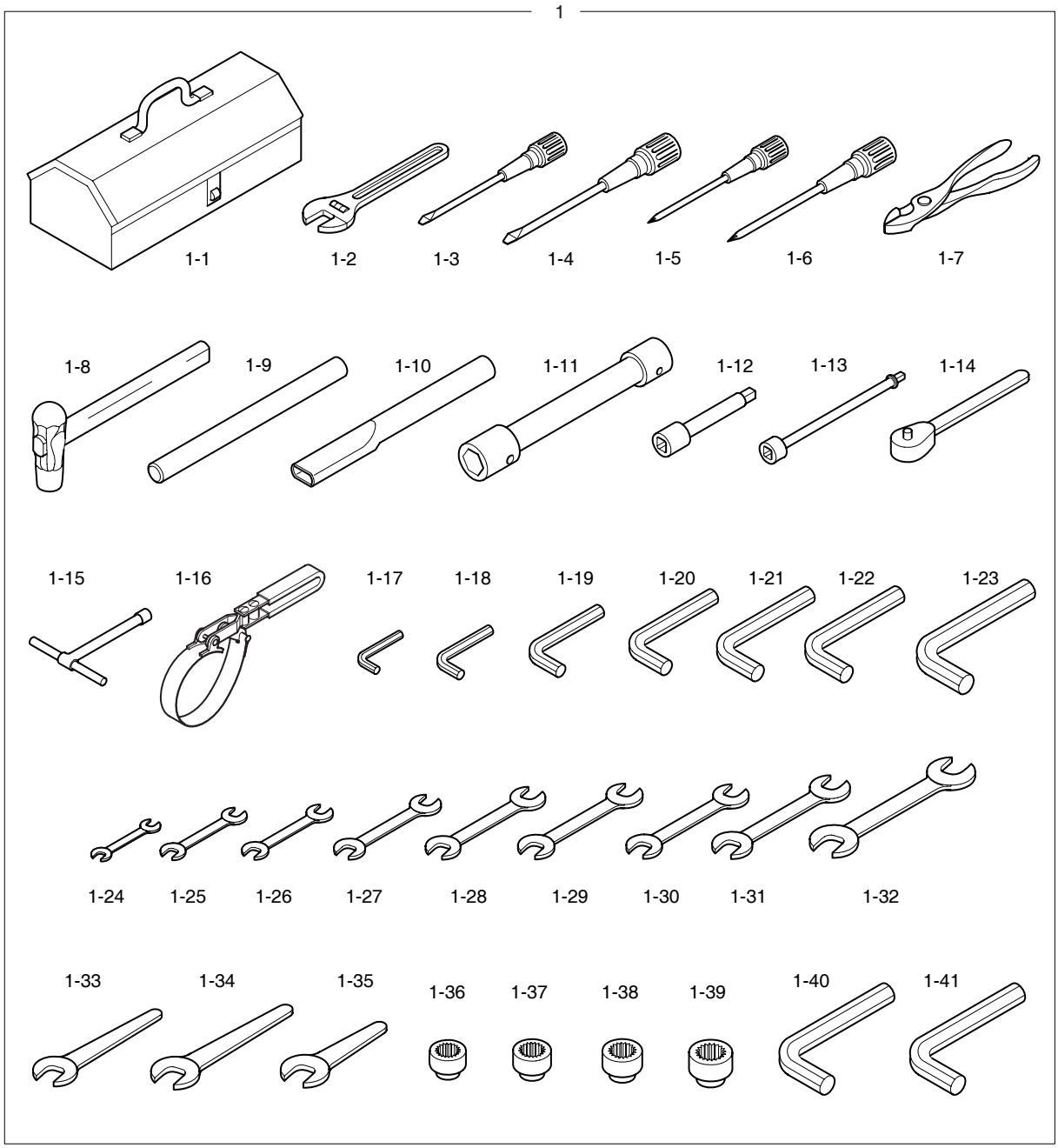

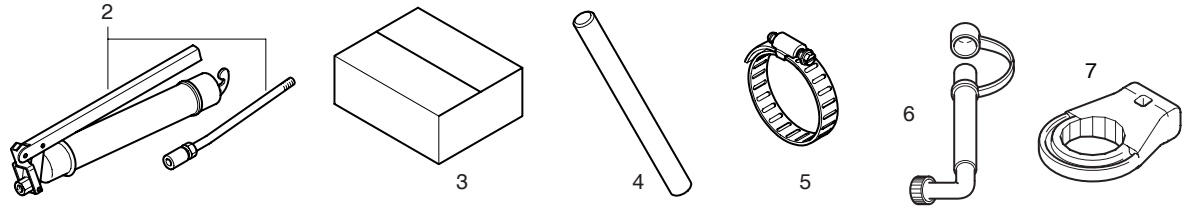

DATE	DEC. 26, 2006
1st EDITION	

Fig. 5100 TOOLS OUTILLAGE

Serial No. ;

Key No.	Part No.	Description	Description	Q'ty	S.C	Serial No.	ICA	Replaceable part	
								Part No.	Q'ty
5100-1-37	T6600201	. SOCKET;WRENCH	. CLE PLATE	1					
1-38	T6600211	. SOCKET;WRENCH	. CLE PLATE	1					
1-39	T6600223	. SOCKET;WRENCH	. CLE PLATE	1					
1-40	T6550022	. L-WRENCH	. CLE MALE	1					
1-41	T6550006	. L-WRENCH	. CLE MALE	1					
2	2199-9008	GREASE GUN	PISTOLET DE GRAISSAGE	1					
3	2199-9010	PAPER;CORRUGATED	PAPIER ONDULE	1					
4	2199-1019	HANDLE	POIGNEE	1					
5	2124-1024D6	BAND	ATTACHE DE TUYAU	1					
6	K1007669	HOSE;OIL DRAIN	TUYAU FLEXIBLE	1					
7	K1006586	TOOL;PRE FILTER	OUTIL	1					

DATE	JUN. 30, 2007
REV.NO.	EXB07-06

Fig. 5110 SPARE PARTS PIECES DE RECHANGE

Serial No. ;

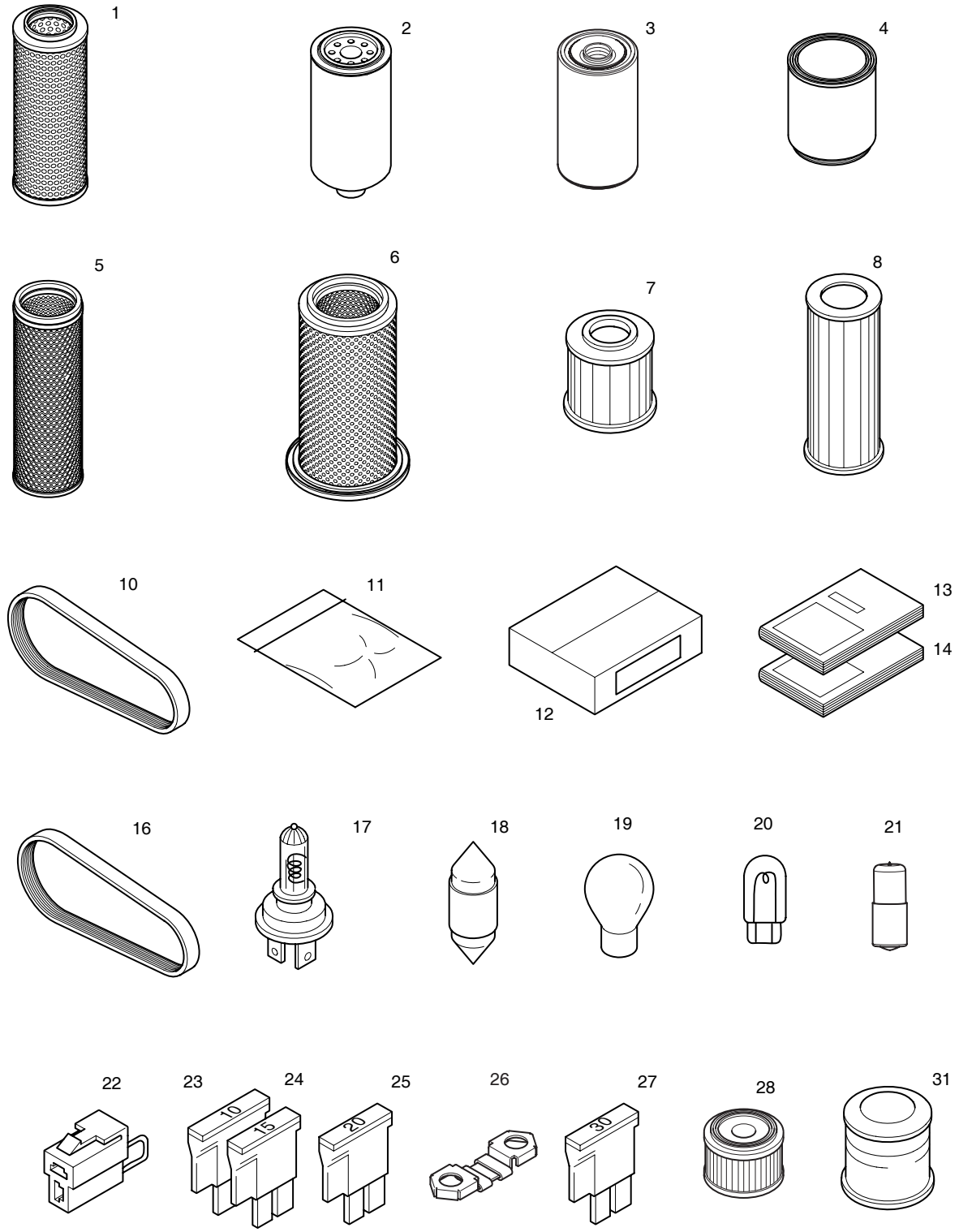

DATE	JUN. 30, 2007
REV. NO.	EXB07-06

Fig. 5110 SPARE PARTS PIECES DE RECHANGE

Serial No. ;

Key No.	Part No.	Description	Description	Q'ty	S.C	Serial No.	ICA	Replaceable part	
								Part No.	Q'ty
5110--	K1026517	SPARE PARTS	BAGUE D'ECARTEMENT	-	D				
1	474-00055	ELEMENT;RETURN FILTER	ELEMENT	1					
2	65.12503-5026	FILTER;E/G FUEL	FILTRE A GAZOLE	1					
3	65.05510-5032	FILTER;E/G OIL	FILTRE D'HUILE	1					
4	K1006530	FILTER;PRE FUEL	FILTRE	1					
5	474-00039	ELEMENT;INNER	ELEMENT	1					
6	474-00040	ELEMENT;OUTER	ELEMENT	1					
7	2471-1154	ELEMENT;FILTER(PILOT)	ELEMENT	1					
8	474-00009	ELEMENT;BRAKE FILTER	ELEMENT	1					
10	65.96801-0194	BELT;FAN	CEINTURE	1					
11	2180-9153	O-RING KIT	JOINT TORIQUE	1					
12	2512-1095D1	BOX;SPARE PARTS	BOITE	1					
13	K1025589EF	PARTS BOOK	LIVRE DE PIECES	1					
14	K1024898E	OPERATION MANUAL	MANUEL D'UTILISATION	1					
16	2106-1019D25	BELT;AIRCON	CEINTURE	1					
17	515-00006	BULB	AMPOULE	1					
18	2515-1021D1	BULB	AMPOULE	2					
19	515-00015	BULB	AMPOULE	2					
20	515-00012A	BULB	AMPOULE	2					
21	515-00005	BULB	AMPOULE	2					
22	2527-1023A	FUSIBLE LINK	FUSIBLE	1					
23	2527-1016	FUSE;BLADE	LAME DE FUSIBLE	2					
24	2527-1017	FUSE;BLADE	LAME DE FUSIBLE	2					
25	2527-1018	FUSE;BLADE	LAME DE FUSIBLE	2					
26	527-00005	FUSE;PREHEAT RELAY	FUSIBLE	1					
27	2527-1025	FUSE;BLADE	LAME DE FUSIBLE	2					
28	**K1029257**	**ELEMENT;AIR BREATHER**	ELEMENT	1		**5013–**			
31	K1006854	OIL;ENGINE	RESERVOIR D'HUILE	4					

DATE	JUN. 30, 2007
REV.NO.	EXB07-06

Fig. 5120 DECAL - CABIN(EXPORT) DECALQUE

Serial No. ;

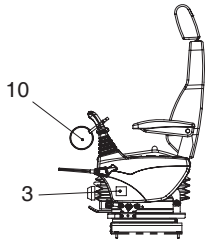

LEFT SIDE VIEW OF
LEFT CONTROL STAND

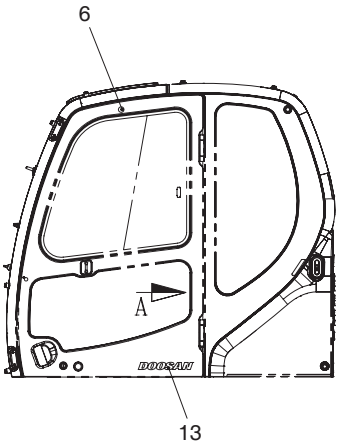

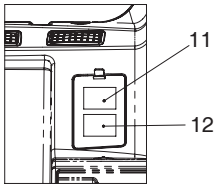

VIEW A
FUSE BOX

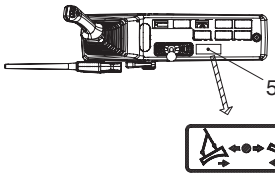

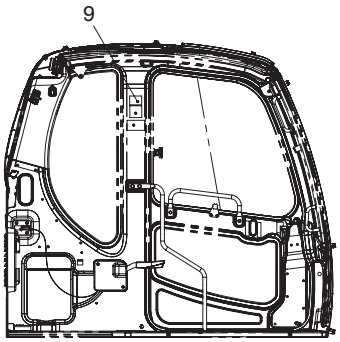

LEFT SIDE VIEW
OF CABIN INSIDE

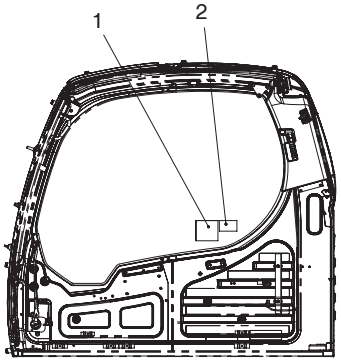

RIGHT SIDE VIEW
OF CABIN INSIDE

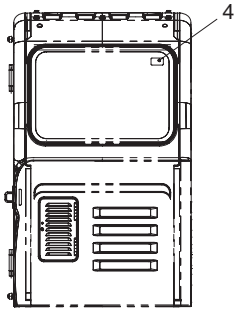

Serial No. 5001 ~ 5012

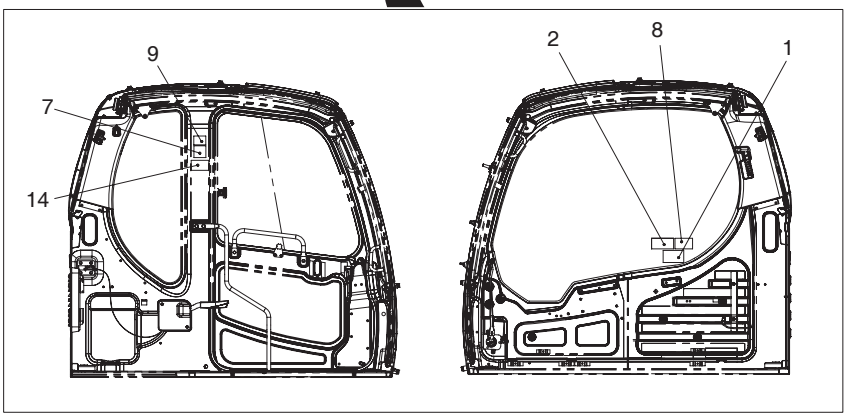

DATE	JUN. 30, 2007
REV. NO.	EXB07-06

Fig. 5120 DECAL - CABIN(EXPORT) DECALQUE

Serial No. ;

Key No.	Part No.	Description	Description	Q'ty	S.C	Serial No.	ICA	Replaceable part	
								Part No.	Q'ty
5120--	**K1026336A**	**NAME PLATE ASS'Y**	PLAQUE D'IDENTIFICATION	-	D				
1	190-00742	PLATE;NAME	PLAQUE D'IDENTIFICATION	1		5001–5012			
	K1034084	**PLATE;NAME**	PLAQUE D'IDENTIFICATION	1		**5013–**			
2	2190-3345	PLATE;NAME	PLAQUE D'IDENTIFICATION	1					
3	K1011358	DECAL(LEVER LOCK)	DECAL	1					
4	2190-2480	PLATE;NAME(HAMMER)	PLAQUE D'IDENTIFICATION	1					
5	2190-2475	PLATE;NAME(DOZER LEVER)	PLAQUE D'IDENTIFICATION	1					
6	**2116-9003**	**PLATE**	PLAQUE	1		**5001–5012**			
7	**190-00693**	**PLATE;NAME(WARNING)**	PLAQUE D'IDENTIFICATION	1		**5001–5012**			
8	**190-00689**	**PLATE;NAME**	PLAQUE D'IDENTIFICATION	1		**5001–5012**			
9	2190-3388	PLATE;NAME(SIDE WINDOW)	PLAQUE D'IDENTIFICATION	1					
10	190-00695	PLATE;NAME	PLAQUE D'IDENTIFICATION	1		5001–5012	I	190-00695A	1
	190-00695A	**PLATE;NAME**	PLAQUE D'IDENTIFICATION	1		**5013–**			
11	K1008019D7	DECAL(FUSE BOX)	DECAL	1					
12	K1008019D8	DECAL(FUSE BOX)	DECAL	1					
13	K1011743D6	DECAL(DOOSAN)	DECAL	1					
14	**K1012583**	**DECAL**	DECAL	1		**5001–5012**			

DATE	JUN. 30, 2007
REV.NO.	EXB07-06

Fig. 5130 DECAL - EXPORT DECALQUE

Serial No. ;

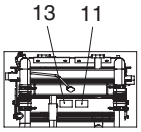

DETAIL **A**

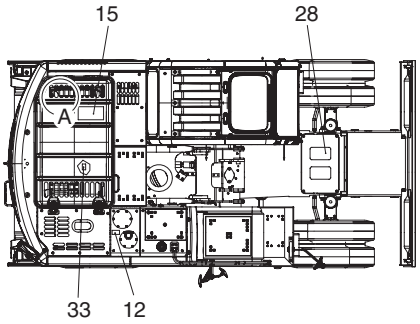

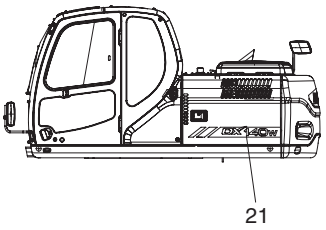

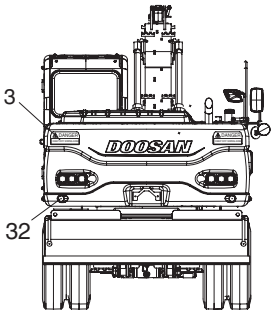

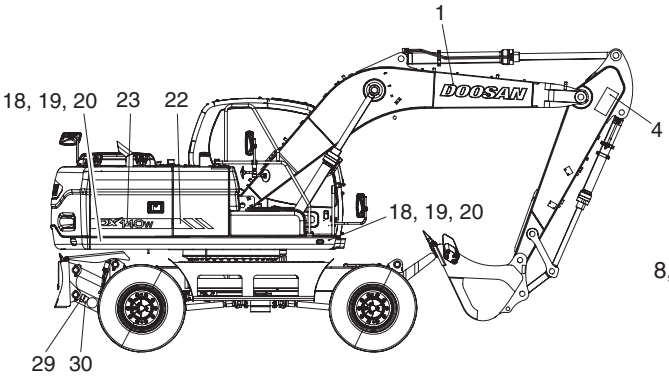

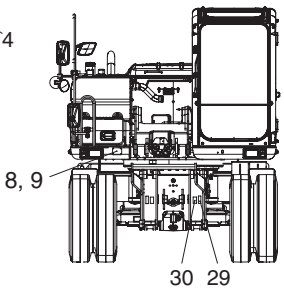

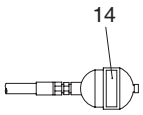

TOOL BOX

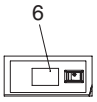

ACCUMULATOR

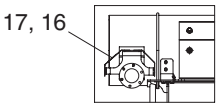

TURBO CHARGER COVER

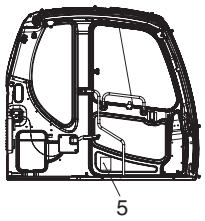

RIGHT SIDE VIEW OF CABIN INSIDE

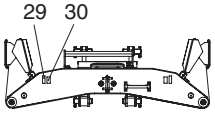

FRONT OUTRIGGER

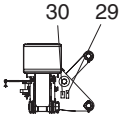

REAR OUTRIGGER

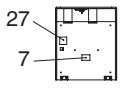

BATTERY DOOR

DATE	JUN. 30, 2007
REV. NO.	EXB07-06

Fig. 5130 DECAL - EXPORT
DECALQUE

Serial No. ;

Key No.	Part No.	Description	Description	Q'ty	S.C	Serial No.	ICA	Replaceable part	
								Part No.	Q'ty
5130--	**K1026159E**	**NAME PLATE ASS'Y**	PLAQUE D'IDENTIFICATION	-	D				
1	K1011645D1	DECAL	DECALQUE	2					
3	2190-3379A	PLATE;NAME	PLAQUE	2					
4	190-00652	PLATE;NAME	PLAQUE	2					
5	2190-2556D145	PLATE;NAME	PLAQUE	1					
6	K1026063	DECAL	DECALQUE	1		5001–5014	I	K1026063A	1
	K1026063A	**DECAL**	DECALQUE	1		**5015–**			
7	2190-2533A	PLATE;NAME	PLAQUE	1					
8	K1011647B	DECAL	DECALQUE	1					
9	2122-1002D2	RIVET	RIVET	4					
11	190-00694	PLATE;NAME	PLAQUE	1					
12	190-00691	PLATE;NAME	PLAQUE	1		5001–5014			
	190-00691A	**PLATE;NAME**	PLAQUE	1		**5015–**			
13	190-00692	PLATE;NAME	PLAQUE	1					
14	190-00703	PLATE;NAME	PLAQUE	3					
15	190-00522	PLATE;NAME	PLAQUE	1		5001–5012	I	190-00522A	1
	190-00522A	**PLATE;NAME**	PLAQUE	1		**5013–**			
16	190-00648A	PLATE;NAME	PLAQUE	1					
17	2122-1002D4	RIVET	RIVET	4					
18	2190-9013	REFLECTOR	REFLECTEUR	4					
19	S3450853	SCREW (M5X0.8X10)	VIS	4					
20	S5102203	WASHER;SPRING	RONDELLE ELASTIQUE	6					
21	K1011302	DECAL	DECALQUE	1					
22	K1011303	DECAL	DECALQUE	1					
23	K1011315	DECAL	DECALQUE	1					
27	K1015739	DECAL	DECALQUE	1					
28	2190-2314D3	TAPE;ANTI-SKID	PLAQUE ANTI-DERAPANTE	2					
29	**2190-2476**	**PLATE;NAME**	PLAQUE	4		**5001–5014**			
30	2190-2477	PLATE;NAME	PLAQUE	4		5001–5014	I	K1042074	4
	K1042074	**PLATE;NAME**	PLAQUE	4		**5015–**			
31	190-00078	REFLECTOR	PROTECTEUR	2					
32	S3450823	SCREW (M5X0.8X10)	VIS	2					
33	**K1018746AD10**	**DECAL**	DECALQUE	1		**5001–5012**			

DATE	JUN. 30, 2007
REV.NO.	EXB07-06

Fig. 5140 DECAL - CABIN(EUROPE) DECALQUE

Serial No. ;

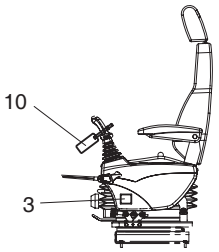

LEFT SIDE VIEW OF
LEFT CONTROL STAND

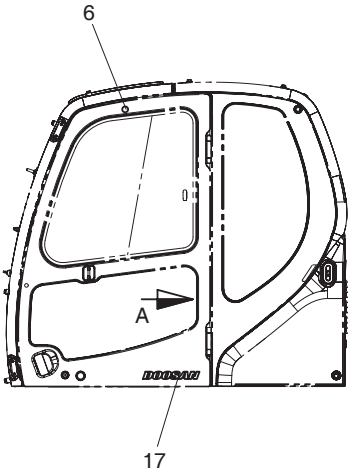

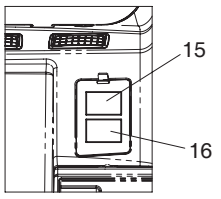

VIEW A
FUSE BOX

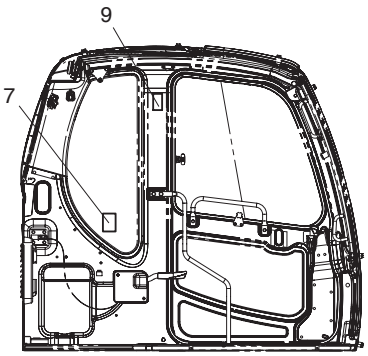

LEFT SIDE VIEW
OF CABIN INSIDE

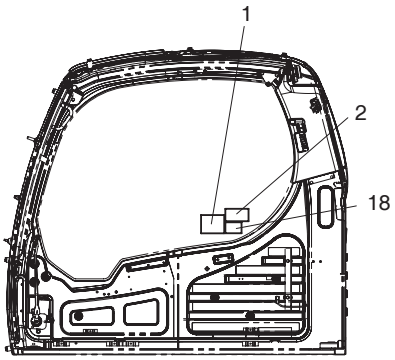

RIGHT SIDE VIEW
OF CABIN INSIDE

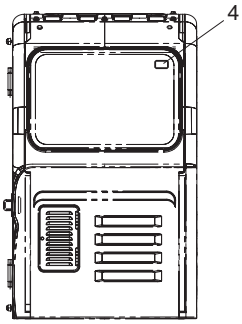

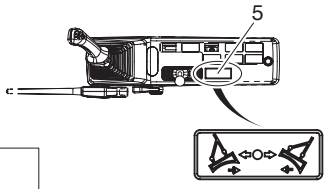

TOP VIEW OF
LEFT CONTROL STAND

Serial No. 5001 ~ 5012

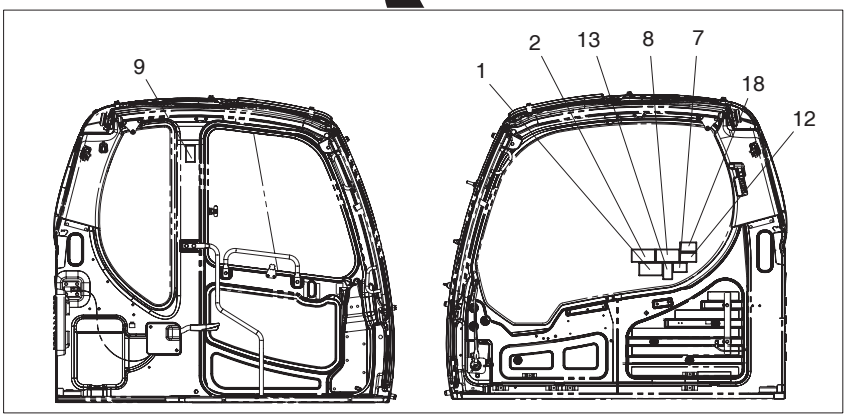

DATE	JUN. 30, 2007
REV. NO.	EXB07-06

Fig. 5140 DECAL - CABIN(EUROPE) DECALQUE

Serial No. ;

Key No.	Part No.	Description	Description	Q'ty	S.C	Serial No.	ICA	Replaceable part	
								Part No.	Q'ty
5140--	**K1026065B**	**DECAL-CABIN(EUROPE)**	DECAL	-	D				
1	190-00092	DECAL	DECAL	1		5001–5012	I	K1034001	1
	K1034001	**DECAL**	DECAL	1		**5013–**			
2	2190-3345	DECAL	DECAL	1					
3	K1011358	DECAL	DECAL	1					
4	190-00101	DECAL	DECAL	1					
5	2190-2475	DECAL	DECAL	1					
6	**2116-9003**	**DECAL**	DECAL	1		**5001–5012**			
7	2190-2524	DECAL	DECAL	1					
8	**190-00096**	**DECAL**	DECAL	1		**5001–5012**			
9	190-00093	DECAL	DECAL	1					
10	190-00098	DECAL	DECAL	1		5001–5012	I	190-00098A	1
	190-00098A	**DECAL**	DECAL	1		**5013–**			
12	**190-00102**	**DECAL**	DECAL	1		**5001–5012**			
13	**190-00094**	**DECAL**	DECAL	1		**5001–5012**			
15	K1008019D7	DECAL	DECAL	1					
16	K1008019D8	DECAL	DECAL	1					
17	K1011743D6	DECAL	DECAL	1					
18	190-00123	DECAL	DECAL	1					

DATE	JUN. 30, 2007
REV.NO.	EXB07-06

Fig. 5150 DECAL - EUROPE
DECALQUE

Serial No. ;

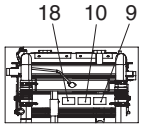

DETAIL **A**

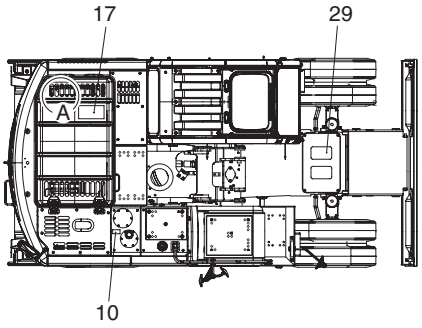

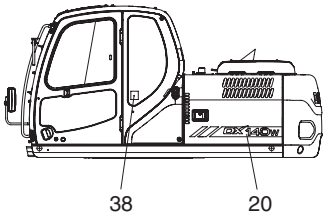

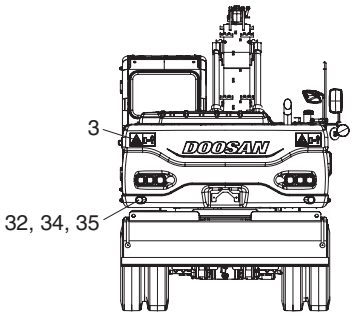

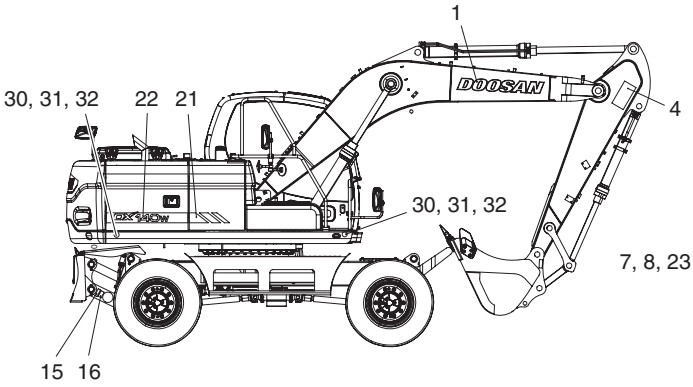

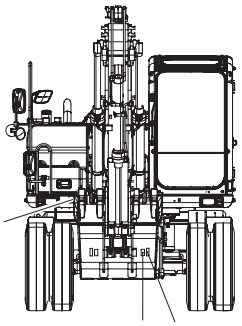



TOOL BOX

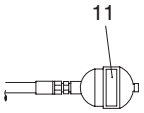

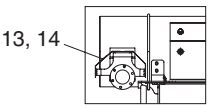

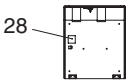

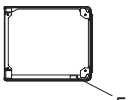

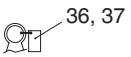

ENGINE LIFTING RING

ACCUMULATOR

TURBO CHARGER COVER

BATTERY DOOR

BOTTOM OF BATTERY COVER

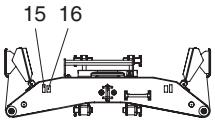

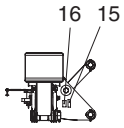

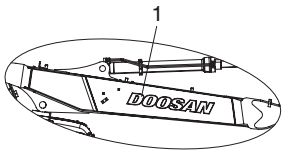

FRONT OUTRIGGER

REAR OUTRIGGER

ARTI.BOOM

DATE	JUN. 30, 2007
REV. NO.	EXB07-06

Fig. 5150 DECAL - EUROPE DECALQUE

Serial No. ;

Key No.	Part No.	Description	Description	Q'ty	S.C	Serial No.	ICA	Replaceable part	
								Part No.	Q'ty
5150--	**K1026343E**	**NAME PLATE ASS'Y**	PLAQUE D'IDENTIFICATION	-	D				
1	K1011645D1	DECAL	DECALQUE	2					
3	K1008571	DECAL	DECALQUE	2					
4	190-00652	PLATE;NAME	PLAQUE	2					
5	190-00100	PLATE;NAME	PLAQUE	1					
6	K1026346	DECAL	DECALQUE	1		5001–5014	I	K1026346A	1
	K1026346A	**DECAL**	DECALQUE	1		**5015–**			
7	K1012204A	DECAL	DECALQUE	1					
8	2122-1002D2	RIVET	RIVET	4					
9	190-00095	PLATE;NAME	PLAQUE	1					
10	190-00097	PLATE;NAME	PLAQUE	2					
11	190-00099	PLATE;NAME	PLAQUE	3					
13	190-00648A	PLATE;NAME	PLAQUE	1					
14	2122-1002D4	RIVET	RIVET	4					
15	**2190-2476**	**PLATE;NAME**	PLAQUE	4		**5001–5014**			
16	2190-2477	PLATE;NAME	PLAQUE	4		5001–5014	I	K1042074	4
	K1042074	**PLATE;NAME**	PLAQUE	4		**5015–**			
17	190-00522	PLATE;NAME	PLAQUE	1		5001–5012	I	190-00522A	1
	190-00522A	**PLATE;NAME**	PLAQUE	1		**5013–**			
18	190-00557	PLATE;NAME	PLAQUE	1					
20	K1011302	DECAL	DECALQUE	1					
21	K1011303	DECAL	DECALQUE	1					
22	K1011315	DECAL	DECALQUE	1					
23	K1012205A	DECAL	DECALQUE	1					
28	K1016102	DECAL	DECALQUE	1					
29	2190-2314D3	TAPE;ANTI-SKID	PLAQUE ANTI-DERAPANTE	2					
30	2190-9013	REFLECTOR	REFLECTEUR	4					
31	S3450853	SCREW M5X0.8X10	VIS	4					
32	S5102203	WASHER;SPRING	RONDELLE ELASTIQUE	6					
34	190-00078	REFLECTOR	REFLECTEUR	2					
35	S3450823	SCREW M5X0.8X10	VIS	2					
36	190-00509BD25	PLATE;NAME	PLAQUE	1					
37	2124-1622D1	CLIP;BAND	AGRAFE	1					
38	190-01059D12	PLATE;NAME	PLAQUE	1					

DATE	JUN. 30, 2007
REV.NO.	EXB07-06

Fig. 5160 DECAL - GERMAN/ITALY DECALQUE

Serial No. ;

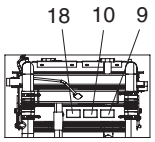

DETAIL A

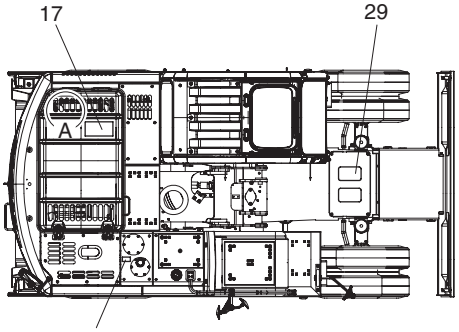

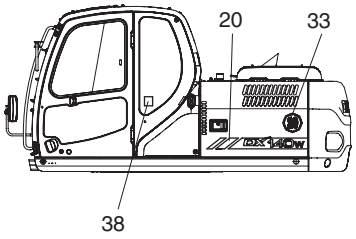

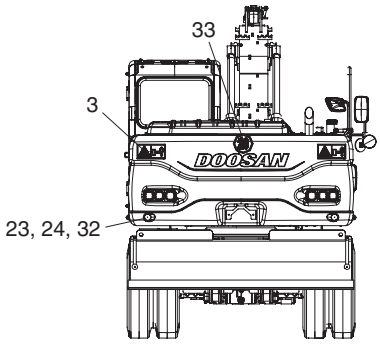

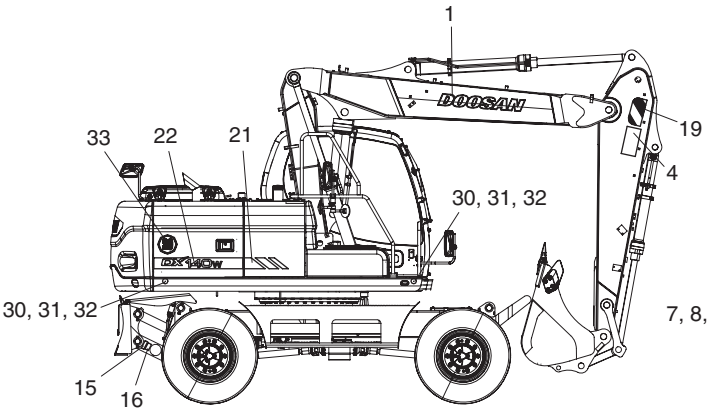

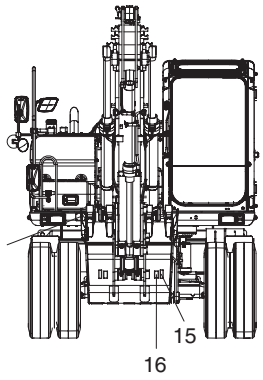

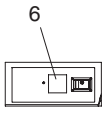

TOOL BOX

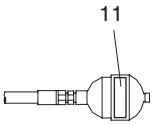

ACCUMULATOR



AIR CLEANER

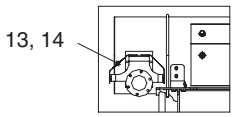

TURBO CHARGER COVER

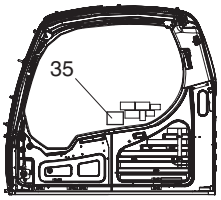

RIGHT SIDE VIEW
OF CABIN INSIDE

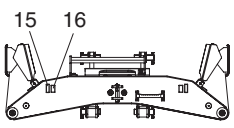

FRONT OUTRIGGER

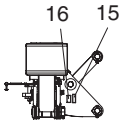

REAR OUTRIGGER

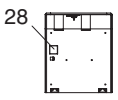

INSIDE VIEW
BATTERY DOOR

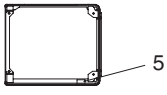

BOTTOM OF
BATTERY COVER



ENGINE
LIFTING RING

DATE	JUN. 30, 2007
REV. NO.	EXB07-06

Fig. 5160 DECAL - GERMAN/ITALY DECALQUE

Serial No. ;

Key No.	Part No.	Description	Description	Q'ty	S.C	Serial No.	ICA	Replaceable part	
								Part No.	Q'ty
5160--	**K1026372G**	**NAME PLATE ASS'Y**	PLAQUE D'INDETIFICATION	-	D				
1	K1011645D1	PLATE;NAME	PLAQUE D'IDENTIFICATION	2					
3	K1008571	PLATE;NAME	PLAQUE D'IDENTIFICATION	2					
4	190-00652	PLATE;NAME	PLAQUE D'IDENTIFICATION	2					
5	190-00100	PLATE;NAME	PLAQUE D'IDENTIFICATION	1					
6	K1026346	PLATE;NAME	PLAQUE D'IDENTIFICATION	1		5001–5014	I	K1026346A	1
	K1026346A	**PLATE;NAME**	PLAQUE D'IDENTIFICATION	1		**5015–**			
7	K1027073A	PLATE;NAME	PLAQUE D'IDENTIFICATION	1					
8	2122-1002D2	RIVET	RIVET	4					
9	190-00095	PLATE;NAME	PLAQUE D'IDENTIFICATION	1					
10	190-00097	PLATE;NAME	PLAQUE D'IDENTIFICATION	2					
11	190-00099	PLATE;NAME	PLAQUE D'IDENTIFICATION	1					
13	190-00648A	PLATE;NAME	PLAQUE D'IDENTIFICATION	1					
14	2122-1002D4	RIVET	RIVET	4					
15	**2190-2476**	**PLATE;NAME**	PLAQUE D'IDENTIFICATION	4		**5001–5014**			
16	2190-2477	PLATE;NAME	PLAQUE D'IDENTIFICATION	4		5001–5014	I	K1042074	4
	K1042074	**PLATE;NAME**	PLAQUE D'IDENTIFICATION	4		**5015–**			
17	190-00522	PLATE;NAME	PLAQUE D'IDENTIFICATION	1		5001–5012	I	190-00522A	1
	190-00522A	**PLATE;NAME**	PLAQUE D'IDENTIFICATION	1		**5013–**			
18	190-00557	PLATE;NAME	PLAQUE D'IDENTIFICATION	1					
19	2190-3528	PLATE;NAME	PLAQUE D'IDENTIFICATION	2					
20	K1011302	PLATE;NAME	PLAQUE D'IDENTIFICATION	1					
21	K1011303	PLATE;NAME	PLAQUE D'IDENTIFICATION	1					
22	K1011315	PLATE;NAME	PLAQUE D'IDENTIFICATION	1					
23	190-00078	REFLECTOR	RFLECTEUR	2					
24	S3450823	SCREW	VIS	2					
28	K1016102	PLATE;NAME	PLAQUE D'IDENTIFICATION	1					
29	2190-2314D3	TAPE;ANTI-SKID	PLAQUE ANTI-DERAPANTE	2					
30	2190-9013	REFLECTOR	RFLECTEUR	4					
31	S3450853	SCREW	VIS	4					
32	S5102203	WASHER;SPRING	RONDELLE ELASTIQUE	6					
33	2190-3531	PLATE;NAME	PLAQUE D'IDENTIFICATION	3					
34	K1026434	PLATE;NAME	PLAQUE D'IDENTIFICATION	1					
35	K1026455	PLATE;NAME	PLAQUE D'IDENTIFICATION	1					
36	190-00509BD25	PLATE;NAME	PLAQUE D'IDENTIFICATION	1					
37	2124-1622D1	CLIP;BAND	AGRAFE	1					
38	190-01059D12	PLATE;NAME	PLAQUE D'IDENTIFICATION	1					
39	K1027482A	PLATE;NAME	PLAQUE D'IDENTIFICATION	1					

Fig. 6100 SEAT MOUNTING - HEATER
SIEGE LE SUPPORT

Serial No. ;

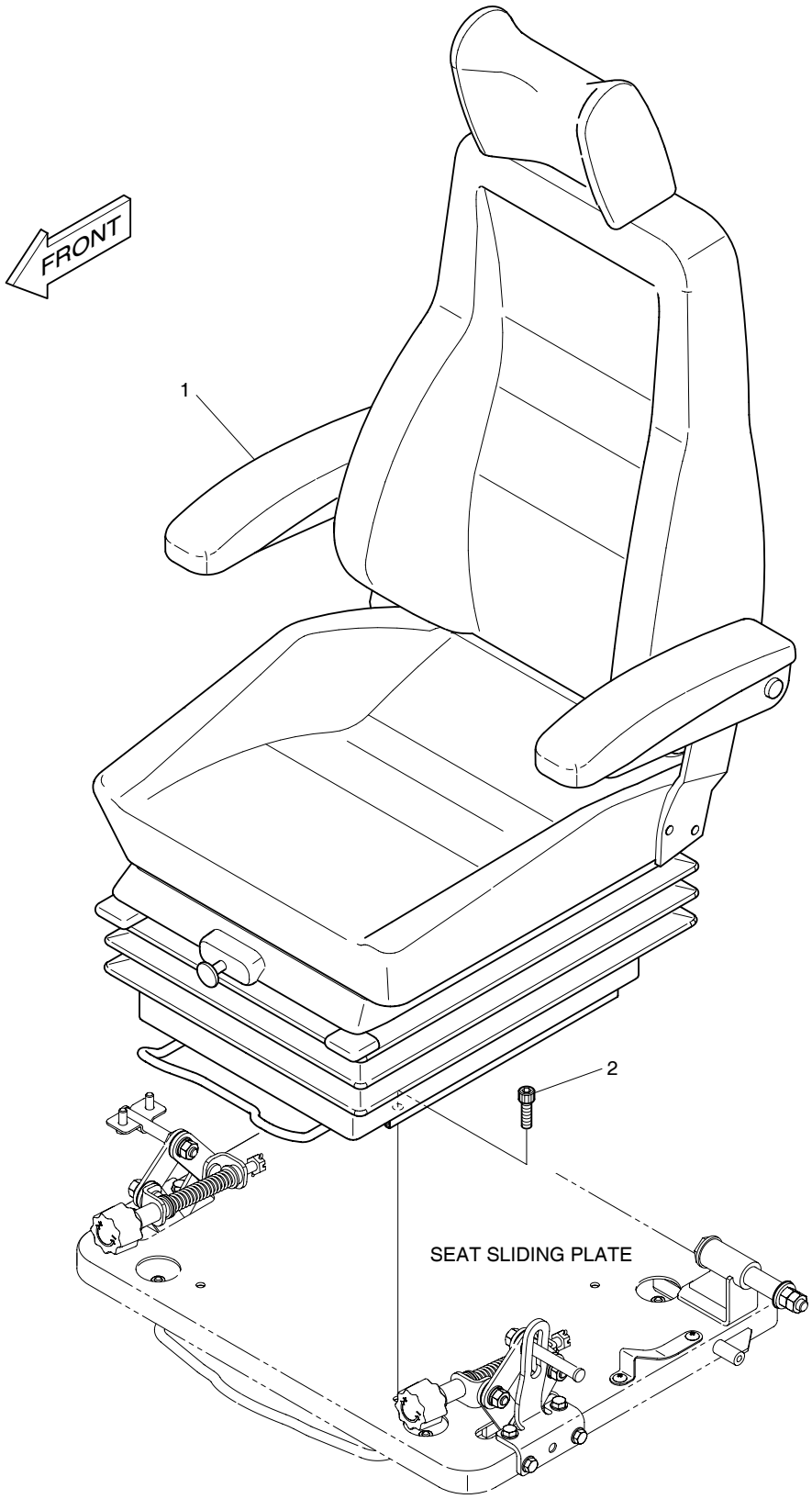

DATE	DEC. 26, 2006
1st EDITION	

Fig. 6100 SEAT MOUNTING - HEATER
SIEGE LE SUPPORT

Serial No. ;

Key No.	Part No.	Description	Description	Q'ty	S.C	Serial No.	ICA	Replaceable part	
								Part No.	Q'ty
6100--	K1002085	SEAT MOUNTING	SIEGE	-	D				
1	901-00047	SEAT;AIR SUSPENSION	SIEGE	1					
2	S2208866	BOLT	BOULON A 6 PANS	4					

DATE	DEC. 26, 2006
1st EDITION	

Fig. 6110 SEAT - HEATER
SIEGE

Serial No. ;

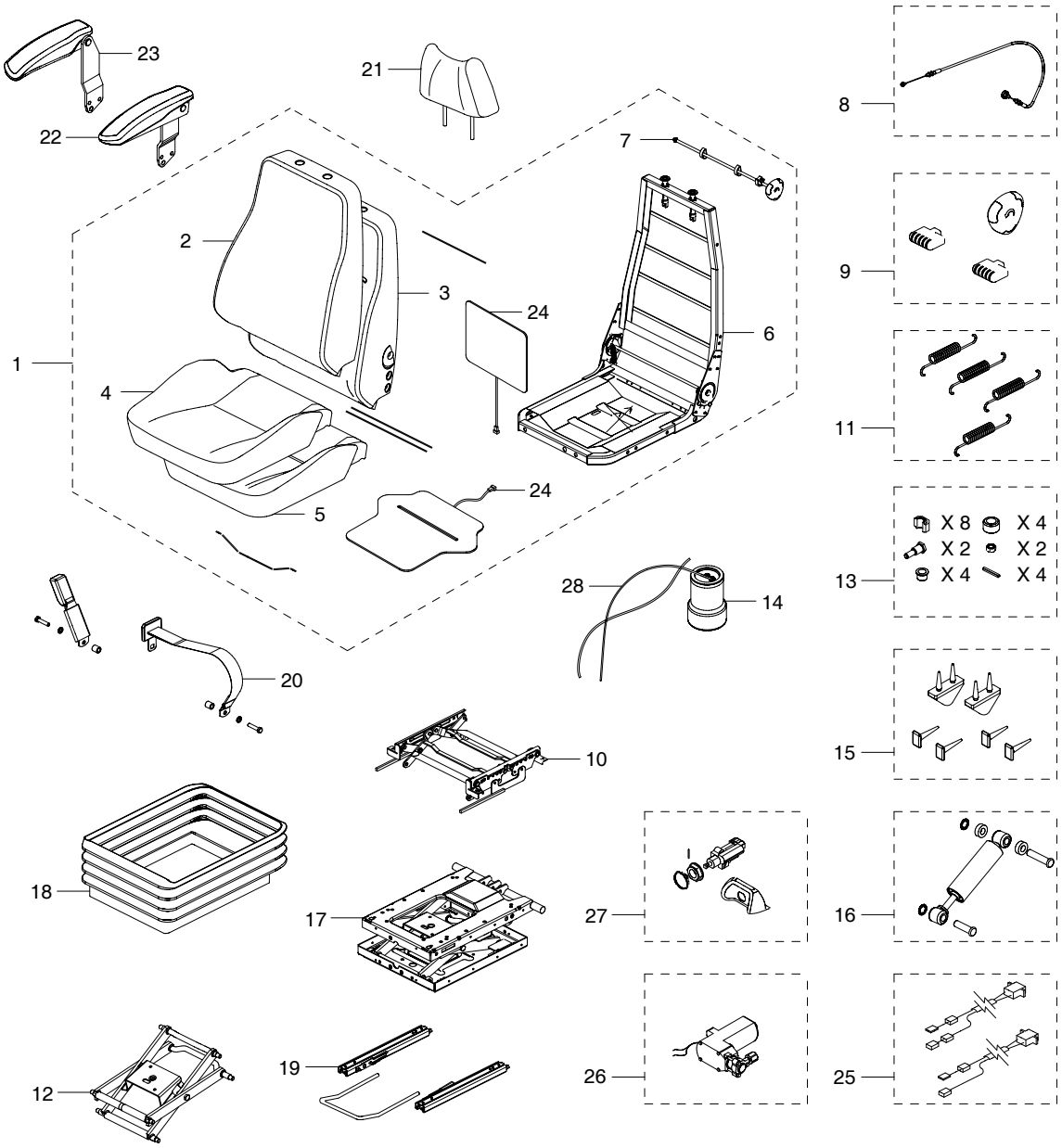

DATE	DEC. 26, 2006
1st EDITION	

Fig. 6110 SEAT - HEATER SIEGE

Serial No. ;

Key No.	Part No.	Description	Description	Q'ty	S.C	Serial No.	ICA	Replaceable part	
								Part No.	Q'ty
6110--	901-00047	SEAT ASS'Y	SIEGE	1					
1	K9001200	UPPER ASS'Y	SUPERIEUR	1					
2	K9001201	BACK COVER	COUVERTURE ARRIERE	1					
3	K9001202	BACK FOAM	MOUSSE ARRIERE	1					
4	K9001203	SEAT COVER	SIEGE	1					
5	K9001204	SEAT FOAM	SIEGE	1					
6	K9001205	FRAME	ARMATURE	1					
7	K9001206	LUMBAR KIT	KIT LOMBAIRE	1					
8	K9001207	CABLE;ADJUST	CABLE	1					
9	2.172-00003	HANDLE	POIGNEE	1					
10	K9001208	HEIGHT RISER	RECHAUFFEUR	1					
11	K9001209	HEIGHT RISER SPRING KIT	RECHAUFFEUR	1					
12	K9001673	LEVER/CENTRE PIVOT KIT	LEVIER	1					
13	K9001674	BEARING KIT	PALIER	1					
14	K9001675	AIR SPRING KIT	KIT DE RESSORT D'AIR	1					
15	K9001213	UPSTOP/BUMP STOP KIT	KIT	1					
16	K9001676	DAMPER KIT	REGISTRE	1					
17	K9001677	SUSPENSION ASS'Y	SUSPENSION	1					
18	K9001678	SUSPENSION COVER	SUSPENSION	1					
19	K9001217	SLIDING RAIL ASS'Y	GLISSEMENT DU RAIL	1					
20	K9001218	BELT;SEAT	COURROIE	1					
21	K9001219	HEAD REST	SIEGE	1					
22	K9001220	ARM REST-L.H	REPOSER	1					
23	K9001221	ARM REST-R.H	REPOSER	1					
24	K9001223	HEATER ASS'Y	RECHAUFFEUR	1					
25	K9001679	HARNESS ASS'Y	HARNAIS	1					
26	K9001680	COMPRESSOR KIT	KIT DE COMPRESSEUR	1					
27	K9001681	AIR VALVE KIT	KIT DE SOUPAPE A AIR	1					
28	K9001682	PIPE KIT	KIT DE PIPE	1					

DATE	JUN. 30, 2007
REV.NO.	EXB07-06

Fig. 6120 FUEL FILLER PUMP
POMPE A GAZOLE

Serial No. ;

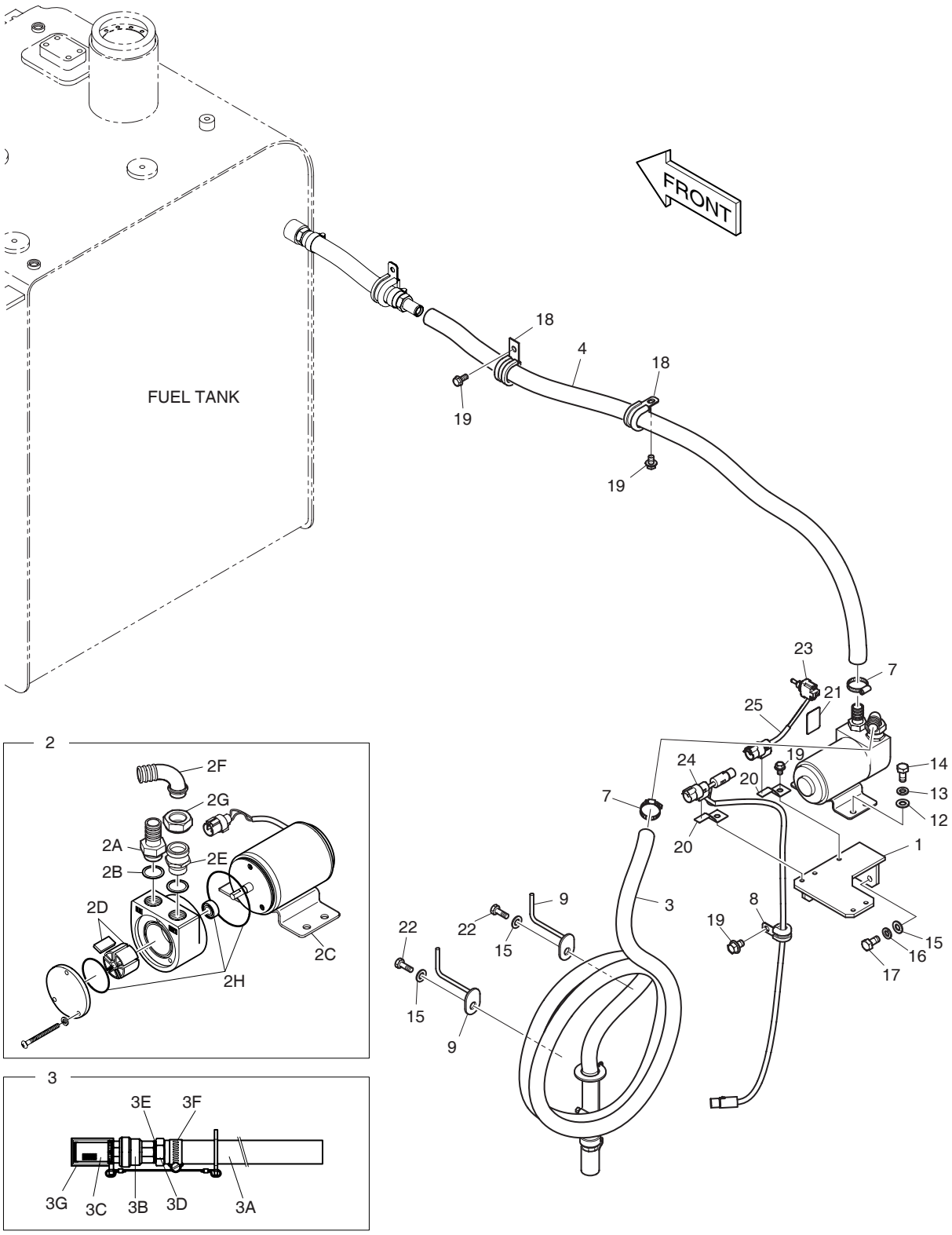

DATE	JUN. 30, 2007
REV. NO.	EXB07-06

Fig. 6120 FUEL FILLER PUMP
POMPE A GAZOLE

Serial No. ;

Key No.	Part No.	Description	Description	Q'ty	S.C	Serial No.	ICA	Replaceable part	
								Part No.	Q'ty
6120--	401-00469C	FUEL FILLER ASS'Y	REMPLISSEUR DE	-	D				
1	195-02657C	BRACKET	SUPPORT	1					
2	K1007358	PUMP;FUEL FILLER	POMPE DE GAZOLE	1					
2A	2181-2755B	. ADAPTER	. ADAPTEUR	1					
2B	S8180321	. SEAL;WASHER	. BAGUE D'ETANCHEITE	1					
2C	523-00012	. MOTOR;FUEL TRANS. PUMP	. MOTEUR	1					
2D	407-00001	. VANE KIT	. PALETTE	1					
2E	181-00809	. ADAPTER	. ADAPTEUR	1					
2F	181-00810	. ELBOW	. COUDE	1					
2G	121-00085	. NUT	. ECROU	1					
2H	2401-1276KT	. SEAL KIT	. KIT D'ETANCHEITE	1					
3	185-00167D1	HOSE ASS'Y	TUYAU FLEXIBLE	1					
3A	185-00195D1	. HOSE	. TUYAU FLEXIBLE	1					
3B	2420-1258	. VALVE;CHECK	. CAPTEUR	1					
3C	2471-1152	. STRAINER	. FILTRE	1					
3D	2181-2755B	. ADAPTER	. ADAPTEUR	1					
3E	S8180321	. RING;SEAL	. BAGUE D'ETANCHEITE	1					
3F	S8450016	. CLAMP;HOSE	. COLLIER DE LA CONDUITE	1					
3G	2160-1336	. CAP;STRAINER	. CHAPEAU	1					
4	DS2079194	HOSE	TUYAU FLEXIBLE	1					
7	S8470032	CLAMP;HOSE	COLLIER DE LA CONDUITE	2					
8	124-00208D2	CLIP	AGRAFE	1					
9	195-01630	BRACKET	SUPPORT	2					
12	S5010513	WASHER	RONDELLE	4					
13	S5102503	WASHER;SPRING	RONDELLE ELASTIQUE	4					
14	S0508566	BOLT	BOULON	4					
15	S5010613	WASHER;PLAIN	RONDELLE	4					
16	S5100603	WASHER;SPRING	RONDELLE ELASTIQUE	2					
17	S0511866	BOLT	BOULON	2					
18	124-00208D5	CLIP	AGRAFE	2					
19	K1001029	BOLT	BOULON	4					
20	195-02154	BRACKET;HOUSING	SUPPORT	2					
21	190-01172	PLATE;NAME(FUEL PUMP)	PLAQUE	1					
22	S0511666	BOLT	BOULON	2					
23	549-00093	SWITCH;TOGGLE(MIL SPEC)	COMMUTATEUR	1					
24	K1007563	HARNESS;JOINT(FUEL PUMP)	HARNAIS	1					
25	K1023195	HARNESS;JOINT	HARNAIS	1					

DATE	DEC. 26, 2006
1st EDITION	

Fig. 6130 ROOF COVER - STEEL
COUVERTURE DE TOIT

Serial No. ;

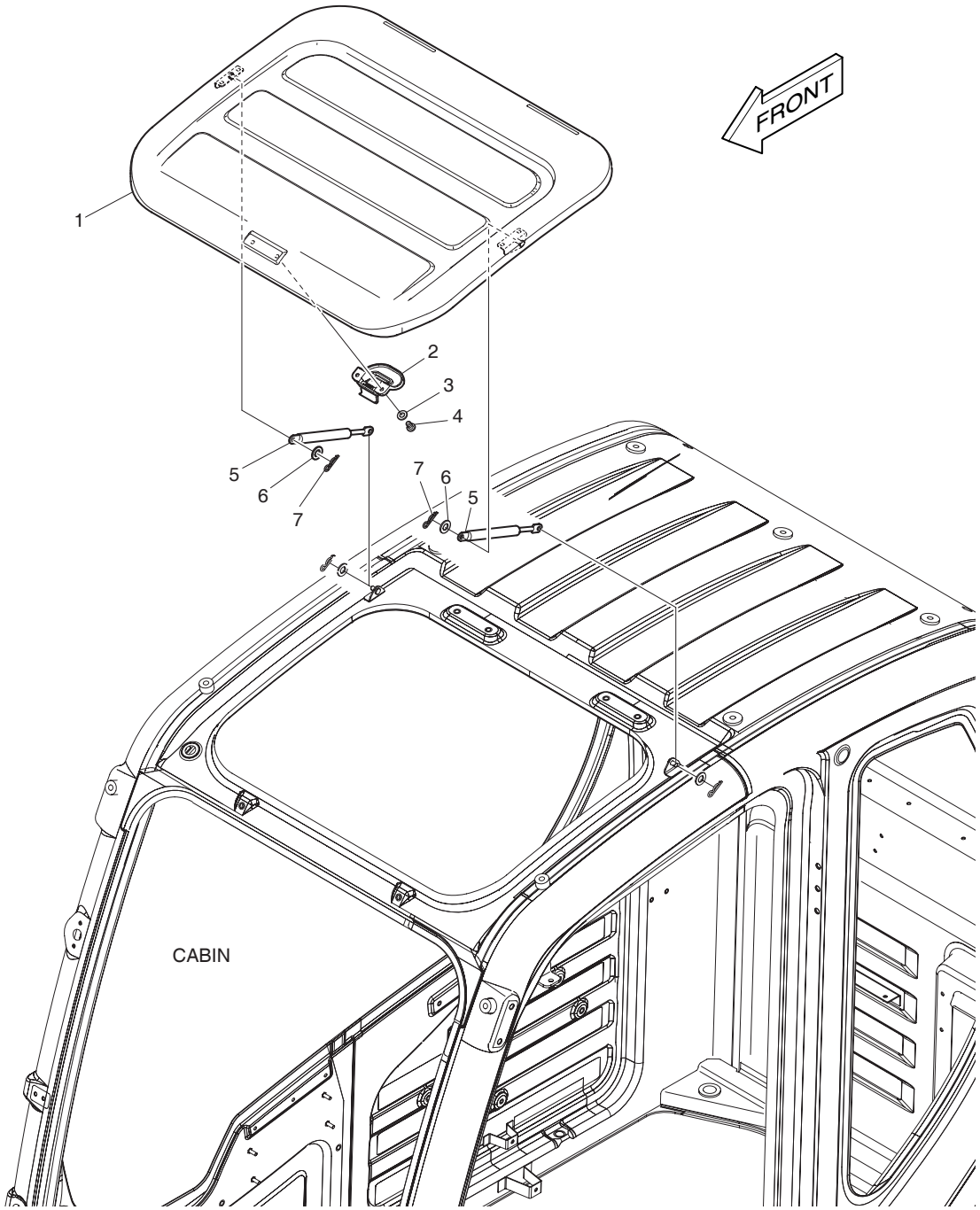

DATE	DEC. 26, 2006
1st EDITION	

Fig. 6130 ROOF COVER - STEEL
COUVERTURE DE TOIT

Serial No. ;

Key No.	Part No.	Description	Description	Q'ty	S.C	Serial No.	ICA	Replaceable part	
								Part No.	Q'ty
6130--	621-03732C	ROOF COVER ASS'Y	COUVERCLE	-	D				
1	621-03727B	COVER;ROOF	COUVERCLE	1					
2	123-00516B	LOCK ASS'Y;ROOF COVER	SERRURE	1					
3	2114-1898D3	WASHER	CALE	2					
4	2120-2166D9	SCREW	VIS	2					
5	DS1003009	GAS-SPRING	GOUJON	2					
6	2114-1898D14	WASHER	CALE	2					
7	123-00523	PIN;GAS-SPRING	GOUJON	2					

DATE	DEC. 26, 2006
1st EDITION	

Fig. 6140 RAIN SHIELD
BOUCLIER DE PLUIE

Serial No. ;

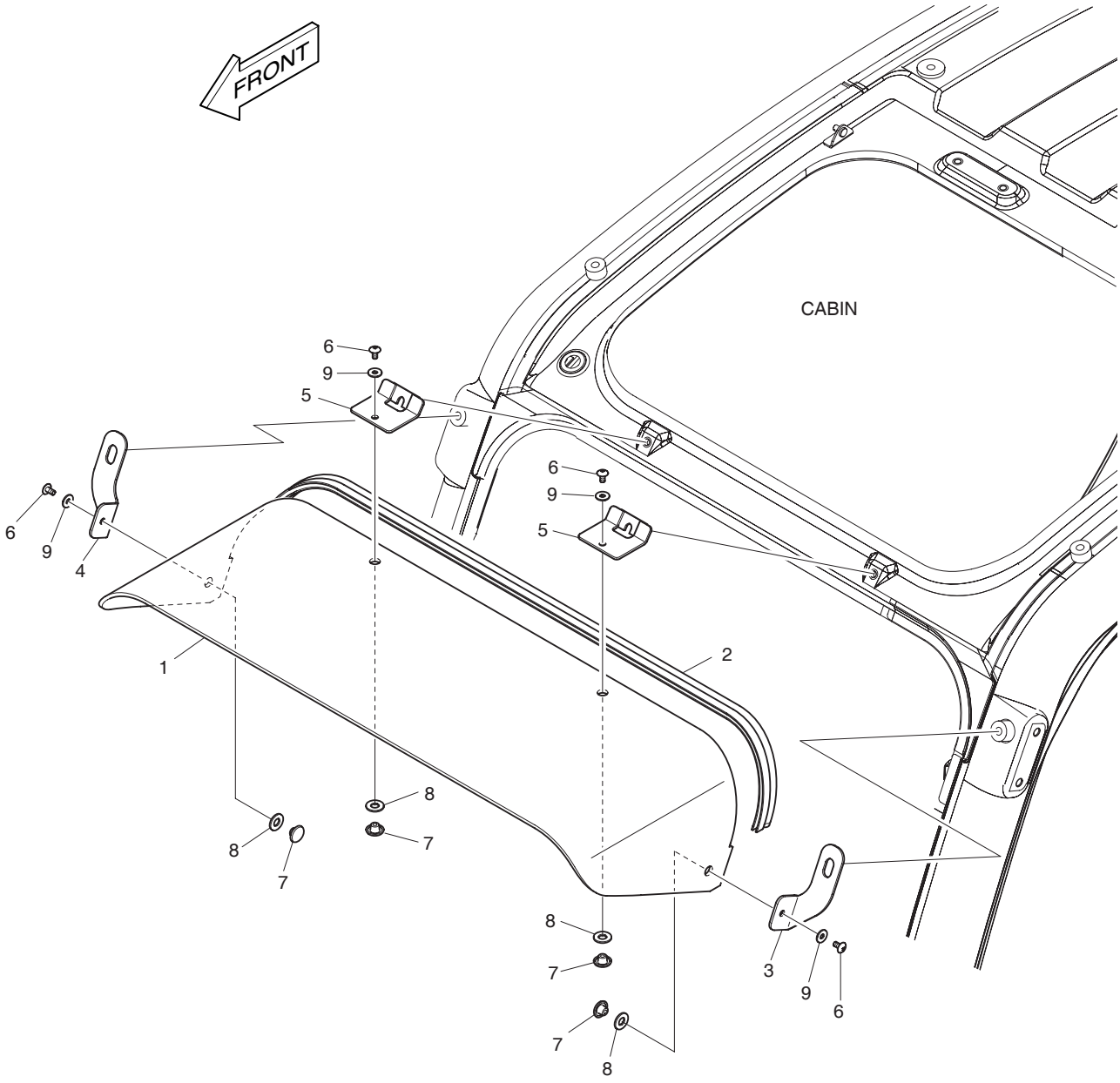

DATE	DEC. 26, 2006
1st EDITION	

Fig. 6140 RAIN SHIELD BOUCLIER DE PLUIE

Serial No. ;

Key No.	Part No.	Description	Description	Q'ty	S.C	Serial No.	ICA	Replaceable part	
								Part No.	Q'ty
6140--	K1002561A	RAIN SHIELD	BOUCLIER DE PLUIE	-	D				
1	159-00294B	COVER;RAIN SHIELD	COUVERCLE	1					
2	162-00040A	STRIP;WEATHER	TAMPON	1					
3	K1002574A	BRACKET(L.H)	SUPPORT	1					
4	K1002575A	BRACKET(R.H)	SUPPORT	1					
5	195-03374B	BRACKET;RAIN SHIELD	SUPPORT	2					
6	2120-2166D52	BOLT M6x1.0x12	BOULON A 6 PANS	4					
7	621-03103	COVER;ROOF HANDLE	COUVERCLE	4					
8	161-00639	RUBBER;ROOF HANDLE	CAOUTCHOUC	4					
9	2114-1898D5	WASHER M6	RONDELLE	4					

DATE	DEC. 26, 2006
1st EDITION	

Fig. 6150 RAIN SHIELD & LAMP MOUNTING
BOUCLIER ET DE LAMPE DE PLUIE

Serial No. ;

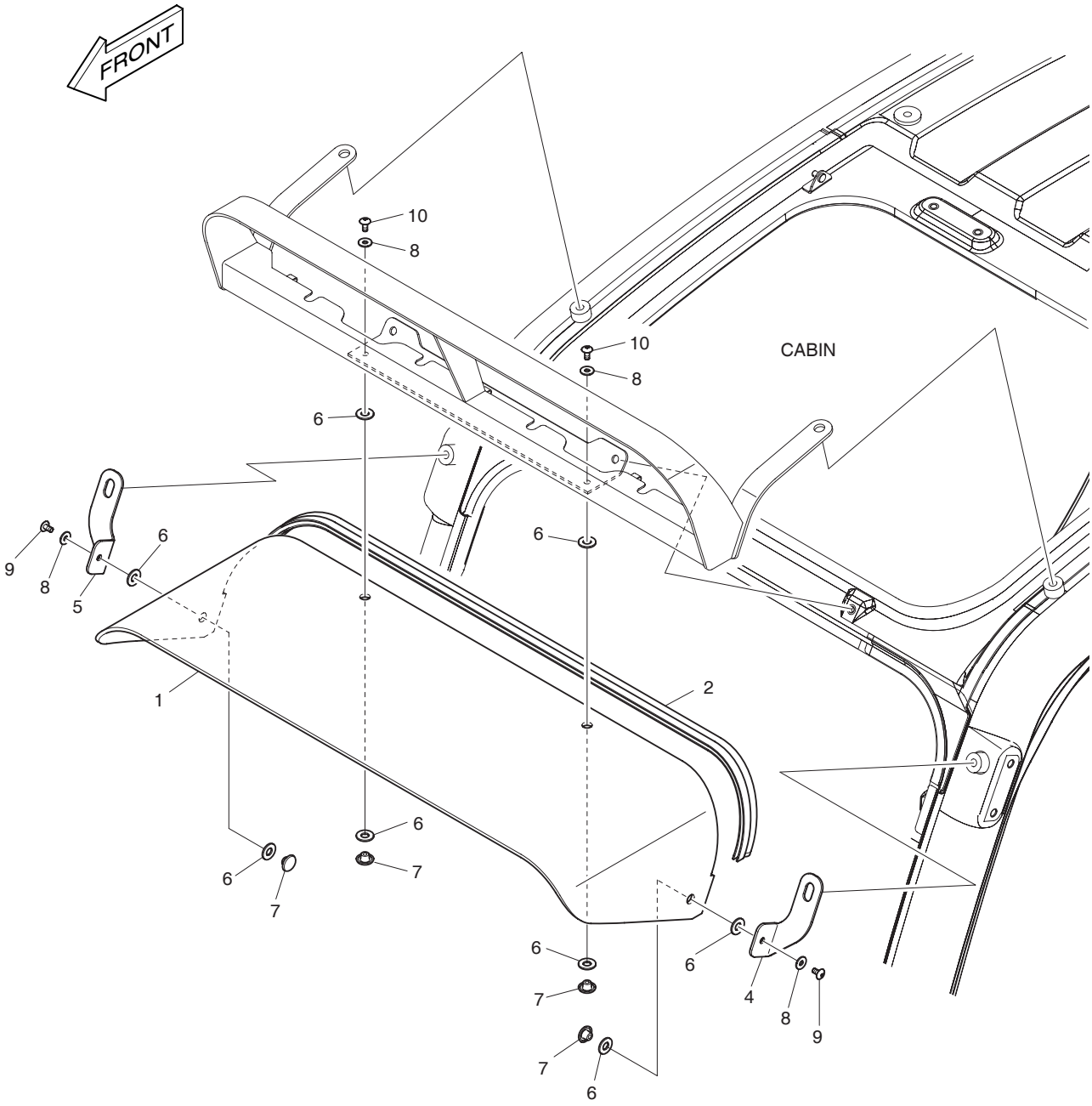

DATE	DEC. 26, 2006
1st EDITION	

Fig. 6150 RAIN SHIELD & LAMP MOUNTING BOUCLIER ET DE LAMPE DE PLUIE

Serial No. ;

Key No.	Part No.	Description	Description	Q'ty	S.C	Serial No.	ICA	Replaceable part	
								Part No.	Q'ty
6150--	534-00117A	RAIN SHIELD & LAMP ASSY	BOUCLIER DE PLUIE	-	D				
1	159-00294B	COVER;RAIN SHIELD	COUVERCLE	1					
2	162-00040A	STRIP;WEATHER	TAMPON	1					
4	K1002574A	BRACKET(L.H)	SUPPORT	1					
5	K1002575A	BRACKET(R.H)	SUPPORT	1					
6	161-00639	RUBBER;ROOF HANDLE	CAOUTCHOUC	8					
7	621-03103	COVER;ROOF HANDLE	COUVERCLE	4					
8	2114-1898D5	WASHER M6	RONDELLE	4					
9	2120-2166D52	SCREW M6X1.0X12	VIS	2					
10	2120-2166D10	SCREW M6X1.0X14	BOULON A 6 PANS	2					

DATE	DEC. 26, 2006
1st EDITION	

Fig. 6160 CABIN LOW GUARD GARDE

Serial No. ;

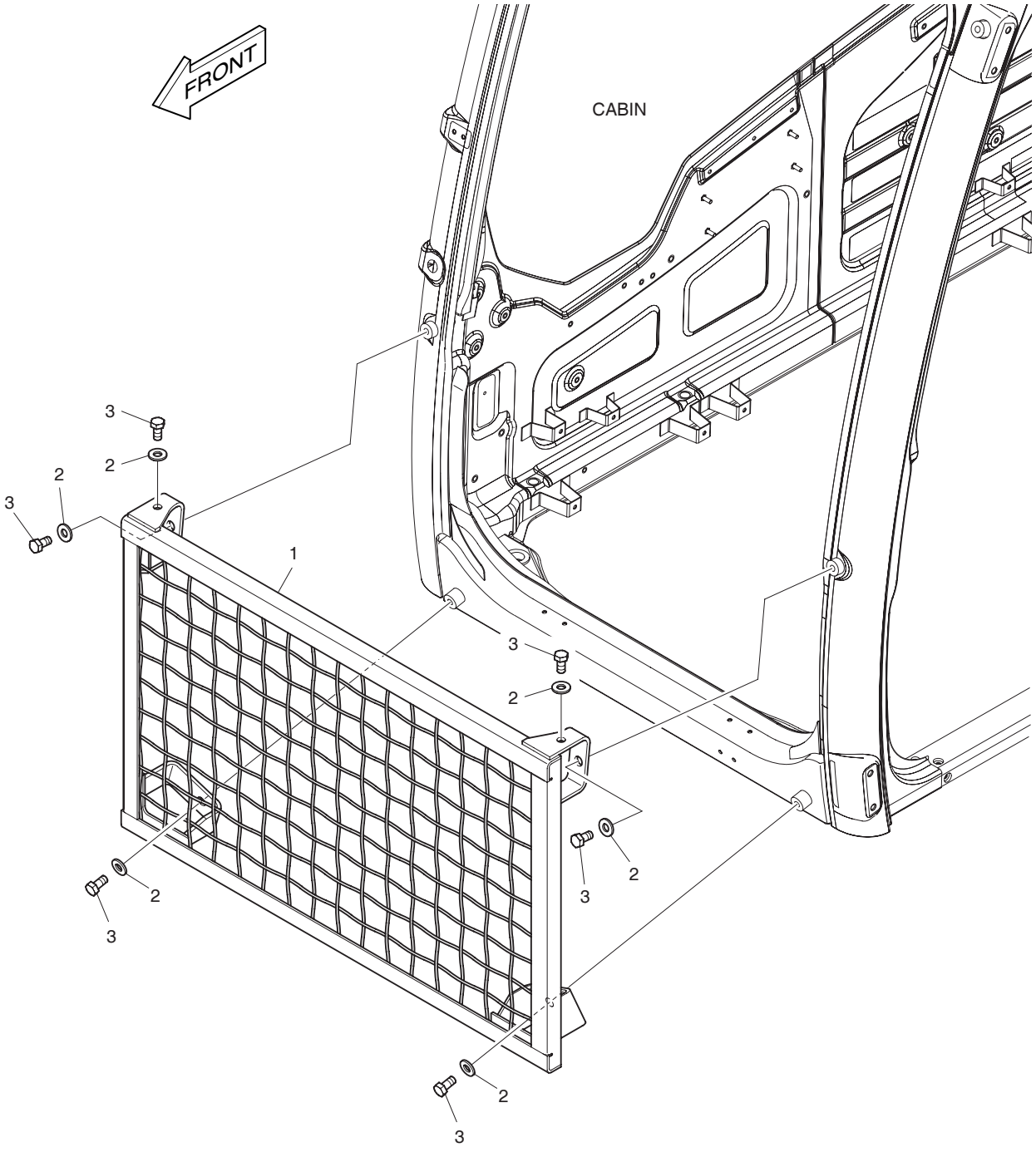

DATE	DEC. 26, 2006
1st EDITION	

Fig. 6160 CABIN LOW GUARD GARDE

Serial No. ;

Key No.	Part No.	Description	Description	Q'ty	S.C	Serial No.	ICA	Replaceable part	
								Part No.	Q'ty
6160--	623-00086	GUARD;FRONT LOWER	GARDE	-	D				
1	623-00085A	GUARD;FRONT	GARDE	1					
2	2114-1898D17	WASHER M12	RONDELLE	6					
3	2120-2166D27	BOLT	BOULON A 6 PANS	6					

DATE	DEC. 26, 2006
1st EDITION	

Fig. 6170 WINDOW GUARD
GARDE DE FENETRE

Serial No. ;

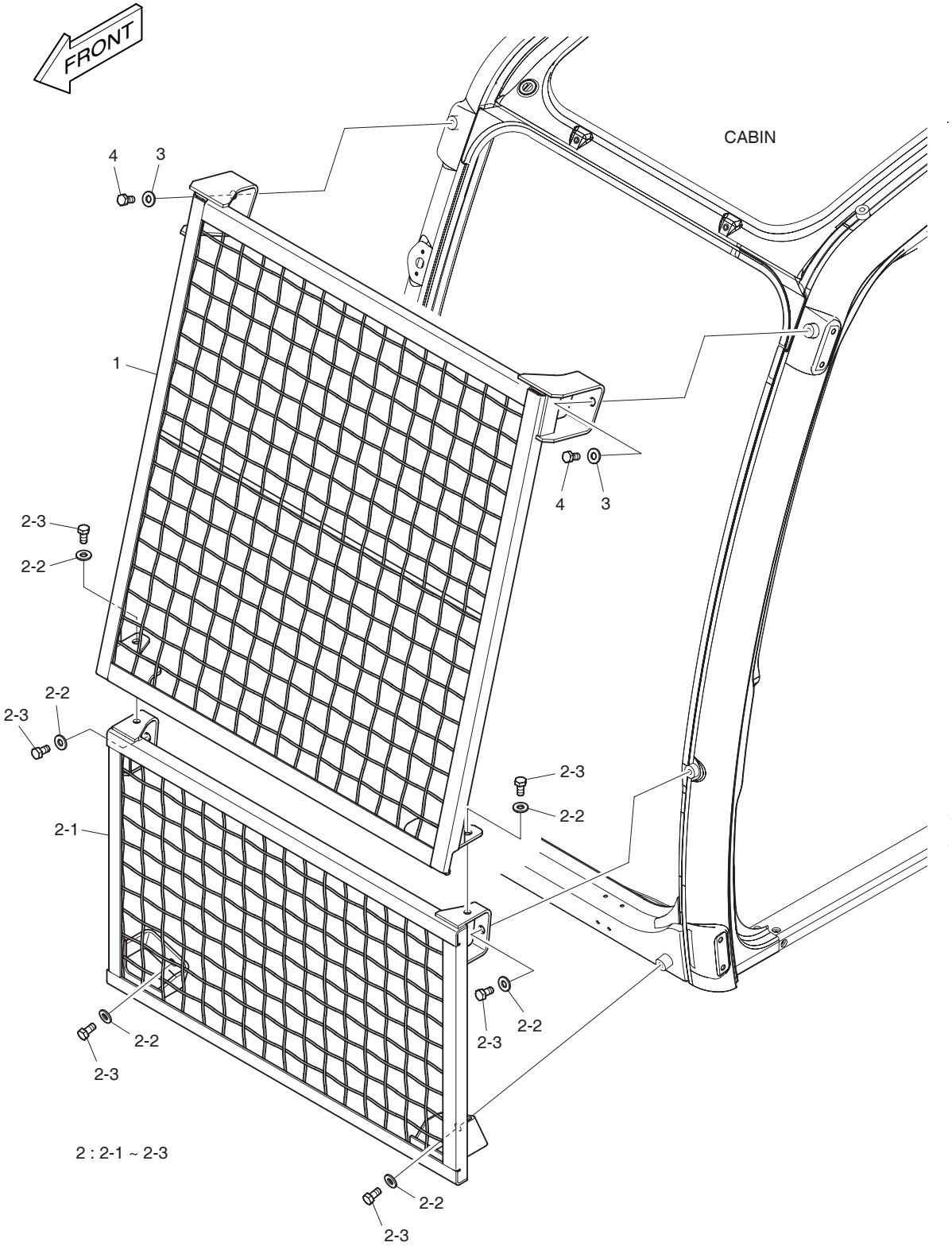

DATE	DEC. 26, 2006
1st EDITION	

Fig. 6170 WINDOW GUARD GARDE DE FENETRE

Serial No. ;

Key No.	Part No.	Description	Description	Q'ty	S.C	Serial No.	ICA	Replaceable part	
								Part No.	Q'ty
6170--	K1002771	WINDOW GUARD	GARDE	-	D				
1	K1002759A	GUARD;FRONT UPPER	GARDE	1					
2	623-00086	GUARD;FRONT LOWER	GARDE	1	D				
2-1	623-00085A	. GUARD;FRONT LOWER	. VITRE	1					
2-2	2114-1898D17	. WASHER	. RONDELLE	6					
2-3	2120-2166D27	. BOLT	. BOULON A 6 PANS	6					
3	2114-1898D17	WASHER M12	RONDELLE	2					
4	2120-2166D27	BOLT	BOULON A 6 PANS	2					

DATE	JUN. 30, 2007
REV.NO.	EXB07-06

Fig. 6180 FOGS GUARD
EMBRUME LA GARDE

Serial No. ;

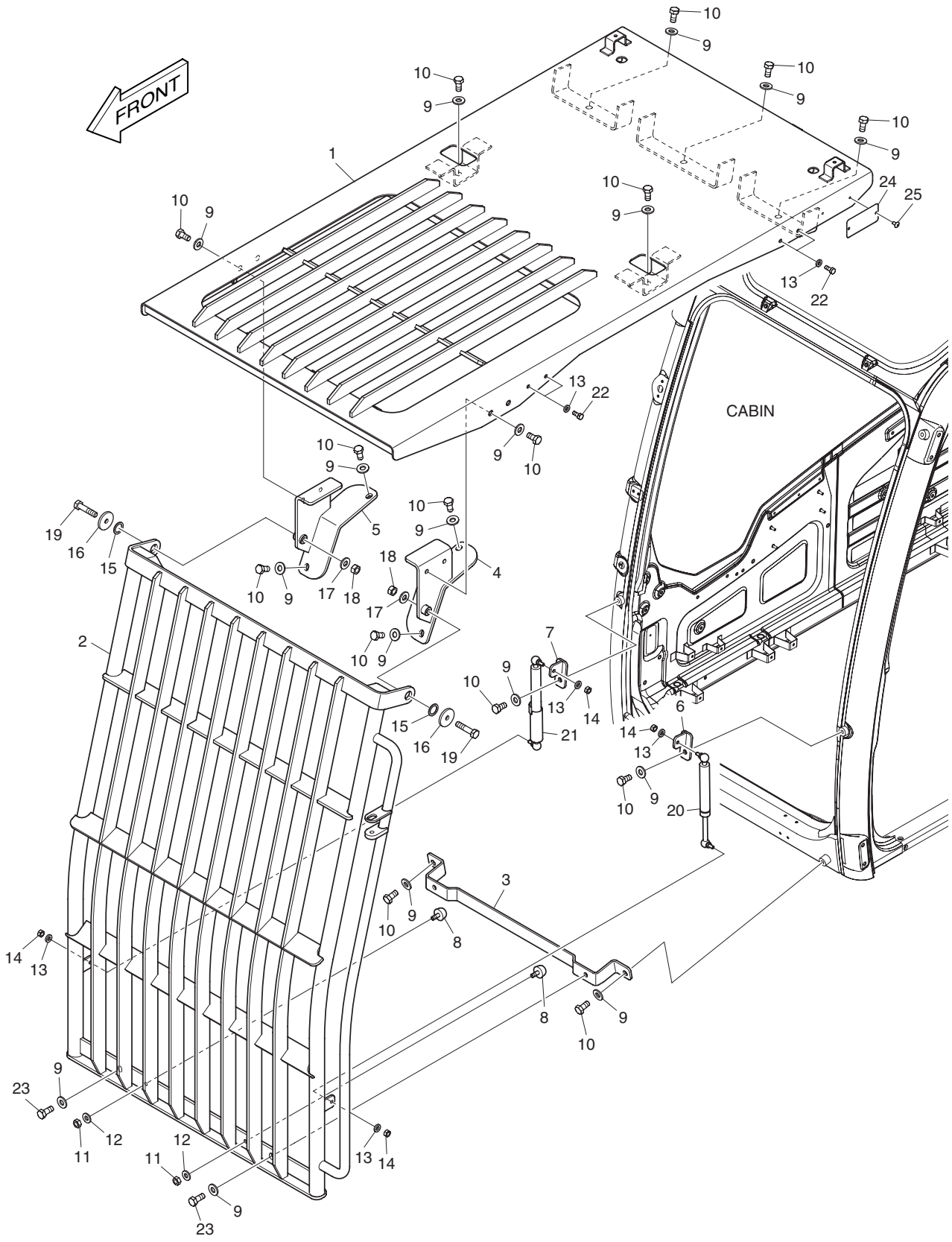

DATE	JUN. 30, 2007
REV. NO.	EXB07-06

Fig. 6180 FOGS GUARD EMBRUME LA GARDE

Serial No. ;

Key No.	Part No.	Description	Description	Q'ty	S.C	Serial No.	ICA	Replaceable part	
								Part No.	Q'ty
6180--	**K1002883A**	**FOGS GUARD ASS'Y**	EMBRUME LA GARDE ASS'Y	-	D				
1	K1002811A	GUARD;ROOF	GARDE	1					
2	K1002846	GUARD;FRONT	GARDE	1					
3	K1002842A	BRACKET	SUPPORT	1					
4	K1002838	BRACKET(L.H)	SUPPORT	1					
5	K1002839A	BRACKET(R.H)	SUPPORT	1					
6	K1002840	BRACKET(L.H)	SUPPORT	1					
7	K1002841	BRACKET(R.H)	SUPPORT	1					
8	161-00195	STOPPER;RUBBER	TAQUET D'ARRET	2					
9	2114-1898D17	WASHER M12	RONDELLE	19					
10	2120-2166D27	BOLT	BOULON A 6 PANS	17					
11	2121-1311D4	NUT M10X1.5	ECROU	2					
12	2114-1898D1	WASHER	CALE	2					
13	2114-1898D2	WASHER	CALE	8					
14	2121-1311D2	NUT M8X1.25	ECROU	4					
15	2114-1058D31	WASHER	CALE	2					
16	2114-1898D10	WASHER M12	RONDELLE	2					
17	2114-1898D6	WASHER M12	RONDELLE	2					
18	2121-1311D1	NUT M12X1.75	ECROU	2					
19	S0515766	BOLT M12X1.75X55	BOULON A 6 PANS	2					
20	K1005823	CYLINDER;GAS	CYLINDRE	1					
21	K1005822	CYLINDER;GAS	CYLINDRE	1					
22	2120-2166D5	BOLT M8X1.25X20	BOULON A 6 PANS	4					
23	2120-2166D32	BOLT M12x1.75x30	BOULON A 6 PANS	2					
24	K1007231	NAME;PLATE	PLAQUE D'IDENTIFICATION	1		5001–5012	I	K1007231A	1
	K1007231A	**NAME;PLATE**	PLAQUE D'IDENTIFICATION	1		**5013–**			
25	2120-2166D52	BOLT	BOULON A 6 PANS	2					

DATE	DEC. 26, 2006
1st EDITION	

Fig. 6190 SINGLE TIRE PNEU SIMPLE

Serial No. ;

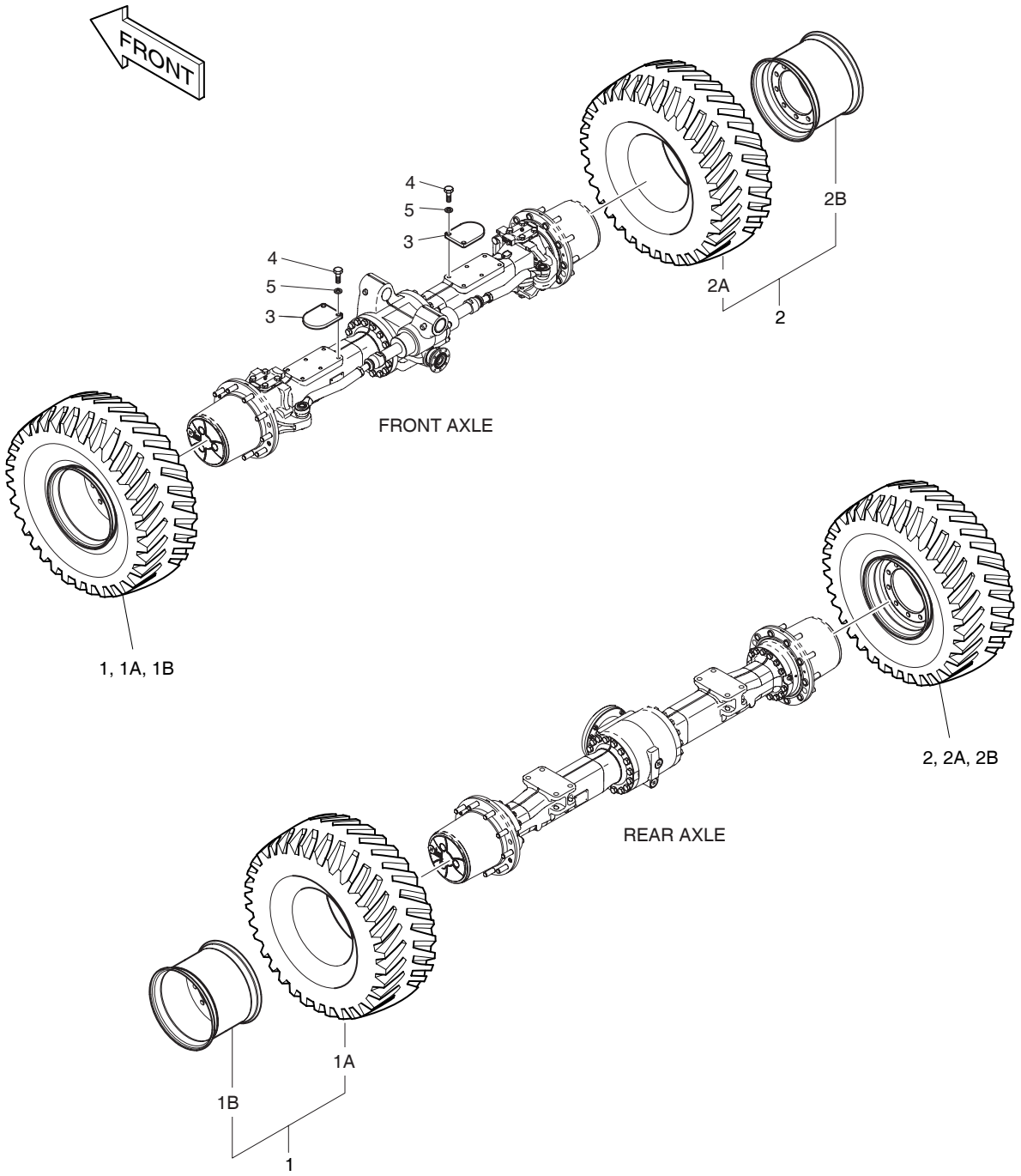

DATE	DEC. 26, 2006
1st EDITION	

Fig. 6190 SINGLE TIRE PNEU SIMPLE

Serial No. ;

Key No.	Part No.	Description	Description	Q'ty	S.C	Serial No.	ICA	Replaceable part	
								Part No.	Q'ty
6190--	K1026955	WHEEL ASS'Y	VOLANT	-	D				
1	K1024676	WHEEL ASS'Y(L.H)	VOLANT	2	D				
1A	276-00137	. TIRE (18-19.5 20PR)	. PNEU	1					
1B	K1024678	. RIM;WHEEL	. JANTE	1					
2	K1024677	WHEEL ASS'Y(R.H)	VOLANT	2	D				
2A	276-00137	. TIRE (18-19.5 20PR)	. PNEU	1					
2B	K1024678	. RIM;WHEEL	. JANTE	1					
3	191-03701B	PLATE;CHOCK PAD	PLAQUE	2					
4	S5102903	WASHER;SPRING	RONDELLE ELASTIQUE	4					
5	S0521466	BOLT	BOULON	4					

DATE	JUN. 30, 2007
REV.NO.	EXB07-06

Fig. 6200 TIRE 10.0X16PR PNEU

Serial No. ;

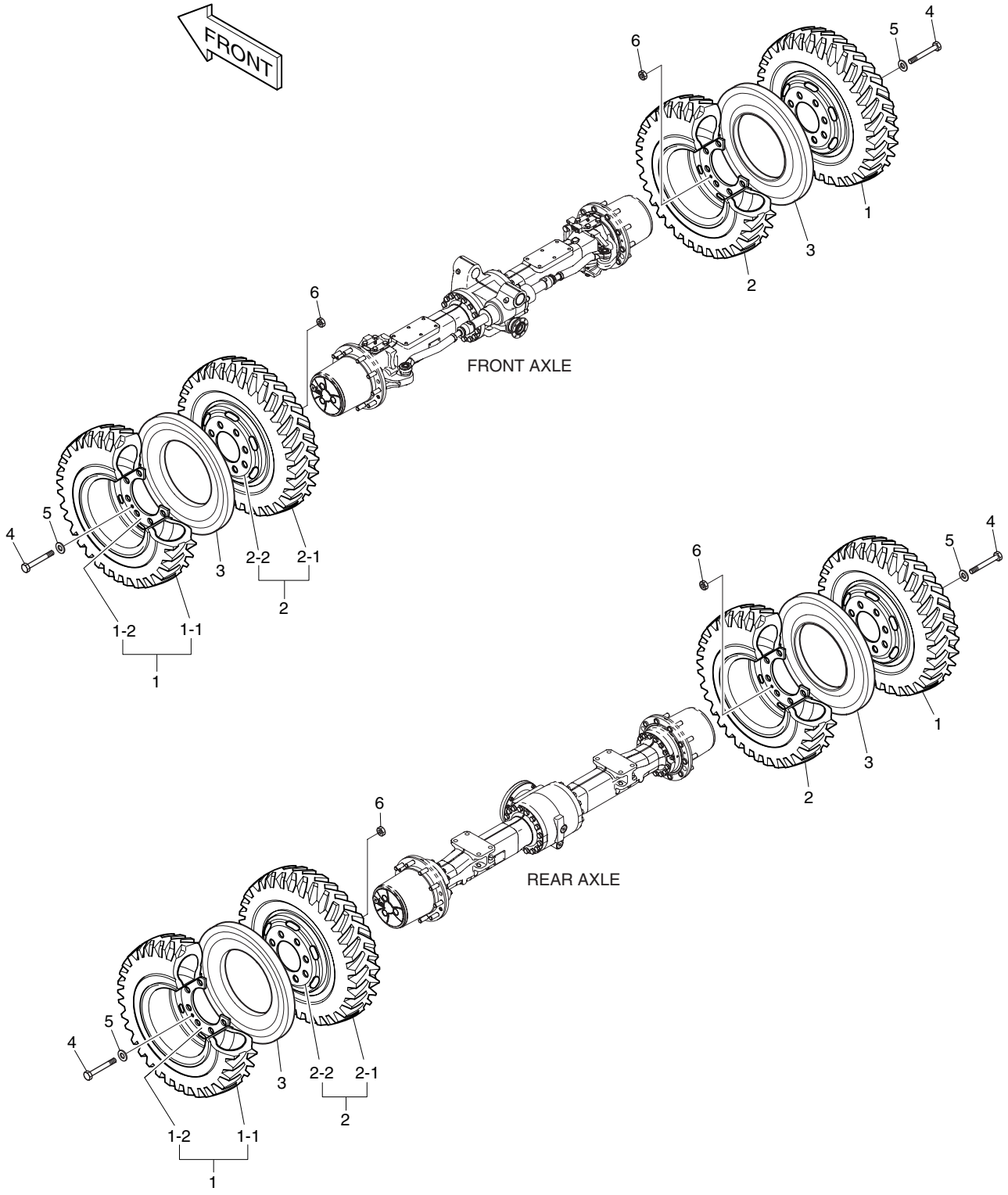

DATE	JUN. 30, 2007
REV. NO.	EXB07-06

Fig. 6200 TIRE 10.0X16PR PNEU

Serial No. ;

Key No.	Part No.	Description	Description	Q'ty	S.C	Serial No.	ICA	Replaceable part	
								Part No.	Q'ty
6200--	K1005866C	WHEEL ASS'Y	VOLANT	-	D				
1	K1013022A	WHEEL ASS'Y	VOLANT	4	D				
1-1	K1004093	. TIRE	. PNEU	1					
1-2	K1012662	. RIM;WHEEL	. JANTE	1					
2	K1013023A	WHEEL ASS'Y	VOLANT	4	D				
2-1	K1004093	. TIRE	. PNEU	1					
2-2	K1012662	. RIM;WHEEL	. JANTE	1					
3	161-00616E	SPACER;RUBBER	ENTERTOISE	4					
4	S0516066	BOLT	BOULON	8					
5	4114-1792A	WASHER;HARD	RONDELLE	8					
6	S4012733	NUT	ECROU	8					

DATE	DEC. 26, 2006
1st EDITION	

Fig. 6210 ALTERNATOR - 80A
ALTERNATEUR

Serial No. ;

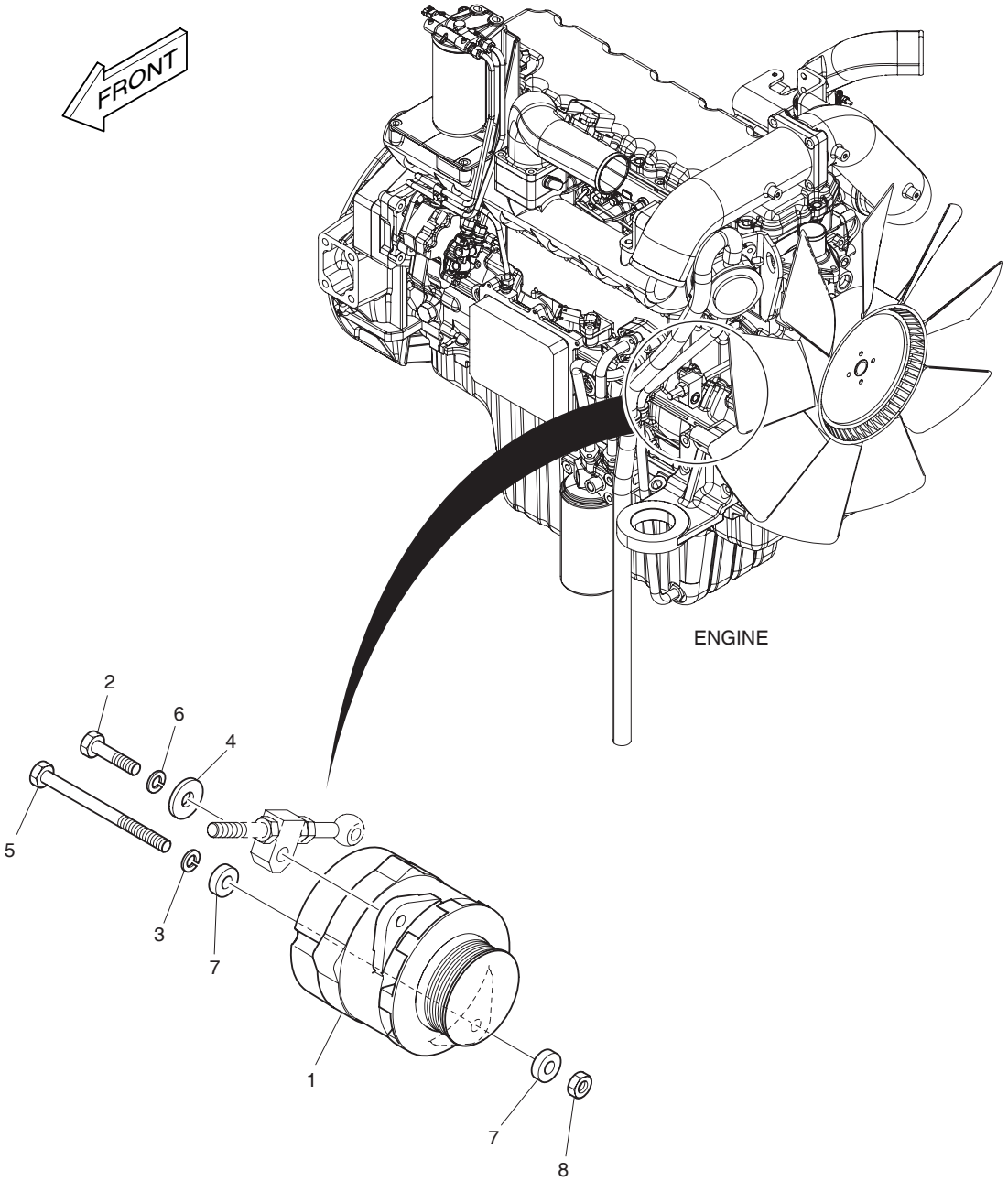

DATE	DEC. 26, 2006
1st EDITION	

Fig. 6210 ALTERNATOR - 80A ALTERNATEUR

Serial No. ;

Key No.	Part No.	Description	Description	Q'ty	S.C	Serial No.	ICA	Replaceable part	
								Part No.	Q'ty
6210--	K1015419	ALTERNATOR MOUNTING	SUPPORT D'ALTERNATEUR	-	D				
1	K1010703	ALTERNATOR 80A	ALTERNATEUR	1					
2	S0760853	BOLT	BOULON A 6 PANS	1					
3	S5102703	WASHER;SPRING	RONDELLE ELASTIQUE	1					
4	2114-1058D54	WASHER	CALE	1					
5	S0562666	BOLT	BOULON A 6 PANS	1					
6	S5102703	WASHER;SPRING	RONDELLE ELASTIQUE	1					
7	S5010713	WASHER;PLAIN	RONDELLE PLATE	2					
8	S4012733	NUT	ECROU 6 PANS M8	1					

DATE	DEC. 26, 2006
1st EDITION	

Fig. 6220 STEREO - CD PLAYER STEREO

Serial No. ;

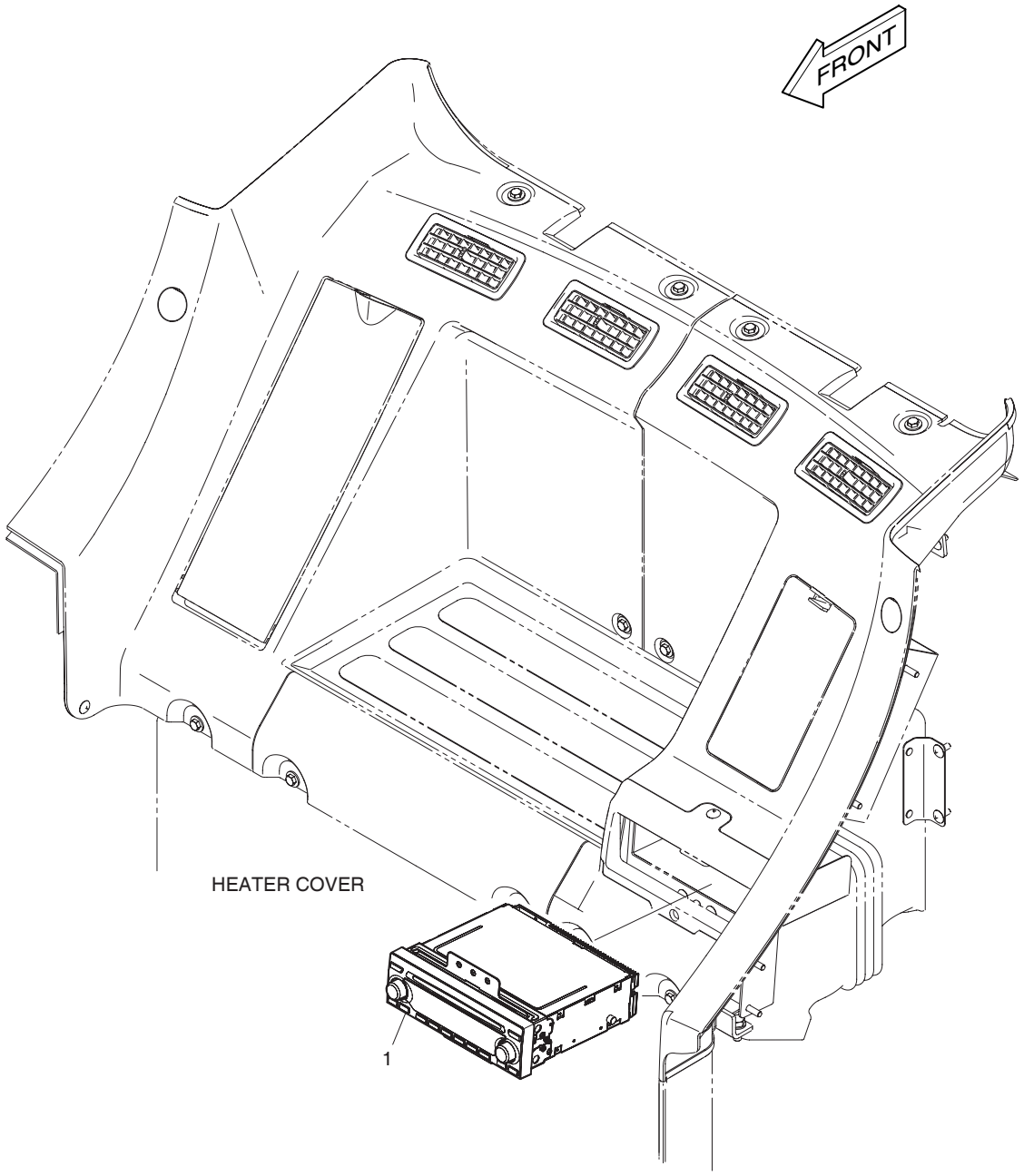

DATE	DEC. 26, 2006
1st EDITION	

Fig. 6220 STEREO - CD PLAYER STEREO

Serial No. ;

Key No.	Part No.	Description	Description	Q'ty	S.C	Serial No.	ICA	Replaceable part	
								Part No.	Q'ty
6220--	500-00401	CD PLAYER	PLAQUEUR DE CD	-	D				
1	K1000982	CD PLAYER	PLAQUEUR DE CD	1					

DATE	JUN. 30, 2007
REV.NO.	EXB07-06

Fig. 6230 FUEL HEATER
RECHAUFFEUR DE CARBURANT

Serial No. ;

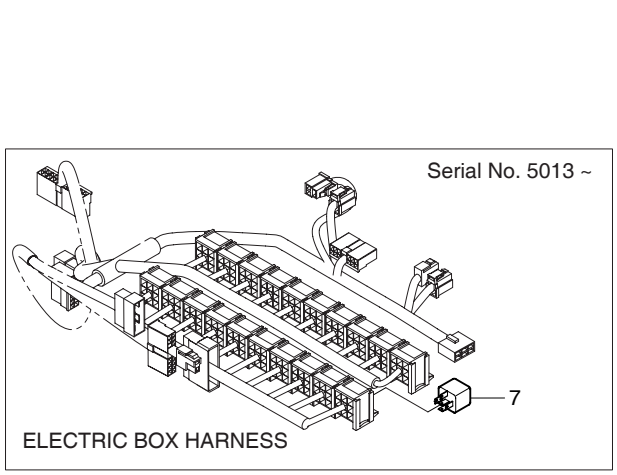

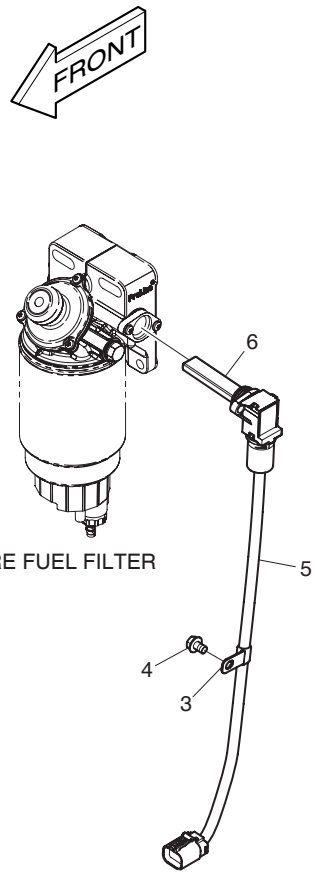

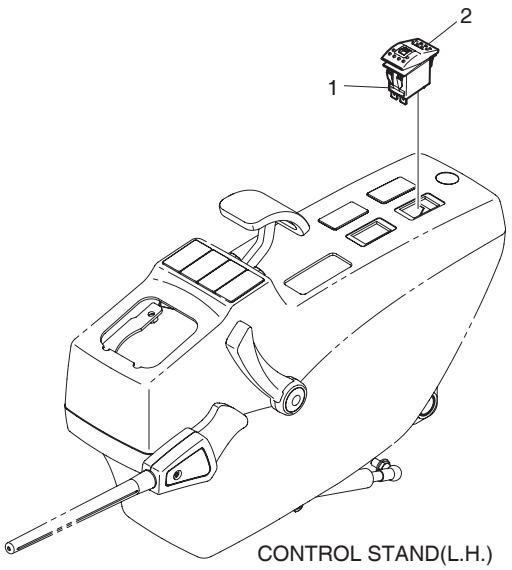

DATE	JUN. 30, 2007
REV. NO.	EXB07-06

Fig. 6230 FUEL HEATER
RECHAUFFEUR DE CARBURANT

Serial No. ;

Key No.	Part No.	Description	Description	Q'ty	S.C	Serial No.	ICA	Replaceable part	
								Part No.	Q'ty
6230--	**K1018010B**	**FUEL HEATER**	RECHAUFFEUR DE	-	D				
1	549-00101	SWITCH;ROCKER	INTERRUPTEUR	1					
2	K1002406D2	ACTUATOR;SWITCH	ACTUATOR;SWITCH	1					
3	2124-1509D1	CLIP	AGRAFE	1					
4	K1001029	BOLT	BOULON	1					
5	K1018019	HARNESS;JOINT	HARNAIS	1					
6	K1004716	HEATER;FUEL	RECHAUFFEUR	1					
7	**2544-9033**	**RELAY**	RELAIS	1		**5013–**			

DATE	DEC. 26, 2006
1st EDITION	

Fig. 6240 WORKING LAMP SWITCH
AVERTISSEUR RELAIS

Serial No. ;

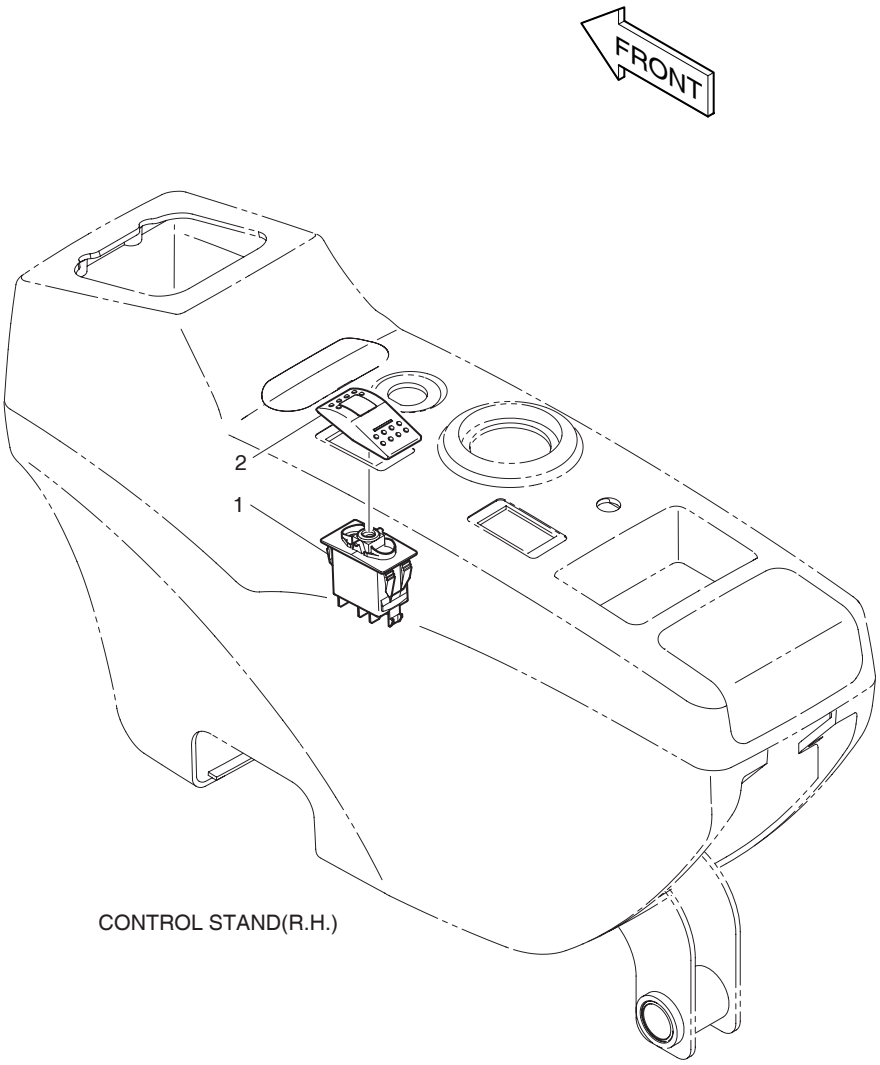

DATE	DEC. 26, 2006
1st EDITION	

Fig. 6240 WORKING LAMP SWITCH AVERTISSEUR RELAIS

Serial No. ;

Key No.	Part No.	Description	Description	Q'ty	S.C	Serial No.	ICA	Replaceable part	
								Part No.	Q'ty
6240--	500-00336	WORKING LAMP SWITCH	AVERTISSEUR RELAIS	-	D				
1	549-00103	SWITCH;ROCKER(2STEP)	INTERRUPTEUR	1					
2	K1002406D13	ACTUATOR;SWITCH	ACTUATOR;SWITCH	1					

Fig. 6250 WORKING LAMP - 2 LAMP
AVERTISSEUR RELAIS

Serial No. ;

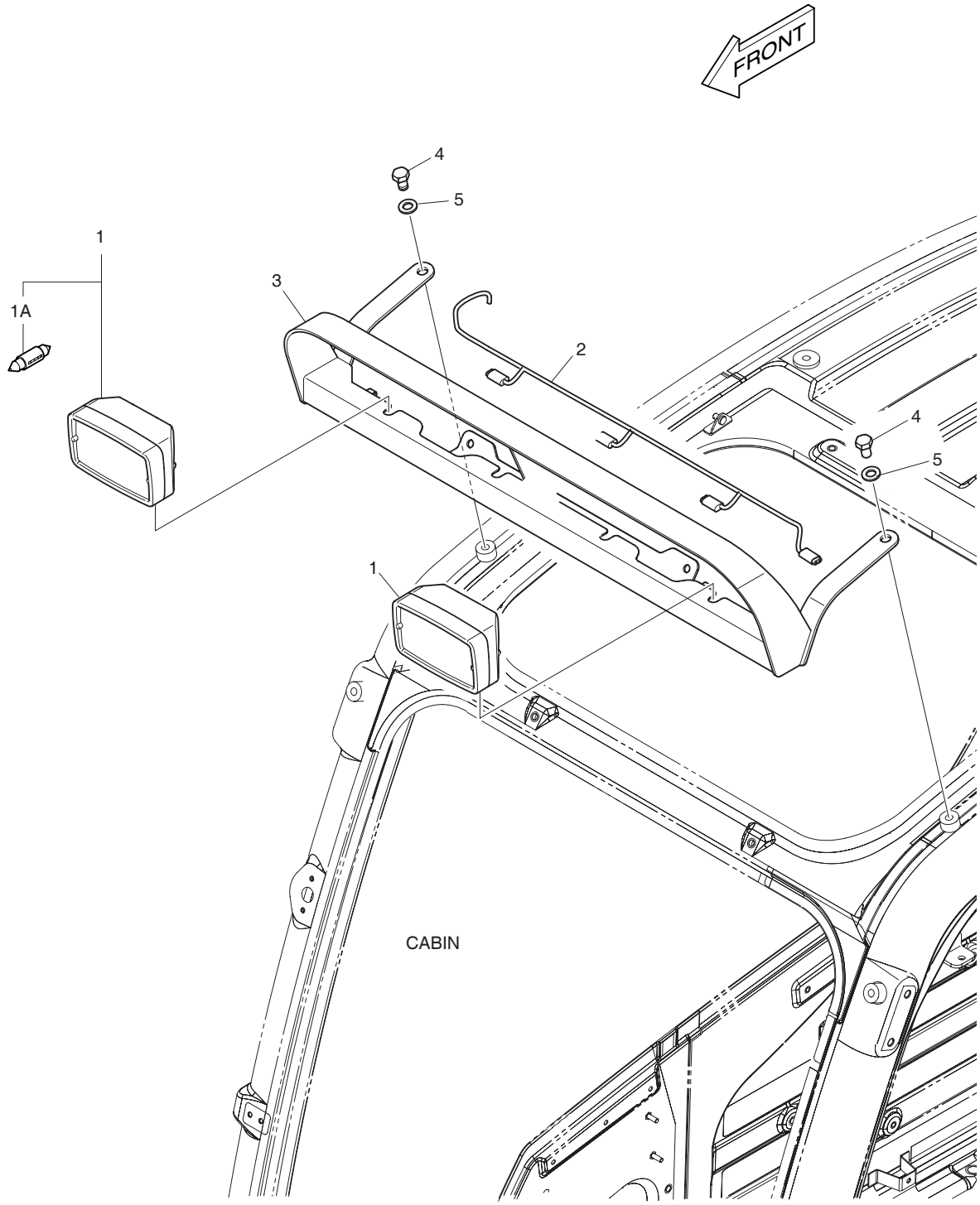

DATE	DEC. 26, 2006
1st EDITION	

Fig. 6250 WORKING LAMP - 2 LAMP AVERTISSEUR RELAIS

Serial No. ;

Key No.	Part No.	Description	Description	Q'ty	S.C	Serial No.	ICA	Replaceable part	
								Part No.	Q'ty
6250--	500-00302A	WORKING LAMP-2LAMP	AVERTISSEUR RELAIS	-	D				
1	534-00085	LAMP;HEAD	LAMPE	2					
1A	2515-1016D4	. BLUB;HALOGEN	. AMPOULE	1					
2	530-00430A	HARNESS;FRONT CABIN LAMP	HARNAIS	1					
3	195-02908C	BRACKET;FRONT LAMP	SUPPORT	1					
4	2120-2166D54	BOLT;GREEN	BOULON A 6 PANS	2					
5	2114-1898D6	WASHER	CALE	2					

DATE	JUN. 30, 2007
REV.NO.	EXB07-06

Fig. 6260 WORKING LAMP - 4 LAMP
AVERTISSEUR RELAIS

Serial No. ;

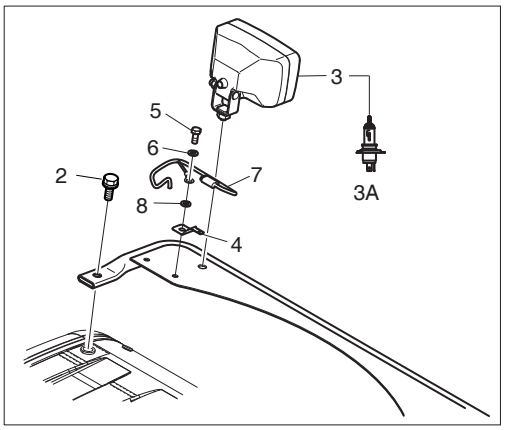

Serial No. : 5001 ~ 5013

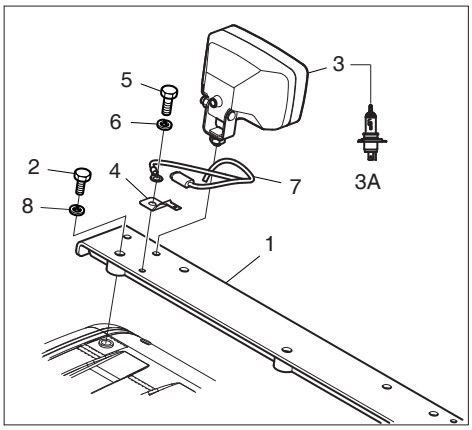

Serial No. : 5014 ~

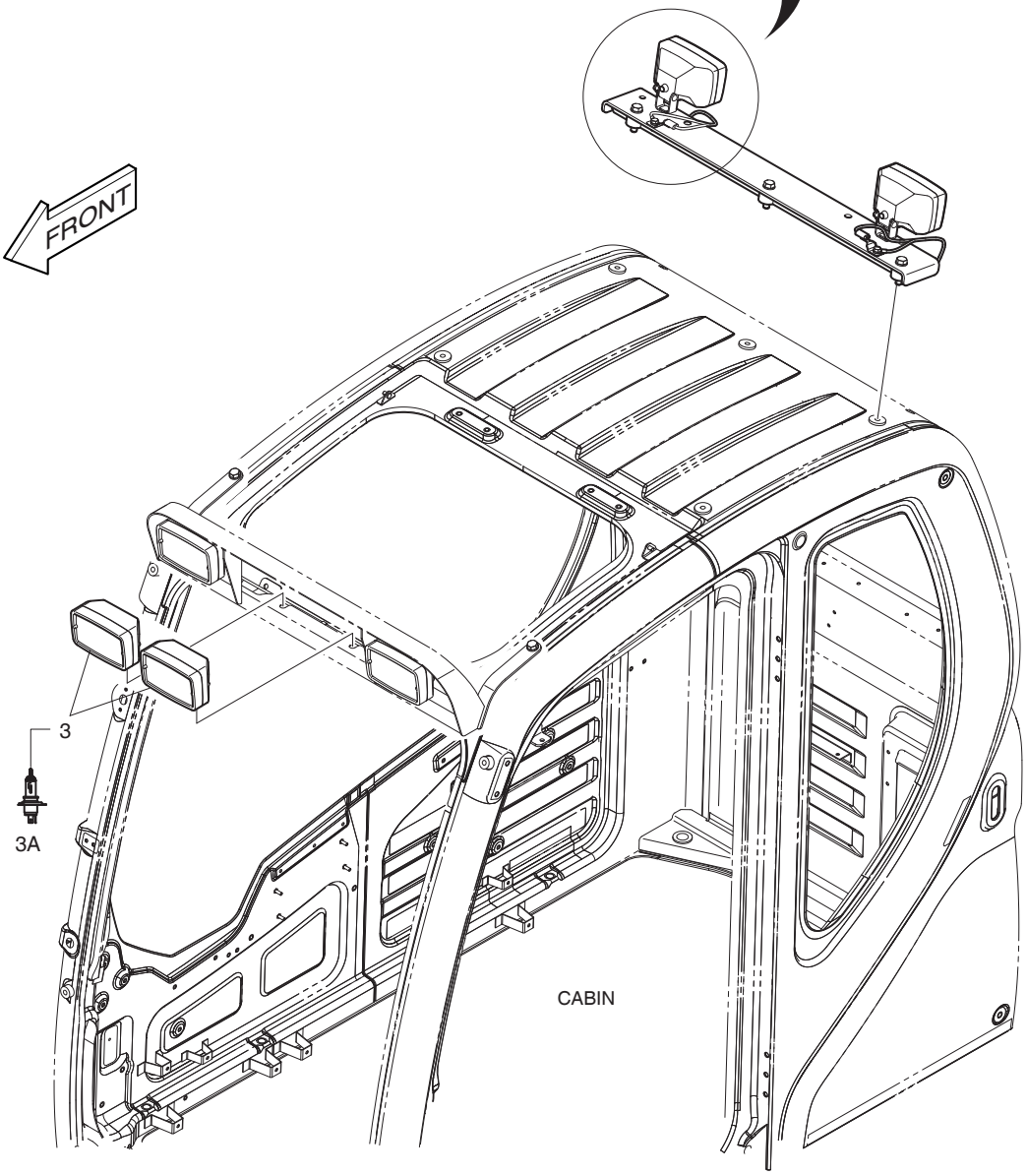

DATE	JUN. 30, 2007
REV. NO.	EXB07-06

Fig. 6260 WORKING LAMP - 4 LAMP AVERTISSEUR RELAIS

Serial No. ;

Key No.	Part No.	Description	Description	Q'ty	S.C	Serial No.	ICA	Replaceable part	
								Part No.	Q'ty
6260--	500-00303	WORKING LAMP-4LAMP	AVERTISSEUR RELAIS	-	D				
1	195-02910A	BRACKET;REAR LAMP	SUPPORT	1		5001–5013			
	195-02910C	**BRACKET;REAR LAMP**	SUPPORT	1		**5014–**			
2	2120-2166D54	BOLT;GREEN	BOULON A 6 PANS	2		5001–5013			
	S0515653	**BOLT M12X1.75X50**	BOULON A 6 PANS	3		**5014–**			
3	534-00085	LAMP;HEAD	LAMPE	4					
3A	2515-1016D4	. BLUB;HALOGEN	. AMPOULE	1					
4	2197-1661	BRACKET;HOUSING	SUPPORT	2					
5	S0508853	BOLT	BOULON A 6 PANS	2					
6	S5102503	WASHER;SPRING	RONDELLE ELASTIQUE	2					
7	530-00463A	HARNESS;REAR CABIN LAMP	HARNAIS	2					
8	2114-1898D6	WASHER	CALE	2		5001–5013			
	S5010713	**WASHER**	CALE	3		**5014–**			

DATE	DEC. 26, 2006
1st EDITION	

Fig. 6270 WORKING LAMP - REAR LAMP AVERTISSEUR RELAIS

Serial No. ;

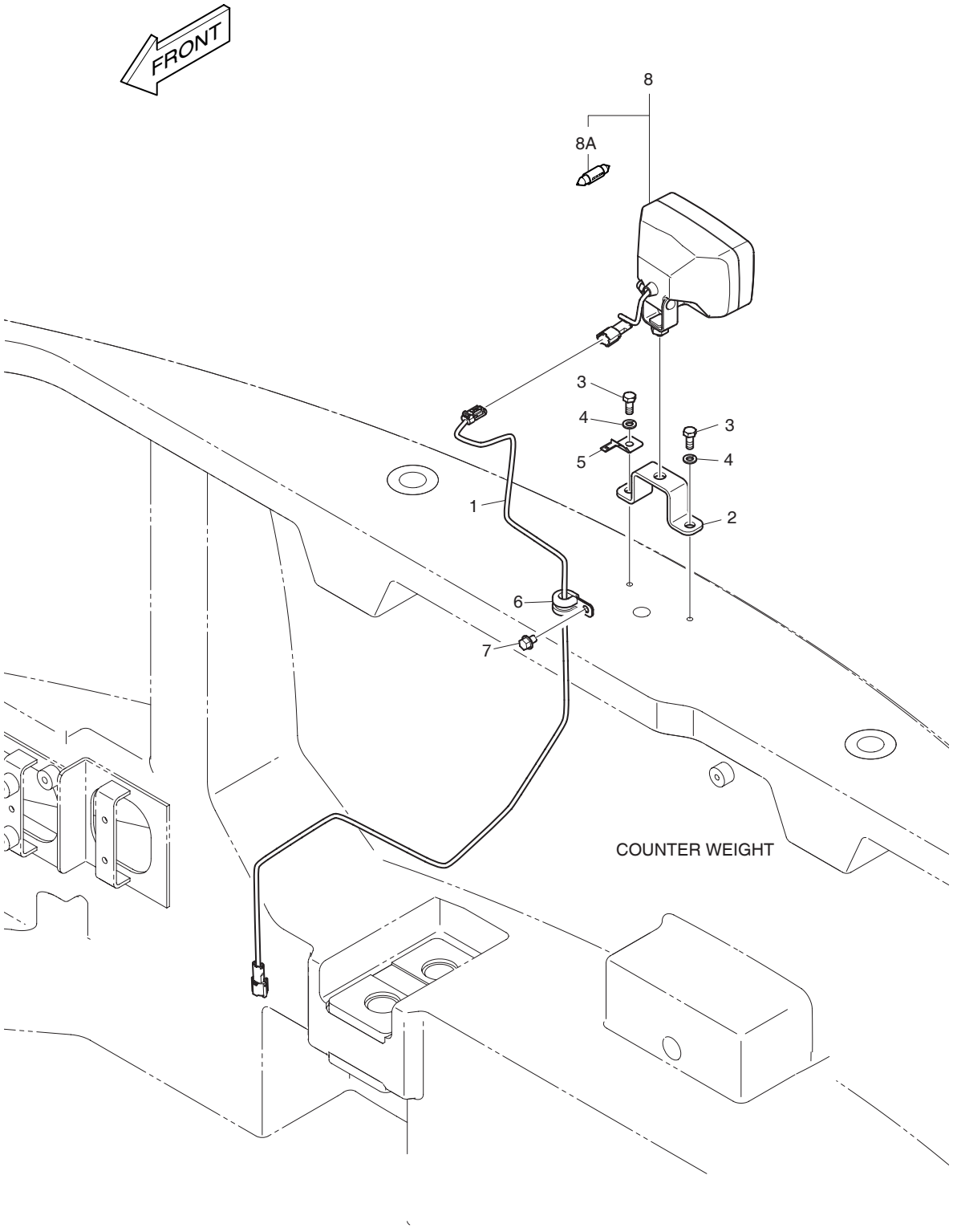

DATE	DEC. 26, 2006
1st EDITION	

Fig. 6270 WORKING LAMP - REAR LAMP AVERTISSEUR RELAIS

Serial No. ;

Key No.	Part No.	Description	Description	Q'ty	S.C	Serial No.	ICA	Replaceable part	
								Part No.	Q'ty
6270--	500-00341	WORKING LAMP-REAR LAMP	AVERTISSEUR RELAIS	-	D				
1	530-00431	HARNESS;REAR LAMP	HARNAIS	1					
2	195-02892B	BRACKET	SUPPORT	1					
3	S0508866	BOLT	BOULON	2					
4	S5102503	WASHER;SPRING	RONDELLE ELASTIQUE	2					
5	2197-1661	BRACKET;HOUSING	SUPPORT	1					
6	124-00208D2	CLIP	AGRAFE	1					
7	K1001029	BOLT	BOULON	1					
8	534-00085	LAMP;HEAD	LAMPE	1					
8A	2515-1016D4	. BLUB;HALOGEN	. AMPOULE	1					

Fig. 6280 ROTATING BEACON FEU DE CIRCULATION

Serial No. ;

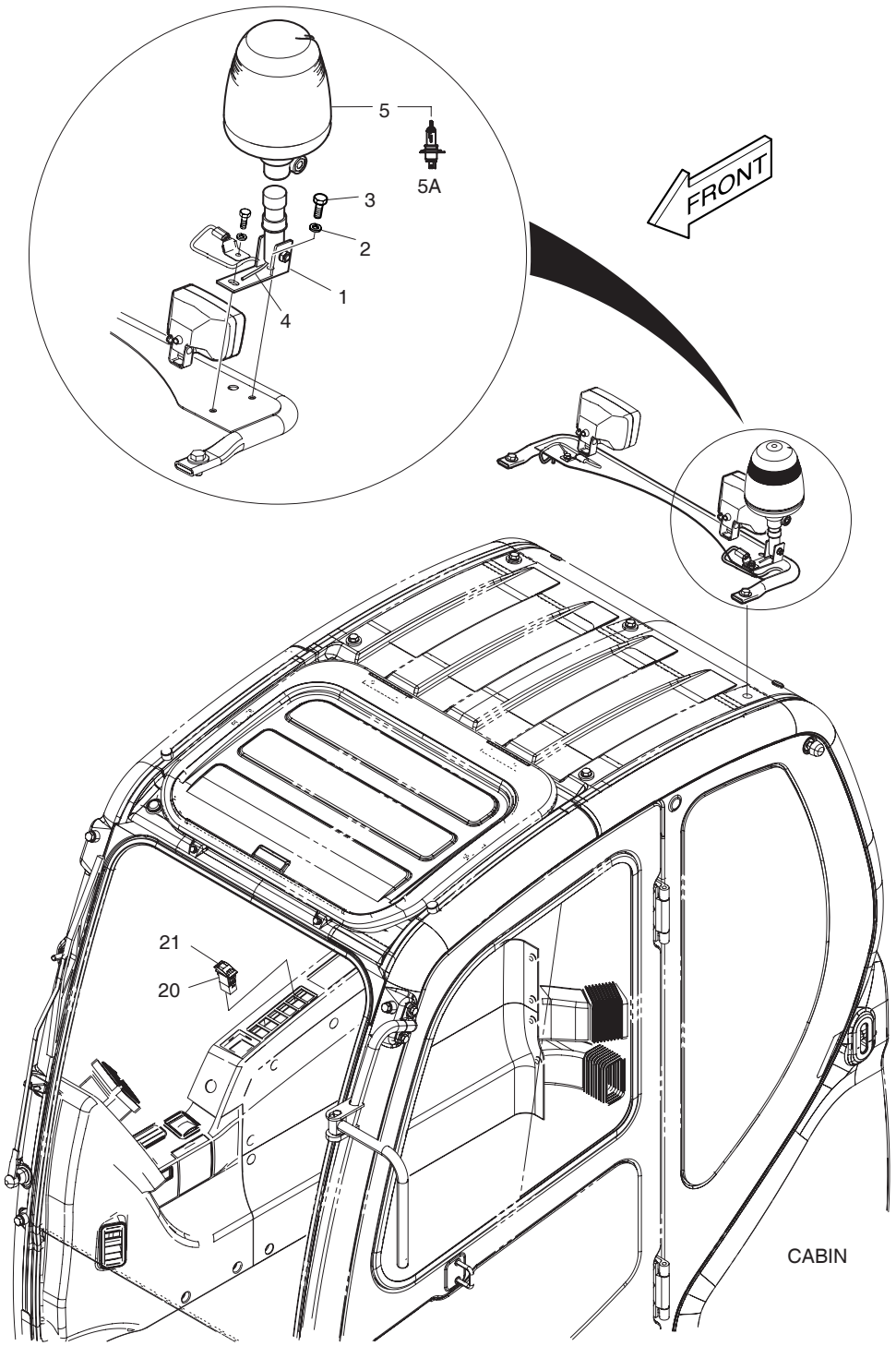

DATE	DEC. 26, 2006
1st EDITION	

Fig. 6280 ROTATING BEACON FEU DE CIRCULATION

Serial No. ;

Key No.	Part No.	Description	Description	Q'ty	S.C	Serial No.	ICA	Replaceable part	
								Part No.	Q'ty
6280--	500-00307	ROTATING BEACON	FEU DE CIRCULATION	-	D				
1	160-00061	BUSH;MOUNTING	MANCHON	1					
2	S5102503	WASHER;SPRING	RONDELLE ELASTIQUE	1					
3	S0508853	BOLT	BOULON A 6 PANS	1					
4	530-00464	HARNESS;ROTATING BEACON	HARNAIS	1					
5	534-00062	ROTATING BEACON	FEU DE CIRCULATION	1					
5A	515-00013	. BULB;HALOGEN 24V 70W	. AMPOULE	1					
20	549-00101	SWITCH	INTERRUPTEUR	1					
21	K1002406D3	ACTUATOR	DECLENCHEURE	1					

DATE	DEC. 26, 2006
1st EDITION	

Fig. 6290 ROTATING BEACON MOUNTING SUPPORT TOURNANT DE BALISE

Serial No. ;

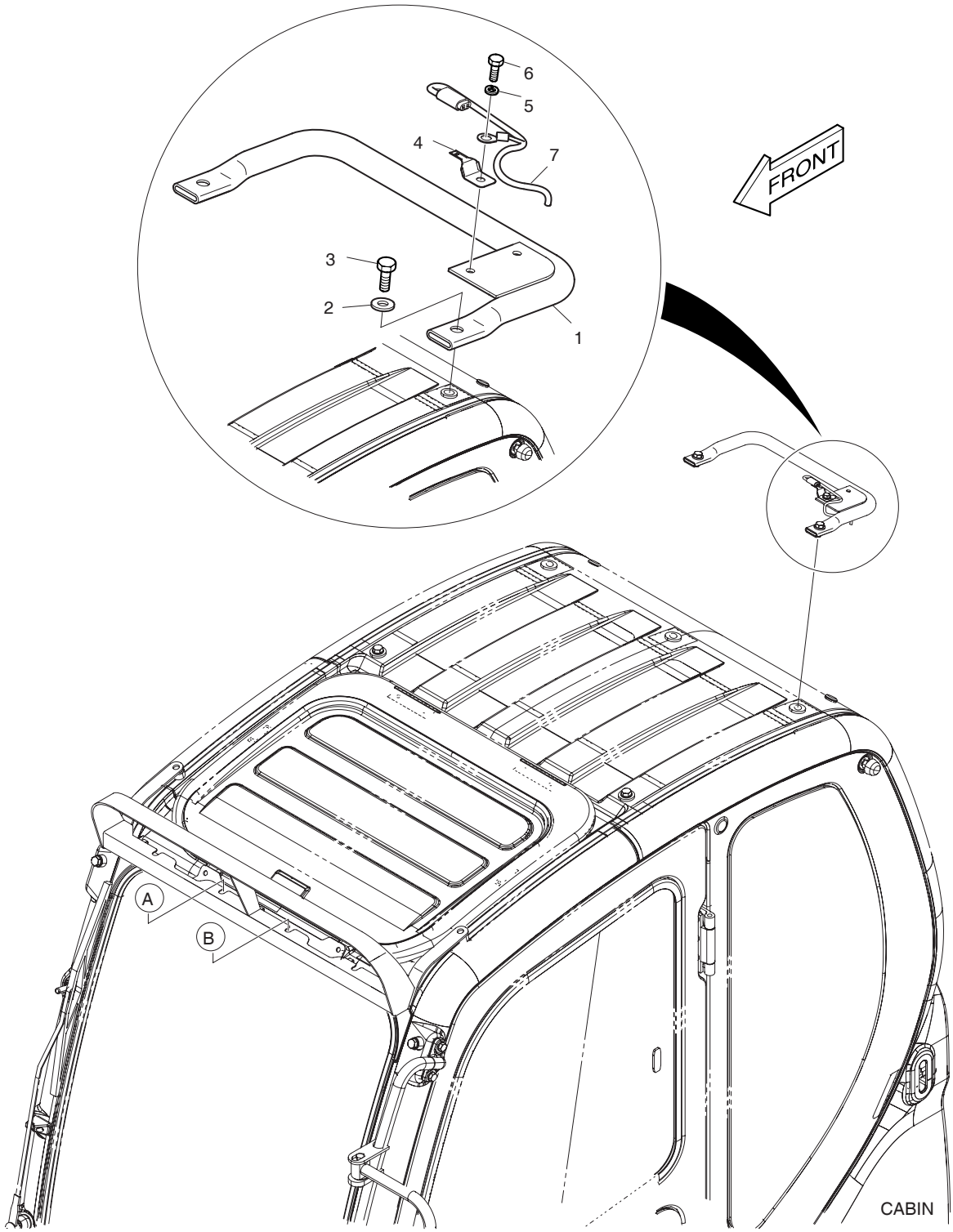

DATE	DEC. 26, 2006
1st EDITION	

Fig. 6290 ROTATING BEACON MOUNTING SUPPORT TOURNANT DE BALISE

Serial No. ;

Key No.	Part No.	Description	Description	Q'ty	S.C	Serial No.	ICA	Replaceable part	
								Part No.	Q'ty
6290--	500-00308	ROTATING BEACON MOUNTING	SUPPORT TOURNANT DE B	-	D				
1	195-02909A	BRACKET;BEACON	SUPPORT	1					
2	2114-1898D1	WASHER	CALE	2					
3	S0512053	BOLT	BOULON A 6 PANS	2					
4	2197-1661	BRACKET;HOUSING	SUPPORT	1					
5	S5102503	WASHER;SPRING	RONDELLE ELASTIQUE	1					
6	S0508853	BOLT	BOULON A 6 PANS	1					
7	530-00463A	HARNESS	HARNAIS	1					

Fig. 6300 ROTATING BEACON(TELESCOPIC) WITH LAMP FEU DE CIRCULATION

Serial No. ;

Serial No. : 5001 ~ 5013

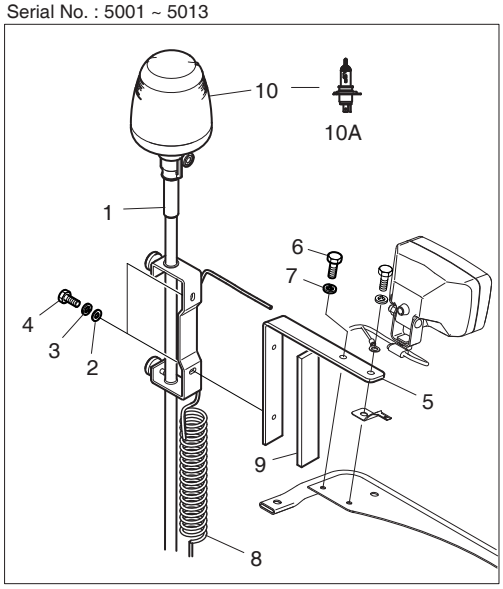

Serial No. : 5014 ~

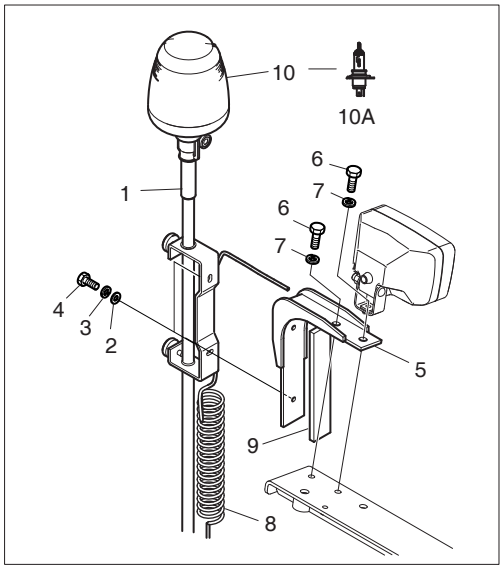

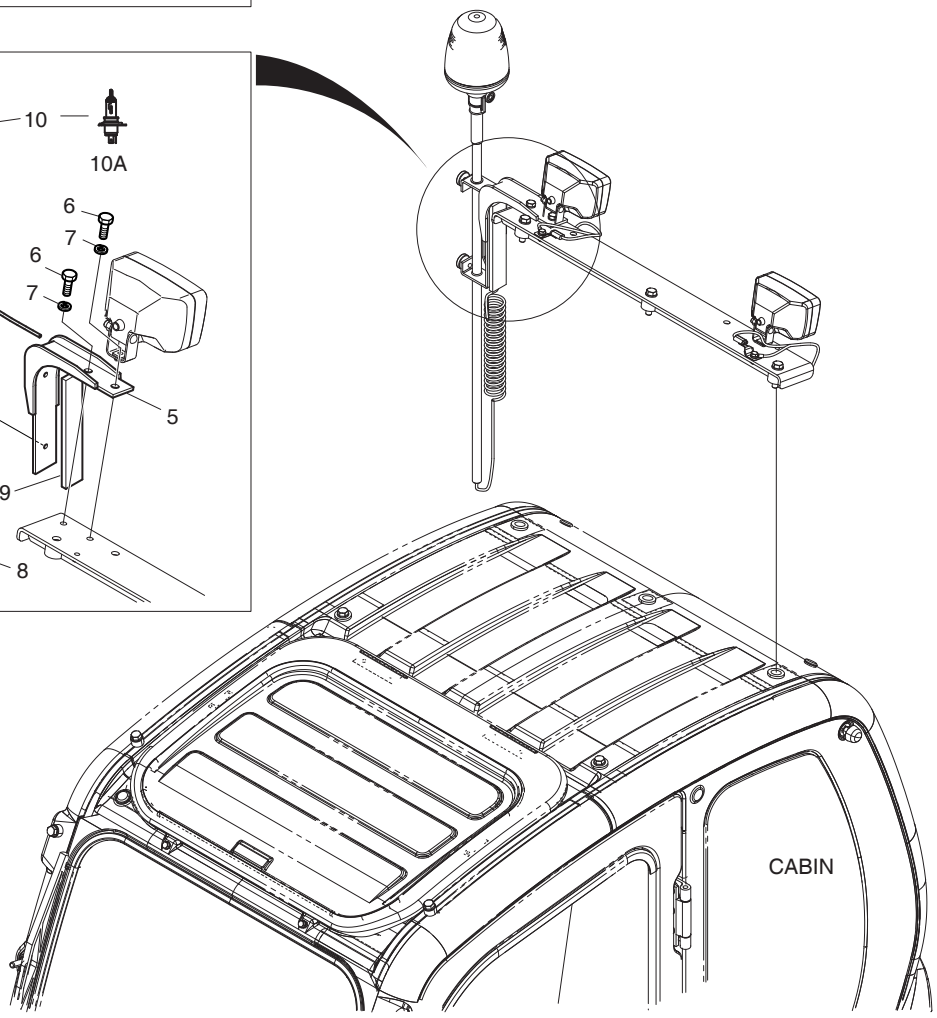

DATE	JUN. 30, 2007
REV. NO.	EXB07-06

Fig. 6300 ROTATING BEACON(TELESCOPIC) WITH LAMP FEU DE CIRCULATION

Serial No. ;

Key No.	Part No.	Description	Description	Q'ty	S.C	Serial No.	ICA	Replaceable part	
								Part No.	Q'ty
6300--	500-00309	ROTATING BEACON	FEU DE CIRCULATION	-	D				
1	195-01805	SUPPORT;BEACON	SUPPORT	1					
2	S5010513	WASHER;PLAIN	RONDELLE PLATE	2					
3	S5102503	WASHER;SPRING	RONDELLE ELASTIQUE	2					
4	S0508653	BOLT	BOULON A 6 PANS	2					
5	195-02925	BRACKET	SUPPORT	1		5001–5013			
	195-02925A	**BRACKET**	SUPPORT	1		**5014–**			
6	S0508853	BOLT	BOULON A 6 PANS	1		5001–5013			
	S0512053	**BOLT**	BOULON A 6 PANS	2		**5014–**			
7	S5102503	WASHER;SPRING	RONDELLE ELASTIQUE	1		5001–5013			
	S5100603	**WASHER;SPRING**	RONDELLE ELASTIQUE	2		**5014–**			
8	K1010065	HARNESS;JOINT	HARNAIS	1					
9	161-00404	RUBBER	CAOUTCHOUC	1					
10	534-00062	LAMP;ROTATING BEACON	BALISE DE LAMP;ROTATI	1					
10A	515-00013	. BULB;HALOGEN 24V 70W	. AMPOULE	1					

DATE	JUN. 30, 2007
REV.NO.	EXB07-06

Fig. 6310 ROTATING BEACON(TELESCOPIC) W/O LAMP FEU DE CIRCULATION

Serial No. ;

Serial No. : 5001 ~ 5013

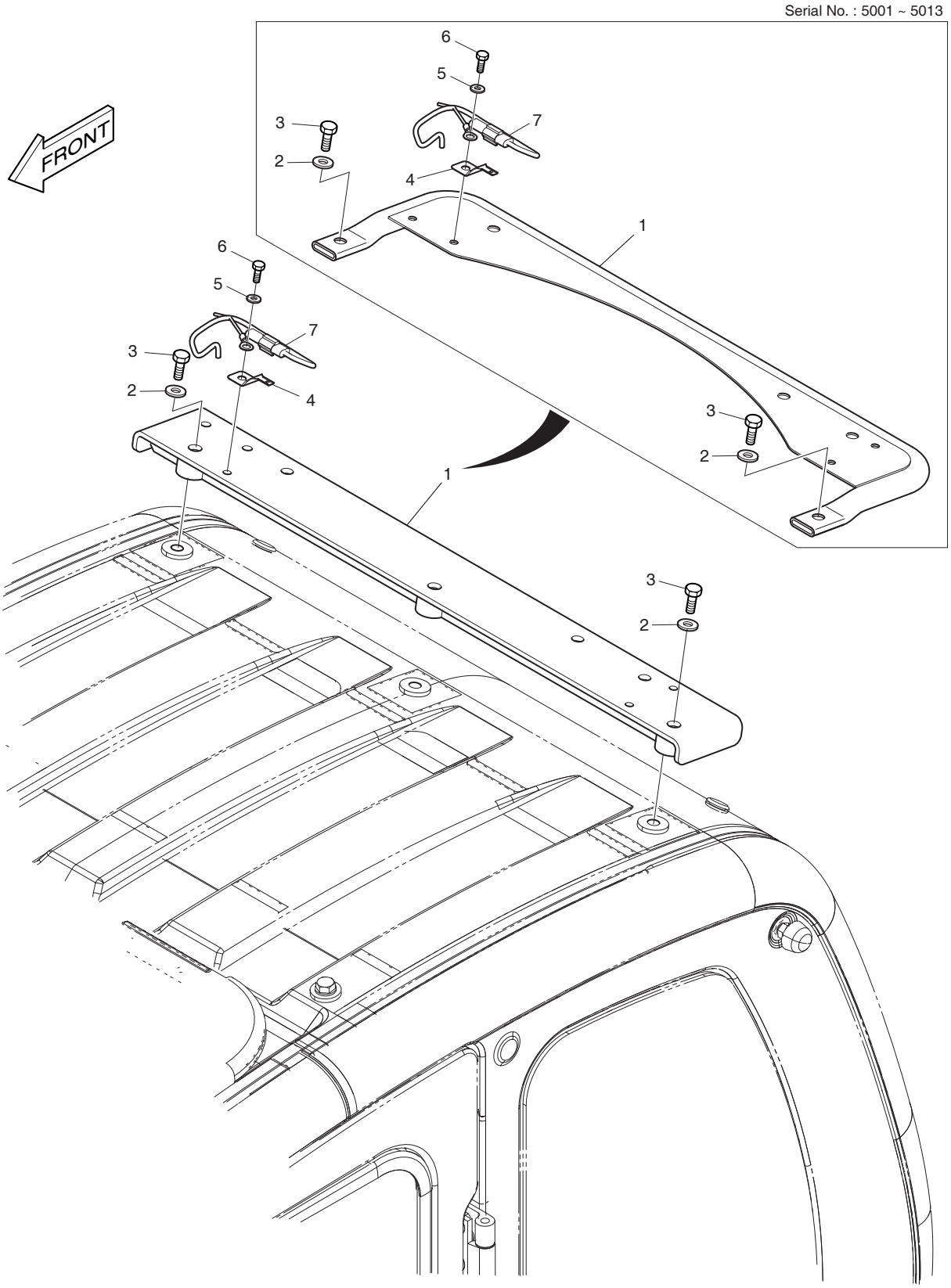

DATE	JUN. 30, 2007
REV. NO.	EXB07-06

Fig. 6310 ROTATING BEACON(TELESCOPIC) W/O LAMP FEU DE CIRCULATION

Serial No. ;

Key No.	Part No.	Description	Description	Q'ty	S.C	Serial No.	ICA	Replaceable part	
								Part No.	Q'ty
6310--	500-00310	ROTATING BEACON-TELESCOPIC	FEU DE CIRCULATION	-	D				
1	195-02910A	BRACKET	SUPPORT	1		5001–5013			
	195-02910C	**BRACKET**	SUPPORT	1		**5014–**			
2	2114-1898D6	WASHER	CALE	2		5001–5013			
	S5010713	**WASHER**	CALE	3		**5014–**			
3	2120-2166D54	BOLT	BOULON A 6 PANS	2		5001–5013			
	S0515653	**BOLT M12X1.75X50**	BOULON A 6 PANS	3		**5014–**			
4	2197-1661	BRACKET;HOUSING	SUPPORT	1					
5	S5102503	WASHER;SPRING	RONDELLE ELASTIQUE	1					
6	S0508853	BOLT	BOULON A 6 PANS	1					
7	530-00463A	HARNESS	HARNAIS	1					

DATE	DEC. 26, 2006
1st EDITION	

Fig. 6320 OVERLOAD WARNING
AVERTISSEMENT DE SURCHARGE

Serial No. ;

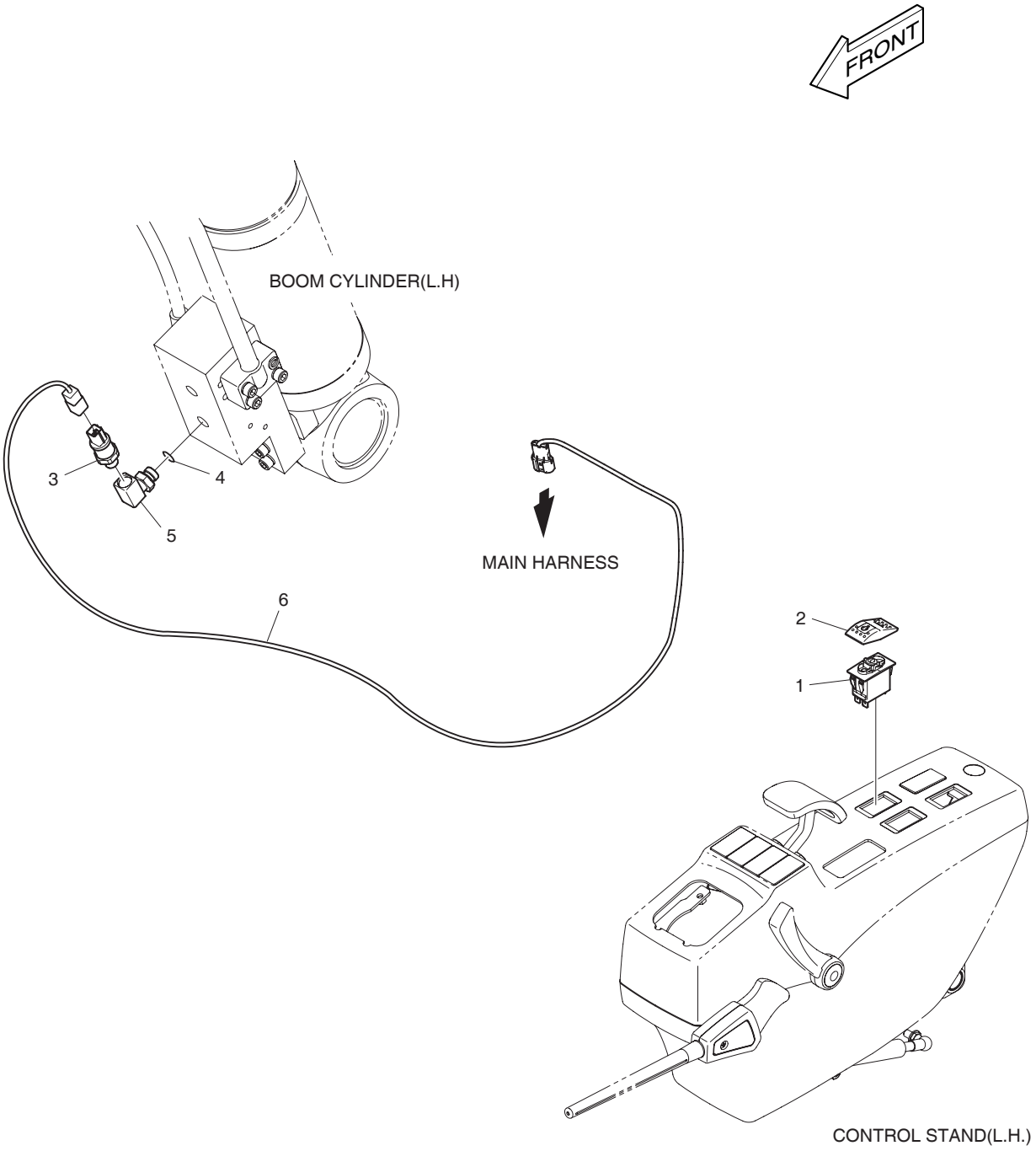

DATE	DEC. 26, 2006
1st EDITION	

Fig. 6320 OVERLOAD WARNING AVERTISSEMENT DE SURCHARGE

Serial No. ;

Key No.	Part No.	Description	Description	Q'ty	S.C	Serial No.	ICA	Replaceable part	
								Part No.	Q'ty
6320--	K1018013A	OVER LOAD WARNING	AVERTISSEMENT DE SURC	-	D				
1	549-00102	SWITCH	INTERRUPTEUR	1					
2	K1002406D4	ACTUATOR	DECLENCHEURE	1					
3	2547-9045	SENSOR;PRESSURE	CAPTEUR	1					
4	S8000121	O-RING	JOINT TORIQUE	1					
5	DS2308022	ELBOW	COUDE	1					
6	K1002153	HARNESS;JOINT	HARNAIS	1					

DATE	JUN. 30, 2007
REV.NO.	EXB07-06

Fig. 6330 LOWER WIPER
ABAISSEZ L'ESSUIE-GLACE

Serial No. ;

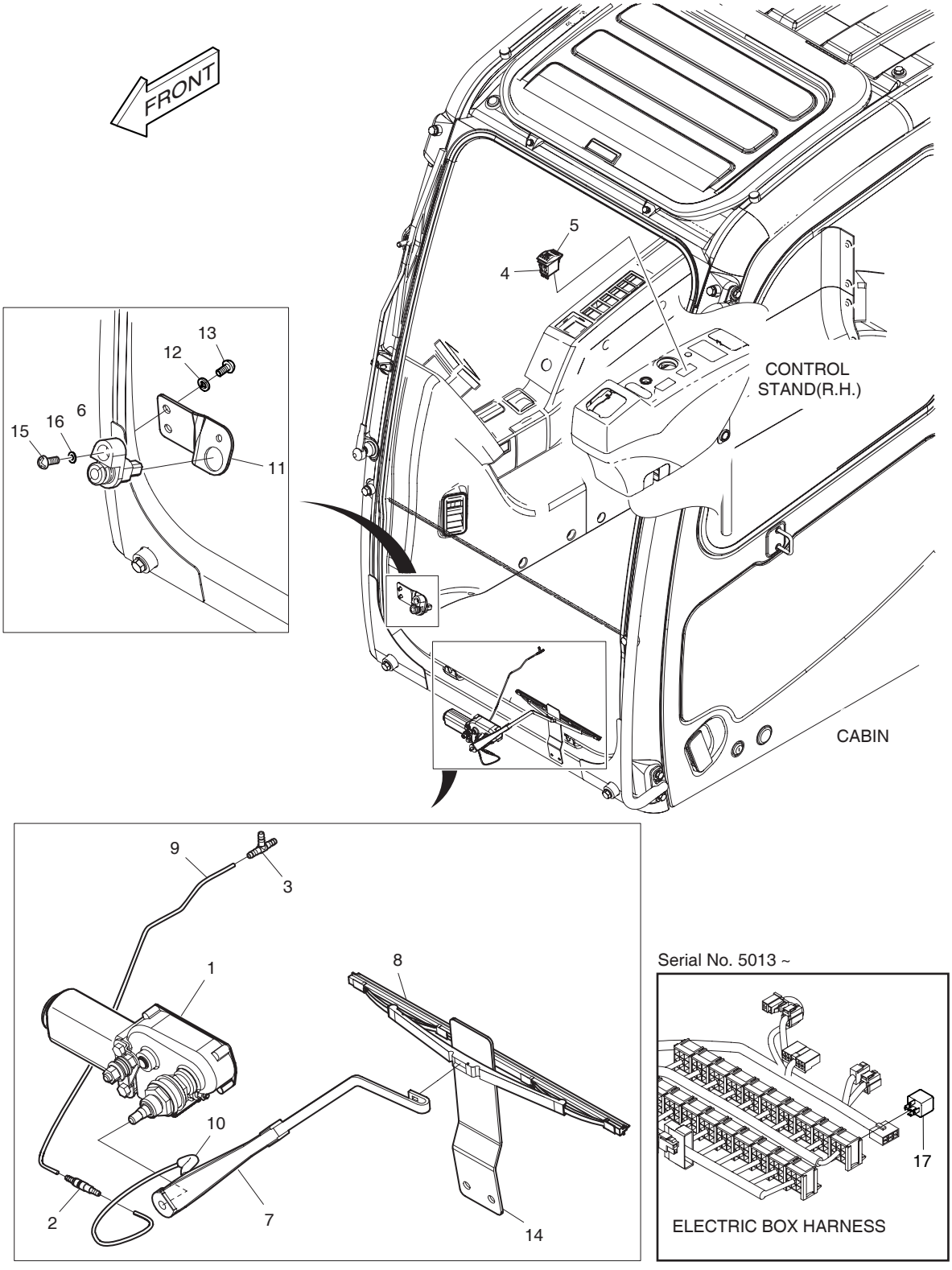

DATE	JUN. 30, 2007
REV. NO.	EXB07-06

Fig. 6330 LOWER WIPER ABAISSEZ L'ESSUIE-GLACE

Serial No. ;

Key No.	Part No.	Description	Description	Q'ty	S.C	Serial No.	ICA	Replaceable part	
								Part No.	Q'ty
6330--	K1018014	LOWER WIPER ASS'Y	ABAISSEZ L'ESSUIE-GLA	-	D				
1	538-00012	MOTOR;WIPER	MOTEUR	1					
2	426-00282	VALVE;LOWER WIPER CHECK	VANNE	1					
3	181-00804	TEE	TE	1					
4	549-00101	SWITCH	INTERRUPTEUR	1					
5	K1002406D5	ACTUATOR	DECLENCHEURE	1					
6	549-00077	SWITCH	INTERRUPTEUR	1					
7	541-00016	ARM;WIPER	BALANCIER	1					
8	507-00007	BLADE;WIPER	LAME	1					
9	K1002866	HOSE	TUYAU FLEXIBLE	1					
10	K1002867D1	TUBE	DOUILLE ACIER	1					
11	195-03444	BRACKET;SWITCH	SUPPORT	1					
12	2114-1898D3	WASHER;PLAIN	RONDELLE PLATE	2					
13	2120-2166D9	SCREW	VIS	2					
14	191-03736E	PLATE;STOPPER	TAQUET D'ARRET	1					
15	S3450833	SCREW	VIS	1					
16	S5100203	WASHER SPRING	RONDELLE	1					
17	**2544-9033**	**RELAY**	RELAIS	1		**5013–**			

DATE	DEC. 26, 2006
1st EDITION	

Fig. 6340 WORKING LAMP - 2 LAMP
AVERTISSEUR RELAIS

Serial No. ;

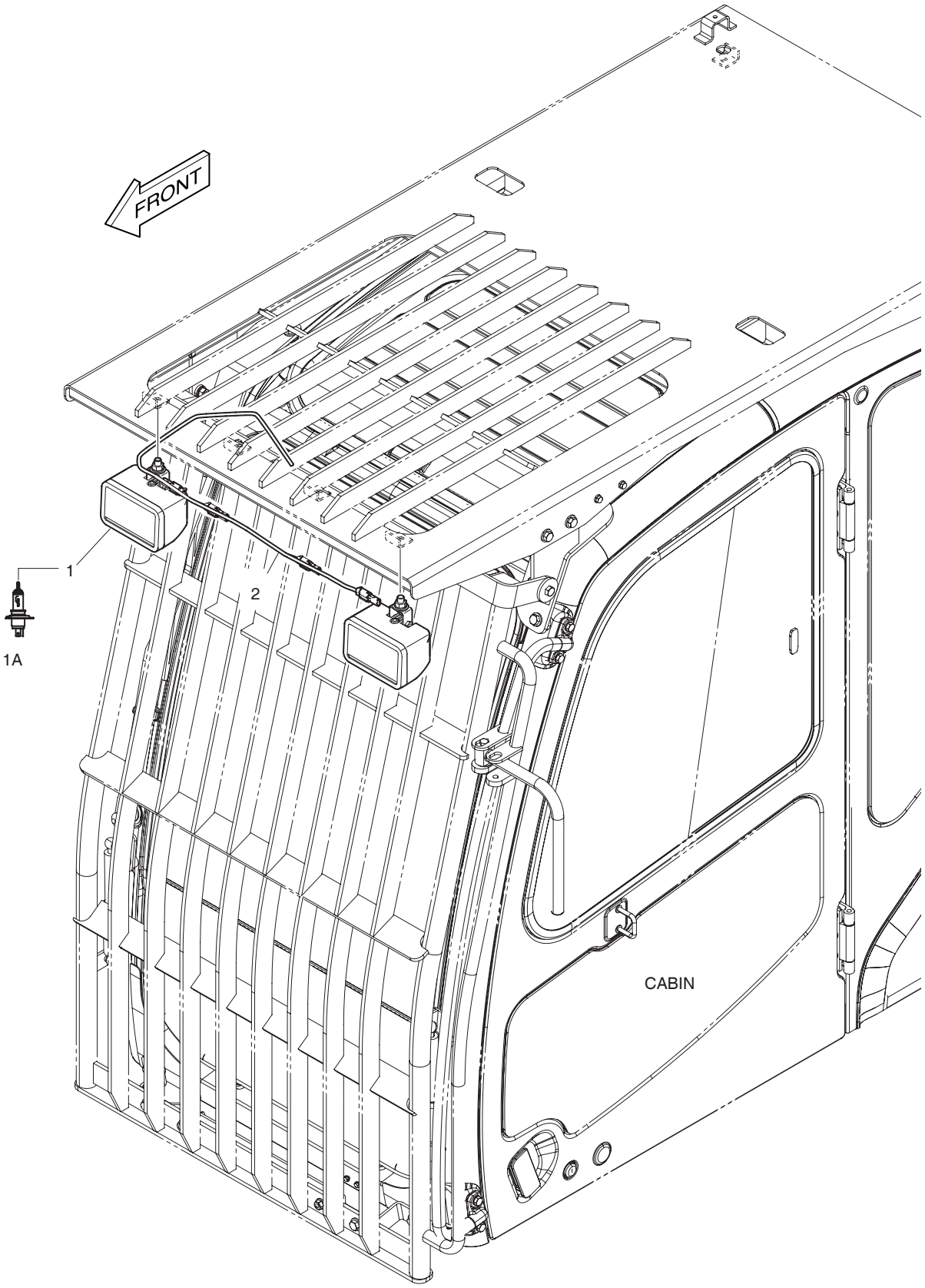

DATE	DEC. 26, 2006
1st EDITION	

Fig. 6340 WORKING LAMP - 2 LAMP
AVERTISSEUR RELAIS

Serial No. ;

Key No.	Part No.	Description	Description	Q'ty	S.C	Serial No.	ICA	Replaceable part	
								Part No.	Q'ty
6340--	K1006801	WORKING LAMP ASS'Y	LAMPE FONCTIONNANTE	-	D				
1	534-00085	LAMP;WORKING	LAMPE	2					
1A	2515-1016D4	. BULB 24V 70W	. AMPOULE	1					
2	K1006663	HARNESS;JOINT	HARNAIS	1					

DATE	DEC. 26, 2006
1st EDITION	

Fig. 6350 WORKING LAMP - 4 LAMP
AVERTISSEUR RELAIS

Serial No. ;

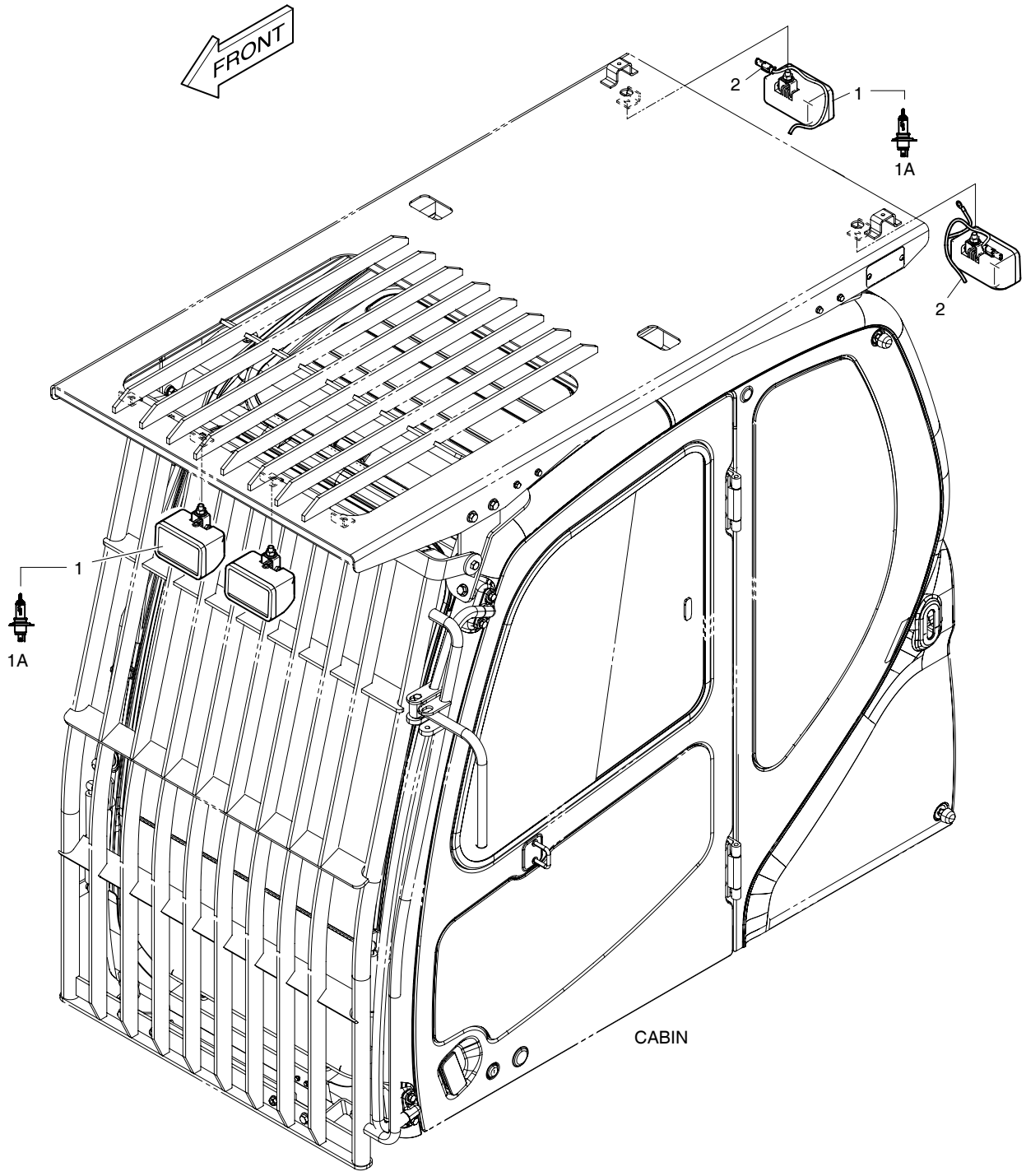

DATE	DEC. 26, 2006
1st EDITION	

Fig. 6350 WORKING LAMP - 4 LAMP
AVERTISSEUR RELAIS

Serial No. ;

Key No.	Part No.	Description	Description	Q'ty	S.C	Serial No.	ICA	Replaceable part	
								Part No.	Q'ty
6350--	K1006802	WORKING LAMP ASS'Y	LAMPE FONCTIONNANTE	-	D				
1	534-00085	LAMP;WORKING	LAMPE	4					
1A	2515-1016D4	. BULB 24V 70W	. AMPOULE	1					
2	530-00463A	HARNESS;JOINT	HARNAIS	2					

DATE	DEC. 26, 2006
1st EDITION	

Fig. 6360 ROTATING BEACON - WITH FOGS
FEU DE CIRCULATION

Serial No. ;

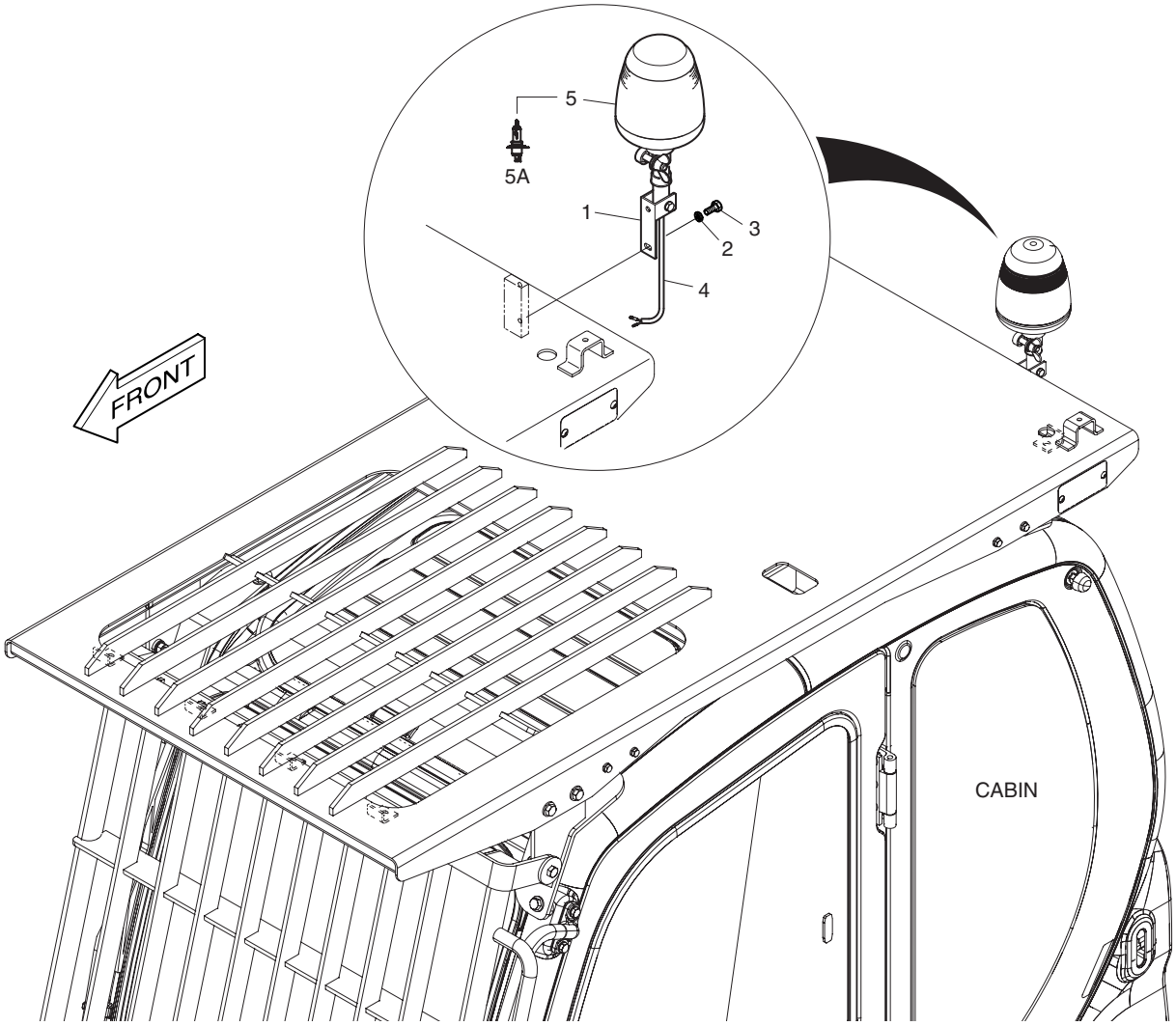

DATE	DEC. 26, 2006
1st EDITION	

Fig. 6360 ROTATING BEACON - WITH FOGS
FEU DE CIRCULATION

Serial No. ;

Key No.	Part No.	Description	Description	Q'ty	S.C	Serial No.	ICA	Replaceable part	
								Part No.	Q'ty
6360--	K1006803	ROTATING BEACON	FEU DE CIRCULATION	-	D				
1	160-00061	BUSH;MOUNTING	MANCHON	1					
2	S5102503	WASHER;SPRING	RONDELLE ELASTIQUE	2					
3	S0508853	BOLT	BOULON A 6 PANS	2					
4	530-00464	HARNESS;JOINT	HARNAIS	1					
5	534-00062	LAMP;ROTATING BEACON	BALISE DE LAMP;ROTATI	1					
5A	515-00013	. BULB;HALOGEN 24V 70W	. AMPOULE	1					

DATE	DEC. 26, 2006
1st EDITION	

Fig. 6370 FLOOR MAT - ONE & TWO WAY PLANCHER

Serial No. ;

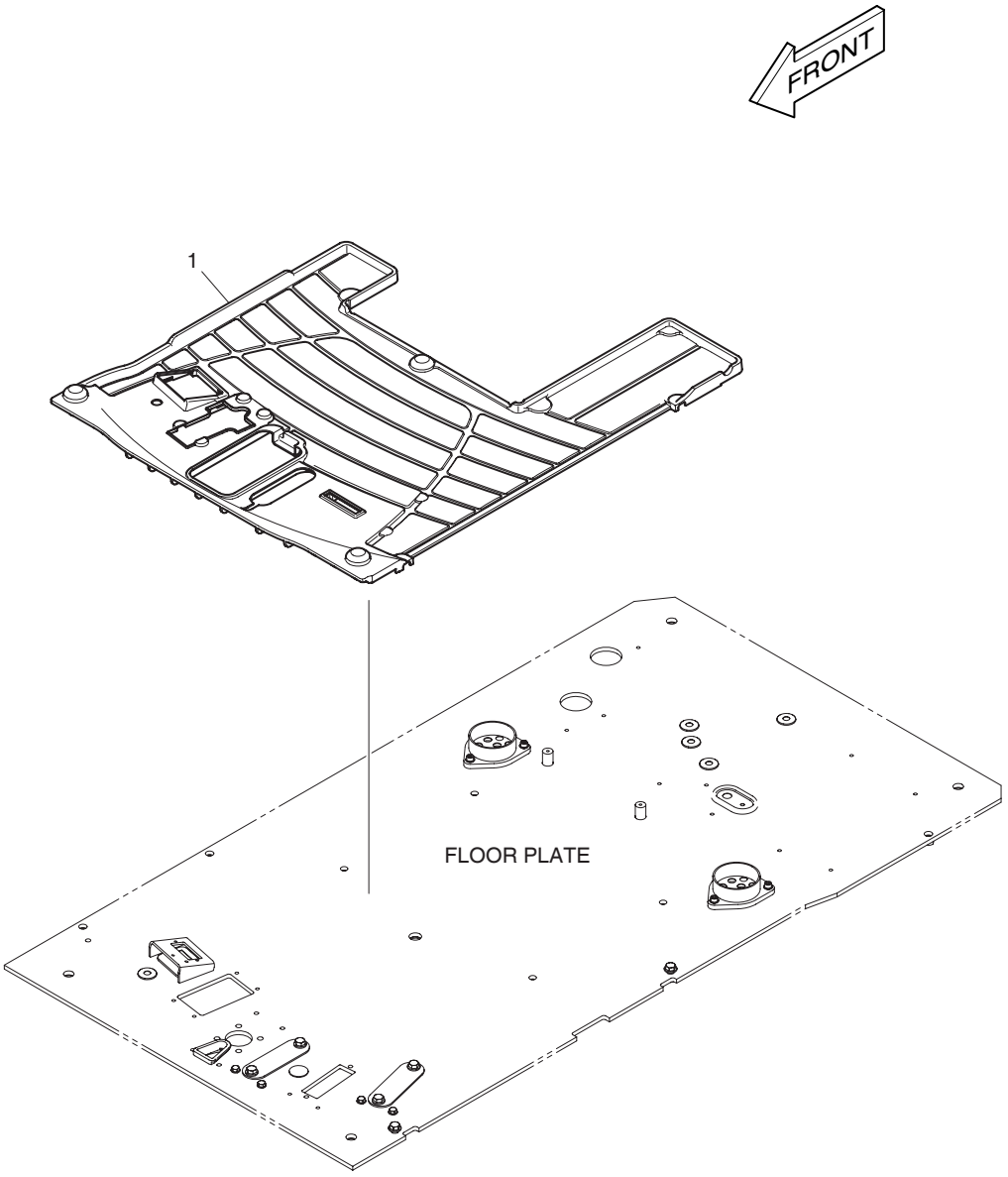

DATE	DEC. 26, 2006
1st EDITION	

Fig. 6370 FLOOR MAT - ONE & TWO WAY PLANCHER

Serial No. ;

Key No.	Part No.	Description	Description	Q'ty	S.C	Serial No.	ICA	Replaceable part	
								Part No.	Q'ty
6370-1	K1017490A	MAT;FLOOR	PLAQUE	1					

DATE	DEC. 26, 2006
1st EDITION	

Fig. 6380 MAIN PIPING - ONE WAY
CONDUITES DE PRINCIPAL

Serial No. ;

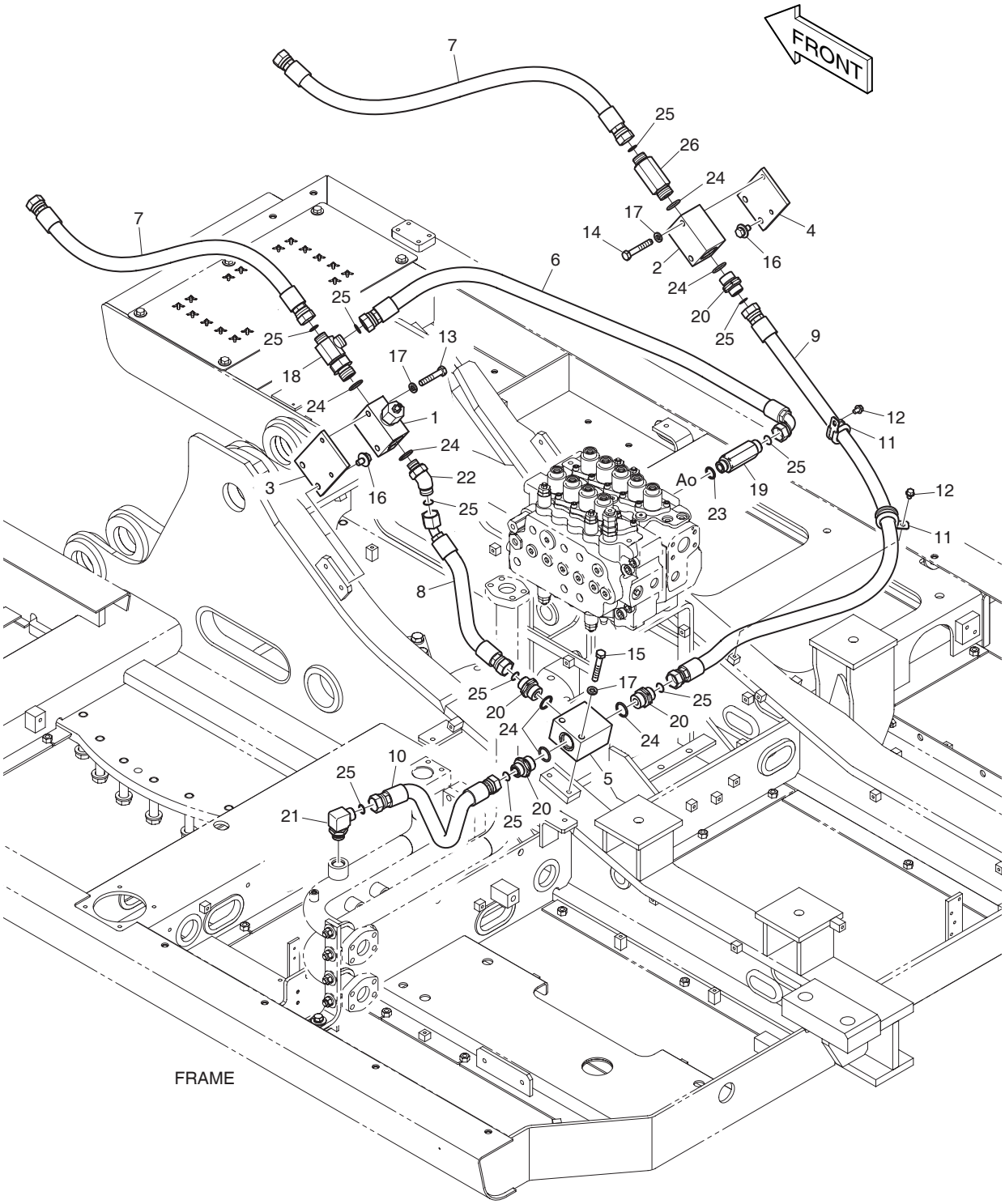

DATE	DEC. 26, 2006
1st EDITION	

Fig. 6380 MAIN PIPING - ONE WAY
CONDUITES DE PRINCIPAL

Serial No. ;

Key No.	Part No.	Description	Description	Q'ty	S.C	Serial No.	ICA	Replaceable part	
								Part No.	Q'ty
6380--	K1018182	BREAKER PIPING	TUYAUTERIE A SENS	-	D				
1	426-00267A	VALVE;RELIEF	VANNE	1					
2	423-00193B	BLOCK	BLOC	1					
3	195-02733B	BRACKET	SUPPORT	1					
4	195-02732B	BRACKET	SUPPORT	1					
5	K1002868A	BLOCK	BLOC	1					
6	DS2013558	HOSE	TUYAU FLEXIBLE	1					
7	DS2011401	HOSE	TUYAU FLEXIBLE	2					
8	DS2012254	HOSE	TUYAU FLEXIBLE	1					
9	DS2011533	HOSE	TUYAU FLEXIBLE	1					
10	DS2011435	HOSE	TUYAU FLEXIBLE	1					
11	124-00208D5	CLIP	AGRAFE	2					
12	K1001029	BOLT	BOULON	2					
13	S0561066	BOLT	BOULON	2					
14	S0561266	BOLT	BOULON	2					
15	S0561366	BOLT	BOULON	2					
16	DS0025020	BOLT;SET	BOULON	4					
17	S5102703	WASHER;SPRING	RONDELLE ELASTIQUE	6					
18	2181-2293D2	TEE	TE	1					
19	2181-2627D4	ADAPTER	ADAPTEUR	1					
20	2181-2627D15	ADAPTER	ADAPTEUR	4					
21	2181-2628D1	ELBOW	COUDE	1					
22	2181-2816D6	ELBOW	COUDE	1					
23	S8000231	O-RING	JOINT TORIQUE	1					
24	S8000291	O-RING	JOINT TORIQUE	7					
25	S8030121	O-RING	JOINT TORIQUE	10					
26	DS2232121	ADAPTER	ADAPTEUR	1					

DATE	DEC. 26, 2006
1st EDITION	

Fig. 6390 PILOT PIPING(1) - ONE WAY
CONDUITES DE PILOTE

Serial No. ;

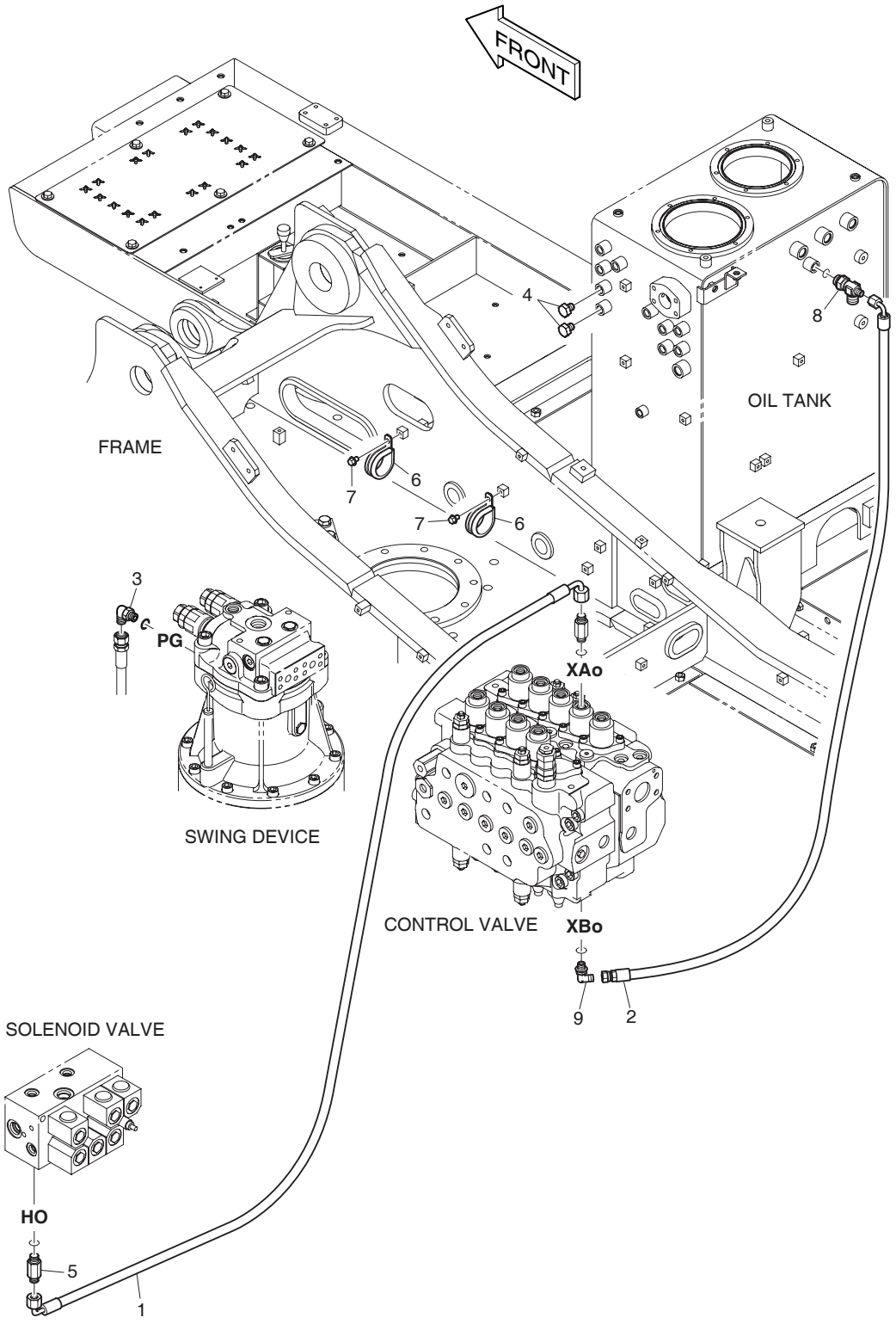

DATE	DEC. 26, 2006
1st EDITION	

Fig. 6390 PILOT PIPING(1) - ONE WAY
CONDUITES DE PILOTE

Serial No. ;

Key No.	Part No.	Description	Description	Q'ty	S.C	Serial No.	ICA	Replaceable part	
								Part No.	Q'ty
6390--	K1018158A	PILOT PIPING-BREAKER	TUYAUTERIE PILOTE	-	D				
1	DS2091029	HOSE	TUYAU FLEXIBLE	1					
2	DS2093056	HOSE	TUYAU FLEXIBLE	1					
3	2181-1702D4	ELBOW	COUDE	1					
4	2181-1950D2	PLUG	BOUCHON	2					
5	2181-1126D34	ADAPTER	ADAPTEUR	1					
6	124-00208D7	CLIP	AGRAFE	2					
7	K1001029	BOLT	BOULON	2					
8	2181-1951D8	TEE	TE	1					
9	2181-1702D10	ELBOW	COUDE	1					

DATE	DEC. 26, 2006
1st EDITION	

Fig. 6400 PILOT PIPING(2) - ONE WAY
CONDUITES DE PILOTE

Serial No. ;

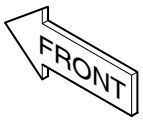

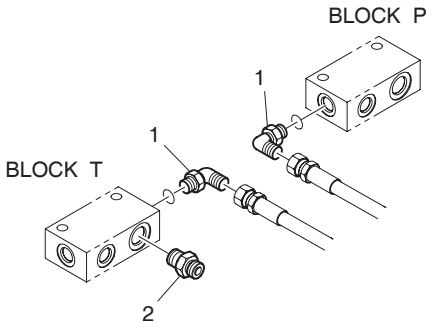

DATE	DEC. 26, 2006
1st EDITION	

Fig. 6400 PILOT PIPING(2) - ONE WAY CONDUITES DE PILOTE

Serial No. ;

Key No.	Part No.	Description	Description	Q'ty	S.C	Serial No.	ICA	Replaceable part	
								Part No.	Q'ty
6400--	K1018147	PILOT PIPING-BREAKER	TUYAUTERIE PILOTE	-	D				
1	2181-1702D5	ELBOW	COUDE	2					
2	2181-1126D7	ADAPTER	ADAPTEUR	1					

DATE	DEC. 26, 2006
1st EDITION	

Fig. 6410 MAIN PIPING - TWO WAY
CONDUITES DE PRINCIPAL

Serial No. ;

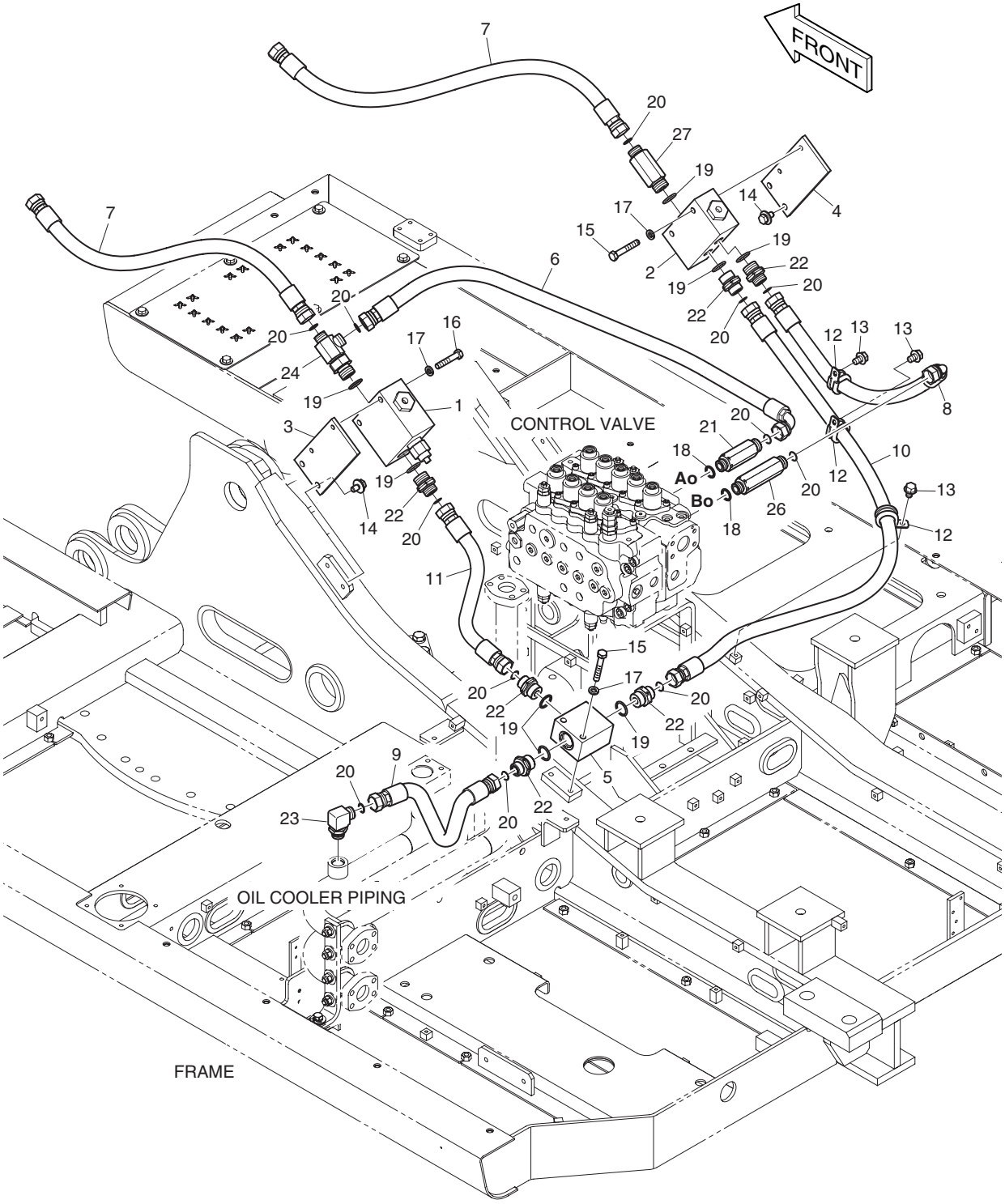

DATE	DEC. 26, 2006
1st EDITION	

Fig. 6410 MAIN PIPING - TWO WAY
CONDUITES DE PRINCIPAL

Serial No. ;

Key No.	Part No.	Description	Description	Q'ty	S.C	Serial No.	ICA	Replaceable part	
								Part No.	Q'ty
6410--	K1018184A	MAIN PIPING;TWO WAY	TUYAUTERIE PRINCIPALE	-	D				
1	426-00248A	VALVE;SELECT	VANNE	1					
2	426-00249A	VALVE;SELECT	VANNE	1					
3	K1003365A	PLATE	PLAQUE	1					
4	K1003366A	PLATE	PLAQUE	1					
5	K1002868A	BLOCK	BLOC	1					
6	DS2013558	HOSE	TUYAU FLEXIBLE	1					
7	DS2011405	HOSE	TUYAU FLEXIBLE	2					
8	DS2013790	HOSE	TUYAU FLEXIBLE	1					
9	DS2011435	HOSE	TUYAU FLEXIBLE	1					
10	DS2011533	HOSE	TUYAU FLEXIBLE	1					
11	DS2011419	HOSE	TUYAU FLEXIBLE	1					
12	124-00208D5	CLIP	AGRAFE	3					
13	K1001029	BOLT	BOULON	3					
14	DS0025020	BOLT;SET	BOULON	4					
15	S0561366	BOLT	BOULON	4					
16	S0561566	BOLT	BOULON	2					
17	S5102703	WASHER;SPRING(M12)	RONDELLE ELASTIQUE	6					
18	S8000231	O-RING	JOINT TORIQUE	2					
19	S8000291	O-RING	JOINT TORIQUE	1					
20	S8030121	O-RING	JOINT TORIQUE	12					
21	2181-2627D4	ADAPTER	ADAPTEUR	1					
22	2181-2627D15	ADAPTER	ADAPTEUR	6					
23	2181-2628D1	ELBOW	COUDE	1					
24	2181-2293D2	TEE	TE	1					
26	DS2404023	ADAPTER	ADAPTEUR	1					
27	DS2232121	ADAPTER	ADAPTEUR	1					

DATE	JUN. 30, 2007
REV.NO.	EXB07-06

Fig. 6420 PILOT PIPING(1) - TWO WAY
CONDUITES DE PILOTE

Serial No. ;

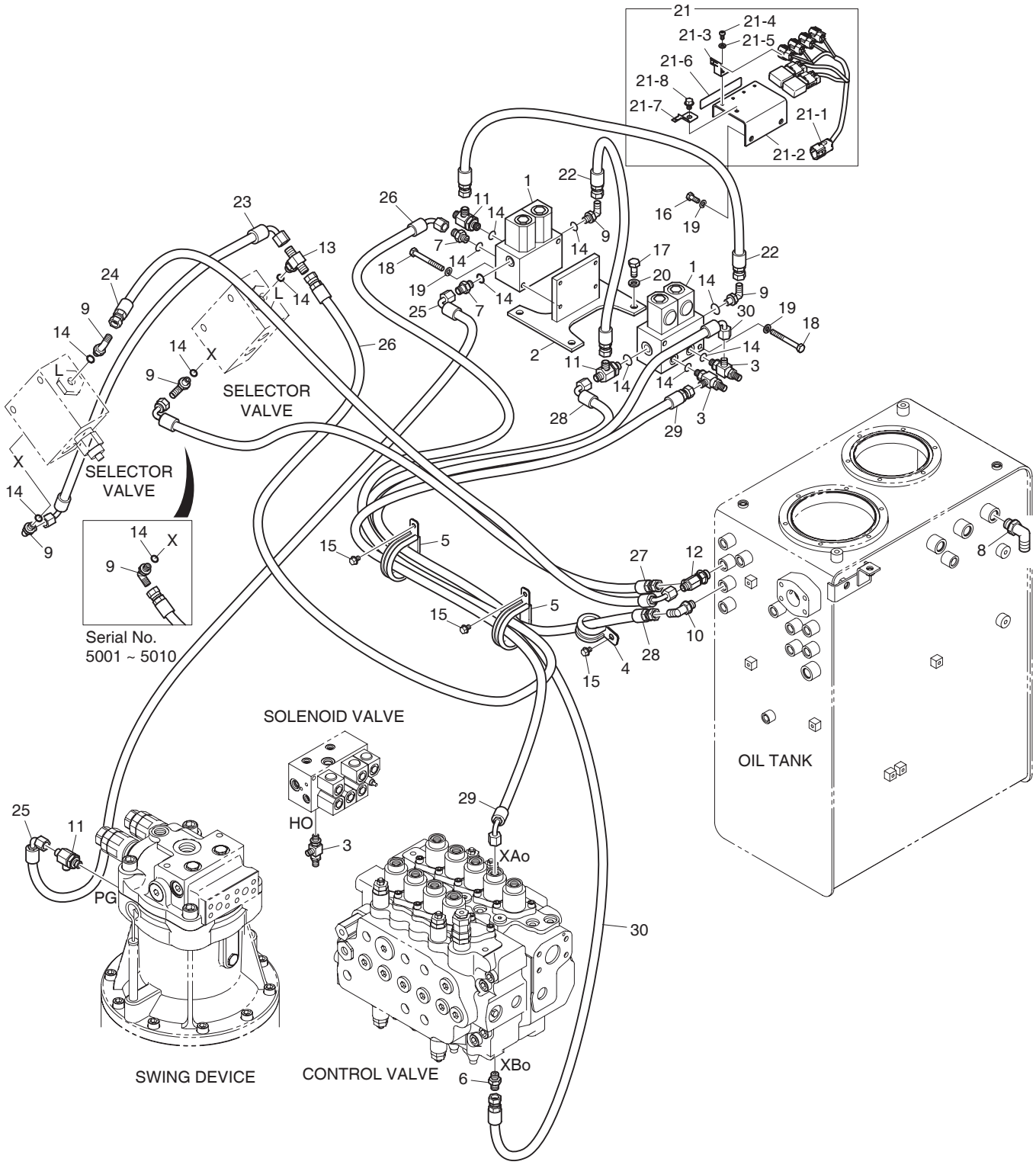

DATE	JUN. 30, 2007
REV. NO.	EXB07-06

Fig. 6420 PILOT PIPING(1) - TWO WAY CONDUITES DE PILOTE

Serial No. ;

Key No.	Part No.	Description	Description	Q'ty	S.C	Serial No.	ICA	Replaceable part	
								Part No.	Q'ty
6420--	K1018159	PILOT PIPING;PE3C	TUYAUTERIE PILOTE	-	D				
1	426-00247A	VALVE;SOLENOID	SOUPAPE A SOLENOIDE	2					
2	195-02731C	BRACKET	SUPPORT	1					
3	181-00779	TEE;SHUTTLE	TE	3					
4	124-00208D4	CLIP	AGRAFE	1					
5	124-00208D8	CLIP	AGRAFE	2					
6	2181-1126D36	ADAPTER	ADAPTEUR	1					
7	2181-1126D14	ADAPTER	ADAPTEUR	2					
8	2181-1702D2	ELBOW	COUDE	1					
9	2181-1702D4	ELBOW	COUDE	5					
10	2181-1702D10	ELBOW	COUDE	1					
11	2181-1951D1	TEE	TE	3					
12	2181-1951D7	TEE	TE	1					
13	2181-2281D1	TEE	TE	1					
14	S8000111	O-RING	JOINT TORIQUE	12					
15	K1001029	BOLT	BOULON	3					
16	S0508866	BOLT	BOULON	2					
17	S0512066	BOLT	BOULON	4					
18	S0556766	BOLT	BOULON	4					
19	S5102503	WASHER;SPRING	RONDELLE ELASTIQUE	6					
20	S5102603	WASHER;SPRING(M10)	RONDELLE ELASTIQUE	4					
21	**500-00404**	**ELECTRIC ASS'Y**	ELECTRIQUE	1					
21-1	K1003654	. HARNESS;JOINT	. HARNAIS	1					
21-2	K1003652	. PLATE	. PLAQUE	1					
21-3	2195-3500	. BRACKET;HOUSING	. SUPPORT	4					
21-4	S3450953	. SCREW	. VIS	4					
21-5	S5102303	. WASHER;SPRING	. RONDELLE ELASTIQUE	4					
21-6	K1003657	. PLATE;NAME	. PLAQUE	1					
21-7	2197-1661	. BRACKET;HOUSING	. SUPPORT	2					
21-8	K1001029	. BOLT	. BOULON	2					
22	DS2094004	HOSE	TUYAU FLEXIBLE	2					
23	DS2091037	HOSE	TUYAU FLEXIBLE	1					
24	DS2093041	HOSE	TUYAU FLEXIBLE	1					
25	DS2091017	HOSE	TUYAU FLEXIBLE	1					
26	DS2093362	HOSE	TUYAU FLEXIBLE	1					
27	DS2094172	HOSE	TUYAU FLEXIBLE	1		5001–5010			
	DS2055129	**HOSE**	TUYAU FLEXIBLE	1		**5011–**			
28	DS2093363	HOSE	TUYAU FLEXIBLE	1					

DATE	JUN. 30, 2007
REV.NO.	EXB07-06

Fig. 6420 PILOT PIPING(1) - TWO WAY
CONDUITES DE PILOTE

Serial No. ;

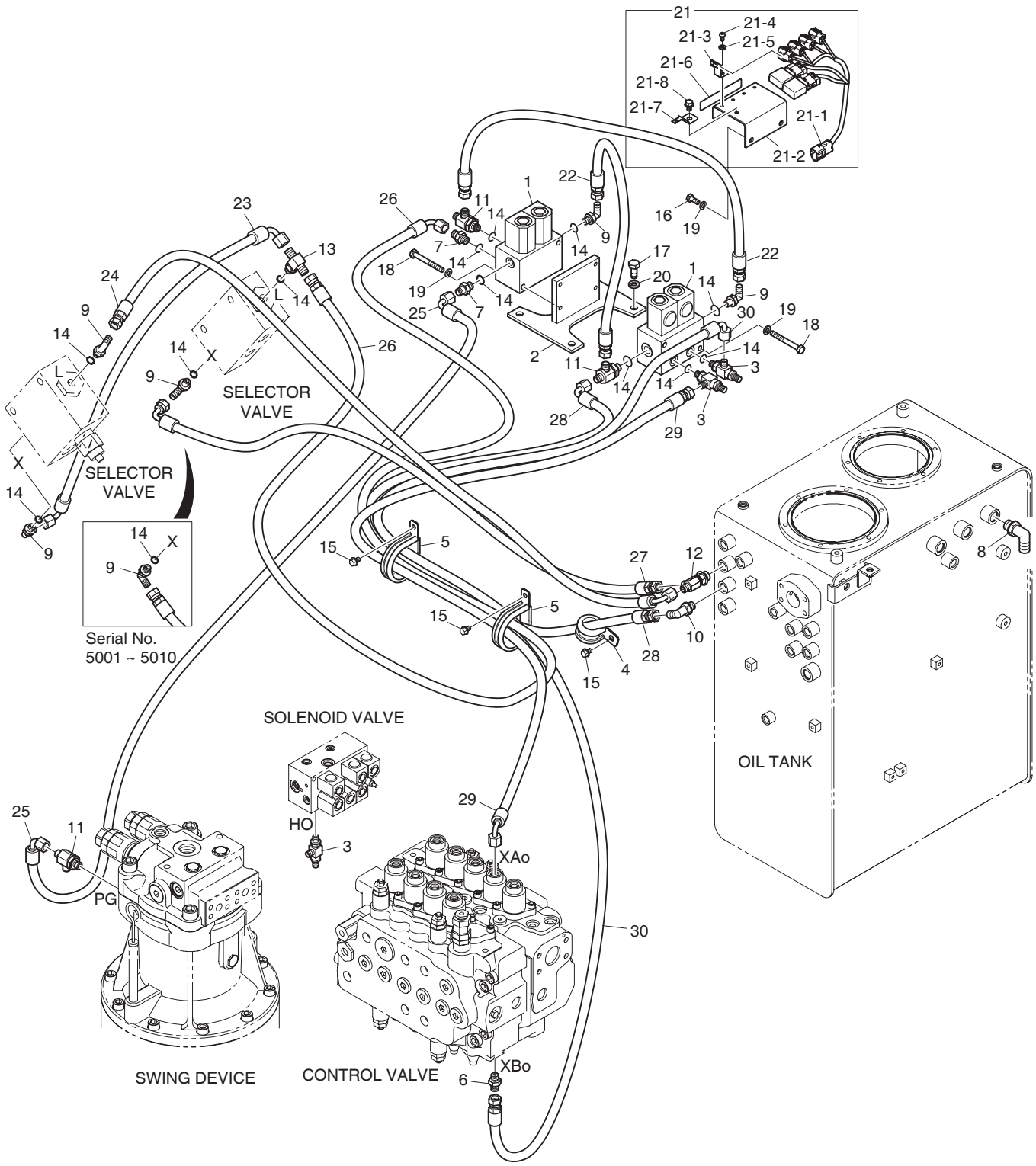

DATE	JUN. 30, 2007
REV. NO.	EXB07-06

Fig. 6420 PILOT PIPING(1) - TWO WAY CONDUITES DE PILOTE

Serial No. ;

Key No.	Part No.	Description	Description	Q'ty	S.C	Serial No.	ICA	Replaceable part	
								Part No.	Q'ty
6420-29	DS2093092	HOSE	TUYAU FLEXIBLE	1					
30	DS2093078	HOSE	TUYAU FLEXIBLE	1					

DATE	JUN. 30, 2008
REV.NO.	EXB08-06

Fig. 6430 PILOT PIPING(2) - TWO WAY
CONDUITES DE PILOTE

Serial No. ;

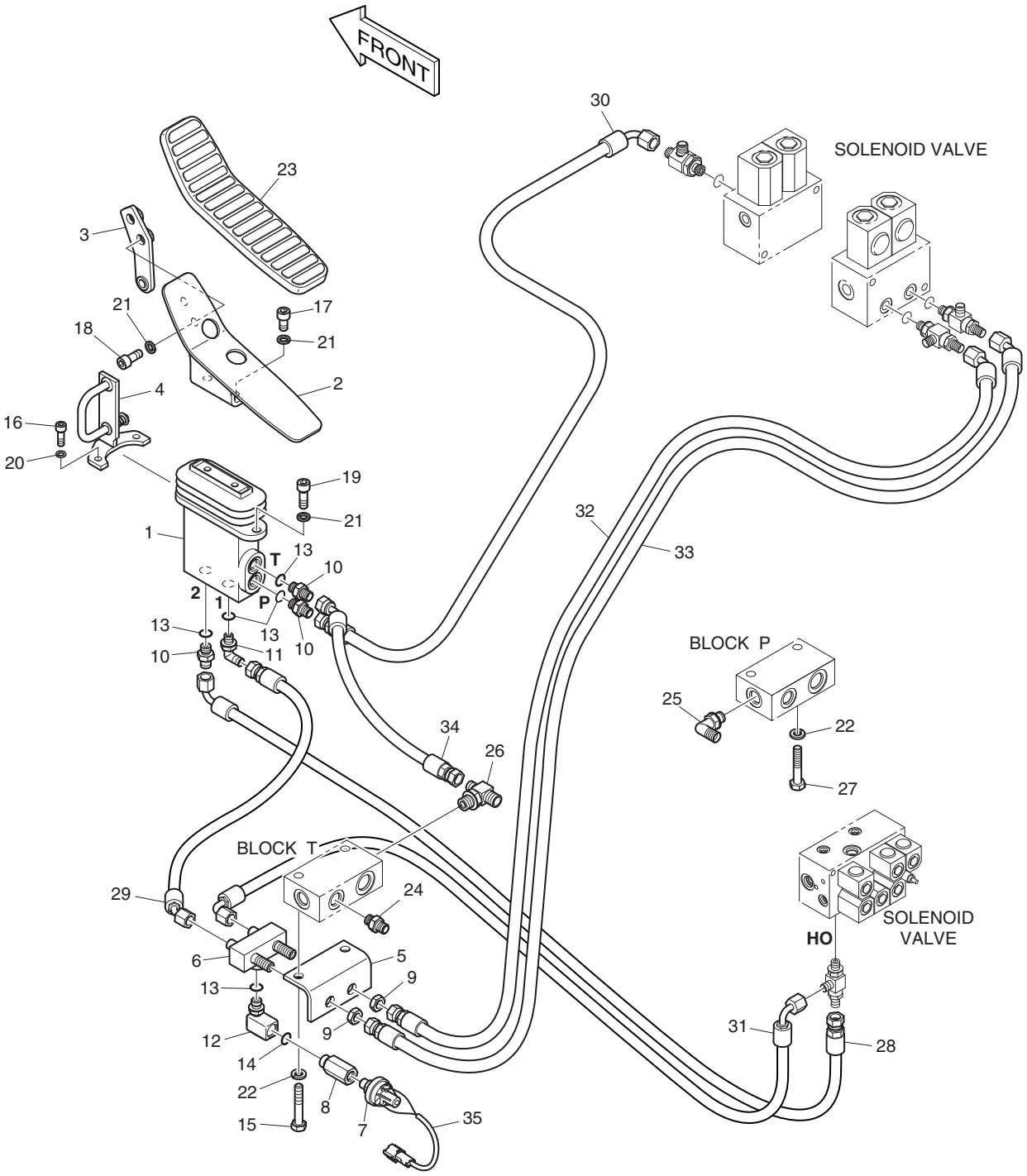

DATE	JUN. 30, 2008
REV. NO.	EXB08-06

Fig. 6430 PILOT PIPING(2) - TWO WAY CONDUITES DE PILOTE

Serial No. ;

Key No.	Part No.	Description	Description	Q'ty	S.C	Serial No.	ICA	Replaceable part	
								Part No.	Q'ty
6430--	K1018148A	PILOT PIPING;PE3C(2)	TUYAUTERIE PILOTE	-	D				
1	K1017382	VALVE;PEDAL	VANNE	1		5001–5014	I	K1017382A	1
	K1017382A	**VALVE;PEDAL**	VANNE	1		**5015–**			
2	K1015404	BRACKET	SUPPORT	1					
3	K1001871B	PLATE	PLAQUE	1					
4	K1001873A	PLATE	PLAQUE	1					
5	195-02779A	BRACKET	SUPPORT	1					
6	420-00476	VALVE;SHUTTLE	VANNE	1					
7	549-00010	SWITCH;PRESSURE	COMMUTATEUR	1					
8	181-00182	REDUCER	REDUCEUR	1					
9	121-00010D7	NUT	ECROU	2					
10	2181-1126D14	ADAPTER	ADAPTEUR	3					
11	2181-1702D4	ELBOW	COUDE	1					
12	DS2308018	ELBOW	COUDE	1					
13	S8000111	O-RING	JOINT TORIQUE	5					
14	S8000141	O-RING	JOINT TORIQUE	1					
15	S0558766	BOLT	BOULON	2					
16	S2209066	BOLT;SOCKET	BOULON A 6 PANS CREUX	2					
17	S2211866	BOLT;SOCKET	BOULON A 6 PANS CREUX	2					
18	S2212066	BOLT;SOCKET	BOULON A 6 PANS CREUX	2					
19	S2212266	BOLT;SOCKET M10X1.5X30	BOULON A 6 PANS CREUX	2					
20	S5110503	WASHER;SPRING	RONDELLE ELASTIQUE	2					
21	S5110603	WASHER	RONDELLE	6					
22	S5102603	WASHER;SPRING(M10)	RONDELLE ELASTIQUE	4					
23	161-00386	RUBBER;PEDAL	CAOUTCHOUC	1					
24	2181-1126D7	ADAPTER	ADAPTEUR	1					
25	2181-1702D5	ELBOW	COUDE	1					
26	2181-2281D3	TEE	TE	1					
27	S0558666	BOLT	BOULON	2					
28	DS2093078	HOSE	TUYAU FLEXIBLE	1					
29	DS2092029	HOSE	TUYAU FLEXIBLE	1					
30	DS2093122	HOSE	TUYAU FLEXIBLE	1					
31	DS2091027	HOSE	TUYAU FLEXIBLE	1					
32	DS2092030	HOSE	TUYAU FLEXIBLE	1					
33	DS2092031	HOSE	TUYAU FLEXIBLE	1					
34	DS2092024	HOSE	TUYAU FLEXIBLE	1					
35	530-00067	HARNESS;STOP LAMP S/W	HARNAIS	1					

DATE	DEC. 26, 2006
1st EDITION	

Fig. 6440 BOOM PIPING - ONE & TWO WAY(BOOM-4.3m) TUYAUTERIE DE PERCHE

Serial No. ;

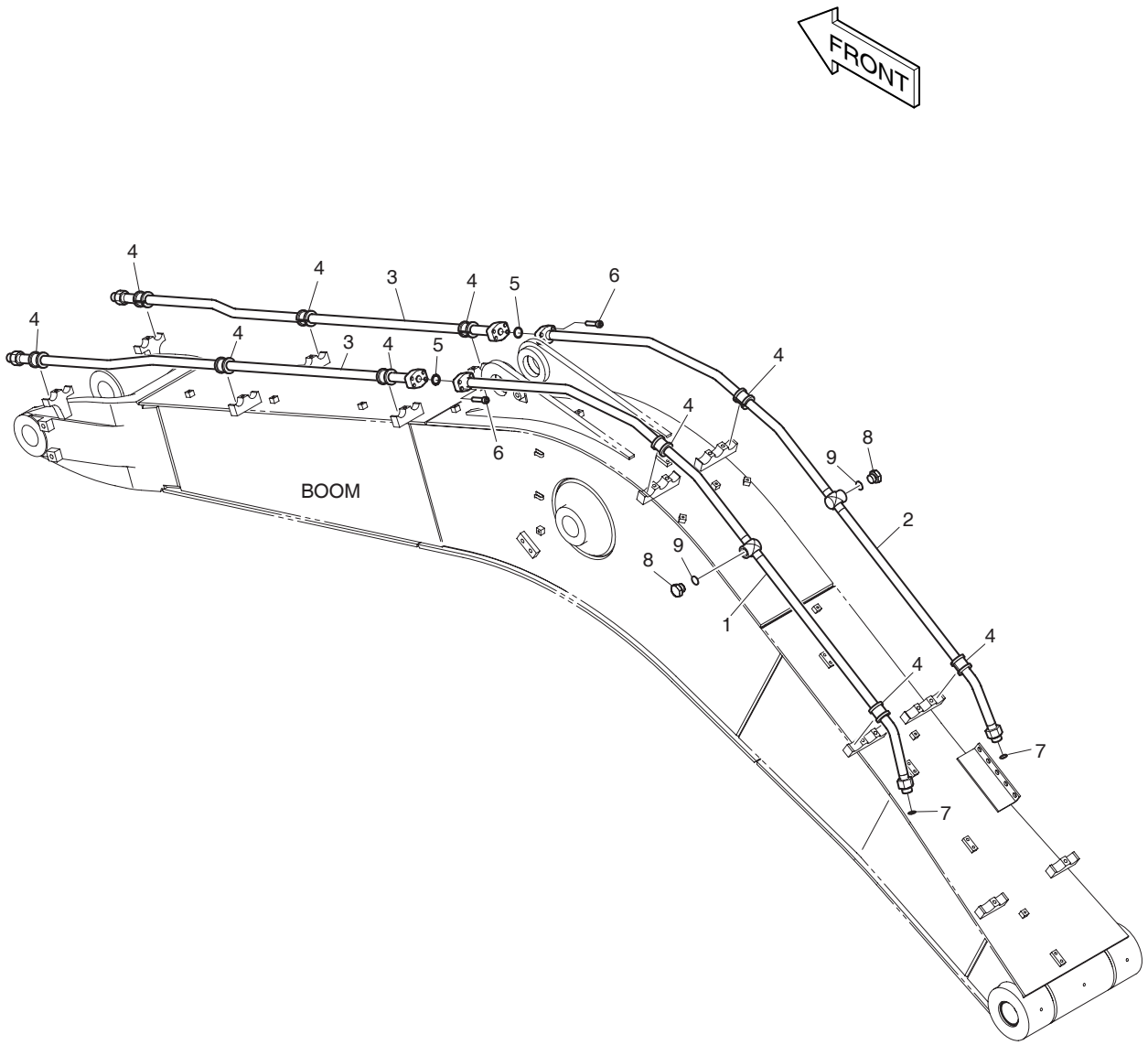

DATE	DEC. 26, 2006
1st EDITION	

Fig. 6440 BOOM PIPING - ONE & TWO WAY(BOOM-4.3m) TUYAUTERIE DE PERCHE

Serial No. ;

Key No.	Part No.	Description	Description	Q'ty	S.C	Serial No.	ICA	Replaceable part	
								Part No.	Q'ty
6440--	400-01349A	BOOM PIPING	CONDUITES DE FLECHE	-	D				
1	140-01531C	PIPE	TUYAU	1					
2	140-01532C	PIPE	TUYAU	1					
3	K1004330	PIPE	TUYAU	2					
4	K1000294A	RUBBER	CAOUTCHOUC	10					
5	2180-1026D2	O-RING	JOINT TORIQUE	2					
6	S2212566	BOLT;SOCKET	BOULON A 6 PANS CREUX	8					
7	S8030121	O-RING	JOINT TORIQUE	2					
8	2181-1950D15	PLUG	BOUCHON	2					
9	S8000231	O-RING	JOINT TORIQUE	2					

DATE	JUN. 30, 2007
REV.NO.	EXB07-06

Fig. 6450 ARM PIPING - ONE & TWO WAY(ARM-2.1m)
CONDUITES DE BALANCIER

Serial No. ;

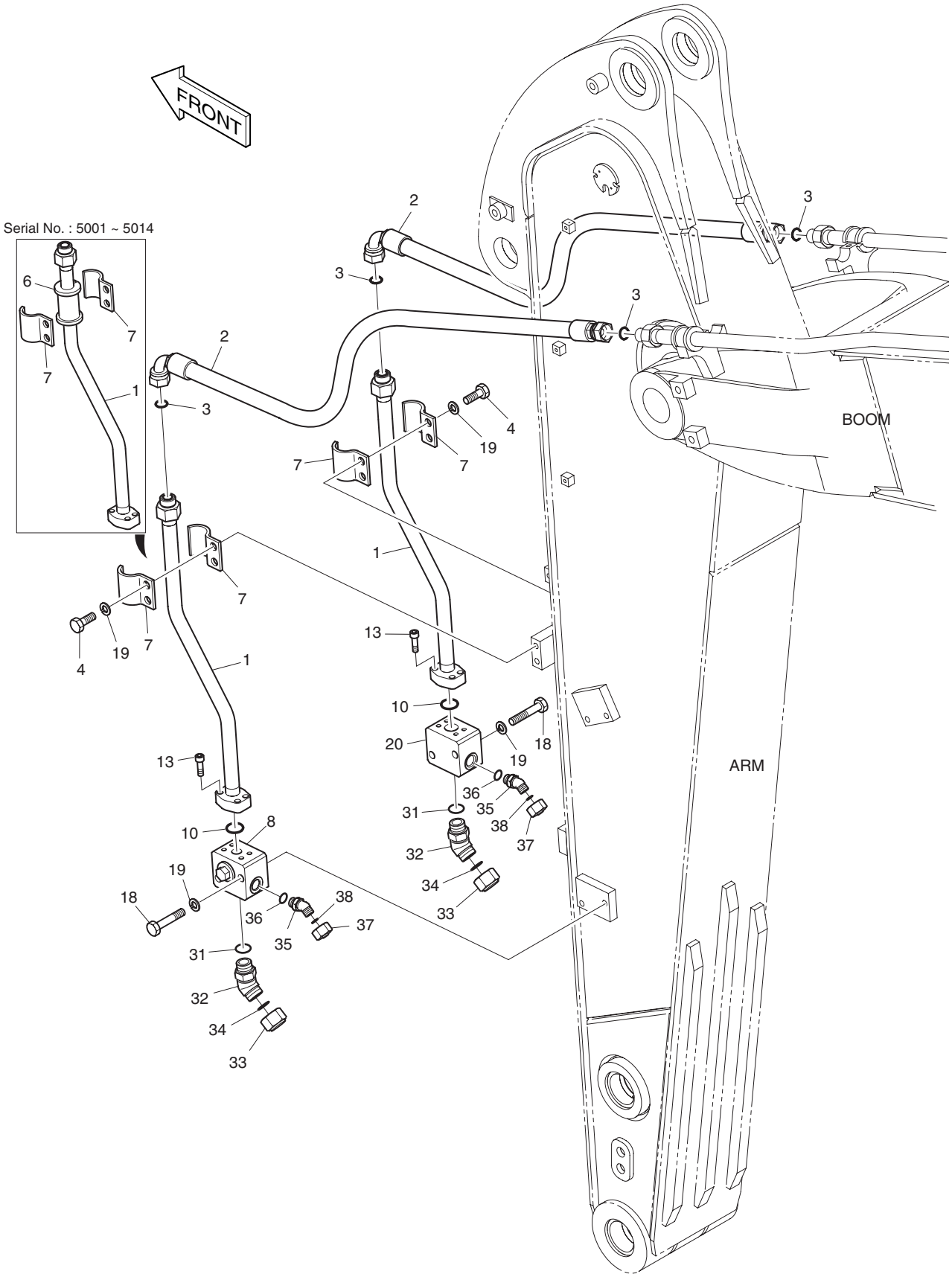

DATE	JUN. 30, 2007
REV. NO.	EXB07-06

Fig. 6450 ARM PIPING - ONE & TWO WAY(ARM-2.1m) CONDUITES DE BALANCIER

Serial No. ;

Key No.	Part No.	Description	Description	Q'ty	S.C	Serial No.	ICA	Replaceable part	
								Part No.	Q'ty
6450--	**400-01355B**	**ARM PIPING-ONE & TWO**	CONDUITES DE BALANCIER	-	D				
1	140-01543A	PIPE	TUYAU	2					
2	2184-1197D12	HOSE	TUYAU FLEXIBLE	2					
3	S8030121	O-RING	JOINT TORIQUE	4					
4	S0562766	BOLT	BOULON	4					
6	**161-00574**	**RUBBER**	CAOUTCHOUC	2		**5001–5014**			
7	124-00302	CLAMP;PIPE	COLLIER	4		5001–5014			
	124-00303	**CLAMP;PIPE**	COLLIER	4		**5015–**			
8	420-00511B	VALVE;STOP(L.H)	VANNE	1					
10	2180-1026D2	O-RING	JOINT TORIQUE	2					
13	S2212366	BOLT;SOCKET	BOULON A 6 PANS CREUX	8					
18	S0563466	BOLT	BOULON	4					
19	S5102803	WASHER;SPRING	RONDELLE ELASTIQUE	8					
20	420-00517B	VALVE;STOP(R.H)	VANNE	1					
31	S8000231	O-RING	JOINT TORIQUE	2					
32	2181-2816D1	ELBOW	COUDE	2					
33	2181-2817D1	CAP	CHAPEAU	2					
34	S8030121	O-RING	JOINT TORIQUE	2					
35	2181-2816D4	ELBOW	COUDE	2					
36	S8000181	O-RING	JOINT TORIQUE	2					
37	2181-2817D4	CAP	CHAPEAU	2					
38	S8030081	O-RING	JOINT TORIQUE	2					

DATE	DEC. 26, 2006
1st EDITION	

Fig. 6460 ARM PIPING - ARM 2.1m(CLAMSHELL)
CONDUITES DE BALANCIER

Serial No. ;

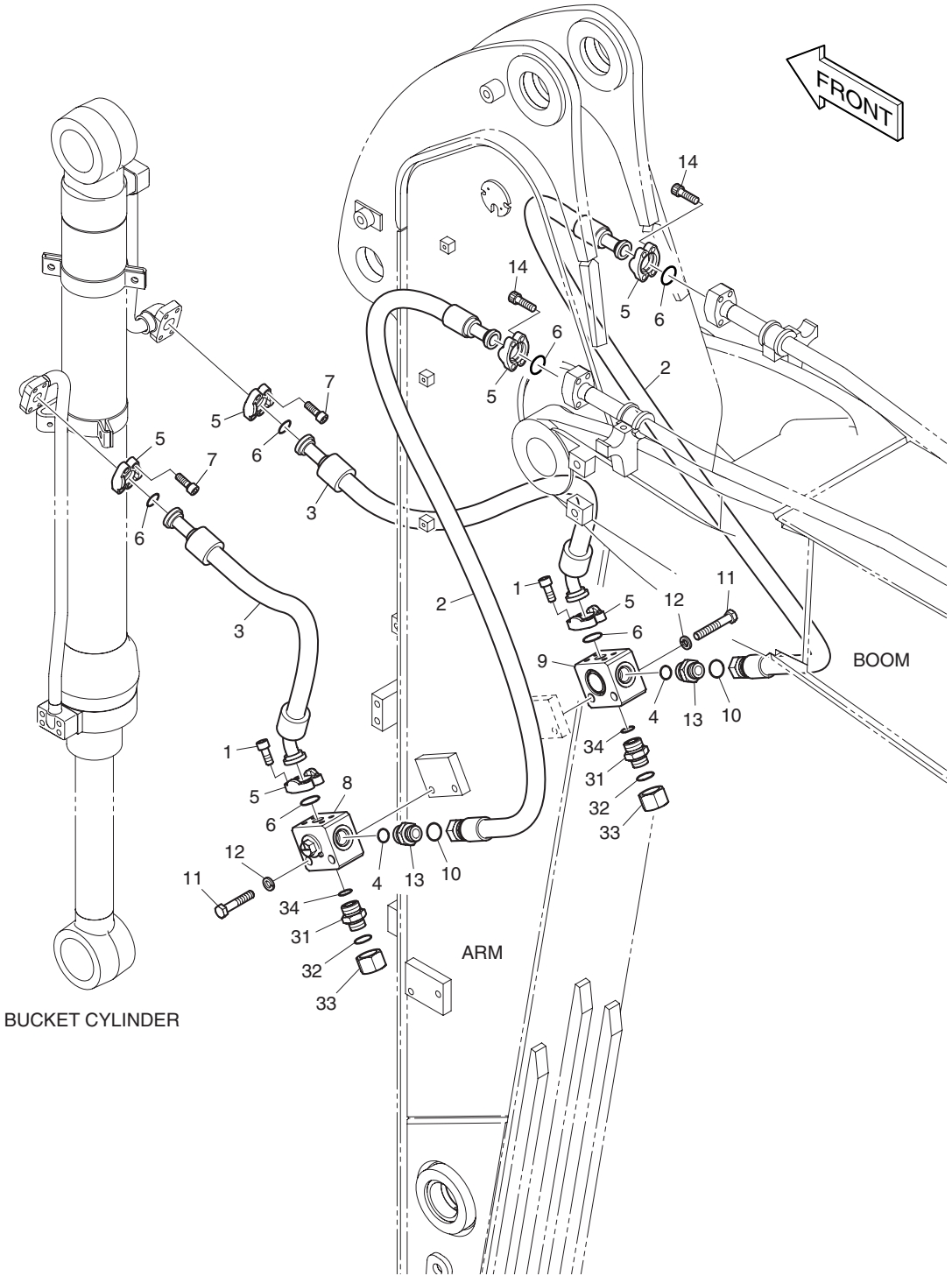

DATE	DEC. 26, 2006
1st EDITION	

Fig. 6460 ARM PIPING - ARM 2.1m(CLAMSHELL)
CONDUITES DE BALANCIER

Serial No. ;

Key No.	Part No.	Description	Description	Q'ty	S.C	Serial No.	ICA	Replaceable part	
								Part No.	Q'ty
6460--	K1017977	CLAMSHELL PIPING	CONDUITES DE BALANCIER	-	D				
1	S2212066	BOLT;SOCKET	BOULON A 6 PANS CREUX	8					
2	DS2016045	HOSE	TUYAU FLEXIBLE	2					
3	DS2039092	HOSE	TUYAU FLEXIBLE	2					
4	S8030121	O-RING	JOINT TORIQUE	2					
5	2181-9079	FLANGE	BRIDE	12					
6	2180-1026D2	O-RING	JOINT TORIQUE	6					
7	S2212266	BOLT;SOCKET M10X1.5X30	BOULON A 6 PANS CREUX	8					
8	K1002939	VALVE;SWITCH(L.H)	VANNE	1					
9	K1002940	VALVE;SWITCH(R.H)	VANNE	1					
10	S8000231	O-RING	JOINT TORIQUE	2					
11	S0563466	BOLT	BOULON	4					
12	S5102803	WASHER;SPRING	RONDELLE ELASTIQUE	4					
13	2181-4133D5	ADAPTER	ADAPTEUR	2					
14	S2212366	BOLT;SOCKET M10X1.5X35	BOULON A 6 PANS CREUX	8					
31	2181-4133D5	ADAPTER	ADAPTEUR	2					
32	S8000231	O-RING	JOINT TORIQUE	2					
33	2181-2817D1	CAP	CHAPEAU	2					
34	S8030121	O-RING	JOINT TORIQUE	2					

DATE	DEC. 26, 2006
1st EDITION	

Fig. 6470 MAIN PIPING - QUICK CLAMP
CONDUITES DE PRINCIPAL

Serial No. ;

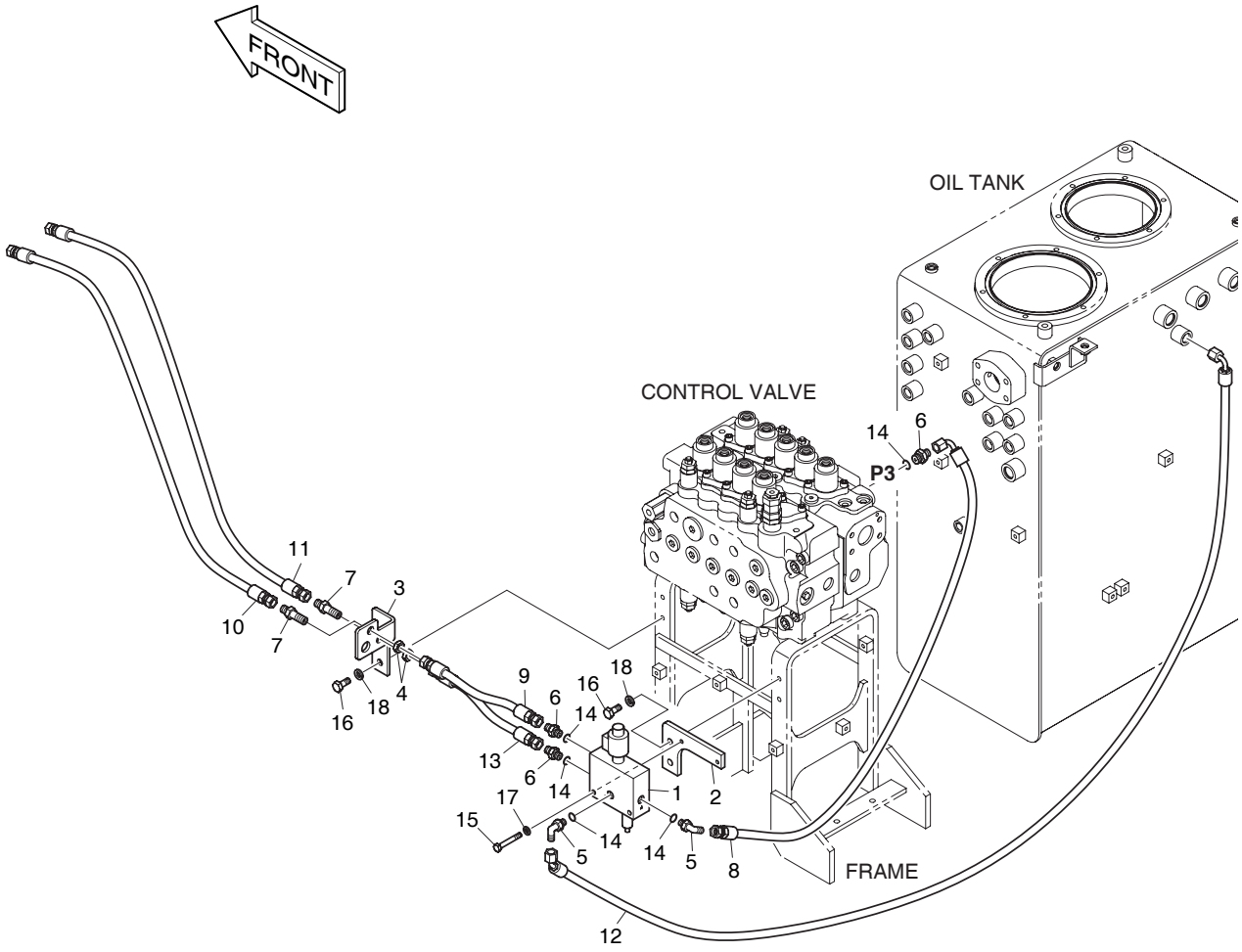

DATE	DEC. 26, 2006
1st EDITION	

Fig. 6470 MAIN PIPING - QUICK CLAMP
CONDUITES DE PRINCIPAL

Serial No. ;

Key No.	Part No.	Description	Description	Q'ty	S.C	Serial No.	ICA	Replaceable part	
								Part No.	Q'ty
6470--	K1018191B	QUICK CLAMP PIPING	BRIDE RAPIDE	-	D				
1	426-00287	VALVE;QUICK-FIT	VANNE	1					
2	K1002911A	BRACKET	SUPPORT	1					
3	K1003185B	PLATE	PLAQUE	1					
4	121-00010D7	NUT	ECROU	2					
5	2181-1702D4	ELBOW	COUDE	2					
6	2181-1126D14	ADAPTER	ADAPTEUR	3					
7	2181-2178	ADAPTER	ADAPTEUR	2					
8	DS2055844	HOSE	TUYAU FLEXIBLE	1					
9	DS2053893	HOSE	TUYAU FLEXIBLE	1					
10	DS2053842	HOSE	TUYAU FLEXIBLE	1					
11	DS2053843	HOSE	TUYAU FLEXIBLE	1					
12	DS2090024	HOSE	TUYAU FLEXIBLE	1					
13	DS2053894	HOSE	TUYAU FLEXIBLE	1					
14	S8000111	O-RING	JOINT TORIQUE	5					
15	S0556466	BOLT	BOULON	2					
16	S0512066	BOLT	BOULON	4					
17	S5102503	WASHER;SPRING	RONDELLE ELASTIQUE	2					
18	S5102603	WASHER;SPRING	RONDELLE ELASTIQUE	4					

DATE	DEC. 26, 2006
1st EDITION	

Fig. 6480 ELECTRIC PARTS - QUICK CLAMP BRIDE RAPIDE

Serial No. ;

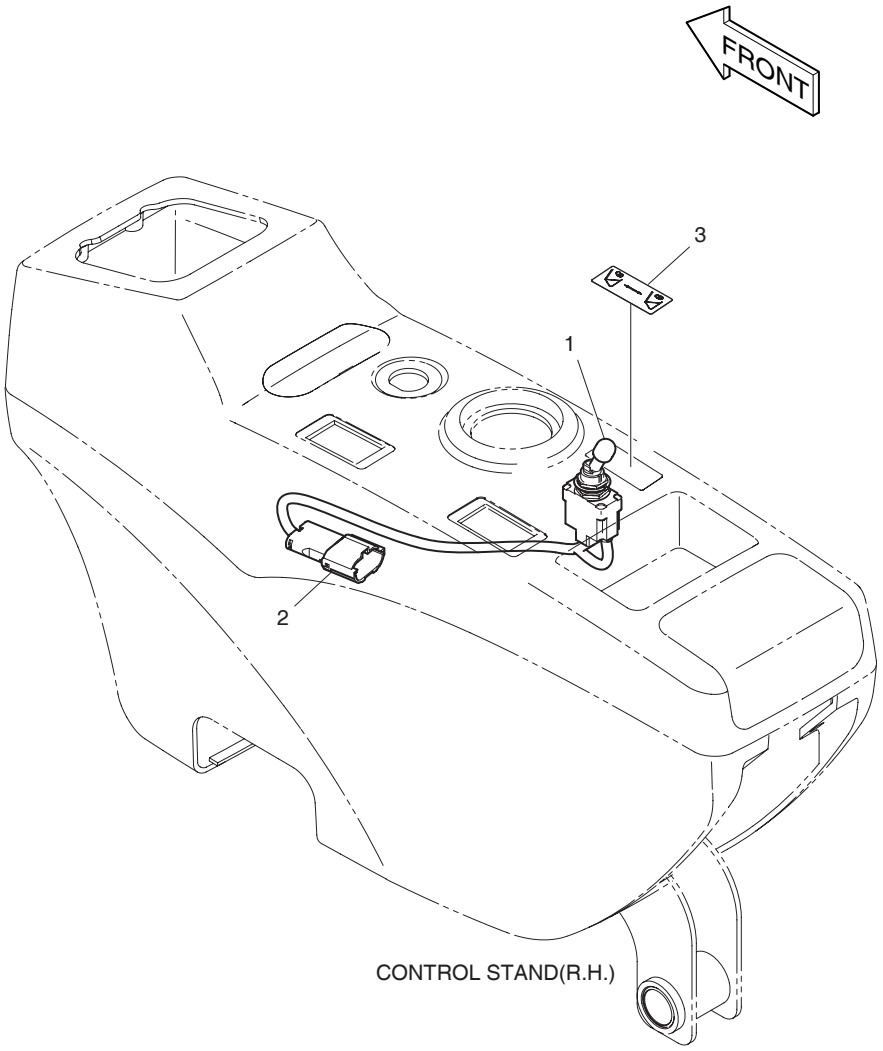

DATE	DEC. 26, 2006
1st EDITION	

Fig. 6480 ELECTRIC PARTS - QUICK CLAMP BRIDE RAPIDE

Serial No. ;

Key No.	Part No.	Description	Description	Q'ty	S.C	Serial No.	ICA	Replaceable part	
								Part No.	Q'ty
6480--	500-00345	QUICK CLAMP	BRIDE RAPIDE	-	D				
1	549-00092	SWITCH;LOCKOUT TOGGLE	INTERRUPTEUR	1					
2	530-00432A	HARNESS;JOINT	HARNAIS	1					
3	K1005776	PLATE;NAME	PLAQUE D'IDENTIFICATION	1					

DATE	DEC. 26, 2006
1st EDITION	

Fig. 6490 BOOM PIPING - QUICK CLAMP(BOOM-4.3m) TUYAUTERIE DE PERCHE

Serial No. ;

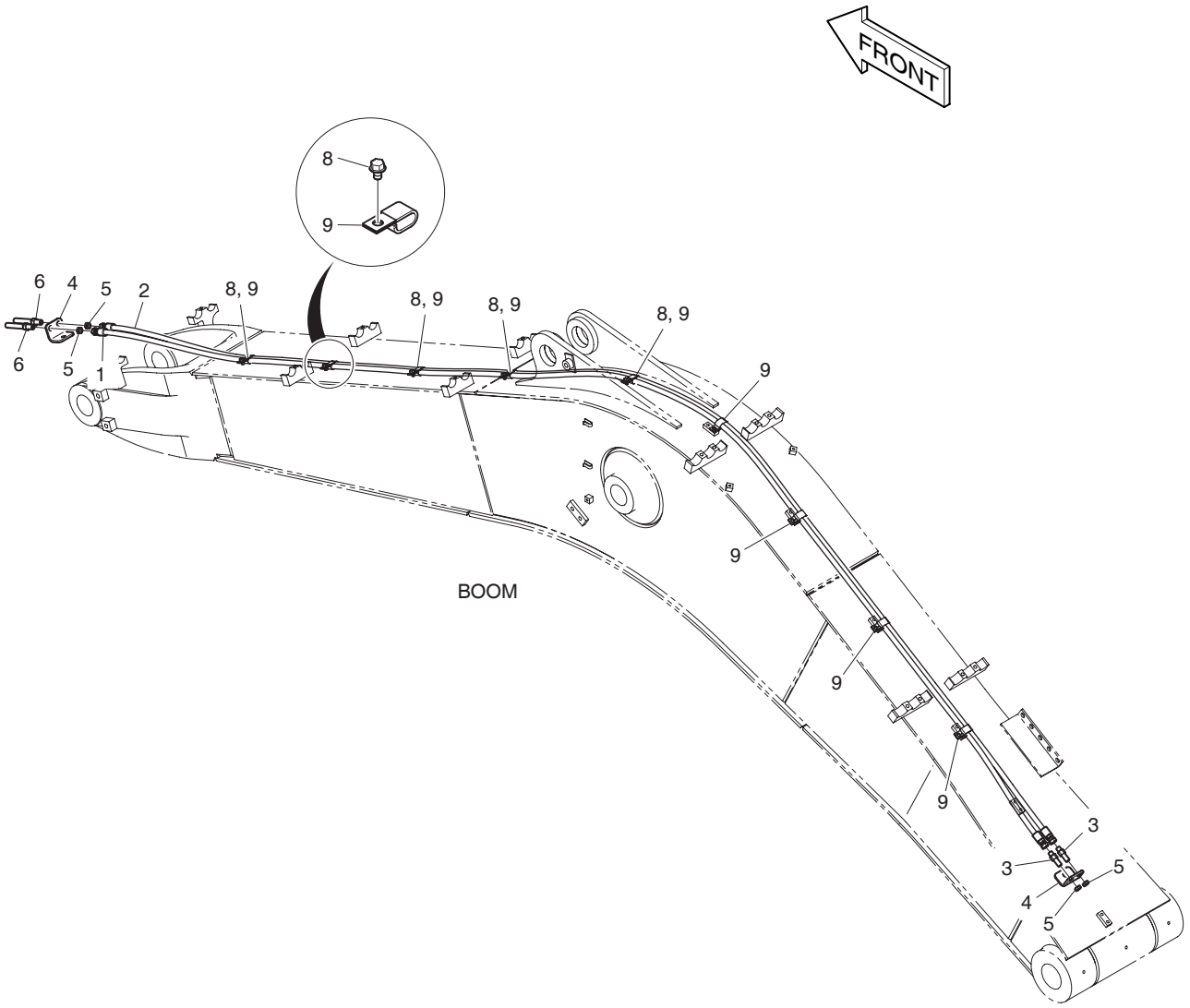

DATE	DEC. 26, 2006
1st EDITION	

Fig. 6490 BOOM PIPING - QUICK CLAMP(BOOM-4.3m) TUYAUTERIE DE PERCHE

Serial No. ;

Key No.	Part No.	Description	Description	Q'ty	S.C	Serial No.	ICA	Replaceable part	
								Part No.	Q'ty
6490--	400-01389B	BOOM PIPING-QUICK CLAMP	CONDUITES DE FLECHE	-	D				
1	DS2053798	HOSE	TUYAU FLEXIBLE	1					
2	DS2053930	HOSE	TUYAU FLEXIBLE	1					
3	DS2410007	ADAPTER	ADAPTEUR	2					
4	K1006957	BRACKET	SUPPORT	2					
5	121-00010D7	NUT	ECROU	4					
6	K1000356	ADAPTER	ADAPTEUR	2					
8	K1001029	BOLT	BOULON	5					
9	DS2805009	CLIP	AGRAFE	9					

DATE	DEC. 26, 2006
1st EDITION	

Fig. 6500 ARM PIPING - QUICK CLAMP(ARM-2.1m)
CONDUITES DE BALANCIER

Serial No. ;

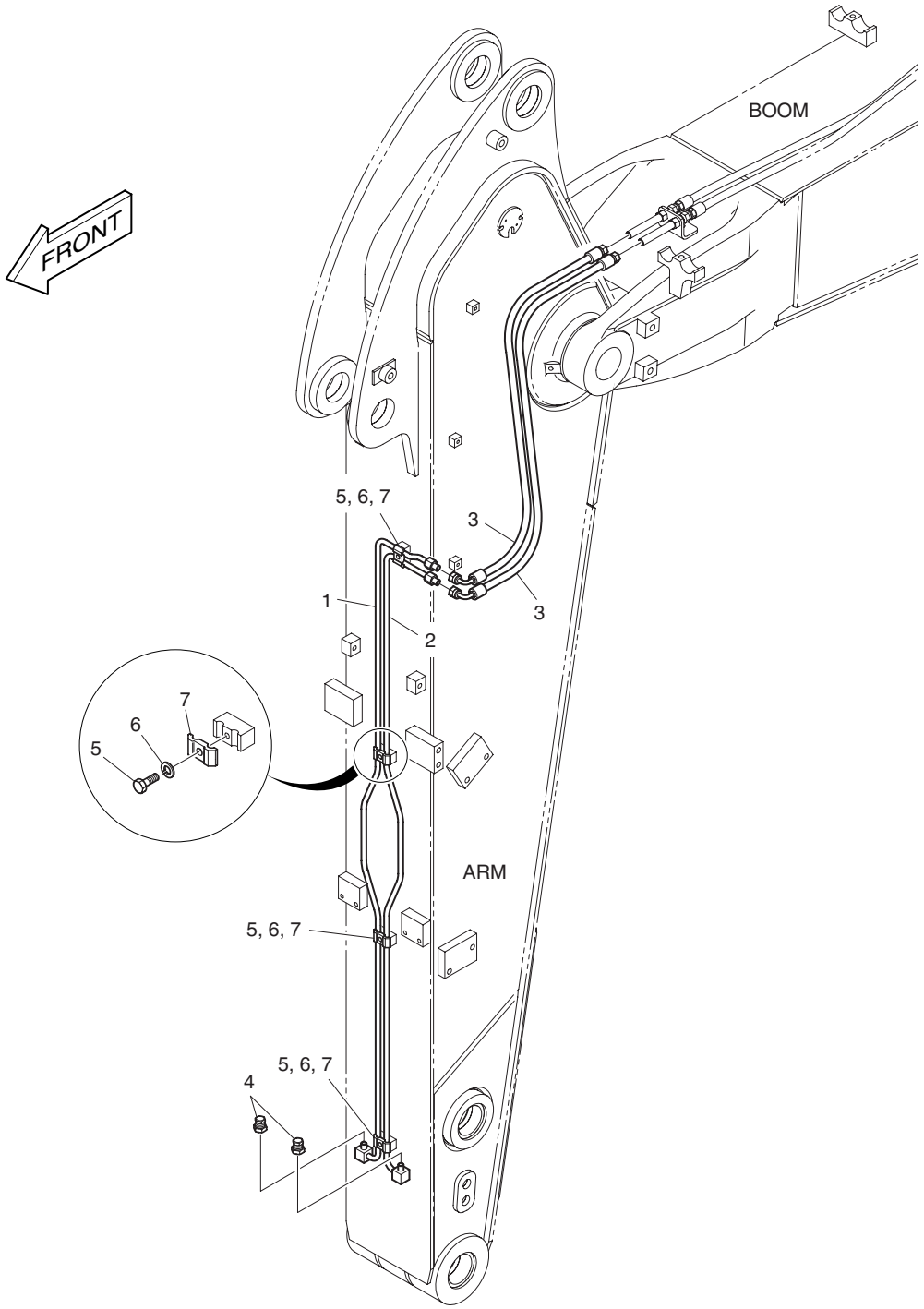

DATE	DEC. 26, 2006
1st EDITION	

Fig. 6500 ARM PIPING - QUICK CLAMP(ARM-2.1m) CONDUITES DE BALANCIER

Serial No. ;

Key No.	Part No.	Description	Description	Q'ty	S.C	Serial No.	ICA	Replaceable part	
								Part No.	Q'ty
6500--	400-01390A	ARM PIPING-QUICK CLAMP	CONDUITES DE BALANCIER	-	D				
1	140-01562C	PIPE	TUYAU	1					
2	140-01563C	PIPE	TUYAU	1					
3	DS2055867	HOSE	TUYAU FLEXIBLE	2					
4	2181-2820D1	PLUG	BOUCHON	2					
5	S0508866	BOLT	BOULON	4					
6	S5102503	WASHER;SPRING	RONDELLE ELASTIQUE	4					
7	K1004011	CLAMP;PIPE	COLLIER	4					

DATE	DEC. 26, 2006
1st EDITION	

Fig. 6510 MAIN PIPING - ROTATING
CONDUITES DE PRINCIPAL

Serial No. ;

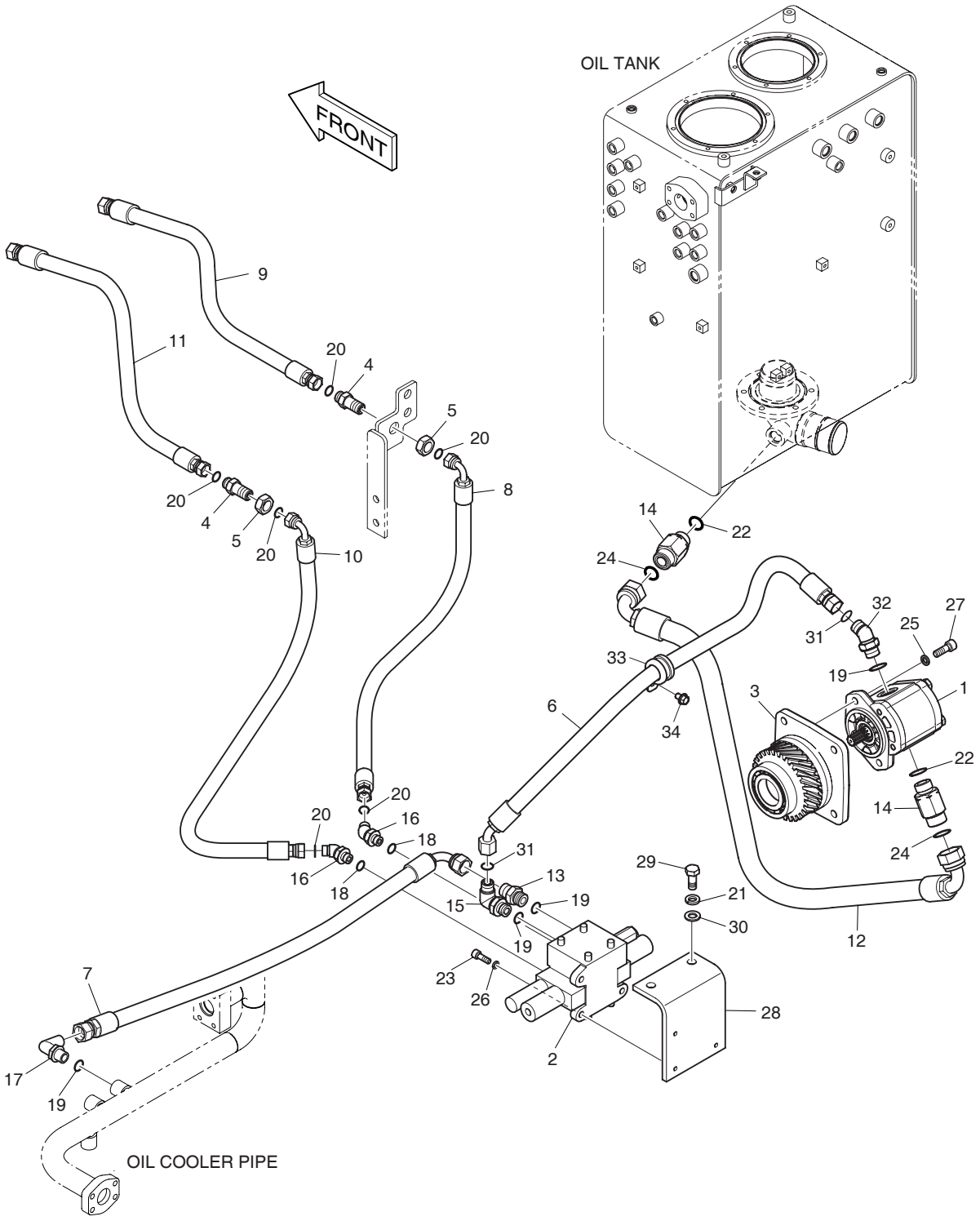

DATE	DEC. 26, 2006
1st EDITION	

Fig. 6510 MAIN PIPING - ROTATING
CONDUITES DE PRINCIPAL

Serial No. ;

Key No.	Part No.	Description	Description	Q'ty	S.C	Serial No.	ICA	Replaceable part	
								Part No.	Q'ty
6510--	K1018187C	MAIN PIPING-ROTATING(PERO)	TUYAUTERIE PRINCIPALE	-	D				
1	K1000410	PUMP;GEAR	POMPE DE PIGNON	1					
2	426-00284B	VALVE;ONE SPOOL	VANNE	1					
3	K1002626	PUMP;POWER TAKE OFF	POMPE	1					
4	181-00128D2	ADAPTER;CONNECTOR	ADAPTEUR	2					
5	121-00025	NUT	ECROU	2					
6	DS2012415	HOSE	TUYAU FLEXIBLE	1					
7	DS2055978	HOSE	TUYAU FLEXIBLE	1					
8	DS2013617	HOSE	TUYAU FLEXIBLE	1					
9	DS2011422	HOSE	TUYAU FLEXIBLE	1					
10	DS2013572	HOSE	TUYAU FLEXIBLE	1					
11	DS2011423	HOSE	TUYAU FLEXIBLE	1					
12	DS2023213	HOSE	TUYAU FLEXIBLE	1					
13	2181-1126D6	ADAPTER	ADAPTEUR	1					
14	2181-2627D18	ADAPTER	ADAPTEUR	2					
15	2181-2815D3	ELBOW	COUDE	1					
16	2181-2816D5	ELBOW	COUDE	2					
17	2181-1702D2	ELBOW	COUDE	1					
18	S8000141	O-RING	JOINT TORIQUE	2					
19	S8000181	O-RING	JOINT TORIQUE	4					
20	S8030061	O-RING	JOINT TORIQUE	6					
21	S5102703	WASHER;SPRING	RONDELLE ELASTIQUE	2					
22	S8000231	O-RING	JOINT TORIQUE	2					
23	S2209066	BOLT;SOCKET	BOULON A 6 PANS CREUX	3					
24	S8030121	O-RING	JOINT TORIQUE	2					
25	S5110603	WASHER	RONDELLE	2					
26	S5110503	WASHER;SPRING	RONDELLE ELASTIQUE	3					
27	S2212266	BOLT;SOCKET	BOULON A 6 PANS CREUX	2					
28	K1006978B	BRACKET	SUPPORT	1					
29	S0515266	BOLT	BOULON	2					
30	S5010713	WASHER;PLAIN	RONDELLE	2					
31	S8030081	O-RING	JOINT TORIQUE	2					
32	2181-2816D4	ELBOW	COUDE	1					
33	124-00208D4	CLIP	AGRAFE	1					
34	K1001029	BOLT	BOULON	1					

DATE	DEC. 26, 2006
1st EDITION	

Fig. 6520 PILOT PIPING - ROTATING(1)
CONDUITES DE PILOTE

Serial No. ;

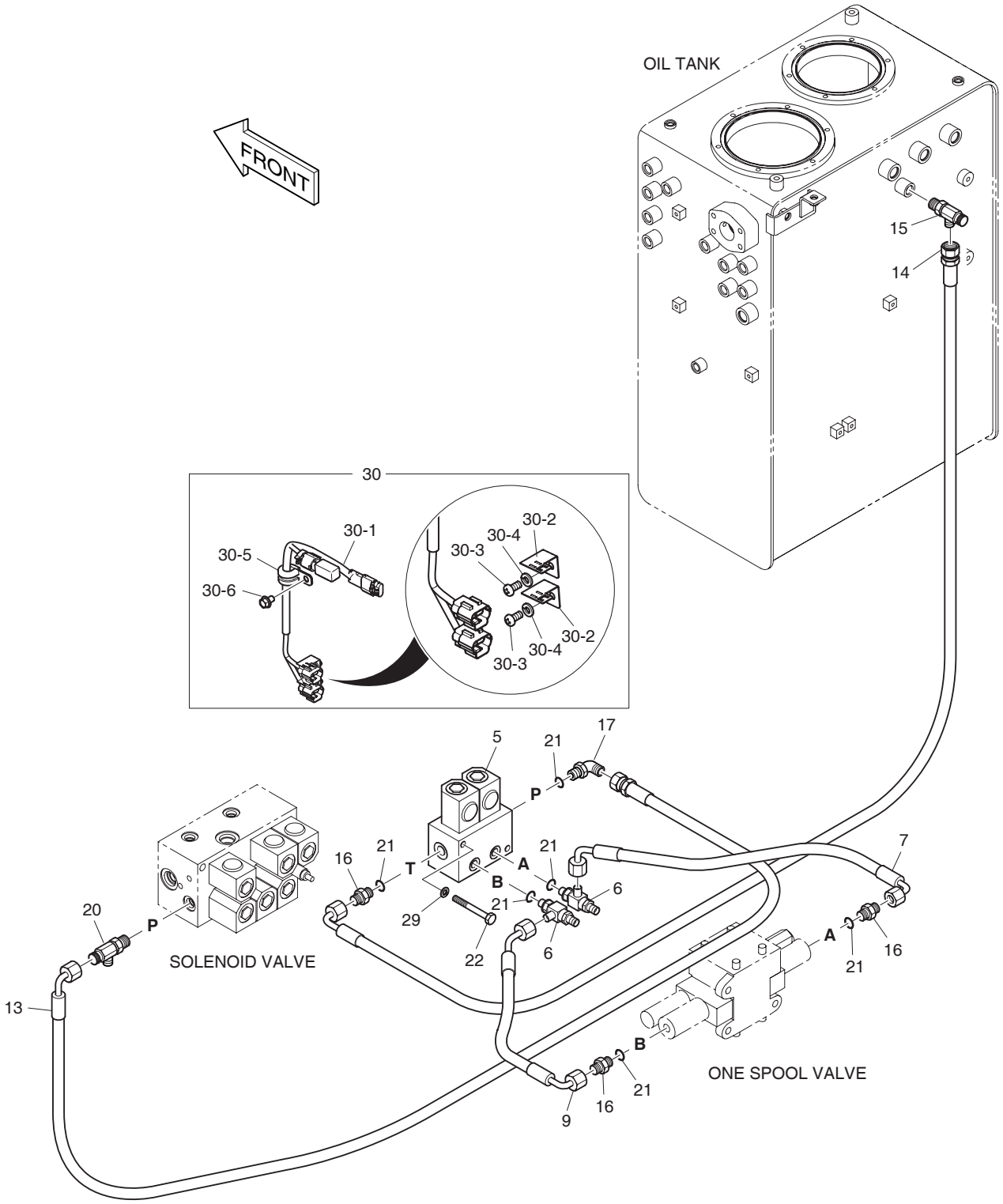

DATE	DEC. 26, 2006
1st EDITION	

Fig. 6520 PILOT PIPING - ROTATING(1)
CONDUITES DE PILOTE

Serial No. ;

Key No.	Part No.	Description	Description	Q'ty	S.C	Serial No.	ICA	Replaceable part	
								Part No.	Q'ty
6520--	K1003368C	PILOT PIPING-ROTATING	TUYAUTERIE PILOTE	-	D				
5	426-00247A	VALVE;SOLENOID	SOUPAPE A SOLENOIDE	1					
6	181-00779	TEE;SHUTTLE	TE	2					
7	DS2091028	HOSE	TUYAU FLEXIBLE	1					
9	DS2090010	HOSE	TUYAU FLEXIBLE	1					
13	DS2093142	HOSE	TUYAU FLEXIBLE	1					
14	DS2093082	HOSE	TUYAU FLEXIBLE	1					
15	2181-1951D7	TEE	TE	1					
16	2181-1126D14	ADAPTER	ADAPTEUR	3					
17	2181-1702D4	ELBOW(1/4)	COUDE	1					
20	2181-1951D1	TEE	TE	1					
21	S8000111	O-RING	JOINT TORIQUE	6					
22	S0556766	BOLT	BOULON	2					
29	S5102503	WASHER;SPRING	RONDELLE ELASTIQUE	2					
30	500-00402A	ROTATING ELECTRIC ASS'Y	ROTATION ELECTRIQUE	1	D				
30-1	K1000817	. HARNESS	. HARNAIS	1					
30-2	2195-3500	. BRACKET;HOUSING	. SUPPORT	2					
30-3	S3450953	. SCREW M6X1.0X12	. VIS	2					
30-4	S5102303	. WASHER;SPRING	. RONDELLE ELASTIQUE	2					
30-5	124-00208D2	. CLIP	. AGRAFE	1					
30-6	K1001029	. BOLT	. BOULON	1					

DATE	JUN. 30, 2008
REV.NO.	EXB08-06

Fig. 6530 PILOT PIPING - ROTATING(2)
CONDUITES DE PILOTE

Serial No. ;

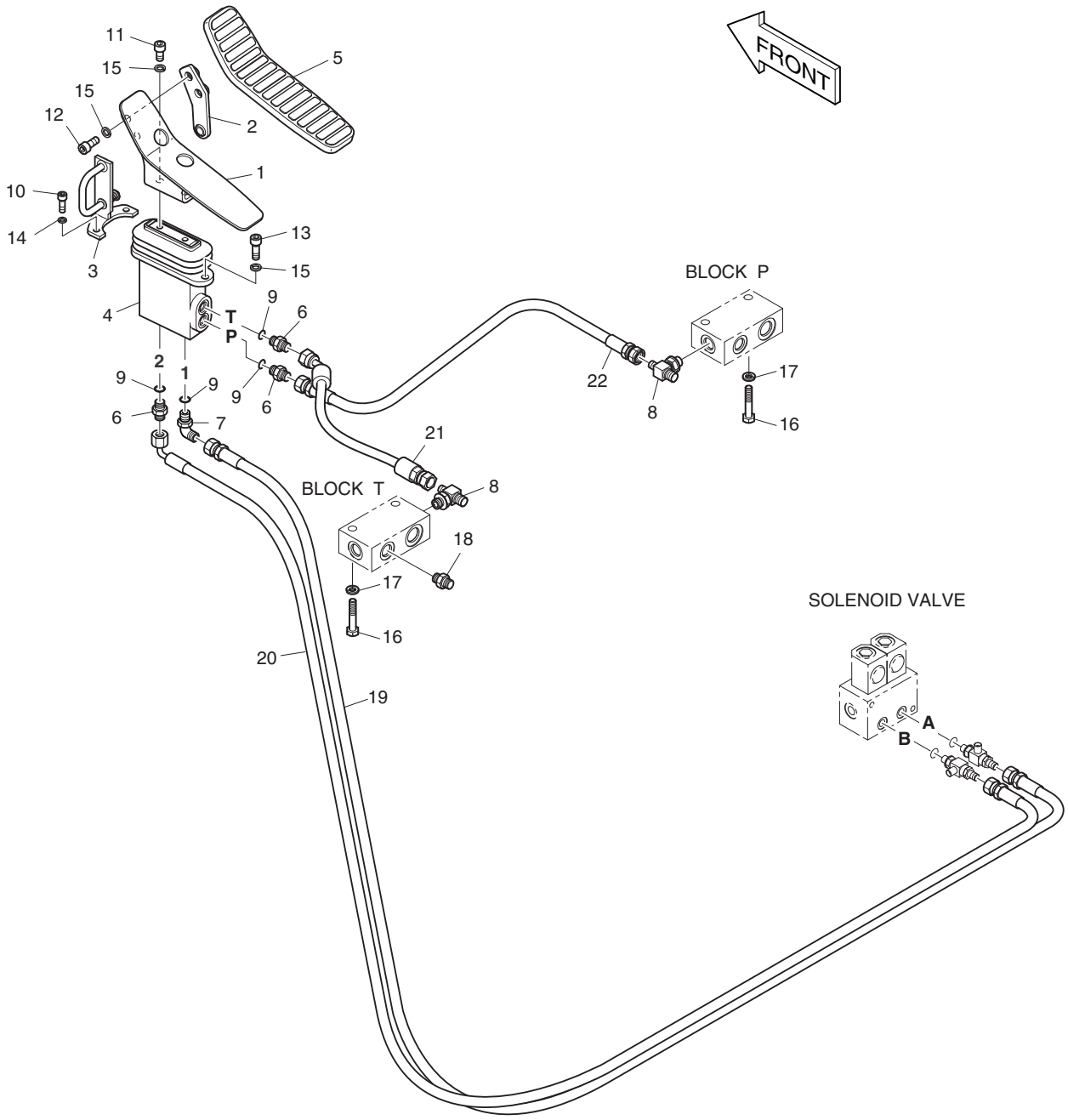

DATE	JUN. 30, 2008
REV. NO.	EXB08-06

Fig. 6530 PILOT PIPING - ROTATING(2) CONDUITES DE PILOTE

Serial No. ;

Key No.	Part No.	Description	Description	Q'ty	S.C	Serial No.	ICA	Replaceable part	
								Part No.	Q'ty
6530--	K1018149	PILOT PIPING;PERO	TUYAUTERIE PILOTE	-	D				
1	K1015404	BRACKET	SUPPORT	1					
2	K1001871B	PLATE	PLAQUE	1					
3	K1001873A	PLATE	PLAQUE	1					
4	K1017382	VALVE;PEDAL	VANNE	1		5001–5014	I	K1017382A	1
	K1017382A	**VALVE;PEDAL**	VANNE	1		**5015–**			
5	161-00386	RUBBER;PEDAL	CAOUTCHOUC	1					
6	2181-1126D14	ADAPTER	ADAPTEUR	3					
7	2181-1702D4	ELBOW	COUDE	1					
8	2181-2281D3	TEE	TE	2					
9	S8000111	O-RING	JOINT TORIQUE	4					
10	S2209066	BOLT;SOCKET	BOULON A 6 PANS CREUX	2					
11	S2211866	BOLT;SOCKET	BOULON A 6 PANS CREUX	2					
12	S2212066	BOLT;SOCKET	BOULON A 6 PANS CREUX	2					
13	S2212266	BOLT;SOCKET M10X1.5X30	BOULON A 6 PANS CREUX	2					
14	S5110503	WASHER;SPRING	RONDELLE ELASTIQUE	2					
15	S5110603	WASHER	RONDELLE	6					
16	S0558666	BOLT	BOULON	4					
17	S5102603	WASHER;SPRING(M10)	RONDELLE ELASTIQUE	4					
18	2181-1126D7	ADAPTER	ADAPTEUR	1					
19	DS2094061	HOSE	TUYAU FLEXIBLE	1					
20	DS2093209	HOSE	TUYAU FLEXIBLE	1					
21	DS2092024	HOSE	TUYAU FLEXIBLE	1					
22	DS2094174	HOSE	TUYAU FLEXIBLE	1					

DATE	JUN. 30, 2008
REV.NO.	EXB08-06

Fig. 6540 PILOT PIPING - TWO WAY + ROTATING
CONDUITES DE PILOTE

Serial No. ;

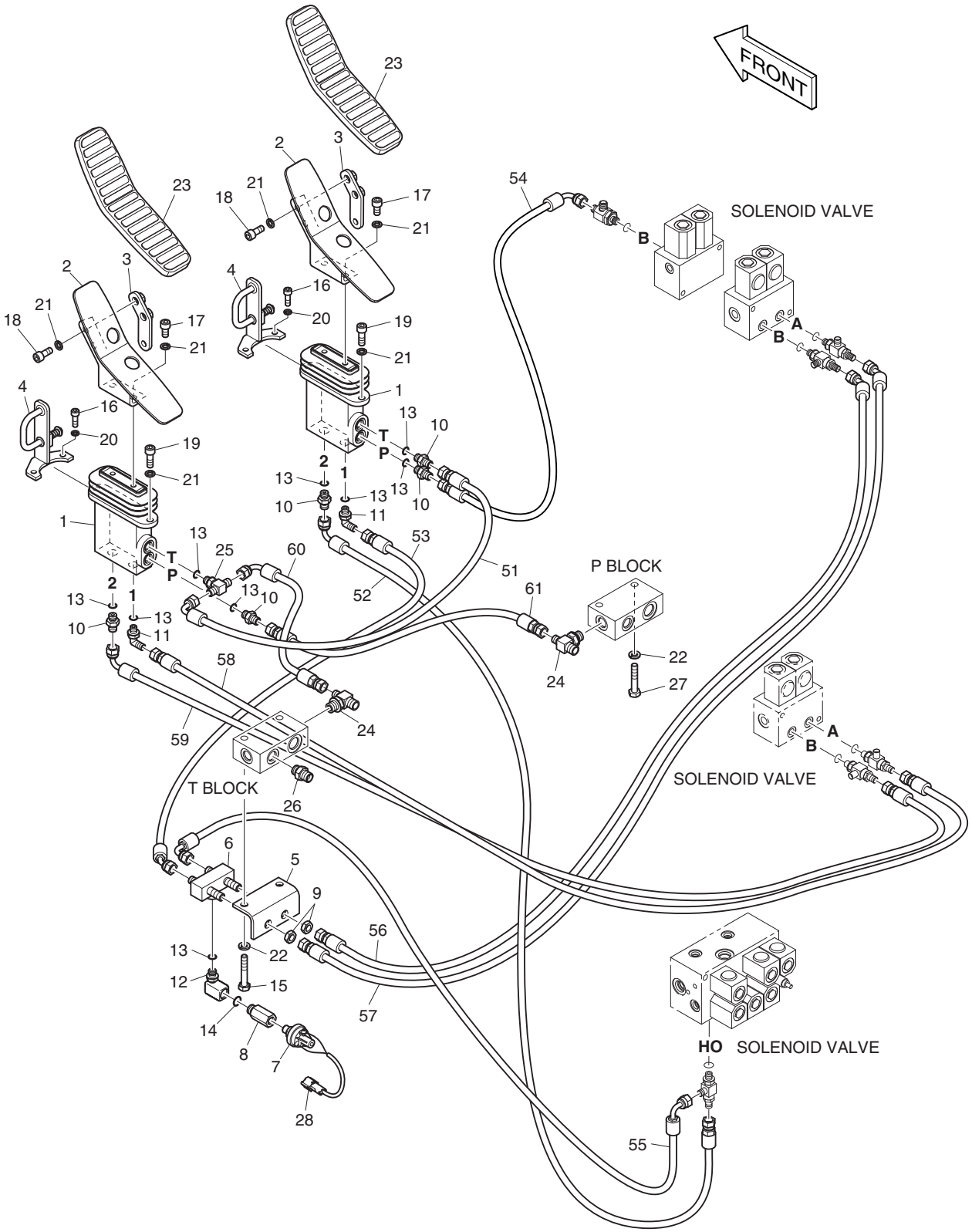

DATE	JUN. 30, 2008
REV. NO.	EXB08-06

Fig. 6540 PILOT PIPING - TWO WAY + ROTATING
CONDUITES DE PILOTE

Serial No. ;

Key No.	Part No.	Description	Description	Q'ty	S.C	Serial No.	ICA	Replaceable part	
								Part No.	Q'ty
6540--	K1018151A	PILOT PIPING;PE3C & PERO	TUYAUTERIE PILOTE	-	D				
1	K1017382	VALVE;PEDAL	VANNE	2		5001–5014	I	K1017382A	2
	K1017382A	**VALVE;PEDAL**	VANNE	2		**5015–**			
2	K1015404	BRACKET	SUPPORT	2					
3	K1001871B	PLATE	PLAQUE	2					
4	K1001873A	PLATE	PLAQUE	2					
5	195-02779A	BRACKET	SUPPORT	1					
6	420-00476	VALVE;SHUTTLE	VANNE	1					
7	549-00010	SWITCH; PRESSURE	COMMUTATEUR	1					
8	181-00182	REDUCER	REDUCEUR	1					
9	121-00010D7	NUT	ECROU	2					
10	2181-1126D14	ADAPTER	ADAPTEUR	5					
11	2181-1702D4	ELBOW	COUDE	2					
12	DS2308018	ELBOW	COUDE	1					
13	S8000111	O-RING	JOINT TORIQUE	9					
14	S8000141	O-RING	JOINT TORIQUE	1					
15	S0558766	BOLT	BOULON	2					
16	S2209066	BOLT;SOCKET	BOULON A 6 PANS CREUX	4					
17	S2211866	BOLT;SOCKET	BOULON A 6 PANS CREUX	4					
18	S2212066	BOLT;SOCKET	BOULON A 6 PANS CREUX	4					
19	S2212266	BOLT;SOCKET M10X1.5X30	BOULON A 6 PANS CREUX	4					
20	S5110503	WASHER;SPRING	RONDELLE ELASTIQUE	4					
21	S5110603	WASHER	RONDELLE	12					
22	S5102603	WASHER;SPRING(M10)	RONDELLE ELASTIQUE	4					
23	161-00386	RUBBER;PEDAL	CAOUTCHOUC	2					
24	2181-2281D3	TEE	TE	2					
25	2181-2281D1	TEE	TE	1					
26	2181-1126D7	ADAPTER	ADAPTEUR	1					
27	S0558666	BOLT	BOULON	2					
28	530-00067	HARNESS;STOP LAMP S/W	HARNAIS	1					
51	DS2093102	HOSE	TUYAU FLEXIBLE	1					
52	DS2093078	HOSE	TUYAU FLEXIBLE	1					
53	DS2092029	HOSE	TUYAU FLEXIBLE	1					
54	DS2093122	HOSE	TUYAU FLEXIBLE	1					
55	DS2091027	HOSE	TUYAU FLEXIBLE	1					
56	DS2092030	HOSE	TUYAU FLEXIBLE	1					
57	DS2092031	HOSE	TUYAU FLEXIBLE	1					
58	DS2094061	HOSE	TUYAU FLEXIBLE	1					

DATE	JUN. 30, 2008
REV.NO.	EXB08-06

Fig. 6540 PILOT PIPING - TWO WAY + ROTATING
CONDUITES DE PILOTE

Serial No. ;

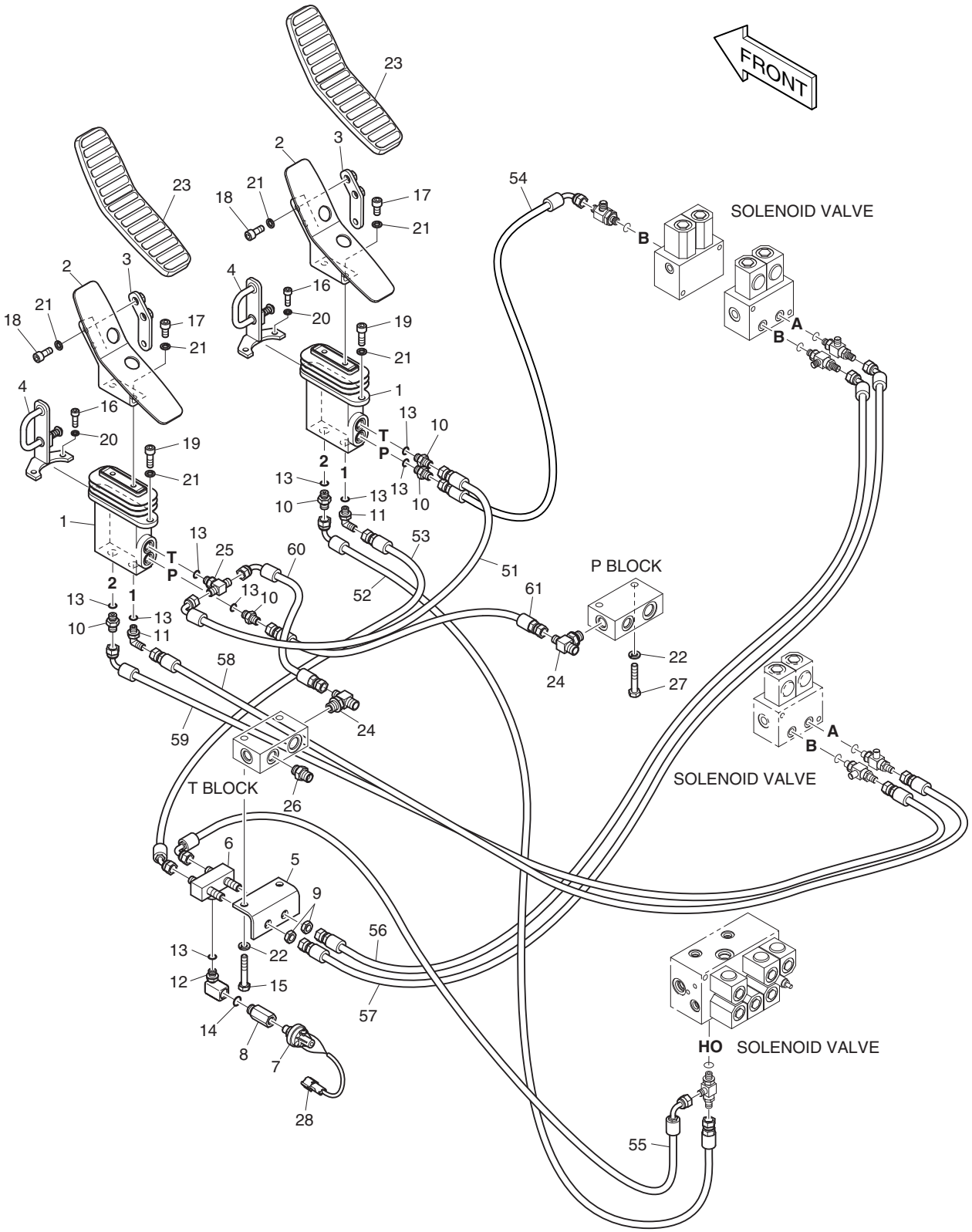

DATE	JUN. 30, 2008
REV. NO.	EXB08-06

Fig. 6540 PILOT PIPING - TWO WAY + ROTATING
CONDUITES DE PILOTE

Serial No. ;

Key No.	Part No.	Description	Description	Q'ty	S.C	Serial No.	ICA	Replaceable part	
								Part No.	Q'ty
6540-59	DS2093209	HOSE	TUYAU FLEXIBLE	1					
60	DS2093208	HOSE	TUYAU FLEXIBLE	1					
61	DS2094060	HOSE	TUYAU FLEXIBLE	1					

DATE	DEC. 26, 2006
1st EDITION	

Fig. 6550 FLOOR MAT - TWO PEDAL PLANCHER

Serial No. ;

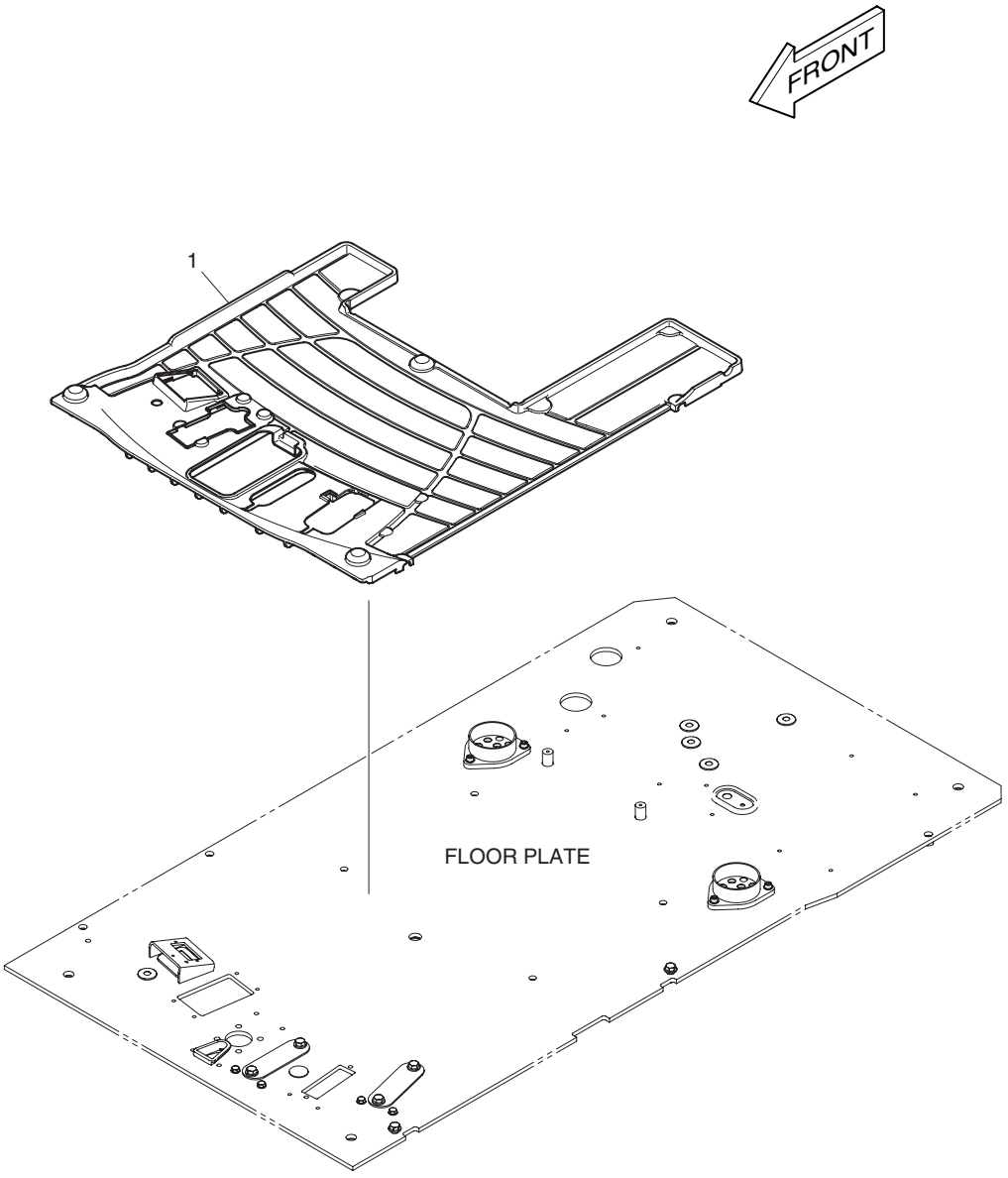

DATE	DEC. 26, 2006
1st EDITION	

Fig. 6550 FLOOR MAT - TWO PEDAL PLANCHER

Serial No. ;

Key No.	Part No.	Description	Description	Q'ty	S.C	Serial No.	ICA	Replaceable part	
								Part No.	Q'ty
6550-1	K1017493A	MAT;FLOOR(TWO PEDAL)	PLAQUE	1					

DATE	DEC. 26, 2006
1st EDITION	

Fig. 6560 BOOM PIPING - BOOM 4.3m (ROTATING)
TUYAUTERIE DE PERCHE

Serial No. ;

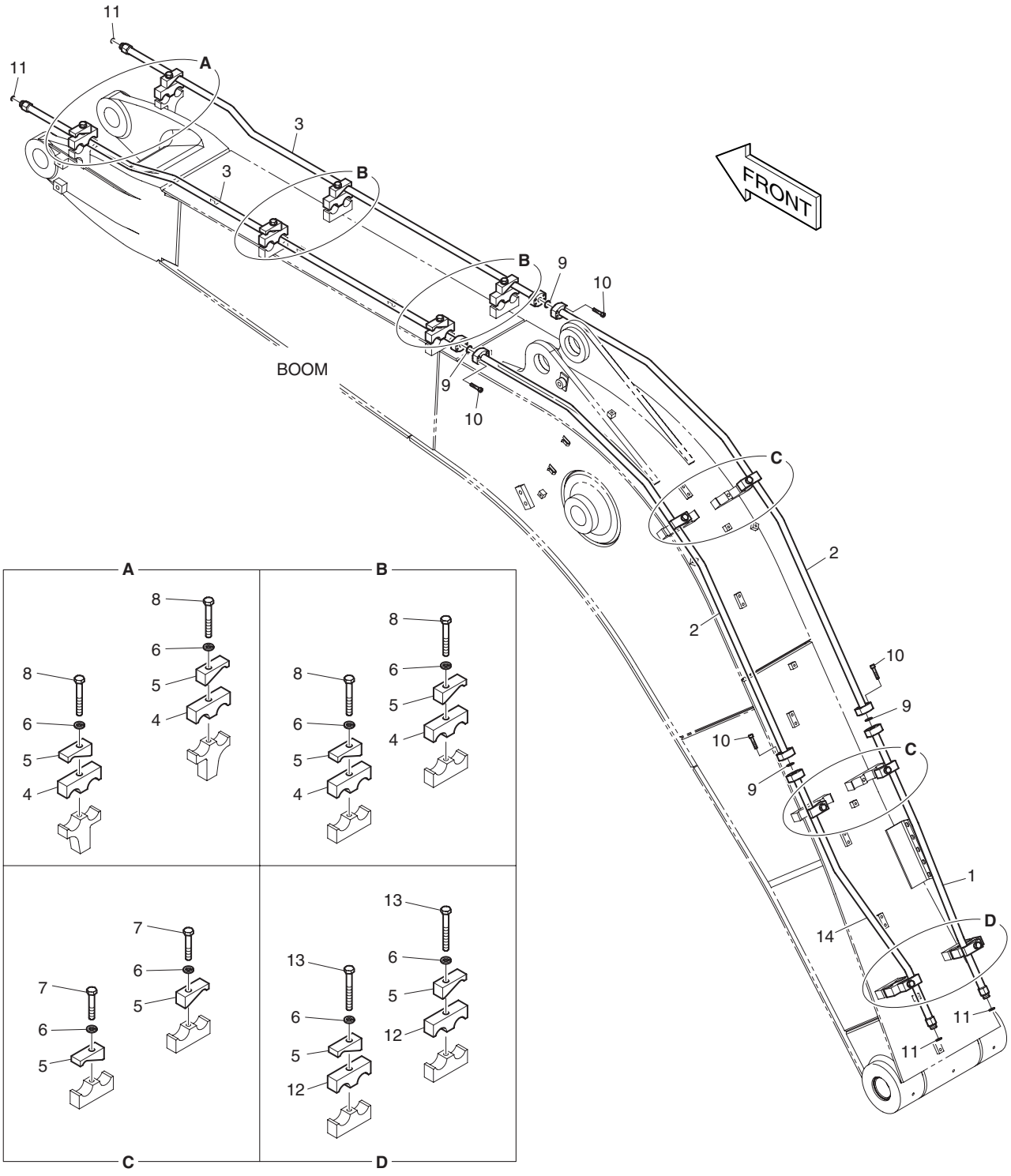

DATE	DEC. 26, 2006
1st EDITION	

Fig. 6560 BOOM PIPING - BOOM 4.3m (ROTATING) TUYAUTERIE DE PERCHE

Serial No. ;

Key No.	Part No.	Description	Description	Q'ty	S.C	Serial No.	ICA	Replaceable part	
								Part No.	Q'ty
6560--	400-01364	BOOM PIPING(ROTATION)	CONDUITES DE FLECHE	-	D				
1	140-01533C	PIPE	TUYAU	1					
2	140-01534A	PIPE	TUYAU	2					
3	140-01535	PIPE	TUYAU	2					
4	K1004348	CLAMP;PIPE	COLLIER	6					
5	K1004349	CLAMP;PIPE	COLLIER	12					
6	S5102703	WASHER;SPRING(M12)	RONDELLE ELASTIQUE	12					
7	S0561366	BOLT	BOULON	4					
8	S0561566	BOLT	BOULON	6					
9	2180-1026D30	O-RING	JOINT TORIQUE	4					
10	S2209466	BOLT;SOCKET	BOULON A 6 PANS CREUX	16					
11	S8030081	O-RING	JOINT TORIQUE	4					
12	K1000845A	CLAMP;PIPE	COLLIER	2					
13	S0561766	BOLT	BOULON	2					
14	K1000844	PIPE	TUYAU	1					

DATE	DEC. 26, 2006
1st EDITION	

Fig. 6570 ARM PIPING - ARM 2.1m (ROTATING)
CONDUITES DE BALANCIER

Serial No. ;

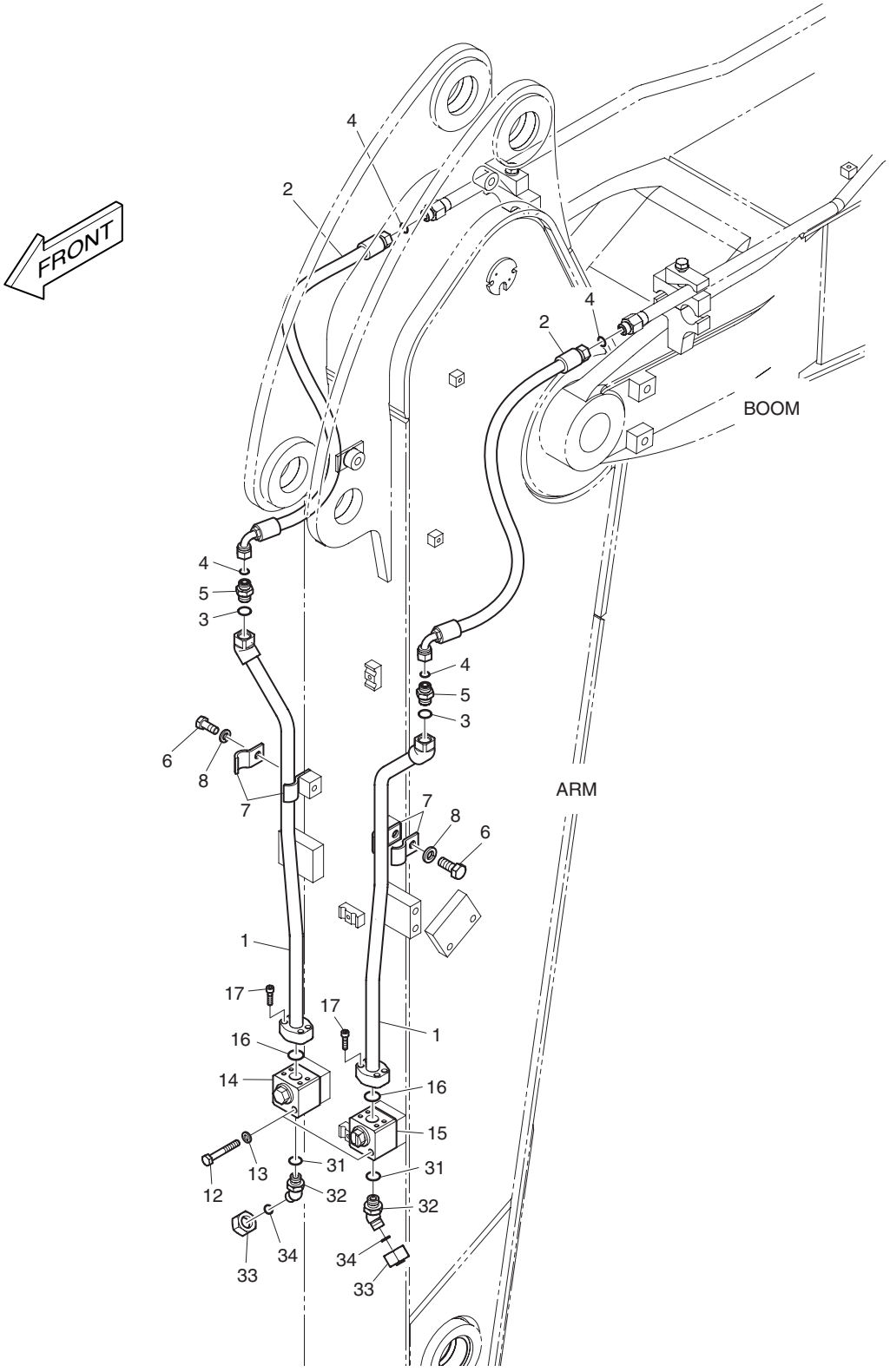

DATE	DEC. 26, 2006
1st EDITION	

Fig. 6570 ARM PIPING - ARM 2.1m (ROTATING)
CONDUITES DE BALANCIER

Serial No. ;

Key No.	Part No.	Description	Description	Q'ty	S.C	Serial No.	ICA	Replaceable part	
								Part No.	Q'ty
6570--	400-01366B	ARM PIPING;2.1m_ARM	CONDUITES DE BALANCIER	-	D				
1	140-01553E	PIPE	TUYAU	2					
2	DS2013388	HOSE	TUYAU FLEXIBLE	2					
3	S8000181	O-RING	JOINT TORIQUE	2					
4	S8030081	O-RING	JOINT TORIQUE	4					
5	2181-4133D3	ADAPTER	ADAPTEUR	2					
6	S0515266	BOLT	BOULON	2					
7	124-00299A	CLAMP;PIPE	COLLIER	4					
8	S5102703	WASHER;SPRING(M12)	RONDELLE ELASTIQUE	2					
12	S0558966	BOLT	BOULON	4					
13	S5102603	WASHER;SPRING(M10)	RONDELLE ELASTIQUE	4					
14	K1006227	VALVE;SWITCH(R.H)	VANNE	1					
15	K1006228	VALVE;SWITCH(L.H)	VANNE	1					
16	2180-1026D30	O-RING	JOINT TORIQUE	2					
17	S2209266	BOLT;SOCKET	BOULON A 6 PANS CREUX	8					
31	S8000181	O-RING	JOINT TORIQUE	2					
32	2181-2816D4	ELBOW	COUDE	2					
33	2181-2817D4	CAP	CHAPEAU	2					
34	S8030081	O-RING	JOINT TORIQUE	2					

DATE	JUN. 30, 2007
REV.NO.	EXB07-06

Fig. 6580 MAIN PIPING - LOCK VALVE
CONDUITES DE PRINCIPAL

Serial No. ;

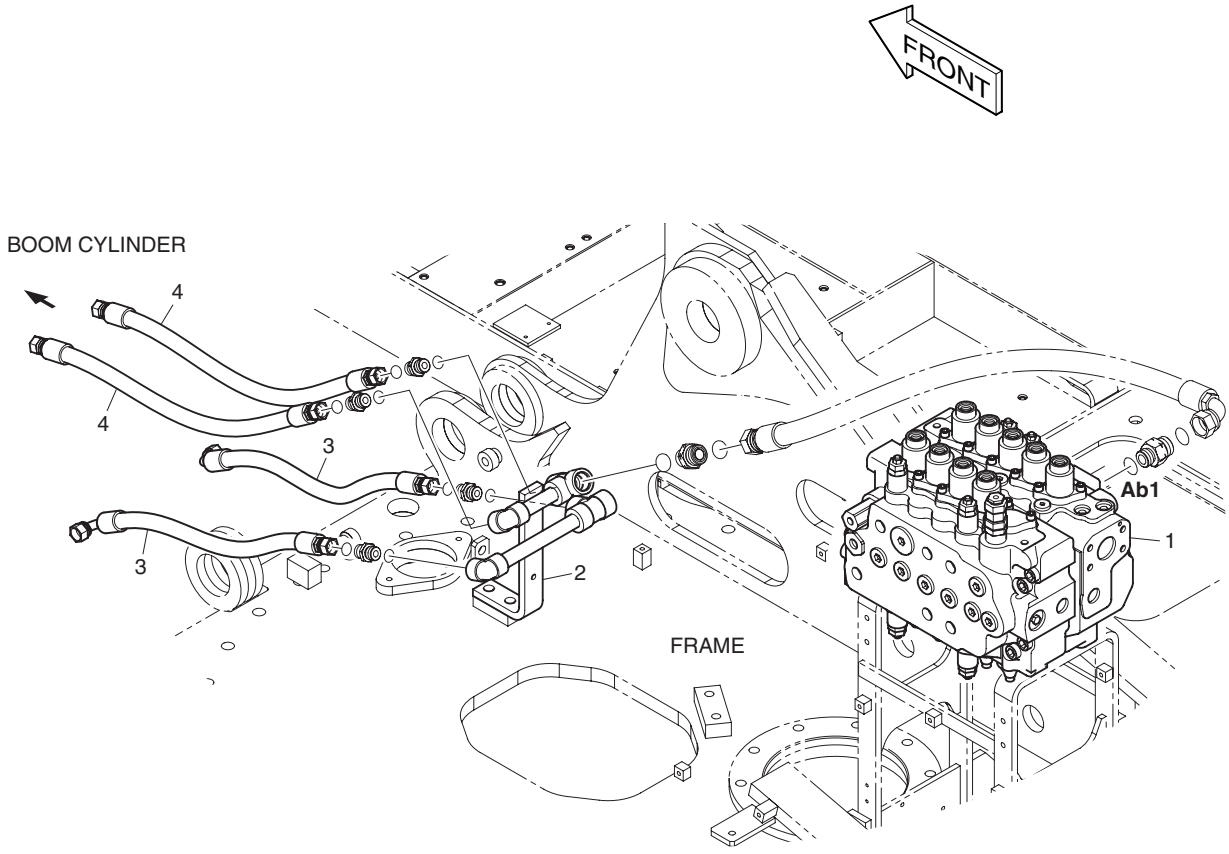

DATE	JUN. 30, 2007
REV. NO.	EXB07-06

Fig. 6580 MAIN PIPING - LOCK VALVE CONDUITES DE PRINCIPAL

Serial No. ;

Key No.	Part No.	Description	Description	Q'ty	S.C	Serial No.	ICA	Replaceable part	
								Part No.	Q'ty
6580--	K1018190E	MAIN PIPING;LOCK VALVE	TUYAUTERIE PRINCIPALE	-	D				
1	K1015269A	VALVE;CONTROL	VANNE DE COMMANDE	1		5001–5010			
	K1015269B	VALVE;CONTROL	VANNE DE COMMANDE	1		5011–			
2	K1009938A	PIPE ASS'Y	ENSEMBLE DE TUYAU	1					
3	DS2013926	HOSE 610L	TUYAU FLEXIBLE	2		5001–5019			
	DS2013892	**HOSE 570L**	TUYAU FLEXIBLE	2		**5020–**			
4	DS2011609	HOSE 670L	TUYAU FLEXIBLE	2		5001–5019			
	DS2011727	**HOSE 640L**	TUYAU FLEXIBLE	2		**5020–**			

DATE	JUN. 30, 2007
REV.NO.	EXB07-06

Fig. 6590 PILOT PIPING - LOCK VALVE
CONDUITES DE PILOTE

Serial No. ;

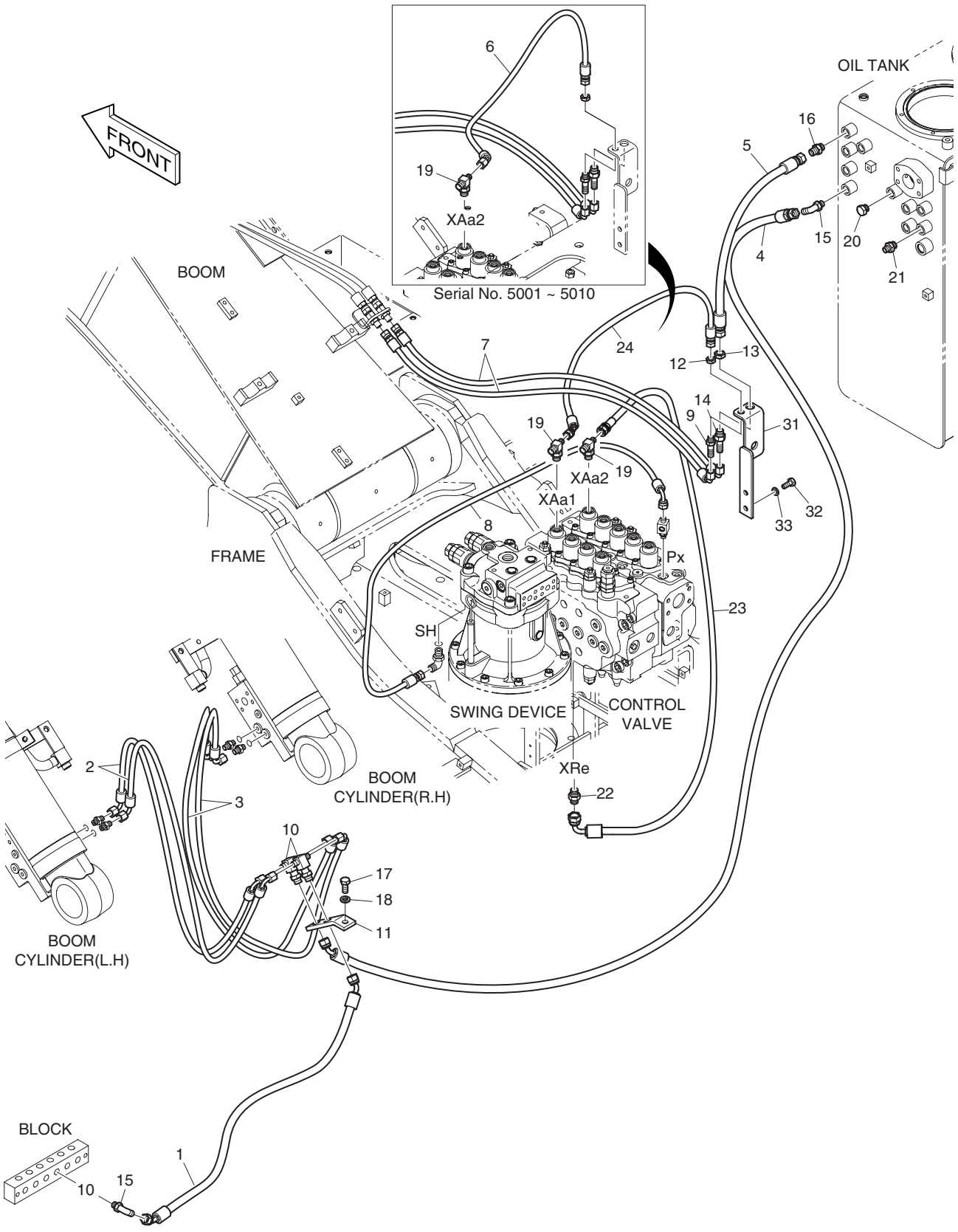

DATE	JUN. 30, 2007
REV. NO.	EXB07-06

Fig. 6590 PILOT PIPING - LOCK VALVE
CONDUITES DE PILOTE

Serial No. ;

Key No.	Part No.	Description	Description	Q'ty	S.C	Serial No.	ICA	Replaceable part	
								Part No.	Q'ty
6590--	**K1018164E**	**PILOT PIPING;LOCK V/V**	TUYAUTERIE PILOTE	-	D				
1	DS2109004	HOSE	TUYAU FLEXIBLE	1					
2	DS2091052	HOSE	TUYAU FLEXIBLE	2					
3	DS2091053	HOSE	TUYAU FLEXIBLE	2					
4	DS2092101	HOSE	TUYAU FLEXIBLE	1					
5	DS2094088	HOSE	TUYAU FLEXIBLE	1					
6	**DS2092102**	**HOSE**	TUYAU FLEXIBLE	1		**5001–5010**			
7	DS2093422	HOSE	TUYAU FLEXIBLE	2					
8	DS2093358	HOSE	TUYAU FLEXIBLE	1					
9	2181-2178	ADAPTER	ADAPTEUR	1					
10	181-00008	TEE	TE	2					
11	195-02400	BRACKET	SUPPORT	1					
12	121-00010D7	NUT	ECROU	1					
13	121-00010D1	NUT	ECROU	1					
14	181-00078D5	ADAPTER	ADAPTEUR	1					
15	2181-1702D5	ELBOW	COUDE	2					
16	2181-1126D7	ADAPTER	ADAPTEUR	1					
17	S0515166	BOLT	BOULON	1					
18	S5102703	WASHER;SPRING(M12)	RONDELLE ELASTIQUE	1					
19	2181-2281D3	TEE	TE	1		5001–5010			
	2181-2281D3	**TEE**	TE	2		**5011–**			
20	2181-1950D2	PLUG	BOUCHON	1					
21	2181-1126D36	ADAPTER	ADAPTEUR	1					
22	**2181-1126D14**	**ADAPTER**	ADAPTEUR	1		**5011–**			
23	**DS2093028**	**HOSE**	TUYAU FLEXIBLE	1		**5011–**			
24	**DS2092138**	**HOSE**	TUYAU FLEXIBLE	1		**5011–5019**			
	DS2092161	**HOSE**	TUYAU FLEXIBLE	1		**5020–**			
31	K1009959	BRACKET	SUPPORT	1					
32	S0512066	BOLT	BOULON	2					
33	S5102603	WASHER;SPRING	RONDELLE ELASTIQUE	2					

DATE	DEC. 26, 2006
1st EDITION	

Fig. 6600 BOOM PIPING - LOCK VALVE
TUYAUTERIE DE PERCHE

Serial No. ;

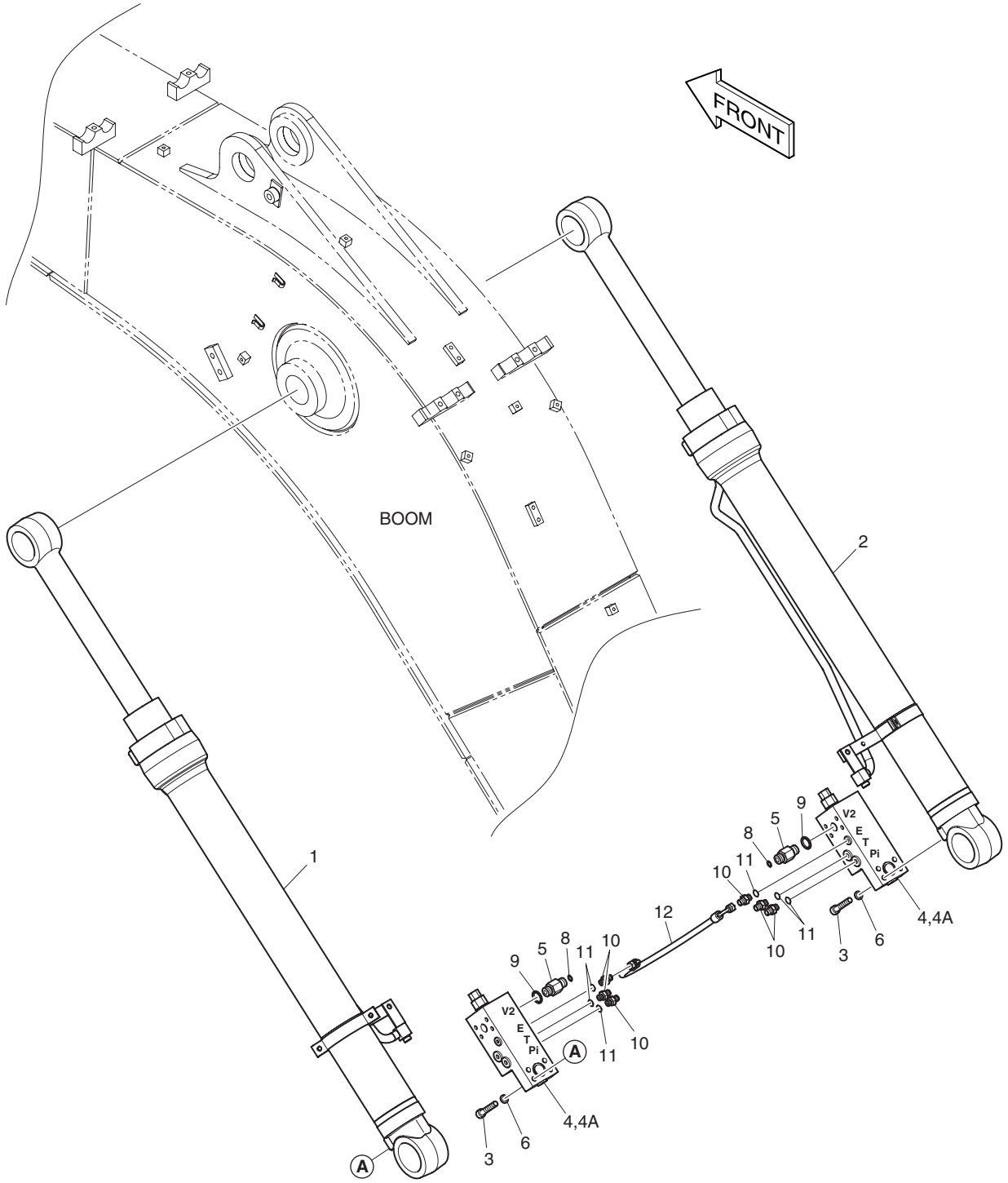

DATE	DEC. 26, 2006
1st EDITION	

Fig. 6600 BOOM PIPING - LOCK VALVE
TUYAUTERIE DE PERCHE

Serial No. ;

Key No.	Part No.	Description	Description	Q'ty	S.C	Serial No.	ICA	Replaceable part	
								Part No.	Q'ty
6600--	400-01504	BOOM PIPING;LOCK V/V	CONDUITES DE FLECHE	-	D				
1	440-00484B	CYLINDER;BOOM(L.H)	VERIN DE FLECHE	1					
2	440-00485B	CYLINDER;BOOM(R.H)	VERIN DE FLECHE	1					
3	S2212666	BOLT;SOCKET M10X1.5X50	BOULON A 6 PANS CREUX	8					
4	420-00003A	VALVE;LOCK	VANNE	2					
4A	K9000998	. SEAL KIT	. KIT D'ETANCHEITE	1					
5	2181-4133D37	ADAPTER	ADAPTEUR	2					
6	S5110601	WASHER;SPRING	RONDELLE ELASTIQUE	8					
8	S8030081	O-RING	JOINT TORIQUE	2					
9	180-00073D4	SEAL	JOINT	2					
10	2181-1126D14	ADAPTER	ADAPTEUR	6					
11	S8000111	O-RING	JOINT TORIQUE	6					
12	2184-1096D8	HOSE	TUYAU FLEXIBLE	1					

DATE	JUN. 30, 2007
REV.NO.	EXB07-06

Fig. 6610 ARM LOCK VALVE PIPING - BOOM 4.3m
TUYAUTERIE DE VALVE DE SERRURE

Serial No. ;

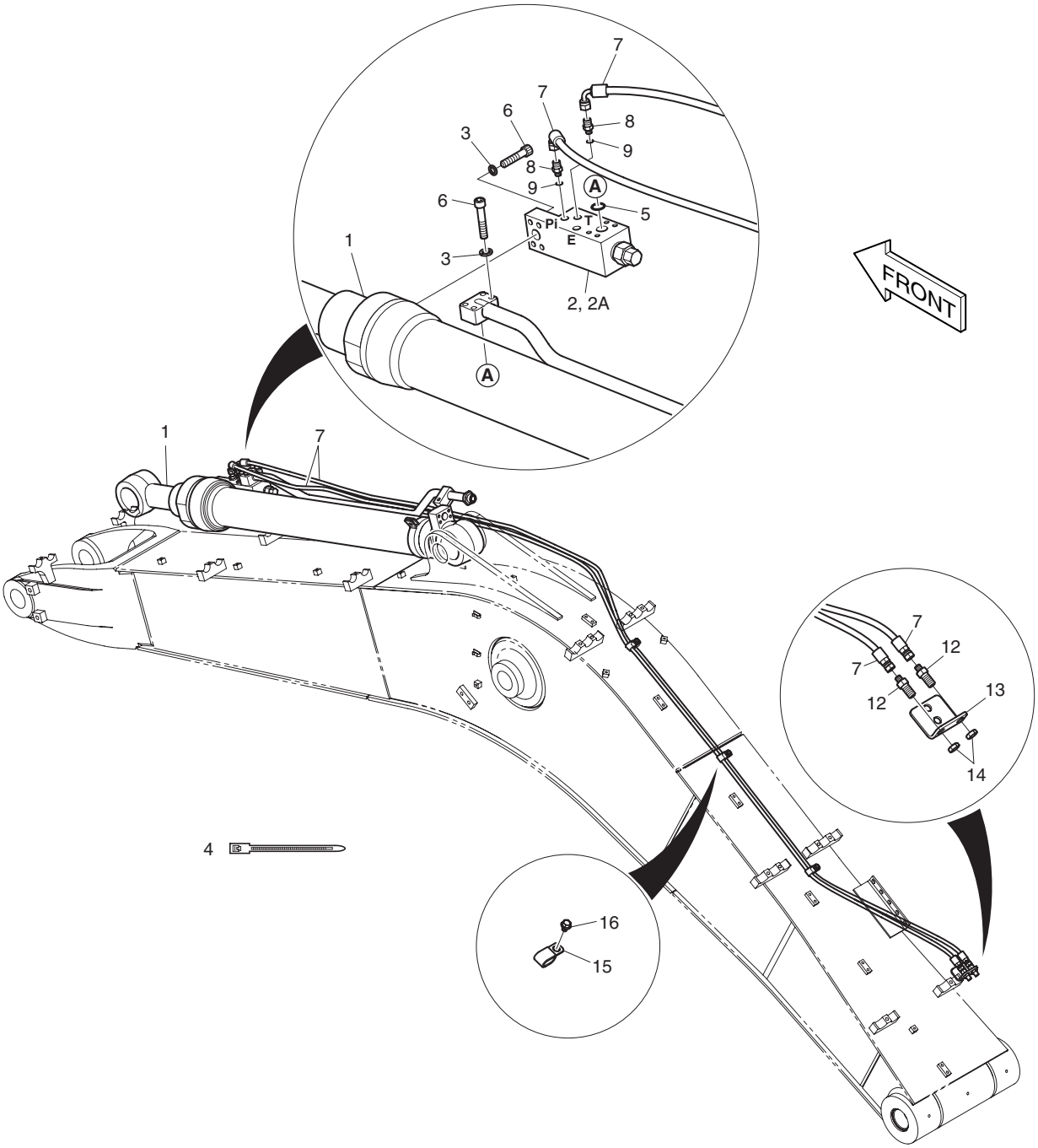

DATE	JUN. 30, 2007
REV. NO.	EXB07-06

Fig. 6610 ARM LOCK VALVE PIPING - BOOM 4.3m TUYAUTERIE DE VALVE DE SERRURE

Serial No. ;

Key No.	Part No.	Description	Description	Q'ty	S.C	Serial No.	ICA	Replaceable part	
								Part No.	Q'ty
6610--	**400-01505B**	**ARM LOCK V/V PIPING**	TUYAUTERIE DE SERRURE	-	D				
1	440-00486A	CYLINDER;ARM(LOCK V/V)	VERIN DE BALANCIER	1		5001–5014			
	440-00486B	**CYLINDER;ARM(LOCK V/V)**	VERIN DE BALANCIER	1		**5015–**			
2	420-00003A	VALVE;LOCK	VANNE	1					
2A	K9000998	. SEAL KIT	. KIT D'ETANCHEITE	1					
3	S5110601	WASHER;SPRING	RONDELLE ELASTIQUE	8					
4	2124-1084D2	CLIP;BAND	AGRAFE	15					
5	S8000281	O-RING	JOINT TORIQUE	1					
6	S2212666	BOLT;SOCKET M10X1.5X50	BOULON A 6 PANS CREUX	8					
7	2184-1046D217	HOSE	TUYAU FLEXIBLE	2					
8	2181-1126D14	ADAPTER	ADAPTEUR	2					
9	S8000111	O-RING	JOINT TORIQUE	2					
12	DS2410007	ADAPTER	ADAPTEUR	2					
13	K1006957	BRACKET	SUPPORT	1					
14	121-00010D7	NUT	ECROU	2					
15	124-00199D5	CLIP	AGRAFE	3					
16	K1001029	BOLT	BOULON	3					

DATE	JUN. 30, 2008
REV.NO.	EXB08-06

Fig. 6620 BOOM - 4.6m PERCHE

Serial No. ;

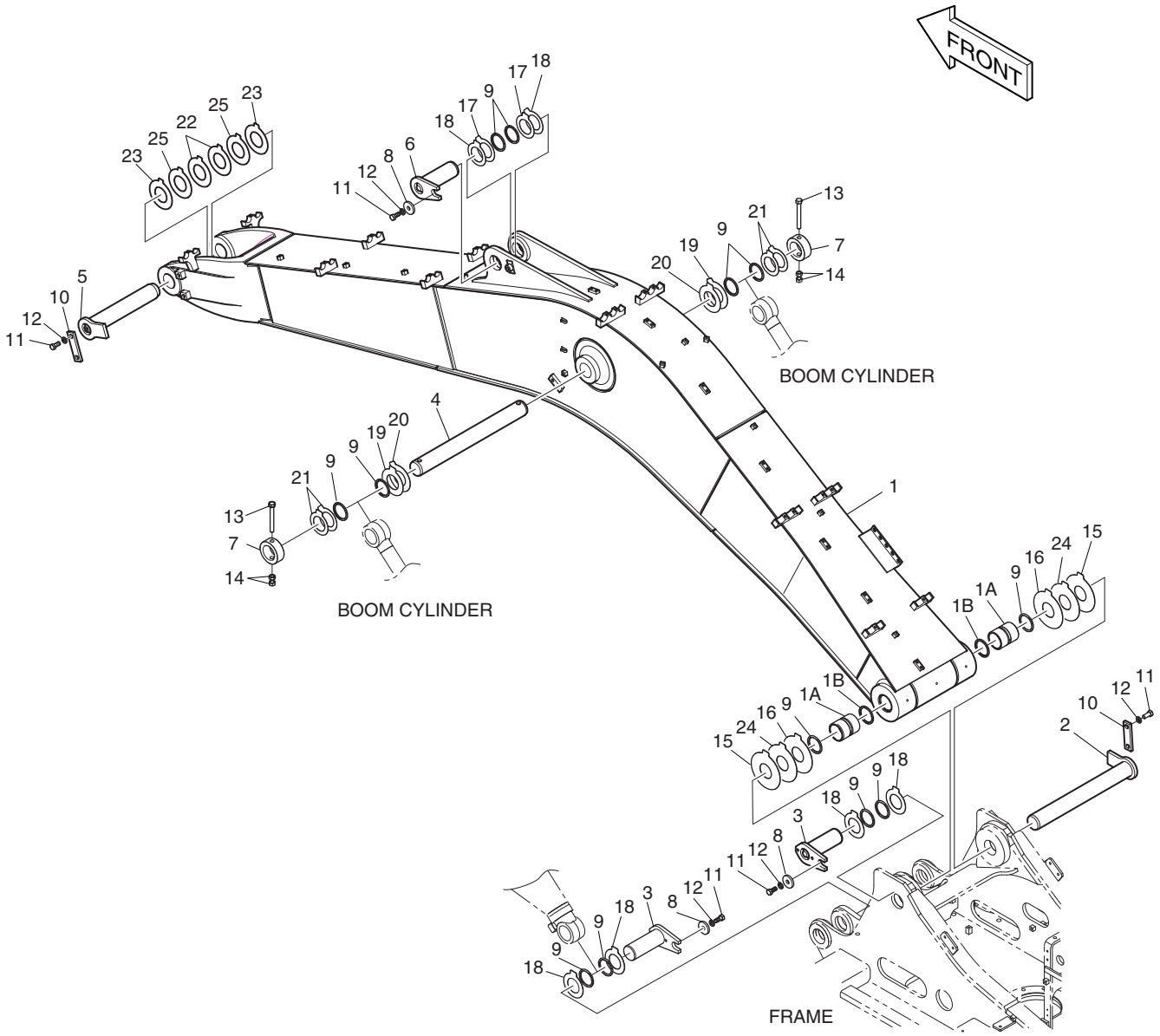

DATE	JUN. 30, 2008
REV. NO.	EXB08-06

Fig. 6620 BOOM - 4.6m PERCHE

Serial No. ;

Key No.	Part No.	Description	Description	Q'ty	S.C	Serial No.	ICA	Replaceable part	
								Part No.	Q'ty
6620--	701-00555C	BOOM ASS'Y	ENSEMBLE FLECHE	-	D				
1	701-00558E	BOOM SUB ASS'Y-4.6m	FLECHE	1					
1A	110-00240	. BUSHING	. DOUILLE	2					
1B	2180-1106BD4	. SEAL;DUST	. JOINT	2					
2	123-00671A	PIN	GOUPILLE	1		5001–5012	I	123-00671B	1
	123-00671B	PIN	GOUPILLE	1		5013–			
3	123-00474	PIN	GOUPILLE	2		5001–5014	I	K1038739	2
	K1038739	PIN	GOUPILLE	2		5015–			
4	K1004508	PIN	GOUPILLE	1		5001–5012	I	K1004508A	1
	K1004508A	PIN	GOUPILLE	1		5013–5016	I	K1004508C	1
	K1004508C	**PIN**	GOUPILLE	1		**5017**–			
5	2123-2207E	PIN	GOUPILLE	1		5001–5014	I	K1038740	1
	K1038740	PIN	GOUPILLE	1		5015–			
6	2123-2209C	PIN	GOUPILLE	1		5001–5014	I	K1038741	1
	K1038741	PIN	GOUPILLE	1		5015–			
7	2116-1532A	STOPPER	ARRET	2					
8	2116-1060D6	STOPPER	ARRET	3					
9	2180-1106BD4	SEAL;DUST	JOINT	12					
10	621-03710A	PLATE;STOPPER	PLAQUE	2					
11	S0521366	BOLT	BOULON	7					
12	S5102906	WASHER;SPRING	RONDELLE ELASTIQUE	7					
13	S0566966	BOLT	BOULON	2					
14	S4012933	NUT	ECROU	4					
15	DS7752023	SHIM	CALE	2					
16	DS7752011	SHIM	CALE	2					
17	DS7752004	SHIM	CALE	4					
18	DS7752005	SHIM	CALE	4					
19	DS7752006	SHIM	CALE	2					
20	DS7752007	SHIM	CALE	2					
21	DS7752003	SHIM	CALE	4					
22	DS7752008	SHIM	CALE	2					
23	DS7752009	SHIM	CALE	2					
24	DS7752089	SHIM	CALE	2					
25	DS7752090	SHIM	CALE	2					

DATE	JUN. 30, 2007
REV.NO.	EXB07-06

Fig. 6630 BOOM PIPING - BOOM 4.6m
TUYAUTERIE DE PERCHE

Serial No. ;

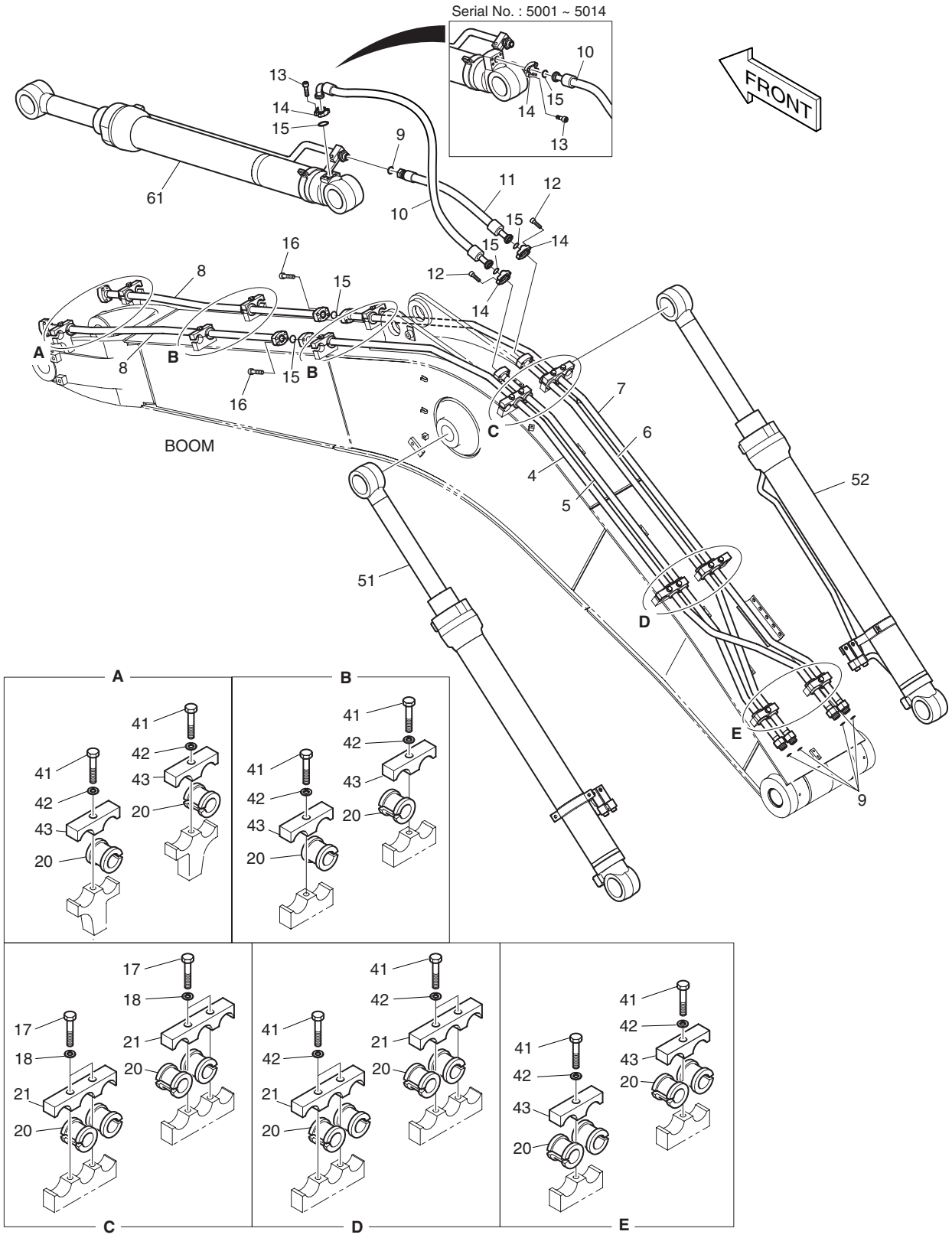

DATE	JUN. 30, 2007
REV. NO.	EXB07-06

Fig. 6630 BOOM PIPING - BOOM 4.6m TUYAUTERIE DE PERCHE

Serial No. ;

Key No.	Part No.	Description	Description	Q'ty	S.C	Serial No.	ICA	Replaceable part	
								Part No.	Q'ty
6630--	**K1018877A**	**BOOM PIPING**	CONDUITES DE FLECHE	-	D				
4	140-01608C	PIPE	TUYAU	1					
5	140-01609C	PIPE	TUYAU	1					
6	140-01610C	PIPE	TUYAU	1					
7	140-01611C	PIPE	TUYAU	1					
8	K1000843A	PIPE	TUYAU	2					
9	S8030121	O-RING	JOINT TORIQUE	5					
10	DS2038186	HOSE	TUYAU FLEXIBLE	1		5001–5014			
	DS2040643	**HOSE**	TUYAU FLEXIBLE	1		**5015–**			
11	DS2016061	HOSE	TUYAU FLEXIBLE	1					
12	S2212366	BOLT;SOCKET	BOULON A 6 PANS CREUX	8					
13	S2212266	BOLT;SOCKET	BOULON A 6 PANS CREUX	4					
14	2181-9079	FLANGE;SPLIT	BRIDE	6					
15	2180-1026D2	O-RING	JOINT TORIQUE	5					
16	S2212566	BOLT;SOCKET	BOULON A 6 PANS CREUX	8					
17	S0560866	BOLT	BOULON	4					
18	S5102703	WASHER;SPRING	RONDELLE ELASTIQUE	4					
20	K1000294A	RUBBER	CAOUTCHOUC	18					
21	K1004317	CLAMP;PIPE	COLLIER	4					
41	S0560866	BOLT	BOULON	12					
42	S5102703	WASHER;SPRING	RONDELLE ELASTIQUE	12					
43	K1004316	CLAMP;PIPE	COLLIER	8					
51	440-00408B	CYLINDER;BOOM(L.H)	VERIN DE FLECHE	1					
52	440-00409B	CYLINDER;BOOM(R.H)	VERIN DE FLECHE	1					
61	440-00425A	CYLINDER;ARM	VERIN DE BALANCIER	1		5001–5014			
	440-00425B	**CYLINDER;ARM**	VERIN DE BALANCIER	1		**5015–**			

DATE	DEC. 26, 2006
1st EDITION	

Fig. 6640 LUBRICATION PIPING - BOOM 4.6m
TUYAUTERIE DE LUBRIFICATION

Serial No. ;

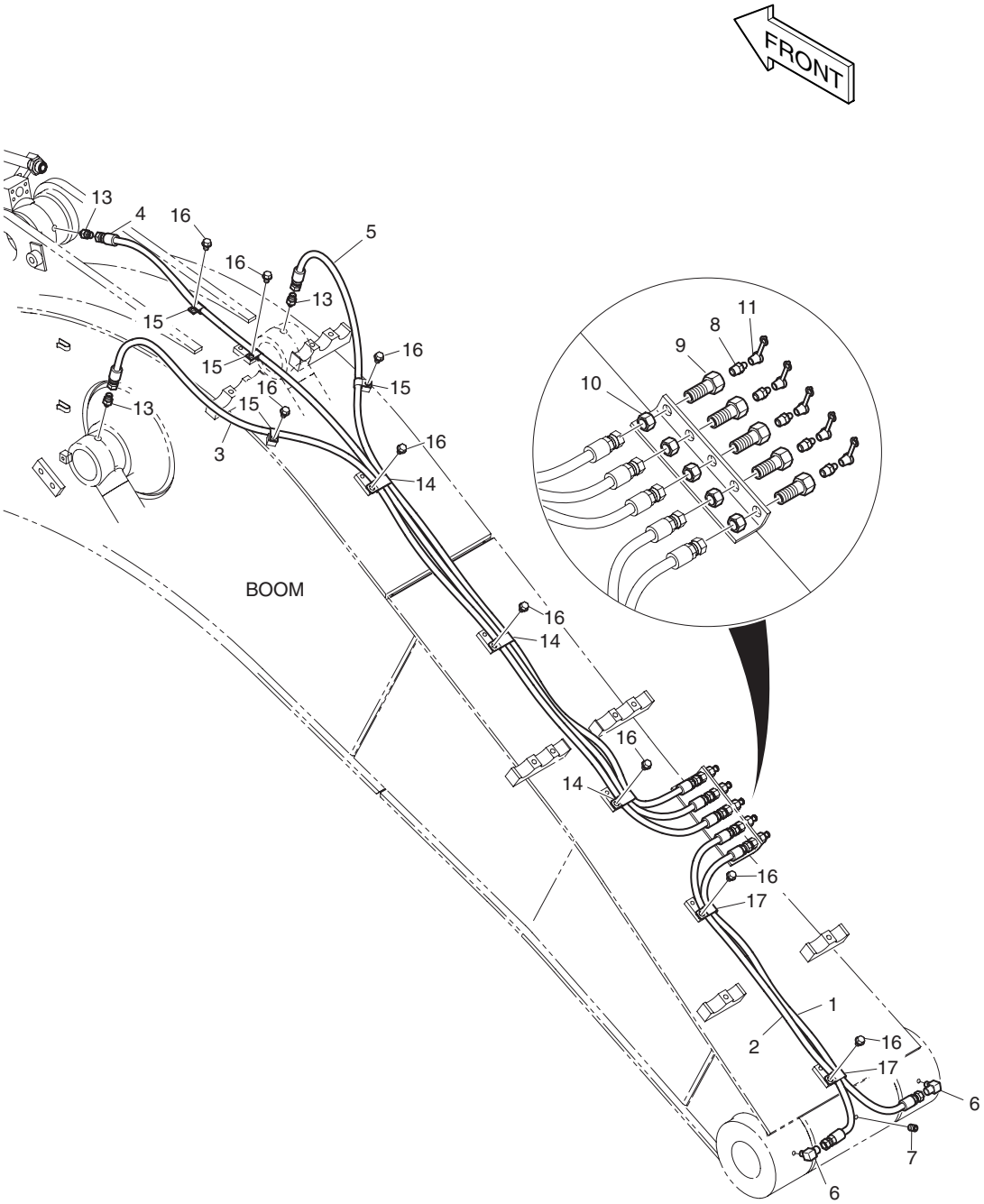

DATE	DEC. 26, 2006
1st EDITION	

Fig. 6640 LUBRICATION PIPING - BOOM 4.6m
TUYAUTERIE DE LUBRIFICATION

Serial No. ;

Key No.	Part No.	Description	Description	Q'ty	S.C	Serial No.	ICA	Replaceable part	
								Part No.	Q'ty
6640--	400-01361B	BOOM LUBRICATION PIPING	TUYAUTERIE DE	-	D				
1	DS2053796	HOSE	TUYAU FLEXIBLE	1					
2	2184-1045D165	HOSE	TUYAU FLEXIBLE	1					
3	2184-1045D103	HOSE	TUYAU FLEXIBLE	1					
4	DS2053929	HOSE	TUYAU FLEXIBLE	1					
5	2184-1045D161	HOSE	TUYAU FLEXIBLE	1					
6	2181-1186D12	ELBOW	COUDE	2					
7	S3524403	PLUG	BOUCHON	1					
8	S6710041	NIPPLE;GREASE	MAMELON	5					
9	181-00103	REDUCER	REDUCEUR	5					
10	121-00006	NUT	ECROU	5					
11	160-00020	CAP;GREASE NIPPLE	CHAPEAU	5					
13	2181-4112	ADAPTER	ADAPTEUR	3					
14	124-00199D4	CLIP	AGRAFE	3					
15	2124-1353D2	CLIP	AGRAFE	4					
16	K1001029	BOLT	BOULON	9					
17	124-00199D5	CLIP	AGRAFE	2					

DATE	DEC. 26, 2006
1st EDITION	

Fig. 6650 BOOM PIPING - ONE & TWO WAY(BOOM-4.6m) TUYAUTERIE DE PERCHE

Serial No. ;

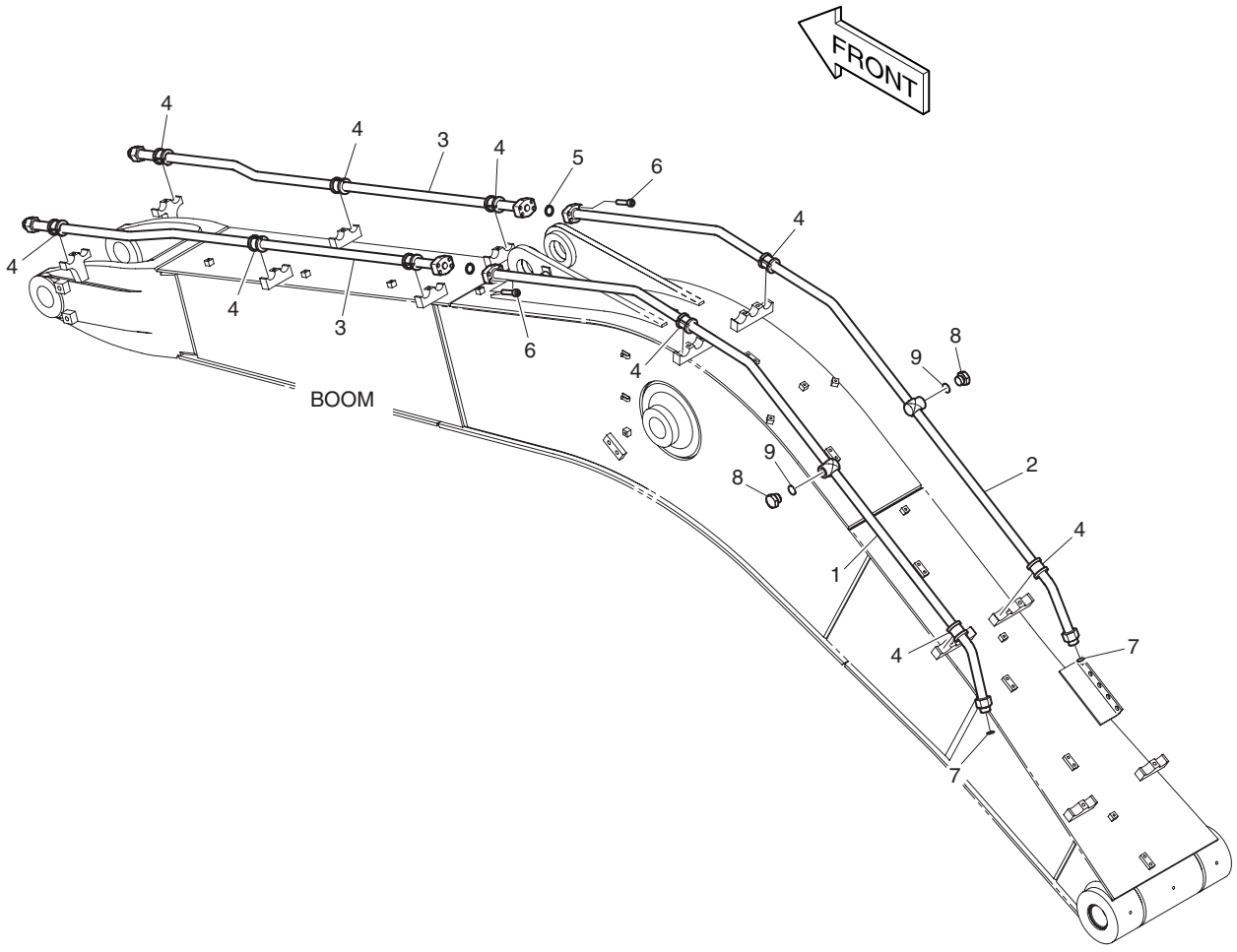

DATE	DEC. 26, 2006
1st EDITION	

Fig. 6650 BOOM PIPING - ONE & TWO WAY(BOOM-4.6m) TUYAUTERIE DE PERCHE

Serial No. ;

Key No.	Part No.	Description	Description	Q'ty	S.C	Serial No.	ICA	Replaceable part	
								Part No.	Q'ty
6650--	400-01346A	BOOM PIPING-ONE & TWO WAY	CONDUITES DE FLECHE	-	D				
1	140-01613C	PIPE	TUYAU	1					
2	140-01614C	PIPE	TUYAU	1					
3	K1004330	PIPE	TUYAU	2					
4	K1000294A	RUBBER	CAOUTCHOUC	10					
5	2180-1026D2	O-RING	JOINT TORIQUE	2					
6	S2212566	BOLT;SOCKET	BOULON A 6 PANS CREUX	8					
7	S8030121	O-RING	JOINT TORIQUE	2					
8	2181-1950D15	PLUG	BOUCHON	2					
9	S8000231	O-RING	JOINT TORIQUE	2					

DATE	DEC. 26, 2006
1st EDITION	

Fig. 6660 BOOM PIPING - QUICK CLAMP(BOM-4.6m)
TUYAUTERIE DE PERCHE

Serial No. ;

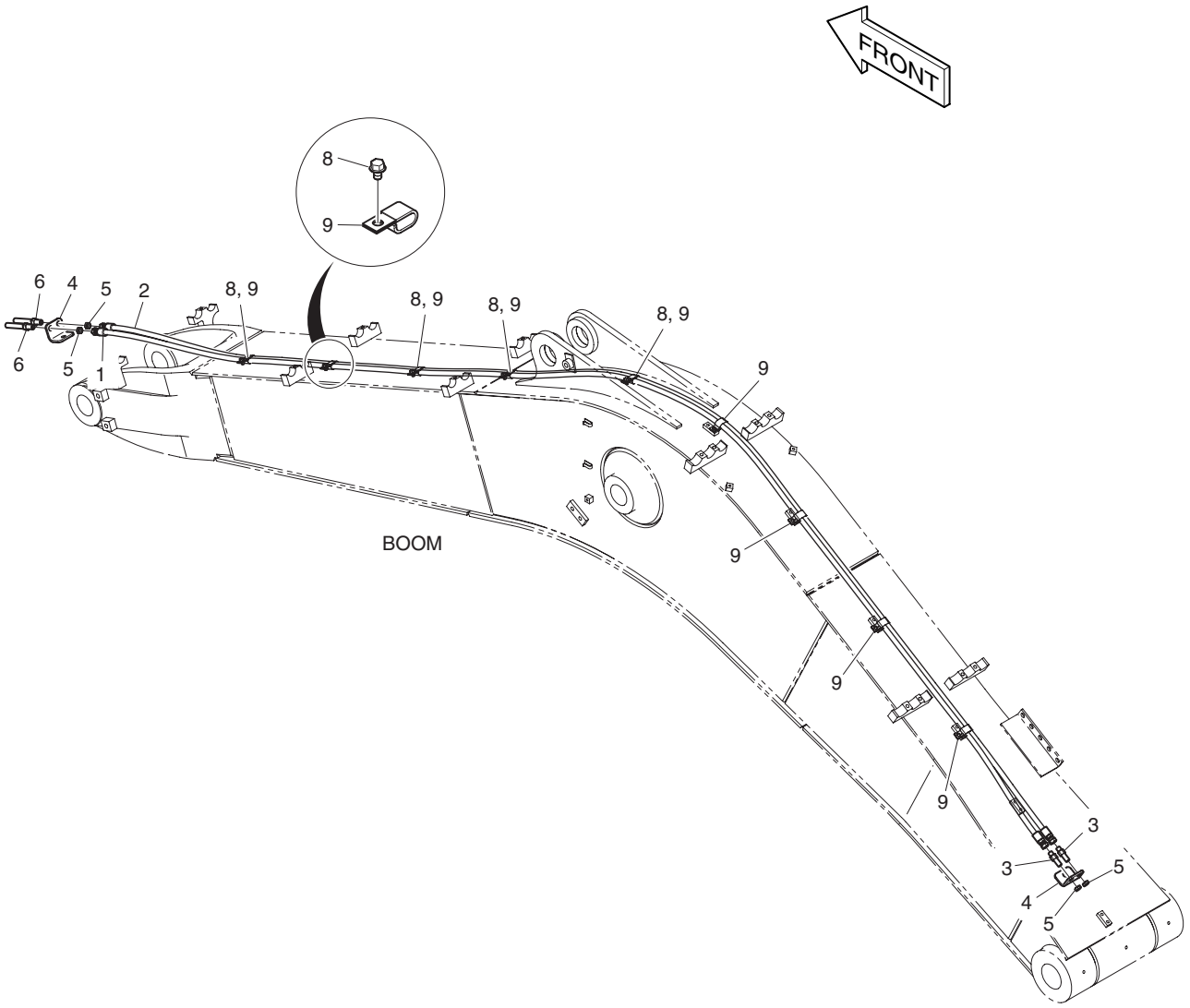

DATE	DEC. 26, 2006
1st EDITION	

Fig. 6660 BOOM PIPING - QUICK CLAMP(BOM-4.6m) TUYAUTERIE DE PERCHE

Serial No. ;

Key No.	Part No.	Description	Description	Q'ty	S.C	Serial No.	ICA	Replaceable part	
								Part No.	Q'ty
6660--	400-01392B	BOOM PIPING-QUICK CLAMP	CONDUITES DE FLECHE	-	D				
1	DS2053799	HOSE	TUYAU FLEXIBLE	1					
2	DS2053931	HOSE	TUYAU FLEXIBLE	1					
3	DS2410007	ADAPTER	ADAPTEUR	2					
4	K1006957	BRACKET	SUPPORT	2					
5	121-00010D7	NUT	ECROU	4					
6	K1000356	ADAPTER	ADAPTEUR	2					
8	K1001029	BOLT	BOULON	4					
9	DS2805009	CLIP	AGRAFE	9					

DATE	DEC. 26, 2006
1st EDITION	

Fig. 6670 BOOM PIPING - BOOM 4.6m(ROTATION) TUYAUTERIE DE PERCHE

Serial No. ;

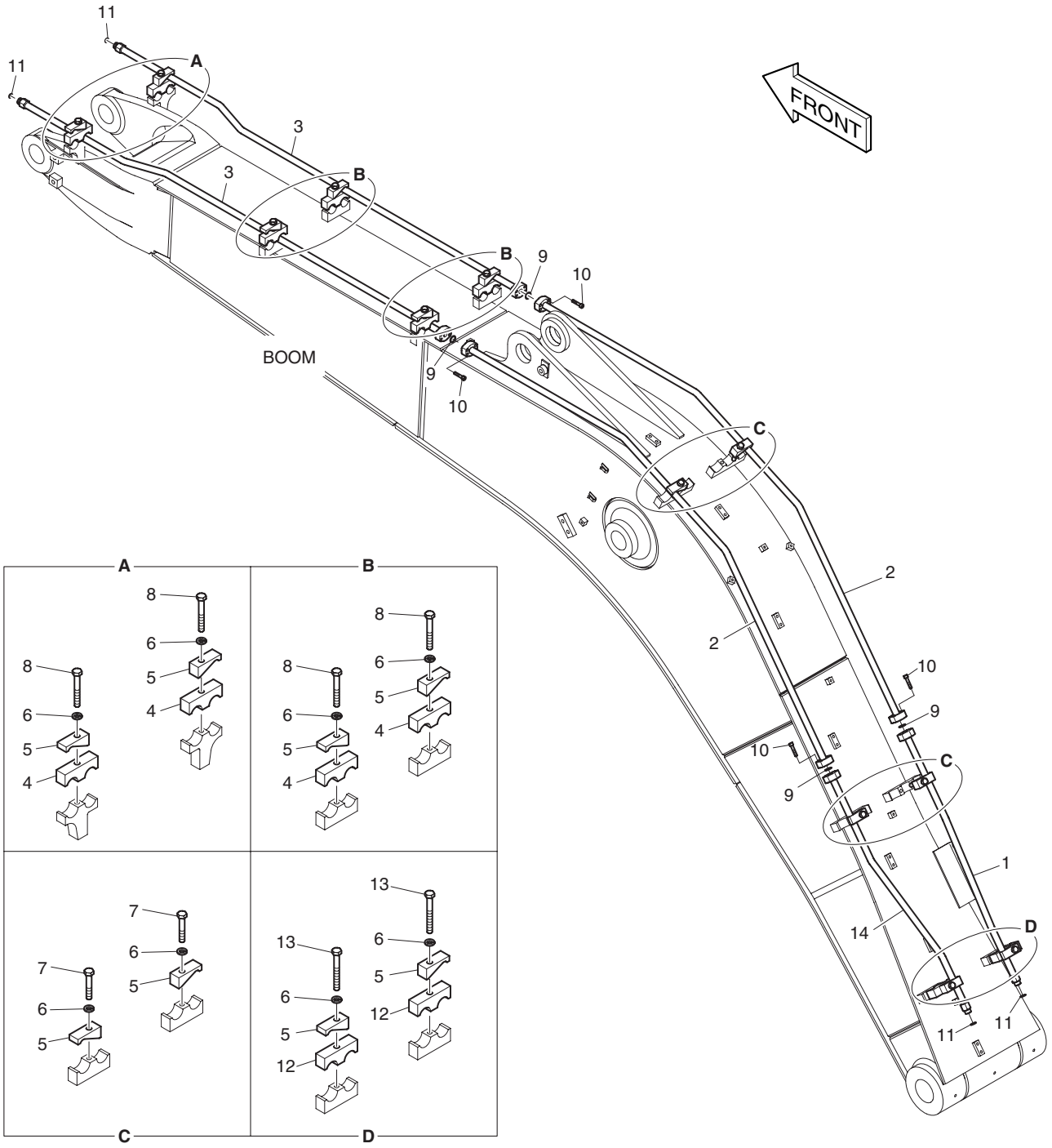

DATE	DEC. 26, 2006
1st EDITION	

Fig. 6670 BOOM PIPING - BOOM 4.6m(ROTATION) TUYAUTERIE DE PERCHE

Serial No. ;

Key No.	Part No.	Description	Description	Q'ty	S.C	Serial No.	ICA	Replaceable part	
								Part No.	Q'ty
6670--	400-01365	BOOM PIPING(ROTATION)	CONDUITES DE FLECHE	-	D				
1	140-01533C	PIPE	TUYAU	1					
2	140-01616	PIPE	TUYAU	2					
3	140-01535	PIPE	TUYAU	2					
4	K1004348	CLAMP;PIPE	COLLIER	8					
5	K1004349	CLAMP;PIPE	COLLIER	14					
6	S5102703	WASHER;SPRING(M12)	RONDELLE ELASTIQUE	10					
7	S0561366	BOLT	BOULON	4					
8	S0561566	BOLT	BOULON	4					
9	2180-1026D30	O-RING	JOINT TORIQUE	4					
10	S2209466	BOLT;SOCKET	BOULON A 6 PANS CREUX	16					
11	S8030081	O-RING	JOINT TORIQUE	4					
12	K1000845A	CLAMP;PIPE	COLLIER	2					
13	S0561766	BOLT	BOULON	2					
14	K1000844	PIPE	TUYAU	1					

DATE	JUN. 30, 2007
REV.NO.	EXB07-06

Fig. 6680 ARM LOCK VALVE PIPING - BOOM 4.6m
TUYAUTERIE DE VALVE DE SERRURE

Serial No. ;

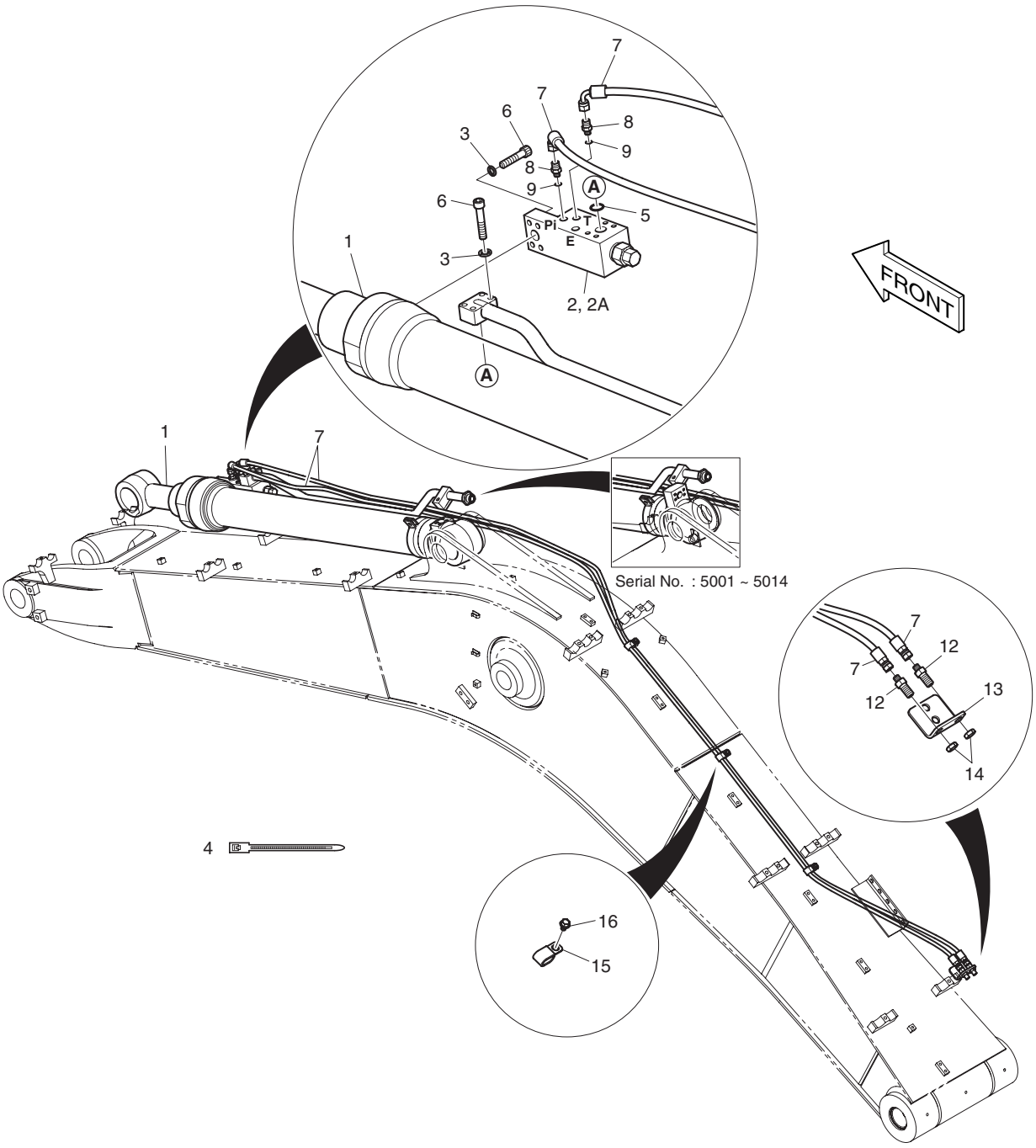

DATE	JUN. 30, 2007
REV. NO.	EXB07-06

Fig. 6680 ARM LOCK VALVE PIPING - BOOM 4.6m TUYAUTERIE DE VALVE DE SERRURE

Serial No. ;

Key No.	Part No.	Description	Description	Q'ty	S.C	Serial No.	ICA	Replaceable part	
								Part No.	Q'ty
6680--	**400-01506B**	**ARM LOCK V/V PIPING**	TUYAUTERIE DE SERRURE	-	D				
1	440-00487A	CYLINDER;ARM(LOCK V/V)	VERIN DE BALANCIER	1		5001–5014			
	440-00487B	**CYLINDER;ARM(LOCK V/V)**	VERIN DE BALANCIER	1		**5015–**			
2	420-00003A	VALVE;LOCK	VANNE	1					
2A	K9000998	. SEAL KIT	. KIT D'ETANCHEITE	1					
3	S5110601	WASHER;SPRING	RONDELLE ELASTIQUE	8					
4	2124-1084D2	CLIP;BAND	AGRAFE	15					
5	S8000281	O-RING	JOINT TORIQUE	1					
6	S2212666	BOLT;SOCKET M10X1.5X50	BOULON A 6 PANS CREUX	8					
7	2184-1046D217	HOSE	TUYAU FLEXIBLE	2					
8	2181-1126D14	ADAPTER	ADAPTEUR	2					
9	S8000111	O-RING	JOINT TORIQUE	2					
12	DS2410007	ADAPTER	ADAPTEUR	2					
13	K1006957	BRACKET	SUPPORT	1					
14	121-00010D7	NUT	ECROU	2					
15	124-00199D5	CLIP	AGRAFE	3					
16	K1001029	BOLT	BOULON	3					

DATE	JUN. 30, 2007
REV.NO.	EXB07-06

Fig. 6690 ARM - 2.5m BALANCIER

Serial No. ;

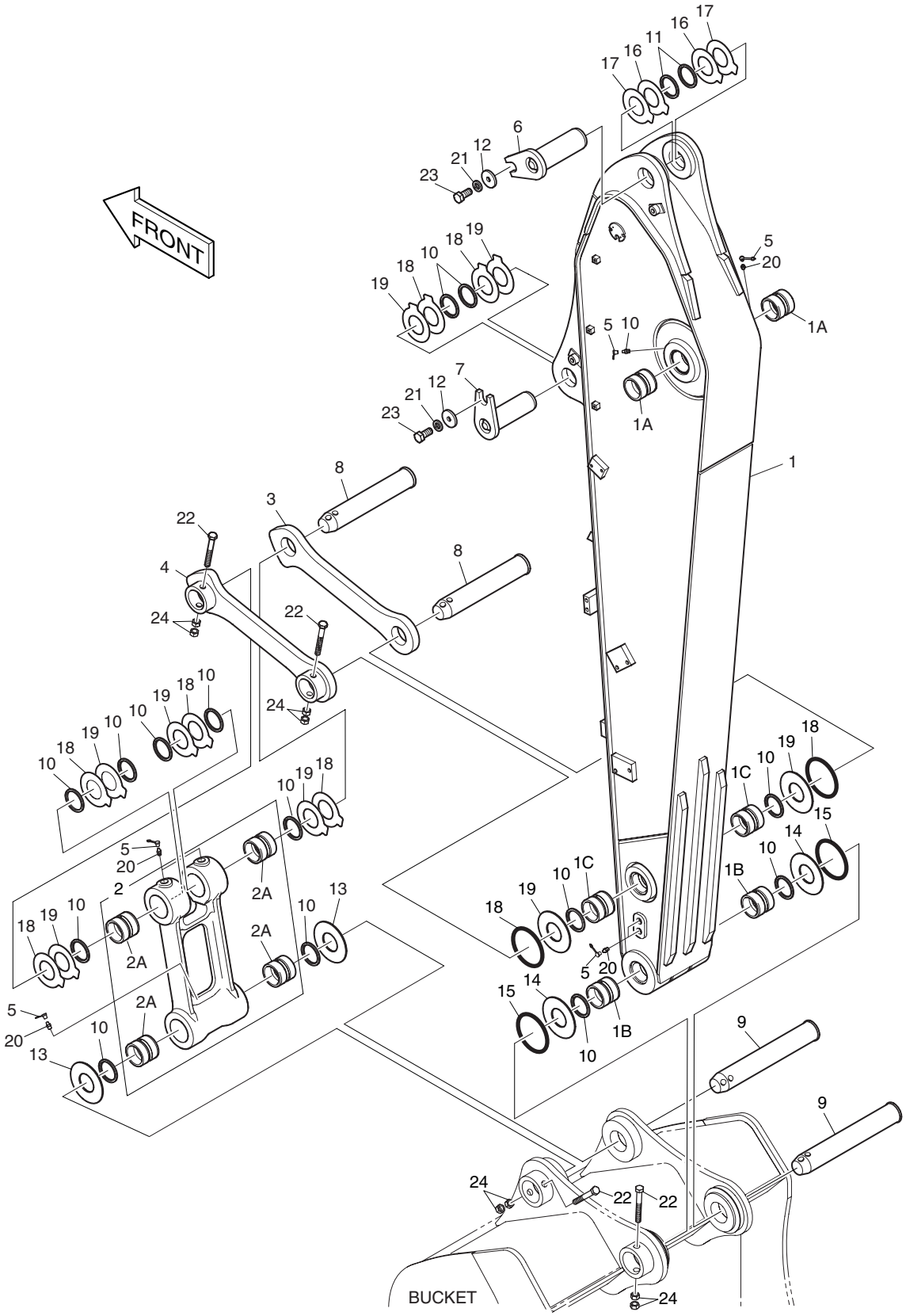

DATE	JUN. 30, 2007
REV. NO.	EXB07-06

Fig. 6690 ARM - 2.5m BALANCIER

Serial No. ;

Key No.	Part No.	Description	Description	Q'ty	S.C	Serial No.	ICA	Replaceable part	
								Part No.	Q'ty
6690--	**701-00561H**	**ARM ASS'Y**	ENSEMBLE DE BRAS	-	D				
1	701-00562H	ARM SUB ASS'Y-2.5m	BALANCIER	1		5001–5014	I	701-00562J	1
	701-00562J	**ARM SUB ASS'Y-2.5m**	BALANCIER	1		**5015–**			
1A	110-00241	. BUSHING	. DOUILLE	2					
1B	110-00242	. BUSHING	. DOUILLE	2					
1C	110-00243	. BUSHING	. DOUILLE	2					
2	155-00061	LINK;PUSH ASS'Y	ARTICULATION	1					
2A	110-00245	. BUSHING	. DOUILLE	4					
3	2155-1306B	LINK;GUIDE(R.H)	ARTICULATION	1					
4	2155-1307B	LINK;GUIDE(L.H)	ARTICULATION	1					
5	160-00020	CAP;GREASE NIPPLE	CHAPEAU	7					
6	2123-2209C	PIN	GOUPILLE	1		5001–5014	I	K1038741	1
	K1038741	**PIN**	GOUPILLE	1		**5015–**			
7	2123-2225C	PIN	GOUPILLE	1		5001–5014	I	K1038743	1
	K1038743	**PIN**	GOUPILLE	1		**5015–**			
8	K1007038	PIN	GOUPILLE	2		5001–5014	I	K1007038A	2
	K1007038A	**PIN**	GOUPILLE	2		**5015–**			
9	2123-2212C	PIN	GOUPILLE	2		5001–5014	I	K1038517	2
	K1038517	**PIN**	GOUPILLE	2		**5015–**			
10	2180-1106BD3	SEAL;DUST	JOINT	14					
11	2180-1106BD4	SEAL;DUST	JOINT	4					
12	2116-1060D6	STOPPER	ARRET	2					
13	2114-1995B	SPACER	DOUILLE D'ECARTEMENT	2					
14	2114-1994B	SPACER	DOUILLE D'ECARTEMENT	2					
15	180-00077D3	O-RING	JOINT TORIQUE	2					
16	DS7752006	SHIM	CALE	2					
17	DS7752007	SHIM	CALE	2					
18	DS7752001	SHIM	CALE	8					
19	DS7752002	SHIM	CALE	8					
20	S6710041	NIPPLE;GREASE	MAMELON	7					
21	S5102906	WASHER;SPRING	RONDELLE ELASTIQUE	2					
22	S0566766	BOLT	BOULON	4					
23	S0521366	BOLT	BOULON	2					
24	S4012933	NUT	ECROU	8					

DATE	JUN. 30, 2007
REV.NO.	EXB07-06

Fig. 6700 ARM PIPING - ARM 2.5m
CONDUITES DE BALANCIER

Serial No. ;

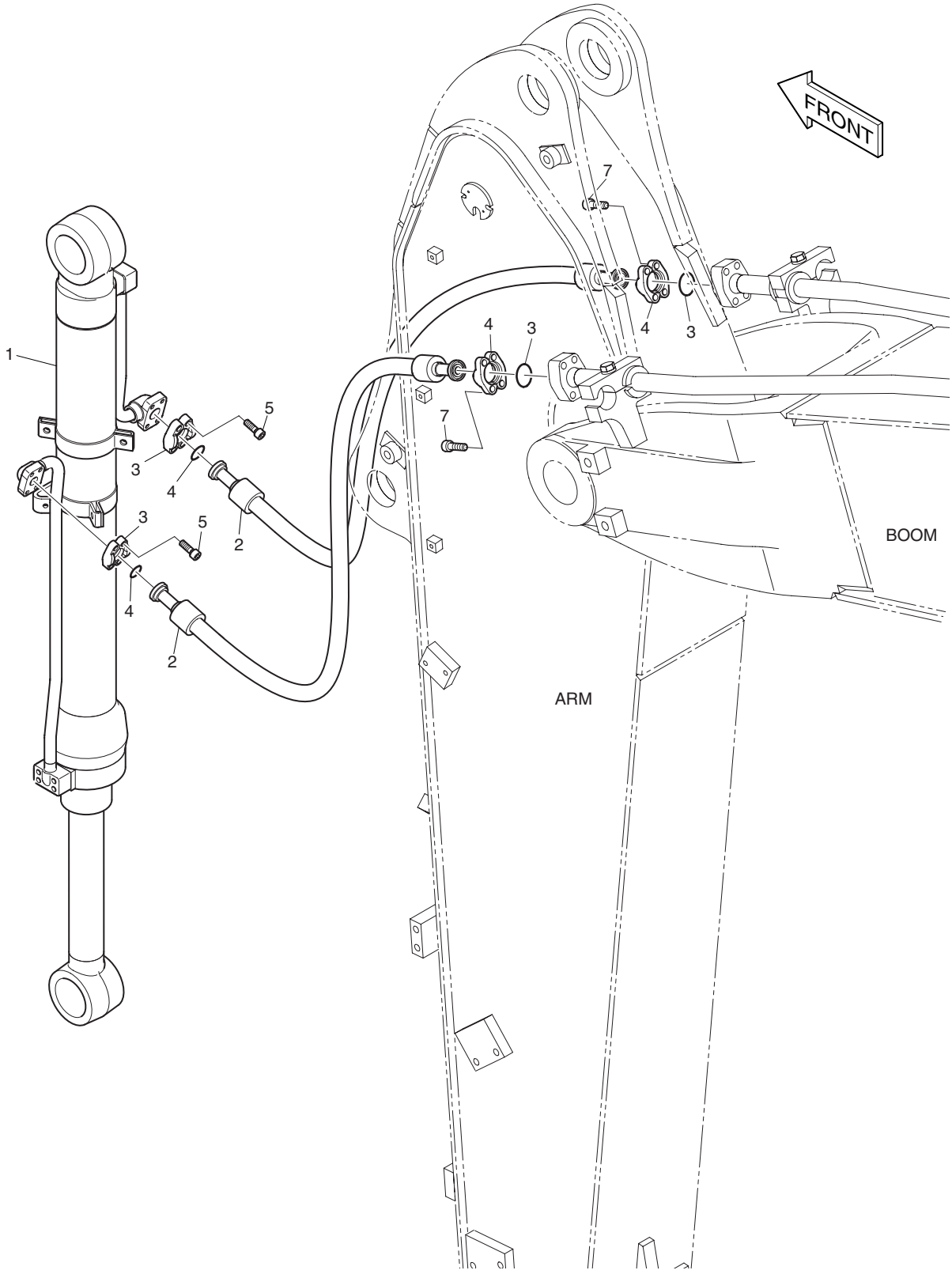

DATE	JUN. 30, 2007
REV. NO.	EXB07-06

Fig. 6700 ARM PIPING - ARM 2.5m
CONDUITES DE BALANCIER

Serial No. ;

Key No.	Part No.	Description	Description	Q'ty	S.C	Serial No.	ICA	Replaceable part	
								Part No.	Q'ty
6700--	**400-01345A**	**ARM PIPING**	CONDUITES DE BALANCIER	-	D				
1	440-00411A	CYLINDER;BUCKET	VERIN DE GODET	1		5001–5013	I	440-00411B	1
	440-00411B	**CYLINDER;BUCKET**	VERIN DE GODET	1		**5014–**			
2	DS2038120	HOSE	TUYAU FLEXIBLE	2					
3	2181-9079	FLANGE;SPLIT	BRIDE	8					
4	2180-1026D2	O-RING	JOINT TORIQUE	4					
5	S2212266	BOLT;SOCKET	BOULON A 6 PANS CREUX	8					
7	S2212366	BOLT;SOCKET	BOULON A 6 PANS CREUX	8					

DATE	JUN. 30, 2007
REV.NO.	EXB07-06

Fig. 6710 ARM PIPING - ONE & TWO WAY(ARM 2.5m)
CONDUITES DE BALANCIER

Serial No. ;

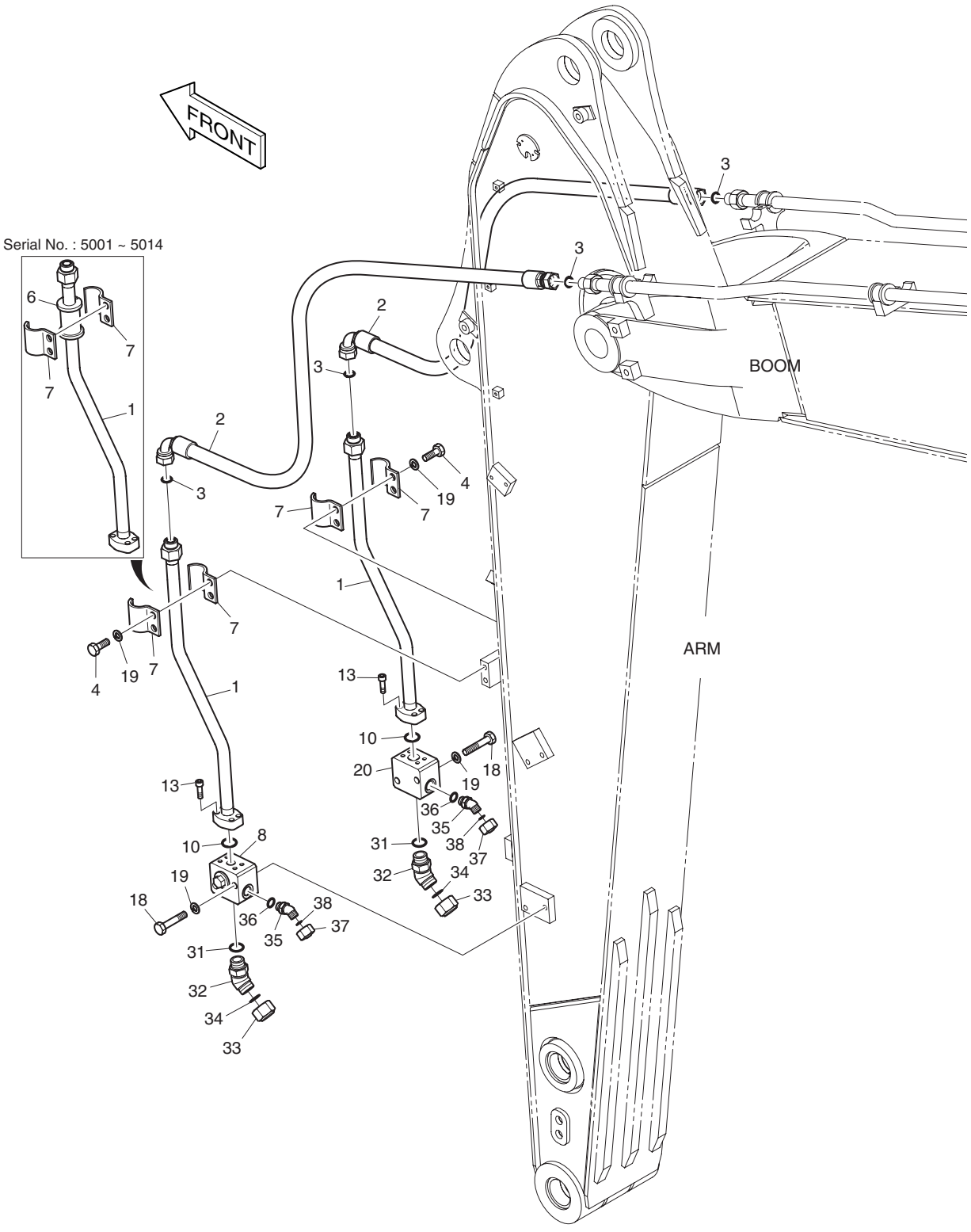

DATE	JUN. 30, 2007
REV. NO.	EXB07-06

Fig. 6710 ARM PIPING - ONE & TWO WAY(ARM 2.5m) CONDUITES DE BALANCIER

Serial No. ;

Key No.	Part No.	Description	Description	Q'ty	S.C	Serial No.	ICA	Replaceable part	
								Part No.	Q'ty
6710--	**400-01347B**	**ARM PIPING-ONE & TWO**	CONDUITES DE BALANCIER	-	D				
1	140-01615A	PIPE	TUYAU	2					
2	2184-1197D24	HOSE	TUYAU FLEXIBLE	2					
3	S8030121	O-RING	JOINT TORIQUE	4					
4	S0562766	BOLT	BOULON	4					
6	**161-00574**	**RUBBER**	CAOUTCHOUC	2		**5001–5014**			
7	124-00302	CLAMP;PIPE	COLLIER	4		5001–5014			
	124-00303	**CLAMP;PIPE**	COLLIER	4		**5015–**			
8	420-00511B	VALVE;STOP(L.H)	VANNE	1					
10	2180-1026D2	O-RING	JOINT TORIQUE	2					
13	S2212366	BOLT;SOCKET	BOULON A 6 PANS CREUX	8					
18	S0563466	BOLT	BOULON	4					
19	S5102803	WASHER;SPRING	RONDELLE ELASTIQUE	8					
20	420-00517B	VALVE;STOP(R.H)	VANNE	1					
31	S8000231	O-RING	JOINT TORIQUE	2					
32	2181-2816D1	ELBOW	COUDE	2					
33	2181-2817D1	CAP	CHAPEAU	2					
34	S8030121	O-RING	JOINT TORIQUE	2					
35	2181-2816D4	ELBOW	COUDE	2					
36	S8000181	O-RING	JOINT TORIQUE	2					
37	2181-2817D4	CAP	CHAPEAU	2					
38	S8030081	O-RING	JOINT TORIQUE	2					

DATE	JUN. 30, 2007
REV.NO.	EXB07-06

Fig. 6720 ARM PIPING - ARM 2.5m(CLAMSHELL)
CONDUITES DE BALANCIER

Serial No. ;

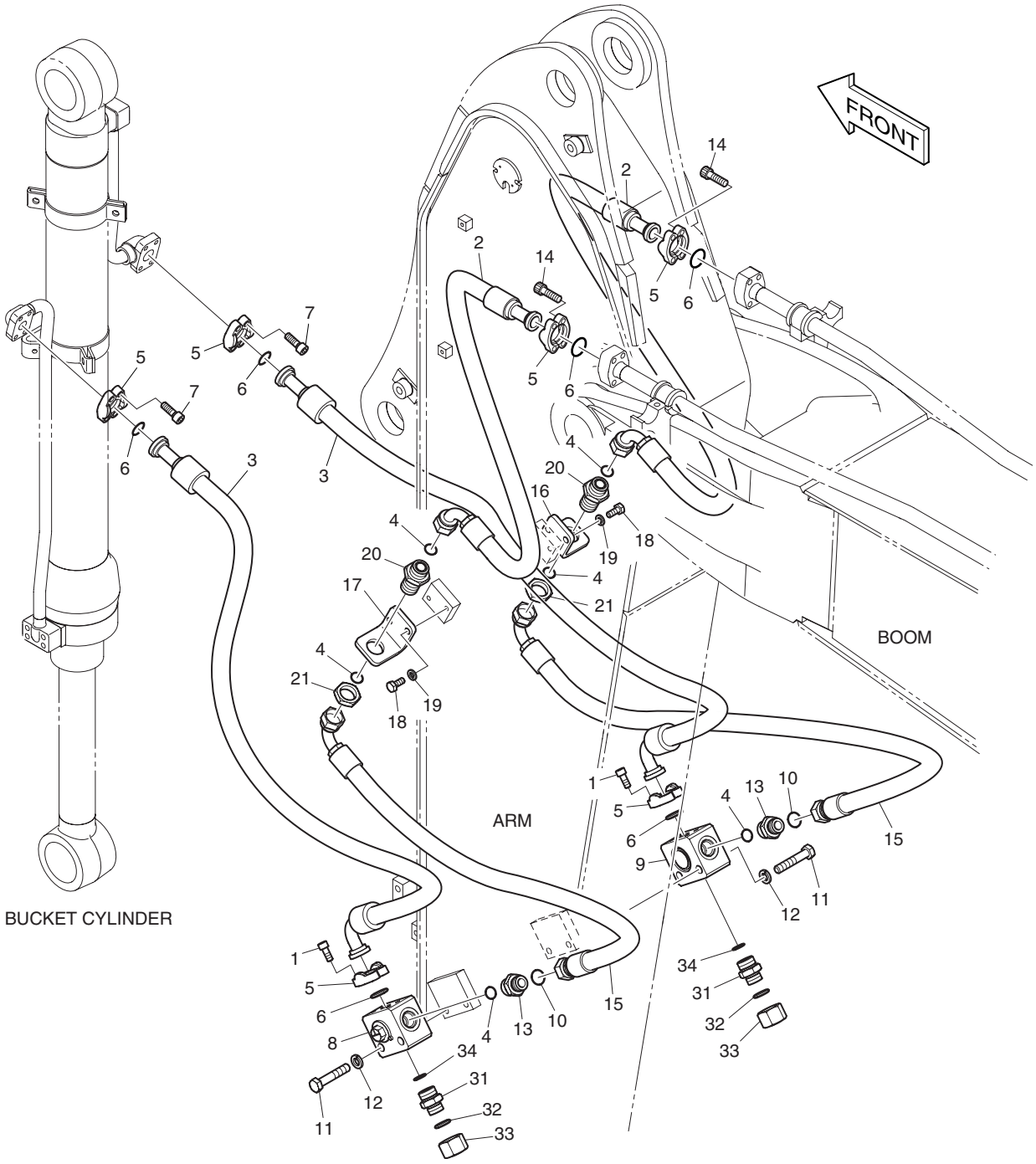

DATE	JUN. 30, 2007
REV. NO.	EXB07-06

Fig. 6720 ARM PIPING - ARM 2.5m(CLAMSHELL)
CONDUITES DE BALANCIER

Serial No. ;

Key No.	Part No.	Description	Description	Q'ty	S.C	Serial No.	ICA	Replaceable part	
								Part No.	Q'ty
6720--	K1017980B	CLAMSHELL PIPING(2.5M_ARM)	TUYAUTERIE DE BLOC	-	D				
1	S2212066	BOLT;SOCKET	BOULON A 6 PANS CREUX	8					
2	DS2025088	HOSE	TUYAU FLEXIBLE	2		5001–5011			
	DS2025098	**HOSE**	TUYAU FLEXIBLE	2		**5012–**			
3	DS2040451	HOSE	TUYAU FLEXIBLE	2					
4	S8030121	O-RING	JOINT TORIQUE	6					
5	2181-9079	FLANGE	BRIDE	12					
6	2180-1026D2	O-RING	JOINT TORIQUE	6					
7	S2212266	BOLT;SOCKET M10X1.5X30	BOULON A 6 PANS CREUX	8					
8	K1002939	VALVE;SWITCH(L.H)	VANNE	1					
9	K1002940	VALVE;SWITCH(R.H)	VANNE	1					
10	S8000231	O-RING	JOINT TORIQUE	2					
11	S0563466	BOLT	BOULON	4					
12	S5102803	WASHER;SPRING	RONDELLE ELASTIQUE	4					
13	2181-4133D5	ADAPTER	ADAPTEUR	2					
14	S2212366	BOLT;SOCKET M10X1.5X35	BOULON A 6 PANS CREUX	8					
15	DS2013893	HOSE	TUYAU FLEXIBLE	2		5001–5011			
	DS20131061	**HOSE**	TUYAU FLEXIBLE	2		**5012–**			
16	K1015093	BRACKET	SUPPORT	1					
17	K1014759	BRACKET	SUPPORT	1					
18	S0512066	BOLT	BOULON	4					
19	S5102603	WASHER;SPRING(M10)	RONDELLE ELASTIQUE	4					
20	DS2415007	ADAPTER	ADAPTEUR	2					
21	121-00010D8	NUT	ECROU	2					
31	2181-4133D5	ADAPTER	ADAPTEUR	2					
32	S8000231	O-RING	JOINT TORIQUE	2					
33	2181-2817D1	CAP	CHAPEAU	2					
34	S8030121	O-RING	JOINT TORIQUE	2					

DATE	DEC. 26, 2006
1st EDITION	

Fig. 6730 ARM PIPING - QUICK CLAMP(ARM 2.5m) CONDUITES DE BALANCIER

Serial No. ;

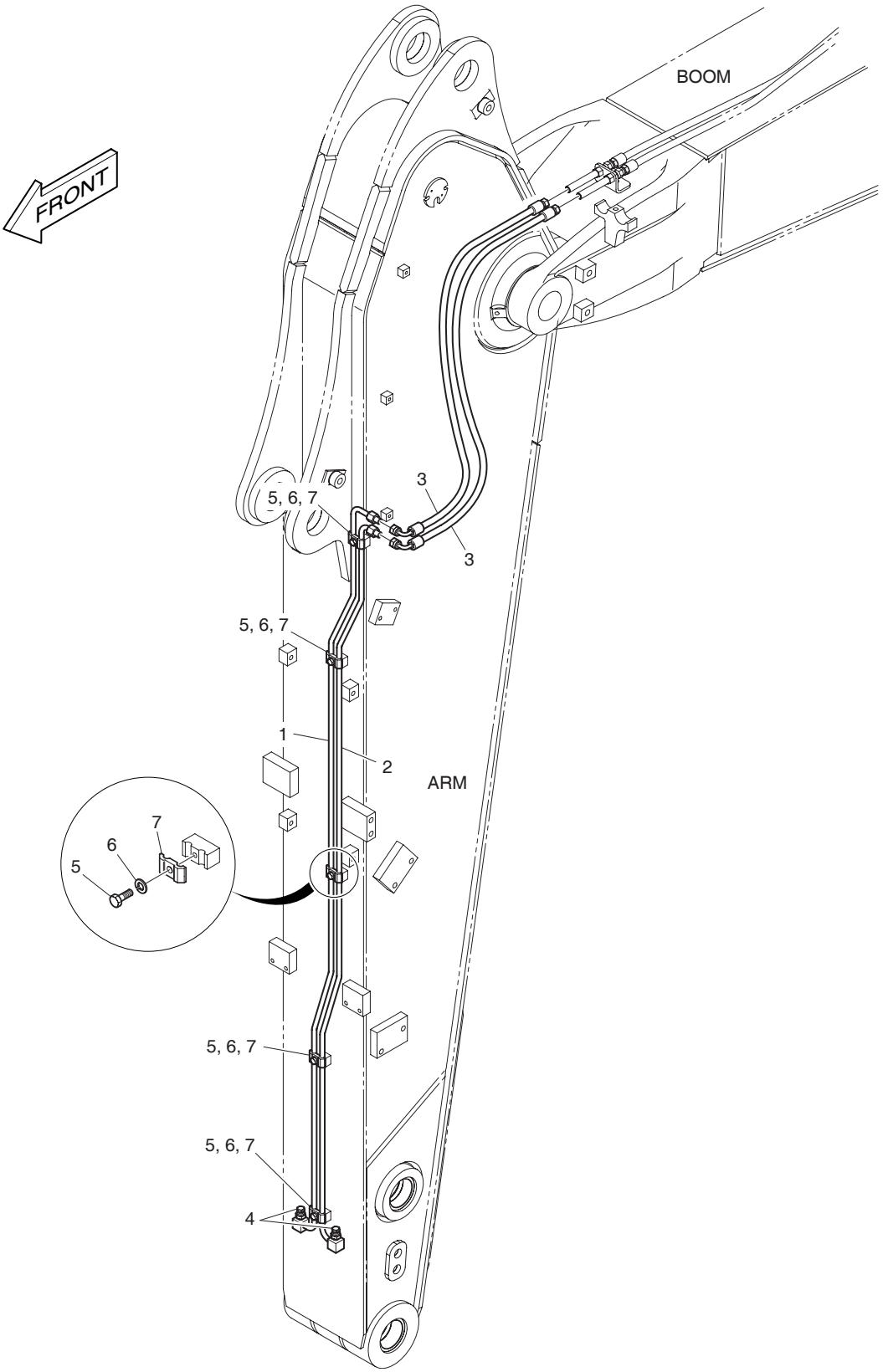

DATE	DEC. 26, 2006
1st EDITION	

Fig. 6730 ARM PIPING - QUICK CLAMP(ARM 2.5m)
CONDUITES DE BALANCIER

Serial No. ;

Key No.	Part No.	Description	Description	Q'ty	S.C	Serial No.	ICA	Replaceable part	
								Part No.	Q'ty
6730--	400-01393B	ARM PIPING-QUICK CLAMP	CONDUITES DE BALANCIER	-	D				
1	K1027308	PIPE	TUYAU	1					
2	K1027309	PIPE	TUYAU	1					
3	DS2055988	HOSE	TUYAU FLEXIBLE	2					
4	2181-2820D1	PLUG	BOUCHON	2					
5	S0508866	BOLT	BOULON	5					
6	S5102503	WASHER;SPRING	RONDELLE ELASTIQUE	5					
7	K1004011	CLAMP;PIPE	COLLIER	5					

DATE	DEC. 26, 2006
1st EDITION	

Fig. 6740 ARM PIPING - 2.5m(ROTATING) CONDUITES DE BALANCIER

Serial No. ;

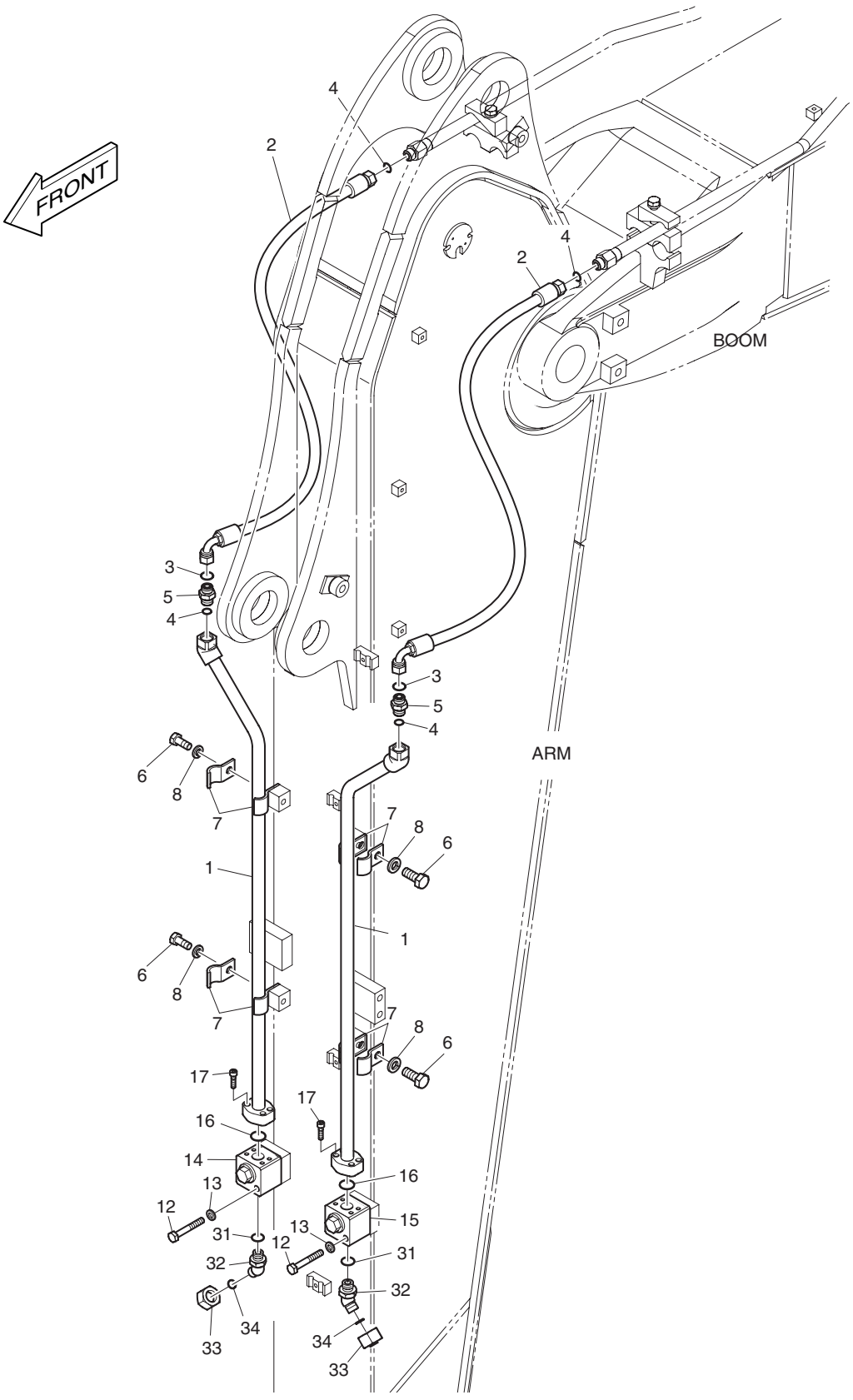

DATE	DEC. 26, 2006
1st EDITION	

Fig. 6740 ARM PIPING - 2.5m(ROTATING) CONDUITES DE BALANCIER

Serial No. ;

Key No.	Part No.	Description	Description	Q'ty	S.C	Serial No.	ICA	Replaceable part	
								Part No.	Q'ty
6740--	400-01367C	ARM PIPING;2.5m ARM	CONDUITES DE BALANCIER	-	D				
1	140-01555H	PIPE	TUYAU	2					
2	DS2013787	HOSE	TUYAU FLEXIBLE	2					
3	S8000181	O-RING	JOINT TORIQUE	4					
4	S8030081	O-RING	JOINT TORIQUE	2					
5	2181-4133D3	ADAPTER	ADAPTEUR	2					
6	S0515266	BOLT	BOULON	4					
7	124-00299A	CLAMP;PIPE	COLLIER	8					
8	S5102703	WASHER;SPRING(M12)	RONDELLE ELASTIQUE	4					
12	S0558966	BOLT	BOULON	4					
13	S5102603	WASHER;SPRING(M10)	RONDELLE ELASTIQUE	4					
14	K1006227	VALVE;SWITCH(R.H)	VANNE	1					
15	K1006228	VALVE;SWITCH(L.H)	VANNE	1					
16	2180-1026D30	O-RING	JOINT TORIQUE	2					
17	S2209266	BOLT;SOCKET	BOULON A 6 PANS CREUX	8					
31	S8000181	O-RING	JOINT TORIQUE	2					
32	2181-2816D4	ELBOW	COUDE	2					
33	2181-2817D4	CAP	CHAPEAU	2					
34	S8030081	O-RING	JOINT TORIQUE	2					

Fig. 6750 BUCKET - 0.24m³(460mm) GODET

Serial No. ;

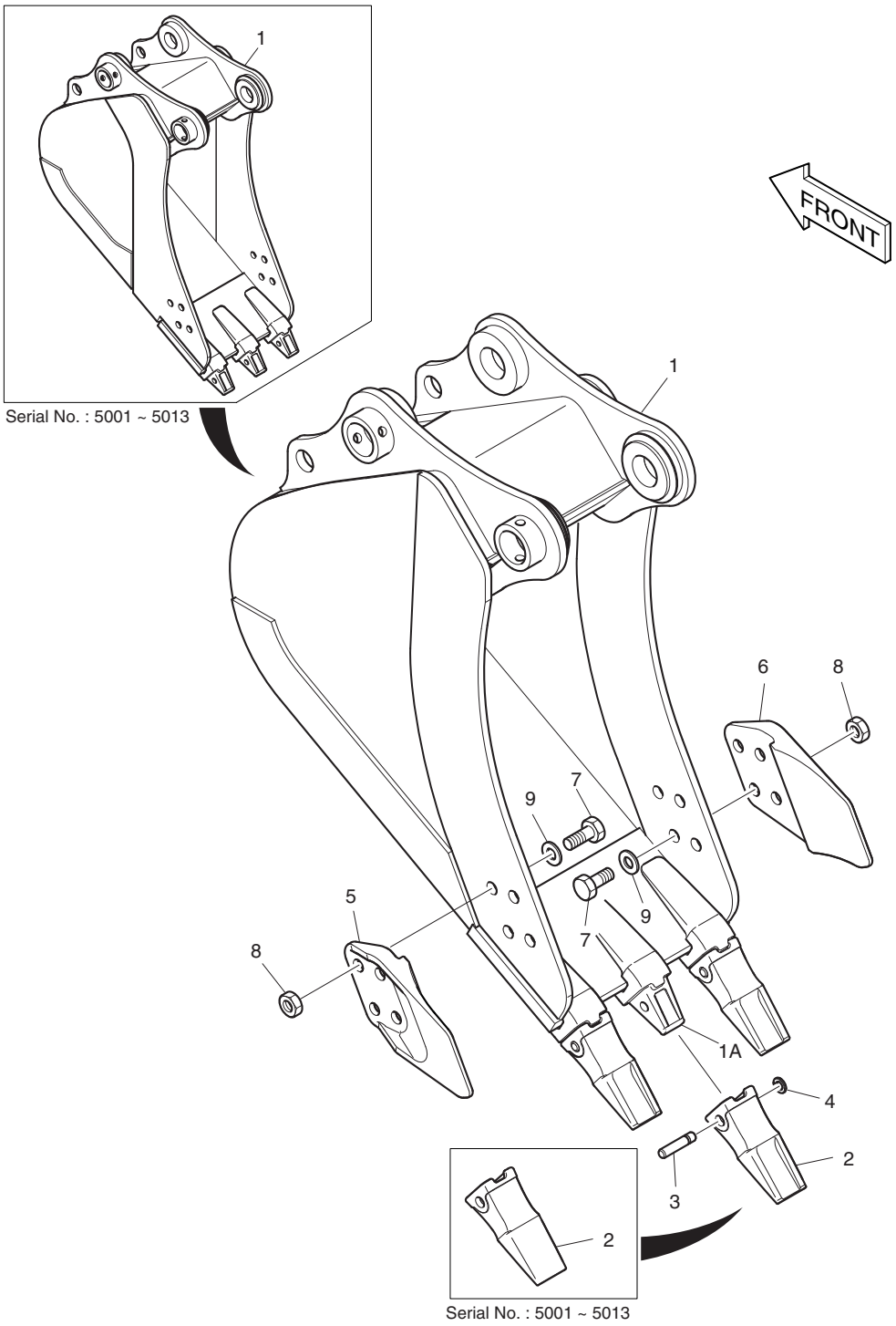

DATE	JUN. 30, 2007
REV. NO.	EXB07-06

Fig. 6750 BUCKET - 0.24㎥(460mm) GODET

Serial No. ;

Key No.	Part No.	Description	Description	Q'ty	S.C	Serial No.	ICA	Replaceable part	
								Part No.	Q'ty
6750--	K1007633A	BUCKET ASS'Y- 0.24㎥	GODET	1		5001–5012	I	K1007633B	1
	K1007633B	**BUCKET ASS'Y- 0.24㎥**	GODET	1		**5013–5013**	I	K1007633C	1
	K1007633C	**BUCKET ASS'Y- 0.24㎥**	GODET	1		**5014–**			
1	K1007634A	BUCKET - 0.24㎥	GODET	1		5001–5012	I	K1007634B	1
	K1007634B	**BUCKET - 0.24㎥**	GODET	1		**5013–5013**	I	K1007634C	1
	K1007634C	**BUCKET - 0.24㎥**	GODET	1		**5014–**			
1A	2713-1222A	. ADAPTER;TOOTH	. DENT DE ADAPTEUR	3					
2	713-00057A	POINT;TOOTH	DENT	3		5001–5013			
	713-00057B	**POINT;TOOTH**	DENT	3		**5014–**			
3	2705-1022	PIN;LOCKING	GOUPILLE	3					
4	2114-1859	WASHER;LOCKING	RONDELLE	3					
5	2713-1229A	CUTTER;SIDE(L.H)	COIN DE GODET DROIT	1					
6	2713-1228A	CUTTER;SIDE(R.H)	COIN DE GODET DROIT	1					
7	S0574561	BOLT	BOULON	8					
8	S4013333	NUT	ECROU	8					
9	2114-1831A	WASHER;HARDEN	RONDELLE	8					

DATE	JUN. 30, 2007
REV.NO.	EXB07-06

Fig. 6760 BUCKET - 0.39m³ GODET

Serial No. ;

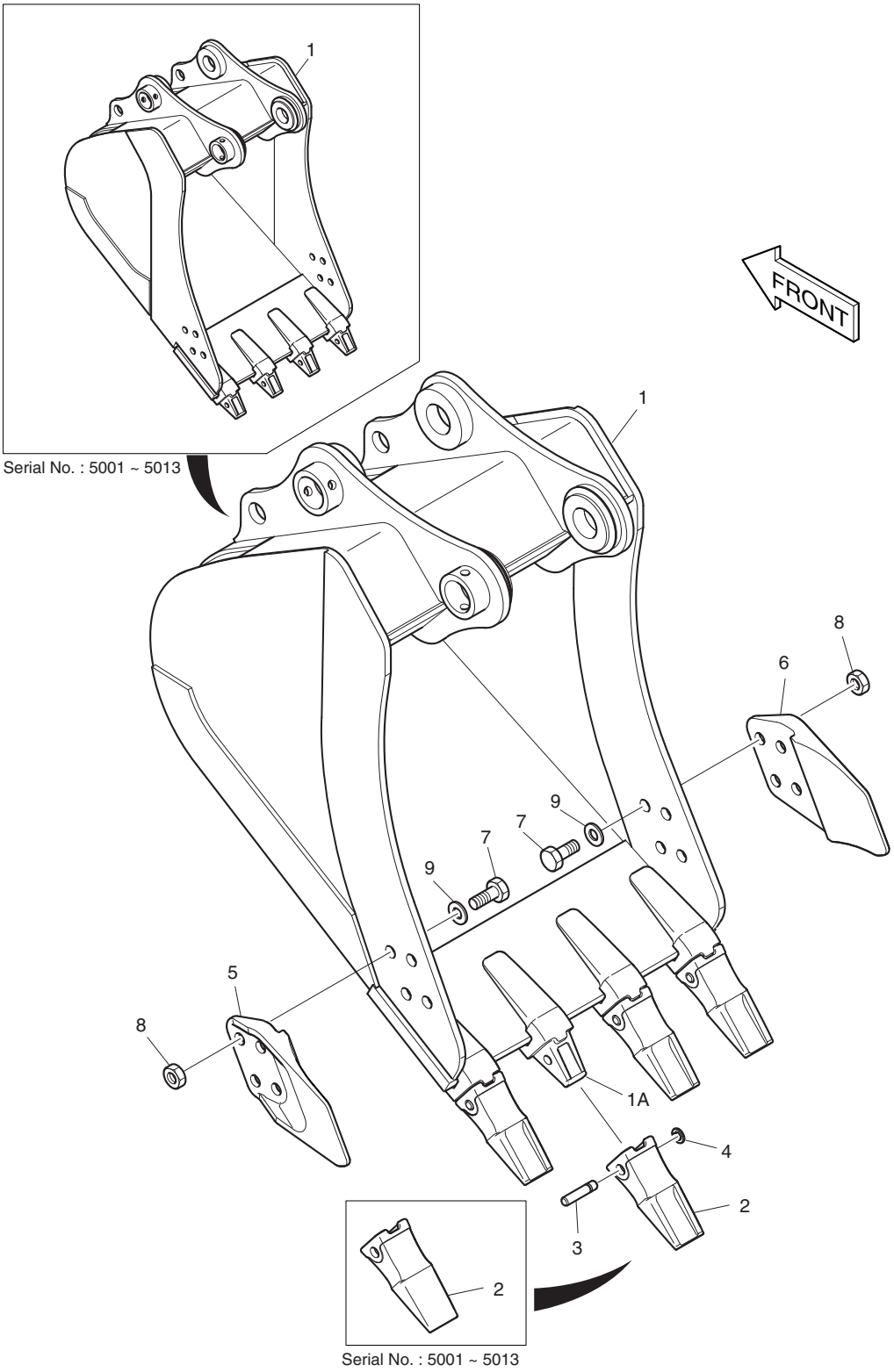

DATE	JUN. 30, 2007
REV. NO.	EXB07-06

Fig. 6760 BUCKET - 0.39㎥ GODET

Serial No. ;

Key No.	Part No.	Description	Description	Q'ty	S.C	Serial No.	ICA	Replaceable part	
								Part No.	Q'ty
6760--	K1007635A	BUCKET ASS'Y- 0.39㎥	GODET	1		5001–5012	I	K1007635B	1
	K1007635B	**BUCKET ASS'Y- 0.39㎥**	GODET	1		**5013–5013**	I	K1007635C	1
	K1007635C	**BUCKET ASS'Y- 0.39㎥**	GODET	1		**5014–**			
1	K1007636A	BUCKET - 0.39㎥	GODET	1		5001–5012	I	K1007636B	1
	K1007636B	**BUCKET - 0.39㎥**	GODET	1		**5013–5013**	I	K1007636C	1
	K1007636C	**BUCKET - 0.39㎥**	GODET	1		**5014–**			
1A	2713-1222A	. ADAPTER;TOOTH	. DENT DE ADAPTEUR	4					
2	713-00057A	POINT;TOOTH	DENT	4		5001–5013			
	713-00057B	**POINT;TOOTH**	DENT	4		**5014–**			
3	2705-1022	PIN;LOCKING	GOUPILLE	4					
4	2114-1859	WASHER;LOCKING	RONDELLE	4					
5	2713-1229A	CUTTER;SIDE(L.H)	COIN DE GODET DROIT	1					
6	2713-1228A	CUTTER;SIDE(R.H)	COIN DE GODET DROIT	1					
7	S0574561	BOLT	BOULON	8					
8	S4013333	NUT	ECROU	8					
9	2114-1831A	WASHER;HARDEN	RONDELLE	8					

DATE	JUN. 30, 2007
REV.NO.	EXB07-06

Fig. 6770 BUCKET - 0.45m³ GODET

Serial No. ;

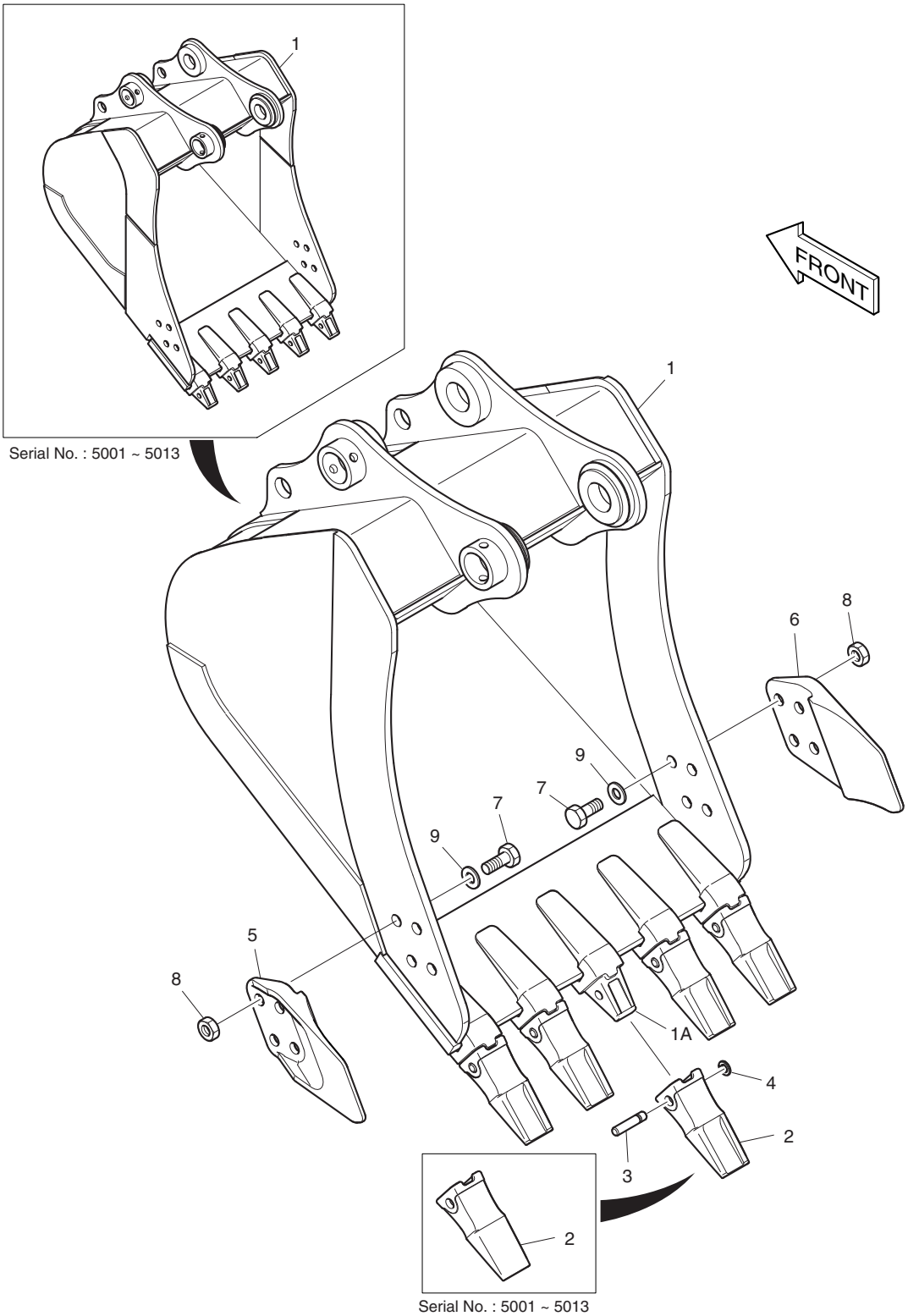

DATE	JUN. 30, 2007
REV. NO.	EXB07-06

Fig. 6770 BUCKET - 0.45㎥ GODET

Serial No. ;

Key No.	Part No.	Description	Description	Q'ty	S.C	Serial No.	ICA	Replaceable part	
								Part No.	Q'ty
6770--	704-00289B	BUCKET ASS'Y- 0.45㎥	GODET	1		5001–5012	I	704-00289C	1
	704-00289C	**BUCKET ASS'Y- 0.45㎥**	GODET	1		**5013–5013**	I	704-00289E	1
	704-00289E	**BUCKET ASS'Y- 0.45㎥**	GODET	1		**5014–**			
1	704-00290B	BUCKET - 0.45㎥	GODET	1		5001–5012	I	704-00290C	1
	704-00290C	**BUCKET - 0.45㎥**	GODET	1		**5013–5013**	I	704-00290E	1
	704-00290E	**BUCKET - 0.45㎥**	GODET	1		**5014–**			
1A	2713-1222A	. ADAPTER;TOOTH	. DENT DE ADAPTEUR	5					
2	713-00057A	POINT;TOOTH	DENT	5		5001–5013			
	713-00057B	**POINT;TOOTH**	DENT	5		**5014–**			
3	2705-1022	PIN;LOCKING	GOUPILLE	5					
4	2114-1859	WASHER;LOCKING	RONDELLE	5					
5	2713-1229A	CUTTER;SIDE(L.H)	COIN DE GODET DROIT	1					
6	2713-1228A	CUTTER;SIDE(R.H)	COIN DE GODET DROIT	1					
7	S0574561	BOLT	BOULON	8					
8	S4013333	NUT	ECROU	8					
9	2114-1831A	WASHER;HARDEN	RONDELLE	8					

Fig. 6780 BUCKET - 0.51m³ GODET

Serial No. ;

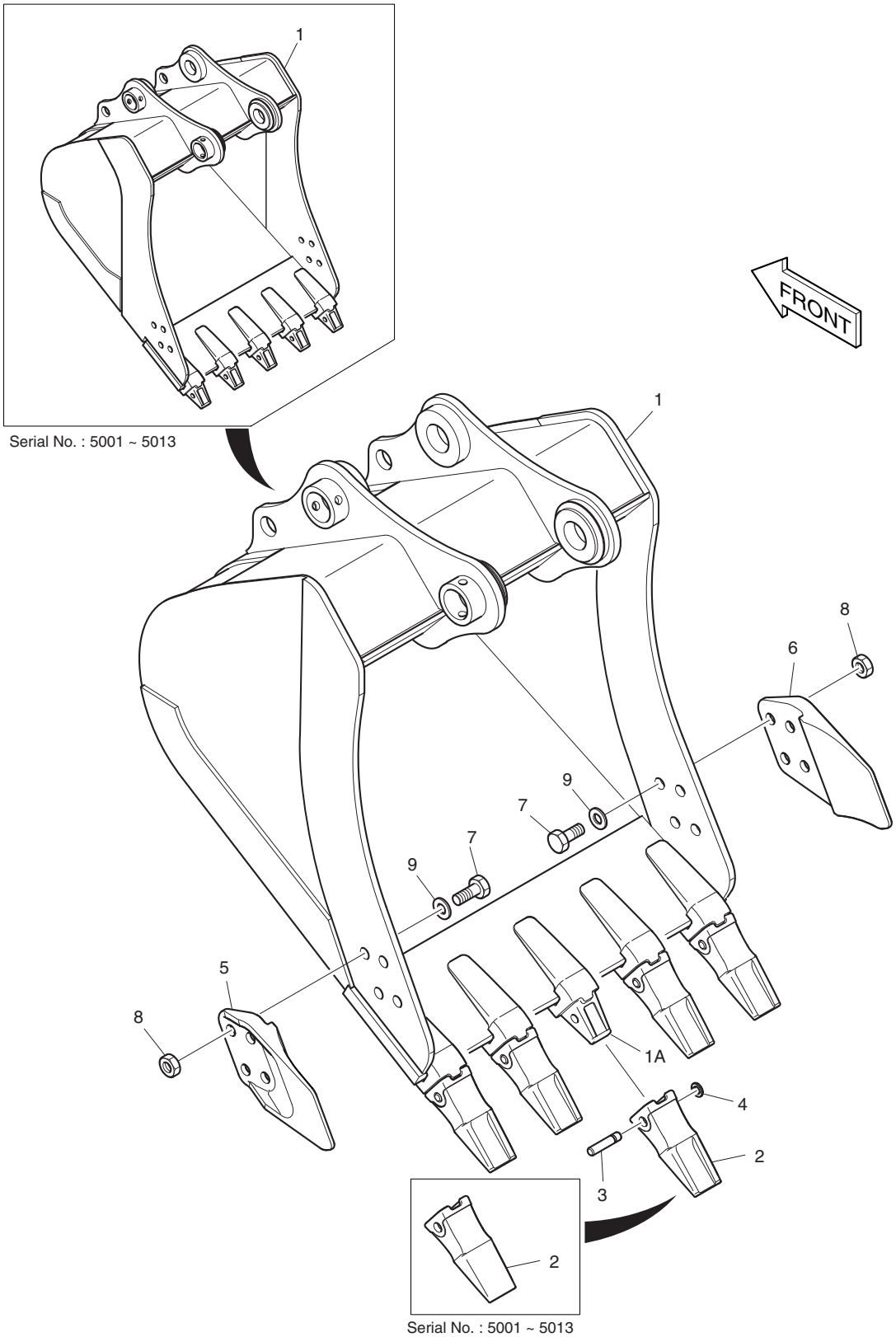

DATE	JUN. 30, 2007
REV. NO.	EXB07-06

Fig. 6780 BUCKET - 0.51㎥ GODET

Serial No. ;

Key No.	Part No.	Description	Description	Q'ty	S.C	Serial No.	ICA	Replaceable part	
								Part No.	Q'ty
6780--	K1007637A	BUCKET ASS'Y- 0.51㎥	GODET	1		5001–5012	I	K1007637B	1
	K1007637B	**BUCKET ASS'Y- 0.51㎥**	GODET	1		**5013–5013**	I	K1007637C	1
	K1007637C	**BUCKET ASS'Y- 0.51㎥**	GODET	1		**5014–**			
1	K1007638A	BUCKET - 0.51㎥	GODET	1		5001–5012	I	K1007638B	1
	K1007638B	**BUCKET - 0.51㎥**	GODET	1		**5013–5013**	I	K1007638C	1
	K1007638C	**BUCKET - 0.51㎥**	GODET	1		**5014–**			
1A	2713-1222A	. ADAPTER;TOOTH	. DENT DE ADAPTEUR	5					
2	713-00057A	POINT;TOOTH	DENT	5		5001–5013			
	713-00057B	**POINT;TOOTH**	DENT	5		**5014–**			
3	2705-1022	PIN;LOCKING	GOUPILLE	5					
4	2114-1859	WASHER;LOCKING	RONDELLE	5					
5	2713-1229A	CUTTER;SIDE(L.H)	COIN DE GODET DROIT	1					
6	2713-1228A	CUTTER;SIDE(R.H)	COIN DE GODET DROIT	1					
7	S0574561	BOLT	BOULON	8					
8	S4013333	NUT	ECROU	8					
9	2114-1831A	WASHER;HARDEN	RONDELLE	8					

DATE	JUN. 30, 2007
REV.NO.	EXB07-06

Fig. 6790 BUCKET - 0.64m³ GODET

Serial No. ;

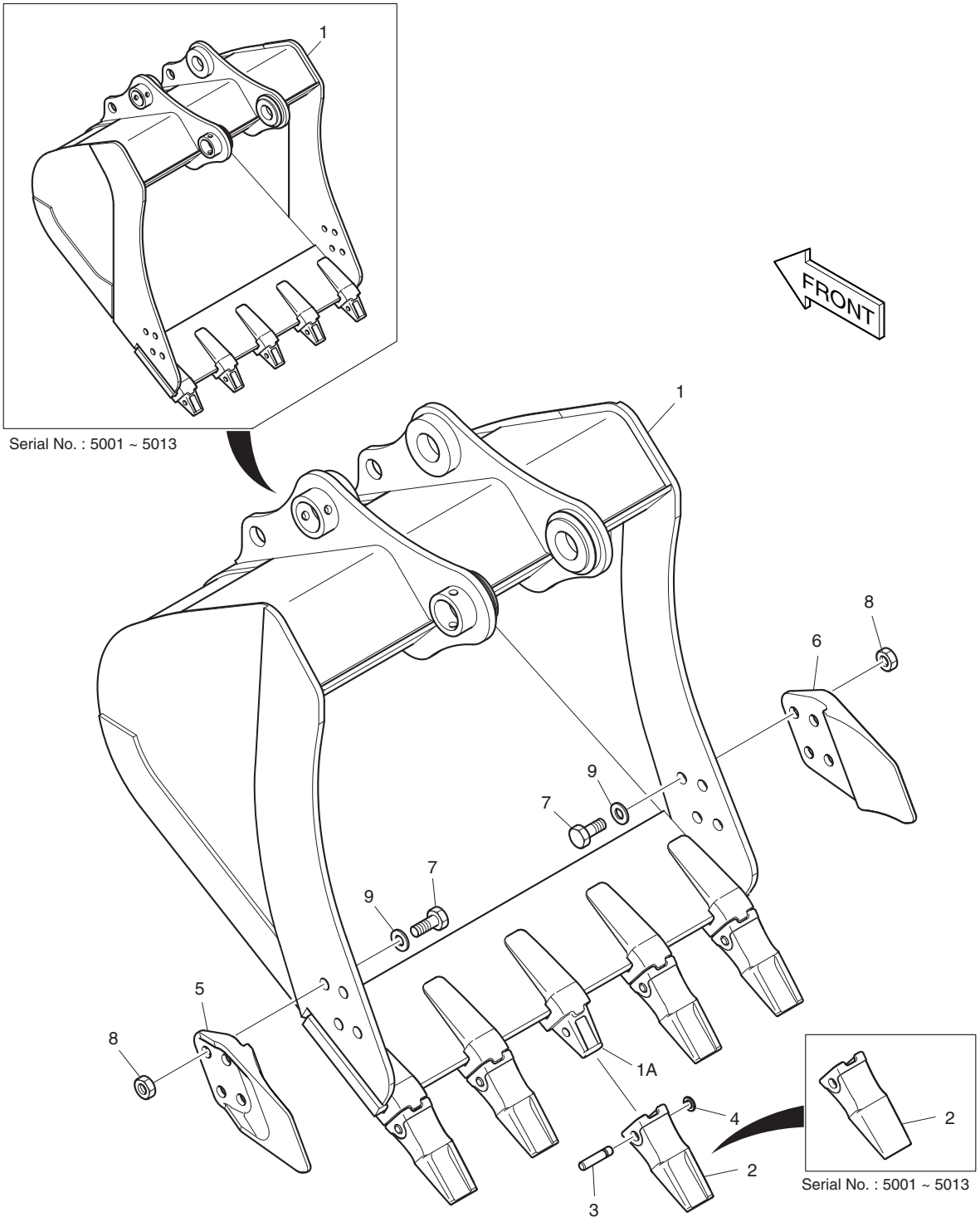

DATE	JUN. 30, 2007
REV. NO.	EXB07-06

Fig. 6790 BUCKET - 0.64㎥ GODET

Serial No. ;

Key No.	Part No.	Description	Description	Q'ty	S.C	Serial No.	ICA	Replaceable part	
								Part No.	Q'ty
6790--	K1007639A	BUCKET ASS'Y- 0.64㎥	GODET	1		5001–5012	I	K1007639B	1
	K1007639B	**BUCKET ASS'Y- 0.64㎥**	GODET	1		**5013–5013**	I	K1007639C	1
	K1007639C	**BUCKET ASS'Y- 0.64㎥**	GODET	1		**5014–**			
1	K1007640A	BUCKET - 0.64㎥	GODET	1		5001–5012	I	K1007640B	1
	K1007640B	**BUCKET - 0.64㎥**	GODET	1		**5013–5013**	I	K1007640C	1
	K1007640C	**BUCKET - 0.64㎥**	GODET	1		**5014–**			
1A	2713-1222A	. ADAPTER;TOOTH	. DENT DE ADAPTEUR	5					
2	713-00057A	POINT;TOOTH	DENT	5		5001–5013			
	713-00057B	**POINT;TOOTH**	DENT	5		**5014–**			
3	2705-1022	PIN;LOCKING	GOUPILLE	5					
4	2114-1859	WASHER;LOCKING	RONDELLE	5					
5	2713-1229A	CUTTER;SIDE(L.H)	COIN DE GODET DROIT	1					
6	2713-1228A	CUTTER;SIDE(R.H)	COIN DE GODET DROIT	1					
7	S0574561	BOLT	BOULON	8					
8	S4013333	NUT	ECROU	8					
9	2114-1831A	WASHER;HARDEN	RONDELLE	8					

DATE	JUN. 30, 2007
REV.NO.	EXB07-06

Fig. 6800 BUCKET - 0.76m³ GODET

Serial No. ;

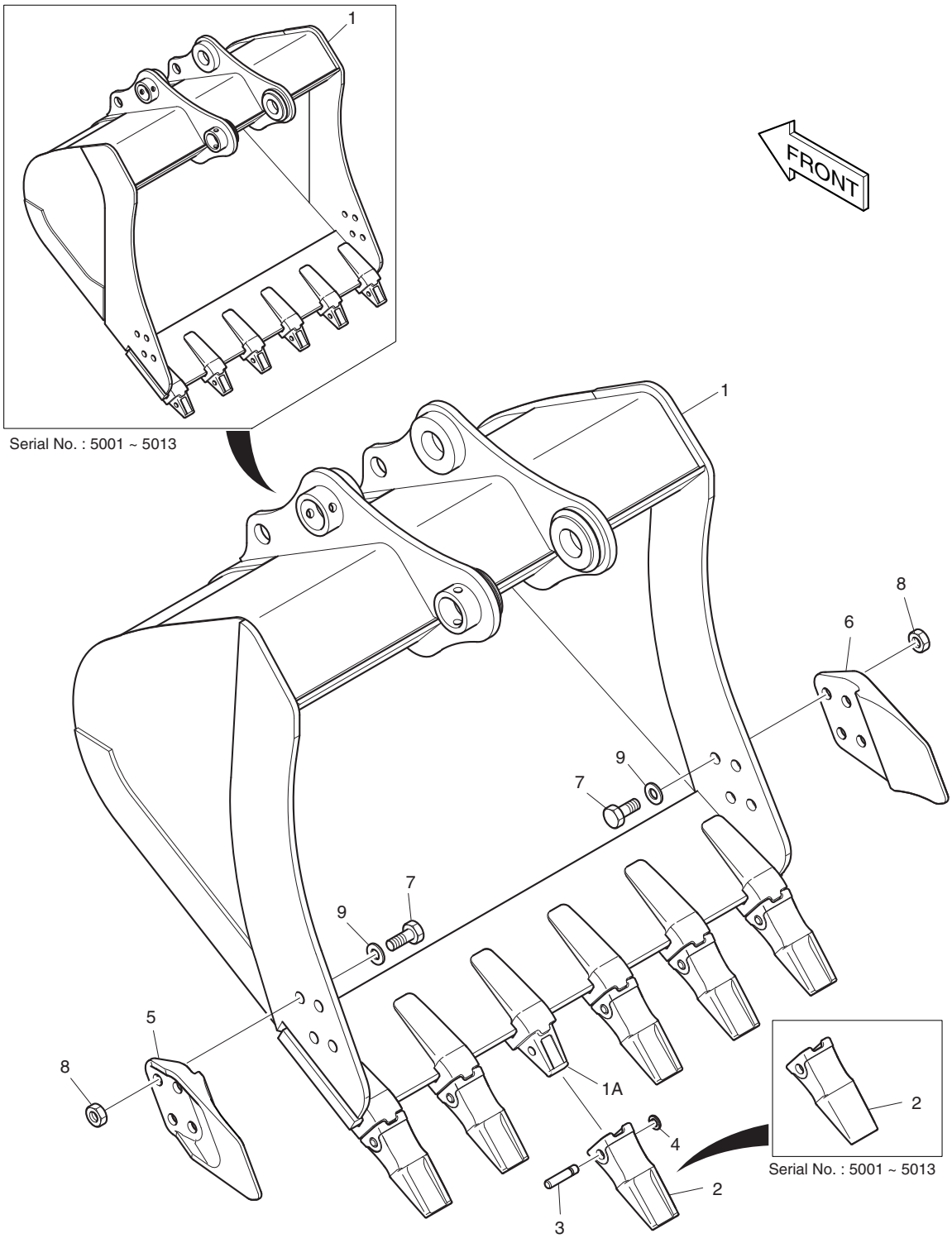

DATE	JUN. 30, 2007
REV. NO.	EXB07-06

Fig. 6800 BUCKET - 0.76㎥ GODET

Serial No. ;

Key No.	Part No.	Description	Description	Q'ty	S.C	Serial No.	ICA	Replaceable part	
								Part No.	Q'ty
6800--	K1007641A	BUCKET ASS'Y- 0.76㎥	GODET	1		5001–5012	I	K1007641B	1
	K1007641B	**BUCKET ASS'Y- 0.76㎥**	GODET	1		**5013–5013**	I	K1007641C	1
	K1007641C	**BUCKET ASS'Y- 0.76㎥**	GODET	1		**5014–**			
1	K1007642A	BUCKET - 0.76㎥	GODET	1		5001–5012	I	K1007642B	1
	K1007642B	**BUCKET - 0.76㎥**	GODET	1		**5013–5013**	I	K1007642C	1
	K1007642C	**BUCKET - 0.76㎥**	GODET	1		**5014–**			
1A	2713-1222A	. ADAPTER;TOOTH	. DENT DE ADAPTEUR	6					
2	713-00057A	POINT;TOOTH	DENT	6		5001–5013			
	713-00057B	**POINT;TOOTH**	DENT	6		**5014–**			
3	2705-1022	PIN;LOCKING	GOUPILLE	6					
4	2114-1859	WASHER;LOCKING	RONDELLE	6					
5	2713-1229A	CUTTER;SIDE(L.H)	COIN DE GODET DROIT	1					
6	2713-1228A	CUTTER;SIDE(R.H)	COIN DE GODET DROIT	1					
7	S0574561	BOLT	BOULON	8					
8	S4013333	NUT	ECROU	8					
9	2114-1831A	WASHER;HARDEN	RONDELLE	8					

DATE	DEC. 26, 2006
1st EDITION	

Fig. 6810 BUCKET ASS'Y - 0.38m³ (30") - SIDE PIN
ENSEMBLE DE GODET

Serial No. ;

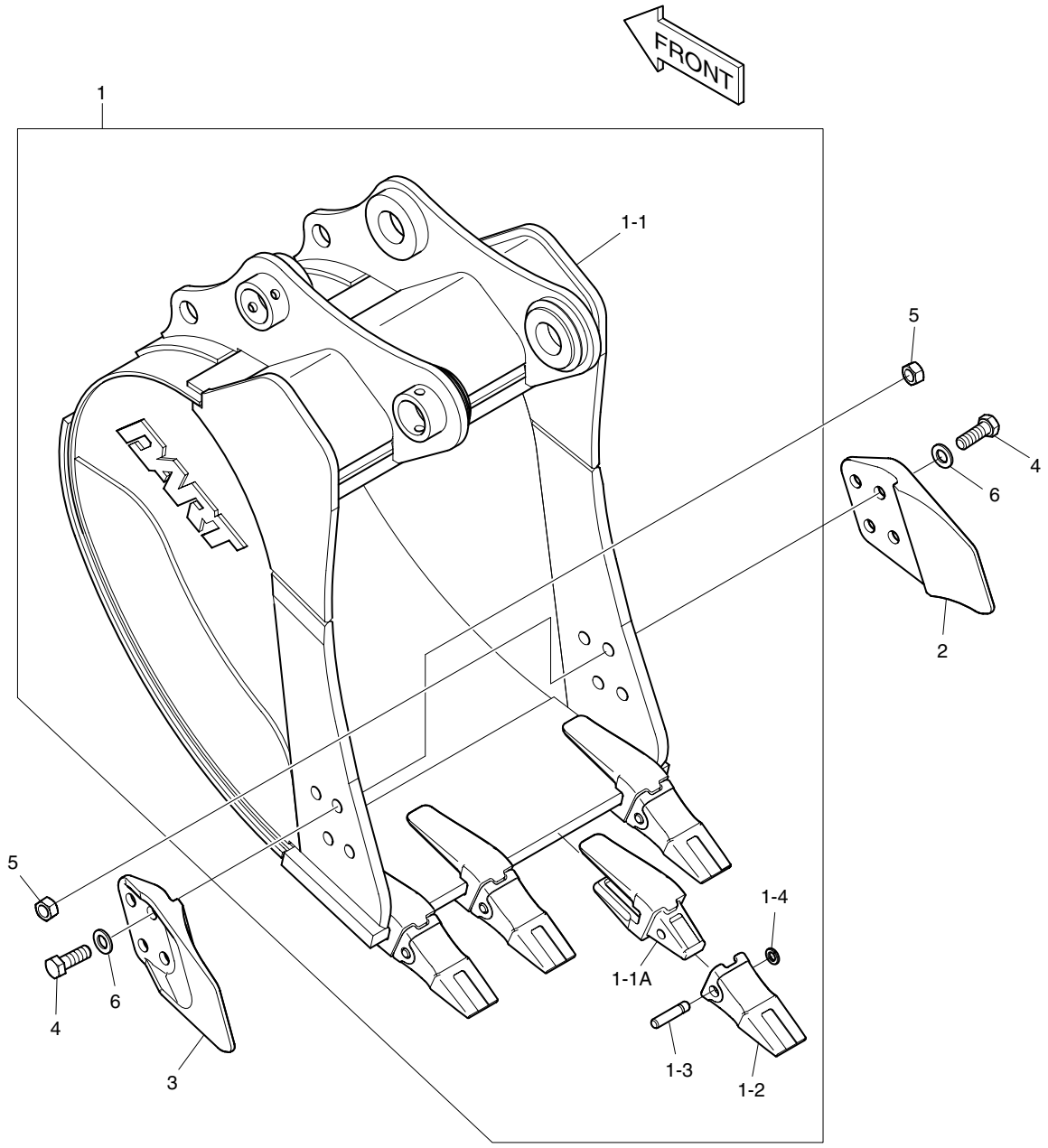

DATE	DEC. 26, 2006
1st EDITION	

Fig. 6810 BUCKET ASS'Y - 0.38㎥ (30") - SIDE PIN
ENSEMBLE DE GODET

Serial No. ;

Key No.	Part No.	Description	Description	Q'ty	S.C	Serial No.	ICA	Replaceable part	
								Part No.	Q'ty
6810--	K1013144	BUCKET ASS'Y-0.38㎥	GODET	1					
1	K1013145	BUCKET ASS'Y	ENSEMBLE GODET	1	D				
1-1	K1013146	. BUCKET;WELD	. GODET	1					
1-1A	2713-1222A	.. ADAPTER;TOOTH	.. DENT DE ADAPTEUR	4					
1-2	713-00022	. POINT;TOOTH	. DENT	4					
1-3	2705-1022	. PIN;LOCKING	. GOUPILLE	4					
1-4	2114-1859	. WASHER;LOCKING	. RONDELLE	4					
2	2713-1228A	CUTTER;SIDE(R.H)	COIN DE GODET DROIT	1					
3	2713-1229A	CUTTER;SIDE(L.H)	COIN DE GODET DROIT	1					
4	S0574761	BOLT	BOULON	8					
5	S4013333	NUT	ECROU	8					
6	2114-1831A	WASHER;HARD	RONDELLE	8					

DATE	DEC. 26, 2006
1st EDITION	

Fig. 6820 BUCKET ASS'Y - 0.44m³ (33") - SIDE PIN ENSEMBLE DE GODET

Serial No. ;

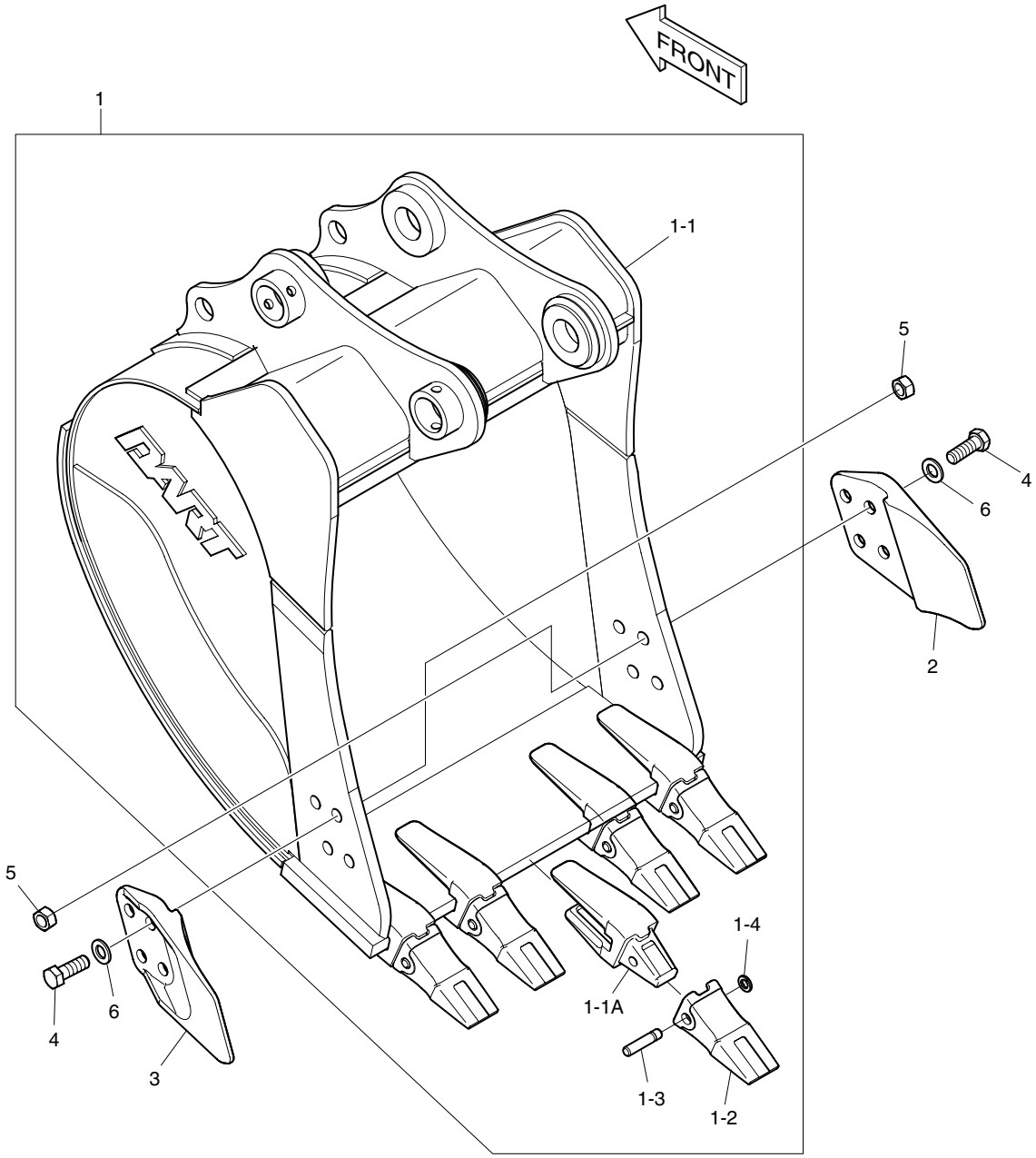

DATE	DEC. 26, 2006
1st EDITION	

Fig. 6820 BUCKET ASS'Y - 0.44㎥ (33") - SIDE PIN
ENSEMBLE DE GODET

Serial No. ;

Key No.	Part No.	Description	Description	Q'ty	S.C	Serial No.	ICA	Replaceable part	
								Part No.	Q'ty
6820--	K1013147	BUCKET ASS'Y-0.44㎥	GODET	1					
1	K1013148	BUCKET ASS'Y	ENSEMBLE GODET	1	D				
1-1	K1013151	. BUCKET;WELD	. GODET	1					
1-1A	2713-1222A	.. ADAPTER;TOOTH	.. DENT DE ADAPTEUR	5					
1-2	713-00022	. POINT;TOOTH	. DENT	5					
1-3	2705-1022	. PIN;LOCKING	. GOUPILLE	5					
1-4	2114-1859	. WASHER;LOCKING	. RONDELLE	5					
2	2713-1228A	CUTTER;SIDE(R.H)	COIN DE GODET DROIT	1					
3	2713-1229A	CUTTER;SIDE(L.H)	COIN DE GODET DROIT	1					
4	S0574761	BOLT	BOULON	8					
5	S4013333	NUT	ECROU	8					
6	2114-1831A	WASHER;HARD	RONDELLE	8					

DATE	DEC. 26, 2006
1st EDITION	

Fig. 6830 BUCKET ASS'Y - 0.48m³ (36") - SIDE PIN
ENSEMBLE DE GODET

Serial No. ;

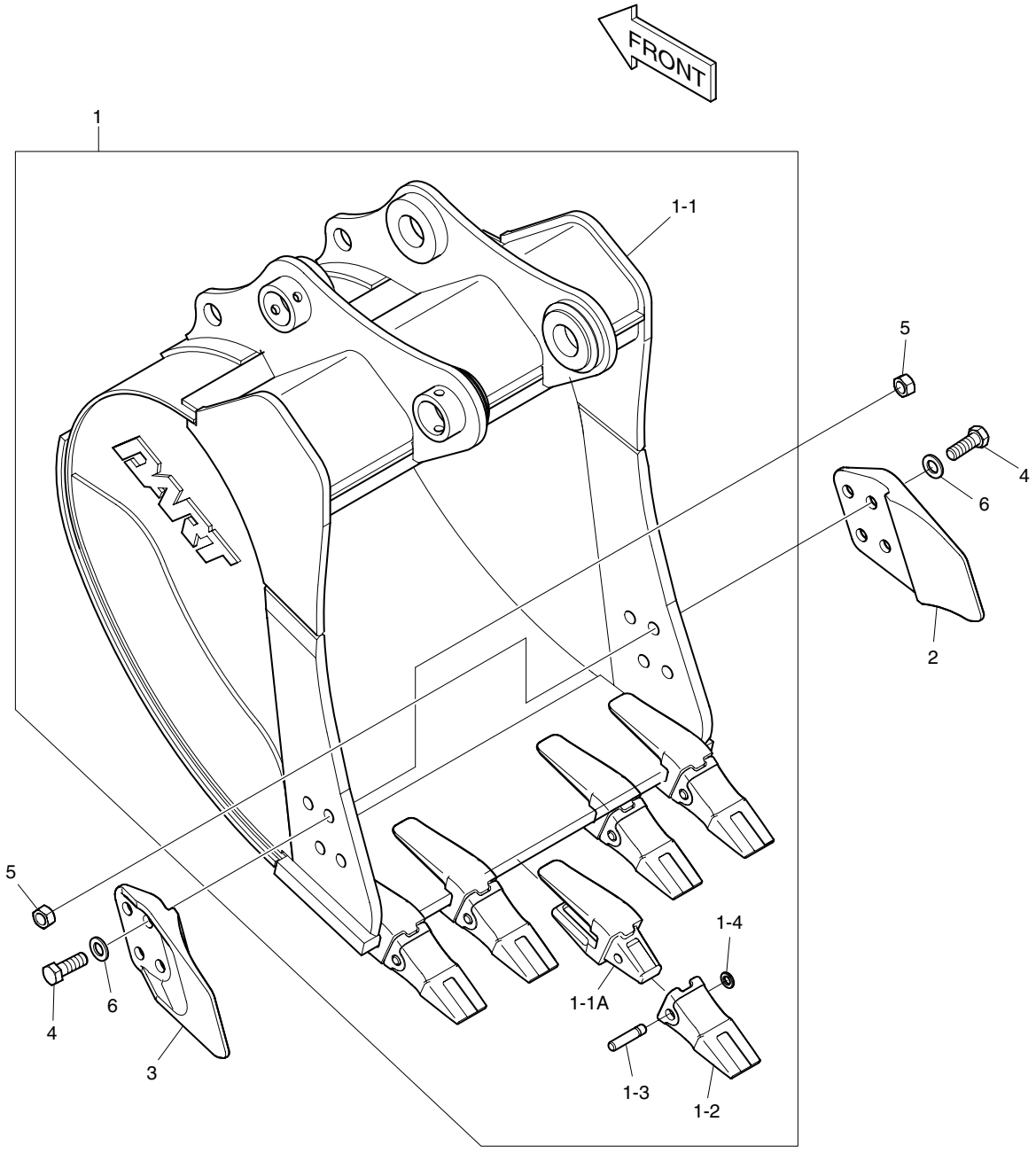

DATE	DEC. 26, 2006
1st EDITION	

Fig. 6830 BUCKET ASS'Y - 0.48㎥ (36") - SIDE PIN
ENSEMBLE DE GODET

Serial No. ;

Key No.	Part No.	Description	Description	Q'ty	S.C	Serial No.	ICA	Replaceable part	
								Part No.	Q'ty
6830--	K1013152	BUCKET ASS'Y-0.48㎥	GODET	1					
1	K1013153	BUCKET ASS'Y	ENSEMBLE GODET	1	D				
1-1	K1013154	. BUCKET;WELD	. GODET	1					
1-1A	2713-1222A	.. ADAPTER;TOOTH	.. DENT DE ADAPTEUR	5					
1-2	713-00022	. POINT;TOOTH	. DENT	5					
1-3	2705-1022	. PIN;LOCKING	. GOUPILLE	5					
1-4	2114-1859	. WASHER;LOCKING	. RONDELLE	5					
2	2713-1228A	CUTTER;SIDE(R.H)	COIN DE GODET DROIT	1					
3	2713-1229A	CUTTER;SIDE(L.H)	COIN DE GODET DROIT	1					
4	S0574761	BOLT	BOULON	8					
5	S4013333	NUT	ECROU	8					
6	2114-1831A	WASHER;HARD	RONDELLE	8					

DATE	DEC. 26, 2006
1st EDITION	

Fig. 6840 PILOT PIPING - FRONT ATTACH
CONDUITES DE PILOTE

Serial No. ;

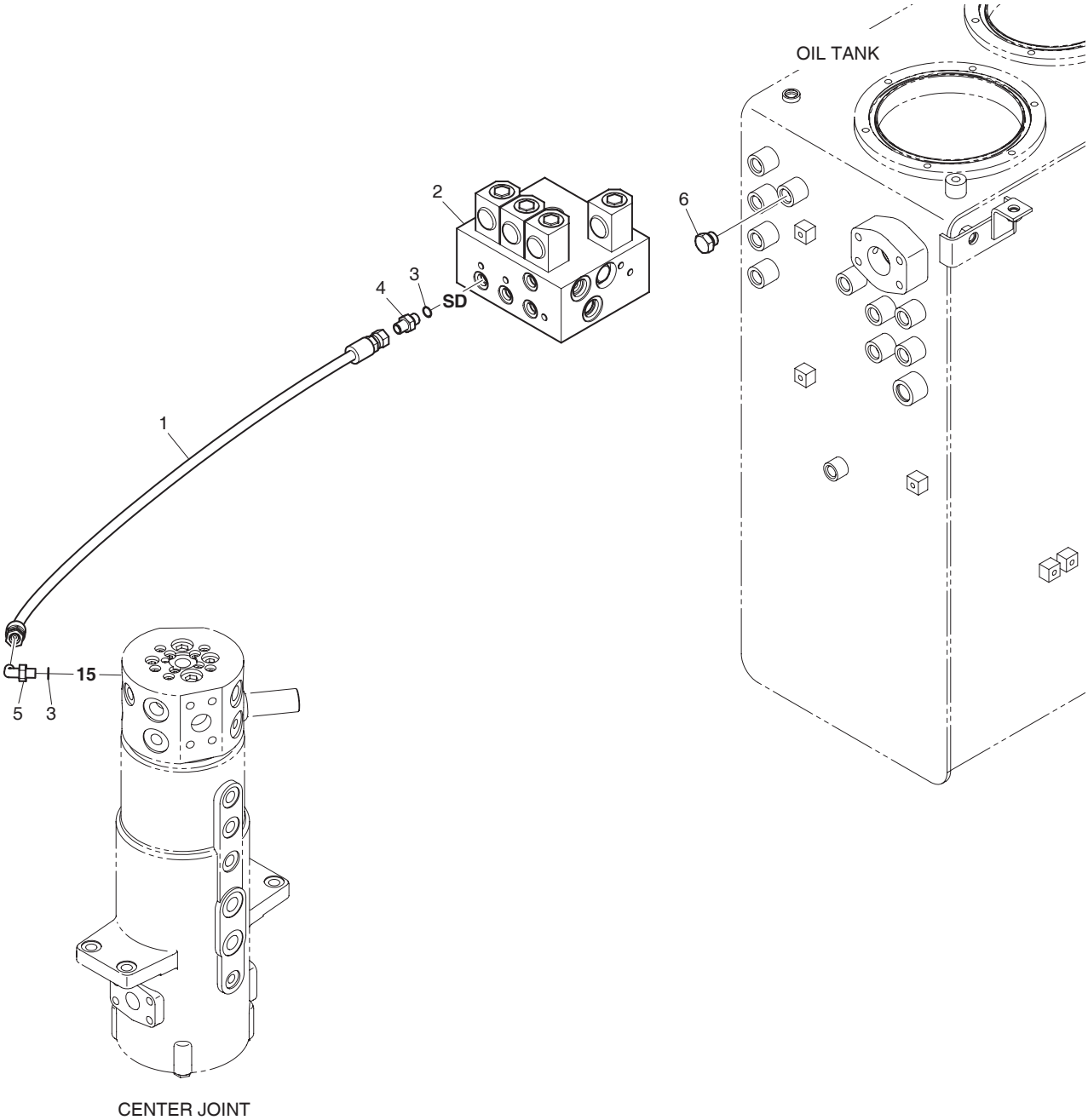

DATE	DEC. 26, 2006
1st EDITION	

Fig. 6840 PILOT PIPING - FRONT ATTACH
CONDUITES DE PILOTE

Serial No. ;

Key No.	Part No.	Description	Description	Q'ty	S.C	Serial No.	ICA	Replaceable part	
								Part No.	Q'ty
6840--	K1018169	PILOT PIPING;FRONT ATTACH	BOULON A 6 PANS CREUX	-	D				
1	DS2094169	HOSE	TUYAU FLEXIBLE	1					
2	K1002821	VALVE;SOLENOID	SOUPAPE A SOLENOIDE	1					
3	S8000111	O-RING	JOINT TORIQUE	2					
4	2181-1126D14	ADAPTER	ADAPTEUR	1					
5	2181-1702D4	ELBOW	COUDE	1					
6	2181-1950D2	PLUG	BOUCHON	1					

DATE	DEC. 26, 2006
1st EDITION	

Fig. 6850 UNDER CARRIAGE PIPING - NOT INDE
SOUS LA TUYAUTERIE DE CHARIOT

Serial No. ;

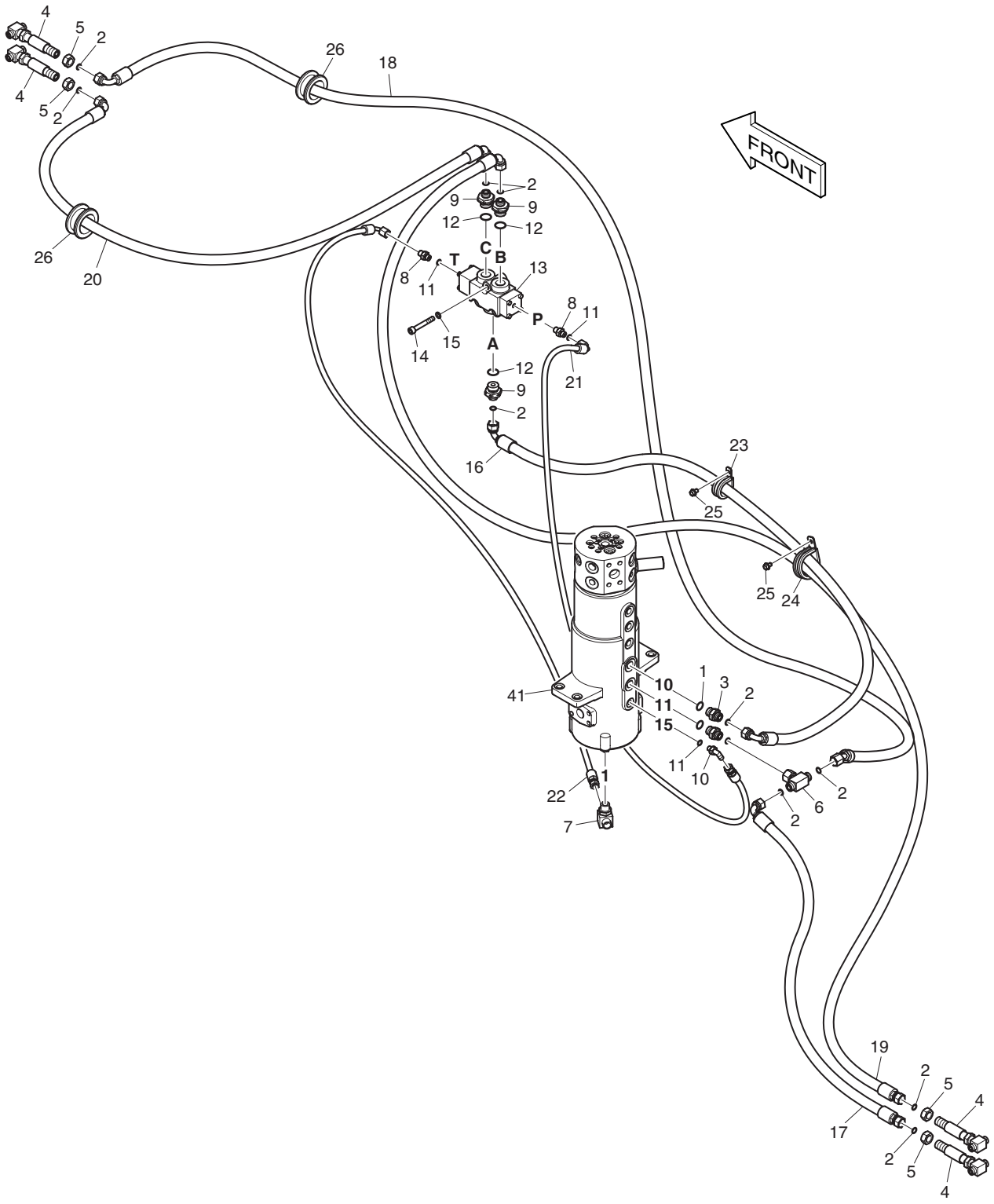

DATE	DEC. 26, 2006
1st EDITION	

Fig. 6850 UNDER CARRIAGE PIPING - NOT INDE
SOUS LA TUYAUTERIE DE CHARIOT

Serial No. ;

Key No.	Part No.	Description	Description	Q'ty	S.C	Serial No.	ICA	Replaceable part	
								Part No.	Q'ty
6850--	400-01485A	UNDER CARRIAGE PIPING	SOUS LA TUYAUTERIE DE	-	D				
1	S8000181	O-RING	JOINT TORIQUE	2					
2	S8030081	O-RING	JOINT TORIQUE	11					
3	2181-4133D3	ADAPTER	ADAPTEUR	2					
4	K1006248	TEE	TE	4					
5	121-00010D5	NUT	ECROU	4					
6	181-00137	TEE	TE	1					
7	2181-2281D15	TEE	TE	1					
8	2181-1126D14	ADAPTER	ADAPTEUR	2					
9	2181-2627D2	ADAPTER	ADAPTEUR	3					
10	2181-1702D4	ELBOW	COUDE	1					
11	S8000111	O-RING	JOINT TORIQUE	3					
12	S8000231	O-RING	JOINT TORIQUE	3					
13	2426-9041	VALVE;SELECTOR	CLAPET SELECTEUR	1					
14	S2213066	BOLT;SOCKET M10X1.5	BOULON A 6 PANS CREUX	3					
15	S5110603	WASHER	RONDELLE	3					
16	DS2023180	HOSE	TUYAU FLEXIBLE	1					
17	DS2013681	HOSE	TUYAU FLEXIBLE	1					
18	DS2021143	HOSE	TUYAU FLEXIBLE	1					
19	DS2013694	HOSE	TUYAU FLEXIBLE	1					
20	DS2023241	HOSE	TUYAU FLEXIBLE	1					
21	DS2093201	HOSE	TUYAU FLEXIBLE	1					
22	DS2093014	HOSE	TUYAU FLEXIBLE	1					
23	124-00208D6	CLIP	AGRAFE	1					
24	124-00208D9	CLIP	AGRAFE	1					
25	K1001029	BOLT	BOULON	2					
26	2160-1004D62	BUSHING;RUBBER	DOUILLE EN CAOUTCHOUC	2					
41	480-00015C	CENTER JOINT	JOINT TOURNANT	1					

DATE	JUN. 30, 2008
REV.NO.	EXB08-06

Fig. 6860 FRONT DOZER
DOZER AVANT

Serial No. ;

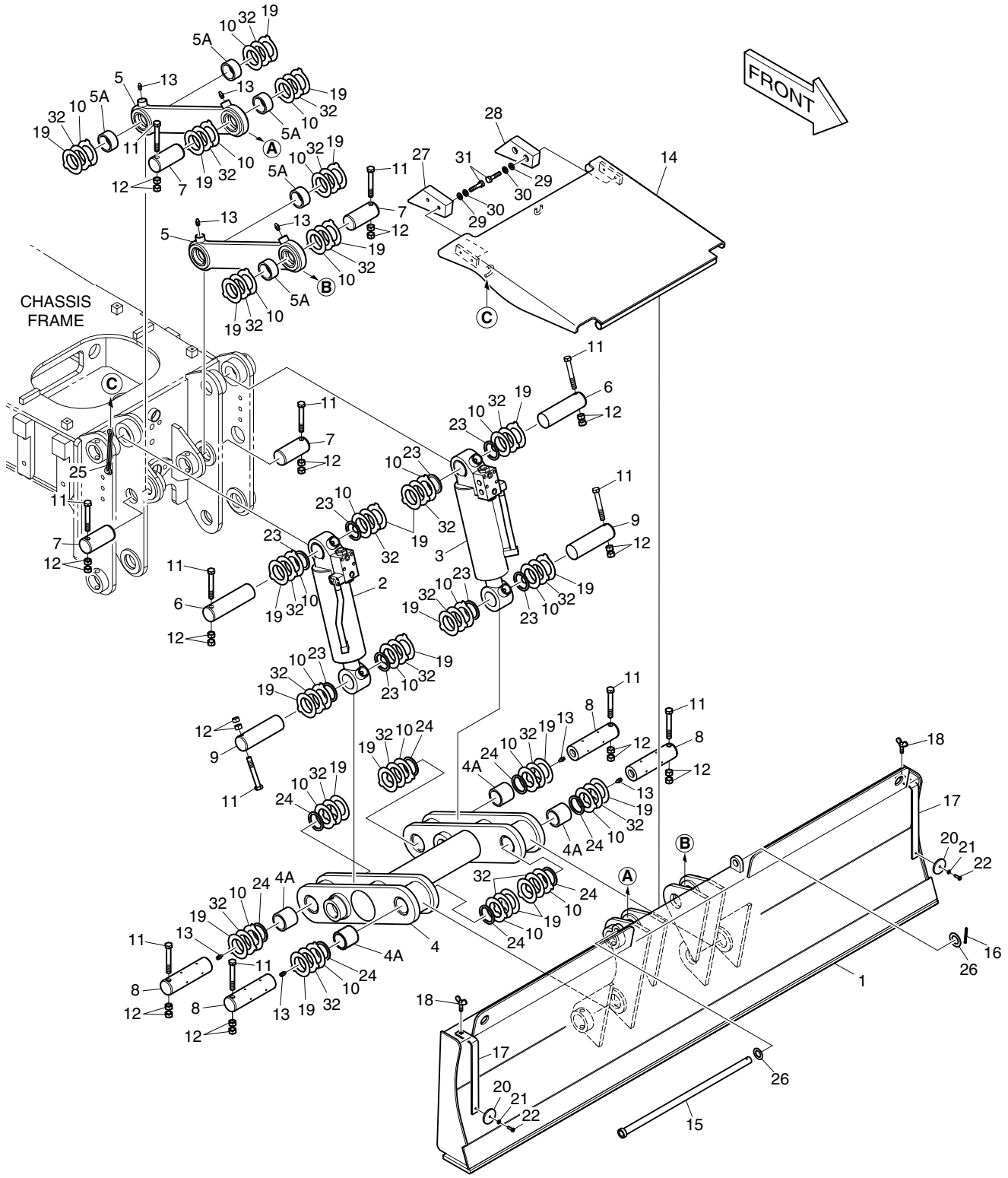

DATE	JUN. 30, 2008
REV. NO.	EXB08-06

Fig. 6860 FRONT DOZER / DOZER AVANT

Serial No. ;

Key No.	Part No.	Description	Description	Q'ty	S.C	Serial No.	ICA	Replaceable part	
								Part No.	Q'ty
6860--	608-00044B	DOZER ASS'Y	ENSEMBLE DOZER	-	D				
1	608-00039A	DOZER;BLADE	DOZER	1					
2	440-00448B	CYLINDER;DOZER(L.H)	CYLINDRE DE DOZER	1		5001–5019	I	440-00448C	1
	440-00448C	CYLINDER;DOZER(L.H)	CYLINDRE DE DOZER	1		5020–			
3	440-00449B	CYLINDER;DOZER(R.H)	CYLINDRE DE DOZER	1		5001–5019	I	440-00449C	1
	440-00449C	CYLINDER;DOZER(R.H)	CYLINDRE DE DOZER	1		5020–			
4	155-00058A	LINK	ARTICULATION	1					
4A	110-00264	. BUSHING	. DOUILLE	4					
5	155-00059B	LINK	ARTICULATION	2					
5A	110-00266	. BUSHING	. DOUILLE	2					
6	2123-1833B	PIN	GOUPILLE	2		5001–5041	I	2123-1833C	2
	2123-1833C	**PIN**	GOUPILLE	2		**5042–**			
7	2123-1529B	PIN	GOUPILLE	4					
8	2123-1835	PIN	GOUPILLE	4					
9	2123-1530B	PIN	GOUPILLE	2					
10	DS7752040	SHIM	CALE	24					
11	S0566666	BOLT	BOULON	12					
12	S4012933	NUT	ECROU	24					
13	S6710043	NIPPLE;GREASE	MAMELON	8					
14	K1004077A	COVER;DOZER PROTECT	COUVERCLE	1					
15	K1004079	PIN	GOUPILLE	1					
16	S5735751	PIN;SPLIT	GOUPILLE	1					
17	K1000813	BRACKET	SUPPORT	2					
18	S3051201	BOLT;WING	BOULON	2					
20	K1002629	REFLECTOR	REFLECTEUR	2					
21	S5102203	WASHER;SPRING	RONDELLE ELASTIQUE	2					
22	S3450853	SCREW	VIS	2					
19	DS7752041	SHIM	CALE	24					
23	DS5501033	SEAL;DUST	JOINT	8					
24	2180-1106BD9	SEAL;DUST	JOINT	8					
25	K1012305	CHAIN	CHAINE	1					
26	DS0401189	WASHER;PLAIN	RONDELLE	2					
27	K1003383A	RUBBER	CAOUTCHOUC	1					
28	K1003405A	RUBBER	CAOUTCHOUC	1					
29	S5010613	WASHER;PLAIN	RONDELLE	4					
30	S5102603	WASHER;SPRING	RONDELLE ELASTIQUE	4					
31	S0512566	BOLT	BOULON	4					
32	DS7752079	SHIM	CALE	24					

DATE	DEC. 26, 2006
1st EDITION	

Fig. 6870 FRONT DOZER PIPING
CONDUITES DE DOZER

Serial No. ;

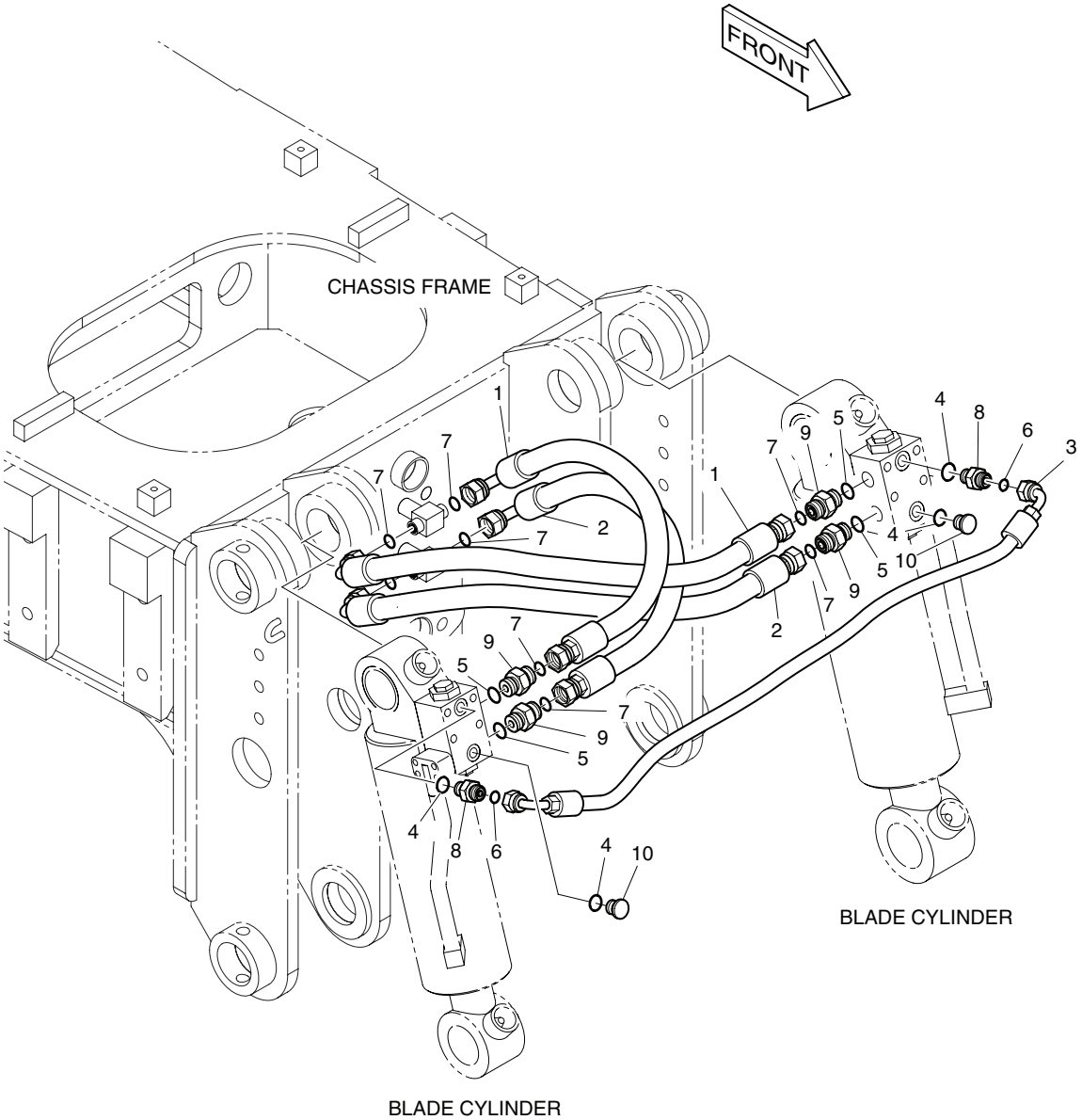

DATE	DEC. 26, 2006
1st EDITION	

Fig. 6870 FRONT DOZER PIPING CONDUITES DE DOZER

Serial No. ;

Key No.	Part No.	Description	Description	Q'ty	S.C	Serial No.	ICA	Replaceable part	
								Part No.	Q'ty
6870--	400-01481A	BALDE PIPING	TUYAUTERIE DE BALDE	-	D				
1	DS2013695	HOSE	TUYAU FLEXIBLE	2					
2	DS2013696	HOSE	TUYAU FLEXIBLE	2					
3	DS2023242	HOSE	TUYAU FLEXIBLE	1					
4	S8000111	O-RING	JOINT TORIQUE	4					
5	S8000141	O-RING	JOINT TORIQUE	4					
6	S8030041	O-RING	JOINT TORIQUE	2					
7	S8030061	O-RING	JOINT TORIQUE	8					
8	2181-4133D1	ADAPTER	ADAPTEUR	2					
9	2181-4133D2	ADAPTER	ADAPTEUR	4					
10	2181-1950D1	PLUG	BOUCHON	2					

DATE	DEC. 26, 2006
1st EDITION	

Fig. 6880 SWITCH - FRONT DOZER COMMUTATEUR

Serial No. ;

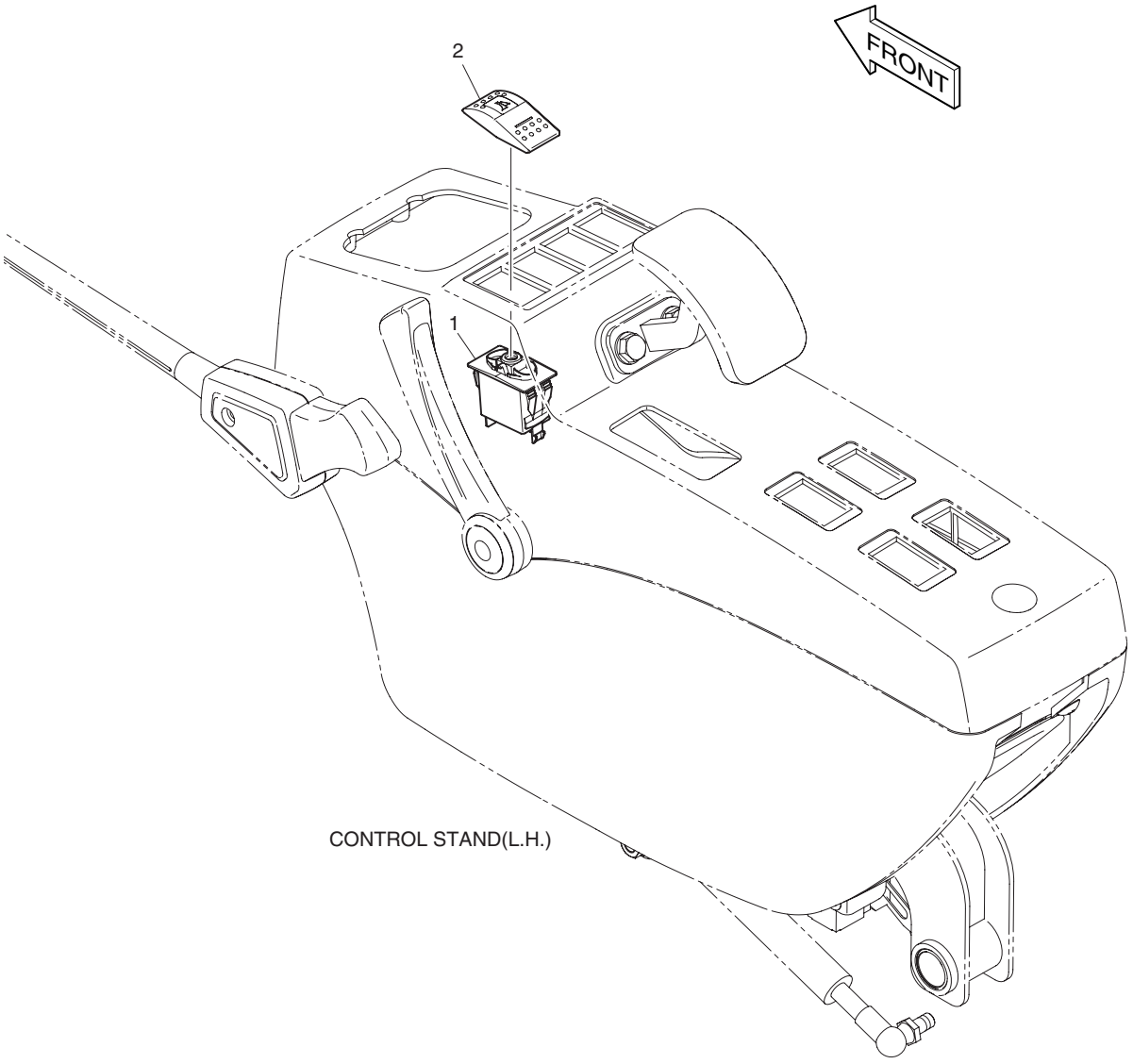

DATE	DEC. 26, 2006
1st EDITION	

Fig. 6880 SWITCH - FRONT DOZER COMMUTATEUR

Serial No. ;

Key No.	Part No.	Description	Description	Q'ty	S.C	Serial No.	ICA	Replaceable part	
								Part No.	Q'ty
6880--	K1023313A	SWITCH ASS'Y	AVERTISSEUR	-	D				
1	549-00101	SWITCH(1 STEP)	AVERTISSEUR	1					
2	K1002406D20	ACTUATOR;SWITCH	ACTUATOR;SWITCH	1					

DATE	JUN. 30, 2008
REV.NO.	EXB08-06

Fig. 6890 REAR OUTRIGGER
TANGON ARRIERE

Serial No. ;

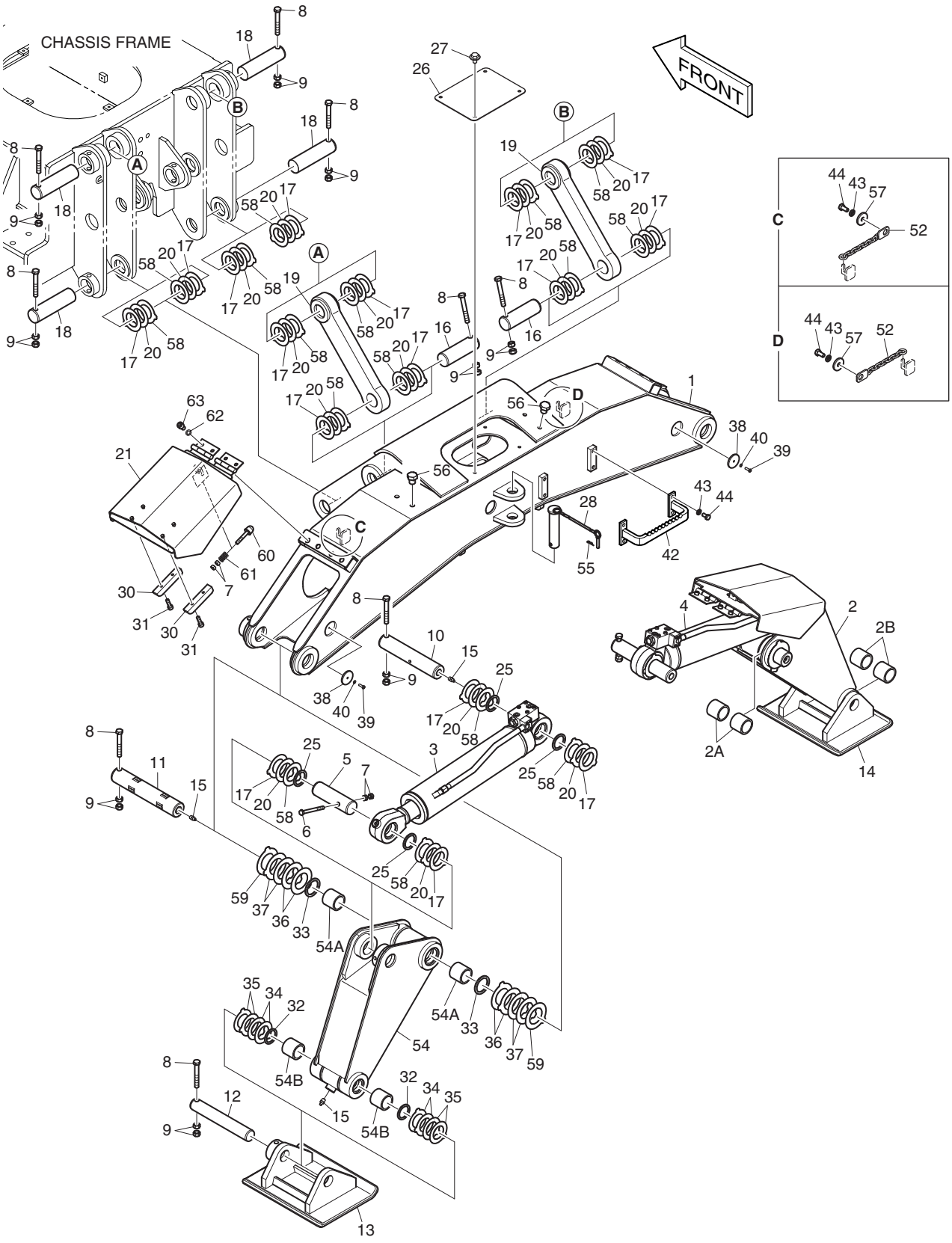

DATE	JUN. 30, 2008
REV. NO.	EXB08-06

Fig. 6890 REAR OUTRIGGER TANGON ARRIERE

Serial No. ;

Key No.	Part No.	Description	Description	Q'ty	S.C	Serial No.	ICA	Replaceable part	
								Part No.	Q'ty
6890--	626-00050E	OUTRIGGER ASSY	TUYAUTERIE DE TANGON	-	D				
1	626-00048G	FRAME;OUTRIGGER	ARMATURE DE TANGON	1					
2	626-00049G	LEG;OUTRIGGER	JAMBE DE TANGON	1					
2A	110-00267	. BUSH	. DOUILLE	2					
2B	110-00268	. BUSH	. DOUILLE	2					
3	440-00450B	CYLINDER;OUTRIGGER(L.H)	CYLINDRE DE TANGON	1					
4	440-00451B	CYLINDER;OUTRIGGER(R.H)	CYLINDRE DE TANGON	1					
5	K1009205	PIN	GOUPILLE	2					
6	S0562366	BOLT	BOULON	2					
7	S4012733	NUT	ECROU	8					
8	S0566666	BOLT	BOULON	12					
9	S4012933	NUT M16X2.0	ECROU	24					
10	K1009208	PIN	GOUPILLE	2					
11	K1018258	PIN	GOUPILLE	2					
12	K1009207	PIN	GOUPILLE	2					
13	195-02712B	FOOT;STABILIZER	PIED DE STABILISATEUR	1					
14	195-02713B	FOOT;STABILIZER	PIED DE STABILISATEUR	1					
15	S6710043	NIPPLE	MAMELON	6					
16	2123-2312A	PIN	GOUPILLE	2					
17	DS7752040	SHIM;POLYMER	CALE	20					
18	2123-1833B	PIN	GOUPILLE	4		5001–5041	I	2123-1833C	4
	2123-1833C	**PIN**	GOUPILLE	4		**5042–**			
19	155-00060A	LINK	ARTICULATION	2					
20	DS7752041	SHIM;POLYMER	CALE	20					
21	K1028433	COVER	COUVERCLE	2					
25	2180-1106BD9	SEAL;DUST	JOINT	8					
26	621-02830C	COVER	COUVERCLE	1					
27	DS0025014	BOLT;SET	BOULON	4					
28	K1000783B	PIN	GOUPILLE	1					
30	K1026710	STOPPER	ARRET	4					
31	S2209266	BOLT;SOCKET	BOULON A 6 PANS CREUX	8					
32	2180-1106BD1	SEAL;DUST	JOINT	4					
33	2180-1106BD3	SEAL;DUST	JOINT	4					
34	2114-1058D18	WASHER	RONDELLE	8					
35	2114-1058D19	WASHER	RONDELLE	8					
36	DS7752001	SHIM;POLYMER	CALE	8					
37	DS7752002	SHIM;POLYMER	CALE	8					
38	190-00078	REFLECTOR	REFLECTEUR	2					

DATE	JUN. 30, 2008
REV.NO.	EXB08-06

Fig. 6890 REAR OUTRIGGER TANGON ARRIERE

Serial No. ;

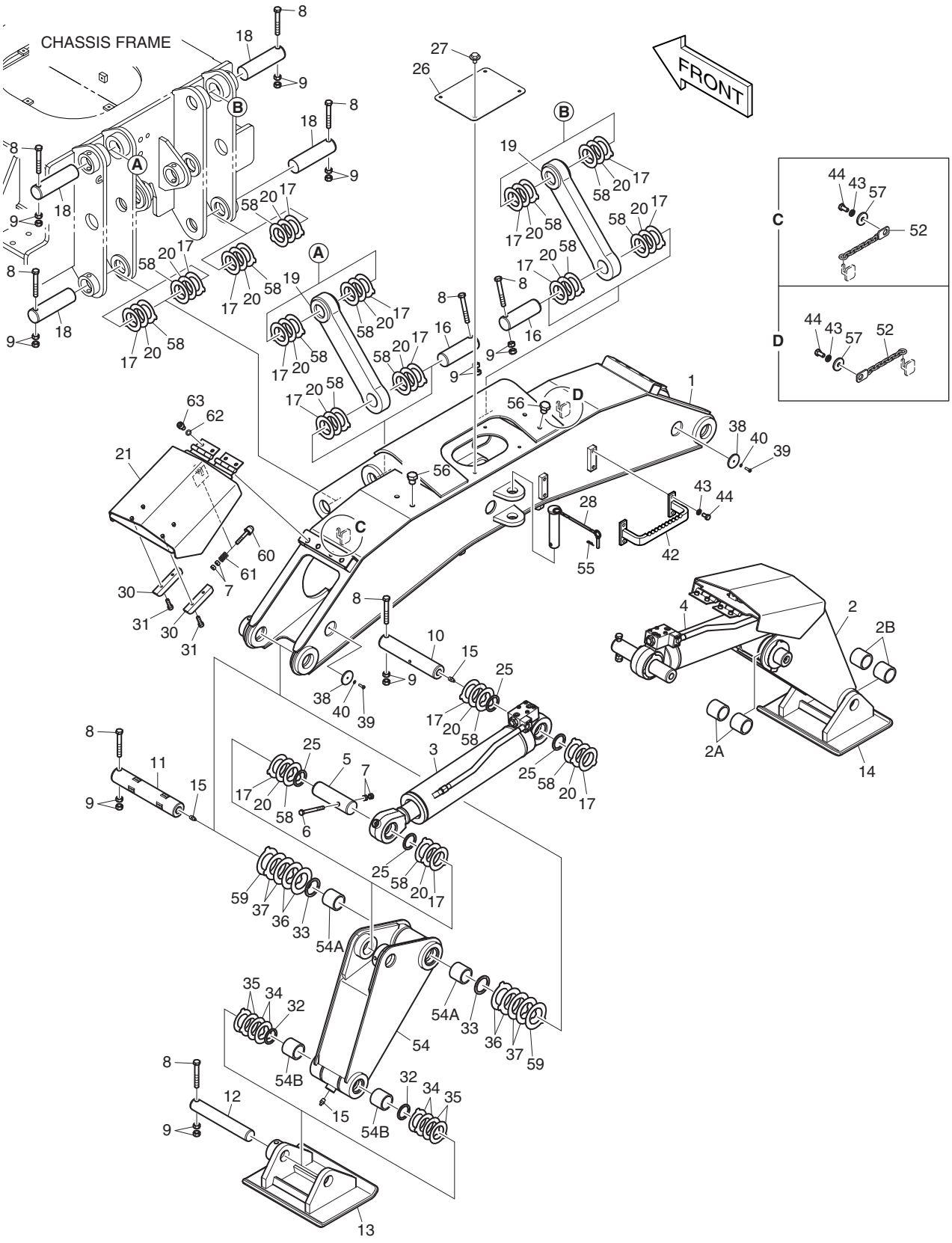

DATE	JUN. 30, 2008
REV. NO.	EXB08-06

Fig. 6890 REAR OUTRIGGER TANGON ARRIERE

Serial No. ;

Key No.	Part No.	Description	Description	Q'ty	S.C	Serial No.	ICA	Replaceable part	
								Part No.	Q'ty
6890-39	S3450853	SCREW M5X0.8X10	VIS	2					
40	S5102203	WASHER;SPRING	RONDELLE ELASTIQUE	2					
42	K1000780B	STEP	MARCHER	1					
43	S5102703	WASHER;SPRING(M12)	RONDELLE ELASTIQUE	6					
44	S0515066	BOLT	BOULON	6					
52	K1018780A	CHAIN;OUTRIGGER	CHAINE	2					
54	K1018831B	LEG;OUTRIGGER	JAMBE DE TANGON	1					
54A	110-00267	. BUSH	. DOUILLE	2					
54B	110-00268	. BUSH	. DOUILLE	2					
55	2123-1441D4	PIN	GOUPILLE	1					
56	S0520766	BOLT	BOULON	4					
57	4114-4078A	WASHER	RONDELLE	2					
58	DS7752079	SHIM	CALE	20					
59	DS7752080	SHIM	CALE	4					
60	161-00465	STOPPER	ARRET	2					
61	129-00145	SPRING;COIL	RESSORT	2					
62	S5110603	WASHER	RONDELLE	8					
63	S2211666	BOLT	BOULON	8					

DATE	DEC. 26, 2006
1st EDITION	

Fig. 6900 FRONT/REAR OUTRIGGER PIPING
TUYAUTERIE DE TANGON

Serial No. ;

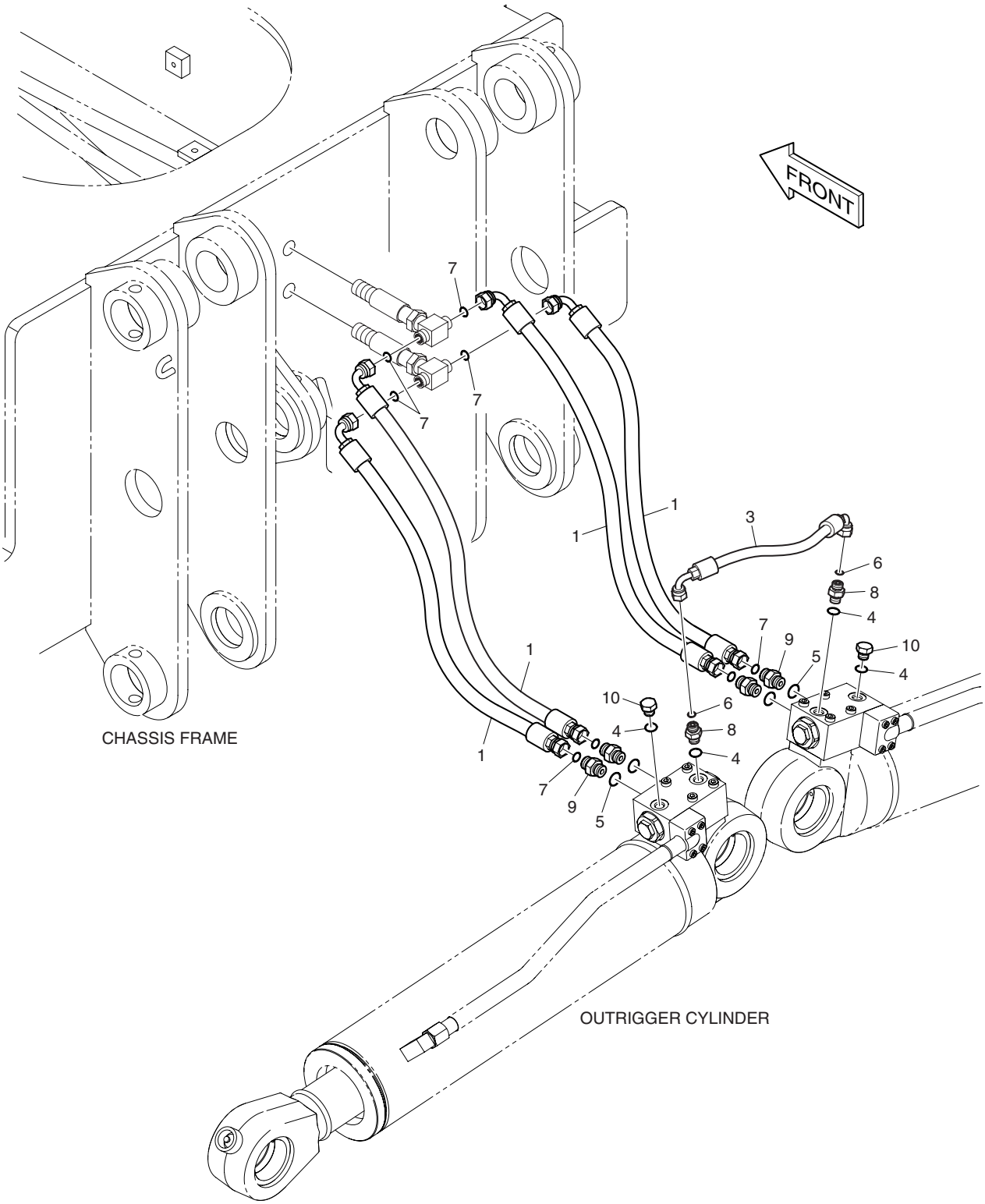

DATE	DEC. 26, 2006
1st EDITION	

Fig. 6900 FRONT/REAR OUTRIGGER PIPING TUYAUTERIE DE TANGON

Serial No. ;

Key No.	Part No.	Description	Description	Q'ty	S.C	Serial No.	ICA	Replaceable part	
								Part No.	Q'ty
6900--	400-01479A	REAR OUTRIGGER PIPING	TUYAUTERIE ARRIERE DE	-	D				
1	DS2013692	HOSE	TUYAU FLEXIBLE	4					
3	DS2023179	HOSE	TUYAU FLEXIBLE	1					
4	S8000111	O-RING	JOINT TORIQUE	4					
5	S8000141	O-RING	JOINT TORIQUE	4					
6	S8030041	O-RING	JOINT TORIQUE	2					
7	S8030061	O-RING	JOINT TORIQUE	8					
8	2181-4133D1	ADAPTER	ADAPTEUR	2					
9	2181-4133D2	ADAPTER	ADAPTEUR	4					
10	2181-1950D1	PLUG	BOUCHON	2					

DATE	DEC. 26, 2006
1st EDITION	

Fig. 6910 SWITCH - FRONT OUTRIGGER(NOT INDE) COMMUTATEUR

Serial No. ;

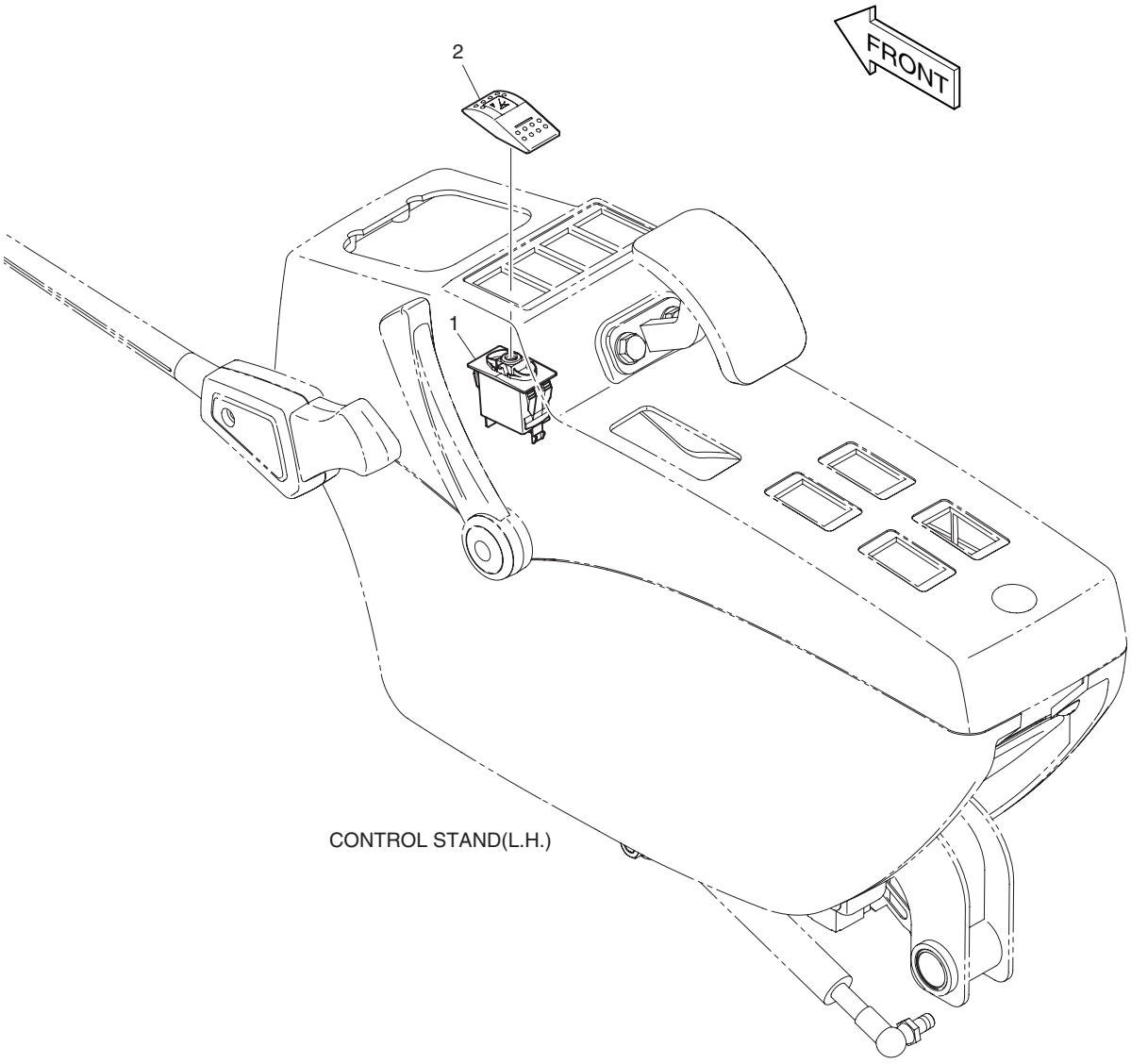

DATE	DEC. 26, 2006
1st EDITION	

Fig. 6910 SWITCH - FRONT OUTRIGGER(NOT INDE) COMMUTATEUR

Serial No. ;

Key No.	Part No.	Description	Description	Q'ty	S.C	Serial No.	ICA	Replaceable part	
								Part No.	Q'ty
6910--	K1018015A	SWITCH ASS'Y	COMMUTATEUR	-	D				
1	549-00101	SWITCH	COMMUTATEUR	1					
2	K1002406D23	ACTUATOR;SWITCH	DECLENCHEURE	1					

DATE	JUN. 30, 2008
REV.NO.	EXB08-06

Fig. 6920 FRONT OUTRIGGER BEQUILLES

Serial No. ;

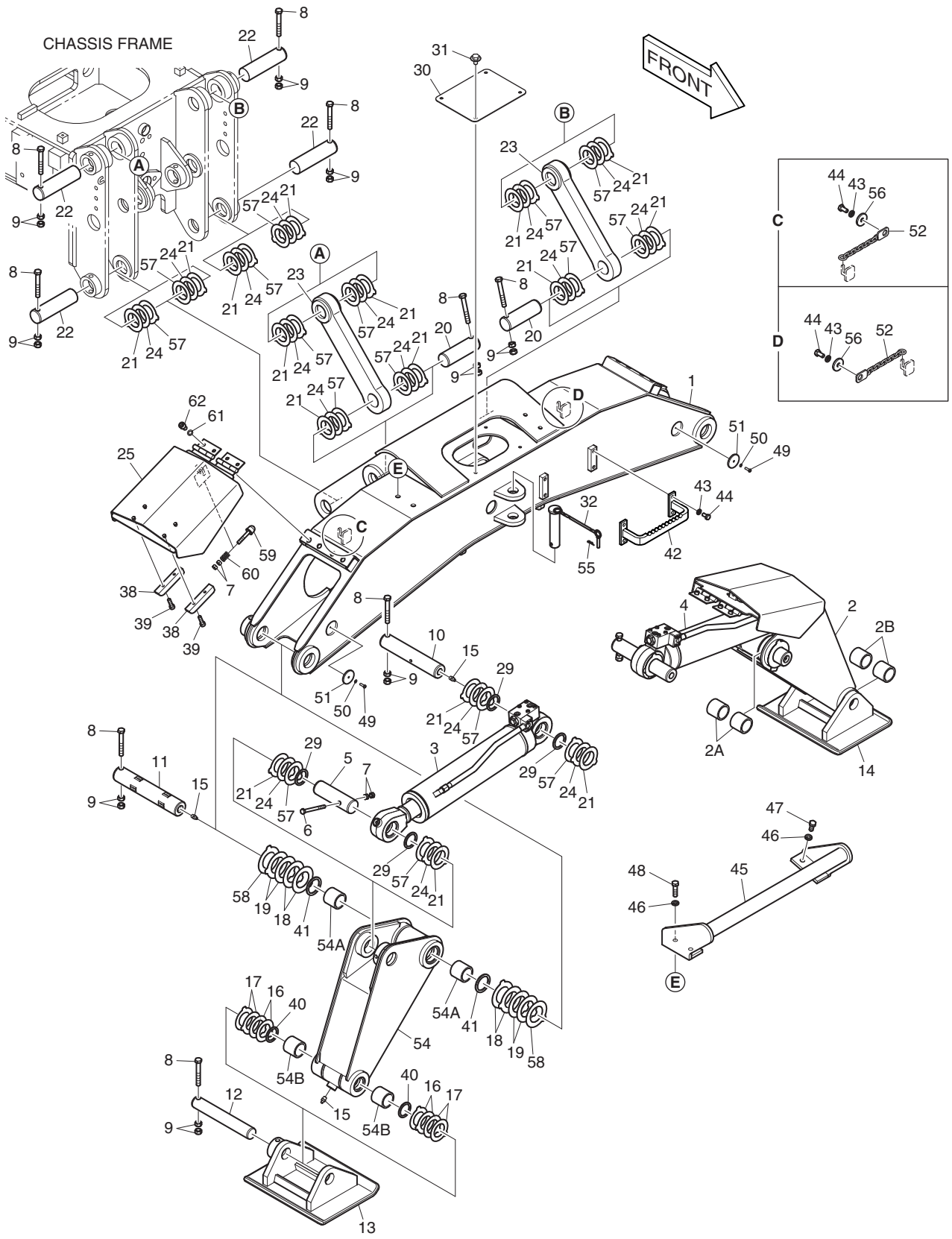

DATE	JUN. 30, 2008
REV. NO.	EXB08-06

Fig. 6920 FRONT OUTRIGGER BEQUILLES

Serial No. ;

Key No.	Part No.	Description	Description	Q'ty	S.C	Serial No.	ICA	Replaceable part	
								Part No.	Q'ty
6920--	626-00051E	OUTRIGGER ASSY	TUYAUTERIE DE TANGON	-	D				
1	626-00048G	FRAME;OUTRIGGER	ARMATURE DE TANGON	1					
2	626-00049G	LEG;OUTRIGGER	JAMBE DE TANGON	1					
2A	110-00267	. BUSH	. DOUILLE	2					
2B	110-00268	. BUSH	. DOUILLE	2					
3	440-00450B	CYLINDER;OUTRIGGER(L.H)	CYLINDRE DE TANGON	1					
4	440-00451B	CYLINDER;OUTRIGGER(R.H)	CYLINDRE DE TANGON	1					
5	K1009205	PIN	GOUPILLE	2					
6	S0562366	BOLT	BOULON	2					
7	S4012733	NUT	ECROU	8					
8	S0566666	BOLT	BOULON	12					
9	S4012933	NUT M16X2.0	ECROU	24					
10	K1009208	PIN	GOUPILLE	2					
11	K1018258	PIN	GOUPILLE	2					
12	K1009207	PIN	GOUPILLE	2					
13	195-02712B	FOOT;STABILIZER	PIED DE STABILISATEUR	1					
14	195-02713B	FOOT;STABILIZER	PIED DE STABILISATEUR	1					
15	S6710043	NIPPLE	MAMELON	6					
16	2114-1058D18	WASHER	RONDELLE	8					
17	2114-1058D19	WASHER	RONDELLE	8					
18	DS7752001	SHIM;POLYMER	CALE	8					
19	DS7752002	SHIM;POLYMER	CALE	8					
20	2123-2312A	PIN	GOUPILLE	2					
21	DS7752040	SHIM;POLYMER	CALE	20					
22	2123-1833B	PIN	GOUPILLE	4		5001–5041	I	2123-1833C	4
	2123-1833C	**PIN**	GOUPILLE	4		**5042–**			
23	155-00060A	LINK	ARTICULATION	2					
24	DS7752041	SHIM;POLYMER	CALE	20					
25	K1028433	COVER	COUVERCLE	2					
29	2180-1106BD9	SEAL;DUST	JOINT	8					
30	621-02830C	COVER	COUVERCLE	1					
31	DS0025014	BOLT;SET	BOULON	4					
32	K1000783B	PIN	GOUPILLE	1					
38	K1026710	STOPPER	ARRET	4					
39	S2209266	BOLT;SOCKET	BOULON A 6 PANS CREUX	8					
40	2180-1106BD1	SEAL;DUST	JOINT	4					
41	2180-1106BD3	SEAL;DUST	JOINT	4					
42	K1000780B	STEP	MARCHER	1					

DATE	JUN. 30, 2008
REV.NO.	EXB08-06

Fig. 6920 FRONT OUTRIGGER BEQUILLES

Serial No. ;

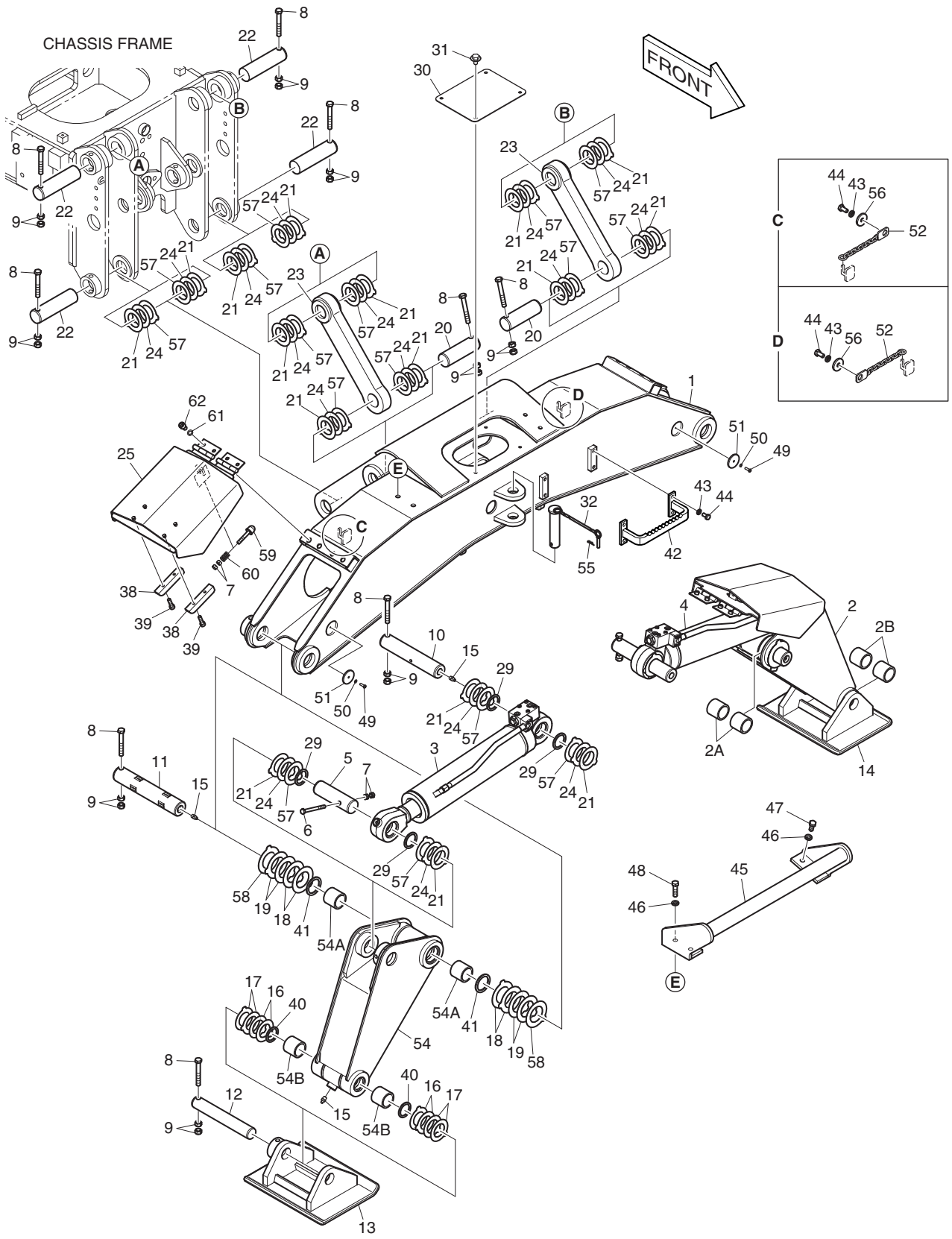

DATE	JUN. 30, 2008
REV. NO.	EXB08-06

Fig. 6920 FRONT OUTRIGGER BEQUILLES

Serial No. ;

Key No.	Part No.	Description	Description	Q'ty	S.C	Serial No.	ICA	Replaceable part	
								Part No.	Q'ty
6920-43	S5102703	WASHER;SPRING(M12)	RONDELLE ELASTIQUE	6					
44	S0515066	BOLT	BOULON	6					
45	K1007711A	CRADLE;BUCKET	BERCEAU DE SEAU	1					
46	S5102903	WASHER;SPRING	RONDELLE ELASTIQUE	4					
47	S0521366	BOLT M16X2.0X35	BOULON	2					
48	S0521866	BOLT	BOULON	2					
49	S3450853	SCREW M5X0.8X10	VIS	2					
50	S5102203	WASHER;SPRING	RONDELLE ELASTIQUE	2					
51	K1002629	REFLECTOR	REFLECTEUR	2					
52	K1018780A	CHAIN;OUTRIGGER	CHAINE	2					
54	K1018831B	LEG;OUTRIGGER	JAMBE DE TANGON	1					
54A	110-00267	. BUSH	. DOUILLE	2					
54B	110-00268	. BUSH	. DOUILLE	2					
55	2123-1441D4	PIN	GOUPILLE	1					
56	4114-4078A	WASHER	RONDELLE	2					
57	DS7752079	SHIM	CALE	20					
58	DS7752080	SHIM	CALE	4					
59	161-00465	STOPPER	ARRET	2					
60	129-00145	SPRING;COIL	RESSORT	2					
61	S5110603	WASHER	RONDELLE	8					
62	S2211666	BOLT	BOULON	8					

DATE	DEC. 26, 2006
1st EDITION	

Fig. 6930 PILOT PIPING - INDEPENDENT CONDUITES DE PILOTE

Serial No. ;

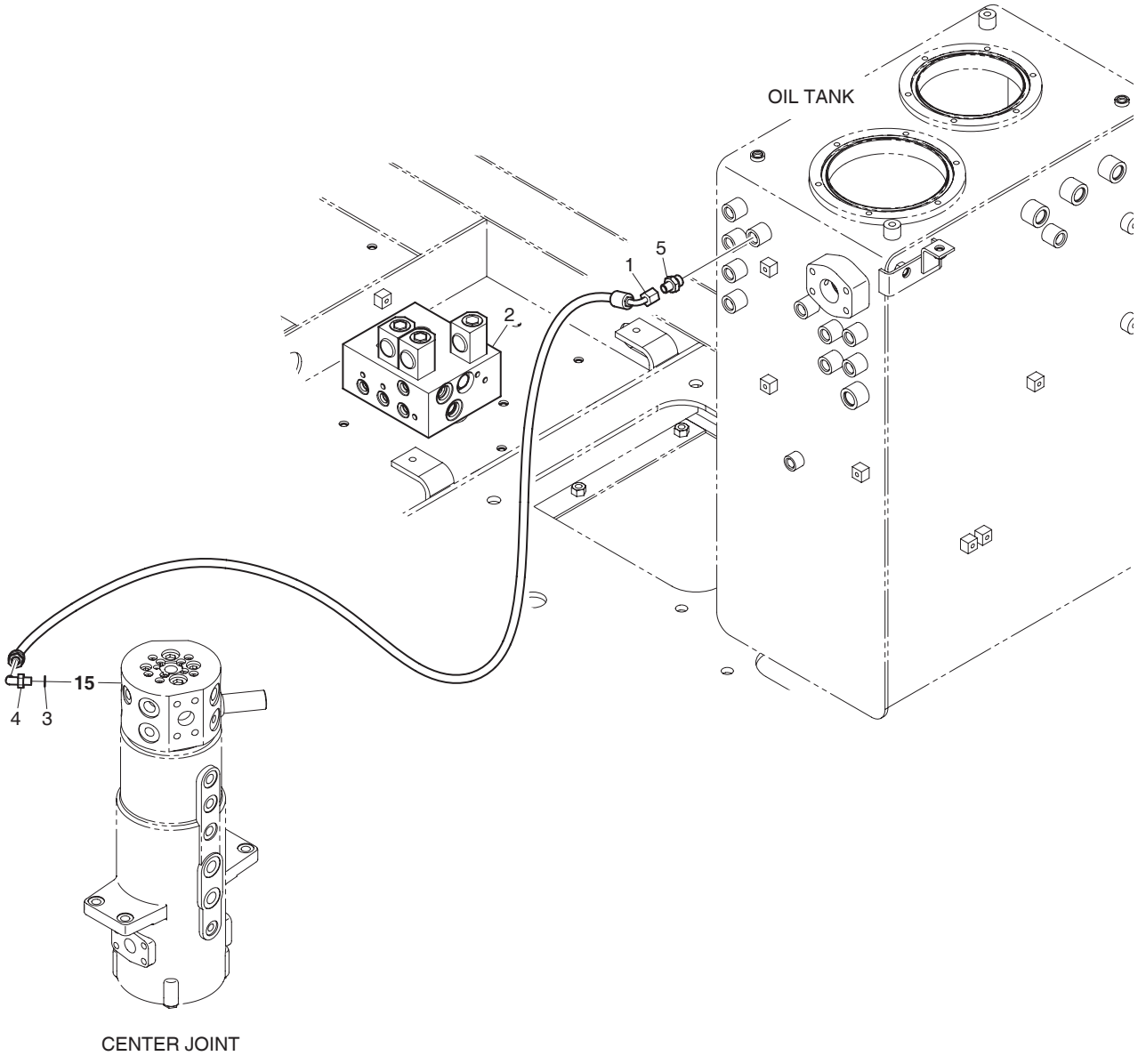

DATE	DEC. 26, 2006
1st EDITION	

Fig. 6930 PILOT PIPING - INDEPENDENT CONDUITES DE PILOTE

Serial No. ;

Key No.	Part No.	Description	Description	Q'ty	S.C	Serial No.	ICA	Replaceable part	
								Part No.	Q'ty
6930--	K1018170	PILOT PIPING;INDE	TUYAUTERIE PILOTE	-	D				
1	DS2093081	HOSE	TUYAU FLEXIBLE	1					
2	K1002820	VALVE;SOLENOID	SOUPAPE A SOLENOIDE	1					
3	S8000111	O-RING	JOINT TORIQUE	1					
4	2181-1702D4	ELBOW	COUDE	1					
5	2181-1126D36	ADAPTER	ADAPTEUR	1					

DATE	DEC. 26, 2006
1st EDITION	

Fig. 6940 ELECTRIC PARTS - INDEPENDENT OUTRIGGER PIECES ELECTRIQUES

Serial No. ;

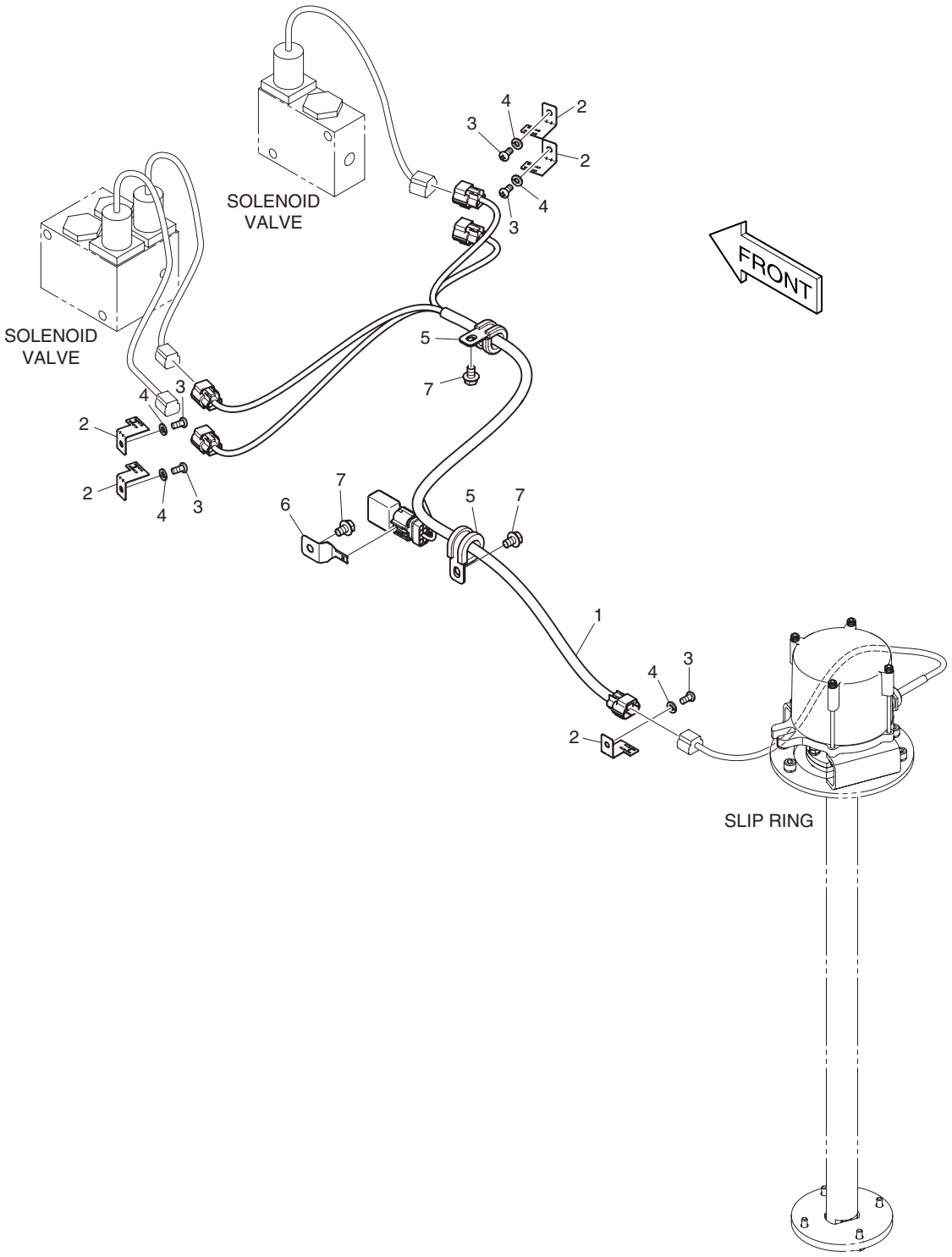

DATE	DEC. 26, 2006
1st EDITION	

Fig. 6940 ELECTRIC PARTS - INDEPENDENT OUTRIGGER
PIECES ELECTRIQUES

Serial No. ;

Key No.	Part No.	Description	Description	Q'ty	S.C	Serial No.	ICA	Replaceable part	
								Part No.	Q'ty
6940--	K1018011B	ELECTRIC ASS'YINDI.	PIECES ELECTRIQUES	-	D				
1	K1017433B	HARNESS	HARNAIS	1					
2	2195-3500	BRACKET;HOUSING	SUPPORT	5					
3	S3450953	SCREW	VIS	5					
4	S5102303	WASHER;SPRING	RONDELLE ELASTIQUE	5					
5	124-00208D3	CLIP	CLIP	2					
6	2197-1661	BRACKET;HOUSING	SUPPORT	1					
7	K1001029	BOLT	BOULON A 6 PANS	3					

DATE	DEC. 26, 2006
1st EDITION	

Fig. 6950 FRONT DOZER & REAR OUTRI. PIPING(INDE) TUYAUTERIE DE TANGON

Serial No. ;

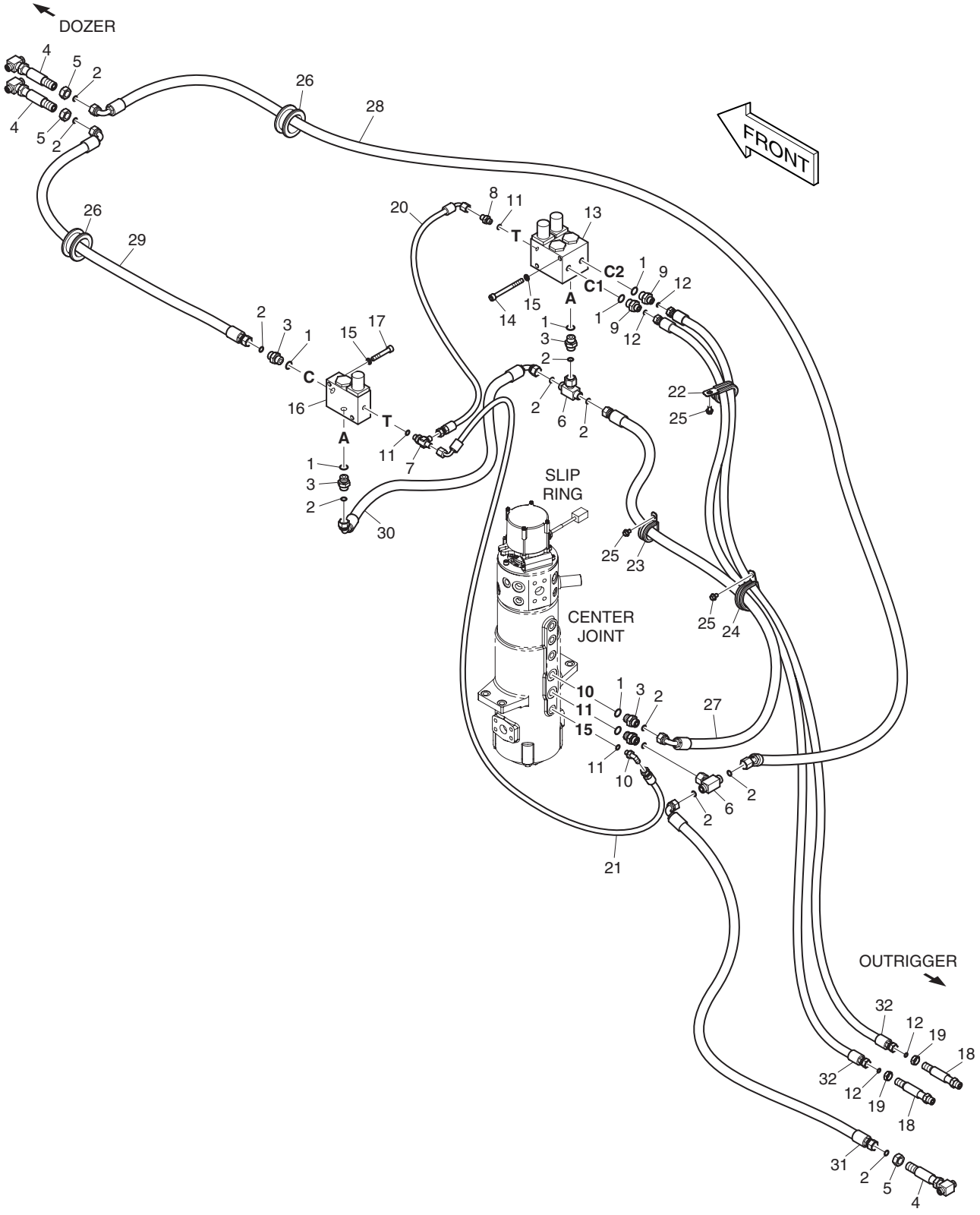

DATE	DEC. 26, 2006
1st EDITION	

Fig. 6950 FRONT DOZER & REAR OUTRI. PIPING(INDE)
TUYAUTERIE DE TANGON

Serial No. ;

Key No.	Part No.	Description	Description	Q'ty	S.C	Serial No.	ICA	Replaceable part	
								Part No.	Q'ty
6950--	400-01486B	F/DZ & R/OR PIPING(INDEPEN.)	TUYAUTERIE DE TANGON	-	D				
1	S8000181	O-RING	JOINT TORIQUE	7					
2	S8030081	O-RING	JOINT TORIQUE	12					
3	2181-4133D3	ADAPTER	ADAPTEUR	5					
4	K1006248	TEE	TE	3					
5	121-00010D5	NUT	ECROU	3					
6	181-00137	TEE	TE	2					
7	2181-1951D1	TEE	TE	1					
8	2181-1126D14	ADAPTER	ADAPTEUR	1					
9	2181-4133D39	ADAPTER	ADAPTEUR	2					
10	2181-1702D4	ELBOW	COUDE	1					
11	S8000111	O-RING	JOINT TORIQUE	3					
12	S8030061	O-RING	JOINT TORIQUE	4					
13	420-00473A	VALVE;SOLENOID	SOUPAPE A SOLENOIDE	1					
14	S2213766	BOLT;SOCKET	BOULON A 6 PANS CREUX	2					
15	S5110603	WASHER	RONDELLE	4					
16	420-00471A	VALVE;SOLENOID	SOUPAPE A SOLENOIDE	1					
17	S2212866	BOLT;SOCKET	BOULON A 6 PANS CREUX	2					
18	K1013483	ADAPTER	ADAPTEUR	2					
19	DS0301032	NUT	ECROU	2					
20	DS2093013	HOSE	TUYAU FLEXIBLE	1					
21	DS2093014	HOSE	TUYAU FLEXIBLE	1					
22	124-00209D2	CLIP	AGRAFE	1					
23	124-00208D6	CLIP	AGRAFE	1					
24	124-00208D9	CLIP	AGRAFE	1					
25	K1001029	BOLT	BOULON	3					
26	2160-1004D62	BUSHING;RUBBER	DOUILLE EN CAOUTCHOUC	2					
27	DS2013540	HOSE	TUYAU FLEXIBLE	1					
28	DS2021143	HOSE	TUYAU FLEXIBLE	1					
29	DS2013683	HOSE	TUYAU FLEXIBLE	1					
30	DS2023183	HOSE	TUYAU FLEXIBLE	1					
31	DS2013681	HOSE	TUYAU FLEXIBLE	1					
32	DS2011496	HOSE	TUYAU FLEXIBLE	2					

DATE	DEC. 26, 2006
1st EDITION	

Fig. 6960 SLIP RING
BAGUE COLLECTRICE

Serial No. ;

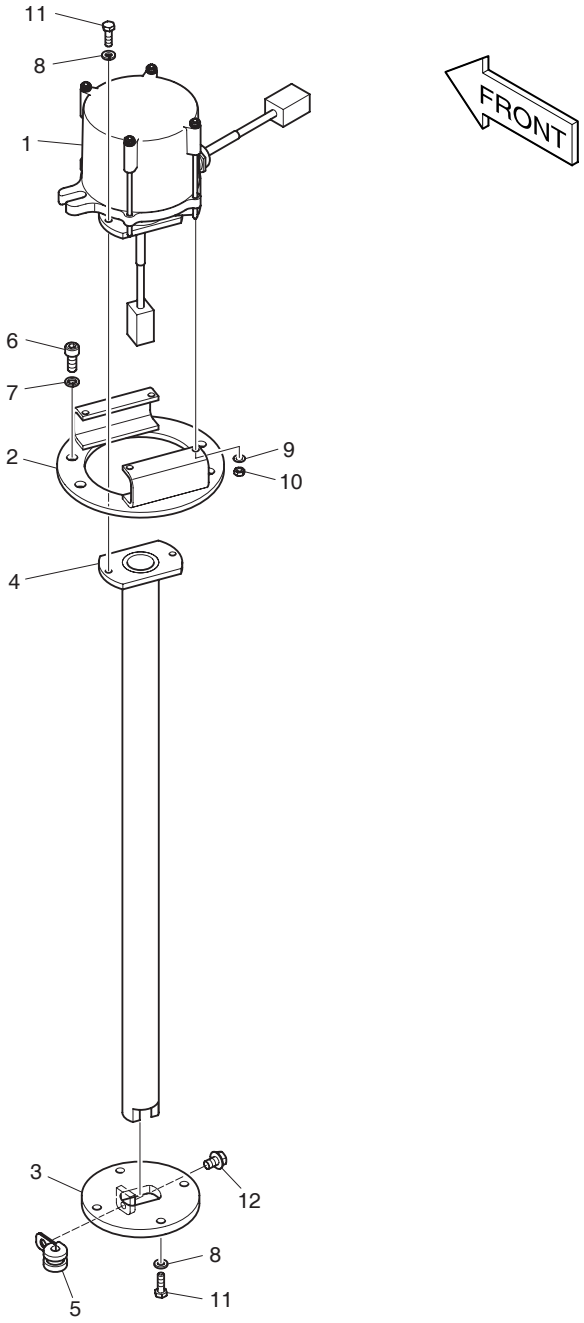

DATE	DEC. 26, 2006
1st EDITION	

Fig. 6960 SLIP RING
BAGUE COLLECTRICE

Serial No. ;

Key No.	Part No.	Description	Description	Q'ty	S.C	Serial No.	ICA	Replaceable part	
								Part No.	Q'ty
6960--	K1017498A	SLIP RING ASS'Y	BAGUE COLLECTRICE	-	D				
1	480-00013A	RING;SLIP	BAGUE COLLECTRICE	1					
2	181-00814C	FLANGE	BRIDE	1					
3	181-00815B	FLANGE	BRIDE	1					
4	140-01588A	PIPE	TUYAU	1					
5	124-00208D1	CLIP	CLIP	1					
6	S2208866	BOLT	BOULON A 6 PANS	4					
7	S5110503	WASHER;SPRING	RONDELLE ELASTIQUE	4					
8	S5102303	WASHER;SPRING	RONDELLE ELASTIQUE	6					
9	S5000113	WASHER;PLAIN	RONDELLE PLATE	4					
10	S4012133	NUT	ECROU 6 PANS M8	4					
11	S0504866	BOLT	BOULON A 6 PANS	6					
12	K1001029	BOLT	BOULON A 6 PANS	1					

DATE	DEC. 26, 2006
1st EDITION	

Fig. 6970 FRONT OUTRI. & REAR DOZER PIPING(INDE) TUYAUTERIE DE TANGON

Serial No. ;

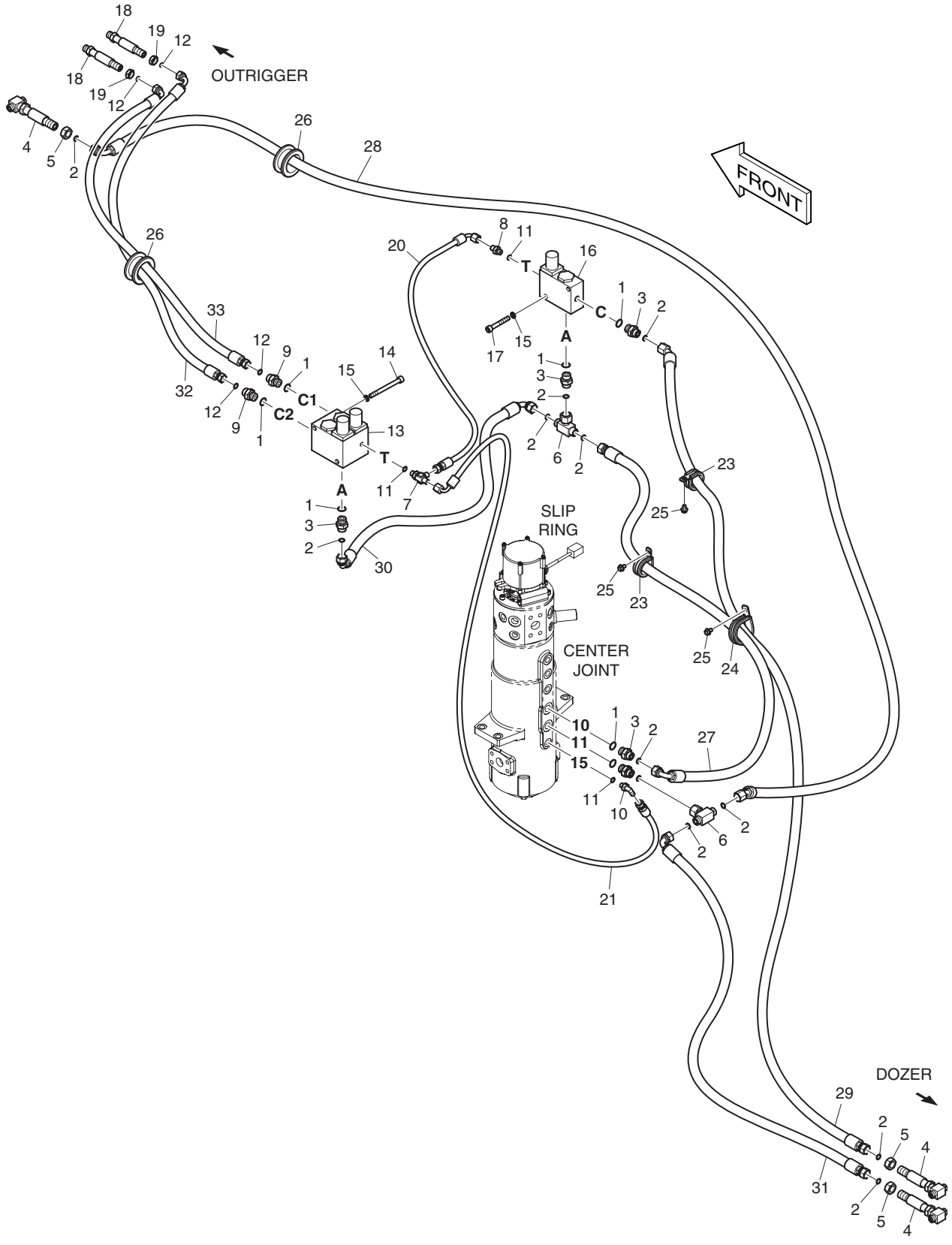

DATE	DEC. 26, 2006
1st EDITION	

Fig. 6970 FRONT OUTRI. & REAR DOZER PIPING(INDE)
TUYAUTERIE DE TANGON

Serial No. ;

Key No.	Part No.	Description	Description	Q'ty	S.C	Serial No.	ICA	Replaceable part	
								Part No.	Q'ty
6970--	400-01487B	F/OR & R/DZ PIPING(INDEPEN.)	TUYAUTERIE DE TANGON	-	D				
1	S8000181	O-RING	JOINT TORIQUE	7					
2	S8030081	O-RING	JOINT TORIQUE	12					
3	2181-4133D3	ADAPTER	ADAPTEUR	5					
4	K1006248	TEE	TE	3					
5	121-00010D5	NUT	ECROU	3					
6	181-00137	TEE	TE	2					
7	2181-1951D1	TEE	TE	1					
8	2181-1126D14	ADAPTER	ADAPTEUR	1					
9	2181-4133D39	ADAPTER	ADAPTEUR	2					
10	2181-1702D4	ELBOW	COUDE	1					
11	S8000111	O-RING	JOINT TORIQUE	3					
12	S8030061	O-RING	JOINT TORIQUE	4					
13	420-00473A	VALVE;SOLENOID	SOUPAPE A SOLENOIDE	1					
14	S2213766	BOLT;SOCKET	BOULON A 6 PANS CREUX	2					
15	S5110603	WASHER	RONDELLE	4					
16	420-00471A	VALVE;SOLENOID	SOUPAPE A SOLENOIDE	1					
17	S2212866	BOLT;SOCKET	BOULON A 6 PANS CREUX	2					
18	K1013483	ADAPTER	ADAPTEUR	2					
19	DS0301032	NUT	ECROU	2					
20	DS2093013	HOSE	TUYAU FLEXIBLE	1					
21	DS2093014	HOSE	TUYAU FLEXIBLE	1					
23	124-00208D6	CLIP	AGRAFE	2					
24	124-00208D9	CLIP	AGRAFE	1					
25	K1001029	BOLT	BOULON	3					
26	2160-1004D62	BUSHING;RUBBER	DOUILLE EN CAOUTCHOUC	2					
27	DS2013540	HOSE	TUYAU FLEXIBLE	1					
28	DS2021143	HOSE	TUYAU FLEXIBLE	1					
29	DS2012308	HOSE	TUYAU FLEXIBLE	1					
30	DS2023183	HOSE	TUYAU FLEXIBLE	1					
31	DS2013681	HOSE	TUYAU FLEXIBLE	1					
32	DS2013707	HOSE	TUYAU FLEXIBLE	1					
33	DS2013680	HOSE	TUYAU FLEXIBLE	1					

DATE	DEC. 26, 2006
1st EDITION	

Fig. 6980 4 OUTRIGGER PIPING - INDE TUYAUTERIE DE TANGON

Serial No. ;

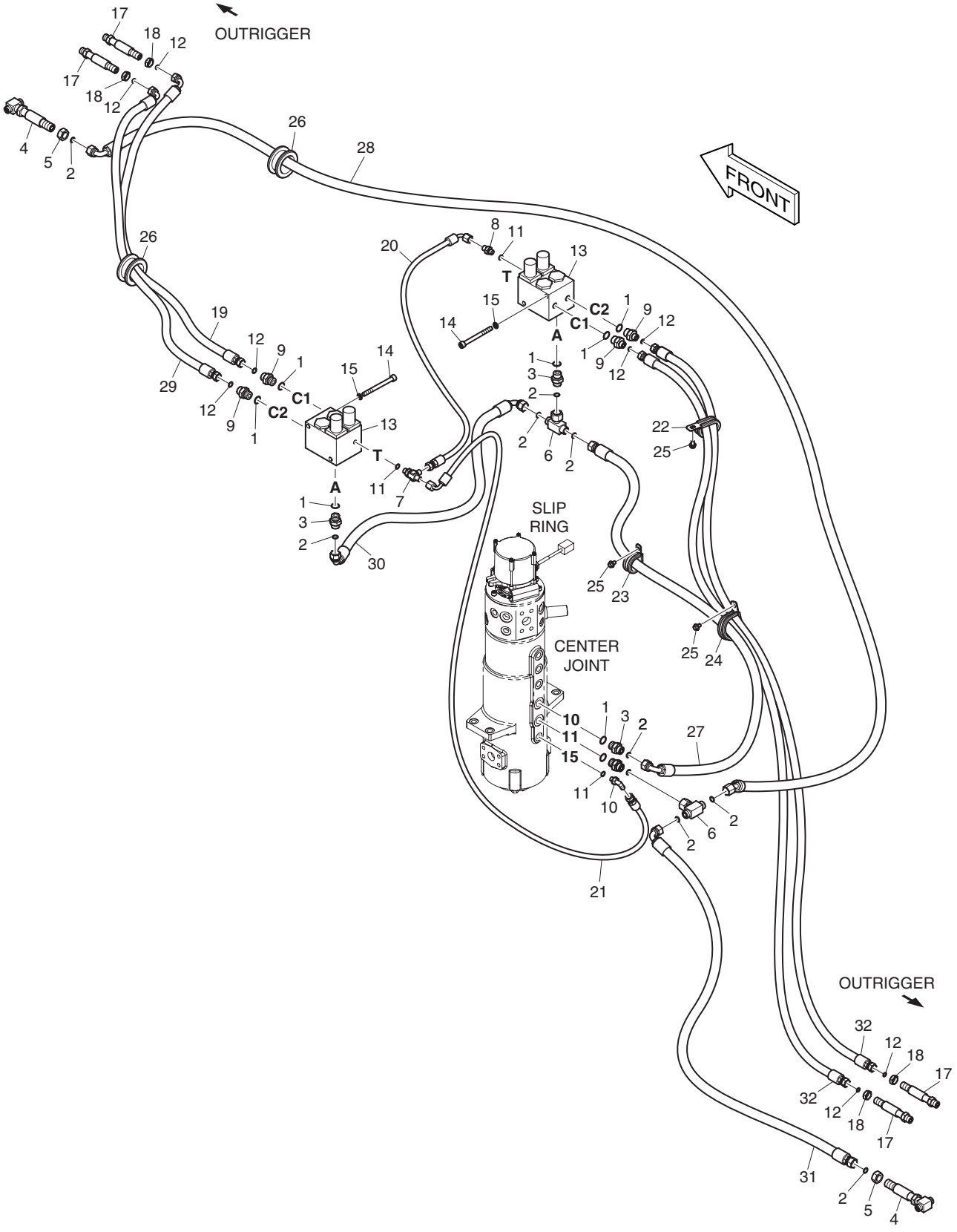

DATE	DEC. 26, 2006
1st EDITION	

Fig. 6980 4 OUTRIGGER PIPING - INDE TUYAUTERIE DE TANGON

Serial No. ;

Key No.	Part No.	Description	Description	Q'ty	S.C	Serial No.	ICA	Replaceable part	
								Part No.	Q'ty
6980--	400-01488C	4 OUTRIGGER PIPING(INDEPEN.)	TUYAUTERIE DE TANGON	-	D				
1	S8000181	O-RING	JOINT TORIQUE	8					
2	S8030081	O-RING	JOINT TORIQUE	10					
3	2181-4133D3	ADAPTER	ADAPTEUR	4					
4	K1006248	TEE	TE	2					
5	121-00010D5	NUT	ECROU	2					
6	181-00137	TEE	TE	2					
7	2181-1951D1	TEE	TE	1					
8	2181-1126D14	ADAPTER	ADAPTEUR	1					
9	2181-4133D39	ADAPTER	ADAPTEUR	4					
10	2181-1702D4	ELBOW	COUDE	1					
11	S8000111	O-RING	JOINT TORIQUE	3					
12	S8030061	O-RING	JOINT TORIQUE	8					
13	420-00473A	VALVE;SOLENOID	SOUPAPE A SOLENOIDE	2					
14	S2213766	BOLT;SOCKET	BOULON A 6 PANS CREUX	4					
15	S5110603	WASHER	RONDELLE	4					
17	K1013483	ADAPTER	ADAPTEUR	4					
18	DS0301032	NUT	ECROU	4					
19	DS2013680	HOSE	TUYAU FLEXIBLE	1					
20	DS2093013	HOSE	TUYAU FLEXIBLE	1					
21	DS2093014	HOSE	TUYAU FLEXIBLE	1					
22	124-00209D2	CLIP	AGRAFE	1					
23	124-00208D6	CLIP	AGRAFE	1					
24	124-00208D9	CLIP	AGRAFE	1					
25	K1001029	BOLT	BOULON	3					
26	2160-1004D62	BUSHING;RUBBER	DOUILLE EN CAOUTCHOUC	2					
27	DS2013540	HOSE	TUYAU FLEXIBLE	1					
28	DS2021143	HOSE	TUYAU FLEXIBLE	1					
29	DS2013707	HOSE	TUYAU FLEXIBLE	1					
30	DS2023183	HOSE	TUYAU FLEXIBLE	1					
31	DS2013681	HOSE	TUYAU FLEXIBLE	1					
32	DS2011496	HOSE	TUYAU FLEXIBLE	2					

Fig. 6990 FRONT / REAR OUTRIGGER PIPING - INDE TUYAUTERIE DE TANGON

Serial No. ;

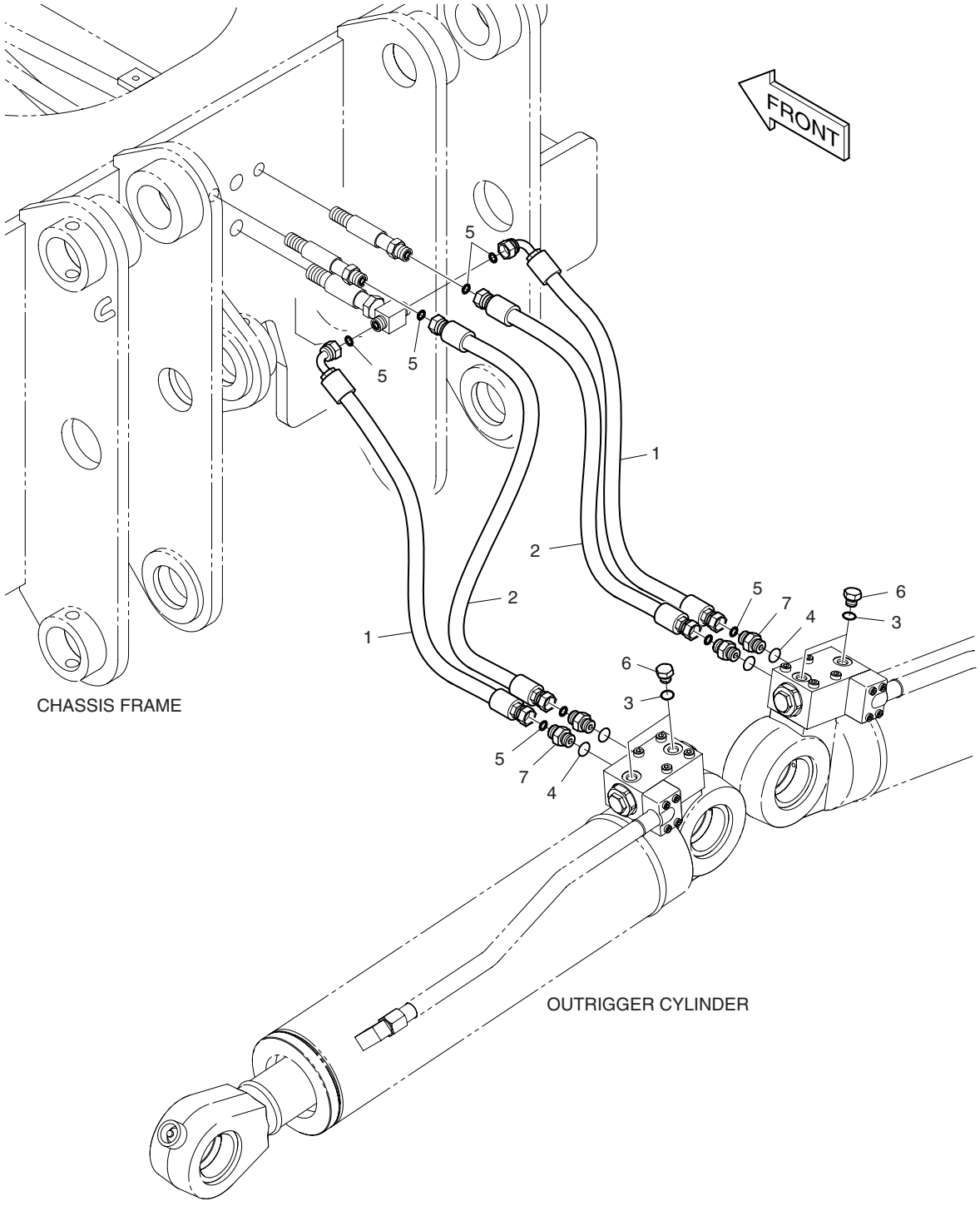

DATE	DEC. 26, 2006
1st EDITION	

Fig. 6990 FRONT / REAR OUTRIGGER PIPING - INDE
TUYAUTERIE DE TANGON

Serial No. ;

Key No.	Part No.	Description	Description	Q'ty	S.C	Serial No.	ICA	Replaceable part	
								Part No.	Q'ty
6990--	400-01480A	OUTRIGGER PIPING(INDE.)	TUYAUTERIE DE TANGON	-	D				
1	DS2013692	HOSE	TUYAU FLEXIBLE	2					
2	DS2011490	HOSE	TUYAU FLEXIBLE	2					
3	S8000111	O-RING	JOINT TORIQUE	4					
4	S8000141	O-RING	JOINT TORIQUE	4					
5	S8030061	O-RING	JOINT TORIQUE	8					
6	2181-1950D1	PLUG	BOUCHON	4					
7	2181-4133D2	ADAPTER	ADAPTEUR	4					

DATE	DEC. 26, 2006
1st EDITION	

Fig. 7000 SWITCH - FRONT OUTRIGGER(INDE) COMMUTATEUR

Serial No. ;

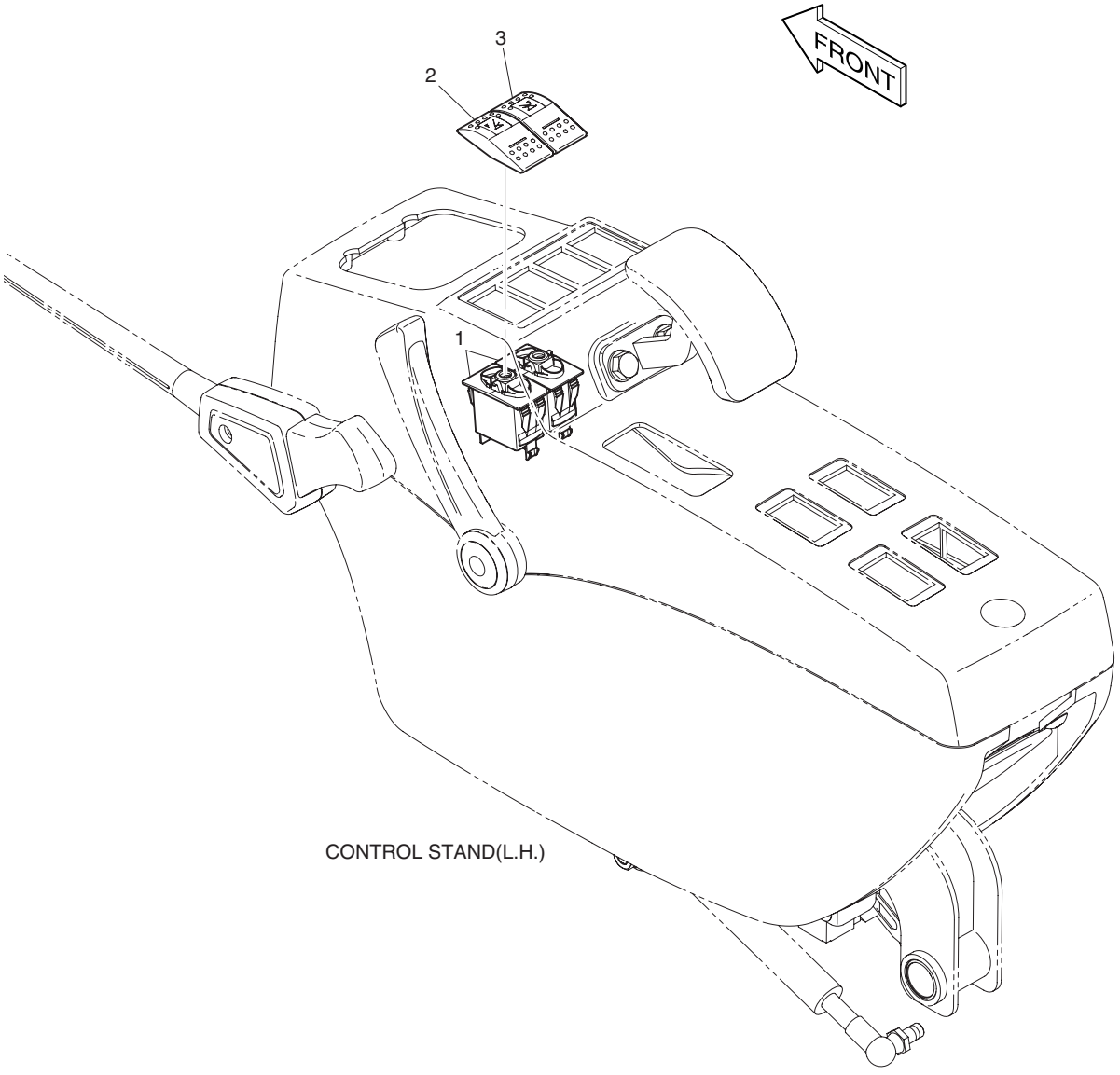

DATE	DEC. 26, 2006
1st EDITION	

Fig. 7000 SWITCH - FRONT OUTRIGGER(INDE) COMMUTATEUR

Serial No. ;

Key No.	Part No.	Description	Description	Q'ty	S.C	Serial No.	ICA	Replaceable part	
								Part No.	Q'ty
7000--	K1023314A	ELECTRIC ASS'Y;FRONT	PIECES ELECTRIQUES	-	D				
1	549-00101	SWITCH;ROCKER(1STEP)	INTERRUPTEUR	2					
2	K1002406D23	ACTUATOR;SWITCH	ACTUATOR;SWITCH	1					
3	K1002406D24	ACTUATOR;SWITCH	ACTUATOR;SWITCH	1					

DATE	DEC. 26, 2006
1st EDITION	

Fig. 7010 SWITCH - REAR OUTRIGGER(INDE) COMMUTATEUR

Serial No. ;

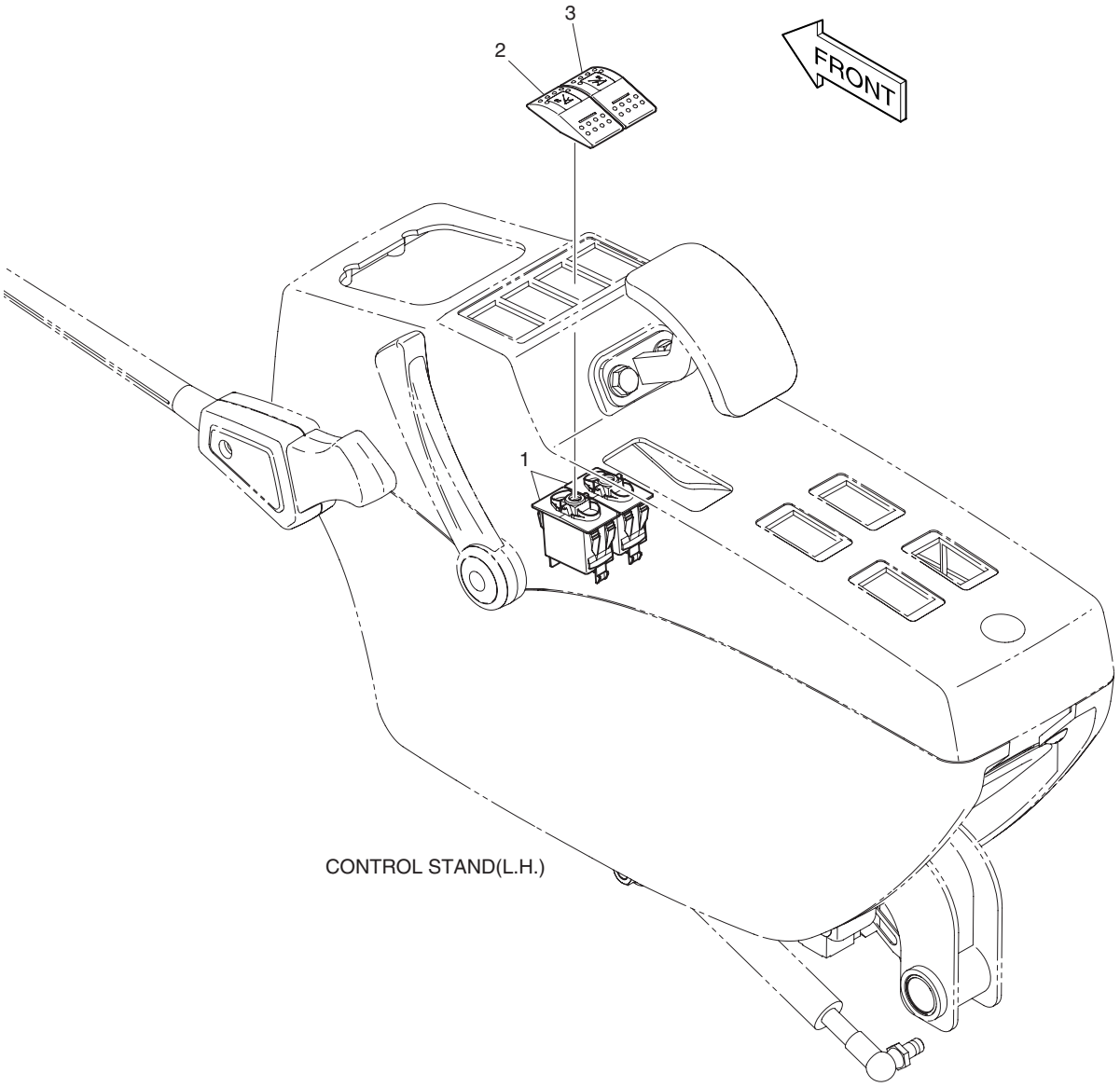

DATE	DEC. 26, 2006
1st EDITION	

Fig. 7010 SWITCH - REAR OUTRIGGER(INDE) COMMUTATEUR

Serial No. ;

Key No.	Part No.	Description	Description	Q'ty	S.C	Serial No.	ICA	Replaceable part	
								Part No.	Q'ty
7010--	K10123316A	SWITCH ASS'Y	AVERTISSEUR	-	D				
1	549-00101	SWITCH(1 STEP)	AVERTISSEUR	2					
2	K1002406D18	ACTUATOR;SWITCH	ACTUATOR;SWITCH	1					
3	K1002406D19	ACTUATOR;SWITCH	ACTUATOR;SWITCH	1					

DATE	DEC. 15, 2006
REV.NO.	EXB06-13

Fig. 7020 MAIN PIPING - ARTI. BOOM
CONDUITES DE PRINCIPAL

Serial No. ;

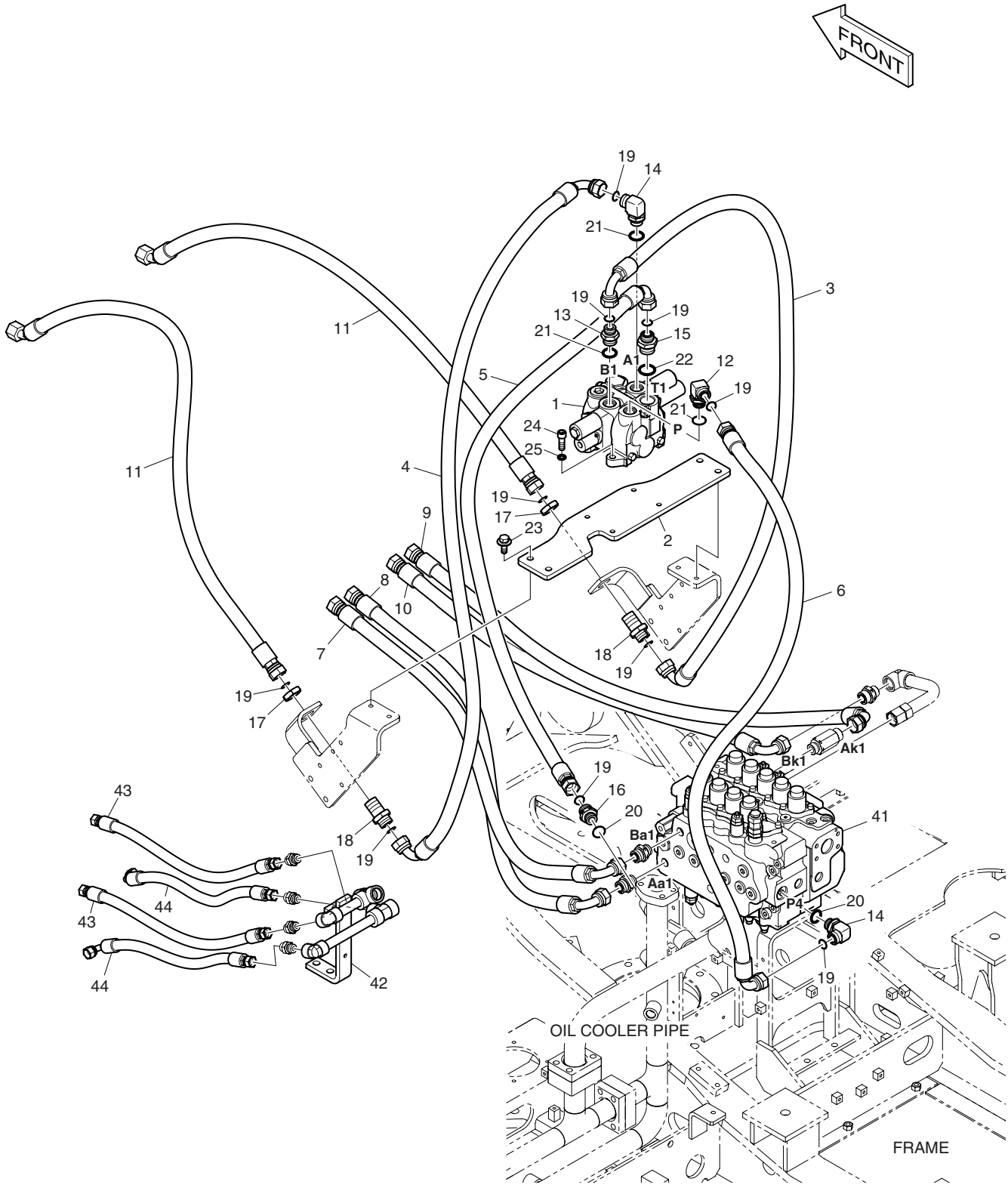

DATE	DEC. 15, 2006
REV. NO.	EXB06-13

Fig. 7020 MAIN PIPING - ARTI. BOOM
CONDUITES DE PRINCIPAL

Serial No. ;

Key No.	Part No.	Description	Description	Q'ty	S.C	Serial No.	ICA	Replaceable part	
								Part No.	Q'ty
7020--	K1018181B	MAIN PIPING;ARTI. BOOM	TUYAUTERIE PRINCIPALE	-	D				
1	K1004312	VALVE;CONTROL	VANNE DE COMMANDE	1					
2	K1009873A	PLATE	PLAQUE	1					
3	DS2023265	HOSE	TUYAU FLEXIBLE	1					
4	DS2023266	HOSE	TUYAU FLEXIBLE	1					
5	DS2013791	HOSE	TUYAU FLEXIBLE	1					
6	DS2013792	HOSE	TUYAU FLEXIBLE	1					
7	DS2013552	HOSE	TUYAU FLEXIBLE	1					
8	DS2013793	HOSE	TUYAU FLEXIBLE	1					
9	DS2013794	HOSE	TUYAU FLEXIBLE	1					
10	DS2013795	HOSE	TUYAU FLEXIBLE	1					
11	DS2012429	HOSE	TUYAU FLEXIBLE	2					
12	2181-2294D2	ELBOW	COUDE	1					
13	2181-4133D5	ADAPTER	ADAPTEUR	1					
14	2181-2628D1	ELBOW	COUDE	2					
15	2181-4133D12	ADAPTER	ADAPTEUR	1					
16	2181-2627D1	ADAPTER	ADAPTEUR	1					
17	121-00010D8	NUT	ECROU	2					
18	DS2415007	ADAPTER	ADAPTEUR	2					
19	S8030121	O-RING	JOINT TORIQUE	10					
20	S8000231	O-RING	JOINT TORIQUE	2					
21	S8000241	O-RING	JOINT TORIQUE	3					
22	S8000291	O-RING	JOINT TORIQUE	1					
23	DS0025020	BOLT;SET	BOULON	4					
24	S2215366	BOLT M12X1.75X35	BOULON	4					
25	S5110703	WASHER;SPRING	RONDELLE ELASTIQUE	4					
41	K1015269A	VALVE;CONTROL	VANNE DE COMMANDE	1		5001–5010			
	K1015269B	**VALVE;CONTROL**	VANNE DE COMMANDE	1		**5011**–			
42	K1009938A	PIPE ASS'Y	ENSEMBLE DE TUYAU	1					
43	DS2013926	HOSE	TUYAU FLEXIBLE	2					
44	DS2011609	HOSE	TUYAU FLEXIBLE	2					

DATE	DEC. 15, 2006
REV.NO.	EXB06-13

Fig. 7030 PILOT PIPING(1) - ARTI. BOOM
CONDUITES DE PILOTE

Serial No. ;

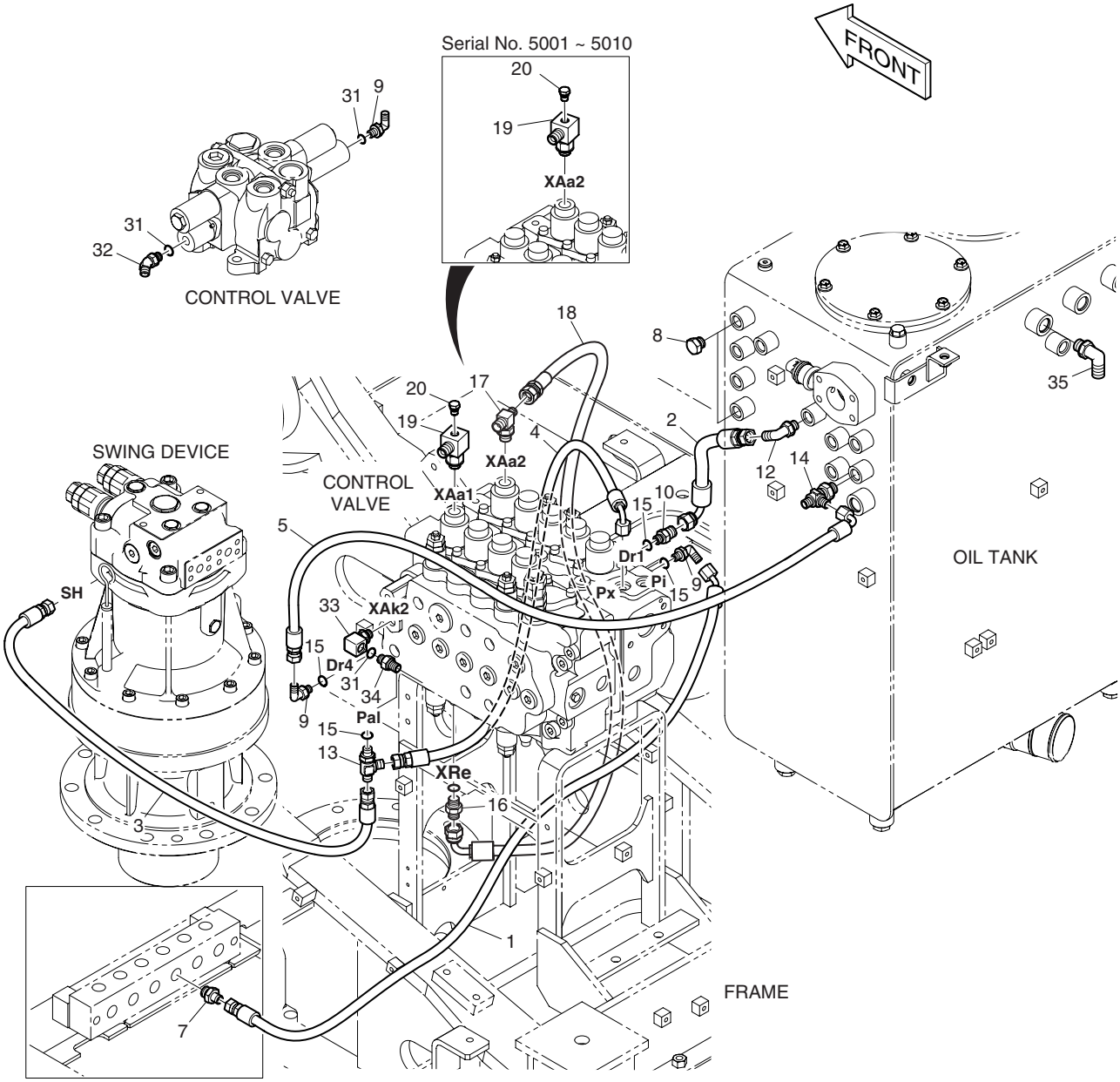

DATE	DEC. 15, 2006
REV. NO.	EXB06-13

Fig. 7030 PILOT PIPING(1) - ARTI. BOOM
CONDUITES DE PILOTE

Serial No. ;

Key No.	Part No.	Description	Description	Q'ty	S.C	Serial No.	ICA	Replaceable part	
								Part No.	Q'ty
7030--	**K1018163A**	**PILOT PIPING;ARTI. BOOM**	TUYAUTERIE PILOTE	-	D				
1	DS2092067	HOSE	TUYAU FLEXIBLE	1					
2	DS2093210	HOSE	TUYAU FLEXIBLE	1					
3	DS2094062	HOSE	TUYAU FLEXIBLE	1					
4	DS2093211	HOSE	TUYAU FLEXIBLE	1					
5	DS2093158	HOSE	TUYAU FLEXIBLE	1					
7	2181-1126D36	ADAPTER	ADAPTEUR	1					
8	2181-1950D2	PLUG	BOUCHON	2					
9	2181-1702D4	ELBOW	COUDE	3					
10	2181-1126D85	ADAPTER	ADAPTEUR	1					
12	2181-1702D5	ELBOW	COUDE	1					
13	2181-1951D1	TEE	TE	1					
14	2181-1951D7	TEE	TE	1					
15	S8000111	O-RING	JOINT TORIQUE	4					
16	**2181-1126D14**	**ADAPTER**	ADAPTEUR	1		**5011–**			
17	**2181-2281D3**	**TEE**	TE	1		**5011–**			
18	**DS2093028**	**HOSE**	TUYAU FLEXIBLE	1		**5011–**			
19	**2181-2590D2**	**ADAPTER**	ADAPTEUR	1					
20	**2181-2047A**	**PLUG**	BOUCHON	1					
31	S8000111	O-RING	JOINT TORIQUE	3					
32	2181-2419D1	ELBOW	COUDE	1					
33	2181-2295D4	ELBOW	COUDE	1					
34	181-00144D21	ADAPTER;ORIFICE	ADAPTEUR	1					
35	2181-1702D2	ELBOW	COUDE	1					

DATE	JUN. 30, 2008
REV.NO.	EXB08-06

Fig. 7040 PILOT PIPING(2) - ARTI. BOOM
CONDUITES DE PILOTE

Serial No. ;

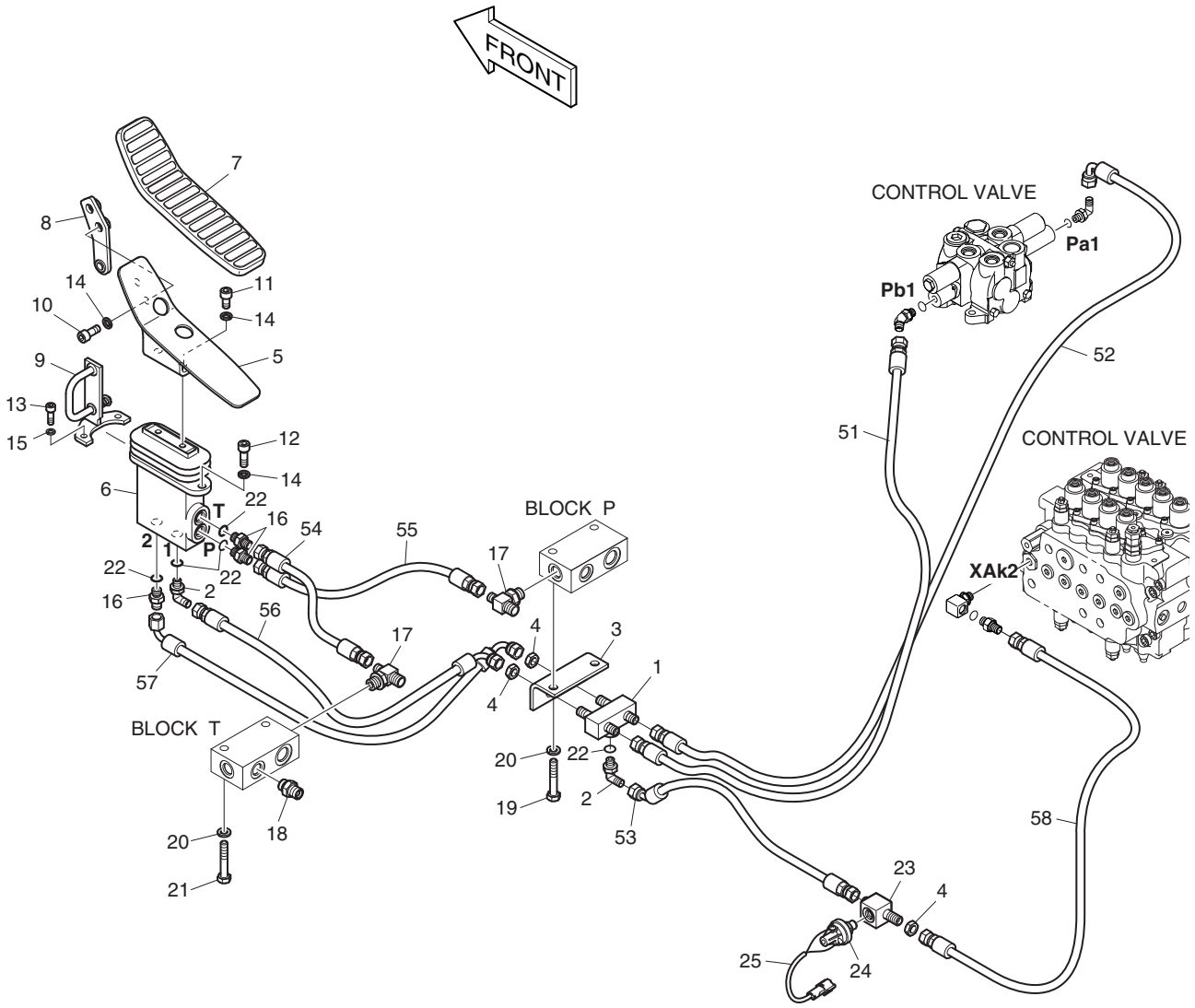

DATE	JUN. 30, 2008
REV. NO.	EXB08-06

Fig. 7040 PILOT PIPING(2) - ARTI. BOOM CONDUITES DE PILOTE

Serial No. ;

Key No.	Part No.	Description	Description	Q'ty	S.C	Serial No.	ICA	Replaceable part	
								Part No.	Q'ty
7040--	K1018150A	PILOT PIPING;ARTI. BOOM	TUYAUTERIE PILOTE	-	D				
1	420-00476	VALVE;SHUTTLE	VANNE	1					
2	2181-1702D4	ELBOW	COUDE	2					
3	195-02779A	BRACKET	SUPPORT	1					
4	121-00010D7	NUT	ECROU	3					
5	K1015404	BRACKET	SUPPORT	1					
6	K1017382	VALVE;PEDAL	VANNE	1		5001–5014	I	K1017382A	1
	K1017382A	**VALVE;PEDAL**	VANNE	1		**5015–**			
7	161-00386	RUBBER;PEDAL	CAOUTCHOUC	1					
8	K1001871B	PLATE	PLAQUE	1					
9	K1001873A	PLATE	PLAQUE	1					
10	S2212066	BOLT;SOCKET	BOULON A 6 PANS CREUX	2					
11	S2211866	BOLT;SOCKET	BOULON A 6 PANS CREUX	2					
12	S2212266	BOLT;SOCKET M10X1.5X30	BOULON A 6 PANS CREUX	2					
13	S2209066	BOLT;SOCKET	BOULON A 6 PANS CREUX	2					
14	S5110603	WASHER	RONDELLE	6					
15	S5110503	WASHER;SPRING	RONDELLE ELASTIQUE	2					
16	2181-1126D14	ADAPTER	ADAPTEUR	3					
17	2181-2281D3	TEE	TE	2					
18	2181-1126D7	ADAPTER	ADAPTEUR	1					
19	S0558766	BOLT	BOULON	2					
20	S5102603	WASHER;SPRING(M10)	RONDELLE ELASTIQUE	4					
21	S0558666	BOLT	BOULON	2					
22	S8000111	O-RING	JOINT TORIQUE	5					
23	K1025319	ADAPTER	ADAPTEUR	1					
24	549-00010	SWITCH;PRESSURE	COMMUTATEUR	1					
25	530-00067	HARNESS;STOP LAMP SW	HARNAIS	1					
51	DS2094175	HOSE	TUYAU FLEXIBLE	1					
52	DS2093364	HOSE	TUYAU FLEXIBLE	1					
53	DS2092116	HOSE	TUYAU FLEXIBLE	1					
54	DS2092024	HOSE	TUYAU FLEXIBLE	1					
55	DS2094174	HOSE	TUYAU FLEXIBLE	1					
56	DS2093005	HOSE	TUYAU FLEXIBLE	1					
57	DS2091054	HOSE	TUYAU FLEXIBLE	1					
58	DS2094211	HOSE	TUYAU FLEXIBLE	1					

DATE	JUN. 30, 2008
REV.NO.	EXB08-06

Fig. 7050 ARTI BOOM
PERCHE D'ARTI

Serial No. ;

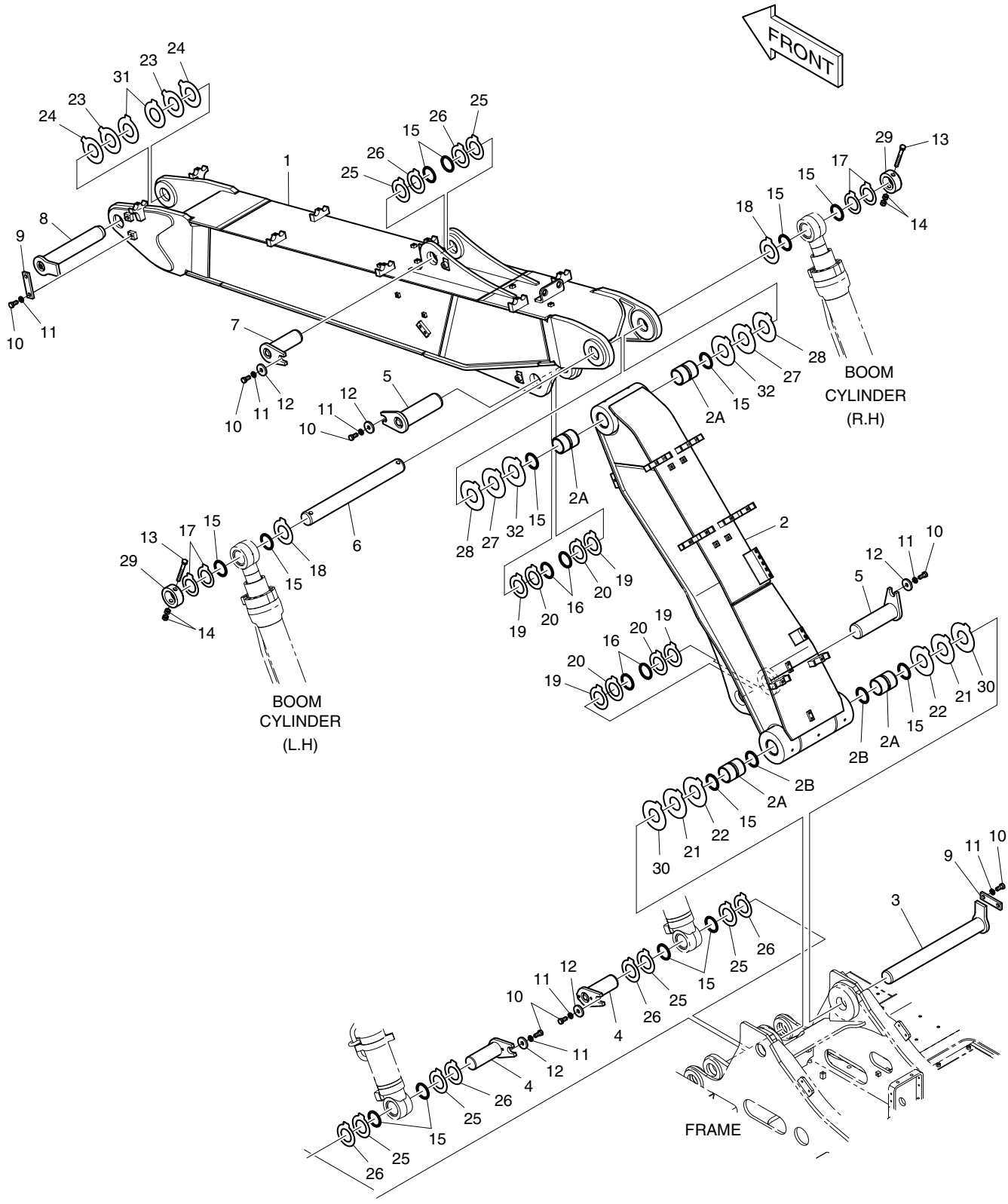

DATE	JUN. 30, 2008
REV. NO.	EXB08-06

Fig. 7050 ARTI BOOM PERCHE D'ARTI

Serial No. ;

Key No.	Part No.	Description	Description	Q'ty	S.C	Serial No.	ICA	Replaceable part	
								Part No.	Q'ty
7050--	K1008201E	ARTI BOOM	PERCHE D'ARTI	-	D				
1	K1008202A	BOOM;UPPER	FLECHE	1					
2	K1008232A	BOOM;LOWER	FLECHE	1					
2A	110-00240	. BUSH	. DOUILLE	4					
2B	2180-1106BD4	. SEAL;DUST	. JOINT	2					
3	123-00671A	PIN	GOUPILLE	1		5001–5012	I	123-00671B	1
	123-00671B	PIN	GOUPILLE	1		5013–			
4	123-00474	PIN	GOUPILLE	2		5001–5014	I	K1038739	2
	K1038739	PIN	GOUPILLE	2		5015–			
5	K1008227	PIN	GOUPILLE	2					
6	K1004508	PIN	GOUPILLE	1		5001–5012	I	K1004508A	1
	K1004508A	PIN	GOUPILLE	1		5013–5016	I	K1004508C	1
	K1004508C	**PIN**	GOUPILLE	1		**5017**–			
7	2123-2209C	PIN	GOUPILLE	1		5001–5014	I	K1038741	1
	K1038741	PIN	GOUPILLE	1		5015–			
8	2123-2207E	PIN	GOUPILLE	1		5001–5014	I	K1038740	1
	K1038740	PIN	GOUPILLE	1		5015–			
9	621-03710A	PLATE;STOPPER	PLAQUE	2					
10	S0521366	BOLT M16X2.0X35	BOULON	9					
11	S5102903	WASHER;SPRING	RONDELLE ELASTIQUE	9					
12	2116-1060D6	STOPPER	ARRET	5					
13	S0566966	BOLT M16X2.0X140	BOULON	2					
14	S4012933	NUT M16X2.0	ECROU	4					
15	2180-1106BD4	SEAL;DUST	JOINT	14					
16	2180-1106BD24	SEAL;DUST	JOINT	4					
17	DS7752003	SHIM	CALE	4					
18	DS7752006	SHIM 1.0mm	CALE	2					
19	DS7752026	SHIM 1.0mm	CALE	4					
20	DS7752027	SHIM 1.6mm	CALE	4					
21	DS7752011	SHIM	CALE	2					
22	DS7752023	SHIM	CALE	2					
23	DS7752008	SHIM	CALE	2					
24	DS7752009	SHIM	CALE	2					
25	DS7752004	SHIM	CALE	6					
26	DS7752005	SHIM	CALE	6					
27	DS7752059	SHIM 1.0t	CALE	2					
28	DS7752060	SHIM 1.6t	CALE	2					
29	2116-1532A	STOPPER	ARRET	2					

DATE	JUN. 30, 2008
REV.NO.	EXB08-06

Fig. 7050 ARTI BOOM
PERCHE D'ARTI

Serial No. ;

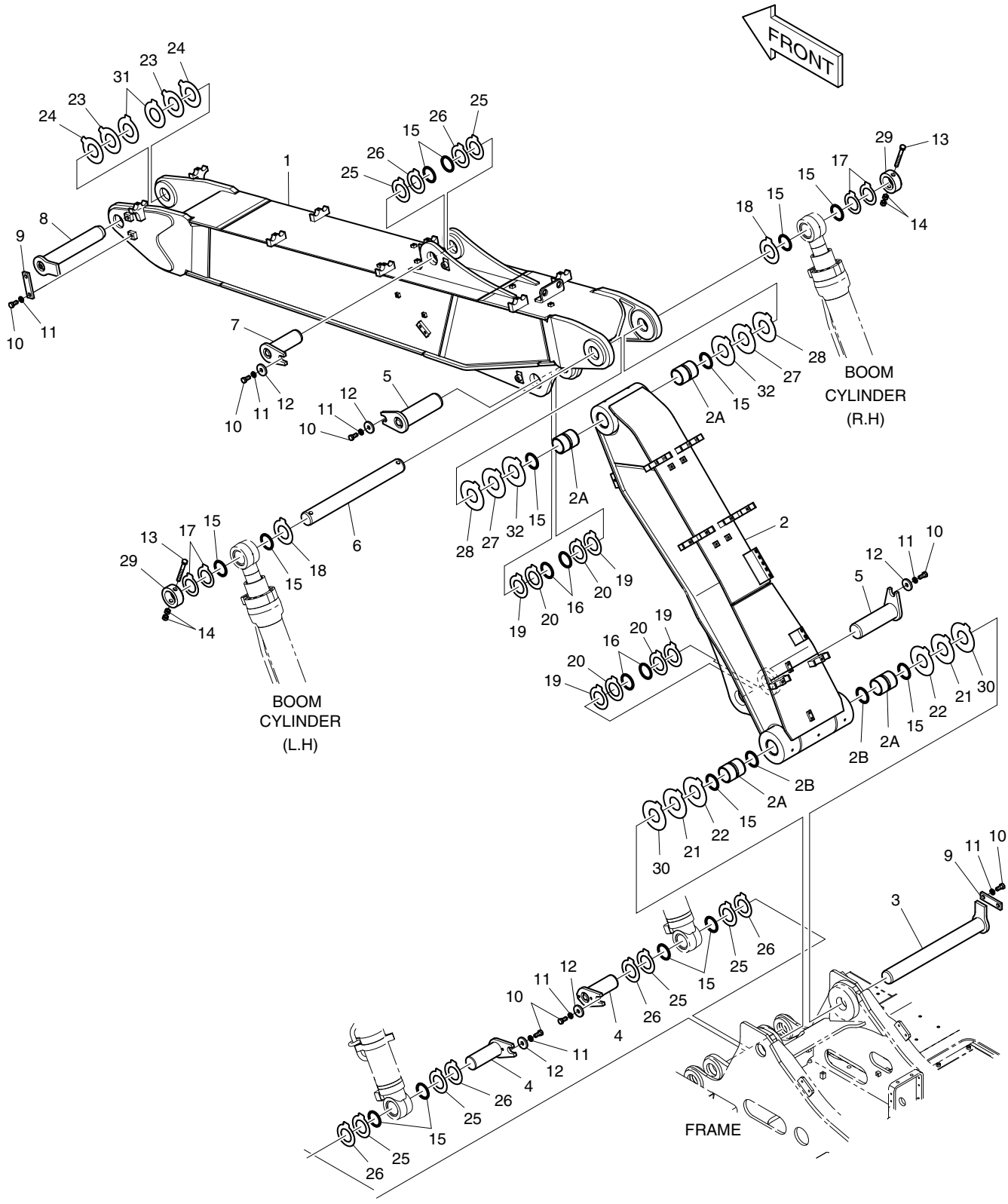

DATE	JUN. 30, 2008
REV. NO.	EXB08-06

Fig. 7050 ARTI BOOM PERCHE D'ARTI

Serial No. ;

Key No.	Part No.	Description	Description	Q'ty	S.C	Serial No.	ICA	Replaceable part	
								Part No.	Q'ty
7050-30	DS7752089	SHIM 1.3mm	CALE	2					
31	DS7752090	SHIM 1.3mm	CALE	2					
32	DS7752091	SHIM	CALE	2					

DATE	DEC. 26, 2006
1st EDITION	

Fig. 7060 ARTI BOOM PIPING
TUYAUTERIE DE PERCHE D'ARTI

Serial No. ;

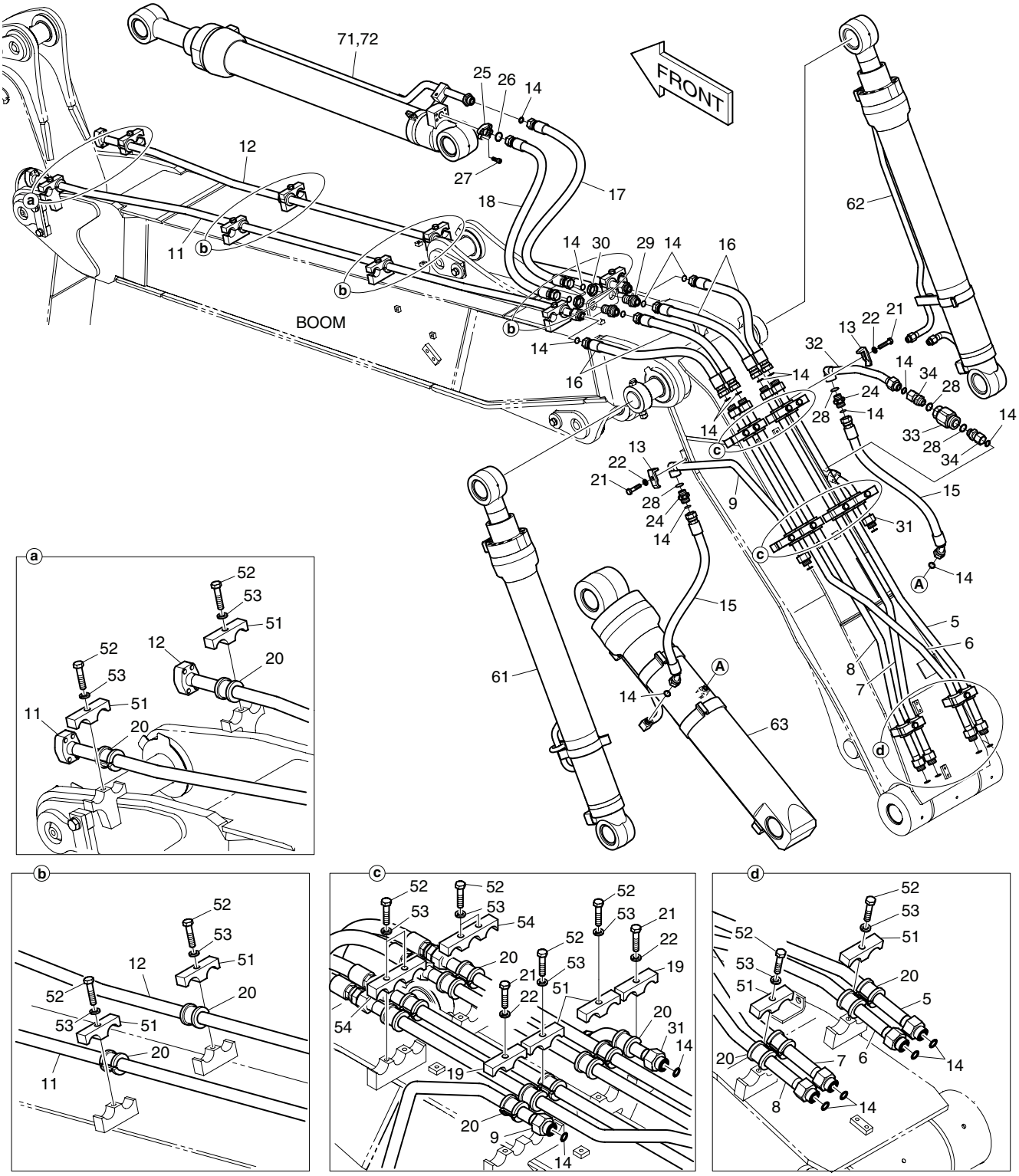

DATE	DEC. 26, 2006
1st EDITION	

Fig. 7060 ARTI BOOM PIPING
TUYAUTERIE DE PERCHE D'ARTI

Serial No. ;

Key No.	Part No.	Description	Description	Q'ty	S.C	Serial No.	ICA	Replaceable part	
								Part No.	Q'ty
7060--	K1008262C	ARTI BOOM PIPING	PERCHE ASS'Y D'ARTI	-	D				
5	K1008263	PIPE	TUYAU	1					
6	K1008264	PIPE	TUYAU	1					
7	K1008265	PIPE	TUYAU	1					
8	K1008266	PIPE	TUYAU	1					
9	K1008267B	PIPE	TUYAU	1					
11	K1008269	PIPE	TUYAU	1					
12	K1008739	PIPE	TUYAU	1					
13	2124-1026D2	CLAMP;PIPE	COLLIER	2					
14	S8030121	O-RING	JOINT TORIQUE	23					
15	DS2012316	HOSE	TUYAU FLEXIBLE	2					
16	DS2011504	HOSE	TUYAU FLEXIBLE	4					
17	DS2011505	HOSE	TUYAU FLEXIBLE	1					
18	DS2016070	HOSE	TUYAU FLEXIBLE	1					
19	K1004316	CLAMP;PIPE	COLLIER	2					
20	K1000294A	RUBBER	CAOUTCHOUC	22					
21	S0560866	BOLT	BOULON	4					
22	S5102703	WASHER;SPRING(M12)	RONDELLE ELASTIQUE	4					
24	2181-2627D1	ADAPTER	ADAPTEUR	2					
25	2181-9079	FLANGE;SPLIT	BRIDE	2					
26	2180-1026D2	O-RING	JOINT TORIQUE	1					
27	S2212266	BOLT;SOCKET M10X1.5X30	BOULON A 6 PANS CREUX	4					
28	S8000231	O-RING	JOINT TORIQUE	4					
29	DS2415007	ADAPTER	ADAPTEUR	2					
30	121-00010D8	NUT	ECROU	2					
31	K1026623A	PIPE	TUYAU	1					
32	K1026624A	PIPE	TUYAU	1					
33	K1025252	VALVE;SLOW RETURN	VANNE	1					
34	2181-2566D10	ADAPTER	ADAPTEUR	2					
51	K1004316	CLAMP;PIPE	COLLIER	12					
52	S0560866	BOLT	BOULON	16					
53	S5102703	WASHER;SPRING(M12)	RONDELLE ELASTIQUE	16					
54	K1004317	CLAMP;PIPE	COLLIER	2					
61	K1008735B	CYLINDER;BOOM(L.H)	VERIN DE FLECHE	1					
62	K1008736B	CYLINDER;BOOM(R.H)	VERIN DE FLECHE	1					
63	K1008737A	CYLINDER;ARTI BOOM	CYLINDRE	1					
71	K1008738	CYLINDER;ARM 2.1m	VERIN DE BALANCIER	1					
72	K1008740	CYLINDER;ARM 2.5m	VERIN DE BALANCIER	1					

DATE	DEC. 26, 2006
1st EDITION	

Fig. 7070 LUBRICATION PIPING - ARTI BOOM
TUYAUTERIE DE LUBRIFICATION

Serial No. ;

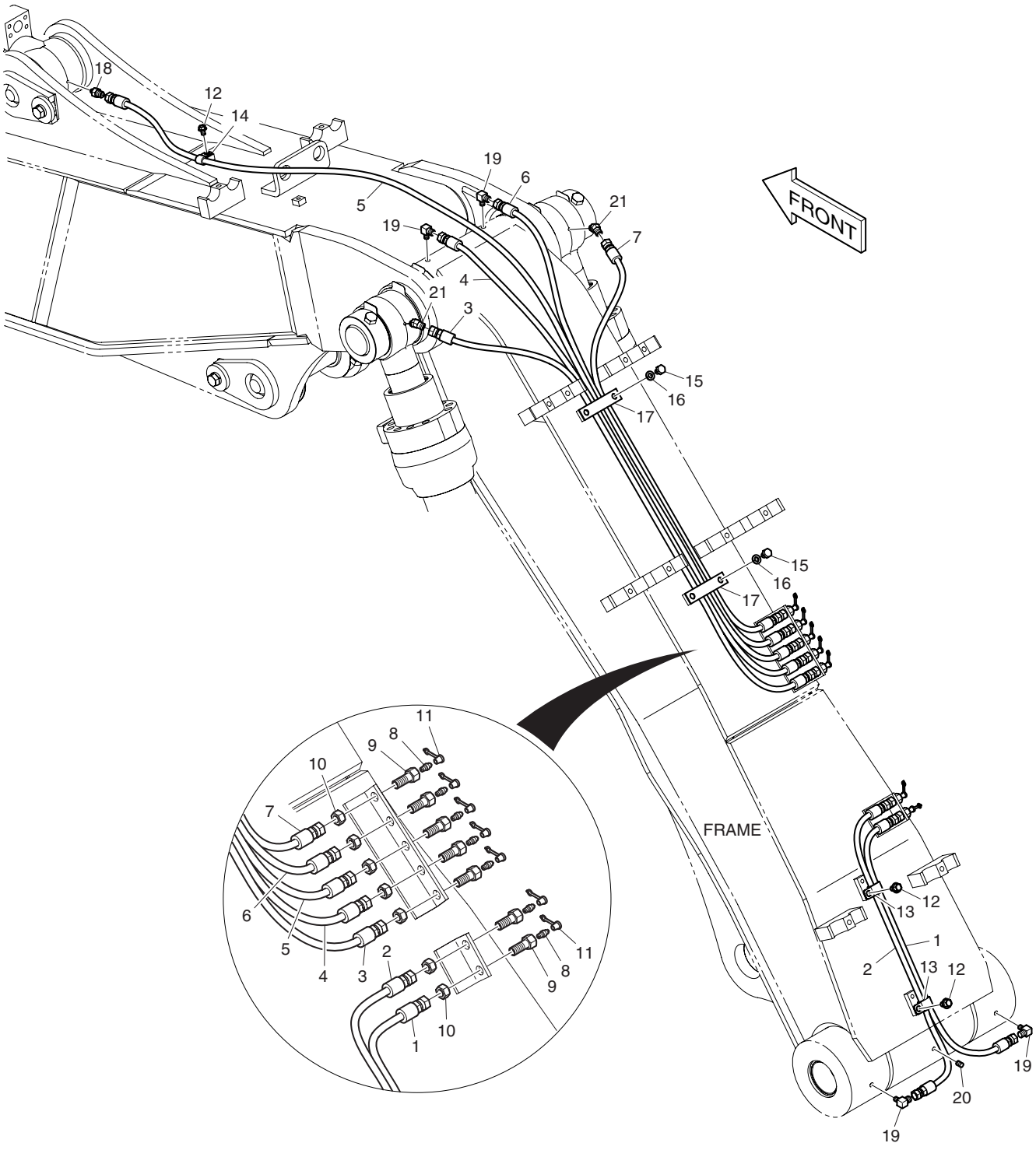

DATE	DEC. 26, 2006
1st EDITION	

Fig. 7070 LUBRICATION PIPING - ARTI BOOM
TUYAUTERIE DE LUBRIFICATION

Serial No. ;

Key No.	Part No.	Description	Description	Q'ty	S.C	Serial No.	ICA	Replaceable part	
								Part No.	Q'ty
7070--	K1008261C	LUBRICATION PIPING;ARTI BOOM	LUBRIFICATION	-	D				
1	2184-1045D66	HOSE	TUYAU FLEXIBLE	1					
2	2184-1045D200	HOSE	TUYAU FLEXIBLE	1					
3	DS2053955	HOSE	TUYAU FLEXIBLE	1					
4	DS2053942	HOSE	TUYAU FLEXIBLE	1					
5	DS2053883	HOSE	TUYAU FLEXIBLE	1					
6	DS2053773	HOSE	TUYAU FLEXIBLE	1					
7	2184-1045D190	HOSE	TUYAU FLEXIBLE	1					
8	S6710041	NIPPLE;GREASE	MAMELON	7					
9	181-00103	REDUCER	REDUCEUR	7					
10	121-00006	NUT	ECROU	7					
11	160-00020	CAP;GREASE NIPPLE	CHAPEAU	7					
12	K1001029	BOLT	BOULON	3					
13	124-00199D5	CLIP	AGRAFE	2					
14	2124-1353D2	CLIP	AGRAFE	1					
15	S0511566	BOLT	BOULON	4					
16	S5102603	WASHER;SPRING(M10)	RONDELLE ELASTIQUE	4					
17	K1008754	CLAMP;PIPE	COLLIER	2					
18	2181-4112	ADAPTER	ADAPTEUR	1					
19	2181-1186D12	ELBOW	COUDE	4					
20	S3524403	PLUG;DRAIN	BOUCHON	1					
21	DS2331015	ELBOW	COUDE	2					

DATE	DEC. 26, 2006
1st EDITION	

Fig. 7080 MAIN PIPING - ONE WAY(ARTI. BOOM) CONDUITES DE PRINCIPAL

Serial No. ;

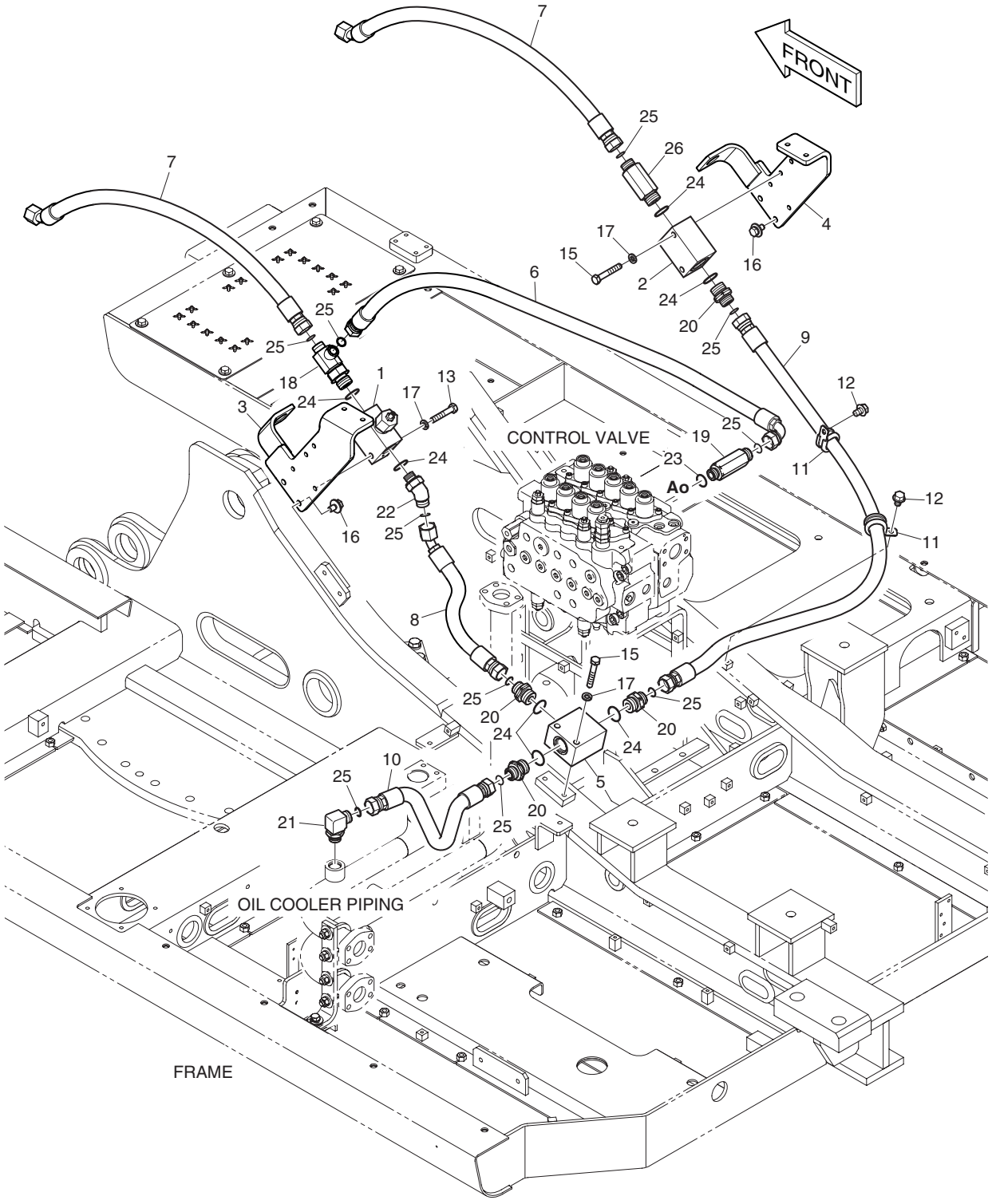

DATE	DEC. 26, 2006
1st EDITION	

Fig. 7080 MAIN PIPING - ONE WAY(ARTI. BOOM) CONDUITES DE PRINCIPAL

Serial No. ;

Key No.	Part No.	Description	Description	Q'ty	S.C	Serial No.	ICA	Replaceable part	
								Part No.	Q'ty
7080--	K1018183A	BREAKER PIPING	TUYAUTERIE A SENS	-	D				
1	426-00267A	VALVE;RELIEF	VANNE	1					
2	423-00193B	BLOCK	BLOC	1					
3	K1009871A	PLATE(L.H)	PLAQUE	1					
4	K1009872A	PLATE(R.H)	PLAQUE	1					
5	K1002868A	BLOCK	BLOC	1					
6	DS2013393	HOSE	TUYAU FLEXIBLE	1					
7	DS2012428	HOSE	TUYAU FLEXIBLE	2					
8	DS2012241	HOSE	TUYAU FLEXIBLE	1					
9	DS2011533	HOSE	TUYAU FLEXIBLE	1					
10	DS2011435	HOSE	TUYAU FLEXIBLE	1					
11	124-00208D5	CLIP	AGRAFE	2					
12	K1001029	BOLT	BOULON	2					
13	S0561266	BOLT	BOULON	2					
15	S0561366	BOLT	BOULON	4					
16	DS0025020	BOLT;SET	BOULON	4					
17	S5102703	WASHER;SPRING	RONDELLE ELASTIQUE	6					
18	2181-2293D2	TEE	TE	1					
19	2181-2627D4	ADAPTER	ADAPTEUR	1					
20	2181-2627D15	ADAPTER	ADAPTEUR	4					
21	2181-2628D1	ELBOW	COUDE	1					
22	2181-2816D6	ELBOW	COUDE	1					
23	S8000231	O-RING	JOINT TORIQUE	2					
24	S8000291	O-RING	JOINT TORIQUE	7					
25	S8030121	O-RING	JOINT TORIQUE	10					
26	DS2232121	ADAPTER	ADAPTEUR	1					

DATE	DEC. 26, 2006
1st EDITION	

Fig. 7090 MAIN PIPING - TWO WAY(ARTI. BOOM) CONDUITES DE PRINCIPAL

Serial No. ;

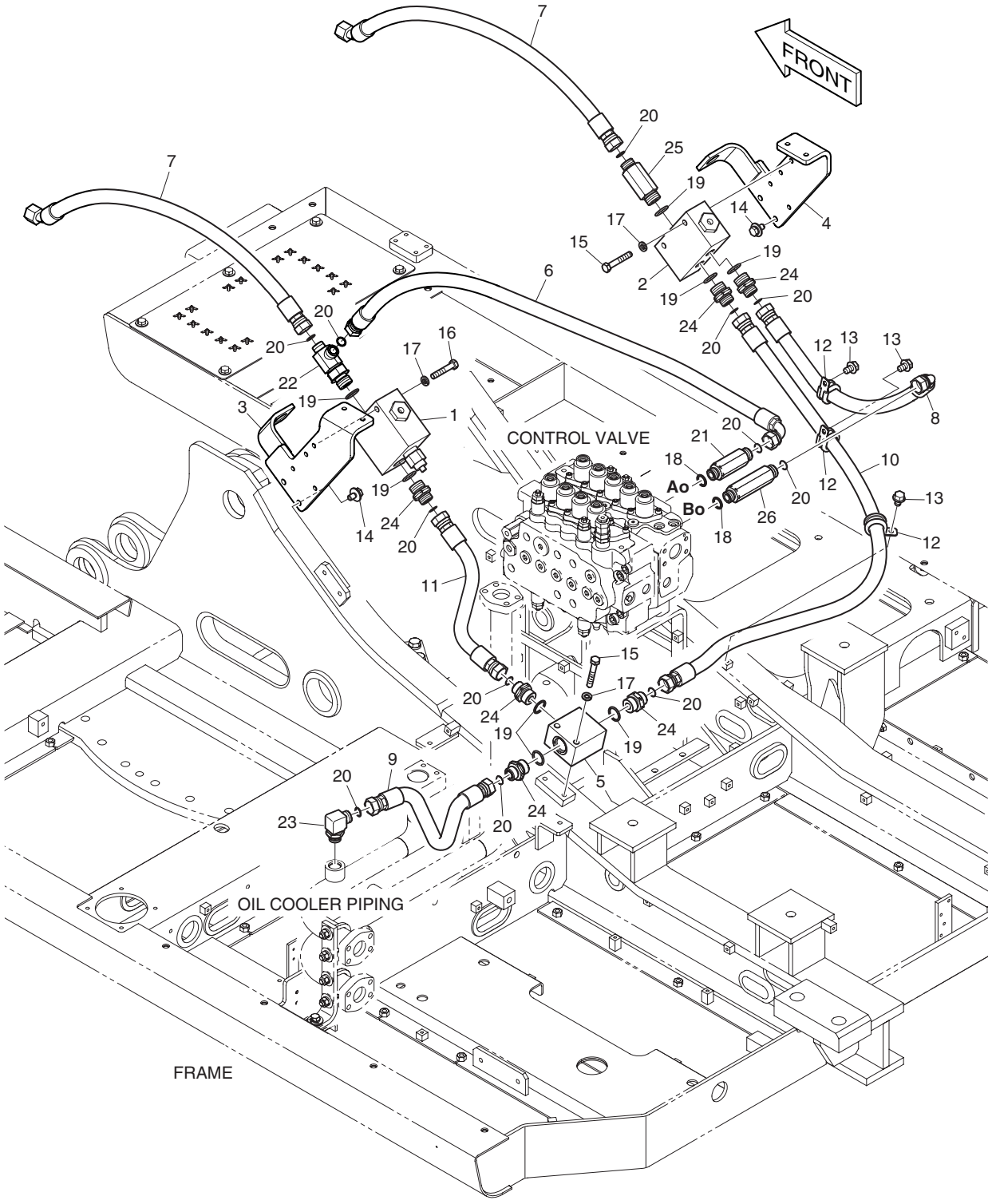

DATE	DEC. 26, 2006
1st EDITION	

Fig. 7090 MAIN PIPING - TWO WAY(ARTI. BOOM) CONDUITES DE PRINCIPAL

Serial No. ;

Key No.	Part No.	Description	Description	Q'ty	S.C	Serial No.	ICA	Replaceable part	
								Part No.	Q'ty
7090--	K1018185A	TWO WAY PIPING	TUYAUTERIE DE DEUX	-	D				
1	426-00248A	VALVE;SELECT	VANNE	1					
2	426-00249A	VALVE;SELECT	VANNE	1					
3	K1009871A	PLATE (L.H)	PLAQUE	1					
4	K1009872A	PLATE (R.H)	PLAQUE	1					
5	K1002868A	BLOCK	BLOC	1					
6	DS2013393	HOSE	TUYAU FLEXIBLE	1					
7	DS2012428	HOSE	TUYAU FLEXIBLE	2					
8	DS2013790	HOSE	TUYAU FLEXIBLE	1					
9	DS2011435	HOSE	TUYAU FLEXIBLE	1					
10	DS2011533	HOSE	TUYAU FLEXIBLE	1					
11	DS2011419	HOSE	TUYAU FLEXIBLE	1					
12	124-00208D5	CLIP	AGRAFE	3					
13	K1001029	BOLT	BOULON	3					
14	DS0025020	BOLT;SET	BOULON	4					
15	S0561366	BOLT	BOULON	4					
16	S0561566	BOLT	BOULON	2					
17	S5102703	WASHER;SPRING(M12)	RONDELLE ELASTIQUE	6					
18	S8000231	O-RING	JOINT TORIQUE	2					
19	S8000291	O-RING	JOINT TORIQUE	8					
20	S8030121	O-RING	JOINT TORIQUE	12					
21	2181-2627D4	ADAPTER	ADAPTEUR	1					
22	2181-2293D2	TEE	TE	1					
23	2181-2628D1	ELBOW	COUDE	1					
24	2181-2627D15	ADAPTER	ADAPTEUR	6					
25	DS2232121	ADAPTER	ADAPTEUR	1					
26	DS2404023	ADAPTER	ADAPTEUR	1					

DATE	JUN. 30, 2008
REV.NO.	EXB08-06

Fig. 7100 PILOT PIPING - PE3C & ARTI
CONDUITES DE PILOTE

Serial No. ;

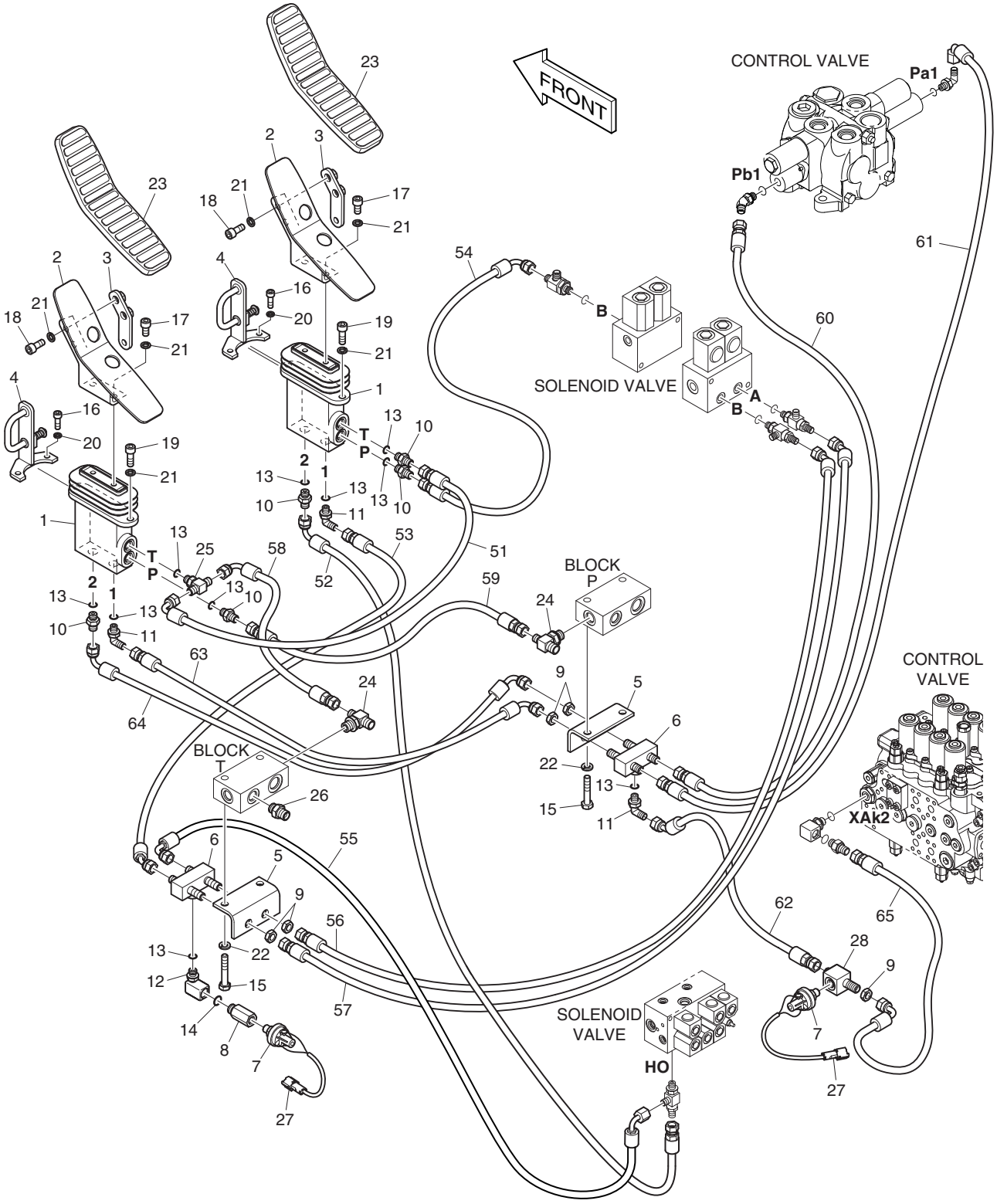

DATE	JUN. 30, 2008
REV. NO.	EXB08-06

Fig. 7100 PILOT PIPING - PE3C & ARTI CONDUITES DE PILOTE

Serial No. ;

Key No.	Part No.	Description	Description	Q'ty	S.C	Serial No.	ICA	Replaceable part	
								Part No.	Q'ty
7100--	K1018152A	PILOT PIPING;PE3C & ARTI	TUYAUTERIE PILOTE	-	D				
1	K1017382	VALVE;PEDAL	VANNE	2		5001–5014	I	K1017382A	2
	K1017382A	**VALVE;PEDAL**	VANNE	2		**5015–**			
2	K1015404	BRACKET	SUPPORT	2					
3	K1001871B	PLATE	PLAQUE	2					
4	K1001873A	PLATE	PLAQUE	2					
5	195-02779A	BRACKET	SUPPORT	2					
6	420-00476	VALVE;SHUTTLE	VANNE	2					
7	549-00010	SWITCH;PRESSURE	COMMUTATEUR	2					
8	181-00182	REDUCER	REDUCEUR	1					
9	121-00010D7	NUT	ECROU	5					
10	2181-1126D14	ADAPTER	ADAPTEUR	5					
11	2181-1702D4	ELBOW	COUDE	3					
12	DS2308018	ELBOW	COUDE	1					
13	S8000111	O-RING	JOINT TORIQUE	10					
14	S8000141	O-RING	JOINT TORIQUE	1					
15	S0558766	BOLT	BOULON	4					
16	S2209066	BOLT;SOCKET	BOULON A 6 PANS CREUX	4					
17	S2211866	BOLT;SOCKET	BOULON A 6 PANS CREUX	4					
18	S2212066	BOLT;SOCKET	BOULON A 6 PANS CREUX	4					
19	S2212266	BOLT;SOCKET M10X1.5X30	BOULON A 6 PANS CREUX	4					
20	S5110503	WASHER;SPRING	RONDELLE ELASTIQUE	4					
21	S5110603	WASHER	RONDELLE	12					
22	S5102603	WASHER;SPRING(M10)	RONDELLE ELASTIQUE	4					
23	161-00386	RUBBER;PEDAL	CAOUTCHOUC	2					
24	2181-2281D3	TEE	TE	2					
25	2181-2281D1	TEE	TE	1					
26	2181-1126D7	ADAPTER	ADAPTEUR	1					
27	530-00067	HARNESS;STOP LAMP SW	HARNAIS	2					
28	K1025319	ADAPTER	ADAPTEUR	1					
51	DS2093102	HOSE	TUYAU FLEXIBLE	1					
52	DS2093078	HOSE	TUYAU FLEXIBLE	1					
53	DS2092029	HOSE	TUYAU FLEXIBLE	1					
54	DS2093122	HOSE	TUYAU FLEXIBLE	1					
55	DS2091027	HOSE	TUYAU FLEXIBLE	1					
56	DS2092030	HOSE	TUYAU FLEXIBLE	1					
57	DS2092031	HOSE	TUYAU FLEXIBLE	1					
58	DS2093208	HOSE	TUYAU FLEXIBLE	1					

DATE	JUN. 30, 2008
REV.NO.	EXB08-06

Fig. 7100 PILOT PIPING - PE3C & ARTI
CONDUITES DE PILOTE

Serial No. ;

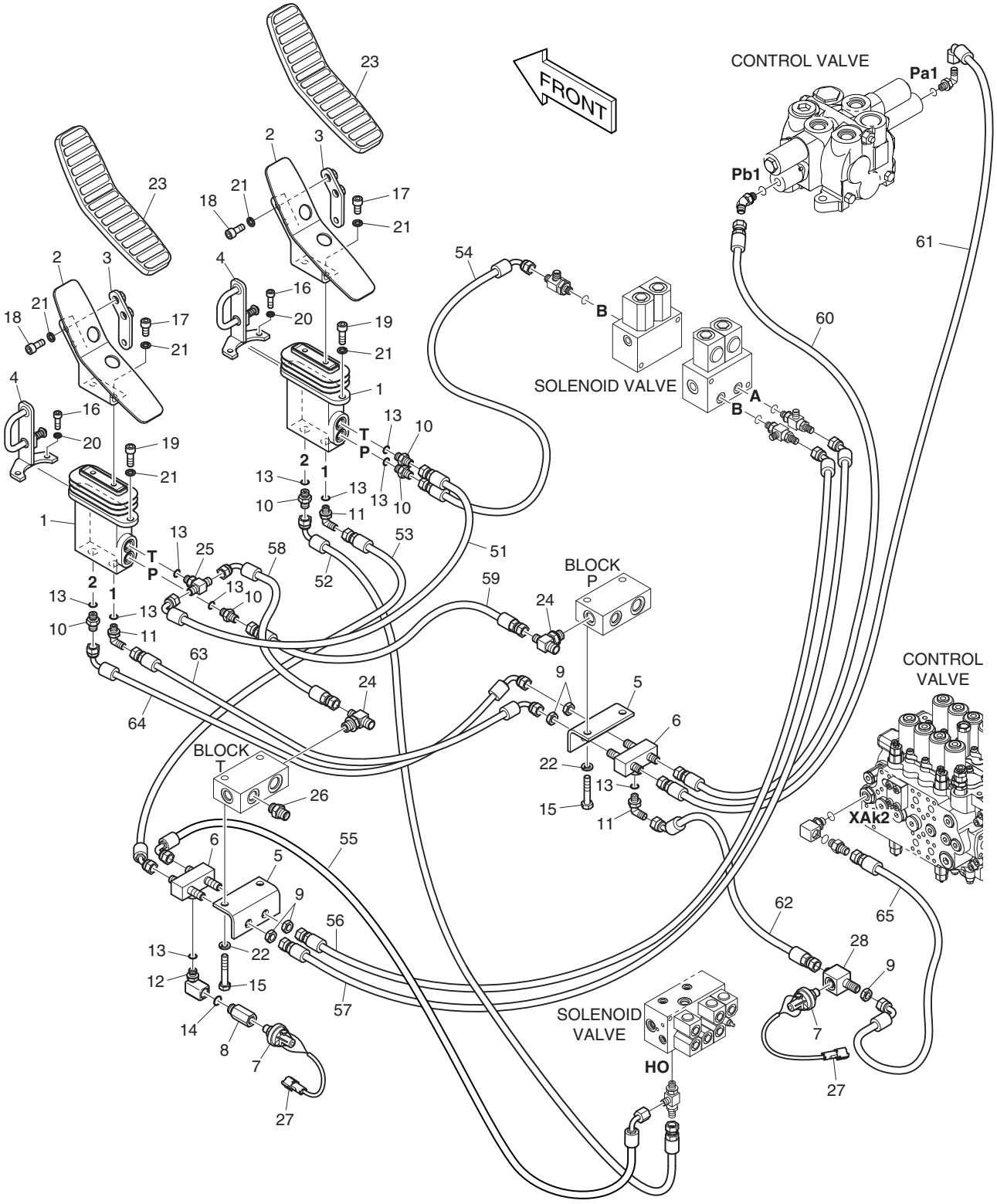

DATE	JUN. 30, 2008
REV. NO.	EXB08-06

Fig. 7100 PILOT PIPING - PE3C & ARTI
CONDUITES DE PILOTE

Serial No. ;

Key No.	Part No.	Description	Description	Q'ty	S.C	Serial No.	ICA	Replaceable part	
								Part No.	Q'ty
7100-59	DS2094060	HOSE	TUYAU FLEXIBLE	1					
60	DS2094175	HOSE	TUYAU FLEXIBLE	1					
61	DS2093364	HOSE	TUYAU FLEXIBLE	1					
62	DS2092116	HOSE	TUYAU FLEXIBLE	1					
63	DS2093091	HOSE	TUYAU FLEXIBLE	1					
64	DS2091055	HOSE	TUYAU FLEXIBLE	1					
65	DS2094211	HOSE	TUYAU FLEXIBLE	1					

DATE	DEC. 26, 2006
1st EDITION	

Fig. 7110 ARTI BOOM PIPING - ONE & TWO WAY
TUYAUTERIE DE PERCHE D'ARTI

Serial No. ;

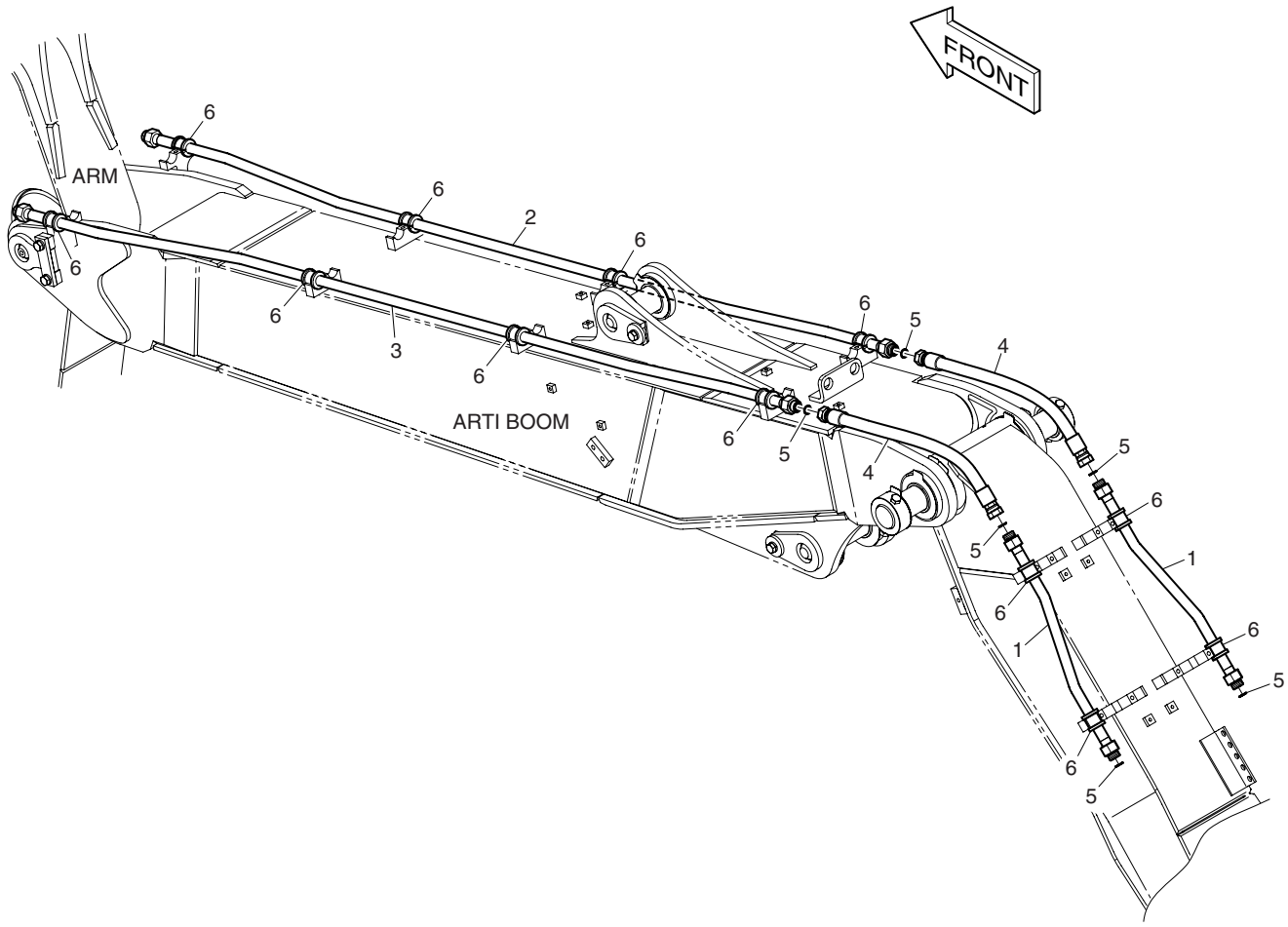

DATE	DEC. 26, 2006
1st EDITION	

Fig. 7110 ARTI BOOM PIPING - ONE & TWO WAY TUYAUTERIE DE PERCHE D'ARTI

Serial No. ;

Key No.	Part No.	Description	Description	Q'ty	S.C	Serial No.	ICA	Replaceable part	
								Part No.	Q'ty
7110--	K1008250A	ONE & TWO WAY PIPING	TUYAUTERIE DE PERCHE	-	D				
1	K1008251A	PIPE	TUYAU	2					
2	K1008252	PIPE	TUYAU	1					
3	K1008254	PIPE	TUYAU	1					
4	DS2011504	HOSE	TUYAU FLEXIBLE	2					
5	S8030121	O-RING	JOINT TORIQUE	6					
6	K1000294A	RUBBER	CAOUTCHOUC	12					

DATE	DEC. 26, 2006
1st EDITION	

Fig. 7120 MAIN PIPING - ROTATING (ARTI)
CONDUITES DE PRINCIPAL

Serial No. ;

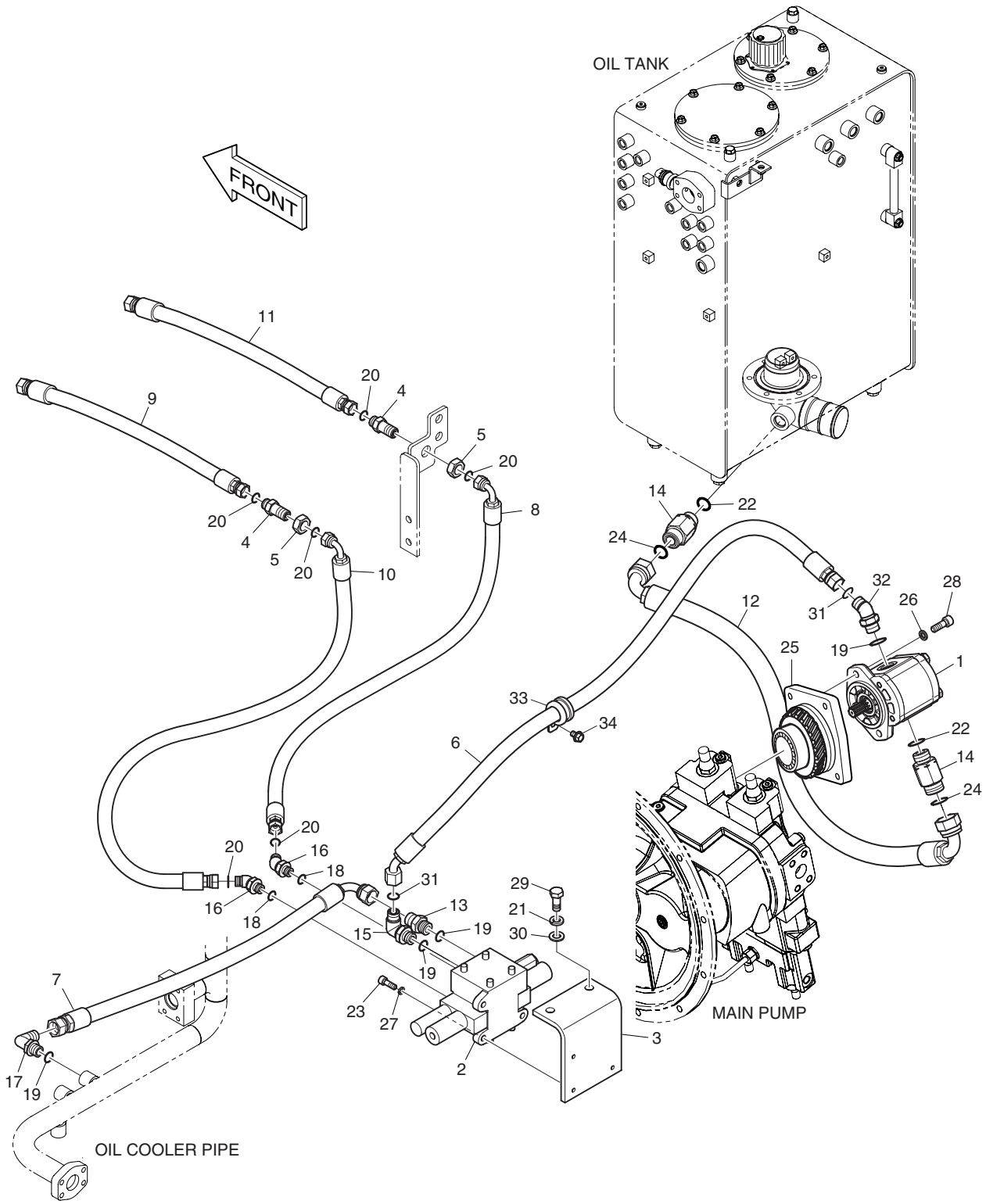

DATE	DEC. 26, 2006
1st EDITION	

Fig. 7120 MAIN PIPING - ROTATING (ARTI) CONDUITES DE PRINCIPAL

Serial No. ;

Key No.	Part No.	Description	Description	Q'ty	S.C	Serial No.	ICA	Replaceable part	
								Part No.	Q'ty
7120--	K1018188C	PERO PIPING;ARTI	CONDUITES DE PILOTE	-	D				
1	K1000410	PUMP;GEAR	POMPE DE PIGNON	1					
2	426-00284B	VALVE;ONE SPOOL	VANNE	1					
3	K1006978B	BRACKET	SUPPORT	1					
4	181-00128D2	ADAPTER;CONNECTOR	ADAPTEUR	2					
5	121-00025	NUT	ECROU	2					
6	DS2012415	HOSE	TUYAU FLEXIBLE	1					
7	DS2055978	HOSE	TUYAU FLEXIBLE	1					
8	DS2013617	HOSE	TUYAU FLEXIBLE	1					
9	DS2011422	HOSE	TUYAU FLEXIBLE	1					
10	DS2013572	HOSE	TUYAU FLEXIBLE	1					
11	DS2011534	HOSE	TUYAU FLEXIBLE	1					
12	DS2023213	HOSE	TUYAU FLEXIBLE	1					
13	2181-1126D6	ADAPTER	ADAPTEUR	1					
14	2181-2627D18	ADAPTER	ADAPTEUR	2					
15	2181-2815D3	ELBOW	COUDE	1					
16	2181-2816D5	ELBOW	COUDE	2					
17	2181-1702D2	ELBOW	COUDE	1					
18	S8000141	O-RING	JOINT TORIQUE	2					
19	S8000181	O-RING	JOINT TORIQUE	4					
20	S8030061	O-RING	JOINT TORIQUE	6					
21	S5102703	WASHER;SPRING(M12)	RONDELLE ELASTIQUE	2					
22	S8000231	O-RING	JOINT TORIQUE	2					
23	S2209066	BOLT;SOCKET	BOULON A 6 PANS CREUX	3					
24	S8030121	O-RING	JOINT TORIQUE	2					
25	K1002626	PUMP;POWER TAKE OFF	POMPE	1					
26	S5110603	WASHER	RONDELLE	2					
27	S5110503	WASHER;SPRING	RONDELLE ELASTIQUE	3					
28	S2212266	BOLT;SOCKET M10X1.5X30	BOULON A 6 PANS CREUX	2					
29	S0515266	BOLT	BOULON	2					
30	S5010713	WASHER	RONDELLE	2					
31	S8030081	O-RING	JOINT TORIQUE	2					
32	2181-2816D4	ELBOW	COUDE	1					
33	124-00208D4	CLIP	AGRAFE	1					
34	K1001029	BOLT	BOULON	1					

DATE	JUN. 30, 2008
REV.NO.	EXB08-06

Fig. 7130 PILOT PIPING - ARTI & PERO
CONDUITES DE PILOTE

Serial No. ;

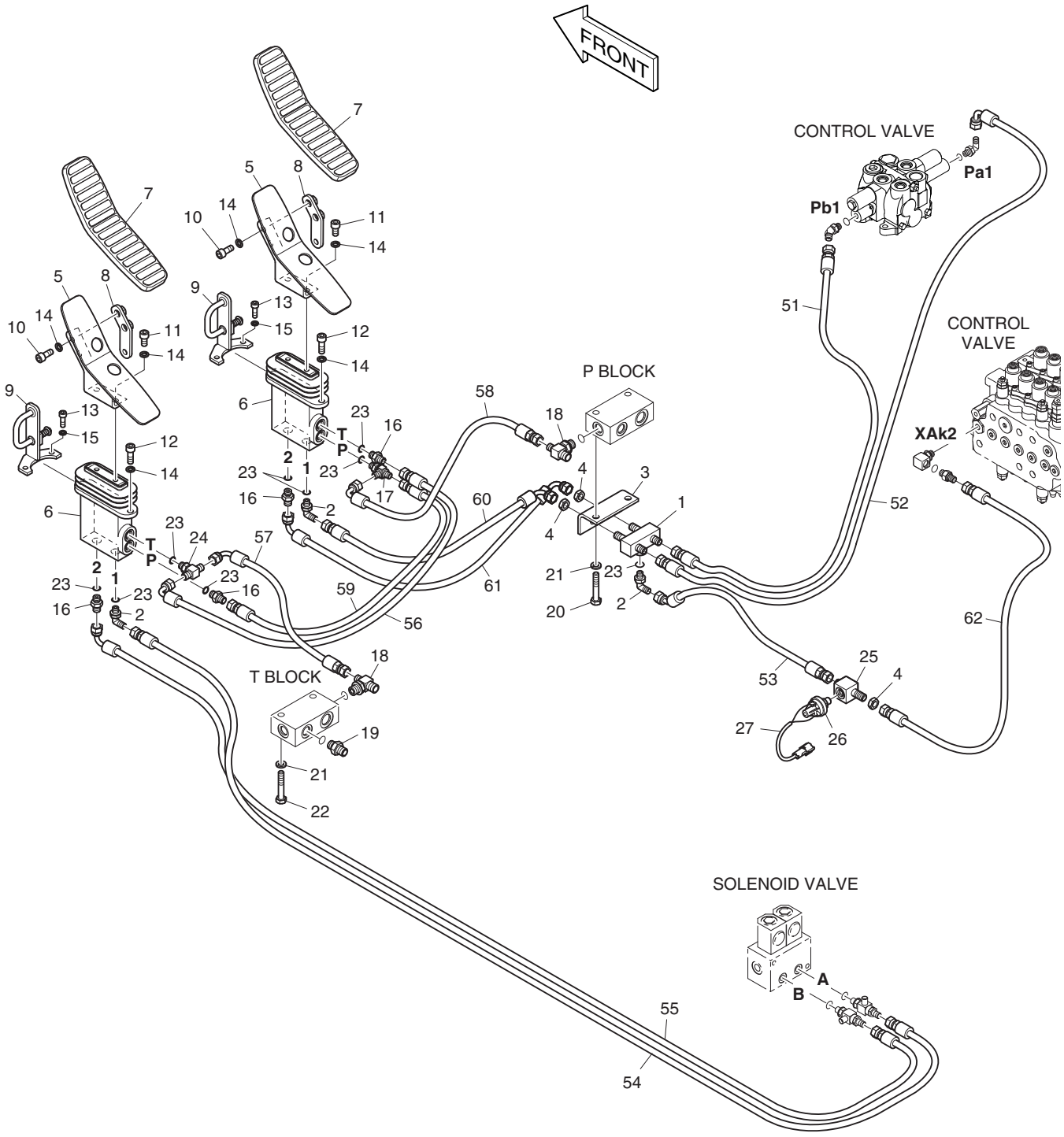

DATE	JUN. 30, 2008
REV. NO.	EXB08-06

Fig. 7130 PILOT PIPING - ARTI & PERO CONDUITES DE PILOTE

Serial No. ;

Key No.	Part No.	Description	Description	Q'ty	S.C	Serial No.	ICA	Replaceable part	
								Part No.	Q'ty
7130--	K1018153A	PILOT PIPING;ARTI & PERO	TUYAUTERIE PILOTE	-	D				
1	420-00476	VALVE;SHUTTLE	VANNE	1					
2	2181-1702D4	ELBOW	COUDE	3					
3	195-02779A	BRACKET	SUPPORT	1					
4	121-00010D7	NUT	ECROU	3					
5	K1015404	BRACKET	SUPPORT	2					
6	K1017382	VALVE;PEDAL	VANNE	2		5001–5014	I	K1017382A	2
	K1017382A	**VALVE;PEDAL**	VANNE	2		**5015–**			
7	161-00386	RUBBER;PEDAL	CAOUTCHOUC	2					
8	K1001871B	PLATE	PLAQUE	2					
9	K1001873A	PLATE	PLAQUE	2					
10	S2212066	BOLT;SOCKET	BOULON A 6 PANS CREUX	4					
11	S2211866	BOLT;SOCKET	BOULON A 6 PANS CREUX	4					
12	S2212266	BOLT;SOCKET M10X1.5X30	BOULON A 6 PANS CREUX	4					
13	S2209066	BOLT;SOCKET	BOULON A 6 PANS CREUX	4					
14	S5110603	WASHER	RONDELLE	12					
15	S5110503	WASHER;SPRING	RONDELLE ELASTIQUE	4					
16	2181-1126D14	ADAPTER	ADAPTEUR	4					
17	2181-1951D1	TEE	TE	1					
18	2181-2281D3	TEE	TE	2					
19	2181-1126D7	ADAPTER	ADAPTEUR	1					
20	S0558766	BOLT	BOULON	2					
21	S5102603	WASHER;SPRING(M10)	RONDELLE ELASTIQUE	4					
22	S0558666	BOLT	BOULON	2					
23	S8000111	O-RING	JOINT TORIQUE	9					
24	2181-2281D1	TEE	TE	1					
25	K1025319	ADAPTER	ADAPTEUR	1					
26	549-00010	SWITCH; PRESSURE	COMMUTATEUR	1					
27	530-00067	HARNESS;STOP LAMP SW	HARNAIS	1					
51	DS2094175	HOSE	TUYAU FLEXIBLE	1					
52	DS2093364	HOSE	TUYAU FLEXIBLE	1					
53	DS2092116	HOSE	TUYAU FLEXIBLE	1					
54	DS2094061	HOSE	TUYAU FLEXIBLE	1					
55	DS2093209	HOSE	TUYAU FLEXIBLE	1					
56	DS2093102	HOSE	TUYAU FLEXIBLE	1					
57	DS2093208	HOSE	TUYAU FLEXIBLE	1					
58	DS2093365	HOSE	TUYAU FLEXIBLE	1					
59	DS2094004	HOSE	TUYAU FLEXIBLE	1					

DATE	JUN. 30, 2008
REV.NO.	EXB08-06

Fig. 7130 PILOT PIPING - ARTI & PERO
CONDUITES DE PILOTE

Serial No. ;

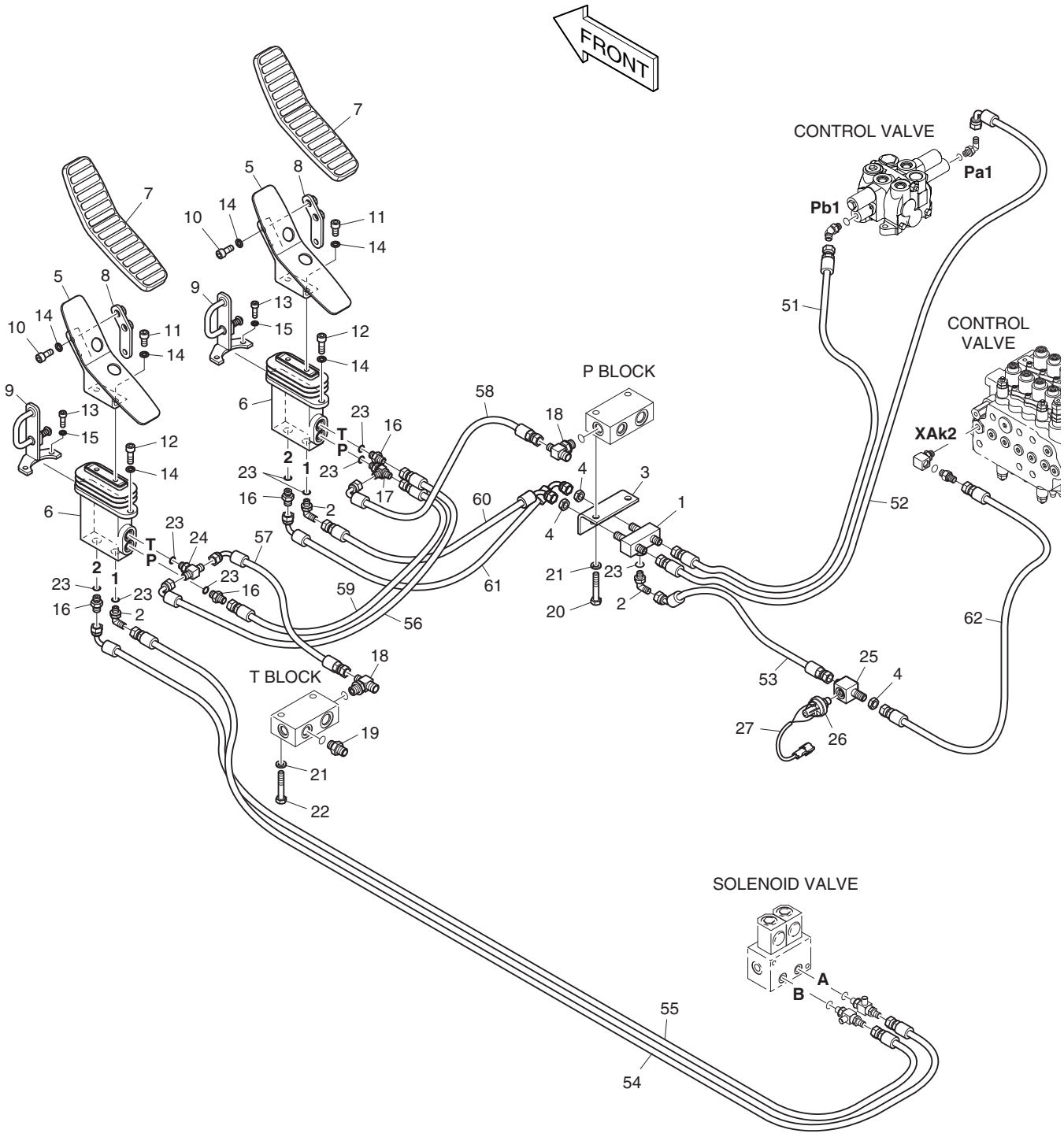

DATE	JUN. 30, 2008
REV. NO.	EXB08-06

Fig. 7130 PILOT PIPING - ARTI & PERO
CONDUITES DE PILOTE

Serial No. ;

Key No.	Part No.	Description	Description	Q'ty	S.C	Serial No.	ICA	Replaceable part	
								Part No.	Q'ty
7130-60	DS2093005	HOSE	TUYAU FLEXIBLE	1					
61	DS2091054	HOSE	TUYAU FLEXIBLE	1					
62	DS2094211	HOSE	TUYAU FLEXIBLE	1					

DATE	DEC. 26, 2006
1st EDITION	

Fig. 7140 FLOOR MAT - ARTI+PE3C+PERO PLANCHER

Serial No. ;

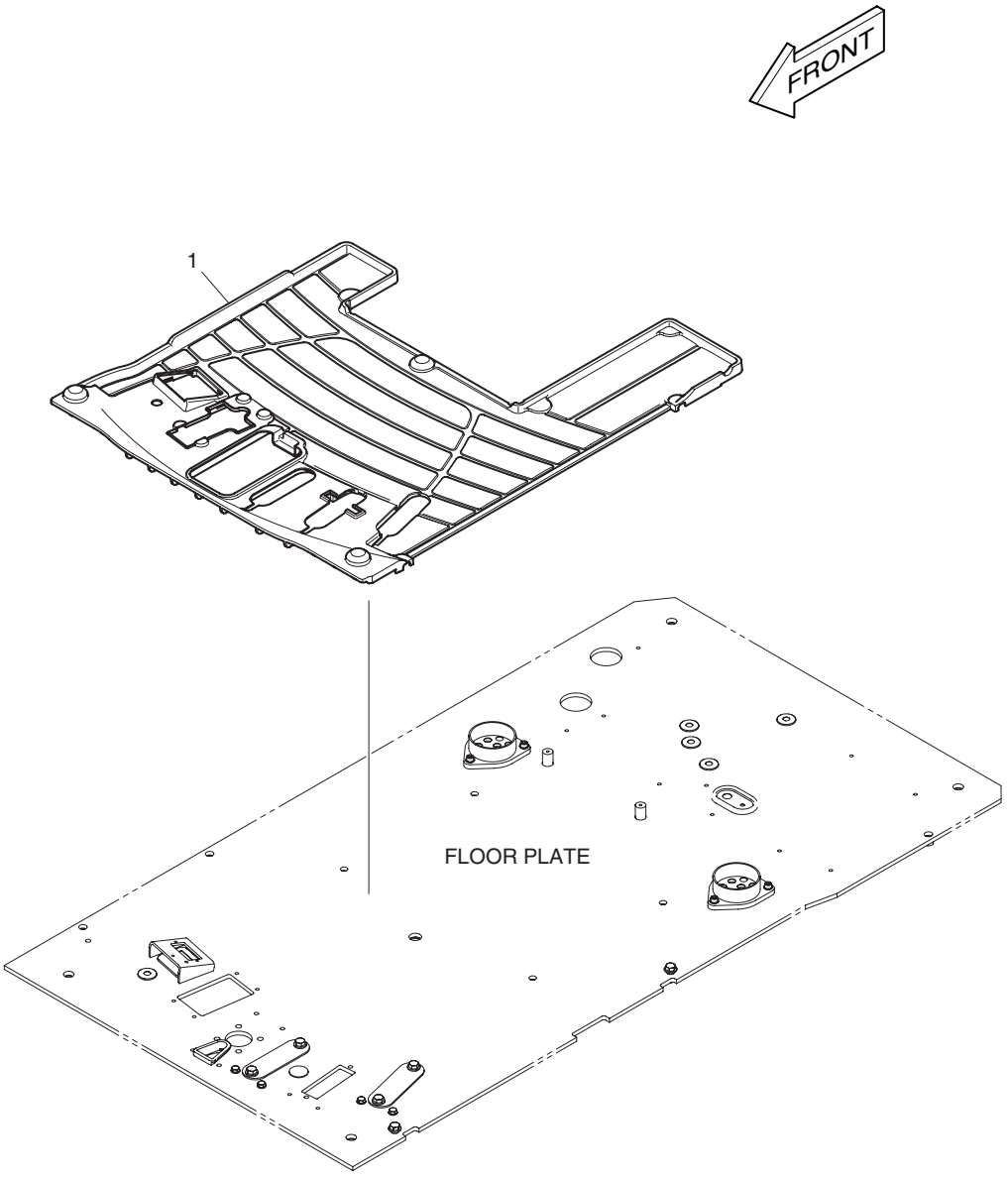

DATE	DEC. 26, 2006
1st EDITION	

Fig. 7140 FLOOR MAT - ARTI+PE3C+PERO PLANCHER

Serial No. ;

Key No.	Part No.	Description	Description	Q'ty	S.C	Serial No.	ICA	Replaceable part	
								Part No.	Q'ty
7140-1	K1017494A	MAT;FLOOR	PLAQUE	1					

DATE	JUN. 30, 2008
REV.NO.	EXB08-06

Fig. 7150 PILOT PIPING - PE3C&PERO&ARTI.
CONDUITES DE PILOTE

Serial No. ;

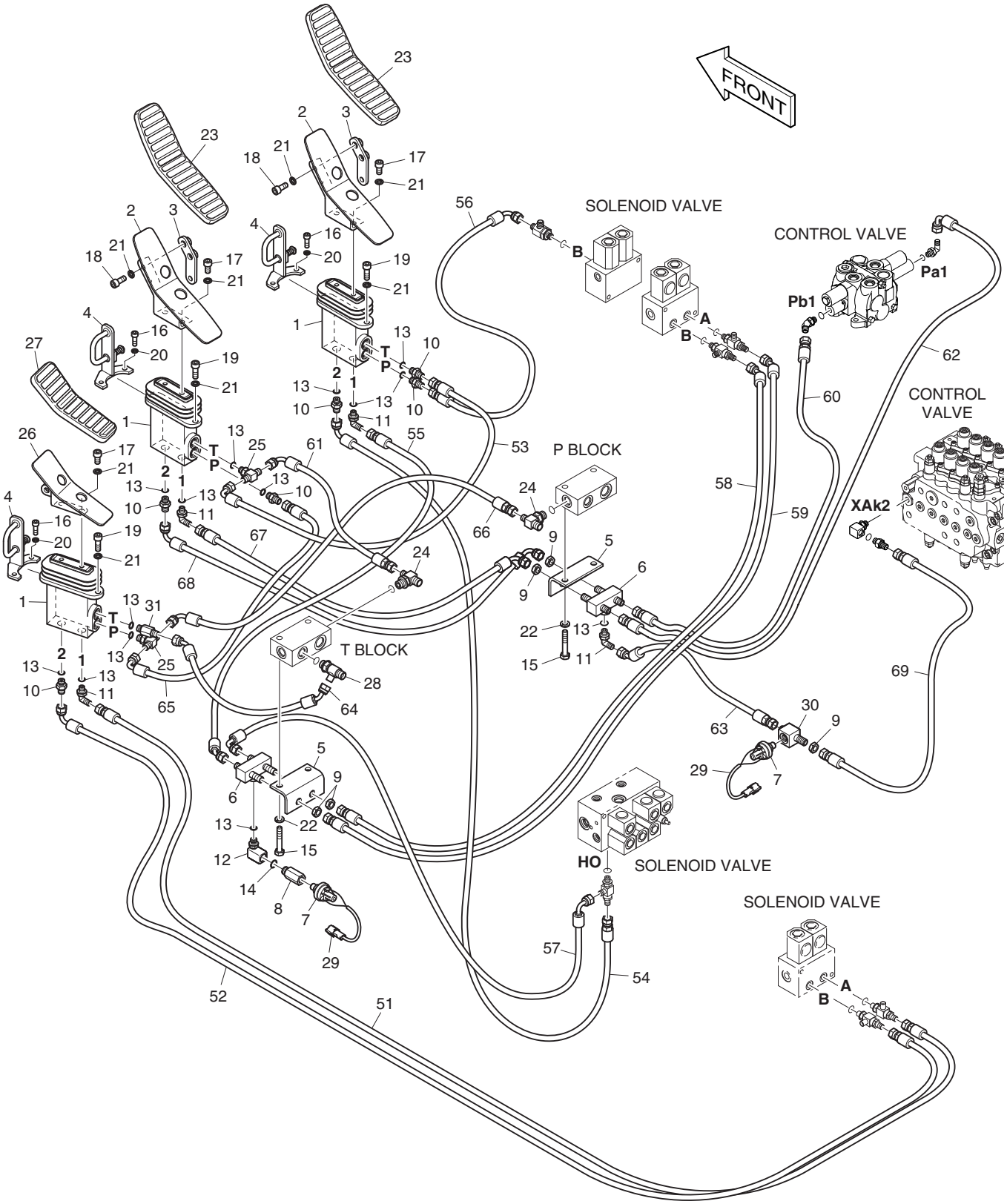

DATE	JUN. 30, 2008
REV. NO.	EXB08-06

Fig. 7150 PILOT PIPING - PE3C&PERO&ARTI. CONDUITES DE PILOTE

Serial No. ;

Key No.	Part No.	Description	Description	Q'ty	S.C	Serial No.	ICA	Replaceable part	
								Part No.	Q'ty
7150--	K1018154B	PILOT PIPING;PE3C&PERO&ARTI	TUYAUTERIE PILOTE	-	D				
1	K1017382	VALVE;PEDAL	VANNE	3		5001–5014	I	K1017382A	3
	K1017382A	**VALVE;PEDAL**	VANNE	3		**5015–**			
2	K1015404	BRACKET	SUPPORT	2					
3	K1001871B	PLATE	PLAQUE	2					
4	K1001873A	PLATE	PLAQUE	3					
5	195-02779A	BRACKET	SUPPORT	2					
6	420-00476	VALVE;SHUTTLE	VANNE	2					
7	549-00010	SWITCH;PRESSURE	COMMUTATEUR	2					
8	181-00182	REDUCER	REDUCEUR	1					
9	121-00010D7	NUT	ECROU	5					
10	2181-1126D14	ADAPTER	ADAPTEUR	6					
11	2181-1702D4	ELBOW	COUDE	4					
12	DS2308018	ELBOW	COUDE	1					
13	S8000111	O-RING	JOINT TORIQUE	14					
14	S8000141	O-RING	JOINT TORIQUE	1					
15	S0558766	BOLT	BOULON	4					
16	S2209066	BOLT;SOCKET	BOULON A 6 PANS CREUX	6					
17	S2211866	BOLT;SOCKET	BOULON A 6 PANS CREUX	6					
18	S2212066	BOLT;SOCKET	BOULON A 6 PANS CREUX	4					
19	S2212266	BOLT;SOCKET M10X1.5X30	BOULON A 6 PANS CREUX	6					
20	S5110503	WASHER;SPRING	RONDELLE ELASTIQUE	6					
21	S5110603	WASHER	RONDELLE	16					
22	S5102603	WASHER;SPRING(M10)	RONDELLE ELASTIQUE	4					
23	161-00386	RUBBER;PEDAL	CAOUTCHOUC	2					
24	2181-2281D3	TEE	TE	2					
25	2181-2281D1	TEE	TE	2					
26	K1015486	BRACKET	SUPPORT	1					
27	K1017235	RUBBER;PEDAL	CAOUTCHOUC	1					
28	2181-1951D6	TEE	TE	1					
29	530-00067	HARNESS;STOP LAMP SW	HARNAIS	2					
30	K1025319	ADAPTER	ADAPTEUR	1					
31	2181-1126D75	ADAPTER	ADAPTEUR	1					
51	DS2094061	HOSE	TUYAU FLEXIBLE	1					
52	DS2093209	HOSE	TUYAU FLEXIBLE	1					
53	DS2093102	HOSE	TUYAU FLEXIBLE	1					
54	DS2093078	HOSE	TUYAU FLEXIBLE	1					
55	DS2092029	HOSE	TUYAU FLEXIBLE	1					

DATE	JUN. 30, 2008
REV.NO.	EXB08-06

Fig. 7150 PILOT PIPING - PE3C&PERO&ARTI.
CONDUITES DE PILOTE

Serial No. ;

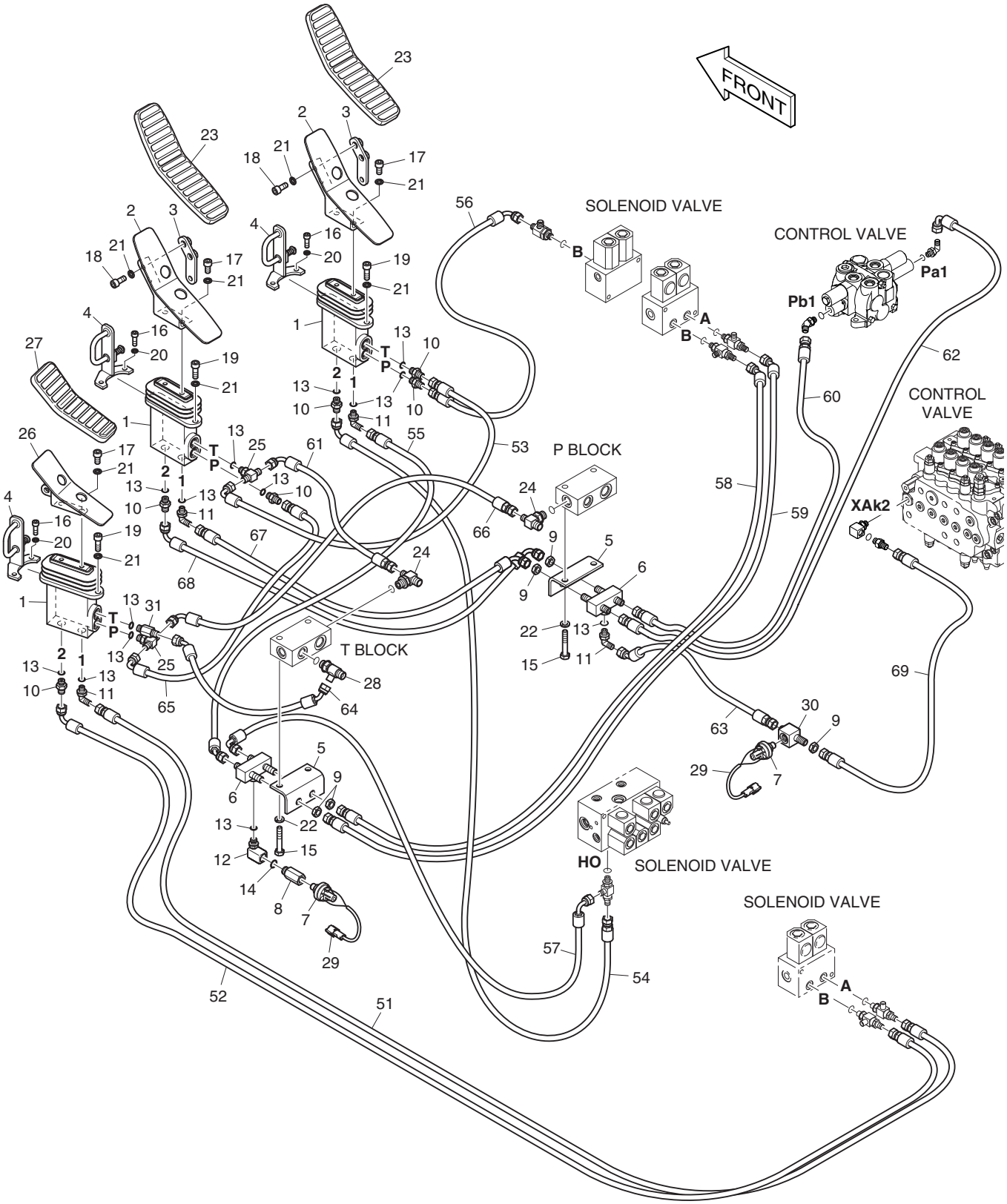

DATE	JUN. 30, 2008
REV. NO.	EXB08-06

Fig. 7150 PILOT PIPING - PE3C&PERO&ARTI. CONDUITES DE PILOTE

Serial No. ;

Key No.	Part No.	Description	Description	Q'ty	S.C	Serial No.	ICA	Replaceable part	
								Part No.	Q'ty
7150-56	DS2093122	HOSE	TUYAU FLEXIBLE	1					
57	DS2091027	HOSE	TUYAU FLEXIBLE	1					
58	DS2092030	HOSE	TUYAU FLEXIBLE	1					
59	DS2092031	HOSE	TUYAU FLEXIBLE	1					
60	DS2094175	HOSE	TUYAU FLEXIBLE	1					
61	DS2093208	HOSE	TUYAU FLEXIBLE	1					
62	DS2093364	HOSE	TUYAU FLEXIBLE	1					
63	DS2092116	HOSE	TUYAU FLEXIBLE	1					
64	DS2109008	HOSE	TUYAU FLEXIBLE	1					
65	DS2093366	HOSE	TUYAU FLEXIBLE	1					
66	DS2093233	HOSE	TUYAU FLEXIBLE	1					
67	DS2093091	HOSE	TUYAU FLEXIBLE	1					
68	DS2091055	HOSE	TUYAU FLEXIBLE	1					
69	DS2094211	HOSE	TUYAU FLEXIBLE	1					

DATE	DEC. 26, 2006
1st EDITION	

Fig. 7160 ARTI BOOM PIPING - ROTATING
TUYAUTERIE DE PERCHE D'ARTI

Serial No. ;

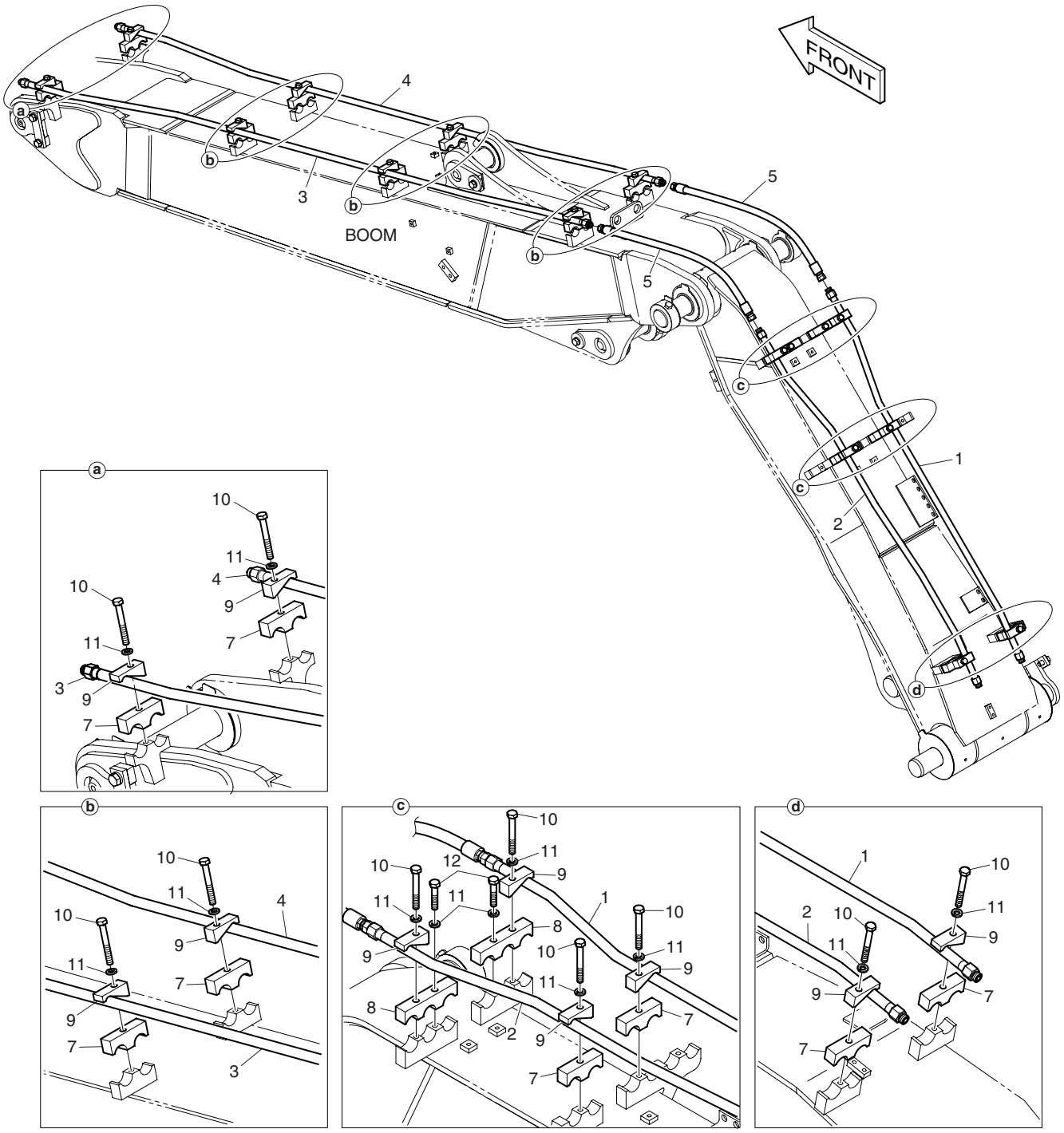

DATE	DEC. 26, 2006
1st EDITION	

Fig. 7160 ARTI BOOM PIPING - ROTATING
TUYAUTERIE DE PERCHE D'ARTI

Serial No. ;

Key No.	Part No.	Description	Description	Q'ty	S.C	Serial No.	ICA	Replaceable part	
								Part No.	Q'ty
7160--	K1008255A	ROTATION PIPING;ARTI BOOM	TUYAUTERIE DE ROTATION	-	D				
1	K1008256A	PIPE	TUYAU	1					
2	K1008257A	PIPE	TUYAU	1					
3	K1008258	PIPE	TUYAU	1					
4	K1008741	PIPE	TUYAU	1					
5	DS2011506	HOSE	TUYAU FLEXIBLE	2					
7	K1004348	CLAMP;PIPE	COLLIER	12					
8	K1008742	CLAMP;PIPE	COLLIER	2					
9	K1004349	CLAMP;PIPE	COLLIER	14					
10	S0561666	BOLT;HEX	BOULON A 6 PANS	14					
11	S5102703	WASHER;SPRING(M12)	RONDELLE ELASTIQUE	16					
12	S0560966	BOLT	BOULON	2					

DATE	DEC. 15, 2006
REV.NO.	EXB06-13

Fig. 7170 MAIN PIPING - LOCK VALVE(ARTI.) CONDUITES DE PRINCIPAL

Serial No. ;

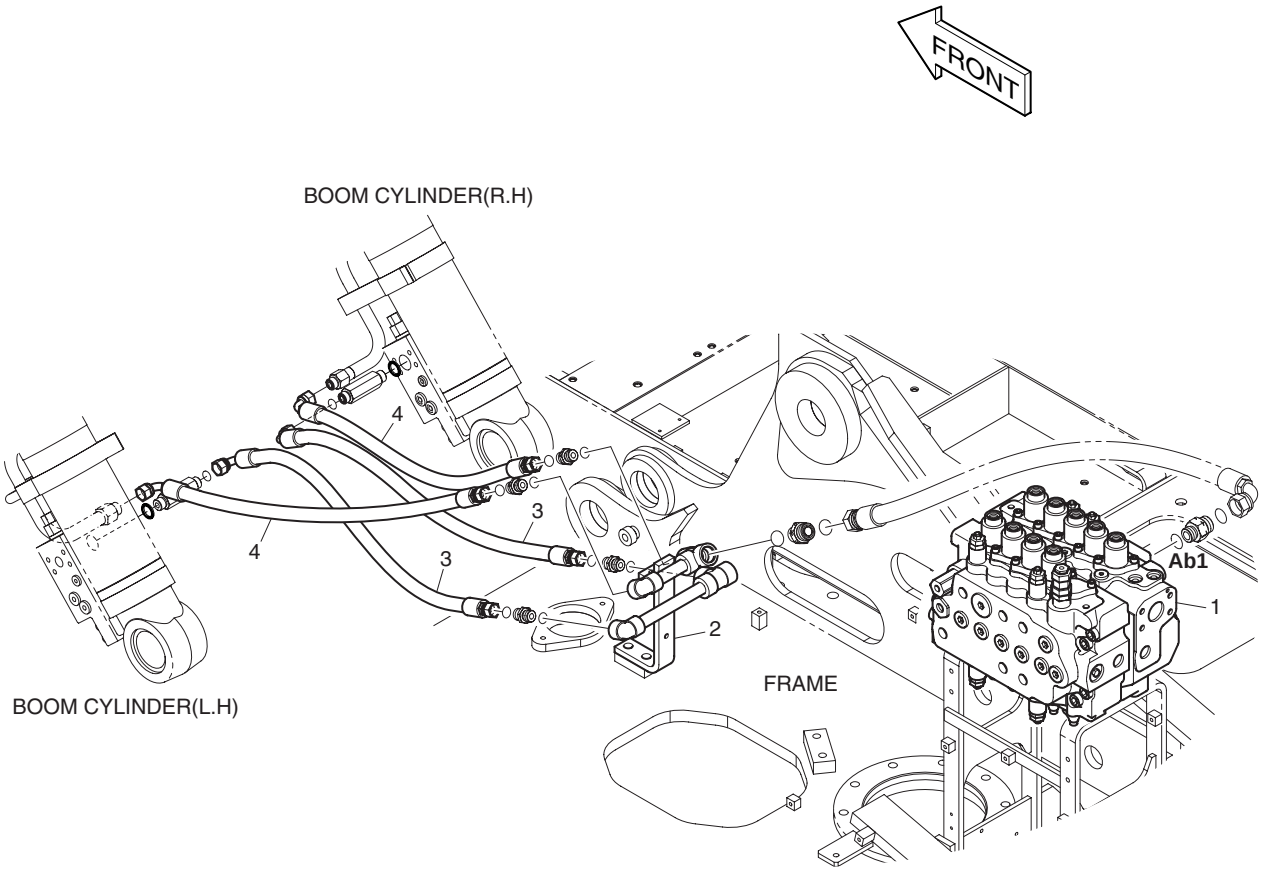

DATE	DEC. 15, 2006
REV. NO.	EXB06-13

Fig. 7170 MAIN PIPING - LOCK VALVE(ARTI.) CONDUITES DE PRINCIPAL

Serial No. ;

Key No.	Part No.	Description	Description	Q'ty	S.C	Serial No.	ICA	Replaceable part	
								Part No.	Q'ty
7170--	K1027225A	MAIN PIPING;LOCK VALVE	TUYAUTERIE PRINCIPALE	-	D				
1	K1015269A	VALVE;CONTROL	VANNE DE COMMANDE	1		5001–5010			
	K1015269B	**VALVE;CONTROL**	VANNE DE COMMANDE	1		**5011–**			
2	K1009938A	PIPE ASS'Y	ENSEMBLE DE TUYAU	1					
3	DS2013926	HOSE	TUYAU FLEXIBLE	2					
4	DS2013918	HOSE	TUYAU FLEXIBLE	2					

DATE	JUN. 30, 2007
REV.NO.	EXB07-06

Fig. 7180 PILOT PIPING - LOCK VALVE(ARTI)
CONDUITES DE PILOTE

Serial No. ;

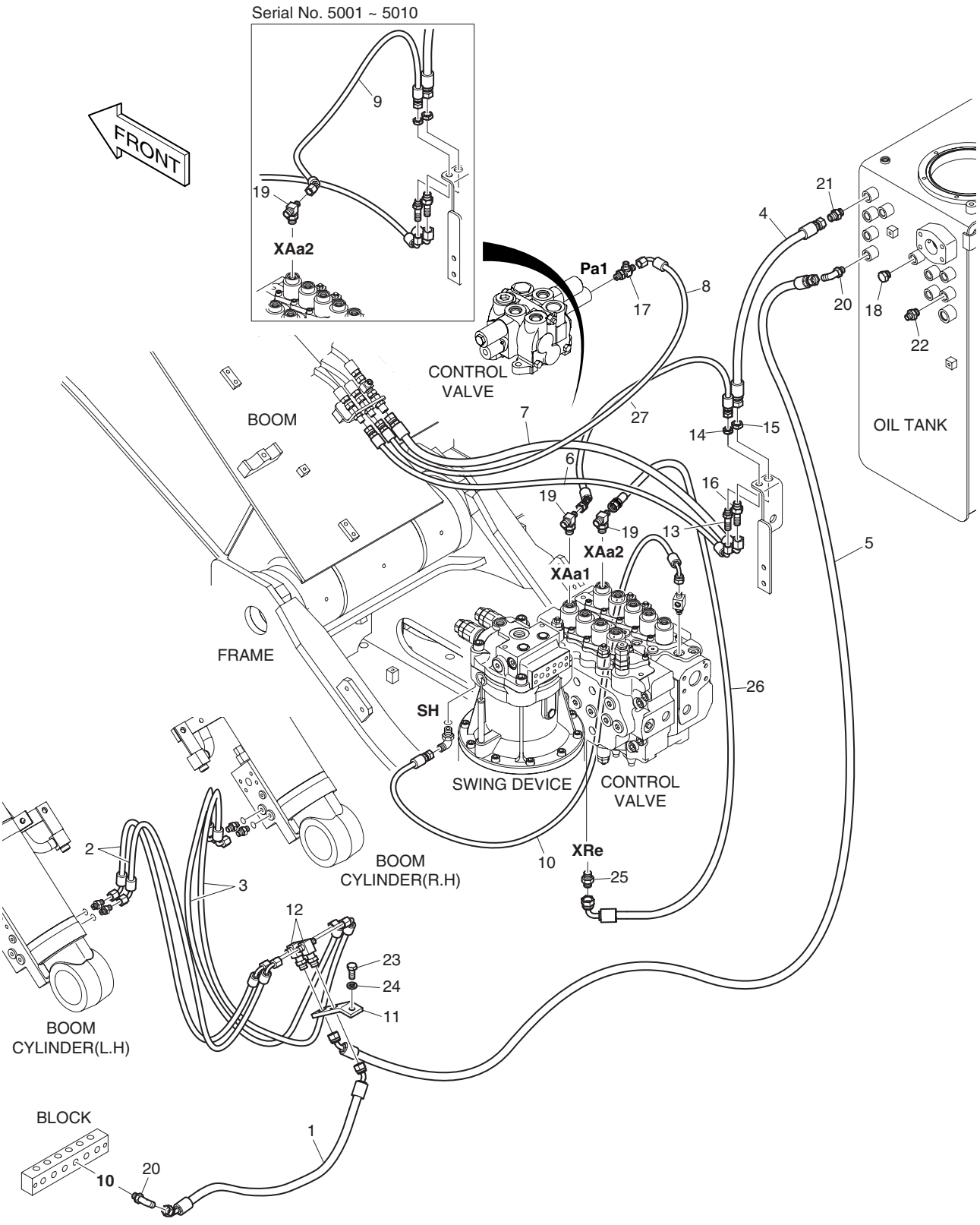

DATE	JUN. 30, 2007
REV. NO.	EXB07-06

Fig. 7180 PILOT PIPING - LOCK VALVE(ARTI)
CONDUITES DE PILOTE

Serial No. ;

Key No.	Part No.	Description	Description	Q'ty	S.C	Serial No.	ICA	Replaceable part	
								Part No.	Q'ty
7180--	**K1018165E**	**PILOT PIPING;LOCK**	TUYAUTERIE PILOTE	-	D				
1	DS2109004	HOSE	TUYAU FLEXIBLE	1					
2	DS2091052	HOSE	TUYAU FLEXIBLE	2					
3	DS2091053	HOSE	TUYAU FLEXIBLE	2					
4	DS2094088	HOSE	TUYAU FLEXIBLE	1					
5	DS2092101	HOSE	TUYAU FLEXIBLE	1					
6	DS2093424	HOSE	TUYAU FLEXIBLE	1					
7	DS2093423	HOSE	TUYAU FLEXIBLE	1					
8	DS2093361	HOSE	TUYAU FLEXIBLE	1					
9	**DS2092102**	**HOSE**	TUYAU FLEXIBLE	1		**5001–5010**			
10	DS2093358	HOSE	TUYAU FLEXIBLE	1					
11	195-02400	BRACKET	SUPPORT	1					
12	181-00008	TEE	TE	2					
13	2181-2178	ADAPTER	ADAPTEUR	1					
14	121-00010D7	NUT	ECROU	1					
15	121-00010D1	NUT	ECROU	1					
16	181-00078D1	ADAPTER	ADAPTEUR	1					
17	2181-1951D1	TEE	TE	1					
18	2181-1950D2	PLUG	BOUCHON	1					
19	2181-2281D3	TEE	TE	1		5001–5010			
	2181-2281D3	**TEE**	TE	2		**5011–**			
20	2181-1702D5	ELBOW	COUDE	2					
21	2181-1126D7	ADAPTER	ADAPTEUR	1					
22	2181-1126D36	ADAPTER	ADAPTEUR	1					
23	S0515166	BOLT	BOULON	1					
24	S5102703	WASHER;SPRING(M12)	RONDELLE ELASTIQUE	1					
25	**2181-1126D14**	**ADAPTER**	ADAPTEUR	1		**5011–**			
26	**DS2093028**	**HOSE**	TUYAU FLEXIBLE	1		**5011–**			
27	**DS2092138**	**HOSE 210L**	TUYAU FLEXIBLE	1		**5011–5019**			
	DS2092161	**HOSE 280L**	TUYAU FLEXIBLE	1		**5020–**			

DATE	DEC. 26, 2006
1st EDITION	

Fig. 7190 ARTI BOOM PIPING - LOCK VALVE
TUYAUTERIE DE PERCHE D'ARTI

Serial No. ;

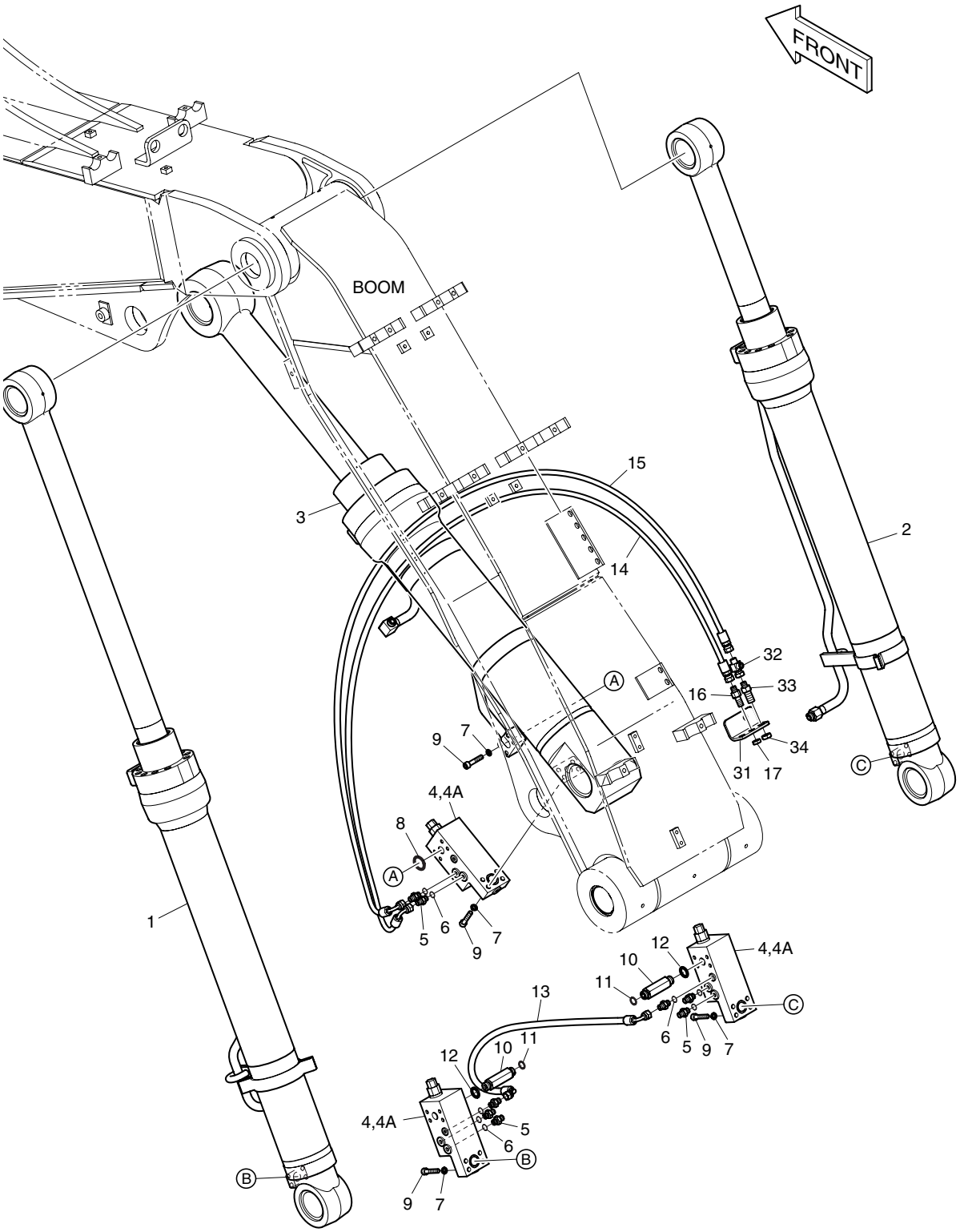

DATE	DEC. 26, 2006
1st EDITION	

Fig. 7190 ARTI BOOM PIPING - LOCK VALVE
TUYAUTERIE DE PERCHE D'ARTI

Serial No. ;

Key No.	Part No.	Description	Description	Q'ty	S.C	Serial No.	ICA	Replaceable part	
								Part No.	Q'ty
7190--	K1015193C	ARTI BOOM PIPING;LOCK V/V	PERCHE ASS'Y D'ARTI	-	D				
1	K1008749B	CYLINDER;BOOM(L.H);LOCK	CYLINDRE	1					
2	K1008750B	CYLINDER;BOOM(R.H);LOCK	CYLINDRE	1					
3	K1008751A	CYLINDER;ARTI LOCK V/V	CYLINDRE D'ARTI	1					
4	420-00003A	VALVE;LOCK	VANNE	3					
4A	K9000998	. SEAL KIT	. KIT D'ETANCHEITE	1					
5	2181-1126D14	ADAPTER	ADAPTEUR	8					
6	S8000111	O-RING	JOINT TORIQUE	8					
7	S5110601	WASHER;SPRING	RONDELLE ELASTIQUE	16					
8	S8000281	O-RING	JOINT TORIQUE	1					
9	S2212666	BOLT;SOCKET M10X1.5X50	BOULON A 6 PANS CREUX	16					
10	DS2232132	ADAPTER	ADAPTEUR	2					
11	S8030081	O-RING	JOINT TORIQUE	2					
12	180-00073D4	SEAL	JOINT	2					
13	2184-1096D8	HOSE	TUYAU FLEXIBLE	1					
14	2184-1046D216	HOSE	TUYAU FLEXIBLE	1					
15	2184-1046D216	HOSE	TUYAU FLEXIBLE	1					
16	DS2410007	ADAPTER	ADAPTEUR	1					
17	121-00010D7	NUT	ECROU	1					
31	K1008271A	BRACKET	SUPPORT	1					
32	181-00673D1	TEE;UNION	TE	1					
33	181-00078D5	ADAPTER	ADAPTEUR	1					
34	121-00010D1	NUT	ECROU	1					

DATE	DEC. 26, 2006
1st EDITION	

Fig. 7200 ARTI ARM PIPING - LOCK VALVE
CONDUITES DE VERROU VANNE

Serial No. ;

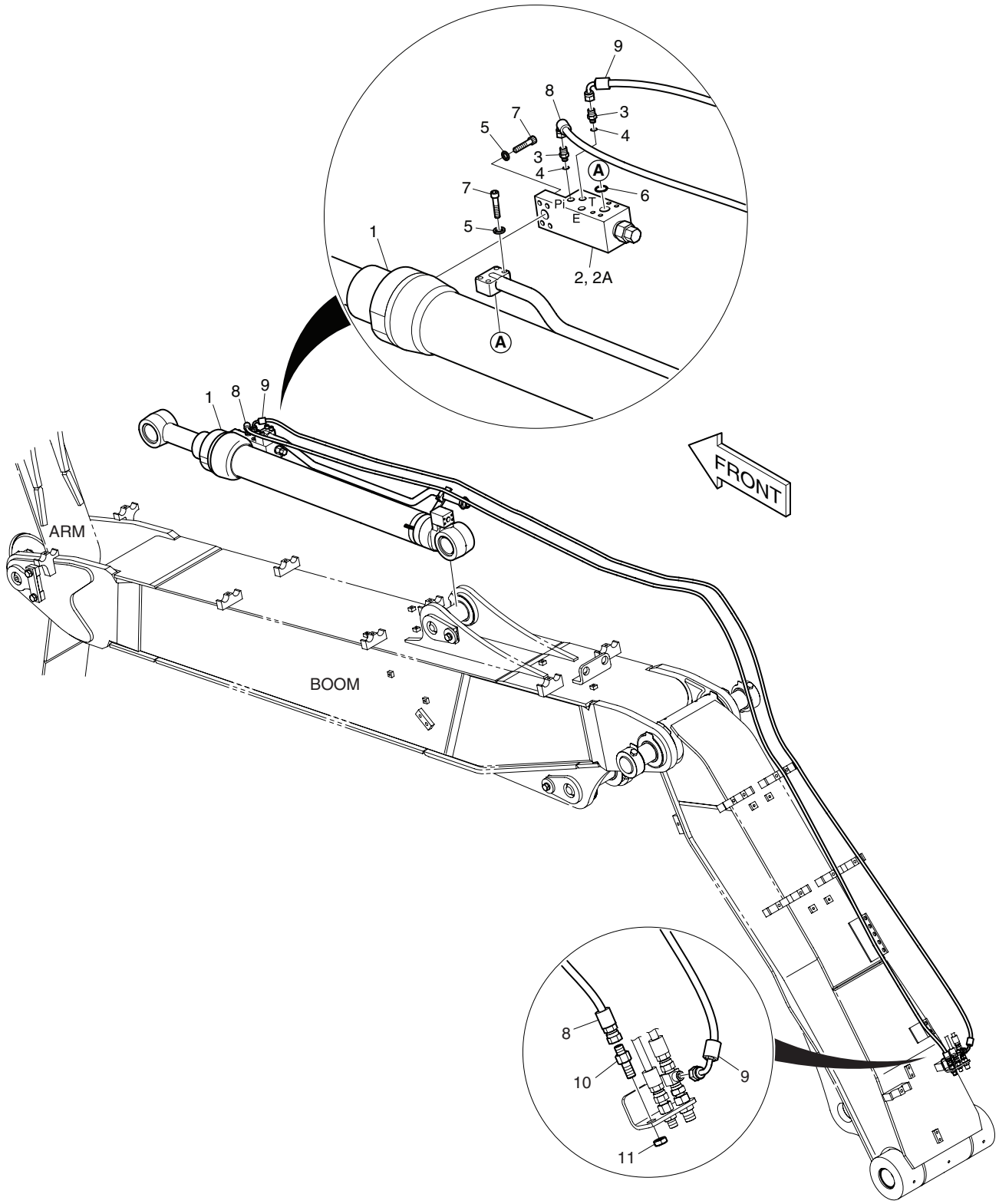

DATE	DEC. 26, 2006
1st EDITION	

Fig. 7200 ARTI ARM PIPING - LOCK VALVE
CONDUITES DE VERROU VANNE

Serial No. ;

Key No.	Part No.	Description	Description	Q'ty	S.C	Serial No.	ICA	Replaceable part	
								Part No.	Q'ty
7200--	K1015195	ARM LOCK VALVE PIPING	TUYAUTERIE DE SERRURE	-	D				
1	K1008752	CYLINDER;ARM 2.1m(LOCK V/V)	VERIN DE BALANCIER	1					
	K1008753	CYLINDER;ARM 2.5m(LOCK V/V)	VERIN DE BALANCIER	1					
2	420-00003A	VALVE;LOCK	VANNE	1					
2A	K9000998	. SEAL KIT	. KIT D'ETANCHEITE	1					
3	2181-1126D14	ADAPTER	ADAPTEUR	2					
4	S8000111	O-RING	JOINT TORIQUE	2					
5	S5110601	WASHER;SPRING	RONDELLE ELASTIQUE	8					
6	S8000281	O-RING	JOINT TORIQUE	1					
7	S2212666	BOLT;SOCKET M10X1.5X50	BOULON A 6 PANS CREUX	8					
8	DS2055880	HOSE	TUYAU FLEXIBLE	1					
9	DS2059496	HOSE	TUYAU FLEXIBLE	1					
10	DS2410007	ADAPTER	ADAPTEUR	1					
11	121-00010D7	NUT	ECROU	1					

DATE	DEC. 26, 2006
1st EDITION	

Fig. 7210 MAIN PIPING - QUICK CLAMP(ARTI)
CONDUITES DE PRINCIPAL

Serial No. ;

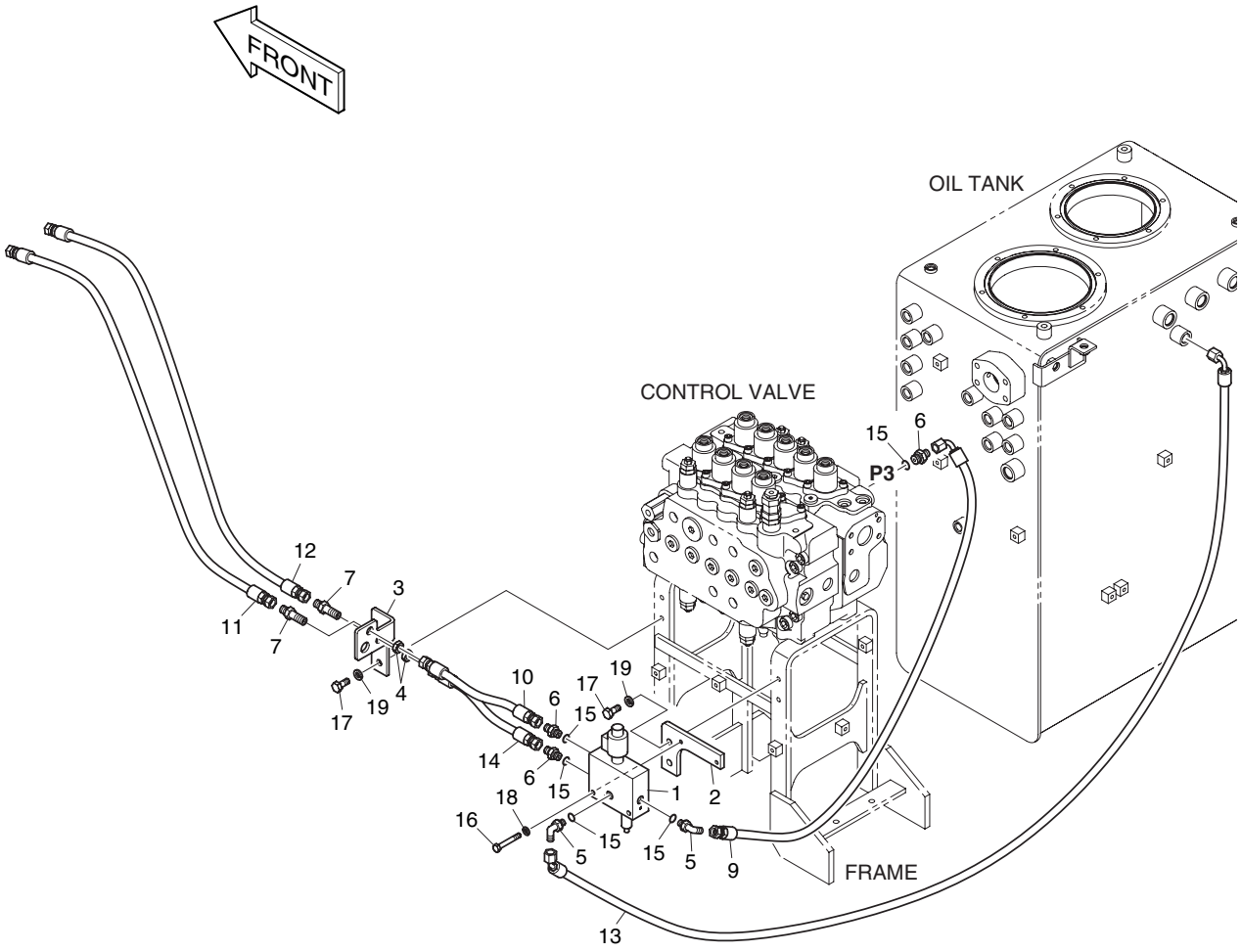

DATE	DEC. 26, 2006
1st EDITION	

Fig. 7210 MAIN PIPING - QUICK CLAMP(ARTI)
CONDUITES DE PRINCIPAL

Serial No. ;

Key No.	Part No.	Description	Description	Q'ty	S.C	Serial No.	ICA	Replaceable part	
								Part No.	Q'ty
7210--	K1018192A	QUICK CLAMP PIPING;ARTI	TUYAUTERIE DE PERCHE	-	D				
1	426-00287	VALVE;QUICK-FIT	VANNE	1					
2	K1002911A	BRACKET	SUPPORT	1					
3	K1003185B	PLATE	PLAQUE	1					
4	121-00010D7	NUT	ECROU	2					
5	2181-1702D4	ELBOW	COUDE	2					
6	2181-1126D14	ADAPTER	ADAPTEUR	3					
7	2181-2178	ADAPTER	ADAPTEUR	2					
9	DS2055844	HOSE	TUYAU FLEXIBLE	1					
10	DS2053893	HOSE	TUYAU FLEXIBLE	1					
11	DS2053919	HOSE	TUYAU FLEXIBLE	1					
12	DS2053920	HOSE	TUYAU FLEXIBLE	1					
13	DS2090024	HOSE	TUYAU FLEXIBLE	1					
14	DS2053894	HOSE	TUYAU FLEXIBLE	1					
15	S8000111	O-RING	JOINT TORIQUE	5					
16	S0556466	BOLT	BOULON	2					
17	S0512066	BOLT	BOULON	4					
18	S5102503	WASHER;SPRING	RONDELLE ELASTIQUE	2					
19	S5102603	WASHER;SPRING(M10)	RONDELLE ELASTIQUE	4					

DATE	DEC. 26, 2006
1st EDITION	

Fig. 7220 ARTI BOOM PIPING - QUICK CLAMP
TUYAUTERIE DE PERCHE D'ARTI

Serial No. ;

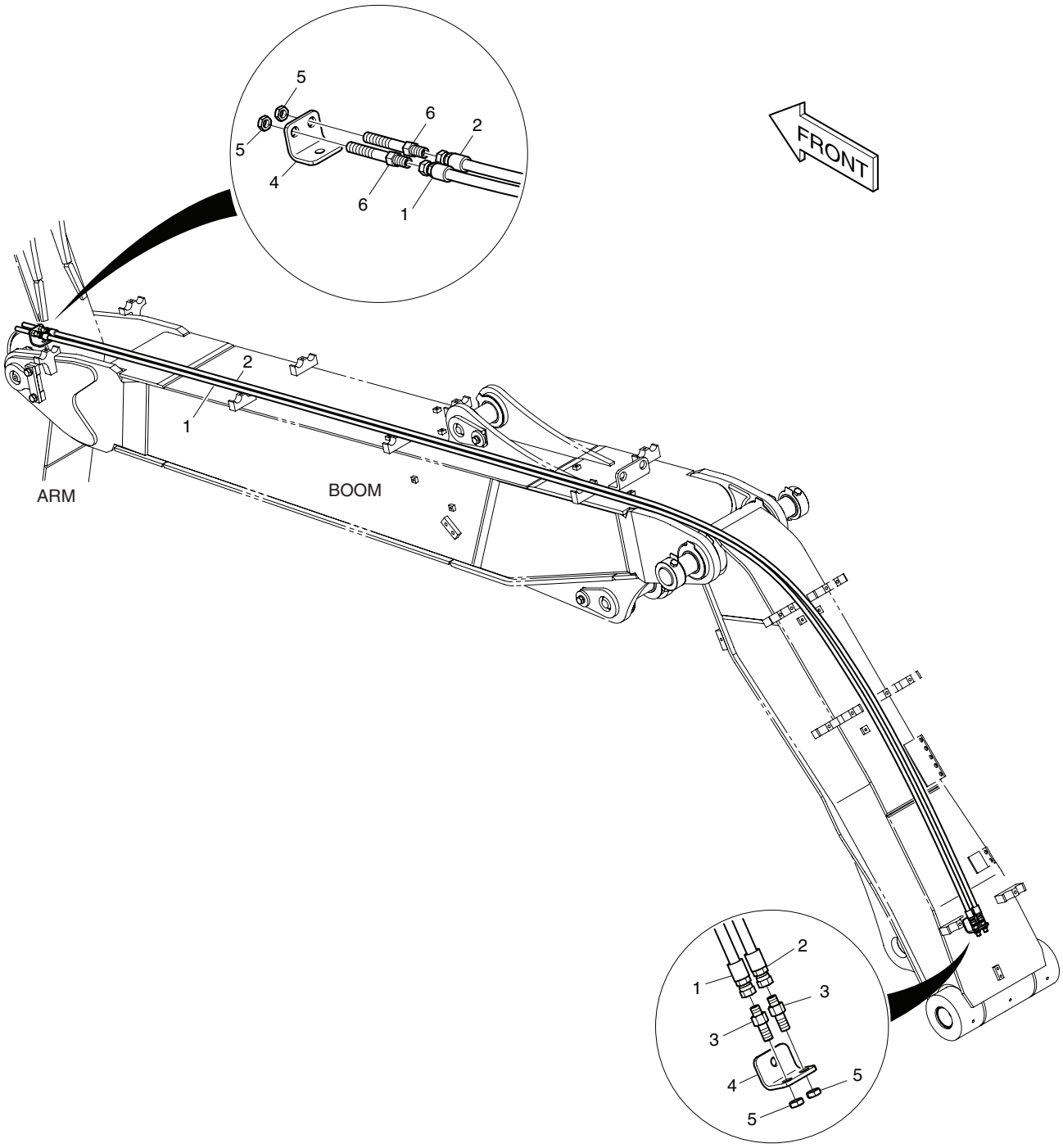

DATE	DEC. 26, 2006
1st EDITION	

Fig. 7220 ARTI BOOM PIPING - QUICK CLAMP
TUYAUTERIE DE PERCHE D'ARTI

Serial No. ;

Key No.	Part No.	Description	Description	Q'ty	S.C	Serial No.	ICA	Replaceable part	
								Part No.	Q'ty
7220--	K1008260A	QUICK CLAMP PIPING;ARTI BOOM	TUYAUTERIE DE PERCHE	-	D				
1	DS2053854	HOSE	TUYAU FLEXIBLE	1					
2	DS2053878	HOSE	TUYAU FLEXIBLE	1					
3	DS2410007	ADAPTER	ADAPTEUR	2					
4	K1006957	BRACKET	SUPPORT	2					
5	121-00010D7	NUT	ECROU	4					
6	K1000356	ADAPTER	ADAPTEUR	2					

DATE	DEC. 26, 2006
1st EDITION	

Fig. 7230 WORKING LAMP - ARTI. BOOM AVERTISSEUR RELAIS

Serial No. ;

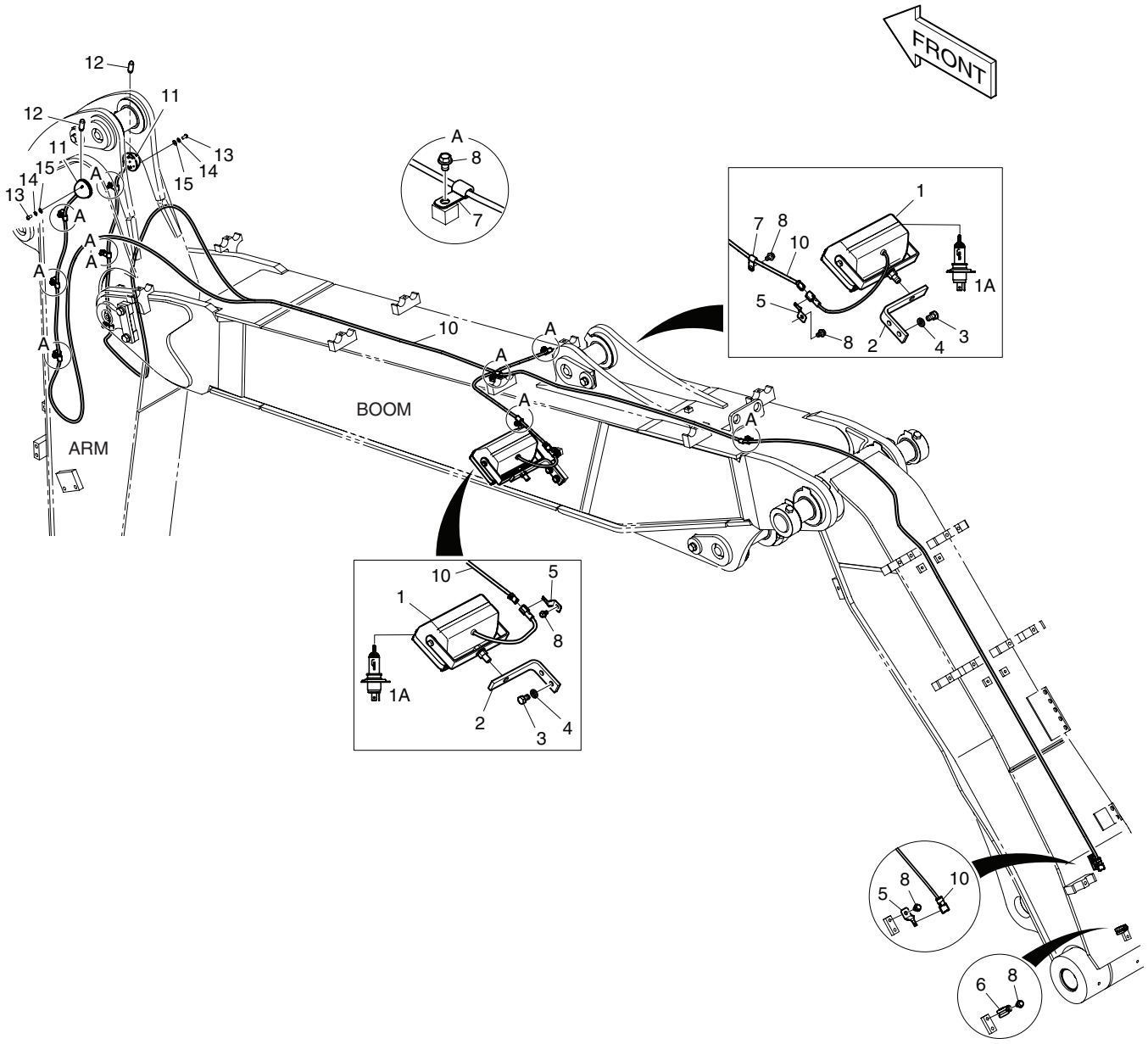

DATE	DEC. 26, 2006
1st EDITION	

Fig. 7230 WORKING LAMP - ARTI. BOOM AVERTISSEUR RELAIS

Serial No. ;

Key No.	Part No.	Description	Description	Q'ty	S.C	Serial No.	ICA	Replaceable part	
								Part No.	Q'ty
7230--	K1027698	WORKING LAMP;ARTI	AVERTISSEUR RELAIS	-	D				
1	534-00064	LAMP ASSY;WORKING	AVERTISSEUR RELAIS	2					
1A	2515-1022D1	. BULB;HALOGEN	. AMPOULE	1					
2	2195-2394B	BRACKET	SUPPORT	2					
3	S0514853	BOLT	BOULON	4					
4	S5102703	WASHER;SPRING(M12)	RONDELLE ELASTIQUE	4					
5	2197-1661	BRACKET;HOUSING	SUPPORT	3					
6	124-00208D2	CLIP	AGRAFE	1					
7	2124-1509D1	CLIP	AGRAFE	11					
8	K1001029	BOLT	BOULON	15					
10	K1023909A	HARNESS;WORK LAMP(ARTI)	HARNAIS	1					
11	534-00001	LAMP;ARM POSITION	LAMPE	2					
12	2515-1021D5	BULB	AMPOULE	2					
13	S3450563	SCREW	VIS	4					
14	S5100103	WASHER;SPRING	RONDELLE ELASTIQUE	4					
15	S5000113	WASHER;PLAIN	RONDELLE	4					

DATE	DEC. 15, 2006
REV.NO.	EXB06-13

Fig. 7240 COUNTER WEIGHT - BOOM 4.6m / ARTI
MASSE D'EQUILIBRAGE

Serial No. ;

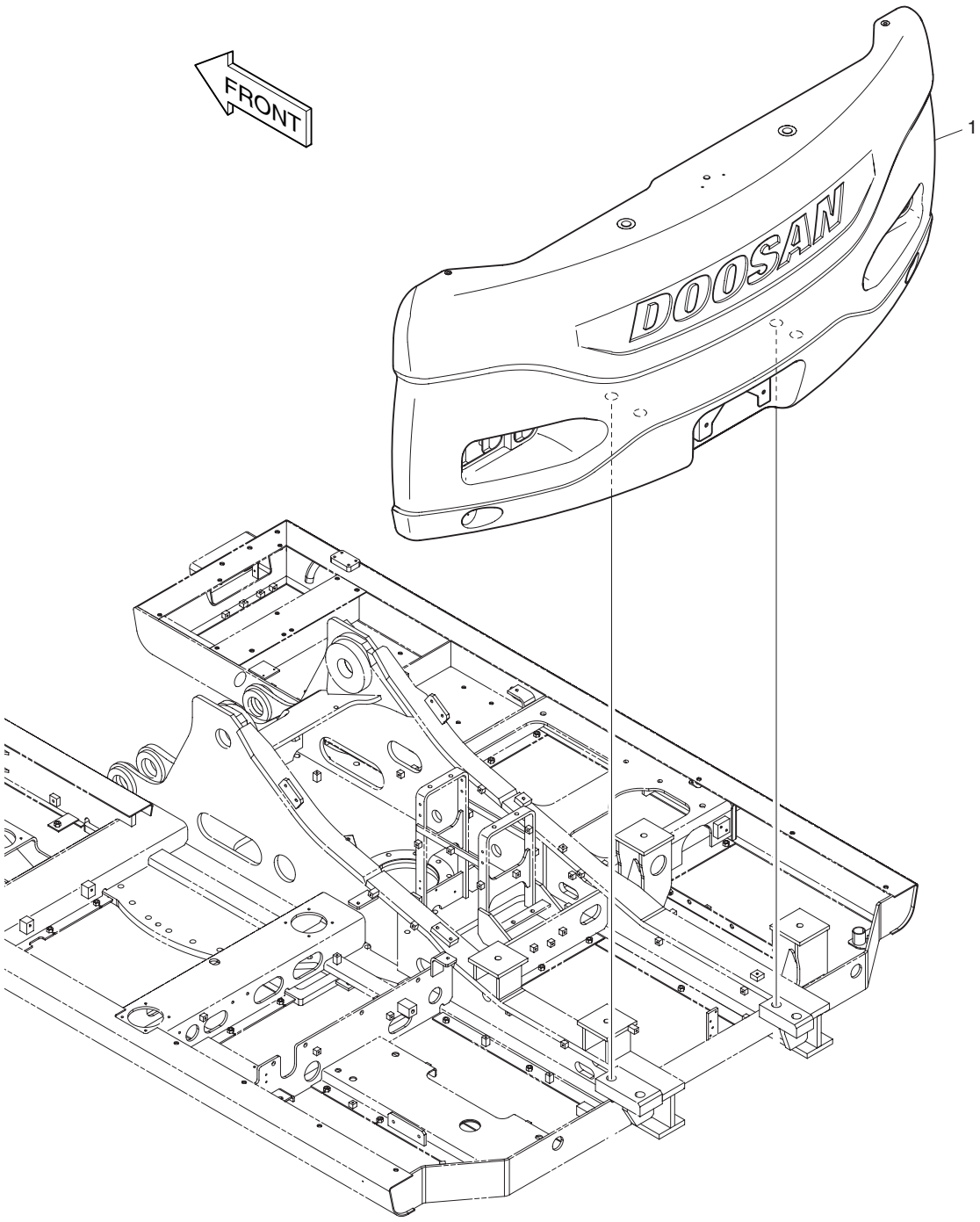

DATE	DEC. 15, 2006
REV. NO.	EXB06-13

Fig. 7240 COUNTER WEIGHT - BOOM 4.6m / ARTI
MASSE D'EQUILIBRAGE

Serial No. ;

Key No.	Part No.	Description	Description	Q'ty	S.C	Serial No.	ICA	Replaceable part	
								Part No.	Q'ty
7240-1	K1029406	COUNTER WEIGHT 2.5ton	CONTRE- POIDS	1					

DATE	JUN. 30, 2007
REV.NO.	EXB07-06

Fig. 7250 RADIO
RADIO

Serial No. ;

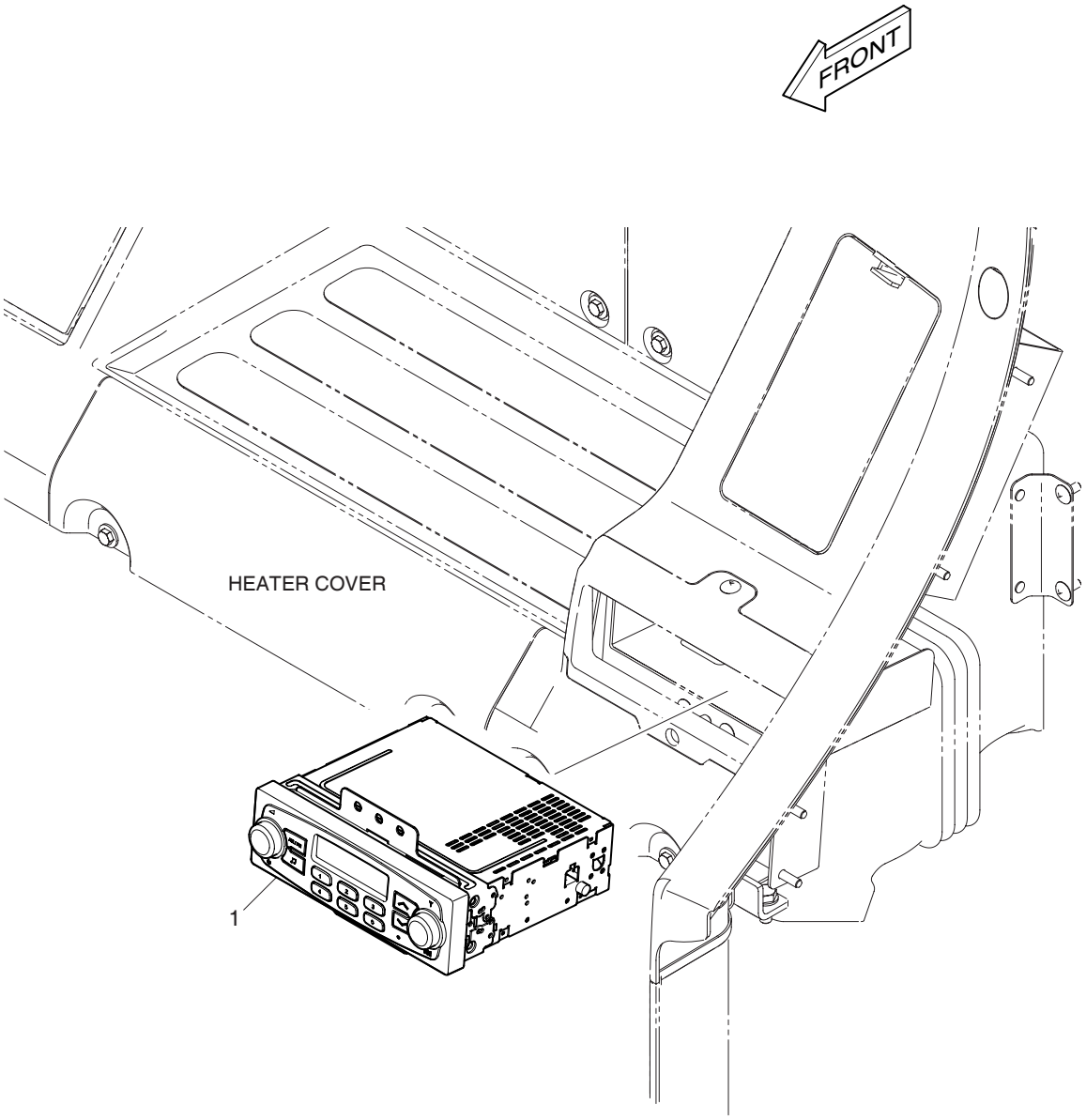

DATE	JUN. 30, 2007
REV. NO.	EXB07-06

Fig. 7250 RADIO
RADIO

Serial No. ;

Key No.	Part No.	Description	Description	Q'ty	S.C	Serial No.	ICA	Replaceable part	
								Part No.	Q'ty
7250- -	K1033652	RADIO;STEREO	RADIO STEREO	-	D				
1	K1033644	RADIO;STEREO(12V)	RADIO STEREO	1					

DATE	JUN. 30, 2007
REV.NO.	EXB07-06

Fig. 7260 TROPICAL PARTS
PIECES TROPICALES

Serial No. ;

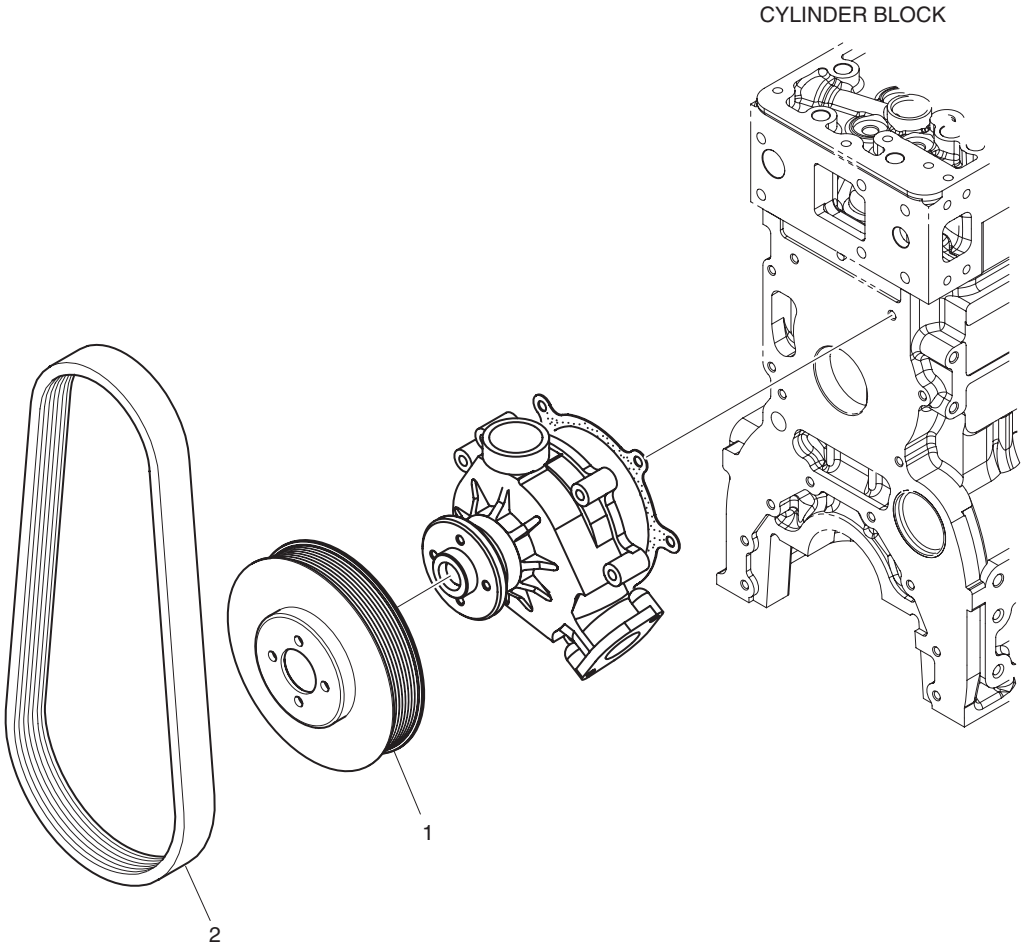

DATE	JUN. 30, 2007
REV. NO.	EXB07-06

Fig. 7260 TROPICAL PARTS PIECES TROPICALES

Serial No. ;

Key No.	Part No.	Description	Description	Q'ty	S.C	Serial No.	ICA	Replaceable part	
								Part No.	Q'ty
7260-1	K1037889	PULLEY;BELT	POULIE	1					
2	DS3201029	BELT;RIBBED(8PK 1200L)	CEINTURE	1					

INDEX

PART NO.	FIG NO.	KEY NO.
06.01013-9127	021	38
	025	3
06.01283-7115	022	12
06.01913-2911	019	35
	037	3
06.01913-3114	020	8
	021	14
	027	17
06.01913-3115	022	16
06.01913-3117	024	15
06.01913-3118	029	31
06.01913-3119	022	17
	029	32
06.01913-3120	024	11
06.01913-3121	024	12
06.01913-3128	021	34
06.01913-3129	021	39
06.01913-3213	026	13
06.01913-3216	032	55
06.01913-3217	032	55
06.01923-2910	026	22
06.01923-2911	031	9
06.01923-2913	036	4
	036	11
	036	13
06.01923-2917	031	3
06.01923-2919	036	5
06.01923-3111	013	9
	015	22
	032	38
	037	24
06.01923-3114	015	3
	023	7
06.01923-3116	014	4
06.01923-3117	021	32
06.01923-3118	030	9
06.01923-3119	021	24
	021	33
06.01923-3120	022	5
06.01923-3125	026	17
06.01923-3215	027	34
	027	41
	027	43
06.01923-3217	032	53
06.01923-3218	023	3
	026	15
	027	39
06.01923-3222	021	8
06.01923-3225	021	9
06.01923-3228	021	10
06.01924-3217	015	4
	034	2
	038	2
	038	4
06.01943-3317	012	11
06.01943-3319	033	8
06.01943-3323	033	2
06.01953-3318	035	2
06.02097-8306	021	29
06.02106-0723	016	42
06.06125-8709	030	6
06.08092-2405	023	8
06.11063-8212	031	10
06.11063-8214	015	15
	029	10
	030	7
	037	8
	037	22
06.11063-9217	033	7
06.15010-2311	021	36
	022	13
	026	19
	037	6
	037	18
	037	20
06.16110-0106	019	21
06.16731-2105	021	30
06.16731-2106	031	11
06.16731-2107	015	14
	021	37
	025	4
	026	20
	027	19
	029	11
	030	8
	037	7
	037	17
	037	21
06.22022-0907	020	6
06.22022-0909	020	9
06.22022-1016	019	33
06.22022-1018	016	2
06.22022-1063	014	5
06.29010-0120	019	19
06.29020-0125	016	37
06.29020-0132	024	5
06.31641-0618	011	17
06.56020-0115	030	5
	040	28
06.56021-0102	011	24
06.56021-0102	040	1
06.56180-0712	032	33
	040	30
	041	15
06.56190-0704	027	8
	027	10
	032	4
	032	12
06.56190-0705	011	29
	039	2
06.56190-0706	032	6
	032	13
	032	16
	032	19
	032	57
06.56190-0709	023	9
	027	6
06.56190-0719	015	17
06.56190-0726	021	6
06.56190-0732	022	3
06.67020-0104	027	14
06.67020-0105	015	6
	015	10
06.67020-0116	027	45
06.78144-2204	032	10
06.78144-2403	027	7
	027	9
1.109-00020	4760	480
1.109-00029	4140	303
1.109-00062	4760	92
1.109-00074	4750	290
1.109-00083	4600	160
1.109-00089	4650	390-3
	4690	390-3
1.109-00091	4750	350
1.109-00093	4650	30
	4690	30
1.110-00039	4620	340
	4630	150
1.110-00068	4350	6
1.110-00169	4240	29
1.110-00170	4250	23
1.114-00057	4620	50
	4670	50
1.114-00060	4620	50
	4670	50
1.114-00061	4620	50
	4670	50
1.114-00063	4620	50
	4670	50

PART NO.	FIG NO.	KEY NO.
1.114-00065	4620	50
	4670	50
1.114-00066	4620	50
	4670	50
1.114-00068	4620	50
	4670	50
1.114-00069	4620	50
	4670	50
1.114-00070	4620	50
	4670	50
1.114-00071	4620	50
	4670	50
1.114-00073	4620	50
	4670	50
1.114-00074	4620	50
	4670	50
1.114-00079	4620	50
	4670	50
1.114-00083	4620	50
	4670	50
1.114-00085	4620	50
	4670	50
1.114-00091	4620	50
	4670	50
1.114-00095	4620	50
	4670	50
1.114-00097	4620	50
	4670	50
1.114-00101	4620	50
	4670	50
1.114-00103	4620	50
	4670	50
1.114-00108	4620	50
	4670	50
1.114-00110	4620	50
	4670	50
1.114-00113	4620	50
	4670	50
1.114-00114	4620	50
	4670	50
1.114-00125	4620	50
	4670	50
1.114-00158	4750	170
1.114-00159	4750	170
1.114-00160	4750	170
1.114-00161	4750	170
1.114-00190	4750	170
1.114-00198	4620	50
	4670	50
1.114-00202	4620	50
1.114-00202	4670	50
1.114-00203	4620	50
	4670	50
1.114-00204	4620	50
	4670	50
1.114-00207	4620	50
	4670	50
1.114-00208	4620	50
	4670	50
1.114-00209	4620	50
	4670	50
1.114-00285	4760	245
	4760	259
	4760	272
1.114-00384	4730	150
1.114-00388	4750	330
1.114-00389	4750	330
1.114-00390	4750	330
1.114-00393	4750	330
1.114-00394	4750	330
1.114-00395	4750	330
1.114-00396	4750	330
1.114-00397	4750	330
1.114-00398	4750	330
1.114-00399	4750	330
1.114-00400	4750	330
1.114-00401	4750	330
1.114-00402	4750	330
1.114-00403	4750	330
1.114-00404	4750	330
1.114-00405	4750	330
1.114-00406	4750	330
1.114-00476	4630	480
1.114-00477	4630	480
1.114-00478	4630	480
1.114-00479	4630	480
1.114-00480	4630	480
1.114-00481	4630	480
1.114-00482	4630	480
1.114-00483	4630	480
1.114-00505	4610	650
	4660	650
1.114-00517	4650	320
	4690	320
1.114-00518	4650	320
	4690	320
1.114-00519	4650	320
	4690	320
1.114-00520	4650	320
	4690	320
1.114-00521	4650	320
	4690	320
1.114-00522	4650	320
	4690	320
1.114-00523	4650	320
	4690	320
1.115-00032	4350	7
1.115-00038	4650	390-5
	4690	390-5
1.115-00042	4720	10
1.115-00049	4760	150
1.115-00050	4760	500
1.115-00066	4740	150
1.115-00113	4650	214
	4690	214
1.115-00143	4600	110
1.115-00144	4600	110
1.115-00145	4600	110
1.115-00146	4600	110
1.115-00147	4600	110
1.115-00148	4600	110
1.115-00149	4600	110
1.115-00178	4650	390-4
	4690	390-4
1.115-00394	4360	7
	4370	7
1.120-00010	4250	18
1.120-00103	4650	630
	4690	630
1.120-00107	4760	242
1.120-00108	4760	262
1.120-00109	4650	510
	4690	510
1.120-00116	4660	10
1.120-00139	4760	202
1.120-00140	4760	254
1.120-00142	4750	430
1.120-00144	4630	120
1.120-00148	4650	256
	4690	256
1.120-00172	4710	291
	4710	311
	4710	410
	4710	450
	4760	46
1.120-00173	4760	341
1.120-00182	4710	371
1.120-00219	4310	24
	4320	24
	4330	24

PART NO.	FIG NO.	KEY NO.
1.120-00219	4340	24
	4350	24
	4360	22
	4370	22
	4420	24
	4430	24
	4440	24
	4450	24
	4500	24
	4550	24
1.121-00022	4620	570
1.121-00028	4240	23
1.121-00036	4600	290
1.121-00076	4350	23
1.121-00087	4610	850
	4660	850
1.123-00022	4250	17
1.123-00053	4140	304
1.124-00010	4350	27
1.131-00009	4330	29
	4340	29
	4440	29
	4450	29
	4490	29
	4500	29
	4540	29
	4550	29
1.131-00035	4250	4
1.131-00091	4760	32
1.131-00110	4650	238
	4690	238
1.131-00111	4760	140
1.138-00004	4240	21
1.148-00008	4760	130
1.161-00021	4240	25A
1.162-00001	1740	3A
1.178-00004	4240	26
1.180-00044	4760	210
1.180-00060	4760	342
1.180-00103	4710	372
	4760	552
1.180-00117	4350	21
	4360	19
	4370	19
1.180-00130	4760	235
1.180-00131	4750	390
1.180-00132	4750	270
1.180-00135	4620	242
	4620	252
	4650	502
1.180-00135	4670	242
	4670	252
	4690	502
1.180-00136	4650	90
	4690	90
1.180-00137	4710	212
	4760	42
1.180-00139	4760	62-5
	4760	72-5
	4760	82-5
1.180-00140	4760	62-6
	4760	72-6
	4760	82-6
1.180-00147	4720	170
1.180-00148	4760	52-2
1.180-00225	4400	12
	4410	12
1.180-00268	4310	14
	4320	14
	4420	14
	4430	14
	4460	14
	4470	14
	4490	14
	4510	14
	4520	14
	4540	14
1.180-00269	4310	22
	4320	22
	4400	19
	4410	19
	4420	22
	4430	22
	4460	22
	4470	22
	4490	22
	4510	22
	4520	22
	4540	22
1.180-00371	4650	210
	4690	210
1.180-00415	4350	19
1.180-00447	4260	4A
1.180-00448	4260	5A
1.180-00470	4360	8
	4370	8
1.180-00496	4350	11
1.180-00518	4140	302
1.180-00538	4750	190
1.180-00632	4360	9
1.180-00632	4370	9
1.180-00634	4400	16
	4410	16
1.180-00657	4480	8
	4530	8
1.180-00663	4480	21
	4530	21
1.180-00665	4400	9
	4410	9
1.181-00009	2140	2-3
1.181-00013	4630	114
1.181-00014	4630	130
1.181-00055	4250	2
1.181-00127	4760	41
1.195-00022	4330	30
	4340	30
	4440	30
	4450	30
	4490	30
	4500	30
	4540	30
	4550	30
1.216-00002	4740	350
1.222-00030	4720	70
1.222-00042	4720	50
	4720	90
1.222-00043	4720	90
1.222-00052	4720	90
1.222-00053	4720	90
1.229-00013	4600	210
1.357-00003	4250	20
1.403-00016	4610	640
	4660	640
1.403-00029	4610	670
	4660	670
1.409-00084	4760	50
1.412-00017	4240	19
1.420-00016	4140	105
1.420-00035	4260	4
1.420-00039	4330	28
	4340	28
	4440	28
	4450	28
	4490	28
	4500	28
	4540	28
	4550	28
1.420-00043	4760	62
1.420-00044	4760	72
1.420-00045	4760	82

PART NO.	FIG NO.	KEY NO.
1.420-00069	4260	3
1.420-00085	4760	52
1.420-00109	4140	107
1.420-00112	4260	2
1.420-00153	4260	5
1.420-00157	4630	430
	4680	50
1.420-00158	4710	330
	4710	340
1.425-00019	4650	258
	4690	258
1.428-00008	4380	7
	4390	7
1.428-00241	4590	7
1.428-00241A	4590	7
1.429-00003	4250	16
1.430-00025	4250	14
1.430-00026	4760	224
1.430-00069	4760	380
1.471-00004	4760	110
1.519-00001	4230	4
	4270	4
104-00019	4150	3
109-00165	2150	1
109-00165A	2150	1
110-00080	4480	6
	4530	6
110-00082	4310	6
	4320	6
	4420	6
	4430	6
	4460	6
	4470	6
	4490	6
	4510	6
	4520	6
	4540	6
110-00097	4330	6
	4340	6
	4440	6
	4450	6
	4500	6
	4550	6
110-00114	4360	6
	4370	6
110-00147	4400	6
	4410	6
110-00240	3100	1A
	6620	1A
	7050	2A
110-00241	3110	1A
	4330	2
	4330	4
	4340	2
	4340	4
	4440	2
	4440	4
	4450	2
	4450	4
	4490	2
	4490	4
	4500	2
	4500	4
	4540	2
	4540	4
	4550	2
	4550	4
	6690	1A
110-00242	3110	1B
	6690	1B
110-00243	3110	1C
	6690	1C
110-00244	4310	2
	4310	4
	4320	2
	4320	4
	4420	2
	4420	4
	4430	2
	4430	4
	4460	2
	4460	4
	4470	2
	4470	4
	4510	2
	4510	4
	4520	2
	4520	4
110-00245	3110	2A
	4350	4
	6690	2A
110-00264	2210	4A
	6860	4A
110-00265	4400	2
	4400	4
	4410	2
	4410	4
110-00266	2210	5A
	6860	5A
110-00267	6890	2A
110-00267	6890	54A
	6920	2A
	6920	54A
110-00268	6890	2B
	6890	54B
	6920	2B
	6920	54B
110-00269	4360	2
	4360	4
	4370	2
	4370	4
110-00269A	4360	2
	4360	4
	4370	2
	4370	4
114-00292	4480	41
	4530	38
114-00425	1210	11
	1230	19
114-00590	1510	15
115-00037	4150	26
115-00050	4310	12
	4320	12
	4420	12
	4430	12
	4460	12
	4470	12
	4490	12
	4510	12
	4520	12
	4540	12
115-00052	4310	7
	4320	7
	4350	12
	4420	7
	4430	7
	4460	7
	4470	7
	4490	7
	4510	7
	4520	7
	4540	7
115-00056	4310	19
	4320	19
	4420	19
	4430	19
	4460	19
	4470	19
	4490	19
	4510	19

PART NO.	FIG NO.	KEY NO.
115-00056	4520	19
	4540	19
115-00060	4310	11
	4320	11
	4420	11
	4430	11
	4460	11
	4470	11
	4490	11
	4510	11
	4520	11
	4540	11
115-00063	4330	12
	4340	12
	4440	12
	4450	12
	4480	7
	4500	12
	4530	7
	4550	12
115-00072	4480	11
	4530	11
115-00073	4480	12
	4530	12
115-00076	4380	3
	4390	3
115-00077	4380	5
	4390	5
115-00078	4380	6
	4390	6
115-00081	4330	26
	4340	26
	4440	26
	4450	26
	4490	26
	4500	26
	4540	26
	4550	26
115-00084	4330	11
	4340	11
	4440	11
	4450	11
	4500	11
	4550	11
115-00085	4330	19
	4340	19
	4440	19
	4450	19
	4500	19
	4550	19
115-00104	4360	11
	4370	11
	4400	7
	4410	7
115-00107	4360	10
	4370	10
115-00122	4480	19
	4530	19
115-00126	4400	10
	4410	10
116-00089B	1600	53
116-00090B	1600	54
116-00092A	1620	32-28D
119-00003	4150	14
119-00014AD1	1210	2
119-00025B	1230	24
120-00246	1920	15
120-00317	1250	8
120-00322A	1110	4
121-00006	1810	8
	2180	18
	3140	10
	6640	10
	7070	10
121-00010D1	1430	14
	6590	13
	7180	15
	7190	34
121-00010D3	1200	1-7
121-00010D5	2220	5
	6850	5
	6950	5
	6970	5
	6980	5
121-00010D7	1370	10
	1390	10
	6430	9
	6470	4
	6490	5
	6540	9
	6590	12
	6610	14
	6660	5
	6680	14
	7040	4
	7100	9
	7130	4
	7150	9
	7180	14
	7190	17
121-00010D7	7200	11
	7210	4
	7220	5
121-00010D8	6720	21
	7020	17
	7060	30
121-00025	1440	10
	6510	5
	7120	5
121-00043	4310	23
	4320	23
	4400	20
	4410	20
	4420	23
	4430	23
	4460	23
	4470	23
	4490	23
	4510	23
	4520	23
	4540	23
121-00046	4330	23
	4340	23
	4440	23
	4450	23
121-00055	4480	22
	4530	22
121-00085	6120	2G
123-00094	4150	10
123-00095	4150	11
123-00096	4150	16
123-00474	3100	3
	6620	3
	7050	4
123-00514	2120	6
123-00516B	1670	6
	6130	2
123-00522B	1600	49-9
123-00523	1590	66
	1670	5
	6130	7
123-00524B	1510	2
123-00671A	3100	2
	6620	2
	7050	3
123-00671B	3100	2
	6620	2
	7050	3
124-00010	1620	32-35
124-00055	4310	27

PART NO.	FIG NO.	KEY NO.
124-00055	4320	27
	4420	27
	4430	27
	4460	27
	4470	27
	4510	27
	4520	27
124-00070	1790	17
124-00085	4330	33
	4340	33
	4440	33
	4450	33
	4500	33
	4550	33
124-00157	4480	26
	4530	26
124-00194	1160	9
124-00199D4	3140	13
	6640	14
124-00199D5	3140	16
	6610	15
	6640	17
	6680	15
	7070	13
124-00208D1	6960	5
124-00208D2	1130	25
	1220	17
	1870	10
	1890	6
	1900	24
	6120	8
	6270	6
	6520	30-5
	7230	6
124-00208D3	1390	27
	1820	41
	1830	37
	1830	37
	1870	11
	1900	25
	1940	32
	6940	5
124-00208D4	1340	67
	1440	53
	1830	38
	1900	26
	2170	30
	2180	27
	6420	4
	6510	33
124-00208D4	7120	33
124-00208D5	1210	45
	1310	68
	1400	28
	1900	27
	6120	18
	6380	11
	6410	12
	7080	11
	7090	12
124-00208D6	1450	24
	1830	55
	6850	23
	6950	23
	6970	23
	6980	23
124-00208D7	1340	13
	1440	54
	1940	40
	2180	28
	6390	6
124-00208D8	1350	12
	1450	23
	6420	5
124-00208D9	1310	69
	1330	69
	1340	69
	2180	29
	6850	24
	6950	24
	6970	24
	6980	24
124-00209D1	1220	16
	1920	13
	1940	31
124-00209D2	1340	11
	1430	55
	1450	25
	6950	22
	6980	22
124-00285	2190	13
124-00298A	1170	1
124-00299A	6570	7
	6740	7
124-00302	6450	7
	6710	7
124-00303	6450	7
	6710	7
124-00306A	1730	14
	1760	3
124-00307B	1730	15
	1760	4
124-00310A	1150	22
124-00344	1620	32-36
125-00034A	1720	7-2A
125-00035A	1710	1-2A
125-00071A	1730	8-2A
125-00072	1620	32-11
125-00073B	1600	49-4A
125-00074B	1600	49-5A
125-00075A	1740	13
125-00077	1610	70
125-00078	1610	71
125-00096A	1600	49-4
125-00097A	1600	49-5
129-00145	6890	61
	6920	60
129-00155	1600	69
129-00157	1490	17
132-00021	1490	30
133-00220E	1620	37
133-00221	1620	32-9
133-00248	1600	49-4C
	1600	49-5C
136-00055A	1620	32-12
137-00092	1620	32-10
140-01411J	1260	2
140-01453B	1230	2
140-01522E	3130	4
140-01531C	6440	1
140-01532C	6440	2
140-01533C	6560	1
	6670	1
140-01534A	6560	2
140-01535	6560	3
	6670	3
140-01536B	3130	5
140-01537B	3130	6
140-01538E	3130	7
140-01543A	6450	1
140-01553E	6570	1
140-01555H	6740	1
140-01562C	6500	1
140-01563C	6500	2
140-01568C	2180	8
140-01569C	2180	9
140-01583B	2200	1
140-01584B	2200	2
140-01585C	1280	63
140-01588A	6960	4

PART NO.	FIG NO.	KEY NO.	PART NO.	FIG NO.	KEY NO.	PART NO.	FIG NO.	KEY NO.
140-01608C	6630	4	161-00386	7040	7	172-00052E	1620	15
140-01609C	6630	5		7100	23	172-00052G	1625	1
140-01610C	6630	6		7130	7	172-00053B	1650	1
140-01611C	6630	7		7150	23	172-00055A	1610	91
140-01613C	6650	1	161-00404	6300	9	172-00372A	1650	-
140-01614C	6650	2	161-00465	6890	60	180-00073D4	6600	9
140-01615A	6710	1		6920	59		7190	12
140-01616	6670	2	161-00548	1120	3	180-00077D3	3110	15
142-00127C	1600	52	161-00550	1120	2		6690	15
142-00128B	1600	51	161-00574	6450	6	180-00179	4150	20
145-00105B	1760	2		6710	6	180-00200	1230	6A
145-00106B	1730	17	161-00580	1730	18	180-00247	4310	21
145-00110A	1730	16		1760	11		4320	21
145-00124A	1620	32-18	161-00598A	1590	59		4400	18
155-00058A	2210	4	161-00599	1670	4		4410	18
	6860	4	161-00600	1670	8		4420	21
155-00059B	2210	5	161-00601A	1790	1		4430	21
	6860	5	161-00602A	1790	2		4460	21
155-00060A	6890	19	161-00603B	1790	3		4470	21
	6920	23	161-00604B	1790	4		4490	21
155-00061	3110	2	161-00606C	1790	6		4510	21
	6690	2	161-00607B	1790	7		4520	21
159-00114	1510	13	161-00608B	1790	8		4540	21
159-00281B	1530	2	161-00609C	1610	84	180-00255	4400	15
159-00287A	1490	7	161-00609E	1610	84		4410	15
	1500	8	161-00610C	1610	85	180-00269	4380	10
159-00290A	1490	6	161-00610E	1610	85		4390	10
	1500	7	161-00613B	1610	90	180-00276	4330	21
159-00294B	6140	1	161-00616E	2130	3		4340	21
	6150	1		6200	3		4440	21
160-00008	4590	5	161-00618B	1600	63		4450	21
160-00020	3110	5	161-00619B	1600	64		4500	21
	3140	11	161-00620	1620	32-28C		4550	21
	6640	11	161-00621B	1620	32-28	180-00297D2	2150	1A
	6690	5	161-00622	1570	23	180-00312	4360	13
	7070	11	161-00623	1620	32-6		4370	13
160-00061	6280	1	161-00624	1570	34	180-00314	4360	16
	6360	1	161-00639	1670	13		4370	16
160-00071	1640	5		6140	8	180-00360	4480	17
160-00072	1640	6		6150	6		4530	17
160-00074A	1590	121	161-00640A	1590	30	180-00363	4480	15
	1590	121	162-00033A	1620	32-3C		4530	15
160-00080A	1640	7	162-00034B	1600	7	180-00379	4400	8
160-00081	1100	51	162-00035A	1590	6		4410	8
161-00195	1600	34	162-00038	1590	9	180-00408	4710	292
	1620	34	162-00039A	1590	8		4710	312
	6180	8	162-00040A	6140	2		4760	72-7
161-00386	6430	23		6150	2	180-00463	1100	7
	6530	5	170-00004	1170	5		2150	7
	6540	23	171-00060A	1670	3	181-00008	6590	10

PART NO.	FIG NO.	KEY NO.
181-00008	7180	12
181-00078D1	7180	16
181-00078D5	6590	14
	7190	33
181-00103	1810	9
	2180	17
	3140	9
	6640	9
	7070	9
181-00111	4220	18
	4560	18
181-00128D2	6510	4
	7120	4
181-00137	6850	6
	6950	6
	6970	6
	6980	6
181-00141	1440	11
181-00144D21	7030	34
181-00144D41	1320	16
181-00182	1430	26
	6430	8
	6540	8
	7100	8
	7150	8
181-00673D1	7190	32
181-00698	1200	1-8
181-00779	1420	3
	6420	3
	6520	6
181-00804	6330	3
181-00809	6120	2E
181-00810	6120	2F
181-00814C	6960	2
181-00815B	6960	3
182-00009	4150	15
185-00167D1	6120	3
185-00195D1	6120	3A
185-00407B	1940	25
186-00017A	1210	9
190-00078	2210	20
	5130	31
	5150	34
	5160	23
	6890	38
190-00092	5140	1
190-00093	5140	9
190-00094	5140	13
190-00095	5150	9
	5160	9
190-00096	5140	8
190-00097	5150	10
	5160	10
190-00098	5140	10
190-00098A	5140	10
190-00099	5150	11
	5160	11
190-00100	5150	5
	5160	5
190-00101	5140	4
190-00102	5140	12
190-00123	5140	18
190-00509BD25	5150	36
	5160	36
190-00522	5130	15
	5150	17
	5160	17
190-00522A	5130	15
	5150	17
	5160	17
190-00557	5150	18
	5160	18
190-00648A	5130	16
	5150	13
	5160	13
190-00652	5130	4
	5150	4
	5160	4
190-00689	5120	8
190-00691	5130	12
190-00691A	5130	12
190-00692	5130	13
190-00693	5120	7
190-00694	5130	11
190-00695	5120	10
190-00695A	5120	10
190-00703	5130	14
190-00742	5120	1
190-01059D12	5150	38
	5160	38
190-01172	6120	21
190-01198D4	1820	38
190-01198D5	1820	39
191-00167	4150	28
191-03000B	1100	2
191-03094C	1100	3
191-03146B	2120	7
191-03166C	1610	17
191-03179A	1610	16
191-03270B	1100	4
191-03279A	1670	9
191-03280A	1670	10
191-03283	1620	32-28A
191-03429B	1110	1
191-03430B	1110	2
191-03701B	2130	4
	6190	3
191-03734A	1600	83
191-03736E	6330	14
195-01630	6120	9
195-01805	6300	1
195-02154	6120	20
195-02400	6590	11
	7180	11
195-02568E	1440	6
195-02643C	1120	1
195-02657C	6120	1
195-02678H	1720	7-1
195-02712B	6890	13
	6920	13
195-02713B	6890	14
	6920	14
195-02719B	1620	38
195-02721J	1320	8
195-02723B	2110	1
195-02725A	1250	7
195-02729	1590	58
195-02730C	1350	5
195-02731C	6420	2
195-02732B	6380	4
195-02733B	6380	3
195-02739B	1600	49-2
195-02739C	1600	49-2
195-02740C	1600	49-3
195-02740E	1600	49-3
195-02754B	1530	1
195-02755C	1500	1
195-02768C	1560	14
195-02769C	1560	15
195-02770C	1560	18
195-02771B	1570	14
195-02772E	1570	15
195-02774	1570	22
195-02779A	6430	5
	6540	5
	7040	3
	7100	5
	7130	3
	7150	5
195-02780A	1170	4

PART NO.	FIG NO.	KEY NO.	PART NO.	FIG NO.	KEY NO.	PART NO.	FIG NO.	KEY NO.
195-02785C	1570	24	2.114-00037	4110	3Ad	2.114-01035	4600	50
195-02787G	1340	2	2.114-00038	4110	2Ad	2.114-01037	4600	50
195-02790B	1570	25		4110	3Ad	2.114-01039	4600	50
195-02806E	1440	4	2.114-00039	4120	2Af	2.114-01041	4600	50
195-02807C	1420	2	2.114-00041	4120	2G	2.114-01043	4600	50
195-02807E	1420	2	2.114-00042	4120	2H	2.114-01045	4600	50
195-02813A	1730	19	2.114-00147	4110	2C	2.114-01047	4600	50
195-02858C	1560	22		4110	3C	2.114-01052	4600	50
195-02868C	1490	4	2.114-00148	4110	2C	2.114-01081	4600	50
195-02892B	6270	2		4110	3C	2.114-01126	4630	480
195-02904C	1510	1-2	2.114-00149	4110	2C	2.114-01127	4630	480
195-02908C	6250	3		4110	3C	2.114-01128	4630	480
195-02909A	6290	1	2.114-00150	4110	2C	2.114-01129	4630	480
195-02910A	6260	1		4110	3C	2.114-01130	4630	480
	6310	1	2.114-00151	4110	2C	2.114-01131	4630	480
195-02910C	6260	1		4110	3C	2.114-01132	4630	480
	6310	1	2.114-00154	4110	22	2.114-01155	4610	680
195-02920A	1490	14	2.114-00155	4200	13		4660	680
195-02920B	1490	14	2.114-00571	4620	50	2.115-00126	4600	110
195-02921E	1490	13		4670	50	2.115-00127	4600	110
195-02921G	1490	13	2.114-00572	4620	50	2.115-00128	4600	110
195-02925	6300	5		4670	50	2.115-00129	4600	110
195-02925A	6300	5	2.114-00573	4620	50	2.115-00130	4600	110
195-02927B	1860	38		4670	50	2.115-00131	4600	110
195-02949A	1680	1	2.114-00574	4620	50	2.115-00132	4600	110
195-03340B	1690	1		4670	50	2.115-00133	4600	110
195-03374B	6140	5	2.114-00575	4620	50	2.115-00134	4600	110
195-03444	6330	11		4670	50	2.115-00135	4600	110
198-00016	1340	9	2.114-00576	4620	50	2.115-00136	4600	110
	1410	7		4670	50	2.115-00137	4600	110
198-00053A	1620	32-8	2.114-00577	4620	50	2.115-00138	4600	110
198-00054A	1590	5		4670	50	2.115-00139	4600	110
199-00002	5100	1-11	2.114-00579	4620	50	2.115-00140	4600	110
2.109-00210	4600	80		4670	50	2.115-00141	4600	110
2.109-00244	4110	2H	2.114-00580	4620	50	2.115-00142	4600	110
	4110	3H		4670	50	2.115-00143	4600	110
2.109-00262	4110	2G	2.114-00619	4720	30	2.115-00144	4600	110
	4110	3G	2.114-00662	4750	170	2.115-00145	4600	110
2.113-00014	4110	27	2.114-00671	4750	170	2.115-00146	4600	110
2.114-00032	4110	2Ad	2.114-00677	4750	170	2.115-00147	4600	110
	4110	3Ad	2.114-00866	4600	270	2.115-00148	4600	110
2.114-00033	4110	2Ad	2.114-00867	4620	140	2.115-00149	4600	110
	4110	3Ad		4670	140	2.115-00150	4600	110
2.114-00034	4110	2Ad	2.114-00871	4750	410	2.115-00151	4600	110
	4110	3Ad	2.114-00877	4130	2E	2.115-00152	4600	110
2.114-00035	4110	2Ad	2.114-01027	4600	50	2.115-00153	4600	110
	4110	3Ad	2.114-01029	4600	50	2.115-00154	4600	110
2.114-00036	4110	2Ad	2.114-01030	4600	50	2.115-00155	4600	110
	4110	3Ad	2.114-01032	4600	50	2.115-00156	4600	110
2.114-00037	4110	2Ad	2.114-01034	4600	50	2.115-00157	4600	110

PART NO.	FIG NO.	KEY NO.
2.115-00158	4600	110
2.115-00159	4600	110
2.115-00160	4600	110
2.115-00161	4600	110
2.115-00162	4600	110
2.115-00163	4600	110
2.115-00164	4600	110
2.115-00165	4600	110
2.115-00166	4600	110
2.115-00167	4600	110
2.115-00302	4110	2F
	4110	3F
2.115-00303	4110	20
2.115-00325	4110	21
2.115-00327	4160	10
2.120-00328	4750	70
2.120-00575	4120	26
2.120-00597	4740	310
2.120-00611	4110	23
	4120	2M
2.120-00612	4110	24
	4120	2As
2.120-00613	4120	2Ah
2.120-00614	4120	18
2.120-00615	4120	50
2.120-00616	4120	52
2.120-00617	4130	2D
2.120-00618	4210	26
2.120-00620	4200	5
2.120-00621	4200	6
2.120-00622	4200	9
2.120-00674	4110	4E
2.120-00675	4120	2O
2.120-00718	4710	94
2.120-00805	4210	10
2.120-00806	4210	11
2.120-00811	4210	27
2.120-00813	4190	16
2.120-00814	4200	10
2.120-00815	4210	20
2.120-00816	4160	8
	4160	13
	4180	34
2.120-00821	4120	43
2.120-00822	4110	4D
2.120-00823	4120	42
2.120-00824	4120	41
2.120-00826	4120	2An
2.120-00832	4130	1C
2.120-00839	4180	23
2.120-00840	4210	21
2.121-00202	4120	2Aj
	4120	2N
	4190	21
2.121-00203	4120	47
2.121-00263	4160	18
2.123-00066	4120	2Ae
2.123-00114	4110	2Ab
	4110	3Ab
2.123-00131	4120	2Ap
2.123-00132	4120	44
	4180	26
2.123-00138	4130	2J
	4210	28
2.123-00198	4610	870
	4660	870
2.123-00203	4610	860
	4660	860
2.123-00235	4120	2Ai
2.123-00236	4120	17
2.123-00238	4120	2F
2.123-00239	4120	46
2.123-00247	4190	19
2.123-00250	4180	8
2.123-00288	4120	2Ao
	4120	49
2.123-00297	4160	17
2.123-00300	4120	2Aq
2.131-00415	4120	2Ag
2.131-00416	4120	15
2.131-00417	4130	2C
2.131-00418	4120	2E
2.131-00421	4190	7
2.131-00422	4190	9
2.131-00423	4200	4
2.172-00003	1550	9
	6110	9
2.180-00081	4760	20
2.180-00084	4120	11
2.180-00436	4700	90
	4750	210
2.180-00443	4700	140
2.180-00450	4620	120
	4670	120
2.180-00471	4120	2Al
	4120	2K
2.180-00988	4110	2E
	4110	3E
2.180-00989	4110	2E
	4110	3E
2.180-00990	4110	2E
	4110	3E
2.180-00991	4110	2E
	4110	3E
2.180-00992	4110	2E
	4110	3E
2.180-00993	4110	2E
	4110	3E
2.180-00994	4110	2E
	4110	3E
2.180-00995	4110	2E
	4110	3E
2.180-00996	4110	2E
	4110	3E
2.180-00997	4110	2E
	4110	3E
2.180-00998	4110	2E
	4110	3E
2.180-01051	4710	430
	4710	455
	4760	48
2.180-01179	4210	25
2.180-01180	4130	2G
2.180-01181	4120	2Am
2.180-01182	4130	2H
2.180-01187	4180	20
2.180-01188	4200	8
	4210	24
2.180-01191	4120	2Ak
2.180-01195	4200	12
2.180-01198	4210	23
2.180-01199	4130	1B
2.180-01202	4210	1-11
2.181-00075	4750	30
2.181-00183	4180	28
2.181-00184	4180	32
2.181-00262	4120	2Ar
2.181-00321	4580	6
2.181-00438	4760	551
2.181-00507	4210	22
2.222-00049	4720	90
2.222-00050	4720	90
2.222-00051	4720	90
2.241-00045	4110	4
2.241-00046	4110	4A
2.402-00210	4120	10
2.402-00211	4120	2Aa
2.402-00212	4120	2B
2.402-00213	4190	1
2.402-00263	4110	5

PART NO.	FIG NO.	KEY NO.
2.403-00018	4110	7
2.405-00107	4110	2B
2.405-00108	4110	3B
2.405-00180	4110	8
2.408-00065	4120	2Ac
2.408-00083	4120	2D
2.408-00109	4190	4
2.409-00068	4120	16
2.409-00072	4200	15
2.409-00116	4110	2Ac
	4110	3Ac
2.409-00179	4120	2Ab
2.409-00180	4120	2C
2.409-00182	4200	3
2.409-00183	4200	16
2.409-00201	4120	12
2.409-00202	4120	2Ad
2.409-00216	4130	2B
2.410-00087	4110	2
2.410-00088	4110	2A
	4110	3A
2.410-00089	4110	3
2.410-00133	4110	2Aa
	4110	3Aa
2.412-00127	4110	3D
2.412-00130	4110	2D
2.412-00221	4110	2Af
	4110	3Af
2.415-00033	4200	11
2.421-00130	4120	2A
2.421-00208	4270	3
2.421-00378	4210	2
2.428-00062	4120	13
2.430-00205	4100	5
	4130	1
2.430-00206	4130	1A
2.453-00023	4110	2Ae
	4110	3Ae
200-00032J	2120	-
200-00036C	2130	-
204-00067	1170	51
	1180	-
204-00070	1180	5
204-00075	1180	4
2106-1019D25	1940	17
	5110	16
2107-6006	1940	13
2109-1041	4150	17
2109-1042	4150	18
211-00159A	2120	1
211-00160A	2120	2
2110-1184D7	4590	2-2
2114-1058D10	1340	62
	1410	25
	1720	39
2114-1058D18	6890	34
	6920	16
2114-1058D19	6890	35
	6920	17
2114-1058D2	1580	4
	1580	4
2114-1058D29	1920	4
2114-1058D30	1250	30
	1710	1-12
	1720	7-9
	1750	40
2114-1058D31	6180	15
2114-1058D33	1740	42
2114-1058D45	1710	1-10
	1720	7-10
2114-1058D52	1940	36
2114-1058D54	1880	4
	6210	4
2114-1058D68	1730	43
	1760	5
2114-1059D224	1110	6
2114-1059D229	1110	5
2114-1183D13	1750	41
2114-1370	1110	3
2114-1592	4150	13
2114-1594	4150	12
2114-1813	1210	12
	1230	20
2114-1814	1210	13
	1230	21
2114-1816A	1130	35
	2140	10
	2160	5
2114-1831A	3120	9
	6750	9
	6760	9
	6770	9
	6780	9
	6790	9
	6800	9
	6810	6
	6820	6
	6830	6
2114-1856	1620	42
2114-1859	3120	4
2114-1859	6750	4
	6760	4
	6770	4
	6780	4
	6790	4
	6800	4
	6810	1-4
	6820	1-4
	6830	1-4
2114-1879	2120	13
2114-1898D1	1580	7
	1580	7
	1640	4
	1680	3
	6180	12
	6290	2
2114-1898D10	6180	16
2114-1898D13	1590	76
	1610	76
2114-1898D14	1490	8
	1510	1-6
	1510	5
	1560	33
	1570	28
	1570	28
	1590	18
	1600	18
	1610	18
	1620	18
	1640	9
	1670	17
	1690	3
	6130	6
2114-1898D15	1520	4
	1530	4
	1620	23
	1620	23
	1620	32-22
	1625	3
	1650	3
	1660	3
2114-1898D17	1510	8
	1640	2
	6160	2
	6170	2-2
	6170	3
	6180	9
2114-1898D18	1510	12
2114-1898D2	1600	49-13
	1620	32-25

PART NO.	FIG NO.	KEY NO.
2114-1898D2	1620	46
	6180	13
2114-1898D3	1490	33
	1590	19
	1600	19
	1600	49-10
	1610	19
	1620	19
	1620	32-29
	1670	14
	6130	3
	6330	12
2114-1898D4	1490	34
2114-1898D5	1560	37
	1570	31
	1610	113
	6140	9
	6150	8
2114-1898D6	1490	10
	1590	26
	1600	26
	6180	17
	6250	5
	6260	8
	6310	2
2114-1929	1120	4
2114-1994B	3110	14
	6690	14
2114-1995B	3110	13
	6690	13
2114-2031D1	1610	97
2114-2031D4	1510	6
	1560	34
2114-9012A	1100	34
	1120	5
	2120	25
	2150	3
2116-1060D6	3100	8
	3110	12
	6620	8
	6690	12
	7050	12
2116-1522	1710	1-3
	1720	7-3
2116-1532A	3100	7
	6620	7
	7050	29
2116-9003	5120	6
	5140	6
2119-1063B	1200	1-5
2120-1354	1850	16
2120-2135A	1150	8C
2120-2150D1	1620	43
2120-2150D3	1620	28
	1620	32-33
2120-2166D1	1530	3
	1620	32-23
	1620	41
	1640	3
	1680	2
2120-2166D10	1490	12
	1500	10
	1510	11
	1520	3
	1570	26
	1570	26
	1610	14
	6150	10
2120-2166D12	1570	29
	1590	25
	1600	25
	1600	49-12
	1610	25
	1620	25
	1640	10
	1690	4
2120-2166D18	1610	99
2120-2166D2	1580	6
	1580	6
	1650	2
2120-2166D23	1560	26
2120-2166D26	1590	77
	1610	77
2120-2166D27	6160	3
	6170	2-3
	6170	4
	6180	10
2120-2166D28	1590	20
	1600	20
	1600	49-11
	1610	20
	1620	20
	1620	32-30
2120-2166D32	6180	23
2120-2166D36	1560	36
	1570	30
2120-2166D37	1590	27
2120-2166D4	1620	22
	1625	2
	1640	14
2120-2166D4	1660	2
2120-2166D5	1490	36
	1510	1-4
	1510	10
	1560	32
	1570	35
	1570	35
	1590	47
	1620	32-24
	1620	47
	6180	22
2120-2166D52	1490	26
	1500	11
	1560	23
	1600	49-15
	1600	80
	1600	80
	1610	80
	1620	32-31
	6140	6
	6150	9
	6180	25
2120-2166D53	1490	11
	1500	9
	1520	5
	1530	5
	1560	24
	1570	27
	1590	111
	1610	111
	1620	32-37
2120-2166D54	6250	4
	6260	2
	6310	3
2120-2166D55	1640	1
2120-2166D57	1560	39
2120-2166D58	1570	36
2120-2166D7	1590	31
	1610	31
	1670	16
2120-2166D9	6130	4
	6330	13
2120-2172	1870	19
2120-2235	1870	9
2121-1251A	2120	20
	2140	8
2121-1284	2170	11
2121-1305	1830	40
	1830	40
	1870	14

PART NO.	FIG NO.	KEY NO.
2121-1305	1920	17
2121-1311D1	1510	9
	6180	18
2121-1311D2	1490	9
	1510	7
	1600	49-14
	6180	14
2121-1311D4	1600	39
	1620	39
	6180	11
2121-9007	1580	5
	1580	5
2122-1002D2	5130	9
	5150	8
	5160	8
2122-1002D4	5130	17
	5150	14
	5160	14
2123-1107D7	1100	33
2123-1441D4	6890	55
	6920	55
2123-1458	1200	4
2123-1529B	2210	7
	6860	7
2123-1530B	2210	9
	6860	9
2123-1833B	2210	6
	6860	6
	6890	18
	6920	22
2123-1833C	2210	6
	6860	6
	6890	18
	6920	22
2123-1835	2210	8
	6860	8
2123-1902B	1100	6
2123-2207E	3100	5
	6620	5
	7050	8
2123-2209C	3100	6
	3110	6
	6620	6
	6690	6
	7050	7
2123-2212C	3110	9
	6690	9
2123-2225C	3110	7
	6690	7
2123-2247	1620	32-19
2123-2312A	6890	16
	6920	20
2123-6119	1620	32-3B
2124-1024D6	5100	5
2124-1026D2	1290	13
	7060	13
2124-1027D2	1810	10
	1810	10
2124-1084D2	6610	4
	6680	4
2124-1353D2	3140	14
	6640	15
	7070	14
2124-1509D1	1890	7
	6230	3
	7230	7
2124-1509D2	1220	15
2124-1622D1	5150	37
	5160	37
2124-1689A	1620	32-20
2125-1095A	1570	16
2125-9055	1620	35
2127-1002A	1620	48
2129-1008	1230	8
2129-1373	4220	21
	4560	21
2129-1374	4220	66
	4560	66
2129-1393	1230	15
2129-1397	4220	38
2129-1401	4220	44
	4560	44
2129-1446	1620	117
2129-1469	4220	46
	4560	46
213-00029C	1560	13
213-00030B	1560	8
213-00031E	1560	9
213-00032B	1560	10
213-00033B	1560	11
213-00034E	1560	12
213-00035B	1560	7
213-00036B	1570	2
213-00037B	1570	3
213-00038B	1570	4
213-00039B	1570	5
213-00040A	1570	21
2136-1434	1230	7
2140-1338	1600	55
	1610	55
2142-9005	1620	33
2150-1132A	1620	32-14
2150-1133	1610	93
2155-1306B	3110	3
	6690	3
2155-1307B	3110	4
	6690	4
2160-1004D23	1100	21
2160-1004D26	1100	30
2160-1004D28	1100	22
2160-1004D3	1100	28
2160-1004D33	1100	23
2160-1004D38	1100	24
2160-1004D51	1100	25
2160-1004D62	6850	26
	6950	26
	6970	26
	6980	26
2160-1201D14	1100	26
2160-1201D15	1100	27
2160-1201D26	1100	31
2160-1201D27	1100	29
2160-1212	1900	4
2160-1213	1900	5
2160-1310	1590	21
2160-1336	6120	3G
2160-1345	1680	4
2160-9011	1110	7
2161-2212	1610	72
2161-2487	1640	16
2161-9052	1710	1-4
	1720	7-4
2161-9053	1710	1-5
	1720	7-5
2161-9057	1580	1
2161-9058	1580	2
2172-9021	1620	32-17
2180-1026D13	2180	25
2180-1026D19	1270	30
	1280	30
	1300	30
	1450	16
	2190	3
	2200	18
2180-1026D2	3130	15
	3150	4
	6440	5
	6450	10
	6460	6
	6630	15

PART NO.	FIG NO.	KEY NO.
2180-1026D2	6650	5
	6700	4
	6710	10
	6720	6
	7060	26
2180-1026D27	1260	22
2180-1026D28	1240	21
	1250	21
	1260	21
2180-1026D30	1200	1-17
	6560	9
	6570	16
	6670	9
	6740	16
2180-1026D32	1240	20
2180-1106BD1	6890	32
	6920	40
2180-1106BD24	7050	16
2180-1106BD3	3110	10
	6690	10
	6890	33
	6920	41
2180-1106BD4	3100	1B
	3100	9
	3110	11
	6620	1B
	6620	9
	6690	11
	7050	2B
	7050	15
2180-1106BD9	2210	24
	6860	24
	6890	25
	6920	29
2180-1216D14	4760	52-1
2180-1216D150	4160	12
2180-1217D147	4140	307
2180-1217D149	4140	308
2180-1217D150	4140	113
2180-1217D16	4110	4C
2180-1217D24	4220	81
	4560	81
2180-1217D57	4120	45
2180-1217D63	4220	42
	4560	42
2180-1217D66	4120	2L
2180-1217D76	4110	4B
2180-1222	4220	29
	4560	29
2180-1223	4220	27

PART NO.	FIG NO.	KEY NO.
2180-1223	4560	27
2180-6086	1940	19A
2180-6088	1940	18A
2180-9153	5110	11
2181-1110D3	1200	1-6
2181-1110D30	2180	16
2181-1111D3	1200	1-3
2181-1116D1	4240	2
	4290	17
	4300	19
2181-1116D2	4140	312
	4150	22
	4290	16
	4300	18
2181-1116D3	4290	15
	4300	17
	4330	31
	4340	31
	4440	31
	4450	31
	4490	31
	4500	31
	4540	31
	4550	31
2181-1116D4	4150	21
	4290	18
	4300	16
2181-1116D5	4140	311
	4290	14
	4300	15
2181-1126D103	1350	20
2181-1126D104	2170	7
2181-1126D108	1350	22
2181-1126D14	1320	18
	1350	18
	1360	16
	1390	11
	1400	11
	2180	13
	6420	7
	6430	10
	6470	6
	6520	16
	6530	6
	6540	10
	6590	22
	6600	10
	6610	8
	6680	8
	6840	4

PART NO.	FIG NO.	KEY NO.
2181-1126D14	6850	8
	6950	8
	6970	8
	6980	8
	7030	16
	7040	16
	7100	10
	7130	16
	7150	10
	7180	25
	7190	5
	7200	3
	7210	6
2181-1126D27	1310	19
	1370	12
	1380	12
	1430	29
2181-1126D30	1330	28
2181-1126D34	1320	21
	6390	5
2181-1126D36	1330	161
	1360	7
	6420	6
	6590	21
	6930	5
	7030	7
	7180	22
2181-1126D39	1320	74
2181-1126D55	2170	6
	2190	9
2181-1126D6	1330	23
	1410	13
	1440	28
	1450	13
	6510	13
	7120	13
2181-1126D7	1310	24
	1320	24
	1350	24
	1370	14
	1380	14
	1430	74
	2170	5
	6400	2
	6430	24
	6530	18
	6540	26
	6590	16
	7040	18
	7100	26

PART NO.	FIG NO.	KEY NO.
2181-1126D7	7130	19
	7180	21
2181-1126D75	1330	25
	7150	31
2181-1126D85	1360	12
	7030	10
2181-1126D96	1310	26
	1320	26
2181-1159	1920	9
2181-1160A	1920	10
2181-1161A	1920	11
2181-1186D12	3140	6
	6640	6
	7070	19
2181-1702D10	1320	30
	1330	30
	1390	34
	6390	9
	6420	10
2181-1702D2	1330	31
	1330	173
	1450	10
	2200	10
	6420	8
	6510	17
	7030	35
	7120	17
2181-1702D25	1350	32
2181-1702D3	1320	75
2181-1702D4	1310	33
	1320	33
	1330	33
	1330	151
	1330	162
	1340	33
	1350	33
	1360	10
	1390	15
	1400	15
	1420	4
	2180	10
	2200	11
	6390	3
	6420	9
	6430	11
	6470	5
	6520	17
	6530	7
	6540	11
	6840	5
2181-1702D4	6850	10
	6930	4
	6950	10
	6970	10
	6980	10
	7030	9
	7040	2
	7100	11
	7130	2
	7150	11
	7210	5
2181-1702D5	1310	34
	1320	34
	1360	11
	1430	33
	2200	12
	6400	1
	6430	25
	6590	15
	7030	12
	7180	20
2181-1702D51	1430	51
2181-1890D2	1210	16
	1230	26
2181-1925	1810	3
	1810	3
2181-1950D1	1210	61
	1250	35
	1260	35
	2230	10
	4140	111
	4290	19
	4300	20
	6870	10
	6900	10
	6990	6
2181-1950D15	1240	51
	6440	8
	6650	8
2181-1950D2	1310	10
	1360	8
	6390	4
	6590	20
	6840	6
	7030	8
	7180	18
2181-1950D3	1250	52
2181-1950D7	1200	1-10
	1230	25
2181-1950D9	4380	8
2181-1950D9	4390	8
2181-1951D1	1350	40
	1360	13
	6420	11
	6520	20
	6950	7
	6970	7
	6980	7
	7030	13
	7130	17
	7180	17
2181-1951D11	2200	13
2181-1951D23	1330	41
2181-1951D38	1330	42
2181-1951D6	1310	44
	1410	16
	7150	28
2181-1951D7	1330	45
	1360	14
	6420	12
	6520	15
	7030	14
2181-1951D8	1330	152
	1350	46
	6390	8
2181-2047A	1310	66
	1340	66
	1360	20
	2170	10
	7030	20
2181-2104D6	1210	40
2181-2178	1390	8
	6470	7
	6590	9
	7180	13
	7210	7
2181-2180	1440	27
2181-2281D1	6420	13
	6540	25
	7100	25
	7130	24
	7150	25
2181-2281D15	1340	47
	1350	47
	6850	7
2181-2281D3	1360	17
	6430	26
	6530	8
	6540	24
	6590	19

PART NO.	FIG NO.	KEY NO.
2181-2281D3	6590	19
	7030	17
	7040	17
	7100	24
	7130	18
	7150	24
	7180	19
	7180	19
2181-2281D4	1400	17
2181-2293D2	6380	18
	6410	24
	7080	18
	7090	22
2181-2294D2	7020	12
2181-2295D12	1310	35
	1320	35
2181-2295D4	1310	36
	7030	33
2181-2300	2170	9
2181-2419D1	7030	32
2181-2419D2	1430	73
2181-2419D3	1330	37
	1340	37
2181-2432	4220	10
	4560	10
2181-2527	1810	2
	1810	2
2181-2566D10	7060	34
2181-2590D2	1310	38
	1360	19
	7030	19
2181-2627D1	1260	32
	1270	15
	1280	15
	1290	15
	7020	16
	7060	24
2181-2627D11	1290	17
2181-2627D13	1300	19
2181-2627D15	6380	20
	6410	22
	7080	20
	7090	24
2181-2627D18	6510	14
	7120	14
2181-2627D2	1300	16
	6850	9
2181-2627D4	6380	19
	6410	21
	7080	19
2181-2627D4	7090	21
2181-2627D7	1280	18
2181-2627D8	1270	40
2181-2628D1	1260	34
	6380	21
	6410	23
	7020	14
	7080	21
	7090	23
2181-2635	1310	48
2181-2701A	2200	9
2181-2718	2170	8
2181-2755B	6120	2A
	6120	3D
2181-2774	1920	7
2181-2815D3	1440	35
	6510	15
	7120	15
2181-2815D4	1450	30
2181-2815D6	1430	34
2181-2816D1	6450	32
	6710	32
2181-2816D4	1300	20
	1450	53
	6450	35
	6510	32
	6570	32
	6710	35
	6740	32
	7120	32
2181-2816D5	6510	16
	7120	16
2181-2816D6	6380	22
	7080	22
2181-2817D1	6450	33
	6460	33
	6710	33
	6720	33
2181-2817D4	6450	37
	6570	33
	6710	37
	6740	33
2181-2820D1	6500	4
	6730	4
2181-4112	3140	12
	6640	13
	7070	18
2181-4133D1	1450	29
	2230	8
	6870	8
2181-4133D1	6900	8
2181-4133D12	7020	15
2181-4133D13	1260	33
2181-4133D2	1430	30
	2180	11
	2230	9
	6870	9
	6900	9
	6990	7
2181-4133D3	1280	21
	1440	31
	1450	12
	1450	54
	2220	3
	6570	5
	6740	5
	6850	3
	6950	3
	6970	3
	6980	3
2181-4133D33	2180	12
2181-4133D37	1300	22
	6600	5
2181-4133D39	1440	32
	2180	14
	6950	9
	6970	9
	6980	9
2181-4133D47	2180	15
2181-4133D5	6460	13
	6460	31
	6720	13
	6720	31
	7020	13
2181-9078	1450	3
2181-9079	3130	14
	3150	3
	6460	5
	6630	14
	6700	3
	6720	5
	7060	25
2181-9081	1270	31
	1300	31
	2190	19
2181-9089	1200	1-15
2182-1820	1810	1
2184-1036D15	2200	5
2184-1036D303	1200	1-12
2184-1045D103	6640	3

PART NO.	FIG NO.	KEY NO.
2184-1045D123	3140	5
2184-1045D161	3140	3
	6640	5
2184-1045D165	6640	2
2184-1045D190	7070	7
2184-1045D200	7070	2
2184-1045D254	3140	4
2184-1045D48	3140	2
2184-1045D65	3140	1
2184-1045D66	7070	1
2184-1046D216	7190	14
	7190	15
2184-1046D217	6610	7
	6680	7
2184-1081D50	3150	2
2184-1096D8	6600	12
	7190	13
2184-1197D12	6450	2
2184-1197D24	6710	2
2184-1197D35	1260	15
2185-1002D105	1240	5
2185-1247D142	1130	15
2185-1308D10	1920	5
	1920	6
2185-1660	1590	106
2186-9003	1920	7
2190-2314D3	5130	28
	5150	29
	5160	29
2190-2475	5120	5
	5140	5
2190-2476	5130	29
	5150	15
	5160	15
2190-2477	5130	30
	5150	16
	5160	16
2190-2480	5120	4
2190-2524	5140	7
2190-2533A	5130	7
2190-2556D145	5130	5
2190-3345	5120	2
	5140	2
2190-3379A	5130	3
2190-3388	5120	9
2190-3528	5160	19
2190-3531	5160	33
2190-9013	5130	18
	5150	30
	5160	30
2195-1534	1850	22
2195-2394B	1890	2
	7230	2
2195-3500	1210	20
	1830	56
	1900	14-3
	1900	19
	6420	21-3
	6520	30-2
	6940	2
2197-1660	1900	22
2197-1661	1340	1I
	1830	36
	1860	52
	1870	12
	1890	5
	1900	14-7
	1900	23
	1920	19
	6260	4
	6270	5
	6290	4
	6310	4
	6420	21-7
	6940	6
	7230	5
2199-1004	5100	1-9
2199-1005	5100	1-10
2199-1019	5100	4
2199-1063F35A	5100	1
2199-9008	5100	2
2199-9009	5100	1-15
2199-9010	5100	3
2199-9043	5100	1-1
2199-9058	1610	92
2204-6039A	1940	28
2208-6013B	1940	4
2229-1031	4220	41
	4560	41
2229-1065	4220	30
	4560	30
2276-9005A	2130	1-1
	2130	2-1
230-00017	4150	8
230-00018	4150	9
230-00071E	2150	-
230-00074C	2160	-
2401-1276KT	6120	2H
2415-1012A	4220	7
	4560	7
2415-1018	1850	27
2420-1131	4220	73
	4560	73
2420-1138	4220	58
	4560	58
2420-1175	4220	22
	4560	22
2420-1209A	4220	86
2420-1220	4220	59
	4560	59
2420-1225A	4220	64
	4560	64
2420-1226	4220	85
	4560	85
2420-1229	4220	11
	4560	11
2420-1258	6120	3B
2420-9325A	1440	2
	4260	-
2423-1470	1410	1
2423-1529B	4220	50
	4560	50
2423-1550	1310	6
2423-9007A	2180	1
2424-1135	4220	52
	4560	52
2424-1139	4220	32
	4560	32
2424-1170A	4220	45
	4560	45
2424-1257	4220	53
	4560	53
2424-1276F	4220	95
	4560	95
2424-1277E	4220	90
	4560	90
2424-1278E	4220	91
	4560	91
2424-1279C	4220	96
	4560	96
2424-1280	4220	94
	4560	94
2424-1281B	4220	89
	4560	89
2424-1282	4220	93
	4560	93
2424-1283	4220	92
	4560	92
2424-1351A	4220	51
	4560	51

PART NO.	FIG NO.	KEY NO.
2426-1173	4220	39
2426-1175	1230	14
2426-1237	1340	1D
2426-9041	6850	13
2429-1047	4220	47
	4560	47
2430-1040A	4220	56
	4560	56
2430-1051	4220	8
	4560	8
2430-1056A	4220	82
	4560	82
2430-1058	4220	23
	4560	23
2430-1059	4220	60
	4560	60
2430-1064A	4220	37
2430-1067	4220	1
	4560	1
2430-1081	4220	43
	4560	43
2430-1083	4220	20
	4560	20
2430-1084	4220	71
	4560	71
2430-1085A	4220	65
	4560	65
2430-1086A	4220	70
	4560	70
2430-1106	4220	48
	4560	48
2430-1107	4220	40
	4560	40
2460-9054	1350	3
2460-9055	1440	5
2471-1133	1420	14
2471-1135	1410	9
2471-1152	6120	3C
2471-1154	1340	1C
	5110	7
2471-1155A	1340	1E
2472-7003	1340	1B
2474-7009	1190	2B
2474-7009K	1190	2H
2474-9016A	1230	3
2512-1095D1	5110	12
2515-1016D4	6250	1A
	6260	3A
	6270	8A
	6340	1A
2515-1016D4	6350	1A
2515-1021D1	1610	75A
	5110	18
2515-1021D5	1850	34A
	1860	37B
	7230	12
2515-1022D1	1890	1A
	7230	1A
2516-1116	1830	26
2525-1011	1820	10
2527-1016	1830	5A
	1830	6A
	5110	23
2527-1017	1830	5B
	1830	6B
	5110	24
2527-1018	1830	5C
	1830	6C
	5110	25
2527-1023A	1850	17
	5110	22
2527-1025	1830	5D
	1830	6D
	5110	27
2527-9004	1850	15
2528-9040	1830	16
2531-1003	1820	8
	1820	9
2534-6019	1860	37A
2534-6030	1850	34B
2534-9069	1850	34
2541-9020	1610	81
2543-9015	1820	6
2544-1022	1850	18
2544-9024	1850	11
2544-9033	1820	16
	1820	17
	1820	18
	1820	19
	1820	20
	1820	21
	1820	22
	1820	23
	1820	24
	1820	25
	1820	26
	1820	27
	1820	28
	1820	29
	1820	30
2544-9033	1820	31
	1820	32
	1820	33
	1820	34
	1820	35
	6230	7
	6330	17
2547-9045	1190	3
	6320	3
2548-1027	1900	1A
2549-9093	1440	9
2549-9112	1310	14
2550-1014D1	1900	2
2550-1014D2	1900	3
2553-1275D39	1900	10
2553-1275D54	1900	7
2553-1275D6	1900	6
2553-1275D82	1900	9
	1900	10
2553-1275D88	1900	8
270-00054B	1600	49-6
270-00062A	1600	74
2705-1022	3120	3
	6750	3
	6760	3
	6770	3
	6780	3
	6790	3
	6800	3
	6810	1-3
	6820	1-3
	6830	1-3
2705-9002	1710	1-19
	1720	7-16
	1740	35
2713-1222A	3120	1A
	6750	1A
	6760	1A
	6770	1A
	6780	1A
	6790	1A
	6800	1A
	6810	1-1A
	6820	1-1A
	6830	1-1A
2713-1228A	3120	6
	6750	6
	6760	6
	6770	6
	6780	6

PART NO.	FIG NO.	KEY NO.	PART NO.	FIG NO.	KEY NO.	PART NO.	FIG NO.	KEY NO.
2713-1228A	6790	6	400-01481A	6870	-	420-00282	1430	7
	6800	6	400-01484A	2220	-	420-00352D6	1310	15
	6810	2	400-01485A	6850	-	420-00459	4560	86
	6820	2	400-01486B	6950	-	420-00460A	4360	26
	6830	2	400-01487B	6970	-		4400	25
2713-1229A	3120	5	400-01488C	6980	-	420-00461A	4370	26
	6750	5	400-01489E	1810	-		4410	25
	6760	5	400-01504A	6600	-	420-00470A	1430	1
	6770	5	400-01505B	6610	-	420-00471A	6950	16
	6780	5	400-01506B	6680	-		6970	16
	6790	5	401-00452B	2120	3	420-00473A	6950	13
	6800	5		4160	-		6970	13
	6810	3	401-00462J	1200	1		6980	13
	6820	3	401-00462K	1200	1	420-00475	1370	6
	6830	3	401-00462L	1200	1	420-00476	6430	6
276-00137	6190	1A	401-00463E	1200	-		6540	6
	6190	2A	401-00467E	1190	-		7040	1
276-00154A	2130	1	401-00469C	6120	-		7100	6
276-00155A	2130	2	401-00476A	1190	1		7130	1
278-00096B	2130	1-2		4100	-		7150	6
	2130	2-2	402-00017	4150	1	420-00490A	1390	5
2891-1311	1620	32-26	402-00036	4590	6		4250	-
2903-6005	1760	12	404-00063	4150	4	420-00511B	6450	8
2903-6006	1690	2	404-00064	4150	5		6710	8
303-00024	1460	1	404-00065	4150	6	420-00517B	6450	20
	1470	-	404-00066	4150	7		6710	20
354-00003	4590	12	405-00006	4150	2	421-00021A	1350	4
359-00021A	1610	87	407-00001	6120	2D	4215-1003D5	1240	16
359-00022A	1610	86	409-00042	4400	14		1250	16
400-01345A	6700	-		4410	14	422-00027A	1230	6
400-01346A	6650	-	4114-1792A	2130	6	423-00124A	4220	28
400-01347B	6710	-		6200	5		4560	28
400-01349A	6440	-	4114-4078A	6890	57	423-00193B	6380	2
400-01350A	3150	-		6920	56		7080	2
400-01355B	6450	-	4132-1138	1620	32-28B	423-00194	1270	14
400-01360A	3140	-	415-00043B	1570	6	424-00059	4330	25
400-01361B	6640	-	415-00044B	1560	19		4340	25
400-01364	6560	-	415-00045B	1560	17		4440	25
400-01365	6670	-	415-00046B	1560	16		4450	25
400-01366B	6570	-	416-00018A	1600	10		4490	25
400-01367C	6740	-	416-00019B	1600	29		4500	25
400-01389B	6490	-	416-00020	1600	40		4540	25
400-01390A	6500	-	4185-1777	1850	26		4550	25
400-01392B	6660	-	420-00003A	6600	4	424-00136	4220	34
400-01393B	6730	-		6610	2		4560	34
400-01473E	2190	-		6680	2	424-00209	4220	55
400-01475B	2200	-		7190	4		4560	55
400-01476C	2180	-		7200	2	426-00059	1440	3D
400-01479A	6900	-	420-00110	4140	400	426-00247A	6420	1
400-01480A	6990	-	420-00258	4580	5		6520	5

PART NO.	FIG NO.	KEY NO.
426-00248A	6410	1
	7090	1
426-00249A	6410	2
	7090	2
426-00266	1420	1
426-00267A	6380	1
	7080	1
426-00278	1200	1-10
	1230	25
426-00282	6330	2
426-00284B	6510	2
	7120	2
426-00287	4280	-
	6470	1
	7210	1
430-00053	4560	37
440-00077KT	4400	*
	4410	*
440-00408B	3130	51
	4310	-
	6630	51
440-00409B	3130	52
	4320	-
	6630	52
440-00410A	3130	61
	4330	-
440-00410B	3130	61
	4330	-
440-00411A	3150	1
	4350	-
	6700	1
440-00411B	3150	1
	4350	-
	6700	1
440-00425A	4340	-
	6630	61
440-00425B	4340	-
	6630	61
440-00448B	2210	2
	4360	-
	6860	2
440-00448C	2210	2
	4360	-
	6860	2
440-00449B	2210	3
	4370	-
	6860	3
440-00449C	2210	3
	4370	-
	6860	3
440-00450B	4400	-
	6890	3
	6920	3
440-00451B	4410	-
	6890	4
	6920	4
440-00457B	2120	4
	4380	-
440-00458B	2120	5
	4390	-
440-00484B	4420	-
	6600	1
440-00485B	4430	-
	6600	2
440-00486A	4440	-
	6610	1
440-00486B	4440	-
	6610	1
440-00487A	4450	-
	6680	1
440-00487B	4450	-
	6680	1
470-00166H	1210	1
470-00166J	1210	1
471-00061	1440	3
471-00075A	1340	1
471-00105A	1210	14
471-00118	1350	73
471-00119	1590	13
471-00127	1230	29
473-00033	1210	5
473-00052	1230	5
474-00009	1440	3C
	5110	8
474-00039	1180	2
	5110	5
474-00040	1180	3
	5110	6
474-00044A	1600	49-16
474-00055	1230	13
	5110	1
480-00013A	6960	1
480-00015C	4290	-
	6850	41
480-00016B	2120	41
	4300	-
480-00016C	2120	41
	4300	-
500-00302A	6250	-
500-00303	6260	-
500-00307	6280	-
500-00308	6290	-
500-00309	6300	-
500-00310	6310	-
500-00336	6240	-
500-00341	6270	-
500-00345	6480	-
500-00401	6220	-
500-00402A	6520	30
500-00404	6420	21
500-00405B	1900	14
505-00016B	1600	49-7
506-00006	1850	1
507-00006	1590	102
507-00007	6330	8
515-00005	1850	28B
	1850	29B
	5110	21
515-00006	1850	28A
	1850	29A
	5110	17
515-00012A	1830	1A
	5110	20
515-00013	6280	5A
	6300	10A
	6360	5A
515-00015	1850	30A
	1850	31A
	1860	35-1A
	1860	36-1A
	5110	19
516-00011	1860	48
516-00014	1850	44
516-00015	1850	45
520-00004	1940	20
523-00012	6120	2C
527-00005	1870	1A
	5110	26
527-00006	1830	15
530-00067	1430	57
	6430	35
	6540	28
	7040	25
	7100	27
	7130	27
	7150	29
530-00150	1840	2
530-00236	1340	1H
530-00416B	1830	31
530-00417B	1610	62

PART NO.	FIG NO.	KEY NO.
530-00430A	6250	2
530-00431	6270	1
530-00432A	6480	2
530-00434B	1830	32
530-00435A	1830	33
530-00435B	1830	33
530-00463A	6260	7
	6290	7
	6310	7
	6350	2
530-00464	6280	4
	6360	4
534-00001	7230	11
534-00012	1850	30B
	1850	31B
534-00062	6280	5
	6300	10
	6360	5
534-00064	1890	1
	7230	1
534-00079	1610	75
534-00085	6250	1
	6260	3
	6270	8
	6340	1
	6350	1
534-00110A	1850	28
	1850	29
534-00111	1850	28C
	1850	29C
534-00112B	1850	30
	1850	31
534-00115A	1860	35
534-00116A	1860	36
534-00117A	6150	-
534-00120	1860	35-1
534-00121	1860	36-1
538-00011	1590	73
538-00012	6330	1
539-00078C	1830	1
539-00078E	1830	1
541-00015	1590	101
541-00016	6330	7
543-00096	1830	13
543-00106	1820	7
543-00107	1940	1
544-00007	1870	1
545-00001	1830	14
545-00011	1820	13
547-00001	1350	71
547-00023	1830	53
547-00024A	1920	18
547-00026	1210	19
548-00003A	1900	1B
549-00010	1430	8
	6430	7
	6540	7
	7040	24
	7100	7
	7130	26
	7150	7
549-00025	1470	2
549-00026	1470	3
549-00046	1490	22
549-00077	6330	6
549-00086	1600	57
549-00089	1490	4A
549-00090	1840	6
549-00090A	1840	6
549-00092	6480	1
549-00093	6120	23
549-00095	1230	28
549-00101	1830	17
	1830	19
	1830	57
	1910	1
	6230	1
	6280	20
	6330	4
	6880	1
	6910	1
	7000	1
	7010	1
549-00102	6320	1
549-00103	1830	18
	6240	1
549-00106	1830	21
549-00107	1430	13
553-00001D4	1870	15
554-00005	1590	60
603-00370G	2100	1
603-00370J	2100	1
608-00039A	2210	1
	6860	1
608-00043C	2210	-
608-00044B	6860	-
621-01507	1640	13
621-01951	1490	16
621-02151	1410	2
621-02726A	1710	1-6
621-02726A	1720	7-6
621-02743E	1710	1-2
621-02743H	1710	1-2
621-02748B	1720	9
621-02750E	1720	7-2
621-02750H	1720	7-2
621-02751H	1720	7
621-02751K	1720	7
621-02757A	1770	2
621-02760B	1780	5
621-02796C	1750	101
621-02797A	1750	10
621-02797B	1750	10
621-02799B	1170	2
621-02801	1490	29
	1500	14
	1560	27
621-02814C	1800	1
621-02815A	2150	5
621-02816B	1800	2
621-02817B	1800	3
621-02819C	1800	5
621-02822C	1800	7
621-02825A	2150	6
621-02830C	6890	26
	6920	30
621-02837A	1590	61
621-02849A	1620	36
621-02854A	2170	1
621-02855A	2170	2
621-02856C	2170	3
621-02856E	2170	3
621-02857C	2170	4
621-02857E	2170	4
621-02864	1590	12
621-02867A	1620	32-21
621-02869B	1620	32-7
621-02870C	1670	-
621-02871B	1670	1
621-02872	1670	2
621-02873	1670	7
621-02894E	1570	1
621-02894G	1570	1
621-02896J	1570	-
621-02900B	1500	3
621-02903C	1560	1
621-02904C	1560	3
621-02905C	1560	2
621-02907B	1570	10
621-02908B	1560	6

PART NO.	FIG NO.	KEY NO.	PART NO.	FIG NO.	KEY NO.	PART NO.	FIG NO.	KEY NO.
621-02909E	1560	4	622-00351H	1590	-	65.01201-0076	011	31
621-02909G	1560	4		1600	-	65.01201-0077	011	32
621-02910C	1610	94		1610	-	65.01201-0078	011	33
621-02911C	1610	95		1620	-	65.01201-0079	011	34
621-02912B	1610	96	622-00351J	1590	-	65.01304-0029	012	1
621-02913C	1570	7		1600	-	65.01304-0029A	012	1
621-02914C	1570	8		1610	-	65.01401-0253A	013	1
621-02915B	1570	9		1620	-	65.01401-0253B	013	1
621-02917C	1570	11	622-00351K	1590	-	65.01414-0004A	013	8
621-02919B	1570	13		1600	-	65.01501-5003A	014	1
621-02920C	1570	19		1610	-	65.01510-0040	013	2
621-02925A	1510	1-5		1620	-		040	4
621-02926C	1500	2	622-00353G	1620	32	65.01510-0157	014	2
621-02926E	1500	2	622-00353H	1620	32		040	6
621-02938B	1100	5	622-00355A	1620	32-3	65.01601-5020	011	20
	2150	8	622-00356	1620	32-3A	65.01801-5043A	015	20
621-02940A	1730	12	622-00359H	1600	49	65.01801-5100	015	1
621-02950B	1730	8-1	622-00359J	1600	49	65.01810-5011	018	8
621-02951C	1730	8	622-00359K	1600	49	65.01840-0017	015	2
621-02951E	1730	8	622-00360G	1600	49-1	65.01903-0034	012	3
621-02952B	1730	8-2	622-00360H	1600	49-1		040	2
621-02954A	1730	8-3	623-00074B	1710	1-8	65.01904-0032	013	3
621-02957A	1500	6	623-00075B	1720	7-8		040	5
621-02981E	1770	10	623-00085A	6160	1	65.01905-0009	014	3
621-02982B	1560	29		6170	2-1		040	7
621-02982C	1560	29	623-00086	6160	-	65.02101-0069A	016	1
621-03005A	1510	4		6170	2	65.02115-0016	016	3
621-03013C	1490	2	624-00082E	1110	51	65.02130-0004	016	18
621-03014B	1500	5	624-00088A	1110	-	65.02201-0002	016	10
621-03037C	1780	6	625-00154E	2160	1	65.02301-0291A	016	16
621-03038E	1780	7	625-00155E	2160	2	65.02301-5148A	016	15
621-03045G	1760	-	625-00159B	1620	11	65.02310-0006	016	17
621-03055E	1510	1	626-00048G	6890	1	65.02401-6032B	016	20
621-03069C	1510	1-1		6920	1	65.02410-0040	016	22
621-03103	1670	12	626-00049G	6890	2	65.02410-0041	016	22
	6140	7		6920	2	65.02410-0042	016	22
	6150	7	626-00050E	6890	-	65.02410-0050	016	23
621-03113B	1610	67	626-00051E	6920	-	65.02410-0051	016	23
621-03114B	1610	68	65.01101-0054	011	2	65.02410-0052	016	23
621-03223A	1580	-	65.01101-0056A	011	2	65.02411-0009	016	21
621-03710A	3100	10	65.01101-6085B	011	1	65.02501-0476	016	30
	6620	10	65.01101-6092A	011	1	65.02501-0477	016	31
	7050	9	65.01105-1051B	011	4	65.02501-0478	016	32
621-03724	1600	49-4B	65.01105-1052B	011	7	65.02502-0017A	016	36
621-03725	1600	49-5B	65.01105-6005B	011	3	65.02503-0132A	016	33
621-03727B	6130	1	65.01105-6006B	011	6	65.02503-0133A	016	34
621-03732C	6130	-	65.01110-6140	016	4	65.02503-0134	016	35
621-03733B	1500	13	65.01110-6140A	016	4	65.02601-0225B	016	40
621-03733C	1500	13	65.01150-6008	016	5	65.03101-1068C	017	2
621-03734A	1560	28	65.01201-0075A	011	30	65.03101-6090F	017	1

PART NO.	FIG NO.	KEY NO.
65.03201-1016B	017	5
65.03203-1062	017	3
65.03203-1063	017	4
65.03205-0006A	017	8
65.03401-5010	018	1
65.03401-5010B	018	1
65.03402-0008A	018	5
65.03402-0008B	018	5
65.03901-0071	017	13
	040	8
	041	1
65.03905-0037A	018	3
	040	10
	041	3
65.03905-0041	018	6
	040	11
	041	4
65.03905-5002	018	4
	040	9
	041	2
65.04101-0065B	019	1
65.04101-0066B	019	2
65.04102-0024	019	3
65.04103-0018	019	4
65.04104-0009	019	6
65.04130-0009A	019	8
65.04130-0011	019	9
65.04200-6038B	019	10
65.04200-6038C	019	10
65.04201-5042B	019	11
65.04201-5042C	019	11
65.04201-5043B	019	12
65.04201-5043C	019	12
65.04202-0033	019	14
65.04202-0034	019	15
65.04202-0035	019	16
65.04203-5020A	019	13
65.04205-0014	019	22
65.04209-0005	019	24
65.04209-0006	019	25
65.04209-5002	019	24
65.04301-5003B	019	30
65.04301-5003C	019	30
65.04302-5015	019	31
65.04401-0045A	019	32
65.04410-0021A	011	10
65.04410-0022	011	11
65.04501-0017	019	40
65.04505-5018	019	42
65.04506-0015	019	47
65.04506-0016	019	43
65.04902-0016	019	7
65.05100-6063	020	1
65.05100-6063A	020	1
65.05102-0030	020	2
65.05103-0034	020	7
65.05104-0022	020	3
65.05104-0023	020	4
65.05201-0016	020	5
65.05401-5002F	011	23
65.05401-5002G	011	23
65.05401-5031	011	21
65.05401-5032	012	7
65.05501-7089	021	1
65.05501-7089A	021	1
65.05503-5056	021	3
65.05510-5032	021	2
	5110	3
65.05510-5032A	021	2
65.05518-0006	021	4
65.05601-7079B	021	20
65.05604-0030A	021	21
65.05606-5032A	021	22
65.05607-5003	021	26
65.05610-0007A	021	28
65.05701-5567	027	5
65.05701-5568	027	11
65.05701-5569	027	12
65.05701-5573A	021	11
65.05701-5573B	021	11
65.05701-5574	021	12
65.05701-6122	022	8
65.05740-0222	022	10
65.05801-5245	022	1
65.05805-5236	022	7
65.05805-5236A	022	7
65.05806-5116	022	6
65.05806-5116A	022	6
65.05901-0031	021	27
65.05901-0032	022	15
	040	15
65.05902-0022	021	23
65.05902-0023	021	31
	040	13
65.05903A0001	021	13
	040	12
65.05904-0035	022	4
	040	14
65.06301-0257	023	11
65.06301-0258A	024	13
65.06402-5015	023	4
65.06404-0039A	023	1
65.06405-0012A	023	6
65.06405-0039	023	6
65.06500-6178B	024	1
65.06500-6271A	024	1
65.06501-0099A	024	2
65.06501-0300	024	2
65.06503-0113	024	8
65.06504-0033	024	6
65.06506-0029A	024	7
65.06506-0032	024	7
65.06520-6007	024	3
65.06520-6008	024	3
65.06601-5071	025	1
65.06611-0137	025	2
65.06901-0042	024	10
	040	19
65.06903-0029	024	14
	040	20
65.06904-0003	023	5
	040	17
	041	6
65.06904-0020	023	2
	040	16
	041	5
65.06904-0021	023	2
	040	16
	041	5
65.08100-6088A	026	1
65.08100-6088B	026	1
65.08101-0263	026	2
65.08101-0264	026	3
65.08101-0264A	026	3
65.08201-5075	026	11
65.08202-0184	026	16
65.08204-0004A	026	21
65.08901-0045	026	5
	040	21
	041	8
65.08902-0030A	026	14
	040	22
	041	9
65.09100-7110	027	1
65.09140-0005	027	20
65.09411-5095	027	30
65.09411-5103	027	37
65.09411-5104	027	36
65.09411-7013	027	35
65.09440-0056	027	42

PART NO.	FIG NO.	KEY NO.	PART NO.	FIG NO.	KEY NO.	PART NO.	FIG NO.	KEY NO.
65.09440-0057	027	40	65.19202-0057A	034	1	65.90201-0136	026	18
65.09440-0058	027	33	65.26201-7075A	035	1	65.90302-0009	011	12
65.09901-0018A	027	2	65.26214-0004	035	10	65.90302-0029	017	7
	040	23	65.26803-7028B	026	30	65.90302-0034	011	14
	041	10	65.27103-7014	036	1	65.90302-0041	011	15
65.09904-0008	026	31		036	2	65.90302-0042	011	13
	040	31	65.27114-5002	029	21	65.90302-0048	017	6
	041	16	65.27423-7003	036	10	65.90310-0065	021	7
65.09904-0009	027	38	65.27427-7001	036	12	65.90310-0134	011	26
65.10205-0006	028	4	65.27444-7001	036	14	65.90310-0135	011	28
65.10205-0006A	028	4	65.29101-6184B	037	1		039	1
65.10301-6191	029	1	65.29101-6184C	037	1	65.90320-0019	023	10
65.10301-6192	029	2	65.29101-6201A	037	4	65.90320-0022	011	22
65.10301-6193	029	3	65.29101-6209	037	15	65.90441-0009A	033	4
65.10301-6194	029	4	65.29150-5006	031	7	65.90441-0066	031	12
65.10301-6195	029	5	65.38901-0018A	012	10	65.90501-0003	019	23
65.10401-7004A	028	1		040	3	65.90510-0012	022	14
65.10410-6003A	029	15	65.41530-0186	038	1	65.90535-0001	027	3
65.10415-0001	029	17		038	3	65.90535-0003	026	6
65.10501-7005A	030	1	65.52122-6002	029	22	65.90701-0098	019	5
65.10601-6004A	029	20	65.54109-0005A	021	25	65.90701-0099	016	41
65.10610-0003	029	30	65.90020-0062B	016	11	65.90701-0136B	019	18
65.11210-0003A	031	2	65.90020-0063B	012	4	65.90720-0032	019	34
65.11210-0003B	031	2	65.90020-0066A	011	9	65.90720-0033A	019	48
65.11301-0038	030	15	65.90020-0080	012	5	65.90720-0034B	019	44
65.11301-5002	019	46	65.90020-0085	020	10	65.91030-0005	017	10
65.11304-0001	030	3	65.90020-0095	031	5	65.91601-0009	012	9
65.11308-0005	036	3	65.90020-0100	013	4	65.91605-0002	011	25
65.11308-0006	036	3	65.90020-0101	013	5	65.91606-0041	011	16
65.11308-0007	036	3	65.90020-0105	013	6	65.91701-0086	026	7
65.11308-0008	036	3	65.90020-0109	018	2	65.91710-0001	011	5
65.12301-5268	032	17	65.90020-0117	019	41		011	8
65.12301-5288A	032	31	65.90020-0118	019	45	65.91710-0009	013	7
65.12301-5288B	032	31		019	49	65.91710-0016	012	2
65.12301-5289	032	14	65.90020-0119	019	50	65.93020-0055	033	6
65.12301-5291	032	7	65.90020-0120	019	26	65.93410-0027	024	4
65.12303-0009	026	12	65.90020-0121	030	4	65.96210-6001A	031	4
65.12501-7042A	032	50	65.90020-0123	016	19		040	29
65.12501-7042B	032	50	65.90020-0136	028	5	65.96301-0035	027	44
65.12503-5026	032	52	65.90020-0138	018	7	65.96301-0327A	027	13
	5110	2	65.90020-0140A	016	19	65.96301-0456A	015	7
65.12504-5027	032	51	65.90021-0009	017	11	65.96301-0462	032	35
65.12504-5028	032	51	65.90030-0018	019	20	65.96301-0464A	015	9
65.12540-0057C	032	54	65.90201-0073	026	9	65.96301-0478	015	5
65.12540-0061	032	54	65.90201-0075	027	18	65.96301-6003	027	31
65.19102-0096	033	1	65.90201-0076	026	8	65.96330-0018	032	8
65.19102-0103	033	1	65.90201-0122	015	11	65.96340-5079	032	1
65.19103-5049	033	9	65.90201-0128	037	16	65.96340-5080	032	2
65.19103-6010A	033	3	65.90201-0134	017	12	65.96501-0033B	015	21
65.19107-0001A	033	5	65.90201-0135	021	35	65.96501-0074	012	8

PART NO.	FIG NO.	KEY NO.
65.96501-0088	017	9
65.96501-0099A	023	12
	040	18
	041	7
65.96501-0102	031	6
65.96501-0431	029	23
65.96501-0437	028	2
65.96501-0438	029	16
65.96501-0439	030	2
65.96507-0043	032	6
	032	13
	032	16
	032	19
65.96507-0053	028	3
	040	27
	041	14
65.96507-0055	032	30
65.96507-0059	026	4
	026	4
65.96601-0052	027	16
	040	25
	041	12
65.96601-0067	027	15
	040	24
	041	11
65.96801-0194	025	5
	5110	10
65.97401-0137	022	11
65.97401-0188	031	8
	037	5
65.97401-0196	037	19
65.97401-5019	015	13
	032	37
65.97401-5024	015	12
	037	25
65.97401-6039	029	8
65.97402-0003	032	36
65.97402-0025	015	8
65.97440-0005	015	8
65.97440-0045	032	9
	032	36
65.97450-5003	027	32
65.97460-0005	037	23
65.97460-0008	037	2
65.97480-0220	029	9
65.97601-0075	021	5
65.97601-0124	019	17
65.98125-5022A	022	2
65.98130-0154	032	32
65.98130-0159A	032	11
65.98130-0200A	027	4
65.98130-0211	032	3
65.98130-0229	032	5
	032	15
	032	18
	032	56
65.98130-0241	012	6
65.98131-0119	015	16
65.98150-0042A	032	34
65.99497-8640	031	1
65.99601-8071	040	-
65.99605-8042	041	-
701-00540J	3100	-
701-00541C	3100	1
701-00544G	3110	-
701-00545E	3110	1
701-00545G	3110	1
701-00555C	6620	-
701-00558E	6620	1
701-00561H	6690	-
701-00562H	6690	1
701-00562J	6690	1
704-00289B	6770	-
704-00289C	6770	-
704-00289E	6770	-
704-00290B	6770	1
704-00290C	6770	1
704-00290E	6770	1
713-00022	6810	1-2
	6820	1-2
	6830	1-2
713-00057A	3120	2
	6750	2
	6760	2
	6770	2
	6780	2
	6790	2
	6800	2
713-00057B	3120	2
	6750	2
	6760	2
	6770	2
	6780	2
	6790	2
	6800	2
901-00045	1540	1
	1550	-
901-00047	6100	1
	6110	-
903-00068	1580	31
903-00068	1730	20
	1760	8
903-00069A	1620	32-2
903-00070B	1620	32-4
903-00071B	1620	32-5
903-00072A	1590	2
903-00073A	1590	3
903-00074A	1600	50
903-00075	1590	4
903-00076B	1600	49-8
903-00077	1690	-
906-00002A	1560	5
920-00127A	1920	1
	1930	-
DS0001079	1850	3
DS0025013	1170	8
DS0025014	1130	27
	1150	27
	1730	29
	1750	29
	1770	12
	1780	12
	2150	9
	6890	27
	6920	31
DS0025015	1700	4
	1710	24
	1720	24
	1730	24
	1740	24
DS0025017	1160	10
DS0025019	1800	9
DS0025020	1250	28
	1280	41
	6380	16
	6410	14
	7020	23
	7080	16
	7090	14
DS0025023	1100	9
	1170	6
	1720	33
	1730	33
	1770	13
	2150	13
DS0025025	1700	5
	1730	30
DS0025029	1940	27
DS0025033	1790	19
DS0301032	6950	19

PART NO.	FIG NO.	KEY NO.
DS0301032	6970	19
	6980	18
DS0401189	2210	26
	6860	26
DS1001045	1490	15
DS1003008	1670	11
DS1003009	6130	5
DS2011401	6380	7
DS2011405	6410	7
DS2011419	6410	11
	7090	11
DS2011422	6510	9
	7120	9
DS2011423	6510	11
DS2011435	6380	10
	6410	9
	7080	10
	7090	9
DS2011484	2180	4
DS2011485	1430	20
DS2011486	1430	19
DS2011488	1280	64
DS2011489	1280	62
DS2011490	6990	2
DS2011495	1450	9
DS2011496	6950	32
	6980	32
DS2011504	7060	16
	7110	4
DS2011505	7060	17
DS2011506	7160	5
DS2011533	6380	9
	6410	10
	7080	9
	7090	10
DS2011534	7120	11
DS2011609	6580	4
	7020	44
DS2011727	6580	4
DS2012241	7080	8
DS2012250	2220	6
DS2012254	6380	8
DS2012308	6970	29
DS2012316	7060	15
DS2012317	1450	5
DS2012399	1440	15
DS2012415	6510	6
	7120	6
DS2012428	7080	7
	7090	7
DS2012429	7020	11
DS20131040	1440	16
DS20131061	6720	15
DS2013388	6570	2
DS2013393	7080	6
	7090	6
DS2013528	2200	3
DS2013540	6950	27
	6970	27
	6980	27
DS2013552	1290	73
	7020	7
DS2013553	1290	74
DS2013554	1290	72
DS2013555	1290	71
DS2013556	1280	6
DS2013557	1300	8
DS2013558	6380	6
	6410	6
DS2013572	6510	10
	7120	10
DS2013587	1260	14
DS2013615	1440	16
DS2013617	6510	8
	7120	8
DS2013680	6970	33
	6980	19
DS2013681	6850	17
	6950	31
	6970	31
	6980	31
DS2013683	6950	29
DS2013692	6900	1
	6990	1
DS2013694	6850	19
DS2013695	2230	1
	6870	1
DS2013696	2230	2
	6870	2
DS2013707	6970	32
	6980	29
DS2013787	6740	2
DS2013790	6410	8
	7090	8
DS2013791	7020	5
DS2013792	7020	6
DS2013793	7020	8
DS2013794	7020	9
DS2013795	7020	10
DS2013892	6580	3
DS2013893	6720	15
DS2013918	7170	4
DS2013926	6580	3
	7020	43
	7170	3
DS2016045	6460	2
DS2016061	3130	11
	6630	11
DS2016070	7060	18
DS2018124	1450	4
DS2021143	6850	18
	6950	28
	6970	28
	6980	28
DS2023179	6900	3
DS2023180	6850	16
DS2023183	6950	30
	6970	30
	6980	30
DS2023198	1300	7
DS2023211	1440	17
DS2023213	6510	12
	7120	12
DS2023214	1440	18
DS2023236	1280	5
DS2023241	6850	20
DS2023242	2230	3
	6870	3
DS2023265	7020	3
DS2023266	7020	4
DS2023328	1440	17
DS2023329	1440	18
DS2025048	1300	4
DS2025049	1270	1
DS2025088	6720	2
DS2025098	6720	2
DS2025101	1270	1
DS2026119	1200	1-13
DS2026122	1300	3
DS2026125	1200	1-14
DS2026204	1200	1-13
DS2026205	1200	1-14
DS2027032	1270	2
DS2027037	1270	2
DS2038120	6700	2
DS2038186	3130	10
	6630	10
DS2038221	1250	13
DS2039088	2190	2
DS2039092	6460	3

PART NO.	FIG NO.	KEY NO.
DS2040430	2190	1
DS2040442	1240	11
DS2040451	6720	3
DS2040537	1250	12
DS2040643	3130	10
	6630	10
DS2053399	1340	104
DS2053773	7070	6
DS2053796	6640	1
DS2053798	6490	1
DS2053799	6660	1
DS2053824	1410	69
DS2053833	1410	74
DS2053842	6470	10
DS2053843	6470	11
DS2053854	7220	1
DS2053878	7220	2
DS2053883	7070	5
DS2053893	6470	9
	7210	10
DS2053894	6470	13
	7210	14
DS2053919	7210	11
DS2053920	7210	12
DS2053929	6640	4
DS2053930	6490	2
DS2053931	6660	2
DS2053942	7070	4
DS2053955	7070	3
DS2054327	1330	102
DS2054371	1330	171
DS2055129	6420	27
DS2055317	1340	101
DS2055636	1450	8
DS2055844	6470	8
	7210	9
DS2055851	1330	108
DS2055867	6500	3
DS2055880	7200	8
DS2055950	1340	105
DS2055978	6510	7
	7120	7
DS2055987	1330	106
DS2055988	6730	3
DS2059496	7200	9
DS2059507	1440	23
DS2079193	1210	44
DS2079194	6120	4
DS2090010	6520	9
DS2090015	1340	129
DS2090016	1430	71
DS2090024	6470	12
	7210	13
DS2090027	1810	13
DS2091007	1350	111
DS2091011	1330	120
DS2091017	6420	25
DS2091024	2170	26
DS2091027	6430	31
	6540	55
	7100	55
	7150	57
DS2091028	6520	7
DS2091029	6390	1
DS2091030	1320	121
DS2091031	1390	75
DS2091033	1430	72
DS2091037	6420	23
DS2091052	6590	2
	7180	2
DS2091053	6590	3
	7180	3
DS2091054	7040	57
	7130	61
DS2091055	7100	64
	7150	68
DS2091086	1420	5
DS2092013	1350	107
DS2092024	1420	7
	6430	34
	6530	21
	7040	54
DS2092029	6430	29
	6540	53
	7100	53
	7150	55
DS2092030	6430	32
	6540	56
	7100	56
	7150	58
DS2092031	6430	33
	6540	57
	7100	57
	7150	59
DS2092047	1350	113
DS2092048	1320	123
DS2092059	1350	112
DS2092067	1360	4
	7030	1
DS2092101	6590	4
DS2092101	7180	5
DS2092102	6590	6
	7180	9
DS2092116	7040	53
	7100	62
	7130	53
	7150	63
DS2092127	2170	25
DS2092138	6590	24
	7180	27
DS2092161	6590	24
	7180	27
DS2093002	2200	4
DS2093003	2200	6
DS2093004	2200	7
DS2093005	2200	8
	7040	56
	7130	60
DS2093006	2180	5
DS2093007	2180	6
DS2093009	2170	27
DS2093010	2170	28
DS2093012	1420	8
DS2093013	6950	20
	6970	20
	6980	20
DS2093014	6850	22
	6950	21
	6970	21
	6980	21
DS2093015	1320	115
DS2093028	1360	18
	6590	23
	7030	18
	7180	26
DS2093041	6420	24
DS2093049	1430	21
DS2093053	1390	66
DS2093054	1350	110
DS2093056	6390	2
DS2093071	1330	127
DS2093078	1330	153
	6420	30
	6430	28
	6540	52
	7100	52
	7150	54
DS2093081	6930	1
DS2093082	6520	14
DS2093083	2180	7

PART NO.	FIG NO.	KEY NO.
DS2093091	7100	63
	7150	67
DS2093092	6420	29
DS2093096	1350	130
DS2093102	6540	51
	7100	51
	7130	56
	7150	53
DS2093110	1410	53
	1420	6
DS2093122	6430	30
	6540	54
	7100	54
	7150	56
DS2093142	6520	13
DS2093158	1360	3
	7030	5
DS2093186	1370	71
DS2093201	6850	21
DS2093207	1320	114
DS2093208	6540	60
	7100	58
	7130	57
	7150	61
DS2093209	6530	20
	6540	59
	7130	55
	7150	52
DS2093210	1360	5
	7030	2
DS2093211	1360	2
	7030	4
DS2093213	1330	103
DS2093214	1310	126
DS2093215	1310	125
DS2093216	1310	124
DS2093217	1310	122
DS2093218	1310	116
DS2093219	1370	70
DS2093220	1390	73
DS2093233	7150	66
DS2093260	1400	52
DS2093279	1430	22
DS2093280	1310	128
DS2093292	2170	32
DS2093358	6590	8
	7180	10
DS2093361	7180	8
DS2093362	6420	26
DS2093363	6420	28
DS2093364	7040	52
	7100	61
	7130	52
	7150	62
DS2093365	7130	58
DS2093366	7150	65
DS2093422	6590	7
DS2093423	7180	7
DS2093424	7180	6
DS2094004	6420	22
	7130	59
DS2094011	1390	67
DS2094033	1390	65
DS2094056	1430	25
DS2094057	1430	24
DS2094060	6540	61
	7100	59
DS2094061	6530	19
	6540	58
	7130	54
	7150	51
DS2094062	1360	1
	7030	3
DS2094066	1310	118
DS2094067	1310	119
DS2094068	1310	117
DS2094088	6590	5
	7180	4
DS2094092	1390	68
DS2094093	1400	51
DS2094094	1310	109
DS2094106	1400	54
DS2094114	2170	29
DS2094123	1330	131
DS2094169	1370	72
	6840	1
DS2094172	6420	27
DS2094174	6530	22
	7040	55
DS2094175	7040	51
	7100	60
	7130	51
	7150	60
DS2094211	7040	58
	7100	65
	7130	62
	7150	69
DS2095005	1380	55
DS2095006	1380	56
DS2095010	1380	59
DS2095013	1370	62
DS2095014	1370	63
DS2095015	1370	61
DS2095016	1370	64
DS2095017	1370	60
DS2095018	1380	57
DS2095026	1380	58
DS2098001	1450	6
DS2102001	1450	52
DS2102002	1450	52
DS2102003	1450	7
DS2104002	1450	51
DS2105006	1210	24
DS2105022	1220	11
DS2105076	1220	10
DS2105078	1220	12
DS2105079	1220	9
DS2109004	6590	1
	7180	1
DS2109008	7150	64
DS2213184	2170	7
DS2214051	1810	12
DS2227062	2170	7
DS2232121	6380	26
	6410	27
	7080	26
	7090	25
DS2232132	6600	5
	7190	10
DS2281102	1440	56
DS2308018	1430	12
	6430	12
	6540	12
	7100	12
	7150	12
DS2308022	6320	5
DS2331015	7070	21
DS2404009	1270	23
	1300	23
DS2404022	1300	24
DS2404023	6410	26
	7090	26
DS2410007	6490	3
	6610	12
	6660	3
	6680	12
	7190	16
	7200	10
	7220	3
DS2415007	6720	20

PART NO.	FIG NO.	KEY NO.
DS2415007	7020	18
	7060	29
DS2459001	1310	39
DS2479001	1340	27
	2190	10
DS2479002	1340	29
	2190	11
DS2479003	1220	4
DS2479004	1220	4
DS2495001	2190	12
DS2802021	1210	4
DS2805009	6490	9
	6660	9
DS3201029	7260	2
DS5501033	2210	23
	6860	23
DS7601020	1100	17
DS7601023	2170	22
	2180	20
DS7601026	1100	20
DS7601031	1100	19
DS7603052	1100	18
DS7752001	3110	18
	6690	18
	6890	36
	6920	18
DS7752002	3110	19
	6690	19
	6890	37
	6920	19
DS7752003	3100	21
	6620	21
	7050	17
DS7752004	3100	17
	6620	17
	7050	25
DS7752005	3100	18
	6620	18
	7050	26
DS7752006	3100	19
	3110	16
	6620	19
	6690	16
	7050	18
DS7752007	3100	20
	3110	17
	6620	20
	6690	17
DS7752008	3100	22
	6620	22
DS7752008	7050	23
DS7752009	3100	23
	6620	23
	7050	24
DS7752011	3100	16
	6620	16
	7050	21
DS7752023	3100	15
	6620	15
	7050	22
DS7752026	7050	19
DS7752027	7050	20
DS7752040	2210	10
	6860	10
	6890	17
	6920	21
DS7752041	2210	19
	6860	19
	6890	20
	6920	24
DS7752059	7050	27
DS7752060	7050	28
DS7752079	2210	32
	6860	32
	6890	58
	6920	57
DS7752080	6890	59
	6920	58
DS7752089	3100	24
	6620	24
	7050	30
DS7752090	3100	25
	6620	25
	7050	31
DS7752091	7050	32
K1000043	1580	3
K1000101	1200	1-1
	4140	-
K1000101KT	4140	*
K1000294A	3130	20
	6440	4
	6630	20
	6650	4
	7060	20
	7110	6
K1000356	6490	6
	6660	6
	7220	6
K1000410	4570	-
	6510	1
K1000410	7120	1
K1000555G	1380	3
	4240	-
K1000555H	1380	3
	4240	-
K1000556G	1370	4
	4240	-
K1000556H	1370	4
	4240	-
K1000602	1710	1-9
	1720	7-19
K1000704A	1160	8
K1000722A	1130	9
K1000780B	6890	42
	6920	42
K1000783B	6890	28
	6920	32
K1000789	1850	21
K1000794	1610	56
K1000813	2210	17
	6860	17
K1000814	1900	1C
K1000815	1900	1D
K1000817	6520	30-1
K1000839A	1490	20
K1000840	1490	23
K1000841	1490	21
K1000842A	1490	24
K1000843A	3130	8
	6630	8
K1000844	6560	14
	6670	14
K1000845A	6560	12
	6670	12
K1000867	2150	4
K1000982	6220	1
K1001022	1510	1-3
K1001023	1490	27
	1500	12
K1001029	1130	28
	1150	28
	1150	28
	1210	3
	1220	14
	1310	52
	1330	52
	1340	52
	1350	52
	1390	21
	1400	21

PART NO.	FIG NO.	KEY NO.	PART NO.	FIG NO.	KEY NO.	PART NO.	FIG NO.	KEY NO.
K1001029	1430	52	K1001273	1640	11	K1002370A	1280	10
	1440	52	K1001274A	1640	12	K1002371G	1560	-
	1450	22	K1001295A	1570	12	K1002385	1570	33
	1790	18	K1001310	1570	20	K1002406D11	1830	23
	1820	42	K1001437A	1490	19	K1002406D13	6240	2
	1830	39	K1001702	1840	7	K1002406D15	1830	22
	1830	39	K1001702A	1840	7	K1002406D18	7010	2
	1860	53	K1001858A	1840	1	K1002406D19	7010	3
	1870	13	K1001871B	6430	3	K1002406D2	6230	2
	1890	8		6530	2	K1002406D20	1910	2
	1900	14-8		6540	3		6880	2
	1900	28		7040	8	K1002406D21	1830	25
	1920	14		7100	3	K1002406D23	6910	2
	1940	33		7130	8		7000	2
	2170	31		7150	3	K1002406D24	7000	3
	2180	30	K1001873A	6430	4	K1002406D25	1830	58
	3140	15		6530	3	K1002406D3	6280	21
	6120	19		6540	4	K1002406D4	6320	2
	6230	4		7040	9	K1002406D5	6330	5
	6270	7		7100	4	K1002406D8	1830	24
	6380	12		7130	9	K1002433	2120	24
	6390	7		7150	4	K1002561A	6140	-
	6410	13	K1002082	1680	-	K1002574A	6140	3
	6420	15	K1002084A	1540	-		6150	4
	6420	21-8	K1002085	6100	-	K1002575A	6140	4
	6490	8	K1002091	2190	14		6150	5
	6510	34	K1002092	2190	15	K1002626	6510	3
	6520	30-6	K1002153	6320	6		7120	25
	6610	16	K1002164C	1510	-	K1002629	6860	20
	6640	16	K1002206	1930	1		6920	51
	6660	8	K1002207	1930	2	K1002635	1590	104
	6680	16	K1002208	1930	3	K1002636	1590	105
	6850	25	K1002209	1930	4	K1002637	1620	32-13
	6940	7	K1002210	1930	5A	K1002638A	1600	49-17
	6950	25	K1002211	1930	6	K1002641	1610	100
	6960	12	K1002212	1930	7	K1002656	1470	7
	6970	25	K1002213	1930	8		1480	-
	6980	25	K1002214	1930	9	K1002657	1470	1
	7070	12	K1002215	1930	10	K1002662	1470	4
	7080	12	K1002216	1930	11	K1002663	1470	5
	7090	13	K1002217	1930	12	K1002664	1470	6
	7120	34	K1002218	1930	13	K1002665	1470	8
	7230	8	K1002219	1930	14	K1002666	1470	9
K1001068	1560	20	K1002228A	1530	-	K1002667	1470	10
K1001069A	1560	21	K1002229A	1520	-	K1002668	1470	12
K1001260A	1710	1-7	K1002230A	1520	1	K1002669	1470	13
	1720	7-7	K1002231A	1520	2	K1002759A	6170	1
	1730	22	K1002280A	1820	1	K1002771	6170	-
K1001263A	1830	5	K1002280B	1820	1	K1002811A	6180	1
	1830	6	K1002348C	1780	9	K1002819	1320	7

PART NO.	FIG NO.	KEY NO.
K1002819	4270	-
K1002820	1350	181
	4230	-
	6930	2
K1002821	6840	2
K1002838	6180	4
K1002839A	6180	5
K1002840	6180	6
K1002841	6180	7
K1002842A	6180	3
K1002846	6180	2
K1002864	1220	3
K1002866	6330	9
K1002867D1	6330	10
K1002868A	6380	5
	6410	5
	7080	5
	7090	5
K1002883A	6180	-
K1002886A	1290	11
K1002909B	1290	12
K1002911A	6470	2
	7210	2
K1002939	6460	8
	6720	8
K1002940	6460	9
	6720	9
K1002944A	1800	10
K1003180A	1130	10
K1003185B	6470	3
	7210	3
K1003284	1600	88
K1003296	1230	27
K1003365A	6410	3
K1003366A	6410	4
K1003368C	6520	-
K1003371B	1420	-
K1003381	1510	3
K1003383A	2210	27
	6860	27
K1003405A	2210	28
	6860	28
K1003427	1590	89
K1003522	1590	109
K1003547C	1940	26
K1003618	1170	52
K1003634C	1850	41
K1003637F	1280	61
	4220	-
K1003637G	1280	61
K1003637G	4220	-
K1003652	1900	14-2
	6420	21-2
K1003654	6420	21-1
K1003657	6420	21-6
K1003664D1	1310	17
K1003676B	1610	107
K1003715	4220	11
	4560	11
K1003716	4220	84
	4560	84
K1003721	4220	54
	4560	54
K1003723	4220	36
	4560	36
K1003725	4220	35
	4560	35
K1003726	4220	67
	4560	67
K1003900	1620	32-16
K1003945	1370	29
	1380	29
K1004011	6500	7
	6730	7
K1004061	1590	108
K1004077A	2210	14
	6860	14
K1004079	2210	15
	6860	15
K1004093	6200	1-1
	6200	2-1
K1004106	4350	2
	4350	4
K1004266	1210	15
K1004272	1650	4
K1004281B	1770	11
K1004300	1740	23
K1004312	4580	-
	7020	1
K1004316	3130	43
	6630	43
	7060	19
	7060	51
K1004317	3130	21
	6630	21
	7060	54
K1004330	6440	3
	6650	3
K1004348	6560	4
	6670	4
K1004348	7160	7
K1004349	6560	5
	6670	5
	7160	9
K1004417B	1730	6
K1004425	1840	9
K1004426	1840	10
K1004427	1840	8
K1004508	3100	4
	6620	4
	7050	6
K1004508A	3100	4
	6620	4
	7050	6
K1004508C	3100	4
	6620	4
	7050	6
K1004521A	1100	8
K1004630	1710	34
	1720	34
	1730	34
	1740	34
K1004716	6230	6
K1005007A	1560	31
K1005053A	1700	3
K1005305	1730	8-13
K1005343B	1500	4
K1005343C	1500	4
K1005344A	1570	17
K1005345A	1570	18
K1005468C	1500	-
K1005717	1860	37
K1005776	6480	3
K1005822	6180	21
K1005823	6180	20
K1005830	1450	11
K1005866C	6200	-
K1005881	2140	2
K1006227	6570	14
	6740	14
K1006228	6570	15
	6740	15
K1006248	2220	4
	6850	4
	6950	4
	6970	4
	6980	4
K1006368	1600	49-18
	1620	120
K1006370	1620	32-38

PART NO.	FIG NO.	KEY NO.
K1006520	1220	1
K1006530	1220	1A
	5110	4
K1006572	1830	20
K1006586	5100	7
K1006663	6340	2
K1006801	6340	-
K1006802	6350	-
K1006803	6360	-
K1006854	5110	31
K1006933	1610	114
K1006936	1610	98
K1006944	2140	1
K1006957	6490	4
	6610	13
	6660	4
	6680	13
	7220	4
K1006973	1220	1B
K1006977	1730	8-8
K1006978B	6510	28
	7120	3
K1006982A	1110	8
K1006985	2120	19
	2140	7
K1006987C	2140	3
K1006995	1500	15
K1007038	3110	8
	6690	8
K1007038A	3110	8
	6690	8
K1007044	1790	13
K1007119	1400	30
K1007231	6180	24
K1007231A	6180	24
K1007357B	1200	1-2
	4150	-
K1007358	6120	2
K1007382	1450	1
K1007428B	1900	14-1
K1007437A	1900	18
K1007563	6120	24
K1007633A	6750	-
K1007633B	6750	-
K1007633C	6750	-
K1007634A	6750	1
K1007634B	6750	1
K1007634C	6750	1
K1007635A	6760	-
K1007635B	6760	-
K1007635C	6760	-
K1007636A	6760	1
K1007636B	6760	1
K1007636C	6760	1
K1007637A	6780	-
K1007637B	6780	-
K1007637C	6780	-
K1007638A	6780	1
K1007638B	6780	1
K1007638C	6780	1
K1007639A	6790	-
K1007639B	6790	-
K1007639C	6790	-
K1007640A	6790	1
K1007640B	6790	1
K1007640C	6790	1
K1007641A	6800	-
K1007641B	6800	-
K1007641C	6800	-
K1007642A	6800	1
K1007642B	6800	1
K1007642C	6800	1
K1007669	5100	6
K1007673A	3120	-
K1007673B	3120	-
K1007673C	3120	-
K1007674A	3120	1
K1007674B	3120	1
K1007674C	3120	1
K1007711A	6920	45
K1007896	1450	27
K1007957	1230	31
K1008019D7	1830	9
	5120	11
	5140	15
K1008019D8	1830	10
	5120	12
	5140	16
K1008167	5100	1-16
K1008168	1460	2
K1008201E	7050	-
K1008202A	7050	1
K1008227	7050	5
K1008232A	7050	2
K1008250A	7110	-
K1008251A	7110	1
K1008252	7110	2
K1008254	7110	3
K1008255A	7160	-
K1008256A	7160	1
K1008257A	7160	2
K1008258	7160	3
K1008260A	7220	-
K1008261C	7070	-
K1008262C	7060	-
K1008263	7060	5
K1008264	7060	6
K1008265	7060	7
K1008266	7060	8
K1008267B	7060	9
K1008269	7060	11
K1008271A	7190	31
K1008335	1710	1-20
	1720	7-20
K1008482B	1940	8
K1008507	1170	3
K1008571	5150	3
	5160	3
K1008572	4480	2
	4480	4
	4530	2
	4530	4
K1008677B	1100	1
K1008677G	1100	1
K1008724E	1100	-
K1008733A	1450	28
K1008733B	1450	28
K1008735B	4460	-
	7060	61
K1008736B	4470	-
	7060	62
K1008737A	4480	-
	7060	63
K1008738	4490	-
	7060	71
K1008739	7060	12
K1008740	4500	-
	7060	72
K1008741	7160	4
K1008742	7160	8
K1008749B	4510	-
	7190	1
K1008750B	4520	-
	7190	2
K1008751A	4530	-
	7190	3
K1008752	4540	-
	7200	1
K1008753	4550	-
	7200	1

PART NO.	FIG NO.	KEY NO.
K1008754	7070	17
K1008794	1240	1
K1008889B	1700	6
K1008902A	1700	2
K1008903A	1700	-
K1008907B	1780	4
K1008908A	1770	-
	1780	-
K1008909	1170	-
K1008922B	1220	-
K1008942	2120	26
K1009016A	1820	-
K1009016B	1820	-
K1009016C	1820	-
K1009016E	1820	-
K1009017E	1830	-
K1009018C	1840	-
K1009019A	1860	-
K1009020B	1870	-
K1009022E	1900	-
K1009023B	1920	-
K1009024B	1940	-
K1009033A	1640	15
K1009033B	1640	15
K1009035C	1900	1
K1009035E	1900	1
K1009037B	1870	7
K1009038B	1830	29
K1009039B	1820	40
K1009039C	1820	40
K1009040A	1830	30
K1009041	1840	11
K1009041A	1840	11
K1009042B	1840	12
K1009042C	1840	12
K1009048B	1830	54
K1009109A	1850	-
K1009160A	1130	13
K1009161A	1130	14
K1009162	1160	2
K1009163A	1160	3
K1009205	6890	5
	6920	5
K1009207	6890	12
	6920	12
K1009208	6890	10
	6920	10
K1009271B	1130	21
	1140	-
K1009271C	1130	21
K1009271C	1140	-
K1009469A	1250	4
K1009470A	1250	36
K1009471	1250	38
K1009510A	1250	37
K1009512A	1250	3
K1009605B	1840	1A
K1009622A	1790	11
K1009623A	1790	10
K1009624A	1790	5
K1009625A	1790	16
K1009626	1790	15
K1009627	1560	35
K1009632	1790	12
K1009634	1160	1
K1009635	1130	6
K1009636A	1160	4
K1009637	1160	5
K1009639	1120	7
K1009641B	1150	8A
K1009642C	1150	8
K1009642E	1150	8
K1009701B	1230	1
K1009721A	1150	11
K1009728B	1870	8
K1009745A	1130	12
K1009750A	1740	3
K1009751A	1740	2
K1009752A	1700	1
K1009833B	1770	1
K1009871A	7080	3
	7090	3
K1009872A	7080	4
	7090	4
K1009873A	7020	2
K1009938A	6580	2
	7020	42
	7170	2
K1009940B	1940	18
K1009941A	1940	19
K1009942A	1940	24
K1009957A	1750	4
K1009959	6590	31
K1009975A	1710	1-1
K1010065	6300	8
K1010117A	1710	1
K1010117C	1710	1
K1010136A	1800	4
K1010138	1800	11
K1010140A	1800	6
K1010144	1800	8
K1010147A	1800	-
K1010304	1560	38
K1010466	1490	35
	1500	16
K1010555C	1450	-
K1010702	1880	1
K1010703	6210	1
K1010769	1140	19
K1010776A	1850	2
K1010777	1850	8
K1010839	1610	116
K1011186	1900	14-6
K1011302	5130	21
	5150	20
	5160	20
K1011303	5130	22
	5150	21
	5160	21
K1011315	5130	23
	5150	22
	5160	22
K1011358	5120	3
	5140	3
K1011384	1940	18B
K1011385	1940	19B
K1011388	1940	24A
	1940	25A
K1011645D1	5130	1
	5150	1
	5160	1
K1011647B	5130	8
K1011675	1230	4
K1011675A	1230	4
K1011743D6	5120	13
	5140	17
K1012004A	1760	1
K1012204A	5150	7
K1012205A	5150	23
K1012206	4220	72
	4560	72
K1012213	1160	6
K1012214	1160	7
K1012283	1730	21
K1012305	2210	25
	6860	25
K10123316A	7010	-
K1012583	5120	14
K1012662	6200	1-2
	6200	2-2

PART NO.	FIG NO.	KEY NO.
K1012685A	1230	6
K1012833A	1430	-
K1012833E	1440	-
K1013022A	6200	1
K1013023A	6200	2
K1013130B	1120	-
K1013130C	1130	-
	1150	-
K1013144	6810	-
K1013145	6810	1
K1013146	6810	1-1
K1013147	6820	-
K1013148	6820	1
K1013151	6820	1-1
K1013152	6830	-
K1013153	6830	1
K1013154	6830	1-1
K1013213	1470	1-1A
K1013214	1470	1-1B
K1013215	1470	11
K1013237A	1790	-
K1013261C	1310	-
	1320	-
	1330	-
	1340	-
K1013261H	1350	-
K1013373C	1240	-
	1260	-
K1013373E	1250	-
K1013483	6950	18
	6970	18
	6980	17
K1013490A	1740	-
K1013490C	1750	-
K1013490E	1720	-
	1730	-
K1013490H	1710	-
K1013590	1450	2
K1013613	1770	3
K1013619A	1780	8
K1013649E	2170	-
K1013689	1460	-
K1013812	1740	5
K1013823	1190	2
K1013846	1840	3
K1014759	6720	17
K1014972	1790	14
K1015093	6720	16
K1015193C	7190	-
K1015195	7200	-
K1015201	1870	4
K1015210	1140	4
K1015269A	4560	-
	6580	1
	7020	41
	7170	1
K1015269B	4560	-
	6580	1
	7020	41
	7170	1
K1015292A	1150	16
K1015293	1150	17
K1015294	1150	18
K1015363	1450	18
K1015404	6430	2
	6530	1
	6540	2
	7040	5
	7100	2
	7130	5
	7150	2
K1015410	1750	102
K1015418	1880	-
K1015419	6210	-
K1015471A	2160	1-1
K1015486	7150	26
K1015739	5130	27
K1016092	1220	2
K1016102	5150	28
	5160	28
K1016286B	1640	-
K1016398	1200	1-4
K1016405	1400	33
K1017130	2160	1-1A
K1017235	7150	27
K1017237A	1630	1
K1017269C	1210	-
K1017270E	1230	-
K1017271	1570	37
K1017307	2230	-
K1017371	2110	-
K1017382	4590	-
	6430	1
	6530	4
	6540	1
	7040	6
	7100	1
	7130	6
	7150	1
	6580	1
	7020	41
	7170	1
K1017382A	4590	-
	6430	1
	6530	4
	6540	1
	7040	6
	7100	1
	7130	6
	7150	1
K1017433B	6940	1
K1017490A	6370	1
K1017493A	6550	1
K1017494A	7140	1
K1017498A	6960	-
K1017689	1490	1
K1017740A	1250	9
K1017741	1250	10
K1017741B	1250	10
K1017753A	1160	-
K1017770	1490	5
K1017771	1490	28
K1017787C	2100	-
K1017933	1820	2
K1017933A	1820	2
K1017933B	1820	2
K1017977	6460	-
K1017980B	6720	-
K1018010B	6230	-
K1018011B	6940	-
K1018013A	6320	-
K1018014	6330	-
K1018015A	6910	-
K1018019	6230	5
K1018146B	1370	-
	1380	-
	1390	-
	1400	-
	1410	-
K1018147	6400	-
K1018148A	6430	-
K1018149	6530	-
K1018150A	7040	-
K1018151A	6540	-
K1018152A	7100	-
K1018153A	7130	-
K1018154B	7150	-
K1018158A	6390	-
K1018159	6420	-
K1018162B	1360	-
K1018163A	7030	-
K1018164E	6590	-
K1018165E	7180	-

PART NO.	FIG NO.	KEY NO.
K1018169	6840	-
K1018170	6930	-
K1018179B	1270	-
	1280	-
	1290	-
	1300	-
K1018181B	7020	-
K1018182	6380	-
K1018183A	7080	-
K1018184A	6410	-
K1018185A	7090	-
K1018187C	6510	-
K1018188C	7120	-
K1018190E	6580	-
K1018191B	6470	-
K1018192A	7210	-
K1018258	6890	11
	6920	11
K1018746AD10	5130	33
K1018780A	6890	52
	6920	52
K1018831B	6890	54
	6920	54
K1018872A	3130	-
K1018877A	6630	-
K1019027	1210	43
K1023195	6120	25
K1023313A	6880	-
K1023314A	7000	-
K1023315A	1910	-
K1023602	1490	3
K1023602A	1490	3
K1023869A	1150	8B
K1023869B	1150	8B
K1023909A	7230	10
K1023960	1490	37
K1024062B	1490	-
K1024182	1150	20
K1024676	6190	1
K1024677	6190	2
K1024678	6190	1B
	6190	2B
K1024898E	5110	14
K1024910	1100	35
K1025252	7060	33
K1025319	7040	23
	7100	28
	7130	25
	7150	30
K1025341	1190	4
K1025341A	1190	4
K1025342	1340	43
K1025530B	1660	1
K1025589EF	5110	13
K1026063	5130	6
K1026063A	5130	6
K1026065B	5140	-
K1026159E	5130	-
K1026336A	5120	-
K1026343E	5150	-
K1026346	5150	6
	5160	6
K1026346A	5150	6
	5160	6
K1026372G	5160	-
K1026434	5160	34
K1026455	5160	35
K1026516	5100	-
K1026517	5110	-
K1026623A	7060	31
K1026624A	7060	32
K1026654	1830	91
K1026710	6890	30
	6920	38
K1026955	6190	-
K1026967C	2140	-
K1027073A	5160	7
K1027225A	7170	-
K1027246	4220	33
	4560	33
K1027247	4220	88
	4560	88
K1027308	6730	1
K1027309	6730	2
K1027482A	5160	39
K1027577	1890	9
K1027578	1890	-
K1027698	7230	-
K1027765	1620	32-15
K1027768	1600	118
K1027769	1600	119
K1027770A	1660	-
K1028433	6890	21
	6920	25
K1029257	1230	6B
	5110	28
K1029263A	2140	11
K1029263B	2140	11
K1029406	7240	1
K1030229	4220	36
K1030230	4220	91
K1030288	1930	5
K1033644	7250	1
K1033652	7250	-
K1033880	1600	49-8
K1033991	1600	49-1
K1034001	5140	1
K1034084	5120	1
K1036331	1600	49-7
K1036967	1600	49-17
K1037356A	1940	8
K1037889	7260	1
K1037930	1150	16
K1038032	1350	40
K1038244	1625	-
K1038517	3110	9
	6690	9
K1038558	1160	6
K1038559	1160	7
K1038739	3100	3
	6620	3
	7050	4
K1038740	3100	5
	6620	5
	7050	8
K1038741	3100	6
	3110	6
	6620	6
	6690	6
	7050	7
K1038743	3110	7
	6690	7
K1038805	1810	1
K1039068	1850	8
K1039521A	1850	2
K1040074	2140	1
K1040074A	2140	1
K1040599	2120	27
K1040606	1580	31
	1730	20
	1760	8
K1040636	1730	8-8
K1041294	1350	133
K1042074	5130	30
	5150	16
	5160	16
K1042329	1830	29
K1042758A	1760	1
K1043189	1810	1
K9000114	4620	100

PART NO.	FIG NO.	KEY NO.
K9000114	4670	100
K9000164	4710	211
K9000167	4630	430-1
	4680	50-1
K9000174	4740	60
K9000422	1190	2E
K9000622	4770	40
	4770	90
K9000957	4180	50
K9000961	4180	19
K9000978	4190	14
K9000998	6600	4A
	6610	2A
	6680	2A
	7190	4A
	7200	2A
K9001001	4240	32
K9001070	4580	1
K9001071	4580	2
K9001072	4580	3
K9001073	4580	4
K9001075	4580	7
K9001076	4580	8
K9001077	4580	9
K9001078	4580	10
K9001079	4580	11
K9001080	4580	14
K9001115	4240	3
K9001119	4240	9
K9001127	4240	18
K9001128	4240	20
K9001129	4240	22
K9001129A	4240	22
K9001130	4240	25
K9001131	4240	25
K9001132	4240	28
K9001133	4240	30
K9001139	4240	37
K9001140	4240	37
K9001153	4480	9
	4530	9
K9001154	4480	10
	4530	10
K9001164	4480	14
	4530	14
K9001200	6110	1
K9001201	1550	2
	6110	2
K9001202	1550	3
	6110	3
K9001203	1550	4
	6110	4
K9001204	1550	5
	6110	5
K9001205	1550	6
	6110	6
K9001206	1550	7
	6110	7
K9001207	1550	8
	6110	8
K9001208	1550	10
	6110	10
K9001209	1550	11
	6110	11
K9001210	1550	12
K9001211	1550	13
K9001212	1550	14
K9001213	1550	15
	6110	15
K9001214	1550	16
K9001215	1550	17
K9001216	1550	18
K9001217	1550	19
	6110	19
K9001218	1550	20
	6110	20
K9001219	1550	21
	6110	21
K9001220	1550	22
	6110	22
K9001221	1550	23
	6110	23
K9001223	6110	24
K9001243	4270	2A
K9001294	4140	101
K9001295	4140	102
K9001296	4140	103
K9001297	4140	104
K9001298	4140	201
K9001299	4140	202
K9001300	4140	203
K9001302	4140	205
K9001303	4140	206
K9001304	4140	207
K9001305	4140	208
K9001306	4140	209
K9001308	4140	210
K9001309	4140	211
K9001310	4140	213
K9001311	4140	301
K9001312	4140	305
K9001313	4140	306
K9001314	4140	309
K9001315	4140	310
K9001346	4280	1
K9001347	4280	2
K9001349	4280	4
K9001350	4280	5
K9001351	4280	6
K9001352	4280	7
K9001353	4280	8
K9001354	4230	2
	4270	2
K9001355	4230	3
K9001357	4250	5
K9001358	4250	6
K9001360	4250	22
K9001361	4250	*
K9001366	4360	1
K9001368	4360	3
	4370	3
K9001369	4360	5
	4370	5
K9001370	4360	15
	4370	15
K9001372	4360	17
	4370	17
K9001373	4360	18
	4370	18
K9001374	4350	22
	4360	20
	4370	20
K9001375	4360	21
	4370	21
K9001376	4360	24
K9001378	4370	1
K9001380	4370	24
K9001381	4310	1
	4320	1
	4420	1
	4430	1
K9001383	4310	3
	4320	3
	4420	3
	4430	3
K9001384	4310	5
	4320	5
	4420	5
	4430	5
	4460	5

PART NO.	FIG NO.	KEY NO.
K9001384	4470	5
	4510	5
	4520	5
K9001385	4310	8
	4320	8
	4420	8
	4430	8
	4460	8
	4470	8
	4490	8
	4510	8
	4520	8
	4540	8
K9001386	4310	9
	4320	9
	4420	9
	4430	9
	4460	9
	4470	9
	4490	9
	4510	9
	4520	9
	4540	9
K9001387	4310	16
	4320	16
	4420	16
	4430	16
	4460	16
	4470	16
	4490	16
	4510	16
	4520	16
	4540	16
K9001388	4310	17
	4320	17
	4420	17
	4430	17
	4460	17
	4470	17
	4510	17
	4520	17
K9001389	4310	18
	4320	18
	4420	18
	4430	18
	4460	18
	4470	18
	4490	18
	4510	18
	4520	18
K9001389	4540	18
K9001390	4310	20
	4320	20
	4400	17
	4410	17
	4420	20
	4430	20
	4460	20
	4470	20
	4490	20
	4510	20
	4520	20
	4540	20
K9001391	4310	26
	4320	26
	4420	26
	4430	26
K9001392	4310	30
K9001393	4310	36
	4420	30
K9001394	4320	30
K9001395	4320	36
	4430	30
K9001396	4310	10
	4320	10
	4420	10
	4430	10
	4460	10
	4470	10
	4490	10
	4510	10
	4520	10
	4540	10
K9001397	4330	1
K9001399	4330	3
	4440	3
K9001400	4330	5
	4340	5
	4440	5
	4450	5
	4500	5
	4550	5
K9001401	4330	7
	4340	7
	4440	7
	4450	7
	4500	7
	4550	7
K9001402	4330	8
	4340	8
K9001402	4440	8
	4450	8
	4500	8
	4550	8
K9001403	4330	9
	4340	9
	4440	9
	4450	9
	4500	9
	4550	9
K9001404	4330	10
	4340	10
	4440	10
	4450	10
	4500	10
	4550	10
K9001405	4330	14
	4340	14
	4440	14
	4450	14
	4500	14
	4550	14
K9001406	4330	16
	4340	16
	4440	16
	4450	16
	4500	16
	4550	16
K9001407	4330	17
	4340	17
	4440	17
	4450	17
	4500	17
	4550	17
K9001408	4330	18
	4340	18
	4440	18
	4450	18
	4500	18
	4550	18
K9001409	4330	20
	4340	20
	4440	20
	4450	20
	4500	20
	4550	20
K9001410	4330	22
	4340	22
	4440	22
	4450	22

PART NO.	FIG NO.	KEY NO.
K9001410	4500	22
	4550	22
K9001411	4330	32
	4340	32
	4440	32
	4450	32
	4500	32
	4550	32
K9001412	4330	36
	4340	36
K9001413	4330	40
	4340	40
	4440	37
	4450	37
	4480	37
	4490	40
	4500	40
	4530	34
	4540	37
	4550	37
K9001414	4330	43
	4340	43
	4440	40
	4450	40
	4490	43
	4500	43
	4540	40
	4550	40
K9001415	4440	1
	4450	1
K9001416	4440	36
	4450	36
K9001417	4340	1
K9001418	4340	3
	4450	3
K9001419	4350	1
K9001421	4350	3
K9001421A	4350	3
K9001423	4350	5
K9001424	4350	8
K9001425	4350	9
K9001426	4350	10
K9001427	4350	14
K9001428	4350	16
K9001429	4350	17
K9001430	4350	18
K9001431	4350	20
K9001432	4350	26
K9001433	4350	30
K9001434	4350	34
K9001435	4350	38
	4460	38
	4470	38
	4510	34
	4520	34
K9001436	4290	1
K9001438	4290	3
K9001439	4290	6
K9001440	4290	7
K9001441	4290	10
K9001442	4290	11
K9001443	4290	*
K9001457	4570	*
K9001469	4600	10
	4660	30
K9001470	4600	20
K9001471	4600	190
K9001472	4600	220
K9001473	4610	570
	4660	570
K9001474	4610	720
	4660	720
K9001475	4610	800
	4660	800
K9001476	4620	90
	4670	90
K9001477	4620	130
	4670	130
K9001478	4620	241
	4650	501
	4670	241
	4690	501
K9001479	4620	251
	4670	251
K9001480	4620	10
K9001481	4620	30
K9001482	4620	350
	4630	160
K9001484	4620	450
K9001485	4620	450-1
K9001486	4620	450-2
K9001487	4620	450-3
K9001488	4620	450-4
K9001490	4620	550
K9001491	4620	550-1
K9001492	4620	550-2
	4620	560-2
K9001493	4620	550-3
	4620	560-3
K9001494	4620	560
K9001495	4620	560-1
K9001496	4630	10
K9001497	4630	10-2
	4630	20-2
	4680	10-2
K9001498	4630	20
K9001499	4630	50
K9001500	4630	80
K9001501	4630	90
K9001502	4630	100
K9001503	4630	100
K9001504	4630	100
K9001510	4630	112
K9001511	4630	115
K9001512	4630	122
K9001513	4630	180
K9001514	4630	190
K9001515	4630	200
K9001516	4630	270
	4680	40
K9001517	4630	500
K9001518	4630	510
K9001519	4640	10
K9001520	4640	10-1
K9001521	4640	10-2
K9001522	4640	10-3
K9001523	4640	10-4
K9001524	4640	10-5
K9001525	4640	10-7
K9001526	4640	10-8
K9001527	4640	10-10
K9001528	4640	30
K9001529	4650	10
	4690	10
K9001530	4650	40
	4690	40
K9001531	4650	80
	4690	80
K9001532	4650	120
	4690	120
K9001533	4650	130
	4690	130
K9001534	4650	135
	4690	135
K9001535	4650	160
	4690	160
K9001536	4650	200
	4690	200
K9001537	4650	205
	4690	205

PART NO.	FIG NO.	KEY NO.
K9001538	4650	230
	4690	230
K9001539	4650	232
	4690	232
K9001540	4650	239
	4690	239
K9001541	4650	270
	4690	270
K9001542	4650	280
	4690	280
K9001543	4650	280
	4690	280
K9001544	4650	280
	4690	280
K9001545	4650	390
	4690	390
K9001546	4650	390-1
	4690	390-1
K9001547	4650	390-2
	4690	390-2
K9001548	4650	540
	4690	540
K9001549	4670	10
K9001550	4670	20
K9001551	4670	30
K9001552	4680	10
K9001553	4680	70
K9001554	4680	74
K9001555	4680	90
K9001556	4680	100
K9001557	4700	10
K9001558	4700	30
K9001559	4700	50
K9001560	4700	70
K9001561	4700	110
K9001564	4710	10
K9001565	4710	20
K9001566	4710	90
K9001567	4710	350
K9001568	4710	390
K9001569	4710	490
K9001570	4710	510
K9001571	4710	530
K9001572	4710	550
K9001573	4710	570
K9001574	4720	110
K9001575	4720	130
K9001576	4720	150
K9001577	4720	190
K9001578	4720	210
K9001579	4720	230
K9001580	4720	250
K9001581	4720	270
K9001582	4720	290
K9001583	4720	310
K9001584	4720	330
K9001585	4730	10
K9001586	4730	30
	4730	50
K9001587	4730	50
K9001588	4730	50
K9001589	4730	80
K9001590	4730	90
K9001591	4730	100
K9001592	4730	110
K9001593	4730	130
K9001594	4730	170
K9001595	4730	190
K9001596	4730	210
K9001597	4740	10
K9001598	4740	30
K9001599	4740	70
	4740	270
K9001600	4740	90
K9001601	4740	110
K9001602	4740	130
K9001603	4740	190
K9001604	4740	210
K9001605	4740	230
K9001606	4740	290
K9001607	4740	330
K9001608	4740	50
K9001609	4740	170
K9001610	4750	90
K9001611	4750	110
K9001612	4750	130
K9001613	4750	150
K9001614	4750	170
K9001615	4750	170
K9001616	4750	170
K9001617	4750	170
K9001618	4750	170
K9001619	4750	170
K9001620	4750	170
K9001621	4750	170
K9001622	4750	170
K9001623	4750	170
K9001624	4750	170
K9001625	4750	170
K9001626	4750	170
K9001627	4750	170
K9001628	4750	170
K9001629	4750	170
K9001630	4750	170
K9001631	4750	170
K9001632	4750	170
K9001633	4750	230
K9001634	4750	310
K9001635	4750	330
K9001636	4750	330
K9001637	4750	330
K9001638	4750	330
K9001639	4750	330
K9001640	4750	330
K9001641	4750	330
K9001642	4750	330
K9001643	4750	330
K9001644	4750	330
K9001645	4750	330
K9001646	4750	330
K9001647	4750	330
K9001648	4750	330
K9001649	4750	330
K9001650	4750	330
K9001651	4750	330
K9001652	4750	330
K9001653	4750	330
K9001654	4750	330
K9001655	4750	330
K9001656	4750	370
K9001657	4750	450
K9001658	4750	50
K9001659	4750	250
K9001660	4760	10
K9001661	4760	95
K9001662	4760	372
K9001663	4770	10
K9001664	4770	20
	4770	70
K9001665	4770	30
	4770	80
K9001666	4770	50
	4770	100
K9001667	4770	60
K9001673	6110	12
K9001674	6110	13
K9001675	6110	14
K9001676	6110	16
K9001677	6110	17
K9001678	6110	18

PART NO.	FIG NO.	KEY NO.	PART NO.	FIG NO.	KEY NO.	PART NO.	FIG NO.	KEY NO.
K9001679	6110	25	K9001832	4210	6	K9004262	1140	2
K9001680	6110	26	K9001906	4100	6	K9004263	1140	3
K9001681	6110	27		4130	2	K9004263A	1140	3
K9001682	6110	28	K9001933	4130	2I	K9004264	1140	6
K9001695	1550	1	K9001943	4230	2A	K9004265	1140	7
K9001719	4100	2	K9002296	1480	1	K9004265A	1140	7
K9001722	4110	2Ag	K9002298	1480	2	K9004266	1140	8
	4110	3Ag	K9002299	1480	3	K9004267	1140	9
K9001723	4120	2	K9002306	4310	*	K9004268	1140	10
K9001724	4120	2I		4320	*	K9004269	1140	11
K9001725	4120	2J		4420	*	K9004270	1140	12
K9001727	4120	37		4430	*	K9004271	1140	15
K9001729	4130	2F		4460	*	K9004272	1140	16
K9001758	4380	2		4470	*	K9004320	4490	5
	4390	2		4490	*		4540	5
K9001759	4660	20		4510	*	K9004321	4490	17
K9001771	4160	1		4520	*		4540	17
	4170	-		4540	*	K9004413	4110	25
K9001773	4160	5	K9002307	4350	*	K9004414	4100	7
K9001774	4160	11	K9002308	4330	*	K9004601	4500	23
K9001775	4160	51		4340	*		4550	23
	4210	-		4440	*	K9005039	4160	2
K9001777	4170	1		4450	*	K9005040	4180	2
K9001778	4170	1-1		4500	*		4200	-
K9001779	4170	1-2		4550	*	K9005041	4200	2
K9001780	4170	1-3	K9002309	4360	*	K9005046	4400	1
K9001781	4170	1-4		4370	*	K9005047	4410	1
K9001782	4170	1-6	K9002679	2140	2-1	K9005048	4490	33
K9001783	4170	1-6	K9002934	4590	2		4540	33
K9001784	4170	1-6	K9002935	4590	8	K9005049	4480	18
K9001785	4170	1-7	K9002957	1480	4		4530	18
K9001786	4170	1-11	K9002958	1480	5	K9005050	4400	3
K9001788	4170	2	K9003465	4590	4		4410	3
K9001789	4170	3	K9003707	4380	*	K9005051	4410	23
K9001790	4170	6		4390	*	K9005052	4400	23
K9001816	4170	6	K9003878	1140	22	K9005053	4400	5
K9001817	4170	6	K9003998	4240	33		4410	5
K9001818	4170	10	K9003999	4240	34	K9005054	4490	1
K9001819	4170	11	K9004000	4240	35	K9005055	4490	3
K9001820	4180	1	K9004001	4240	36		4540	3
	4190	-	K9004002	4300	1	K9005056	4490	32
K9001822	4180	3	K9004004	4300	3		4540	32
K9001823	4180	4	K9004005	4300	6	K9005057	4490	36
K9001824	4180	5	K9004006	4300	7	K9005058	4460	1
K9001825	4180	7	K9004007	4300	10		4470	1
K9001826	4180	24	K9004008	4300	11		4510	1
K9001827	4200	1	K9004009	4300	*		4520	1
K9001829	4200	18	K9004058	4200	17	K9005059	4460	3
K9001830	4210	1	K9004228	4170	1-12		4470	3
K9001831	4210	3	K9004261	1140	1		4510	3

PART NO.	FIG NO.	KEY NO.
K9005059	4520	3
K9005060	4480	1
	4530	1
K9005061	4480	3
	4530	3
K9005062	4480	5
	4530	5
K9005063	4480	16
	4530	16
K9005064	4480	25
	4530	25
K9005065	4480	29
K9005066	4480	33
	4530	30
K9005067	4460	26
	4470	26
	4510	26
	4520	26
K9005068	4470	34
	4520	30
K9005069	4460	34
	4510	30
K9005070	4470	30
K9005071	4460	30
K9005072	4480	*
	4530	*
K9005073	4500	1
K9005074	4500	3
	4550	3
K9005075	4500	36
K9005076	4540	1
K9005077	4540	36
K9005078	4550	1
K9005079	4550	36
K9005080	4530	29
K9005523	4120	14
K9005662	1230	6A
K9005736	4760	-
K9006476	4630	120
K9006480	4240	35
K9006481	4240	36
S0504366	1810	6
	1810	6
S0504453	1850	23
	1850	32
	1870	2
S0504553	1710	1-13
	1720	7-14
S0504653	1940	34
S0504666	1850	19
S0504866	6960	11
S0505266	1390	22
S0508466	1860	49
S0508566	6120	14
S0508653	1340	1J
	1830	43
	1920	2
	6300	4
S0508666	1420	12
	1830	51
	1850	46
	1900	15
	1940	29
S0508766	1710	1-16
	1720	7-13
S0508853	6260	5
	6280	3
	6290	6
	6300	6
	6310	6
	6360	3
S0508866	1100	15
	1730	8-11
	1740	26
	6270	3
	6420	16
	6500	5
	6730	5
S0509066	1850	12
S0509366	1940	21
S0511566	7070	15
S0511653	1870	16
	1900	11
S0511666	1200	5
	1870	5
	6120	22
S0511863	4310	35
	4310	41
	4320	35
	4320	41
	4420	35
	4430	35
S0511866	1350	53
	1710	1-11
	1720	7-11
	6120	17
S0512053	6290	3
	6300	6
S0512066	1100	13
	1210	7
S0512066	1230	16
	1350	54
	1420	13
	1440	42
	1450	33
	1730	8-4
	1850	42
	1940	14
	6420	17
	6470	16
	6590	32
	6720	18
	7210	17
S0512266	1940	9
S0512366	1410	23
S0512466	1340	55
S0512566	2210	31
	6860	31
S0512966	1310	56
S0514666	1210	23
	1230	32
S0514853	1890	3
	7230	3
S0515066	1130	29
	1320	57
	1440	43
	1730	37
	2140	6
	6890	44
	6920	44
S0515166	6590	17
	7180	23
S0515266	1220	5
	1250	39
	1290	32
	1750	38
	2170	18
	6510	29
	6570	6
	6740	6
	7120	29
S0515366	1270	33
S0515566	1760	10
S0515653	6260	2
	6310	3
S0515766	6180	19
S0515866	1150	32
S0516066	1760	7
	2130	5
	6200	4

PART NO.	FIG NO.	KEY NO.
S0520766	6890	56
S0521366	1100	11
	1130	26
	3100	11
	3110	23
	6620	11
	6690	23
	6920	47
	7050	10
S0521466	2130	9
	2170	19
	6190	5
S0521566	1120	31
S0521866	6920	48
S0553766	1340	58
	1440	44
S0555966	1430	45
S0556466	1350	59
	1450	31
	6470	15
	7210	16
S0556766	6420	18
	6520	22
S0557066	2180	2
S0557166	1940	5
S0558153	4310	29
	4320	29
	4330	35
	4340	35
	4350	29
	4420	29
	4430	29
	4440	35
	4450	35
	4460	29
	4470	29
	4480	28
	4490	35
	4500	35
	4510	29
	4520	29
	4530	28
	4540	35
	4550	35
S0558166	1190	8
S0558261	4290	12
S0558266	4300	13
S0558366	1190	6
S0558463	4460	40
	4470	40
S0558463	4510	36
	4520	36
S0558466	1150	33
S0558553	4350	40
S0558666	6430	27
	6530	16
	6540	27
	7040	21
	7130	22
S0558766	6430	15
	6540	15
	7040	19
	7100	15
	7130	20
	7150	15
S0558966	1940	10
	6570	12
	6740	12
S0559066	1440	46
S0559266	2190	16
S0559553	4570	7
S0560766	1290	34
	2120	8
S0560866	3130	17
	3130	41
	6630	17
	6630	41
	7060	21
	7060	52
S0560966	7160	12
S0561066	1220	8
	6380	13
S0561266	6380	14
	7080	13
S0561366	6380	15
	6410	15
	6560	7
	6670	7
	7080	15
	7090	15
S0561566	6410	16
	6560	8
	6670	8
	7090	16
S0561666	7160	10
S0561766	6560	13
	6670	13
S0562366	6890	6
	6920	6
S0562666	1880	5
S0562666	6210	5
S0562766	6450	4
	6710	4
S0563466	6450	18
	6460	11
	6710	18
	6720	11
S0565066	2160	3
S0565166	2110	2
S0565266	2120	11
S0565451	4330	42
	4340	42
	4440	39
	4450	39
	4480	39
	4490	42
	4500	42
	4530	36
	4540	39
	4550	39
S0565466	1210	10
	1230	18
S0565566	2140	9
S0566666	2210	11
	6860	11
	6890	8
	6920	8
S0566766	3110	22
	6690	22
S0566966	3100	13
	6620	13
	7050	13
S0570866	1100	32
S0574561	3120	7
	6750	7
	6760	7
	6770	7
	6780	7
	6790	7
	6800	7
S0574761	6810	4
	6820	4
	6830	4
S0760853	1880	2
	6210	2
S0765266	1200	2
S0770066	2150	2
S0771466	1120	30
S0771666	2120	15
S2202766	1230	22

PART NO.	FIG NO.	KEY NO.
S2202966	1490	31
S2204466	1490	32
S2204566	1400	32
S2204861	4220	83
	4560	83
S2205066	1370	24
	1380	24
S2205361	4250	15
S2208466	1590	110
S2208561	1590	24
	1670	18
S2208866	1510	14
	1540	2
	1640	8
	6100	2
	6960	6
S2209061	4220	31
	4560	31
S2209066	1200	1-16
	6430	16
	6510	23
	6530	10
	6540	16
	7040	13
	7100	16
	7120	23
	7130	13
	7150	16
S2209261	4590	9
S2209266	6570	17
	6740	17
	6890	31
	6920	39
S2209461	4360	28
	4370	28
	4400	27
	4410	27
S2209466	6560	10
	6670	10
S2209561	4310	39
	4320	39
	4350	33
	4350	37
	4420	33
	4430	33
	4460	37
	4470	37
	4510	33
	4520	33
S2209661	4190	15
S2211666	6890	63
	6920	62
S2211866	6430	17
	6530	11
	6540	17
	7040	11
	7100	17
	7130	11
	7150	17
S2212066	1460	3
	6430	18
	6460	1
	6530	12
	6540	18
	6720	1
	7040	10
	7100	18
	7130	10
	7150	18
S2212266	1450	37
	3130	13
	3150	5
	6430	19
	6460	7
	6510	27
	6530	13
	6540	19
	6630	13
	6700	5
	6720	7
	7040	12
	7060	27
	7100	19
	7120	28
	7130	12
	7150	19
S2212366	1730	31
	1760	6
	3130	12
	3150	7
	6450	13
	6460	14
	6630	12
	6700	7
	6710	13
	6720	14
S2212566	3130	16
	6440	6
	6630	16
	6650	6
S2212666	6600	3
	6610	6
	6680	6
	7190	9
	7200	7
S2212761	4310	33
	4320	33
	4330	39
	4340	39
	4460	33
	4470	33
	4480	36
	4490	39
	4500	39
	4530	33
S2212766	1280	35
S2212861	4480	32
S2212866	6950	17
	6970	17
S2212961	4330	46
	4340	46
	4360	27
	4370	27
	4440	43
	4450	43
	4490	46
	4500	46
	4540	43
	4550	43
S2213066	6850	14
S2213166	1450	17
S2213261	4400	26
	4410	26
S2213566	1320	60
S2213766	6950	14
	6970	14
	6980	14
S2214061	4200	7
S2215261	4220	49
	4560	49
S2215266	1240	23
	1250	23
S2215361	4180	15
S2215366	1260	26
	7020	24
S2215466	1240	24
	1250	24
	1260	24
	1270	36
	1300	36

PART NO.	FIG NO.	KEY NO.
S2215466	2190	6
	2200	20
S2216066	1270	37
S2216673	4180	16
S2216766	2190	7
S2216873	4150	19
S2218961	4350	25
S2219071	4310	25
	4320	25
	4420	25
	4430	25
	4460	25
	4470	25
	4490	27
	4510	25
	4520	25
	4540	27
S2221471	4140	110
S2221566	1240	25
S2221666	2120	17
S2221873	4480	24
	4530	24
S2221961	4140	109
S2222171	4330	27
	4340	27
	4440	27
	4450	27
	4500	27
	4550	27
S2227866	2120	22
S2266461	4220	3
	4560	3
S3050863	1850	9
S3051201	2210	18
	6860	18
S3056203	2150	11
S3450343	1830	34
	1830	45
S3450563	7230	13
S3450583	1840	4
	1860	39
	1940	2
S3450823	1490	25
	1820	36
	5130	32
	5150	35
	5160	24
S3450833	1210	21
	1610	82
	1830	11
S3450833	1830	48
	6330	15
S3450853	1830	2
	2210	22
	5130	19
	5150	31
	5160	31
	6860	22
	6890	39
	6920	49
S3450863	1820	14
S3450943	1670	15
	1830	27
S3450953	1820	11
	1830	41
	1900	14-4
	1900	20
	6420	21-4
	6520	30-3
	6940	3
S3450983	1830	7
S3450993	1600	78
	1610	78
S3452853	1610	79
S3453116	4150	29
S3458843	1610	65
S3523601	4590	4-4
S3523836	4400	21
	4410	21
	4460	24
	4470	24
	4480	23
	4490	24
	4510	24
	4520	24
	4530	23
	4540	24
S3524403	3140	7
	6640	7
	7070	20
S3644163	1570	32
S3654523	1560	25
S4012003	1830	47
	1830	50
S4012133	6960	10
S4012303	1940	37
S4012333	1620	32-32
	1730	8-14
S4012533	1620	32-27
	1730	8-10
S4012633	1150	8D
	1710	1-14
	1720	7-15
	1730	36
	1820	3
S4012733	1150	37
	1230	9
	1250	29
	1710	1-18
	1720	7-12
	1730	32
	1760	9
	1880	8
	2120	9
	2130	7
	6200	6
	6210	8
	6890	7
	6920	7
S4012833	4240	24
S4012933	2210	12
	3100	14
	3110	24
	6620	14
	6690	24
	6860	12
	6890	9
	6920	9
	7050	14
S4013333	3120	8
	6750	8
	6760	8
	6770	8
	6780	8
	6790	8
	6800	8
	6810	5
	6820	5
	6830	5
S4014233	4250	19
S4014633	4590	4-3
S4033133	2120	16
S4034833	1600	103
S5000113	1940	3
	6960	9
	7230	15
S5000213	1830	4
S5000313	1940	39
S5010303	1940	35
S5010313	1610	115

PART NO.	FIG NO.	KEY NO.
S5010313	1710	1-17
	1720	7-18
	1850	25
S5010503	1850	14
S5010513	1710	1-15
	1720	7-17
	1730	8-12
	1740	27
	1860	51
	1900	17
	1940	7
	1940	23
	6120	12
	6300	2
S5010613	1100	14
	1150	8E
	1150	41
	1310	70
	1730	8-5
	1820	5
	1870	18
	1900	13
	1940	12
	1940	16
	2190	17
	2210	29
	6120	15
	6860	29
S5010713	1150	39
	1220	6
	1270	38
	1290	38
	1450	21
	1730	25
	1760	13
	1880	7
	2170	13
	6210	7
	6260	8
	6310	2
	6510	30
	7120	30
S5010913	1130	40
	2170	12
S5011113	1200	1-9
S5100003	1830	35
	1830	46
	1830	49
	1830	49
S5100103	1840	5
S5100103	1860	40
	7230	14
S5100203	1210	22
	1820	15
	1820	37
	1830	3
	1830	12
	6330	16
S5100503	4310	38
	4320	38
	4350	32
	4350	36
	4360	29
	4370	29
	4400	28
	4410	28
	4420	32
	4430	32
	4460	36
	4470	36
	4510	32
	4520	32
S5100603	4290	13
	4300	14
	4310	28
	4310	32
	4310	34
	4310	40
	4320	28
	4320	32
	4320	34
	4320	40
	4330	34
	4330	38
	4330	45
	4340	34
	4340	38
	4340	45
	4350	28
	4350	39
	4420	28
	4420	34
	4430	28
	4430	34
	4440	34
	4440	42
	4450	34
	4450	42
	4460	28
	4460	32
S5100603	4460	39
	4470	28
	4470	32
	4470	39
	4480	27
	4480	31
	4480	35
	4490	34
	4490	38
	4490	45
	4500	34
	4500	38
	4500	45
	4510	28
	4510	35
	4520	28
	4520	35
	4530	27
	4530	32
	4540	34
	4540	42
	4550	34
	4550	42
	6120	16
	6300	7
S5102203	2210	21
	5130	20
	5150	32
	5160	32
	6860	21
	6890	40
	6920	50
S5102303	1340	63
	1390	26
	1440	47
	1730	8-15
	1810	11
	1810	11
	1820	12
	1830	8
	1830	28
	1830	42
	1850	20
	1850	24
	1850	33
	1860	35-2
	1860	36-2
	1870	3
	1900	14-5
	1900	21

PART NO.	FIG NO.	KEY NO.
S5102303	1940	38
	6420	21-5
	6520	30-4
	6940	4
	6960	8
S5102503	1100	16
	1340	1K
	1350	65
	1420	10
	1430	48
	1450	32
	1730	8-9
	1740	28
	1830	44
	1830	52
	1850	10
	1850	13
	1850	47
	1860	50
	1900	16
	1920	3
	1940	6
	1940	22
	1940	30
	2180	3
	6120	13
	6260	6
	6270	4
	6280	2
	6290	5
	6300	3
	6300	7
	6310	5
	6360	2
	6420	19
	6470	17
	6500	6
	6520	29
	6730	6
	7210	18
S5102603	1100	10
	1150	42
	1190	7
	1210	8
	1230	17
	1310	61
	1350	61
	1420	11
	1440	49
	1450	34
S5102603	1820	4
	1850	4
	1850	43
	1870	6
	1870	17
	1900	12
	1920	16
	1940	11
	1940	15
	2150	10
	2190	18
	2210	30
	4570	8
	6420	20
	6430	22
	6470	18
	6530	17
	6540	22
	6570	13
	6590	33
	6720	19
	6740	13
	6860	30
	7040	20
	7070	16
	7100	22
	7130	21
	7150	22
	7210	19
S5102703	1130	36
	1220	7
	1250	31
	1270	39
	1290	39
	1320	64
	1440	50
	1760	14
	1880	3
	1880	6
	1890	4
	2120	10
	2140	5
	2170	15
	3130	18
	3130	42
	6210	3
	6210	6
	6380	17
	6410	17
	6510	21
S5102703	6560	6
	6570	8
	6590	18
	6630	18
	6630	42
	6670	6
	6740	8
	6890	43
	6920	43
	7060	22
	7060	53
	7080	17
	7090	17
	7120	21
	7160	11
	7180	24
	7230	4
S5102803	6450	19
	6460	12
	6710	19
	6720	12
S5102901	1100	12
S5102903	1120	34
	1130	34
	1200	3
	2110	3
	2120	12
	2130	8
	4330	41
	4340	41
	4440	38
	4450	38
	4480	38
	4490	41
	4500	41
	4530	35
	4540	38
	4550	38
	6190	4
	6920	46
	7050	11
S5102906	3100	12
	3110	21
	6620	12
	6690	21
S5103001	2170	14
S5103103	2120	23
S5110303	1400	31
S5110503	6430	20
	6510	26

PART NO.	FIG NO.	KEY NO.
S5110503	6530	14
	6540	20
	6960	7
	7040	15
	7100	20
	7120	27
	7130	15
	7150	20
S5110601	6600	6
	6610	3
	6680	3
	7190	7
	7200	5
S5110603	1320	72
	1450	19
	1460	4
	6430	21
	6510	25
	6530	15
	6540	21
	6850	15
	6890	62
	6920	61
	6950	15
	6970	15
	6980	15
	7040	14
	7100	21
	7120	26
	7130	14
	7150	21
S5110701	4220	4
	4560	4
S5110703	1450	20
	7020	25
S5110903	1240	27
	2120	18
S5210303	1620	32-34
S5710671	4190	20
S5735751	2210	16
	6860	16
S5740530	4250	21
S5740730	4140	114
S5740800	4240	27
S5740890	4150	23
	4150	27
S6005040	4140	108
S6500300	4150	24
S6500650	4150	25
S6500700	4290	8
S6500800	4300	8
S6510500	4140	212
S6510650	4170	7
S6510800	4160	9
S6540600	1600	112
S6541000	1490	18
S6710032	4310	42
	4320	42
	4330	47
	4340	47
	4350	41
	4360	23
	4370	23
	4400	22
	4410	22
	4420	36
	4430	36
	4440	44
	4450	44
	4460	41
	4470	41
	4480	40
	4490	47
	4500	47
	4510	37
	4520	37
	4530	37
	4540	44
	4550	44
S6710041	1810	5
	1810	5
	2120	14
	2140	2-2
	2180	19
	3110	20
	3140	8
	6640	8
	6690	20
	7070	8
S6710043	2210	13
	6860	13
	6890	15
	6920	15
S8000081	4250	3
S8000101	4220	25
	4560	25
S8000111	1210	17
	1210	62
	1230	23
	1250	41
S8000111	1260	41
	1310	49
	1320	49
	1330	49
	1340	49
	1350	49
	1350	49
	1360	15
	1390	18
	1400	18
	1420	9
	1430	36
	1440	36
	1450	35
	2180	21
	2200	14
	2230	4
	4140	112
	4220	9
	4290	20
	4300	21
	4560	9
	6420	14
	6430	13
	6470	14
	6520	21
	6530	9
	6540	13
	6600	11
	6610	9
	6680	9
	6840	3
	6850	11
	6870	4
	6900	4
	6930	3
	6950	11
	6970	11
	6980	11
	6990	3
	7030	15
	7030	31
	7040	22
	7100	13
	7130	23
	7150	13
	7190	6
	7200	4
	7210	15
S8000121	2170	20

PART NO.	FIG NO.	KEY NO.
S8000121	2190	4
	4220	61
	4560	61
	6320	4
S8000141	1310	50
	1320	50
	1330	50
	1350	50
	1370	19
	1380	19
	1390	19
	1400	19
	1410	19
	1430	37
	1430	75
	1440	37
	2170	21
	2180	22
	2190	4
	2200	15
	2230	5
	4220	24
	4250	6-3
	4380	9
	4390	9
	4560	24
	6430	14
	6510	18
	6540	14
	6870	5
	6900	5
	6990	4
	7100	14
	7120	18
	7150	14
S8000161	2180	23
S8000181	1200	1-11
	1210	41
	1230	30
	1250	40
	1280	25
	1300	25
	1330	51
	1330	172
	1340	51
	1350	51
	1410	20
	1440	38
	1450	14
	1450	55

PART NO.	FIG NO.	KEY NO.
S8000181	2180	24
	2200	16
	2220	1
	4220	15
	4560	15
	6450	36
	6510	19
	6570	3
	6570	31
	6710	36
	6740	3
	6740	31
	6850	1
	6950	1
	6970	1
	6980	1
	7120	19
S8000201	4310	37
	4320	37
	4350	31
	4350	35
	4360	25
	4370	25
	4400	24
	4410	24
	4420	31
	4430	31
	4460	35
	4470	35
	4510	31
	4520	31
S8000205	4240	17
S8000211	4220	6
	4560	6
S8000221	4140	106
S8000231	1240	17
	1250	17
	1260	17
	1270	26
	1280	26
	1290	26
	1300	26
	2200	17
	4220	2
	4560	2
	6380	23
	6410	18
	6440	9
	6450	31
	6460	10

PART NO.	FIG NO.	KEY NO.
S8000231	6460	32
	6510	22
	6650	9
	6710	31
	6720	10
	6720	32
	6850	12
	7020	20
	7060	28
	7080	23
	7090	18
	7120	22
S8000241	7020	21
S8000281	4310	31
	4320	31
	4330	37
	4330	44
	4340	37
	4340	44
	4440	41
	4450	41
	4460	31
	4470	31
	4480	30
	4480	34
	4480	42
	4490	37
	4490	44
	4500	37
	4500	44
	4530	31
	4530	39
	4540	41
	4550	41
	6610	5
	6680	5
	7190	8
	7200	6
S8000291	4220	26
	4560	26
	6380	24
	6410	19
	7020	22
	7080	24
	7090	19
S8000551	4300	12
S8001001	4290	4
S8001101	4300	4
S8001151	4290	5
S8001251	4300	5

PART NO.	FIG NO.	KEY NO.
S8010751	4480	20
	4530	20
S8010901	4350	13
S8010951	4350	15
	4360	12
	4370	12
S8011001	4360	14
	4370	14
S8011051	4310	13
	4320	13
	4420	13
	4430	13
	4460	13
	4470	13
	4490	13
	4510	13
	4520	13
	4540	13
S8011051-90	4400	11
	4410	11
S8011101	4310	15
	4320	15
	4330	13
	4340	13
	4400	13
	4410	13
	4420	15
	4430	15
	4440	13
	4450	13
	4460	15
	4470	15
	4490	15
	4500	13
	4510	15
	4520	15
	4540	15
	4550	13
S8011151	4330	15
	4340	15
	4440	15
	4450	15
	4500	15
	4550	15
S8011200	1230	10
S8011251	4290	9
S8011351	4300	9
S8011450	1210	6
S8011451	4480	13
	4530	13
S8011650	1230	12
S8011850	1230	11
S8030041	1450	36
	2230	6
	6870	6
	6900	6
S8030061	1430	41
	1440	41
	2180	26
	2230	7
	6510	20
	6870	7
	6900	7
	6950	12
	6970	12
	6980	12
	6990	5
	7120	20
S8030081	1270	27
	1280	27
	1300	27
	1440	40
	1450	15
	1450	56
	2220	2
	6450	38
	6510	31
	6560	11
	6570	4
	6570	34
	6600	8
	6670	11
	6710	38
	6740	4
	6740	34
	6850	2
	6950	2
	6970	2
	6980	2
	7120	31
	7190	11
S8030121	1260	18
	1270	28
	1280	28
	1290	28
	2190	5
	2200	19
	3130	9
	6380	25
	6410	20
S8030121	6440	7
	6450	3
	6450	34
	6460	4
	6460	34
	6510	24
	6630	9
	6650	7
	6710	3
	6710	34
	6720	4
	6720	34
	7020	19
	7060	14
	7080	25
	7090	20
	7110	5
	7120	24
S8030161	1240	19
	1300	29
S8040061	1190	5
S8060121	4220	62
	4560	62
S8060211	4220	57
	4560	57
S8180211	1440	39
S8180321	6120	2B
	6120	3E
S8180411	1920	12
S8450006	1130	24
S8450012	1210	18
	1220	13
S8450016	1920	8
	6120	3F
S8470032	1210	42
	6120	7
S8470075	1130	23
S8500105	1240	6
S8510118	1170	9
S8510143	1170	7
T6510023	5100	1-33
T6510025	5100	1-34
T6510027	5100	1-35
T6510062	5100	1-24
T6510066	5100	1-25
T6510070	5100	1-26
T6510072	5100	1-27
T6510075	5100	1-28
T6510079	5100	1-29
T6510081	5100	1-30

PART NO.	FIG NO.	KEY NO.	PART NO.	FIG NO.	KEY NO.	PART NO.	FIG NO.	KEY NO.
T6510087	5100	1-31						
T6510091	5100	1-32						
T6550005	5100	1-17						
T6550006	5100	1-41						
T6550007	5100	1-18						
T6550009	5100	1-19						
T6550011	5100	1-20						
T6550013	5100	1-21						
T6550015	5100	1-22						
T6550020	5100	1-23						
T6550022	5100	1-40						
T6580016	5100	1-2						
T6600197	5100	1-36						
T6600201	5100	1-37						
T6600211	5100	1-38						
T6600223	5100	1-39						
T6690012	5100	1-12						
T6690013	5100	1-13						
T6750003	5100	1-14						
T7050003	5100	1-3						
T7050013	5100	1-4						
T7050021	5100	1-5						
T7050022	5100	1-6						
T7260057	5100	1-8						
T7500004	5100	1-7						
Y-3738-04	1340	1F						
	1440	3F						
Y-3738-05	1340	1G						
	1440	3E						

DOOSAN INFRACORE CO., LTD.
AROUND THE WORLD

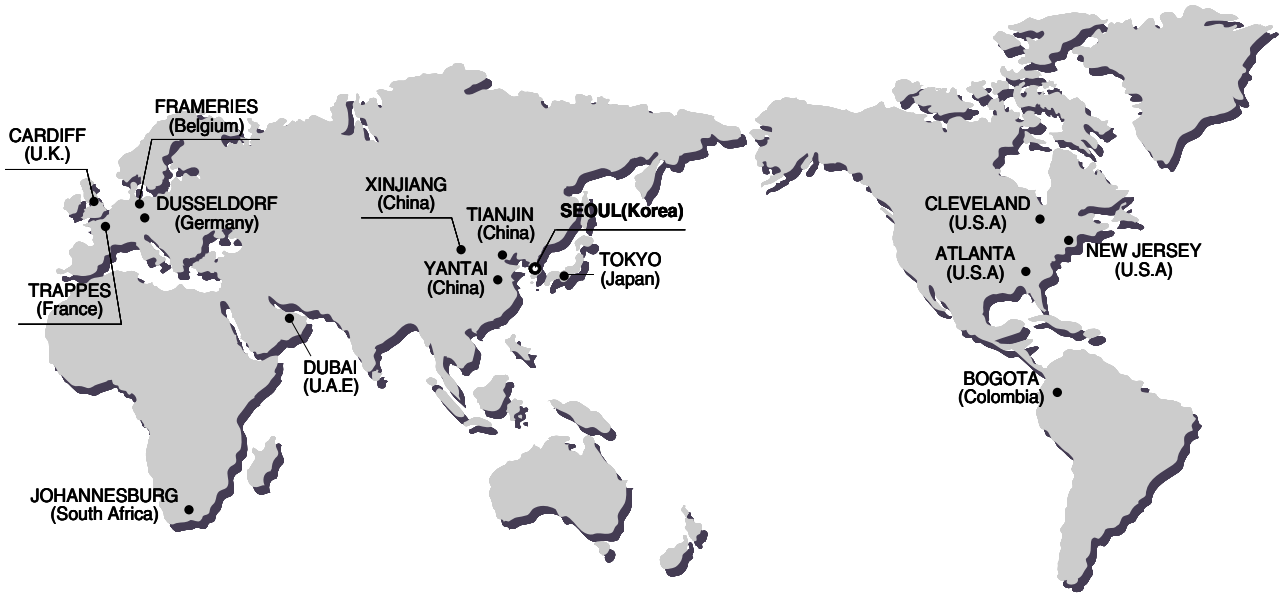

Head Office
Hwasu-Dong 7-11, Dong-Gu, Incheon, Korea.
Tel : +82-32-211-1114 Fax : +82-32-211-1231

Seoul Office
Doosan Tower 26TH FL. 18-12, Euljiro-6Ga,
Jung-Gu, Seoul, korea 100-730
Tel : +82-2-3389-8114 Fax : +82-2-3389-8117

ASIA & OCEANIA

Doosan Infracore Machine Tools Yantai Co.,Ltd.
1, Dayu Road 1, ETDZ, Yantai, Shandong, China
Tel : +86-0535-693-5060 , Fax : +86-0535-693-5619

Doosan Infracore Liaoning Machinery Co.,Ltd.
No.32 DongLing Road, DongLing District, ShenYang,
Liaoning, China
Tel : +86-24-8841-1407, Fax : +86-24-8841-1404

Doosan Infracore Xinjiang Machinery Co.,Ltd.
No. 178, Hetanbei Road, Wurumuqi, Xinjiang, China
Tel : +86-991-469-7217 , Fax : +86-991-469-8641

Dajian(Tianjin) Mechanical Construction Co., Ltd
No.87 Gongxing Road, Tanggu, Tianjin, china
Tel : +86-22-2521-0540 Fax : +86-22-2521-0714

Doosan Infracore (China) Co., Ltd.
#28, Wuzhishan Road, Eco. & Tech, Development Zone,
Yantai, Shandong, China
Tel : +86-535-638-2000 Fax : +86-535-638-2004

Doosan Infracore Japan Corporation
3rd Floor, k-1 Bld.,19-4, Nishi-shinbashi 2-Chome,
Minato-Ku, Tokyo, Japan
Phone : +81-3-3434-2547 Fax : +81-3-3434-2548

Doosan Infracore Middle East Center(Dubai)
183127, Al-Serkal Building, Air Port Road, Dubai, U.A.E
Phone : +971-4-295-2781, 2782 Fax : +971-4-295-2783

NORTH AMERICA

Doosan Infracore America Corporation
2905 Shawnee Industrial Way, Suwanee,
Georgia 30024, U. S. A
Tel : +1-770-831-2200 Fax : +1-770-831-0480

Doosan Infracore America Corporation Cleveland Office
4530 Renaissance Parkway, Warrensville Heights, OH 44128, U.S.A
Tel : +1-216-595-1212 Fax : +1-216-595-1214

Doosan Infracore America Corporation N.J. Office
8 York Avenue, West Caldwell, N.J. 07006, U.S.A
Tel : +1-973-618-2500 Fax : +1-973-618-2501

EUROPE

Doosan Infracore U.K., Ltd.
Doosan House, Unit 6.3, Nantgarw Park, Cardiff
CF47QU, U.K.
Tel : +44-1443-84-2273 Fax : +44-1443-84-1933

Doosan Infracore Germany GmbH
Hans-Boeckler strasse 27-29, D-40764, Langenfeld-Fuhrkamp,
Germany / Tel : +49-2173-8509-20 Fax : +49-2173-8509-60

Doosan Infracore Europe S.A. (Europe Head Office)
1A, Rue Achille Degrace, 7080 Frameries, Belgium
Tel : +32-65-61-3231 Fax : +32-65-61-3238

Doosan Infracore France SARL
(Doosan Infracore Europe S.A. France Office)
2Eme Etage, 1/3 Avenue Pavlov, Z.A.I. Des Bruyeres, 78190 Trappes France
Tel : +33-1-3016-2140 Fax : +33-1-3016-2144

Doosan Infracore Europe S.A. Italy Office
Via Monfalcone 41, 20090 Cinisello B.mo (MI)
Tel : +39-2-612-0565 Fax : +39-2-612-6322

SOUTH AMERICA

Colombia Liaison Office
Diagonal127 A No. 17-34 Oficina 302
Bogota, Colombia
Tel : +57-1-625-3470 Fax : 57-1 -625-3883

AFRICA

Doosan Infracore South Africa (PTY)Ltd.
60C Electron Road, Isando 1600, Johannesburg, South Africa
Tel : +27-11-974-2095 Fax : +27-11 -974-2778