RUTHZIL TRATOR COMERCIAL DE PEÇAS LTDA 11 97083-6812 ROLANDO CITRANGULO

DOOSAN

DX180LC

Parts Manual

K1024424EF

Serial Number 5001 and Up

November 27, 2006

Doosan reserves the right to improve our products in a continuing process to provide the best possible product to the market place. These improvements can be implemented at any time with no obligation to change materials on previously sold products. It is recommended that consumers periodically contact their distributors for recent documentation on purchased equipment.

This documentation may include attachments and optional equipment that is not available in your machine's package. Please call your distributor for additional items that you may require.

Illustrations used throughout this manual are used only as a representation of the actual piece of equipment, and may vary from the actual item.

Copyright 2006 Doosan

Product Label 

Instructions

Trim Out The Label Along The Lines And Insert Into Pocket On The Binder Spine

DX180LC

Serial Number 5001 and Up

Pub.No. K1024424EF

DOOSAN

Pub. No. K1024424EF

DX180LC

PARTS LIST
LISTE DE PIECES DETACHEES

N° DE REFERENCE : K1024424EF
HEBG - 2611

FOREWORD

● This parts list is shown the equipment components parts of

「DOOSAN EXCAVATOR DX180LC」.

1. HOW TO ORDER PARTS.

When ordering parts, please specify the follwing items as shown in the following example.

Ex.	1) Model of Machine	:	DX180LC	(Shown on name plate on the side cover)
	2) Machine Serial No	:	HEBG0-○○○○	(Shown on nameplate on the bed frame)
	3) Engine Serial No	:	DL06○○○○○○EJ	(Shown on Engine cylinder block)
	4) Part No.	:	K1012643	
	5) Description	:	MAIN PUMP	
	6) Q'ty	:	1	

2. HOW TO USE THIS PARTS LIST.

Key No. : It shows the reference no. on the illustration.

Part No. : It shows the part number of the parts which are included in an illustration.

Description : It shows the name of part. Components of an assembly part are shown with [•] marks and are shown on the line, or lines, below the assembly part. Also if the components with [•] mark is consists of further components part. These further components are shown with the marks [••].

Q'ty : It shows the quantity use for one machine. quantity of components show the quantity for one assembly part.

Service code : Abbreviations in this column have their own meaning as show below.

- B : The parts with this abbreviation shows that the part requires some work on it before installing in the machine.
- D : These parts are not serviceable, In case of the part with this abbreviation is a component of an assembly and is not available independently. The assembly part containing this part should be ordered.
- K : This means that the part is contained in the service part kit.
- M : This means that the part is available only with its mating parts altogether.
- R : The part with this abbreviation shows that the quantity of the part is changed depending on the machine, such as an adjusting shim etc.
- S : This part is specially provided as a service part, which was not provided in the machine before shipping from the factory.

G : This part need grade control and should be requested as the same grade of counter part.

OP : Optional parts.

EX : Specific design parts.

OS : Over-sized parts.

US : Under-sized parts.
(Part with abbreviation "OS" or "US" is described on the line below the standard sized part.)

: The part with this mark is newly added on that page of the equipment.

Serial no. : Serial No. shows the machine serial number which the parts were applied.
As to the engine Serial No. shows only engine serial number which the parts were applied.
Parts without any applicable serial number are used in every machine.

ICA : ICA shows the interchangeability between the original and the improved parts.
Abbreviations used in this column are as follows;

I : Part No. in the column of "Replaceable part" can be used instead of this part but not vice versa.

P : This must not be used for machine. The part No. in the column "Replaceable part" should be used instead.

T : Parts No. those in the column of "Replaceable part" can be used as an assembly instead of this part.

Y : This part and the part in the column of "Replaceable part" are interchangeable with each other.

Blank : This part has no "Repleaceable part"

Replaceable part : Interchangeable parts nos. and their required quantity are shown in this column.
If interchangeable improved parts are provided for the parts which you may order, the improved parts classified as "I", "P" "T" or "Y" may be supplied.

● When repairing, it is recommended to use our standard part.

● Researching the assembling parts from Part No., see the 「Parts Index」 of this parts list.

Nov. 2006

AVANT-PROPOS

● Cette liste de pieces apparait dans le 「DOOSAN EXCAVATEUR DX180LC」.

1. COMMENT COMMANDER LES PICES.

Lorsque vous commanderez les pieces, veuillez specifier les articles suivants comme indiques dans l'exemple ci-dessous:

Ex.	1) Modele de machine	:	DX180LC
	2) Serie de la machine	:	HEBG0-○○○○
	3) Numero de serie du moteur	:	DL06○○○○○○EJ
	4) Numero de la piece	:	K1012643
	5) Description	:	POMPE
	6) Quantite	:	1

2. COMMENT UTILISER CE RECUEIL DE PIECES DETACHEES.

Numero de la cle : Indique le numero de reference de l'illustration.

Numero de la piece : Indique le numero de piece sur l'illustration.

Description : Nom de la piece. Les pieces composantes des pieces d'assemblage sont indiquees avec une marque [•] en dessous des pieces d'assemblage. Aussi, si les pieces composantes sont marques d'un [•]. Cela indique qu'ily a plusieurs pieces composantes, ces autres pieces composantes sont indiquees par un [••].

Quantite : Quantite, montre la quantite utilisee pour une machine, cependant Q'te des composants de pieces montre la quantite utilisee pour un assemblage de pieces.

Code de Service : L'Abveration est un composant d'un code de service qui a sa propre signification comme indique ci-dessous.

- B : La piece avec cette abreviation indique que la piece exige d'etre travaillee avant d'etre installee dans la machine.
- D : La piece avec cette abreviation est uun composant d'un assemblage et n'est pas diponible toute seule, la d'assemblage contenant cette peece dcvrait ctrc commandee
- K : Cette veut dire que la piece est inclue dans la trousse de pieces de service. "ensemble kit"
- M : Cela signifie que la piece est disponible uniquement avec as peice piece d'accouplement.
- R : La piece avec cette abreviation montre que la quantite de la piece est changee en fonction de la machine.

S : Cette piece est specialement approvisionnee en tant que piece de service, qui n'a pas ete livree dans la machine lors du depart de l'usine.

G : Cette piece a besoin d'on degerde controle et doit etre commande avec un niveau de degre equivalent.

OP : Prieces facultatives

EX : Pieces specifiquement dessinees

OS : Pieces demesurees

US : Pieces uop petites
La piece avec abreviation OS-US est decrite sur la ligne en dessous de la piece standard

: La piece avec cette marque vient d'ent d'etre rajoutee sur la page de l'equipement.

Numero de serie : Numero de serie indique le numero de serie de la machine avcc lesquels les pieces etaient appliquees.
En ce qui conceme le numero de serie du moteur. Celui-ci indique seulement le numero de serie du moteur sur lesquels les pieces etaient appliquess.
Les pieces qui n'ont aucun numero de serie applicable sont utilisees dans toutes les machines.

ICA : Indique l'interchangeabilite entre la piece originale et les piece ameliorees.
Les abreviations utilisees dans cette colonne sont les suivantes:

I : Piece numero dans la colonne de piece de piece de remplacement peut etre utilisee au lieu de cette piece mais pas l'inverse.

P : Ceci ne peut etrc utilise pour la machine. Le numero de piece dans colonne pieces remplacable devrait etre utilise a la place.

T : Numcros de pieces, ceux dans la colonne piece de remplacement' peuvent etre utilisees en tant qu'assemblage au lieu de cette piece.

Y : Cette piece et la piece dans la colonne piece de remplacement'sont.

Piece de rechange : Numeros de pieces interchangeables et leurs quantites requises sont indiques sur cette colonne. Si les pieces ameliorees interchangeables sont fournies, les pieces que vous pouvez commander sont classees de la facon suivante "I", "P", "T" ou "Y" peuvent etre fournies.

- Lors de reparation. il est recommande d'utiliser notre piece standard.
- Recherche de pieces d'assemblage a partir des numeros de pieces
  Regarder l'index des pieces qui se trouvent a la fin du livre.

Nov. 2006

CONTENT
TABLES DES MATIERES

• ENGINE PARTS

Fig.	011	CYLINDER BLOCK	BLOC CYLINDRE	2
	012	TIMING GEAR CASE	CARTER DE DISTRIBUTION	4
	013	FLYWHEEL HOUSING	CARTER DE VOLANT MOTEUR	6
	014	OIL SEAL	JOINT	8
	015	BREATHER	CONDUIT DE VENTILATION	10
	016	DRIVING SYSTEM	SYSTEME D'CENTRAINEMENT	12
	017	CYLINDER HEAD	CULLASSE	14
	018	CYLINDER HEAD COVER	COUVERTURE DE CULASSE	16
	019	TIMING SYSTEM	SYSTEME DE SYNCHRONISATION	18
	020	OIL PUMP	POMPE A HUILE	22
	021	OIL FILTER & OIL COOLER	FILTRE D'HUILE	24
	022	OIL PAN	CARTER D'HUILE	26
	023	THERMOSTAT	THERMOSTAT	28
	024	WATER PUMP	SYSTEME DE REFROIDSSEMENT	30
	025	COOLING FAN	VENTILATEUR	32
	026	INTAKE & EXHAUST MANIFOLD	D'ADMISSION ET D'ECHAPPEMENT	34
	027	TURBO CHARGER	CHARGEUR DE TURBO	36
	028	INJECTOR	INJECTEUR	38
	029	INJECTION PIPE	PIPE D'INJECTION	40
	030	INJECTION PUMP	POMPE D'INJECTION	42
	031	ENGINE CONTROL	COMMANDE REGIME MOTEUR	44
	032	FUEL SYSTEM	INJECTEUR ET POMPE-INJECTEUR	46
	033	ALTERNATOR MOUNTING	ALTERNATEUR	48
	034	LIFTING HOOK	CROCHET DE LEVAGE	50
	035	STARTER	DEMARREUR	52
	036	SENSOR	CAPTEUR	54
	037	WIRE HARNESS	JAGUE DE NIVEAU	56
	038	ENGINE MOUNTING	SUPPORT DE MOTEUR	58
	039	AIR COMPRESSOR	COMPRESSEUR D'AIR	60
	040	OVERHAUL GASKET KIT - ALL	KIT DE GARNITURE DE REVISION	62
	041	OVERHAUL GASKET KIT - TOP	KIT DE GARNITURE DE REVISION	64

• BODY PARTS

Fig.	1100	MAIN FRAME	BATI PRINCIPAL	66
	1110	COUNTER WEIGHT	MASSE D'EQUILIBRAGE	68
	1120	ENGINE MOUNTING	SUPPORT DE MOTEUR	70
	1130	RADIATOR MOUNTING	SUPPORT DE RADIATEUR	72
	1140	RADIATOR	RADIATEUR	74
	1150	MUFFLER	SILENCIEUX	76
	1160	AIR CLEANER ASS'Y	FILTRE A AIR	78

1170	AIR CLEANER	FILTRE A AIR	80
1180	PUMP MOUNTING	POMPE	82
1190	SWING MOTOR	MOTEUR D'ORIENTATION	84
1200	FUEL TANK	RESERVOIR DE GAZOLE	8
1210	FUEL PIPING	CONDUITES DE GAZOLE	88
1220	OIL TANK	RESERVOIR DE HUILE	90
1230	OIL COOLER PIPING(1)	CONDUITES DE HUILE	92
1240	OIL COOLER PIPING(2)	CONDUITES DE HUILE	94
1250	OIL COOLER PIPING(3)	CONDUITES DE HUILE	96
1260	MAIN PIPING(1)	CONDUITES DE BATI PRINCIPAL	100
1270	MAIN PIPING(2)	CONDUITES DE BATI PRINCIPAL	104
1280	PILOT PIPING(1)	CONDUITES DE PILOTE	106
1290	PILOT PIPING(2)	CONDUITES DE PILOTE	110
1300	PILOT PIPING(3)	CONDUITES DE PILOTE	114
1310	PILOT PIPING(4)	CONDUITES DE PILOTE	116
1320	PILOT PIPING(5)	CONDUITES DE PILOTE	118
1330	CONTROL STAND - L.H.	CONSOLE DE COMMANDE	120
1340	CONTROL STAND - R.H.	CONSOLE DE COMMANDE	122
1350	SEAT SLIDING PLATE	POSEZ GLISSER LE PLAT	124
1360	SEAT PLATE	POSEZ LE PLAT	126
1370	SEAT MOUNTING	SIEGE LE SUPPORT	128
1380	SEAT	SIEGE	130
1390	DUCT COVER	CONDUITES COUVERCLE	13
1400	HEATER COVER	BOITIES DE CHAUFFAGE	134
1410	CABIN MOUNTING	SUPPORT DE CABINE	136
1420	CABIN(1)	CABINE	138
1430	CABIN(2)	CABINE	142
1440	CABIN(3)	CABINE	146
1450	CABIN(4)	CABINE	150
1460	FLOOR MAT	PLANCHER	154
1470	FLOOR PLATE	TOLE DE PLANCHER	156
1480	HANDLE ASS'Y	HANDLE	158
1490	ROOF COVER	COUVERCLE	160
1500	FOOT REST - L.H.	REPOS DE PIED	162
1510	FOOT REST - R.H.	REPOS DE PIED	164
1520	SUPPORT	SUPPORT	166
1530	BAFFLE	COUVERCLE	168
1540	SIDE DOOR - L.H	ENSEMBLE DE PORTE	170
1550	SIDE DOOR - R.H	ENSEMBLE DE PORTE	172
1560	BATTERY COVER	COUVERCLE	174
1570	COVER	COUVERCLE	176
1580	ENGINE COVER	COUVERTURE DE MOTEUR	17
1590	ACOUSTIC FOAM	ENSEMBLE DE EPONGE	18
1600	UNDER COVER	TOLES IMFERIEVRES	182
1610	LUBRICATION PIPING	LUBRIFICATION	184
1620	ELECTRIC BOX ASS'Y	EQUIPMENT ELECTRIQUE	186

1630	ELECTRIC PARTS - CABIN	PIECES ELECTRIQUES	188
1640	ELECTRIC PARTS - CONTROL STAND	PIECES ELECTRIQUES	192
1650	ELECTRIC PARTS - RELATED	PIECES ELECTRIQUES	194
1660	ELECTRIC PARTS - ENGINE	PIECES ELECTRIQUES	198
1670	ALTERNATOR MOUNTING	ALTERNATEUR	200
1680	ELECTRIC PARTS - WORKING LAMP	EQUIPMENT ELECTRIQUE	202
1690	HEATER PIPING	CONDUITES DE CHAUFFAGE	204
1700	HEATER PIPING	CONDUITES DE CHAUFFAGE	206
1710	AIRCON UNIT	REFRIGERATION	208
1720	AIRCONDITIONER	REFRIGERATION	210

• TRACK PARTS

Fig. 2100	TRACK FRAME	TRAIN DE ROULEMENT	214
2110	TRAVEL DEVICE	SYSTEME D'TRANSLATION	216
2120	IDLER	BARBOTIN	218
2130	TRACK SPRING	TENDEUR DE CHENILLE	220
2140	UPPER ROLLER	GALET SUPERIEUR	222
2150	LOWER ROLLER	GALET INFERIEUR	224
2160	CENTER JOINT	JOINT CENTRAL	226
2170	TRACK SHOE ASS'Y - 600G	MAILLON DE CHAINE	228
2180	TRAVEL PIPING	CONDUITES DE TRANSLATION	230

• FRONT PARTS

Fig. 3100	BOOM - 5.2m	ENSEMBLE FLECHE	232
3110	ARM - 2.6m	BALANCIER	234
3120	BUCKET-0.62m³	GODET	236
3130	BOOM PIPING	CONDUITES DE FLECHE	238
3140	LUBRICATION PIPING	LUBRIFICATION	240
3150	ARM PIPING - ARM 2.6m	CONDUITES DE BALANCIER	242

• HYDRAULIC COMPONENTS

Fig. 4100	MAIN PUMP	POMPE	244
4110	MAIN PUMP - ROTARY GROUP	POMPE	246
4120	MAIN PUMP - CONTROL	POMPE	250
4130	MAIN PUMP - E.P.P.R VALVE	POMPE	254
4140	SWING MOTOR	MOTEUR D'ORIENTATION	256
4150	SWING REDUCTION GEAR	REDEUTEUR D'ORIENTATION	260
4160	TRAVEL MOTOR	MOTEUR DE TRANSLATION	264
4170	TRAVEL REDUCTION GEAR	BOITE REDUCTEUR	268
4180	CONTROL VALVE	DISTRIBUTEUR	270
4190	REMOTE CONTROL VALVE	VANNE DE COMMAND A DISTANCE	276
4200	PEDAL VALVE	VANNE	280
4210	SOLENOID VALVE	VANNE	284
4220	BOOM CYLINDER - L.H	VERIN DE FLECHE	286
4230	BOOM CYLINDER - R.H	VERIN DE FLECHE	290
4240	ARM CYLINDER	VERIN DE BALANCIER	294

4250	BUCKET CYLINDER - ARM 2.6m/3.1m	VERIN DE GODET	298
4260	BUCKET CYLINDER - ARM 2.2m	VERIN DE GODET	302
4270	BUCKET CYLINDER - L.H (LOCK VALVE)	VERIN DE GODET	306
4280	BOOM CYLINDER - R.H (LOCK VALVE)	VERIN DE FLECHE	31
4290	ARM CYLINDER - LOCK VALVE	VERIN DE BALANCIER	314
4300	PEDAL VALVE - TWO WAY	VANNE DE PEDALE	318
4310	BOOM CYLINDER - L.H. (ARTI)	VERIN DE FLECHE	320
4320	BOOM CYLINDER - R.H. (ARTI)	VERIN DE FLECHE	324
4330	ARTI. BOOM CYLINDER	VERIN DE ARTICULAIRE FLECHE	328
4340	ARM CYLINDER - ARM 2.3m (ARTI. BOOM)	VERIN DE BALANCIER	332
4350	BUCKET CYLINDER - ARM 2.3m (ARTI. BOOM)	VERIN DE GODET	336
4360	BOOM CYLINDER - L.H. (LOCK VALVE)	VERIN DE FLECHE	340
4370	BOOM CYLINDER - R.H. (LOCK VALVE)	VERIN DE FLECHE	344
4380	ARTI BOOM CYLINDER - LOCK VALVE	VERIN DE ARTICULAIRE FLECHE	348
4390	ARM CYLINDER - LOCK VALVE	VERIN DE BALANCIER	352
4400	CONTROL VALVE - ROTATING	DISTRIBUTEUR	356
4410	CONTROL VALVE - ARTI BOOM	DISTRIBUTEUR	358
4420	CONTROL VALVE - ROTATING(ARTI)	DISTRIBUTEUR	360

• OTHER PARTS

Fig. 5100	TOOLS	OUTILLAGE	362
5110	SPARE PARTS	PIECES DE RECHANGE	366
5120	NAME PLATE - CABIN(EUROPE)	PLAQUE D'IDENTIFICATION	36
5130	DECAL - EUROPE	DECALQUE	370

• OPTION PARTS

Fig. 6100	FUEL FILLER PUMP	POMPE	372
6110	NOISE KIT - EUROPE	KIT DE BRUIT	374
6120	MAIN PIPING - ONE WAY	CONDUITES DE BATI PRINCIPAL	376
6130	ONE & TWO WAY PIPING - WITH FILTER	CONDUITES DE BALANCIER	378
6140	PILOT PIPING - ONE WAY	CONDUITES DE PILOTE	380
6150	MAIN PIPING - TWO WAY	CONDUITES DE BATI PRINCIPAL	382
6160	PILOT PIPING - TWO WAY(1)	CONDUITES DE PILOTE	384
6170	PILOT PIPING - TWO WAY(2)	CONDUITES DE PILOTE	386
6180	BOOM PIPING - BOOM 5.2m (ONE & TWO WAY)	DONDUITER DE FLECHE	388
6190	ARM PIPING - ARM 2.6m (ONE & TWO WAY)	CONDUITES DE BALANCIER	390
6200	PATTERN CHANGE PIPING (1)	TUYAUTERIE DE CHANGEMENT DE MODELE	392
6210	PATTERN CHANGE PIPING (2)	TUYAUTERIE DE CHANGEMENT DE MODELE	394
6220	SWING ALARM	AVERTISSEUR	396
6230	MAIN PIPING - QUICK FIT	CONDUITES DE BATI PRINCIPAL	398
6240	ELECTRIC PARTS - QUICK CLAMP	BRIDE RAPIDE	400
6250	BOOM PIPING - BOOM 5.2m(QUICK CLAMP)	DONDUITER DE FLECHE	402
6260	ARM PIPING - ARM 2.6m (QUICK CLAMP)	CONDUITES DE BALANCIER	40
6270	ARM PIPING - ARM 2.6m (CLAMSHELL)	CONDUITES DE BALANCIER	406
6280	SUN ROOF COVER	COUVERTURE DE TOIT DU SOLEIL	408
6290	RAIN SHIELD	BOUCLIER DE PLUIE	410

6300	RAIN SHIELD & LAMP MOUNTING	BOUCLIER ET DE LAMPE DE PLUIE	412
6310	CABIN LOWER GUARD	LA CARLINGUE ABAISSENT LA GARDE	414
6320	WINDOW GUARD	GARDE DE FENETRE	416
6330	FOGS GUARD ASS'Y	EMBRUME LA GARDE ASS'Y	418
6340	FLOOR MAT - ONE & TWO WAY	PLANCHER	420
6350	ALTERNATOR - 80A	ALTERNATEUR	422
6360	CD PLAYER	PLAQUEUR DE CD	424
6370	FUEL HEATER	RECHAUFFEUR DE CARBURANT	426
6380	TRAVEL ALARM	ALARME DE VOYAGE	428
6390	WORKING LAMP(2-LAMP)	LAMPE FONCTIONNANTE	430
6400	WORKING LAMP(4-LAMP)	LAMPE FONCTIONNANTE	432
6410	WORKING LAMP - REAR	AVERTISSEUR RELAIS	434
6420	ROTATING BEACON	FEU DE CIRCULATION	436
6430	ROTATING BEACON MOUNTING	SUPPORT TOURNANT DE BALISE	438
6440	ROTATING BEACON(TELESCOPIC) WITH LAMP	FEU DE CIRCULATION	440
6450	ROTATING BEACON(TELESCOPIC) W/O LAMP	FEU DE CIRCULATION	442
6460	OVERLOAD WARNING	AVERTISSEMENT DE SURCHARGE	444
6470	LOWER WIPER	ABAISSEZ L'ESSUIE-GLACE	446
6480	WORKING LAMP(2-LAMP)	LAMPE FONCTIONNANTE	448
6490	WORKING LAMP(4-LAMP)	LAMPE FONCTIONNANTE	450
6500	ROTATING BEACON-WITH FOGS	FEU DE CIRCULATION	452
6510	MAIN PIPING - ROTATING	CONDUITES DE BATI PRINCIPAL	454
6520	PILOT PIPING(1) - ROTATING	CONDUITES DE PILOTE	456
6530	PILOT PIPING(2) - ROTATING OR ARTI	CONDUITES DE PILOTE	458
6540	PEDAL - ROTATING OR ARTI	PEDALE	460
6550	BOOM PIPING - ROTATING(BOOM 5.2m)	CONDUITES DE FLECHE	462
6560	ARM PIPING - ARM 2.6m(ROTATING)	CONDUITES DE BALANCIER	464
6570	BUCKET - 0.35m^3	GODET	466
6580	BUCKET - 0.41m^3	GODET	468
6590	BUCKET - 0.51m^3	GODET	470
6600	BUCKET - 0.67m^3	GODET	472
6610	BUCKET - 0.7m^3	GODET	474
6620	BUCKET - 0.8m^3	GODET	476
6630	TRACK FRAME - NARROW	TRAIN DE ROULEMENT	478
6640	TRACK SHOE ASS'Y - 500G	MAILLON DE CHAINE	480
6650	TRACK SHOE ASS'Y - 700G	MAILLON DE CHAINE	482
6660	TRACK SHOE ASS'Y - 800G	MAILLON DE CHAINE	484
6670	TRACK SHOE ASS'Y - 900G	MAILLON DE CHAINE	486
6680	LOCK VALVE PIPING - BOOM	CONDUITES DE VERROU VANNE	488
6690	BOOM PIPING - LOCK VALVE	DONDUITER DE FLECHE	490
6700	PILOT PIPING - ARM LOCK V/V	CONDUITES DE PILOTE	492
6710	ARM PIPING - LOCK VALVE	CONDUITES DE BALANCIER	494
6720	ARM - 2.2m	BALANCIER	496
6730	ARM PIPING - ARM 2.2m	CONDUITES DE BALANCIER	498
6740	ARM PIPING - ARM 2.2m (ONE & TWO WAY)	CONDUITES DE BALANCIER	500
6750	ARM PIPING - ARM 2.2m(QUICK CLAMP)	CONDUITES DE BALANCIER	502

6760	ARM PIPING - ARM 2.2m(CLAMSHELL)	CONDUITES DE BALANCIER	504
6770	ARM PIPING - ARM 2.2m(ROTATING)	CONDUITES DE BALANCIER	506
6780	ARM - 3.1m	BALANCIER	508
6790	ARM PIPING - ARM 3.1m	CONDUITES DE BALANCIER	51
6800	ARM PIPING - ARM 3.1m(ONE & TWO WAY)	CONDUITES DE BALANCIER	512
6810	ARM PIPING - ARM 3.1m(QUICK CLAMP)	CONDUITES DE BALANCIER	514
6820	ARM PIPING - ARM 3.1m(CLAMSHELL)	CONDUITES DE BALANCIER	516
6830	ARM PIPING - ARM 3.1m(ROTATING)	CONDUITES DE BALANCIER	518
6840	BUCKET ASS'Y - 0.66m³(36") - SIDE PIN	ENSEMBLE DE GODET	520
6850	BUCKET ASS'Y - 0.73m³(39") - SIDE PIN	ENSEMBLE DE GODET	522
6860	BUCKET ASS'Y - 0.8m³(42") - SIDE PIN	ENSEMBLE DE GODET	524
6870	MAIN PIPING - ARTI BOOM	CONDUITES DE BATI PRINCIPAL	526
6880	PILOT PIPING - ARTI BOOM	CONDUITES DE PILOTE	528
6890	ARTI BOOM	PERCHE D'ARTI	530
6900	ARM - 2.3m (FOR ARTI BOOM)	BALANCIER	532
6910	ARTI BOOM PIPING	TUYAUTERIE DE PERCHE D'ARTI	534
6920	LUBRICATION PIPING - ARTI BOOM	LUBRIFICATION	538
6930	ARM PIPING - ARM 2.3m (ARTI BOOM)	CONDUITES DE BALANCIER	540
6940	MAIN PIPING - ONE & TWO WAY (ARTI)	CONDUITES DE BATI PRINCIPAL	542
6950	ARTI BOOM PIPING - ONE & TWO WAY	TUYAUTERIE DE PERCHE D'ARTI	544
6960	ARM PIPING - ARM 2.3m(ONE & TWO WAY)	CONDUITES DE BALANCIER	546
6970	MAIN PIPING - ROTATING(ARTI)	CONDUITES DE BATI PRINCIPAL	548
6980	PILOT PIPING - ROTATING(ARTI)	CONDUITES DE PILOTE	55
6990	ROTATING PIPING - ARTI BOOM	TUYAUTERIE TOURNANTE - ARTI.BOOM	552
7000	MAIN PIPING - QUICK FIT(ARTI)	CONDUITES DE BATI PRINCIPAL	554
7010	ARTI BOOM PIPING - QUICK FIT	TUYAUTERIE DE PERCHE D'ARTI	556
7020	PILOT PIPING - LOCK VALVE(ARTI)	CONDUITES DE PILOTE	558
7030	LOCK VALVE PIPING - ARM(ARTI)	FERMEZ LA TUYAUTERIE A CLEF DE VALVE	560
7040	ARTI BOOM PIPING - LOCK VALVE	TUYAUTERIE DE PERCHE D'ARTI	562
7050	ARTI BOOM PIPING - LOCK VALVE	TUYAUTERIE DE PERCHE D'ARTI	564

- **WORLDWIDE NETWORK**

DATE	NOV. 27, 2006
1st EDITION	

Fig. 011 CYLINDER BLOCK
BLOC CYLINDRE

Serial No. ;

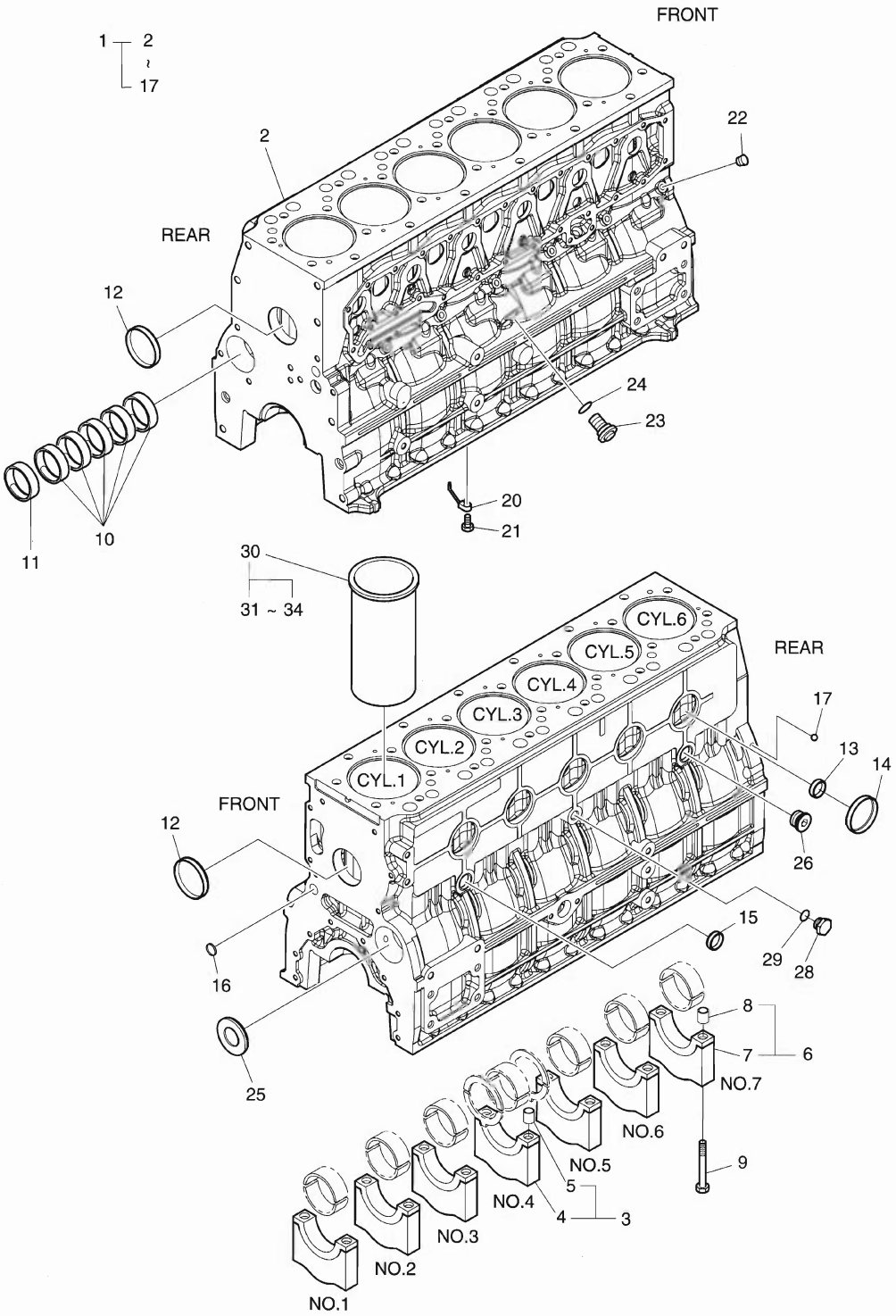

DATE	NOV. 27, 2006
1st EDITION	

Fig. 011 CYLINDER BLOCK BLOC CYLINDRE

Serial No. ;

Key No.	Part No.	Description	Description	Q'ty	S.C	Serial No.	ICA	Replaceable part	
								Part No.	Q'ty
011-1	65.01101-6085B	CYLINDER BLOCK ASS'Y	BLOC CYLINDRE	1					
2	65.01101-0054B	. CYLINDER BLOCK	. BLOC CYLINDRE	1	D				
3	65.01105-6005B	. BEARING CAP ASS'Y(No:3)	. CHAPEAU DE PALIER	1	D				
4	65.01105-1051B	.. CAP;BEARING	.. CHAPEAU	1	D				
5	65.91710-0001	.. RING. STOPPER. BRG CAP	.. BAGUE D'ETANCHEITE	2					
6	65.01105-6006B	. BEARING CAP ASS'Y	. CHAPEAU DE PALIER	6	D				
7	65.01105-1052B	.. CAP;BEARING	.. CHAPEAU	1	D				
8	65.91710-0001	.. RING. STOPPER. BRG CAP	.. BAGUE D'ETANCHEITE	2					
9	65.90020-0066A	. BOLT;BRG CAP	. BOULON A 6 PANS	14					
10	65.04410-0021A	. BUSH;CAMSHAFT	. BUISSON	6	B				
11	65.04410-0022	. BUSH;CAMSHAFT	. BUISSON	1	B				
12	65.90302-0009	. PLUG;CORE	. BOUCHON B28D	2					
13	65.90302-0042	. PLUG CORE	. BOUCHON DE	8					
14	65.90302-0034	. PLUG CORE	. BOUCHON DE	5					
15	65.90302-0041	. PLUG CORE	. BOUCHON DE	1					
16	65.91606-0041	. PLUG CORE	. NOYAU DE PRISE	2					
17	06.31641-0618	. BALL;STEEL	. BILLE	1					
20	65.01601-5019	NOZZLE;OIL SPRAY	INJECTEUR	6					
21	65.05401-5031	RELIEF VALVE ASS'Y	SOULAGEMENT VANNE	6					
22	65.90320-0022	PLUG SCREW PT1/8	VIS DE REGLAGE	7					
23	65.05401-5002F	RELIEF VALVE ASSY	SOULAGEMENT VANNE	1					
24	06.56021-0102	O-RING	JOINT TORIQUE	1					
25	65.91605-0002	COVER;CORE HOLE	COUVERCLE	1					
26	65.90310-0134	SCREW;PLUG	VIS	1					
28	65.90310-0135	SCREW;PLUG	BOUCHON A VIS	1					
29	06.56190-0705	RING;SEAL	ENSEMBLE BAGUE	1					
30	65.01201-0075A	CYLINDER LINER - GRADE	VIS DE REGLAGE	6	D				
31	65.01201-0076	. LINER;CYLINDER - 1A	. CHEMISE DE CYLINDRE	6					
32	65.01201-0077	. LINER;CYLINDER - 1B	. CHEMISE DE CYLINDRE	6					
33	65.01201-0078	. LINER;CYLINDER - 2A	. CHEMISE DE CYLINDRE	6					
34	65.01201-0079	. LINER;CYLINDER - 2B	. CHEMISE DE CYLINDRE	6					

Fig. 012 TIMING GEAR CASE
CARTER DE DISTRIBUTION

Serial No. ;

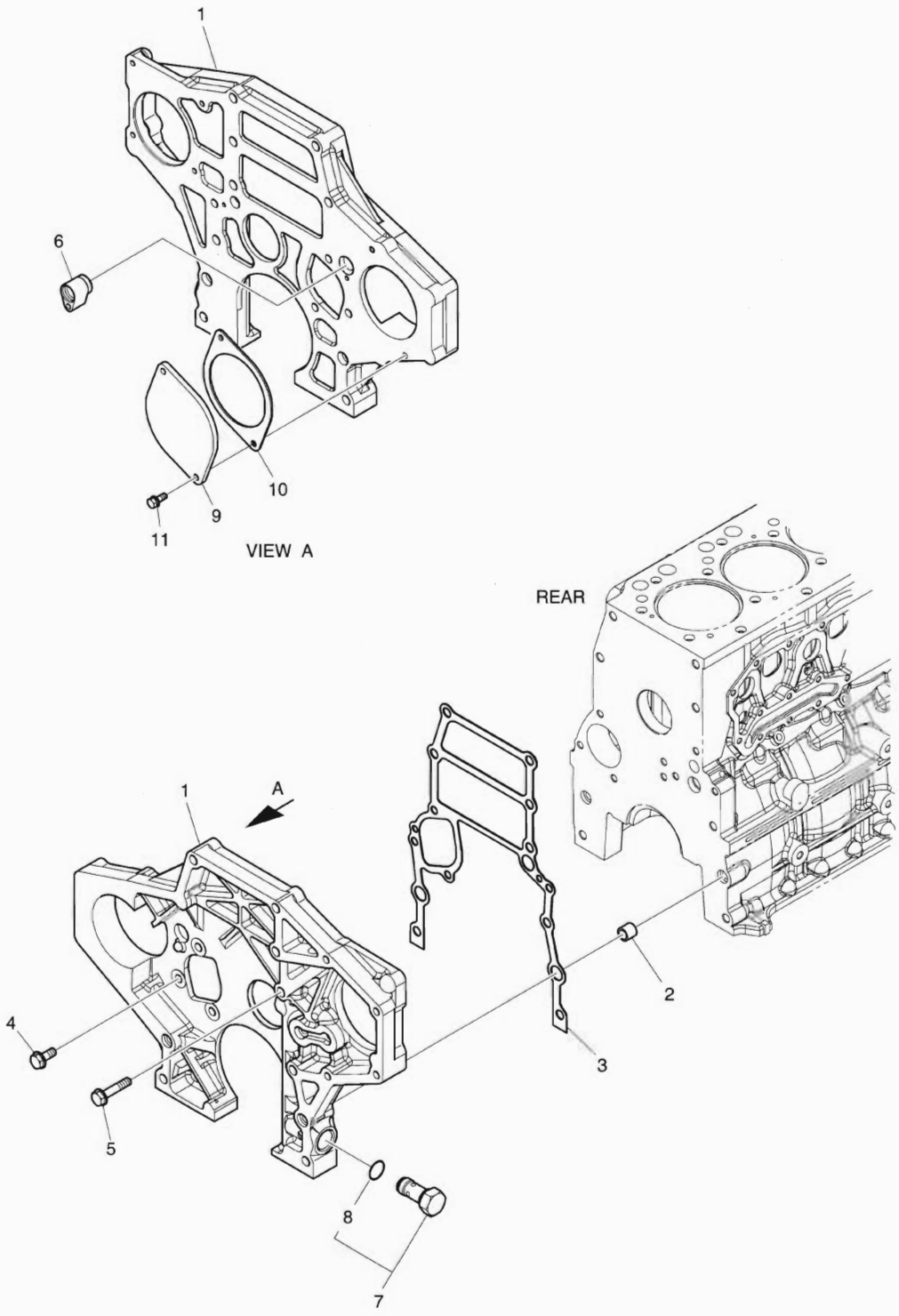

DATE	NOV. 27, 2006
1st EDITION	

Fig. 012 TIMING GEAR CASE
CARTER DE DISTRIBUTION

Serial No. ;

Key No.	Part No.	Description	Description	Q'ty	S.C	Serial No.	ICA	Replaceable part	
								Part No.	Q'ty
012-1	65.01304-0029	CASE;TIMING GEAR	CARTER	1					
2	65.91710-0016	RING;STOPPER	RESSORT	2					
3	65.01903-0034	GASKET	JOINT	1					
4	65.90020-0063B	BOLT;HEX M10X25	BOULON A 6 PANS	3					
5	65.90020-0080	BOLT;COLLARED HEX.	BOULON A 6 PANS	1					
6	65.98130-0241	ADAPTER	ADAPTEUR	1					
7	65.05401-5032	RELIEF VALVE ASS'Y	SOULAGEMENT VANNE	1					
8	65.96501-0074	. O-RING	. JOINT TORIQUE	1					
9	65.91601-0011	COVER	COUVERCLE	1					
10	65.38901-0018A	GASKET;PTO	JOINT	1					
11	06.01943-3318	BOLT ASS'Y M12X1.5X35	BOULON A 6 PANS	2					

Fig. 013 FLYWHEEL HOUSING
CARTER DE VOLANT MOTEUR

Serial No. ;

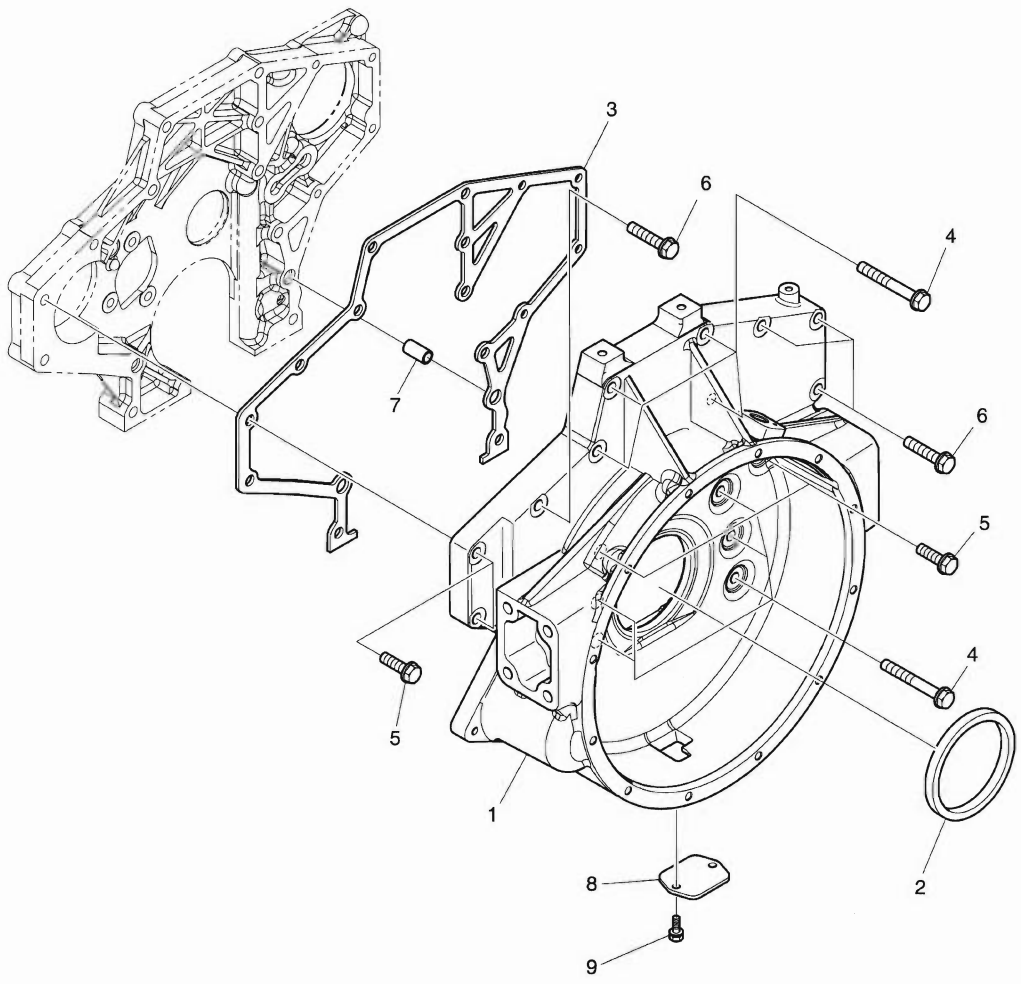

DATE	NOV. 27, 2006
1st EDITION	

Fig. 013 FLYWHEEL HOUSING
CARTER DE VOLANT MOTEUR

Serial No. ;

Key No.	Part No.	Description	Description	Q'ty	S.C	Serial No.	ICA	Replaceable part	
								Part No.	Q'ty
013-1	65.01401-0253A	HOUSING;FLYWHEEL	BOITIER	1					
2	65.01510-0040	SEAL;OIL	JOINT D'HUILE	1					
3	65.01904-0032	GASKET	JOINT	1					
4	65.90020-0100	BOLT	BOULON A 6 PANS	9					
5	65.90020-0101	BOLT	BOULON A 6 PANS	4					
6	65.90020-0105	BOLT	BOULON A 6 PANS	4					
7	65.91710-0009	RING;STOPPER	RESSORT	2					
8	65.01414-0004A	COVER;TIMING POINT HOLE	COUVERCLE	1					
9	06.01923-3111	BOLT ASS'Y M8X16	BOULON A 6 PANS	2					

Fig. 014 OIL SEAL JOINT

Serial No. ;

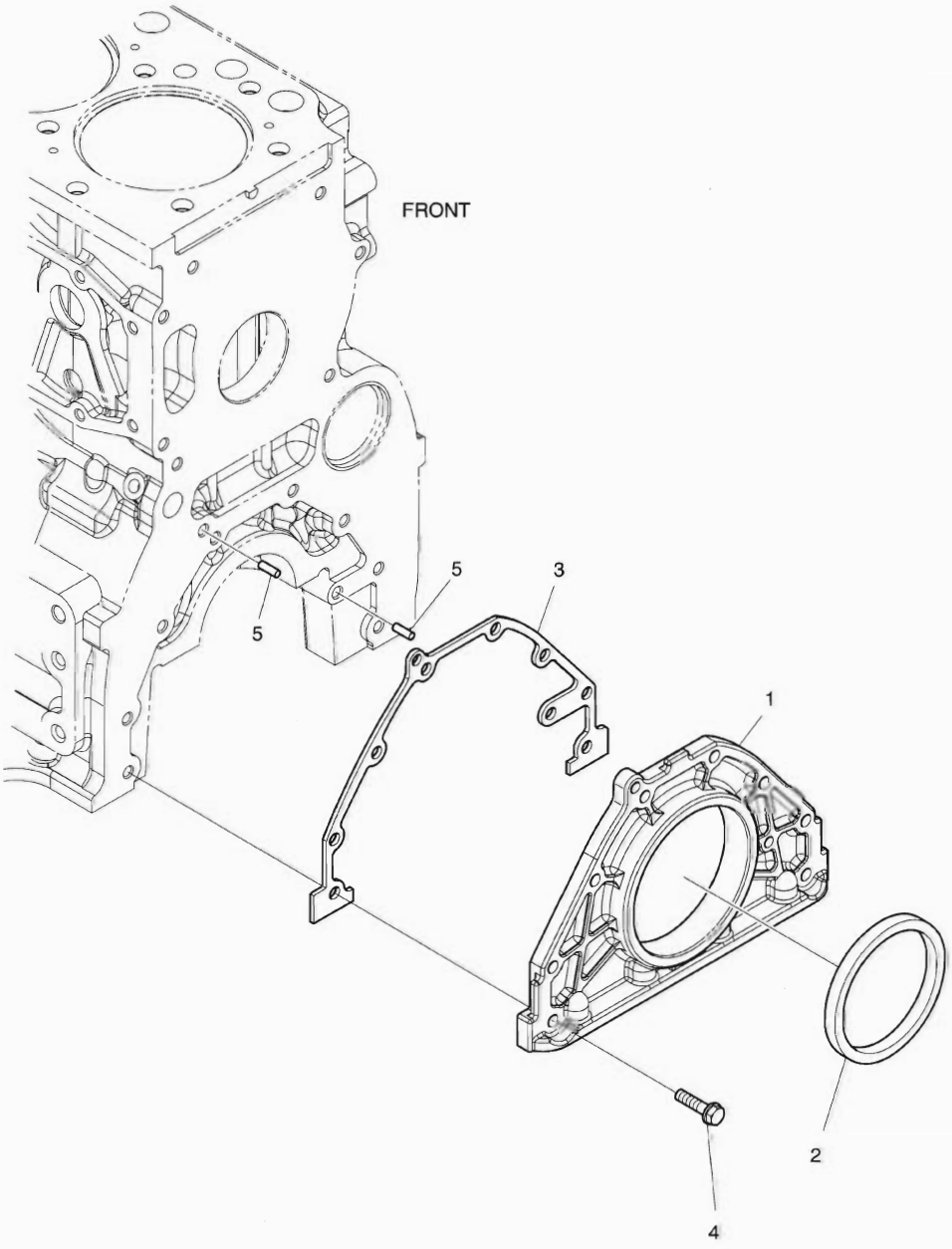

DATE	NOV. 27, 2006
1st EDITION	

Fig. 014 OIL SEAL JOINT

Serial No. ;

Key No.	Part No.	Description	Description	Q'ty	S.C	Serial No.	ICA	Replaceable part	
								Part No.	Q'ty
014-1	65.01501-5003A	COVER;SEALING	COUVERCLE	1					
2	65.01510-0157	SEAL;OIL	JOINT D'HUILE	1					
3	65.01905-0009	GASKET	JOINT	1					
4	06.01923-3116	BOLT ASS'Y M8X28	BOULON A 6 PANS	8					
5	06.22022-1063	PIN	GOUJON D'ASSEMBLAGE	2					

DATE	NOV. 27, 2006
1st EDITION	

Fig. 015 BREATHER
CONDUIT DE VENTILATION

Serial No. ;

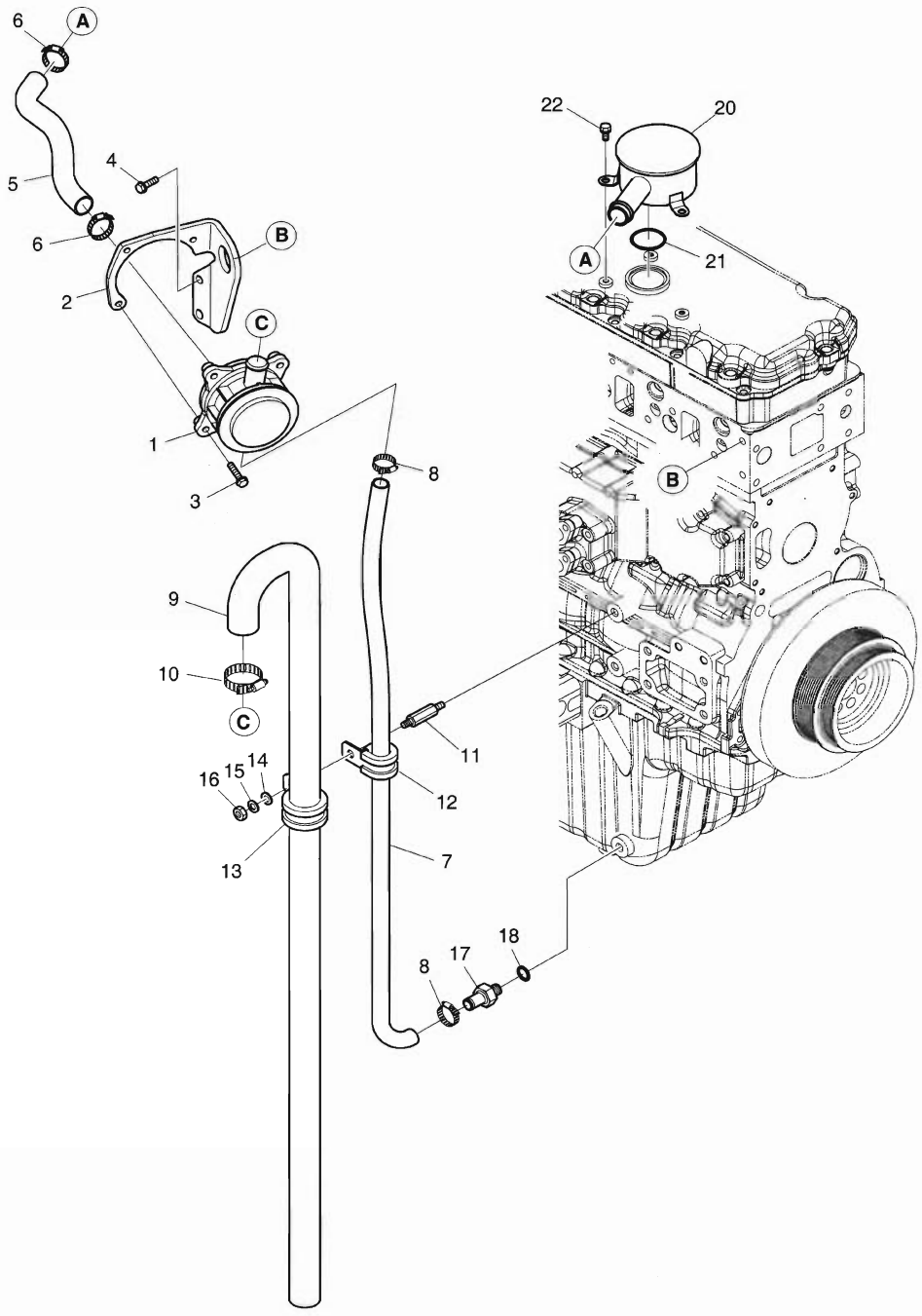

DATE	NOV. 27, 2006
1st EDITION	

Fig. 015 BREATHER CONDUIT DE VENTILATION

Serial No. ;

Key No.	Part No.	Description	Description	Q'ty	S.C	Serial No.	ICA	Replaceable part	
								Part No.	Q'ty
015-1	65.01801-5100	HOUSING;BREATHER	LOGEMENT DE RENIFLARD	1					
2	65.01840-0017	BRACKET;BREATHER PIPE	SUPPORT	1					
3	06.01923-3114	BOLT ASS'Y M8X22	BOULON A 6 PANS	3					
4	06.01924-3217	BOLT ASS'Y M10X30	BOULON A 6PANS	2					
5	65.96301-0478	HOSE;RUBBER	TUYAU FLEXIBLE	1					
6	06.67020-0105	CLAMP	COLLIER	2					
7	65.96301-0456A	HOSE;RUBBER	TUYAU FLEXIBLE	1					
8	65.97440-0005	CLAMP;HOSE	COLLIER	2					
9	65.96301-0464	HOSE;RUBBER	TUYAU CAOUTCHOUC	1					
10	06.67020-0105	CLAMP	COLLIER	1					
11	65.90201-0122	BOLT;STUD	BOULON A 6 PANS	1					
12	65.97401-5024	CLIP;PIPE	ATTACHE	2					
13	65.97401-5019	CLIP;PIPE	ATTACHE	1					
14	06.15010-2311	WASHER	CALE	1					
15	06.16731-2107	WASHER;SPRING	RONDELLE ELASTIQUE	1					
16	06.11063-8214	NUT	ECROU 6 PANS	1					
17	65.98131-0119	NIPPLE	GRAISSEUR	1					
18	06.56190-0719	SEAL RING	BAGUE D'ETANCHEITE	1					
20	65.01801-5043A	HOUSING;BREATHER	LOGEMENT DE RENIFLARD	1					
21	65.96501-0033B	O-RING	JOINT TORIQUE	1					
22	06.01923-3111	BOLT;HEX. M8X16	BOULON A 6 PANS	3					

Fig. 016 DRIVING SYSTEM
SYSTEME D'CENTRAINEMENT

Serial No. ;

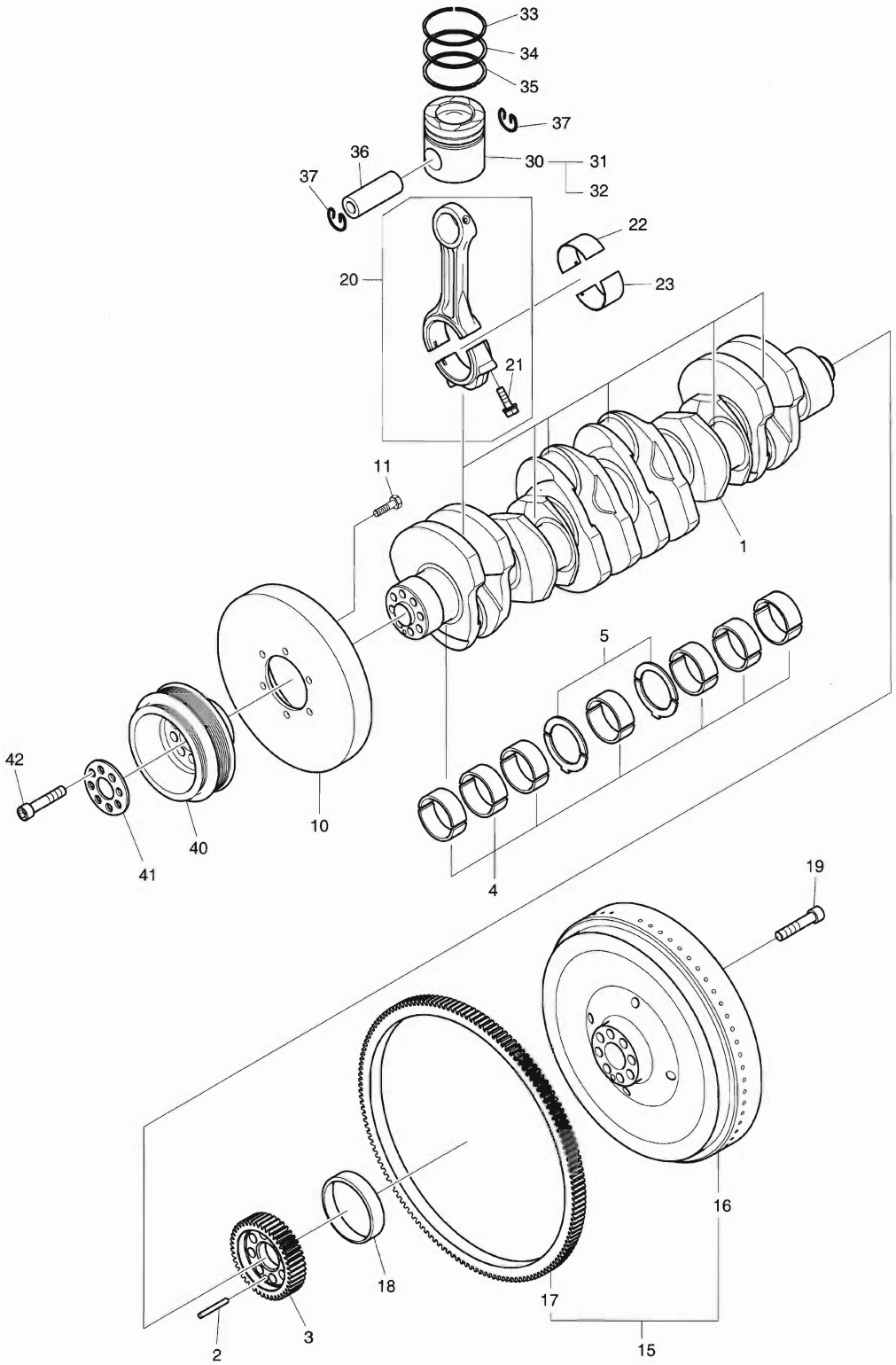

DATE	NOV. 27, 2006
1st EDITION	

Fig. 016 DRIVING SYSTEM SYSTEME D'CENTRAINEMENT

Serial No. ;

Key No.	Part No.	Description	Description	Q'ty	S.C	Serial No.	ICA	Replaceable part	
								Part No.	Q'ty
016-1	65.02101-0069A	CRANK SHAFT	VILEBREQUIN	1					
2	06.22022-1018	DOWEL PIN 8M6X45	GOUJON	1					
3	65.02115-0016	GEAR;CRANKSHAFT	PIGNON	1					
4	65.01110-6140	METAL;MAIN	PALIER	7					
5	65.01150-6008	WASHER;THRUST	RONDELLE DE BUTEE	2					
10	65.02201-0002	DAMPER;VIBRATION	AMORTISSEUR DE	1					
11	65.90020-0062B	BOLT;HEX M10X20	BOULON A 6 PANS	6					
15	65.02301-5148A	FLYWHEEL ASS'Y	VOLANT	1					
16	65.02301-0291A	. FLYWHEEL	. ENSEMBLE VOLANT	1					
17	65.02310-0006	. GEAR;RING	. ENGRENAGE	1					
18	65.02130-0004	BUSH;DRIVING	BUISSON	1					
19	65.90020-0123	BOLT;COLLARED HEX.	BOULON A 6 PANS	8					
20	65.02401-6032B	CONNECTING ROD ASS'Y	BIELLE ASS'Y	6					
21	65.02411-0009	. BOLT;CONNECTING ROD	. VIS DE BIELLE	2					
22	65.02410-0040	METAL;CON-ROD(STD)	PALIER	6					
	65.02410-0041	METAL;CON-ROD(0.25)	PALIER	6	US				
	65.02410-0042	METAL;CON-ROD(0.50)	PALIER	6	US				
23	65.02410-0050	METAL;CON-ROD(STD)	PALIER	6					
	65.02410-0051	METAL;CON-ROD(0.25)	PALIER	6	US				
	65.02410-0052	METAL;CON-ROD(0.50)	PALIER	6	US				
30	65.02501-0476	PISTON;GRADE	PISTON	6	D				
31	65.02501-0477	. PISTON;A GRADE	. PISTON	6					
32	65.02501-0478	. PISTON;B GRADE	. PISTON	6					
33	65.02503-0132A	RING;PISTON	BAGUE D'ETANCHEITE	6					
34	65.02503-0133A	RING;PISTON	BAGUE D'ETANCHEITE	6					
35	65.02503-0134	RING;PISTON	BAGUE D'ETANCHEITE	6					
36	65.02502-0017A	PIN;PISTON	AXE DE PISTON	6					
37	65.90815-0125	RING;LOCK	BAGUE	12					
40	65.02601-0225B	PULLEY;V-BELT	POULIE DE COURROIE	1					
41	65.90701-0099	WASHER	CALE	1					
42	06.02106-0723	BOLT;SOCKET	BOULON	8					

DATE	NOV. 27, 2006
1st EDITION	

Fig. 017 CYLINDER HEAD
CULLASSE

Serial No. ;

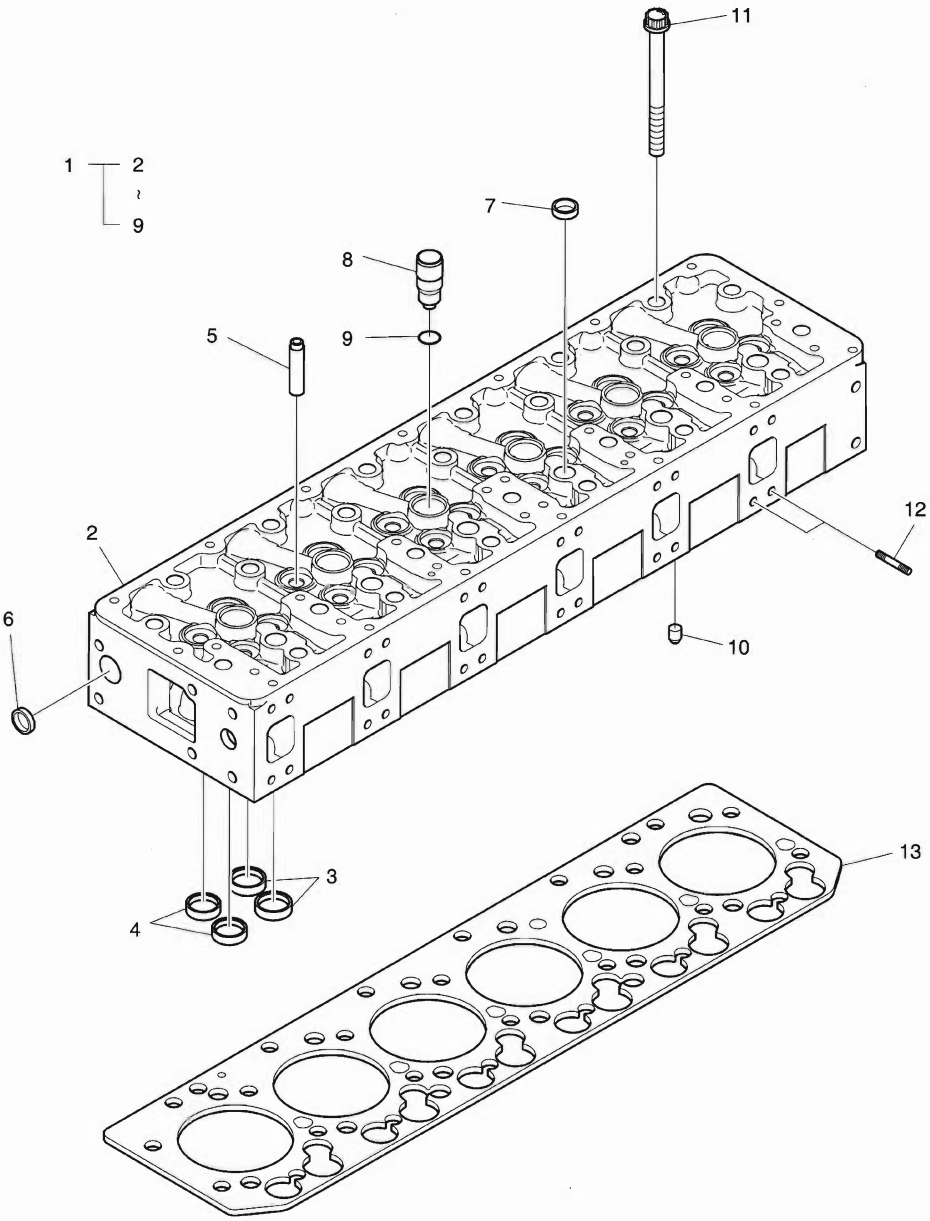

DATE	NOV. 27, 2006
1st EDITION	

Fig. 017 CYLINDER HEAD CULLASSE

Serial No. ;

Key No.	Part No.	Description	Description	Q'ty	S.C	Serial No.	ICA	Replaceable part	
								Part No.	Q'ty
017-1	65.03101-6090E	CYLINDER HEAD ASS'Y	CULLASSE	1					
2	65.03101-1068C	. CYLINDER HEAD	. CULLASSE	1	D				
3	65.03203-1062	. SEAT;VALVE	. SIEGE	12	B				
4	65.03203-1063	. SEAT;VALVE	. SIEGE	12	B				
5	65.03201-1016A	. GUIDE;VALVE	. GUIDE-SOUPAPE	24	B				
6	65.90302-0048	. CORE;PLUG	. BOUCHON DE	10					
7	65.90302-0029	. PLUG;CORE	. CONSOLE	21					
8	65.03205-0006A	. BUSH;INJECTION NOZZLE	. COUSSINET	6					
9	65.96501-0088	. O-RING	. JOINT TORIQUE	6					
10	65.91030-0005	PIN;FIX	GOUJON	2					
11	65.90021-0009	BOLT;COLLARED DUO.	BOULON A 6 PANS	26					
12	65.90201-0134	BOLT;STUD	GOUJON	24					
13	65.03901-0071	GASKET;CYLINDER HEAD	JOINT	1					

DATE	NOV. 27, 2006
1st EDITION	

Fig. 018 CYLINDER HEAD COVER
COUVERTURE DE CULASSE

Serial No. ;

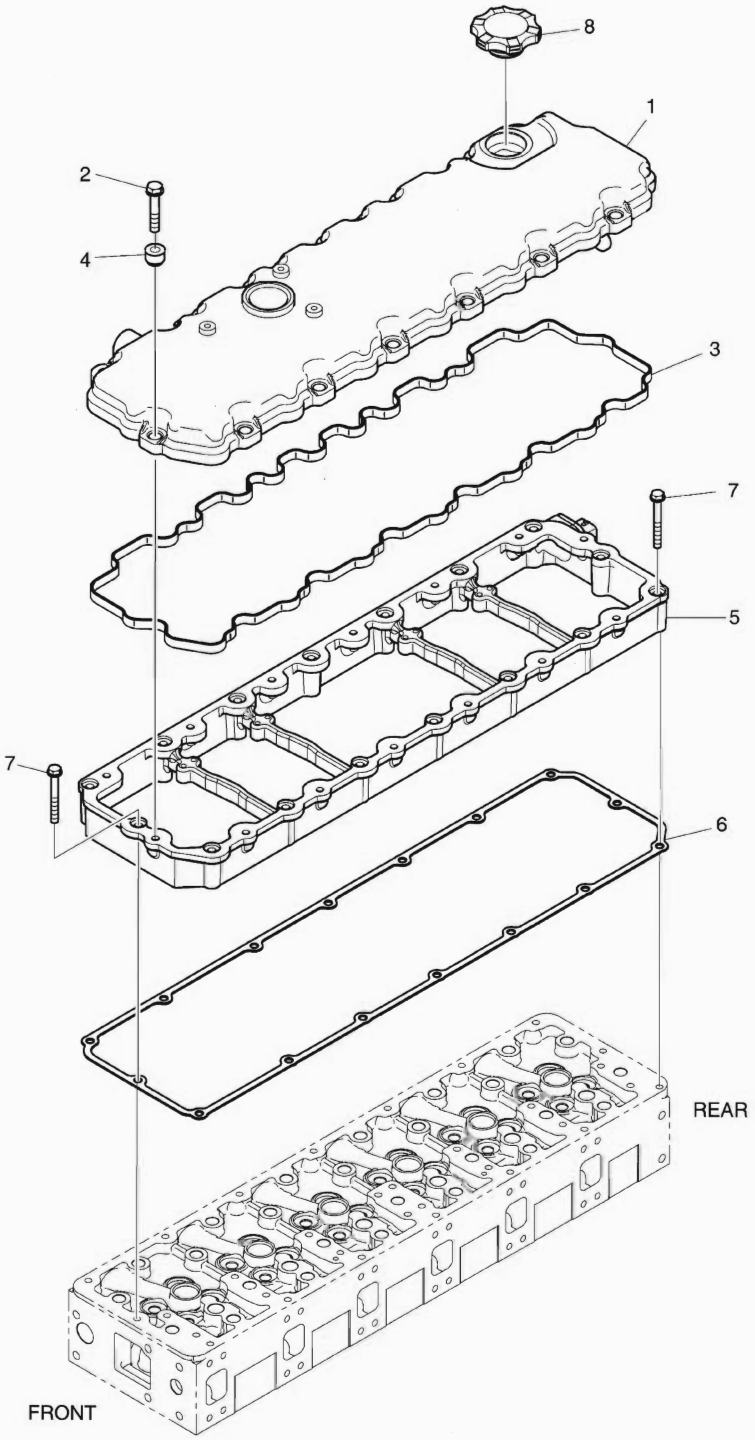

DATE	NOV. 27, 2006
1st EDITION	

Fig. 018 CYLINDER HEAD COVER COUVERTURE DE CULASSE

Serial No. ;

Key No.	Part No.	Description	Description	Q'ty	S.C	Serial No.	ICA	Replaceable part	
								Part No.	Q'ty
18-1	65.03401-5010	COVER;CYLINDER HEAD	COUVRE-CULASSE	1					
2	65.90020-0109	BOLT;COLLARED HEX.	BOULON A 6 PANS	14					
3	65.03905-0037A	GASKET;CYL. HEAD COVER	JOINT	1					
4	65.03905-5002	PACKING;CYL. HEAD COVER	JOINT	14					
5	65.03402-0008A	COVER;INTERMEDIATE	COUVERCLE	1					
6	65.03905-0041	GASKET;CYL. HEAD COVER	JOINT	1					
7	65.90020-0138	BOLT;COLLARED HEX.	BOULON A 6 PANS	16					
8	65.01810-5011	CAP;OIL FILLER	VIBREUR	1					

DATE	NOV. 27, 2006
1st EDITION	

Fig. 019 TIMING SYSTEM
SYSTEME DE SYNCHRONISATION

Serial No. ;

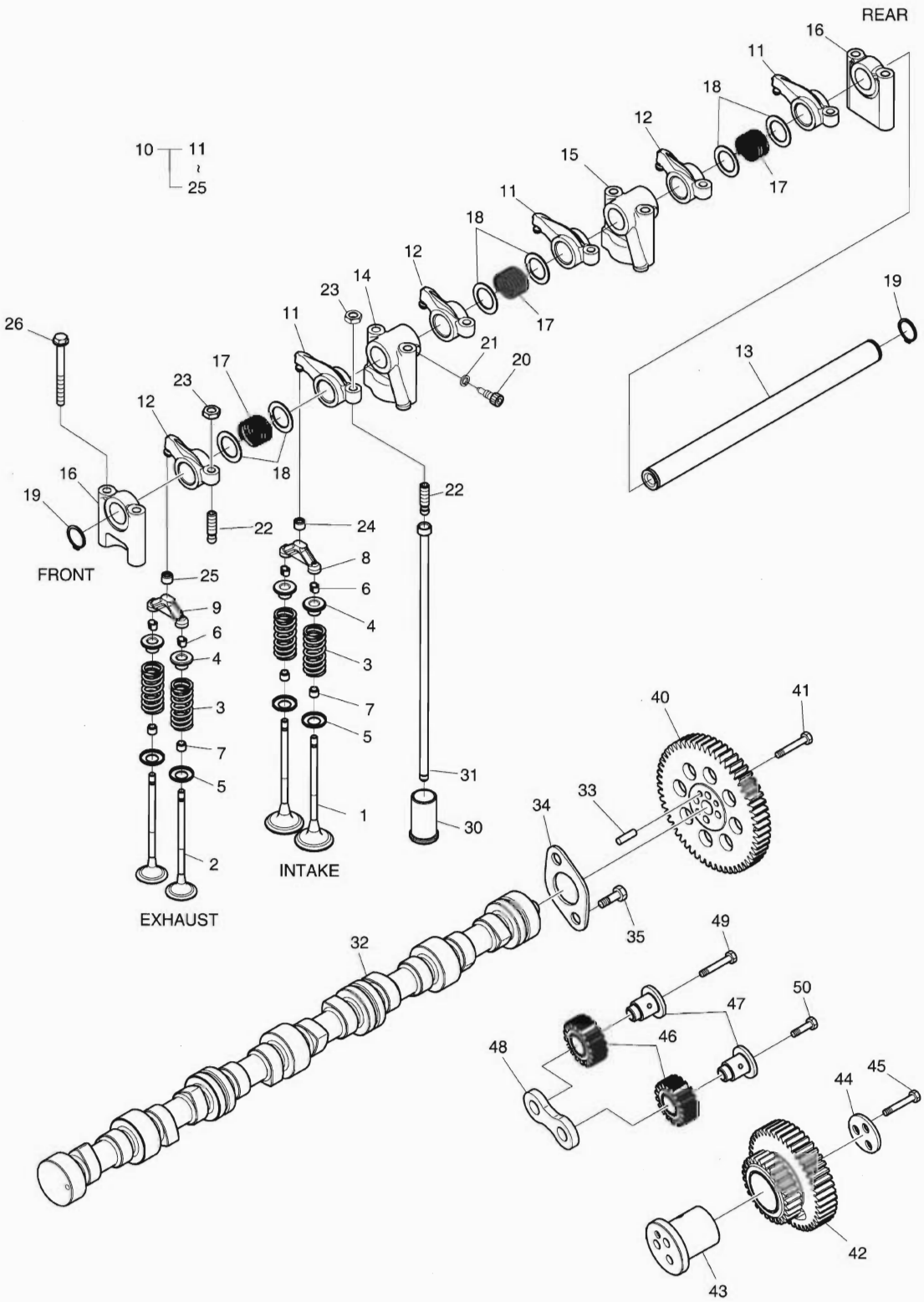

DATE	NOV. 27, 2006
1st EDITION	

Fig. 019 TIMING SYSTEM SYSTEME DE SYNCHRONISATION

Serial No. ;

Key No.	Part No.	Description	Description	Q'ty	S.C	Serial No.	ICA	Replaceable part	
								Part No.	Q'ty
019-1	65.04101-0065B	VALVE;INTAKE	SOUPAPE D'ADMISSION	12					
2	65.04101-0066B	VALVE;EXHAUST	VANNE	12					
3	65.04102-0024	SPRING;VALVE	JOINT TORIQUE	24					
4	65.04103-0018	PLATE;VALVE SPRING	PLAQUE	24					
5	65.90701-0098	WASHER	CALE	24					
6	65.04104-0009	COTTER;VALVE	COTTER;VALVE	48					
7	65.04902-0016	SEAL;VALVE STEM	JOINT	24					
8	65.04130-0009A	CALIPER;INTAKE	ETRIER	6					
9	65.04130-0011	CALIPER;EXHAUST	ETRIER	6					
10	65.04200-6038A	ROCKER ARM S/F ASS'Y	AXE DE BRAS DE	2					
11	65.04201-5042A	. ROCKER ARM;INTAKE	. BRAS DE CULBUTEUR	3					
12	65.04201-5043A	. ROCKER ARM;EXHAUST	. BRAS DE CULBUTEUR	3					
13	65.04203-5020A	. SHAFT;ROCKER ARM	. AXE DU CULBUTEUR	1					
14	65.04202-0033	. BRACKET;ROCKER ARM	. SUPPORT	1					
15	65.04202-0034	. BRACKET;ROCKER ARM	. SUPPORT	1					
16	65.04202-0035	. BRACKET;ROCKER ARM	. SUPPORT	2					
17	65.97601-0124	. SPRING;COMPESSION	. RESSORT	3					
18	65.90701-0136B	. WASHER	. RONDELLE	6					
19	06.29010-0120	. RING;SNAP	. CIRCLIP	2					
20	65.90030-0018	. BOLT;SOCKET	. BOULON	1					
21	06.16110-0106	. WASHER	. RONDELLE ELASTIQUE	1					
22	65.04205-0014	. SCREW;ADJUST	. VIS	6					
23	65.90501-0003	. NUT	. ECROU	6					
24	65.04209-0005	. CAP;ADJUST SCREW (INTAKE)	. CHAPEAU	3					
25	65.04209-0006	. CAP;ADJUST SCREW (EX.)	. CHAPEAU	3					
26	65.90020-0120	. BOLT;COLLARED HEX.	. BOULON A 6 PANS	8					
30	65.04301-5003B	TAPPET;VALVE	TRINGLERIE	12					
31	65.04302-5015	ROD;PUSH	POUSSOIR	12					
32	65.04401-0045A	CAMSHAFT	EQUIPAGE MOBILE	1					
33	06.22022-1016	DOWEL PIN	GOUPILLE D'AJUSTAGE	1					
34	65.90720-0032	WASHER;THRUST	RONDELLE DE BUTEE	1					
35	06.01913-2911	BOLT ASS'Y M6X16	BOULON A 6 PANS	2					
40	65.04501-0017	GEAR;CAM SHAFT	PIGNON	1					
41	65.90020-0117	BOLT;COLLARED HEX.	BOULON A 6 PANS	4					
42	65.04505-5018	GEAR;IDLE	PIGNON	1					
43	65.04506-0016	PIN;IDLE GEAR	GOUPILLE	1					
44	65.90720-0034B	WASHER;THRUST	RONDELLE DE BUTEE	1					
45	65.90020-0118	BOLT;COLLARED HEX.	BOULON A 6 PANS	3					

DATE	NOV. 27, 2006
1st EDITION	

Fig. 019 TIMING SYSTEM
SYSTEME DE SYNCHRONISATION

Serial No. ;

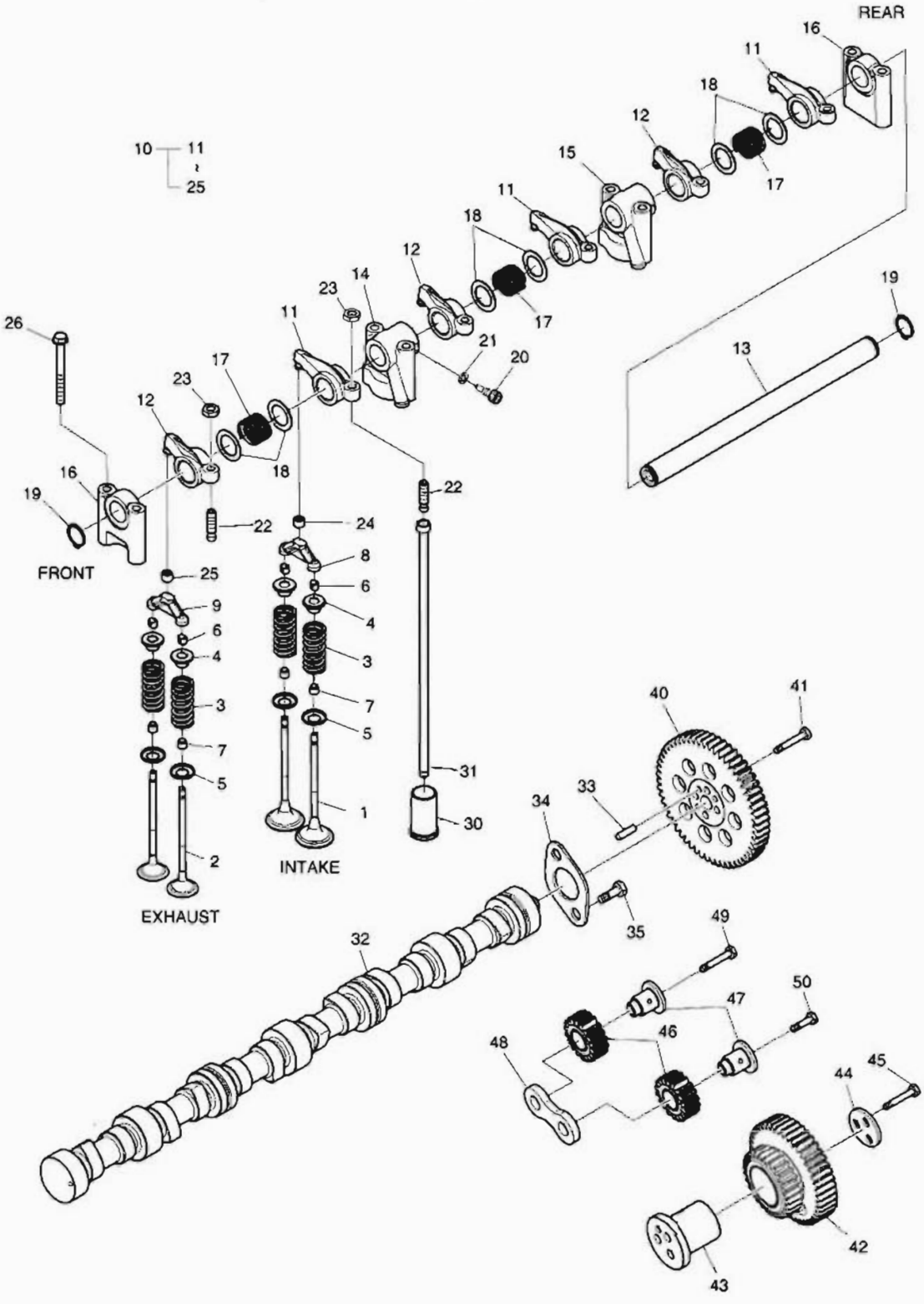

DATE	NOV. 27, 2006
1st EDITION	

Fig. 019 TIMING SYSTEM
SYSTEME DE SYNCHRONISATION

Serial No. ;

Key No.	Part No.	Description	Description	Q'ty	S.C	Serial No.	ICA	Replaceable part	
								Part No.	Q'ty
019-46	65.11301-5002	GEAR;DRIVE;INJECTION	PIGNON	2					
47	65.04506-0015	PIN;IDLE GEAR	GOUPILLE	2					
48	65.90720-0033A	WASHER;THRUST	RONDELLE DE BUTEE	1					
49	65.90020-0118	BOLT;COLLARED HEX.	BOULON A 6 PANS	1					
50	65.90020-0119	BOLT;COLLARED HEX.	BOULON A 6 PANS	1					

DATE	NOV. 27, 2006
1st EDITION	

Fig. 020 OIL PUMP
POMPE A HUILE

Serial No. ;

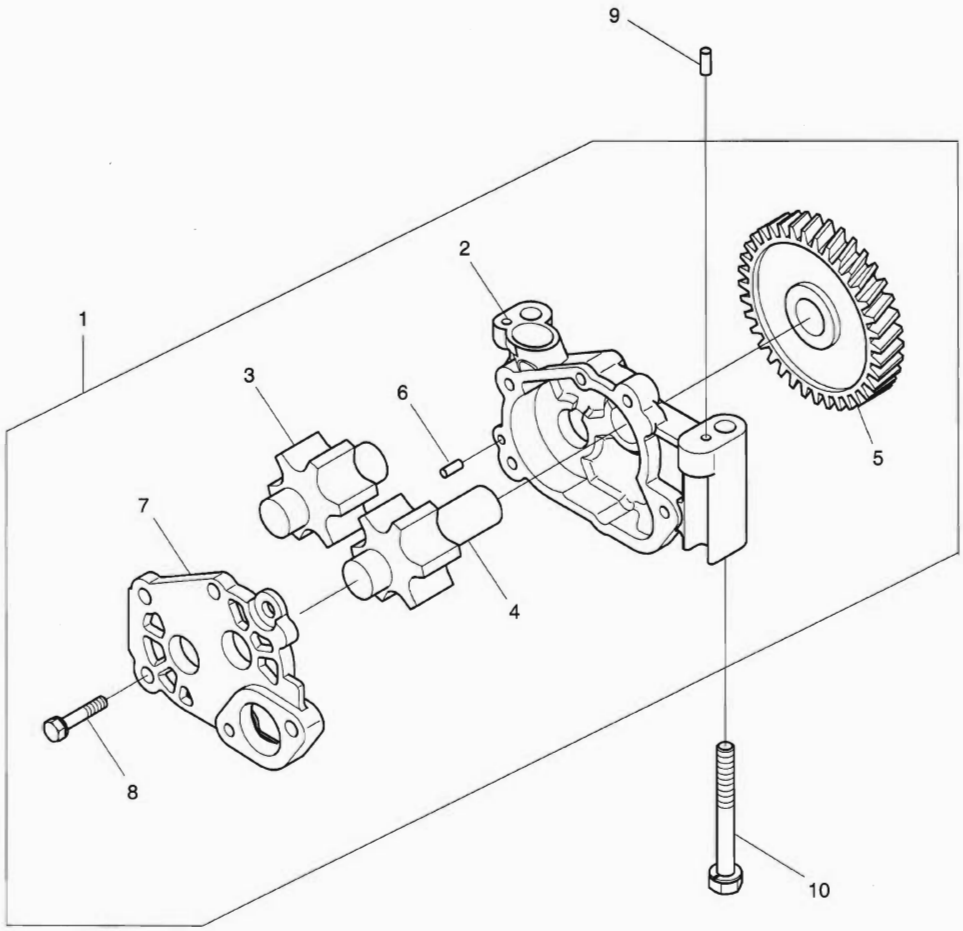

DATE	NOV. 27, 2006
1st EDITION	

Fig. 020 OIL PUMP
POMPE A HUILE

Serial No. ;

Key No.	Part No.	Description	Description	Q'ty	S.C	Serial No.	ICA	Replaceable part	
								Part No.	Q'ty
020-1	65.05100-6063	OIL PUMP ASS'Y	ENSEMBLE POMPE A HUILE	1					
2	65.05102-0030	. HOUSING;OIL PUMP	. BOITIER POMPE A HUILE	1	D				
3	65.05104-5014	. GEAR;OIL PUMP	. POMPE A HUILE	1					
4	65.05104-5015	. GEAR;OIL PUMP	. POMPE A HUILE	1					
5	65.05201-0016	. GEAR;DRIVE;OIL PUMP	. PIGNON	1					
6	06.22022-0907	. DOWEL PIN 6M6X10	. GOUPILLE D'AJUSTAGE	1					
7	65.05103-0034	. COVER;OIL PUMP	. COUVERCLE	1					
8	06.01913-3114	. BOLT ASS'Y M8X22	. BOULON A 6 PANS	4					
9	06.22022-0909	PIN DOWEL 6M6X14	GOUPILLE D'AJUSTAGE	2					
10	65.90020-0085	BOLT;COLLARED HEX.	BOULON A 6 PANS	2					

DATE	NOV. 27, 2006
1st EDITION	

Fig. 021 OIL FILTER & OIL COOLER FILTRE D'HUILE

Serial No. ;

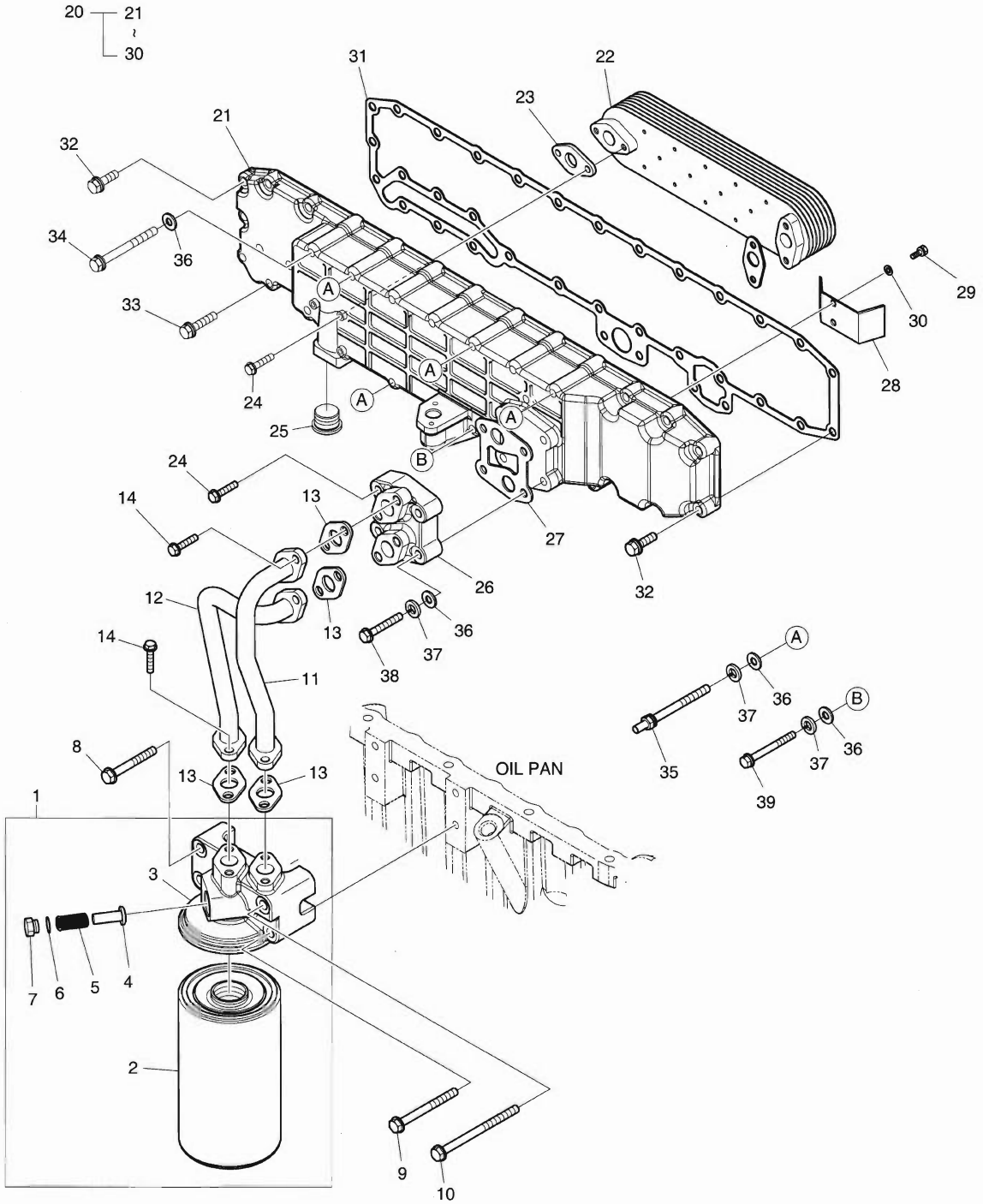

DATE	NOV. 27, 2006
1st EDITION	

Fig. 021 OIL FILTER & OIL COOLER FILTRE D'HUILE

Serial No. ;

Key No.	Part No.	Description	Description	Q'ty	S.C	Serial No.	ICA	Replaceable part	
								Part No.	Q'ty
021-1	65.05501-7089	OIL FILTER ASS'Y	FILTRE D'HUILE	1					
2	65.05510-5032	. FILTER;OIL	. FILTRE D'HUILE	1					
3	65.05503-5056	. HEAD;OIL FILTER	. CULASSE	1					
4	65.05518-0006	. VALVE	. VANNE	1					
5	65.97601-0075	. SPRING	. RESSORT	1					
6	06.56190-0726	. SEAL;RING	. BAGUE D'ETANCHEITE	1					
7	65.90310-0065	. SCREW;PLUG	. VIS	1					
8	06.01923-3222	BOLT ASS'Y	BOULON A 6 PANS	2					
9	06.01923-3225	BOLT ASS'Y M10X70	BOULON A 6 PANS	1					
10	06.01923-3228	BOLT ASS'Y M10X85	BOULON A 6 PANS	1					
11	65.05701-5573A	PIPE;OIL	CONDUITES DE HUILE	1					
12	65.05701-5574	PIPE;OIL	CONDUITES DE HUILE	1					
13	65.05903A0001	GASKET	JOINT	4					
14	06.01913-3114	BOLT ASS'Y M8X22	BOULON A 6 PANS	8					
20	65.05601-7079B	OIL COOLER ASS'Y	ENSEMBLE	1					
21	65.05604-0030A	. HOUSING;OIL COOLER	. CARTER	1					
22	65.05606-5032A	. ELEMENT;OIL COOLER	. ELEMENT	1					
23	65.05902-0022	. GASKET;OIL COOLER	. JOINT	2					
24	06.01923-3119	. BOLT ASS'Y M8X40	. BOULON A 6 PANS	6					
25	65.54109-0005A	. SCREW PLUG M22X1.5	. VIS	1					
26	65.05607-5003	. FLANGE;OIL COOLER	. BRIDE	1					
27	65.05901-0031	. GASKET;OIL FILTER	. JOINT	1					
28	65.05610-0007A	. GUIDE;WATER FLOW	. GUIDE	1					
29	06.02097-8306	. BOLT;SOCKET	. BOULON	2					
30	06.16731-2105	. WASHER	. RONDELLE ELASTIQUE	2					
31	65.05902-0023	GASKET;OIL COOLER	JOINT	1					
32	06.01923-3117	BOLT ASS'Y M8X30	BOULON 6 PANS	12					
33	06.01923-3119	BOLT ASS'Y M8X40	BOULON A 6 PANS	8					
34	06.01913-3128	BOLT M8X85	BOULON A 6 PANS	7					
35	65.90201-0135	BOLT;STUD	GOUJON	4					
36	06.15010-2311	WASHER	RONDELLE	14					
37	06.16731-2107	WASHER	RONDELLE ELASTIQUE	7					
38	06.01013-9127	BOLT M8X120	BOULON A 6 PANS	2					
39	06.01913-3129	BOLT ASS'Y M8X90	BOULON A 6 PANS	1					

DATE	NOV. 27, 2006
1st EDITION	

Fig. 022 OIL PAN
CARTER D'HUILE

Serial No. ;

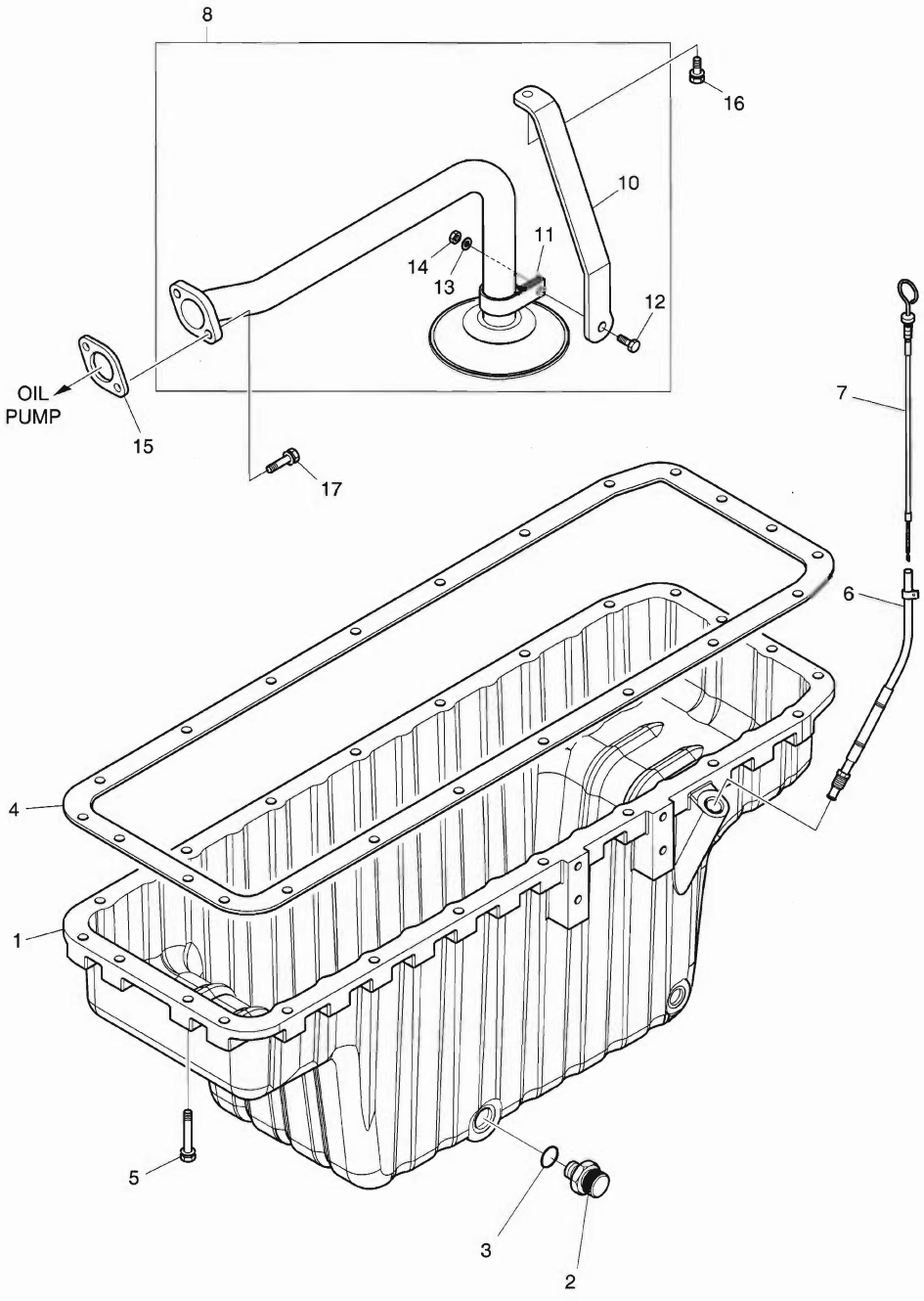

DATE	NOV. 27, 2006
1st EDITION	

Fig. 022 OIL PAN / CARTER D'HUILE

Serial No. ;

Key No.	Part No.	Description	Description	Q'ty	S.C	Serial No.	ICA	Replaceable part	
								Part No.	Q'ty
022-1	65.05801-5245	PAN;OIL	CARTER MOTEUR	1					
2	65.98125-5022A	JOINT;DRAIN	JOINT	1					
3	06.56190-0732	SEAL;RING	CONTACT DE NIVEAU	1					
4	65.05904-0035	GASKET;OIL PAN	JOINT	1					
5	06.01923-3120	BOLT ASS'Y M8X45	BOULON A 6 PANS	22					
6	65.05806-5116	TUBE;OIL LEVEL GAUGE	TUBE	1					
7	65.05805-5236	OIL LEVEL GAUGE	INDICATEUR DE NIVEAU	1					
8	65.05701-6122	OIL PIPE ASS'Y	CONDUITES DE HUILE	1					
10	65.05740-0222	. BRACKET;OIL SUCT.PIPE	. SUPPORT	1					
11	65.97401-0137	. CLIP;PIPE	. ATTACHE	1					
12	06.01283-7115	. BOLT M8X25	. BOULON A 6 PANS	1					
13	06.15010-2311	. WASHER	. RONDELLE	1					
14	65.90510-0012	. NUT	. ECROU DE BLOCAGE	1					
15	65.05901-0032	GASKET	JOINT	1					
16	06.01913-3115	BOLT ASS'Y M8X25	BOULON A 6 PANS	1					
17	06.01913-3119	BOLT ASS'Y M8X40	BOULON A 6 PANS	2					

Fig. 023 THERMOSTAT
THERMOSTAT

Serial No. ;

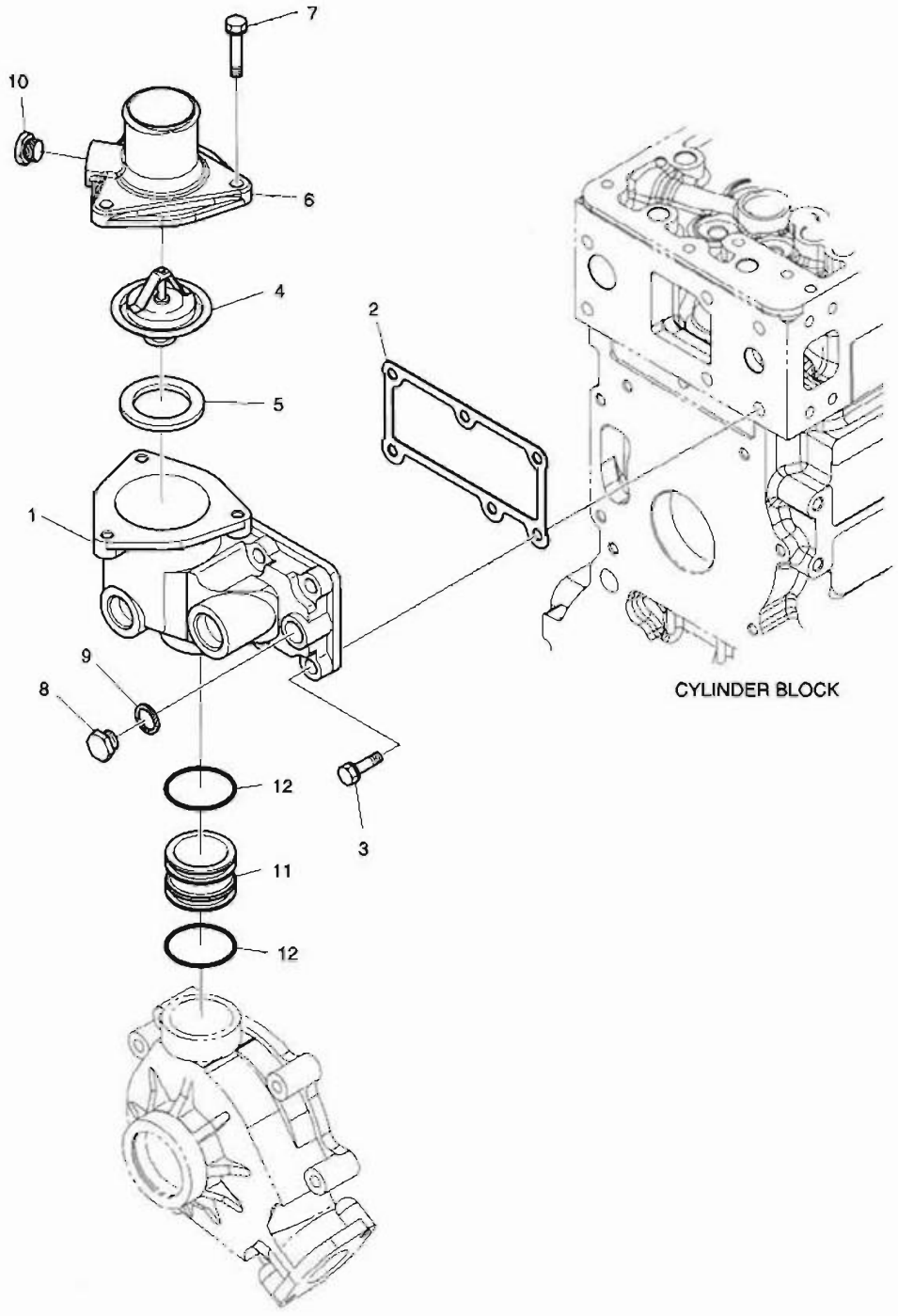

DATE	NOV. 27, 2006
1st EDITION	

Fig. 023 THERMOSTAT
THERMOSTAT

Serial No. ;

Key No.	Part No.	Description	Description	Q'ty	S.C	Serial No.	ICA	Replaceable part	
								Part No.	Q'ty
023-1	65.06404-0039A	HOUSING;THERMOSTAT	LOGEMENT	1					
2	65.06904-0020	GASKET;THERMOSTAT	JOINT	1					
3	06.01923-3218	BOLT ASS'Y M10X35	BOULON A 6 PANS	6					
4	65.06402-5015	THERMOSTAT	FILTRE	1					
5	65.06904-0003	GASKET;THERMOSTAT	JOINT	1					
6	65.06405-0012A	OUTLET;WATER	SORTIE DE L'EAU	1					
7	06.01923-3114	BOLT ASS'Y M8X22	BOULON A 6 PANS	3					
8	06.08092-2405	PLUG SCREW M16 X 1.5	BOUCHON A VIS	1					
9	06.56190-0709	SEAL;RING	BAGUE D'ETANCHEITE	1					
10	65.90320-0019	PLUG SCREW PT3/8	VIS	1					
11	65.06301-0257	PIPE;COOLING WATER	CONDUITE D'EAU DE	1					
12	65.96501-0099A	O-RING	JOINT TORIQUE	2					

Fig. 024 WATER PUMP
SYSTEME DE REFROIDSSEMENT

Serial No. ;

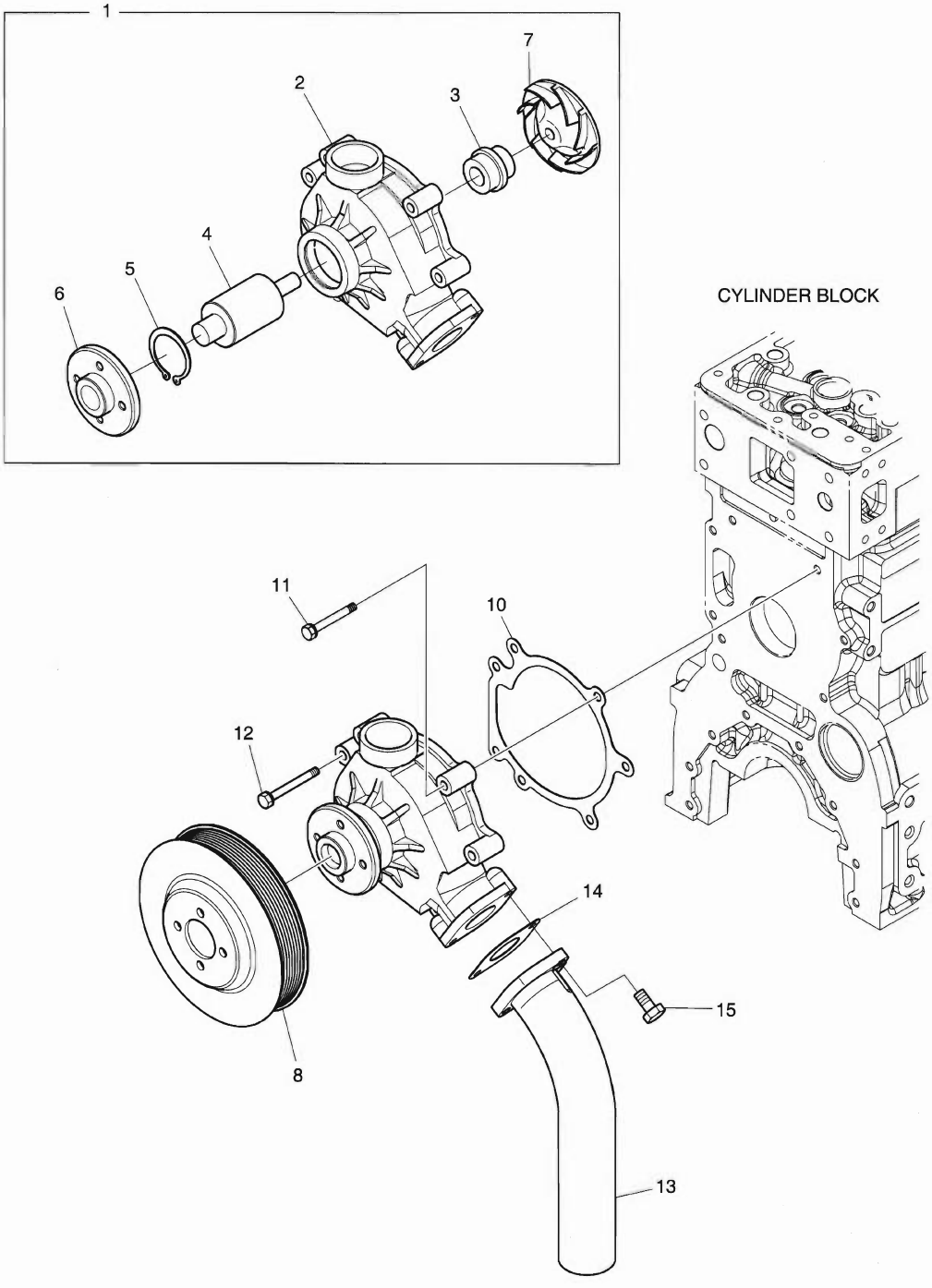

DATE	NOV. 27, 2006
1st EDITION	

Fig. 024 WATER PUMP
SYSTEME DE REFROIDSSEMENT

Serial No. ;

Key No.	Part No.	Description	Description	Q'ty	S.C	Serial No.	ICA	Replaceable part	
								Part No.	Q'ty
024-1	65.06500-6178B	WATER PUMP ASS'Y	ENSEMBLE POMPE A EAU	1					
2	65.06501-0099A	. HOUSING;WATER PUMP	. BOITIER	1	D				
3	65.06520-6007	. SEAL;MECHANICAL	. JOINT	1					
4	65.93410-0027	. BEARING	. PALIER	1					
5	06.29020-0132	. SNAP RING 55X2	. BAGUE ELASTIQUE	1					
6	65.06504-0033	. HUB;V-BELT PULLEY	. MOYEU	1					
7	65.06506-0029A	. IMPELLER;WATER PUMP	. TURBINE	1					
8	65.06503-0113	PULLEY;V-BELT	POULIE DE COURROIE	1					
10	65.06901-0042	GASKET;WATER PUMP	JOINT	1					
11	06.01913-3120	BOLT ASS'Y M8X45	BOULON A 6 PANS	5					
12	06.01913-3121	BOLT ASS'Y M8X50	BOULON A 6 PANS	2					
13	65.06301-0258A	PIPE;COOLING WATER	CONDUITE D'EAU DE	1					
14	65.06903-0029	GASKET;WATER PIPE	JOINT	1					
15	06.01913-3117	BOLT ASS'Y M8X30	BOULON A 6 PANS	2					

DATE	NOV. 27, 2006
1st EDITION	

Fig. 025 COOLING FAN VENTILATEUR

Serial No. ;

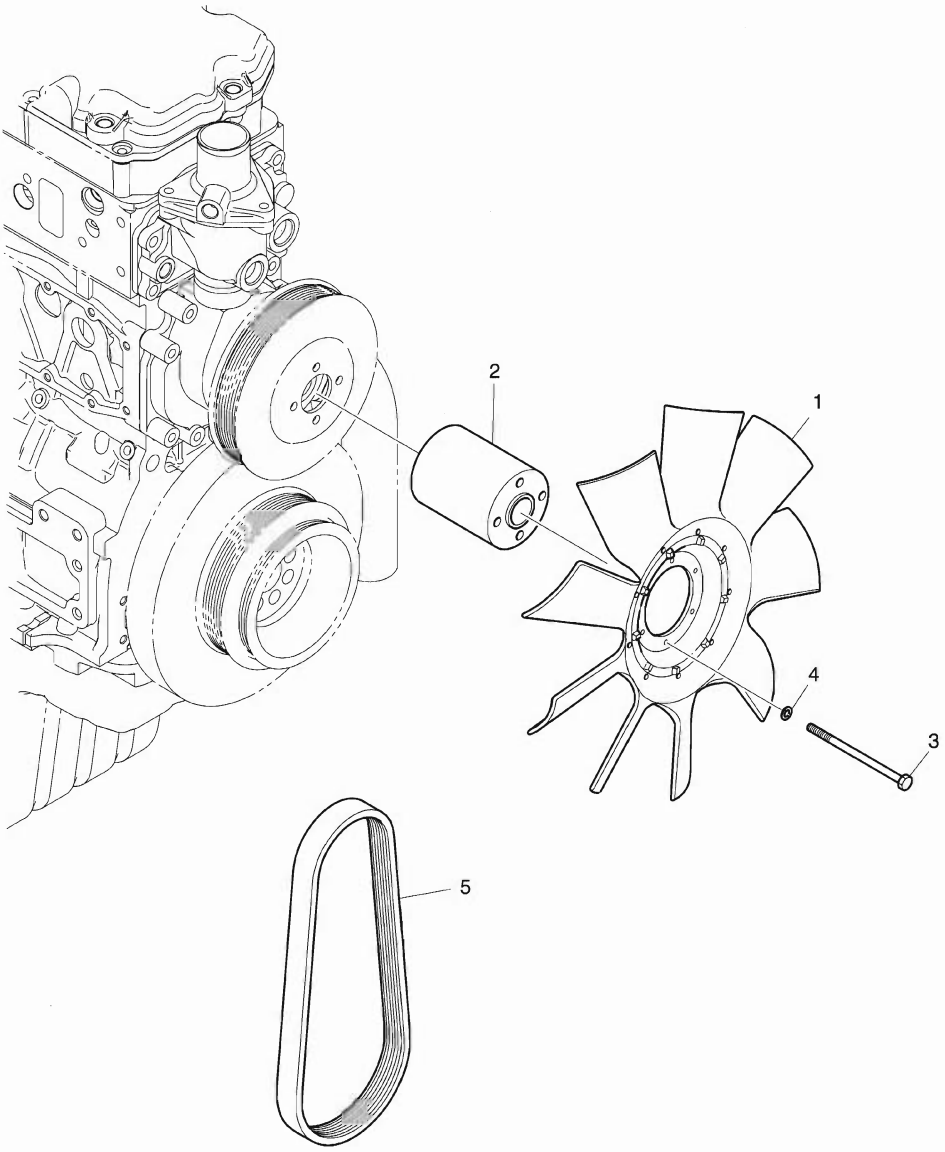

DATE	NOV. 27, 2006
1st EDITION	

Fig. 025 COOLING FAN VENTILATEUR

Serial No. ;

Key No.	Part No.	Description	Description	Q'ty	S.C	Serial No.	ICA	Replaceable part	
								Part No.	Q'ty
25-1	65.06601-5076	FAN;COOLING	VENTILATEUR	1					
2	65.06611-0132	FLANGE;FAN	BRIDE	1					
3	06.01013-9130	BOLT M8X150	BOULON A 6 PANS	4					
4	06.16731-2107	WASHER	RONDELLE ELASTIQUE	4					
5	65.96801-0194	BELT	COURROIE	1					

DATE	NOV. 27, 2006
1st EDITION	

Fig. 026 INTAKE & EXHAUST MANIFOLD D'ADMISSION ET D'ECHAPPEMENT

Serial No. ;

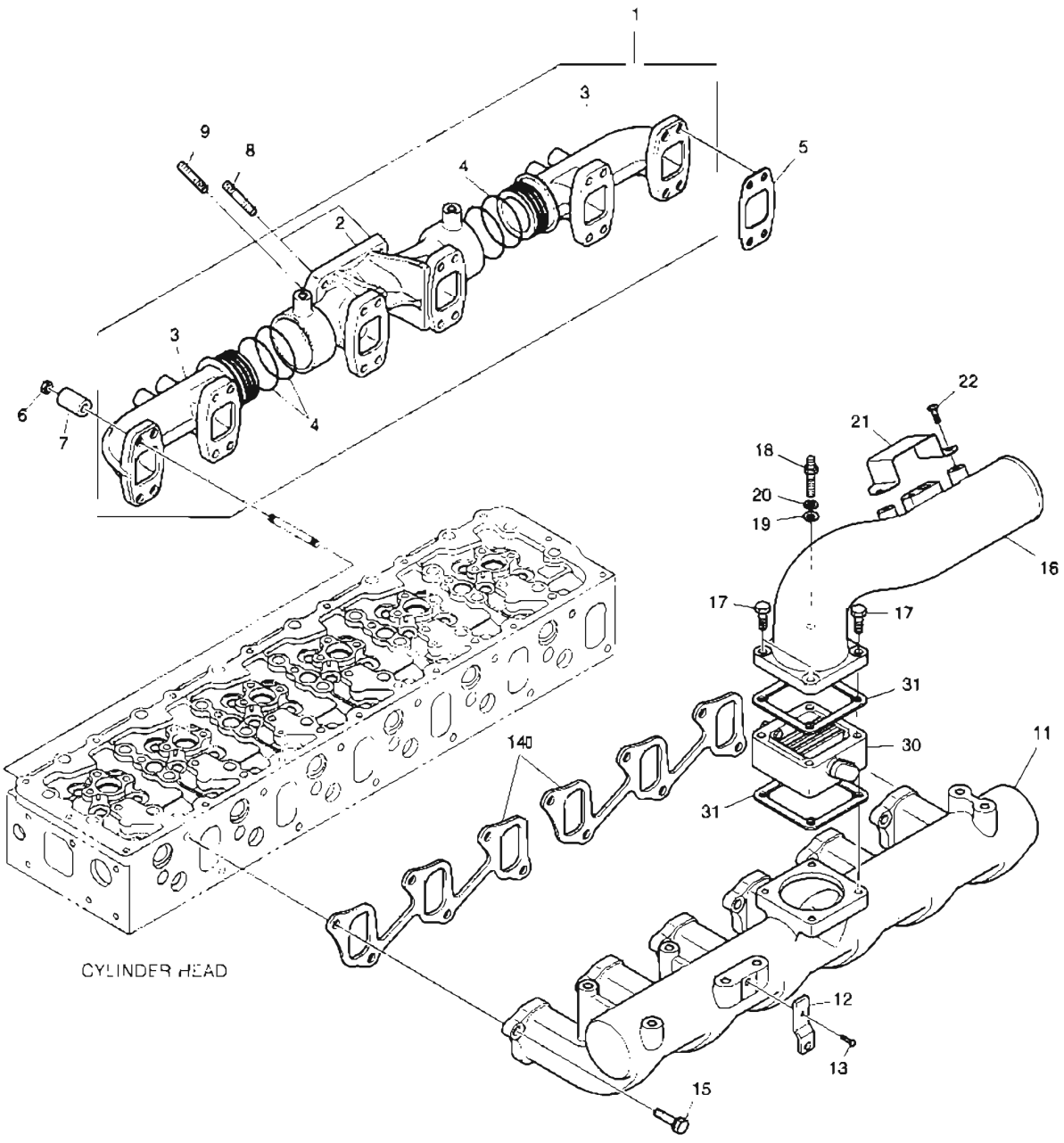

DATE	NOV. 27, 2006
1st EDITION	

Fig. 026 INTAKE & EXHAUST MANIFOLD D'ADMISSION ET D'ECHAPPEMENT

Serial No. ;

Key No.	Part No.	Description	Description	Q'ty	S.C	Serial No.	ICA	Replaceable part	
								Part No.	Q'ty
026-1	65.08100-6088A	EXHAUST MANIFOLD ASS'Y	TUBULURE	1					
2	65.08101-0263	. MANIFOLD;EXHAUST	. TUBULURE	1					
3	65.08101-0264	. MANIFOLD;EXHAUST	. TUBULURE	2					
4	65.96507-0059	. RING;SEAL	. BAGUE D'ETANCHEITE	6					
5	65.08901-0045	GASKET;EXHAUST MANIFOLD	JOINT	6					
6	65.90535-0003	NUT	ECROU	24					
7	65.91701-0086	SPACER	BAGUE D'ECARTEMENT	24					
8	65.90201-0076	BOLT;STUD M10X1.25X30	BOULON DE GOUJON	2					
9	65.90201-0073	BOLT;STUD M10X1.25X25	BOULON DE GOUJON	2					
11	65.08201-5075	MANIFOLD;INTAKE	COLLECTEUR	1					
12	65.12303-0009	BRACKET;FUEL PIPE	SUPPORT	1					
13	06.01913-3213	BOLT ASS'Y M10X20	BOULON A 6 PANS	1					
14	65.08902-0030A	GASKET;INTAKE MANIFOLD	JOINT	2					
15	06.01923-3218	BOLT ASS'Y M10X35	BOULON A 6 PANS	12					
16	65.08202-0184	STAKE;INTAKE	TUBULURE D'ADIMISSION	1					
17	06.01923-3125	BOLT ASS'Y M8X70	BOULON A 6 PANS	3					
18	65.90201-0136	BOLT;STUD	GOUJON	1					
19	06.15010-2311	WASHER	RONDELLE	1					
20	06.16731-2107	WASHER	RONDELLE ELASTIQUE	1					
21	65.08204-0004	COVER	COUVERCLE	1					
22	06.01923-2910	BOLT ASS'Y M6X12	BOULON A 6 PANS	2					
30	65.26803-7028B	AIR HEATER	RECHAUFFEUR D'AIR	1					
31	65.09904-0008	GASKET;AIR HEATER	JOINT	2					

DATE	NOV. 27, 2006
1st EDITION	

Fig. 027 TURBO CHARGER
CHARGEUR DE TURBO

Serial No. ;

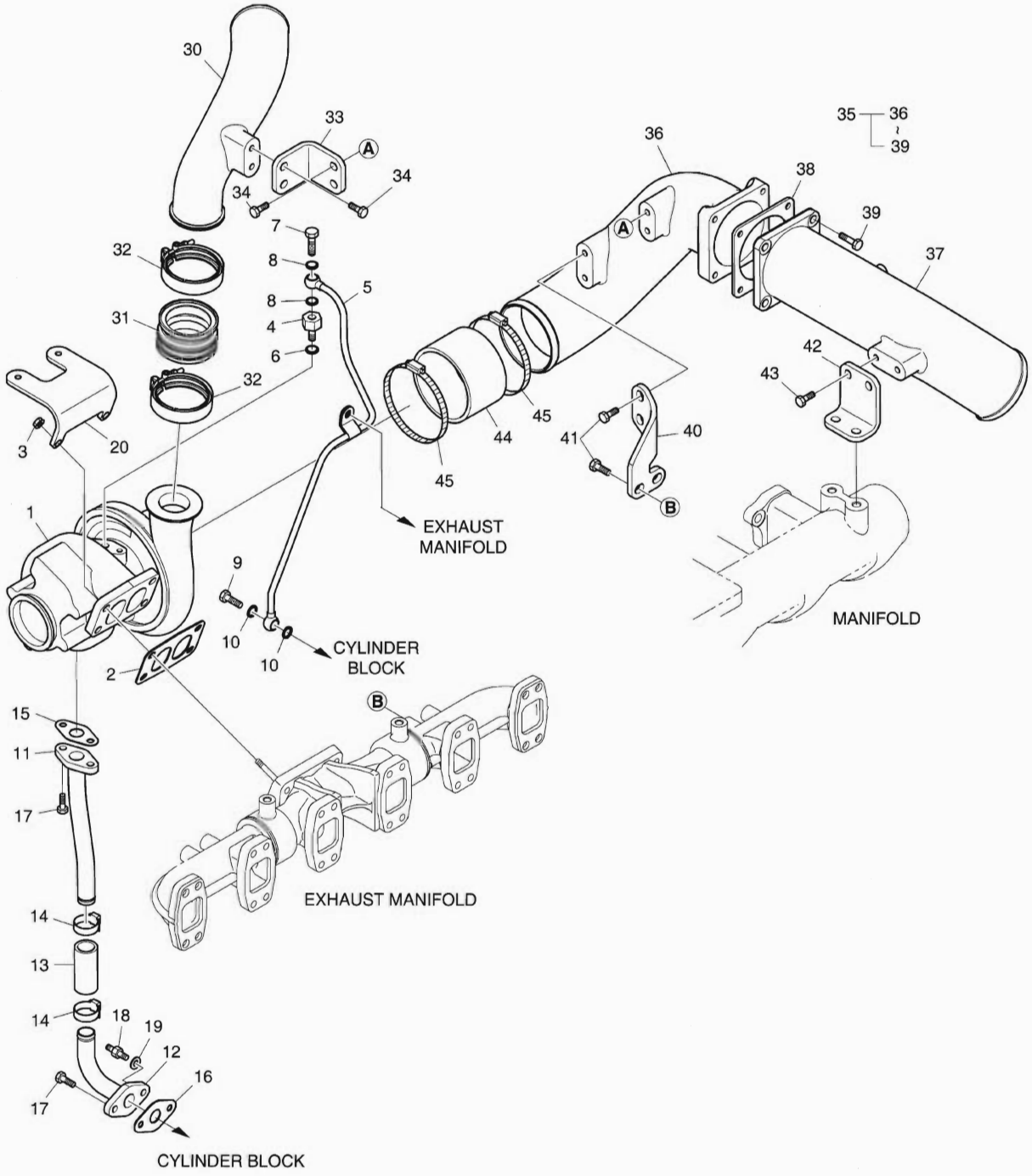

DATE	NOV. 27, 2006
1st EDITION	

Fig. 027 TURBO CHARGER
CHARGEUR DE TURBO

Serial No. ;

Key No.	Part No.	Description	Description	Q'ty	S.C	Serial No.	ICA	Replaceable part	
								Part No.	Q'ty
027-1	65.09100-7110	TURBOCHARGER ASS'Y	TURBOCOMPRESSEUR	1					
2	65.09901-0018A	GASKET	JOINT	1					
3	65.90535-0001	NUT	ECROU 6 PANS	4					
4	65.98130-0200A	ADAPTER	ADAPTEUR	1					
5	65.05701-5567	PIPE;OIL	CONDUITES DE HUILE	1					
6	06.56190-0709	SEAL;RING	BAGUE D'ETANCHEITE	1					
7	06.78144-2403	HOLLOW SCREW M12X1.5	VIS CREUSE	1					
8	06.56190-0704	SEAL RING A12X18	BAGUE D'ETANCHEITE	2					
9	06.78144-2403	HOLLOW SCREW M12X1.5	VIS CREUSE	1					
10	06.56190-0704	SEAL RING A12X18	BAGUE D'ETANCHEITE	2					
11	65.05701-5568	PIPE;OIL	CONDUITES DE HUILE	1					
12	65.05701-5569	PIPE;OIL	CONDUITES DE HUILE	1					
13	65.96301-0327A	HOSE;RUBBER	TUYAU	1					
14	06.67020-0104	CLAMP;HOSE	COLLIER	2					
15	65.96601-0067	GASKET;T/C-PIPE	JOINT	1					
16	65.96601-0052	GASKET;PIPE-BLOCK	JOINT	1					
17	06.01913-3114	BOLT ASS'Y M8X22	BOULON A 6 PANS	3					
18	65.90201-0075	BOLT;SPACER	BOUCHON	1					
19	06.16731-2107	WASHER	RONDELLE ELASTIQUE	1					
20	65.09140-0005	BRACKET	SUPPORT	1					
30	65.09411-5095	PIPE;INLET	TUYAU	1					
31	65.96301-6003	HOSE;RUBBER	TUYAU FLEXIBLE	1					
32	65.97450-5003	CLAMP	COLLIER	2					
33	65.09440-0058	BRACKET	SUPPORT	1					
34	06.01923-3215	BOLT ASS'Y M10X25	BOULON A 6 PANS	4					
35	65.09411-7013	INLET PIPE ASS'Y	TUYAU D'ADMISSION	1					
36	65.09411-5104	. INLET	. PRISE	1					
37	65.09411-5103	. INLET	. PRISE	1					
38	65.09904-0009	. GASKET;AIR PIPE	. JOINT	1					
39	06.01923-3218	. BOLT ASS'Y M10X35	. BOULON A 6 PANS	4					
40	65.09440-0057	BRACKET	SUPPORT	1					
41	06.01923-3215	BOLT ASS'Y M10X25	BOULON A 6 PANS	4					
42	65.09440-0056	BRACKET	SUPPORT	1					
43	06.01923-3215	BOLT ASS'Y M10X25	BOULON A 6 PANS	4					
44	65.96301-0035	HOSE;RUBBER	TUYAU FLEXIBLE	1					
45	06.67020-0116	CLAMP;HOSE	TUYAU FLEXIBLE	2					

Fig. 028 INJECTOR
INJECTEUR

Serial No. ;

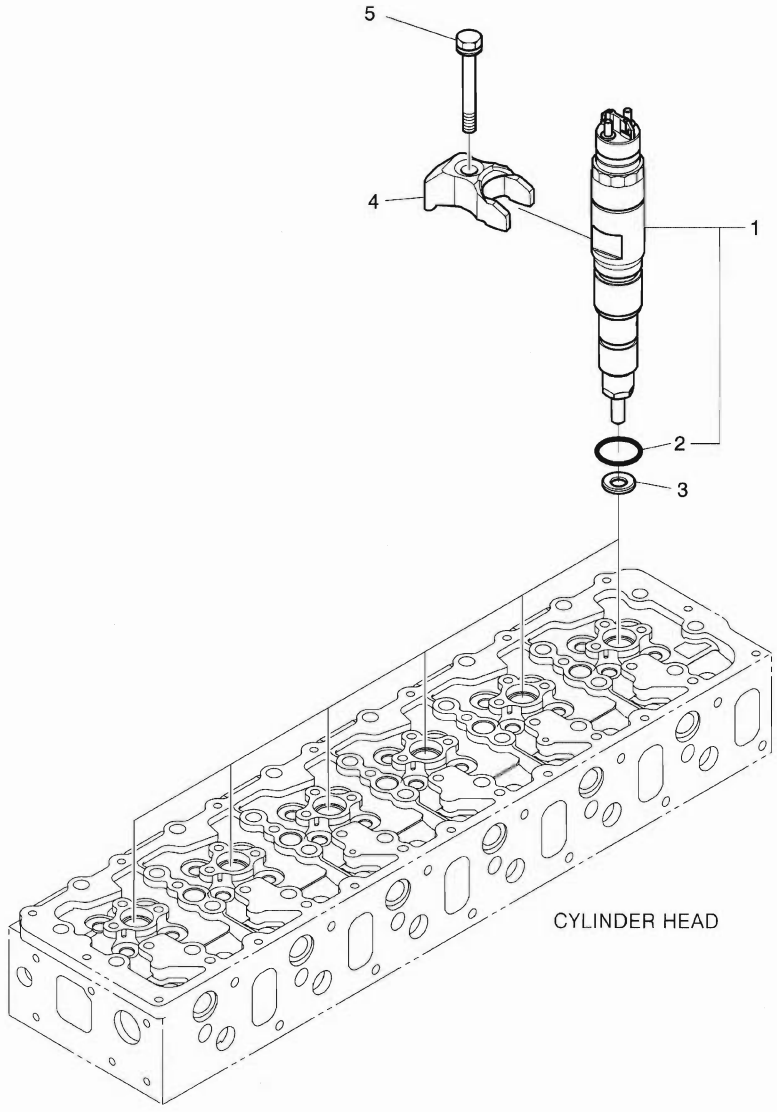

DATE	NOV. 27, 2006
1st EDITION	

Fig. 028 INJECTOR INJECTEUR

Serial No. ;

Key No.	Part No.	Description	Description	Q'ty	S.C	Serial No.	ICA	Replaceable part	
								Part No.	Q'ty
028-1	65.10401-7004A	INJECTOR ASS'Y	INDICATEUR	6					
2	65.96501-0437	. O-RING	. JOINT TORIQUE	1					
3	65.96507-0053	RING;SEAL	BAGUE	6					
4	65.10205-0006	FIXTURE	SUPPORT	6					
5	65.90020-0136	BOLT;COLLARED HEX.	BOULON A 6 PANS	6					

DATE	NOV. 27, 2006
1st EDITION	

Fig. 029 INJECTION PIPE
PIPE D'INJECTION

Serial No. ;

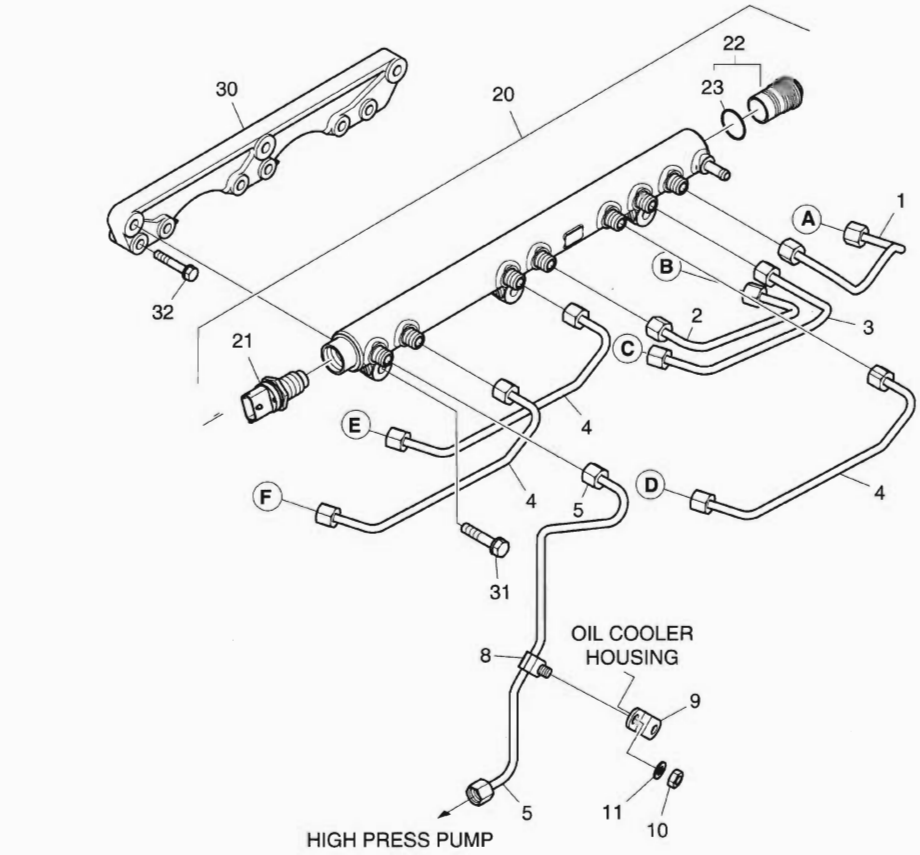

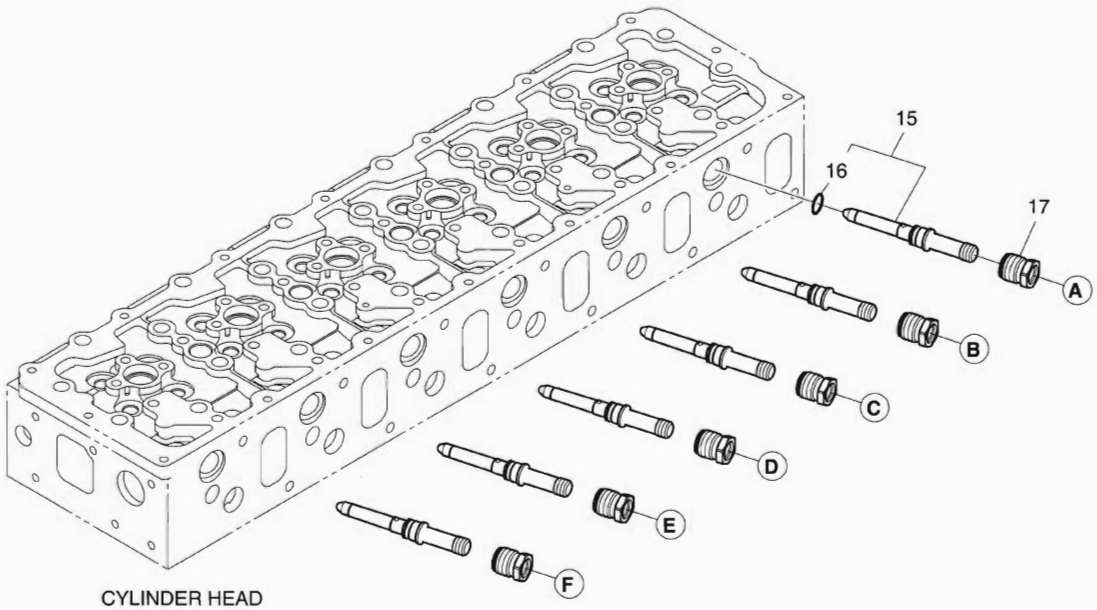

DATE	NOV. 27, 2006
1st EDITION	

Fig. 029 INJECTION PIPE
PIPE D'INJECTION

Serial No. ;

Key No.	Part No.	Description	Description	Q'ty	S.C	Serial No.	ICA	Replaceable part	
								Part No.	Q'ty
029-1	65.10301-6191	PIPE;INJECTION	TUYAU D'INJECTEUR	1					
2	65.10301-6192	PIPE;INJECTION	TUYAU D'INJECTEUR	1					
3	65.10301-6193	PIPE;INJECTION	TUYAU D'INJECTEUR	1					
4	65.10301-6194	PIPE;INJECTION	TUYAU D'INJECTEUR	3					
5	65.10301-6195	PIPE;INJECTION	TUYAU D'INJECTEUR	1					
8	65.97401-6039	CLIP;PIPE	CLIP DE FIXATION	1					
9	65.97480-0220	HOLDER	SUPPORT	1					
10	06.11063-8214	NUT	ECROU 6 PANS	1					
11	06.16731-2107	WASHER	RONDELLE ELASTIQUE	1					
15	65.10410-6003A	H.P.CONNECTOR	CONNECTEUR	6					
16	65.96501-0438	. O-RING	. JOINT TORIQUE	1					
17	65.10415-0001	NUT	ECROU	6					
20	65.10601-6004A	COMMON RAIL ASS'Y	CHEMIN DE FER	1					
21	65.27114-5002	. SENSOR;RAIL PRESSURE	. SENSER;RAIL	1					
22	65.52122-6002	. VALVE;PRESSURE LIMITING	. VANNE	1					
23	65.96501-0431	.. O-RING	.. JOINT TORIQUE	1					
30	65.10610-0003	BRACKET;MOUNTING	SUPPORT	1					
31	06.01913-3118	BOLT ASS'Y M8X35	BOULON A 6 PANS	3					
32	06.01913-3119	BOLT ASS'Y M8X40	BOULON A 6 PANS	6					

DATE	NOV. 27, 2006
1st EDITION	

Fig. 030 INJECTION PUMP
POMPE D'INJECTION

Serial No. ;

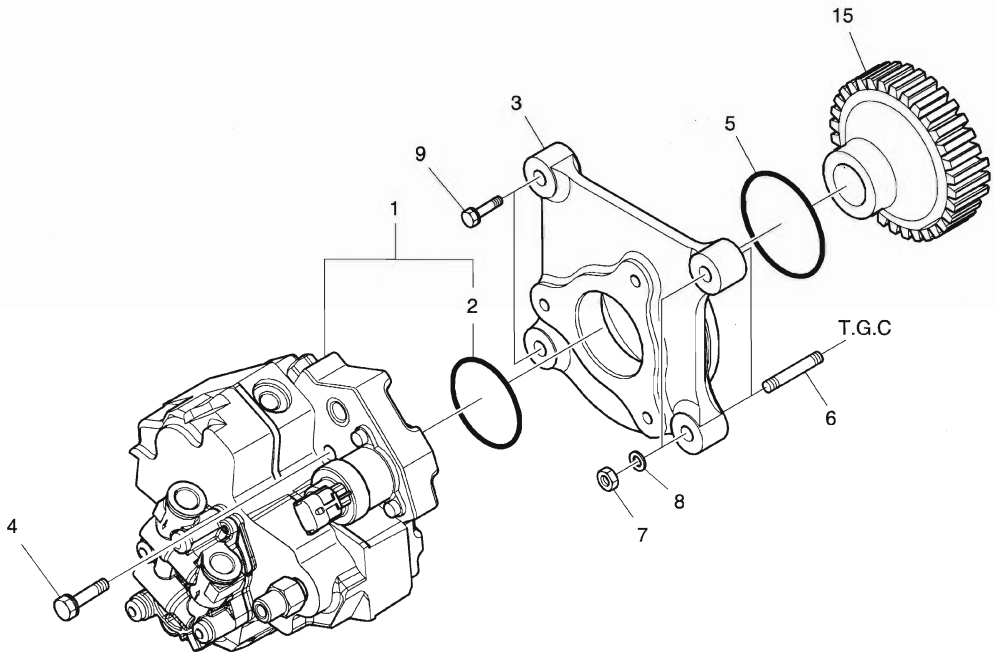

DATE	NOV. 27, 2006
1st EDITION	

Fig. 030 INJECTION PUMP POMPE D'INJECTION

Serial No. ;

Key No.	Part No.	Description	Description	Q'ty	S.C	Serial No.	ICA	Replaceable part	
								Part No.	Q'ty
030-1	65.10501-7005A	PUMP;HIGH PRESSURE	POMPE	1					
2	65.96501-0439	. O-RING	. JOINT TORIQUE	1					
3	65.11304-0001	FLANGE;INJECTION PUMP	BRIDE	1					
4	65.90020-0121	BOLT;COLLARED HEX.	BOULON A 6 PANS	3					
5	06.56020-0115	O-RING	JOINT TORIQUE	1					
6	06.06125-8709	STUD BOLT M8X35	GOUJON	2					
7	06.11063-8214	NUT	ECROU 6 PANS	2					
8	06.16731-2107	WASHER	RONDELLE ELASTIQUE	2					
9	06.01923-3118	BOLT ASS'Y M8X35	BOULON 6 PANS	2					
15	65.11301-0038	GEAR;PUMP DRIVE	PIGNON	1					

Fig. 031 ENGINE CONTROL
COMMANDE REGIME MOTEUR

Serial No. ;

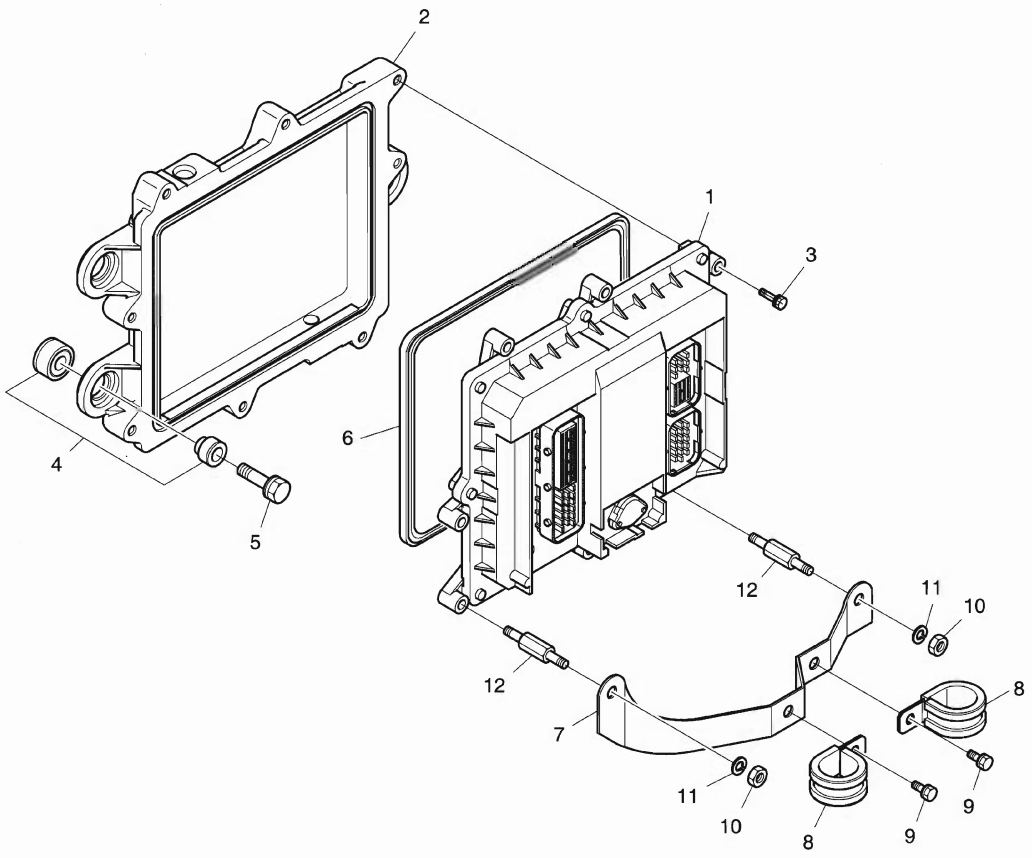

DATE	NOV. 27, 2006
1st EDITION	

Fig. 031 ENGINE CONTROL COMMANDE REGIME MOTEUR

Serial No. ;

Key No.	Part No.	Description	Description	Q'ty	S.C	Serial No.	ICA	Replaceable part	
								Part No.	Q'ty
031-1	65.99497-8651	E.C.U	E.C.U	1					
2	65.11210-0003A	PLATE;ECU	PLAQUE	1					
3	06.01923-2917	BOLT ASS'Y M6X30	BOULON A 6 PANS	6					
4	65.96210-6001A	RUBBER;CUSHION	CUSHION;RUBBER	3					
5	65.90020-0095	BOLT;COLLARED HEX.	BOULON A 6 PANS	3					
6	65.96501-0102	PACKING	RONDELLE D'ETANCHEITE	1					
7	65.29150-5006	BRACKET	SUPPORT	1					
8	65.97401-0188	CLIP;PIPE	ATTACHE	2					
9	06.01923-2911	BOLT ASS'Y M6X16	ENSEMBLE BOULON	2					
10	06.11063-8212	NUT	ECROU 6 PANS M6	2					
11	06.16731-2106	WASHER	RONDELLE ELASTIQUE	2					
12	65.90441-0066	BOLT;SPACER	BOULON A 6 PANS	2					

DATE	NOV. 27, 2006
1st EDITION	

Fig. 032 FUEL SYSTEM
INJECTEUR ET POMPE-INJECTEUR

Serial No. ;

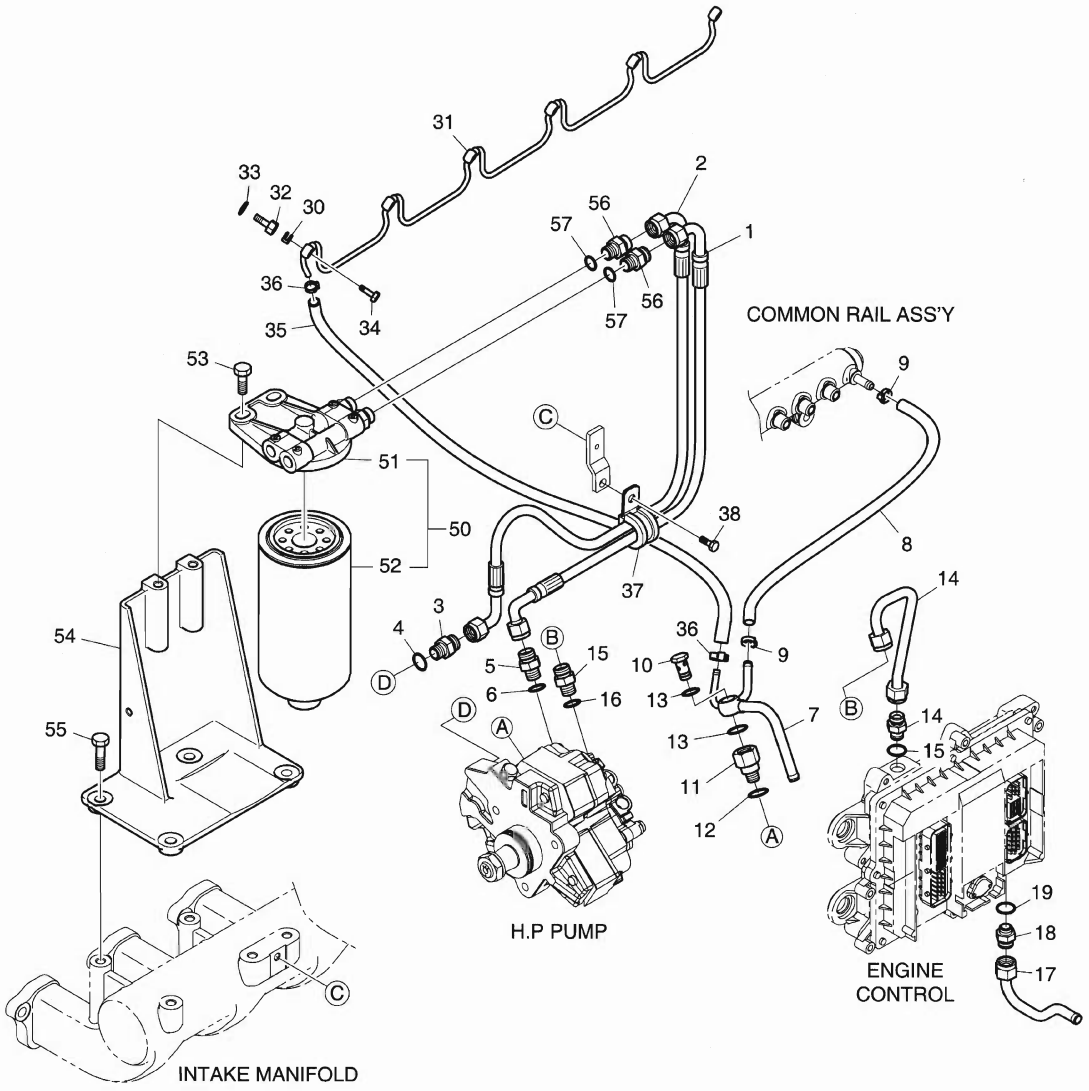

DATE	NOV. 27, 2006
1st EDITION	

Fig. 032 FUEL SYSTEM
INJECTEUR ET POMPE-INJECTEUR

Serial No. ;

Key No.	Part No.	Description	Description	Q'ty	S.C	Serial No.	ICA	Replaceable part	
								Part No.	Q'ty
032-1	65.96340-5079	HOSE	TUYAU FLEXIBLE	1					
2	65.96340-5080	HOSE	TUYAU FLEXIBLE	1					
3	65.98130-0211	ADAPTER	ADAPTEUR	1					
4	06.56190-0704	SEAL RING A12X18	BAGUE D'ETANCHEITE	1					
5	65.98130-0229	ADAPTER	RACCORD ADAPTATEUR	1					
6	06.56190-0706	SEAL RING A14X20	BAGUE D'ETANCHEITE	1					
7	65.12301-5291	PIPE;FUEL	CONDUITE	1					
8	65.96330-0018	HOSE;RUBBER;RING JOINT	TUYAU CAOUTCHOUC	1					
9	65.97440-0045	CLAMP;HOSE	COLLIER	2					
10	06.78144-2204	HOLLOW SCREW NW10	VIS CREUSE	1					
11	65.98130-0159A	ADAPTER	ADAPTEUR	1					
12	06.56190-0704	SEAL RING A12X18	BAGUE D'ETANCHEITE	1					
13	06.56190-0706	SEAL RING A14X20	BAGUE D'ETANCHEITE	2					
14	65.12301-5289	PIPE;FUEL	CONDUITE	1					
15	65.98130-0229	ADAPTER	RACCORD ADAPTATEUR	2					
16	06.56190-0706	SEAL RING A14X20	BAGUE D'ETANCHEITE	2					
17	65.12301-5268	PIPE;FUEL	CONDUITE	1					
18	65.98130-0229	ADAPTER	RACCORD ADAPTATEUR	1					
19	06.56190-0706	SEAL RING A14X20	BAGUE D'ETANCHEITE	1					
30	65.96507-0055	RING;SEAL	BAGUE	6					
31	65.12301-5288A	PIPE;FUEL	CONDUITE	1					
32	65.98130-0154	ADAPTER	ADAPTEUR	6					
33	06.56180-0712	RING;SEAL	BAGUE D'ETANCHEITE	6					
34	65.98150-0042A	HOLLOW SCREW	VIS CREUSE	6					
35	65.96301-0462	HOSE;RUBBER	TUYAU FLEXIBLE	1					
36	65.97440-0045	CLAMP;HOSE	COLLIER	2					
37	65.97401-5019	CLIP;PIPE	ATTACHE	1					
38	06.01923-3111	BOLT M8X16	BOULON A 6 PANS	1					
50	65.12501-7042A	FUEL FILTER ASS'Y	ENSEMBLE FILTRE A	1					
51	65.12504-5027	. COVER;FUEL FILTER	. COUVERCLE	1					
52	65.12503-5026	. FILTER;FUEL	. FILTRE A GAZOLE	1					
53	06.01923-3217	BOLT ASS'Y M10X30	BOULON A 6 PANS	2					
54	65.12540-0057B	BRACKET;FUEL FILTER	SUPPORT	1					
55	06.01913-3216	BOLT M10X28	BOULON A 6 PANS	4					
56	65.98130-0229	ADAPTER	RACCORD ADAPTATEUR	2					
57	06.56190-0706	SEAL RING A14X20	BAGUE D'ETANCHEITE	2					

Fig. 033 ALTERNATOR MOUNTING ALTERNATEUR

Serial No. ;

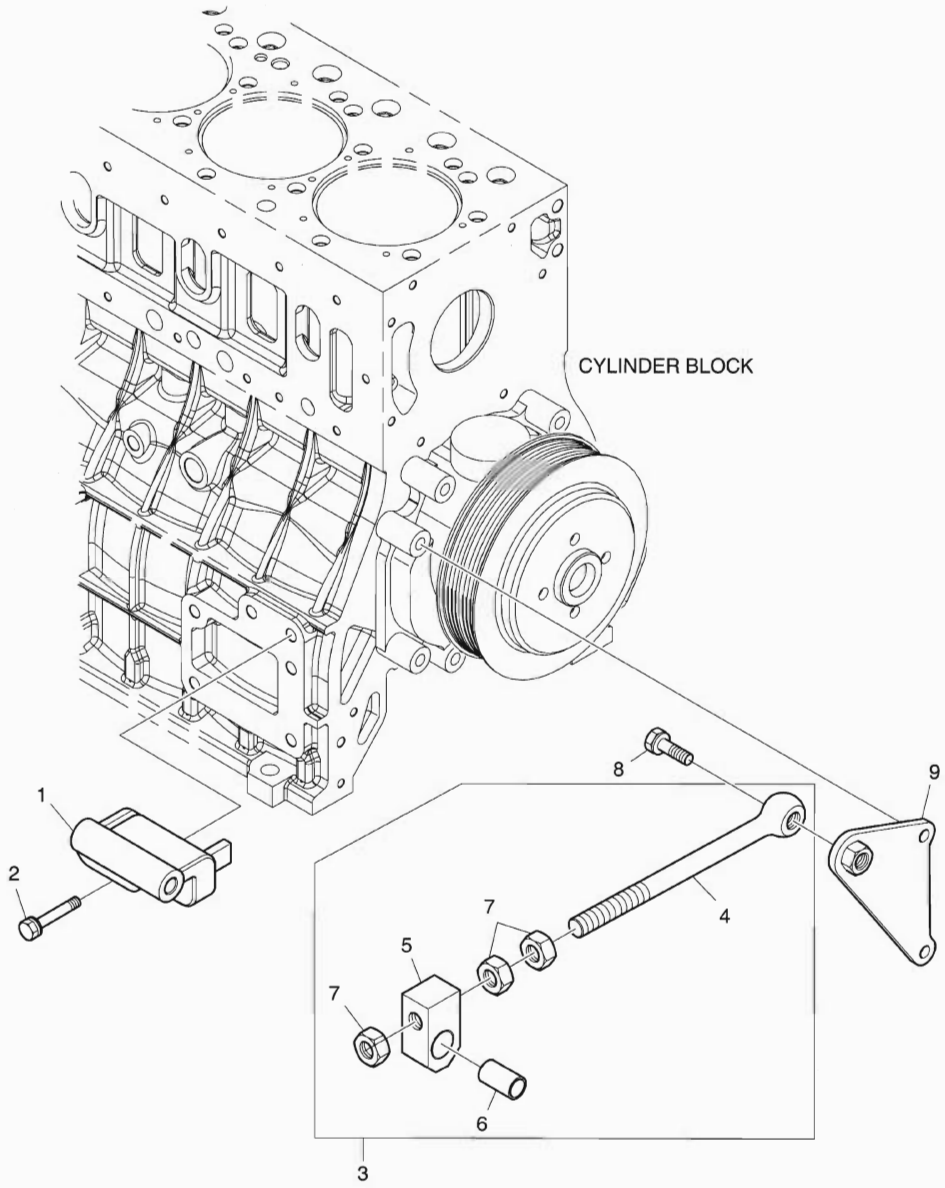

DATE	NOV. 27, 2006
1st EDITION	

Fig. 033 ALTERNATOR MOUNTING ALTERNATEUR

Serial No. ;

Key No.	Part No.	Description	Description	Q'ty	S.C	Serial No.	ICA	Replaceable part	
								Part No.	Q'ty
33-1	65.19102-0096	BRACKET;ALTERNATOR	SUPPORT	1					
2	06.01943-3323	BOLT ASS'Y M12X1.5X60	BOULON 6 PANS	2					
3	65.19103-6010A	EYE BOLT ASS'Y	BOULON A 6PANS	1					
4	65.90441-0009A	. EYE BOLT	. BOUCHON A VIS	1	D				
5	65.19107-0001A	. PIECE;GUIDE	. GUIDE	1	D				
6	65.93020-0055	. BUSH	. AMPOULE	1	D				
7	06.11063-9217	. NUT	. ECROU 6 PANS	3					
8	06.01943-3319	BOLT ASS'Y M12X1.5X40	BOULON 6 A PANS	1					
9	65.19103-5049	SUPPORT;ALTERNATOR	SUPPORT D'ALTERNATEUR	1					

DATE	NOV. 27, 2006
1st EDITION	

Fig. 034 LIFTING HOOK CROCHET DE LEVAGE

Serial No. ;

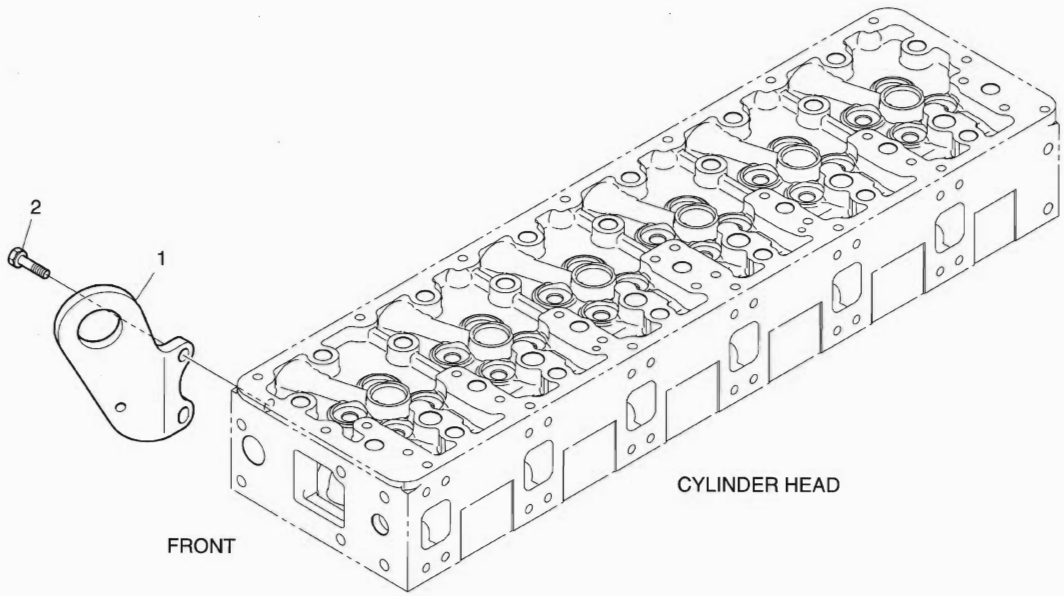

DATE	NOV. 27, 2006
1st EDITION	

Fig. 034 LIFTING HOOK CROCHET DE LEVAGE

Serial No. ;

Key No.	Part No.	Description	Description	Q'ty	S.C	Serial No.	ICA	Replaceable part	
								Part No.	Q'ty
034-1	65.19202-0057A	HOOK;LIFTING	CROCHET	1					
2	06.01924-3217	BOLT ASS'Y M10X30	BOULON A 6PANS	2					

Fig. 035 STARTER DEMARREUR

Serial No. ;

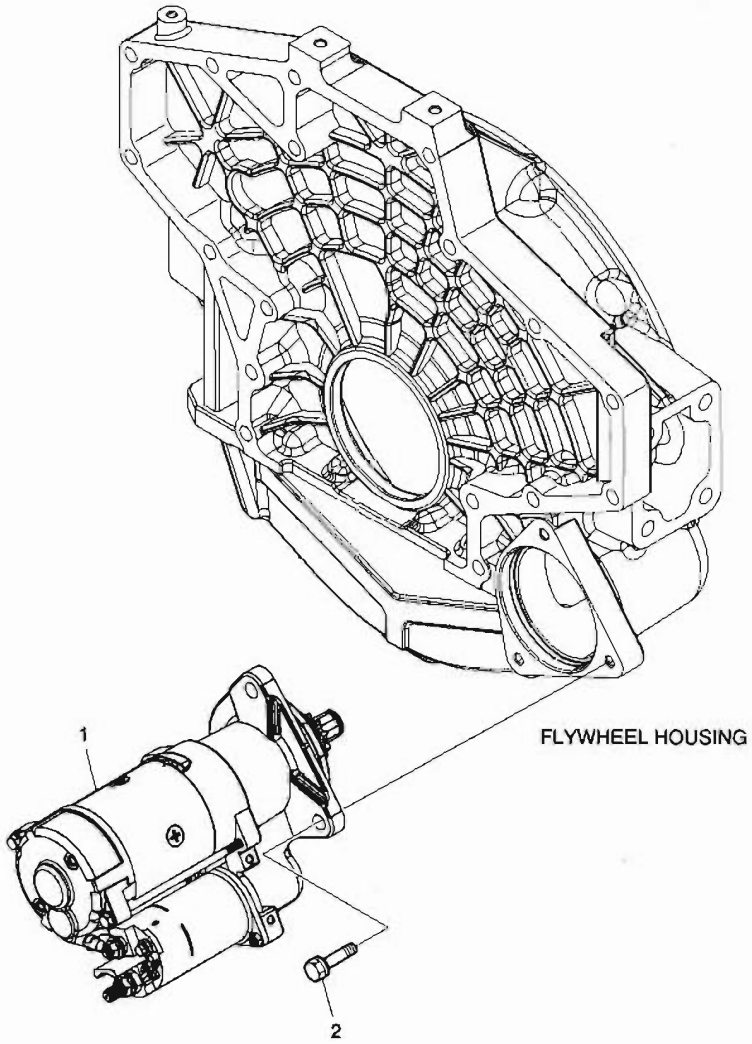

DATE	NOV. 27, 2006
1st EDITION	

Fig. 035 STARTER DEMARREUR

Serial No. ;

Key No.	Part No.	Description	Description	Q'ty	S.C	Serial No.	ICA	Replaceable part	
								Part No.	Q'ty
035-1	65.26201-7075A	STARTER	D'MARREUR	1					
2	06.01953-3318	BOLT ASS'Y M12X1.5X35	BOULON A 6 PANS	3					

Fig. 036 SENSOR CAPTEUR

Serial No. ;

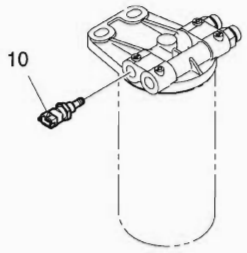

FUEL FILTER

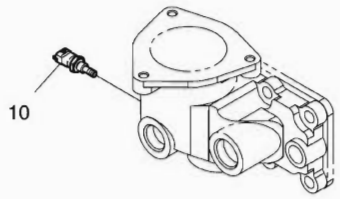

THERMOSTAT HOUSING

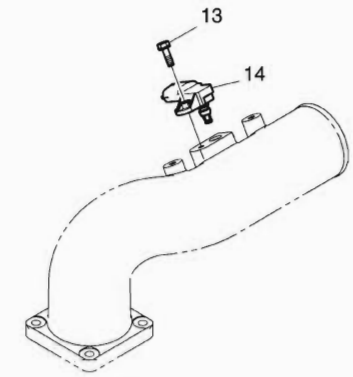

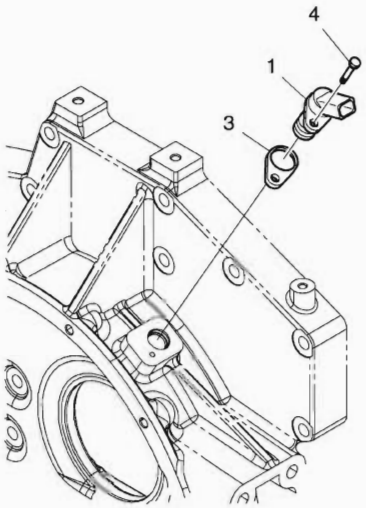

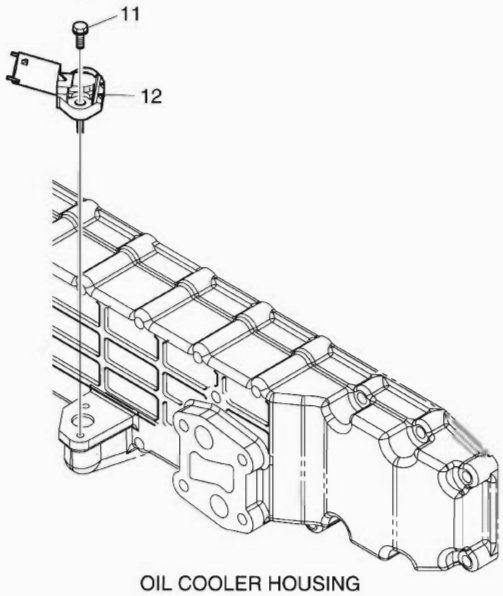

OIL COOLER HOUSING

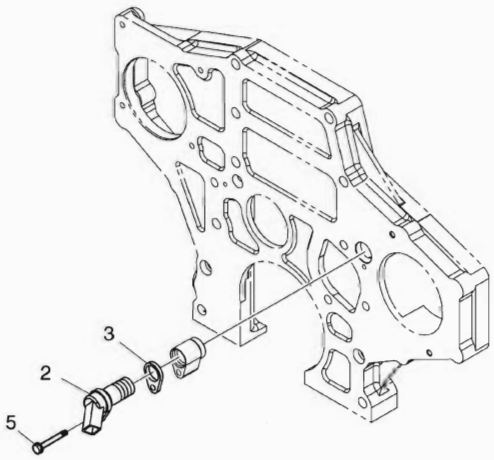

DATE	NOV. 27, 2006
1st EDITION	

Fig. 036 SENSOR CAPTEUR

Serial No. ;

Key No.	Part No.	Description	Description	Q'ty	S.C	Serial No.	ICA	Replaceable part	
								Part No.	Q'ty
036-1	65.27103-7014	SENSOR	CAPTEUR	1					
2	65.27103-7014	SENSOR	CAPTEUR	1					
3	65.11308-0005	SHIM	ENTERTOISE	2	R				
	65.11308-0006	SHIM	ENTERTOISE	2	R				
	65.11308-0007	SHIM	ENTERTOISE	2	R				
	65.11308-0008	SHIM	ENTERTOISE	2	R				
4	06.01923-2913	BOLT ASS'Y M6X20	BOULON A 6 PANS	1					
5	06.01923-2919	BOLT ASS'Y M6X40	BOULON A 6 PANS	1					
10	65.27423-7003	SENSOR;WATER TEMP	CAPTEUR	2					
11	06.01923-2913	BOLT ASS'Y M6X20	BOULON A 6 PANS	2					
12	65.27427-7001	SENSOR;OIL PRESSURE	CAPTEUR	1					
13	06.01923-2915	BOLT ASS'Y M6X25	BOULON A 6 PANS	1					
14	65.27444-7001	SENSOR;BOOST PRESSURE	CAPTEUR	1					

DATE	NOV. 27, 2006
1st EDITION	

Fig. 037 WIRE HARNESS
JAGUE DE NIVEAU

Serial No. ;

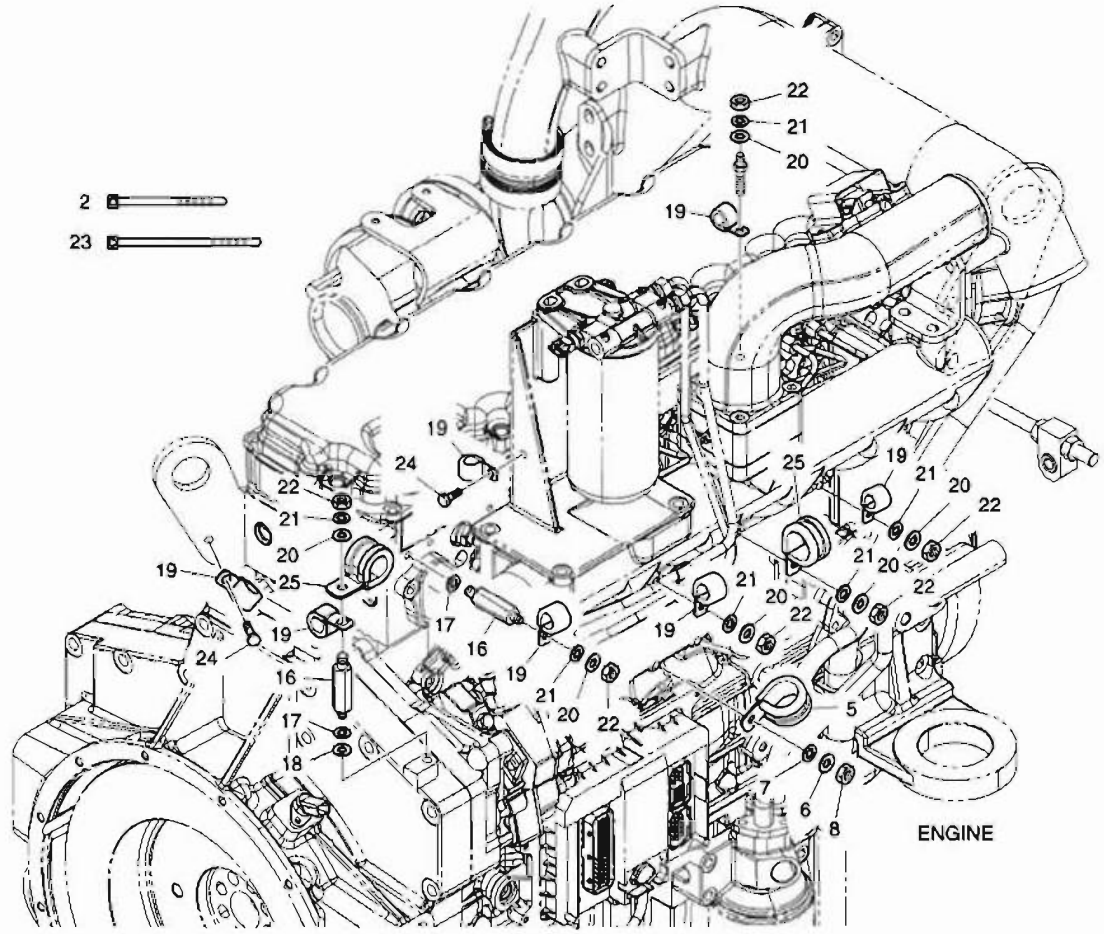

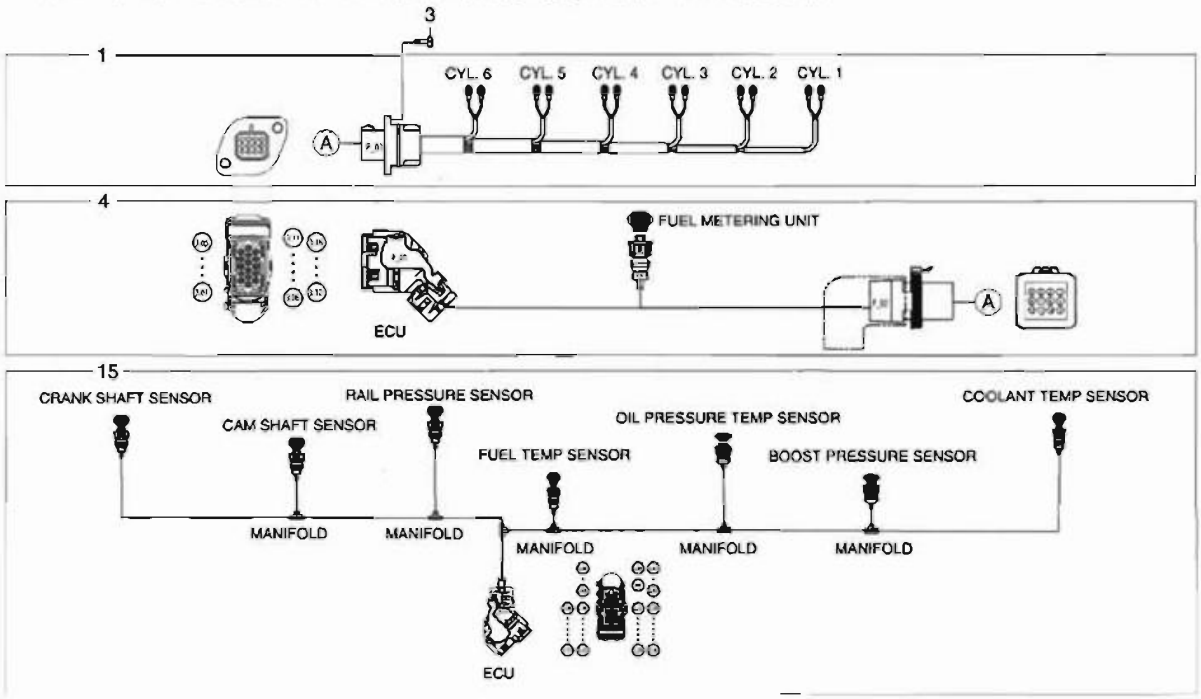

DATE	NOV. 27, 2006
1st EDITION	

Fig. 037 WIRE HARNESS JAGUE DE NIVEAU

Serial No. ;

Key No.	Part No.	Description	Description	Q'ty	S.C	Serial No.	ICA	Replaceable part	
								Part No.	Q'ty
037-1	65.29101-6184B	WIRE;ELECTRIC	FIL	1					
2	65.97460-0008	BAND;TENSION	JAGUE DE NIVEAU	5					
3	06.01913-2911	BOLT ASS'Y M6X16	BOULON A 6 PANS	2					
4	65.29101-6201A	WIRE;ELECTRIC	FIL	1					
5	65.97401-0188	CLIP;PIPE	ATTACHE	1					
6	06.15010-2311	WASHER	RONDELLE	1					
7	06.16731-2107	WASHER	RONDELLE ELASTIQUE	1					
8	06.11063-8214	NUT	ECROU 6 PANS	1					
15	65.29101-6209	WIRE;ELECTRIC	FIL	1					
16	65.90201-0128	BOLT;STUD	BOULON A 6 PANS	2					
17	06.16731-2107	WASHER	RONDELLE ELASTIQUE	2					
18	06.15010-2311	WASHER	RONDELLE	1					
19	65.97401-0196	CLIP;PIPE	CLIP DE FIXATION	7					
20	06.15010-2311	WASHER	RONDELLE	6					
21	06.16731-2107	WASHER	RONDELLE ELASTIQUE	6					
22	06.11063-8214	NUT	ECROU 6 PANS	6					
23	65.97460-0005	BAND;TENSION	ATTACHE DE TUYAU	2					
24	06.01923-3111	BOLT ASS'Y M8X16	BOULON A 6 PANS	2					
25	65.97401-5024	CLIP;PIPE	ATTACHE	2					

Fig. 038 ENGINE MOUNTING SUPPORT DE MOTEUR

Serial No. ;

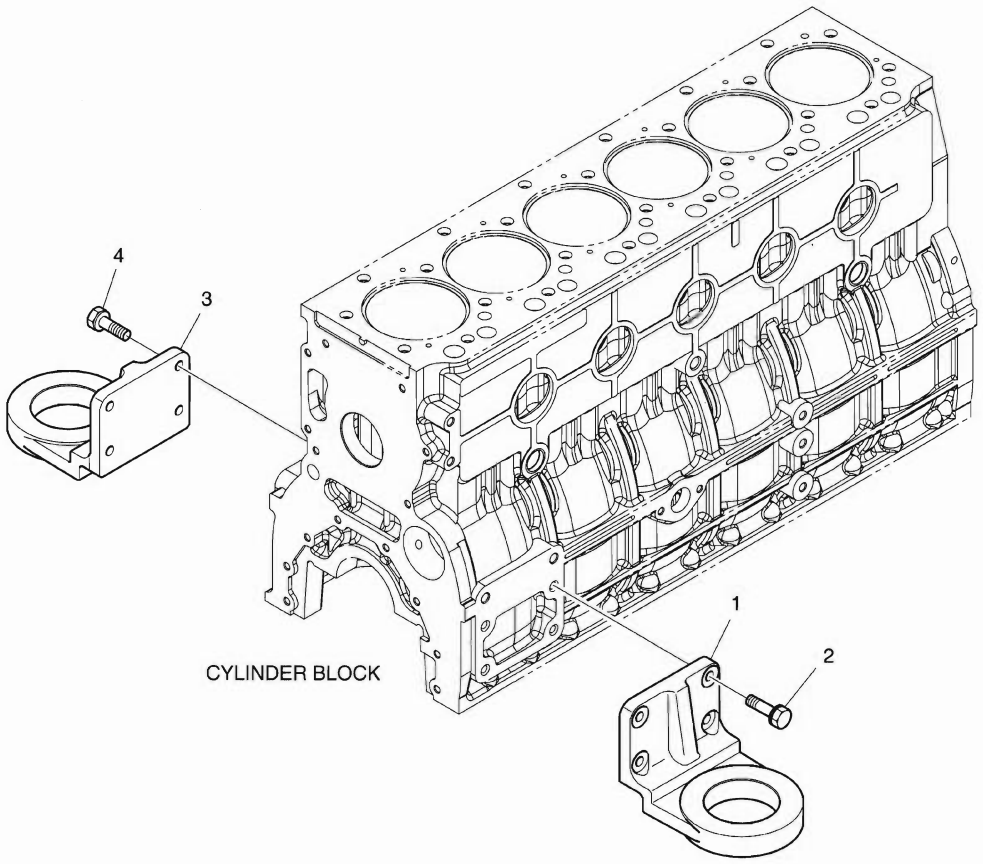

DATE	NOV. 27, 2006
1st EDITION	

Fig. 038 ENGINE MOUNTING SUPPORT DE MOTEUR

Serial No. ;

Key No.	Part No.	Description	Description	Q'ty	S.C	Serial No.	ICA	Replaceable part	
								Part No.	Q'ty
038-1	65.41530-0186	BRACKET;FRONT MOUNTING	SUPPORT	1					
2	06.01924-3217	BOLT ASS'Y M10X30	BOULON A 6PANS	4					
3	65.41530-0186	BRACKET;FRONT MOUNTING	SUPPORT	1					
4	06.01924-3217	BOLT ASS'Y M10X30	BOULON A 6PANS	4					

Fig. 039 AIR COMPRESSOR COMPRESSEUR D'AIR

Serial No. ;

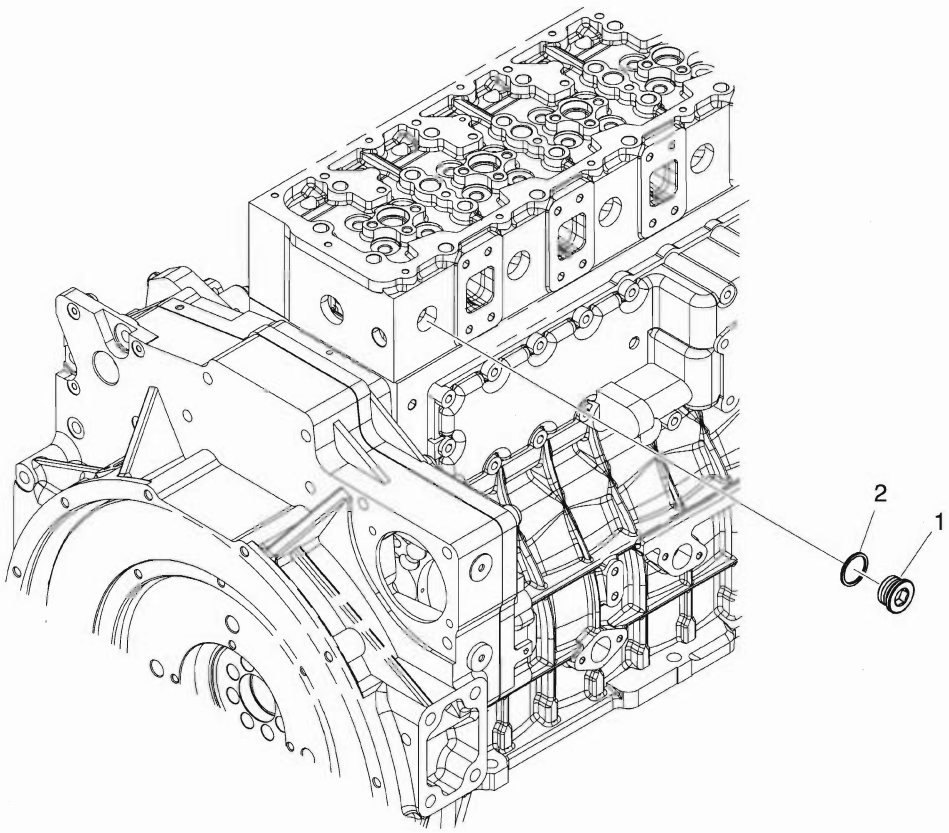

DATE	NOV. 27, 2006
1st EDITION	

Fig. 039 AIR COMPRESSOR COMPRESSEUR D'AIR

Serial No. ;

Key No.	Part No.	Description	Description	Q'ty	S.C	Serial No.	ICA	Replaceable part	
								Part No.	Q'ty
039-1	65.90310-0135	PLUG;SCREW	BOUCHON A VIS	1					
2	06.56190-0705	RING;SEAL A14X18	ENSEMBLE BAGUE	1					

DATE	NOV. 27, 2006
1st EDITION	

Fig. 040 OVERHAUL GASKET KIT - ALL
KIT DE GARNITURE DE REVISION

Serial No. ;

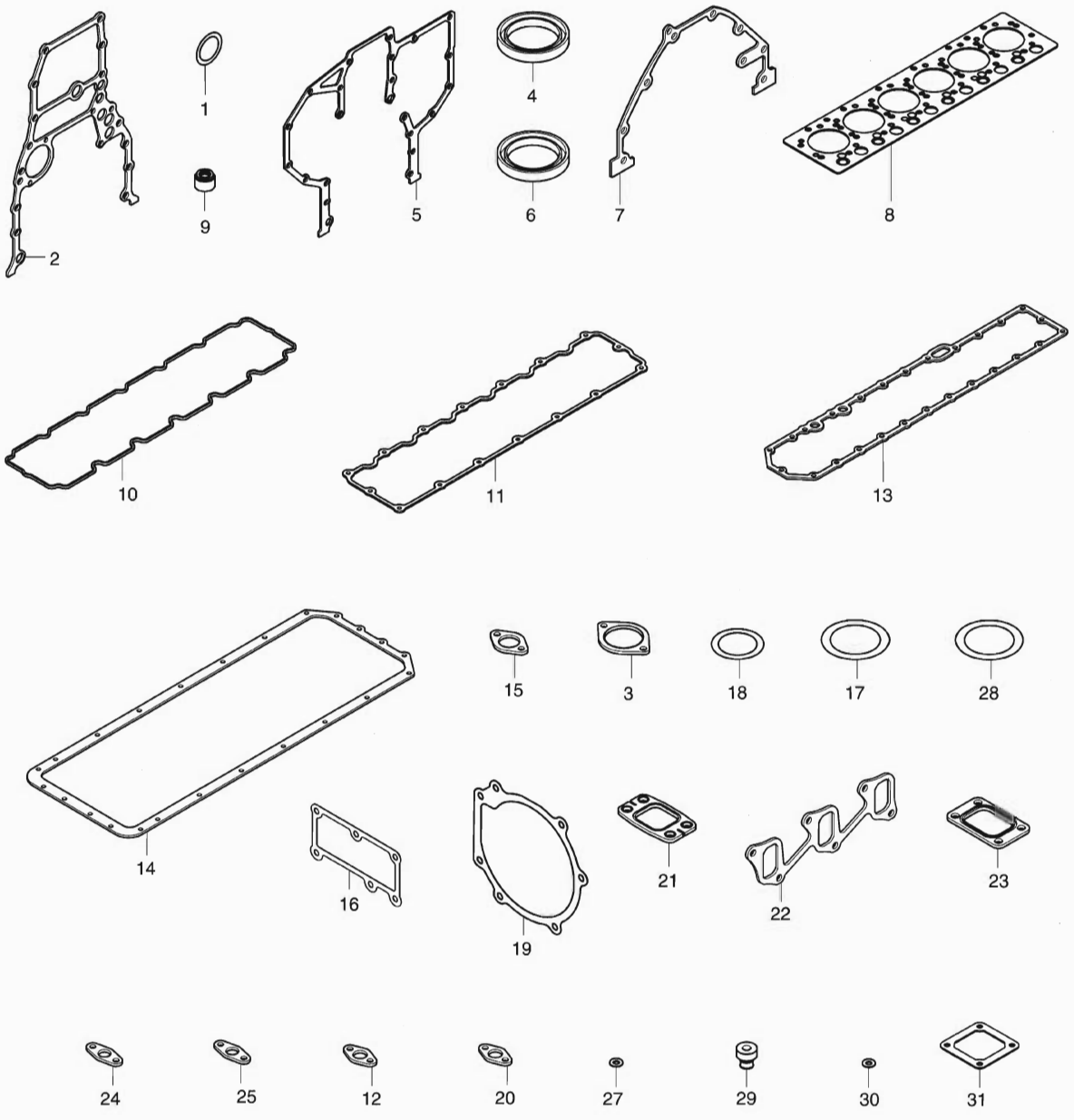

DATE	NOV. 27, 2006
1st EDITION	

Fig. 040 OVERHAUL GASKET KIT - ALL
KIT DE GARNITURE DE REVISION

Serial No. ;

Key No.	Part No.	Description	Description	Q'ty	S.C	Serial No.	ICA	Replaceable part	
								Part No.	Q'ty
040--	65.99601-8071	ALL OVERHAUL GASKET KIT	TOUS REVISENT LE KIT DE	1					
1	06.56021-0102	. O-RING	. JOINT TORIQUE	1					
2	65.01903-0034	. GASKET	. JOINT	1					
3	65.38901-0018A	. GASKET;PTO	. JOINT	1					
4	65.01510-0040	. SEAL;OIL	. JOINT D'HUILE	1					
5	65.01904-0032	. GASKET	. JOINT	1					
6	65.01510-0157	. SEAL;OIL	. JOINT D'HUILE	1					
7	65.01905-0009	. GASKET	. JOINT	1					
8	65.03901-0071	. GASKET;CYLINDER HEAD	. JOINT	1					
9	65.03905-5002	. PACKING;CYLHEAD COVER	. JOINT	14					
10	65.03905-0037A	. GASKET;CYLHEAD COVER	. JOINT	1					
11	65.03905-0041	. GASKET;CYLHEAD COVER	. JOINT	1					
12	65.05903A0001	. GASKET	. JOINT	4					
13	65.05902-0023	. GASKET;OIL COOLER	. JOINT	1					
14	65.05904-0035	. GASKET;OIL PAN	. JOINT	1					
15	65.05901-0027	. GASKET;OIL FILTER	. JOINT	1					
16	65.06904-0020	. GASKET;THERMOSTAT	. JOINT	1					
17	65.06904-0003	. GASKET;THERMOSTAT	. JOINT	1					
18	65.96501-0099A	. O-RING	. JOINT TORIQUE	2					
19	65.06901-0042	. GASKET;WATER PUMP	. JOINT	1					
20	65.06903-0029	. GASKET;WATER PIPE	. JOINT	1					
21	65.08901-0045	. GASKET;EXHAUST MANIFOL	. JOINT	6					
22	65.08902-0030A	. GASKET;INTAKE MANIFOLD	. JOINT	2					
23	65.09901-0018A	. GASKET	. JOINT	1					
24	65.96601-0067	. GASKET;T/C OIL RETURN	. JOINT	1					
25	65.96601-0052	. GASKET(M/G OIL COOLER)	. JOINT	1					
27	65.96507-0053	. RING;SEAL	. BAGUE	6					
28	06.56020-0115	. O-RING	. JOINT TORIQUE	1					
29	65.96210-6001A	. RUBBER;CUSHION	. CUSHION;RUBBER	3					
30	06.56180-0712	. RING;SEAL A8X14	. BAGUE D'ETANCHEITE	18					
31	65.09904-0008	. GASKET;AIR HEATER	. JOINT	2					

DATE	NOV. 27, 2006
1st EDITION	

Fig. 041 OVERHAUL GASKET KIT - TOP
KIT DE GARNITURE DE REVISION

Serial No. ;

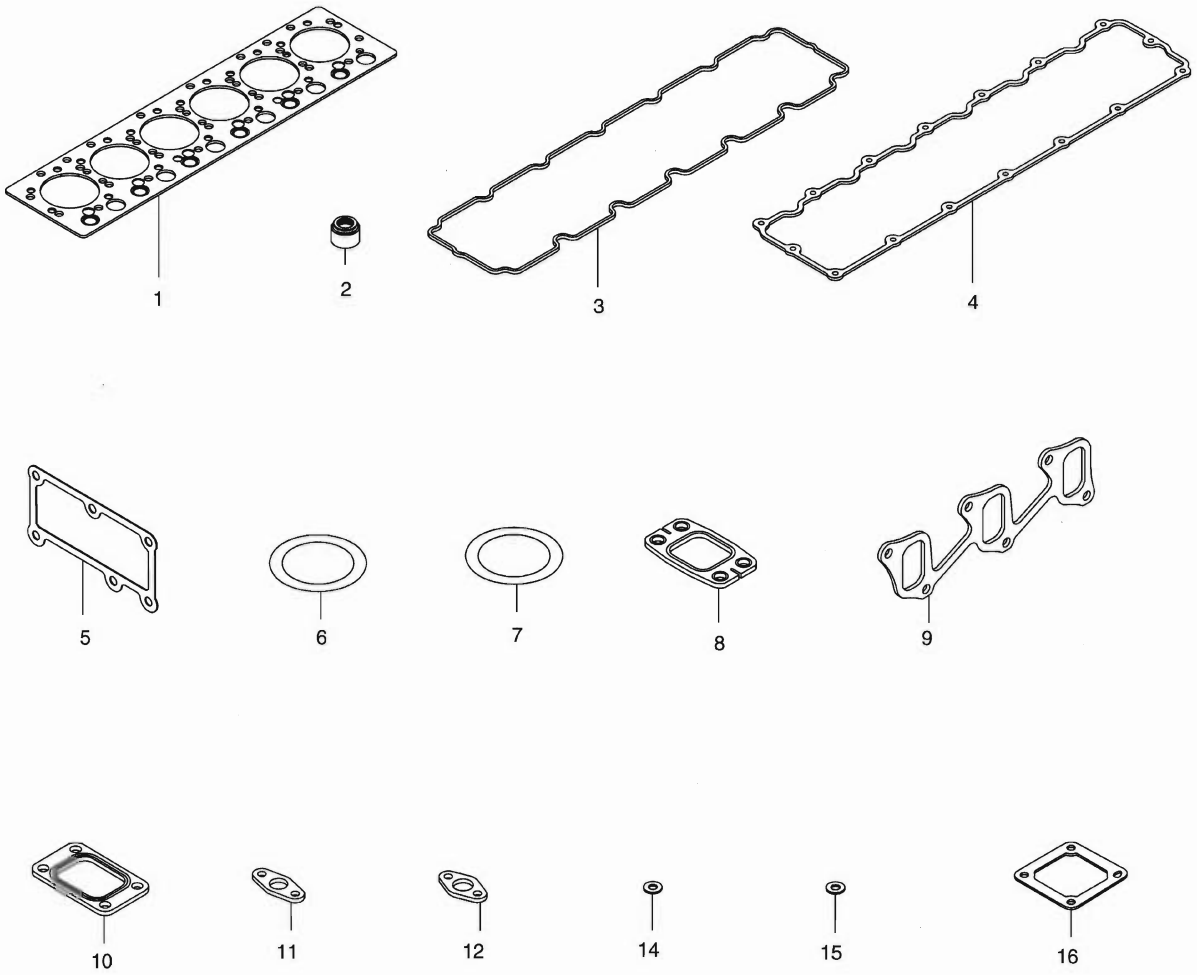

DATE	NOV. 27, 2006
1st EDITION	

Fig. 041 OVERHAUL GASKET KIT - TOP
KIT DE GARNITURE DE REVISION

Serial No. ;

Key No.	Part No.	Description	Description	Q'ty	S.C	Serial No.	ICA	Replaceable part	
								Part No.	Q'ty
41--	65.99605-8042	TOP OVERHAUL GASKET KIT	TOUS REVISENT LE KIT DE	1					
1	65.03901-0071	. GASKET;CYLINDER HEAD	. JOINT	1					
2	65.03905-5002	. PACKING;CYLHEAD COVER	. JOINT	14					
3	65.03905-0037A	. GASKET;CYLHEAD COVER	. JOINT	1					
4	65.03905-0041	. GASKET;CYLHEAD COVER	. JOINT	1					
5	65.06904-0020	. GASKET;THERMOSTAT	. JOINT	1					
6	65.06904-0003	. GASKET;THERMOSTAT	. JOINT	1					
7	65.96501-0099A	. O-RING	. JOINT TORIQUE	2					
8	65.08901-0045	. GASKET;EXHAUST MANIFOL	. JOINT	6					
9	65.08902-0030A	. GASKET;INTAKE MANIFOLD	. JOINT	2					
10	65.09901-0018A	. GASKET	. JOINT	1					
11	65.96601-0067	. GASKET;T/C OIL RETURN	. JOINT	1					
12	65.96601-0052	. GASKET(M/G OIL COOLER)	. JOINT	1					
14	65.96507-0053	. RING;SEAL	. BAGUE	6					
15	06.56180-0712	. RING;SEAL A8X14	. BAGUE D'ETANCHEITE	18					
16	65.09904-0008	. GASKET;AIR HEATER	. JOINT	2					

DATE	NOV. 27, 2006
1st EDITION	

Fig. 1100 MAIN FRAME
BATI PRINCIPAL

Serial No. ;

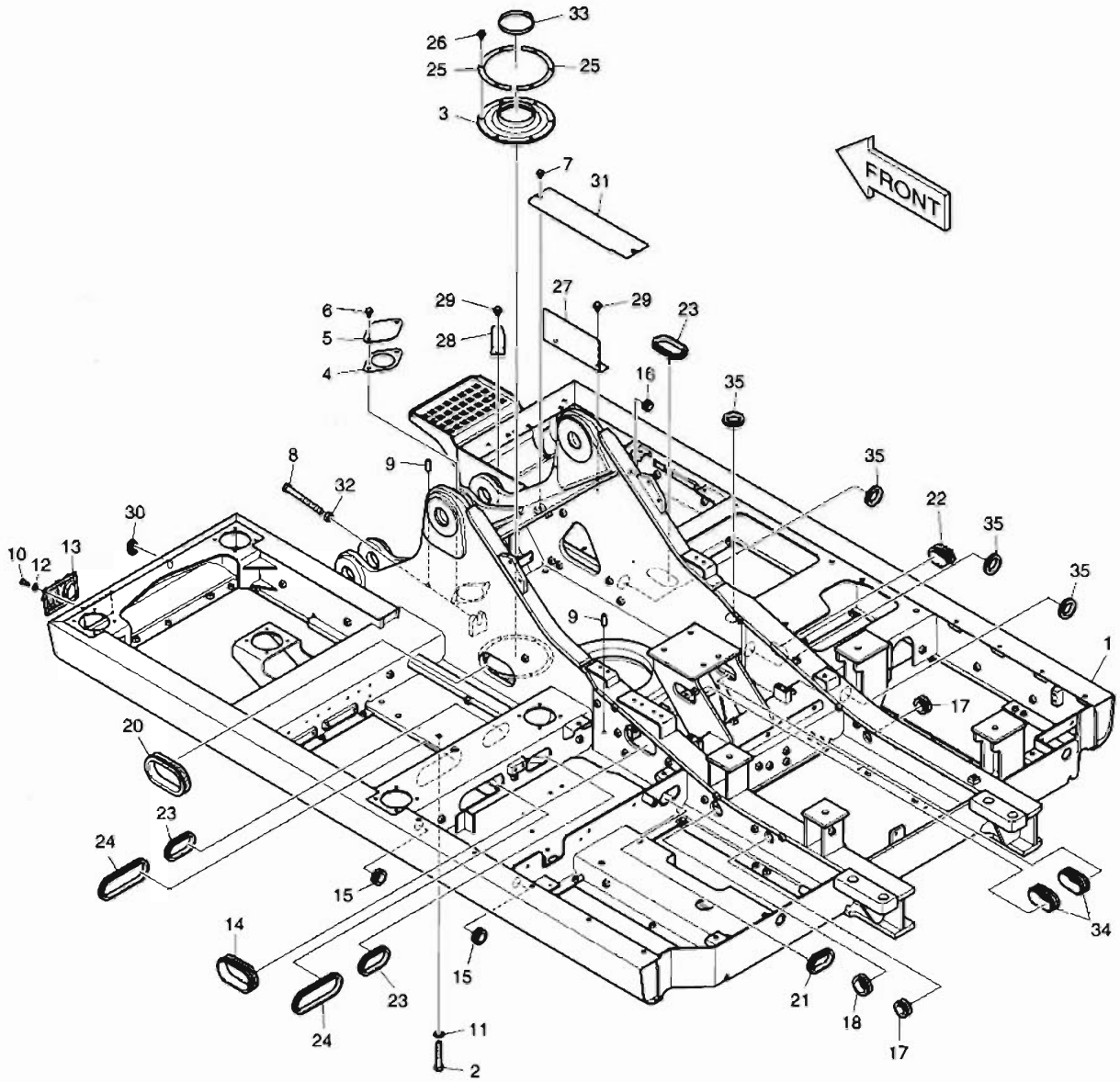

DATE	NOV. 27, 2006
1st EDITION	

Fig. 1100 MAIN FRAME BATI PRINCIPAL

Serial No. ;

Key No.	Part No.	Description	Description	Q'ty	S.C	Serial No.	ICA	Replaceable part	
								Part No.	Q'ty
1100--	K1013755C	MAIN FRAME ASS'Y	ARMATURE PRINCIPALE	-	D				
1	K1013756C	FRAME;MAIN	ARMATURE PRINCIPALE	1					
2	S0571066	BOLT	BOULON A 6 PANS	36					
3	160-00068	COVER;RUBBER	COUVERCLE	1					
4	180-00463	PACKING	RONDELLE D'ETANCHEITE	1					
5	621-02938B	COVER	COUVERCLE	1					
6	DS0025023	BOLT;SET	BOULON A 6 PANS	2					
7	DS0025014	BOLT;SET	BOULON A 6 PANS	2					
8	S0572166	BOLT	BOULON A 6 PANS	1					
9	2123-1107D7	PIN;KNOCK	GOUPILLE	2					
10	S0508866	BOLT	BOULON A 6 PANS	4					
11	2114-9012A	WASHER;HARDEN	RONDELLE	36					
12	S5010513	WASHER	CALE	4					
13	621-02800	GUARD;LAMP	GARDE	1					
14	DS7601048	BUSHING	DOUILLE	1					
15	2160-1004D44	BUSHING;RUBBER	DOUILLE EN CAOUTCHOUC	2					
16	2160-1004D48	BUSHING;RUBBER	DOUILLE EN CAOUTCHOUC	1					
17	2160-1004D51	BUSHING;RUBBER	DOUILLE EN CAOUTCHOUC	2					
18	2160-1004D55	BUSHING;RUBBER	DOUILLE EN CAOUTCHOUC	1					
20	2160-1201D11	BUSHING;RUBBER	DOUILLE EN CAOUTCHOUC	1					
21	2160-1201D12	BUSHING;RUBBER	DOUILLE EN CAOUTCHOUC	1					
22	2160-1201D14	BUSHING;RUBBER	DOUILLE EN CAOUTCHOUC	1					
23	DS7601020	BUSHING;RUBBER	DOUILLE EN CAOUTCHOUC	3					
24	DS7601021	BUSHING;RUBBER	DOUILLE EN CAOUTCHOUC	2					
25	191-02990B	PLATE	PLAQUE	2					
26	K1001029	BOLT	BOULON A 6 PANS	6					
27	K1013982	PLATE	PLAQUE	1					
28	195-02623B	BRACKET	SUPPORT	1					
29	DS0025015	BOLT;SET	BOULON A 6 PANS	3					
30	160-00081	CAP;RUBBER	CHAPEAU	1					
31	K1014444A	PLATE	PLAQUE	1					
32	S4013133	NUT	ECROU 6 PANS	1					
33	S8470165	CLAMP;HOSE	COLLIER	1					
34	DS7601023	BUSHING;RUBBER	DOUILLE EN CAOUTCHOUC	2					
35	2160-1004D3	BUSHING;RUBBER	DOUILLE EN CAOUTCHOUC	4					

DATE	NOV. 27, 2006
1st EDITION	

Fig. 1110 COUNTER WEIGHT MASSE D'EQUILIBRAGE

Serial No. ;

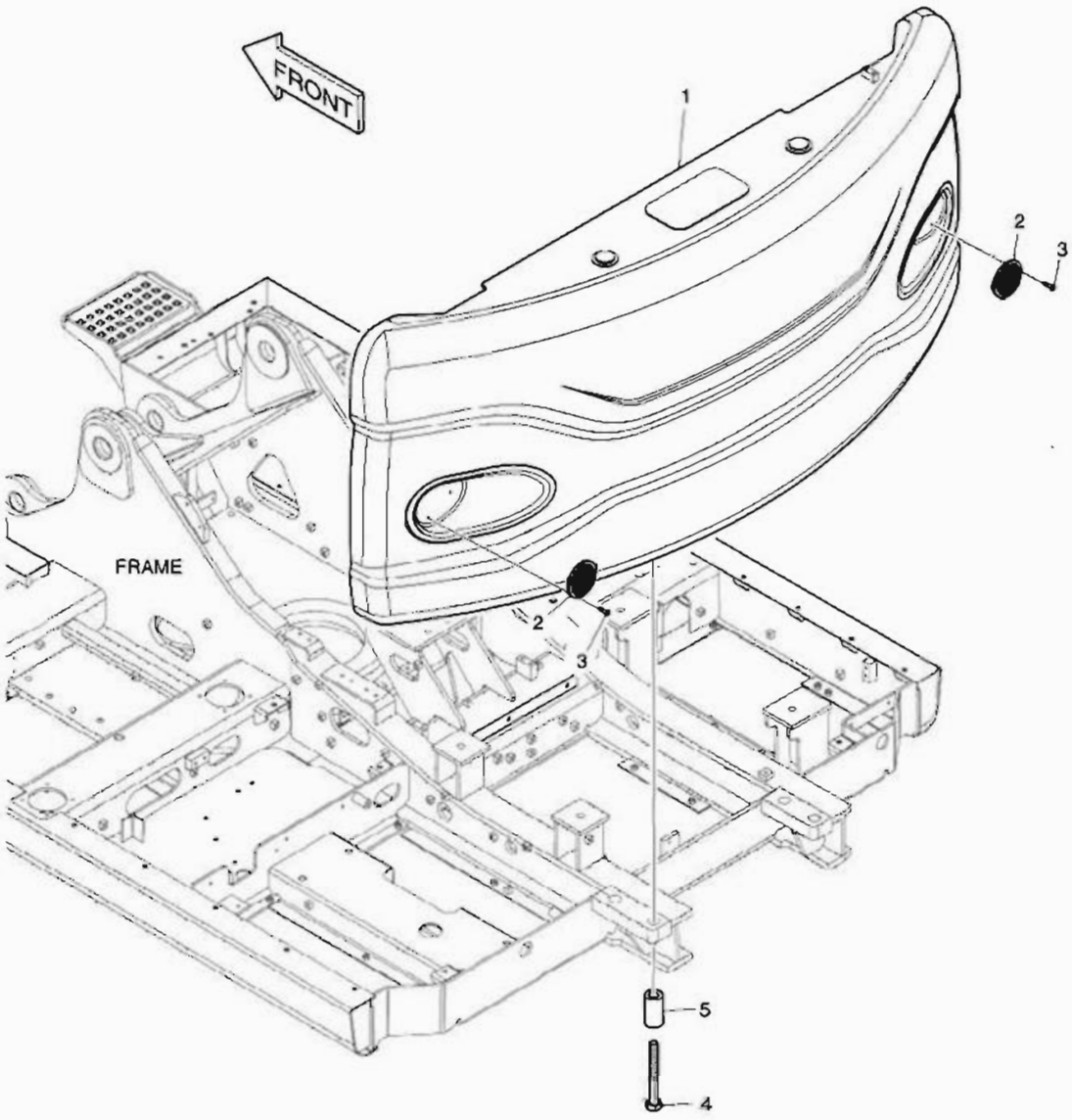

DATE	NOV. 27, 2006
1st EDITION	

Fig. 1110 COUNTER WEIGHT MASSE D'EQUILIBRAGE

Serial No. ;

Key No.	Part No.	Description	Description	Q'ty	S.C	Serial No.	ICA	Replaceable part	
								Part No.	Q'ty
110--	K1012665A	COUNTER WEIGHT	MASSE D'EQUILIBRAGE	-	D				
1	K1012664A	COUNTER WEIGHT;3ton	MASSE D'EQUILIBRAGE	1					
2	190-01107B	REFLECTOR	REDUCTEUR	2					
3	S3450343	SCREW	VIS	6					
4	2120-2137A	BOLT	BOULON A 6 PANS	4					
5	2114-1817	SPACER	BAGUE D'ECARTEMENT	4					

DATE	NOV. 27, 2006
1st EDITION	

Fig. 1120 ENGINE MOUNTING
SUPPORT DE MOTEUR

Serial No. ;

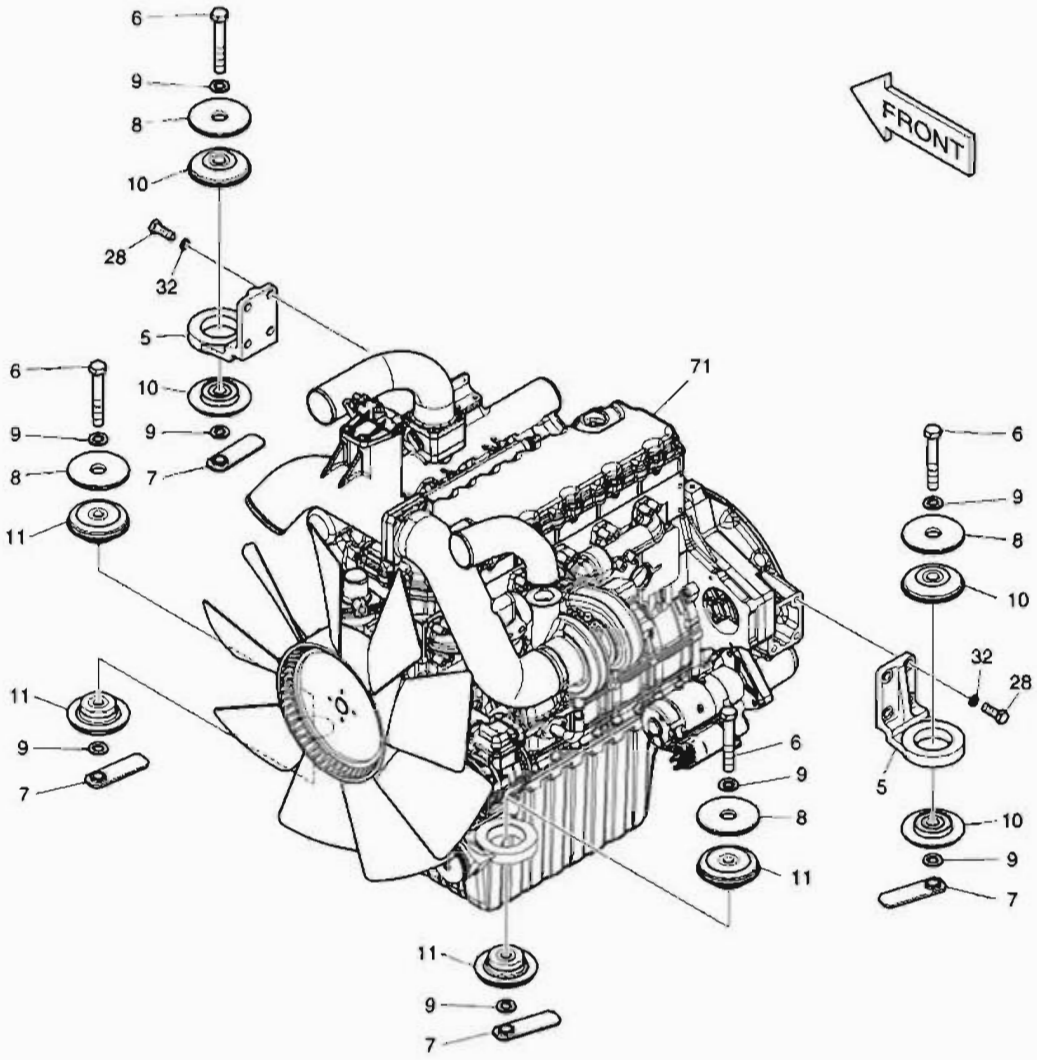

DATE	NOV. 27, 2006
1st EDITION	

Fig. 1120 ENGINE MOUNTING SUPPORT DE MOTEUR

Serial No. ;

Key No.	Part No.	Description	Description	Q'ty	S.C	Serial No.	ICA	Replaceable part	
								Part No.	Q'ty
1120--	K1011714C	ENGINE ASS'Y	ENSEMBLE MOTEUR	-	D				
5	K1009639	BRACKET	SUPPORT	2					
6	S0771466	BOLT	BOULON A 6 PANS	4					
7	195-02643C	SUPPORT;NUT	SUPPORT	4					
8	2114-1929	WASHER	CALE	4					
9	2114-9012A	WASHER;HARDEN	RONDELLE	8					
10	2161-9066	RUBBER;FRONT	CAOUTCHOUC	4					
11	4161-9067	MOUNT RUBBER	LE CAOUTCHOUC DE BATI	4					
28	S0521566	BOLT;HEX.	BOULON A 6 PANS	8					
32	S5102703	WASHER;SPRING	RONDELLE ELASTIQUE	8					
71	K1011715	ENGINE ASS'Y	ENSEMBLE MOTEUR	1					

DATE	NOV. 27, 2006
1st EDITION	

Fig. 1130 RADIATOR MOUNTING
SUPPORT DE RADIATEUR

Serial No. ;

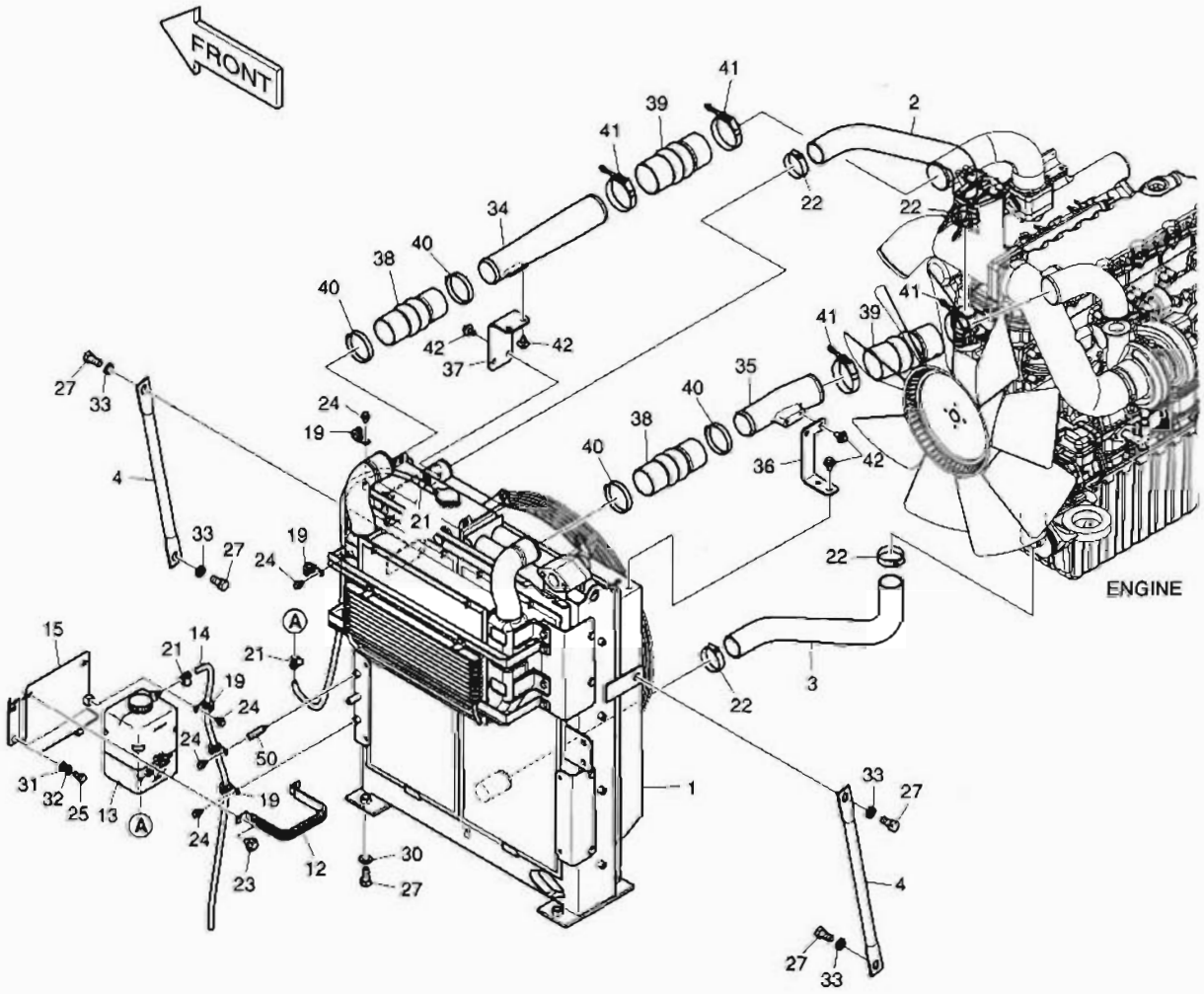

DATE	NOV. 27, 2006
1st EDITION	

Fig. 1130 RADIATOR MOUNTING SUPPORT DE RADIATEUR

Serial No. ;

Key No.	Part No.	Description	Description	Q'ty	S.C	Serial No.	ICA	Replaceable part	
								Part No.	Q'ty
1130--	K1011714C	ENGINE ASS'Y	ENSEMBLE MOTEUR	-	D				
1	K1009271B	RADIATOR ASS'Y	ENSEMBLE RADIATEUR	1					
2	K1009160A	HOSE;WATER	TUYAU FLEXIBLE	1					
3	K1009161A	HOSE;WATER	TUYAU FLEXIBLE	1					
4	K1009635	STAY	SEJOUR	2					
12	K1000722A	CLAMP	COLLIER	1					
13	K1003180A	TANK;RESERVE	RESERVOIR	1					
14	DS2079032	HOSE	TUYAU FLEXIBLE	1					
15	K1009745A	BRACKET	SUPPORT	1					
19	124-00208D2	CLIP	AGRAFE	4					
21	S8450006	CLAMP;HOSE	COLLIER	3					
22	S8450053	CLAMP;HOSE	COLLIER	4					
23	DS0025014	BOLT;SET	BOULON A 6 PANS	2					
24	K1001029	BOLT	BOULON A 6 PANS	5					
25	S0515066	BOLT	BOULON A 6 PANS	2					
27	S0521366	BOLT	BOULON A 6 PANS	8					
30	2114-1816A	WASHER;HARDEN	RONDELLE	4					
31	S5010713	WASHER	CALE	2					
32	S5102703	WASHER;SPRING	RONDELLE ELASTIQUE	2					
33	S5102903	WASHER;SPRING	RONDELLE ELASTIQUE	4					
34	K1009162	PIPE;AIR	TUYAU	1					
35	K1009163A	PIPE;AIR	TUYAU	1					
36	K1009636A	BRACKET	SUPPORT	1					
37	K1009637	BRACKET	SUPPORT	1					
38	K1012213	HOSE;AIR	TUYAU FLEXIBLE	2					
39	K1012214	HOSE;AIR	TUYAU FLEXIBLE	2					
40	K1000704	CLAMP	COLLIER	4					
41	124-00194	CLAMP	COLLIER	4					
42	DS0025017	BOLT;SET	BOULON A 6 PANS	8					
50	2120-2187	BOLT;STUD	BOULON A 6 PANS	1					

DATE	NOV. 27, 2006
1st EDITION	

Fig. 1140 RADIATOR
RADIATEUR

Serial No. ;

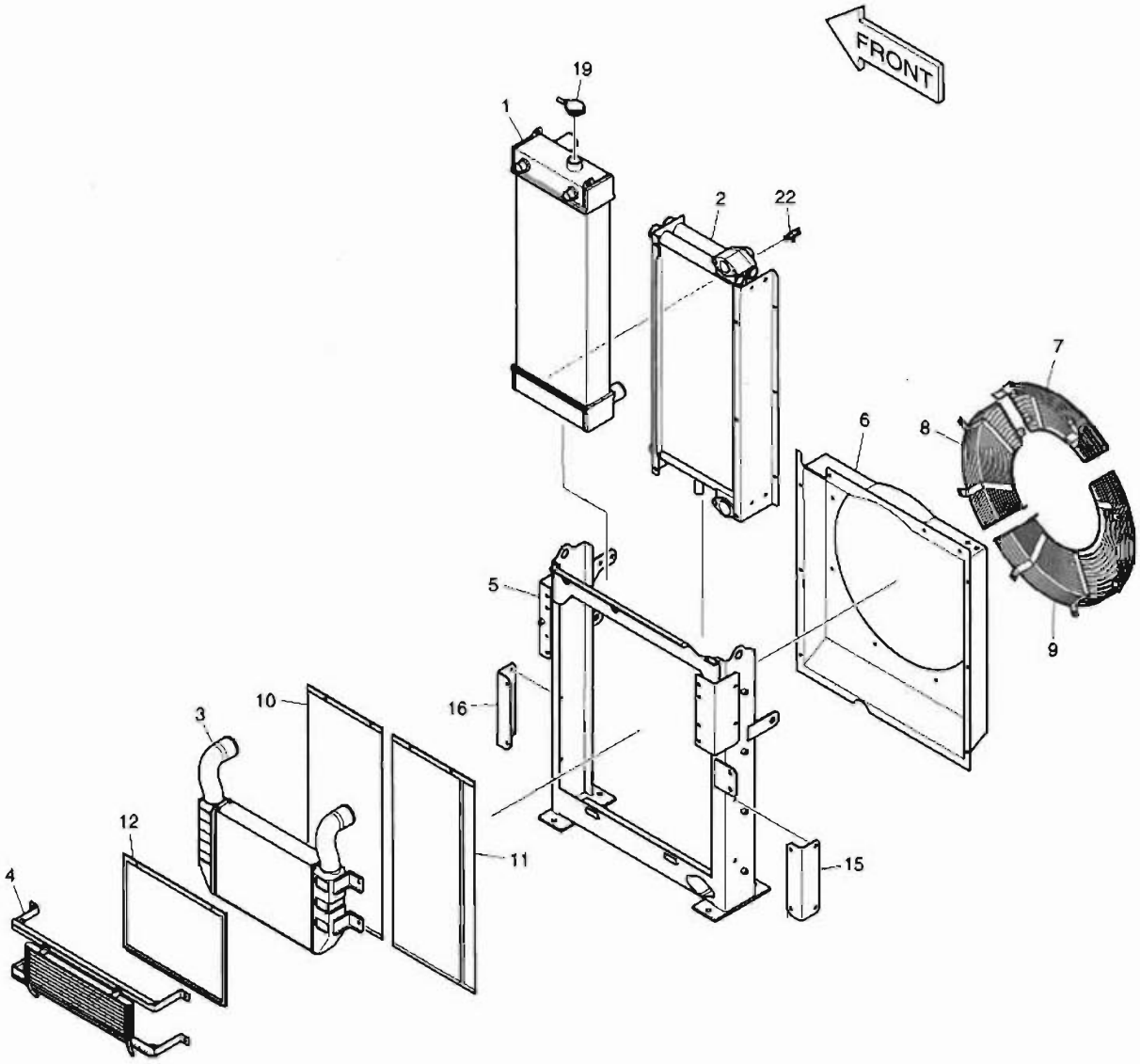

DATE	NOV. 27, 2006
1st EDITION	

Fig. 1140 RADIATOR RADIATEUR

Serial No. ;

Key No.	Part No.	Description	Description	Q'ty	S.C	Serial No.	ICA	Replaceable part	
								Part No.	Q'ty
1140--	K1009271B	RADIATOR ASS'Y	ENSEMBLE RADIATEUR	1					
1	K9004261	RADIATOR	RADIATEUR	1					
2	K9004262	COOLER;OIL	REFROIDISSEUR	1					
3	K9004263	CAC ASS'Y	CHARGEE	1					
4	K1015210	COOLER;FUEL	REFROIDISSEUR	1					
5	-	FRAME	ARMATURE	1					
6	K9004264	SHROUD	MONTURE	1					
7	K9004265	GUARD;FAN	GARDE	1					
8	K9004266	GUARD;FAN	GARDE	1					
9	K9004267	GUARD;FAN	GARDE	1					
10	K9004268	NET;WIRE	FILET DE FIL	1					
11	K9004269	NET;WIRE	FILET DE FIL	1					
12	K9004270	NET;WIRE	FILET DE FIL	1					
15	K9004271	BRACKET	SUPPORT	1					
16	K9004272	BRACKET	SUPPORT	1					
19	K1010769	CAP;PRESSURE	CHAPEAU	1					
22	K9003878	COCK ASS'Y	ROBINET	1					

DATE	NOV. 27, 2006
1st EDITION	

Fig. 1150 MUFFLER SILENCIEUX

Serial No. ;

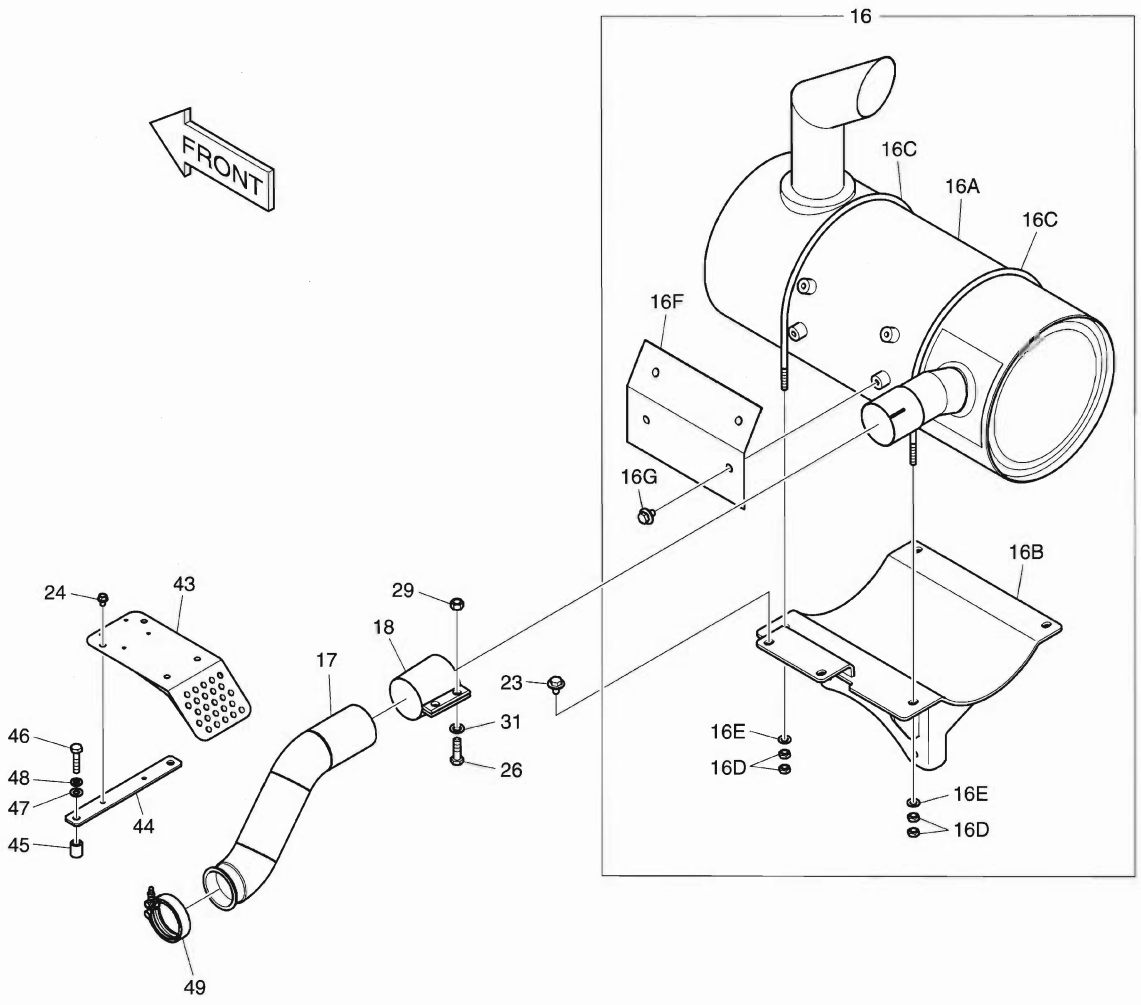

DATE	NOV. 27, 2006
1st EDITION	

Fig. 1150 MUFFLER SILENCIEUX

Serial No. ;

Key No.	Part No.	Description	Description	Q'ty	S.C	Serial No.	ICA	Replaceable part	
								Part No.	Q'ty
150--	K1011714C	ENGINE ASS'Y	ENSEMBLE MOTEUR	-	D				
16	K1011735C	MUFFLER SUB ASS'Y	SILENCIEUX	1					
16A	K1011734B	. MUFFLER	. SILENCIEUX	1					
16B	K1023198A	. BRACKET	. SUPPORT	1					
16C	2120-2135A	. BOLT;U	. BOULON A 6 PANS	2					
16D	S4012633	. NUT	. ECROU	8					
16E	S5010613	. WASHER;PLAIN	. RONDELLE	4					
16F	K1023194	. INSULATOR	. ISOLATEUR	1					
16G	DS0025013	. BOLT;SET	. BOULON A 6 PANS	4					
17	K1009721A	PIPE;EXHAUST	TUYAU	1					
18	124-00310A	CLAMP	COLLIER	1					
23	DS0025014	BOLT;SET	BOULON A 6 PANS	2					
24	K1001029	BOLT	BOULON A 6 PANS	4					
26	S0515466	BOLT	BOULON A 6 PANS	2					
29	S4012733	NUT	ECROU 6 PANS	2					
31	S5010713	WASHER;PLAIN	RONDELLE	2					
43	K1015292A	COVER	COUVERCLE	1					
44	K1015293	PLATE	PLAQUE	1					
45	K1015294	SPACER	BAGUE D'ECARTEMENT	2					
46	S0558466	BOLT	BOULON A 6 PANS	2					
47	S5010613	WASHER;PLAIN	RONDELLE	2					
48	S5102603	WASHER;SPRING	RONDELLE ELASTIQUE	2					
49	K1014728	CLAMP	COLLIER	1					

DATE	NOV. 27, 2006
1st EDITION	

Fig. 1160 AIR CLEANER ASS'Y
FILTRE A AIR

Serial No. ;

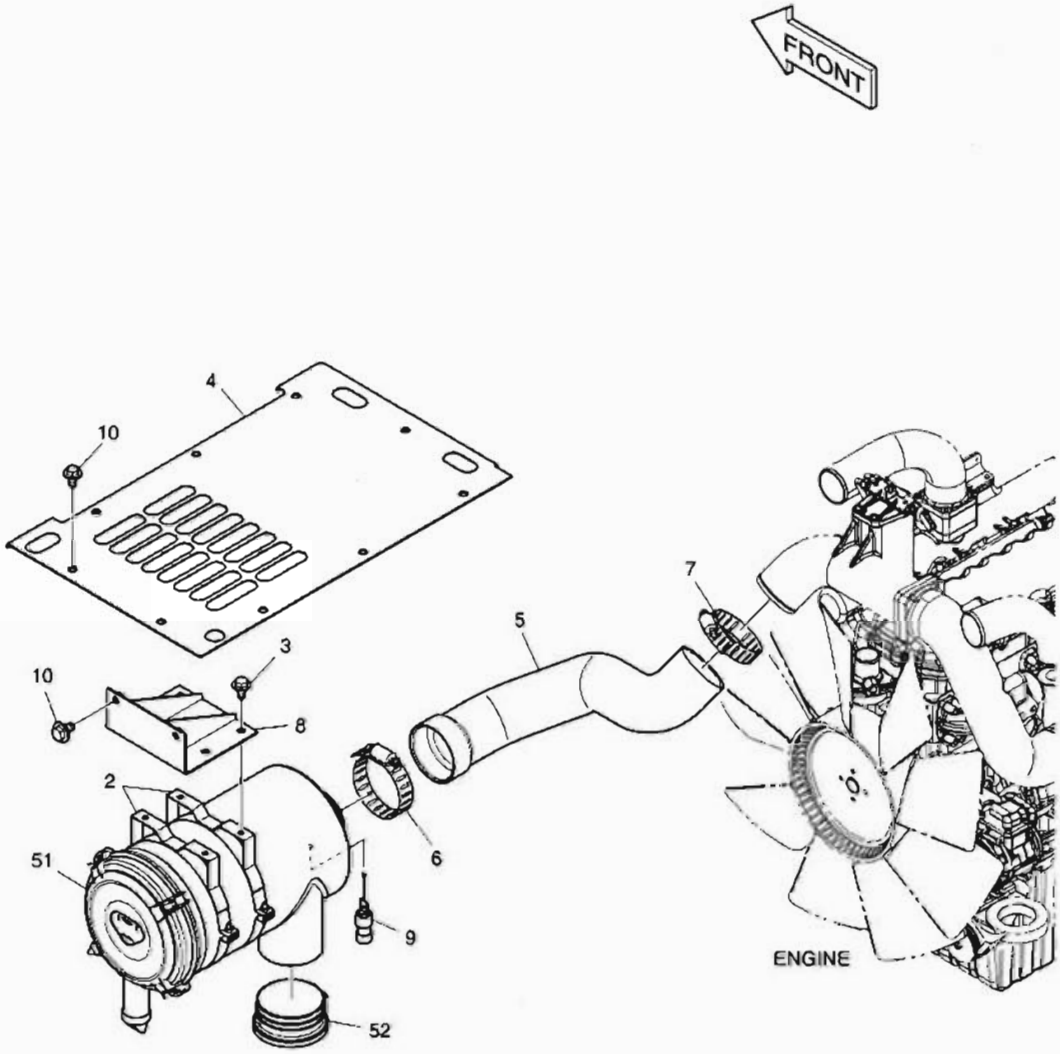

DATE	NOV. 27, 2006
1st EDITION	

Fig. 1160 AIR CLEANER ASS'Y FILTRE A AIR

Serial No. ;

Key No.	Part No.	Description	Description	Q'ty	S.C	Serial No.	ICA	Replaceable part	
								Part No.	Q'ty
160--	K1012708A	AIR CLEANER ASS'Y	ENSEMBLE FILTRE A AIR	-	D				
2	124-00298A	BAND;AIR CLEANER	ATTACHE	2					
3	DS0025023	BOLT;SET	BOULON A 6 PANS	4					
4	K1012710A	COVER;AIR CLEANER	COUVERCLE	1					
5	K1012719	HOSE;AIR	TUYAU FLEXIBLE	1					
6	S8510143	CLAMP;HOSE	COLLIER	1					
7	S8510118	CLAMP;HOSE	COLLIER	1					
8	195-02780A	BRACKET;AIR CLEANER	SUPPORT	1					
9	170-00004	INDICATOR;DUST	INDICATEUR	1					
10	DS0025015	BOLT;SET	BOULON A 6 PANS	11					
51	204-00067	AIR CLEANER ASS'Y	ENSEMBLE FILTRE A AIR	1					
52	K1003618	CAP;RAIN	CHAPEAU	1					

DATE	NOV. 27, 2006
1st EDITION	

Fig. 1170 AIR CLEANER
FILTRE A AIR

Serial No. ;

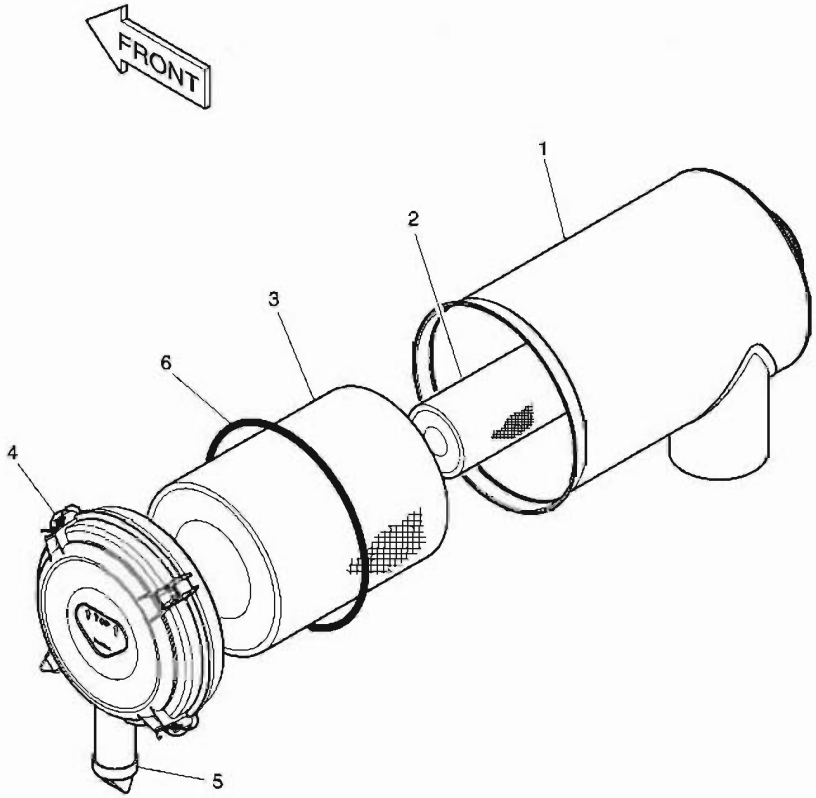

DATE	NOV. 27, 2006
1st EDITION	

Fig. 1170 AIR CLEANER FILTRE A AIR

Serial No. ;

Key No.	Part No.	Description	Description	Q'ty	S.C	Serial No.	ICA	Replaceable part	
								Part No.	Q'ty
70--	204-00067	AIR CLEANER	FILTRE A AIR	1					
1	-	BODY	CARTER	1	D				
2	474-00039	ELEMENT;INNER	ELEMENT	1					
3	474-00040	ELEMENT;OUTER	ELEMENT	1					
4	204-00075	COVER	COUVERCLE	1					
5	204-00070	VALVE;VACUATOR	VANNE	1					
6	-	O-RING	JOINT TORIQUE	1	D				

DATE	NOV. 27, 2006
1st EDITION	

Fig. 1180 PUMP MOUNTING
POMPE

Serial No. ;

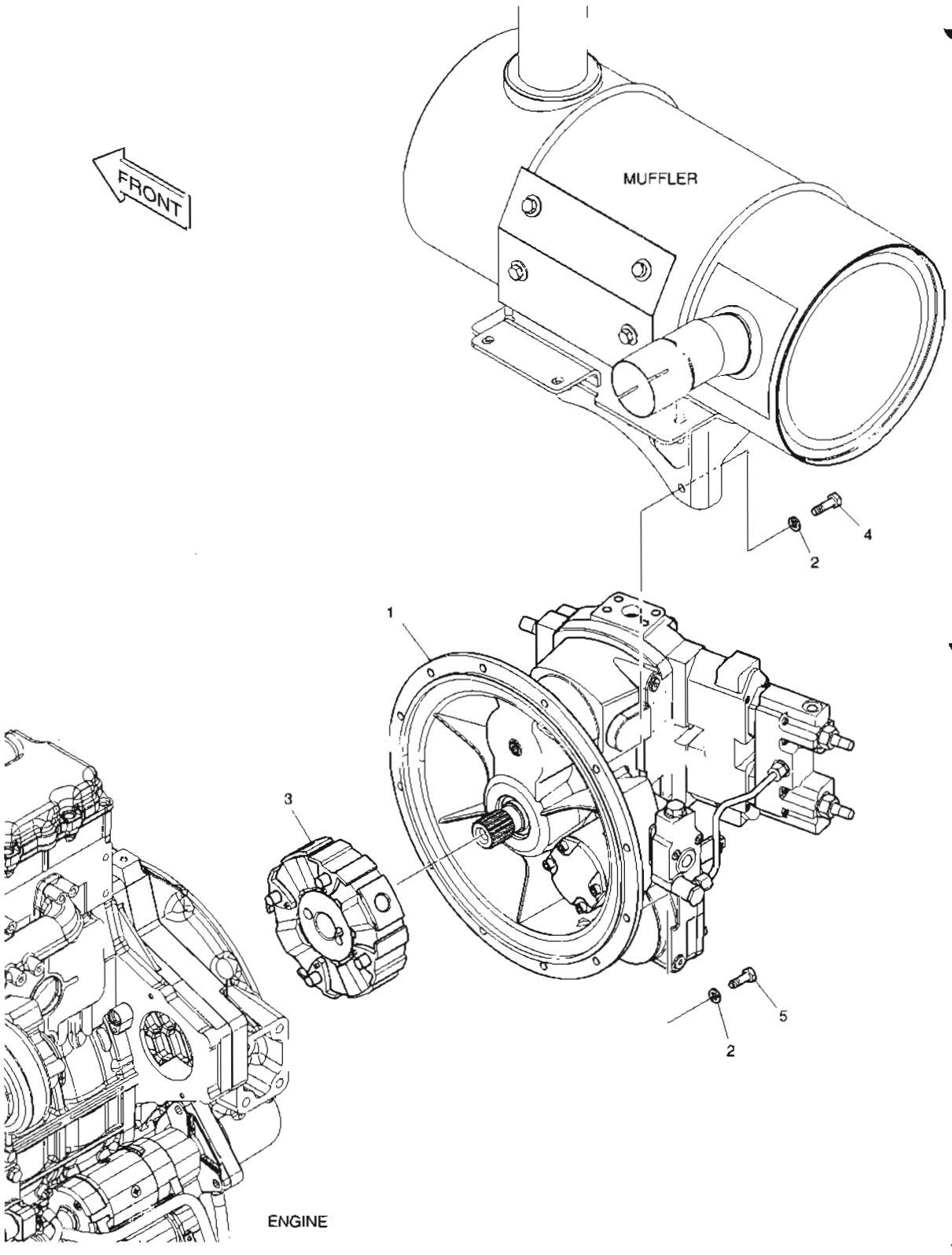

DATE	NOV. 27, 2006
1st EDITION	

Fig. 1180 PUMP MOUNTING POMPE

Serial No. ;

Key No.	Part No.	Description	Description	Q'ty	S.C	Serial No.	ICA	Replaceable part	
								Part No.	Q'ty
1180--	K1011682	PUMP INSTALLATION	INSTALLATION DE POMPE	-	D				
1	K1012643	PUMP;MAIN	POMPE	1					
2	S5102603	WASHER;SPRING	RONDELLE ELASTIQUE	12					
3	K1013823	COUPLING;PUMP	ACCOUPLEMENT	1					
4	S0558266	BOLT	BOULON A 6 PANS	3					
5	S0558166	BOLT	BOULON A 6 PANS	9					

DATE	NOV. 27, 2006
1st EDITION	

Fig. 1190 SWING MOTOR
MOTEUR D'ORIENTATION

Serial No. ;

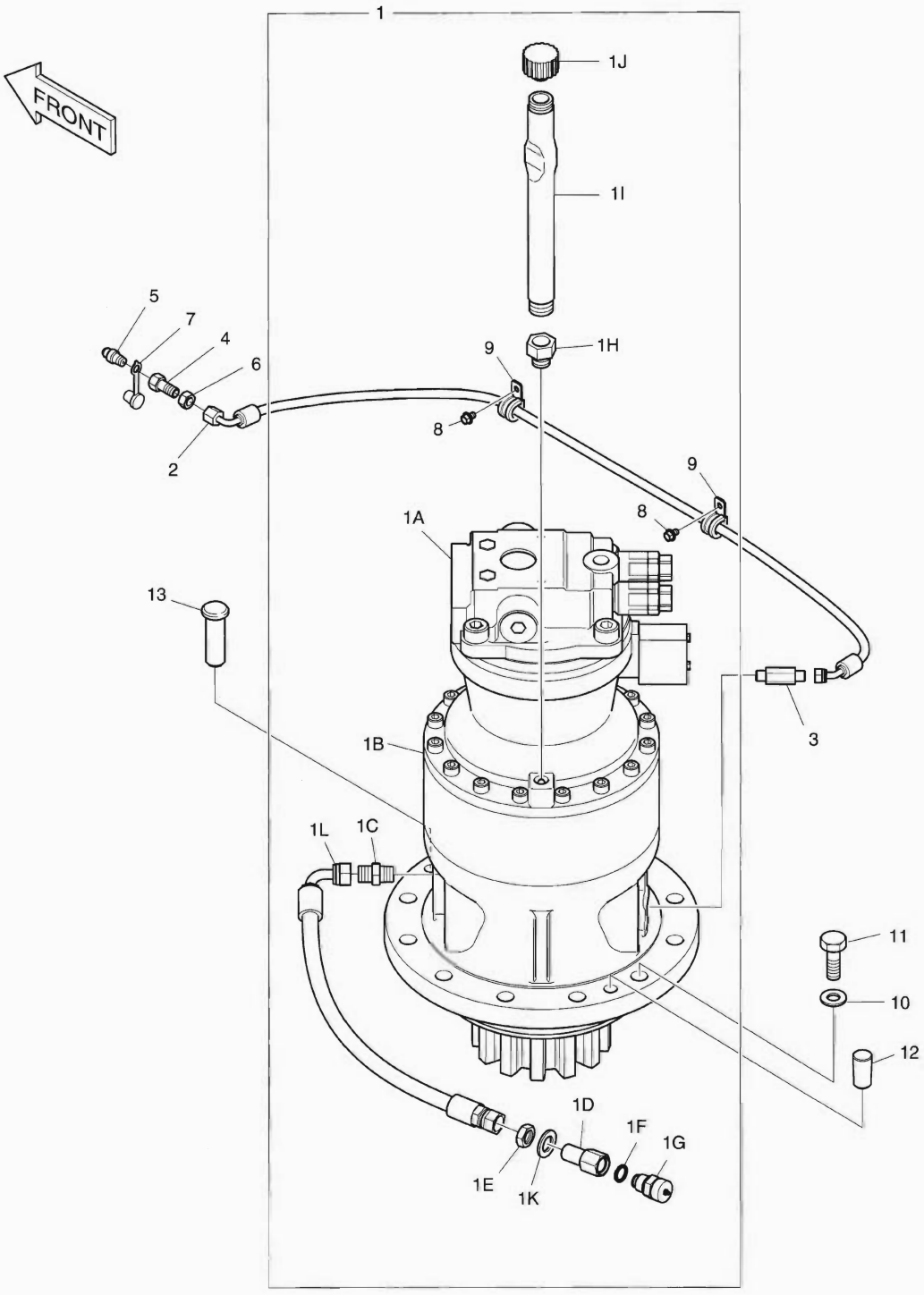

DATE	NOV. 27, 2006
1st EDITION	

Fig. 1190 SWING MOTOR MOTEUR D'ORIENTATION

Serial No. ;

Key No.	Part No.	Description	Description	Q'ty	S.C	Serial No.	ICA	Replaceable part	
								Part No.	Q'ty
1190--	K1013610B	SWING DEVICE ASS'Y	AVERTISSEUR	-	D				
1	K1023902A	SWING DEVICE SUB ASS'Y	AVERTISSEUR	1					
1A	K1000697A	. SWING MOTOR	. MOTEUR D'ORIENTATION	1					
1B	K1013561	. SWING REDUCTION GEAR ASS'Y	. VITESSE DE REDUCTION	1					
1C	2181-1110D3	. ADAPTER	. ADAPTEUR	1					
1D	181-00698	. REDUCER	. REDUCEUR	1					
1E	121-00010D3	. NUT	. ECROU	1					
1F	S8000181	. O-RING	. JOINT TORIQUE	1					
1G	426-00278	. VALVE;DRAIN	. VANNE	1					
1H	2181-1913D24	. REDUCER	. REDUCEUR	1					
1I	K1000266	. PIPE	. CONDUITE	1					
1J	2119-1063B	. CAP;PIPE	. CHAPEAU	1					
1K	S5011113	. WASHER;PLAIN	. RONDELLE	1					
1L	2184-1036D118	. HOSE	. TUYAU FLEXIBLE	1					
2	DS2090036	HOSE	TUYAU FLEXIBLE	1					
3	DS2214050	ADAPTER	ADAPTEUR	1					
4	181-00103	REDUCER	REDUCTEUR	1					
5	S6710041	NIPPLE;GREASE	GRAISSEUR	1					
6	121-00006	NUT	ECROU 6 PANS	1					
7	160-00020	CAP;GREASE NIPPLE	CHAPEAU	1					
8	124-00208D2	CLIP	AGRAFE	2					
9	K1001029	BOLT	BOULON A 6 PANS	2					
10	2114-9012A	WASHER;HARDEN	RONDELLE	11					
11	S0570166	BOLT	BOULON A 6 PANS	11					
12	160-00027	CAP	CHAPEAU	2					
13	2123-4030	PIN;KNOCK	GOUPILLE	1					

Fig. 1200 FUEL TANK
RESERVOIR DE GAZOLE

Serial No. ;

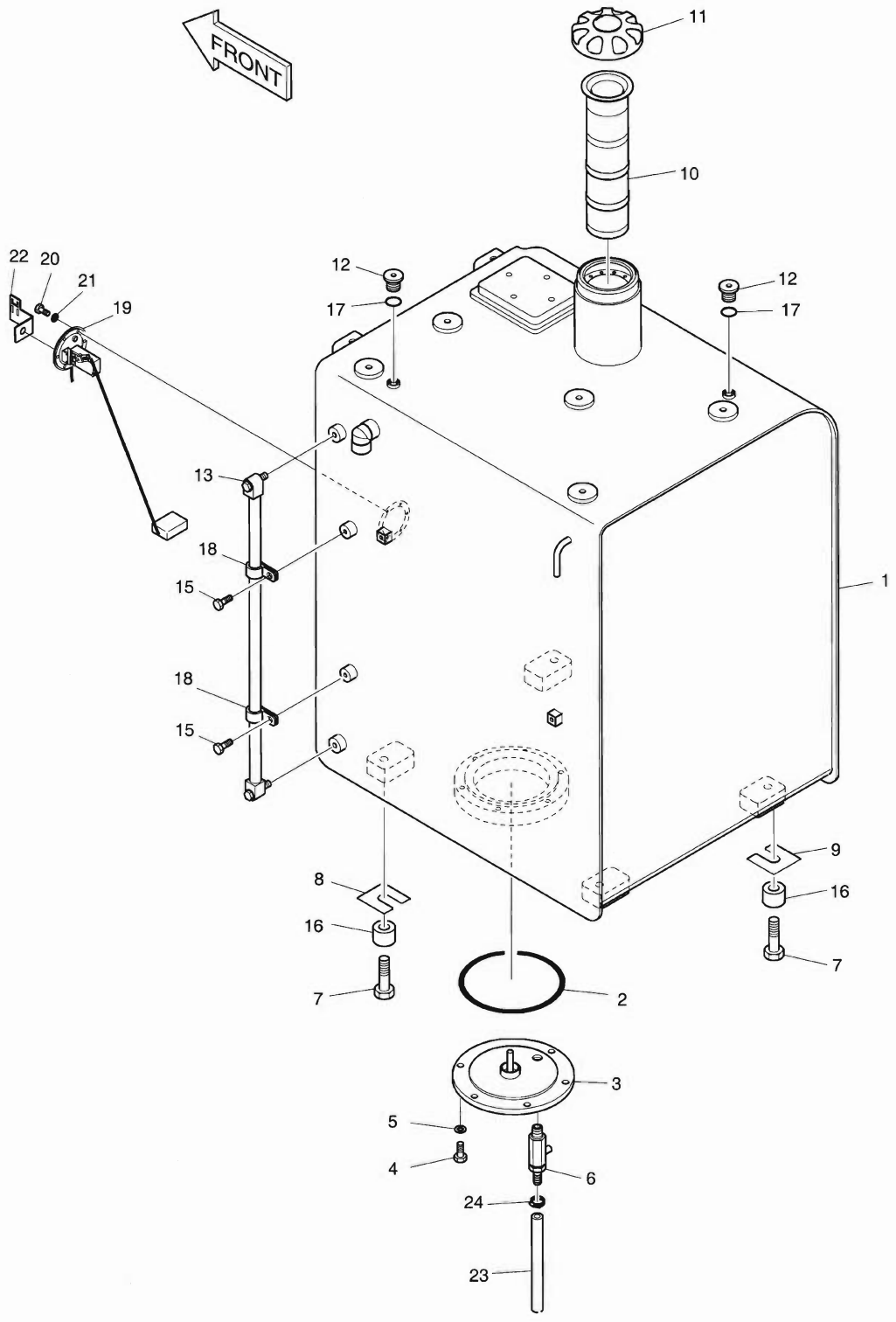

DATE	NOV. 27, 2006
1st EDITION	

Fig. 1200 FUEL TANK RESERVOIR DE GAZOLE

Serial No. ;

Key No.	Part No.	Description	Description	Q'ty	S.C	Serial No.	ICA	Replaceable part	
								Part No.	Q'ty
1200--	K1012768C	FUEL TANK ASS'Y	RESERVOIR A GAZOLE	-	D				
1	K1012769B	TANK;FUEL	RESERVOIR DE	1					
3	473-00033	COVER	COUVERCLE	1					
2	S8011450	O-RING	JOINT TORIQUE	1					
4	S0512066	BOLT	BOULON A 6 PANS	6					
5	S5102603	WASHER;SPRING	RONDELLE ELASTIQUE	6					
6	186-00017A	COCK;DRAIN	ROBINET DE PURGE	1					
7	S0565466	BOLT	BOULON A 6 PANS	4					
8	2114-1813	SHIM	ENTERTOISE	3					
9	2114-1814	SHIM	ENTERTOISE	3					
10	471-00105A	FILTER;FUEL STRAINER	FILTRE	1					
11	K1004266	CAP;FUEL	CHAPEAU	1					
12	2181-1890D2	PLUG	BOUCHON	2					
13	119-00014AD1	GAUGE;LEVEL	INDICATEUR DE NIVEAU	1					
15	K1001029	BOLT	BOULON A 6 PANS	2					
16	114-00425	SPACER	BAGUE D'ECARTEMENT	4					
17	S8000111	O-RING	JOINT TORIQUE	2					
18	DS2802021	CLIP	AGRAFE	2					
19	547-00026	SENSOR;FUEL	SIEGE	1					
20	S3450833	SCREW	VIS	6					
21	S5100203	WASHER;SPRING	RONDELLE ELASTIQUE	6					
22	2195-3500	BRACKET;HOUSING	SUPPORT	1					
23	DS2105053	HOSE	TUYAU FLEXIBLE	1					
24	S8450012	CLAMP;HOSE	COLLIER	1					

DATE	NOV. 27, 2006
1st EDITION	

Fig. 1210 FUEL PIPING
CONDUITES DE GAZOLE

Serial No. ;

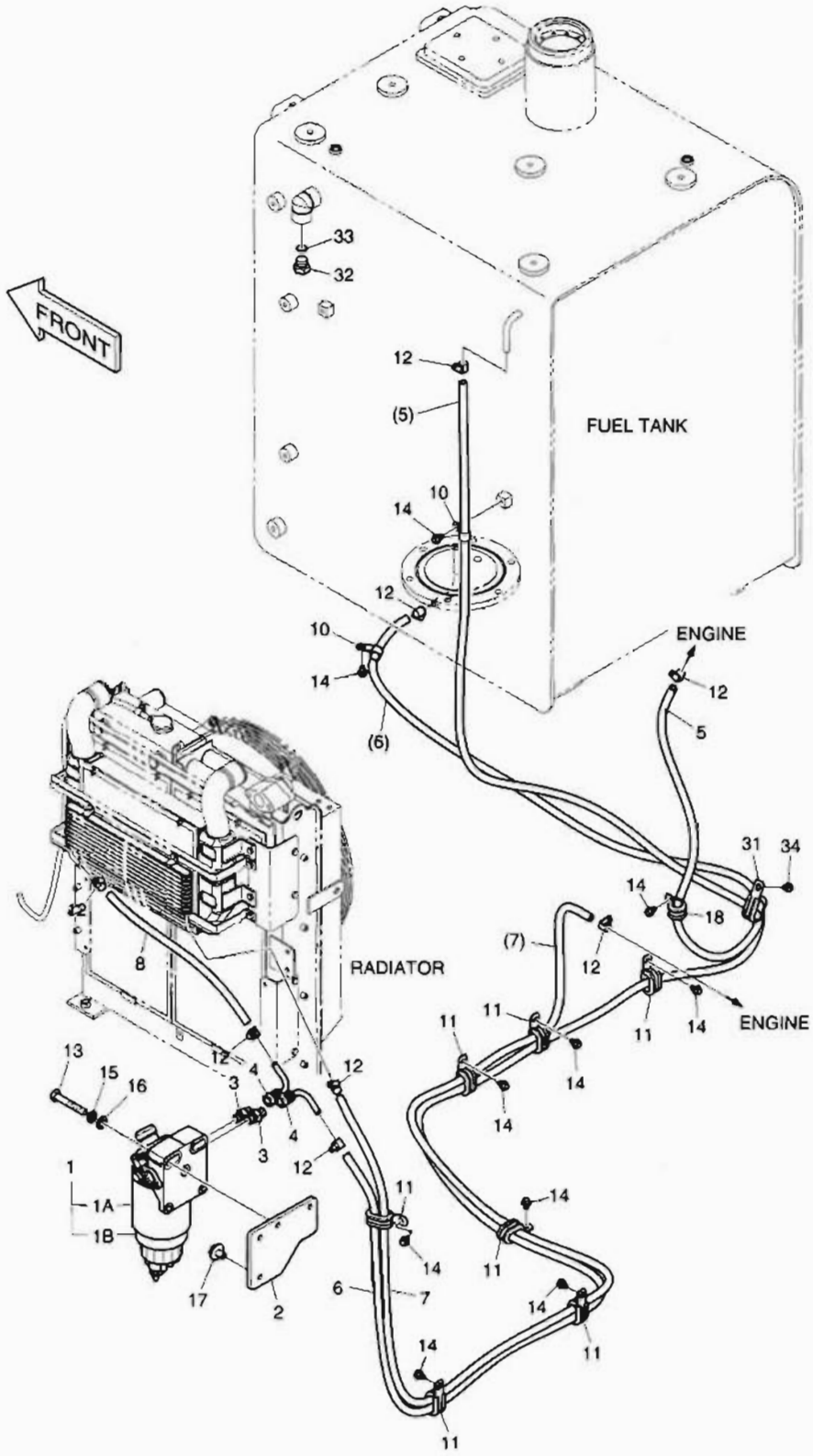

DATE	NOV. 27, 2006
1st EDITION	

Fig. 1210 FUEL PIPING CONDUITES DE GAZOLE

Serial No. ;

Key No.	Part No.	Description	Description	Q'ty	S.C	Serial No.	ICA	Replaceable part	
								Part No.	Q'ty
1210--	K1013615C	FUEL PIPING	CONDUITES DE GAZOLE	-	D				
1	K1006520	FILTER;PRE FUEL	FILTRE	1					
1A	K1006530	. FILTER	. FILTRE A GAZOLE	1					
1B	K1006973	. BOWL	. CUVETTE	1					
2	K1015089	PLATE	PLAQUE	1					
3	DS2479004	ADAPTER	ADAPTEUR	2					
4	K1002864	ELBOW	COUDE	2					
5	DS2105087	HOSE	TUYAU FLEXIBLE	1					
6	DS2105028	HOSE	TUYAU FLEXIBLE	1					
7	DS2105025	HOSE	TUYAU FLEXIBLE	1					
8	DS2105011	HOSE	TUYAU FLEXIBLE	1					
10	2124-1509D2	CLIP	AGRAFE	2					
11	124-00209D1	CLIP	AGRAFE	7					
12	S8450012	CLAMP;HOSE	COLLIER	8					
13	S0561266	BOLT	BOULON A 6 PANS	2					
14	K1001029	BOLT	BOULON A 6 PANS	10					
15	S5102703	WASHER;SPRING	RONDELLE ELASTIQUE	2					
16	S5010713	WASHER;PLAIN	RONDELLE	2					
17	DS0025022	BOLT;SET	BOULON A 6 PANS	2					
18	124-00208D3	CLIP	AGRAFE	1					
31	124-00209D1	CLIP	AGRAFE	1					
32	2181-1950D7	PLUG	BOUCHON	1					
33	S8000181	O-RING	JOINT TORIQUE	1					
34	K1001029	BOLT	BOULON A 6 PANS	1					

DATE	NOV. 27, 2006
1st EDITION	

Fig. 1220 OIL TANK
RESERVOIR DE HUILE

Serial No. ;

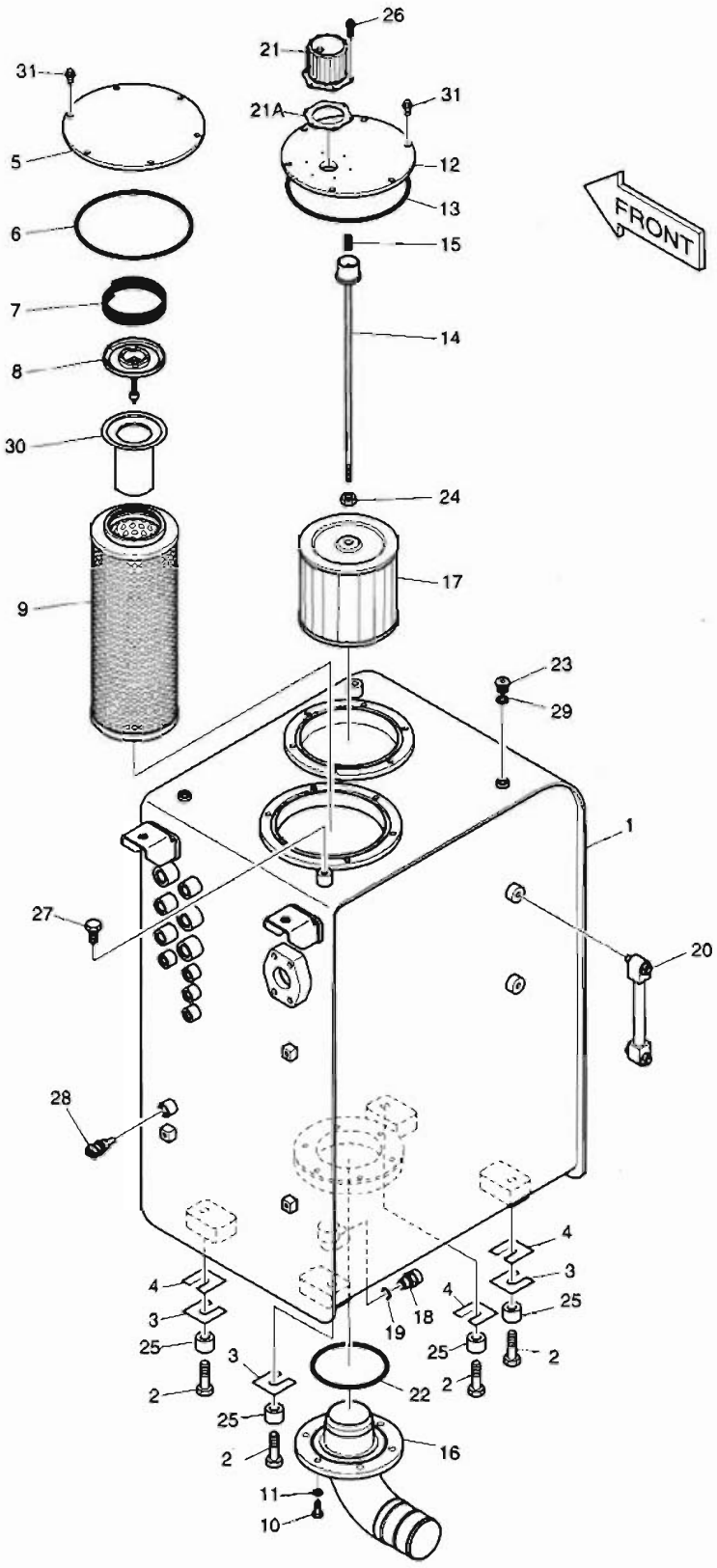

DATE	NOV. 27, 2006
1st EDITION	

Fig. 1220 OIL TANK RESERVOIR DE HUILE

Serial No. ;

Key No.	Part No.	Description	Description	Q'ty	S.C	Serial No.	ICA	Replaceable part	
								Part No.	Q'ty
1220--	K1012771B	OIL TANK ASS'Y	POMPE	-	D				
1	K1012772B	TANK;OIL	RESERVOIR DE HUILE	1					
2	S0565466	BOLT	BOULON A 6 PANS	6					
3	2114-1813	SHIM	ENTERTOISE	3					
4	2114-1814	SHIM	ENTERTOISE	3					
5	473-00048	COVER	COUVERCLE	1					
6	S8011850	O-RING	JOINT TORIQUE	1					
7	2129-1393	SPRING	RESSORT	1					
8	2426-1175	VALVE;BY-PASS	VANNE	1					
9	474-00055	FILTER;RETURN	FILTRE A GAZOLE	1					
10	S0512066	BOLT	BOULON A 6 PANS	6					
11	S5102603	WASHER;SPRING	RONDELLE ELASTIQUE	6					
12	473-00052	COVER	COUVERCLE	1					
13	S8011650	O-RING	JOINT TORIQUE	1					
14	136-00002	ROD	TIGE	1					
15	2129-1008	SPRING	RESSORT	1					
16	140-00198	PIPE;SUCTION	PIPE;OIL	1					
17	2474-9016A	FILTER;SUCTION	FILTRE A GAZOLE	1					
18	426-00278	VALVE;DRAIN	VANNE	1					
19	S8000181	O-RING	JOINT TORIQUE	1					
20	119-00025B	GAUGE;LEVEL	INDICATEUR DE NIVEAU	1					
21	422-00027A	BREATHER;AIR	SUPPORT	1					
21A	180-00200	. PACKING	. JOINT	1					
22	S8011200	O-RING	JOINT TORIQUE	1					
23	2181-1890D2	PLUG	BOUCHON	2					
24	S4012733	NUT	ECROU 6 PANS	1					
25	114-00425	SPACER;HARDEN	BAGUE D'ECARTEMENT	4					
26	S2202766	BOLT	BOULON A 6 PANS	6					
27	S0514666	BOLT	BOULON A 6 PANS	2					
28	K1003296	SENSOR;OIL TEMP	SIEGE	1					
29	S8000111	O-RING	JOINT TORIQUE	2					
30	471-00127	STRAINER;BY-PASS	FILTRE	1					
31	K1007957	BOLT	BOULON A 6 PANS	12					

DATE	NOV. 27, 2006
1st EDITION	

Fig. 1230 OIL COOLER PIPING(1)
CONDUITES DE HUILE

Serial No. ;

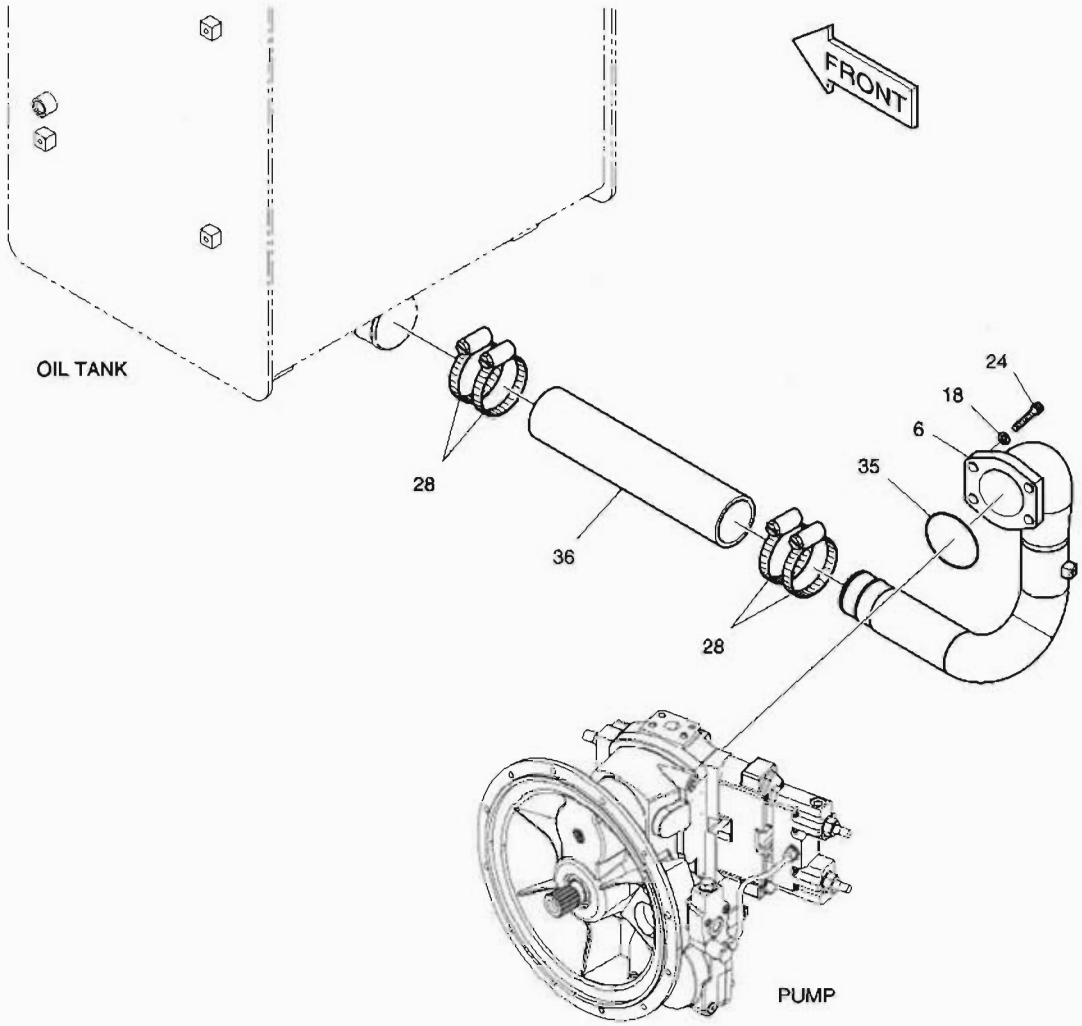

DATE	NOV. 27, 2006
1st EDITION	

Fig. 1230 OIL COOLER PIPING(1) CONDUITES DE HUILE

Serial No. ;

Key No.	Part No.	Description	Description	Q'ty	S.C	Serial No.	ICA	Replaceable part	
								Part No.	Q'ty
230--	K1013511B	OIL COOLER PIPING	CONDUITES DE HUILE	-	D				
6	K1013527A	PIPE;SUCTION	PIPE;OIL	1					
18	S5110903	WASHER;SPRING	RONDELLE ELASTIQUE	4					
24	S2221566	BOLT;SOCKET M16X2.0X45	BOULON DE PLOT	4					
28	S8500105	CLAMP;HOSE	COLLIER	4					
*35	2180-1026D32	O-RING	JOINT TORIQUE	1					
36	2185-1002D105	HOSE;SUCTION PF2 1/2-375L	TUYAU FLEXIBLE	1					

DATE	NOV. 27, 2006
1st EDITION	

Fig. 1240 OIL COOLER PIPING(2) CONDUITES DE HUILE

Serial No. ;

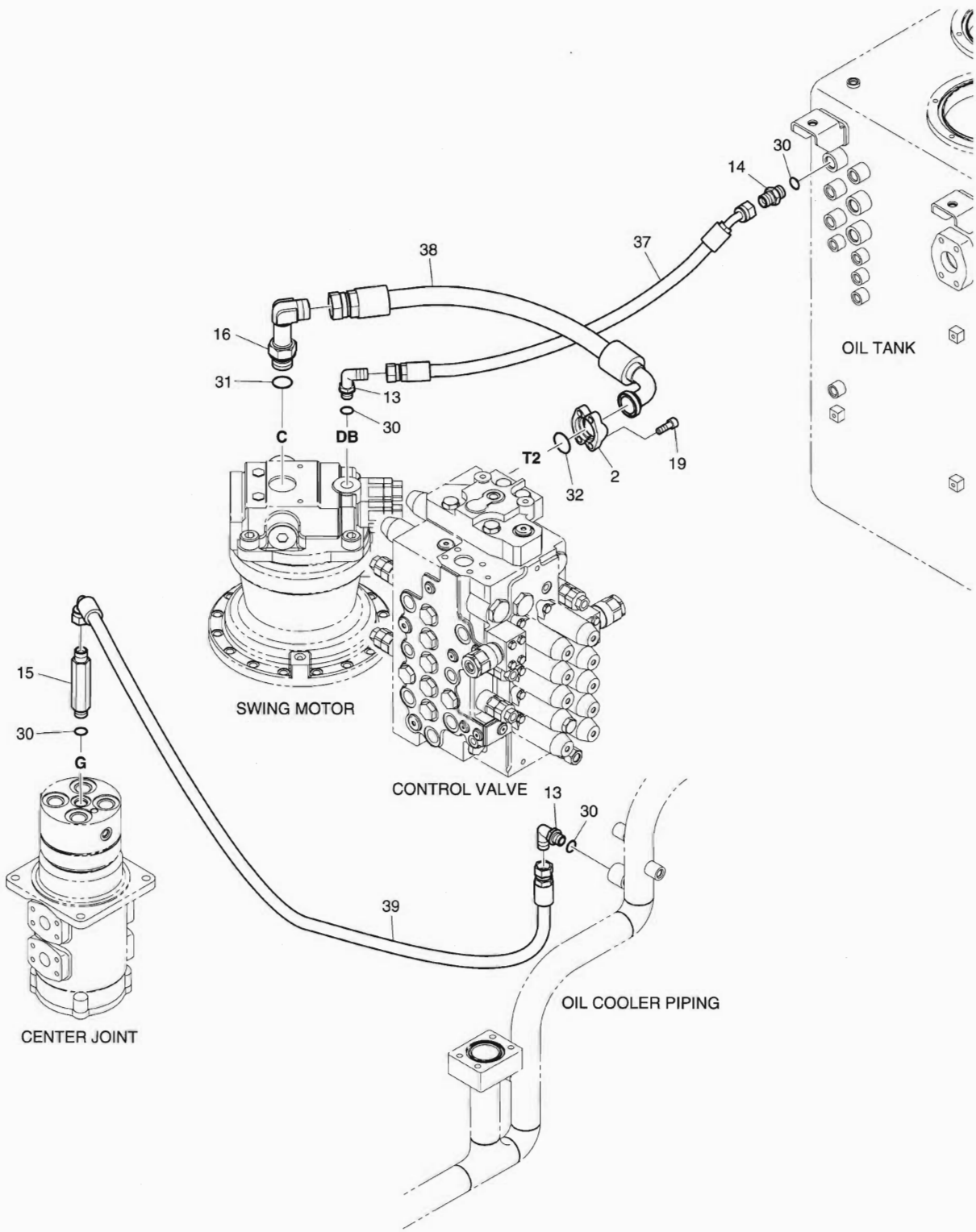

DATE	NOV. 27, 2006
1st EDITION	

Fig. 1240 OIL COOLER PIPING(2) CONDUITES DE HUILE

Serial No. ;

Key No.	Part No.	Description	Description	Q'ty	S.C	Serial No.	ICA	Replaceable part	
								Part No.	Q'ty
1240--	K1013511B	OIL COOLER PIPING	CONDUITES DE HUILE	-	D				
2	2181-9078	FLANGE;SPLIT	BRIDE	2					
13	2181-1702D2	ELBOW	COUDE	2					
14	2181-1126D6	ADAPTER	ADAPTEUR	1					
15	DS2213167	ADAPTER	ADAPTEUR	1					
16	DS2281103	ELBOW	COUDE	1					
19	S2212266	BOLT;SOCKET M10X1.5X30	BOULON A 6 PANS CREUX	4					
30	S8000181	O-RING	JOINT TORIQUE	4					
31	S8000291	O-RING	JOINT TORIQUE	1					
32	2180-1026D19	O-RING	JOINT TORIQUE	1					
37	DS2054223	HOSE	TUYAU FLEXIBLE	1					
38	DS2046029	HOSE	TUYAU FLEXIBLE	1					
39	DS2055315	HOSE	TUYAU FLEXIBLE	1					

DATE	NOV. 27, 2006
1st EDITION	

Fig. 1250 OIL COOLER PIPING(3) CONDUITES DE HUILE

Serial No. ;

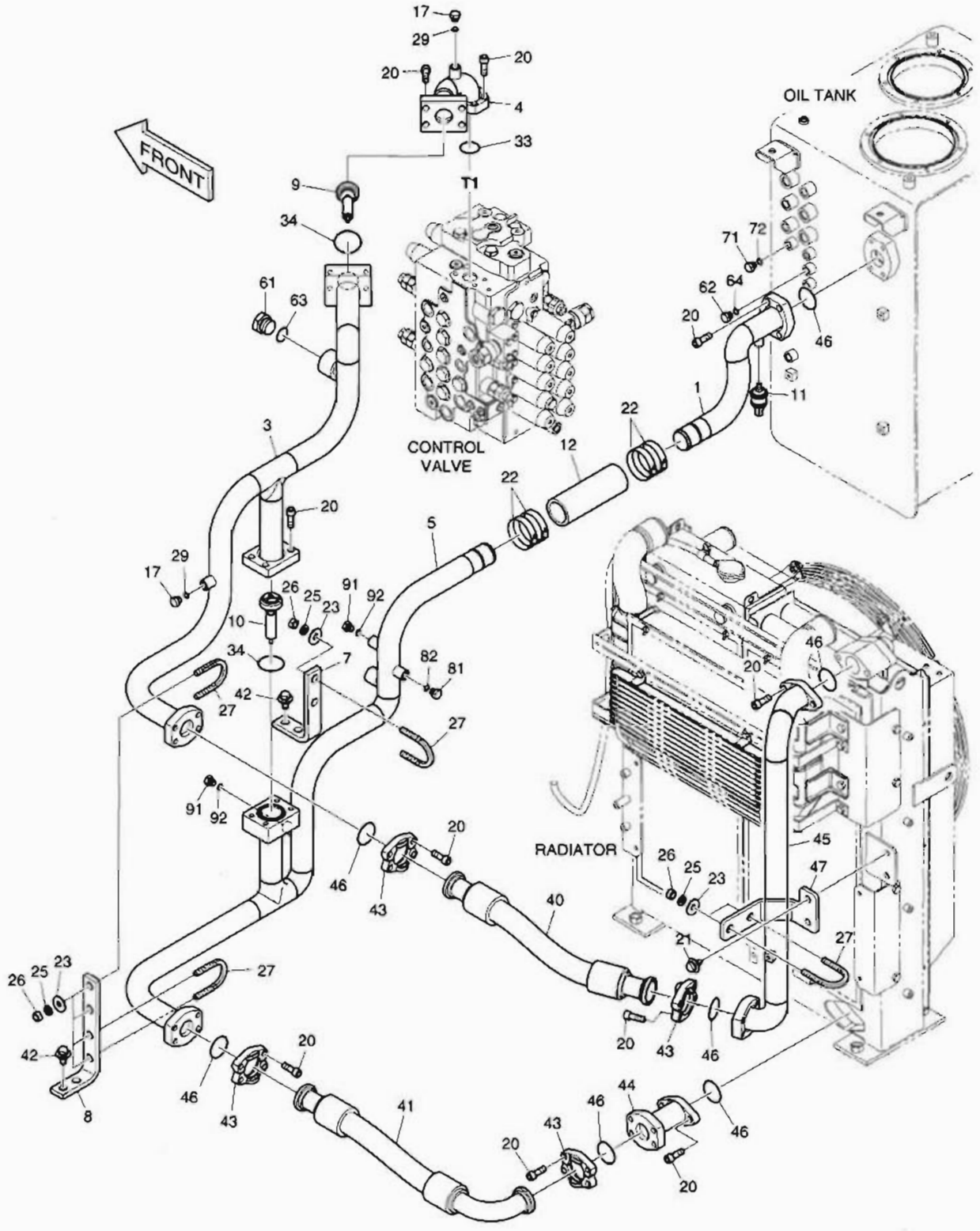

DATE	NOV. 27, 2006
1st EDITION	

Fig. 1250 OIL COOLER PIPING(3) CONDUITES DE HUILE

Serial No. ;

Key No.	Part No.	Description	Description	Q'ty	S.C	Serial No.	ICA	Replaceable part	
								Part No.	Q'ty
0--	K1013511B	OIL COOLER PIPING	CONDUITES DE HUILE	-	D				
1	K1013521	PIPE	TUYAU	1					
3	K1013522A	PIPE	TUYAU	1					
4	K1016456	PIPE	TUYAU	1					
5	K1013524A	PIPE	TUYAU	1					
7	K1013529	BRACKET;PLATE	SUPPORT	1					
8	195-02725B	BRACKET	SUPPORT	1					
9	420-00304	VALVE;BYPASS	VANNE	1					
10	K1007197	VALVE;BYPASS	VANNE	1					
11	549-00095	SWITCH	COMMUTATEUR	1					
12	2185-1776D2	HOSE	TUYAU FLEXIBLE	1					
17	2181-1950D1	PLUG	BOUCHON	2					
20	S2215366	BOLT	BOULON A 6 PANS	36					
21	DS0025019	BOLT;SET	BOULON A 6 PANS	2					
22	S8500079	CLAMP;HOSE	COLLIER	4					
23	2114-1058D30	WASHER	CALE	8					
25	S5102703	WASHER	CALE	8					
26	S4012733	NUT	ECROU 6 PANS	8					
27	120-00317	BOLT	BOULON A 6 PANS	4					
29	S8000111	O-RING	JOINT TORIQUE	2					
33	2180-1026D23	O-RING	JOINT TORIQUE	1					
34	2180-1026D27	O-RING	JOINT TORIQUE	2					
40	DS2038200	HOSE	TUYAU FLEXIBLE	1					
41	DS2040492	HOSE	TUYAU FLEXIBLE	1					
42	DS0025018	BOLT;SET	BOULON A 6 PANS	4					
43	4215-1003D5	FLANGE;SPLIT	BRIDE	8					
44	K1013525	PIPE	TUYAU	1					
45	K1015094	PIPE	TUYAU	1					
46	2180-1026D28	O-RING	JOINT TORIQUE	7					
47	K1009510A	PLATE	PLAQUE	1					
61	2181-1950D9	PLUG	BOUCHON	1					
62	2181-1950D1	PLUG	BOUCHON	1					
63	S8000291	O-RING	JOINT TORIQUE	1					
64	S8000111	O-RING	JOINT TORIQUE	1					
71	2181-1950D1	PLUG	BOUCHON	1					
72	S8000111	O-RING	JOINT TORIQUE	1					
81	2181-1950D1	PLUG	BOUCHON	1					
82	S8000111	O-RING	JOINT TORIQUE	1					

DATE	NOV. 27, 2006
1st EDITION	

Fig. 1250 OIL COOLER PIPING(3) CONDUITES DE HUILE

Serial No. ;

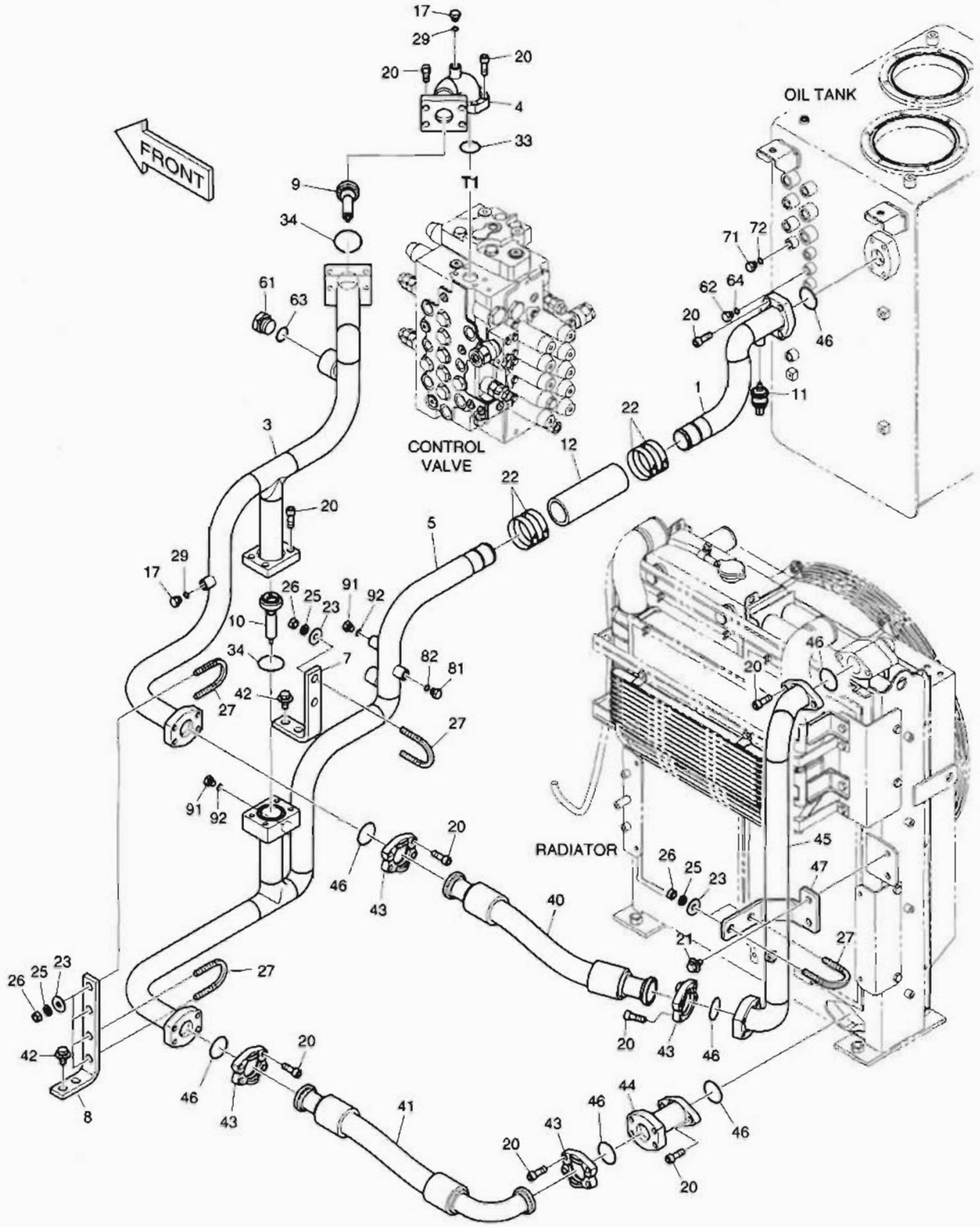

DATE	NOV. 27, 2006
1st EDITION	

Fig. 1250 OIL COOLER PIPING(3) CONDUITES DE HUILE

Serial No. ;

Key No.	Part No.	Description	Description	Q'ty	S.C	Serial No.	ICA	Replaceable part	
								Part No.	Q'ty
1250-91	2181-1950D1	PLUG	BOUCHON	2					
92	S8000111	O-RING	JOINT TORIQUE	2					

DATE	NOV. 27, 2006
1st EDITION	

Fig. 1260 MAIN PIPING(1)
CONDUITES DE BATI PRINCIPAL

Serial No. ;

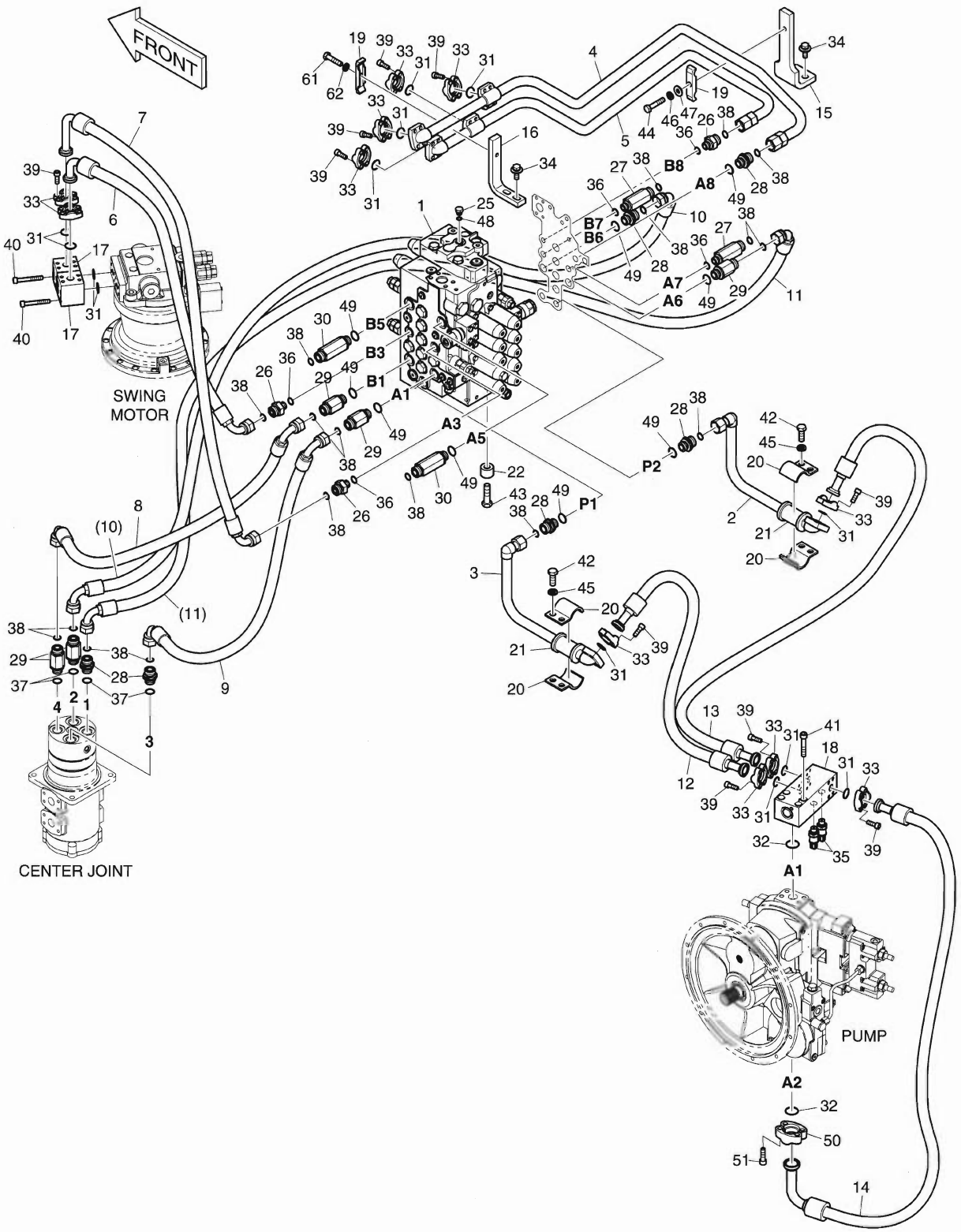

DATE	NOV. 27, 2006
1st EDITION	

Fig. 1260 MAIN PIPING(1) CONDUITES DE BATI PRINCIPAL

Serial No. ;

Key No.	Part No.	Description	Description	Q'ty	S.C	Serial No.	ICA	Replaceable part	
								Part No.	Q'ty
1260--	K1013545B	MAIN PIPING	TUYAUTERIE PRINCIPALE	-	D				
1	420-00466A	VALVE;CONTROL	VANNE DE COMMANDE	1					
2	K1013557	PIPE	TUYAU	1					
3	K1013556A	PIPE	TUYAU	1					
4	K1013554	PIPE	TUYAU	1					
5	K1013555A	PIPE	TUYAU	1					
6	DS2026164	HOSE	TUYAU FLEXIBLE	1					
7	DS2026165	HOSE	TUYAU FLEXIBLE	1					
8	DS2023281	HOSE	TUYAU FLEXIBLE	1					
9	DS2023281	HOSE	TUYAU FLEXIBLE	1					
10	DS2023282	HOSE	TUYAU FLEXIBLE	1					
11	DS2023282	HOSE	TUYAU FLEXIBLE	1					
12	DS2038198	HOSE	TUYAU FLEXIBLE	1					
13	DS2038244	HOSE	TUYAU FLEXIBLE	1					
14	DS2040360	HOSE	TUYAU FLEXIBLE	1					
15	K1024200	BRACKET	SUPPORT	1					
16	2195-3657	BRACKET	SUPPORT	1					
17	423-00202	BLOCK	BLOC	2					
18	K1024101	BLOCK	BLOC	1					
19	2124-1025D6	CLAMP;PIPE	COLLIER	2					
20	124-00302	CLAMP;PIPE	COLLIER	4					
21	161-00574	RUBBER	CAOUTCHOUC	2					
22	114-00425	SPACER	BAGUE D'ECARTEMENT	4					
25	2181-1950D1	PLUG	BOUCHON	1					
26	DS2257002	ADAPTER	ADAPTEUR	3					
27	DS2257004	ADAPTER	ADAPTEUR	2					
28	2181-2627D1	ADAPTER	ADAPTEUR	6					
29	2181-2627D3	ADAPTER	ADAPTEUR	5					
30	2181-2627D4	ADAPTER	ADAPTEUR	2					
31	2180-1026D2	O-RING	JOINT TORIQUE	13					
32	2180-1026D19	O-RING	JOINT TORIQUE	2					
33	2181-9079	FLANGE	BRIDE	22					
34	DS0025020	BOLT;SET	BOULON A 6 PANS	4					
35	2547-9045	SENSOR;PRESSURE	CAPTEUR	2					
36	S8000181	O-RING	JOINT TORIQUE	5					
37	S8000231	O-RING	JOINT TORIQUE	4					
38	S8030121	O-RING	JOINT TORIQUE	18					
39	S2212266	BOLT;SOCKET M10X1.5X30	BOULON A 6 PANS CREUX	44					

DATE	NOV. 27, 2006
1st EDITION	

Fig. 1260 MAIN PIPING(1)
CONDUITES DE BATI PRINCIPAL

Serial No. ;

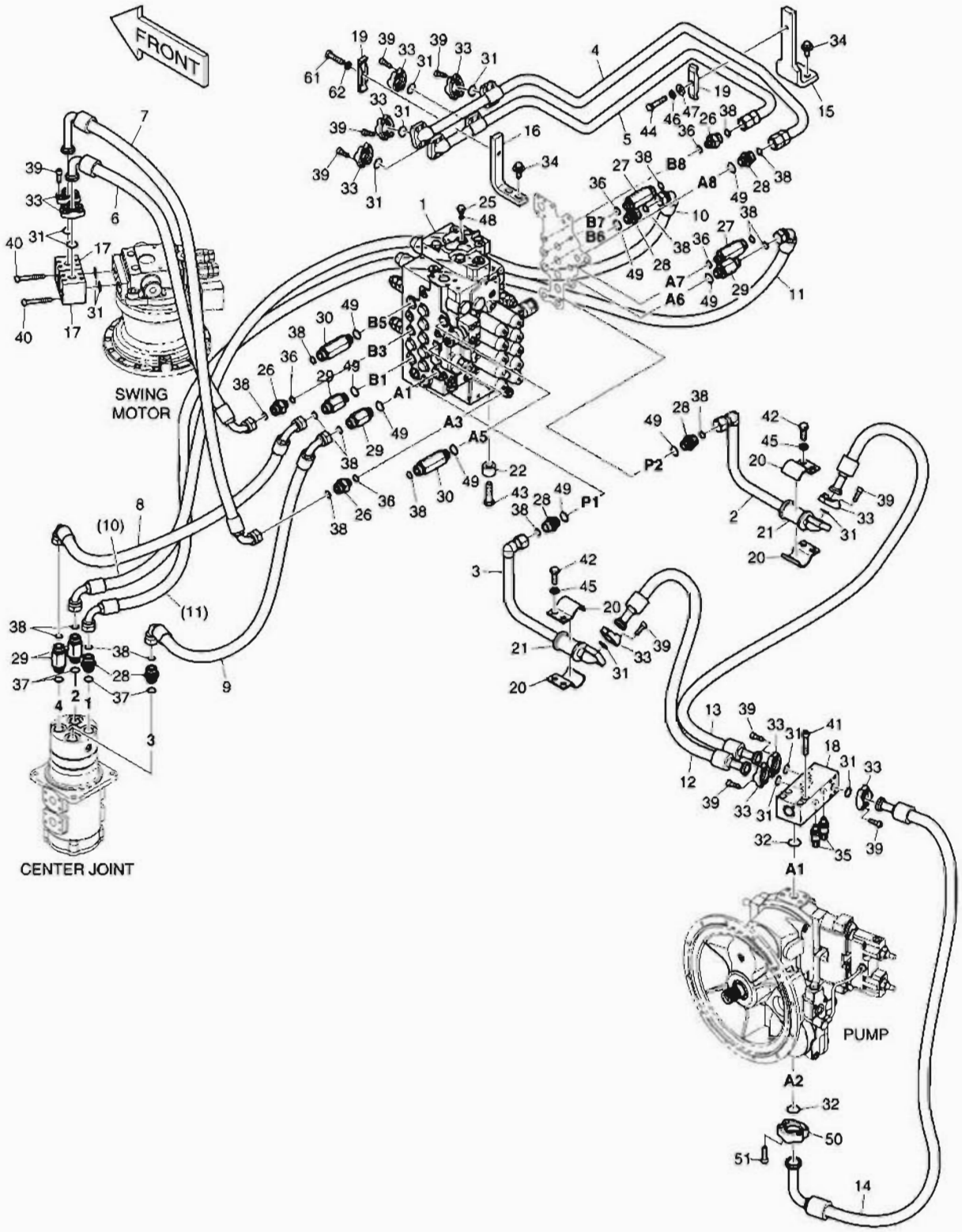

DATE	NOV. 27, 2006
1st EDITION	

Fig. 1260 MAIN PIPING(1) CONDUITES DE BATI PRINCIPAL

Serial No. ;

Key No.	Part No.	Description	Description	Q'ty	S.C	Serial No.	ICA	Replaceable part	
								Part No.	Q'ty
1260-40	S2213166	BOLT;SOCKET	BOULON	8					
41	S2215966	BOLT;SOCKET	BOULON	4					
42	S0562766	BOLT M14X2.0X40	BOULON A 6 PANS	4					
43	S0565466	BOLT	BOULON A 6 PANS	4					
44	S0560966	BOLT	BOULON A 6 PANS	1					
45	S5102803	WASHER;SPRING	RONDELLE ELASTIQUE	4					
46	S5102703	WASHER;SPRING	RONDELLE ELASTIQUE	1					
47	2114-1058D33	WASHER	CALE	1					
48	S8000111	O-RING	JOINT TORIQUE	1					
49	S8000241	O-RING	JOINT TORIQUE	9					
50	2181-9084A	FLANGE;SPLIT	BRIDE	2					
51	S2215466	BOLT;SOCKET M12X1.75X40	BOULON A 6 PANS CREUX	4					
61	S0560866	BOLT	BOULON A 6 PANS	1					
62	S5102703	WASHER;SPRING	RONDELLE ELASTIQUE	1					

DATE	NOV. 27, 2006
1st EDITION	

Fig. 1270 MAIN PIPING(2) CONDUITES DE BATI PRINCIPAL

Serial No. ;

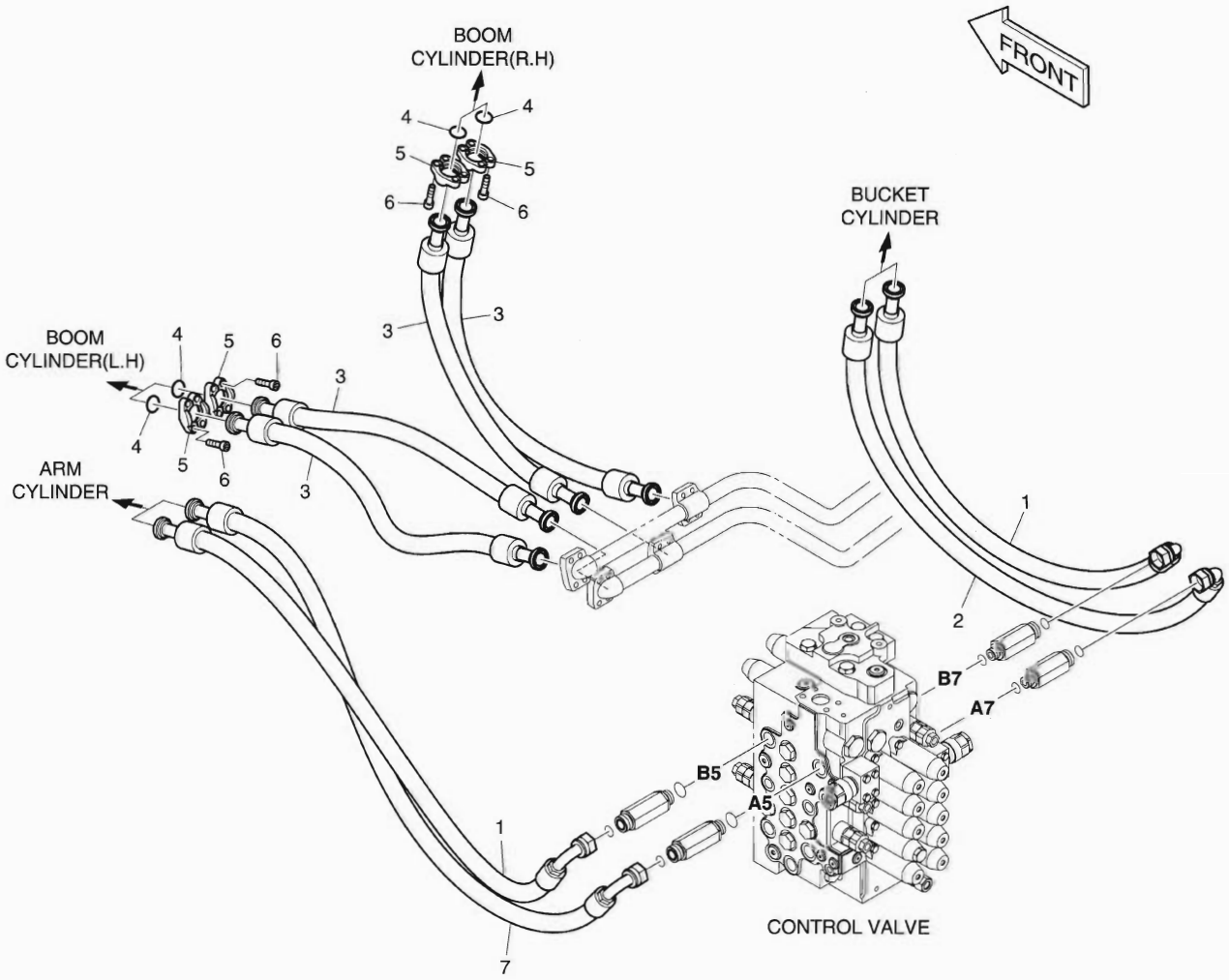

DATE	NOV. 27, 2006
1st EDITION	

Fig. 1270 MAIN PIPING(2) CONDUITES DE BATI PRINCIPAL

Serial No. ;

Key No.	Part No.	Description	Description	Q'ty	S.C	Serial No.	ICA	Replaceable part	
								Part No.	Q'ty
1270--	K1023793A	MAIN PIPING-MONO BOOM	CONDUITES DE BATI	-	D				
1	DS2025070	HOSE	TUYAU FLEXIBLE	2					
2	DS2025069	HOSE	TUYAU FLEXIBLE	1					
3	DS2038222	HOSE	TUYAU FLEXIBLE	4					
4	2180-1026D2	O-RING	JOINT TORIQUE	4					
5	2181-9079	FLANGE	BRIDE	8					
6	S2212466	BOLT;SOCKET M10X1.5X40	BOULON A 6 PANS CREUX	16					
7	DS2025091	HOSE	TUYAU FLEXIBLE	1					

DATE	NOV. 27, 2006
1st EDITION	

Fig. 1280 PILOT PIPING(1)
CONDUITES DE PILOTE

Serial No. ;

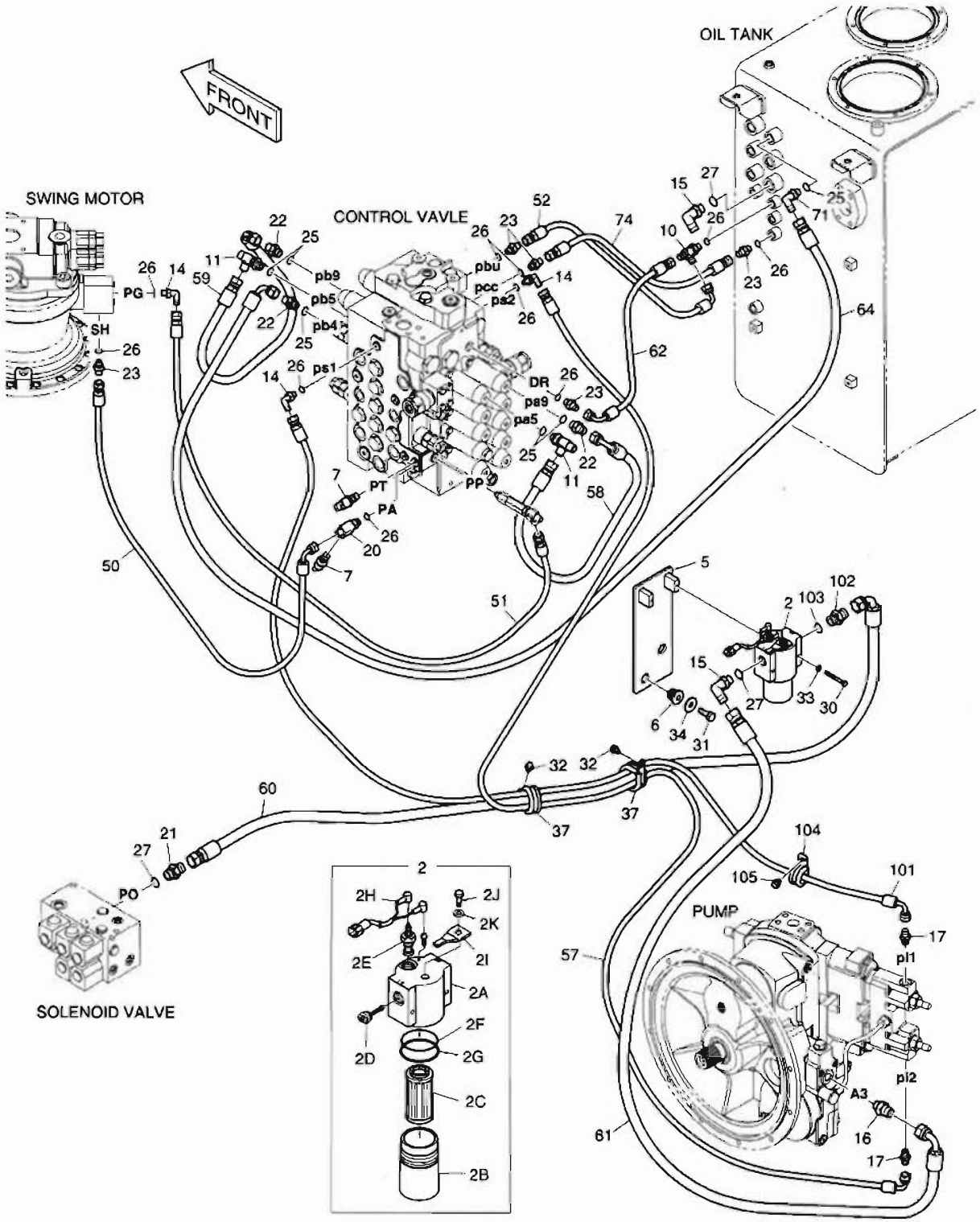

DATE	NOV. 27, 2006
1st EDITION	

Fig. 1280 PILOT PIPING(1) CONDUITES DE PILOTE

Serial No. ;

Key No.	Part No.	Description	Description	Q'ty	S.C	Serial No.	ICA	Replaceable part	
								Part No.	Q'ty
1280--	K1014034C	PILOT PIPING	TUYAUTERIE PILOTE	-	D				
2	471-00075A	FILTER;PILOT	FILTRE	1					
2A	-	. HEAD	. TETE	1	D				
2B	2472-7003	. CASE	. CARTER	1					
2C	2471-1154	. ELEMENT;PILOT FILTER	. ELEMENT	1					
2D	2426-1237	. VALVE;BY-PASS	. VANNE BY-PASS	1					
2E	2471-1155A	. INDICATOR	. INDICATEUR	1					
2F	Y-3738-04	. O-RING	. JOINT TORIQUE	1					
2G	Y-3738-05	. RING;BACK UP	. BAGUE	1					
2H	530-00236	. HARNESS;PILOT FILTER	. HARNAIS	1					
2I	2197-1661	. BRACKET	. SUPPORT	1					
2J	S0508653	. BOLT	. BOULON A 6 PANS	1					
2K	S5102503	. WASHER;SPRING	. RONDELLE ELASTIQUE	1					
5	195-02716B	BRACKET;FILTER	SUPPORT	1					
6	198-00016	RUBBER	CAOUTCHOUC	2					
7	2549-9112	SWITCH;PRESSURE	COMMUTATEUR	2					
10	2181-1951D1	TEE	TE	1					
11	2181-1951D16	TEE	TE	2					
14	2181-1702D4	ELBOW	COUDE	3					
15	2181-1702D2	ELBOW	COUDE	2					
16	DS2479001	ADAPTER	ADAPTEUR	1					
17	DS2479002	ADAPTER	ADAPTEUR	2					
20	K1024104	TEE	TE	1					
21	2181-1126D6	ADAPTER	ADAPTEUR	1					
22	2181-1126D7	ADAPTER	ADAPTEUR	3					
23	2181-1126D14	ADAPTER	ADAPTEUR	5					
25	S8000141	O-RING	JOINT TORIQUE	6					
26	S8000111	O-RING	JOINT TORIQUE	9					
27	S8000181	O-RING	JOINT TORIQUE	3					
30	S0553766	BOLT	BOULON A 6 PANS	2					
31	S0512266	BOLT	BOULON A 6 PANS	2					
32	K1001029	BOLT	BOULON A 6 PANS	2					
33	S5102303	WASHER	CALE	2					
34	2114-1058D10	WASHER	CALE	2					
37	124-00208D7	CLIP	AGRAFE	2					
50	DS2093041	HOSE	TUYAU FLEXIBLE	1					
51	DS2094077	HOSE	TUYAU FLEXIBLE	1					
52	DS2093254	HOSE	TUYAU FLEXIBLE	1					

DATE	NOV. 27, 2006
1st EDITION	

Fig. 1280 PILOT PIPING(1)
CONDUITES DE PILOTE

Serial No. ;

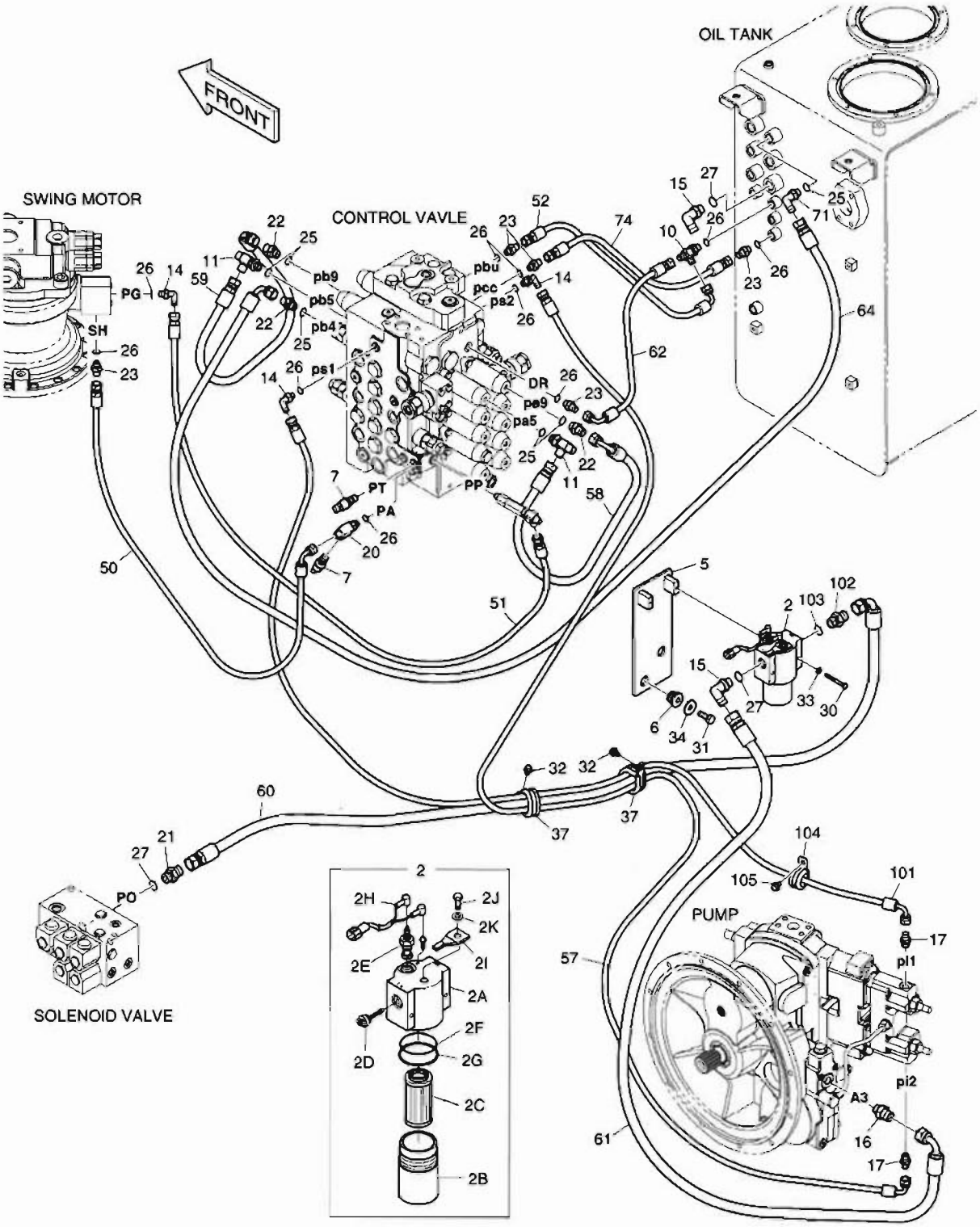

DATE	NOV. 27, 2006
1st EDITION	

Fig. 1280 PILOT PIPING(1) CONDUITES DE PILOTE

Serial No. ;

Key No.	Part No.	Description	Description	Q'ty	S.C	Serial No.	ICA	Replaceable part	
								Part No.	Q'ty
1280-57	DS2093149	HOSE	TUYAU FLEXIBLE	1					
58	DS2093296	HOSE	TUYAU FLEXIBLE	1					
59	DS2093296	HOSE	TUYAU FLEXIBLE	1					
60	DS2055318	HOSE	TUYAU FLEXIBLE	1					
61	DS2054315	HOSE	TUYAU FLEXIBLE	1					
62	DS2093013	HOSE	TUYAU FLEXIBLE	1					
64	DS2093137	HOSE	TUYAU FLEXIBLE	1					
71	2181-1702D5	ELBOW	COUDE	1					
74	DS2094173	HOSE	TUYAU FLEXIBLE	1					
101	DS2093140	HOSE	TUYAU FLEXIBLE	1					
102	2181-1126D6	ADAPTER	ADAPTEUR	1					
103	S8000181	O-RING	JOINT TORIQUE	1					
104	124-00208D4	CLIP	AGRAFE	1					
105	K1001029	BOLT	BOULON A 6 PANS	1					

DATE	NOV. 27, 2006
1st EDITION	

Fig. 1290 PILOT PIPING(2)
CONDUITES DE PILOTE

Serial No. ;

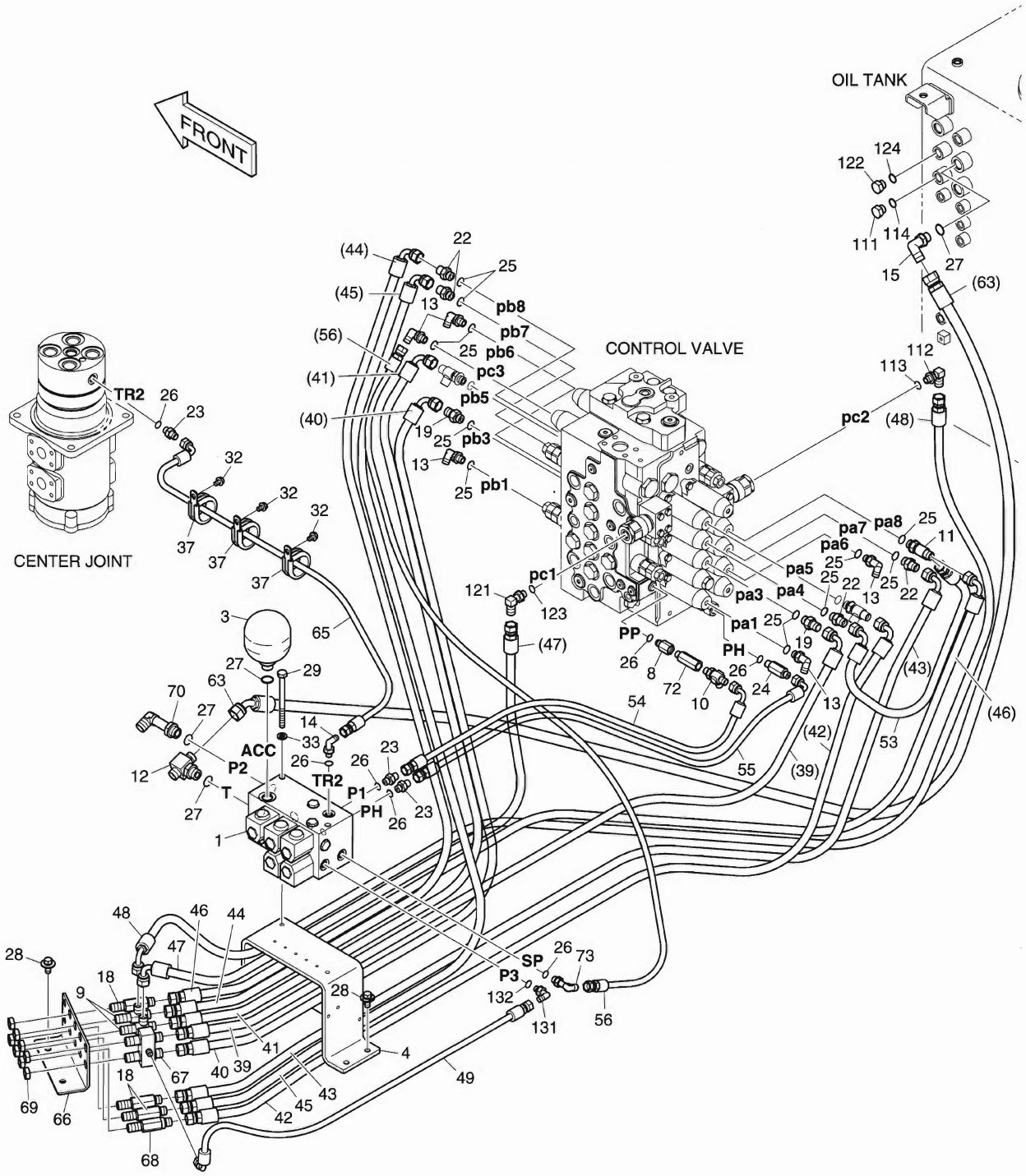

DATE	NOV. 27, 2006
1st EDITION	

Fig. 1290 PILOT PIPING(2) CONDUITES DE PILOTE

Serial No. ;

Key No.	Part No.	Description	Description	Q'ty	S.C	Serial No.	ICA	Replaceable part	
								Part No.	Q'ty
1290--	K1014034C	PILOT PIPING	TUYAUTERIE PILOTE	-	D				
1	K1012576	VALVE;SOLENOID	SOUPAPE A SOLENOIDE	1					
3	2460-9057A	ACCUMULATOR	ACCUMULATEUR	1					
4	K1018246A	BRACKET	SUPPORT	1					
8	471-00118	FILTER;REDUCER	FILTRE	1					
9	181-00086D2	TEE	TE	2					
10	2181-1951D1	TEE	TE	1					
11	2181-1951D16	TEE	TE	1					
12	2181-2281D10	TEE	TE	1					
13	2181-1702D10	ELBOW	COUDE	5					
14	2181-1702D4	ELBOW	COUDE	1					
15	2181-1702D2	ELBOW	COUDE	1					
18	DS2410009	ADAPTER	ADAPTEUR	3					
19	181-00144D5	ADAPTER	ADAPTEUR	2					
22	2181-1126D7	ADAPTER	ADAPTEUR	4					
23	2181-1126D14	ADAPTER	ADAPTEUR	3					
24	2181-1126D34	ADAPTER	ADAPTEUR	1					
25	S8000141	O-RING	JOINT TORIQUE	12					
26	S8000111	O-RING	JOINT TORIQUE	9					
27	S8000181	O-RING	JOINT TORIQUE	4					
28	DS0025017	BOLT;SET	BOULON A 6 PANS	6					
29	S0560066	BOLT	BOULON A 6 PANS	2					
32	K1001029	BOLT	BOULON A 6 PANS	3					
33	S5102603	WASHER	CALE	2					
37	124-00208D7	CLIP	AGRAFE	3					
39	DS2093049	HOSE	TUYAU FLEXIBLE	1					
40	DS2093066	HOSE	TUYAU FLEXIBLE	1					
41	DS2093003	HOSE	TUYAU FLEXIBLE	1					
42	DS2093020	HOSE	TUYAU FLEXIBLE	1					
43	DS2093279	HOSE	TUYAU FLEXIBLE	1					
44	DS2093295	HOSE	TUYAU FLEXIBLE	1					
45	DS2093231	HOSE	TUYAU FLEXIBLE	1					
46	DS2093244	HOSE	TUYAU FLEXIBLE	1					
47	DS2093054	HOSE	TUYAU FLEXIBLE	1					
48	DS2093176	HOSE	TUYAU FLEXIBLE	1					
49	DS2093070	HOSE	TUYAU FLEXIBLE	1					
53	DS2093097	HOSE	TUYAU FLEXIBLE	1					
54	DS2093051	HOSE	TUYAU FLEXIBLE	1					

DATE	NOV. 27, 2006
1st EDITION	

Fig. 1290 PILOT PIPING(2)
CONDUITES DE PILOTE

Serial No. ;

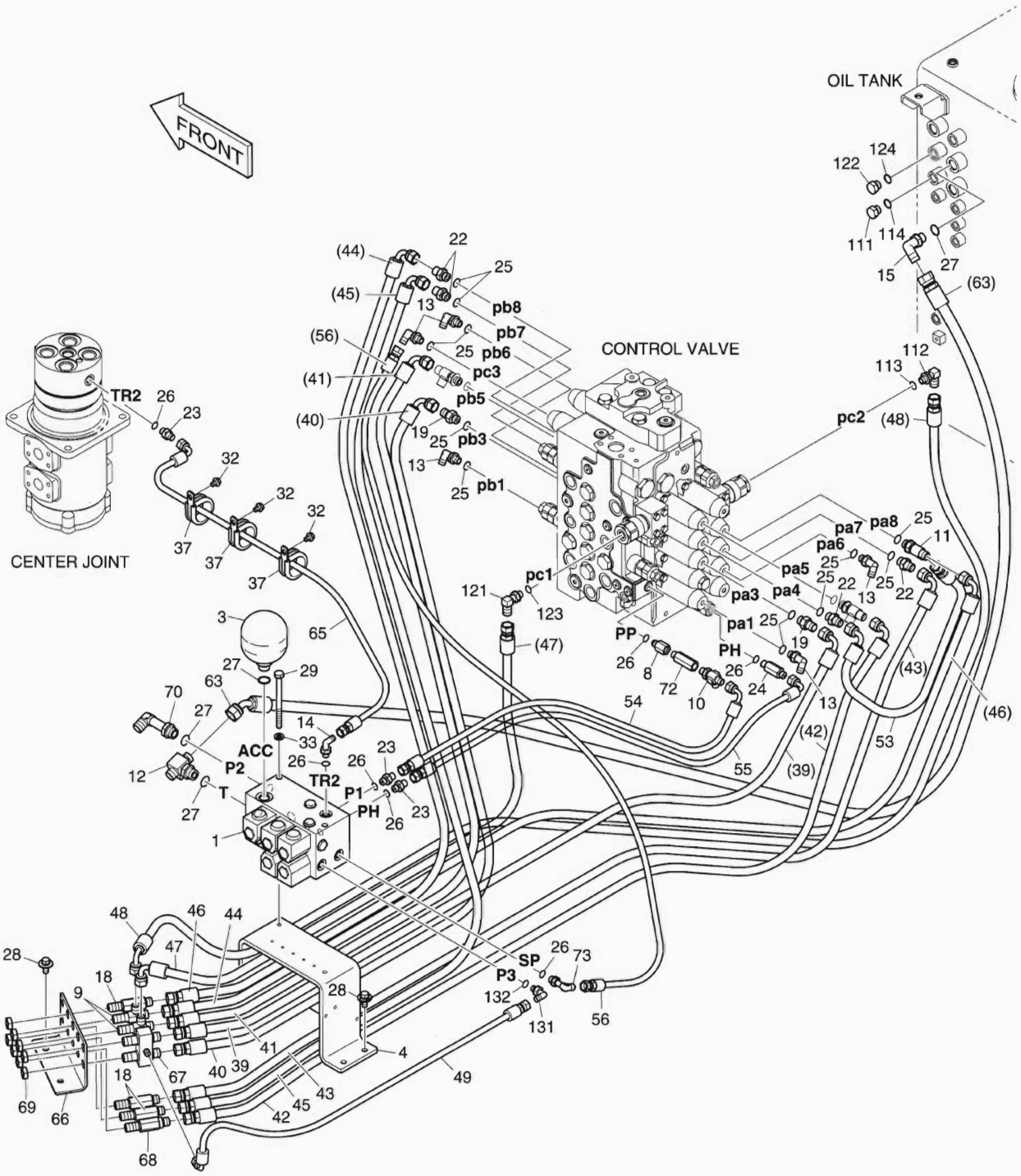

DATE	NOV. 27, 2006
1st EDITION	

Fig. 1290 PILOT PIPING(2) CONDUITES DE PILOTE

Serial No. ;

Key No.	Part No.	Description	Description	Q'ty	S.C	Serial No.	ICA	Replaceable part	
								Part No.	Q'ty
1290-55	DS2093090	HOSE	TUYAU FLEXIBLE	1					
56	DS2094038	HOSE	TUYAU FLEXIBLE	1					
63	DS2054358	HOSE	TUYAU FLEXIBLE	1					
65	DS2093120	HOSE	TUYAU FLEXIBLE	1					
66	K1000354	BRACKET;JOINT	SUPPORT	1					
67	420-00307	VALVE;SHUTTLE	VANNE	1					
68	420-00352D1	VALVE;SHOCKLESS	VANNE	1					
69	121-00010D1	NUT	ECROU 6 PANS	8					
70	2181-1702D53	ELBOW	COUDE	1					
72	DS2242022	ADAPTER	ADAPTEUR	1					
73	2181-1702D57	ELBOW	COUDE	1					
111	2181-1950D2	PLUG	BOUCHON	1					
112	2181-1702D3	ELBOW	COUDE	1					
113	S8000111	O-RING	JOINT TORIQUE	1					
114	S8000141	O-RING	JOINT TORIQUE	1					
121	2181-1702D3	ELBOW	COUDE	1					
122	2181-1950D2	PLUG	BOUCHON	1					
123	S8000111	O-RING	JOINT TORIQUE	1					
124	S8000141	O-RING	JOINT TORIQUE	1					
131	2181-1702D4	ELBOW	COUDE	1					
132	S8000111	O-RING	JOINT TORIQUE	1					

DATE	NOV. 27, 2006
1st EDITION	

Fig. 1300 PILOT PIPING(3) CONDUITES DE PILOTE

Serial No. ;

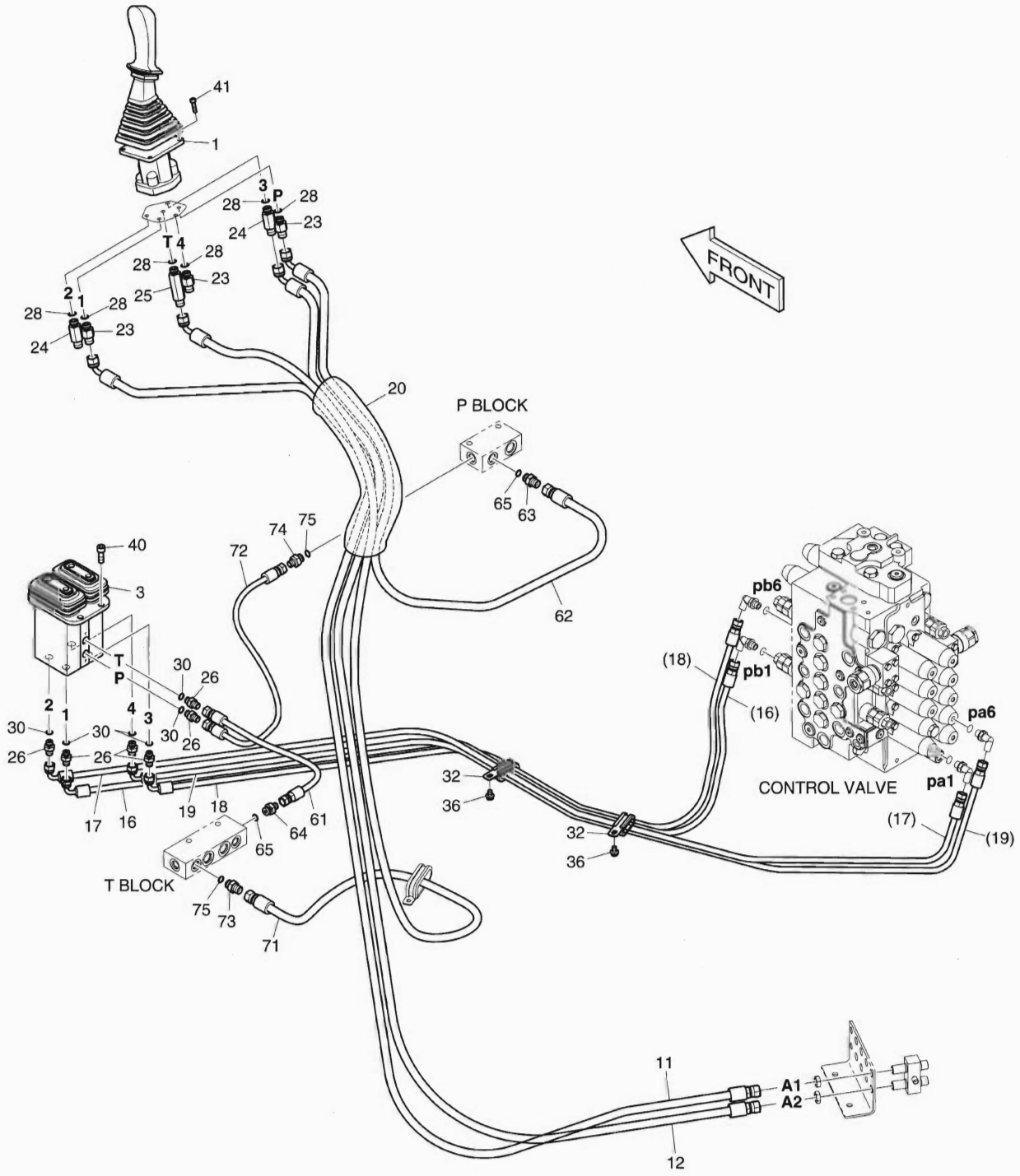

DATE	NOV. 27, 2006
1st EDITION	

Fig. 1300 PILOT PIPING(3) CONDUITES DE PILOTE

Serial No. ;

Key No.	Part No.	Description	Description	Q'ty	S.C	Serial No.	ICA	Replaceable part	
								Part No.	Q'ty
1300--	K1013655C	PILOT PIPING	TUYAUTERIE PILOTE	-	D				
1	K1000556G	VALVE;REMOCON(L.H)	VANNE DE COMMANDE	1					
3	420-00467	VALVE;PEDAL	VANNE	1					
11	DS2095027	HOSE	TUYAU FLEXIBLE	1					
12	DS2095027	HOSE	TUYAU FLEXIBLE	1					
16	DS2093337	HOSE	TUYAU FLEXIBLE	1					
17	DS2093205	HOSE	TUYAU FLEXIBLE	1					
18	DS2093205	HOSE	TUYAU FLEXIBLE	1					
19	DS2093283	HOSE	TUYAU FLEXIBLE	1					
20	K1003945	PROTECTOR	PROTECTEUR	1					
23	DS2213165	ADAPTER	ADAPTEUR	3					
24	2181-1126D27	ADAPTER	ADAPTEUR	2					
25	2181-1126D28	ADAPTER	ADAPTEUR	1					
26	2181-1126D14	ADAPTER	ADAPTEUR	6					
28	S8000141	O-RING	JOINT TORIQUE	6					
30	S8000111	O-RING	JOINT TORIQUE	6					
32	124-00209D3	CLIP	AGRAFE	2					
36	K1001029	BOLT	BOULON A 6 PANS	2					
40	S2212266	BOLT	BOULON A 6 PANS	4					
41	S2205066	BOLT	BOULON A 6 PANS	4					
61	DS2094006	HOSE	TUYAU FLEXIBLE	1					
62	DS2095003	HOSE	TUYAU FLEXIBLE	1					
63	2181-1126D7	ADAPTER	ADAPTEUR	1					
64	2181-1126D36	ADAPTER	ADAPTEUR	1					
65	S8000141	O-RING	JOINT TORIQUE	2					
71	DS2095004	HOSE	TUYAU FLEXIBLE	1					
72	DS2094006	HOSE	TUYAU FLEXIBLE	1					
73	2181-1126D7	ADAPTER	ADAPTEUR	1					
74	2181-1126D36	ADAPTER	ADAPTEUR	1					
75	S8000141	O-RING	JOINT TORIQUE	2					

DATE	NOV. 27, 2006
1st EDITION	

Fig. 1310 PILOT PIPING(4)
CONDUITES DE PILOTE

Serial No. ;

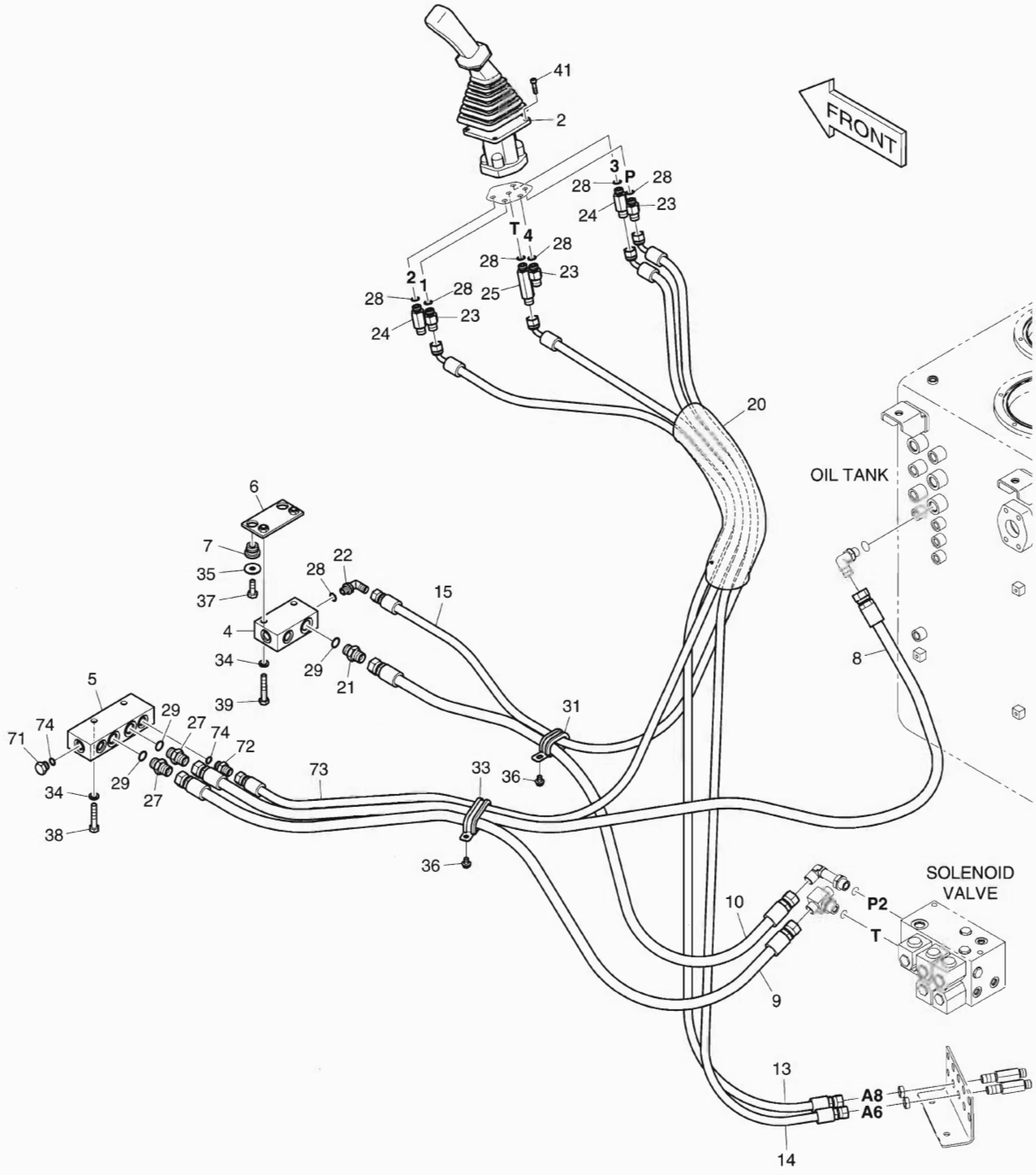

DATE	NOV. 27, 2006
1st EDITION	

Fig. 1310 PILOT PIPING(4) CONDUITES DE PILOTE

Serial No. ;

Key No.	Part No.	Description	Description	Q'ty	S.C	Serial No.	ICA	Replaceable part	
								Part No.	Q'ty
1310--	K1013655C	PILOT PIPING	TUYAUTERIE PILOTE	-	D				
2	K1000555G	VALVE;REMOCON(R.H)	VANNE DE COMMANDE	1					
4	2423-1470	BLOCK	BLOC	1					
5	K1007042	BLOCK	BLOC	1					
6	621-02151	PLATE	PLAQUE	1					
7	198-00016	RUBBER	CAOUTCHOUC	2					
8	DS2053905	HOSE	TUYAU FLEXIBLE	1					
9	DS2053852	HOSE	TUYAU FLEXIBLE	1					
10	DS2053852	HOSE	TUYAU FLEXIBLE	1					
13	DS2095027	HOSE	TUYAU FLEXIBLE	1					
14	DS2095027	HOSE	TUYAU FLEXIBLE	1					
15	DS2095002	HOSE	TUYAU FLEXIBLE	1					
20	K1003945	PROTECTOR	PROTECTEUR	1					
21	2471-1135	ADAPTER	ADAPTEUR	1					
22	2181-1702D5	ELBOW	COUDE	1					
23	DS2213165	ADAPTER	ADAPTEUR	3					
24	2181-1126D27	ADAPTER	ADAPTEUR	2					
25	2181-1126D28	ADAPTER	ADAPTEUR	1					
27	2181-1126D6	ADAPTER	ADAPTEUR	2					
28	S8000141	O-RING	JOINT TORIQUE	7					
29	S8000181	O-RING	JOINT TORIQUE	3					
31	124-00209D2	CLIP	AGRAFE	1					
33	124-00209D8	CLIP	AGRAFE	1					
34	2114-2031D5	WASHER;SPRING	RONDELLE ELASTIQUE	4					
35	2114-1058D10	WASHER	CALE	2					
36	K1001029	BOLT	BOULON A 6 PANS	2					
37	S0512266	BOLT	BOULON A 6 PANS	2					
38	S0558666	BOLT	BOULON A 6 PANS	2					
39	S0558766	BOLT	BOULON A 6 PANS	2					
41	S2205066	BOLT	BOULON A 6 PANS	4					
71	2181-1950D2	PLUG	BOUCHON	1					
72	2181-1126D7	ADAPTER	ADAPTEUR	1					
73	DS2095003	HOSE	TUYAU FLEXIBLE	1					
74	S8000141	O-RING	JOINT TORIQUE	2					

DATE	NOV. 27, 2006
1st EDITION	

Fig. 1320 PILOT PIPING(5) CONDUITES DE PILOTE

Serial No. ;

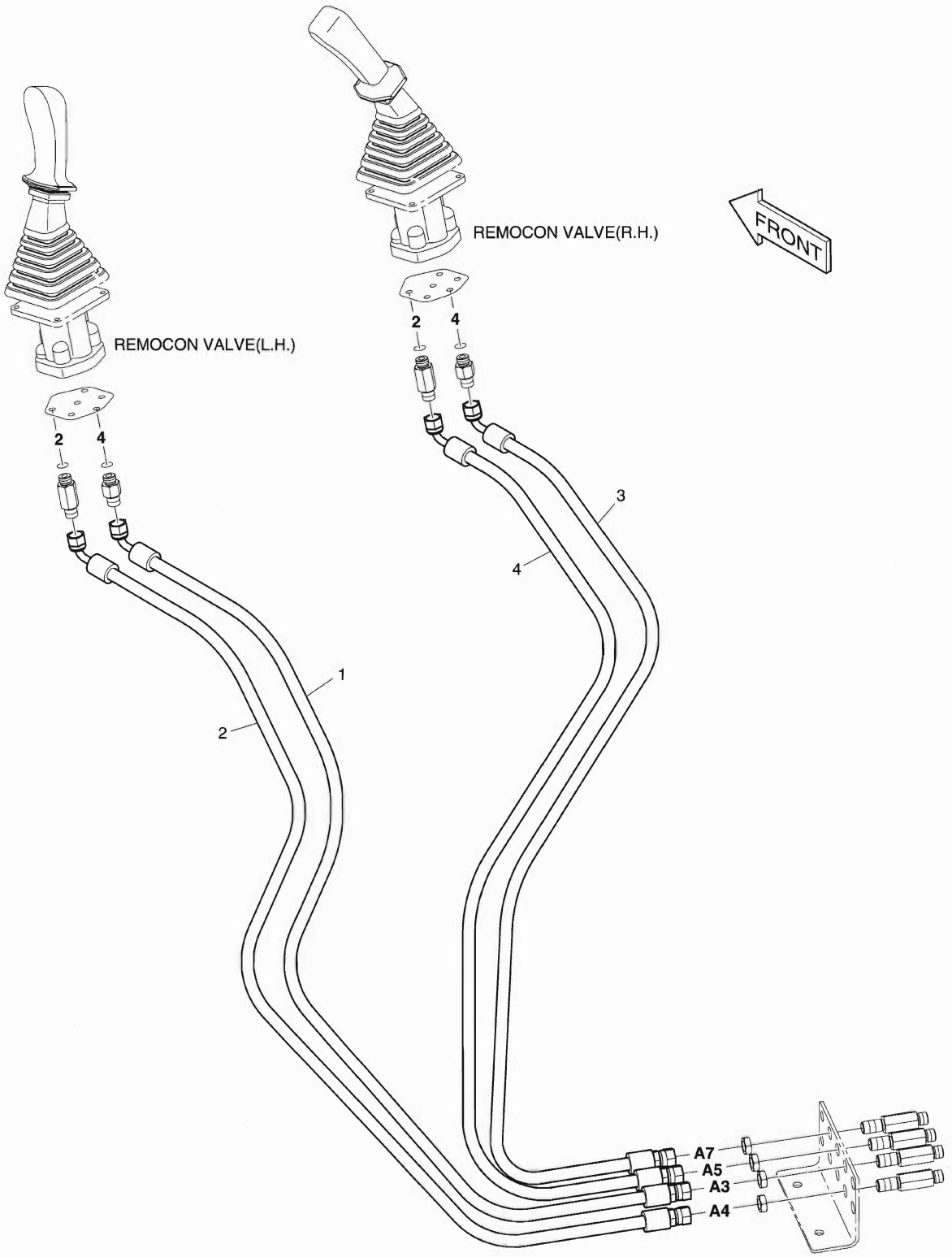

DATE	NOV. 27, 2006
1st EDITION	

Fig. 1320 PILOT PIPING(5) CONDUITES DE PILOTE

Serial No. ;

Key No.	Part No.	Description	Description	Q'ty	S.C	Serial No.	ICA	Replaceable part	
								Part No.	Q'ty
1320--	K1014918	PILOT PIPING	TUYAUTERIE PILOTE	-	D				
1	DS2095027	HOSE	TUYAU FLEXIBLE	1					
2	DS2095027	HOSE	TUYAU FLEXIBLE	1					
3	DS2095027	HOSE	TUYAU FLEXIBLE	1					
4	DS2095027	HOSE	TUYAU FLEXIBLE	1					

DATE	NOV. 27, 2006
1st EDITION	

Fig. 1330 CONTROL STAND - L.H.
CONSOLE DE COMMANDE

Serial No. ;

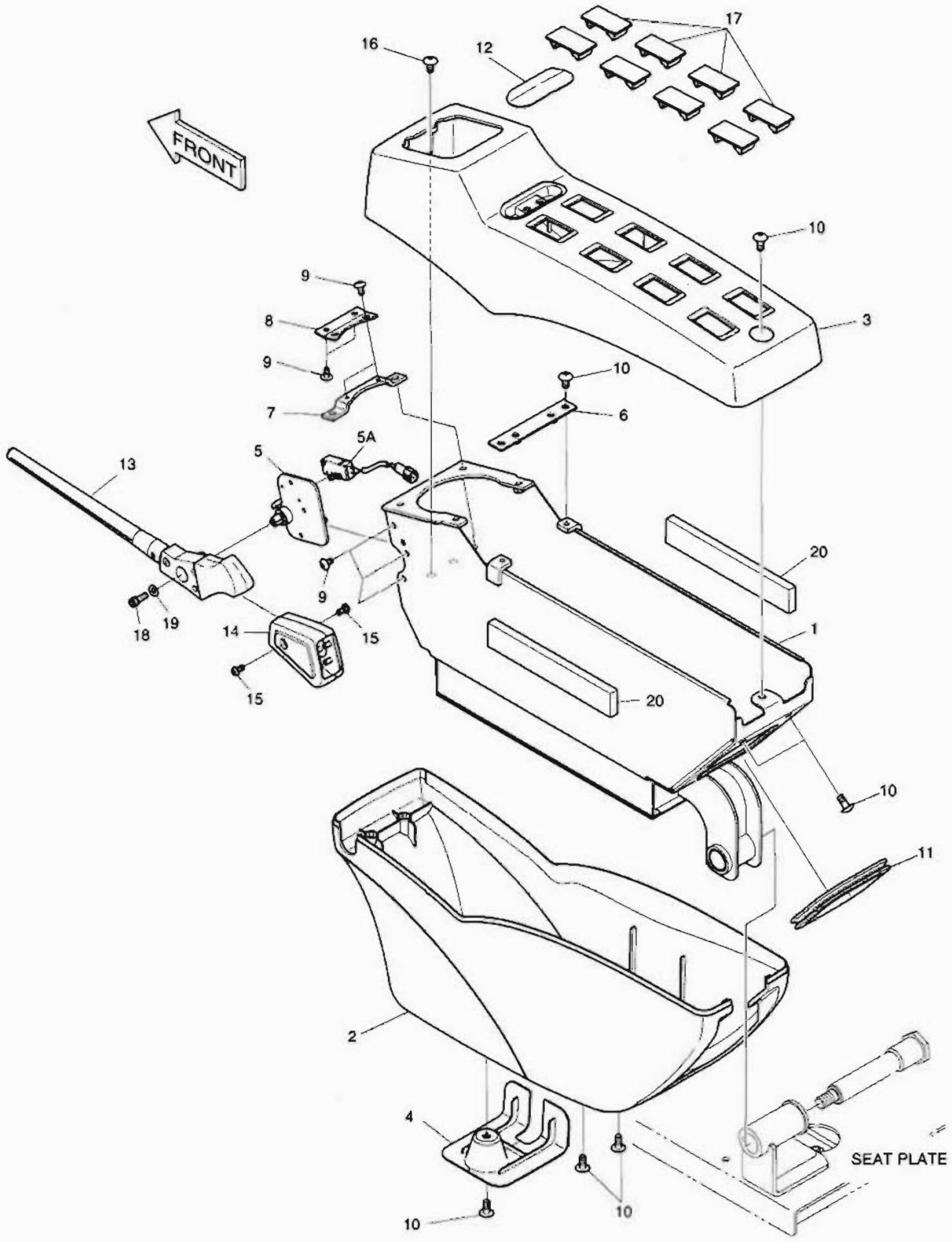

DATE	NOV. 27, 2006
1st EDITION	

Fig. 1330 CONTROL STAND - L.H.
CONSOLE DE COMMANDE

Serial No. ;

Key No.	Part No.	Description	Description	Q'ty	S.C	Serial No.	ICA	Replaceable part	
								Part No.	Q'ty
1330--	K1002202E	CONTROL STAND L.H.	PANNEAU	-	D				
1	195-02753C	BRACKET;STAND LH	SUPPORT	1					
2	621-02901B	COVER;STAND LH LOWER	COUVERCLE	1					
3	621-03012E	COVER;STAND LH UPPER	COUVERCLE	1					
4	621-03014B	COVER;STAND LOW	COUVERCLE	1					
5	195-02868C	BRACKET;SAFETY ASM	SUPPORT	1					
5A	549-00089	. SWITCH;MICRO	. INTERRUPTEUR	1					
6	621-02957A	PLATE;STAND MOUNT	PLAQUE	1					
7	159-00290A	PLATE	PLAQUE	1					
8	159-00287A	PLATE;COVER MOUNT	PLAQUE	1					
9	2120-2166D53	SCREW	VIS	7					
10	2120-2166D10	SCREW	VIS	10					
11	K1001023	STRIP;WEATHER	TAMPON	1					
12	621-03733B	COVER	COUVERCLE	1					
13	K1000840	LEVER	LEVIER	1					
14	K1000842A	COVER	COUVERCLE	1					
15	S3450823	SCREW M5X0.8X10	VIS	2					
16	2120-2166D52	BOLT	BOULON	2					
17	621-02801	COVER;SWITCH	COUVERCLE	8					
18	S2202966	BOLT;SOCKET	BOULON DE PLOT	1					
19	2114-1898D4	WASHER	RONDELLE	1					
20	K1010466	FORM	EPONGE	2					

DATE	NOV. 27, 2006
1st EDITION	

Fig. 1340 CONTROL STAND - R.H.
CONSOLE DE COMMANDE

Serial No. ;

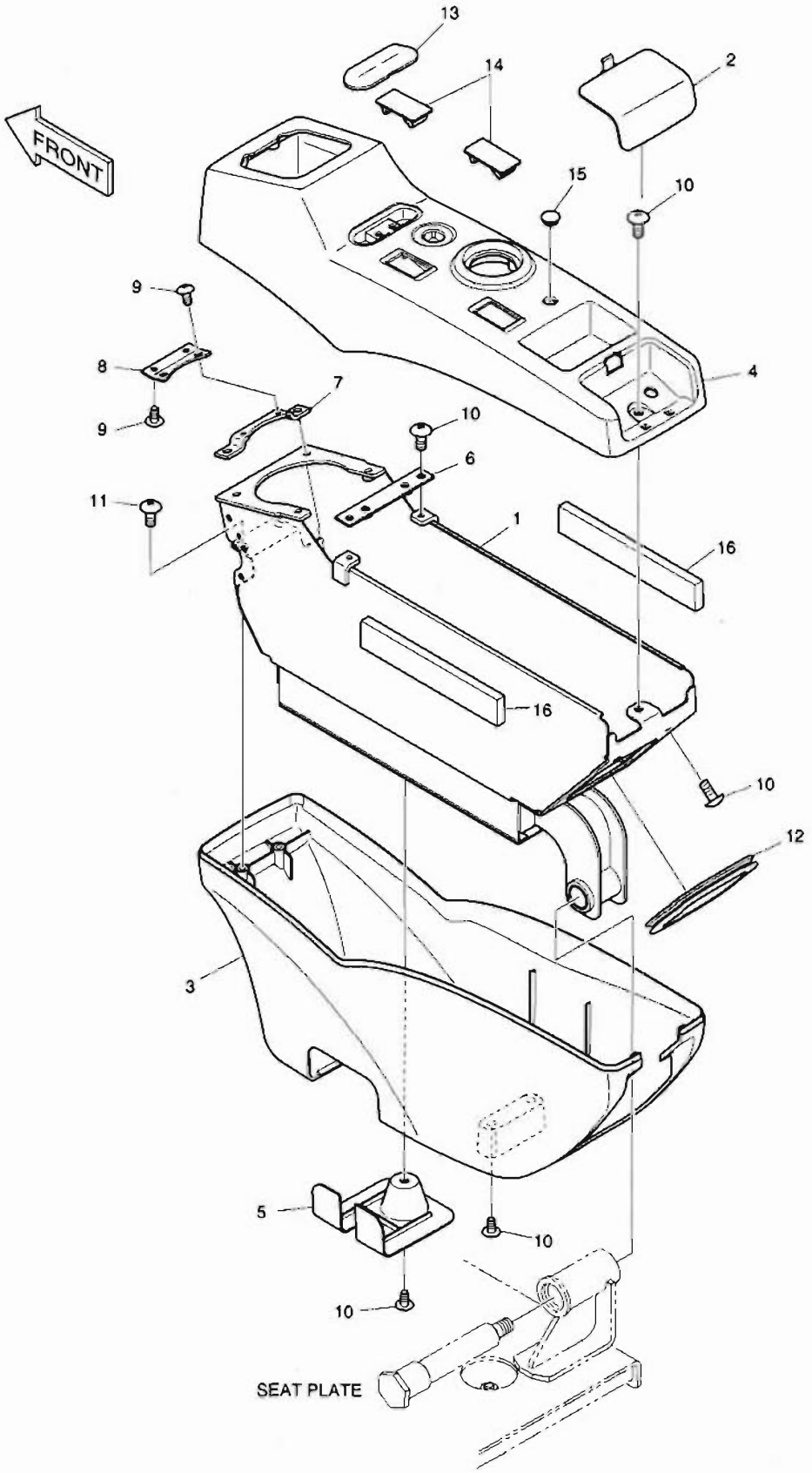

DATE	NOV. 27, 2006
1st EDITION	

Fig. 1340 CONTROL STAND - R.H.
CONSOLE DE COMMANDE

Serial No. ;

Key No.	Part No.	Description	Description	Q'ty	S.C	Serial No.	ICA	Replaceable part	
								Part No.	Q'ty
1340--	K1005468B	STAND ASS'Y R.H.	CONSOLE DE COMMANDE	-	D				
1	195-02755C	BRACKET;STAND RH	SUPPORT	1					
2	621-02926C	COVER;SWITCH	COUVERCLE	1					
3	621-02900B	COVER;STAND RH LOWER	COUVERCLE	1					
4	K1005343B	COVER;STAND RH UPPER	COUVERCLE	1					
5	621-03014B	COVER;STAND LOW	COUVERCLE	1					
6	621-02957A	PLATE;STAND MOUNT	PLAQUE	1					
7	159-00290A	PLATE	PLAQUE	1					
8	159-00287A	PLATE;COVER MOUNT	PLAQUE	1					
9	2120-2166D53	BOLT	BOULON	4					
10	2120-2166D10	SCREW	VIS	10					
11	2120-2166D52	BOLT	BOULON	2					
12	K1001023	STRIP;WEATHER	TAMPON	1					
13	621-03733B	COVER	COUVERCLE	1					
14	621-02801	COVER;SWITCH	COUVERCLE	2					
15	K1006995	CAP	CHAPEAU	1					
16	K1010466	FORM	EPONGE	2					

DATE	NOV. 27, 2006
1st EDITION	

Fig. 1350 SEAT SLIDING PLATE
POSEZ GLISSER LE PLAT

Serial No. ;

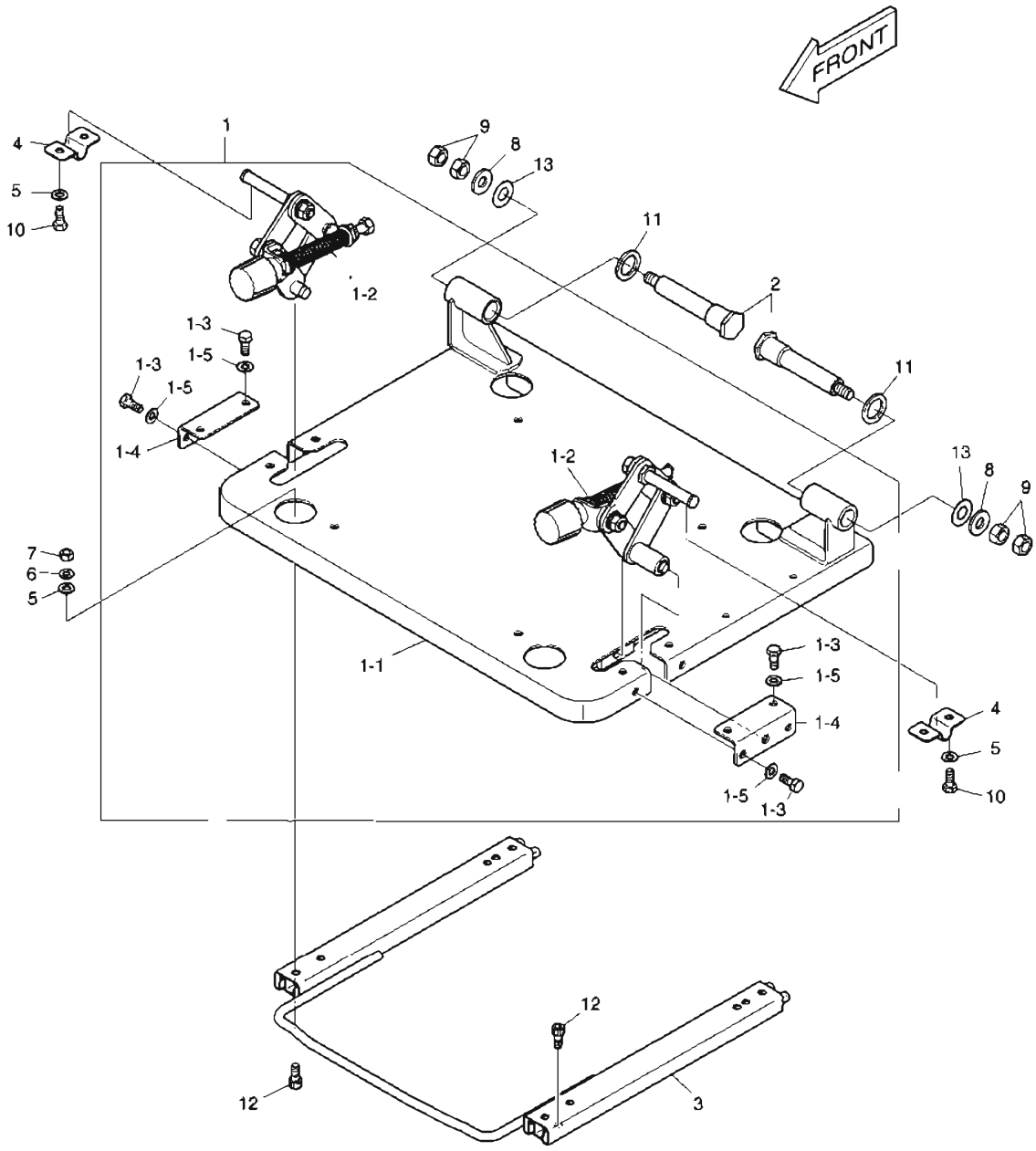

DATE	NOV. 27, 2006
1st EDITION	

Fig. 1350 SEAT SLIDING PLATE
POSEZ GLISSER LE PLAT

Serial No. ;

Key No.	Part No.	Description	Description	Q'ty	S.C	Serial No.	ICA	Replaceable part	
								Part No.	Q'ty
1350--	K1002204C	SEAT PLATE ASS'Y	SIEGE	-	D				
1	621-03011E	SEAT PLATE ASS'Y	SIEGE	1					
1-1	621-02895C	. PLATE;SEAT MOUNT	. PLAQUE	1					
1-2	195-02904C	. BRACKET ASS'Y;STAND TILT	. ENSEMBLE GODET	1					
1-3	2120-2166D5	. BOLT	. BOULON A 6 PANS	8					
1-4	621-02925A	. PLATE	. PLAQUE	2					
1-5	2114-1898D14	. WASHER;PLAIN	. RONDELLE PLATE	8					
2	123-00524B	PIN;TILT STAND	GOUJON	2					
3	K1003381	RAIL	RAIL	1					
4	621-03005A	PLATE	PLAQUE	2					
5	2114-1898D14	WASHER	RONDELLE	8					
6	2114-2031D4	WASHER;SPRING	RONDELLE ELASTIQUE	4					
7	2121-1311D2	NUT	ECROU	4					
8	2114-1898D17	WASHER	RONDELLE	2					
9	2121-1311D1	NUT	ECROU	4					
10	2120-2166D5	BOLT	BOULON	4					
11	2114-1898D18	WASHER	RONDELLE	2					
12	S2208866	BOLT;SOCKET	BOULON DE PLOT	8					
13	114-00590	WASHER	RONDELLE	2					

Fig. 1360 SEAT PLATE
POSEZ LE PLAT

Serial No. ;

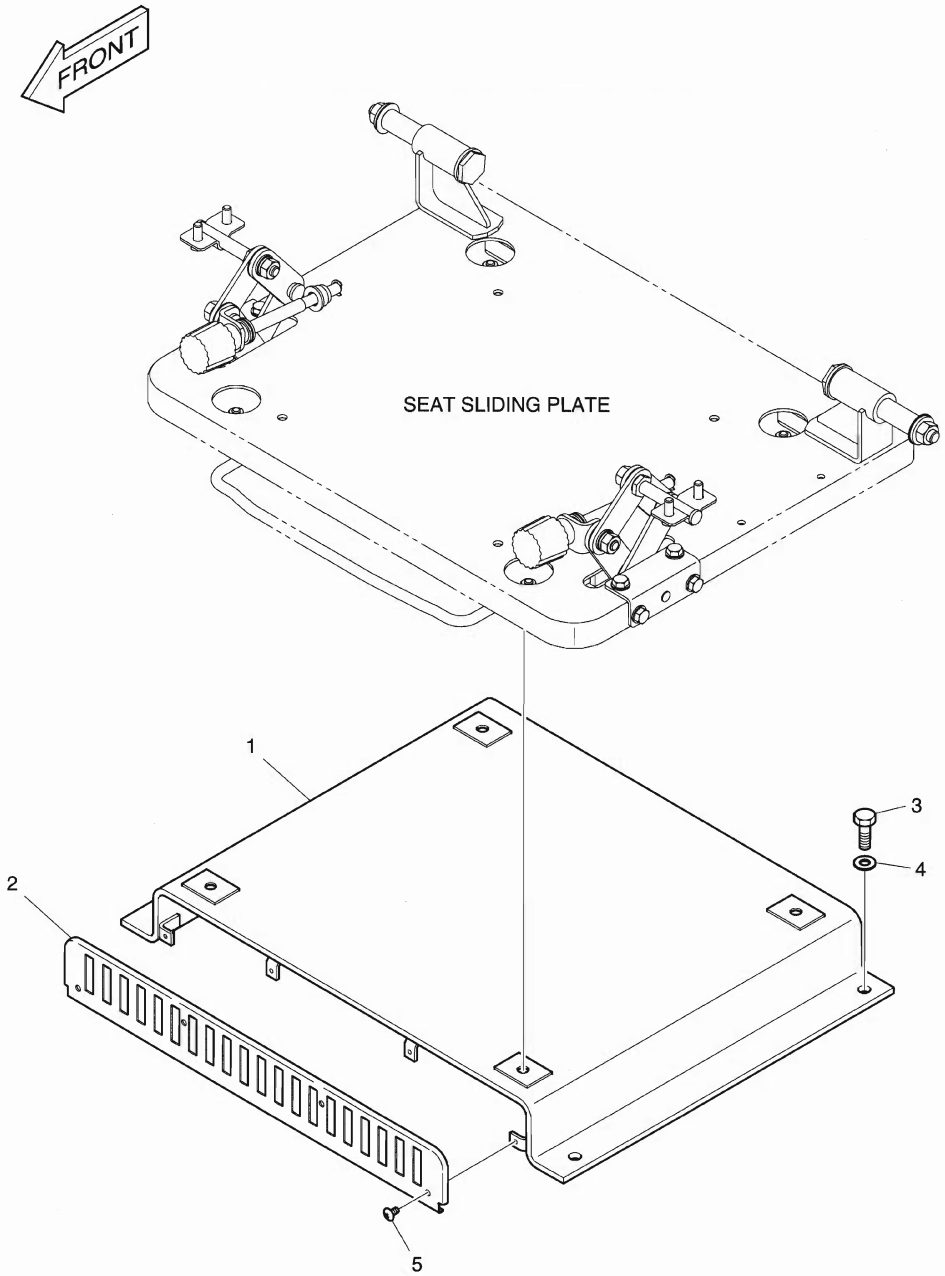

DATE	NOV. 27, 2006
1st EDITION	

Fig. 1360 SEAT PLATE POSEZ LE PLAT

Serial No. ;

Key No.	Part No.	Description	Description	Q'ty	S.C	Serial No.	ICA	Replaceable part	
								Part No.	Q'ty
1360--	K1002229A	SEAT PLATE	SIEGE	-	D				
1	K1002230A	BRACKET;SEAT LOWER	SUPPORT	1					
2	K1002231A	PLATE;COVER	PLAQUE	1					
3	2120-2166D10	BOLT	BOULON	4					
4	2114-1898D15	WASHER	RONDELLE	4					
5	2120-2166D53	BOLT	BOULON	4					

Fig. 1370 SEAT MOUNTING
SIEGE LE SUPPORT

Serial No. ;

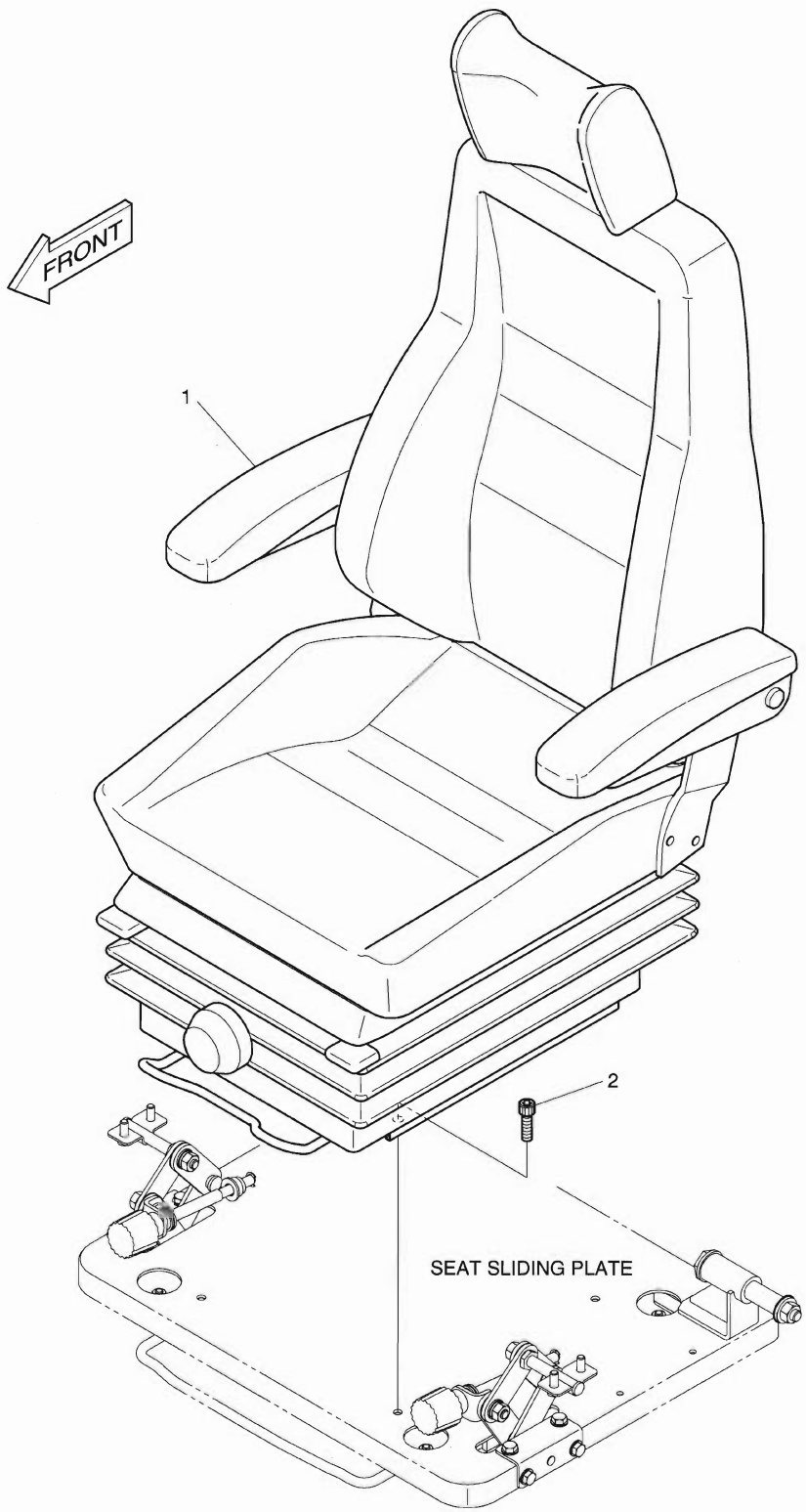

DATE	NOV. 27, 2006
1st EDITION	

Fig. 1370 SEAT MOUNTING SIEGE LE SUPPORT

Serial No. ;

Key No.	Part No.	Description	Description	Q'ty	S.C	Serial No.	ICA	Replaceable part	
								Part No.	Q'ty
370--	K1002084A	SEAT MOUNTING	SIEGE	-	D				
1	901-00045	SEAT	SIEGE	1					
2	S2208866	BOLT;SOCKET	BOULON DE PLOT	4					

Fig. 1380 SEAT SIEGE

Serial No. ;

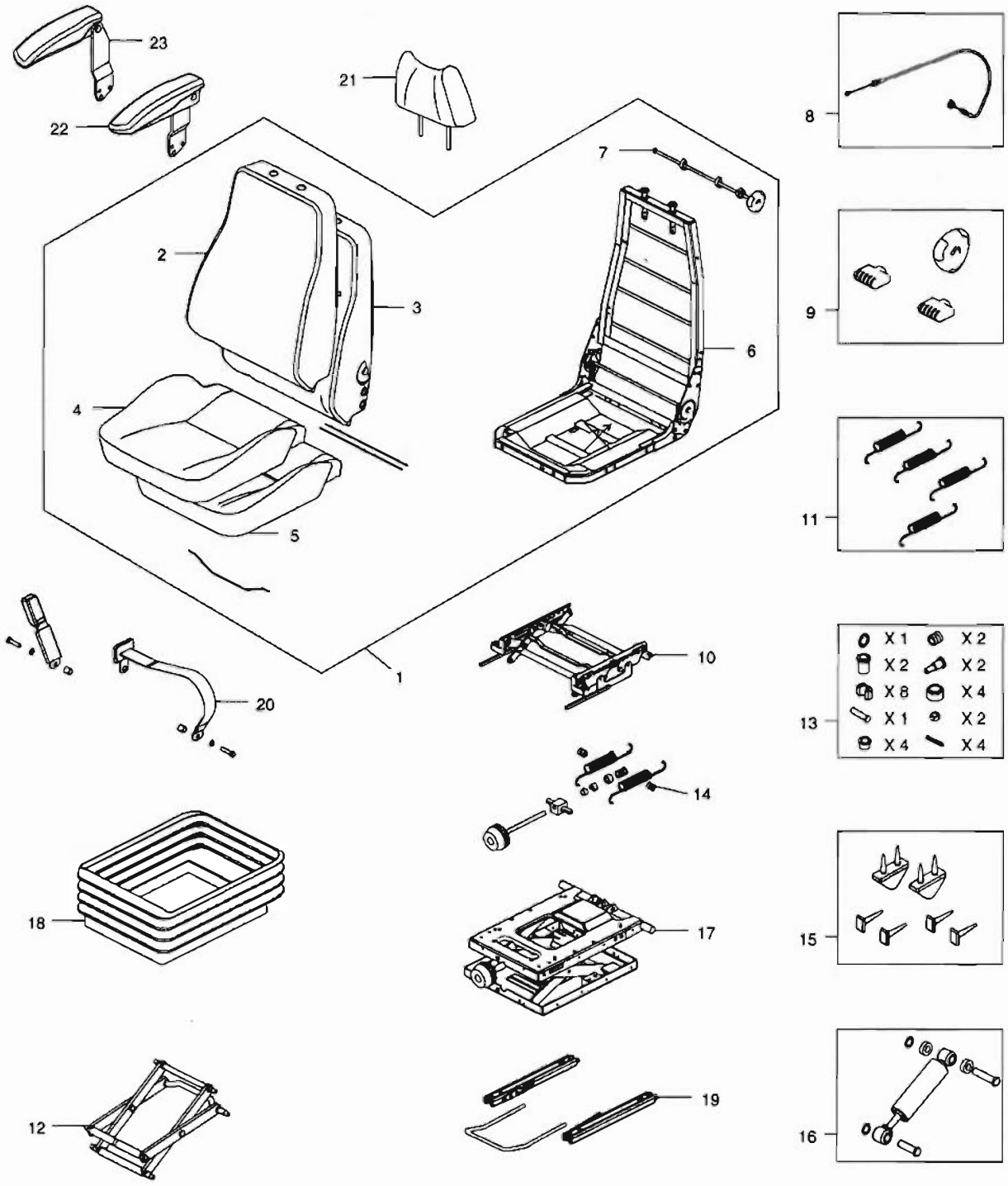

DATE	NOV. 27, 2006
1st EDITION	

Fig. 1380 SEAT SIEGE

Serial No. ;

Key No.	Part No.	Description	Description	Q'ty	S.C	Serial No.	ICA	Replaceable part	
								Part No.	Q'ty
1380--	901-00045	SEAT ASS'Y	SIEGE	1					
1	K9001695	UPPER ASS'Y	SUPERIEUR	1					
2	K9001201	BACK COVER	COUVERTURE ARRIERE	1					
3	K9001202	BACK FOAM	MOUSSE ARRIERE	1					
4	K9001203	SEAT COVER	SIEGE	1					
5	K9001204	SEAT FOAM	SIEGE	1					
6	-	FRAME	ARMATURE	1	D				
7	K9001206	LUMBAR KIT	KIT LOMBAIRE	1					
8	K9001207	CABLE;ADJUST	CABLE	1					
9	2.172-00003	HANDLE	POIGNEE	1					
10	K9001208	HEIGHT RISER	RECHAUFFEUR	1					
11	K9001209	HEIGHT RISER SPRING KIT	RECHAUFFEUR	1					
12	K9001210	LEVER/CENTRE PIVOT KIT	LEVIER	1					
13	K9001211	BEARING KIT	PALIER	1					
14	K9001212	WEIGHT ADJUST KIT	LE POIDS AJUSTENT LE KIT	1					
15	K9001213	UPSTOP/BUMPSTOP KIT	KIT DE	1					
16	K9001214	DAMPER KIT	REGISTRE	1					
17	K9001215	SUSPENSION ASS'Y	SUSPENSION	1					
18	K9001216	SUSPENSION COVER	SUSPENSION	1					
19	K9001217	SLIDING RAIL ASS'Y	GLISSEMENT DU RAIL	1					
20	K9001218	BELT;SEAT	COURROIE	1					
21	K9001219	HEAD REST	SIEGE	1					
22	K9001220	ARM REST-L.H	REPOSER	1					
23	K9001221	ARM REST-R.H	REPOSER	1					

Fig. 1390 DUCT COVER
CONDUITES COUVERCLE

Serial No. ;

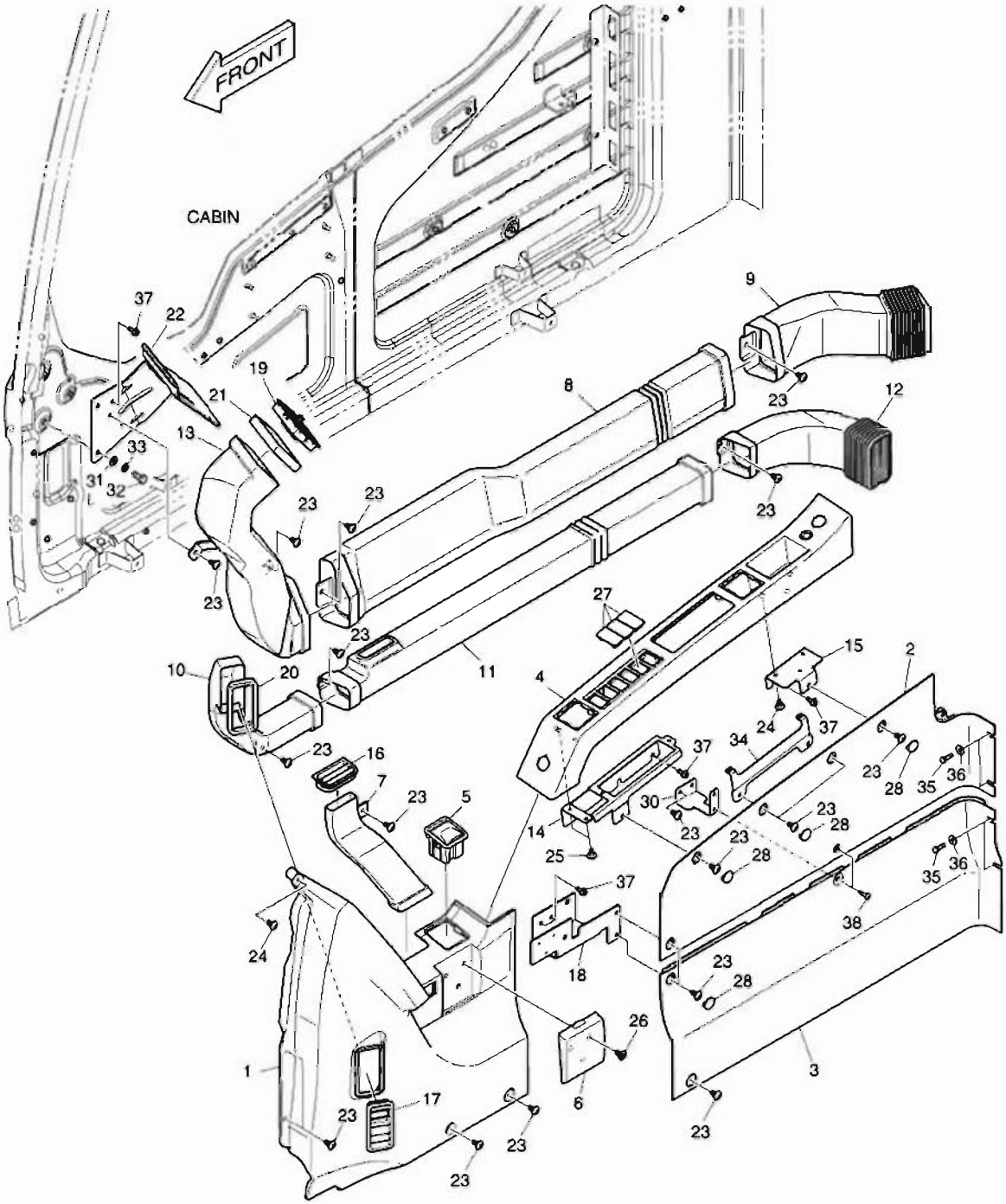

DATE	NOV. 27, 2006
1st EDITION	

Fig. 1390 DUCT COVER
CONDUITES COUVERCLE

Serial No. ;

Key No.	Part No.	Description	Description	Q'ty	S.C	Serial No.	ICA	Replaceable part	
								Part No.	Q'ty
1390--	621-02902G	SIDE COVER ASS'Y	COUVERCLE	-	D				
1	621-02903C	COVER;SIDE FRONT	COUVERCLE	1					
2	621-02905C	COVER;SIDE UPPER	COUVERCLE	1					
3	621-02904C	COVER;SIDE LOWER	COUVERCLE	1					
4	621-02909E	COVER;SWITCH	COUVERCLE	1					
5	906-00002A	ASHTRAY	CENDRIER	1					
6	621-02908B	CUP HOLDER	POSSESSEUR	1					
7	213-00035B	DUCT;DEFROSTER SIDE	COUVERCLE	1					
8	213-00030B	DUCT;FACE MID	COUVERCLE	1					
9	213-00031E	DUCT;FACE REAR	COUVERCLE	1					
10	213-00032B	DUCT;DEFROSTER FRONT	COUVERCLE	1					
11	213-00033B	DUCT;DEFROSTER MID	COUVERCLE	1					
12	213-00034E	DUCT;DEFROSTER REAR	COUVERCLE	1					
13	213-00029C	DUCT;FACE FRONT	COUVERCLE	1					
14	195-02768C	BRACKET;SWITCH COVER	SUPPORT	1					
15	195-02769C	BRACKET;SWITCH COVER REAR	SUPPORT	1					
16	415-00046B	LOUVER;SIDE	COUVERCLE	1					
17	415-00045B	LOUVER;FRONT	COUVERCLE	1					
18	195-02770C	BRACKET;CUP HOLDER	SUPPORT	1					
19	415-00044B	LOUVER;FACE	COUVERCLE	1					
20	K1001068	FOAM	EPONGE	1					
21	K1001069A	FOAM	EPONGE	1					
22	195-02858C	BRACKET;MONITOR	SUPPORT	1					
23	2120-2166D52	BOLT	BOULON	22					
24	2120-2166D53	BOLT	BOULON	4					
25	S3654523	SCREW	VIS	4					
26	2120-2166D23	SCREW	VIS	3					
27	621-02801	COVER;SWITCH	COUVERCLE	3					
28	621-03734A	COVER	COUVERCLE	6					
30	K1005007A	PLATE	PLAQUE	1					
31	2114-1898D14	WASHER	RONDELLE	3					
32	2120-2166D5	BOLT	BOULON	3					
33	2114-2031D4	WASHER;SPRING	RONDELLE ELASTIQUE	3					
34	K1009627	PLATE	PLAQUE	1					
35	2120-2166D36	BOLT	BOULON	4					
36	2114-1898D5	WASHER	RONDELLE	4					
37	K1010304	BOLT;FLANGE	BOULON A 6 PANS	8					
38	2120-2166D57	BOLT	BOULON	2					

DATE	NOV. 27, 2006
1st EDITION	

Fig. 1400 HEATER COVER
BOITIES DE CHAUFFAGE

Serial No. ;

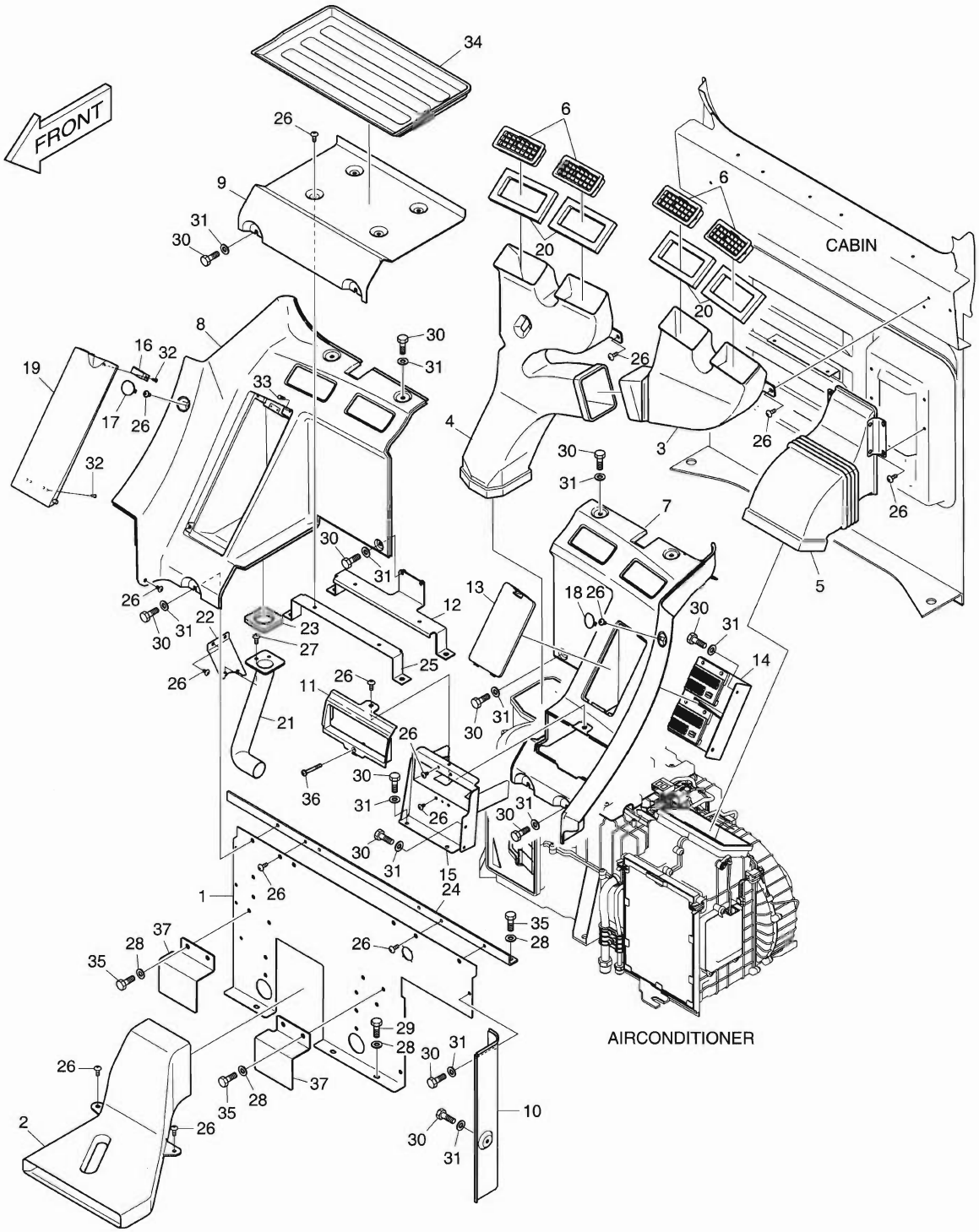

DATE	NOV. 27, 2006
1st EDITION	

Fig. 1400 HEATER COVER
BOITIES DE CHAUFFAGE

Serial No. ;

Key No.	Part No.	Description	Description	Q'ty	S.C	Serial No.	ICA	Replaceable part	
								Part No.	Q'ty
1400--	621-02896G	HEATER COVER	BOITIES DE CHAUFFAGE	-	D				
1	621-02894E	COVER;REAR LOWER	COUVERCLE	1					
2	213-00036B	DUCT;FOOT	COUVERCLE	1					
3	213-00037B	DUCT;REAR (L.H.)	COUVERCLE	1					
4	213-00038B	DUCT;REAR (R.H.)	COUVERCLE	1					
5	213-00039B	DUCT;AIR INLET	COUVERCLE	1					
6	415-00043B	NOZZLE;REAR	INJECTEUR	4					
7	621-02913C	COVER;REAR (L.H.)	COUVERCLE	1					
8	621-02914C	COVER;REAR (R.H.)	COUVERCLE	1					
9	621-02915B	COVER;REAR CENTER	COUVERCLE	1					
10	621-02907B	COVER;SIDE REAR (L.H.)	COUVERCLE	1					
11	621-02917C	COVER;STEREO UP	COUVERCLE	1					
12	K1001295A	PLATE	PLAQUE	1					
13	621-02919B	COVER;FUSE	COUVERCLE	1					
14	195-02771B	BRACKET;FUSE BOX	SUPPORT	1					
15	195-02772E	BRACKET;STEREO	SUPPORT	1					
16	2125-1095A	CATCH;MAGNETIC	LOQUET	1					
17	K1005344A	COVER	COUVERCLE	1					
18	K1005345A	COVER;HOLE	COUVERCLE	1					
19	621-02920C	COVER;BOX	COUVERCLE	1					
20	K1001310	FOAM	EPONGE	4					
21	213-00040A	DUCT;AIR BOX	COUVERCLE	1					
22	195-02774	BRACKET;AIR DUCT MOUNT	SUPPORT	1					
23	161-00622	FOAM;AIR SEAL	EPONGE	1					
24	195-02785C	BRACKET;CROSS BAR	SUPPORT	1					
25	195-02790B	BRACKET	SUPPORT	1					
26	2120-2166D10	SCREW	VIS	21					
27	2120-2166D53	BOLT	BOULON	2					
28	2114-1898D14	WASHER	RONDELLE	9					
29	2120-2166D12	BOLT	BOULON	3					
30	2120-2166D36	BOLT	BOULON	19					
31	2114-1898D5	WASHER	RONDELLE	19					
32	S3644163	SCREW	VIS	8					
33	K1002385	STOPPER	CHAPEAU	2					
34	161-00624	PAD;FOAM	CAOUTCHOUC	1					
35	2120-2166D5	BOLT	BOULON	6					
36	2120-2166D58	BOLT	BOULON	1					
37	K1017271	PLATE	PLAQUE	2					

Fig. 1410 CABIN MOUNTING
SUPPORT DE CABINE

Serial No. ;

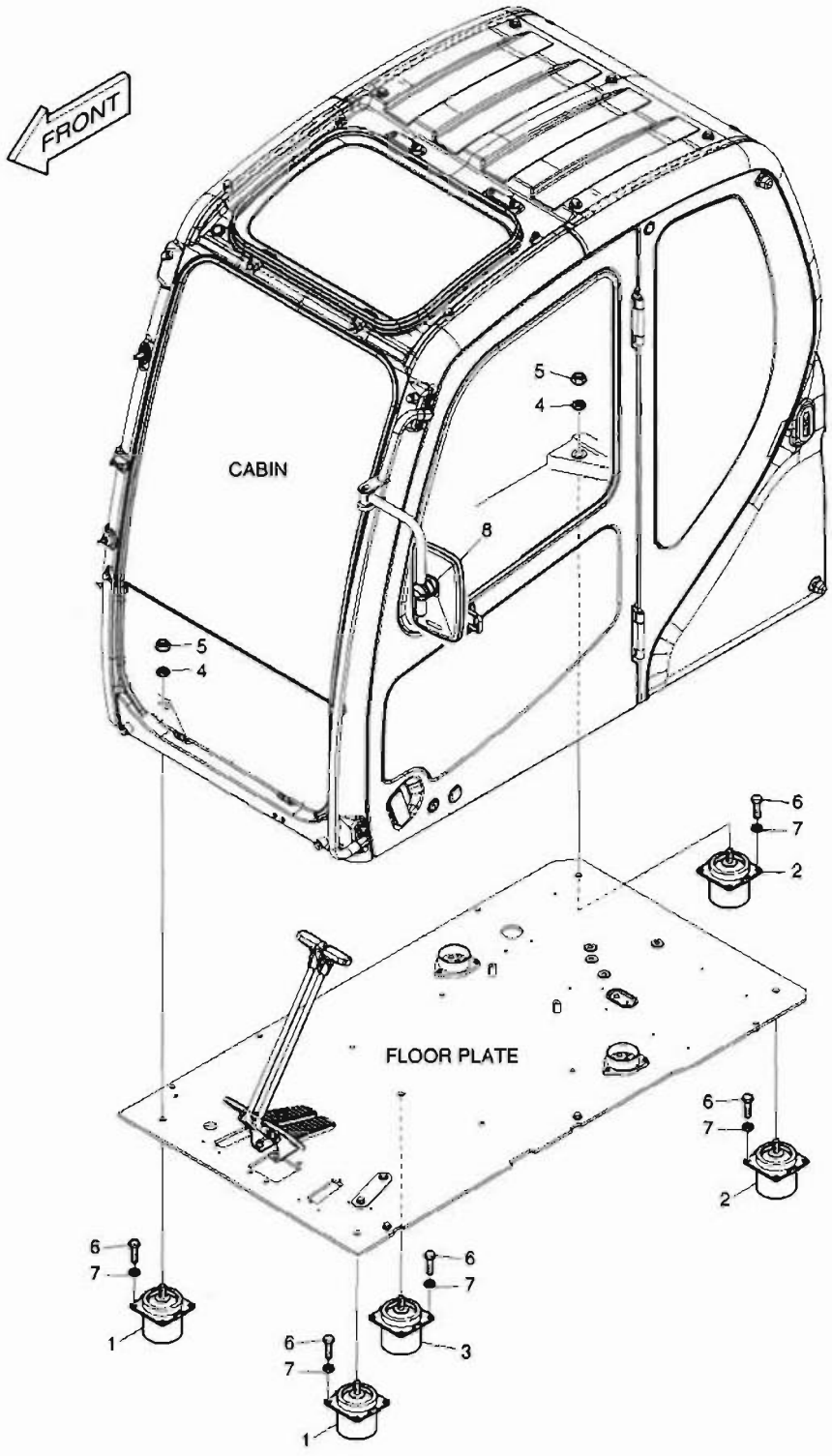

DATE	NOV. 27, 2006
1st EDITION	

Fig. 1410 CABIN MOUNTING SUPPORT DE CABINE

Serial No. ;

Key No.	Part No.	Description	Description	Q'ty	S.C	Serial No.	ICA	Replaceable part	
								Part No.	Q'ty
1410--	621-03224	CABIN MOUNT	SUPPORT DE CABINE	-	D				
1	161-00010	RUBBER;MOUNT(FRONT)	CAOUTCHOUC	2					
2	161-00011	RUBBER;MOUNT(REAR)	CAOUTCHOUC	2					
3	K1000043	RUBBER;CABIN MOUNT	CAOUTCHOUC	1					
4	2114-1058D2	WASHER	RONDELLE	5					
5	2121-9007	NUT	ECROU	5					
6	2120-2166D2	BOLT	BOULON	20					
7	2114-1898D1	WASHER	RONDELLE	20					
8	903-00068	MIRROR;SIDE	RETROVISEUR	1					

DATE	NOV. 27, 2006
1st EDITION	

Fig. 1420 CABIN(1) CABINE

Serial No. ;

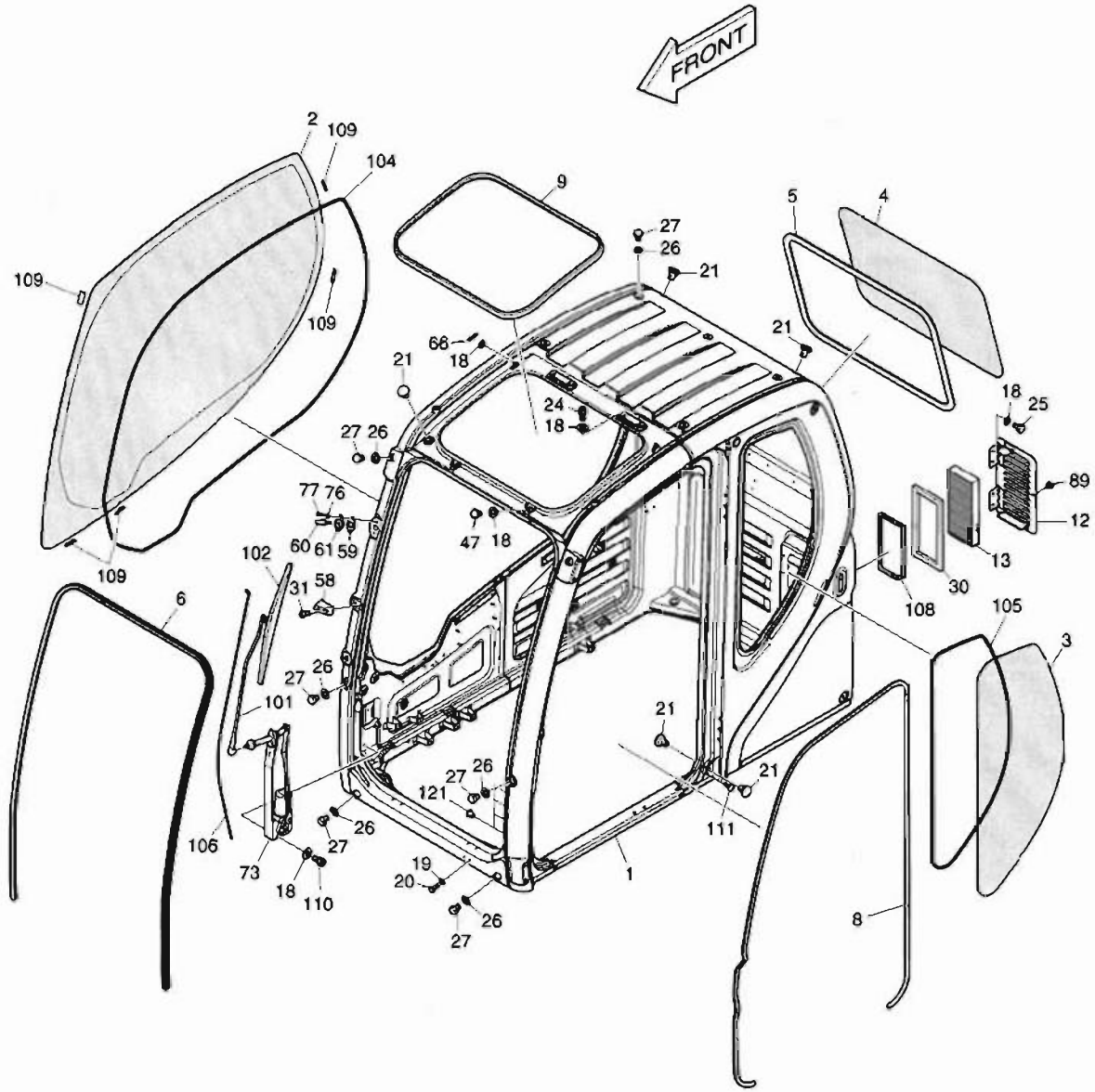

DATE	NOV. 27, 2006
1st EDITION	

Fig. 1420 CABIN(1) CABINE

Serial No. ;

Key No.	Part No.	Description	Description	Q'ty	S.C	Serial No.	ICA	Replaceable part	
								Part No.	Q'ty
1420--	622-00351H	CABIN ASS'Y	CABINE	1					
1	-	BODY;CABIN	CARTER	1	D				
2	903-00072A	GLASS;RH	VITRE	1					
3	903-00073A	GLASS;LH REAR	VITRE	1					
4	903-00075	GLASS;REAR	VITRE	1					
5	198-00054A	TRIM;REAR GLASS	CANAL	1					
6	162-00035A	STRIP;WEATHER	TAMPON	1					
8	162-00039A	STRIP;BODY	TAMPON	1					
9	162-00038	TRIM;ROOF	CANAL	1					
12	621-02864	COVER;FRESH AIR ASM	COUVERCLE	1					
13	471-00119	FILTER;FRESH AIR	FILTRE	1					
18	2114-1898D14	WASHER;PLAIN	RONDELLE	15					
19	2114-1898D3	WASHER;PLAIN	RONDELLE	2					
20	2120-2166D28	BOLT	BOULON A 6 PANS	2					
21	2160-1310	RUBBER;BUSHING	CAOUTCHOUC	5					
24	S2208561	BOLT	BOULON A 6 PANS	4					
25	2120-2166D12	BOLT	BOULON A 6 PANS	4					
26	2114-1898D6	WASHER;PLAIN	RONDELLE	13					
27	2120-2166D37	BOLT	BOULON A 6 PANS	13					
30	161-00640A	SPONGE	EPONGE	1					
31	2120-2166D7	SCREW	VIS	2					
47	2120-2166D5	BOLT	BOULON A 6 PANS	2					
58	195-02729	BRACKET;BLADE	SUPPORT	1					
59	161-00598A	RUBBER;WASHER NOZZLE	RUBBER;WASHER NOZZLE	1					
60	554-00005	NOZZLE;WASHER	INJECTEUR	1					
61	621-02837A	COVER;WASHER NOZZLE	COUVERCLE	1					
66	123-00523	PIN;GAS-SPRING	GOUJON	2					
73	538-00011	MOTOR;WIPER	MOTEUR	1					
76	2114-1898D13	WASHER;PLAIN	RONDELLE	2					
77	2120-2166D26	SCREW	VIS	2					
89	K1003427	BOLT;KNOB	BOULON A 6 PANS	1					
101	541-00015	ARM;WIPER	BALANCIER	1					
102	507-00006	BLADE;WIPER	LAME	1					
104	K1002635	DAMPER	AMORTISSEUR	1					
105	K1002636	DAMPER	AMORTISSEUR	1					
106	2185-1660	HOSE	TUYAU FLEXIBLE	1					
108	K1004061	FOAM	EPONGE	1					
109	K1003522	STOPPER	CHAPEAU	5					

DATE	NOV. 27, 2006
1st EDITION	

Fig. 1420 CABIN(1) CABINE

Serial No. ;

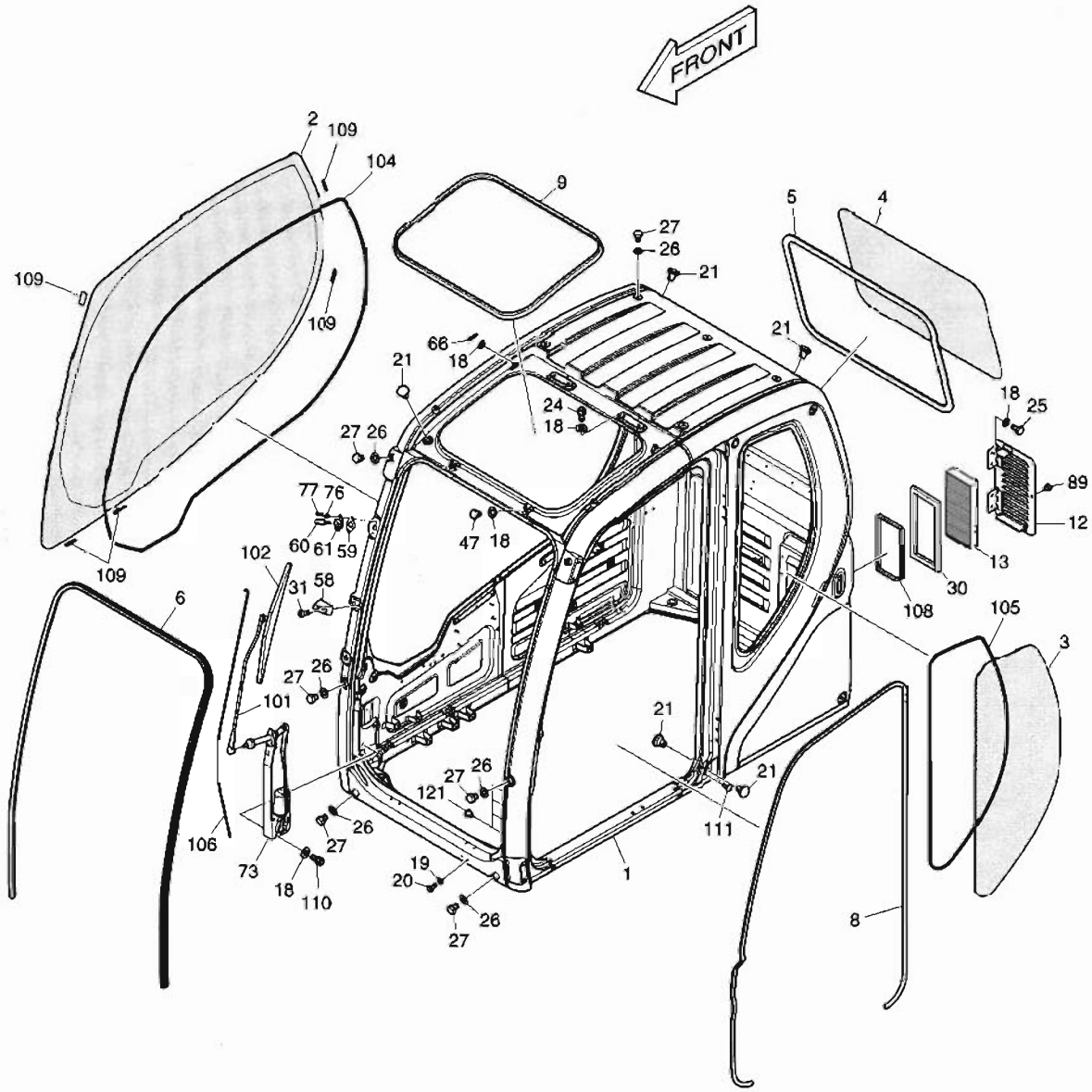

DATE	NOV. 27, 2006
1st EDITION	

Fig. 1420 CABIN(1) CABINE

Serial No. ;

Key No.	Part No.	Description	Description	Q'ty	S.C	Serial No.	ICA	Replaceable part	
								Part No.	Q'ty
1420-110	S2208466	BOLT;SOCKET	BOULON	3					
111	2120-2166D53	BOLT	BOULON A 6 PANS	1					
121	160-00074A	CAP	CHAPEAU	4					

Fig. 1430 CABIN(2) CABINE

Serial No. ;

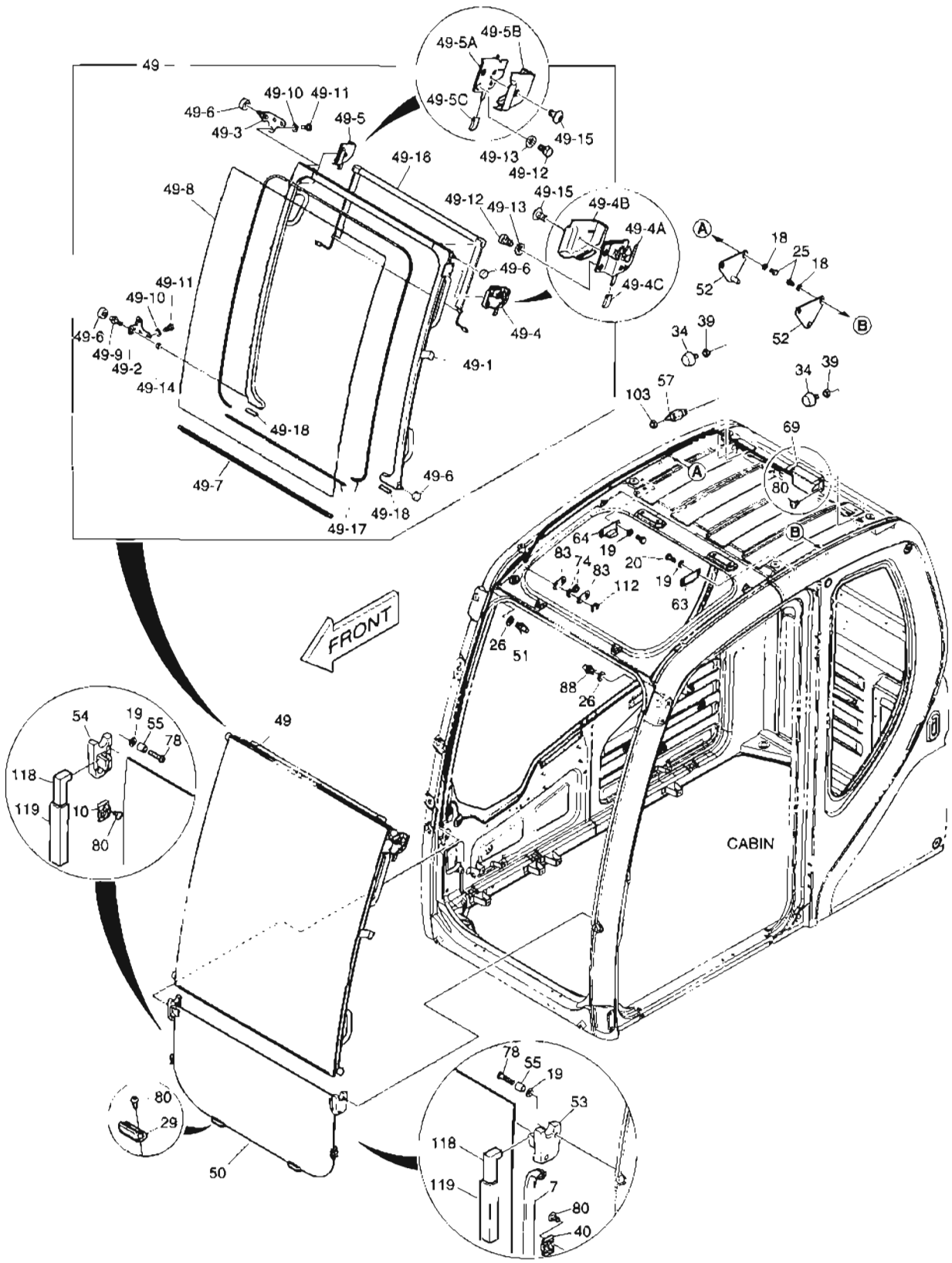

DATE	NOV. 27, 2006
1st EDITION	

Fig. 1430 CABIN(2) CABINE

Serial No. ;

Key No.	Part No.	Description	Description	Q'ty	S.C	Serial No.	ICA	Replaceable part	
								Part No.	Q'ty
1430--	622-00351H	CABIN ASS'Y	CABINE	1					
7	162-00034B	STRIP;WEATHER	TAMPON	1					
10	416-00018A	STOPPER;GLASS LOWER RH	TAQUET D'ARRET	1					
18	2114-1898D14	WASHER;PLAIN	RONDELLE	4					
19	2114-1898D3	WASHER;PLAIN	RONDELLE	8					
20	2120-2166D28	BOLT;HEX	BOULON A 6 PANS	4					
25	2120-2166D12	BOLT;HEX	BOULON A 6 PANS	4					
26	2114-1898D6	WASHER;PLAIN	RONDELLE	2					
29	416-00019B	STOPPER;LOWER	TAQUET D'ARRET	2					
34	161-00195	STOPPER;SLIDE DOOR BACK	TAQUET D'ARRET	2					
39	2121-1311D4	NUT	ECROU 6 PANS	2					
40	416-00020	STOPPER;GLASS LOWER LH	TAQUET D'ARRET	1					
49	622-00359H	DOOR;SLIDE	VERROU	1					
49-1	622-00360G	. PANEL ASS'Y	. PANNEAU	1					
49-2	195-02739B	. BRACKET;RH LOWER ROLLER	. SUPPORT	1					
49-3	195-02740C	. BRACKET;RH ROLLER UPPER	. SUPPORT	1					
49-4	125-00096A	. CATCH ASS'Y;SLIDE DOOR LH	. LOQUET	1					
49-4A	125-00073B	.. CATCH;LH	.. LOQUET	1					
49-4B	621-03724	.. COVER;CATCH LH	.. COUVERCLE	1					
49-4C	133-00248	.. KNOB;SLIDE DOOR CATCH	.. BOUTON	1					
49-5	125-00097A	. CATCH ASM;SLIDE DOOR RH	. LOQUET	1					
49-5A	125-00074B	.. CATCH;RH	.. LOQUET	1					
49-5B	621-03725	.. COVER;CATCH RH	.. COUVERCLE	1					
49-5C	133-00248	.. KNOB;SLIDE DOOR CATCH	.. BOUTON	1					
49-6	270-00054B	. ROLLER	. PLAIER	4					
49-7	505-00016B	. BAR	. CAOUTCHOUC	1					
49-8	903-00076B	. GLASS;FRONT UPPER	. VITRE	1					
49-9	123-00522B	. PIN;SLIDE ROLLER RH LOWER	. GOUPILLE	1					
49-10	2114-1898D3	. WASHER;PLAIN	. RONDELLE	6					
49-11	2120-2166D28	. BOLT	. BOULON A 6 PANS	6					
49-12	2120-2166D12	. BOLT	. BOULON A 6 PANS	4					
49-13	2114-1898D2	. WASHER	. RONDELLE	4					
49-14	2121-1311D2	. NUT	. ECROU	1					
49-15	2120-2166D52	. SCREW	. VIS	2					
49-16	474-00044A	. SUN SCREEN;FRONT	. LE SOLEIL	1					
49-17	K1002638A	. DAMPER	. REGISTRE	1					
49-18	K1006368	. RUBBER	. CAOUTCHOUC	2					
50	903-00074A	GLASS;FRONT LOWER	VITRE	1					

Fig. 1430 CABIN(2) CABINE

Serial No. ;

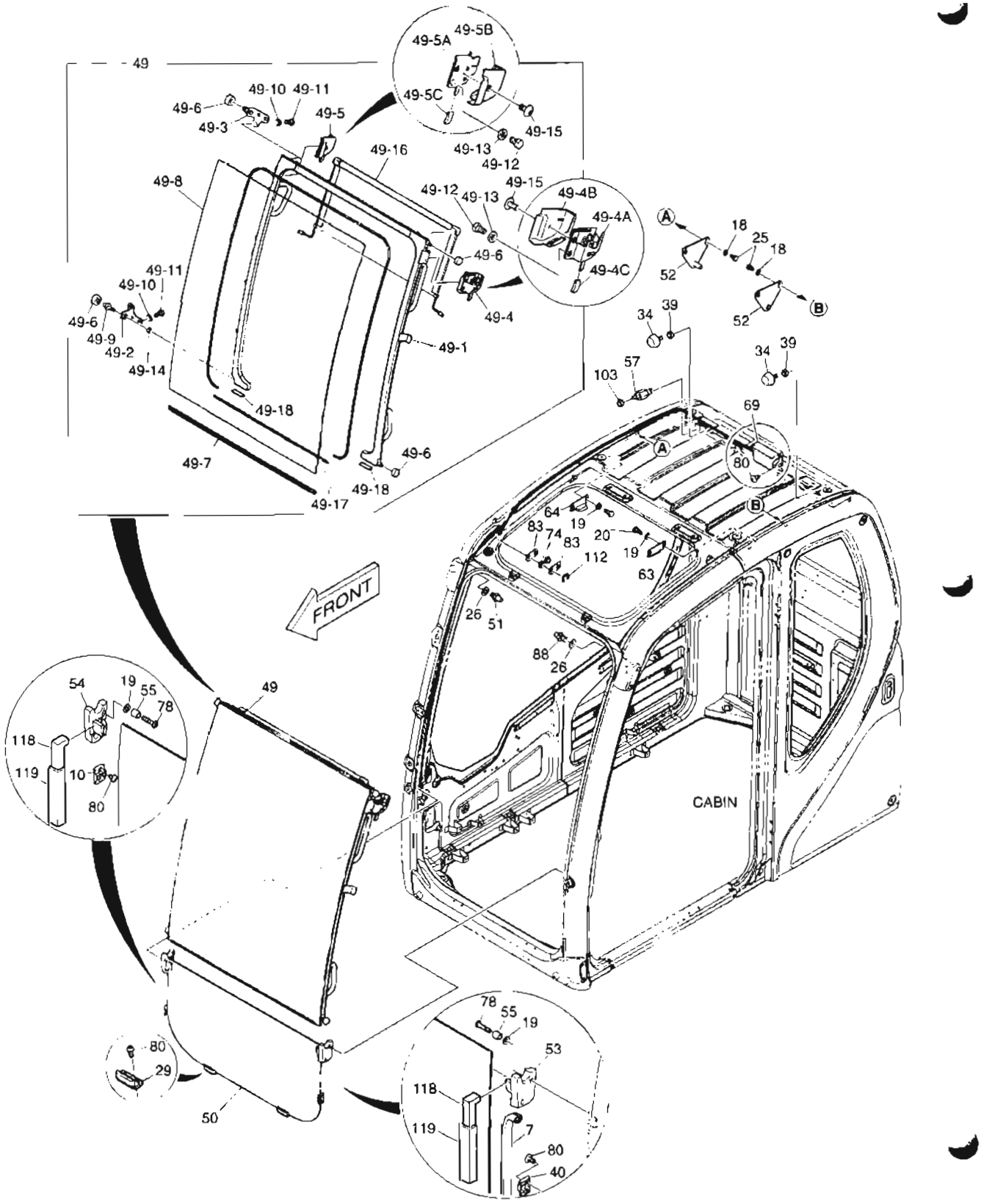

DATE	NOV. 27, 2006
1st EDITION	

Fig. 1430 CABIN(2) CABINE

Serial No. ;

Key No.	Part No.	Description	Description	Q'ty	S.C	Serial No.	ICA	Replaceable part	
								Part No.	Q'ty
50-51	142-00128B	STRIKER;RH	FRAPPER	1					
52	142-00127C	STRIKER;SLIDE DOOR REAR	FRAPPER	2					
53	116-00089B	STOPPER;RUBBER LH	TAQUET D'ARRET	1					
54	116-00090B	STOPPER;RUBBER RH	TAQUET D'ARRET	1					
55	2140-1338	PIPE;SPACER	PIPE;OIL	4					
57	549-00086	SWITCH;SLIDE	INTERRUPTEUR	1					
63	161-00618B	STOPPER;SLIDE DOOR	TAQUET D'ARRET	1					
64	161-00619B	STOPPER;SLIDE DOOR	TAQUET D'ARRET	1					
69	129-00155	SPRING;ASSIST	RESSORT	1					
74	270-00062A	ROLLER;ASSIST CABLE	GALET	2					
78	S3450993	SCREW	VIS	4					
80	2120-2166D52	SCREW	VIS	10					
83	191-03734A	PLATE;WASHER	PLAQUE	2					
88	K1003284	STRIKER;LH	FRAPPER	1					
103	S4034833	NUT	ECROU 6 PANS	1					
112	S6540600	RING;RETAINER	BAGUE	2					
118	K1027768	FOAM	EPONGE	2					
119	K1027769	FOAM	EPONGE	2					

Fig. 1440 CABIN(3) CABINE

Serial No. ;

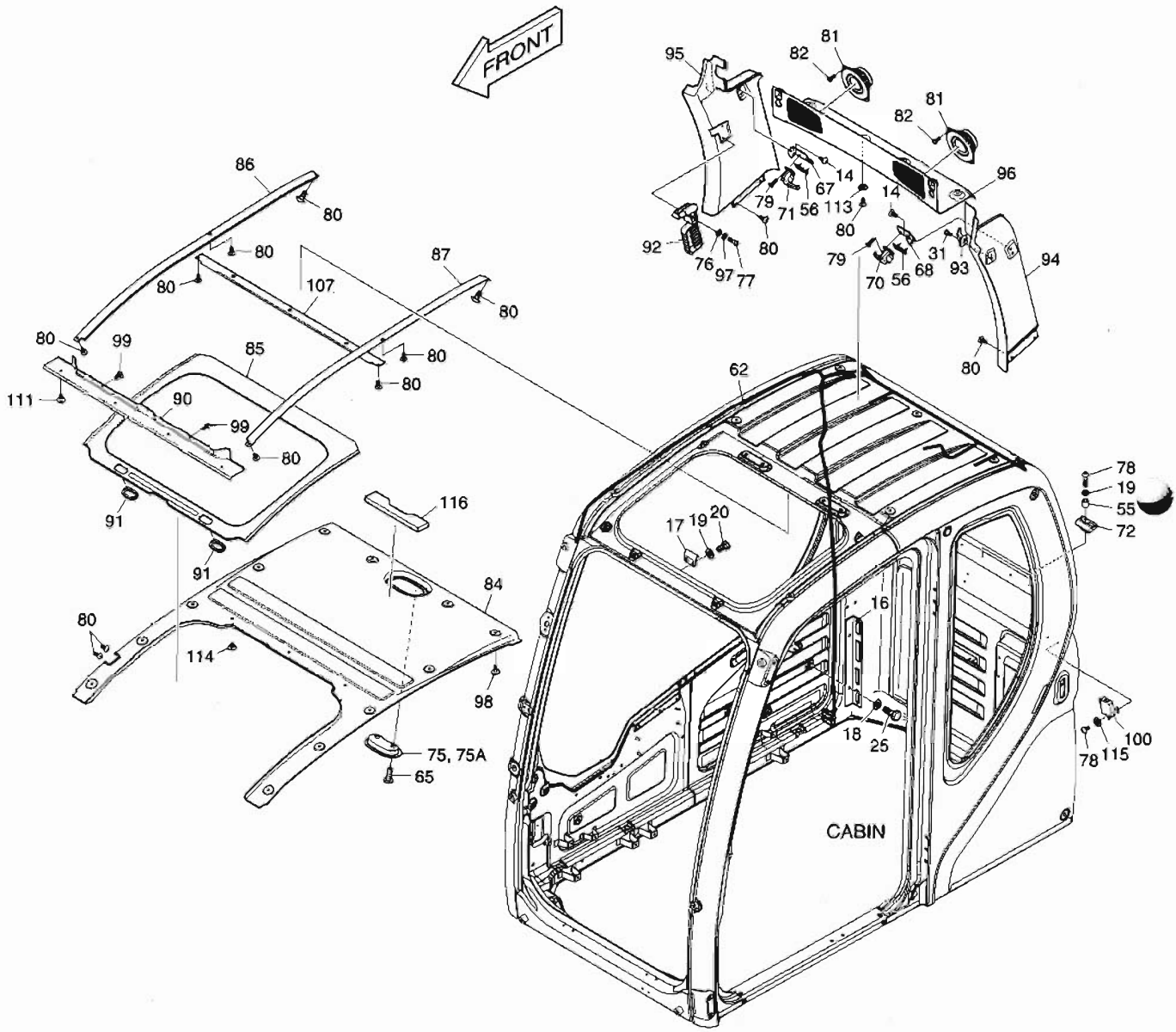

DATE	NOV. 27, 2006
1st EDITION	

Fig. 1440 CABIN(3) CABINE

Serial No. ;

Key No.	Part No.	Description	Description	Q'ty	S.C	Serial No.	ICA	Replaceable part	
								Part No.	Q'ty
1440--	622-00351H	CABIN ASS'Y	CABINE	1					
14	2120-2166D10	SCREW	VIS	4					
16	191-03179A	PLATE;CONNECTOR	PLAQUE	1					
17	191-03166C	STRIKER PLATE ROOF	TOIT DE PLAT DE BUTEE	1					
18	2114-1898D14	WASHER;PLAIN	RONDELLE	2					
19	2114-1898D3	WASHER;PLAIN	RONDELLE	4					
20	2120-2166D28	BOLT	BOULON A 6 PANS	2					
25	2120-2166D12	BOLT	BOULON A 6 PANS	2					
31	2120-2166D7	SCREW	VIS	1					
55	2140-1338	PIPE;SPACER	PIPE;OIL	2					
56	K1000794	STOPPER;RUBBER	TAQUET D'ARRET	2					
62	530-00417B	HARNESS;CABIN	FAISCEAU	1					
65	S3458843	SCREW	VIS	2					
67	621-03113B	PLATE;STOPPER (R.H)	TAQUET D'ARRET	1					
68	621-03114B	PLATE;STOPPER (L.H)	TAQUET D'ARRET	1					
70	125-00077	LOCK;REAR GLASS (L.H)	SERRURE	1					
71	125-00078	LOCK;REAR GLASS (R.H)	SERRURE	1					
72	2161-2212	STOPPER;RUBBER	TAQUET D'ARRET	2					
75	534-00079	ROOM LAMP	LAMPE DE PIECE	1					
75A	2515-1021D1	. BULB	. AMPOULE	1					
76	2114-1898D13	WASHER;PLAIN	RONDELLE	2					
77	2120-2166D26	SCREW	VIS	2					
78	S3450993	SCREW	VIS	4					
79	S3452853	SCREW	VIS	4					
80	2120-2166D52	SCREW	VIS	20					
81	2541-9020	SPEAKER	HAUT-PARLEUR	2					
82	S3450833	SCREW	VIS	8					
84	161-00609C	PAD;ROOF REAR	CAOUTCHOUC	1					
85	161-00610C	PAD;ROOF CENTER	CAOUTCHOUC	1					
86	359-00022A	RAIL;ROOF PANEL RH	CHEMIN DE FER	1					
87	359-00021A	RAIL;ROOF PANEL LH	CHEMIN DE FER	1					
90	161-00613B	PAD;ROOF FRONT	CAOUTCHOUC	1					
91	172-00055A	HANDLE;ROOF	POIGNEE	2					
92	2199-9058	HAMMER	MARTEAU	1					
93	2150-1133	HOOK;COAT	CROCHET	1					
94	621-02910C	COVER;PILLAR LH	COUVERCLE	1					
95	621-02911C	COVER;PILLAR RH	COUVERCLE	1					
96	621-02912B	COVER;REAR UPPER	COUVERCLE	1					

DATE	NOV. 27, 2006
1st EDITION	

Fig. 1440 CABIN(3) CABINE

Serial No. ;

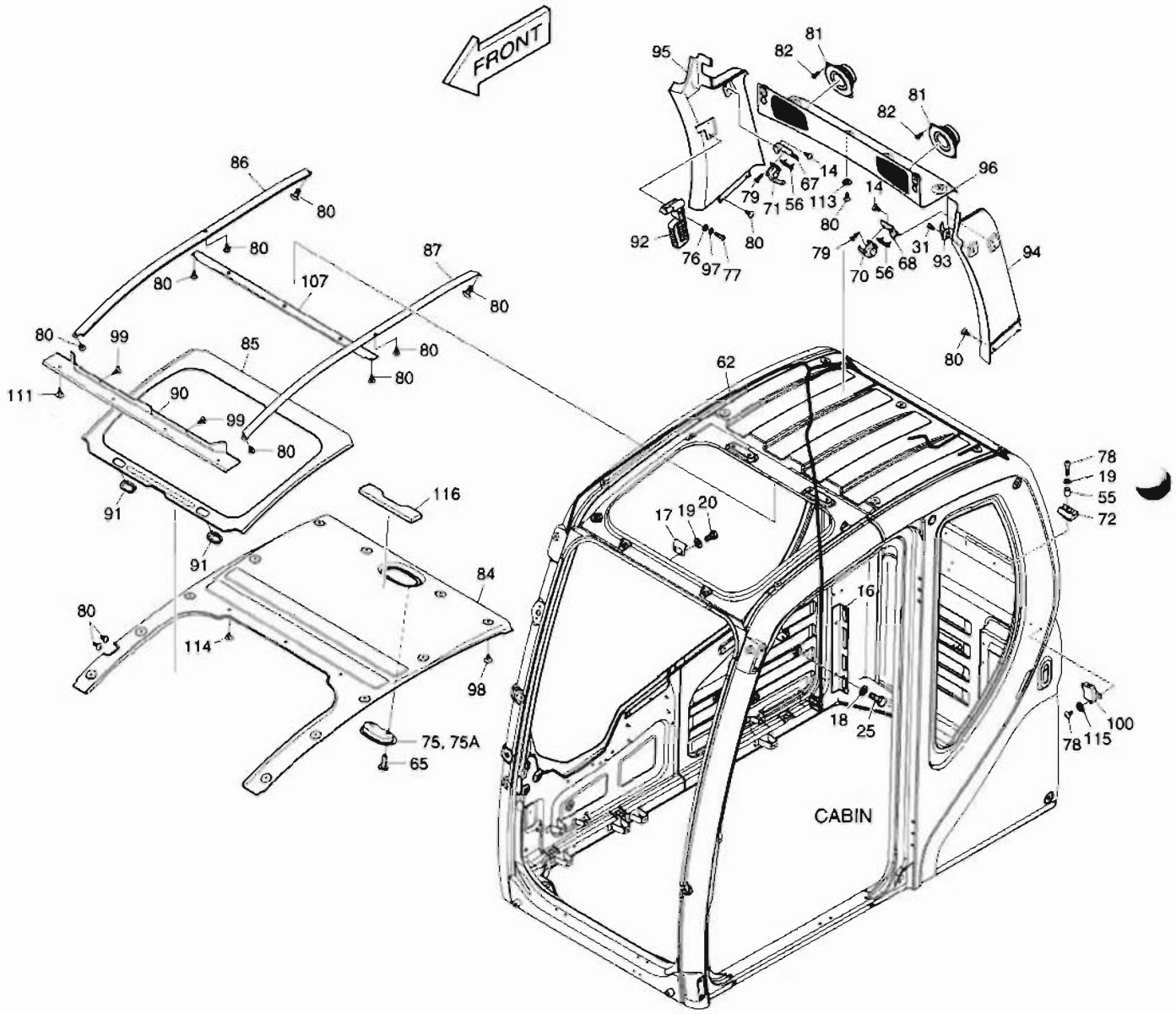

DATE	NOV. 27, 2006
1st EDITION	

Fig. 1440 CABIN(3) CABINE

Serial No. ;

Key No.	Part No.	Description	Description	Q'ty	S.C	Serial No.	ICA	Replaceable part	
								Part No.	Q'ty
1440-97	2114-2031D1	WASHER;SPRING	RONDELLE ELASTIQUE	2					
98	K1006936	SCRIVET	RIVET	12					
99	2120-2166D18	SCREW	VIS	2					
100	K1002641	MODULE ASS'Y	MODULE	1					
107	K1003676B	PLATE	PLAQUE	1					
111	2120-2166D53	SCREW	VIS	4					
113	2114-1898D5	WASHER	CALE	4					
114	K1006933	SCRIVET	RIVET	3					
115	S5010313	WASHER	CALE	2					
116	K1010839	FORM	EPONGE	1					

Fig. 1450 CABIN(4) CABINE

Serial No. ;

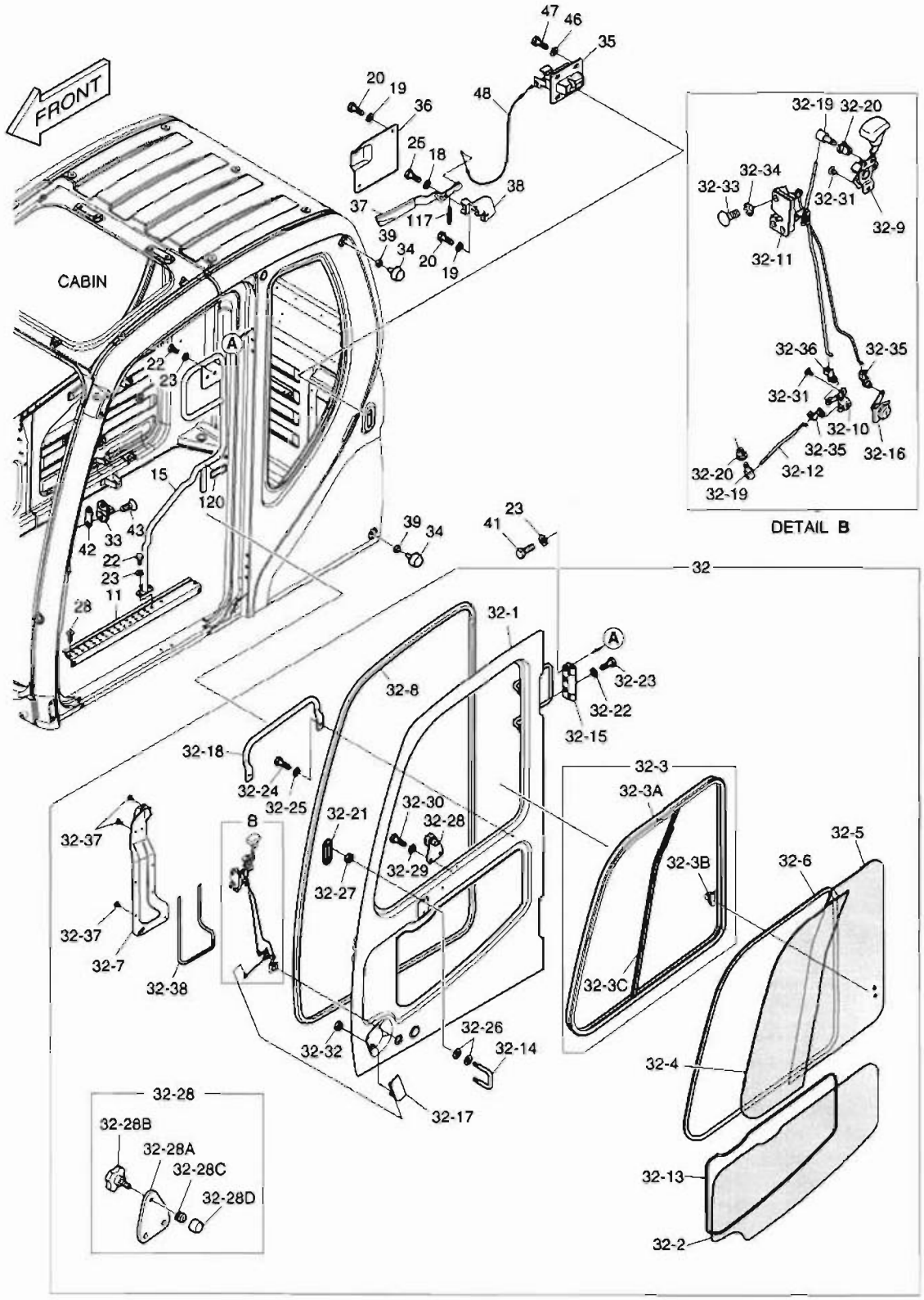

DATE	NOV. 27, 2006
1st EDITION	

Fig. 1450 CABIN(4) CABINE

Serial No. ;

Key No.	Part No.	Description	Description	Q'ty	S.C	Serial No.	ICA	Replaceable part	
								Part No.	Q'ty
1450--	622-00351H	CABIN ASS'Y	CABINE	1					
11	625-00159B	STEP;CABIN DOOR	MARCHER	1					
15	172-00052E	HANDLE;INNER	POIGNEE	1					
18	2114-1898D14	WASHER;PLAIN	RONDELLE	1					
19	2114-1898D3	WASHER;PLAIN	RONDELLE	4					
20	2120-2166D28	BOLT	BOULON A 6 PANS	4					
22	2120-2166D4	BOLT	BOULON A 6 PANS	4					
23	2114-1898D15	WASHER;PLAIN	RONDELLE	10					
25	2120-2166D12	BOLT	BOULON A 6 PANS	1					
28	2120-2150D3	SCREW	VIS	4					
32	622-00353G	DOOR ASS'Y	VERROU	1					
32-1	-	. DOOR;BODY	. DIODE	1	D				
32-2	903-00069A	. GLASS;DOOR LOWER	. VITRE	1					
32-3	622-00355A	. SASH ASS'Y	. CHASSIS	1					
32-3A	622-00356	.. FRAME ASS'Y;SASH	.. BATI	1					
32-3B	2123-6119	.. LOCK;SASH	.. VERROU	1					
32-3C	162-00033A	.. BAR;CENTER	.. CAOUTCHOUC	1					
32-4	903-00070B	. GLASS;SASH FRONT	. VITRE	1					
32-5	903-00071B	. GLASS;SASH REAR	. VITRE	1					
32-6	161-00623	. TRIM	. ATTACHE	1					
32-7	621-02869B	. COVER;LOCK	. COUVERCLE	1					
32-8	198-00053A	. RUBBER TRIM;DOOR INNER	. CAOUTCHOUC	1					
32-9	133-00221	. LEVER ASS'Y;INNER HANDLE	. LEVIER	1					
32-10	137-00092	. LINK;DOOR INNER	. PIECE DE JONCTION	1					
32-11	125-00072	. CATCH ASS'Y;DOOR INNER	. LOQUET	1					
32-12	136-00055A	. ROD;OUTER HANDLE TO LINK	. TIGE	1					
32-13	K1002637	. DAMPER	. REGISTRE	1					
32-14	2150-1132A	. HOOK;CATCH DOOR	. CROCHET	1					
32-15	K1027765	. HINGE ASS'Y;DOOR	. PAUMELLE	2					
32-16	K1003900	. KEY ASS'Y;DOOR	. CLE	1					
32-17	2172-9021	. HANDLE;OUTER	. POIGNEE	1					
32-18	145-00124A	. STAY	. ENTRETOISE	1					
32-19	2123-2247	. PIN	. GOUPILLE	2					
32-20	2124-1689A	. SNAP	. RUPTURE	2					
32-21	621-02867A	. COVER;DOOR INNER	. COUVERCLE	1					
32-22	2114-1898D15	. WASHER;PLAIN	. RONDELLE	6					
32-23	2120-2166D1	. BOLT	. BOULON A 6 PANS	6					
32-24	2120-2166D5	. BOLT	. BOULON A 6 PANS	2					

Fig. 1450 CABIN(4) CABINE

Serial No. ;

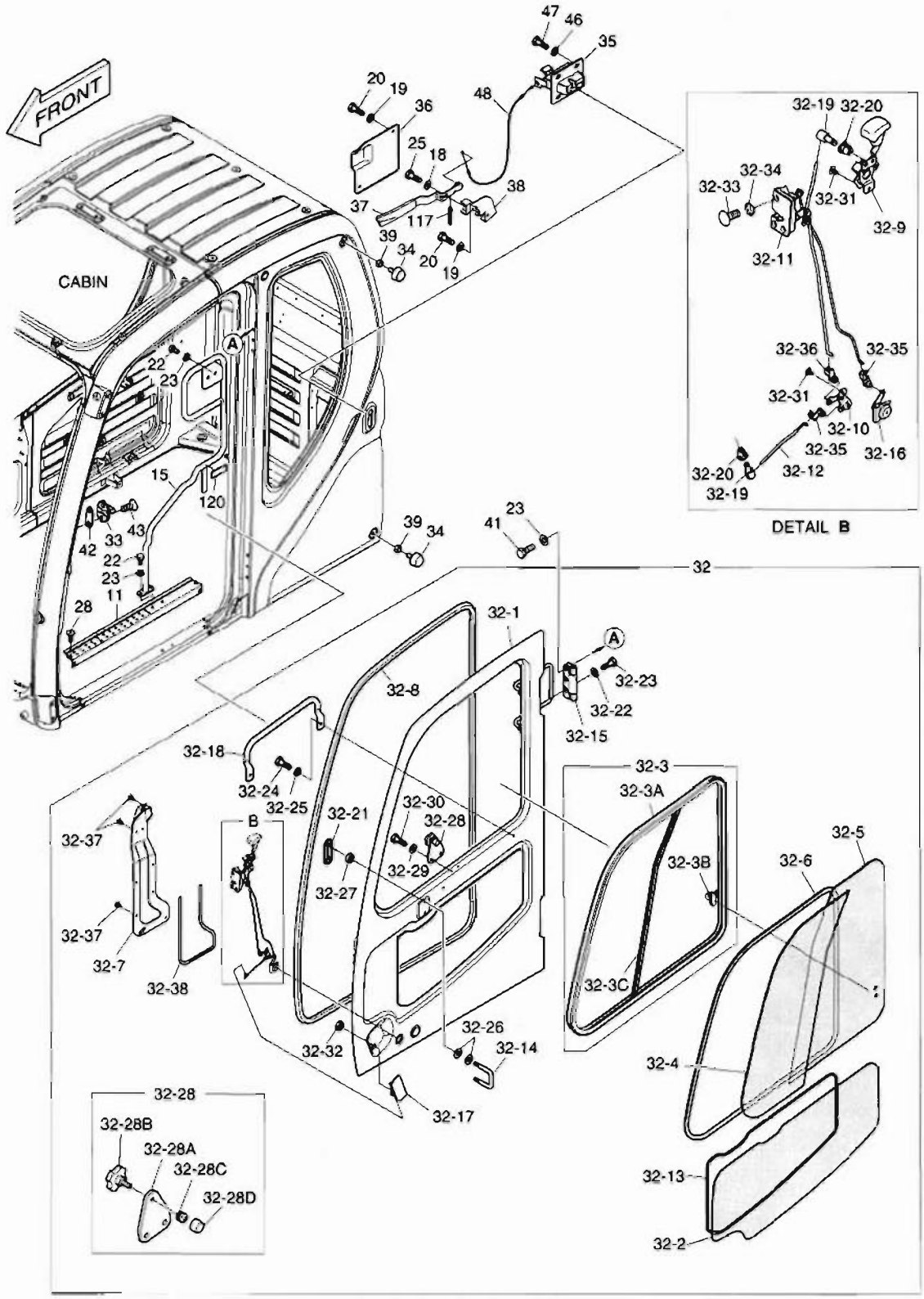

DATE	NOV. 27, 2006
1st EDITION	

Fig. 1450 CABIN(4) CABINE

Serial No. ;

Key No.	Part No.	Description	Description	Q'ty	S.C	Serial No.	ICA	Replaceable part	
								Part No.	Q'ty
1450-32-25	2114-1898D2	. WASHER	. RONDELLE	2					
32-26	2891-1311	. PLATE	. PLAQUE	4					
32-27	S4012533	. NUT;HEXAGON	. ECROU	2					
32-28	161-00621B	. STOPPER;RUBBER	. TAQUET D'ARRET	1					
32-28	191-03283	.. PLATE;STOPPER	.. TAQUET D'ARRET	1					
32-28	4132-1138	.. KNOB	.. BOUTON	1					
32-28	161-00620	.. RUBBER;STOPPER	.. CAOUTCHOUC	1					
32-28	116-00092A	.. STOPPER	.. TAQUET D'ARRET	1					
32-29	2114-1898D3	. WASHER;PLAIN	. RONDELLE	2					
32-30	2120-2166D28	. BOLT	. BOULON A 6 PANS	2					
32-31	2120-2166D52	. SCREW	. VIS	5					
32-32	S4012333	. NUT	. ECROU	2					
32-33	2120-2150D3	. SCREW	. VIS	3					
32-34	S5210303	. WASHER;TOOTHED	. RONDELLEELASTIQUE	3					
32-35	124-00010	. CLIP;ROD	. ATTACHE	2					
32-36	124-00344	. CLIP;ROD	. ATTACHE	1					
32-37	2120-2166D53	. SCREW	. VIS	8					
32-38	K1006370	. FOAM	. EPONGE	1					
33	2142-9005	STRIKER;DOOR	FRAPPER	1					
34	161-00195	STOPPER;SLIDE DOOR BACK	TAQUET D'ARRET	2					
35	2125-9055	LOCK;BACK	SERRURE	1					
36	621-02849A	COVER;BACK LOCK INNER	COUVERCLE	1					
37	133-00220E	LEVER;BACK LOCK	LEVIER	1					
38	195-02719B	BRACKET;BACK LOCK	SUPPORT	1					
39	2121-1311D4	NUT	ECROU 6 PANS	2					
41	2120-2166D1	BOLT	BOULON A 6 PANS	6					
42	2114-1856	SHIM;STRIKER	CALE	1					
43	2120-2150D1	BOLT	BOULON A 6 PANS	2					
46	2114-1898D2	WASHER	CALE	4					
47	2120-2166D5	BOLT	BOULON A 6 PANS	4					
48	2127-1002A	CABLE;BACK LOCK	CABLE	1					
117	2129-1446	SPRING	RESSORT	1					
120	K1006368	RUBBER	CAOUTCHOUC	1					

DATE	NOV. 27, 2006
1st EDITION	

Fig. 1460 FLOOR MAT PLANCHER

Serial No. ;

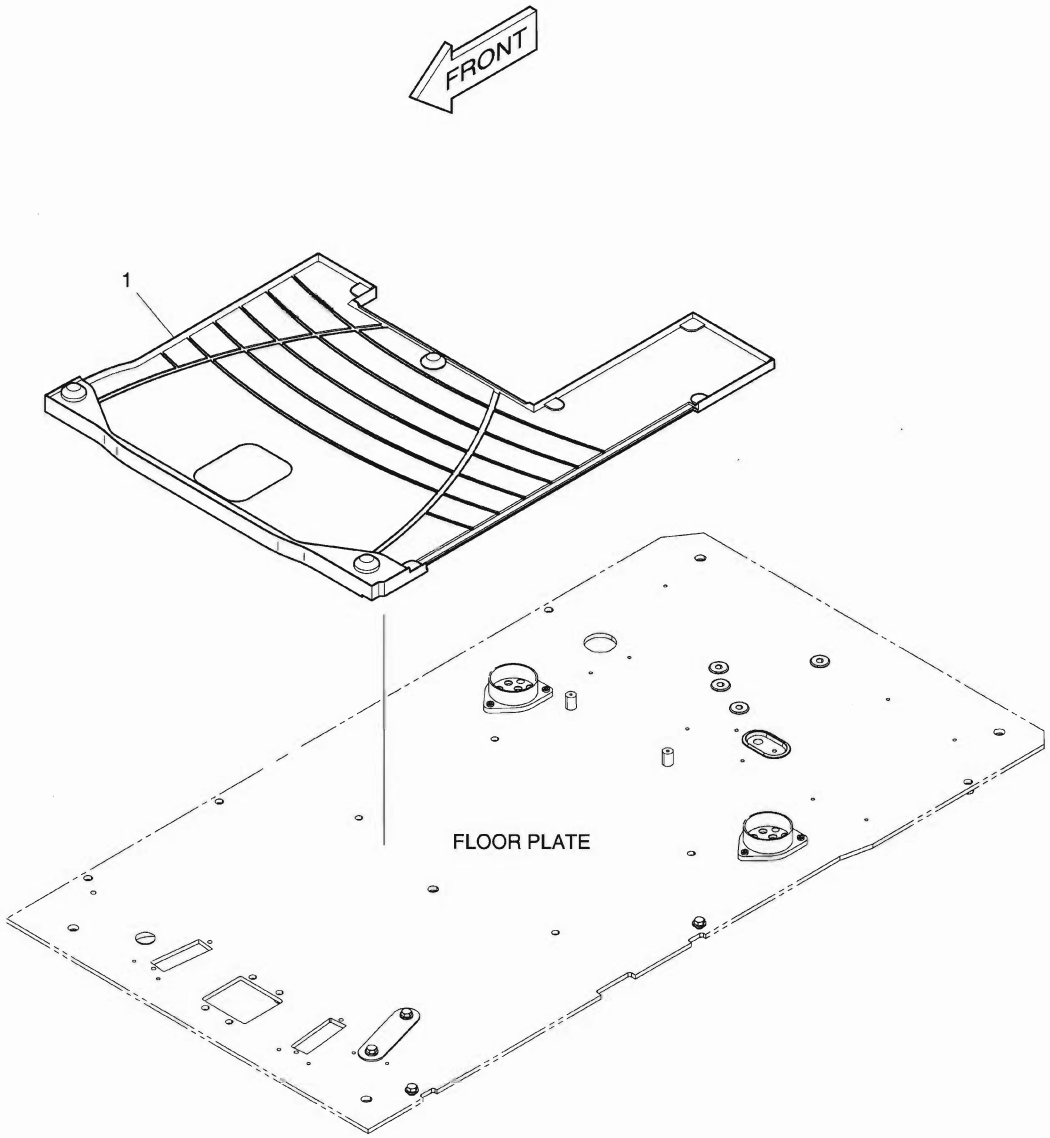

DATE	NOV. 27, 2006
1st EDITION	

Fig. 1460 FLOOR MAT PLANCHER

Serial No. ;

Key No.	Part No.	Description	Description	Q'ty	S.C	Serial No.	ICA	Replaceable part	
								Part No.	Q'ty
1460-1	K1002081A	MAT;FLOOR	PLAQUE	1					

DATE	NOV. 27, 2006
1st EDITION	

Fig. 1470 FLOOR PLATE
TOLE DE PLANCHER

Serial No. ;

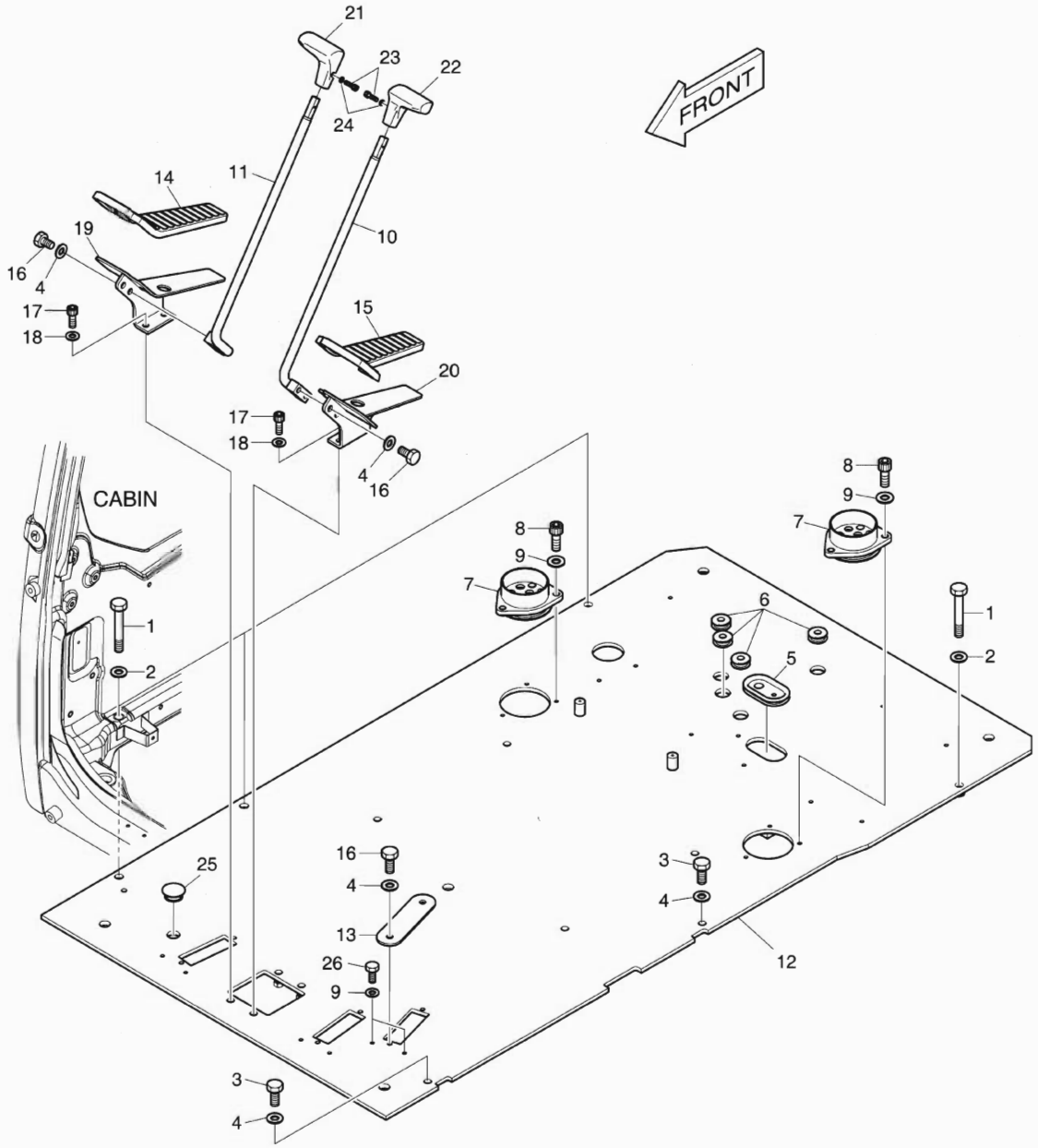

DATE	NOV. 27, 2006
1st EDITION	

Fig. 1470 FLOOR PLATE TOLE DE PLANCHER

Serial No. ;

Key No.	Part No.	Description	Description	Q'ty	S.C	Serial No.	ICA	Replaceable part	
								Part No.	Q'ty
1470--	622-00426B	FLOOR PLATE ASS'Y	TOLE DE PLANCHER	-	D				
1	2120-2166D55	BOLT	BOULON	4					
2	2114-1898D17	WASHER	RONDELLE	4					
3	2120-2166D1	BOLT	BOULON	2					
4	2114-1898D1	WASHER	RONDELLE	8					
5	160-00071	BUSHING;RUBBER	DOUILLE EN CAOUTCHOUC	1					
6	160-00072	BUSHING;RUBBER	DOUILLE EN CAOUTCHOUC	4					
7	160-00080A	BUSHING;RUBBER	DOUILLE EN CAOUTCHOUC	2					
8	S2208866	BOLT	BOULON	6					
9	2114-1898D14	WASHER	RONDELLE	8					
10	133-00229A	LEVER;TRAVEL (L.H)	LEVIER	1					
11	133-00230A	LEVER;TRAVEL (R.H)	LEVIER	1					
12	621-02892E	PLATE;FLOOR	PLAQUE	1					
13	621-01507	PLATE	PLAQUE	1					
14	161-00381	RUBBER;PEDAL(R.H)	CAOUTCHOUC	1					
15	161-00382	RUBBER;PEDAL(L.H)	CAOUTCHOUC	1					
16	2120-2166D4	BOLT	BOULON	6					
17	S2211866	BOLT;SOCKET	BOULON DE PLOT	4					
18	S5110603	WASHER	RONDELLE	4					
19	195-01683A	BRACKET;PEDAL(R.H)	SUPPORT	1					
20	195-01684A	BRACKET;PEDAL(L.H)	SUPPORT	1					
21	2132-1134B	GRIP;LEVER(R.H)	POIGNEE	1					
22	2132-1133B	GRIP;LEVER(L.H)	POIGNEE	1					
23	S2201766	BOLT	BOULON	2					
24	S5000113	WASHER;PLAIN	RONDELLE PLATE	2					
25	2161-2487	CAP;RUBBER	CHAPEAU	1					
26	2120-2166D12	BOLT	BOULON	2					

DATE	NOV. 27, 2006
1st EDITION	

Fig. 1480 HANDLE ASS'Y HANDLE

Serial No. ;

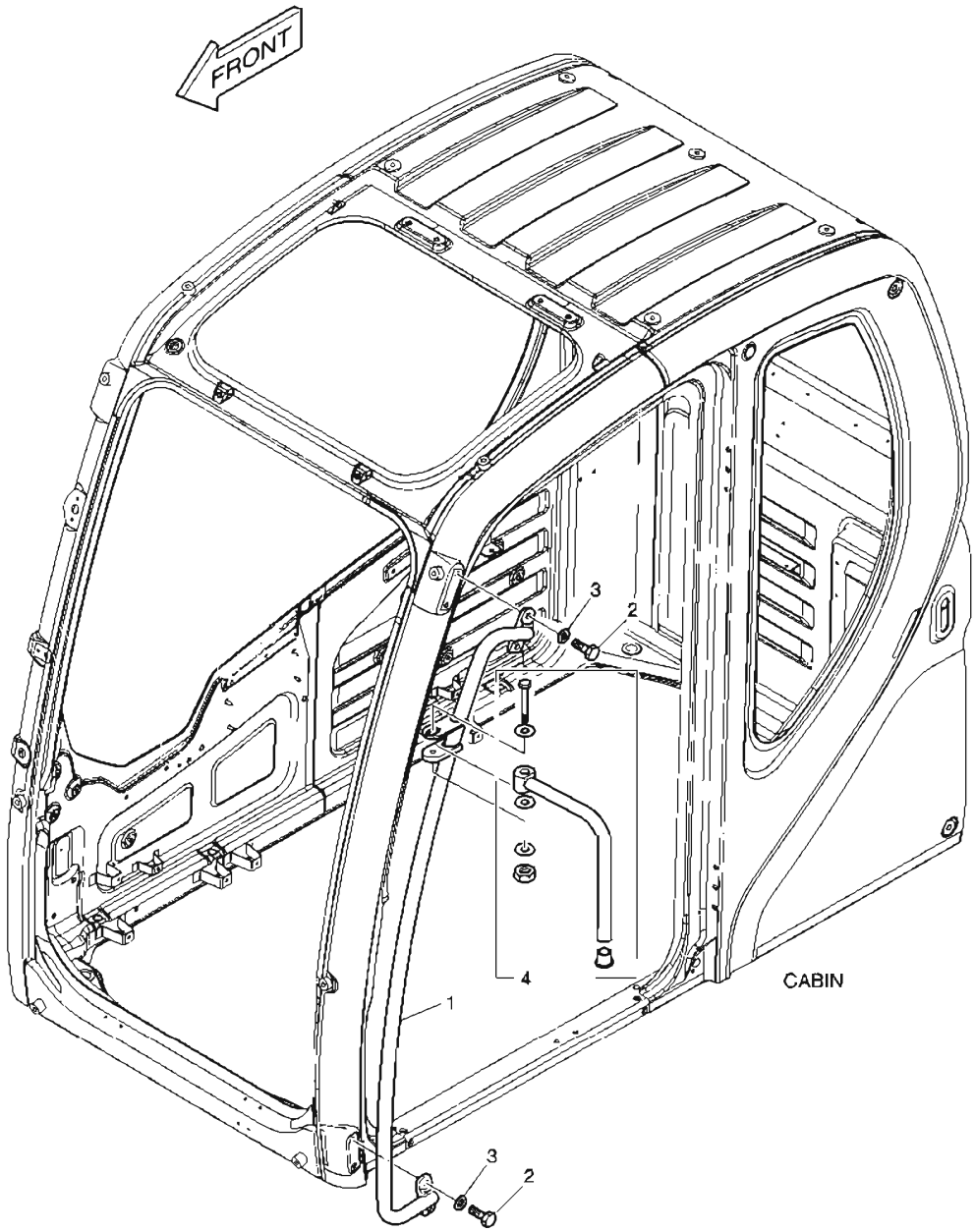

DATE	NOV. 27, 2006
1st EDITION	

Fig. 1480 HANDLE ASS'Y HANDLE

Serial No. ;

Key No.	Part No.	Description	Description	Q'ty	S.C	Serial No.	ICA	Replaceable part	
								Part No.	Q'ty
1480--	172-00372A	HANDLE ASS'Y	HANDLE	-	D				
1	172-00053B	HANDLE;OUTER	POIGNEE	1					
2	2120-2166D2	BOLT	BOULON	4					
3	2114-1898D15	WASHER	RONDELLE	4					
4	K1004272	STAY;MIRROR	ENTRETOISE	1					

DATE	NOV. 27, 2006
1st EDITION	

Fig. 1490 ROOF COVER COUVERCLE

Serial No. ;

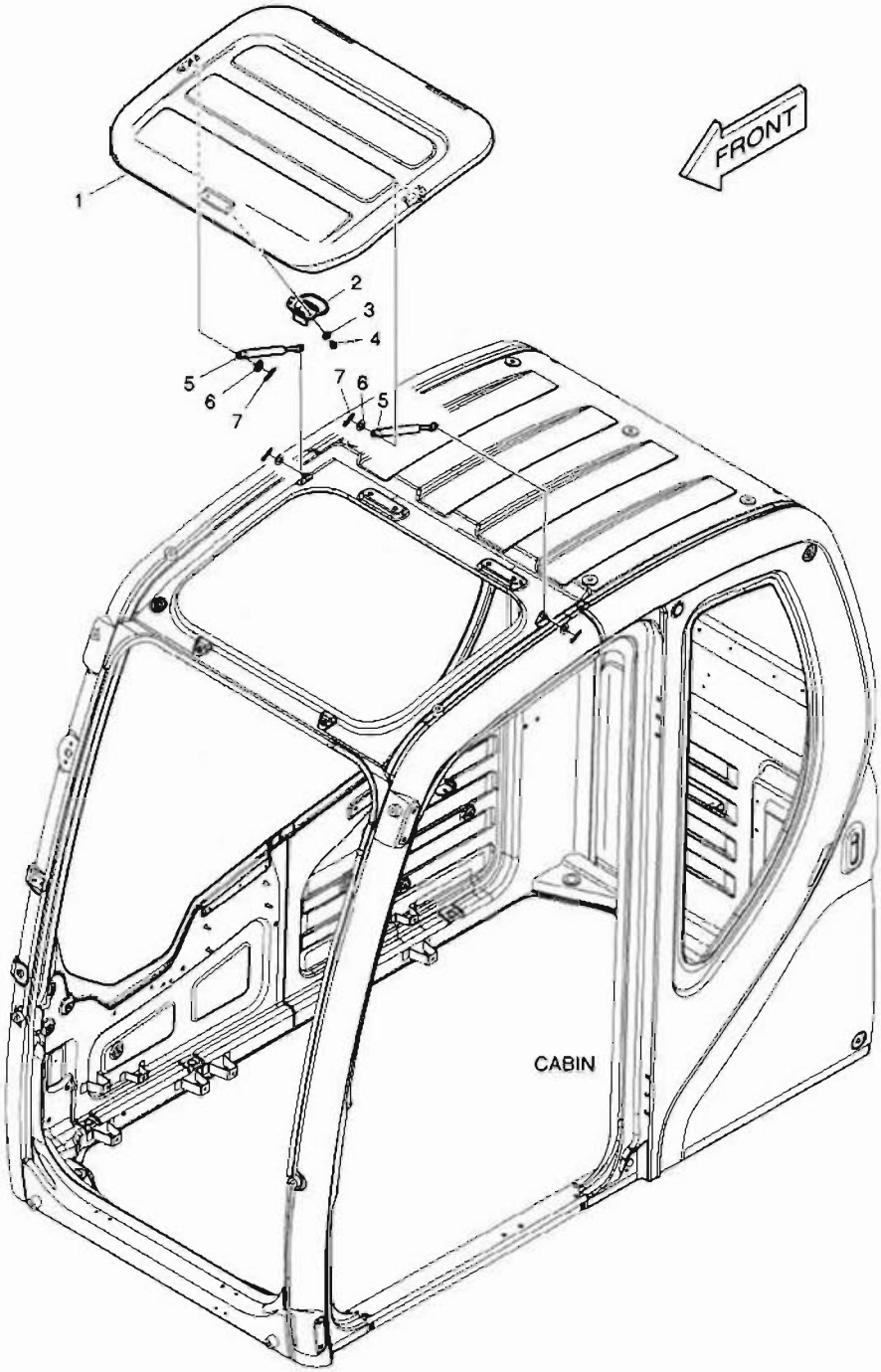

DATE	NOV. 27, 2006
1st EDITION	

Fig. 1490 ROOF COVER COUVERCLE

Serial No. ;

Key No.	Part No.	Description	Description	Q'ty	S.C	Serial No.	ICA	Replaceable part	
								Part No.	Q'ty
1490--	621-03732C	ROOF COVER ASS'Y	COUVERCLE	-	D				
1	621-03727B	COVER;ROOF	COUVERCLE	1					
2	123-00516B	LOCK ASS'Y;ROOF COVER	SERRURE	1					
3	2114-1898D3	WASHER	RONDELLE	2					
4	2120-2166D9	SCREW	VIS	2					
5	DS1003009	GAS-SPRING	GOUJON	2					
6	2114-1898D14	WASHER	RONDELLE	2					
7	123-00523	PIN;GAS-SPRING	GOUJON	2					

DATE	NOV. 27, 2006
1st EDITION	

Fig. 1500 FOOT REST - L.H.
REPOS DE PIED

Serial No. ;

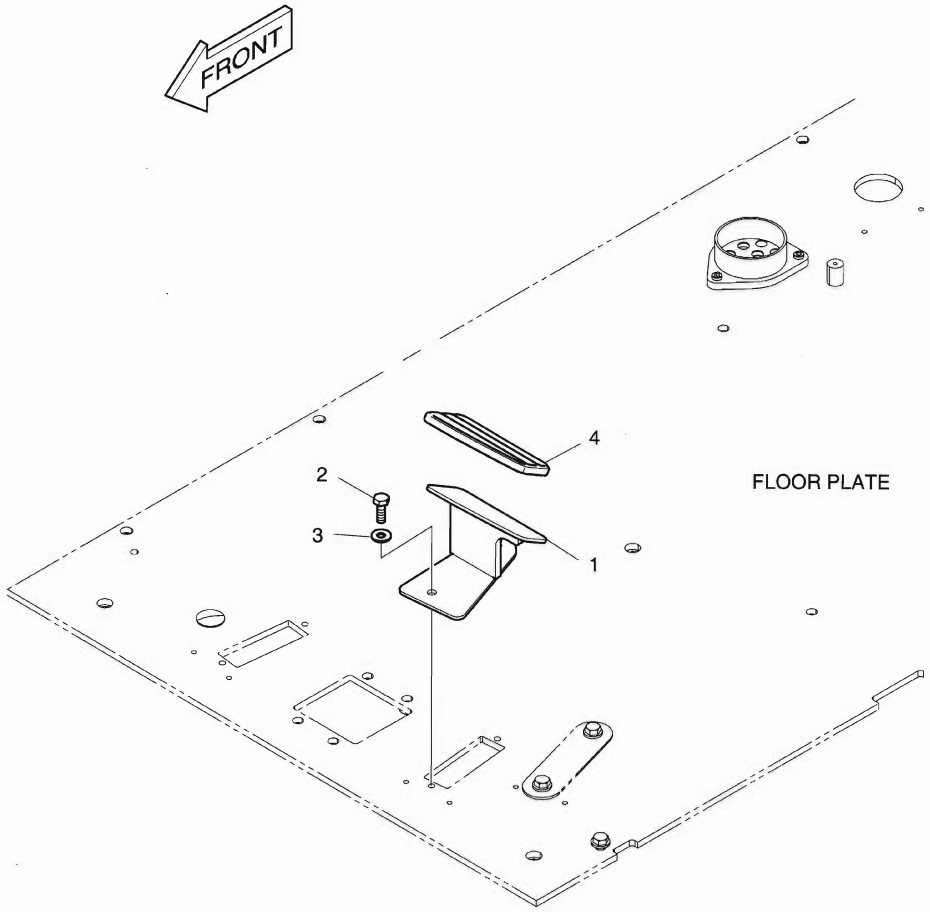

DATE	NOV. 27, 2006
1st EDITION	

Fig. 1500 FOOT REST - L.H. REPOS DE PIED

Serial No. ;

Key No.	Part No.	Description	Description	Q'ty	S.C	Serial No.	ICA	Replaceable part	
								Part No.	Q'ty
1500--	K1002082	FOOT REST(L.H)	REPOS DE PIED	-	D				
1	195-02949A	BRACKET;FOOT REST(L.H)	SUPPORT	1					
2	2120-2166D1	BOLT	BOULON	2					
3	2114-1898D1	WASHER	RONDELLE	2					
4	2160-1345	COVER;FOOT REST	COUVERCLE	1					

DATE	NOV. 27, 2006
1st EDITION	

Fig. 1510 FOOT REST - R.H.
REPOS DE PIED

Serial No. ;

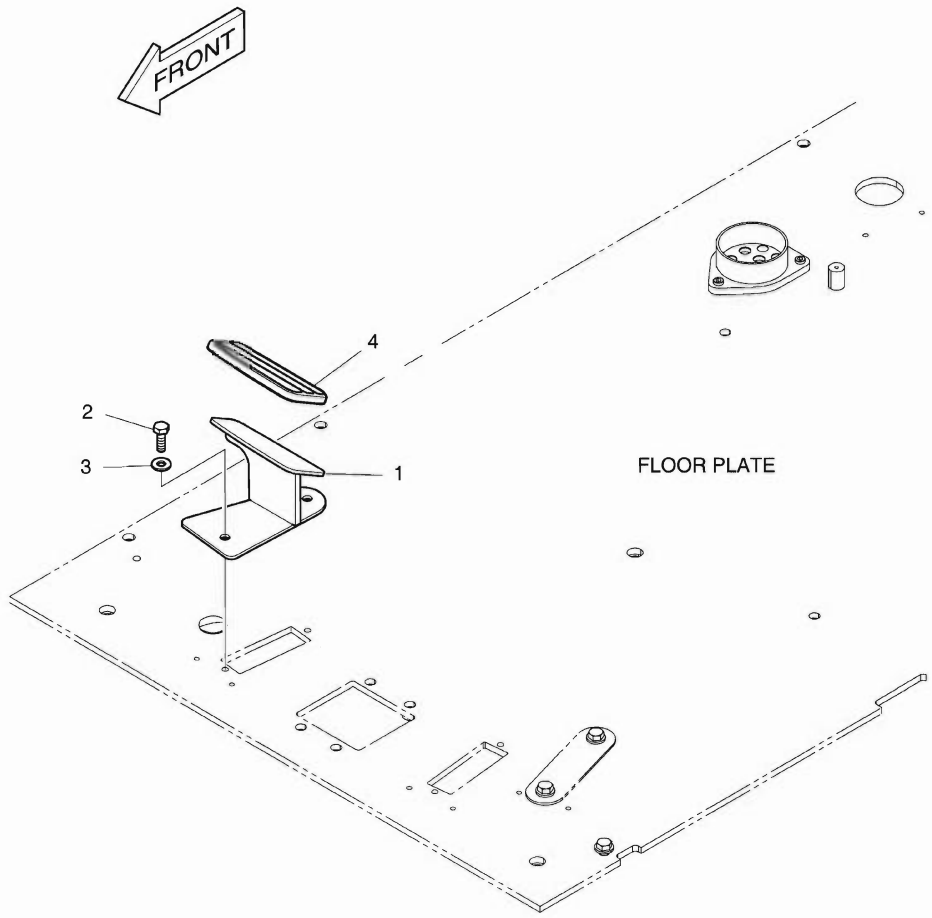

DATE	NOV. 27, 2006
1st EDITION	

Fig. 1510 FOOT REST - R.H. REPOS DE PIED

Serial No. ;

Key No.	Part No.	Description	Description	Q'ty	S.C	Serial No.	ICA	Replaceable part	
								Part No.	Q'ty
1510--	K1002083	FOOT REST(R.H)	REPOS DE PIED	-	D				
1	195-02948A	BRACKET;FOOT REST(R.H)	SUPPORT	1					
2	2120-2166D1	BOLT	BOULON	2					
3	2114-1898D1	WASHER	RONDELLE	2					
4	2160-1346	COVER;FOOT REST	COUVERCLE	1					

Fig. 1520 SUPPORT SUPPORT

Serial No. ;

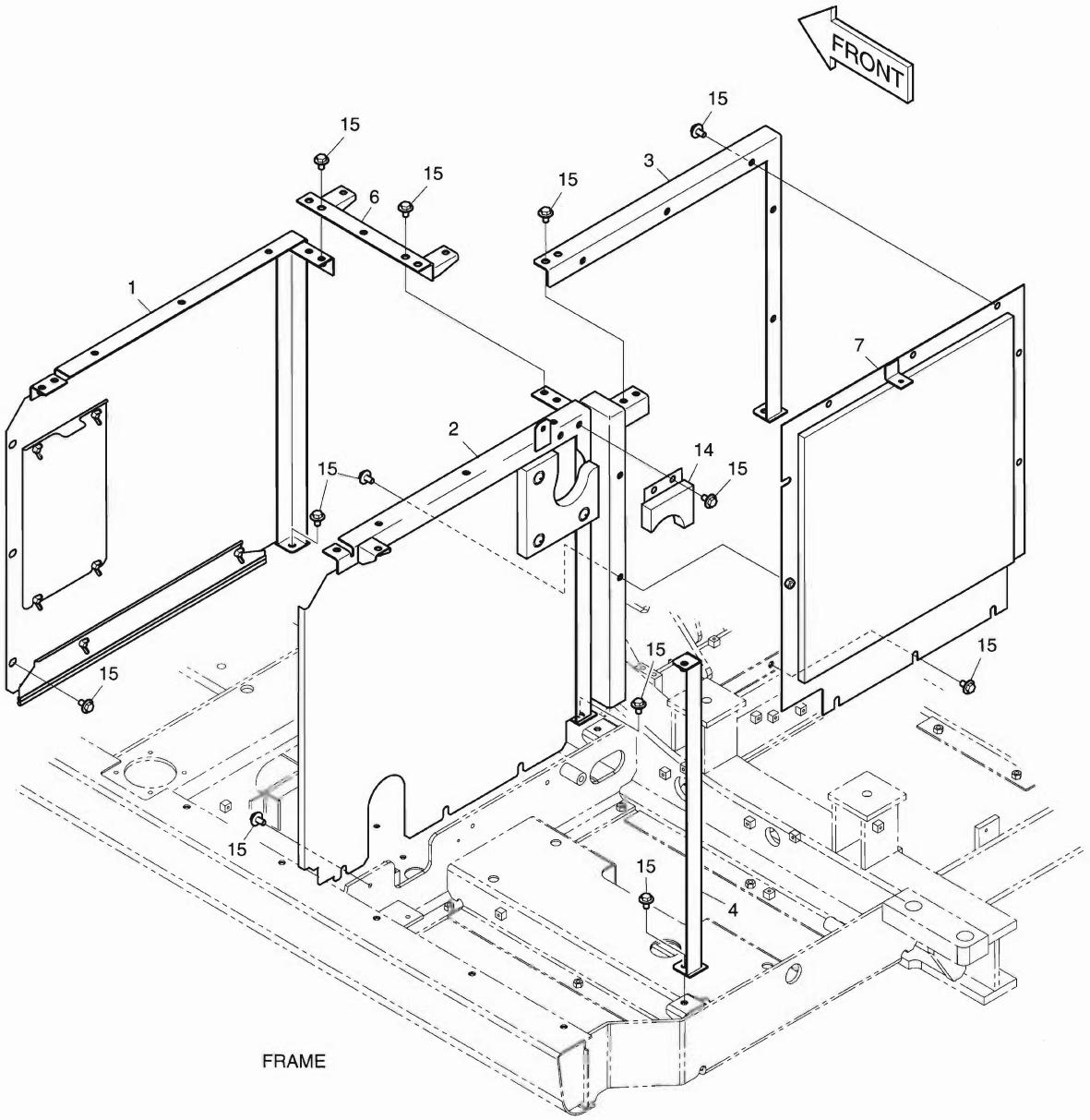

FRAME

DATE	NOV. 27, 2006
1st EDITION	

Fig. 1520 SUPPORT
SUPPORT

Serial No. ;

Key No.	Part No.	Description	Description	Q'ty	S.C	Serial No.	ICA	Replaceable part	
								Part No.	Q'ty
1520--	K1012791E	SUPPORT & BAFFLE	SUPPORT	-	D				
1	K1012792A	SUPPORT	LAMPE	1					
2	K1012795A	SUPPORT	LAMPE	1					
3	K1012796A	SUPPORT	LAMPE	1					
4	K1012797B	SUPPORT	LAMPE	1					
6	K1012799A	SUPPORT	LAMPE	1					
7	K1012800B	COVER;BAFFLE	COUVERCLE	1					
14	K1012821	COVER;BAFFLE	COUVERCLE	1					
15	DS0025015	BOLT;SET	BOULON A 6 PANS	28					

DATE	NOV. 27, 2006
1st EDITION	

Fig. 1530 BAFFLE COUVERCLE

Serial No. ;

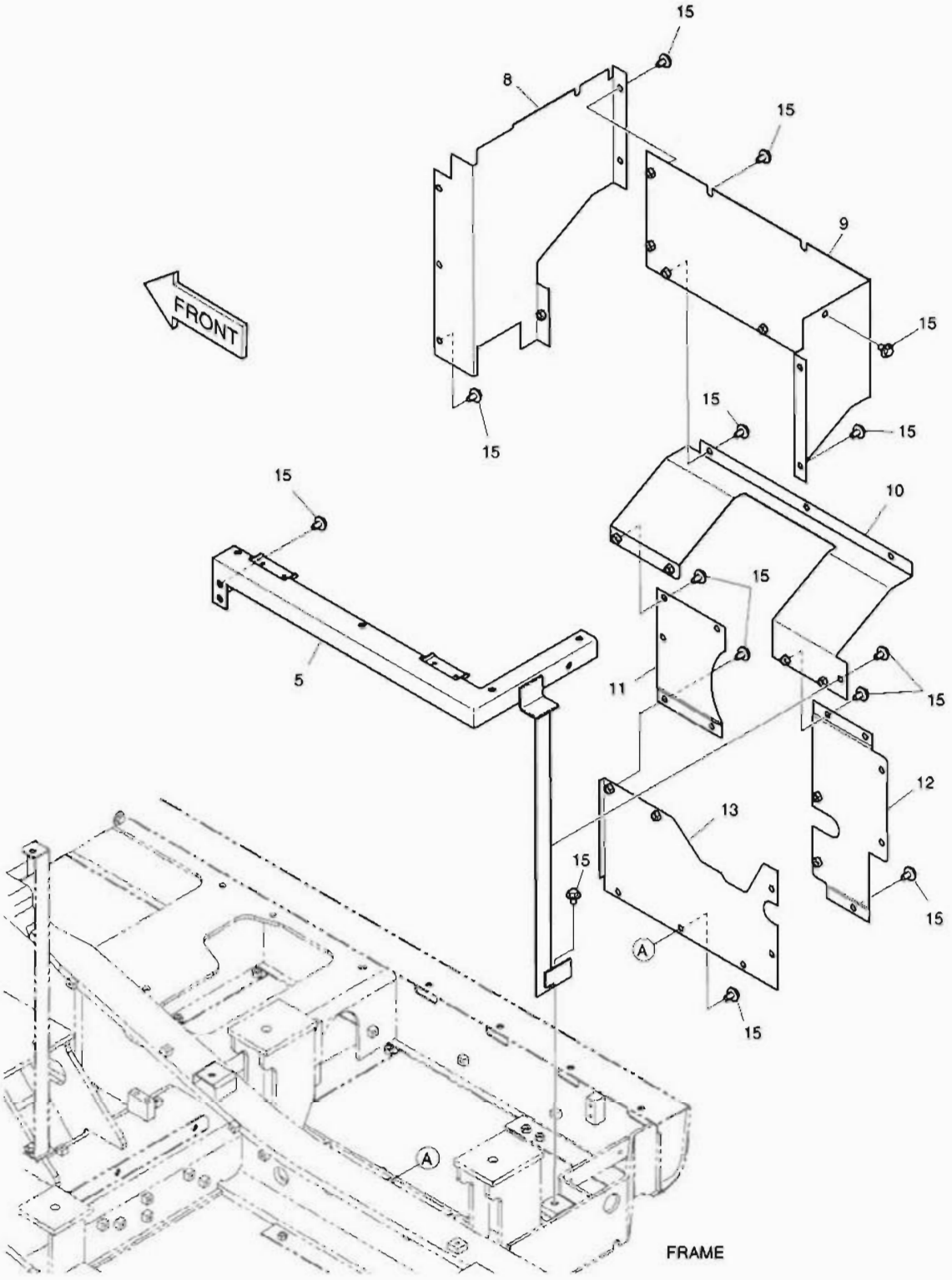

DATE	NOV. 27, 2006
1st EDITION	

Fig. 1530 BAFFLE COUVERCLE

Serial No. ;

Key No.	Part No.	Description	Description	Q'ty	S.C	Serial No.	ICA	Replaceable part	
								Part No.	Q'ty
1530--	K1012791E	SUPPORT & BAFFLE	COUVERCLE	-	D				
5	K1012798E	SUPPORT	LAMPE	1					
8	K1012801A	COVER;BAFFLE	COUVERCLE	1					
9	K1012802A	COVER;BAFFLE	COUVERCLE	1					
10	K1012803B	COVER;BAFFLE	COUVERCLE	1					
11	K1012804A	COVER;BAFFLE	COUVERCLE	1					
12	K1012805B	COVER;BAFFLE	COUVERCLE	1					
13	K1012806B	COVER;BAFFLE	COUVERCLE	1					
15	DS0025015	BOLT;SET	BOULON A 6 PANS	33					

Fig. 1540 SIDE DOOR - L.H
ENSEMBLE DE PORTE

Serial No. ;

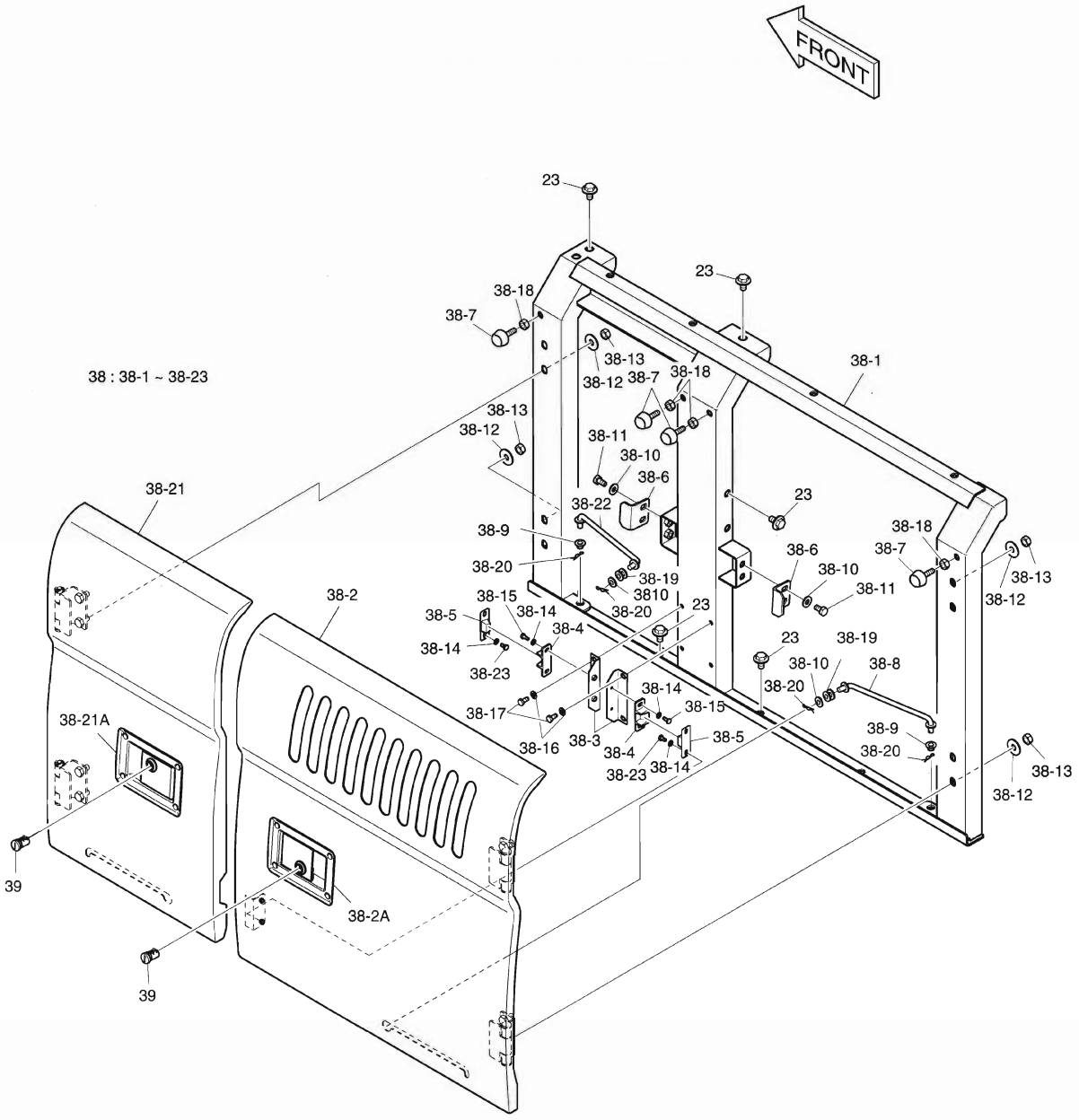

DATE	NOV. 27, 2006
1st EDITION	

Fig. 1540 SIDE DOOR - L.H
ENSEMBLE DE PORTE

Serial No. ;

Key No.	Part No.	Description	Description	Q'ty	S.C	Serial No.	ICA	Replaceable part	
								Part No.	Q'ty
1540--	K1013497C	COVER ASS'Y	COUVERCLE	-	D				
23	DS0025015	BOLT;SET	BOULON A 6 PANS	8					
38	K1024358A	SIDE DOOR ASS'Y(L.H)	ASSEMBLEE LATERALE DE	1					
38-1	K1024359A	. SUPPORT(L.H)	. SUPPORT	1					
38-2	K1014554A	. DOOR;SIDE(L.H)	. PORTE	1					
38-2A	125-00034A	.. LOCK	.. SERRURE	1					
38-3	2116-1522	. PLATE	. PLAQUE	2					
38-4	2161-9052	. STOPPER;PLATE	. ARRET	2					
38-5	2161-9053	. STOPPER;RUBBER	. TAQUET D'ARRET	2					
38-6	621-02726A	. PLATE;LOCK	. PLAQUE	2					
38-7	K1001260A	. RUBBER;STOPPER	. CAOUTCHOUC	4					
38-8	623-00074B	. STAY	. ENTRETOISE	1					
38-9	K1000602	. BUSHING	. DOUILLE	2					
38-10	2114-1058D45	. WASHER	. RONDELLE	6					
38-11	S0511853	. BOLT	. BOULON A 6 PANS	4					
38-12	2114-1058D30	. WASHER	. RONDELLE	8					
38-13	S4012733	. NUT	. ECROU	8					
38-14	S5010313	. WASHER	. RONDELLE	8					
38-15	S0504553	. BOLT	. BOULON A 6 PANS	4					
38-16	S5010513	. WASHER	. RONDELLE	4					
38-17	S0508753	. BOLT	. BOULON A 6 PANS	4					
38-18	S4012633	. NUT	. ECROU	4					
38-19	K1008335	. BUSHING	. DOUILLE	2					
38-20	2705-9002	. PIN;LOCK	. GOUPILLE	4					
38-21	K1024040	. DOOR;SIDE	. PORTE	1					
38-21	125-00035A	.. LOCK	.. SERRURE	1					
38-22	623-00075B	. STAY	. ENTRETOISE	1					
38-23	S0504453	. BOLT	. BOULON A 6 PANS	4					
39	K1004630	CYLINDER;KEY	CYLINDRE	2					

Fig. 1550 SIDE DOOR - R.H
ENSEMBLE DE PORTE

Serial No. ;

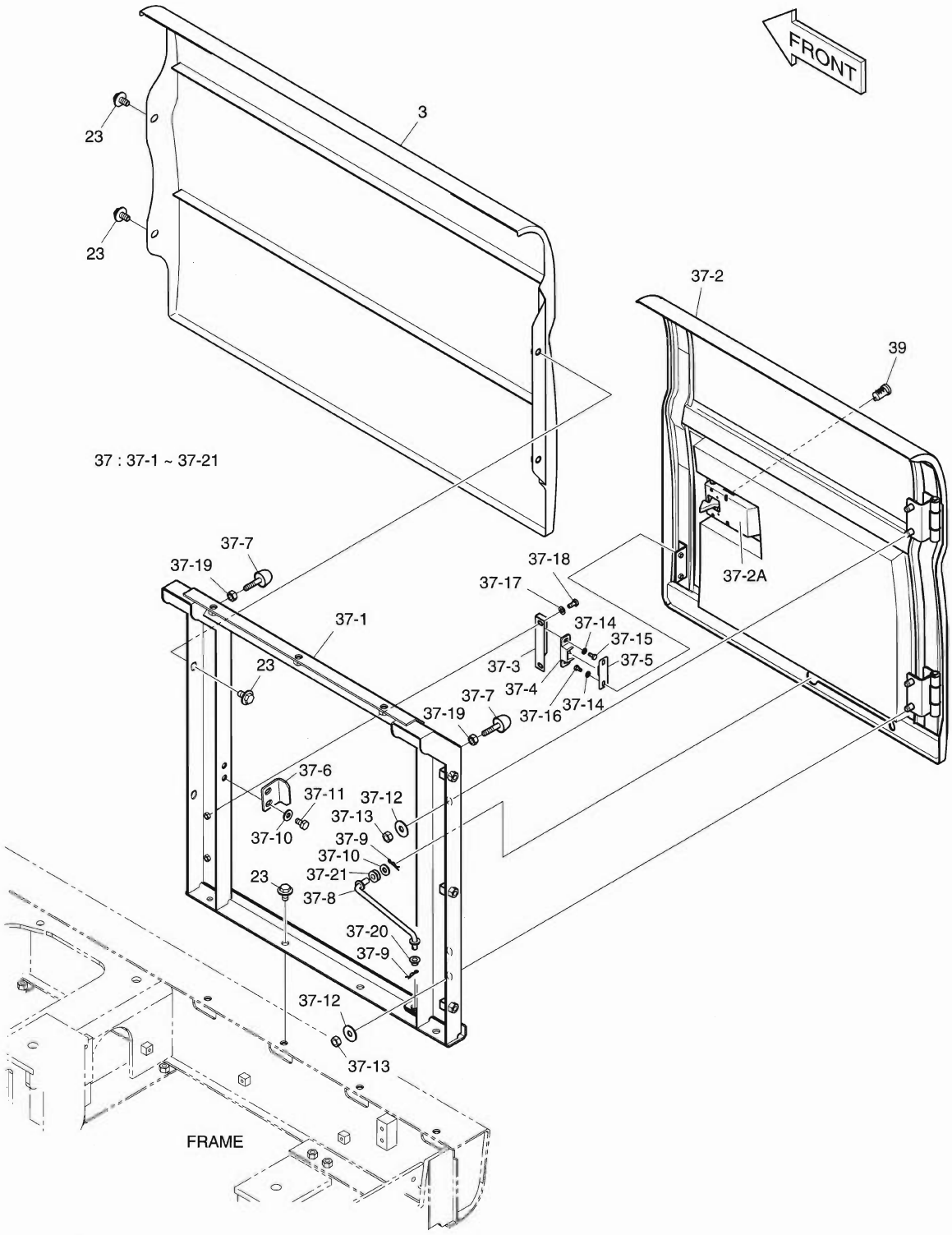

DATE	NOV. 27, 2006
1st EDITION	

Fig. 1550 SIDE DOOR - R.H
ENSEMBLE DE PORTE

Serial No. ;

Key No.	Part No.	Description	Description	Q'ty	S.C	Serial No.	ICA	Replaceable part	
								Part No.	Q'ty
1550--	K1013497C	COVER ASS'Y	COUVERCLE	-	D				
3	621-03642C	TANK COVER	COUVERCLE	1					
23	DS0025015	BOLT;SET	BOULON A 6 PANS	8					
37	K1013478	SIDE DOOR ASS'Y (R.H)	PORTE	1					
37-1	K1013479	. SUPPORT(R.H)	. SUPPORT	1					
37-2	K1013480	. SIDE DOOR	. PORTE	1					
37-2A	125-00035A	.. LOCK	.. SERRURE	1					
37-3	2116-1522	. PLATE	. PLAQUE	1					
37-4	2161-9052	. STOPPER;PLATE	. ARRET	1					
37-5	2161-9053	. STOPPER;RUBBER	. TAQUET D'ARRET	1					
37-6	621-02726A	. PLATE;LOCK	. PLAQUE	1					
37-7	K1001260A	. RUBBER;STOPPER	. CAOUTCHOUC	2					
37-8	623-00075B	. STAY	. ENTRETOISE	1					
37-9	2705-9002	. PIN;LOCK	. GOUPILLE	2					
37-10	2114-1058D45	. WASHER	. RONDELLE	3					
37-11	S0511853	. BOLT	. BOULON A 6 PANS	2					
37-12	2114-1058D30	. WASHER	. RONDELLE	4					
37-13	S4012733	. NUT	. ECROU	4					
37-14	S5010313	. WASHER	. RONDELLE	4					
37-15	S0504553	. BOLT	. BOULON A 6 PANS	2					
37-16	S0504453	. BOLT	. BOULON A 6 PANS	2					
37-17	S5010513	. WASHER;PLAIN	. RONDELLE	2					
37-18	S0508753	. BOLT	. BOULON A 6 PANS	2					
37-19	S4012633	. NUT	. ECROU	2					
37-20	K1000602	. BUSHING	. DOUILLE	1					
37-21	K1008335	. BUSHING	. DOUILLE	1					
39	K1004630	CYLINDER;KEY	CYLINDRE	1					

Fig. 1560 BATTERY COVER
COUVERCLE

Serial No. ;

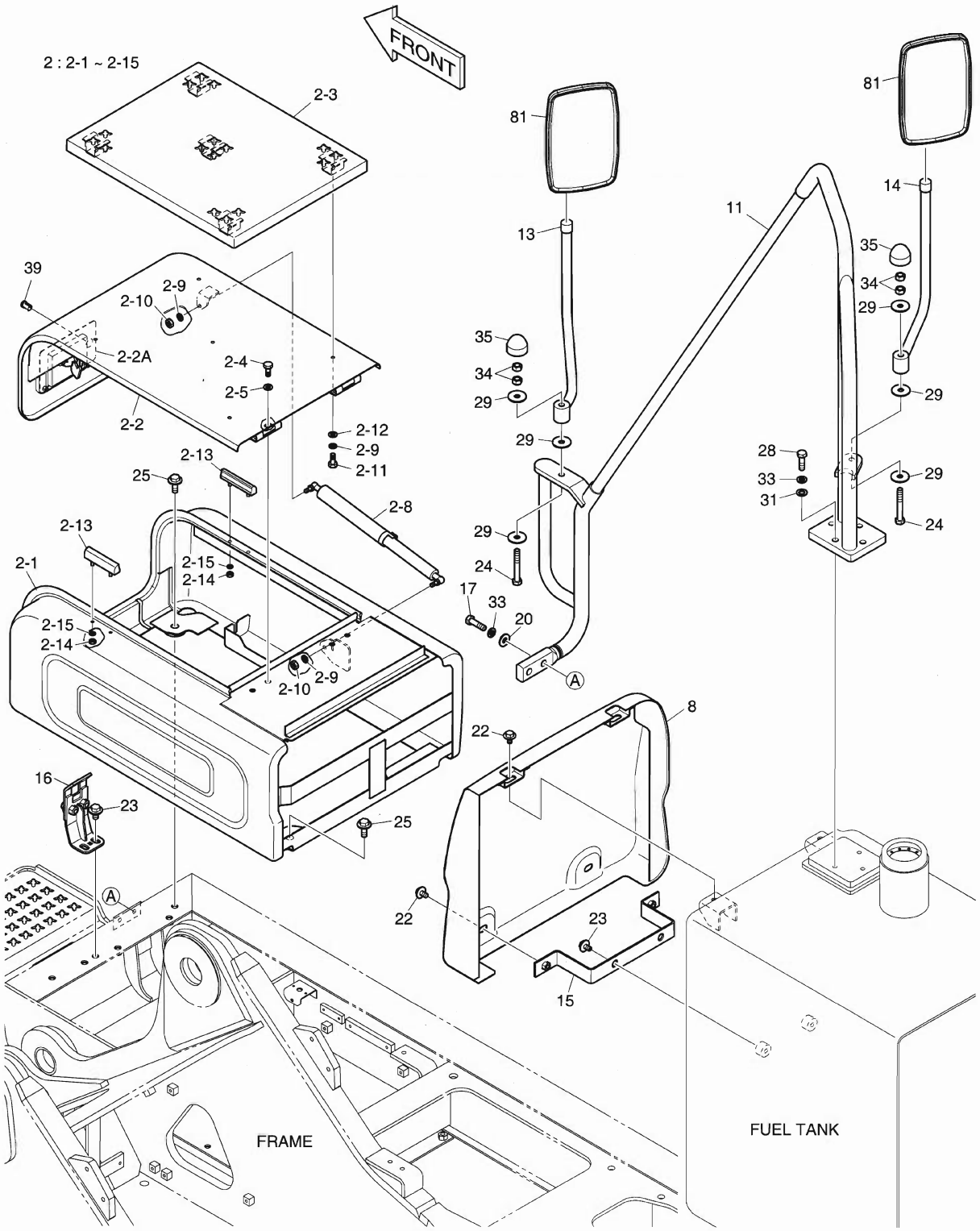

DATE	NOV. 27, 2006
1st EDITION	

Fig. 1560 BATTERY COVER COUVERCLE

Serial No. ;

Key No.	Part No.	Description	Description	Q'ty	S.C	Serial No.	ICA	Replaceable part	
								Part No.	Q'ty
1560--	K1013497C	COVER ASS'Y	COUVERCLE	-	D				
2	K1013486B	BATTERY COVER ASS'Y	COUVERCLE	1					
2-1	-	. BATTERY COVER	. COUVERCLE	1	D				
2-2	K1013488	. DOOR;BATTERY COVER	. PORTE	1					
2-2A	125-00071B	.. LATCH	.. VERROU	1					
2-3	K1014272	. COVER	. COUVERCLE	1					
2-4	S0512066	. BOLT	. BOULON A 6 PANS	4					
2-5	S5010613	. WASHER	. RONDELLE	4					
2-8	K1006977	. CYLINDER;GAS	. CYLINDRE	1					
2-9	S5102503	. WASHER	. RONDELLE	7					
2-10	S4012533	. NUT	. ECROU	2					
2-11	S0508866	. BOLT	. BOULON A 6 PANS	5					
2-12	S5010513	. WASHER	. RONDELLE	5					
2-13	K1005305	. STOPPER;RUBBER	. TAQUET D'ARRET	2					
2-14	S4012333	. NUT	. ECROU	4					
2-15	S5102303	. WASHER	. RONDELLE	4					
8	K1004860B	PLATE	PLAQUE	1					
11	K1014131	HANDRAIL	BALUSTRADE	1					
13	K1013269	STAY;MIRROR	ENTRETOISE	1					
14	K1013290	STAY;MIRROR	ENTRETOISE	1					
15	K1005285A	BRACKET	SUPPORT	1					
16	195-02624C	BRACKET	SUPPORT	1					
17	S0560666	BOLT	BOULON A 6 PANS	2					
20	2114-1058D33	WASHER	CALE	2					
22	DS0025014	BOLT;SET	BOULON A 6 PANS	4					
23	DS0025015	BOLT;SET	BOULON A 6 PANS	4					
24	S0561466	BOLT	BOULON A 6 PANS	2					
25	DS0025027	BOLT;SET	BOULON A 6 PANS	4					
28	S0560566	BOLT	BOULON A 6 PANS	4					
29	2114-1058D68	WASHER	CALE	6					
31	S5010713	WASHER	CALE	4					
33	S5102703	WASHER	CALE	6					
34	S4012733	NUT	ECROU 6 PANS	4					
35	161-00580	CAP;RUBBER	CHAPEAU	2					
39	K1004630	CYLINDER;KEY	CYLINDRE	1					
81	903-00068	MIRROR	MIROIR	2					

Fig. 1570 COVER
COUVERCLE

Serial No. ;

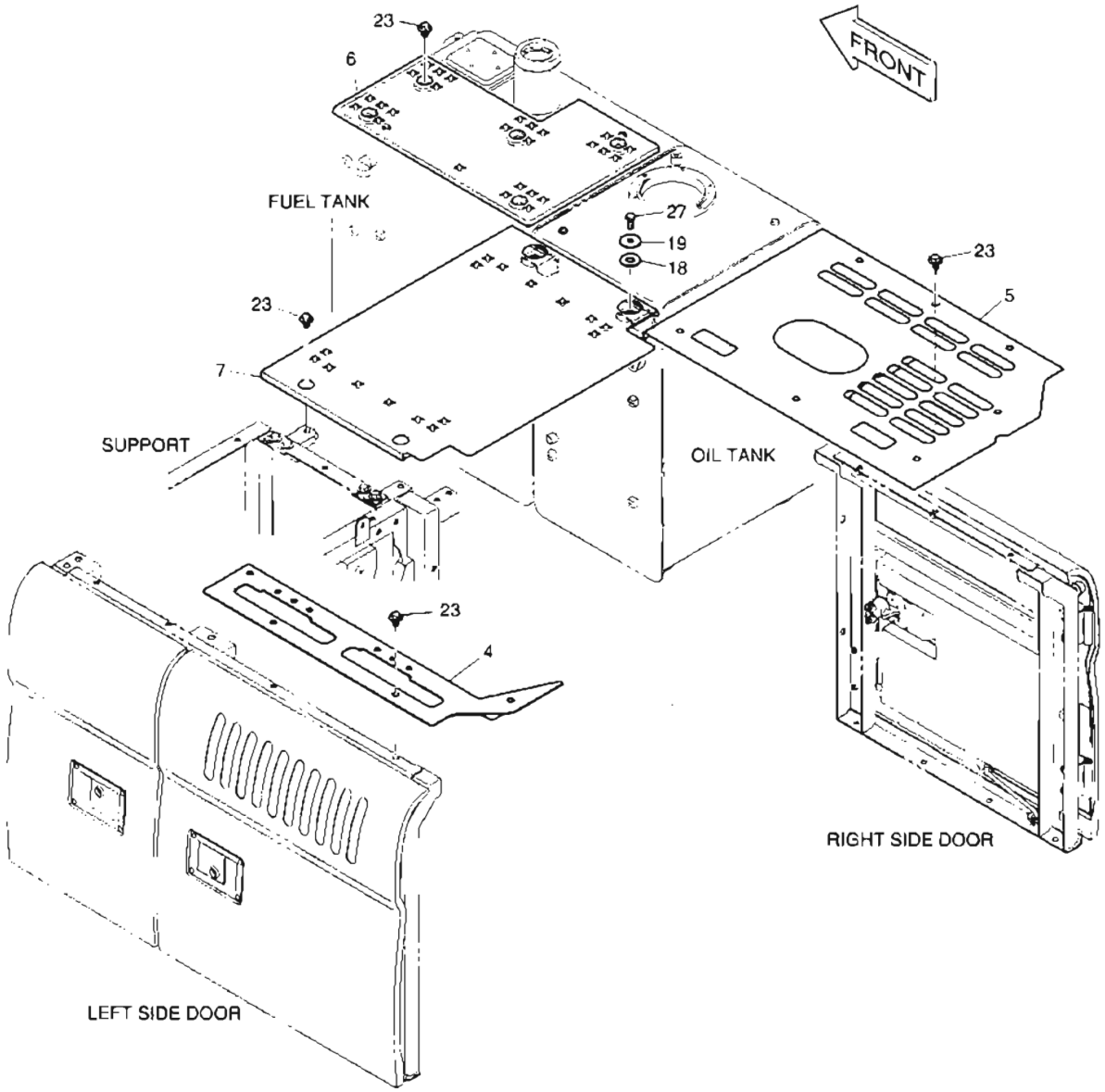

DATE	NOV. 27, 2006
1st EDITION	

Fig. 1570 COVER COUVERCLE

Serial No. ;

Key No.	Part No.	Description	Description	Q'ty	S.C	Serial No.	ICA	Replaceable part	
								Part No.	Q'ty
1570--	K1013497C	COVER ASS'Y	COUVERCLE	-	D				
4	K1013493A	COVER	COUVERCLE	1					
5	K1013494C	COVER	COUVERCLE	1					
6	K1013495	COVER	COUVERCLE	1					
7	K1013496A	COVER	COUVERCLE	1					
18	K1002943	RUBBER	CAOUTCHOUC	2					
19	114-00529	SPACER	BAGUE D'ECARTEMENT	2					
23	DS0025015	BOLT;SET	BOULON A 6 PANS	18					
27	S0515266	BOLT	BOULON A 6 PANS	2					

DATE	NOV. 27, 2006
1st EDITION	

Fig. 1580 ENGINE COVER
COUVERTURE DE MOTEUR

Serial No. ;

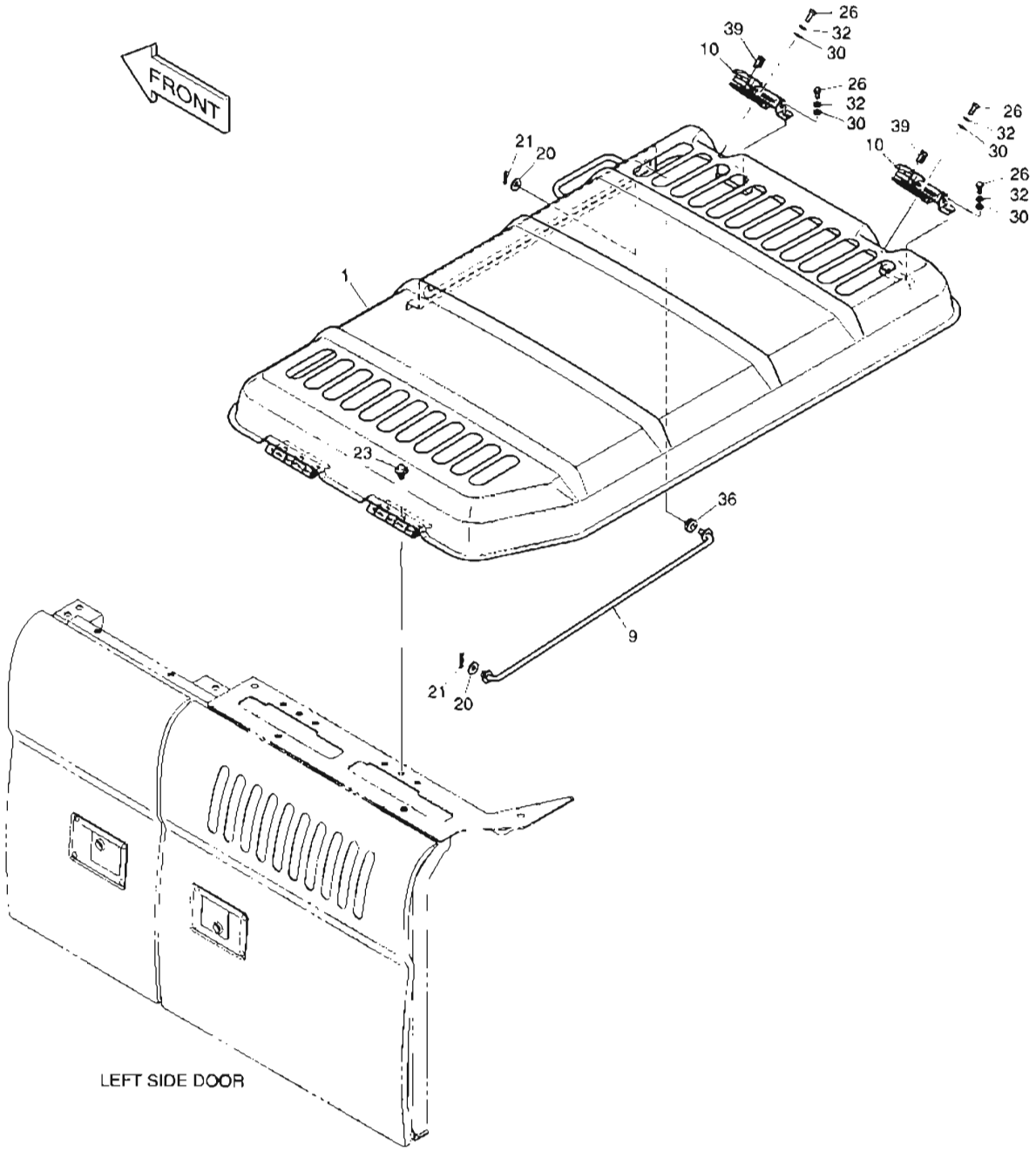

DATE	NOV. 27, 2006
1st EDITION	

Fig. 1580 ENGINE COVER
COUVERTURE DE MOTEUR

Serial No. ;

Key No.	Part No.	Description	Description	Q'ty	S.C	Serial No.	ICA	Replaceable part	
								Part No.	Q'ty
1580--	K1013497C	COVER ASS'Y	COUVERCLE	-	D				
1	K1009750A	COVER;ENGINE	COUVERCLE	1					
9	K1009751A	STAY	SEJOUR	1					
10	125-00075A	CATCH	CROCHET	2					
20	2114-1058D33	WASHER	CALE	2					
21	2705-9002	PIN;LOCK	GOUPILLE	2					
23	DS0025015	BOLT;SET	BOULON A 6 PANS	6					
26	S0508866	BOLT	BOULON A 6 PANS	8					
30	S5010513	WASHER	CALE	8					
32	S5102503	WASHER	CALE	8					
36	K1013812	BUSHING	DOUILLE	1					
39	K1004630	CYLINDER;KEY	CYLINDRE	2					

DATE	NOV. 27, 2006
1st EDITION	

Fig. 1590 ACOUSTIC FOAM
ENSEMBLE DE EPONGE

Serial No. ;

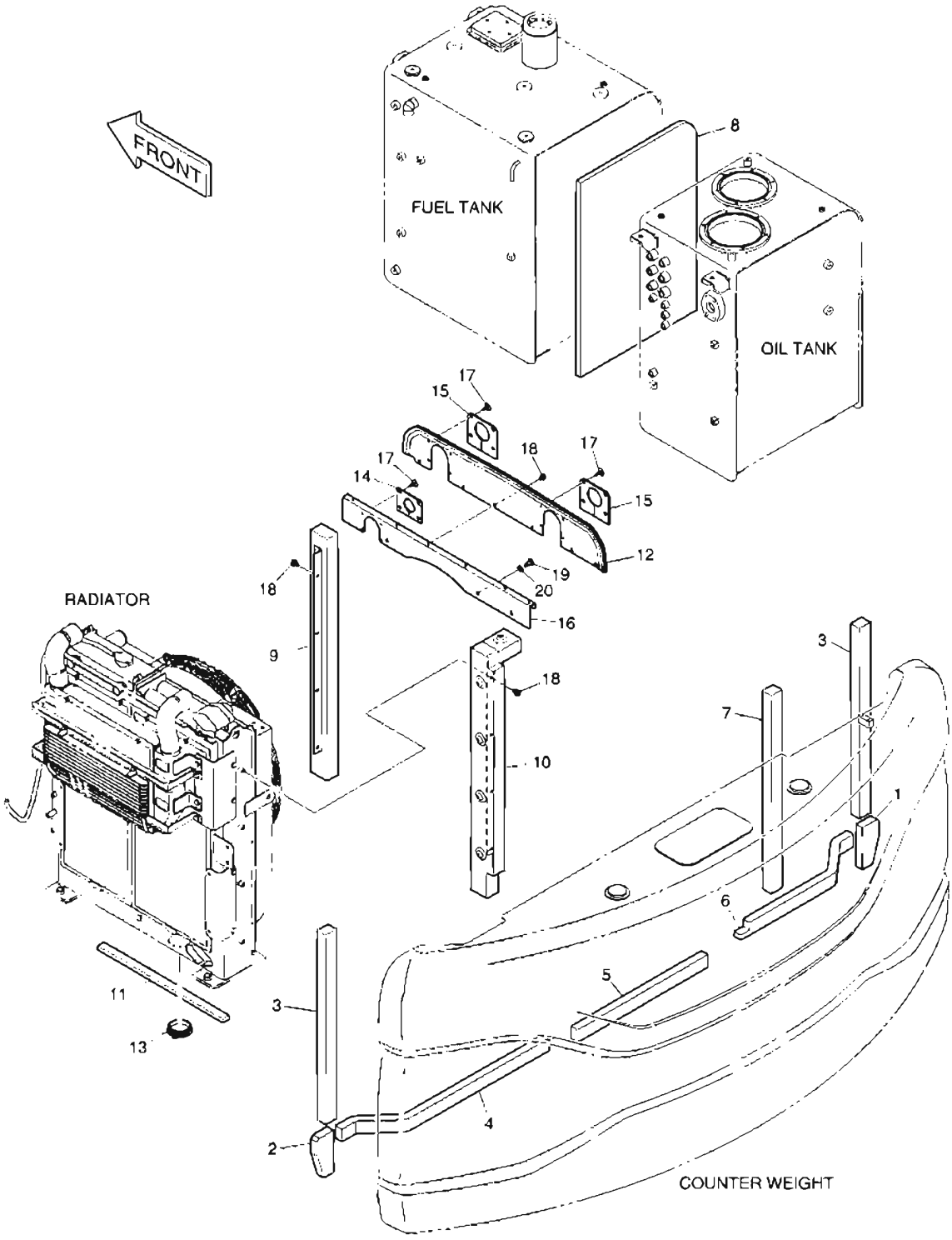

DATE	NOV. 27, 2006
1st EDITION	

Fig. 1590 ACOUSTIC FOAM ENSEMBLE DE EPONGE

Serial No. ;

Key No.	Part No.	Description	Description	Q'ty	S.C	Serial No.	ICA	Replaceable part	
								Part No.	Q'ty
1590--	K1012963A	ACOUSTIC FOAM	ENSEMBLE DE EPONGE	-	D				
1	K1012964	FOAM	EPONGE	1					
2	K1012965	FOAM	EPONGE	1					
3	161-00603B	FOAM;POLYURETHANE	EPONGE	2					
4	K1012966	FOAM	EPONGE	1					
5	K1012967	FOAM	EPONGE	1					
6	K1012968A	FOAM	EPONGE	1					
7	161-00608B	FOAM;POLYURETHANE	EPONGE	1					
8	K1013453	FOAM	EPONGE	1					
9	K1009623A	FOAM	EPONGE	1					
10	K1009622A	FOAM	EPONGE	1					
11	K1009632	FOAM	EPONGE	1					
12	K1009624	BAFFLE;RADIATOR	CLOISON	1					
13	K1007044	BUSHING	DOUILLE	1					
14	K1014972	STRIP;WEATHER	TAMPON	1					
15	K1009626	STRIP;WEATHER	TAMPON	2					
16	K1009625A	BAFFLE;RADIATOR	CLOISON	1					
17	124-00070	CLIP;TREE	AGRAFE	12					
18	K1001029	BOLT	BOULON A 6 PANS	14					
19	S0511866	BOLT	BOULON A 6 PANS	3					
20	S5102603	WASHER;SPRING(M10)	RONDELLE ELASTIQUE	3					

Fig. 1600 UNDER COVER
TOLES IMFERIEVRES

Serial No. ;

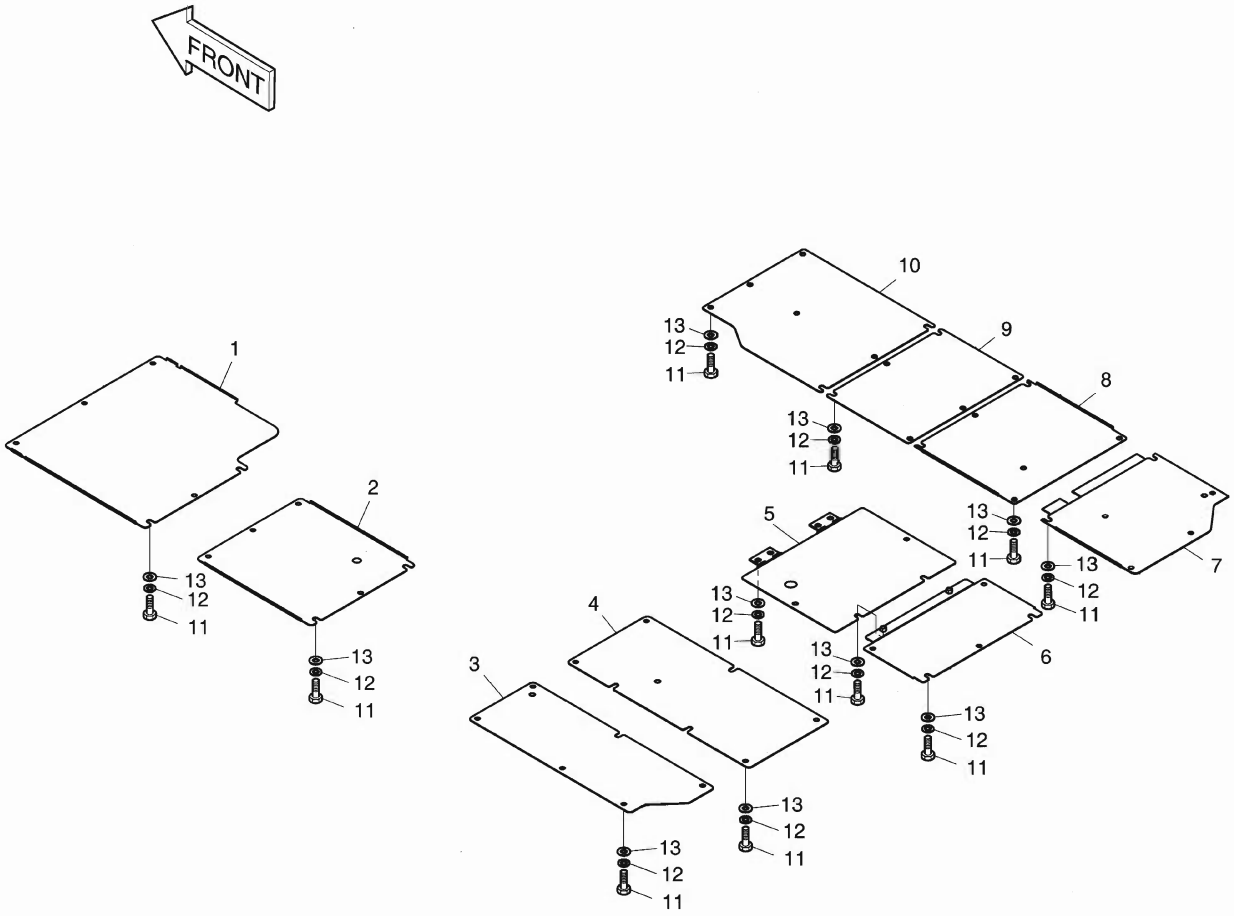

DATE	NOV. 27, 2006
1st EDITION	

Fig. 1600 UNDER COVER
TOLES IMFERIEVRES

Serial No. ;

Key No.	Part No.	Description	Description	Q'ty	S.C	Serial No.	ICA	Replaceable part	
								Part No.	Q'ty
1600--	K1013671C	UNDER COVER ASS'Y	COUVERCLE	-	D				
1	K1013692A	COVER;UNDER	COUVERCLE	1					
2	K1013693	COVER;UNDER	COUVERCLE	1					
3	K1013694B	COVER;UNDER	COUVERCLE	1					
4	K1013695B	COVER;UNDER	COUVERCLE	1					
5	K1013696A	COVER;UNDER	COUVERCLE	1					
6	K1013697B	COVER;UNDER	COUVERCLE	1					
7	K1013698A	COVER;UNDER	COUVERCLE	1					
8	K1013699	COVER;UNDER	COUVERCLE	1					
9	K1013700	COVER;UNDER	COUVERCLE	1					
10	K1013701A	COVER;UNDER	COUVERCLE	1					
11	S0515266	BOLT	BOULON A 6 PANS	62					
12	S5102703	WASHER;SPRING(M12)	RONDELLE ELASTIQUE	62					
13	DS0401188	WASHER;PLAIN	RONDELLE	62					

Fig. 1610 LUBRICATION PIPING LUBRIFICATION

Serial No. ;

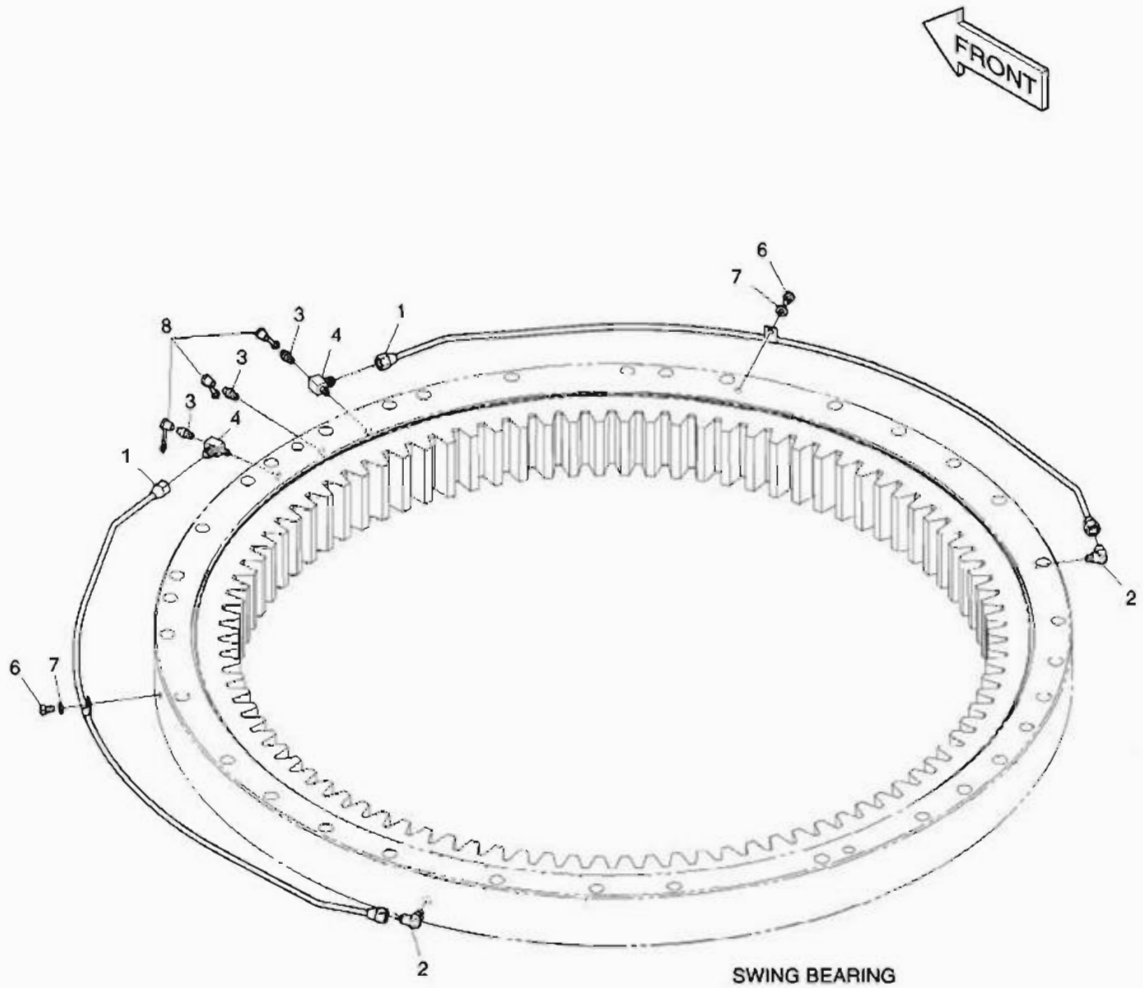

DATE	NOV. 27, 2006
1st EDITION	

Fig. 1610 LUBRICATION PIPING LUBRIFICATION

Serial No. ;

Key No.	Part No.	Description	Description	Q'ty	S.C	Serial No.	ICA	Replaceable part	
								Part No.	Q'ty
1610--	K1014859A	LUBRICATION PIPING	LUBRIFICATION	-	D				
1	K1024449	PIPE;GREASE	TUYAU	2					
2	2181-1925	ELBOW	COUDE	2					
3	S6710041	NIPPLE	GRAISSEUR	3					
4	2181-2527	TEE	TE	2					
6	S0504366	BOLT	BOULON A 6 PANS	2					
7	S5102303	WASHER;SPRING	RONDELLE ELASTIQUE	2					
8	160-00020	CAP;GREASE NIPPLE	CHAPEAU	3					

DATE	NOV. 27, 2006
1st EDITION	

Fig. 1620 ELECTRIC BOX ASS'Y EQUIPMENT ELECTRIQUE

Serial No. ;

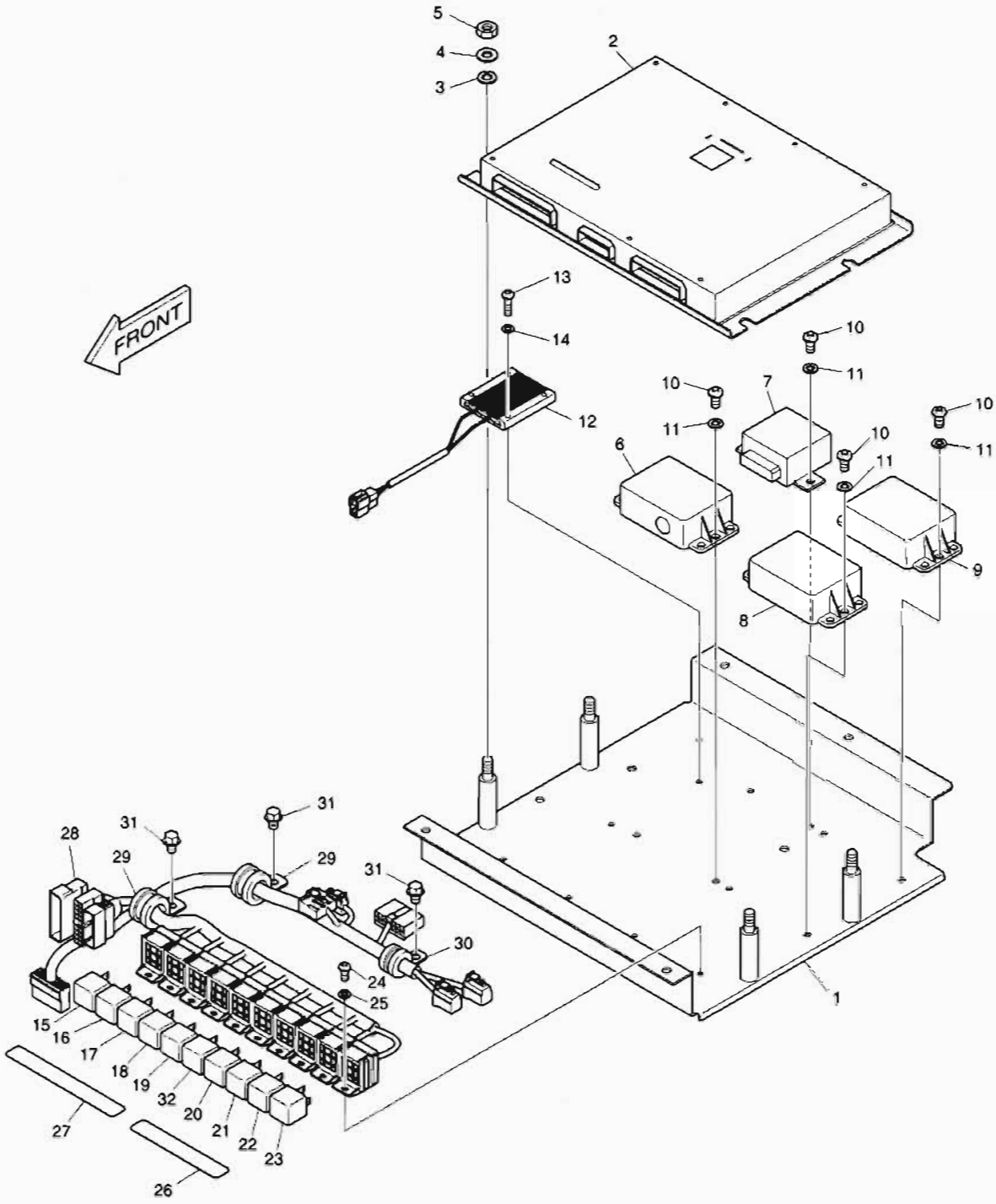

DATE	NOV. 27, 2006
1st EDITION	

Fig. 1620 ELECTRIC BOX ASS'Y EQUIPMENT ELECTRIQUE

Serial No. ;

Key No.	Part No.	Description	Description	Q'ty	S.C	Serial No.	ICA	Replaceable part	
								Part No.	Q'ty
1620--	K1014133	ELECTRIC BOX ASS'Y	EQUIPMENT ELECTRIQUE	1					
1	621-02955B	PLATE;E-BOX	PLAQUE	1					
2	K1015654	CONTROLLER;EPOS	PANNEAU	1					
3	S5010613	WASHER;PLAIN	RONDELLE	4					
4	S5102603	WASHER;SPRING	RONDELLE ELASTIQUE	4					
5	S4012633	NUT	ECROU 6 PANS	4					
6	2543-9015	CONTROLLER;STARTER	COMMANDE	1					
7	543-00106	CONTROLLER;WIPER	COMMANDE	1					
8	2531-1003	CONVERTER;DC-DC	CONVERTEUR	1					
9	2531-1003	CONVERTER;DC-DC	CONVERTEUR	1					
10	S3450953	SCREW	VIS	8					
11	S5102303	WASHER;SPRING	RONDELLE ELASTIQUE	8					
12	545-00011	RESISTOR;AUXILIARY	RESISTOR;AUXILIARY	1					
13	S3450863	SCREW	VIS	2					
14	S5100203	WASHER;SPRING	RONDELLE ELASTIQUE	2					
15	2544-9033	RELAY	RELAIS	1					
16	2544-9033	RELAY	RELAIS	1					
17	2544-9033	RELAY	RELAIS	1					
18	2544-9033	RELAY	RELAIS	1					
19	2544-9033	RELAY	RELAIS	1					
20	2544-9033	RELAY	RELAIS	1					
21	2544-9033	RELAY	RELAIS	1					
22	2544-9033	RELAY	RELAIS	1					
23	2544-9033	RELAY	RELAIS	1					
24	S3450833	BOLT	BOULON A 6 PANS	4					
25	S5100203	WASHER;SPRING	RONDELLE ELASTIQUE	4					
26	190-01192D9	PLATE;NAME(RELAY)	PLAQUE D'IDENTIFICATION	1					
27	190-01192D2	PLATE;NAME(RELAY)	PLAQUE D'IDENTIFICATION	1					
28	530-00412G	HARNESS;ELECTRIC BOX	FAISCEAU	1					
29	124-00208D3	CLIP	AGRAFE	2					
30	124-00208D2	CLIP	AGRAFE	1					
31	K1001029	BOLT	BOULON A 6 PANS	3					
32	2544-9033	RELAY	RELAIS	1					

Fig. 1630 ELECTRIC PARTS - CABIN
PIECES ELECTRIQUES

Serial No. ;

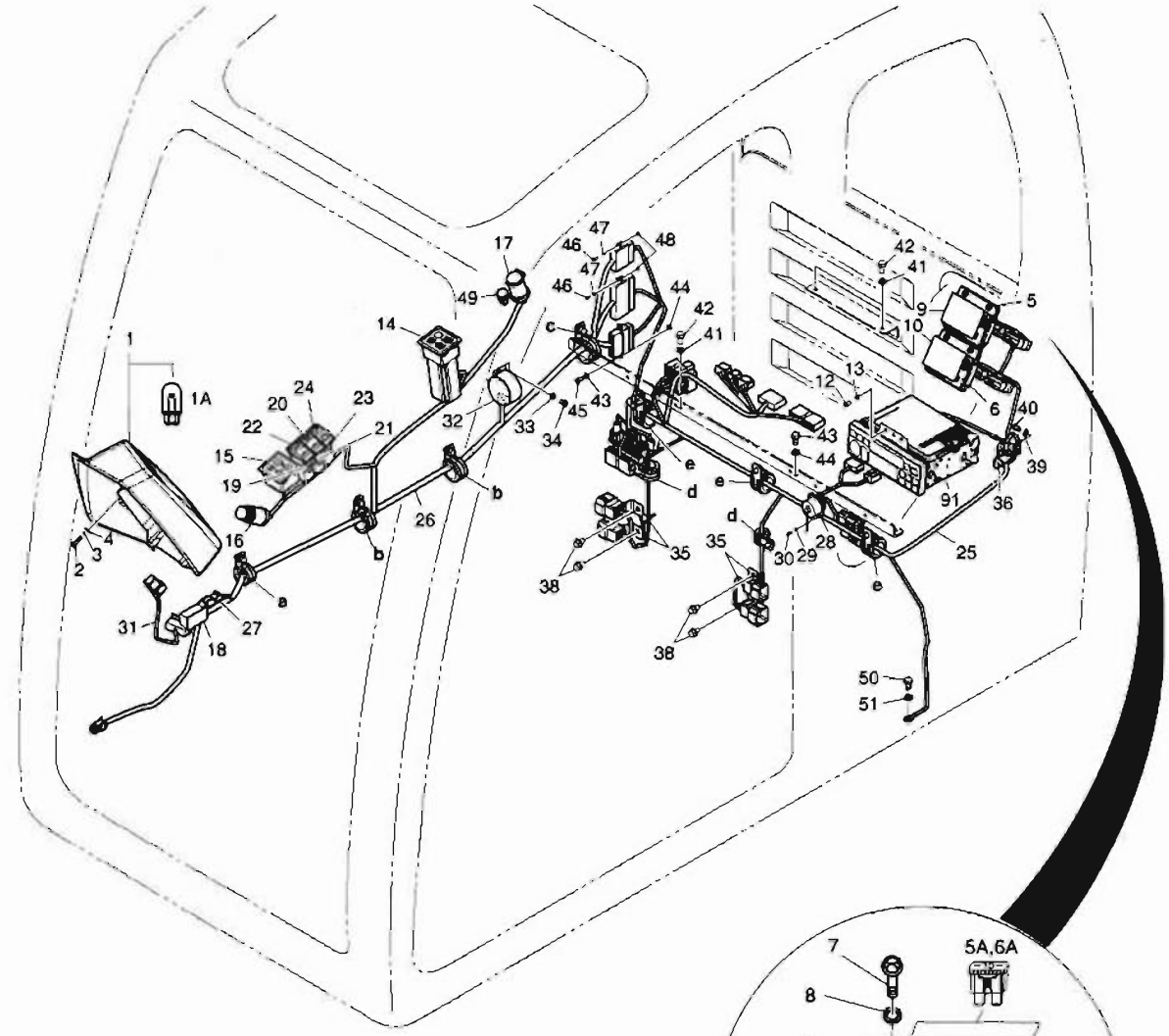

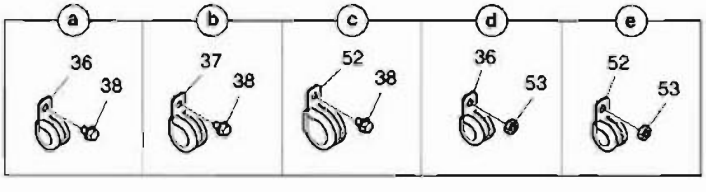

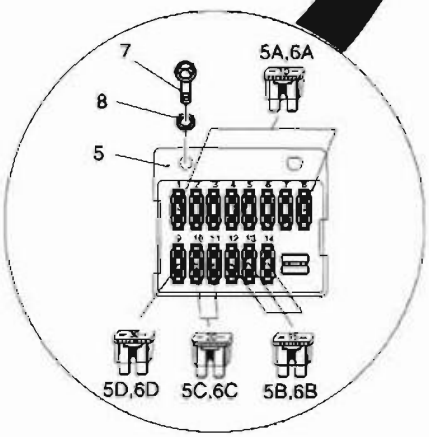

DATE	NOV. 27, 2006
1st EDITION	

Fig. 1630 ELECTRIC PARTS - CABIN PIECES ELECTRIQUES

Serial No. ;

Key No.	Part No.	Description	Description	Q'ty	S.C	Serial No.	ICA	Replaceable part	
								Part No.	Q'ty
1630--	K1014134A	ELECTRIC PARTS-CABIN	EQUIPMENT ELECTRIQUE	-	D				
1	539-00076C	PANEL;GAUGE	PANNEAU	1					
1A	515-00012A	. BULB	. AMPOULE	6					
2	S3450863	SCREW	VIS	4					
3	S5100203	WASHER;SPRING	RONDELLE ELASTIQUE	4					
4	S5000213	WASHER;PLAIN	RONDELLE	4					
5	K1001263A	FUSE BOX	FUSIBLE	1					
5A	2527-1016	. FUSE;BLADE 10A	. LAME DE FUSIBLE	8					
5B	2527-1017	. FUSE;BLADE 15A	. LAME DE FUSIBLE	3					
5C	2527-1018	. FUSE;BLADE 20A	. LAME DE FUSIBLE	2					
5D	2527-1025	. FUSE;BLADE 30A	. LAME DE FUSIBLE	1					
6	K1001263A	FUSE BOX	FUSIBLE	1					
6A	2527-1016	. FUSE;BLADE 10A	. LAME DE FUSIBLE	8					
6B	2527-1017	. FUSE;BLADE 15A	. LAME DE FUSIBLE	3					
6C	2527-1018	. FUSE;BLADE 20A	. LAME DE FUSIBLE	2					
6D	2527-1025	. FUSE;BLADE 30A	. LAME DE FUSIBLE	1					
7	S3450983	SCREW	VIS	4					
8	S5102303	WASHER;SPRING	RONDELLE ELASTIQUE	4					
9	K1008019D3	PLATE;NAME(1)	PLAQUE D'IDENTIFICATION	1					
10	K1008019D9	PLATE;NAME(2)	PLAQUE D'IDENTIFICATION	1					
12	S3450833	BOLT	BOULON A 6 PANS	4					
13	S5100203	WASHER;SPRING	RONDELLE ELASTIQUE	4					
14	543-00095	PANEL ASS'Y;WIPER CONTROL	PANNEAU	1					
15	543-00096	PANEL ASS'Y;RADIO CONTROL	PANNEAU	1					
16	545-00001	LIGHTER;CIGAR	ALLUMEUR DE CIGARE	1					
17	527-00006	SOCKET;12V POWER	CLE A DOUILLE	1					
18	2528-9040	METER;HOUR	TOTALISATEUR HORAIRE	1					
19	549-00103	SWITCH;ROCKER(2STEP)	INTERRUPTEUR	1					
20	K1002406D11	ACTUATOR;SWITCH	ACTUATOR;SWITCH	1					
21	549-00103	SWITCH;ROCKER(2STEP)	INTERRUPTEUR	1					
22	K1002406D12	ACTUATOR;SWITCH	ACTUATOR;SWITCH	1					
23	K1006572	SWITCH;BREAKER/SHEAR	AVERTISSEUR	1					
24	K1002406D21	ACTUATOR;SWITCH	ACTUATOR;SWITCH	1					
25	530-00411G	HARNESS;CABIN	FAISCEAU	1					
26	530-00413C	HARNESS;SWITCH BOX	FAISCEAU	1					
27	530-00434B	HARNESS;HOUR METER JOINT	FAISCEAU	1					
28	530-00435A	HARNESS;CHECK CONNECTOR	FAISCEAU	1					
29	S5100003	WASHER;SPRING	RONDELLE ELASTIQUE	4					

Fig. 1630 ELECTRIC PARTS - CABIN
PIECES ELECTRIQUES

Serial No. ;

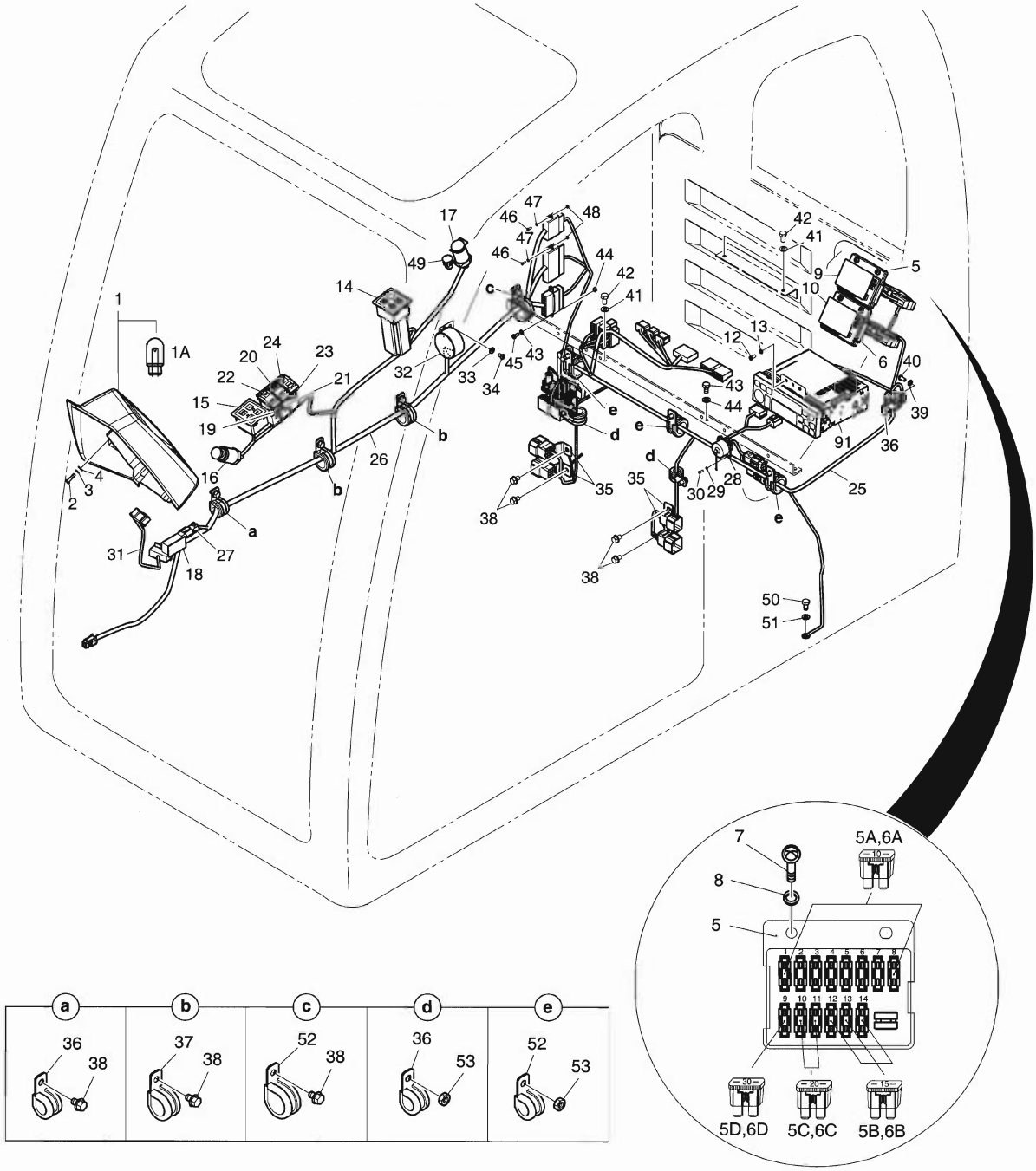

DATE	NOV. 27, 2006
1st EDITION	

Fig. 1630 ELECTRIC PARTS - CABIN PIECES ELECTRIQUES

Serial No. ;

Key No.	Part No.	Description	Description	Q'ty	S.C	Serial No.	ICA	Replaceable part	
								Part No.	Q'ty
1630-30	S3450343	SCREW	VIS	4					
31	530-00416B	HARNESS;GAUGE PANEL JOINT	FAISCEAU	1					
32	2516-1116	BUZZER;PILOT	VIBREUR ARRIERE	1					
33	S5102303	WASHER;SPRING	RONDELLE ELASTIQUE	2					
34	S3450943	SCREW	VIS	2					
35	2197-1661	BRACKET;HOUSING	SUPPORT	4					
36	124-00208D3	CLIP	AGRAFE	4					
37	124-00208D4	CLIP	AGRAFE	2					
38	K1001029	BOLT	BOULON A 6 PANS	8					
39	S5102303	WASHER;SPRING	RONDELLE ELASTIQUE	1					
40	S3450953	SCREW	VIS	1					
41	S5102503	WASHER;SPRING	RONDELLE ELASTIQUE	4					
42	S0508653	BOLT	BOULON A 6 PANS	4					
43	S5100203	WASHER;SPRING	RONDELLE ELASTIQUE	2					
44	S4012203	NUT	ECROU 6 PANS	2					
45	S3450833	BOLT	BOULON A 6 PANS	2					
46	S3450343	SCREW	VIS	4					
47	S5100003	WASHER;SPRING	RONDELLE ELASTIQUE	4					
48	S4012003	NUT	ECROU 6 PANS	4					
49	547-00023	SENSOR;SUN	CAPTEUR	1					
50	S0508653	BOLT	BOULON A 6 PANS	1					
51	S5102503	WASHER;SPRING	RONDELLE ELASTIQUE	1					
52	124-00208D5	CLIP	AGRAFE	4					
53	2121-1305	NUT	ECROU 6 PANS	5					
91	K1026654	STEREO;CAR	RELAIS AVERTISSEUR	1					

DATE	NOV. 27, 2006
1st EDITION	

Fig. 1640 ELECTRIC PARTS - CONTROL STAND
PIECES ELECTRIQUES

Serial No. ;

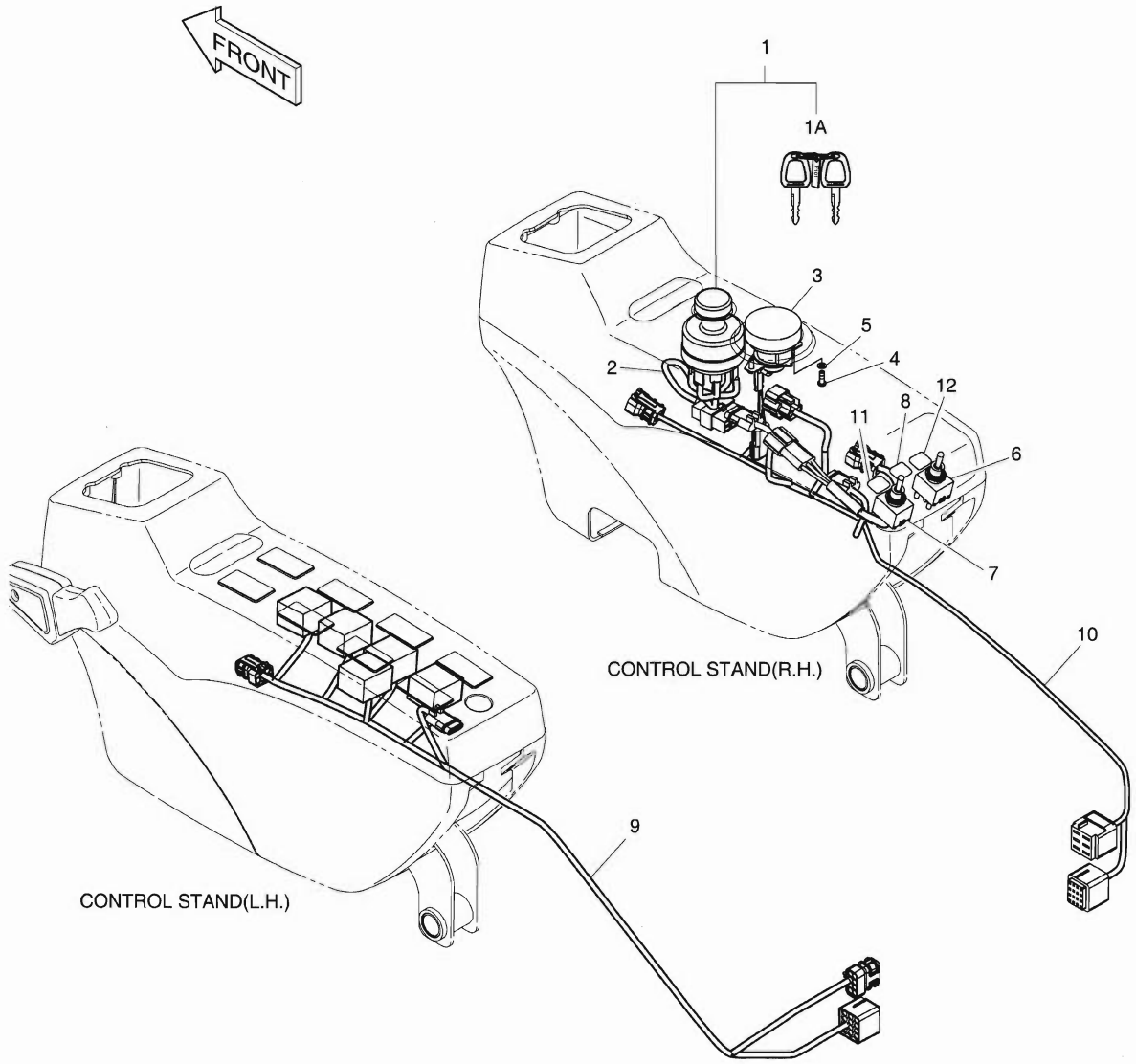

DATE	NOV. 27, 2006
1st EDITION	

Fig. 1640 ELECTRIC PARTS - CONTROL STAND
PIECES ELECTRIQUES

Serial No. ;

Key No.	Part No.	Description	Description	Q'ty	S.C	Serial No.	ICA	Replaceable part	
								Part No.	Q'ty
1640--	K1014135	ELECTRIC PARTS-CONTROL	EQUIPMENT ELECTRIQUE	-	D				
1	K1001858A	SWITCH;STARTER	INTERRUPTEUR	1					
1A	K1009605B	. KEY;STARTER	. CLE	2					
2	530-00150	HARNESS;STARTER SWITCH	FAISCEAU	1					
3	K1013846	DIAL;ENGINE CONTROL	CADRAN	1					
4	S3450583	SCREW M4X0.7X12	VIS	2					
5	S5100103	WASHER;SPRING M4	RONDELLE ELASTIQUE	2					
6	549-00090	SWITCH;TOGGLE	INTERRUPTEUR	1					
7	K1001702	SWITCH;TOGGLE	INTERRUPTEUR	1					
8	K1004427	PLATE;NAME	PLAQUE D'IDENTIFICATION	1					
9	530-00415C	HARNESS;STAND(LH)	FAISCEAU	1					
10	530-00414C	HARNESS;STAND(RH)	FAISCEAU	1					
11	K1004425	PLATE;NAME	PLAQUE D'IDENTIFICATION	1					
12	K1004426	PLATE;NAME	PLAQUE D'IDENTIFICATION	1					

DATE	NOV. 27, 2006
1st EDITION	

Fig. 1650 ELECTRIC PARTS - RELATED PIECES ELECTRIQUES

Serial No. ;

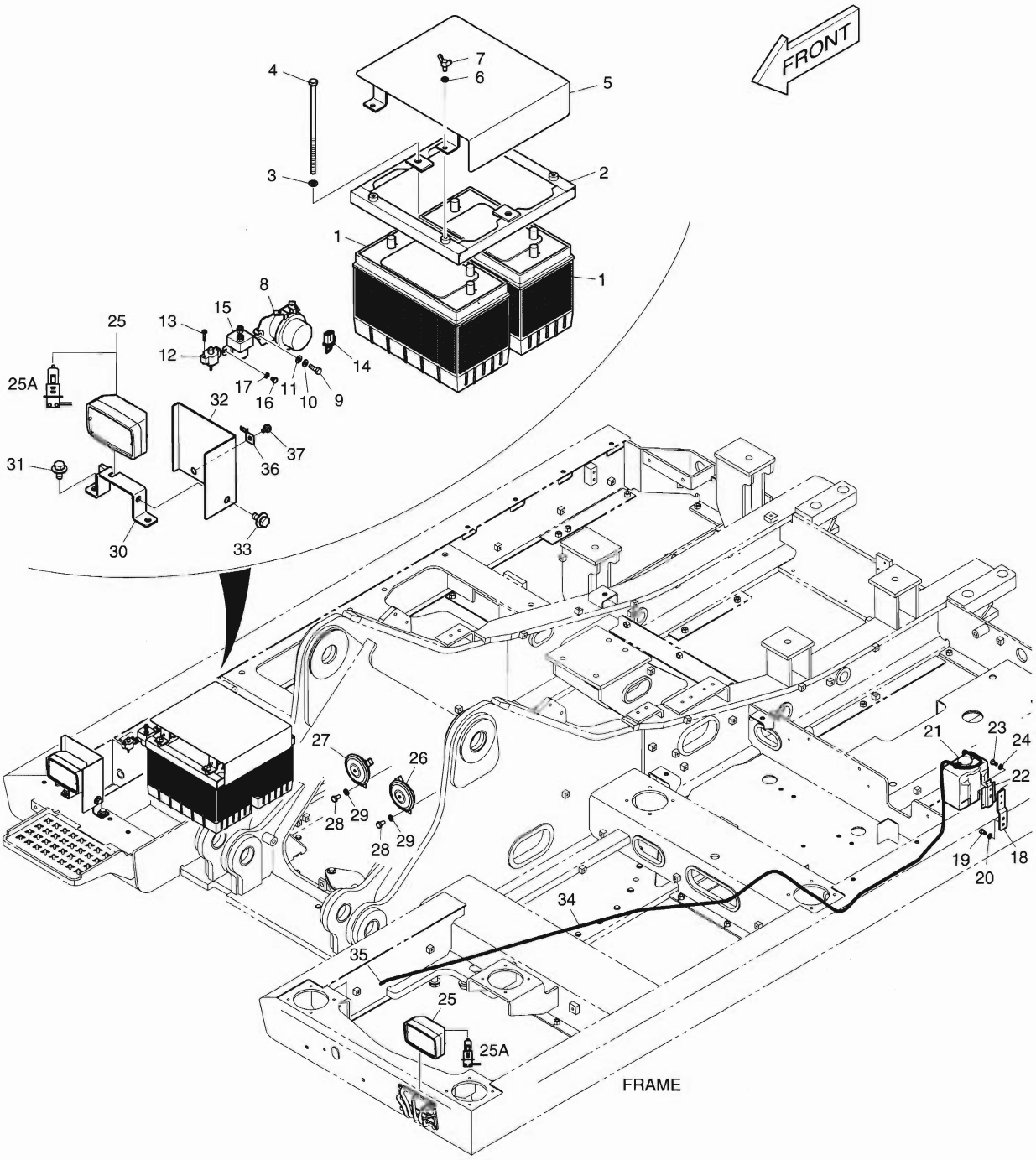

DATE	NOV. 27, 2006
1st EDITION	

Fig. 1650 ELECTRIC PARTS - RELATED PIECES ELECTRIQUES

Serial No. ;

Key No.	Part No.	Description	Description	Q'ty	S.C	Serial No.	ICA	Replaceable part	
								Part No.	Q'ty
1650--	K1014136	ELECTRIC PARTS;CHASSIS	EQUIPMENT ELECTRIQUE	-	D				
1	506-00006	BATTERY	BATTERIE	2					
2	K1010776	BRACKET	SUPPORT	1					
3	S5102603	WASHER;SPRING	RONDELLE ELASTIQUE	2					
4	DS0001079	BOLT	BOULON A 6 PANS	2					
5	K1010777	COVER	COUVERCLE	1					
6	S5102503	WASHER;SPRING	RONDELLE ELASTIQUE	4					
7	S3050863	BOLT;WING	BOULON D'AILE	4					
8	2544-9024	RELAY;BATTERY	RELAIS	1					
9	S0509066	BOLT	BOULON A 6 PANS	2					
10	S5102503	WASHER;SPRING	RONDELLE ELASTIQUE	2					
11	S5010503	WASHER;PLAIN	RONDELLE	2					
12	2527-9004	BREAKER;CIRCUIT	SUPPORT	1					
13	2120-1354	SCREW	VIS	2					
14	2527-1023A	FUSIBLE LINK	FUSIBLE	1					
15	2544-1022	RELAY	RELAIS	1					
16	S0504253	BOLT	BOULON A 6 PANS	2					
17	S5102303	WASHER;SPRING	RONDELLE ELASTIQUE	2					
18	K1007668	BRACKET	SUPPORT	1					
19	S0508666	BOLT	BOULON A 6 PANS	2					
20	S5102503	WASHER;SPRING	RONDELLE ELASTIQUE	2					
21	K1000789	TANK;RESERVE	RESERVOIR	1					
22	2195-1534	BRACKET	SUPPORT	1					
23	S0504453	BOLT	BOULON A 6 PANS	2					
24	S5102303	WASHER;SPRING	RONDELLE ELASTIQUE	2					
25	534-00085	LAMP;HEAD	LAMPE	2					
25A	2515-1016D4	. BULB 24V 70W	. AMPOULE	1					
26	516-00014	HORN;HIGH	AVERTISSEUR	1					
27	516-00015	HORN;LOW	AVERTISSEUR	1					
28	S0508666	BOLT	BOULON A 6 PANS	2					
29	S5102503	WASHER;SPRING	RONDELLE ELASTIQUE	2					
30	K1016025	BRACKET	SUPPORT	1					
31	DS0025019	BOLT;SET	BOULON A 6 PANS	2					
32	K1016027	PLATE	PLAQUE	1					
33	DS0025013	BOLT;SET	BOULON A 6 PANS	2					
34	4185-1777	HOSE	TUYAU FLEXIBLE	1					
35	2415-1018	ADAPTER;HOSE	ADAPTEUR	1					
36	2197-1661	BRACKET;HOUSING	SUPPORT	1					

Fig. 1650 ELECTRIC PARTS - RELATED PIECES ELECTRIQUES

Serial No. ;

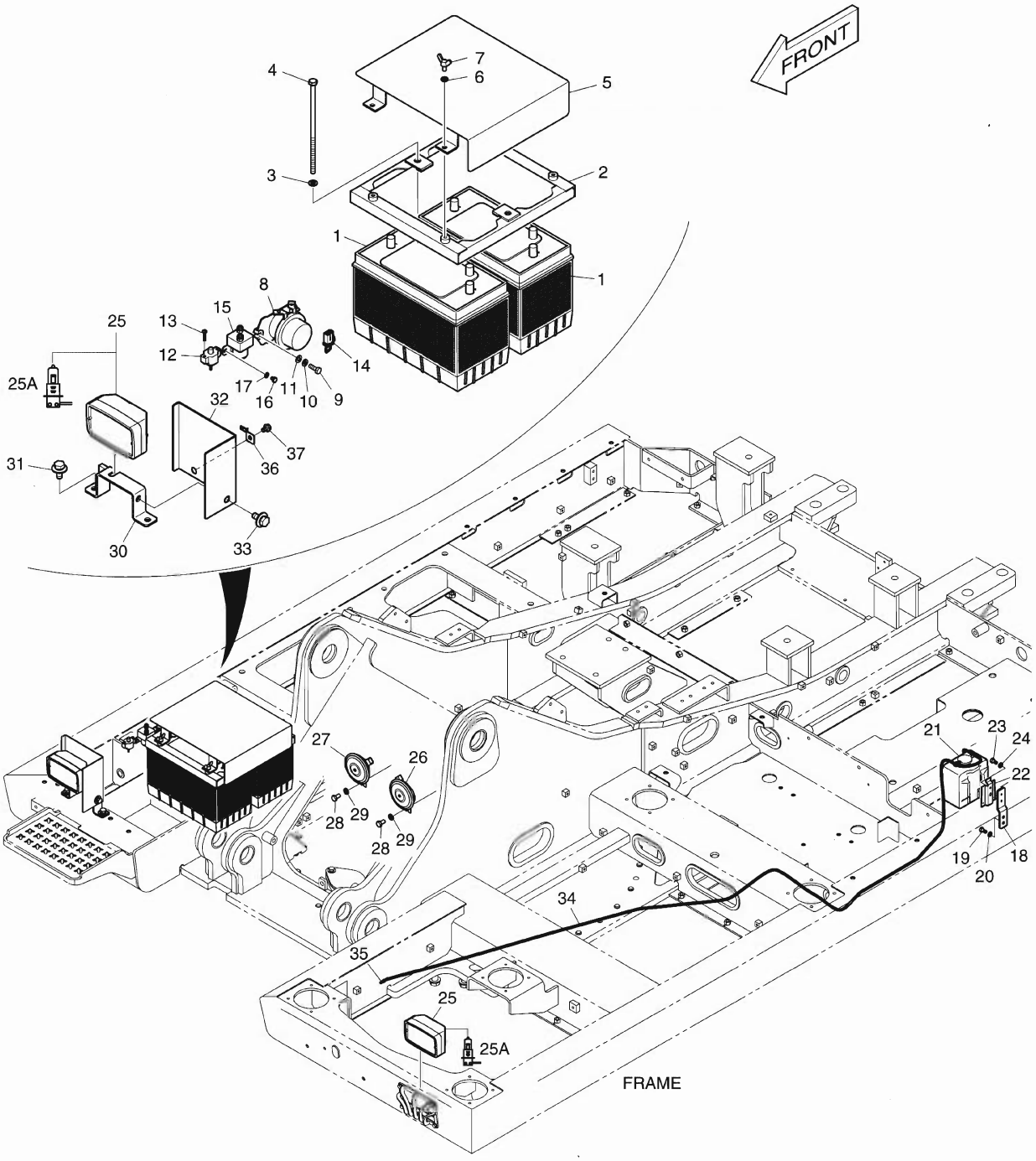

DATE	NOV. 27, 2006
1st EDITION	

Fig. 1650 ELECTRIC PARTS - RELATED PIECES ELECTRIQUES

Serial No. ;

Key No.	Part No.	Description	Description	Q'ty	S.C	Serial No.	ICA	Replaceable part	
								Part No.	Q'ty
1650-37	K1001029	BOLT	BOULON A 6 PANS	1					

Fig. 1660 ELECTRIC PARTS - ENGINE
PIECES ELECTRIQUES

Serial No. ;

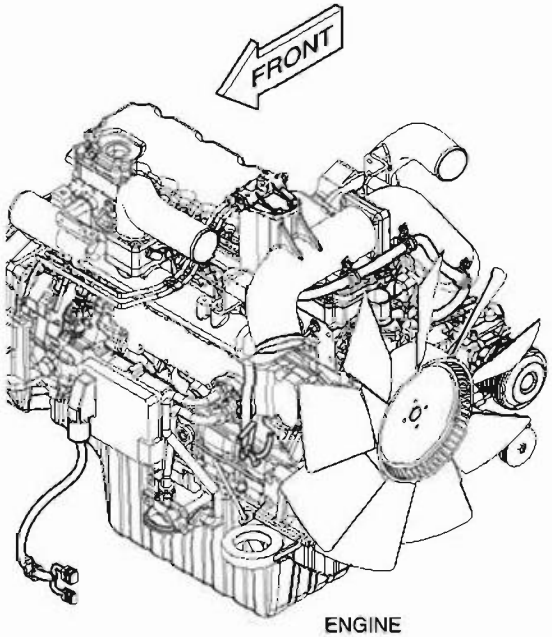

ENGINE

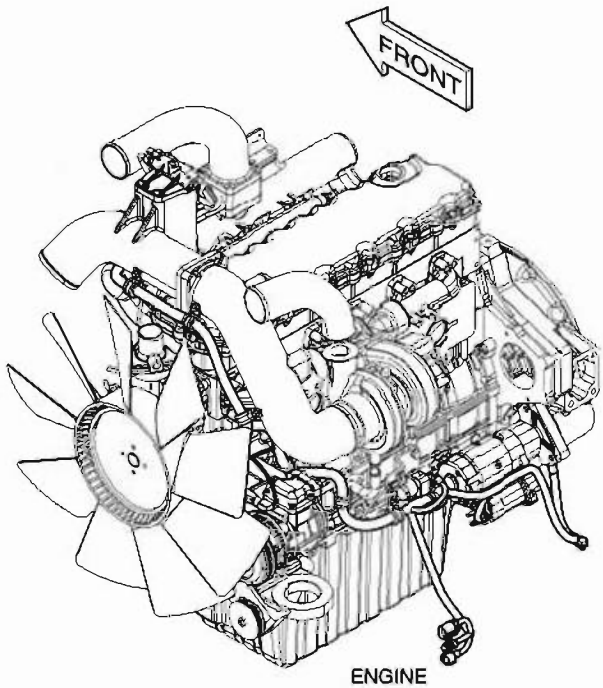

ENGINE

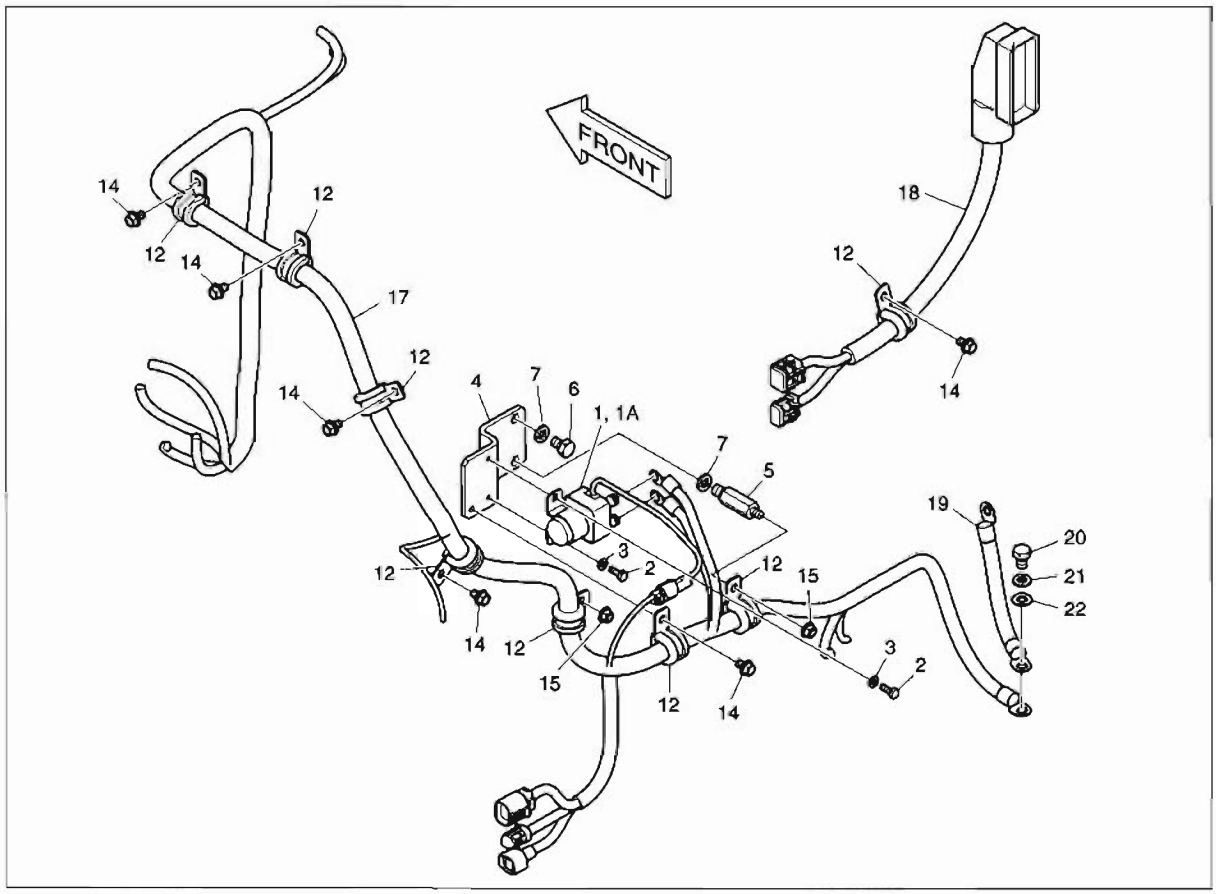

DATE	NOV. 27, 2006
1st EDITION	

Fig. 1660 ELECTRIC PARTS - ENGINE PIECES ELECTRIQUES

Serial No. ;

Key No.	Part No.	Description	Description	Q'ty	S.C	Serial No.	ICA	Replaceable part	
								Part No.	Q'ty
1660--	K1014137A	ELECTRIC ASS'Y;ENGINE	EQUIPMENT ELECTRIQUE	-	D				
1	544-00007	RELAY;PREHEAT	RELAIS	1					
1A	527-00005	. FUSE;PREHEAT RELAY	. FUSIBLE	1					
2	S0504666	BOLT	BOULON A 6 PANS	2					
3	S5102303	WASHER;SPRING	RONDELLE ELASTIQUE	2					
4	K1015201	BRACKET;PREHEAT RELAY	SUPPORT	1					
5	120-00246	BOLT;STUD	BOULON A 6 PANS	1					
6	S0511666	BOLT	BOULON A 6 PANS	1					
7	S5102603	WASHER;SPRING	RONDELLE ELASTIQUE	2					
12	124-00208D3	CLIP	AGRAFE	8					
14	K1001029	BOLT	BOULON A 6 PANS	6					
15	2121-1305	NUT	ECROU 6 PANS	2					
17	K1015602A	HARNESS;ENGINE	FAISCEAU	1					
18	K1008449A	HARNESS;JOINT(ECU)	FAISCEAU	1					
19	553-00001D4	CABLE;E/G EARTH	CABLE	1					
20	S0511653	BOLT	BOULON A 6 PANS	1					
21	S5102603	WASHER;SPRING	RONDELLE ELASTIQUE	1					
22	S5010613	WASHER;PLAIN	RONDELLE	1					

Fig. 1670 ALTERNATOR MOUNTING
ALTERNATEUR

Serial No. ;

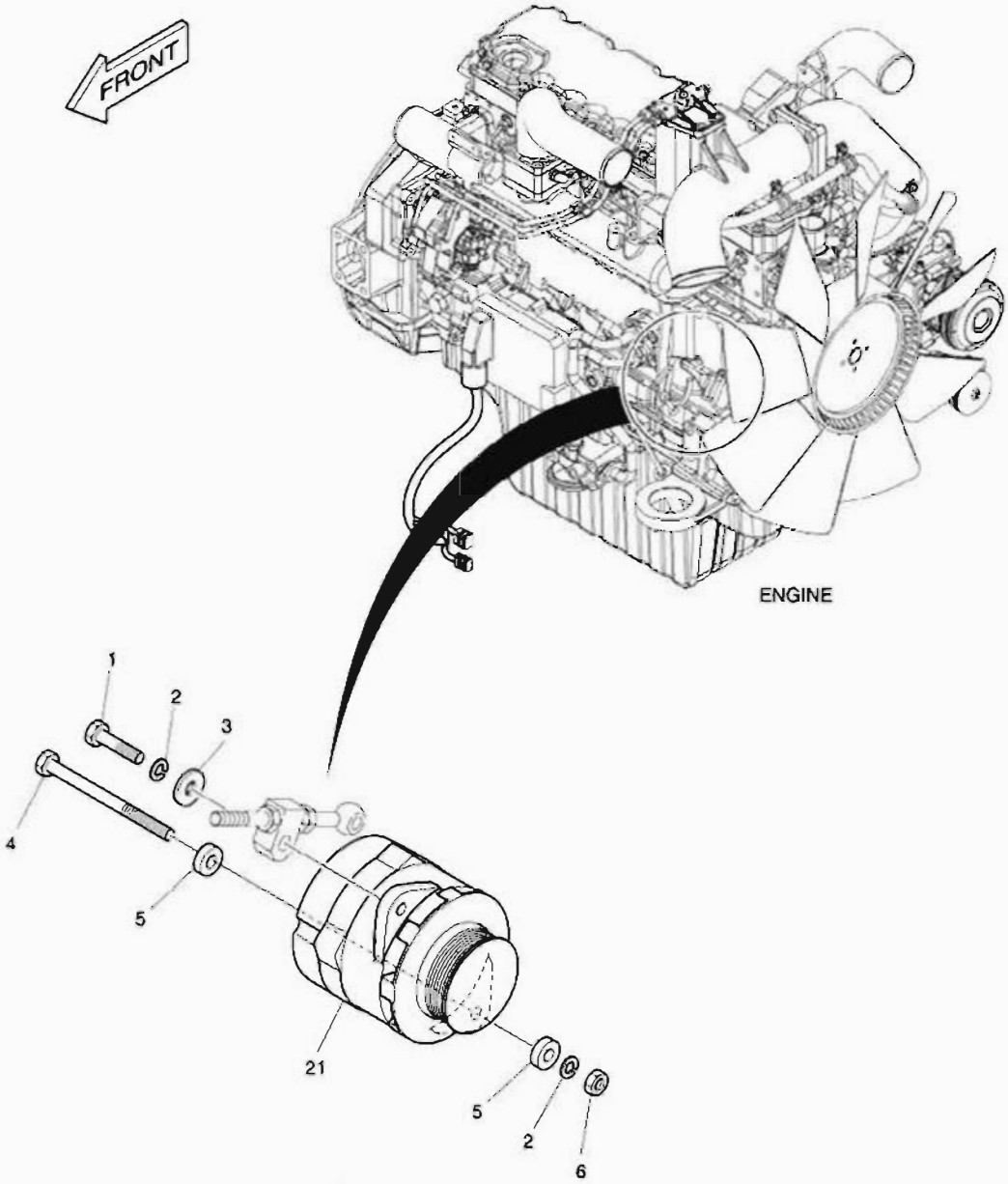

DATE	NOV. 27, 2006
1st EDITION	

Fig. 1670 ALTERNATOR MOUNTING ALTERNATEUR

Serial No. ;

Key No.	Part No.	Description	Description	Q'ty	S.C	Serial No.	ICA	Replaceable part	
								Part No.	Q'ty
1670--	K1008713	ALTERNATOR MOUNTING	SUPPORT D'ALTERNATEUR	-	D				
1	S0760853	BOLT	BOULON A 6 PANS	1					
2	S5102703	WASHER;SPRING	RONDELLE ELASTIQUE	2					
3	2114-1058D54	WASHER	CALE	1					
4	S0562653	BOLT	BOULON A 6 PANS	1					
5	2114-1058D70	WASHER;PLAIN	RONDELLE	2					
6	S4012733	NUT	ECROU 6 PANS	1					
21	K1010702	ALTERNATOR	ALTERNATEUR	1					

DATE	NOV. 27, 2006
1st EDITION	

Fig. 1680 ELECTRIC PARTS - WORKING LAMP
EQUIPMENT ELECTRIQUE

Serial No. ;

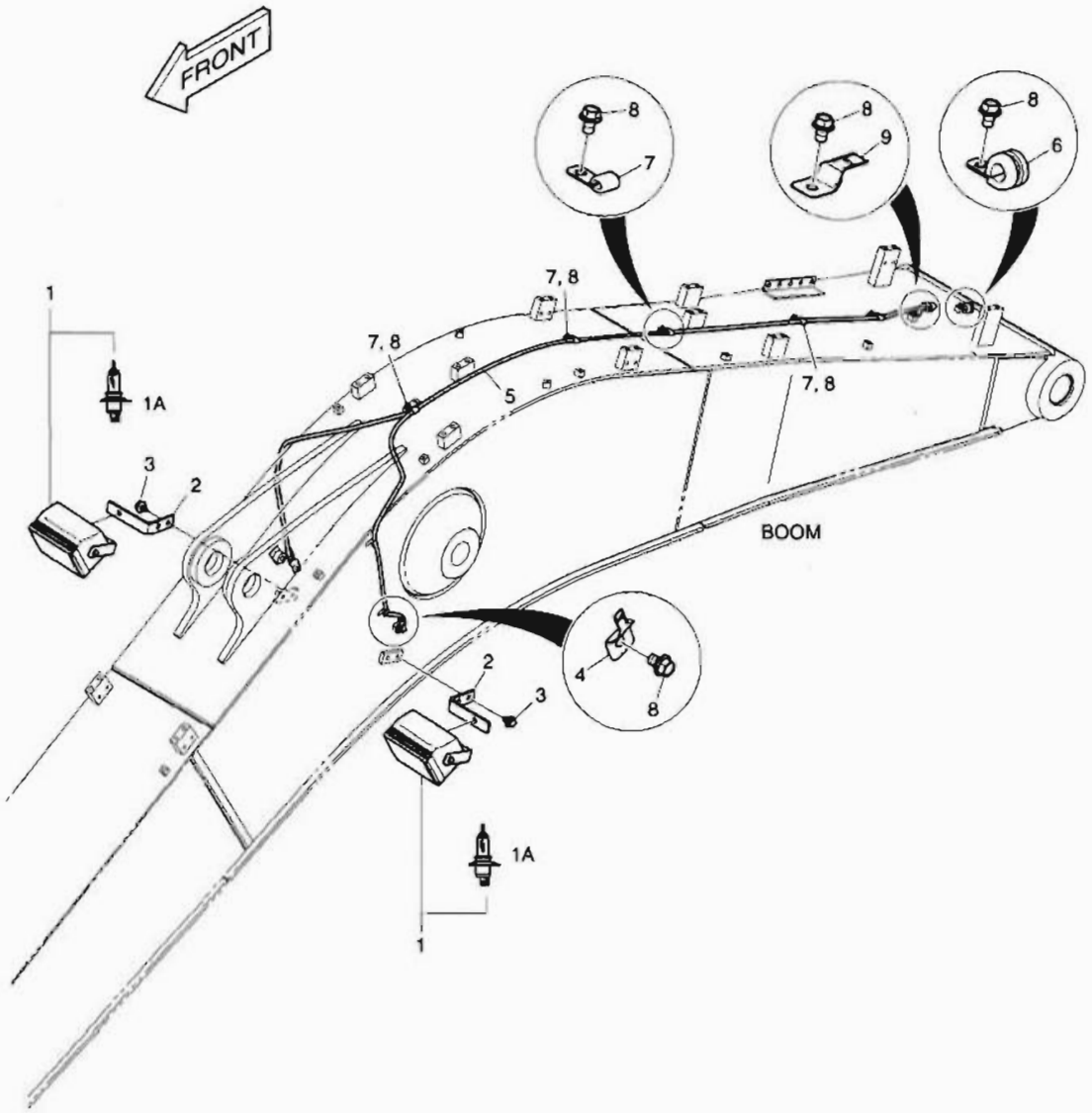

DATE	NOV. 27, 2006
1st EDITION	

Fig. 1680 ELECTRIC PARTS - WORKING LAMP
EQUIPMENT ELECTRIQUE

Serial No. ;

Key No.	Part No.	Description	Description	Q'ty	S.C	Serial No.	ICA	Replaceable part	
								Part No.	Q'ty
1680--	K1014138	ELECTRIC PARTS;WORKING	EQUIPMENT ELECTRIQUE	-	D				
1	534-00064	LAMP;WORKING	LAMPE	2					
1A	2515-1022D1	. BULB;HALOGEN	. AMPOULE	1					
2	2195-2394B	BRACKET	SUPPORT	2					
3	DS0025019	BOLT;SET	BOULON A 6 PANS	4					
4	2197-1661	BRACKET;HOUSING	SUPPORT	2					
5	530-00418D2	HARNESS;WORKING LAMP	FAISCEAU	1					
6	124-00208D2	CLIP	AGRAFE	1					
7	2124-1509D1	CLIP	AGRAFE	5					
8	K1001029	BOLT	BOULON A 6 PANS	9					
9	2197-1660	BRACKET;HOUSING	SUPPORT	1					

DATE	NOV. 27, 2006
1st EDITION	

Fig. 1690 ELECTRIC WIRING
POSE DE FILES ELECTRIQUES

Serial No. ;

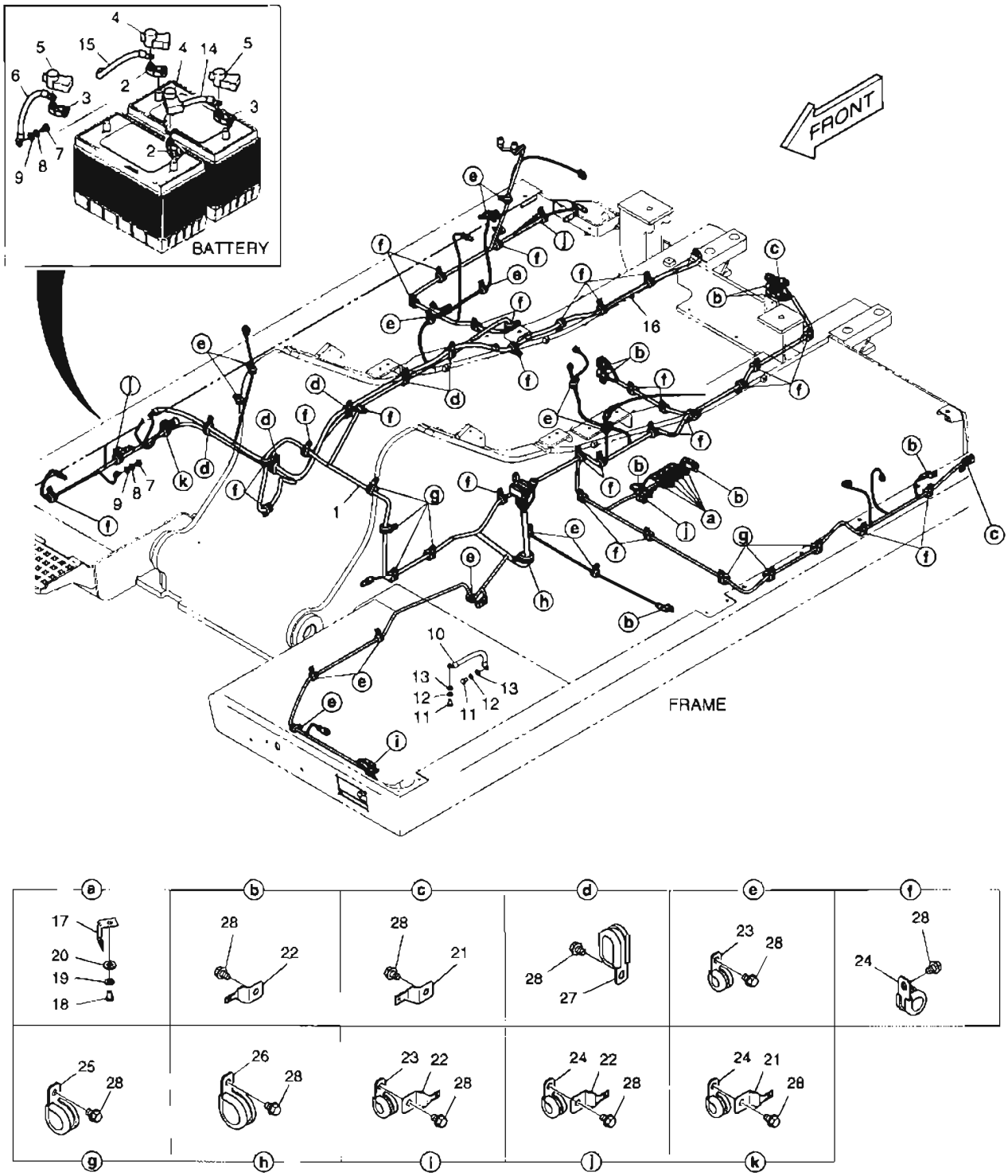

DATE	NOV. 27, 2006
1st EDITION	

Fig. 1690 ELECTRIC WIRING
POSE DE FILES ELECTRIQUES

Serial No. ;

Key No.	Part No.	Description	Description	Q'ty	S.C	Serial No.	ICA	Replaceable part	
								Part No.	Q'ty
1690--	K1014139A	ELECTRIC WIRING	CABLAGE ELECTRIQUE	-	D				
1	K1015557B	HARNESS;MAIN	HARNAIS	1					
1A	2548-1027	. DIODE	. DIODE	4					
1B	548-00003A	. DIODE	. DIODE	1					
1C	K1000814	. DIODE	. DIODE	1					
1D	K1000815	. DIODE	. DIODE	1					
2	2550-1014D1	TERMINAL;BATTERY(+)	COSSE DE BATTERIE(+)	2					
3	2550-1014D2	TERMINAL;BATTERY(-)	COSSE DE BATTERIE	2					
4	2160-1212	CAP;BATT. TERMINAL (+)	CHAPEAU	2					
5	2160-1213	CAP;BATT. TERMINAL (-)	CHAPEAU	2					
6	2553-1275D82	CABLE;BATT RELAY-STARTER	CABLE	1					
7	S0511653	BOLT	BOULON A 6 PANS	2					
8	S5102603	WASHER;SPRING(M10)	RONDELLE ELASTIQUE	2					
9	S5010613	WASHER;PLAIN(M10)	RONDELLE	2					
10	2553-1275D5	CABLE;EARTH	CABLE	1					
11	S0511653	BOLT	BOULON A 6 PANS	2					
12	S5102603	WASHER;SPRING(M10)	RONDELLE ELASTIQUE	2					
13	S5010613	WASHER;PLAIN(M10)	RONDELLE	2					
14	2553-1275D6	CABLE;BATT-BATT	CABLE	1					
15	2553-1275D59	CABLE;BATT-BATT RY	CABLE	1					
16	2553-1275D81	CABLE;BATT RY-STARTER	CABLE	1					
17	2195-3500	BRACKET;HOUSING	SUPPORT	5					
18	S0504453	BOLT	BOULON A 6 PANS	5					
19	S5102303	WASHER;SPRING	RONDELLE ELASTIQUE	5					
20	S5010313	WASHER	CALE	5					
21	2197-1660	BRACKET;HOUSING	SUPPORT	3					
22	2197-1661	BRACKET;HOUSING	SUPPORT	13					
23	124-00208D2	CLIP	AGRAFE	15					
24	124-00208D3	CLIP	AGRAFE	33					
25	124-00208D4	CLIP	AGRAFE	7					
26	124-00208D6	CLIP	AGRAFE	1					
27	124-00209D1	CLIP	AGRAFE	5					
28	K1001029	BOLT	BOULON A 6 PANS	71					

DATE	NOV. 27, 2006
1st EDITION	

Fig. 1700 HEATER PIPING
CONDUITES DE CHAUFFAGE

Serial No. ;

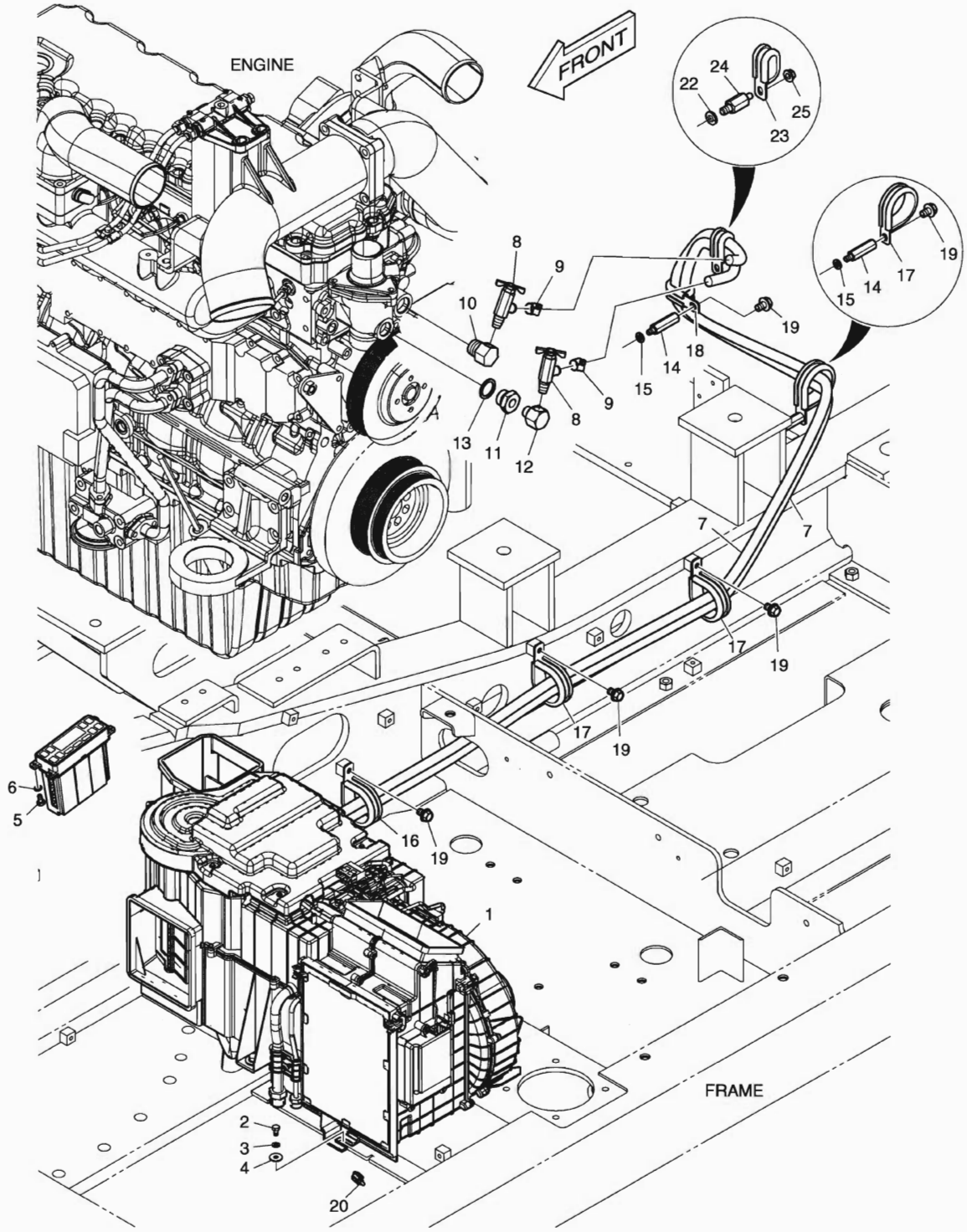

DATE	NOV. 27, 2006
1st EDITION	

Fig. 1700 HEATER PIPING / CONDUITES DE CHAUFFAGE

Serial No. ;

Key No.	Part No.	Description	Description	Q'ty	S.C	Serial No.	ICA	Replaceable part	
								Part No.	Q'ty
700--	K1014143A	HEATER PIPING	CONDUITES DE	-	D				
1	920-00127A	UNIT;AIR CON	UNITE DE CLIGNOTANTS	1					
2	S0508653	BOLT	BOULON A 6 PANS	6					
3	S5102503	WASHER;SPRING	RONDELLE ELASTIQUE	6					
4	2114-1058D29	WASHER	CALE	6					
5	S3450833	BOLT M5X0.8X12	BOULON A 6 PANS	4					
6	S5000213	WASHER	CALE	4					
7	2185-1308D6	HOSE;RUBBER	TUYAU FLEXIBLE	2					
8	2186-9003	VALVE	VANNE	2					
9	S8450016	CLAMP;HOSE	COLLIER	4					
10	2181-1159	ADAPTER	ADAPTEUR	1					
11	2181-1160A	ADAPTER	ADAPTEUR	1					
12	2181-1161A	ADAPTER	ADAPTEUR	1					
13	S8180411	SEAL;COPPER	BAGUE D'ETANCHEITE	1					
14	2120-2187	BOLT;STUD	BOULON A 6 PANS	2					
15	S5102503	WASHER;SPRING	RONDELLE ELASTIQUE	2					
16	124-00208D7	CLIP	AGRAFE	1					
17	124-00208D9	CLIP	AGRAFE	3					
18	124-00209D1	CLIP	AGRAFE	1					
19	K1001029	BOLT	BOULON A 6 PANS	5					
20	547-00024A	SENSOR;AMBENT	CAPTEUR	1					
22	S5102603	WASHER;SPRING(M10)	RONDELLE ELASTIQUE	1					
23	124-00209D1	CLIP	AGRAFE	1					
24	DS0014011	BOLT;STUD	BOULON A 6 PANS	1					
25	2121-1305	NUT	ECROU 6 PANS	1					

Fig. 1710 AIRCON UNIT REFRIGERATION

Serial No. ;

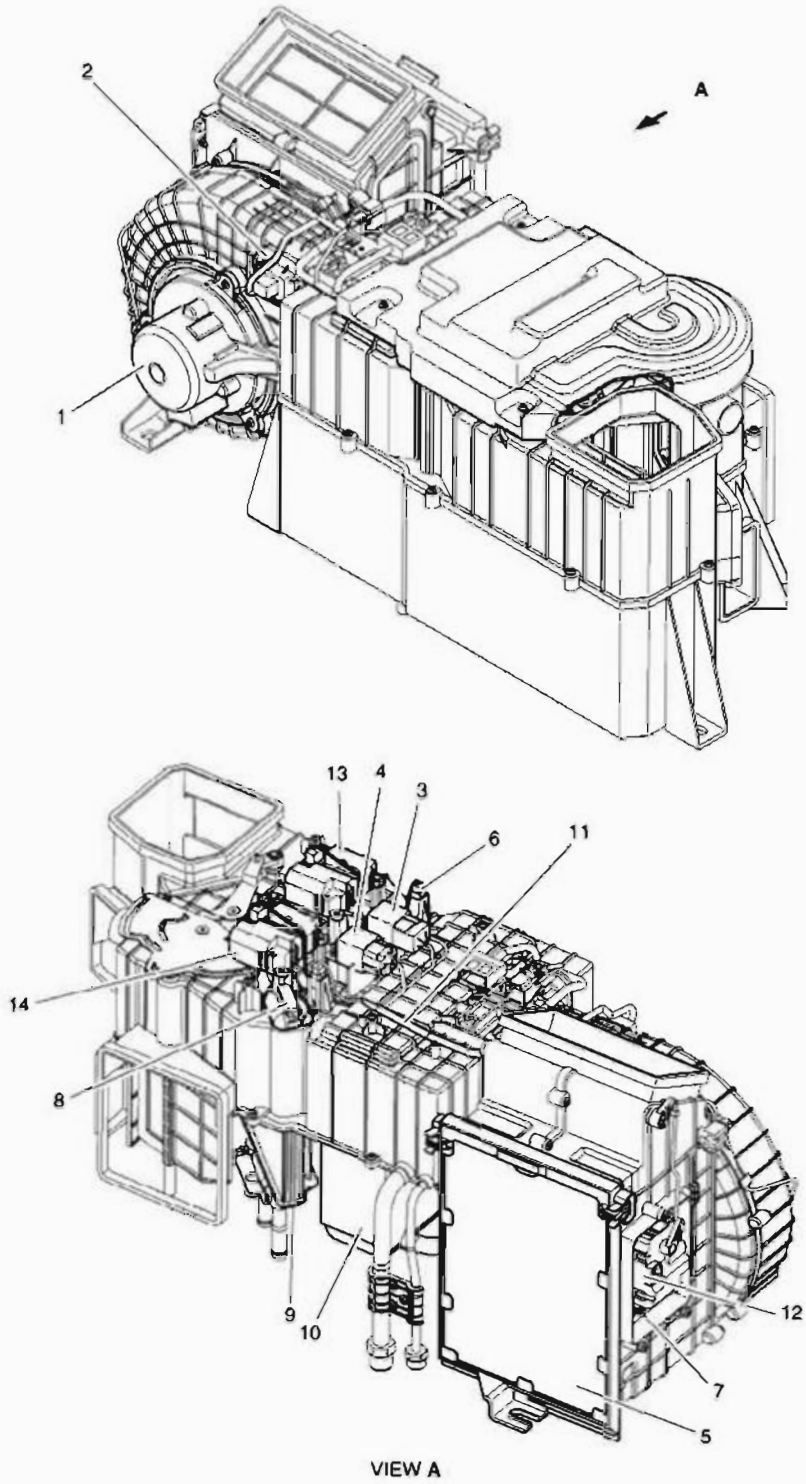

VIEW A

DATE	NOV. 27, 2006
1st EDITION	

Fig. 1710 AIRCON UNIT REFRIGERATION

Serial No. ;

Key No.	Part No.	Description	Description	Q'ty	S.C	Serial No.	ICA	Replaceable part	
								Part No.	Q'ty
710--	920-00127A	AIRCON UNIT	UNITE D'AIRCON	1					
1	K1002206	MOTOR;BLOWER;24V	MOTEUR	1					
2	K1002207	POWER FET	FET DE PUISSANCE	1					
3	K1002208	RELAY;BLOWER 24V	RELAIS	1					
4	K1002209	RELAY;AIRCON 24V	RELAIS	1					
5	K1002210	FILTER;AIR CON.	FILTRE A GAZOLE	1					
6	K1002211	SENSOR;TEMP EVAPORATOR	CAPTEUR	1					
7	K1002212	SENSOR;TEMPERATURE	CAPTEUR	1					
8	K1002213	SENSOR;WATER TEMPERATURE	CAPTEUR	1					
9	K1002214	CORE;HEATER	CORE;HEATER	1					
10	K1002215	EVAPORATOR	CHAUFFAGE	1					
11	K1002216	HARNESS;AIR CONDITIONER	FAISCEAU	1					
12	K1002217	ACTUATOR;INTAKE	DECLENCHEURE	1					
13	K1002218	ACTUATOR;AIR MIX	DECLENCHEURE	1					
14	K1002219	ACTUATOR;MODE	DECLENCHEURE	1					

Fig. 1720 AIRCONDITIONER REFRIGERATION

Serial No. ;

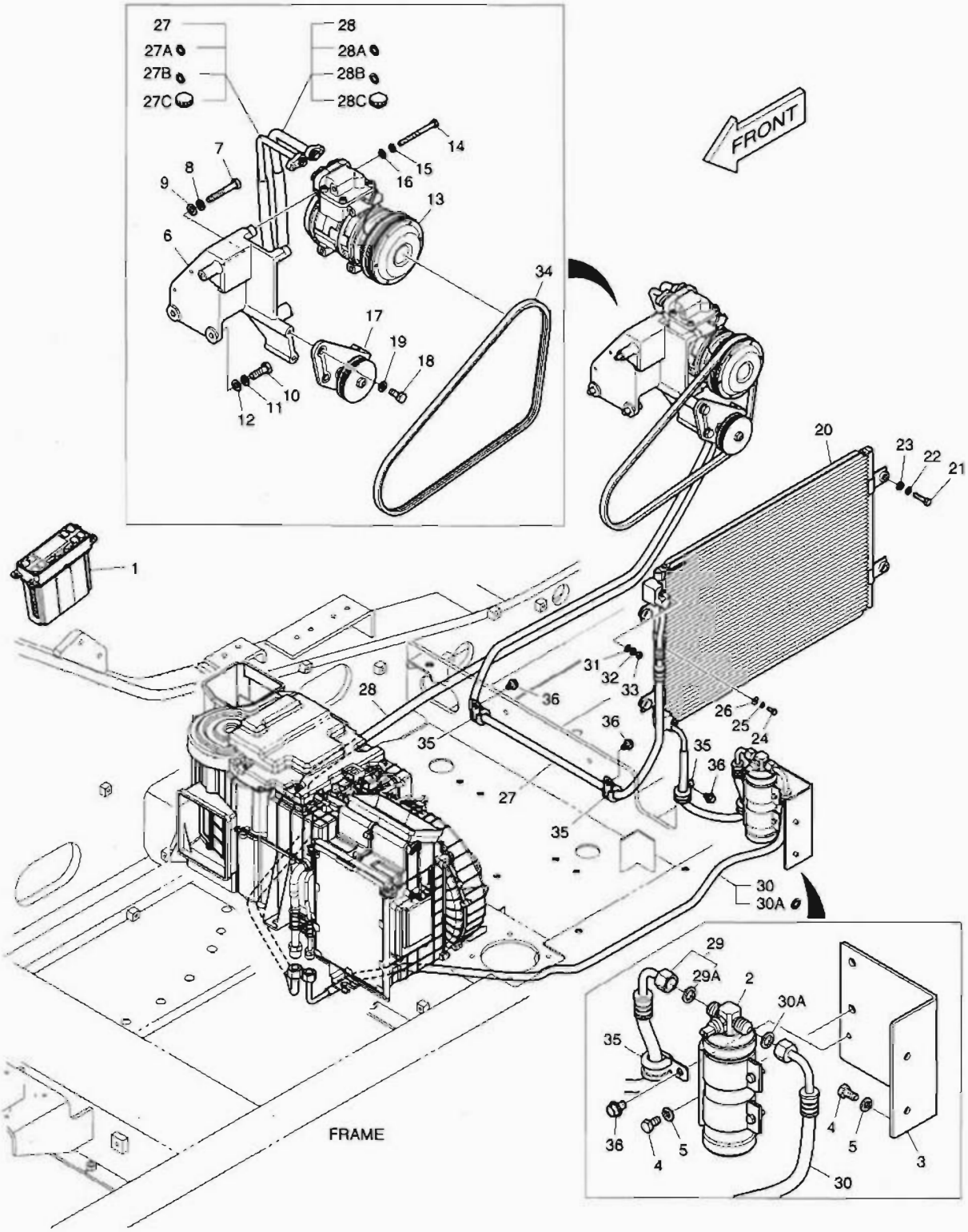

DATE	NOV. 27, 2006
1st EDITION	

Fig. 1720 AIRCONDITIONER REFRIGERATION

Serial No. ;

Key No.	Part No.	Description	Description	Q'ty	S.C	Serial No.	ICA	Replaceable part	
								Part No.	Q'ty
1720--	K1014144A	ASSEMBLY;AIR CONDITIONER	CONDITIONNEUR	-	D				
1	543-00107	CONTROL PANEL;AIR CON	PANNEAU	1					
2	2204-6039A	RECEIVER DRIER	RESERVOIR DESSICATEUR	1					
3	K1024102	BRACKET	SUPPORT	1					
4	S0508666	BOLT	BOULON A 6 PANS	4					
5	S5102503	WASHER;SPRING	RONDELLE ELASTIQUE	4					
6	K1008482B	BRACKET;COMPRESSOR	SUPPORT	1					
7	S0558966	BOLT	BOULON A 6 PANS	1					
8	S5102603	WASHER;SPRING	RONDELLE ELASTIQUE	1					
9	S5010613	WASHER;PLAIN	RONDELLE	1					
10	S0786366	BOLT	BOULON A 6 PANS	2					
11	S5102703	WASHER;SPRING	RONDELLE ELASTIQUE	2					
12	S5010713	WASHER	CALE	2					
13	2208-6013B	COMPRESSOR	COMPRESSEUR	1					
14	S0557166	BOLT	BOULON A 6 PANS	4					
15	S5102503	WASHER;SPRING	RONDELLE ELASTIQUE	4					
16	S5010513	WASHER	CALE	4					
17	2107-6006	PULLEY ASS'Y;IDLE	POULIE	1					
18	S0512066	BOLT	BOULON A 6 PANS	2					
19	S5102603	WASHER;SPRING	RONDELLE ELASTIQUE	2					
20	520-00004	CONDENSER;AIR CON	CONDENSER;AIRCON	1					
21	S0509366	BOLT	BOULON A 6 PANS	4					
22	S5102503	WASHER;SPRING	RONDELLE ELASTIQUE	4					
23	2114-1058D29	WASHER	CALE	4					
24	S0504666	BOLT	BOULON A 6 PANS	1					
25	S5010303	WASHER	CALE	1					
26	2114-1058D52	WASHER	CALE	1					
27	K1015629A	HOSE;DISCHARGE	TUYAU FLEXIBLE	1					
27A	2180-6088	. O-RING;DISCHARGE(COMP)	. JOINT TORIQUE	1					
27B	K1011384	. O-RING(CONDENSER)	. JOINT TORIQUE	1					
27C	1.161-00018	. CAP;CHECK PORT	. CHAPEAU	1					
28	K1015628A	HOSE;SUCTION	TUYAU FLEXIBLE	1					
28A	2180-6086	. O-RING;SUCTION(COMP)	. JOINT TORIQUE	1					
28B	K1011385	. O-RING(EVAPORATOR)	. JOINT TORIQUE	1					
28C	1.161-00019	. CAP;CHECK PORT	. CHAPEAU	1					
29	K1024103	HOSE;LIQUID(1)	TUYAU FLEXIBLE	1					
29A	K1011388	. O-RING	. JOINT TORIQUE	2					
30	K1015630A	HOSE;LIQUID(2)	TUYAU FLEXIBLE	1					

Fig. 1720 AIRCONDITIONER REFRIGERATION

Serial No. ;

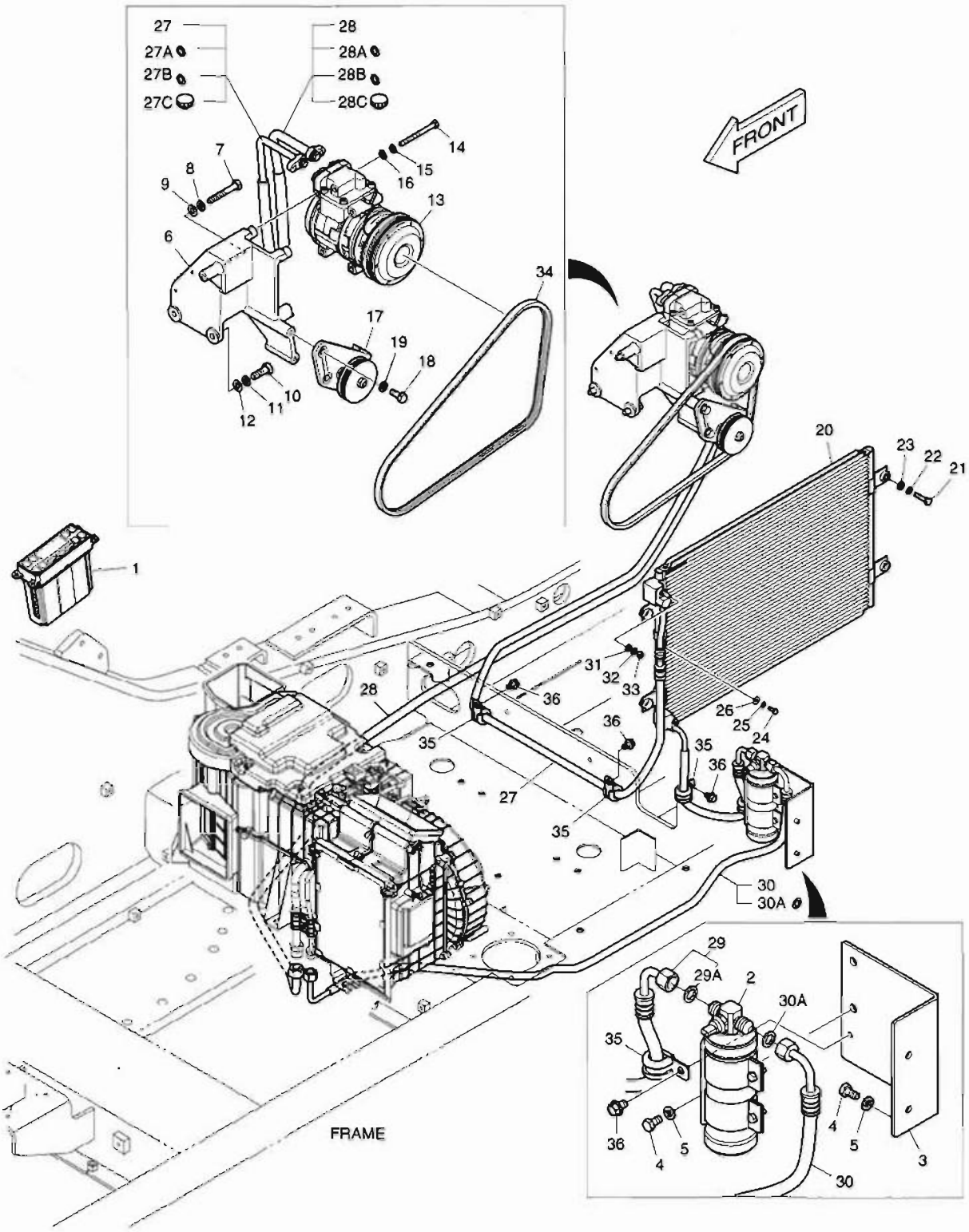

DATE	NOV. 27, 2006
1st EDITION	

Fig. 1720 AIRCONDITIONER REFRIGERATION

Serial No. ;

Key No.	Part No.	Description	Description	Q'ty	S.C	Serial No.	ICA	Replaceable part	
								Part No.	Q'ty
1720-30A	K1011388	. O-RING	. JOINT TORIQUE	2					
31	S5000313	WASHER;PLAIN	RONDELLE	2					
32	S5102303	WASHER;SPRING	RONDELLE ELASTIQUE	2					
33	S4012303	NUT	ECROU 6 PANS	2					
34	2106-1019D25	V-BELT;POLY 4PK-1210L	COURROIE	1					
35	124-00208D3	CLIP	AGRAFE	4					
36	K1001029	BOLT	BOULON A 6 PANS	4					

Fig. 2100 TRACK FRAME
TRAIN DE ROULEMENT

Serial No. ;

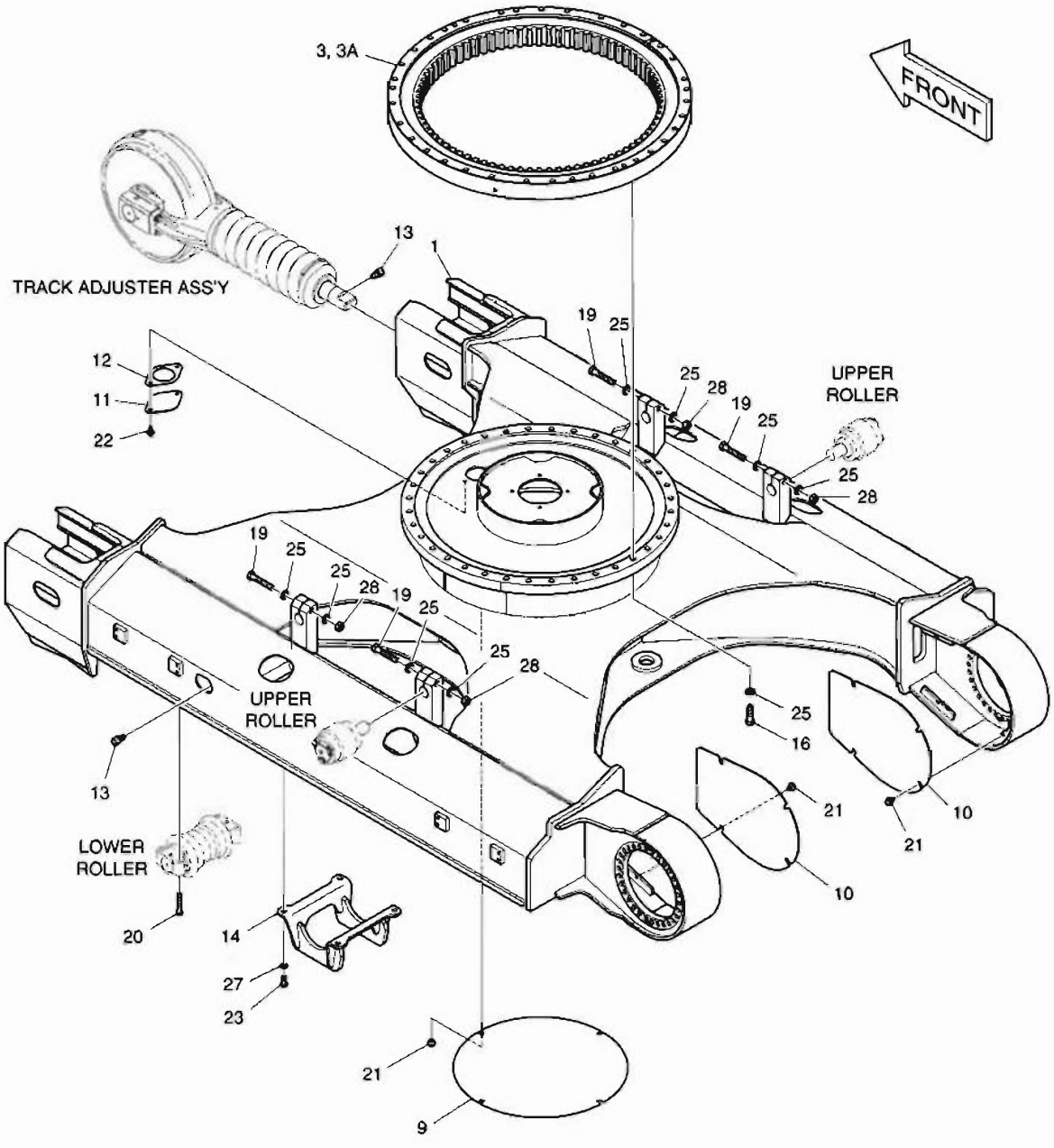

DATE	NOV. 27, 2006
1st EDITION	

Fig. 2100 TRACK FRAME TRAIN DE ROULEMENT

Serial No. ;

Key No.	Part No.	Description	Description	Q'ty	S.C	Serial No.	ICA	Replaceable part	
								Part No.	Q'ty
2100--	K1011238E	TRACK FRAME	TRAIN DE ROULEMENT	-	D				
1	K1011239C	FRAME;TRACK	ARMATURE	1					
3	K1011995	BEARING;SWING	PALIER D'ORIENTATION	1					
3A	180-00297D3	. SEAL	. JOINT	2					
9	621-03166	COVER	COUVERCLE	1					
10	K1011274	COVER;MOTOR	COUVERCLE	2					
11	621-02938B	COVER	COUVERCLE	1					
12	180-00463	PACKING	RONDELLE D'ETANCHEITE	1					
13	422-00055	VALVE;GREASE	VANNE	2					
14	K1011994	GUARD;TRACK	GARDE	2					
16	S0770266	BOLT	BOULON A 6 PANS	36					
19	S0571166	BOLT	BOULON A 6 PANS	4					
20	S0766066	BOLT	BOULON A 6 PANS	56					
21	DS0025019	BOLT;SET	BOULON A 6 PANS	12					
22	DS0025016	BOLT SET	BOULON A 6 PANS	2					
23	S0721466	BOLT	BOULON A 6 PANS	8					
25	2114-9012A	WASHER;HARD	RONDELLE	44					
27	S5102903	WASHER	CALE	8					
28	S4013133	NUT	ECROU 6 PANS	4					

Fig. 2110 TRAVEL DEVICE
SYSTEME D'TRANSLATION

Serial No. ;

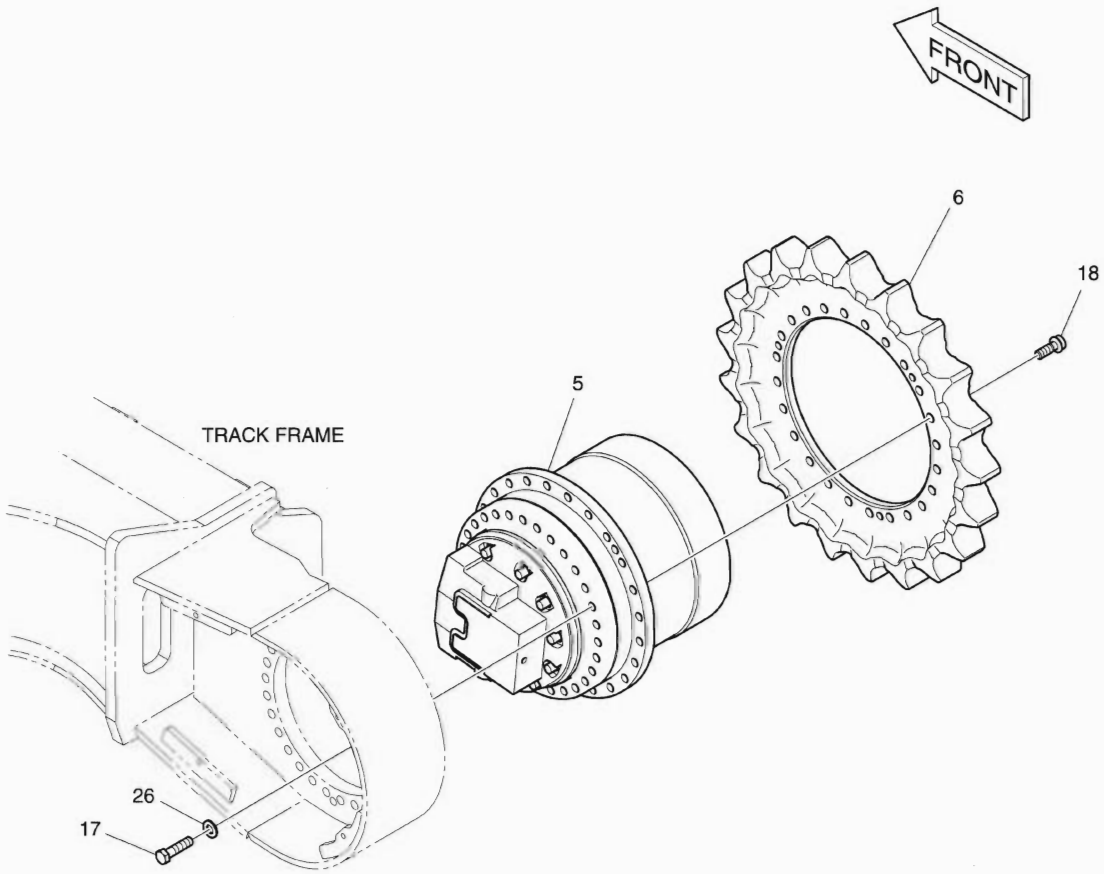

DATE	NOV. 27, 2006
1st EDITION	

Fig. 2110 TRAVEL DEVICE SYSTEME D'TRANSLATION

Serial No. ;

Key No.	Part No.	Description	Description	Q'ty	S.C	Serial No.	ICA	Replaceable part	
								Part No.	Q'ty
2110--	K1011238E	TRACK FRAME	TRAIN DE ROULEMENT	-	D				
5	K1017674	TRAVEL DEVICE	BOITE REDUCTEUR	2					
6	K1011438A	SPROCKET	COURONNE DENTEE	2					
17	S0565566	BOLT	BOULON A 6 PANS	60					
18	120-00050B	BOLT	BOULON A 6 PANS	48					
26	2114-1816A	WASHER;PLAIN	RONDELLE	60					

Fig. 2120 IDLER BARBOTIN

Serial No. ;

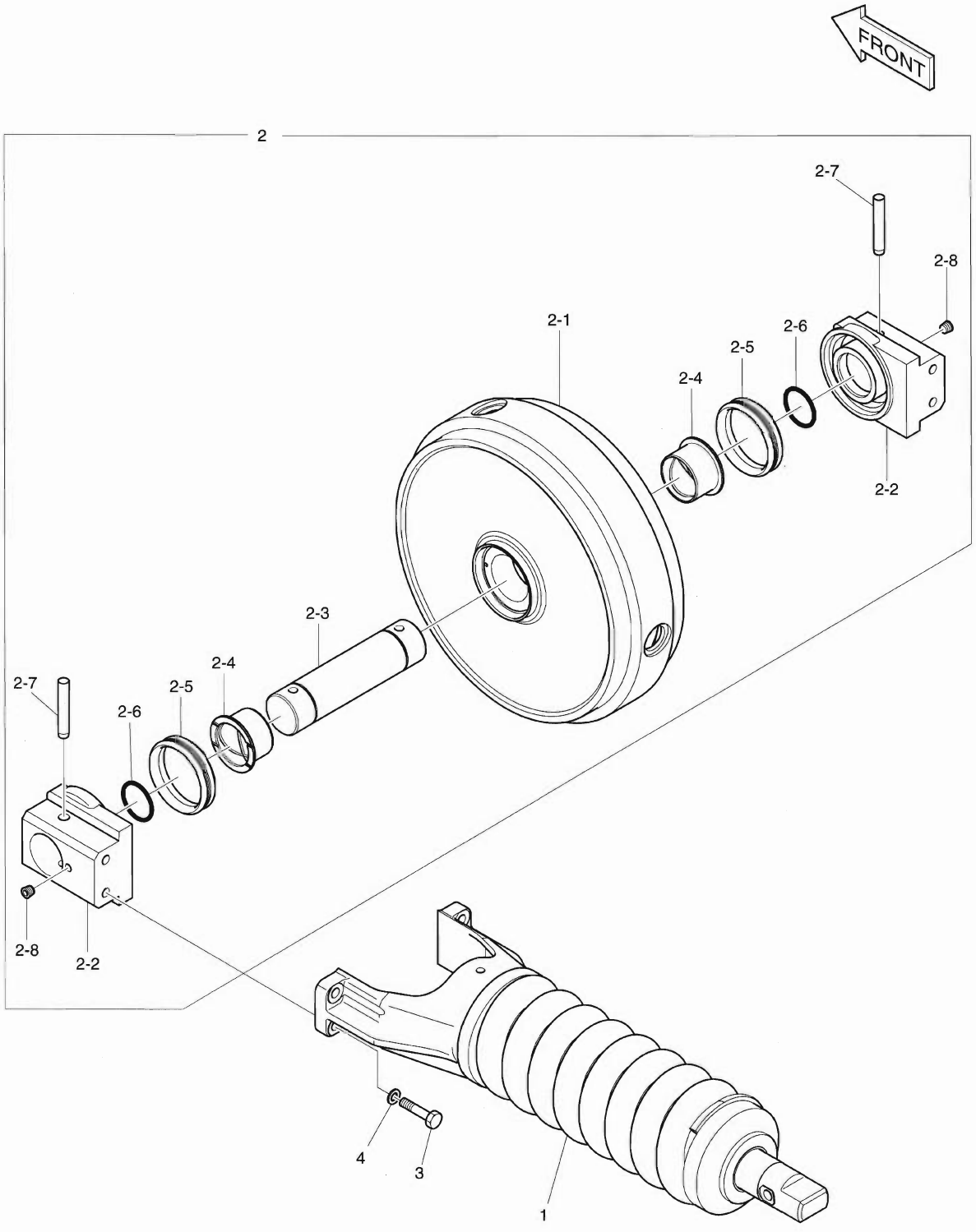

DATE	NOV. 27, 2006
1st EDITION	

Fig. 2120 IDLER BARBOTIN

Serial No. ;

Key No.	Part No.	Description	Description	Q'ty	S.C	Serial No.	ICA	Replaceable part	
								Part No.	Q'ty
2120--	K1025171	IDLER SUB ASS'Y	BARBOTIN	2					
1	K1024943	TRACK SPRING	TENDEUR DE CHENILLE	1					
2	K1011588B	IDLER ASS'Y	ENSEMBLE DE OISIF	1					
2-1	-	. BODY	. CARTER	1	D				
2-2	K1024966	. SUPPORT	. LAMPE	2					
2-3	K1013651A	. SHAFT	. ARBRE	1					
2-4	K1024968	. BUSHING	. DOUILLE	2					
2-5	2180-6096	. SEAL;FLOATING	. JOINT	2					
2-6	S8010700	. O-RING	. JOINT TORIQUE	2					
2-7	K1013653	. PIN	. GOUPILLE	2					
2-8	2181-1116D2	. PLUG	. BOUCHON	2					
3	S0565266	BOLT	BOULON A 6 PANS	4					
4	S5102903	WASHER;SPRING	RONDELLE ELASTIQUE	4					

Fig. 2130 TRACK SPRING
TENDEUR DE CHENILLE

Serial No. ;

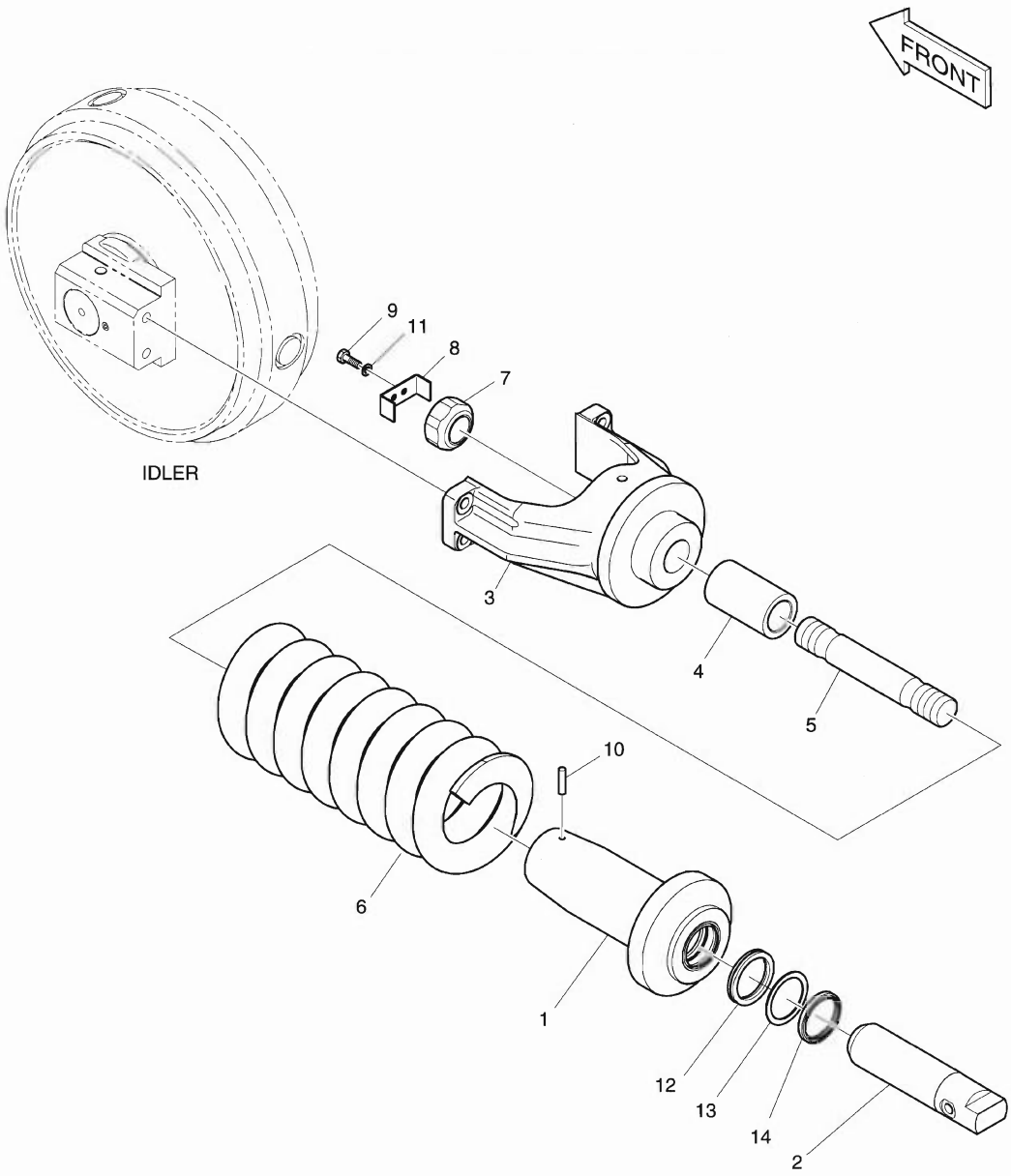

DATE	NOV. 27, 2006
1st EDITION	

Fig. 2130 TRACK SPRING TENDEUR DE CHENILLE

Serial No. ;

Key No.	Part No.	Description	Description	Q'ty	S.C	Serial No.	ICA	Replaceable part	
								Part No.	Q'ty
2130--	K1024943	TRACK SPRING ASS'Y	ENSEMBLE MAILLON DE	2					
1	-	BODY	CARTER	1	D				
2	K1024948	ROD;PISTON	TIGE	1					
3	K1024949	YOKE	JOUG	1					
4	K1024950	SPACER	BAGUE D'ECARTEMENT	1					
5	K1024953	SHAFT	ARBRE	1					
6	2129-1236	SPRING	RESSORT	1					
7	K1024956	NUT;LOCK	ECROU	1					
8	K1024957	PLATE;LOCK	PLAQUE	1					
9	S0512266	BOLT	BOULON A 6 PANS	2					
10	S5741262	PIN;SPRING	GOUPILLE	1					
11	S5102603	WASHER;SPRING	RONDELLE ELASTIQUE	2					
12	-	PACKING	RONDELLE D'ETANCHEITE	1	K				
13	-	RING;BACK-UP	BAGUE	1	K				
14	-	SEAL;DUST	JOINT	1	K				
*	K9004529	SEAL KIT;TRACK SPRING	KIT DE JOINT	1					

DATE	NOV. 27, 2006
1st EDITION	

Fig. 2140 UPPER ROLLER
GALET SUPERIEUR

Serial No. ;

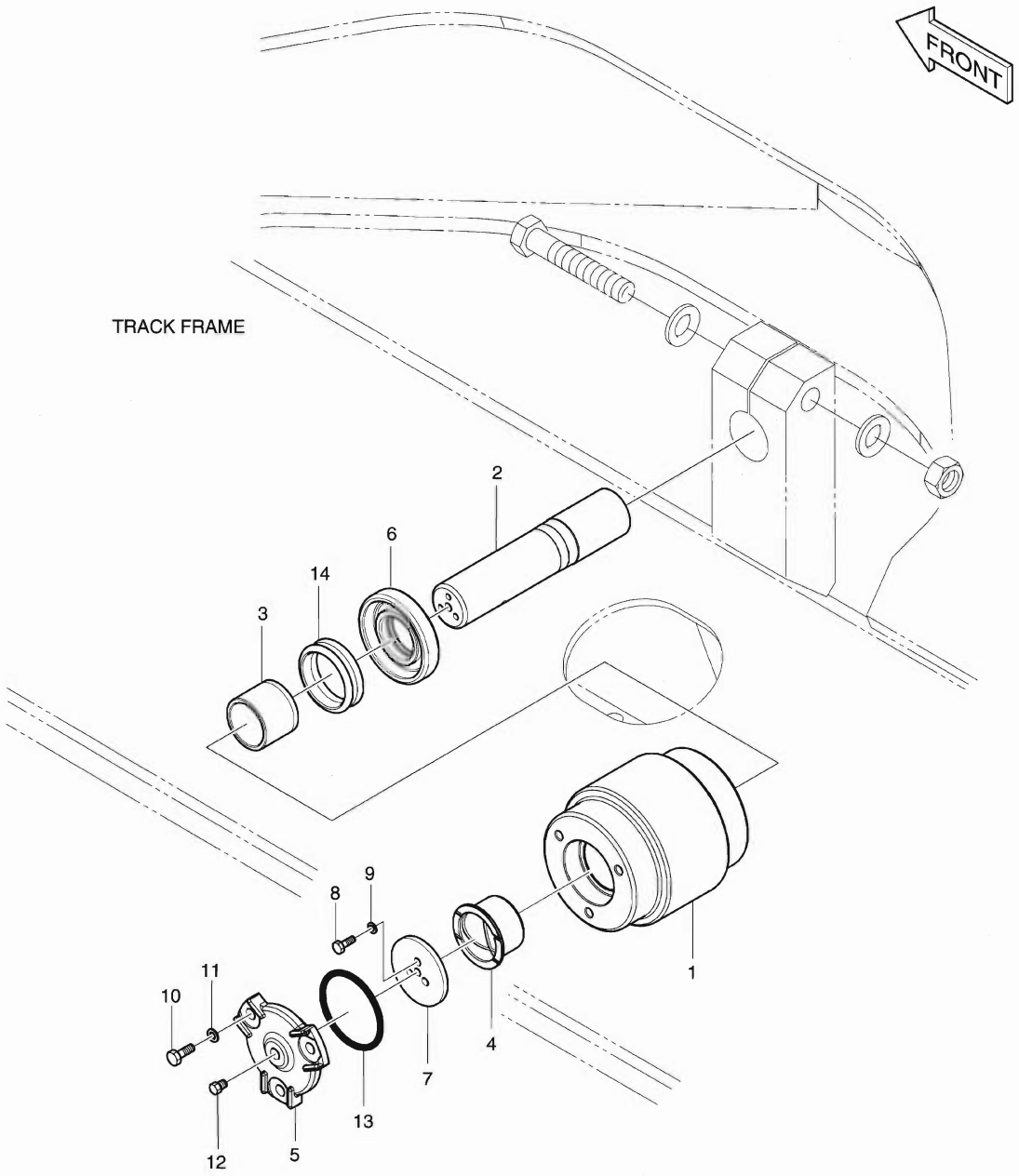

DATE	NOV. 27, 2006
1st EDITION	

Fig. 2140 UPPER ROLLER GALET SUPERIEUR

Serial No. ;

Key No.	Part No.	Description	Description	Q'ty	S.C	Serial No.	ICA	Replaceable part	
								Part No.	Q'ty
2140--	K1011772B	UPPER ROLLER ASS'Y	GALET SUPERIEUR	4					
1	-	BODY	CARTER	1	D				
2	K1029203	SHAFT	ARBRE	1					
3	K1029204	BUSHING	DOUILLE	1					
4	K1029205	BUSHING	DOUILLE	1					
5	K1029201	COVER	COUVERCLE	1					
6	K1024748	THRUST;RING	POUSSEE D'ANNEAU	1					
7	2114-1379	WASHER	CALE	1					
8	S0508863	BOLT	BOULON A 6 PANS	3					
9	S5102503	WASHER;SPRING	RONDELLE ELASTIQUE	3					
10	S0512061	BOLT	BOULON A 6 PANS	3					
11	S5102603	WASHER;SPRING	RONDELLE ELASTIQUE	3					
12	2181-1116D2	PLUG	BOUCHON	1					
13	S8010600	O-RING	JOINT TORIQUE	1					
14	2180-9087	SEAL;FLOATING	JOINT	1					

DATE	NOV. 27, 2006
1st EDITION	

Fig. 2150 LOWER ROLLER
GALET INFERIEUR

Serial No. ;

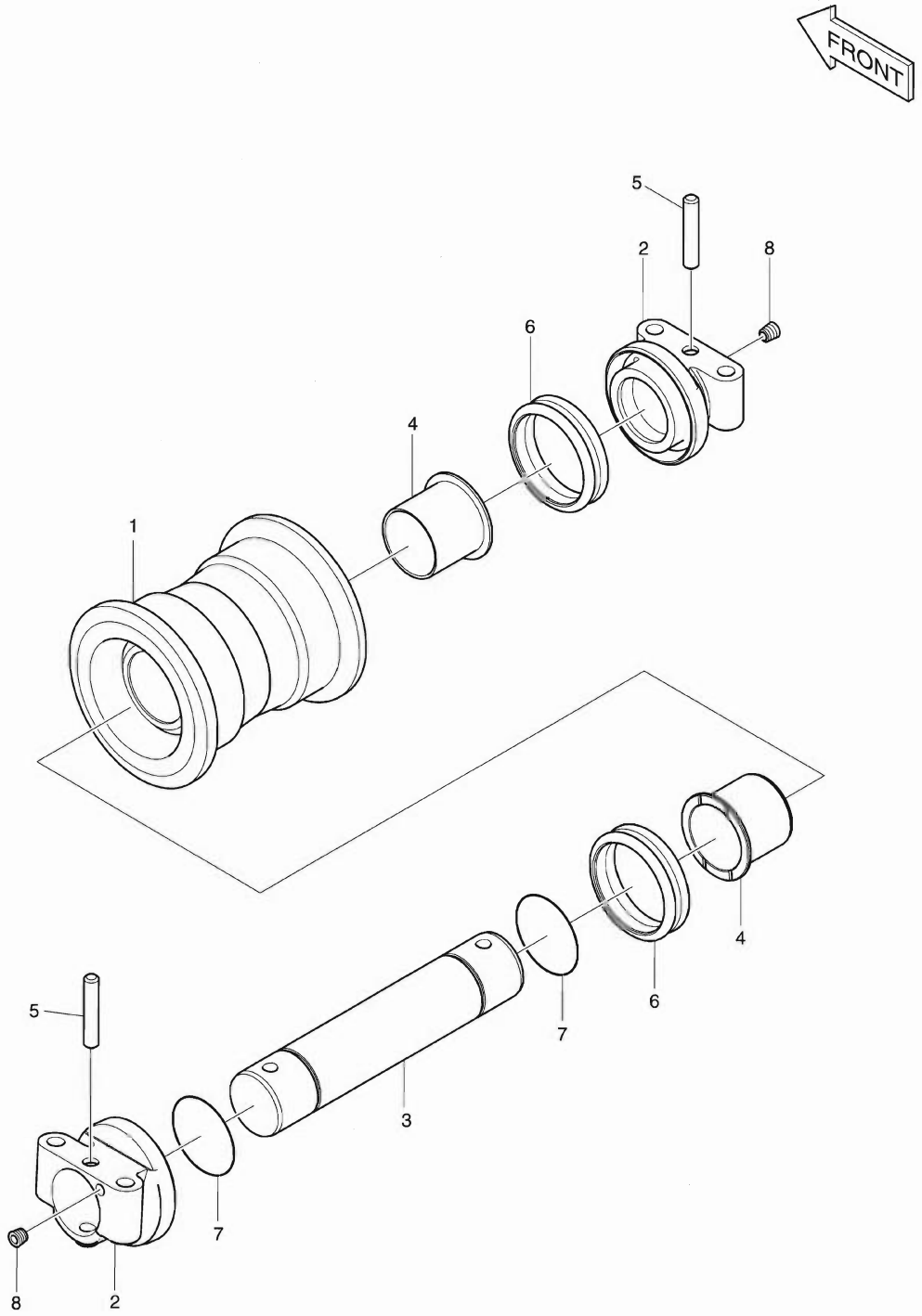

DATE	NOV. 27, 2006
1st EDITION	

Fig. 2150 LOWER ROLLER GALET INFERIEUR

Serial No. ;

Key No.	Part No.	Description	Description	Q'ty	S.C	Serial No.	ICA	Replaceable part	
								Part No.	Q'ty
150--	K1023169A	LOWER ROLLER	GALET INFERIEUR	14					
1	-	BODY	CARTER	1	D				
2	K1025257A	COLLAR	COLLIER	2					
3	K1025259	SHAFT	ARBRE	1					
4	K1013713A	BUSHING	DOUILLE	2					
5	K1013714	PIN	GOUJON D'ASSEMBLAGE	2					
6	2180-9098	SEAL;FLOATING	JOINT	2					
7	S8010600	O-RING	JOINT TORIQUE	2					
8	2181-1116D2	PLUG	BOUCHON	2					

Fig. 2160 CENTER JOINT
JOINT CENTRAL

Serial No. ;

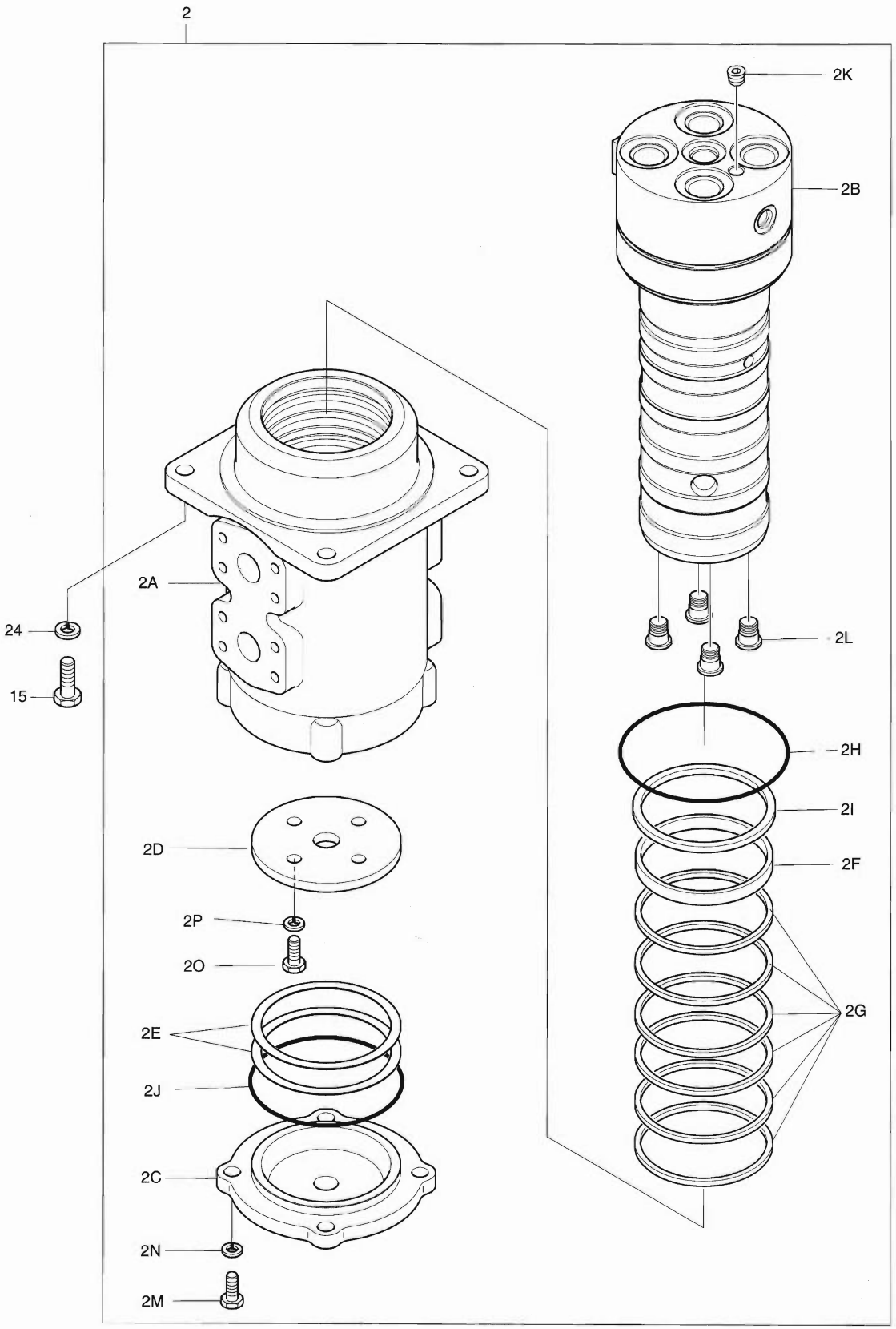

DATE	NOV. 27, 2006
1st EDITION	

Fig. 2160 CENTER JOINT / JOINT CENTRAL

Serial No. ;

Key No.	Part No.	Description	Description	Q'ty	S.C	Serial No.	ICA	Replaceable part	
								Part No.	Q'ty
2160--	K1011238E	TRACK ASS'Y	TRAIN	-	D				
2	480-00018C	JOINT;CENTER	JOINT CENTRAL	1					
2A	481-00002	. HUB	. MOYEU	1					
2B	483-00002	. SPINDLE	. TOUPIE	1					
2C	482-00003	. COVER	. COUVERCLE	1					
2D	114-00583	. SPACER	. ENTERTOISE	1					
2E	114-00584	. SHIM	. CALE	2					
2F	-	. RING;WEAR	. SEGMENT D'USURE	1	K				
2G	-	. SEAL;SLIPPER	. PATIN D'ETANCHEITE	6	K				
2H	S8001200	. O-RING	. JOINT TORIQUE	1	K				
2I	S8001001	. O-RING	. JOINT TORIQUE	1	K				
2J	S8011201	. O-RING	. JOINT TORIQUE	1	K				
2K	2181-1116D2	. PLUG;PT	. BOUCHON	1					
2L	-	. PLUG;PF	. BOUCHON	4					
2M	S0515253	. BOLT;HEX	. BOULON A 6 PANS	4					
2N	S5102703	. WASHER;SPRING	. RONDELLE ELASTIQUE	4					
2O	S0512053	. BOLT;HEX	. BOULON A 6 PANS	4					
2P	S5102603	. WASHER;SPRING	. RONDELLE ELASTIQUE	4					
15	S0515366	BOLT	BOULON A 6 PANS	4					
24	S5102703	WASHER;SPRING	RONDELLE ELASTIQUE	4					
*	480-00018KT	SEAL KIT;CENTER JOINT	KIT DE JOINT	1					

Fig. 2170 TRACK SHOE ASS'Y - 600G
MAILLON DE CHAINE

Serial No. ;

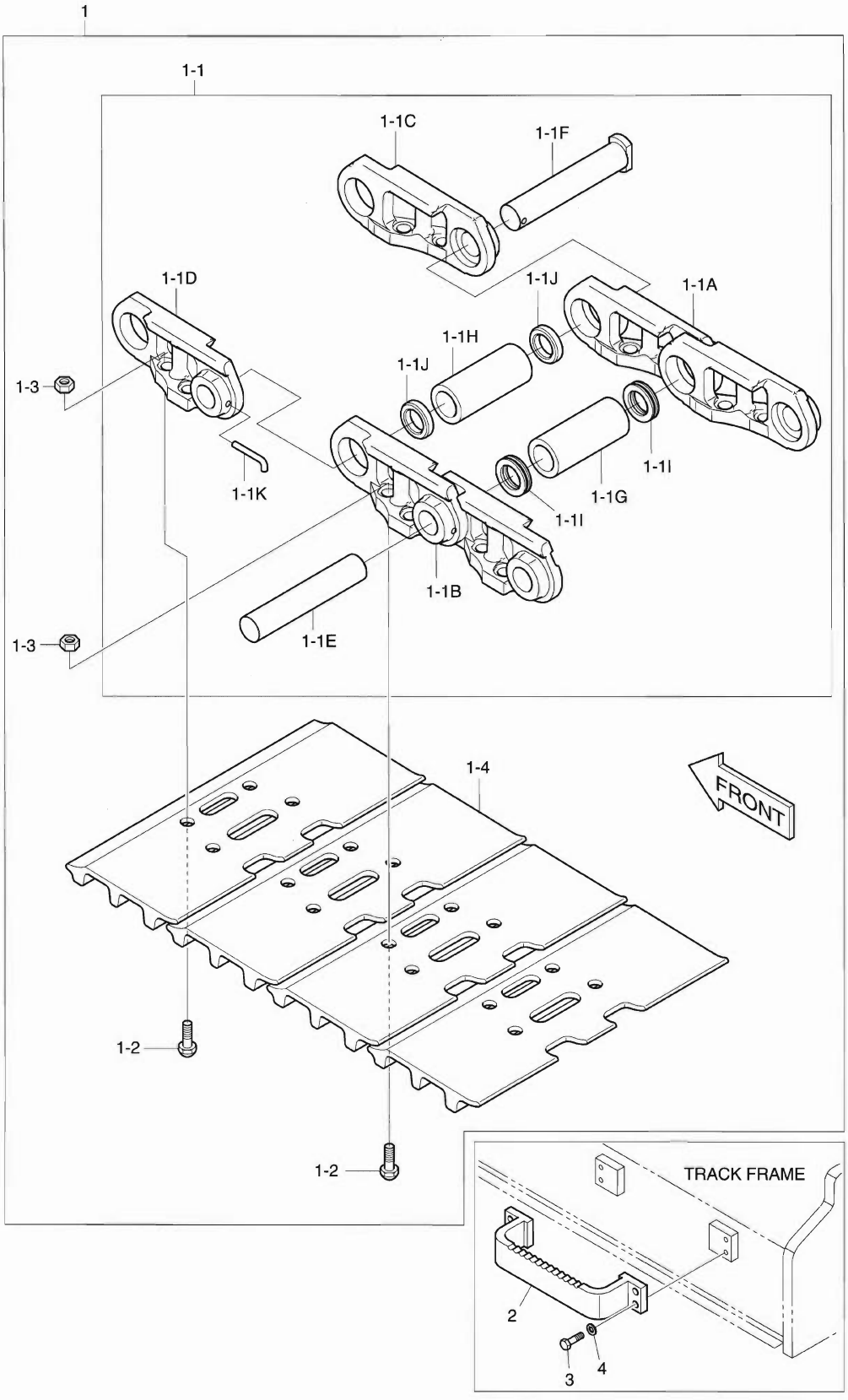

DATE	NOV. 27, 2006
1st EDITION	

Fig. 2170 TRACK SHOE ASS'Y - 600G MAILLON DE CHAINE

Serial No. ;

Key No.	Part No.	Description	Description	Q'ty	S.C	Serial No.	ICA	Replaceable part	
								Part No.	Q'ty
2170--	K1024452	TRACK SHOE ASS'Y	MAILLON DE CHAINE	-	D				
1	K1012410	TRACK SHOE ASS'Y 600G	MAILLON DE CHAINE	2					
1-1	K1029370	. TRACK LINK ASS'Y	. ENSEMBLE MAILLON DE	1					
1-1A	K1014783R	.. LINK - R.H	.. ARTICULATION	43					
1-1B	K1014783L	.. LINK - L.H	.. ARTICULATION	43					
1-1C	K1014782R	.. LINK;MASTER - R.H	.. ARTICULATION	1					
1-1D	K1014782L	.. LINK;MASTER - L.H	.. ARTICULATION	1					
1-1E	K1014781	.. PIN;REGULAR	.. GOUPILLE	43					
1-1F	K1014780	.. PIN;MASTER	.. GOUPILLE	1					
1-1G	K1014779	.. BUSHING;REGULAR	.. DOUILLE	43					
1-1H	K1014778	.. BUSHING;MASTER	.. DOUILLE PRINCIPALE	1					
1-1I	K1014777	.. SEAL;DUST	.. JOINT	86					
1-1J	K1014776	.. SPACER	.. DOUILLE D'ECARTEMENT	2					
1-1K	K1014775	.. PIN;CLAMPING	.. GOUPILLE	1					
1-2	K1014774	. BOLT	. BOULON A 6 PANS	176					
1-3	K1014773	. NUT	. ECROU	176					
1-4	K1014758	. SHOE 600mm	. SABOT	44					
2	K1024485D1	STEP	MARCHER	4					
3	S0515366	BOLT	BOULON A 6 PANS	16					
4	S5102703	WASHER;SPRING	RONDELLE ELASTIQUE	16					

DATE	NOV. 27, 2006
1st EDITION	

Fig. 2180 TRAVEL PIPING
CONDUITES DE TRANSLATION

Serial No. ;

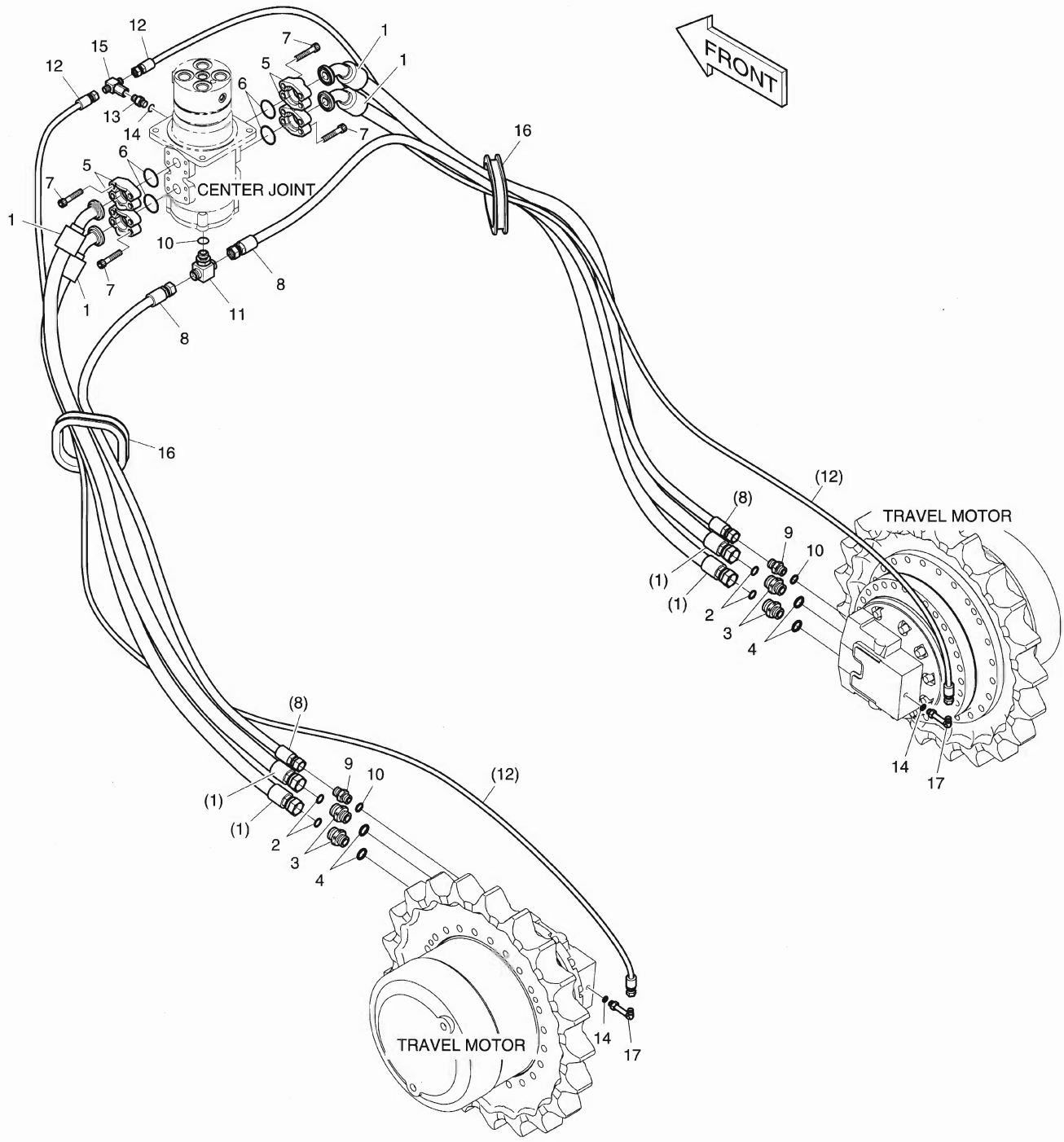

DATE	NOV. 27, 2006
1st EDITION	

Fig. 2180 TRAVEL PIPING
CONDUITES DE TRANSLATION

Serial No. ;

Key No.	Part No.	Description	Description	Q'ty	S.C	Serial No.	ICA	Replaceable part	
								Part No.	Q'ty
2180--	K1012537C	TRAVEL PIPING	CONDUITES	-	D				
1	DS2017050	HOSE	TUYAU FLEXIBLE	4					
2	S8030121	O-RING	JOINT TORIQUE	4					
3	2181-2627D1	ADAPTER	ADAPTEUR	4					
4	S8000231	O-RING	JOINT TORIQUE	4					
5	2181-9081	FLANGE;SPLIT	BRIDE	8					
6	2180-1026D19	O-RING	JOINT TORIQUE	4					
7	S2215466	BOLT;SOCKET M12X1.75X40	BOULON A 6 PANS CREUX	16					
8	2184-1026D435	HOSE	TUYAU FLEXIBLE	2					
9	2181-1126D6	ADAPTER	ADAPTEUR	2					
10	S8000181	O-RING	JOINT TORIQUE	3					
11	2181-2281D10	TEE	TE	1					
12	DS2055045	HOSE	TUYAU FLEXIBLE	2					
13	2181-1126D14	ADAPTER	ADAPTEUR	1					
14	S8000111	O-RING	JOINT TORIQUE	3					
15	2181-4125	TEE	TE	1					
16	DS7604003	BUSHING	DOUILLE	2					
17	2181-1702D56	ELBOW	COUDE	2					

DATE	NOV. 27, 2006
1st EDITION	

Fig. 3100 BOOM - 5.2m
ENSEMBLE FLECHE

Serial No. ;

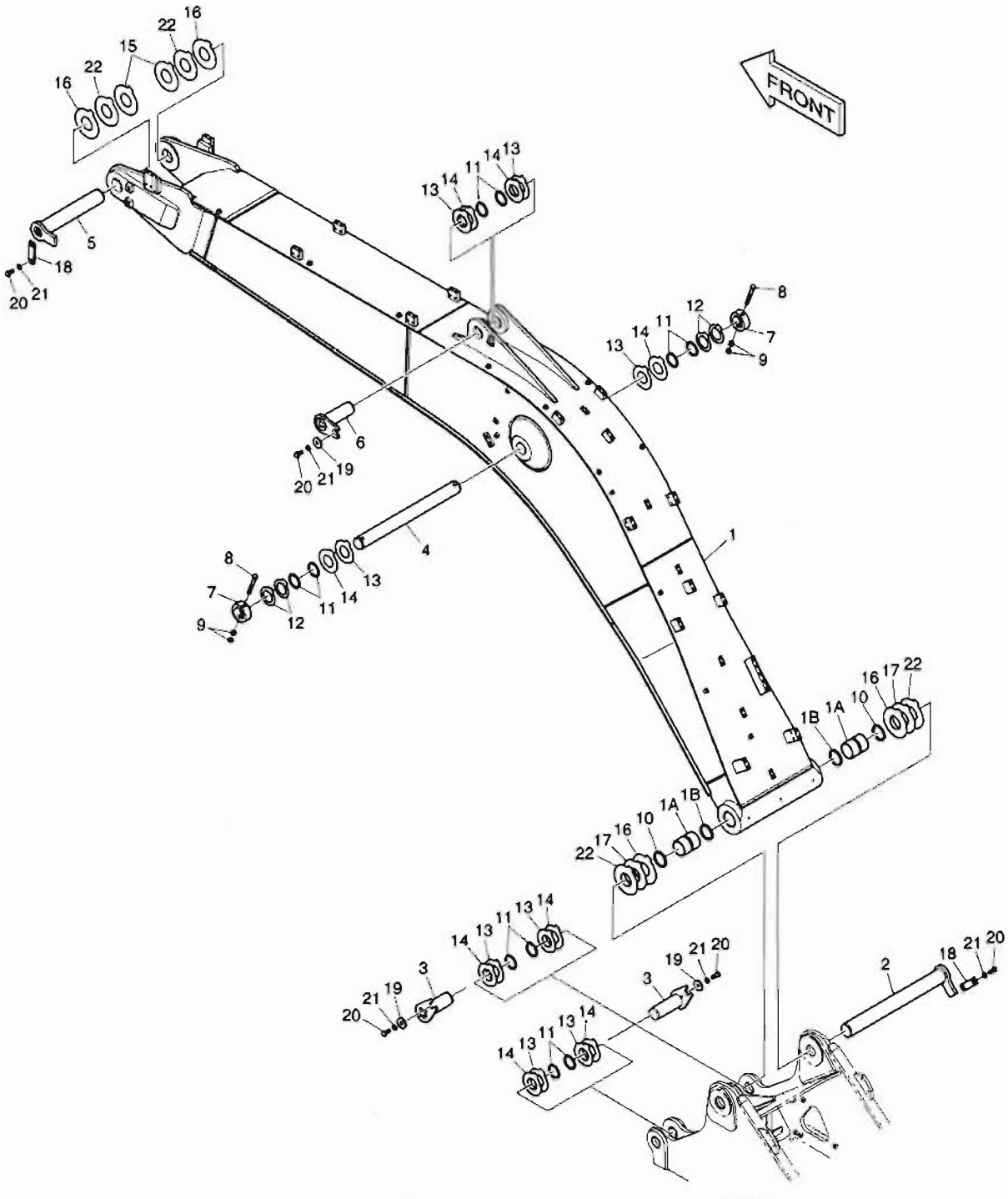

DATE	NOV. 27, 2006
1st EDITION	

Fig. 3100 BOOM - 5.2m ENSEMBLE FLECHE

Serial No. ;

Key No.	Part No.	Description	Description	Q'ty	S.C	Serial No.	ICA	Replaceable part	
								Part No.	Q'ty
3100--	K1027915	BOOM ASS'Y	ENSEMBLE FLECHE	-	D				
1	K1012419B	BOOM;MACH-5.2M	FLECHE	1					
1A	K1008572	. BUSHING	. DOUILLE	2					
1B	2180-1106BD24	. SEAL;DUST	. JOINT	2					
2	K1014301	PIN;BOOM FOOT	GOUPILLE	1					
3	K1014303	PIN	GOUJON D'ASSEMBLAGE	2					
4	K1012387A	PIN	GOUJON D'ASSEMBLAGE	1					
5	2123-2012G	PIN	GOUJON D'ASSEMBLAGE	1					
6	2123-2441	PIN	GOUJON D'ASSEMBLAGE	1					
7	2116-1532A	STOPPER	CHAPEAU	2					
8	S0566966	BOLT M16X2.0X140	BOULON A 6 PANS	2					
9	S4012933	NUT M16X2.0	ECROU	4					
10	2180-1106BD24	SEAL;DUST	JOINT	2					
11	2180-1106BD4	SEAL;DUST	JOINT	10					
12	DS7752003	SHIM	ENTERTOISE	4					
13	DS7752008	SHIM	ENTERTOISE	8					
14	DS7752009	SHIM	ENTERTOISE	8					
15	DS7752071	SHIM	ENTERTOISE	2					
16	DS7752072	SHIM	ENTERTOISE	4					
17	DS7752073	SHIM	ENTERTOISE	2					
18	621-03710A	PLATE;STOPPER	PLAQUE	2					
19	2116-1060D6	STOPPER	CHAPEAU	3					
20	S0521366	BOLT M16X2.0X35	BOULON A 6 PANS	7					
21	S5102903	WASHER;SPRING	RONDELLE ELASTIQUE	7					
22	DS7752095	SHIM 1.3mm	CALE	4					

DATE	NOV. 27, 2006
1st EDITION	

Fig. 3110 ARM - 2.6m BALANCIER

Serial No. ;

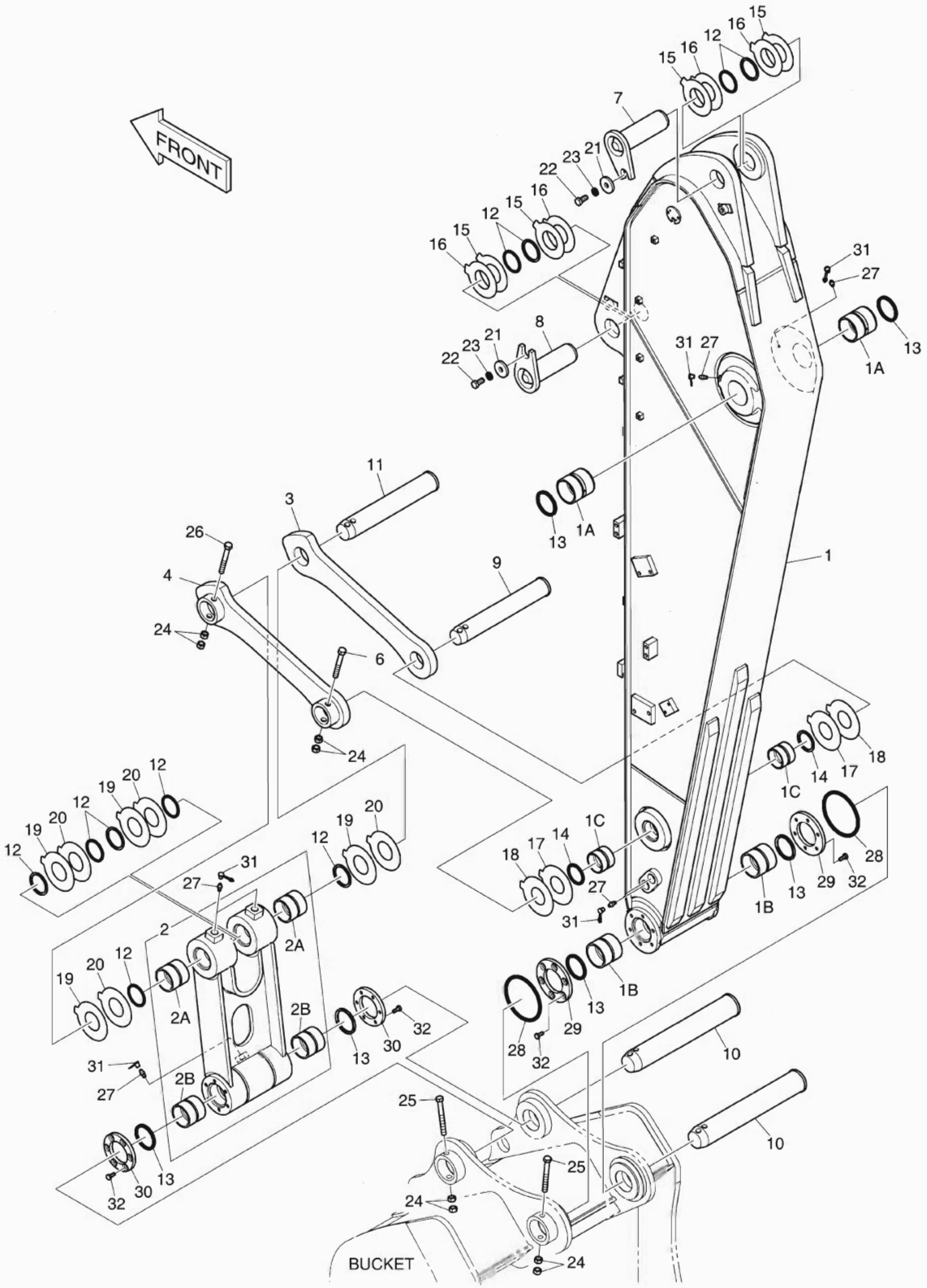

DATE	NOV. 27, 2006
1st EDITION	

Fig. 3110 ARM - 2.6m BALANCIER

Serial No. ;

Key No.	Part No.	Description	Description	Q'ty	S.C	Serial No.	ICA	Replaceable part	
								Part No.	Q'ty
3110--	K1012425E	ARM ASS'Y	ENSEMBLE DE BRAS	-	D				
1	K1012426E	ARM;MACH 2.6M	BALANCIER	1					
1A	K1012381	. BUSHING	. DOUILLE	2					
1B	K1000733	. BUSHING	. DOUILLE	2					
1C	110-00243	. BUSHING	. DOUILLE	2					
2	K1012391	LINK ASS'Y;PUSH	ARTICULATION	1					
2A	K1012439	. BUSHING	. DOUILLE	2					
2B	110-00249	. BUSHING	. DOUILLE	2					
3	2155-4019A	LINK:GUIDE(R.H)	ARTICULATION	1					
4	2155-4020B	LINK:GUIDE(L.H)	ARTICULATION	1					
6	DS0001082	BOLT	BOULON A 6 PANS	1					
7	2123-2443	PIN	GOUJON D'ASSEMBLAGE	1					
8	2123-2441	PIN	GOUJON D'ASSEMBLAGE	1					
9	K1012388	PIN	GOUJON D'ASSEMBLAGE	1					
10	2123-2192C	PIN	GOUJON D'ASSEMBLAGE	2					
11	K1012389	PIN	GOUJON D'ASSEMBLAGE	1					
12	2180-1106BD4	SEAL;DUST	JOINT	10					
13	2180-1106BD24	SEAL;DUST	JOINT	6					
14	2180-1106BD3	SEAL;DUST	JOINT	2					
15	DS7752008	SHIM	ENTERTOISE	4					
16	DS7752009	SHIM	ENTERTOISE	4					
17	DS7752067	SHIM	ENTERTOISE	2					
18	DS7752068	SHIM	ENTERTOISE	2					
19	DS7752069	SHIM	ENTERTOISE	4					
20	DS7752070	SHIM	ENTERTOISE	4					
21	2116-1060D6	STOPPER	CHAPEAU	2					
22	S0521366	BOLT M16X2.0X35	BOULON A 6 PANS	2					
23	S5102903	WASHER;SPRING	RONDELLE ELASTIQUE	2					
24	S4012933	NUT M16X2.0	ECROU	8					
25	DS0001084	BOLT	BOULON A 6 PANS	2					
26	DS0001083	BOLT	BOULON A 6 PANS	1					
27	S6710041	NIPPLE	GRAISSEUR	7					
28	180-00077D5	O-RING	JOINT TORIQUE	2					
29	K1000911	SPACER	BAGUE D'ECARTEMENT	2					
30	K1000912A	SPACER	BAGUE D'ECARTEMENT	2					
31	160-00020	CAP;GREASE NIPPLE	CHAPEAU	7					
32	S0712066	BOLT	BOULON A 6 PANS	24					

DATE	NOV. 27, 2006
1st EDITION	

Fig. 3120 BUCKET-0.62m³ GODET

Serial No. ;

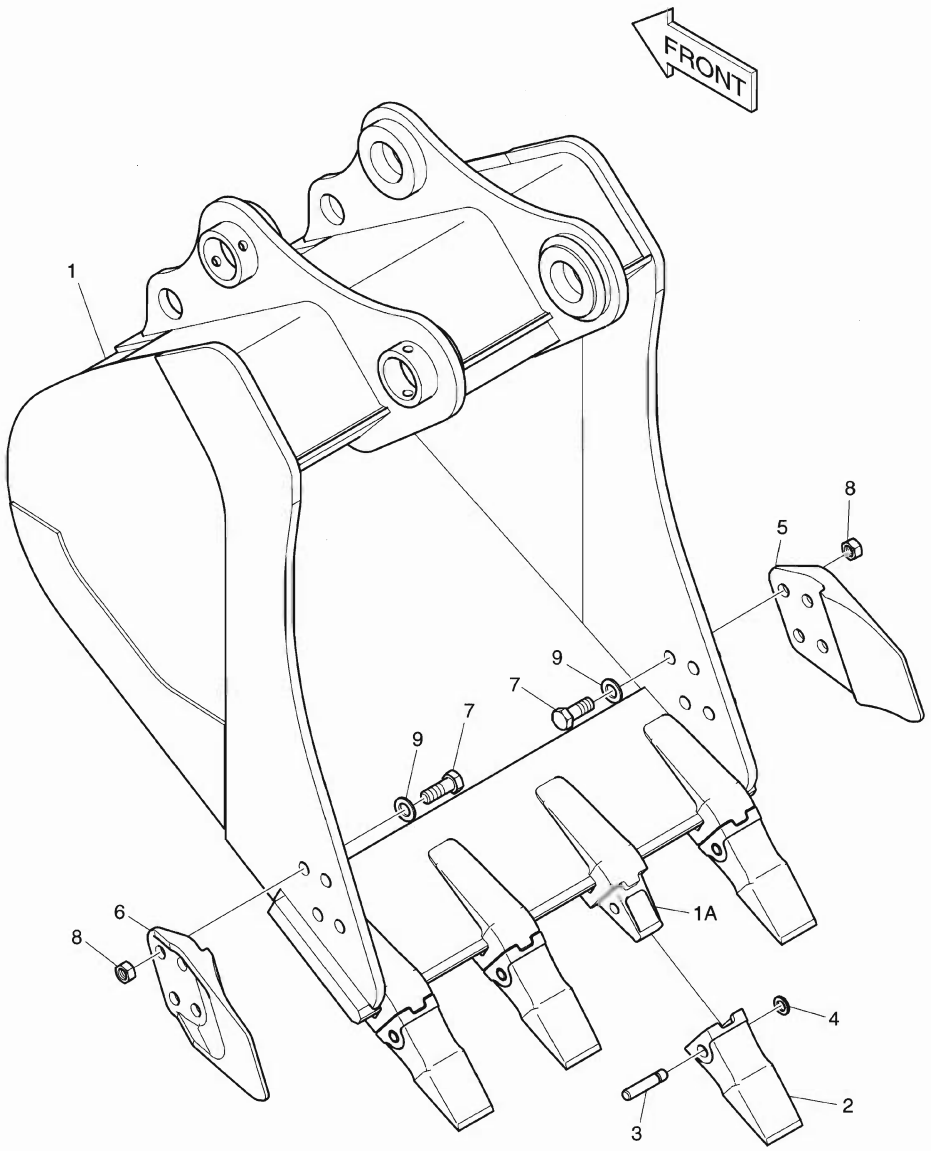

DATE	NOV. 27, 2006
1st EDITION	

Fig. 3120 BUCKET-0.62m³ GODET

Serial No. ;

Key No.	Part No.	Description	Description	Q'ty	S.C	Serial No.	ICA	Replaceable part	
								Part No.	Q'ty
3120--	K1012433A	BUCKET ASS'Y-0.62m³	ENSEMBLE GODET	1					
1	K1012434A	BUCKET;WELD	ENSEMBLE GODET	1					
1A	2713-1218	. ADAPTER;TOOTH	. ADAPTEUR	4					
2	K1000344	POINT;TOOTH	DENT	4					
3	2705-1020	PIN;LOCK	GOUPILLE	4					
4	2114-1848A	WASHER	CALE	4					
5	2713-1228A	CUTTER;SIDE(R.H)	COIN DE GODET(RH)	1					
6	2713-1229A	CUTTER;SIDE(L.H)	COIN DE GODET(LH)	1					
7	S0574661	BOLT M24X3.0X65	BOULON A 6 PANS	8					
8	S4013333	NUT M24X3.0	ECROU	8					
9	2114-1831A	WASHER;HARDEN	RONDELLE	8					

DATE	NOV. 27, 2006
1st EDITION	

Fig. 3130 BOOM PIPING
CONDUITES DE FLECHE

Serial No. ;

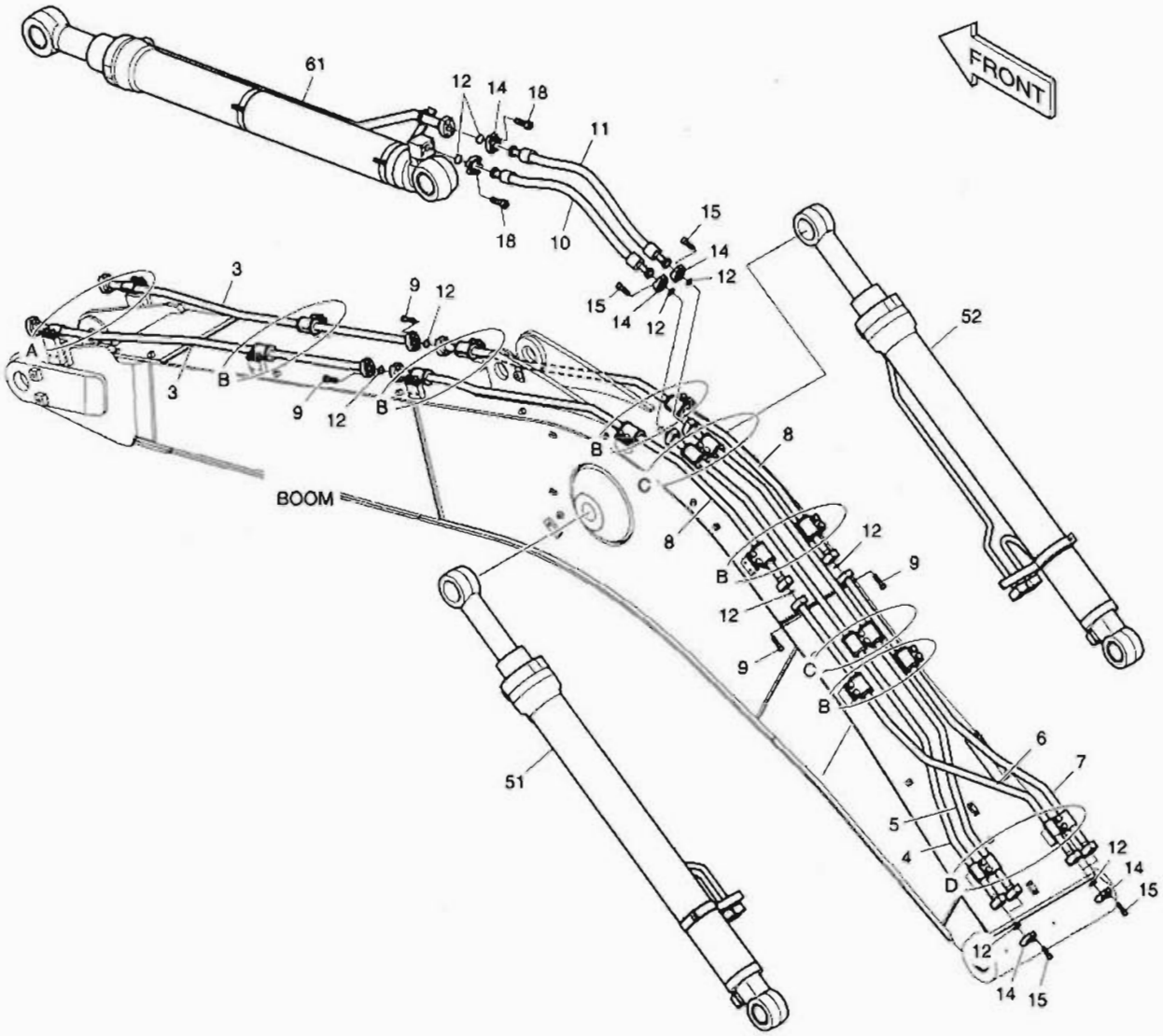

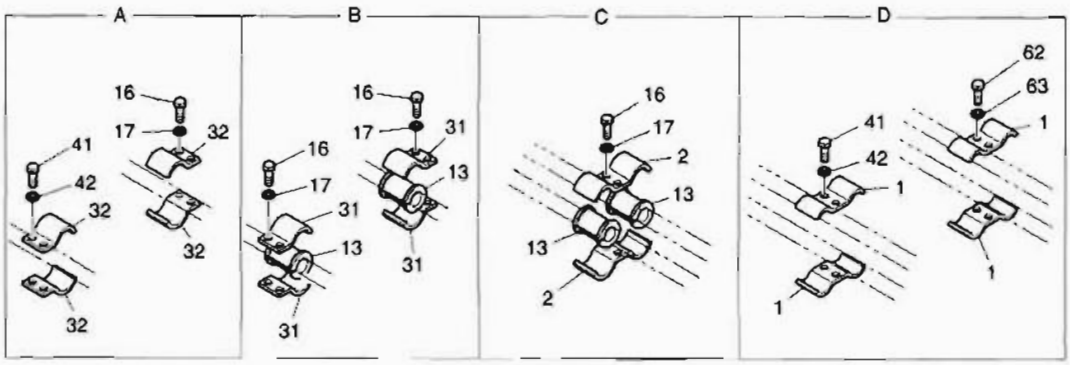

DATE	NOV. 27, 2006
1st EDITION	

Fig. 3130 BOOM PIPING CONDUITES DE FLECHE

Serial No. ;

Key No.	Part No.	Description	Description	Q'ty	S.C	Serial No.	ICA	Replaceable part	
								Part No.	Q'ty
3130--	K1014788A	BOOM PIPING	TUYAUTERIE DE PERCHE	-	D				
1	124-00300	CLAMP;PIPE	COLLIER	4					
2	K1011211	CLAMP;PIPE	COLLIER	4					
3	K1000878	PIPE	TUYAU	2					
4	K1014790A	PIPE	TUYAU	1					
5	K1014791A	PIPE	TUYAU	1					
6	K1014792A	PIPE	TUYAU	1					
7	K1014793A	PIPE	TUYAU	1					
8	K1014794	PIPE	TUYAU	2					
9	S2212566	BOLT;SOCKET M10X1.5X45	BOULON A 6 PANS CREUX	16					
10	DS2038228	HOSE	TUYAU FLEXIBLE	1					
11	DS2038228	HOSE	TUYAU FLEXIBLE	1					
12	2180-1026D2	O-RING	JOINT TORIQUE	12					
13	161-00574	RUBBER	CAOUTCHOUC	14					
14	2181-9079	FLANGE	BRIDE	16					
15	S2212366	BOLT;SOCKET M10X1.5X35	BOULON A 6 PANS CREUX	24					
16	S0562766	BOLT M14X2.0X40	BOULON A 6 PANS	26					
17	S5102803	WASHER;SPRING	RONDELLE ELASTIQUE	26					
18	S2212266	BOLT;SOCKET M10X1.5X30	BOULON A 6 PANS CREUX	8					
31	124-00302	CLAMP;PIPE	COLLIER	20					
32	124-00303	CLAMP;PIPE	COLLIER	4					
41	S0562766	BOLT M14X2.0X40	BOULON A 6 PANS	4					
42	S5102803	WASHER;SPRING	RONDELLE ELASTIQUE	4					
51	K1014801	CYLINDER;BOOM (L.H)	CYLINDRE	1					
52	K1014802	CYLINDER;BOOM (R.H)	CYLINDRE	1					
61	K1014805	CYLINDER;ARM	VERIN DE BALANCIER	1					
62	S0562766	BOLT M14X2.0X40	BOULON A 6 PANS	2					
63	S5102803	WASHER;SPRING	RONDELLE ELASTIQUE	2					

DATE	NOV. 27, 2006
1st EDITION	

Fig. 3140 LUBRICATION PIPING
LUBRIFICATION

Serial No. ;

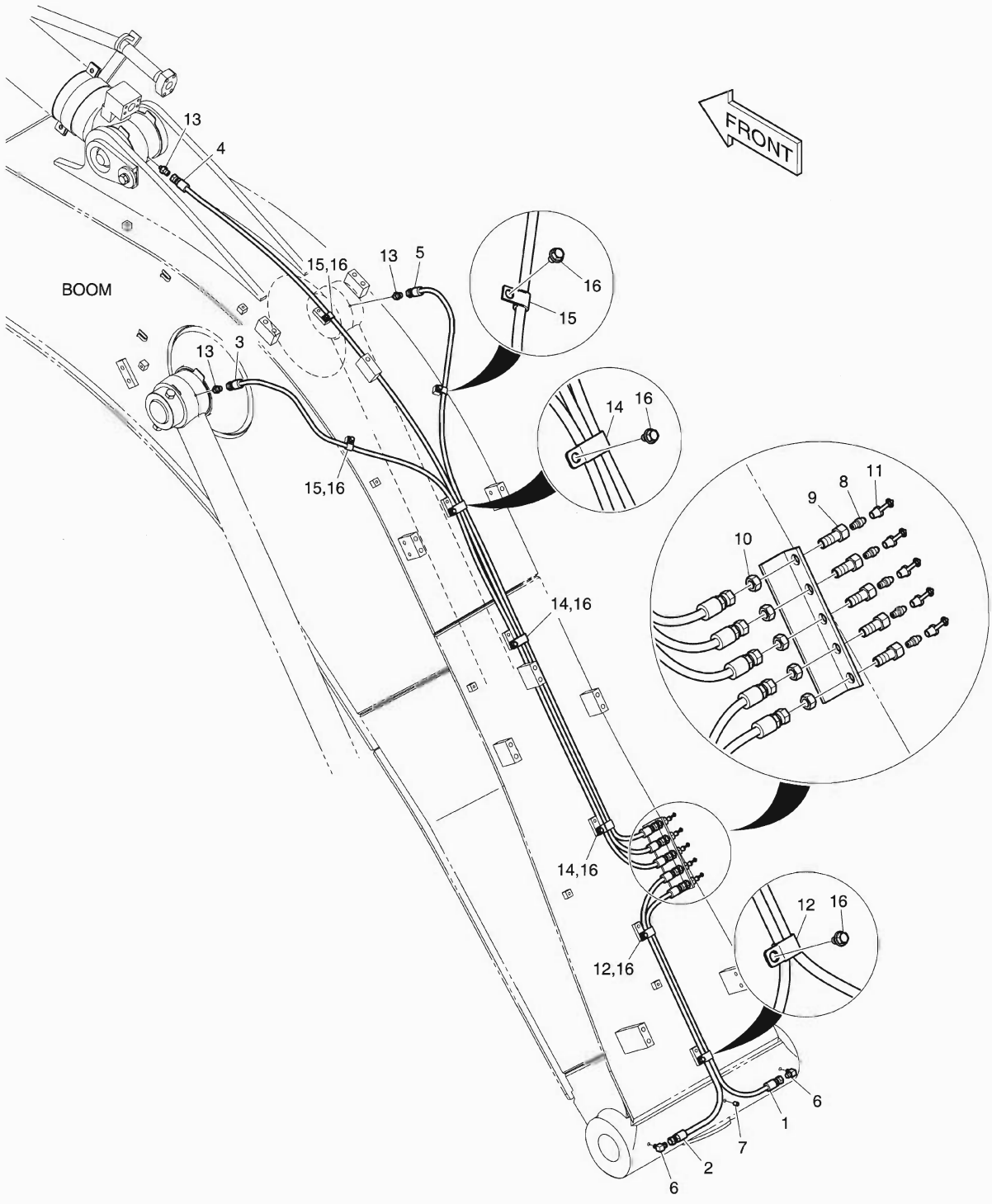

DATE	NOV. 27, 2006
1st EDITION	

Fig. 3140 LUBRICATION PIPING LUBRIFICATION

Serial No. ;

Key No.	Part No.	Description	Description	Q'ty	S.C	Serial No.	ICA	Replaceable part	
								Part No.	Q'ty
140--	K1014806A	LUBRICATION PIPING	LUBRIFICATION	-	D				
1	DS2053796	HOSE	TUYAU FLEXIBLE	1					
2	2184-1045D55	HOSE	TUYAU FLEXIBLE	1					
3	DS2053867	HOSE	TUYAU FLEXIBLE	1					
4	DS2053882	HOSE	TUYAU FLEXIBLE	1					
5	2184-1045D152	HOSE	TUYAU FLEXIBLE	1					
6	2181-1186D12	ELBOW	COUDE	2					
7	S3524403	PLUG;DRAIN	BOUCHON	1					
8	S6710041	NIPPLE	GRAISSEUR	5					
9	181-00103	REDUCER	REDUCTEUR	5					
10	121-00006	NUT	ECROU 6 PANS	5					
11	160-00020	CAP;GREASE NIPPLE	CHAPEAU	5					
12	124-00199D5	CLIP	AGRAFE	2					
13	2181-4112	ADAPTER	ADAPTEUR	3					
14	124-00199D4	CLIP	AGRAFE	3					
15	2124-1353D2	CLIP	AGRAFE	3					
16	K1001029	BOLT	BOULON A 6 PANS	8					

DATE	NOV. 27, 2006
1st EDITION	

Fig. 3150 ARM PIPING - ARM 2.6m
CONDUITES DE BALANCIER

Serial No. ;

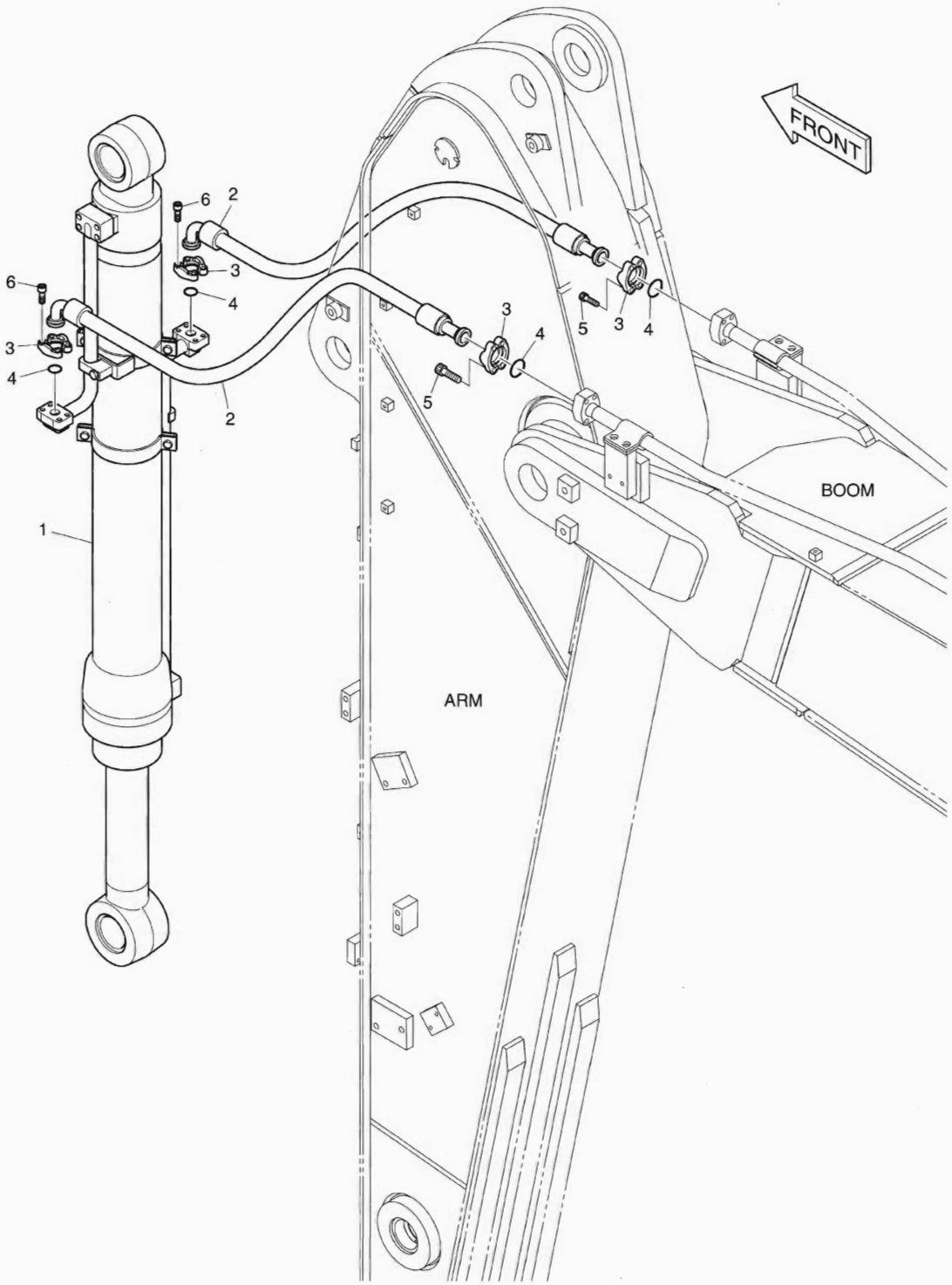

DATE	NOV. 27, 2006
1st EDITION	

Fig. 3150 ARM PIPING - ARM 2.6m CONDUITES DE BALANCIER

Serial No. ;

Key No.	Part No.	Description	Description	Q'ty	S.C	Serial No.	ICA	Replaceable part	
								Part No.	Q'ty
3150--	K1014825	ARM PIPING	CONDUITES DE BALANCIER	-	D				
1	K1014826	CYLINDER;BUCKET	VERIN DE GODET	1					
2	2184-1100D130	HOSE	TUYAU FLEXIBLE	2					
3	2181-9079	FLANGE;SPLIT	BRIDE	8					
4	2180-1026D2	O-RING	JOINT TORIQUE	4					
5	S2212366	BOLT;SOCKET	BOULON	8					
6	S2212266	BOLT;SOCKET	BOULON	8					

Fig. 4100 MAIN PUMP
POMPE

Serial No. ;

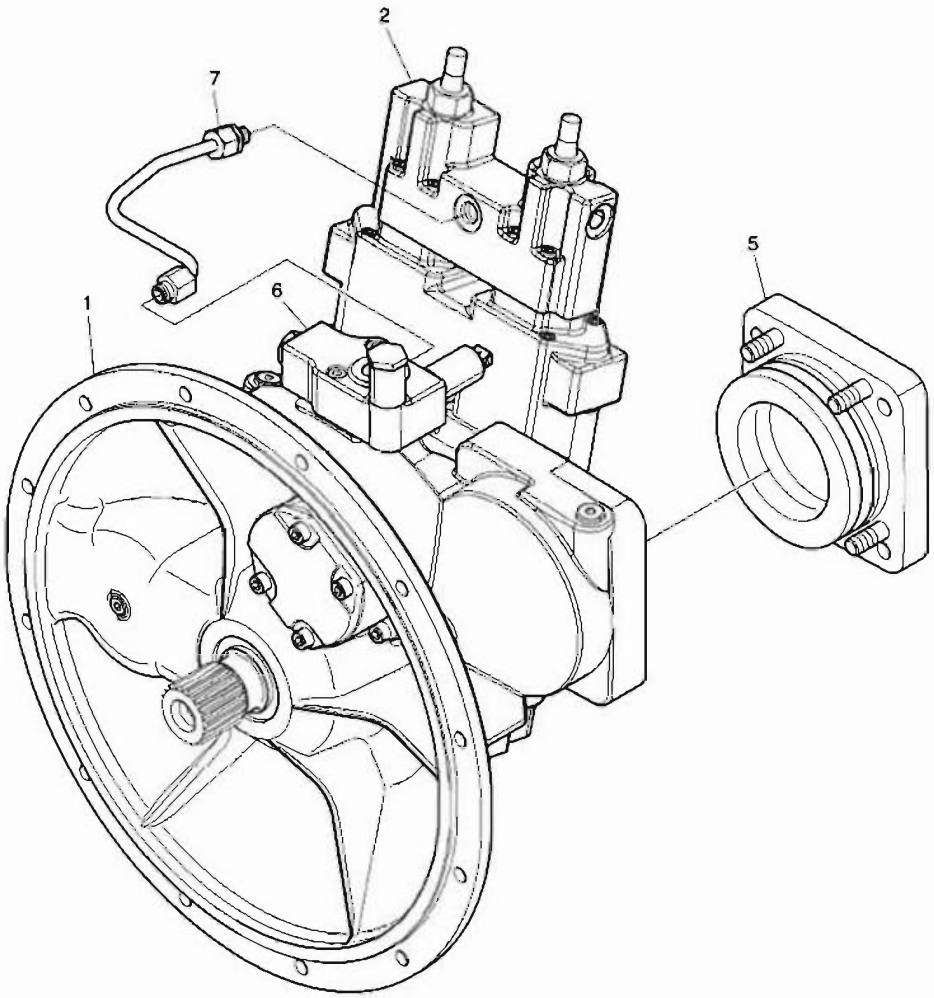

DATE	NOV. 27, 2006
1st EDITION	

Fig. 4100 MAIN PUMP POMPE

Serial No. ;

Key No.	Part No.	Description	Description	Q'ty	S.C	Serial No.	ICA	Replaceable part	
								Part No.	Q'ty
4100--	K1012643	PUMP;MAIN	POMPE	1					
1	-	PUMP	POMPE	1	D				
2	K9004415	CONTROL ASS'Y	CONTROL	1					
5	2.430-00205	COVER ASS'Y	COUVERCLE	1					
6	K9001906	PORT PLATE WITH VALVES	PLAQUE	1					
7	K9004414	PIPE ASS'Y	ENSEMBLE CONDUITES	1					

Fig. 4110 MAIN PUMP - ROTARY GROUP
POMPE

Serial No. ;

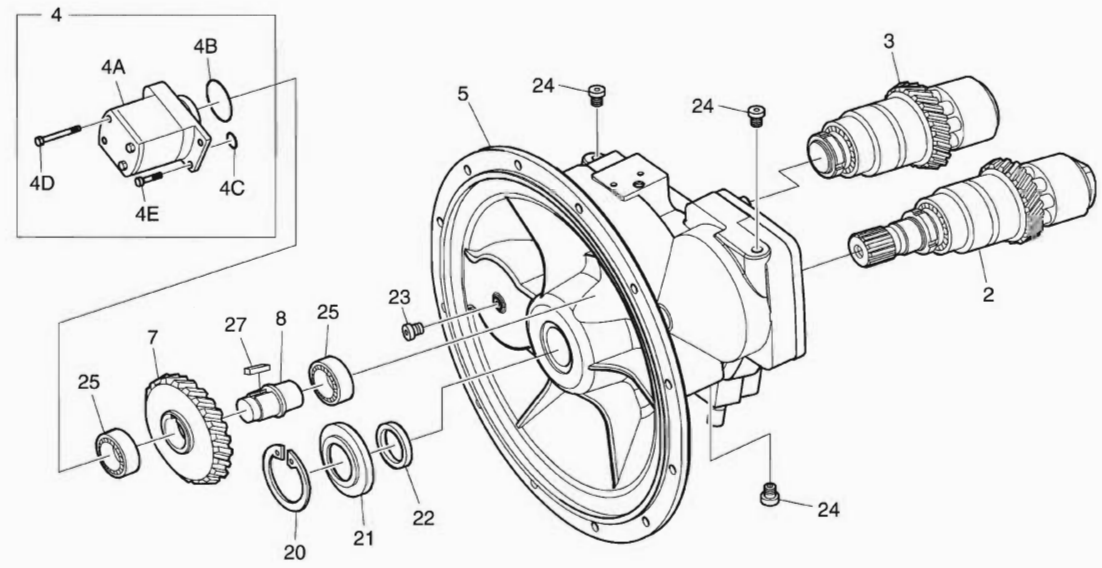

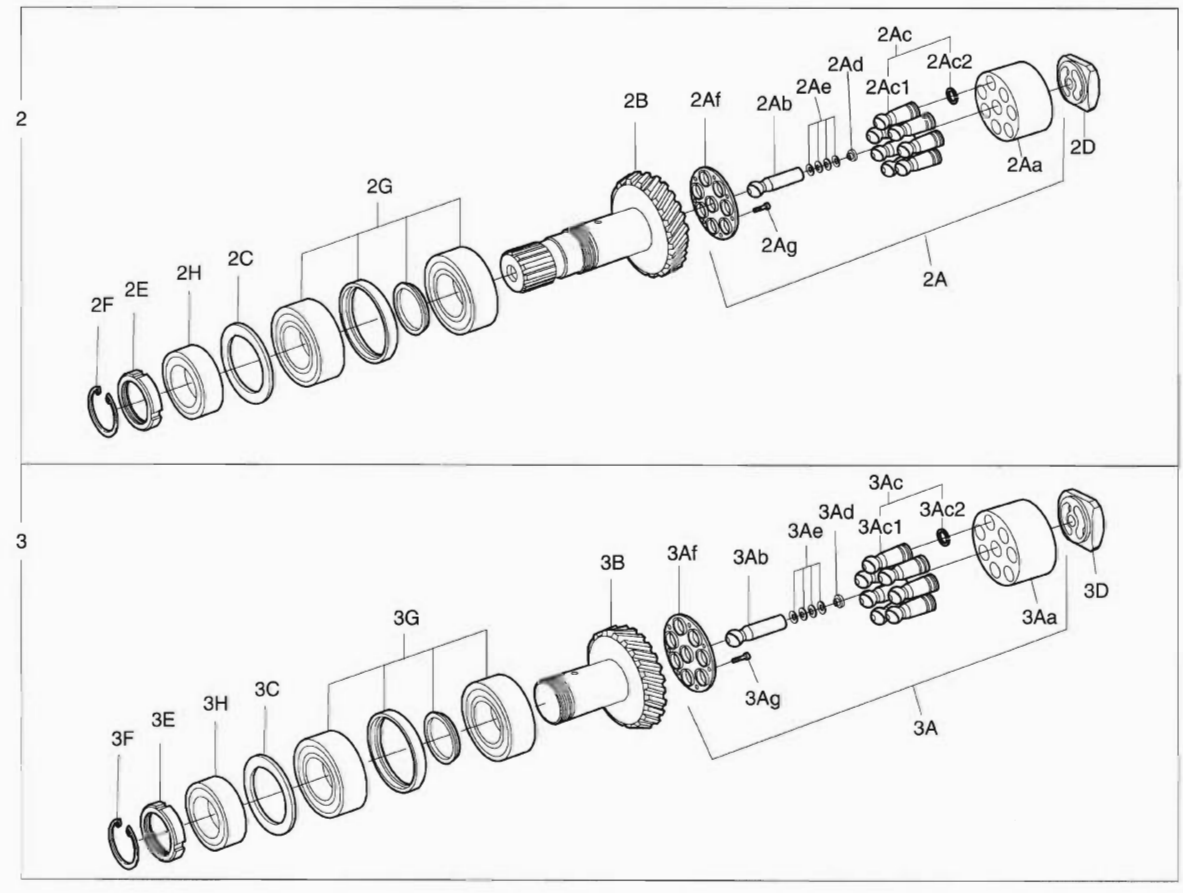

DATE	NOV. 27, 2006
1st EDITION	

Fig. 4110 MAIN PUMP - ROTARY GROUP POMPE

Serial No. ;

Key No.	Part No.	Description	Description	Q'ty	S.C	Serial No.	ICA	Replaceable part	
								Part No.	Q'ty
4110-2	2.410-00087	ROTARY GROUP	ROTATOIRE GROUPE	1					
2A	2.410-00088	. ROTARY GROUP. HYDR.	. ROTATOIRE GROUPE	1					
2Aa	2.410-00133	.. CYLINDER BLOCK	.. CYLINDRE	1					
2Ab	2.123-00114	.. PIN;CENTER	.. BROUCHE	1					
2Ac	2.409-00116	.. PISTON & PISTON RINGS	.. PISTON	7					
2Ac1	-	... PISTON	... PISTON	1	D				
2Ac2	2.115-00437	... RING;STEEL SEALING	... BAGUE	1					
2Ad	2.114-00033	.. COLLAR;SPRING	.. BAGUE	1	R				
	2.114-00034	.. COLLAR;SPRING	.. BAGUE	1	R				
	2.114-00035	.. COLLAR;SPRING	.. BAGUE	1	R				
	2.114-00036	.. COLLAR;SPRING	.. BAGUE	1	R				
	2.114-00037	.. COLLAR;SPRING	.. BAGUE	1	R				
	2.114-00038	.. COLLAR;SPRING	.. BAGUE	1	R				
2Ae	2.453-00023	.. CUP SPRING	.. RESSORT	4					
2Af	2.412-00221	.. PLATE;RETAINING	.. PLAQUE	1					
2Ag	K9004228	.. SCREW;PAN HEAD	.. VIS	14					
2B	2.405-00107	. SHAFT;DRIVE	. ARBRE	1					
2C	2.114-00147	. SHIM 2.7t	. CALE	1	R				
	2.114-00148	. SHIM 2.8t	. CALE	1	R				
	2.114-00149	. SHIM 2.9t	. CALE	1	R				
	2.114-00150	. SHIM 3.0t	. CALE	1	R				
	2.114-00151	. SHIM 3.1t	. CALE	1	R				
2D	2.412-00130	. CONTROL LENS;RIGHT-HAND	. ROTATOIRE	1					
2E	2.180-00987	. PLATE;BACK-UP	. PLAQUE	1					
2F	2.115-00302	. RING;RETAINING	. BAGUE D'ARRET	1					
2G	2.109-00262	. BEARING;UNIT	. PALIER	1					
2H	2.109-00244	. BEARING;TAPERED-ROLLER	. PALIER	1					
3	2.410-00089	ROTARY GROUP	ROTATOIRE GROUPE	1					
3A	2.410-00088	. ROTARY GROUP. HYDR.	. ROTATOIRE GROUPE	1					
3Aa	2.410-00133	.. CYLINDER BLOCK	.. CYLINDRE	1					
3Ab	2.123-00114	.. PIN;CENTER	.. BROUCHE	1					
3Ac	2.409-00116	.. PISTON & PISTON RINGS	.. PISTON	7					
3Ac1	-	... PISTON	... PISTON	1	D				
3Ac2	2.115-00437	... RING;STEEL SEALING	... BAGUE	1					
3Ad	2.114-00033	.. COLLAR;SPRING	.. BAGUE	1	R				
	2.114-00034	.. COLLAR;SPRING	.. BAGUE	1	R				
	2.114-00035	.. COLLAR;SPRING	.. BAGUE	1	R				
	2.114-00036	.. COLLAR;SPRING	.. BAGUE	1	R				

DATE	NOV. 27, 2006
1st EDITION	

Fig. 4110 MAIN PUMP - ROTARY GROUP POMPE

Serial No. ;

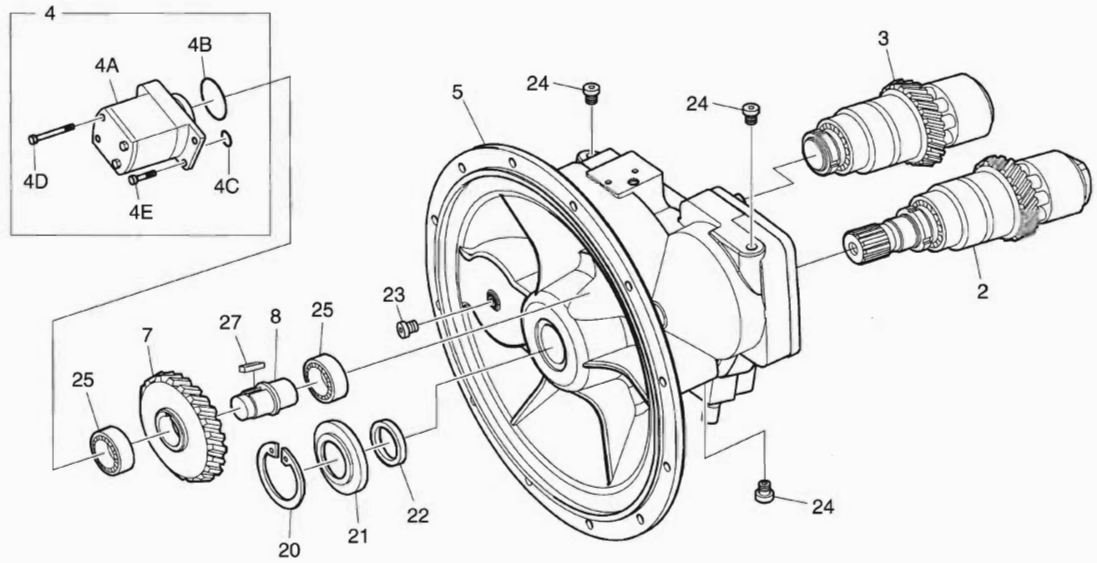

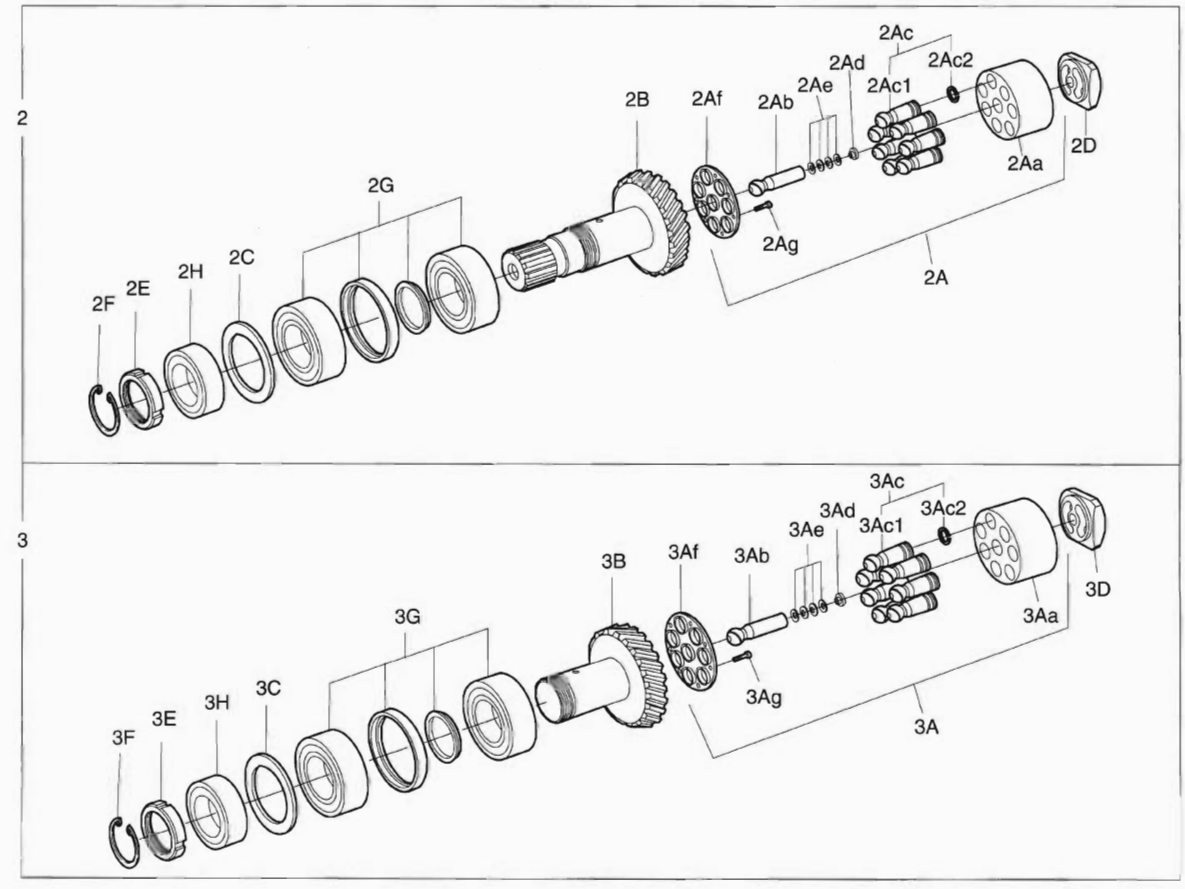

DATE	NOV. 27, 2006
1st EDITION	

Fig. 4110 MAIN PUMP - ROTARY GROUP POMPE

Serial No. ;

Key No.	Part No.	Description	Description	Q'ty	S.C	Serial No.	ICA	Replaceable part	
								Part No.	Q'ty
4110-3Ad	2.114-00037	.. COLLAR;SPRING	.. BAGUE	1	R				
	2.114-00038	.. COLLAR;SPRING	.. BAGUE	1	R				
3Ae	2.453-00023	.. CUP SPRING	.. RESSORT	4					
3Af	2.412-00221	.. PLATE;RETAINING	.. PLAQUE	1					
3Ag	K9004228	.. SCREW	.. VIS	14					
3B	2.405-00108	. SHAFT;DRIVE	. ARBRE	1					
3C	2.114-00147	. SHIM 2.7t	. CALE	1	R				
	2.114-00148	. SHIM 2.8t	. CALE	1	R				
	2.114-00149	. SHIM 2.9t	. CALE	1	R				
	2.114-00150	. SHIM 3.0t	. CALE	1	R				
	2.114-00151	. SHIM 3.1t	. CALE	1	R				
3D	2.412-00127	. CONTROL LENS;LEFT-HAND	. ROTATOIRE	1					
3E	2.180-00987	. PLATE;BACK-UP	. PLAQUE	1					
3F	2.115-00302	. RING;RETAINING	. BAGUE D'ARRET	1					
3G	2.109-00262	. BEARING;UNIT	. PALIER	1					
3H	2.109-00244	. BEARING;TAPERED-ROLLER	. PALIER	1					
4	2.241-00045	GEAR PUMP ASS'Y	PIGNON	1					
4A	2.241-00046	. PUMP;GEAR	. POMPE	1					
4B	2180-1217D76	. O-RING	. JOINT TORIQUE	1					
4C	2180-1217D16	. O-RING	. JOINT TORIQUE	1					
4D	S2210161	. BOLT;SOCKET M8X75	. VIS	2					
4E	S2209071	. BOLT;SOCKET M8X25	. VIS	2					
5	-	HOUSING;PUMP	CARTER	1	D				
7	K9004418	GEAR	PISTON	1					
8	2.405-00180	SHAFT;STUB	ARBRE	1					
20	2.115-00303	RING;RETAINING	BAGUE D'ARRET	1					
21	2.115-00325	RING;SHAFT SEAL	BAGUE	1					
22	2.114-00154	SHIM	ENTERTOISE	1					
23	2.181-00331	PLUG	BOUCHON	1					
24	2.120-00612	PLUG	BOUCHON	3					
25	K9004413	BEARING;BALL	ROULEMENT A BILLES	2					
27	2.113-00014	SHAFT;KEY	ARBRE	1					

DATE	NOV. 27, 2006
1st EDITION	

Fig. 4120 MAIN PUMP - CONTROL POMPE

Serial No. ;

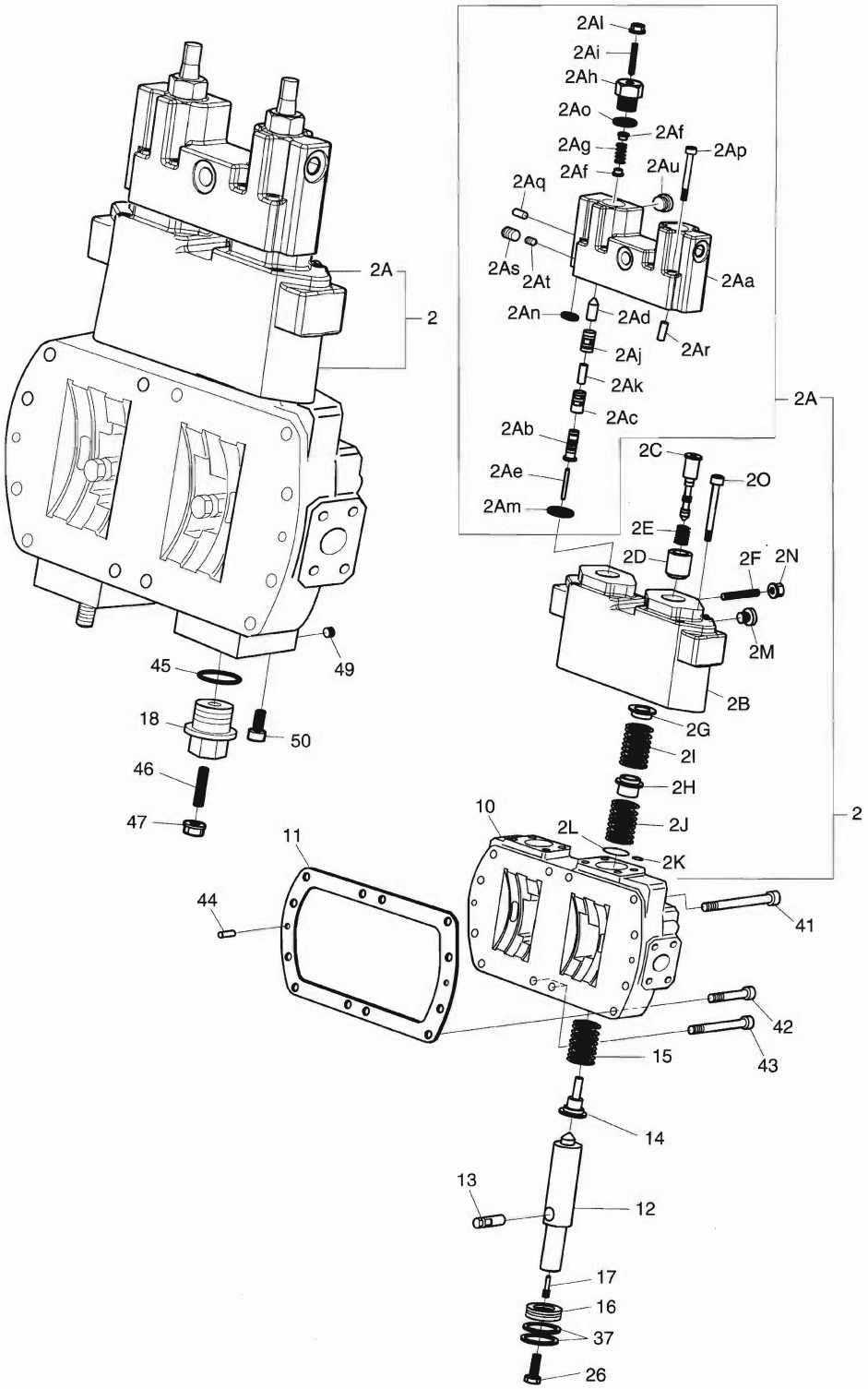

DATE	NOV. 27, 2006
1st EDITION	

Fig. 4120 MAIN PUMP - CONTROL POMPE

Serial No. ;

Key No.	Part No.	Description	Description	Q'ty	S.C	Serial No.	ICA	Replaceable part	
								Part No.	Q'ty
4120--	K9004415	CONTROL ASS'Y	CONTROL	1					
2	K9004416	CONTROL MODULE	MODULE DE COMMANDE	1					
2A	K9004417	. CONTROL MODULE	. MODULE DE COMMANDE	1					
2Aa	-	.. HOUSING;CONTROL	.. CARTER	1	D				
2Ab	2.409-00177	.. PISTON;CONTROL	.. PISTON	2					
2Ac	2.408-00063	.. BUSH;CONTROL	.. DOUILLE	2					
2Ad	2.409-00202	.. PISTON;POSITIONING	.. PISTON	2					
2Ae	2.123-00066	.. PIN	.. BROUCHE	2					
2Af	2.114-00039	.. COLLAR;SPRING	.. BAGUE	4					
2Ag	2.131-00415	.. SPRING;PRESSURE	.. RESSORT	2					
2Ah	2.120-00613	.. SCREW;LOCKING	.. VIS	2					
2Ai	2.123-00235	.. PIN;THREADED	.. BROUCHE	2					
2Aj	2.408-00064	.. BUSH;CONTROL	.. DOUILLE	2					
2Ak	2.409-00178	.. PISTON;CONTROL	.. PISTON	2					
2Al	2.121-00202	.. NUT;SEAL LOCK	.. ECROU	2					
2Am	2.180-01191	.. O-RING	.. JOINT TORIQUE	2					
2An	2.180-00471	.. O-RING	.. JOINT TORIQUE	2					
2Ao	2.180-01181	.. O-RING	.. JOINT TORIQUE	2					
2Ap	2.120-00826	.. SCREW;SOCKET-HEAD	.. VIS	6					
2Aq	2.181-00183	.. PIN;DOUBLE BREAK-OFF	.. BROUCHE	5					
2Ar	2.123-00131	.. PIN;CYLINDER	.. BROUCHE	2					
2As	2.181-00184	.. PIN;DOUBLE BREAK-OFF	.. BROUCHE	1					
2At	2.181-00262	.. PLUG	.. BOUCHON	1					
2Au	2.120-00612	.. PLUG	.. BOUCHON	1					
2B	-	. HOUSING;CONTROL	. LOGEMENT	1	D				
2C	2.409-00180	. PISTON;CONTROL	. PISTON	2					
2D	2.408-00083	. BUSH;SPRING	. DOUILLE	2					
2E	2.131-00418	. SPRING	. RESSORT	2					
2F	2.123-00238	. PIN;THREADED	. GOUPILLE	2					
2G	2.114-00041	. COLLAR;SPRING	. COLLIER DE RESSORT	2					
2H	2.114-00042	. COLLAR;SPRING	. COLLIER DE RESSORT	2					
2I	2.131-00419	. SPRING	. RESSORT	2					
2J	2.131-00420	. SPRING	. RESSORT	2					
2K	2.180-00471	. O-RING	. JOINT TORIQUE	4					
2L	2180-1217D66	. O-RING	. JOINT TORIQUE	2					
2M	2.181-00331	. PLUG	. BOUCHON	2					
2N	2.121-00202	. NUT;SEAL LOCK	. ECROU	2					
2O	2.120-00675	. SCREW;SOCKET-HEAD	. VIS	6					

Fig. 4120 MAIN PUMP - CONTROL POMPE

Serial No. ;

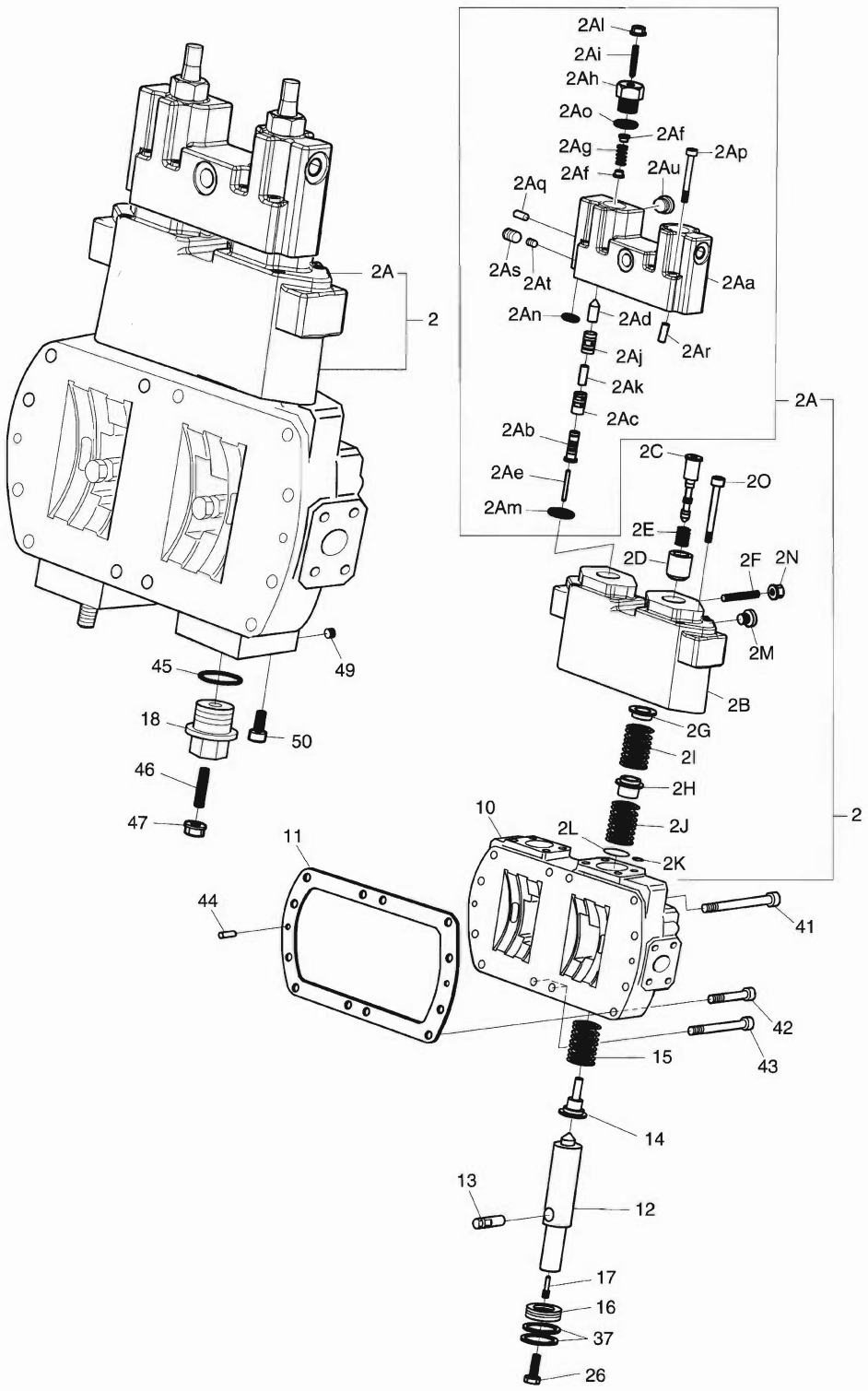

DATE	NOV. 27, 2006
1st EDITION	

Fig. 4120 MAIN PUMP - CONTROL POMPE

Serial No. ;

Key No.	Part No.	Description	Description	Q'ty	S.C	Serial No.	ICA	Replaceable part	
								Part No.	Q'ty
4120-10	-	HOUSING;CONTROL	CARTER	1	D				
11	2.180-00084	GASKET	JOINT	1					
12	2.409-00201	PISTON;POSITIONING	PISTON	2					
13	K9004411	TRUNNION;POSITIONING	BOULON A 6 PANS	2					
14	K9004410	COLLAR;SPRING	BAGUE	2					
•15	2.131-00416	SPRING;PRESSURE	RESSORT	2					
16	2.409-00068	PISTON	PISTON	2					
17	2.123-00236	PIN;THREADED	BROUCHE	2					
18	2.120-00614	PLUG	BOUCHON	2					
26	2.120-00575	SCREW;HEX	VIS	2					
37	K9004412	RING;STEEL SEALING	ANNEAU	4					
41	2.120-00824	SCREW;SOCKET M10X70	VIS	4					
42	2.120-00823	SCREW;SOCKET M10X45	VIS	6					
43	2.120-00821	SCREW;SOCKET M10X60	VIS	2					
44	2.123-00132	PIN;CYLINDER	BROUCHE	2					
45	2180-1217D57	O-RING	JOINT TORIQUE	2					
46	2.123-00239	PIN;THREADED M10X50	BROUCHE	2					
47	2.121-00203	NUT;SEAL LOCK	ECROU	2					
49	2.181-00183	PIN;DOUBLE BREAK-OFF	BROUCHE	1					
50	2.120-00615	PLUG	BOUCHON	2					

DATE	NOV. 27, 2006
1st EDITION	

Fig. 4130 MAIN PUMP - E.P.P.R VALVE POMPE

Serial No. ;

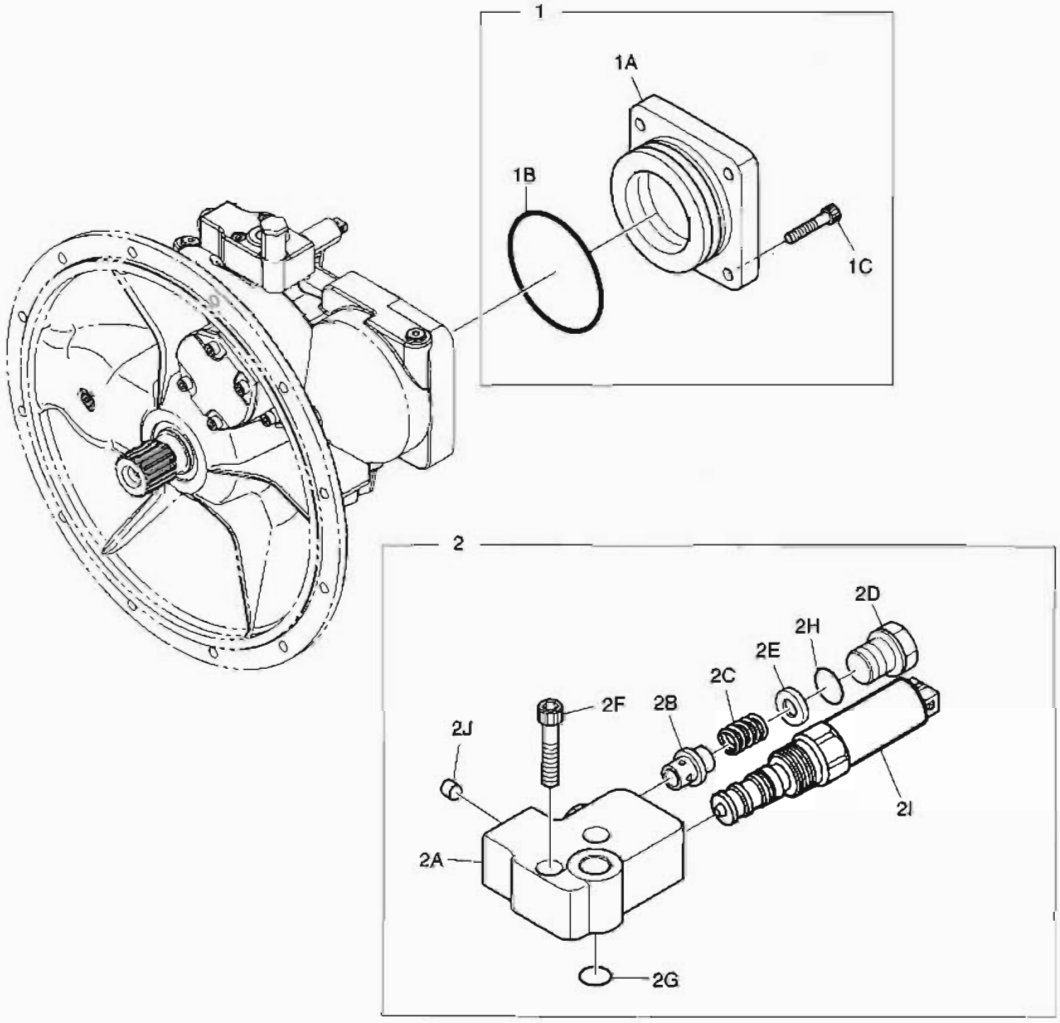

DATE	NOV. 27, 2006
1st EDITION	

Fig. 4130 MAIN PUMP - E.P.P.R VALVE POMPE

Serial No. ;

Key No.	Part No.	Description	Description	Q'ty	S.C	Serial No.	ICA	Replaceable part	
								Part No.	Q'ty
4130-1	2.430-00205	COVER	COUVERCLE	1					
1A	2.430-00206	. COVER	. COUVERCLE	1					
1B	2.180-01199	. O-RING	. JOINT TORIQUE	1					
1C	2.120-00832	. BOLT;SOCKET	. BOULON	4					
2	K9001906	PORT PLATE WITH VALVES	PLAQUE	1					
2A	-	. PLATE;PORT	. PLAQUE	1	D				
2B	2.409-00216	. PISTON;VALVE	. PISTON	1					
2C	2.131-00417	. SPRING;PRESSURE	. RESSORT	1					
2D	2.120-00617	. PLUG	. BOUCHON	1					
2E	2.114-00877	. WASHER	. RONDELLE	1					
2F	S2209361	. SCREW;SOCKET-HEAD	. VIS	2					
2G	2.180-01180	. O-RING	. JOINT TORIQUE	2					
2H	2.180-01182	. O-RING	. JOINT TORIQUE	1					
2I	K9001933	. VALVE	. VANNE	1					
2J	2.123-00138	. PIN;DOUBLE BREAK-OFF	. BROUCHE	1					

Fig. 4140 SWING MOTOR
MOTEUR D'ORIENTATION

Serial No. ;

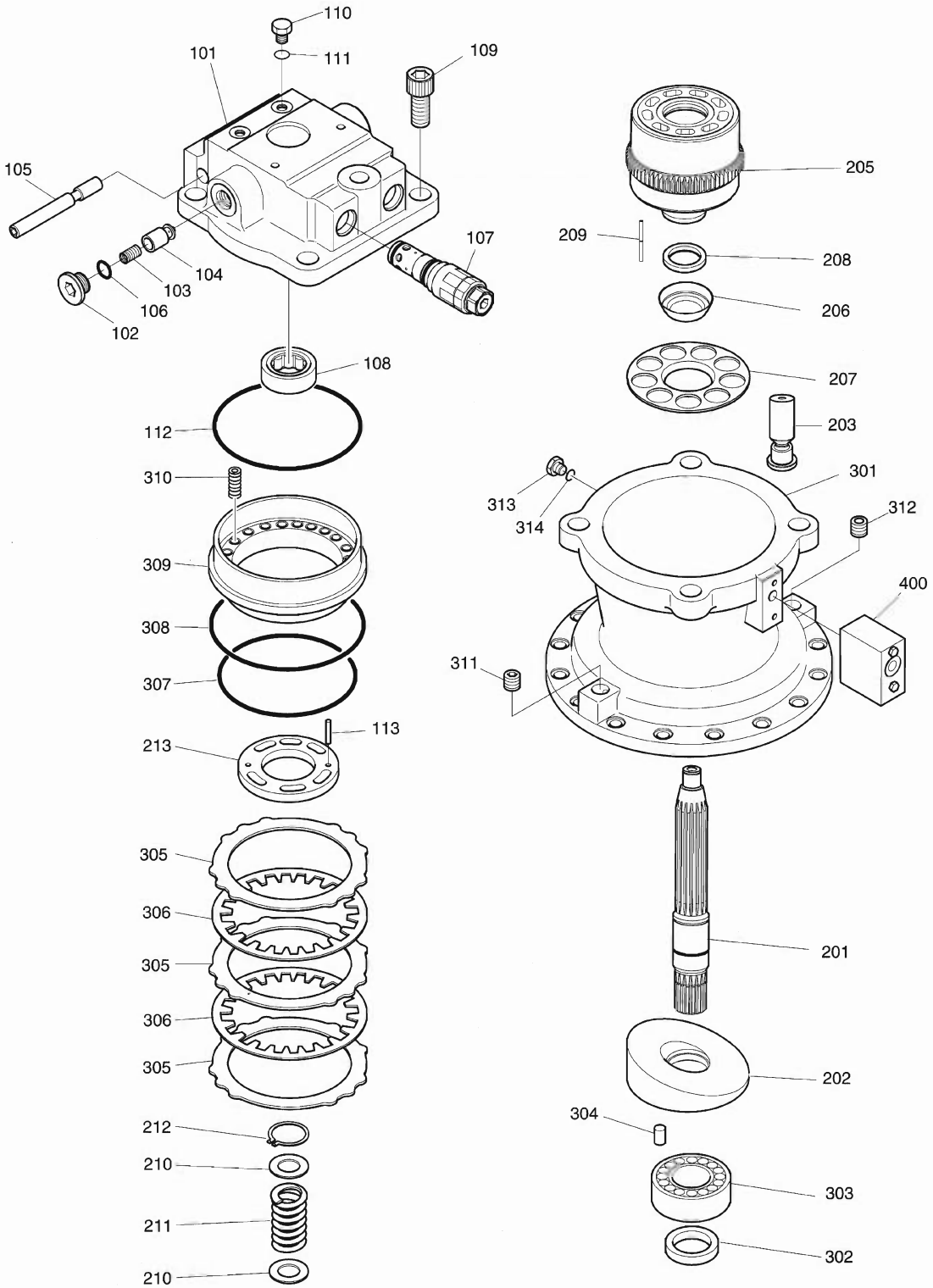

DATE	NOV. 27, 2006
1st EDITION	

Fig. 4140 SWING MOTOR MOTEUR D'ORIENTATION

Serial No. ;

Key No.	Part No.	Description	Description	Q'ty	S.C	Serial No.	ICA	Replaceable part	
								Part No.	Q'ty
140--	K1000697A	SWING MOTOR	AVERTISSEUR	1					
101	-	CASING;VALVE	CARTER	1	D				
102	2.121-00009	PLUG	BOUCHON	2					
103	K9001840	SPRING	RESSORT	2					
104	K9001841	PLUNGER	PLONGEUR	2					
105	1.420-00016	VALVE;SWING REACTIONLESS	ROTATION SANS	1					
106	S8000341	O-RING	JOINT TORIQUE	2	K				
107	1.420-00111	VALVE;RELIEF	VANNE	2					
108	S6005050	BEARING;BALL	ROULEMENT A BILLES	1					
109	S2227561	BOLT;SOCKET	BOULON	4					
110	2181-1950D1	PLUG	BOUCHON	2					
111	S8000111	O-RING	JOINT TORIQUE	2	K				
112	K9001842	O-RING	JOINT TORIQUE	1	K				
113	S5741162	PIN;SPRING	GOUPILLE	2					
201	K9001843	SHAFT;DRIVE	ARBRE	1					
202	K9001844	PLATE;SWASH	PLAQUE	1					
203	K9001845	PISTON & SHOE ASS'Y	PISTON	1					
205	K9001846	BLOCK;CYLINDER	BLOC	1					
206	1.148-00015	BALL;THRUST	POUSSEE DE BOULE	1					
207	1.412-00092	PLATE;RETAINER	PLAQUE D'IDENTIFICATION	1					
208	1.114-00009	COLLAR	COLLIER	1					
209	1.109-00134	ROLLER	ROULEAU	5					
210	1.114-00286	WASHER	CALE	2					
211	1.131-00048	SPRING	RESSORT	1					
212	S6510620	RING;SNAP	BAGUE	1					
213	K9001847	PLATE;TIMING	PLAQUE	1					
301	K9001848	CASING	CARTER	1					
302	180-00219	SEAL;OIL	JOINT D'HUILE	1	K				
303	S6005090	BEARING;BALL	ROULEMENT A BILLES	1					
304	1.123-00053	PIN;PARALLEL	GOUJON	1					
305	352-00014	PLATE;SEPARATION	PLAQUE D'IDENTIFICATION	3					
306	412-00013	PLATE;FRICTION	PLAQUE	2					
307	180-00220	O-RING	JOINT TORIQUE	1	K				
308	180-00221	O-RING	JOINT TORIQUE	1	K				
309	452-00020	PISTON;BRAKE	PISTON	1					
310	129-00062	SPRING;BRAKE	RESSORT	18					
311	181-00346	PLUG	BOUCHON	1					
312	2181-1116D2	PLUG	BOUCHON	1					

Fig. 4140 SWING MOTOR
MOTEUR D'ORIENTATION

Serial No. ;

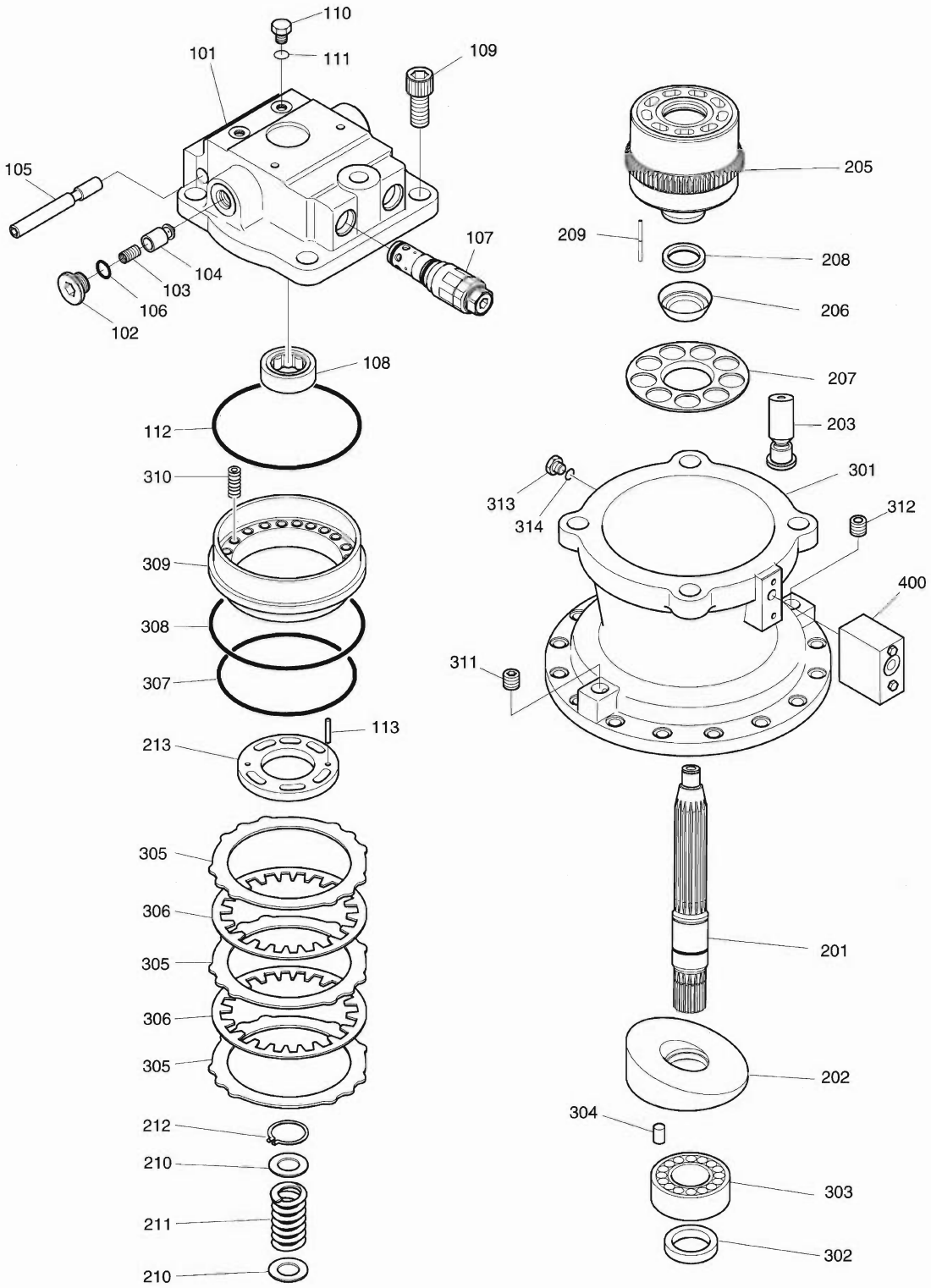

DATE	NOV. 27, 2006
1st EDITION	

Fig. 4140 SWING MOTOR MOTEUR D'ORIENTATION

Serial No. ;

Key No.	Part No.	Description	Description	Q'ty	S.C	Serial No.	ICA	Replaceable part	
								Part No.	Q'ty
4140-313	2181-1950D1	PLUG	BOUCHON	1					
314	S8000111	O-RING	JOINT TORIQUE	1	K				
400	420-00110	VALVE;BRAKE	VANNE	1					
*	K9001903	SEAL KIT;SWING MOTOR	JOINT	1					

DATE	NOV. 27, 2006
1st EDITION	

Fig. 4150 SWING REDUCTION GEAR
REDEUTEUR D'ORIENTATION

Serial No. ;

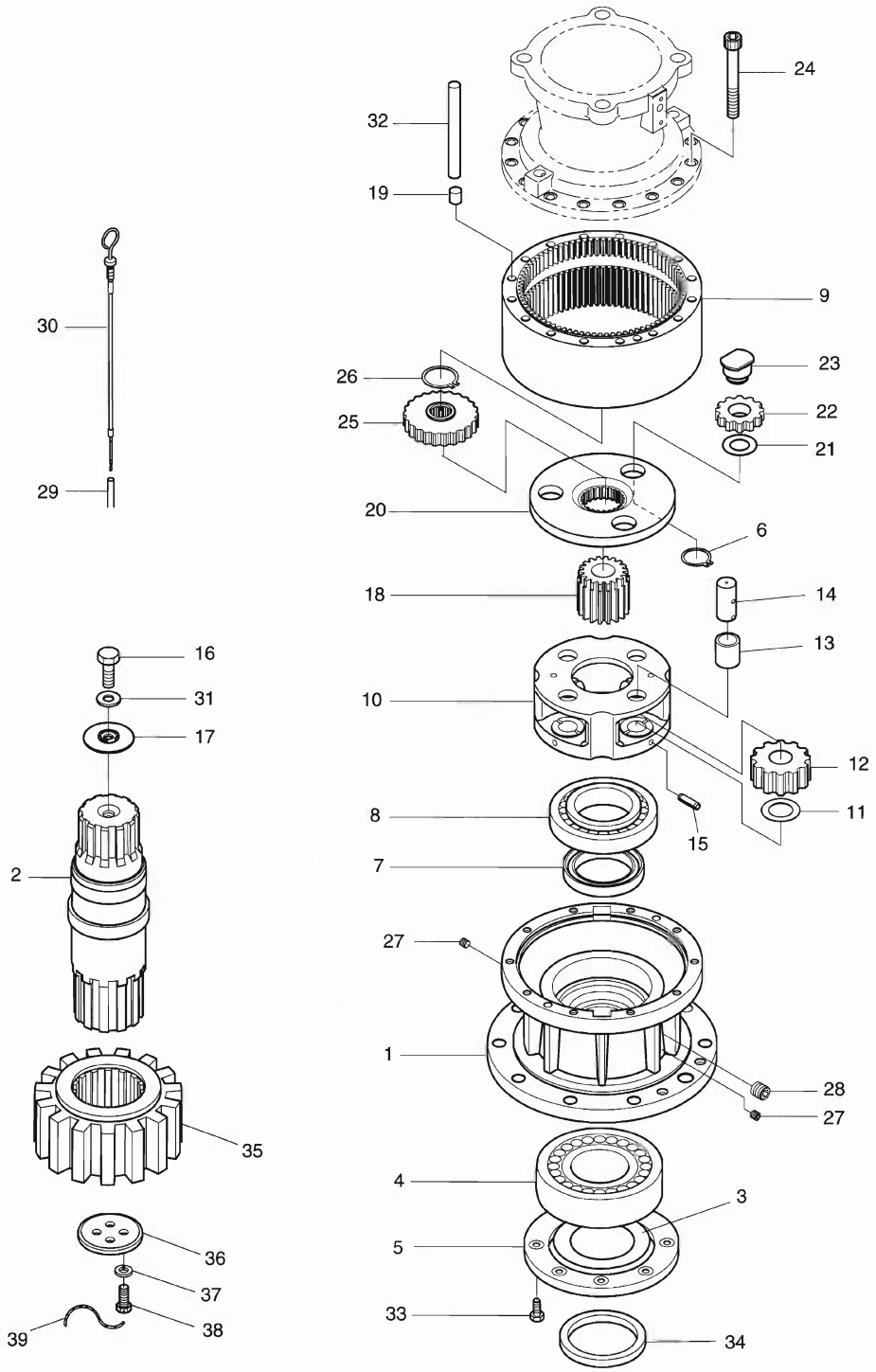

DATE	NOV. 27, 2006
1st EDITION	

Fig. 4150 SWING REDUCTION GEAR REDEUTEUR D'ORIENTATION

Serial No. ;

Key No.	Part No.	Description	Description	Q'ty	S.C	Serial No.	ICA	Replaceable part	
								Part No.	Q'ty
4150--	K1013561	REDUCTION GEAR	BOITE REDUCTEUR	1					
1	K1001235	CASING	CARTER	1					
2	105-00001A	SHAFT;DRIVE	ARBRE	1					
3	2412-1040	PLATE	PLAQUE	1					
4	2109-9033	BEARING;ROLLER	ROULEMENT A BILLES	1					
5	2891-1421B	PLATE;COVER	PLAQUE	1					
6	S6500380	RING;SNAP	BAGUE	3					
7	2180-1254	SEAL;OIL	JOINT D'HUILE	1					
8	109-00174	BEARING;ROLLER	ROULEMENT A BILLES	1					
9	104-00051A	GEAR;RING	PIGNON	1					
10	230-00061	CARRIER NO.2	SUPPORT	1					
11	2114-1901A	WASHER;THRUST NO.2	RONDELLE	4					
12	104-00050	GEAR;PLANET NO.2	PIGNON	4					
13	110-00219	BUSH NO.2	DOUILLE	4					
14	123-00437A	PIN NO.2	GOUJON	4					
15	S5741341	PIN;SPRING	GOUPILLE	4					
16	S0121061	BOLT	BOULON A 6 PANS	1					
17	114-00548	WASHER;THRUST NO.3	RONDELLE	1					
18	104-00048	GEAR;SUN NO.2	PIGNON	1					
19	2705-1030	PIN;KNOCK	GOUPILLE	4					
20	230-00060A	CARRIER NO.1	SUPPORT	1					
21	114-00527	WASHER;THRUST NO.1	RONDELLE	3					
22	104-00049A	GEAR;PLANET NO.1	PIGNON	3					
23	123-00435A	PIN ASS'Y NO.1	GOUJON	3					
24	S2217471	BOLT;SOCKET	BOULON	16					
25	104-00047A	GEAR;SUN NO.1	PIGNON	1					
26	S6500450	RING;SNAP	BAGUE	1					
27	2181-1116D2	PLUG	BOUCHON	2					
28	2181-1116D4	PLUG	BOUCHON	1					
29	2140-1406	PIPE;LEVEL GAUGE	TUYAU	1					
30	2119-1065	GAUGE;LEVEL	INDICATEUR DE NIVEAU	1					
31	S5231090	WASHER;DOUBLE TAB	RONDELLE	1					
32	140-01374A	PIPE	TUYAU	4					
33	120-00144	BOLT	BOULON A 6 PANS	8					
34	2114-1914A	SPACER	BAGUE D'ECARTEMENT	1					
35	404-00018A	PINION GEAR	PINION	1					
36	2403-4001A	COVER	COUVERCLE	1					
37	S5102901	WASHER;SPRING	RONDELLE ELASTIQUE	4					

DATE	NOV. 27, 2006
1st EDITION	

Fig. 4150 SWING REDUCTION GEAR
REDEUTEUR D'ORIENTATION

Serial No. ;

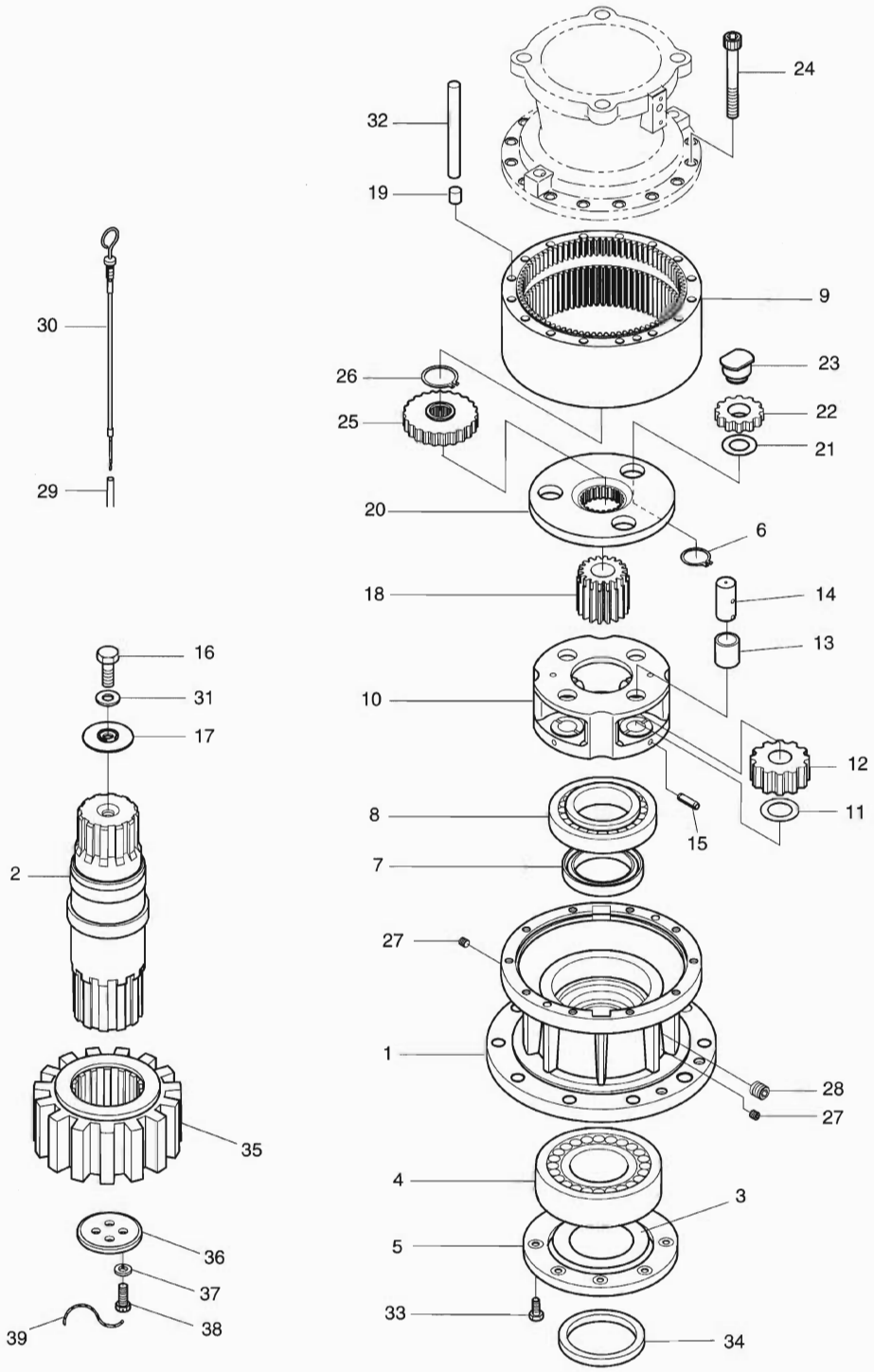

DATE	NOV. 27, 2006
1st EDITION	

Fig. 4150 SWING REDUCTION GEAR REDEUTEUR D'ORIENTATION

Serial No. ;

Key No.	Part No.	Description	Description	Q'ty	S.C	Serial No.	ICA	Replaceable part	
								Part No.	Q'ty
4150-38	2120-1363	BOLT	BOULON A 6 PANS	4					
39	2126-9001	WIRE	CABLE	1					

Fig. 4160 TRAVEL MOTOR
MOTEUR DE TRANSLATION

Serial No. ;

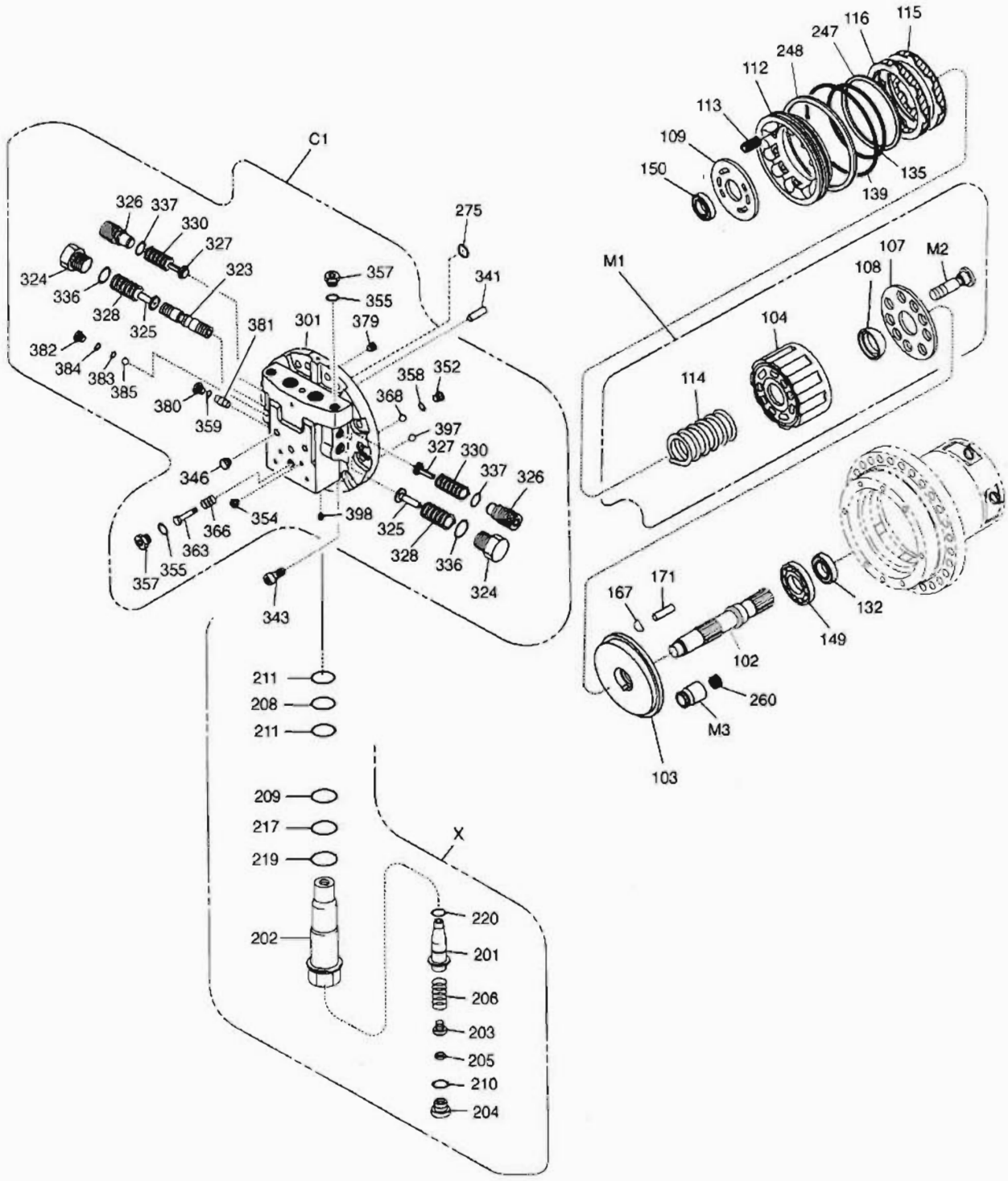

DATE	NOV. 27, 2006
1st EDITION	

Fig. 4160 TRAVEL MOTOR MOTEUR DE TRANSLATION

Serial No. ;

Key No.	Part No.	Description	Description	Q'ty	S.C	Serial No.	ICA	Replaceable part	
								Part No.	Q'ty
4160--	K1017674	TRAVEL DEVICE	MOTEUR DE TRANSLATION	2					
	K9004441	TRAVEL MOTOR	MOTEUR DE TRANSLATION	1					
C1	K9004442	REAR FLANGE ASS'Y	ARRIRE BRIDE	1					
C2	K9004443	. REAR FLANGE KIT	. KIT ARRIRE DE BRIDE	1					
301	-	.. FLANGE;REAR	.. ARRIRE BRIDE	1	D				
323	1.424-00024	.. SPOOL	.. TRAITEMENT DIFFR	1					
381	2.409-00058	.. PISTON	.. PISTON	1					
324	1.181-00059	. PLUG	. BOUCHON	2					
325	1.416-00009	. STOPPER	. ARRET	2					
326	1.181-00067	. PLUG	. BOUCHON	2					
327	1.420-00013	. VALVE;CHECK	. VANNE	2					
328	1.131-00058	. SPRING	. RESSORT	2					
330	1.129-00006	. SPRING	. RESSORT	2					
336	S8000321	. O-RING	. JOINT TORIQUE	2	K				
337	S8002731	. O-RING	. JOINT TORIQUE	2	K				
346	2181-1116D2	. PLUG;PT	. PRISE	2					
352	2181-1890D2	. PLUG;RO	. BOUCHON	2					
354	2181-1116D10	. PLUG;PT	. BOUCHON	7					
355	S8000181	. O-RING	. JOINT TORIQUE	2	K				
357	2181-1890D4	. PLUG;RO	. BOUCHON	2					
358	S8000111	. O-RING	. JOINT TORIQUE	2	K				
359	S8000141	. O-RING	. JOINT TORIQUE	2	K				
363	1.424-00041	. SPOOL;2 SPEED	. BOBINE	1					
366	1.131-00001	. SPRING	. RESSORT	1					
368	S6250182	. BALL;STEEL	. BILLE	2					
379	1.471-00001	. FILTER	. FILTRE	1					
380	2181-1890D3	. PLUG	. BOUCHON	2					
382	1.181-00062	. PLUG	. BOUCHON	2					
383	S8000051	. O-RING	. JOINT TORIQUE	2	K				
384	S8000081	. O-RING	. JOINT TORIQUE	2	K				
385	1.148-00012	. BALL;STEEL	. BILLE	2					
397	1.415-00005	. ORIFICE	. ORIFICE	1					
398	2181-1116D1	. PLUG;PT	. PRISE	4					
341	S5700891	PIN;PARALLEL	BROUCHE	1					
343	S2221471	BOLT;SOCKET	BOULON DE PLOT	12					
M1	K9004444	CYL. BLOCK & PISTON KIT	BLOC-CYLINDRES &	1					
M2	K9004445	. PISTON ASS'Y	. ENSEMBLE DE PISTON	1					
104	K9004446	. BLOCK;CYLINDER	. BLOC DE CYLINDRE	1					

DATE	NOV. 27, 2006
1st EDITION	

Fig. 4160 TRAVEL MOTOR
MOTEUR DE TRANSLATION

Serial No. ;

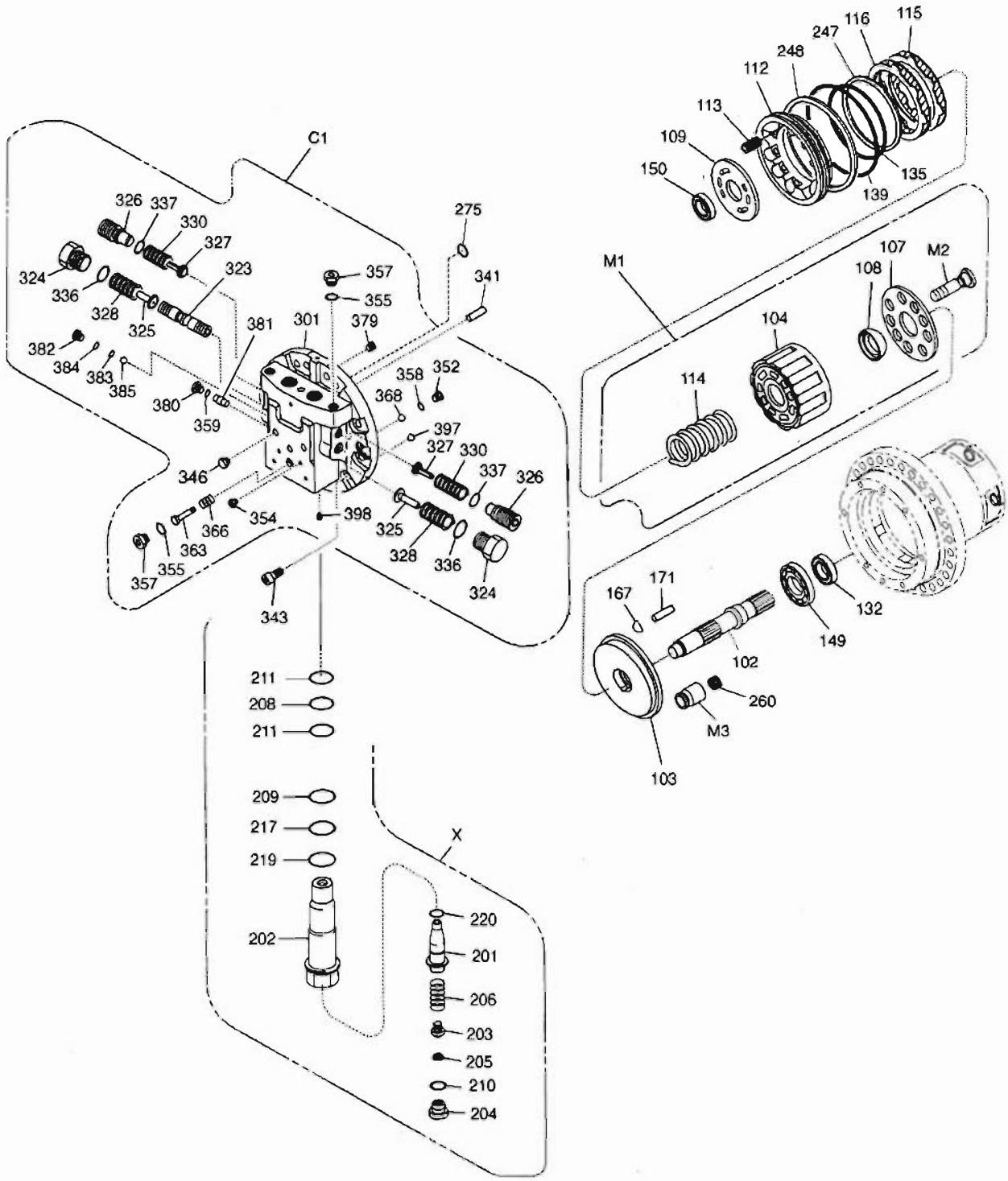

DATE	NOV. 27, 2006
1st EDITION	

Fig. 4160 TRAVEL MOTOR MOTEUR DE TRANSLATION

Serial No. ;

Key No.	Part No.	Description	Description	Q'ty	S.C	Serial No.	ICA	Replaceable part	
								Part No.	Q'ty
4160-107	K9004447	. PLATE;RETAINER	. PLAQUE	1					
108	K9004448	. BALL;THRUST	. BILLE	1					
114	K9004449	. SPRING	. RESSORT	9					
M3	1.409-00180	PISTON KIT;2 SPEED	ENSEMBLE DE PISTON	1					
102	K9004450	SHAFT;MAIN	AXE	1					
103	K9004451	PLATE;SWASH	OSCILLANT PLATEAU	1					
109	K9004452	PLATE;TIMING	PLAQUE	1					
112	K9004453	PISTON;PARKING	PISTON	1					
113	1.131-00049	SPRING	RESSORT	12					
115	412-00013	PLATE;FRICTION	PLAQUE	2					
116	352-00014	PLATE;MATING	PLAT D'CACCOUPLEMENT	2					
132	1.180-00521	SEAL;OIL	JOINT	1	K				
135	S8001801	O-RING	JOINT TORIQUE	1	K				
139	S8002101	O-RING	JOINT TORIQUE	1	K				
149	1.109-00147	BEARING;BALL	BILLES ROULEMENT	1					
150	1.109-00026	BEARING;BALL	BILLES ROULEMENT	1					
167	1.540-00006	PIVOT	PIVOT	1					
171	1.123-00053	PIN;PARALLEL	BROUCHE	2					
X	1.420-00119	RELIEF VALVE ASS'Y	SOULAGEMENT VANNE	2					
201	-	. VALVE	. SOUPAPE	1	D				
202	1.425-00004	. SLEEVE	. BROUCHE	1					
203	1.115-00010	. RETAINER;SPRING	. BAGUE DE RESSORT	1					
204	1.181-00063	. PLUG	. BOUCHON	1					
205	1.114-00016	. SHIM	. CALE	1					
206	1.131-00050	. SPRING	. RESSORT	1					
208	S8000161	. O-RING	. JOINT TORIQUE	1	K				
209	S8000221	. O-RING	. JOINT TORIQUE	1	K				
210	S8000181	. O-RING	. JOINT TORIQUE	1	K				
211	S8060161	. RING;BACK UP	. BAGUE ANTIEXTRUSION	2	K				
217	S8060221	. RING;BACK UP	. BAGUE ANTIEXTRUSION	1	K				
219	S8010291	. O-RING	. JOINT TORIQUE	1	K				
220	1.180-00527	. SEAL;PISTON	. JOINT DE PISTON	1	K				
247	S8061800	RING;BACK UP	BAGUE ANTIEXTRUSION	1	K				
248	S8062100	RING;BACK UP	BAGUE ANTIEXTRUSION	1	K				
260	1.131-00042	SPRING	RESSORT	1					
275	S8000081	O-RING	JOINT TORIQUE	2	K				
900	K9004604	SEAL KIT;TRAVEL MOTOR	JOINT TORIQUE	1					
901	1.180-00465	SEAL KIT;RELIEF VALVE	KIT DE JOINT	1					

DATE	NOV. 27, 2006
1st EDITION	

Fig. 4170 TRAVEL REDUCTION GEAR BOITE REDUCTEUR

Serial No. ;

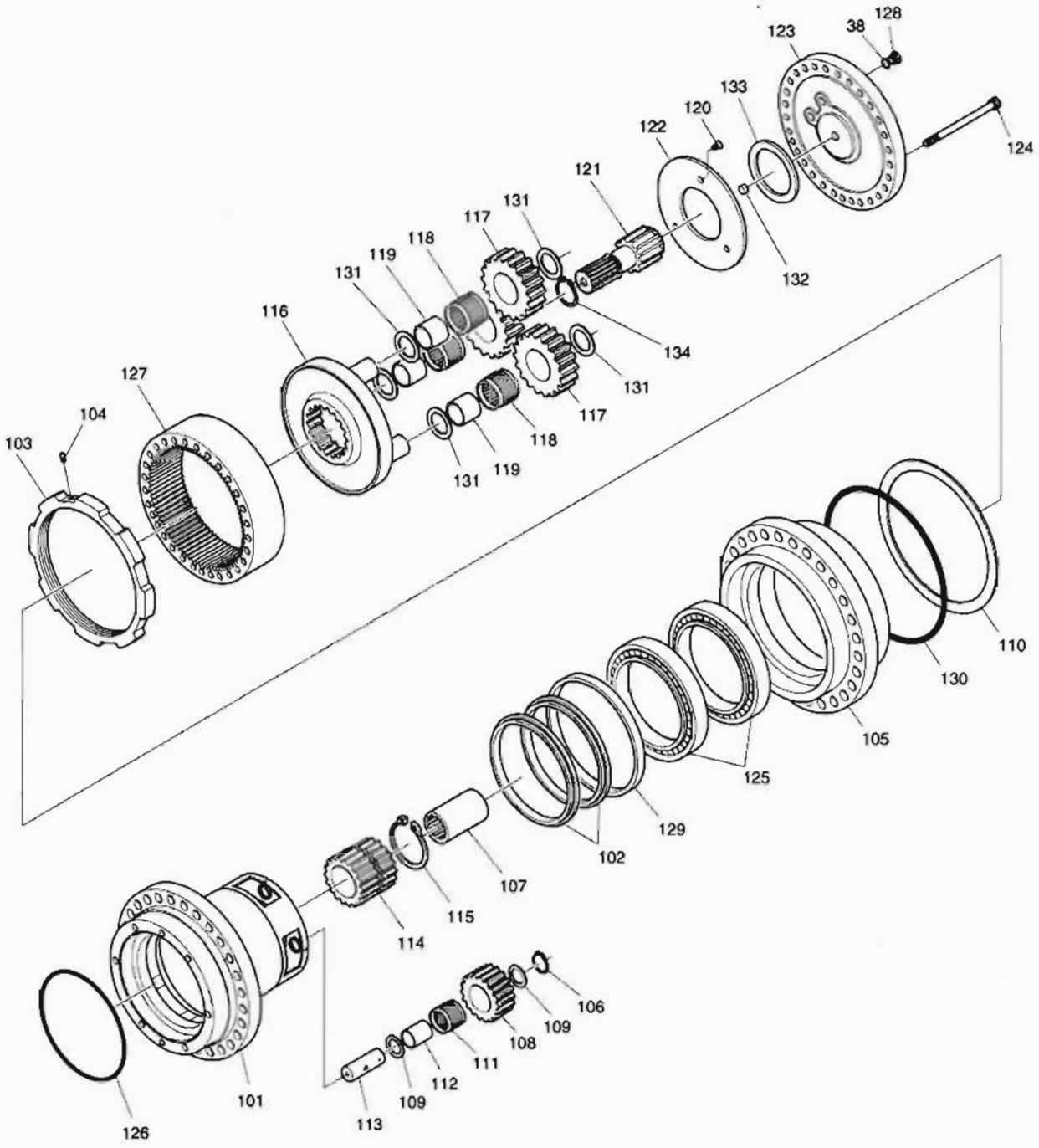

DATE	NOV. 27, 2006
1st EDITION	

Fig. 4170 TRAVEL REDUCTION GEAR BOITE REDUCTEUR

Serial No. ;

Key No.	Part No.	Description	Description	Q'ty	S.C	Serial No.	ICA	Replaceable part	
								Part No.	Q'ty
4170--	K1017674	TRAVEL DEVICE	BOITE REDUCTEUR	2					
R	K9004308	REDUCTION GEAR	REDUCTEUR	1					
R-1	K9004309	SPINDLE ASS'Y	TOUPIE	1					
38	S8000181	O-RING	JOINT TORIQUE	3					
101	K9004310	SPINDLE	TOUPIE	1					
102	1.180-00511	SEAL;FLOATING	JOINT	2					
103	K9004311	RING;NUT	BAGUE	1					
104	S3523031	SCREW;SET	VIS	4					
105	K9004312	HUB	MOYEU	1					
106	S6510380	RING;SNAP	BAGUE D'ARRET	1					
107	K9004296	COUPLING	ACCOUPLEMENT	1					
108	K9004314	GEAR;PLANETARY	PIGNON	4					
109	K9004313	WASHER;THRUST	RONDELLE DE BUTEE	8					
110	K9004300	PIECE;DISTANCE	GUIDE	1					
111	1.109-00145	BEARING;NEEDLE	ROULEMENT D'AIGUILLE	4					
112	K9004315	BUSH;FLOATING	DOUILLE	4					
113	K9004316	BEARING;SHAFT	ROULEMENT	4					
114	K9004317	GEAR;SUN	PIGNON	1					
115	S6500850	RING;SNAP	BAGUE D'ARRET	1					
116	K9004297	CARRIER	PORTE-SATELLITES	1					
117	K9004298	GEAR;PLANETARY	PIGNON	3					
118	1.216-00017	BEARING;NEEDLE	ROULEMENT D'AIGUILLE	3					
119	K9004299	COLLAR	COLLIER	3					
120	K9004303	SCREW	VIS	3					
121	K9004306	GEAR;DRIVE	PIGNON	1					
122	K9004302	PLATE;THRUST	PLAQUE	1					
123	K9004307	COVER	COUVERCLE	1					
124	S2223671	BOLT;SOCKET	BOULON A 6 PANS CREUX	24					
125	1.109-00033	BEARING;ANGULAR BALL	A BILLES ROULEMENT	2					
126	S8010230	O-RING	JOINT TORIQUE	1					
127	K9004305	GEAR;RING	PIGNON	1					
128	2181-1890D4	PLUG	BOUCHON	3					
129	1.180-00354	RING;SEAL	BAGUE D'ETANCHEITE	1					
130	2180-1217D103	O-RING	JOINT TORIQUE	1	K				
131	K9004301	WASHER;THRUST	RONDELLE DE BUTEE	6					
132	K9004304	WASHER;THRUST	RONDELLE DE BUTEE	1					
133	1.412-00164	PLATE;THRUST	PLAQUE	1					
134	S6510280	RING;SNAP	BAGUE D'ARRET	1					

DATE	NOV. 27, 2006
1st EDITION	

Fig. 4180 CONTROL VALVE DISTRIBUTEUR

Serial No. ;

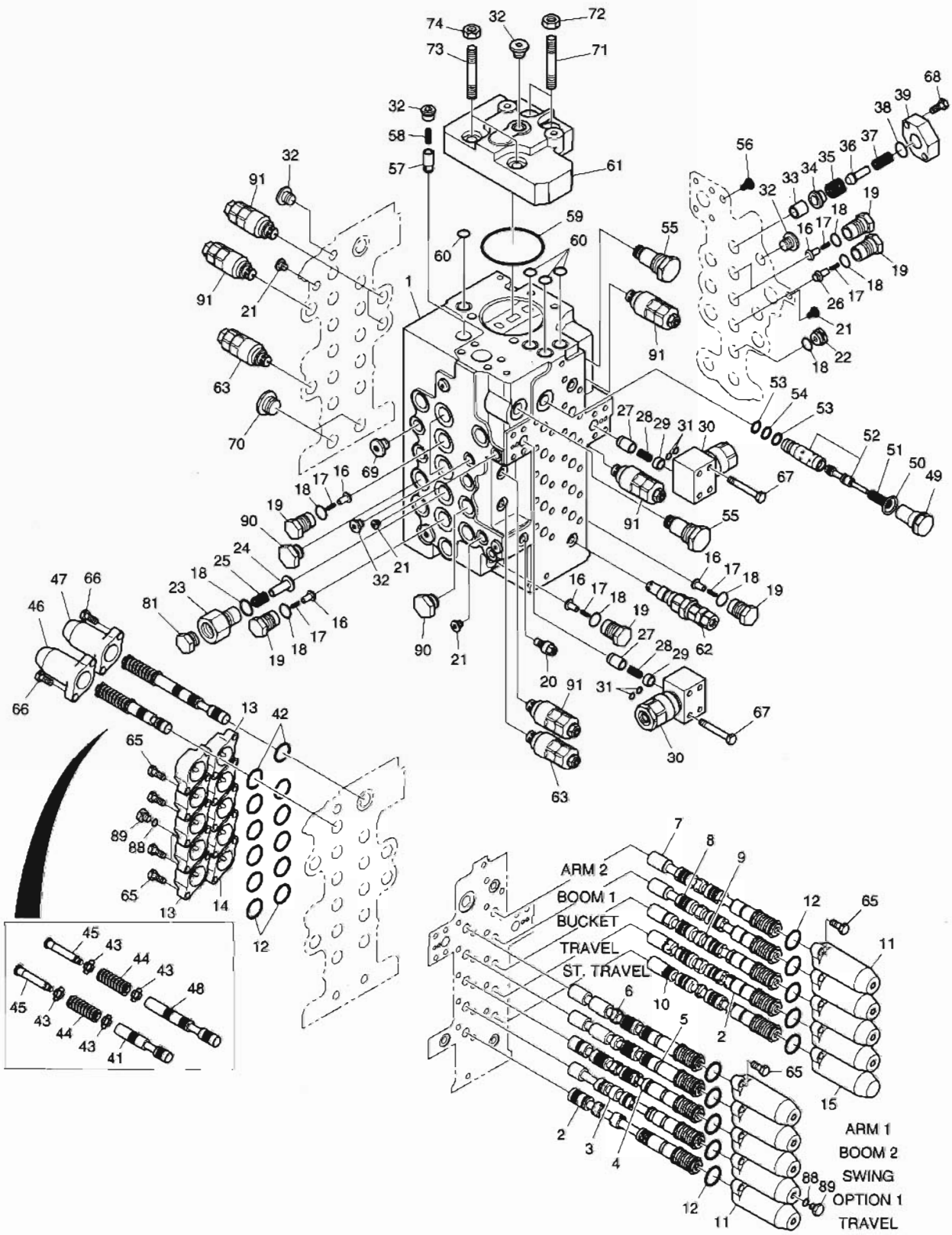

DATE	NOV. 27, 2006
1st EDITION	

Fig. 4180 CONTROL VALVE DISTRIBUTEUR

Serial No. ;

Key No.	Part No.	Description	Description	Q'ty	S.C	Serial No.	ICA	Replaceable part	
								Part No.	Q'ty
4180--	420-00466A	VALVE;CONTROL	DISTRIBUTEUR	1					
1	-	HOUSING;VALVE	LOGEMENT	1	D				
2	K9004482	SPOOL ASS'Y - TRAVEL	BOBINE	2					
3	K9004481	SPOOL ASS'Y - OPTION	BOBINE	1					
4	K9004483	SPOOL ASS'Y - SWING	BOBINE	1					
5	K9004484	SPOOL ASS'Y - BOOM 2	BOBINE	1					
6	K9004485	SPOOL ASS'Y - ARM 1	BOBINE	1					
7	K9004486	SPOOL ASS'Y - ARM 2	BOBINE	1					
8	K9004487	SPOOL ASS'Y - BOOM 1	BOBINE	1					
9	K9004488	SPOOL ASS'Y - BUCKET	BOBINE	1					
10	K9004480	SPOOL ASS'Y - STRAIGHT	BOBINE	1					
11	K9004473	CAP	CHAPEAU	9					
12	S8010351	O-RING	JOINT TORIQUE	20					
13	K9004474	CAP	CHAPEAU	9					
14	K9004471	CAP	CHAPEAU	1					
15	K9004472	CAP	CHAPEAU	1					
16	K9004499	POPPET	POUPEE	8					
17	129-00129	SPRING	RESSORT	9					
18	180-00398	O-RING	JOINT TORIQUE	11					
19	430-00042	PLUG	BOUCHON	9					
20	K9004475	PLUG ASS'Y	BOUCHON	1					
21	K9004467	PLUG ASS'Y	BOUCHON	4					
22	K9004465	PLUG	BOUCHON	1					
23	K9004497	PLUG	BOUCHON	1					
24	K9004502	POPPET	POUPEE	1					
25	K9004508	SPRING	RESSORT	1					
26	K9004500	POPPET	POUPEE	1					
27	K9004504	POPPET	POUPEE	2					
28	K9004506	SPRING	RESSORT	2					
29	K9004491	SPACER ASS'Y	BAGUE D'ECARTEMENT	2					
30	K9004490	VALVE ASS'Y	ENSEMBLE DE VANNE	2					
31	S8000061	O-RING	JOINT TORIQUE	4					
32	181-00561	PLUG ASS'Y	BOUCHON	5					
33	K9004498	SLEEVE	MANCHON	1					
34	K9004503	POPPET	POUPEE	1					
35	K9004468	SPRING	RESSORT	1					
36	K9004501	POPPET	POUPEE	1					
37	K9004505	SPRING	RESSORT	1					

DATE	NOV. 27, 2006
1st EDITION	

Fig. 4180 CONTROL VALVE DISTRIBUTEUR

Serial No. ;

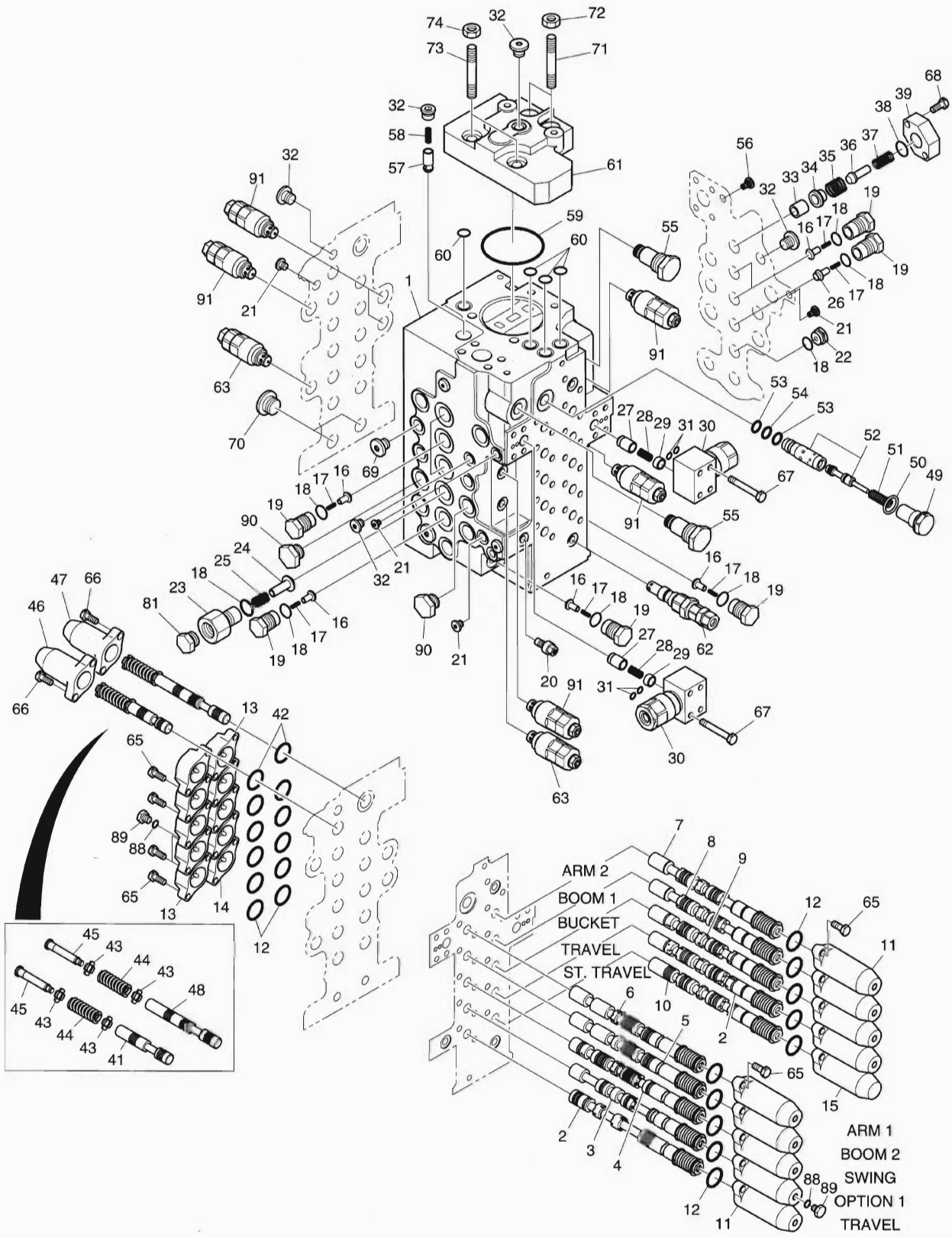

DATE	NOV. 27, 2006
1st EDITION	

Fig. 4180 CONTROL VALVE DISTRIBUTEUR

Serial No. ;

Key No.	Part No.	Description	Description	Q'ty	S.C	Serial No.	ICA	Replaceable part	
								Part No.	Q'ty
180-38	S8000261	O-RING	JOINT TORIQUE	1					
39	K9004509	FLANGE	BRIDE	1					
41	K9004477	SPOOL	BOBINE	1					
42	S8000261	O-RING	JOINT TORIQUE	2					
43	429-00024	SEAT;SPRING	SIEGE	4					
44	129-00124	SPRING	RESSORT	2					
45	430-00040	SPOOL;END	BOBINE	2					
46	K9004469	CAP	CHAPEAU	1					
47	K9004470	CAP	CHAPEAU	1					
48	K9004478	SPOOL	BOBINE	1					
49	K9004496	PLUG	BOUCHON	1					
50	S8000241	O-RING	JOINT TORIQUE	1					
51	K9004507	SPRING	RESSORT	1					
52	K9004479	SPOOL ASS'Y	BOBINE	1					
53	S8060161	RING;BACK-UP	BAGUE	2					
54	S8000161	O-RING	JOINT TORIQUE	1					
55	K9004476	VALVE;RELIEF	VANNE	2					
56	415-00037	PLUG;ORIFICE	BOUCHON	1					
57	426-00168	POPPET	POUPEE	1					
58	129-00126	SPRING	RESSORT	1					
59	S8011001	O-RING	JOINT TORIQUE	1					
60	180-00403	O-RING	JOINT TORIQUE	4					
61	K9004489	OUTLET ASS'Y	SORTIE	1					
62	K9004493	VALVE;RELIEF	VANNE	1					
63	K9002672	VALVE;RELIEF	VANNE	2					
65	S2209066	BOLT;SOCKET	BOULON	40					
66	S2204866	BOLT;SOCKET	BOULON	4					
67	S2209666	BOLT;SOCKET	BOULON	8					
68	S2212466	BOLT;SOCKET	BOULON	2					
69	181-00563	PLUG ASS'Y	BOUCHON	2					
70	181-00564	PLUG ASS'Y	BOUCHON	2					
71	K9004494	ROD;TIE	TIGE	2					
72	K9001075	NUT	ECROU 6 PANS	2					
73	K9004495	ROD;TIE	TIGE	2					
74	K9001077	NUT	ECROU 6 PANS	2					
81	K9004466	PLUG ASS'Y	BOUCHON	1					
88	S8000141	O-RING	JOINT TORIQUE	2					
89	181-00646	PLUG	BOUCHON	2					

DATE	NOV. 27, 2006
1st EDITION	

Fig. 4180 CONTROL VALVE
DISTRIBUTEUR

Serial No. ;

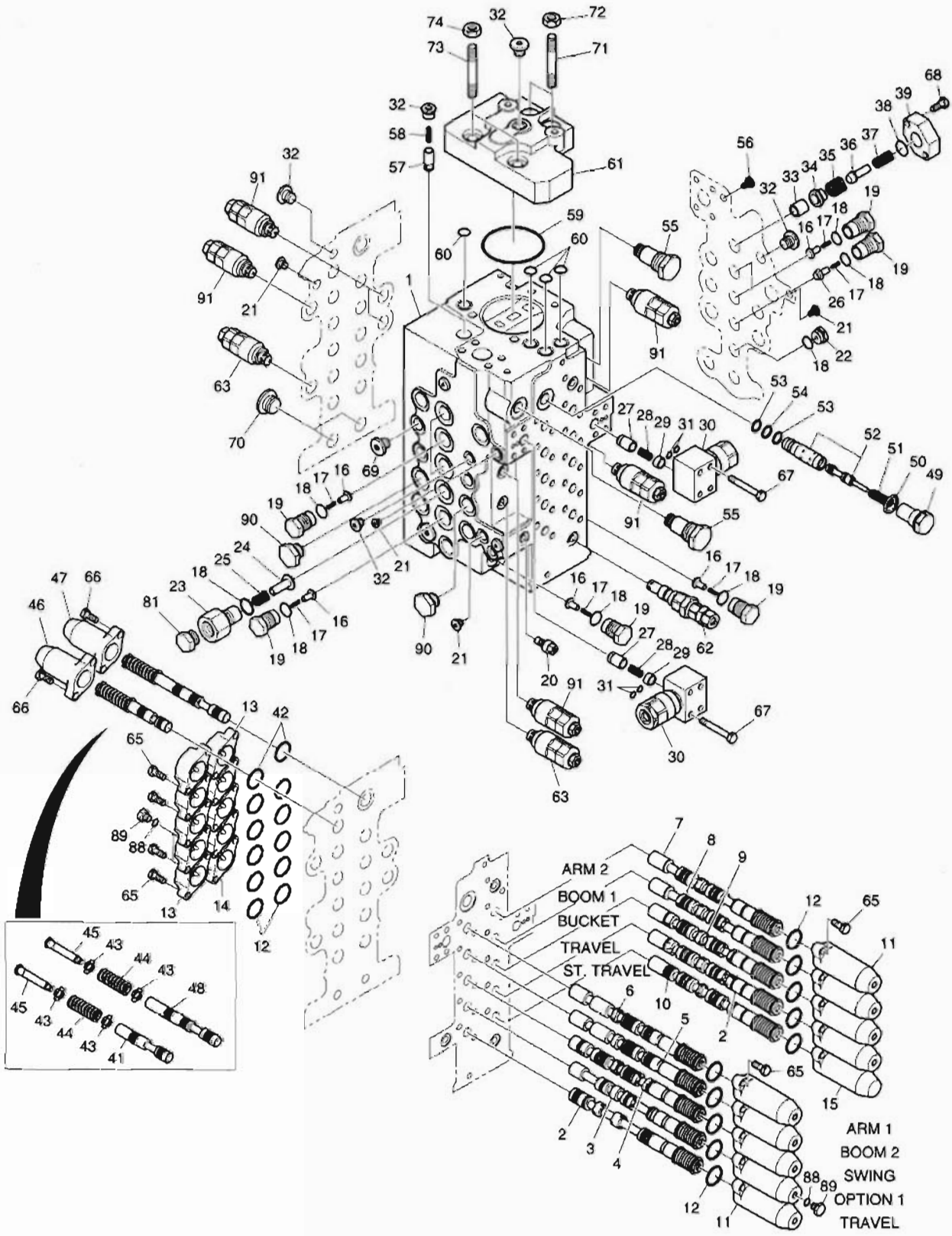

DATE	NOV. 27, 2006
1st EDITION	

Fig. 4180 CONTROL VALVE DISTRIBUTEUR

Serial No. ;

Key No.	Part No.	Description	Description	Q'ty	S.C	Serial No.	ICA	Replaceable part	
								Part No.	Q'ty
4180-90	181-00647	PLUG ASS'Y	BOUCHON	2					
91	K9004492	VALVE;RELIEF	VANNE	6					

DATE	NOV. 27, 2006
1st EDITION	

Fig. 4190 REMOTE CONTROL VALVE
VANNE DE COMMAND A DISTANCE

Serial No. ;

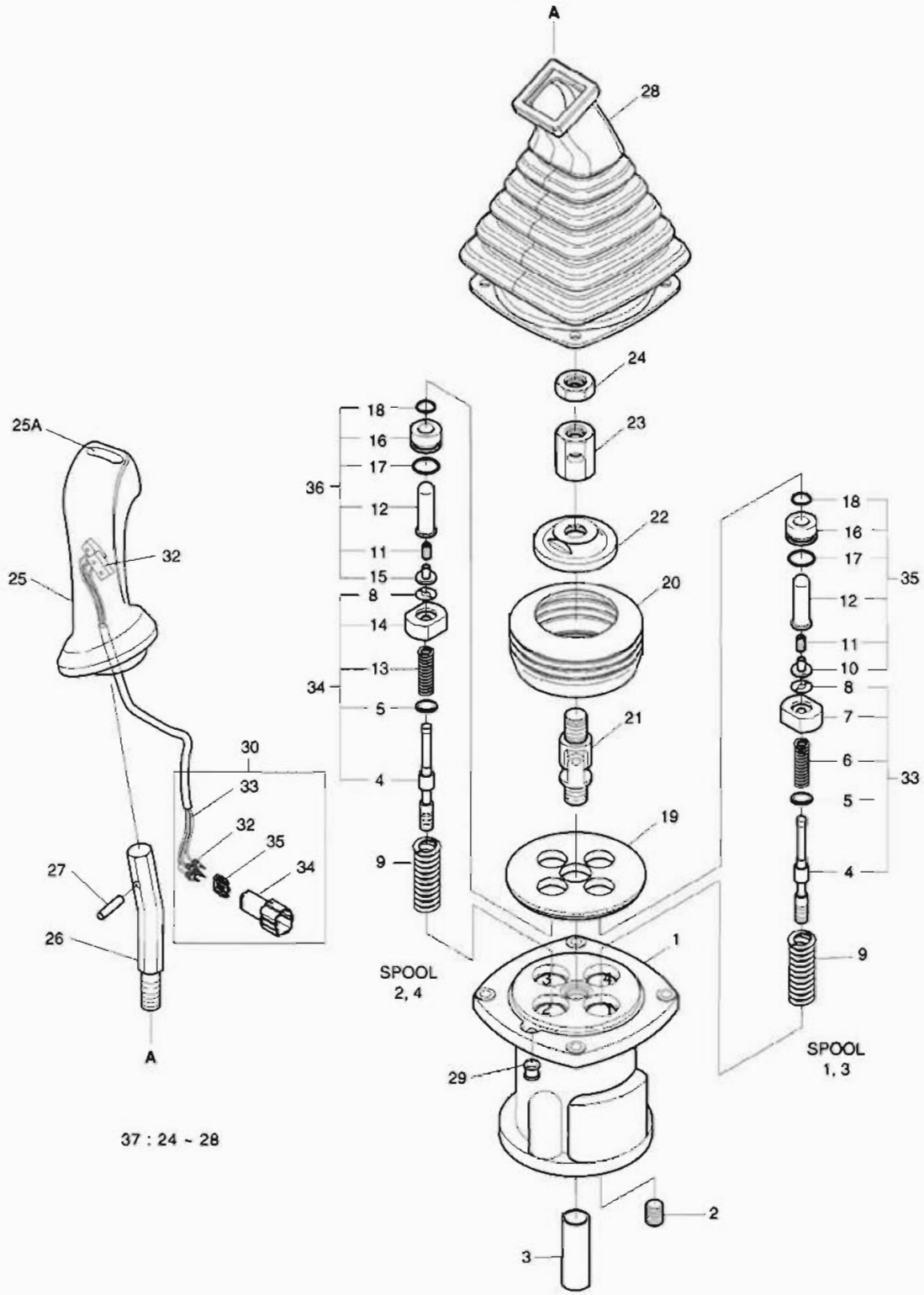

DATE	NOV. 27, 2006
1st EDITION	

Fig. 4190 REMOTE CONTROL VALVE VANNE DE COMMAND A DISTANCE

Serial No. ;

Key No.	Part No.	Description	Description	Q'ty	S.C	Serial No.	ICA	Replaceable part	
								Part No.	Q'ty
4190--	K1000556G	REMOTE CONTROL VALVE(L.H)	MANETTE DE CONTROLE	1					
	K1000555G	REMOTE CONTROL VALVE(R.H)	MANETTE DE CONTROLE	1					
1	-	CASE	CARTER	1	D				
2	2181-1116D1	PLUG	BOUCHON	4					
3	K9001115	BUSHING	DOUILLE	1					
4	-	SPOOL	BOBINE	4	D				
5	-	SHIM	ENTERTOISE	1	D				
6	-	SPRING	RESSORT	2	D				
7	-	SEAT;SPRING	SIEGE	2	D				
8	-	STOPPER	CHAPEAU	4	D				
9	K9001119	SPRING	RESSORT	4					
10	-	STOPPER	CHAPEAU	2	D				
11	-	SPRING	RESSORT	4	D				
12	-	ROD;PUSH	POUSSOIR	4	D				
13	-	SPRING	RESSORT	2	D				
14	-	SEAT;SPRING	SIEGE	2	D				
15	-	STOPPER	CHAPEAU	2	D				
16	-	PLUG	BOUCHON	4	D				
17	S8000205	O-RING	JOINT TORIQUE	4					
18	K9001127	SEAL;ROD	TIGE D'ETANCHEITE	4					
19	1.412-00017	PLATE	PLAQUE	1					
20	K9001128	BOOT	BOTTE	1					
21	1.138-00004	JOINT ASS'Y	ENSEMBLE DE JOINT	1					
22	K9001129	PLATE;SWASH	PLAQUE	1					
23	1.121-00028	NUT	ECROU 6 PANS	1					
24	S4012833	NUT	ECROU 6 PANS	1					
25	K9001130	HANDLE ASS'Y(L.H)	HANDLE	1					
	K9001131	HANDLE ASS'Y(R.H)	HANDLE	1					
25A	1.161-00021	. CAP;PEANUT	. CHAPEAU	1					
26	1.178-00004	BAR;HANDLE	JAGUE DE NIVEAU	1					
27	S5740800	PIN;SPRING	GOUPILLE	1					
28	K9001132	BELLOWS	SOUFFLET	1					
29	1.110-00169	BUSHING	DOUILLE	1					
30	K9001133	CONNECTOR ASS'Y	CONNECTOR	1					
32	K9001001	SWITCH ASS'Y	AVERTISSEUR	1					
33	K9003998	KIT;SPOOL(1,3)	KIT DE BOBINE	1					
34	K9003999	KIT;SPOOL(2,4)	KIT DE BOBINE	1					
35	K9004000	KIT;PLUG(1,3)	KIT DE PRISE	1					

DATE	NOV. 27, 2006
1st EDITION	

Fig. 4190 REMOTE CONTROL VALVE
VANNE DE COMMAND A DISTANCE

Serial No. ;

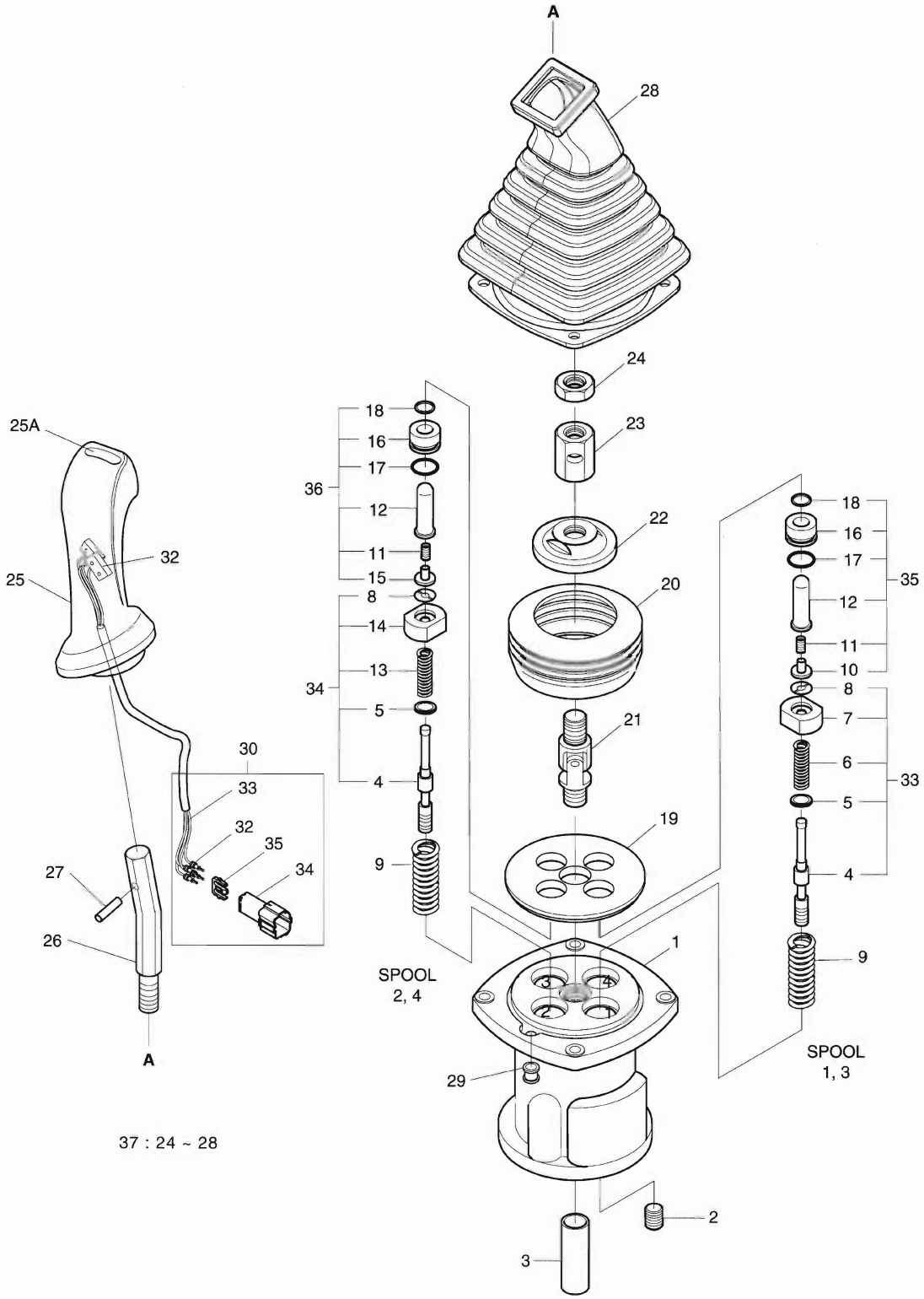

DATE	NOV. 27, 2006
1st EDITION	

Fig. 4190 REMOTE CONTROL VALVE
VANNE DE COMMAND A DISTANCE

Serial No. ;

Key No.	Part No.	Description	Description	Q'ty	S.C	Serial No.	ICA	Replaceable part	
								Part No.	Q'ty
4190-36	K9004001	KIT;PLUG(2,4)	KIT DE PRISE	1					
37	K9001139	KIT;HANDLE(R.H)	KIT DE POIGN?E	1					
	K9001140	KIT;HANDLE(L.H)	KIT DE POIGN?E	1					

Fig. 4200 PEDAL VALVE VANNE

Serial No. ;

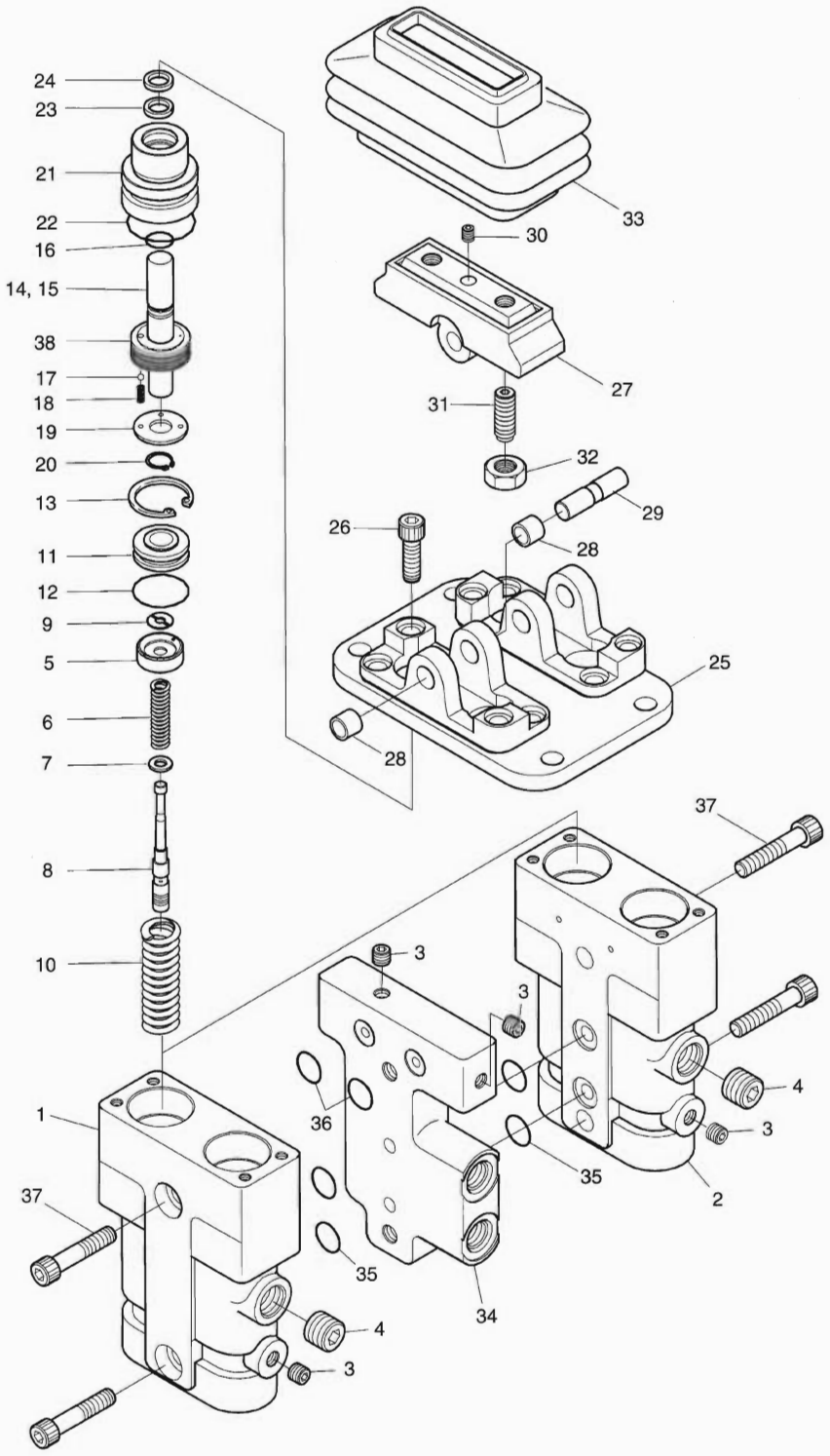

DATE	NOV. 27, 2006
1st EDITION	

Fig. 4200 PEDAL VALVE VANNE

Serial No. ;

Key No.	Part No.	Description	Description	Q'ty	S.C	Serial No.	ICA	Replaceable part	
								Part No.	Q'ty
4200--	420-00467	PEDAL VALVE	VANNE DE PEDALE	1					
1	423-00046	BODY(1)	CARTER	1	D				
2	423-00047	BODY(2)	CARTER	1	D				
3	2181-1116D1	PLUG PT1/8	BOUCHON	4					
4	2181-1116D3	PLUG PT3/8	BOUCHON	2					
5	429-00004	SEAT;SPRING	SIEGE	4					
6	K9001141	SPRING	RESSORT	4					
7	429-00005	SEAT;SPRING	SIEGE	4					
8	424-00042	SPOOL	BOBINE	4					
9	161-00080	STOPPER	CHAPEAU	4					
10	129-00042	SPRING	RESSORT	4					
11	429-00006	GUIDE;ROD	GARDE	4					
12	S8000221	O-RING	JOINT TORIQUE	4	K				
13	1.229-00036	RING;SNAP	BAGUE	4					
14	1.454-00001	ROD;PUSH	POUSSOIR	4					
15	S5740480	PIN;SPRING	GOUPILLE	4					
16	180-00197	SEAL	JOINT	4	K				
17	S6250110	BALL;STEEL	BILLE	4					
18	129-00043	SPRING	RESSORT	4					
19	159-00017	PLATE	PLAQUE	4					
20	115-00042	RING;SNAP	BAGUE	4					
21	181-00319	PLUG	BOUCHON	4					
22	S8010251	O-RING	JOINT TORIQUE	4	K				
23	180-00198	SEAL;ROD	TIGE D'ETANCHEITE	4	K				
24	180-00199	SEAL;DUST	JOINT	4	K				
25	K9001142	COVER	COUVERCLE	1					
26	S2205261	BOLT;WRENCH M6X1.0X30	BOULON A 6 PANS	4					
27	354-00002	CAM	CAME	2					
28	2110-1184D7	BUSHING	DOUILLE	4					
29	354-00003	SHAFT;CAM	ARBRE A CAMES	2					
30	S3523608	SCREW;SET	VIS	2					
31	120-00127	SCREW;SET	VIS	4					
32	S4014633	NUT M10	ECROU	4					
33	160-00008	BELLOWS	SOUFFLET	2					
34	114-00225	SPACER	BAGUE D'ECARTEMENT	1					
35	S8000121	O-RING	JOINT TORIQUE	4	K				
36	S8000101	O-RING	JOINT TORIQUE	2	K				
37	S2212461	BOLT;WRENCH M10X1.5X42	BOULON A 6 PANS	4					

DATE	NOV. 27, 2006
1st EDITION	

Fig. 4200 PEDAL VALVE VANNE

Serial No. ;

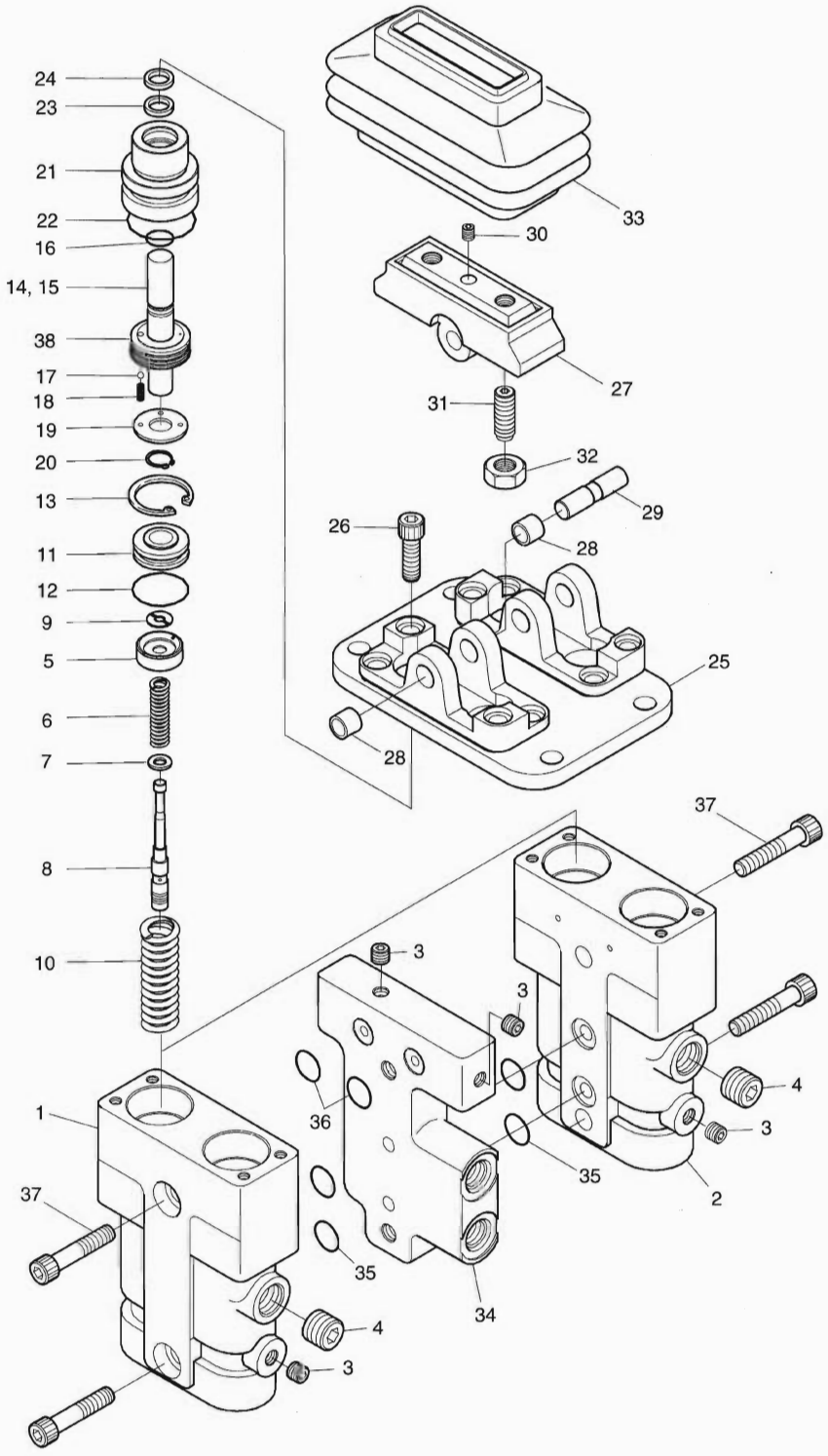

DATE	NOV. 27, 2006
1st EDITION	

Fig. 4200 PEDAL VALVE VANNE

Serial No. ;

Key No.	Part No.	Description	Description	Q'ty	S.C	Serial No.	ICA	Replaceable part	
								Part No.	Q'ty
4200-38	1.409-00225	PISTON	PISTON	4					
*	420-00453KT	SEAL KIT;PEDAL VALVE	KIT DE JOINT	1					

Fig. 4210 SOLENOID VALVE VANNE

Serial No. ;

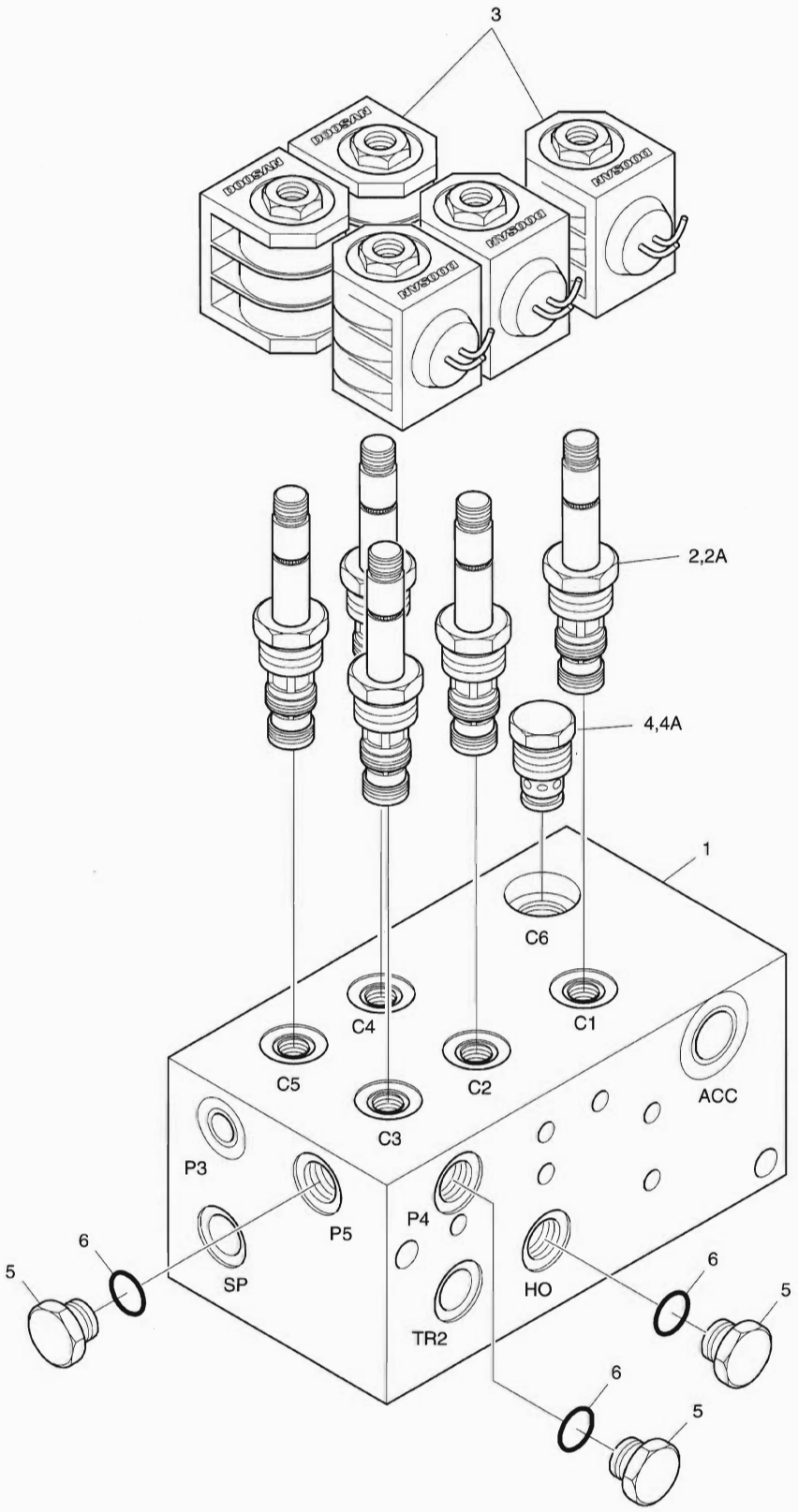

DATE	NOV. 27, 2006
1st EDITION	

Fig. 4210 SOLENOID VALVE VANNE

Serial No. ;

Key No.	Part No.	Description	Description	Q'ty	S.C	Serial No.	ICA	Replaceable part	
								Part No.	Q'ty
4210--	K1012576	SOLENOID VALVE	VANNE DE SOLENOIDE	1					
1	-	BLOCK	BLOC	1	D				
2	K9001354	SOLENOID VALVE	VANNE DE SOLENOIDE	5					
2A	K9001943	. SEAL KIT	. KIT D'ETANCHEITE	1					
3	1.519-00001	COIL	ENROULEMENT	5					
4	K9002065	VALVE;CHECK	VANNE	1					
4A	1.180-00447	. SEAL KIT	. KIT D'ETANCHEITE	1					
5	2181-1950D1	PLUG PF1/4	BOUCHON	3					
6	S8000111	O-RING P11	JOINT TORIQUE	3					

DATE	NOV. 27, 2006
1st EDITION	

Fig. 4220 BOOM CYLINDER - L.H
VERIN DE FLECHE

Serial No. ;

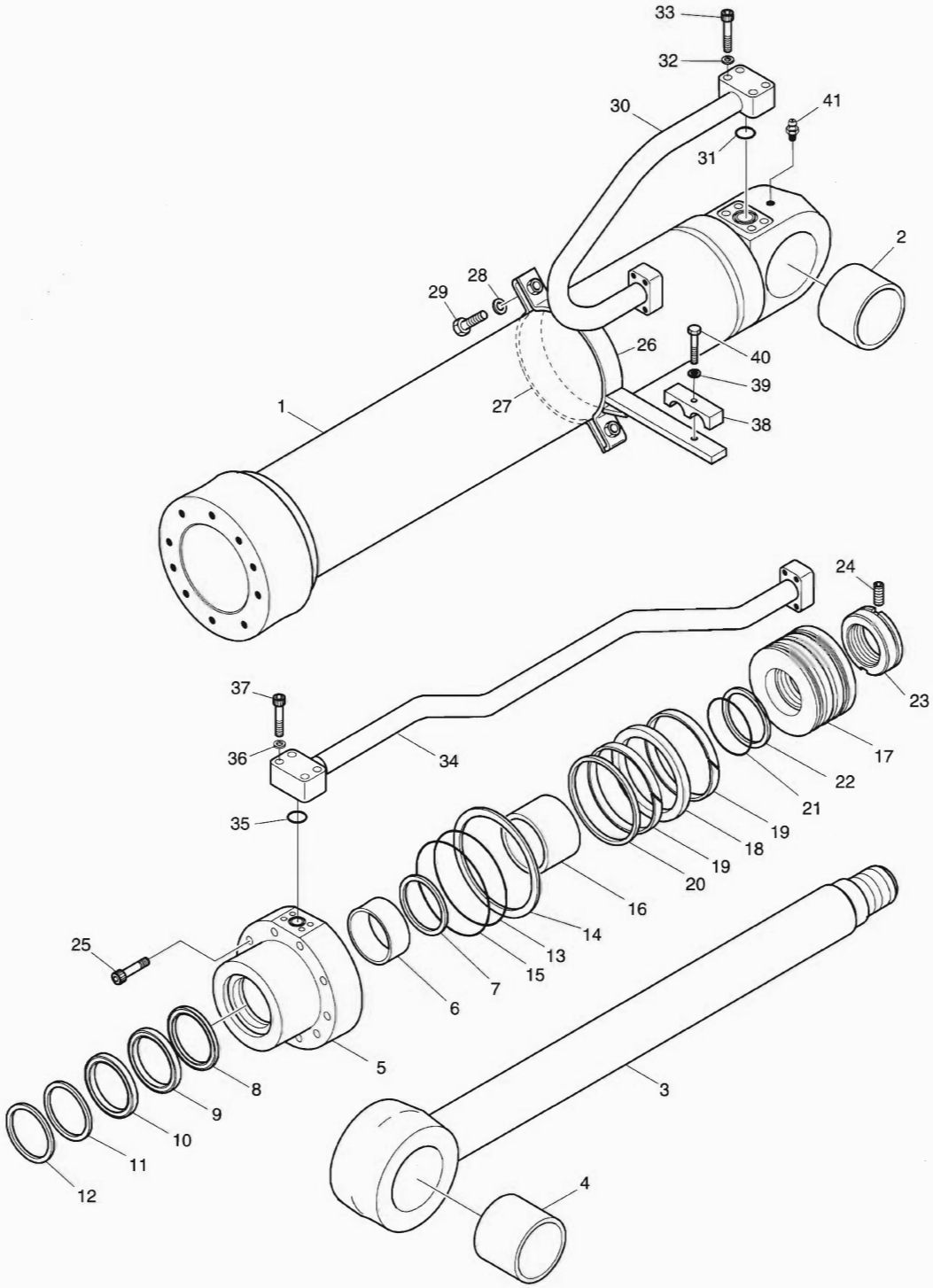

DATE	NOV. 27, 2006
1st EDITION	

Fig. 4220 BOOM CYLINDER - L.H VERIN DE FLECHE

Serial No. ;

Key No.	Part No.	Description	Description	Q'ty	S.C	Serial No.	ICA	Replaceable part	
								Part No.	Q'ty
4220--	K1014801	CYLINDER;BOOM-L.H	CYLINDRE	1					
1	K9004403	TUBE ASS'Y	TUYAU FLEXIBLE	1					
2	K1012382	BUSH	DOUILLE	1					
3	K9004404	ROD ASS'Y	ENSEMBLE TIGE	1					
4	K1012382	BUSH	DOUILLE	1					
5	K9001400	COVER;ROD	COUVERCLE	1					
6	110-00097	DD-BUSH	COUSSINET	1					
7	K9001401	RING;RETAINING	BAGUE D'ARRET	1					
8	K9001402	SEAL;BUFFER	ETANCHEITE	1	K				
9	K9001403	U-PACKING	JOINT EN U	1	K				
10	K9001404	RING;BACK UP	BAGUE	1	K				
11	115-00084	WIPER;DUST	RACCORD ADAPTATEUR	1	K				
12	115-00063	RING;RETAINING	BAGUE D'ARRET	1					
13	S8011101	O-RING	JOINT TORIQUE	1	K				
14	K9001405	RING;BACK UP	BAGUE	1	K				
15	S8011151	O-RING	JOINT TORIQUE	1	K				
16	K9001406	RING;CUSHION	BAGUE	1					
17	K9001407	PISTON	PISTON	1					
18	K9001408	SEAL;SLIPPER	JOINT	1	K				
19	115-00085	RING;WEAR	BAGUE D'USURE	2	K				
20	K9001409	RING;SLYD	BAGUE	2	K				
21	180-00276	O-RING	JOINT TORIQUE	1	K				
22	K9001410	RING;BACK UP	BAGUE	2	K				
23	K9001862	NUT;PISTON	ECROU	1					
24	S3523836	SCREW;SET	VIS	1					
25	S2222171	BOLT;SOCKET	BOULON	10					
26	K9004405	PIPE BAND ASS'Y	ENSEMBLE DE BANDE DE	1					
27	124-00085	BAND;PIPE	ATTACHE	1					
28	S5100603	WASHER;SPRING	RONDELLE ELASTIQUE	2					
29	S0558153	BOLT;HEX	BOULON A 6 PANS	2					
30	K9004406	PIPE ASS'Y-H(L.H)	ENSEMBLE DE TUYAU	1					
31	S8000281	O-RING	JOINT TORIQUE	1					
32	S5100603	WASHER;SPRING	RONDELLE ELASTIQUE	4					
33	S2212761	BOLT;SOCKET	BOULON	4					
34	K9004408	PIPE ASS'Y-R(L.H)	ENSEMBLE DE TUYAU	1					
35	S8000281	O-RING	JOINT TORIQUE	1					
36	S5100603	WASHER;SPRING	RONDELLE ELASTIQUE	4					
37	S2212761	BOLT;SOCKET	BOULON	4					

DATE	NOV. 27, 2006
1st EDITION	

Fig. 4220 BOOM CYLINDER - L.H
VERIN DE FLECHE

Serial No. ;

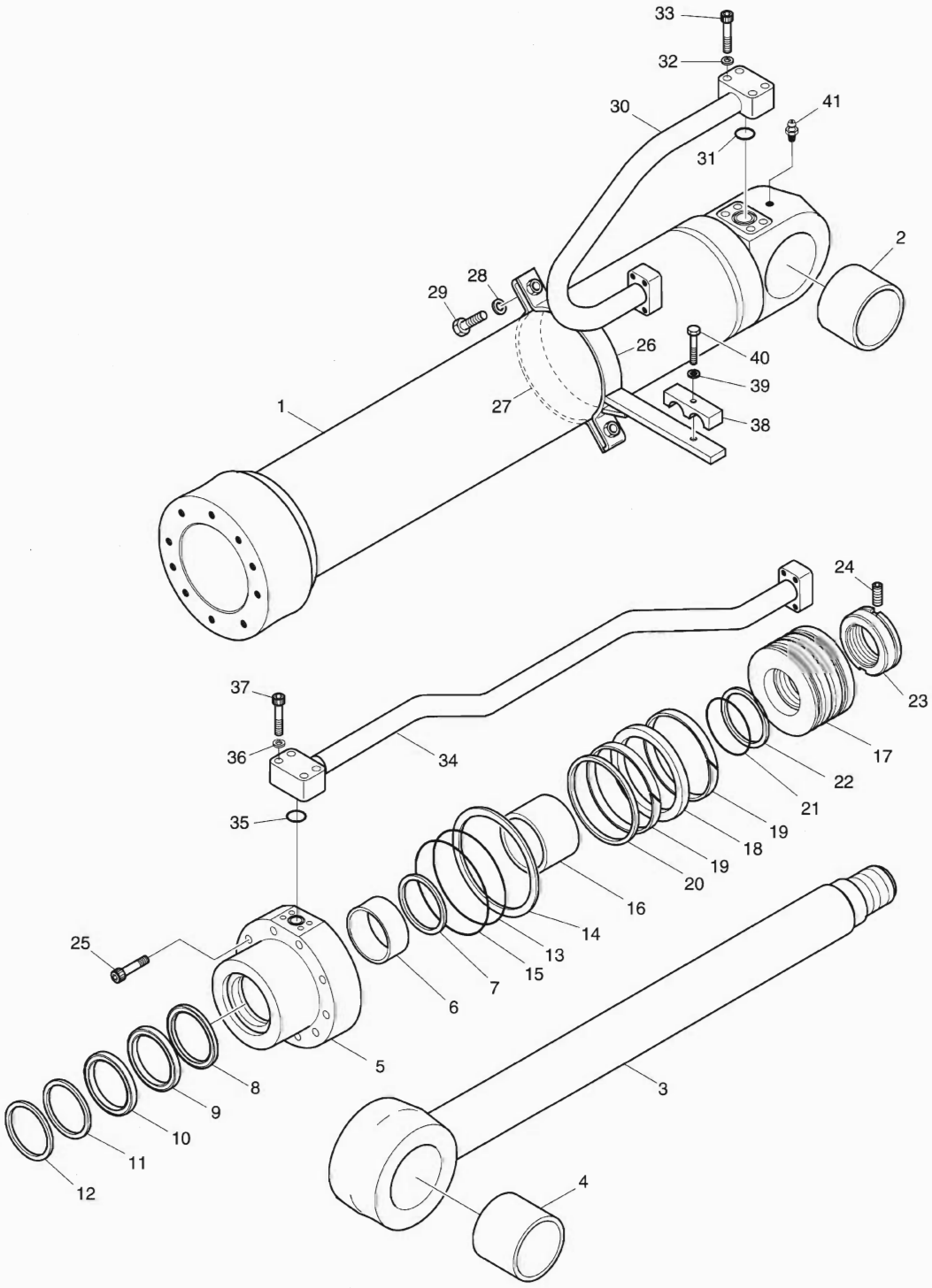

DATE	NOV. 27, 2006
1st EDITION	

Fig. 4220 BOOM CYLINDER - L.H
VERIN DE FLECHE

Serial No. ;

Key No.	Part No.	Description	Description	Q'ty	S.C	Serial No.	ICA	Replaceable part	
								Part No.	Q'ty
20-38	1.124-00157	CLAMP;PIPE	COLLIER	1					
39	S5100703	WASHER;SPRING	RONDELLE ELASTIQUE	1					
40	S0561053	BOLT	BOULON A 6 PANS	1					
41	S6710032	NIPPLE;GREASE	GRAISSEUR	1					
*	K9002308	SEAL KIT	KIT D'ETANCHEITE	1					

DATE	NOV. 27, 2006
1st EDITION	

Fig. 4230 BOOM CYLINDER - R.H
VERIN DE FLECHE

Serial No. ;

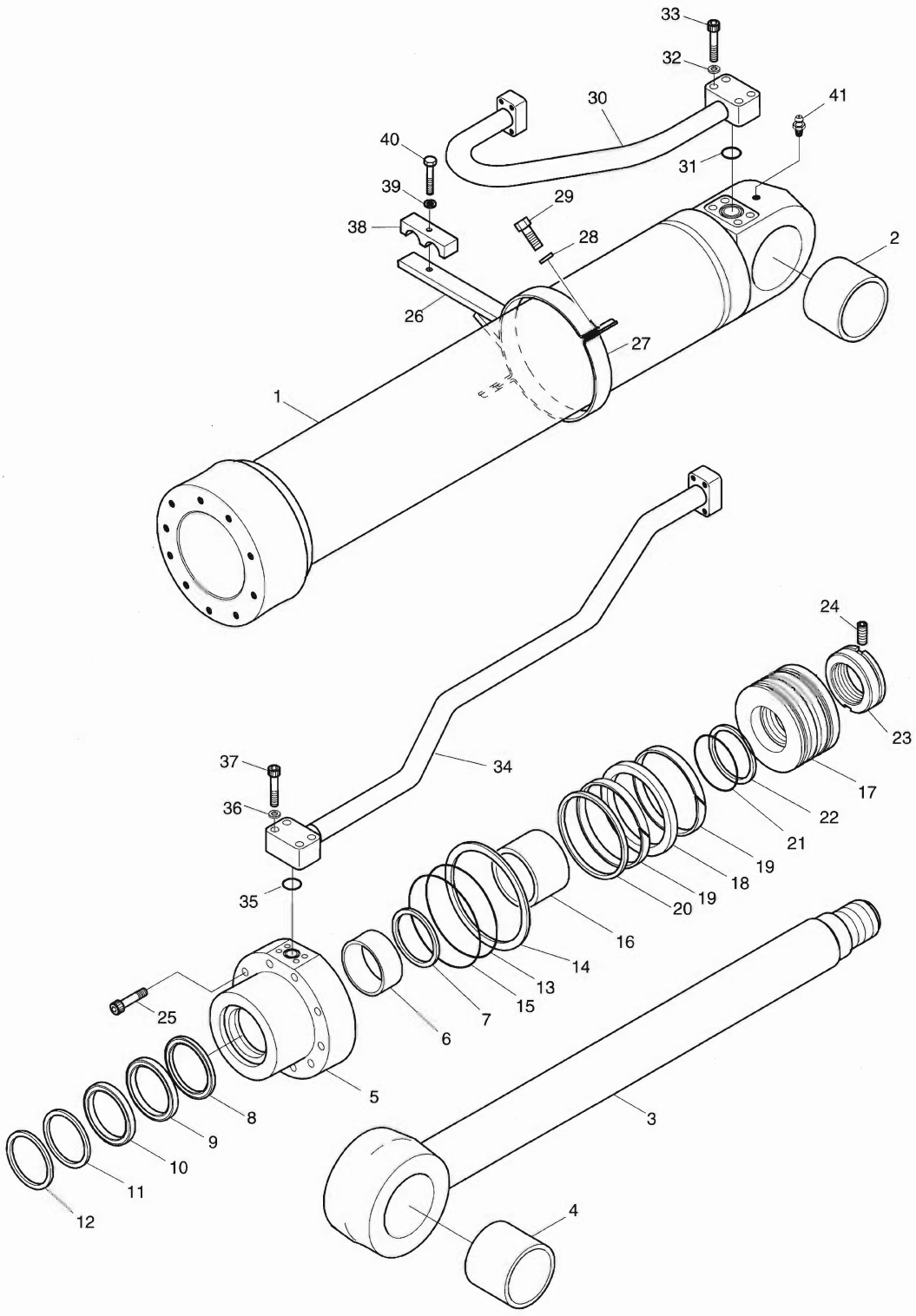

DATE	NOV. 27, 2006
1st EDITION	

Fig. 4230 BOOM CYLINDER - R.H
VERIN DE FLECHE

Serial No. ;

Key No.	Part No.	Description	Description	Q'ty	S.C	Serial No.	ICA	Replaceable part	
								Part No.	Q'ty
4230--	K1014802	CYLINDER;BOOM-R.H	CYLINDRE	1					
1	K9004403	TUBE ASS'Y	TUYAU FLEXIBLE	1					
2	K1012382	BUSH	DOUILLE	1					
3	K9004404	ROD ASS'Y	ENSEMBLE TIGE	1					
4	K1012382	BUSH	DOUILLE	1					
5	K9001400	COVER;ROD	COUVERCLE	1					
6	110-00097	DD-BUSH	COUSSINET	1					
7	K9001401	RING;RETAINING	BAGUE D'ARRET	1					
8	K9001402	SEAL;BUFFER	ETANCHEITE	1	K				
9	K9001403	U-PACKING	JOINT EN U	1	K				
10	K9001404	RING;BACK UP	BAGUE	1	K				
11	115-00084	WIPER;DUST	RACCORD ADAPTATEUR	1	K				
12	115-00063	RING;RETAINING	BAGUE D'ARRET	1					
13	S8011101	O-RING	JOINT TORIQUE	1	K				
14	K9001405	RING;BACK UP	BAGUE	1	K				
15	S8011151	O-RING	JOINT TORIQUE	1	K				
16	K9001406	RING;CUSHION	BAGUE	1					
17	K9001407	PISTON	PISTON	1					
18	K9001408	SEAL;SLIPPER	JOINT	1	K				
19	115-00085	RING;WEAR	BAGUE D'USURE	2	K				
20	K9001409	RING;SLYD	BAGUE	2	K				
21	180-00276	O-RING	JOINT TORIQUE	1	K				
22	K9001410	RING;BACK UP	BAGUE	2	K				
23	K9001862	NUT;PISTON	ECROU	1					
24	S3523836	SCREW;SET	VIS	1					
25	S2222171	BOLT;SOCKET	BOULON	10					
26	K9004405	PIPE BAND ASS'Y	ENSEMBLE DE BANDE DE	1					
27	124-00085	BAND;PIPE	ATTACHE	1					
28	S5100603	WASHER;SPRING	RONDELLE ELASTIQUE	2					
29	S0558153	BOLT;HEX	BOULON A 6 PANS	2					
30	K9004407	PIPE ASS'Y-H(R.H)	ENSEMBLE DE TUYAU	1					
31	S8000281	O-RING	JOINT TORIQUE	1					
32	S5100603	WASHER;SPRING	RONDELLE ELASTIQUE	4					
33	S2212761	BOLT;SOCKET	BOULON	4					
34	K9004409	PIPE ASS'Y-R(R.H)	ENSEMBLE DE TUYAU	1					
35	S8000281	O-RING	JOINT TORIQUE	1					
36	S5100603	WASHER;SPRING	RONDELLE ELASTIQUE	4					
37	S2212761	BOLT;SOCKET	BOULON	4					

DATE	NOV. 27, 2006
1st EDITION	

Fig. 4230 BOOM CYLINDER - R.H
VERIN DE FLECHE

Serial No. ;

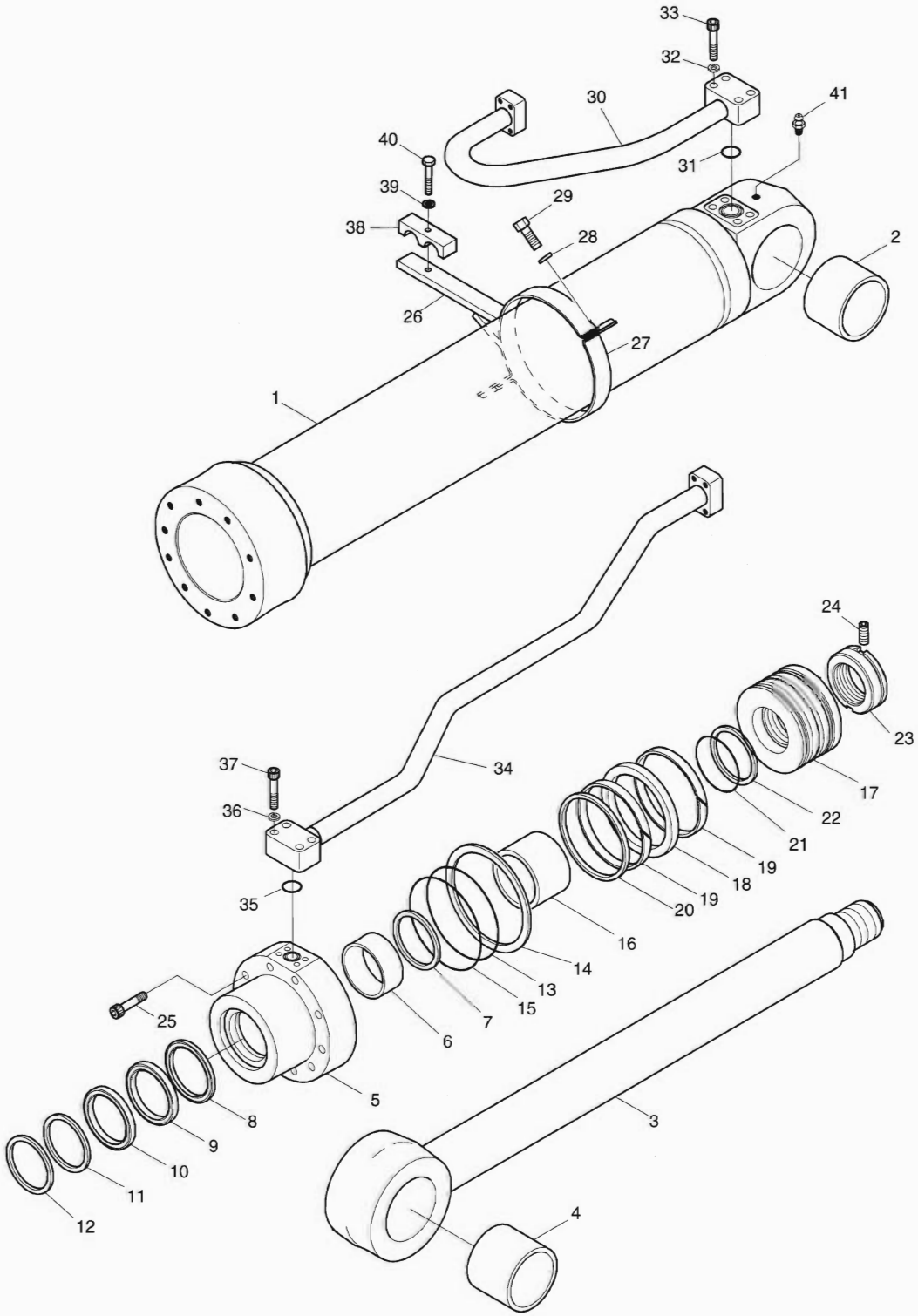

DATE	NOV. 27, 2006
1st EDITION	

Fig. 4230 BOOM CYLINDER - R.H VERIN DE FLECHE

Serial No. ;

Key No.	Part No.	Description	Description	Q'ty	S.C	Serial No.	ICA	Replaceable part	
								Part No.	Q'ty
4230-38	1.124-00157	CLAMP;PIPE	COLLIER	1					
39	S5100703	WASHER;SPRING	RONDELLE ELASTIQUE	1					
40	S0561053	BOLT	BOULON A 6 PANS	1					
41	S6710032	NIPPLE;GREASE	GRAISSEUR	1					
*	K9002308	SEAL KIT	KIT D'ETANCHEITE	1					

DATE	NOV. 27, 2006
1st EDITION	

Fig. 4240 ARM CYLINDER VERIN DE BALANCIER

Serial No. ;

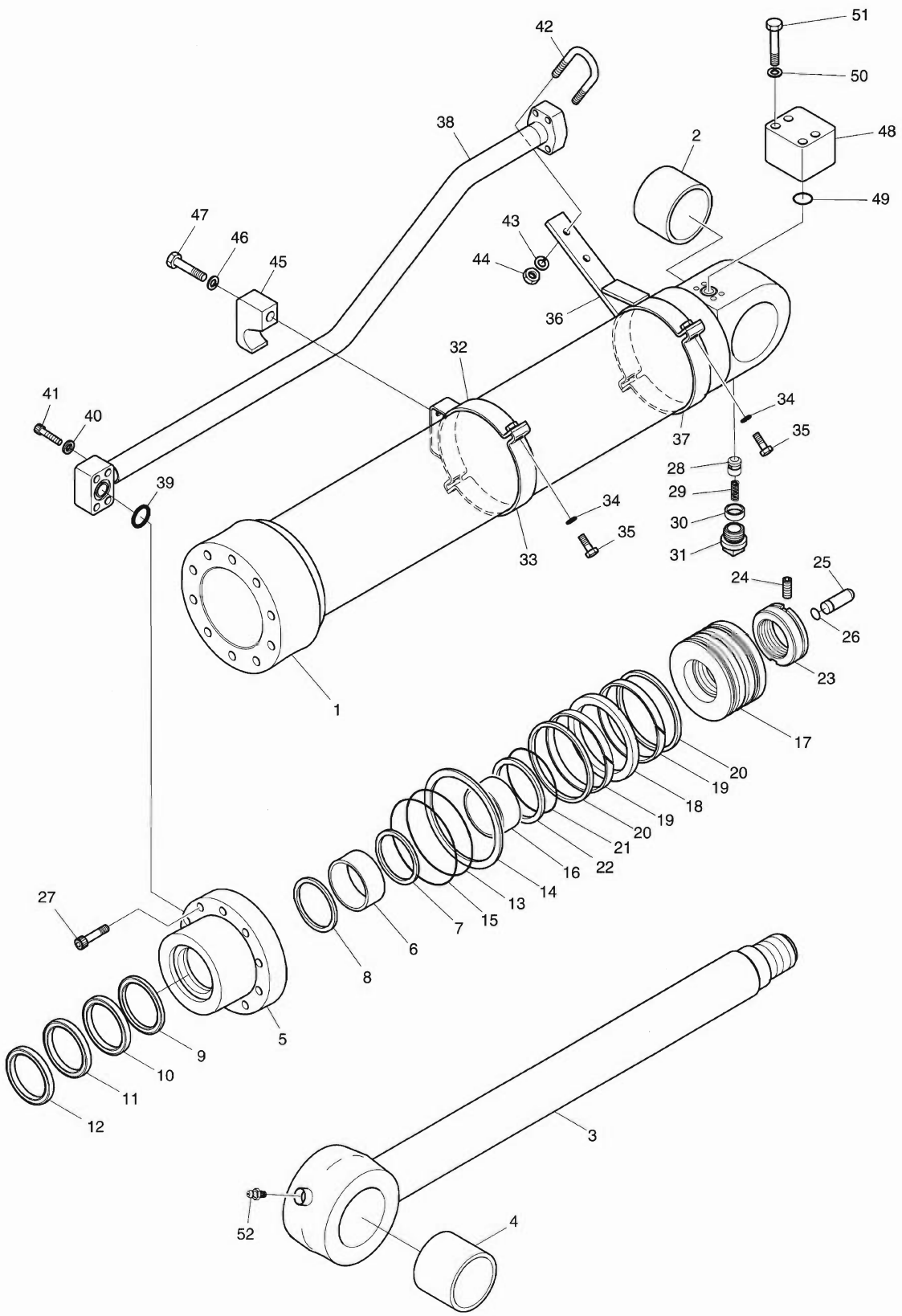

DATE	NOV. 27, 2006
1st EDITION	

Fig. 4240 ARM CYLINDER VERIN DE BALANCIER

Serial No. ;

Key No.	Part No.	Description	Description	Q'ty	S.C	Serial No.	ICA	Replaceable part	
								Part No.	Q'ty
4240--	K1014805	CYLINDER;ARM	VERIN DE BALANCIER	1					
1	K9004390	TUBE ASS'Y	TUYAU FLEXIBLE	1					
2	K1012383	BUSH	DOUILLE	1					
3	K9004391	ROD ASS'Y	ENSEMBLE TIGE	1					
4	K1012383	BUSH	DOUILLE	1					
5	K9004392	COVER;ROD	COUVERCLE	1					
6	110-00080	DD-BUSH	COUSSINET	1					
7	115-00063	RING;RETAINING	BAGUE D'ARRET	1					
8	1.180-00657	SEAL;BUFFER	ETANCHEITE	1	K				
9	K9001153	U-PACKING	JOINT EN U	1	K				
10	K9001154	RING;BACK UP	BAGUE	1	K				
11	115-00072	WIPER;DUST	RACCORD ADAPTATEUR	1	K				
12	115-00073	RING;RETAINING	BAGUE D'ARRET	1					
13	S8011201	O-RING	JOINT TORIQUE	1	K				
14	K9001859	RING;BACK UP	BAGUE	1	K				
15	S8011251	O-RING	JOINT TORIQUE	1	K				
16	K9004393	RING;CUSHION	BAGUE	1					
17	K9004394	PISTON	PISTON	1					
18	K9001890	SEAL;SLIPPER	JOINT	1	K				
19	115-00087	RING;WEAR	BAGUE D'USURE	2	K				
20	K9001861	RING;DUST	BAGUE	2	K				
21	S8010701	O-RING	JOINT TORIQUE	1	K				
22	K9001156	RING;BACK UP	BAGUE	2	K				
23	121-00045	NUT;PISTON	ECROU	1					
24	S3523836	SCREW;SET	VIS	1					
25	K9002278	PLUNGER;CUSHION	PLONGEUR	1					
26	115-00081	RING;STOP	BAGUE D'ARRET	1					
27	S2222272	BOLT;SOCKET	BOULON	10					
28	420-00132	VALVE;CHECK	VANNE	1					
29	129-00071	SPRING	RESSORT	1					
30	1.195-00022	SUPPORT;SPRING	SUPPORT	1					
31	2181-1116D3	PLUG;SOCKET	BOUCHON	1					
32	K9004395	PIPE BAND ASS'Y-H	ENSEMBLE DE BANDE DE	1					
33	K9004396	BAND;PIPE	ATTACHE	1					
34	S5100703	WASHER;SPRING	RONDELLE ELASTIQUE	4					
35	S0560563	BOLT;HEX	BOULON A 6 PANS	4					
36	K9004397	PIPE BAND ASS'Y-R	ENSEMBLE DE BANDE DE	1					
37	K9004396	BAND;PIPE	ATTACHE	1					

DATE	NOV. 27, 2006
1st EDITION	

Fig. 4240 ARM CYLINDER VERIN DE BALANCIER

Serial No. ;

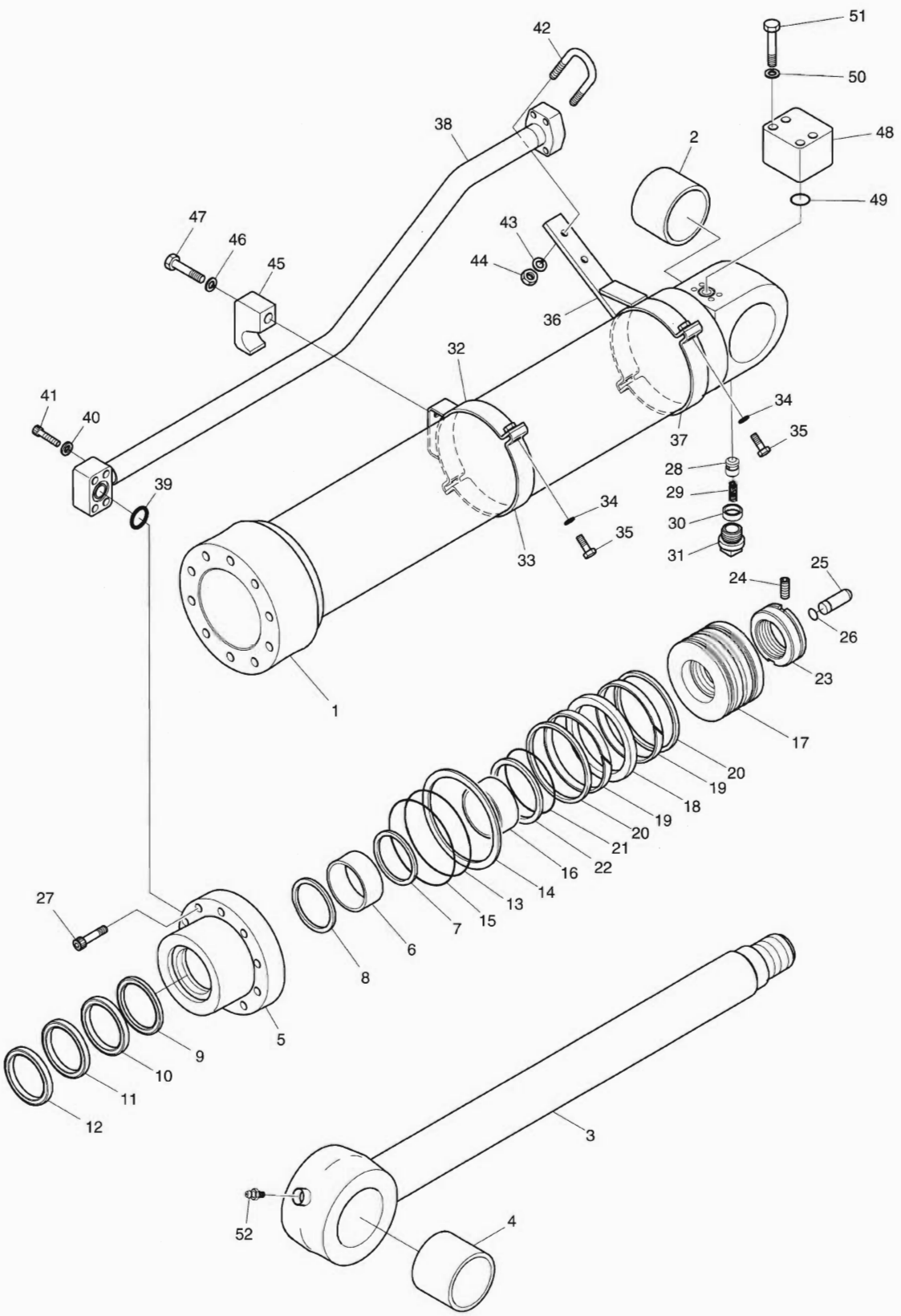

DATE	NOV. 27, 2006
1st EDITION	

Fig. 4240 ARM CYLINDER VERIN DE BALANCIER

Serial No. ;

Key No.	Part No.	Description	Description	Q'ty	S.C	Serial No.	ICA	Replaceable part	
								Part No.	Q'ty
4240-38	K9004399	PIPE ASS'Y-R	ENSEMBLE DE TUYAU	1					
39	S8000281	O-RING	JOINT TORIQUE	1					
40	S5100603	WASHER;SPRING	RONDELLE ELASTIQUE	4					
41	S2212761	BOLT;HEX	BOULON A 6 PANS	4					
42	K9004400	BOLT;U	BOULON A 6 PANS	1					
43	S5100603	WASHER;SPRING	RONDELLE ELASTIQUE	2					
44	S4012633	NUT;HEX	ECROU	2					
45	K9001413	CLAMP;PIPE	COLLIER	1					
46	S5102903	WASHER;SPRING	RONDELLE ELASTIQUE	1					
47	S0565451	BOLT	BOULON A 6 PANS	1					
48	K9004401	PORT;FLANGE	PORT;FLANGE	1					
49	S8000281	O-RING	JOINT TORIQUE	1					
50	S5100603	WASHER;SPRING	RONDELLE ELASTIQUE	4					
51	S0513163	BOLT;SOCKET	BOULON	4					
52	S6710032	NIPPLE;GREASE	GRAISSEUR	1					
*	K9004402	SEAL KIT	KIT D'ETANCHEITE	1					

DATE	NOV. 27, 2006
1st EDITION	

Fig. 4250 BUCKET CYLINDER - ARM 2.6m/3.1m
VERIN DE GODET

Serial No. ;

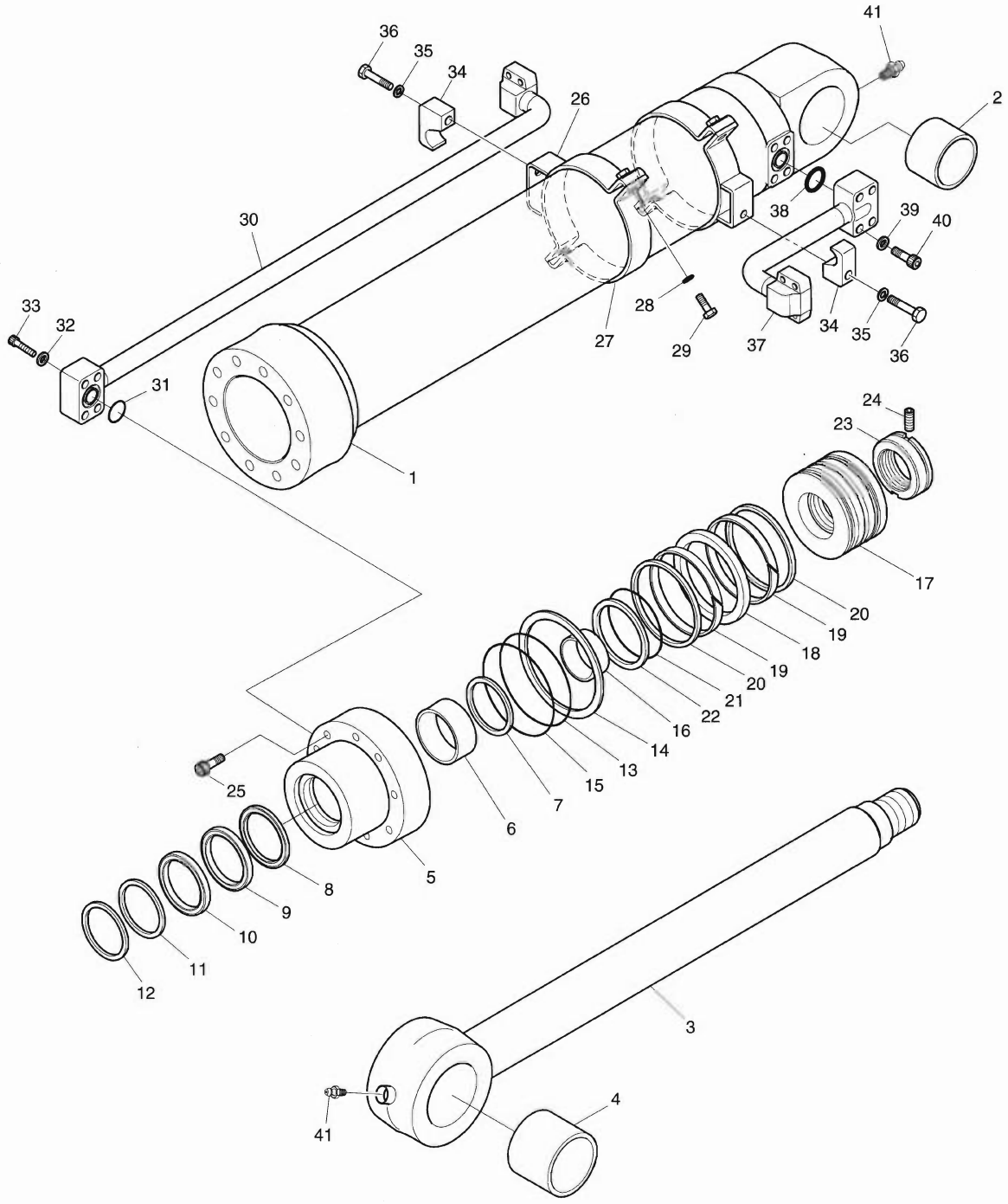

DATE	NOV. 27, 2006
1st EDITION	

Fig. 4250 BUCKET CYLINDER - ARM 2.6m/3.1m VERIN DE GODET

Serial No. ;

Key No.	Part No.	Description	Description	Q'ty	S.C	Serial No.	ICA	Replaceable part	
								Part No.	Q'ty
4250--	K1014826	CYLINDER;BUCKET	VERIN DE GODET	1					
1	K9004318	TUBE ASS'Y	TUYAU FLEXIBLE	1					
2	110-00241	BUSH	DOUILLE	1					
3	K9004319	ROD ASS'Y	ENSEMBLE TIGE	1					
4	K1012384	BUSH;ROLLED	DOUILLE	1					
5	K9004320	COVER;ROD	COUVERCLE	1					
6	110-00082	DD-BUSH	COUSSINET	1					
7	115-00052	RING;RETAINING	BAGUE D'ARRET	1					
8	K9001385	SEAL;BUFFER	ETANCHEITE	1	K				
9	K9001386	U-PACKING	JOINT EN U	1	K				
10	K9001396	RING;BACK UP	BAGUE	1	K				
11	115-00060	WIPER;DUST	RACCORD ADAPTATEUR	1	K				
12	115-00050	RING;RETAINING	BAGUE D'ARRET	1					
13	S8011051-90	O-RING	JOINT TORIQUE	1	K				
14	1.180-00268	RING;BACK UP	BAGUE	1	K				
15	S8011101	O-RING	JOINT TORIQUE	1	K				
16	K9001387	RING;CUSHION	BAGUE	1					
17	K9004321	PISTON	PISTON	1					
18	K9001389	SEAL;SLIPPER	JOINT	1	K				
19	115-00056	RING;WEAR	BAGUE D'USURE	2	K				
20	K9001390	RING;DUST	BAGUE	2	K				
21	180-00247	O-RING	JOINT TORIQUE	1	K				
22	1.180-00269	RING;BACK UP	BAGUE	2	K				
23	121-00043	NUT;PISTON	ECROU	1					
24	S3523836	SCREW;SET	VIS	1					
25	S2219071	BOLT;SOCKET	BOULON	10					
26	K9004322	PIPE BAND ASS'Y	ENSEMBLE DE BANDE DE	2					
27	K9004323	BAND;PIPE	ATTACHE	2					
28	S5100603	WASHER;SPRING	RONDELLE ELASTIQUE	4					
29	S0558153	BOLT;HEX	BOULON A 6 PANS	4					
30	K9004324	PIPE ASS'Y-R	ENSEMBLE DE TUYAU	1					
31	S8000281	O-RING	JOINT TORIQUE	1					
32	S5100603	WASHER;SPRING	RONDELLE ELASTIQUE	4					
33	S2212761	BOLT;HEX	BOULON A 6 PANS	4					
34	K9003968	CLAMP;PIPE	COLLIER	2					
35	S5100703	WASHER;SPRING	RONDELLE ELASTIQUE	2					
36	S0512863	BOLT;HEX	BOULON A 6 PANS	2					
37	K9004325	PIPE ASS'Y-H	ENSEMBLE DE TUYAU	1					

DATE	NOV. 27, 2006
1st EDITION	

Fig. 4250 BUCKET CYLINDER - ARM 2.6m/3.1m
VERIN DE GODET

Serial No. ;

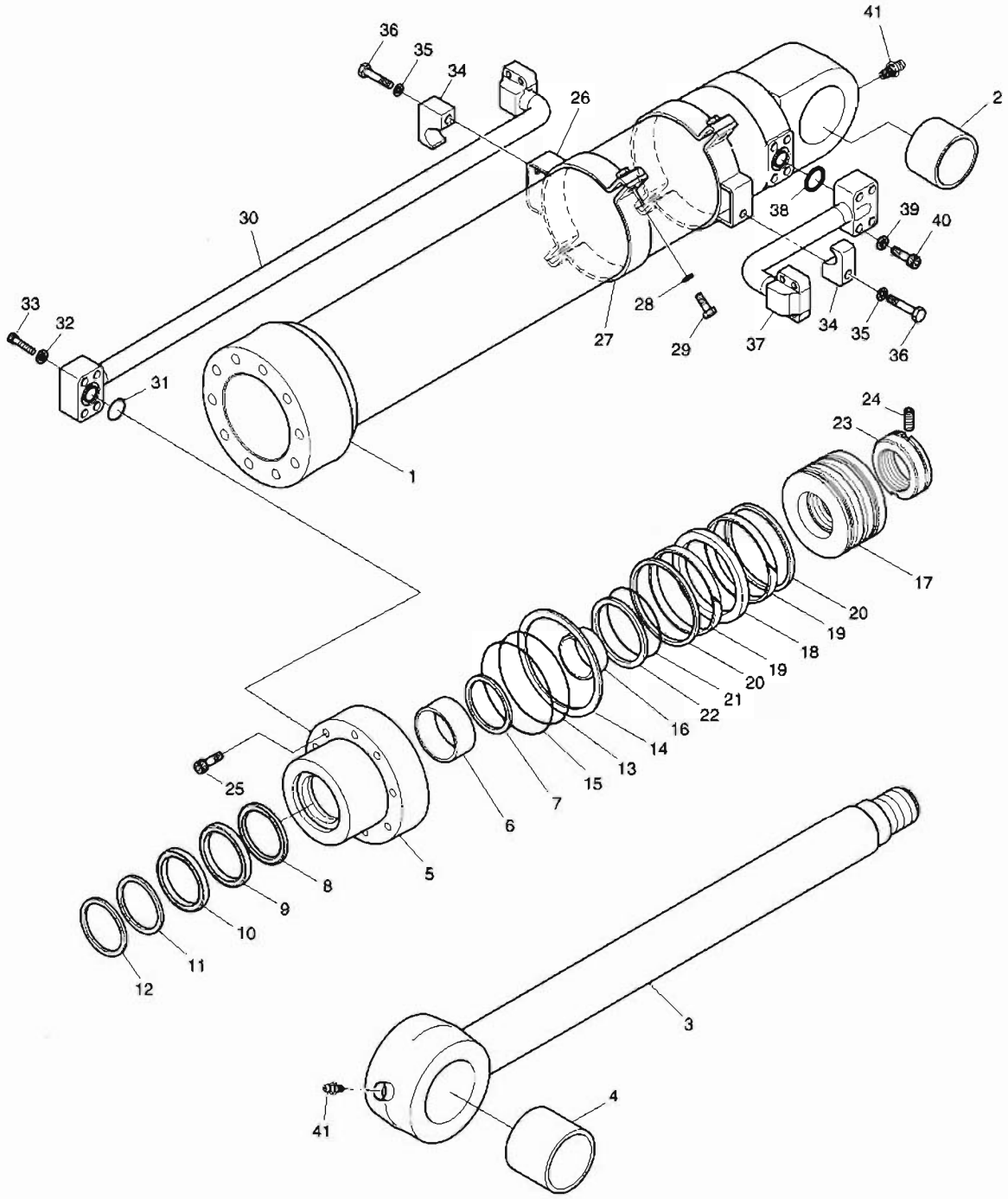

DATE	NOV. 27, 2006
1st EDITION	

Fig. 4250 BUCKET CYLINDER - ARM 2.6m/3.1m VERIN DE GODET

Serial No. ;

Key No.	Part No.	Description	Description	Q'ty	S.C	Serial No.	ICA	Replaceable part	
								Part No.	Q'ty
4250-38	S8000281	O-RING	JOINT TORIQUE	1					
39	S5100603	WASHER;SPRING	RONDELLE ELASTIQUE	4					
40	S2212761	BOLT;HEX	BOULON A 6 PANS	4					
41	S6710032	NIPPLE;GREASE	GRAISSEUR	2					
*	K9002306	SEAL KIT	KIT D'ETANCHEITE	1					

DATE	NOV. 27, 2006
1st EDITION	

Fig. 4260 BUCKET CYLINDER - ARM 2.2m
VERIN DE GODET

Serial No. ;

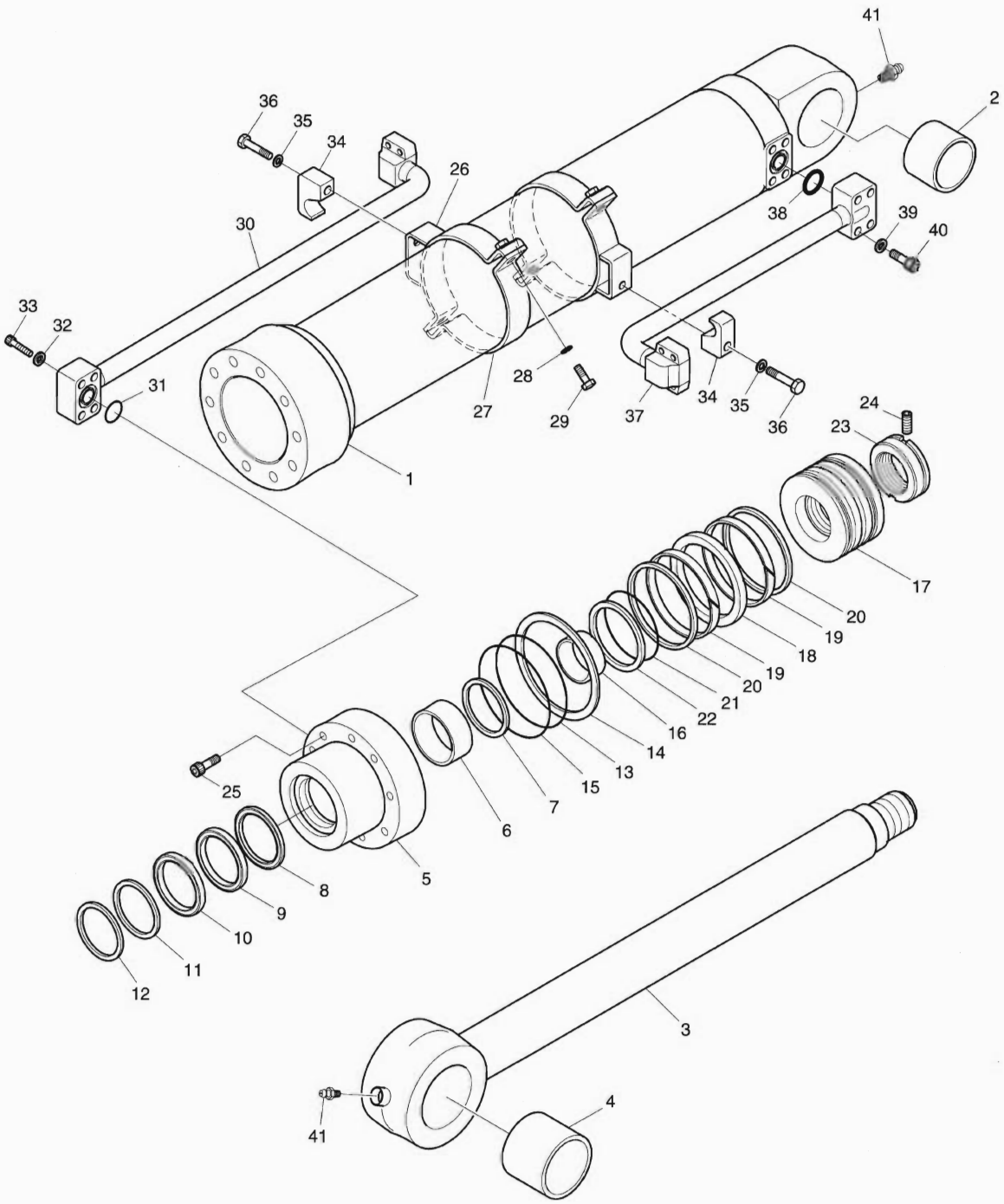

DATE	NOV. 27, 2006
1st EDITION	

Fig. 4260 BUCKET CYLINDER - ARM 2.2m VERIN DE GODET

Serial No. ;

Key No.	Part No.	Description	Description	Q'ty	S.C	Serial No.	ICA	Replaceable part	
								Part No.	Q'ty
4260--	K1024395	CYLINDER;BUCKET	VERIN DE GODET	1					
1	K9004419	TUBE ASS'Y	TUYAU FLEXIBLE	1					
2	110-00241	BUSH	DOUILLE	1					
3	K9004319	ROD ASS'Y	ENSEMBLE TIGE	1					
4	K1012384	BUSH;ROLLED	DOUILLE	1					
5	K9004320	COVER;ROD	COUVERCLE	1					
6	110-00082	DD-BUSH	COUSSINET	1					
7	115-00052	RING;RETAINING	BAGUE D'ARRET	1					
8	K9001385	SEAL;BUFFER	ETANCHEITE	1	K				
9	K9001386	U-PACKING	JOINT EN U	1	K				
10	K9001396	RING;BACK UP	BAGUE	1	K				
11	115-00060	WIPER;DUST	RACCORD ADAPTATEUR	1	K				
12	115-00050	RING;RETAINING	BAGUE D'ARRET	1					
13	S8011051-90	O-RING	JOINT TORIQUE	1	K				
14	1.180-00268	RING;BACK UP	BAGUE	1	K				
15	S8011101	O-RING	JOINT TORIQUE	1	K				
16	K9001387	RING;CUSHION	BAGUE	1					
17	K9004321	PISTON	PISTON	1					
18	K9001389	SEAL;SLIPPER	JOINT	1	K				
19	115-00056	RING;WEAR	BAGUE D'USURE	2	K				
20	K9001390	RING;DUST	BAGUE	2	K				
21	180-00247	O-RING	JOINT TORIQUE	1	K				
22	1.180-00269	RING;BACK UP	BAGUE	2	K				
23	121-00043	NUT;PISTON	ECROU	1					
24	S3523836	SCREW;SET	VIS	1					
25	S2219071	BOLT;SOCKET	BOULON	10					
26	K9004322	PIPE BAND ASS'Y	ENSEMBLE DE BANDE DE	2					
27	K9004323	BAND;PIPE	ATTACHE	2					
28	S5100603	WASHER;SPRING	RONDELLE ELASTIQUE	4					
29	S0558153	BOLT;HEX	BOULON A 6 PANS	4					
30	K9004420	PIPE ASS'Y-R	ENSEMBLE DE TUYAU	1					
31	S8000281	O-RING	JOINT TORIQUE	1					
32	S5100603	WASHER;SPRING	RONDELLE ELASTIQUE	4					
33	S2212761	BOLT;HEX	BOULON A 6 PANS	4					
34	K9003968	CLAMP;PIPE	COLLIER	2					
35	S5100703	WASHER;SPRING	RONDELLE ELASTIQUE	2					
36	S0512863	BOLT;HEX	BOULON A 6 PANS	2					
37	K9004421	PIPE ASS'Y-H	ENSEMBLE DE TUYAU	1					

DATE	NOV. 27, 2006
1st EDITION	

Fig. 4260 BUCKET CYLINDER - ARM 2.2m
VERIN DE GODET

Serial No. ;

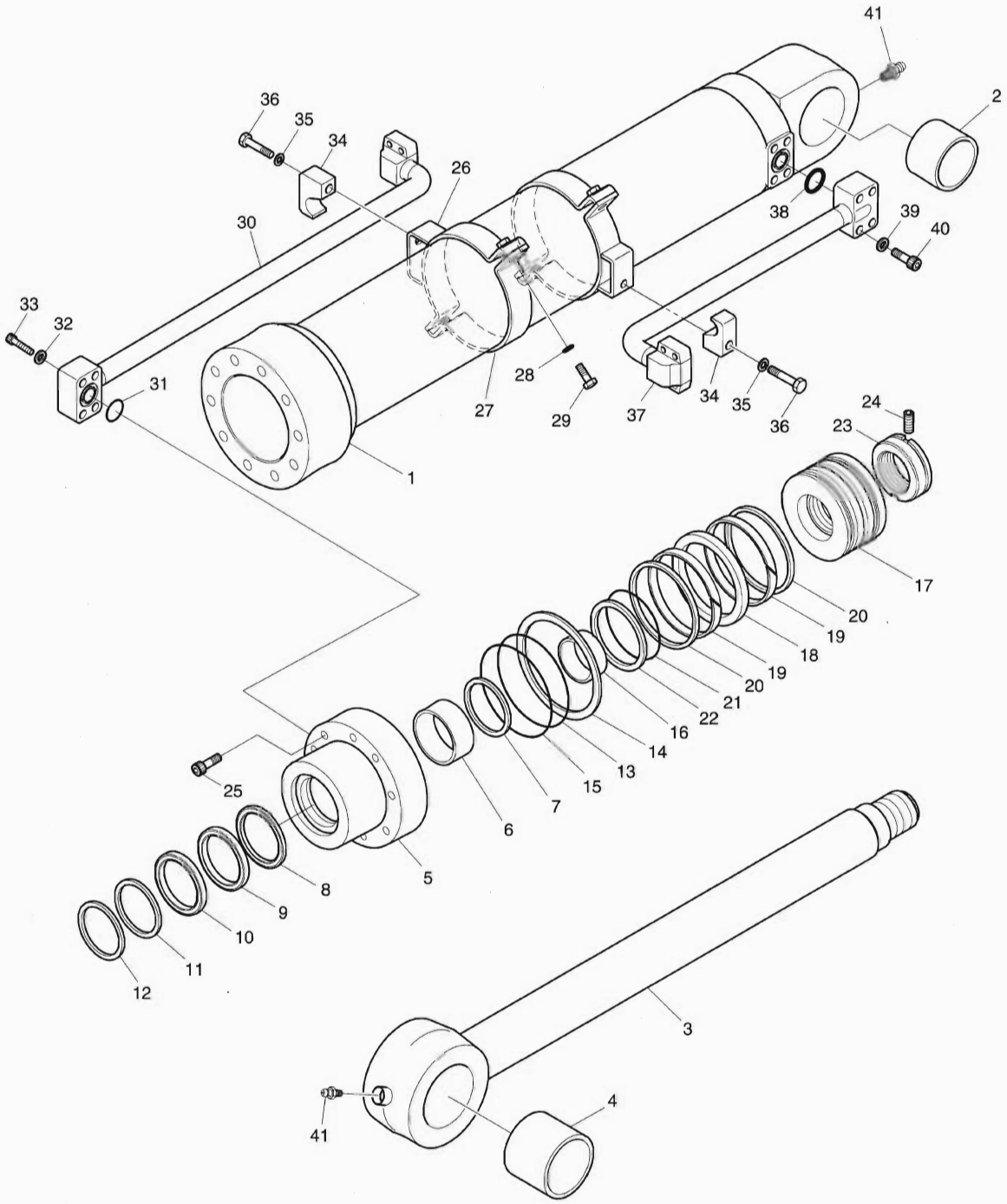

DATE	NOV. 27, 2006
1st EDITION	

Fig. 4260 BUCKET CYLINDER - ARM 2.2m VERIN DE GODET

Serial No. ;

Key No.	Part No.	Description	Description	Q'ty	S.C	Serial No.	ICA	Replaceable part	
								Part No.	Q'ty
60-38	S8000281	O-RING	JOINT TORIQUE	1					
39	S5100603	WASHER;SPRING	RONDELLE ELASTIQUE	4					
40	S2212761	BOLT;HEX	BOULON A 6 PANS	4					
41	S6710032	NIPPLE;GREASE	GRAISSEUR	2					
*	K9002306	SEAL KIT	KIT D'ETANCHEITE	1					

DATE	NOV. 27, 2006
1st EDITION	

Fig. 4270 BUCKET CYLINDER - L.H (LOCK VALVE)
VERIN DE GODET

Serial No. ;

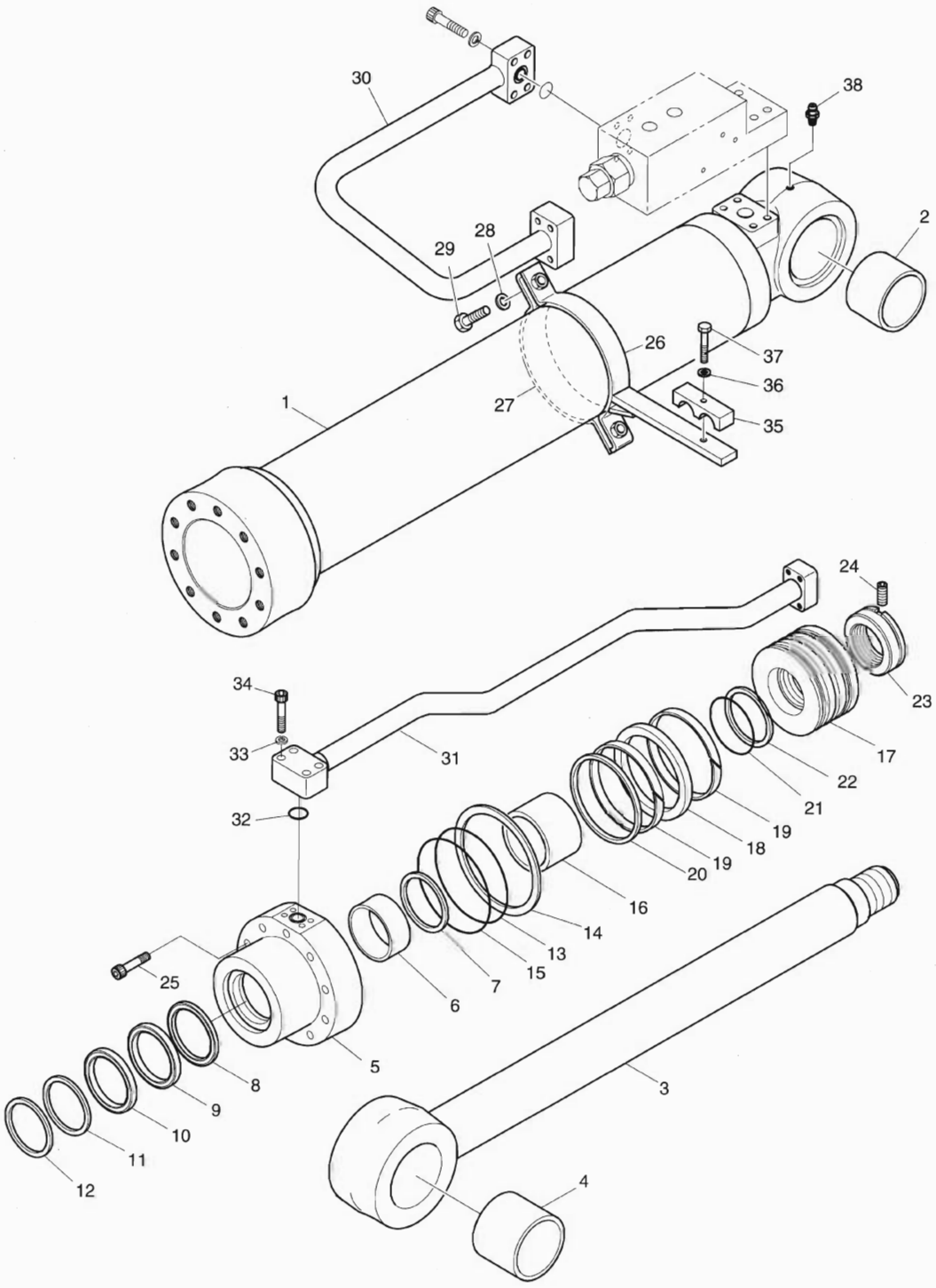

DATE	NOV. 27, 2006
1st EDITION	

Fig. 4270 BUCKET CYLINDER - L.H (LOCK VALVE) VERIN DE GODET

Serial No. ;

Key No.	Part No.	Description	Description	Q'ty	S.C	Serial No.	ICA	Replaceable part	
								Part No.	Q'ty
4270--	K1014819	CYLINDER;BOOM-L.H	CYLINDRE	1					
1	K9004403	TUBE ASS'Y	TUYAU FLEXIBLE	1					
2	K1012382	BUSH	DOUILLE	1					
3	K9004404	ROD ASS'Y	ENSEMBLE TIGE	1					
4	K1012382	BUSH	DOUILLE	1					
5	K9001400	COVER;ROD	COUVERCLE	1					
6	110-00097	DD-BUSH	COUSSINET	1					
7	K9001401	RING;RETAINING	BAGUE D'ARRET	1					
8	K9001402	SEAL;BUFFER	ETANCHEITE	1	K				
9	K9001403	U-PACKING	JOINT EN U	1	K				
10	K9001404	RING;BACK UP	BAGUE	1	K				
11	115-00084	WIPER;DUST	RACCORD ADAPTATEUR	1	K				
12	115-00063	RING;RETAINING	BAGUE D'ARRET	1					
13	S8011101	O-RING	JOINT TORIQUE	1	K				
14	K9001405	RING;BACK UP	BAGUE	1	K				
15	S8011151	O-RING	JOINT TORIQUE	1	K				
16	K9001406	RING;CUSHION	BAGUE	1					
17	K9001407	PISTON	PISTON	1					
18	K9001408	SEAL;SLIPPER	JOINT	1	K				
19	115-00085	RING;WEAR	BAGUE D'USURE	2	K				
20	K9001409	RING;SLYD	BAGUE	2	K				
21	180-00276	O-RING	JOINT TORIQUE	1	K				
22	K9001410	RING;BACK UP	BAGUE	2	K				
23	K9001862	NUT;PISTON	ECROU	1					
24	S3523836	SCREW;SET	VIS	1					
25	S2222171	BOLT;SOCKET	BOULON	10					
26	K9004405	PIPE BAND ASS'Y	ENSEMBLE DE BANDE DE	1					
27	124-00085	BAND;PIPE	ATTACHE	1					
28	S5100603	WASHER;SPRING	RONDELLE ELASTIQUE	2					
29	S0558153	BOLT;HEX	BOULON A 6 PANS	2					
30	K9004425	PIPE ASS'Y-H(L.H)	ENSEMBLE DE TUYAU	1					
31	K9004408	PIPE ASS'Y-R(L.H)	ENSEMBLE DE TUYAU	1					
32	S8000281	O-RING	JOINT TORIQUE	1					
33	S5100603	WASHER;SPRING	RONDELLE ELASTIQUE	4					
34	S2212761	BOLT;SOCKET	BOULON	4					
35	1.124-00157	CLAMP;PIPE	COLLIER	1					
36	S5100703	WASHER;SPRING	RONDELLE ELASTIQUE	1					
37	S0561053	BOLT	BOULON A 6 PANS	1					

DATE	NOV. 27, 2006
1st EDITION	

Fig. 4270 BUCKET CYLINDER - L.H (LOCK VALVE)
VERIN DE GODET

Serial No. ;

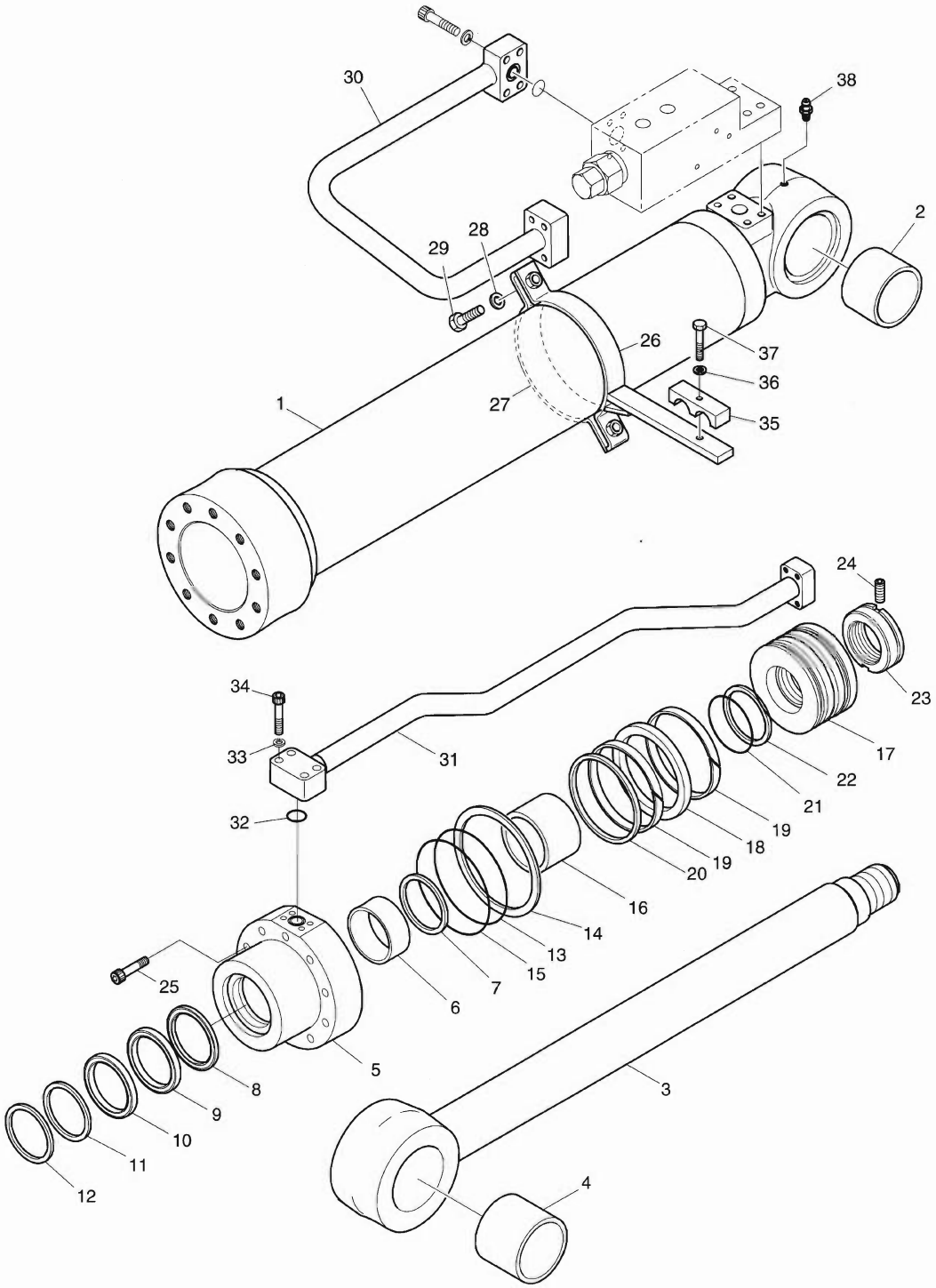

DATE	NOV. 27, 2006
1st EDITION	

Fig. 4270 BUCKET CYLINDER - L.H (LOCK VALVE) VERIN DE GODET

Serial No. ;

Key No.	Part No.	Description	Description	Q'ty	S.C	Serial No.	ICA	Replaceable part	
								Part No.	Q'ty
4270-38	S6710032	NIPPLE;GREASE	GRAISSEUR	1					
*	K9002308	SEAL KIT	KIT D'ETANCHEITE	1					

Fig. 4280 BOOM CYLINDER - R.H (LOCK VALVE)
VERIN DE FLECHE

Serial No. ;

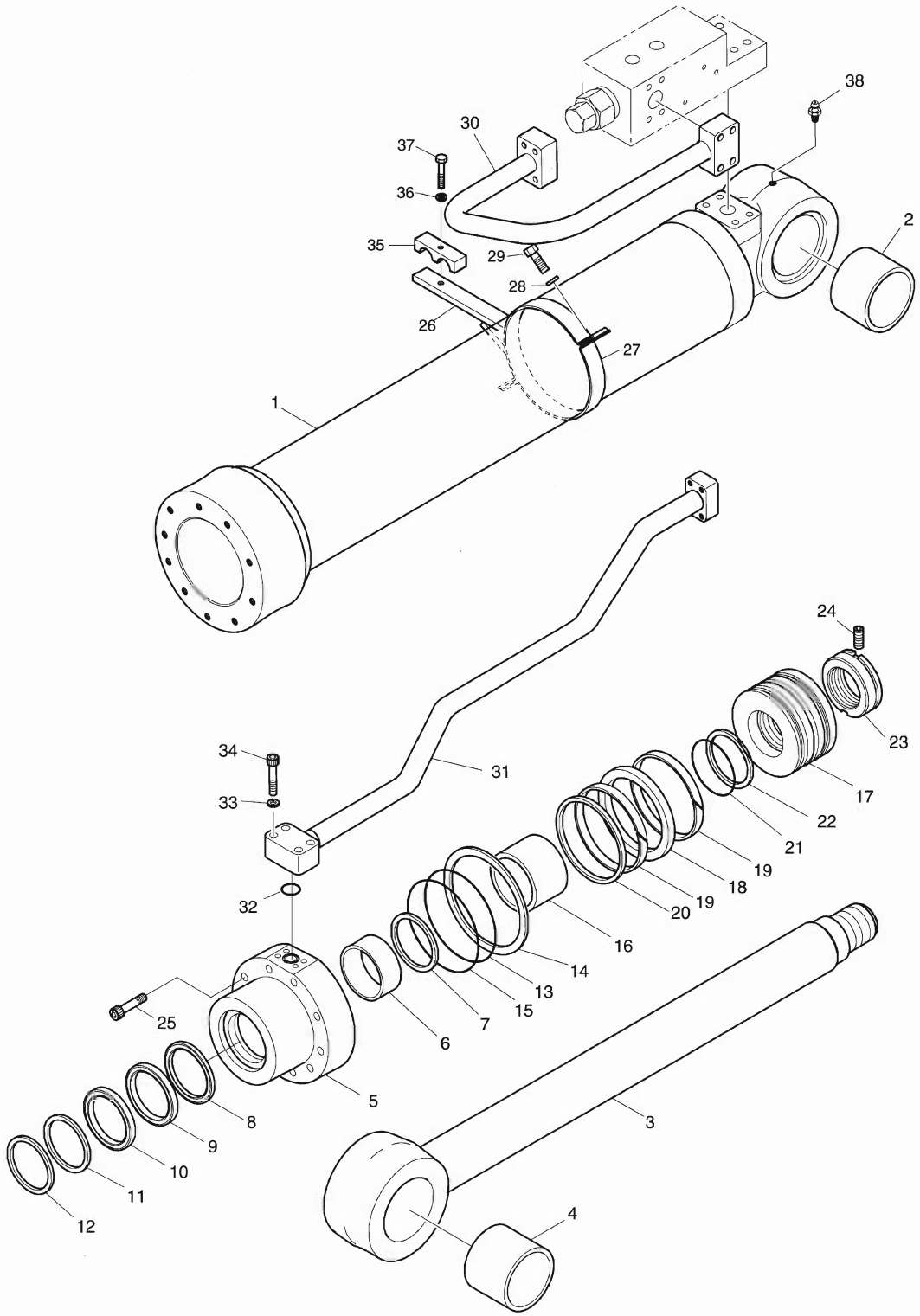

DATE	NOV. 27, 2006
1st EDITION	

Fig. 4280 BOOM CYLINDER - R.H (LOCK VALVE) VERIN DE FLECHE

Serial No. ;

Key No.	Part No.	Description	Description	Q'ty	S.C	Serial No.	ICA	Replaceable part	
								Part No.	Q'ty
4280--	K1014820	CYLINDER;BOOM-R.H	CYLINDRE	1					
1	K9004403	TUBE ASS'Y	TUYAU FLEXIBLE	1					
2	K1012382	BUSH	DOUILLE	1					
3	K9004404	ROD ASS'Y	ENSEMBLE TIGE	1					
4	K1012382	BUSH	DOUILLE	1					
5	K9001400	COVER;ROD	COUVERCLE	1					
6	110-00097	DD-BUSH	COUSSINET	1					
7	K9001401	RING;RETAINING	BAGUE D'ARRET	1					
8	K9001402	SEAL;BUFFER	ETANCHEITE	1	K				
9	K9001403	U-PACKING	JOINT EN U	1	K				
10	K9001404	RING;BACK UP	BAGUE	1	K				
11	115-00084	WIPER;DUST	RACCORD ADAPTATEUR	1	K				
12	115-00063	RING;RETAINING	BAGUE D'ARRET	1					
13	S8011101	O-RING	JOINT TORIQUE	1	K				
14	K9001405	RING;BACK UP	BAGUE	1	K				
15	S8011151	O-RING	JOINT TORIQUE	1	K				
16	K9001406	RING;CUSHION	BAGUE	1					
17	K9001407	PISTON	PISTON	1					
18	K9001408	SEAL;SLIPPER	JOINT	1	K				
19	115-00085	RING;WEAR	BAGUE D'USURE	2	K				
20	K9001409	RING;SLYD	BAGUE	2	K				
21	180-00276	O-RING	JOINT TORIQUE	1	K				
22	K9001410	RING;BACK UP	BAGUE	2	K				
23	K9001862	NUT;PISTON	ECROU	1					
24	S3523836	SCREW;SET	VIS	1					
25	S2222171	BOLT;SOCKET	BOULON	10					
26	K9004405	PIPE BAND ASS'Y	ENSEMBLE DE BANDE DE	1					
27	124-00085	BAND;PIPE	ATTACHE	1					
28	S5100603	WASHER;SPRING	RONDELLE ELASTIQUE	2					
29	S0558153	BOLT;HEX	BOULON A 6 PANS	2					
30	K9004424	PIPE ASS'Y-H(R.H)	ENSEMBLE DE TUYAU	1					
31	K9004409	PIPE ASS'Y-R(R.H)	ENSEMBLE DE TUYAU	1					
32	S8000281	O-RING	JOINT TORIQUE	1					
33	S5100603	WASHER;SPRING	RONDELLE ELASTIQUE	4					
34	S2212761	BOLT;SOCKET	BOULON	4					
35	1.124-00157	CLAMP;PIPE	COLLIER	1					
36	S5100703	WASHER;SPRING	RONDELLE ELASTIQUE	1					
37	S0561053	BOLT	BOULON A 6 PANS	1					

DATE	NOV. 27, 2006
1st EDITION	

Fig. 4280 BOOM CYLINDER - R.H (LOCK VALVE)
VERIN DE FLECHE

Serial No. ;

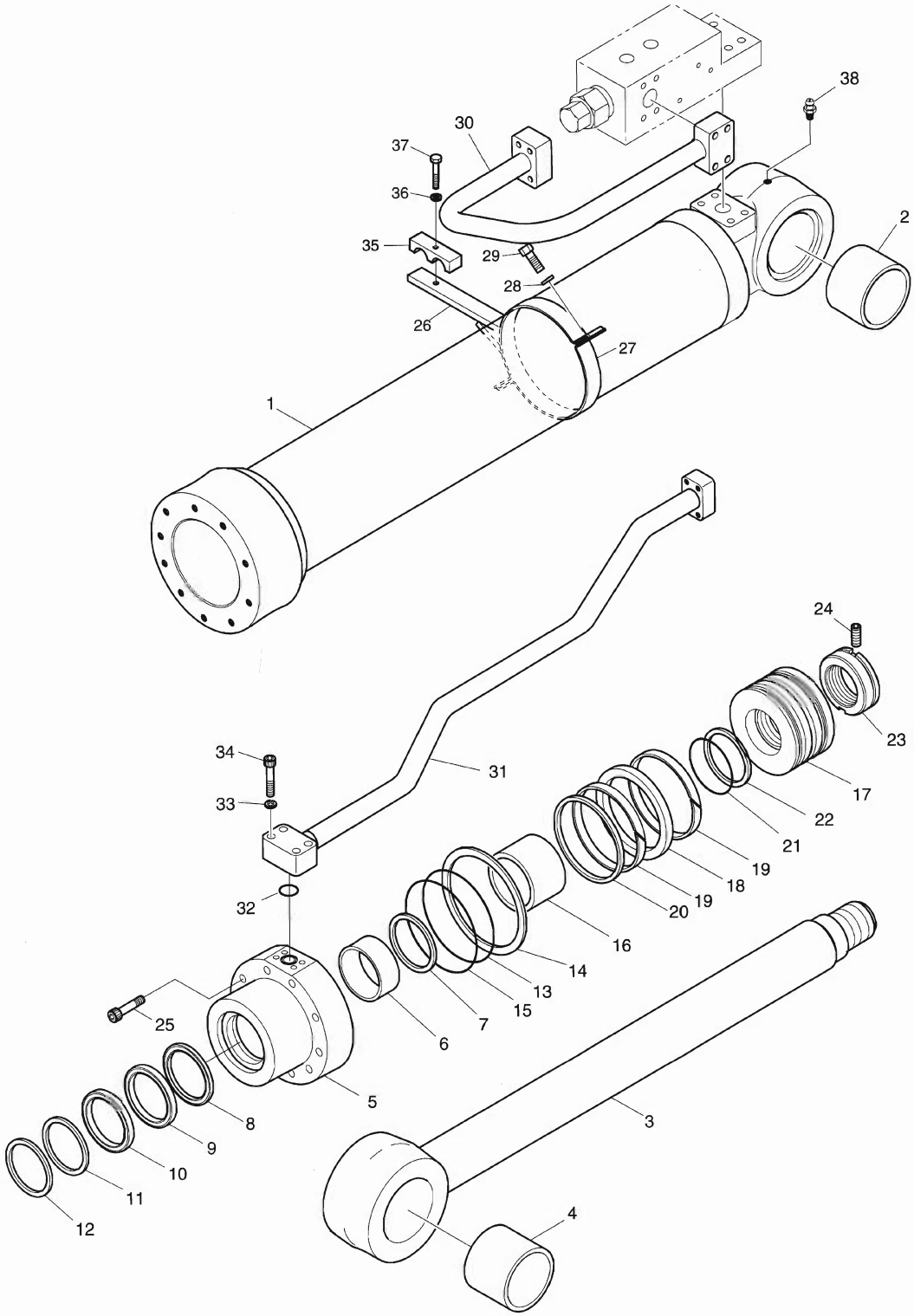

DATE	NOV. 27, 2006
1st EDITION	

Fig. 4280 BOOM CYLINDER - R.H (LOCK VALVE) VERIN DE FLECHE

Serial No. ;

Key No.	Part No.	Description	Description	Q'ty	S.C	Serial No.	ICA	Replaceable part	
								Part No.	Q'ty
4280-38	S6710032	NIPPLE;GREASE	GRAISSEUR	1					
*	K9002308	SEAL KIT	KIT D'ETANCHEITE	1					

DATE	NOV. 27, 2006
1st EDITION	

Fig. 4290 ARM CYLINDER - LOCK VALVE
VERIN DE BALANCIER

Serial No. ;

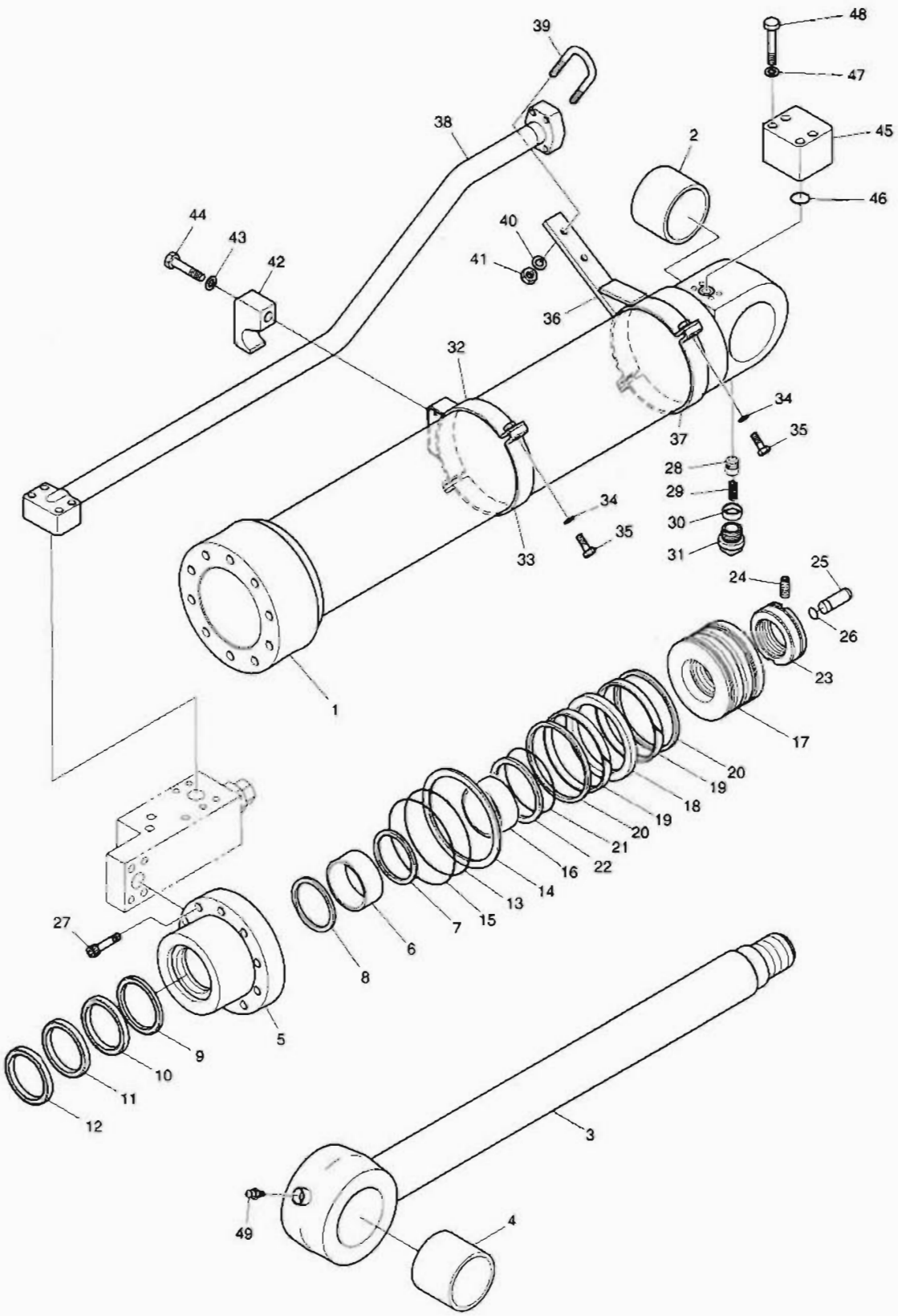

DATE	NOV. 27, 2006
1st EDITION	

Fig. 4290 ARM CYLINDER - LOCK VALVE VERIN DE BALANCIER

Serial No. ;

Key No.	Part No.	Description	Description	Q'ty	S.C	Serial No.	ICA	Replaceable part	
								Part No.	Q'ty
4290--	K1014822	CYLINDER;ARM	VERIN DE BALANCIER	1					
1	K9004390	TUBE ASS'Y	TUYAU FLEXIBLE	1					
2	K1012383	BUSH	DOUILLE	1					
3	K9004391	ROD ASS'Y	ENSEMBLE TIGE	1					
4	K1012383	BUSH	DOUILLE	1					
5	K9004392	COVER;ROD	COUVERCLE	1					
6	110-00080	DD-BUSH	COUSSINET	1					
7	115-00063	RING;RETAINING	BAGUE D'ARRET	1					
8	1.180-00657	SEAL;BUFFER	ETANCHEITE	1	K				
9	K9001153	U-PACKING	JOINT EN U	1	K				
10	K9001154	RING;BACK UP	BAGUE	1	K				
11	115-00072	WIPER;DUST	RACCORD ADAPTATEUR	1	K				
12	115-00073	RING;RETAINING	BAGUE D'ARRET	1					
13	S8011201	O-RING	JOINT TORIQUE	1	K				
14	K9001859	RING;BACK UP	BAGUE	1	K				
15	S8011251	O-RING	JOINT TORIQUE	1	K				
16	K9004393	RING;CUSHION	BAGUE	1					
17	K9004394	PISTON	PISTON	1					
18	K9001890	SEAL;SLIPPER	JOINT	1	K				
19	115-00087	RING;WEAR	BAGUE D'USURE	2	K				
20	K9001861	RING;DUST	BAGUE	2	K				
21	S8010701	O-RING	JOINT TORIQUE	1	K				
22	K9001156	RING;BACK UP	BAGUE	2	K				
23	121-00045	NUT;PISTON	ECROU	1					
24	S3523836	SCREW;SET	VIS	1					
25	K9002278	PLUNGER;CUSHION	PLONGEUR	1					
26	115-00081	RING;STOP	BAGUE D'ARRET	1					
27	S2222272	BOLT;SOCKET	BOULON	10					
28	420-00132	VALVE;CHECK	VANNE	1					
29	129-00071	SPRING	RESSORT	1					
30	1.195-00022	SUPPORT;SPRING	SUPPORT	1					
31	2181-1116D3	PLUG;SOCKET	BOUCHON	1					
32	K9004395	PIPE BAND ASS'Y-H	ENSEMBLE DE BANDE DE	1					
33	K9004396	BAND;PIPE	ATTACHE	1					
34	S5100703	WASHER;SPRING	RONDELLE ELASTIQUE	4					
35	S0560563	BOLT;HEX	BOULON A 6 PANS	4					
36	K9004397	PIPE BAND ASS'Y-R	ENSEMBLE DE BANDE DE	1					
37	K9004396	BAND;PIPE	ATTACHE	1					

DATE	NOV. 27, 2006
1st EDITION	

Fig. 4290 ARM CYLINDER - LOCK VALVE
VERIN DE BALANCIER

Serial No. ;

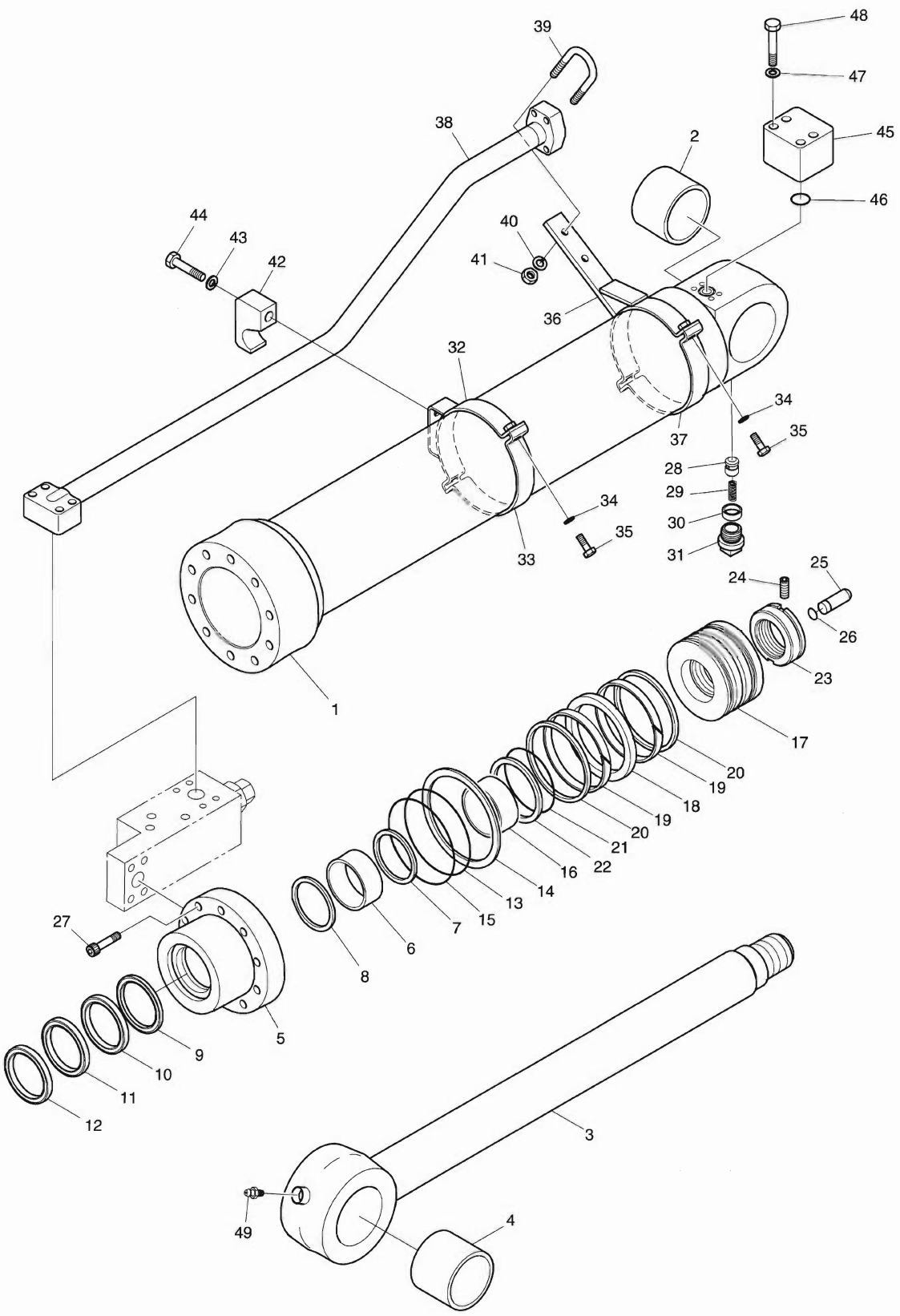

DATE	NOV. 27, 2006
1st EDITION	

Fig. 4290 ARM CYLINDER - LOCK VALVE VERIN DE BALANCIER

Serial No. ;

Key No.	Part No.	Description	Description	Q'ty	S.C	Serial No.	ICA	Replaceable part	
								Part No.	Q'ty
290-38	K9004422	PIPE ASS'Y-R	ENSEMBLE DE TUYAU	1					
39	K9004400	BOLT;U	BOULON A 6 PANS	1					
40	S5100603	WASHER;SPRING	RONDELLE ELASTIQUE	2					
41	S4012633	NUT;HEX	ECROU	2					
42	K9001413	CLAMP;PIPE	COLLIER	1					
43	S5102903	WASHER;SPRING	RONDELLE ELASTIQUE	1					
44	S0565451	BOLT	BOULON A 6 PANS	1					
45	K9004401	PORT;FLANGE	PORT;FLANGE	1					
46	S8000281	O-RING	JOINT TORIQUE	1					
47	S5100603	WASHER;SPRING	RONDELLE ELASTIQUE	4					
48	S0513163	BOLT;SOCKET	BOULON	4					
49	S6710032	NIPPLE;GREASE	GRAISSEUR	1					
*	K9004402	SEAL KIT	KIT D'ETANCHEITE	1					

DATE	NOV. 27, 2006
1st EDITION	

Fig. 4300 PEDAL VALVE - TWO WAY
VANNE DE PEDALE

Serial No. ;

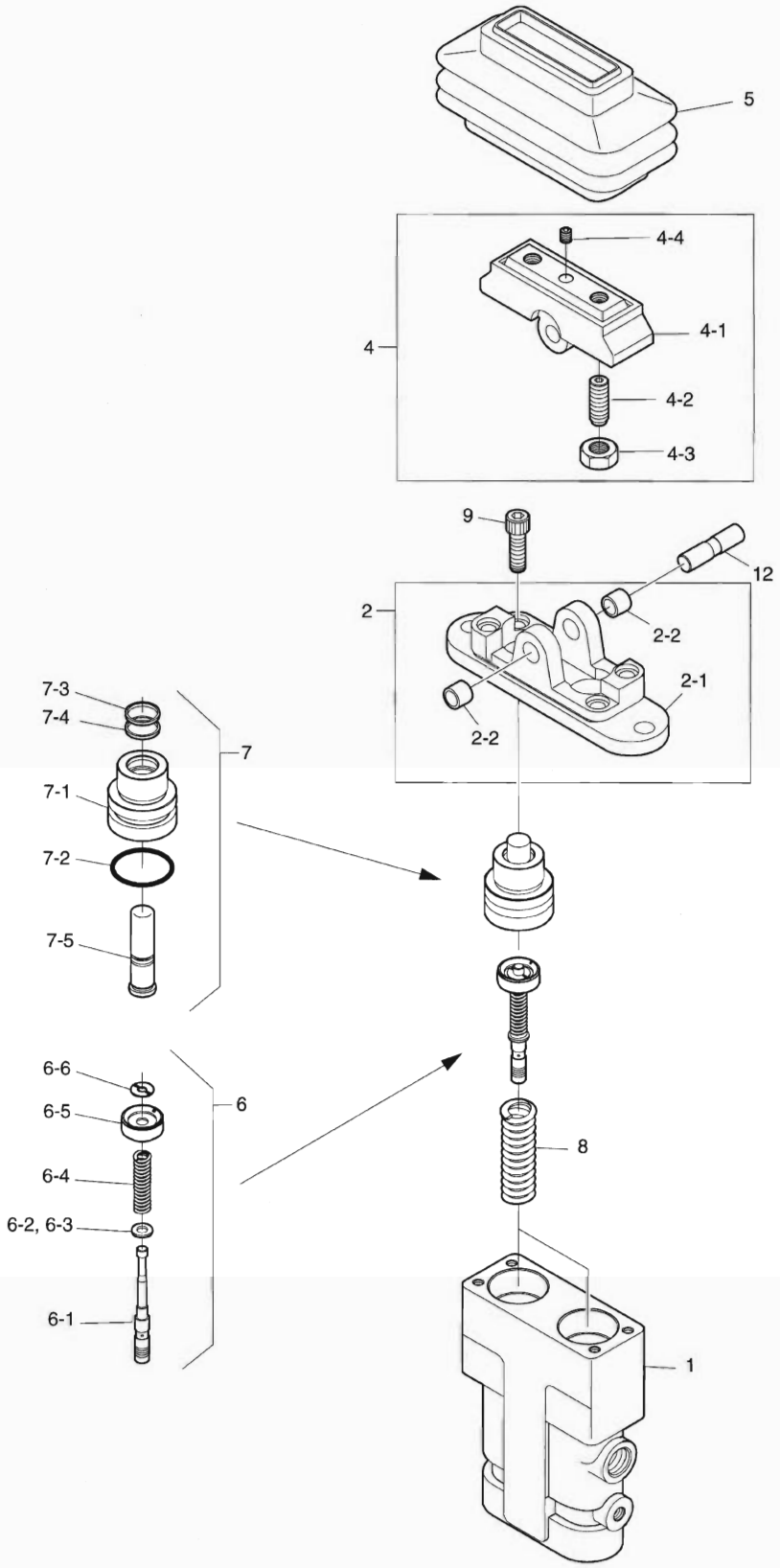

DATE	NOV. 27, 2006
1st EDITION	

Fig. 4300 PEDAL VALVE - TWO WAY VANNE DE PEDALE

Serial No. ;

Key No.	Part No.	Description	Description	Q'ty	S.C	Serial No.	ICA	Replaceable part	
								Part No.	Q'ty
4300--	K1017382	PEDAL VALVE	VANNE DE PEDALE	1					
1	-	CASING	CARTER	1	D				
2	K9002934	COVER KIT	COUVERCLE	1	D				
2-1	-	. COVER	. COUVERCLE	1	D				
2-2	2110-1184D7	. BUSH;DU 10X10	. BAGUE	2					
4	K9003465	CAM KIT	CAME	1	D				
4-1	-	. CAM	. CAME	1	D				
4-2	-	. SCREW;SET	. VIS	2	D				
4-3	S4014633	. NUT M10	. ECROU	2					
4-4	S3523601	. SCREW;SET M8X12	. VIS	1					
5	160-00008	BELLOW	SOUFFLET	1					
6	402-00036	SPOOL ASS'Y	BOBINE	2					
6-1	-	. SPOOL	. PLUNGEUR	1	D				
6-2	-	. SHIM	. CALE	1	R				
6-3	-	. SEAT;SPRING	. SIEGE DE RESSORT	1	D				
6-4	-	. SPRING	. RESSORT	1	D				
6-5	-	. SEAT;SPRING	. SIEGE DE RESSORT	1	D				
6-6	-	. STOPPER	. ARRET	1	D				
7	1.428-00241	PLUG ASS'Y	BOUCHON	2					
7-1	-	. PLUG	. BOUCHON	1	D				
7-2	-	. O-RING	. JOINT TORIQUE	1	D				
7-3	-	. SEAL;DUST	. JOINT	1	D				
7-4	-	. SEAL;ROD	. BAGUE D'ETANCHEITE	1	D				
7-5	-	. ROD;PUSH	. TIGE	1	D				
8	K9002935	SPRING	RESSORT	2					
9	S2209261	BOLT;WRENCH M8X30	BOULON A 6 PANS	2					
12	354-00003	SHAFT;CAM	ARBRE A CAMES	1					

DATE	NOV. 27, 2006
1st EDITION	

Fig. 4310 BOOM CYLINDER - L.H. (ARTI) VERIN DE FLECHE

Serial No. ;

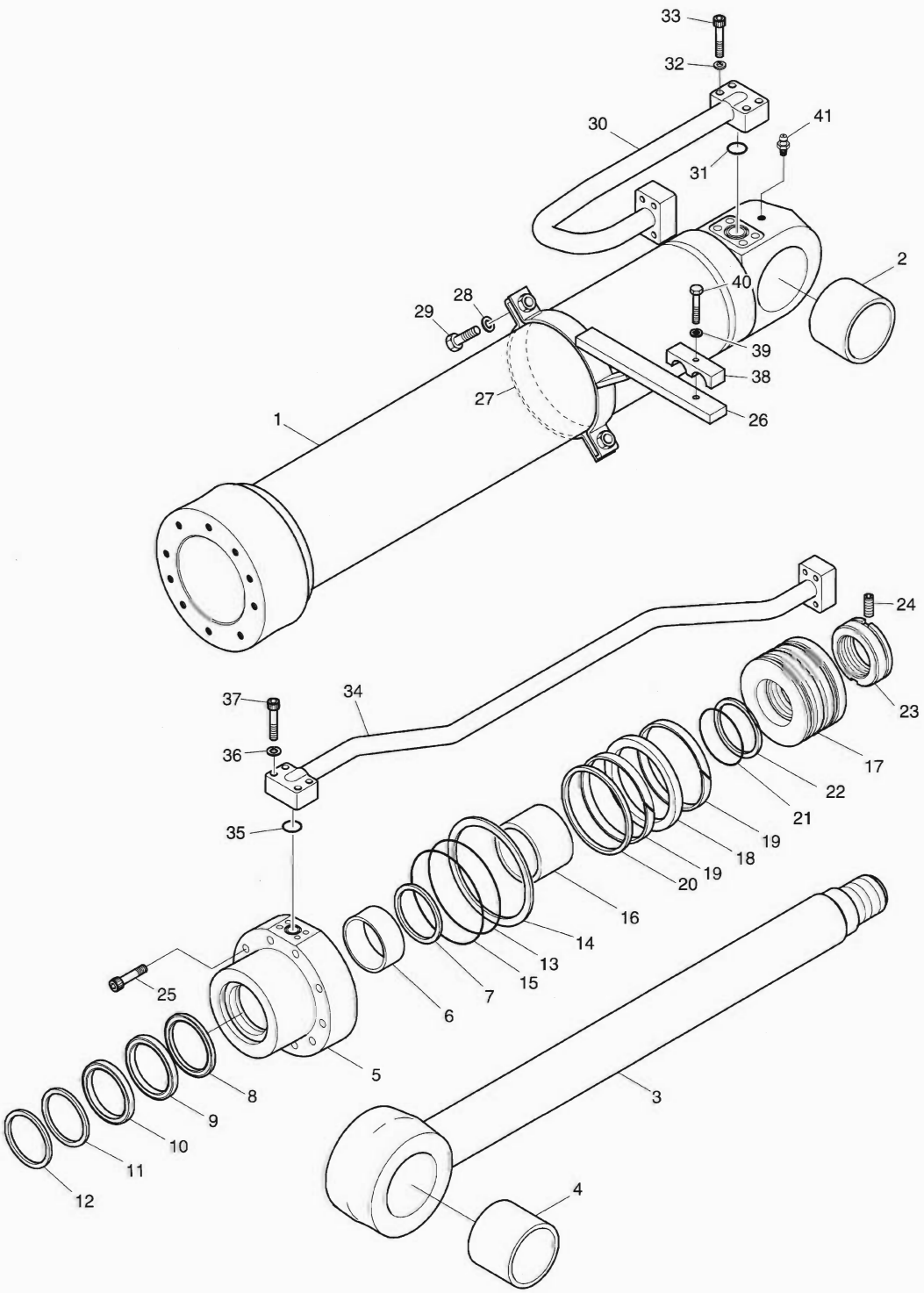

DATE	NOV. 27, 2006
1st EDITION	

Fig. 4310 BOOM CYLINDER - L.H. (ARTI) VERIN DE FLECHE

Serial No. ;

Key No.	Part No.	Description	Description	Q'ty	S.C	Serial No.	ICA	Replaceable part	
								Part No.	Q'ty
10--	K1017658A	CYLINDER;BOOM(L.H)	VERIN DE FLECHE	1					
1	K9004426	TUBE ASS'Y	TUYAU FLEXIBLE	1					
2	K1012382	BUSH	DOUILLE	1					
3	K9004427	ROD ASS'Y	ENSEMBLE TIGE	1					
4	K1018089	BUSH	DOUILLE	1					
5	K9004423	COVER;ROD	COUVERCLE	1					
6	110-00079	DD-BUSH	COUSSINET	1					
7	115-00050	RING;RETAINING	BAGUE D'ARRET	1					
8	K9001857	SEAL;BUFFER	ETANCHEITE	1	K				
9	K9001858	U-PACKING	JOINT EN U	1	K				
10	K9001877	RING;BACK UP	BAGUE	1	K				
11	115-00059	WIPER;DUST	RACCORD ADAPTATEUR	1	K				
12	115-00051	RING;RETAINING	BAGUE D'ARRET	1					
13	S8011151	O-RING	JOINT TORIQUE	1	K				
14	1.180-00278	RING;BACK UP	BAGUE	1	K				
15	S8011201	O-RING	JOINT TORIQUE	1	K				
16	1.115-00204	RING;CUSHION	BAGUE	1					
17	K9003900	PISTON	PISTON	1					
18	K9001891	SEAL;SLIPPER	JOINT	1	K				
19	115-00055	RING;WEAR	BAGUE D'USURE	2	K				
20	K9001872	RING;SLYD	BAGUE	2	K				
21	S8010651	O-RING	JOINT TORIQUE	1	K				
22	1.180-00277	RING;BACK UP	BAGUE	2	K				
23	K9001862	NUT;PISTON	ECROU	1					
24	S3523836	SCREW;SET	VIS	1					
25	S2222171	BOLT;SOCKET	BOULON	10					
26	K9004428	PIPE BAND ASS'Y	ENSEMBLE DE BANDE DE	1					
27	1.195-00007	BAND;PIPE	ATTACHE	1					
28	S5100603	WASHER;SPRING	RONDELLE ELASTIQUE	2					
29	S0558153	BOLT;HEX	BOULON A 6 PANS	2					
30	K9004430	PIPE ASS'Y-L.H	ENSEMBLE DE TUYAU	1					
31	S8000281	O-RING	JOINT TORIQUE	1					
32	S5100603	WASHER;SPRING	RONDELLE ELASTIQUE	4					
33	S2212761	BOLT;SOCKET	BOULON	4					
34	K9004432	PIPE ASS'Y-L.H	ENSEMBLE DE TUYAU	1					
35	S8000281	O-RING	JOINT TORIQUE	1					
36	S5100603	WASHER;SPRING	RONDELLE ELASTIQUE	4					
37	S2212761	BOLT;SOCKET	BOULON	4					

DATE	NOV. 27, 2006
1st EDITION	

Fig. 4310 BOOM CYLINDER - L.H. (ARTI) VERIN DE FLECHE

Serial No. ;

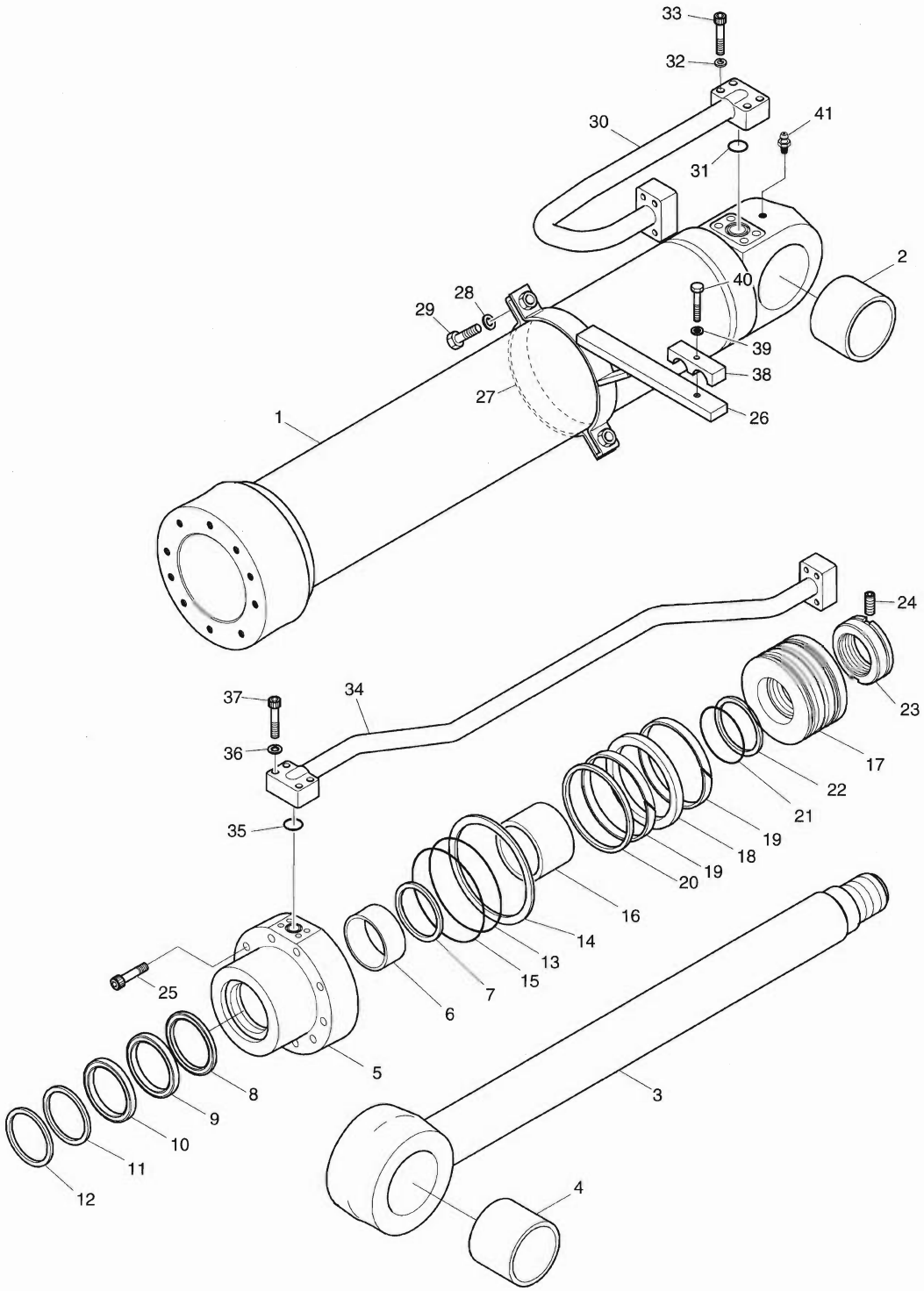

DATE	NOV. 27, 2006
1st EDITION	

Fig. 4310 BOOM CYLINDER - L.H. (ARTI) VERIN DE FLECHE

Serial No. ;

Key No.	Part No.	Description	Description	Q'ty	S.C	Serial No.	ICA	Replaceable part	
								Part No.	Q'ty
4310-38	1.124-00157	CLAMP;PIPE	COLLIER	1					
39	S5100703	WASHER;SPRING	RONDELLE ELASTIQUE	1					
40	S0561053	BOLT	BOULON A 6 PANS	1					
41	S6710032	NIPPLE;GREASE	GRAISSEUR	1					
*	K9003934	SEAL KIT	KIT D'ETANCHEITE	1					

DATE	NOV. 27, 2006
1st EDITION	

Fig. 4320 BOOM CYLINDER - R.H. (ARTI) VERIN DE FLECHE

Serial No. ;

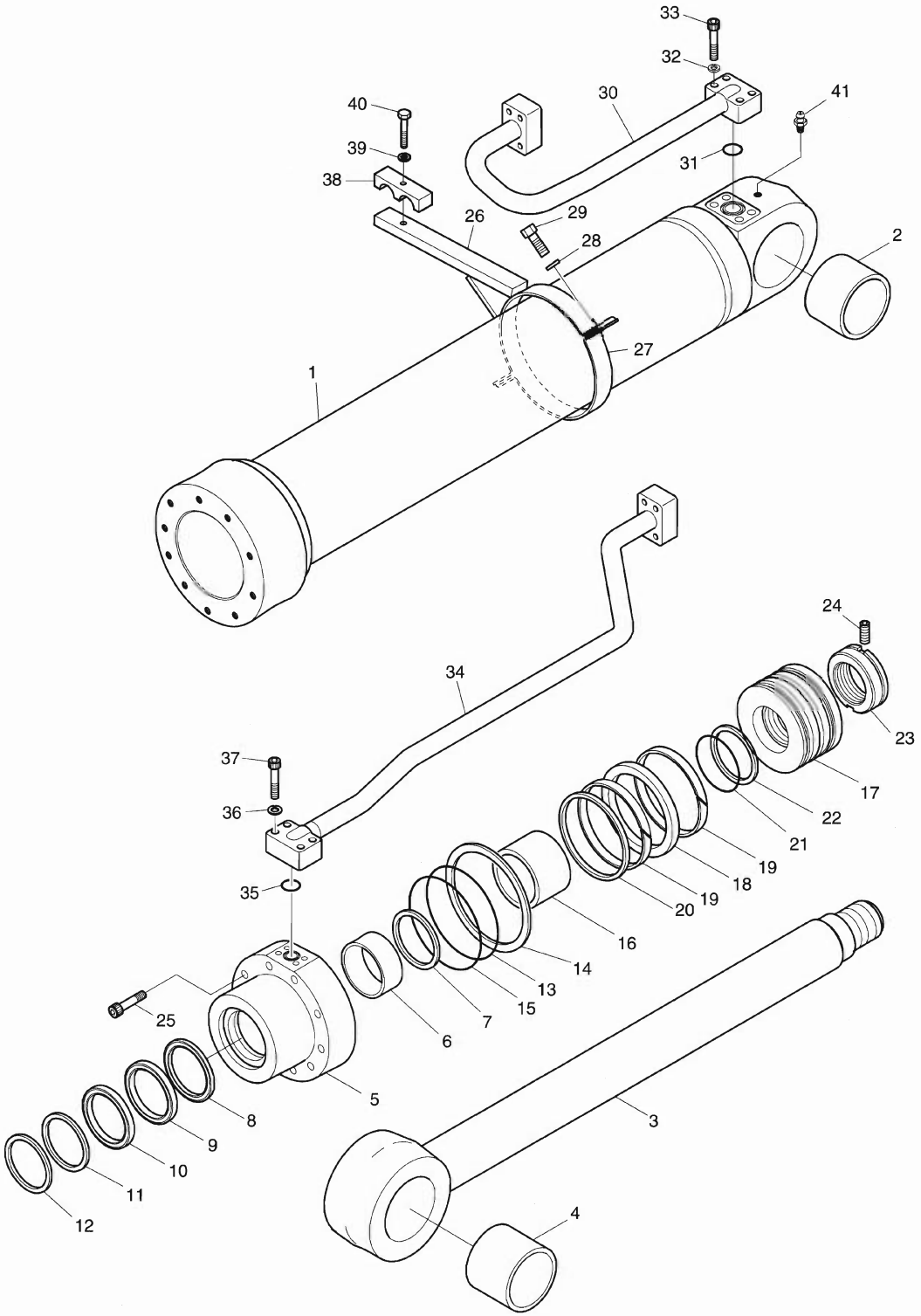

DATE	NOV. 27, 2006
1st EDITION	

Fig. 4320 BOOM CYLINDER - R.H. (ARTI) VERIN DE FLECHE

Serial No. ;

Key No.	Part No.	Description	Description	Q'ty	S.C	Serial No.	ICA	Replaceable part	
								Part No.	Q'ty
4320--	K1017659A	CYLINDER;BOOM(R.H)	VERIN DE FLECHE	1					
1	K9004426	TUBE ASS'Y	TUYAU FLEXIBLE	1					
2	K1012382	BUSH	DOUILLE	1					
3	K9004427	ROD ASS'Y	ENSEMBLE TIGE	1					
4	K1018089	BUSH	DOUILLE	1					
5	K9004423	COVER;ROD	COUVERCLE	1					
6	110-00079	DD-BUSH	COUSSINET	1					
7	115-00050	RING;RETAINING	BAGUE D'ARRET	1					
8	K9001857	SEAL;BUFFER	ETANCHEITE	1	K				
9	K9001858	U-PACKING	JOINT EN U	1	K				
10	K9001877	RING;BACK UP	BAGUE ANTIEXTRUSION	1	K				
11	115-00059	WIPER;DUST	RACCORD ADAPTATEUR	1	K				
12	115-00051	RING;RETAINING	BAGUE D'ARRET	1					
13	S8011151	O-RING	JOINT TORIQUE	1	K				
14	1.180-00278	RING;BACK UP	BAGUE ANTIEXTRUSION	1	K				
15	S8011201	O-RING	JOINT TORIQUE	1	K				
16	1.115-00204	RING;CUSHION	BAGUE	1					
17	K9003900	PISTON	PISTON	1					
18	K9001891	SEAL;SLIPPER	JOINT	1	K				
19	115-00055	RING;WEAR	BAGUE D'USURE	2	K				
20	K9001872	RING;SLYD	BAGUE	2	K				
21	S8010651	O-RING	JOINT TORIQUE	1	K				
22	1.180-00277	RING;BACK UP	BAGUE ANTIEXTRUSION	2	K				
23	K9001862	NUT;PISTON	ECROU	1					
24	S3523836	SCREW;SET	VIS	1					
25	S2222171	BOLT;SOCKET	BOULON	10					
26	K9004428	PIPE BAND ASS'Y	ENSEMBLE DE BANDE DE	1					
27	1.195-00007	BAND;PIPE	ATTACHE	1					
28	S5100603	WASHER;SPRING	RONDELLE ELASTIQUE	2					
29	S0558153	BOLT;HEX	BOULON A 6 PANS	2					
30	K9004429	PIPE ASS'Y-R.H	ENSEMBLE DE TUYAU	1					
31	S8000281	O-RING	JOINT TORIQUE	1					
32	S5100603	WASHER;SPRING	RONDELLE ELASTIQUE	4					
33	S2212761	BOLT;SOCKET	BOULON	4					
34	K9004431	PIPE ASS'Y-R.H	ENSEMBLE DE TUYAU	1					
35	S8000281	O-RING	JOINT TORIQUE	1					
36	S5100603	WASHER;SPRING	RONDELLE ELASTIQUE	4					
37	S2212761	BOLT;SOCKET	BOULON	4					

DATE	NOV. 27, 2006
1st EDITION	

Fig. 4320 BOOM CYLINDER - R.H. (ARTI) VERIN DE FLECHE

Serial No. ;

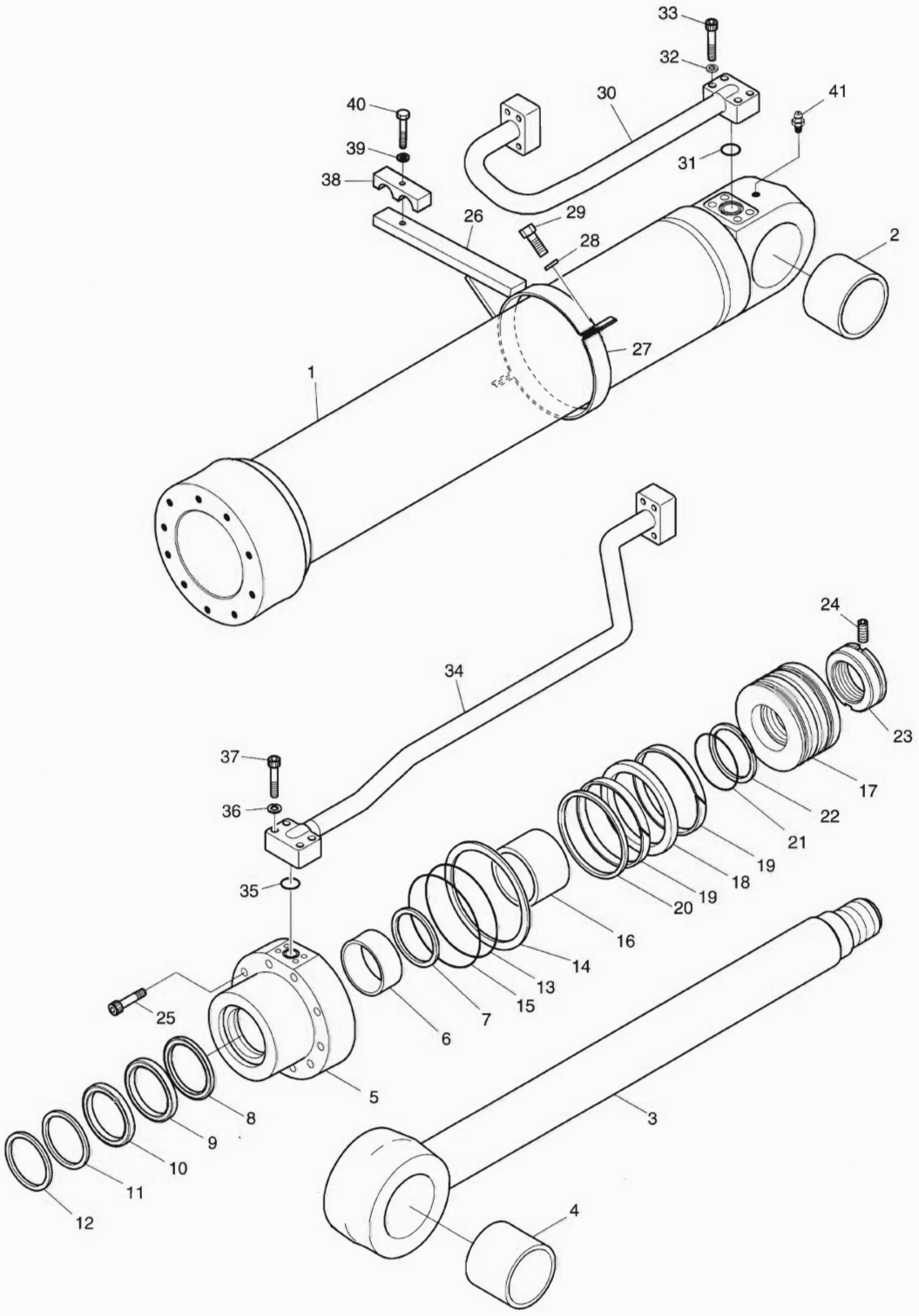

DATE	NOV. 27, 2006
1st EDITION	

Fig. 4320 BOOM CYLINDER - R.H. (ARTI) VERIN DE FLECHE

Serial No. ;

Key No.	Part No.	Description	Description	Q'ty	S.C	Serial No.	ICA	Replaceable part	
								Part No.	Q'ty
4320-38	1.124-00157	CLAMP;PIPE	COLLIER	1					
39	S5100703	WASHER;SPRING	RONDELLE ELASTIQUE	1					
40	S0561053	BOLT	BOULON A 6 PANS	1					
41	S6710032	NIPPLE;GREASE	GRAISSEUR	1					
*	K9003934	SEAL KIT	KIT D'ETANCHEITE	1					

DATE	NOV. 27, 2006
1st EDITION	

Fig. 4330 ARTI. BOOM CYLINDER
VERIN DE ARTICULAIRE FLECHE

Serial No. ;

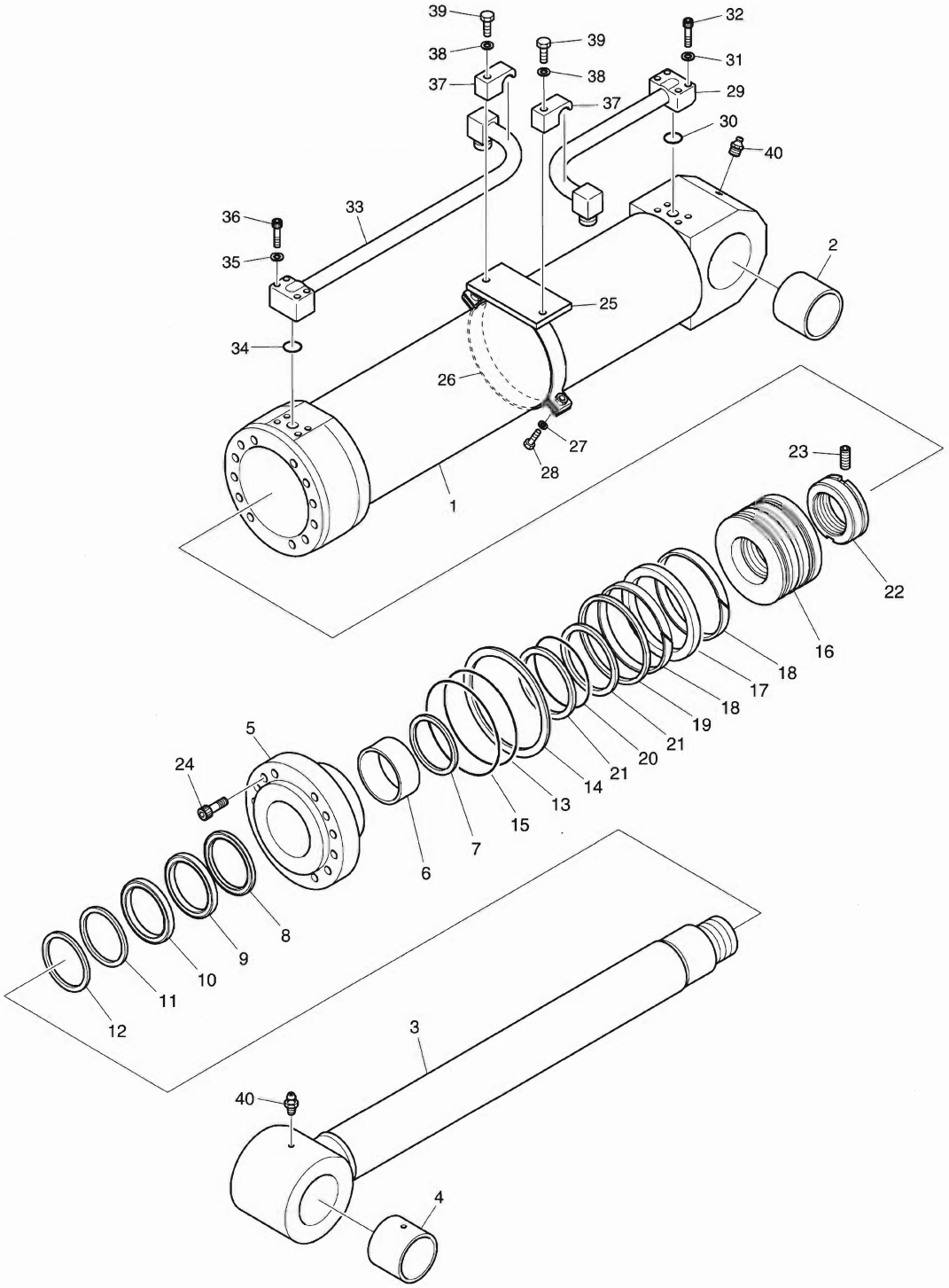

DATE	NOV. 27, 2006
1st EDITION	

Fig. 4330 ARTI. BOOM CYLINDER VERIN DE ARTICULAIRE FLECHE

Serial No. ;

Key No.	Part No.	Description	Description	Q'ty	S.C	Serial No.	ICA	Replaceable part	
								Part No.	Q'ty
4330--	K1017660	CYLINDER;ARTI BOOM	CYLINDRE	1					
1	K9004433	TUBE ASS'Y	TUYAU FLEXIBLE	1					
2	K1000732	BUSH	DOUILLE	1					
3	K9004434	ROD ASS'Y	ENSEMBLE TIGE	1					
4	K1000732	BUSH	DOUILLE	1					
5	K9004435	COVER;ROD	COUVERCLE	1					
6	110-00110	DD-BUSH	COUSSINET	1					
7	115-00051	RING;RETAINING	BAGUE D'ARRET	1					
8	1.180-00659	SEAL;BUFFER	ETANCHEITE	1	K				
9	1.180-00660	U-PACKING	JOINT EN U	1	K				
10	K9001146	RING;BACK UP	BAGUE	1	K				
11	115-00099	WIPER;DUST	RACCORD ADAPTATEUR	1	K				
12	115-00092	RING;RETAINING	BAGUE D'ARRET	1					
13	S8011501	O-RING	JOINT TORIQUE	1	K				
14	K9002098	RING;BACK UP	BAGUE	1	K				
15	2180-1216D149	O-RING	JOINT TORIQUE	1	K				
16	K9004436	PISTON	PISTON	1					
17	1.180-00572	SEAL;SLIPPER	JOINT	1	K				
18	1.180-00433	RING;WEAR	BAGUE D'USURE	2	K				
19	K9002174	RING;DUST	BAGUE	1	K				
20	S8010801	O-RING	JOINT TORIQUE	1	K				
21	K9001895	RING;BACK UP	BAGUE	2	K				
22	121-00044	NUT;PISTON	ECROU	1					
23	S3523836	SCREW;SET	VIS	1					
24	S2224971	BOLT;SOCKET	BOULON	12					
25	K9004437	PIPE BAND ASS'Y	ENSEMBLE DE BANDE DE	1					
26	1.124-00104	BAND;PIPE	ATTACHE	1					
27	S5100603	WASHER;SPRING	RONDELLE ELASTIQUE	2					
28	S0558153	BOLT;HEX	BOULON A 6 PANS	2					
29	K9004438	PIPE ASS'Y-H	ENSEMBLE DE TUYAU	1					
30	S8000281	O-RING	JOINT TORIQUE	1					
31	S5100603	WASHER;SPRING	RONDELLE ELASTIQUE	4					
32	S2212861	BOLT;HEX	BOULON A 6 PANS	4					
33	K9004439	PIPE ASS'Y-R	ENSEMBLE DE TUYAU	1					
34	S8000281	O-RING	JOINT TORIQUE	1					
35	S5100603	WASHER;SPRING	RONDELLE ELASTIQUE	4					
36	S2212761	BOLT;SOCKET	BOULON	4					
37	K9003968	CLAMP;PIPE	COLLIER	2					

DATE	NOV. 27, 2006
1st EDITION	

Fig. 4330 ARTI. BOOM CYLINDER
VERIN DE ARTICULAIRE FLECHE

Serial No. ;

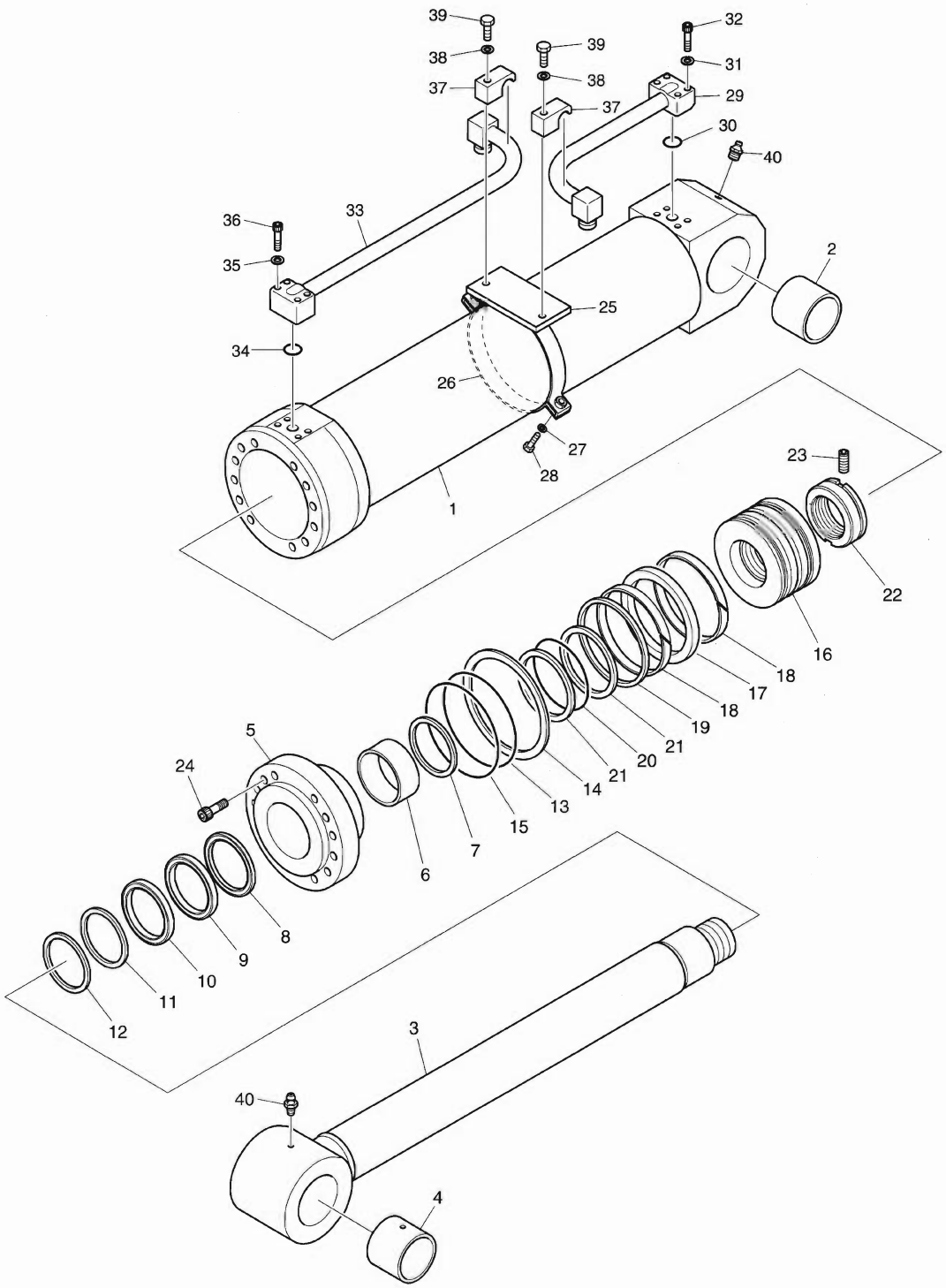

DATE	NOV. 27, 2006
1st EDITION	

Fig. 4330 ARTI. BOOM CYLINDER VERIN DE ARTICULAIRE FLECHE

Serial No. ;

Key No.	Part No.	Description	Description	Q'ty	S.C	Serial No.	ICA	Replaceable part	
								Part No.	Q'ty
4330-38	S5100703	WASHER;SPRING	RONDELLE ELASTIQUE	2					
39	S2215761	BOLT;HEX	BOULON A 6 PANS	2					
40	S6710032	NIPPLE;GREASE	GRAISSEUR	2					
*	K9004440	SEAL KIT	KIT D'ETANCHEITE	1					

DATE	NOV. 27, 2006
1st EDITION	

Fig. 4340 ARM CYLINDER - ARM 2.3m (ARTI. BOOM)
VERIN DE BALANCIER

Serial No. ;

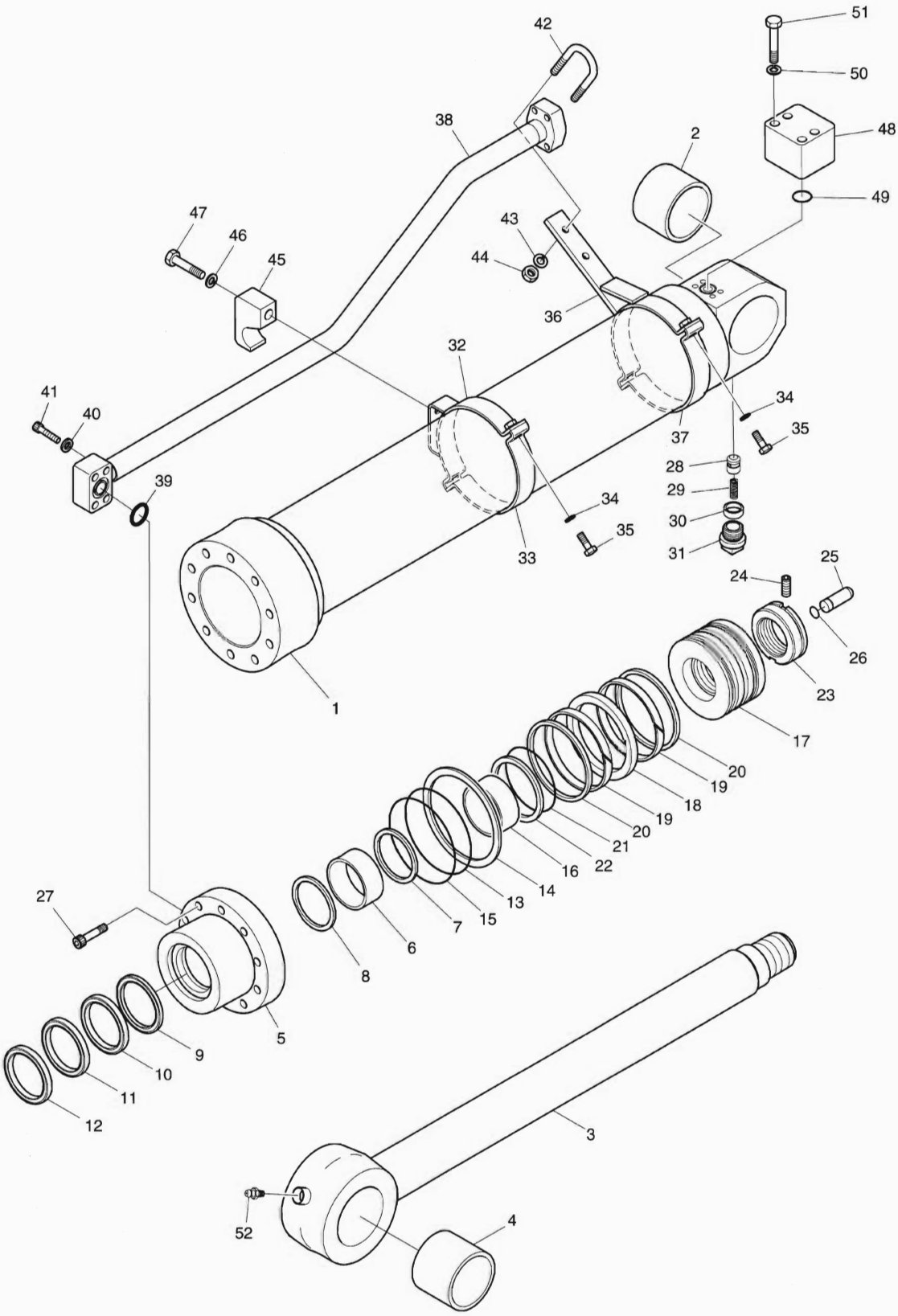

DATE	NOV. 27, 2006
1st EDITION	

Fig. 4340 ARM CYLINDER - ARM 2.3m (ARTI. BOOM) VERIN DE BALANCIER

Serial No. ;

Key No.	Part No.	Description	Description	Q'ty	S.C	Serial No.	ICA	Replaceable part	
								Part No.	Q'ty
4340--	K1017662	CYLINDER;ARM	VERIN DE BALANCIER	1					
1	K9004463	TUBE ASS'Y	TUYAU FLEXIBLE	1					
2	K1012383	BUSH	DOUILLE	1					
3	K9004464	ROD ASS'Y	ENSEMBLE TIGE	1					
4	K1012383	BUSH	DOUILLE	1					
5	K9004392	COVER;ROD	COUVERCLE	1					
6	110-00080	DD-BUSH	COUSSINET	1					
7	115-00063	RING;RETAINING	BAGUE D'ARRET	1					
8	1.180-00657	SEAL;BUFFER	ETANCHEITE	1	K				
9	K9001153	U-PACKING	JOINT EN U	1	K				
10	K9001154	RING;BACK UP	BAGUE	1	K				
11	115-00072	WIPER;DUST	RACCORD ADAPTATEUR	1	K				
12	115-00073	RING;RETAINING	BAGUE D'ARRET	1					
13	S8011201	O-RING	JOINT TORIQUE	1	K				
14	K9001859	RING;BACK UP	BAGUE	1	K				
15	S8011251	O-RING	JOINT TORIQUE	1	K				
16	K9004393	RING;CUSHION	BAGUE	1					
17	K9004394	PISTON	PISTON	1					
18	K9001890	SEAL;SLIPPER	JOINT	1	K				
19	115-00087	RING;WEAR	BAGUE D'USURE	2	K				
20	K9001861	RING;DUST	BAGUE	2	K				
21	S8010701	O-RING	JOINT TORIQUE	1	K				
22	K9001156	RING;BACK UP	BAGUE	2	K				
23	121-00045	NUT;PISTON	ECROU	1					
24	S3523836	SCREW;SET	VIS	1					
25	K9002278	PLUNGER;CUSHION	PLONGEUR	1					
26	115-00081	RING;STOP	BAGUE D'ARRET	1					
27	S2222272	BOLT;SOCKET	BOULON	10					
28	420-00132	VALVE;CHECK	VANNE	1					
29	129-00071	SPRING	RESSORT	1					
30	1.195-00022	SUPPORT;SPRING	SUPPORT	1					
31	2181-1116D3	PLUG;SOCKET	BOUCHON	1					
32	K9004395	PIPE BAND ASS'Y-H	ENSEMBLE DE BANDE DE	1					
33	K9004396	BAND;PIPE	ATTACHE	1					
34	S5100703	WASHER;SPRING	RONDELLE ELASTIQUE	4					
35	S0560563	BOLT;HEX	BOULON A 6 PANS	4					
36	K9004397	PIPE BAND ASS'Y-R	ENSEMBLE DE BANDE DE	1					
37	K9004396	BAND;PIPE	ATTACHE	1					

Fig. 4340 ARM CYLINDER - ARM 2.3m (ARTI. BOOM)
VERIN DE BALANCIER

Serial No. ;

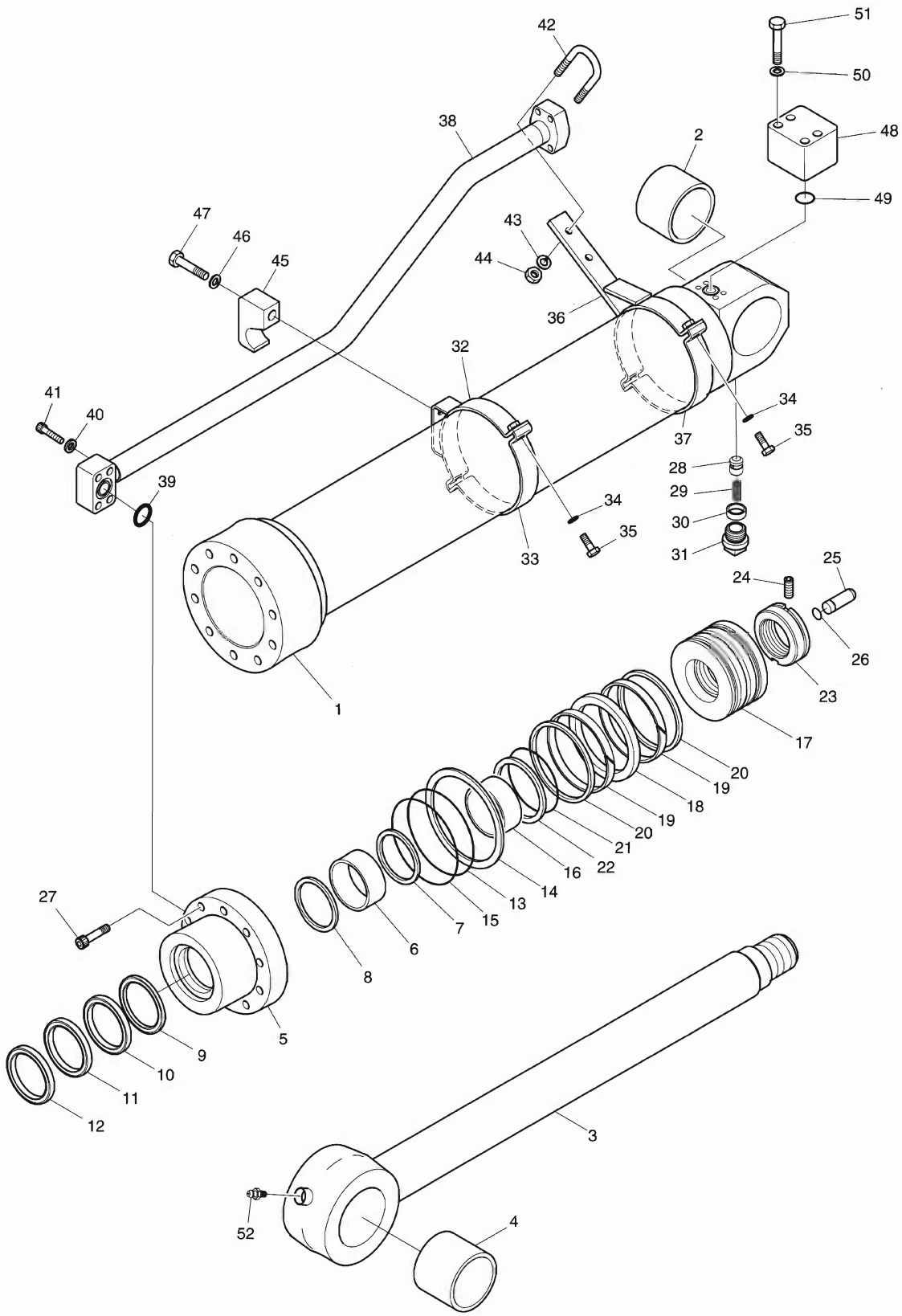

DATE	NOV. 27, 2006
1st EDITION	

Fig. 4340 ARM CYLINDER - ARM 2.3m (ARTI. BOOM) VERIN DE BALANCIER

Serial No. ;

Key No.	Part No.	Description	Description	Q'ty	S.C	Serial No.	ICA	Replaceable part	
								Part No.	Q'ty
4340-38	K9004399	PIPE ASS'Y-R	ENSEMBLE DE TUYAU	1					
39	S8000281	O-RING	JOINT TORIQUE	1					
40	S5100603	WASHER;SPRING	RONDELLE ELASTIQUE	4					
41	S2212761	BOLT;HEX	BOULON A 6 PANS	4					
42	K9004400	BOLT;U	BOULON A 6 PANS	1					
43	S5100603	WASHER;SPRING	RONDELLE ELASTIQUE	2					
44	S4012633	NUT;HEX	ECROU	2					
45	K9001413	CLAMP;PIPE	COLLIER	1					
46	S5102903	WASHER;SPRING	RONDELLE ELASTIQUE	1					
47	S0565451	BOLT	BOULON A 6 PANS	1					
48	K9004401	PORT;FLANGE	PORT;FLANGE	1					
49	S8000281	O-RING	JOINT TORIQUE	1					
50	S5100603	WASHER;SPRING	RONDELLE ELASTIQUE	4					
51	S0513163	BOLT;SOCKET	BOULON	4					
52	S6710032	NIPPLE;GREASE	GRAISSEUR	1					
*	K9004402	SEAL KIT	KIT D'ETANCHEITE	1					

DATE	NOV. 27, 2006
1st EDITION	

Fig. 4350 BUCKET CYLINDER - ARM 2.3m (ARTI. BOOM) VERIN DE GODET

Serial No. ;

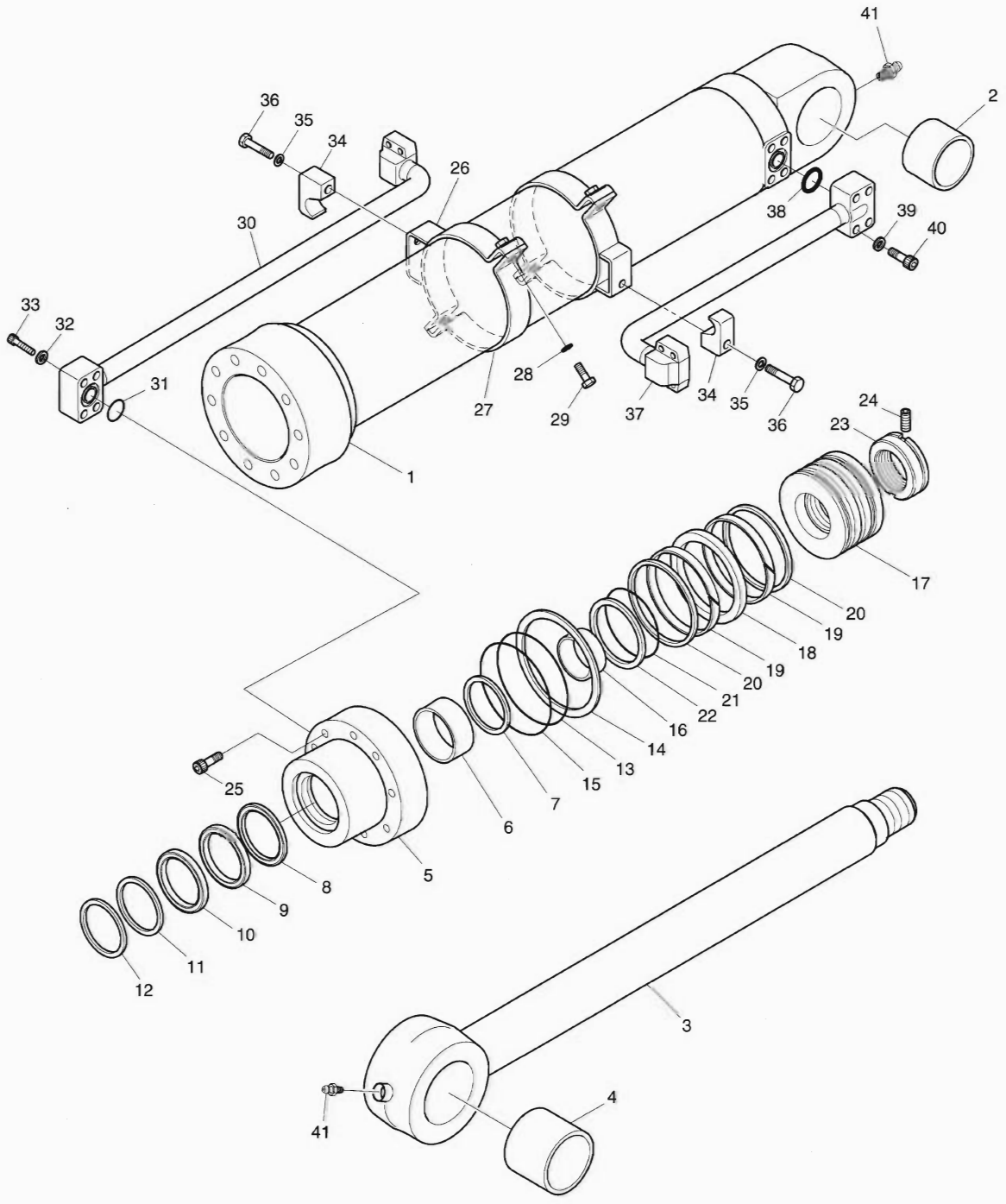

DATE	NOV. 27, 2006
1st EDITION	

Fig. 4350 BUCKET CYLINDER - ARM 2.3m (ARTI. BOOM) VERIN DE GODET

Serial No. ;

Key No.	Part No.	Description	Description	Q'ty	S.C	Serial No.	ICA	Replaceable part	
								Part No.	Q'ty
350--	K1018027	CYLINDER;BUCKET	VERIN DE GODET	1					
1	K9004454	TUBE ASS'Y	TUYAU FLEXIBLE	1					
2	110-00241	BUSH	DOUILLE	1					
3	K9004455	ROD ASS'Y	ENSEMBLE TIGE	1					
4	K1012384	BUSH;ROLLED	DOUILLE	1					
5	K9001400	COVER;ROD	COUVERCLE	1					
6	110-00097	DD-BUSH	COUSSINET	1					
7	K9001401	RING;RETAINING	BAGUE D'ARRET	1					
8	K9001402	SEAL;BUFFER	ETANCHEITE	1	K				
9	K9001403	U-PACKING	JOINT EN U	1	K				
10	K9001404	RING;BACK UP	BAGUE	1	K				
11	115-00084	WIPER;DUST	RACCORD ADAPTATEUR	1	K				
12	115-00063	RING;RETAINING	BAGUE D'ARRET	1					
13	S8011101	O-RING	JOINT TORIQUE	1	K				
14	K9001405	RING;BACK UP	BAGUE	1	K				
15	S8011151	O-RING	JOINT TORIQUE	1	K				
16	K9004456	RING;CUSHION	BAGUE	1					
17	K9001407	PISTON	PISTON	1					
18	K9001408	SEAL;SLIPPER	JOINT	1	K				
19	115-00085	RING;WEAR	BAGUE D'USURE	2	K				
20	K9001409	RING;DUST	BAGUE	2	K				
21	180-00276	O-RING	JOINT TORIQUE	1	K				
22	K9001410	RING;BACK UP	BAGUE	2	K				
23	K9001862	NUT;PISTON	ECROU	1					
24	S3523836	SCREW;SET	VIS	1					
25	S2222171	BOLT;SOCKET	BOULON	10					
26	K9004457	PIPE BAND ASS'Y	ENSEMBLE DE BANDE DE	2					
27	124-00085	BAND;PIPE	ATTACHE	2					
28	S5100603	WASHER;SPRING	RONDELLE ELASTIQUE	4					
29	S0558153	BOLT;HEX	BOULON A 6 PANS	4					
30	K9004458	PIPE ASS'Y-R	ENSEMBLE DE TUYAU	1					
31	S8000281	O-RING	JOINT TORIQUE	1					
32	S5100603	WASHER;SPRING	RONDELLE ELASTIQUE	4					
33	S2212761	BOLT;HEX	BOULON A 6 PANS	4					
34	K9003968	CLAMP;PIPE	COLLIER	2					
35	S5100703	WASHER;SPRING	RONDELLE ELASTIQUE	2					
36	S0512863	BOLT;HEX	BOULON A 6 PANS	2					
37	K9004459	PIPE ASS'Y-H	ENSEMBLE DE TUYAU	1					

DATE	NOV. 27, 2006
1st EDITION	

Fig. 4350 BUCKET CYLINDER - ARM 2.3m (ARTI. BOOM) VERIN DE GODET

Serial No. ;

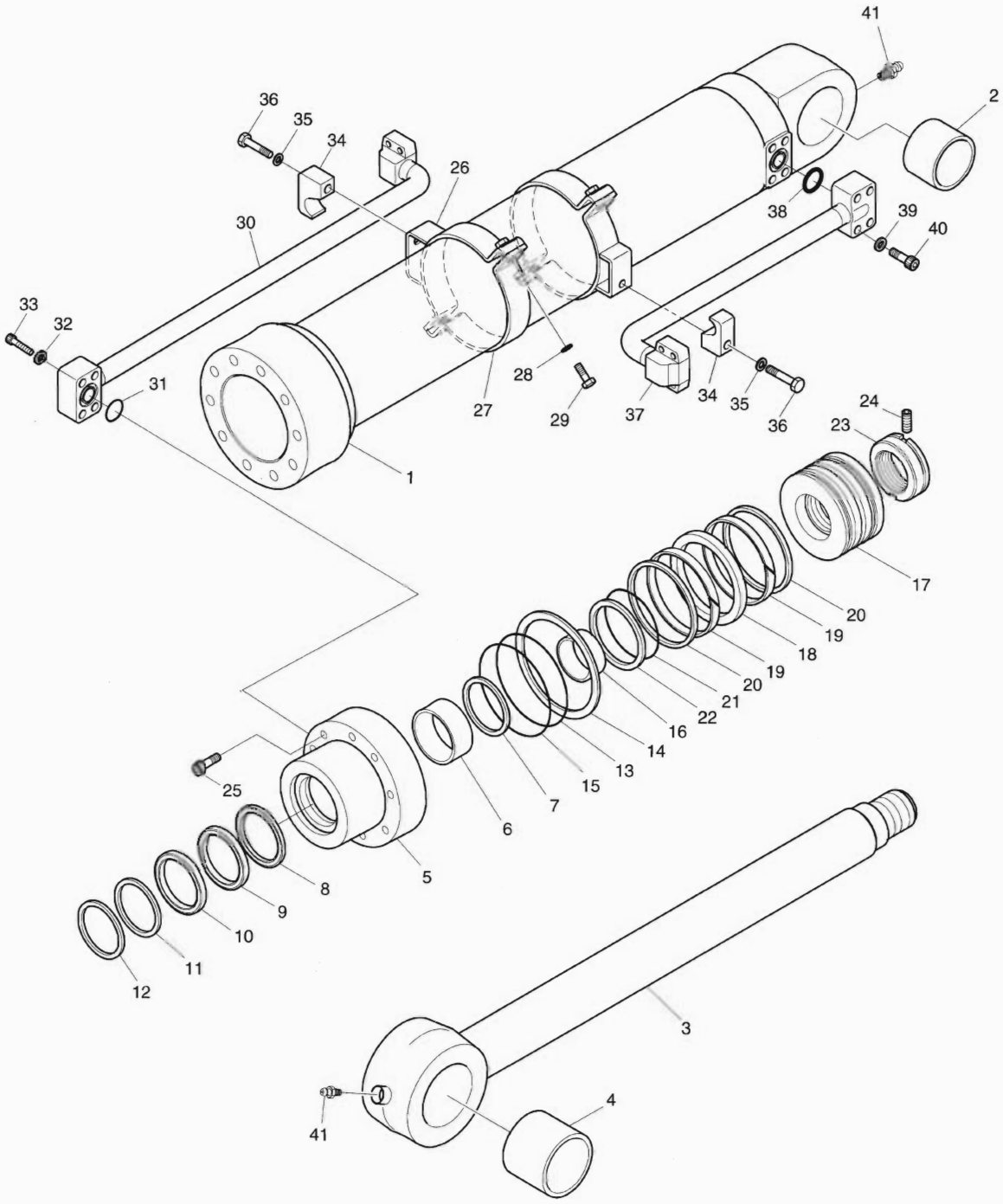

DATE	NOV. 27, 2006
1st EDITION	

Fig. 4350 BUCKET CYLINDER - ARM 2.3m (ARTI. BOOM) VERIN DE GODET

Serial No. ;

Key No.	Part No.	Description	Description	Q'ty	S.C	Serial No.	ICA	Replaceable part	
								Part No.	Q'ty
4350-38	S8000281	O-RING	JOINT TORIQUE	1					
39	S5100603	WASHER;SPRING	RONDELLE ELASTIQUE	4					
40	S2212761	BOLT;HEX	BOULON A 6 PANS	4					
41	S6710032	NIPPLE;GREASE	GRAISSEUR	2					
*	K9002308	SEAL KIT	KIT D'ETANCHEITE	1					

DATE	NOV. 27, 2006
1st EDITION	

Fig. 4360 BOOM CYLINDER - L.H. (LOCK VALVE) VERIN DE FLECHE

Serial No. ;

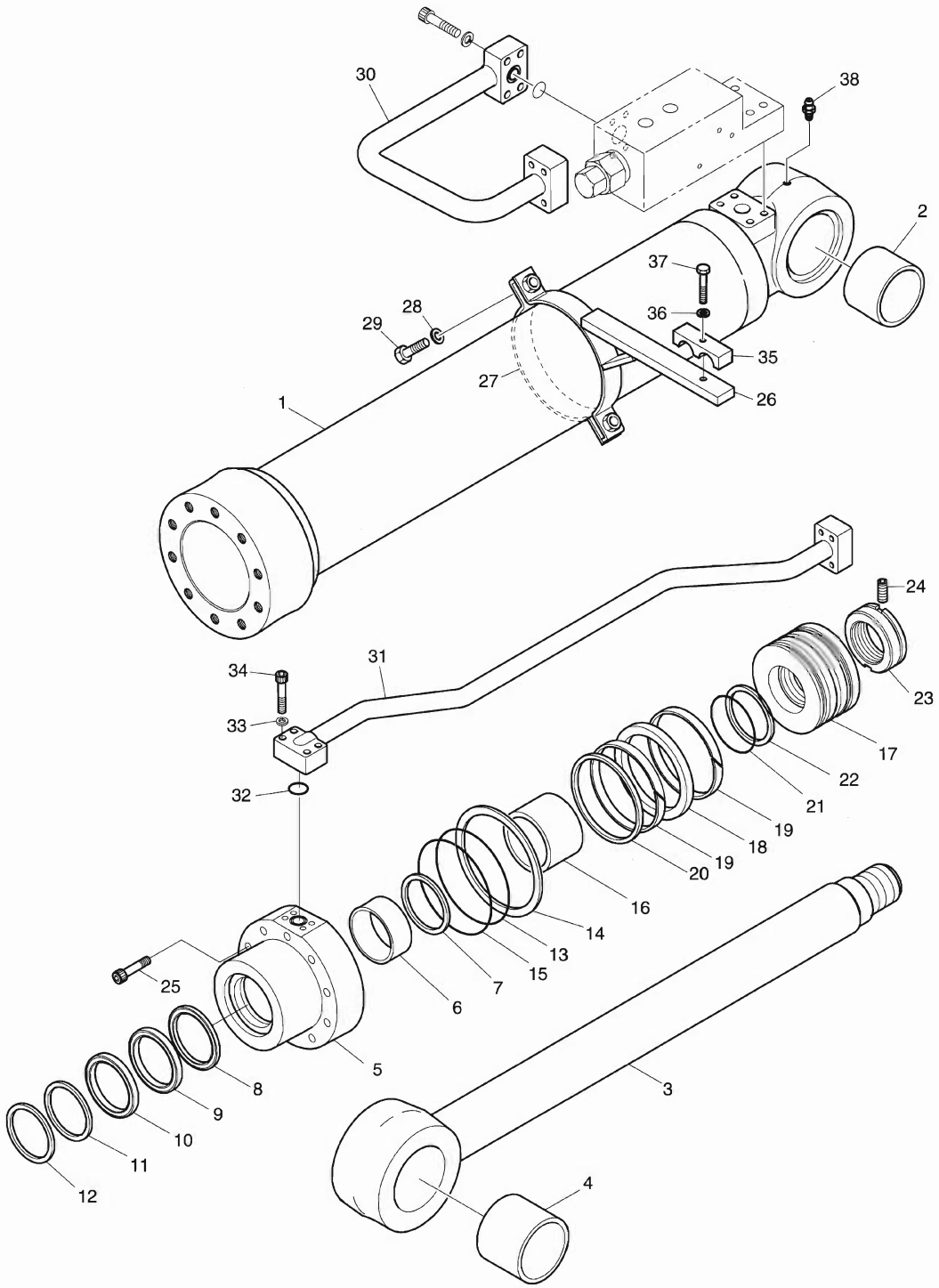

DATE	NOV. 27, 2006
1st EDITION	

Fig. 4360 BOOM CYLINDER - L.H. (LOCK VALVE) VERIN DE FLECHE

Serial No. ;

Key No.	Part No.	Description	Description	Q'ty	S.C	Serial No.	ICA	Replaceable part	
								Part No.	Q'ty
4360--	K1017665A	CYLINDER;BOOM(L.H)	VERIN DE FLECHE	1					
1	K9004426	TUBE ASS'Y	TUYAU FLEXIBLE	1					
2	K1012382	BUSH	DOUILLE	1					
3	K9004427	ROD ASS'Y	ENSEMBLE TIGE	1					
4	K1018089	BUSH	DOUILLE	1					
5	K9004423	COVER;ROD	COUVERCLE	1					
6	110-00079	DD-BUSH	COUSSINET	1					
7	115-00050	RING;RETAINING	BAGUE D'ARRET	1					
8	K9001857	SEAL;BUFFER	ETANCHEITE	1	K				
9	K9001858	U-PACKING	JOINT EN U	1	K				
10	K9001877	RING;BACK UP	BAGUE	1	K				
11	115-00059	WIPER;DUST	RACCORD ADAPTATEUR	1	K				
12	115-00051	RING;RETAINING	BAGUE D'ARRET	1					
13	S8011151	O-RING	JOINT TORIQUE	1	K				
14	1.180-00278	RING;BACK UP	BAGUE	1	K				
15	S8011201	O-RING	JOINT TORIQUE	1	K				
16	1.115-00204	RING;CUSHION	BAGUE	1					
17	K9003900	PISTON	PISTON	1					
18	K9001891	SEAL;SLIPPER	JOINT	1	K				
19	115-00055	RING;WEAR	BAGUE D'USURE	2	K				
20	K9001872	RING;SLYD	BAGUE	2	K				
21	S8010651	O-RING	JOINT TORIQUE	1	K				
22	1.180-00277	RING;BACK UP	BAGUE	2	K				
23	K9001862	NUT;PISTON	ECROU	1					
24	S3523836	SCREW;SET	VIS	1					
25	S2222171	BOLT;SOCKET	BOULON	10					
26	K9004428	PIPE BAND ASS'Y	ENSEMBLE DE BANDE DE	1					
27	1.195-00007	BAND;PIPE	ATTACHE	1					
28	S5100603	WASHER;SPRING	RONDELLE ELASTIQUE	2					
29	S0558153	BOLT;HEX	BOULON A 6 PANS	2					
30	K9004460	PIPE ASS'Y-L.H	ENSEMBLE DE TUYAU	1					
31	K9004432	PIPE ASS'Y-L.H	ENSEMBLE DE TUYAU	1					
32	S8000281	O-RING	JOINT TORIQUE	1					
33	S5100603	WASHER;SPRING	RONDELLE ELASTIQUE	4					
34	S2212761	BOLT;SOCKET	BOULON	4					
35	1.124-00157	CLAMP;PIPE	COLLIER	1					
36	S5100703	WASHER;SPRING	RONDELLE ELASTIQUE	1					
37	S0561053	BOLT	BOULON A 6 PANS	1					

DATE	NOV. 27, 2006
1st EDITION	

Fig. 4360 BOOM CYLINDER - L.H. (LOCK VALVE)
VERIN DE FLECHE

Serial No. ;

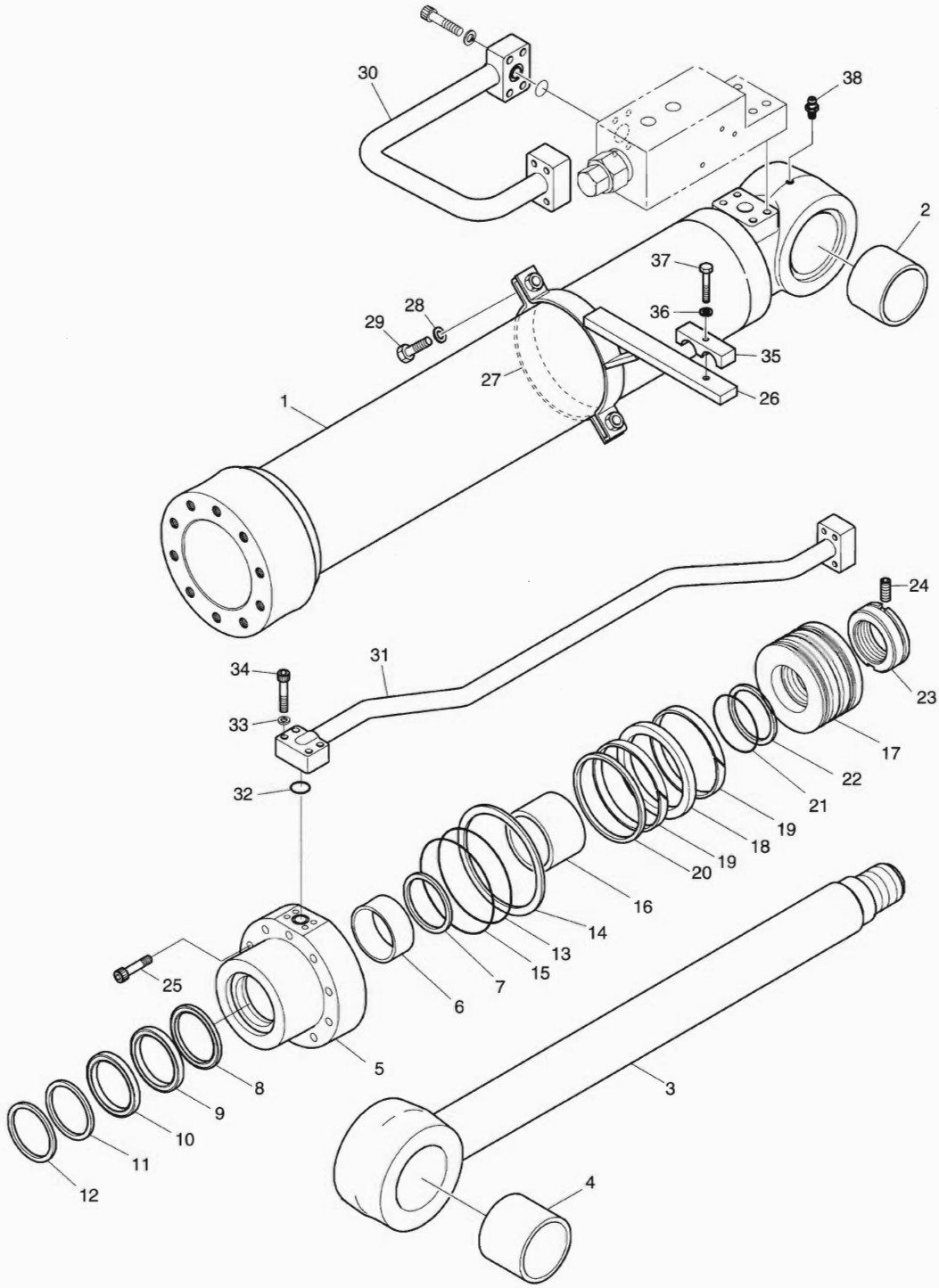

DATE	NOV. 27, 2006
1st EDITION	

Fig. 4360 BOOM CYLINDER - L.H. (LOCK VALVE) VERIN DE FLECHE

Serial No. ;

Key No.	Part No.	Description	Description	Q'ty	S.C	Serial No.	ICA	Replaceable part	
								Part No.	Q'ty
4360-38	S6710032	NIPPLE;GREASE	GRAISSEUR	1					
*	K9003934	SEAL KIT	KIT D'ETANCHEITE	1					

DATE	NOV. 27, 2006
1st EDITION	

Fig. 4370 BOOM CYLINDER - R.H. (LOCK VALVE)
VERIN DE FLECHE

Serial No. ;

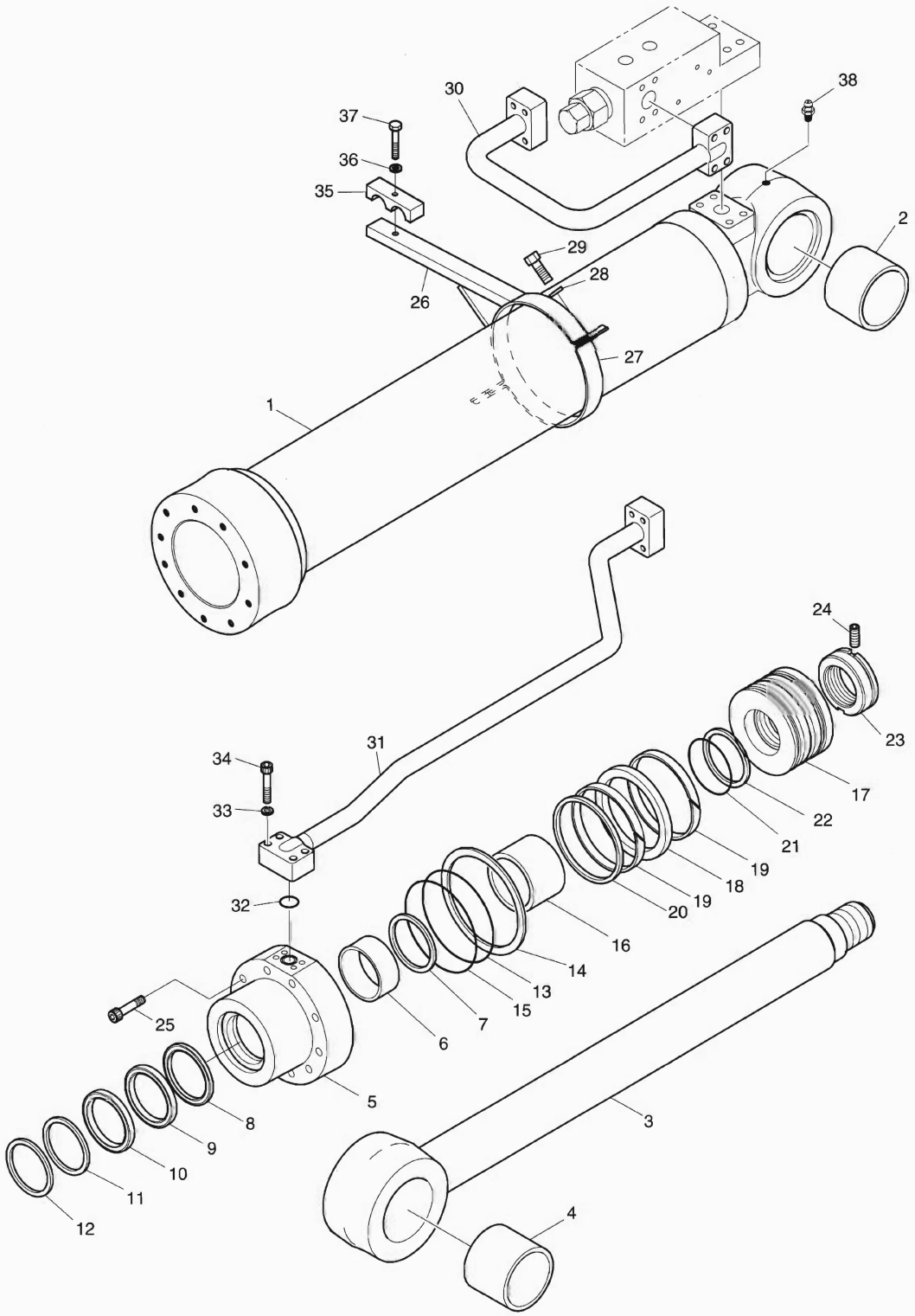

DATE	NOV. 27, 2006
1st EDITION	

Fig. 4370 BOOM CYLINDER - R.H. (LOCK VALVE) VERIN DE FLECHE

Serial No. ;

Key No.	Part No.	Description	Description	Q'ty	S.C	Serial No.	ICA	Replaceable part	
								Part No.	Q'ty
4370--	K1017666A	CYLINDER;BOOM(R.H)	VERIN DE FLECHE	1					
1	K9004426	TUBE ASS'Y	TUYAU FLEXIBLE	1					
2	K1012382	BUSH	DOUILLE	1					
3	K9004427	ROD ASS'Y	ENSEMBLE TIGE	1					
4	K1018089	BUSH	DOUILLE	1					
5	K9004423	COVER;ROD	COUVERCLE	1					
6	110-00079	DD-BUSH	COUSSINET	1					
7	115-00050	RING;RETAINING	BAGUE D'ARRET	1					
8	K9001857	SEAL;BUFFER	ETANCHEITE	1	K				
9	K9001858	U-PACKING	JOINT EN U	1	K				
10	K9001877	RING;BACK UP	BAGUE	1	K				
11	115-00059	WIPER;DUST	RACCORD ADAPTATEUR	1	K				
12	115-00051	RING;RETAINING	BAGUE D'ARRET	1					
13	S8011151	O-RING	JOINT TORIQUE	1	K				
14	1.180-00278	RING;BACK UP	BAGUE	1	K				
15	S8011201	O-RING	JOINT TORIQUE	1	K				
16	1.115-00204	RING;CUSHION	BAGUE	1					
17	K9003900	PISTON	PISTON	1					
18	K9001891	SEAL;SLIPPER	JOINT	1	K				
19	115-00055	RING;WEAR	BAGUE D'USURE	2	K				
20	K9001872	RING;SLYD	BAGUE	2	K				
21	S8010651	O-RING	JOINT TORIQUE	1	K				
22	1.180-00277	RING;BACK UP	BAGUE	2	K				
23	K9001862	NUT;PISTON	ECROU	1					
24	S3523836	SCREW;SET	VIS	1					
25	S2222171	BOLT;SOCKET	BOULON	10					
26	K9004428	PIPE BAND ASS'Y	ENSEMBLE DE BANDE DE	1					
27	1.195-00007	BAND;PIPE	ATTACHE	1					
28	S5100603	WASHER;SPRING	RONDELLE ELASTIQUE	2					
29	S0558153	BOLT;HEX	BOULON A 6 PANS	2					
30	K9004461	PIPE ASS'Y-R.H	ENSEMBLE DE TUYAU	1					
31	K9004431	PIPE ASS'Y-R.H	ENSEMBLE DE TUYAU	1					
32	S8000281	O-RING	JOINT TORIQUE	1					
33	S5100603	WASHER;SPRING	RONDELLE ELASTIQUE	4					
34	S2212761	BOLT;SOCKET	BOULON	4					
35	1.124-00157	CLAMP;PIPE	COLLIER	1					
36	S5100703	WASHER;SPRING	RONDELLE ELASTIQUE	1					
37	S0561053	BOLT	BOULON A 6 PANS	1					

DATE	NOV. 27, 2006
1st EDITION	

Fig. 4370 BOOM CYLINDER - R.H. (LOCK VALVE)
VERIN DE FLECHE

Serial No. ;

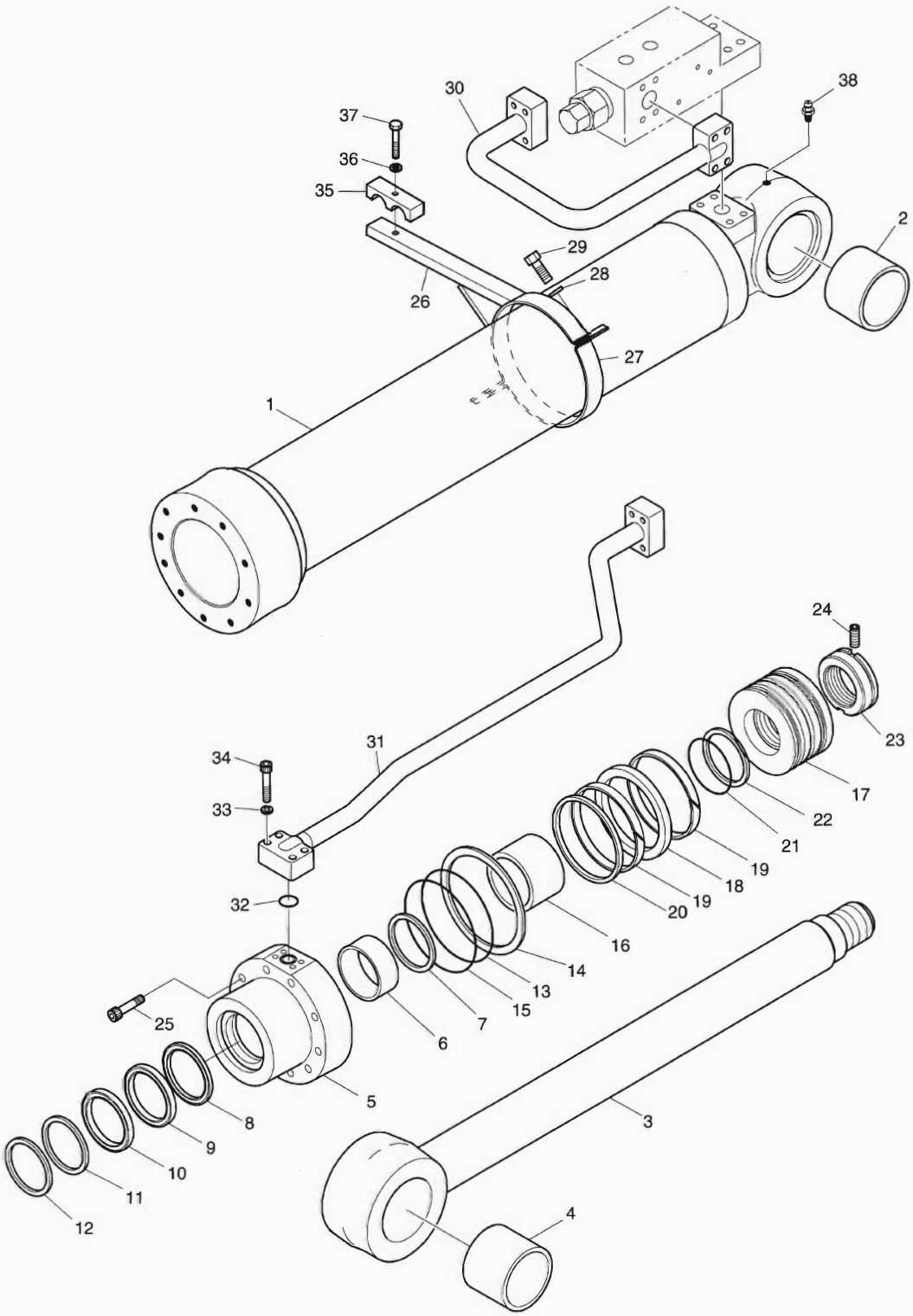

DATE	NOV. 27, 2006
1st EDITION	

Fig. 4370 BOOM CYLINDER - R.H. (LOCK VALVE) VERIN DE FLECHE

Serial No. ;

Key No.	Part No.	Description	Description	Q'ty	S.C	Serial No.	ICA	Replaceable part	
								Part No.	Q'ty
370-38	S6710032	NIPPLE;GREASE	GRAISSEUR	1					
*	K9003934	SEAL KIT	KIT D'ETANCHEITE	1					

Fig. 4380 ARTI BOOM CYLINDER - LOCK VALVE
VERIN DE ARTICULAIRE FLECHE

Serial No. ;

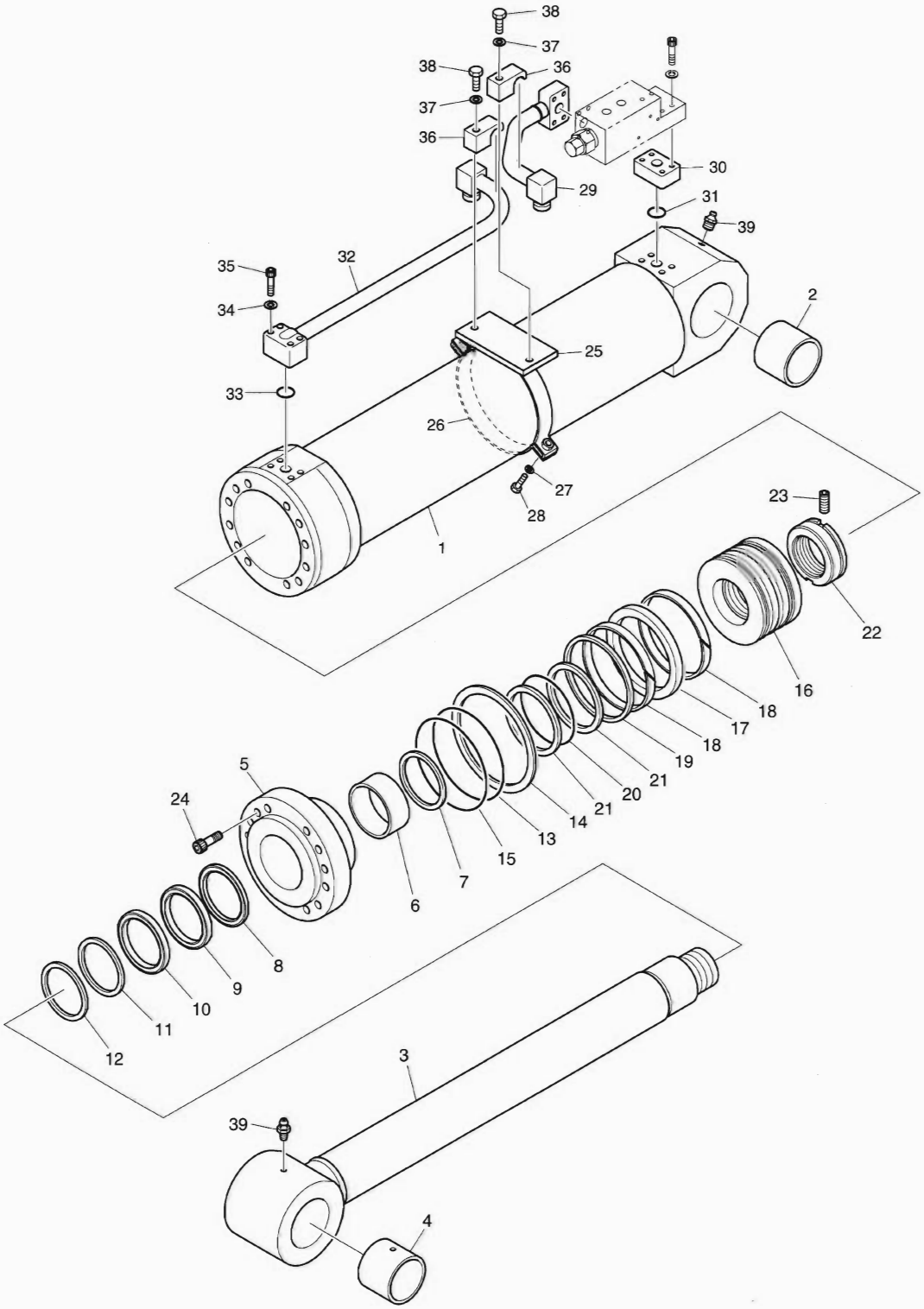

DATE	NOV. 27, 2006
1st EDITION	

Fig. 4380 ARTI BOOM CYLINDER - LOCK VALVE
VERIN DE ARTICULAIRE FLECHE

Serial No. ;

Key No.	Part No.	Description	Description	Q'ty	S.C	Serial No.	ICA	Replaceable part	
								Part No.	Q'ty
380--	K1017667	CYLINDER;ARTI BOOM	CYLINDRE	1					
1	K9004433	TUBE ASS'Y	TUYAU FLEXIBLE	1					
2	K1000732	BUSH	DOUILLE	1					
3	K9004434	ROD ASS'Y	ENSEMBLE TIGE	1					
4	K1000732	BUSH	DOUILLE	1					
5	K9004435	COVER;ROD	COUVERCLE	1					
6	110-00110	DD-BUSH	COUSSINET	1					
7	115-00051	RING;RETAINING	BAGUE D'ARRET	1					
8	1.180-00659	SEAL;BUFFER	ETANCHEITE	1	K				
9	1.180-00660	U-PACKING	JOINT EN U	1	K				
10	K9001146	RING;BACK UP	BAGUE	1	K				
11	115-00099	WIPER;DUST	RACCORD ADAPTATEUR	1	K				
12	115-00092	RING;RETAINING	BAGUE D'ARRET	1					
13	S8011501	O-RING	JOINT TORIQUE	1	K				
14	K9002098	RING;BACK UP	BAGUE	1	K				
15	2180-1216D149	O-RING	JOINT TORIQUE	1	K				
16	K9004436	PISTON	PISTON	1					
17	1.180-00572	SEAL;SLIPPER	JOINT	1	K				
18	1.180-00433	RING;WEAR	BAGUE D'USURE	2	K				
19	K9002174	RING;DUST	BAGUE	1	K				
20	S8010801	O-RING	JOINT TORIQUE	1	K				
21	K9001895	RING;BACK UP	BAGUE	2	K				
22	121-00044	NUT;PISTON	ECROU	1					
23	S3523836	SCREW;SET	VIS	1					
24	S2224971	BOLT;SOCKET	BOULON	12					
25	K9004437	PIPE BAND ASS'Y	ENSEMBLE DE BANDE DE	1					
26	1.124-00104	BAND;PIPE	ATTACHE	1					
27	S5100603	WASHER;SPRING	RONDELLE ELASTIQUE	2					
28	S0558153	BOLT;HEX	BOULON A 6 PANS	2					
29	K9004462	PIPE ASS'Y-H	ENSEMBLE DE TUYAU	1					
30	K9004193	SPACER	BAGUE D'ECARTEMENT	1					
31	S8000281	O-RING	JOINT TORIQUE	1					
32	K9004439	PIPE ASS'Y-R	ENSEMBLE DE TUYAU	1					
33	S8000281	O-RING	JOINT TORIQUE	1					
34	S5100603	WASHER;SPRING	RONDELLE ELASTIQUE	4					
35	S2212761	BOLT;SOCKET	BOULON	4					
36	K9003968	CLAMP;PIPE	COLLIER	2					
37	S5100703	WASHER;SPRING	RONDELLE ELASTIQUE	2					

DATE	NOV. 27, 2006
1st EDITION	

Fig. 4380 ARTI BOOM CYLINDER - LOCK VALVE
VERIN DE ARTICULAIRE FLECHE

Serial No. ;

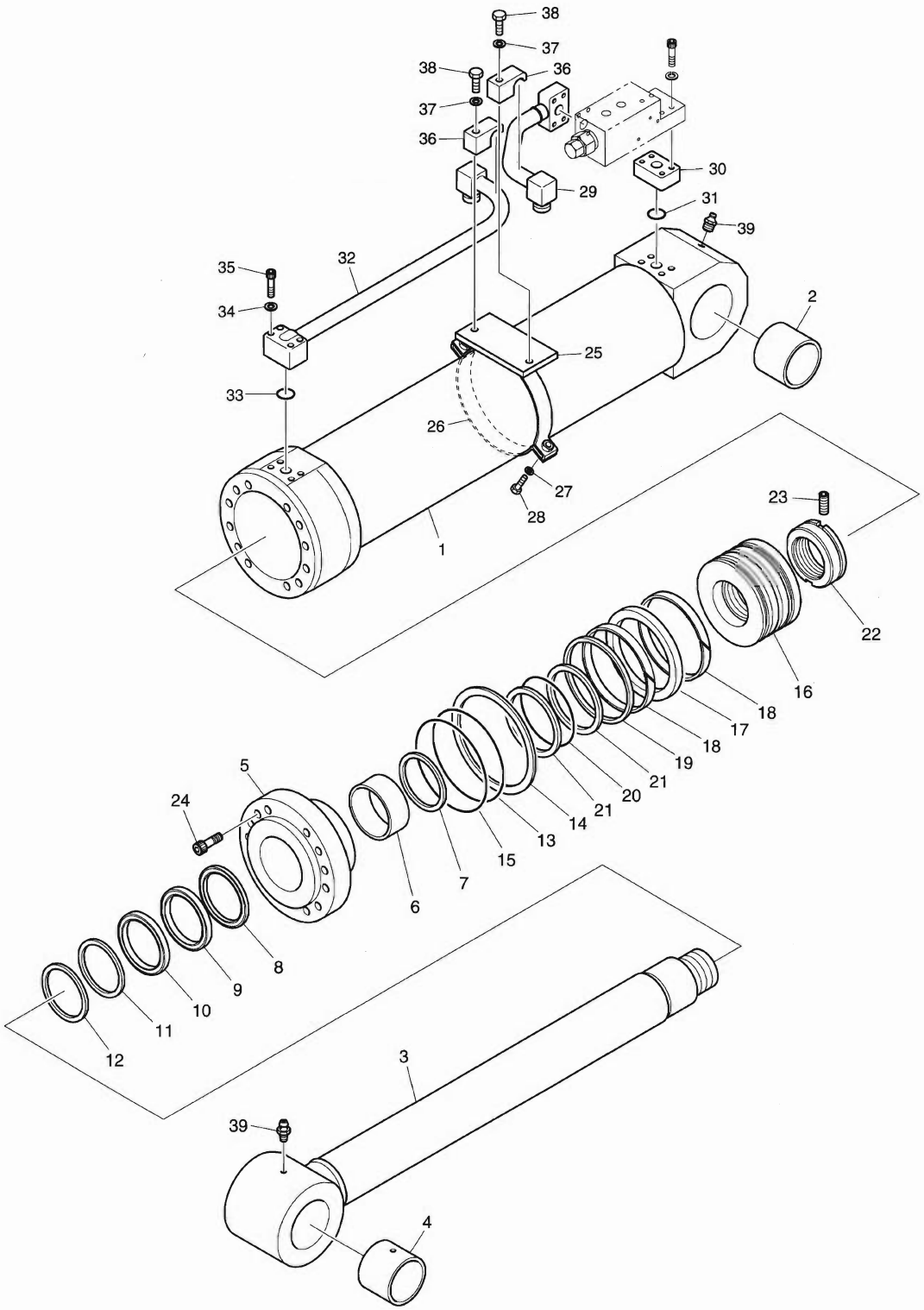

DATE	NOV. 27, 2006
1st EDITION	

Fig. 4380 ARTI BOOM CYLINDER - LOCK VALVE
VERIN DE ARTICULAIRE FLECHE

Serial No. ;

Key No.	Part No.	Description	Description	Q'ty	S.C	Serial No.	ICA	Replaceable part	
								Part No.	Q'ty
380-38	S2215761	BOLT;HEX	BOULON A 6 PANS	2					
39	S6710032	NIPPLE;GREASE	GRAISSEUR	2					
*	K9004440	SEAL KIT	KIT D'ETANCHEITE	1					

DATE	NOV. 27, 2006
1st EDITION	

Fig. 4390 ARM CYLINDER - LOCK VALVE
VERIN DE BALANCIER

Serial No. ;

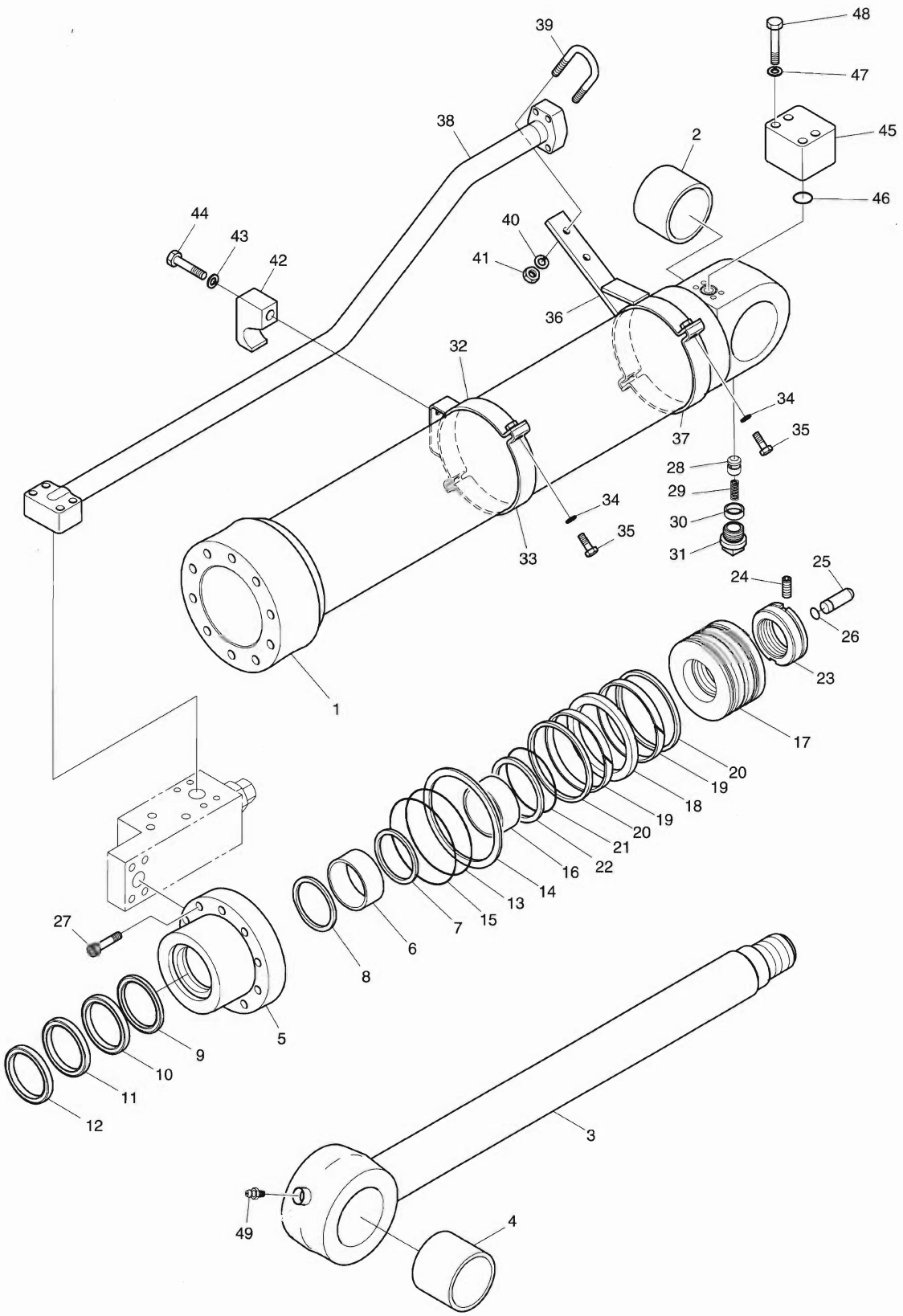

DATE	NOV. 27, 2006
1st EDITION	

Fig. 4390 ARM CYLINDER - LOCK VALVE VERIN DE BALANCIER

Serial No. ;

Key No.	Part No.	Description	Description	Q'ty	S.C	Serial No.	ICA	Replaceable part	
								Part No.	Q'ty
390--	K1017668	CYLINDER;ARM	VERIN DE BALANCIER	1					
1	K9004463	TUBE ASS'Y	TUYAU FLEXIBLE	1					
2	K1012383	BUSH	DOUILLE	1					
3	K9004464	ROD ASS'Y	ENSEMBLE TIGE	1					
4	K1012383	BUSH	DOUILLE	1					
5	K9004392	COVER;ROD	COUVERCLE	1					
6	110-00080	DD-BUSH	COUSSINET	1					
7	115-00063	RING;RETAINING	BAGUE D'ARRET	1					
8	1.180-00657	SEAL;BUFFER	ETANCHEITE	1					
9	K9001153	U-PACKING	JOINT EN U	1					
10	K9001154	RING;BACK UP	BAGUE	1					
11	115-00072	WIPER;DUST	RACCORD ADAPTATEUR	1					
12	115-00073	RING;RETAINING	BAGUE D'ARRET	1					
13	S8011201	O-RING	JOINT TORIQUE	1					
14	K9001859	RING;BACK UP	BAGUE	1					
15	S8011251	O-RING	JOINT TORIQUE	1					
16	K9004393	RING;CUSHION	BAGUE	1					
17	K9004394	PISTON	PISTON	1					
18	K9001890	SEAL;SLIPPER	JOINT	1					
19	115-00087	RING;WEAR	BAGUE D'USURE	2					
20	K9001861	RING;DUST	BAGUE	2					
21	S8010701	O-RING	JOINT TORIQUE	1					
22	K9001156	RING;BACK UP	BAGUE	2					
23	121-00045	NUT;PISTON	ECROU	1					
24	S3523836	SCREW;SET	VIS	1					
25	K9002278	PLUNGER;CUSHION	PLONGEUR	1					
26	115-00081	RING;STOP	BAGUE D'ARRET	1					
27	S2222272	BOLT;SOCKET	BOULON	10					
28	420-00132	VALVE;CHECK	VANNE	1					
29	129-00071	SPRING	RESSORT	1					
30	1.195-00022	SUPPORT;SPRING	SUPPORT	1					
31	2181-1116D3	PLUG;SOCKET	BOUCHON	1					
32	K9004395	PIPE BAND ASS'Y-H	ENSEMBLE DE BANDE DE	1					
33	K9004396	BAND;PIPE	ATTACHE	1					
34	S5100703	WASHER;SPRING	RONDELLE ELASTIQUE	4					
35	S0560563	BOLT;HEX	BOULON A 6 PANS	4					
36	K9004397	PIPE BAND ASS'Y-R	ENSEMBLE DE BANDE DE	1					
37	K9004396	BAND;PIPE	ATTACHE	1					

Fig. 4390 ARM CYLINDER - LOCK VALVE
VERIN DE BALANCIER

Serial No. ;

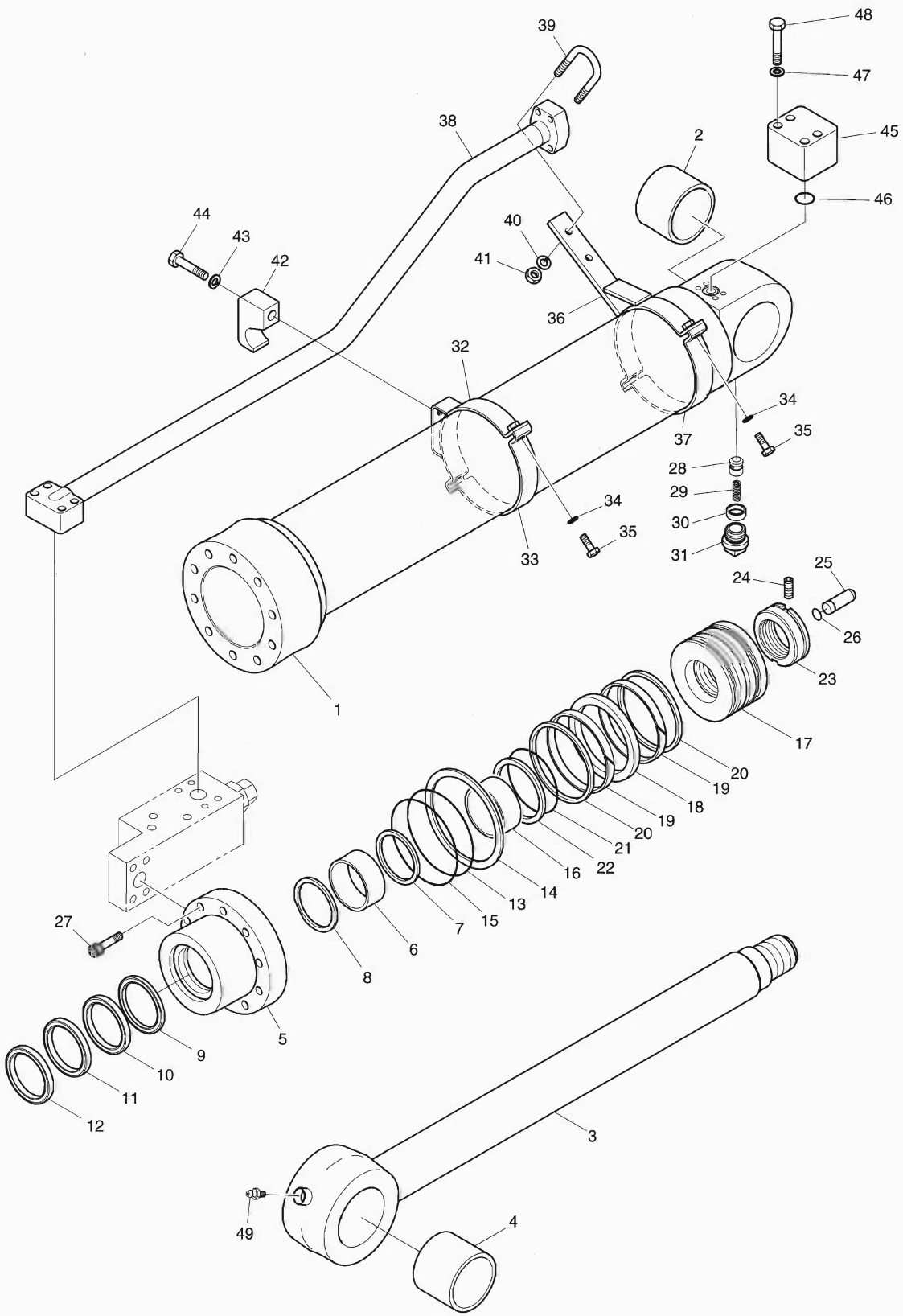

DATE	NOV. 27, 2006
1st EDITION	

Fig. 4390 ARM CYLINDER - LOCK VALVE VERIN DE BALANCIER

Serial No. ;

Key No.	Part No.	Description	Description	Q'ty	S.C	Serial No.	ICA	Replaceable part	
								Part No.	Q'ty
4390-38	K9004422	PIPE ASS'Y-R	ENSEMBLE DE TUYAU	1					
39	K9004400	BOLT;U	BOULON A 6 PANS	1					
40	S5100603	WASHER;SPRING	RONDELLE ELASTIQUE	2					
41	S4012633	NUT;HEX	ECROU	2					
42	K9001413	CLAMP;PIPE	COLLIER	1					
43	S5102903	WASHER;SPRING	RONDELLE ELASTIQUE	1					
44	S0565451	BOLT	BOULON A 6 PANS	1					
45	K9004401	PORT;FLANGE	PORT;FLANGE	1					
46	S8000281	O-RING	JOINT TORIQUE	1					
47	S5100603	WASHER;SPRING	RONDELLE ELASTIQUE	4					
48	S0513163	BOLT;SOCKET	BOULON	4					
49	S6710032	NIPPLE;GREASE	GRAISSEUR	1					
*	K9004402	SEAL KIT	KIT D'ETANCHEITE	1					

DATE	NOV. 27, 2006
1st EDITION	

Fig. 4400 CONTROL VALVE - ROTATING DISTRIBUTEUR

Serial No. ;

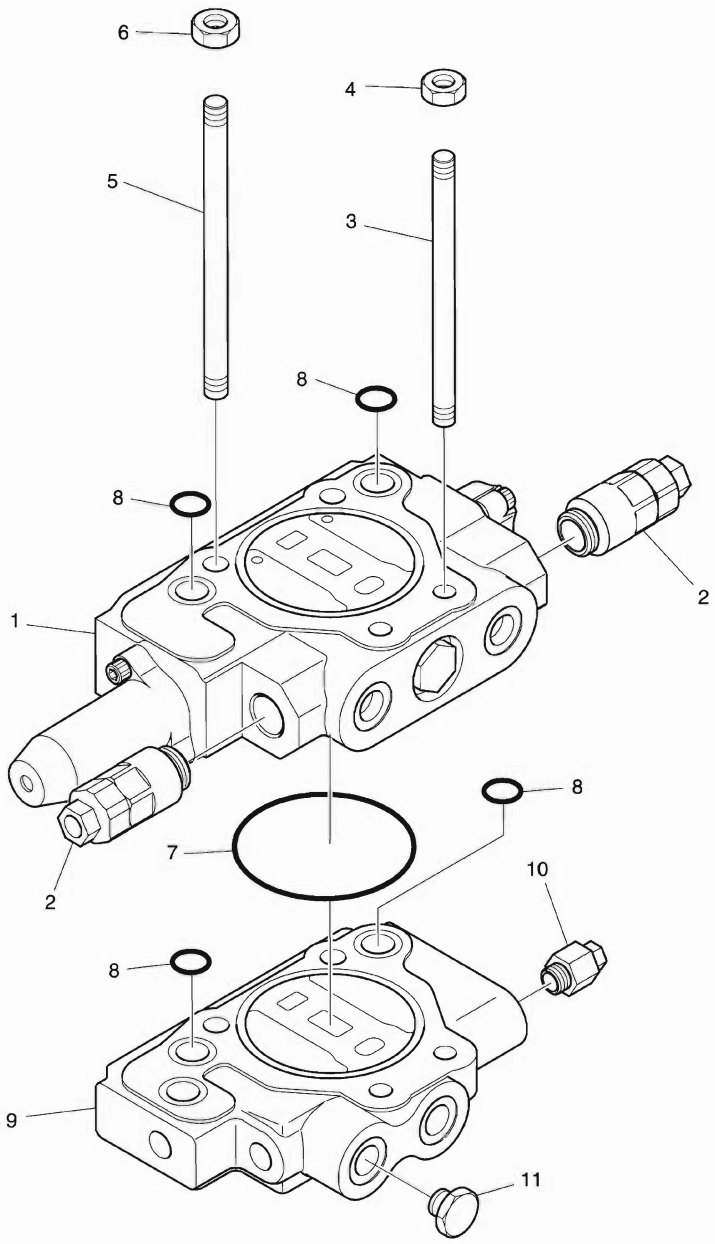

DATE	NOV. 27, 2006
1st EDITION	

Fig. 4400 CONTROL VALVE - ROTATING DISTRIBUTEUR

Serial No. ;

Key No.	Part No.	Description	Description	Q'ty	S.C	Serial No.	ICA	Replaceable part	
								Part No.	Q'ty
4400--	K1013538	CONTROL VALVE(ROTATING)	DISTRIBUTEUR	1					
1	K9004514	SPOOL SECTION ASS'Y	BOBINE	1					
2	420-00258	RELIEF VALVE	SOULAGEMENT VANNE	2					
3	K9004518	ROD;TIE	TIGE	2					
4	K9001075	NUT	ECROU 6 PANS	2					
5	K9004521	ROD;TIE	TIGE	2					
6	K9001077	NUT	ECROU 6 PANS	2					
7	S8011001	O-RING	JOINT TORIQUE	1					
8	180-00403	O-RING	JOINT TORIQUE	4					
9	K9004516	INLET SECTION ASS'Y	SECTION D'ADMISSION	1					
10	K9004515	RELIEF VALVE	SOULAGEMENT VANNE	1					
11	181-00563	PLUG ASS'Y	BOUCHON	1					

Fig. 4410 CONTROL VALVE - ARTI BOOM
DISTRIBUTEUR

Serial No. ;

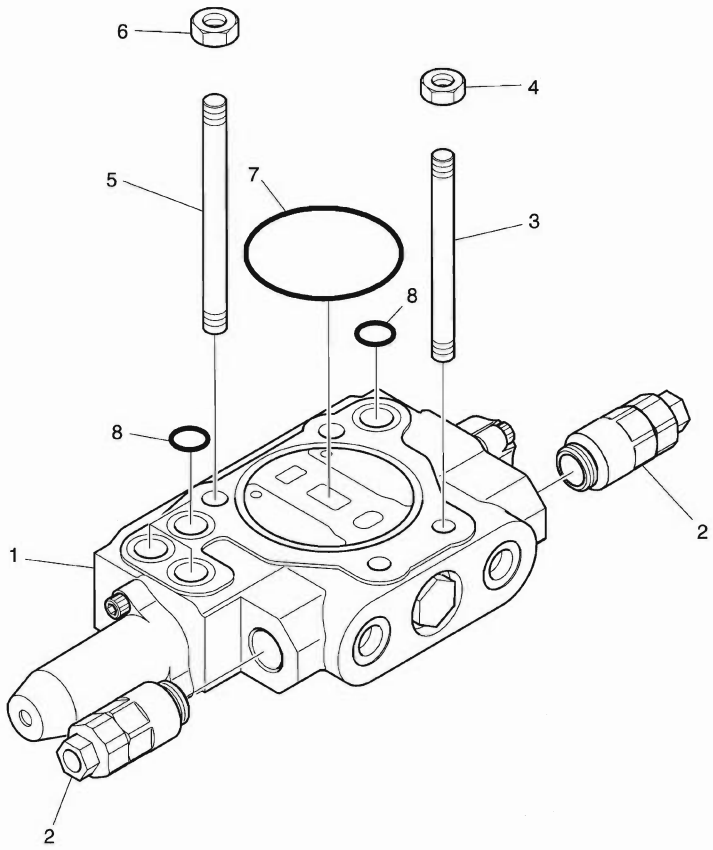

DATE	NOV. 27, 2006
1st EDITION	

Fig. 4410 CONTROL VALVE - ARTI BOOM DISTRIBUTEUR

Serial No. ;

Key No.	Part No.	Description	Description	Q'ty	S.C	Serial No.	ICA	Replaceable part	
								Part No.	Q'ty
4410--	K1013536	CONTROL VALVE(ARTI)	DISTRIBUTEUR	1					
1	K9004517	SPOOL SECTION ASS'Y	BOBINE	1					
2	420-00258	RELIEF VALVE	SOULAGEMENT VANNE	2					
3	K9004520	ROD;TIE	TIGE	2					
4	K9001075	NUT	ECROU 6 PANS	2					
5	K9004523	ROD;TIE	TIGE	2					
6	K9001077	NUT	ECROU 6 PANS	2					
7	S8011001	O-RING	JOINT TORIQUE	1					
8	180-00403	O-RING	JOINT TORIQUE	4					

DATE	NOV. 27, 2006
1st EDITION	

Fig. 4420 CONTROL VALVE - ROTATING(ARTI) DISTRIBUTEUR

Serial No. ;

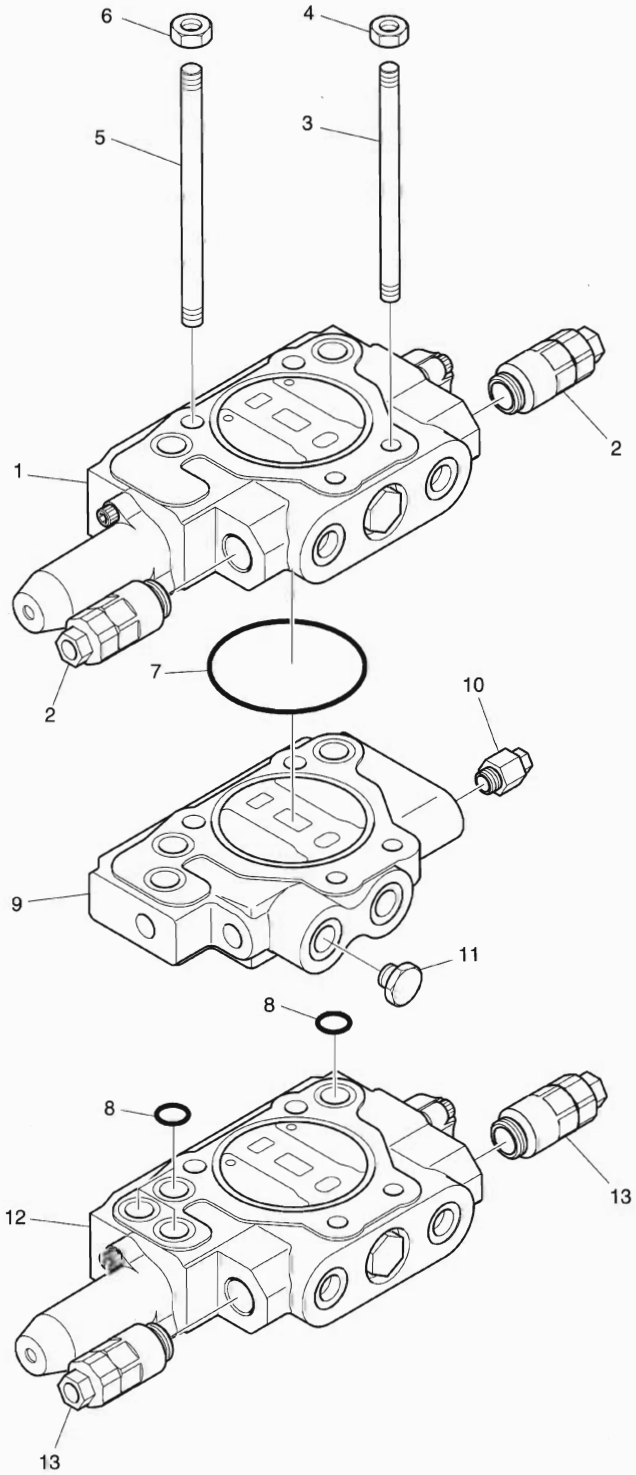

DATE	NOV. 27, 2006
1st EDITION	

Fig. 4420 CONTROL VALVE - ROTATING(ARTI) DISTRIBUTEUR

Serial No. ;

Key No.	Part No.	Description	Description	Q'ty	S.C	Serial No.	ICA	Replaceable part	
								Part No.	Q'ty
4420--	K1013539	CONTROL	DISTRIBUTEUR	1					
1	K9004514	SPOOL SECTION ASS'Y	BOBINE	1					
2	420-00258	RELIEF VALVE	SOULAGEMENT VANNE	2					
3	K9004519	ROD;TIE	TIGE	2					
4	K9001075	NUT	ECROU 6 PANS	2					
5	K9004522	ROD;TIE	TIGE	2					
6	K9001077	NUT	ECROU 6 PANS	2					
7	S8011001	O-RING	JOINT TORIQUE	1					
8	180-00403	O-RING	JOINT TORIQUE	4					
9	K9004516	INLET SECTION ASS'Y	SECTION D'ADMISSION	1					
10	K9004515	RELIEF VALVE	SOULAGEMENT VANNE	1					
11	181-00563	PLUG ASS'Y	BOUCHON	1					
12	K9004517	SPOOL SECTION ASS'Y	BOBINE	1					
13	420-00258	RELIEF VALVE	SOULAGEMENT VANNE	2					

Fig. 5100 TOOLS OUTILLAGE

Serial No. ;

1

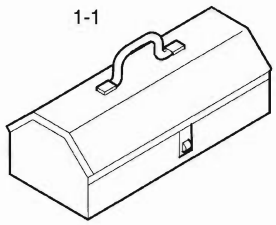
1-1


1-2, 1-3


1-4, 1-5


1-6, 1-7


1-8

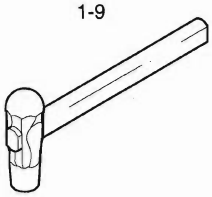
1-9

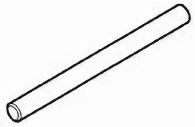
1-10

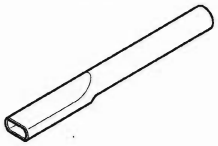
1-11

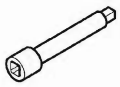
1-12, 1-13


1-14


1-15

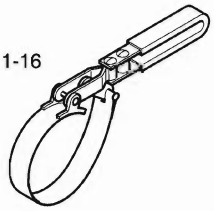
1-16


1-17 ~ 1-22

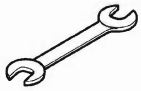
1-23 ~ 1-32

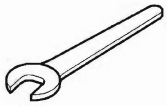
1-33


1-34 ~ 1-40

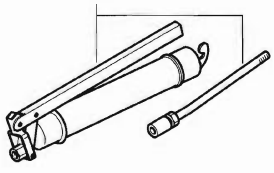
2

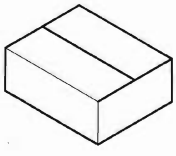
3


4


5

DATE	NOV. 27, 2006
1st EDITION	

Fig. 5100 TOOLS OUTILLAGE

Serial No. ;

Key No.	Part No.	Description	Description	Q'ty	S.C	Serial No.	ICA	Replaceable part	
								Part No.	Q'ty
00--	K1024422	ASSEMBLY;TOOLS	ENSEMBLE OUTILLAGE	-	D				
1	2199-1063F34A	TOOL ASS'Y	OUTILLAGE	1					
1-1	2199-9043	. BOX;TOOL	. BOITE	1	D				
1-2	T6580008	. WRENCH:ADJUST	. CLE A MOLETTE	1	D				
1-3	T6580020	. WRENCH;ADJUST	. CLE A MOLETTE	1	D				
1-4	T7050003	. DRIVER (-)	. TOURNEVIS(-)	1	D				
1-5	T7050013	. DRIVER	. TOURNEVIS	1	D				
1-6	T7050021	. DRIVER - 6 100MM	. TOURNEVIS	1	D				
1-7	T7050022	. DRIVER 8X150	. TOURNEVIS	1	D				
1-8	T7500004	. PILER;COMBI 8	. GERBEUR COMBI	1	D				
1-9	T7260057	. HAMMER 2 L/B	. MARTEAU	1	D				
1-10	2199-1004	. BAR	. CAOUTCHOUC	1					
1-11	2199-1005	. PIPE	. CONDUITE	1					
1-12	T6690012	. BAR;EXTENSION	. RALLONGE	1	D				
1-13	T6690013	. BAR;EXTENSION	. RALLONGE	1	D				
1-14	T6750003	. HANDLE;RATCHET	. POIGNEE A CLIQUET	1	D				
1-15	2199-9009	. CLIP;DRIVER 13	. ATTACHE	1	D				
1-16	K1008167	. WRENCH;FILTER	. CLE A FILTRE	1					
1-17	T6550005	. L-WRENCH 4	. CLE MALE	1	D				
1-18	T6550006	. L-WRENCH 5	. CLE MALE	1	D				
1-19	T6550007	. L-WRENCH 6	. CLE MALE	1	D				
1-20	T6550009	. L-WRENCH	. CLE MALE	1	D				
1-21	T6550011	. L-WRENCH	. CLE MALE	1	D				
1-22	T6550018	. L-WRENCH	. CLE MALE	1	D				
1-23	T6510062	. SPANNER	. CLE PLATE	1	D				
1-24	T6510066	. SPANNER	. CLE PLATE	1	D				
1-25	T6510070	. SPANNER	. CLE PLATE	1	D				
1-26	T6510072	. SPANNER	. CLE PLATE	1	D				
1-27	T6510075	. SPANNER	. CLE PLATE	1	D				
1-28	T6510081	. SPANNER 10X12	. CLE PLATE	1	D				
1-29	T6510085	. SPANNER	. CLE PLATE	1	D				
1-30	T6510089	. SPANNER	. CLE PLATE	1	D				
1-31	T6510091	. SPANNER	. CLE PLATE	1	D				
1-32	T6510018	. SPANNER	. CLE PLATE	1	D				
1-33	T6510027	. SPANNER	. CLE PLATE	1	D				
1-34	T6600183	. WRENCH	. CLE PLATE	1	D				
1-35	T6600189	. WRENCH;SOCKET	. CLE PLATE	1	D				
1-36	T6600197	. SOCKET;WRENCH	. CLE PLATE	1	D				

Fig. 5100 TOOLS OUTILLAGE

Serial No. ;

1

1-1

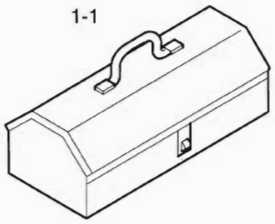

1-2, 1-3



1-4, 1-5



1-6, 1-7



1-8



1-9

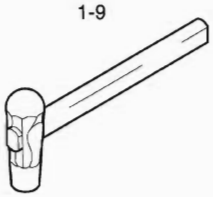

1-10

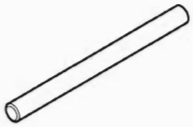

1-11

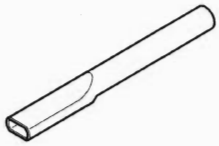

1-12, 1-13

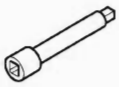

1-14



1-15



1-16



1-17 ~ 1-22



1-23 ~ 1-32



1-33

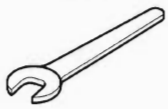

1-34 ~ 1-40



2

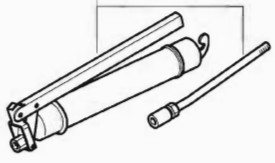

3

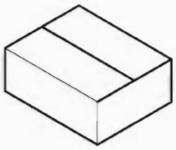

4



5



DATE	NOV. 27, 2006
1st EDITION	

Fig. 5100 TOOLS OUTILLAGE

Serial No. ;

Key No.	Part No.	Description	Description	Q'ty	S.C	Serial No.	ICA	Replaceable part	
								Part No.	Q'ty
5100-1-37	T6600201	. SOCKET;WRENCH	. CLE PLATE	1	D				
1-38	T6600211	. SOCKET;WRENCH	. CLE PLATE	1	D				
1-39	T6600223	. SOCKET;WRENCH	. CLE PLATE	1	D				
1-40	T6600217	. SOCKET;WRENCH	. CLE PLATE	1	D				
2	2199-9008	GREASE GUN	PISTOLET DE GRAISSAGE	1					
3	2199-9007	BOX	BOITE	1					
4	K1007669	HOSE;DRAIN OIL	TUYAU FLEXIBLE	1					
5	K1006586	WRENCH;PRE FUEL FILTER	FILTRE D'ESSENCE	1					

Fig. 5110 SPARE PARTS PIECES DE RECHANGE

Serial No. ;

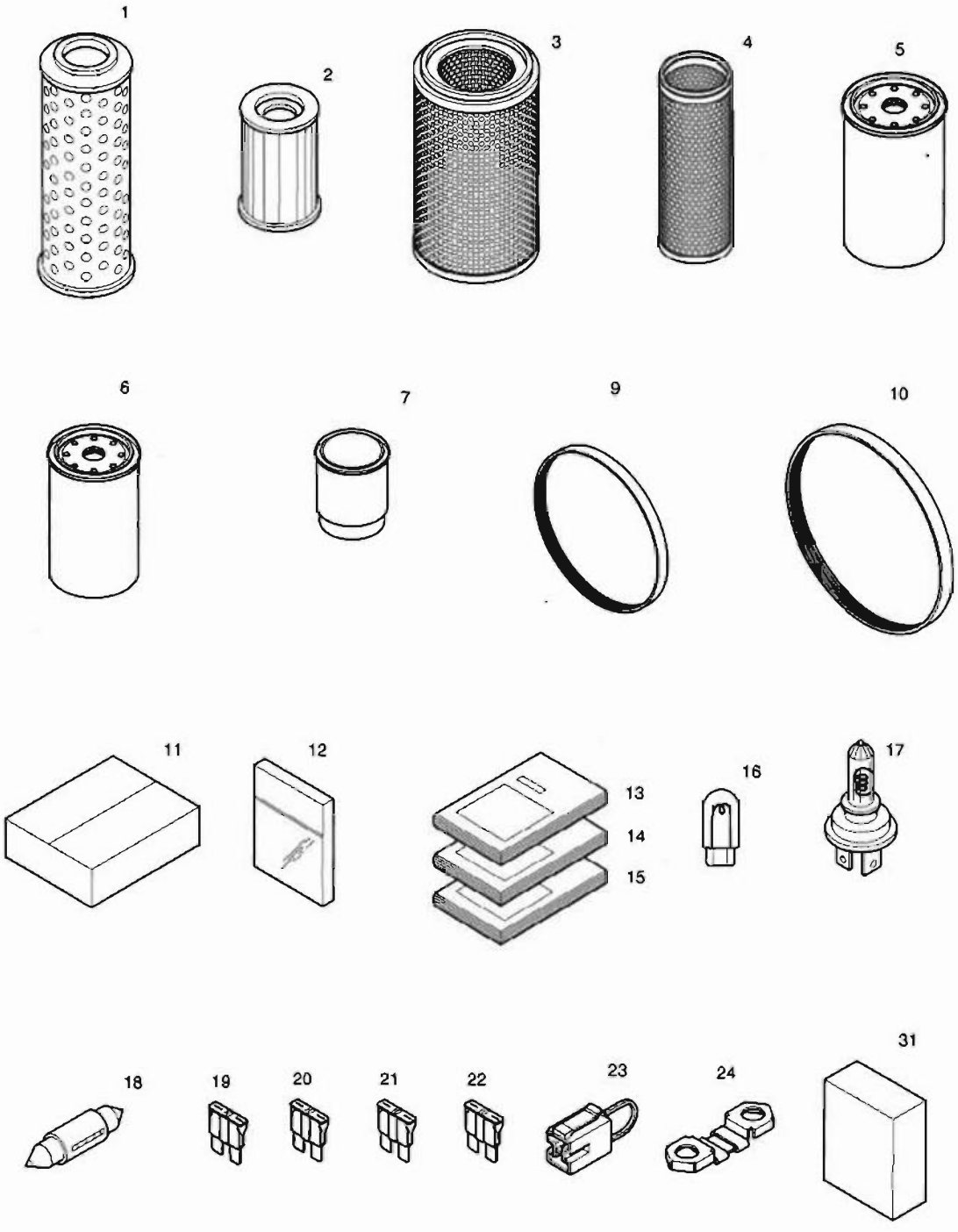

DATE	NOV. 27, 2006
1st EDITION	

Fig. 5110 SPARE PARTS PIECES DE RECHANGE

Serial No. ;

Key No.	Part No.	Description	Description	Q'ty	S.C	Serial No.	ICA	Replaceable part	
								Part No.	Q'ty
5110--	K1024419	SPARE PARTS	BAGUE D'ECARTEMENT	-	D				
1	474-00055	FILTER;RETURN	FILTRE A GAZOLE	1					
2	2471-1154	ELEMENT;FILTER(PILOT)	ELEMENT	1					
3	474-00040	ELEMENT;OUTER	ELEMENT	1					
4	474-00039	ELEMENT;INNER	ELEMENT	1					
5	65.05510-5032	FILTER;E/G OIL	FILTRE D'HUILE	1					
6	65.12503-5026	FILTER;E/G FUEL	FILTRE A GAZOLE	1					
7	K1006530	FILTER;PRE FUEL	FILTRE	1					
9	2106-1019D25	BELT(AIRCON)	COURROIE	1					
10	65.96801-0194	BELT(FAN) 8PK-1230L	COURROIE	1					
11	2512-1095D1	BOX;SPARE PARTS	BOITE	1					
12	2180-9153	O-RING KIT	JOINT TORIQUE	1					
13	K1024424EF	PARTS BOOK	MANUEL DE PIECES	1					
14	K1024428E	OPERATION MANUAL	MANUEL D'UTILISATION	1					
15	K1024431E	SHOP MANUAL	MANUEL DE MAGASIN	1					
16	515-00012A	BULB	AMPOULE	2					
17	2515-1022D1	BULB;HALOGEN	AMPOULE	1					
18	2515-1016D4	BULB	AMPOULE	1					
19	2527-1016	FUSE;BLADE	LAME DE FUSIBLE	2					
20	2527-1017	FUSE;BLADE	LAME DE FUSIBLE	2					
21	2527-1018	FUSE;BLADE	LAME DE FUSIBLE	1					
22	2527-1025	FUSE;BLADE	LAME DE FUSIBLE	1					
23	2527-1023A	FUSIBLE LINK	FUSIBLE	1					
24	527-00005	FUSE;PREHEAT RELAY	FUSIBLE	1					
31	K1006854	OIL;ENGINE(TIER-III)	RESERVOIR D'HUILE	6					

DATE	NOV. 27, 2006
1st EDITION	

Fig. 5120 NAME PLATE - CABIN(EUROPE) PLAQUE D'IDENTIFICATION

Serial No. ;

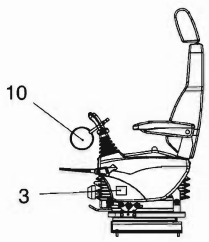

LEFT SIDE VIEW OF
LEFT CONTROL STAND

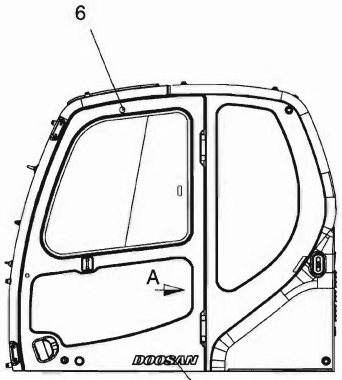

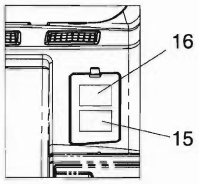

VIEW A

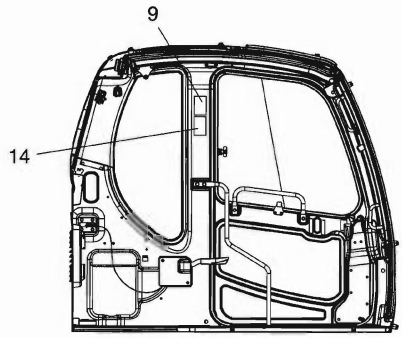

LEFT SIDE VIEW
OF CABIN INSIDE

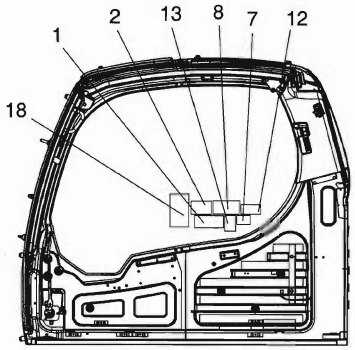

RIGHT SIDE VIEW
OF CABIN INSIDE

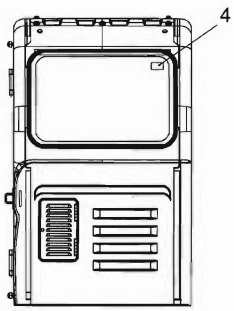

DATE	NOV. 27, 2006
1st EDITION	

Fig. 5120 NAME PLATE - CABIN(EUROPE) PLAQUE D'IDENTIFICATION

Serial No. ;

Key No.	Part No.	Description	Description	Q'ty	S.C	Serial No.	ICA	Replaceable part	
								Part No.	Q'ty
120--	K1026784	NAME PLATE ASS'Y	PLAQUE D'IDENTIFICATION	-	D				
1	190-00092	PLATE;NAME	PLAQUE D'IDENTIFICATION	1					
2	2190-3297	PLATE;NAME	PLAQUE D'IDENTIFICATION	1					
3	K1005909	PLATE;NAME	PLAQUE D'IDENTIFICATION	1					
4	190-00101	PLATE;NAME	PLAQUE D'IDENTIFICATION	1					
6	2116-9003	PLATE	PLAQUE	1					
7	2190-2524	PLATE;NAME	PLAQUE D'IDENTIFICATION	1					
8	190-00096	PLATE;NAME	PLAQUE D'IDENTIFICATION	1					
9	190-00093	PLATE;NAME	PLAQUE D'IDENTIFICATION	1					
10	190-00098	PLATE;NAME	PLAQUE D'IDENTIFICATION	1					
12	190-00102	PLATE;NAME	PLAQUE D'IDENTIFICATION	1					
13	190-00094	PLATE;NAME	PLAQUE D'IDENTIFICATION	1					
14	190-00521	PLATE;NAME	PLAQUE D'IDENTIFICATION	1					
15	K1008019D3	PLATE;NAME	PLAQUE D'IDENTIFICATION	1					
16	K1008019D9	PLATE;NAME	PLAQUE D'IDENTIFICATION	1					
17	K1011743D6	PLATE;NAME	PLAQUE D'IDENTIFICATION	1					
18	K1016614	PLATE;NAME	PLAQUE D'IDENTIFICATION	1					

DATE	NOV. 27, 2006
1st EDITION	

Fig. 5130 DECAL - EUROPE
DECALQUE

Serial No. ;

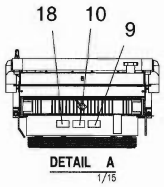

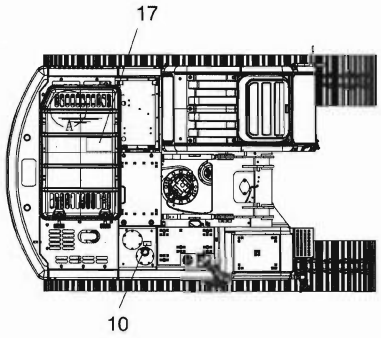

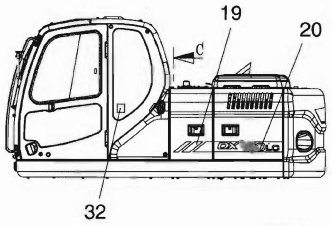

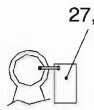

ENGINIG ▯
LIFTING RING

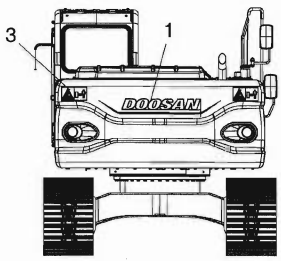

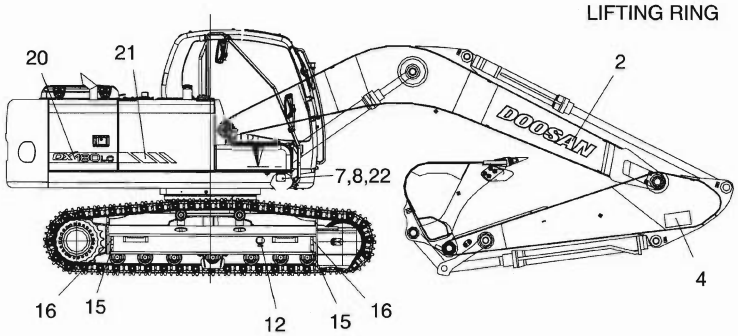

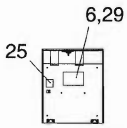

BATTERY DOOR

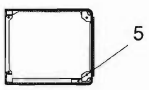

SECTION B

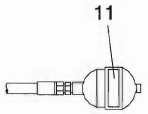

ACCUMULATOR

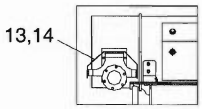

TOP VIEW OF▯
TURBO CHARGER COVER

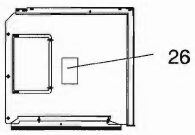

SECTION C

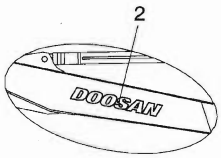

ARTI. BOOM

DATE	NOV. 27, 2006
1st EDITION	

Fig. 5130 DECAL - EUROPE DECALQUE

Serial No. ;

Key No.	Part No.	Description	Description	Q'ty	S.C	Serial No.	ICA	Replaceable part	
								Part No.	Q'ty
5130--	K1026757B	DECAL & NAMEPLATE ASS'Y	DECALQUE	-	D				
1	K1011645D5	PLATE;NAME	PLAQUE D'IDENTIFICATION	1					
2	K1011645D12	PLATE;NAME	PLAQUE D'IDENTIFICATION	2					
3	K1008571	PLATE;NAME	PLAQUE D'IDENTIFICATION	2					
4	190-00652	PLATE;NAME	PLAQUE D'IDENTIFICATION	2					
5	190-00100	PLATE;NAME	PLAQUE D'IDENTIFICATION	1					
6	K1026758	PLATE;NAME	PLAQUE D'IDENTIFICATION	1					
7	K1012204A	PLATE;NAME	PLAQUE D'IDENTIFICATION	1					
8	2122-1002D2	RIVET	RIVET	4					
9	190-00095	PLATE;NAME	PLAQUE D'IDENTIFICATION	1					
10	190-00097	PLATE;NAME	PLAQUE D'IDENTIFICATION	2					
11	190-00099	PLATE;NAME	PLAQUE D'IDENTIFICATION	1					
12	190-00122	PLATE;NAME	PLAQUE D'IDENTIFICATION	2					
13	190-00648A	PLATE;NAME	PLAQUE D'IDENTIFICATION	1					
14	2122-1002D4	RIVET	RIVET	4					
15	2190-2476	PLATE;NAME	PLAQUE D'IDENTIFICATION	4					
16	2190-2477	PLATE;NAME	PLAQUE D'IDENTIFICATION	4					
17	190-00522	PLATE;NAME	PLAQUE D'IDENTIFICATION	1					
18	190-00557	PLATE;NAME	PLAQUE D'IDENTIFICATION	1					
19	K1011000	DECAL	DECALQUE	1					
20	K1026759	DECAL	DECALQUE	2					
21	K1011002	DECAL	DECALQUE	1					
22	K1012205A	PLATE;NAME	PLAQUE D'IDENTIFICATION	1					
25	K1016102	PLATE;NAME	PLAQUE D'IDENTIFICATION	1					
26	K1016614	PLATE;NAME	PLAQUE D'IDENTIFICATION	1					
27	190-00509BD25	PLATE;NAME	PLAQUE D'IDENTIFICATION	1					
28	2124-1622D1	CLIP;BAND	AGRAFE	1					
29	K1027550	PLATE;NAME	PLAQUE D'IDENTIFICATION	1					
32	190-01059D13	PLATE;NAME	PLAQUE D'IDENTIFICATION	1					

DATE	NOV. 27, 2006
1st EDITION	

Fig. 6100 FUEL FILLER PUMP
POMPE

Serial No. ;

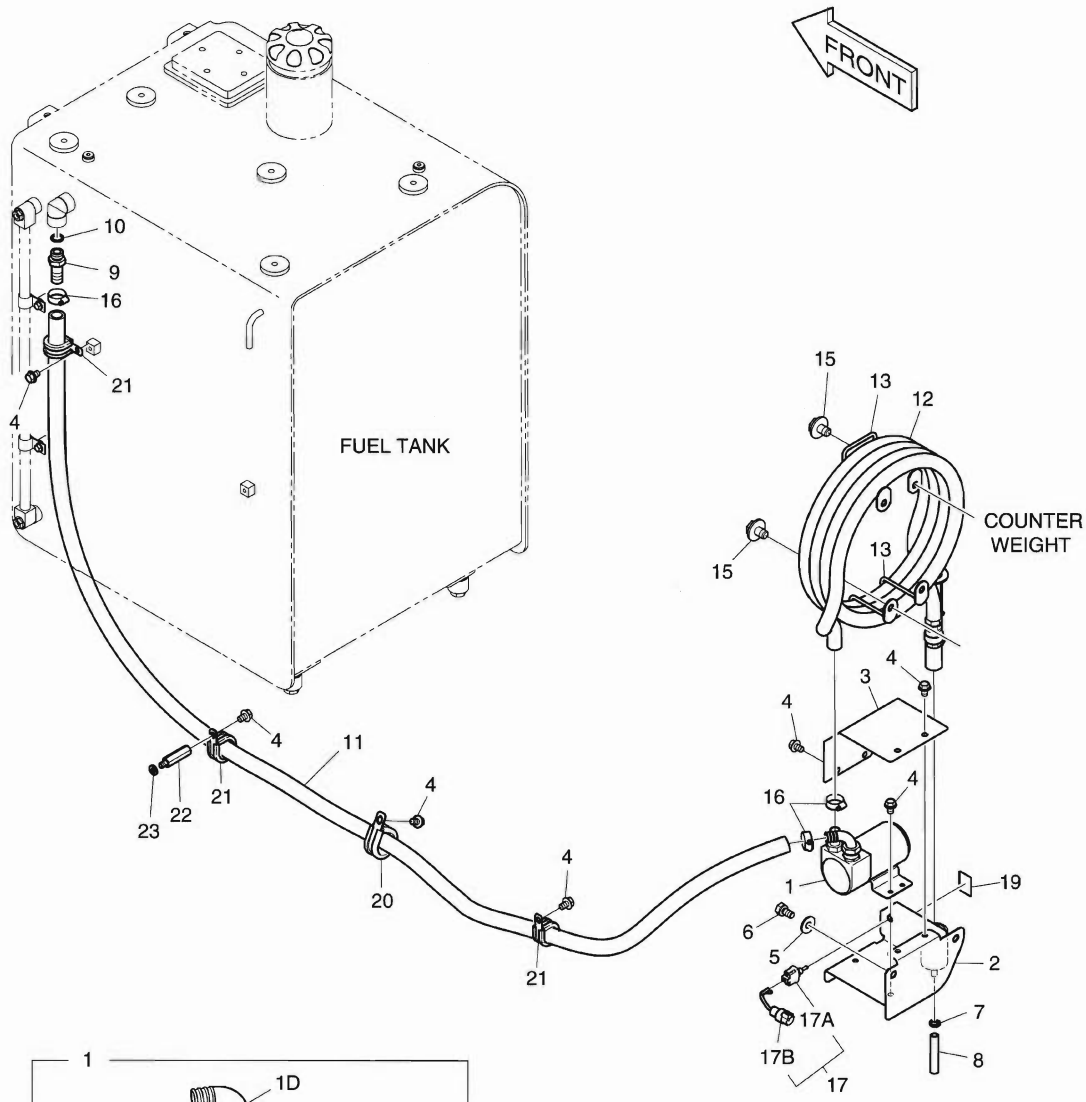

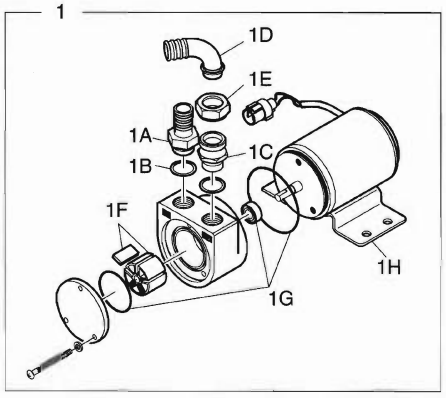

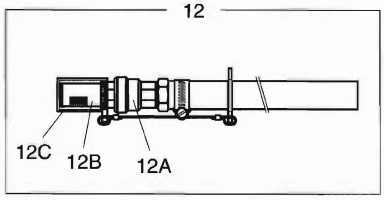

DATE	NOV. 27, 2006
1st EDITION	

Fig. 6100 FUEL FILLER PUMP POMPE

Serial No. ;

Key No.	Part No.	Description	Description	Q'ty	S.C	Serial No.	ICA	Replaceable part	
								Part No.	Q'ty
6100--	K1013618E	FUEL FILLER PUMP ASS'Y	POMPE	-	D				
1	401-00449	PUMP;FUEL FILLER	POMPE	1					
1A	2181-2755B	. ADAPTER	. ADAPTEUR	1					
1B	S8180321	. SEAL;WASHER	. BAGUE D'ETANCHEITE	2					
1C	181-00809	. ADAPTER	. ADAPTEUR	1					
1D	181-00810	. ELBOW	. COUDE	1					
1E	121-00085	. NUT	. ECROU	1					
1F	407-00001	. VANE KIT	. VANNE	1					
1G	2401-1276KT	. SEAL KIT	. KIT D'ETANCHEITE	1					
1H	523-00012	. MOTOR;FUEL TRANS. PUMP	. MOTEUR	1					
2	195-02662B	BRACKET	SUPPORT	1					
3	621-02739B	COVER	COUVERCLE	1					
4	K1001029	BOLT	BOULON A 6 PANS	10					
5	2114-1058D72	WASHER;PLAIN	RONDELLE	2					
6	DS0025021	BOLT;SET	BOULON A 6 PANS	2					
7	S8470014	CLAMP;HOSE	COLLIER	1					
8	DS2079153	HOSE	TUYAU FLEXIBLE	1					
9	2181-2104D6	ADAPTER	ADAPTEUR	1					
10	S8000181	O-RING	JOINT TORIQUE	1					
11	DS2105089	HOSE	TUYAU FLEXIBLE	1					
12	185-00167D3	HOSE ASS'Y	TUYAU FLEXIBLE	1					
12A	2420-1258	. VALVE;CHECK	. VANNE	1					
12B	2471-1152	. STRAINER	. FILTRE	1					
12C	2160-1336	. CAP;SERAINER	. CHAPEAU	1					
13	K1014330A	BRACKET	SUPPORT	2					
15	DS0025019	BOLT;SET	BOULON A 6 PANS	4					
16	S8470032	CLAMP;HOSE	COLLIER	3					
17	K1024144	TOGGLE SWITCH ASS'Y	INTERRUPTEUR	1					
17A	549-00093	. SWITCH;TOGGLE	. COMMUTATEUR	1					
17B	530-00214A	. HARNESS;JOINT(F/P SWITCH)	. FAISCEAU	1					
19	190-01172	PLATE;NAME(FUEL PUMP)	PLAQUE D'IDENTIFICATION	1					
20	124-00208D6	CLIP	AGRAFE	1					
21	124-00208D5	CLIP	AGRAFE	3					
22	2120-2187	BOLT;STUD	BOULON A 6 PANS	1					
23	S5102503	WASHER;SPRING	RONDELLE ELASTIQUE	1					

Fig. 6110 NOISE KIT - EUROPE
KIT DE BRUIT

Serial No. ;

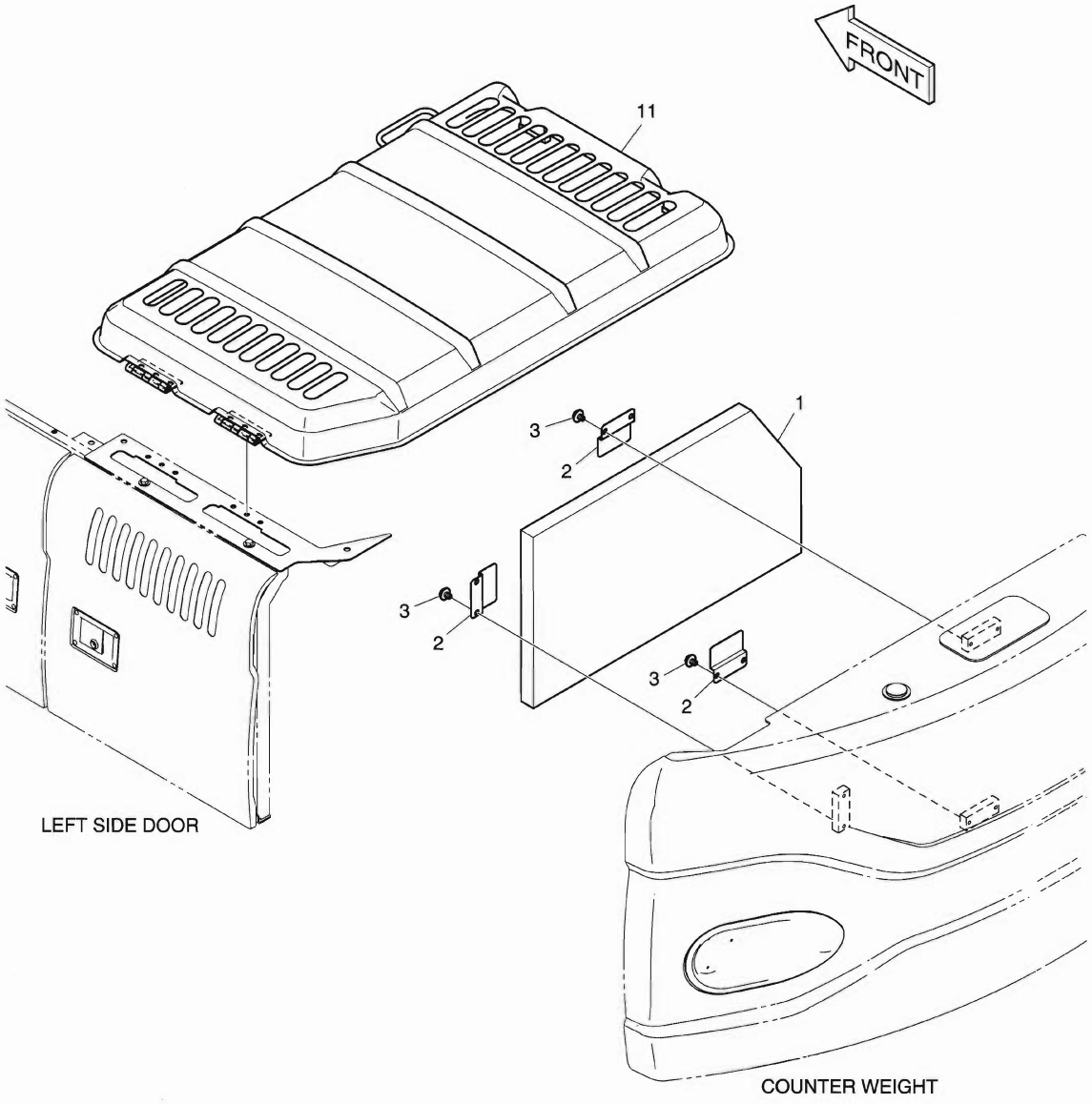

DATE	NOV. 27, 2006
1st EDITION	

Fig. 6110 NOISE KIT - EUROPE KIT DE BRUIT

Serial No. ;

Key No.	Part No.	Description	Description	Q'ty	S.C	Serial No.	ICA	Replaceable part	
								Part No.	Q'ty
6110--	K1024243	ACOUSTIC FOAM;LOW NOISE	KIT DE BRUIT	-	D				
1	K1018983	FOAM	EPONGE	1					
2	K1004119	BRACKET	SUPPORT	3					
3	DS0025022	BOLT;SET	BOULON A 6 PANS	6					
11	K1028070	COVER;ENGINE	COUVERCLE	1					

DATE	NOV. 27, 2006
1st EDITION	

Fig. 6120 MAIN PIPING - ONE WAY
CONDUITES DE BATI PRINCIPAL

Serial No. ;

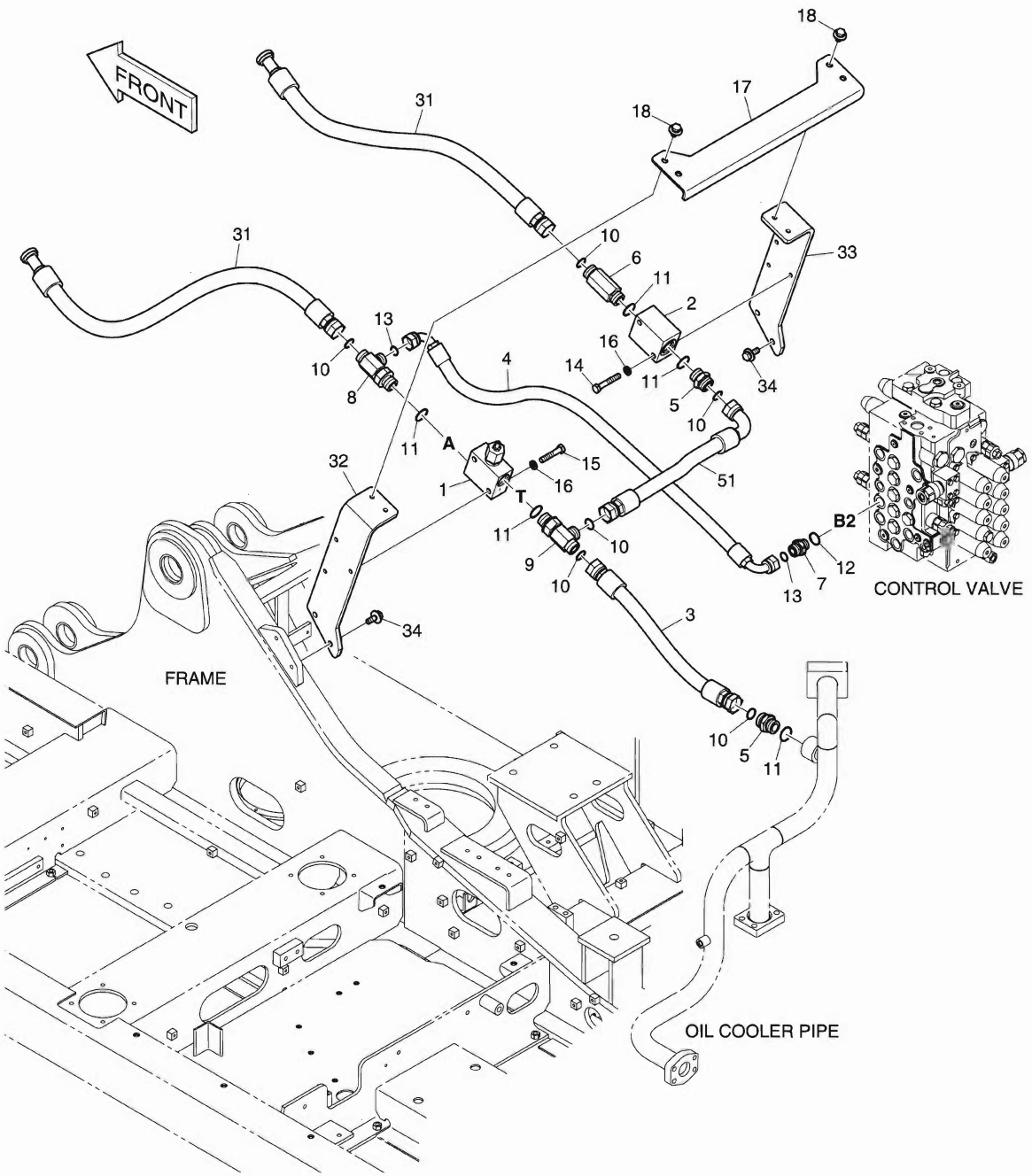

DATE	NOV. 27, 2006
1st EDITION	

Fig. 6120 MAIN PIPING - ONE WAY
CONDUITES DE BATI PRINCIPAL

Serial No. ;

Key No.	Part No.	Description	Description	Q'ty	S.C	Serial No.	ICA	Replaceable part	
								Part No.	Q'ty
6120--	K1013548A	MAIN PIPING-ONE WAY	TUYAUTERIE PRINCIPALE	-	D				
1	426-00267A	VALVE;RELIEF	VANNE	1					
2	423-00193B	BLOCK	BLOC	1					
3	DS2011487	HOSE	TUYAU FLEXIBLE	1					
4	DS2023286	HOSE	TUYAU FLEXIBLE	1					
5	2181-4133D6	ADAPTER	ADAPTEUR	2					
6	DS2232107	ADAPTER	ADAPTEUR	1					
7	2181-2627D1	ADAPTER	ADAPTEUR	1					
8	DS2412023	TEE	TE	1					
9	2181-2293D4	TEE	TE	1					
10	S8030161	O-RING	JOINT TORIQUE	6					
11	S8000291	O-RING	JOINT TORIQUE	5					
12	S8000241	O-RING	JOINT TORIQUE	1					
13	S8030121	O-RING	JOINT TORIQUE	2					
14	S0561266	BOLT	BOULON A 6 PANS	2					
15	S0561066	BOLT	BOULON A 6 PANS	2					
16	S5102703	WASHER;SPRING	RONDELLE ELASTIQUE	4					
17	K1013596	BRACKET	SUPPORT	1					
18	DS0025019	BOLT;SET	BOULON A 6 PANS	4					
31	DS2016089	HOSE	TUYAU FLEXIBLE	2					
32	195-03435B	BRACKET	SUPPORT	1					
33	195-03436B	BRACKET	SUPPORT	1					
34	DS0025020	BOLT;SET	BOULON A 6 PANS	4					
51	DS2013215	HOSE	TUYAU FLEXIBLE	1					

DATE	NOV. 27, 2006
1st EDITION	

Fig. 6130 ONE & TWO WAY PIPING - WITH FILTER
CONDUITES DE BALANCIER

Serial No. ;

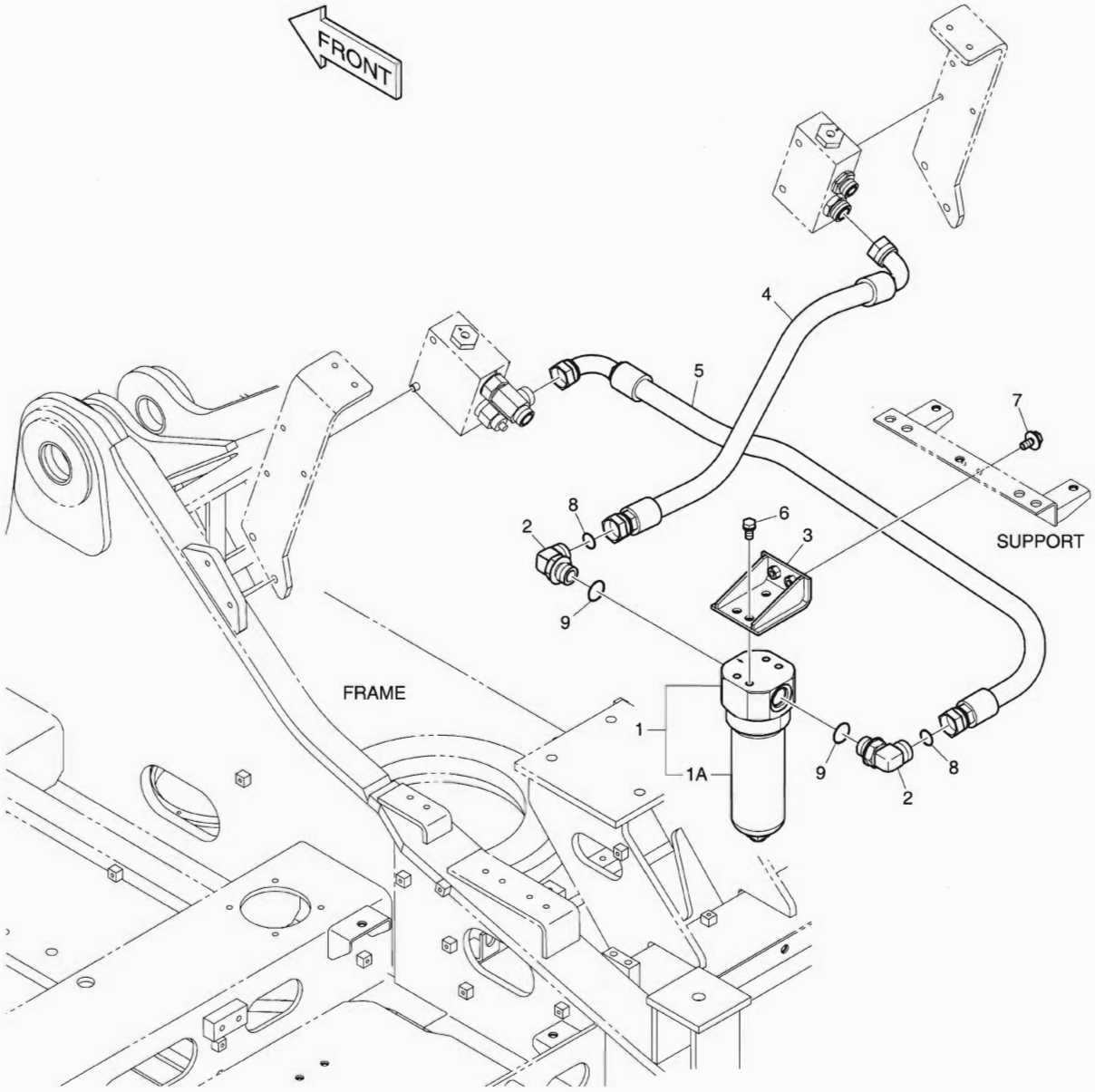

DATE	NOV. 27, 2006
1st EDITION	

Fig. 6130 ONE & TWO WAY PIPING - WITH FILTER
CONDUITES DE BALANCIER

Serial No. ;

Key No.	Part No.	Description	Description	Q'ty	S.C	Serial No.	ICA	Replaceable part	
								Part No.	Q'ty
6130--	K1013593B	BREAKER FILTER;ONE WAY	CONDUITES DE BALANCIER	-	D				
1	471-00114	FILTER;BREAKER	FILTRE	1					
1A	474-00046	. ELEMENT;BREAKER FILTER	. ELEMENT	1					
2	2181-2815D1	ELBOW	COUDE	2					
3	K1024909	BRACKET	SUPPORT	1					
4	2184-1197D103	HOSE	TUYAU FLEXIBLE	1					
5	DS2013594	HOSE	TUYAU FLEXIBLE	1					
6	DS0025021	BOLT;SET	BOULON A 6 PANS	4					
7	DS0025018	BOLT;SET	BOULON A 6 PANS	2					
8	S8030161	O-RING	JOINT TORIQUE	2					
9	S8000291	O-RING	JOINT TORIQUE	2					

DATE	NOV. 27, 2006
1st EDITION	

Fig. 6140 PILOT PIPING - ONE WAY
CONDUITES DE PILOTE

Serial No. ;

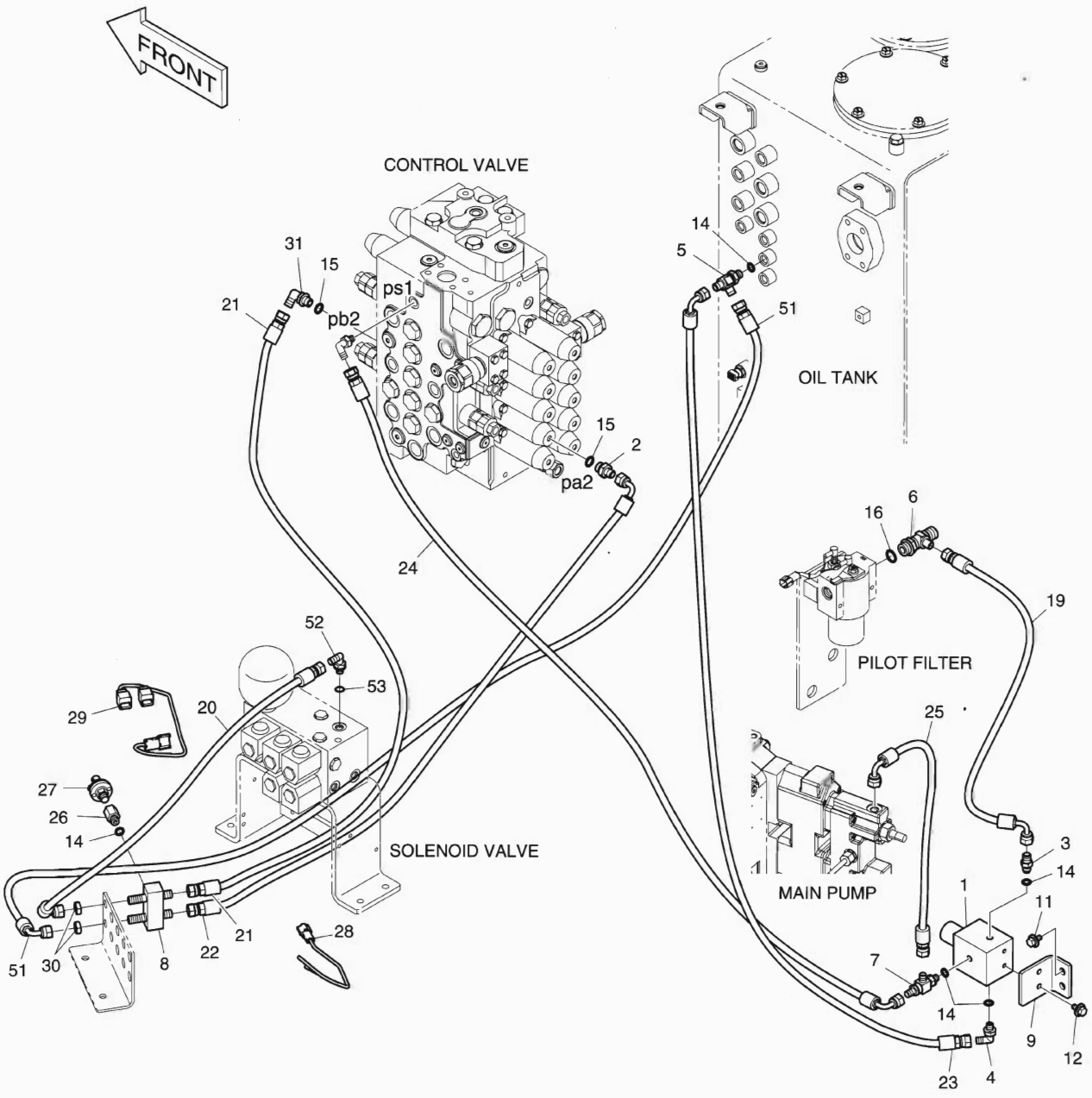

DATE	NOV. 27, 2006
1st EDITION	

Fig. 6140 PILOT PIPING - ONE WAY CONDUITES DE PILOTE

Serial No. ;

Key No.	Part No.	Description	Description	Q'ty	S.C	Serial No.	ICA	Replaceable part	
								Part No.	Q'ty
6140--	K1014042	PILOT PIPING;One Way or PE3C	CONDUITES DE PILOTE	-	D				
1	426-00266	VALVE;EPPR	VANNE	1					
2	2181-1126D36	ADAPTER	ADAPTEUR	1					
3	2471-1133	ADAPTER;FILTER	FILTRE DE ADAPTEUR	1					
4	2181-1702D4	ELBOW	COUDE	1					
5	2181-1951D1	TEE	TE	1					
6	2181-1951D19	TEE	TE	1					
7	181-00779	TEE;SHUTTLE	TE	1					
8	420-00476	VALVE;SHUTTLE	VANNE	1					
9	195-02711B	BRACKET	SUPPORT	1					
11	DS0025013	BOLT;SET	BOULON A 6 PANS	2					
12	DS0025033	BOLT;SET	BOULON A 6 PANS	2					
14	S8000111	O-RING	JOINT TORIQUE	5					
15	S8000141	O-RING	JOINT TORIQUE	2					
16	S8000181	O-RING	JOINT TORIQUE	1					
19	DS2093005	HOSE	TUYAU FLEXIBLE	1					
20	DS2093071	HOSE	TUYAU FLEXIBLE	1					
21	DS2094052	HOSE	TUYAU FLEXIBLE	1					
22	DS2093193	HOSE	TUYAU FLEXIBLE	1					
23	DS2093149	HOSE	TUYAU FLEXIBLE	1					
24	DS2093125	HOSE	TUYAU FLEXIBLE	1					
25	DS2093115	HOSE	TUYAU FLEXIBLE	1					
26	DS2242017	REDUCER	REDUCTEUR	1					
27	549-00010	SWITCH;PRESSURE	COMMUTATEUR	1					
28	530-00067	HARNESS;STOP LAMP	HARNAIS	1					
29	K1000816	HARNESS	HARNAIS	1					
30	121-00010D7	NUT	ECROU 6 PANS	2					
31	2181-1702D10	ELBOW	COUDE	1					
51	DS2093206	HOSE	TUYAU FLEXIBLE	1					
52	2181-1702D4	ELBOW	COUDE	1					
53	S8000111	O-RING	JOINT TORIQUE	1					

DATE	NOV. 27, 2006
1st EDITION	

Fig. 6150 MAIN PIPING - TWO WAY
CONDUITES DE BATI PRINCIPAL

Serial No. ;

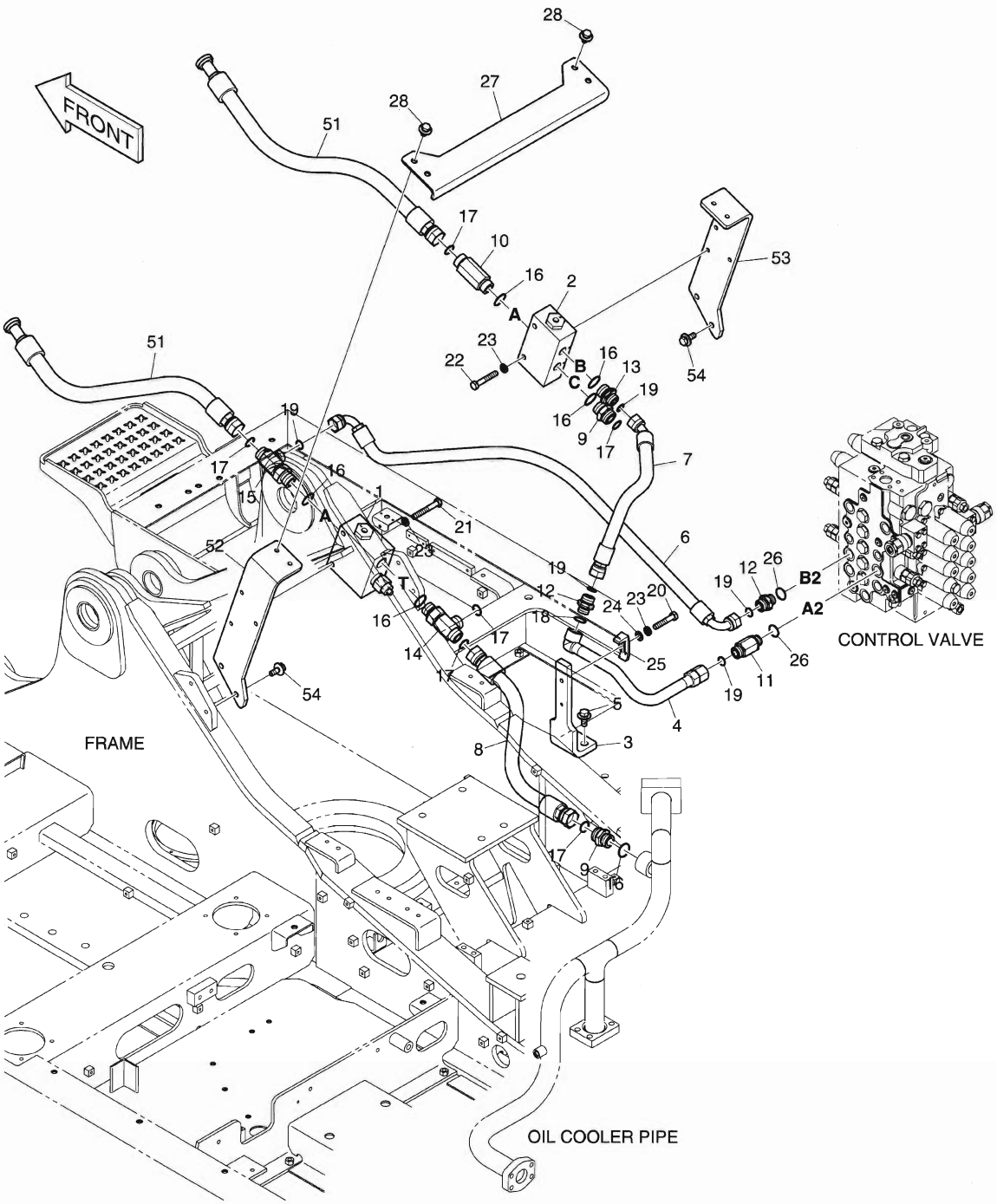

DATE	NOV. 27, 2006
1st EDITION	

Fig. 6150 MAIN PIPING - TWO WAY
CONDUITES DE BATI PRINCIPAL

Serial No. ;

Key No.	Part No.	Description	Description	Q'ty	S.C	Serial No.	ICA	Replaceable part	
								Part No.	Q'ty
6150--	K1013551C	MAIN PIPING;PE3C	CONDUITES DE BATI	-	D				
1	426-00248A	VALVE;SELECT	VANNE	1					
2	426-00249A	VALVE;SELECT	VANNE	1					
3	K1013578	BRACKET	SUPPORT	1					
4	K1013577	PIPE	TUYAU	1					
5	DS0025020	BOLT;SET	BOULON A 6 PANS	2					
6	DS2023286	HOSE	TUYAU FLEXIBLE	1					
7	DS2012338	HOSE	TUYAU FLEXIBLE	1					
8	DS2011557	HOSE	TUYAU FLEXIBLE	1					
9	2181-4133D6	ADAPTER	ADAPTEUR	2					
10	DS2232107	ADAPTER	ADAPTEUR	1					
11	2181-2627D3	ADAPTER	ADAPTEUR	1					
12	2181-2627D1	ADAPTER	ADAPTEUR	2					
13	2181-2627D15	ADAPTER	ADAPTEUR	1					
14	2181-2293D4	TEE	TE	1					
15	DS2412023	TEE	TE	1					
16	S8000291	O-RING	JOINT TORIQUE	6					
17	S8030161	O-RING	JOINT TORIQUE	6					
18	S8000231	O-RING	JOINT TORIQUE	1					
19	S8030121	O-RING	JOINT TORIQUE	5					
20	S0561066	BOLT	BOULON A 6 PANS	1					
21	S0561466	BOLT	BOULON A 6 PANS	2					
22	S0561266	BOLT	BOULON A 6 PANS	2					
23	S5102703	WASHER;SPRING	RONDELLE ELASTIQUE	5					
24	S5010713	WASHER	CALE	1					
25	2124-1026D2	CLAMP;PIPE	COLLIER	1					
26	S8000241	O-RING	JOINT TORIQUE	2					
27	K1013596	BRACKET	SUPPORT	1					
28	DS0025019	BOLT;SET	BOULON A 6 PANS	4					
51	DS2016089	HOSE	TUYAU FLEXIBLE	2					
52	195-03435B	BRACKET	SUPPORT	1					
53	195-03436B	BRACKET	SUPPORT	1					
54	DS0025020	BOLT;SET	BOULON A 6 PANS	4					

DATE	NOV. 27, 2006
1st EDITION	

Fig. 6160 PILOT PIPING - TWO WAY(1)
CONDUITES DE PILOTE

Serial No. ;

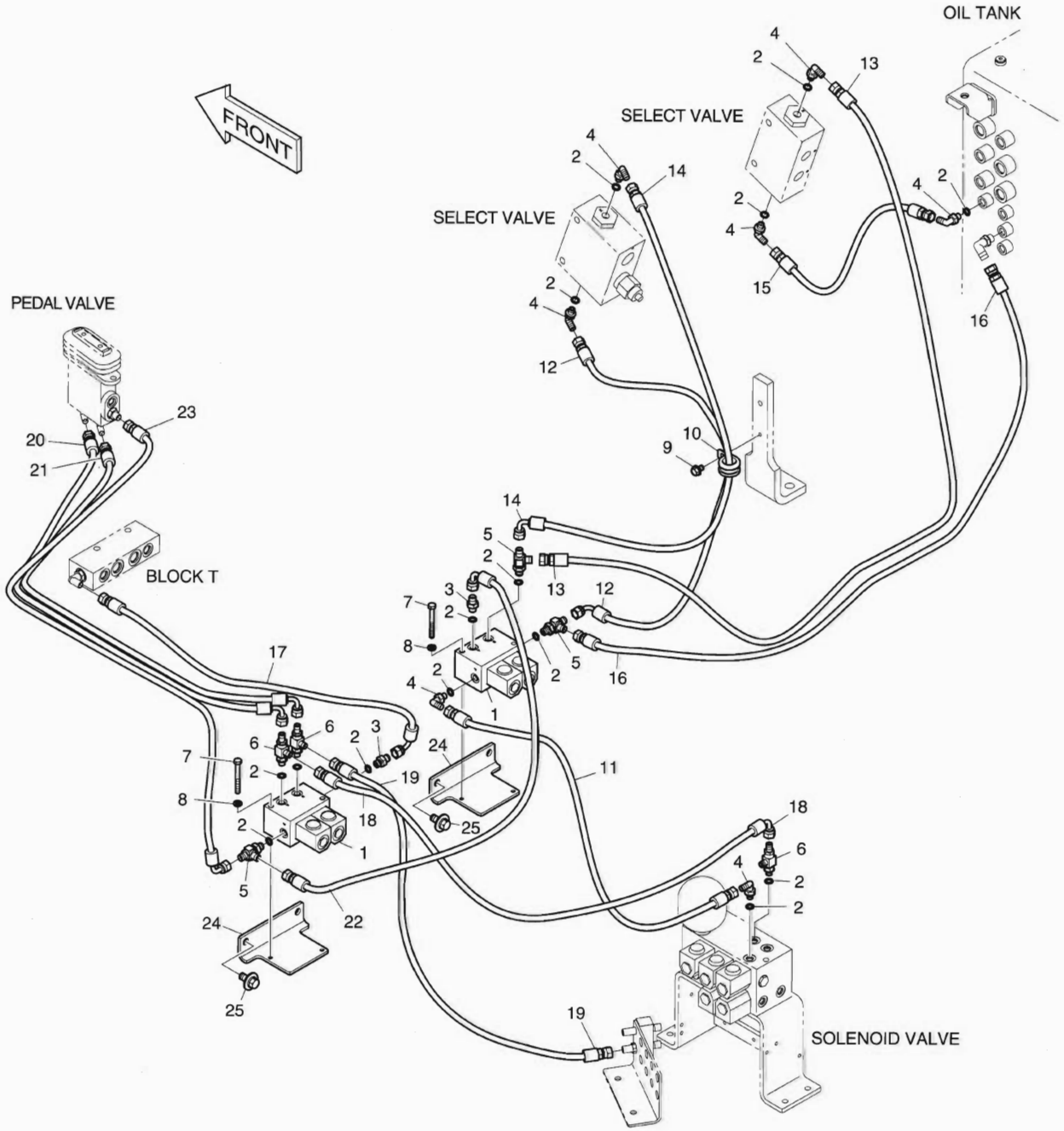

DATE	NOV. 27, 2006
1st EDITION	

Fig. 6160 PILOT PIPING - TWO WAY(1) CONDUITES DE PILOTE

Serial No. ;

Key No.	Part No.	Description	Description	Q'ty	S.C	Serial No.	ICA	Replaceable part	
								Part No.	Q'ty
60--	K1014044C	PILOT PIPING;PE3C	CONDUITES DE PILOTE	-	D				
1	426-00247A	VALVE;SOLENOID	SOUPAPE A SOLENOIDE	2					
2	S8000111	O-RING	JOINT TORIQUE	15					
3	2181-1126D14	ADAPTER	ADAPTEUR	2					
4	2181-1702D4	ELBOW	COUDE	7					
5	2181-1951D1	TEE	TE	3					
6	181-00779	TEE;SHUTTLE	TE	3					
7	S0556766	BOLT	BOULON A 6 PANS	4					
8	S5102503	WASHER;SPRING	RONDELLE ELASTIQUE	4					
9	K1001029	BOLT	BOULON A 6 PANS	1					
10	124-00208D4	CLIP	AGRAFE	1					
11	DS2094097	HOSE	TUYAU FLEXIBLE	1					
12	DS2093031	HOSE	TUYAU FLEXIBLE	1					
13	DS2094120	HOSE	TUYAU FLEXIBLE	1					
14	DS2093031	HOSE	TUYAU FLEXIBLE	1					
15	DS2094121	HOSE	TUYAU FLEXIBLE	1					
16	DS2094106	HOSE	TUYAU FLEXIBLE	1					
17	DS2093080	HOSE	TUYAU FLEXIBLE	1					
18	DS2093121	HOSE	TUYAU FLEXIBLE	1					
19	DS2094041	HOSE	TUYAU FLEXIBLE	1					
20	DS2093055	HOSE	TUYAU FLEXIBLE	1					
21	DS2093056	HOSE	TUYAU FLEXIBLE	1					
22	DS2093027	HOSE	TUYAU FLEXIBLE	1					
23	DS2093060	HOSE	TUYAU FLEXIBLE	1					
24	K1014268	BRACKET	SUPPORT	2					
25	DS0025017	BOLT;SET	BOULON A 6 PANS	4					

DATE	NOV. 27, 2006
1st EDITION	

Fig. 6170 PILOT PIPING - TWO WAY(2)
CONDUITES DE PILOTE

Serial No. ;

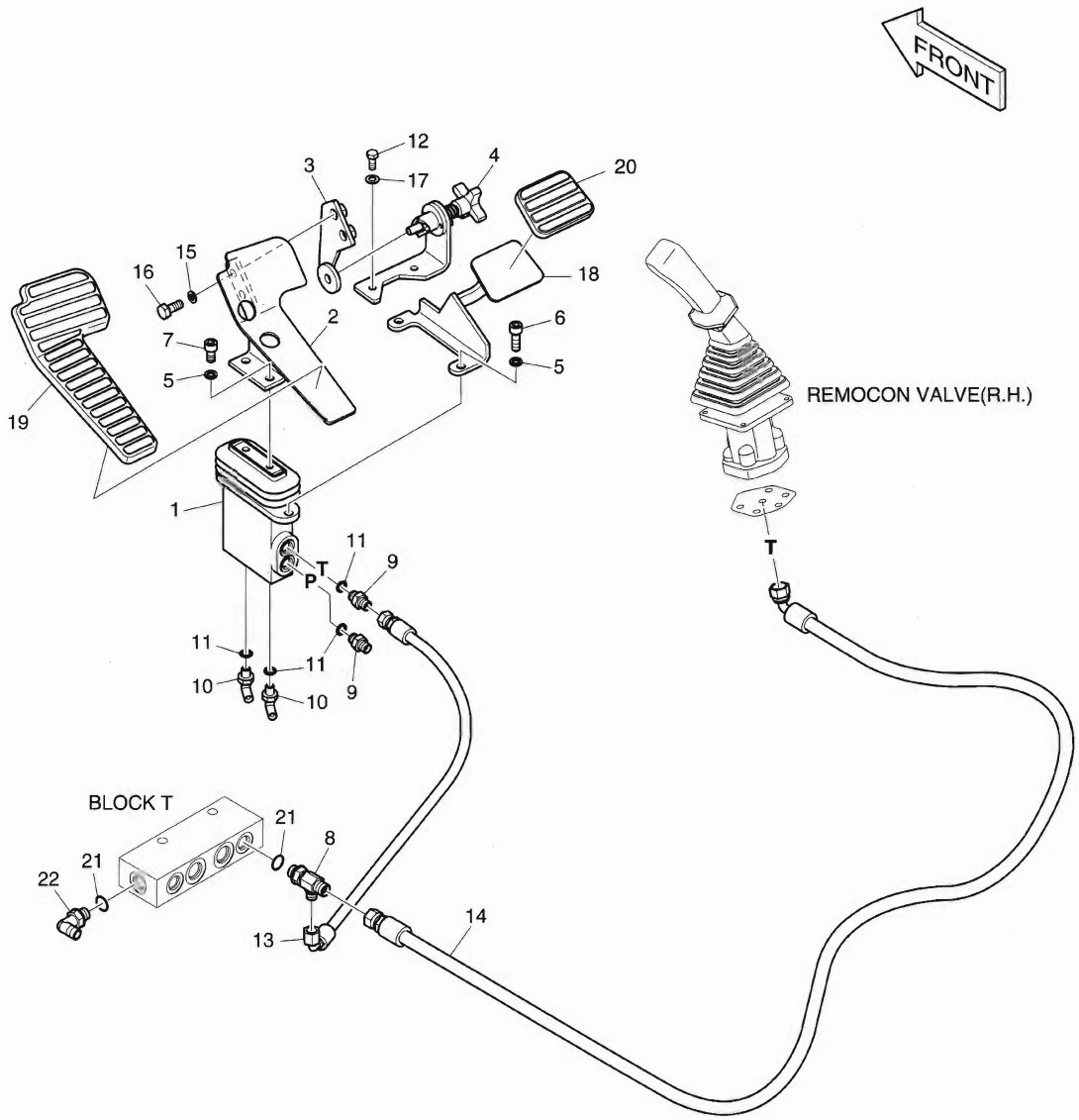

DATE	NOV. 27, 2006
1st EDITION	

Fig. 6170 PILOT PIPING - TWO WAY(2) CONDUITES DE PILOTE

Serial No. ;

Key No.	Part No.	Description	Description	Q'ty	S.C	Serial No.	ICA	Replaceable part	
								Part No.	Q'ty
6170--	K1014105	PILOT PIPING-TWO WAY(2)	CIRCUIT DE PILOTE	-	D				
1	K1017382	VALVE;PEDAL	VANNE	1					
2	195-01683A	BRACKET;PEDAL(R.H)	SUPPORT	1					
3	K1000695A	PLATE	PLAQUE	1					
4	K1000696C	LOCK ASS'Y	SERRURE	1					
5	S5110603	WASHER;SPRING	RONDELLE ELASTIQUE	4					
6	S2212266	BOLT;SOCKET	BOULON	2					
7	S2211866	BOLT;SOCKET	BOULON	2					
8	2181-1951D6	TEE	TE	1					
9	2181-1126D14	ADAPTER	ADAPTEUR	2					
10	2181-1702D4	ELBOW	COUDE	2					
11	S8000111	O-RING	JOINT TORIQUE	4					
12	S0508866	BOLT	BOULON A 6 PANS	2					
13	DS2093200	HOSE	TUYAU FLEXIBLE	1					
14	DS2095020	HOSE	TUYAU FLEXIBLE	1					
15	S5102603	WASHER;SPRING	RONDELLE ELASTIQUE	2					
16	S0512066	BOLT	BOULON A 6 PANS	2					
17	S5102503	WASHER;SPRING	RONDELLE ELASTIQUE	2					
18	K1003947A	FOOT REST	REPOS DE PIED	1					
19	161-00381	RUBBER;PEDAL(R.H)	CAOUTCHOUC	1					
20	K1006656	RUBBER	CAOUTCHOUC	1					
21	S8000141	O-RING	JOINT TORIQUE	2					
22	2181-1702D10	ELBOW	COUDE	1					

DATE	NOV. 27, 2006
1st EDITION	

Fig. 6180 BOOM PIPING - BOOM 5.2m (ONE & TWO WAY) DONDUITER DE FLECHE

Serial No. ;

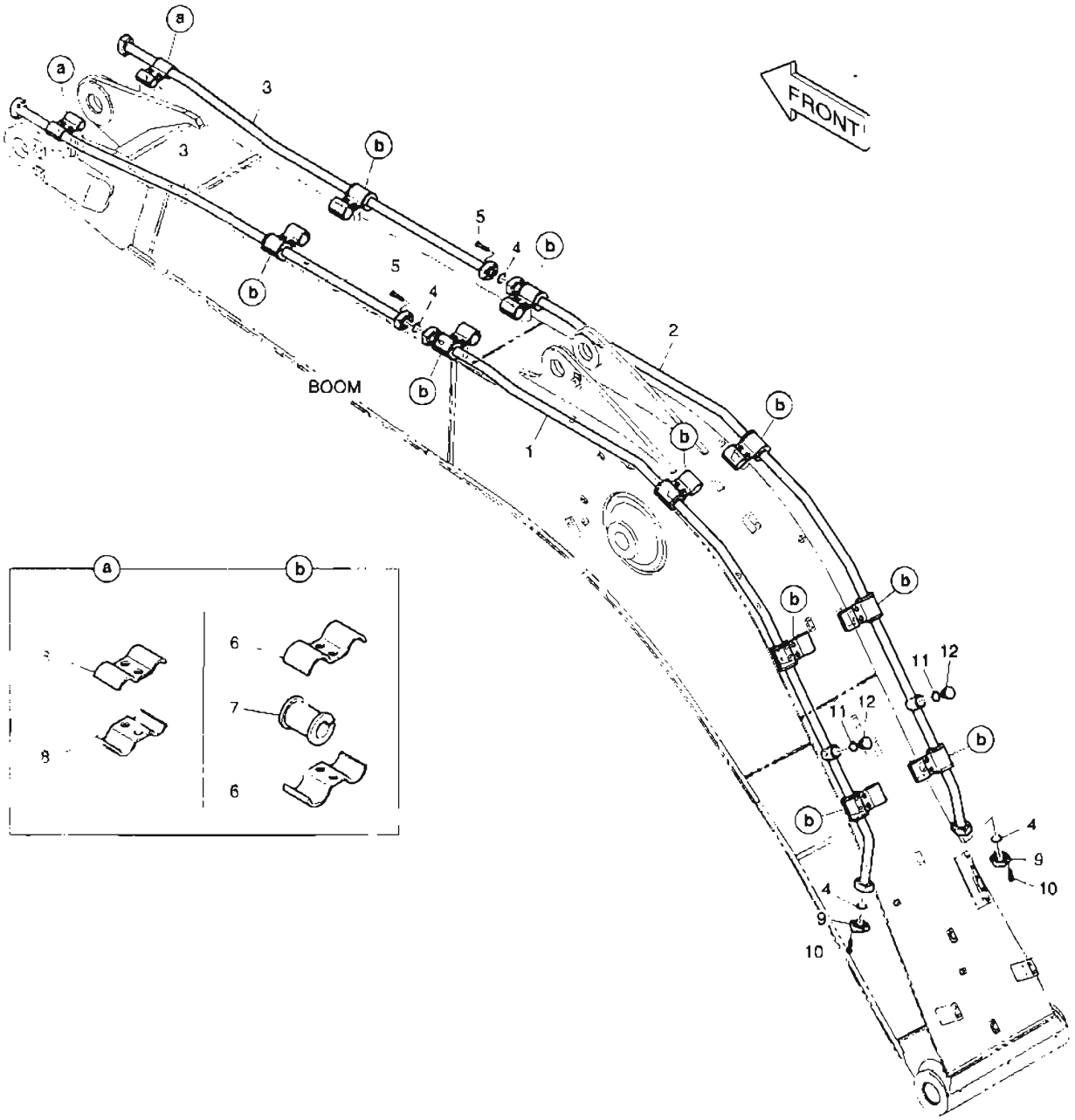

DATE	NOV. 27, 2006
1st EDITION	

Fig. 6180 BOOM PIPING - BOOM 5.2m (ONE & TWO WAY) DONDUITER DE FLECHE

Serial No. ;

Key No.	Part No.	Description	Description	Q'ty	S.C	Serial No.	ICA	Replaceable part	
								Part No.	Q'ty
6180--	K1014807	BOOM PIPING;ONE & TWO WAY	DONDUITER DE FLECHE	-	D				
1	K1014808	PIPE	TUYAU	1					
2	K1014809	PIPE	TUYAU	1					
3	K1000882A	PIPE	TUYAU	2					
4	2180-1026D19	O-RING	JOINT TORIQUE	4					
5	S2212666	BOLT;SOCKET M10X1.5X50	BOULON A 6 PANS CREUX	8					
6	124-00368	CLAMP;PIPE	COLLIER	20					
7	161-00281	RUBBER	CAOUTCHOUC	10					
8	124-00367	CLAMP;PIPE	COLLIER	4					
9	2181-9078	FLANGE	BRIDE	4					
10	S2212466	BOLT;SOCKET M10X1.5X40	BOULON A 6 PANS CREUX	8					
11	S8000291	O-RING	JOINT TORIQUE	2					
12	2181-1950D9	PLUG	BOUCHON	2					

DATE	NOV. 27, 2006
1st EDITION	

Fig. 6190 ARM PIPING - ARM 2.6m (ONE & TWO WAY)
CONDUITES DE BALANCIER

Serial No. ;

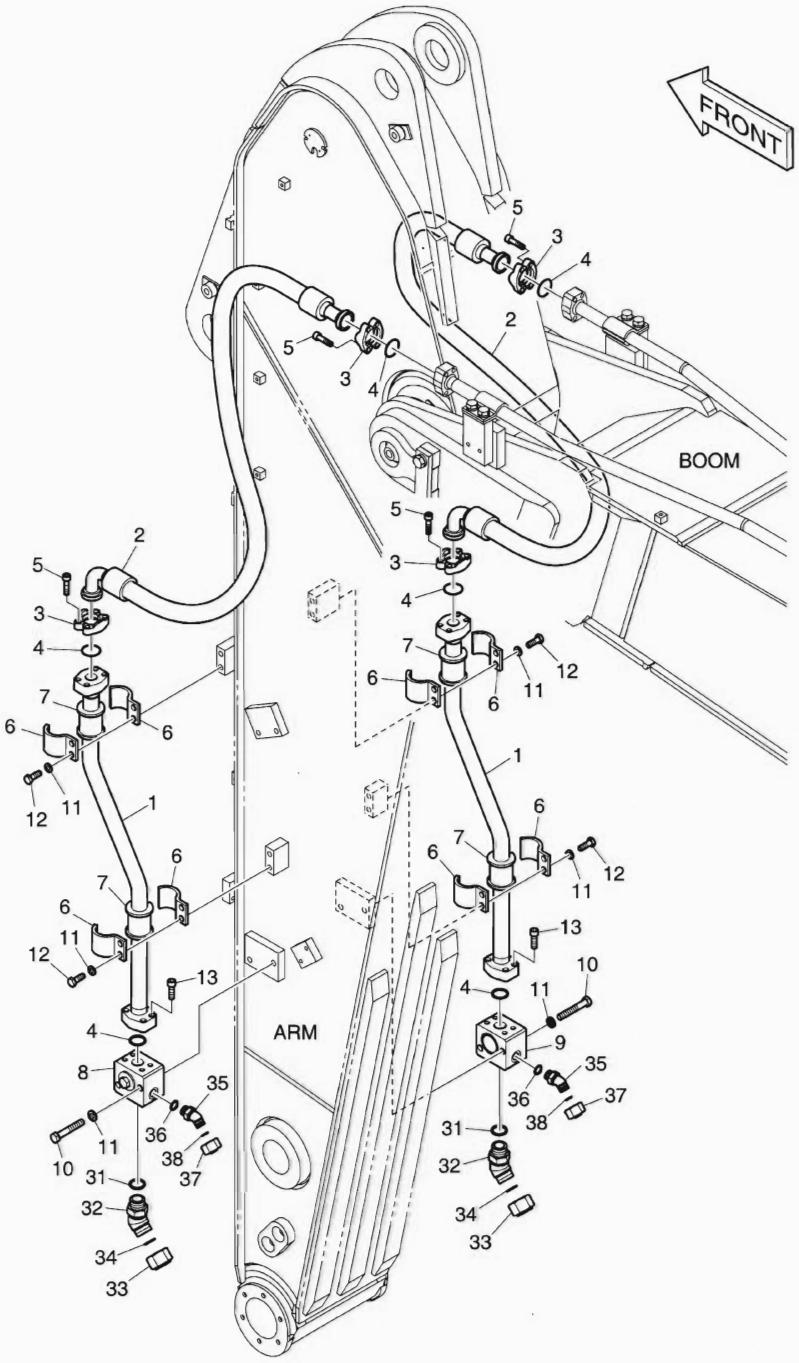

DATE	NOV. 27, 2006
1st EDITION	

Fig. 6190 ARM PIPING - ARM 2.6m (ONE & TWO WAY) CONDUITES DE BALANCIER

Serial No. ;

Key No.	Part No.	Description	Description	Q'ty	S.C	Serial No.	ICA	Replaceable part	
								Part No.	Q'ty
6190--	K1014833	ARM PIPING-ONE & TWO WAY	CONDUITES DE BALANCIER	-	D				
1	K1014834	PIPE	TUYAU	2					
2	2184-1100D78	HOSE	TUYAU FLEXIBLE	2					
3	2181-9078	FLANGE;SPLIT	BRIDE	8					
4	2180-1026D19	O-RING	JOINT TORIQUE	6					
5	S2212466	BOLT;SOCKET	BOULON	16					
6	K1004056	CLAMP	COLLIER	8					
7	161-00281	RUBBER	CAOUTCHOUC	4					
8	K1000334A	VALVE;STOP(L.H)	VANNE	1					
9	K1000338A	VALVE;STOP(R.H)	VANNE	1					
10	S0563666	BOLT	BOULON A 6 PANS	4					
11	S5102803	WASHER;SPRING	RONDELLE ELASTIQUE	12					
12	S0562766	BOLT	BOULON A 6 PANS	8					
13	S2212366	BOLT;SOCKET	BOULON	8					
31	S8000291	O-RING	JOINT TORIQUE	2					
32	2181-2816D2	ELBOW	COUDE	2					
33	2181-2817D2	CAP	CHAPEAU	2					
34	S8030161	O-RING	JOINT TORIQUE	2					
35	2181-2816D4	ELBOW	COUDE	2					
36	S8000181	O-RING	JOINT TORIQUE	2					
37	2181-2817D4	PLUG	BOUCHON	2					
38	S8030081	O-RING	JOINT TORIQUE	2					

DATE	NOV. 27, 2006
1st EDITION	

Fig. 6200 PATTERN CHANGE PIPING (1)
TUYAUTERIE DE CHANGEMENT DE MODELE

Serial No. ;

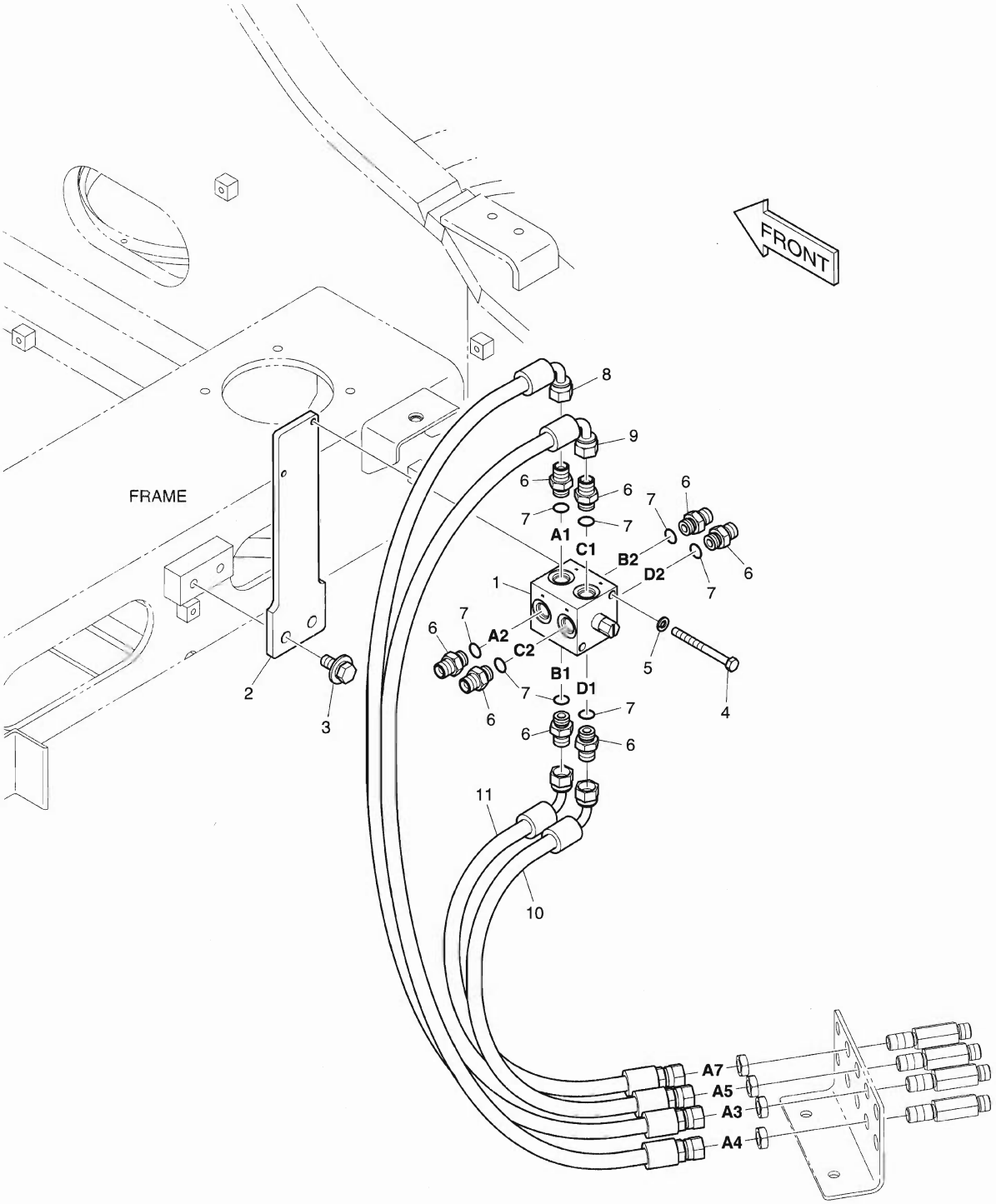

DATE	NOV. 27, 2006
1st EDITION	

Fig. 6200 PATTERN CHANGE PIPING (1)
TUYAUTERIE DE CHANGEMENT DE MODELE

Serial No. ;

Key No.	Part No.	Description	Description	Q'ty	S.C	Serial No.	ICA	Replaceable part	
								Part No.	Q'ty
6200--	K1025172	PILOT PIPING;PATTERN CHANGE	TUYAUTERIE DE	-	D				
1	K1014874	VALVE;SELECTOR	CLAPET SELECTEUR	1					
2	K1014921	PLATE	PLAQUE	1					
3	DS0025018	BOLT;SET	BOULON A 6 PANS	2					
4	S0557066	BOLT	BOULON A 6 PANS	2					
5	S5100503	WASHER;SPRING	RONDELLE ELASTIQUE	2					
6	2181-1126D7	ADAPTER	ADAPTEUR	8					
7	S8000141	O-RING	JOINT TORIQUE	8					
8	DS2093297	HOSE	TUYAU FLEXIBLE	1					
9	DS2093298	HOSE	TUYAU FLEXIBLE	1					
10	DS2093001	HOSE	TUYAU FLEXIBLE	1					
11	DS2093001	HOSE	TUYAU FLEXIBLE	1					

DATE	NOV. 27, 2006
1st EDITION	

Fig. 6210 PATTERN CHANGE PIPING (2)
TUYAUTERIE DE CHANGEMENT DE MODELE

Serial No. ;

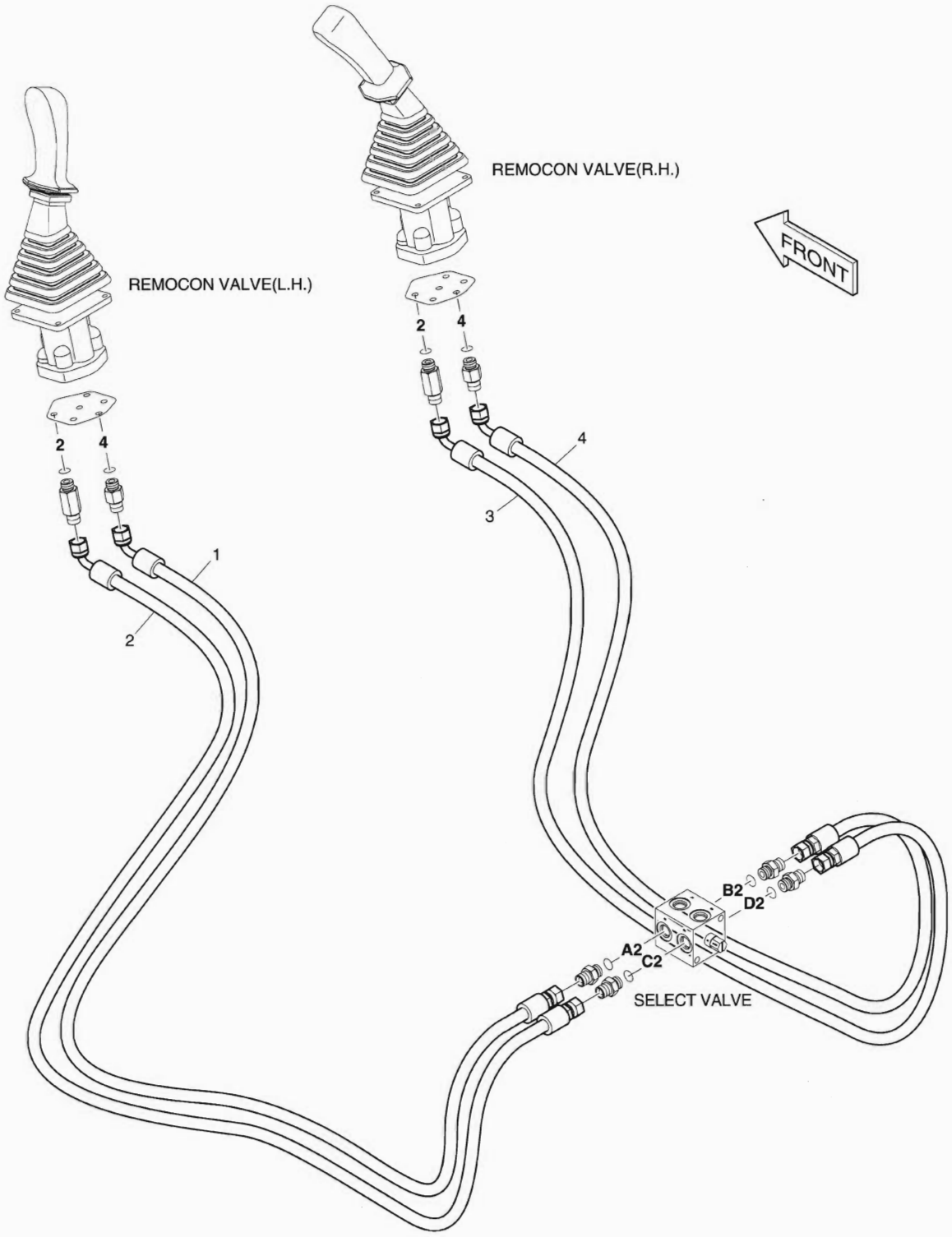

DATE	NOV. 27, 2006
1st EDITION	

Fig. 6210 PATTERN CHANGE PIPING (2) TUYAUTERIE DE CHANGEMENT DE MODELE

Serial No. ;

Key No.	Part No.	Description	Description	Q'ty	S.C	Serial No.	ICA	Replaceable part	
								Part No.	Q'ty
6210--	K1014917	PILOT PIPING;PATTERN CHANGE	TUYAUTERIE DE	-	D				
1	DS2095003	HOSE	TUYAU FLEXIBLE	1					
2	DS2095003	HOSE	TUYAU FLEXIBLE	1					
3	DS2095027	HOSE	TUYAU FLEXIBLE	1					
4	DS2095027	HOSE	TUYAU FLEXIBLE	1					

Fig. 6220 SWING ALARM AVERTISSEUR

Serial No. ;

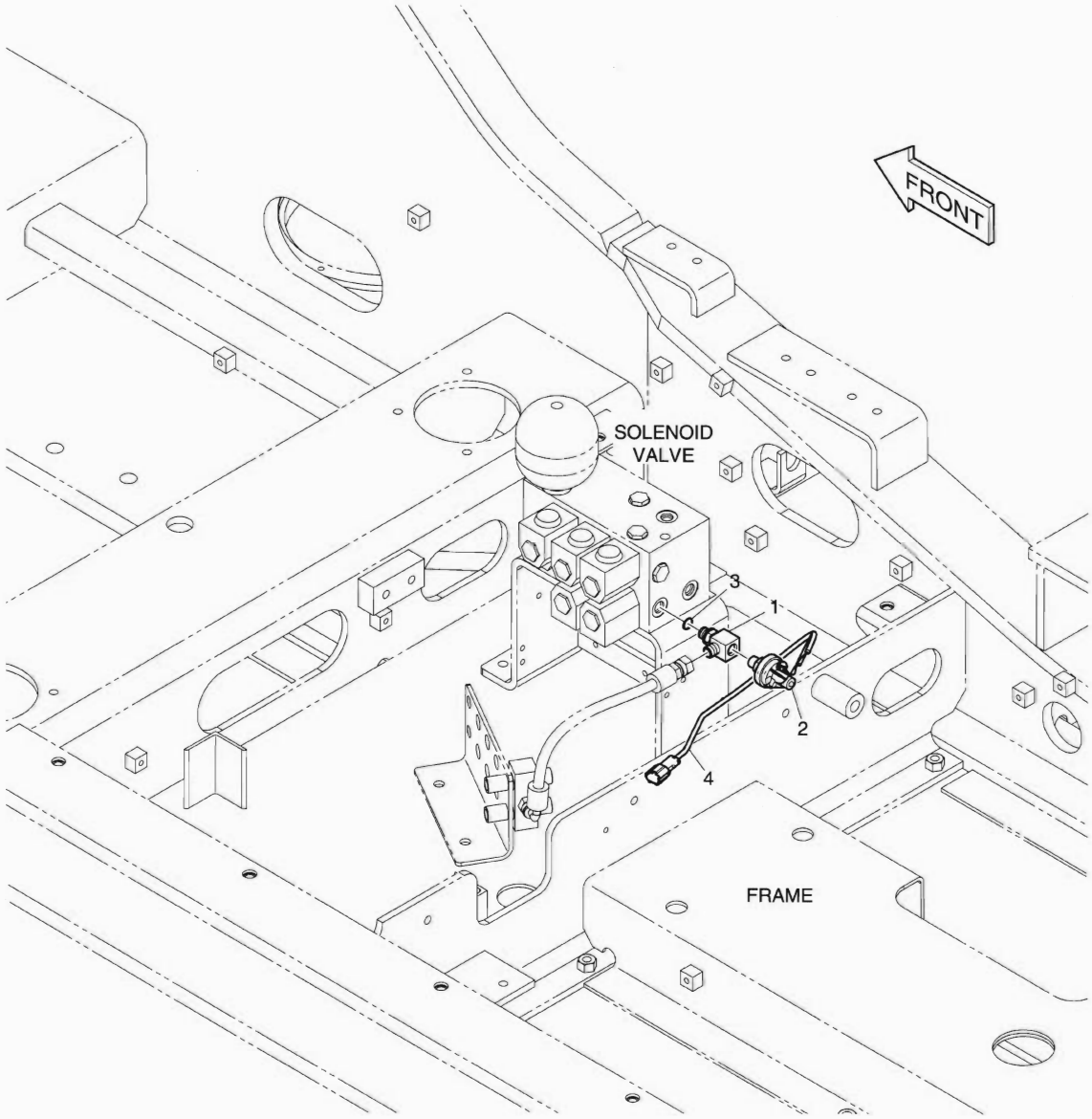

DATE	NOV. 27, 2006
1st EDITION	

Fig. 6220 SWING ALARM AVERTISSEUR

Serial No. ;

Key No.	Part No.	Description	Description	Q'ty	S.C	Serial No.	ICA	Replaceable part	
								Part No.	Q'ty
6220--	K1014046A	ASSEMBLY;SWING ALARM	ALARME D'OSCILLATION	-	D				
1	K1002158	TEE	TE	1					
2	549-00010	SWITCH;PRESSURE	COMMUTATEUR	1					
3	S8000111	O-RING	JOINT TORIQUE	1					
4	530-00067	HARNESS;PRESS.SWITCH	FAISCEAU	1					

DATE	NOV. 27, 2006
1st EDITION	

Fig. 6230 MAIN PIPING - QUICK FIT
CONDUITES DE BATI PRINCIPAL

Serial No. ;

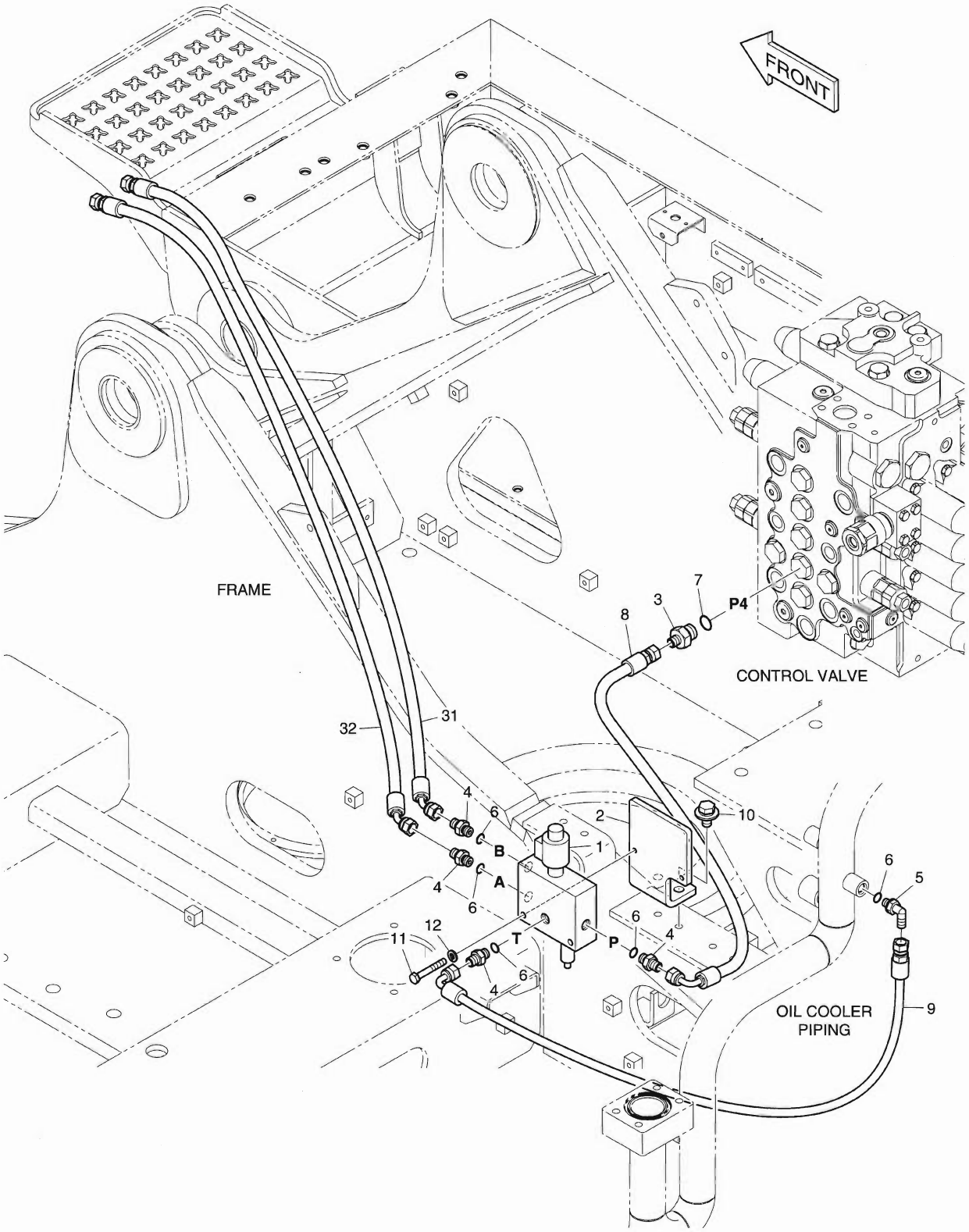

DATE	NOV. 27, 2006
1st EDITION	

Fig. 6230 MAIN PIPING - QUICK FIT
CONDUITES DE BATI PRINCIPAL

Serial No. ;

Key No.	Part No.	Description	Description	Q'ty	S.C	Serial No.	ICA	Replaceable part	
								Part No.	Q'ty
6230--	K1013550A	MAIN PIPING;QUICK FIT	CONDUITES DE BATI	-	D				
1	426-00287	VALVE;QUICK-FIT	VANNE	1					
2	K1013581	BRACKET	SUPPORT	1					
3	2181-1126D37	ADAPTER	ADAPTEUR	1					
4	2181-1126D14	ADAPTER	ADAPTEUR	4					
5	2181-1702D4	ELBOW	COUDE	1					
6	S8000111	O-RING	JOINT TORIQUE	5					
7	S8000181	O-RING	JOINT TORIQUE	1					
8	DS2093314	HOSE	TUYAU FLEXIBLE	1					
9	DS2093202	HOSE	TUYAU FLEXIBLE	1					
10	DS0025019	BOLT;SET	BOULON A 6 PANS	2					
11	S0556466	BOLT	BOULON A 6 PANS	2					
12	S5102503	WASHER;SPRING	RONDELLE ELASTIQUE	2					
31	DS2054376	HOSE	TUYAU FLEXIBLE	1					
32	DS2054376	HOSE	TUYAU FLEXIBLE	1					

DATE	NOV. 27, 2006
1st EDITION	

Fig. 6240 ELECTRIC PARTS - QUICK CLAMP BRIDE RAPIDE

Serial No. ;

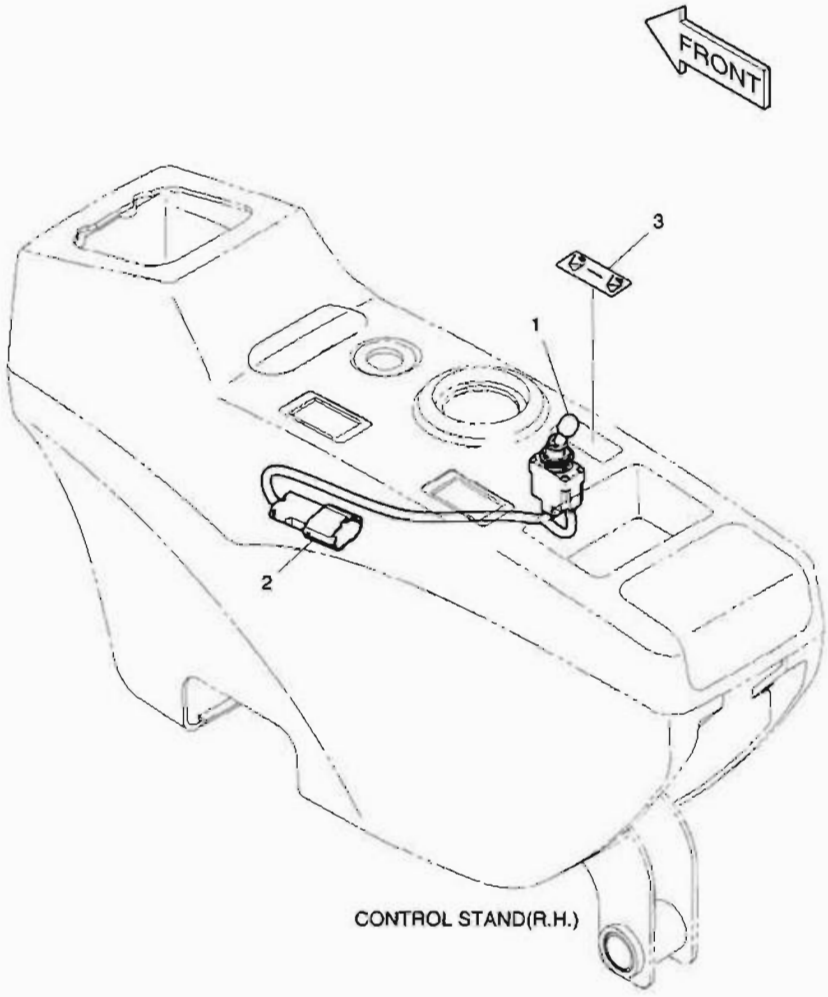

DATE	NOV. 27, 2006
1st EDITION	

Fig. 6240 ELECTRIC PARTS - QUICK CLAMP BRIDE RAPIDE

Serial No. ;

Key No.	Part No.	Description	Description	Q'ty	S.C	Serial No.	ICA	Replaceable part	
								Part No.	Q'ty
240--	500-00317	QUICK CLAMP	BRIDE RAPIDE	-	D				
1	549-00092	SWITCH;LOCKOUT TOGGLE	INTERRUPTEUR	1					
2	530-00432A	HARNESS;JOINT	FAISCEAU	1					
3	K1005776	PLATE;NAME	PLAQUE D'IDENTIFICATION	1					

DATE	NOV. 27, 2006
1st EDITION	

Fig. 6250 BOOM PIPING - BOOM 5.2m(QUICK CLAMP)
DONDUITER DE FLECHE

Serial No. ;

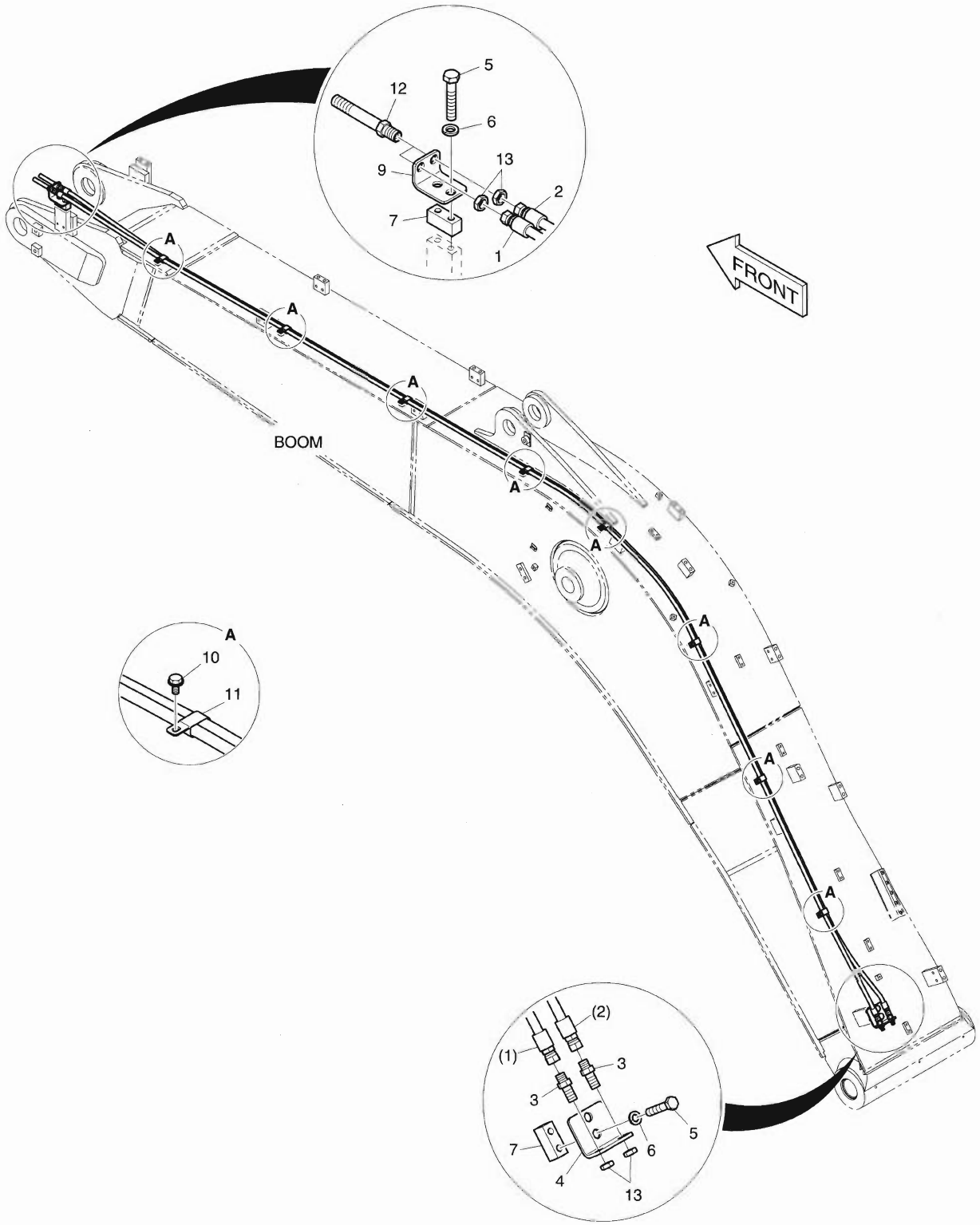

DATE	NOV. 27, 2006
1st EDITION	

Fig. 6250 BOOM PIPING - BOOM 5.2m(QUICK CLAMP) DONDUITER DE FLECHE

Serial No. ;

Key No.	Part No.	Description	Description	Q'ty	S.C	Serial No.	ICA	Replaceable part	
								Part No.	Q'ty
6250--	K1014814B	BOOM PIPING-QUICK FIT	CONDUITES DE FLECHE	-	D				
1	DS2053932	HOSE	TUYAU FLEXIBLE	1					
2	DS2053878	HOSE	TUYAU FLEXIBLE	1					
3	DS2410007	ADAPTER	ADAPTEUR	2					
4	K1014842	BRACKET	SUPPORT	1					
5	S0563366	BOLT	BOULON A 6 PANS	4					
6	S5102803	WASHER;SPRING	RONDELLE ELASTIQUE	4					
7	K1004006	PLATE	PLAQUE	2					
9	K1010847	BRACKET	SUPPORT	1					
10	K1001029	BOLT	BOULON A 6 PANS	8					
11	DS2805009	CLIP	AGRAFE	8					
12	K1000356	ADATER	ADAPTEUR	2					
13	121-00010D7	NUT	ECROU 6 PANS	4					

DATE	NOV. 27, 2006
1st EDITION	

Fig. 6260 ARM PIPING - ARM 2.6m (QUICK CLAMP)
CONDUITES DE BALANCIER

Serial No. ;

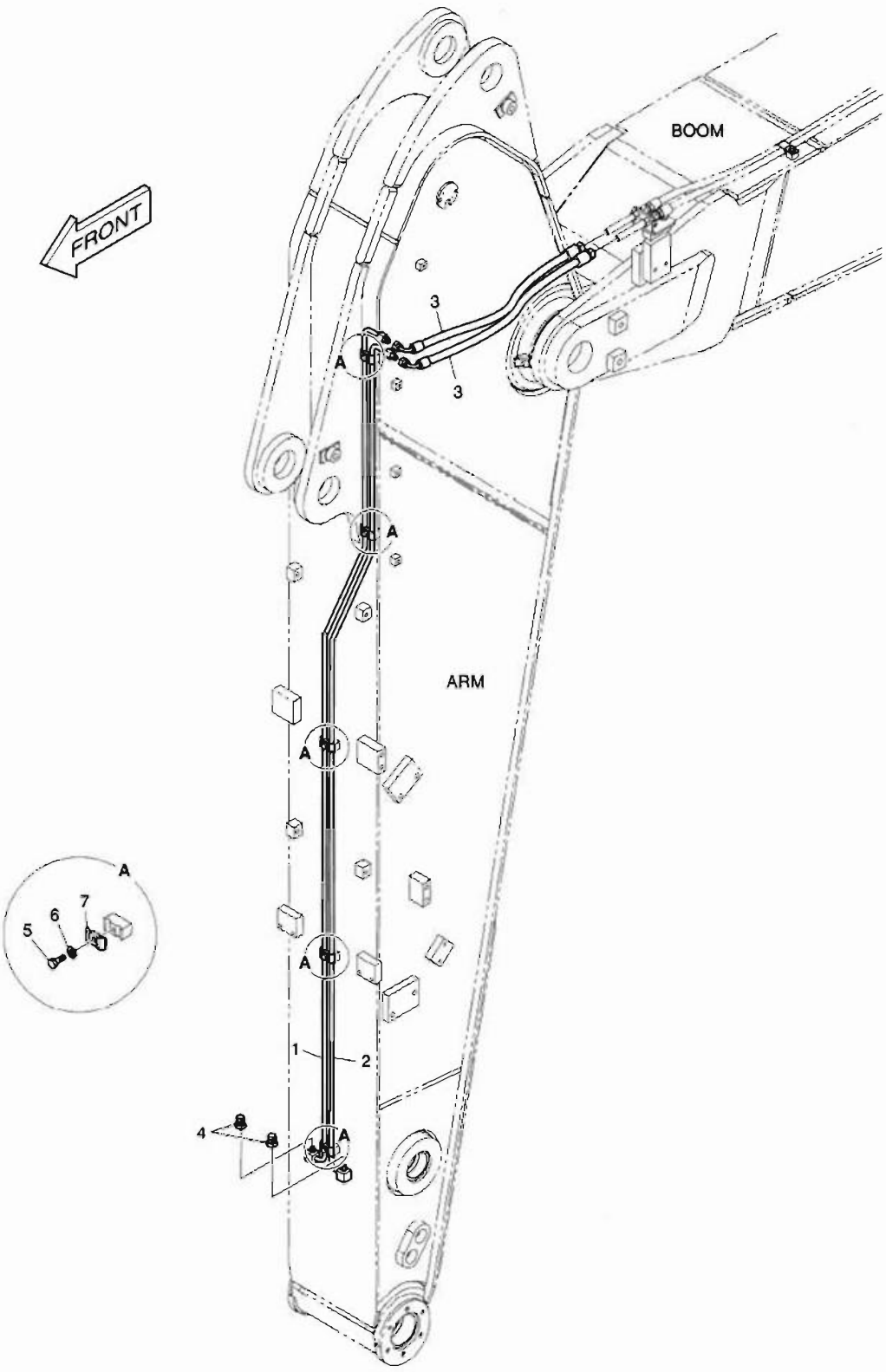

DATE	NOV. 27, 2006
1st EDITION	

Fig. 6260 ARM PIPING - ARM 2.6m (QUICK CLAMP) CONDUITES DE BALANCIER

Serial No. ;

Key No.	Part No.	Description	Description	Q'ty	S.C	Serial No.	ICA	Replaceable part	
								Part No.	Q'ty
6260--	K1014845A	ARM PIPING-QUICK CLAMP	CONDUITES DE BALANCIER	-	D				
1	K1014846A	PIPE	TUYAU	1					
2	K1014847A	PIPE	TUYAU	1					
3	DS2055977	HOSE	TUYAU FLEXIBLE	2					
4	2181-2820D1	PLUG	BOUCHON	2					
5	S0508866	BOLT	BOULON A 6 PANS	5					
6	S5102503	WASHER;SPRING	RONDELLE ELASTIQUE	5					
7	K1004011	CLAMP;PIPE	COLLIER	5					

DATE	NOV. 27, 2006
1st EDITION	

Fig. 6270 ARM PIPING - ARM 2.6m (CLAMSHELL)
CONDUITES DE BALANCIER

Serial No. ;

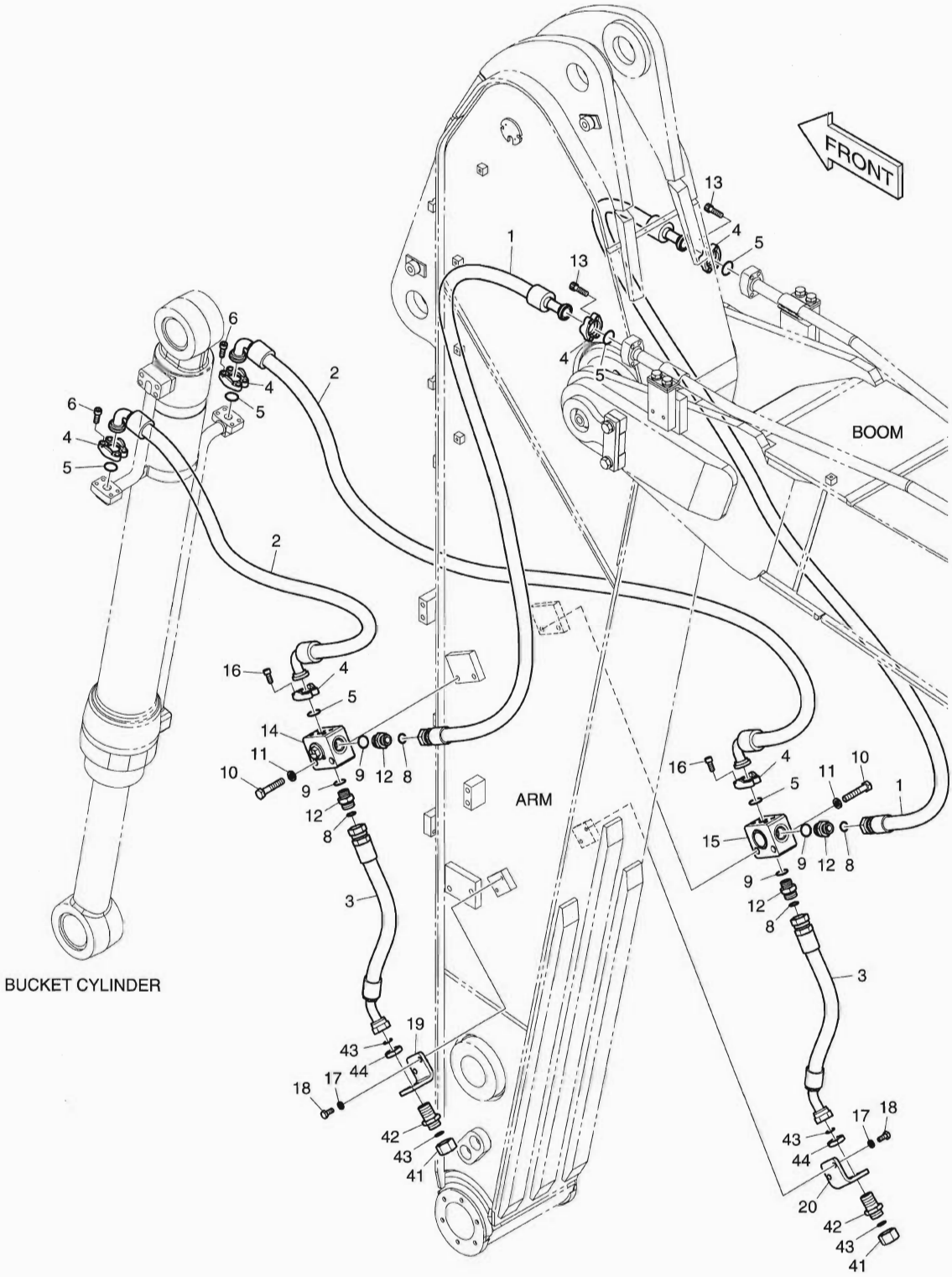

DATE	NOV. 27, 2006
1st EDITION	

Fig. 6270 ARM PIPING - ARM 2.6m (CLAMSHELL) CONDUITES DE BALANCIER

Serial No. ;

Key No.	Part No.	Description	Description	Q'ty	S.C	Serial No.	ICA	Replaceable part	
								Part No.	Q'ty
6270--	K1014848B	ARM PIPING-CLAMSHELL	CONDUITES DE BALANCIER	-	D				
1	DS2016092	HOSE	TUYAU FLEXIBLE	2					
2	DS2045439	HOSE	TUYAU FLEXIBLE	2					
3	DS2012449	HOSE	TUYAU FLEXIBLE	2					
4	2181-9079	FLANGE;SPLIT	BRIDE	12					
5	2180-1026D2	O-RING	JOINT TORIQUE	6					
6	S2212266	BOLT;SOCKET	BOULON	8					
8	S8030121	O-RING	JOINT TORIQUE	4					
9	S8000231	O-RING	JOINT TORIQUE	4					
10	S0563466	BOLT	BOULON A 6 PANS	4					
11	S5102803	WASHER;SPRING	RONDELLE ELASTIQUE	4					
12	2181-4133D5	ADAPTER	ADAPTEUR	4					
13	S2212366	BOLT;SOCKET	BOULON	8					
14	K1002939	VALVE;SWITCH(L.H)	VANNE	1					
15	K1002940	VALVE;SWITCH(R.H)	VANNE	1					
16	S2212066	BOLT;SOCKET	BOULON	8					
17	S5102603	WASHER;SPRING	RONDELLE ELASTIQUE	4					
18	S0512066	BOLT	BOULON A 6 PANS	4					
19	K1014759	BRACKET(L.H)	SUPPORT	1					
20	K1015093	BRACKET(R.H)	SUPPORT	1					
41	2181-2817D1	PLUG	BOUCHON	2					
42	DS2415007	ADAPTER	ADAPTEUR	2					
43	S8030121	O-RING	JOINT TORIQUE	4					
44	121-00010D8	NUT	ECROU 6 PANS	2					

DATE	NOV. 27, 2006
1st EDITION	

Fig. 6280 SUN ROOF COVER
COUVERTURE DE TOIT DU SOLEIL

Serial No. ;

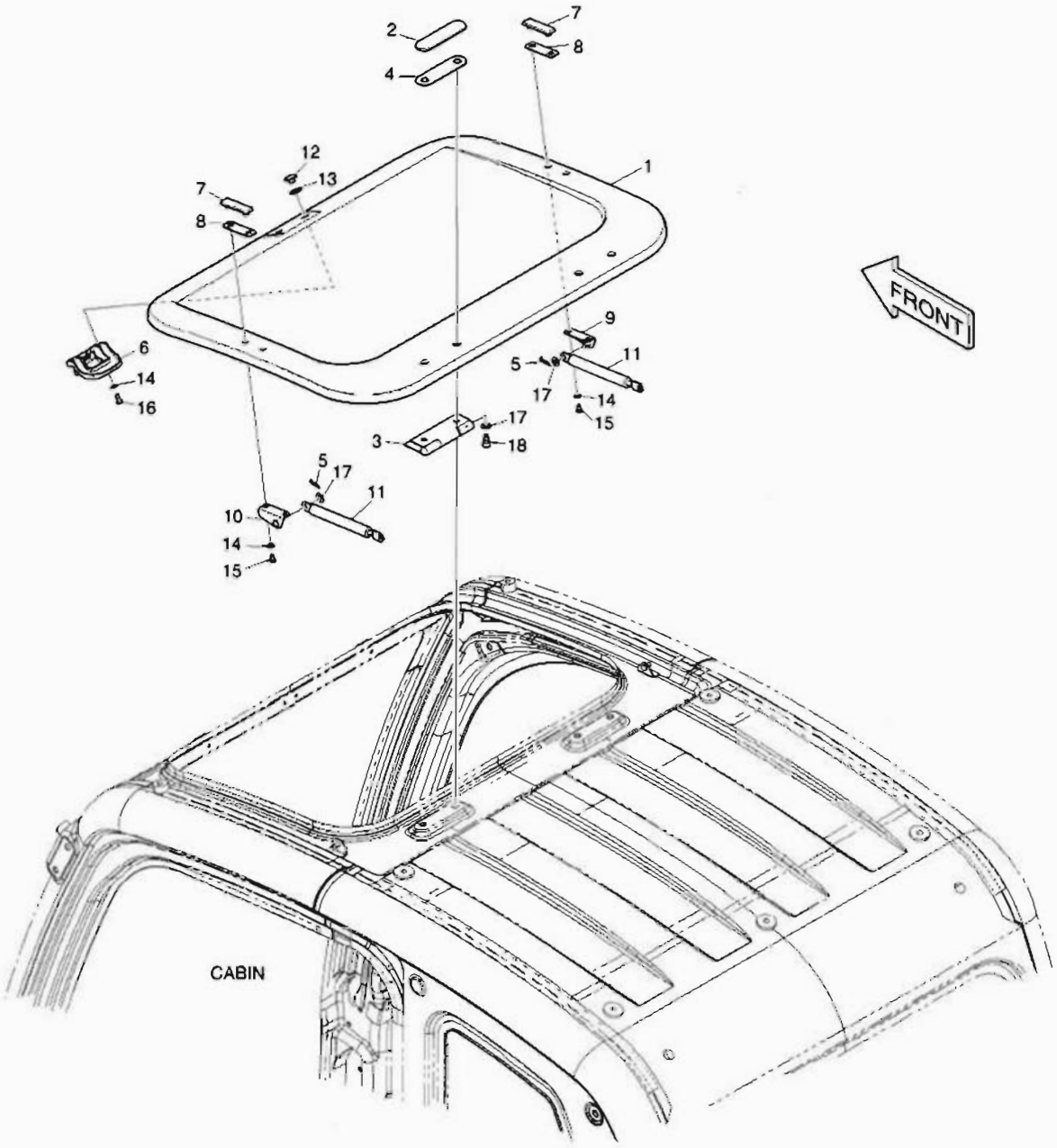

DATE	NOV. 27, 2006
1st EDITION	

Fig. 6280 SUN ROOF COVER
COUVERTURE DE TOIT DU SOLEIL

Serial No. ;

Key No.	Part No.	Description	Description	Q'ty	S.C	Serial No.	ICA	Replaceable part	
								Part No.	Q'ty
6280--	621-02870C	SUN ROOF COVER	LE SOLEIL	-	D				
1	621-02871B	COVER;SUN ROOF	COUVERCLE	1					
2	621-02872	COVER;ROOF HINGE	COUVERCLE	2					
3	171-00060A	HINGE;ROOF COVER	CHARNIERE	2					
4	161-00599	PAD;RUBBER	CAOUTCHOUC	2					
5	123-00523	PIN;GAS-SPRING	GOUJON	2					
6	123-00516B	LOCK ASS'Y;ROOF COVER	SERRURE	1					
7	621-02873	COVER;ROOF GAS-CYLINDER	COUVERCLE	2					
8	161-00600	PAD;RUBBER	CAOUTCHOUC	2					
9	191-03279A	PLATE;ROOF GAS-SPRING RH	PLAQUE	1					
10	191-03280A	PLATE;ROOF GAS-SPRING LH	PLAQUE	1					
11	DS1003008	GAS-SPRING	GOUJON	2					
12	621-03103	COVER;ROOF HANDLE	COUVERCLE	2					
13	161-00639	RUBBER;ROOF HANDLE	CAOUTCHOUC	2					
14	2114-1898D3	WASHER	CALE	6					
15	S3450943	SCREW	VIS	4					
16	2120-2166D7	SCREW	VIS	2					
17	2114-1898D14	WASHER	CALE	6					
18	S2208561	BOLT;SOCKET	BOULON	4					

DATE	NOV. 27, 2006
1st EDITION	

Fig. 6290 RAIN SHIELD
BOUCLIER DE PLUIE

Serial No. ;

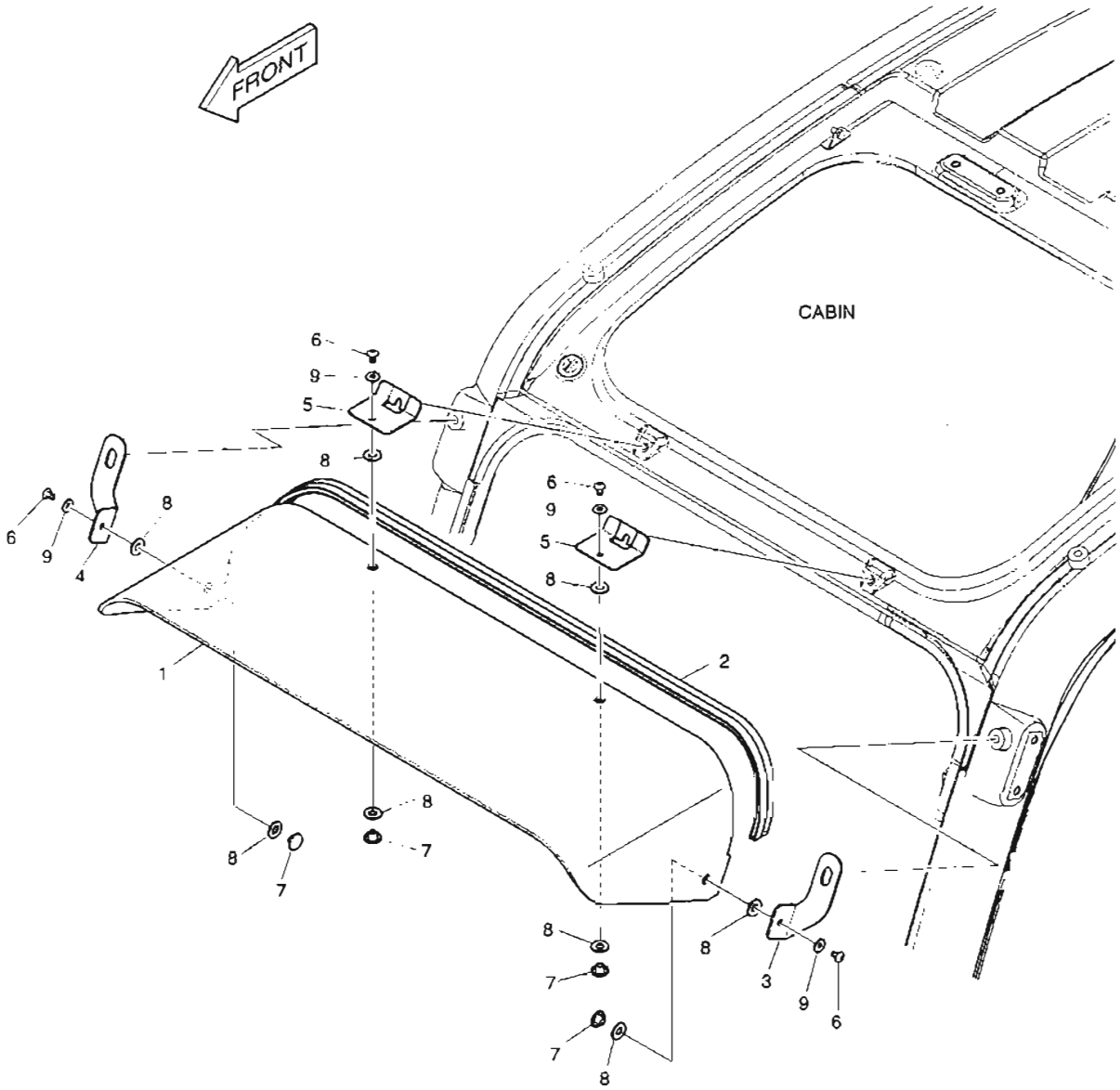

DATE	NOV. 27, 2006
1st EDITION	

Fig. 6290 RAIN SHIELD BOUCLIER DE PLUIE

Serial No. ;

Key No.	Part No.	Description	Description	Q'ty	S.C	Serial No.	ICA	Replaceable part	
								Part No.	Q'ty
6290--	K1002561A	RAIN SHIELD	BOUCLIER DE PLUIE	-	D				
1	159-00294B	COVER;RAIN SHIELD	COUVERCLE	1					
2	162-00040A	STRIP;WEATHER	TAMPON	1					
3	K1002574A	BRACKET(L.H)	SUPPORT	1					
4	K1002575A	BRACKET(R.H)	SUPPORT	1					
5	195-03374B	BRACKET;RAIN SHIELD	SUPPORT	2					
6	2120-2166D52	BOLT	BOULON A 6 PANS	4					
7	621-03103	COVER;ROOF HANDLE	COUVERCLE	4					
8	161-00639	RUBBER;ROOF HANDLE	CAOUTCHOUC	8					
9	2114-1898D5	WASHER	CALE	4					

DATE	NOV. 27, 2006
1st EDITION	

Fig. 6300 RAIN SHIELD & LAMP MOUNTING
BOUCLIER ET DE LAMPE DE PLUIE

Serial No. ;

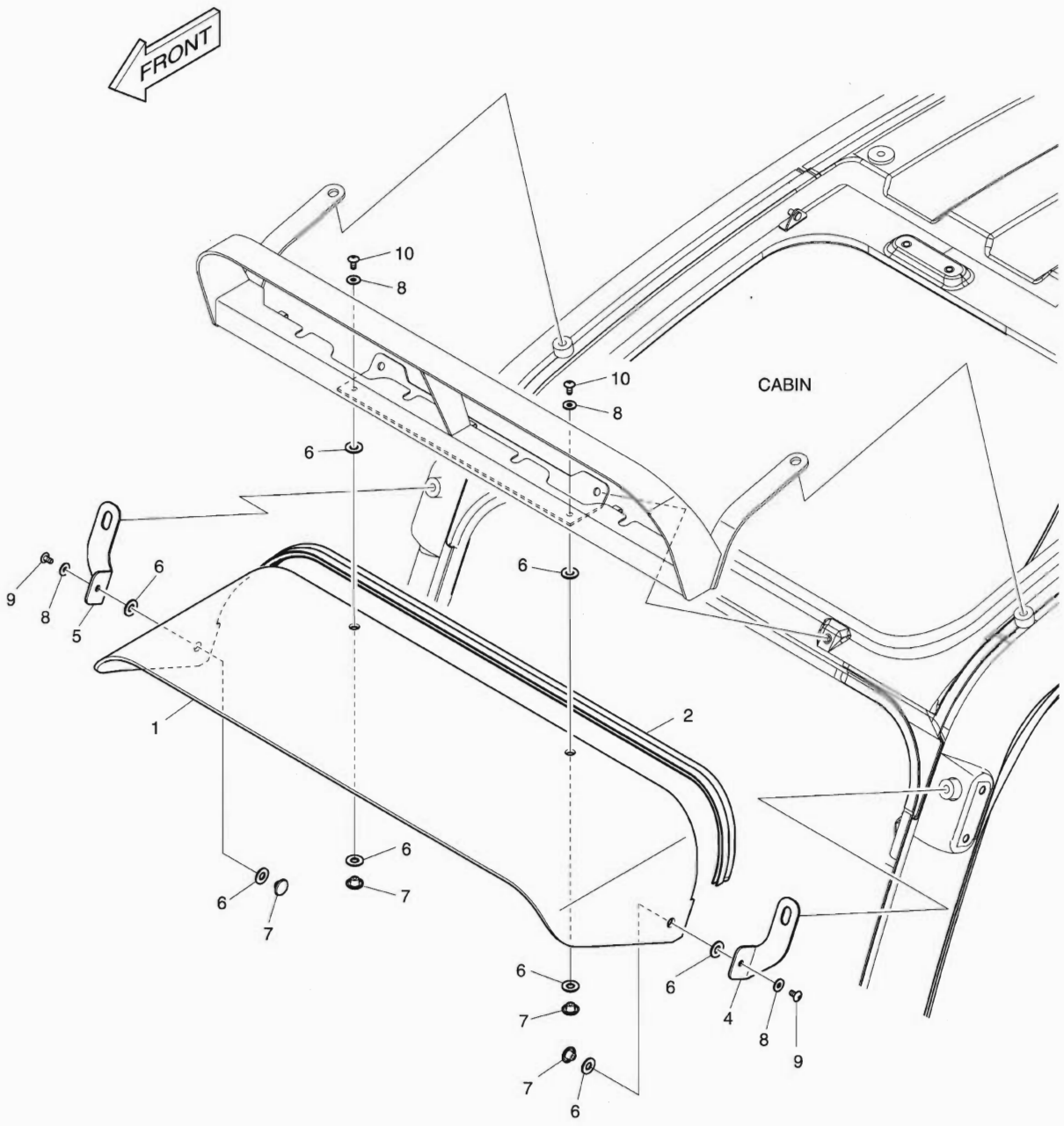

DATE	NOV. 27, 2006
1st EDITION	

Fig. 6300 RAIN SHIELD & LAMP MOUNTING BOUCLIER ET DE LAMPE DE PLUIE

Serial No. ;

Key No.	Part No.	Description	Description	Q'ty	S.C	Serial No.	ICA	Replaceable part	
								Part No.	Q'ty
6300--	534-00117A	RAIN SHIELD & LAMP ASSY	BOUCLIER DE PLUIE	-	D				
1	159-00294B	COVER;RAIN SHIELD	COUVERCLE	1					
2	162-00040A	STRIP;WEATHER	TAMPON	1					
4	K1002574A	BRACKET(L.H)	SUPPORT	1					
5	K1002575A	BRACKET(R.H)	SUPPORT	1					
6	161-00639	RUBBER;ROOF HANDLE	CAOUTCHOUC	8					
7	621-03103	COVER;ROOF HANDLE	COUVERCLE	4					
8	2114-1898D5	WASHER	CALE	4					
9	2120-2166D52	SCREW	VIS	2					
10	2120-2166D10	SCREW	VIS	2					

DATE	NOV. 27, 2006
1st EDITION	

Fig. 6310 CABIN LOWER GUARD
LA CARLINGUE ABAISSENT LA GARDE

Serial No. ;

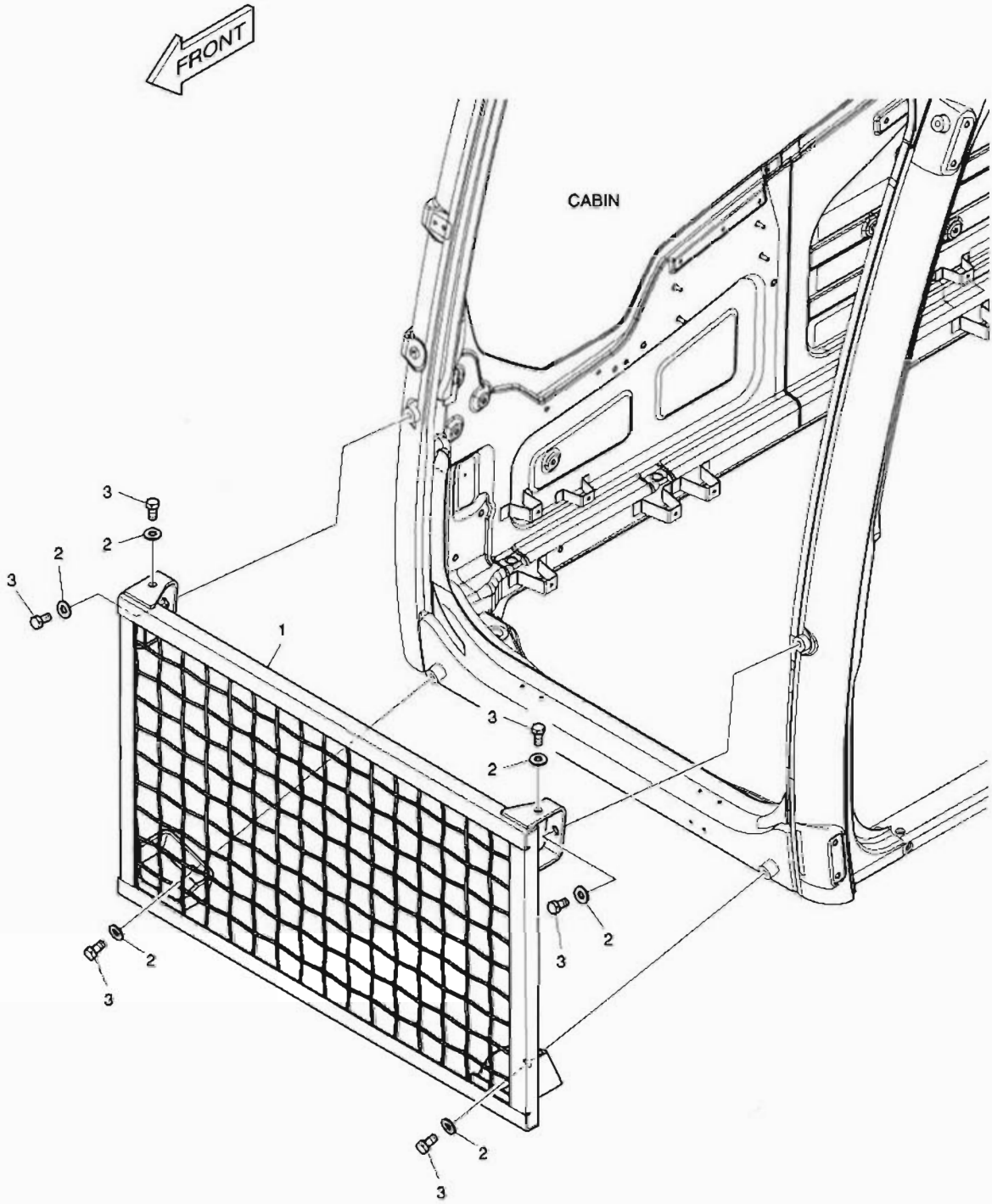

DATE	NOV. 27, 2006
1st EDITION	

Fig. 6310 CABIN LOWER GUARD
LA CARLINGUE ABAISSENT LA GARDE

Serial No. ;

Key No.	Part No.	Description	Description	Q'ty	S.C	Serial No.	ICA	Replaceable part	
								Part No.	Q'ty
6310--	623-00086	GUARD;FRONT LOWER	GARDE	-	D				
1	623-00085A	GUARD;FRONT	GARDE	1					
2	2114-1898D17	WASHER	CALE	6					
3	2120-2166D27	BOLT	BOULON A 6 PANS	6					

DATE	NOV. 27, 2006
1st EDITION	

Fig. 6320 WINDOW GUARD
GARDE DE FENETRE

Serial No. ;

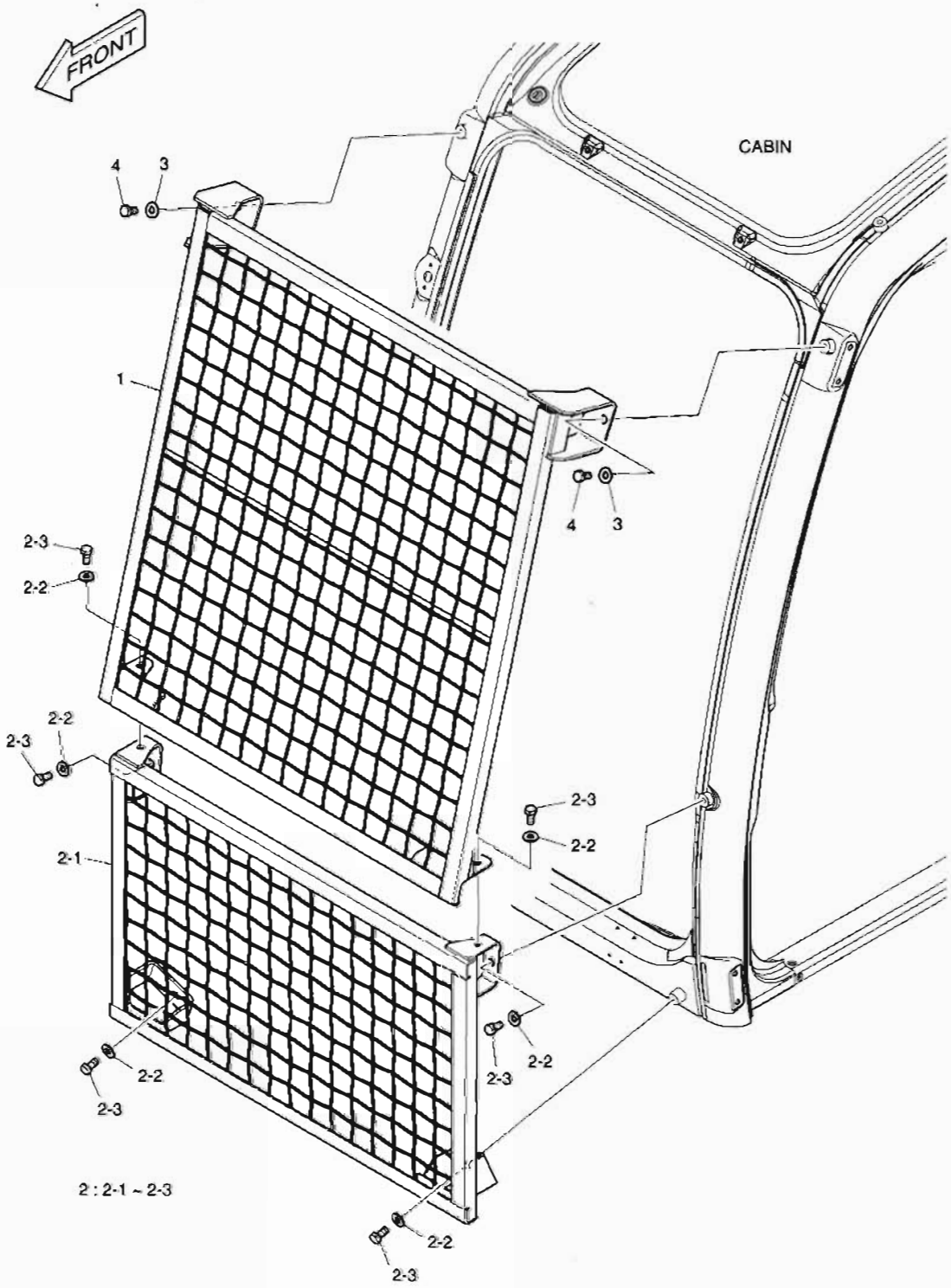

DATE	NOV. 27, 2006
1st EDITION	

Fig. 6320 WINDOW GUARD GARDE DE FENETRE

Serial No. ;

Key No.	Part No.	Description	Description	Q'ty	S.C	Serial No.	ICA	Replaceable part	
								Part No.	Q'ty
320--	K1002771	WINDOW GUARD	GARDE	-	D				
1	K1002759A	GUARD;FRONT UPPER	GARDE	1					
2	623-00086	GUARD;FRONT LOWER	GARDE	1	D				
2-1	623-00085A	. GUARD;FRONT LOWER	. VITRE	1					
2-2	2114-1898D17	. WASHER	. RONDELLE	6					
2-3	2120-2166D27	. BOLT	. BOULON A 6 PANS	6					
3	2114-1898D17	WASHER	CALE	2					
4	2120-2166D27	BOLT	BOULON A 6 PANS	2					

DATE	NOV. 27, 2006
1st EDITION	

Fig. 6330 FOGS GUARD ASS'Y
EMBRUME LA GARDE ASS'Y

Serial No. ;

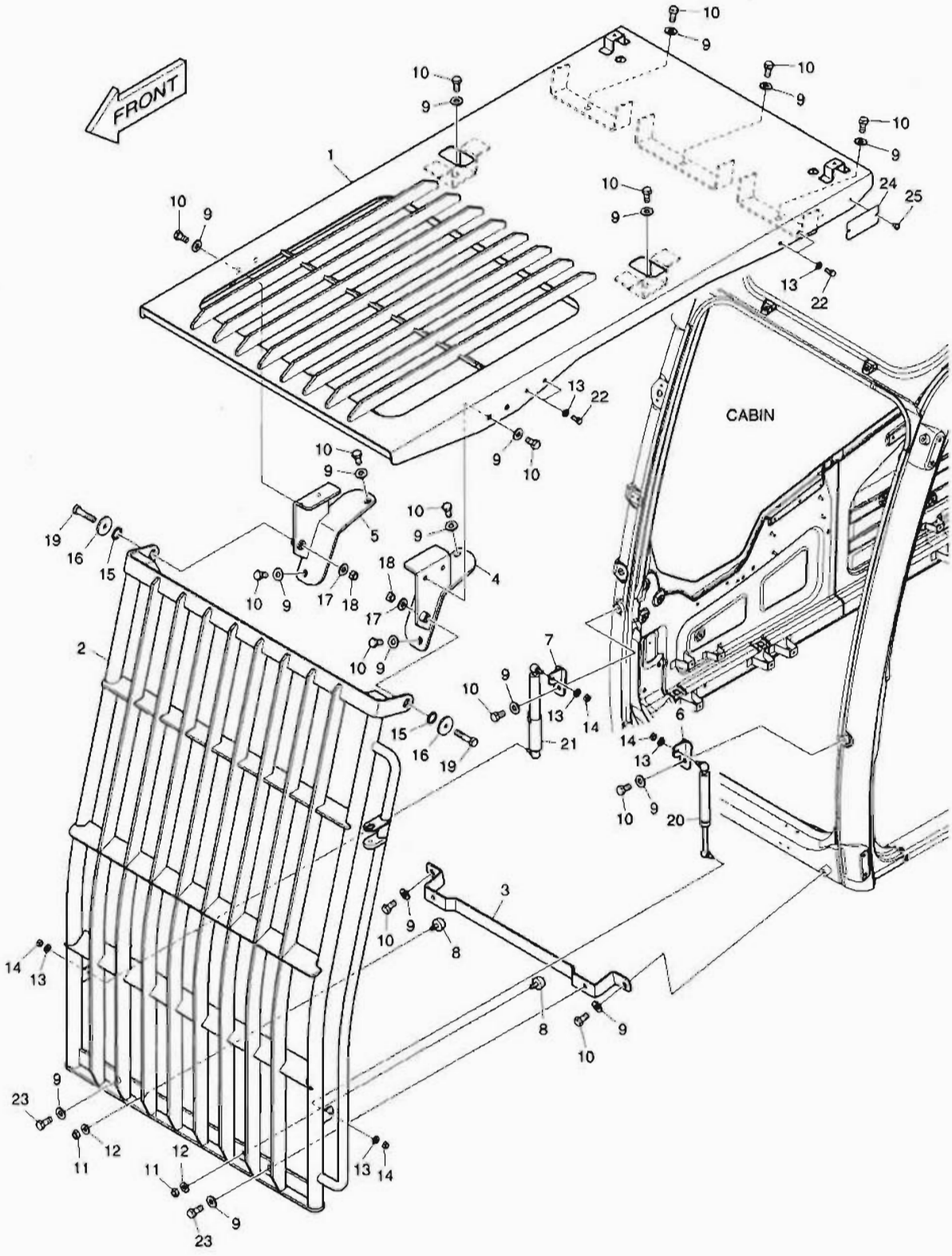

DATE	NOV. 27, 2006
1st EDITION	

Fig. 6330 FOGS GUARD ASS'Y EMBRUME LA GARDE ASS'Y

Serial No. ;

Key No.	Part No.	Description	Description	Q'ty	S.C	Serial No.	ICA	Replaceable part	
								Part No.	Q'ty
6330--	K1002883	FOGS GUARD ASS'Y	EMBRUME LA GARDE	-	D				
1	K1002811A	GUARD;ROOF	GARDE	1					
2	K1002846	GUARD;FRONT	GARDE	1					
3	K1002842A	BRACKET	SUPPORT	1					
4	K1002838	BRACKET(L.H)	SUPPORT	1					
5	K1002839A	BRACKET(R.H)	SUPPORT	1					
6	K1002840	BRACKET(L.H)	SUPPORT	1					
7	K1002841	BRACKET(R.H)	SUPPORT	1					
8	161-00195	STOPPER;RUBBER	TAQUET D'ARRET	2					
9	2114-1898D17	WASHER M12	RONDELLE	19					
10	2120-2166D27	BOLT	BOULON A 6 PANS	17					
11	2121-1311D4	NUT M10X1.5	ECROU	2					
12	2114-1898D1	WASHER	CALE	2					
13	2114-1898D2	WASHER	CALE	8					
14	2121-1311D2	NUT M8X1.25	ECROU	4					
15	2114-1058D31	WASHER	CALE	2					
16	2114-1898D10	WASHER M12	RONDELLE	2					
17	2114-1898D6	WASHER M12	RONDELLE	2					
18	2121-1311D1	NUT M12X1.75	ECROU	2					
19	S0515766	BOLT M12X1.75X55	BOULON A 6 PANS	2					
20	K1005823	CYLINDER;GAS	CYLINDRE	1					
21	K1005822	CYLINDER;GAS	CYLINDRE	1					
22	2120-2166D5	BOLT M8X1.25X20	BOULON A 6 PANS	4					
23	2120-2166D32	BOLT M12x1.75x30	BOULON A 6 PANS	2					
24	K1007231	NAME;PLATE	PLAQUE D'IDENTIFICATION	1					
25	2120-2166D52	BOLT	BOULON A 6 PANS	2					

DATE	NOV. 27, 2006
1st EDITION	

Fig. 6340 FLOOR MAT - ONE & TWO WAY PLANCHER

Serial No. ;

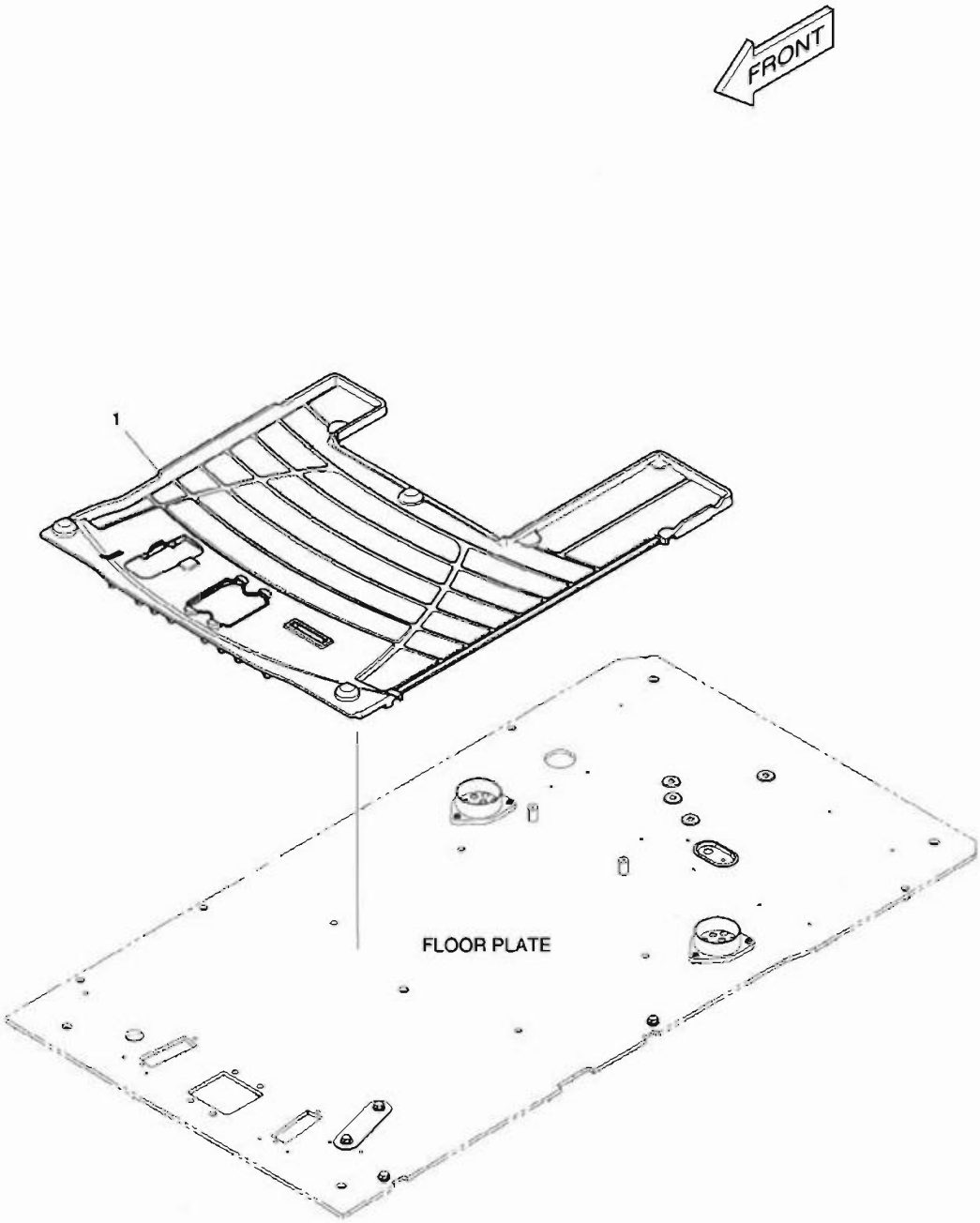

DATE	NOV. 27, 2006
1st EDITION	

Fig. 6340 FLOOR MAT - ONE & TWO WAY
PLANCHER

Serial No. ;

Key No.	Part No.	Description	Description	Q'ty	S.C	Serial No.	ICA	Replaceable part	
								Part No.	Q'ty
6340-1	K1007092A	MAT;FLOOR	PLAQUE	1					

DATE	NOV. 27, 2006
1st EDITION	

Fig. 6350 ALTERNATOR - 80A
ALTERNATEUR

Serial No. ;

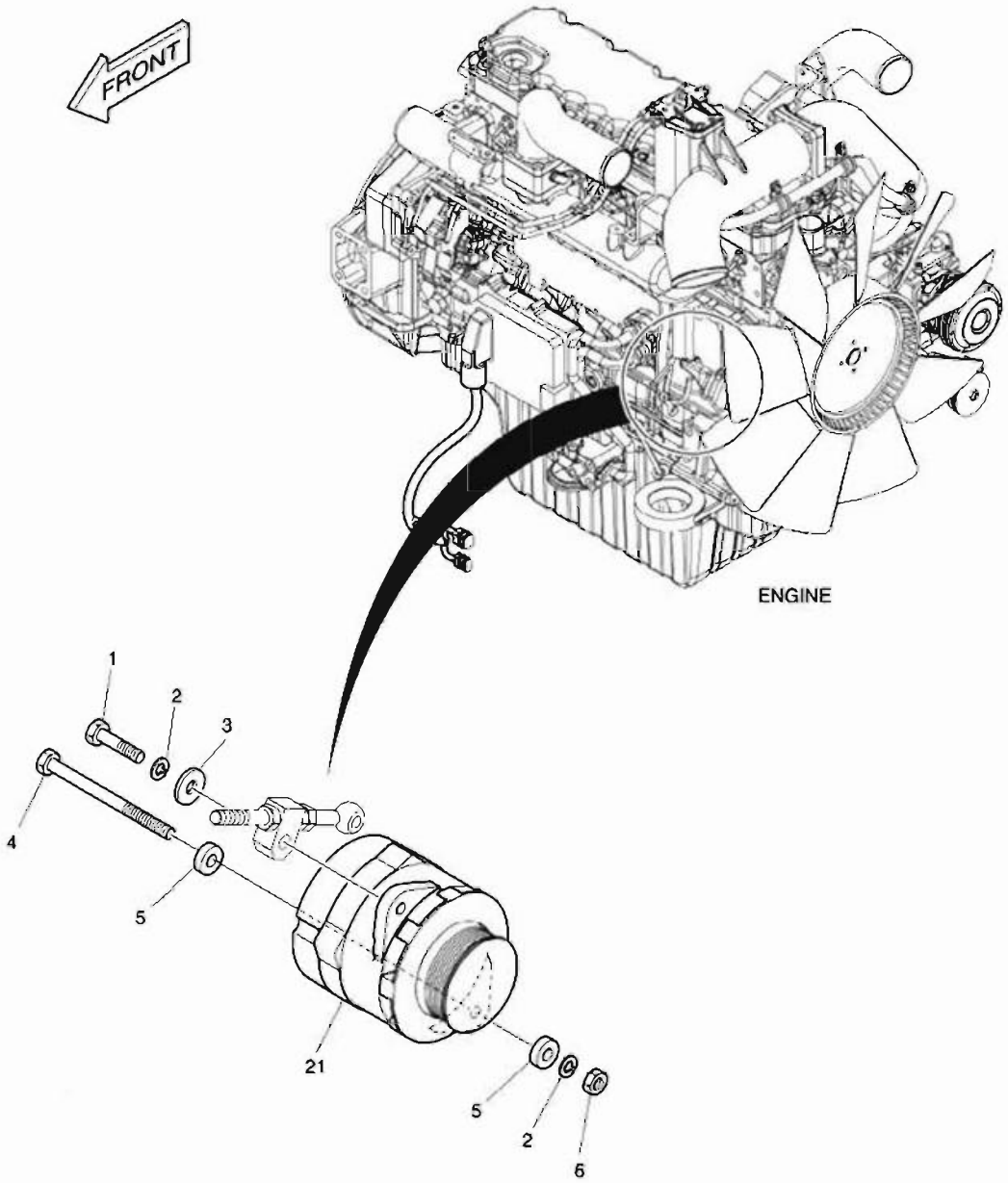

DATE	NOV. 27, 2006
1st EDITION	

Fig. 6350 ALTERNATOR - 80A ALTERNATEUR

Serial No. ;

Key No.	Part No.	Description	Description	Q'ty	S.C	Serial No.	ICA	Replaceable part	
								Part No.	Q'ty
6350--	K1008715	ALTERNATOR MOUNTING	SUPPORT D'ALTERNATEUR	-	D				
1	S0760853	BOLT	BOULON A 6 PANS	1					
2	S5102703	WASHER;SPRING	RONDELLE ELASTIQUE	2					
3	2114-1058D54	WASHER	CALE	1					
4	S0562653	BOLT	BOULON A 6 PANS	1					
5	S5010713	WASHER;PLAIN	RONDELLE	2					
6	S4012733	NUT	ECROU 6 PANS	1					
21	K1010703	ALTERNATOR 80A	ALTERNATEUR	1					

Fig. 6360 CD PLAYER
PLAQUEUR DE CD

Serial No. ;

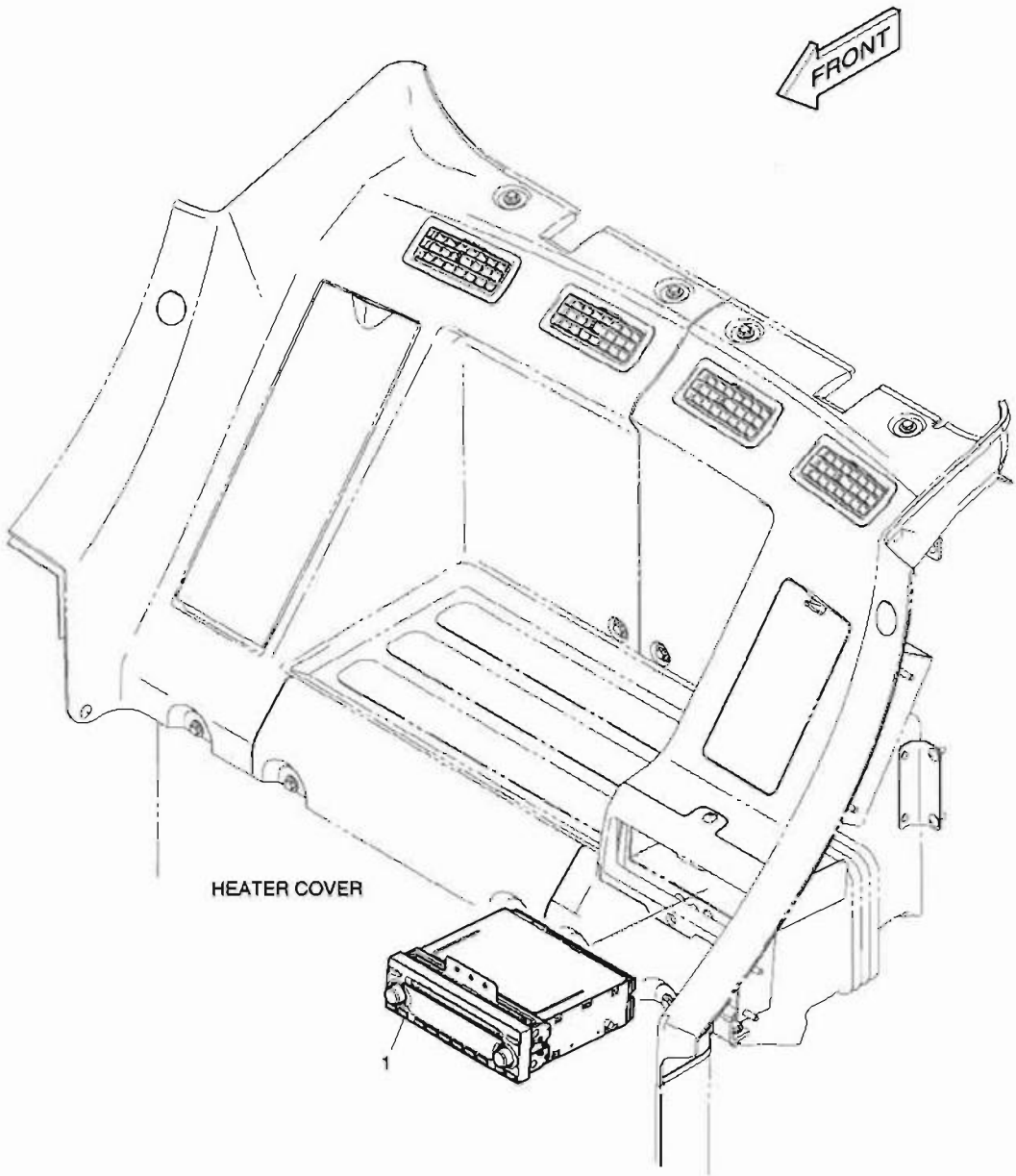

DATE	NOV. 27, 2006
1st EDITION	

Fig. 6360 CD PLAYER PLAQUEUR DE CD

Serial No. ;

Key No.	Part No.	Description	Description	Q'ty	S.C	Serial No.	ICA	Replaceable part	
								Part No.	Q'ty
6360--	K1003350	CD PLAYER	PLAQUEUR DE CD	-	D				
1	K1000982	CD PLAYER	PLAQUEUR DE CD	1					

DATE	NOV. 27, 2006
1st EDITION	

Fig. 6370 FUEL HEATER
RECHAUFFEUR DE CARBURANT

Serial No. ;

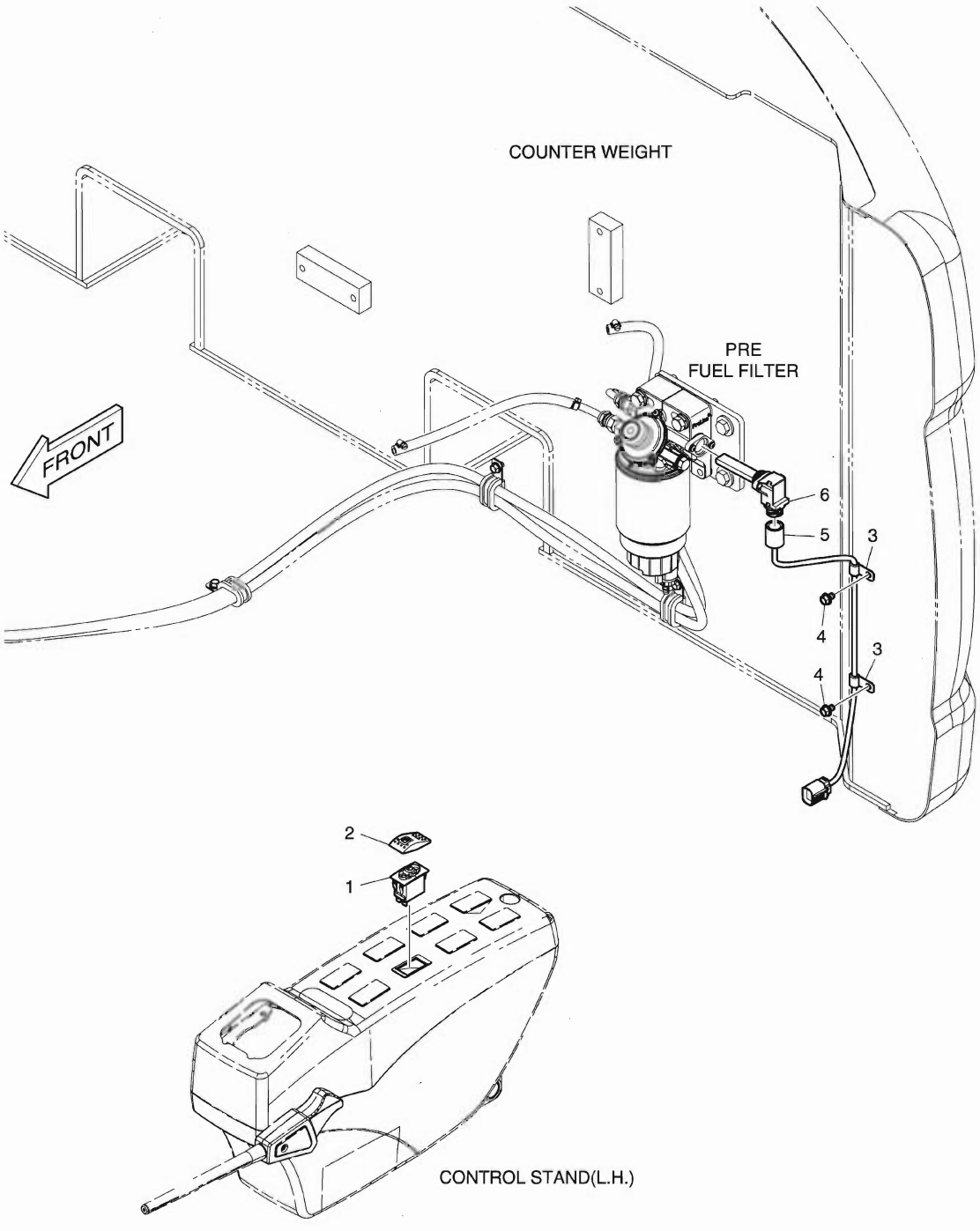

DATE	NOV. 27, 2006
1st EDITION	

Fig. 6370 FUEL HEATER
RECHAUFFEUR DE CARBURANT

Serial No. ;

Key No.	Part No.	Description	Description	Q'ty	S.C	Serial No.	ICA	Replaceable part	
								Part No.	Q'ty
6370--	K1014146	FUEL HEATER	RECHAUFFEUR DE	-	D				
1	549-00101	SWITCH;ROCKER	INTERRUPTEUR	1					
2	K1002406D2	ACTUATOR;SWITCH	ACTUATOR;SWITCH	1					
3	2124-1509D1	CLIP	AGRAFE	2					
4	K1001029	BOLT	BOULON A 6 PANS	2					
5	K1006668	HARNESS;JOINT	FAISCEAU	1					
6	K1004716	HEATER;FUEL	RECHAUFFEUR	1					

DATE	NOV. 27, 2006
1st EDITION	

Fig. 6380 TRAVEL ALARM
ALARME DE VOYAGE

Serial No. ;

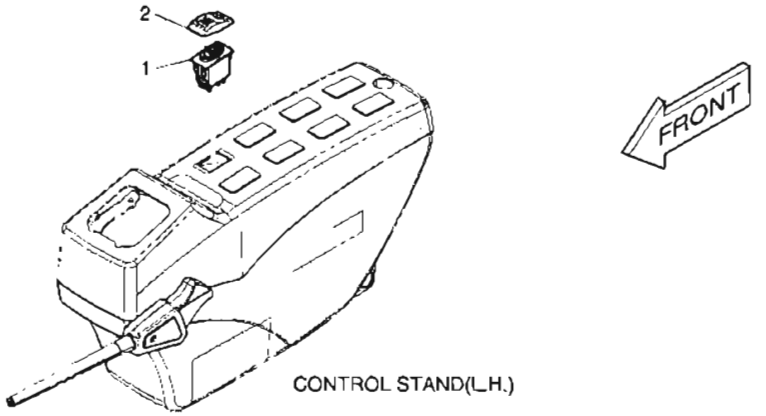

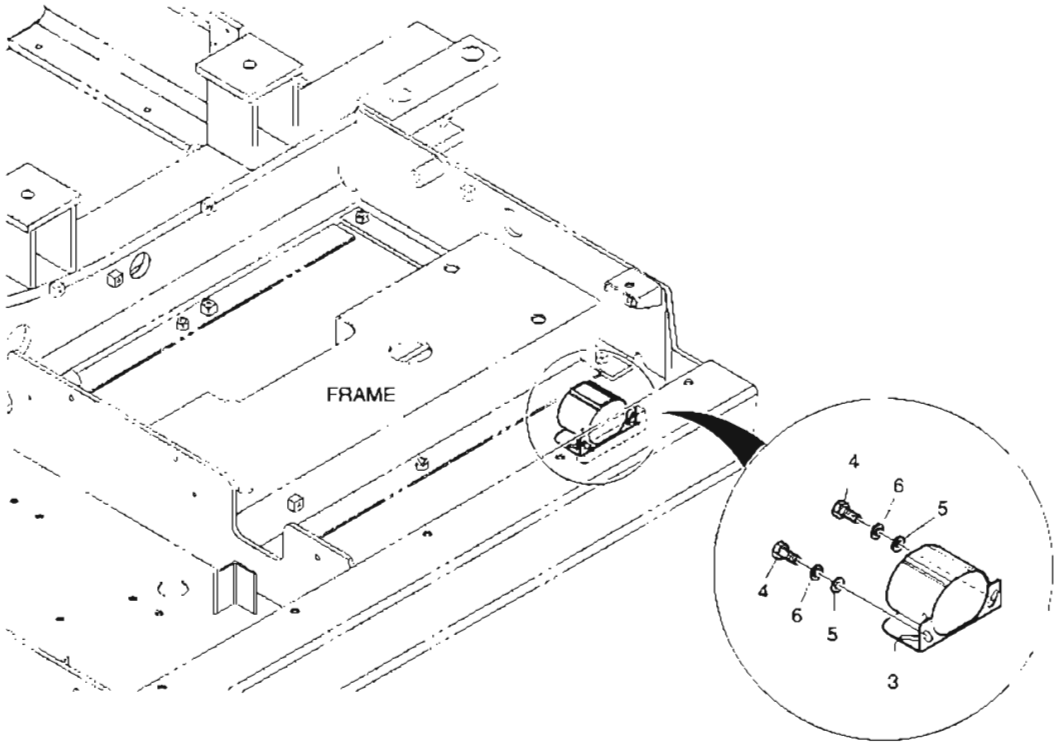

DATE	NOV. 27, 2006
1st EDITION	

Fig. 6380 TRAVEL ALARM ALARME DE VOYAGE

Serial No. ;

Key No.	Part No.	Description	Description	Q'ty	S.C	Serial No.	ICA	Replaceable part	
								Part No.	Q'ty
6380--	K1014149	TRAVEL ALARM	ALARME DE VOYAGE	-	D				
1	549-00103	SWITCH;ROCKER	INTERRUPTEUR	1					
2	K1002406D14	ACTUATOR;SWITCH	ACTUATOR;SWITCH	1					
3	516-00011	BUZZER;BACK-UP	BUZZER;BACK-UP	1					
4	S0508666	BOLT	BOULON A 6 PANS	2					
5	S5010513	WASHER;PLAIN	RONDELLE	2					
6	S5102503	WASHER;SPRING	RONDELLE ELASTIQUE	2					

DATE	NOV. 27, 2006
1st EDITION	

Fig. 6390 WORKING LAMP(2-LAMP) LAMPE FONCTIONNANTE

Serial No. ;

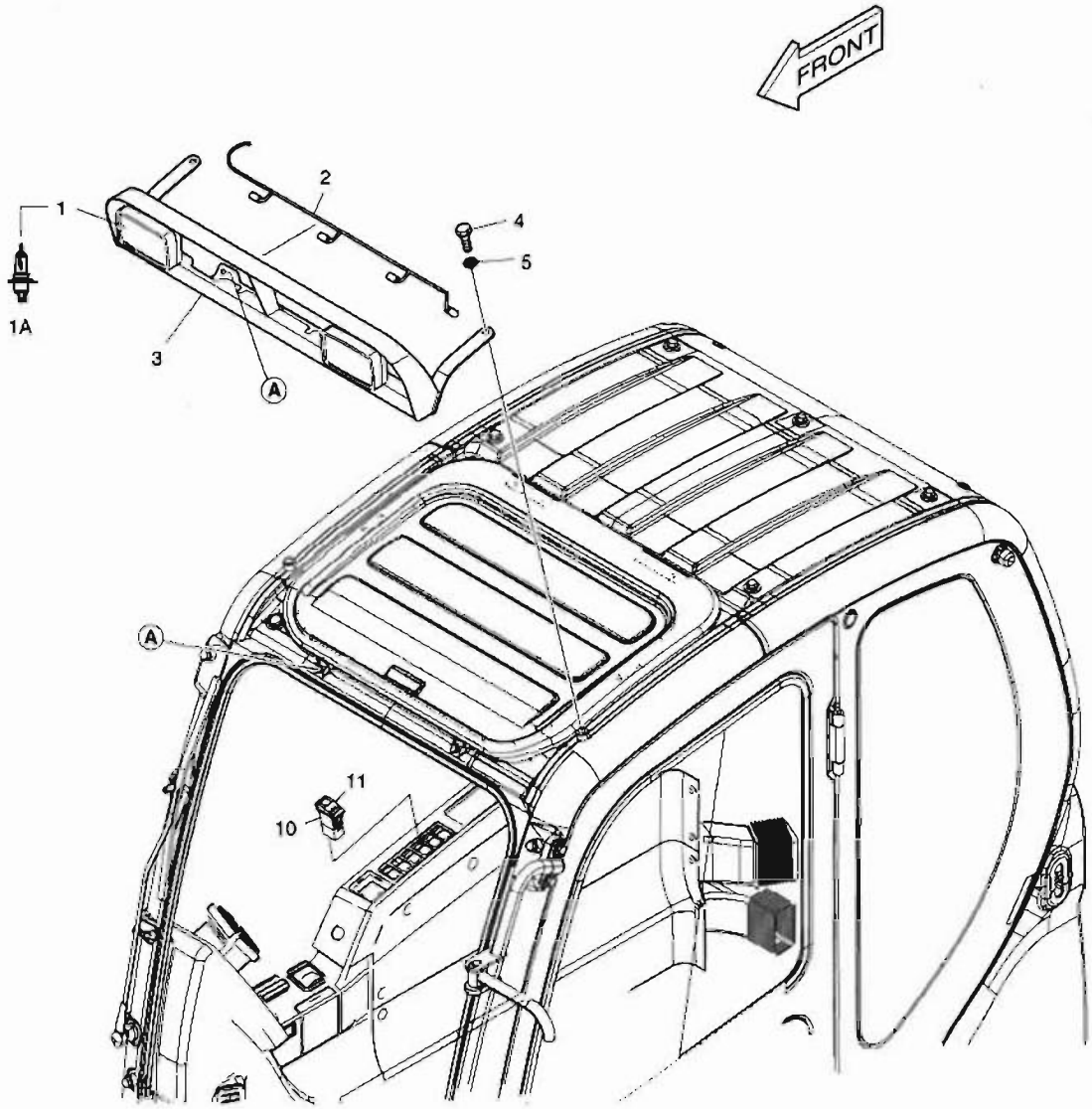

CABIN

DATE	NOV. 27, 2006
1st EDITION	

Fig. 6390 WORKING LAMP(2-LAMP) LAMPE FONCTIONNANTE

Serial No. ;

Key No.	Part No.	Description	Description	Q'ty	S.C	Serial No.	ICA	Replaceable part	
								Part No.	Q'ty
6390--	500-00302A	WORKING LAMP-2 LAMP	LAMPE FONCTIONNANTE	-	D				
1	534-00085	LAMP;CABIN	LAMPE;CABIN	2					
1A	2515-1016D4	. BULB 24V 70W	. AMPOULE	1					
2	530-00430A	HARNESS;FRONT LAMP	FAISCEAU	1					
3	195-02908C	BRACKET;FRONT LAMP	SUPPORT	1					
4	2120-2166D54	BOLT	BOULON A 6 PANS	2					
5	2114-1898D6	WASHER;PLAIN	RONDELLE	2					
10	549-00103	SWITCH	COMMUTATEUR	1					
11	K1002406D13	ACTUATOR	DECLENCHEURE	1					

DATE	NOV. 27, 2006
1st EDITION	

Fig. 6400 WORKING LAMP(4-LAMP) LAMPE FONCTIONNANTE

Serial No. ;

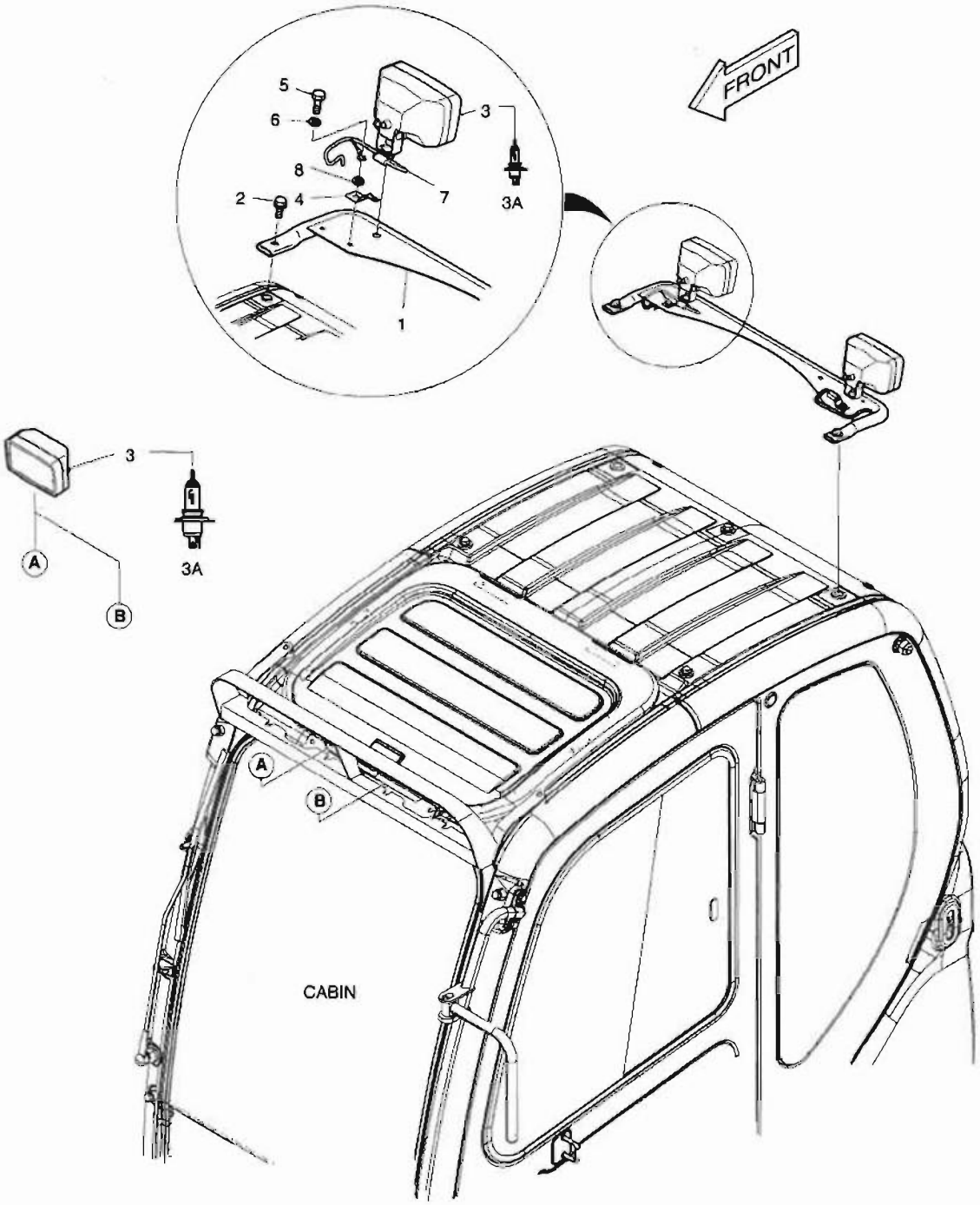

DATE	NOV. 27, 2006
1st EDITION	

Fig. 6400 WORKING LAMP(4-LAMP) LAMPE FONCTIONNANTE

Serial No. ;

Key No.	Part No.	Description	Description	Q'ty	S.C	Serial No.	ICA	Replaceable part	
								Part No.	Q'ty
400--	500-00303	WORKING LAMP	LAMPE FONCTIONNANTE	-	D				
1	195-02910A	BRACKET	SUPPORT	1					
2	2120-2166D54	BOLT	BOULON A 6 PANS	2					
3	534-00085	LAMP;CABIN	LAMPE;CABIN	4					
3A	2515-1016D4	. BULB 24V 70W	. AMPOULE	1					
4	2197-1661	BRACKET;HOUSING	SUPPORT	2					
5	S0508853	BOLT	BOULON A 6 PANS	2					
6	S5102503	WASHER;SPRING	RONDELLE ELASTIQUE	2					
7	530-00463A	HARNESS;REAR LAMP	FAISCEAU	2					
8	2114-1898D6	WASHER	CALE	2					

Fig. 6410 WORKING LAMP - REAR AVERTISSEUR RELAIS

Serial No. ;

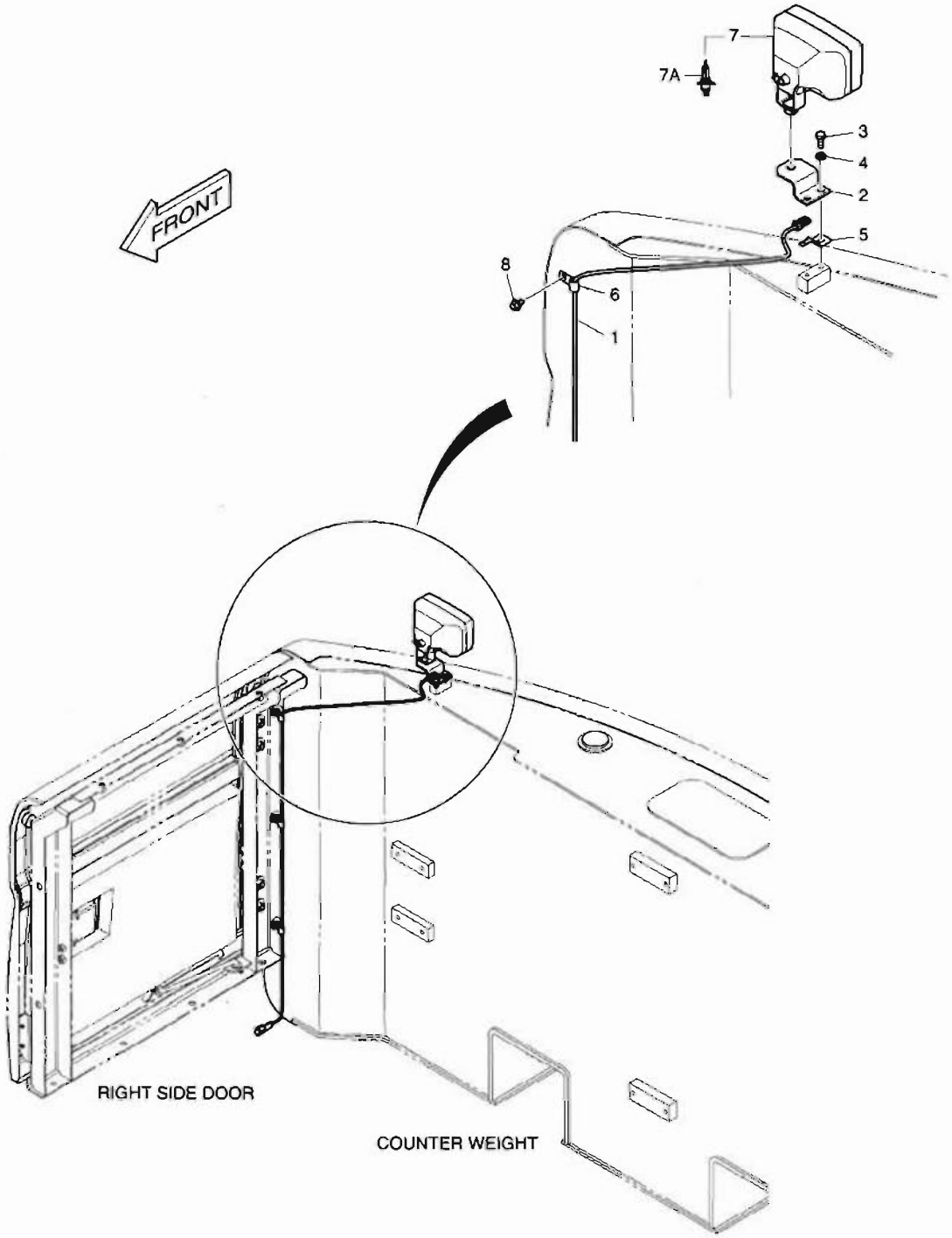

DATE	NOV. 27, 2006
1st EDITION	

Fig. 6410 WORKING LAMP - REAR AVERTISSEUR RELAIS

Serial No. ;

Key No.	Part No.	Description	Description	Q'ty	S.C	Serial No.	ICA	Replaceable part	
								Part No.	Q'ty
6410--	K1014153	WORKING LAMP-REAR	AVERTISSEUR RELAIS	-	D				
1	530-00431	HARNESS;REAR LAMP	FAISCEAU	1					
2	195-02775A	PLATE	PLAQUE	1					
3	S0508866	BOLT	BOULON A 6 PANS	2					
4	S5102503	WASHER;SPRING	RONDELLE ELASTIQUE	2					
5	2197-1661	BRACKET;HOUSING	SUPPORT	1					
6	2124-1509D1	CLIP;BAND	ATTACHE	3					
7	534-00085	LAMP	LAMPE	1					
7A	2515-1016D4	. BULB 24V 70W	. AMPOULE	1					
8	K1001029	BOLT	BOULON A 6 PANS	3					

DATE	NOV. 27, 2006
1st EDITION	

Fig. 6420 ROTATING BEACON FEU DE CIRCULATION

Serial No. ;

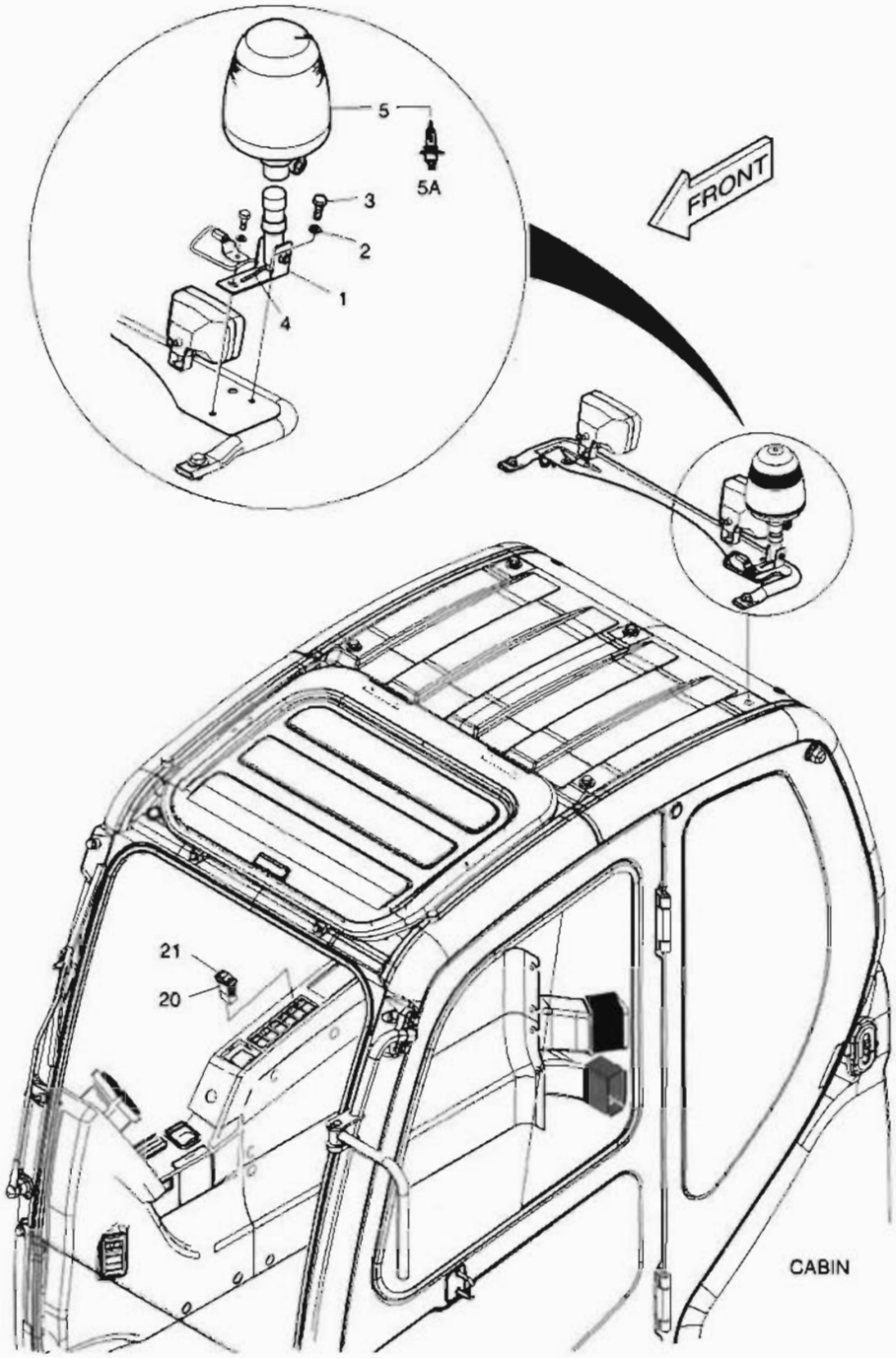

DATE	NOV. 27, 2006
1st EDITION	

Fig. 6420 ROTATING BEACON FEU DE CIRCULATION

Serial No. ;

Key No.	Part No.	Description	Description	Q'ty	S.C	Serial No.	ICA	Replaceable part	
								Part No.	Q'ty
6420--	500-00307	ROTATING BEACON	FEU DE CIRCULATION	-	D				
1	160-00061	BUSH;MOUNTING	MANCHON	1					
2	S5102503	WASHER;SPRING	RONDELLE ELASTIQUE	1					
3	S0508853	BOLT	BOULON A 6 PANS	1					
4	530-00464	HARNESS;ROTATING BEACON	FAISCEAU	1					
5	534-00062	ROTATING BEACON	FEU DE CIRCULATION	1					
5A	515-00013	. BULB;HALOGEN 24V 70W	. AMPOULE	1					
20	549-00101	SWITCH	COMMUTATEUR	1					
21	K1002406D3	ACTUATOR	DECLENCHEURE	1					

DATE	NOV. 27, 2006
1st EDITION	

Fig. 6430 ROTATING BEACON MOUNTING SUPPORT TOURNANT DE BALISE

Serial No. ;

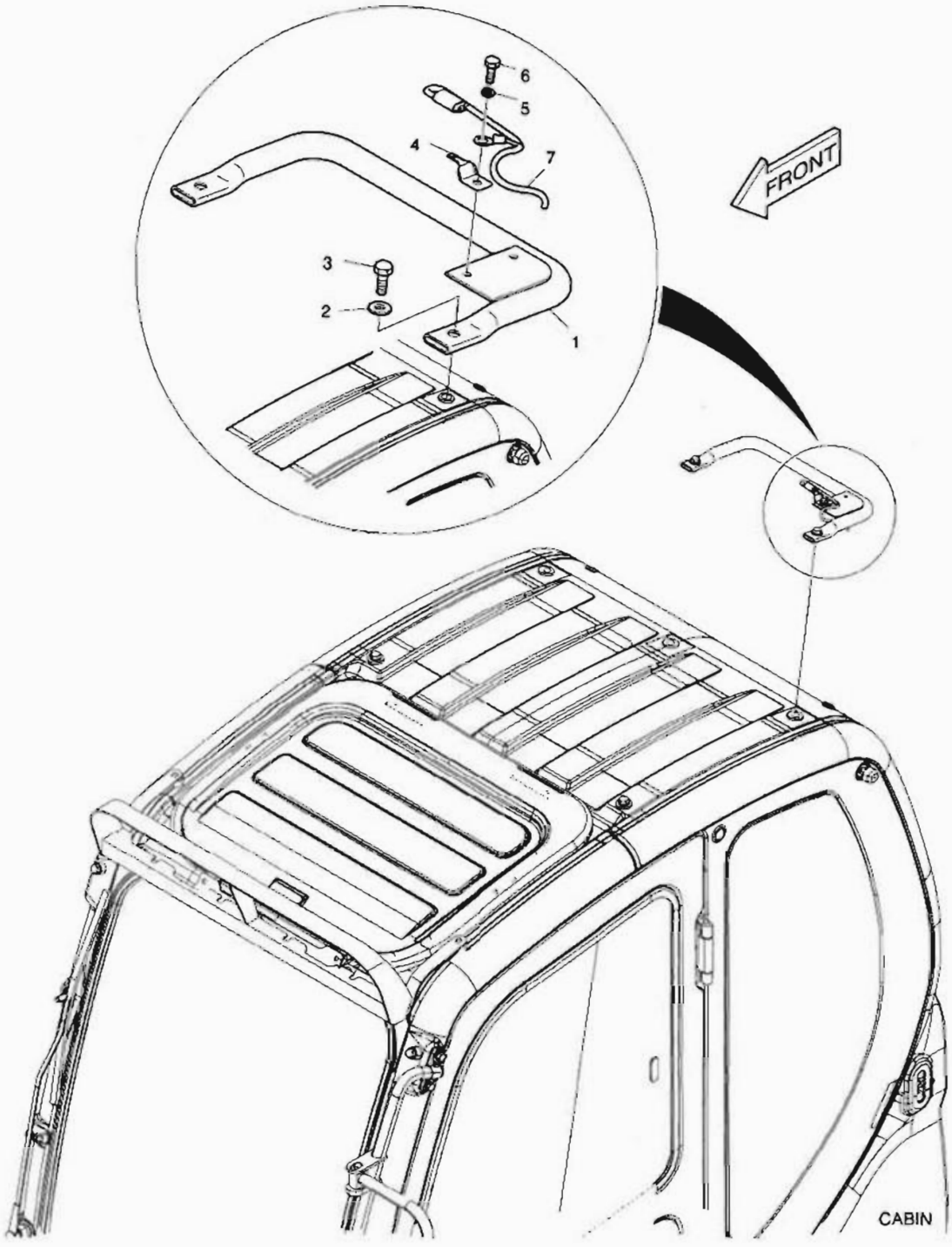

DATE	NOV. 27, 2006
1st EDITION	

Fig. 6430 ROTATING BEACON MOUNTING SUPPORT TOURNANT DE BALISE

Serial No. ;

Key No.	Part No.	Description	Description	Q'ty	S.C	Serial No.	ICA	Replaceable part	
								Part No.	Q'ty
6430--	500-00308	ROTATING BEACON MOUNTING	SUPPORT TOURNANT DE B	-	D				
1	195-02909A	BRACKET;BEACON	SUPPORT	1					
2	2114-1898D1	WASHER	CALE	2					
3	S0512053	BOLT	BOULON A 6 PANS	2					
4	2197-1661	BRACKET;HOUSING	SUPPORT	1					
5	S5102503	WASHER;SPRING	RONDELLE ELASTIQUE	1					
6	S0508853	BOLT	BOULON A 6 PANS	1					
7	530-00463A	HARNESS	HARNAIS	1					

Fig. 6440 ROTATING BEACON(TELESCOPIC) WITH LAMP FEU DE CIRCULATION

Serial No. ;

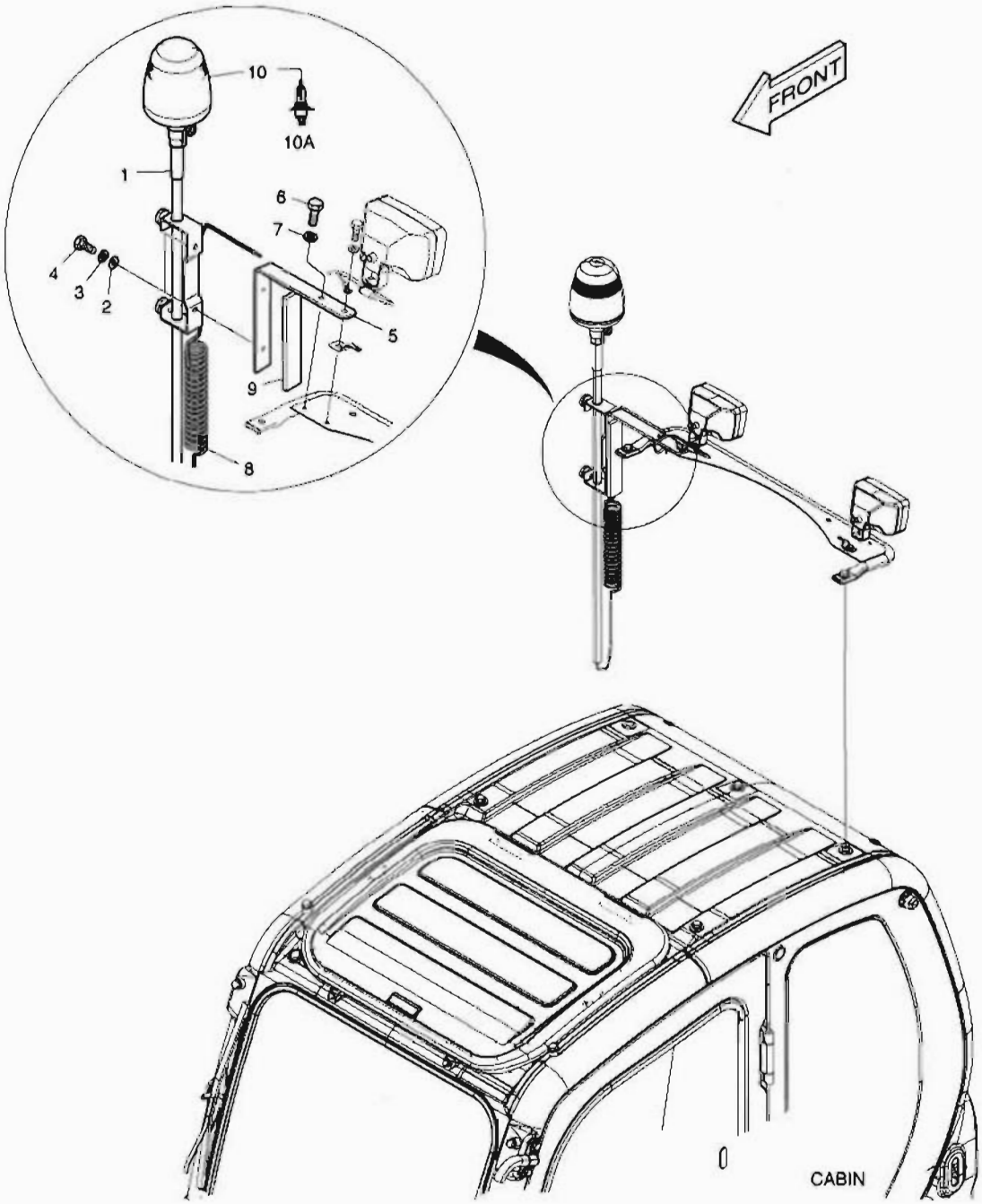

DATE	NOV. 27, 2006
1st EDITION	

Fig. 6440 ROTATING BEACON(TELESCOPIC) WITH LAMP FEU DE CIRCULATION

Serial No. ;

Key No.	Part No.	Description	Description	Q'ty	S.C	Serial No.	ICA	Replaceable part	
								Part No.	Q'ty
6440--	500-00309	ROTATING BEACON	FEU DE CIRCULATION	-	D				
1	195-01805	SUPPORT;BEACON	SUPPORT	1					
2	S5010513	WASHER;PLAIN	RONDELLE	2					
3	S5102503	WASHER;SPRING	RONDELLE ELASTIQUE	2					
4	S0508653	BOLT	BOULON A 6 PANS	2					
5	195-02925	BRACKET	SUPPORT	1					
6	S0508853	BOLT	BOULON A 6 PANS	1					
7	S5102503	WASHER;SPRING	RONDELLE ELASTIQUE	1					
8	K1010065	HARNESS;JOINT	FAISCEAU	1					
9	161-00404	RUBBER	CAOUTCHOUC	1					
10	534-00062	LAMP;ROTATING BEACON	BALISE DE LAMP;ROTATI	1					
10A	515-00013	. BULB;HALOGEN 24V 70W	. AMPOULE	1					

DATE	NOV. 27, 2006
1st EDITION	

Fig. 6450 ROTATING BEACON(TELESCOPIC) W/O LAMP FEU DE CIRCULATION

Serial No. ;

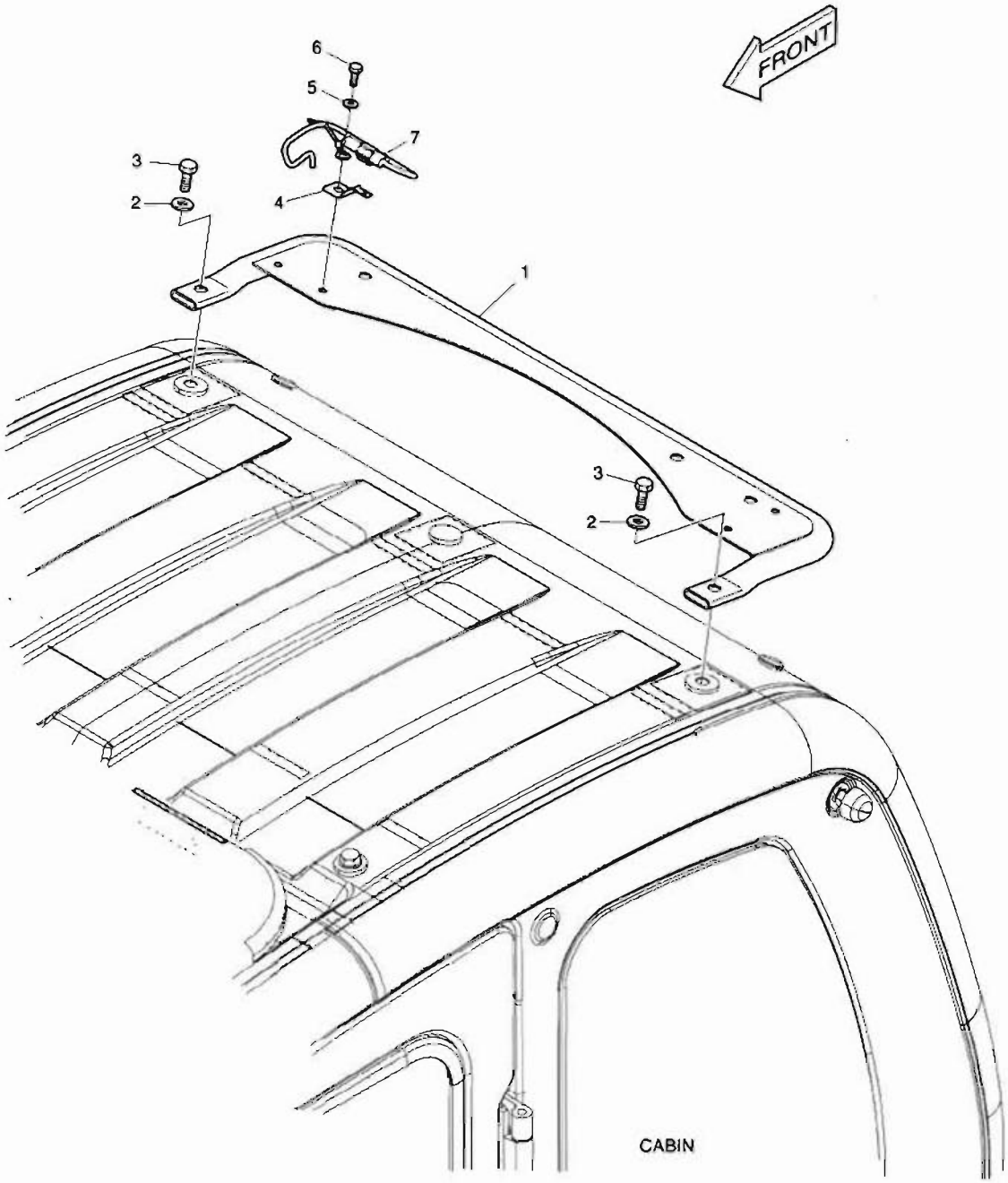

DATE	NOV. 27, 2006
1st EDITION	

Fig. 6450 ROTATING BEACON(TELESCOPIC) W/O LAMP FEU DE CIRCULATION

Serial No. ;

Key No.	Part No.	Description	Description	Q'ty	S.C	Serial No.	ICA	Replaceable part	
								Part No.	Q'ty
6450--	500-00310	ROTATING BEACON-TELESCOPIC	FEU DE CIRCULATION	-	D				
1	195-02910A	BRACKET	SUPPORT	1					
2	2114-1898D6	WASHER	CALE	2					
3	2120-2166D54	BOLT	BOULON A 6 PANS	2					
4	2197-1661	BRACKET;HOUSING	SUPPORT	1					
5	S5102503	WASHER;SPRING	RONDELLE ELASTIQUE	1					
6	S0508853	BOLT	BOULON A 6 PANS	1					
7	530-00463A	HARNESS	HARNAIS	1					

DATE	NOV. 27, 2006
1st EDITION	

Fig. 6460 OVERLOAD WARNING
AVERTISSEMENT DE SURCHARGE

Serial No. ;

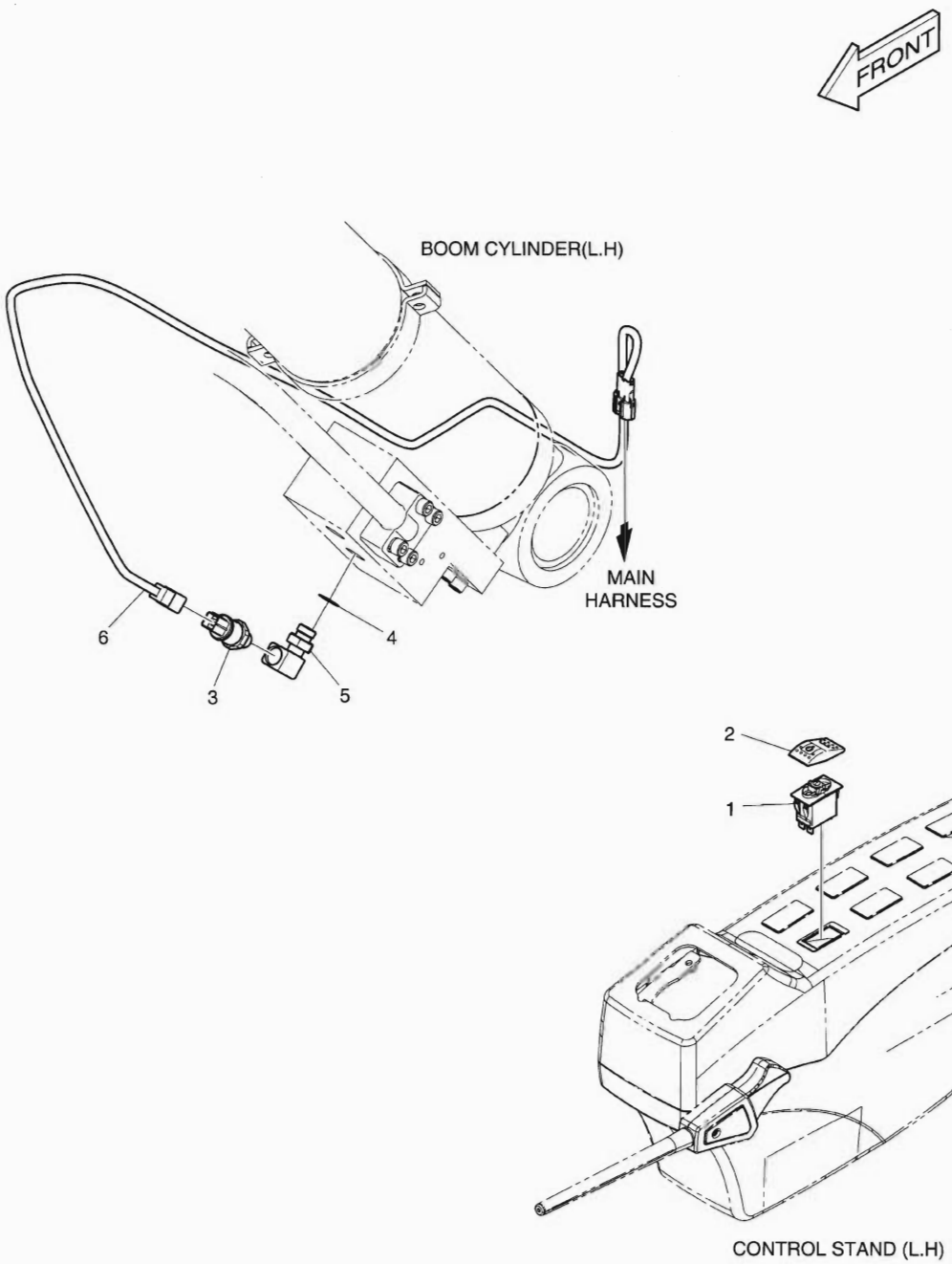

DATE	NOV. 27, 2006
1st EDITION	

Fig. 6460 OVERLOAD WARNING AVERTISSEMENT DE SURCHARGE

Serial No. ;

Key No.	Part No.	Description	Description	Q'ty	S.C	Serial No.	ICA	Replaceable part	
								Part No.	Q'ty
6460--	K1014166	OVER LOAD WARNING	AVERTISSEMENT DE SURC	-	D				
1	549-00102	SWITCH	COMMUTATEUR	1					
2	K1002406D4	ACTUATOR	DECLENCHEURE	1					
3	2547-9045	SENSOR;PRESSURE	CAPTEUR	1					
4	S8000161	O-RING	JOINT TORIQUE	1					
5	DS2308021	ELBOW	COUDE	1					
6	K1002153	HARNESS;JOINT	FAISCEAU	1					

DATE	NOV. 27, 2006
1st EDITION	

Fig. 6470 LOWER WIPER
ABAISSEZ L'ESSUIE-GLACE

Serial No. ;

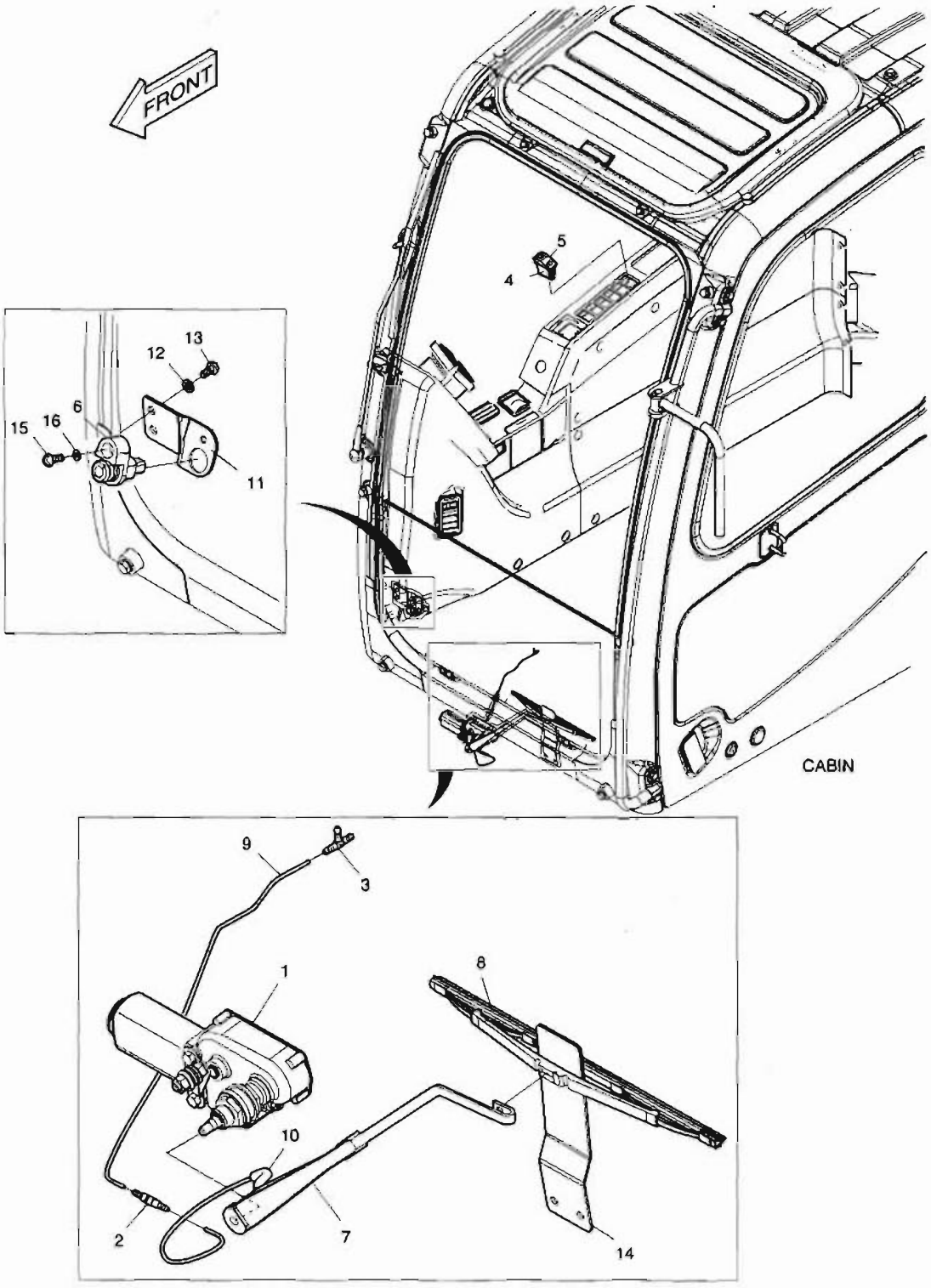

DATE	NOV. 27, 2006
1st EDITION	

Fig. 6470 LOWER WIPER ABAISSEZ L'ESSUIE-GLACE

Serial No. ;

Key No.	Part No.	Description	Description	Q'ty	S.C	Serial No.	ICA	Replaceable part	
								Part No.	Q'ty
6470--	K1014167	LOWER WIPER ASS'Y	ABAISSEZ L'ESSUIE-GLA	-	D				
1	538-00012	MOTOR;WIPER	MOTEUR	1					
2	426-00282	VALVE;LOWER WIPER CHECK	VANNE	1					
3	181-00804	TEE	TE	1					
4	549-00101	SWITCH	COMMUTATEUR	1					
5	K1002406D5	ACTUATOR	DECLENCHEURE	1					
6	549-00077	SWITCH	COMMUTATEUR	1					
7	541-00016	ARM;WIPER	BALANCIER	1					
8	507-00007	BLADE;WIPER	LAME	1					
9	K1002866	HOSE	TUYAU FLEXIBLE	1					
10	K1002867D1	TUBE	DOUILLE ACIER	1					
11	195-03444	BRACKET;SWITCH	SUPPORT	1					
12	2114-1898D3	WASHER;PLAIN	RONDELLE	2					
13	2120-2166D9	SCREW	VIS	2					
14	191-03736E	PLATE;STOPPER	PLAQUE	1					
15	S3450833	SCREW	VIS	1					
16	S5100203	WASHER SPRING	RONDELLE	1					

Fig. 6480 WORKING LAMP(2-LAMP) LAMPE FONCTIONNANTE

Serial No. ;

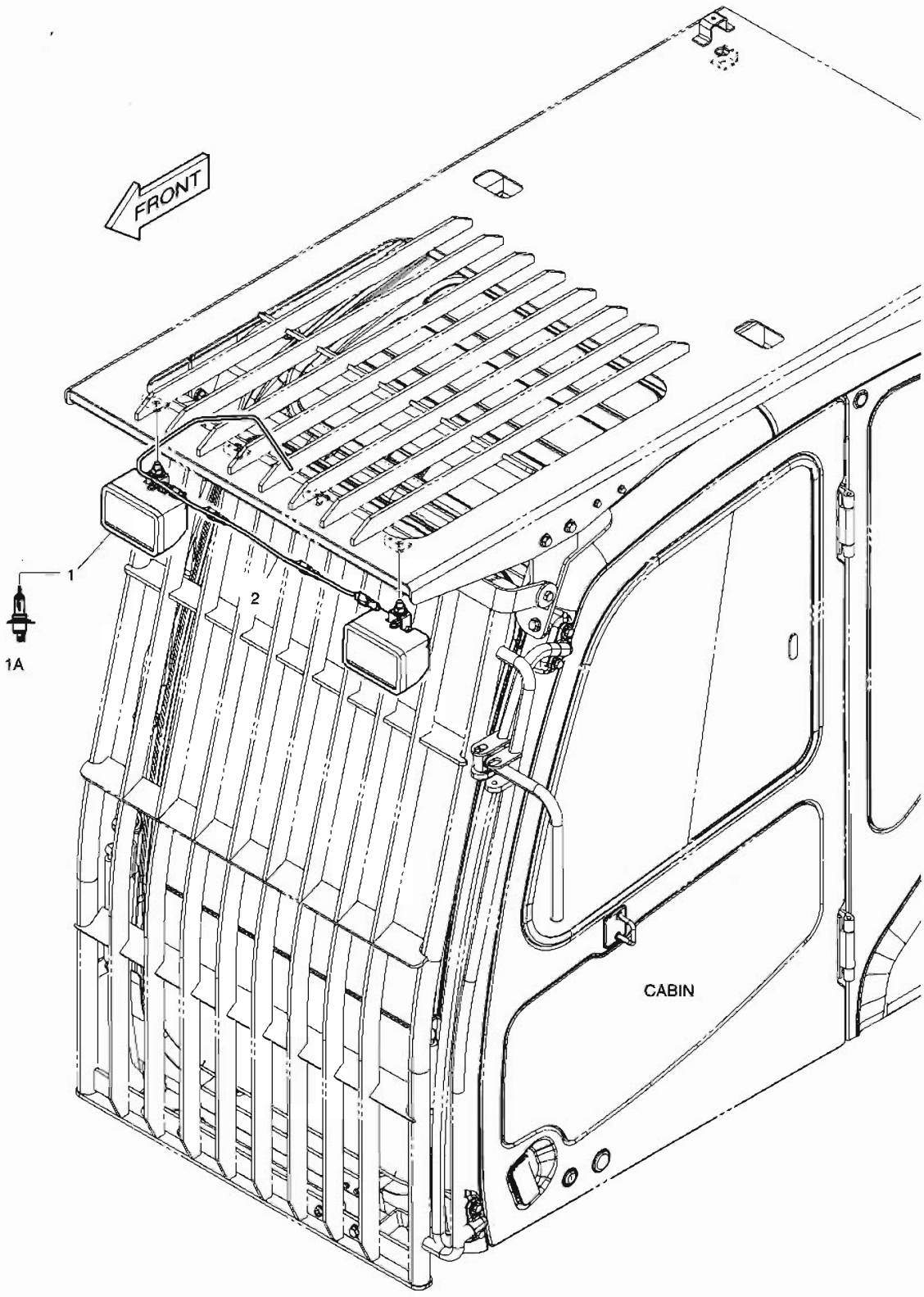

DATE	NOV. 27, 2006
1st EDITION	

Fig. 6480 WORKING LAMP(2-LAMP) LAMPE FONCTIONNANTE

Serial No. ;

Key No.	Part No.	Description	Description	Q'ty	S.C	Serial No.	ICA	Replaceable part	
								Part No.	Q'ty
6480--	K1006801	WORKING LAMP ASS'Y	LAMPE FONCTIONNANTE	-	D				
1	534-00085	LAMP;WORKING	LAMPE	2					
1A	2515-1016D4	. BULB 24V 70W	. AMPOULE	1					
2	K1006663	HARNESS;JOINT	FAISCEAU	1					

DATE	NOV. 27, 2006
1st EDITION	

Fig. 6490 WORKING LAMP(4-LAMP) LAMPE FONCTIONNANTE

Serial No. ;

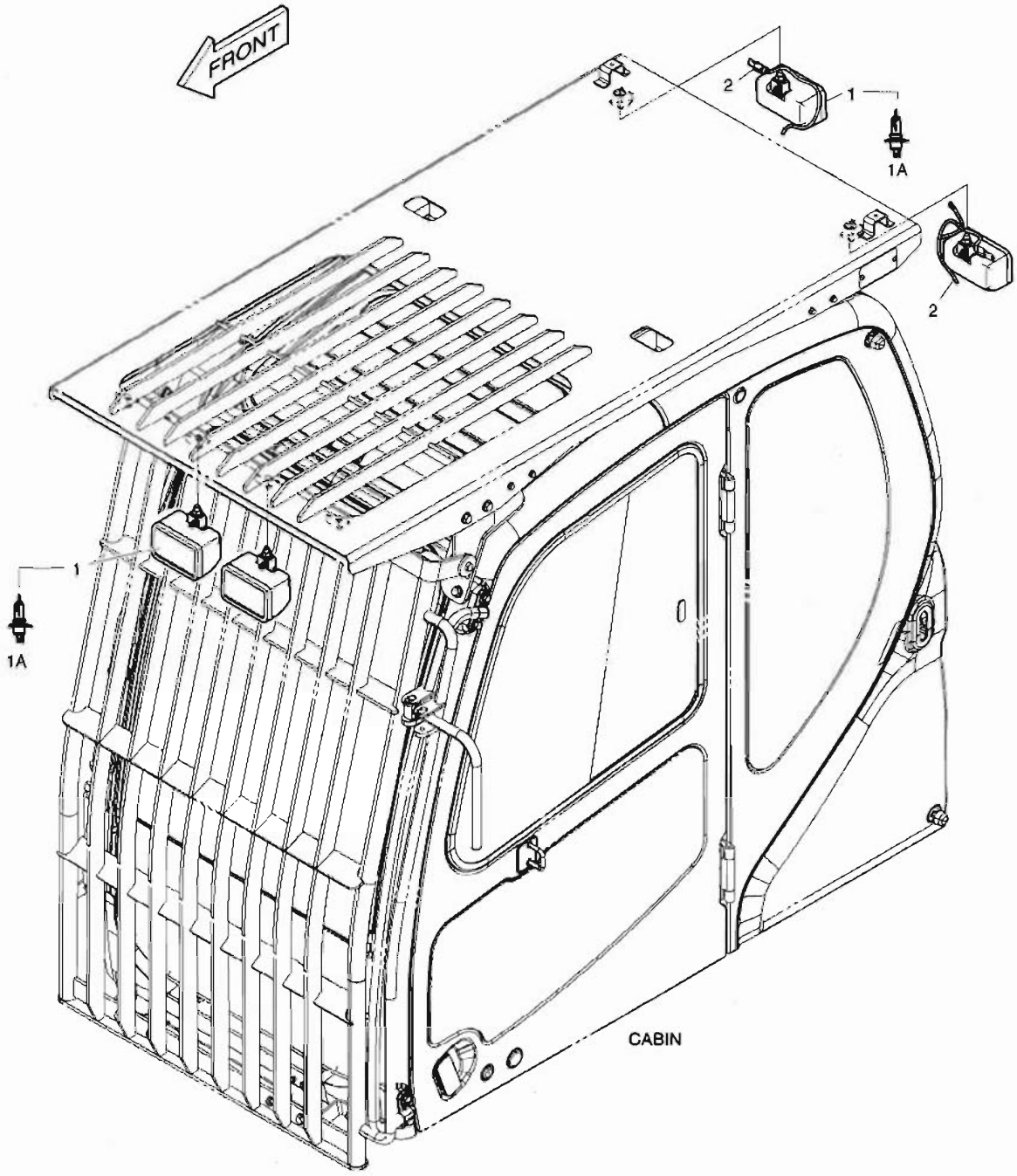

DATE	NOV. 27, 2006
1st EDITION	

Fig. 6490 WORKING LAMP(4-LAMP) LAMPE FONCTIONNANTE

Serial No. ;

Key No.	Part No.	Description	Description	Q'ty	S.C	Serial No.	ICA	Replaceable part	
								Part No.	Q'ty
6490--	K1006802	WORKING LAMP ASS'Y	LAMPE FONCTIONNANTE	-	D				
1	534-00085	LAMP;WORKING	LAMPE	4					
1A	2515-1016D4	. BULB 24V 70W	. AMPOULE	1					
2	530-00463A	HARNESS;JOINT	FAISCEAU	2					

DATE	NOV. 27, 2006
1st EDITION	

Fig. 6500 ROTATING BEACON-WITH FOGS
FEU DE CIRCULATION

Serial No. ;

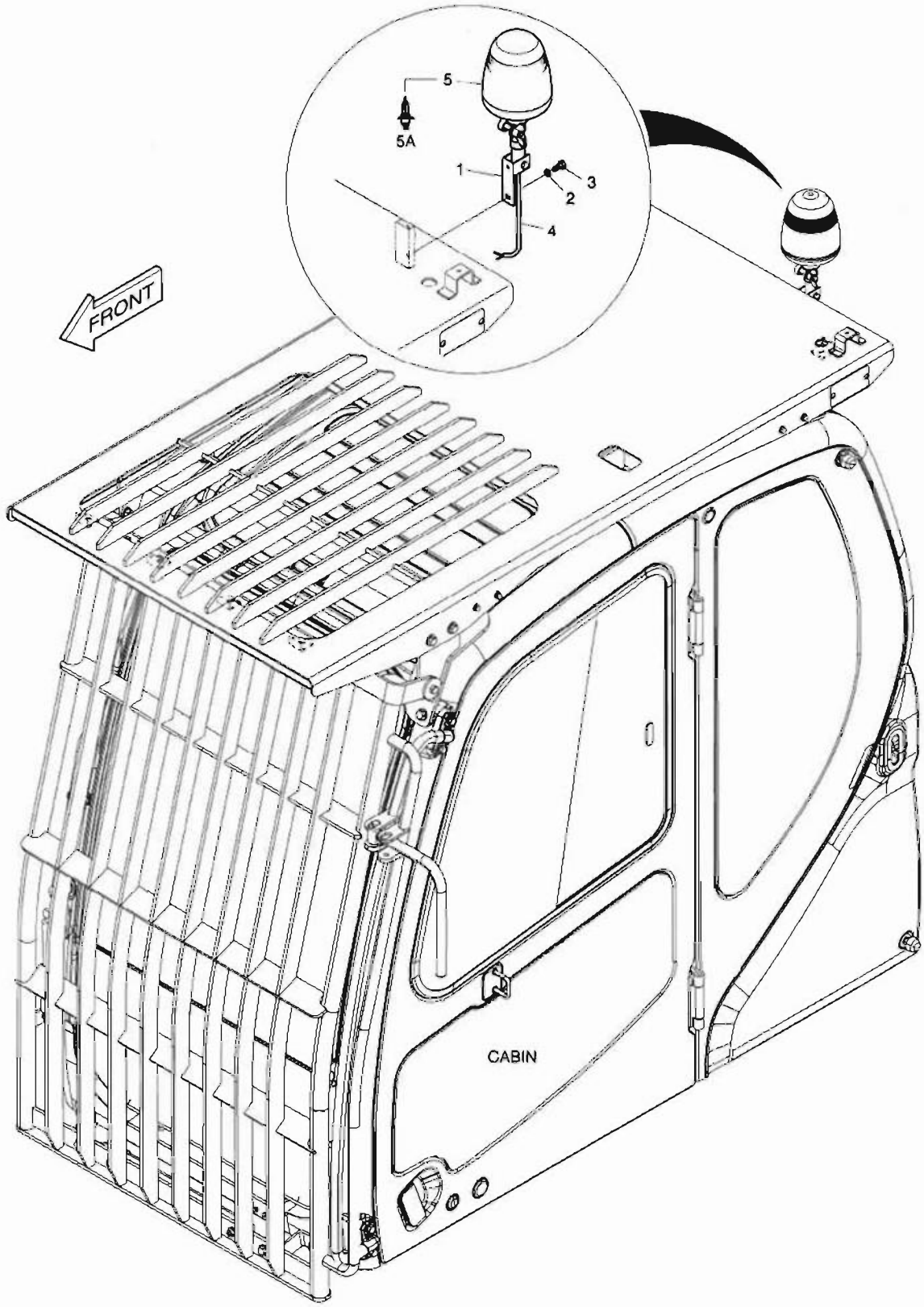

DATE	NOV. 27, 2006
1st EDITION	

Fig. 6500 ROTATING BEACON-WITH FOGS FEU DE CIRCULATION

Serial No. ;

Key No.	Part No.	Description	Description	Q'ty	S.C	Serial No.	ICA	Replaceable part	
								Part No.	Q'ty
6500--	K1006803	ROTATING BEACON	FEU DE CIRCULATION	-	D				
1	160-00061	BUSH;MOUNTING	MANCHON	1					
2	S5102503	WASHER;SPRING	RONDELLE ELASTIQUE	2					
3	S0508853	BOLT	BOULON A 6 PANS	2					
4	530-00464	HARNESS;JOINT	FAISCEAU	1					
5	534-00062	LAMP;ROTATING BEACON	BALISE DE LAMP;ROTATI	1					
5A	515-00013	. BULB;HALOGEN 24V 70W	. AMPOULE	1					

DATE	NOV. 27, 2006
1st EDITION	

Fig. 6510 MAIN PIPING - ROTATING
CONDUITES DE BATI PRINCIPAL

Serial No. ;

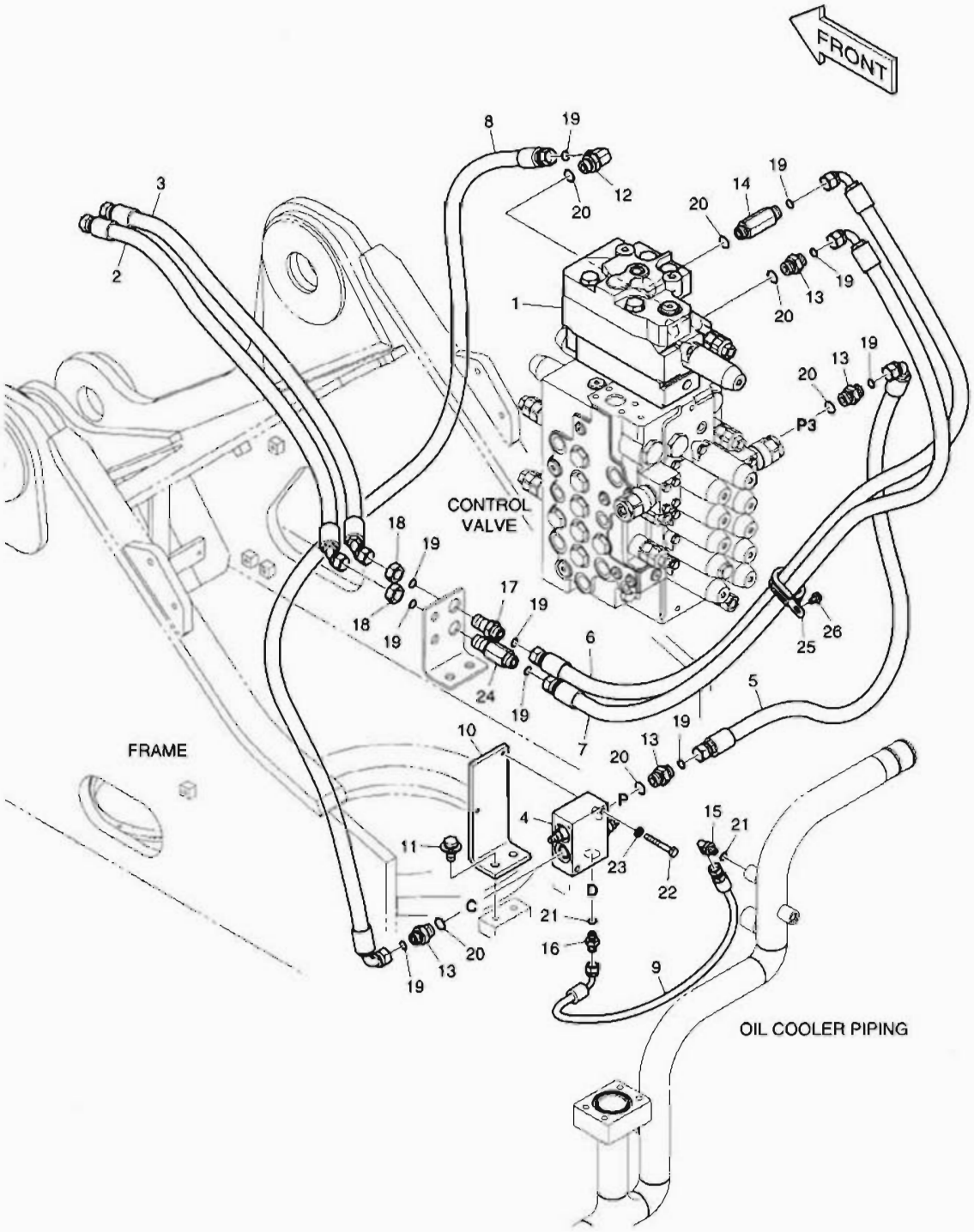

DATE	NOV. 27, 2006
1st EDITION	

Fig. 6510 MAIN PIPING - ROTATING
CONDUITES DE BATI PRINCIPAL

Serial No. ;

Key No.	Part No.	Description	Description	Q'ty	S.C	Serial No.	ICA	Replaceable part	
								Part No.	Q'ty
6510--	K1013552E	MAIN PIPING;PERO	CONDUITES DE BATI	-	D				
1	K1013538	VALVE;CONTROL(ROTATING)	VANNE	1					
2	DS2012397	HOSE	TUYAU FLEXIBLE	1					
3	DS2012397	HOSE	TUYAU FLEXIBLE	1					
4	426-00028	VALVE;PACKAGE	VANNE	1					
5	DS2013843	HOSE	TUYAU FLEXIBLE	1					
6	DS2013729	HOSE	TUYAU FLEXIBLE	1					
7	DS2013729	HOSE	TUYAU FLEXIBLE	1					
8	DS2013841	HOSE	TUYAU FLEXIBLE	1					
9	DS2093006	HOSE	TUYAU FLEXIBLE	1					
10	K1013806	BRACKET	SUPPORT	1					
11	DS0025018	BOLT;SET	BOULON A 6 PANS	2					
12	2181-2815D3	ELBOW	COUDE	1					
13	2181-4133D3	ADAPTER	ADAPTEUR	4					
14	2181-4133D46	ADAPTER	ADAPTEUR	1					
15	2181-1702D4	ELBOW	COUDE	1					
16	2181-1126D14	ADAPTER	ADAPTEUR	1					
17	181-00128D3	ADAPTER;CONNECTOR	ADAPTATEUR	1					
18	121-00010D5	NUT	ECROU 6 PANS	2					
19	S8030081	O-RING	JOINT TORIQUE	10					
20	S8000181	O-RING	JOINT TORIQUE	6					
21	S8000111	O-RING	JOINT TORIQUE	2					
22	S0556566	BOLT	BOULON A 6 PANS	2					
23	S5102503	WASHER;SPRING	RONDELLE ELASTIQUE	2					
24	DS2415014	ADAPTER	ADAPTEUR	1					
25	124-00209D2	CLIP	AGRAFE	1					
26	K1001029	BOLT	BOULON A 6 PANS	1					

DATE	NOV. 27, 2006
1st EDITION	

Fig. 6520 PILOT PIPING(1) - ROTATING
CONDUITES DE PILOTE

Serial No. ;

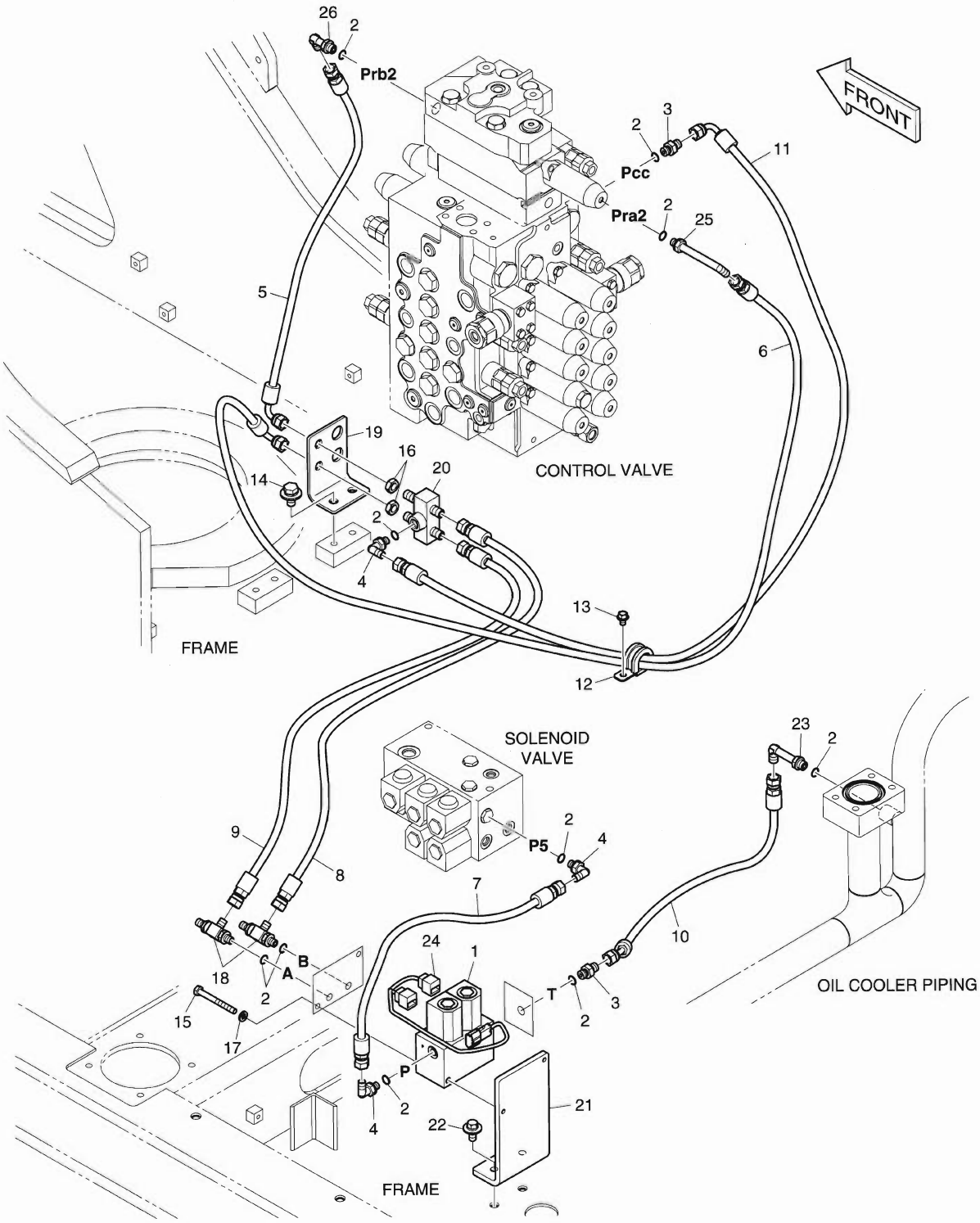

DATE	NOV. 27, 2006
1st EDITION	

Fig. 6520 PILOT PIPING(1) - ROTATING
CONDUITES DE PILOTE

Serial No. ;

Key No.	Part No.	Description	Description	Q'ty	S.C	Serial No.	ICA	Replaceable part	
								Part No.	Q'ty
6520--	K1014045C	PILOT PIPING;PERO	CONDUITES DE PILOTE	-	D				
1	426-00247A	VALVE;SOLENOID	SOUPAPE A SOLENOIDE	1					
2	S8000111	O-RING	JOINT TORIQUE	10					
3	2181-1126D14	ADAPTER	ADAPTEUR	2					
4	2181-1702D4	ELBOW	COUDE	3					
5	DS2093074	HOSE	TUYAU FLEXIBLE	1					
6	DS2093021	HOSE	TUYAU FLEXIBLE	1					
7	DS2094137	HOSE	TUYAU FLEXIBLE	1					
8	DS2094038	HOSE	TUYAU FLEXIBLE	1					
9	DS2094038	HOSE	TUYAU FLEXIBLE	1					
10	DS2092006	HOSE	TUYAU FLEXIBLE	1					
11	DS2093336	HOSE	TUYAU FLEXIBLE	1					
12	124-00208D4	CLIP	AGRAFE	1					
13	K1001029	BOLT	BOULON A 6 PANS	1					
14	DS0025019	BOLT;SET	BOULON A 6 PANS	2					
15	S0556866	BOLT	BOULON A 6 PANS	2					
16	121-00010D7	NUT	ECROU 6 PANS	2					
17	S5102503	WASHER;SPRING	RONDELLE ELASTIQUE	2					
18	181-00779	TEE;SHUTTLE	TE	2					
19	K1014174	BRACKET	SUPPORT	1					
20	420-00476	VALVE;SHUTTLE	VANNE	1					
21	K1024074	BRACKET	SUPPORT	1					
22	DS0025017	BOLT;SET	BOULON A 6 PANS	2					
23	2181-1702D56	ELBOW	COUDE	1					
24	K1000817	HARNESS	HARNAIS	1					
25	DS2281105	ELBOW	COUDE	1					
26	2181-1702D57	ELBOW	COUDE	1					

DATE	NOV. 27, 2006
1st EDITION	

Fig. 6530 PILOT PIPING(2) - ROTATING OR ARTI
CONDUITES DE PILOTE

Serial No. ;

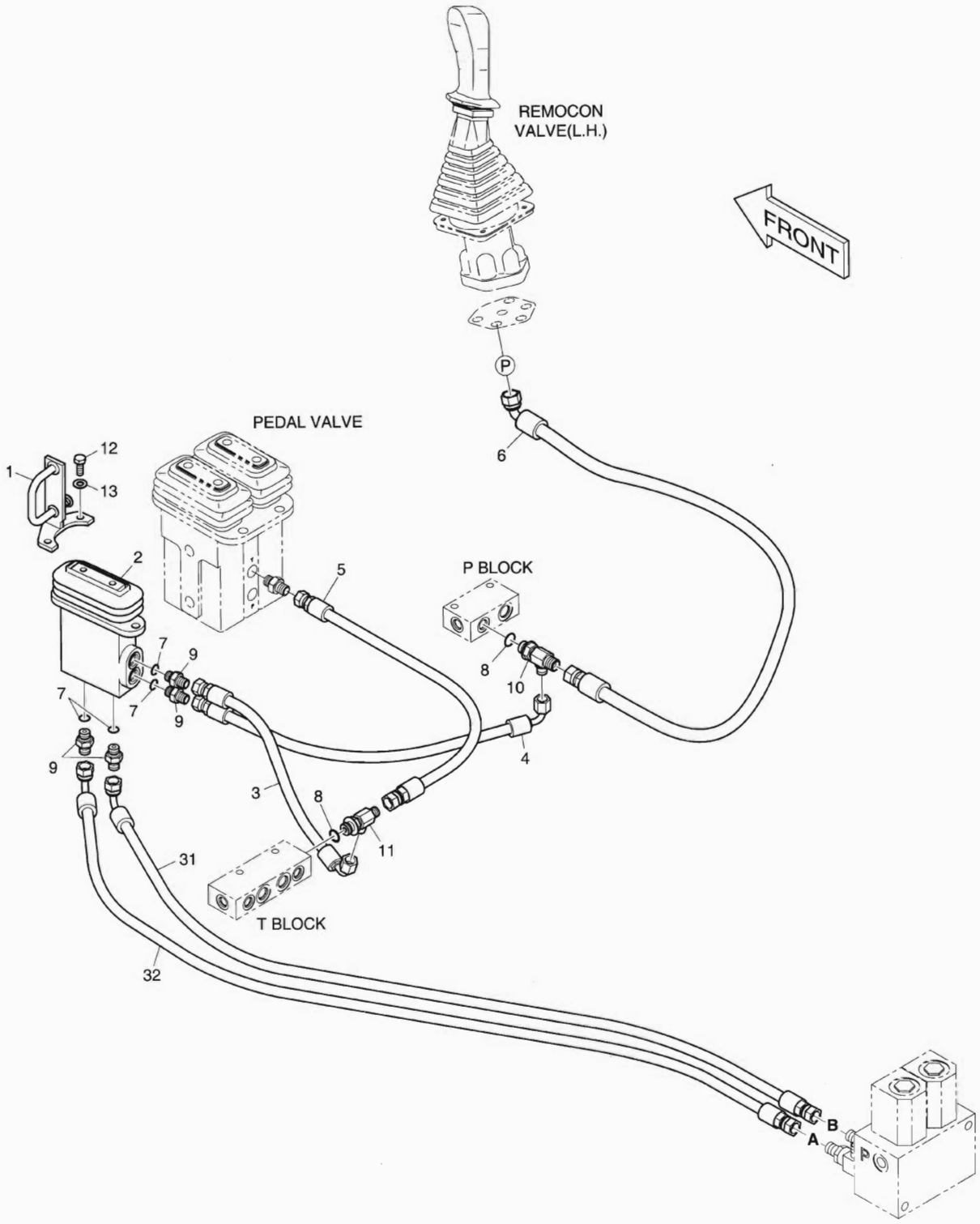

DATE	NOV. 27, 2006
1st EDITION	

Fig. 6530 PILOT PIPING(2) - ROTATING OR ARTI
CONDUITES DE PILOTE

Serial No. ;

Key No.	Part No.	Description	Description	Q'ty	S.C	Serial No.	ICA	Replaceable part	
								Part No.	Q'ty
6530--	K1014103A	PILOT PIPING-ROTATING	CIRCUIT DE PILOTE	-	D				
1	K1001873A	LOCK;PEDAL(L.H)	LOCK;PEDAL	1					
2	K1017382	VALVE;PEDAL	VANNE	1					
3	DS2093130	HOSE	TUYAU FLEXIBLE	1					
4	DS2093202	HOSE	TUYAU FLEXIBLE	1					
5	DS2094006	HOSE	TUYAU FLEXIBLE	1					
6	DS2095003	HOSE	TUYAU FLEXIBLE	1					
7	S8000111	O-RING	JOINT TORIQUE	4					
8	S8000141	O-RING	JOINT TORIQUE	2					
9	2181-1126D14	ADAPTER	ADAPTEUR	4					
10	2181-1951D6	TEE	TE	1					
11	2181-1951D7	TEE	TE	1					
12	S0508866	BOLT	BOULON A 6 PANS	2					
13	S5102503	WASHER	CALE	2					
31	DS2093114	HOSE	TUYAU FLEXIBLE	1					
32	DS2093129	HOSE	TUYAU FLEXIBLE	1					

DATE	NOV. 27, 2006
1st EDITION	

Fig. 6540 PEDAL - ROTATING OR ARTI PEDALE

Serial No. ;

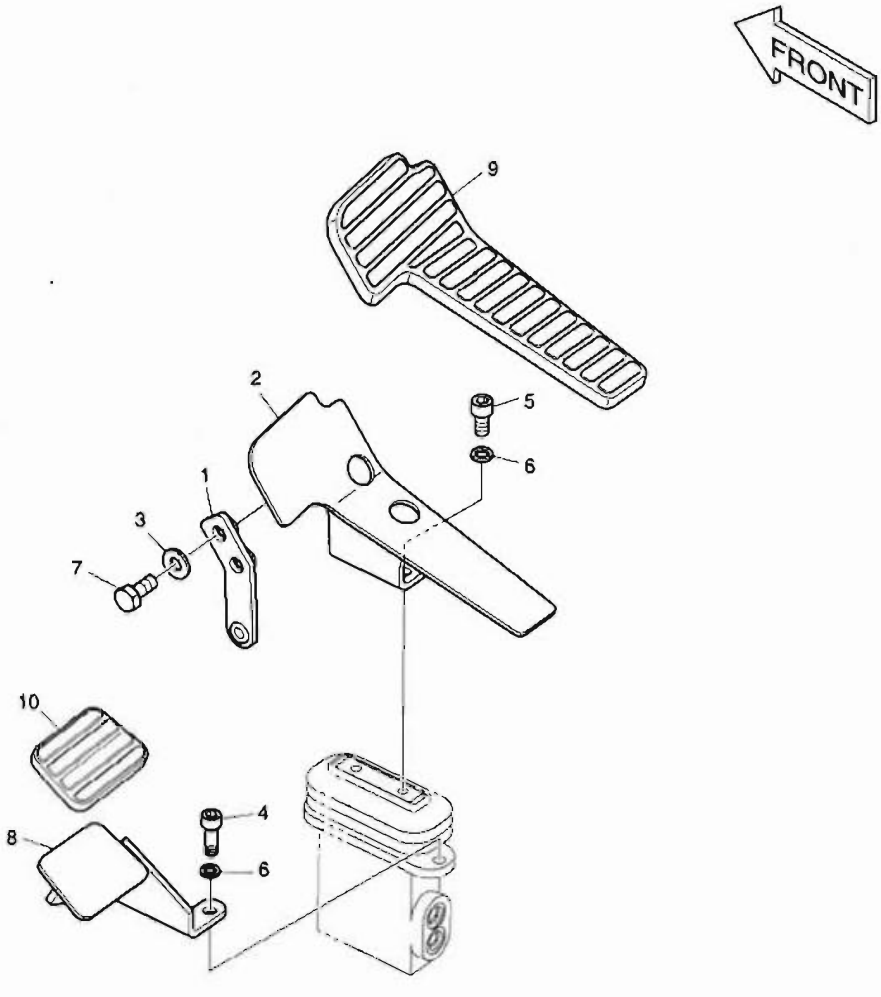

PEDAL VALVE

DATE	NOV. 27, 2006
1st EDITION	

Fig. 6540 PEDAL - ROTATING OR ARTI PEDALE

Serial No. ;

Key No.	Part No.	Description	Description	Q'ty	S.C	Serial No.	ICA	Replaceable part	
								Part No.	Q'ty
6540--	K1023883	SINGLE PEDAL	PEDALE	-	D				
1	K1001871B	PLATE	PLAQUE	1					
2	195-01684A	BRACKET;PEDAL(L)	SUPPORT	1					
3	S5102603	WASHER;SPRING	RONDELLE ELASTIQUE	2					
4	S2212266	BOLT;SOCKET M10X1.5X30	BOULON A 6 PANS CREUX	2					
5	S2211866	BOLT;SOCKET	BOULON	2					
6	S5110603	WASHER	CALE	4					
7	S0512066	BOLT	BOULON A 6 PANS	2					
8	K1003948A	FOOT REST	REPOS DE PIED	1					
9	161-00382	RUBBER;PEDAL	CAOUTCHOUC	1					
10	K1006656	RUBBER;PEDAL	CAOUTCHOUC	1					

DATE	NOV. 27, 2006
1st EDITION	

Fig. 6550 BOOM PIPING - ROTATING(BOOM 5.2m)
CONDUITES DE FLECHE

Serial No. ;

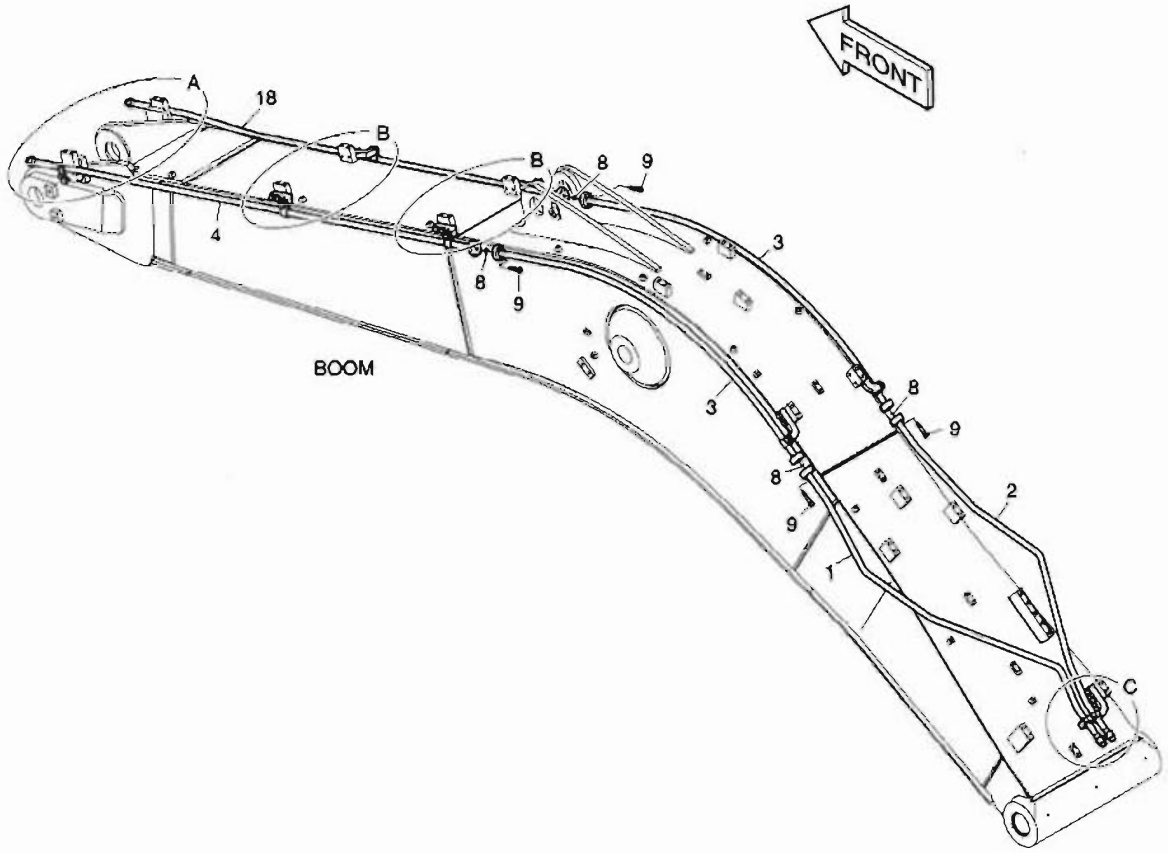

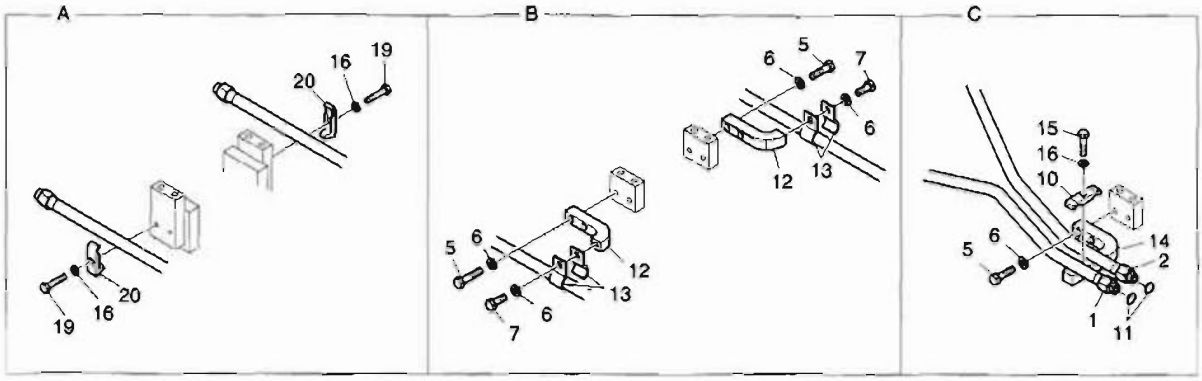

DATE	NOV. 27, 2006
1st EDITION	

Fig. 6550 BOOM PIPING - ROTATING(BOOM 5.2m) CONDUITES DE FLECHE

Serial No. ;

Key No.	Part No.	Description	Description	Q'ty	S.C	Serial No.	ICA	Replaceable part	
								Part No.	Q'ty
6550--	K1014810B	BOOM PIPING;ROTATING	BOOM PIPING	-	D				
1	K1014811A	PIPE	TUYAU	1					
2	K1014812A	PIPE	TUYAU	1					
3	K1014813	PIPE	TUYAU	2					
4	K1025283	PIPE	TUYAU	1					
5	S0560666	BOLT M12X1.75X45	BOULON A 6 PANS	14					
6	S5102703	WASHER;SPRING	RONDELLE ELASTIQUE	20					
7	S0515266	BOLT	BOULON A 6 PANS	6					
8	2180-1026D30	O-RING	JOINT TORIQUE	4					
9	S2209466	BOLT;SOCKET	BOULON	16					
10	K1004028	CLAMP;PIPE	COLLIER	1					
11	S8030081	O-RING	JOINT TORIQUE	2					
12	621-02700A	PLATE	PLAQUE	6					
13	124-00299A	CLAMP;PIPE	COLLIER	12					
14	621-02798	PLATE	PLAQUE	1					
15	S0558466	BOLT	BOULON A 6 PANS	1					
16	S5102603	WASHER;SPRING	RONDELLE ELASTIQUE	3					
18	K1025284	PIPE	TUYAU	1					
19	S0558566	BOLT	BOULON A 6 PANS	2					
20	2124-1026D1	CLAMP;PIPE	COLLIER	2					

DATE	NOV. 27, 2006
1st EDITION	

Fig. 6560 ARM PIPING - ARM 2.6m(ROTATING)
CONDUITES DE BALANCIER

Serial No. ;

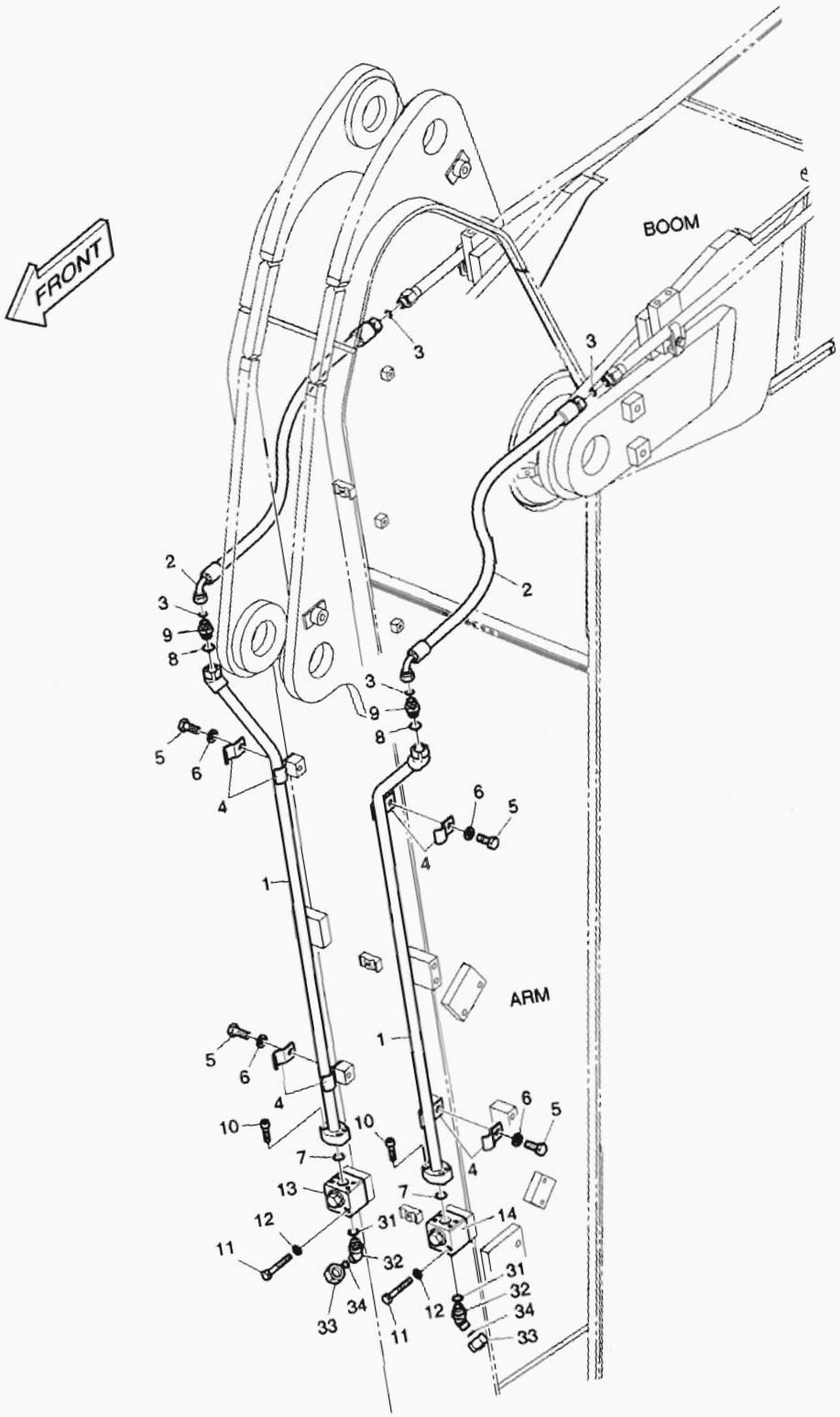

DATE	NOV. 27, 2006
1st EDITION	

Fig. 6560 ARM PIPING - ARM 2.6m(ROTATING) CONDUITES DE BALANCIER

Serial No. ;

Key No.	Part No.	Description	Description	Q'ty	S.C	Serial No.	ICA	Replaceable part	
								Part No.	Q'ty
6560--	K1014839C	ARM PIPING;ROTATING	CONDUITES DE BALANCIER	-	D				
1	K1014840B	PIPE	TUYAU	2					
2	DS2013886	HOSE	TUYAU FLEXIBLE	2					
3	S8030081	O-RING	JOINT TORIQUE	4					
4	124-00299A	CLAMP;PIPE	COLLIER	8					
5	S0515266	BOLT	BOULON A 6 PANS	4					
6	S5102703	WASHER;SPRING	RONDELLE ELASTIQUE	4					
7	2180-1026D30	O-RING	JOINT TORIQUE	2					
8	S8000181	O-RING	JOINT TORIQUE	2					
9	2181-4133D3	ADAPTER	ADAPTEUR	2					
10	S2209266	BOLT;SOCKET	BOULON	8					
11	S0558966	BOLT	BOULON A 6 PANS	4					
12	S5102603	WASHER;SPRING	RONDELLE ELASTIQUE	4					
13	K1006227	VALVE;SWITCH(R.H)	VANNE	1					
14	K1006228	VALVE;SWITCH(L.H)	VANNE	1					
31	S8000181	O-RING	JOINT TORIQUE	2					
32	2181-2816D4	ELBOW	COUDE	2					
33	2181-2817D4	CAP	CHAPEAU	2					
34	S8030081	O-RING	JOINT TORIQUE	2					

Fig. 6570 BUCKET - 0.35m³ GODET

Serial No. ;

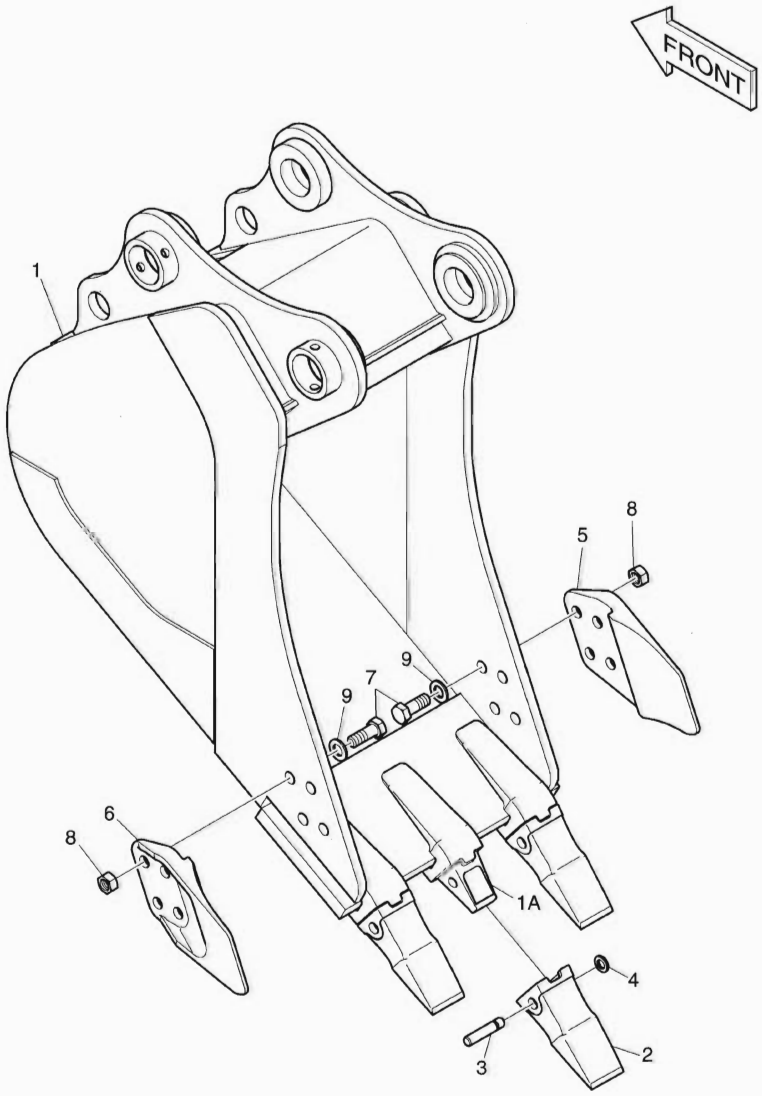

DATE	NOV. 27, 2006
1st EDITION	

Fig. 6570 BUCKET - 0.35m³ GODET

Serial No. ;

Key No.	Part No.	Description	Description	Q'ty	S.C	Serial No.	ICA	Replaceable part	
								Part No.	Q'ty
6570--	K1015995	BUCKET ASS'Y-0.35m³	ENSEMBLE GODET	1					
1	K1015996	BUCKET;WELD	ENSEMBLE GODET	1					
1A	2713-1218	. ADAPTER;TOOTH	. ADAPTEUR	3					
2	K1000344	POINT;TOOTH	DENT	3					
3	2705-1020	PIN;LOCKING	BROCHE DE BLOCAGE	3					
4	2114-1848A	WASHER;LOCKING	RONDELLE	3					
5	2713-1228A	CUTTER;SIDE(R)	COIN DE GODET	1					
6	2713-1229A	CUTTER;SIDE(L)	COIN DE GODET	1					
7	S0574661	BOLT M24X3.0X65	BOULON A 6 PANS	8					
8	S4013333	NUT M24	ECROU	8					
9	2114-1831A	WASHER;HARDEN	RONDELLE	8					

Fig. 6580 BUCKET - 0.41m³ GODET

Serial No. ;

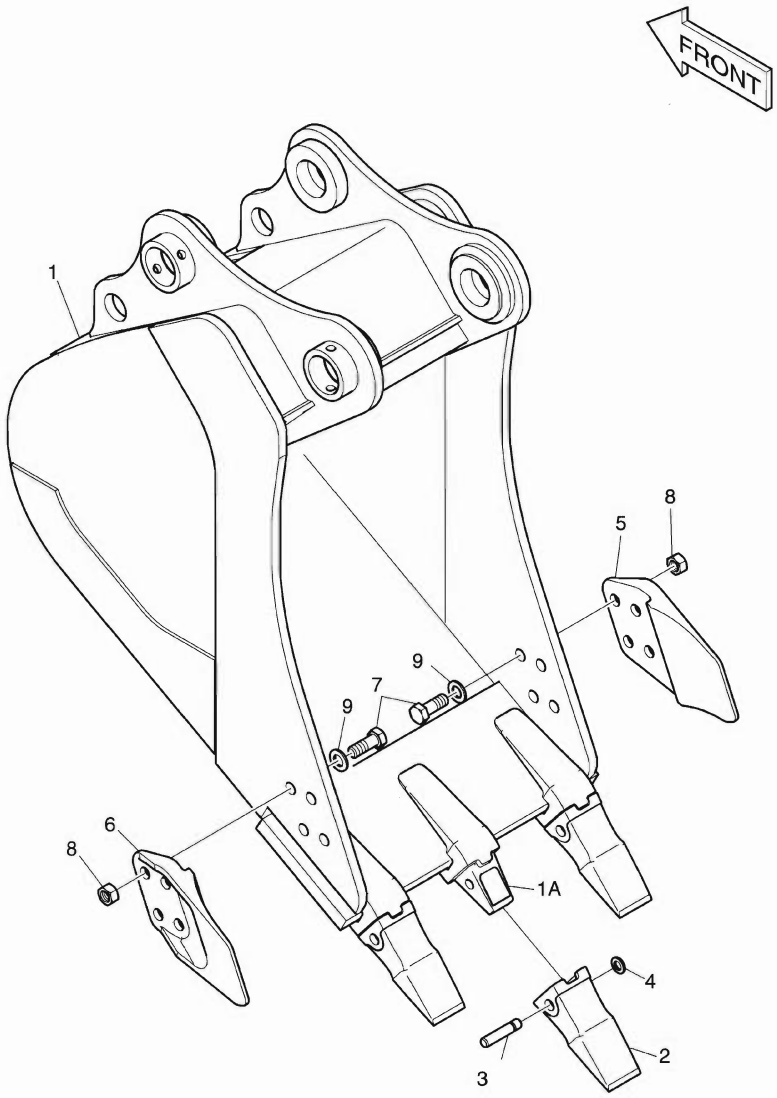

DATE	NOV. 27, 2006
1st EDITION	

Fig. 6580 BUCKET - 0.41m³ GODET

Serial No. ;

Key No.	Part No.	Description	Description	Q'ty	S.C	Serial No.	ICA	Replaceable part	
								Part No.	Q'ty
6580--	K1015997	BUCKET ASS'Y-0.41m³	ENSEMBLE GODET	1					
1	K1015998	BUCKET;WELD	ENSEMBLE GODET	1					
1A	2713-1218	. ADAPTER;TOOTH	. ADAPTEUR	3					
2	K1000344	POINT;TOOTH	DENT	3					
3	2705-1020	PIN;LOCKING	BROCHE DE BLOCAGE	3					
4	2114-1848A	WASHER;LOCKING	RONDELLE	3					
5	2713-1228A	CUTTER;SIDE(R)	COIN DE GODET	1					
6	2713-1229A	CUTTER;SIDE(L)	COIN DE GODET	1					
7	S0574661	BOLT M24X3.0X65	BOULON A 6 PANS	8					
8	S4013333	NUT M24	ECROU	8					
9	2114-1831A	WASHER;HARDEN	RONDELLE	8					

DATE	NOV. 27, 2006
1st EDITION	

Fig. 6590 BUCKET - 0.51m³ GODET

Serial No. ;

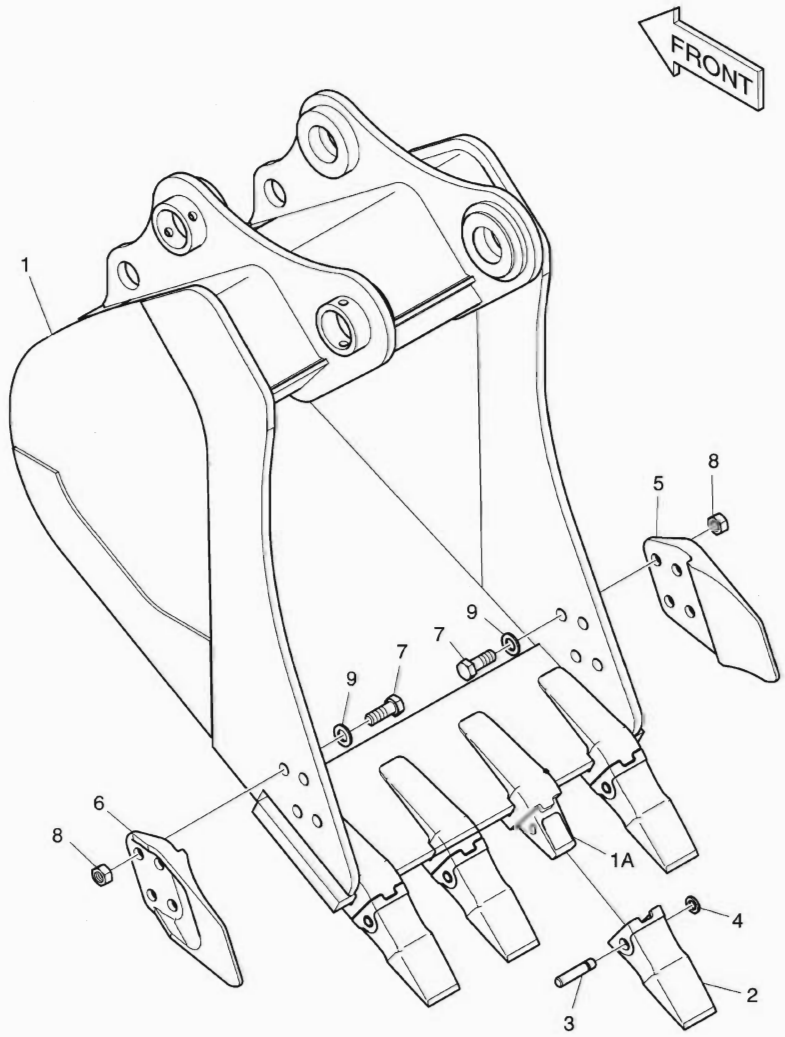

DATE	NOV. 27, 2006
1st EDITION	

Fig. 6590 BUCKET - 0.51m³ GODET

Serial No. ;

Key No.	Part No.	Description	Description	Q'ty	S.C	Serial No.	ICA	Replaceable part	
								Part No.	Q'ty
6590--	K1015999	BUCKET ASS'Y-0.51m³	ENSEMBLE GODET	1					
1	K1016000	BUCKET;WELD	ENSEMBLE GODET	1					
1A	2713-1218	. ADAPTER;TOOTH	. ADAPTEUR	4					
2	K1000344	POINT;TOOTH	DENT	4					
3	2705-1020	PIN;LOCKING	BROCHE DE BLOCAGE	4					
4	2114-1848A	WASHER;LOCKING	RONDELLE	4					
5	2713-1228A	CUTTER;SIDE(R)	COIN DE GODET	1					
6	2713-1229A	CUTTER;SIDE(L)	COIN DE GODET	1					
7	S0574661	BOLT M24X3.0X65	BOULON A 6 PANS	8					
8	S4013333	NUT M24	ECROU	8					
9	2114-1831A	WASHER;HARDEN	RONDELLE	8					

DATE	NOV. 27, 2006
1st EDITION	

Fig. 6600 BUCKET - 0.67m³ GODET

Serial No. ;

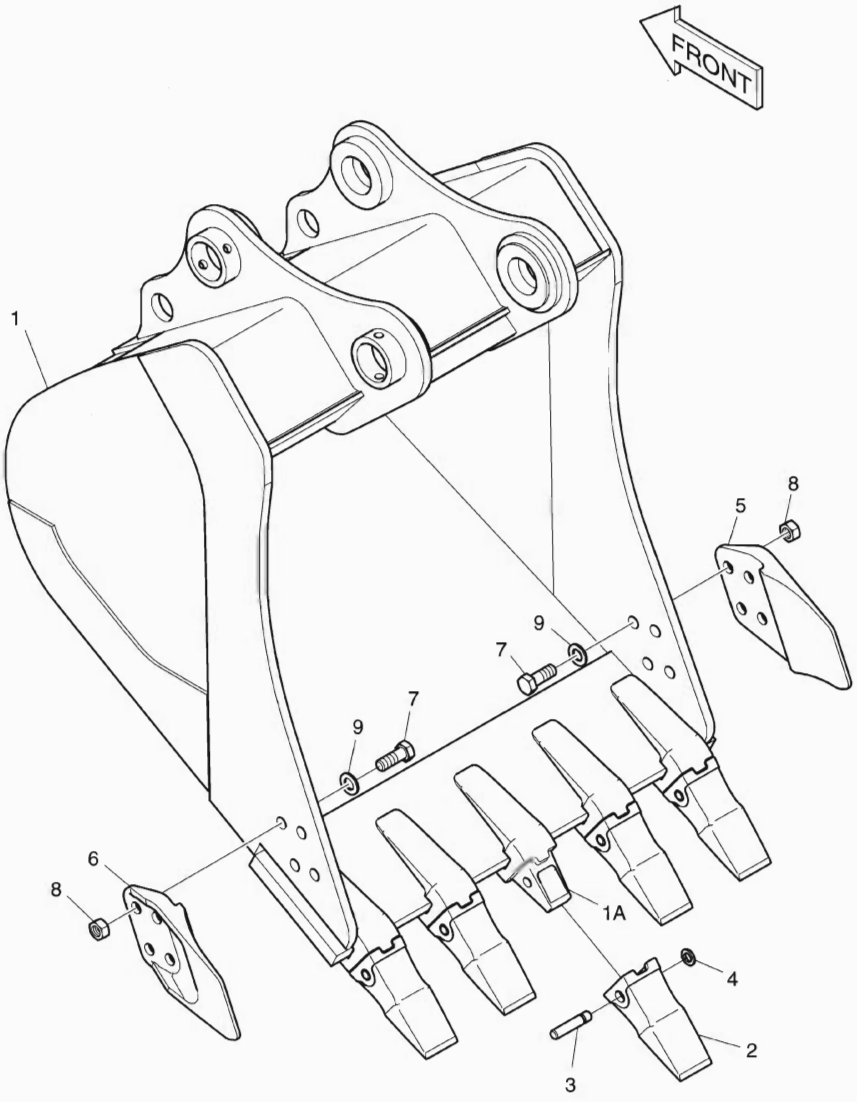

DATE	NOV. 27, 2006
1st EDITION	

Fig. 6600 BUCKET - 0.67m³ GODET

Serial No. ;

Key No.	Part No.	Description	Description	Q'ty	S.C	Serial No.	ICA	Replaceable part	
								Part No.	Q'ty
6600--	K1012435	BUCKET ASS'Y-0.67m³	ENSEMBLE GODET	1					
1	K1012436	BUCKET;WELD	ENSEMBLE GODET	1					
1A	2713-1218	. ADAPTER;TOOTH	. ADAPTEUR	5					
2	K1000344	POINT;TOOTH	DENT	5					
3	2705-1020	PIN;LOCKING	BROCHE DE BLOCAGE	5					
4	2114-1848A	WASHER;LOCKING	RONDELLE	5					
5	2713-1228A	CUTTER;SIDE(R)	COIN DE GODET	1					
6	2713-1229A	CUTTER;SIDE(L)	COIN DE GODET	1					
7	S0574661	BOLT M24X3.0X65	BOULON A 6 PANS	8					
8	S4013333	NUT M24	ECROU	8					
9	2114-1831A	WASHER;HARDEN	RONDELLE	8					

DATE	NOV. 27, 2006
1st EDITION	

Fig. 6610 BUCKET - 0.7m³ GODET

Serial No. ;

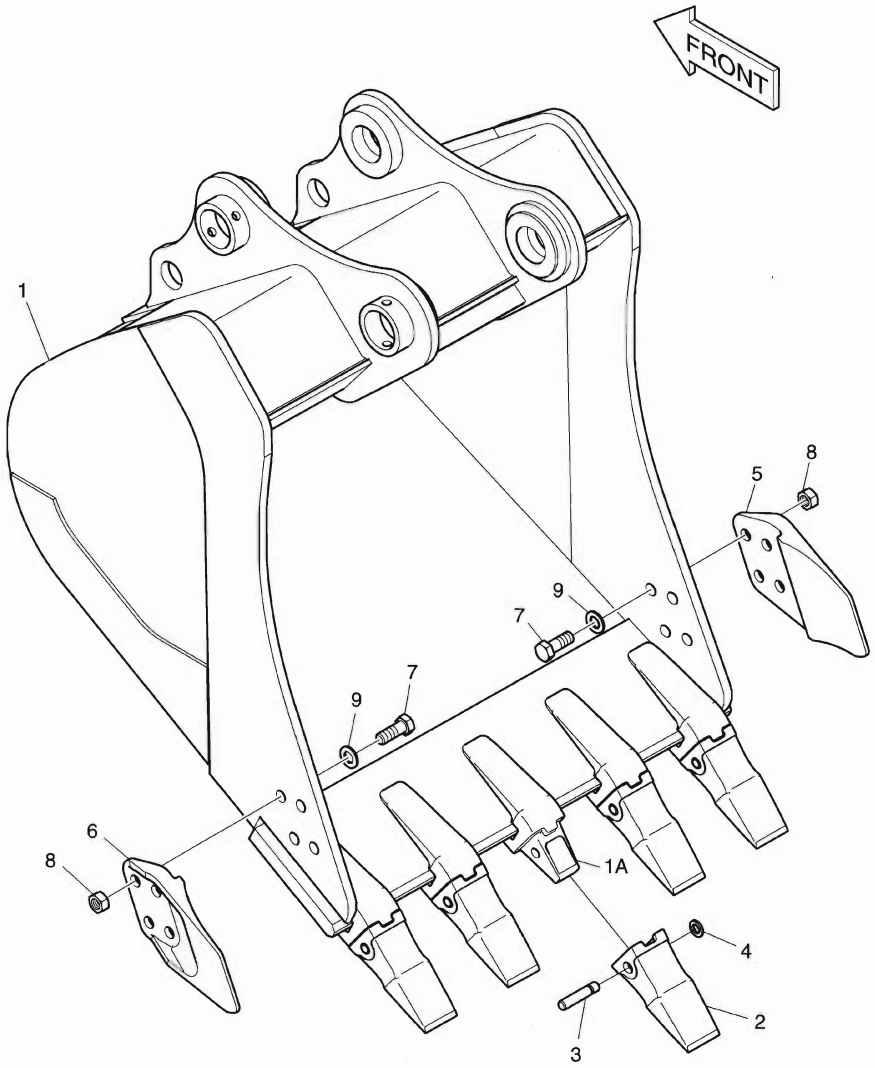

DATE	NOV. 27, 2006
1st EDITION	

Fig. 6610 BUCKET - 0.7m³ GODET

Serial No. ;

Key No.	Part No.	Description	Description	Q'ty	S.C	Serial No.	ICA	Replaceable part	
								Part No.	Q'ty
6610--	K1012437	BUCKET ASS'Y-0.7m³	ENSEMBLE GODET	1					
1	K1012438	BUCKET;WELD	ENSEMBLE GODET	1					
1A	2713-1218	. ADAPTER;TOOTH	. ADAPTEUR	5					
2	K1000344	POINT;TOOTH	DENT	5					
3	2705-1020	PIN;LOCKING	BROCHE DE BLOCAGE	5					
4	2114-1848A	WASHER;LOCKING	RONDELLE	5					
5	2713-1228A	CUTTER;SIDE(R)	COIN DE GODET	1					
6	2713-1229A	CUTTER;SIDE(L)	COIN DE GODET	1					
7	S0574661	BOLT M24X3.0X65	BOULON A 6 PANS	8					
8	S4013333	NUT M24	ECROU	8					
9	2114-1831A	WASHER;HARDEN	RONDELLE	8					

DATE	NOV. 27, 2006
1st EDITION	

Fig. 6620 BUCKET - 0.8m³ GODET

Serial No. ;

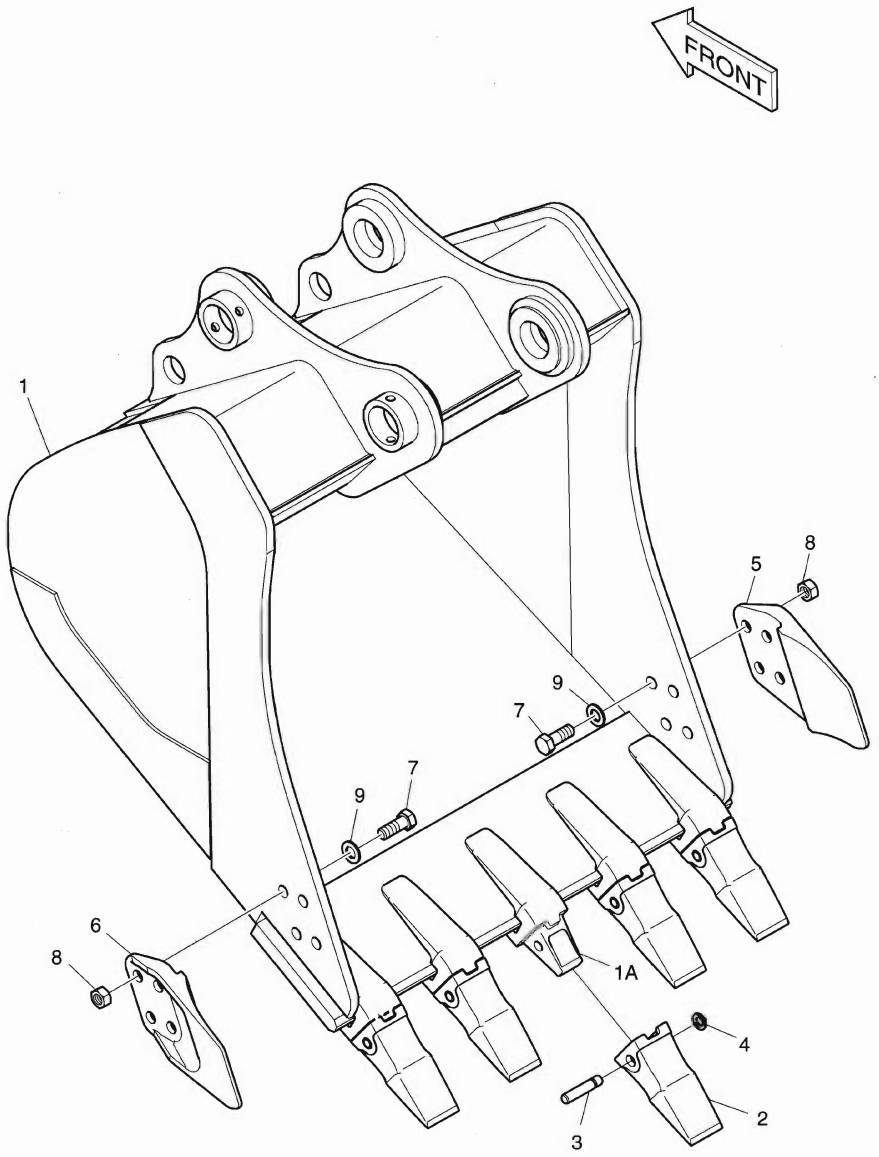

DATE	NOV. 27, 2006
1st EDITION	

Fig. 6620 BUCKET - 0.8m³ GODET

Serial No. ;

Key No.	Part No.	Description	Description	Q'ty	S.C	Serial No.	ICA	Replaceable part	
								Part No.	Q'ty
6620--	K1016001	BUCKET ASS'Y-0.8m³	ENSEMBLE GODET	1					
1	K1016002	BUCKET;WELD	ENSEMBLE GODET	1					
1A	2713-1218	. ADAPTER;TOOTH	. ADAPTEUR	5					
2	K1000344	POINT;TOOTH	DENT	5					
3	2705-1020	PIN;LOCKING	BROCHE DE BLOCAGE	5					
4	2114-1848A	WASHER;LOCKING	RONDELLE	5					
5	2713-1228A	CUTTER;SIDE(R)	COIN DE GODET	1					
6	2713-1229A	CUTTER;SIDE(L)	COIN DE GODET	1					
7	S0574661	BOLT M24X3.0X65	BOULON A 6 PANS	8					
8	S4013333	NUT M24	ECROU	8					
9	2114-1831A	WASHER;HARDEN	RONDELLE	8					

DATE	NOV. 27, 2006
1st EDITION	

Fig. 6630 TRACK FRAME - NARROW
TRAIN DE ROULEMENT

Serial No. ;

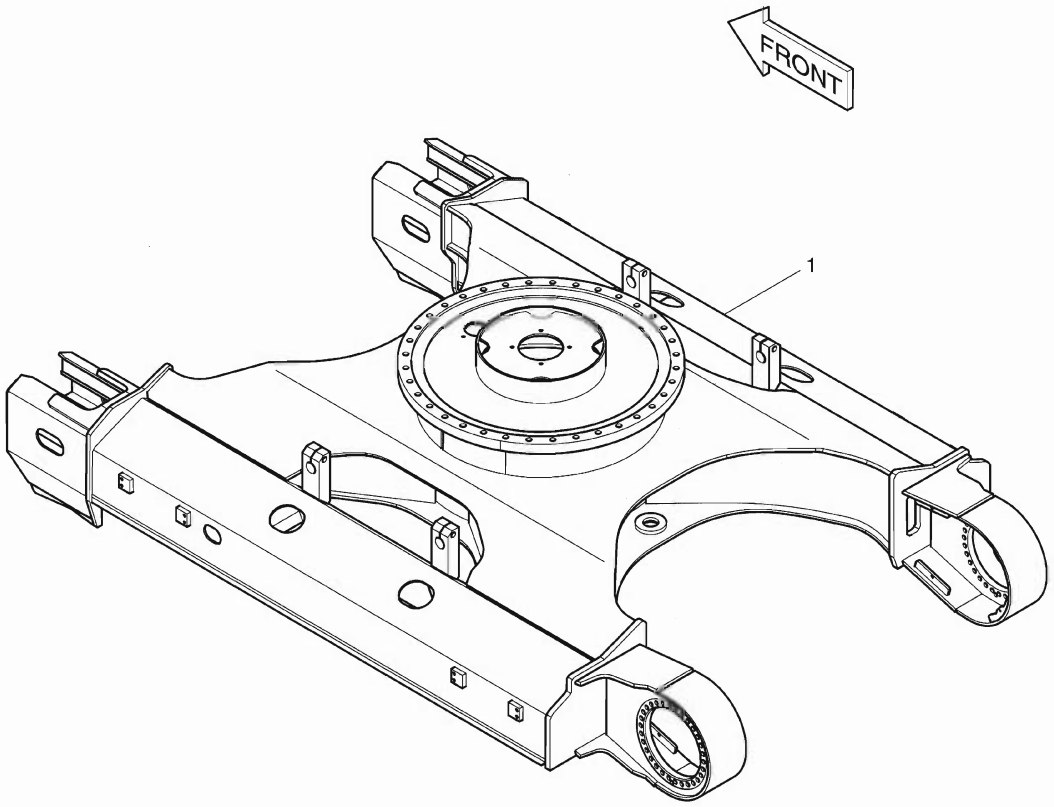

DATE	NOV. 27, 2006
1st EDITION	

Fig. 6630 TRACK FRAME - NARROW TRAIN DE ROULEMENT

Serial No. ;

Key No.	Part No.	Description	Description	Q'ty	S.C	Serial No.	ICA	Replaceable part	
								Part No.	Q'ty
6630--	K1024400C	TRACK FRAME ASS'Y	TRAIN DE ROULEMENT	-	D				
1	K1024401B	FRAME;TRACK(NARROW)	TRAIN DE ROULEMENT	1					

Fig. 6640 TRACK SHOE ASS'Y - 500G
MAILLON DE CHAINE

Serial No. ;

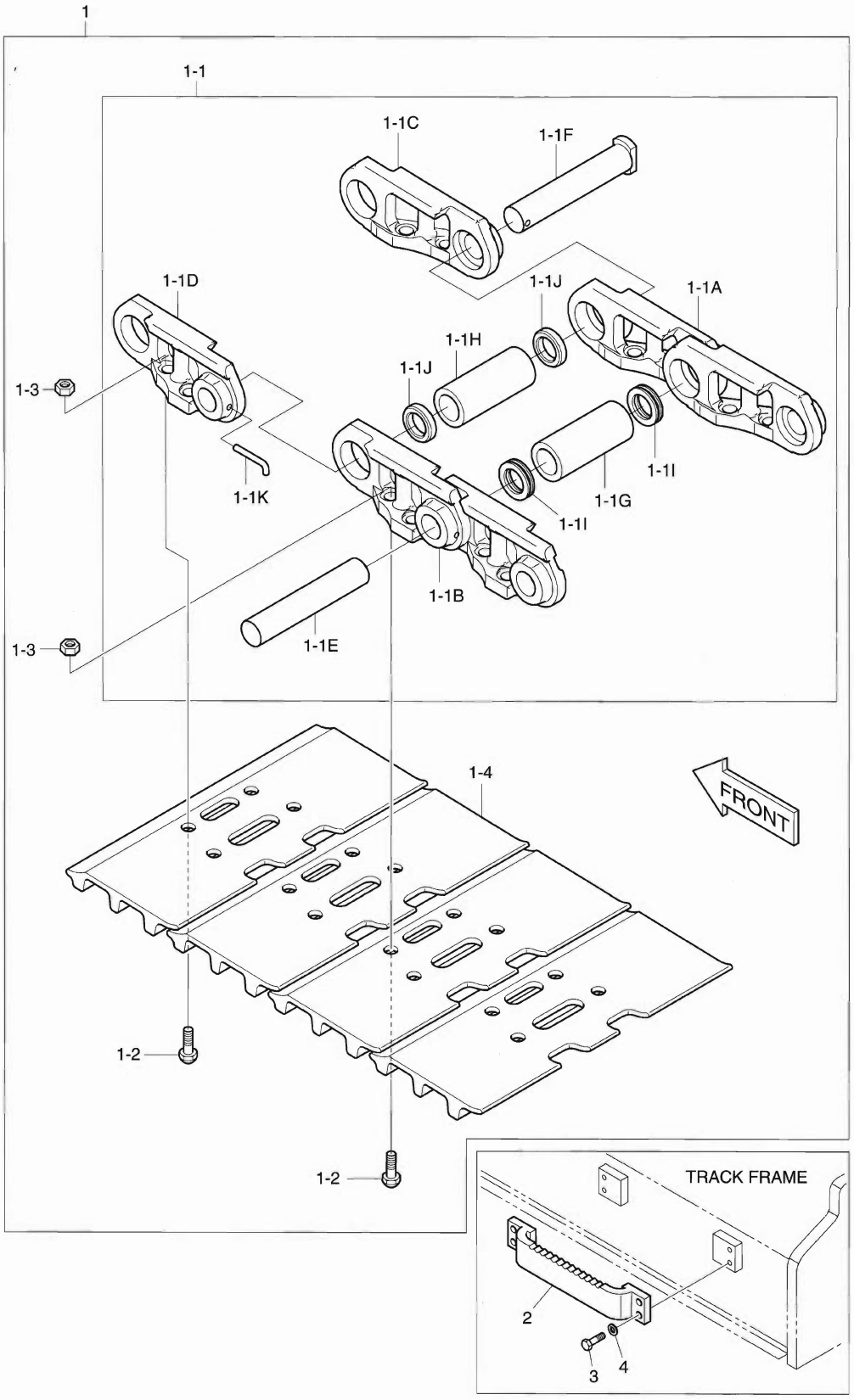

DATE	NOV. 27, 2006
1st EDITION	

Fig. 6640 TRACK SHOE ASS'Y - 500G MAILLON DE CHAINE

Serial No. ;

Key No.	Part No.	Description	Description	Q'ty	S.C	Serial No.	ICA	Replaceable part	
								Part No.	Q'ty
6640--	K1024453	TRACK SHOE ASS'Y	MAILLON DE CHAINE	-	D				
1	K1024458	TRACK SHOE ASS'Y 500G	MAILLON DE CHAINE	2					
1-1	K1029370	. TRACK LINK ASS'Y	. ENSEMBLE MAILLON DE	1					
1-1A	K1014783R	.. LINK - R.H	.. ARTICULATION	43					
1-1B	K1014783L	.. LINK - L.H	.. ARTICULATION	43					
1-1C	K1014782R	.. LINK;MASTER - R.H	.. ARTICULATION	1					
1-1D	K1014782L	.. LINK;MASTER - L.H	.. ARTICULATION	1					
1-1E	K1014781	.. PIN;REGULAR	.. GOUPILLE	43					
1-1F	K1014780	.. PIN;MASTER	.. GOUPILLE	1					
1-1G	K1014779	.. BUSHING;REGULAR	.. DOUILLE	43					
1-1H	K1014778	.. BUSHING;MASTER	.. DOUILLE PRINCIPALE	1					
1-1I	K1014777	.. SEAL;DUST	.. JOINT	86					
1-1J	K1014776	.. SPACER	.. DOUILLE D'ECARTEMENT	2					
1-1K	K1014775	.. PIN;CLAMPING	.. GOUPILLE	1					
1-2	K1014774	. BOLT	. BOULON A 6 PANS	176					
1-3	K1014773	. NUT	. ECROU	176					
1-4	K1024598	. SHOE 500mm	. SABOT	44					
2	K1024485D2	STEP	MARCHER	4					
3	S0515366	BOLT	BOULON A 6 PANS	16					
4	S5102703	WASHER;SPRING	RONDELLE ELASTIQUE	16					

DATE	NOV. 27, 2006
1st EDITION	

Fig. 6650 TRACK SHOE ASS'Y - 700G
MAILLON DE CHAINE

Serial No. ;

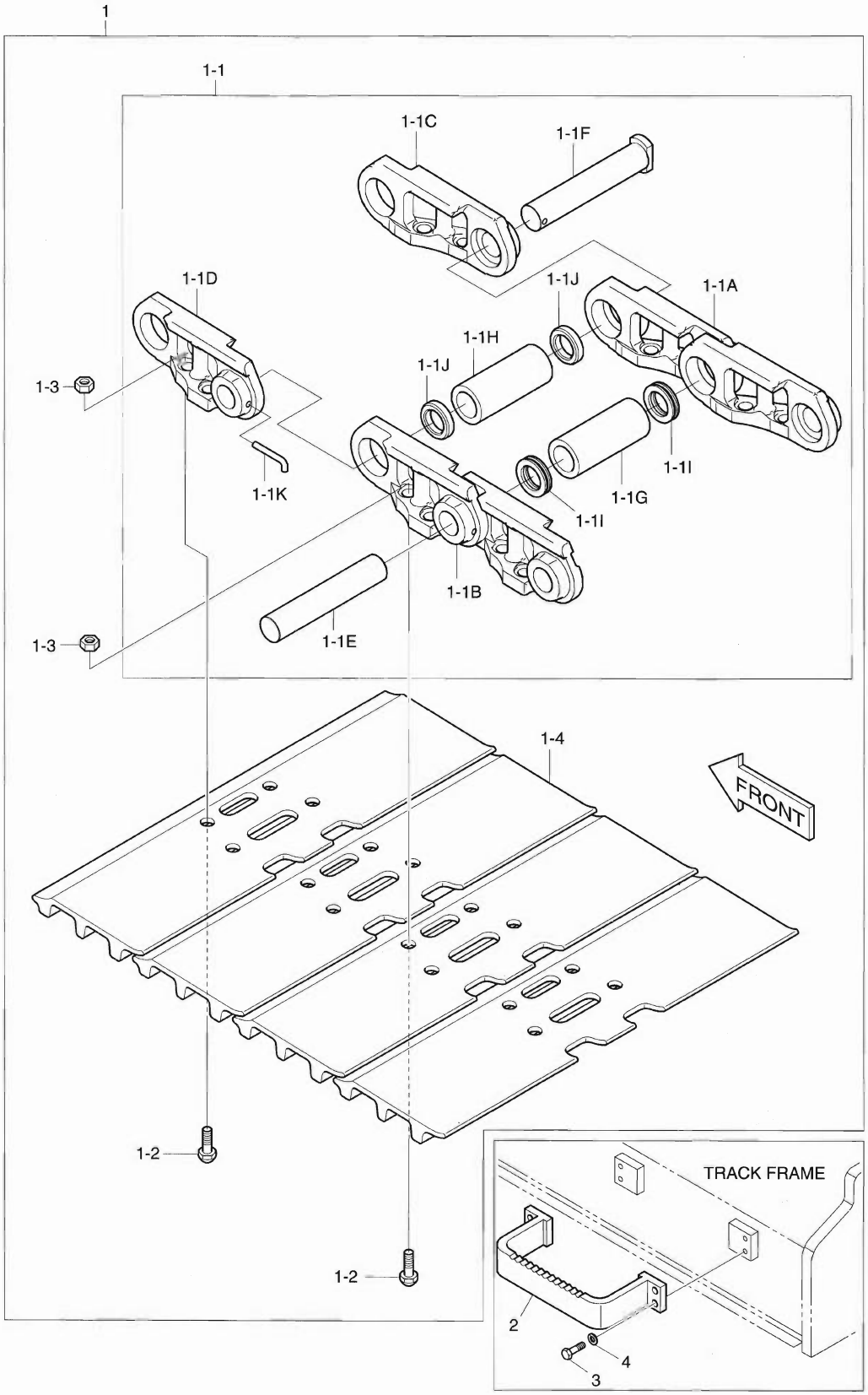

DATE	NOV. 27, 2006
1st EDITION	

Fig. 6650 TRACK SHOE ASS'Y - 700G MAILLON DE CHAINE

Serial No. ;

Key No.	Part No.	Description	Description	Q'ty	S.C	Serial No.	ICA	Replaceable part	
								Part No.	Q'ty
6650--	K1024454	TRACK SHOE ASS'Y	MAILLON DE CHAINE	-	D				
1	K1024459	TRACK SHOE ASS'Y 700G	MAILLON DE CHAINE	2					
1-1	K1029370	. TRACK LINK ASS'Y	. ENSEMBLE MAILLON DE	1					
1-1A	K1014783R	.. LINK - R.H	.. ARTICULATION	43					
1-1B	K1014783L	.. LINK - L.H	.. ARTICULATION	43					
1-1C	K1014782R	.. LINK;MASTER - R.H	.. ARTICULATION	1					
1-1D	K1014782L	.. LINK;MASTER - L.H	.. ARTICULATION	1					
1-1E	K1014781	.. PIN;REGULAR	.. GOUPILLE	43					
1-1F	K1014780	.. PIN;MASTER	.. GOUPILLE	1					
1-1G	K1014779	.. BUSHING;REGULAR	.. DOUILLE	43					
1-1H	K1014778	.. BUSHING;MASTER	.. DOUILLE PRINCIPALE	1					
1-1I	K1014777	.. SEAL;DUST	.. JOINT	86					
1-1J	K1014776	.. SPACER	.. DOUILLE D'ECARTEMENT	2					
1-1K	K1014775	.. PIN;CLAMPING	.. GOUPILLE	1					
1-2	K1014774	. BOLT	. BOULON A 6 PANS	176					
1-3	K1014773	. NUT	. ECROU	176					
1-4	K1024599	. SHOE 700mm	. SABOT	44					
2	K1024485D3	STEP	MARCHER	4					
3	S0515366	BOLT	BOULON A 6 PANS	16					
4	S5102703	WASHER;SPRING	RONDELLE ELASTIQUE	16					

DATE	NOV. 27, 2006
1st EDITION	

Fig. 6660 TRACK SHOE ASS'Y - 800G
MAILLON DE CHAINE

Serial No. ;

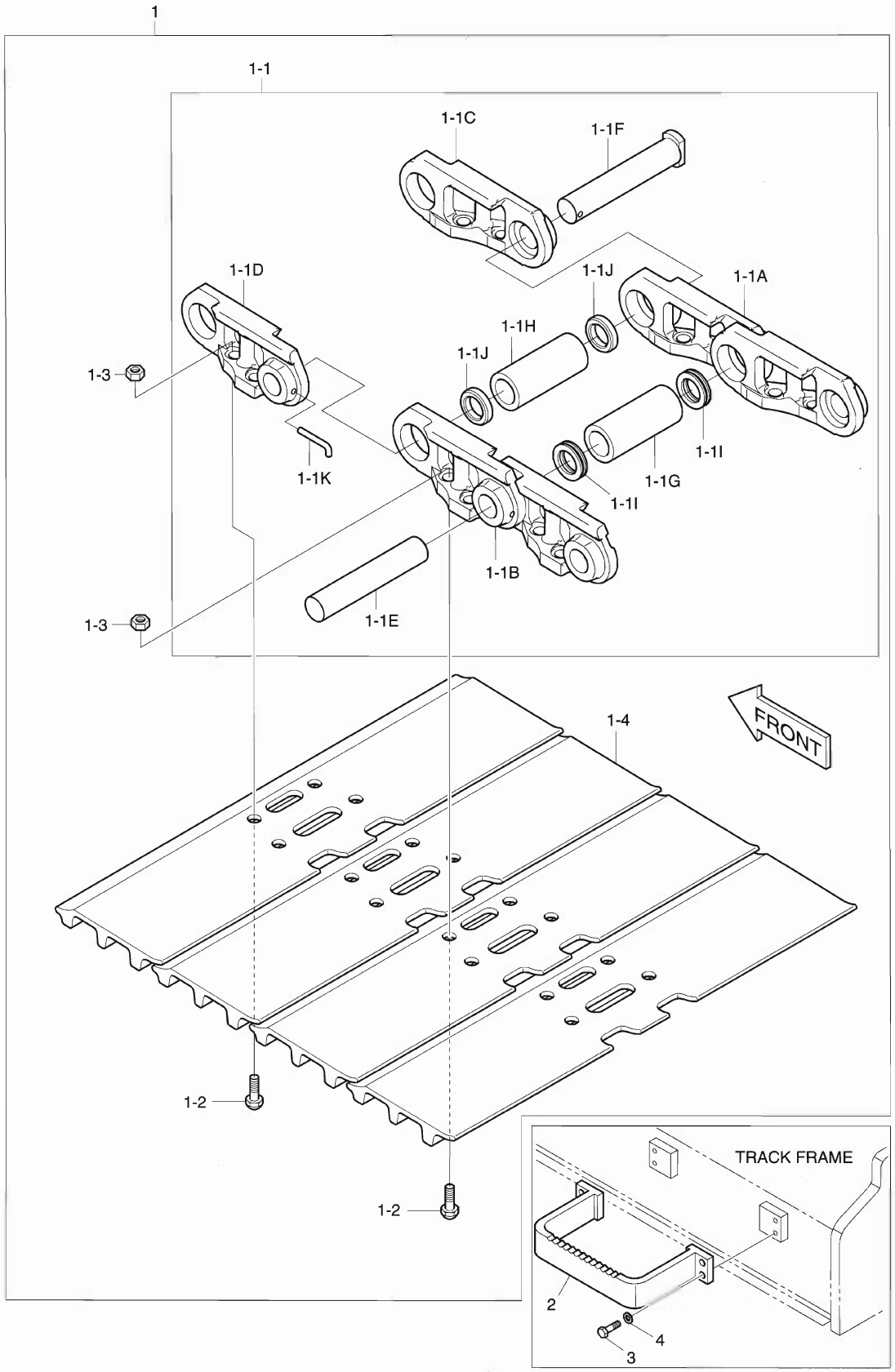

DATE	NOV. 27, 2006
1st EDITION	

Fig. 6660 TRACK SHOE ASS'Y - 800G MAILLON DE CHAINE

Serial No. ;

Key No.	Part No.	Description	Description	Q'ty	S.C	Serial No.	ICA	Replaceable part	
								Part No.	Q'ty
6660--	K1024455	TRACK SHOE ASS'Y	MAILLON DE CHAINE	-	D				
1	K1024460	TRACK SHOE ASS'Y 800G	MAILLON DE CHAINE	2					
1-1	K1029370	. TRACK LINK ASS'Y	. ENSEMBLE MAILLON DE	1					
1-1A	K1014783R	.. LINK - R.H	.. ARTICULATION	43					
1-1B	K1014783L	.. LINK - L.H	.. ARTICULATION	43					
1-1C	K1014782R	.. LINK;MASTER - R.H	.. ARTICULATION	1					
1-1D	K1014782L	.. LINK;MASTER - L.H	.. ARTICULATION	1					
1-1E	K1014781	.. PIN;REGULAR	.. GOUPILLE	43					
1-1F	K1014780	.. PIN;MASTER	.. GOUPILLE	1					
1-1G	K1014779	.. BUSHING;REGULAR	.. DOUILLE	43					
1-1H	K1014778	.. BUSHING;MASTER	.. DOUILLE PRINCIPALE	1					
1-1I	K1014777	.. SEAL;DUST	.. JOINT	86					
1-1J	K1014776	.. SPACER	.. DOUILLE D'ECARTEMENT	2					
1-1K	K1014775	.. PIN;CLAMPING	.. GOUPILLE	1					
1-2	K1014774	. BOLT	. BOULON A 6 PANS	176					
1-3	K1014773	. NUT	. ECROU	176					
1-4	K1024600	. SHOE 800mm	. SABOT	44					
2	K1024485D4	STEP	MARCHER	4					
3	S0515366	BOLT	BOULON A 6 PANS	16					
4	S5102703	WASHER;SPRING	RONDELLE ELASTIQUE	16					

Fig. 6670 TRACK SHOE ASS'Y - 900G
MAILLON DE CHAINE

Serial No. ;

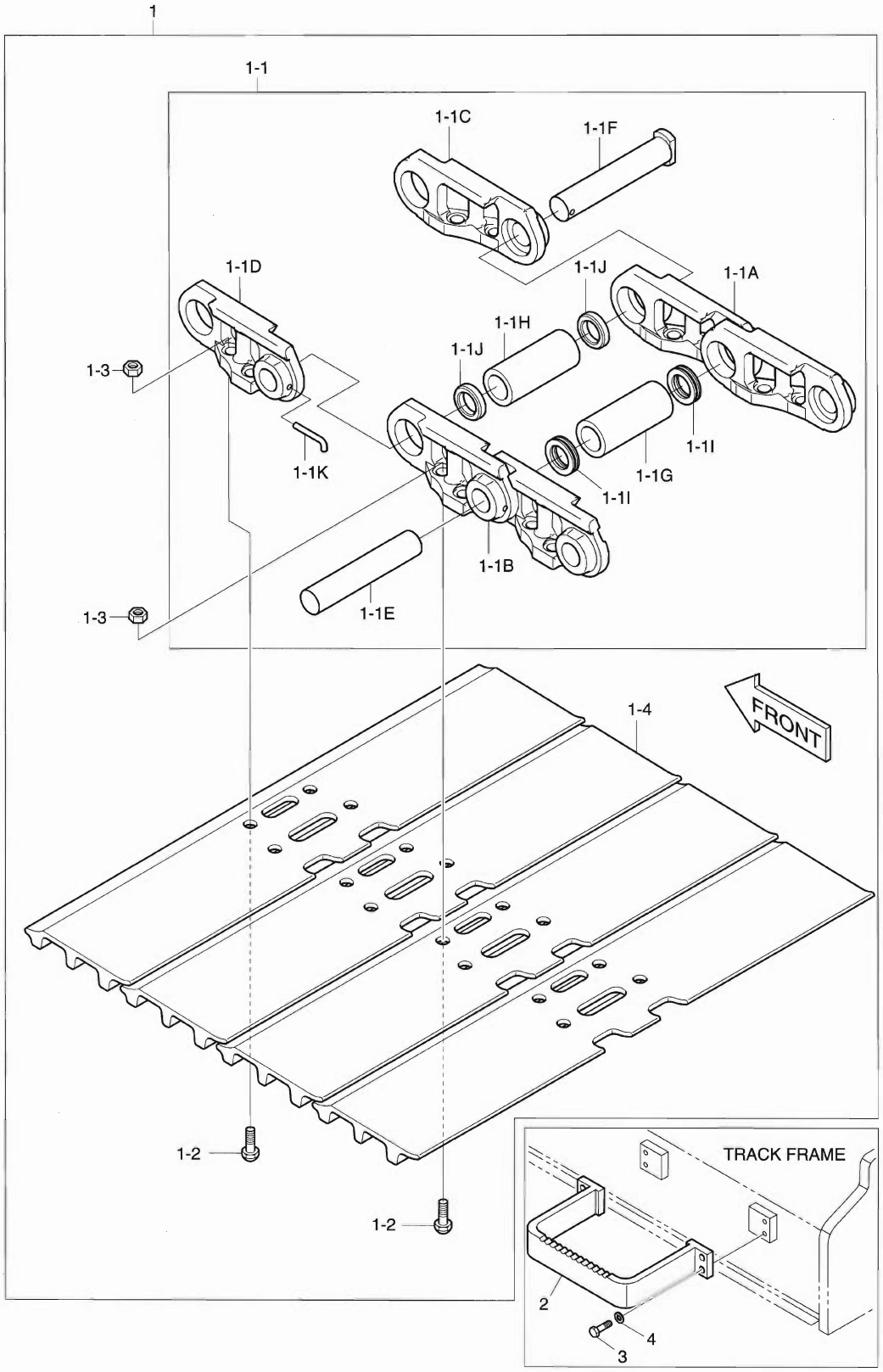

DATE	NOV. 27, 2006
1st EDITION	

Fig. 6670 TRACK SHOE ASS'Y - 900G MAILLON DE CHAINE

Serial No. ;

Key No.	Part No.	Description	Description	Q'ty	S.C	Serial No.	ICA	Replaceable part	
								Part No.	Q'ty
6670--	K1024456	TRACK SHOE ASS'Y	MAILLON DE CHAINE	-	D				
1	K1024461	TRACK SHOE ASS'Y 900G	MAILLON DE CHAINE	2					
1-1	K1029370	. TRACK LINK ASS'Y	. ENSEMBLE MAILLON DE	1					
1-1A	K1014783R	.. LINK - R.H	.. ARTICULATION	43					
1-1B	K1014783L	.. LINK - L.H	.. ARTICULATION	43					
1-1C	K1014782R	.. LINK;MASTER - R.H	.. ARTICULATION	1					
1-1D	K1014782L	.. LINK;MASTER - L.H	.. ARTICULATION	1					
1-1E	K1014781	.. PIN;REGULAR	.. GOUPILLE	43					
1-1F	K1014780	.. PIN;MASTER	.. GOUPILLE	1					
1-1G	K1014779	.. BUSHING;REGULAR	.. DOUILLE	43					
1-1H	K1014778	.. BUSHING;MASTER	.. DOUILLE PRINCIPALE	1					
1-1I	K1014777	.. SEAL;DUST	.. JOINT	86					
1-1J	K1014776	.. SPACER	.. DOUILLE D'ECARTEMENT	2					
1-1K	K1014775	.. PIN;CLAMPING	.. GOUPILLE	1					
1-2	K1014774	. BOLT	. BOULON A 6 PANS	176					
1-3	K1014773	. NUT	. ECROU	176					
1-4	K1024601	. SHOE 900mm	. SABOT	44					
2	K1024485D5	STEP	MARCHER	4					
3	S0515366	BOLT	BOULON A 6 PANS	16					
4	S5102703	WASHER;SPRING	RONDELLE ELASTIQUE	16					

Fig. 6680 LOCK VALVE PIPING - BOOM
CONDUITES DE VERROU VANNE

Serial No. ;

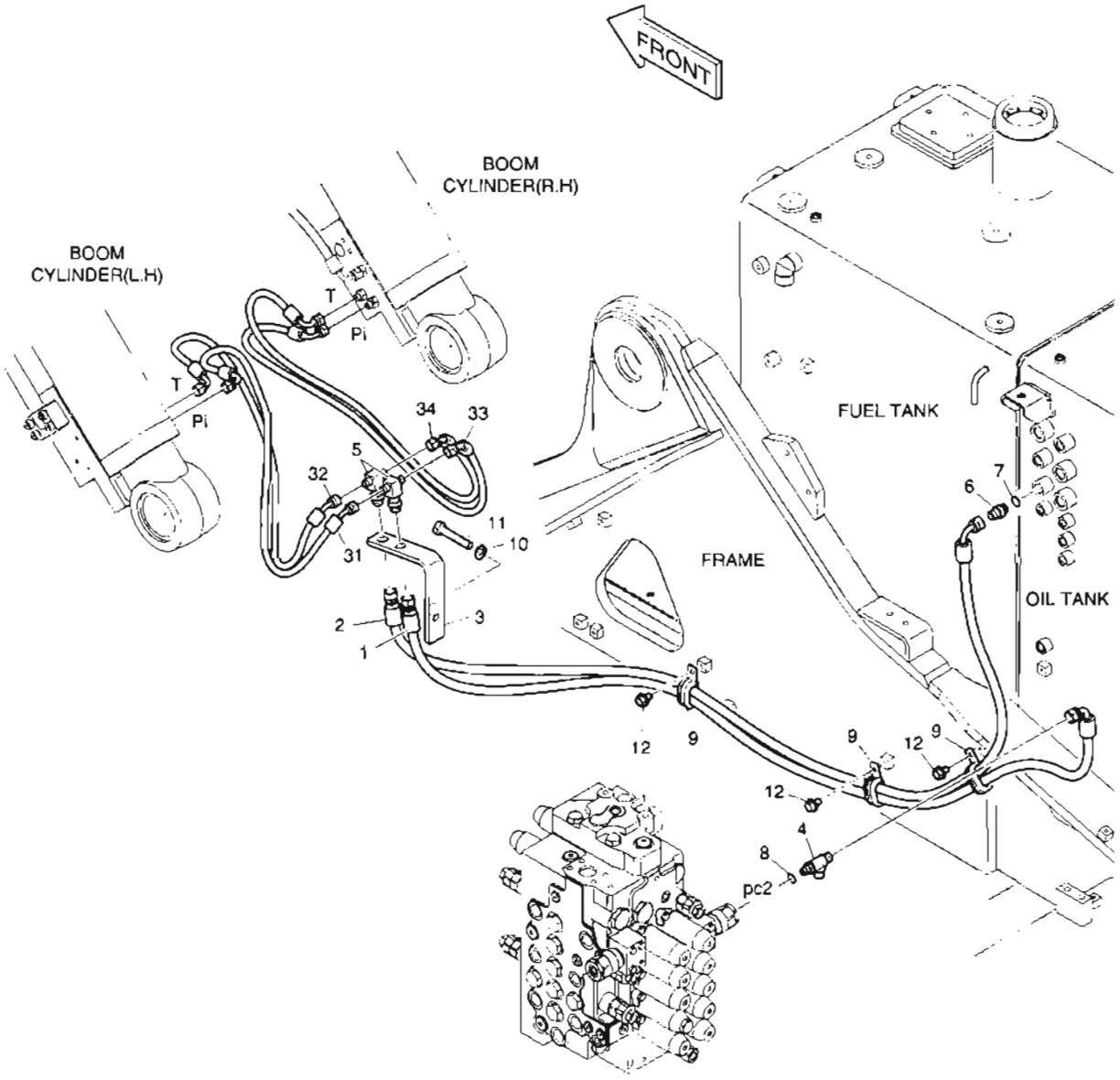

DATE	NOV. 27, 2006
1st EDITION	

Fig. 6680 LOCK VALVE PIPING - BOOM
CONDUITES DE VERROU VANNE

Serial No. ;

Key No.	Part No.	Description	Description	Q'ty	S.C	Serial No.	ICA	Replaceable part	
								Part No.	Q'ty
6680--	K1014040B	LOCK VALVE PIPING;BOOM	FERMEZ LA TUYAUTERIE A	-	D				
1	DS2093216	HOSE	TUYAU FLEXIBLE	1					
2	DS2093045	HOSE	TUYAU FLEXIBLE	1					
3	K1024204	BRACKET	SUPPORT	1					
4	2181-2375D7	TEE	TE	1					
5	181-00008	TEE	TE	2					
6	2181-1126D7	ADAPTER	ADAPTEUR	1					
7	S8000141	O-RING	JOINT TORIQUE	1					
8	S8000111	O-RING	JOINT TORIQUE	1					
9	124-00209D1	CLIP	AGRAFE	3					
10	S5102703	WASHER;SPRING	RONDELLE ELASTIQUE	1					
11	S0561066	BOLT	BOULON A 6 PANS	1					
12	120-00276	BOLT	BOULON A 6 PANS	3					
31	DS2090017	HOSE	TUYAU FLEXIBLE	1					
32	DS2090017	HOSE	TUYAU FLEXIBLE	1					
33	DS2090017	HOSE	TUYAU FLEXIBLE	1					
34	DS2090017	HOSE	TUYAU FLEXIBLE	1					

DATE	NOV. 27, 2006
1st EDITION	

Fig. 6690 BOOM PIPING - LOCK VALVE
DONDUITER DE FLECHE

Serial No. ;

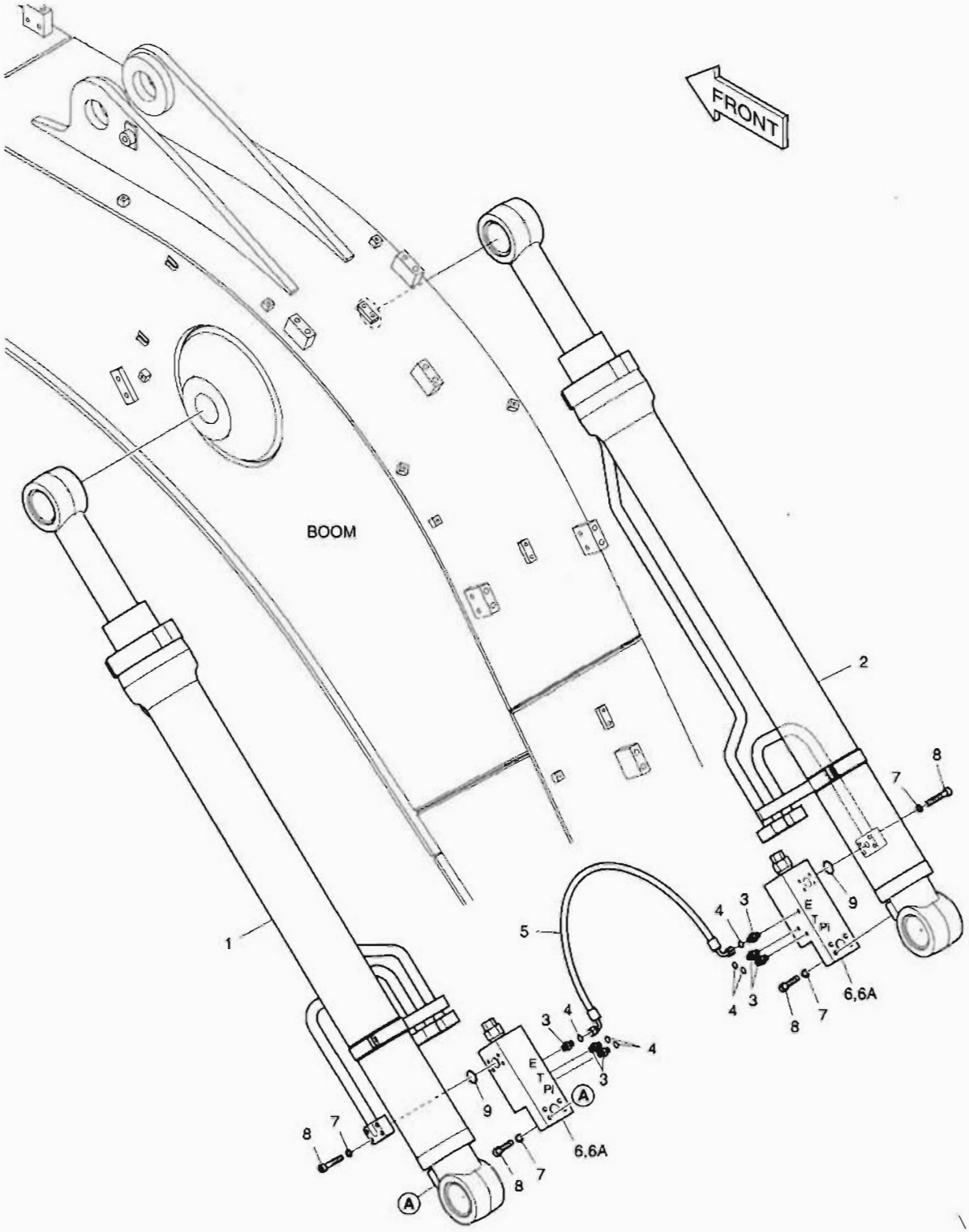

DATE	NOV. 27, 2006
1st EDITION	

Fig. 6690 BOOM PIPING - LOCK VALVE DONDUITER DE FLECHE

Serial No. ;

Key No.	Part No.	Description	Description	Q'ty	S.C	Serial No.	ICA	Replaceable part	
								Part No.	Q'ty
90--	K1014818	BOOM LOCK V/V PIPING	CONDUITES DE PILOTE	-	D				
1	K1014819	CYLINDER;BOOM (L.H)	CYLINDRE	1					
2	K1014820	CYLINDER;BOOM (R.H)	CYLINDRE	1					
3	2181-1126D14	ADAPTER	ADAPTEUR	6					
4	S8000111	O-RING	JOINT TORIQUE	6					
5	DS2059383	HOSE	TUYAU FLEXIBLE	1					
6	420-00003A	VALVE;LOCK	VANNE	2					
6A	K9000998	. SEAL KIT	. KIT D'ETANCHEITE	1					
7	S5110603	WASHER	CALE	16					
8	S2212666	BOLT;SOCKET	BOULON	16					
9	S8000281	O-RING	JOINT TORIQUE	2					

DATE	NOV. 27, 2006
1st EDITION	

Fig. 6700 PILOT PIPING - ARM LOCK V/V
CONDUITES DE PILOTE

Serial No. ;

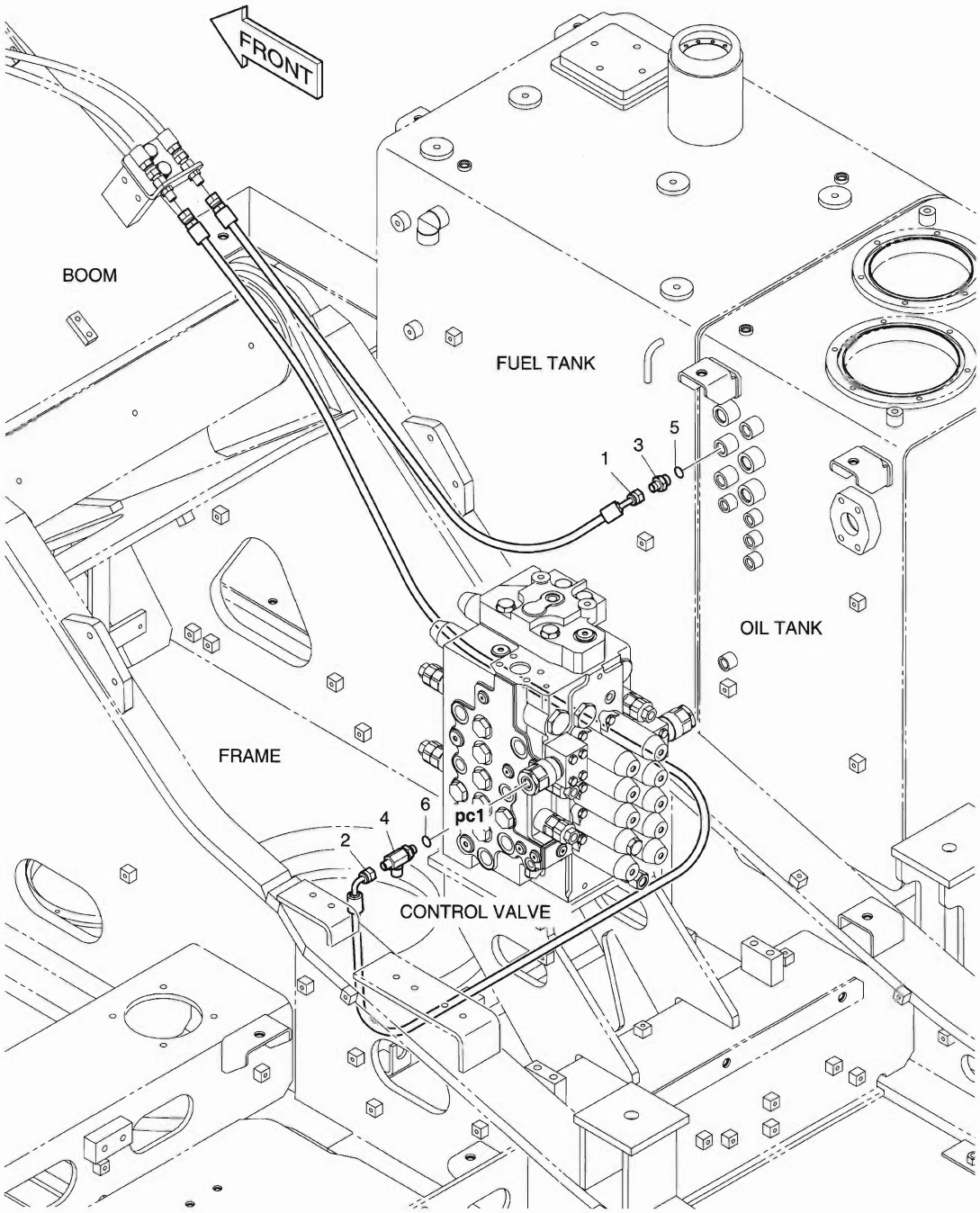

DATE	NOV. 27, 2006
1st EDITION	

Fig. 6700 PILOT PIPING - ARM LOCK V/V
CONDUITES DE PILOTE

Serial No. ;

Key No.	Part No.	Description	Description	Q'ty	S.C	Serial No.	ICA	Replaceable part	
								Part No.	Q'ty
00--	K1014041B	LOCK VALVE PIPING;ARM	FERMEZ LA TUYAUTERIE A	-	D				
1	DS2092093	HOSE	TUYAU FLEXIBLE	1					
2	DS2093072	HOSE	TUYAU FLEXIBLE	1					
3	2181-1126D36	ADAPTER	ADAPTEUR	1					
4	2181-1951D14	TEE	TE	1					
5	S8000141	O-RING	JOINT TORIQUE	1					
6	S8000111	O-RING	JOINT TORIQUE	1					

DATE	NOV. 27, 2006
1st EDITION	

Fig. 6710 ARM PIPING - LOCK VALVE
CONDUITES DE BALANCIER

Serial No. ;

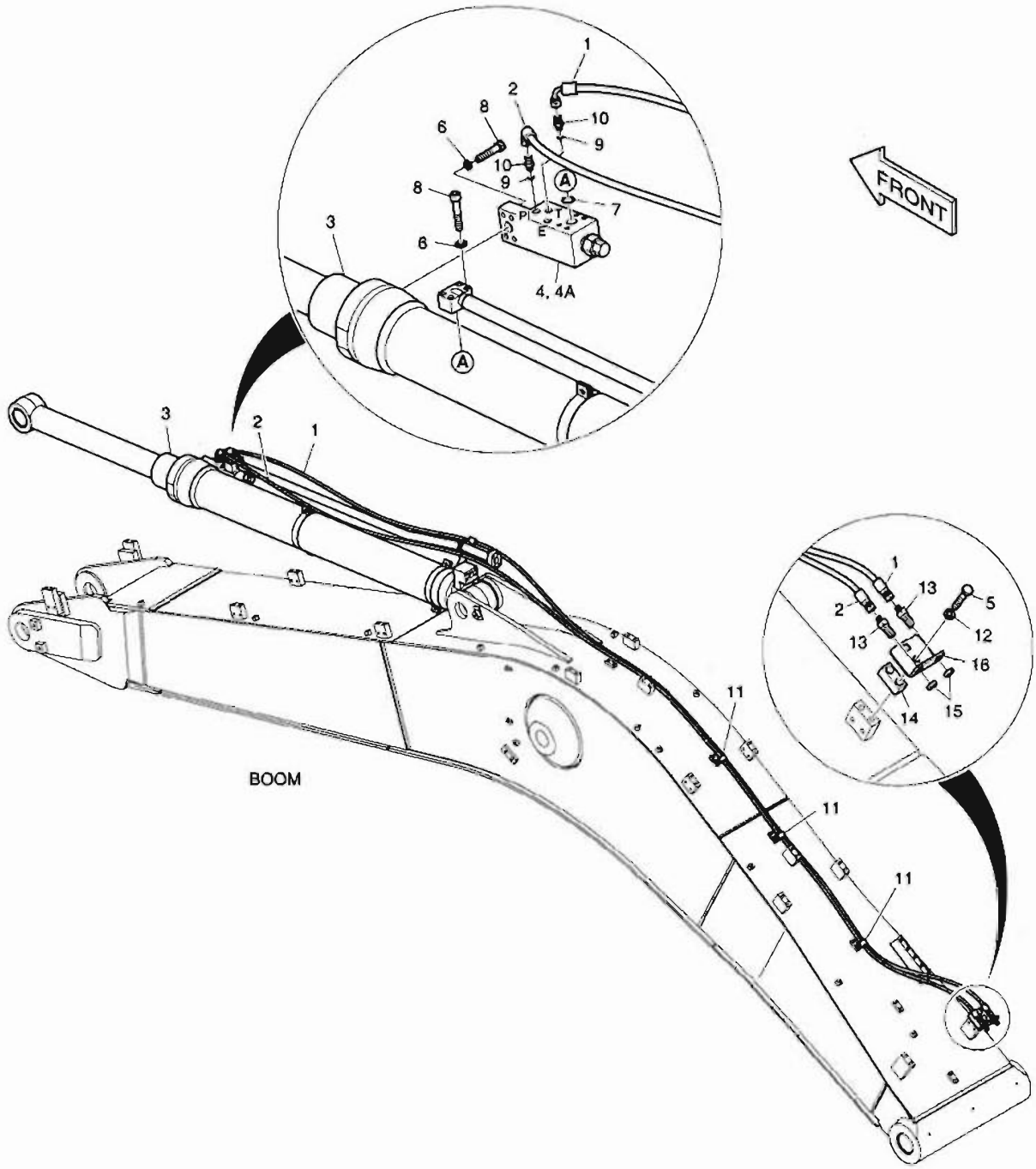

DATE	NOV. 27, 2006
1st EDITION	

Fig. 6710 ARM PIPING - LOCK VALVE CONDUITES DE BALANCIER

Serial No. ;

Key No.	Part No.	Description	Description	Q'ty	S.C	Serial No.	ICA	Replaceable part	
								Part No.	Q'ty
10--	K1014821B	ARM;LOCK V/V PIPING	CONDUITES DE BALANCIER	-	D				
1	2184-1046D251	HOSE	TUYAU FLEXIBLE	1					
2	2184-1046D251	HOSE	TUYAU FLEXIBLE	1					
3	K1014822	CYLINDER;ARM(LOCK V/V)	VERIN DE BALANCIER	1					
4	420-00003A	VALVE;LOCK	VANNE	1					
4A	K9000998	. SEAL KIT	. KIT D'ETANCHEITE	1					
5	S0563366	BOLT	BOULON A 6 PANS	2					
6	S5110603	WASHER;SPRING	RONDELLE ELASTIQUE	8					
7	S8000281	O-RING	JOINT TORIQUE	1					
8	S2212666	BOLT;SOCKET	BOULON	8					
9	S8000111	O-RING	JOINT TORIQUE	2					
10	2181-1126D14	ADAPTER	ADAPTEUR	2					
11	124-00199D5	CLIP	AGRAFE	3					
12	S5102803	WASHER;SPRING	RONDELLE ELASTIQUE	2					
13	DS2410007	ADAPTER	ADAPTEUR	2					
14	K1004006	PLATE	PLAQUE	1					
16	K1014842	BRACKET	SUPPORT	1					
15	121-00010D7	NUT	ECROU 6 PANS	2					

DATE	NOV. 27, 2006
1st EDITION	

Fig. 6720 ARM - 2.2m BALANCIER

Serial No. ;

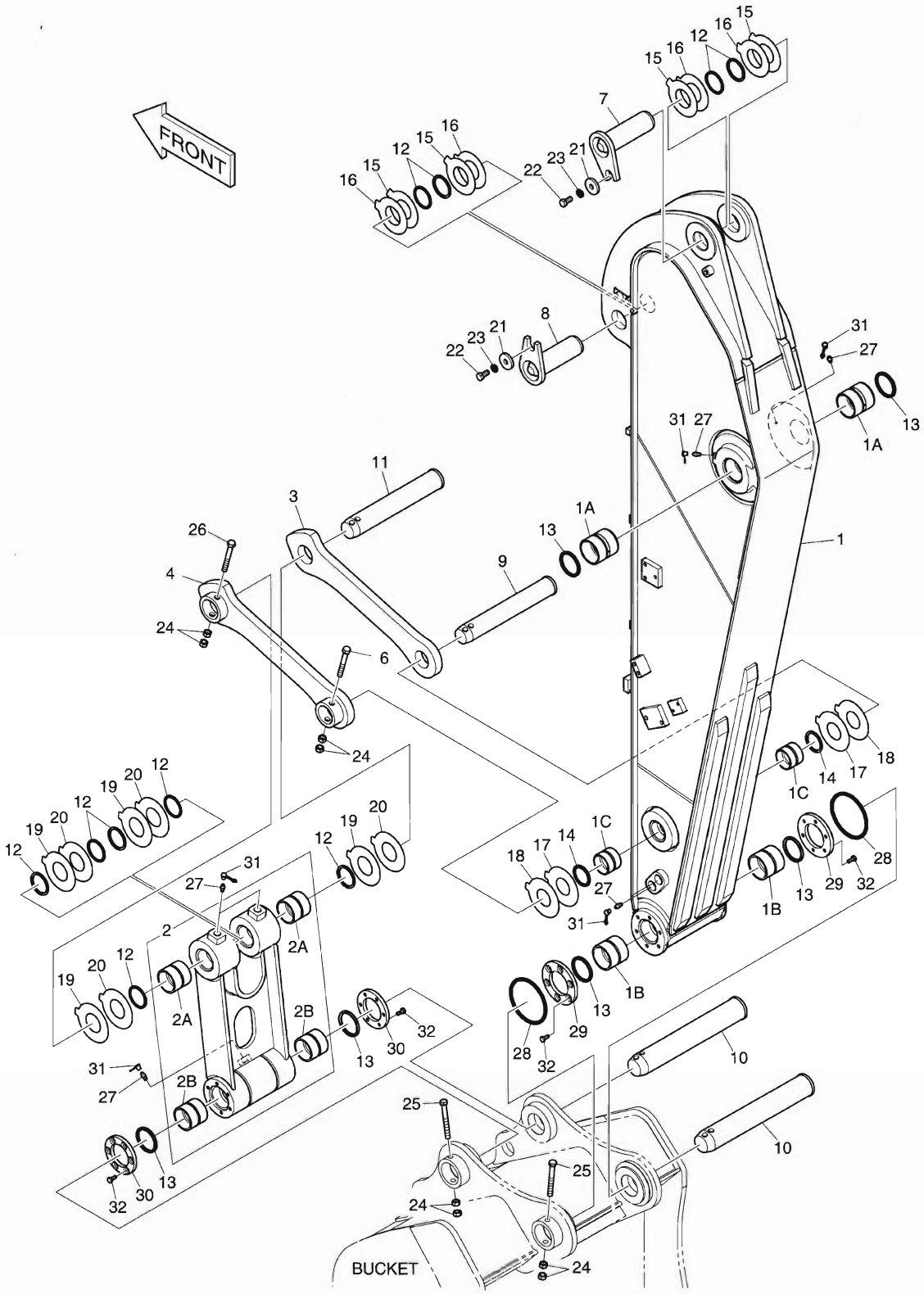

DATE	NOV. 27, 2006
1st EDITION	

Fig. 6720 ARM - 2.2m BALANCIER

Serial No. ;

Key No.	Part No.	Description	Description	Q'ty	S.C	Serial No.	ICA	Replaceable part	
								Part No.	Q'ty
20--	K1015987B	ARM ASS'Y	ENSEMBLE DE BRAS	-	D				
1	K1015988A	ARM;MACH 2.2M	BALANCIER	1					
1A	K1012381	. BUSHING	. DOUILLE	2					
1B	K1000733	. BUSHING	. DOUILLE	2					
1C	110-00243	. BUSHING	. DOUILLE	2					
2	K1012391	LINK ASS'Y;PUSH	ARTICULATION	1					
2A	K1012439	. BUSHING	. DOUILLE	2					
2B	110-00249	. BUSHING	. DOUILLE	2					
3	2155-4019A	LINK:GUIDE(R.H)	ARTICULATION	1					
4	2155-4020B	LINK:GUIDE(L.H)	ARTICULATION	1					
6	DS0001082	BOLT	BOULON A 6 PANS	1					
7	2123-2443	PIN	GOUJON D'ASSEMBLAGE	1					
8	2123-2441	PIN	GOUJON D'ASSEMBLAGE	1					
9	K1012388	PIN	GOUJON D'ASSEMBLAGE	1					
10	2123-2192C	PIN	GOUJON D'ASSEMBLAGE	2					
11	K1012389	PIN	GOUJON D'ASSEMBLAGE	1					
12	2180-1106BD4	SEAL;DUST	JOINT	10					
13	2180-1106BD24	SEAL;DUST	JOINT	6					
14	2180-1106BD3	SEAL;DUST	JOINT	2					
15	DS7752008	SHIM	ENTERTOISE	4					
16	DS7752009	SHIM	ENTERTOISE	4					
17	DS7752067	SHIM	ENTERTOISE	2					
18	DS7752068	SHIM	ENTERTOISE	2					
19	DS7752069	SHIM	ENTERTOISE	4					
20	DS7752070	SHIM	ENTERTOISE	4					
21	2116-1060D6	STOPPER	CHAPEAU	2					
22	S0521366	BOLT M16X2.0X35	BOULON A 6 PANS	2					
23	S5102903	WASHER;SPRING	RONDELLE ELASTIQUE	2					
24	S4012933	NUT M16X2.0	ECROU	8					
25	DS0001084	BOLT	BOULON A 6 PANS	2					
26	DS0001083	BOLT	BOULON A 6 PANS	1					
27	S6710041	NIPPLE	GRAISSEUR	7					
28	180-00077D5	O-RING	JOINT TORIQUE	2					
29	K1000911	SPACER	BAGUE D'ECARTEMENT	2					
30	K1000912A	SPACER	BAGUE D'ECARTEMENT	2					
31	160-00020	CAP;GREASE NIPPLE	CHAPEAU	7					
32	S0712066	BOLT	BOULON A 6 PANS	24					

DATE	NOV. 27, 2006
1st EDITION	

Fig. 6730 ARM PIPING - ARM 2.2m
CONDUITES DE BALANCIER

Serial No. ;

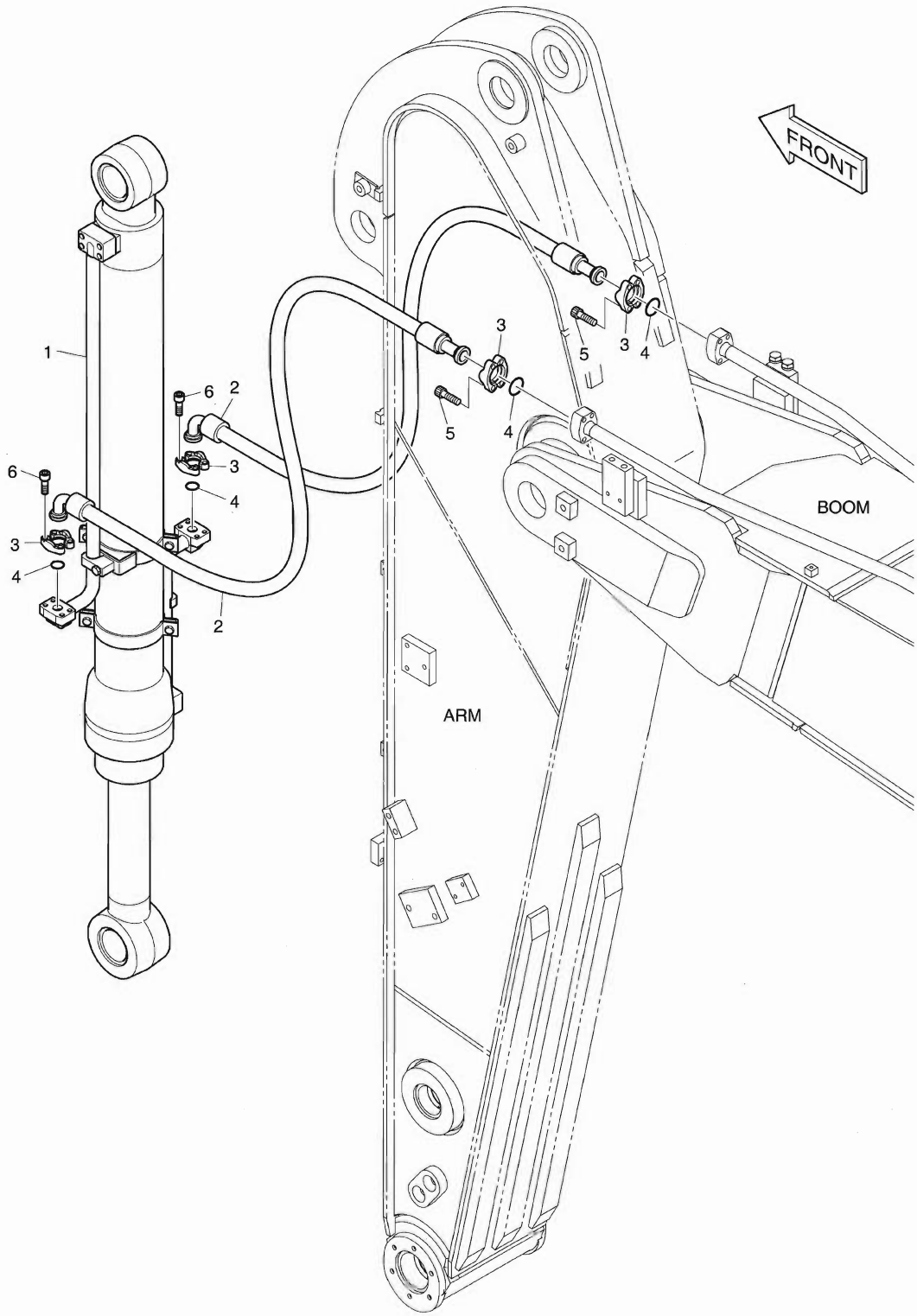

DATE	NOV. 27, 2006
1st EDITION	

Fig. 6730 ARM PIPING - ARM 2.2m CONDUITES DE BALANCIER

Serial No. ;

Key No.	Part No.	Description	Description	Q'ty	S.C	Serial No.	ICA	Replaceable part	
								Part No.	Q'ty
6730--	K1024394	ARM PIPING	CONDUITES DE BALANCIER	-	D				
1	K1024395	CYLINDER;BUCKET	VERIN DE GODET	1					
2	DS2040368	HOSE	TUYAU FLEXIBLE	2					
3	2181-9079	FLANGE;SPLIT	BRIDE	8					
4	2180-1026D2	O-RING	JOINT TORIQUE	4					
5	S2212366	BOLT;SOCKET	BOULON	8					
6	S2212266	BOLT;SOCKET	BOULON	8					

DATE	NOV. 27, 2006
1st EDITION	

Fig. 6740 ARM PIPING - ARM 2.2m (ONE & TWO WAY)
CONDUITES DE BALANCIER

Serial No. ;

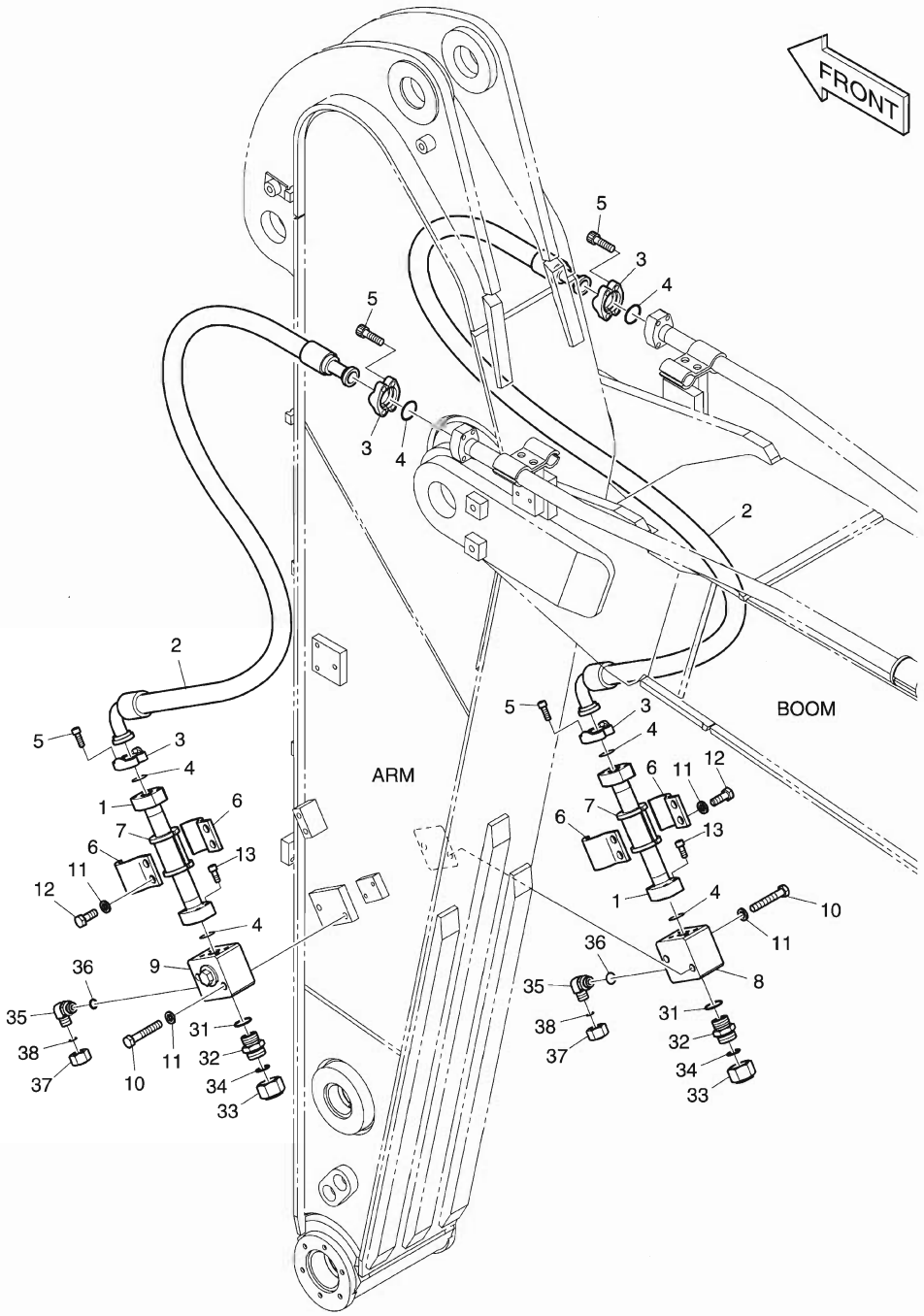

DATE	NOV. 27, 2006
1st EDITION	

Fig. 6740 ARM PIPING - ARM 2.2m (ONE & TWO WAY) CONDUITES DE BALANCIER

Serial No. ;

Key No.	Part No.	Description	Description	Q'ty	S.C	Serial No.	ICA	Replaceable part	
								Part No.	Q'ty
6740--	K1018032A	ARM PIPING-ONE & TWO WAY	CONDUITES DE BALANCIER	-	D				
1	K1025246	PIPE	TUYAU	2					
2	2184-1100D16	HOSE	TUYAU FLEXIBLE	2					
3	2181-9078	FLANGE;SPLIT	BRIDE	8					
4	2180-1026D19	O-RING	JOINT TORIQUE	6					
5	S2212466	BOLT;SOCKET	BOULON	16					
6	K1004056	CLAMP;PIPE	COLLIER	4					
7	161-00281	RUBBER	CAOUTCHOUC	2					
8	K1000334A	VALVE;STOP	VANNE	1					
9	K1000338A	VALVE;STOP	VANNE	1					
10	S0563666	BOLT	BOULON A 6 PANS	4					
11	S5102803	WASHER;SPRING	RONDELLE ELASTIQUE	8					
12	S0562766	BOLT	BOULON A 6 PANS	4					
13	S2212366	BOLT;SOCKET	BOULON	8					
31	S8000291	O-RING	JOINT TORIQUE	2					
32	2181-4133D6	ADAPTER	ADAPTEUR	2					
33	2181-2817D2	PLUG	BOUCHON	2					
34	S8030161	O-RING	JOINT TORIQUE	2					
35	2181-2815D3	ELBOW	COUDE	2					
36	S8000181	O-RING	JOINT TORIQUE	2					
37	2181-2817D4	PLUG	BOUCHON	2					
38	S8030181	O-RING	JOINT TORIQUE	2					

DATE	NOV. 27, 2006
1st EDITION	

Fig. 6750 ARM PIPING - ARM 2.2m(QUICK CLAMP)
CONDUITES DE BALANCIER

Serial No. ;

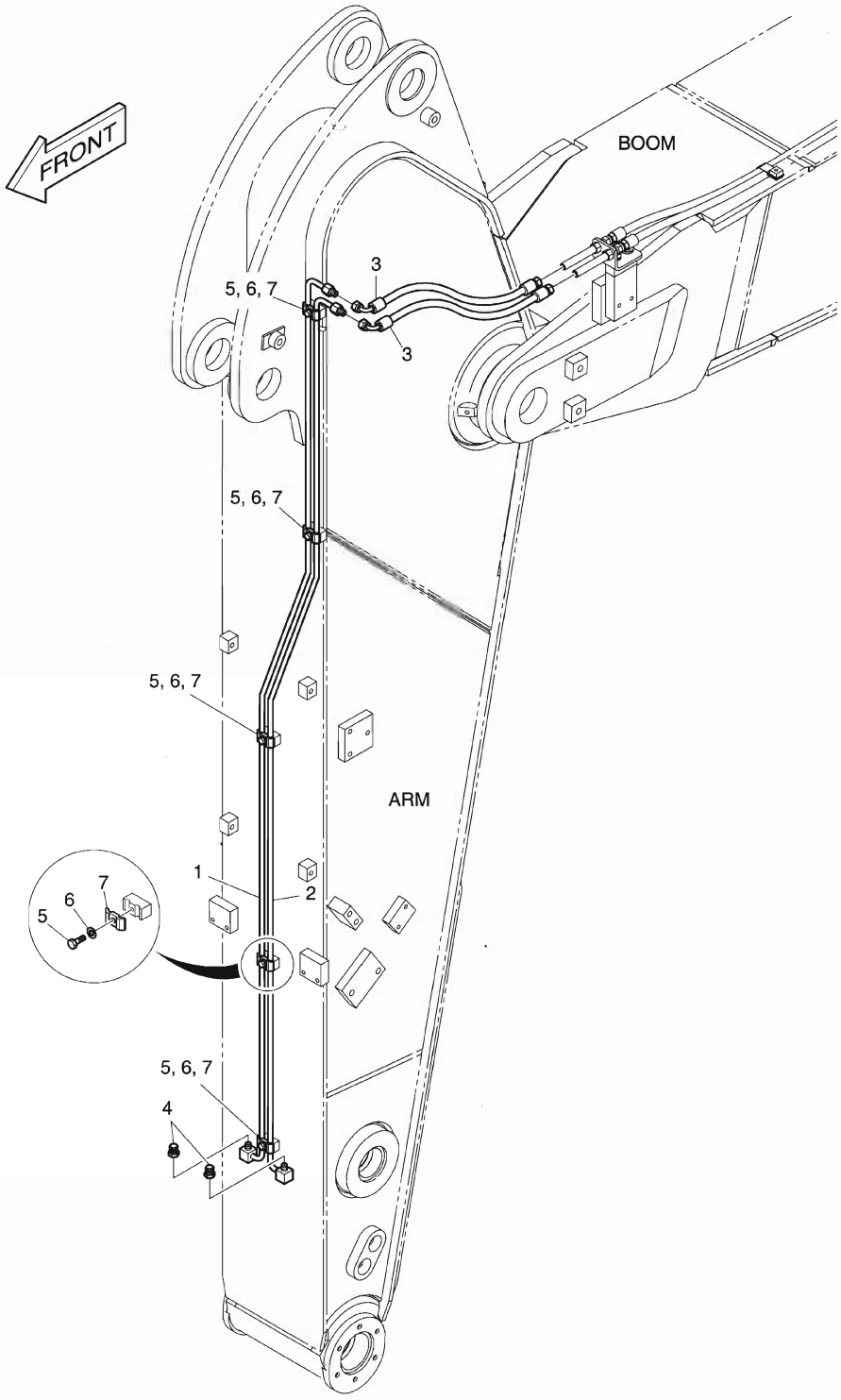

DATE	NOV. 27, 2006
1st EDITION	

Fig. 6750 ARM PIPING - ARM 2.2m(QUICK CLAMP) CONDUITES DE BALANCIER

Serial No. ;

Key No.	Part No.	Description	Description	Q'ty	S.C	Serial No.	ICA	Replaceable part	
								Part No.	Q'ty
6750--	K1018041A	ARM PIPING-QUICK CLAMP	CONDUITES DE BALANCIER	-	D				
1	K1018042A	PIPE	TUYAU	1					
2	K1018043A	PIPE	TUYAU	1					
3	DS2055867	HOSE	TUYAU FLEXIBLE	2					
4	2181-2820D1	PLUG	BOUCHON	2					
5	S0508866	BOLT	BOULON A 6 PANS	5					
6	S5102503	WASHER;SPRING	RONDELLE ELASTIQUE	5					
7	K1004011	CLAMP;PIPE	COLLIER	5					

DATE	NOV. 27, 2006
1st EDITION	

Fig. 6760 ARM PIPING - ARM 2.2m(CLAMSHELL)
CONDUITES DE BALANCIER

Serial No. ;

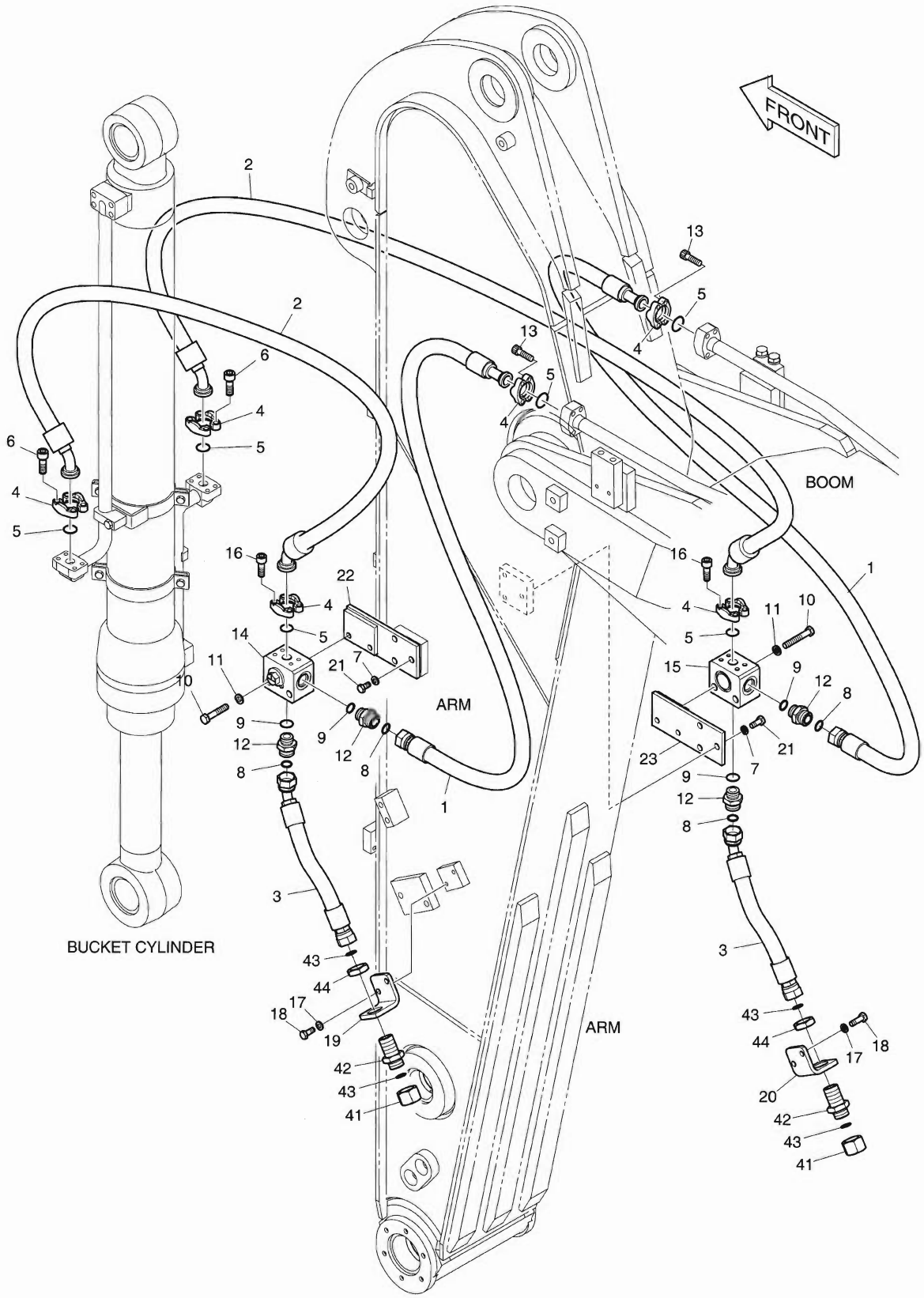

DATE	NOV. 27, 2006
1st EDITION	

Fig. 6760 ARM PIPING - ARM 2.2m(CLAMSHELL) CONDUITES DE BALANCIER

Serial No. ;

Key No.	Part No.	Description	Description	Q'ty	S.C	Serial No.	ICA	Replaceable part	
								Part No.	Q'ty
6760--	K1018044A	ARM PIPING-CLAMSHELL	CONDUITES DE BALANCIER	-	D				
1	DS2016053	HOSE	TUYAU FLEXIBLE	2					
2	DS2048019	HOSE	TUYAU FLEXIBLE	2					
3	DS2012362	HOSE	TUYAU FLEXIBLE	2					
4	2181-9079	FLANGE;SPLIT	BRIDE	12					
5	2180-1026D2	O-RING	JOINT TORIQUE	6					
6	S2212266	BOLT;SOCKET	BOULON	8					
7	S5102703	WASHER;SPRING	RONDELLE ELASTIQUE	6					
8	S8030121	O-RING	JOINT TORIQUE	4					
9	S8000231	O-RING	JOINT TORIQUE	4					
10	S0563466	BOLT	BOULON A 6 PANS	4					
11	S5102803	WASHER;SPRING	RONDELLE ELASTIQUE	4					
12	2181-4133D5	ADAPTER	ADAPTEUR	4					
13	S2212366	BOLT;SOCKET	BOULON	8					
14	K1002939	VALVE;SWITCH(L.H)	VANNE	1					
15	K1002940	VALVE;SWITCH(R.H)	VANNE	1					
16	S2212066	BOLT;SOCKET	BOULON	8					
17	S5102603	WASHER;SPRING	RONDELLE ELASTIQUE	4					
18	S0512066	BOLT	BOULON A 6 PANS	4					
19	K1014759	BRACKET(L.H)	SUPPORT	1					
20	K1015093	BRACKET(R.H)	SUPPORT	1					
21	S0515066	BOLT	BOULON A 6 PANS	6					
22	K1025286	BRACKET(L.H)	SUPPORT	1					
23	K1025336	BRACKET(R.H)	SUPPORT	1					
41	2181-2817D1	PLUG	BOUCHON	2					
42	DS2415007	ADAPTER	ADAPTEUR	2					
43	S8030121	O-RING	JOINT TORIQUE	4					
44	121-00010D8	NUT	ECROU 6 PANS	2					

DATE	NOV. 27, 2006
1st EDITION	

Fig. 6770 ARM PIPING - ARM 2.2m(ROTATING)
CONDUITES DE BALANCIER

Serial No. ;

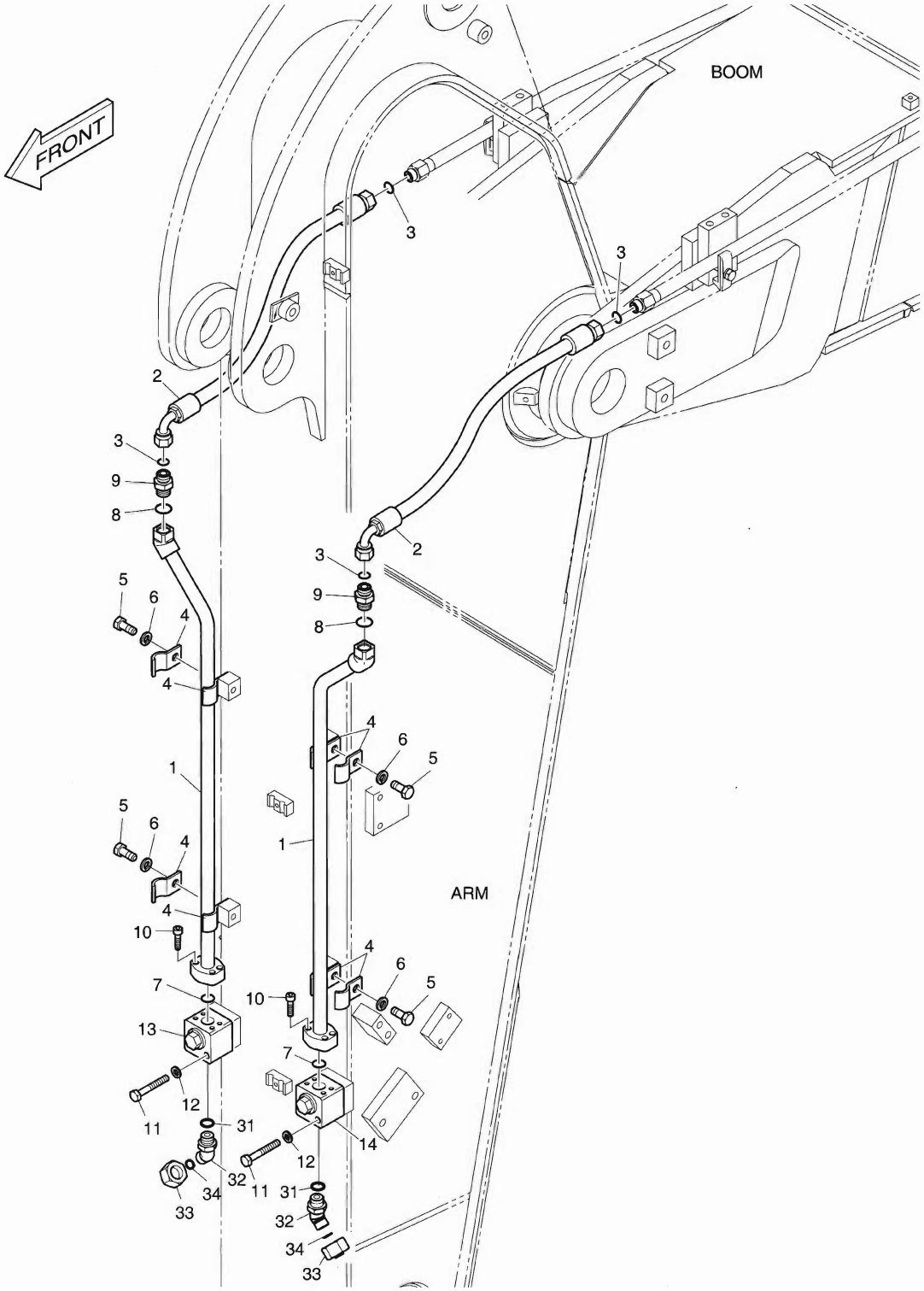

DATE	NOV. 27, 2006
1st EDITION	

Fig. 6770 ARM PIPING - ARM 2.2m(ROTATING) CONDUITES DE BALANCIER

Serial No. ;

Key No.	Part No.	Description	Description	Q'ty	S.C	Serial No.	ICA	Replaceable part	
								Part No.	Q'ty
6770--	K1018036A	ARM PIPING;ROTATING	CONDUITES DE BALANCIER	-	D				
1	K1018037A	PIPE	TUYAU	2					
2	DS2013886	HOSE	TUYAU FLEXIBLE	2					
3	S8030081	O-RING	JOINT TORIQUE	4					
4	124-00299A	CLAMP;PIPE	COLLIER	8					
5	S0515266	BOLT	BOULON A 6 PANS	4					
6	S5102703	WASHER;SPRING	RONDELLE ELASTIQUE	4					
8	S8000181	O-RING	JOINT TORIQUE	2					
7	2180-1026D30	O-RING	JOINT TORIQUE	2					
9	2181-4133D3	ADAPTER	ADAPTEUR	2					
10	S2209266	BOLT;SOCKET	BOULON	8					
11	S0558966	BOLT	BOULON A 6 PANS	4					
12	S5102603	WASHER;SPRING	RONDELLE ELASTIQUE	4					
13	K1006227	VALVE;SWITCH(R.H)	VANNE	1					
14	K1006228	VALVE;SWITCH(L.H)	VANNE	1					
31	S8000181	O-RING	JOINT TORIQUE	2					
32	2181-2816D4	ELBOW	COUDE	2					
33	2181-2817D4	CAP	CHAPEAU	2					
34	S8030081	O-RING	JOINT TORIQUE	2					

DATE	NOV. 27, 2006
1st EDITION	

Fig. 6780 ARM - 3.1m BALANCIER

Serial No. ;

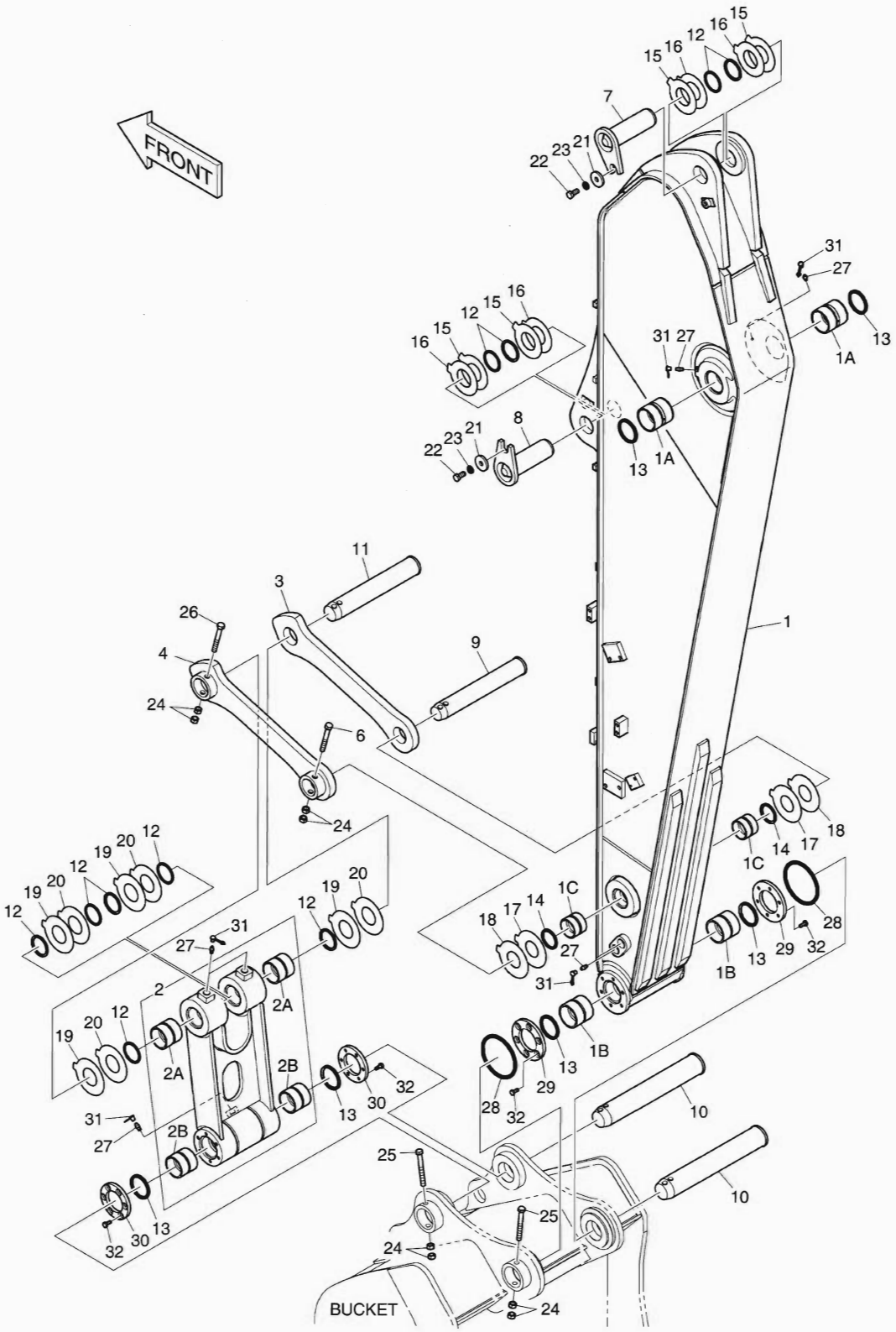

DATE	NOV. 27, 2006
1st EDITION	

Fig. 6780 ARM - 3.1m BALANCIER

Serial No. ;

Key No.	Part No.	Description	Description	Q'ty	S.C	Serial No.	ICA	Replaceable part	
								Part No.	Q'ty
80--	K1015991B	ARM ASS'Y	ENSEMBLE DE BRAS	-	D				
1	K1015992A	ARM;MACH 3.1M	BALANCIER	1					
1A	K1012381	. BUSHING	. DOUILLE	2					
1B	K1000733	. BUSHING	. DOUILLE	2					
1C	110-00243	. BUSHING	. DOUILLE	2					
2	K1012391	LINK ASS'Y;PUSH	ARTICULATION	1					
2A	K1012439	. BUSHING	. DOUILLE	2					
2B	110-00249	. BUSHING	. DOUILLE	2					
3	2155-4019A	LINK:GUIDE(R.H)	ARTICULATION	1					
4	2155-4020B	LINK:GUIDE(L.H)	ARTICULATION	1					
6	DS0001082	BOLT	BOULON A 6 PANS	1					
7	2123-2443	PIN	GOUJON D'ASSEMBLAGE	1					
8	2123-2441	PIN	GOUJON D'ASSEMBLAGE	1					
9	K1012388	PIN	GOUJON D'ASSEMBLAGE	1					
10	2123-2192C	PIN	GOUJON D'ASSEMBLAGE	2					
11	K1012389	PIN	GOUJON D'ASSEMBLAGE	1					
12	2180-1106BD4	SEAL;DUST	JOINT	10					
13	2180-1106BD24	SEAL;DUST	JOINT	6					
14	2180-1106BD3	SEAL;DUST	JOINT	2					
15	DS7752008	SHIM	ENTERTOISE	4					
16	DS7752009	SHIM	ENTERTOISE	4					
17	DS7752067	SHIM	ENTERTOISE	2					
18	DS7752068	SHIM	ENTERTOISE	2					
19	DS7752069	SHIM	ENTERTOISE	4					
20	DS7752070	SHIM	ENTERTOISE	4					
21	2116-1060D6	STOPPER	CHAPEAU	2					
22	S0521366	BOLT M16X2.0X35	BOULON A 6 PANS	2					
23	S5102903	WASHER;SPRING	RONDELLE ELASTIQUE	2					
24	S4012933	NUT M16X2.0	ECROU	8					
25	DS0001084	BOLT	BOULON A 6 PANS	2					
26	DS0001083	BOLT	BOULON A 6 PANS	1					
27	S6710041	NIPPLE	GRAISSEUR	7					
28	180-00077D5	O-RING	JOINT TORIQUE	2					
29	K1000911	SPACER	BAGUE D'ECARTEMENT	2					
30	K1000912A	SPACER	BAGUE D'ECARTEMENT	2					
31	160-00020	CAP;GREASE NIPPLE	CHAPEAU	7					
32	S0712066	BOLT	BOULON A 6 PANS	24					

DATE	NOV. 27, 2006
1st EDITION	

Fig. 6790 ARM PIPING - ARM 3.1m
CONDUITES DE BALANCIER

Serial No. ;

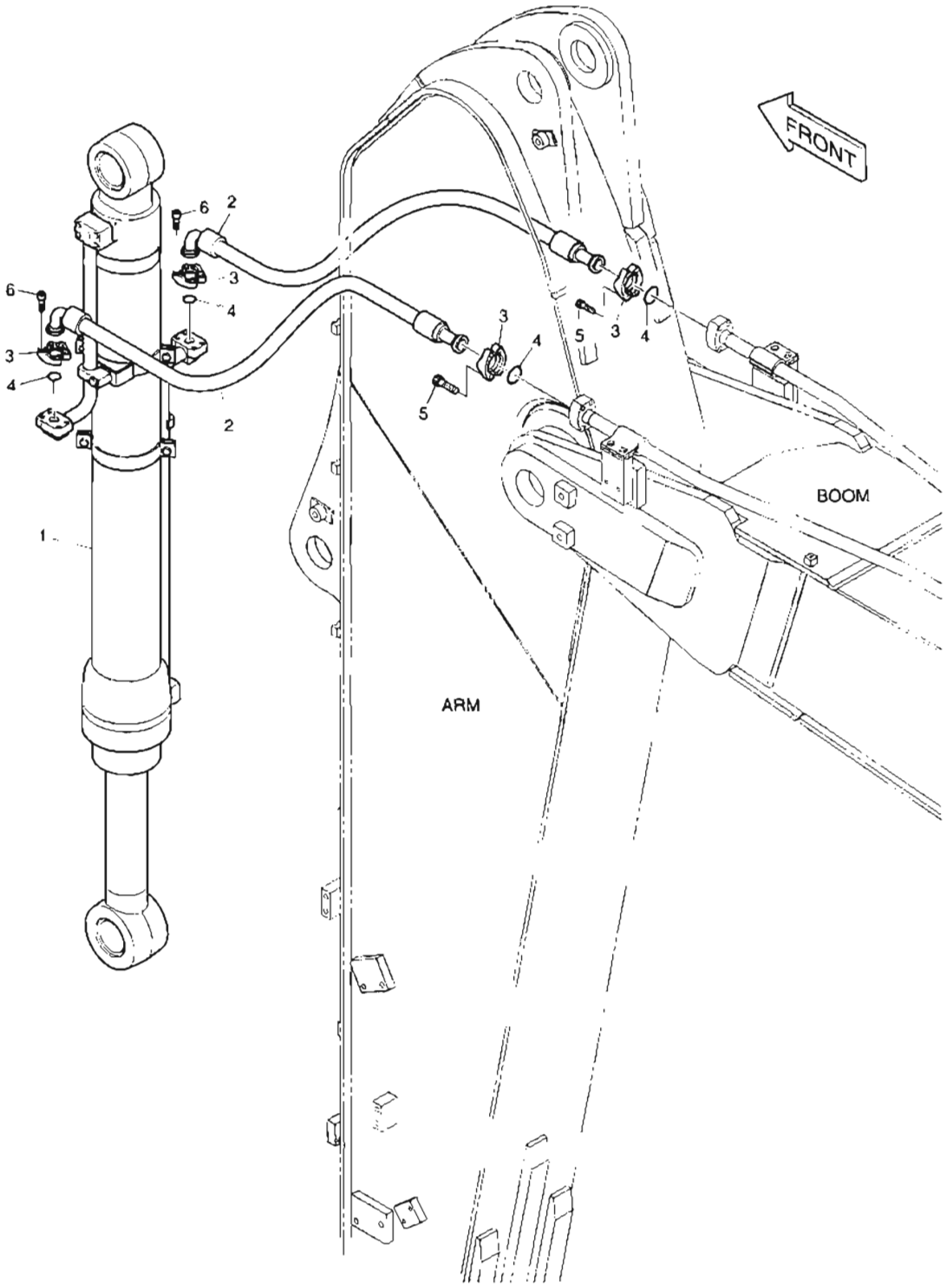

DATE	NOV. 27, 2006
1st EDITION	

Fig. 6790 ARM PIPING - ARM 3.1m CONDUITES DE BALANCIER

Serial No. ;

Key No.	Part No.	Description	Description	Q'ty	S.C	Serial No.	ICA	Replaceable part	
								Part No.	Q'ty
790--	K1023979	ARM PIPING	CONDUITES DE BALANCIER	-	D				
1	K1014826	CYLINDER;BUCKET	VERIN DE GODET	1					
2	DS2040553	HOSE	TUYAU FLEXIBLE	2					
3	2181-9079	FLANGE	BRIDE	8					
4	2180-1026D2	O-RING	JOINT TORIQUE	4					
5	S2212366	BOLT;SOCKET M10X1.5X35	BOULON A 6 PANS CREUX	8					
6	S2212266	BOLT;SOCKET M10X1.5X30	BOULON A 6 PANS CREUX	8					

DATE	NOV. 27, 2006
1st EDITION	

Fig. 6800 ARM PIPING - ARM 3.1m(ONE & TWO WAY)
CONDUITES DE BALANCIER

Serial No. ;

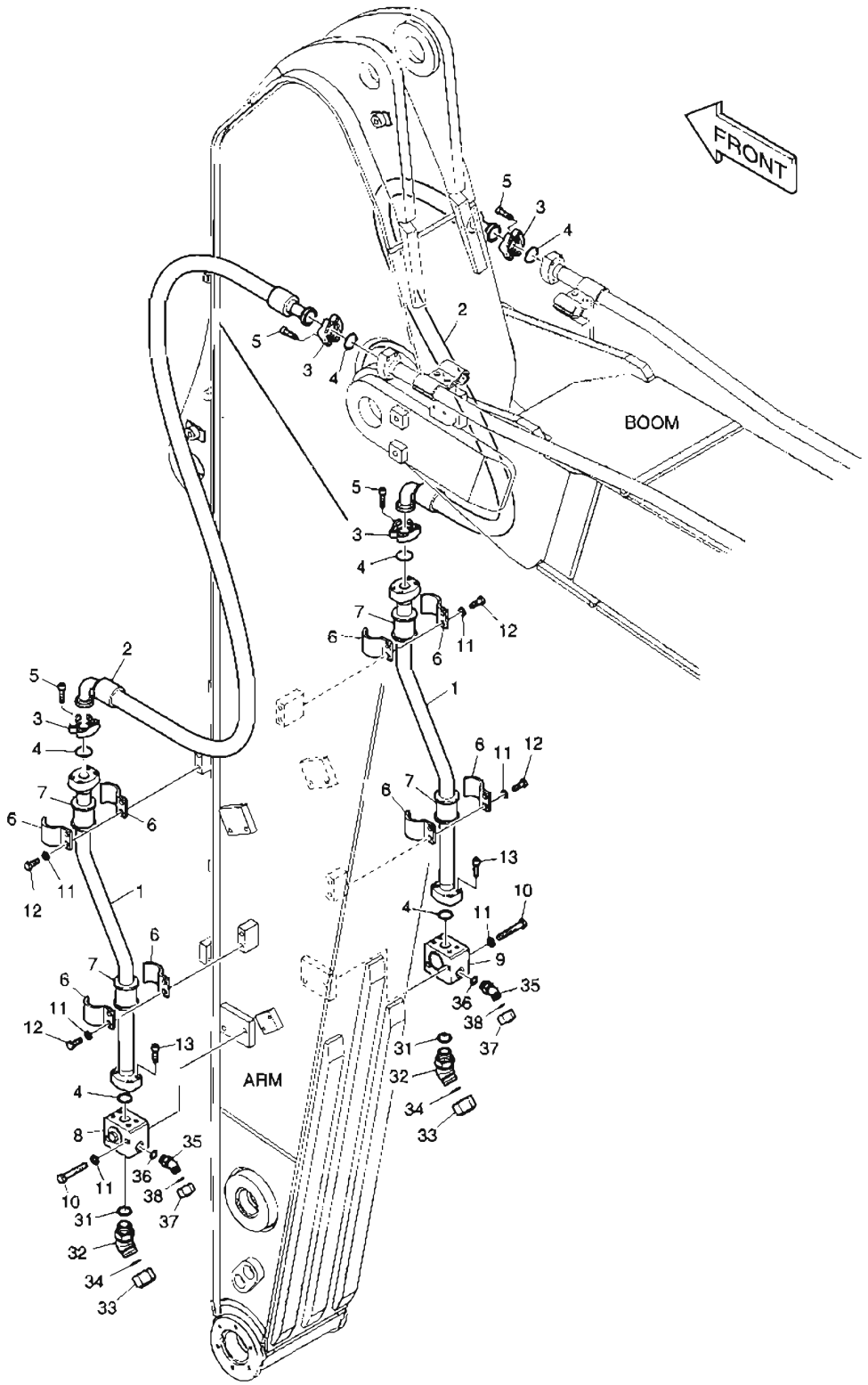

DATE	NOV. 27, 2006
1st EDITION	

Fig. 6800 ARM PIPING - ARM 3.1m(ONE & TWO WAY) CONDUITES DE BALANCIER

Serial No. ;

Key No.	Part No.	Description	Description	Q'ty	S.C	Serial No.	ICA	Replaceable part	
								Part No.	Q'ty
6800--	K1023980	ARM PIPING-ONE & TWO WAY	CONDUITES DE BALANCIER	-	D				
1	K1014834	PIPE	TUYAU	2					
2	DS2040554	HOSE	TUYAU FLEXIBLE	2					
3	2181-9078	FLANGE;SPLIT	BRIDE	8					
4	2180-1026D19	O-RING	JOINT TORIQUE	6					
5	S2212466	BOLT;SOCKET	BOULON	16					
6	K1004056	CLAMP	COLLIER	8					
7	161-00281	RUBBER	CAOUTCHOUC	4					
8	K1000334A	VALVE;STOP(L.H)	VANNE	1					
9	K1000338A	VALVE;STOP(R.H)	VANNE	1					
10	S0563666	BOLT	BOULON A 6 PANS	4					
11	S5102803	WASHER;SPRING	RONDELLE ELASTIQUE	12					
12	S0562766	BOLT	BOULON A 6 PANS	8					
13	S2212366	BOLT;SOCKET	BOULON	8					
31	S8000291	O-RING	JOINT TORIQUE	2					
32	2181-2816D2	ELBOW	COUDE	2					
33	2181-2817D2	PLUG	BOUCHON	2					
34	S8030161	O-RING	JOINT TORIQUE	2					
35	2181-2816D4	ELBOW	COUDE	2					
36	S8000181	O-RING	JOINT TORIQUE	2					
37	2181-2817D4	PLUG	BOUCHON	2					
38	S8030181	O-RING	JOINT TORIQUE	2					

DATE	NOV. 27, 2006
1st EDITION	

Fig. 6810 ARM PIPING - ARM 3.1m(QUICK CLAMP)
CONDUITES DE BALANCIER

Serial No. ;

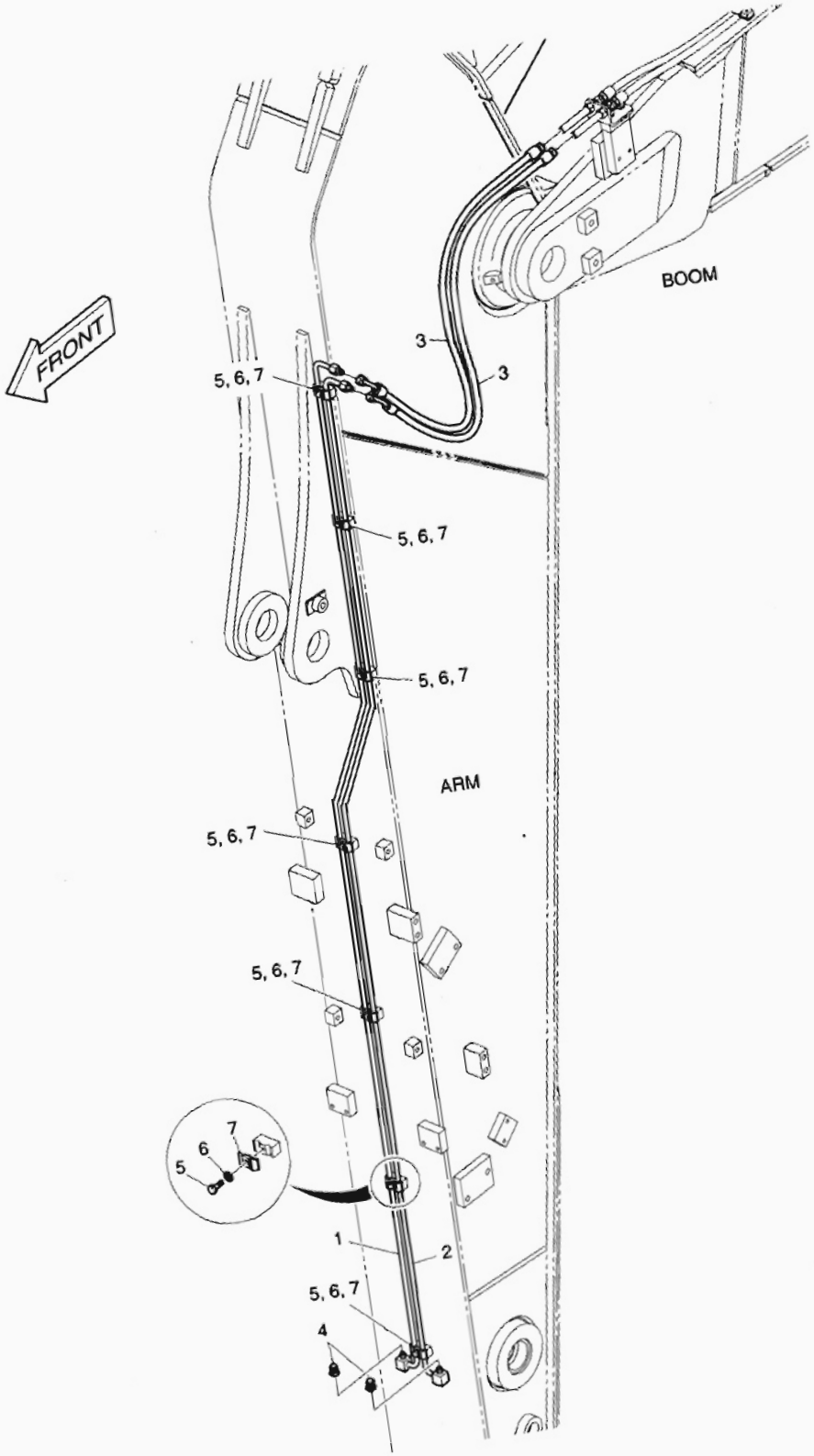

DATE	NOV. 27, 2006
1st EDITION	

Fig. 6810 ARM PIPING - ARM 3.1m(QUICK CLAMP) CONDUITES DE BALANCIER

Serial No. ;

Key No.	Part No.	Description	Description	Q'ty	S.C	Serial No.	ICA	Replaceable part	
								Part No.	Q'ty
6810--	K1023986A	ARM PIPING-QUICK CLAMP	CONDUITES DE BALANCIER	-	D				
1	K1025324	PIPE	TUYAU	1					
2	K1025325	PIPE	TUYAU	1					
3	DS2055866	HOSE	TUYAU FLEXIBLE	2					
4	2181-2820D1	PLUG	BOUCHON	2					
5	S0508866	BOLT	BOULON A 6 PANS	7					
6	S5102503	WASHER;SPRING	RONDELLE ELASTIQUE	7					
7	K1004011	CLAMP;PIPE	COLLIER	7					

DATE	NOV. 27, 2006
1st EDITION	

Fig. 6820 ARM PIPING - ARM 3.1m(CLAMSHELL)
CONDUITES DE BALANCIER

Serial No. ;

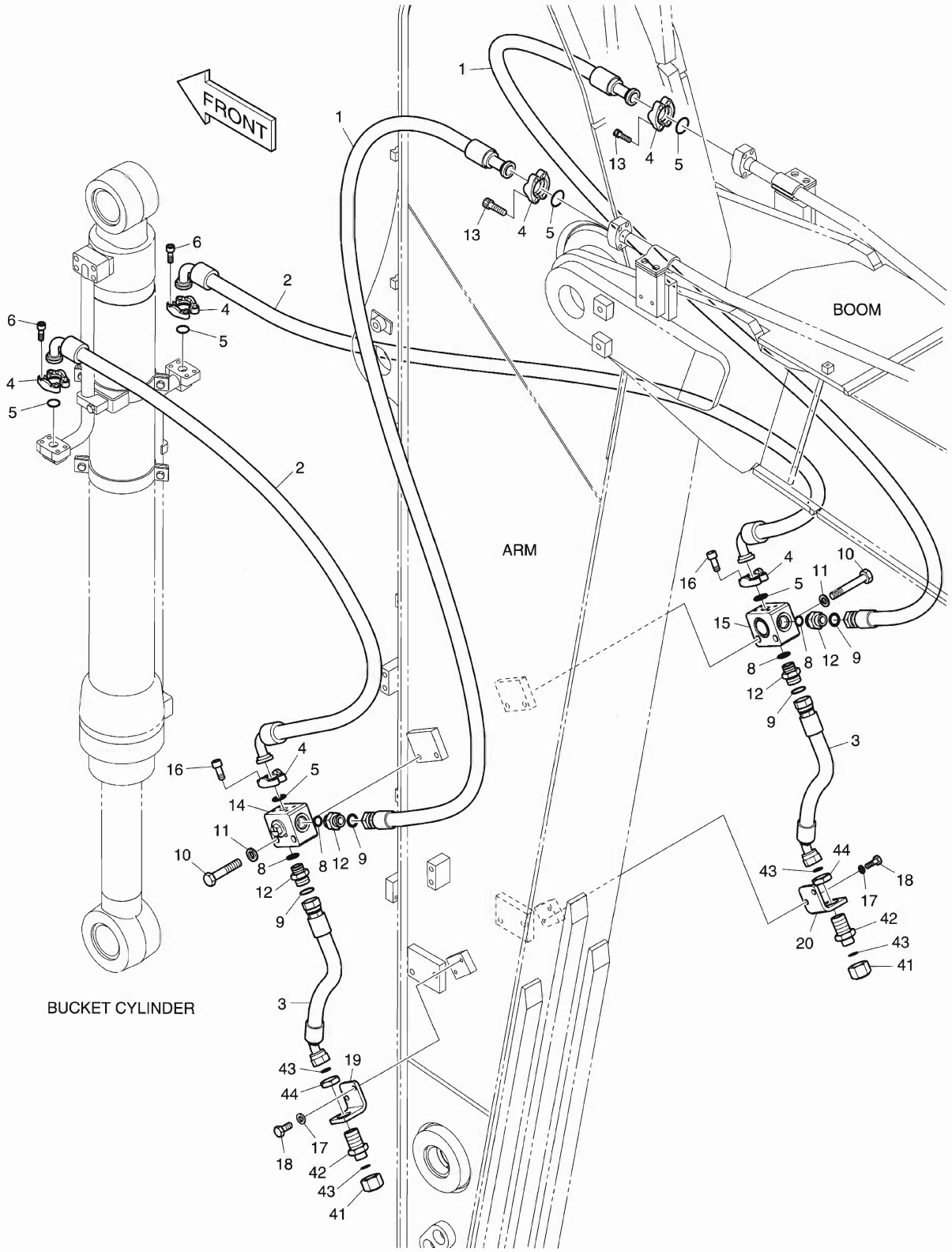

DATE	NOV. 27, 2006
1st EDITION	

Fig. 6820 ARM PIPING - ARM 3.1m(CLAMSHELL) CONDUITES DE BALANCIER

Serial No. ;

Key No.	Part No.	Description	Description	Q'ty	S.C	Serial No.	ICA	Replaceable part	
								Part No.	Q'ty
6820--	K1023987A	ARM PIPING-CLAMSHELL	CONDUITES DE BALANCIER	-	D				
1	DS2016098	HOSE	TUYAU FLEXIBLE	2					
2	DS2045439	HOSE	TUYAU FLEXIBLE	2					
3	DS2012362	HOSE	TUYAU FLEXIBLE	2					
4	2181-9079	FLANGE;SPLIT	BRIDE	12					
5	2180-1026D2	O-RING	JOINT TORIQUE	6					
6	S2212266	BOLT;SOCKET	BOULON	8					
8	S8030121	O-RING	JOINT TORIQUE	4					
9	S8000231	O-RING	JOINT TORIQUE	4					
10	S0563466	BOLT	BOULON A 6 PANS	4					
11	S5102803	WASHER;SPRING	RONDELLE ELASTIQUE	4					
12	2181-4133D5	ADAPTER	ADAPTEUR	4					
13	S2212366	BOLT;SOCKET	BOULON	8					
14	K1002939	VALVE;SWITCH(L.H)	VANNE	1					
15	K1002940	VALVE;SWITCH(R.H)	VANNE	1					
16	S2212066	BOLT;SOCKET	BOULON	8					
17	S5102603	WASHER;SPRING	RONDELLE ELASTIQUE	4					
18	S0512066	BOLT	BOULON A 6 PANS	4					
19	K1014759	BRACKET	SUPPORT	1					
20	K1015093	BRACKET	SUPPORT	1					
41	2181-2817D1	PLUG	BOUCHON	2					
42	DS2415007	ADAPTER	ADAPTEUR	2					
43	S8030121	O-RING	JOINT TORIQUE	4					
44	121-00010D8	NUT	ECROU 6 PANS	2					

DATE	NOV. 27, 2006
1st EDITION	

Fig. 6830 ARM PIPING - ARM 3.1m(ROTATING) CONDUITES DE BALANCIER

Serial No. ;

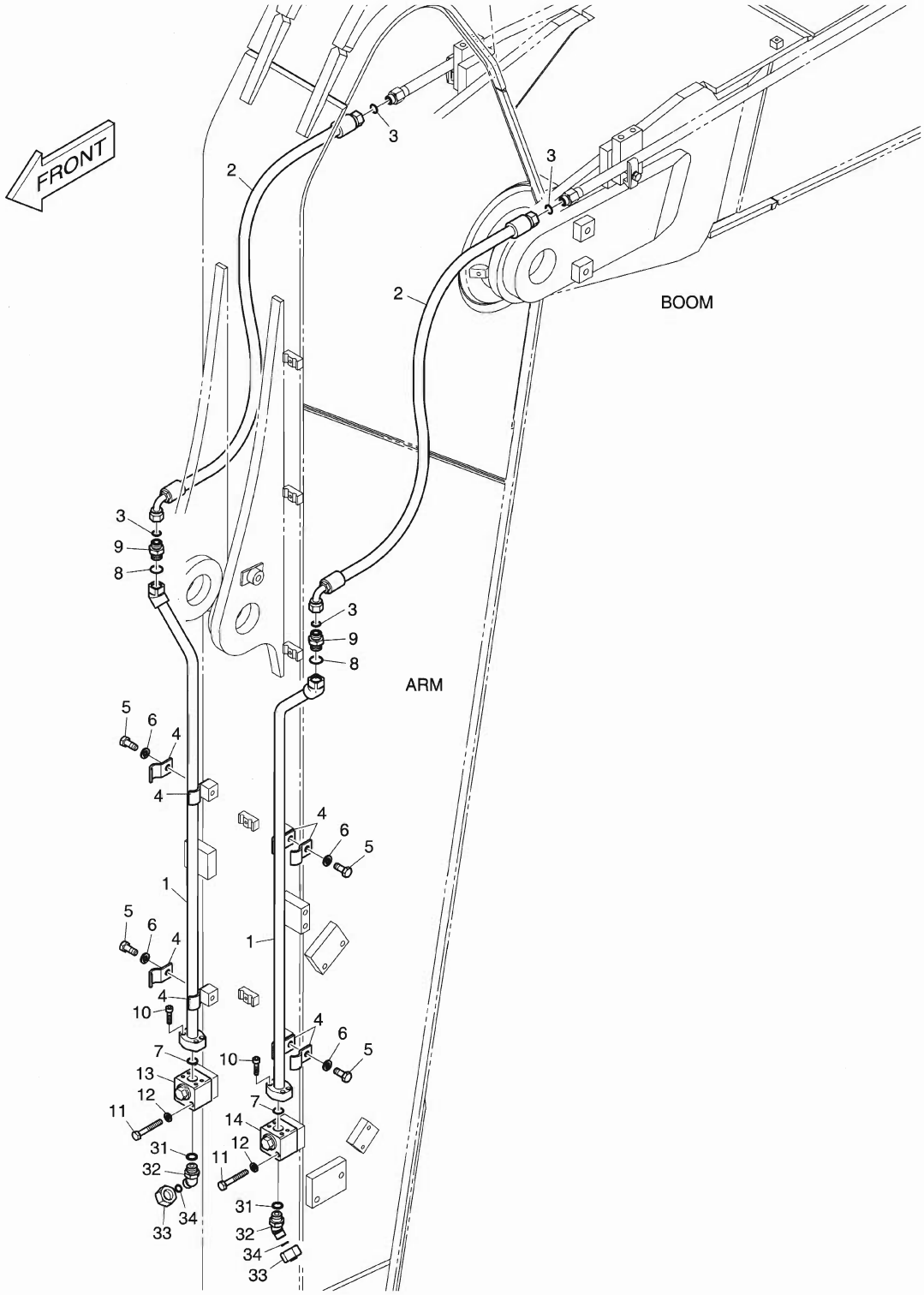

DATE	NOV. 27, 2006
1st EDITION	

Fig. 6830 ARM PIPING - ARM 3.1m(ROTATING) CONDUITES DE BALANCIER

Serial No. ;

Key No.	Part No.	Description	Description	Q'ty	S.C	Serial No.	ICA	Replaceable part	
								Part No.	Q'ty
6830--	K1023983A	ARM PIPING;ROTATING	CONDUITES DE BALANCIER	-	D				
1	K1014840B	PIPE	TUYAU	2					
2	DS2013621	HOSE	TUYAU FLEXIBLE	2					
3	S8030081	O-RING	JOINT TORIQUE	4					
4	124-00299A	CLAMP;PIPE	COLLIER	8					
5	S0515266	BOLT	BOULON A 6 PANS	4					
6	S5102703	WASHER;SPRING	RONDELLE ELASTIQUE	4					
7	2180-1026D30	O-RING	JOINT TORIQUE	2					
8	S8000181	O-RING	JOINT TORIQUE	2					
9	2181-4133D3	ADAPTER	ADAPTEUR	2					
10	S2209266	BOLT;SOCKET	BOULON	8					
11	S0558966	BOLT	BOULON A 6 PANS	4					
12	S5102603	WASHER;SPRING	RONDELLE ELASTIQUE	4					
13	K1006227	VALVE;SWITCH(R.H)	VANNE	1					
14	K1006228	VALVE;SWITCH(L.H)	VANNE	1					
31	S8000181	O-RING	JOINT TORIQUE	2					
32	2181-2816D4	ELBOW	COUDE	2					
33	2181-2817D4	CAP	CHAPEAU	2					
34	S8030081	O-RING	JOINT TORIQUE	2					

Fig. 6840 BUCKET ASS'Y - 0.66m³(36") - SIDE PIN
ENSEMBLE DE Ggodet

Serial No. ;

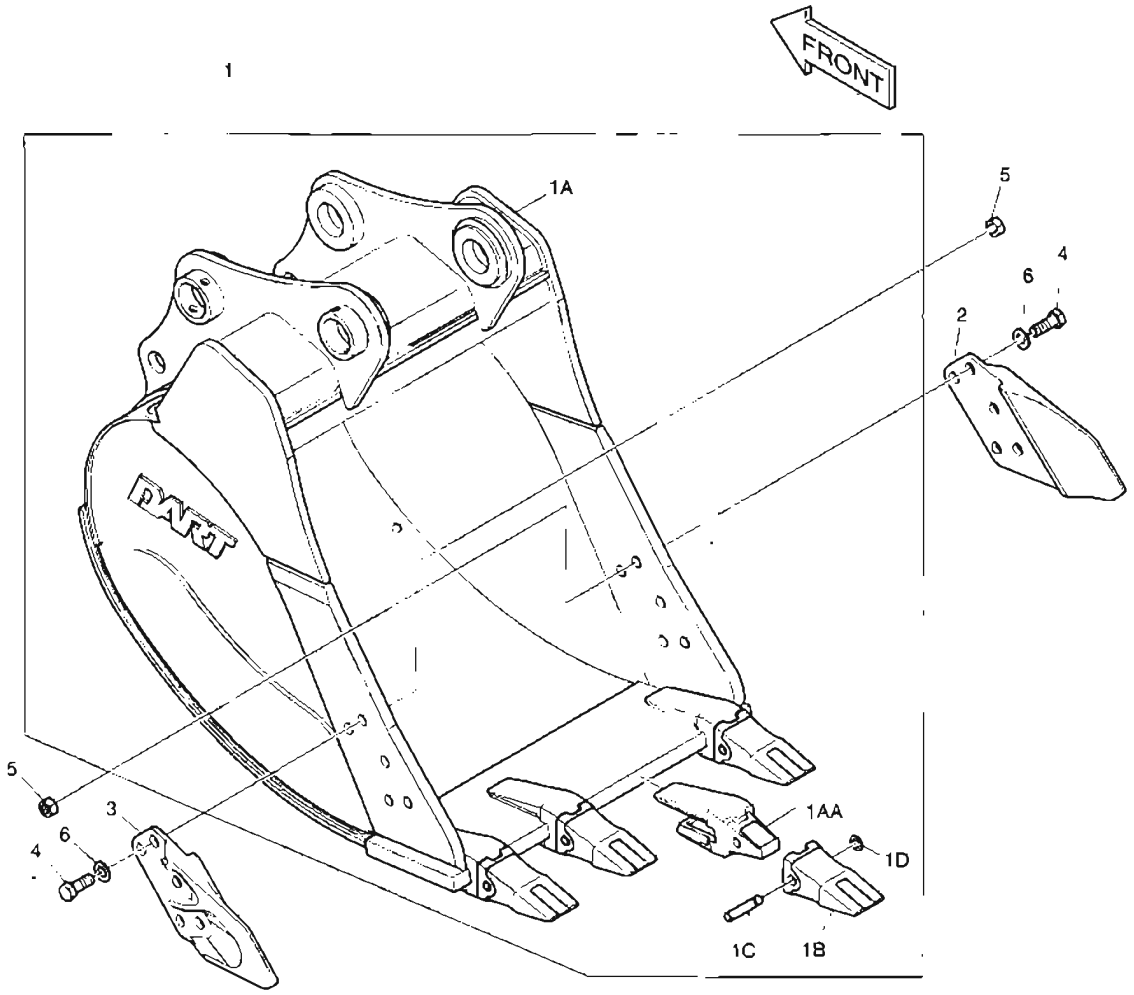

DATE	NOV. 27, 2006
1st EDITION	

Fig. 6840 BUCKET ASS'Y - 0.66m³(36") - SIDE PIN ENSEMBLE DE GODET

Serial No. ;

Key No.	Part No.	Description	Description	Q'ty	S.C	Serial No.	ICA	Replaceable part	
								Part No.	Q'ty
6840--	K1013165	BUCKET ASS'Y-0.66m³	GODET	1					
1	K1013166	BUCKET;WITH TOOTH-0.66m³	GODET	1	D				
1A	K1013167	. BUCKET;WELD-0.66m³	. GODET	1					
1AA	2713-1218	.. ADAPTER;TOOTH	.. DENT DE ADAPTEUR	4					
1B	713-00024	. TOOTH;POINT	. DENT	4					
1C	2705-1020	. PIN;LOCKING	. GOUPILLE	4					
1D	2114-1848A	. WASHER;LOCKING	. RONDELLE	4					
2	2713-1059A	CUTTER;SIDE(R.H)	COIN DE GODET(RH)	1					
3	2713-1060A	CUTTER;SIDE(L.H)	COIN DE GODET(LH)	1					
4	S0574861	BOLT	BOULON A 6 PANS	10					
5	S4013333	NUT	ECROU 6 PANS	10					
6	2114-1831A	WASHER;HARD	RONDELLE	10					

DATE	NOV. 27, 2006
1st EDITION	

Fig. 6850 BUCKET ASS'Y - 0.73m³(39") - SIDE PIN ENSEMBLE DE GODET

Serial No. ;

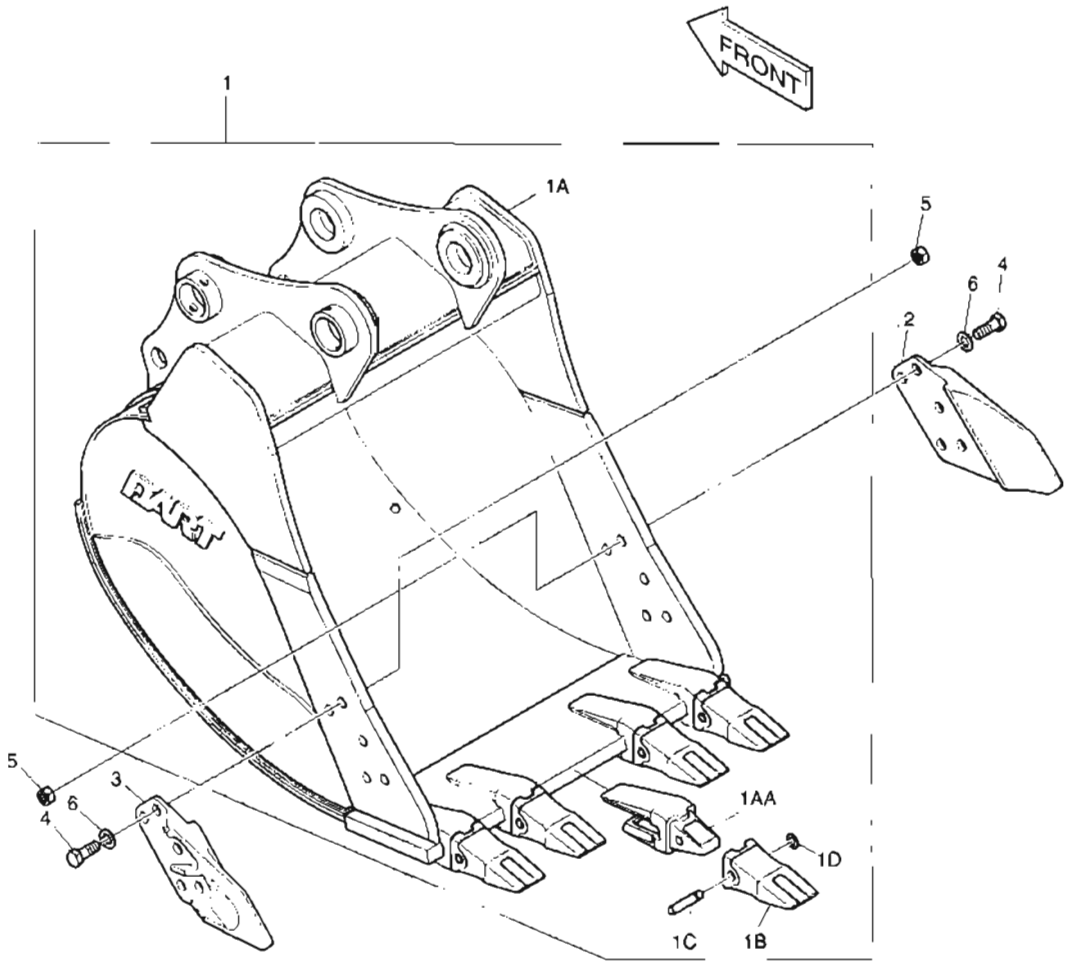

DATE	NOV. 27, 2006
1st EDITION	

Fig. 6850 BUCKET ASS'Y - 0.73m³(39") - SIDE PIN
ENSEMBLE DE GODET

Serial No. ;

Key No.	Part No.	Description	Description	Q'ty	S.C	Serial No.	ICA	Replaceable part	
								Part No.	Q'ty
6850--	K1013168	BUCKET ASS'Y-0.73m³	ENSEMBLE GODET	1					
1	K1013169	BUCKET;WITH TOOTH-0.73m³	GODET	1	D				
1A	K1013170	. BUCKET;WELD-0.73m³	. GODET	1					
1AA	2713-1218	.. ADAPTER;TOOTH	.. DENT DE ADAPTEUR	5					
1B	713-00024	. TOOTH;POINT	. DENT	5					
1C	2705-1020	. PIN;LOCKING	. GOUPILLE	5					
1D	2114-1848A	. WASHER;LOCKING	. RONDELLE	5					
2	2713-1059A	CUTTER;SIDE(R.H)	COIN DE GODET(RH)	1					
3	2713-1060A	CUTTER;SIDE(L.H)	COIN DE GODET(LH)	1					
4	S0574861	BOLT	BOULON A 6 PANS	10					
5	S4013333	NUT	ECROU 6 PANS	10					
6	2114-1831A	WASHER;HARD	RONDELLE	10					

DATE	NOV. 27, 2006
1st EDITION	

Fig. 6860 BUCKET ASS'Y - 0.8m³(42") - SIDE PIN
ENSEMBLE DE GODET

Serial No. ;

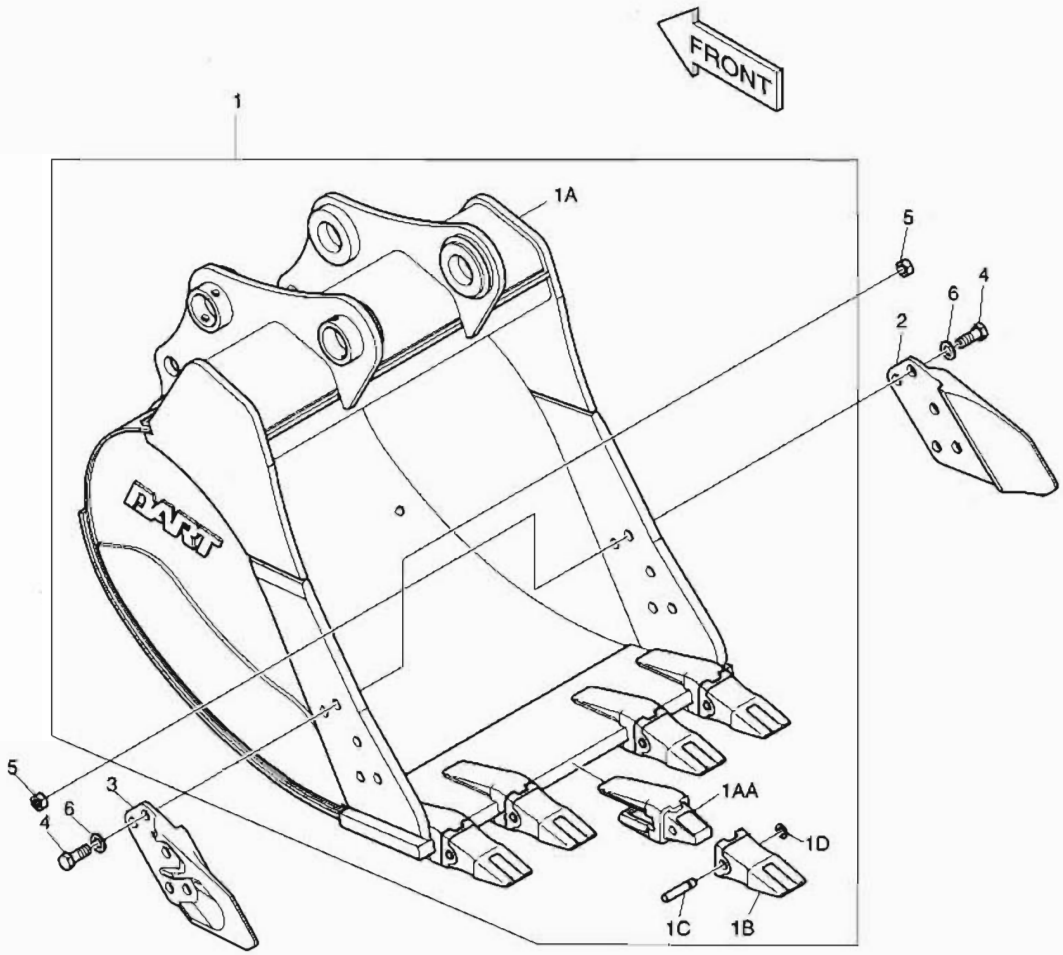

DATE	NOV. 27, 2006
1st EDITION	

Fig. 6860 BUCKET ASS'Y - 0.8m³(42") - SIDE PIN ENSEMBLE DE GODET

Serial No. ;

Key No.	Part No.	Description	Description	Q'ty	S.C	Serial No.	ICA	Replaceable part	
								Part No.	Q'ty
6860--	K1013171	BUCKET ASS'Y-0.8m³	ENSEMBLE GODET	1					
1	K1013172	BUCKET;WITH TOOTH-0.8m³	GODET	1	D				
1A	K1013173	. BUCKET;WELD-0.8m³	. GODET	1					
1AA	2713-1218	.. ADAPTER;TOOTH	.. DENT DE ADAPTEUR	5					
1B	713-00024	. TOOTH;POINT	. DENT	5					
1C	2705-1020	. PIN;LOCKING	. GOUPILLE	5					
1D	2114-1848A	. WASHER;LOCKING	. RONDELLE	5					
2	2713-1059A	CUTTER;SIDE(R.H)	COIN DE GODET(RH)	1					
3	2713-1060A	CUTTER;SIDE(L.H)	COIN DE GODET(LH)	1					
4	S0574861	BOLT	BOULON A 6 PANS	10					
5	S4013333	NUT	ECROU 6 PANS	10					
6	2114-1831A	WASHER;HARD	RONDELLE	10					

DATE	NOV. 27, 2006
1st EDITION	

Fig. 6870 MAIN PIPING - ARTI BOOM
CONDUITES DE BATI PRINCIPAL

Serial No. ;

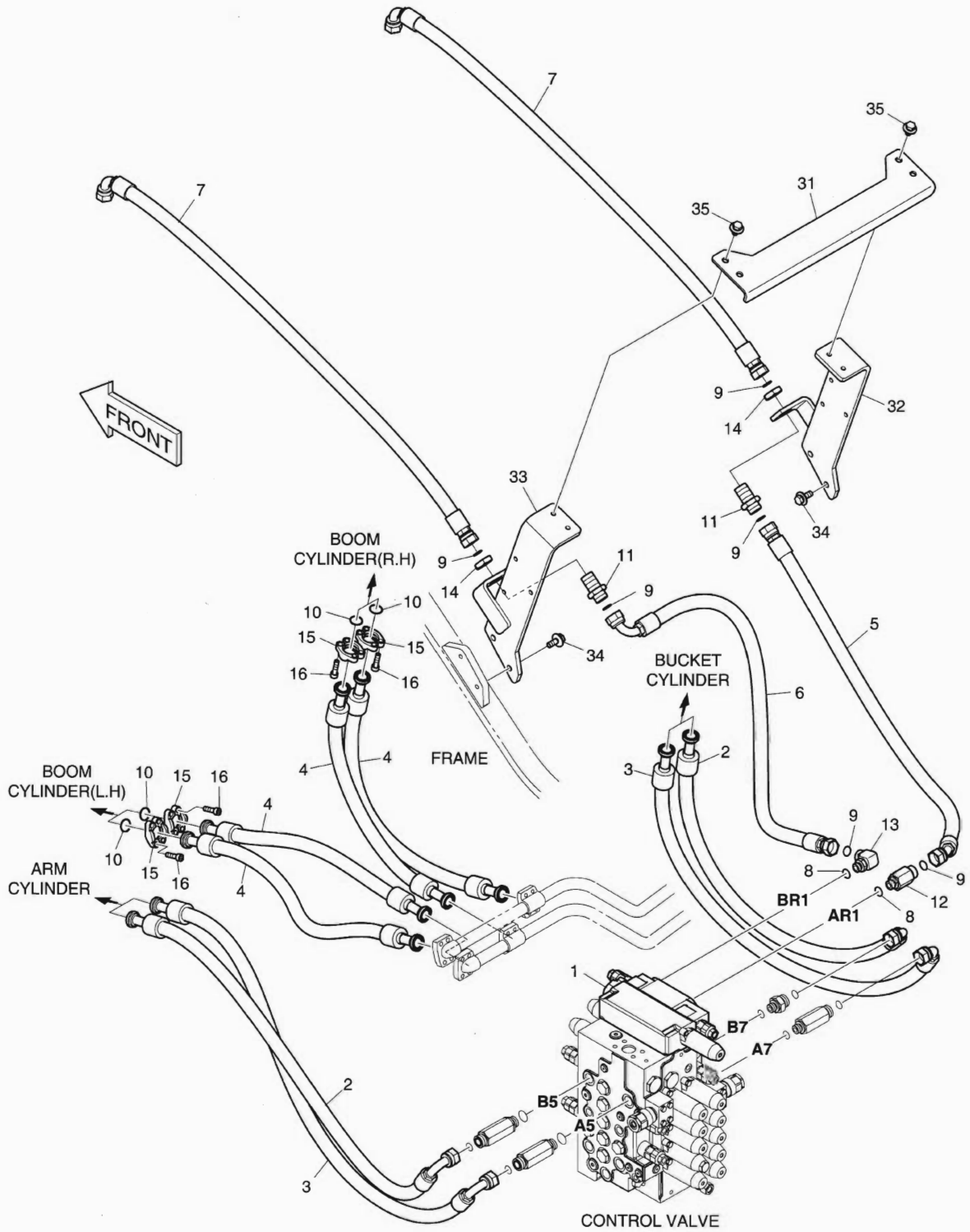

DATE	NOV. 27, 2006
1st EDITION	

Fig. 6870 MAIN PIPING - ARTI BOOM CONDUITES DE BATI PRINCIPAL

Serial No. ;

Key No.	Part No.	Description	Description	Q'ty	S.C	Serial No.	ICA	Replaceable part	
								Part No.	Q'ty
870--	K1013553A	MAIN PIPING;ARTI BOOM	CONDUITES DE BATI	-	D				
1	K1013536	VALVE;CONTROL(ARTI BOOM)	VANNE	1					
2	DS2025013	HOSE	TUYAU FLEXIBLE	2					
3	DS2025082	HOSE	TUYAU FLEXIBLE	2					
4	DS2038227	HOSE	TUYAU FLEXIBLE	4					
5	DS2013396	HOSE	TUYAU FLEXIBLE	1					
6	DS2013140	HOSE	TUYAU FLEXIBLE	1					
7	DS2013200	HOSE	TUYAU FLEXIBLE	2					
8	S8000181	O-RING	JOINT TORIQUE	2					
9	S8030121	O-RING	JOINT TORIQUE	6					
10	2180-1026D2	O-RING	JOINT TORIQUE	4					
11	DS2415007	ADAPTER	ADAPTEUR	2					
12	DS2257003	ADAPTER	ADAPTEUR	1					
13	2181-2294D1	ELBOW	COUDE	1					
14	121-00010D8	NUT	ECROU 6 PANS	2					
15	2181-9079	FLANGE	BRIDE	8					
16	S2212466	BOLT;SOCKET M10X1.5X40	BOULON A 6 PANS CREUX	16					
31	K1013596	BRACKET	SUPPORT	1					
32	K1023924	BRACKET	SUPPORT	1					
33	K1023923	BRACKET	SUPPORT	1					
34	DS0025020	BOLT;SET	BOULON A 6 PANS	4					
35	DS0025019	BOLT;SET	BOULON A 6 PANS	4					

DATE	NOV. 27, 2006
1st EDITION	

Fig. 6880 PILOT PIPING - ARTI BOOM
CONDUITES DE PILOTE

Serial No. ;

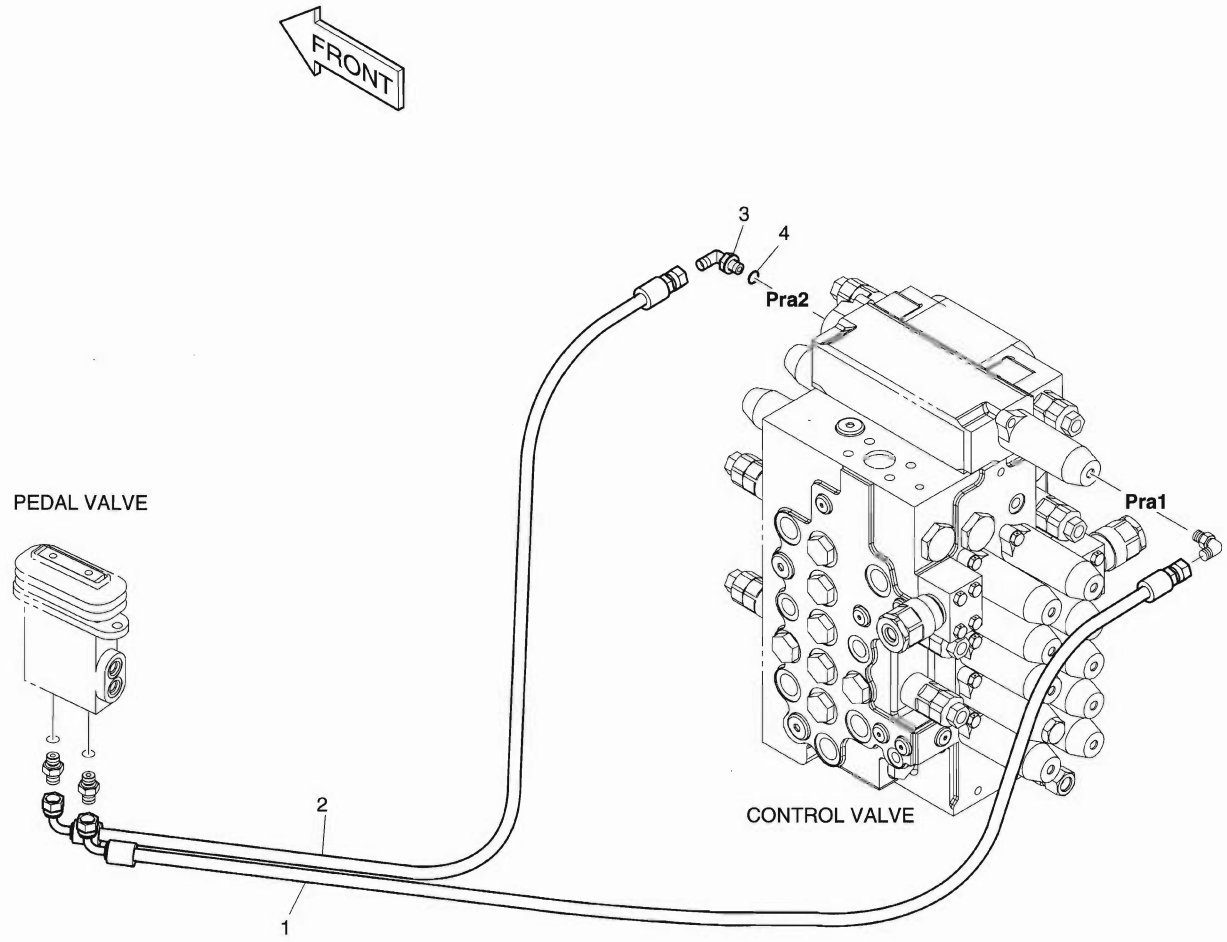

DATE	NOV. 27, 2006
1st EDITION	

Fig. 6880 PILOT PIPING - ARTI BOOM
CONDUITES DE PILOTE

Serial No. ;

Key No.	Part No.	Description	Description	Q'ty	S.C	Serial No.	ICA	Replaceable part	
								Part No.	Q'ty
6880--	K1023881	PILOT PIPING;ARTI	CONDUITES DE PILOTE	-	D				
1	DS2093099	HOSE	TUYAU FLEXIBLE	1					
2	DS2093283	HOSE	TUYAU FLEXIBLE	1					
3	2181-1702D4	ELBOW	COUDE	1					
4	S8000111	O-RING	JOINT TORIQUE	1					

DATE	NOV. 27, 2006
1st EDITION	

Fig. 6890 ARTI BOOM
PERCHE D'ARTI

Serial No. ;

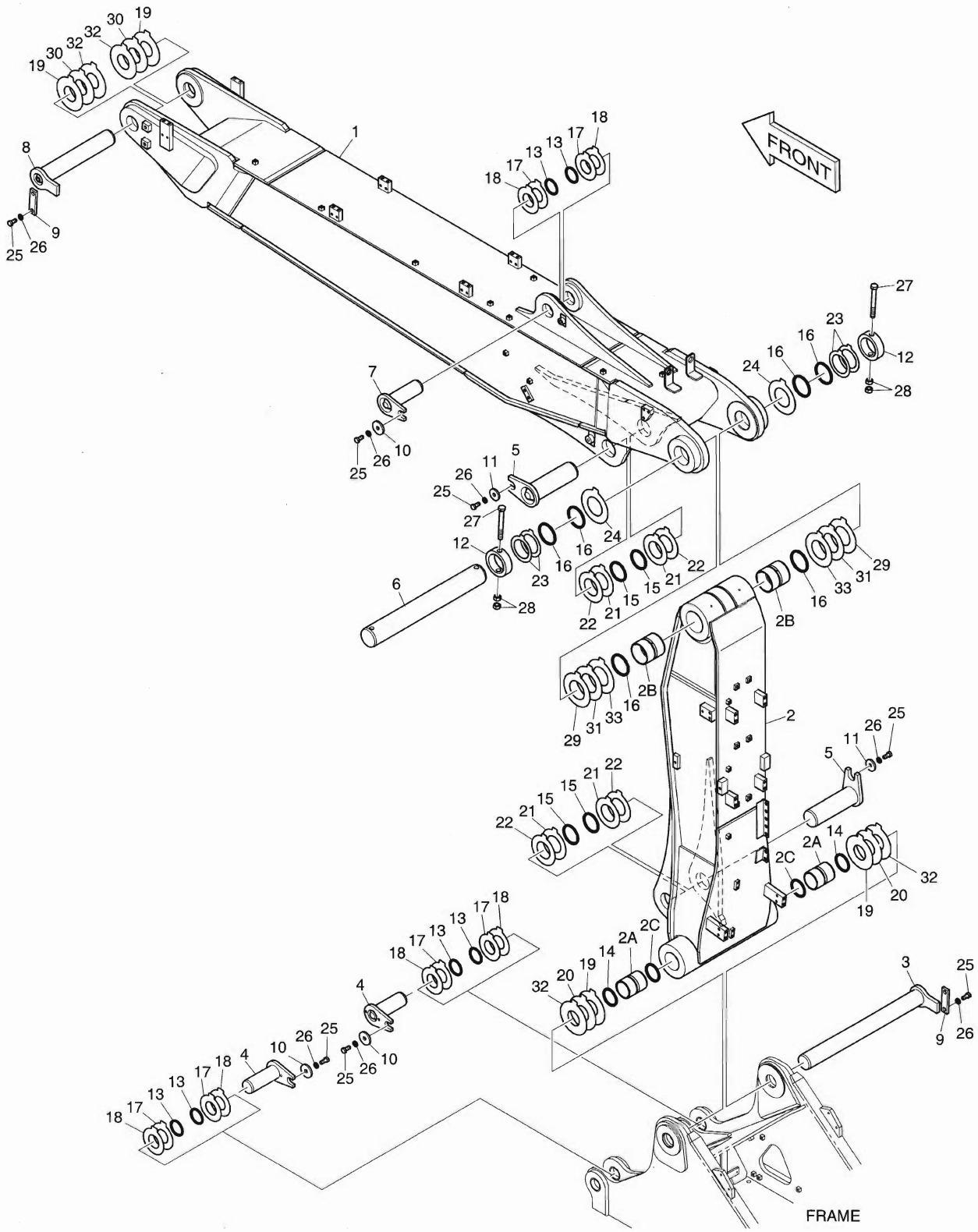

DATE	NOV. 27, 2006
1st EDITION	

Fig. 6890 ARTI BOOM PERCHE D'ARTI

Serial No. ;

Key No.	Part No.	Description	Description	Q'ty	S.C	Serial No.	ICA	Replaceable part	
								Part No.	Q'ty
6890--	K1027921	ARTI BOOM ASS'Y	PERCHE D'ARTI	-	D				
1	K1015249C	BOOM;UPPER	LA PERCHE S'ABAISSENT	1					
2	K1015258A	BOOM;LOWER	LA PERCHE S'ABAISSENT	1					
2A	K1008572	. BUSHING	. DOUILLE	2					
2B	110-00247	. BUSHING	. DOUILLE	2					
2C	2180-1106BD24	. SEAL;DUST	. JOINT	2					
3	K1014301	PIN	GOUJON D'ASSEMBLAGE	1					
4	K1014303	PIN	GOUJON D'ASSEMBLAGE	2					
5	K1010934	PIN	GOUJON D'ASSEMBLAGE	2					
6	K1015265	PIN	GOUJON D'ASSEMBLAGE	1					
7	2123-2441	PIN	GOUJON D'ASSEMBLAGE	1					
8	2123-2012G	PIN	GOUJON D'ASSEMBLAGE	1					
9	621-03710A	PLATE;STOPPER	PLAQUE	2					
10	2116-1060D5	STOPPER	CHAPEAU	3					
11	2116-1060D6	STOPPER	CHAPEAU	2					
12	2116-1539	STOPPER	CHAPEAU	2					
13	2180-1106BD4	SEAL;DUST	JOINT	6					
14	2180-1106BD24	SEAL;DUST	JOINT	2					
15	2180-1106BD6	SEAL;DUST	JOINT	4					
16	2180-1106BD14	SEAL;DUST	JOINT	6					
17	DS7752008	SHIM	ENTERTOISE	6					
18	DS7752009	SHIM	ENTERTOISE	6					
19	DS7752072	SHIM	ENTERTOISE	4					
20	DS7752073	SHIM	ENTERTOISE	2					
21	DS7752061	SHIM 1.0t	CALE	4					
22	DS7752062	SHIM 1.6t	CALE	4					
23	DS7752044	SHIM 1.0t	CALE	4					
24	DS7752045	SHIM 1.0t	CALE	2					
25	S0521366	BOLT M16X2.0X35	BOULON A 6 PANS	9					
26	S5102903	WASHER;SPRING	RONDELLE ELASTIQUE	9					
27	S0571966	BOLT M20X2.5X180	BOULON A 6 PANS	2					
28	S4013133	NUT M20x2.5	ECROU	4					
29	DS7752065	SHIM 1.0t	CALE	2					
30	DS7752071	SHIM	ENTERTOISE	2					
31	DS7752077	SHIM	ENTERTOISE	2					
32	DS7752095	SHIM 1.3mm	CALE	4					
33	DS7752094	SHIM 1.3mm	CALE	2					

Fig. 6900 ARM - 2.3m (FOR ARTI BOOM) BALANCIER

Serial No. ;

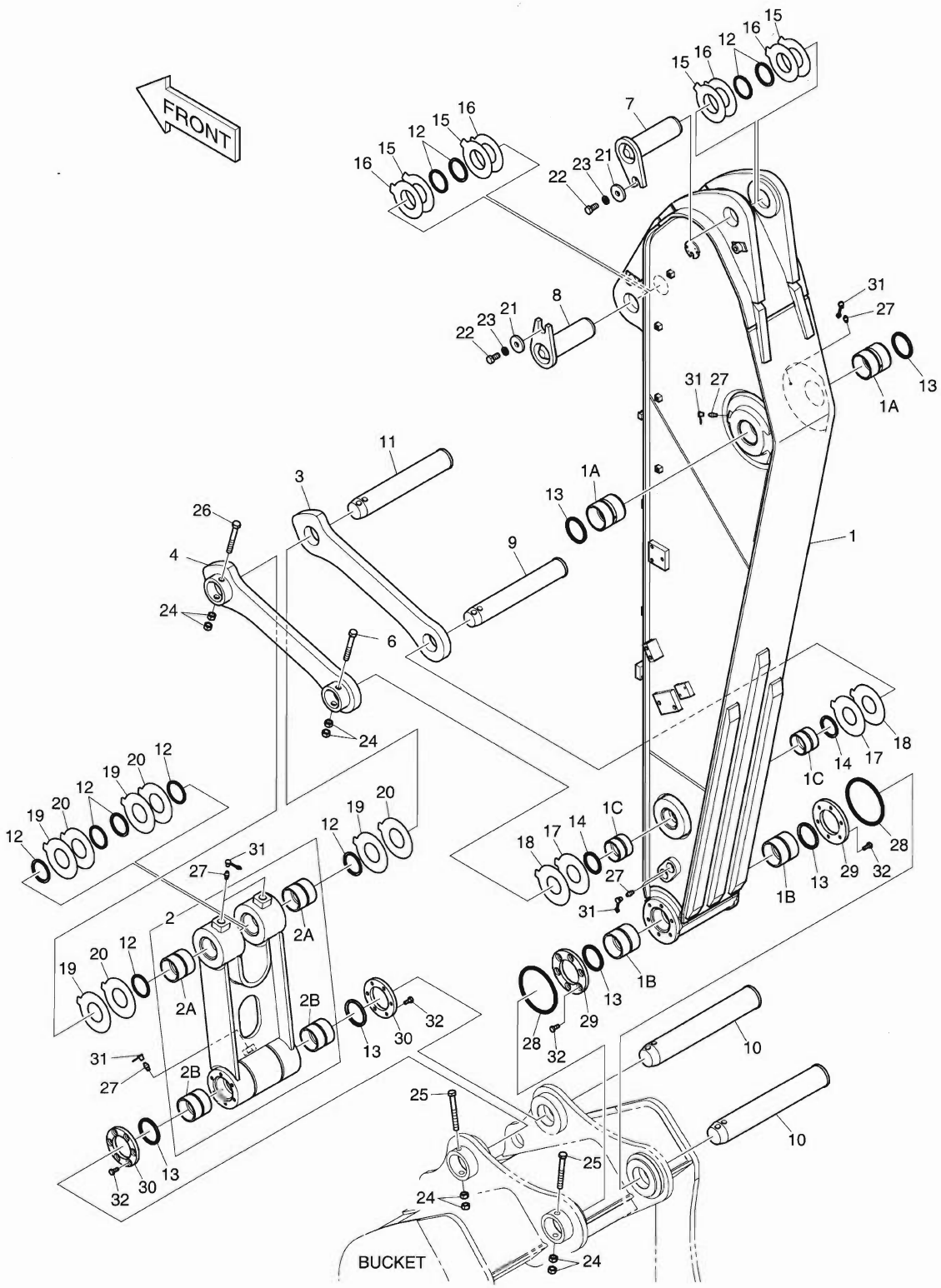

DATE	NOV. 27, 2006
1st EDITION	

Fig. 6900 ARM - 2.3m (FOR ARTI BOOM) BALANCIER

Serial No. ;

Key No.	Part No.	Description	Description	Q'ty	S.C	Serial No.	ICA	Replaceable part	
								Part No.	Q'ty
6900--	K1015607C	ARM ASS'Y	ENSEMBLE DE BRAS	-	D				
1	K1015608C	ARM;MACH 2.3M	BALANCIER	1					
1A	K1012381	. BUSHING	. DOUILLE	2					
1B	K1000733	. BUSHING	. DOUILLE	2					
1C	110-00243	. BUSHING	. DOUILLE	2					
2	K1012391	LINK ASS'Y;PUSH	ARTICULATION	1					
2A	K1012439	. BUSHING	. DOUILLE	2					
2B	110-00249	. BUSHING	. DOUILLE	2					
3	2155-4019A	LINK:GUIDE(R.H)	ARTICULATION	1					
4	2155-4020B	LINK:GUIDE(L.H)	ARTICULATION	1					
6	DS0001082	BOLT	BOULON A 6 PANS	1					
7	2123-2443	PIN	GOUJON D'ASSEMBLAGE	1					
8	2123-2441	PIN	GOUJON D'ASSEMBLAGE	1					
9	K1012388	PIN	GOUJON D'ASSEMBLAGE	1					
10	2123-2192C	PIN	GOUJON D'ASSEMBLAGE	2					
11	K1012389	PIN	GOUJON D'ASSEMBLAGE	1					
12	2180-1106BD4	SEAL;DUST	JOINT	10					
13	2180-1106BD24	SEAL;DUST	JOINT	6					
14	2180-1106BD3	SEAL;DUST	JOINT	2					
15	DS7752008	SHIM	ENTERTOISE	4					
16	DS7752009	SHIM	ENTERTOISE	4					
17	DS7752067	SHIM	ENTERTOISE	2					
18	DS7752068	SHIM	ENTERTOISE	2					
19	DS7752069	SHIM	ENTERTOISE	4					
20	DS7752070	SHIM	ENTERTOISE	4					
21	2116-1060D6	STOPPER	CHAPEAU	2					
22	S0521366	BOLT M16X2.0X35	BOULON A 6 PANS	2					
23	S5102903	WASHER;SPRING	RONDELLE ELASTIQUE	2					
24	S4012933	NUT M16X2.0	ECROU	8					
25	DS0001084	BOLT	BOULON A 6 PANS	2					
26	DS0001083	BOLT	BOULON A 6 PANS	1					
27	S6710041	NIPPLE	GRAISSEUR	7					
28	180-00077D5	O-RING	JOINT TORIQUE	2					
29	K1000911	SPACER	BAGUE D'ECARTEMENT	2					
30	K1000912A	SPACER	BAGUE D'ECARTEMENT	2					
31	160-00020	CAP;GREASE NIPPLE	CHAPEAU	7					
32	S0712066	BOLT	BOULON A 6 PANS	24					

DATE	NOV. 27, 2006
1st EDITION	

Fig. 6910 ARTI BOOM PIPING
TUYAUTERIE DE PERCHE D'ARTI

Serial No. ;

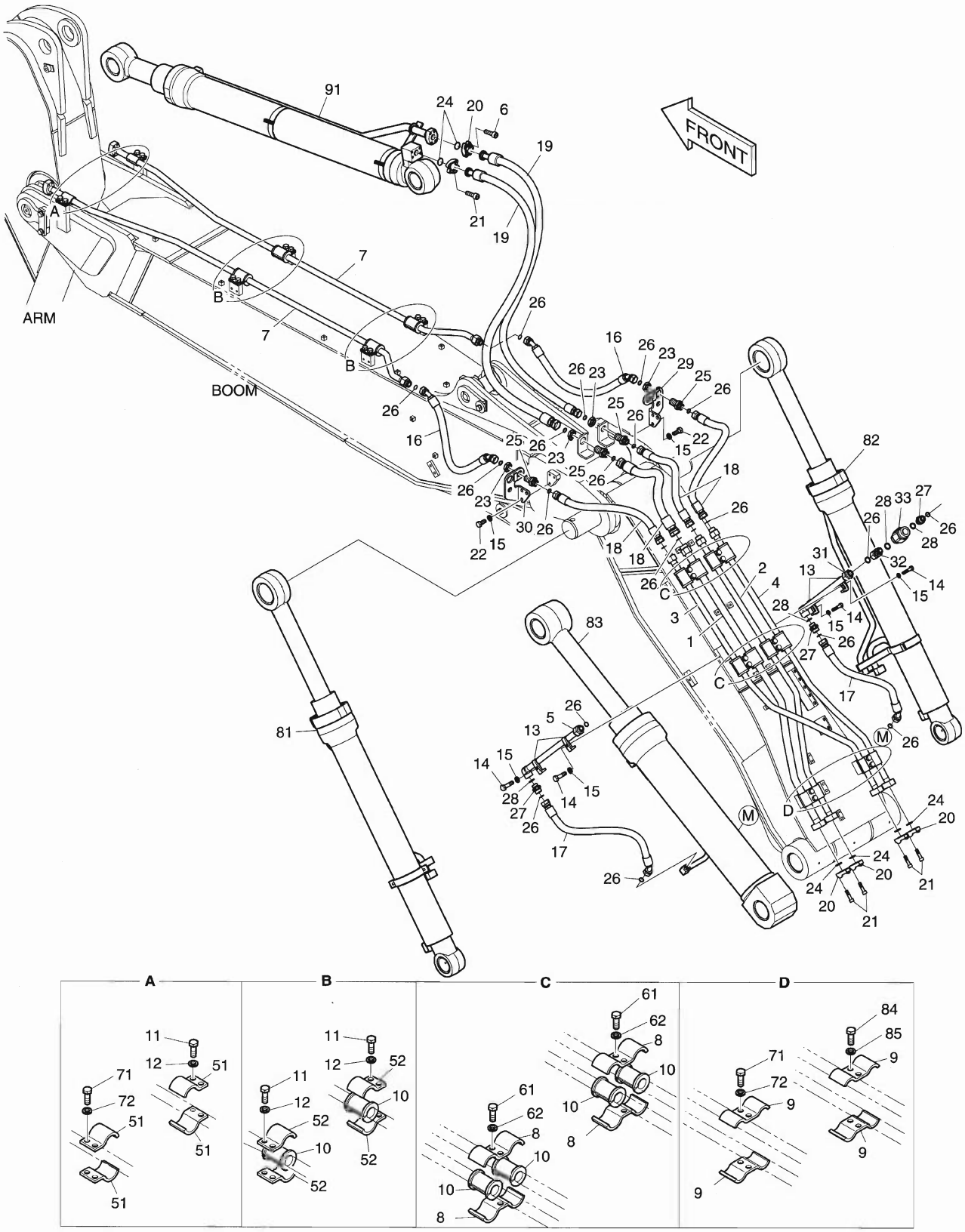

DATE	NOV. 27, 2006
1st EDITION	

Fig. 6910 ARTI BOOM PIPING TUYAUTERIE DE PERCHE D'ARTI

Serial No. ;

Key No.	Part No.	Description	Description	Q'ty	S.C	Serial No.	ICA	Replaceable part	
								Part No.	Q'ty
6910--	K1015453B	ARTI BOOM PIPING	PERCHE ASS'Y D'ARTI	-	D				
1	K1015454A	PIPE	TUYAU	1					
2	K1015456A	PIPE	TUYAU	1					
3	K1015457A	PIPE	TUYAU	1					
4	K1015458A	PIPE	TUYAU	1					
5	K1015459	PIPE	TUYAU	1					
6	S2212466	BOLT;SOCKET M10X1.5X40	BOULON A 6 PANS CREUX	4					
7	K1015461	PIPE	TUYAU	2					
8	K1011211	CLAMP	COLLIER	8					
9	124-00300	CLAMP;PIPE	COLLIER	4					
10	161-00574	RUBBER	CAOUTCHOUC	12					
11	S0562766	BOLT M14X2.0X40	BOULON A 6 PANS	10					
12	S5102803	WASHER;SPRING	RONDELLE ELASTIQUE	10					
13	2124-1026D2	CLAMP;PIPE	COLLIER	4					
14	S0560866	BOLT	BOULON A 6 PANS	4					
15	S5102703	WASHER;SPRING(M12)	RONDELLE ELASTIQUE	10					
16	DS2020038	HOSE	TUYAU FLEXIBLE	2					
17	DS2012372	HOSE	TUYAU FLEXIBLE	2					
18	DS2011530	HOSE	TUYAU FLEXIBLE	4					
19	DS2016094	HOSE	TUYAU FLEXIBLE	2					
20	2181-9079	FLANGE	BRIDE	12					
21	S2212366	BOLT;SOCKET M10X1.5X35	BOULON A 6 PANS CREUX	20					
22	S0515266	BOLT	BOULON A 6 PANS	6					
23	121-00010D8	NUT	ECROU 6 PANS	4					
24	2180-1026D2	O-RING	JOINT TORIQUE	6					
25	DS2415007	ADAPTER	ADAPTEUR	4					
26	S8030121	O-RING	JOINT TORIQUE	21					
27	2181-2627D1	ADAPTER	ADAPTEUR	3					
28	S8000231	O-RING	JOINT TORIQUE	4					
29	K1011212B	BRACKET	SUPPORT	1					
30	K1011213B	BRACKET	SUPPORT	1					
31	K1027879	PIPE	TUYAU	1					
32	2181-2566D10	ADAPTER	ADAPTEUR	1					
33	K1025252	VALVE;SLOW RETURN	VANNE	1					
51	124-00303	CLAMP;PIPE	COLLIER	4					
52	124-00302	CLAMP;PIPE	COLLIER	8					
61	S0562766	BOLT	BOULON A 6 PANS	8					
62	S5102803	WASHER;SPRING	RONDELLE ELASTIQUE	8					

Fig. 6910 ARTI BOOM PIPING
TUYAUTERIE DE PERCHE D'ARTI

Serial No. ;

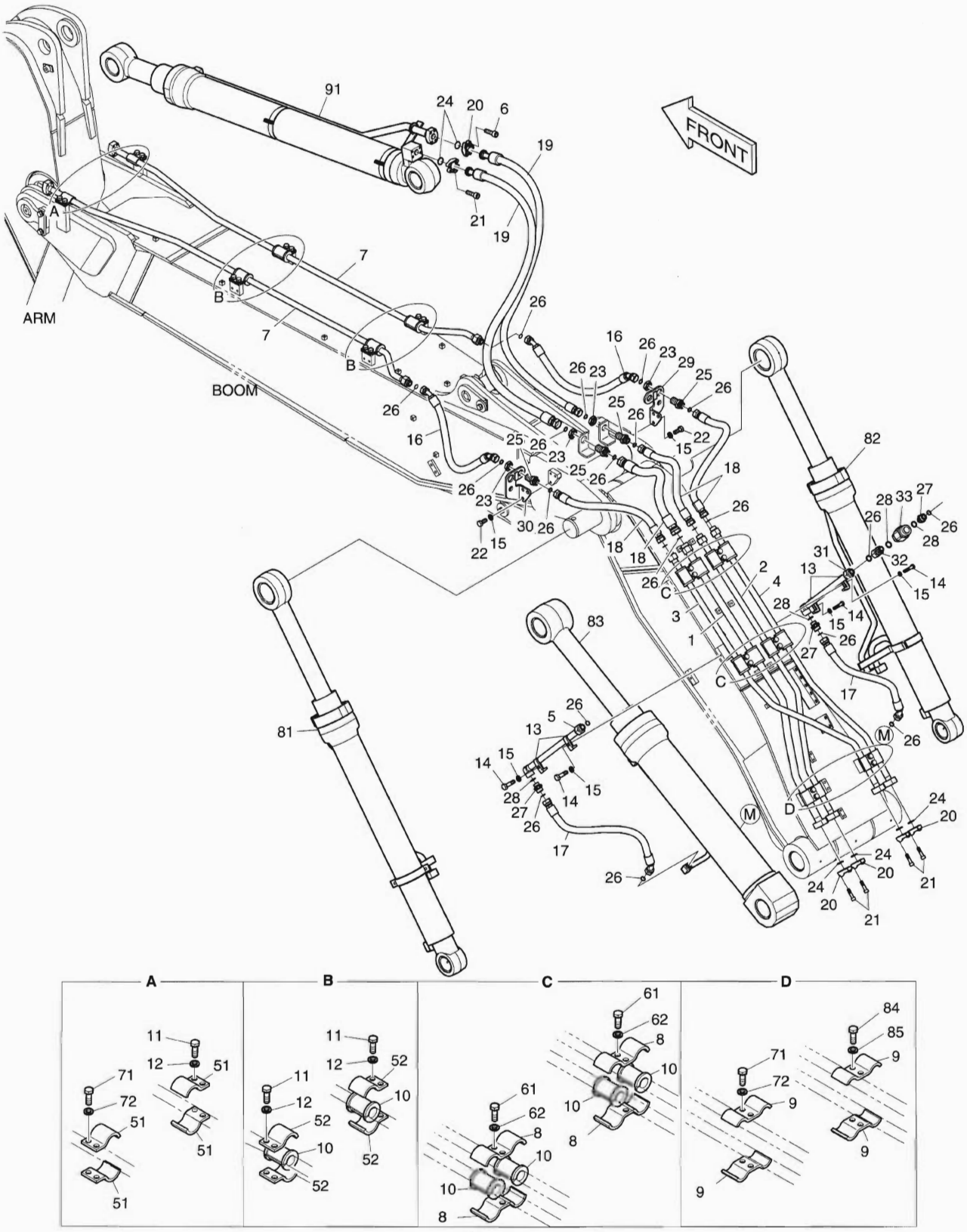

DATE	NOV. 27, 2006
1st EDITION	

Fig. 6910 ARTI BOOM PIPING TUYAUTERIE DE PERCHE D'ARTI

Serial No. ;

Key No.	Part No.	Description	Description	Q'ty	S.C	Serial No.	ICA	Replaceable part	
								Part No.	Q'ty
6910-71	S0562766	BOLT	BOULON A 6 PANS	4					
72	S5102803	WASHER;SPRING	RONDELLE ELASTIQUE	4					
81	K1017658A	CYLINDER;ARTI.BOOM(L.H)	CYLINDRE	1					
82	K1017659A	CYLINDER;ARTI.BOOM(R.H)	CYLINDRE	1					
83	K1017660	CYLINDER;ARTI	CYLINDRE	1					
84	S0562766	BOLT M14X2.0X40	BOULON A 6 PANS	2					
85	S5102803	WASHER;SPRING	RONDELLE ELASTIQUE	2					
91	K1017662	CYLINDER;ARM	CYLINDRE	1					

DATE	NOV. 27, 2006
1st EDITION	

Fig. 6920 LUBRICATION PIPING - ARTI BOOM LUBRIFICATION

Serial No. ;

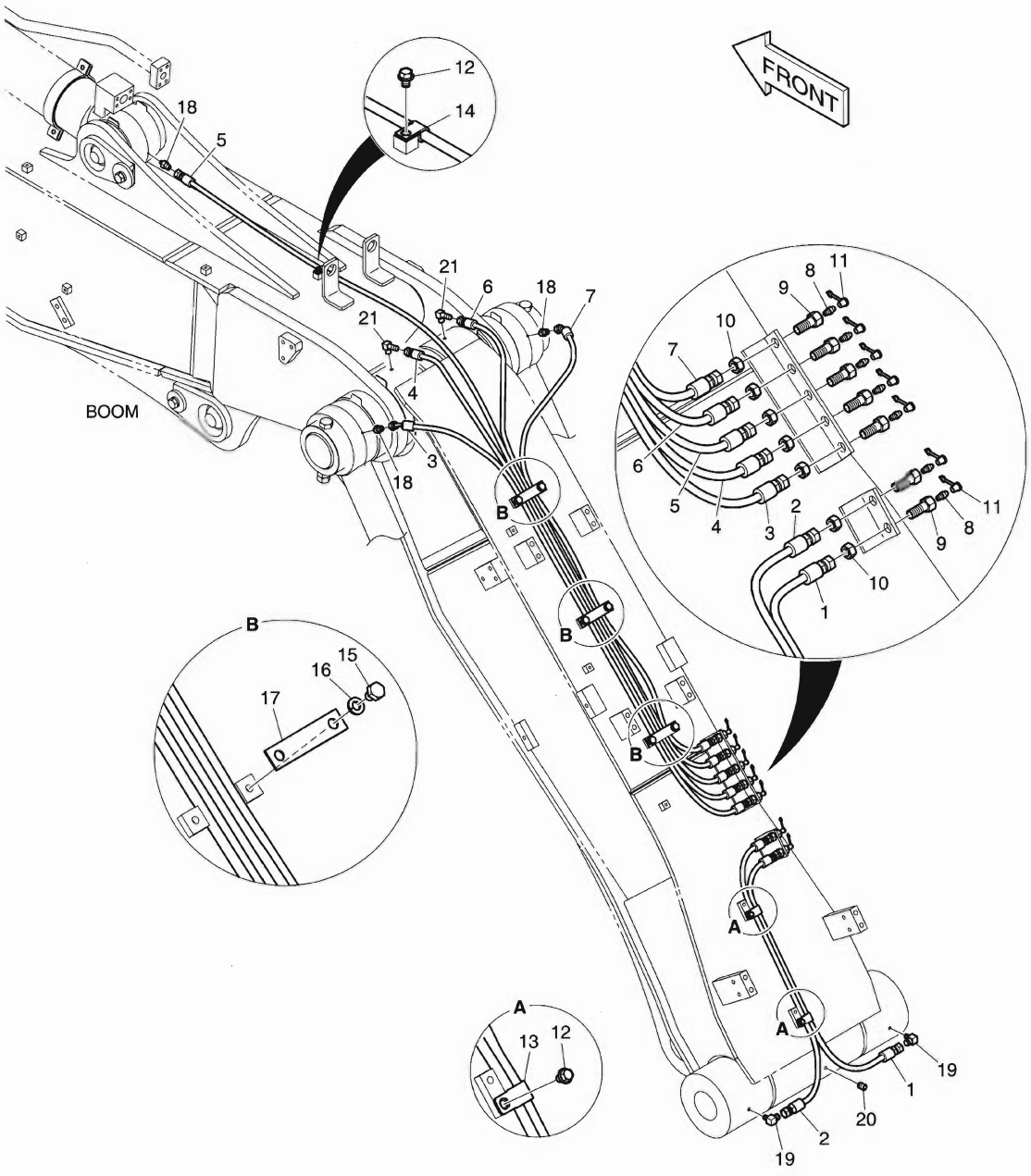

DATE	NOV. 27, 2006
1st EDITION	

Fig. 6920 LUBRICATION PIPING - ARTI BOOM LUBRIFICATION

Serial No. ;

Key No.	Part No.	Description	Description	Q'ty	S.C	Serial No.	ICA	Replaceable part	
								Part No.	Q'ty
6920--	K1015462A	LUBRICATION PIPING	LUBRIFICATION	-	D				
1	DS2053855	HOSE	TUYAU FLEXIBLE	1					
2	DS2053796	HOSE	TUYAU FLEXIBLE	1					
3	2184-1060D107	HOSE	TUYAU FLEXIBLE	1					
4	2184-1045D74	HOSE	TUYAU FLEXIBLE	1					
5	DS2053895	HOSE	TUYAU FLEXIBLE	1					
6	DS2053896	HOSE	TUYAU FLEXIBLE	1					
7	DS2054348	HOSE	TUYAU FLEXIBLE	1					
8	S6710041	NIPPLE	GRAISSEUR	7					
9	181-00103	REDUCER	REDUCTEUR	7					
10	121-00006	NUT	ECROU 6 PANS	7					
11	160-00020	CAP;GREASE NIPPLE	CHAPEAU	7					
12	K1001029	BOLT	BOULON A 6 PANS	3					
13	124-00199D5	CLIP	AGRAFE	2					
14	2124-1353D2	CLIP	AGRAFE	1					
15	S0511566	BOLT	BOULON A 6 PANS	6					
16	S5102603	WASHER;SPRING	RONDELLE ELASTIQUE	6					
17	K1008754	CLAMP;PIPE	COLLIER	3					
18	2181-4112	ADAPTER	ADAPTEUR	3					
19	2181-1186D12	ELBOW	COUDE	2					
20	S3524403	PLUG;DRAIN	BOUCHON	1					
21	2181-1111D11	ELBOW	COUDE	2					

DATE	NOV. 27, 2006
1st EDITION	

Fig. 6930 ARM PIPING - ARM 2.3m (ARTI BOOM)
CONDUITES DE BALANCIER

Serial No. ;

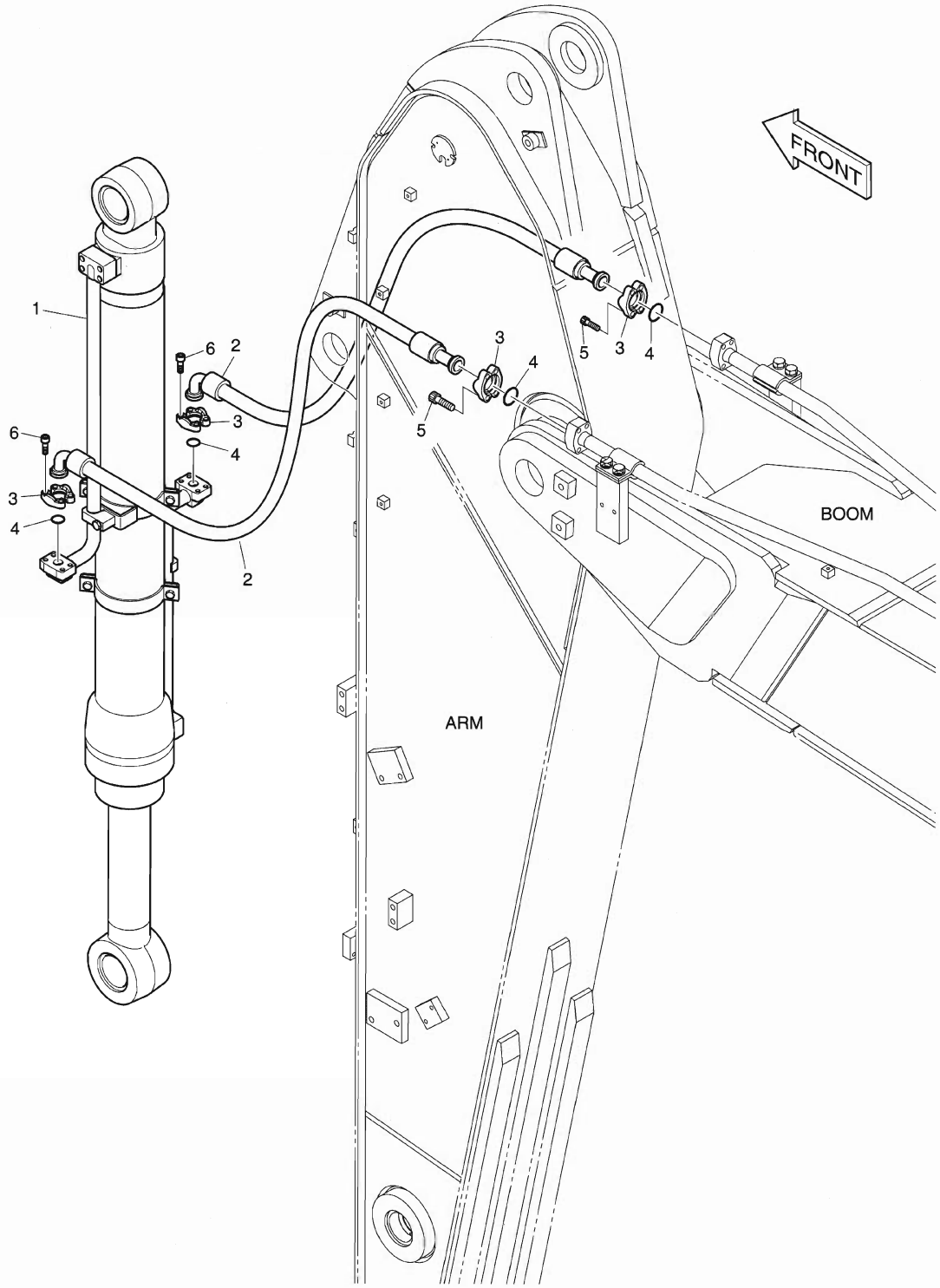

DATE	NOV. 27, 2006
1st EDITION	

Fig. 6930 ARM PIPING - ARM 2.3m (ARTI BOOM) CONDUITES DE BALANCIER

Serial No. ;

Key No.	Part No.	Description	Description	Q'ty	S.C	Serial No.	ICA	Replaceable part	
								Part No.	Q'ty
6930--	K1018047	ARM PIPING	CONDUITES DE BALANCIER	-	D				
1	K1018027	CYLINDER;BUCKET	VERIN DE GODET	1					
2	2184-1100D237	HOSE	TUYAU FLEXIBLE	2					
3	2181-9079	FLANGE;SPLIT	BRIDE	8					
4	2180-1026D2	O-RING	JOINT TORIQUE	4					
5	S2212366	BOLT;SOCKET	BOULON A 6 PANS CREUX	8					
6	S2212266	BOLT;SOCKET	BOULON A 6 PANS CREUX	8					

DATE	NOV. 27, 2006
1st EDITION	

Fig. 6940 MAIN PIPING - ONE & TWO WAY (ARTI)
CONDUITES DE BATI PRINCIPAL

Serial No. ;

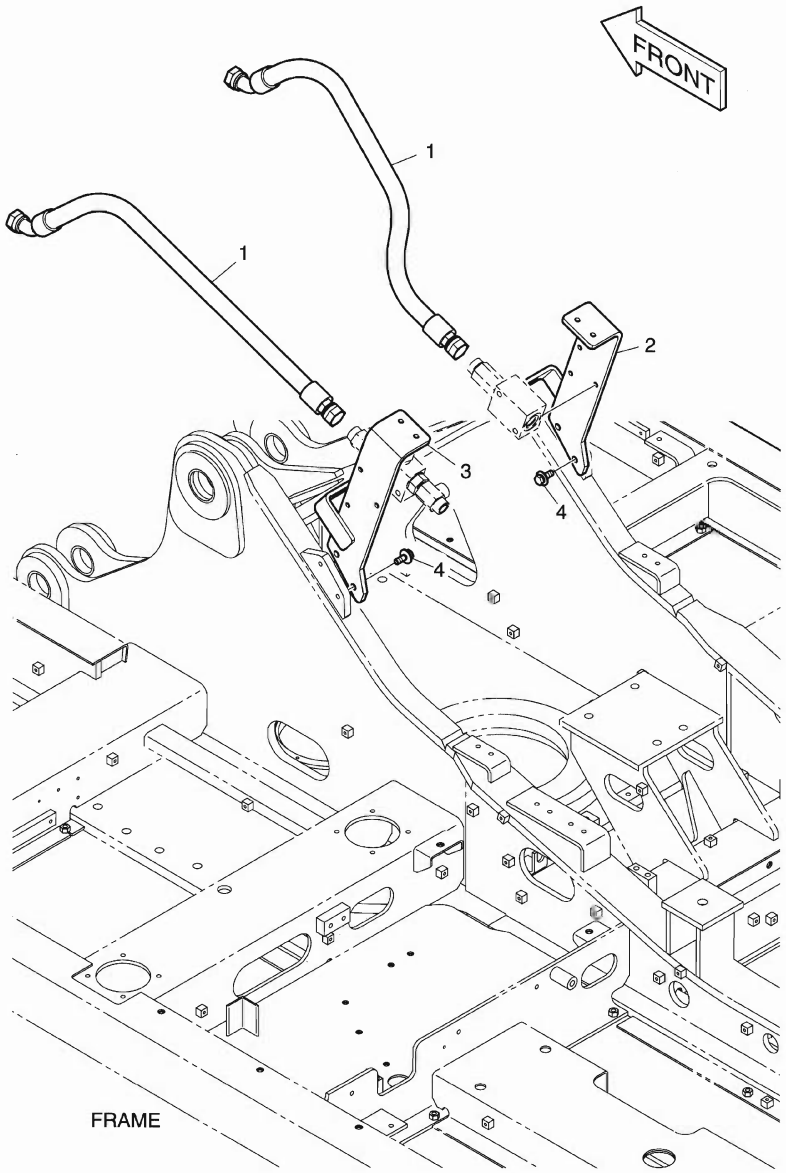

DATE	NOV. 27, 2006
1st EDITION	

Fig. 6940 MAIN PIPING - ONE & TWO WAY (ARTI) CONDUITES DE BATI PRINCIPAL

Serial No. ;

Key No.	Part No.	Description	Description	Q'ty	S.C	Serial No.	ICA	Replaceable part	
								Part No.	Q'ty
6940--	K1023799	MAIN PIPING;ONE & TWO WAY	CONDUITES DE BATI	-	D				
1	DS2012395	HOSE	TUYAU FLEXIBLE	2					
2	K1023924	BRACKET	SUPPORT	1					
3	K1023923	BRACKET	SUPPORT	1					
4	DS0025020	BOLT;SET	BOULON A 6 PANS	4					

DATE	NOV. 27, 2006
1st EDITION	

Fig. 6950 ARTI BOOM PIPING - ONE & TWO WAY
TUYAUTERIE DE PERCHE D'ARTI

Serial No. ;

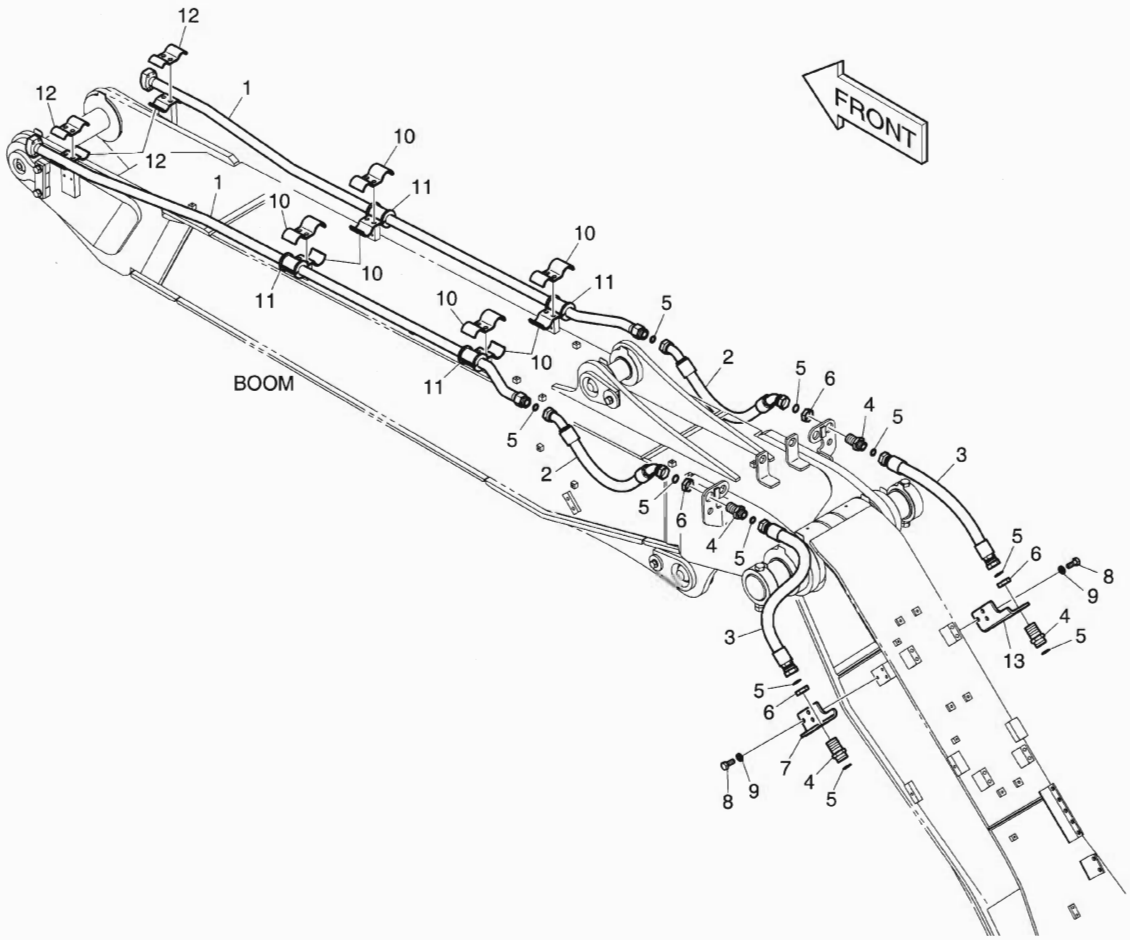

DATE	NOV. 27, 2006
1st EDITION	

Fig. 6950 ARTI BOOM PIPING - ONE & TWO WAY TUYAUTERIE DE PERCHE D'ARTI

Serial No. ;

Key No.	Part No.	Description	Description	Q'ty	S.C	Serial No.	ICA	Replaceable part	
								Part No.	Q'ty
6950--	K1015463	ONE & TWO WAY PIPING;ARTI	TUYAUTERIE DE PERCHE	-	D				
1	K1015464	PIPE	TUYAU	2					
2	DS2020039	HOSE	TUYAU FLEXIBLE	2					
3	DS2011529	HOSE	TUYAU FLEXIBLE	2					
4	DS2415005	ADAPTER;CONNECTOR	ADAPTATEUR	4					
5	S8030161	O-RING	JOINT TORIQUE	10					
6	121-00010D9	NUT	ECROU 6 PANS	4					
7	K1011217	BRACKET	SUPPORT	1					
8	S0515266	BOLT	BOULON A 6 PANS	6					
9	S5102703	WASHER;SPRING(M12)	RONDELLE ELASTIQUE	6					
10	124-00368	CLAMP;PIPE	COLLIER	8					
11	161-00281	RUBBER	CAOUTCHOUC	4					
12	124-00367	CLAMP;PIPE	COLLIER	4					
13	K1011441	BRACKET	SUPPORT	1					

DATE	NOV. 27, 2006
1st EDITION	

Fig. 6960 ARM PIPING - ARM 2.3m(ONE & TWO WAY)
CONDUITES DE BALANCIER

Serial No. ;

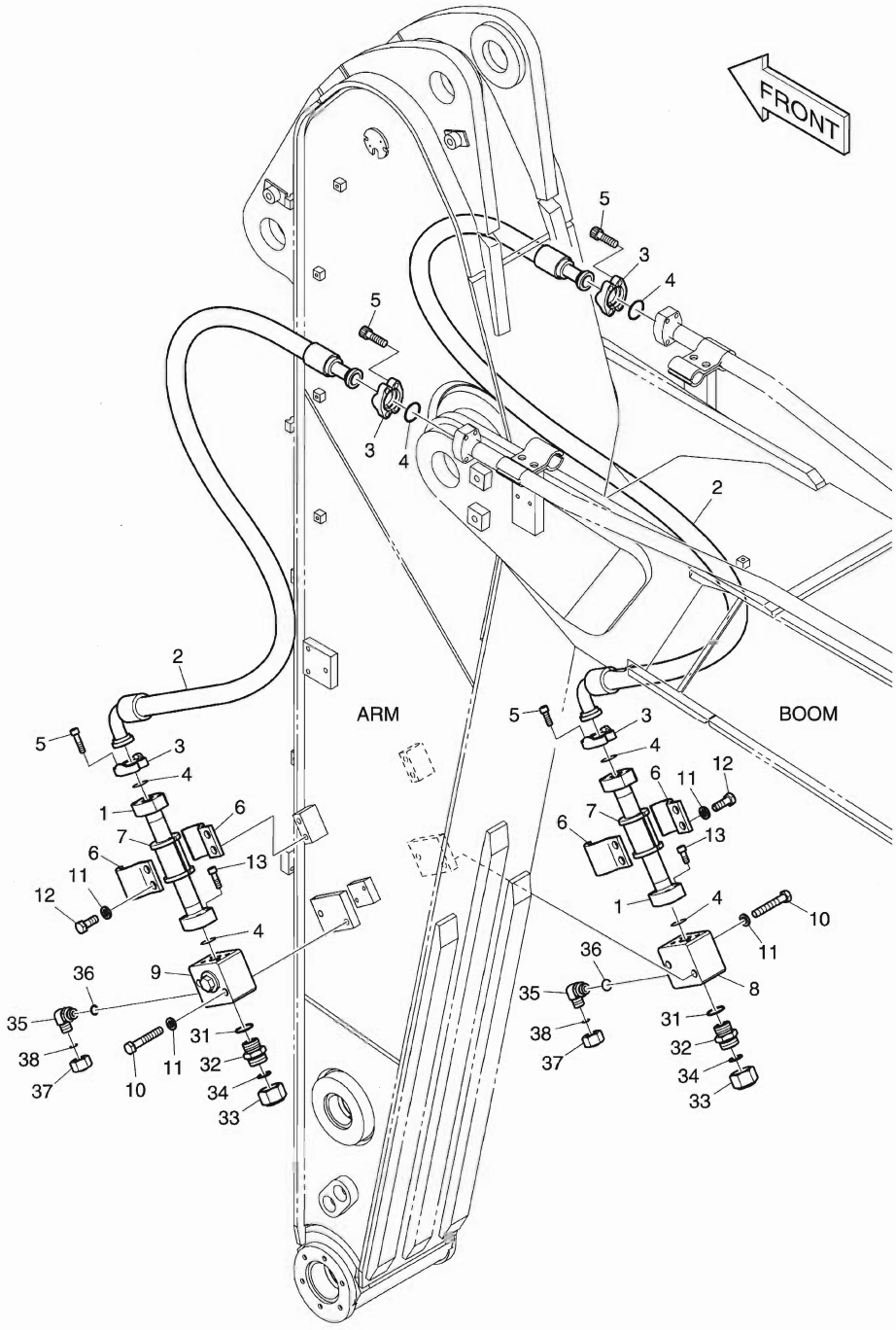

DATE	NOV. 27, 2006
1st EDITION	

Fig. 6960 ARM PIPING - ARM 2.3m(ONE & TWO WAY) CONDUITES DE BALANCIER

Serial No. ;

Key No.	Part No.	Description	Description	Q'ty	S.C	Serial No.	ICA	Replaceable part	
								Part No.	Q'ty
6960--	K1018051A	ARM PIPING-ONE & TWO WAY	CONDUITES DE BALANCIER	-	D				
1	K1025246	PIPE	TUYAU	2					
2	DS2040583	HOSE	TUYAU FLEXIBLE	2					
3	2181-9078	FLANGE;SPLIT	BRIDE	8					
4	2180-1026D19	O-RING	JOINT TORIQUE	6					
5	S2212466	BOLT;SOCKET	BOULON	16					
6	K1004056	CLAMP;PIPE	COLLIER	4					
7	161-00281	RUBBER	CAOUTCHOUC	2					
8	K1000334A	VALVE;STOP(L.H)	VANNE	1					
9	K1000338A	VALVE;STOP(R.H)	VANNE	1					
10	S0563666	BOLT	BOULON A 6 PANS	4					
11	S5102803	WASHER;SPRING	RONDELLE ELASTIQUE	8					
12	S0562766	BOLT	BOULON A 6 PANS	4					
13	S2212366	BOLT;SOCKET	BOULON	8					
31	S8000291	O-RING	JOINT TORIQUE	2					
32	2181-4133D6	ADAPTER	ADAPTEUR	2					
33	2181-2817D2	PLUG	BOUCHON	2					
34	S8030161	O-RING	JOINT TORIQUE	2					
35	2181-2815D3	ELBOW	COUDE	2					
36	S8000181	O-RING	JOINT TORIQUE	2					
37	2181-2817D4	PLUG	BOUCHON	2					
38	S8030181	O-RING	JOINT TORIQUE	2					

DATE	NOV. 27, 2006
1st EDITION	

Fig. 6970 MAIN PIPING - ROTATING(ARTI)
CONDUITES DE BATI PRINCIPAL

Serial No. ;

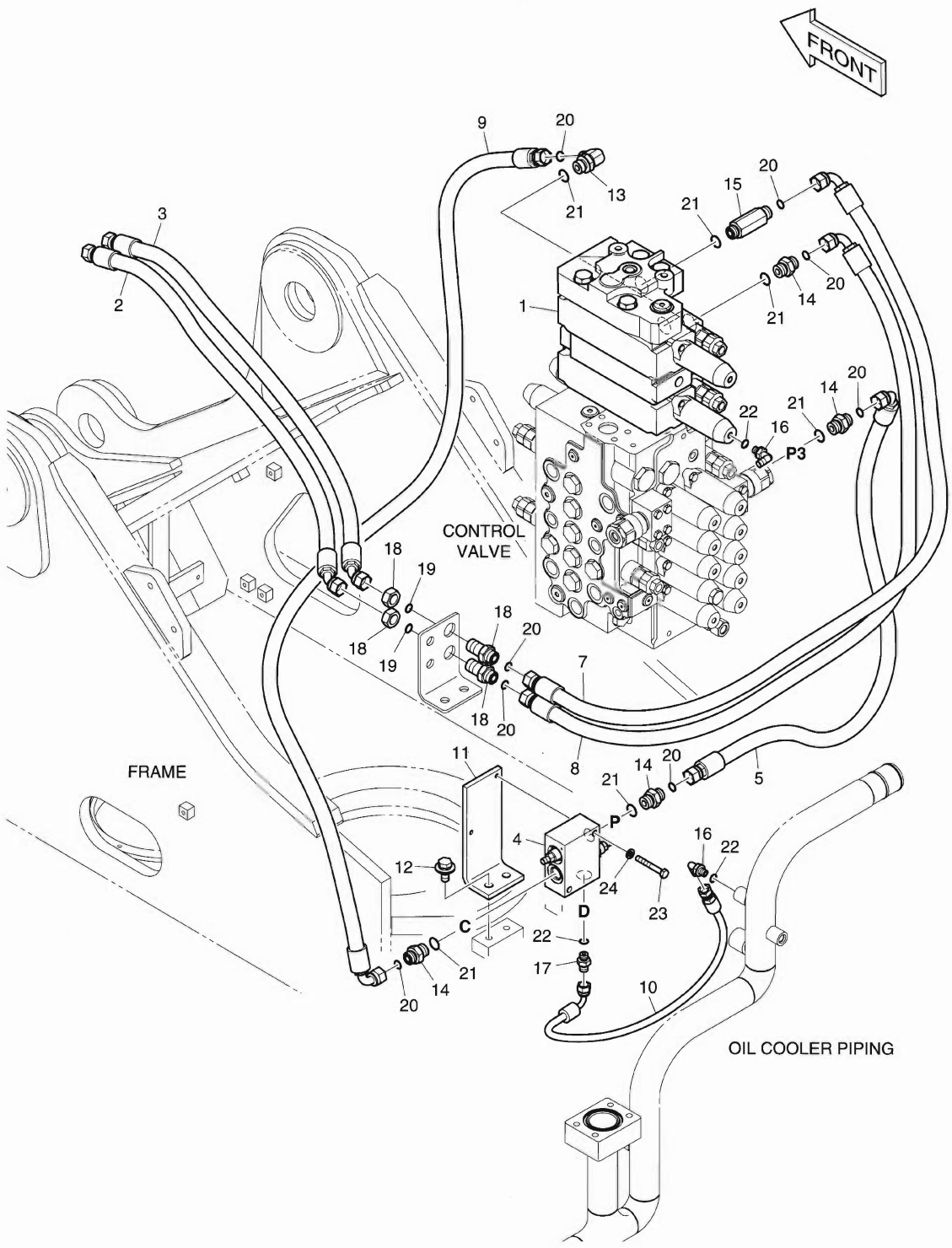

DATE	NOV. 27, 2006
1st EDITION	

Fig. 6970 MAIN PIPING - ROTATING(ARTI) CONDUITES DE BATI PRINCIPAL

Serial No. ;

Key No.	Part No.	Description	Description	Q'ty	S.C	Serial No.	ICA	Replaceable part	
								Part No.	Q'ty
6970--	K1013549A	MAIN PIPING;PERO	CONDUITES DE BATI	-	D				
1	K1013539	VALVE;CONTROL(ARTI & PERO)	VANNE	1					
2	DS2012311	HOSE	TUYAU FLEXIBLE	1					
3	DS2012311	HOSE	TUYAU FLEXIBLE	1					
4	426-00028	VALVE;PACKAGE	VANNE	1					
5	DS2013843	HOSE	TUYAU FLEXIBLE	1					
7	DS2013726	HOSE	TUYAU FLEXIBLE	1					
8	DS2013840	HOSE	TUYAU FLEXIBLE	1					
9	DS2013713	HOSE	TUYAU FLEXIBLE	1					
10	DS2093006	HOSE	TUYAU FLEXIBLE	1					
11	K1013806	BRACKET	SUPPORT	1					
12	DS0025018	BOLT;SET	BOULON A 6 PANS	2					
13	2181-2815D3	ELBOW	COUDE	1					
14	2181-4133D3	ADAPTER	ADAPTEUR	4					
15	2181-4133D46	ADAPTER	ADAPTEUR	1					
16	2181-1702D4	ELBOW	COUDE	2					
17	2181-1126D14	ADAPTER	ADAPTEUR	1					
18	181-00128D3	ADAPTER;CONNECTOR	ADAPTATEUR	2					
19	121-00010D5	NUT	ECROU 6 PANS	2					
20	S8030081	O-RING	JOINT TORIQUE	10					
21	S8000181	O-RING	JOINT TORIQUE	6					
22	S8000111	O-RING	JOINT TORIQUE	3					
23	S0556566	BOLT	BOULON A 6 PANS	2					
24	S5102503	WASHER;SPRING	RONDELLE ELASTIQUE	2					

DATE	NOV. 27, 2006
1st EDITION	

Fig. 6980 PILOT PIPING - ROTATING(ARTI)
CONDUITES DE PILOTE

Serial No. ;

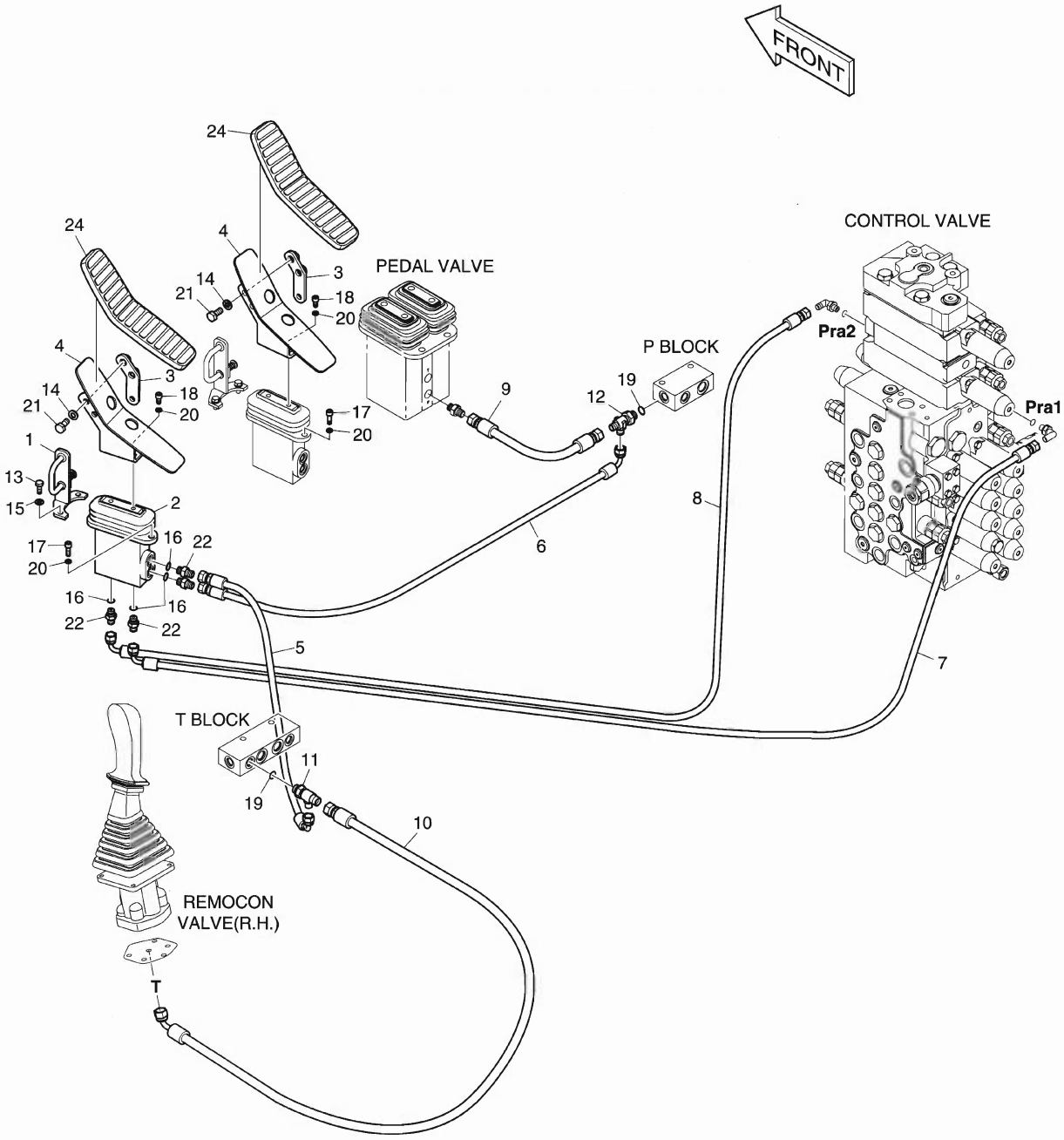

DATE	NOV. 27, 2006
1st EDITION	

Fig. 6980 PILOT PIPING - ROTATING(ARTI)
CONDUITES DE PILOTE

Serial No. ;

Key No.	Part No.	Description	Description	Q'ty	S.C	Serial No.	ICA	Replaceable part	
								Part No.	Q'ty
6980--	K1023882	PILOT PIPING;PERO	CONDUITES DE PILOTE	-	D				
1	K1001873A	PLATE	PLAQUE	1					
2	K1017382	VALVE;PEDAL	VANNE	1					
3	K1001871B	PLATE	PLAQUE	2					
4	K1015404	BRACKET	SUPPORT	2					
5	DS2093130	HOSE	TUYAU FLEXIBLE	1					
6	DS2093102	HOSE	TUYAU FLEXIBLE	1					
7	DS2093099	HOSE	TUYAU FLEXIBLE	1					
8	DS2093283	HOSE	TUYAU FLEXIBLE	1					
9	DS2094006	HOSE	TUYAU FLEXIBLE	1					
10	DS2095004	HOSE	TUYAU FLEXIBLE	1					
11	2181-1951D6	TEE	TE	1					
12	2181-1951D7	TEE	TE	1					
13	S0508866	BOLT	BOULON A 6 PANS	2					
14	S5102603	WASHER;SPRING(M10)	RONDELLE ELASTIQUE	4					
15	S5102503	WASHER;SPRING	RONDELLE ELASTIQUE	2					
16	S8000111	O-RING	JOINT TORIQUE	4					
17	S2212066	BOLT;SOCKET	BOULON	4					
18	S2211866	BOLT;SOCKET	BOULON	4					
19	S8000141	O-RING	JOINT TORIQUE	2					
20	S5110603	WASHER	CALE	8					
21	S0512066	BOLT	BOULON A 6 PANS	4					
22	2181-1126D14	ADAPTER	ADAPTEUR	4					
24	161-00386	RUBBER;PEDAL	CAOUTCHOUC	2					

DATE	NOV. 27, 2006
1st EDITION	

Fig. 6990 ROTATING PIPING - ARTI BOOM
TUYAUTERIE TOURNANTE - ARTI.BOOM

Serial No. ;

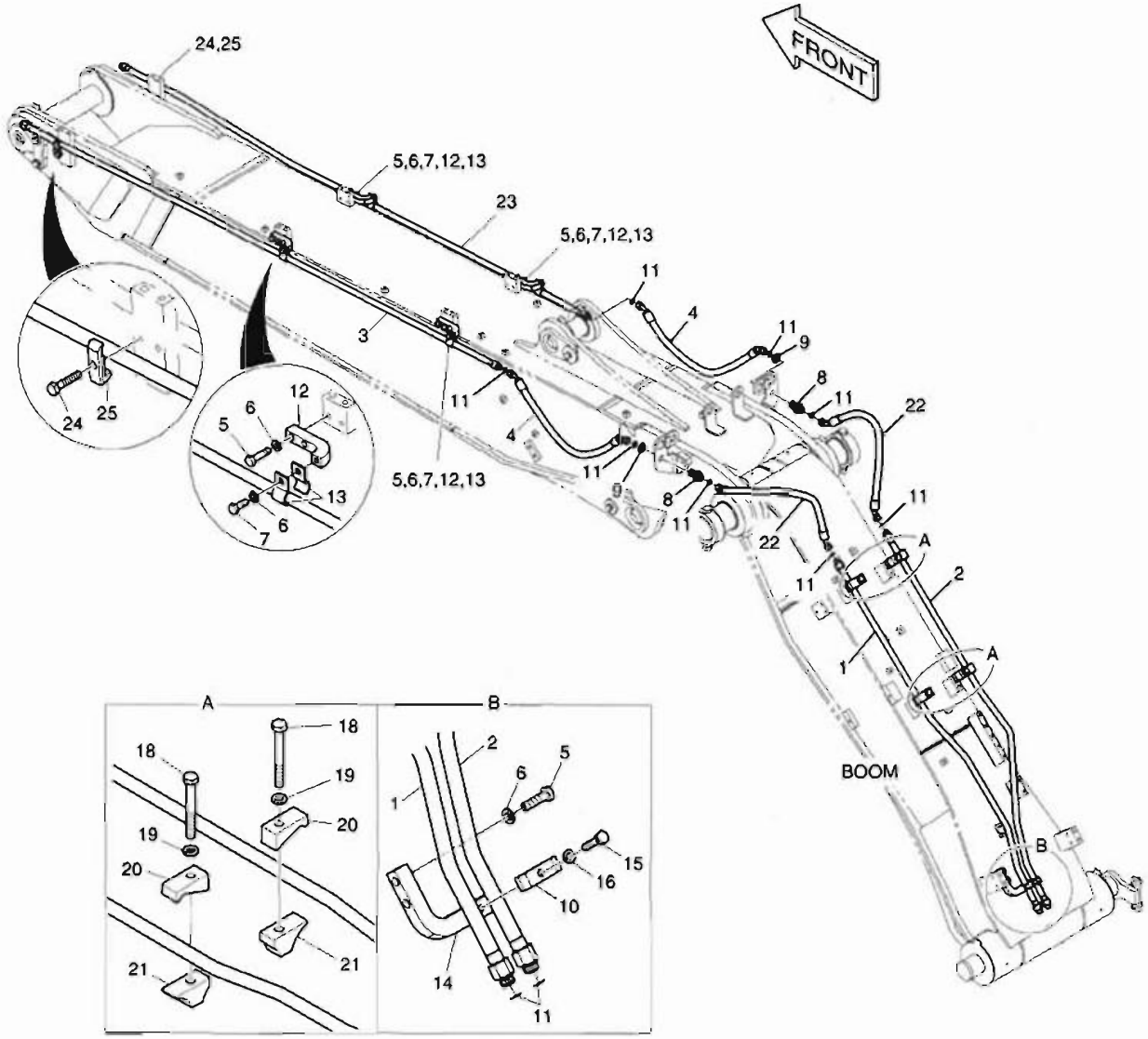

DATE	NOV. 27, 2006
1st EDITION	

Fig. 6990 ROTATING PIPING - ARTI BOOM
TUYAUTERIE TOURNANTE - ARTI.BOOM

Serial No. ;

Key No.	Part No.	Description	Description	Q'ty	S.C	Serial No.	ICA	Replaceable part	
								Part No.	Q'ty
6990--	K1015466B	ARTI BOOM PIPING;ROTATING	TUYAUTERIE TOURNANTE	-	D				
1	K1015467A	PIPE	TUYAU	1					
2	K1015468A	PIPE	TUYAU	1					
3	K1015469A	PIPE	TUYAU	1					
4	DS2020040	HOSE	TUYAU FLEXIBLE	2					
5	S0560666	BOLT M12X1.75X45	BOULON A 6 PANS	10					
6	S5102703	WASHER;SPRING(M12)	RONDELLE ELASTIQUE	14					
7	S0515266	BOLT	BOULON A 6 PANS	4					
8	DS2415012	ADAPTER;CONNECTOR	ADAPTATEUR	2					
9	121-00010D5	NUT	ECROU 6 PANS	2					
10	K1004028	CLAMP;PIPE	COLLIER	1					
11	S8030081	O-RING	JOINT TORIQUE	10					
12	621-02700A	PLATE	PLAQUE	4					
13	124-00299A	CLAMP;PIPE	COLLIER	8					
14	621-02798	PLATE	PLAQUE	1					
15	S0558466	BOLT	BOULON A 6 PANS	1					
16	S5102603	WASHER;SPRING(M10)	RONDELLE ELASTIQUE	1					
18	S0564166	BOLT	BOULON A 6 PANS	4					
19	S5102803	WASHER;SPRING	RONDELLE ELASTIQUE	4					
20	K1006931	CLAMP;PIPE	COLLIER	4					
21	K1006930	CLAMP;PIPE	COLLIER	4					
22	DS2020041	HOSE	TUYAU FLEXIBLE	2					
23	K1025285	PIPE	TUYAU	1					
24	S0558566	BOLT	BOULON A 6 PANS	2					
25	2124-1026D1	CLAMP;PIPE	COLLIER	2					

DATE	NOV. 27, 2006
1st EDITION	

Fig. 7000 MAIN PIPING - QUICK FIT(ARTI)
CONDUITES DE BATI PRINCIPAL

Serial No. ;

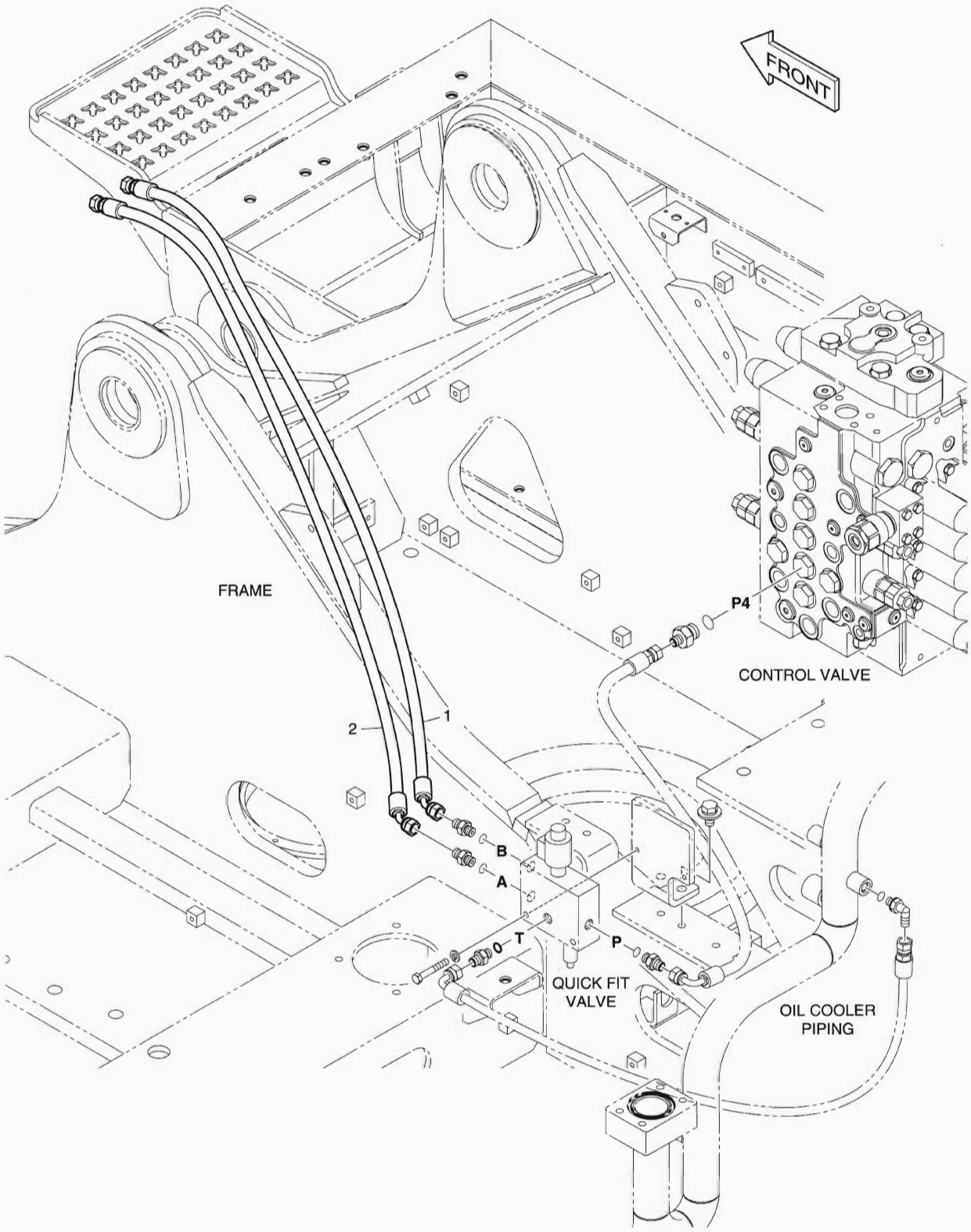

DATE	NOV. 27, 2006
1st EDITION	

Fig. 7000 MAIN PIPING - QUICK FIT(ARTI) CONDUITES DE BATI PRINCIPAL

Serial No. ;

Key No.	Part No.	Description	Description	Q'ty	S.C	Serial No.	ICA	Replaceable part	
								Part No.	Q'ty
7000--	K1023797	MAIN PIPING;QUIKCK FIT	CONDUITES DE BATI	-	D				
1	DS2054373	HOSE	TUYAU FLEXIBLE	1					
2	DS2054373	HOSE	TUYAU FLEXIBLE	1					

DATE	NOV. 27, 2006
1st EDITION	

Fig. 7010 ARTI BOOM PIPING - QUICK FIT
TUYAUTERIE DE PERCHE D'ARTI

Serial No. ;

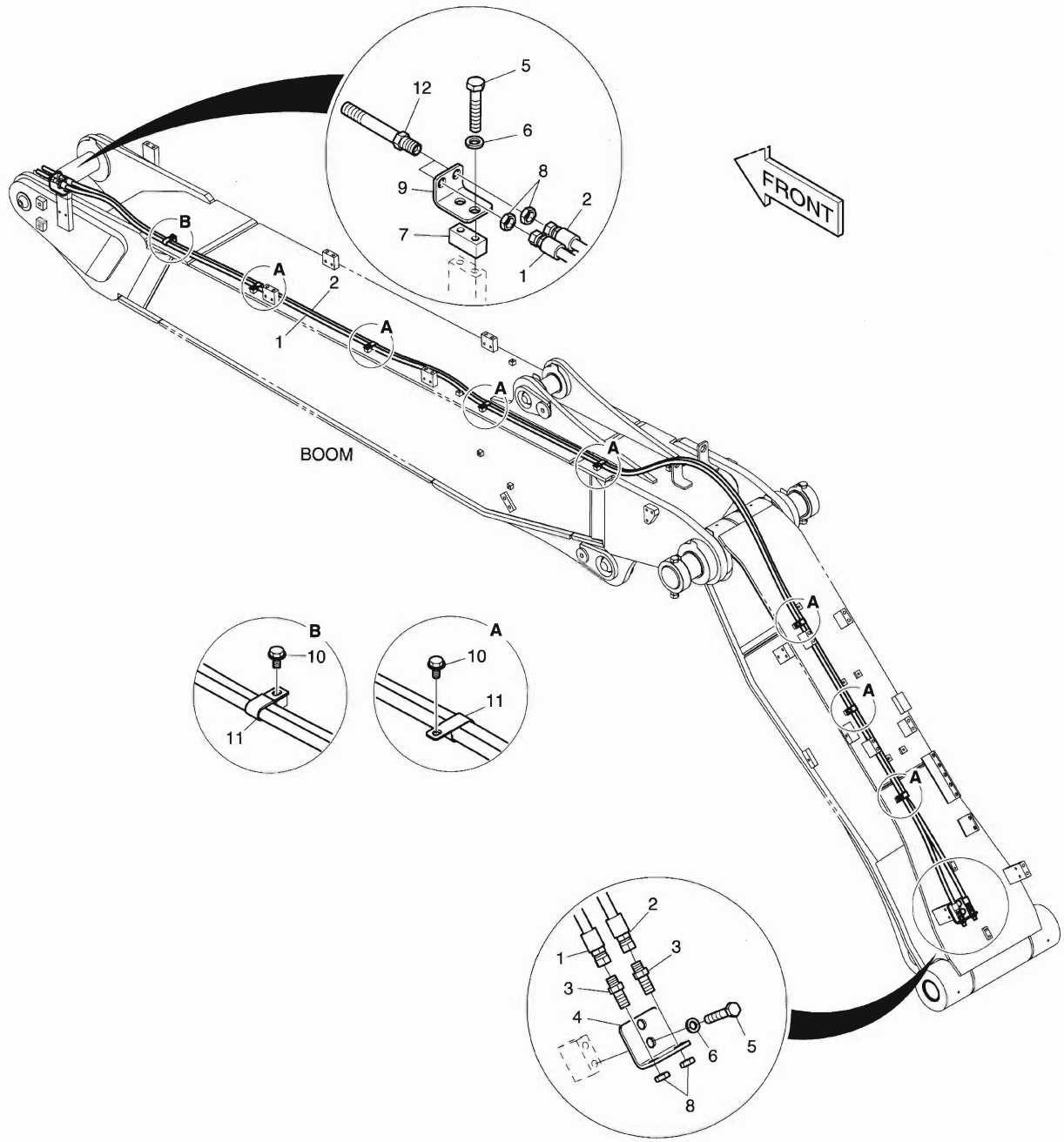

DATE	NOV. 27, 2006
1st EDITION	

Fig. 7010 ARTI BOOM PIPING - QUICK FIT
TUYAUTERIE DE PERCHE D'ARTI

Serial No. ;

Key No.	Part No.	Description	Description	Q'ty	S.C	Serial No.	ICA	Replaceable part	
								Part No.	Q'ty
7010--	K1015473A	QUICK CLAMP PIPING(ARTI)	TUYAUTERIE RAPIDE DE	-	D				
1	DS2053933	HOSE	TUYAU FLEXIBLE	1					
2	DS2053768	HOSE	TUYAU FLEXIBLE	1					
3	DS2410007	ADAPTER	ADAPTEUR	2					
4	K1011781	BRACKET	SUPPORT	1					
5	S0563366	BOLT	BOULON A 6 PANS	4					
6	S5102803	WASHER;SPRING	RONDELLE ELASTIQUE	4					
7	K1004006	PLATE	PLAQUE	1					
8	121-00010D7	NUT	ECROU 6 PANS	4					
9	K1011782	BRACKET	SUPPORT	1					
10	K1001029	BOLT	BOULON A 6 PANS	8					
11	DS2805009	CLIP	AGRAFE	8					
12	K1000356	ADAPTER	ADAPTEUR	2					

DATE	NOV. 27, 2006
1st EDITION	

Fig. 7020 PILOT PIPING - LOCK VALVE(ARTI)
CONDUITES DE PILOTE

Serial No. ;

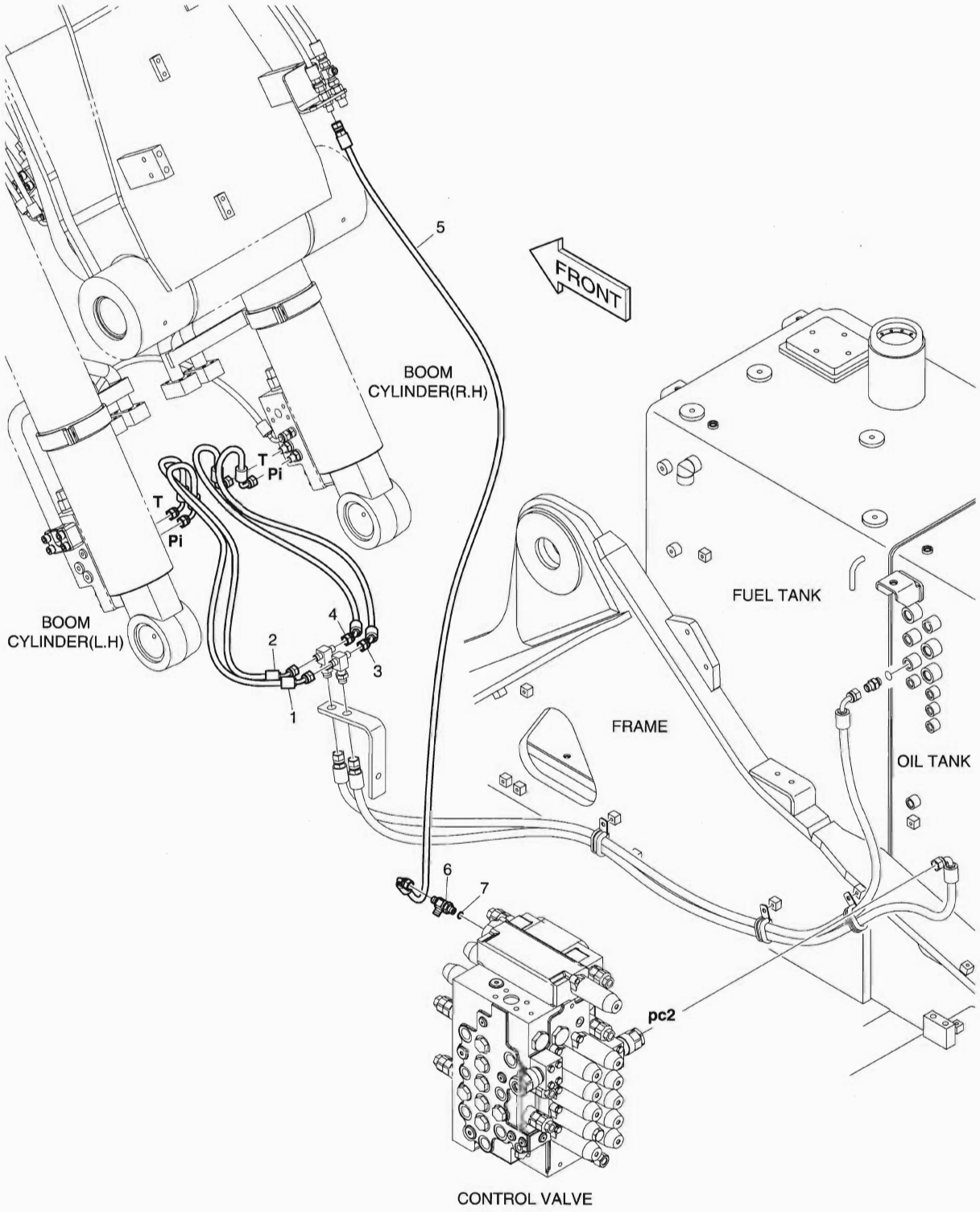

DATE	NOV. 27, 2006
1st EDITION	

Fig. 7020 PILOT PIPING - LOCK VALVE(ARTI)
CONDUITES DE PILOTE

Serial No. ;

Key No.	Part No.	Description	Description	Q'ty	S.C	Serial No.	ICA	Replaceable part	
								Part No.	Q'ty
020--	K1023810	LOCK VALVE PIPING;BOOM	FERMEZ LA TUYAUTERIE A	-	D				
1	DS2090017	HOSE	TUYAU FLEXIBLE	1					
2	DS2090017	HOSE	TUYAU FLEXIBLE	1					
3	DS2090017	HOSE	TUYAU FLEXIBLE	1					
4	DS2090017	HOSE	TUYAU FLEXIBLE	1					
5	DS2093025	HOSE	TUYAU FLEXIBLE	1					
6	2181-1951D1	TEE	TE	1					
7	S8000111	O-RING	JOINT TORIQUE	1					

DATE	NOV. 27, 2006
1st EDITION	

Fig. 7030 LOCK VALVE PIPING - ARM(ARTI)
FERMEZ LA TUYAUTERIE A CLEF DE VALVE

Serial No. ;

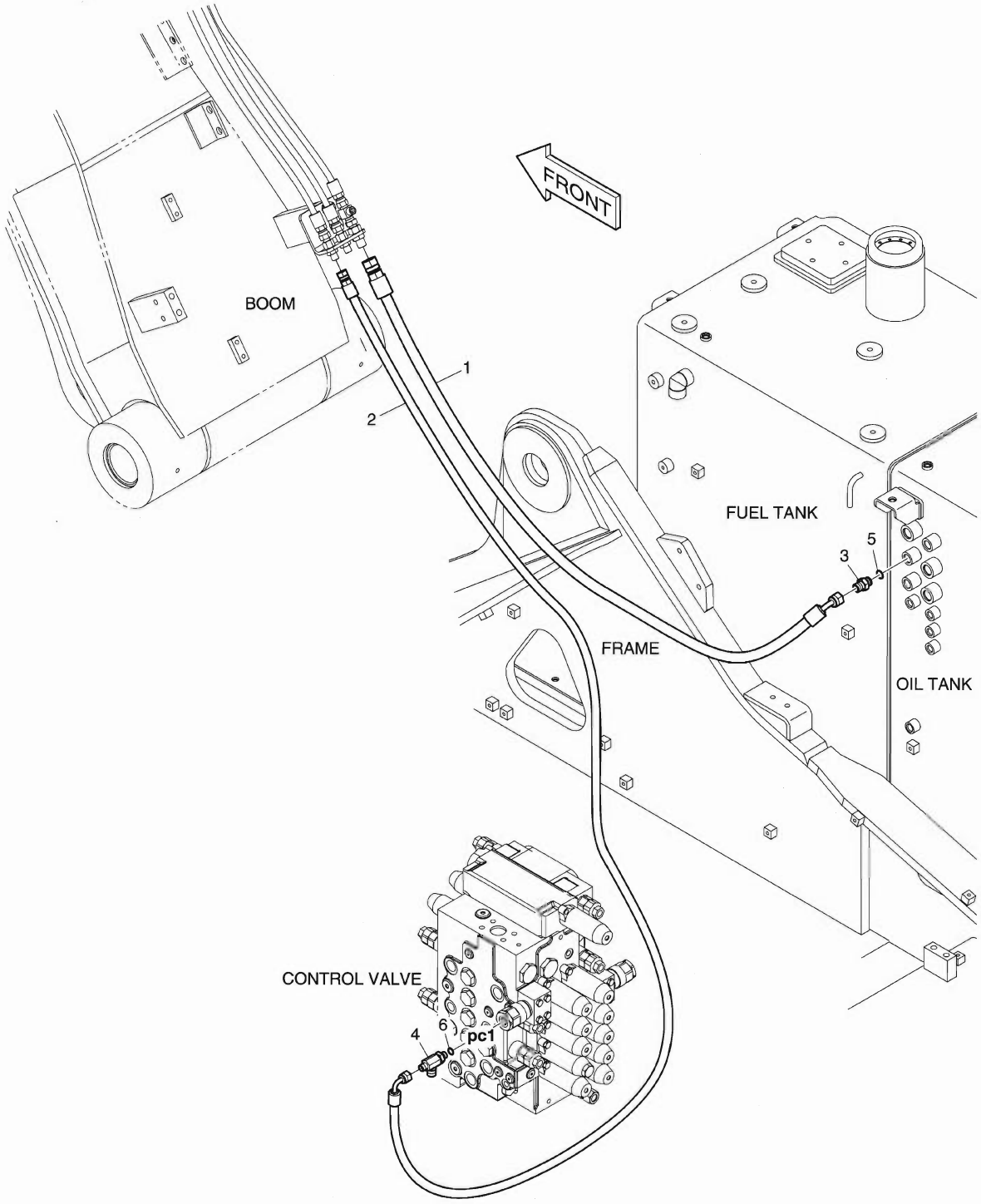

DATE	NOV. 27, 2006
1st EDITION	

Fig. 7030 LOCK VALVE PIPING - ARM(ARTI)
FERMEZ LA TUYAUTERIE A CLEF DE VALVE

Serial No. ;

Key No.	Part No.	Description	Description	Q'ty	S.C	Serial No.	ICA	Replaceable part	
								Part No.	Q'ty
7030--	K1023809	LOCK VALVE PIPING;ARM	FERMEZ LA TUYAUTERIE A	-	D				
1	DS2092079	HOSE	TUYAU FLEXIBLE	1					
2	DS2093140	HOSE	TUYAU FLEXIBLE	1					
3	2181-1126D7	ADAPTER	ADAPTEUR	1					
4	2181-1951D14	TEE	TE	1					
5	S8000141	O-RING	JOINT TORIQUE	1					
6	S8000111	O-RING	JOINT TORIQUE	1					

DATE	NOV. 27, 2006
1st EDITION	

Fig. 7040 ARTI BOOM PIPING - LOCK VALVE
TUYAUTERIE DE PERCHE D'ARTI

Serial No. ;

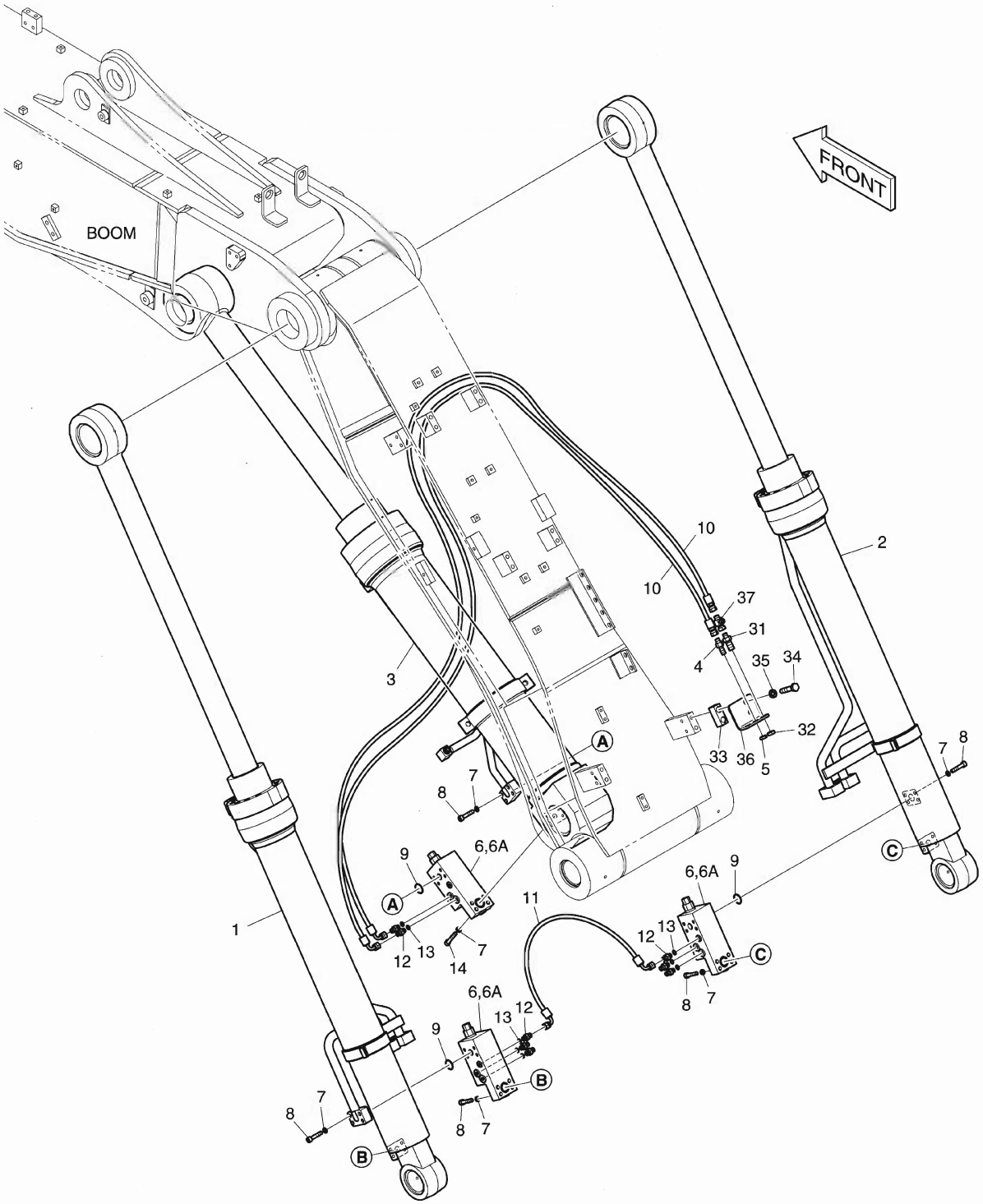

DATE	NOV. 27, 2006
1st EDITION	

Fig. 7040 ARTI BOOM PIPING - LOCK VALVE
TUYAUTERIE DE PERCHE D'ARTI

Serial No. ;

Key No.	Part No.	Description	Description	Q'ty	S.C	Serial No.	ICA	Replaceable part	
								Part No.	Q'ty
7040--	K1015477B	ARTI BOOM PIPING;LOCK V/V	TUYAUTERIE DE PERCHE	-	D				
1	K1017665A	CYLINDER;BOOM(L.H);LOCK V/V	CYLINDRE DE PERCHE	1					
2	K1017666A	CYLINDER;BOOM(R.H);LOCK V/V	CYLINDRE DE PERCHE	1					
3	K1017667	CYLINDER;ARTI(LOCK V/V)	CYLINDRE D'ARTI	1					
4	DS2410007	ADAPTER	ADAPTEUR	1					
5	121-00010D7	NUT	ECROU 6 PANS	1					
6	420-00003A	VALVE;LOCK	VANNE	3					
6A	K9000998	. SEAL KIT	. KIT D'ETANCHEITE	1					
7	S5110603	WASHER	CALE	24					
8	S2212666	BOLT;SOCKET M10X1.5X50	BOULON A 6 PANS CREUX	20					
9	S8000281	O-RING	JOINT TORIQUE	3					
10	2184-1046D177	HOSE	TUYAU FLEXIBLE	2					
11	DS2059383	HOSE	TUYAU FLEXIBLE	1					
12	2181-1126D14	ADAPTER	ADAPTEUR	8					
13	S8000111	O-RING	JOINT TORIQUE	8					
14	S2212866	BOLT;SOCKET	BOULON	4					
31	181-00078D5	ADAPTER	ADAPTEUR	1					
32	121-00010D1	NUT	ECROU 6 PANS	1					
33	K1004006	PLATE	PLAQUE	1					
34	S0563366	BOLT	BOULON A 6 PANS	2					
35	S5102803	WASHER;SPRING	RONDELLE ELASTIQUE	2					
36	K1018038	BRACKET	SUPPORT	1					
37	181-00673D1	TEE;UNION	TE	1					

DATE	NOV. 27, 2006
1st EDITION	

Fig. 7050 ARTI BOOM PIPING - LOCK VALVE
TUYAUTERIE DE PERCHE D'ARTI

Serial No. ;

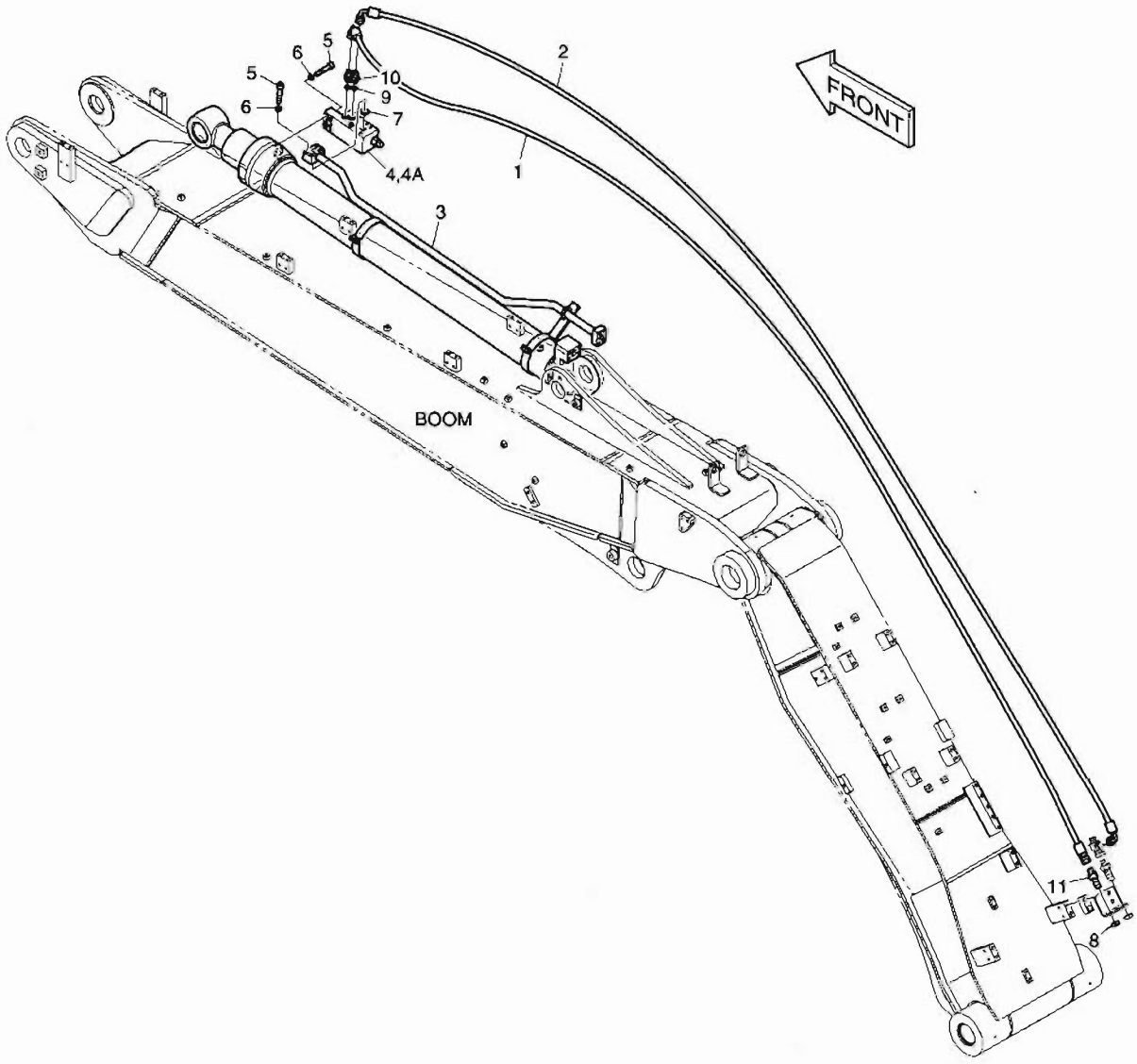

DATE	NOV. 27, 2006
1st EDITION	

Fig. 7050 ARTI BOOM PIPING - LOCK VALVE
TUYAUTERIE DE PERCHE D'ARTI

Serial No. ;

Key No.	Part No.	Description	Description	Q'ty	S.C	Serial No.	ICA	Replaceable part	
								Part No.	Q'ty
050--	K1015481A	ARTI BOOM PIPING;ARM	TUYAUTERIE DE PERCHE	-	D				
1	DS2055943	HOSE	TUYAU FLEXIBLE	1					
2	DS2059515	HOSE	TUYAU FLEXIBLE	1					
3	K1017668	CYLINDER;ARM LOCK V/V	VERIN DE BALANCIER	1					
4	420-00003A	VALVE;LOCK	VANNE	1					
4A	K9000998	. SEAL KIT	. KIT D'ETANCHEITE	1					
5	S2212666	BOLT;SOCKET M10X1.5X50	BOULON A 6 PANS CREUX	8					
6	S5110603	WASHER	CALE	8					
7	S8000281	O-RING	JOINT TORIQUE	1					
8	121-00010D7	NUT	ECROU 6 PANS	1					
9	S8000111	O-RING	JOINT TORIQUE	2					
10	2181-1126D14	ADAPTER	ADAPTEUR	2					
11	DS2410007	ADAPTER	ADAPTEUR	1					

INDEX

PART NO.	FIG NO.	KEY NO.
06.01013-9127	021	38
06.01013-9130	025	3
06.01283-7115	022	12
06.01913-2911	019	35
	037	3
06.01913-3114	020	8
	021	14
	027	17
06.01913-3115	022	16
06.01913-3117	024	15
06.01913-3118	029	31
06.01913-3119	022	17
	029	32
06.01913-3120	024	11
06.01913-3121	024	12
06.01913-3128	021	34
06.01913-3129	021	39
06.01913-3213	026	13
06.01913-3216	032	55
06.01923-2910	026	22
06.01923-2911	031	9
06.01923-2913	036	4
	036	11
06.01923-2915	036	13
06.01923-2917	031	3
06.01923-2919	036	5
06.01923-3111	013	9
	015	22
	032	38
	037	24
06.01923-3114	015	3
	023	7
06.01923-3116	014	4
06.01923-3117	021	32
06.01923-3118	030	9
06.01923-3119	021	24
	021	33
06.01923-3120	022	5
06.01923-3125	026	17
06.01923-3215	027	34
	027	41
	027	43
06.01923-3217	032	53
06.01923-3218	023	3
	026	15
	027	39
06.01923-3222	021	8
06.01923-3225	021	9
06.01923-3228	021	10
06.01924-3217	015	4
06.01924-3217	034	2
	038	2
	038	4
06.01943-3318	012	11
06.01943-3319	033	8
06.01943-3323	033	2
06.01953-3318	035	2
06.02097-8306	021	29
06.02106-0723	016	42
06.06125-8709	030	6
06.08092-2405	023	8
06.11063-8212	031	10
06.11063-8214	015	16
	029	10
	030	7
	037	8
	037	22
06.11063-9217	033	7
06.15010-2311	015	14
	021	36
	022	13
	026	19
	037	6
	037	18
	037	20
06.16110-0106	019	21
06.16731-2105	021	30
06.16731-2106	031	11
06.16731-2107	015	15
	021	37
	025	4
	026	20
	027	19
	029	11
	030	8
	037	7
	037	17
	037	21
06.22022-0907	020	6
06.22022-0909	020	9
06.22022-1016	019	33
06.22022-1018	016	2
06.22022-1063	014	5
06.29010-0120	019	19
06.29020-0132	024	5
06.31641-0618	011	17
06.56020-0115	030	5
	040	28
06.56021-0102	011	24
	040	1
06.56180-0712	032	33
	040	30
	041	15
06.56190-0704	027	8
	027	10
	032	4
	032	12
06.56190-0705	011	29
	039	2
06.56190-0706	032	6
	032	13
	032	16
	032	19
	032	57
06.56190-0709	023	9
	027	6
06.56190-0719	015	18
06.56190-0726	021	6
06.56190-0732	022	3
06.67020-0104	027	14
06.67020-0105	015	6
	015	10
06.67020-0116	027	45
06.78144-2204	032	10
06.78144-2403	027	7
	027	9
1.109-00026	4160	150
1.109-00033	4170	125
1.109-00134	4140	209
1.109-00145	4170	111
1.109-00147	4160	149
1.110-00169	4190	29
1.114-00009	4140	208
1.114-00016	4160	205
1.114-00286	4140	210
1.115-00010	4160	203
1.115-00204	4310	16
	4320	16
	4360	16
	4370	16
1.121-00028	4190	23
1.123-00053	4140	304
	4160	171
1.124-00104	4330	26
	4380	26
1.124-00157	4220	38
	4230	38
	4270	35
	4280	35
	4310	38

PART NO.	FIG NO.	KEY NO.
1.124-00157	4320	38
	4360	35
	4370	35
1.129-00006	4160	330
1.131-00001	4160	366
1.131-00042	4160	260
1.131-00048	4140	211
1.131-00049	4160	113
1.131-00050	4160	206
1.131-00058	4160	328
1.138-00004	4190	21
1.148-00012	4160	385
1.148-00015	4140	206
1.161-00018	1720	27C
1.161-00019	1720	28C
1.161-00021	4190	25A
1.178-00004	4190	26
1.180-00268	4250	14
	4260	14
1.180-00269	4250	22
	4260	22
1.180-00277	4310	22
	4320	22
	4360	22
	4370	22
1.180-00278	4310	14
	4320	14
	4360	14
	4370	14
1.180-00354	4170	129
1.180-00433	4330	18
	4380	18
1.180-00447	4210	4A
1.180-00465	4160	901
1.180-00511	4170	102
1.180-00521	4160	132
1.180-00527	4160	220
1.180-00572	4330	17
	4380	17
1.180-00657	4240	8
	4290	8
	4340	8
	4390	8
1.180-00659	4330	8
	4380	8
1.180-00660	4330	9
	4380	9
1.181-00059	4160	324
1.181-00062	4160	382
1.181-00063	4160	204
1.181-00067	4160	326
1.195-00007	4310	27
	4320	27
	4360	27
	4370	27
1.195-00022	4240	30
	4290	30
	4340	30
	4390	30
1.216-00017	4170	118
1.229-00036	4200	13
1.409-00180	4160	M3
1.409-00225	4200	38
1.412-00017	4190	19
1.412-00092	4140	207
1.412-00164	4170	133
1.415-00005	4160	397
1.416-00009	4160	325
1.420-00013	4160	327
1.420-00016	4140	105
1.420-00111	4140	107
1.420-00119	4160	X
1.424-00024	4160	323
1.424-00041	4160	363
1.425-00004	4160	202
1.428-00241	4300	7
1.454-00001	4200	14
1.471-00001	4160	379
1.519-00001	4210	3
1.540-00006	4160	167
104-00047A	4150	25
104-00048	4150	18
104-00049A	4150	22
104-00050	4150	12
104-00051A	4150	9
105-00001A	4150	2
109-00174	4150	8
110-00079	4310	6
	4320	6
	4360	6
	4370	6
110-00080	4240	6
	4290	6
	4340	6
	4390	6
110-00082	4250	6
	4260	6
110-00097	4220	6
	4230	6
	4270	6
110-00097	4280	6
	4350	6
110-00110	4330	6
	4380	6
110-00219	4150	13
110-00241	4250	2
	4260	2
	4350	2
110-00243	3110	1C
	6720	1C
	6780	1C
	6900	1C
110-00247	6890	2B
110-00249	3110	2B
	6720	2B
	6780	2B
	6900	2B
114-00225	4200	34
114-00425	1200	16
	1220	25
	1260	22
114-00527	4150	21
114-00529	1570	19
114-00548	4150	17
114-00583	2160	2D
114-00584	2160	2E
114-00590	1350	13
115-00042	4200	20
115-00050	4250	12
	4260	12
	4310	7
	4320	7
	4360	7
	4370	7
115-00051	4310	12
	4320	12
	4330	7
	4360	12
	4370	12
	4380	7
115-00052	4250	7
	4260	7
115-00055	4310	19
	4320	19
	4360	19
	4370	19
115-00056	4250	19
	4260	19
115-00059	4310	11
	4320	11

PART NO.	FIG NO.	KEY NO.
115-00059	4360	11
	4370	11
115-00060	4250	11
	4260	11
115-00063	4220	12
	4230	12
	4240	7
	4270	12
	4280	12
	4290	7
	4340	7
	4350	12
	4390	7
115-00072	4240	11
	4290	11
	4340	11
	4390	11
115-00073	4240	12
	4290	12
	4340	12
	4390	12
115-00081	4240	26
	4290	26
	4340	26
	4390	26
115-00084	4220	11
	4230	11
	4270	11
	4280	11
	4350	11
115-00085	4220	19
	4230	19
	4270	19
	4280	19
	4350	19
115-00087	4240	19
	4290	19
	4340	19
	4390	19
115-00092	4330	12
	4380	12
115-00099	4330	11
	4380	11
116-00089B	1430	53
116-00090B	1430	54
116-00092A	1450	32-28D
119-00014AD1	1200	13
119-00025B	1220	20
120-00050B	2110	18
120-00127	4200	31
120-00144	4150	33
120-00246	1660	5
120-00276	6680	12
120-00317	1250	27
121-00006	1190	6
	3140	10
	6920	10
121-00010D1	1290	69
	7040	32
121-00010D3	1190	1E
121-00010D5	6510	18
	6970	19
	6990	9
121-00010D7	6140	30
	6250	13
	6520	16
	6710	15
	7010	8
	7040	5
	7050	8
121-00010D8	6270	44
	6760	44
	6820	44
	6870	14
	6910	23
121-00010D9	6950	6
121-00043	4250	23
	4260	23
121-00044	4330	22
	4380	22
121-00045	4240	23
	4290	23
	4340	23
	4390	23
121-00085	6100	1E
123-00435A	4150	23
123-00437A	4150	14
123-00516B	1490	2
	6280	6
123-00522B	1430	49-9
123-00523	1420	66
	1490	7
	6280	5
123-00524B	1350	2
124-00010	1450	32-35
124-00070	1590	17
124-00085	4220	27
	4230	27
	4270	27
	4280	27
124-00085	4350	27
124-00194	1130	41
124-00199D4	3140	14
124-00199D5	3140	12
	6710	11
	6920	13
124-00208D2	1130	19
	1190	8
	1620	30
	1680	6
	1690	23
124-00208D3	1210	18
	1620	29
	1630	36
	1660	12
	1690	24
	1720	35
124-00208D4	1280	104
	1630	37
	1690	25
	6160	10
	6520	12
124-00208D5	1630	52
	6100	21
124-00208D6	1690	26
	6100	20
124-00208D7	1280	37
	1290	37
	1700	16
124-00208D9	1700	17
124-00209D1	1210	11
	1210	31
	1690	27
	1700	18
	1700	23
	6680	9
124-00209D2	1310	31
	6510	25
124-00209D3	1300	32
124-00209D8	1310	33
124-00298A	1160	2
124-00299A	6550	13
	6560	4
	6770	4
	6830	4
	6990	13
124-00300	3130	1
	6910	9
124-00302	1260	20
	3130	31

PART NO.	FIG NO.	KEY NO.
124-00302	6910	52
124-00303	3130	32
	6910	51
124-00310A	1150	18
124-00344	1450	32-36
124-00367	6180	8
	6950	12
124-00368	6180	6
	6950	10
125-00034A	1540	38-2A
125-00035A	1540	38-21A
	1550	37-2A
125-00071B	1560	2-2A
125-00072	1450	32-11
125-00073B	1430	49-4A
125-00074B	1430	49-5A
125-00075A	1580	10
125-00077	1440	70
125-00078	1440	71
125-00096A	1430	49-4
125-00097A	1430	49-5
129-00042	4200	10
129-00043	4200	18
129-00062	4140	310
129-00071	4240	29
	4290	29
	4340	29
	4390	29
129-00124	4180	44
129-00126	4180	58
129-00129	4180	17
129-00155	1430	69
133-00220E	1450	37
133-00221	1450	32-9
133-00229A	1470	10
133-00230A	1470	11
133-00248	1430	49-4C
	1430	49-5C
136-00002	1220	14
136-00055A	1450	32-12
137-00092	1450	32-10
140-00198	1220	16
140-01374A	4150	32
142-00127C	1430	52
142-00128B	1430	51
145-00124A	1450	32-18
159-00017	4200	19
159-00287A	1330	8
	1340	8
159-00290A	1330	7
159-00290A	1340	7
159-00294B	6290	1
	6300	1
160-00008	4200	33
	4300	5
160-00020	1190	7
	1610	8
	3110	31
	3140	11
	6720	31
	6780	31
	6900	31
	6920	11
160-00027	1190	12
160-00061	6420	1
	6500	1
160-00068	1100	3
160-00071	1470	5
160-00072	1470	6
160-00074A	1420	121
160-00080A	1470	7
160-00081	1100	30
161-00010	1410	1
161-00011	1410	2
161-00080	4200	9
161-00195	1430	34
	1450	34
	6330	8
161-00281	6180	7
	6190	7
	6740	7
	6800	7
	6950	11
	6960	7
161-00381	1470	14
	6170	19
161-00382	1470	15
	6540	9
161-00386	6980	24
161-00404	6440	9
161-00574	1260	21
	3130	13
	6910	10
161-00580	1560	35
161-00598A	1420	59
161-00599	6280	4
161-00600	6280	8
161-00603B	1590	3
161-00608B	1590	7
161-00609C	1440	84
161-00610C	1440	85
161-00613B	1440	90
161-00618B	1430	63
161-00619B	1430	64
161-00620	1450	32-28C
161-00621B	1450	32-28
161-00622	1400	23
161-00623	1450	32-6
161-00624	1400	34
161-00639	6280	13
	6290	8
	6300	6
161-00640A	1420	30
162-00033A	1450	32-3C
162-00034B	1430	7
162-00035A	1420	6
162-00038	1420	9
162-00039A	1420	8
162-00040A	6290	2
	6300	2
170-00004	1160	9
171-00060A	6280	3
172-00052E	1450	15
172-00053B	1480	1
172-00055A	1440	91
172-00372A	1480	-
180-00077D5	3110	28
	6720	28
	6780	28
	6900	28
180-00197	4200	16
180-00198	4200	23
180-00199	4200	24
180-00200	1220	21A
180-00219	4140	302
180-00220	4140	307
180-00221	4140	308
180-00247	4250	21
	4260	21
180-00276	4220	21
	4230	21
	4270	21
	4280	21
	4350	21
180-00297D3	2100	3A
180-00398	4180	18
180-00403	4180	60
	4400	8
	4410	8
	4420	8

PART NO.	FIG NO.	KEY NO.
180-00463	1100	4
	2100	12
181-00008	6680	5
181-00078D5	7040	31
181-00086D2	1290	9
181-00103	1190	4
	3140	9
	6920	9
181-00128D3	6510	17
	6970	18
181-00144D5	1290	19
181-00319	4200	21
181-00346	4140	311
181-00561	4180	32
181-00563	4180	69
	4400	11
	4420	11
181-00564	4180	70
181-00646	4180	89
181-00647	4180	90
181-00673D1	7040	37
181-00698	1190	1D
181-00779	6140	7
	6160	6
	6520	18
181-00804	6470	3
181-00809	6100	1C
181-00810	6100	1D
185-00167D3	6100	12
186-00017A	1200	6
190-00092	5120	1
190-00093	5120	9
190-00094	5120	13
190-00095	5130	9
190-00096	5120	8
190-00097	5130	10
190-00098	5120	10
190-00099	5130	11
190-00100	5130	5
190-00101	5120	4
190-00102	5120	12
190-00122	5130	12
190-00509BD25	5130	27
190-00521	5120	14
190-00522	5130	17
190-00557	5130	18
190-00648A	5130	13
190-00652	5130	4
190-01059D13	5130	32
190-01107B	1110	2
190-01172	6100	19
190-01192D2	1620	27
190-01192D9	1620	26
191-02990B	1100	25
191-03166C	1440	17
191-03179A	1440	16
191-03279A	6280	9
191-03280A	6280	10
191-03283	1450	32-28A
191-03734A	1430	83
191-03736E	6470	14
195-01683A	1470	19
	6170	2
195-01684A	1470	20
	6540	2
195-01805	6440	1
195-02623B	1100	28
195-02624C	1560	16
195-02643C	1120	7
195-02662B	6100	2
195-02711B	6140	9
195-02716B	1280	5
195-02719B	1450	38
195-02725B	1250	8
195-02729	1420	58
195-02739B	1430	49-2
195-02740C	1430	49-3
195-02753C	1330	1
195-02755C	1340	1
195-02768C	1390	14
195-02769C	1390	15
195-02770C	1390	18
195-02771B	1400	14
195-02772E	1400	15
195-02774	1400	22
195-02775A	6410	2
195-02780A	1160	8
195-02785C	1400	24
195-02790B	1400	25
195-02858C	1390	22
195-02868C	1330	5
195-02904C	1350	1-2
195-02908C	6390	3
195-02909A	6430	1
195-02910A	6400	1
	6450	1
195-02925	6440	5
195-02948A	1510	1
195-02949A	1500	1
195-03374B	6290	5
195-03435B	6120	32
	6150	52
195-03436B	6120	33
	6150	53
195-03444	6470	11
198-00016	1280	6
	1310	7
198-00053A	1450	32-8
198-00054A	1420	5
2.109-00244	4110	2H
	4110	3H
2.109-00262	4110	2G
	4110	3G
2.113-00014	4110	27
2.114-00033	4110	2Ad
	4110	3Ad
2.114-00034	4110	2Ad
	4110	3Ad
2.114-00035	4110	2Ad
	4110	3Ad
2.114-00036	4110	2Ad
	4110	3Ad
2.114-00037	4110	2Ad
	4110	3Ad
2.114-00038	4110	2Ad
	4110	3Ad
2.114-00039	4120	2Af
2.114-00041	4120	2G
2.114-00042	4120	2H
2.114-00147	4110	2C
	4110	3C
2.114-00148	4110	2C
	4110	3C
2.114-00149	4110	2C
	4110	3C
2.114-00150	4110	2C
	4110	3C
2.114-00151	4110	2C
	4110	3C
2.114-00154	4110	22
2.114-00877	4130	2E
2.115-00302	4110	2F
	4110	3F
2.115-00303	4110	20
2.115-00325	4110	21
2.115-00437	4110	2Ac2
	4110	3Ac2
2.120-00575	4120	26
2.120-00612	4110	24
	4120	2Au

PART NO.	FIG NO.	KEY NO.
2.120-00613	4120	2Ah
2.120-00614	4120	18
2.120-00615	4120	50
2.120-00617	4130	2D
2.120-00675	4120	2O
2.120-00821	4120	43
2.120-00823	4120	42
2.120-00824	4120	41
2.120-00826	4120	2Ap
2.120-00832	4130	1C
2.121-00009	4140	102
2.121-00202	4120	2Al
	4120	2N
2.121-00203	4120	47
2.123-00066	4120	2Ae
2.123-00114	4110	2Ab
	4110	3Ab
2.123-00131	4120	2Ar
2.123-00132	4120	44
2.123-00138	4130	2J
2.123-00235	4120	2Ai
2.123-00236	4120	17
2.123-00238	4120	2F
2.123-00239	4120	46
2.131-00415	4120	2Ag
2.131-00416	4120	15
2.131-00417	4130	2C
2.131-00418	4120	2E
2.131-00419	4120	2I
2.131-00420	4120	2J
2.172-00003	1380	9
2.180-00084	4120	11
2.180-00471	4120	2An
	4120	2K
2.180-00987	4110	2E
	4110	3E
2.180-01180	4130	2G
2.180-01181	4120	2Ao
2.180-01182	4130	2H
2.180-01191	4120	2Am
2.180-01199	4130	1B
2.181-00183	4120	2Aq
	4120	49
2.181-00184	4120	2As
2.181-00262	4120	2At
2.181-00331	4110	23
	4120	2M
2.241-00045	4110	4
2.241-00046	4110	4A
2.405-00107	4110	2B
2.405-00108	4110	3B
2.405-00180	4110	8
2.408-00063	4120	2Ac
2.408-00064	4120	2Aj
2.408-00083	4120	2D
2.409-00058	4160	381
2.409-00068	4120	16
2.409-00116	4110	2Ac
	4110	3Ac
2.409-00177	4120	2Ab
2.409-00178	4120	2Ak
2.409-00180	4120	2C
2.409-00201	4120	12
2.409-00202	4120	2Ad
2.409-00216	4130	2B
2.410-00087	4110	2
2.410-00088	4110	2A
	4110	3A
2.410-00089	4110	3
2.410-00133	4110	2Aa
	4110	3Aa
2.412-00127	4110	3D
2.412-00130	4110	2D
2.412-00221	4110	2Af
	4110	3Af
2.430-00205	4100	5
	4130	1
2.430-00206	4130	1A
2.453-00023	4110	2Ae
	4110	3Ae
204-00067	1160	51
	1170	-
204-00070	1170	5
204-00075	1170	4
2106-1019D25	1720	34
	5110	9
2107-6006	1720	17
2109-9033	4150	4
2110-1184D7	4200	28
	4300	2-2
2114-1058D10	1280	34
	1310	35
2114-1058D2	1410	4
2114-1058D29	1700	4
	1720	23
2114-1058D30	1250	23
	1540	38-12
	1550	37-12
2114-1058D31	6330	15
2114-1058D33	1260	47
2114-1058D33	1560	20
	1580	20
2114-1058D45	1540	38-10
	1550	37-10
2114-1058D52	1720	26
2114-1058D54	1670	3
	6350	3
2114-1058D68	1560	29
2114-1058D70	1670	5
2114-1058D72	6100	5
2114-1379	2140	7
2114-1813	1200	8
	1220	3
2114-1814	1200	9
	1220	4
2114-1816A	1130	30
	2110	26
2114-1817	1110	5
2114-1831A	3120	9
	6570	9
	6580	9
	6590	9
	6600	9
	6610	9
	6620	9
	6840	6
	6850	6
	6860	6
2114-1848A	3120	4
	6570	4
	6580	4
	6590	4
	6600	4
	6610	4
	6620	4
	6840	1D
	6850	1D
	6860	1D
2114-1856	1450	42
2114-1898D1	1410	7
	1470	4
	1500	3
	1510	3
	6330	12
	6430	2
2114-1898D10	6330	16
2114-1898D13	1420	76
	1440	76
2114-1898D14	1350	1-5
	1350	5

PART NO.	FIG NO.	KEY NO.
2114-1898D14	1390	31
	1400	28
	1420	18
	1430	18
	1440	18
	1450	18
	1470	9
	1490	6
	6280	17
2114-1898D15	1360	4
	1450	23
	1450	32-22
	1480	3
2114-1898D17	1350	8
	1470	2
	6310	2
	6320	2-2
	6320	3
	6330	9
2114-1898D18	1350	11
2114-1898D2	1430	49-13
	1450	32-25
	1450	46
	6330	13
2114-1898D3	1420	19
	1430	19
	1430	49-10
	1440	19
	1450	19
	1450	32-29
	1490	3
	6280	14
	6470	12
2114-1898D4	1330	19
2114-1898D5	1390	36
	1400	31
	1440	113
	6290	9
	6300	8
2114-1898D6	1420	26
	1430	26
	6330	17
	6390	5
	6400	8
	6450	2
2114-1901A	4150	11
2114-1914A	4150	34
2114-1929	1120	8
2114-2031D1	1440	97
2114-2031D4	1350	6
2114-2031D4	1390	33
2114-2031D5	1310	34
2114-9012A	1100	11
	1120	9
	1190	10
	2100	25
2116-1060D5	6890	10
2116-1060D6	3100	19
	3110	21
	6720	21
	6780	21
	6890	11
	6900	21
2116-1522	1540	38-3
	1550	37-3
2116-1532A	3100	7
2116-1539	6890	12
2116-9003	5120	6
2119-1063B	1190	1J
2119-1065	4150	30
2120-1354	1650	13
2120-1363	4150	38
2120-2135A	1150	16C
2120-2137A	1110	4
2120-2150D1	1450	43
2120-2150D3	1450	28
	1450	32-33
2120-2166D1	1450	32-23
	1450	41
	1470	3
	1500	2
	1510	2
2120-2166D10	1330	10
	1340	10
	1360	3
	1400	26
	1440	14
	6300	10
2120-2166D12	1400	29
	1420	25
	1430	25
	1430	49-12
	1440	25
	1450	25
	1470	26
2120-2166D18	1440	99
2120-2166D2	1410	6
	1480	2
2120-2166D23	1390	26
2120-2166D26	1420	77
2120-2166D26	1440	77
2120-2166D27	6310	3
	6320	2-3
	6320	4
	6330	10
2120-2166D28	1420	20
	1430	20
	1430	49-11
	1440	20
	1450	20
	1450	32-30
2120-2166D32	6330	23
2120-2166D36	1390	35
	1400	30
2120-2166D37	1420	27
2120-2166D4	1450	22
	1470	16
2120-2166D5	1350	1-3
	1350	10
	1390	32
	1400	35
	1420	47
	1450	32-24
	1450	47
	6330	22
2120-2166D52	1330	16
	1340	11
	1390	23
	1430	49-15
	1430	80
	1440	80
	1450	32-31
	6290	6
	6300	9
	6330	25
2120-2166D53	1330	9
	1340	9
	1360	5
	1390	24
	1400	27
	1420	111
	1440	111
	1450	32-37
2120-2166D54	6390	4
	6400	2
	6450	3
2120-2166D55	1470	1
2120-2166D57	1390	38
2120-2166D58	1400	36
2120-2166D7	1420	31

PART NO.	FIG NO.	KEY NO.
2120-2166D7	1440	31
	6280	16
2120-2166D9	1490	4
	6470	13
2120-2187	1130	50
	1700	14
	6100	22
2121-1305	1630	53
	1660	15
	1700	25
2121-1311D1	1350	9
	6330	18
2121-1311D2	1350	7
	1430	49-14
	6330	14
2121-1311D4	1430	39
	1450	39
	6330	11
2121-9007	1410	5
2122-1002D2	5130	8
2122-1002D4	5130	14
2123-1107D7	1100	9
2123-2012G	3100	5
	6890	8
2123-2192C	3110	10
	6720	10
	6780	10
	6900	10
2123-2247	1450	32-19
2123-2441	3100	6
	3110	8
	6720	8
	6780	8
	6890	7
	6900	8
2123-2443	3110	7
	6720	7
	6780	7
	6900	7
2123-4030	1190	13
2123-6119	1450	32-3B
2124-1025D6	1260	19
2124-1026D1	6550	20
	6990	25
2124-1026D2	6150	25
	6910	13
2124-1353D2	3140	15
	6920	14
2124-1509D1	1680	7
	6370	3
2124-1509D1	6410	6
2124-1509D2	1210	10
2124-1622D1	5130	28
2124-1689A	1450	32-20
2125-1095A	1400	16
2125-9055	1450	35
2126-9001	4150	39
2127-1002A	1450	48
2129-1008	1220	15
2129-1236	2130	6
2129-1393	1220	7
2129-1446	1450	117
213-00029C	1390	13
213-00030B	1390	8
213-00031E	1390	9
213-00032B	1390	10
213-00033B	1390	11
213-00034E	1390	12
213-00035B	1390	7
213-00036B	1400	2
213-00037B	1400	3
213-00038B	1400	4
213-00039B	1400	5
213-00040A	1400	21
2132-1133B	1470	22
2132-1134B	1470	21
2140-1338	1430	55
	1440	55
2140-1406	4150	29
2142-9005	1450	33
2150-1132A	1450	32-14
2150-1133	1440	93
2155-4019A	3110	3
	6720	3
	6780	3
	6900	3
2155-4020B	3110	4
	6720	4
	6780	4
	6900	4
2160-1004D3	1100	35
2160-1004D44	1100	15
2160-1004D48	1100	16
2160-1004D51	1100	17
2160-1004D55	1100	18
2160-1201D11	1100	20
2160-1201D12	1100	21
2160-1201D14	1100	22
2160-1212	1690	4
2160-1213	1690	5
2160-1310	1420	21
2160-1336	6100	12C
2160-1345	1500	4
2160-1346	1510	4
2161-2212	1440	72
2161-2487	1470	25
2161-9052	1540	38-4
	1550	37-4
2161-9053	1540	38-5
	1550	37-5
2161-9066	1120	10
2172-9021	1450	32-17
2180-1026D19	1240	32
	1260	32
	2180	6
	6180	4
	6190	4
	6740	4
	6800	4
	6960	4
2180-1026D2	1260	31
	1270	4
	3130	12
	3150	4
	6270	5
	6730	4
	6760	5
	6790	4
	6820	5
	6870	10
	6910	24
	6930	4
2180-1026D23	1250	33
2180-1026D27	1250	34
2180-1026D28	1250	46
2180-1026D30	6550	8
	6560	7
	6770	7
	6830	7
2180-1026D32	1230	35
2180-1106BD14	6890	16
2180-1106BD24	3100	1B
	3100	10
	3110	13
	6720	13
	6780	13
	6890	2C
	6890	14
	6900	13
2180-1106BD3	3110	14

PART NO.	FIG NO.	KEY NO.
2180-1106BD3	6720	14
	6780	14
	6900	14
2180-1106BD4	3100	11
	3110	12
	6720	12
	6780	12
	6890	13
	6900	12
2180-1106BD6	6890	15
2180-1216D149	4330	15
	4380	15
2180-1217D103	4170	130
2180-1217D16	4110	4C
2180-1217D57	4120	45
2180-1217D66	4120	2L
2180-1217D76	4110	4B
2180-1254	4150	7
2180-6086	1720	28A
2180-6088	1720	27A
2180-6096	2120	2-5
2180-9087	2140	14
2180-9098	2150	6
2180-9153	5110	12
2181-1110D3	1190	1C
2181-1111D11	6920	21
2181-1116D1	4160	398
	4190	2
	4200	3
2181-1116D10	4160	354
2181-1116D2	2120	2-8
	2140	12
	2150	8
	2160	2K
	4140	312
	4150	27
	4160	346
2181-1116D3	4200	4
	4240	31
	4290	31
	4340	31
	4390	31
2181-1116D4	4150	28
2181-1126D14	1280	23
	1290	23
	1300	26
	2180	13
	6160	3
	6170	9
	6230	4

PART NO.	FIG NO.	KEY NO.
2181-1126D14	6510	16
	6520	3
	6530	9
	6690	3
	6710	10
	6970	17
	6980	22
	7040	12
	7050	10
2181-1126D27	1300	24
	1310	24
2181-1126D28	1300	25
	1310	25
2181-1126D34	1290	24
2181-1126D36	1300	64
	1300	74
	6140	2
	6700	3
2181-1126D37	6230	3
2181-1126D6	1240	14
	1280	21
	1280	102
	1310	27
	2180	9
2181-1126D7	1280	22
	1290	22
	1300	63
	1300	73
	1310	72
	6200	6
	6680	6
	7030	3
2181-1159	1700	10
2181-1160A	1700	11
2181-1161A	1700	12
2181-1186D12	3140	6
	6920	19
2181-1702D10	1290	13
	6140	31
	6170	22
2181-1702D2	1240	13
	1280	15
	1290	15
2181-1702D3	1290	112
	1290	121
2181-1702D4	1280	14
	1290	14
	1290	131
	6140	4
	6140	52

PART NO.	FIG NO.	KEY NO.
2181-1702D4	6160	4
	6170	10
	6230	5
	6510	15
	6520	4
	6880	3
	6970	16
2181-1702D5	1280	71
	1310	22
2181-1702D53	1290	70
2181-1702D56	2180	17
	6520	23
2181-1702D57	1290	73
	6520	26
2181-1890D2	1200	12
	1220	23
	4160	352
2181-1890D3	4160	380
2181-1890D4	4160	357
	4170	128
2181-1913D24	1190	1H
2181-1925	1610	2
2181-1950D1	1250	17
	1250	62
	1250	71
	1250	81
	1250	91
	1260	25
	4140	110
	4140	313
	4210	5
2181-1950D2	1290	111
	1290	122
	1310	71
2181-1950D7	1210	32
2181-1950D9	1250	61
	6180	12
2181-1951D1	1280	10
	1290	10
	6140	5
	6160	5
	7020	6
2181-1951D14	6700	4
	7030	4
2181-1951D16	1280	11
	1290	11
2181-1951D19	6140	6
2181-1951D6	6170	8
	6530	10
	6980	11

PART NO.	FIG NO.	KEY NO.
2181-1951D7	6530	11
	6980	12
2181-2104D6	6100	9
2181-2281D10	1290	12
	2180	11
2181-2293D4	6120	9
	6150	14
2181-2294D1	6870	13
2181-2375D7	6680	4
2181-2527	1610	4
2181-2566D10	6910	32
2181-2627D1	1260	28
	2180	3
	6120	7
	6150	12
	6910	27
2181-2627D15	6150	13
2181-2627D3	1260	29
	6150	11
2181-2627D4	1260	30
2181-2755B	6100	1A
2181-2815D1	6130	2
2181-2815D3	6510	12
	6740	35
	6960	35
	6970	13
2181-2816D2	6190	32
	6800	32
2181-2816D4	6190	35
	6560	32
	6770	32
	6800	35
	6830	32
2181-2817D1	6270	41
	6760	41
	6820	41
2181-2817D2	6190	33
	6740	33
	6800	33
	6960	33
2181-2817D4	6190	37
	6560	33
	6740	37
	6770	33
	6800	37
	6830	33
	6960	37
2181-2820D1	6260	4
	6750	4
	6810	4
2181-4112	3140	13
	6920	18
2181-4125	2180	15
2181-4133D3	6510	13
	6560	9
	6770	9
	6830	9
	6970	14
2181-4133D46	6510	14
	6970	15
2181-4133D5	6270	12
	6760	12
	6820	12
2181-4133D6	6120	5
	6150	9
	6740	32
	6960	32
2181-9078	1240	2
	6180	9
	6190	3
	6740	3
	6800	3
	6960	3
2181-9079	1260	33
	1270	5
	3130	14
	3150	3
	6270	4
	6730	3
	6760	4
	6790	3
	6820	4
	6870	15
	6910	20
	6930	3
2181-9081	2180	5
2181-9084A	1260	50
2184-1026D435	2180	8
2184-1036D118	1190	1L
2184-1045D152	3140	5
2184-1045D55	3140	2
2184-1045D74	6920	4
2184-1046D177	7040	10
2184-1046D251	6710	1
	6710	2
2184-1060D107	6920	3
2184-1100D130	3150	2
2184-1100D16	6740	2
2184-1100D237	6930	2
2184-1100D78	6190	2
2184-1197D103	6130	4
2185-1002D105	1230	36
2185-1308D6	1700	7
2185-1660	1420	106
2185-1776D2	1250	12
2186-9003	1700	8
2190-2476	5130	15
2190-2477	5130	16
2190-2524	5120	7
2190-3297	5120	2
2195-1534	1650	22
2195-2394B	1680	2
2195-3500	1200	22
	1690	17
2195-3657	1260	16
2197-1660	1680	9
	1690	21
2197-1661	1280	2I
	1630	35
	1650	36
	1680	4
	1690	22
	6400	4
	6410	5
	6430	4
	6450	4
2199-1004	5100	1-10
2199-1005	5100	1-11
2199-1063F34A	5100	1
2199-9007	5100	3
2199-9008	5100	2
2199-9009	5100	1-15
2199-9043	5100	1-1
2199-9058	1440	92
2204-6039A	1720	2
2208-6013B	1720	13
230-00060A	4150	20
230-00061	4150	10
2401-1276KT	6100	1G
2403-4001A	4150	36
2412-1040	4150	3
2415-1018	1650	35
2420-1258	6100	12A
2423-1470	1310	4
2426-1175	1220	8
2426-1237	1280	2D
2460-9057A	1290	3
2471-1133	6140	3
2471-1135	1310	21
2471-1152	6100	12B

PART NO.	FIG NO.	KEY NO.
2471-1154	1280	2C
	5110	2
2471-1155A	1280	2E
2472-7003	1280	2B
2474-9016A	1220	17
2512-1095D1	5110	11
2515-1016D4	1650	25A
	5110	18
	6390	1A
	6400	3A
	6410	7A
	6480	1A
	6490	1A
2515-1021D1	1440	75A
2515-1022D1	1680	1A
	5110	17
2516-1116	1630	32
2527-1016	1630	5A
	1630	6A
	5110	19
2527-1017	1630	5B
	1630	6B
	5110	20
2527-1018	1630	5C
	1630	6C
	5110	21
2527-1023A	1650	14
	5110	23
2527-1025	1630	5D
	1630	6D
	5110	22
2527-9004	1650	12
2528-9040	1630	18
2531-1003	1620	8
	1620	9
2541-9020	1440	81
2543-9015	1620	6
2544-1022	1650	15
2544-9024	1650	8
2544-9033	1620	15
	1620	16
	1620	17
	1620	18
	1620	19
	1620	20
	1620	21
	1620	22
	1620	23
	1620	32
2547-9045	1260	35
2547-9045	6460	3
2548-1027	1690	1A
2549-9112	1280	7
2550-1014D1	1690	2
2550-1014D2	1690	3
2553-1275D5	1690	10
2553-1275D59	1690	15
2553-1275D6	1690	14
2553-1275D81	1690	16
2553-1275D82	1690	6
270-00054B	1430	49-6
270-00062A	1430	74
2705-1020	3120	3
	6570	3
	6580	3
	6590	3
	6600	3
	6610	3
	6620	3
	6840	1C
	6850	1C
	6860	1C
2705-1030	4150	19
2705-9002	1540	38-20
	1550	37-9
	1580	21
2713-1059A	6840	2
	6850	2
	6860	2
2713-1060A	6840	3
	6850	3
	6860	3
2713-1218	3120	1A
	6570	1A
	6580	1A
	6590	1A
	6600	1A
	6610	1A
	6620	1A
	6840	1AA
	6850	1AA
	6860	1AA
2713-1228A	3120	5
	6570	5
	6580	5
	6590	5
	6600	5
	6610	5
	6620	5
2713-1229A	3120	6
2713-1229A	6570	6
	6580	6
	6590	6
	6600	6
	6610	6
	6620	6
2891-1311	1450	32-26
2891-1421B	4150	5
352-00014	4140	305
	4160	116
354-00002	4200	27
354-00003	4200	29
	4300	12
359-00021A	1440	87
359-00022A	1440	86
401-00449	6100	1
402-00036	4300	6
404-00018A	4150	35
407-00001	6100	1F
412-00013	4140	306
	4160	115
4132-1138	1450	32-28B
415-00037	4180	56
415-00043B	1400	6
415-00044B	1390	19
415-00045B	1390	17
415-00046B	1390	16
416-00018A	1430	10
416-00019B	1430	29
416-00020	1430	40
4161-9067	1120	11
4185-1777	1650	34
420-00003A	6690	6
	6710	4
	7040	6
	7050	4
420-00110	4140	400
420-00132	4240	28
	4290	28
	4340	28
	4390	28
420-00258	4400	2
	4410	2
	4420	2
	4420	13
420-00304	1250	9
420-00307	1290	67
420-00352D1	1290	68
420-00453KT	4200	*
420-00466A	1260	1

PART NO.	FIG NO.	KEY NO.
420-00466A	4180	-
420-00467	1300	3
	4200	-
420-00476	6140	8
	6520	20
4215-1003D5	1250	43
422-00027A	1220	21
422-00055	2100	13
423-00046	4200	1
423-00047	4200	2
423-00193B	6120	2
423-00202	1260	17
424-00042	4200	8
426-00028	6510	4
	6970	4
426-00168	4180	57
426-00247A	6160	1
	6520	1
426-00248A	6150	1
426-00249A	6150	2
426-00266	6140	1
426-00267A	6120	1
426-00278	1190	1G
	1220	18
426-00282	6470	2
426-00287	6230	1
429-00004	4200	5
429-00005	4200	7
429-00006	4200	11
429-00024	4180	43
430-00040	4180	45
430-00042	4180	19
452-00020	4140	309
471-00075A	1280	2
471-00105A	1200	10
471-00114	6130	1
471-00118	1290	8
471-00119	1420	13
471-00127	1220	30
473-00033	1200	3
473-00048	1220	5
473-00052	1220	12
474-00039	1170	2
	5110	4
474-00040	1170	3
	5110	3
474-00044A	1430	49-16
474-00046	6130	1A
474-00055	1220	9
	5110	1

PART NO.	FIG NO.	KEY NO.
480-00018C	2160	2
480-00018KT	2160	*
481-00002	2160	2A
482-00003	2160	2C
483-00002	2160	2B
500-00302A	6390	-
500-00303	6400	-
500-00307	6420	-
500-00308	6430	-
500-00309	6440	-
500-00310	6450	-
500-00317	6240	-
505-00016B	1430	49-7
506-00006	1650	1
507-00006	1420	102
507-00007	6470	8
515-00012A	1630	1A
	5110	16
515-00013	6420	5A
	6440	10A
	6500	5A
516-00011	6380	3
516-00014	1650	26
516-00015	1650	27
520-00004	1720	20
523-00012	6100	1H
527-00005	1660	1A
	5110	24
527-00006	1630	17
530-00067	6140	28
	6220	4
530-00150	1640	2
530-00214A	6100	17B
530-00236	1280	2H
530-00411G	1630	25
530-00412G	1620	28
530-00413C	1630	26
530-00414C	1640	10
530-00415C	1640	9
530-00416B	1630	31
530-00417B	1440	62
530-00418D2	1680	5
530-00430A	6390	2
530-00431	6410	1
530-00432A	6240	2
530-00434B	1630	27
530-00435A	1630	28
530-00463A	6400	7
	6430	7
	6450	7

PART NO.	FIG NO.	KEY NO.
530-00463A	6490	2
530-00464	6420	4
	6500	4
534-00062	6420	5
	6440	10
	6500	5
534-00064	1680	1
534-00079	1440	75
534-00085	1650	25
	6390	1
	6400	3
	6410	7
	6480	1
	6490	1
534-00117A	6300	-
538-00011	1420	73
538-00012	6470	1
539-00076C	1630	1
541-00015	1420	101
541-00016	6470	7
543-00095	1630	14
543-00096	1630	15
543-00106	1620	7
543-00107	1720	1
544-00007	1660	1
545-00001	1630	16
545-00011	1620	12
547-00023	1630	49
547-00024A	1700	20
547-00026	1200	19
548-00003A	1690	1B
549-00010	6140	27
	6220	2
549-00077	6470	6
549-00086	1430	57
549-00089	1330	5A
549-00090	1640	6
549-00092	6240	1
549-00093	6100	17A
549-00095	1250	11
549-00101	6370	1
	6420	20
	6470	4
549-00102	6460	1
549-00103	1630	19
	1630	21
	6380	1
	6390	10
553-00001D4	1660	19
554-00005	1420	60

PART NO.	FIG NO.	KEY NO.
621-01507	1470	13
621-02151	1310	6
621-02700A	6550	12
	6990	12
621-02726A	1540	38-6
	1550	37-6
621-02739B	6100	3
621-02798	6550	14
	6990	14
621-02800	1100	13
621-02801	1330	17
	1340	14
	1390	27
621-02837A	1420	61
621-02849A	1450	36
621-02864	1420	12
621-02867A	1450	32-21
621-02869B	1450	32-7
621-02870C	6280	-
621-02871B	6280	1
621-02872	6280	2
621-02873	6280	7
621-02892E	1470	12
621-02894E	1400	1
621-02895C	1350	1-1
621-02896G	1400	-
621-02900B	1340	3
621-02901B	1330	2
621-02902G	1390	-
621-02903C	1390	1
621-02904C	1390	3
621-02905C	1390	2
621-02907B	1400	10
621-02908B	1390	6
621-02909E	1390	4
621-02910C	1440	94
621-02911C	1440	95
621-02912B	1440	96
621-02913C	1400	7
621-02914C	1400	8
621-02915B	1400	9
621-02917C	1400	11
621-02919B	1400	13
621-02920C	1400	19
621-02925A	1350	1-4
621-02926C	1340	2
621-02938B	1100	5
	2100	11
621-02955B	1620	1
621-02957A	1330	6
621-02957A	1340	6
621-03005A	1350	4
621-03011E	1350	1
621-03012E	1330	3
621-03014B	1330	4
	1340	5
621-03103	6280	12
	6290	7
	6300	7
621-03113B	1440	67
621-03114B	1440	68
621-03166	2100	9
621-03224	1410	-
621-03642C	1550	3
621-03710A	3100	18
	6890	9
621-03724	1430	49-4B
621-03725	1430	49-5B
621-03727B	1490	1
621-03732C	1490	-
621-03733B	1330	12
	1340	13
621-03734A	1390	28
622-00351H	1420	-
	1430	-
	1440	-
	1450	-
622-00353G	1450	32
622-00355A	1450	32-3
622-00356	1450	32-3A
622-00359H	1430	49
622-00360G	1430	49-1
622-00426B	1470	-
623-00074B	1540	38-8
623-00075B	1540	38-22
	1550	37-8
623-00085A	6310	1
	6320	2-1
623-00086	6310	-
	6320	2
625-00159B	1450	11
65.01101-0054B	011	2
65.01101-6085B	011	1
65.01105-1051B	011	4
65.01105-1052B	011	7
65.01105-6005B	011	3
65.01105-6006B	011	6
65.01110-6140	016	4
65.01150-6008	016	5
65.01201-0075A	011	30
65.01201-0076	011	31
65.01201-0077	011	32
65.01201-0078	011	33
65.01201-0079	011	34
65.01304-0029	012	1
65.01401-0253A	013	1
65.01414-0004A	013	8
65.01501-5003A	014	1
65.01510-0040	013	2
	040	4
65.01510-0157	014	2
	040	6
65.01601-5019	011	20
65.01801-5043A	015	20
65.01801-5100	015	1
65.01810-5011	018	8
65.01840-0017	015	2
65.01903-0034	012	3
	040	2
65.01904-0032	013	3
	040	5
65.01905-0009	014	3
	040	7
65.02101-0069A	016	1
65.02115-0016	016	3
65.02130-0004	016	18
65.02201-0002	016	10
65.02301-0291A	016	16
65.02301-5148A	016	15
65.02310-0006	016	17
65.02401-6032B	016	20
65.02410-0040	016	22
65.02410-0041	016	22
65.02410-0042	016	22
65.02410-0050	016	23
65.02410-0051	016	23
65.02410-0052	016	23
65.02411-0009	016	21
65.02501-0476	016	30
65.02501-0477	016	31
65.02501-0478	016	32
65.02502-0017A	016	36
65.02503-0132A	016	33
65.02503-0133A	016	34
65.02503-0134	016	35
65.02601-0225B	016	40
65.03101-1068C	017	2
65.03101-6090E	017	1
65.03201-1016A	017	5
65.03203-1062	017	3

PART NO.	FIG NO.	KEY NO.
65.03203-1063	017	4
65.03205-0006A	017	8
65.03401-5010	018	1
65.03402-0008A	018	5
65.03901-0071	017	13
	040	8
	041	1
65.03905-0037A	018	3
	040	10
	041	3
65.03905-0041	018	6
	040	11
	041	4
65.03905-5002	018	4
	040	9
	041	2
65.04101-0065B	019	1
65.04101-0066B	019	2
65.04102-0024	019	3
65.04103-0018	019	4
65.04104-0009	019	6
65.04130-0009A	019	8
65.04130-0011	019	9
65.04200-6038A	019	10
65.04201-5042A	019	11
65.04201-5043A	019	12
65.04202-0033	019	14
65.04202-0034	019	15
65.04202-0035	019	16
65.04203-5020A	019	13
65.04205-0014	019	22
65.04209-0005	019	24
65.04209-0006	019	25
65.04301-5003B	019	30
65.04302-5015	019	31
65.04401-0045A	019	32
65.04410-0021A	011	10
65.04410-0022	011	11
65.04501-0017	019	40
65.04505-5018	019	42
65.04506-0015	019	47
65.04506-0016	019	43
65.04902-0016	019	7
65.05100-6063	020	1
65.05102-0030	020	2
65.05103-0034	020	7
65.05104-5014	020	3
65.05104-5015	020	4
65.05201-0016	020	5
65.05401-5002F	011	23
65.05401-5031	011	21
65.05401-5032	012	7
65.05501-7089	021	1
65.05503-5056	021	3
65.05510-5032	021	2
	5110	5
65.05518-0006	021	4
65.05601-7079B	021	20
65.05604-0030A	021	21
65.05606-5032A	021	22
65.05607-5003	021	26
65.05610-0007A	021	28
65.05701-5567	027	5
65.05701-5568	027	11
65.05701-5569	027	12
65.05701-5573A	021	11
65.05701-5574	021	12
65.05701-6122	022	8
65.05740-0222	022	10
65.05801-5245	022	1
65.05805-5236	022	7
65.05806-5116	022	6
65.05901-0027	040	15
65.05901-0031	021	27
65.05901-0032	022	15
65.05902-0022	021	23
65.05902-0023	021	31
	040	13
65.05903A0001	021	13
	040	12
65.05904-0035	022	4
	040	14
65.06301-0257	023	11
65.06301-0258A	024	13
65.06402-5015	023	4
65.06404-0039A	023	1
65.06405-0012A	023	6
65.06500-6178B	024	1
65.06501-0099A	024	2
65.06503-0113	024	8
65.06504-0033	024	6
65.06506-0029A	024	7
65.06520-6007	024	3
65.06601-5076	025	1
65.06611-0132	025	2
65.06901-0042	024	10
	040	19
65.06903-0029	024	14
	040	20
65.06904-0003	023	5
65.06904-0003	040	17
	041	6
65.06904-0020	023	2
	040	16
	041	5
65.08100-6088A	026	1
65.08101-0263	026	2
65.08101-0264	026	3
65.08201-5075	026	11
65.08202-0184	026	16
65.08204-0004	026	21
65.08901-0045	026	5
	040	21
	041	8
65.08902-0030A	026	14
	040	22
	041	9
65.09100-7110	027	1
65.09140-0005	027	20
65.09411-5095	027	30
65.09411-5103	027	37
65.09411-5104	027	36
65.09411-7013	027	35
65.09440-0056	027	42
65.09440-0057	027	40
65.09440-0058	027	33
65.09901-0018A	027	2
	040	23
	041	10
65.09904-0008	026	31
	040	31
	041	16
65.09904-0009	027	38
65.10205-0006	028	4
65.10301-6191	029	1
65.10301-6192	029	2
65.10301-6193	029	3
65.10301-6194	029	4
65.10301-6195	029	5
65.10401-7004A	028	1
65.10410-6003A	029	15
65.10415-0001	029	17
65.10501-7005A	030	1
65.10601-6004A	029	20
65.10610-0003	029	30
65.11210-0003A	031	2
65.11301-0038	030	15
65.11301-5002	019	46
65.11304-0001	030	3
65.11308-0005	036	3

PART NO.	FIG NO.	KEY NO.
65.11308-0006	036	3
65.11308-0007	036	3
65.11308-0008	036	3
65.12301-5268	032	17
65.12301-5288A	032	31
65.12301-5289	032	14
65.12301-5291	032	7
65.12303-0009	026	12
65.12501-7042A	032	50
65.12503-5026	032	52
	5110	6
65.12504-5027	032	51
65.12540-0057B	032	54
65.19102-0096	033	1
65.19103-5049	033	9
65.19103-6010A	033	3
65.19107-0001A	033	5
65.19202-0057A	034	1
65.26201-7075A	035	1
65.26803-7028B	026	30
65.27103-7014	036	1
	036	2
65.27114-5002	029	21
65.27423-7003	036	10
65.27427-7001	036	12
65.27444-7001	036	14
65.29101-6184B	037	1
65.29101-6201A	037	4
65.29101-6209	037	15
65.29150-5006	031	7
65.38901-0018A	012	10
	040	3
65.41530-0186	038	1
	038	3
65.52122-6002	029	22
65.54109-0005A	021	25
65.90020-0062B	016	11
65.90020-0063B	012	4
65.90020-0066A	011	9
65.90020-0080	012	5
65.90020-0085	020	10
65.90020-0095	031	5
65.90020-0100	013	4
65.90020-0101	013	5
65.90020-0105	013	6
65.90020-0109	018	2
65.90020-0117	019	41
65.90020-0118	019	45
	019	49
65.90020-0119	019	50
65.90020-0120	019	26
65.90020-0121	030	4
65.90020-0123	016	19
65.90020-0136	028	5
65.90020-0138	018	7
65.90021-0009	017	11
65.90030-0018	019	20
65.90201-0073	026	9
65.90201-0075	027	18
65.90201-0076	026	8
65.90201-0122	015	11
65.90201-0128	037	16
65.90201-0134	017	12
65.90201-0135	021	35
65.90201-0136	026	18
65.90302-0009	011	12
65.90302-0029	017	7
65.90302-0034	011	14
65.90302-0041	011	15
65.90302-0042	011	13
65.90302-0048	017	6
65.90310-0065	021	7
65.90310-0134	011	26
65.90310-0135	011	28
	039	1
65.90320-0019	023	10
65.90320-0022	011	22
65.90441-0009A	033	4
65.90441-0066	031	12
65.90501-0003	019	23
65.90510-0012	022	14
65.90535-0001	027	3
65.90535-0003	026	6
65.90701-0098	019	5
65.90701-0099	016	41
65.90701-0136B	019	18
65.90720-0032	019	34
65.90720-0033A	019	48
65.90720-0034B	019	44
65.90815-0125	016	37
65.91030-0005	017	10
65.91601-0011	012	9
65.91605-0002	011	25
65.91606-0041	011	16
65.91701-0086	026	7
65.91710-0001	011	5
	011	8
65.91710-0009	013	7
65.91710-0016	012	2
65.93020-0055	033	6
65.93410-0027	024	4
65.96210-6001A	031	4
	040	29
65.96301-0035	027	44
65.96301-0327A	027	13
65.96301-0456A	015	7
65.96301-0462	032	35
65.96301-0464	015	9
65.96301-0478	015	5
65.96301-6003	027	31
65.96330-0018	032	8
65.96340-5079	032	1
65.96340-5080	032	2
65.96501-0033B	015	21
65.96501-0074	012	8
65.96501-0088	017	9
65.96501-0099A	023	12
	040	18
	041	7
65.96501-0102	031	6
65.96501-0431	029	23
65.96501-0437	028	2
65.96501-0438	029	16
65.96501-0439	030	2
65.96507-0053	028	3
	040	27
	041	14
65.96507-0055	032	30
65.96507-0059	026	4
65.96601-0052	027	16
	040	25
	041	12
65.96601-0067	027	15
	040	24
	041	11
65.96801-0194	025	5
	5110	10
65.97401-0137	022	11
65.97401-0188	031	8
	037	5
65.97401-0196	037	19
65.97401-5019	015	13
	032	37
65.97401-5024	015	12
	037	25
65.97401-6039	029	8
65.97440-0005	015	8
65.97440-0045	032	9
	032	36
65.97450-5003	027	32

PART NO.	FIG NO.	KEY NO.
65.97460-0005	037	23
65.97460-0008	037	2
65.97480-0220	029	9
65.97601-0075	021	5
65.97601-0124	019	17
65.98125-5022A	022	2
65.98130-0154	032	32
65.98130-0159A	032	11
65.98130-0200A	027	4
65.98130-0211	032	3
65.98130-0229	032	5
	032	15
	032	18
	032	56
65.98130-0241	012	6
65.98131-0119	015	17
65.98150-0042A	032	34
65.99497-8651	031	1
65.99601-8071	040	-
65.99605-8042	041	-
713-00024	6840	1B
	6850	1B
	6860	1B
901-00045	1370	1
	1380	-
903-00068	1410	8
	1560	81
903-00069A	1450	32-2
903-00070B	1450	32-4
903-00071B	1450	32-5
903-00072A	1420	2
903-00073A	1420	3
903-00074A	1430	50
903-00075	1420	4
903-00076B	1430	49-8
906-00002A	1390	5
920-00127A	1700	1
	1710	-
DS0001079	1650	4
DS0001082	3110	6
	6720	6
	6780	6
	6900	6
DS0001083	3110	26
	6720	26
	6780	26
	6900	26
DS0001084	3110	25
	6720	25
	6780	25
DS0001084	6900	25
DS0014011	1700	24
DS0025013	1150	16G
	1650	33
	6140	11
DS0025014	1100	7
	1130	23
	1150	23
	1560	22
DS0025015	1100	29
	1160	10
	1520	15
	1530	15
	1540	23
	1550	23
	1560	23
	1570	23
	1580	23
DS0025016	2100	22
DS0025017	1130	42
	1290	28
	6160	25
	6520	22
DS0025018	1250	42
	6130	7
	6200	3
	6510	11
	6970	12
DS0025019	1250	21
	1650	31
	1680	3
	2100	21
	6100	15
	6120	18
	6150	28
	6230	10
	6520	14
	6870	35
DS0025020	1260	34
	6120	34
	6150	5
	6150	54
	6870	34
	6940	4
DS0025021	6100	6
	6130	6
DS0025022	1210	17
	6110	3
DS0025023	1100	6
	1160	3
DS0025027	1560	25
DS0025033	6140	12
DS0401188	1600	13
DS1003008	6280	11
DS1003009	1490	5
DS2011487	6120	3
DS2011529	6950	3
DS2011530	6910	18
DS2011557	6150	8
DS2012311	6970	2
	6970	3
DS2012338	6150	7
DS2012362	6760	3
	6820	3
DS2012372	6910	17
DS2012395	6940	1
DS2012397	6510	2
	6510	3
DS2012449	6270	3
DS2013140	6870	6
DS2013200	6870	7
DS2013215	6120	51
DS2013396	6870	5
DS2013594	6130	5
DS2013621	6830	2
DS2013713	6970	9
DS2013726	6970	7
DS2013729	6510	6
	6510	7
DS2013840	6970	8
DS2013841	6510	8
DS2013843	6510	5
	6970	5
DS2013886	6560	2
	6770	2
DS2016053	6760	1
DS2016089	6120	31
	6150	51
DS2016092	6270	1
DS2016094	6910	19
DS2016098	6820	1
DS2017050	2180	1
DS2020038	6910	16
DS2020039	6950	2
DS2020040	6990	4
DS2020041	6990	22
DS2023281	1260	8
	1260	9
DS2023282	1260	10
	1260	11

PART NO.	FIG NO.	KEY NO.
DS2023286	6120	4
	6150	6
DS2025013	6870	2
DS2025069	1270	2
DS2025070	1270	1
DS2025082	6870	3
DS2025091	1270	7
DS2026164	1260	6
DS2026165	1260	7
DS2038198	1260	12
DS2038200	1250	40
DS2038222	1270	3
DS2038227	6870	4
DS2038228	3130	10
	3130	11
DS2038244	1260	13
DS2040360	1260	14
DS2040368	6730	2
DS2040492	1250	41
DS2040553	6790	2
DS2040554	6800	2
DS2040583	6960	2
DS2045439	6270	2
	6820	2
DS2046029	1240	38
DS2048019	6760	2
DS2053768	7010	2
DS2053796	3140	1
	6920	2
DS2053852	1310	9
	1310	10
DS2053855	6920	1
DS2053867	3140	3
DS2053878	6250	2
DS2053882	3140	4
DS2053895	6920	5
DS2053896	6920	6
DS2053905	1310	8
DS2053932	6250	1
DS2053933	7010	1
DS2054223	1240	37
DS2054315	1280	61
DS2054348	6920	7
DS2054358	1290	63
DS2054373	7000	1
	7000	2
DS2054376	6230	31
	6230	32
DS2055045	2180	12
DS2055315	1240	39
DS2055318	1280	60
DS2055866	6810	3
DS2055867	6750	3
DS2055943	7050	1
DS2055977	6260	3
DS2059383	6690	5
	7040	11
DS2059515	7050	2
DS2079032	1130	14
DS2079153	6100	8
DS2090017	6680	31
	6680	32
	6680	33
	6680	34
	7020	1
	7020	2
	7020	3
	7020	4
DS2090036	1190	2
DS2092006	6520	10
DS2092079	7030	1
DS2092093	6700	1
DS2093001	6200	10
	6200	11
DS2093003	1290	41
DS2093005	6140	19
DS2093006	6510	9
	6970	10
DS2093013	1280	62
DS2093020	1290	42
DS2093021	6520	6
DS2093025	7020	5
DS2093027	6160	22
DS2093031	6160	12
	6160	14
DS2093041	1280	50
DS2093045	6680	2
DS2093049	1290	39
DS2093051	1290	54
DS2093054	1290	47
DS2093055	6160	20
DS2093056	6160	21
DS2093060	6160	23
DS2093066	1290	40
DS2093070	1290	49
DS2093071	6140	20
DS2093072	6700	2
DS2093074	6520	5
DS2093080	6160	17
DS2093090	1290	55
DS2093097	1290	53
DS2093099	6880	1
	6980	7
DS2093102	6980	6
DS2093114	6530	31
DS2093115	6140	25
DS2093120	1290	65
DS2093121	6160	18
DS2093125	6140	24
DS2093129	6530	32
DS2093130	6530	3
	6980	5
DS2093137	1280	64
DS2093140	1280	101
	7030	2
DS2093149	1280	57
	6140	23
DS2093176	1290	48
DS2093193	6140	22
DS2093200	6170	13
DS2093202	6230	9
	6530	4
DS2093205	1300	17
	1300	18
DS2093206	6140	51
DS2093216	6680	1
DS2093231	1290	45
DS2093244	1290	46
DS2093254	1280	52
DS2093279	1290	43
DS2093283	1300	19
	6880	2
	6980	8
DS2093295	1290	44
DS2093296	1280	58
	1280	59
DS2093297	6200	8
DS2093298	6200	9
DS2093314	6230	8
DS2093336	6520	11
DS2093337	1300	16
DS2094006	1300	61
	1300	72
	6530	5
	6980	9
DS2094038	1290	56
	6520	8
	6520	9
DS2094041	6160	19
DS2094052	6140	21

PART NO.	FIG NO.	KEY NO.
DS2094077	1280	51
DS2094097	6160	11
DS2094106	6160	16
DS2094120	6160	13
DS2094121	6160	15
DS2094137	6520	7
DS2094173	1280	74
DS2095002	1310	15
DS2095003	1300	62
	1310	73
	6210	1
	6210	2
	6530	6
DS2095004	1300	71
	6980	10
DS2095020	6170	14
DS2095027	1300	11
	1300	12
	1310	13
	1310	14
	1320	1
	1320	2
	1320	3
	1320	4
	6210	3
	6210	4
DS2105011	1210	8
DS2105025	1210	7
DS2105028	1210	6
DS2105053	1200	23
DS2105087	1210	5
DS2105089	6100	11
DS2213165	1300	23
	1310	23
DS2213167	1240	15
DS2214050	1190	3
DS2232107	6120	6
	6150	10
DS2242017	6140	26
DS2242022	1290	72
DS2257002	1260	26
DS2257003	6870	12
DS2257004	1260	27
DS2281103	1240	16
DS2281105	6520	25
DS2308021	6460	5
DS2410007	6250	3
	6710	13
	7010	3
	7040	4
DS2410007	7050	11
DS2410009	1290	18
DS2412023	6120	8
	6150	15
DS2415005	6950	4
DS2415007	6270	42
	6760	42
	6820	42
	6870	11
	6910	25
DS2415012	6990	8
DS2415014	6510	24
DS2479001	1280	16
DS2479002	1280	17
DS2479004	1210	3
DS2802021	1200	18
DS2805009	6250	11
	7010	11
DS7601020	1100	23
DS7601021	1100	24
DS7601023	1100	34
DS7601048	1100	14
DS7604003	2180	16
DS7752003	3100	12
DS7752008	3100	13
	3110	15
	6720	15
	6780	15
	6890	17
	6900	15
DS7752009	3100	14
	3110	16
	6720	16
	6780	16
	6890	18
	6900	16
DS7752044	6890	23
DS7752045	6890	24
DS7752061	6890	21
DS7752062	6890	22
DS7752065	6890	29
DS7752067	3110	17
	6720	17
	6780	17
	6900	17
DS7752068	3110	18
	6720	18
	6780	18
	6900	18
DS7752069	3110	19
DS7752069	6720	19
	6780	19
	6900	19
DS7752070	3110	20
	6720	20
	6780	20
	6900	20
DS7752071	3100	15
	6890	30
DS7752072	3100	16
	6890	19
DS7752073	3100	17
	6890	20
DS7752077	6890	31
DS7752094	6890	33
DS7752095	3100	22
	6890	32
K1000043	1410	3
K1000266	1190	1I
K1000334A	6190	8
	6740	8
	6800	8
	6960	8
K1000338A	6190	9
	6740	9
	6800	9
	6960	9
K1000344	3120	2
	6570	2
	6580	2
	6590	2
	6600	2
	6610	2
	6620	2
K1000354	1290	66
K1000356	6250	12
	7010	12
K1000555G	1310	2
	4190	-
K1000556G	1300	1
	4190	-
K1000602	1540	38-9
	1550	37-20
K1000695A	6170	3
K1000696C	6170	4
K1000697A	1190	1A
	4140	-
K1000704	1130	40
K1000722A	1130	12
K1000732	4330	2

PART NO.	FIG NO.	KEY NO.
K1000732	4330	4
	4380	2
	4380	4
K1000733	3110	1B
	6720	1B
	6780	1B
	6900	1B
K1000789	1650	21
K1000794	1440	56
K1000814	1690	1C
K1000815	1690	1D
K1000816	6140	29
K1000817	6520	24
K1000840	1330	13
K1000842A	1330	14
K1000878	3130	3
K1000882A	6180	3
K1000911	3110	29
	6720	29
	6780	29
	6900	29
K1000912A	3110	30
	6720	30
	6780	30
	6900	30
K1000982	6360	1
K1001023	1330	11
	1340	12
K1001029	1100	26
	1130	24
	1150	24
	1190	9
	1200	15
	1210	14
	1210	34
	1280	32
	1280	105
	1290	32
	1300	36
	1310	36
	1590	18
	1620	31
	1630	38
	1650	37
	1660	14
	1680	8
	1690	28
	1700	19
	1720	36
	3140	16

PART NO.	FIG NO.	KEY NO.
K1001029	6100	4
	6160	9
	6250	10
	6370	4
	6410	8
	6510	26
	6520	13
	6920	12
	7010	10
K1001068	1390	20
K1001069A	1390	21
K1001235	4150	1
K1001260A	1540	38-7
	1550	37-7
K1001263A	1630	5
	1630	6
K1001295A	1400	12
K1001310	1400	20
K1001702	1640	7
K1001858A	1640	1
K1001871B	6540	1
	6980	3
K1001873A	6530	1
	6980	1
K1002081A	1460	1
K1002082	1500	-
K1002083	1510	-
K1002084A	1370	-
K1002153	6460	6
K1002158	6220	1
K1002202E	1330	-
K1002204C	1350	-
K1002206	1710	1
K1002207	1710	2
K1002208	1710	3
K1002209	1710	4
K1002210	1710	5
K1002211	1710	6
K1002212	1710	7
K1002213	1710	8
K1002214	1710	9
K1002215	1710	10
K1002216	1710	11
K1002217	1710	12
K1002218	1710	13
K1002219	1710	14
K1002229A	1360	-
K1002230A	1360	1
K1002231A	1360	2
K1002385	1400	33

PART NO.	FIG NO.	KEY NO.
K1002406D11	1630	20
K1002406D12	1630	22
K1002406D13	6390	11
K1002406D14	6380	2
K1002406D2	6370	2
K1002406D21	1630	24
K1002406D3	6420	21
K1002406D4	6460	2
K1002406D5	6470	5
K1002561A	6290	-
K1002574A	6290	3
	6300	4
K1002575A	6290	4
	6300	5
K1002635	1420	104
K1002636	1420	105
K1002637	1450	32-13
K1002638A	1430	49-17
K1002641	1440	100
K1002759A	6320	1
K1002771	6320	-
K1002811A	6330	1
K1002838	6330	4
K1002839A	6330	5
K1002840	6330	6
K1002841	6330	7
K1002842A	6330	3
K1002846	6330	2
K1002864	1210	4
K1002866	6470	9
K1002867D1	6470	10
K1002883	6330	-
K1002939	6270	14
	6760	14
	6820	14
K1002940	6270	15
	6760	15
	6820	15
K1002943	1570	18
K1003180A	1130	13
K1003284	1430	88
K1003296	1220	28
K1003350	6360	-
K1003381	1350	3
K1003427	1420	89
K1003522	1420	109
K1003618	1160	52
K1003676B	1440	107
K1003900	1450	32-16
K1003945	1300	20

PART NO.	FIG NO.	KEY NO.
K1003945	1310	20
K1003947A	6170	18
K1003948A	6540	8
K1004006	6250	7
	6710	14
	7010	7
	7040	33
K1004011	6260	7
	6750	7
	6810	7
K1004028	6550	10
	6990	10
K1004056	6190	6
	6740	6
	6800	6
	6960	6
K1004061	1420	108
K1004119	6110	2
K1004266	1200	11
K1004272	1480	4
K1004425	1640	11
K1004426	1640	12
K1004427	1640	8
K1004630	1540	39
	1550	39
	1560	39
	1580	39
K1004716	6370	6
K1004860B	1560	8
K1005007A	1390	30
K1005285A	1560	15
K1005305	1560	2-13
K1005343B	1340	4
K1005344A	1400	17
K1005345A	1400	18
K1005468B	1340	-
K1005776	6240	3
K1005822	6330	21
K1005823	6330	20
K1005909	5120	3
K1006227	6560	13
	6770	13
	6830	13
K1006228	6560	14
	6770	14
	6830	14
K1006368	1430	49-18
	1450	120
K1006370	1450	32-38
K1006520	1210	1
K1006530	1210	1A
	5110	7
K1006572	1630	23
K1006586	5100	5
K1006656	6170	20
	6540	10
K1006663	6480	2
K1006668	6370	5
K1006801	6480	-
K1006802	6490	-
K1006803	6500	-
K1006854	5110	31
K1006930	6990	21
K1006931	6990	20
K1006933	1440	114
K1006936	1440	98
K1006973	1210	1B
K1006977	1560	2-8
K1006995	1340	15
K1007042	1310	5
K1007044	1590	13
K1007092A	6340	1
K1007197	1250	10
K1007231	6330	24
K1007668	1650	18
K1007669	5100	4
K1007957	1220	31
K1008019D3	1630	9
	5120	15
K1008019D9	1630	10
	5120	16
K1008167	5100	1-16
K1008335	1540	38-19
	1550	37-21
K1008449A	1660	18
K1008482B	1720	6
K1008571	5130	3
K1008572	3100	1A
	6890	2A
K1008713	1670	-
K1008715	6350	-
K1008754	6920	17
K1009160A	1130	2
K1009161A	1130	3
K1009162	1130	34
K1009163A	1130	35
K1009271B	1130	1
	1140	-
K1009510A	1250	47
K1009605B	1640	1A
K1009622A	1590	10
K1009623A	1590	9
K1009624	1590	12
K1009625A	1590	16
K1009626	1590	15
K1009627	1390	34
K1009632	1590	11
K1009635	1130	4
K1009636A	1130	36
K1009637	1130	37
K1009639	1120	5
K1009721A	1150	17
K1009745A	1130	15
K1009750A	1580	1
K1009751A	1580	9
K1010065	6440	8
K1010304	1390	37
K1010466	1330	20
	1340	16
K1010702	1670	21
K1010703	6350	21
K1010769	1140	19
K1010776	1650	2
K1010777	1650	5
K1010839	1440	116
K1010847	6250	9
K1010934	6890	5
K1011000	5130	19
K1011002	5130	21
K1011211	3130	2
	6910	8
K1011212B	6910	29
K1011213B	6910	30
K1011217	6950	7
K1011238E	2100	-
	2110	-
	2160	-
K1011239C	2100	1
K1011274	2100	10
K1011384	1720	27B
K1011385	1720	28B
K1011388	1720	29A
	1720	30A
K1011438A	2110	6
K1011441	6950	13
K1011588B	2120	2
K1011645D12	5130	2
K1011645D5	5130	1
K1011682	1180	-
K1011714C	1120	-

PART NO.	FIG NO.	KEY NO.
K1011714C	1130	-
	1150	-
K1011715	1120	71
K1011734B	1150	16A
K1011735C	1150	16
K1011743D6	5120	17
K1011772B	2140	-
K1011781	7010	4
K1011782	7010	9
K1011994	2100	14
K1011995	2100	3
K1012204A	5130	7
K1012205A	5130	22
K1012213	1130	38
K1012214	1130	39
K1012381	3110	1A
	6720	1A
	6780	1A
	6900	1A
K1012382	4220	2
	4220	4
	4230	2
	4230	4
	4270	2
	4270	4
	4280	2
	4280	4
	4310	2
	4320	2
	4360	2
	4370	2
K1012383	4240	2
	4240	4
	4290	2
	4290	4
	4340	2
	4340	4
	4390	2
	4390	4
K1012384	4250	4
	4260	4
	4350	4
K1012387A	3100	4
K1012388	3110	9
	6720	9
	6780	9
	6900	9
K1012389	3110	11
	6720	11
	6780	11
K1012389	6900	11
K1012391	3110	2
	6720	2
	6780	2
	6900	2
K1012410	2170	1
K1012419B	3100	1
K1012425E	3110	-
K1012426E	3110	1
K1012433A	3120	-
K1012434A	3120	1
K1012435	6600	-
K1012436	6600	1
K1012437	6610	-
K1012438	6610	1
K1012439	3110	2A
	6720	2A
	6780	2A
	6900	2A
K1012537C	2180	-
K1012576	1290	1
	4210	-
K1012643	1180	1
	4100	-
K1012664A	1110	1
K1012665A	1110	-
K1012708A	1160	-
K1012710A	1160	4
K1012719	1160	5
K1012768C	1200	-
K1012769B	1200	1
K1012771B	1220	-
K1012772B	1220	1
K1012791E	1520	-
	1530	-
K1012792A	1520	1
K1012795A	1520	2
K1012796A	1520	3
K1012797B	1520	4
K1012798E	1530	5
K1012799A	1520	6
K1012800B	1520	7
K1012801A	1530	8
K1012802A	1530	9
K1012803B	1530	10
K1012804A	1530	11
K1012805B	1530	12
K1012806B	1530	13
K1012821	1520	14
K1012963A	1590	-
K1012964	1590	1
K1012965	1590	2
K1012966	1590	4
K1012967	1590	5
K1012968A	1590	6
K1013165	6840	-
K1013166	6840	1
K1013167	6840	1A
K1013168	6850	-
K1013169	6850	1
K1013170	6850	1A
K1013171	6860	-
K1013172	6860	1
K1013173	6860	1A
K1013269	1560	13
K1013290	1560	14
K1013453	1590	8
K1013478	1550	37
K1013479	1550	37-1
K1013480	1550	37-2
K1013486B	1560	2
K1013488	1560	2-2
K1013493A	1570	4
K1013494C	1570	5
K1013495	1570	6
K1013496A	1570	7
K1013497C	1540	-
	1550	-
	1560	-
	1570	-
	1580	-
K1013511B	1230	-
	1240	-
	1250	-
K1013521	1250	1
K1013522A	1250	3
K1013524A	1250	5
K1013525	1250	44
K1013527A	1230	6
K1013529	1250	7
K1013536	4410	-
	6870	1
K1013538	4400	-
	6510	1
K1013539	4420	-
	6970	1
K1013545B	1260	-
K1013548A	6120	-
K1013549A	6970	-
K1013550A	6230	-

PART NO.	FIG NO.	KEY NO.
K1013551C	6150	-
K1013552E	6510	-
K1013553A	6870	-
K1013554	1260	4
K1013555A	1260	5
K1013556A	1260	3
K1013557	1260	2
K1013561	1190	1B
	4150	-
K1013577	6150	4
K1013578	6150	3
K1013581	6230	2
K1013593B	6130	-
K1013596	6120	17
	6150	27
	6870	31
K1013610B	1190	-
K1013615C	1210	-
K1013618E	6100	-
K1013651A	2120	2-3
K1013653	2120	2-7
K1013655C	1300	-
	1310	-
K1013671C	1600	-
K1013692A	1600	1
K1013693	1600	2
K1013694B	1600	3
K1013695B	1600	4
K1013696A	1600	5
K1013697B	1600	6
K1013698A	1600	7
K1013699	1600	8
K1013700	1600	9
K1013701A	1600	10
K1013713A	2150	4
K1013714	2150	5
K1013755C	1100	-
K1013756C	1100	1
K1013806	6510	10
	6970	11
K1013812	1580	36
K1013823	1180	3
K1013846	1640	3
K1013982	1100	27
K1014034C	1280	-
	1290	-
K1014040B	6680	-
K1014041B	6700	-
K1014042	6140	-
K1014044C	6160	-
K1014045C	6520	-
K1014046A	6220	-
K1014103A	6530	-
K1014105	6170	-
K1014131	1560	11
K1014133	1620	-
K1014134A	1630	-
K1014135	1640	-
K1014136	1650	-
K1014137A	1660	-
K1014138	1680	-
K1014139A	1690	-
K1014143A	1700	-
K1014144A	1720	-
K1014146	6370	-
K1014149	6380	-
K1014153	6410	-
K1014166	6460	-
K1014167	6470	-
K1014174	6520	19
K1014268	6160	24
K1014272	1560	2-3
K1014301	3100	2
	6890	3
K1014303	3100	3
	6890	4
K1014330A	6100	13
K1014444A	1100	31
K1014554A	1540	38-2
K1014728	1150	49
K1014758	2170	1-4
K1014759	6270	19
	6760	19
	6820	19
K1014773	2170	1-3
	6640	1-3
	6650	1-3
	6660	1-3
	6670	1-3
K1014774	2170	1-2
	6640	1-2
	6650	1-2
	6660	1-2
	6670	1-2
K1014775	2170	1-1K
	6640	1-1K
	6650	1-1K
	6660	1-1K
	6670	1-1K
K1014776	2170	1-1J
K1014776	6640	1-1J
	6650	1-1J
	6660	1-1J
	6670	1-1J
K1014777	2170	1-1I
	6640	1-1I
	6650	1-1I
	6660	1-1I
	6670	1-1I
K1014778	2170	1-1H
	6640	1-1H
	6650	1-1H
	6660	1-1H
	6670	1-1H
K1014779	2170	1-1G
	6640	1-1G
	6650	1-1G
	6660	1-1G
	6670	1-1G
K1014780	2170	1-1F
	6640	1-1F
	6650	1-1F
	6660	1-1F
	6670	1-1F
K1014781	2170	1-1E
	6640	1-1E
	6650	1-1E
	6660	1-1E
	6670	1-1E
K1014782L	2170	1-1D
	6640	1-1D
	6650	1-1D
	6660	1-1D
	6670	1-1D
K1014782R	2170	1-1C
	6640	1-1C
	6650	1-1C
	6660	1-1C
	6670	1-1C
K1014783L	2170	1-1B
	6640	1-1B
	6650	1-1B
	6660	1-1B
	6670	1-1B
K1014783R	2170	1-1A
	6640	1-1A
	6650	1-1A
	6660	1-1A
	6670	1-1A
K1014788A	3130	-

PART NO.	FIG NO.	KEY NO.
K1014790A	3130	4
K1014791A	3130	5
K1014792A	3130	6
K1014793A	3130	7
K1014794	3130	8
K1014801	3130	51
	4220	-
K1014802	3130	52
	4230	-
K1014805	3130	61
	4240	-
K1014806A	3140	-
K1014807	6180	-
K1014808	6180	1
K1014809	6180	2
K1014810B	6550	-
K1014811A	6550	1
K1014812A	6550	2
K1014813	6550	3
K1014814B	6250	-
K1014818	6690	-
K1014819	4270	-
	6690	1
K1014820	4280	-
	6690	2
K1014821B	6710	-
K1014822	4290	-
	6710	3
K1014825	3150	-
K1014826	3150	1
	4250	-
	6790	1
K1014833	6190	-
K1014834	6190	1
	6800	1
K1014839C	6560	-
K1014840B	6560	1
	6830	1
K1014842	6250	4
	6710	16
K1014845A	6260	-
K1014846A	6260	1
K1014847A	6260	2
K1014848B	6270	-
K1014859A	1610	-
K1014874	6200	1
K1014917	6210	-
K1014918	1320	-
K1014921	6200	2
K1014972	1590	14
K1015089	1210	2
K1015093	6270	20
	6760	20
	6820	20
K1015094	1250	45
K1015201	1660	4
K1015210	1140	4
K1015249C	6890	1
K1015258A	6890	2
K1015265	6890	6
K1015292A	1150	43
K1015293	1150	44
K1015294	1150	45
K1015404	6980	4
K1015453B	6910	-
K1015454A	6910	1
K1015456A	6910	2
K1015457A	6910	3
K1015458A	6910	4
K1015459	6910	5
K1015461	6910	7
K1015462A	6920	-
K1015463	6950	-
K1015464	6950	1
K1015466B	6990	-
K1015467A	6990	1
K1015468A	6990	2
K1015469A	6990	3
K1015473A	7010	-
K1015477B	7040	-
K1015481A	7050	-
K1015557B	1690	1
K1015602A	1660	17
K1015607C	6900	-
K1015608C	6900	1
K1015628A	1720	28
K1015629A	1720	27
K1015630A	1720	30
K1015654	1620	2
K1015987B	6720	-
K1015988A	6720	1
K1015991B	6780	-
K1015992A	6780	1
K1015995	6570	-
K1015996	6570	1
K1015997	6580	-
K1015998	6580	1
K1015999	6590	-
K1016000	6590	1
K1016001	6620	-
K1016002	6620	1
K1016025	1650	30
K1016027	1650	32
K1016102	5130	25
K1016456	1250	4
K1016614	5120	18
	5130	26
K1017271	1400	37
K1017382	4300	-
	6170	1
	6530	2
	6980	2
K1017658A	4310	-
	6910	81
K1017659A	4320	-
	6910	82
K1017660	4330	-
	6910	83
K1017662	4340	-
	6910	91
K1017665A	4360	-
	7040	1
K1017666A	4370	-
	7040	2
K1017667	4380	-
	7040	3
K1017668	4390	-
	7050	3
K1017674	2110	5
	4160	-
	4170	-
K1018027	4350	-
	6930	1
K1018032A	6740	-
K1018036A	6770	-
K1018037A	6770	1
K1018038	7040	36
K1018041A	6750	-
K1018042A	6750	1
K1018043A	6750	2
K1018044A	6760	-
K1018047	6930	-
K1018051A	6960	-
K1018089	4310	4
	4320	4
	4360	4
	4370	4
K1018246A	1290	4
K1018983	6110	1
K1023169A	2150	-

PART NO.	FIG NO.	KEY NO.
K1023194	1150	16F
K1023198A	1150	16B
K1023793A	1270	-
K1023797	7000	-
K1023799	6940	-
K1023809	7030	-
K1023810	7020	-
K1023881	6880	-
K1023882	6980	-
K1023883	6540	-
K1023902A	1190	1
K1023923	6870	33
	6940	3
K1023924	6870	32
	6940	2
K1023979	6790	-
K1023980	6800	-
K1023983A	6830	-
K1023986A	6810	-
K1023987A	6820	-
K1024040	1540	38-21
K1024074	6520	21
K1024101	1260	18
K1024102	1720	3
K1024103	1720	29
K1024104	1280	20
K1024144	6100	17
K1024200	1260	15
K1024204	6680	3
K1024243	6110	-
K1024358A	1540	38
K1024359A	1540	38-1
K1024394	6730	-
K1024395	4260	-
	6730	1
K1024400C	6630	-
K1024401B	6630	1
K1024419	5110	-
K1024422	5100	-
K1024424EF	5110	13
K1024428E	5110	14
K1024431E	5110	15
K1024449	1610	1
K1024452	2170	-
K1024453	6640	-
K1024454	6650	-
K1024455	6660	-
K1024456	6670	-
K1024458	6640	1
K1024459	6650	1
K1024460	6660	1
K1024461	6670	1
K1024485D1	2170	2
K1024485D2	6640	2
K1024485D3	6650	2
K1024485D4	6660	2
K1024485D5	6670	2
K1024598	6640	1-4
K1024599	6650	1-4
K1024600	6660	1-4
K1024601	6670	1-4
K1024748	2140	6
K1024909	6130	3
K1024943	2120	1
	2130	-
K1024948	2130	2
K1024949	2130	3
K1024950	2130	4
K1024953	2130	5
K1024956	2130	7
K1024957	2130	8
K1024966	2120	2-2
K1024968	2120	2-4
K1025171	2120	-
K1025172	6200	-
K1025246	6740	1
	6960	1
K1025252	6910	33
K1025257A	2150	2
K1025259	2150	3
K1025283	6550	4
K1025284	6550	18
K1025285	6990	23
K1025286	6760	22
K1025324	6810	1
K1025325	6810	2
K1025336	6760	23
K1026654	1630	91
K1026757B	5130	-
K1026758	5130	6
K1026759	5130	20
K1026784	5120	-
K1027550	5130	29
K1027765	1450	32-15
K1027768	1430	118
K1027769	1430	119
K1027879	6910	31
K1027915	3100	-
K1027921	6890	-
K1028070	6110	11
K1029201	2140	5
K1029203	2140	2
K1029204	2140	3
K1029205	2140	4
K1029370	2170	1-1
	6640	1-1
	6650	1-1
	6660	1-1
	6670	1-1
K9000998	6690	6A
	6710	4A
	7040	6A
	7050	4A
K9001001	4190	32
K9001075	4180	72
	4400	4
	4410	4
	4420	4
K9001077	4180	74
	4400	6
	4410	6
	4420	6
K9001115	4190	3
K9001119	4190	9
K9001127	4190	18
K9001128	4190	20
K9001129	4190	22
K9001130	4190	25
K9001131	4190	25
K9001132	4190	28
K9001133	4190	30
K9001139	4190	37
K9001140	4190	37
K9001141	4200	6
K9001142	4200	25
K9001146	4330	10
	4380	10
K9001153	4240	9
	4290	9
	4340	9
	4390	9
K9001154	4240	10
	4290	10
	4340	10
	4390	10
K9001156	4240	22
	4290	22
	4340	22
	4390	22
K9001201	1380	2

PART NO.	FIG NO.	KEY NO.
K9001202	1380	3
K9001203	1380	4
K9001204	1380	5
K9001206	1380	7
K9001207	1380	8
K9001208	1380	10
K9001209	1380	11
K9001210	1380	12
K9001211	1380	13
K9001212	1380	14
K9001213	1380	15
K9001214	1380	16
K9001215	1380	17
K9001216	1380	18
K9001217	1380	19
K9001218	1380	20
K9001219	1380	21
K9001220	1380	22
K9001221	1380	23
K9001354	4210	2
K9001385	4250	8
	4260	8
K9001386	4250	9
	4260	9
K9001387	4250	16
	4260	16
K9001389	4250	18
	4260	18
K9001390	4250	20
	4260	20
K9001396	4250	10
	4260	10
K9001400	4220	5
	4230	5
	4270	5
	4280	5
	4350	5
K9001401	4220	7
	4230	7
	4270	7
	4280	7
	4350	7
K9001402	4220	8
	4230	8
	4270	8
	4280	8
	4350	8
K9001403	4220	9
	4230	9
	4270	9
K9001403	4280	9
	4350	9
K9001404	4220	10
	4230	10
	4270	10
	4280	10
	4350	10
K9001405	4220	14
	4230	14
	4270	14
	4280	14
	4350	14
K9001406	4220	16
	4230	16
	4270	16
	4280	16
K9001407	4220	17
	4230	17
	4270	17
	4280	17
	4350	17
K9001408	4220	18
	4230	18
	4270	18
	4280	18
	4350	18
K9001409	4220	20
	4230	20
	4270	20
	4280	20
	4350	20
K9001410	4220	22
	4230	22
	4270	22
	4280	22
	4350	22
K9001413	4240	45
	4290	42
	4340	45
	4390	42
K9001695	1380	1
K9001840	4140	103
K9001841	4140	104
K9001842	4140	112
K9001843	4140	201
K9001844	4140	202
K9001845	4140	203
K9001846	4140	205
K9001847	4140	213
K9001848	4140	301
K9001857	4310	8
	4320	8
	4360	8
	4370	8
K9001858	4310	9
	4320	9
	4360	9
	4370	9
K9001859	4240	14
	4290	14
	4340	14
	4390	14
K9001861	4240	20
	4290	20
	4340	20
	4390	20
K9001862	4220	23
	4230	23
	4270	23
	4280	23
	4310	23
	4320	23
	4350	23
	4360	23
	4370	23
K9001872	4310	20
	4320	20
	4360	20
	4370	20
K9001877	4310	10
	4320	10
	4360	10
	4370	10
K9001890	4240	18
	4290	18
	4340	18
	4390	18
K9001891	4310	18
	4320	18
	4360	18
	4370	18
K9001895	4330	21
	4380	21
K9001903	4140	*
K9001906	4100	6
	4130	2
K9001933	4130	2I
K9001943	4210	2A
K9002065	4210	4
K9002098	4330	14

PART NO.	FIG NO.	KEY NO.
K9002098	4380	14
K9002174	4330	19
	4380	19
K9002278	4240	25
	4290	25
	4340	25
	4390	25
K9002306	4250	*
	4260	*
K9002308	4220	*
	4230	*
	4270	*
	4280	*
	4350	*
K9002672	4180	63
K9002934	4300	2
K9002935	4300	8
K9003465	4300	4
K9003878	1140	22
K9003900	4310	17
	4320	17
	4360	17
	4370	17
K9003934	4310	*
	4320	*
	4360	*
	4370	*
K9003968	4250	34
	4260	34
	4330	37
	4350	34
	4380	36
K9003998	4190	33
K9003999	4190	34
K9004000	4190	35
K9004001	4190	36
K9004193	4380	30
K9004228	4110	2Ag
	4110	3Ag
K9004261	1140	1
K9004262	1140	2
K9004263	1140	3
K9004264	1140	6
K9004265	1140	7
K9004266	1140	8
K9004267	1140	9
K9004268	1140	10
K9004269	1140	11
K9004270	1140	12
K9004271	1140	15
K9004272	1140	16
K9004296	4170	107
K9004297	4170	116
K9004298	4170	117
K9004299	4170	119
K9004300	4170	110
K9004301	4170	131
K9004302	4170	122
K9004303	4170	120
K9004304	4170	132
K9004305	4170	127
K9004306	4170	121
K9004307	4170	123
K9004308	4170	R
K9004309	4170	R-1
K9004310	4170	101
K9004311	4170	103
K9004312	4170	105
K9004313	4170	109
K9004314	4170	108
K9004315	4170	112
K9004316	4170	113
K9004317	4170	114
K9004318	4250	1
K9004319	4250	3
	4260	3
K9004320	4250	5
	4260	5
K9004321	4250	17
	4260	17
K9004322	4250	26
	4260	26
K9004323	4250	27
	4260	27
K9004324	4250	30
K9004325	4250	37
K9004390	4240	1
	4290	1
K9004391	4240	3
	4290	3
K9004392	4240	5
	4290	5
	4340	5
	4390	5
K9004393	4240	16
	4290	16
	4340	16
	4390	16
K9004394	4240	17
	4290	17
K9004394	4340	17
	4390	17
K9004395	4240	32
	4290	32
	4340	32
	4390	32
K9004396	4240	33
	4240	37
	4290	33
	4290	37
	4340	33
	4340	37
	4390	33
	4390	37
K9004397	4240	36
	4290	36
	4340	36
	4390	36
K9004399	4240	38
	4340	38
K9004400	4240	42
	4290	39
	4340	42
	4390	39
K9004401	4240	48
	4290	45
	4340	48
	4390	45
K9004402	4240	*
	4290	*
	4340	*
	4390	*
K9004403	4220	1
	4230	1
	4270	1
	4280	1
K9004404	4220	3
	4230	3
	4270	3
	4280	3
K9004405	4220	26
	4230	26
	4270	26
	4280	26
K9004406	4220	30
K9004407	4230	30
K9004408	4220	34
	4270	31
K9004409	4230	34
	4280	31

PART NO.	FIG NO.	KEY NO.
K9004410	4120	14
K9004411	4120	13
K9004412	4120	37
K9004413	4110	25
K9004414	4100	7
K9004415	4100	2
	4120	-
K9004416	4120	2
K9004417	4120	2A
K9004418	4110	7
K9004419	4260	1
K9004420	4260	30
K9004421	4260	37
K9004422	4290	38
	4390	38
K9004423	4310	5
	4320	5
	4360	5
	4370	5
K9004424	4280	30
K9004425	4270	30
K9004426	4310	1
	4320	1
	4360	1
	4370	1
K9004427	4310	3
	4320	3
	4360	3
	4370	3
K9004428	4310	26
	4320	26
	4360	26
	4370	26
K9004429	4320	30
K9004430	4310	30
K9004431	4320	34
	4370	31
K9004432	4310	34
	4360	31
K9004433	4330	1
	4380	1
K9004434	4330	3
	4380	3
K9004435	4330	5
	4380	5
K9004436	4330	16
	4380	16
K9004437	4330	25
	4380	25
K9004438	4330	29

PART NO.	FIG NO.	KEY NO.
K9004439	4330	33
	4380	32
K9004440	4330	*
	4380	*
K9004441	4160	-
K9004442	4160	C1
K9004443	4160	C2
K9004444	4160	M1
K9004445	4160	M2
K9004446	4160	104
K9004447	4160	107
K9004448	4160	108
K9004449	4160	114
K9004450	4160	102
K9004451	4160	103
K9004452	4160	109
K9004453	4160	112
K9004454	4350	1
K9004455	4350	3
K9004456	4350	16
K9004457	4350	26
K9004458	4350	30
K9004459	4350	37
K9004460	4360	30
K9004461	4370	30
K9004462	4380	29
K9004463	4340	1
	4390	1
K9004464	4340	3
	4390	3
K9004465	4180	22
K9004466	4180	81
K9004467	4180	21
K9004468	4180	35
K9004469	4180	46
K9004470	4180	47
K9004471	4180	14
K9004472	4180	15
K9004473	4180	11
K9004474	4180	13
K9004475	4180	20
K9004476	4180	55
K9004477	4180	41
K9004478	4180	48
K9004479	4180	52
K9004480	4180	10
K9004481	4180	3
K9004482	4180	2
K9004483	4180	4
K9004484	4180	5

PART NO.	FIG NO.	KEY NO.
K9004485	4180	6
K9004486	4180	7
K9004487	4180	8
K9004488	4180	9
K9004489	4180	61
K9004490	4180	30
K9004491	4180	29
K9004492	4180	91
K9004493	4180	62
K9004494	4180	71
K9004495	4180	73
K9004496	4180	49
K9004497	4180	23
K9004498	4180	33
K9004499	4180	16
K9004500	4180	26
K9004501	4180	36
K9004502	4180	24
K9004503	4180	34
K9004504	4180	27
K9004505	4180	37
K9004506	4180	28
K9004507	4180	51
K9004508	4180	25
K9004509	4180	39
K9004514	4400	1
	4420	1
K9004515	4400	10
	4420	10
K9004516	4400	9
	4420	9
K9004517	4410	1
	4420	12
K9004518	4400	3
K9004519	4420	3
K9004520	4410	3
K9004521	4400	5
K9004522	4420	5
K9004523	4410	5
K9004529	2130	*
K9004604	4160	900
S0121061	4150	16
S0504253	1650	16
S0504366	1610	6
S0504453	1540	38-23
	1550	37-16
	1650	23
	1690	18
S0504553	1540	38-15
	1550	37-15

PART NO.	FIG NO.	KEY NO.
S0504666	1660	2
	1720	24
S0508653	1280	2J
	1630	42
	1630	50
	1700	2
	6440	4
S0508666	1650	19
	1650	28
	1720	4
	6380	4
S0508753	1540	38-17
	1550	37-18
S0508853	6400	5
	6420	3
	6430	6
	6440	6
	6450	6
	6500	3
S0508863	2140	8
S0508866	1100	10
	1560	2-11
	1580	26
	6170	12
	6260	5
	6410	3
	6530	12
	6750	5
	6810	5
	6980	13
S0509066	1650	9
S0509366	1720	21
S0511566	6920	15
S0511653	1660	20
	1690	7
	1690	11
S0511666	1660	6
S0511853	1540	38-11
	1550	37-11
S0511866	1590	19
S0512053	2160	2O
	6430	3
S0512061	2140	10
S0512066	1200	4
	1220	10
	1560	2-4
	1720	18
	6170	16
	6270	18
	6540	7
S0512066	6760	18
	6820	18
	6980	21
S0512266	1280	31
	1310	37
	2130	9
S0512863	4250	36
	4260	36
	4350	36
S0513163	4240	51
	4290	48
	4340	51
	4390	48
S0514666	1220	27
S0515066	1130	25
	6760	21
S0515253	2160	2M
S0515266	1570	27
	1600	11
	6550	7
	6560	5
	6770	5
	6830	5
	6910	22
	6950	8
	6990	7
S0515366	2160	15
	2170	3
	6640	3
	6650	3
	6660	3
	6670	3
S0515466	1150	26
S0515766	6330	19
S0521366	1130	27
	3100	20
	3110	22
	6720	22
	6780	22
	6890	25
	6900	22
S0521566	1120	28
S0553766	1280	30
S0556466	6230	11
S0556566	6510	22
	6970	23
S0556766	6160	7
S0556866	6520	15
S0557066	6200	4
S0557166	1720	14
S0558153	4220	29
	4230	29
	4250	29
	4260	29
	4270	29
	4280	29
	4310	29
	4320	29
	4330	28
	4350	29
	4360	29
	4370	29
	4380	28
S0558166	1180	5
S0558266	1180	4
S0558466	1150	46
	6550	15
	6990	15
S0558566	6550	19
	6990	24
S0558666	1310	38
S0558766	1310	39
S0558966	1720	7
	6560	11
	6770	11
	6830	11
S0560066	1290	29
S0560563	4240	35
	4290	35
	4340	35
	4390	35
S0560566	1560	28
S0560666	1560	17
	6550	5
	6990	5
S0560866	1260	61
	6910	14
S0560966	1260	44
S0561053	4220	40
	4230	40
	4270	37
	4280	37
	4310	40
	4320	40
	4360	37
	4370	37
S0561066	6120	15
	6150	20
	6680	11
S0561266	1210	13

PART NO.	FIG NO.	KEY NO.
S0561266	6120	14
	6150	22
S0561466	1560	24
	6150	21
S0562653	1670	4
	6350	4
S0562766	1260	42
	3130	16
	3130	41
	3130	62
	6190	12
	6740	12
	6800	12
	6910	11
	6910	61
	6910	71
	6910	84
	6960	12
S0563366	6250	5
	6710	5
	7010	5
	7040	34
S0563466	6270	10
	6760	10
	6820	10
S0563666	6190	10
	6740	10
	6800	10
	6960	10
S0564166	6990	18
S0565266	2120	3
S0565451	4240	47
	4290	44
	4340	47
	4390	44
S0565466	1200	7
	1220	2
	1260	43
S0565566	2110	17
S0566966	3100	8
S0570166	1190	11
S0571066	1100	2
S0571166	2100	19
S0571966	6890	27
S0572166	1100	8
S0574661	3120	7
	6570	7
	6580	7
	6590	7
	6600	7
S0574661	6610	7
	6620	7
S0574861	6840	4
	6850	4
	6860	4
S0712066	3110	32
	6720	32
	6780	32
	6900	32
S0721466	2100	23
S0760853	1670	1
	6350	1
S0766066	2100	20
S0770266	2100	16
S0771466	1120	6
S0786366	1720	10
S2201766	1470	23
S2202766	1220	26
S2202966	1330	18
S2204866	4180	66
S2205066	1300	41
	1310	41
S2205261	4200	26
S2208466	1420	110
S2208561	1420	24
	6280	18
S2208866	1350	12
	1370	2
	1470	8
S2209066	4180	65
S2209071	4110	4E
S2209261	4300	9
S2209266	6560	10
	6770	10
	6830	10
S2209361	4130	2F
S2209466	6550	9
S2209666	4180	67
S2210161	4110	4D
S2211866	1470	17
	6170	7
	6540	5
	6980	18
S2212066	6270	16
	6760	16
	6820	16
	6980	17
S2212266	1240	19
	1260	39
	1300	40
S2212266	3130	18
	3150	6
	6170	6
	6270	6
	6540	4
	6730	6
	6760	6
	6790	6
	6820	6
	6930	6
S2212366	3130	15
	3150	5
	6190	13
	6270	13
	6730	5
	6740	13
	6760	13
	6790	5
	6800	13
	6820	13
	6910	21
	6930	5
	6960	13
S2212461	4200	37
S2212466	1270	6
	4180	68
	6180	10
	6190	5
	6740	5
	6800	5
	6870	16
	6910	6
	6960	5
S2212566	3130	9
S2212666	6180	5
	6690	8
	6710	8
	7040	8
	7050	5
S2212761	4220	33
	4220	37
	4230	33
	4230	37
	4240	41
	4250	33
	4250	40
	4260	33
	4260	40
	4270	34
	4280	34

PART NO.	FIG NO.	KEY NO.
S2212761	4310	33
	4310	37
	4320	33
	4320	37
	4330	36
	4340	41
	4350	33
	4350	40
	4360	34
	4370	34
	4380	35
S2212861	4330	32
S2212866	7040	14
S2213166	1260	40
S2215366	1250	20
S2215466	1260	51
	2180	7
S2215761	4330	39
	4380	38
S2215966	1260	41
S2217471	4150	24
S2219071	4250	25
	4260	25
S2221471	4160	343
S2221566	1230	24
S2222171	4220	25
	4230	25
	4270	25
	4280	25
	4310	25
	4320	25
	4350	25
	4360	25
	4370	25
S2222272	4240	27
	4290	27
	4340	27
	4390	27
S2223671	4170	124
S2224971	4330	24
	4380	24
S2227561	4140	109
S3050863	1650	7
S3450343	1110	3
	1630	30
	1630	46
S3450583	1640	4
S3450823	1330	15
S3450833	1200	20
	1440	82
S3450833	1620	24
	1630	12
	1630	45
	1700	5
	6470	15
S3450863	1620	13
	1630	2
S3450943	1630	34
	6280	15
S3450953	1620	10
	1630	40
S3450983	1630	7
S3450993	1430	78
	1440	78
S3452853	1440	79
S3458843	1440	65
S3523031	4170	104
S3523601	4300	4-4
S3523608	4200	30
S3523836	4220	24
	4230	24
	4240	24
	4250	24
	4260	24
	4270	24
	4280	24
	4290	24
	4310	24
	4320	24
	4330	23
	4340	24
	4350	24
	4360	24
	4370	24
	4380	23
	4390	24
S3524403	3140	7
	6920	20
S3644163	1400	32
S3654523	1390	25
S4012003	1630	48
S4012203	1630	44
S4012303	1720	33
S4012333	1450	32-32
	1560	2-14
S4012533	1450	32-27
	1560	2-10
S4012633	1150	16D
	1540	38-18
	1550	37-19
S4012633	1620	5
	4240	44
	4290	41
	4340	44
	4390	41
S4012733	1150	29
	1220	24
	1250	26
	1540	38-13
	1550	37-13
	1560	34
	1670	6
	6350	6
S4012833	4190	24
S4012933	3100	9
	3110	24
	6720	24
	6780	24
	6900	24
S4013133	1100	32
	2100	28
	6890	28
S4013333	3120	8
	6570	8
	6580	8
	6590	8
	6600	8
	6610	8
	6620	8
	6840	5
	6850	5
	6860	5
S4014633	4200	32
	4300	4-3
S4034833	1430	103
S5000113	1470	24
S5000213	1630	4
	1700	6
S5000313	1720	31
S5010303	1720	25
S5010313	1440	115
	1540	38-14
	1550	37-14
	1690	20
S5010503	1650	11
S5010513	1100	12
	1540	38-16
	1550	37-17
	1560	2-12
	1580	30

PART NO.	FIG NO.	KEY NO.
S5010513	1720	16
	6380	5
	6440	2
S5010613	1150	16E
	1150	47
	1560	2-5
	1620	3
	1660	22
	1690	9
	1690	13
	1720	9
S5010713	1130	31
	1150	31
	1210	16
	1560	31
	1720	12
	6150	24
	6350	5
S5011113	1190	1K
S5100003	1630	29
	1630	47
S5100103	1640	5
S5100203	1200	21
	1620	14
	1620	25
	1630	3
	1630	13
	1630	43
	6470	16
S5100503	6200	5
S5100603	4220	28
	4220	32
	4220	36
	4230	28
	4230	32
	4230	36
	4240	40
	4240	43
	4240	50
	4250	28
	4250	32
	4250	39
	4260	28
	4260	32
	4260	39
	4270	28
	4270	33
	4280	28
	4280	33
	4290	40
S5100603	4290	47
	4310	28
	4310	32
	4310	36
	4320	28
	4320	32
	4320	36
	4330	27
	4330	31
	4330	35
	4340	40
	4340	43
	4340	50
	4350	28
	4350	32
	4350	39
	4360	28
	4360	33
	4370	28
	4370	33
	4380	27
	4380	34
	4390	40
	4390	47
S5100703	4220	39
	4230	39
	4240	34
	4250	35
	4260	35
	4270	36
	4280	36
	4290	34
	4310	39
	4320	39
	4330	38
	4340	34
	4350	35
	4360	36
	4370	36
	4380	37
	4390	34
S5102303	1280	33
	1560	2-15
	1610	7
	1620	11
	1630	8
	1630	33
	1630	39
	1650	17
	1650	24
S5102303	1660	3
	1690	19
	1720	32
S5102503	1280	2K
	1560	2-9
	1580	32
	1630	41
	1630	51
	1650	6
	1650	10
	1650	20
	1650	29
	1700	3
	1700	15
	1720	5
	1720	15
	1720	22
	2140	9
	6100	23
	6160	8
	6170	17
	6230	12
	6260	6
	6380	6
	6400	6
	6410	4
	6420	2
	6430	5
	6440	3
	6440	7
	6450	5
	6500	2
	6510	23
	6520	17
	6530	13
	6750	6
	6810	6
	6970	24
	6980	15
S5102603	1150	48
	1180	2
	1200	5
	1220	11
	1290	33
	1590	20
	1620	4
	1650	3
	1660	7
	1660	21
	1690	8

PART NO.	FIG NO.	KEY NO.
S5102603	1690	12
	1700	22
	1720	8
	1720	19
	2130	11
	2140	11
	2160	2P
	6170	15
	6270	17
	6540	3
	6550	16
	6560	12
	6760	17
	6770	12
	6820	17
	6830	12
	6920	16
	6980	14
	6990	16
S5102703	1120	32
	1130	32
	1210	15
	1250	25
	1260	46
	1260	62
	1560	33
	1600	12
	1670	2
	1720	11
	2160	2N
	2160	24
	2170	4
	6120	16
	6150	23
	6350	2
	6550	6
	6560	6
	6640	4
	6650	4
	6660	4
	6670	4
	6680	10
	6760	7
	6770	6
	6830	6
	6910	15
	6950	9
	6990	6
S5102803	1260	45
	3130	17
S5102803	3130	42
	3130	63
	6190	11
	6250	6
	6270	11
	6710	12
	6740	11
	6760	11
	6800	11
	6820	11
	6910	12
	6910	62
	6910	72
	6910	85
	6960	11
	6990	19
	7010	6
	7040	35
S5102901	4150	37
S5102903	1130	33
	2100	27
	2120	4
	3100	21
	3110	23
	4240	46
	4290	43
	4340	46
	4390	43
	6720	23
	6780	23
	6890	26
	6900	23
S5110603	1470	18
	6170	5
	6540	6
	6690	7
	6710	6
	6980	20
	7040	7
	7050	6
S5110903	1230	18
S5210303	1450	32-34
S5231090	4150	31
S5700891	4160	341
S5740480	4200	15
S5740800	4190	27
S5741162	4140	113
S5741262	2130	10
S5741341	4150	15
S6005050	4140	108
S6005090	4140	303
S6250110	4200	17
S6250182	4160	368
S6500380	4150	6
S6500450	4150	26
S6500850	4170	115
S6510280	4170	134
S6510380	4170	106
S6510620	4140	212
S6540600	1430	112
S6710032	4220	41
	4230	41
	4240	52
	4250	41
	4260	41
	4270	38
	4280	38
	4290	49
	4310	41
	4320	41
	4330	40
	4340	52
	4350	41
	4360	38
	4370	38
	4380	39
	4390	49
S6710041	1190	5
	1610	3
	3110	27
	3140	8
	6720	27
	6780	27
	6900	27
	6920	8
S8000051	4160	383
S8000061	4180	31
S8000081	4160	384
	4160	275
S8000101	4200	36
S8000111	1200	17
	1220	29
	1250	29
	1250	64
	1250	72
	1250	82
	1250	92
	1260	48
	1280	26
	1290	26

PART NO.	FIG NO.	KEY NO.
S8000111	1290	113
	1290	123
	1290	132
	1300	30
	2180	14
	4140	111
	4140	314
	4160	358
	4210	6
	6140	14
	6140	53
	6160	2
	6170	11
	6220	3
	6230	6
	6510	21
	6520	2
	6530	7
	6680	8
	6690	4
	6700	6
	6710	9
	6880	4
	6970	22
	6980	16
	7020	7
	7030	6
	7040	13
	7050	9
S8000121	4200	35
S8000141	1280	25
	1290	25
	1290	114
	1290	124
	1300	28
	1300	65
	1300	75
	1310	28
	1310	74
	4160	359
	4180	88
	6140	15
	6170	21
	6200	7
	6530	8
	6680	7
	6700	5
	6980	19
	7030	5
S8000161	4160	208
S8000161	4180	54
	6460	4
S8000181	1190	1F
	1210	33
	1220	19
	1240	30
	1260	36
	1280	27
	1280	103
	1290	27
	1310	29
	2180	10
	4160	355
	4160	210
	4170	38
	6100	10
	6140	16
	6190	36
	6230	7
	6510	20
	6560	8
	6560	31
	6740	36
	6770	8
	6770	31
	6800	36
	6830	8
	6830	31
	6870	8
	6960	36
	6970	21
S8000205	4190	17
S8000221	4160	209
	4200	12
S8000231	1260	37
	2180	4
	6150	18
	6270	9
	6760	9
	6820	9
	6910	28
S8000241	1260	49
	4180	50
	6120	12
	6150	26
S8000261	4180	38
	4180	42
S8000281	4220	31
	4220	35
	4230	31
S8000281	4230	35
	4240	39
	4240	49
	4250	31
	4250	38
	4260	31
	4260	38
	4270	32
	4280	32
	4290	46
	4310	31
	4310	35
	4320	31
	4320	35
	4330	30
	4330	34
	4340	39
	4340	49
	4350	31
	4350	38
	4360	32
	4370	32
	4380	31
	4380	33
	4390	46
	6690	9
	6710	7
	7040	9
	7050	7
S8000291	1240	31
	1250	63
	6120	11
	6130	9
	6150	16
	6180	11
	6190	31
	6740	31
	6800	31
	6960	31
S8000321	4160	336
S8000341	4140	106
S8001001	2160	2I
S8001200	2160	2H
S8001801	4160	135
S8002101	4160	139
S8002731	4160	337
S8010230	4170	126
S8010251	4200	22
S8010291	4160	219
S8010351	4180	12

PART NO.	FIG NO.	KEY NO.
S8010600	2140	13
	2150	7
S8010651	4310	21
	4320	21
	4360	21
	4370	21
S8010700	2120	2-6
S8010701	4240	21
	4290	21
	4340	21
	4390	21
S8010801	4330	20
	4380	20
S8011001	4180	59
	4400	7
	4410	7
	4420	7
S8011051-90	4250	13
	4260	13
S8011101	4220	13
	4230	13
	4250	15
	4260	15
	4270	13
	4280	13
	4350	13
S8011151	4220	15
	4230	15
	4270	15
	4280	15
	4310	13
	4320	13
	4350	15
	4360	13
	4370	13
S8011200	1220	22
S8011201	2160	2J
	4240	13
	4290	13
	4310	15
	4320	15
	4340	13
	4360	15
	4370	15
	4390	13
S8011251	4240	15
	4290	15
	4340	15
	4390	15
S8011450	1200	2
S8011501	4330	13
	4380	13
S8011650	1220	13
S8011850	1220	6
S8030081	6190	38
	6510	19
	6550	11
	6560	3
	6560	34
	6770	3
	6770	34
	6830	3
	6830	34
	6970	20
	6990	11
S8030121	1260	38
	2180	2
	6120	13
	6150	19
	6270	8
	6270	43
	6760	8
	6760	43
	6820	8
	6820	43
	6870	9
	6910	26
S8030161	6120	10
	6130	8
	6150	17
	6190	34
	6740	34
	6800	34
	6950	5
	6960	34
S8030181	6740	38
	6800	38
	6960	38
S8060161	4160	211
	4180	53
S8060221	4160	217
S8061800	4160	247
S8062100	4160	248
S8180321	6100	1B
S8180411	1700	13
S8450006	1130	21
S8450012	1200	24
	1210	12
S8450016	1700	9
S8450053	1130	22
S8470014	6100	7
S8470032	6100	16
S8470165	1100	33
S8500079	1250	22
S8500105	1230	28
S8510118	1160	7
S8510143	1160	6
T6510018	5100	1-32
T6510027	5100	1-33
T6510062	5100	1-23
T6510066	5100	1-24
T6510070	5100	1-25
T6510072	5100	1-26
T6510075	5100	1-27
T6510081	5100	1-28
T6510085	5100	1-29
T6510089	5100	1-30
T6510091	5100	1-31
T6550005	5100	1-17
T6550006	5100	1-18
T6550007	5100	1-19
T6550009	5100	1-20
T6550011	5100	1-21
T6550018	5100	1-22
T6580008	5100	1-2
T6580020	5100	1-3
T6600183	5100	1-34
T6600189	5100	1-35
T6600197	5100	1-36
T6600201	5100	1-37
T6600211	5100	1-38
T6600217	5100	1-40
T6600223	5100	1-39
T6690012	5100	1-12
T6690013	5100	1-13
T6750003	5100	1-14
T7050003	5100	1-4
T7050013	5100	1-5
T7050021	5100	1-6
T7050022	5100	1-7
T7260057	5100	1-9
T7500004	5100	1-8
Y-3738-04	1280	2F
Y-3738-05	1280	2G