CONTENTS

RUTHZIL TRATOR COMERCIAL DE PEÇAS LTDA 11 97083-6812 ROLANDO CITRANGULO

• ENGINE PARTS

Fig. 011	CYLINDER BLOCK	BLOC CYLINDRE	011-1
012	TIMING GEAR CASE	CARTER DE DISTRIBUTION	012-1
013	FLYWHEEL HOUSING	CARTER DE VOLANT MOTEUR	013-1
014	OIL SEAL	JOINT	014-1
015	BREATHER	CONDUIT DE VENTILATION	015-1
016	DRIVING SYSTEM	SYSTEME D'CENTRAINEMENT	016-1
017	CYLINDER HEAD	CULLASSE	017-1
018	CYLINDER HEAD COVER	COUVERTURE DE CULASSE	018-1
019	TIMING SYSTEM	SYSTEME DE SYNCHRONISATION	019-1
020	OIL PUMP	POMPE A HUILE	020-1
021	OIL FILTER & OIL COOLER	FILTRE D'HUILE	021-1
022	OIL PAN	CARTER D'HUILE	022-1
023	THERMOSTAT	THERMOSTAT	023-1
024	WATER PUMP	SYSTEME DE REFROIDSSEMENT	024-1
025	COOLING FAN	VENTILATEUR	025-1
026	INTAKE & EXHAUST MANIFOLD	D'ADMISSION ET D'ECHAPPEMENT	026-1
027	TURBO CHARGER	CHARGEUR DE TURBO	027-1
028	INJECTOR	INJECTEUR	028-1
029	INJECTION PIPE	PIPE D'INJECTION	029-1
030	INJECTION PUMP	POMPE D'INJECTION	030-1
031	ENGINE CONTROL	COMMANDE REGIME MOTEUR	031-1
032	FUEL SYSTEM	INJECTEUR ET POMPE-INJECTEUR	032-1
033	ALTERNATOR MOUNTING	ALTERNATEUR	033-1
034	LIFTING HOOK	CROCHET DE LEVAGE	034-1
035	STARTER	DEMARREUR	035-1
036	SENSOR	CAPTEUR	036-1
037	WIRE HARNESS	JAGUE DE NIVEAU	037-1
038	ENGINE MOUNTING	MOTEUR	038-1
039	AIR COMPRESSOR	COMPRESSEUR D'AIR	039-1
040	OVERHAUL GASKET KIT - ALL	KIT DE GARNITURE DE REVISION	040-1

041	OVERHAUL GASKET KIT - TOP	KIT DE GARNITURE DE REVISION	041-1

• BODY PARTS

Fig. 1100	MAIN FRAME	BATI PRINCIPAL	1100-1
1110	COUNTER WEIGHT	MASSE D'EQUILIBRAGE	1110-1
1120	ENGINE MOUNTING	MOTEUR	1120-1
1130	RADIATOR MOUNTING	SUPPORT DE RADIATEUR	1130-1
1140	RADIATOR	RADIATEUR	1140-1
1150	MUFFLER	SILENCIEUX	1150-1
1160	CAC PIPING	CHARGEE DE REFROIDISSEUR D'CAIR	1160-1
1170	AIR CLEANER	FILTRE A AIR	1170-1
1180	PUMP MOUNTING	POMPE	1180-1
1190	SWING MOTOR	MOTEUR D'ORIENTATION	1190-1
1200	FUEL TANK	RESERVOIR DE GAZOLE	1200-1
1210	FUEL PIPING	CONDUITES DE GAZOLE	1210-1
1220	OIL TANK	RESERVOIR D'HUILE	1220-1
1230	OIL COOLER PIPING(1)	CONDUITES DE HUILE	1230-1
1240	OIL COOLER PIPING(2)	CONDUITES DE HUILE	1240-1
1250	OIL COOLER PIPING(3)	CONDUITES DE HUILE	1250-1
1260	MAIN PIPING(1) - PUMP	CONDUITES DE BATI PRINCIPAL	1260-1
1261	MAIN PIPING(1) - PUMP	CONDUITES DE BATI PRINCIPAL	1261-1
1270	MAIN PIPING(2) - BOOM	CONDUITES DE BATI PRINCIPAL	1270-1
1280	MAIN PIPING(3) - ARM, BUCKET	CIRCUIT HYDRAULIQUE PRINCIPAL	1280-1
1290	MAIN PIPING(4) - SWING	CONDUITES DE BATI PRINCIPAL	1290-1
1300	MAIN PIPING(5) - CENTER JOINT	CONDUITES DE BATI PRINCIPAL	1300-1
1310	PILOT PIPING(1)	CONDUITES DE PILOTE	1310-1
1320	PILOT PIPING(2)	CONDUITES DE PILOTE	1320-1
1330	PILOT PIPING(3)	CONDUITES DE PILOTE	1330-1
1340	PILOT PIPING(4)	CONDUITES DE PILOTE	1340-1
1350	PILOT PIPING(5)	CONDUITES DE PILOTE	1350-1
1360	PILOT PIPING(6)	CONDUITES DE PILOTE	1360-1
1370	PILOT PIPING(7)	CONDUITES DE PILOTE	1370-1
1380	PILOT PIPING(8)	CONDUITES DE PILOTE	1380-1
1390	CONTROL STAND - L.H.	CONSOLE DE COMMANDE	1390-1
1400	CONTROL STAND - R.H.	CONSOLE DE COMMANDE	1400-1
1410	SEAT SLIDING PLATE	POSEZ GLISSER LE PLAT	1410-1

1420	SEAT PLATE	POSEZ LE PLAT	1420-1
1430	SEAT MOUNTING	SIEGE LE SUPPORT	1430-1
1440	SEAT	SIEGE	1440-1
1450	DUCT COVER	CONDUITES COUVERCLE	1450-1
1460	HEATER COVER	BOITIES DE CHAUFFAGE	1460-1
1470	CABIN MOUNTING	SUPPORT DE CABINE	1470-1
1480	CABIN(1)	CABINE	1480-1
1490	CABIN(2)	CABINE	1490-1
1500	CABIN(3)	CABINE	1500-1
1510	CABIN(4)	CABINE	1510-1
1515	HANDLE - CABIN	HANDLE	1515-1
1520	FLOOR MAT	PLANCHER	1520-1
1530	FLOOR PLATE	TOLE DE PLANCHER	1530-1
1540	HANDLE ASS'Y	HANDLE	1540-1
1550	ROOF COVER	COUVERCLE	1550-1
1560	FOOT REST - L.H.	REPOS DE PIED	1560-1
1570	FOOT REST - R.H.	REPOS DE PIED	1570-1
1580	SUPPORT	SUPPORT	1580-1
1590	BAFFLE	COUVERCLE	1590-1
1600	SIDE DOOR - L.H	ENSEMBLE DE PORTE	1600-1
1610	SIDE DOOR - R.H	ENSEMBLE DE PORTE	1610-1
1620	BATTERY COVER	COUVERCLE	1620-1
1630	COVER	COUVERCLE	1630-1
1640	ENGINE COVER	COUVERTURE DE MOTEUR	1640-1
1650	ACOUSTIC FOAM	ENSEMBLE DE EPONGE	1650-1
1660	UNDER COVER	TOLES IMFERIEVRES	1660-1
1670	LUBRICATION PIPING	LUBRIFICATION	1670-1
1680	ELECTRIC BOX ASS'Y	EQUIPMENT ELECTRIQUE	1680-1
1690	ELECTRIC PARTS - CABIN	PIECES ELECTRIQUES	1690-1
1700	ELECTRIC PARTS - CONTROL STAND	PIECES ELECTRIQUES	1700-1
1710	ELECTRIC PARTS - RELATED	PIECES ELECTRIQUES	1710-1
1720	ELECTRIC PARTS - ENGINE	PIECES ELECTRIQUES	1720-1
1730	ALTERNATOR MOUNTING	ALTERNATEUR	1730-1
1740	ELECTRIC PARTS - WORKING LAMP	EQUIPMENT ELECTRIQUE	1740-1
1750	ELECTRIC WIRING	POSE DE FILES ELECTRIQUES	1750-1
1760	HEATER PIPING(1)	CONDUITES DE CHAUFFAGE	1760-1

1770	HEATER PIPING(2)	CONDUITES DE CHAUFFAGE	1770-1
1780	AIRCON UNIT	REFRIGERATION	1780-1
1790	AIRCONDITIONER	REFRIGERATION	1790-1

• TRACK PARTS

Fig. 2100	TRACK FRAME	TRAIN DE ROULEMENT	2100-1
2110	TRAVEL DEVICE	SYSTEME D'TRANSLATION	2110-1
2120	IDLER	BARBOTIN	2120-1
2130	TRACK SPRING	TENDEUR DE CHENILLE	2130-1
2140	UPPER ROLLER	GALET SUPERIEUR	2140-1
2150	LOWER ROLLER	GALET INFERIEUR	2150-1
2160	CENTER JOINT	JOINT CENTRAL	2160-1
2170	TRACK SHOE ASS'Y - 600G	MAILLON DE CHAINE	2170-1
2180	TRAVEL PIPING	CONDUITES DE TRANSLATION	2180-1

• FRONT PARTS

Fig. 3100	BOOM - 5.7m	FLECHE	3100-1
3110	ARM - 2.9m	BALANCIER	3110-1
3120	BUCKET ASS'Y - 0.8m³	ENSEMBLE DE GODET	3120-1
3130	BOOM PIPING	CONDUITES DE FLECHE	3130-1
3140	LUBRICATION PIPING - BOOM	LUBRIFICATION	3140-1
3150	ARM PIPING	CONDUITES DE BALANCIER	3150-1
3160	LUBRICATION PIPING - ARM	LUBRIFICATION	3160-1

• HYDRAULIC PARTS

Fig. 4100	MAIN PUMP	POMPE	4100-1
4110	REGULATOR	REGULATEUR	4110-1
4120	GEAR PUMP	POMPE	4120-1
4130	SWING MOTOR	MOTEUR D'ORIENTATION	4130-1
4131	SWING MOTOR	MOTEUR D'ORIENTATION	4131-1
4140	SWING REDUCTION GEAR	REDEUTEUR D'ORIENTATION	4140-1
4141	SWING REDUCTION GEAR	REDEUTEUR D'ORIENTATION	4141-1
4150	TRAVEL MOTOR	MOTEUR DE TRANSLATION	4150-1
4160	TRAVEL REDUCTION GEAR	BOITE REDUCTEUR	4160-1
4170	CONTROL VALVE(1)	DISTRIBUTEUR	4170-1

4180	CONTROL VALVE(2)	DISTRIBUTEUR	4180-1
4190	CONTROL VALVE(3)	DISTRIBUTEUR	4190-1
4200	REMOTE CONTROL VALVE	VANNE DE COMMAND A DISTANCE	4200-1
4210	PEDAL VALVE	VANNE	4210-1
4220	SOLENOID VALVE	VANNE	4220-1
4230	BOOM CYLINDER - L.H.	VERIN DE FLECHE	4230-1
4240	BOOM CYLINDER - R.H.	VERIN DE FLECHE	4240-1
4250	ARM CYLINDER	VERIN DE BALANCIER	4250-1
4260	BUCKET CYLINDER - ARM 2.9m	VERIN DE GODET	4260-1
4270	PEDAL VALVE - TWO WAY	VANNE DE PEDALE	4270-1
4280	BUCKET CYLINDER - ARM 2.4m	VERIN DE GODET	4280-1
4290	BUCKET CYLINDER - ARM 3.5m	VERIN DE GODET	4290-1
4300	BUCKET CYLINDER - ARM 6.2m	VERIN DE GODET	4300-1
4310	BOOM CYLINDER - L.H (LOCK VALVE)	VERIN DE FLECHE	4310-1
4320	BOOM CYLINDER - R.H (LOCK VALVE)	VERIN DE FLECHE	4320-1
4330	ARM CYLINDER - LOCK VALVE	VERIN DE BALANCIER	4330-1
4340	ARTI. BOOM CYLINDER	VERIN DE ARTICULAIRE FLECHE	4340-1
4350	ARM CYLINDER - ARTI. BOOM(ARM 2m)	VERIN DE BALANCIER	4350-1
4360	ARM CYLINDER - ARTI. BOOM(ARM 2.4m)	VERIN DE BALANCIER	4360-1
4370	ARTI BOOM CYLINDER - LOCK VALVE	VERIN DE ARTICULAIRE FLECHE	4370-1
4380	ARM CYL - ARM 2.0m (ARTI BOOM)(LOCK V/V)	VERIN DE BALANCIER	4380-1
4390	ARM CYL - ARM 2.4m (ARTI BOOM)(LOCK V/V)	VERIN DE BALANCIER	4390-1
4400	GEAR PUMP-ROTATION	POMPE	4400-1
4410	CONTROL VALVE-ARTI.BOOM	TIROIRS DE COMMANDE	4410-1
4420	REMOTE CONTROL VALVE - ROPS	VANNE DE COMMAND A DISTANCE	4420-1

• OTHER PARTS

Fig. 5100	TOOLS	OUTILLAGE	5100-1
5110	SPARE PARTS	PIECES DE RECHANGE	5110-1
5120	NAME PLATE - CABIN(EXPORT)	PLAQUE D'IDENTIFICATION	5120-1
5130	NAME PLATE - EXPORT	PLAQUE D'IDENTIFICATION	5130-1
5140	NAME PLATE - CABIN(EUROPE)	PLAQUE D'IDENTIFICATION	5140-1
5150	NAME PLATE - EUROPE	PLAQUE D'IDENTIFICATION	5150-1
5160	DECAL - SPEC	DECAL	5160-1
5170	DECAL - FUSE BOX	DECAL	5170-1
5180	DECAL - PATTERN CHANGE	DECAL	5180-1

5190	DECAL - SOUND	DECAL	5190-1
5200	DECAL - ARTI BOOM	DECAL	5200-1
5210	DECAL - MACHINE NAME	DECAL	5210-1
5220	DECAL - SERIAL(EXPORT)	DECAL	5220-1
5230	DECAL - SERIAL(EUROPE)	DECAL	5230-1
5240	DECAL - SERIAL(TURKEY)	DECALQUE	5240-1
5250	DECAL - PATTERN CHANGE	DECAL	5250-1
5260	DECAL - LUBRICATION(EXPORT)	DECAL	5260-1
5270	DECAL - LUBRICATION(EUROPE)	DECAL	5270-1
5280	DECAL - LUBRICATION(ARTI BOOM)	DECAL	5280-1
5290	DECAL - BOOM	DECAL	5290-1
5300	DECAL - LIFTING CAPA	DECALQUE	5300-1
5310	NAME PLATE - CABIN(ROPS)	PLAQUE D'IDENTIFICATION	5310-1

• OPTION PARTS

Fig. 6100	FUEL FILLER PUMP	POMPE	6100-1
6110	MAIN PIPING - ONE WAY	CONDUITES DE BATI PRINCIPAL	6110-1
6120	ONE WAY PIPING - WITH FILTER	TUYAUTERIE A SENS UNIQUE	6120-1
6130	MAIN PIPING - TWO WAY	CONDUITES DE BATI PRINCIPAL	6130-1
6140	TWO WAY PIPING - WITH FILTER	TUYAUTERIE DE DEUX MANIERES	6140-1
6150	PILOT PIPING - ONE OR TWO WAY	CONDUITES DE PILOTE	6150-1
6155	PILOT PIPING - ONE WAY	CONDUITES DE PILOTE	6155-1
6160	PILOT PIPING - TWO WAY(1)	CONDUITES DE PILOTE	6160-1
6170	PILOT PIPING - TWO WAY(2)	CONDUITES DE PILOTE	6170-1
6180	BOOM PIPING - BOOM 5.7m(ONE & TWO WAY)	CONDUITES DE FLECHE	6180-1
6190	ARM PIPING - ARM 2.9m(ONE & TWO WAY)	CONDUITES DE BALANCIER	6190-1
6200	MAIN PIPING - QUICK FIT	CONDUITES DE BATI PRINCIPAL	6200-1
6210	ELECTRIC PARTS - QUICK CLAMP	BRIDE RAPIDE	6210-1
6220	BOOM PIPING - BOOM 5.7m(QUICK CLAMP)	CONDUITES DE FLECHE	6220-1
6230	ARM PIPING - ARM 2.9m(QUICK CLAMP)	CONDUITES DE BALANCIER	6230-1
6240	ALTERNATOR - 80A	ALTERNATEUR	6240-1
6250	CD PLAYER	PLAQUEUR DE CD	6250-1
6260	SUN ROOF COVER	COUVERTURE DE TOIT DU SOLEIL	6260-1
6270	RAIN SHIELD	BOUCLIER DE PLUIE	6270-1
6280	RAIN SHIELD & LAMP MOUNTING	BOUCLIER ET DE LAMPE DE PLUIE	6280-1
6290	CABIN LOWER GUARD	LA CARLINGUE ABAISSENT LA GARDE	6290-1

6300	WINDOW GUARD	GARDE DE FENETRE	6300-1
6310	FLOOR MAT - TWO WAY	PLANCHER	6310-1
6320	FLOOR MAT - ROTATING	PLANCHER	6320-1
6330	FLOOR MAT - TWO WAY & ROTATING	PLANCHER	6330-1
6340	FOGS GUARD ASS'Y	EMBRUME LA GARDE ASS'Y	6340-1
6350	TRACK SHOE ASS'Y - 700G	MAILLON DE CHAINE	6350-1
6360	TRACK SHOE ASS'Y - 800G	MAILLON DE CHAINE	6360-1
6370	TRACK SHOE ASS'Y - 900G	MAILLON DE CHAINE	6370-1
6380	SWING ALARM - NOT ONE OR TWO WAY	AVERTISSEUR	6380-1
6385	SWING ALARM - ONE OR TWO WAY	AVERTISSEUR	6385-1
6390	PATTERN CHANGE PIPING(1)	TUYAUTERIE DE CHANGEMENT DE MODELE	6390-1
6400	PATTERN CHANGE PIPING(2)	TUYAUTERIE DE CHANGEMENT DE MODELE	6400-1
6410	LOCK VALVE PIPING - BOOM	CONDUITES DE VERROU VANNE	6410-1
6420	BOOM PIPING - LOCK VALVE	DONDUITER DE FLECHE	6420-1
6430	PILOT PIPING - ARM LOCK V/V	CONDUITES DE PILOTE	6430-1
6440	ARM PIPING - LOCK VALVE	CONDUITES DE BALANCIER	6440-1
6450	ARM PIPING - ARM 2.9m(CLAMSHELL)	CONDUITES DE BALANCIER	6450-1
6460	MAIN PIPING-ROTATION	CONDUITES DE BATI PRINCIPAL	6460-1
6470	PILOT PIPING(1) - ROTATING	CONDUITES DE PILOTE	6470-1
6480	PILOT PIPING(2) - ROTATING	CONDUITES DE PILOTE	6480-1
6490	BOOM PIPING - ROTATING(BOOM 5.7m)	CONDUITES DE FLECHE	6490-1
6500	ARM PIPING - ROTATING(ARM 2.9m)	CONDUITES DE BALANCIER	6500-1
6510	BUCKET ASS'Y - 0.67m³(36") - SIDE PIN	ENSEMBLE DE GODET	6510-1
6520	BUCKET ASS'Y - 0.8m³(42") - SIDE PIN	ENSEMBLE DE GODET	6520-1
6530	BUCKET ASS'Y - 0.95m³(48") - SIDE PIN	ENSEMBLE DE GODET	6530-1
6540	BUCKET ASS'Y - 1.1m³(54") - SIDE PIN	ENSEMBLE DE GODET	6540-1
6550	BUCKET ASS'Y - 1.17m³(57") - SIDE PIN	ENSEMBLE DE GODET	6550-1
6560	BUCKET ASS'Y - 1.31m³(63") - SIDE PIN	ENSEMBLE DE GODET	6560-1
6570	ARM - 2.0m	BALANCIER	6570-1
6580	ARM PIPING - ARM 2.0m	CONDUITES DE BALANCIER	6580-1
6590	LUBRICATION PIPING - ARM 2.0m	LUBRIFICATION	6590-1
6600	ARM PIPING - ARM 2.0m(ONE & TWO WAY)	CONDUITES DE BALANCIER	6600-1
6610	ARM PIPING - ARM 2.0m(QUICK CLAMP)	CONDUITES DE BALANCIER	6610-1
6620	ARM PIPING - ARM 2.0m(CLAMSHELL)	CONDUITES DE BALANCIER	6620-1
6630	ARM PIPING - ARM 2.0m(ROTATING)	CONDUITES DE BALANCIER	6630-1
6640	ARM - 2.4m	BALANCIER	6640-1

6650	ARM PIPING - ARM 2.4m	CONDUITES DE BALANCIER	6650-1
6660	LUBRICATION PIPING - ARM 2.4m	LUBRIFICATION	6660-1
6670	ARM PIPING - ARM 2.4m(ONE & TWO WAY)	CONDUITES DE BALANCIER	6670-1
6680	ARM PIPING - ARM 2.4m(QUICK CLAMP)	CONDUITES DE BALANCIER	6680-1
6690	ARM PIPING - ARM 2.4m(CLAMSHELL)	CONDUITES DE BALANCIER	6690-1
6700	ARM PIPING - ARM 2.4m(ROTATING)	CONDUITES DE BALANCIER	6700-1
6710	ARM - 3.5m	BALANCIER	6710-1
6720	ARM PIPING - ARM 3.5m	CONDUITES DE BALANCIER	6720-1
6730	LUBRICATION PIPING - ARM 3.5m	LUBRIFICATION	6730-1
6740	ARM PIPING - ARM 3.5m(ONE & TWO WAY)	CONDUITES DE BALANCIER	6740-1
6750	ARM PIPING - ARM 3.5m(QUICK CLAMP)	CONDUITES DE BALANCIER	6750-1
6760	ARM PIPING - ARM 3.5m(CLAMSHELL)	CONDUITES DE BALANCIER	6760-1
6770	ARM PIPING - ARM 3.5m(ROTATING)	CONDUITES DE BALANCIER	6770-1
6780	BUCKET ASS'Y - 0.47m³	ENSEMBLE DE GODET	6780-1
6790	BUCKET ASS'Y - 0.72m³	ENSEMBLE DE GODET	6790-1
6800	BUCKET ASS'Y - 0.92m³	ENSEMBLE DE GODET	6800-1
6810	BUCKET ASS'Y - 1.0m³	ENSEMBLE DE GODET	6810-1
6820	BUCKET ASS'Y - 1.1m³	ENSEMBLE DE GODET	6820-1
6830	BOOM - 5.2m	ENSEMBLE FLECHE	6830-1
6840	BOOM PIPING - BOOM 5.2m	CONDUITES DE FLECHE	6840-1
6850	LUBRICATION PIPING - BOOM 5.2m	LUBRIFICATION	6850-1
6860	BOOM PIPING - BOOM 5.2m(ONE & TWO WAY)	CONDUITES DE FLECHE	6860-1
6870	BOOM PIPING - BOOM 5.2m(QUICK FIT)	CONDUITES DE FLECHE	6870-1
6880	BOOM PIPING - BOOM 5.2m(ROTATING)	CONDUITES DE FLECHE	6880-1
6890	LOCK VALVE PIPING - BOOM 5.2m	CONDUITES DE BALANCIER	6890-1
6900	BOOM - 8.5m	ENSEMBLE FLECHE	6900-1
6910	ARM - 6.2m	BALANCIER	6910-1
6920	COUNTER WEIGHT - SUPER LONG	MASSE D'EQUILIBRAGE	6920-1
6930	COUNTER WEIGHT - 5.3TON(NOISE KIT)	MASSE D'EQUILIBRAGE	6930-1
6940	BUCKET ASS'Y - 0.39m³	ENSEMBLE DE GODET	6940-1
6950	BUCKET ASS'Y - 0.38m³ - DITCH CLEANING	ENSEMBLE DE GODET	6950-1
6960	BUCKET ASS'Y - 0.46m³ - DITCH CLEANING	ENSEMBLE DE GODET	6960-1
6970	BOOM PIPING - BOOM 8.5m	CONDUITES DE FLECHE	6970-1
6980	LUBRICATION PIPING - BOOM 8.5m	LUBRIFICATION	6980-1
6990	LOCK VALVE PIPING - BOOM 8.5m	CONDUITES DE BALANCIER	6990-1
7000	BOOM PIPING - BOOM 8.5m(ROTATING)	CONDUITES DE FLECHE	7000-1

7010	ARM PIPING - ARM 6.2m	CONDUITES DE BALANCIER	7010-1
7020	LUBRICATION PIPING - ARM 6.2m	LUBRIFICATION	7020-1
7025	ARM PIPING - ARM 6.2m(ROTATING)	CONDUITES DE BALANCIER	7025-1
7030	FUEL HEATER	RECHAUFFEUR DE CARBURANT	7030-1
7040	TRAVEL ALARM	ALARME DE VOYAGE	7040-1
7050	WORKING LAMP(2-LAMP)	LAMPE FONCTIONNANTE	7050-1
7060	WORKING LAMP(4-LAMP)	LAMPE FONCTIONNANTE	7060-1
7070	WORKING LAMP - REAR	AVERTISSEUR RELAIS	7070-1
7080	ROTATING BEACON	FEU DE CIRCULATION	7080-1
7090	ROTATING BEACON MOUNTING	SUPPORT TOURNANT DE BALISE	7090-1
7100	ROTATING BEACON(TELESCOPIC) WITH LAMP	FEU DE CIRCULATION	7100-1
7110	ROTATING BEACON(TELESCOPIC) W/O LAMP	FEU DE CIRCULATION	7110-1
7120	OVERLOAD WARNING	AVERTISSEMENT DE SURCHARGE	7120-1
7130	LOWER WIPER	ABAISSEZ L'ESSUIE-GLACE	7130-1
7140	WORKING LAMP(2-LAMP)	LAMPE FONCTIONNANTE	7140-1
7150	WORKING LAMP(4-LAMP)	LAMPE FONCTIONNANTE	7150-1
7160	ROTATING BEACON-WITH FOGS	FEU DE CIRCULATION	7160-1
7170	CCD CAMERA	APPAREIL-PHOTO DE CCD	7170-1
7180	MAIN PIPING-ARTI.BOOM	CONDUITES DE BATI PRINCIPAL	7180-1
7190	PILOT PIPING(1) - ARTI.BOOM	CONDUITES DE PILOTE	7190-1
7200	PILOT PIPING(2) - ARTI.BOOM	CONDUITES DE PILOTE	7200-1
7205	FLOOR MAT - THREE PEDAL	PLANCHER	7205-1
7210	ARTI.BOOM	PERCHE ASS'Y D'ARTI	7210-1
7220	ARTI.BOOM PIPING	PERCHE ASS'Y D'ARTI	7220-1
7230	LUBRICATION PIPING - LOWER BOOM	LUBRIFICATION	7230-1
7240	LUBRICATION PIPING - UPPER BOOM	LUBRIFICATION	7240-1
7250	ONE WAY PIPING - ARTI.BOOM	TUYAUTERIE A SENS UNIQUE	7250-1
7260	TWO WAY PIPING - ARTI.BOOM	TUYAUTERIE DE DEUX MANIERES	7260-1
7270	ARTI.BOOM PIPING - ONE & TWO WAY	PERCHE ASS'Y D'ARTI	7270-1
7280	ROTATING PIPING - ARTI.BOOM	TUYAUTERIE TOURNANTE - ARTI.BOOM	7280-1
7290	PILOT PIPING - ARTI & ROTATING	CONDUITES DE PILOTE	7290-1
7300	ARTI.BOOM PIPING - ROTATING	PERCHE ASS'Y D'ARTI	7300-1
7310	QUICK FIT PIPING - ARTI.BOOM	TUYAUTERIE CONVENABLE RAPIDE	7310-1
7320	ARTI.BOOM PIPING - QUICK FIT	PERCHE ASS'Y D'ARTI	7320-1
7330	LOCK VALVE PIPING - ARTI.BOOM	CONDUITES DE VERROU VANNE	7330-1
7340	ARTI.BOOM PIPING - LOCK VALVE	PERCHE ASS'Y D'ARTI	7340-1

7350	ARTI.ARM PIPING - LOCK VALVE	CONDUITES DE VERROU VANNE	7350-1
7360	WORKING LAMP - ARTI. BOOM	AVERTISSEUR RELAIS	7360-1
7370	SIDE DOOR - L.H (TROPICAL)	ENSEMBLE DE PORTE	7370-1
7380	PATTERN CHANGE PIPING(1) - ARTI BOOM	TUYAUTERIE DE CHANGEMENT DE MODELE	7380-1
7390	PATTERN CHANGE PIPING(2) - ARTI BOOM	TUYAUTERIE DE CHANGEMENT DE MODELE	7390-1
7400	RADIO	RADIO	7400-1
7410	TROPICAL PARTS	PIECES TROPICALES	7410-1
7420	ACOUSTIC FOAM - NOISE KIT	MOUSSE ACOUSTIQUE - KIT DE BRUIT	7420-1
7430	MIRROR - ADDITIONAL	MIROIR - ADDITIONNEL	7430-1
7440	MIRROR - ADDITIONAL(CABIN)	MIROIR - ADDITIONNEL	7440-1
7450	CONTROL STAND - L.H(ROPS)	CONSOLE DE COMMANDE	7450-1
7460	CONTROL STAND - R.H(ROPS)	CONSOLE DE COMMANDE	7460-1
7470	SEAT SLIDING PLATE - ROPS	POSEZ GLISSER LE PLAT	7470-1
7480	SEAT PLATE - ROPS	POSEZ LE PLAT	7480-1
7490	SUSPENSION - ROPS	SUSPENSION	7490-1
7500	SEAT MOUNTING - ROPS	SIEGE LE SUPPORT	7500-1
7510	SEAT - ROPS	SIEGE	7510-1
7520	DUCT COVER - ROPS	CONDUITES COUVERCLE	7520-1
7530	HEATER COVER - ROPS	BOITIES DE CHAUFFAGE	7530-1
7540	CABIN MOUNTING - ROPS	SUPPORT DE CABINE	7540-1
7550	CABIN(1) - ROPS	CABINE	7550-1
7560	CABIN(2) - ROPS	CABINE	7560-1
7570	CABIN(3) - ROPS	CABINE	7570-1
7580	CABIN(4) - ROPS	CABINE	7580-1
7590	FLOOR MAT - ROPS	PLANCHER	7590-1
7600	FLOOR MAT - ONE PEDAL(R.H)(ROPS)	PLANCHER	7600-1
7610	FLOOR MAT - ONE PEDAL(L.H)(ROPS)	PLANCHER	7610-1
7620	FLOOR MAT - TWO PEDAL(ROPS)	PLANCHER	7620-1
7630	FLOOR MAT - THREE PEDAL(ROPS)	PLANCHER	7630-1
7640	FLOOR PLATE - ROPS	TOLE DE PLANCHER	7640-1
7650	HANDLE - CABIN(ROPS)	HANDLE	7650-1
7660	ROOF COVER - PC(ROPS)	COUVERTURE DE TOIT	7660-1
7670	ROOF COVER - STEEL(ROPS)	COUVERTURE DE TOIT	7670-1
7680	FOOT REST - L.H(ROPS)	REPOS DE PIED	7680-1
7690	FOOT REST - R.H(ROPS)	REPOS DE PIED	7690-1
7700	RAIN SHIELD - ROPS	BOUCLIER DE PLUIE	7700-1

7710	CABIN LOW GUARD - ROPS	GARDE	7710-1
7720	WINDOW GUARD - ROPS	GARDE DE FENETRE	7720-1
7730	FOGS GUARD - ROPS	EMBRUME LA GARDE	7730-1
7740	ELECTRIC PARTS - CABIN(ROPS)	PIECES ELECTRIQUES	7740-1
7750	ELECTRIC PARTS - CONTROL STAND(ROPS)	PIECES ELECTRIQUES	7750-1
7760	AUDIO - ROPS	AUDIO	7760-1
7770	WORKING LAMP(2-LAMP) - ROPS	LAMPE FONCTIONNANTE	7770-1
7780	WORKING LAMP(6-LAMP) - ROPS	LAMPE FONCTIONNANTE	7780-1
7790	WORKING LAMP(2-LAMP) - ROPS GUARD	LAMPE FONCTIONNANTE	7790-1
7800	WORKING LAMP(6-LAMP) - ROPS GUARD	LAMPE FONCTIONNANTE	7800-1
7810	TELESCOPIC BEACON - ROPS	TELESCOPIQUE BEACON	7810-1
7820	TELESCOPIC BEACON - ROPS(WITH LAMP)	TELESCOPIQUE BEACON	7820-1
7830	ROTATING BEACON - ROPS	FEU DE CIRCULATION	7830-1
7840	ROTATING BEACON - ROPS(WITH LAMP)	FEU DE CIRCULATION	7840-1
7850	ROTATING BEACON - ROPS(GUARD)	SUPPORT TOURNANT DE BALISE	7850-1
7860	VENTILATION - ROPS	VENTILATION	7860-1
7870	AIRCONDITIONER - ROPS	REFRIGERATION	7870-1
7880	TRAVEL ALARM - ROPS	ALARME DE VOYAGE	7880-1
7890	FUEL HEATER - ROPS	RECHAUFFEUR DE CARBURANT	7890-1
7900	QUICK CLAMP SWITCH - ROPS	COMMUTATEUR RAPIDE DE BRIDE	7900-1
7910	OVERLOAD WARNING - ROPS	AVERTISSEMENT DE SURCHARGE	7910-1
7920	LOWER WIPER - ROPS	ABAISSEZ L'ESSUIE-GLACE	7920-1
7930	12V SOCKET - ROPS	DOUILLE 12V	7930-1
7940	PILOT PIPING - ROPS	CONDUITES DE PILOTE	7940-1

● **WORLDWIDE NETWORK**

DATE	JUN. 01, 2010
3rd EDITION	

Fig. 011 CYLINDER BLOCK
BLOC CYLINDRE

Serial No. ;

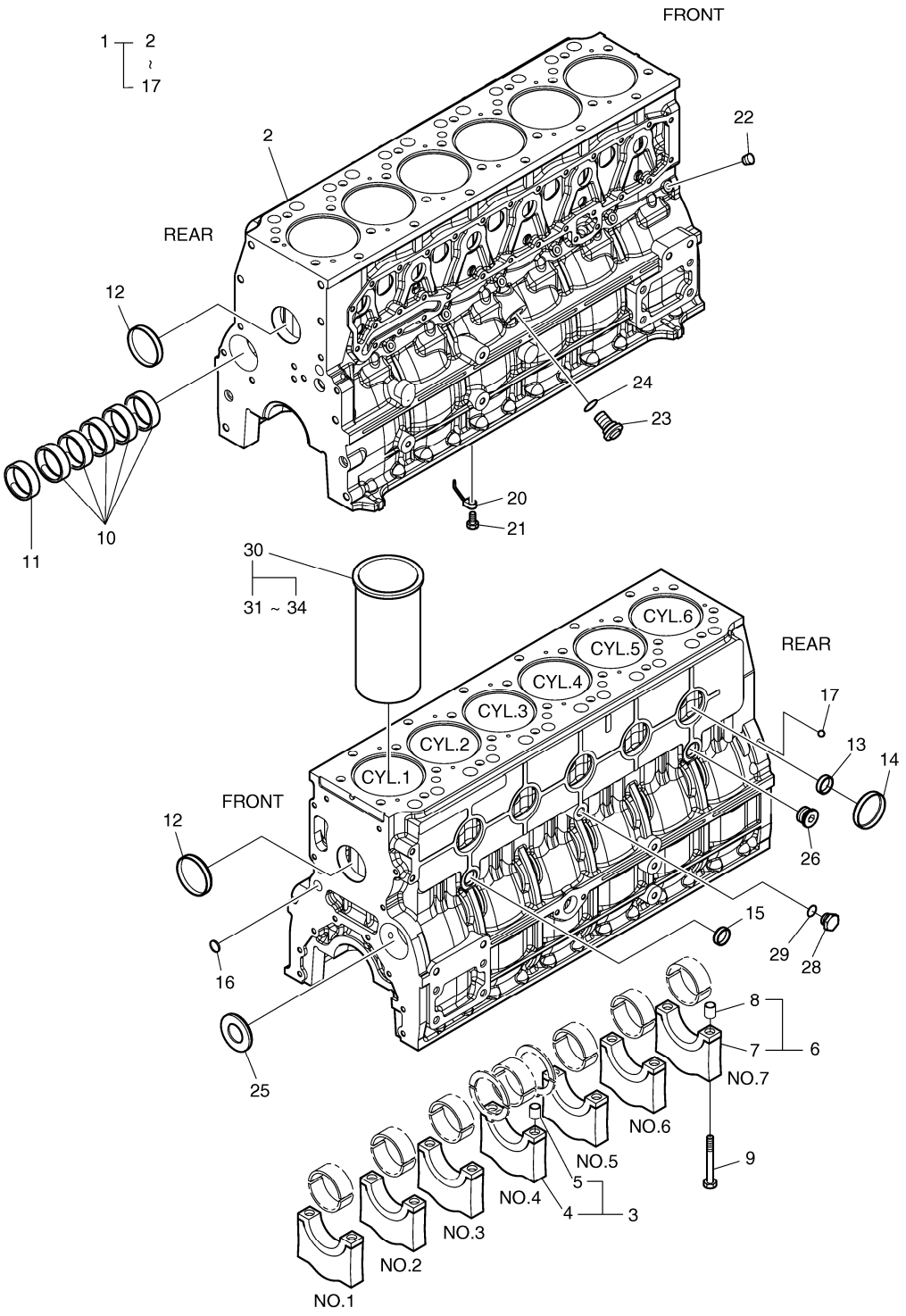

DATE	JUN. 01, 2010
3rd EDITION	

Fig. 011 CYLINDER BLOCK BLOC CYLINDRE

Serial No. ;

Key No.	Part No.	Description	Description	Q'ty	S.C	Serial No.	ICA	Replaceable part	
								Part No.	Q'ty
011 -1	65.01101-6092A	CYLINDER BLOCK ASS`Y	BLOC CYLINDRE	1					
2	65.01101-0054A	CYLINDER BLOCK	BLOC CYLINDRE	1	D				
3	65.01105-6005B	BEARING CAP ASS`Y(No:3)	CHAPEAU DE PALIER	1	D				
4	65.01105-1051B	CAP;BEARING	CHAPEAU	1	D				
5	65.91710-0001	RING. STOPPER. BRG CAP	BAGUE D`ETANCHEITE	2					
6	65.01105-6006B	BEARING CAP ASS`Y	CHAPEAU DE PALIER	6	D				
7	65.01105-1052B	CAP;BEARING	CHAPEAU	1	D				
8	65.91710-0001	RING. STOPPER. BRG CAP	BAGUE D`ETANCHEITE	2					
9	65.90020-0066A	BOLT;BRG CAP	BOULON A 6 PANS	14					
10	65.04410-0021A	BUSH;CAMSHAFT	DOUILLE	6	B				
11	65.04410-0022	BUSH;CAMSHAFT	DOUILLE	1	B				
12	65.90302-0009	PLUG;CORE	BOUCHON B28D	2					
13	65.90302-0042	PLUG;CORE	BOUCHON B28D	8					
14	65.90302-0034	PLUG;CORE	BOUCHON	5					
15	65.90302-0041	PLUG;CORE	BOUCHON B28D	1					
16	65.91606-0041	PLUG;CORE	BOUCHON	2					
17	06.31641-0618	BALL;STEEL	BILLE	1					
20	65.01601-5020	NOZZLE;OIL SPRAY	INJECTEUR	6					
21	65.05401-5031	RELIEF VALVE ASS`Y	SOULAGEMENT VANNE	6					
22	65.90320-0022	PLUG SCREW PT1/8	VIS DE REGLAGE	7					
23	65.05401-5002G	RELIEF VALVE ASS`Y	SOULAGEMENT VANNE	1					
24	06.56021-0102	O-RING	COUVERCLE	1					
25	65.91605-0002	COVER;CORE HOLE	COUVERCLE	1					
26	65.90310-0134	SCREW;PLUG	BOUCHON A VIS	1					
28	65.90310-0135	PLUG;SCREW	ENSEMBLE BAGUE D'ETAN	1					
29	06.56190-0705	RING;SEAL	BAGUE	1					
30	65.01201-0075A	CYLINDER LINER-GRADE	CULLASSE	6	D				
31	65.01201-0076	LINER;CYLINDER-1A	CHEMISE DE CYLINDRE	6					
32	65.01201-0077	LINER;CYLINDER-1B	CHEMISE DE CYLINDRE	6					
33	65.01201-0078	LINER;CYLINDER-2A	CHEMISE DE CYLINDRE	6					
34	65.01201-0079	LINER;CYLINDER-2B	CHEMISE DE CYLINDRE	6					

DATE	JUN. 01, 2010
3rd EDITION	

Fig. 012 TIMING GEAR CASE CARTER DE DISTRIBUTION

Serial No. ;

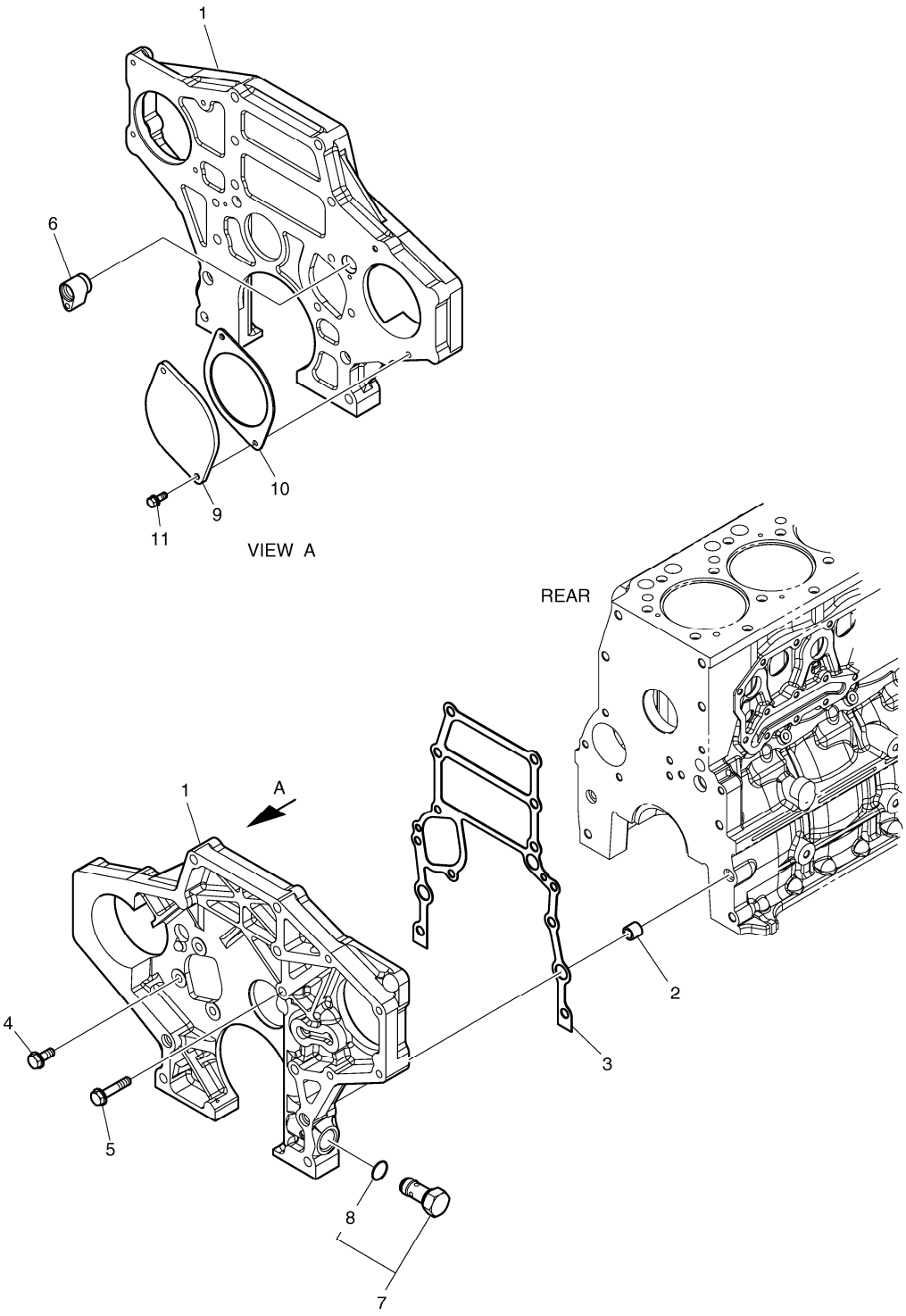

DATE	JUN. 01, 2010
3rd EDITION	

Fig. 012 TIMING GEAR CASE CARTER DE DISTRIBUTION

Serial No. ;

Key No.	Part No.	Description	Description	Q'ty	S.C	Serial No.	ICA	Replaceable part	
								Part No.	Q'ty
012 -1	65.01304-0029A	CASE;TIMING GEAR	CARTER	1					
2	65.91710-0016	RING;STOPPER	BAGUE	2					
3	65.01903-0034	GASKET	GARNITURE	1					
4	65.90020-0063B	BOLT;HEX M10X25	BOULON A 6 PANS	3					
5	65.90020-0080	BOLT;COLLARED HEX.	BOULON A 6 PANS	1					
6	65.98130-0241	ADAPTER	ADAPTEUR	1					
7	65.05401-5032	RELIEF VALVE ASS'Y	SOULAGEMENT VANNE	1		-090319	Y	65.05401-5032A	1
	65.05401-5032A	RELIEF VALVE ASS`Y	SOULAGEMENT VANNE	1		090320-	I	410127-00040	1
	410127-00040	VALVE ASSY,RELIEF;OIL PUMP	SOULAGEMENT VANNE	1		091117-			
8	65.96501-0074	O-RING	JOINT TORIQUE	1					
9	65.91601-0011	COVER	COUVERCLE	1					
10	65.38901-0018A	GASKET;PTO	GARNITURE	1					
11	06.01943-3318	BOLT ASS`Y M12X1.5X35	BOULON A 6 PANS	2					

DATE	JUN. 01, 2010
3rd EDITION	

Fig. 013 FLYWHEEL HOUSING
CARTER DE VOLANT MOTEUR

Serial No. ;

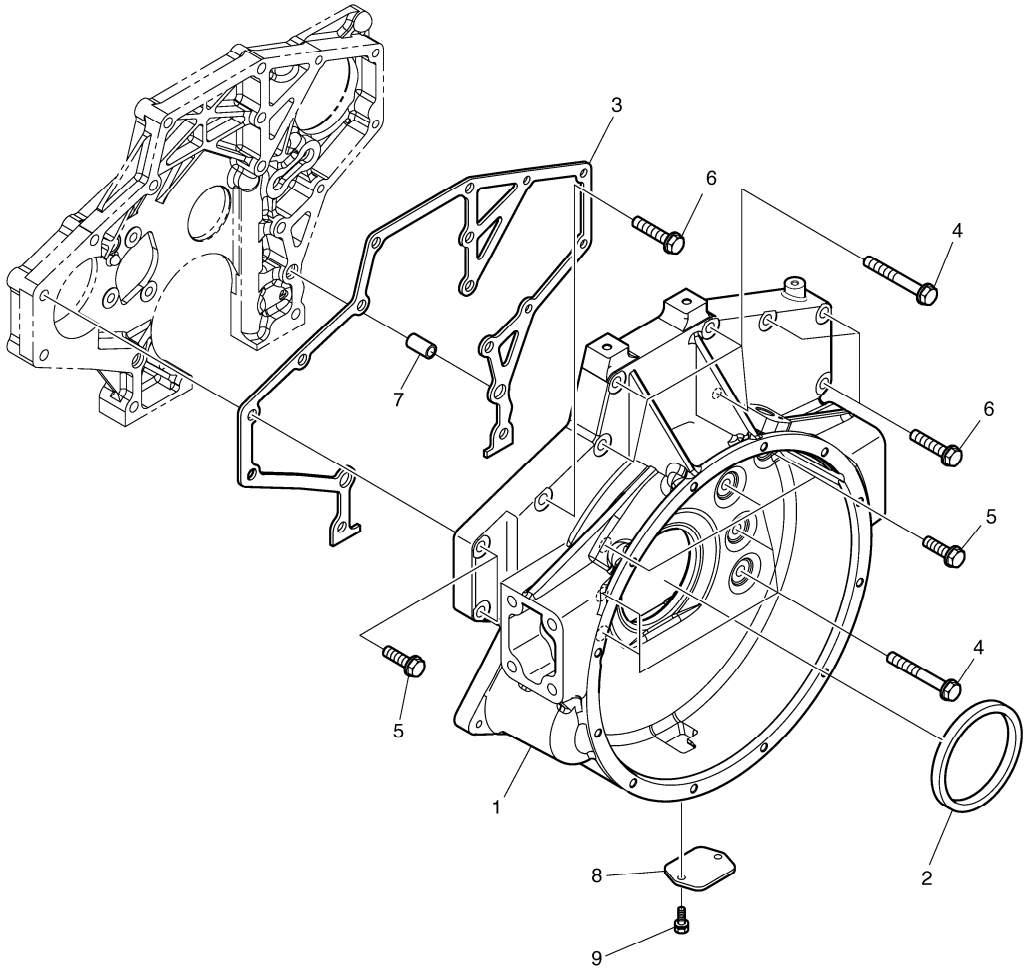

DATE	JUN. 01, 2010
3rd EDITION	

Fig. 013 FLYWHEEL HOUSING
CARTER DE VOLANT MOTEUR

Serial No. ;

Key No.	Part No.	Description	Description	Q'ty	S.C	Serial No.	ICA	Replaceable part	
								Part No.	Q'ty
013 -1	65.01401-0253B	HOUSING;FLYWHEEL	BOITIER	1					
2	65.01510-0040	SEAL;OIL	JOINT D'HUILE	1					
3	65.01904-0032	GASKET	GARNITURE	1					
4	65.90020-0100	BOLT	BOULON A 6 PANS	9					
5	65.90020-0101	BOLT	BOULON A 6 PANS	4					
6	65.90020-0105	BOLT	BOULON A 6 PANS	4					
7	65.91710-0009	RING;STOPPER	BAGUE	2					
8	65.01414-0004A	COVER;TIMING POINT HOLE	COUVERCLE	1					
9	06.01923-3111	BOLT M8X16	BOULON A 6 PANS	2					

DATE	JUN. 01, 2010
3rd EDITION	

Fig. 014 OIL SEAL JOINT

Serial No. ;

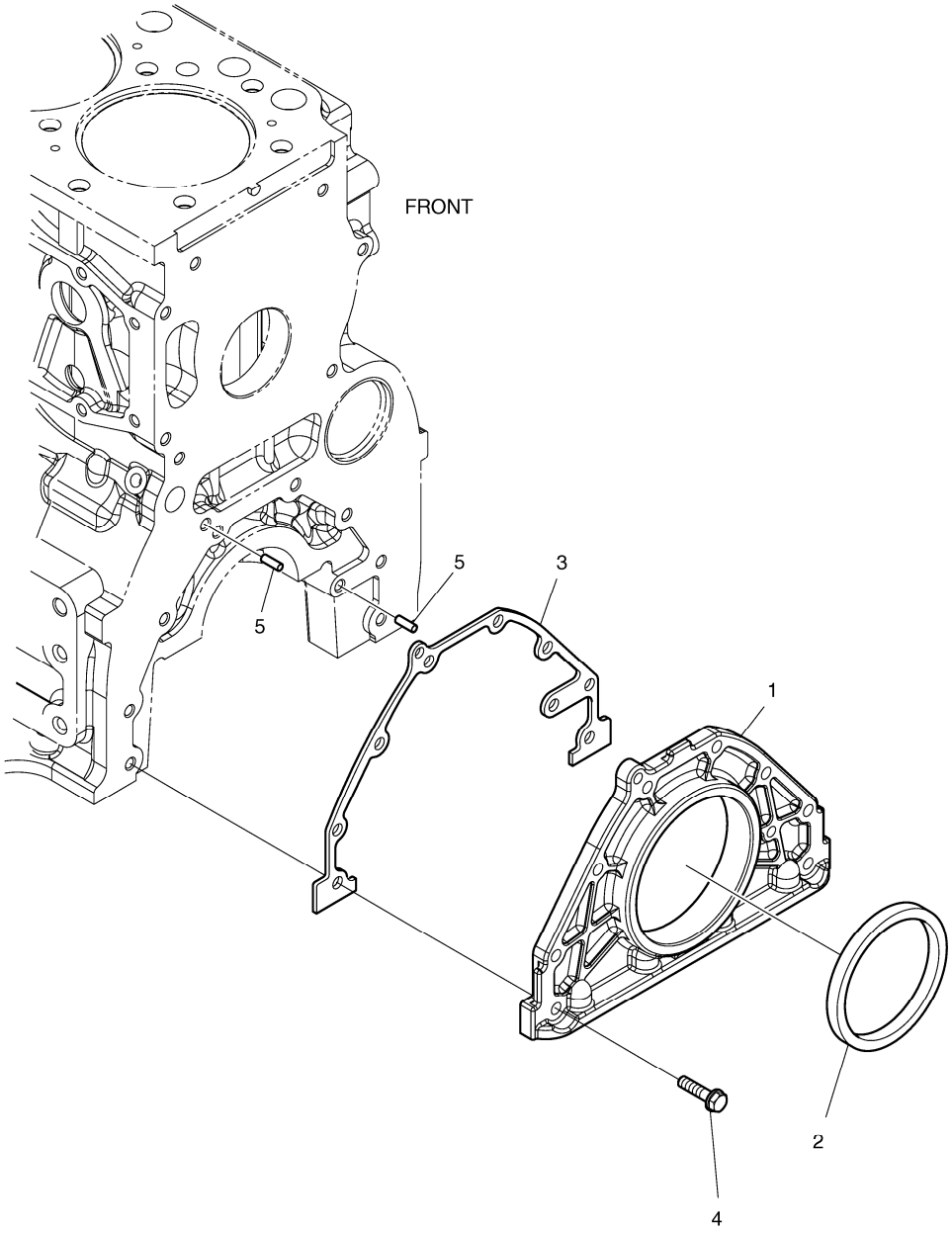

DATE	JUN. 01, 2010
3rd EDITION	

Fig. 014 OIL SEAL JOINT

Serial No. ;

Key No.	Part No.	Description	Description	Q'ty	S.C	Serial No.	ICA	Replaceable part	
								Part No.	Q'ty
014 -1	65.01501-5003A	COVER;SEALING	COUVERCLE	1					
2	65.01510-0157	SEAL;OIL	JOINT D'HUILE	1					
3	65.01905-0009	GASKET	GARNITURE	1					
4	06.01923-3116	BOLT ASS`Y M8X28	BOULON A 6 PANS	8					
5	06.22022-1063	PIN	GOUPILLE	2					

DATE	JUN. 01, 2010
3rd EDITION	

Fig. 015 BREATHER
CONDUIT DE VENTILATION

Serial No. ;

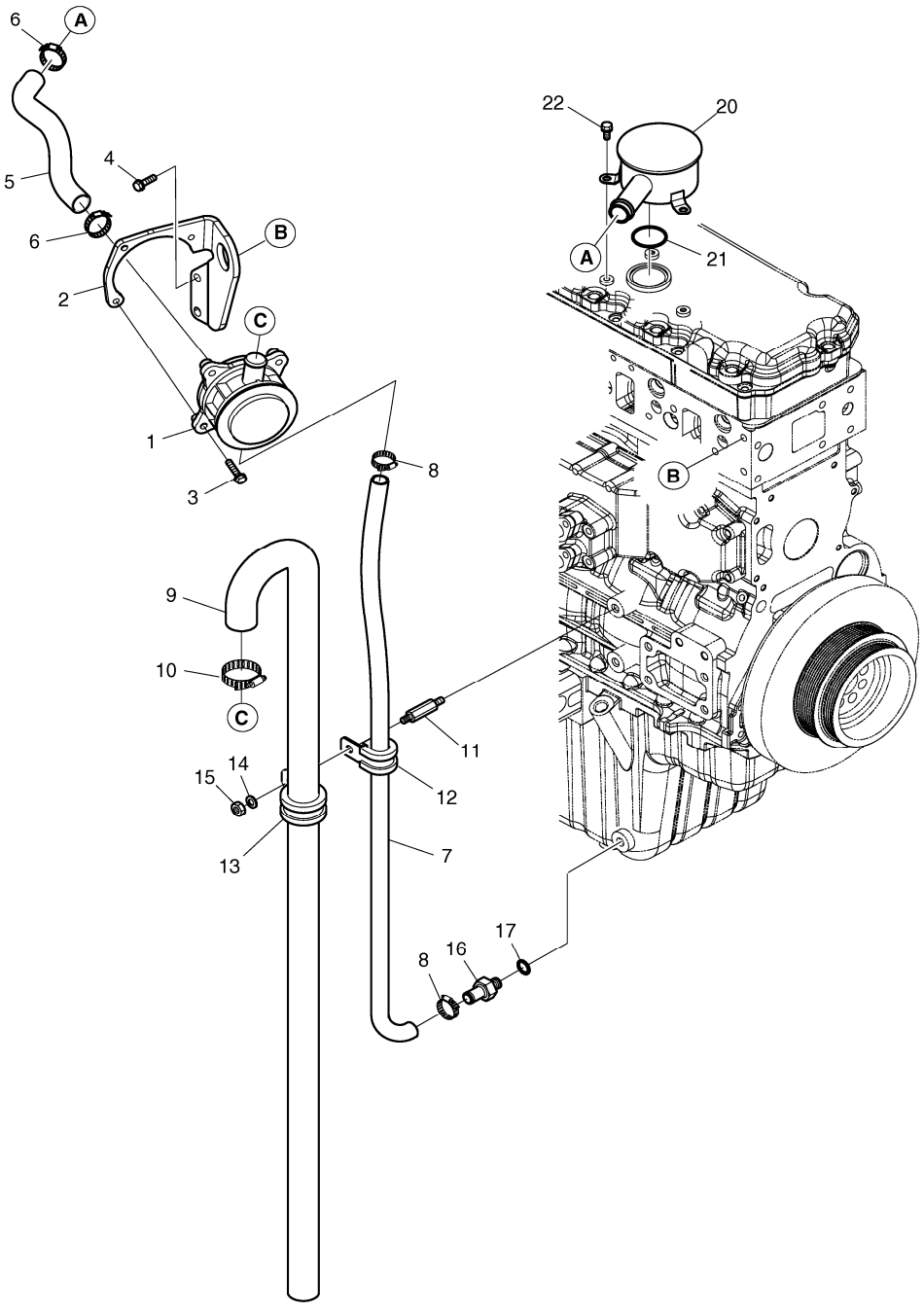

DATE	JUN. 01, 2010
3rd EDITION	

Fig. 015 BREATHER
CONDUIT DE VENTILATION

Serial No. ;

Key No.	Part No.	Description	Description	Q'ty	S.C	Serial No.	ICA	Replaceable part	
								Part No.	Q'ty
015 -1	65.01801-5100	HOUSING;BREATHER	CARTER	1					
2	65.01840-0017	BRACKET;BREATHER PIPE	SUPPORT	1					
3	06.01923-3114	BOLT ASS`Y M8X22	BOULON A 6 PANS	3					
4	06.01924-3217	BOLT ASS`Y M10X30	BOULON A 6PANS	2					
5	65.96301-0478	HOSE;RUBBER	TUYAU FLEXIBLE	1					
6	06.67020-0105	CLAMP	COLLIER	2					
7	65.96301-0455A	HOSE;RUBBER	TUYAU FLEXIBLE	1					
8	65.97402-0025	CLAMP;HOSE	COLLIER	2					
9	65.96301-0441A	HOSE;RUBBER	TUYAU FLEXIBLE	1					
10	06.67020-0105	CLAMP	COLLIER	1					
11	65.90201-0122	BOLT;STUD	BOULON A 6 PANS	1					
12	65.97401-5024	CLIP;PIPE	AGRAFE	2					
13	65.97401-5019	CLIP;PIPE	AGRAFE	1					
14	06.16731-2107	WASHER	RONDELLE ELASTIQUE	1					
15	06.11063-8214	NUT	ECROU 6 PANS	1					
16	65.98131-0119	NIPPLE	GRAISSEUR	1					
17	06.56190-0719	RING;SEAL	BAGUE	1					
20	65.01801-5043A	HOUSING;BREATHER	LOGEMENT DE RENIFLARD	1					
21	65.96501-0033B	O-RING	JOINT TORIQUE	1					
22	06.01923-3111	BOLT M8X16	BOULON A 6 PANS	3					

DATE	JUN. 01, 2010
3rd EDITION	

Fig. 016 DRIVING SYSTEM
SYSTEME D'CENTRAINEMENT

Serial No. ;

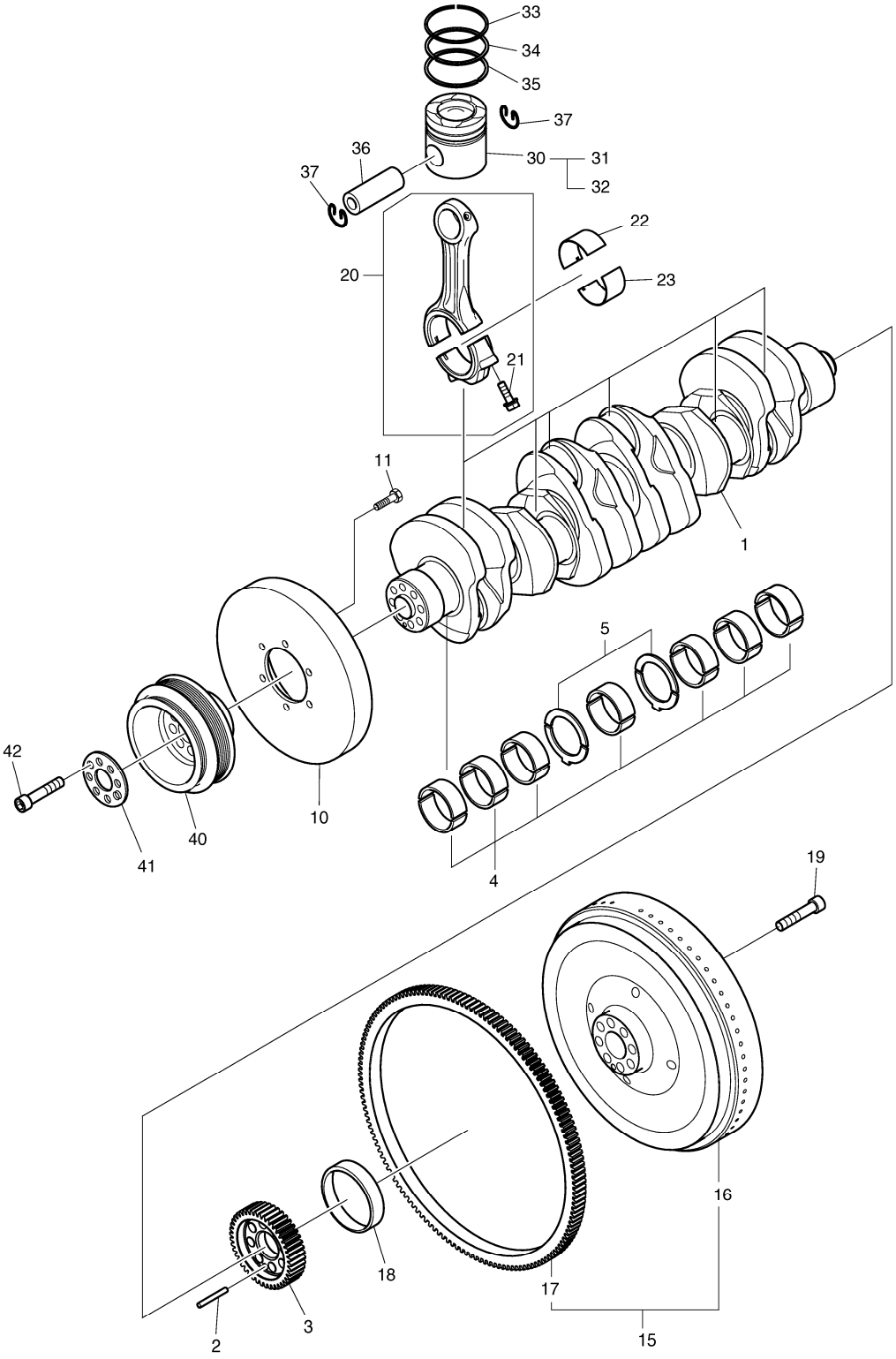

DATE	JUN. 01, 2010
3rd EDITION	

Fig. 016 DRIVING SYSTEM SYSTEME D'CENTRAINEMENT

Serial No. ;

Key No.	Part No.	Description	Description	Q'ty	S.C	Serial No.	ICA	Replaceable part	
								Part No.	Q'ty
016 -1	65.02101-0069A	SHAFT;CRANK	ARBRE	1					
2	06.22022-1018	PIN;DOWEL 8M6X45	GOUPILLE	1					
3	65.02115-0016	GEAR;CRANKSHAFT	PIGNON	1					
4	65.01110-6140A	METAL;MAIN	PALIER	7					
5	65.01150-6008	WASHER;THRUST	RONDELLE	2					
10	65.02201-0002	DAMPER;VIBRATION	AMORTISSEUR DE VIBRAT	1					
11	65.90020-0062B	BOLT;HEX M10X20	BOULON A 6 PANS	6					
15	65.02301-5148A	FLYWHEEL ASS`Y	VOLANT	1					
16	65.02301-0291A	FLYWHEEL	ENSEMBLE VOLANT	1					
17	65.02310-0006	GEAR;RING	ENGRENAGE	1					
18	65.02130-0004	BUSH;DRIVING	DOUILLE	1					
19	65.90020-0140A	BOLT;COLLARED HEX.	BOULON A 6 PANS	8					
20	65.02401-6032B	CONNECTING ROD ASS`Y	RACCORDEMENT	6					
21	65.02411-0009	BOLT;CONNECTING ROD	BOULON	2					
22	65.02410-0040	METAL;CON-ROD(STD)	PALIER	6					
	65.02410-0041	METAL;CON-ROD(0.25)	PALIER	6	US				
	65.02410-0042	METAL;CON-ROD(0.50)	PALIER	6	US				
23	65.02410-0050	METAL;CON-ROD(STD)	PALIER	6					
	65.02410-0051	METAL;CON-ROD(0.25)	PALIER	6	US				
	65.02410-0052	METAL;CON-ROD(0.50)	PALIER	6	US				
30	65.02501-0476	PISTON - GRADE	PISTON	6	D				
31	65.02501-0477	PISTON;A GRADE	PISTON	6					
32	65.02501-0478	PISTON;B GRADE	PISTON	6					
33	65.02503-0132A	RING;PISTON	BAGUE D'ETANCHEITE	6					
34	65.02503-0133A	RING;PISTON	BAGUE D'ETANCHEITE	6					
35	65.02503-0134	RING;PISTON	BAGUE D'ETANCHEITE	6					
36	65.02502-0017A	PIN;PISTON	GOUPILLE	6					
37	06.29020-0125	RING;LOCK	BAGUE	12					
40	65.02601-0225B	PULLEY;V-BELT	POULIE DE COURROIE TRA	1					
41	65.90701-0099	WASHER	RONDELLE	1					
42	06.02106-0723	BOLT;SOCKET	BOULON A 6 PANS CREUX	8					

DATE	JUN. 01, 2010
3rd EDITION	

Fig. 017 CYLINDER HEAD CULLASSE

Serial No. ;

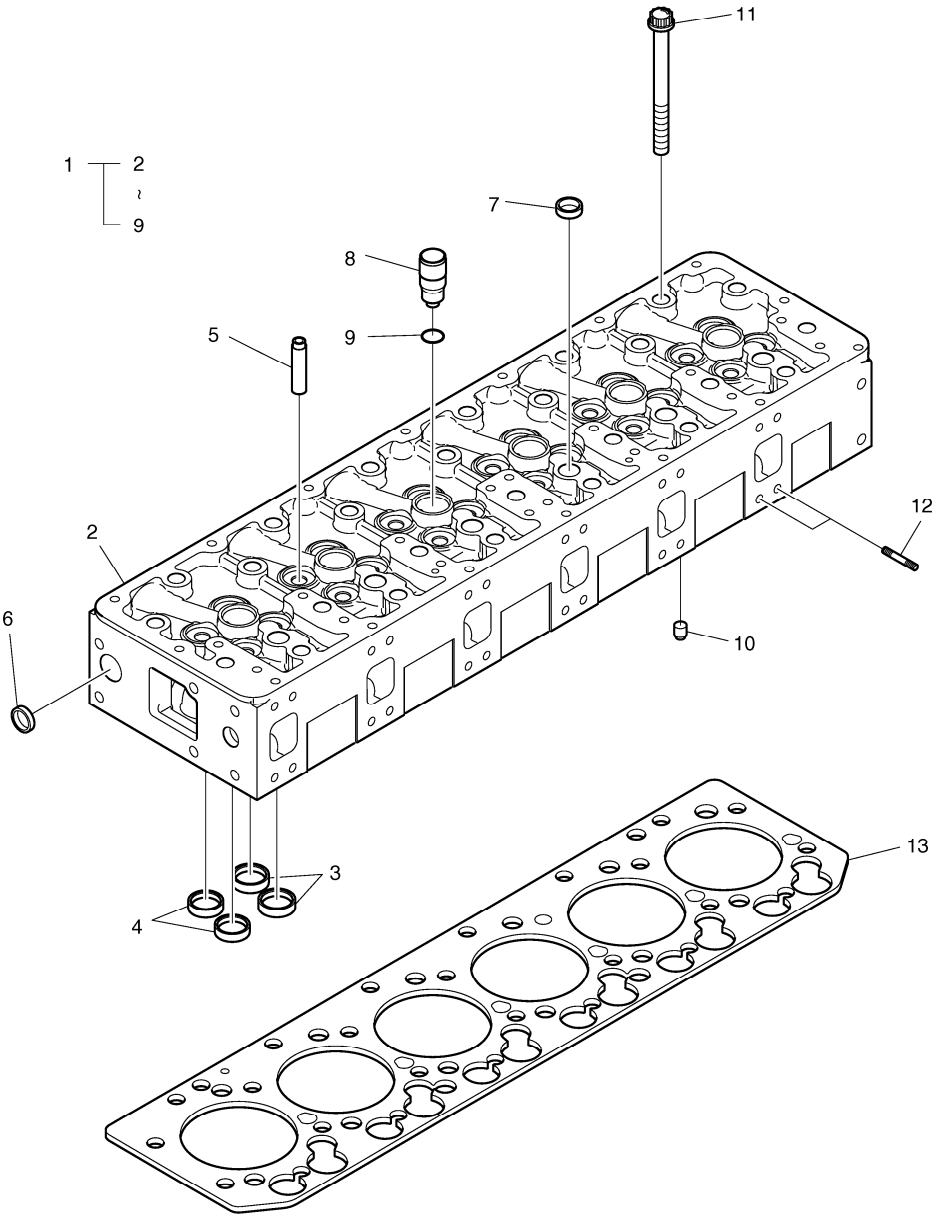

DATE	JUN. 01, 2010
3rd EDITION	

Fig. 017 CYLINDER HEAD CULLASSE

Serial No. ;

Key No.	Part No.	Description	Description	Q'ty	S.C	Serial No.	ICA	Replaceable part	
								Part No.	Q'ty
017 -1	65.03101-6090F	CYLINDER HEAD ASS`Y	CULLASSE	1					
2	65.03101-1068C	CYLINDER HEAD	CULLASSE	1	D				
3	65.03203-1062	SEAT;VALVE	SIEGE	12	B				
4	65.03203-1063	SEAT;VALVE	SIEGE	12	B				
5	65.03201-1016B	GUIDE;VALVE	GUIDE-SOUPAPE	24	B				
6	65.90302-0048	CORE;PLUG	BOUCHON DE DESSABLAG	10					
7	65.90302-0029	PLUG;CORE	BOUCHON	21					
8	65.03205-0006A	BUSH;INJECTION NOZZLE	COUSSINET	6					
9	65.96501-0088	O-RING	JOINT TORIQUE	6					
10	65.91030-0005	PIN;FIX	GOUPILLE	2					
11	65.90021-0009	BOLT;COLLARED DUO.	BOULON A 6 PANS	26					
12	65.90201-0134	BOLT;STUD	GOUJON	24					
13	65.03901-0071	GASKET;CYLINDER HEAD	GARNITURE	1					

DATE	JUN. 01, 2010
3rd EDITION	

Fig. 018 CYLINDER HEAD COVER
COUVERTURE DE CULASSE

Serial No. ;

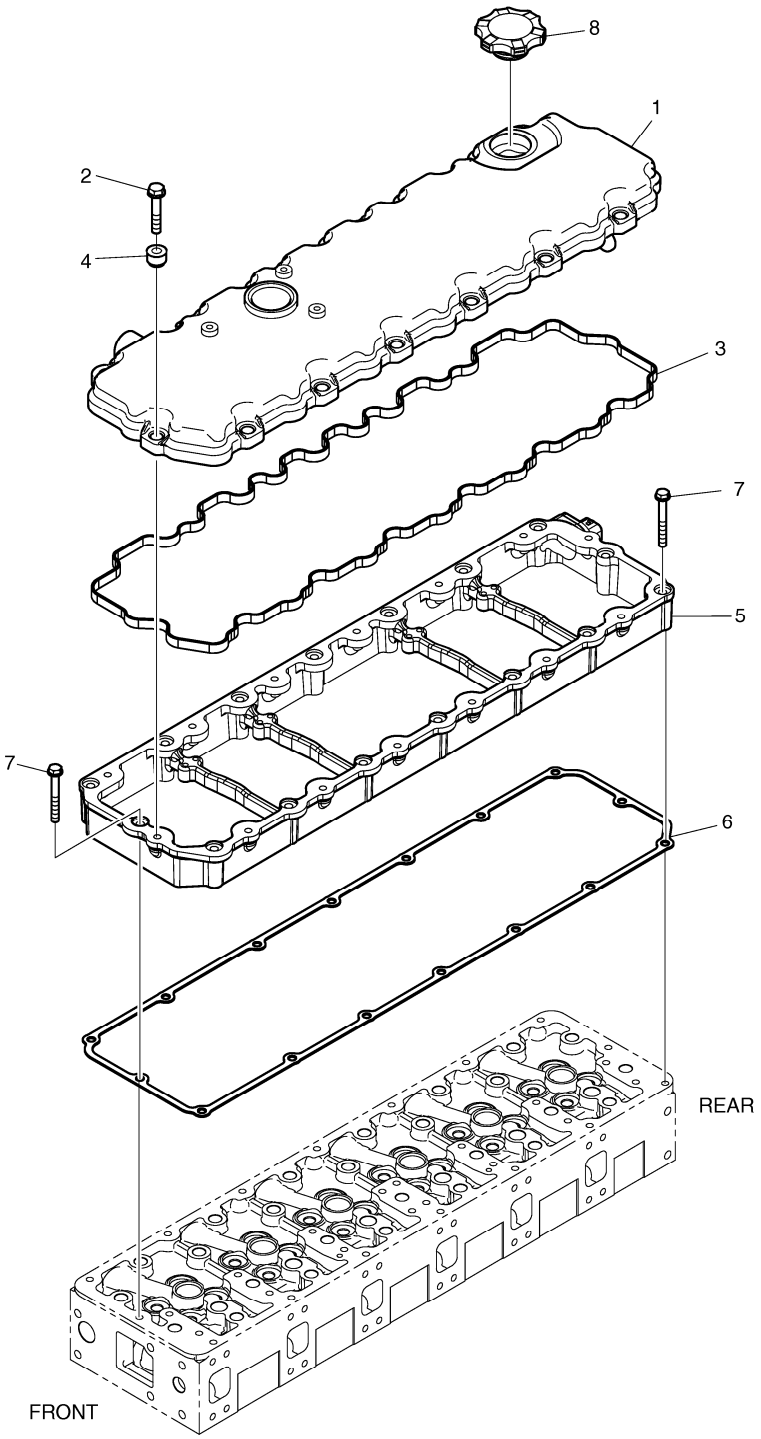

DATE	JUN. 01, 2010
3rd EDITION	

Fig. 018 CYLINDER HEAD COVER
COUVERTURE DE CULASSE

Serial No. ;

Key No.	Part No.	Description	Description	Q'ty	S.C	Serial No.	ICA	Replaceable part	
								Part No.	Q'ty
018 -1	65.03401-5010B	COVER;CYLINDER HEAD	COUVRE-CULASSE	1					
2	65.90020-0109	BOLT;COLLARED HEX.	BOULON A 6 PANS	14					
3	65.03905-0037A	GASKET;CYL. HEAD COVER	GARNITURE	1					
4	65.03905-5002	PACKING;CYLHEAD COVER	EMBALLAGE	14					
5	65.03402-0008B	COVER;INTERMEDIATE	COUVERCLE	1		-080320	I	65.03402-0009	1
	65.03402-0009	COVER;INTERMEDIATE	COUVERCLE	1		080321-			
6	65.03905-0041	GASKET;CYL. HEAD COVER	GARNITURE	1					
7	65.90020-0138	BOLT;COLLARED HEX.	BOULON A 6 PANS	16					
8	65.01810-5011	CAP;OIL FILLER	VIBREUR	1					

DATE	JUN. 01, 2010
3rd EDITION	

Fig. 019 TIMING SYSTEM
SYSTEME DE SYNCHRONISATION

Serial No. ;

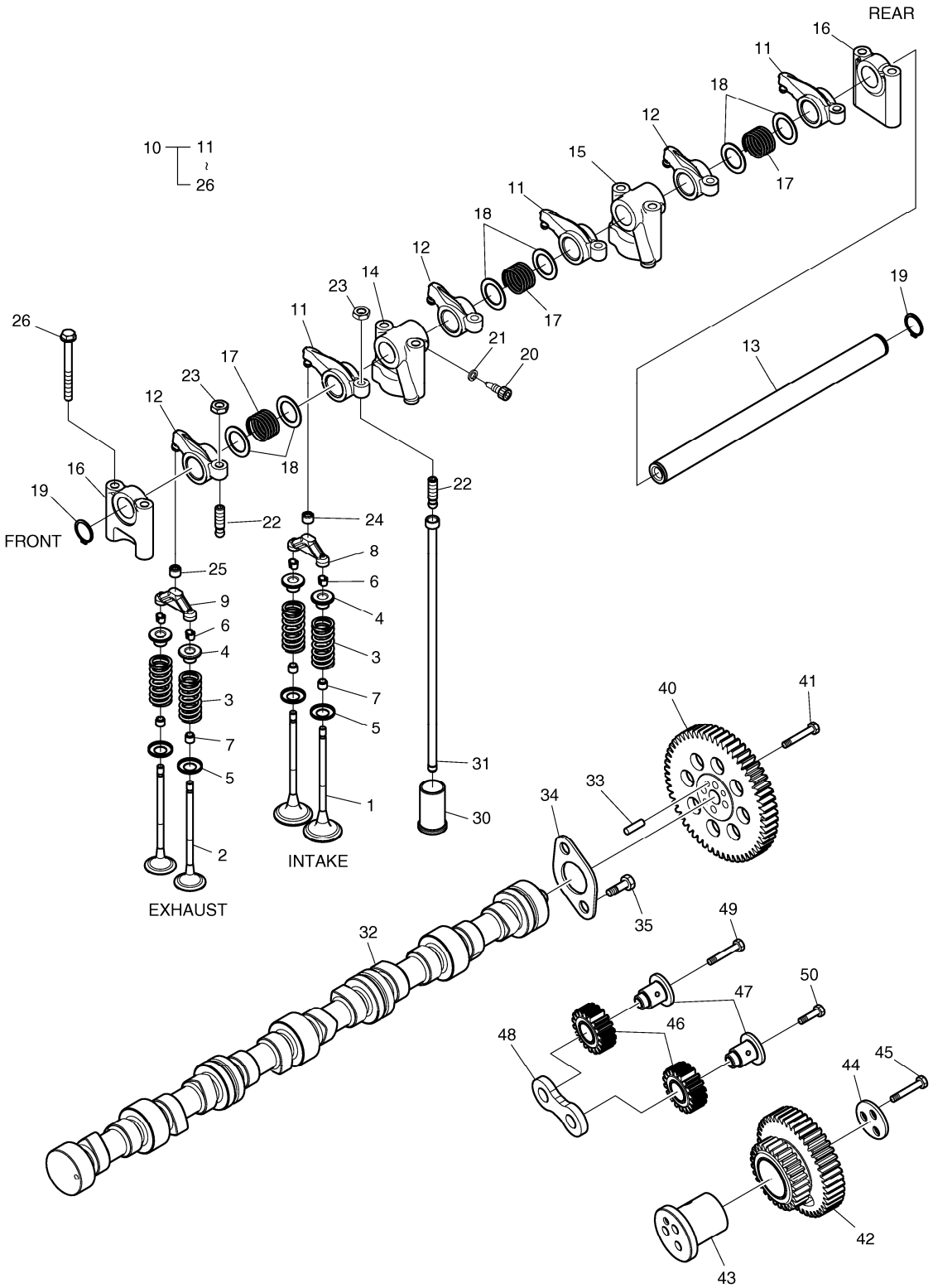

DATE	JUN. 01, 2010
3rd EDITION	

Fig. 019 TIMING SYSTEM
SYSTEME DE SYNCHRONISATION

Serial No. ;

Key No.	Part No.	Description	Description	Q'ty	S.C	Serial No.	ICA	Replaceable part	
								Part No.	Q'ty
019 -1	65.04101-0065B	VALVE;INTAKE	VANNE	12					
2	65.04101-0066B	VALVE;EXHAUST	VANNE	12					
3	65.04102-0024	SPRING;VALVE	RESSORT	24					
4	65.04103-0018	PLATE;VALVE SPRING	PLAQUE	24					
5	65.90701-0098	WASHER	RONDELLE	24					
6	65.04104-0009	COTTER;VALVE	COTTER;VALVE	48					
7	65.04902-0016	SEAL;VALVE STEM	JOINT	24					
8	65.04130-0009A	CALIPER;INTAKE	ETRIER	6					
9	65.04130-0011	CALIPER;EXHAUST	ETRIER	6					
10	65.04200-6038C	ROCKER ARM S/F ASS'Y	AXE DE BRAS DE CULBUTE	2		-081016	I	65.04200-6038D	2
	65.04200-6038D	ROCKER ARM S/F ASS`Y	BRAS DE CULBUTEUR	2		081017-			
11	65.04201-5042C	ROCKER ARM;INTAKE	BRAS DE CULBUTEUR	3					
12	65.04201-5043C	ROCKER ARM;EXHAUST	BRAS DE CULBUTEUR	3					
13	65.04203-5020A	SHAFT;ROCKER ARM	ARBRE	1					
14	65.04202-0033	BRACKET;ROCKER ARM	SUPPORT	1					
15	65.04202-0034	BRACKET;ROCKER ARM	SUPPORT	1					
16	65.04202-0035	BRACKET;ROCKER ARM	SUPPORT	2					
17	65.97601-0124	SPRING;COMPESSION	RESSORT	3					
18	65.90701-0136B	WASHER	RONDELLE	6					
19	06.29010-0120	RING;SNAP	BAGUE	2					
20	65.90030-0018	BOLT;SOCKET	BOULON A 6 PANS CREUX	1					
21	06.16110-0106	WASHER	RONDELLE	1					
22	65.04205-0014	SCREW;ADJUST	VIS	6					
23	65.90501-0003	NUT	ECROU	6					
24	65.04209-5002	CAP;INTAKE	PAC	3					
25	65.04209-0006	CAP;EXHAUST	PAC	3					
26	65.90020-0120	BOLT;COLLARED HEX.	BOULON A 6 PANS	8					
30	65.04301-5003C	TAPPET;VALVE	TRINGLERIE	12					
31	65.04302-5015	ROD;PUSH	TIGE DE POUSSOIR	12					
32	65.04401-0045A	CAMSHAFT	EQUIPAGE MOBILE	1					
33	06.22022-1016	PIN;DOWEL	GOUPILLE D'AJUSTAGE	1					
34	65.90720-0032	WASHER;THRUST	RONDELLE DE BUTEE	1					
35	06.01913-2911	BOLT ASS`Y M6X16	BOULON A 6 PANS	2					
40	65.04501-0017	GEAR;CAM SHAFT	PIGNON	1					
41	65.90020-0117	BOLT;COLLARED HEX.	BOULON A 6 PANS	4					
42	65.04505-5018	GEAR;IDLE	PIGNON	1					
43	65.04506-0016	PIN;IDLE GEAR	GOUPILLE	1					
44	65.90720-0034B	WASHER;THRUST	RONDELLE DE BUTEE	1					

DATE	JUN. 01, 2010
3rd EDITION	

Fig. 019 TIMING SYSTEM
SYSTEME DE SYNCHRONISATION

Serial No. ;

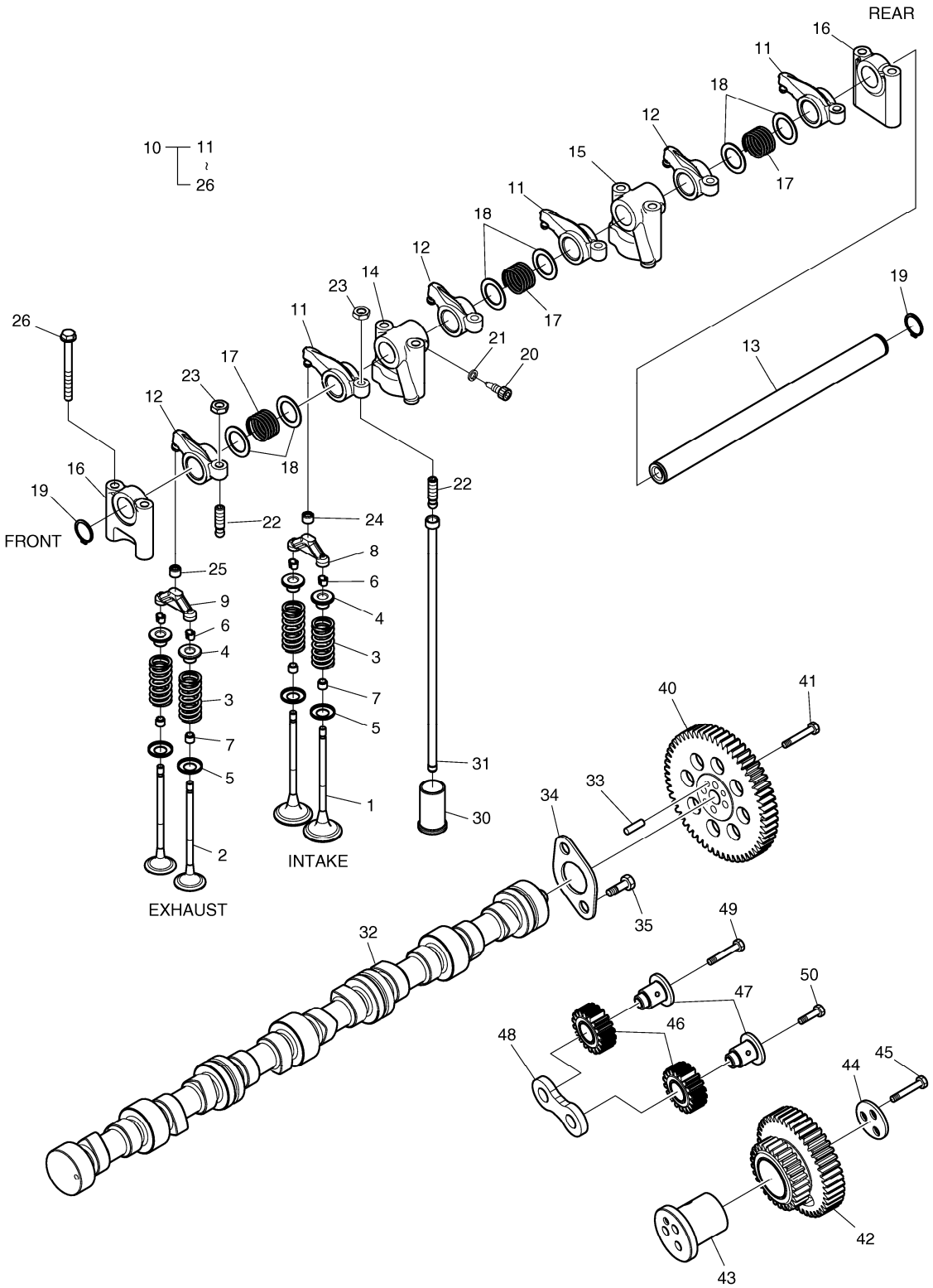

DATE	JUN. 01, 2010
3rd EDITION	

Fig. 019 TIMING SYSTEM
SYSTEME DE SYNCHRONISATION

Serial No. ;

Key No.	Part No.	Description	Description	Q'ty	S.C	Serial No.	ICA	Replaceable part	
								Part No.	Q'ty
019 -45	65.90020-0118	BOLT;COLLARED HEX.	BOULON A 6 PANS	3					
46	65.11301-5002	GEAR;DRIVE;INJECTION	PIGNON	2					
47	65.04506-0015	PIN;IDLE GEAR	GOUPILLE	2					
48	65.90720-0033A	WASHER;THRUST	RONDELLE DE BUTEE	1					
49	65.90020-0118	BOLT;COLLARED HEX.	BOULON A 6 PANS	1					
50	65.90020-0119	BOLT;COLLARED HEX.	BOULON A 6 PANS	1					

DATE	JUN. 01, 2010
3rd EDITION	

Fig. 020 OIL PUMP
POMPE A HUILE

Serial No. ;

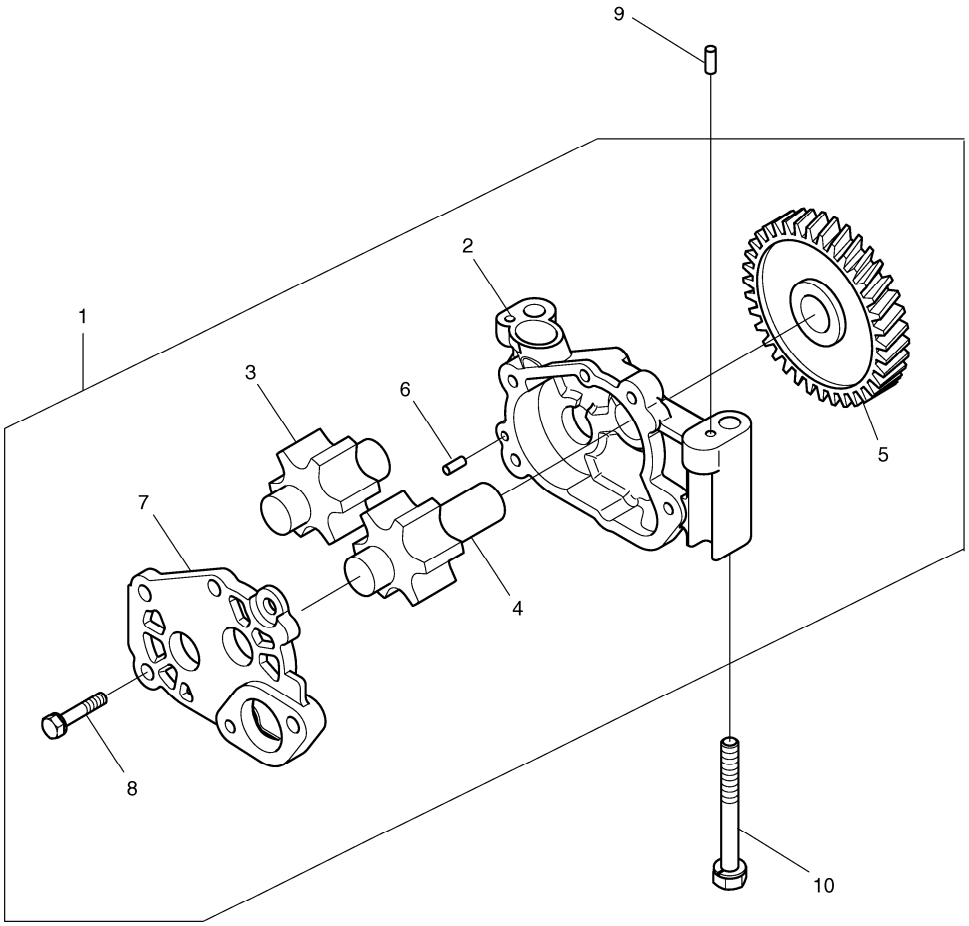

DATE	JUN. 01, 2010
3rd EDITION	

Fig. 020 OIL PUMP
POMPE A HUILE

Serial No. ;

Key No.	Part No.	Description	Description	Q'ty	S.C	Serial No.	ICA	Replaceable part	
								Part No.	Q'ty
020 -1	65.05100-6063A	OIL PUMP ASS`Y	ENSEMBLE POMPE A HUILE	1					
2	65.05102-0030	HOUSING;OIL PUMP	CARTER	1	D				
3	65.05104-0022	GEAR;OIL PUMP	PIGNON	1					
4	65.05104-0023	GEAR;OIL PUMP	PIGNON	1					
5	65.05201-0016	GEAR;DRIVE;OIL PUMP	PIGNON	1					
6	06.22022-0907	DOWEL PIN 6M6X10	GOUPILLE D'AJUSTAGE	1					
7	65.05103-0034	COVER;OIL PUMP	COUVERCLE	1					
8	06.01913-3114	BOLT ASS`Y M8X22	BOULON A 6 PANS	4					
9	06.22022-0909	PIN DOWEL 6M6X14	GOUPILLE	2					
10	65.90020-0085	BOLT;COLLARED HEX.	BOULON A 6 PANS	2					

DATE	JUN. 01, 2010
3rd EDITION	

Fig. 021 OIL FILTER & OIL COOLER
FILTRE D'HUILE

Serial No. ;

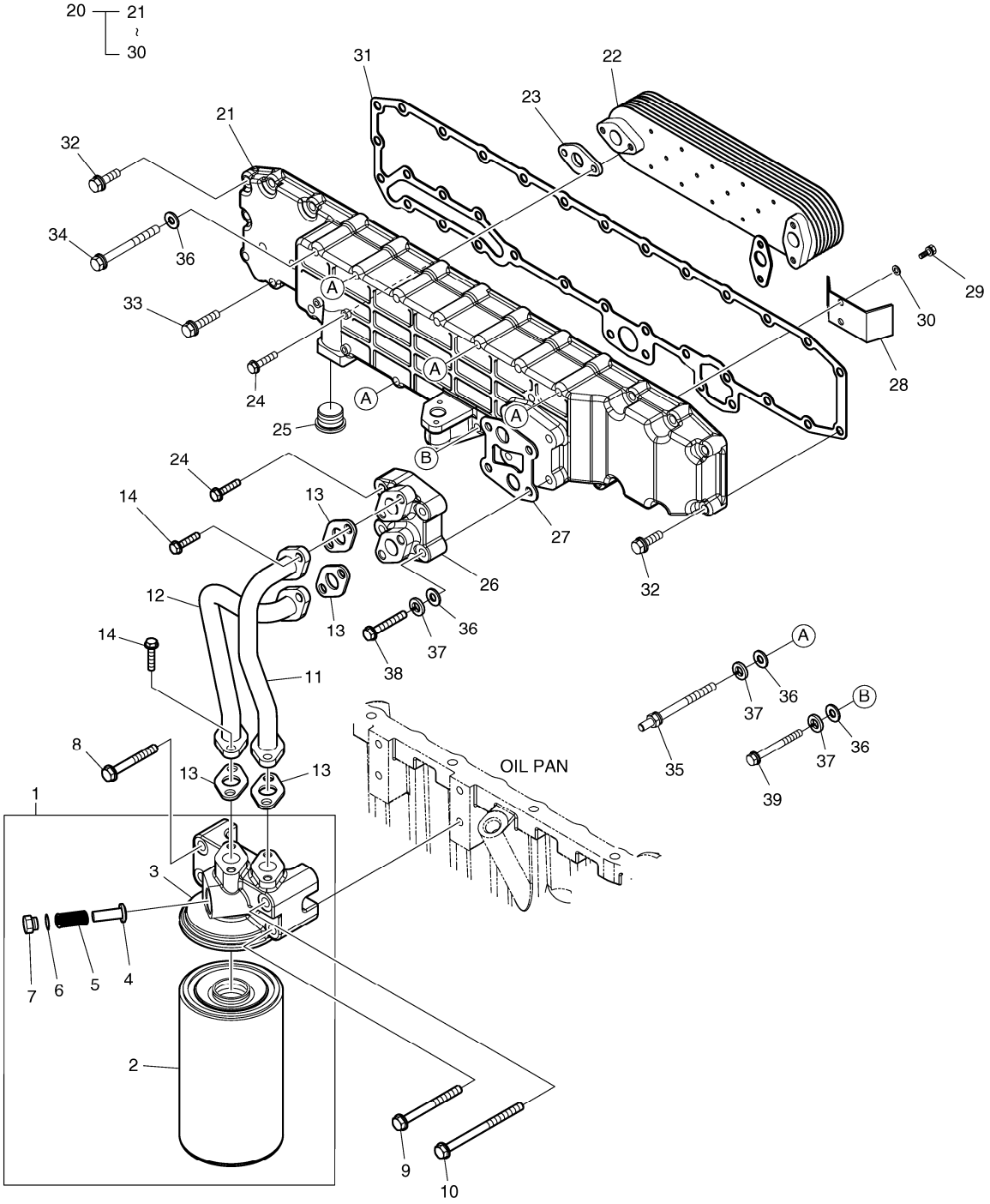

DATE	JUN. 01, 2010
3rd EDITION	

Fig. 021 OIL FILTER & OIL COOLER
FILTRE D'HUILE

Serial No. ;

Key No.	Part No.	Description	Description	Q'ty	S.C	Serial No.	ICA	Replaceable part	
								Part No.	Q'ty
021 -1	65.05501-7089A	OIL FILTER ASS`Y	FILTRE D'HUILE	1					
2	65.05510-5032A	FILTER;E/G OIL	FILTRE D'HUILE	1					
3	65.05503-5056	HEAD;OIL FILTER	CULASSE	1					
4	65.05518-0006	VALVE	VANNE	1					
5	65.97601-0075	SPRING	RESSORT	1					
6	06.56190-0726	SEAL;RING	JOINT	1					
7	65.90310-0065	SCREW;PLUG	VIS	1					
8	06.01923-3222	BOLT ASS`Y	BOULON A 6 PANS	2					
9	06.01923-3225	BOLT ASS`Y M10X70	BOULON A 6 PANS	1					
10	06.01923-3228	BOLT ASS`Y M10X85	BOULON A 6 PANS	1					
11	65.05701-5573B	PIPE;OIL	CONDUITES DE HUILE	1					
12	65.05701-5574	PIPE;OIL	CONDUITES DE HUILE	1					
13	65.05903A0001	GASKET	JOINT	4					
14	06.01913-3114	BOLT ASS`Y M8X22	BOULON A 6 PANS	8					
20	65.05601-7079B	OIL COOLER ASS`Y	ENSEMBLE REFROIDISSEU	1					
21	65.05604-0030A	HOUSING;OIL COOLER	CARTER	1					
22	65.05606-5032A	ELEMENT;OIL COOLER	ELEMENT	1					
23	65.05902-0022	GASKET;OIL COOLER	GARNITURE	2					
24	06.01923-3119	BOLT ASS`Y M8X40	BOULON A 6 PANS	6					
25	65.54109-0005A	SCREW PLUG M22X1.5	VIS	1					
26	65.05607-5003	FLANGE;OIL COOLER	BRIDE	1					
27	65.05901-0031	GASKET;OIL FILTER	GARNITURE	1					
28	65.05610-0007A	GUIDER;WATER FLOW	GUIDE	1					
29	06.02097-8306	BOLT;SOCKET	BOULON	2					
30	06.16731-2105	WASHER	RONDELLE	2					
31	65.05902-0023	GASKET;OIL COOLER	GARNITURE	1					
32	06.01923-3117	BOLT ASS`Y M8X30	BOULON A 6 PANS	12					
33	06.01923-3119	BOLT ASS`Y M8X40	BOULON A 6 PANS	8					
34	06.01913-3128	BOLT M8X85	BOULON A 6 PANS	7					
35	65.90201-0135	BOLT;STUD	GOUJON	4					
36	06.15010-2311	WASHER	RONDELLE	14					
37	06.16731-2107	WASHER	RONDELLE ELASTIQUE	7					
38	06.01013-9127	BOLT M8X120	BOULON A 6 PANS	2					
39	06.01913-3129	BOLT ASS`Y M8X90	BOULON A 6 PANS	1					

DATE	JUN. 01, 2010
3rd EDITION	

Fig. 022 OIL PAN
CARTER D'HUILE

Serial No. ;

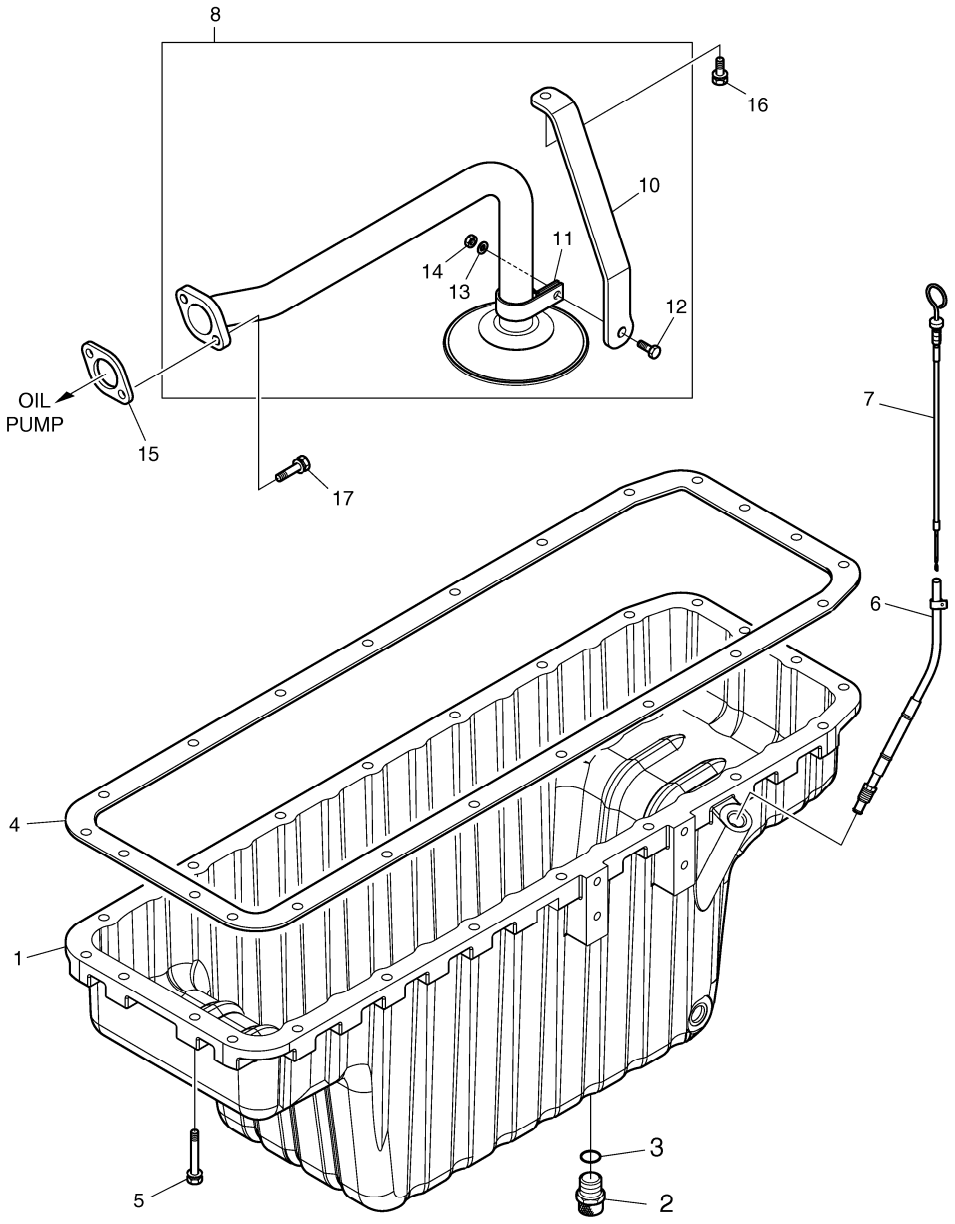

DATE	JUN. 01, 2010
3rd EDITION	

Fig. 022 OIL PAN
CARTER D'HUILE

Serial No. ;

Key No.	Part No.	Description	Description	Q'ty	S.C	Serial No.	ICA	Replaceable part	
								Part No.	Q'ty
022 -1	65.05801-5244	PAN;OIL	CARTER MOTEUR	1					
2	65.98125-5022A	JOINT;DRAIN	JOINT	1					
3	06.56190-0732	SEAL;RING	CONTACT DE NIVEAU D'HU	1					
4	65.05904-0035	GASKET;OIL PAN	GARNITURE	1					
5	06.01923-3120	BOLT ASS`Y M8X45	BOULON A 6 PANS	22					
6	65.05806-5118A	TUBE;OIL LEVEL GAUGE	TUBE	1					
7	65.05805-5233C	OIL LEVEL GAUGE	INDICATEUR DE NIVEAU D	1					
8	65.05701-6121	OIL PIPE ASS`Y	CONDUITES DE HUILE	1					
10	65.05740-0041	BRACKET;OIL SUCT.PIPE	SUPPORT	1					
11	65.97401-0137	CLIP;PIPE	AGRAFE	1					
12	06.01283-7115	BOLT M8X25	BOULON A 6 PANS	1					
13	06.15010-2311	WASHER	RONDELLE	1					
14	65.90510-0012	NUT	ECROU	1					
15	65.05901-0032	GASKET	GARNITURE	1					
16	06.01913-3115	BOLT ASS`Y M8X25	BOULON A 6 PANS	1					
17	06.01913-3119	BOLT ASS`Y M8X40	BOULON A 6 PANS	2					

DATE	JUN. 01, 2010
3rd EDITION	

Fig. 023 THERMOSTAT
THERMOSTAT

Serial No. ;

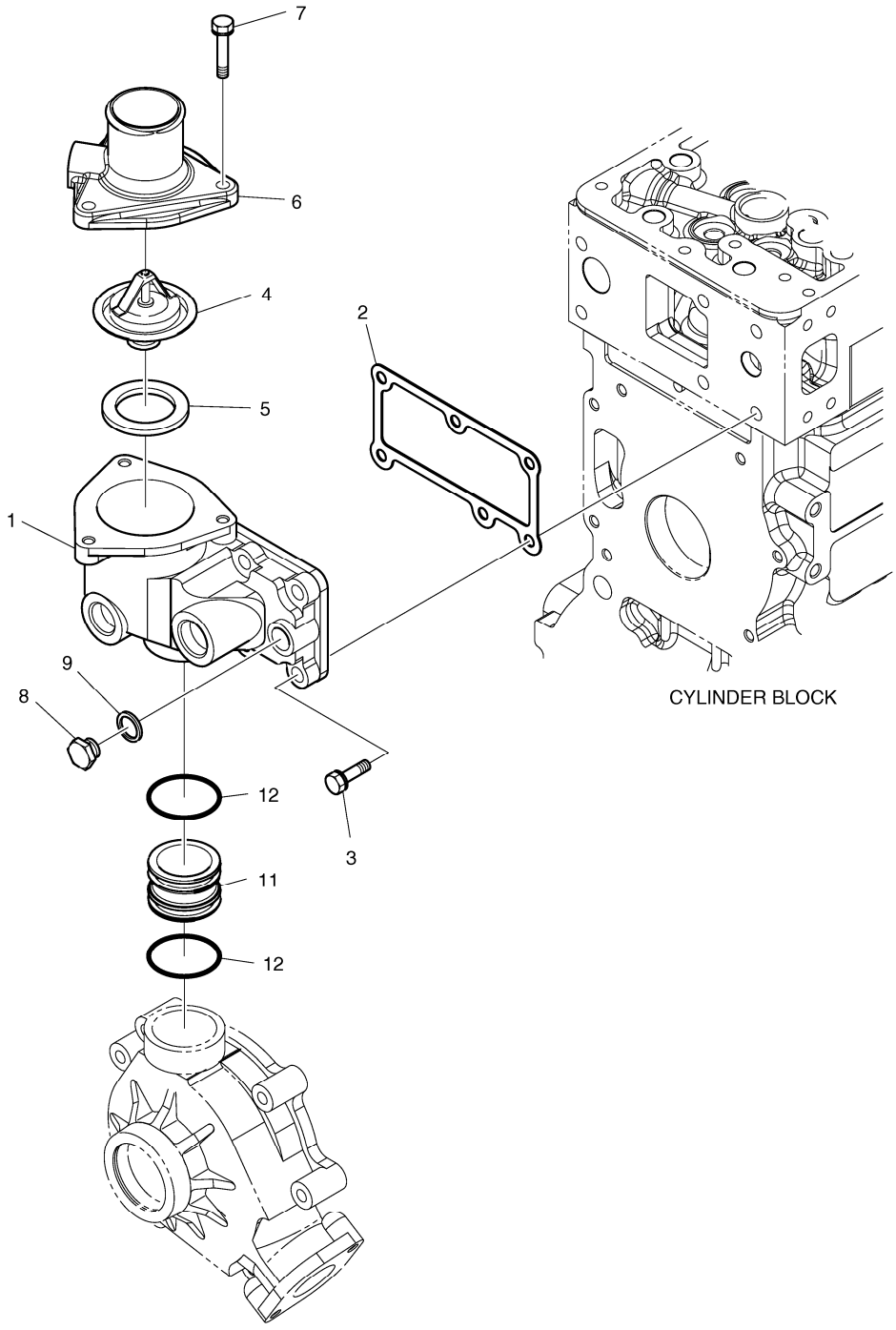

DATE	JUN. 01, 2010
3rd EDITION	

Fig. 023 THERMOSTAT
THERMOSTAT

Serial No. ;

Key No.	Part No.	Description	Description	Q'ty	S.C	Serial No.	ICA	Replaceable part	
								Part No.	Q'ty
023 -1	65.06404-0039A	HOUSING;THERMOSTAT	CARTER	1					
2	65.06904-0021	GASKET;THERMOSTAT	GARNITURE	1					
3	06.01923-3218	BOLT ASS`Y M10X35	BOULON A 6 PANS	6					
4	65.06402-5015	THERMOSTAT	FILTRE	1					
5	65.06904-0003	GASKET;THERMOSTAT	JOINT	1					
6	65.06405-0039	OUTLET;WATER	SORTIE DE L`EAU	1					
7	06.01923-3114	BOLT ASS`Y M8X22	BOULON A 6 PANS	3					
8	06.08092-2405	PLUG SCREW M16 X 1.5	BOUCHON A VIS	1					
9	06.56190-0709	SEAL;RING	BAGUE D`ETANCHEITE	1					
11	65.06301-0257	PIPE;COOLING WATER	TUYAU	1					
12	65.96501-0099A	O-RING	JOINT TORIQUE	2					

DATE	JUN. 01, 2010
3rd EDITION	

Fig. 024 WATER PUMP
SYSTEME DE REFROIDSSEMENT

Serial No. ;

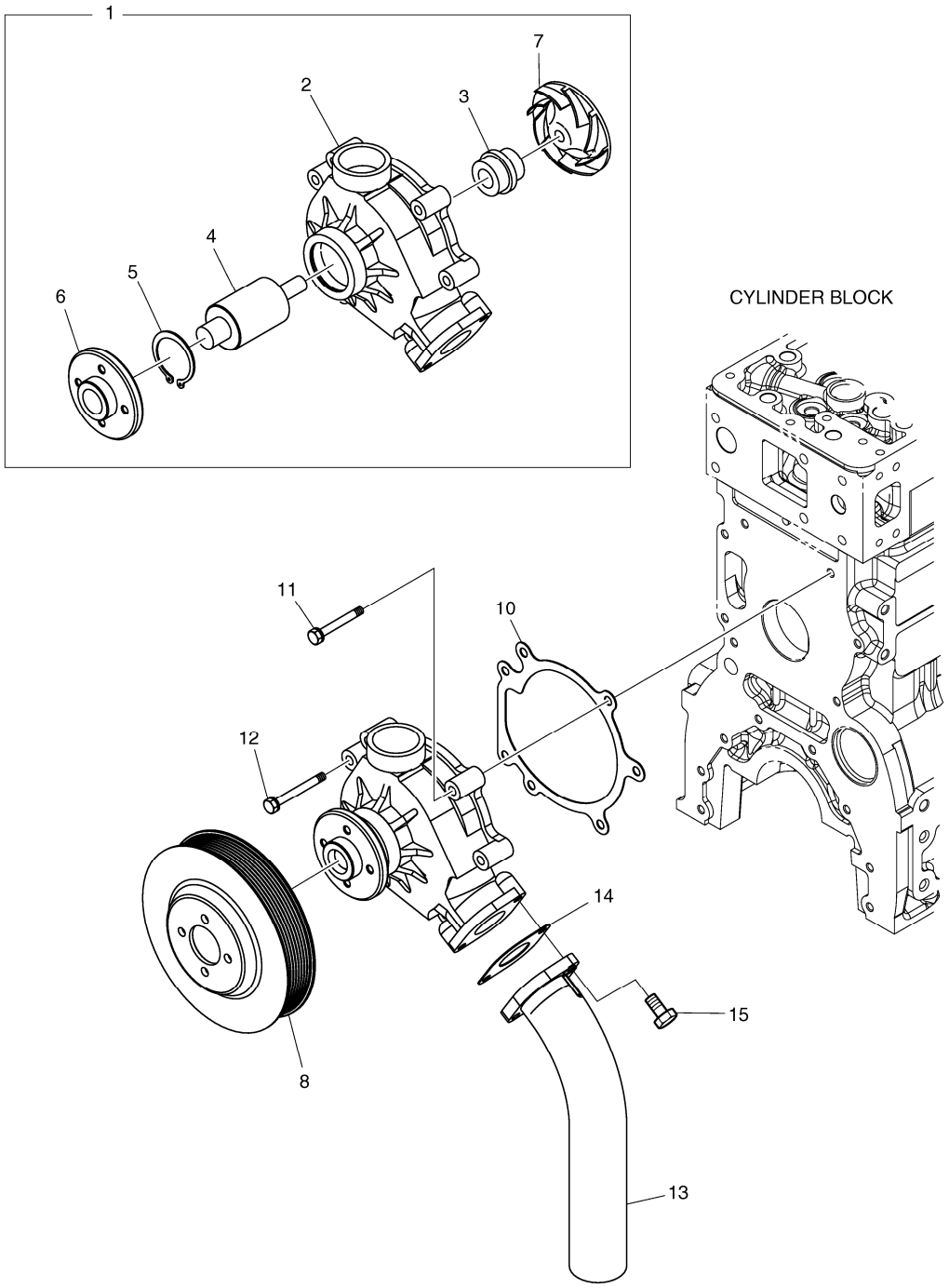

DATE	JUN. 01, 2010
3rd EDITION	

Fig. 024 WATER PUMP
SYSTEME DE REFROIDSSEMENT

Serial No. ;

Key No.	Part No.	Description	Description	Q'ty	S.C	Serial No.	ICA	Replaceable part	
								Part No.	Q'ty
024 -1	65.06500-6271A	WATER PUMP ASS`Y	ENSEMBLE POMPE A EAU	1					
2	65.06501-0300	HOUSING;WATER PUMP	CARTER	1	D				
3	65.06520-6008	SEAL;MECHANICAL	JOINT	1					
4	65.93410-0027	BEARING	PALIER	1					
5	06.29020-0132	SNAP RING 55X2	BAGUE ELASTIQUE	1					
6	65.06504-0033	HUB;V-BELT PULLEY	MOYEU	1					
7	65.06506-0032	IMPELLER;WATER PUMP	TURBINE	1					
8	65.06503-0113	PULLEY;V-BELT	POULIE DE COURROIE TRA	1					
10	65.06901-0042	GASKET;WATER PUMP	GARNITURE	1					
11	06.01913-3120	BOLT ASS`Y M8X45	BOULON A 6 PANS	5					
12	06.01913-3121	BOLT ASS`Y M8X50	BOULON A 6 PANS	2					
13	65.06301-0258A	PIPE;COOLING WATER	TUYAU	1					
14	65.06903-0029	GASKET;WATER PIPE	GARNITURE	1					
15	06.01913-3117	BOLT ASS`Y M8X30	BOULON A 6 PANS	2					

DATE	JUN. 01, 2010
3rd EDITION	

Fig. 025 COOLING FAN VENTILATEUR

Serial No. ;

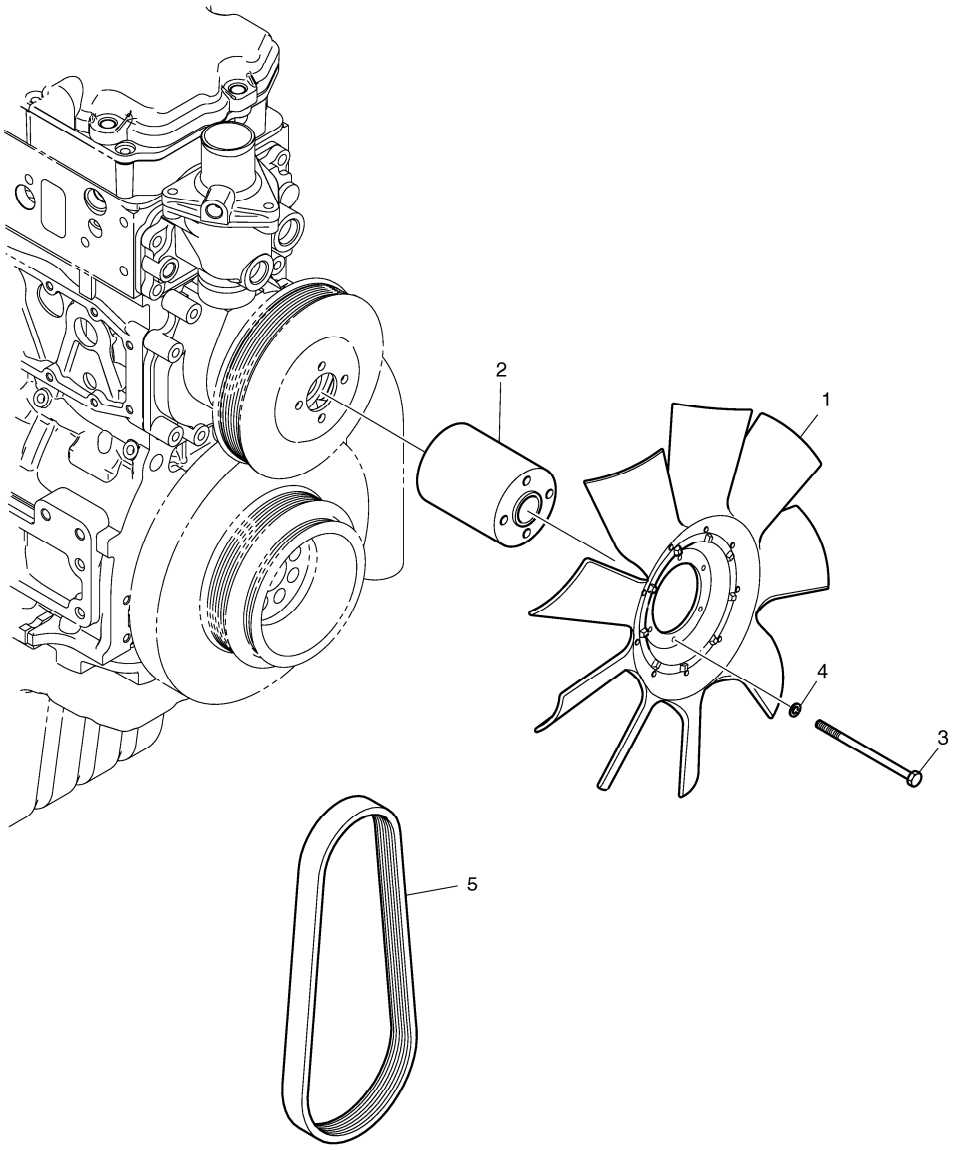

DATE	JUN. 01, 2010
3rd EDITION	

Fig. 025 COOLING FAN VENTILATEUR

Serial No. ;

Key No.	Part No.	Description	Description	Q'ty	S.C	Serial No.	ICA	Replaceable part	
								Part No.	Q'ty
025 -1	65.06601-5070	FAN;COOLING	VENTILATEUR	1		-090204	Y	210101-00029	1
	210101-00029	FAN;COOLING	VENTILATEUR	1		090205-			
2	65.06611-0136	FLANGE;FAN	BRIDE	1		-080718	Y	65.06611-0167	1
	65.06611-0167	FLANGE,FAN	BRIDE	1		080179-			
3	06.01013-9129	BOLT M8X140	BOULON A 6 PANS	4					
4	06.16731-2107	WASHER	RONDELLE ELASTIQUE	4					
5	65.96801-0194	BELT;FAN	COURROIE	1					

DATE	JUN. 01, 2010
3rd EDITION	

Fig. 026 INTAKE & EXHAUST MANIFOLD D'ADMISSION ET D'ECHAPPEMENT

Serial No. ;

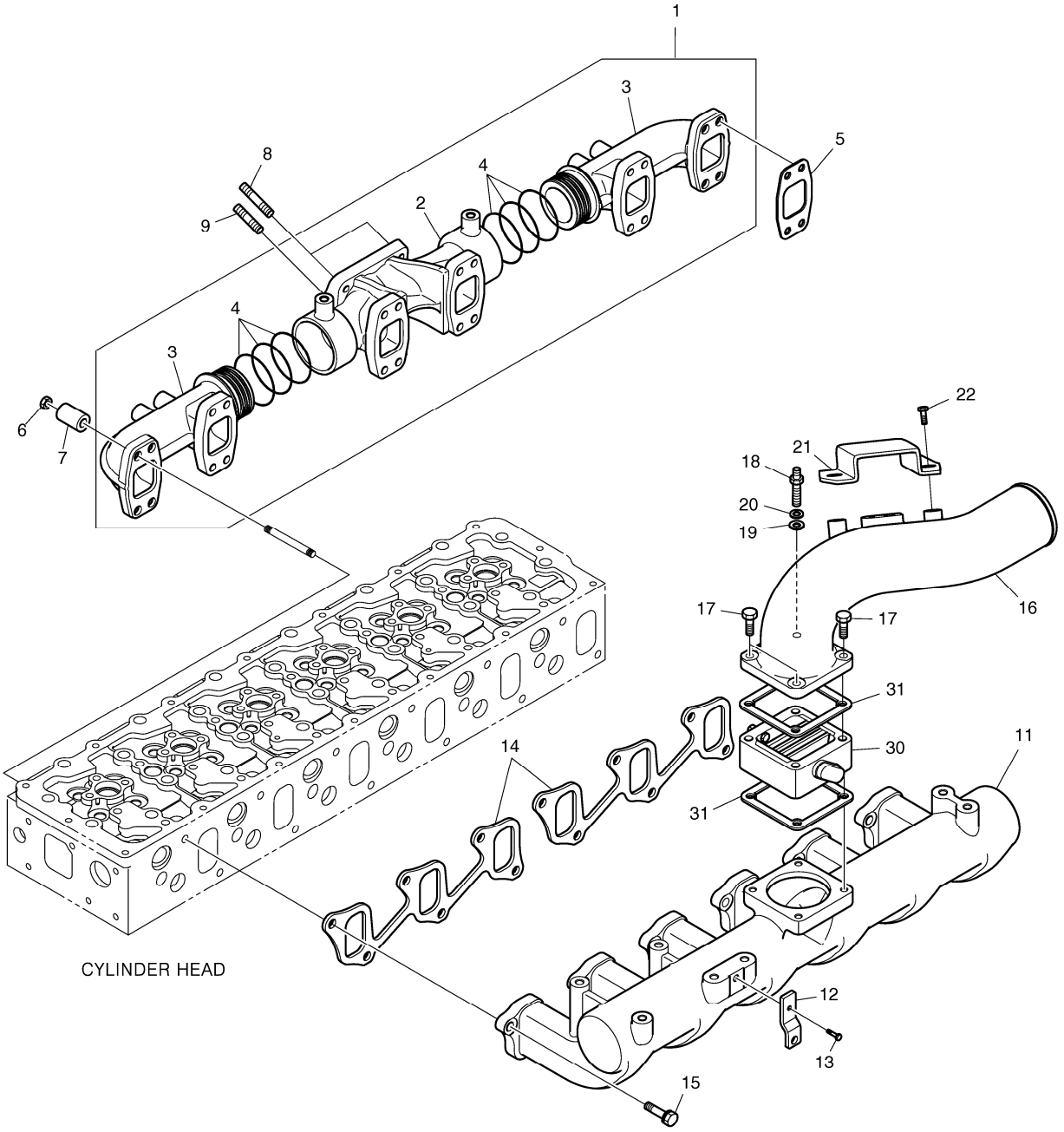

DATE	JUN. 01, 2010
3rd EDITION	

Fig. 026 INTAKE & EXHAUST MANIFOLD D'ADMISSION ET D'ECHAPPEMENT

Serial No. ;

Key No.	Part No.	Description	Description	Q'ty	S.C	Serial No.	ICA	Replaceable part	
								Part No.	Q'ty
026 -1	65.08100-6088B	EXHAUST MANIFOLD ASS`Y	TUBULURE D'ECHAPPEME	1					
2	65.08101-0263	MANIFOLD;EXHAUST	TUBULURE D'ECHAPPEME	1					
3	65.08101-0264A	MANIFOLD;EXHAUST	TUBULURE D'ECHAPPEME	2					
4	65.96507-0059	RING;SEAL	BAGUE	8					
5	65.08901-0045	GASKET;EXHAUST MANIFOLD	GARNITURE	6					
6	65.90535-0003	NUT	ECROU	24					
7	65.91701-0086	SPACER	BAGUE D`ECARTEMENT	24					
8	65.90201-0076	BOLT;STUD	BOUCHON	2					
9	65.90201-0073	BOLT;STUD	BOUCHON	2					
11	65.08201-5075	MANIFOLD;INTAKE	TUBULURE	1					
12	65.12303-0009	BRACKET;FUEL PIPE	SUPPORT	1					
13	06.01913-3213	BOLT ASS`Y M10X20	BOULON A 6 PANS	1					
14	65.08902-0030A	GASKET;INTAKE MANIFOLD	GARNITURE	2					
15	06.01923-3218	BOLT ASS`Y M10X35	BOULON A 6 PANS	12					
16	65.08202-0183A	STAKE;INTAKE	TUBULURE D'ADIMISSION	1					
17	06.01923-3125	BOLT ASS`Y M8X70	BOULON A 6 PANS	3					
18	65.90201-0136	BOLT;STUD	GOUJON	1					
19	06.15010-2311	WASHER	RONDELLE	1					
20	06.16731-2107	WASHER	RONDELLE ELASTIQUE	1					
21	65.08204-0004A	COVER	COUVERCLE	1					
22	06.01923-2910	BOLT ASS`Y M6X12	BOULON A 6 PANS	2					
30	65.26803-7028B	AIR HEATER	RECHAUFFEUR D`AIR	1					
31	65.09904-0008	GASKET;AIR HEATER	JOINT	2					

DATE	JUN. 01, 2010
3rd EDITION	

Fig. 027 TURBO CHARGER
CHARGEUR DE TURBO

Serial No. ;

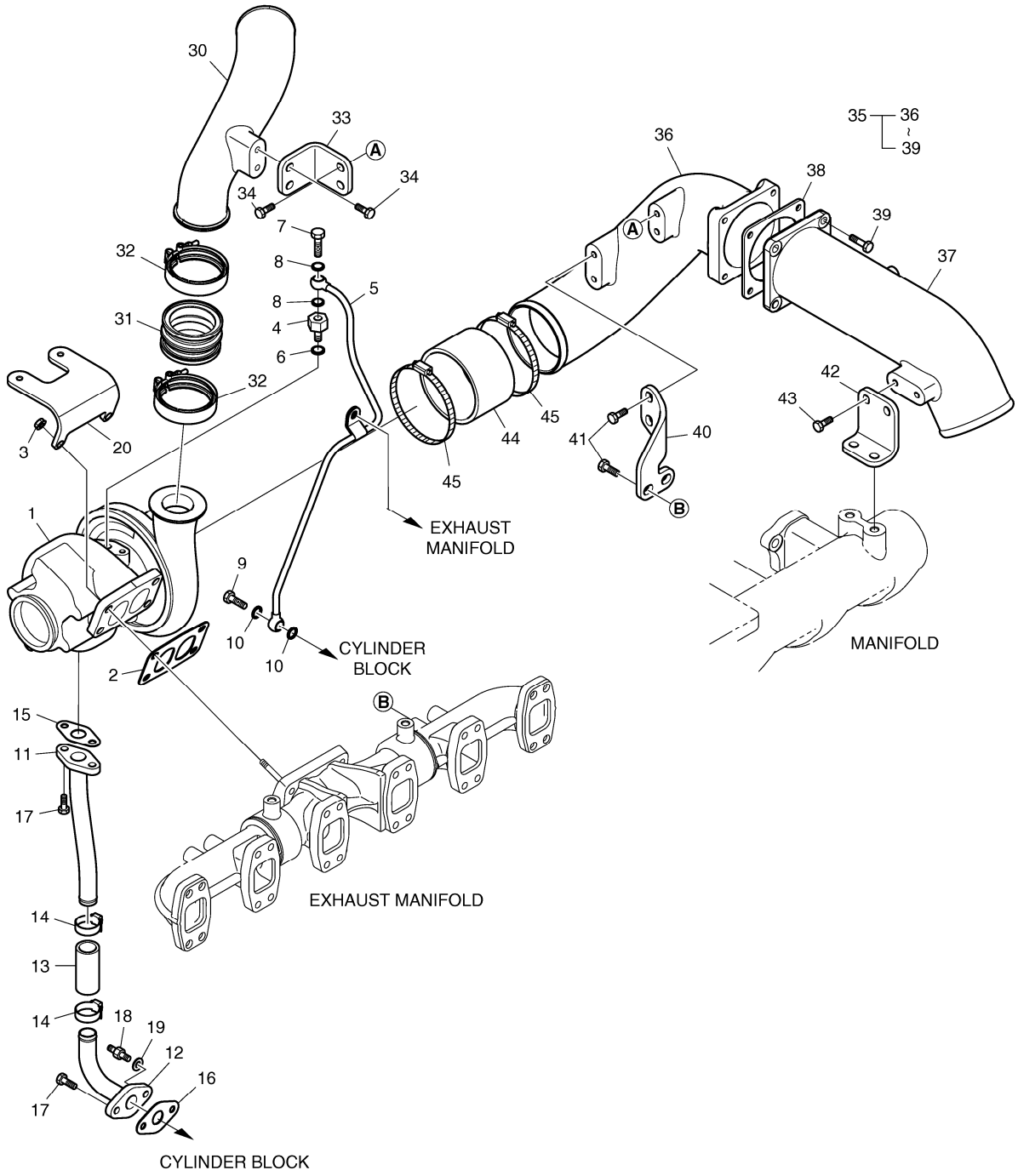

DATE	JUN. 01, 2010
3rd EDITION	

Fig. 027 TURBO CHARGER
CHARGEUR DE TURBO

Serial No. ;

Key No.	Part No.	Description	Description	Q'ty	S.C	Serial No.	ICA	Replaceable part	
								Part No.	Q'ty
027 -1	65.09100-7110	TURBOCHARGER ASS`Y	TURBOCOMPRESSEUR	1					
2	65.09901-0018A	GASKET	JOINT	1					
3	65.90535-0001	NUT	ECROU	4					
4	65.98130-0200A	ADAPTER	ADAPTEUR	1					
5	65.05701-5567	PIPE;OIL	CONDUITES DE HUILE	1					
6	06.56190-0709	SEAL;RING	BAGUE D`ETANCHEITE	1					
7	06.78144-2403	HOLLOW SCREW M12X1.5	VIS CREUSE	1					
8	06.56190-0704	SEAL RING A12X18	BAGUE D`ETANCHEITE	2					
9	06.78144-2403	HOLLOW SCREW M12X1.5	VIS CREUSE	1					
10	06.56190-0704	SEAL RING A12X18	BAGUE D`ETANCHEITE	2					
11	65.05701-5568	PIPE;OIL	CONDUITES DE HUILE	1					
12	65.05701-5569	PIPE;OIL	TUYAU	1					
13	65.96301-0327A	HOSE;RUBBER	TUYAU FLEXIBLE	1					
14	06.67020-0104	CLAMP;HOSE	COLLIER	2					
15	65.96601-0067	GASKET;T/C OIL RETURN	JOINT	1					
16	65.96601-0052	GASKET;PIPE-BLOCK	GARNITURE	1					
17	06.01913-3114	BOLT ASS`Y M8X22	BOULON A 6 PANS	3					
18	65.90201-0075	BOLT;SPACER	BOUCHON	1					
19	06.16731-2107	WASHER	RONDELLE ELASTIQUE	1					
20	65.09140-0005	BRACKET	SUPPORT	1					
30	65.09411-5094	PIPE;INLET	TUYAU	1					
31	65.96301-6003	HOSE;RUBBER	TUYAU FLEXIBLE	1					
32	65.97450-5003	CLAMP	COLLIER	2					
33	65.09440-0058	BRACKET	SUPPORT	1					
34	06.01923-3215	BOLT ASS`Y M10X25	BOULON A 6 PANS	4					
35	65.09411-7012	INLET PIPE ASS`Y	TUYAU D'ADMISSION	1					
36	65.09411-5104	INLET	PRISE	1					
37	65.09411-5102	INLET	PRISE	1					
38	65.09904-0009	GASKET;AIR PIPE	JOINT	1					
39	06.01923-3218	BOLT ASS`Y M10X35	BOULON A 6 PANS	4					
40	65.09440-0057	BRACKET	SUPPORT	1					
41	06.01923-3215	BOLT ASS`Y M10X25	BOULON A 6 PANS	4					
42	65.09440-0056	BRACKET	SUPPORT	1					
43	06.01923-3215	BOLT ASS`Y M10X25	BOULON A 6 PANS	4					
44	65.96301-0035	HOSE;RUBBER	TUYAU FLEXIBLE	1					
45	06.67020-0116	CLAMP;HOSE	TUYAU FLEXIBLE	2					

DATE	JUN. 01, 2010
3rd EDITION	

Fig. 028 INJECTOR INJECTEUR

Serial No. ;

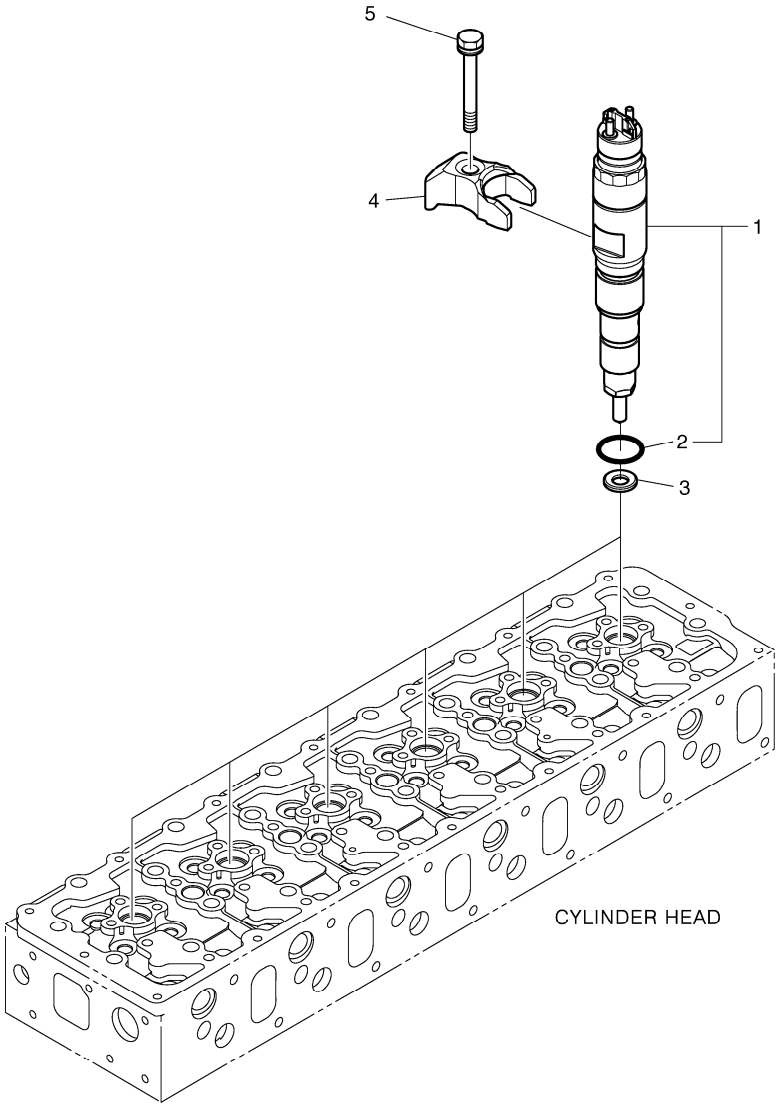

DATE	JUN. 01, 2010
3rd EDITION	

Fig. 028 INJECTOR INJECTEUR

Serial No. ;

Key No.	Part No.	Description	Description	Q'ty	S.C	Serial No.	ICA	Replaceable part	
								Part No.	Q'ty
028 -1	65.10401-7004A	INJECTOR ASS`Y	INDICATEUR	6					
2	65.96501-0437	O-RING	JOINT TORIQUE	1					
3	65.96507-0053	RING;SEAL	BAGUE	6					
4	65.10205-0006A	FIXTURE	SUPPORT	6					
5	65.90020-0136	BOLT;COLLARED HEX.	BOULON A 6 PANS	6					

DATE	JUN. 01, 2010
3rd EDITION	

Fig. 029 INJECTION PIPE
PIPE D'INJECTION

Serial No. ;

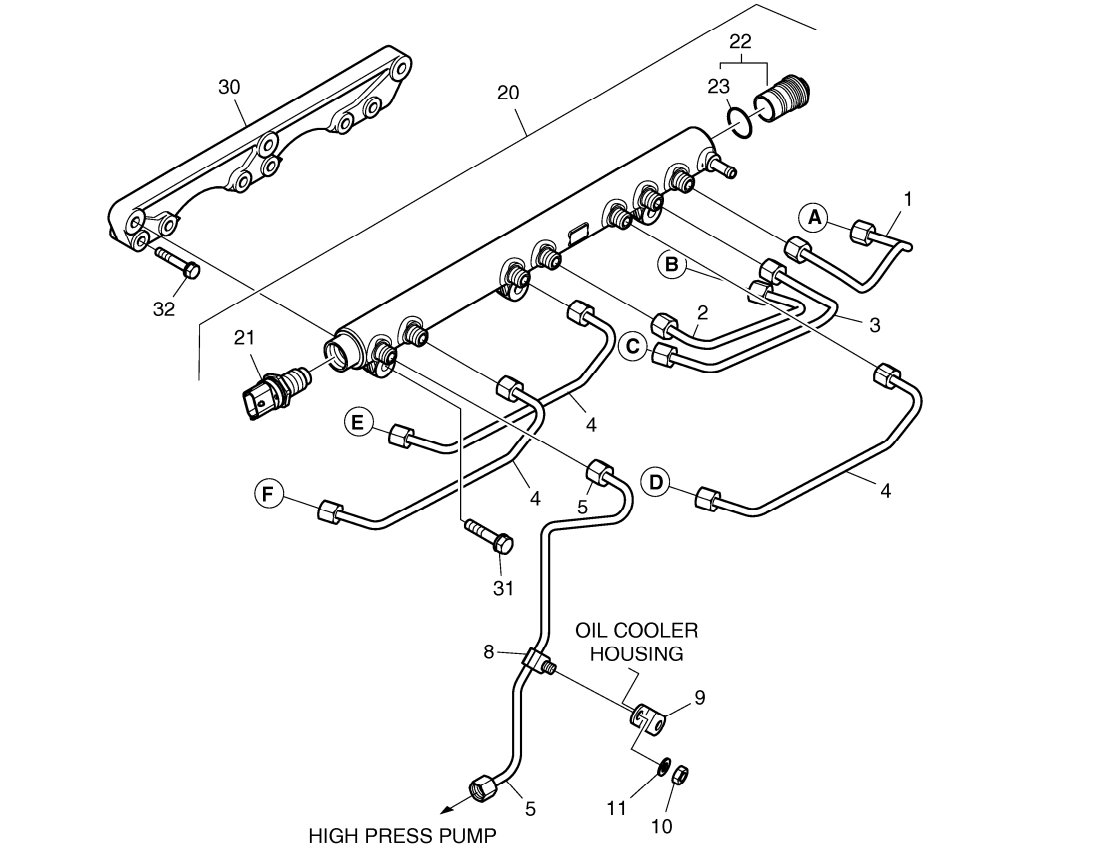

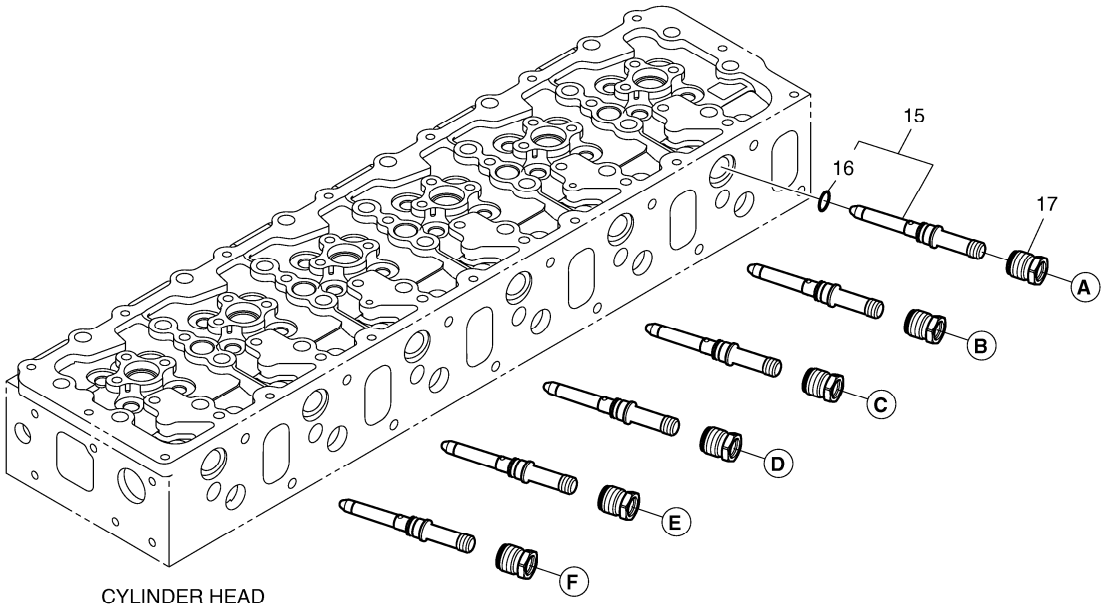

DATE	JUN. 01, 2010
3rd EDITION	

Fig. 029 INJECTION PIPE
PIPE D'INJECTION

Serial No. ;

Key No.	Part No.	Description	Description	Q'ty	S.C	Serial No.	ICA	Replaceable part	
								Part No.	Q'ty
029 -1	65.10301-6191	PIPE;INJECTION	TUYAU D'INJECTEUR	1					
2	65.10301-6192	PIPE;INJECTION	TUYAU D'INJECTEUR	1					
3	65.10301-6193	PIPE;INJECTION	TUYAU D'INJECTEUR	1					
4	65.10301-6194	PIPE;INJECTION	TUYAU D'INJECTEUR	3					
5	65.10301-6195	PIPE;INJECTION	TUYAU D'INJECTEUR	1					
8	65.97401-6039	CLIP;PIPE	AGRAFE	1					
9	65.97480-0220	HOLDER	SUPPORT	1					
10	06.11063-8214	NUT	ECROU 6 PANS	1					
11	06.16731-2107	WASHER	RONDELLE ELASTIQUE	1					
15	65.10410-6003A	H.P.CONNECTOR	CONNECTEUR	6					
16	65.96501-0438	O-RING	JOINT TORIQUE	1					
17	65.10415-0001	NUT	ECROU	6					
20	65.10601-6004A	COMMON RAIL ASS`Y	CHEMIN DE FER	1					
21	65.27114-5002	SENSOR;RAIL PRESSURE	CAPTEUR	1					
22	65.52122-6002	VALVE;PRESSURE LIMITING	VANNE	1					
23	65.96501-0431	O-RING	JOINT TORIQUE	1					
30	65.10610-0003	BRACKET;MOUNTING	SUPPORT	1					
31	06.01913-3118	BOLT ASS`Y M8X35	BOULON A 6 PANS	3					
32	06.01913-3119	BOLT ASS`Y M8X40	BOULON A 6 PANS	6					

DATE	JUN. 01, 2010
3rd EDITION	

Fig. 030 INJECTION PUMP
POMPE D'INJECTION

Serial No. ;

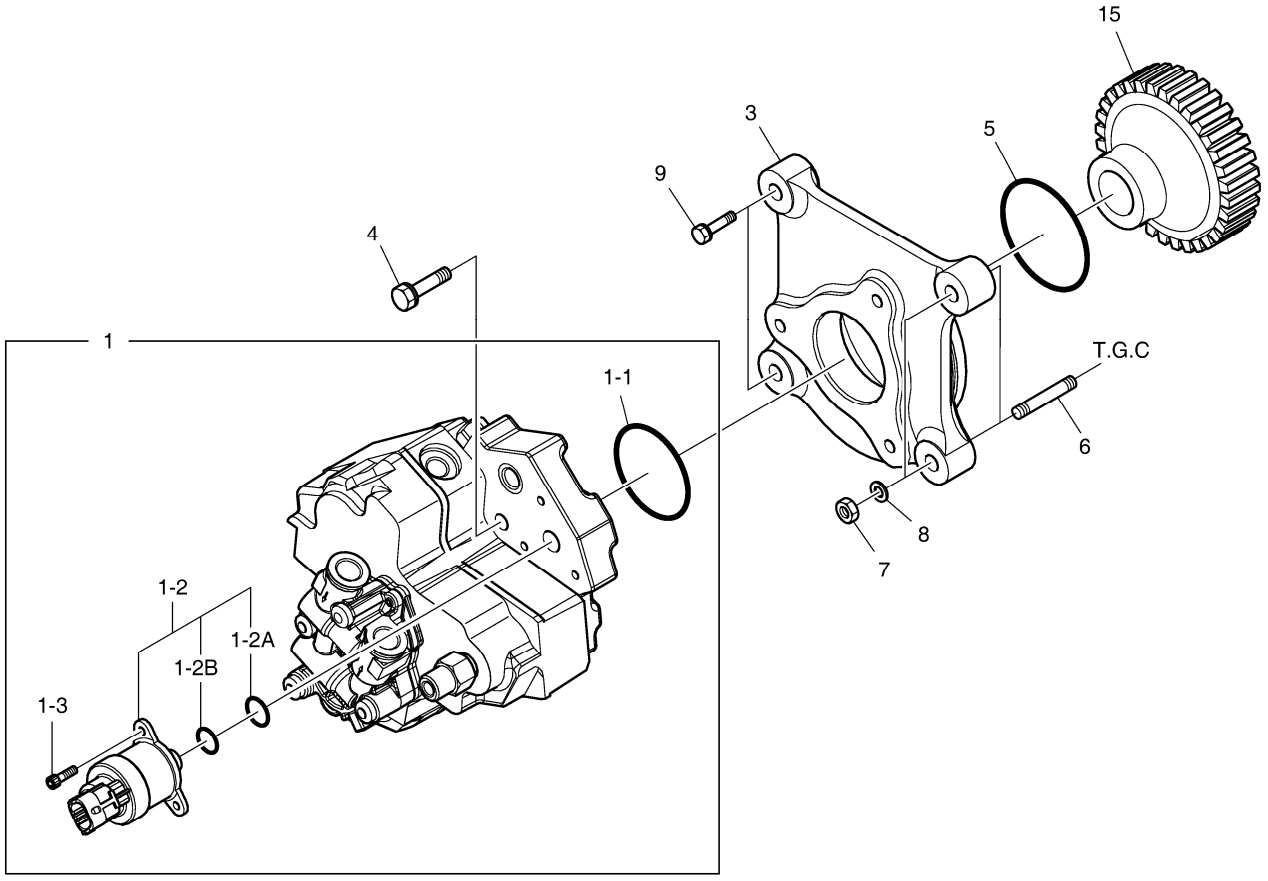

DATE	JUN. 01, 2010
3rd EDITION	

Fig. 030 INJECTION PUMP POMPE D'INJECTION

Serial No. ;

Key No.	Part No.	Description	Description	Q'ty	S.C	Serial No.	ICA	Replaceable part	
								Part No.	Q'ty
030 -1	65.10501-7005A	PUMP;HIGH PRESSURE	POMPE	1					
1-1	65.96501-0439	. O-RING	. JOINT TORIQUE	1					
1-2	800215-00004	. FUEL METERING UINT	. COMPTEUR DE DEBIT	1					
1-2A	401002-00195	.. O-RING	.. JOINT TORIQUE	1					
1-2B	401002-00196	.. O-RING	.. JOINT TORIQUE	1					
1-3	120705-00042	. BOLT	. BOULON A 6 PANS	3					
3	65.11304-0001	FLANGE;INJECTION PUMP	BRIDE	1					
4	65.90020-0121	BOLT;COLLARED HEX.	BOULON A 6 PANS	3					
5	06.56020-0115	O-RING	JOINT TORIQUE	1					
6	06.06125-8709	BOLT;STUD M8X35	GOUJON	2					
7	06.11063-8214	NUT	ECROU 6 PANS	2					
8	06.16731-2107	WASHER	RONDELLE ELASTIQUE	2					
9	06.01923-3118	BOLT ASS`Y M8X35	BOULON A 6 PANS	2					
15	65.11301-0038	GEAR;PUMP DRIVE	PIGNON	1					

DATE	JUN. 01, 2010
3rd EDITION	

Fig. 031 ENGINE CONTROL
COMMANDE REGIME MOTEUR

Serial No. ;

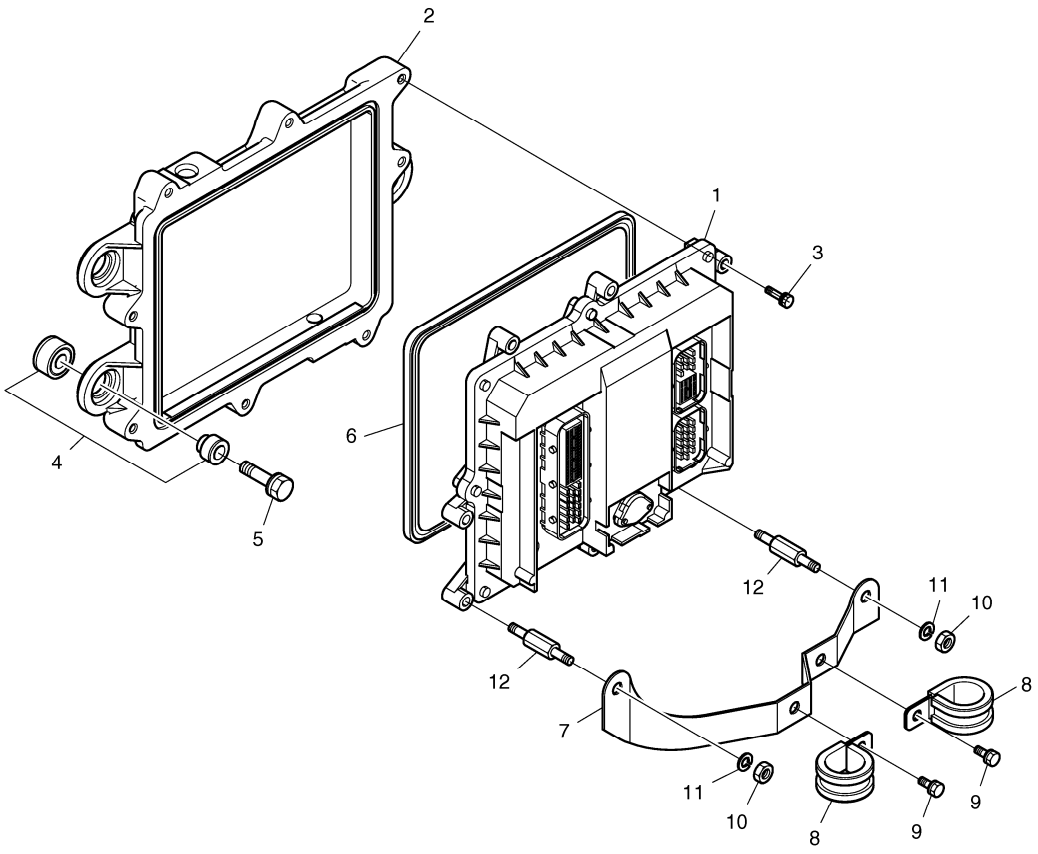

DATE	JUN. 01, 2010
3rd EDITION	

Fig. 031 ENGINE CONTROL
COMMANDE REGIME MOTEUR

Serial No. ;

Key No.	Part No.	Description	Description	Q'ty	S.C	Serial No.	ICA	Replaceable part	
								Part No.	Q'ty
031 -1	65.99497-8634	E.C.U	E.C.U	1					
2	65.11210-0003B	PLATE;ECU	PLAQUE	1					
3	06.01923-2917	BOLT ASS`Y M6X30	BOULON A 6 PANS	6					
4	65.96210-6001A	RUBBER;CUSHION	CAOUTCHOUC	3					
5	65.90020-0095	BOLT;COLLARED HEX.	BOULON A 6 PANS	3					
6	65.96501-0102	PACKING	EMBALLAGE	1					
7	65.29150-5006	BRACKET	SUPPORT	1					
8	65.97401-0188	CLIP;PIPE	AGRAFE	2					
9	06.01923-2911	BOLT ASS`Y M6X16	BOULON A 6 PANS	2					
10	06.11063-8212	NUT	ECROU	2					
11	06.16731-2106	WASHER	RONDELLE	2					
12	65.90441-0066	BOLT;SPACER	BOUCHON	2					

DATE	JUN. 01, 2010
3rd EDITION	

Fig. 032 FUEL SYSTEM
INJECTEUR ET POMPE-INJECTEUR

Serial No. ;

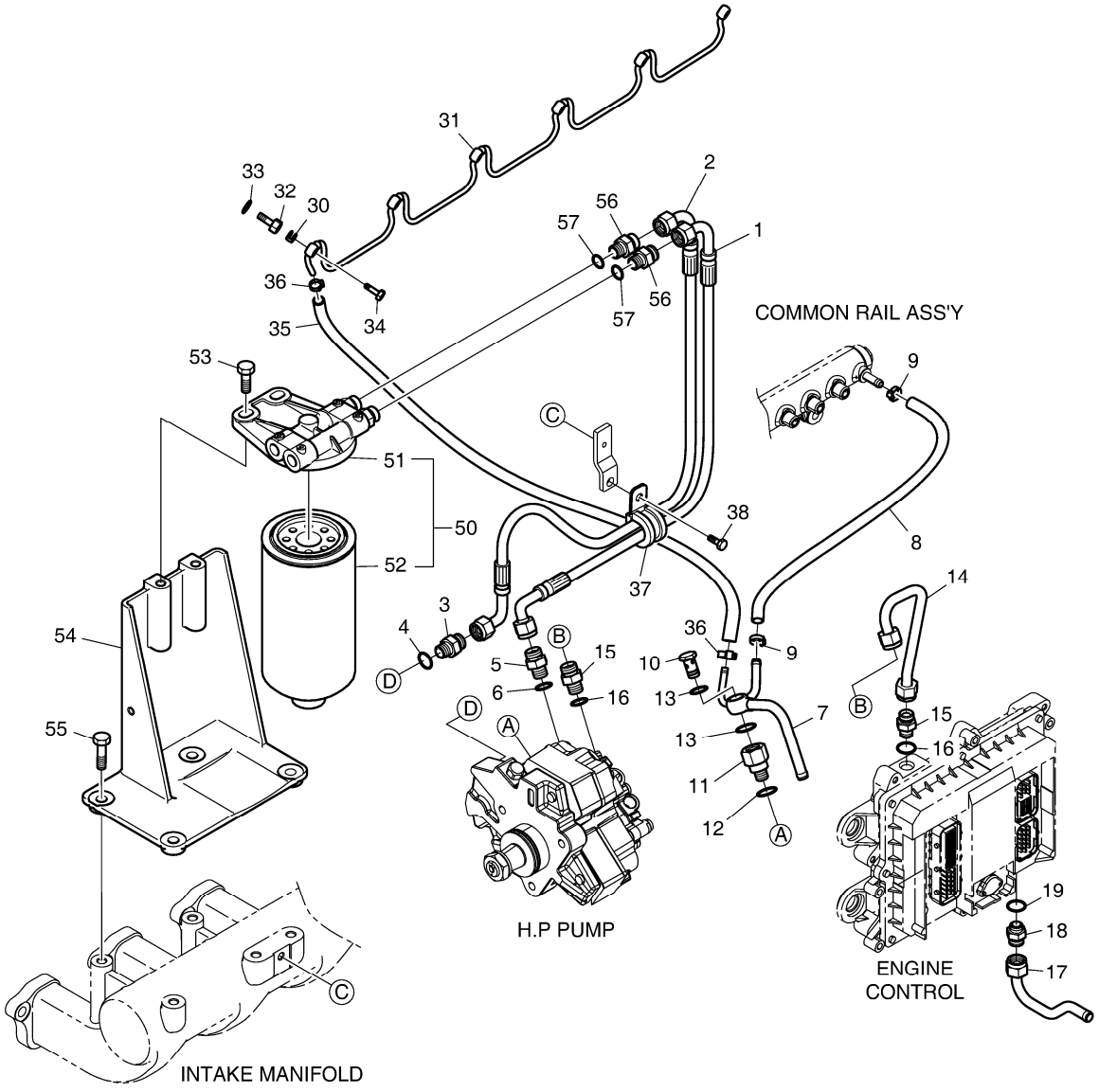

Fig. 032 FUEL SYSTEM
INJECTEUR ET POMPE-INJECTEUR

Serial No. ;

Key No.	Part No.	Description	Description	Q'ty	S.C	Serial No.	ICA	Replaceable part	
								Part No.	Q'ty
032 -1	65.96340-5079	HOSE;FUEL	TUYAU FLEXIBLE	1					
2	65.96340-5080	HOSE;FUEL	TUYAU FLEXIBLE	1					
3	65.98130-0211	ADAPTER	ADAPTEUR	1					
4	06.56190-0704	SEAL RING A12X18	BAGUE D`ETANCHEITE	1					
5	65.98130-0229	ADAPTER	ADAPTEUR	1					
6	65.96507-0043	SEAL RING A14X20	BAGUE D`ETANCHEITE	1					
7	65.12301-5291	PIPE;FUEL	TUYAU	1					
8	65.96330-0018	HOSE;RUBBER;RING JOIN	TUYAU CAOUTCHOUC	1		-080825	Y	65.96330-0018B	1
	65.96330-0018B	HOSE;RUBBER;RING JOIN	TUYAU FLEXIBLE	1		080826-			
9	65.97440-0045	CLAMP;HOSE	COLLIER	2					
10	06.78144-2204	HOLLOW SCREW NW10	VIS CREUSE	1					
11	65.98130-0159A	ADAPTER	ADAPTEUR	1					
12	06.56190-0704	SEAL RING A12X18	BAGUE D`ETANCHEITE	1					
13	65.96507-0043	SEAL RING A14X20	BAGUE D`ETANCHEITE	2					
14	65.12301-5289	PIPE;FUEL	TUYAU	1					
15	65.98130-0229	ADAPTER	ADAPTEUR	2		-071017	I	06.78190-0206	2
	06.78190-0206	CONNECTION;SCREW	RACCORDEMENT	2		071018-			
16	65.96507-0043	SEAL RING A14X20	BAGUE D`ETANCHEITE	2					
17	65.12301-5268	PIPE;FUEL	TUYAU	1					
18	65.98130-0229	ADAPTER	ADAPTEUR	1					
19	65.96507-0043	SEAL RING A14X20	BAGUE D`ETANCHEITE	1					
30	65.96507-0055	RING;SEAL	BAGUE	6					
31	65.12301-5288B	PIPE;FUEL	TUYAU	1					
32	65.98130-0154	ADAPTER	ADAPTEUR	6					
33	06.56180-0712	RING;SEAL	BAGUE	6					
34	65.98150-0042A	HOLLOW SCREW	VIS CREUSE	6					
35	65.96301-0462	HOSE;RUBBER	TUYAU FLEXIBLE	1		-081013	Y	65.96301-0462A	1
	65.96301-0462A	HOSE;RUBBER	TUYAU FLEXIBLE	1		081014-			
36	65.97402-0003	CLAMP;HOSE	COLLIER	2					
37	65.97401-5019	CLIP;PIPE	AGRAFE	1					
38	06.01923-3111	BOLT M8X16	BOULON A 6 PANS	1					
50	65.12501-7042B	FUEL FILTER ASS'Y	ENSEMBLE FILTRE A GAZO	1		-081019	Y	65.12501-7042C	1
	65.12501-7042C	FUEL FILTER ASS`Y	REMPLISSEUR DE CARBUI	1		080820-			
51	65.12504-5028	HEAD;FUEL FILTER	TETE	1					
52	65.12503-5026	FILTER;E/G FUEL	FILTRE A GAZOLE	1		-081019	Y	65.12503-5026A	1
	65.12503-5026A	FILTER;E/G FUEL	FILTRE	1		080820-			
53	06.01923-3217	BOLT ASS`Y M10X30	BOULON A 6 PANS	2					
54	65.12540-0061	BRACKET;FUEL FILTER	SUPPORT	1					

DATE	JUN. 01, 2010
3rd EDITION	

Fig. 032 FUEL SYSTEM
INJECTEUR ET POMPE-INJECTEUR

Serial No. ;

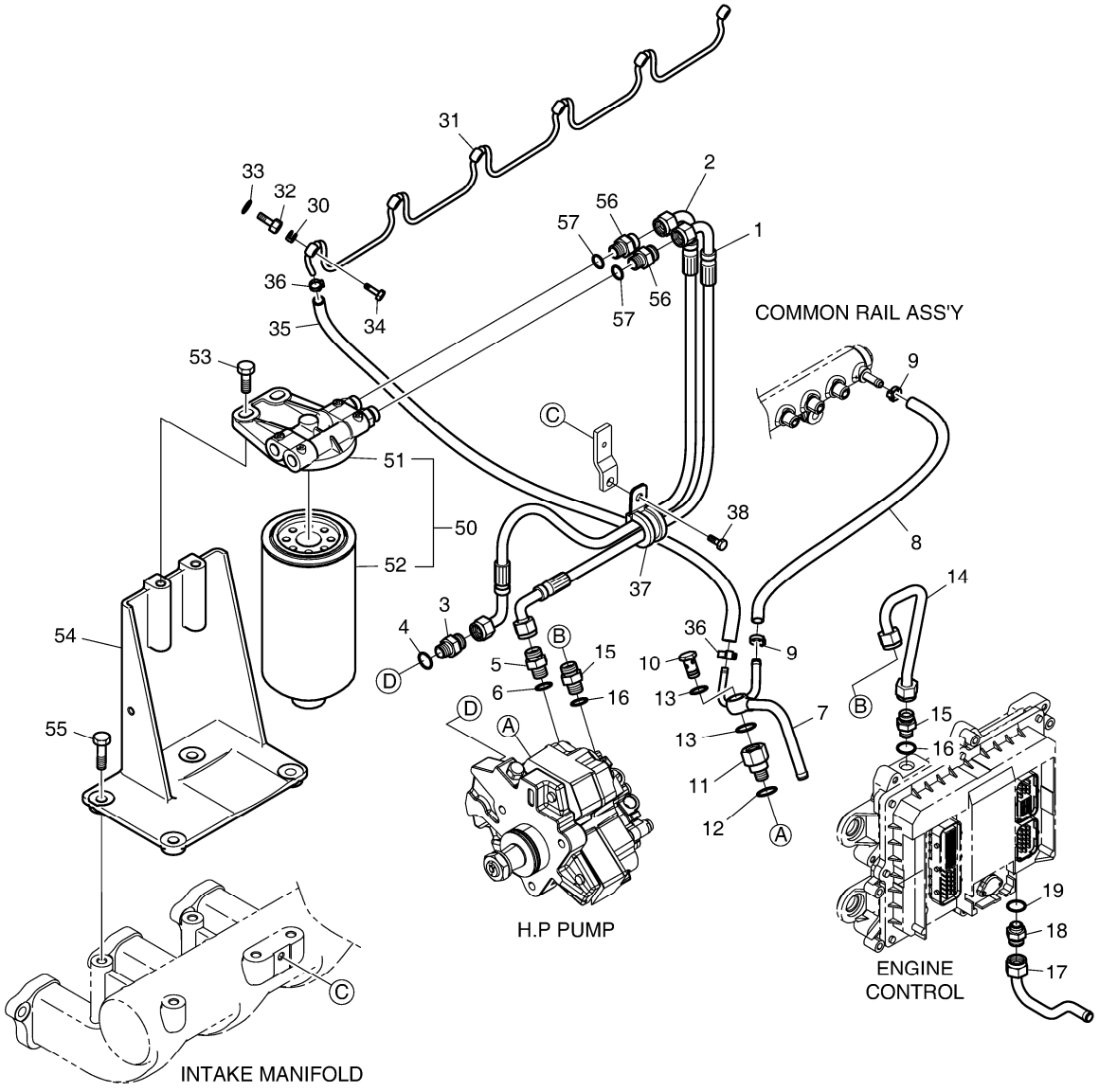

Fig. 032 FUEL SYSTEM
INJECTEUR ET POMPE-INJECTEUR

Serial No. ;

Key No.	Part No.	Description	Description	Q'ty	S.C	Serial No.	ICA	Replaceable part	
								Part No.	Q'ty
032 -55	06.01913-3217	BOLT M10X30	BOULON A 6 PANS	4					
56	65.98130-0229	ADAPTER	ADAPTEUR	2					
57	65.96507-0043	SEAL RING A14X20	BAGUE D`ETANCHEITE	2					

DATE	JUN. 01, 2010
3rd EDITION	

Fig. 033 ALTERNATOR MOUNTING ALTERNATEUR

Serial No. ;

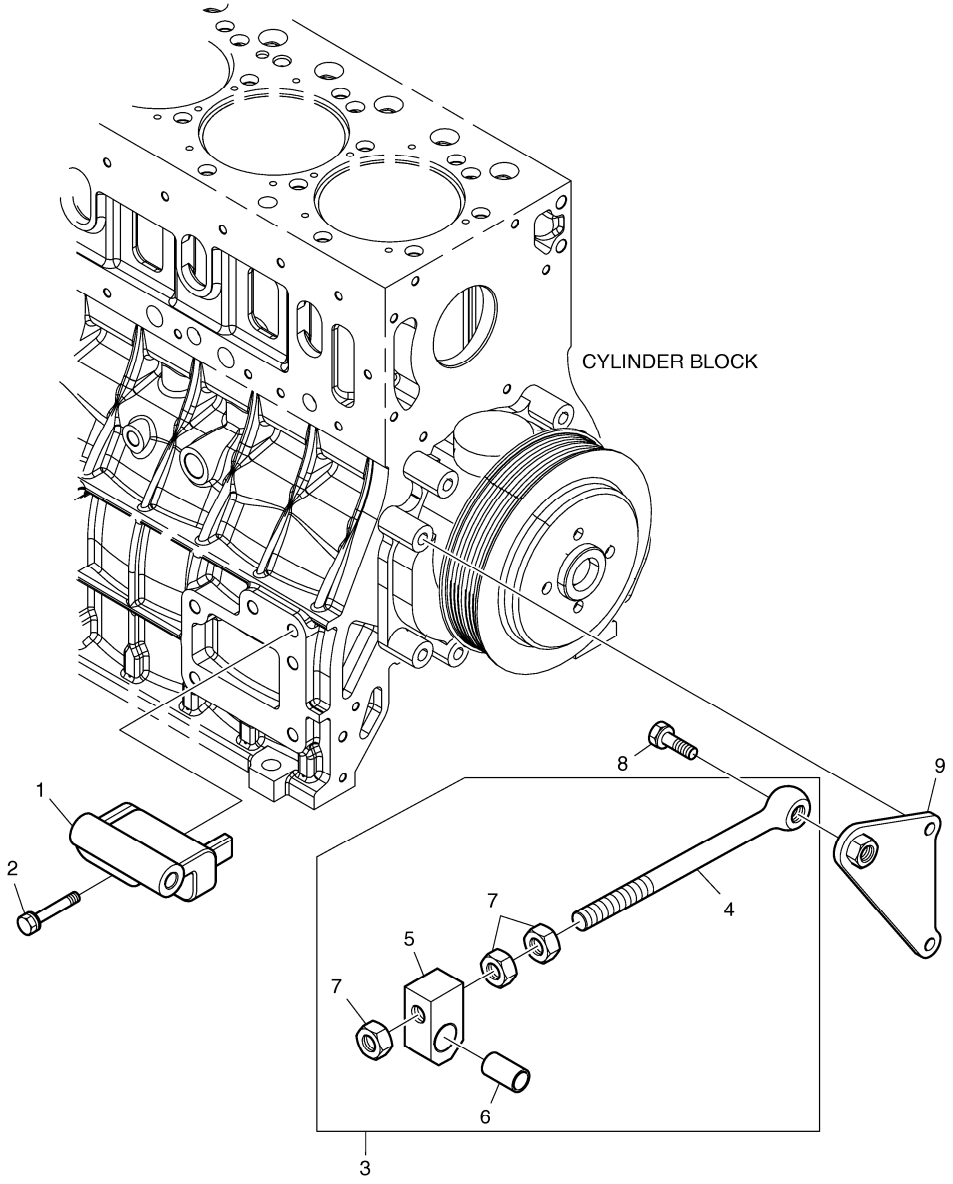

DATE	JUN. 01, 2010
3rd EDITION	

Fig. 033 ALTERNATOR MOUNTING ALTERNATEUR

Serial No. ;

Key No.	Part No.	Description	Description	Q'ty	S.C	Serial No.	ICA	Replaceable part	
								Part No.	Q'ty
033 -1	65.19102-0103	BRACKET;ALTERNATOR	SUPPORT	1					
2	06.01943-3323	BOLT ASS`Y M12X1.5X60	BOULON A 6 PANS	2					
3	65.19103-6010A	EYE BOLT ASS'Y	BOUCHON A VIS	1					
4	65.90441-0009A	EYE BOLT	GUIDE	1	D				
5	65.19107-0001A	PIECE;GUIDE	AMPOULE	1	D				
6	65.93020-0055	BUSH	DOUILLE	1	D				
7	06.11063-9217	NUT	ECROU 6 PANS	3					
8	06.01943-3319	BOLT ASS`Y M12X1.5X40	BOULON A 6 PANS	1					
9	65.19103-5049	SUPPORT;ALTERNATOR	SUPPORT D'ALTERNATEU	1					

DATE	JUN. 01, 2010
3rd EDITION	

Fig. 034 LIFTING HOOK CROCHET DE LEVAGE

Serial No. ;

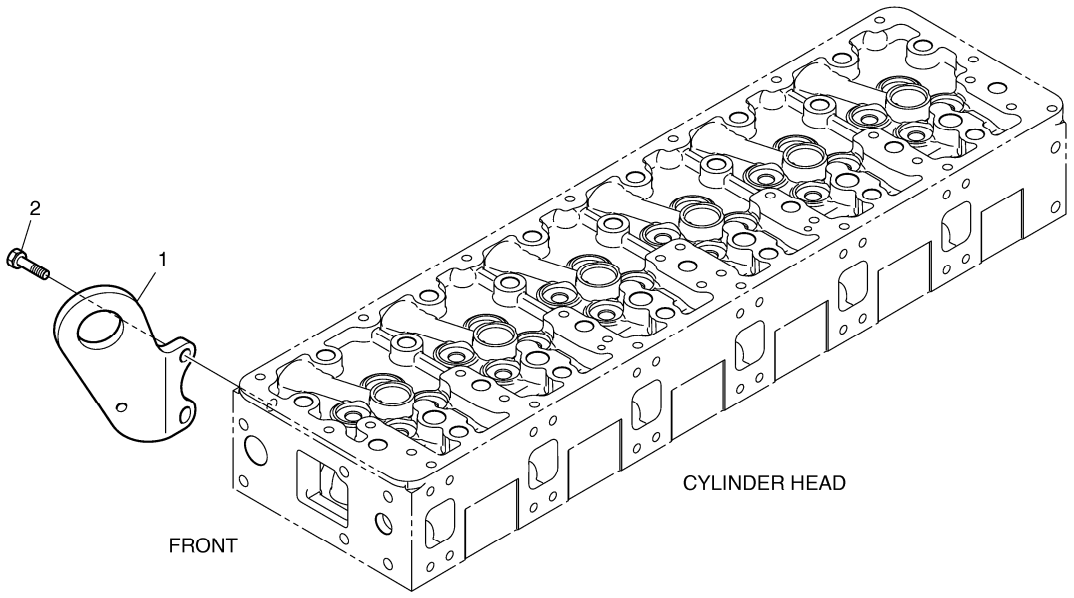

DATE	JUN. 01, 2010
3rd EDITION	

Fig. 034 LIFTING HOOK CROCHET DE LEVAGE

Serial No. ;

Key No.	Part No.	Description	Description	Q'ty	S.C	Serial No.	ICA	Replaceable part	
								Part No.	Q'ty
034 -1	65.19202-0057A	HOOK;LIFTING	CROCHET	1					
2	06.01924-3217	BOLT ASS`Y M10X30	BOULON A 6PANS	2					

DATE	JUN. 01, 2010
3rd EDITION	

Fig. 035 STARTER DEMARREUR

Serial No. ;

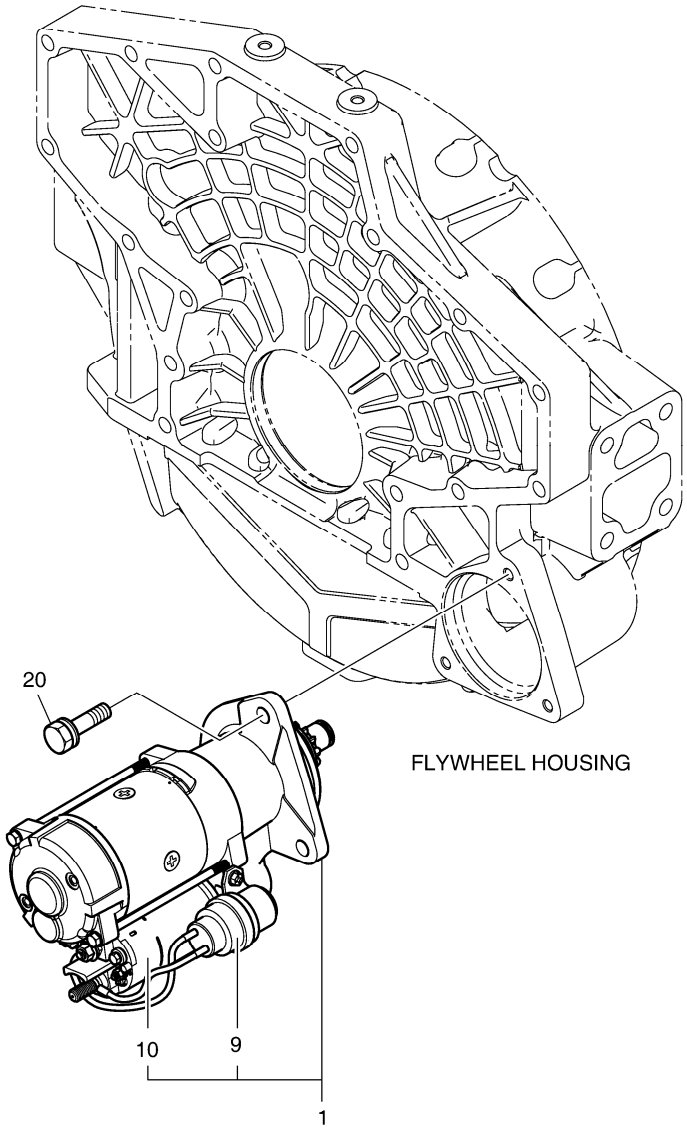

DATE	JUN. 01, 2010
3rd EDITION	

Fig. 035 STARTER DEMARREUR

Serial No. ;

Key No.	Part No.	Description	Description	Q'ty	S.C	Serial No.	ICA	Replaceable part	
								Part No.	Q'ty
035 -1	65.26201-7075A	STARTER	D'MARREUR	1		-080324	I	65.26201-7093	1
	65.26201-7093	STARTER	DEMARREUR	1		080325-			
9	65.26212-0006	RELAY;MAGNETIC	RELAIS	1		080325-			
10	65.26214-0004	SWITCH;MAGNETIC	INTERRUPTEUR	1		071130-			
20	06.01953-3318	BOLT ASS`Y M12X1.5X35	BOULON A 6 PANS	3					

DATE	JUN. 01, 2010
3rd EDITION	

Fig. 036 SENSOR CAPTEUR

Serial No. ;

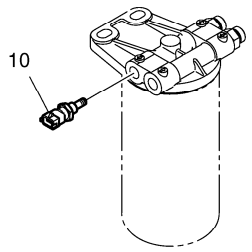

FUEL FILTER

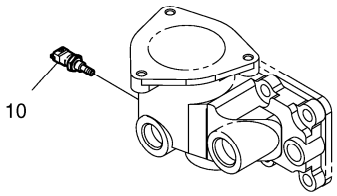

THERMOSTAT HOUSING

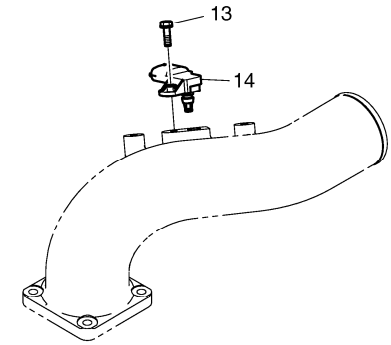

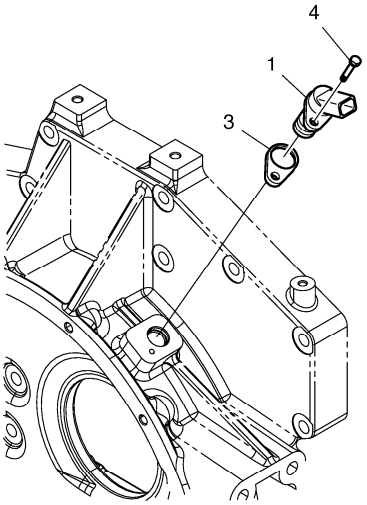

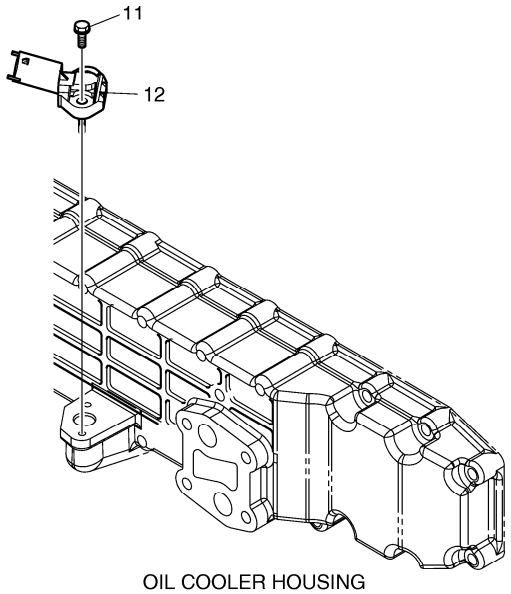

OIL COOLER HOUSING

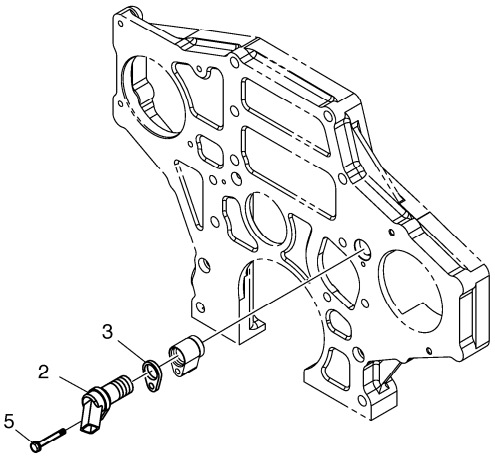

DATE	JUN. 01, 2010
3rd EDITION	

Fig. 036 SENSOR CAPTEUR

Serial No. ;

Key No.	Part No.	Description	Description	Q'ty	S.C	Serial No.	ICA	Replaceable part	
								Part No.	Q'ty
036 -1	65.27103-7014	SENSOR	CAPTEUR	1					
2	65.27103-7014	SENSOR	CAPTEUR	1					
3	65.11308-0005	SHIM	CALE	2	R				
	65.11308-0006	SHIM	CALE	2	R				
	65.11308-0007	SHIM	CALE	2	R				
	65.11308-0008	SHIM	CALE	2	R				
4	06.01923-2913	BOLT ASS`Y M6X20	BOULON A 6 PANS	1					
5	06.01923-2919	BOLT ASS`Y M6X40	BOULON A 6 PANS	1					
10	65.27423-7003	SENSOR;WATER TEMP	CAPTEUR	2					
11	06.01923-2913	BOLT ASS`Y M6X20	BOULON A 6 PANS	2					
12	65.27427-7001	SENSOR;OIL PRESSURE	CAPTEUR	1					
13	06.01923-2913	BOLT ASS`Y M6X20	BOULON A 6 PANS	1					
14	65.27444-7001	SENSOR;BOOST PRESSURE	CAPTEUR	1					

DATE	JUN. 01, 2010
3rd EDITION	

Fig. 037 WIRE HARNESS
JAGUE DE NIVEAU

Serial No. ;

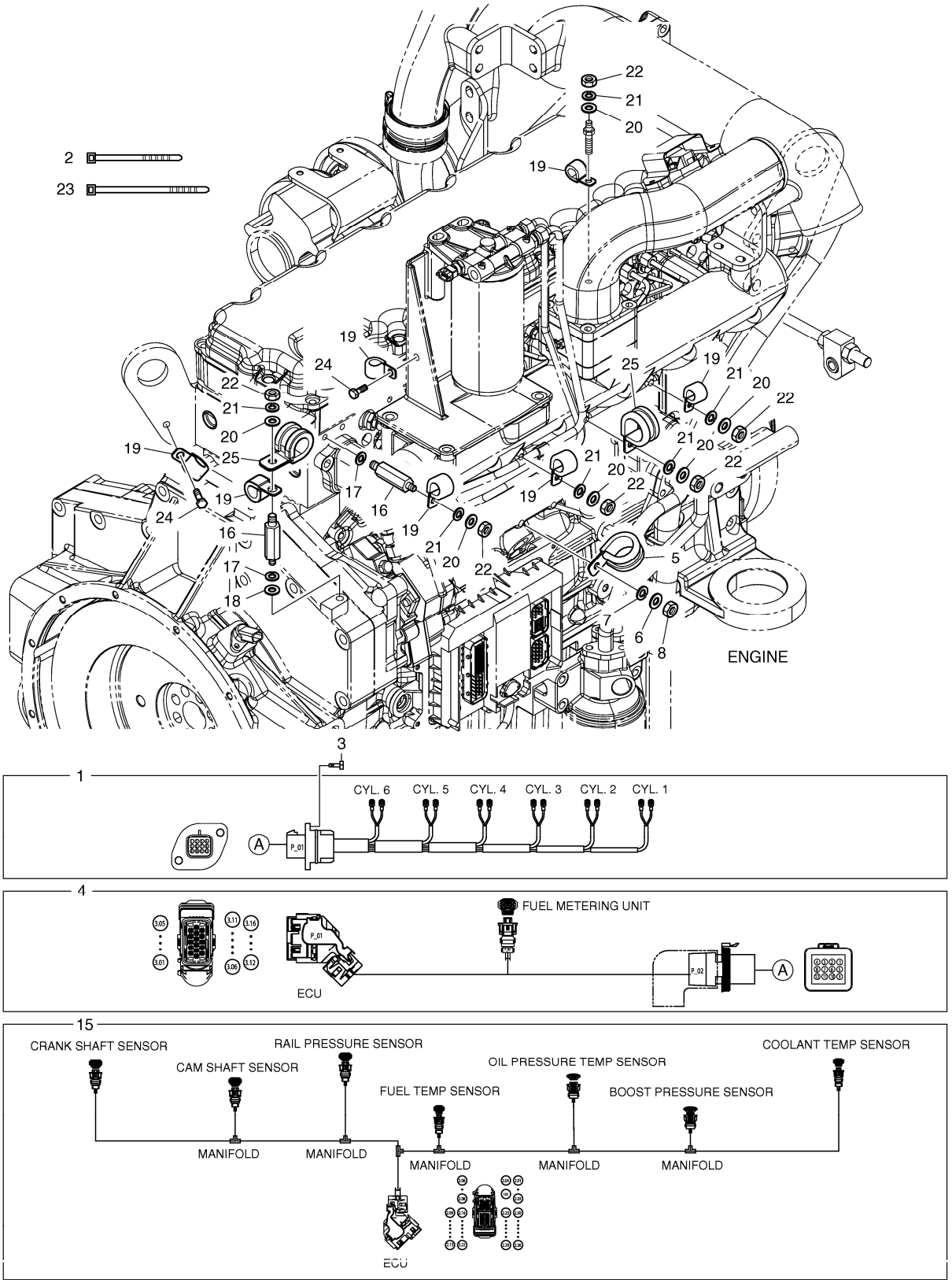

DATE	JUN. 01, 2010
3rd EDITION	

Fig. 037 WIRE HARNESS
JAGUE DE NIVEAU

Serial No. ;

Key No.	Part No.	Description	Description	Q'ty	S.C	Serial No.	ICA	Replaceable part	
								Part No.	Q'ty
037 -1	65.29101-6184C	WIRE;ELECTRIC	FIL	1					
2	65.97460-0008	BAND;TENSION	ATTACHE DE TUYAU	5					
3	06.01913-2911	BOLT ASS`Y M6X16	BOULON A 6 PANS	2					
4	65.29101-6201A	WIRE;ELECTRIC	FIL	1		-081104	Y	65.29101-6201C	1
	65.29101-6201C	WIRE;ELECTRIC	FIL	1		081105-			
5	65.97401-0188	CLIP;PIPE	AGRAFE	1					
6	06.15010-2311	WASHER	RONDELLE	1					
7	06.16731-2107	WASHER	RONDELLE ELASTIQUE	1					
8	06.11063-8214	NUT	ECROU 6 PANS	1					
15	65.29101-6209	WIRE;ELECTRIC	FIL	1		-081104	Y	65.29101-6209B	1
	65.29101-6209B	WIRE;ELECTRIC	FIL	1		081105-			
16	65.90201-0128	BOLT;STUD	BOUCHON	2					
17	06.16731-2107	WASHER	RONDELLE ELASTIQUE	2					
18	06.15010-2311	WASHER	RONDELLE	1					
19	65.97401-0196	CLIP;PIPE	AGRAFE	7					
20	06.15010-2311	WASHER	RONDELLE	6					
21	06.16731-2107	WASHER	RONDELLE ELASTIQUE	6					
22	06.11063-8214	NUT	ECROU 6 PANS	6					
23	65.97460-0005	BAND;TENSION	ATTACHE DE TUYAU	2					
24	06.01923-3111	BOLT M8X16	BOULON A 6 PANS	2					
25	65.97401-5024	CLIP;PIPE	AGRAFE	2					

DATE	JUN. 01, 2010
3rd EDITION	

Fig. 038 ENGINE MOUNTING MOTEUR

Serial No. ;

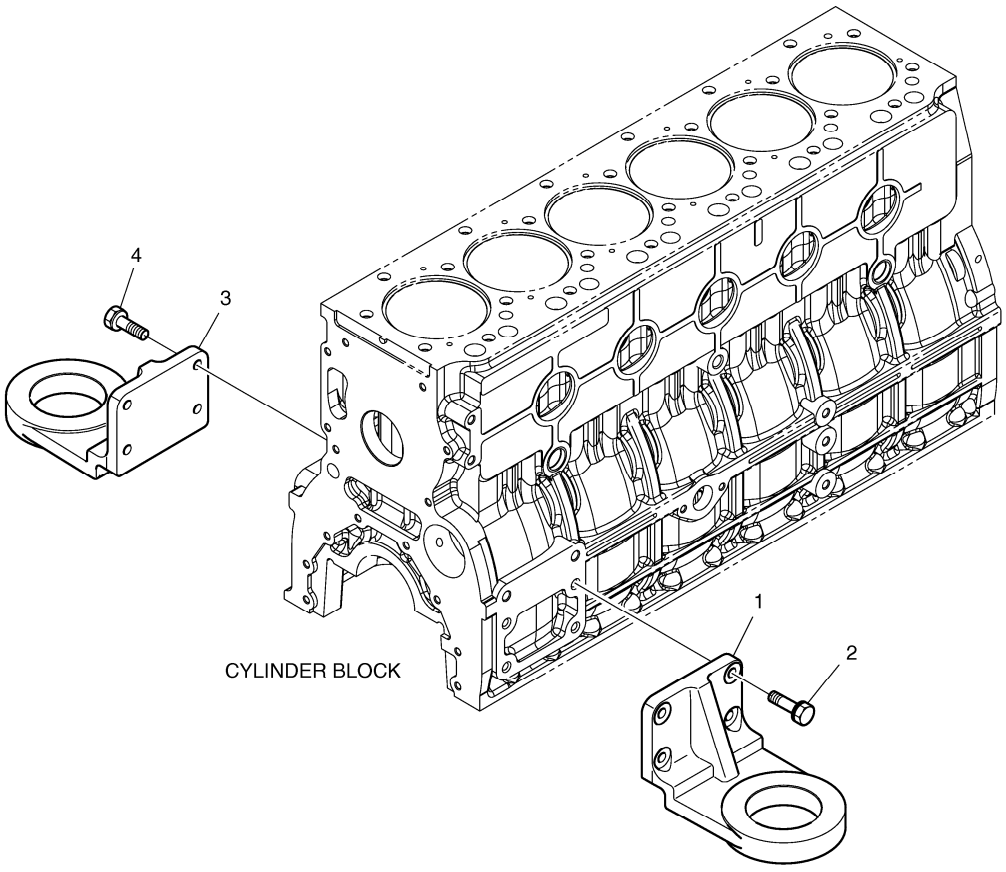

DATE	JUN. 01, 2010
3rd EDITION	

Fig. 038 ENGINE MOUNTING MOTEUR

Serial No. ;

Key No.	Part No.	Description	Description	Q'ty	S.C	Serial No.	ICA	Replaceable part	
								Part No.	Q'ty
038 -1	65.41530-0185	BRACKET;FRONT MOUNTING	SUPPORT	1					
2	06.01924-3217	BOLT ASS`Y M10X30	BOULON A 6PANS	4					
3	65.41530-0185	BRACKET;FRONT MOUNTING	SUPPORT	1					
4	06.01924-3217	BOLT ASS`Y M10X30	BOULON A 6PANS	4					

DATE	JUN. 01, 2010
3rd EDITION	

Fig. 039 AIR COMPRESSOR COMPRESSEUR D'AIR

Serial No. ;

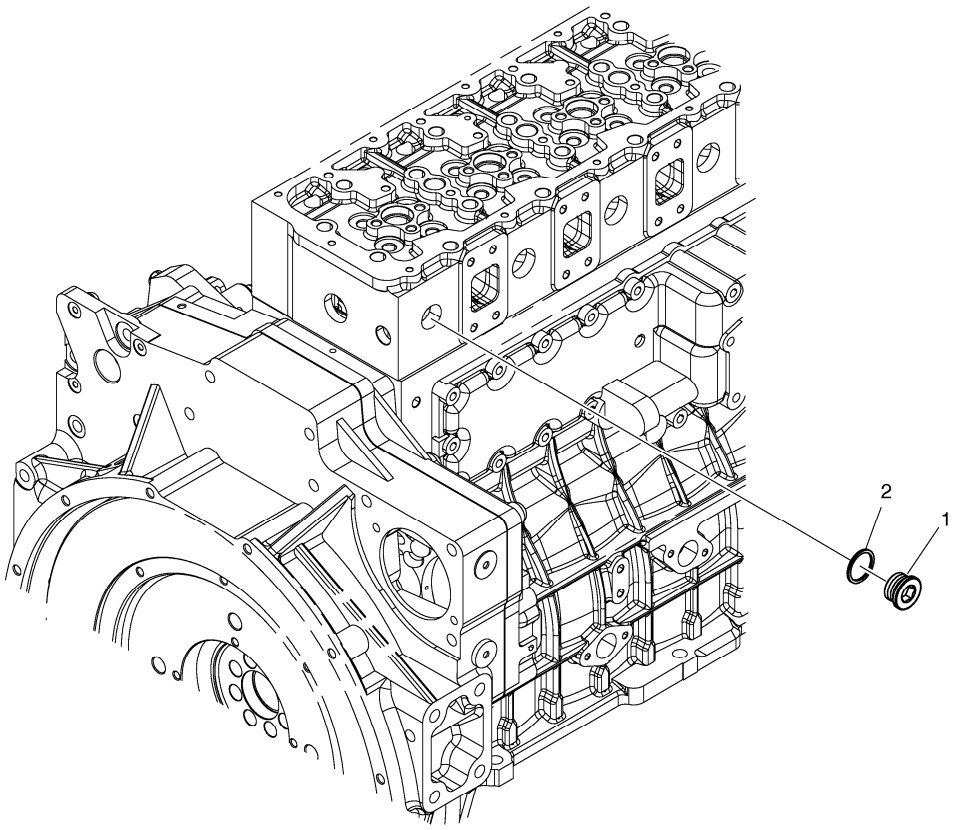

DATE	JUN. 01, 2010
3rd EDITION	

Fig. 039 AIR COMPRESSOR COMPRESSEUR D'AIR

Serial No. ;

Key No.	Part No.	Description	Description	Q'ty	S.C	Serial No.	ICA	Replaceable part	
								Part No.	Q'ty
039 -1	65.90310-0135	PLUG;SCREW	ENSEMBLE BAGUE D'ETAN	1					
2	06.56190-0705	RING;SEAL	BAGUE	1					

DATE	JUN. 01, 2010
3rd EDITION	

Fig. 040 OVERHAUL GASKET KIT - ALL
KIT DE GARNITURE DE REVISION

Serial No. ;

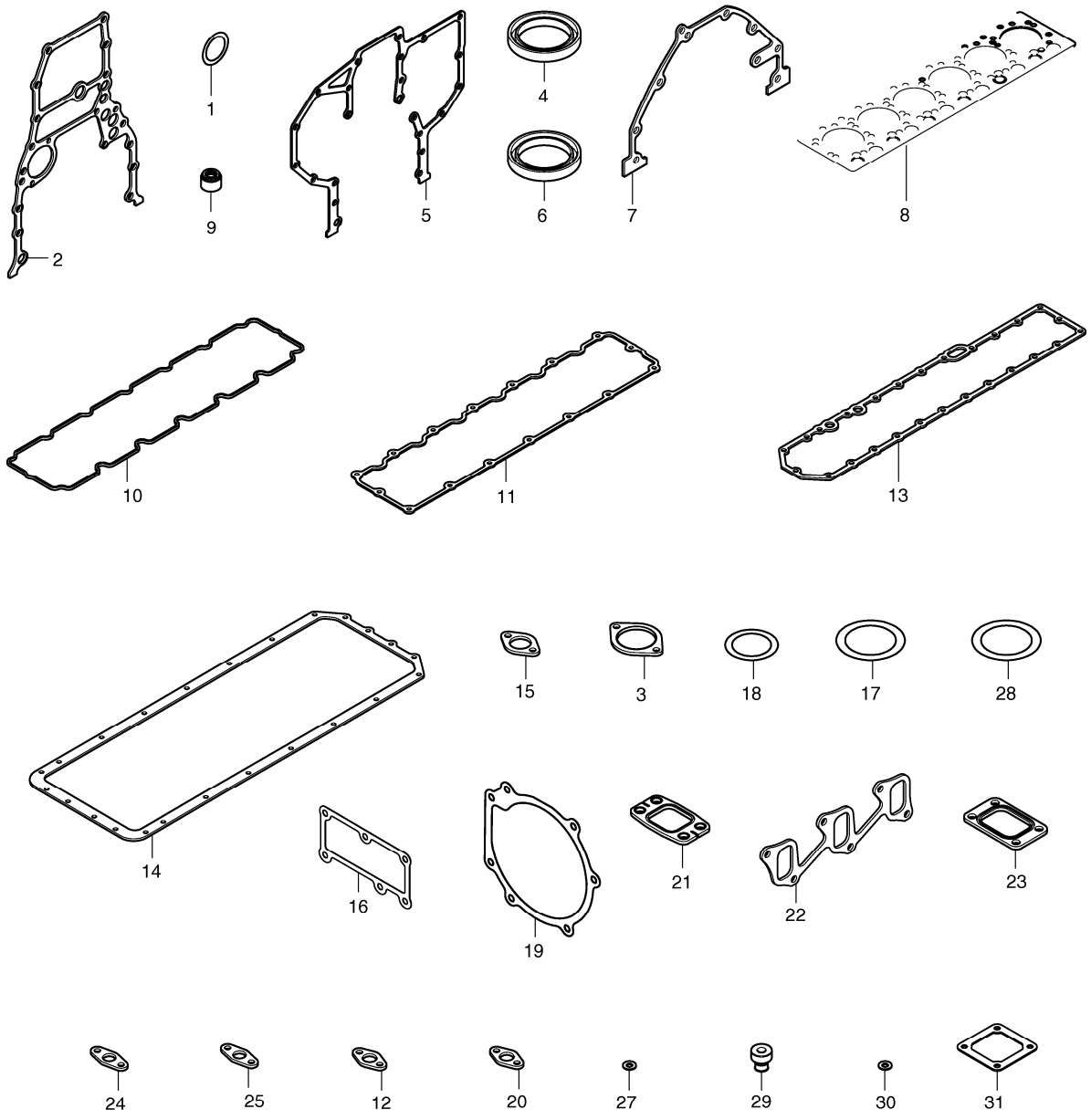

DATE	JUN. 01, 2010
3rd EDITION	

Fig. 040 OVERHAUL GASKET KIT - ALL
KIT DE GARNITURE DE REVISION

Serial No. ;

Key No.	Part No.	Description	Description	Q'ty	S.C	Serial No.	ICA	Replaceable part	
								Part No.	Q'ty
040 --	65.99601-8071	ALL OVERHAUL GASKET KIT	TOUS REVISENT LE KIT DE	1					
1	06.56021-0102	O-RING	COUVERCLE	1					
2	65.01903-0034	GASKET	GARNITURE	1					
3	65.38901-0018A	GASKET;PTO	GARNITURE	1					
4	65.01510-0040	SEAL;OIL	JOINT D'HUILE	1					
5	65.01904-0032	GASKET	GARNITURE	1					
6	65.01510-0157	SEAL;OIL	JOINT D'HUILE	1					
7	65.01905-0009	GASKET	GARNITURE	1					
8	65.03901-0071	GASKET;CYLINDER HEAD	GARNITURE	1					
9	65.03905-5002	PACKING;CYLHEAD COVER	EMBALLAGE	14					
10	65.03905-0037A	GASKET;CYL. HEAD COVER	GARNITURE	1					
11	65.03905-0041	GASKET;CYL. HEAD COVER	GARNITURE	1					
12	65.05903A0001	GASKET	JOINT	4					
13	65.05902-0023	GASKET;OIL COOLER	GARNITURE	1					
14	65.05904-0035	GASKET;OIL PAN	GARNITURE	1					
15	65.05901-0027	GASKET;OIL FILTER	GARNITURE	1					
16	65.06904-0021	GASKET;THERMOSTAT	GARNITURE	1					
17	65.06904-0003	GASKET;THERMOSTAT	JOINT	1					
18	65.96501-0099A	O-RING	JOINT TORIQUE	2					
19	65.06901-0042	GASKET;WATER PUMP	GARNITURE	1					
20	65.06903-0029	GASKET;WATER PIPE	GARNITURE	1					
21	65.08901-0045	GASKET;EXHAUST MANIFOLD	GARNITURE	6					
22	65.08902-0030A	GASKET;INTAKE MANIFOLD	GARNITURE	2					
23	65.09901-0018A	GASKET	JOINT	1					
24	65.96601-0067	GASKET;T/C OIL RETURN	JOINT	1					
25	65.96601-0052	GASKET;PIPE-BLOCK	GARNITURE	1					
27	65.96507-0053	RING;SEAL	BAGUE	6					
28	06.56020-0115	O-RING	JOINT TORIQUE	1					
29	65.96210-6001A	RUBBER;CUSHION	CAOUTCHOUC	3					
30	06.56180-0712	RING;SEAL	BAGUE	18					
31	65.09904-0008	GASKET;AIR HEATER	JOINT	2					

DATE	JUN. 01, 2010
3rd EDITION	

Fig. 041 OVERHAUL GASKET KIT - TOP
KIT DE GARNITURE DE REVISION

Serial No. ;

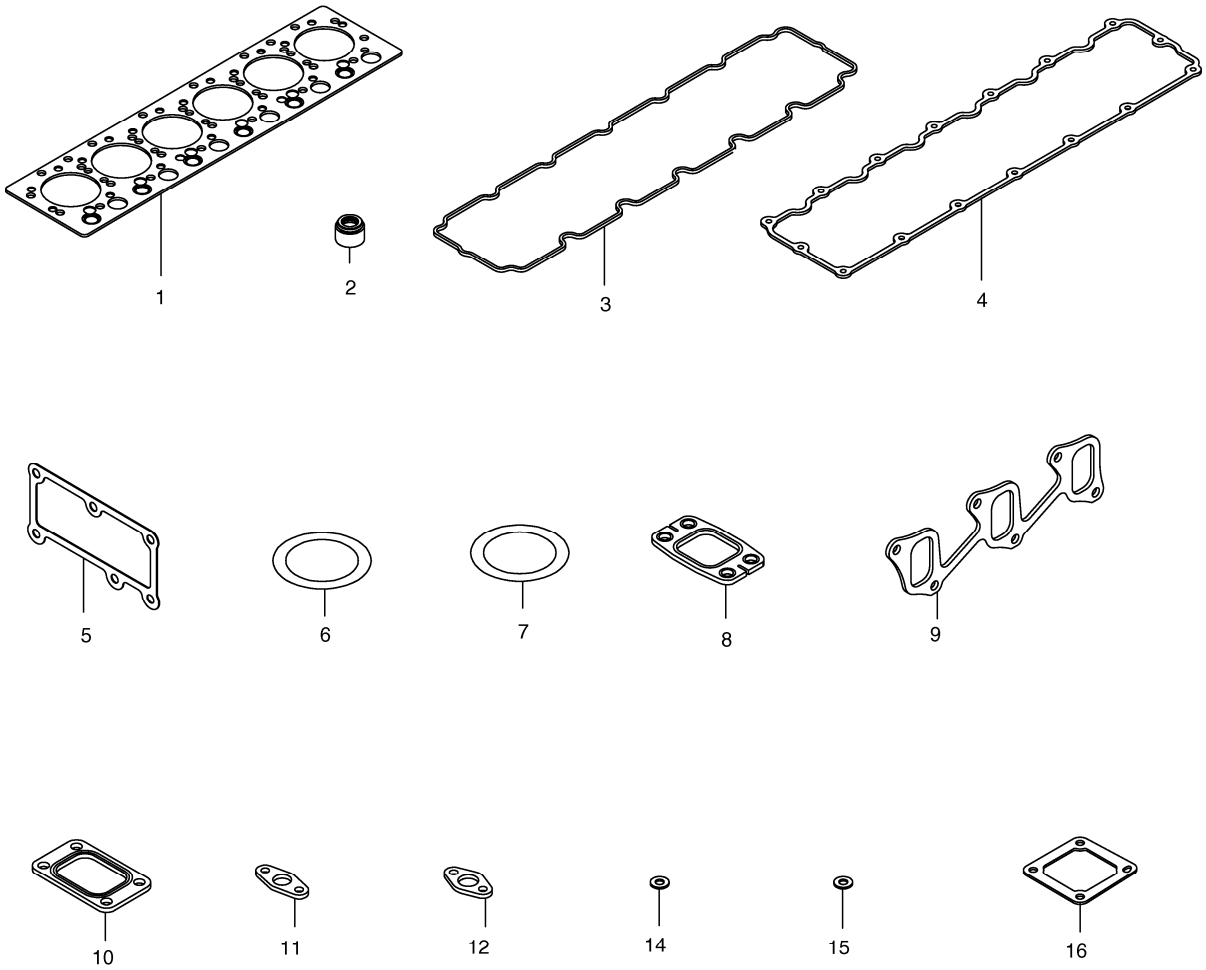

DATE	JUN. 01, 2010
3rd EDITION	

Fig. 041 OVERHAUL GASKET KIT - TOP
KIT DE GARNITURE DE REVISION

Serial No. ;

Key No.	Part No.	Description	Description	Q'ty	S.C	Serial No.	ICA	Replaceable part	
								Part No.	Q'ty
041 --	65.99605-8042	TOP OVERHAUL GASKET KIT	TOUS REVISENT LE KIT DE	1					
1	65.03901-0071	GASKET;CYLINDER HEAD	GARNITURE	1					
2	65.03905-5002	PACKING;CYLHEAD COVER	EMBALLAGE	14					
3	65.03905-0037A	GASKET;CYL. HEAD COVER	GARNITURE	1					
4	65.03905-0041	GASKET;CYL. HEAD COVER	GARNITURE	1					
5	65.06904-0021	GASKET;THERMOSTAT	GARNITURE	1					
6	65.06904-0003	GASKET;THERMOSTAT	JOINT	1					
7	65.96501-0099A	O-RING	JOINT TORIQUE	2					
8	65.08901-0045	GASKET;EXHAUST MANIFOLD	GARNITURE	6					
9	65.08902-0030A	GASKET;INTAKE MANIFOLD	GARNITURE	2					
10	65.09901-0018A	GASKET	JOINT	1					
11	65.96601-0067	GASKET;T/C OIL RETURN	JOINT	1					
12	65.96601-0052	GASKET;PIPE-BLOCK	GARNITURE	1					
14	65.96507-0053	RING;SEAL	BAGUE	6					
15	06.56180-0712	RING;SEAL	BAGUE	18					
16	65.09904-0008	GASKET;AIR HEATER	JOINT	2					

DATE	JUN. 01, 2010
3rd EDITION	

Fig. 1100 MAIN FRAME
BATI PRINCIPAL

Serial No. ;

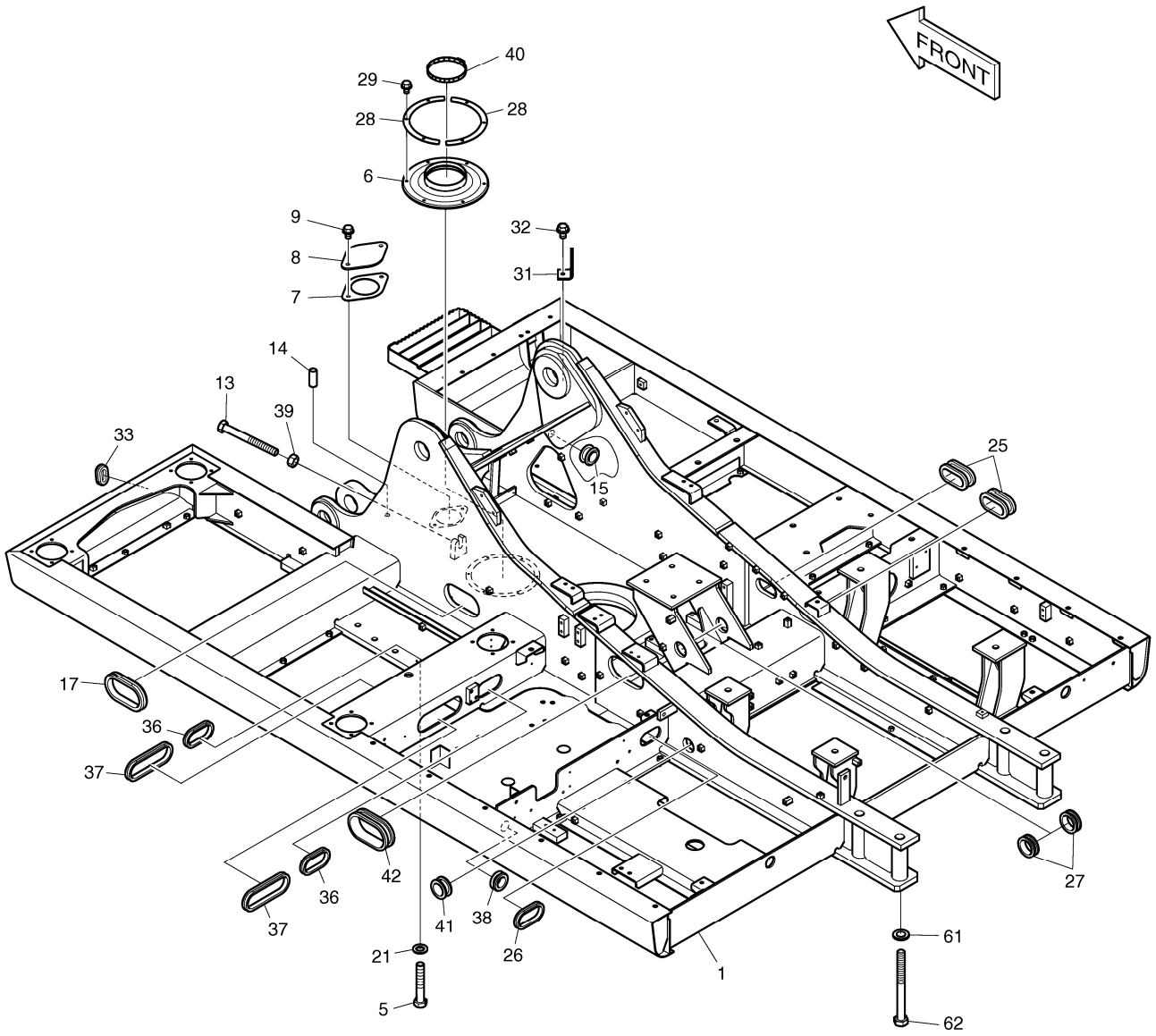

DATE	JUN. 01, 2010
3rd EDITION	

Fig. 1100 MAIN FRAME BATI PRINCIPAL

Serial No. ;

Key No.	Part No.	Description	Description	Q'ty	S.C	Serial No.	ICA	Replaceable part	
								Part No.	Q'ty
1100 --	K1039463E	MAIN FRAME ASS'Y	BATI PRINCIPAL	-	D	5433-5583			
	160620-00078	FRAME ASSY,MAIN	ARMATURE PRINCIPALE	-	D	5584-			
1	K1039462C	FRAME;MAIN	ARMATURE PRINCIPALE	1		5433-5495	I	K1039462E	1
	K1039462E	FRAME;MAIN	ARMATURE PRINCIPALE	1		5496-5583	I	160620-00079	1
	160620-00079	FRAME,MAIN	ARMATURE PRINCIPALE	1		5584-5730	I	160620-00079A	1
	160620-00079A	FRAME,MAIN	ARMATURE PRINCIPALE	1		5731-			
5	S0571266	BOLT	BOULON	36					
6	160-00068A	COVER;RUBBER	COUVERTURE	1					
7	180-00463	PACKING	EMBALLAGE	1					
8	621-02938B	COVER	COUVERTURE	1					
9	DS0025023	BOLT;SET	BOULON	2					
13	S0572166	BOLT	BOULON	1					
14	2123-1107D7	PIN;KNOCK	GOUPILLE	2					
15	2160-1004D48	BUSHING;RUBBER	DOUILLE	1					
17	2160-1201D11	BUSHING;RUBBER	DOUILLE	1					
21	2114-9012A	WASHER;HARD	RONDELLE	36					
25	2160-1201D13	BUSHING;RUBBER	DOUILLE	2					
26	2160-1201D12	BUSHING;RUBBER	DOUILLE	1					
27	2160-1004D55	BUSHING;RUBBER	DOUILLE	2					
28	191-02990C	PLATE	PLAQUE	2					
29	K1049858	BOLT	BOULON	6					
31	195-02623B	BRACKET	SUPPORT	1					
32	DS0025015	BOLT;SET	BOULON	1					
33	160-00081	CAP	CHAPEAU	1					
36	DS7601020	BUSHING;RUBBER	DOUILLE	2					
37	DS7601021	BUSHING;RUBBER	DOUILLE	2					
38	2160-1004D31	BUSHING;RUBBER	DOUILLE	1					
39	S4013133	NUT	ECROU	1					
40	S8470165	CLAMP;HOSE	BRIDE	1					
41	2160-1004D62	BUSHING;RUBBER	DOUILLE EN CAOUTCHOU	1					
42	DS7601046	BUSHING;RUBBER	DOUILLE	1					
61	K1039519	WASHER;HARD	RONDELLE	4					
62	K1039520	BOLT	BOULON A 6 PANS	4					

DATE	JUN. 01, 2010
3rd EDITION	

Fig. 1110 COUNTER WEIGHT MASSE D'EQUILIBRAGE

Serial No. ;

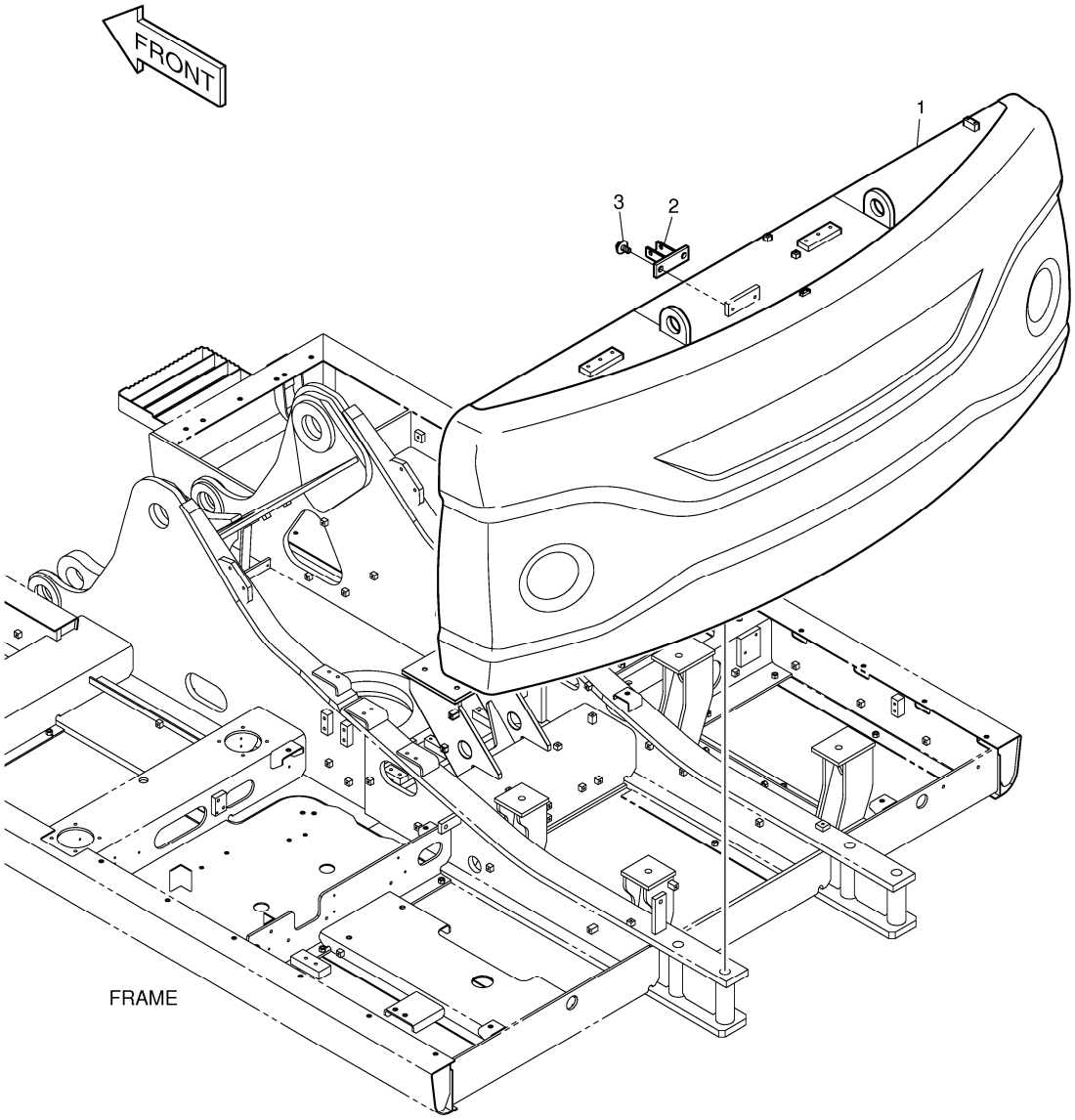

DATE	JUN. 01, 2010
3rd EDITION	

Fig. 1110 COUNTER WEIGHT MASSE D'EQUILIBRAGE

Serial No. ;

Key No.	Part No.	Description	Description	Q'ty	S.C	Serial No.	ICA	Replaceable part	
								Part No.	Q'ty
1110 --	K1045675A	COUNTER WEIGHT;4.1ton	MASSE D'EQUILIBRAGE	1		5001-5495	I	K1045675B	1
	K1045675B	COUNTER WEIGHT;4.1ton	MASSE D'EQUILIBRAGE	1		5496-5645	Y	160702-00048	1
	160702-00048	WEIGHT ASSY,COUNTER;4.1ton	MASSE D'EQUILIBRAGE	1		5646-			
1	K1039183C	COUNTER WEIGHT;4.1ton	MASSE D'EQUILIBRAGE	1		5001-5495	I	K1039183E	1
	K1039183E	COUNTER WEIGHT;4.1ton	MASSE D'EQUILIBRAGE	1		5496-5645	Y	160702-00046	1
	160702-00046	WEIGHT,COUNTER;4.1ton	MASSE D'EQUILIBRAGE	1		5646-			
2	K1002454B	BRACKET	SUPPORT	1					
3	DS0025015	BOLT;SET	BOULON	2					

DATE	JUN. 01, 2010
3rd EDITION	

Fig. 1120 ENGINE MOUNTING MOTEUR

Serial No. ;

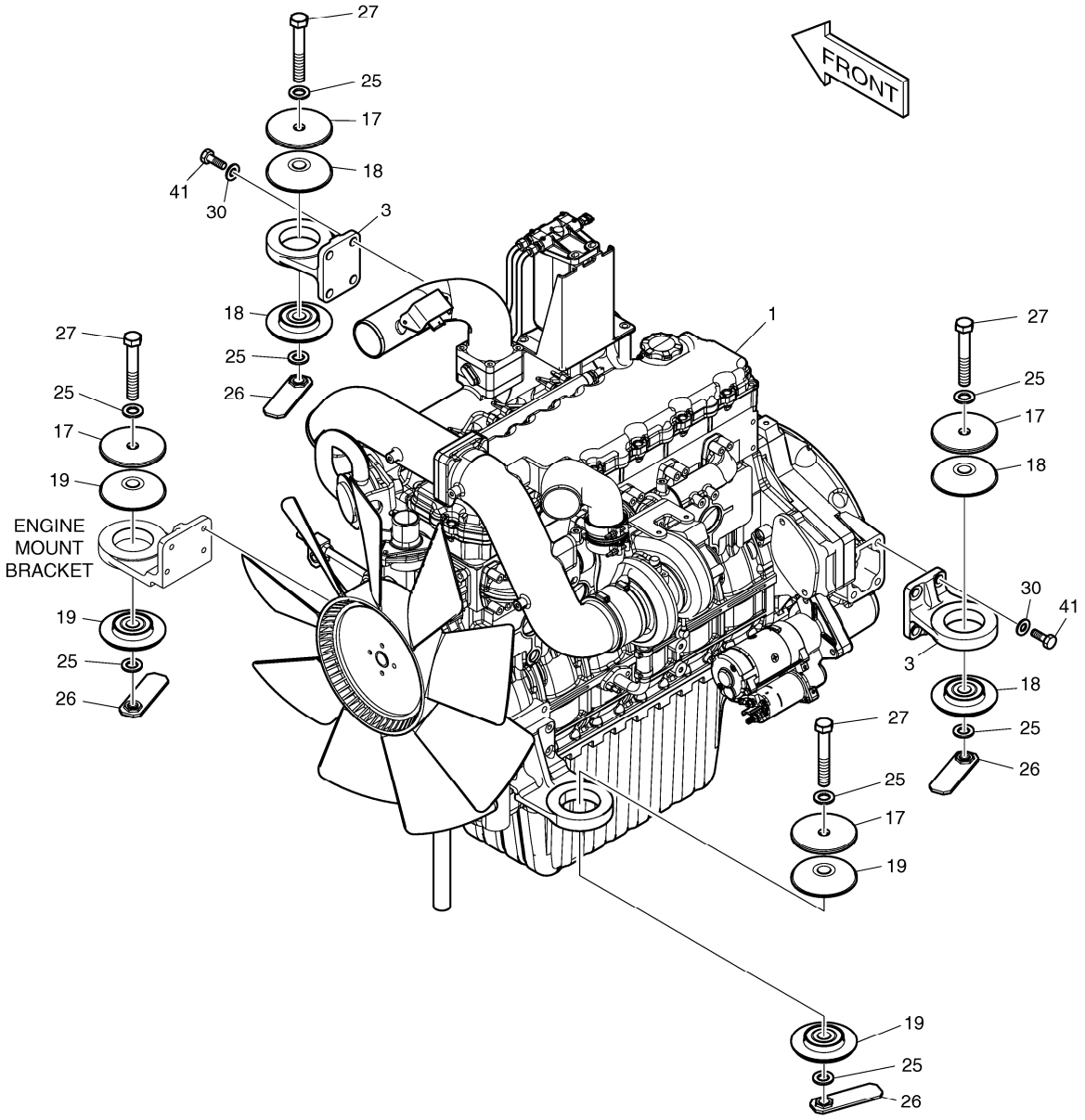

DATE	JUN. 01, 2010
3rd EDITION	

Fig. 1120 ENGINE MOUNTING MOTEUR

Serial No. ;

Key No.	Part No.	Description	Description	Q'ty	S.C	Serial No.	ICA	Replaceable part	
								Part No.	Q'ty
1120 --	K1039446B	ENGINE ASS`Y	MOTEUR	-	D				
1	K1015516	ENGINE	MOTEUR	1					
3	K1037354A	BRACKET;ENGINE MOUNT	SUPPORT	2					
17	2114-1929	WASHER	RONDELLE	4					
18	161-00548	RUBBER	LE CAOUTCHOUC	4					
19	161-00550	RUBBER	LE CAOUTCHOUC	4					
25	2114-9012A	WASHER;HARD	RONDELLE	8					
26	195-02643C	SUPPORT;NUT	APPUI	4					
27	S0771466	BOLT	BOULON	4					
30	S5102903	WASHER	RONDELLE	8					
41	S0521566	BOLT	BOULON	8					

DATE	JUN. 01, 2010
3rd EDITION	

Fig. 1130 RADIATOR MOUNTING
SUPPORT DE RADIATEUR

Serial No. ;

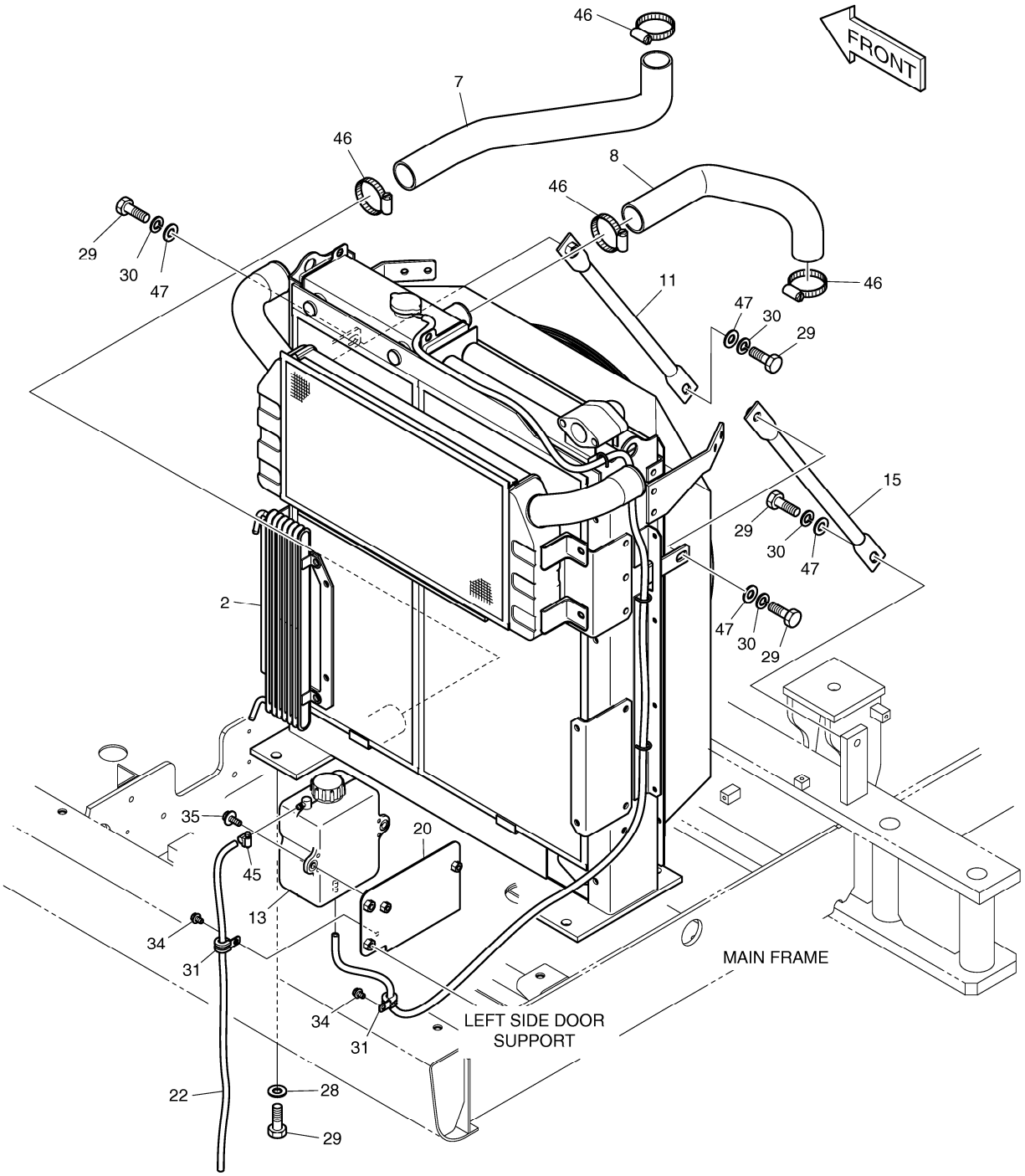

DATE	JUN. 01, 2010
3rd EDITION	

Fig. 1130 RADIATOR MOUNTING
SUPPORT DE RADIATEUR

Serial No. ;

Key No.	Part No.	Description	Description	Q'ty	S.C	Serial No.	ICA	Replaceable part	
								Part No.	Q'ty
1130 --	K1039446B	ENGINE ASS`Y	MOTEUR	-	D				
2	K1008289C	RADIATOR ASS`Y	RADIATEUR	1					
7	K1033424	HOSE;WATER	TUYAU FLEXIBLE	1					
8	K1006962	HOSE;WATER	TUYAU	1					
11	K1047774	STAY	ENTRETOISE	1					
13	K1038409	TANK;RESERVE	RESERVOIR	1					
15	K1000563B	STAY	ENTRETOISE	1					
20	K1040048	BRACKET	SUPPORT	1					
22	K1004515	HOSE	TUYAU	1					
28	2114-1816A	WASHER	RONDELLE	4					
29	S0521366	BOLT	BOULON	8					
30	S5102903	WASHER	RONDELLE	4					
31	124-00208D2	CLIP	AGRAFE	2					
34	K1001029	BOLT	BOULON	2					
35	DS0025016	BOLT;SET	BOULON	2					
45	S8470014	CLAMP;HOSE	BRIDE	1					
46	S8470075	CLAMP;HOSE	BRIDE	4					
47	S5010913	WASHER	RONDELLE	4					

DATE	JUN. 01, 2010
3rd EDITION	

Fig. 1140 RADIATOR
RADIATEUR

Serial No. ;

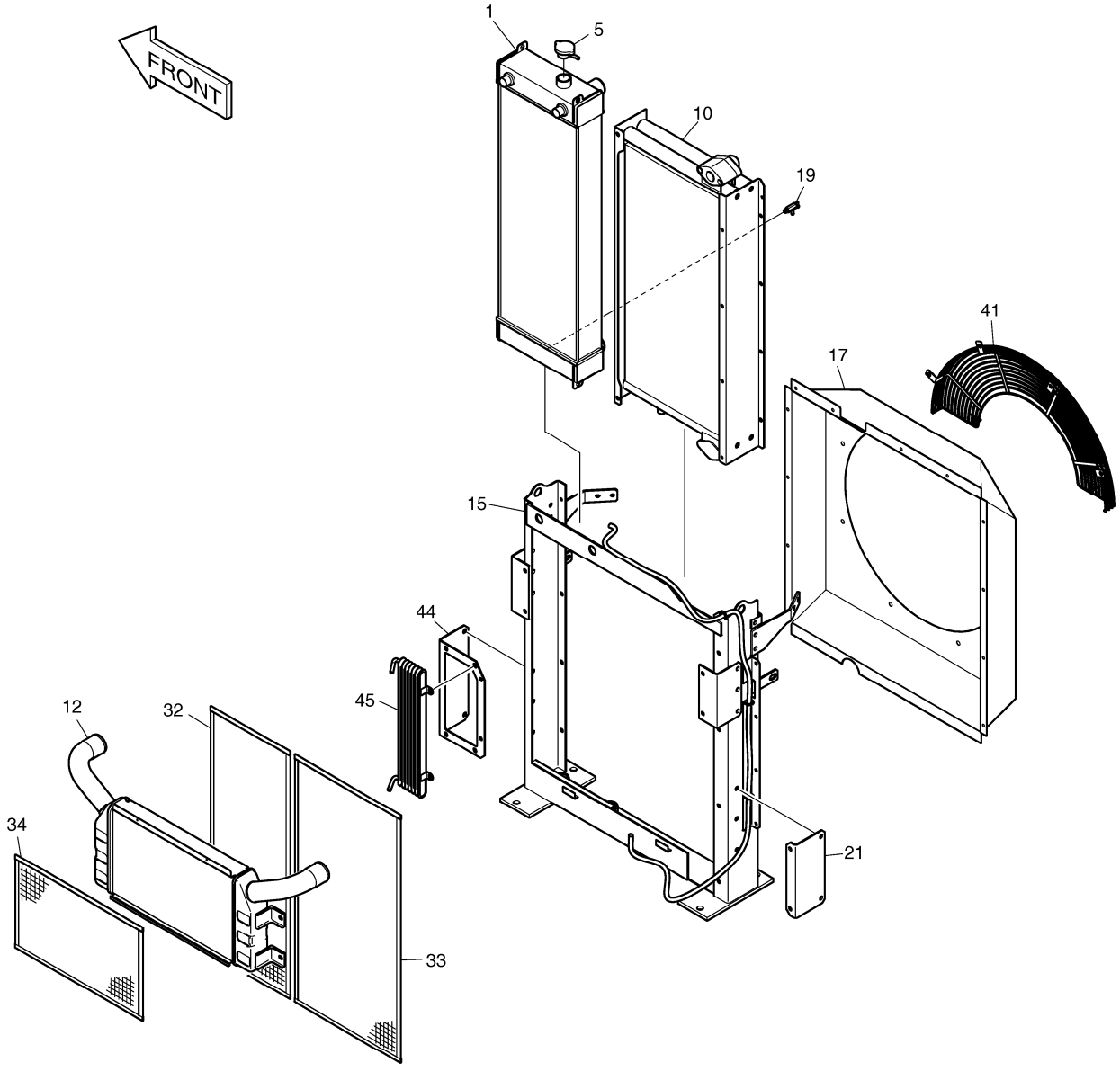

DATE	JUN. 01, 2010
3rd EDITION	

Fig. 1140 RADIATOR RADIATEUR

Serial No. ;

Key No.	Part No.	Description	Description	Q'ty	S.C	Serial No.	ICA	Replaceable part	
								Part No.	Q'ty
1140 --	K1008289C	RADIATOR ASS`Y	RADIATEUR	1					
1	K1008126	RADIATOR	RADIATEUR	1					
5	K1010769	CAP;PRESSURE	CHAPEAU	1					
10	K1008128	OIL COOLER	REFRIGERANT A HUILE	1					
12	K1010767A	CAC ASS`Y	CHARGEE	1					
15	-	FRAME	ARMATURE	1	D				
17	K1008129	SHROUD	MONTURE	1					
19	K9003878	COCK ASS'Y	ROBINET ASS'Y	1					
21	K1015211	BRACKET	SUPPORT	1					
32	K1008130	WIRE NET	FIL	1					
33	K1008131	WIRE NET	FIL	1					
34	K1010768	WIRE NET(CAC)	FIL	1					
41	K1008132	GUARD;FAN(UPPER)	GARDE	1					
44	K1015212	BRACKET	SUPPORT	1					
45	K1015210	COOLER;FUEL	REFROIDISSEUR	1					

DATE	JUN. 01, 2010
3rd EDITION	

Fig. 1150 MUFFLER SILENCIEUX

Serial No. ;

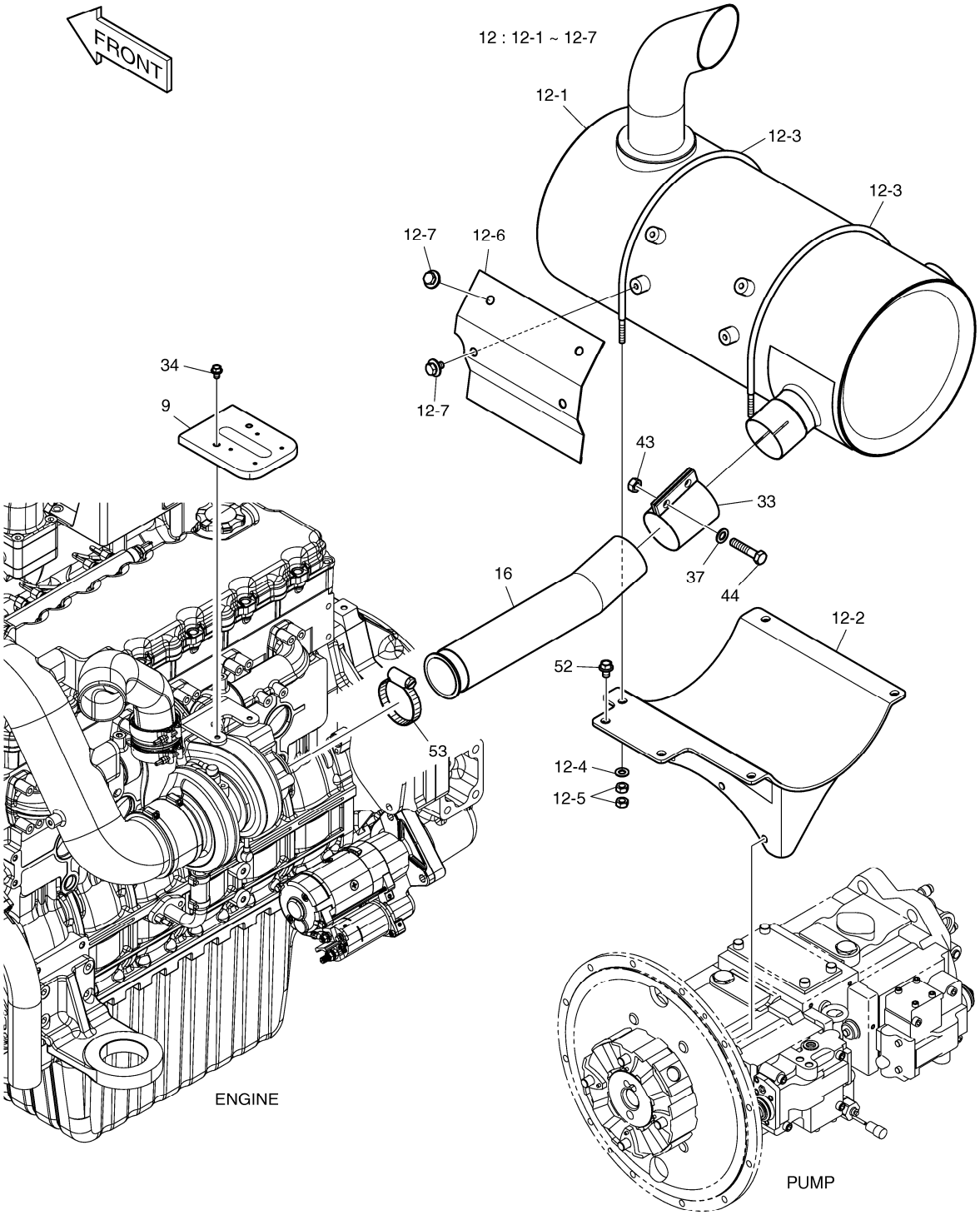

DATE	JUN. 01, 2010
3rd EDITION	

Fig. 1150 MUFFLER SILENCIEUX

Serial No. ;

Key No.	Part No.	Description	Description	Q'ty	S.C	Serial No.	ICA	Replaceable part	
								Part No.	Q'ty
1150 --	K1039446B	ENGINE ASS`Y	MOTEUR	-	D				
9	K1037930	COVER;TURBO CHARGER	COUVERTURE	1					
12	K1039295A	MUFFLER SUB ASS`Y	SILENCIEUX	1					
12-1	K1039296A	. MUFFLER	. SILENCIEUX	1					
12-2	K1030291A	. BRACKET	. SUPPORT	1					
12-3	K1039117A	. U-BOLT	. BOULON A 6 PANS	2					
12-4	S5010613	. WASHER;PLAIN	. RONDELLE	4					
12-5	S4012633	. NUT	. ECROU	8					
12-6	K1015415A	. INSULATOR	. ISOLATEUR	1					
12-7	DS0025013	. BOLT;SET	. BOULON	4					
16	K1030239	PIPE;EXHAUST	CONDUITE	1					
33	124-00310A	CLAMP	BRIDE	1					
34	K1001029	BOLT	BOULON	2					
37	S5010713	WASHER;PLAIN	RONDELLE	2					
43	S4012733	NUT	ECROU	2					
44	S0515866	BOLT	BOULON	2					
52	DS0025017	BOLT;SET	BOULON	2					
53	K1024182	CLAMP;HOSE	BRIDE	1					

DATE	JUN. 01, 2010
3rd EDITION	

Fig. 1160 CAC PIPING
CHARGEE DE REFROIDISSEUR D'CAIR

Serial No. ;

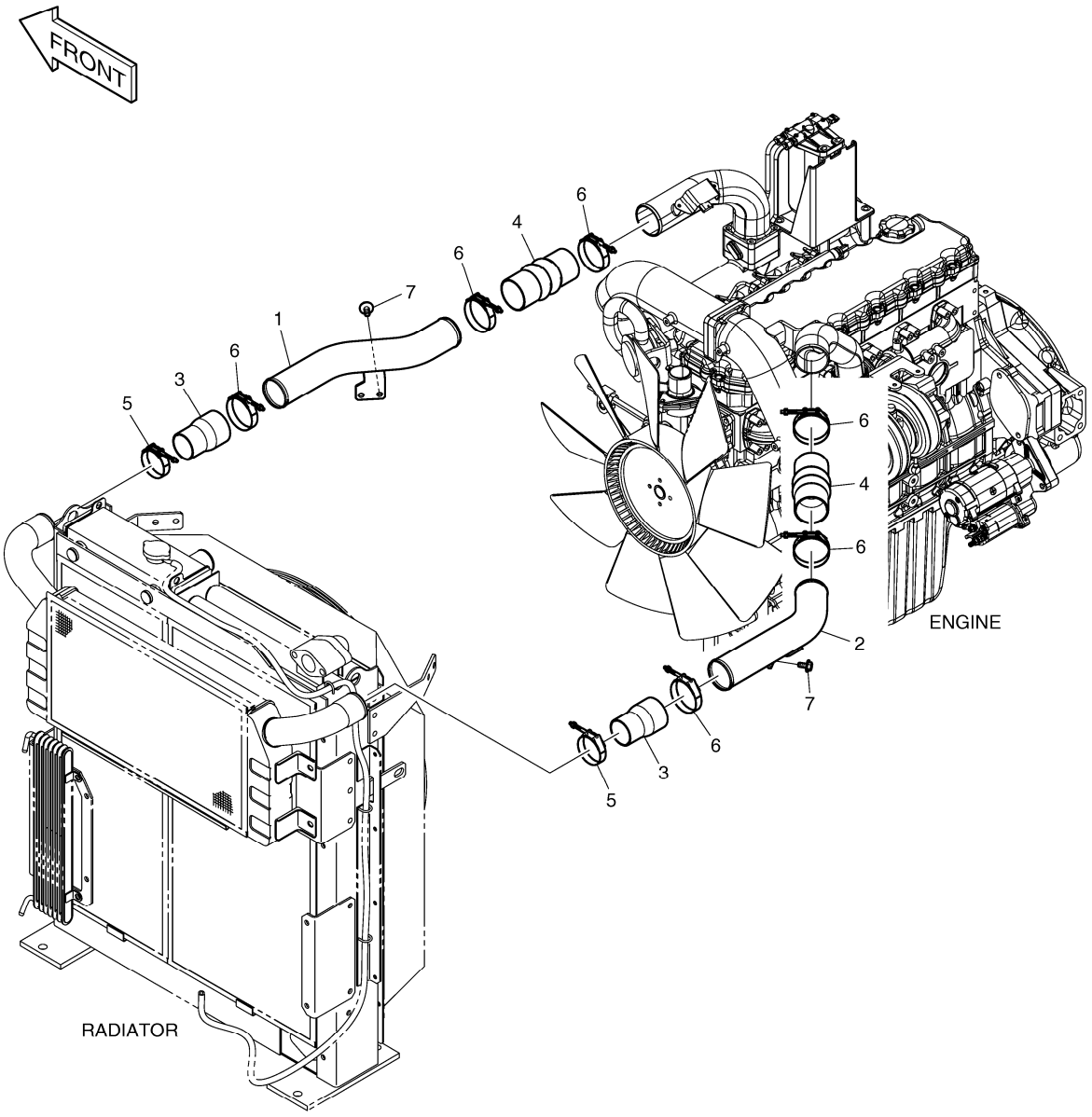

DATE	JUN. 01, 2010
3rd EDITION	

Fig. 1160 CAC PIPING
CHARGEE DE REFROIDISSEUR D'CAIR

Serial No. ;

Key No.	Part No.	Description	Description	Q'ty	S.C	Serial No.	ICA	Replaceable part	
								Part No.	Q'ty
1160 --	K1039124	CAC PIPING	TUYAUTERIE DE CAC	-	D				
1	K1038931	PIPE	TUYAU	1					
2	K1038932	PIPE	TUYAU	1					
3	K1038375	HOSE;AIR	TUYAU	2					
4	K1038559	HOSE;AIR	TUYAU	2					
5	K1000704A	CLAMP	BRIDE	2					
6	124-00194	CLAMP	BRIDE	6					
7	DS0025023	BOLT;SET	BOULON	4					

DATE	JUN. 01, 2010
3rd EDITION	

Fig. 1170 AIR CLEANER
FILTRE A AIR

Serial No. ;

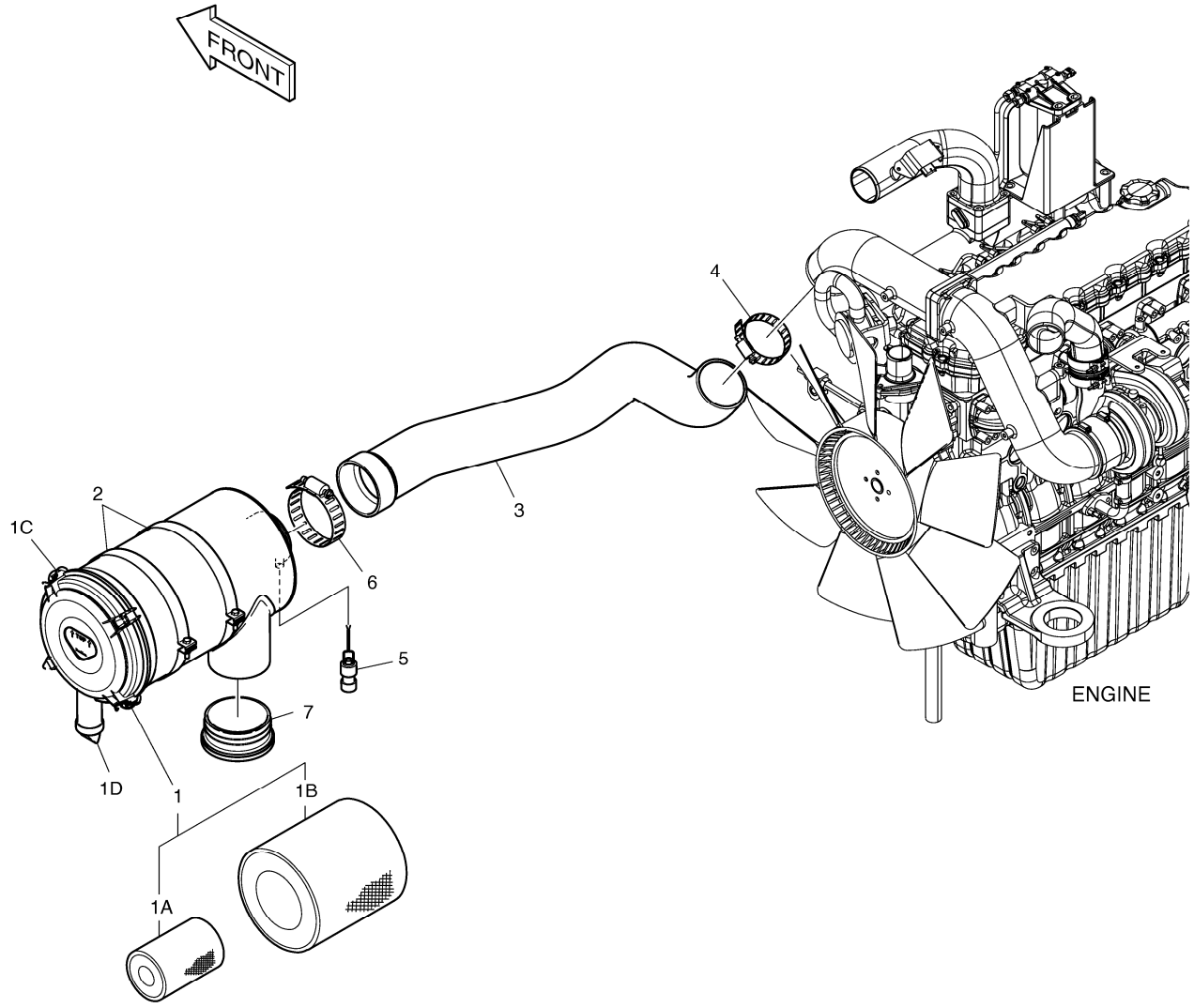

DATE	JUN. 01, 2010
3rd EDITION	

Fig. 1170 AIR CLEANER FILTRE A AIR

Serial No. ;

Key No.	Part No.	Description	Description	Q'ty	S.C	Serial No.	ICA	Replaceable part	
								Part No.	Q'ty
1170 --	K1039418	AIR CLEANER ASS`Y	ENSEMBLE FILTRE A AIR	-	D				
1	204-00067	AIR CLEANER	FILTRE A AIR	1					
1A	474-00039	. ELEMENT;INNER	. ELEMENT	1					
1B	474-00040	. ELEMENT;OUTER	. ELEMENT	1					
1C	204-00075	. COVER	. COUVERTURE	1					
1D	204-00070	. VALVE;VACUATOR	. VALVE	1					
2	124-00298B	BAND;AIR CLEANER	BANDE	2					
3	K1030455	HOSE;AIR	TUYAU FLEXIBLE	1					
4	S8510118	CLAMP;HOSE	BRIDE	1					
5	170-00004	INDICATOR;DUST	INDICATEUR	1					
6	S8510143	CLAMP;HOSE	BRIDE	1					
7	K1003618	CAP;RAIN	CHAPEAU	1					

DATE	JUN. 01, 2010
3rd EDITION	

Fig. 1180 PUMP MOUNTING
POMPE

Serial No. ;

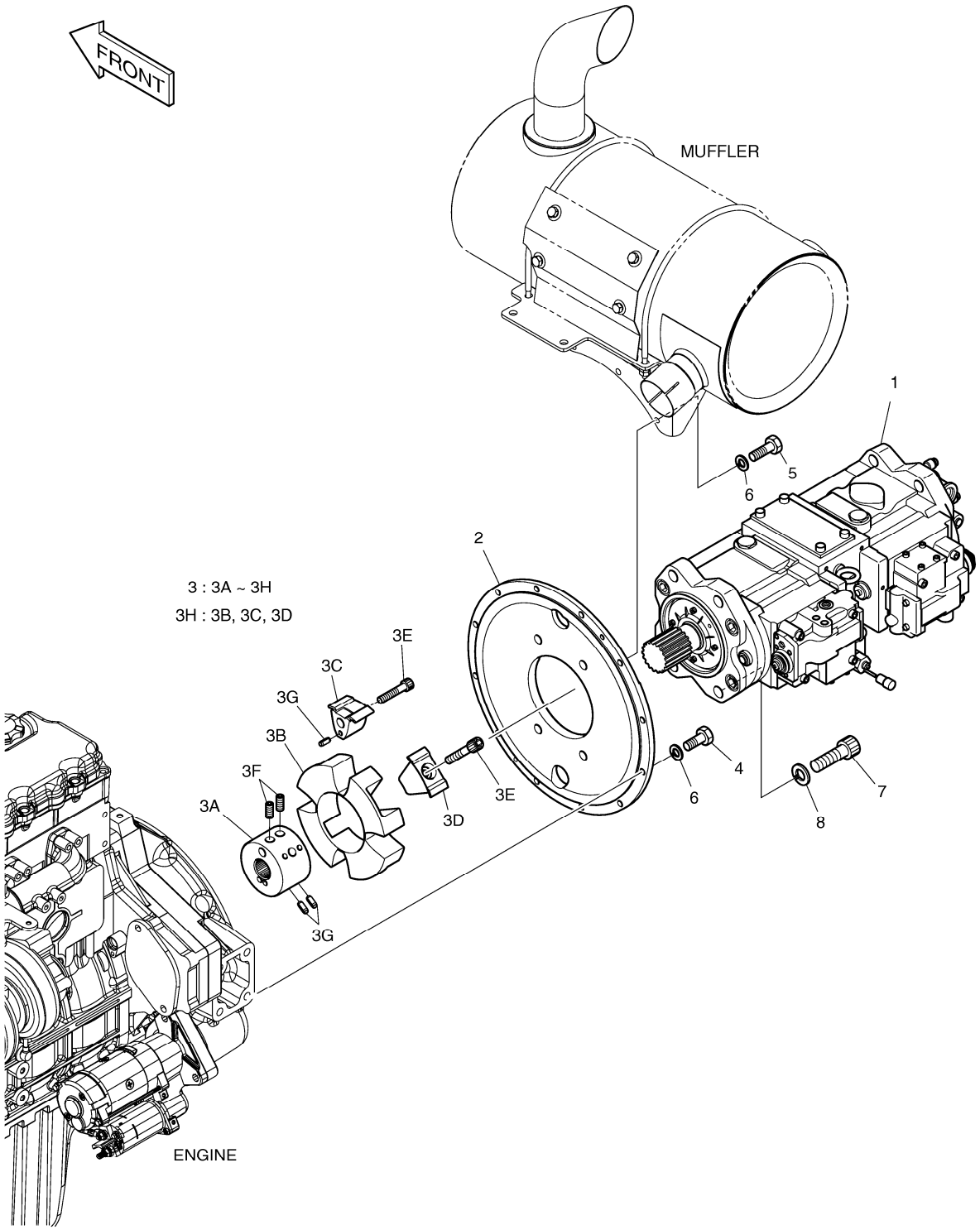

DATE	JUN. 01, 2010
3rd EDITION	

Fig. 1180 PUMP MOUNTING POMPE

Serial No. ;

Key No.	Part No.	Description	Description	Q'ty	S.C	Serial No.	ICA	Replaceable part	
								Part No.	Q'ty
1180 --	401-00502H	PUMP MOUNTING	POMPE	-	D	5001-5730			
	400911-00005	PUMP INSTALLATION	BATI POMPE	-	D	5731-			
1	K1000698G	PUMP;MAIN	POMPE DE BATI PRINCIPAL	1		5001-5730			
	K1000698E	MAIN PUMP	POMPE DE BATI PRINCIPAL	1		5731-			
2	229-00025C	COVER;PUMP	COUVERTURE	1					
3	K1013825	COUPLING	FIXATION DE POMPE	1					
3A	-	. HUB	. HUB	1	D				
3B	2474-7009	. ELEMENT	. ELEMENT	1					
3C	-	. INSERT(A)	. INSERTION	4	D				
3D	-	. INSERT(R)	. INSERTION	4	D				
3E	K9000422	. SET;SOCKET BOLT	. ENSEMBLE	1					
3F	-	. BOLT;CLAMPING	. BOULON	2	D				
3G	-	. PIN;SPRING	. GOUPILLE	12	D				
3H	2474-7009K	. ELEMENT KIT	. ELEMENT	1					
4	S0512266	BOLT	BOULON	9					
5	S0512366	BOLT	BOULON	3					
6	S5102603	WASHER	RONDELLE	12					
7	S2227866	BOLT;SOCKET	BOULON	4					
8	S5111103	WASHER;SPRING	RONDELLE	4					

DATE	JUN. 01, 2010
3rd EDITION	

Fig. 1190 SWING MOTOR
MOTEUR D'ORIENTATION

Serial No. ;

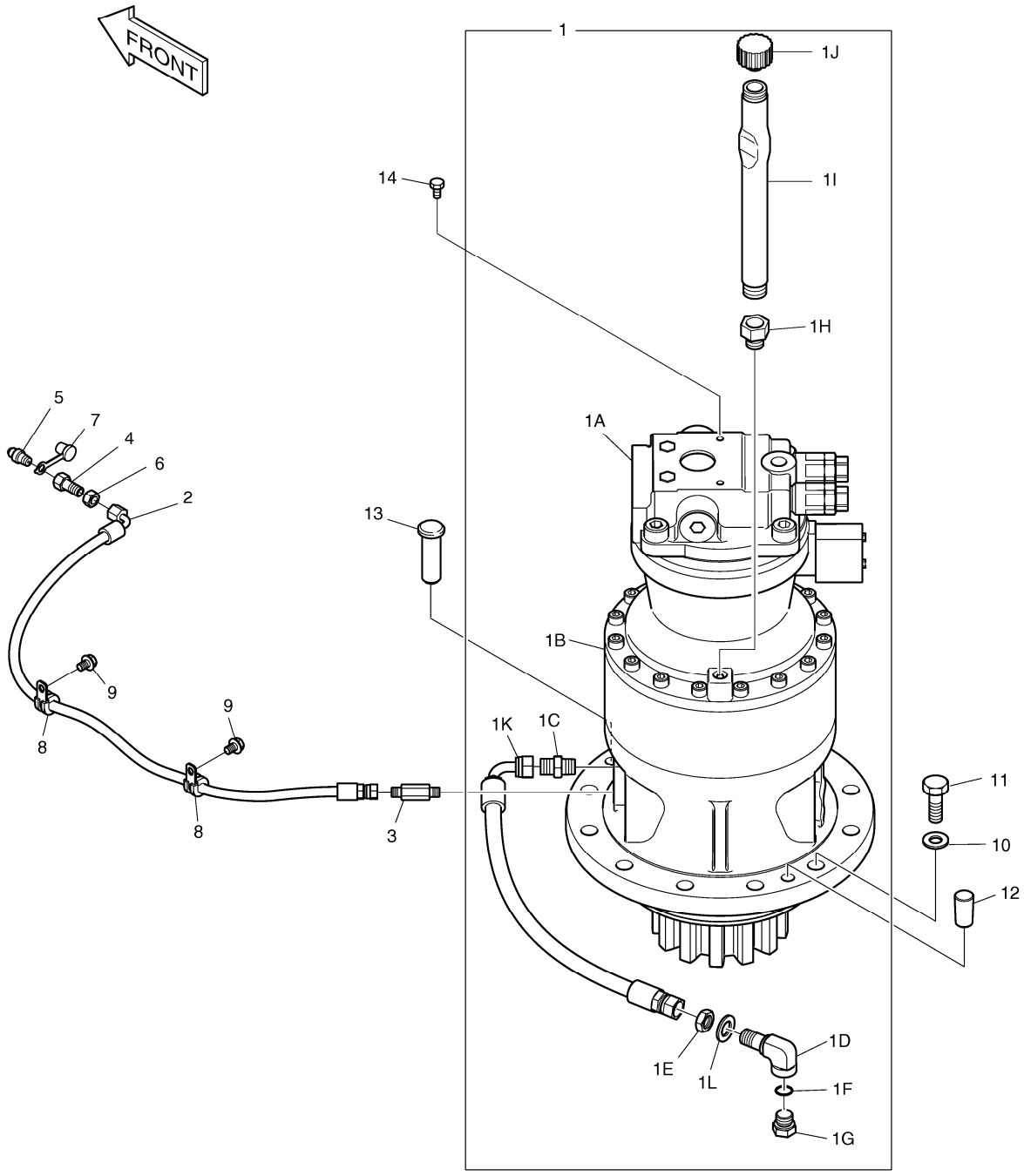

DATE	JUN. 01, 2010
3rd EDITION	

Fig. 1190 SWING MOTOR MOTEUR D'ORIENTATION

Serial No. ;

Key No.	Part No.	Description	Description	Q'ty	S.C	Serial No.	ICA	Replaceable part	
								Part No.	Q'ty
1190 --	K1015489E	SWING DEVICE ASS`Y	AVERTISSEUR	-	D				
1	K1015490A	SWING DEVICE SUB ASS'Y	AVERTISSEUR	1		5433-5495	I	K1039373	1
	K1039373	SWING DEVICE SUB ASS`Y	AVERTISSEUR	1		5496-5888	I	170301-00109	1
	170301-00109	DEVICE,SWING	AVERTISSEUR	1		5889-			
1A	K1000697A	. SWING MOTOR	. MOTEUR D'OSCILLATION	1		5433-5495			
	K1045024	. SWING MOTOR	. MOTEUR D'OSCILLATION	1		5496-			
1B	404-00097C	. REDUCTION GEAR ASS'Y	. REDUCTEUR	1		5433-5495			
	K1038203	. SWING REDUCTION GEAR ASS	. ENSEMBLE DE REDUCTE	1		5496-5888	I	130426-00010	1
	130426-00010	. GEAR ASSY,REDUCTION	. ENSEMBLE DE REDUCTE	1		5889-			
1C	2181-1110D3	. ADAPTER	. ADAPTEUR	1					
1D	181-00717	. ELBOW	. COUDE	1					
1E	121-00010D3	. NUT	. ECROU	1					
1F	S8000181	. O-RING	. JOINT CIRCULAIRE	1					
1G	2181-1950D7	. PLUG	. BOUCHON	1					
1H	2181-1913D24	. REDUCER	. REDUCTEUR	1					
1I	K1000266	. PIPE	. TUYAU	1					
1J	2119-1063B	. CAP	. CHAPEAU	1					
1K	2184-1036D43	. HOSE PF1/2-550L	. TUYAU	1					
1L	S5011113	. WASHER;PLAIN	. RONDELLE	1					
2	2184-1046D50	HOSE	TUYAU FLEXIBLE	1					
3	DS2214051	ADAPTER	ADAPTEUR	1					
4	181-00103	REDUCER	REDUCTEUR	1					
5	S6710041	NIPPLE;GREASE	MAMELON	1					
6	121-00006	NUT	ECROU	1					
7	160-00020	CAP;GREASE NIPPLE	CHAPEAU	1					
8	124-00208D2	CLIP	AGRAFE	2					
9	K1001029	BOLT	BOULON	2					
10	2114-9012A	WASHER;HARD	RONDELLE	11					
11	S0570166	BOLT M20X2.5X65	BOULON	11					
12	160-00027	CAP	CHAPEAU	2					
13	2123-4030	PIN;LOCK	GOUPILLE	1					
14	S0511666	BOLT	BOULON	2					

DATE	JUN. 01, 2010
3rd EDITION	

Fig. 1200 FUEL TANK
RESERVOIR DE GAZOLE

Serial No. ;

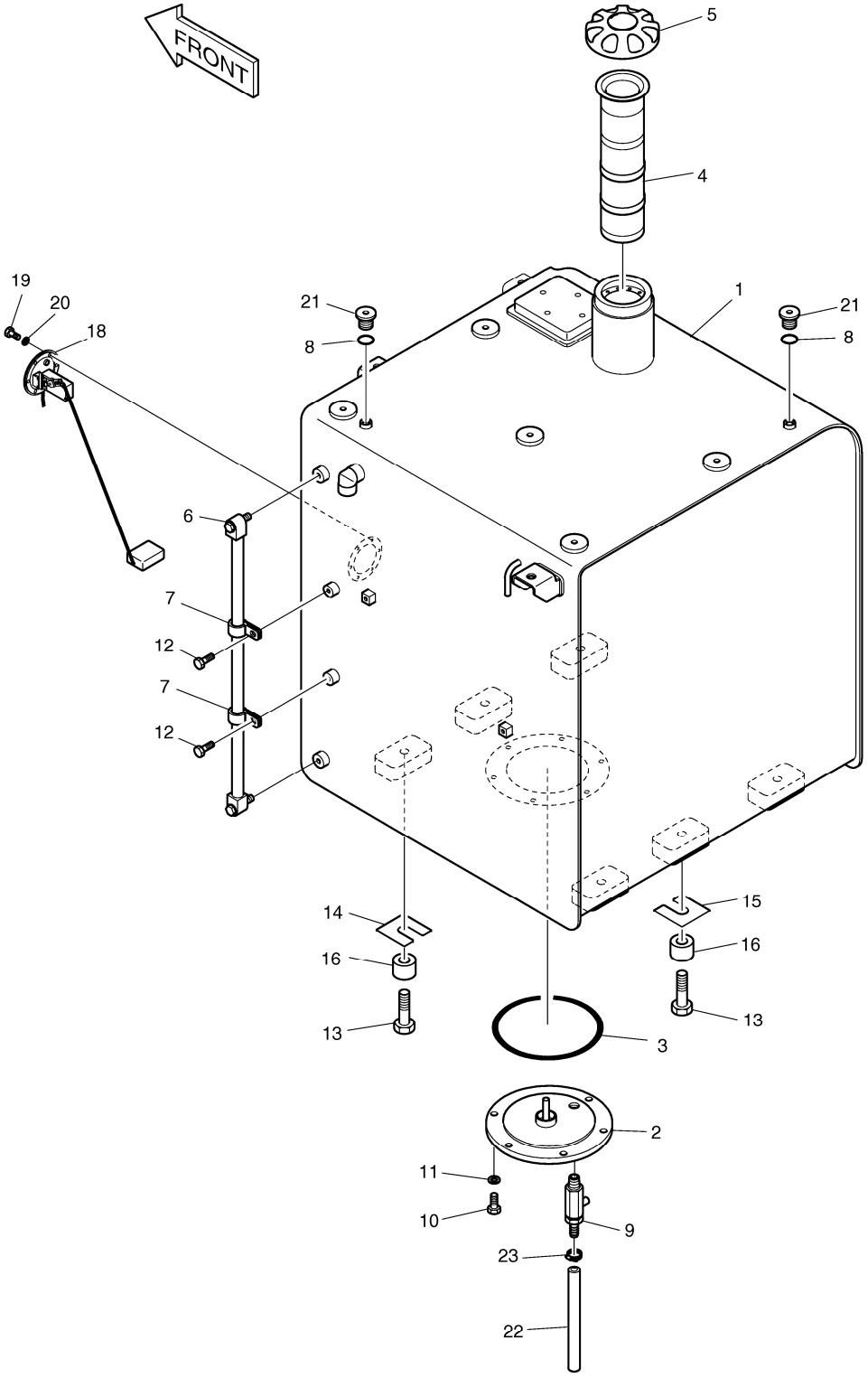

DATE	JUN. 01, 2010
3rd EDITION	

Fig. 1200 FUEL TANK
RESERVOIR DE GAZOLE

Serial No. ;

Key No.	Part No.	Description	Description	Q'ty	S.C	Serial No.	ICA	Replaceable part	
								Part No.	Q'ty
1200 --	K1045318A	FUEL TANK ASS`Y	RESERVOIR A GAZOLE	-	D				
1	K1044948A	TANK;FUEL	RESERVOIR DE CARBURA	1					
2	473-00033	COVER	COUVERTURE	1					
3	S8011450	O-RING	JOINT CIRCULAIRE	1					
4	471-00105A	FILTER;FUEL STRAINER	FILTRE	1					
5	K1004266	CAP;FUEL	CHAPEAU	1					
6	119-00014AD1	GAUGE;LEVEL	MESURE	1					
7	DS2802021	CLIP	AGRAFE	2					
8	S8000111	O-RING	JOINT CIRCULAIRE	2					
9	186-00017A	COCK;DRAIN	ROBINET	1					
10	S0512066	BOLT	BOULON	6					
11	S5102603	WASHER	RONDELLE	6					
12	K1001029	BOLT	BOULON	2					
13	S0565466	BOLT	BOULON	6					
14	2114-1813	SHIM	CALE	3					
15	2114-1814	SHIM	CALE	3					
16	114-00425	SPACER	ENTRETOISE	6					
18	547-00026	SENDER;FUEL	EXPEDITEUR	1					
19	S3450833	SCREW	VIS	6					
20	S5100203	WASHER;SPRING	RONDELLE	6					
21	2181-1890D2	PLUG	BOUCHON	2					
22	DS2105053	HOSE	TUYAU	1					
23	S8450012	CLAMP	BRIDE	1					

DATE	JUN. 01, 2010
3rd EDITION	

Fig. 1210 FUEL PIPING
CONDUITES DE GAZOLE

Serial No. ;

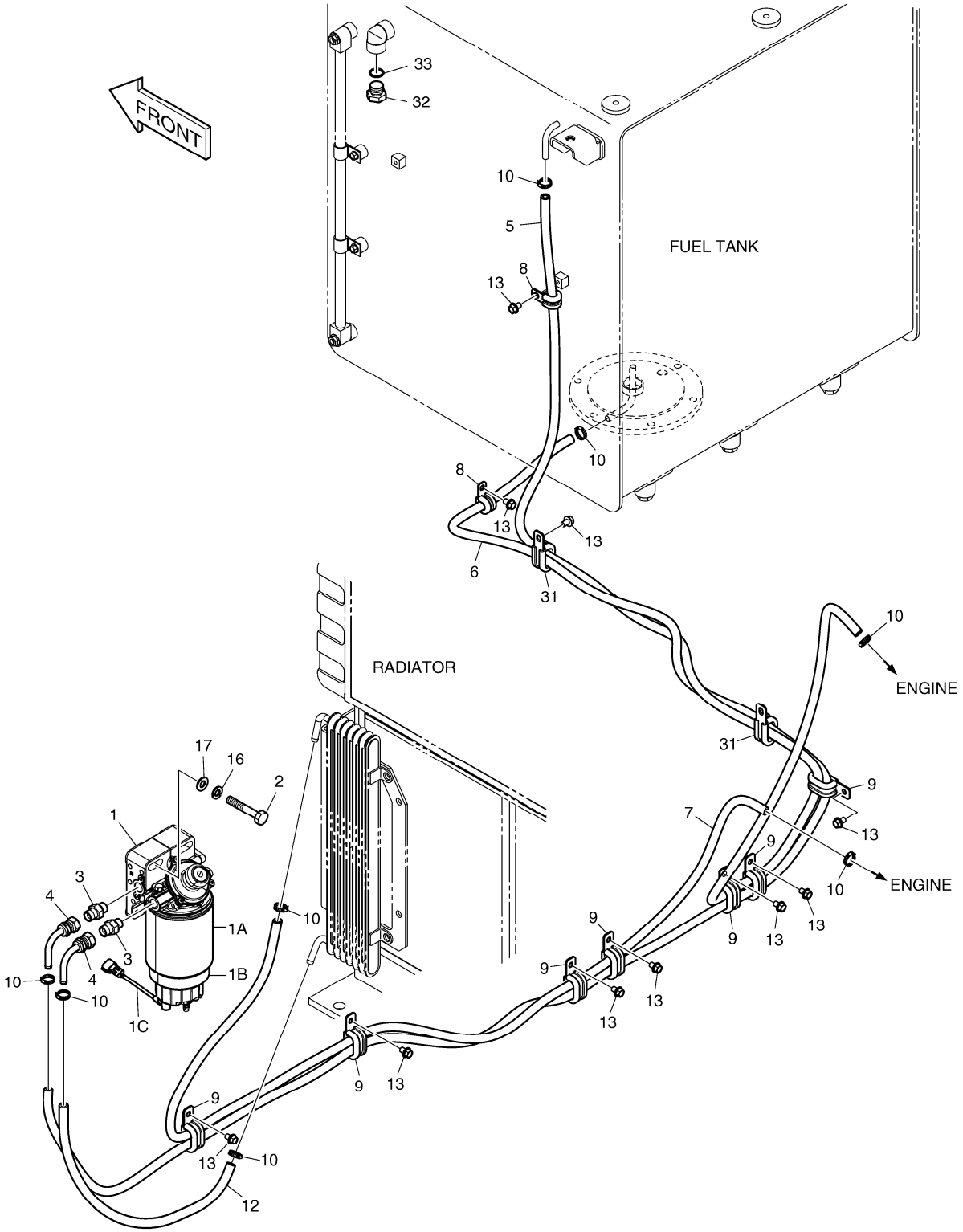

DATE	JUN. 01, 2010
3rd EDITION	

Fig. 1210 FUEL PIPING
CONDUITES DE GAZOLE

Serial No. ;

Key No.	Part No.	Description	Description	Q'ty	S.C	Serial No.	ICA	Replaceable part	
								Part No.	Q'ty
1210 --	K1008555H	FUEL PIPING	CONDUITES DE GAZOLE	-	D				
1	K1044605	PRE FUEL FILTER ASS'Y	PRE FILTRE A ESSENCE	1					
1A	K1006530	. FILTER;PRE FUEL	. FILTRE	1					
1B	K1046352	. BOWL	. CUVETTE	1					
1C	K1046350	. SENSOR;WATER	. CAPTEUR	1					
2	S0561266	BOLT	BOULON	2					
3	DS2479004	ADAPTER	ADAPTEUR	2					
4	K1002864	ELBOW	COUDE	2					
5	DS2105021	HOSE	TUYAU	1					
6	DS2105026	HOSE	TUYAU FLEXIBLE	1					
7	DS2105018	HOSE	TUYAU FLEXIBLE	1					
8	124-00208D2	CLIP	AGRAFE	2					
9	124-00209D1	CLIP	AGRAFE	7					
10	S8470014	CLAMP;HOSE	BRIDE	8					
12	DS2105015	HOSE	TUYAU	1					
13	K1001029	BOLT	BOULON	10					
16	S5102703	WASHER;SPRING	RONDELLE	2					
17	S5010713	WASHER;PLAIN	RONDELLE	2					
31	124-00209D1	CLIP	AGRAFE	2					
32	2181-1950D7	PLUG	BOUCHON	1					
33	S8000181	O-RING	JOINT CIRCULAIRE	1					

DATE	JUN. 01, 2010
3rd EDITION	

Fig. 1220 OIL TANK
RESERVOIR D'HUILE

Serial No. ;

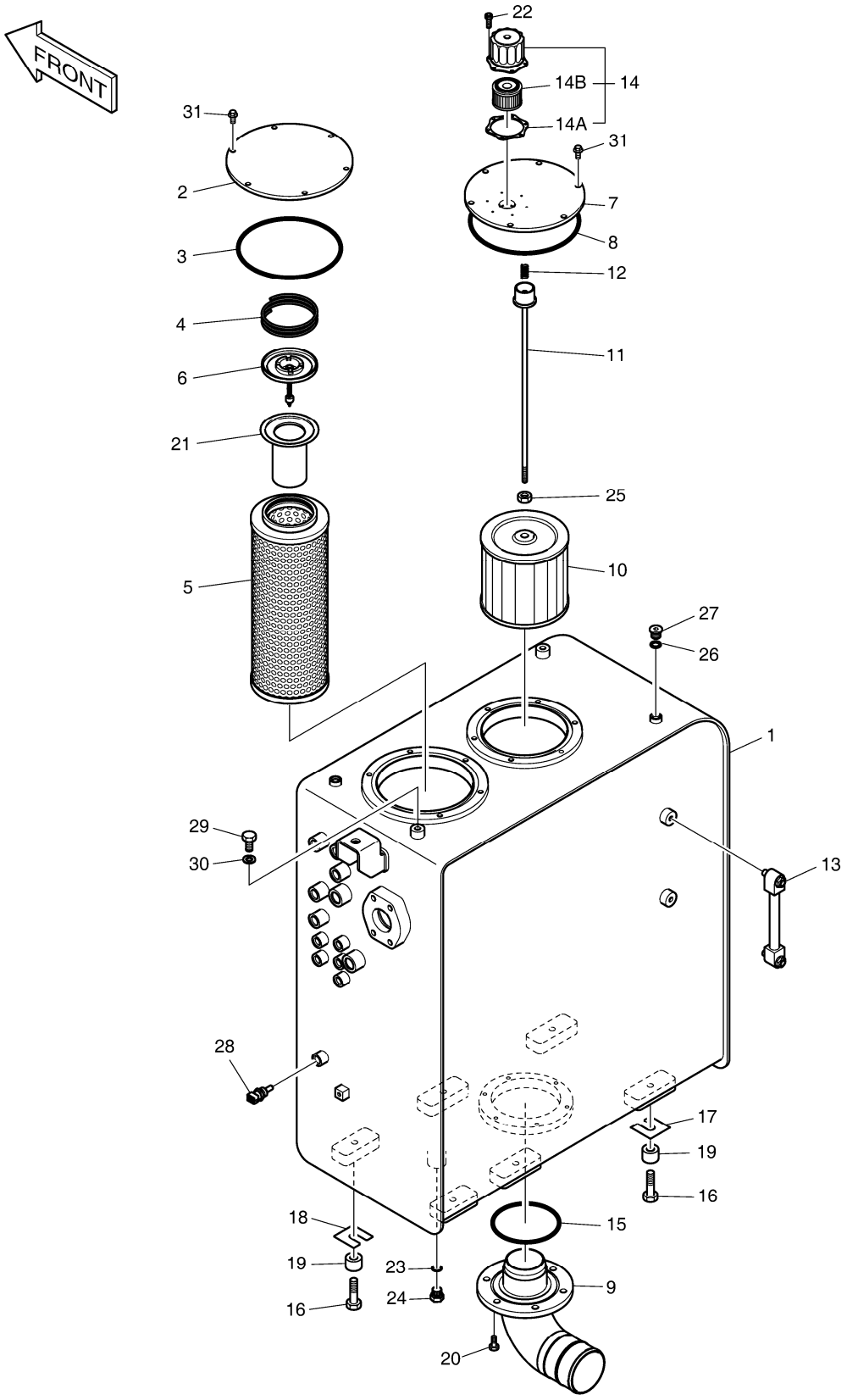

DATE	JUN. 01, 2010
3rd EDITION	

Fig. 1220 OIL TANK RESERVOIR D'HUILE

Serial No. ;

Key No.	Part No.	Description	Description	Q'ty	S.C	Serial No.	ICA	Replaceable part	
								Part No.	Q'ty
1220 --	K1045319	OIL TANK ASS`Y	POMPE	-	D				
1	K1044950	TANK;OIL	RESERVOIR DE HUILE	1					
2	K1011675A	COVER	COUVERTURE	1					
3	S8011850	O-RING	JOINT CIRCULAIRE	1					
4	2129-1393	SPRING	RESSORT	1					
5	474-00055	ELEMENT;RETURN FILTER	ELEMENT	1					
6	2426-1175	VALVE;BY-PASS	VALVE	1					
7	473-00052	COVER	COUVERTURE	1					
8	S8011650	O-RING	JOINT CIRCULAIRE	1					
9	K1000269A	PIPE;SUCTION	TUYAU	1					
10	2474-9016A	FILTER;SUCTION	FILTRE	1					
11	136-00002	ROD	TIGE	1					
12	2129-1008	SPRING;COMPRESS	RESSORT	1					
13	119-00025B	GAUGE;LEVEL	MESURE	1					
14	K1012685A	BREATHER;AIR	RENIFLARD	1					
14A	K9005662	. GASKET	. GARNITURE	1					
14B	K1029257	. ELEMENT;AIR BREATHER	. ELEMENT	1					
15	S8011200	O-RING	JOINT CIRCULAIRE	1					
16	S0565466	BOLT	BOULON	6					
17	2114-1813	SHIM	CALE	3					
18	2114-1814	SHIM	CALE	3					
19	114-00425	SPACER	ENTRETOISE	6					
20	DS0025024	BOLT;SET	BOULON	6					
21	471-00127	STRAINER;BY-PASS	TAMIS	1					
22	2120-2166D41	BOLT;SOCKET M5X0.8X8	BOULON	6					
23	S8000181	O-RING	JOINT CIRCULAIRE	1					
24	2181-1950D7	PLUG	BOUCHON	1					
25	S4012733	NUT	ECROU	1					
26	S8000111	O-RING	JOINT CIRCULAIRE	2					
27	2181-1890D2	PLUG	BOUCHON	2					
28	K1003296	SENSOR;HYD OIL TEMP	CAPTEUR	1					
29	S0514666	BOLT M12X1.75x16	BOULON	2					
30	S5102703	WASHER;SPRING	RONDELLE	2					
31	K1007957	BOLT;SET	BOULON	12					

DATE	JUN. 01, 2010
3rd EDITION	

Fig. 1230 OIL COOLER PIPING(1)
CONDUITES DE HUILE

Serial No. ;

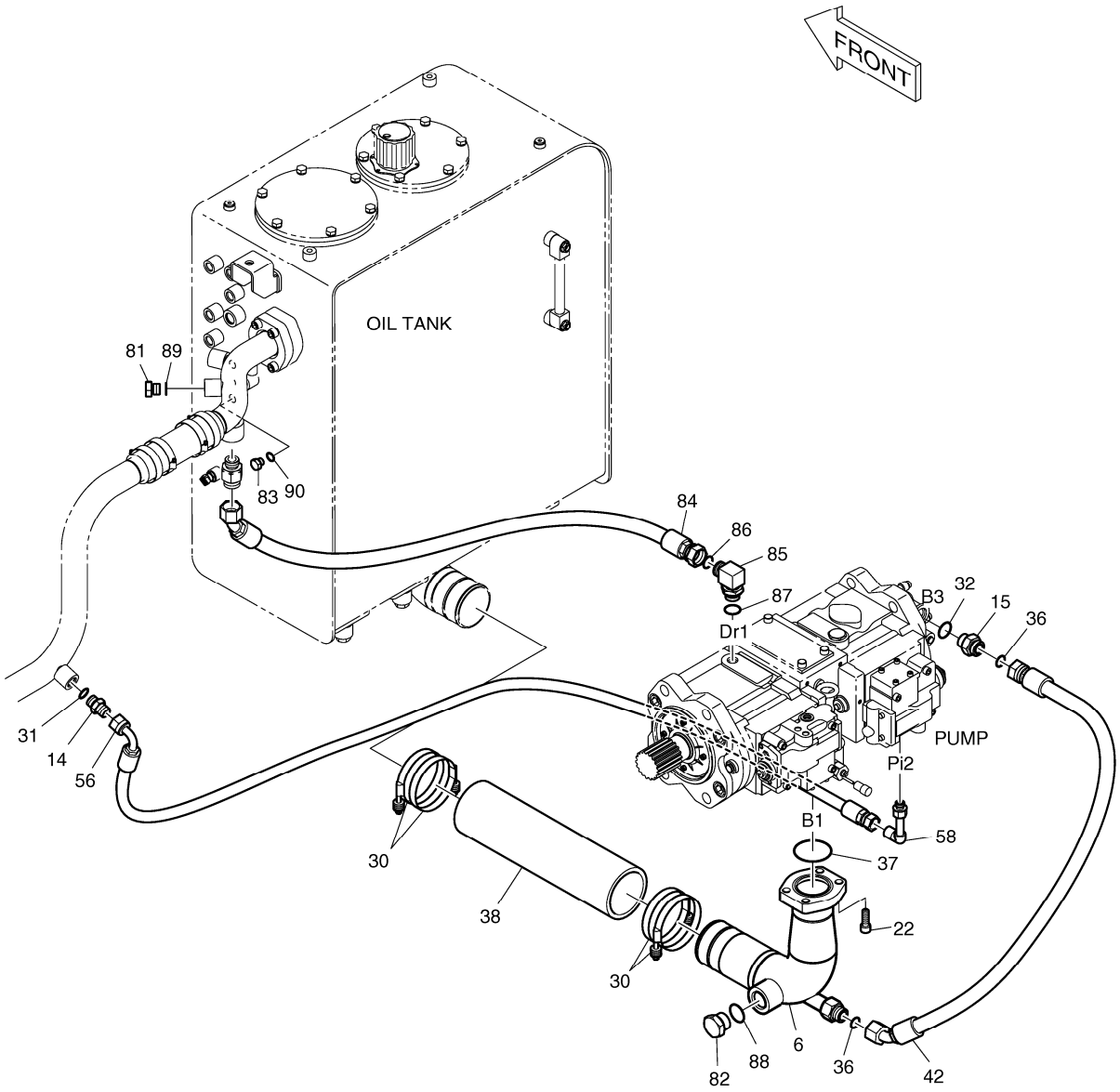

DATE	JUN. 01, 2010
3rd EDITION	

Fig. 1230 OIL COOLER PIPING(1) CONDUITES DE HUILE

Serial No. ;

Key No.	Part No.	Description	Description	Q'ty	S.C	Serial No.	ICA	Replaceable part	
								Part No.	Q'ty
1230 --	K1039406A	OIL COOLER PIPING	CONDUITES DE HUILE	-	D				
6	140-01603A	PIPE;SUCTION	PIPE;OIL	1					
14	2181-1126D6	ADAPTER	ADAPTEUR	1					
15	2181-4133D5	ADAPTER	ADAPTEUR	1					
22	S2215366	BOLT	BOULON	4					
30	S8500118	CLAMP;HOSE	BRIDE	4					
31	S8000181	O-RING	JOINT CIRCULAIRE	1					
32	S8000241	O-RING	JOINT CIRCULAIRE	1					
36	S8030121	O-RING	JOINT CIRCULAIRE	2					
37	2180-1026D31	O-RING	JOINT CIRCULAIRE	1					
38	2185-1737D8	HOSE	TUYAU	1					
42	DS2012136	HOSE	TUYAU FLEXIBLE	1					
56	DS2055950	HOSE	TUYAU FLEXIBLE	1					
58	2181-1702D36	ELBOW	COUDE	1					
81	2181-1950D3	PLUG	BOUCHON	1					
82	2181-1950D9	PLUG	BOUCHON	1					
83	2181-1950D1	PLUG	BOUCHON	1					
84	DS2012070	HOSE	TUYAU	1					
85	2181-2294D2	ELBOW	COUDE	1					
86	S8030121	O-RING	JOINT CIRCULAIRE	1					
87	S8000241	O-RING	JOINT CIRCULAIRE	1					
88	S8000291	O-RING	JOINT CIRCULAIRE	1					
89	S8000181	O-RING	JOINT CIRCULAIRE	1					
90	S8000111	O-RING	JOINT CIRCULAIRE	1					

DATE	JUN. 01, 2010
3rd EDITION	

Fig. 1240 OIL COOLER PIPING(2) CONDUITES DE HUILE

Serial No. ;

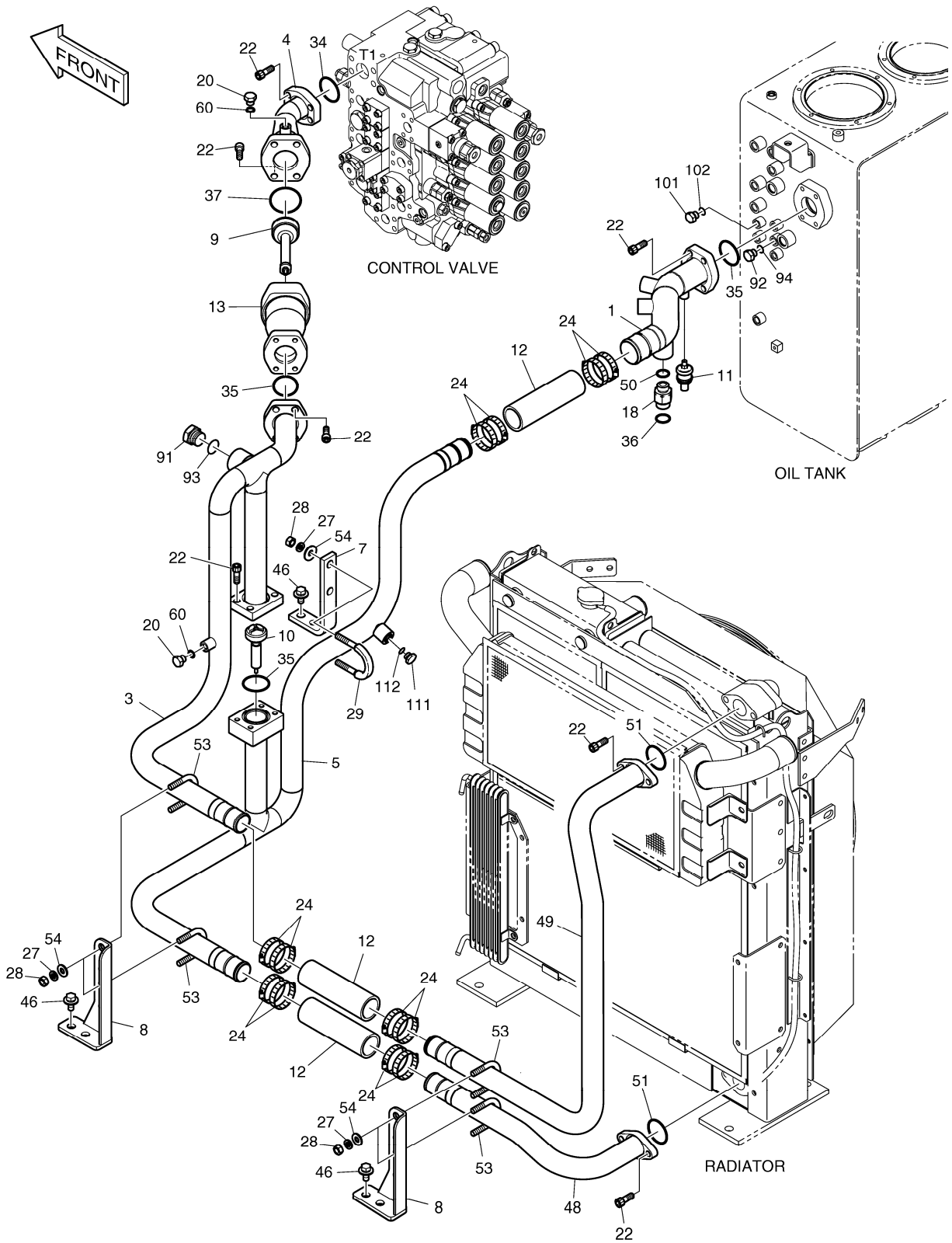

DATE	JUN. 01, 2010
3rd EDITION	

Fig. 1240 OIL COOLER PIPING(2) CONDUITES DE HUILE

Serial No. ;

Key No.	Part No.	Description	Description	Q'ty	S.C	Serial No.	ICA	Replaceable part	
								Part No.	Q'ty
1240 --	K1039406A	OIL COOLER PIPING	CONDUITES DE HUILE	-	D	5433-5583			
	420212-00225	PIPING,OIL COOLER	CONDUITES DE HUILE	-	D	5584-			
1	K1036301	PIPE	TUYAU	1		5433-5583	I	420202-00015	1
	420202-00015	PIPE	TUYAU	1		5584-			
3	K1036303B	PIPE	TUYAU	1					
4	140-01604C	PIPE	TUYAU	1					
5	K1036302B	PIPE	TUYAU	1					
7	K1044617	PLATE	PLAQUE	1					
8	K1039456A	PLATE	PLAQUE	2		5433-5583	I	110406-00039	2
	110406-00039	BRACKET	SUPPORT	2		5584-			
9	K1002341	VALVE;BYPASS	VALVE	1					
10	K1007197	VALVE;BYPASS	VALVE	1					
11	549-00095	SWITCH;PRESSURE	COMMUTATEUR	1					
12	2185-1776D2	HOSE	TUYAU	3					
13	K1000644B	PIPE	TUYAU	1					
18	2181-2627D5	ADAPTER	ADAPTEUR	1					
20	2181-1950D1	PLUG	BOUCHON	2					
22	S2215366	BOLT	BOULON	24					
24	S8500079	CLAMP;HOSE	BRIDE	12					
27	S5102703	WASHER;SPRING	RONDELLE	10					
28	S4012733	NUT	ECROU	10					
29	120-00317	BOLT;U	BOULON	1					
34	2180-1026D24	O-RING	JOINT CIRCULAIRE	1					
35	2180-1026D27	O-RING	JOINT CIRCULAIRE	3					
36	S8030121	O-RING	JOINT CIRCULAIRE	1					
37	2180-1026D31	O-RING	JOINT CIRCULAIRE	1					
46	DS0025018	BOLT;SET	BOULON	6					
48	K1036143A	PIPE	TUYAU	1					
49	K1036299A	PIPE	TUYAU	1					
50	S8000231	O-RING	JOINT CIRCULAIRE	1					
51	2180-1026D28	O-RING	JOINT CIRCULAIRE	2					
53	2120-1413D12	U-BOLT	U-BOULON	4					
54	2114-1058D46	WASHER	RONDELLE	10		5433-5583			
	2114-1058D72	WASHER;PLAIN	RONDELLE	10		5584-			
60	S8000111	O-RING	JOINT CIRCULAIRE	2					
91	2181-1950D9	PLUG	BOUCHON	1					
92	2181-1950D1	PLUG	BOUCHON	1					
93	S8000291	O-RING	JOINT CIRCULAIRE	1					

DATE	JUN. 01, 2010
3rd EDITION	

Fig. 1240 OIL COOLER PIPING(2)
CONDUITES DE HUILE

Serial No. ;

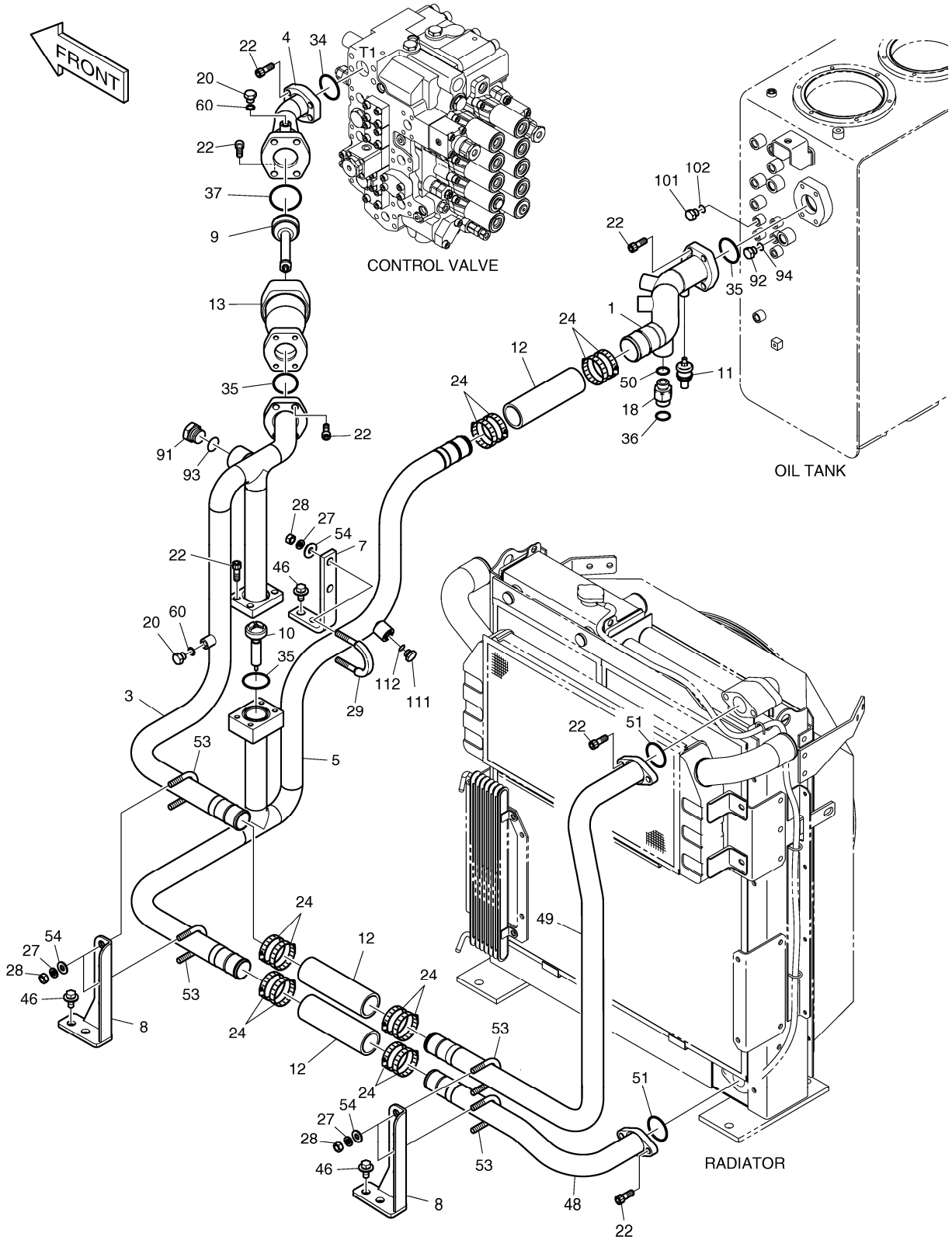

DATE	JUN. 01, 2010
3rd EDITION	

Fig. 1240 OIL COOLER PIPING(2) CONDUITES DE HUILE

Serial No. ;

Key No.	Part No.	Description	Description	Q'ty	S.C	Serial No.	ICA	Replaceable part	
								Part No.	Q'ty
1240 -94	S8000111	O-RING	JOINT CIRCULAIRE	1					
101	2181-1950D1	PLUG	BOUCHON	1					
102	S8000111	O-RING	JOINT CIRCULAIRE	1					
111	2181-1950D2	PLUG	BOUCHON	1					
112	S8000141	O-RING	JOINT CIRCULAIRE	1					

DATE	JUN. 01, 2010
3rd EDITION	

Fig. 1250 OIL COOLER PIPING(3)
CONDUITES DE HUILE

Serial No. ;

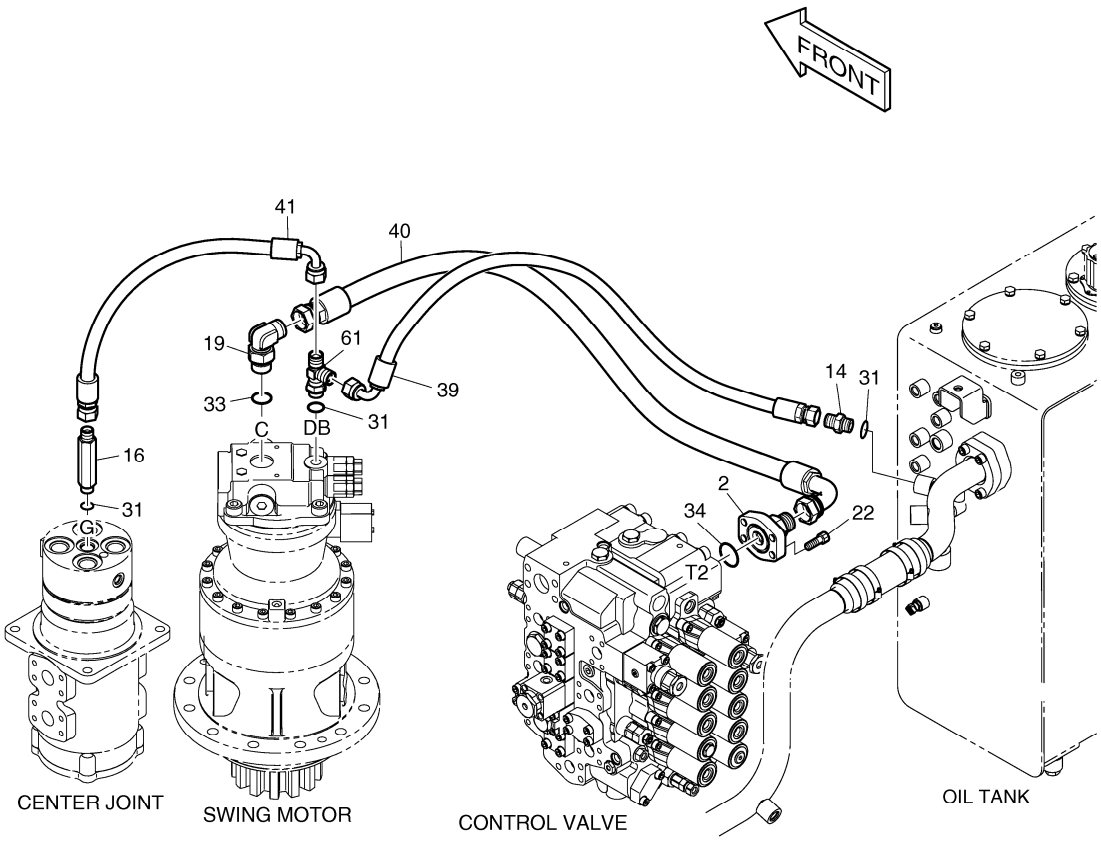

DATE	JUN. 01, 2010
3rd EDITION	

Fig. 1250 OIL COOLER PIPING(3) CONDUITES DE HUILE

Serial No. ;

Key No.	Part No.	Description	Description	Q'ty	S.C	Serial No.	ICA	Replaceable part	
								Part No.	Q'ty
1250 --	K1039406A	OIL COOLER PIPING	CONDUITES DE HUILE	-	D				
2	140-02009A	PIPE	TUYAU	1					
14	2181-1126D6	ADAPTER	ADAPTEUR	1					
16	DS2213167	ADAPTER	ADAPTEUR	1					
19	2181-1702D73	ELBOW	COUDE	1					
22	S2215366	BOLT	BOULON	4					
31	S8000181	O-RING	JOINT CIRCULAIRE	3					
33	S8000291	O-RING	JOINT CIRCULAIRE	1					
34	2180-1026D24	O-RING	JOINT CIRCULAIRE	1					
39	2184-1036D293	HOSE PF1/2-600L	TUYAU FLEXIBLE	1					
40	DS20551024	HOSE	TUYAU FLEXIBLE	1					
41	DS2055976	HOSE	TUYAU	1					
61	2181-1951D5	TEE	TE	1					

DATE	JUN. 01, 2010
3rd EDITION	

Fig. 1260 MAIN PIPING(1) - PUMP
CONDUITES DE BATI PRINCIPAL

Serial No. ; 5001 ~ 5730

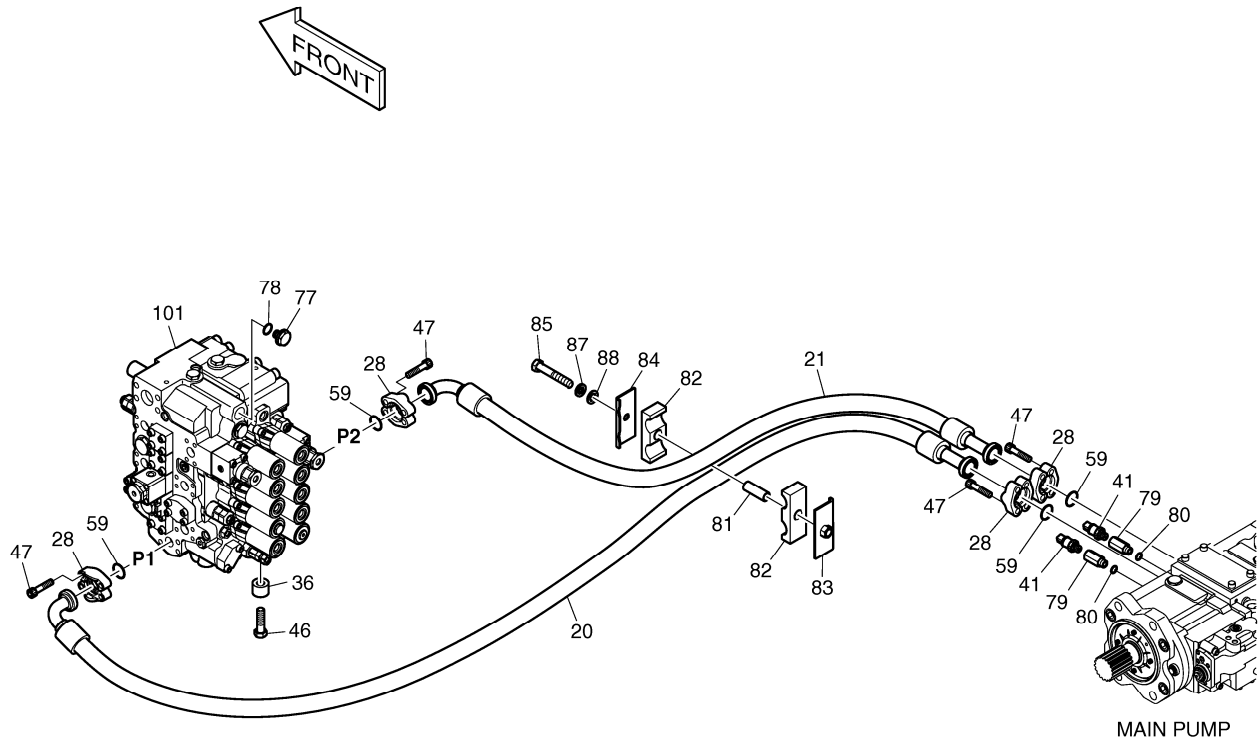

DATE	JUN. 01, 2010
3rd EDITION	

Fig. 1260 MAIN PIPING(1) - PUMP
CONDUITES DE BATI PRINCIPAL

Serial No. ; 5001 ~ 5730

Key No.	Part No.	Description	Description	Q'ty	S.C	Serial No.	ICA	Replaceable part	
								Part No.	Q'ty
1260 --	K1044586B	MAIN PIPING(1)	CIRCUIT HYDRAULIQUE PF	-	D				
20	DS2040687	HOSE	TUYAU FLEXIBLE	1					
21	DS2040709	HOSE	TUYAU FLEXIBLE	1					
28	2181-9081	FLANGE;SPLIT	BRIDE	8					
36	114-00425	SPACER	ENTRETOISE	4					
41	K1048145	SENSOR;PRESSURE	CAPTEUR	2					
46	S0565466	BOLT	BOULON	4					
47	S2215466	BOLT;SOCKET	BOULON	16					
59	2180-1026D19	O-RING	JOINT CIRCULAIRE	4					
77	2181-1950D9	PLUG	BOUCHON	1					
78	S8000291	O-RING	JOINT CIRCULAIRE	1					
79	DS2242029	REDUCER	REDUCTEUR	2					
80	S8000141	O-RING	JOINT CIRCULAIRE	2					
81	K1050297	SPACER	BAGUE D'ECARTEMENT	1					
82	124-00247	CLAMP;HOSE	COLLIER	2					
83	K1038968	PLATE	PLAQUE	1					
84	2191-3705C	PLATE	PLAQUE	1					
85	S0566266	BOLT	BOULON A 6 PANS	1					
87	S5102903	WASHER	RONDELLE	1					
88	S5010913	WASHER	RONDELLE	1					
101	K1025391	VALVE;CONTROL	VALVE	1					

DATE	JUN. 01, 2010
3rd EDITION	

Fig. 1261 MAIN PIPING(1) - PUMP
CONDUITES DE BATI PRINCIPAL

Serial No. ; 5731 ~

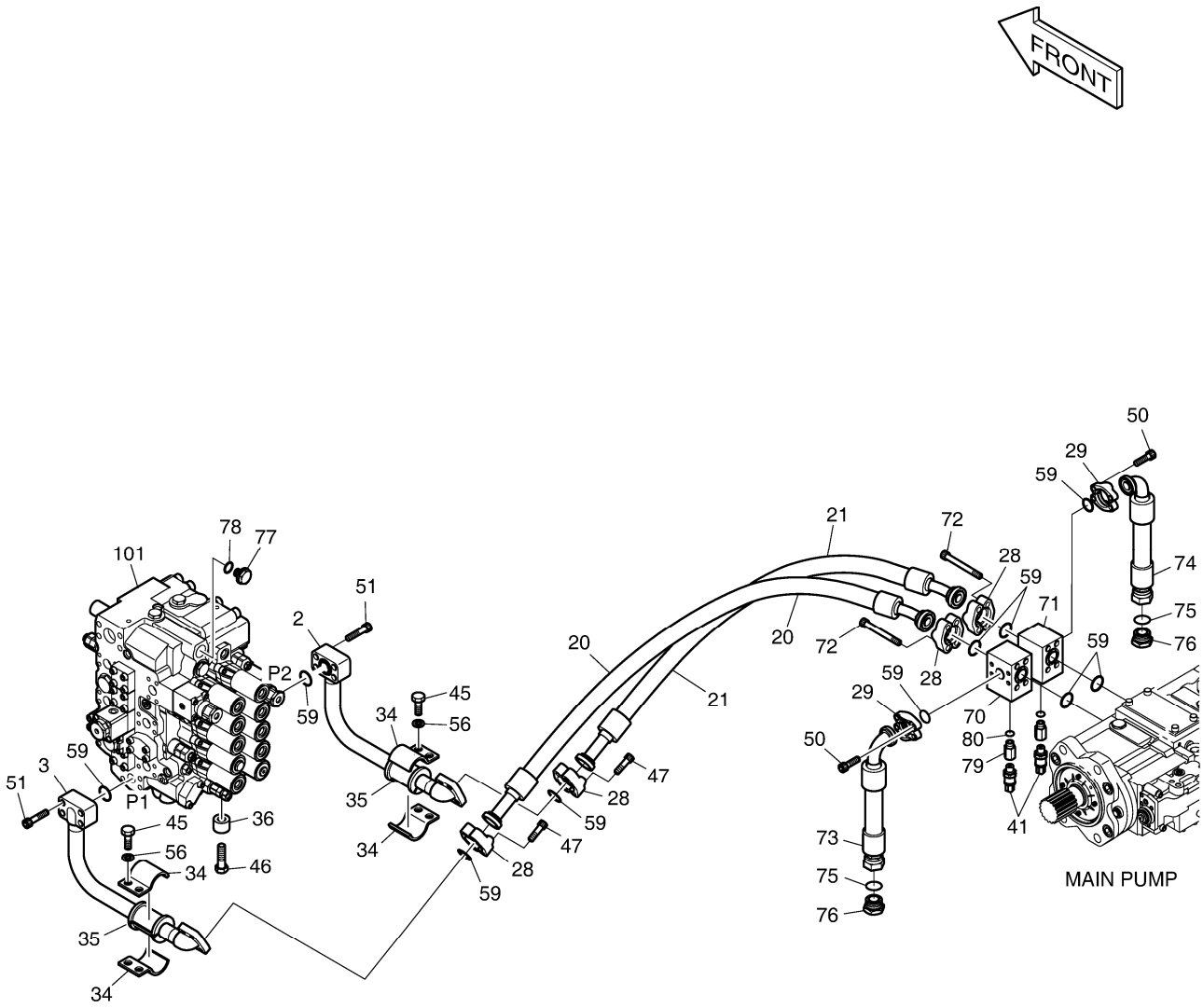

DATE	JUN. 01, 2010
3rd EDITION	

Fig. 1261 MAIN PIPING(1) - PUMP
CONDUITES DE BATI PRINCIPAL

Serial No. ; 5731 ~

Key No.	Part No.	Description	Description	Q'ty	S.C	Serial No.	ICA	Replaceable part	
								Part No.	Q'ty
1261 --	420212-00576	PIPING,MAIN	CONDUITES DE BATI PRIN(	-	D				
2	140-01484B	PIPE	TUYAU	1					
3	140-01485B	PIPE	TUYAU	1					
20	DS2097013	HOSE	TUYAU FLEXIBLE	1					
21	DS2097014	HOSE	TUYAU FLEXIBLE	1					
28	2181-9081	FLANGE;SPLIT	BRIDE	8					
29	2181-9078	FLANGE	BRIDE	4					
34	124-00218	CLAMP	BRIDE	4					
35	161-00281	RUBBER	LE CAOUTCHOUC	2					
36	114-00425	SPACER	ENTRETOISE	4					
41	K1048145	SENSOR;PRESSURE	CAPTEUR	2					
45	S0562766	BOLT	BOULON	4					
46	S0565466	BOLT	BOULON	4					
47	S2215466	BOLT;SOCKET	BOULON	8					
50	S2212266	BOLT;SOCKET	BOULON	8					
51	S2215766	BOLT;SOCKET M12X1.75X55	BOULON	8					
56	S5102803	WASHER;SPRING	RONDELLE	4					
59	2180-1026D19	O-RING	JOINT CIRCULAIRE	10					
70	K1006396B	BLOCK	BLOC	1					
71	K1007164B	BLOCK	BLOC	1					
72	S2217066	BOLT;SOCKET	BOULON	8					
73	DS2018100	HOSE	TUYAU	1					
74	DS2018100	HOSE	TUYAU	1					
75	S8030161	O-RING	JOINT CIRCULAIRE	2					
76	2181-2218D6	PLUG	BOUCHON	2					
77	2181-1950D9	PLUG	BOUCHON	1					
78	S8000291	O-RING	JOINT CIRCULAIRE	1					
79	DS2242029	REDUCER	REDUCTEUR	2					
80	S8000141	O-RING	JOINT CIRCULAIRE	2					
101	K1025391	VALVE;CONTROL	VALVE	1					

DATE	JUN. 01, 2010
3rd EDITION	

Fig. 1270 MAIN PIPING(2) - BOOM
CONDUITES DE BATI PRINCIPAL

Serial No. ;

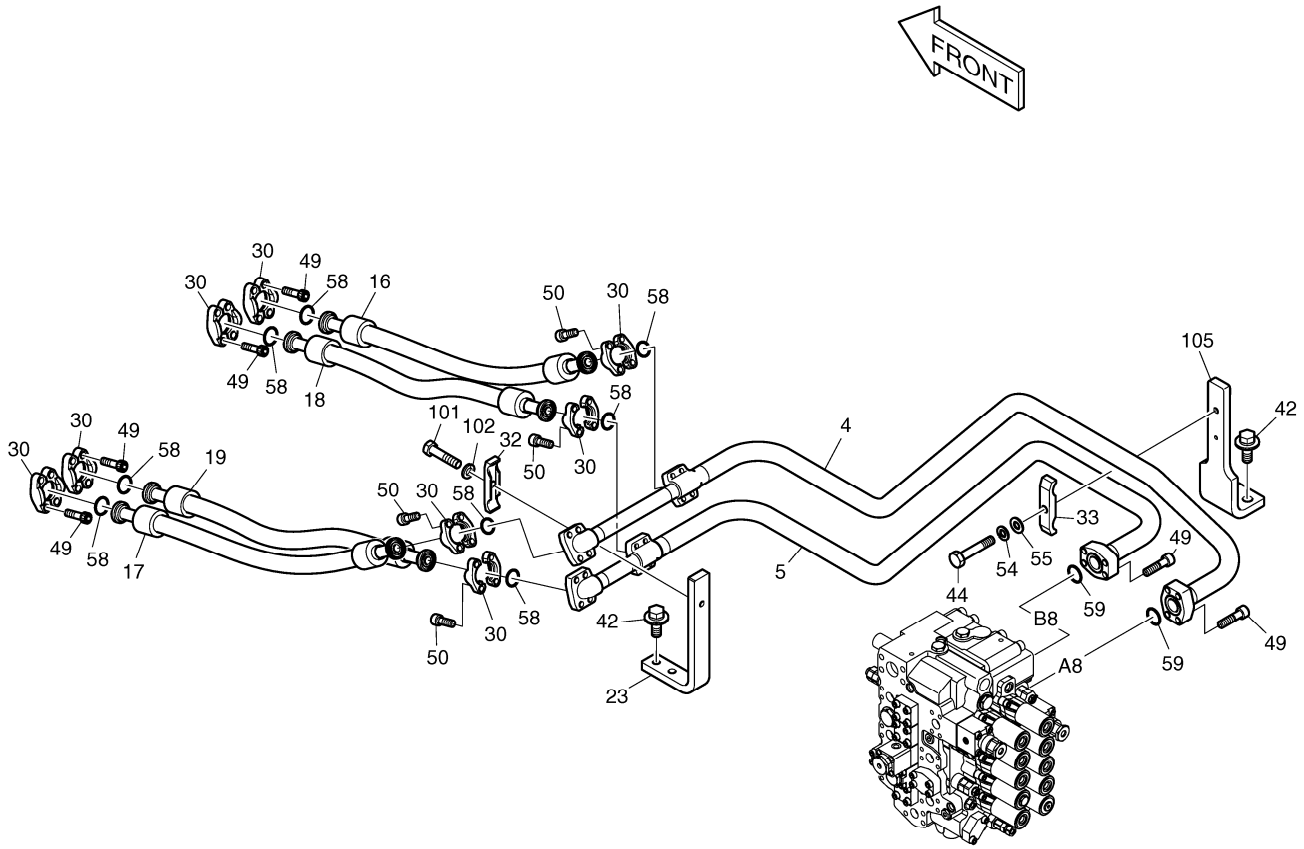

DATE	JUN. 01, 2010
3rd EDITION	

Fig. 1270 MAIN PIPING(2) - BOOM
CONDUITES DE BATI PRINCIPAL

Serial No. ;

Key No.	Part No.	Description	Description	Q'ty	S.C	Serial No.	ICA	Replaceable part	
								Part No.	Q'ty
1270 --	K1044586B	MAIN PIPING(1)	CIRCUIT HYDRAULIQUE PF	-	D				
4	140-01601C	PIPE;BOOM UP	TUYAU	1					
5	140-01602C	PIPE;BOOM DOWN	TUYAU	1					
16	DS2038222	HOSE	TUYAU	1					
17	DS2038222	HOSE	TUYAU	1					
18	DS2038144	HOSE	TUYAU	1					
19	DS2038144	HOSE	TUYAU	1					
23	195-02883B	PLATE	PLAQUE	1					
30	2181-9079	FLANGE	BRIDE	16					
32	2124-1025D6	CLAMP;PIPE	BRIDE	1					
33	2124-1025D5	CLAMP;PIPE	BRIDE	1					
42	DS0025020	BOLT;SET	BOULON	4					
44	S0561066	BOLT	BOULON	1					
49	S2212466	BOLT;SOCKET M10X1.5X40	BOULON	24					
50	S2212266	BOLT;SOCKET	BOULON	16					
54	S5102703	WASHER;SPRING	RONDELLE	1					
55	S5010713	WASHER;PLAIN	RONDELLE	1					
58	2180-1026D2	O-RING	JOINT CIRCULAIRE	8					
59	2180-1026D19	O-RING	JOINT CIRCULAIRE	2					
101	S0560866	BOLT	BOULON	1					
102	S5102703	WASHER;SPRING	RONDELLE	1					
105	195-02884B	PLATE	PLAQUE	1					

DATE	JUN. 01, 2010
3rd EDITION	

Fig. 1280 MAIN PIPING(3) - ARM, BUCKET
CIRCUIT HYDRAULIQUE PRINCIPAL

Serial No. ;

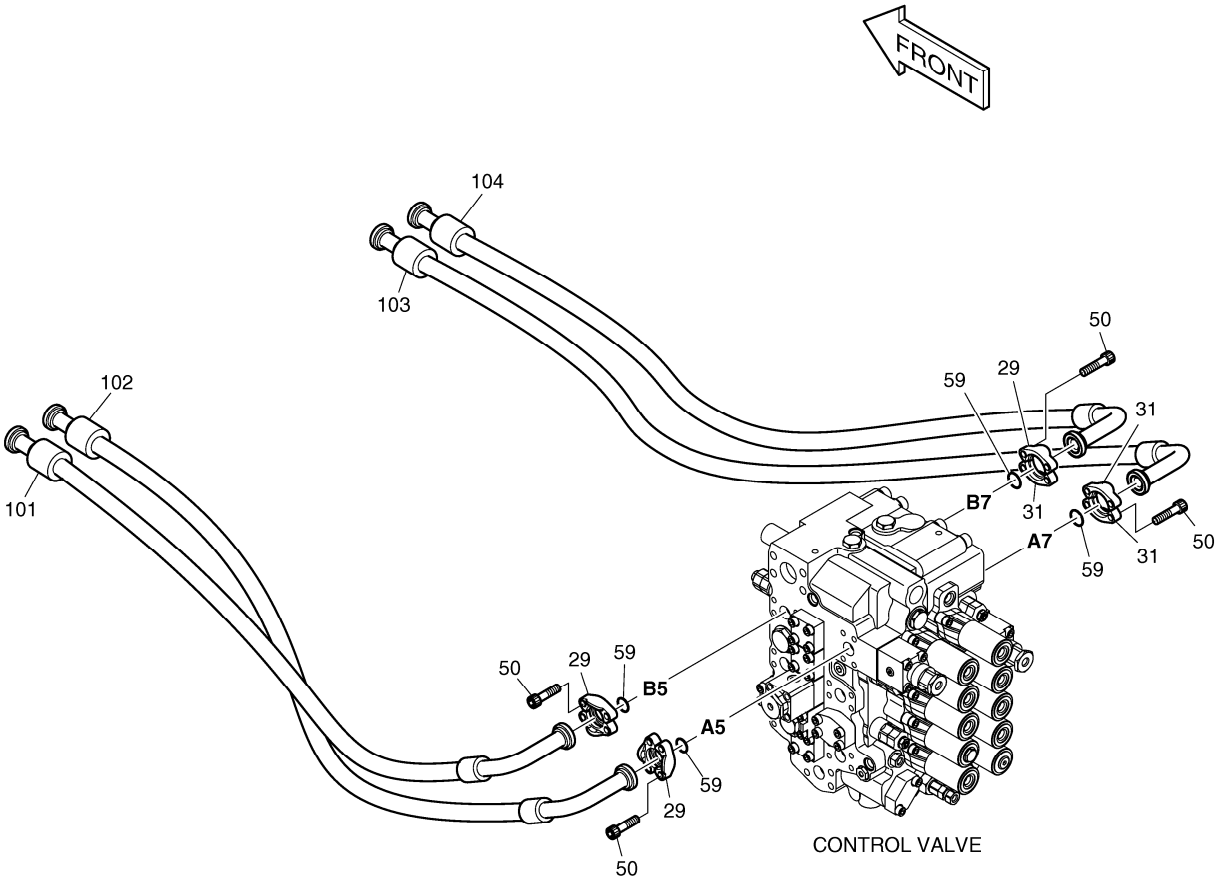

DATE	JUN. 01, 2010
3rd EDITION	

Fig. 1280 MAIN PIPING(3) - ARM, BUCKET
CIRCUIT HYDRAULIQUE PRINCIPAL

Serial No. ;

Key No.	Part No.	Description	Description	Q'ty	S.C	Serial No.	ICA	Replaceable part	
								Part No.	Q'ty
1280 --	K1044586B	MAIN PIPING(1)	CIRCUIT HYDRAULIQUE PF	-	D				
29	2181-9078	FLANGE	BRIDE	6					
31	2181-9083	FLANGE;SPLIT	BRIDE	3					
50	S2212266	BOLT;SOCKET	BOULON	16					
59	2180-1026D19	O-RING	JOINT CIRCULAIRE	4					
101	DS2040683	HOSE	TUYAU	1					
102	DS2040684	HOSE	TUYAU	1					
103	DS2040686	HOSE	TUYAU	1					
104	DS2040685	HOSE	TUYAU	1					

DATE	JUN. 01, 2010
3rd EDITION	

Fig. 1290 MAIN PIPING(4) - SWING
CONDUITES DE BATI PRINCIPAL

Serial No. ;

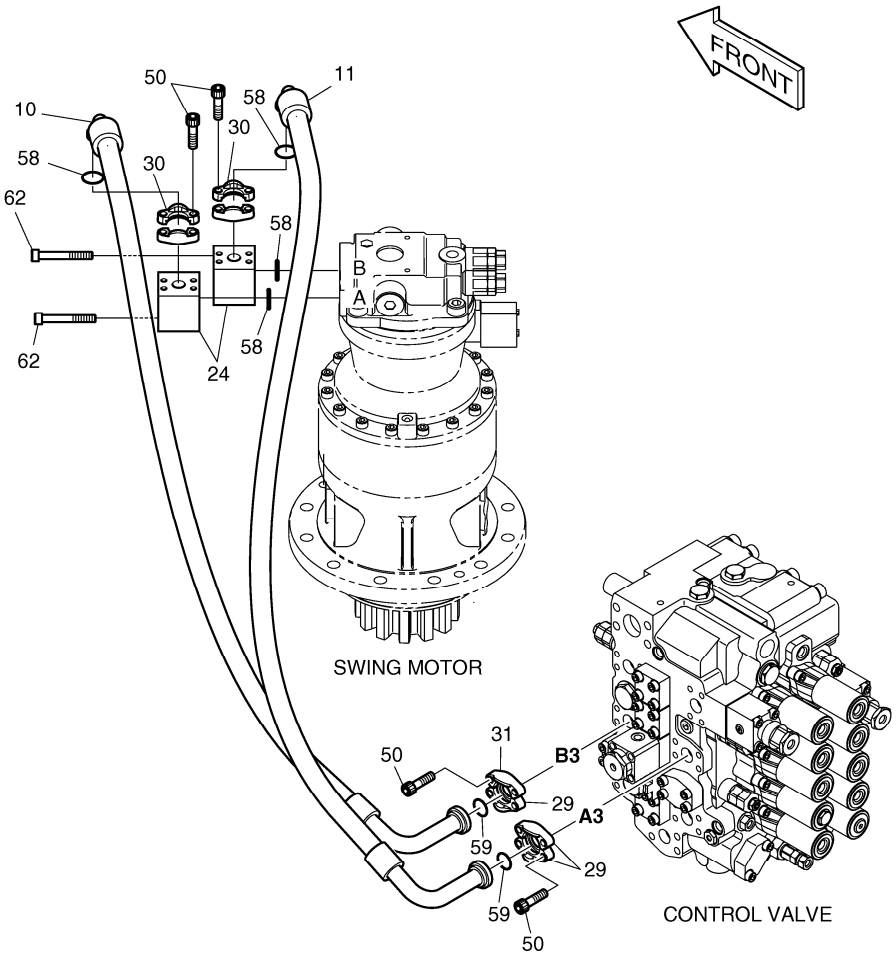

DATE	JUN. 01, 2010
3rd EDITION	

Fig. 1290 MAIN PIPING(4) - SWING
CONDUITES DE BATI PRINCIPAL

Serial No. ;

Key No.	Part No.	Description	Description	Q'ty	S.C	Serial No.	ICA	Replaceable part	
								Part No.	Q'ty
1290 --	K1044586B	MAIN PIPING(1)	CIRCUIT HYDRAULIQUE PF	-	D				
10	DS2045337	HOSE	TUYAU FLEXIBLE	1					
11	DS2045338	HOSE	TUYAU FLEXIBLE	1					
24	423-00202	BLOCK	BLOC	2					
29	2181-9078	FLANGE	BRIDE	3					
30	2181-9079	FLANGE	BRIDE	4					
31	2181-9083	FLANGE;SPLIT	BRIDE	1					
50	S2212266	BOLT;SOCKET	BOULON	16					
58	2180-1026D2	O-RING	JOINT CIRCULAIRE	4					
59	2180-1026D19	O-RING	JOINT CIRCULAIRE	2					
62	S2213166	BOLT;SOCKET	BOULON	8					

DATE	JUN. 01, 2010
3rd EDITION	

Fig. 1300 MAIN PIPING(5) - CENTER JOINT
CONDUITES DE BATI PRINCIPAL

Serial No. ;

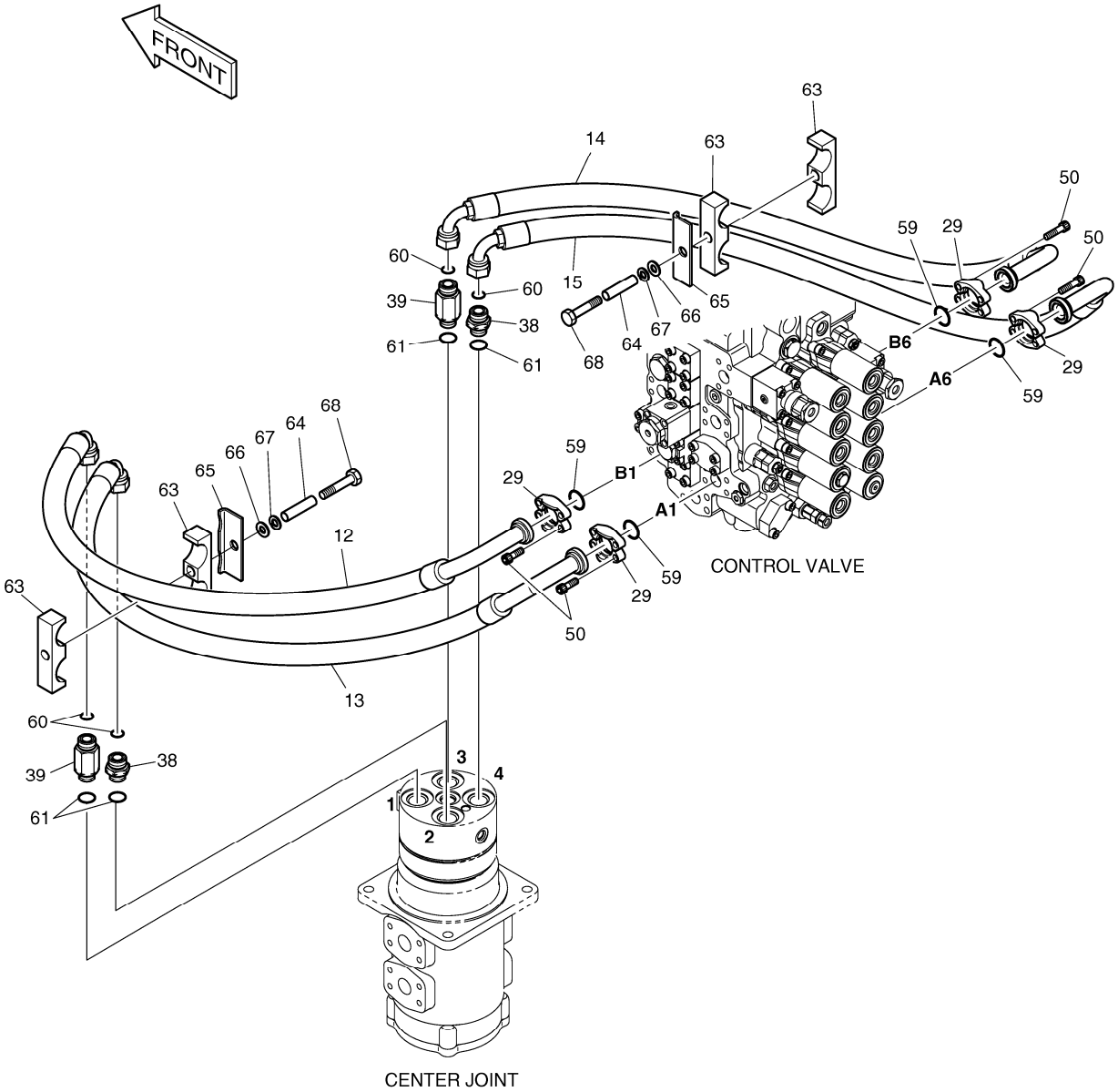

DATE	JUN. 01, 2010
3rd EDITION	

Fig. 1300 MAIN PIPING(5) - CENTER JOINT
CONDUITES DE BATI PRINCIPAL

Serial No. ;

Key No.	Part No.	Description	Description	Q'ty	S.C	Serial No.	ICA	Replaceable part	
								Part No.	Q'ty
1300 --	K1044586B	MAIN PIPING(1)	CIRCUIT HYDRAULIQUE PF	-	D				
12	DS2026146	HOSE	TUYAU FLEXIBLE	1					
13	DS2026129	HOSE	TUYAU FLEXIBLE	1					
14	DS2026145	HOSE	TUYAU FLEXIBLE	1					
15	DS2026127	HOSE	TUYAU FLEXIBLE	1					
29	2181-9078	FLANGE	BRIDE	8					
38	2181-2627D1	ADAPTER	ADAPTEUR	2					
39	2181-2627D3	ADAPTER	ADAPTEUR	2					
50	S2212266	BOLT;SOCKET	BOULON	16					
59	2180-1026D19	O-RING	JOINT CIRCULAIRE	4					
60	S8030121	O-RING	JOINT CIRCULAIRE	4					
61	S8000231	O-RING	JOINT CIRCULAIRE	4					
63	124-00192	CLAMP;HOSE	BRIDE	4					
64	2114-1737	SPACER	ENTRETOISE	2					
65	621-02850B	PLATE	PLAQUE	2					
66	S5010913	WASHER	RONDELLE	2					
67	S5102903	WASHER	RONDELLE	2					
68	S0566066	BOLT	BOULON	2					

DATE	JUN. 01, 2010
3rd EDITION	

Fig. 1310 PILOT PIPING(1)
CONDUITES DE PILOTE

Serial No. ;

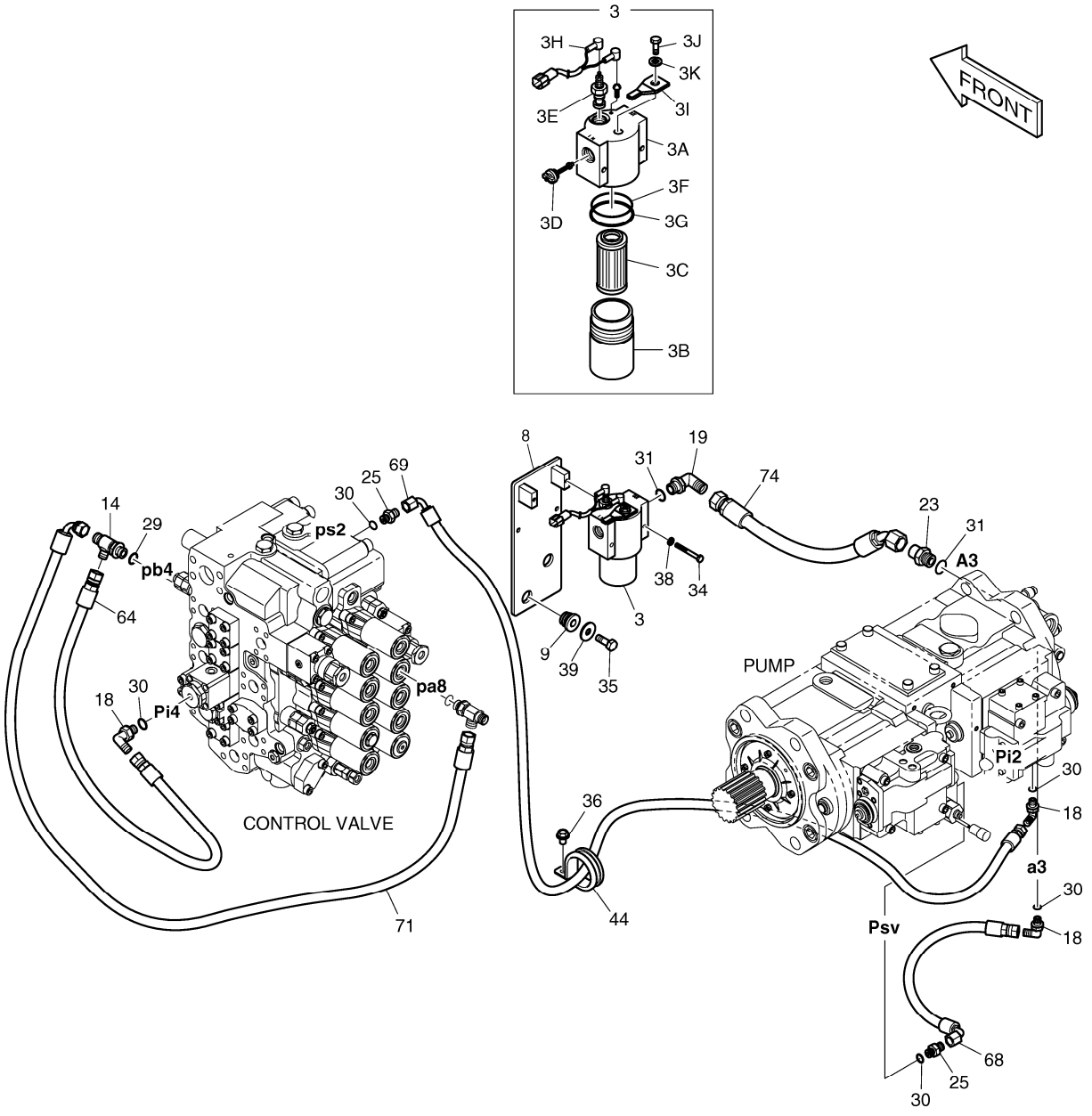

DATE	JUN. 01, 2010
3rd EDITION	

Fig. 1310 PILOT PIPING(1) CONDUITES DE PILOTE

Serial No. ;

Key No.	Part No.	Description	Description	Q'ty	S.C	Serial No.	ICA	Replaceable part	
								Part No.	Q'ty
1310 --	K1044664A	PILOT PIPING	CONDUITES DE PILOTE	-	D				
3	471-00075A	FILTER;PILOT	FILTRE	1					
3A	-	. HEAD	. TETE	1	D				
3B	2472-7003	. CASE	. CARTER	1					
3C	2471-1154	. ELEMENT;FILTER(PILOT)	. ELEMENT	1					
3D	2426-1237	. VALVE;BY-PASS	. VALVE	1					
3E	2471-1155A	. INDICATOR	. INDICATEUR	1					
3F	Y-3738-04	. O-RING	. JOINT CIRCULAIRE	1					
3G	Y-3738-05	. RING;BACK UP	. ANNEAU	1					
3H	530-00236	. HARNESS;PILOT FILTER	. HARNAIS	1					
3I	2197-1661	. BRACKET	. SUPPORT	1					
3J	S0508653	. BOLT	. BOULON	1					
3K	S5102503	. WASHER	. RONDELLE	1					
8	195-02716C	BRACKET;FILTER	SUPPORT	1					
9	198-00016	RUBBER	LE CAOUTCHOUC	2					
14	2181-1951D6	TEE	TE	1					
18	2181-1702D4	ELBOW PFO1/4-PF1/4	COUDE	3					
19	2181-1702D2	ELBOW	COUDE	1					
23	2181-1126D6	ADAPTER	ADAPTEUR	1					
25	2181-1126D14	ADAPTER PF1/4	ADAPTEUR	3					
29	S8000141	O-RING	JOINT CIRCULAIRE	1					
30	S8000111	O-RING	JOINT CIRCULAIRE	5					
31	S8000181	O-RING	JOINT CIRCULAIRE	2					
34	S0553766	BOLT	BOULON	2					
35	S0512266	BOLT	BOULON	2					
36	K1001029	BOLT	BOULON	1					
38	S5102303	WASHER;SPRING	RONDELLE	2					
39	2114-1058D10	WASHER	RONDELLE	2					
44	124-00208D9	CLIP	AGRAFE	1					
64	DS2094053	HOSE	TUYAU	1					
68	DS2093180	HOSE PF1/4-450L	TUYAU FLEXIBLE	1					
69	DS2093182	HOSE	TUYAU FLEXIBLE	1					
71	DS2093003	HOSE PF3/8-1350L	TUYAU	1					
74	DS2054133	HOSE	TUYAU FLEXIBLE	1					

DATE	JUN. 01, 2010
3rd EDITION	

Fig. 1320 PILOT PIPING(2)
CONDUITES DE PILOTE

Serial No. ;

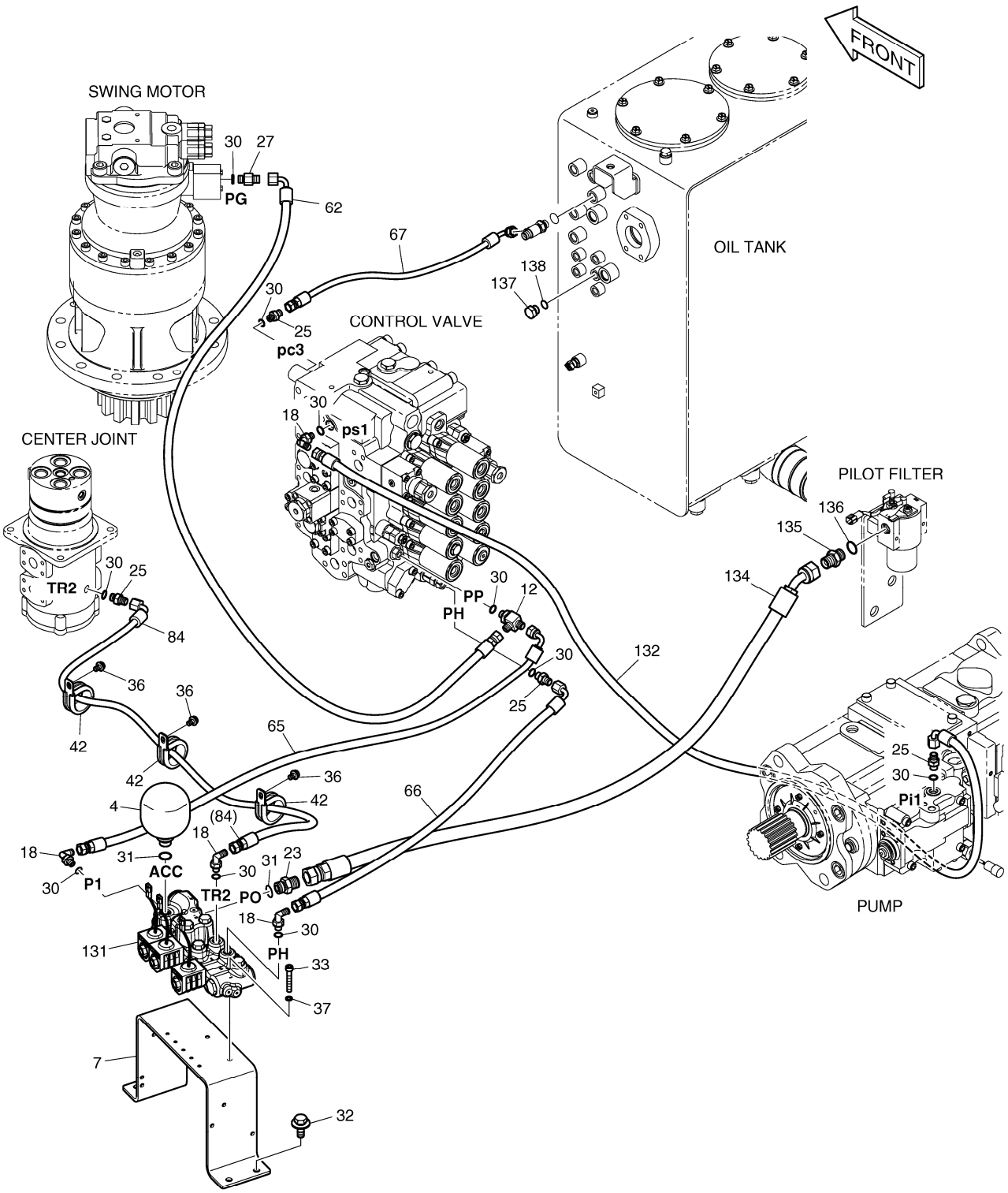

DATE	JUN. 01, 2010
3rd EDITION	

Fig. 1320 PILOT PIPING(2) CONDUITES DE PILOTE

Serial No. ;

Key No.	Part No.	Description	Description	Q'ty	S.C	Serial No.	ICA	Replaceable part	
								Part No.	Q'ty
1320 --	K1044664A	PILOT PIPING	CONDUITES DE PILOTE	-	D				
4	2460-9057A	ACCUMULATOR	ACCUMULATEUR	1					
7	K1039014A	BRACKET	SUPPORT	1					
12	K1038032	TEE	TE	1					
18	2181-1702D4	ELBOW PFO1/4-PF1/4	COUDE	4					
23	2181-1126D6	ADAPTER	ADAPTEUR	1					
25	2181-1126D14	ADAPTER PF1/4	ADAPTEUR	3					
27	2181-1126D38	ADAPTER	ADAPTEUR	1					
30	S8000111	O-RING	JOINT CIRCULAIRE	10					
31	S8000181	O-RING	JOINT CIRCULAIRE	2					
32	DS0025017	BOLT;SET	BOULON	4					
33	S2209666	BOLT	BOULON	2					
36	K1001029	BOLT	BOULON	3					
37	S5110503	WASHER;SPRING	RONDELLE	2					
42	124-00208D7	CLIP	AGRAFE	3					
62	DS2093193	HOSE	TUYAU	1					
65	DS2093080	HOSE	TUYAU FLEXIBLE	1					
66	DS2093212	HOSE	TUYAU FLEXIBLE	1					
67	DS2093017	HOSE	TUYAU	1					
84	DS2093034	HOSE	TUYAU FLEXIBLE	1					
131	K1047557	VALVE;SOLENOID	VALVE	1					
132	DS2093181	HOSE	TUYAU FLEXIBLE	1					
134	DS2054336	HOSE	TUYAU FLEXIBLE	1					
135	2181-1126D6	ADAPTER	ADAPTEUR	1					
136	S8000181	O-RING	JOINT CIRCULAIRE	1					
137	2181-1950D1	PLUG	BOUCHON	1					
138	S8000111	O-RING	JOINT CIRCULAIRE	1					

DATE	JUN. 01, 2010
3rd EDITION	

Fig. 1330 PILOT PIPING(3)
CONDUITES DE PILOTE

Serial No. ;

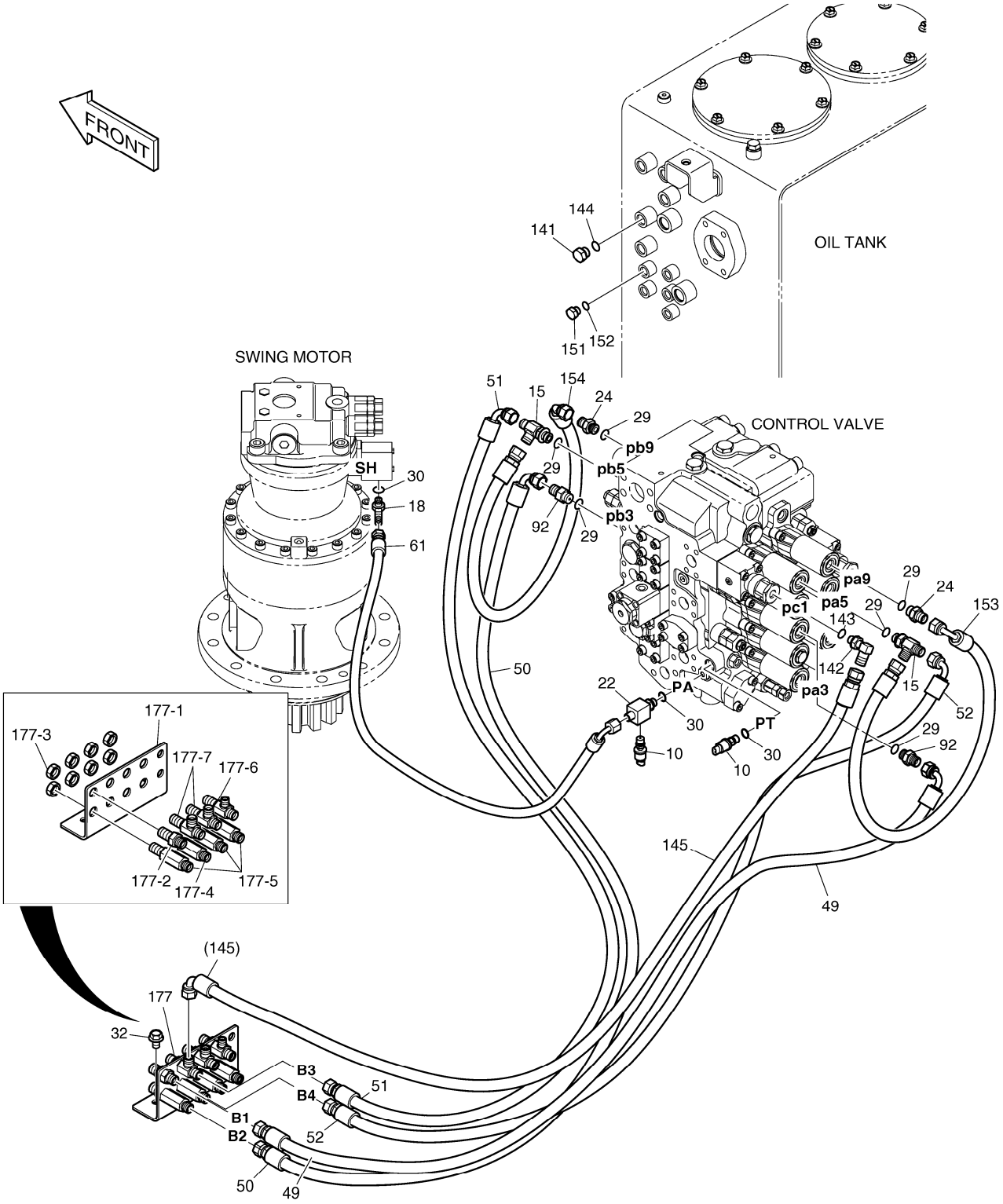

DATE	JUN. 01, 2010
3rd EDITION	

Fig. 1330 PILOT PIPING(3) CONDUITES DE PILOTE

Serial No. ;

Key No.	Part No.	Description	Description	Q'ty	S.C	Serial No.	ICA	Replaceable part	
								Part No.	Q'ty
1330 --	K1044664A	PILOT PIPING	CONDUITES DE PILOTE	-	D				
10	2549-9112	SWITCH;PRESSURE	COMMUTATEUR	2					
15	2181-1951D16	TEE	TE	2					
18	2181-1702D4	ELBOW PFO1/4-PF1/4	COUDE	1					
22	2181-2635	TEE	TE	1					
24	2181-1126D7	ADAPTER	ADAPTEUR	2					
29	S8000141	O-RING	JOINT CIRCULAIRE	6					
30	S8000111	O-RING	JOINT CIRCULAIRE	3					
32	DS0025017	BOLT;SET	BOULON	2					
49	DS2093134	HOSE	TUYAU	1					
50	DS2093174	HOSE	TUYAU	1					
51	DS2093175	HOSE	TUYAU	1					
52	DS2093178	HOSE	TUYAU	1					
61	DS2093090	HOSE PF1/4-800L	TUYAU	1					
92	181-00144D5	ADAPTER	ADAPTEUR	2					
141	2181-1950D2	PLUG	BOUCHON	1					
142	2181-1702D3	ELBOW PFO1/4XPF3/8	COUDE	1					
143	S8000111	O-RING	JOINT CIRCULAIRE	1					
144	S8000141	O-RING	JOINT CIRCULAIRE	1					
145	DS2093134	HOSE	TUYAU	1					
151	2181-1951D1	TEE	TE	1					
152	S8000111	O-RING	JOINT CIRCULAIRE	1					
153	DS2093155	HOSE	TUYAU	1					
154	DS2093184	HOSE	TUYAU	1					
177	K1044408	JOINT PLATE SUB ASS`Y	SOUS-MARIN COMMUN AS	1		5433-5592	Y	430216-00004	1
	430216-00004	JOINT PLATE SUB ASS`Y	SOUS-MARIN COMMUN AS	1		5593-			
177-1	K1000354	. BRACKET;JOINT	. SUPPORT	1					
177-2	181-00078D1	. ADAPTER	. ADAPTEUR	1					
177-3	121-00010D1	. NUT	. ECROU	8					
177-4	420-00352D1	. VALVE;SHOCKLESS	. VALVE	1					
177-5	DS2410009	. ADAPTER	. ADAPTEUR	3					
177-6	181-00086D1	. TEE	. TE	1					
177-7	181-00086D2	. TEE	. TE	2					

DATE	JUN. 01, 2010
3rd EDITION	

Fig. 1340 PILOT PIPING(4)
CONDUITES DE PILOTE

Serial No. ;

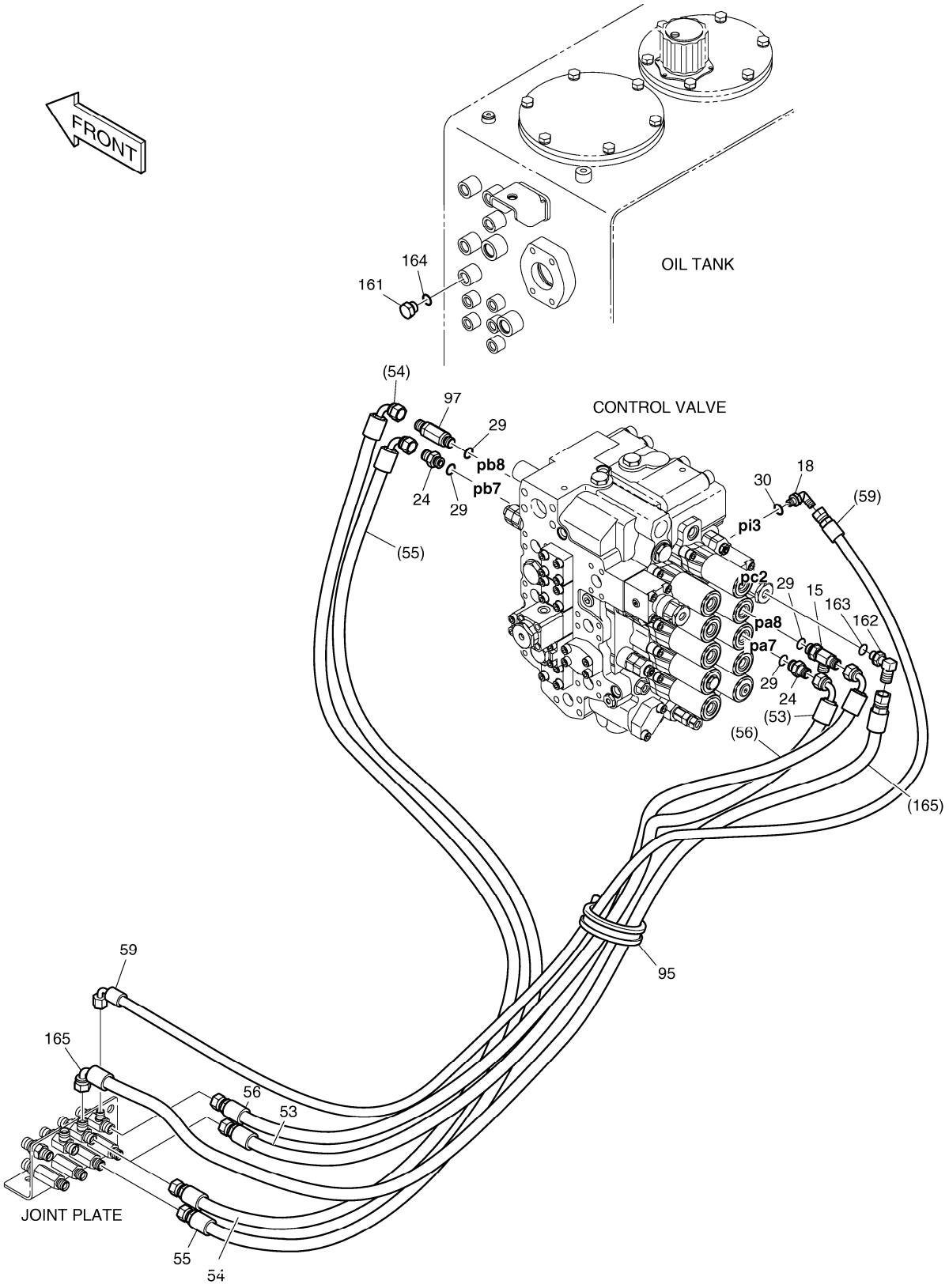

DATE	JUN. 01, 2010
3rd EDITION	

Fig. 1340 PILOT PIPING(4) CONDUITES DE PILOTE

Serial No. ;

Key No.	Part No.	Description	Description	Q'ty	S.C	Serial No.	ICA	Replaceable part	
								Part No.	Q'ty
1340 --	K1044664A	PILOT PIPING	CONDUITES DE PILOTE	-	D				
15	2181-1951D16	TEE	TE	1					
18	2181-1702D4	ELBOW PFO1/4-PF1/4	COUDE	1					
24	2181-1126D7	ADAPTER	ADAPTEUR	2					
29	S8000141	O-RING	JOINT CIRCULAIRE	4					
30	S8000111	O-RING	JOINT CIRCULAIRE	1					
53	DS2093139	HOSE	TUYAU FLEXIBLE	1					
54	DS2093222	HOSE	TUYAU	1					
55	DS2093022	HOSE	TUYAU	1					
56	DS2093173	HOSE	TUYAU	1					
59	DS2093026	HOSE	TUYAU	1					
95	124-00208D8	CLIP	AGRAFE	1					
97	K1003664D1	VALVE;SHOCKLESS	VALVE	1					
161	2181-1950D2	PLUG	BOUCHON	1					
162	2181-1702D3	ELBOW PFO1/4XPF3/8	COUDE	1					
163	S8000111	O-RING	JOINT CIRCULAIRE	1					
164	S8000141	O-RING	JOINT CIRCULAIRE	1					
165	DS2093178	HOSE	TUYAU	1					

DATE	JUN. 01, 2010
3rd EDITION	

Fig. 1350 PILOT PIPING(5)
CONDUITES DE PILOTE

Serial No. ;

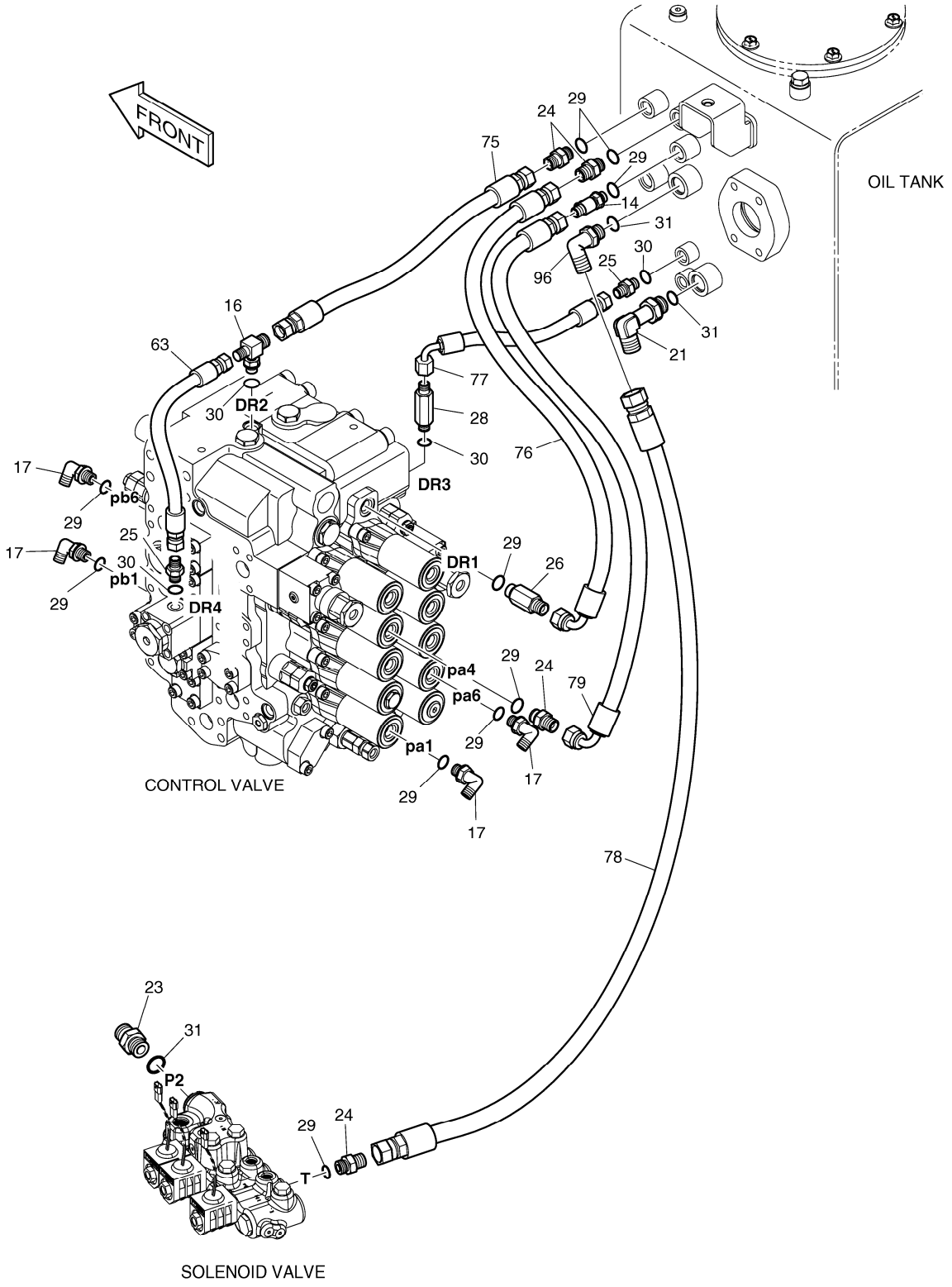

DATE	JUN. 01, 2010
3rd EDITION	

Fig. 1350 PILOT PIPING(5) CONDUITES DE PILOTE

Serial No. ;

Key No.	Part No.	Description	Description	Q'ty	S.C	Serial No.	ICA	Replaceable part	
								Part No.	Q'ty
1350 --	K1044664A	PILOT PIPING	CONDUITES DE PILOTE	-	D				
14	2181-1951D6	TEE	TE	1					
16	2181-2281D21	TEE	TE	1					
17	2181-1702D10	ELBOW	COUDE	4					
21	2181-1702D34	ELBOW	COUDE	1					
23	2181-1126D6	ADAPTER	ADAPTEUR	1					
24	2181-1126D7	ADAPTER	ADAPTEUR	3					
25	2181-1126D14	ADAPTER PF1/4	ADAPTEUR	2					
26	2181-1126D27	ADAPTER	ADAPTEUR	1					
28	2181-1126D103	ADAPTER	ADAPTEUR	1					
29	S8000141	O-RING	JOINT CIRCULAIRE	10					
30	S8000111	O-RING	JOINT CIRCULAIRE	4					
31	S8000181	O-RING	JOINT CIRCULAIRE	3					
63	DS2094004	HOSE	TUYAU	1					
75	DS2094055	HOSE	TUYAU	1					
76	DS2093185	HOSE	TUYAU	1					
77	DS2093130	HOSE	TUYAU	1					
78	DS2094037	HOSE	TUYAU FLEXIBLE	1					
79	DS2093030	HOSE	TUYAU	1					
96	2181-1702D9	ELBOW	COUDE	1					

DATE	JUN. 01, 2010
3rd EDITION	

Fig. 1360 PILOT PIPING(6)
CONDUITES DE PILOTE

Serial No. ;

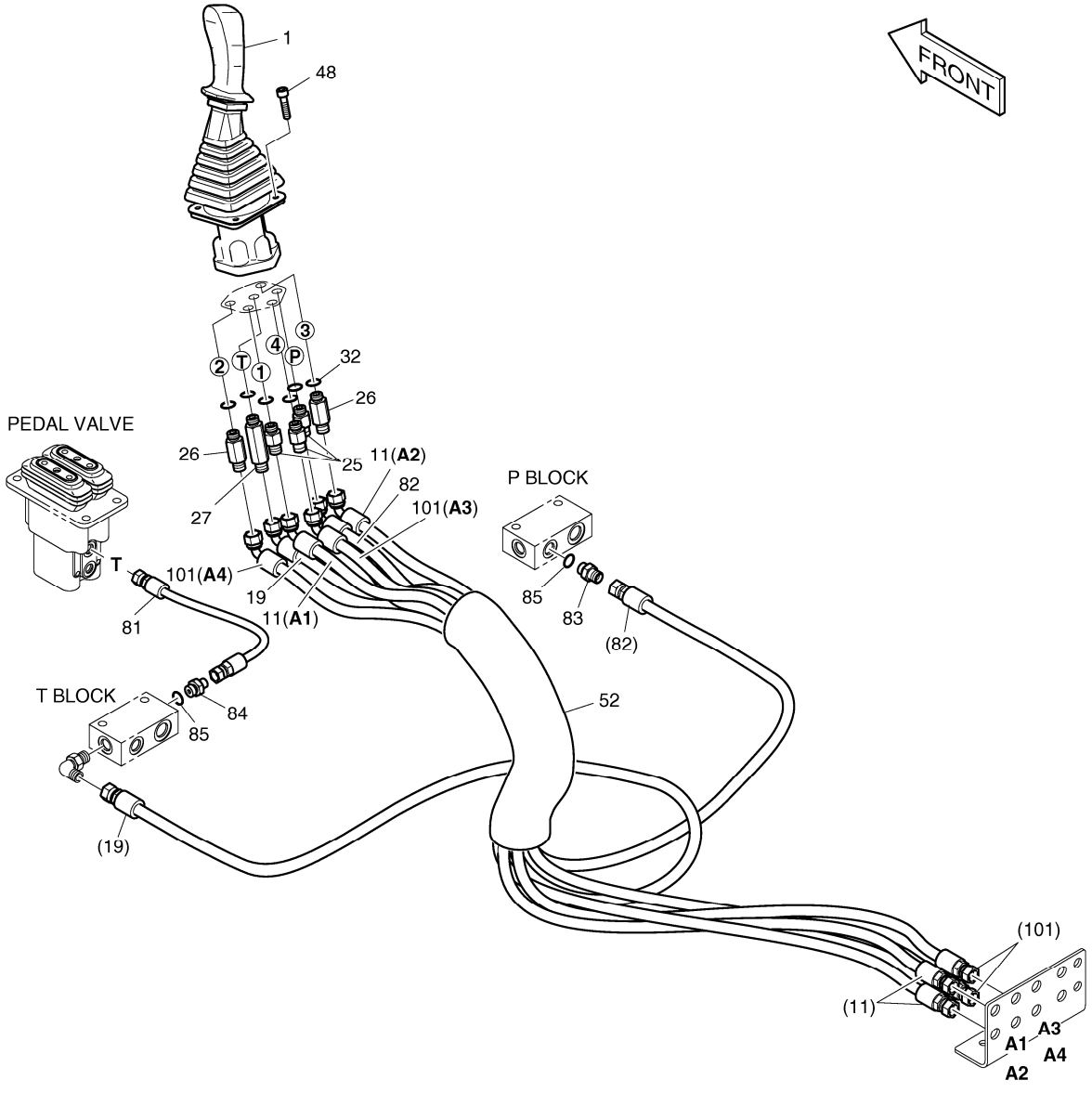

DATE	JUN. 01, 2010
3rd EDITION	

Fig. 1360 PILOT PIPING(6) CONDUITES DE PILOTE

Serial No. ;

Key No.	Part No.	Description	Description	Q'ty	S.C	Serial No.	ICA	Replaceable part	
								Part No.	Q'ty
1360 --	K1044708	PILOT PIPING	CONDUITES DE PILOTE	-	D				
1	K1000556H	REMOTE CONTROL VALVE(L.H)	VALVE DE REMOCON	1					
11	DS2095001	HOSE	TUYAU	2					
19	DS2095004	HOSE	TUYAU	1					
25	DS2213165	ADAPTER	ADAPTEUR	3					
26	2181-1126D27	ADAPTER	ADAPTEUR	2					
27	2181-1126D28	ADAPTER	ADAPTEUR	1					
32	S8000141	O-RING	JOINT CIRCULAIRE	6					
48	S2205066	BOLT;SOCKET	BOULON	4					
52	K1003945	PROTECTOR	PROTECTEUR	1					
81	DS2094006	HOSE	TUYAU	1					
82	DS2095003	HOSE	TUYAU	1					
83	2181-1126D7	ADAPTER	ADAPTEUR	1					
84	2181-1126D36	ADAPTER	ADAPTEUR	1					
85	S8000141	O-RING	JOINT CIRCULAIRE	2					
101	DS2095001	HOSE	TUYAU	2					

DATE	JUN. 01, 2010
3rd EDITION	

Fig. 1370 PILOT PIPING(7)
CONDUITES DE PILOTE

Serial No. ;

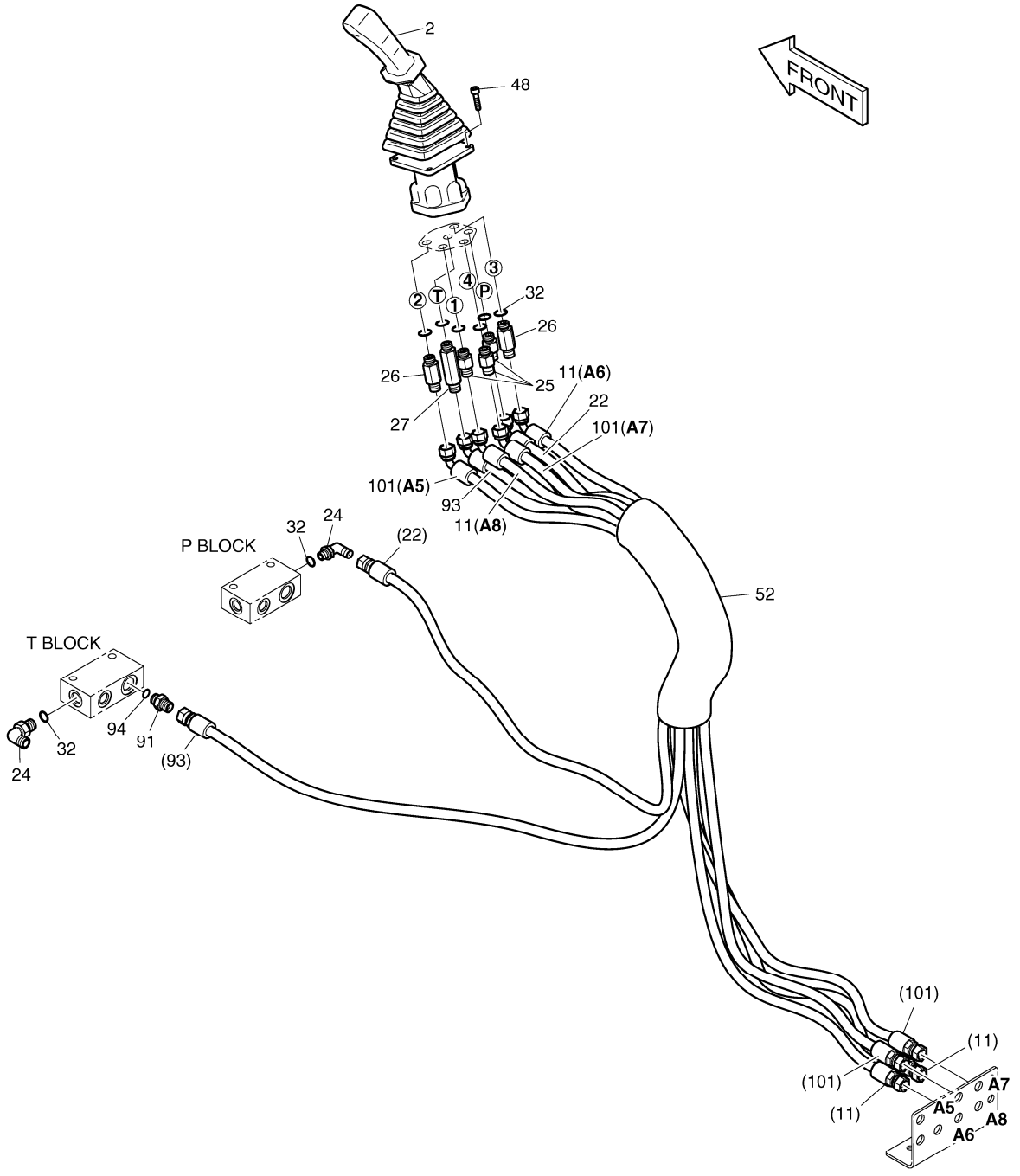

DATE	JUN. 01, 2010
3rd EDITION	

Fig. 1370 PILOT PIPING(7) CONDUITES DE PILOTE

Serial No. ;

Key No.	Part No.	Description	Description	Q'ty	S.C	Serial No.	ICA	Replaceable part	
								Part No.	Q'ty
1370 --	K1044708	PILOT PIPING	CONDUITES DE PILOTE	-	D				
2	K1000555H	REMOTE CONTROL VALVE(R.H)	VALVE DE REMOCON	1					
11	DS2095001	HOSE	TUYAU	2					
22	DS2095002	HOSE	TUYAU	1					
24	2181-1702D5	ELBOW	COUDE	2					
25	DS2213165	ADAPTER	ADAPTEUR	3					
26	2181-1126D27	ADAPTER	ADAPTEUR	2					
27	2181-1126D28	ADAPTER	ADAPTEUR	1					
32	S8000141	O-RING	JOINT CIRCULAIRE	8					
48	S2205066	BOLT;SOCKET	BOULON	4					
52	K1003945	PROTECTOR	PROTECTEUR	1					
91	2181-1126D7	ADAPTER	ADAPTEUR	1					
93	DS2095003	HOSE	TUYAU	1					
94	S8000141	O-RING	JOINT CIRCULAIRE	1					
101	DS2095001	HOSE	TUYAU	2					

DATE	JUN. 01, 2010
3rd EDITION	

Fig. 1380 PILOT PIPING(8)
CONDUITES DE PILOTE

Serial No. ;

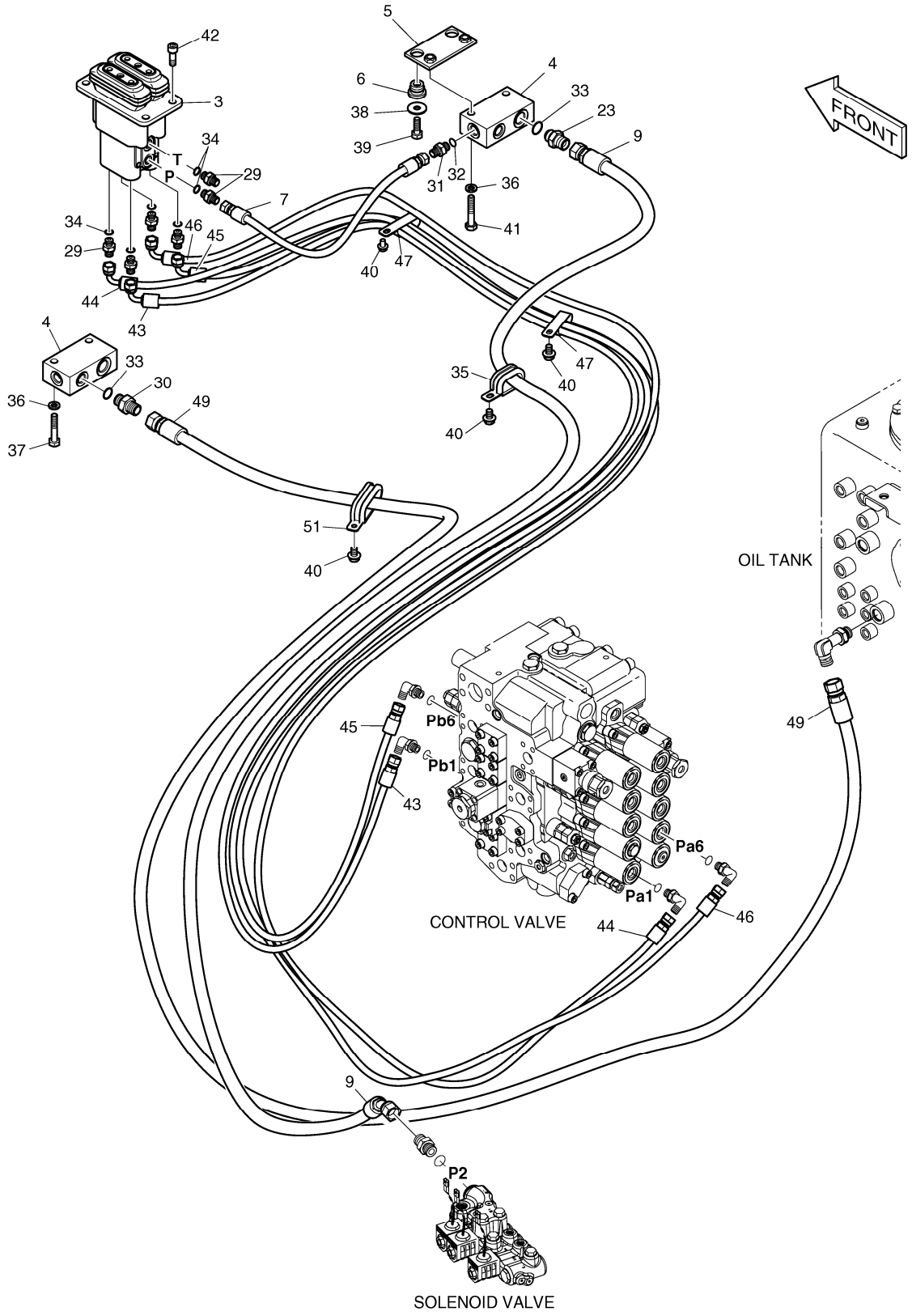

DATE	JUN. 01, 2010
3rd EDITION	

Fig. 1380 PILOT PIPING(8) CONDUITES DE PILOTE

Serial No. ;

Key No.	Part No.	Description	Description	Q'ty	S.C	Serial No.	ICA	Replaceable part	
								Part No.	Q'ty
1380 --	K1044708	PILOT PIPING	CONDUITES DE PILOTE	-	D				
3	420-00467A	VALVE;PEDAL	VALVE	1					
4	2423-1470	BLOCK	BLOC	2					
5	621-02151	PLATE	PLAQUE	1					
6	198-00016	RUBBER	LE CAOUTCHOUC	2					
7	DS2094006	HOSE	TUYAU	1					
9	DS2054356	HOSE	TUYAU	1					
23	2471-1135	FILTER;ADAPTER	FILTRE	1					
29	2181-1126D14	ADAPTER PF1/4	ADAPTEUR	6					
30	2181-1126D6	ADAPTER	ADAPTEUR	1					
31	2181-1126D36	ADAPTER	ADAPTEUR	1					
32	S8000141	O-RING	JOINT CIRCULAIRE	1					
33	S8000181	O-RING	JOINT CIRCULAIRE	2					
34	S8000111	O-RING	JOINT CIRCULAIRE	6					
35	124-00209D2	CLIP	AGRAFE	1					
36	2114-2031D5	WASHER;SPRING	RONDELLE	4					
37	S0558666	BOLT	BOULON	2					
38	2114-1058D10	WASHER	RONDELLE	2					
39	S0512266	BOLT	BOULON	2					
40	K1001029	BOLT	BOULON	4					
41	S0558766	BOLT	BOULON	2					
42	S2212266	BOLT;SOCKET	BOULON	4					
43	DS2093189	HOSE	TUYAU	1					
44	DS2093191	HOSE	TUYAU	1					
45	DS2093190	HOSE	TUYAU	1					
46	DS2093192	HOSE	TUYAU	1					
47	124-00209D3	CLIP	AGRAFE	2					
49	DS2053833	HOSE	TUYAU FLEXIBLE	1					
51	124-00209D8	CLIP	AGRAFE	1					

DATE	JUN. 01, 2010
3rd EDITION	

Fig. 1390 CONTROL STAND - L.H.
CONSOLE DE COMMANDE

Serial No. ;

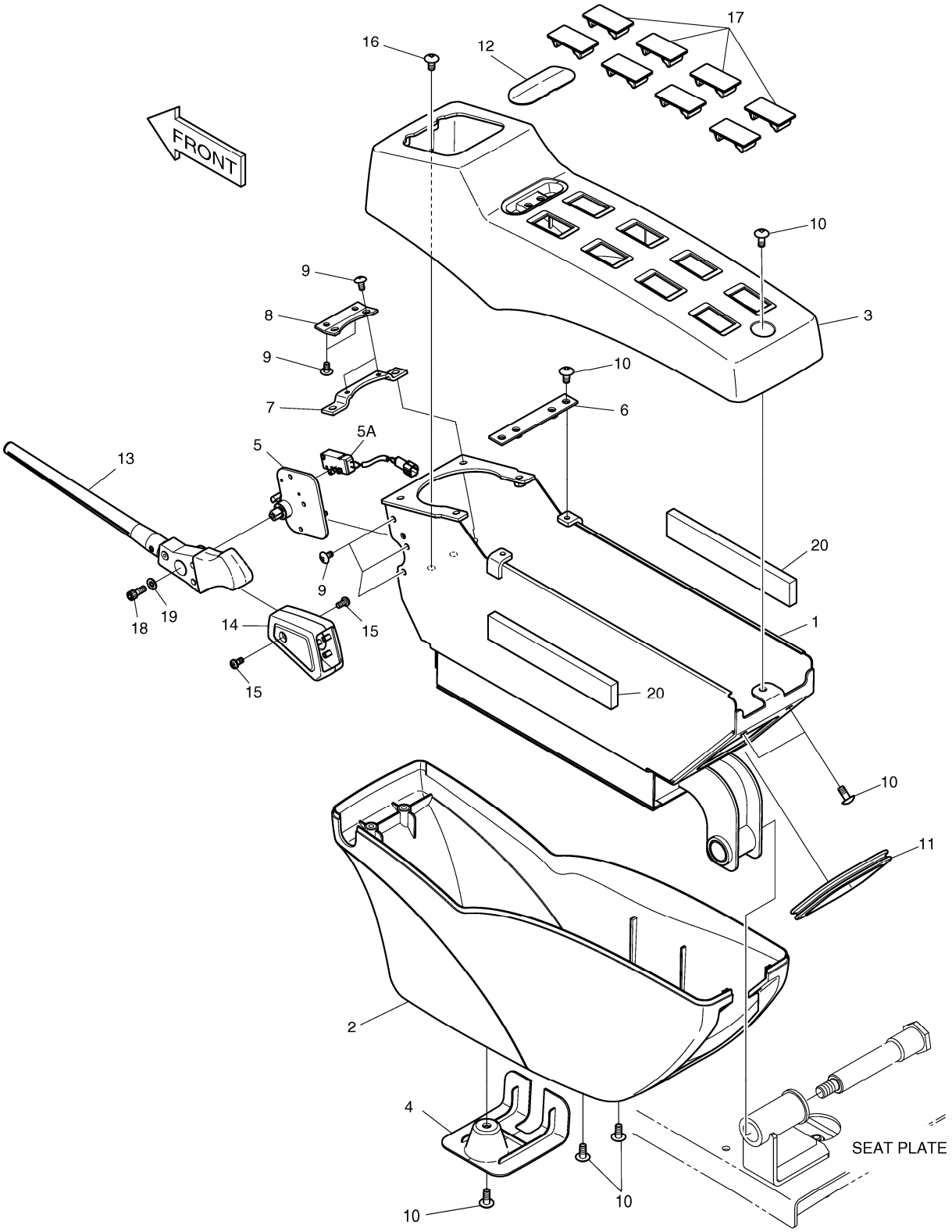

DATE	JUN. 01, 2010
3rd EDITION	

Fig. 1390 CONTROL STAND - L.H.
CONSOLE DE COMMANDE

Serial No. ;

Key No.	Part No.	Description	Description	Q'ty	S.C	Serial No.	ICA	Replaceable part	
								Part No.	Q'ty
1390 --	K1002202H	CONTROL STAND L.H.	COMMANDEZ LE GAUCHE	-	D				
1	195-02753C	BRACKET;STAND LH	SUPPORT	1					
2	621-02901B	COVER;STAND LH LOWER	COUVERTURE	1					
3	621-03012G	COVER;STAND LH UPPER	COUVERTURE	1					
4	621-03014B	COVER;STAND LOW	COUVERTURE	1					
5	195-02868C	BRACKET;SAFETY	SUPPORT	1					
5A	549-00089	. SWITCH;MICRO	. COMMUTATEUR	1					
6	621-02957B	PLATE;STAND MOUNT	PLAQUE	1					
7	159-00290B	PLATE	PLAQUE	1					
8	159-00287B	PLATE;COVER MOUNT	PLAQUE	1					
9	2120-2166D53	SCREW	VIS	7					
10	2120-2166D10	SCREW M6X1.0X14	VIS	10					
11	K1001023	STRIP;WEATHER	BANDE	1					
12	621-03733C	COVER	COUVERTURE	1					
13	K1000840	LEVER	LEVIER	1					
14	K1000842A	COVER	COUVERTURE	1					
15	S3450823	SCREW	VIS	2					
16	2120-2166D52	BOLT	BOULON	2					
17	621-02801	COVER;SWITCH	COUVERTURE	8					
18	S2202966	BOLT;SOCKET	BOULON	1					
19	2114-1898D4	WASHER	RONDELLE	1					
20	K1010466	FOAM	MOUSSE	2					

DATE	JUN. 01, 2010
3rd EDITION	

Fig. 1400 CONTROL STAND - R.H.
CONSOLE DE COMMANDE

Serial No. ;

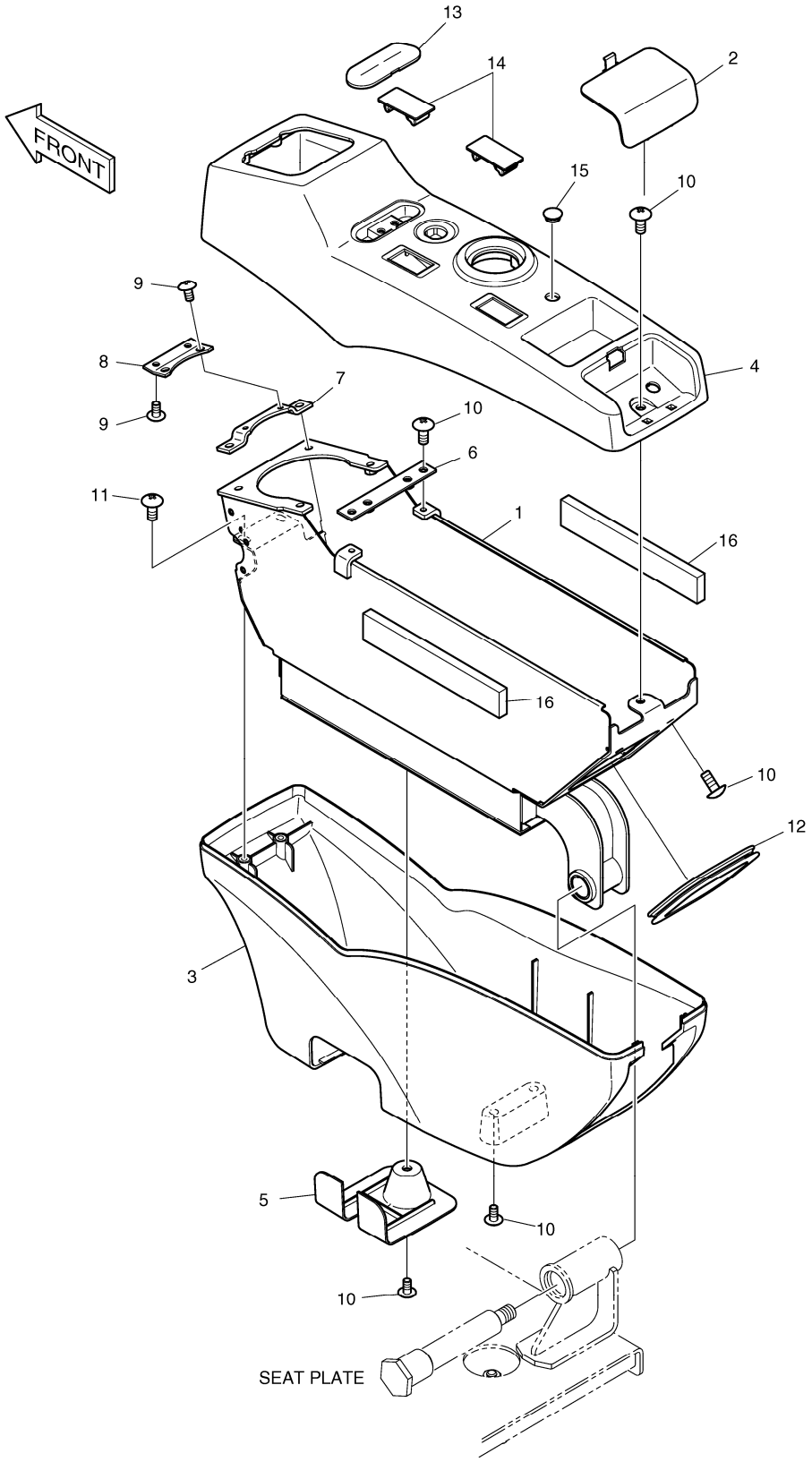

DATE	JUN. 01, 2010
3rd EDITION	

Fig. 1400 CONTROL STAND - R.H.
CONSOLE DE COMMANDE

Serial No. ;

Key No.	Part No.	Description	Description	Q'ty	S.C	Serial No.	ICA	Replaceable part	
								Part No.	Q'ty
1400 --	K1005468E	CONTROL STAND-R.H.	COMMANDEZ LE GAUCHE	-	D				
1	195-02755C	BRACKET;R.H.	SUPPORT	1					
2	621-02926E	COVER;SWITCH	COUVERTURE	1					
3	621-02900B	COVER;STAND LOWER	COUVERTURE	1					
4	K1005343C	COVER	COUVERTURE	1					
5	621-03014B	COVER;STAND LOW	COUVERTURE	1					
6	621-02957B	PLATE;STAND MOUNT	PLAQUE	1					
7	159-00290B	PLATE	PLAQUE	1					
8	159-00287B	PLATE;COVER MOUNT	PLAQUE	1					
9	2120-2166D53	SCREW	VIS	4					
10	2120-2166D10	SCREW M6X1.0X14	VIS	10					
11	2120-2166D52	BOLT	BOULON	2					
12	K1001023	STRIP;WEATHER	BANDE	1					
13	621-03733C	COVER	COUVERTURE	1					
14	621-02801	COVER;SWITCH	COUVERTURE	2					
15	K1006995	CAP	CHAPEAU	1					
16	K1010466	FOAM	MOUSSE	2					

DATE	JUN. 01, 2010
3rd EDITION	

Fig. 1410 SEAT SLIDING PLATE
POSEZ GLISSER LE PLAT

Serial No. ;

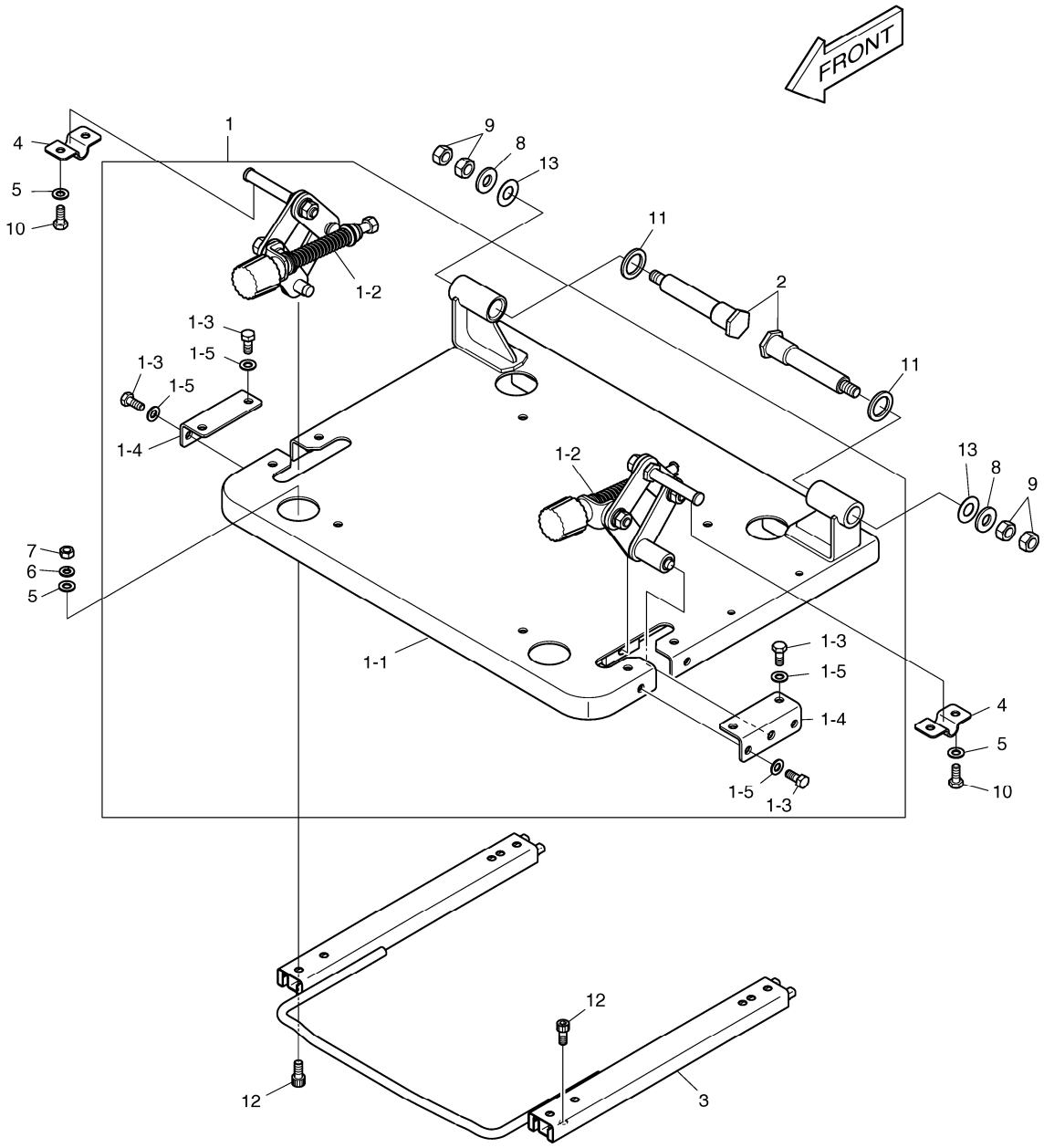

DATE	JUN. 01, 2010
3rd EDITION	

Fig. 1410 SEAT SLIDING PLATE
POSEZ GLISSER LE PLAT

Serial No. ;

Key No.	Part No.	Description	Description	Q'ty	S.C	Serial No.	I	CA	Replaceable part	
									Part No.	Q'ty
1410 --	K1002204C	SEAT PLATE ASS`Y	SIEGE	-	D					
1	621-03011E	SEAT PLATE ASS'Y	POSEZ LE PLAT ASS'Y	1						
1-1	621-02895C	. PLATE;SEAT MOUNT	. PLAQUE	1						
1-2	195-02904C	. STAND TILT BRACKET ASS'Y	. SUPPORT ASS'Y	1						
1-3	2120-2166D5	. BOLT	. BOULON	8						
1-4	621-02925A	. PLATE	. PLAQUE	2						
1-5	2114-1898D14	. WASHER;PLAIN	. RONDELLE	8						
2	123-00524B	PIN;TILT STAND	GOUPILLE	2						
3	K1003381	RAIL	RAIL	1		5001-5495	I		K1040096	1
	K1040096	RAIL	RAIL	1		5496-				
4	621-03005A	PLATE	PLAQUE	2						
5	2114-1898D14	WASHER;PLAIN	RONDELLE	8						
6	2114-2031D4	WASHER;SPRING	RONDELLE	4						
7	2121-1311D2	NUT	ECROU	4						
8	2114-1898D17	WASHER M12	RONDELLE	2						
9	2121-1311D1	NUT	ECROU	4						
10	2120-2166D5	BOLT	BOULON	4						
11	2114-1898D18	WASHER	RONDELLE	2						
12	S2208866	BOLT;SOCKET	BOULON	8						
13	114-00590	WASHER	RONDELLE	2						

DATE	JUN. 01, 2010
3rd EDITION	

Fig. 1420 SEAT PLATE
POSEZ LE PLAT

Serial No. ;

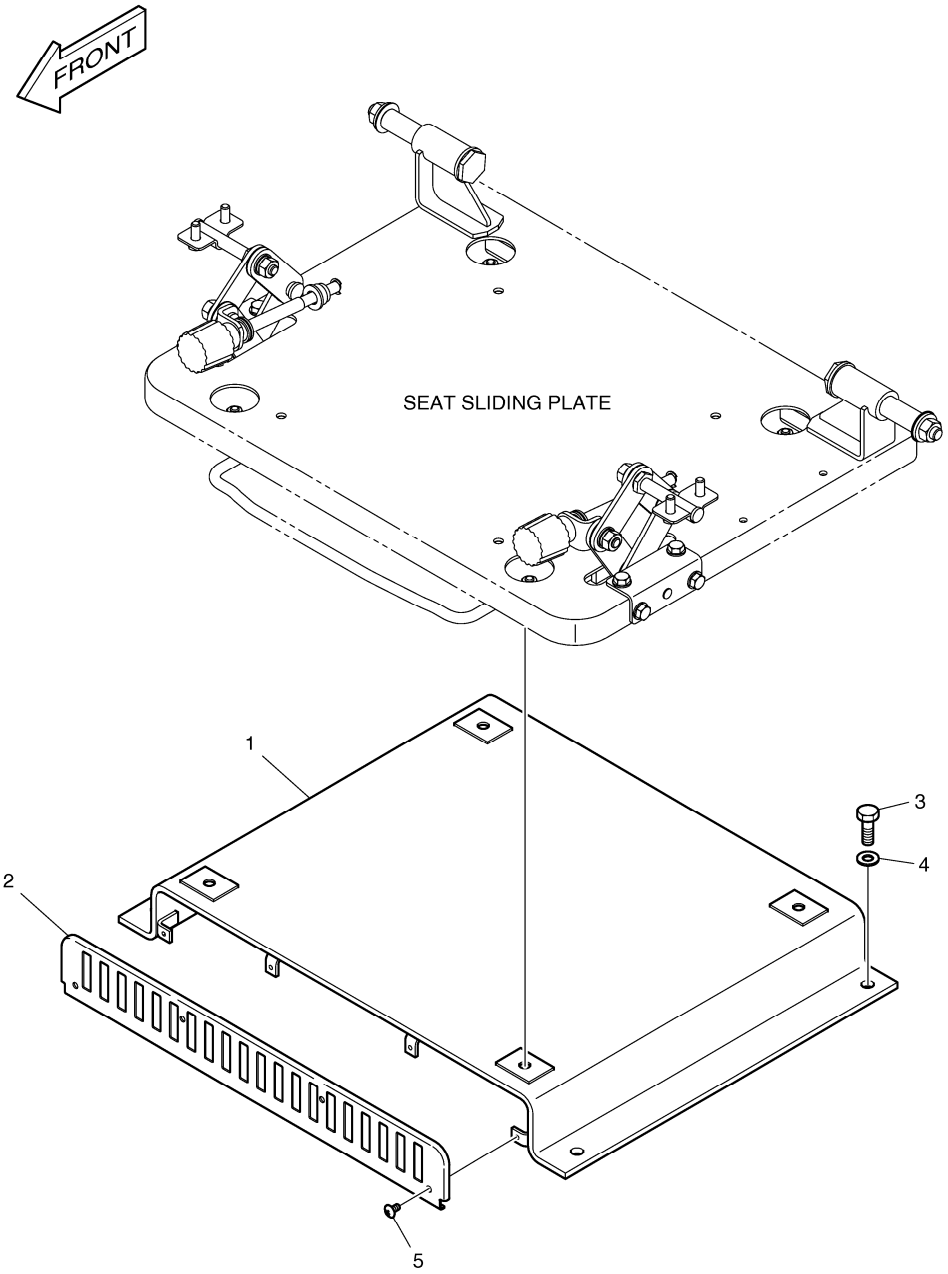

DATE	JUN. 01, 2010
3rd EDITION	

Fig. 1420 SEAT PLATE POSEZ LE PLAT

Serial No. ;

Key No.	Part No.	Description	Description	Q'ty	S.C	Serial No.	ICA	Replaceable part	
								Part No.	Q'ty
1420 --	K1002229A	SEAT PLATE	POSEZ LE PLAT	-	D				
1	K1002230A	BRACKET;SEAT LOWER	SUPPORT	1					
2	K1002231A	PLATE;COVER	PLAQUE	1					
3	2120-2166D10	SCREW M6X1.0X14	VIS	4					
4	2114-1898D15	WASHER;PLAIN	RONDELLE	4					
5	2120-2166D53	SCREW	VIS	4					

DATE	JUN. 01, 2010
3rd EDITION	

Fig. 1430 SEAT MOUNTING
SIEGE LE SUPPORT

Serial No. ;

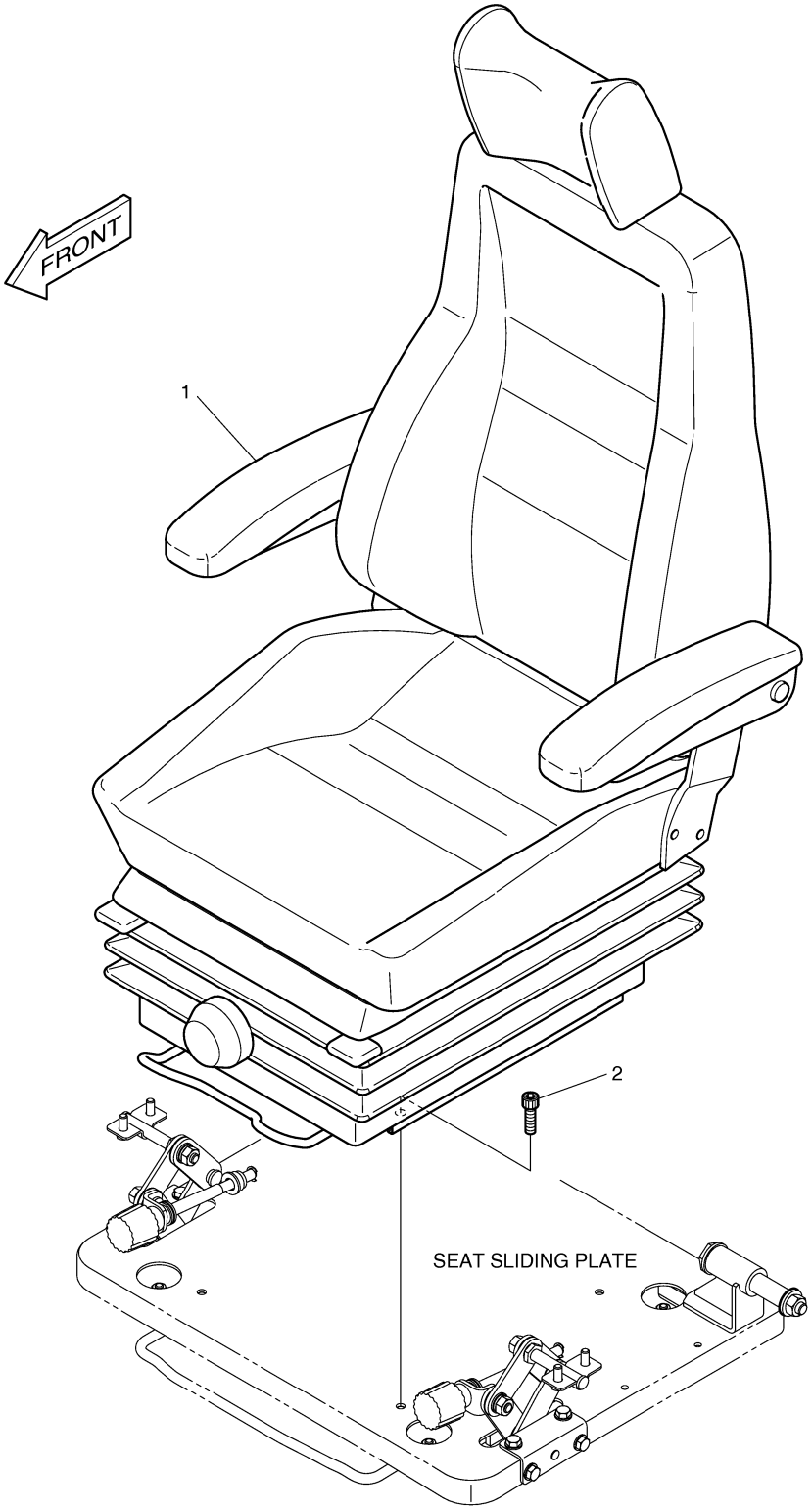

DATE	JUN. 01, 2010
3rd EDITION	

Fig. 1430 SEAT MOUNTING SIEGE LE SUPPORT

Serial No. ;

Key No.	Part No.	Description	Description	Q'ty	S.C	Serial No.	ICA	Replaceable part	
								Part No.	Q'ty
1430 --	K1002084A	SEAT MOUNTING	SUPPORT DE SIEGE	-	D				
1	901-00045	SEAT ASS'Y	POSEZ ASS'Y	1					
2	S2208866	BOLT;SOCKET	BOULON	4					

DATE	JUN. 01, 2010
3rd EDITION	

Fig. 1440 SEAT SIEGE

Serial No. ;

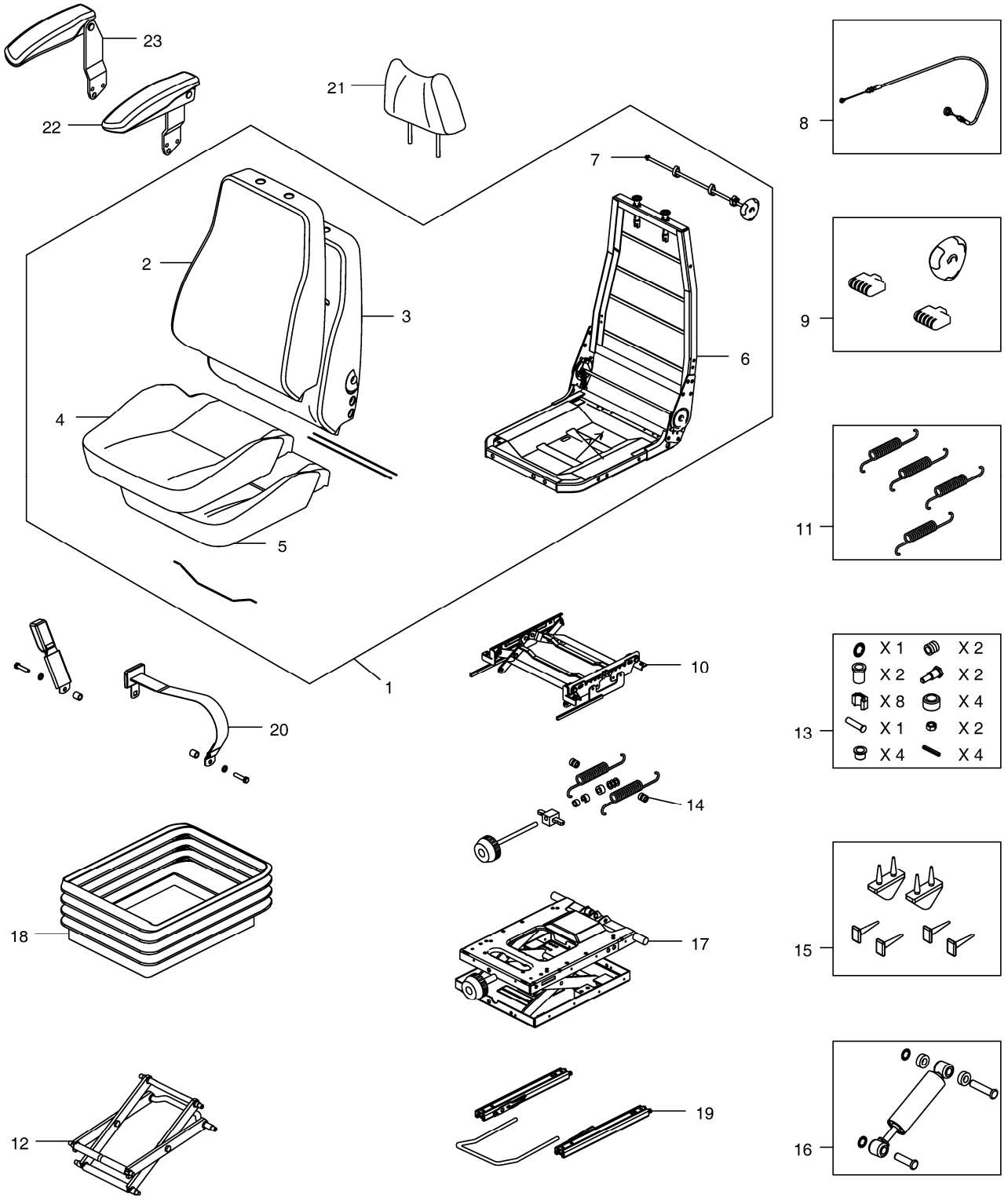

DATE	JUN. 01, 2010
3rd EDITION	

Fig. 1440 SEAT SIEGE

Serial No. ;

Key No.	Part No.	Description	Description	Q'ty	S.C	Serial No.	ICA	Replaceable part	
								Part No.	Q'ty
1440 --	901-00045	SEAT ASS'Y	POSEZ ASS'Y	1					
1	K9001695	UPPER ASS'Y	ASS' SUPERIEUR	1					
2	K9001201	BACK COVER	COUVERTURE ARRIERE	1					
3	K9001202	BACK FOAM	MOUSSE ARRIERE	1					
4	K9001203	SEAT COVER	COUVERTURE DE SIEGE	1					
5	K9001204	SEAT FOAM	POSEZ LA MOUSSE	1					
6	-	FRAME	ARMATURE	1	D				
7	K9001206	LUMBAR KIT	KIT LOMBAIRE	1					
8	K9001207	CABLE;ADJUST	CABLE	1					
9	2.172-00003	HANDLE	POIGNEE	1					
10	K9001208	HEIGHT RISER	CANALISATION VERTICALE	1					
11	K9001209	HEIGHT RISER SPRING KIT	KIT DE RESSORT DE CANA	1					
12	K9001210	LEVER/CENTRE PIVOT KIT	KIT DE PIVOT DE LEVER/CE	1					
13	K9001211	BEARING KIT	KIT DE ROULEMENT	1					
14	K9001212	WEIGHT ADJUST KIT	LE POIDS AJUSTENT LE KIT	1					
15	K9001213	UPSTOP/BUMP STOP KIT	KIT D'ARRET D'UPSTOP/BU	1					
16	K9001214	DAMPER KIT	AMORTISSEUR	1					
17	K9001215	SUSPENSION ASS'Y	SUSPENSION ASS'Y	1					
18	K9001216	SUSPENSION COVER	COUVERTURE DE SUSPEN	1					
19	K9001217	SLIDING RAIL ASS'Y	GLISSEMENT DU RAIL ASS	1					
20	K9001218	BELT;SEAT	CEINTURE	1					
21	K9001219	HEAD REST	REPOS PRINCIPAL	1					
22	K9001220	ARM REST-L.H	REPOS DE BRAS	1					
23	K9001221	ARM REST-R.H	REPOS DE BRAS	1					

DATE	JUN. 01, 2010
3rd EDITION	

Fig. 1450 DUCT COVER
CONDUITES COUVERCLE

Serial No. ;

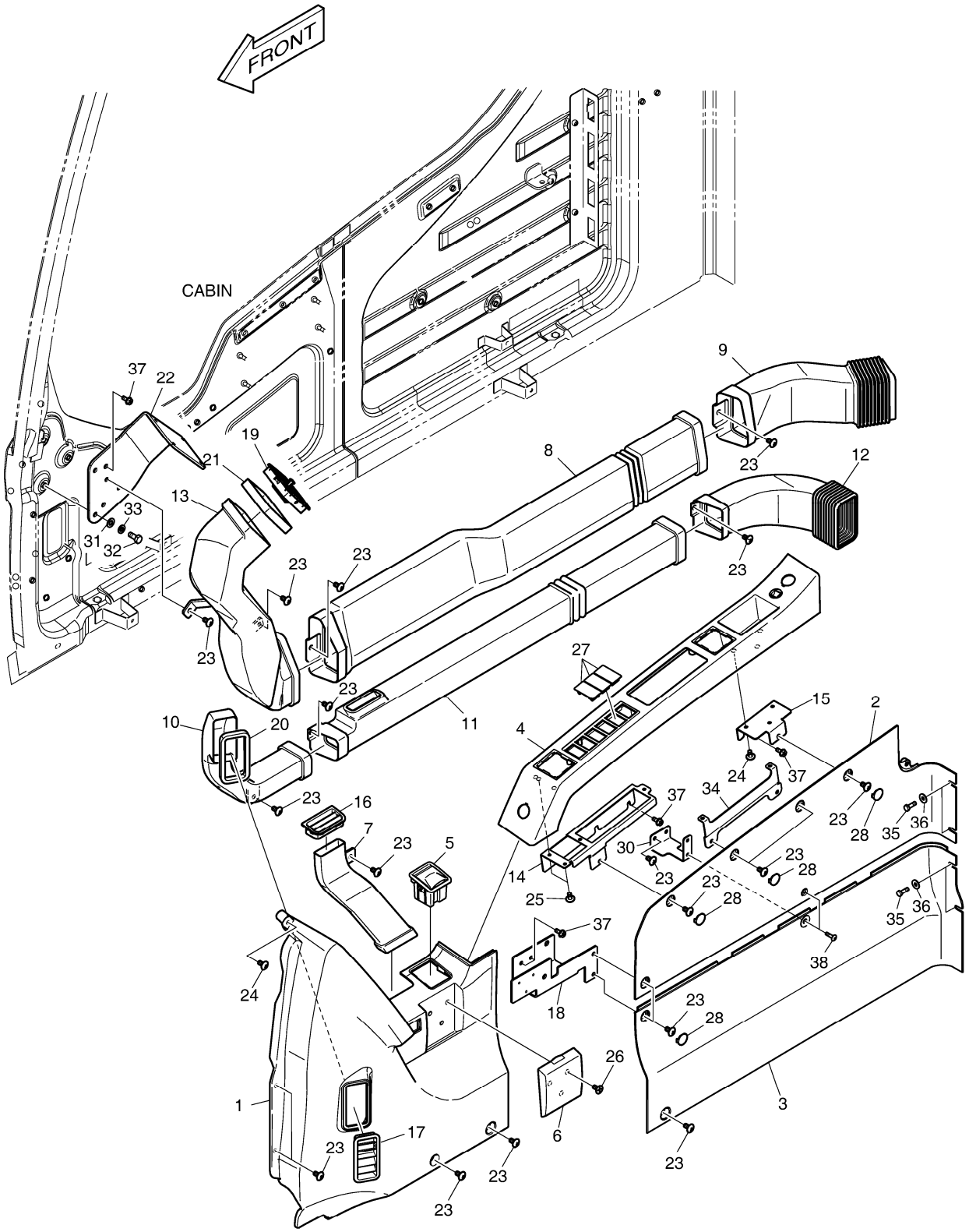

DATE	JUN. 01, 2010
3rd EDITION	

Fig. 1450 DUCT COVER
CONDUITES COUVERCLE

Serial No. ;

Key No.	Part No.	Description	Description	Q'ty	S.C	Serial No.	ICA	Replaceable part	
								Part No.	Q'ty
1450 --	K1048688	SIDE COVER ASS'Y	COUVERTURE LATERALE A	-	D				
1	621-02903C	COVER;SIDE FRONT	COUVERTURE	1					
2	621-02905C	COVER;SIDE MID UPPER	COUVERTURE	1					
3	621-02904C	COVER;SIDE MID LOWER	COUVERTURE	1					
4	621-02909G	COVER;SWITCH	COUVERTURE	1					
5	906-00002A	ASHTRAY ASM	CENDRIER	1					
6	621-02908B	HOLDER;CUP	SUPPORT	1					
7	213-00035B	DUCT;DEFROSTER SIDE	CONDUIT	1					
8	213-00030B	DUCT;FACE MID	CONDUIT	1					
9	213-00031E	DUCT;FACE REAR	CONDUIT	1					
10	213-00032B	DUCT;DEFROSTER FRONT	CONDUIT	1					
11	213-00033B	DUCT;DEFROSTER MID	CONDUIT	1					
12	213-00034E	DUCT;DEFROSTER REAR	CONDUIT	1					
13	213-00029C	DUCT;FACE FRONT	CONDUIT	1					
14	195-02768E	BRACKET;SWITCH	SUPPORT	1					
15	195-02769E	BRACKET;SWITCH	SUPPORT	1					
16	415-00046B	LOUVER DEF SIDE	AUVENT	1					
17	415-00045B	LOUVER DEF FRONT	AUVENT	1					
18	195-02770E	BRACKET;CUP	SUPPORT	1					
19	415-00044B	LOUVER FACE	AUVENT	1					
20	K1001068	FOAM	MOUSSE	1					
21	K1048689	FOAM	MOUSSE	1					
22	K1039212C	PLATE	PLAQUE	1					
23	2120-2166D52	BOLT	BOULON	22					
24	2120-2166D53	SCREW	VIS	4					
25	S3654523	SCREW	VIS	4					
26	2120-2166D23	SCREW	VIS	3					
27	621-02801	COVER;SWITCH	COUVERTURE	3					
28	621-03734A	COVER	COUVERTURE	6					
30	K1005007A	PLATE	PLAQUE	1					
31	2114-1898D14	WASHER;PLAIN	RONDELLE	3					
32	2120-2166D5	BOLT	BOULON	3					
33	2114-2031D4	WASHER;SPRING	RONDELLE	3					
34	K1009627	PLATE	PLAQUE	1					
35	2120-2166D36	BOLT	BOULON	4					
36	2114-1898D5	WASHER M6	RONDELLE	4					
37	K1010304	BOLT;FLANGE	BOULON	8					
38	2120-2166D57	BOLT;GREEN	BOULON	2					

DATE	JUN. 01, 2010
3rd EDITION	

Fig. 1460 HEATER COVER
BOITIES DE CHAUFFAGE

Serial No. ;

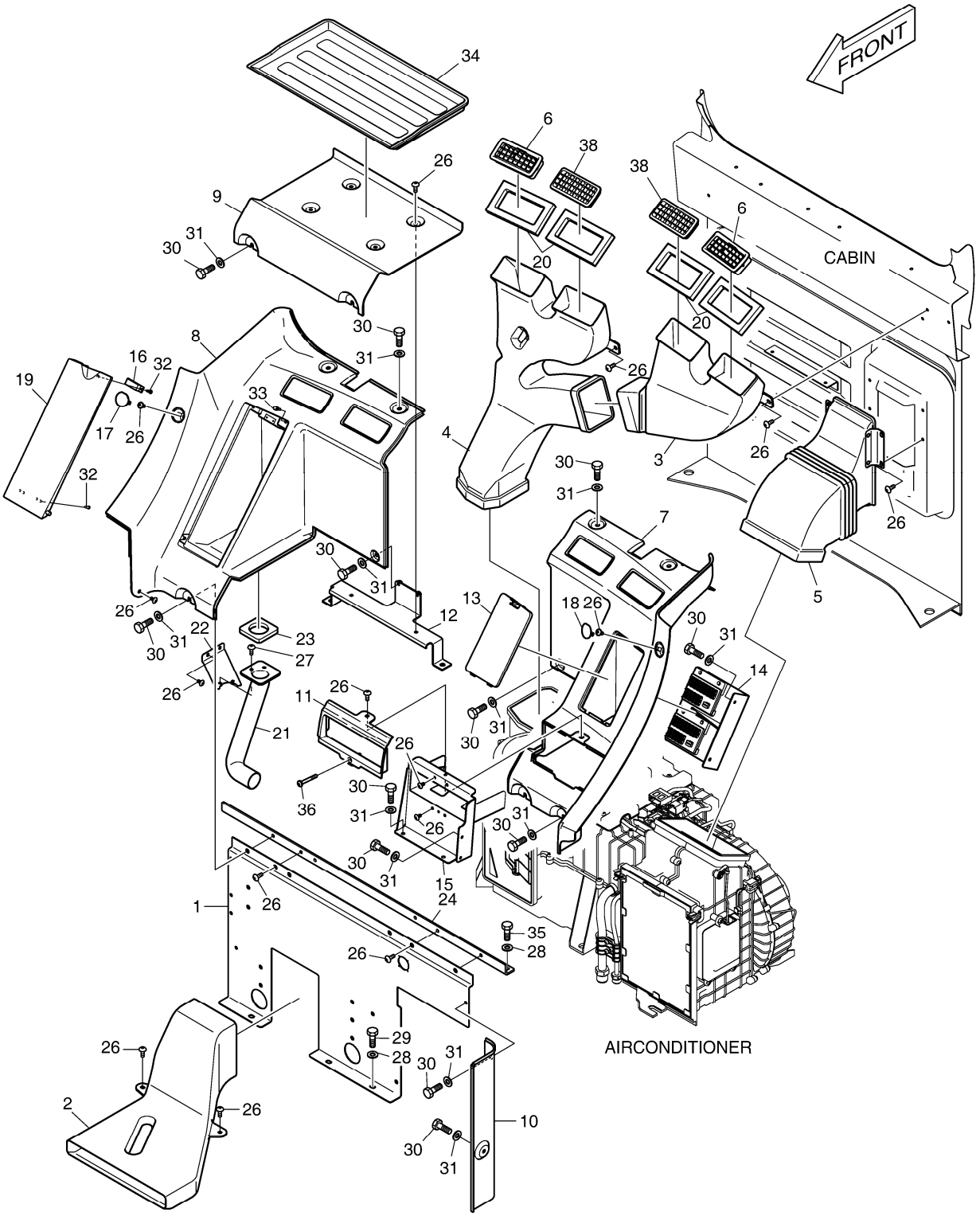

DATE	JUN. 01, 2010
3rd EDITION	

Fig. 1460 HEATER COVER
BOITIES DE CHAUFFAGE

Serial No. ;

Key No.	Part No.	Description	Description	Q'ty	S.C	Serial No.	ICA	Replaceable part	
								Part No.	Q'ty
1460 --	621-02896K	HEATER COVER	COUVERTURE DE RECHA	-	D				
1	621-02894G	COVER;REAR LOWER	COUVERTURE	1					
2	213-00036B	DUCT;FOOT	CONDUIT	1					
3	213-00037B	DUCT;REAR(L.H.)	CONDUIT	1					
4	213-00038B	DUCT;REAR(R.H.)	CONDUIT	1					
5	213-00039B	DUCT;AIR INLET	CONDUIT	1					
6	415-00043B	NOZZLE;REAR	BEC	2					
7	621-02913C	COVER;REAR(L.H.)	COUVERTURE	1					
8	621-02914C	COVER;REAR(R.H.)	COUVERTURE	1					
9	621-02915B	COVER;REAR CENTER	COUVERTURE	1					
10	621-02907B	COVER;SIDE REAR(L.H.)	COUVERTURE	1					
11	621-02917C	COVER;STEREO UP	COUVERTURE	1					
12	K1001295B	PLATE	PLAQUE	1					
13	621-02919B	COVER;FUSE	COUVERTURE	1					
14	195-02771C	BRACKET;FUSE BOX	SUPPORT	1					
15	195-02772G	BRACKET;STEREO	SUPPORT	1					
16	2125-1095A	CATCH;MAGNETIC	CROCHET	1					
17	K1005344A	COVER	COUVERTURE	1					
18	K1005345A	COVER;HOLE	COUVERTURE	1					
19	621-02920C	COVER;BOX	COUVERTURE	1					
20	K1001310	FOAM	MOUSSE	4					
21	213-00040A	DUCT;AIR BOX	CONDUIT	1					
22	195-02774A	BRACKET;AIR DUCT MOUNT	SUPPORT	1					
23	161-00622	FOAM;AIR SEAL	MOUSSE	1					
24	195-02785E	BRACKET;CROSS BAR	SUPPORT	1					
26	2120-2166D10	SCREW M6X1.0X14	VIS	19					
27	2120-2166D53	SCREW	VIS	2					
28	2114-1898D14	WASHER;PLAIN	RONDELLE	5					
29	2120-2166D12	BOLT;HEX	BOULON	3					
30	2120-2166D36	BOLT	BOULON	19					
31	2114-1898D5	WASHER M6	RONDELLE	19					
32	S3644163	SCREW	VIS	8					
33	K1002385	STOPPER	TAQUET	2					
34	161-00624	PAD;FOAM	GARNITURE	1					
35	2120-2166D5	BOLT	BOULON	2					
36	2120-2166D58	BOLT	BOULON	1					
38	K1043726	NOZZLE;REAR	BEC	2					

DATE	JUN. 01, 2010
3rd EDITION	

Fig. 1470 CABIN MOUNTING
SUPPORT DE CABINE

Serial No. ;

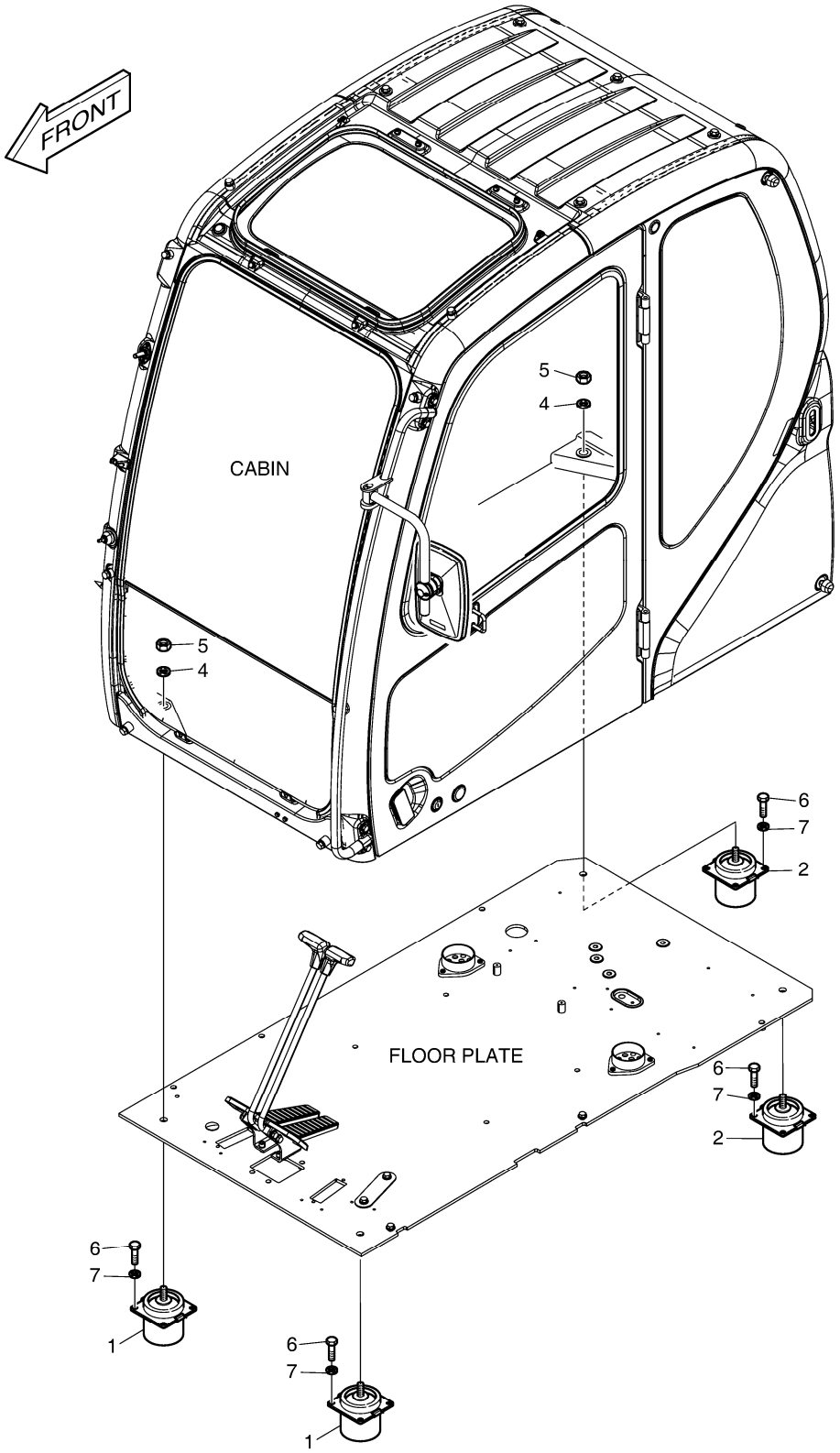

DATE	JUN. 01, 2010
3rd EDITION	

Fig. 1470 CABIN MOUNTING SUPPORT DE CABINE

Serial No. ;

Key No.	Part No.	Description	Description	Q'ty	S.C	Serial No.	ICA	Replaceable part	
								Part No.	Q'ty
1470 --	621-03224B	CABIN MOUNT	SUPPORT DE CABINE	-	D				
1	161-00010	RUBBER;MOUNT(FRONT)	LE CAOUTCHOUC	2					
2	161-00011	RUBBER;MOUNT(REAR)	LE CAOUTCHOUC	2					
4	2114-1058D2	WAHSER	RONDELLE	4					
5	2121-9007	NUT	ECROU	4					
6	2120-2166D2	BOLT	BOULON	16					
7	2114-1898D1	WASHER	RONDELLE	16					

DATE	JUN. 01, 2010
3rd EDITION	

Fig. 1480 CABIN(1) CABINE

Serial No. ;

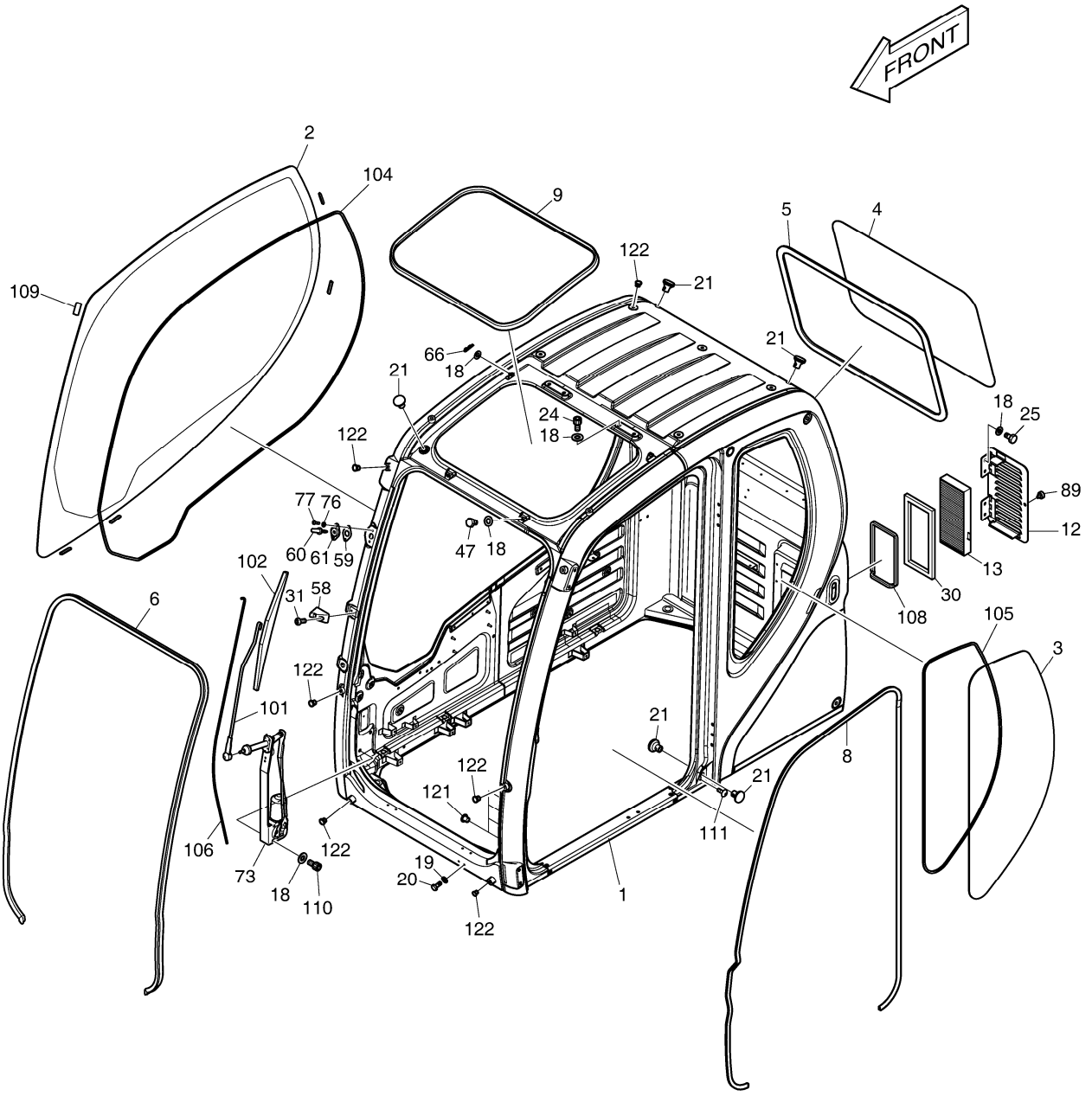

Fig. 1480 CABIN(1) CABINE

Serial No. ;

Key No.	Part No.	Description	Description	Q'ty	S.C	Serial No.	ICA	Replaceable part	
								Part No.	Q'ty
1480 --	622-00351M	CABIN ASS`Y	CABINE	1					
1	-	BODY;CABIN	CORPS	1	D				
2	903-00072A	GLASS;RH	VERRE	1					
3	903-00073A	GLASS;LH REAR	VERRE	1					
4	903-00075	GLASS;REAR	VERRE	1					
5	198-00054A	TRIM;REAR GLASS	EQUILIBRE	1					
6	162-00035A	STRIP;WEATHER	BANDE	1					
8	162-00039A	STRIP;BODY	BANDE	1					
9	162-00038	TRIM;ROOF	EQUILIBRE	1					
12	621-02864	COVER;FRESH AIR ASM	COUVERTURE	1					
13	471-00119	FILTER;FRESH AIR	FILTRE	1					
18	2114-1898D14	WASHER;PLAIN	RONDELLE	15					
19	2114-1898D3	WASHER;PLAIN	RONDELLE	2					
20	2120-2166D28	BOLT;HEX	BOULON	2					
21	2160-1310	BUSHING;RUBBER	DOUILLE	5					
24	S2208561	BOLT;SOCKET	BOULON	4					
25	2120-2166D12	BOLT;HEX	BOULON	4					
30	161-00640A	SPONGE	EPONGE	1					
31	2120-2166D7	SCREW	VIS	2					
47	2120-2166D5	BOLT	BOULON	2					
58	195-02729	BRACKET;BLADE	SUPPORT	1					
59	161-00598A	RUBBER;WASHER NOZZLE	LE CAOUTCHOUC	1					
60	554-00005	NOZZLE;WASHER	BEC	1					
61	621-02837A	COVER;WASHER NOZZLE	COUVERTURE	1					
66	123-00523	PIN;GAS-SPRING	GOUPILLE	2					
73	538-00011	MOTOR;WIPER	MOTEUR	1					
76	2114-1898D13	WASHER;PLAIN	RONDELLE	2					
77	2120-2166D26	SCREW	VIS	2					
89	K1003427	BOLT;KNOB	BOULON	1					
101	541-00015	ARM;WIPER	BRAS	1					
102	507-00006	BLADE;WIPER	LAME	1					
104	K1002635	DAMPER	AMORTISSEUR	1					
105	K1002636	DAMPER	AMORTISSEUR	1					
106	2185-1660	HOSE	TUYAU	1					
108	K1004061	FOAM	MOUSSE	1					
109	K1003522	STOPPER	TAQUET	5					
110	S2208466	BOLT;SOCKET	BOULON	3					
111	2120-2166D53	SCREW	VIS	1					

DATE	JUN. 01, 2010
3rd EDITION	

Fig. 1480 CABIN(1) CABINE

Serial No. ;

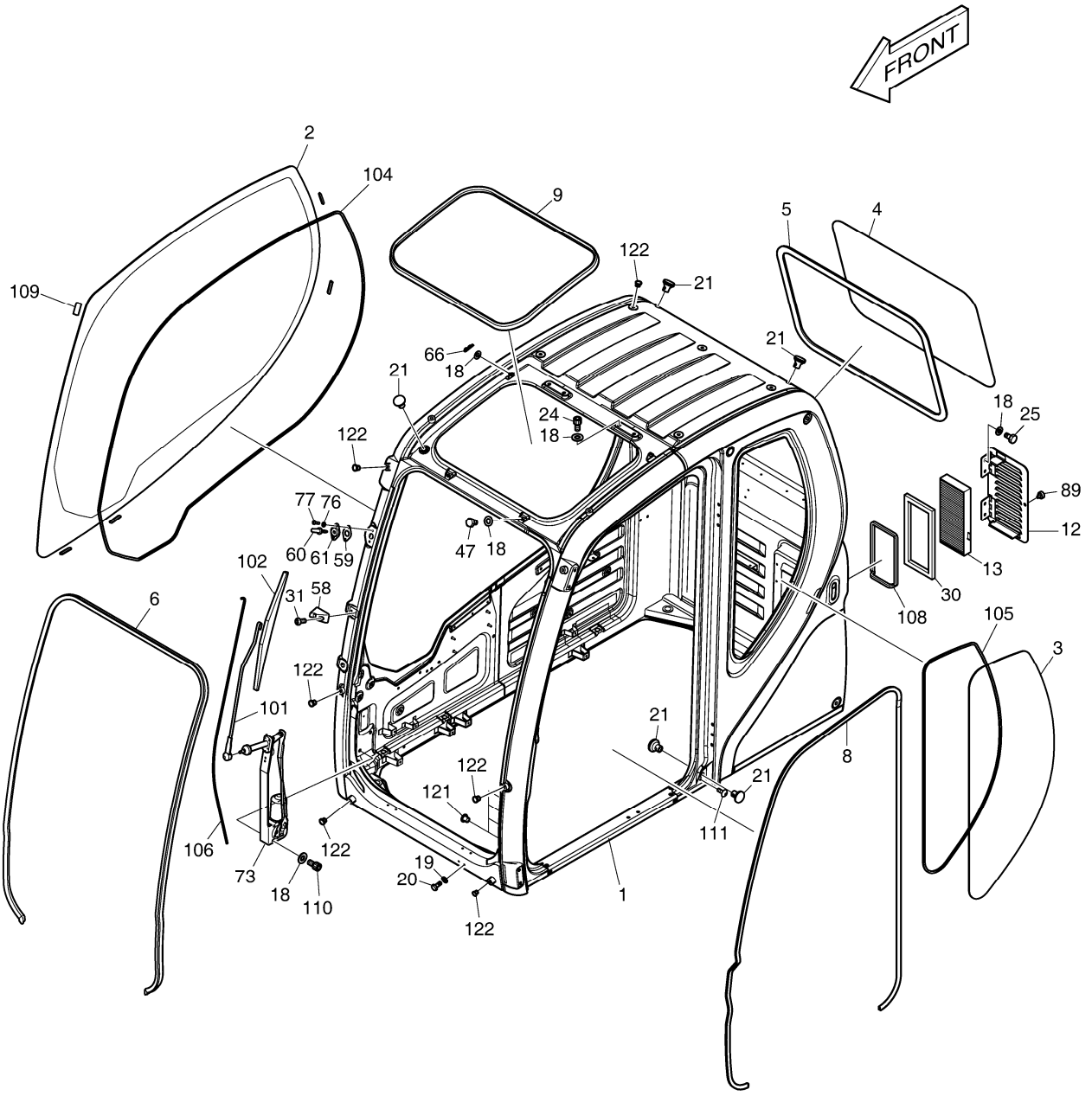

Fig. 1480 CABIN(1) CABINE

Serial No. ;

Key No.	Part No.	Description	Description	Q'ty	S.C	Serial No.	ICA	Replaceable part	
								Part No.	Q'ty
1480 -121	160-00074A	CAP	CHAPEAU	2					
122	160-00075A	CAP	CHAPEAU	13					

DATE	JUN. 01, 2010
3rd EDITION	

Fig. 1490 CABIN(2)
CABINE

Serial No. ;

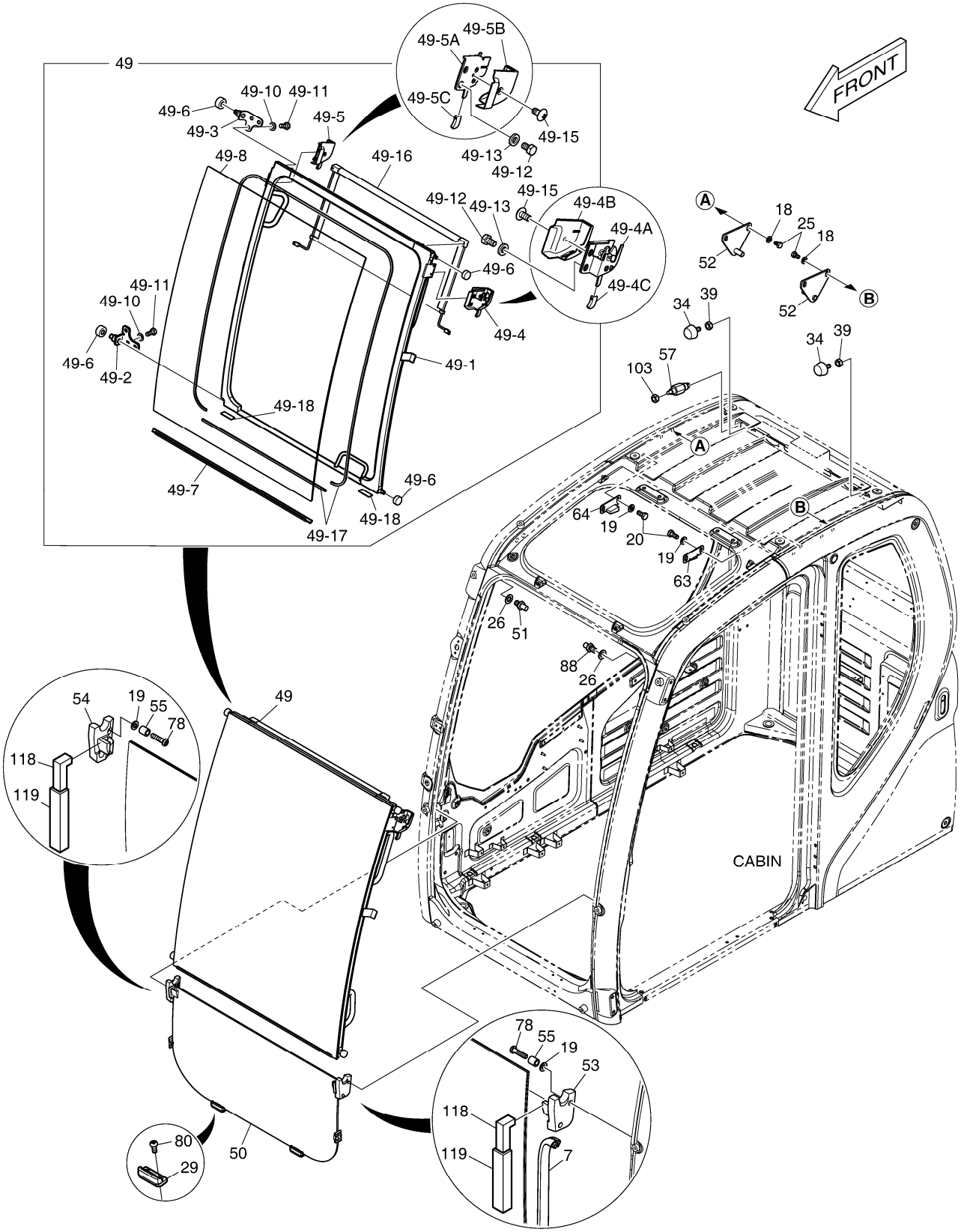

Fig. 1490 CABIN(2) CABINE

Serial No. ;

Key No.	Part No.	Description	Description	Q'ty	S.C	Serial No.	ICA	Replaceable part	
								Part No.	Q'ty
1490 --	622-00351M	CABIN ASS`Y	CABINE	1					
7	162-00034B	STRIP;WEATHER	BANDE	1					
18	2114-1898D14	WASHER;PLAIN	RONDELLE	4					
19	2114-1898D3	WASHER;PLAIN	RONDELLE	8					
20	2120-2166D28	BOLT;HEX	BOULON	4					
25	2120-2166D12	BOLT;HEX	BOULON	4					
26	2114-1898D6	WASHER;PLAIN	RONDELLE	2					
29	416-00019B	STOPPER;LOWER	TAQUET	2					
34	161-00195	STOPPER	TAQUET	2					
39	2121-1311D4	NUT	ECROU	2					
49	622-00359K	DOOR;SLIDE	PORTE	1					
49-1	K1033991	. PANEL ASS'Y	. PANNEAU	1					
49-2	195-02739C	. BRACKET;RH LOWER ROLLER	. SUPPORT	1					
49-3	195-02740E	. BRACKET;RH ROLLER UPPER	. SUPPORT	1					
49-4	125-00096A	. CATCH ASS'Y;SLIDE DOOR LH	. CROCHET	1					
49-4A	125-00073B	.. CATCH;LH	.. CROCHET	1					
49-4B	621-03724	.. COVER;CATCH LH	.. COUVERTURE	1					
49-4C	133-00248	.. KNOB;SLIDE DOOR CATCH	.. BOUTON	1					
49-5	125-00097A	. CATCH ASM;SLIDE DOOR RH	. ASM DE CROCHET	1					
49-5A	125-00074B	.. CATCH;RH	.. CROCHET	1					
49-5B	621-03725	.. COVER;CATCH RH	.. COUVERTURE	1					
49-5C	133-00248	.. KNOB;SLIDE DOOR CATCH	.. BOUTON	1					
49-6	270-00054B	. ROLLER	. ROULEAU	4					
49-7	K1036331	. BAR	. BARRE	1					
49-8	K1033880	. GLASS;FRONT UPPER	. VERRE	1					
49-10	2114-1898D3	. WASHER;PLAIN	. RONDELLE	6					
49-11	2120-2166D28	. BOLT;HEX	. BOULON	6					
49-12	2120-2166D12	. BOLT;HEX	. BOULON	4					
49-13	2114-1898D2	. WASHER	. RONDELLE	4					
49-15	2120-2166D52	. BOLT	. BOULON	2					
49-16	474-00044A	. SUN SCREEN;FRONT	. ECRAN DE SOLEIL	1					
49-17	K1036967	. DAMPER	. AMORTISSEUR	1					
49-18	K1006368	. RUBBER	. LE CAOUTCHOUC	2					
50	903-00074	GLASS;FRONT LOWER	VITRE	1					
51	142-00128B	STRIKER;RH	BUTEE	1					
52	142-00127C	STRIKER;SLIDE DOOR REAR	BUTEE	2					
53	116-00089B	STOPPER;RUBBER LH	TAQUET	1					
54	116-00090B	STOPPER;RUBBER RH	TAQUET	1					

DATE	JUN. 01, 2010
3rd EDITION	

Fig. 1490 CABIN(2)
CABINE

Serial No. ;

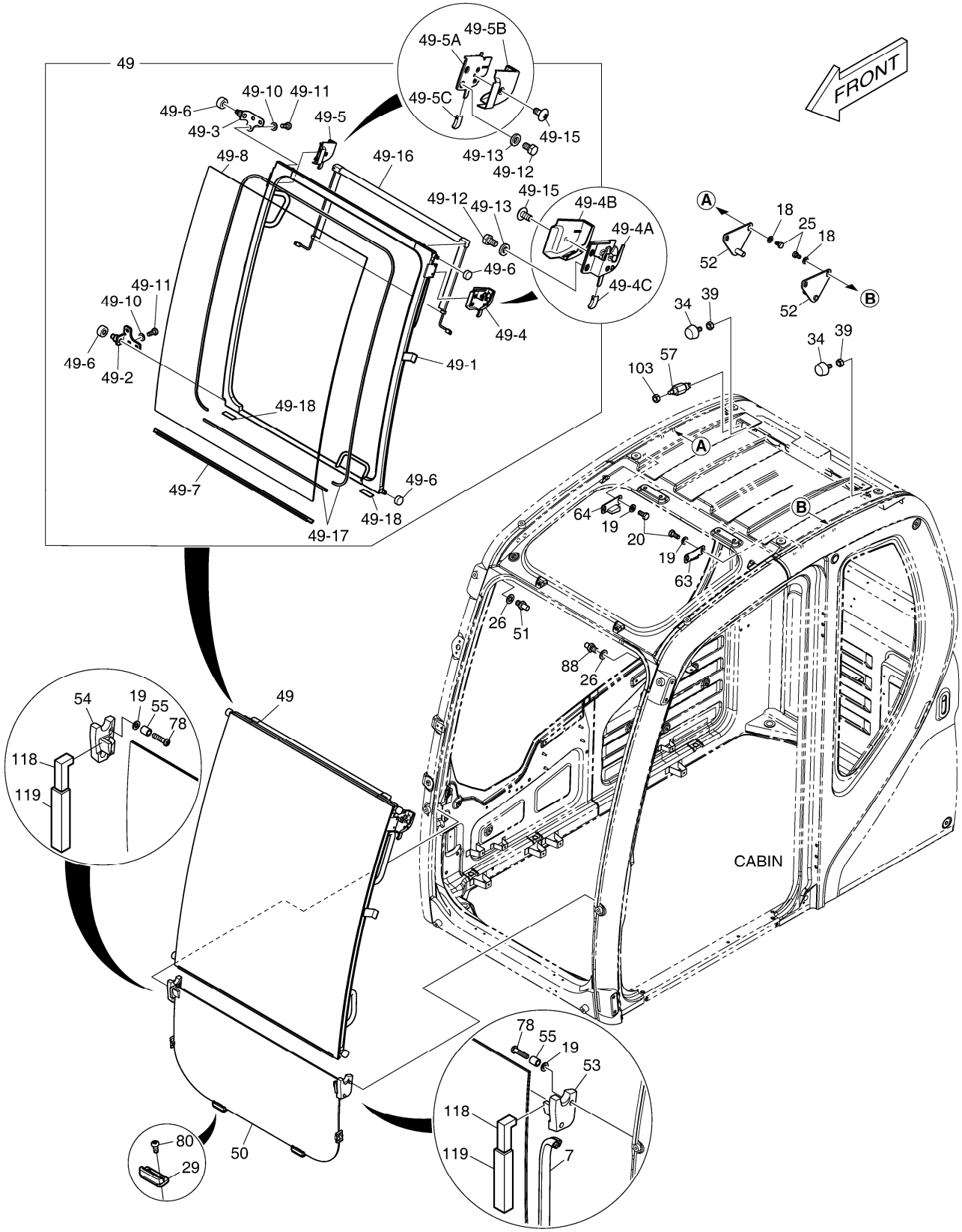

DATE	JUN. 01, 2010
3rd EDITION	

Fig. 1490 CABIN(2) CABINE

Serial No. ;

Key No.	Part No.	Description	Description	Q'ty	S.C	Serial No.	ICA	Replaceable part	
								Part No.	Q'ty
1490 -55	2140-1338	PIPE;SPACER	TUYAU	4					
57	549-00086	SWITCH;SLIDE	COMMUTATEUR	1					
63	161-00618B	STOPPER;SLIDE DOOR OPEN(L.	TAQUET	1					
64	161-00619B	STOPPER;SLIDE DOOR OPEN(R	TAQUET	1					
78	S3450993	SCREW	VIS	4					
80	2120-2166D52	BOLT	BOULON	4					
88	K1003284	STRIKER;LH	BUTEE	1					
103	S4034833	NUT	ECROU	1					
118	K1027768	FOAM	MOUSSE	2					
119	K1027769	FOAM	MOUSSE	2					

DATE	JUN. 01, 2010
3rd EDITION	

Fig. 1500 CABIN(3) CABINE

Serial No. ;

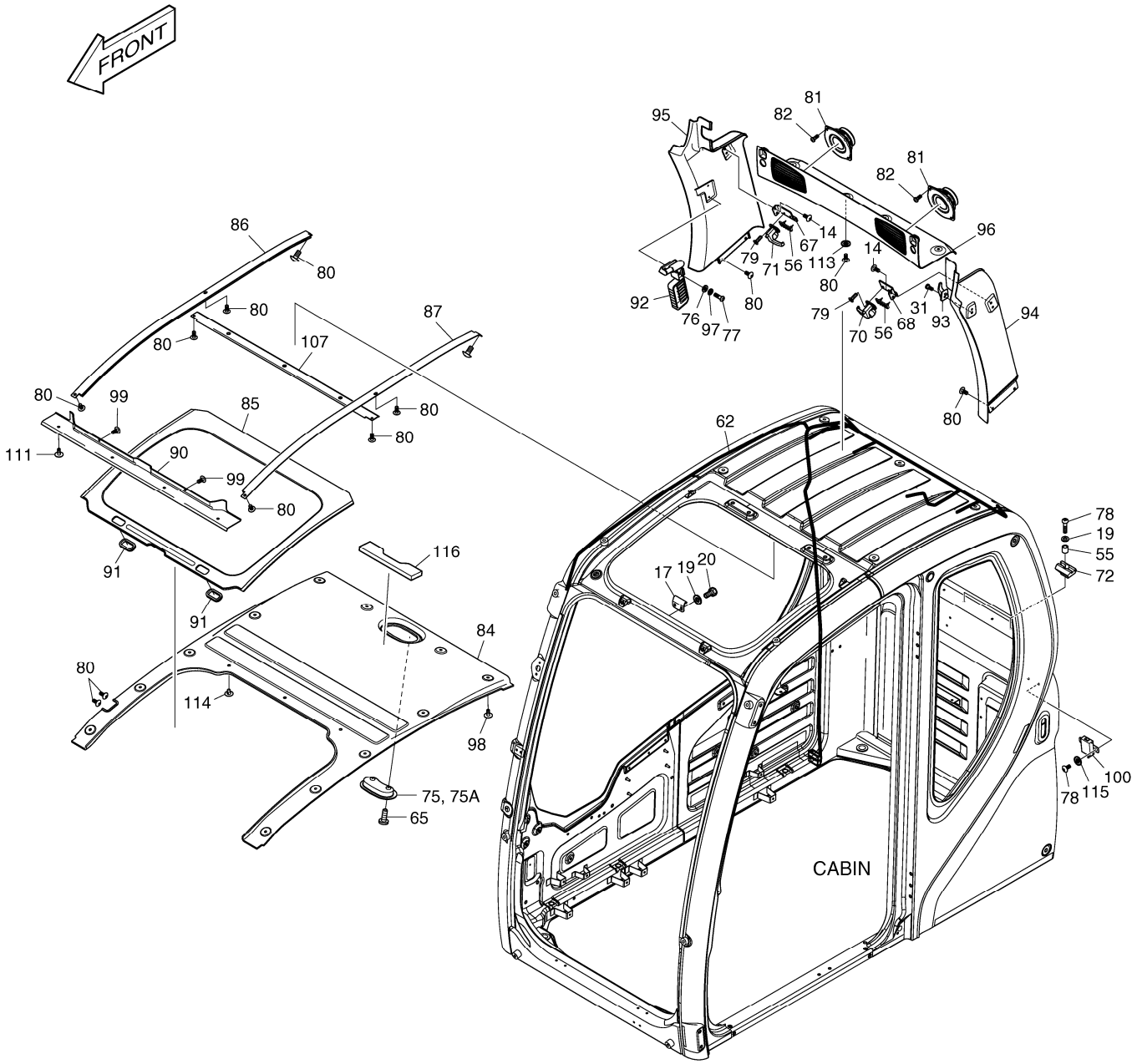

DATE	JUN. 01, 2010
3rd EDITION	

Fig. 1500 CABIN(3) CABINE

Serial No. ;

Key No.	Part No.	Description	Description	Q'ty	S.C	Serial No.	ICA	Replaceable part	
								Part No.	Q'ty
1500 --	622-00351M	CABIN ASS`Y	CABINE	1					
14	2120-2166D10	SCREW M6X1.0X14	VIS	4					
17	191-03166C	STRIKER PLATE ROOF	TOIT DE PLAT DE BUTEE	1					
19	2114-1898D3	WASHER;PLAIN	RONDELLE	4					
20	2120-2166D28	BOLT;HEX	BOULON	2					
31	2120-2166D7	SCREW	VIS	1					
55	2140-1338	PIPE;SPACER	TUYAU	2					
56	K1000794	STOPPER;RUBBER	TAQUET	2					
62	530-00417B	HARNESS;CABIN	HARNAIS	1					
65	S3458843	SCREW	VIS	2					
67	621-03113B	PLATE;STOPPER (R.H)	PLAQUE	1					
68	621-03114B	PLATE;STOPPER (L.H)	PLAQUE	1					
70	125-00077	LOCK;REAR GLASS (L.H)	SERRURE	1					
71	125-00078	LOCK;REAR GLASS (R.H)	SERRURE	1					
72	2161-2212	STOPPER;RUBBER	TAQUET	2					
75	534-00079	ROOM LAMP	LAMPE DE PIECE	1					
75A	2515-1021D1	. BULB	. AMPOULE	1					
76	2114-1898D13	WASHER;PLAIN	RONDELLE	2					
77	2120-2166D26	SCREW	VIS	2					
78	S3450993	SCREW	VIS	4					
79	S3452853	SCREW	VIS	4					
80	2120-2166D52	BOLT	BOULON	20					
81	2541-9020	SPEAKER	ORATEUR	2					
82	S3450833	SCREW	VIS	8					
84	161-00609E	PAD;ROOF REAR	GARNITURE	1					
85	161-00610E	PAD;ROOF CENTER	GARNITURE	1					
86	359-00022A	RAIL;ROOF PANEL RH	RAIL	1					
87	359-00021A	RAIL;ROOF PANEL LH	RAIL	1					
90	161-00613B	PAD;ROOF FRONT	GARNITURE	1					
91	172-00055A	HANDLE;ROOF	POIGNEE	2					
92	2199-9058	HAMMER	MARTEAU	1					
93	2150-1133	HOOK;COAT	CROCHET	1					
94	621-02910C	COVER;PILLAR LH	COUVERTURE	1					
95	621-02911C	COVER;PILLAR RH	COUVERTURE	1					
96	621-02912B	COVER;REAR UPPER	COUVERTURE	1					
97	2114-2031D1	WASHER;SPRING	RONDELLE	2					
98	K1006936	SCRIVET	SCRIVET	12					
99	2120-2166D18	SCREW	VIS	2					

Fig. 1500 CABIN(3) CABINE

Serial No. ;

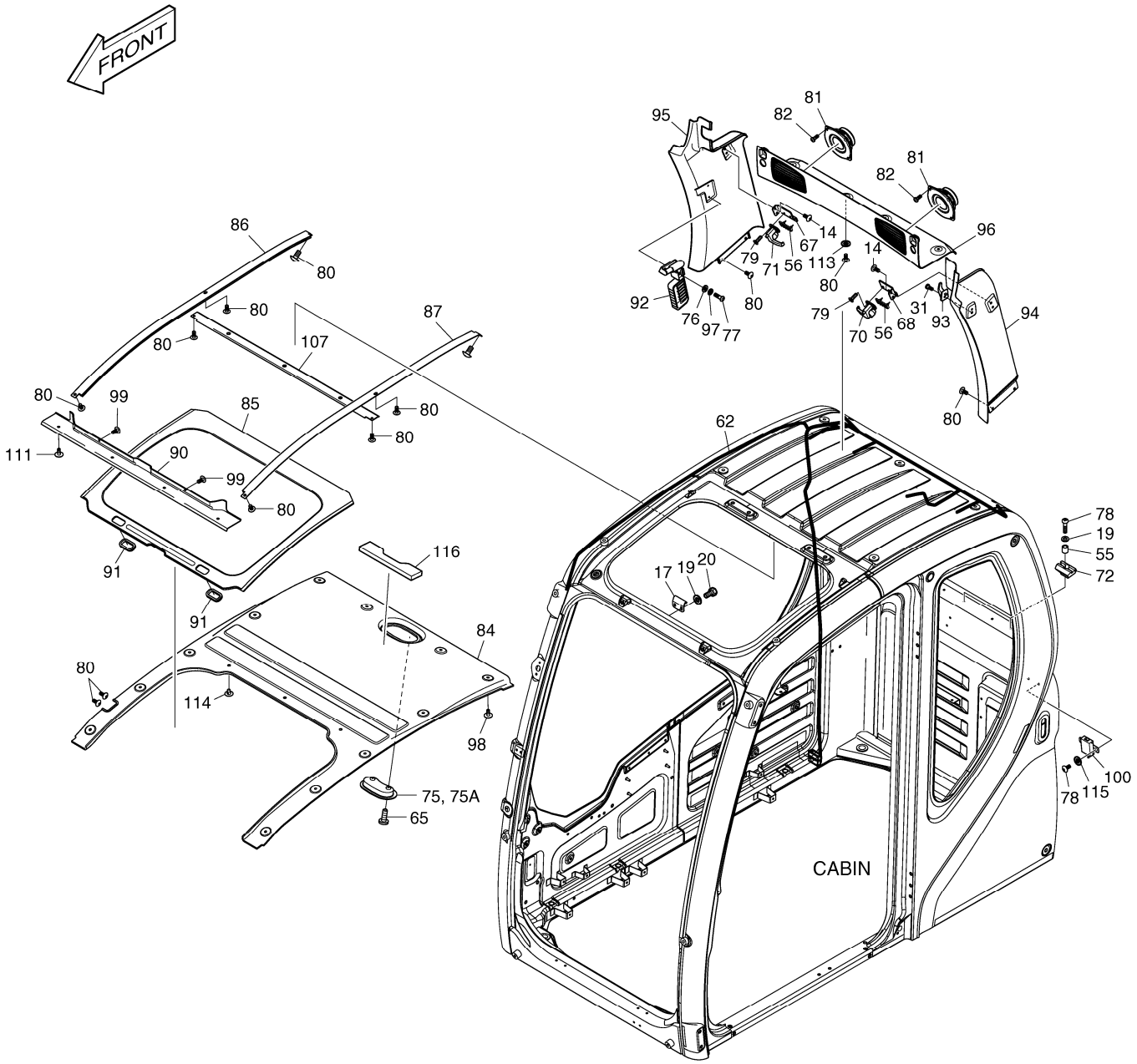

Fig. 1500 CABIN(3) CABINE

Serial No. ;

Key No.	Part No.	Description	Description	Q'ty	S.C	Serial No.	ICA	Replaceable part	
								Part No.	Q'ty
1500 -100	K1002641	MODULE ASS'Y	MODULE	1					
107	K1003676B	PLATE	PLAQUE	1					
111	2120-2166D53	SCREW	VIS	4					
113	2114-1898D5	WASHER M6	RONDELLE	4					
114	K1006933	SCRIVET	SCRIVET	3					
115	S5010313	WASHER	RONDELLE	2					
116	K1010839	FORM	FORME	1					

DATE	JUN. 01, 2010
3rd EDITION	

Fig. 1510 CABIN(4)
CABINE

Serial No. ;

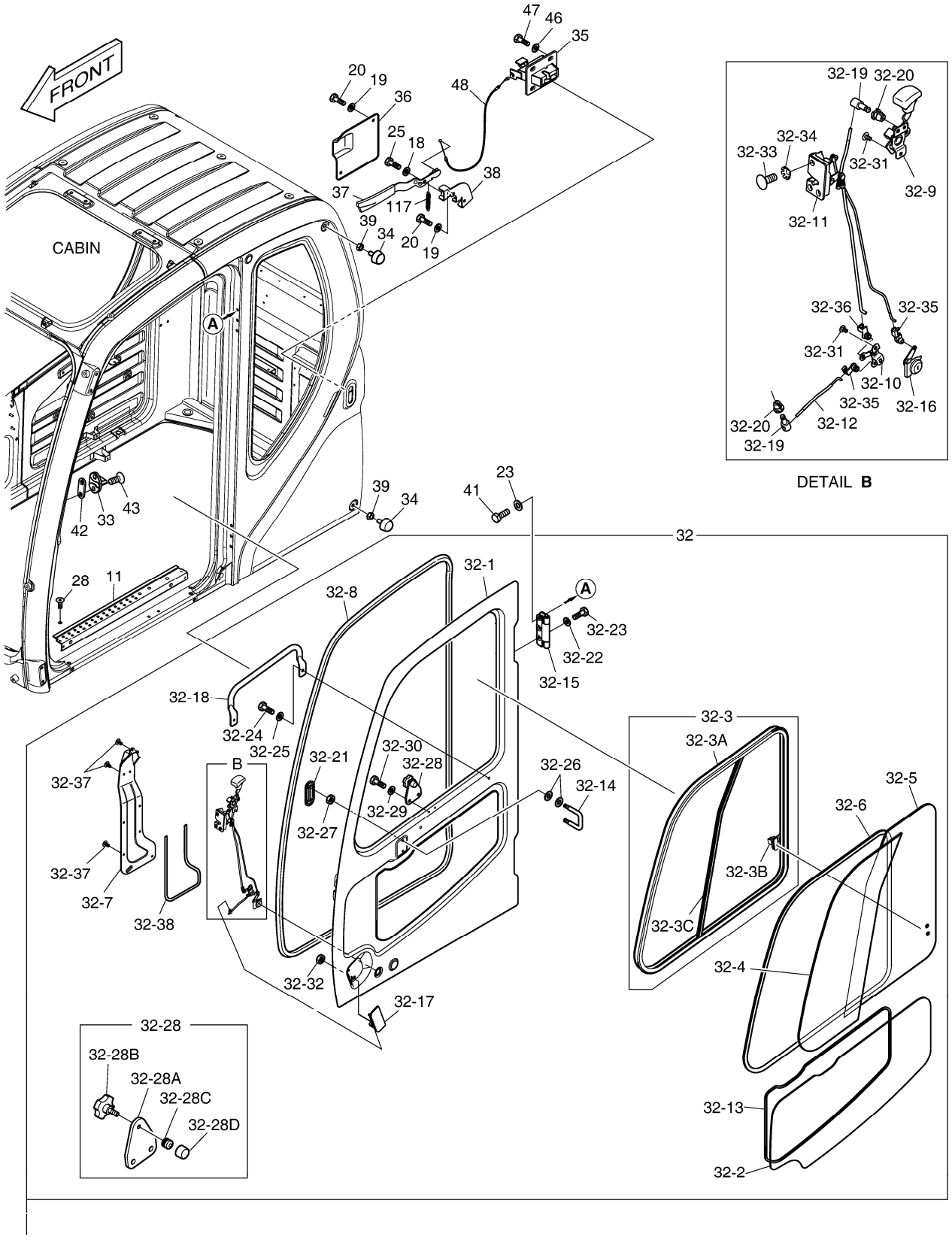

DATE	JUN. 01, 2010
3rd EDITION	

Fig. 1510 CABIN(4) CABINE

Serial No. ;

Key No.	Part No.	Description	Description	Q'ty	S.C	Serial No.	ICA	Replaceable part	
								Part No.	Q'ty
1510 --	622-00351M	CABIN ASS`Y	CABINE	1					
11	625-00159B	STEP;CABIN DOOR	ETAPE	1					
18	2114-1898D14	WASHER;PLAIN	RONDELLE	1					
19	2114-1898D3	WASHER;PLAIN	RONDELLE	4					
20	2120-2166D28	BOLT;HEX	BOULON	4					
23	2114-1898D15	WASHER;PLAIN	RONDELLE	6					
25	2120-2166D12	BOLT;HEX	BOULON	1					
28	2120-2150D3	SCREW	VIS	4					
32	622-00353J	DOOR ASS`Y	VERROU	1					
32-1	-	. DOOR;BODY	. PORTE	1	D				
32-2	903-00069A	. GLASS;DOOR LOWER	. VERRE	1					
32-3	622-00355A	. SASH ASS'Y	. SASH	1					
32-3A	622-00356	.. FRAME ASS'Y;SASH	.. ARMATURE	1					
32-3B	2123-6119	.. LOCK;SASH	.. SERRURE	1					
32-3C	162-00033A	.. BAR;CENTER	.. BARRE	1					
32-4	903-00070B	. GLASS;SASH FRONT	. VERRE	1					
32-5	903-00071B	. GLASS;SASH REAR	. VERRE	1					
32-6	161-00623	. TRIM	. EQUILIBRE	1					
32-7	621-02869C	. COVER;LOCK	. COUVERTURE	1					
32-8	198-00053A	. RUBBER TRIM;DOOR INNER	. LE CAOUTCHOUC	1					
32-9	133-00221	. LEVER ASS'Y;INNER HANDLE	. LEVIER	1					
32-10	137-00092	. LINK;DOOR INNER	. LIEN	1					
32-11	125-00072	. CATCH ASS'Y;DOOR INNER	. CROCHET	1					
32-12	136-00055A	. ROD;OUTER HANDLE	. TIGE	1					
32-13	K1002637	. DAMPER	. AMORTISSEUR	1					
32-14	2150-1132A	. HOOK;CATCH DOOR	. CROCHET	1					
32-15	K1027765	. HINGE ASS'Y;DOOR	. CHARNIERE	2					
32-16	K1003900	. KEY ASS`Y;DOOR	. CLE	1					
32-17	2172-9021	. HANDLE;OUTER	. POIGNEE	1					
32-18	145-00124A	. STAY	. SEJOUR	1					
32-19	2123-2247	. PIN	. GOUPILLE	2					
32-20	2124-1689A	. SNAP	. RUPTURE	2					
32-21	621-02867A	. COVER;DOOR INNER	. COUVERTURE	1					
32-22	2114-1898D15	. WASHER;PLAIN	. RONDELLE	6					
32-23	2120-2166D1	. BOLT	. BOULON	6					
32-24	2120-2166D5	. BOLT	. BOULON	2					
32-25	2114-1898D2	. WASHER	. RONDELLE	2					
32-26	2891-1311	. PLATE	. PLAQUE	4					

DATE	JUN. 01, 2010
3rd EDITION	

Fig. 1510 CABIN(4) CABINE

Serial No. ;

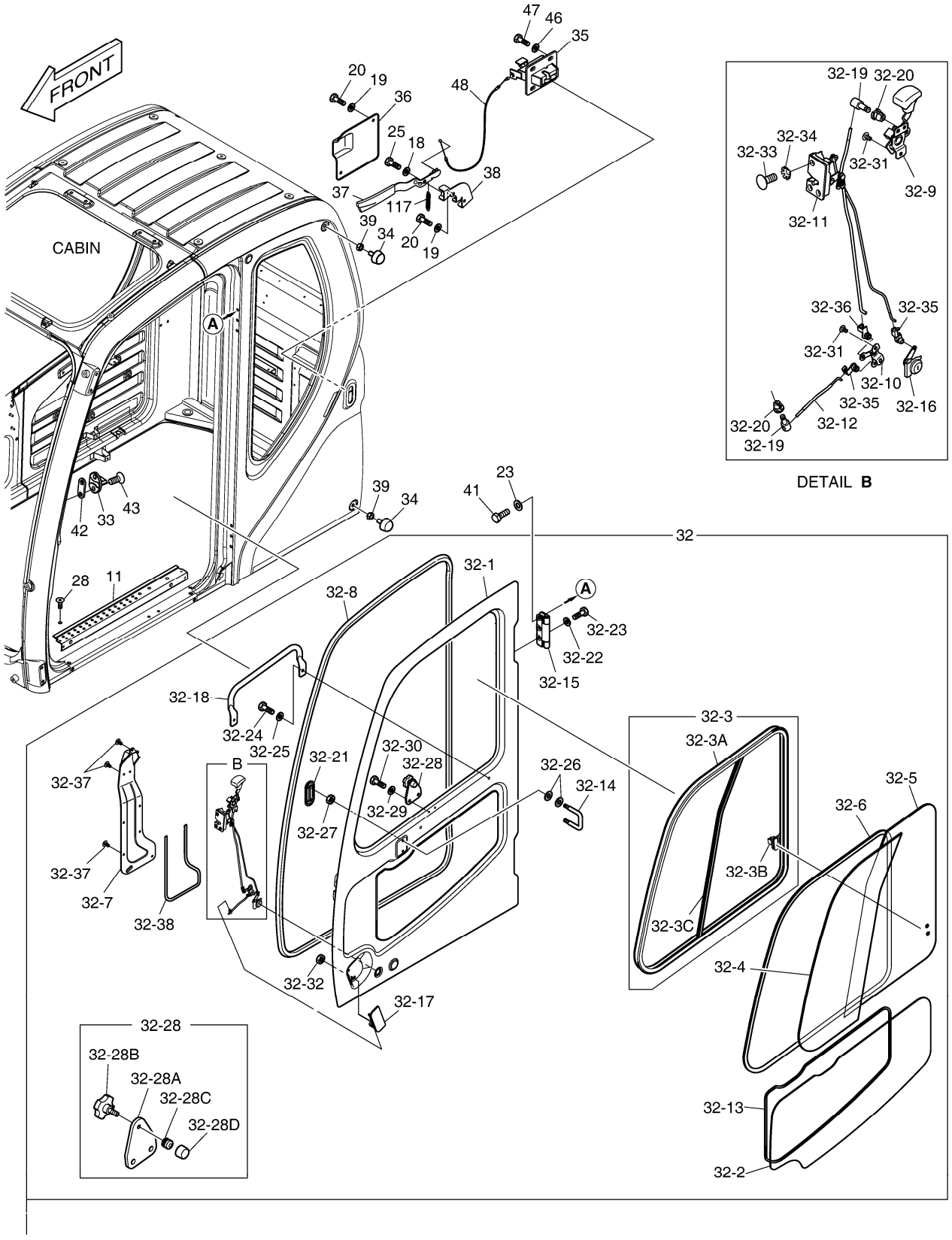

DATE	JUN. 01, 2010
3rd EDITION	

Fig. 1510 CABIN(4) CABINE

Serial No. ;

Key No.	Part No.	Description	Description	Q'ty	S.C	Serial No.	ICA	Replaceable part	
								Part No.	Q'ty
1510 -32-27	S4012533	. NUT	. ECROU	2					
32-28	161-00621B	. STOPPER;RUBBER	. TAQUET	1					
32-28A	191-03283	.. PLATE;STOPPER	.. PLAQUE	1					
32-28B	4132-1138	.. KNOB	.. BOUTON	1					
32-28C	161-00620	.. RUBBER;STOPPER	.. LE CAOUTCHOUC	1					
32-28D	116-00092A	.. STOPPER	.. TAQUET	1					
32-29	2114-1898D3	. WASHER;PLAIN	. RONDELLE	2					
32-30	2120-2166D28	. BOLT;HEX	. BOULON	2					
32-31	2120-2166D52	. BOLT	. BOULON	5					
32-32	S4012333	. NUT	. ECROU	2					
32-33	2120-2150D3	. SCREW	. VIS	3					
32-34	S5210303	. WASHER;TOOTHED	. RONDELLE	3					
32-35	124-00010	. CLIP;ROD	. AGRAFE	2					
32-36	124-00344	. CLIP;ROD	. AGRAFE	1					
32-37	2120-2166D53	. SCREW	. VIS	8					
32-38	K1006370	. FOAM	. MOUSSE	1					
33	2142-9005	STRIKER;DOOR	BUTEE	1					
34	161-00195	STOPPER	TAQUET	2					
35	2125-9055	LOCK;BACK	SERRURE	1					
36	621-02849A	COVER;BACK LOCK INNER	COUVERTURE	1					
37	133-00220E	LEVER;BACK LOCK	LEVIER	1					
38	195-02719C	BRACKET;BACK LOCK	SUPPORT	1					
39	2121-1311D4	NUT	ECROU	2					
41	2120-2166D1	BOLT	BOULON	6					
42	2114-1856	SHIM;STRIKER	CALE	1					
43	2120-2150D1	BOLT	BOULON	2					
46	2114-1898D2	WASHER	RONDELLE	4					
47	2120-2166D5	BOLT	BOULON	4					
48	2127-1002A	CABLE;BACK LOCK	CABLE	1					
117	2129-1446	SPRING	RESSORT	1					

DATE	JUN. 01, 2010
3rd EDITION	

Fig. 1515 HANDLE - CABIN HANDLE

Serial No. ;

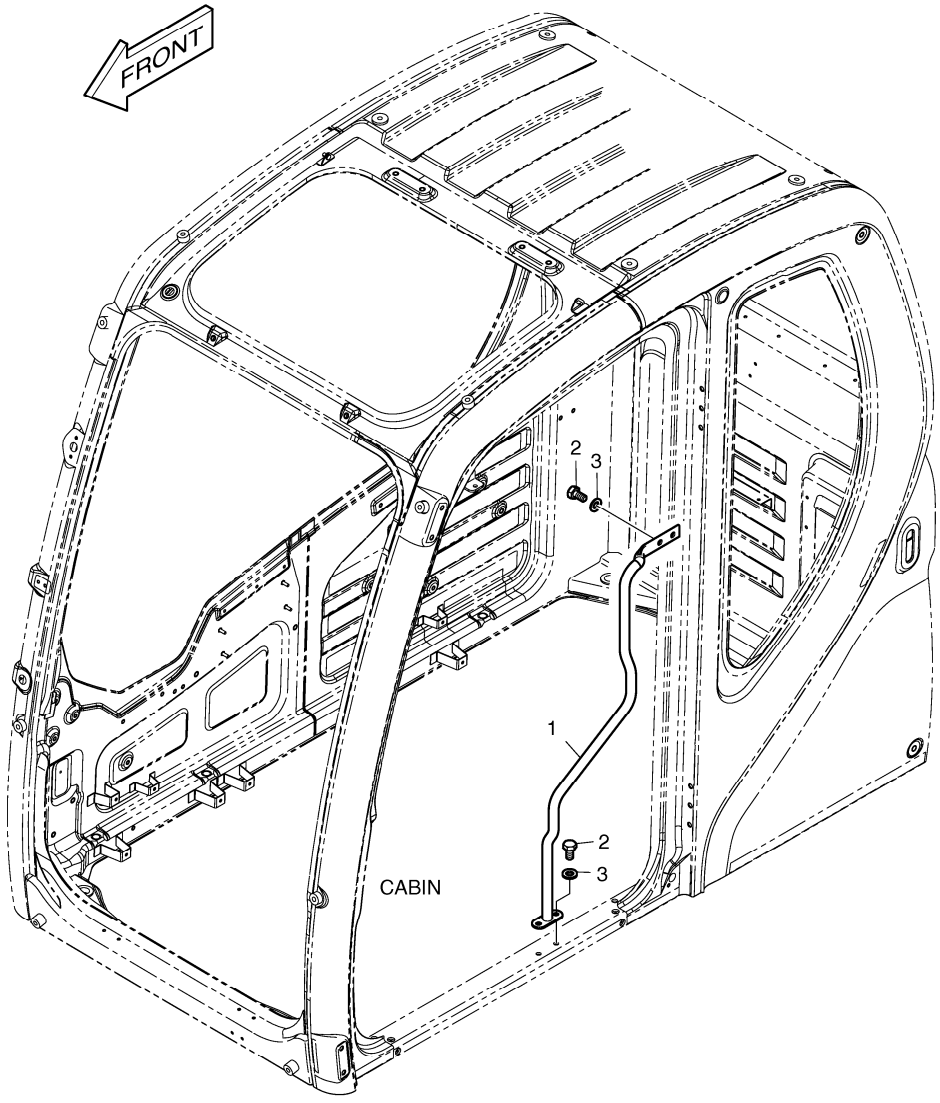

DATE	JUN. 01, 2010
3rd EDITION	

Fig. 1515 HANDLE - CABIN HANDLE

Serial No. ;

Key No.	Part No.	Description	Description	Q'ty	S.C	Serial No.	ICA	Replaceable part	
								Part No.	Q'ty
1515 --	K1038240	HANDLE ASS'Y	POIGNEE	-	D				
1	K1038247	HANDLE	POIGNEE	1					
2	2120-2166D4	BOLT	BOULON	4					
3	2114-1898D15	WASHER;PLAIN	RONDELLE	4					

DATE	JUN. 01, 2010
3rd EDITION	

Fig. 1520 FLOOR MAT PLANCHER

Serial No. ;

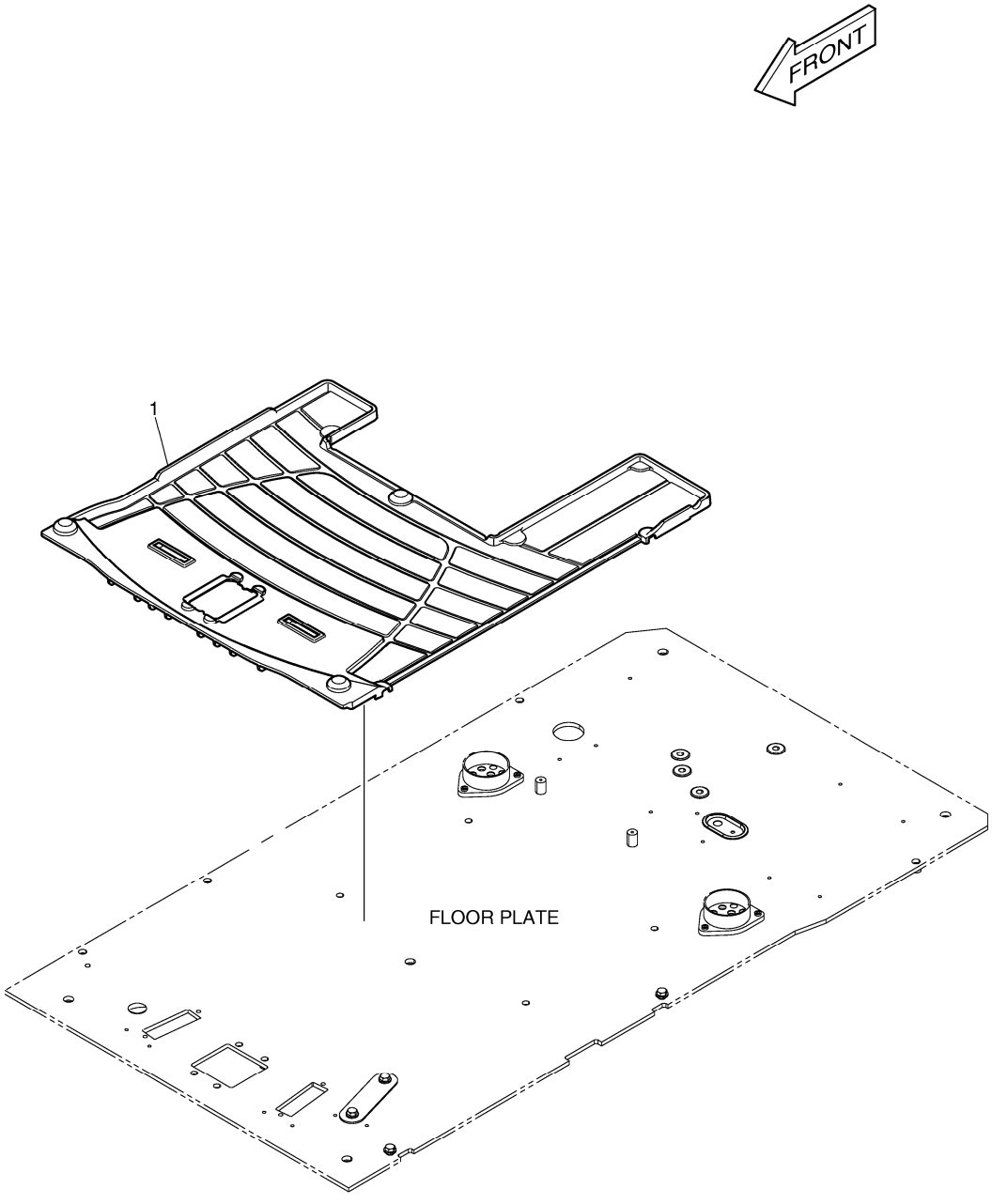

DATE	JUN. 01, 2010
3rd EDITION	

Fig. 1520 FLOOR MAT PLANCHER

Serial No. ;

Key No.	Part No.	Description	Description	Q'ty	S.C	Serial No.	ICA	Replaceable part	
								Part No.	Q'ty
1520 -1	K1002081B	MAT;FLOOR	TAPIS	1					

DATE	JUN. 01, 2010
3rd EDITION	

Fig. 1530 FLOOR PLATE
TOLE DE PLANCHER

Serial No. ;

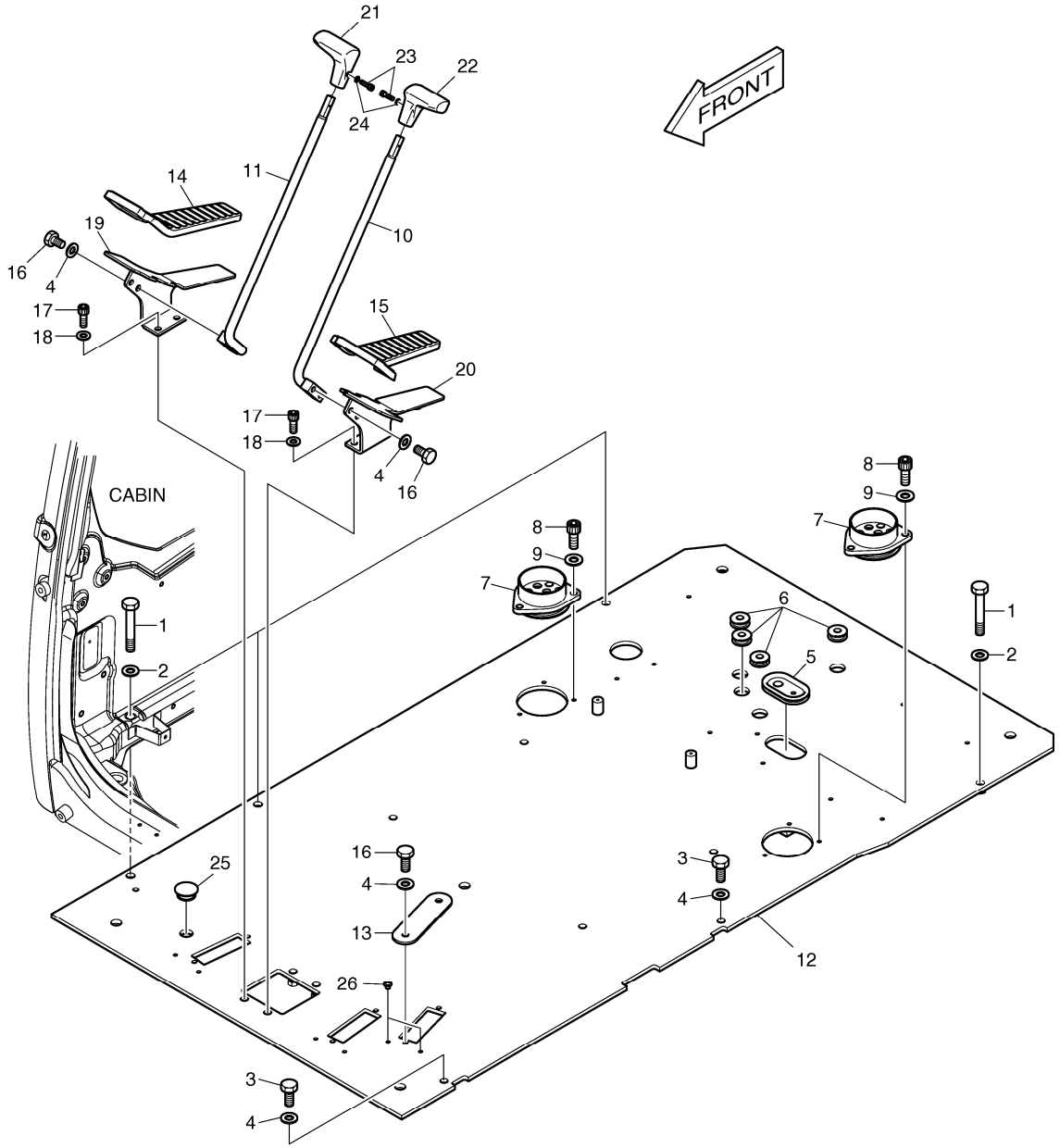

DATE	JUN. 01, 2010
3rd EDITION	

Fig. 1530 FLOOR PLATE TOLE DE PLANCHER

Serial No. ;

Key No.	Part No.	Description	Description	Q'ty	S.C	Serial No.	ICA	Replaceable part	
								Part No.	Q'ty
1530 --	622-00426G	FLOOR PLATE ASS`Y	TOLE DE PLANCHER	-	D				
1	2120-2166D55	BOLT	BOULON	4					
2	2114-1898D17	WASHER M12	RONDELLE	4					
3	2120-2166D1	BOLT	BOULON	2					
4	2114-1898D1	WASHER	RONDELLE	8					
5	160-00071	BUSHING;RUBBER	DOUILLE	1					
6	160-00072	BUSHING;RUBBER	DOUILLE	4					
7	160-00080B	BUSHING;RUBBER	DOUILLE	2					
8	S2208866	BOLT;SOCKET	BOULON	6					
9	2114-1898D14	WASHER;PLAIN	RONDELLE	6					
10	133-00229A	LEVER;TRAVEL (L.H)	LEVIER	1					
11	133-00230A	LEVER;TRAVEL (R.H)	LEVIER	1					
12	621-02892J	PLATE;FLOOR	PLAQUE	1					
13	621-01507A	PLATE	PLAQUE	1					
14	161-00381	RUBBER;PEDAL(R.H)	LE CAOUTCHOUC	1					
15	161-00382	RUBBER;PEDAL(L.H)	LE CAOUTCHOUC	1					
16	2120-2166D4	BOLT	BOULON	6					
17	S2211866	BOLT;SOCKET	BOULON	4					
18	S5110603	WASHER;SPRING	RONDELLE	4					
19	K1039515	BRACKET;PEDAL(R.H)	SUPPORT	1					
20	K1039514	BRACKET;PEDAL(L.H)	SUPPORT	1					
21	2132-1134B	GRIP;LEVER(R.H)	POIGNEE	1					
22	2132-1133B	GRIP;LEVER(L.H)	POIGNEE	1					
23	S2201766	BOLT	BOULON	2					
24	S5000113	WASHER;PLAIN	RONDELLE	2					
25	2161-2487	CAP;RUBBER	CHAPEAU	1					
26	160-00073A	CAP	CHAPEAU	2					

DATE	JUN. 01, 2010
3rd EDITION	

Fig. 1540 HANDLE ASS'Y HANDLE

Serial No. ;

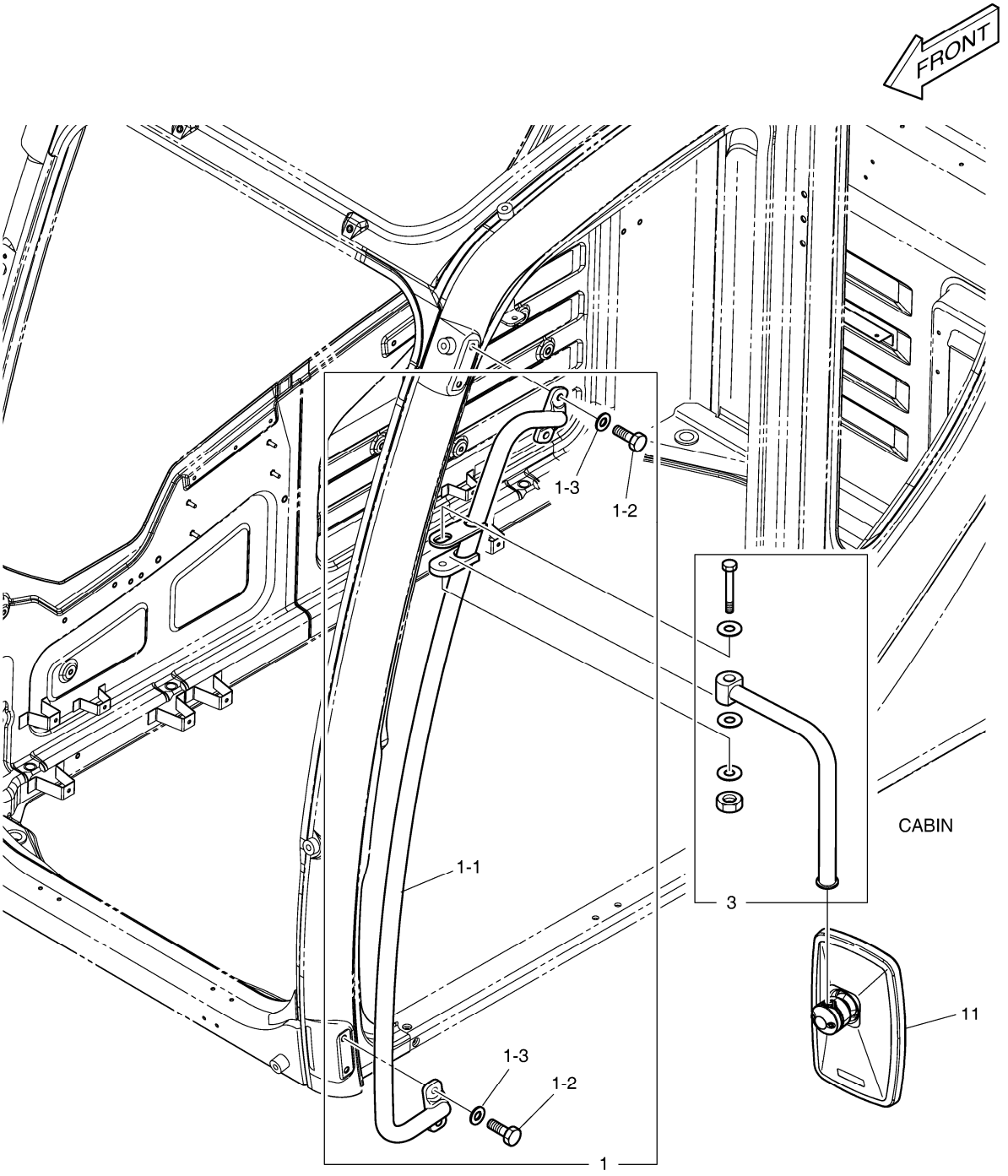

DATE	JUN. 01, 2010
3rd EDITION	

Fig. 1540 HANDLE ASS'Y HANDLE

Serial No. ;

Key No.	Part No.	Description	Description	Q'ty	S.C	Serial No.	ICA	Replaceable part	
								Part No.	Q'ty
1540 -1	110925-00007	HANDLE ASS'Y;OUTER	HANDLE	1					
1-1	172-00053B	. HANDLE;OUTER	. POIGNEE	1					
1-2	2120-2166D2	. BOLT	. BOULON	4					
1-3	2114-1898D15	. WASHER;PLAIN	. RONDELLE	4					
3	K1004272	STAY;MIRROR	SEJOUR	1					
11	K1040606	MIRROR;SIDE	MIROIR	1					

DATE	JUN. 01, 2010
3rd EDITION	

Fig. 1550 ROOF COVER COUVERCLE

Serial No. ;

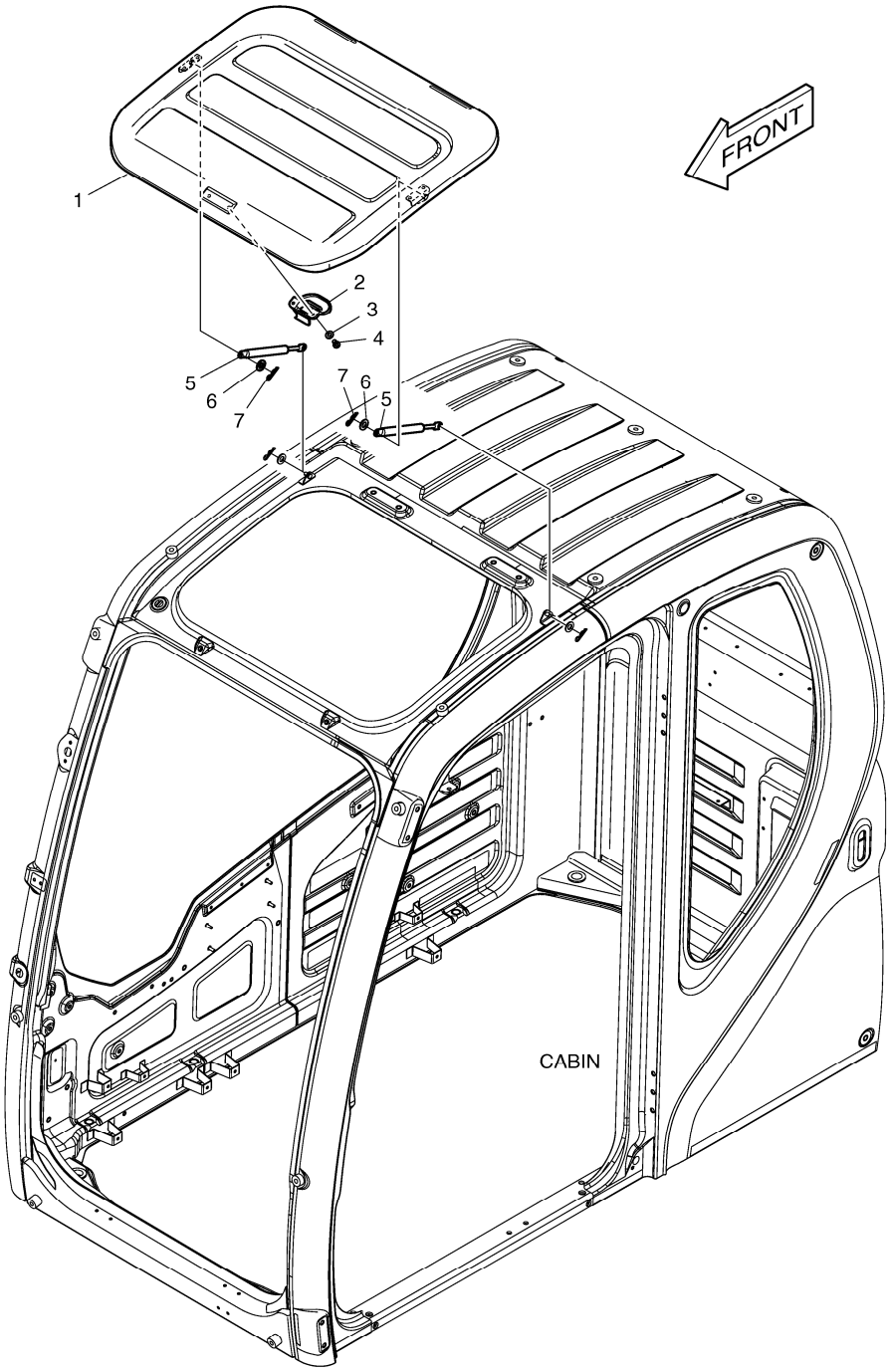

DATE	JUN. 01, 2010
3rd EDITION	

Fig. 1550 ROOF COVER COUVERCLE

Serial No. ;

Key No.	Part No.	Description	Description	Q'ty	S.C	Serial No.	ICA	Replaceable part	
								Part No.	Q'ty
1550 --	621-03732C	ROOF COVER ASS'Y	COUVERTURE ASS' DE TO	-	D				
1	621-03727B	COVER;ROOF	COUVERTURE	1					
2	123-00516B	LOCK ASS'Y;ROOF COVER	SERRURE	1					
3	2114-1898D3	WASHER;PLAIN	RONDELLE	2					
4	2120-2166D9	SCREW	VIS	2					
5	DS1003009	GAS-SPRING	GAS-SPRING	2					
6	2114-1898D14	WASHER;PLAIN	RONDELLE	2					
7	123-00523	PIN;GAS-SPRING	GOUPILLE	2					

DATE	JUN. 01, 2010
3rd EDITION	

Fig. 1560 FOOT REST - L.H.
REPOS DE PIED

Serial No. ;

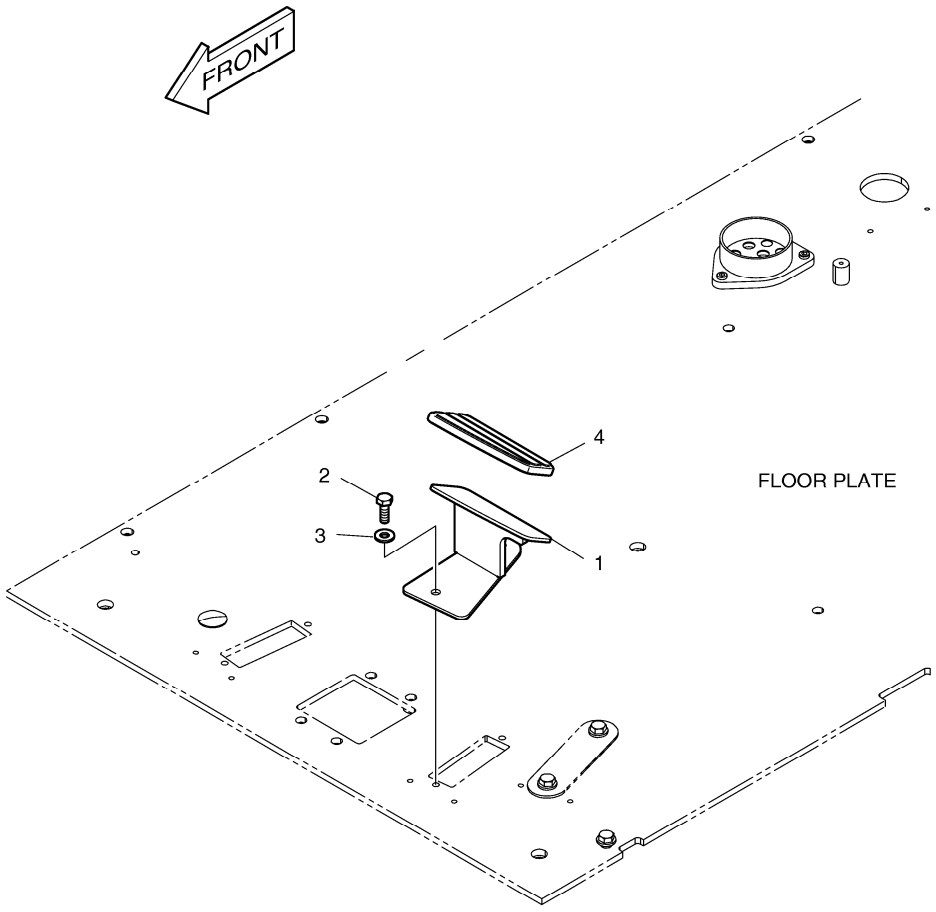

DATE	JUN. 01, 2010
3rd EDITION	

Fig. 1560 FOOT REST - L.H. REPOS DE PIED

Serial No. ;

Key No.	Part No.	Description	Description	Q'ty	S.C	Serial No.	ICA	Replaceable part	
								Part No.	Q'ty
1560 --	K1002082	FOOT REST(L.H)	REPOS DE PIED	-	D				
1	195-02949A	BRACKET;FOOT REST(L.H)	SUPPORT	1					
2	2120-2166D1	BOLT	BOULON	2					
3	2114-1898D1	WASHER	RONDELLE	2					
4	2160-1345	COVER;FOOT REST	COUVERTURE	1					

DATE	JUN. 01, 2010
3rd EDITION	

Fig. 1570 FOOT REST - R.H.
REPOS DE PIED

Serial No. ;

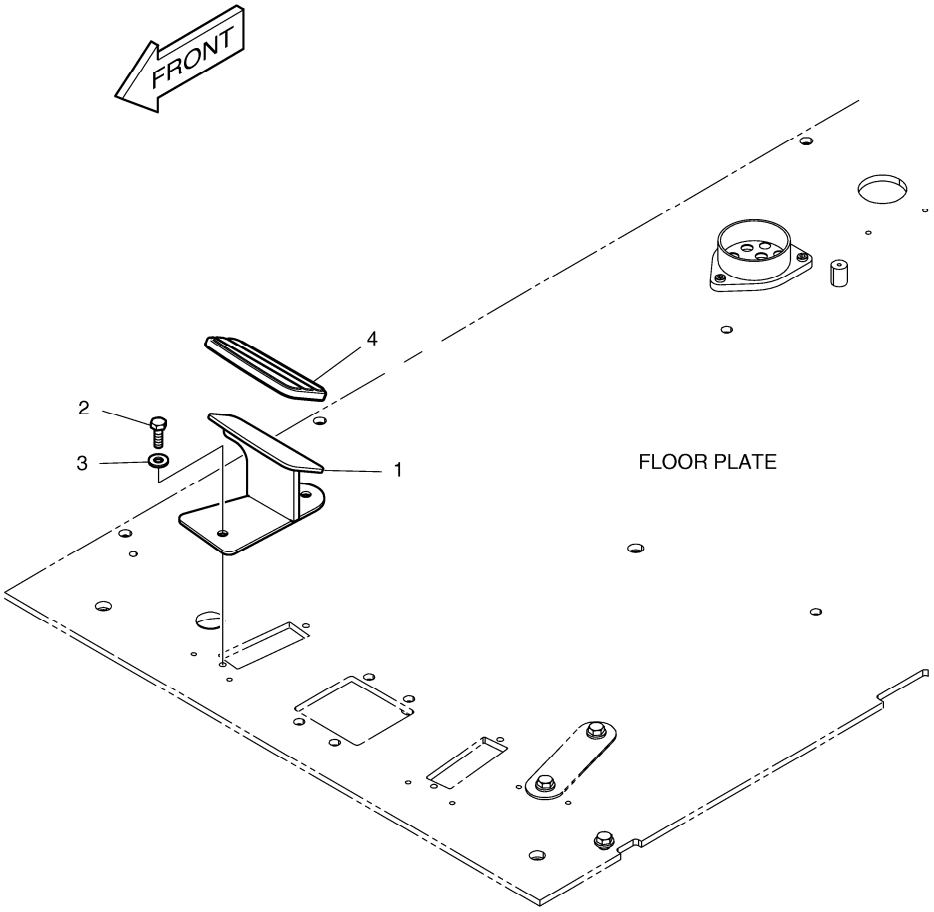

DATE	JUN. 01, 2010
3rd EDITION	

Fig. 1570 FOOT REST - R.H. REPOS DE PIED

Serial No. ;

Key No.	Part No.	Description	Description	Q'ty	S.C	Serial No.	ICA	Replaceable part	
								Part No.	Q'ty
1570 --	K1002083	FOOT REST(R.H)	REPOS DE PIED	-	D				
1	195-02948A	BRACKET;FOOT REST(R.H)	SUPPORT	1					
2	2120-2166D1	BOLT	BOULON	2					
3	2114-1898D1	WASHER	RONDELLE	2					
4	2160-1346	COVER;FOOT REST	COUVERTURE	1					

DATE	JUN. 01, 2010
3rd EDITION	

Fig. 1580 SUPPORT SUPPORT

Serial No. ;

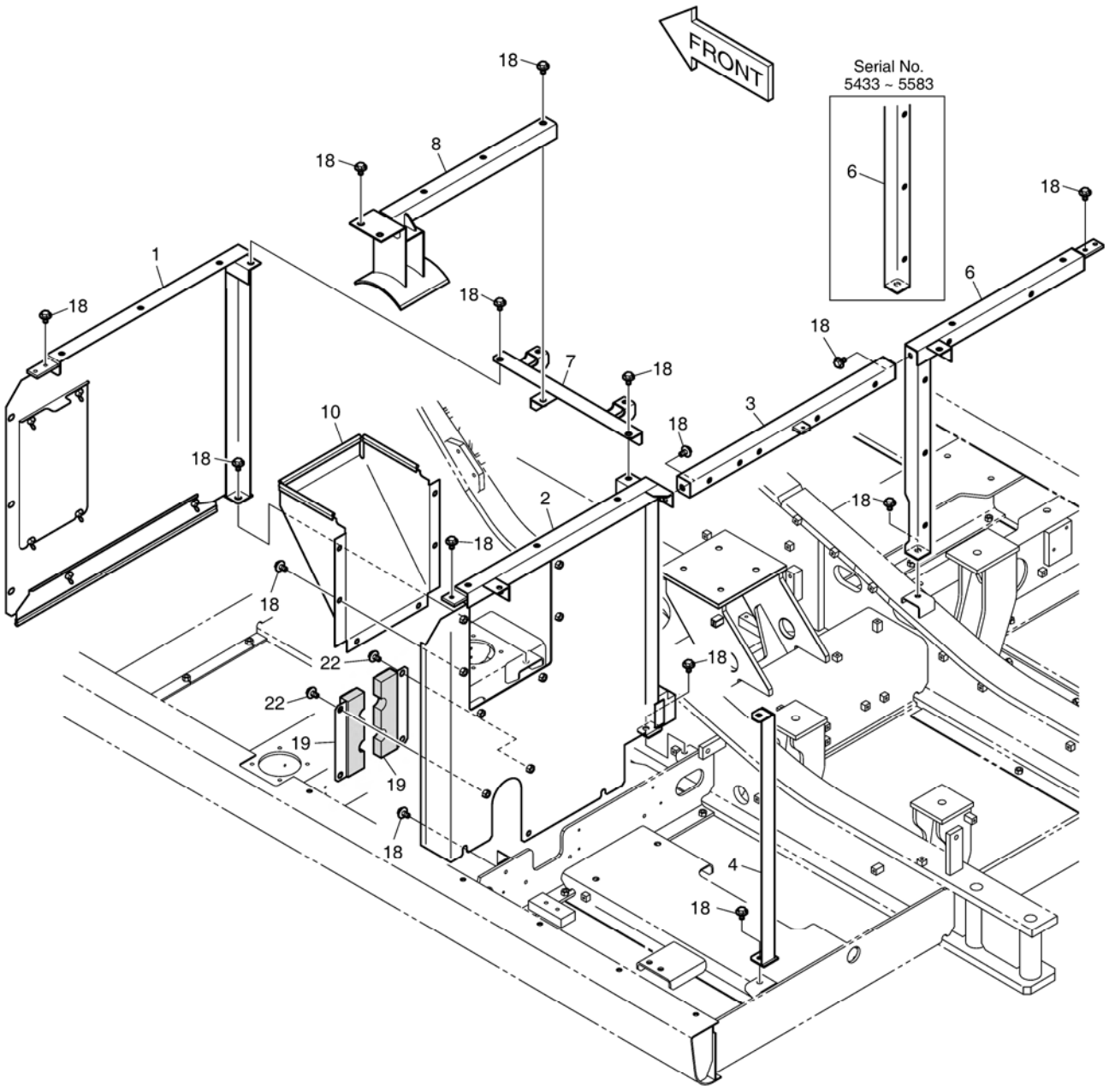

DATE	JUN. 01, 2010
3rd EDITION	

Fig. 1580 SUPPORT
SUPPORT

Serial No. ;

Key No.	Part No.	Description	Description	Q'ty	S.C	Serial No.	ICA	Replaceable part	
								Part No.	Q'ty
1580 --	K1039429C	SUPPORT ASS'Y	SUPPORT	-	D	5433-5583			
	110958-00022	SUPPORT & BAFFLE ASSY	SUPPORT	-	D	5584-			
1	K1038954B	SUPPORT	SUPPORT	1					
2	K1030497B	SUPPORT	SUPPORT	1					
3	K1030528B	SUPPORT	SUPPORT	1					
4	K1030750A	SUPPORT	SUPPORT	1					
6	K1030529A	SUPPORT	SUPPORT	1		5433-5583	I	110958-00015	1
	110958-00015	SUPPORT	SUPPORT	1		5584-			
7	K1030506B	SUPPORT	SUPPORT	1					
8	195-03434E	SUPPORT	APPUI	1					
10	K1039465	COVER;BAFFLE	COUVERCLE	1		5433-5583	I	110502-00025	1
	110502-00025	COVER,BAFFLE	COUVERCLE	1		5584-			
18	DS0025015	BOLT;SET	BOULON	26					
19	K1039427A	COVER	COUVERCLE	2					
22	DS0025022	BOLT;SET	BOULON	4					

DATE	JUN. 01, 2010
3rd EDITION	

Fig. 1590 BAFFLE COUVERCLE

Serial No. ;

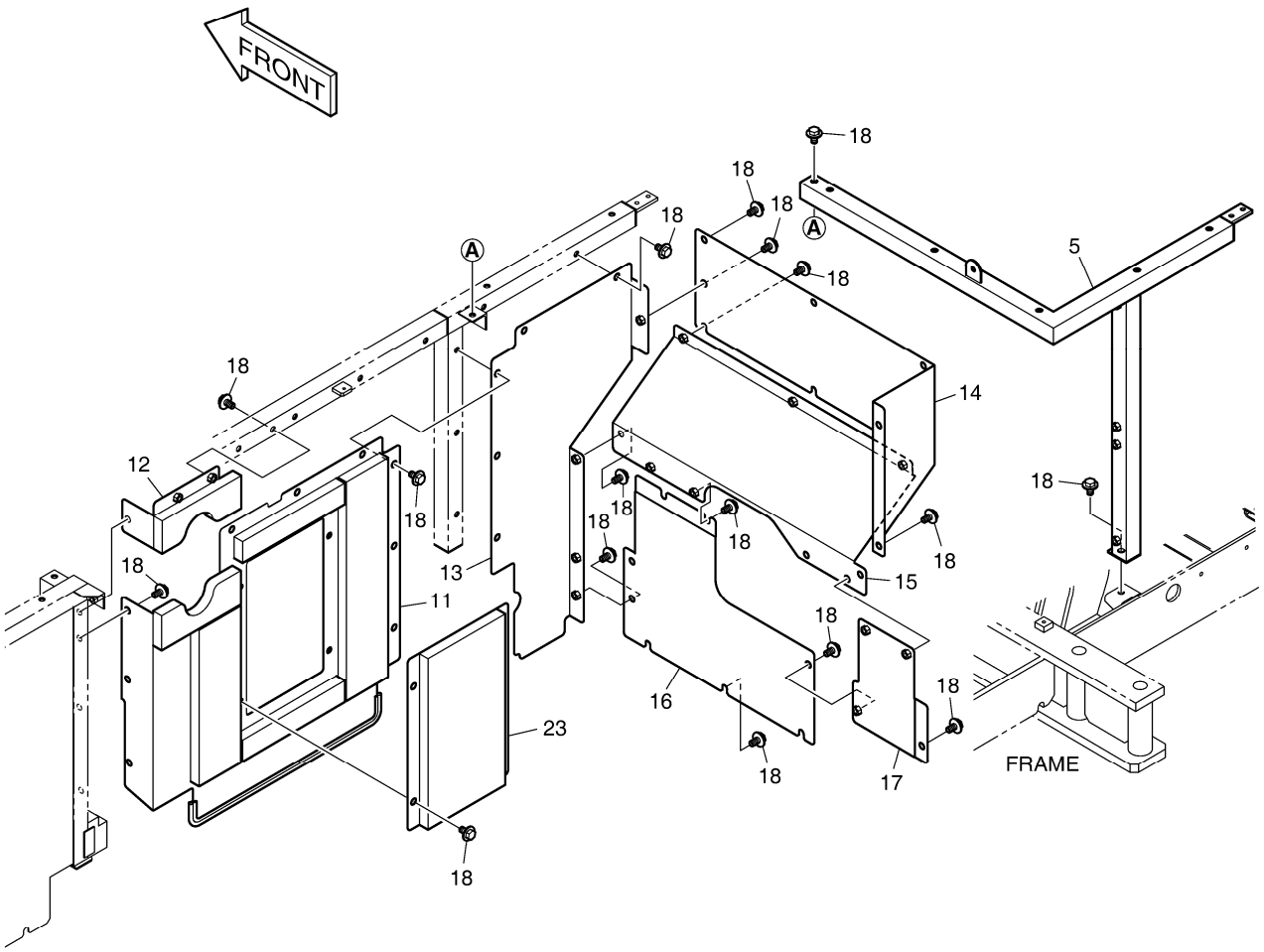

DATE	JUN. 01, 2010
3rd EDITION	

Fig. 1590 BAFFLE COUVERCLE

Serial No. ;

Key No.	Part No.	Description	Description	Q'ty	S.C	Serial No.	ICA	Replaceable part	
								Part No.	Q'ty
1590 --	K1039429C	SUPPORT ASS'Y	SUPPORT	-	D	5433-5583			
	110958-00022	SUPPORT & BAFFLE ASSY	SUPPORT	-	D	5584-			
5	K1030530B	SUPPORT	SUPPORT	1					
11	K1048349	COVER;BAFFLE	COUVERCLE	1					
12	K1030736A	COVER;BAFFLE	COUVERCLE	1					
13	K1030733	COVER;BAFFLE	COUVERCLE	1					
14	K1030731	COVER;BAFFLE	COUVERCLE	1					
15	K1030732	COVER;BAFFLE	COUVERCLE	1					
16	K1030735	COVER;BAFFLE	COUVERCLE	1					
17	K1030734	COVER;BAFFLE	COUVERCLE	1					
18	DS0025015	BOLT;SET	BOULON	45					
23	K1038966	COVER;BAFFLE	COUVERCLE	1					

DATE	JUN. 01, 2010
3rd EDITION	

Fig. 1600 SIDE DOOR - L.H
ENSEMBLE DE PORTE

Serial No. ;

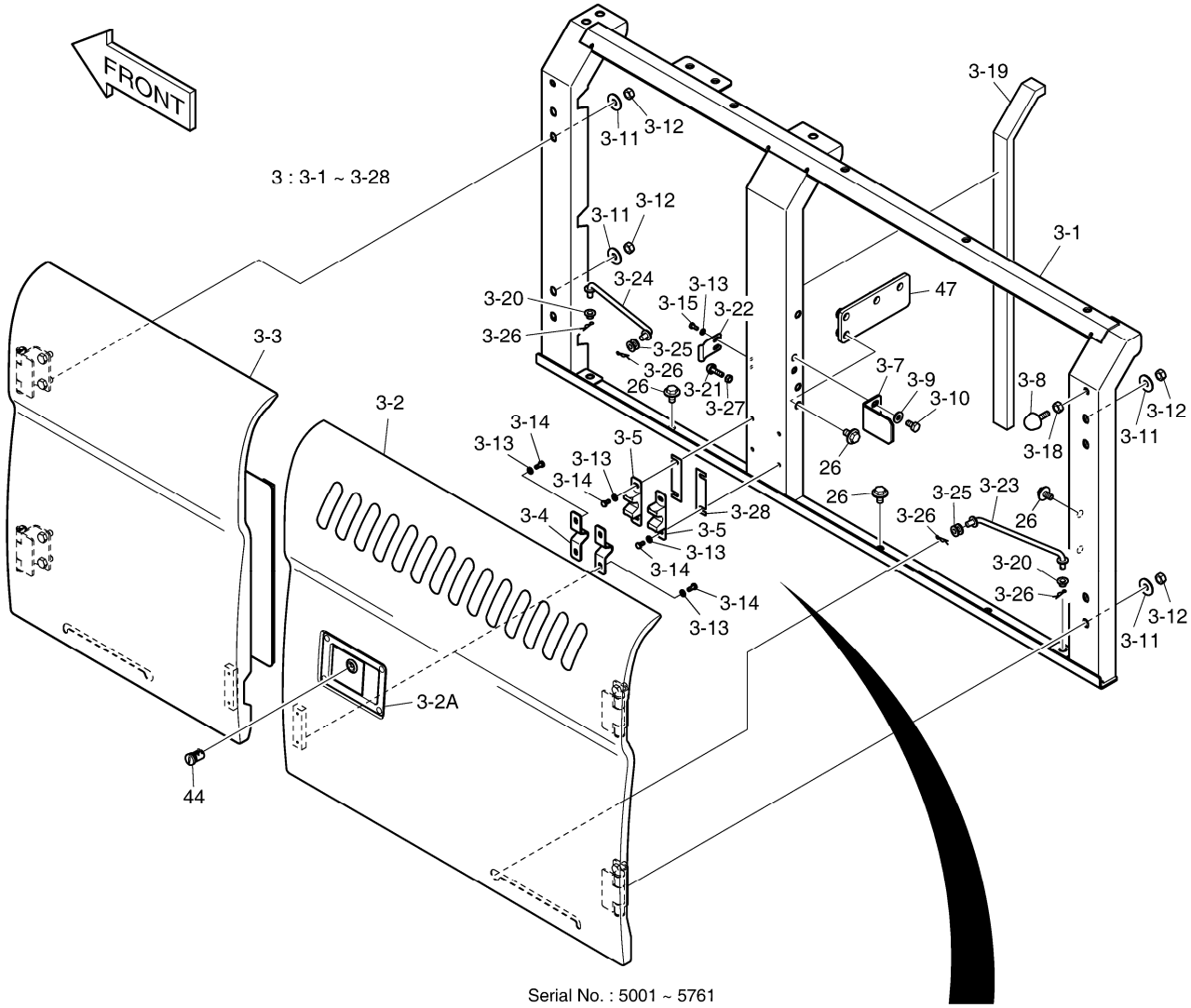

Serial No. : 5001 ~ 5761

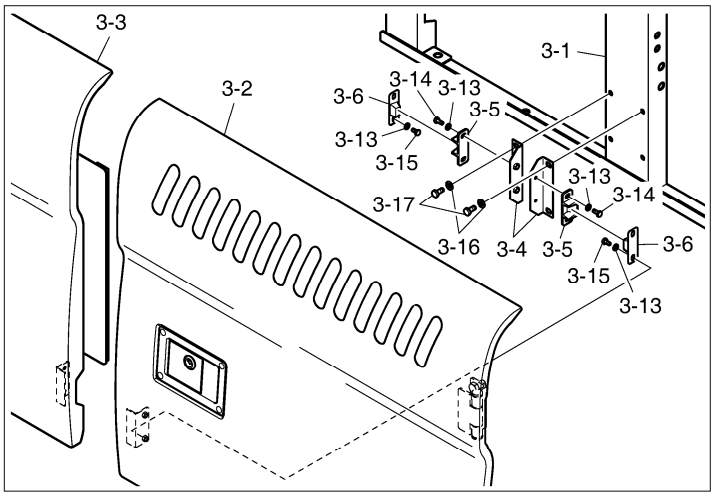

DATE	JUN. 01, 2010
3rd EDITION	

Fig. 1600 SIDE DOOR - L.H
ENSEMBLE DE PORTE

Serial No. ;

Key No.	Part No.	Description	Description	Q'ty	S.C	Serial No.	ICA	Replaceable part	
								Part No.	Q'ty
1600 --	K1039799B	COVER ASS`Y	COUVERCLE	-	D				
3	K1038922B	SIDE DOOR ASS`Y (L.H)	PORTE	1		5001-5761	I	110982-00129	1
	110982-00129	DOOR ASSY,SIDE(L.H)	PORTE	1		5762-			
3-1	K1038917B	. SUPPORT(L.H)	. SUPPORT	1		5001-5761			
	110958-00230	. SUPPORT	. SUPPORT	1		5762-			
3-2	K1038918	. DOOR(R.H)	. DIODE	1		5001-5761			
	110982-00130	. DOOR,SIDE	. DIODE	1		5762-			
3-2A	125-00034A	.. LOCK	.. SERRURE	1					
3-3	K1038919B	. DOOR(L.H)	. DIODE	1		5001-5761			
	110982-00131	. DOOR,SIDE(L.H)	. PORTE	1		5762-			
3-4	2116-1522	. PLATE	. PLAQUE	2		5001-5761			
	250201-00028	. PLATE;STOPPER	. PLAQUE	2		5762-			
3-5	2161-9052	. STOPPER;PLATE	. ARRET	2		5001-5761			
	110956-00002	. STOPPER,RUBBER	. TAQUET	2		5762-			
3-6	2161-9053	. STOPPER;RUBBER	. ARRET	2		5001-5761			
3-7	K1038920	. PLATE;LOCK	. PLAQUE	1					
3-8	K1001260A	. STOPPER;RUBBER	. TAQUET	1					
3-9	2114-1058D45	. WASHER	. RONDELLE	2					
3-10	S0511853	. BOLT M10X1.5X20	. BOULON	2					
3-11	2114-1058D30	. WASHER;PLAIN	. RONDELLE	8					
3-12	S4012733	. NUT	. ECROU	8					
3-13	S5010313	. WASHER	. RONDELLE	10					
3-14	S0504553	. BOLT M6X1.0X14	. BOULON	4		5001-5761			
	S0504553	. BOLT M6X1.0X14	. BOULON	8		5762-			
3-15	S0504453	. BOLT M6X1.0X12	. BOULON	6		5001-5761			
	S0504453	. BOLT M6X1.0X12	. BOULON	2		5762-			
3-16	S5010513	. WASHER	. RONDELLE	4		5001-5761			
3-17	S0508753	. BOLT M8X1.25X18	. BOULON A 6 PANS	4		5001-5761			
3-18	S4012633	. NUT	. ECROU	1					
3-19	-	. FOAM	. MOUSSE	1	D				
3-20	K1000602	. BUSHING	. BUSHING	2					
3-21	K1048085	. STOPPER;RUBBER	. TAQUET	1					
3-22	K1039869B	. PLATE;LOCK	. PLAQUE	1					
3-23	623-00074B	. STAY	. SEJOUR	1					
3-24	623-00075B	. STAY	. SEJOUR	1					
3-25	K1008335	. BUSHING	. BUSHING	2					
3-26	2705-9002	. PIN;LOCK	. GOUPILLE	4					
3-27	S4012533	. NUT	. ECROU	1					

DATE	JUN. 01, 2010
3rd EDITION	

Fig. 1600 SIDE DOOR - L.H
ENSEMBLE DE PORTE

Serial No. ;

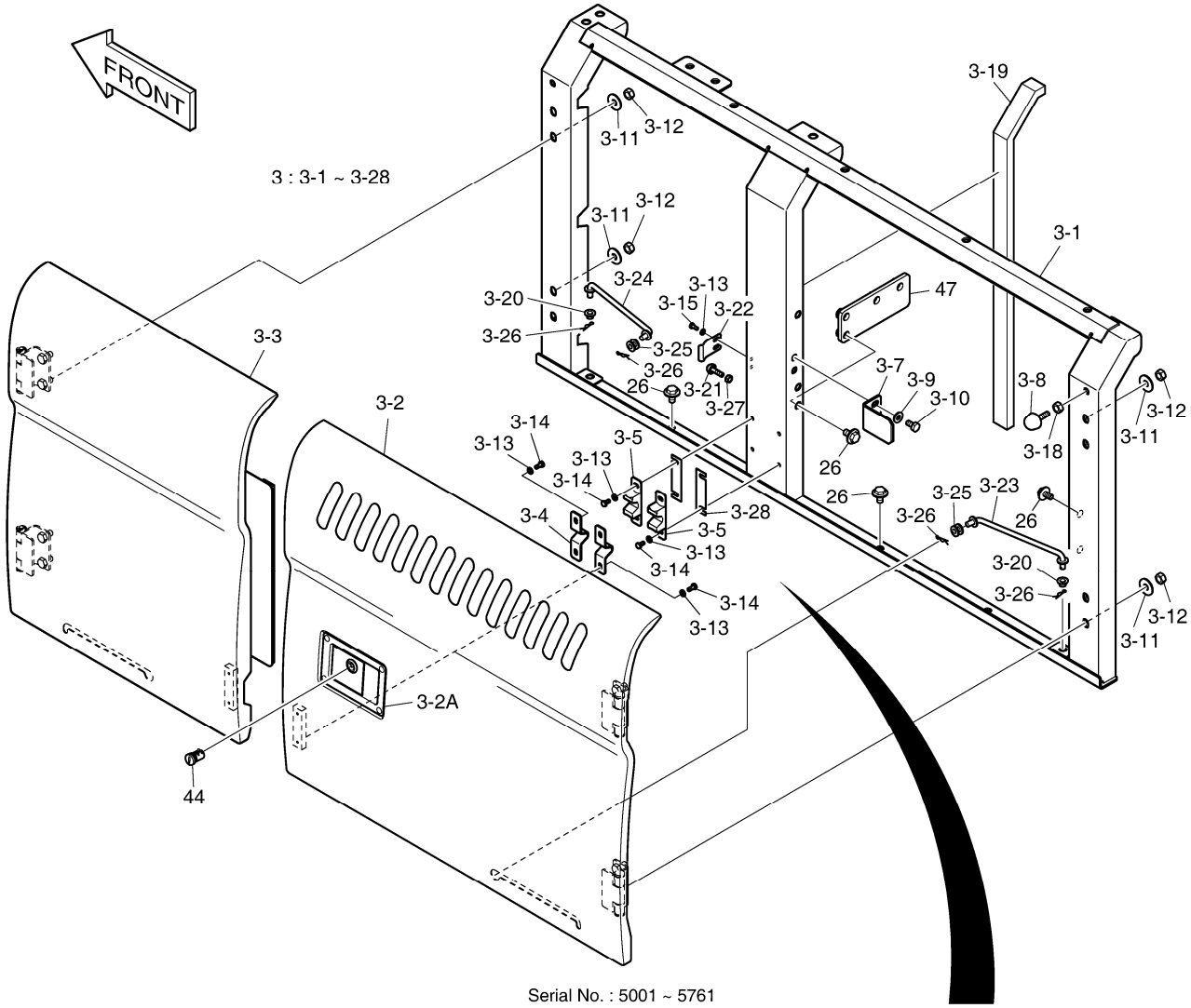

Serial No. : 5001 ~ 5761

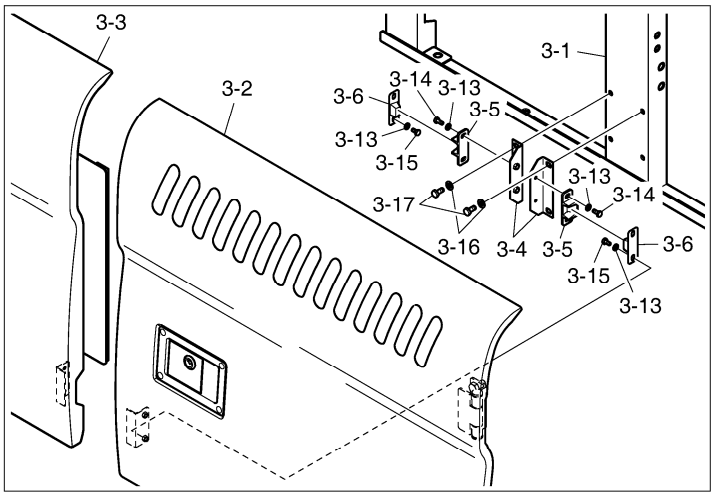

DATE	JUN. 01, 2010
3rd EDITION	

Fig. 1600 SIDE DOOR - L.H
ENSEMBLE DE PORTE

Serial No. ;

Key No.	Part No.	Description	Description	Q'ty	S.C	Serial No.	ICA	Replaceable part	
								Part No.	Q'ty
1600 -3-28	110947-00027	. SHIM	. CALE	2		5762-			
26	DS0025015	BOLT;SET	BOULON	10					
44	K1004630	KEY;CYLINDER	CLE	1					
47	K1015627A	PLATE	PLAQUE	1					

DATE	JUN. 01, 2010
3rd EDITION	

Fig. 1610 SIDE DOOR - R.H
ENSEMBLE DE PORTE

Serial No. ;

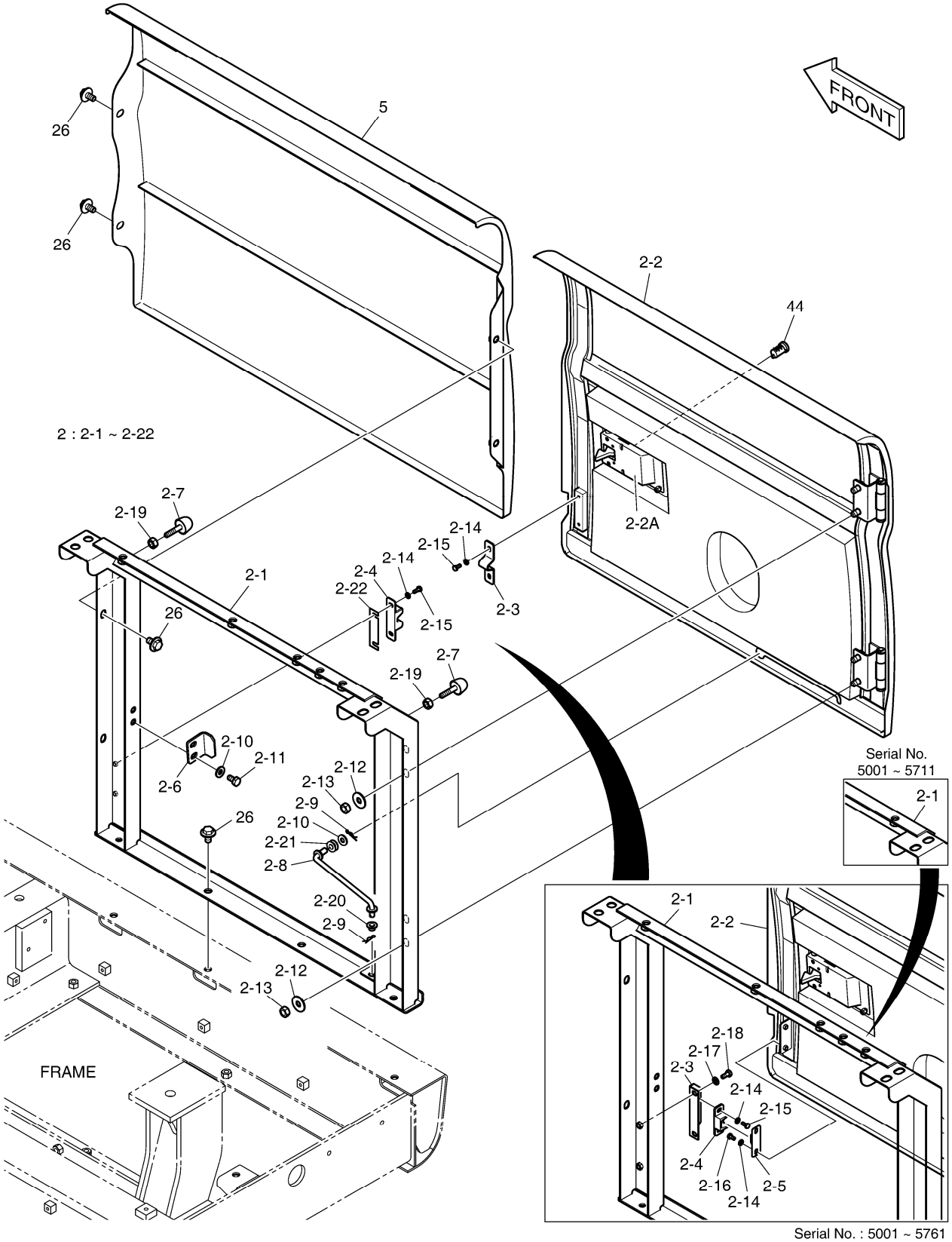

DATE	JUN. 01, 2010
3rd EDITION	

Fig. 1610 SIDE DOOR - R.H
ENSEMBLE DE PORTE

Serial No. ;

Key No.	Part No.	Description	Description	Q'ty	S.C	Serial No.	I.C.A	Replaceable part	
								Part No.	Q'ty
1610 --	K1039448G	COVER ASS`Y	COUVERCLE	-	D	5001-5711			
	110508-00250	COVER ASSY	COUVERCLE	-	D	5712-			
2	K1043854A	SIDE DOOR ASS`Y (R.H)	PORTE	1		5001-5711	I	110982-00103	1
	110982-00103	DOOR ASSY,SIDE(R.H)	PORTE	1		5712-5761	I	110982-00103A	1
	110982-00103A	DOOR ASSY,SIDE(R.H)	PORTE	1		5762-			
2-1	K1043855A	. SUPPORT(R.H)	. SUPPORT	1		5001-5711	I	110958-00181	1
	110958-00181	. SUPPORT	. SUPPORT	1		5712-5761			
	110958-00181A	. SUPPORT	. SUPPORT	1		5762-			
2-2	621-03449E	. SIDE DOOR	. PORTE	1		5001-5761			
	110982-00128	. DOOR,SIDE	. PORTE	1		5762-			
2-2A	125-00035A	.. LOCK	.. SERRURE	1					
2-3	2116-1522	. PLATE	. PLAQUE	1		5001-5761			
	250201-00028	. PLATE;STOPPER	. PLAQUE	1		5762-			
2-4	2161-9052	. STOPPER;PLATE	. ARRET	1		5001-5761			
	110956-00002	. STOPPER,RUBBER	. TAQUET	1		5762-			
2-5	2161-9053	. STOPPER;RUBBER	. ARRET	1		5001-5761			
2-6	621-02726A	. PLATE;LOCK	. PLAQUE	1					
2-7	K1001260A	. STOPPER;RUBBER	. TAQUET	2					
2-8	623-00075B	. STAY	. SEJOUR	1					
2-9	2705-9002	. PIN;LOCK	. GOUPILLE	2					
2-10	2114-1058D45	. WASHER	. RONDELLE	3					
2-11	S0511853	. BOLT M10X1.5X20	. BOULON	2					
2-12	2114-1058D30	. WASHER;PLAIN	. RONDELLE	4					
2-13	S4012733	. NUT	. ECROU	4					
2-14	S5010313	. WASHER	. RONDELLE	4					
2-15	S0504553	. BOLT M6X1.0X14	. BOULON	2		5001-5761			
	S0504553	. BOLT M6X1.0X14	. BOULON	4		5762-			
2-16	S0504453	. BOLT M6X1.0X12	. BOULON	2		5001-5761			
2-17	S5010513	. WASHER	. RONDELLE	2		5001-5761			
2-18	S0508753	. BOLT M8X1.25X18	. BOULON A 6 PANS	2		5001-5761			
2-19	S4012633	. NUT	. ECROU	2					
2-20	K1000602	. BUSHING	. BUSHING	1					
2-21	K1008335	. BUSHING	. BUSHING	1					
2-22	110947-00027	. SHIM	. CALE	1		5762-			
5	621-03642C	TANK COVER	COUVERCLE	1					
26	DS0025015	BOLT;SET	BOULON	8					
44	K1004630	KEY;CYLINDER	CLE	1					

DATE	JUN. 01, 2010
3rd EDITION	

Fig. 1620 BATTERY COVER COUVERCLE

Serial No. ;

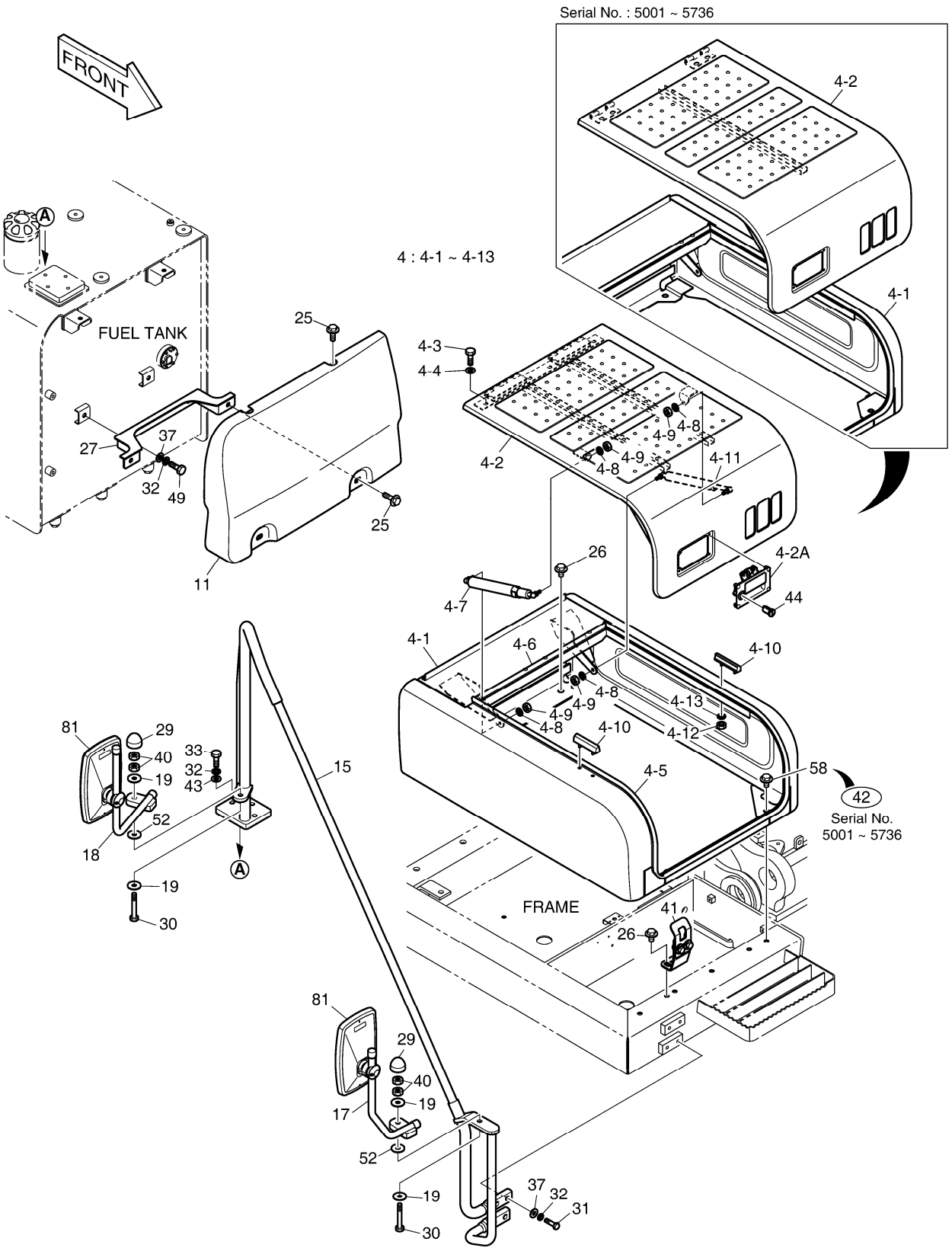

DATE	JUN. 01, 2010
3rd EDITION	

Fig. 1620 BATTERY COVER COUVERCLE

Serial No. ;

Key No.	Part No.	Description	Description	Q'ty	S.C	Serial No.	I	CA	Replaceable part	
									Part No.	Q'ty
1620 --	K1039448G	COVER ASS`Y	COUVERCLE	-	D	5001-5736				
	110508-00250	COVER ASSY	COUVERCLE	-	D	5737-				
4	K1039067B	BATTERY COVER ASS'Y	COUVERCLE	1		5001-5495	I		K1039067C	1
	K1039067C	BATTERY COVER ASS`Y	COUVERCLE	1		5496-5736	I		110503-00016A	1
	110503-00016A	COVER ASSY,BATTERY	COUVERCLE	1		5737-				
4-1	-	. BATTERY COVER	. COUVERTURE DE BATTE	1	D					
4-2	K1038697A	. COVER	. COUVERCLE	1		5001-5495	I		K1038697B	1
	K1038697B	. COVER	. COUVERCLE	1		5496-5736				
	110503-00008A	. COVER,BATTERY	. COUVERCLE	1		5737-				
4-2A	125-00071B	.. LATCH;FRONT	.. LATCH;FRONT	1						
4-3	S0512066	. BOLT	. BOULON	4						
4-4	S5010613	. WASHER;PLAIN	. RONDELLE	4						
4-5	-	. RUBBER	. CAOUTCHOUC	1	D					
4-6	-	. RUBBER	. CAOUTCHOUC	1	D					
4-7	K1001968	. CYLINDER;GAS	. CYLINDRE	1						
4-8	S5102503	. WASHER	. RONDELLE	4						
4-9	S4012533	. NUT	. ECROU	4						
4-10	K1005305A	. STOPPER;RUBBER	. TAQUET	2						
4-11	DS1001061	. CYLINDER;GAS	. CYLINDRE	1						
4-12	S4012333	. NUT	. ECROU	4						
4-13	S5102303	. WASHER;SPRING	. RONDELLE	4						
11	621-03657B	COVER;TANK	COUVERCLE	1						
15	K1013266B	STAY	ENTRETOISE	1						
17	K1038110A	STAY;MIRROR	SEJOUR	1						
18	K1038107A	STAY;MIRROR	SEJOUR	1						
19	2114-1058D68	WASHER	RONDELLE	4						
25	DS0025014	BOLT;SET	BOULON	4						
26	DS0025015	BOLT;SET	BOULON	4						
27	195-02706C	BRACKET	SUPPORT	1						
29	161-00580	CAP;RUBBER	CHAPEAU	2						
30	S0561066	BOLT	BOULON	2						
31	S0560666	BOLT	BOULON	4						
32	S5102703	WASHER;SPRING	RONDELLE	10						
33	S0560566	BOLT	BOULON	4						
37	2114-1154	WASHER	RONDELLE	6						
40	S4012733	NUT	ECROU	4						
41	195-02624C	BRACKET	SUPPORT	1						
42	DS0025027	BOLT;SET	BOULON	2		5001-5736				

DATE	JUN. 01, 2010
3rd EDITION	

Fig. 1620 BATTERY COVER COUVERCLE

Serial No. ;

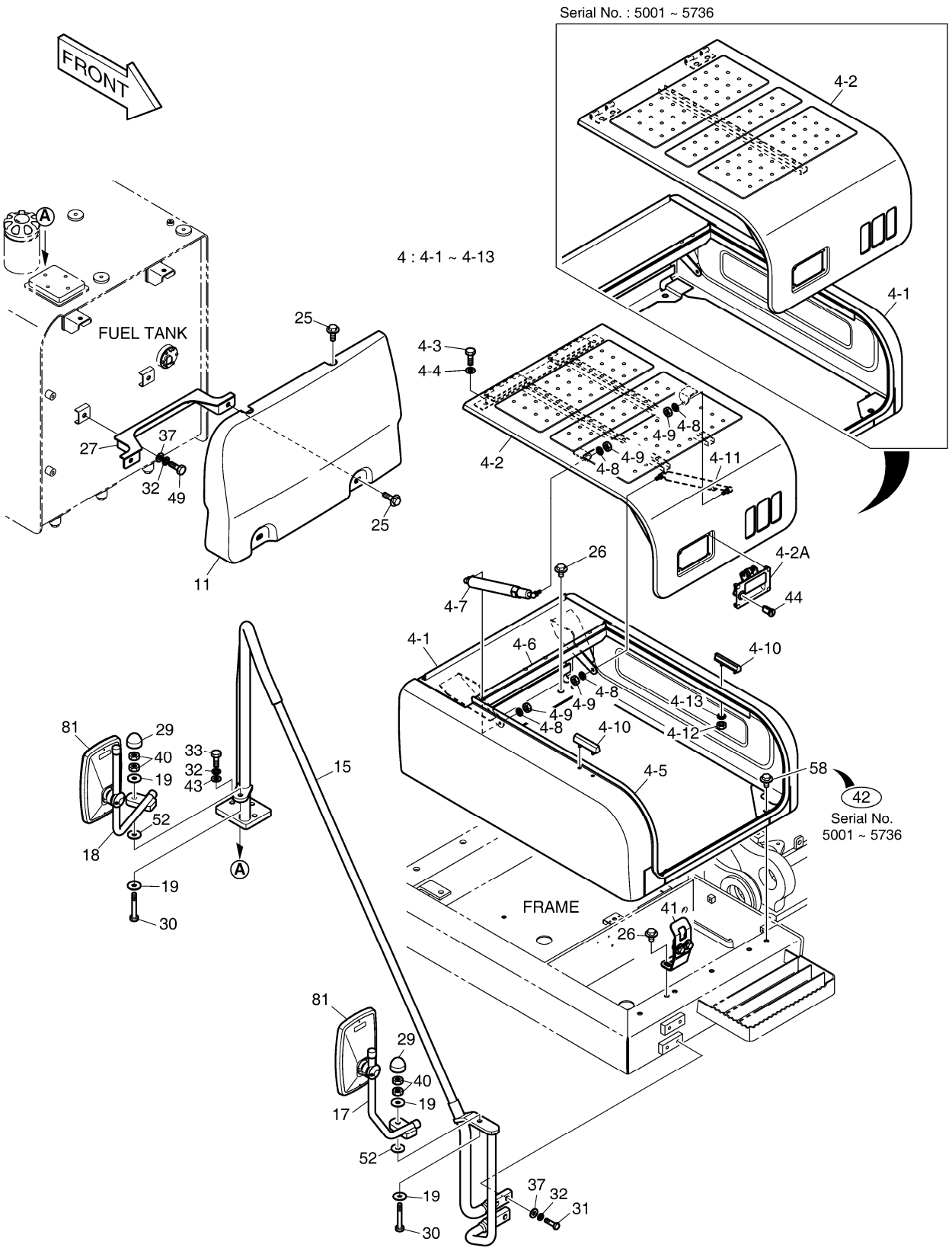

DATE	JUN. 01, 2010
3rd EDITION	

Fig. 1620 BATTERY COVER COUVERCLE

Serial No. ;

Key No.	Part No.	Description	Description	Q'ty	S.C	Serial No.	ICA	Replaceable part	
								Part No.	Q'ty
1620 -43	S5010713	WASHER;PLAIN	RONDELLE	4					
44	K1004630	KEY;CYLINDER	CLE	1					
49	S0515166	BOLT	BOULON	2					
52	2114-1058D54	WASHER	RONDELLE	2					
58	DS0025025	BOLT;SET	BOULON	2		5737-			
81	K1040606	MIRROR;SIDE	MIROIR	2					

DATE	JUN. 01, 2010
3rd EDITION	

Fig. 1630 COVER
COUVERCLE

Serial No. ;

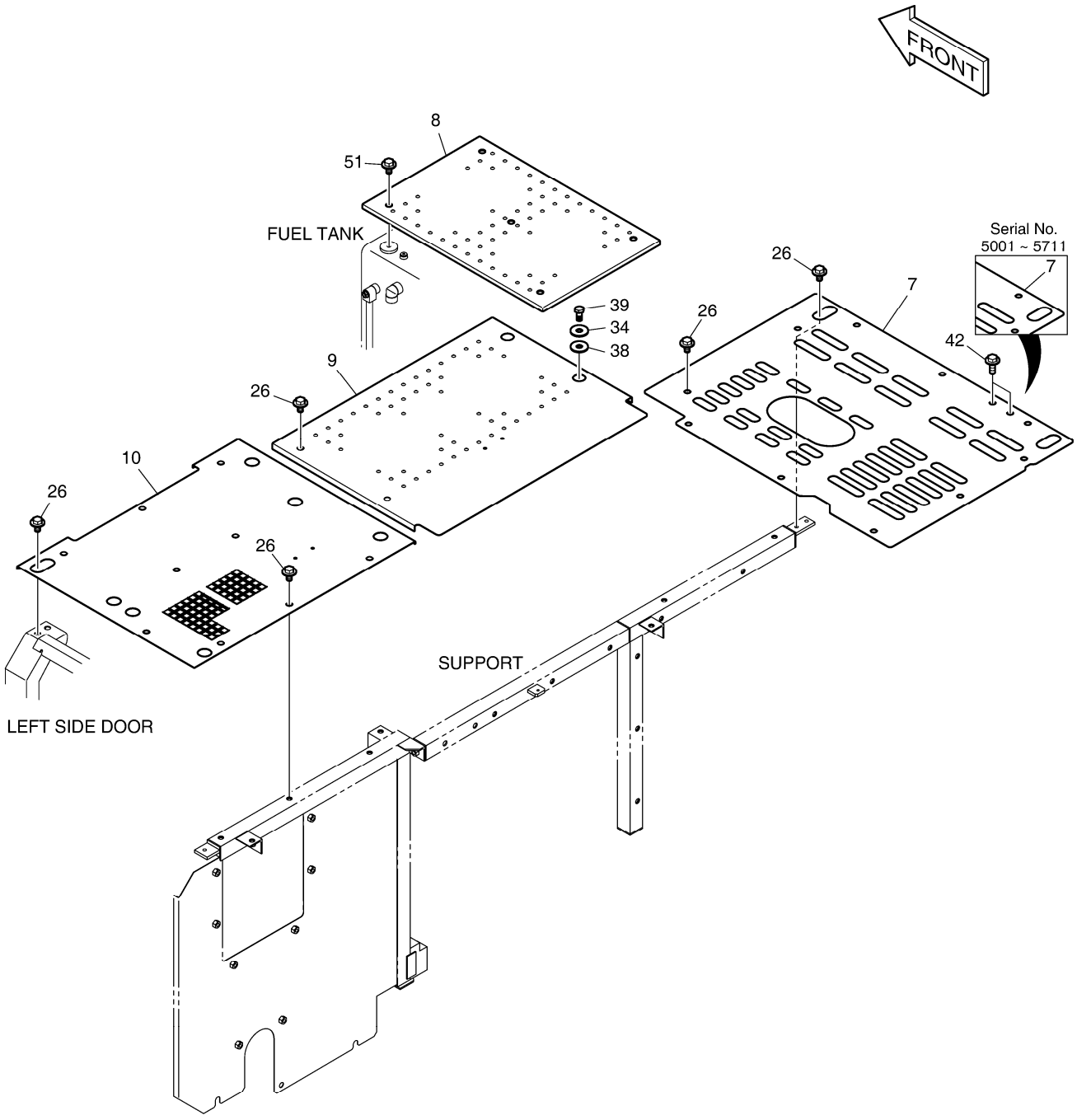

DATE	JUN. 01, 2010
3rd EDITION	

Fig. 1630 COVER COUVERCLE

Serial No. ;

Key No.	Part No.	Description	Description	Q'ty	S.C	Serial No.	ICA	Replaceable part	
								Part No.	Q'ty
1630 --	K1039448G	COVER ASS`Y	COUVERCLE	-	D	5001-5711			
	110508-00250	COVER ASSY	COUVERCLE	-	D	5712-			
7	K1047790	COVER	COUVERCLE	1		5001-5711	I	110508-00409	1
	110508-00409	COVER	COUVERCLE	1		5712-			
8	K1039208A	COVER	COUVERCLE	1					
9	K1039209A	COVER	COUVERCLE	1					
10	K1039468B	COVER	COUVERCLE	1					
26	DS0025015	BOLT;SET	BOULON	21					
34	114-00529	SPACER	ENTRETOISE	2					
38	K1002943	RUBBER	LE CAOUTCHOUC	2					
39	S0515266	BOLT	BOULON	2					
42	DS0025027	BOLT;SET	BOULON	2		5712-			
51	DS0025022	BOLT;SET	BOULON	5					

DATE	JUN. 01, 2010
3rd EDITION	

Fig. 1640 ENGINE COVER
COUVERTURE DE MOTEUR

Serial No. ;

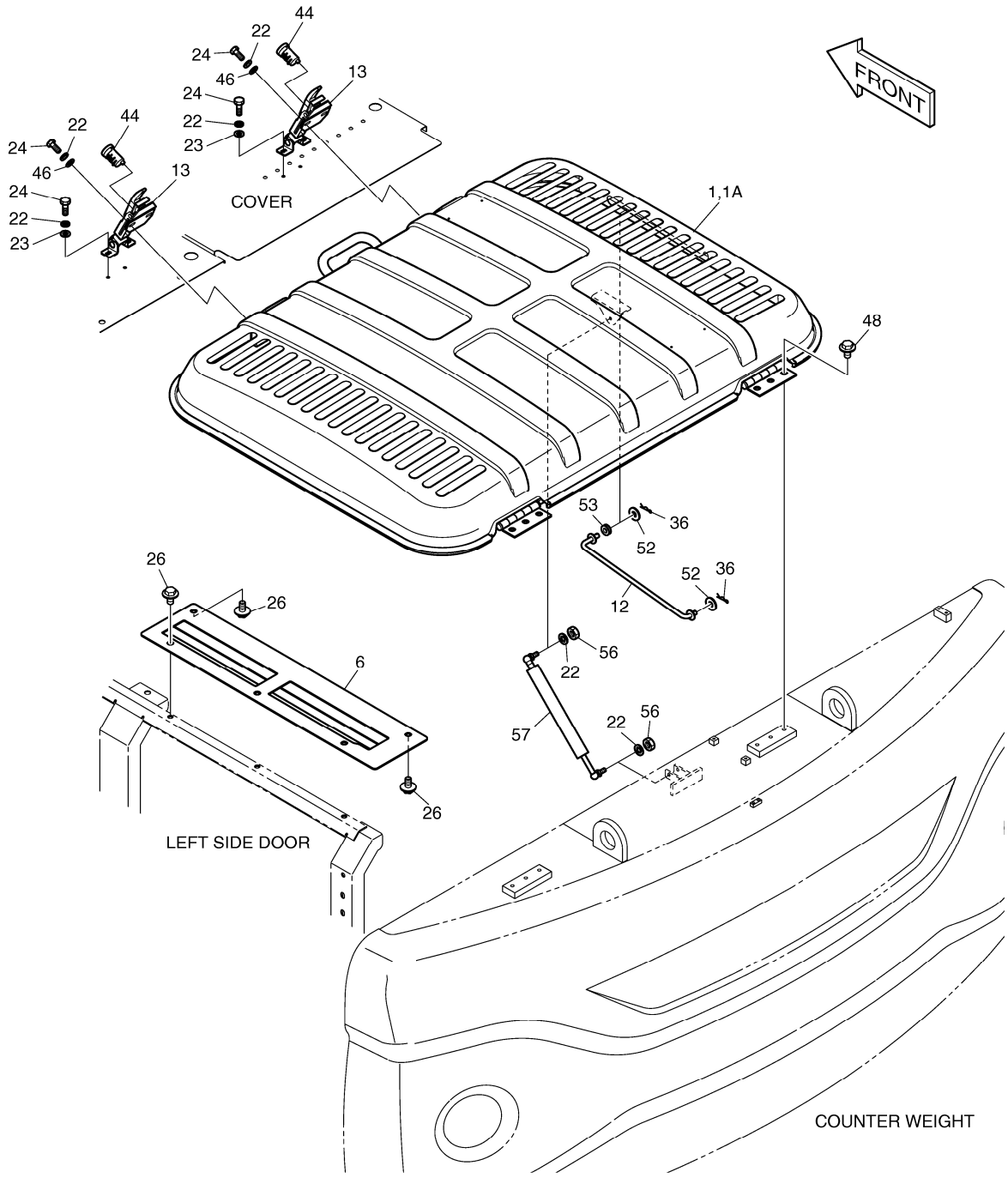

DATE	JUN. 01, 2010
3rd EDITION	

Fig. 1640 ENGINE COVER
COUVERTURE DE MOTEUR

Serial No. ;

Key No.	Part No.	Description	Description	Q'ty	S.C	Serial No.	I	C	A	Replaceable part	
										Part No.	Q'ty
1640 --	K1039448H	COVER ASS`Y	COUVERCLE	-	D	5001-5711					
	110508-00250	COVER ASSY	COUVERCLE	-	D	5712-					
1	K1038688C	ENGINE COVER ASS`Y	COUVERCLE	1		5001-5761	I			110506-00047	1
	110506-00047	COVER,ENGINE	COUVERCLE	1		5762-					
1A	1.162-00001	. RUBBER;CUSHION	. LE CAOUTCHOUC	1							
6	K1038870B	COVER	COUVERCLE	1							
12	K1039430C	STAY	ENTRETOISE	1							
13	125-00075A	CATCH	CROCHET	2							
22	S5102503	WASHER	RONDELLE	10							
23	2114-1058D56	WASHER	RONDELLE	4							
24	S0508866	BOLT	BOULON	8							
26	DS0025015	BOLT;SET	BOULON	5							
36	2705-9002	PIN;LOCK	GOUPILLE	2							
44	K1004630	KEY;CYLINDER	CLE	2							
46	S5010513	WASHER	RONDELLE	4							
48	DS0025019	BOLT;SET	BOULON	6							
52	2114-1058D54	WASHER	RONDELLE	2							
53	K1013812	BUSHING	DOUILLE	1							
56	S4012533	NUT	ECROU	2							
57	DS1001083	SPRING;GAS	RESSORT	1		5001-5495	I			DS1001088	1
	DS1001088	SPRING;GAS	RESSORT	1		5496-					

DATE	JUN. 01, 2010
3rd EDITION	

Fig. 1650 ACOUSTIC FOAM
ENSEMBLE DE EPONGE

Serial No. ;

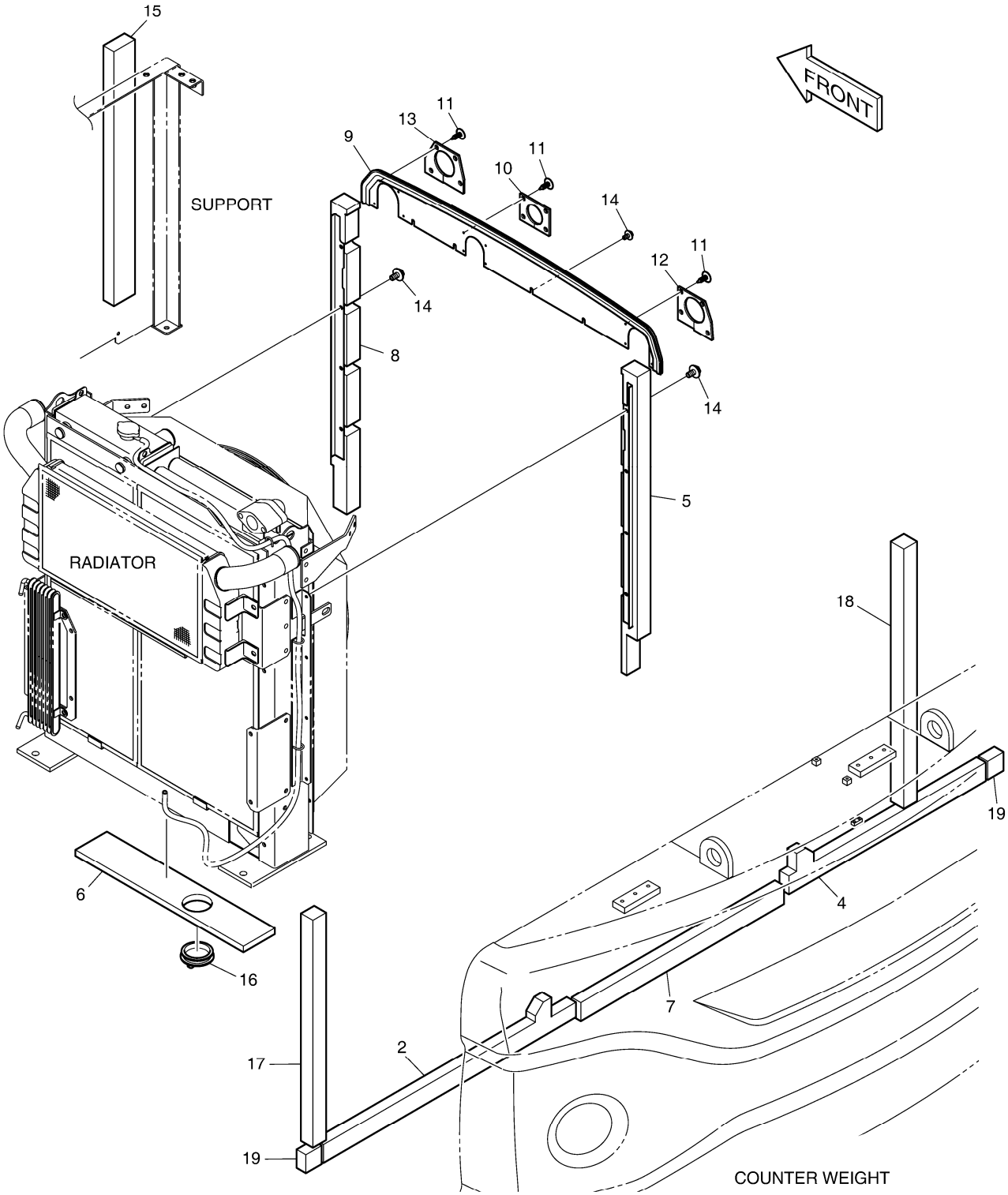

DATE	JUN. 01, 2010
3rd EDITION	

Fig. 1650 ACOUSTIC FOAM
ENSEMBLE DE EPONGE

Serial No. ;

Key No.	Part No.	Description	Description	Q'ty	S.C	Serial No.	ICA	Replaceable part	
								Part No.	Q'ty
1650 --	K1041849B	FOAM ASS`Y	EPONGE	-	D				
2	K1000485A	FOAM;POLYURETHANE	EPONGE	1					
4	K1000488A	FOAM;POLYURETHANE	EPONGE	1					
5	K1000489A	COVER	COUVERCLE	1					
6	K1000490A	FOAM;POLYURETHANE	MOUSSE	1					
7	K1000491	FOAM;POLYURETHANE	EPONGE	1					
8	K1000492A	COVER	COUVERCLE	1					
9	K1039132B	COVER	COUVERCLE	1					
10	K1000500	RUBBER	LE CAOUTCHOUC	1					
11	124-00070	CLIP;TREE	AGRAFE	12					
12	K1039721A	RUBBER	CAOUTCHOUC	1					
13	K1039722A	RUBBER	CAOUTCHOUC	1					
14	K1001029	BOLT	BOULON	12					
15	161-00614	FOAM	MOUSSE	1					
16	K1007044	BUSHING	BUSHING	1					
17	K1038009	FOAM	MOUSSE	1					
18	K1038010	FOAM	MOUSSE	1					
19	K1038011	FOAM	MOUSSE	2					

DATE	JUN. 01, 2010
3rd EDITION	

Fig. 1660 UNDER COVER TOLES IMFERIEVRES

Serial No. ;

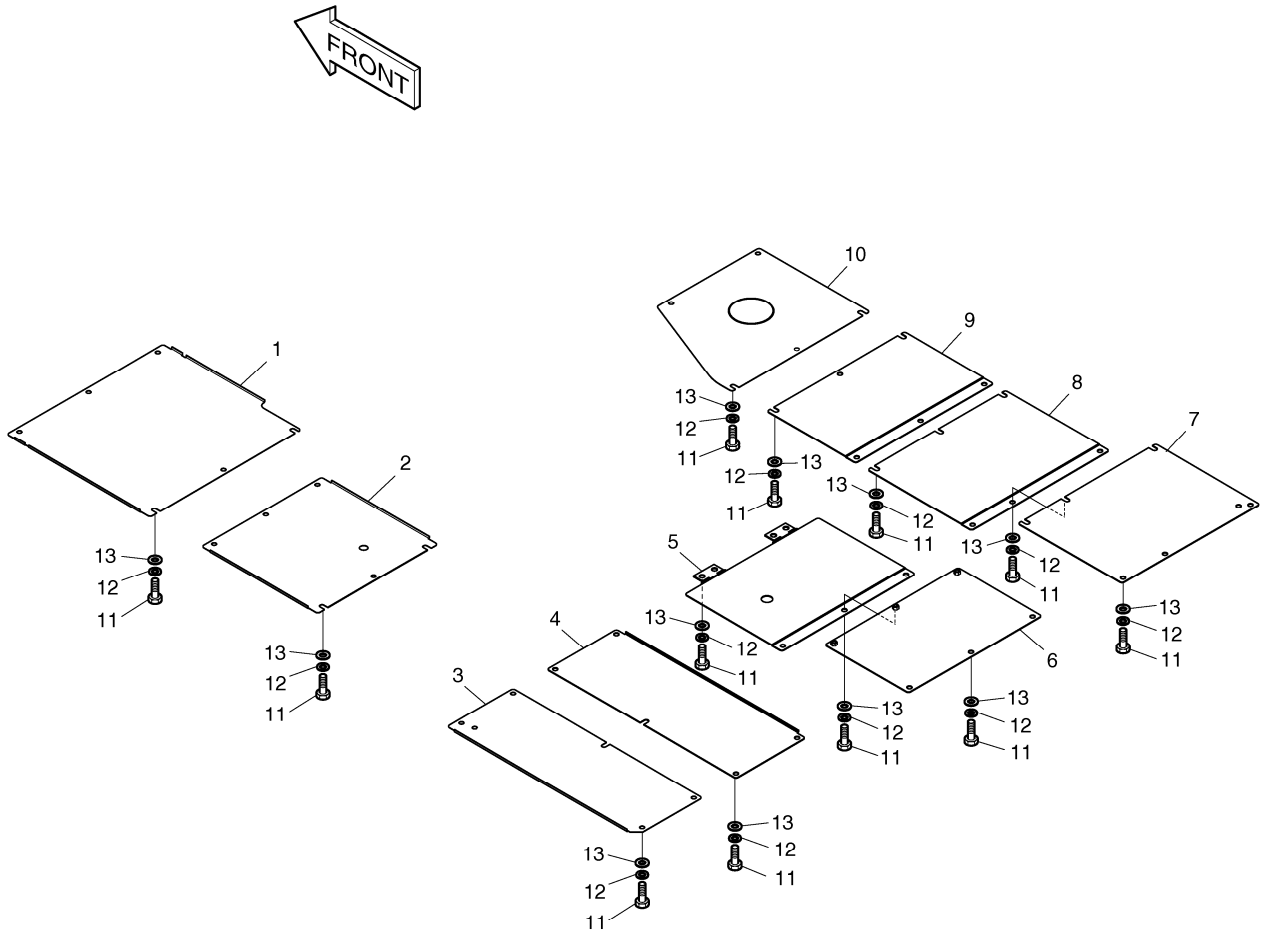

DATE	JUN. 01, 2010
3rd EDITION	

Fig. 1660 UNDER COVER
TOLES IMFERIEVRES

Serial No. ;

Key No.	Part No.	Description	Description	Q'ty	S.C	Serial No.	ICA	Replaceable part	
								Part No.	Q'ty
1660 --	K1015366B	UNDER COVER ASS`Y	COUVERCLE	-	D				
1	K1000591A	COVER;UNDER	COUVERCLE	1					
2	K1000592A	COVER;UNDER	COUVERCLE	1					
3	K1024692	COVER;UNDER	COUVERCLE	1					
4	K1039134	COVER;UNDER	COUVERCLE	1					
5	K1039136	COVER;UNDER	COUVERTURE	1					
6	K1039137	COVER;UNDER	COUVERTURE	1					
7	K1041250	COVER;UNDER	COUVERCLE	1					
8	K1041251	COVER;UNDER	COUVERCLE	1					
9	K1041252	COVER;UNDER	COUVERCLE	1					
10	K1000600B	COVER;UNDER	COUVERCLE	1					
11	S0560466	BOLT	BOULON	49					
12	S5102703	WASHER;SPRING	RONDELLE	49					
13	DS0401188	WASHER;PLAIN	RONDELLE	49					

DATE	JUN. 01, 2010
3rd EDITION	

Fig. 1670 LUBRICATION PIPING
LUBRIFICATION

Serial No. ;

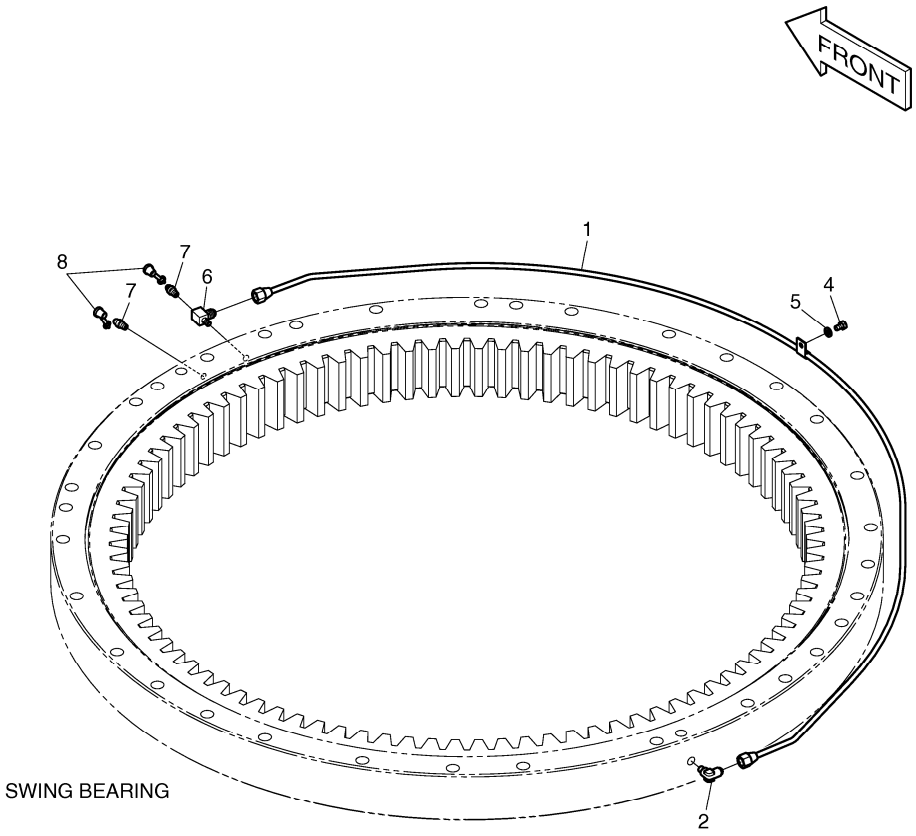

DATE	JUN. 01, 2010
3rd EDITION	

Fig. 1670 LUBRICATION PIPING LUBRIFICATION

Serial No. ;

Key No.	Part No.	Description	Description	Q'ty	S.C	Serial No.	ICA	Replaceable part	
								Part No.	Q'ty
1670 --	K1007600B	LUBRICATION PIPING	LUBRIFICATION	-	D				
1	K1007665B	PIPE;GREASE	TUYAU	1					
2	2181-1925	ELBOW	COUDE	1					
4	S0504366	BOLT	BOULON	1					
5	S5102303	WASHER;SPRING	RONDELLE	1					
6	2181-2527	TEE	TE	1					
7	S6710041	NIPPLE;GREASE	MAMELON	2					
8	160-00020	CAP;GREASE NIPPLE	CHAPEAU	2					

DATE	JUN. 01, 2010
3rd EDITION	

Fig. 1680 ELECTRIC BOX ASS'Y
EQUIPMENT ELECTRIQUE

Serial No. ;

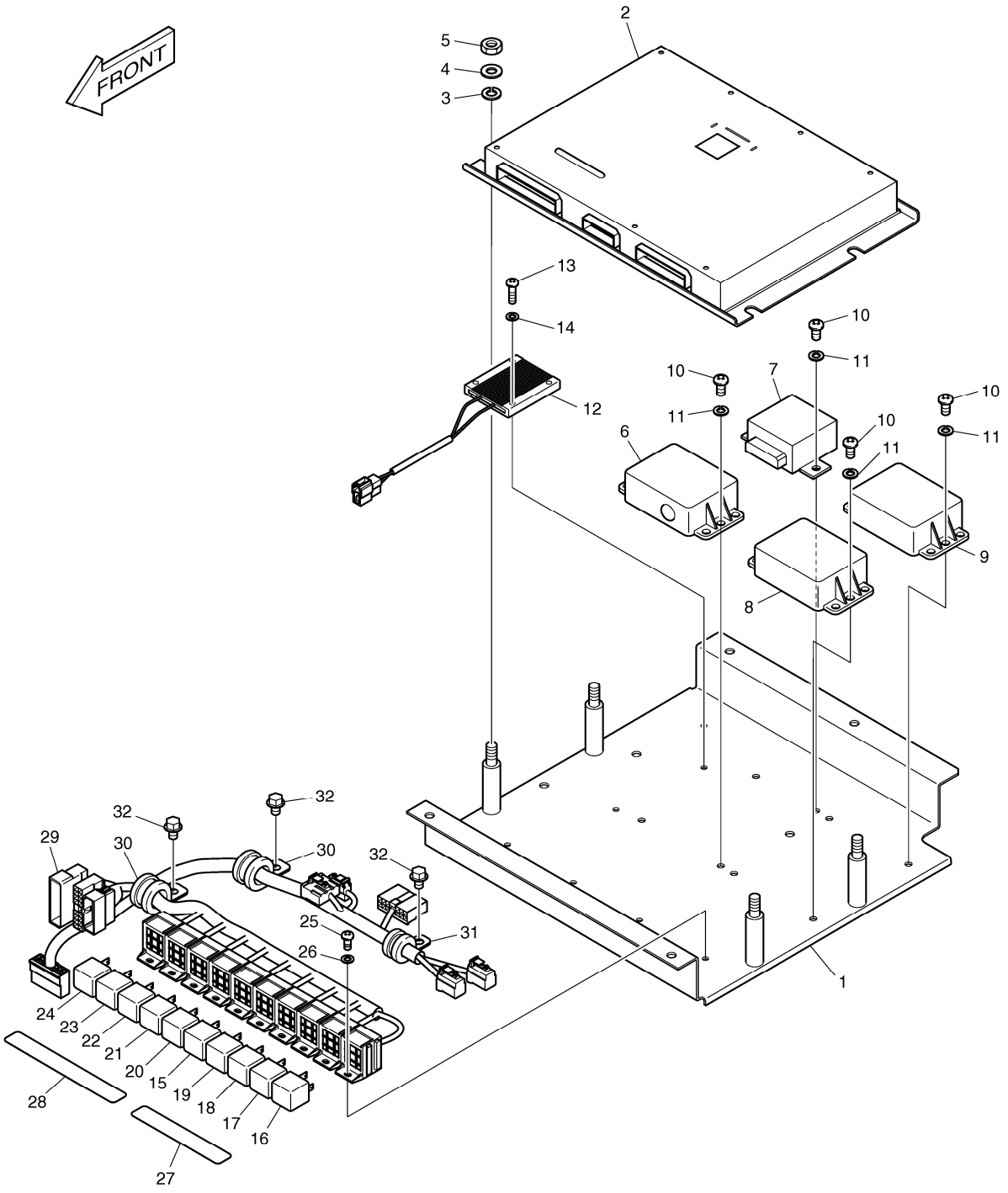

DATE	JUN. 01, 2010
3rd EDITION	

Fig. 1680 ELECTRIC BOX ASS'Y
EQUIPMENT ELECTRIQUE

Serial No. ;

Key No.	Part No.	Description	Description	Q'ty	S.C	Serial No.	ICA	Replaceable part	
								Part No.	Q'ty
1680 --	K1044850A	ELECTRIC BOX ASS`Y	EQUIPMENT ELECTRIQUE	1		5001-5882	Y	300619-00300	1
	300619-00300	ELECTRIC ASSY;ELECTRIC BOX	EQUIPMENT ELECTRIQUE	1		5883-			
1	621-02955C	PLATE;ELECTRIC BOX	PLAQUE	1					
2	K1008873E	CONTROLLER,EPOS	COMMANDE	1		5001-5882	Y	300611-00035	1
	300611-00035	CONTROLLER,EPOS	CONTROLEUR	1		5883-			
3	S5010613	WASHER;PLAIN	RONDELLE	4					
4	S5102603	WASHER	RONDELLE	4					
5	S4012633	NUT	ECROU	4					
6	2543-9015	CONTROLLER;STARTER	CONTROLEUR	1					
7	543-00106	CONTROLLER;WIPER	CONTROLEUR	1					
8	2531-1003	CONVERTER;DC-DC	CONVERTISSEUR	1					
9	2531-1003	CONVERTER;DC-DC	CONVERTISSEUR	1					
10	S3450953	SCREW M16X12	VIS	8					
11	S5102303	WASHER;SPRING	RONDELLE	8					
12	545-00011	RESISTOR;AUXILIARY	RESISTANCE	1					
13	S3450863	SCREW	VIS	2					
14	S5100203	WASHER;SPRING	RONDELLE	2					
15	2544-9033	RELAY	RELAIS	1					
16	2544-9033	RELAY	RELAIS	1					
17	2544-9033	RELAY	RELAIS	1					
18	2544-9033	RELAY	RELAIS	1					
19	2544-9033	RELAY	RELAIS	1					
20	2544-9033	RELAY	RELAIS	1					
21	2544-9033	RELAY	RELAIS	1					
22	2544-9033	RELAY	RELAIS	1					
23	2544-9033	RELAY	RELAIS	1					
24	2544-9033	RELAY	RELAIS	1					
25	S3450833	SCREW	VIS	4					
26	S5100203	WASHER;SPRING	RONDELLE	4					
27	190-01192D9	PLATE;NAME(RELAY)	PLAQUE	1					
28	190-01192D2	PLATE;NAME(RELAY)	PLAQUE	1					
29	K1039724A	HARNESS;ELECTRIC BOX	FAISCEAU	1					
30	124-00208D3	CLIP	AGRAFE	2					
31	124-00208D2	CLIP	AGRAFE	1					
32	K1001029	BOLT	BOULON	3					

DATE	JUN. 01, 2010
3rd EDITION	

Fig. 1690 ELECTRIC PARTS - CABIN
PIECES ELECTRIQUES

Serial No. ;

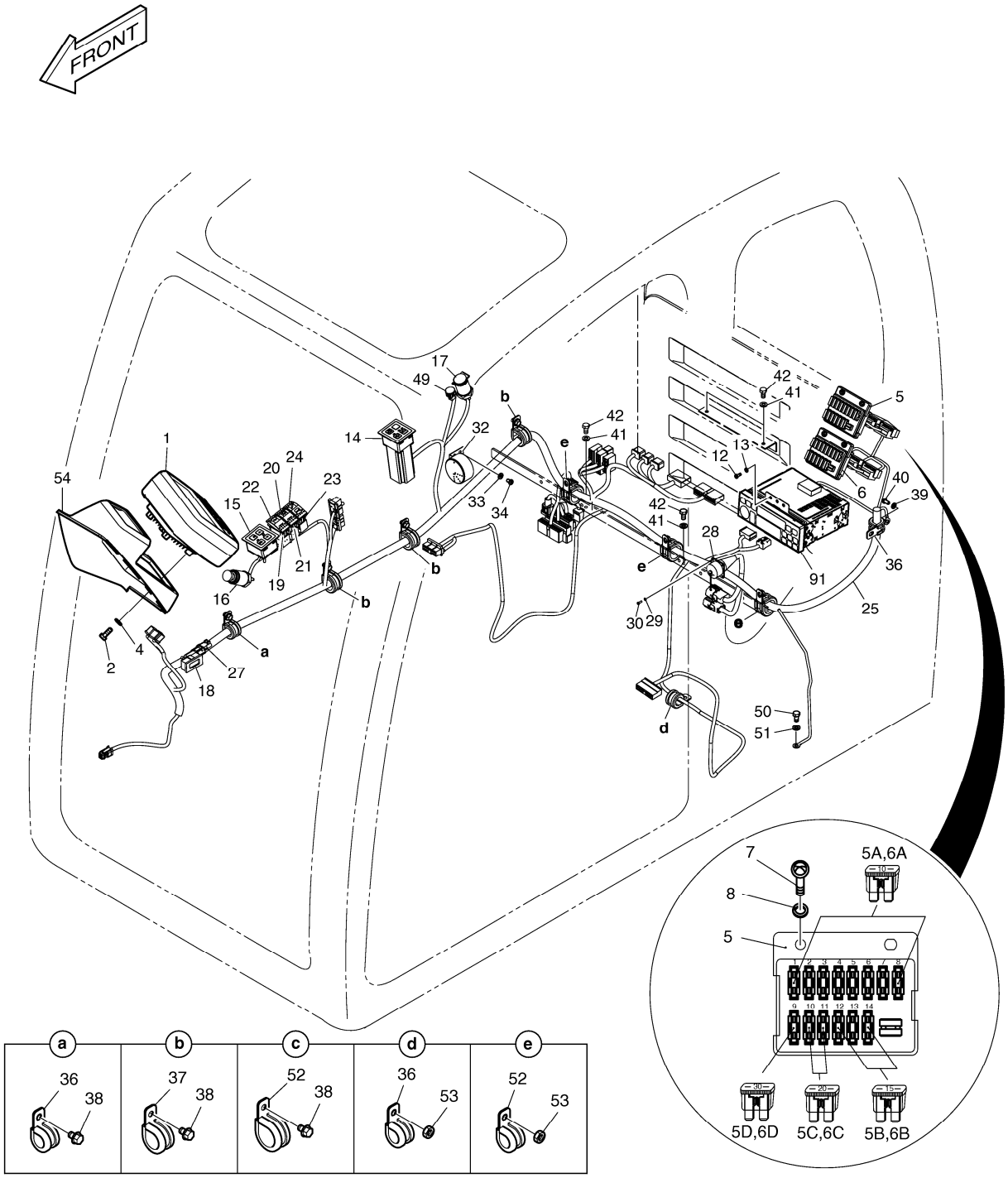

Fig. 1690 ELECTRIC PARTS - CABIN
PIECES ELECTRIQUES

Serial No. ;

Key No.	Part No.	Description	Description	Q'ty	S.C	Serial No.	ICA	Replaceable part	
								Part No.	Q'ty
1690 --	K1044908B	ELECTRIC PARTS-CABIN	EQUIPMENT ELECTRIQUE	-	D	5001-5882			
	300619-00306	ELECTRIC ASSY;CABIN	EQUIPMENT ELECTRIQUE	-	D	5883-			
1	K1047760	PANEL;GAUGE	PANNEAU	1		5001-5882	Y	300426-00010	1
	300426-00010	PANEL;GAUGE 7INCH	PANNEAU	1		5883-			
2	2120-2166D6	BOLT	BOULON	4					
4	S5010313	WASHER	RONDELLE	4					
5	K1001263A	BOX;FUSE	BOITE	1					
5A	2527-1016	. FUSE;BLADE 10A	. FUSIBLE	8					
5B	2527-1017	. FUSE;BLADE 15A	. FUSIBLE	3					
5C	2527-1018	. FUSE;BLADE 20A	. FUSIBLE	2					
5D	2527-1025	. FUSE;BLADE 30A	. FUSIBLE	1					
6	K1001263A	BOX;FUSE	BOITE	1					
6A	2527-1016	. FUSE;BLADE 10A	. FUSIBLE	8					
6B	2527-1017	. FUSE;BLADE 15A	. FUSIBLE	3					
6C	2527-1018	. FUSE;BLADE 20A	. FUSIBLE	2					
6D	2527-1025	. FUSE;BLADE 30A	. FUSIBLE	1					
7	S3450983	SCREW M16X20	VIS	4					
8	S5102303	WASHER;SPRING	RONDELLE	4					
12	S3450833	SCREW	VIS	4					
13	S5100203	WASHER;SPRING	RONDELLE	4					
14	543-00095	PANEL ASS'Y;WIPER CONTROL	PANNEAU	1					
15	543-00096	RADIO CONTROL PANEL ASS'Y	PANNEAU DE COMMANDE	1					
16	545-00001	LIGHTER;CIGAR	PLUS LEGER	1					
17	527-00006	SOCKET;12V POWER	DOUILLE	1					
18	2528-9040	METER;HOUR	METRE	1					
19	549-00103	SWITCH;ROCKER(2STEP)	COMMUTATEUR	1					
20	K1002406D11	ACTUATOR;SWITCH	ACTIONNEUR	1					
21	549-00103	SWITCH;ROCKER(2STEP)	COMMUTATEUR	1					
22	K1002406D12	ACTUATOR;SWITCH	ACTIONNEUR	1					
23	K1006572	SWITCH;BREAKER/SHEAR SELE	COMMUTATEUR	1					
24	K1002406D21	ACTUATOR;SWITCH	ACTIONNEUR	1					
25	K1039723B	HARNESS;CABIN	HARNAIS	1					
27	530-00434B	HARNESS;HOUR METER JOINT	HARNAIS	1					
28	K1047915	HARNESS;CHECK CONNECTOR	HARNAIS	1					
29	S5100003	WASHER;SPRING	RONDELLE	4					
30	S3450343	SCREW	VIS	4					
32	2516-1116	BUZZER;PILOT	VIBREUR	1					
33	S5102303	WASHER;SPRING	RONDELLE	2					

Fig. 1690 ELECTRIC PARTS - CABIN
PIECES ELECTRIQUES

Serial No. ;

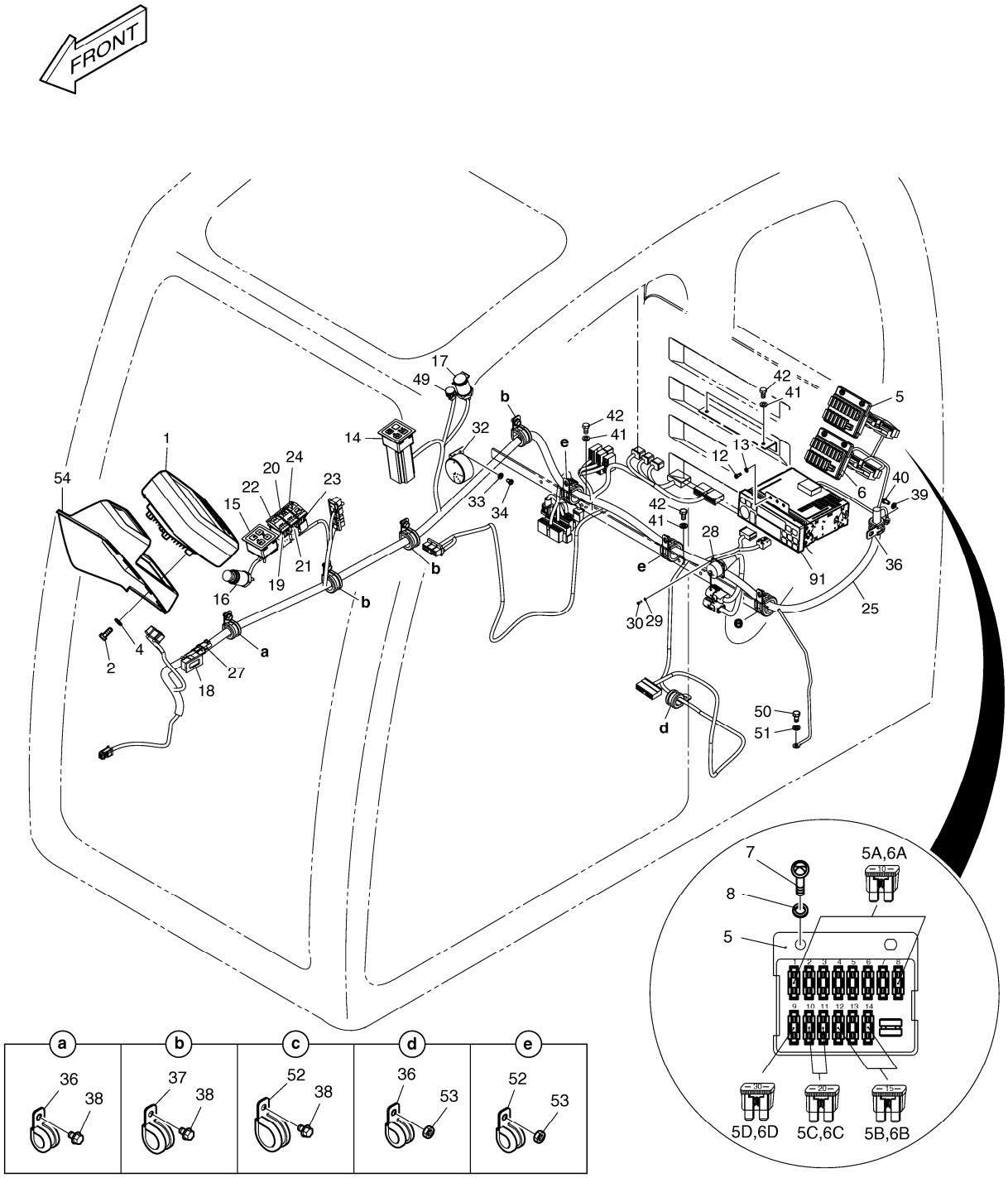

DATE	JUN. 01, 2010
3rd EDITION	

Fig. 1690 ELECTRIC PARTS - CABIN
PIECES ELECTRIQUES

Serial No. ;

Key No.	Part No.	Description	Description	Q'ty	S.C	Serial No.	ICA	Replaceable part	
								Part No.	Q'ty
1690 -34	S3450943	SCREW	VIS	2					
36	124-00208D3	CLIP	AGRAFE	3					
37	124-00208D4	CLIP	AGRAFE	3					
38	K1001029	BOLT	BOULON	4					
39	S5102303	WASHER;SPRING	RONDELLE	1					
40	S3450953	SCREW M16X12	VIS	1					
41	S5102503	WASHER	RONDELLE	4					
42	S0508653	BOLT	BOULON	4					
49	547-00023	SENSOR;SUN	SONDE	1					
50	S0508653	BOLT	BOULON	1					
51	S5102503	WASHER	RONDELLE	1					
52	124-00208D5	CLIP	AGRAFE	3					
53	2121-1305	NUT	ECROU	3					
54	K1041204	COVER;NOZZLE	COUVERCLE	1					
91	K1026654	CAR STEREO	STEREO DE VOITURE	1					

DATE	JUN. 01, 2010
3rd EDITION	

Fig. 1700 ELECTRIC PARTS - CONTROL STAND
PIECES ELECTRIQUES

Serial No. ;

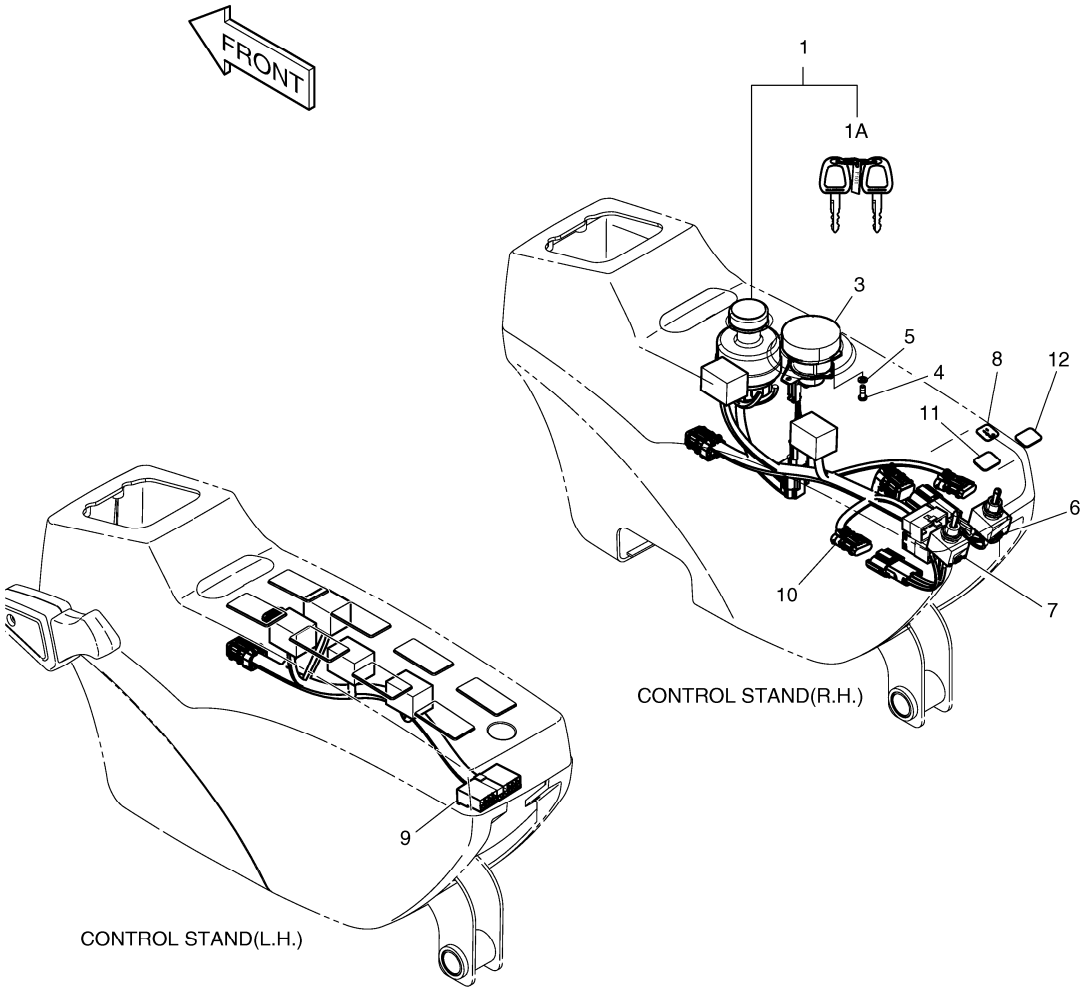

DATE	JUN. 01, 2010
3rd EDITION	

Fig. 1700 ELECTRIC PARTS - CONTROL STAND
PIECES ELECTRIQUES

Serial No. ;

Key No.	Part No.	Description	Description	Q'ty	S.C	Serial No.	ICA	Replaceable part	
								Part No.	Q'ty
1700 --	K1044911	ELECTRIC PARTS-CONTROL ST	EQUIPMENT ELECTRIQUE	-	D				
1	K1001858A	SWITCH;STARTER	COMMUTATEUR	1					
1A	K1009605B	. KEY;STARTER	. CLAVETTE	2					
3	K1013846	DIAL;ENGINE CONTROL	CADRAN	1					
4	S3450583	SCREW	VIS	2					
5	S5100103	WASHER;SPRING	RONDELLE	2					
6	549-00090A	SWITCH;TOGGLE	COMMUTATEUR	1					
7	K1001702A	SWITCH;TOGGLE	COMMUTATEUR	1					
8	K1004427	PLATE;NAME	PLAQUE	1					
9	K1045025	HARNESS;STAND(LH)	FAISCEAU	1					
10	K1045026	HARNESS;STAND(RH)	FAISCEAU	1					
11	K1004425	PLATE;NAME	PLAQUE	1					
12	K1004426	PLATE;NAME	PLAQUE	1					

DATE	JUN. 01, 2010
3rd EDITION	

Fig. 1710 ELECTRIC PARTS - RELATED PIECES ELECTRIQUES

Serial No. ;

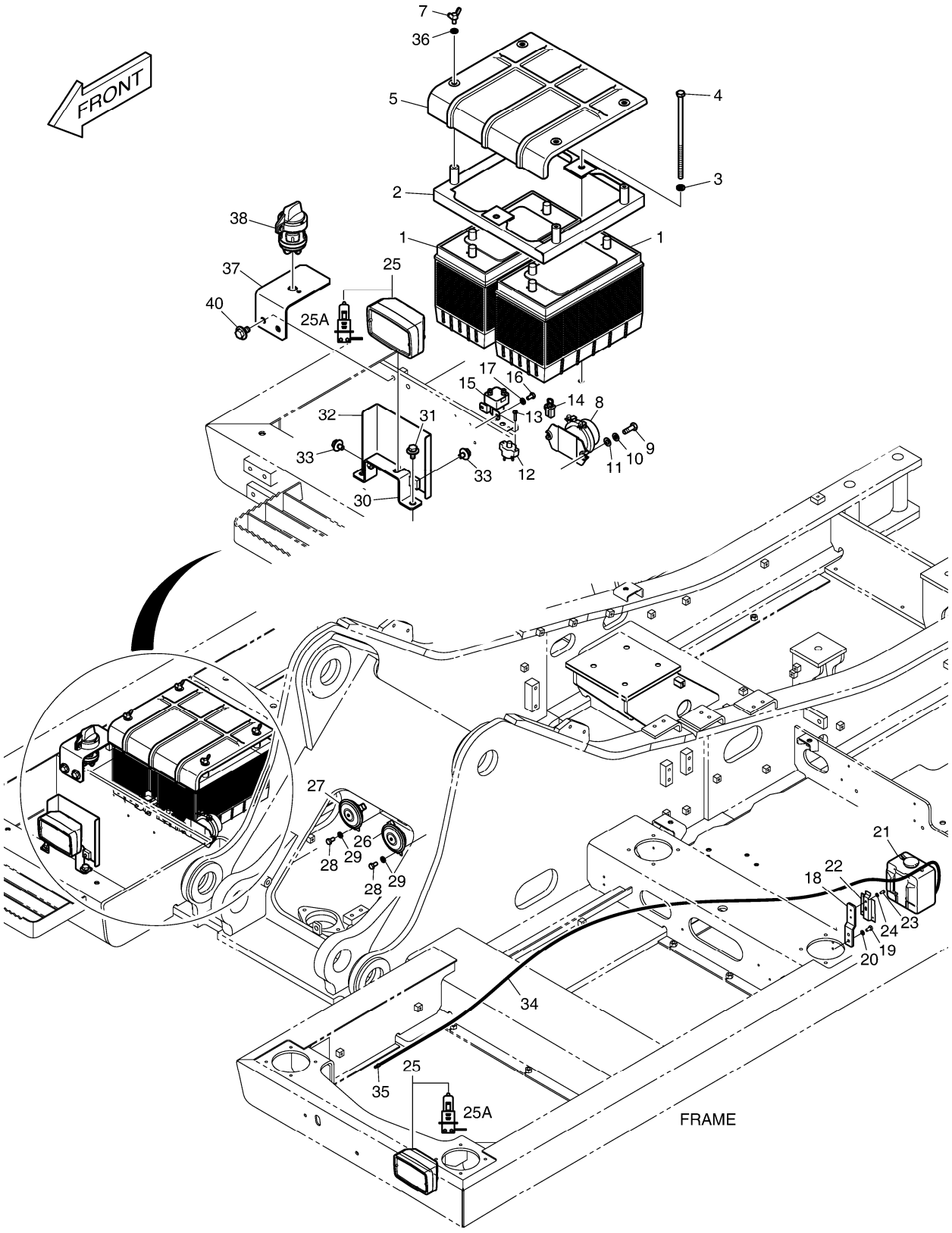

Fig. 1710 ELECTRIC PARTS - RELATED PIECES ELECTRIQUES

Serial No. ;

Key No.	Part No.	Description	Description	Q'ty	S.C	Serial No.	ICA	Replaceable part	
								Part No.	Q'ty
1710 --	K1044912A	ELECTRIC PARTS;CHASSIS	EQUIPMENT ELECTRIQUE	-	D				
1	506-00006	BATTERY	BATTERIE	2					
2	K1039521A	BRACKET	SUPPORT	1					
3	S5102603	WASHER	RONDELLE	2					
4	DS0001079	BOLT	BOULON	2					
5	K1039068	COVER	COUVERTURE	1					
7	S3050863	BOLT;WING	BOULON	4					
8	2544-9024	RELAY;BATTERY	RELAIS	1					
9	S0509066	BOLT	BOULON	2					
10	S5102503	WASHER	RONDELLE	2					
11	S5010503	WASHER	RONDELLE	2					
12	2527-9004	BREAKER;CIRCUIT	BRISEUR	1					
13	2120-1354	SCREW	VIS	2					
14	2527-1023A	LINK;FUSIBLE	LIEN	1					
15	2544-1022	RELAY;STARTER	RELAIS DEMARREUR	1					
16	S0504453	BOLT M6X1.0X12	BOULON	2					
17	S5102303	WASHER;SPRING	RONDELLE	2					
18	K1007668	BRACKET	SUPPORT	1					
19	S0508666	BOLT	BOULON	2					
20	S5102503	WASHER	RONDELLE	2					
21	K1000789	TANK;RESERVE	RESERVOIR	1					
22	2195-1534	BRACKET	SUPPORT	1					
23	S0504453	BOLT M6X1.0X12	BOULON	2					
24	S5102303	WASHER;SPRING	RONDELLE	2					
25	534-00085	LAMP;HEAD	LAMPE	2					
25A	2515-1016D4	. BLUB;HALOGEN	. AMPOULE	1					
26	516-00014	HORN;HIGH	AVERTISSEUR	1		5001-5736	I	300726-00002	1
	300726-00002	HORN;HIGH	KLAXON	1		5737-			
27	516-00015	HORN;LOW	AVERTISSEUR	1		5001-5736	I	300726-00003	1
	300726-00003	HORN;LOW	KLAXON	1		5737-			
28	S0508666	BOLT	BOULON	2					
29	S5102503	WASHER	RONDELLE	2					
30	195-02622C	BRACKET	SUPPORT	1					
31	DS0025019	BOLT;SET	BOULON	2					
32	621-02643C	PLATE	PLAQUE	1					
33	DS0025013	BOLT;SET	BOULON	2					
34	4185-1777	HOSE;WATER	TUYAU	1					
35	2415-1018	ADAPTER;HOSE	ADAPTEUR	1					

DATE	JUN. 01, 2010
3rd EDITION	

Fig. 1710 ELECTRIC PARTS - RELATED PIECES ELECTRIQUES

Serial No. ;

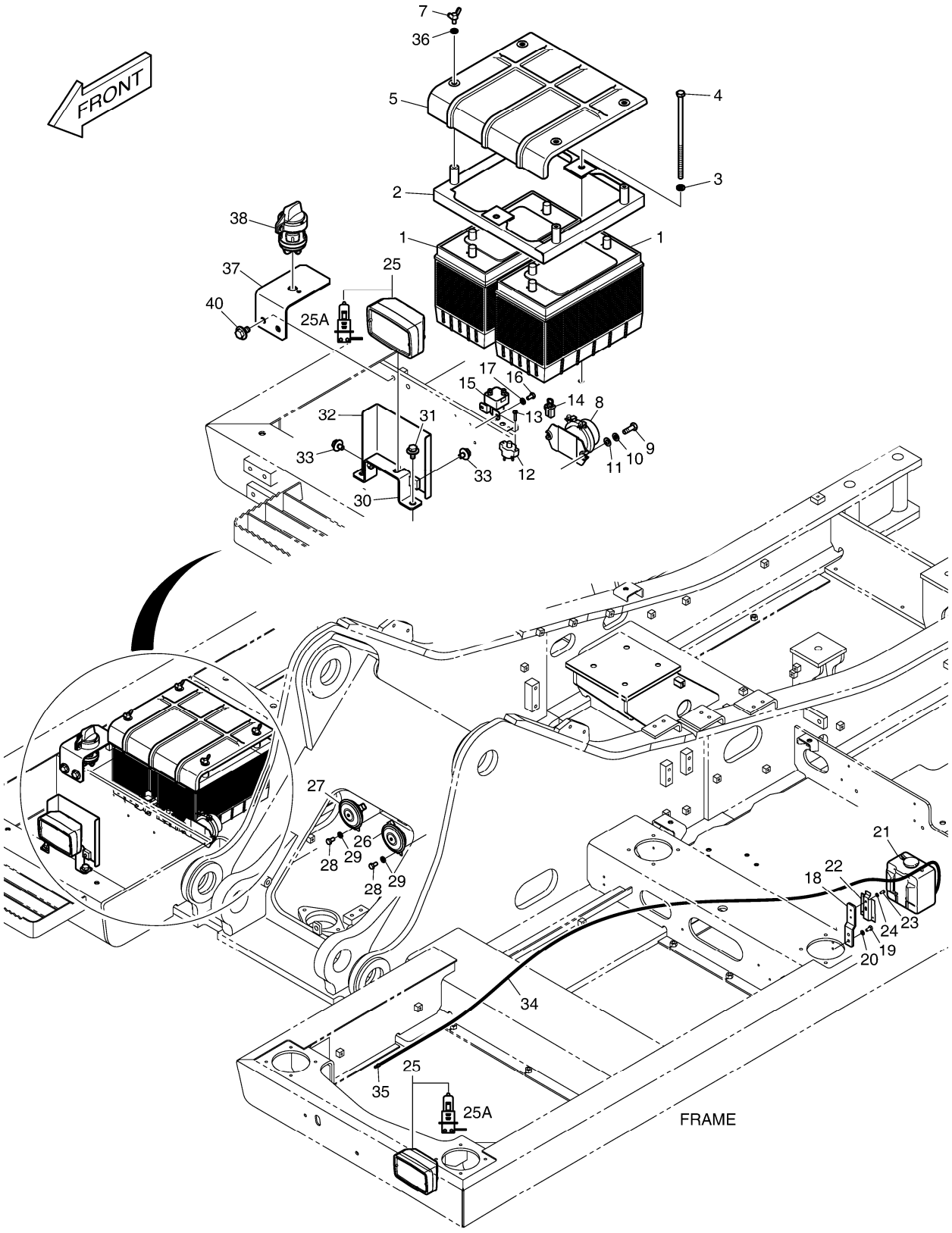

Fig. 1710 ELECTRIC PARTS - RELATED
PIECES ELECTRIQUES

Serial No. ;

Key No.	Part No.	Description	Description	Q'ty	S.C	Serial No.	ICA	Replaceable part	
								Part No.	Q'ty
1710 -36	S5010513	WASHER	RONDELLE	4					
37	110406-00608	BRACKET	SUPPORT	1		5737-			
38	K1057605	SWITCH;DISCONNECTOR	INTERRUPTEUR	1		5737-			
40	DS0025015	BOLT;SET	BOULON	2		5737-			

DATE	JUN. 01, 2010
3rd EDITION	

Fig. 1720 ELECTRIC PARTS - ENGINE
PIECES ELECTRIQUES

Serial No. ;

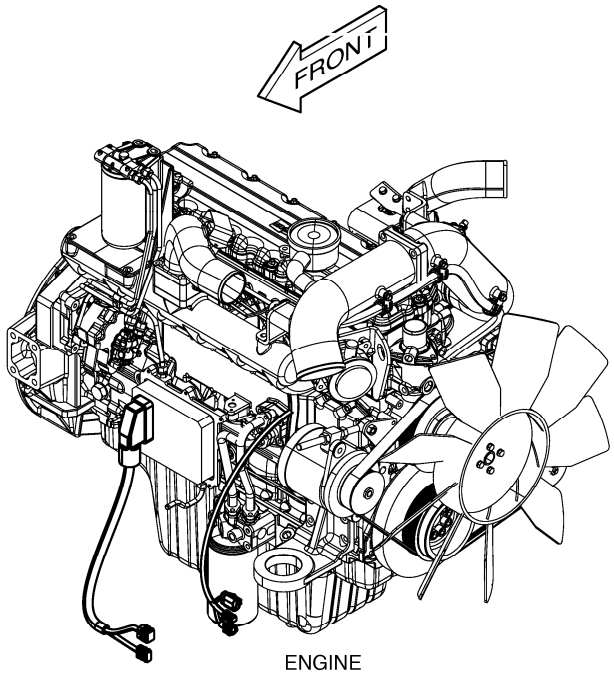

ENGINE

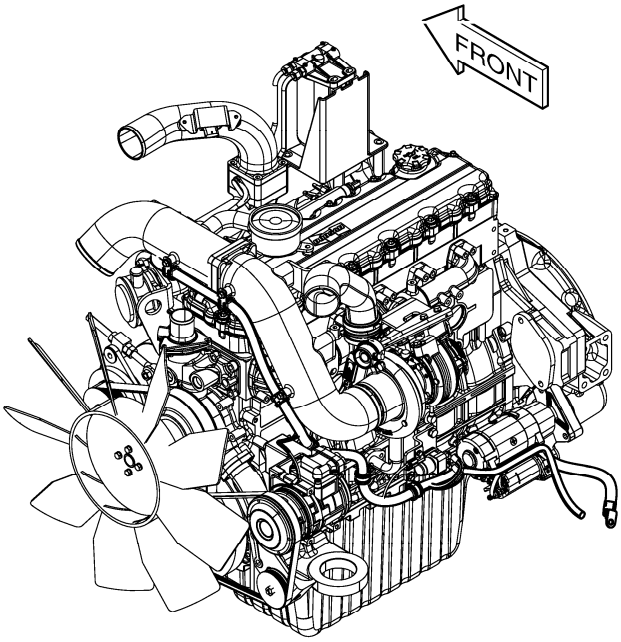

ENGINE

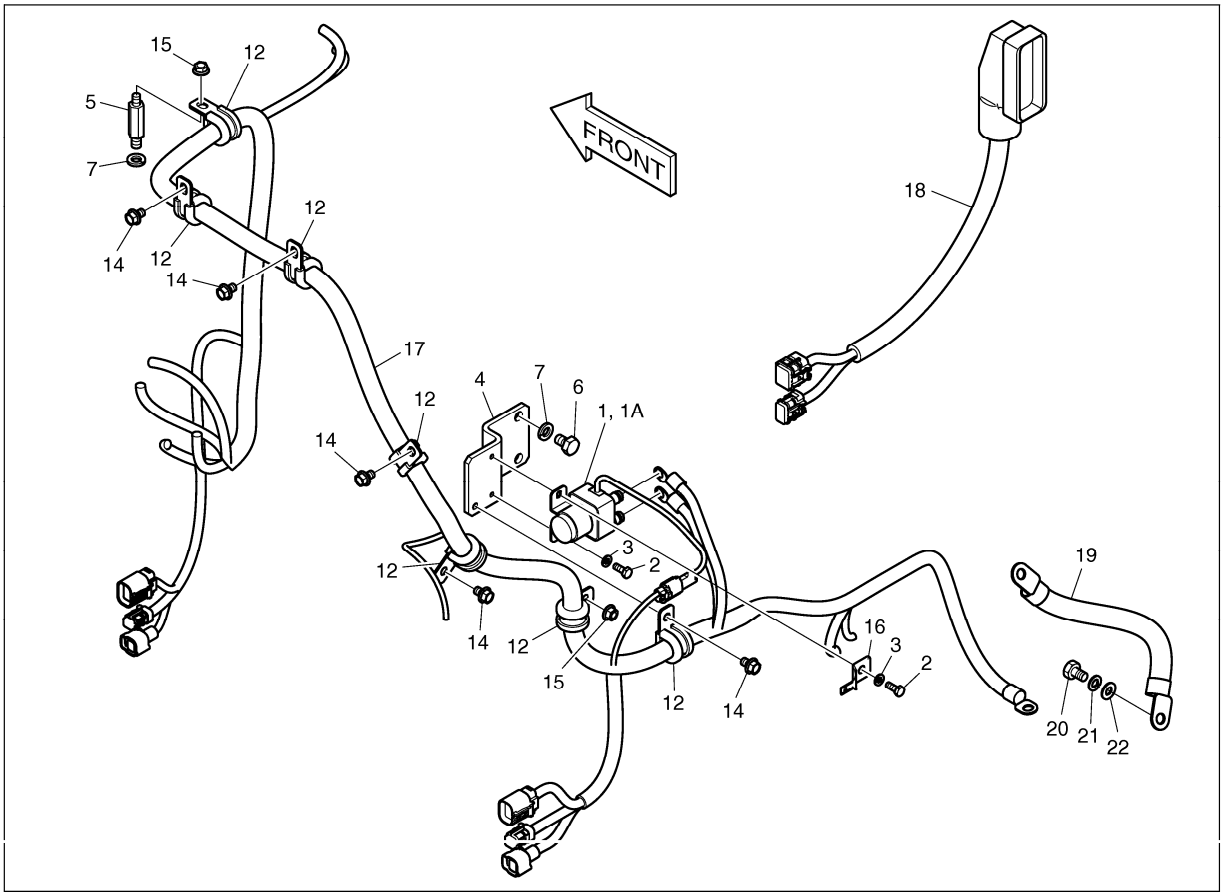

Fig. 1720 ELECTRIC PARTS - ENGINE
PIECES ELECTRIQUES

Serial No. ;

Key No.	Part No.	Description	Description	Q'ty	S.C	Serial No.	ICA	Replaceable part	
								Part No.	Q'ty
1720 --	K1044913A	ELECTRIC ASSY	EQUIPMENT ELECTRIQUE	-	D	5001-5584			
	300619-00125	ELECTRIC ASSY;ENGINE	EQUIPMENT ELECTRIQUE	-	D	5585-			
1	544-00007	RELAY;PREHEAT	RELAIS	1					
1A	527-00005	. FUSE;PREHEAT RELAY	. FUSIBLE	1					
2	S0504666	BOLT	BOULON	2					
3	S5102303	WASHER;SPRING	RONDELLE	2					
4	K1015201	BRACKET;PREHEAT RELAY	SUPPORT	1					
5	120-00246	BOLT;STUD	BOULON	1					
6	S0511666	BOLT	BOULON	1					
7	S5102603	WASHER	RONDELLE	2					
12	124-00208D3	CLIP	AGRAFE	7					
14	K1001029	BOLT	BOULON	5					
15	2121-1305	NUT	ECROU	2					
16	2197-1661	BRACKET	SUPPORT	1					
17	K1039725A	HARNESS,ENGINE	FAISCEAU	1		5001-5584	I	310207-00127	1
	310207-00127	HARNESS,ENGINE	FAISCEAU	1		5585-			
18	K1048096	HARNESS;JOINT(ECU)	HARNAIS	1					
19	2553-1275D82	CABLE;BATT EARTH	CABLE	1					
20	S0511653	BOLT	BOULON	1					
21	S5102603	WASHER	RONDELLE	1					
22	S5010613	WASHER;PLAIN	RONDELLE	1					

DATE	JUN. 01, 2010
3rd EDITION	

Fig. 1730 ALTERNATOR MOUNTING ALTERNATEUR

Serial No. ;

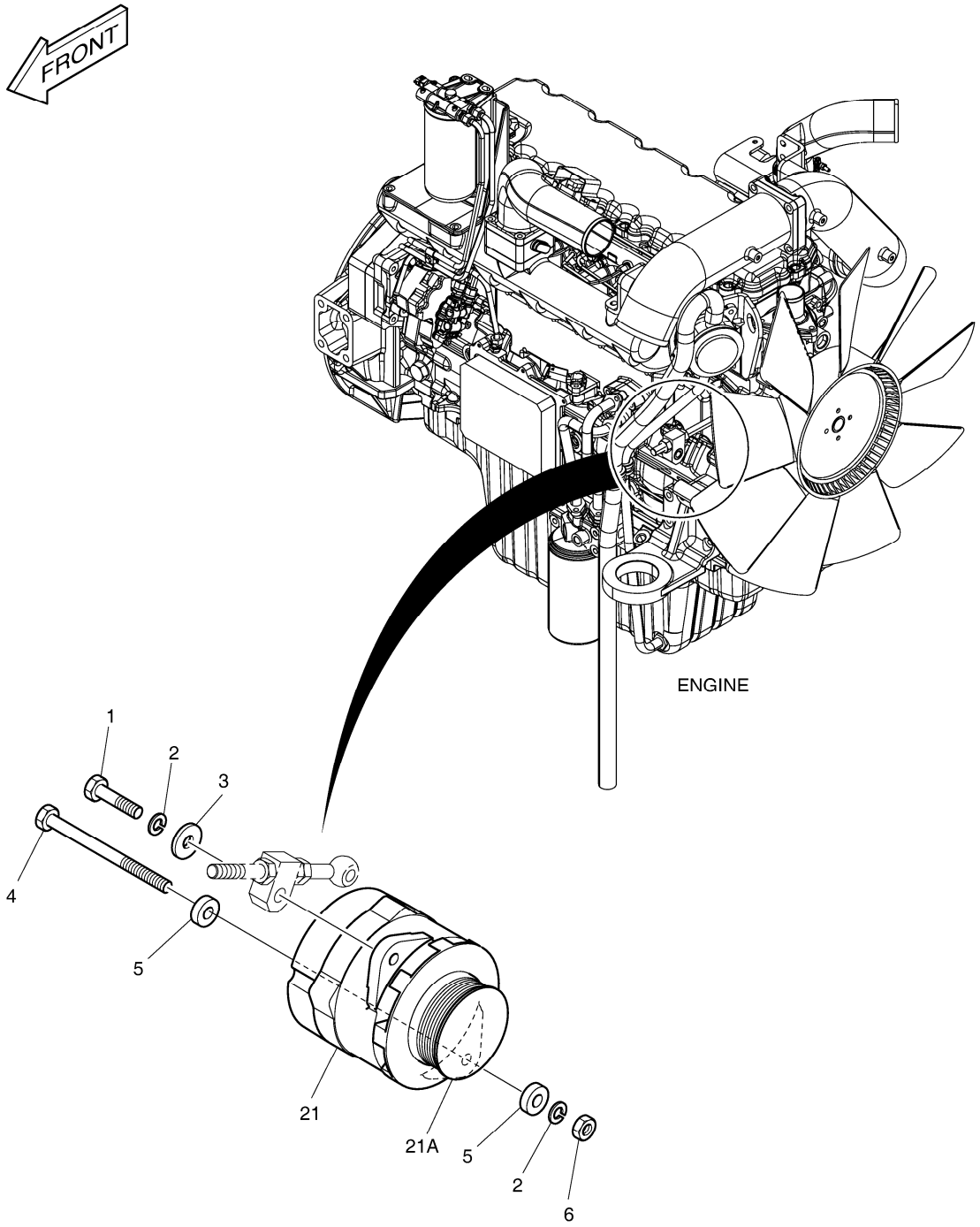

DATE	JUN. 01, 2010
3rd EDITION	

Fig. 1730 ALTERNATOR MOUNTING ALTERNATEUR

Serial No. ;

Key No.	Part No.	Description	Description	Q'ty	S.C	Serial No.	ICA	Replaceable part	
								Part No.	Q'ty
1730 --	K1008713	ALTERNATOR MOUNTING	SUPPORT D'ALTERNATEU	-	D				
1	S0760853	BOLT	BOULON	1					
2	S5102703	WASHER;SPRING	RONDELLE	2					
3	2114-1058D54	WASHER	RONDELLE	1					
4	S0562653	BOLT M12X1.75X160	BOULON	1					
5	2114-1058D70	WASHER	RONDELLE	2					
6	S4012733	NUT	ECROU	1					
21	K1010702	ALTERNATOR 60A	ALTERNATEUR	1		5433-5736	Y	300901-00034	1
	300901-00034	ALTERNATOR;60A	ALTERNATEUR	1		5737-			
21A	130707-00030	. PULLEY,ALTERNATOR	. POULIE	1		5433-5736	Y	130707-00042	1
	130707-00042	. PULLEY,ALTERNATOR	. POULIE	1		5737-			

DATE	JUN. 01, 2010
3rd EDITION	

Fig. 1740 ELECTRIC PARTS - WORKING LAMP
EQUIPMENT ELECTRIQUE

Serial No. ;

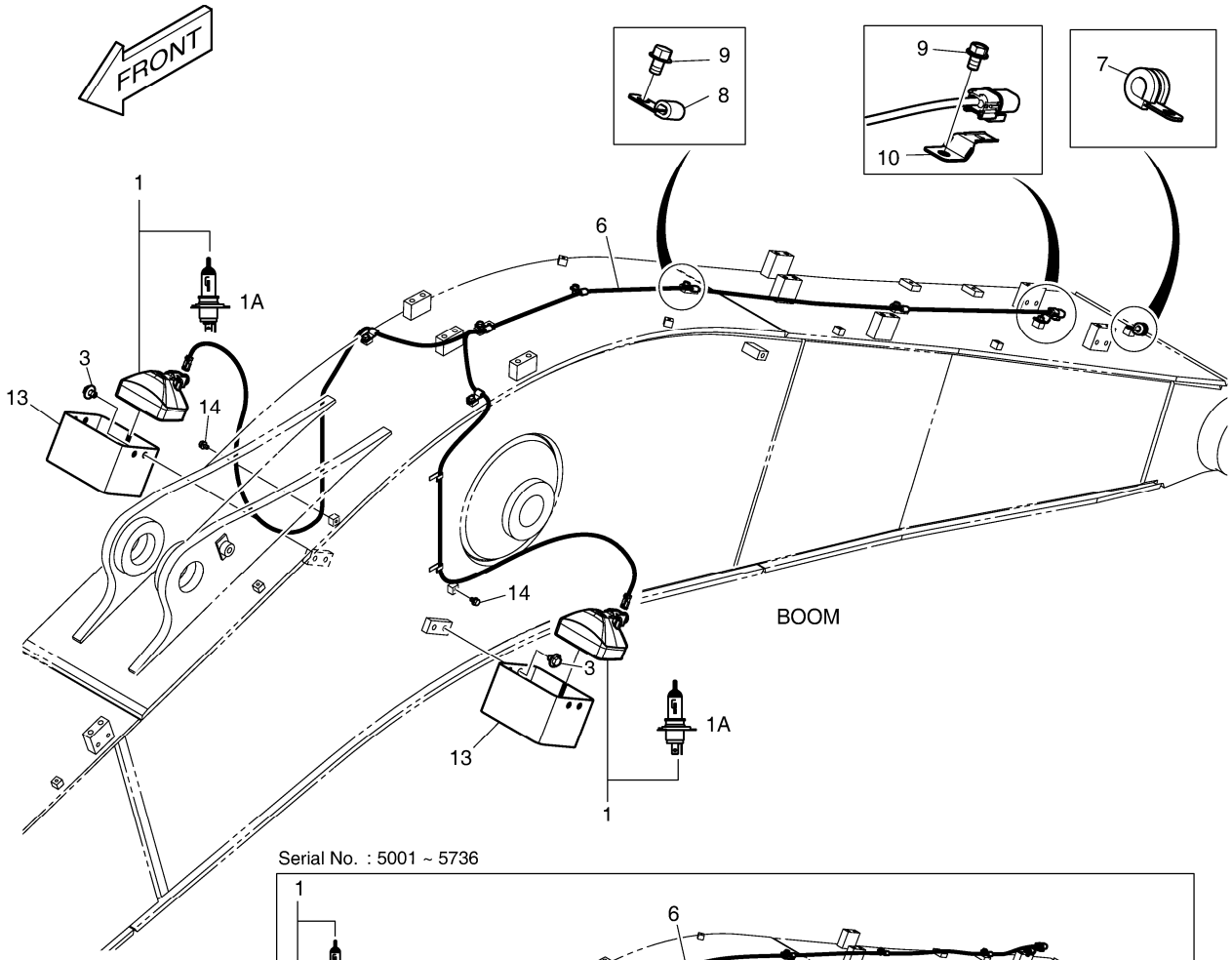

Serial No. : 5001 ~ 5736

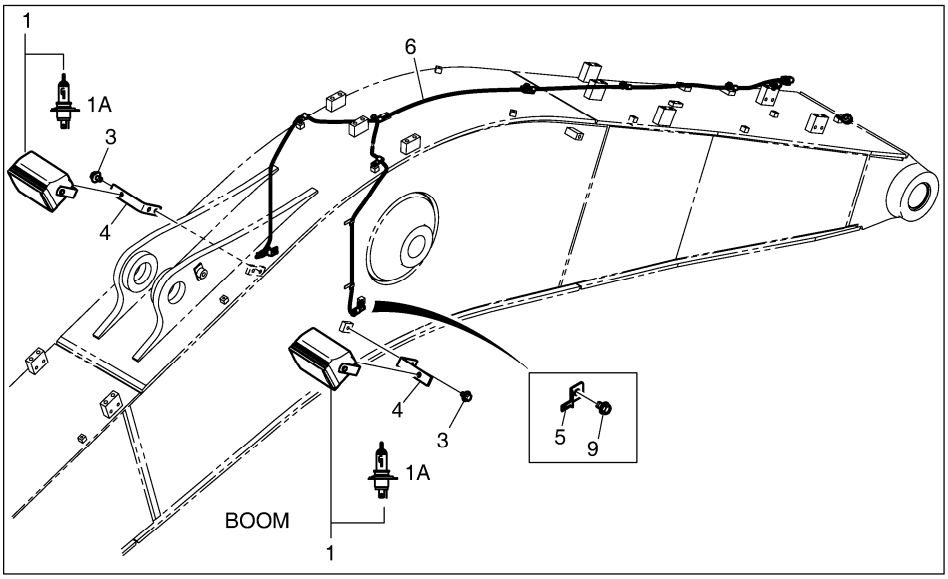

DATE	JUN. 01, 2010
3rd EDITION	

Fig. 1740 ELECTRIC PARTS - WORKING LAMP
EQUIPMENT ELECTRIQUE

Serial No. ;

Key No.	Part No.	Description	Description	Q'ty	S.C	Serial No.	ICA	Replaceable part	
								Part No.	Q'ty
1740 --	K1044917	ELECTRIC PARTS;WORKING LAI	PIECES ELECTRIQUES	-	D				
1	534-00064	LAMP ASS'Y;WORKING	LAMPE	2		5001-5736			
	301005-00132	LAMP;WORKING	LAMPE	2		5737-			
1A	2515-1022D1	. BULB;HALOGEN	. AMPOULE	1		5001-5736			
	2515-1016D4	. BLUB;HALOGEN	. AMPOULE	1		5737-			
3	DS0025019	BOLT;SET	BOULON	2		5001-5736			
	DS0025022	BOLT;SET	BOULON	4		5737-			
4	K1045028	BRACKET	SUPPORT	2		5001-5736			
5	2197-1661	BRACKET	SUPPORT	2		5001-5736			
6	530-00418D2	HARNESS;WORKING LAMP	FAISCEAU	1		5001-5736			
	310207-00539	HARNESS;WORKING LAMP	HARNAIS	1		5737-			
7	124-00208D2	CLIP	AGRAFE	1					
8	2124-1509D1	CLIP	AGRAFE	6					
9	K1001029	BOLT	BOULON	8		5001-5736			
	K1001029	BOLT	BOULON	7		5737-			
10	2197-1660	BRACKET;HOUSING	SUPPORT	1					
13	110921-00091	GUARD;LAMP	GARDE	2		5737-			
14	DS0025044	BOLT;SET	BOULON	2		5737-			

DATE	JUN. 01, 2010
3rd EDITION	

Fig. 1750 ELECTRIC WIRING
POSE DE FILES ELECTRIQUES

Serial No. ;

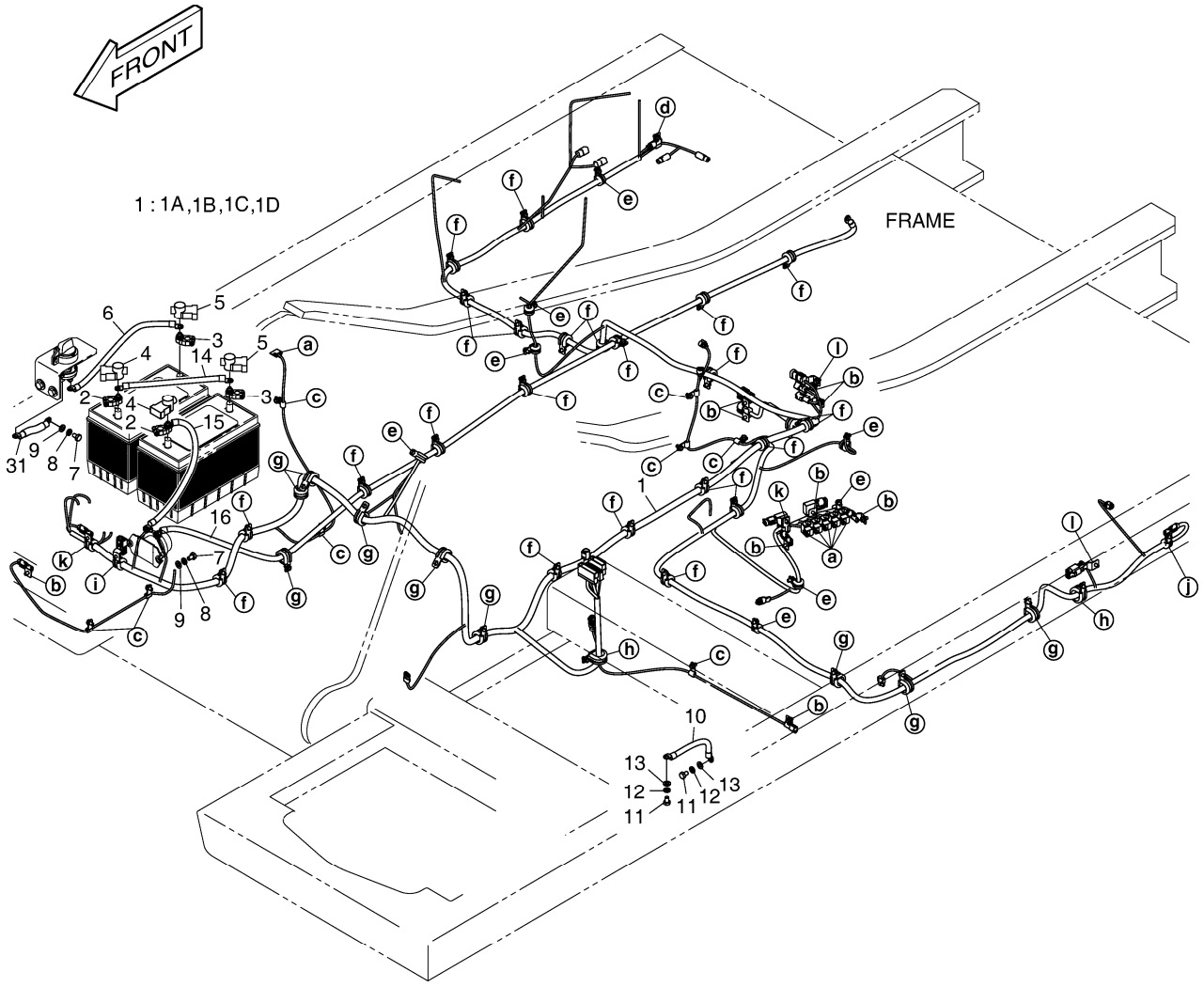

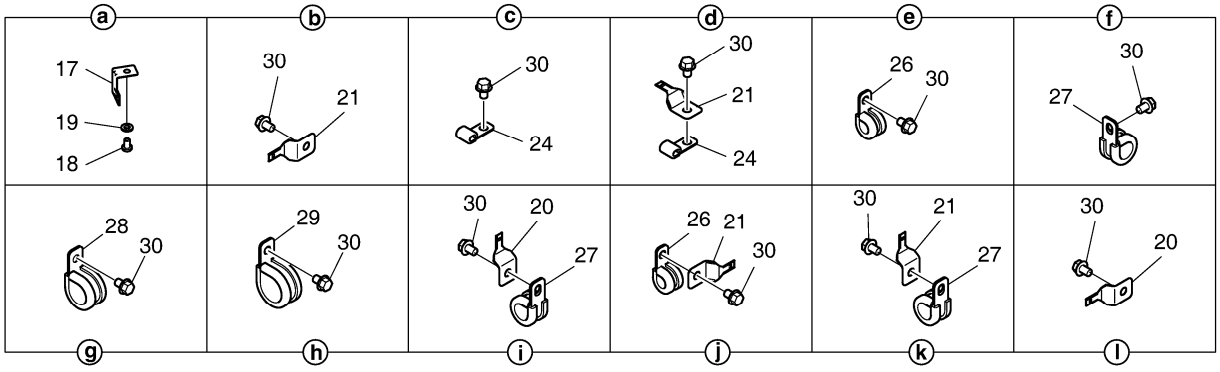

DATE	JUN. 01, 2010
3rd EDITION	

Fig. 1750 ELECTRIC WIRING
POSE DE FILES ELECTRIQUES

Serial No. ;

Key No.	Part No.	Description	Description	Q'ty	S.C	Serial No.	ICA	Replaceable part	
								Part No.	Q'ty
1750 --	K1044848A	ELECTRIC WIRING	POSE DE FILES ELECTRIQU	-	D				
1	K1030273B	HARNESS;MAIN	FAISCEAU	1					
1A	2548-1027	. DIODE	. DIODE	4					
1B	548-00003A	. DIODE	. DIODE	1					
1C	K1000814	. DIODE	. DIODE	1					
1D	K1000815	. DIODE	. DIODE	1					
2	2550-1014D1	TERMINAL;BATTERY(+)	BORNE	2					
3	2550-1014D2	TERMINAL;BATTERY(-)	BORNE	2					
4	2160-1212	CAP;BATT. TML (+)	CHAPEAU	2					
5	2160-1213	CAP;BATT. TML (-)	CHAPEAU	2					
6	2553-1275D78	CABLE;PUMP-BATT RELAY	CABLE	1					
7	S0511653	BOLT	BOULON	2					
8	S5102603	WASHER	RONDELLE	2					
9	S5010613	WASHER;PLAIN	RONDELLE	2					
10	2553-1275D39	CABLE;EARTH	CABLE	1					
11	S0511653	BOLT	BOULON	2					
12	S5102603	WASHER	RONDELLE	2					
13	S5010613	WASHER;PLAIN	RONDELLE	2					
14	2553-1275D46	CABLE;BATT-BATT	CABLE	1					
15	2553-1275D7	CABLE;BATT-BATT RELAY 60R-4(	CABLE	1					
16	2553-1275D88	CABLE;BATT RY-STARTER	CABLE	1					
17	2195-3500	BRACKET	SUPPORT	6					
18	S0504453	BOLT M6X1.0X12	BOULON	6					
19	S5102303	WASHER;SPRING	RONDELLE	6					
20	2197-1660	BRACKET;HOUSING	SUPPORT	3					
21	2197-1661	BRACKET	SUPPORT	13					
24	2124-1509D1	CLIP	AGRAFE	9					
26	124-00208D2	CLIP	AGRAFE	9					
27	124-00208D3	CLIP	AGRAFE	26					
28	124-00208D4	CLIP	AGRAFE	9					
29	124-00208D5	CLIP	AGRAFE	2					
30	K1001029	BOLT	BOULON	66					
31	310203-00020	CABLE,EARTH	CABLE	1		5737-			

DATE	JUN. 01, 2010
3rd EDITION	

Fig. 1760 HEATER PIPING(1)
CONDUITES DE CHAUFFAGE

Serial No. ;

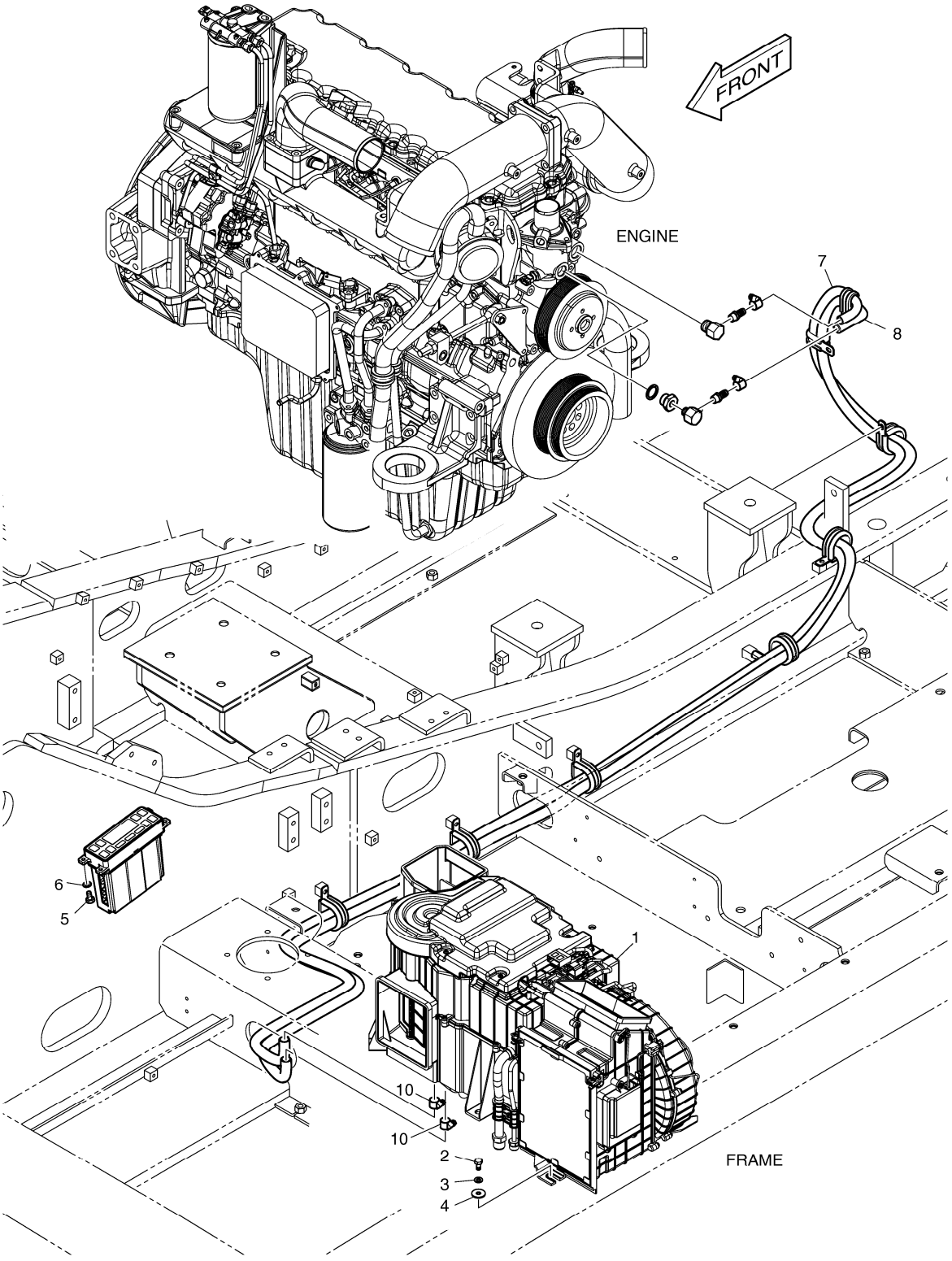

DATE	JUN. 01, 2010
3rd EDITION	

Fig. 1760 HEATER PIPING(1)
CONDUITES DE CHAUFFAGE

Serial No. ;

Key No.	Part No.	Description	Description	Q'ty	S.C	Serial No.	ICA	Replaceable part	
								Part No.	Q'ty
1760 --	K1044920A	AIR CONDITIONER	REFRIGERATION	-	D				
1	920-00127A	UNIT;AIR CON. & HEATING	UNITE	1					
2	S0508653	BOLT	BOULON	6					
3	S5102503	WASHER	RONDELLE	6					
4	2114-1058D29	WASHER	RONDELLE	6					
5	S3450833	SCREW	VIS	4					
6	S5000213	WASHER;PLAIN M5	RONDELLE	4					
7	2185-1308D7	HOSE;RUBBER	TUYAU	1					
8	2185-1308D7	HOSE;RUBBER	TUYAU	1					
10	S8450016	CLAMP	BRIDE	2					

DATE	JUN. 01, 2010
3rd EDITION	

Fig. 1770 HEATER PIPING(2)
CONDUITES DE CHAUFFAGE

Serial No. ;

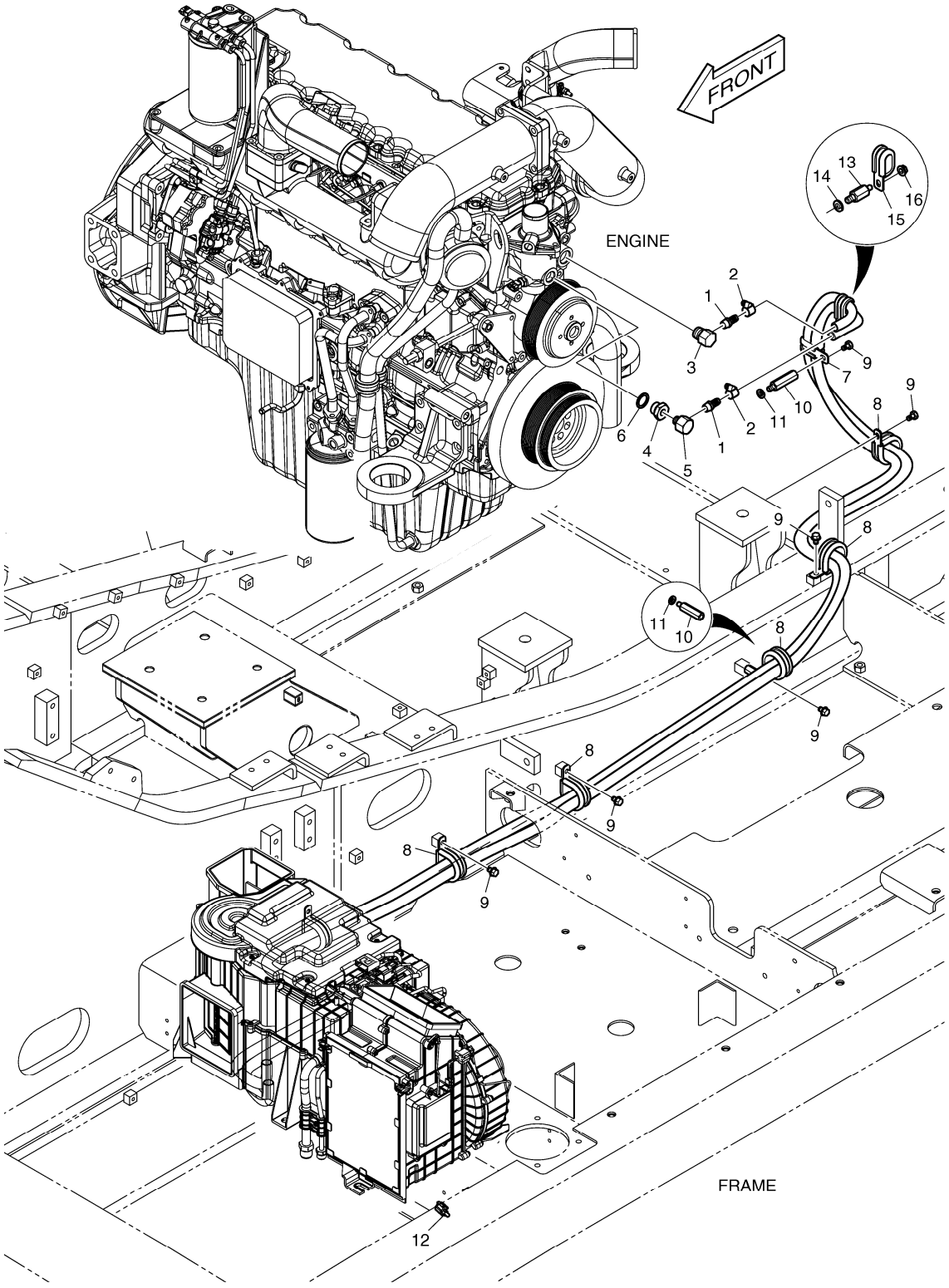

DATE	JUN. 01, 2010
3rd EDITION	

Fig. 1770 HEATER PIPING(2)
CONDUITES DE CHAUFFAGE

Serial No. ;

Key No.	Part No.	Description	Description	Q'ty	S.C	Serial No.	ICA	Replaceable part	
								Part No.	Q'ty
1770 --	K1046267	AIR CONDITIONER	REFRIGERATION	-	D				
1	2181-2774	NIPPLE;HOSE	MAMELON	2					
2	S8450016	CLAMP	BRIDE	2					
3	2181-1159	ADAPTER	ADAPTEUR	1					
4	2181-1160A	ADAPTER	ADAPTEUR	1					
5	2181-1161A	ADAPTER	ADAPTEUR	1					
6	S8180411	SEAL;COPPER	CACHET	1					
7	124-00209D1	CLIP	AGRAFE	1					
8	124-00208D7	CLIP	AGRAFE	6					
9	K1001029	BOLT	BOULON	7					
10	2120-2187	BOLT;STUD	BOULON	2					
11	S5102503	WASHER	RONDELLE	2					
12	547-00024A	SENSOR;AMBENT	SONDE	1					
13	120-00246	BOLT;STUD	BOULON	1					
14	S5102603	WASHER	RONDELLE	1					
15	124-00209D1	CLIP	AGRAFE	1					
16	2121-1305	NUT	ECROU	1					

DATE	JUN. 01, 2010
3rd EDITION	

Fig. 1780 AIRCON UNIT REFRIGERATION

Serial No. ;

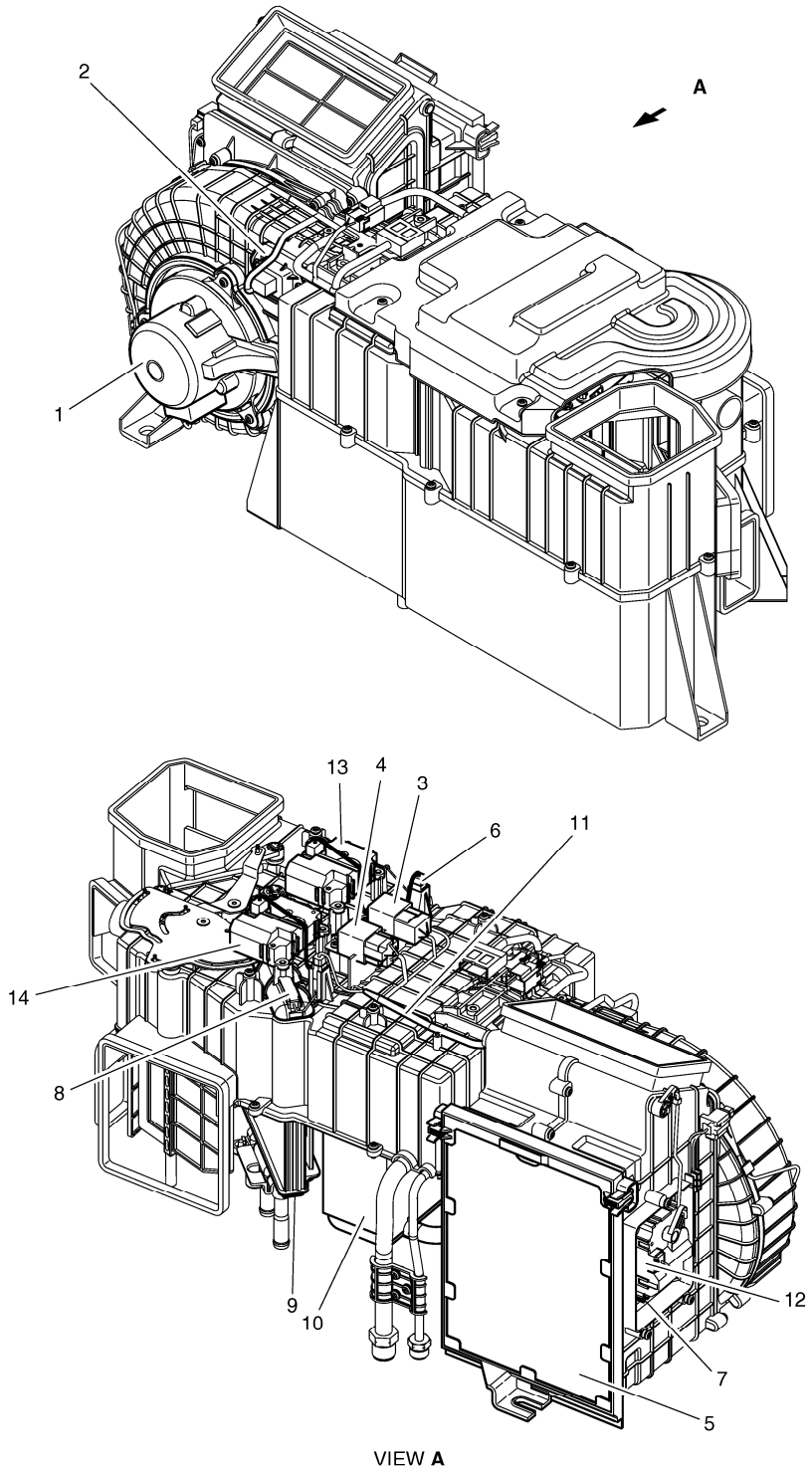

VIEW **A**

DATE	JUN. 01, 2010
3rd EDITION	

Fig. 1780 AIRCON UNIT REFRIGERATION

Serial No. ;

Key No.	Part No.	Description	Description	Q'ty	S.C	Serial No.	ICA	Replaceable part	
								Part No.	Q'ty
1780 --	920-00127A	UNIT;AIR CON. & HEATING	UNITE	1					
1	K1002206	MOTOR;BLOWER;24V	MOTEUR	1					
2	K1002207	POWER FET	PIGNON	1					
3	K1002208	RELAY;BLOWER 24V	RELAIS	1					
4	K1002209	RELAY;AIRCON 24V	RELAIS	1					
5	K1002210	FILTER;AIR CON.	FILTRE	1					
6	K1002211	SENSOR;TEMP EVAPORATOR	SONDE	1					
7	K1002212	SENSOR;TEMPERATURE	SONDE	1					
8	K1002213	SENSOR;WATER TEMPERATUR	SONDE	1					
9	K1002214	CORE;HEATER	NOYAU	1					
10	K1002215	EVAPORATOR	NOYAU DE VAPORISATEUR	1					
11	K1002216	HARNESS;AIR CONDITIONER	HARNAIS	1					
12	K1002217	ACTUATOR;INTAKE	ACTIONNEUR	1					
13	K1002218	ACTUATOR;AIR MIX	ACTIONNEUR	1					
14	K1002219	ACTUATOR;MODE	ACTIONNEUR	1					

DATE	JUN. 01, 2010
3rd EDITION	

Fig. 1790 AIRCONDITIONER REFRIGERATION

Serial No. ;

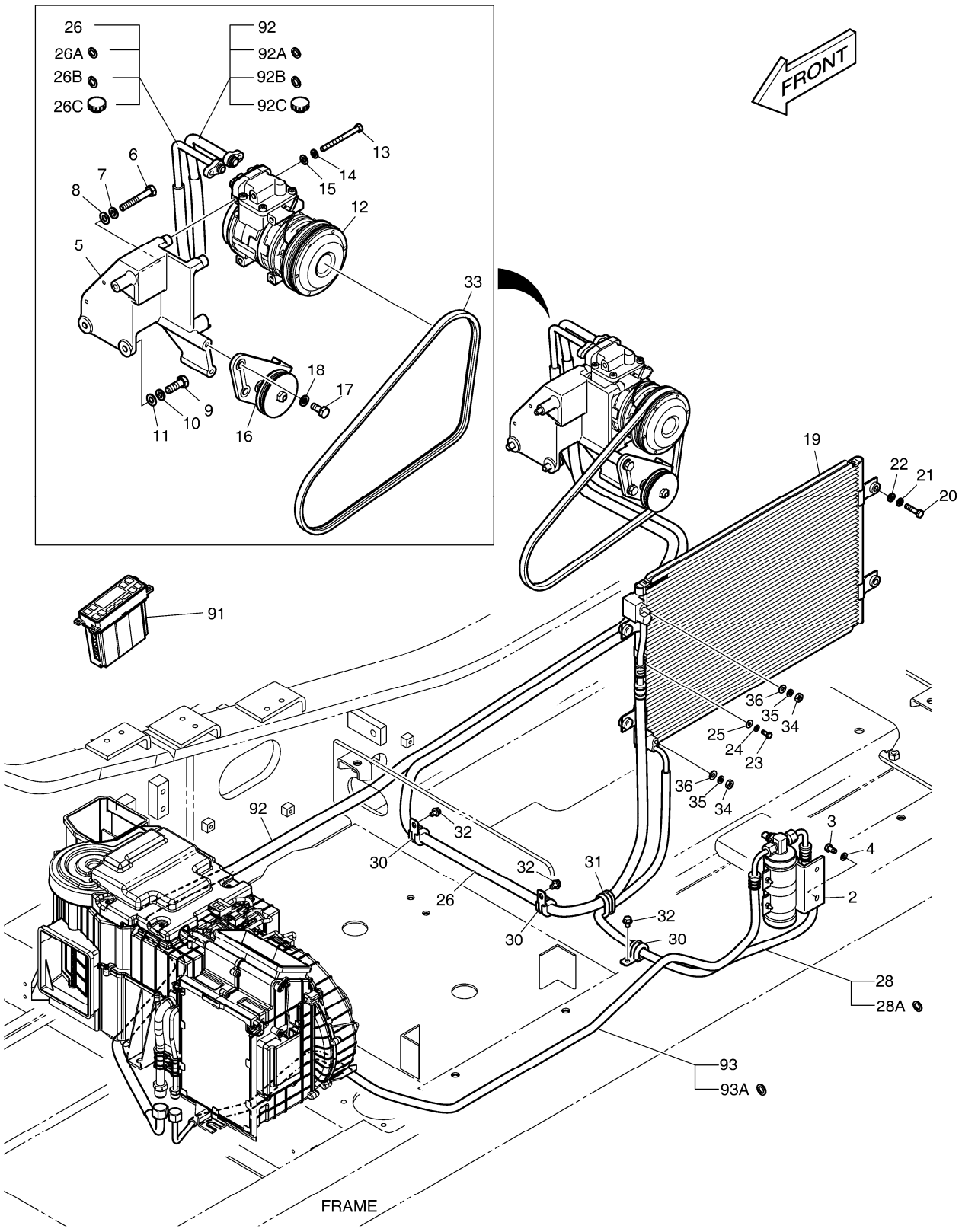

DATE	JUN. 01, 2010
3rd EDITION	

Fig. 1790 AIRCONDITIONER REFRIGERATION

Serial No. ;

Key No.	Part No.	Description	Description	Q'ty	S.C	Serial No.	ICA	Replaceable part	
								Part No.	Q'ty
1790 --	K1044921B	ASSEMBLY;AIR CONDITIONER	CONDITIONNEUR D'ASSEM	-	D				
2	2204-6039A	RECEIVER DRIER	DESSICCATEUR DE RECEI	1					
3	S0508666	BOLT	BOULON	2					
4	S5102503	WASHER	RONDELLE	2					
5	K1037356A	BRACKET;COMPRESSOR	SUPPORT	1					
6	S0558966	BOLT M10X1.5X70	BOULON	1					
7	S5102603	WASHER	RONDELLE	1					
8	S5010613	WASHER;PLAIN	RONDELLE	1					
9	S0786366	BOLT	BOULON	2					
10	S5102703	WASHER;SPRING	RONDELLE	2					
11	S5010713	WASHER;PLAIN	RONDELLE	2					
12	2208-6013B	COMPRESSOR	COMPRESSEUR	1					
13	S0557166	BOLT	BOULON	4					
14	S5102503	WASHER	RONDELLE	4					
15	S5010513	WASHER	RONDELLE	4					
16	2107-6006	PULLEY ASS'Y;IDLE	POULIE	1					
17	S0512066	BOLT	BOULON	2					
18	S5102603	WASHER	RONDELLE	2					
19	520-00004	CONDENSER;AIR CON	CONDENSATEUR	1					
20	S0509366	BOLT	BOULON	4					
21	S5102503	WASHER	RONDELLE	4					
22	2114-1058D29	WASHER	RONDELLE	4					
23	S0504666	BOLT	BOULON	1					
24	S5010303	WASHER	RONDELLE	1					
25	2114-1058D52	WASHER	RONDELLE	1					
26	K1008516B	HOSE;DISCHARGE	TUYAU FLEXIBLE	1					
26A	2180-6088	. O-RING;DISCHARGE(COMP)	. JOINT CIRCULAIRE	1					
26B	K1011384	. O-RING;CONDENSER	. JOINT CIRCULAIRE	1					
26C	1.161-00018	. CAP;CHECK PORT(H)	. CHAPEAU	1					
28	K1008518B	HOSE;LIQUID(1)	TUYAU FLEXIBLE	1					
28A	K1011388	. O-RING	. JOINT CIRCULAIRE	2					
30	124-00208D3	CLIP	AGRAFE	3					
31	124-00209D1	CLIP	AGRAFE	1					
32	K1001029	BOLT	BOULON	4					
33	2106-1019D25	V-BELT;POLY(4PK-1210L)	V-BELT	1					
34	S4012303	NUT	ECROU	2					
35	S5102303	WASHER;SPRING	RONDELLE	2					
36	S5000313	WASHER;PLAIN	RONDELLE	2					

Fig. 1790 AIRCONDITIONER REFRIGERATION

Serial No. ;

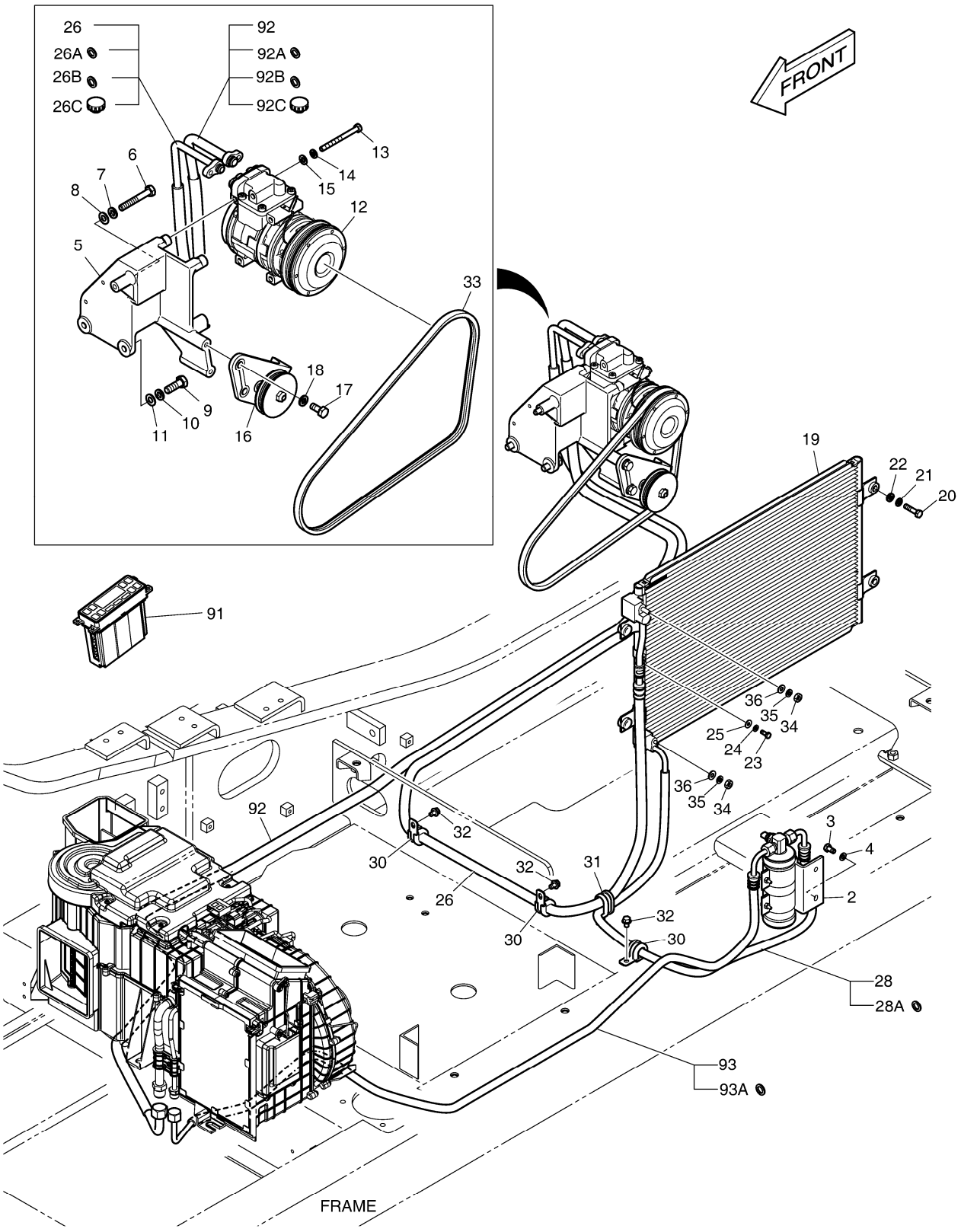

Fig. 1790 AIRCONDITIONER REFRIGERATION

Serial No. ;

Key No.	Part No.	Description	Description	Q'ty	S.C	Serial No.	ICA	Replaceable part	
								Part No.	Q'ty
1790 -91	543-00107	CONTROL PANEL;AIR CON	PANNEAU DE COMMANDE	1					
92	K1008517A	HOSE;SUCTION	TUYAU FLEXIBLE	1					
92A	2180-6086	. O-RING;SUCTION(COMP)	. JOINT CIRCULAIRE	1					
92B	K1011385	. O-RING;EVAPORATOR	. JOINT CIRCULAIRE	1					
92C	1.161-00019	. CAP;CHECK PORT(L)	. CHAPEAU	1					
93	K1001280C	HOSE;LIQUID(2)	TUYAU	1					
93A	K1011388	. O-RING	. JOINT CIRCULAIRE	2					

DATE	JUN. 01, 2010
3rd EDITION	

Fig. 2100 TRACK FRAME
TRAIN DE ROULEMENT

Serial No. ;

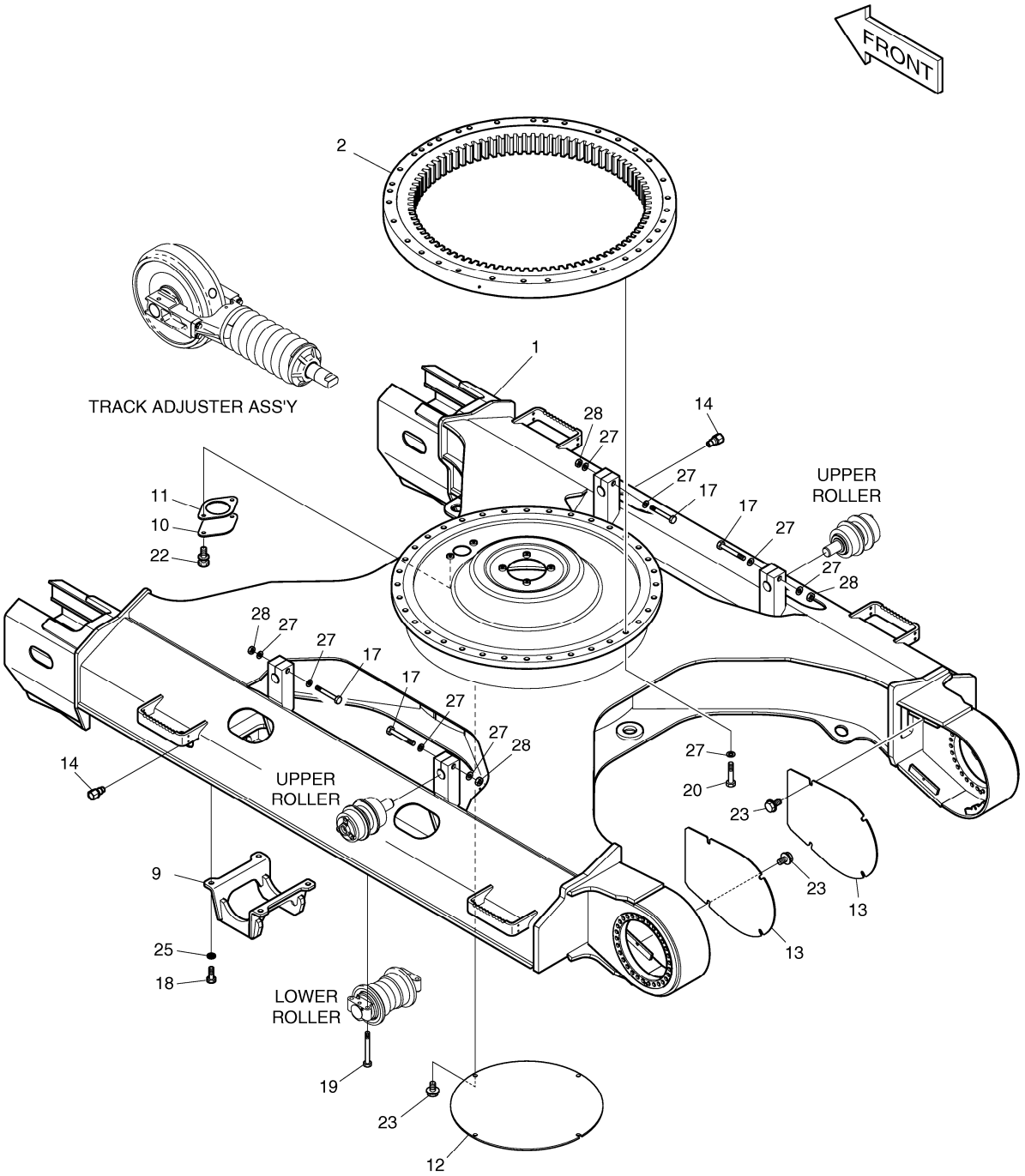

DATE	JUN. 01, 2010
3rd EDITION	

Fig. 2100 TRACK FRAME TRAIN DE ROULEMENT

Serial No. ;

Key No.	Part No.	Description	Description	Q'ty	S.C	Serial No.	ICA	Replaceable part	
								Part No.	Q'ty
2100 --	K1039703B	TRACK ASS`Y	TRAIN	-	D	5001-5693			
	650105-00059	UNDERCARRIAGE ASSY	TRAIN	-	D	5694-			
1	604-00277H	FRAME;TRACK	CHASSIS	1		5001-5693	Y	160617-00115	1
	160617-00115	FRAME,TRACK	CHASSIS	1		5694-			
2	109-00162A	BEARING;SWING	PALIER D'ORIENTATION	1					
9	142-00126A	GUARD;TRACK	GARDE	4		5001-5795	I	200112-00022	4
	200112-00022	GUARD,TRACK	GARDE	4		5796-			
10	621-02938B	COVER	COUVERTURE	1					
11	180-00463	PACKING	EMBALLAGE	1					
12	621-03166	COVER	COUVERTURE	1					
13	621-03167	COVER;MOTOR	COUVERTURE	2					
14	422-00055	VALVE;GREASE	VALVE	2					
17	S0571166	BOLT	BOULON	4					
18	S0721466	BOLT M16X1.5X40	BOULON	16					
19	S0765966	BOLT	BOULON	72					
20	S0770266	BOLT M20X1.5X70	BOULON	36					
22	DS0025016	BOLT;SET	BOULON	2					
23	DS0025019	BOLT;SET	BOULON	12					
25	S5102903	WASHER	RONDELLE	16					
27	2114-9012A	WASHER;HARD	RONDELLE	44					
28	S4013133	NUT	ECROU	4					

DATE	JUN. 01, 2010
3rd EDITION	

Fig. 2110 TRAVEL DEVICE
SYSTEME D'TRANSLATION

Serial No. ;

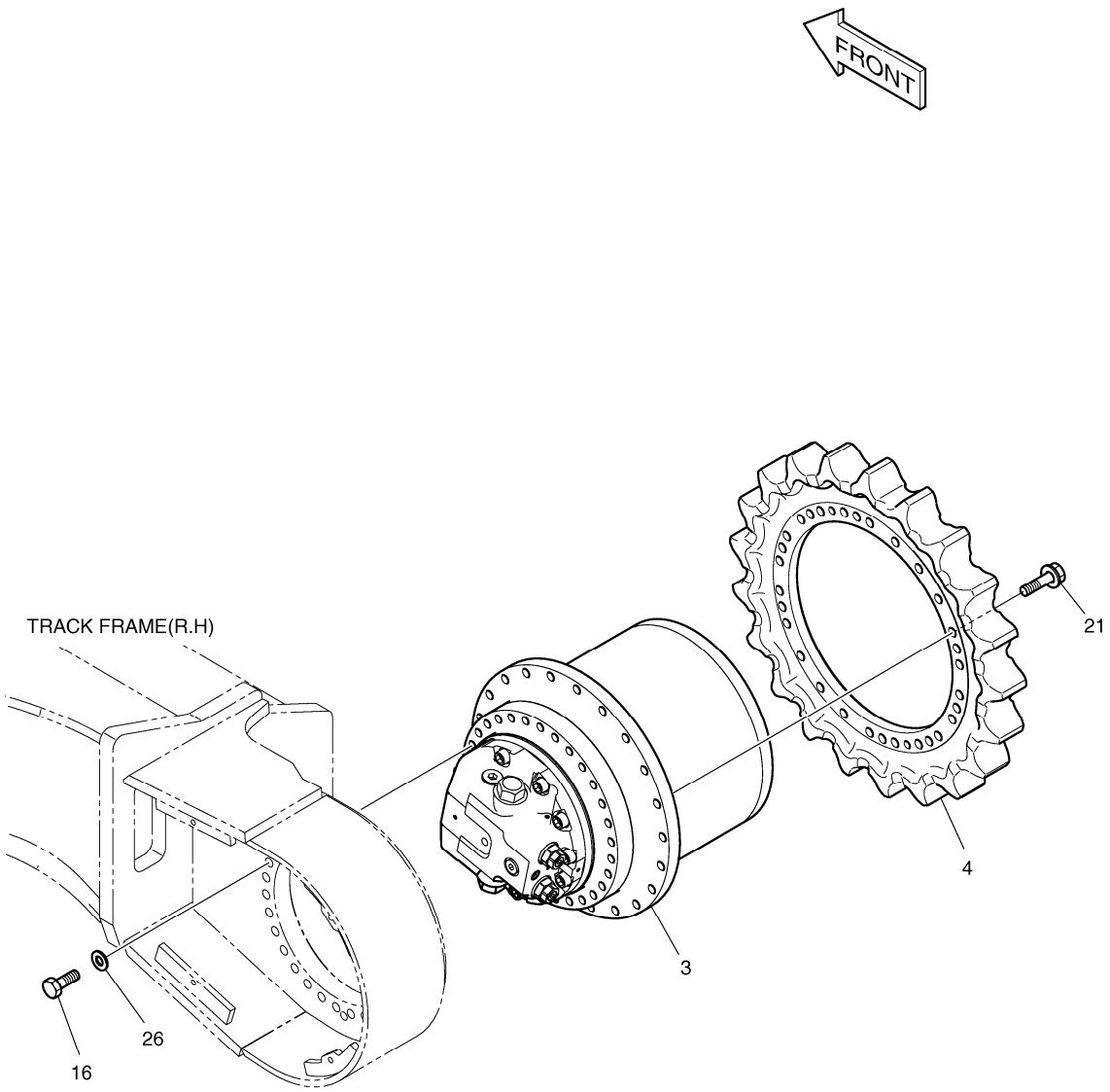

DATE	JUN. 01, 2010
3rd EDITION	

Fig. 2110 TRAVEL DEVICE SYSTEME D'TRANSLATION

Serial No. ;

Key No.	Part No.	Description	Description	Q'ty	S.C	Serial No.	ICA	Replaceable part	
								Part No.	Q'ty
2110 --	K1039703B	TRACK ASS`Y	TRAIN	-	D				
3	K1037757	TRAVEL DEVICE	SIGNALISATEUR	2					
4	K1000682	SPROCKET	COURONNE DENTEE	2					
16	S0565666	BOLT M16X2.0X70	BOULON	60					
21	120-00050B	BOLT;FLANGE	BOULON	60					
26	2114-1816A	WASHER	RONDELLE	60					

DATE	JUN. 01, 2010
3rd EDITION	

Fig. 2120 IDLER BARBOTIN

Serial No. ;

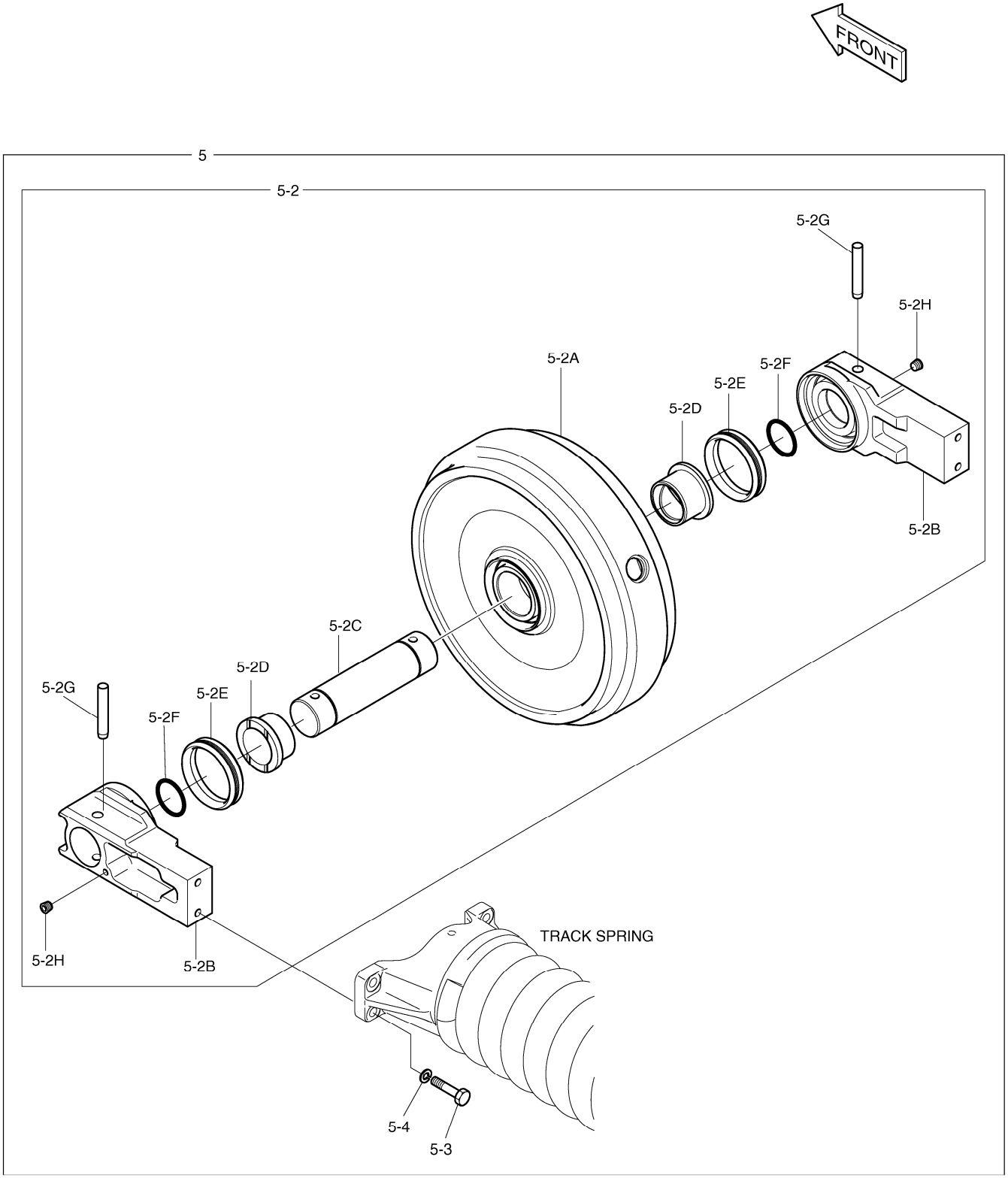

DATE	JUN. 01, 2010
3rd EDITION	

Fig. 2120 IDLER BARBOTIN

Serial No. ;

Key No.	Part No.	Description	Description	Q'ty	S.C	Serial No.	ICA	Replaceable part	
								Part No.	Q'ty
2120 --	K1039703B	TRACK ASS`Y	TRAIN	-	D				
5	K1039702	ADJUSTER ASS`Y	SUPPORT	2		5001-5813	I	200101-00033	2
	200101-00033	ADJUSTER ASS'Y,TRACK	TENDEUR DE CHENILLE	2		5814-			
5-2	270-00063B	. IDLER ASS`Y	. ENSEMBLE BARBOTIN	1		5001-5813	I	200102-00052	1
	200102-00052	. IDLER ASS'Y	. ENSEMBLE BARBOTIN	1		5814-			
5-2A	-	.. BODY	.. CORPS	1	D				
5-2B	271-00026	.. SUPPORT	.. SUPPORT	2		5001-5813	I	140204-00005	2
	140204-00005	.. SUPPORT	.. APPUI	2		5814-			
5-2C	2220-1013	.. AXLE	.. ESSIEU	1					
5-2D	K1036466	.. BUSHING	.. BUSHING	2					
5-2E	2180-9020	.. SEAL;GROUP	.. CACHET	2					
5-2F	S8010700	.. O-RING	.. JOINT CIRCULAIRE	2					
5-2G	2123-1011	.. PIN	.. GOUPILLE	2					
5-2H	2181-1116D2	.. PLUG	.. BOUCHON	2					
5-3	S0565466	. BOLT	. BOULON	4					
5-4	S5102903	. WASHER	. RONDELLE	4					

DATE	JUN. 01, 2010
3rd EDITION	

Fig. 2130 TRACK SPRING TENDEUR DE CHENILLE

Serial No. ;

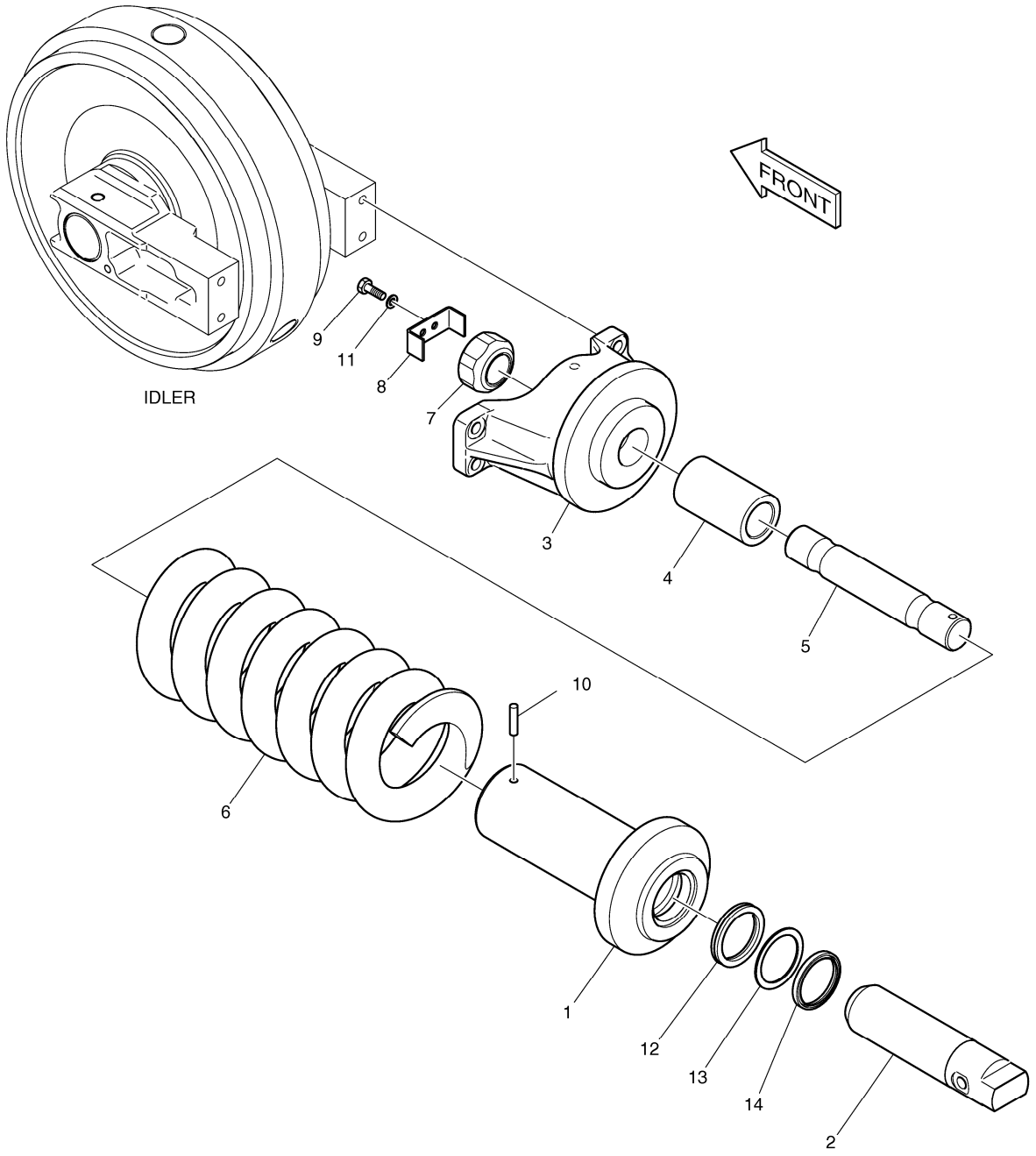

DATE	JUN. 01, 2010
3rd EDITION	

Fig. 2130 TRACK SPRING
TENDEUR DE CHENILLE

Serial No. ;

Key No.	Part No.	Description	Description	Q'ty	S.C	Serial No.	ICA	Replaceable part	
								Part No.	Q'ty
2130 --	K1038864	TRACK SPRING	RESSORT DE VOIE	2					
1	K1038865	BODY	CORPS	1					
2	K1039450	ROD;PISTON	TIGE	1					
3	K1039451	BRACKET	SUPPORT	1					
4	K1039452	SPACER	ENTRETOISE	1					
5	K1039453	SHAFT	AXE	1					
6	2129-1236	SPRING	RESSORT	1					
7	K1024956	NUT	ECROU	1					
8	621-03707	PLATE	PLAQUE	1					
9	S0512263	BOLT M10X1.5X30	BOULON	2					
10	S5741250	PIN;SPRING	GOUPILLE	1					
11	S5102603	WASHER	RONDELLE	2					
12	-	PACKING	EMBALLAGE	1	K				
13	-	RING;BACK UP	ANNEAU	1	K				
14	-	SEAL;DUST	CACHET	1	K				
*	K9006882	SEAL KIT;TRACK SPRING	KIT DE JOINT	1					

DATE	JUN. 01, 2010
3rd EDITION	

Fig. 2140 UPPER ROLLER
GALET SUPERIEUR

Serial No. ;

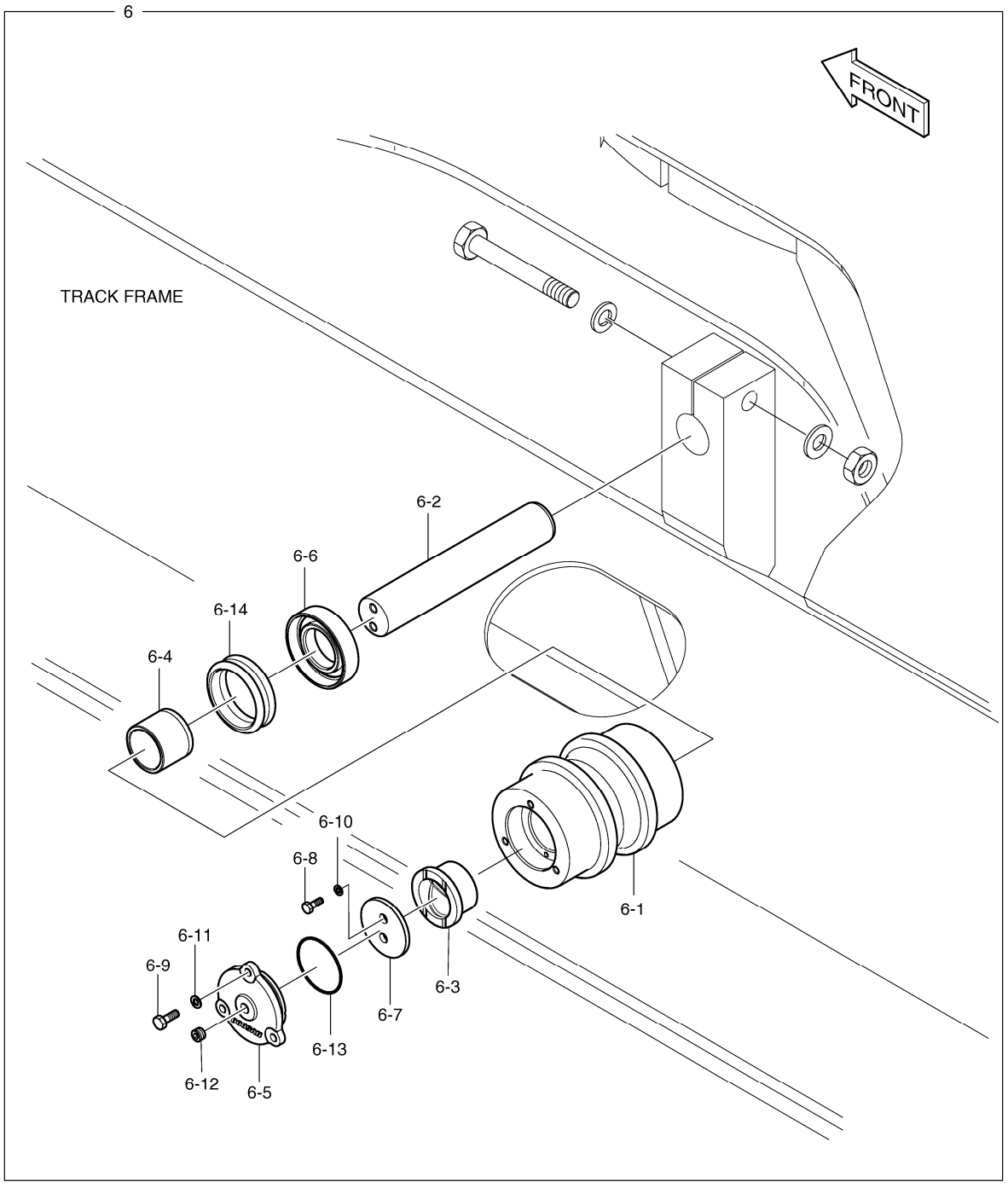

DATE	JUN. 01, 2010
3rd EDITION	

Fig. 2140 UPPER ROLLER GALET SUPERIEUR

Serial No. ;

Key No.	Part No.	Description	Description	Q'ty	S.C	Serial No.	ICA	Replaceable part	
								Part No.	Q'ty
2140 --	K1039703B	TRACK ASS`Y	TRAIN	-	D				
6	K1037728	ROLLER;UPPER	GALET	4		5001-5813	I	200105-00022	4
	200105-00022	ROLLER,UPPER	GALET SUPERIEUR	4		5814-			
6-1	-	. BODY	. CORPS	1	D				
6-2	K1038389	. SHAFT	. ARBRE	1		5001-5813	I	130712-00208	1
	130712-00208	. SHAFT	. AXE	1		5814-			
6-3	K1038390	. BUSHING	. BUSHING	1					
6-4	K1038391	. BUSHING	. BUSHING	1					
6-5	K1038392	. COVER	. COUVERTURE	1					
6-6	K1038393	. RING;THRUST	. BAGUE	1		5001-5813	I	401003-00094	1
	401003-00094	. RING,THRUST	. ANNEAU	1		5814-			
6-7	K1038394	. WASHER	. RONDELLE	1					
6-8	S0712061	. BOLT	. BOULON	2					
6-9	S0508861	. BOLT M8X1.25X20	. BOULON	3					
6-10	S5102603	. WASHER	. RONDELLE	2					
6-11	S5102503	. WASHER	. RONDELLE	3					
6-12	2181-1116D2	. PLUG	. BOUCHON	1					
6-13	S8010650	. O-RING	. JOINT CIRCULAIRE	1					
6-14	2180-9005B	. SEAL;FLOATING	. CACHET	2					

DATE	JUN. 01, 2010
3rd EDITION	

Fig. 2150 LOWER ROLLER GALET INFERIEUR

Serial No. ;

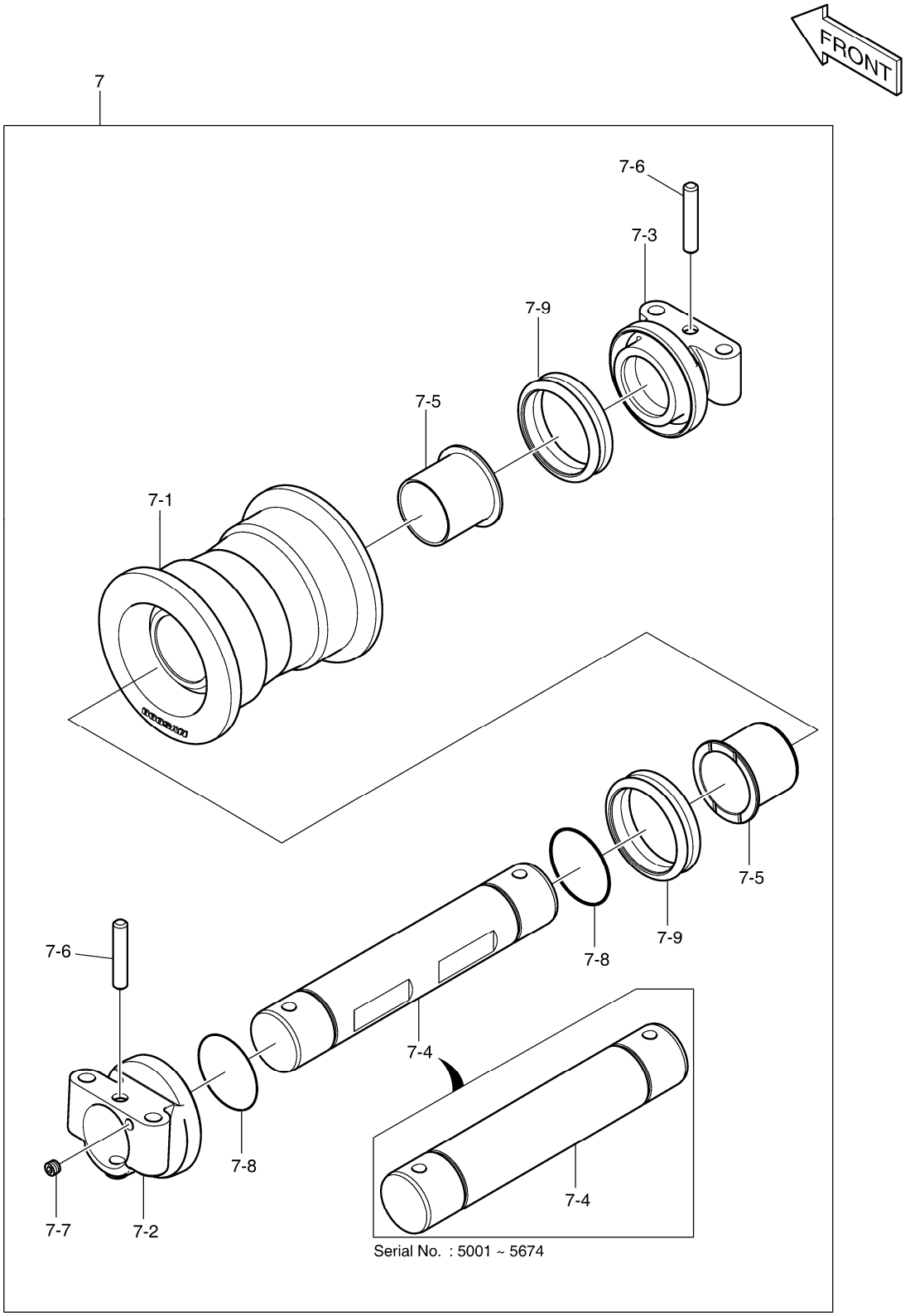

DATE	JUN. 01, 2010
3rd EDITION	

Fig. 2150 LOWER ROLLER GALET INFERIEUR

Serial No. ;

Key No.	Part No.	Description	Description	Q'ty	S.C	Serial No.	ICA	Replaceable part	
								Part No.	Q'ty
2150 --	K1039703B	TRACK ASS`Y	TRAIN	-	D	5001-5674			
	650105-00059	UNDERCARRIAGE ASSY	TRAIN	-	D	5675-			
7	K1037713A	ROLLER;LOWER	GALET	18		5001-5674	Y	200104-00021	18
	200104-00021	ROLLER,LOWER	GALET	18		5675-			
7-1	-	. BODY	. CORPS	1	D				
7-2	K1038383A	. COLLAR	. COLLIER	1		5001-5674			
	110917-00013	. COLLAR;A	. BRIDE	1		5675-			
7-3	K1038386A	. COLLAR	. COLLIER	1		5001-5674			
	110917-00014	. COLLAR;B	. BRIDE	1		5675-			
7-4	K1038387	. SHAFT	. AXE	1		5001-5674	I	130712-00125	1
	130712-00125	. SHAFT	. AXE	1		5675-			
7-5	K1013713A	. BUSHING	. BUSHING	2					
7-6	K1013714	. PIN	. GOUPILLE	2					
7-7	2181-1116D2	. PLUG	. BOUCHON	1					
7-8	S8010600	. O-RING	. JOINT CIRCULAIRE	2					
7-9	2180-9098	. SEAL;FLOATING	. CACHET	2					

DATE	JUN. 01, 2010
3rd EDITION	

Fig. 2160 CENTER JOINT
JOINT CENTRAL

Serial No. ;

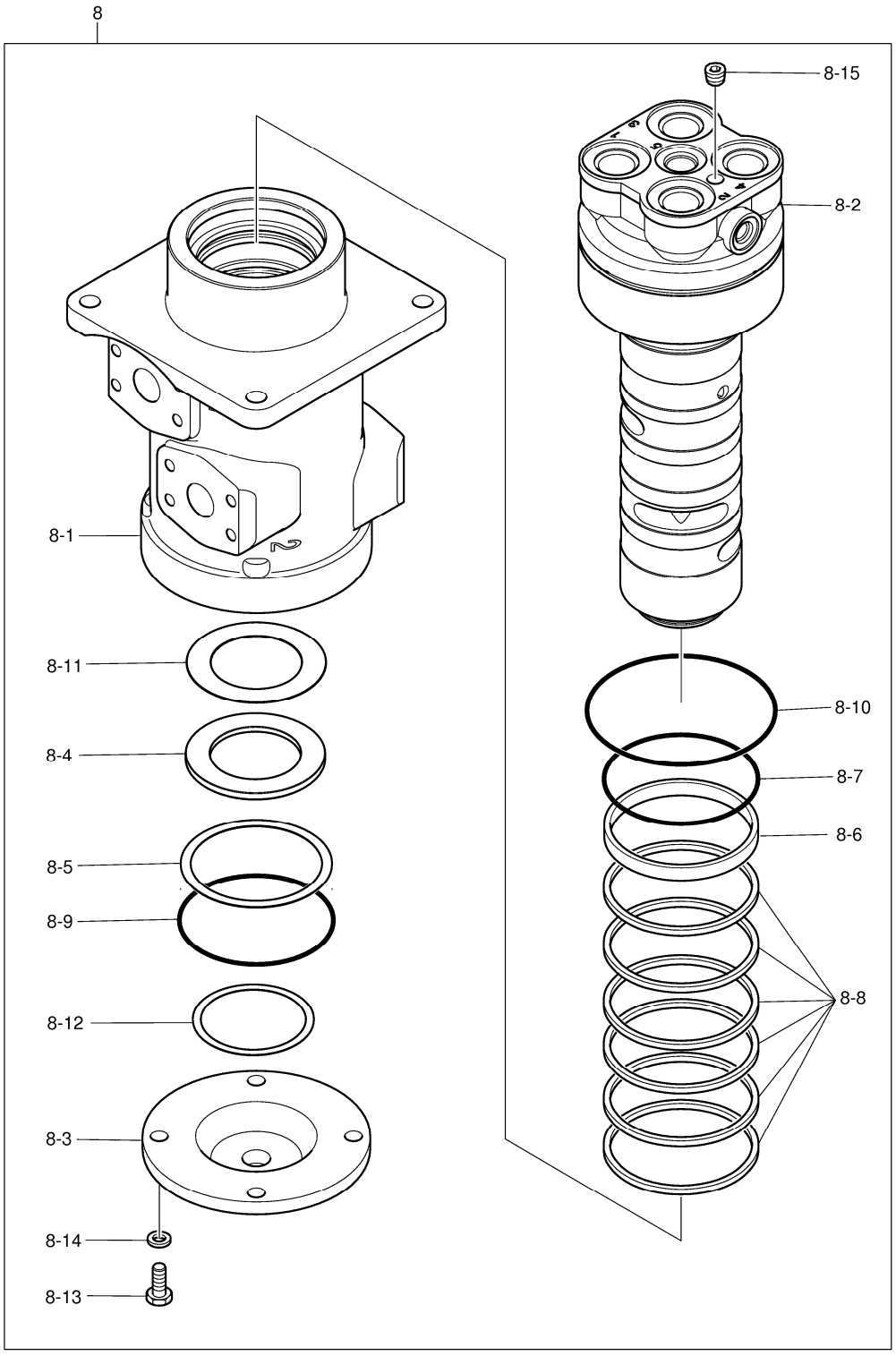

Fig. 2160 CENTER JOINT
JOINT CENTRAL

Serial No. ;

Key No.	Part No.	Description	Description	Q'ty	S.C	Serial No.	ICA	Replaceable part	
								Part No.	Q'ty
2160 --	K1039703B	TRACK ASS`Y	TRAIN	-	D				
8	K1038790	JOINT;CENTER	JOINT	1					
8-1	K1038791	. HUB	. HUB	1					
8-2	K1038792	. SPINDLE	. AXE	1					
8-3	K1038793	. COVER	. COUVERTURE	1					
8-4	K1038794	. SPACER	. ENTRETOISE	1					
8-5	S6500600	. RING;RETAINER	. ANNEAU	1					
8-6	-	. RING;WEAR	. ANNEAU	1	K				
8-7	S8000901	. O-RING	. JOINT CIRCULAIRE	1	K				
8-8	-	. SEAL;SLIPPER	. CACHET	6	K				
8-9	S8011000	. O-RING	. JOINT CIRCULAIRE	1	K				
8-10	S8001050	. O-RING	. JOINT CIRCULAIRE	1	K				
8-11	K9006884	. SHIM	. CALE	1					
8-12	K9006883	. SHIM	. CALE	1					
8-13	S0515253	. BOLT M12X1.75X30	. BOULON	4					
8-14	S5102703	. WASHER;SPRING	. RONDELLE	4					
8-15	2181-1116D2	. PLUG	. BOUCHON	1					
*	K1038790KT	SEAL KIT;CENTER JOINT	KIT DE JOINT	1					

DATE	JUN. 01, 2010
3rd EDITION	

Fig. 2170 TRACK SHOE ASS'Y - 600G
MAILLON DE CHAINE

Serial No. ;

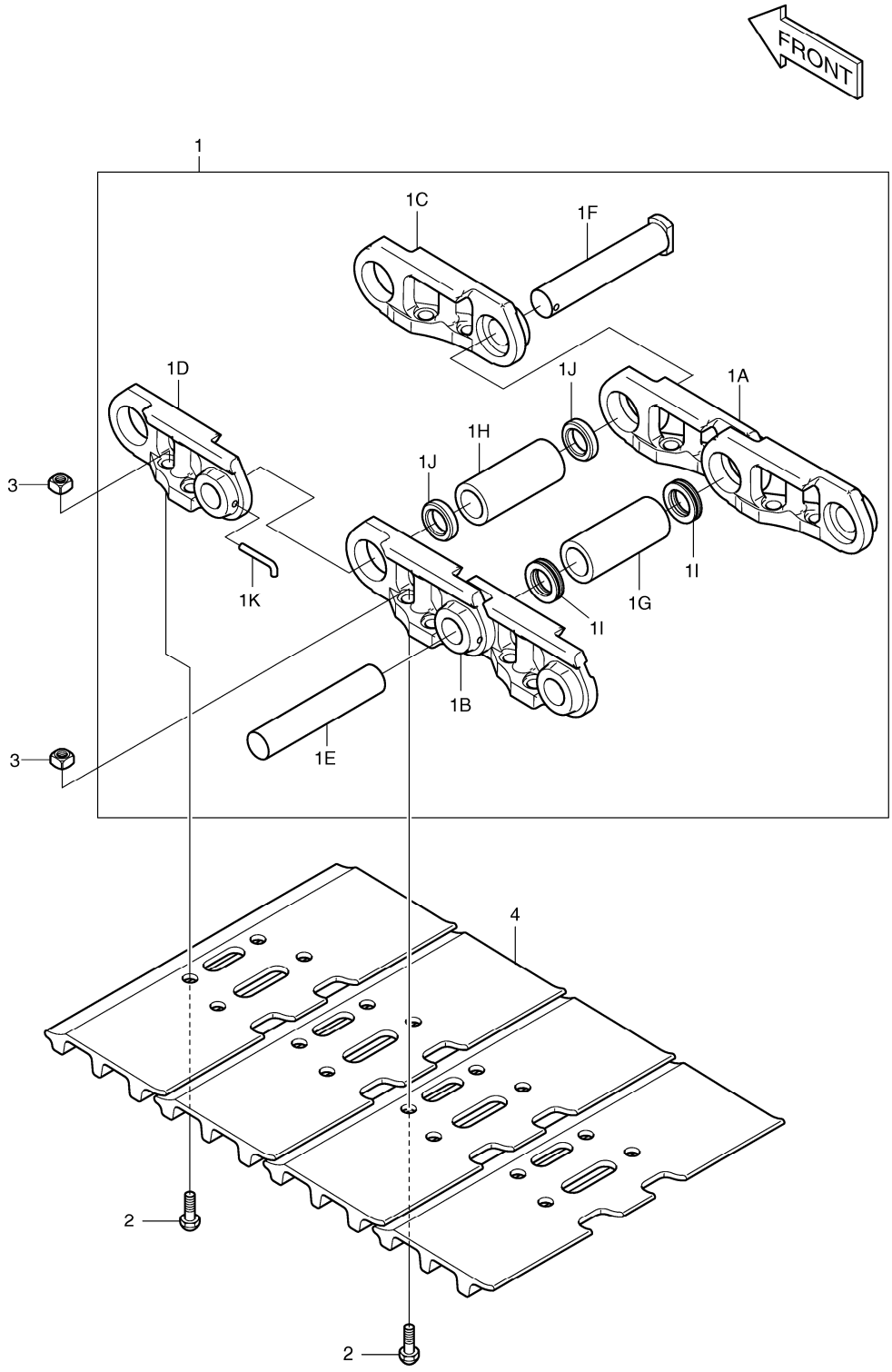

DATE	JUN. 01, 2010
3rd EDITION	

Fig. 2170 TRACK SHOE ASS'Y - 600G
MAILLON DE CHAINE

Serial No. ;

Key No.	Part No.	Description	Description	Q'ty	S.C	Serial No.	ICA	Replaceable part	
								Part No.	Q'ty
2170 --	K1038365	TRACK SHOE ASS`Y	MAILLON DE CHAINE	2					
1	K1038366	TRACK LINK ASS`Y	ENSEMBLE MAILLON DE CI	1					
1A	K1038367	. LINK;TRACK(RH)	. PIECE DE JONCTION	48					
1B	K1038368	. LINK;TRACK(LH)	. PIECE DE JONCTION	48					
1C	K1038429	. LINK;MASTER(RH)	. PIECE DE JONCTION	1					
1D	K1038430	. LINK;MASTER(LH)	. PIECE DE JONCTION	1					
1E	K1038369	. PIN	. GOUPILLE	48					
1F	K1038370	. PIN;MASTER	. GOUPILLE	1					
1G	K1038371	. BUSHING	. DOUILLE	48					
1H	K1038372	. BUSHING;MASTER	. DOUILLE	1					
1I	K1038373	. SEAL;DUST	. CACHET	96					
1J	K1038374	. SPACER	. ENTRETOISE	2					
1K	K1038376	. PIN;SMALL	. GOUPILLE	1					
2	K1038377	BOLT	BOULON	196					
3	K1038378	NUT	ECROU	196					
4	K1038379	SHOE 600mm	CHAUSSURE	49					

DATE	JUN. 01, 2010
3rd EDITION	

Fig. 2180 TRAVEL PIPING
CONDUITES DE TRANSLATION

Serial No. ;

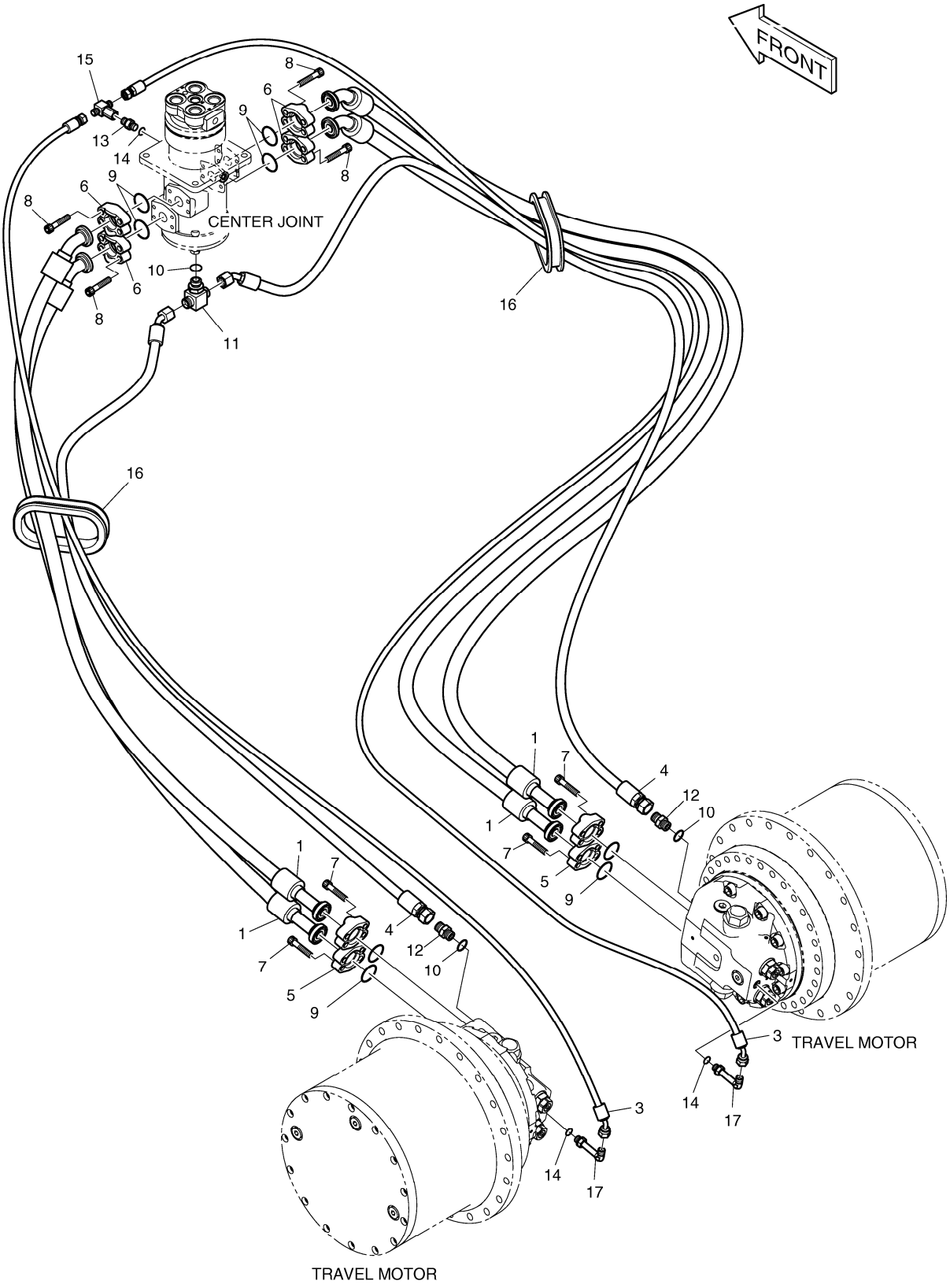

DATE	JUN. 01, 2010
3rd EDITION	

Fig. 2180 TRAVEL PIPING
CONDUITES DE TRANSLATION

Serial No. ;

Key No.	Part No.	Description	Description	Q'ty	S.C	Serial No.	ICA	Replaceable part	
								Part No.	Q'ty
2180 --	K1044576B	TRAVELLING PIPING	TUYAUTERIE DE DEPLACE	-	D				
1	DS2112002	HOSE	TUYAU FLEXIBLE	4					
3	DS2092177	HOSE	TUYAU FLEXIBLE	2					
4	DS2054217	HOSE	TUYAU FLEXIBLE	2					
5	2181-9078	FLANGE	BRIDE	8					
6	2181-9081	FLANGE;SPLIT	BRIDE	8					
7	S2212266	BOLT;SOCKET	BOULON	16					
8	S2215466	BOLT;SOCKET	BOULON	16					
9	2180-1026D19	O-RING	JOINT CIRCULAIRE	8					
10	S8000181	O-RING	JOINT CIRCULAIRE	3					
11	2181-2281D10	TEE	TE	1					
12	2181-1126D6	ADAPTER	ADAPTEUR	2					
13	2181-1126D14	ADAPTER PF1/4	ADAPTEUR	1					
14	S8000111	O-RING	JOINT CIRCULAIRE	3					
15	2181-4125	TEE	TE	1					
16	160-00069	BUSHING;RUBBER	DOUILLE	2					
17	2181-1702D56	ELBOW	COUDE	2					

DATE	JUN. 01, 2010
3rd EDITION	

Fig. 3100 BOOM - 5.7m FLECHE

Serial No. ;

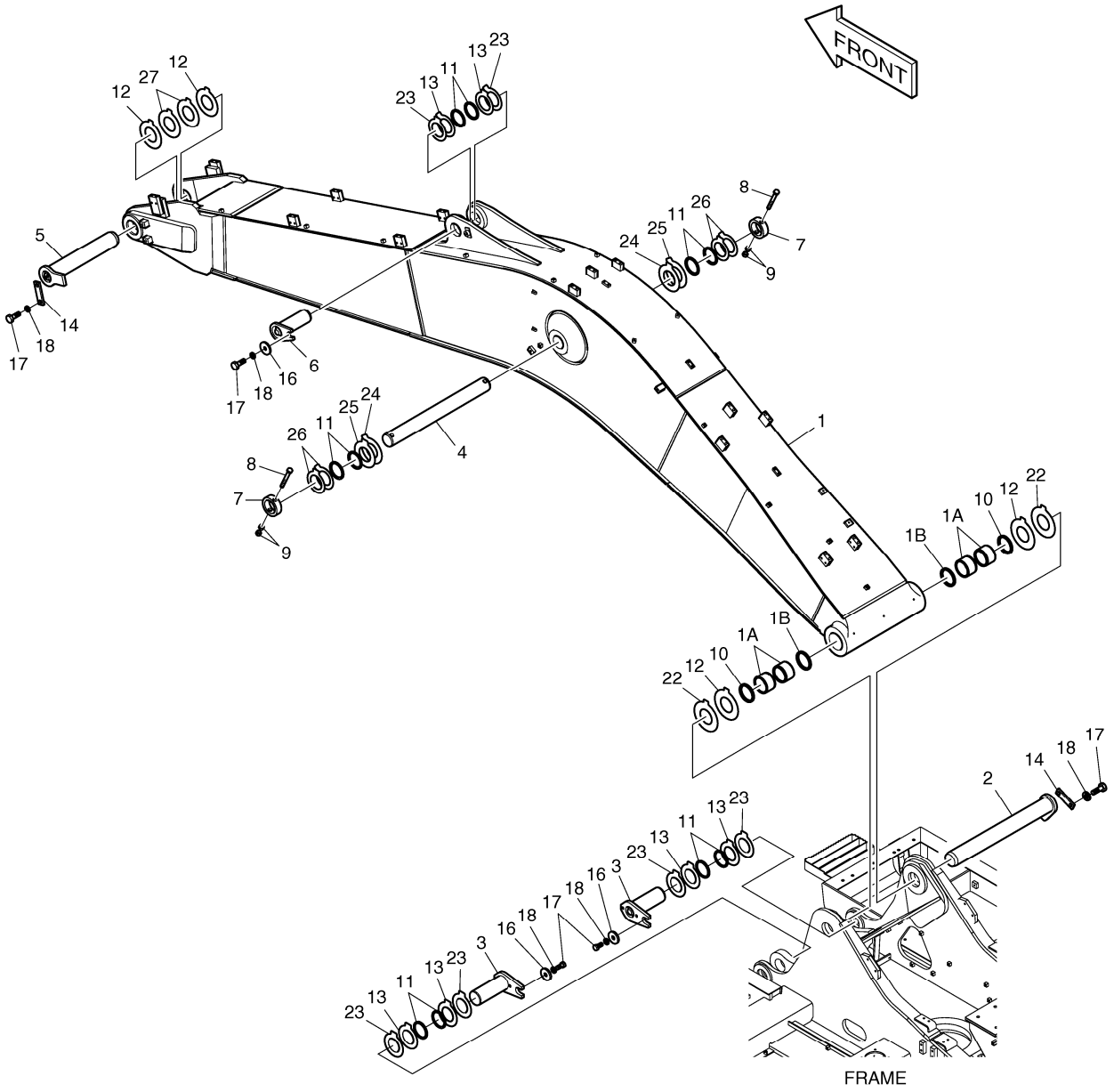

DATE	JUN. 01, 2010
3rd EDITION	

Fig. 3100 BOOM - 5.7m FLECHE

Serial No. ;

Key No.	Part No.	Description	Description	Q'ty	S.C	Serial No.	ICA	Replaceable part	
								Part No.	Q'ty
3100 --	K1037858E	BOOM ASS'Y	FLECHE	-	D	5001-5736			
	230207-00081	BOOM ASS'Y(5.7M)	FLECHE	-	D	5737-			
1	K1037857E	BOOM SUB ASS'Y-5.7M	ENSEMBLE FLECHE	1		5001-5736	I	230211-00054	1
	230211-00054	BOOM,MACHINE;(5.7M)	ENSEMBLE FLECHE	1		5737-			
1A	K1037847A	. BUSHING	. BUSHING	4					
1B	2180-1106BD6	. SEAL;DUST	. CACHET	2					
2	2123-2180G	PIN	GOUPILLE	1					
3	123-00409A	PIN	GOUPILLE	2					
4	K1007253B	PIN	GOUPILLE	1					
5	2123-2185G	PIN	GOUPILLE	1					
6	2123-2187E	PIN	GOUPILLE	1					
7	2116-1531A	STOPPER	TAQUET	2					
8	S0567066	BOLT	BOULON	2					
9	S4012933	NUT	ECROU	4					
10	2180-1106BD6	SEAL;DUST	CACHET	2					
11	2180-1106BD24	SEAL;DUST	CACHET	10					
12	DS7752018	SHIM	CALE	4					
13	DS7752012	SHIM	CALE	6					
14	621-03710A	PLATE;STOPPER	PLAQUE	2					
16	2116-1060D6	STOPPER	TAQUET	3					
17	S0521366	BOLT	BOULON	7					
18	S5102903	WASHER	RONDELLE	7					
22	DS7752017	SHIM	CALE	2					
23	DS7752013	SHIM	CALE	6					
24	DS7752026	SHIM	CALE	2					
25	DS7752027	SHIM	CALE	2					
26	DS7752025	SHIM	CALE	4					
27	DS7752017	SHIM	CALE	2					

DATE	JUN. 01, 2010
3rd EDITION	

Fig. 3110 ARM - 2.9m BALANCIER

Serial No. ;

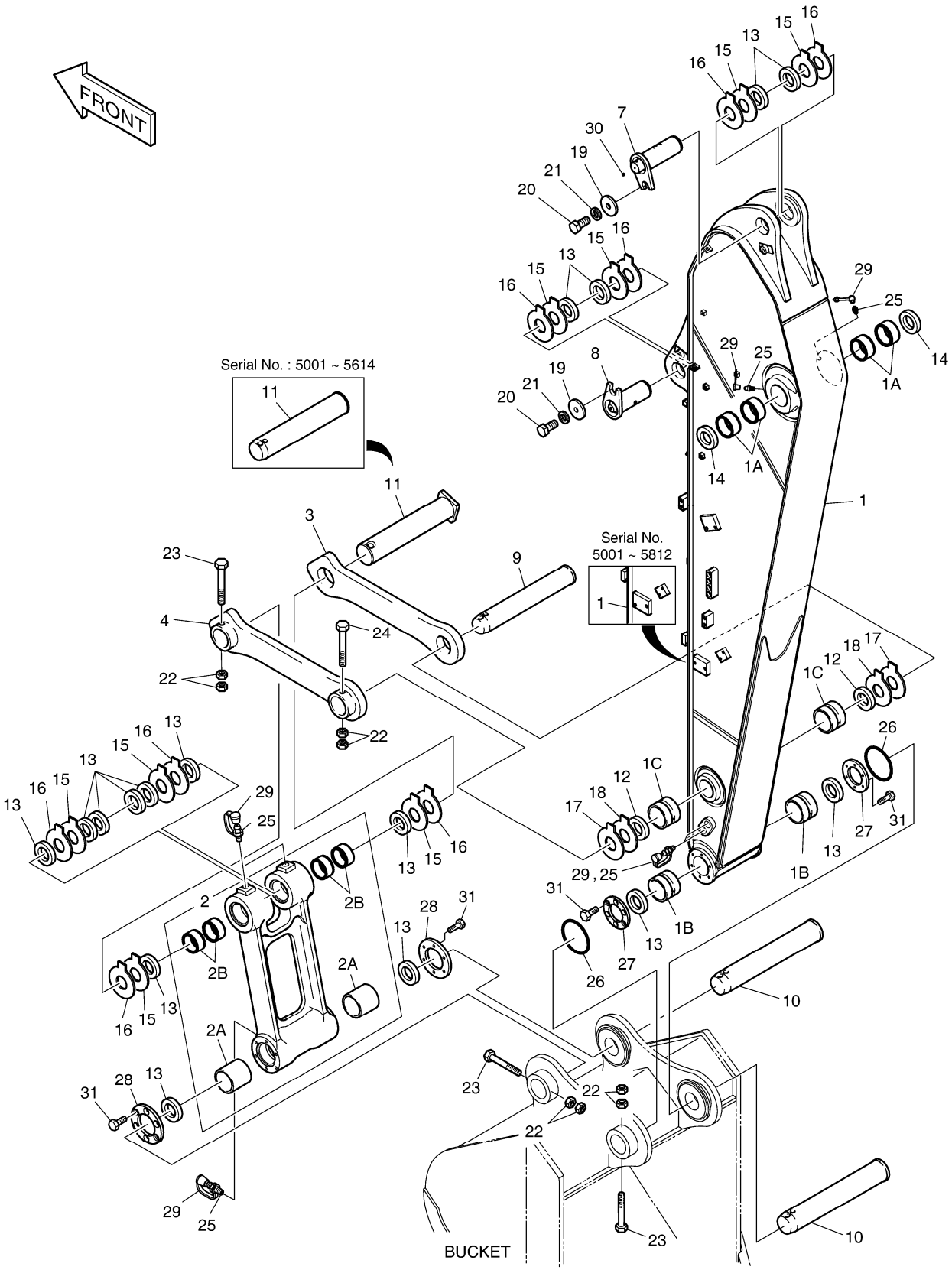

DATE	JUN. 01, 2010
3rd EDITION	

Fig. 3110 ARM - 2.9m BALANCIER

Serial No. ;

Key No.	Part No.	Description	Description	Q'ty	S.C	Serial No.	ICA	Replaceable part	
								Part No.	Q'ty
3110 --	K1037998C	ARM ASS'Y	BALANCIER	-	D	5001-5614			
	230201-00104	ARM ASS'Y;2.9M	BALANCIER	-	D	5615-			
1	K1037999B	ARM SUB ASS'Y-2.9m	ENSEMBLE BALANCIER	1		5001-5812			
	230204-00083A	ARM,MACHINE;2.9M	ENSEMBLE BALANCIER	1		5813-			
1A	K1037848A	. BUSHING	. BUSHING	4					
1B	K1037849A	. BUSHING	. BUSHING	2					
1C	K1037850A	. BUSHING	. BUSHING	2					
2	K1041214A	PUSH LINK ASS'Y	ENSEMBLE DE ARTICULAT	1					
2A	K1037852A	. BUSHING	. BUSHING	2					
2B	K1037851A	. BUSHING	. BUSHING	4					
3	2155-1299B	LINK;GUIDE(R.H)	ARTICULATION	1		5001-5614	Y	101540-00012	1
	101540-00012	LINK,GUIDE(R.H)	ARTICULATION	1		5615-			
4	2155-1300B	LINK;GUIDE(L.H)	LIEN	1					
7	K1046927	PIN	GOUPILLE	1					
8	K1002130A	PIN	GOUPILLE	1					
9	K1007255A	PIN	GOUPILLE	1					
10	2123-2192E	PIN	GOUPILLE	2					
11	K1007256A	PIN	GOUPILLE	1		5001-5614	Y	120501-00130	1
	120501-00130	PIN;BUCKET CYL ROD	GOUPILLE	1		5615-			
12	2180-1106BD4	SEAL;DUST	CACHET	2					
13	2180-1106BD24	SEAL;DUST	CACHET	14					
14	2180-1106BD6	SEAL;DUST	CACHET	2					
15	DS7752012	SHIM	CALE	8					
16	DS7752013	SHIM	CALE	8					
17	DS7752006	SHIM	CALE	2					
18	DS7752007	SHIM	CALE	2					
19	2116-1060D6	STOPPER	TAQUET	2					
20	S0521366	BOLT	BOULON	2					
21	S5102903	WASHER	RONDELLE	2					
22	S4012933	NUT	ECROU	8					
23	DS0001084	BOLT	BOULON	3					
24	DS0001083	BOLT	BOULON	1					
25	S6710041	NIPPLE;GREASE	MAMELON	7					
26	180-00077D5	O-RING	JOINT CIRCULAIRE	2					
27	K1000911	SPACER	ENTRETOISE	2					
28	K1000912B	SPACER	ENTRETOISE	2					
29	160-00020	CAP;GREASE NIPPLE	CHAPEAU	7					
30	2181-1116D1	PLUG	BOUCHON	1					

DATE	JUN. 01, 2010
3rd EDITION	

Fig. 3110 ARM - 2.9m BALANCIER

Serial No. ;

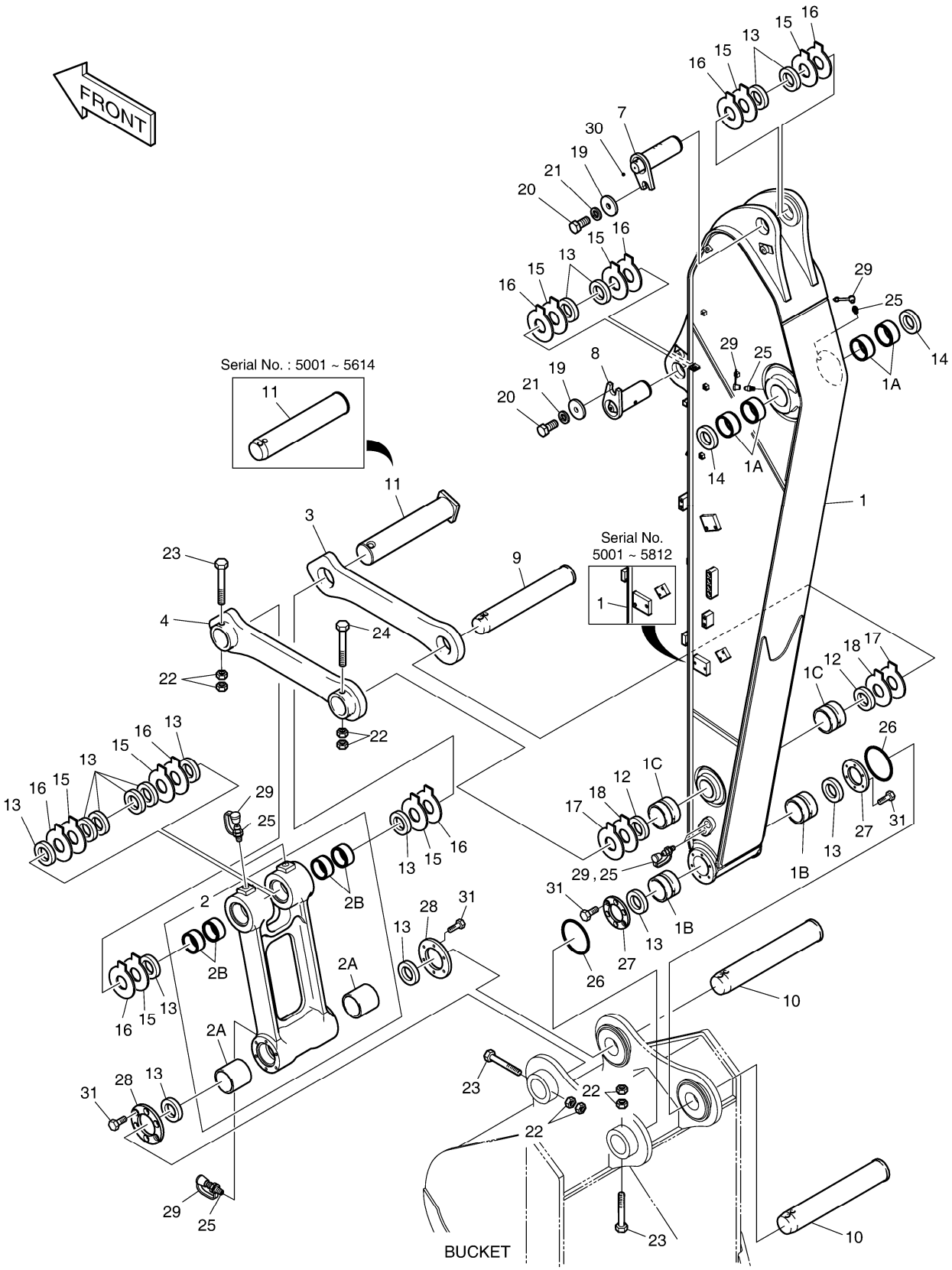

Fig. 3110 ARM - 2.9m BALANCIER

Serial No. ;

Key No.	Part No.	Description	Description	Q'ty	S.C	Serial No.	ICA	Replaceable part	
								Part No.	Q'ty
3110 -31	S0712066	BOLT	BOULON	24					

DATE	JUN. 01, 2010
3rd EDITION	

Fig. 3120 BUCKET ASS'Y - 0.8m³ ENSEMBLE DE GODET

Serial No. ;

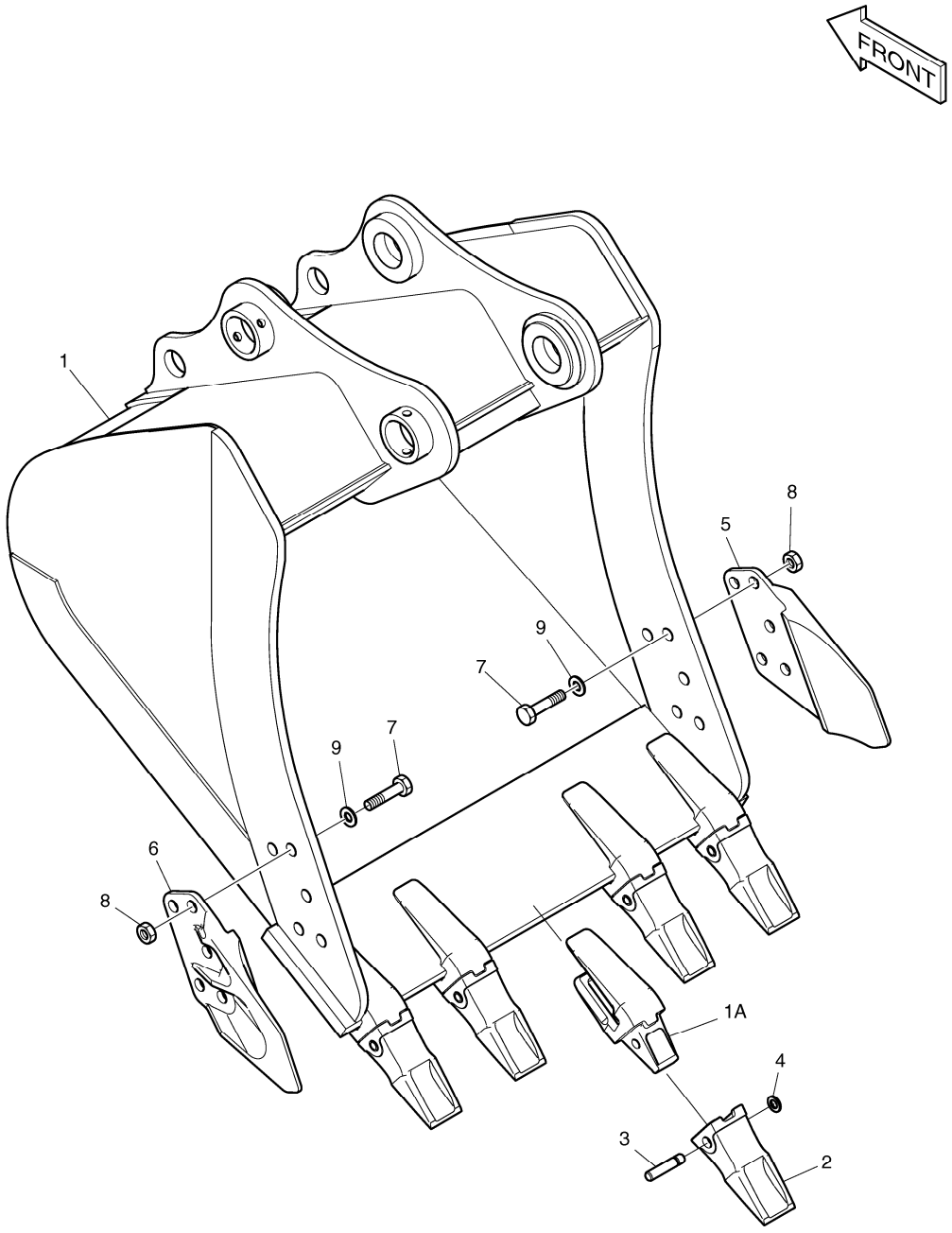

DATE	JUN. 01, 2010
3rd EDITION	

Fig. 3120 BUCKET ASS'Y - 0.8m³ ENSEMBLE DE GODET

Serial No. ;

Key No.	Part No.	Description	Description	Q'ty	S.C	Serial No.	ICA	Replaceable part	
								Part No.	Q'ty
3120 --	K1000321G	BUCKET ASS'Y-0.8㎥	GODET	1					
1	K1000322G	BUCKET-0.8㎥	GODET	1					
1A	2713-1218A	. ADAPTER;TOOTH	. ADAPTEUR	5					
2	K1038006A	TOOTH	DENT	5					
3	2705-1020	PIN;LOCKING	GOUPILLE	5					
4	2114-1848A	WASHER;LOCKING	RONDELLE	5					
5	2713-1059A	CUTTER;SIDE(R.H)	COUPEUR	1					
6	2713-1060A	CUTTER;SIDE(L.H)	COUPEUR	1					
7	S0574661	BOLT M24X3.0X65	BOULON	10					
8	S4013333	NUT	ECROU	10					
9	2114-1831A	WASHER;HARDEN	RONDELLE	10					

DATE	JUN. 01, 2010
3rd EDITION	

Fig. 3130 BOOM PIPING
CONDUITES DE FLECHE

Serial No. ;

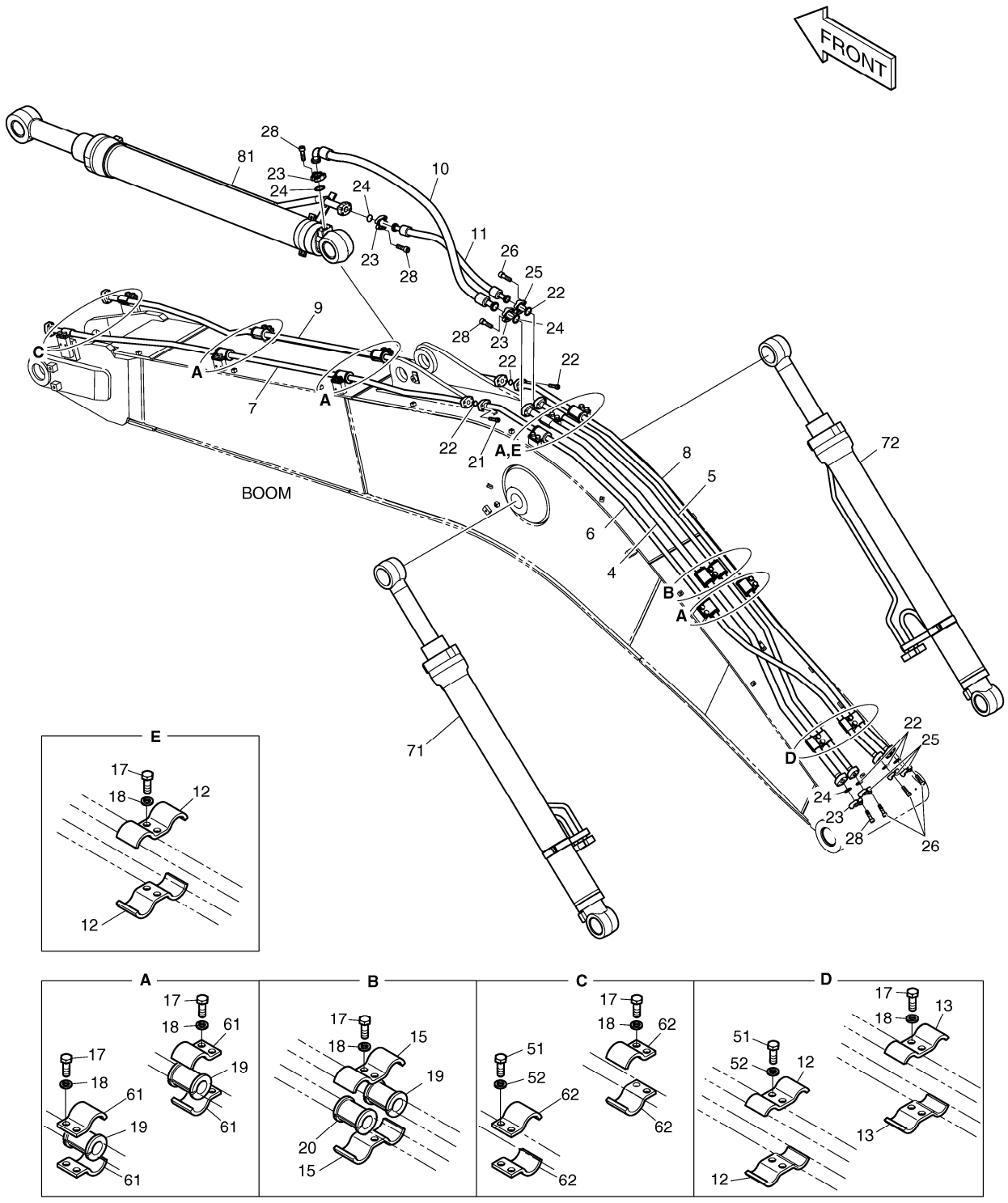

DATE	JUN. 01, 2010
3rd EDITION	

Fig. 3130 BOOM PIPING CONDUITES DE FLECHE

Serial No. ;

Key No.	Part No.	Description	Description	Q'ty	S.C	Serial No.	ICA	Replaceable part	
								Part No.	Q'ty
3130 --	K1041795	BOOM PIPING	TUYAUTERIE DE PERCHE	-	D				
4	K1033273	PIPE	TUYAU	1					
5	K1033274	PIPE	TUYAU	1					
6	K1033265	PIPE	TUYAU	1					
7	K1033267	PIPE	TUYAU	1					
8	K1033266	PIPE	TUYAU	1					
9	K1033268	PIPE	TUYAU	1					
10	DS2040610	HOSE	TUYAU	1					
11	DS2038190	HOSE	TUYAU	1					
12	124-00367	CLAMP;PIPE	BRIDE	4					
13	124-00300	CLAMP;PIPE	BRIDE	2					
15	124-00368	CLAMP;PIPE	BRIDE	2					
17	S0562766	BOLT	BOULON	24					
18	S5102803	WASHER;SPRING	RONDELLE	24					
19	161-00574	RUBBER	LE CAOUTCHOUC	9					
20	161-00281	RUBBER	LE CAOUTCHOUC	1					
21	S2212566	BOLT;SOCKET	BOULON	8					
22	2180-1026D2	O-RING	JOINT CIRCULAIRE	6					
23	2181-9078	FLANGE	BRIDE	8					
24	2180-1026D19	O-RING	JOINT CIRCULAIRE	4					
25	2181-9079	FLANGE	BRIDE	8					
26	S2212366	BOLT;SOCKET M10X1.5X35	BOULON	20					
28	S2212466	BOLT;SOCKET M10X1.5X40	BOULON	12					
51	S0562766	BOLT	BOULON	4					
52	S5102803	WASHER;SPRING	RONDELLE	4					
61	124-00302	CLAMP;PIPE	BRIDE	16					
62	124-00303	CLAMP;PIPE	BRIDE	4					
71	K1044989B	CYLINDER;BOOM (LH)	CYLINDRE	1					
72	K1044990B	CYLINDER;BOOM (RH)	CYLINDRE	1					
81	K1044991A	CYLINDER;ARM	VERIN DE BALANCIER	1					

DATE	JUN. 01, 2010
3rd EDITION	

Fig. 3140 LUBRICATION PIPING - BOOM
LUBRIFICATION

Serial No. ;

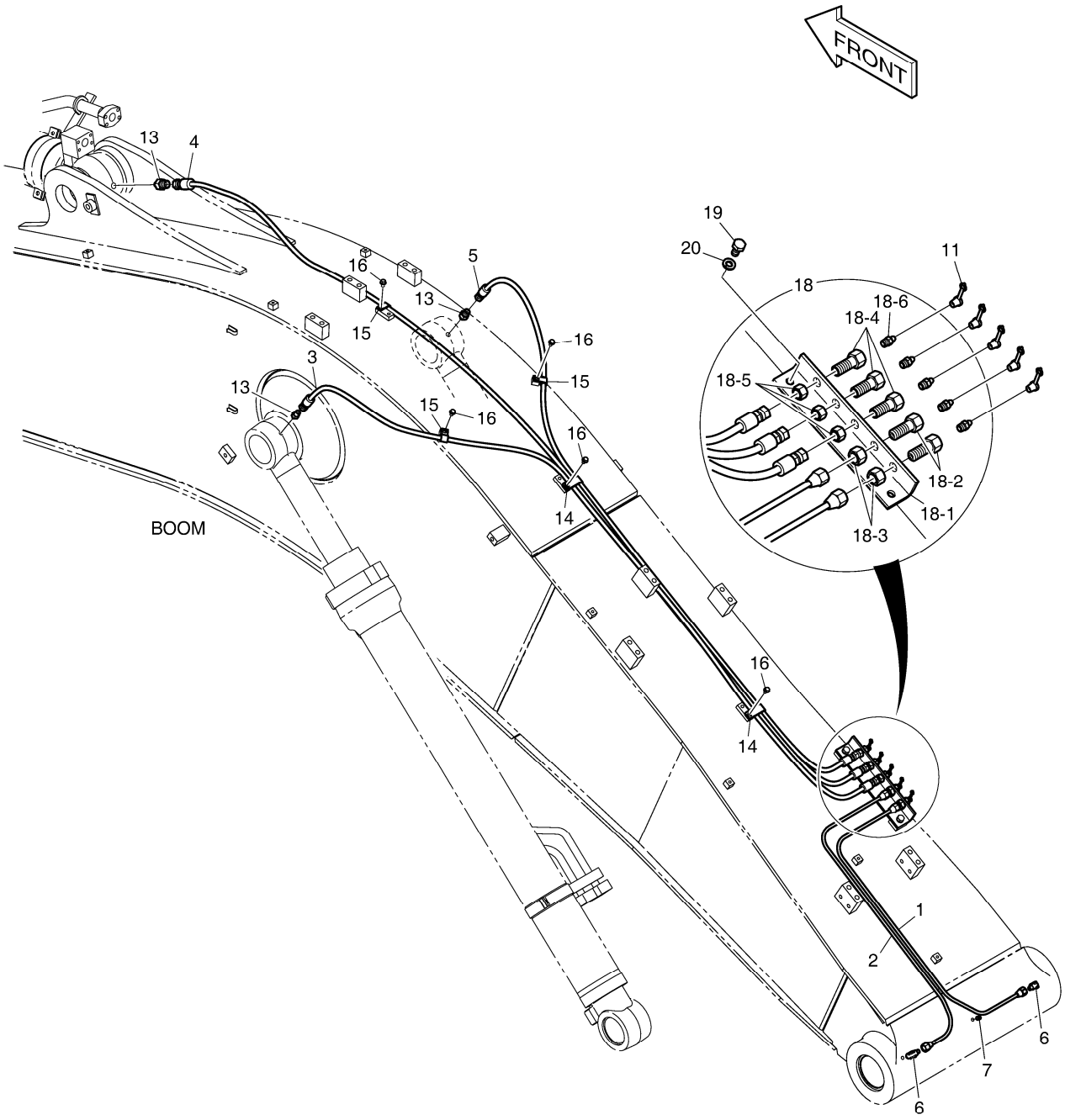

DATE	JUN. 01, 2010
3rd EDITION	

Fig. 3140 LUBRICATION PIPING - BOOM LUBRIFICATION

Serial No. ;

Key No.	Part No.	Description	Description	Q'ty	S.C	Serial No.	ICA	Replaceable part	
								Part No.	Q'ty
3140 --	K1041834	LUBRICATION PIPING-BOOM(5.7	LUBRIFICATION	-	D				
1	K1038814	PIPE	TUYAU	1					
2	K1038815	PIPE	TUYAU	1					
3	DS2053864	HOSE	TUYAU	1					
4	2184-1045D126	HOSE	TUYAU	1					
5	2184-1045D254	HOSE	TUYAU	1					
6	2181-1925	ELBOW	COUDE	2					
7	S3524403	PLUG	BOUCHON	1					
11	160-00020	CAP;GREASE NIPPLE	CHAPEAU	5					
13	2181-4112	ADAPTER	ADAPTEUR	3					
14	124-00199D4	CLIP	AGRAFE	2					
15	2124-1353D2	CLIP	AGRAFE	3					
16	K1001029	BOLT	BOULON	5					
18	K1038003	GREASE PLATE ASS'Y	TUYAUTERIE DE GRAISSE	1					
18-1	K1037887	. PLATE	. PLAQUE	1					
18-2	181-00525	. REDUCER	. REDUCTEUR	2					
18-3	S4032833	. NUT	. ECROU	2					
18-4	181-00103	. REDUCER	. REDUCTEUR	3					
18-5	121-00006	. NUT	. ECROU	3					
18-6	S6710041	. NIPPLE;GREASE	. MAMELON	5					
19	S0511866	BOLT	BOULON	2					
20	S5102603	WASHER	RONDELLE	2					

DATE	JUN. 01, 2010
3rd EDITION	

Fig. 3150 ARM PIPING
CONDUITES DE BALANCIER

Serial No. ;

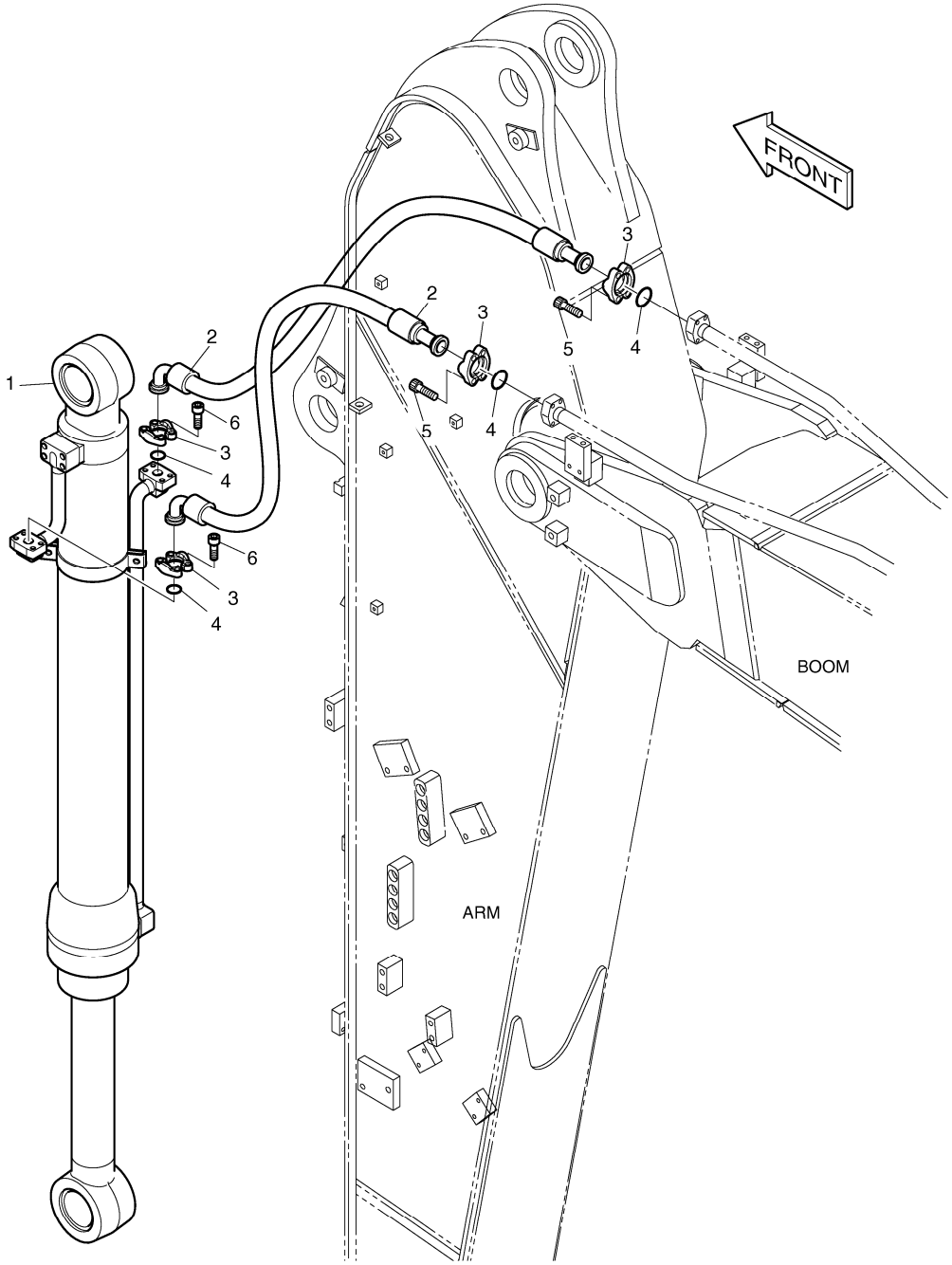

DATE	JUN. 01, 2010
3rd EDITION	

Fig. 3150 ARM PIPING
CONDUITES DE BALANCIER

Serial No. ;

Key No.	Part No.	Description	Description	Q'ty	S.C	Serial No.	ICA	Replaceable part	
								Part No.	Q'ty
3150 --	K1041817A	ARM PIPING	TUYAUTERIE DU BRAS	-	D				
1	K1041218A	BUCKET CYLINDER	VERIN DE GODET	1					
2	2184-1100D178	HOSE PF3/4-1450L	TUYAU	2					
3	2181-9079	FLANGE	BRIDE	8					
4	2180-1026D2	O-RING	JOINT CIRCULAIRE	4					
5	S2212366	BOLT;SOCKET M10X1.5X35	BOULON	8					
6	S2212266	BOLT;SOCKET	BOULON	8					

DATE	JUN. 01, 2010
3rd EDITION	

Fig. 3160 LUBRICATION PIPING - ARM
LUBRIFICATION

Serial No. ;

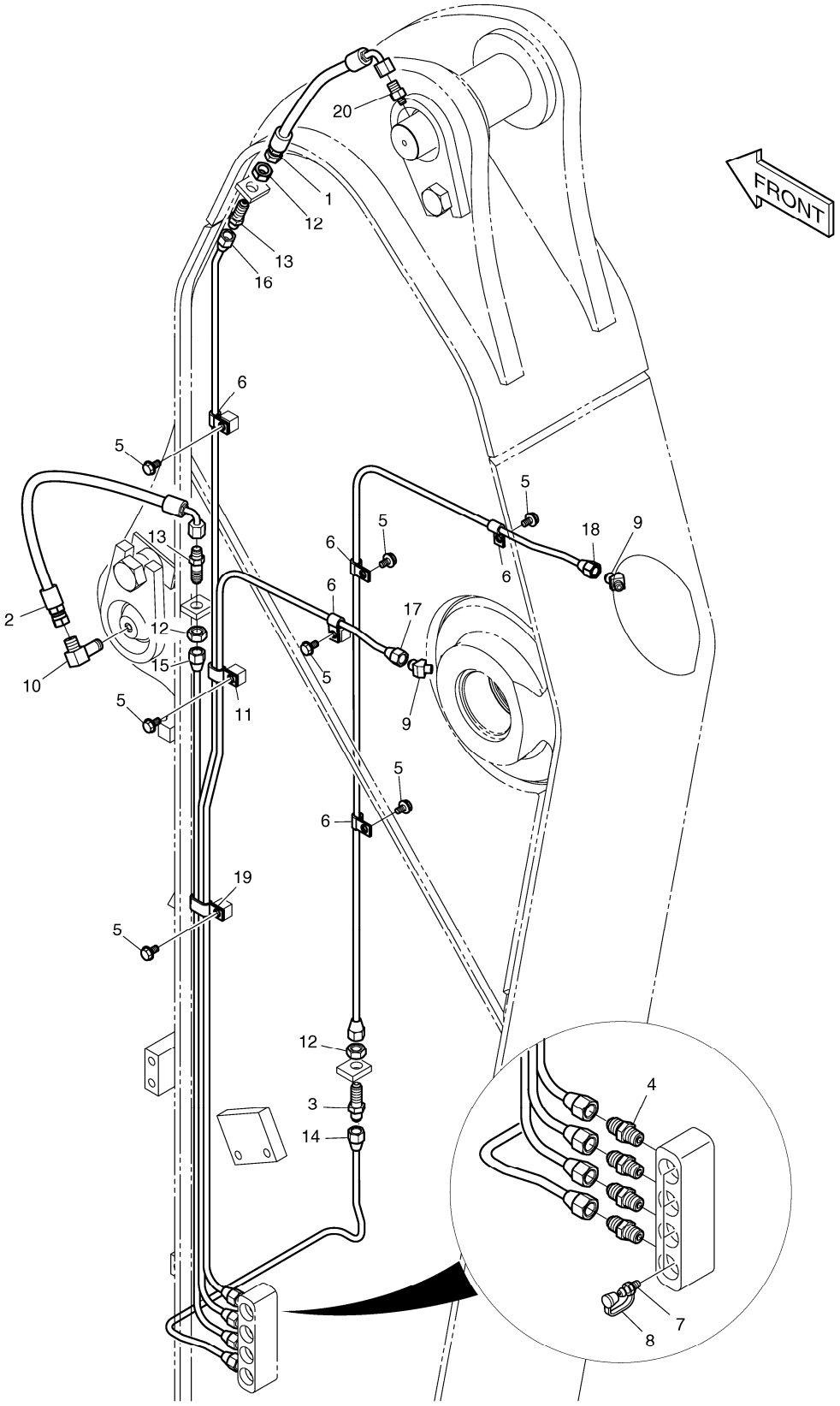

DATE	JUN. 01, 2010
3rd EDITION	

Fig. 3160 LUBRICATION PIPING - ARM LUBRIFICATION

Serial No. ;

Key No.	Part No.	Description	Description	Q'ty	S.C	Serial No.	ICA	Replaceable part	
								Part No.	Q'ty
3160 --	K1047299	LUBRICATION PIPING-ARM	LUBRIFICATION	-	D				
1	DS2055849	HOSE	TUYAU	1					
2	2184-1036D11	HOSE	TUYAU	1					
3	DS2225009	ADAPTER	ADAPTEUR	1					
4	2181-1184	ADAPTER	ADAPTEUR	4					
5	K1001029	BOLT	BOULON	7					
6	DS2802023	CLIP	AGRAFE	5					
7	S6710041	NIPPLE;GREASE	MAMELON	4					
8	160-00020	CAP;GREASE NIPPLE	CHAPEAU	4					
9	K1010730	ELBOW	COUDE	2					
10	2181-1111D11	ELBOW	COUDE	1					
11	DS2805007	CLIP	AGRAFE	1					
12	S4032833	NUT	ECROU	3					
13	2181-1923D12	ADAPTER	ADAPTEUR	2					
14	K1047301	PIPE	TUYAU	1					
15	K1047302	PIPE	TUYAU	1					
16	K1047303	PIPE	TUYAU	1					
17	K1047304	PIPE	TUYAU	1					
18	K1047305	PIPE	TUYAU	1					
19	DS2805008	CLIP	AGRAFE	1					
20	2181-4112	ADAPTER	ADAPTEUR	1					

DATE	JUN. 01, 2010
3rd EDITION	

Fig. 4100 MAIN PUMP POMPE

Serial No. ;

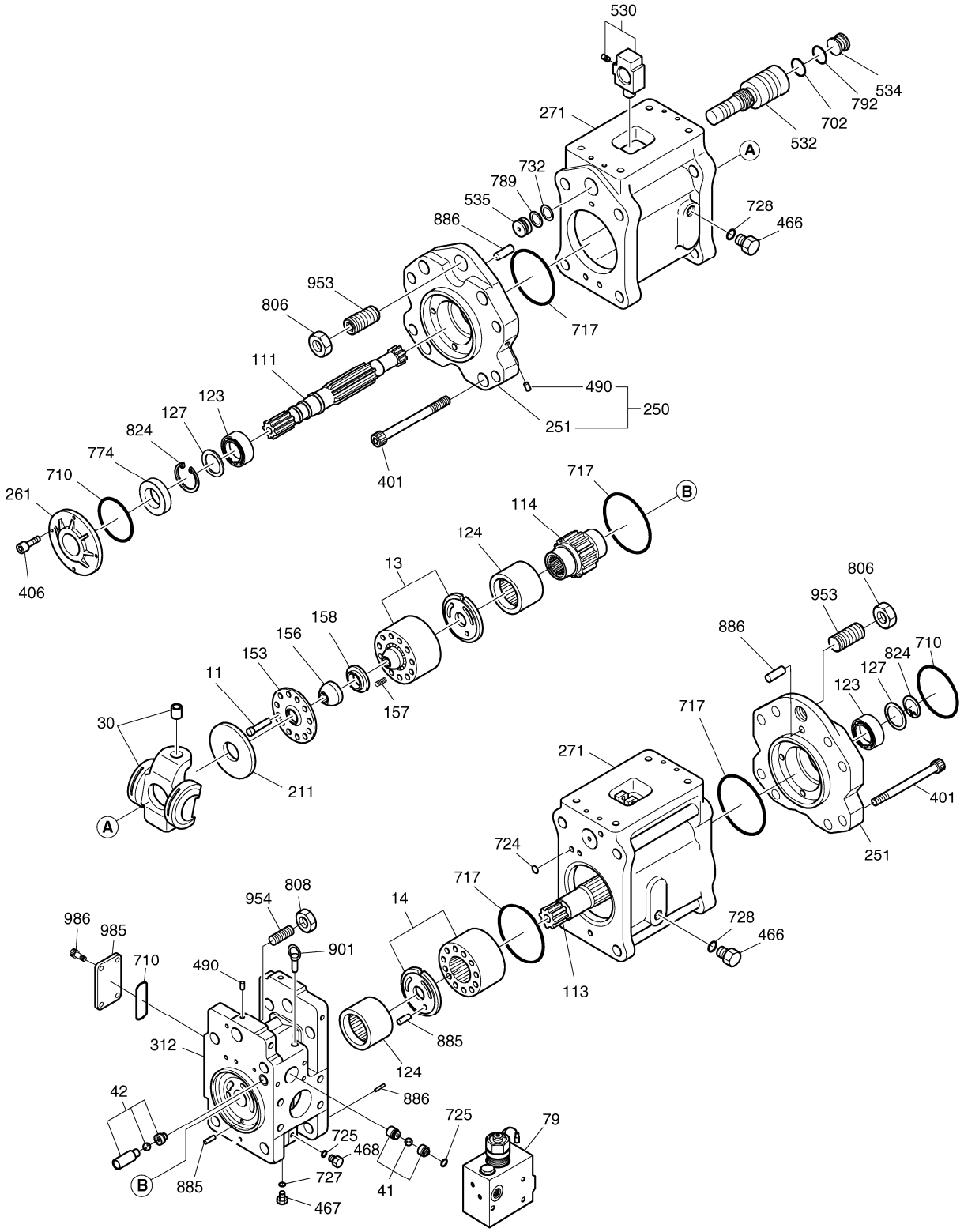

DATE	JUN. 01, 2010
3rd EDITION	

Fig. 4100 MAIN PUMP POMPE

Serial No. ;

Key No.	Part No.	Description	Description	Q'ty	S.C	Serial No.	ICA	Replaceable part	
								Part No.	Q'ty
4100 --	K1000698G	PUMP;MAIN	POMPE DE BATI PRINCIPAL	1		5001-5730			
	K1000698E	MAIN PUMP	POMPE DE BATI PRINCIPAL	1		5731-			
11	1.409-00167	PISTON & SHOE ASS`Y	PISTON	2					
13	K9007364	CYLINDER ASS`Y(R)	CYLINDRE	1		5001-5730			
	1.451-00063	CYLINDER ASS'Y(R)	CYLINDRE	1		5731-			
14	K9007365	CYLINDER ASS`Y(L)	CYLINDRE	1		5001-5730			
	1.451-00060	CYLINDER ASS'Y(L)	CYLINDRE	1		5731-			
30	284-00005	SWASH PLATE ASS`Y	CLAPOTIS	2					
41	K9001849	CHECK 1 ASS`Y	CONTROLE	2					
42	K9001850	CHECK 2 ASS`Y	CONTROLE	2					
79	420-00127	VALVE;PROPORTIONAL	VANNE	1					
111	1.405-00060	SHAFT;DRIVING(F)	AXE	1					
113	405-00008	SHAFT;DRIVING(R)	AXE	1					
114	101-00006	GEAR	VITESSE	1					
123	109-00097	BEARING;ROLLER	ROULEMENT	2					
124	109-00098	BEARING;SPACER	ROULEMENT	2					
127	1.109-00124	SPACER;BEARING	ENTRETOISE	4					
153	1.412-00083	PLATE;PUSH	PLAQUE	2					
156	408-00013	BUSH;SPHERICAL	BAGUE	2					
157	129-00044	SPRING;CYLINDER	RESSORT	18					
158	114-00228	SPACER	ENTRETOISE	2					
211	412-00006	PLATE;SHOE	PLAQUE	2					
250	1.197-00005	SUPPORT KIT	APPUI	1					
251	195-00463	SUPPORT	APPUI	2					
261	1.430-00212	COVER;SEAL(F)	COUVERCLE	1					
271	-	CASING;PUMP	CARTER	2	D				
312	-	BLOCK;VALVE	BLOC	1	D				
401	S2229071	BOLT;SOCKET	BOULON	8					
406	S2208871	BOLT;SOCKET	BOULON	4					
466	2181-1950D5	PLUG PF3/4	BOUCHON	4					
467	2181-1950D2	PLUG	BOUCHON	2					
468	2181-1890D2	PLUG	BOUCHON	2					
490	181-00519	PLUG	BOUCHON	18	D				
530	123-00150	TILTING PIN ASS`Y	GOUPILLE	2					
532	409-00003	PISTON;SERVO	PISTON	2					
534	416-00004	STOPPER(L)	TAQUET	2					
535	416-00005	STOPPER(S)	TAQUET	2					
702	S8010355	O-RING	JOINT CIRCULAIRE	2	K				

DATE	JUN. 01, 2010
3rd EDITION	

Fig. 4100 MAIN PUMP POMPE

Serial No. ;

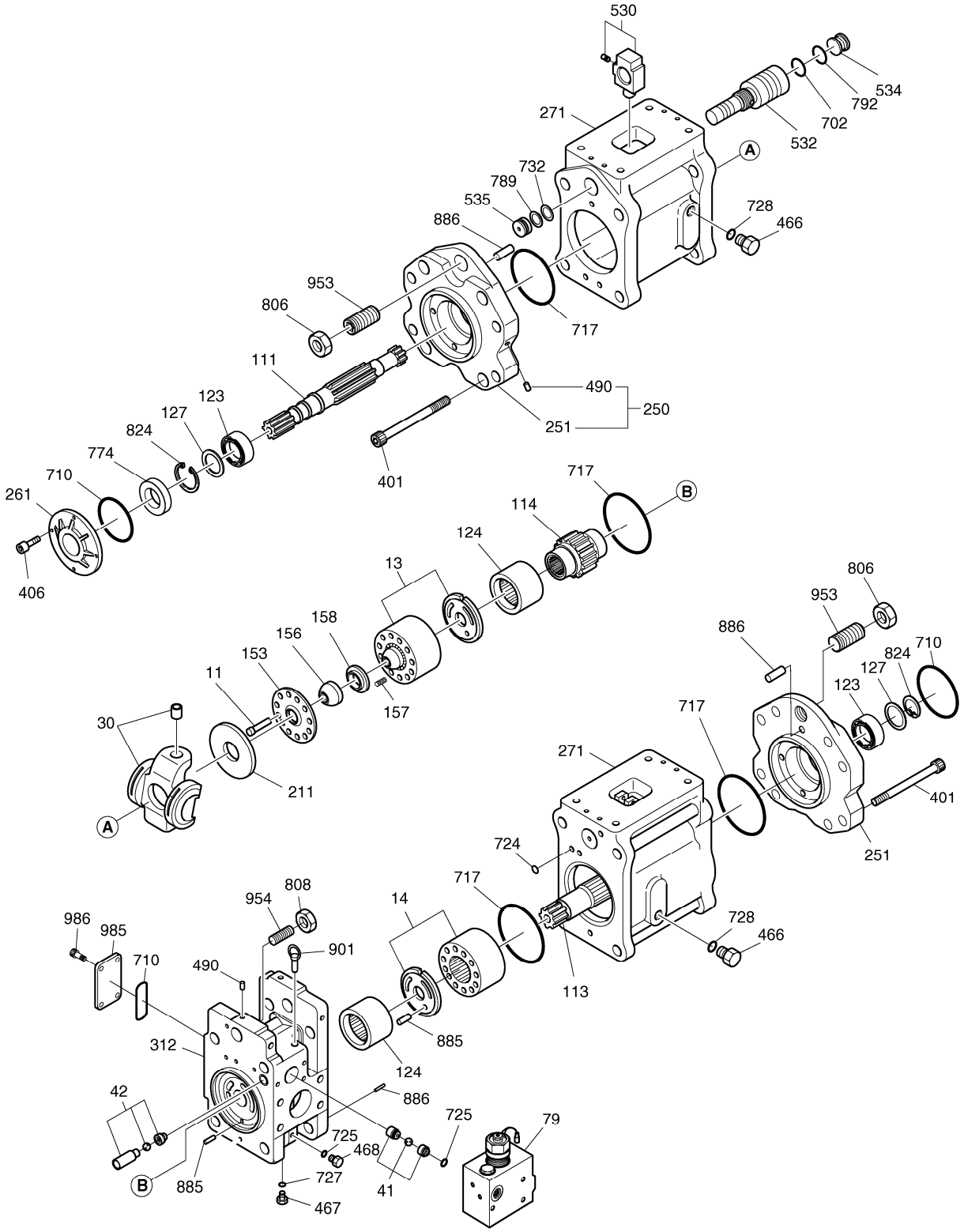

DATE	JUN. 01, 2010
3rd EDITION	

Fig. 4100 MAIN PUMP POMPE

Serial No. ;

Key No.	Part No.	Description	Description	Q'ty	S.C	Serial No.	ICA	Replaceable part	
								Part No.	Q'ty
4100 -710	S8010951	O-RING	JOINT CIRCULAIRE	3	K				
717	S8011451	O-RING	JOINT CIRCULAIRE	4	K				
724	S8000081	O-RING	JOINT CIRCULAIRE	16	K				
725	S8000111	O-RING	JOINT CIRCULAIRE	2	K				
727	S8000141	O-RING	JOINT CIRCULAIRE	2					
728	S8000241	O-RING	JOINT CIRCULAIRE	4	K				
732	S8000185	O-RING	JOINT CIRCULAIRE	2	K				
774	K9001851	SEAL;OIL	JOINT D'HUILE	1	K				
789	S8060181	RING;BACKUP	ANNEAU	2	K				
792	S8090350	RING;BACK-UP	ANNEAU	2	K				
806	S4012933	NUT	ECROU	2					
808	S4013133	NUT	ECROU	2					
824	S6500400	RING;RETAINING	ANNEAU	2					
885	123-00151	PIN D8X12L	GOUPILLE	2					
886	S5740870	PIN;SPRING	GOUPILLE	4					
901	S3140025	BOLT;EYE	BOULON	2					
953	S3527808	SCREW;SET M16X30L	VIS	2					
954	120-00130	SCREW;ADJUST	VIS	2					
985	K9001852	COVER	COUVERCLE	1					
986	S2212061	BOLT;SOCKET M10X1.5X25	BOULON A 6 PANS CREUX	4					
*	K9001902	SEAL KIT;MAIN PUMP+REG.	JOINT	1					

DATE	JUN. 01, 2010
3rd EDITION	

Fig. 4110 REGULATOR
REGULATEUR

Serial No. ;

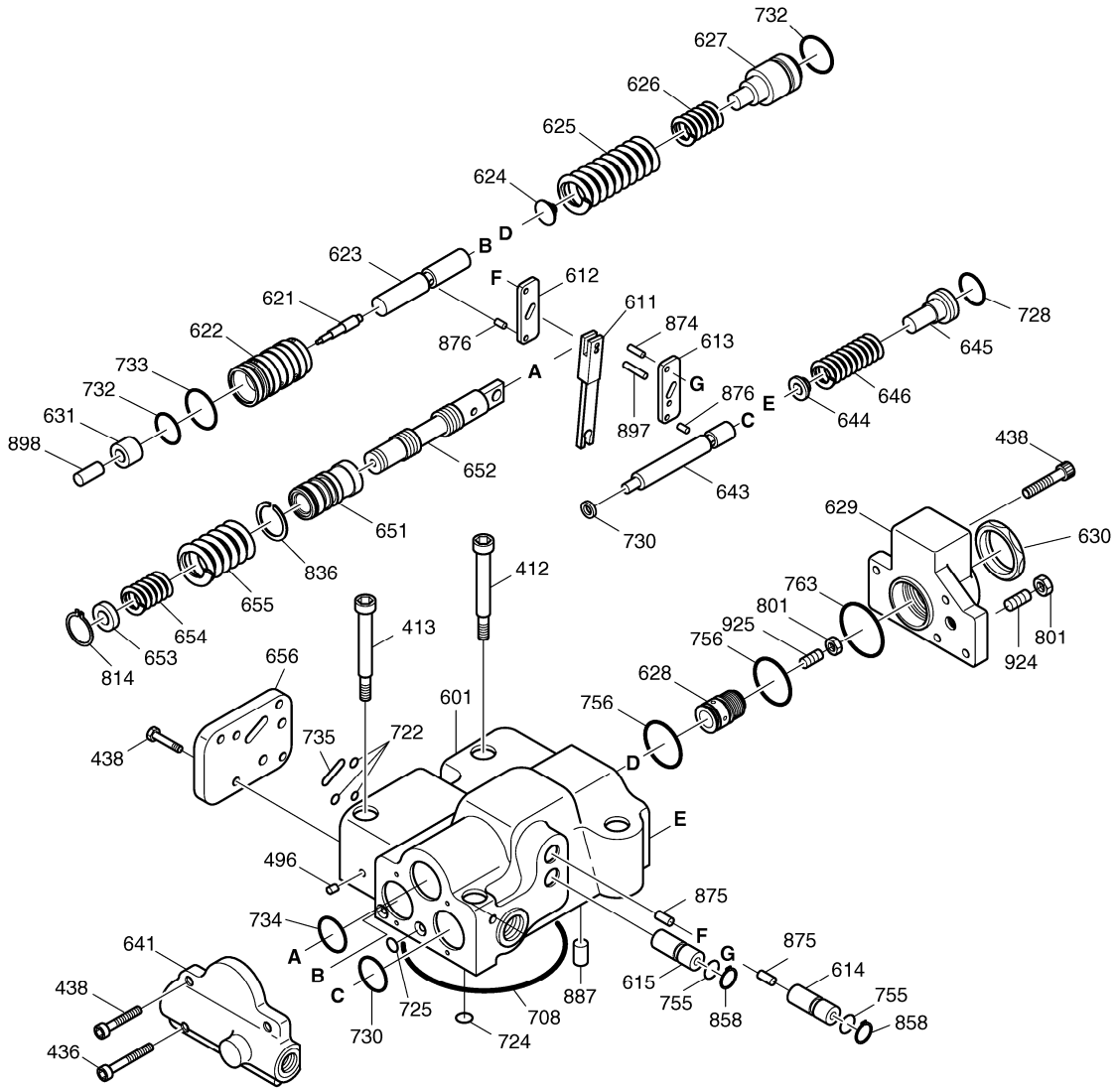

DATE	JUN. 01, 2010
3rd EDITION	

Fig. 4110 REGULATOR REGULATEUR

Serial No. ;

Key No.	Part No.	Description	Description	Q'ty	S.C	Serial No.	ICA	Replaceable part	
								Part No.	Q'ty
4110 --	K9001833	REGULATOR ASS`Y	REDUCTEUR	2					
412	S2209661	BOLT	BOULON	2					
413	S2210071	BOLT;SOCKET	BOULON	2					
436	S2205261	BOLT;WRENCH M6X1.0X30	BOULON	2					
438	S2204861	BOLT	BOULON	10					
496	181-00318	PLUG	BOUCHON	5					
601	1.402-00055	CASING(A)	CARTER	1	D				
611	1.357-00014	LEVER;FEEDBACK(A)	LEVIER	1	D				
612	1.357-00005	LEVER 1(A)	LEVIER	1	D				
613	1.357-00008	LEVER 2(B)	LEVIER	1	D				
614	1.181-00136	PLUG;CENTER(A)	BOUCHON	1	D				
615	1.181-00090	PLUG;ADJUST(A)	BOUCHON	1	D				
621	1.409-00189	PISTON;COMPEN	PISTON	1	D				
622	1.402-00036	CASE;PISTON	CARTER	1	D				
623	1.428-00208	ROD;COMPEN	TIGE	1	D				
624	1.131-00165	SEAT;SPRING(C)	SIEGE	1	D				
625	1.131-00143	SPRING;OUTER	RESSORT	1	D				
626	1.131-00139	SPRING;INNER	RESSORT	1	D				
627	K9001834	RING;ADJUST(C)	ANNEAU	1	D				
628	K9001835	SCREW;ADJUST(C)	VIS	1	D				
629	K9001836	COVER C(A)	COUVERCLE	1	D				
630	1.121-00044	NUT;LOCK	ECROU	1	D				
631	K9001837	SLEEVE;PF	DOUILLE	1	D				
641	K9001838	COVER;PILOT	COUVERCLE	1	D				
643	1.409-00204	PISTON;PILOT	PISTON	1	D				
644	1.131-00170	SEAT;SPRING(Q)	SIEGE	1	D				
645	1.115-00171	RING;ADJUST(Q)	ANNEAU	1	D				
646	1.131-00157	SPRING;PILOT	RESSORT	1	D				
651	1.425-00001	SLEEVE	DOUILLE	1	D				
652	1.424-00038	SPOOL(A)	SPOOL	1	D				
653	1.131-00166	SEAT;SPRING	SIEGE	1	D				
654	1.131-00160	SPRING;RETURN	RESSORT	1	D				
655	1.131-00172	SPRING;SET	RESSORT	1	D				
656	1.430-00017	COVER	COUVERTURE	1	D				
708	S8010755	O-RING 1BG-75	JOINT TORIQUE	1	K				
722	S8000061	O-RING	JOINT CIRCULAIRE	3	K				
724	S8000085	O-RING	JOINT CIRCULAIRE	9	K				
725	S8000111	O-RING	JOINT CIRCULAIRE	1	K				

DATE	JUN. 01, 2010
3rd EDITION	

Fig. 4110 REGULATOR
REGULATEUR

Serial No. ;

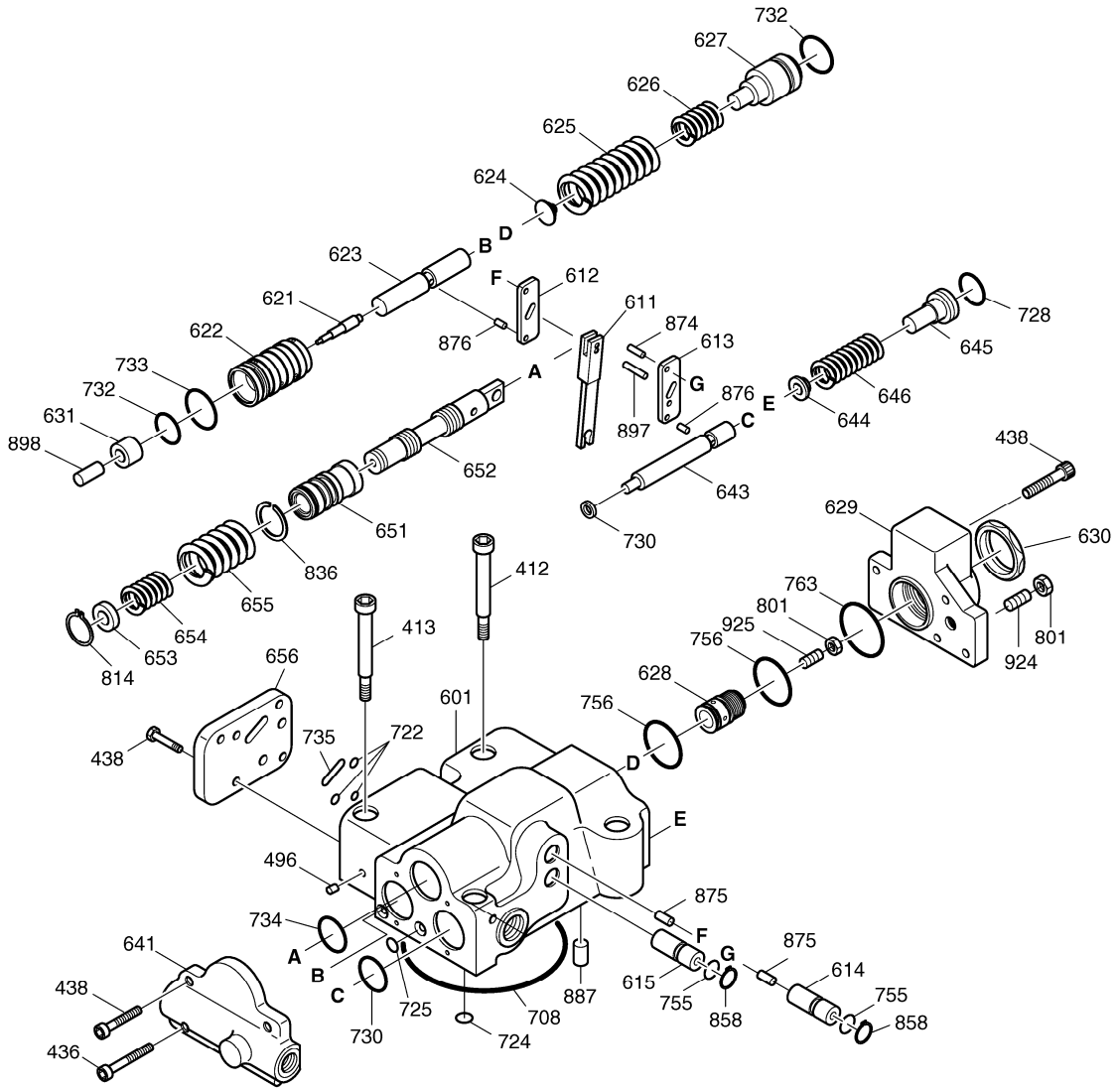

Fig. 4110 REGULATOR REGULATEUR

Serial No. ;

Key No.	Part No.	Description	Description	Q'ty	S.C	Serial No.	ICA	Replaceable part	
								Part No.	Q'ty
4110 -728	S8000181	O-RING	JOINT CIRCULAIRE	1	K				
730	S8000221	O-RING	JOINT CIRCULAIRE	1	K				
732	S8000161	O-RING	JOINT CIRCULAIRE	1	K				
733	S8000201	O-RING	JOINT CIRCULAIRE	1	K				
734	S8010251	O-RING	JOINT CIRCULAIRE	1	K				
735	S8002721	O-RING	JOINT CIRCULAIRE	1	K				
755	S8000111	O-RING	JOINT CIRCULAIRE	2	K				
756	S8000261	O-RING	JOINT CIRCULAIRE	1	K				
763	S8010351	O-RING	JOINT CIRCULAIRE	1	K				
801	S4012533	NUT	ECROU	2					
814	S6500100	RING;SNAP	ANNEAU	1					
836	1.115-00366	RING;STOP	ANNEAU	1	D				
858	S6510150	RING;SNAP	ANNEAU	2					
874	1.123-00007	PIN	GOUPILLE	1					
875	1.123-00012	PIN(A)	GOUPILLE	2	D				
876	1.123-00014	PIN(A)	GOUPILLE	2	D				
887	1.123-00009	PIN	GOUPILLE	1	D				
897	1.123-00016	PIN(A)	GOUPILLE	1	D				
898	K9001839	PIN	GOUPILLE	1	D				
924	S3524008	SCREW;SET	VIS	1					
925	120-00199	SCREW;ADJUST(Qi)	VIS	1					

DATE	JUN. 01, 2010
3rd EDITION	

Fig. 4120 GEAR PUMP POMPE

Serial No. ;

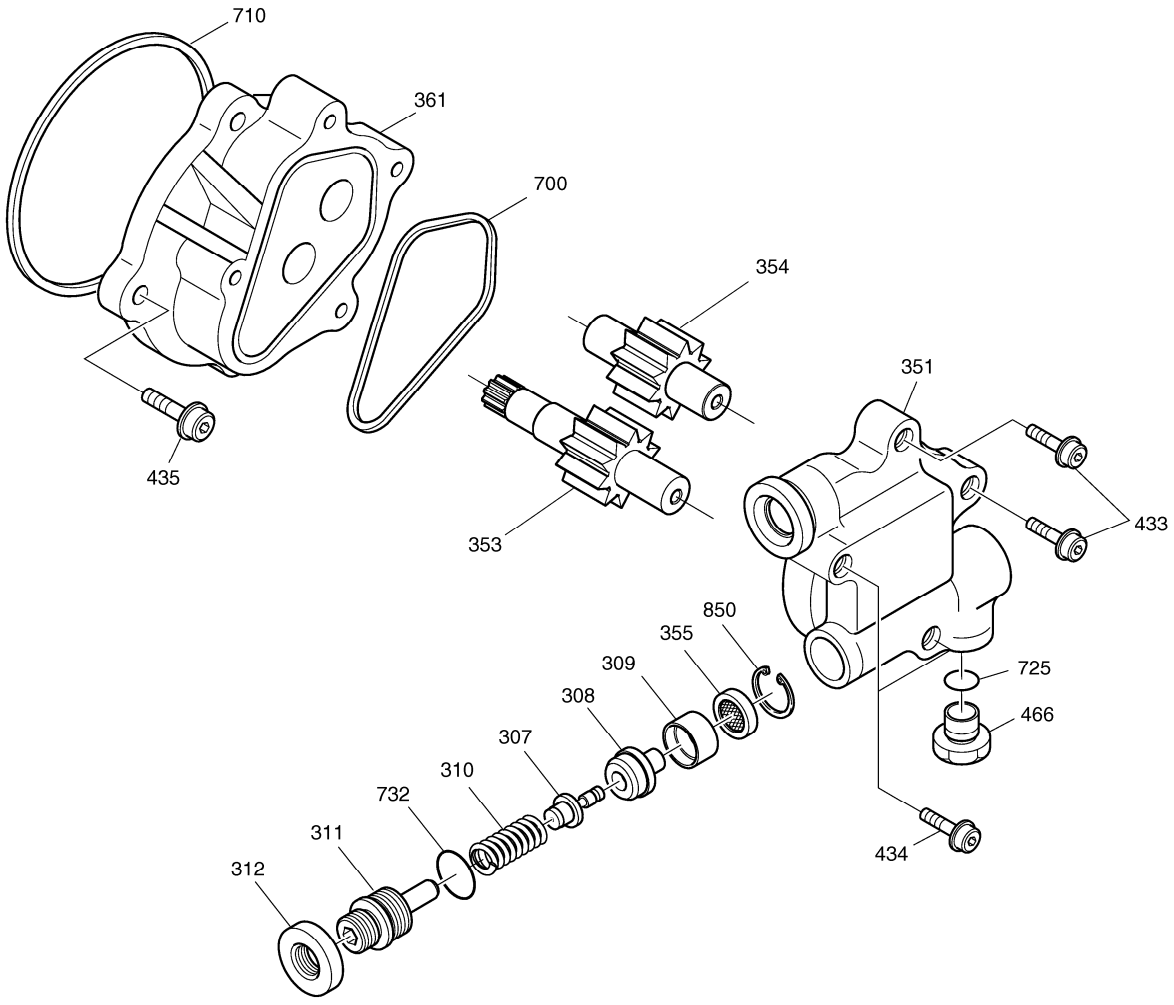

DATE	JUN. 01, 2010
3rd EDITION	

Fig. 4120 GEAR PUMP POMPE

Serial No. ;

Key No.	Part No.	Description	Description	Q'ty	S.C	Serial No.	ICA	Replaceable part	
								Part No.	Q'ty
4120 --	K9001811	PUMP;GEAR	POMPE	1					
307	1.426-00005	POPPET	POUPEE	1					
308	1.427-00002	SEAT	SIEGE	1					
309	180-00211	RING	ANNEAU	1					
310	129-00045	SPRING	RESSORT	1					
311	120-00131	SCREW;ADJUSTING	VIS	1					
312	121-00038	NUT;LOCK	ECROU	1					
351	-	CASE;GEAR	CARTER	1	D				
353	1.403-00037	GEAR;DRIVE	VITESSE	1	D				
354	1.403-00040	GEAR;DRIVEN	VITESSE	1	D				
355	471-00030	FILTER	FILTRE	1					
361	1.402-00017	CASE;FRONT	CARTER	1	D				
433	S2209666	BOLT	BOULON	2					
434	S2209961	BOLT;SOCKET	BOULON	2					
435	S2208871	BOLT;SOCKET	BOULON	4					
466	2181-1950D1	PLUG	BOUCHON	1					
700	115-00043	RING	ANNEAU	1	K				
710	S8010951	O-RING	JOINT CIRCULAIRE	1	K				
725	S8000111	O-RING	JOINT CIRCULAIRE	1	K				
732	S8000161	O-RING	JOINT CIRCULAIRE	1	K				
850	S6510180	RING;SNAP	ANNEAU	1					
*	719212KT	SEAL KIT;GEAR PUMP	KIT D`ETANCHEITE	1					

DATE	JUN. 01, 2010
3rd EDITION	

Fig. 4130 SWING MOTOR MOTEUR D'ORIENTATION

Serial No. ; 5001 ~ 5495

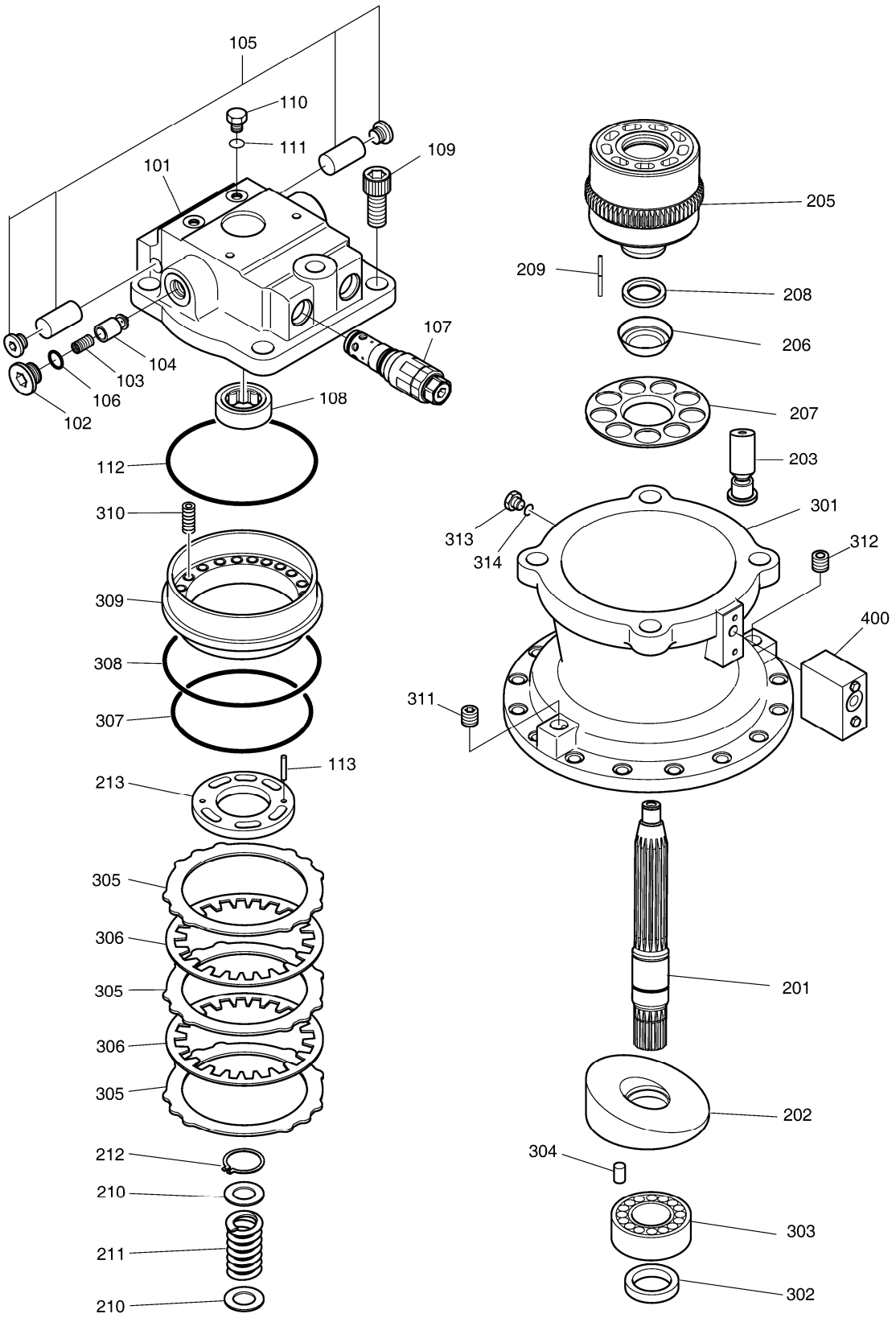

DATE	JUN. 01, 2010
3rd EDITION	

Fig. 4130 SWING MOTOR MOTEUR D'ORIENTATION

Serial No. ; 5001 ~ 5495

Key No.	Part No.	Description	Description	Q'ty	S.C	Serial No.	ICA	Replaceable part	
								Part No.	Q'ty
4130 --	K1000697A	SWING MOTOR	MOTEUR D'OSCILLATION	1		5001-5495			
101	-	CASING;VALVE	CARTER	1	D				
102	2.121-00009	PLUG	BOUCHON	2					
103	K9001840	SPRING	RESSORT	2					
104	K9001841	PLUNGER	PLONGEUR	2					
105	1.420-00016	VALVE;SWING REACTION	VANNE	1					
106	S8000341	O-RING	JOINT CIRCULAIRE	2	K				
107	1.420-00111	VALVE;RELIEF	VALVE	2					
108	S6005050	BEARING;BALL	ROULEMENT	1					
109	S2227561	BOLT;SOCKET	BOULON	4					
110	2181-1950D1	PLUG	BOUCHON	2					
111	S8000111	O-RING	JOINT CIRCULAIRE	2	K				
112	K9001842	O-RING	JOINT CIRCULAIRE	1	K				
113	S5741162	PIN;SPRING	GOUPILLE	2					
201	K9001843	SHAFT;DRIVE	AXE	1					
202	K9001844	PLATE;SWASH	PLAQUE	1					
203	K9001845	PISTON & SHOE ASS`Y	PISTON	1					
205	K9001846	BLOCK;CYLINDER	BLOC	1					
206	1.148-00015	BALL;THRUST	BOULE	1					
207	1.412-00092	PLATE;RETAINER	PLAQUE	1					
208	1.114-00009	COLLAR	COLLIER	1					
209	1.109-00134	ROLLER	ROULEAU	5					
210	1.114-00286	WASHER	RONDELLE	2					
211	1.131-00048	SPRING	RESSORT	1					
212	S6510620	RING;SNAP	ANNEAU	1					
213	K9001847	PLATE;TIMING	PLAQUE	1					
301	K9001848	CASING	CARTER	1					
302	180-00219	SEAL;OIL	CACHET	1	K				
303	S6005090	BEARING;BALL	ROULEMENT	1					
304	1.123-00053	PIN;PARALLEL	GOUPILLE	1					
305	352-00014	PLATE;SEPARATION	PLAQUE	3					
306	412-00013	PLATE;FRICTION	PLAQUE	2					
307	180-00220	O-RING	JOINT CIRCULAIRE	1	K				
308	180-00221	O-RING	JOINT CIRCULAIRE	1	K				
309	452-00020	PISTON;BRAKE	PISTON	1					
310	129-00062	SPRING;BRAKE	RESSORT	18					
311	181-00346	PLUG	BOUCHON	1					
312	2181-1116D2	PLUG	BOUCHON	1					

Fig. 4130 SWING MOTOR
MOTEUR D'ORIENTATION

Serial No. ; 5001 ~ 5495

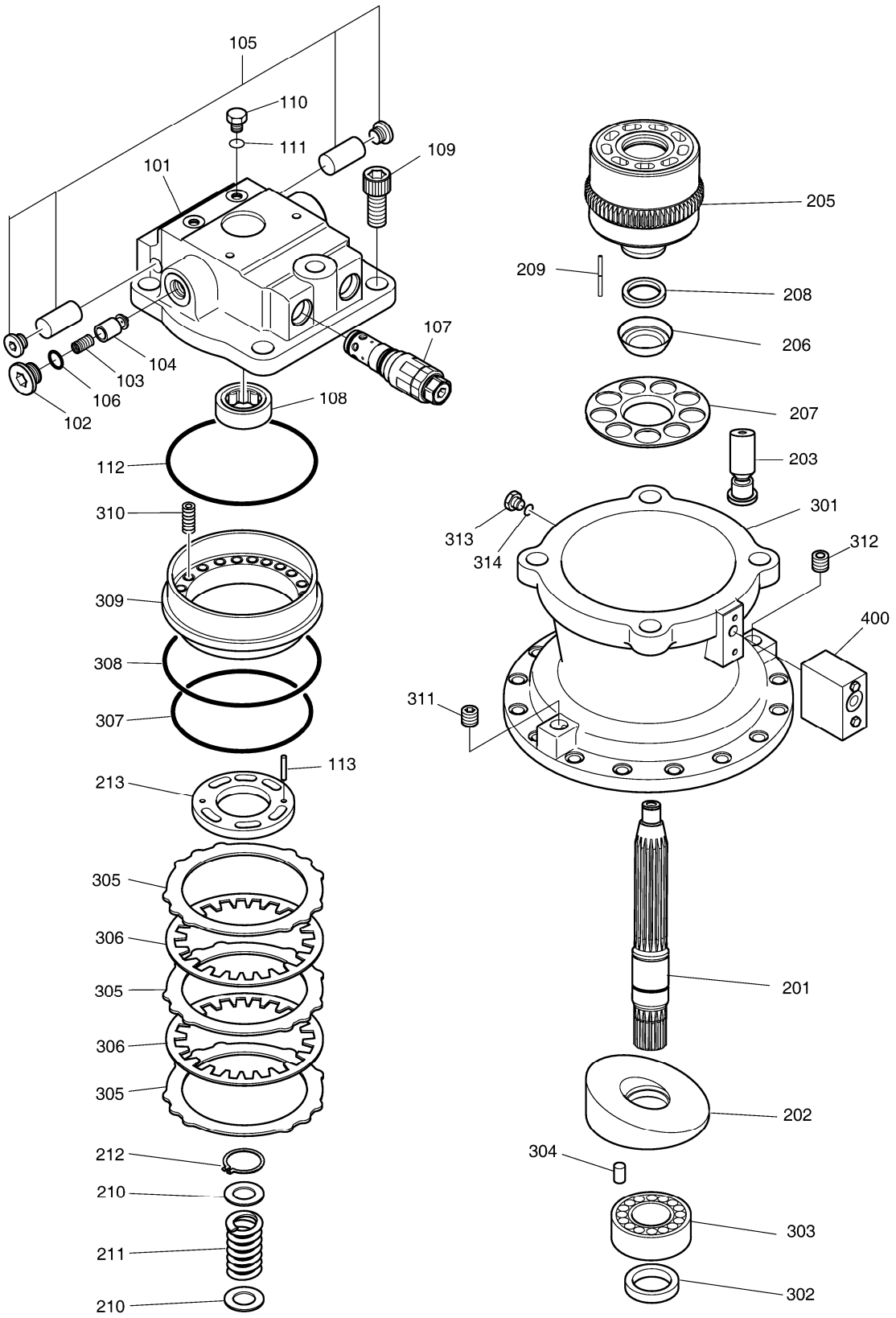

DATE	JUN. 01, 2010
3rd EDITION	

Fig. 4130 SWING MOTOR MOTEUR D'ORIENTATION

Serial No. ; 5001 ~ 5495

Key No.	Part No.	Description	Description	Q'ty	S.C	Serial No.	ICA	Replaceable part	
								Part No.	Q'ty
4130 -313	2181-1950D1	PLUG	BOUCHON	1					
314	S8000111	O-RING	JOINT CIRCULAIRE	1	K				
400	420-00110	VALVE;BRAKE	VALVE	1					
*	K9001903	SEAL KIT;SWING MOTOR	KIT DE JOINT	1					

DATE	JUN. 01, 2010
3rd EDITION	

Fig. 4131 SWING MOTOR MOTEUR D'ORIENTATION

Serial No. ; 5496 ~

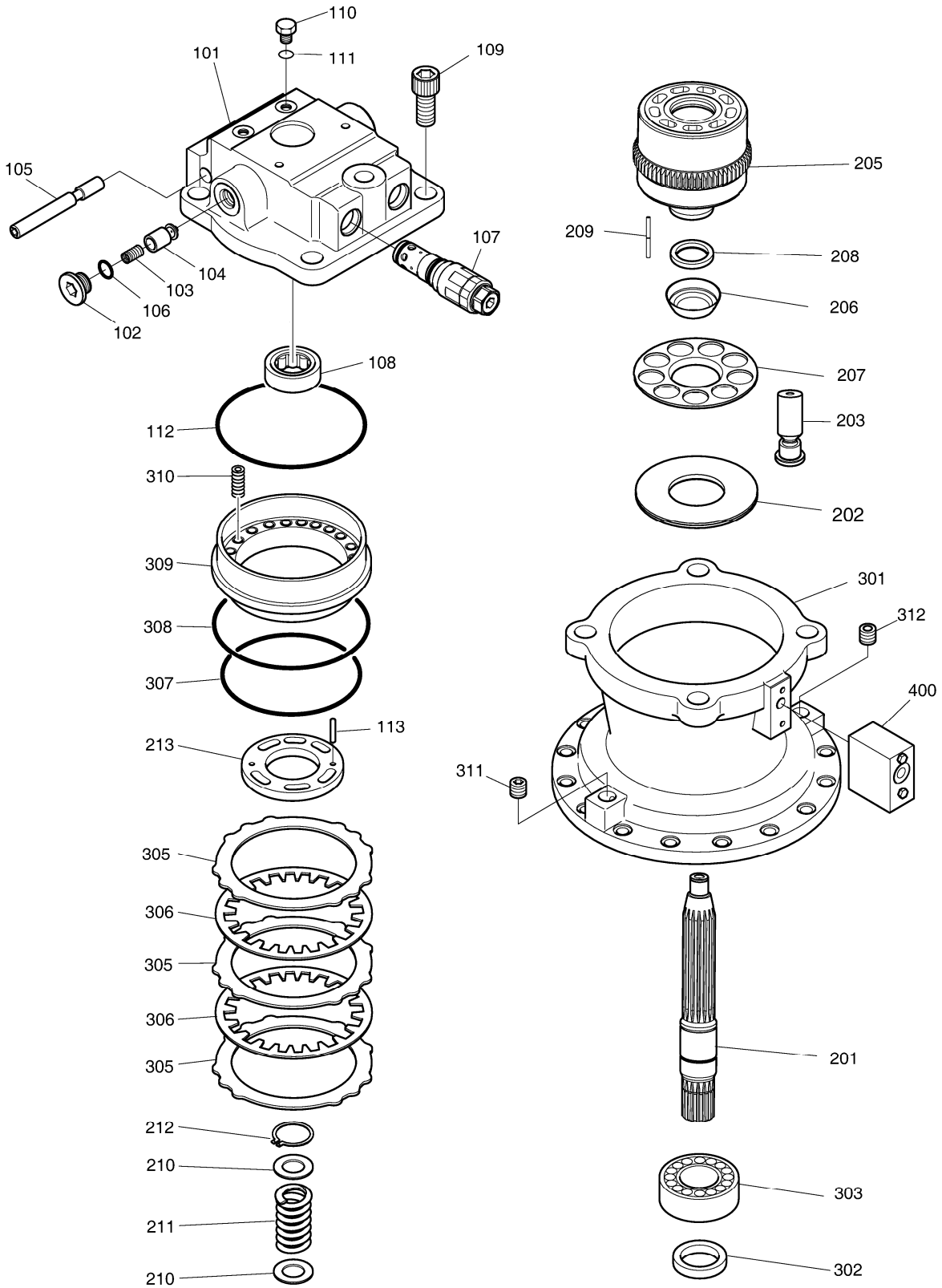

DATE	JUN. 01, 2010
3rd EDITION	

Fig. 4131 SWING MOTOR MOTEUR D'ORIENTATION

Serial No. ; 5496 ~

Key No.	Part No.	Description	Description	Q'ty	S.C	Serial No.	ICA	Replaceable part	
								Part No.	Q'ty
4131 --	K1045024	SWING MOTOR	MOTEUR D'OSCILLATION	1		5496-			
101	-	CASING;VALVE	CARTER	1	D				
102	2.121-00009	PLUG	BOUCHON	2					
103	K9001840	SPRING	RESSORT	2					
104	K9001841	PLUNGER	PLONGEUR	2					
105	K9006899	VALVE;SWING REACTIONLESS	VANNE	1					
106	S8000341	O-RING	JOINT CIRCULAIRE	2	K				
107	K9008333	VALVE;RELIEF	VANNE	2					
108	S6005050	BEARING;BALL	ROULEMENT	1					
109	S2227561	BOLT;SOCKET	BOULON	4					
110	2181-1950D1	PLUG	BOUCHON	2					
111	S8000111	O-RING	JOINT CIRCULAIRE	2	K				
112	K9001842	O-RING	JOINT CIRCULAIRE	1	K				
113	S5741162	PIN;SPRING	GOUPILLE	2					
201	K9001843	SHAFT;DRIVE	AXE	1					
202	412-00011	PLATE;SHOE	PLAQUE	1					
203	K9001845	PISTON & SHOE ASS`Y	PISTON	1					
205	K9001846	BLOCK;CYLINDER	BLOC	1					
206	1.148-00015	BALL;THRUST	BOULE	1					
207	1.412-00092	PLATE;RETAINER	PLAQUE	1					
208	1.114-00009	COLLAR	COLLIER	1					
209	1.109-00134	ROLLER	ROULEAU	5					
210	1.114-00286	WASHER	RONDELLE	2					
211	1.131-00048	SPRING	RESSORT	1					
212	S6510620	RING;SNAP	ANNEAU	1					
213	K9001847	PLATE;TIMING	PLAQUE	1					
301	K9008334	CASING	CARTER	1					
302	K9006399	SEAL;OIL	JOINT D'HUILE	1	K				
303	K9008335	BEARING;ROLLER	A BILLES ROULEMENT	1					
305	352-00014	PLATE;SEPARATION	PLAQUE	3					
306	412-00013	PLATE;FRICTION	PLAQUE	2					
307	180-00220	O-RING	JOINT CIRCULAIRE	1	K				
308	180-00221	O-RING	JOINT CIRCULAIRE	1	K				
309	452-00020	PISTON;BRAKE	PISTON	1					
310	129-00062	SPRING;BRAKE	RESSORT	18					
311	2181-1116D4	PLUG	BOUCHON	1					
312	2181-1116D2	PLUG	BOUCHON	1					
400	420-00110	VALVE;BRAKE	VALVE	1					

DATE	JUN. 01, 2010
3rd EDITION	

Fig. 4131 SWING MOTOR MOTEUR D'ORIENTATION

Serial No. ; 5496 ~

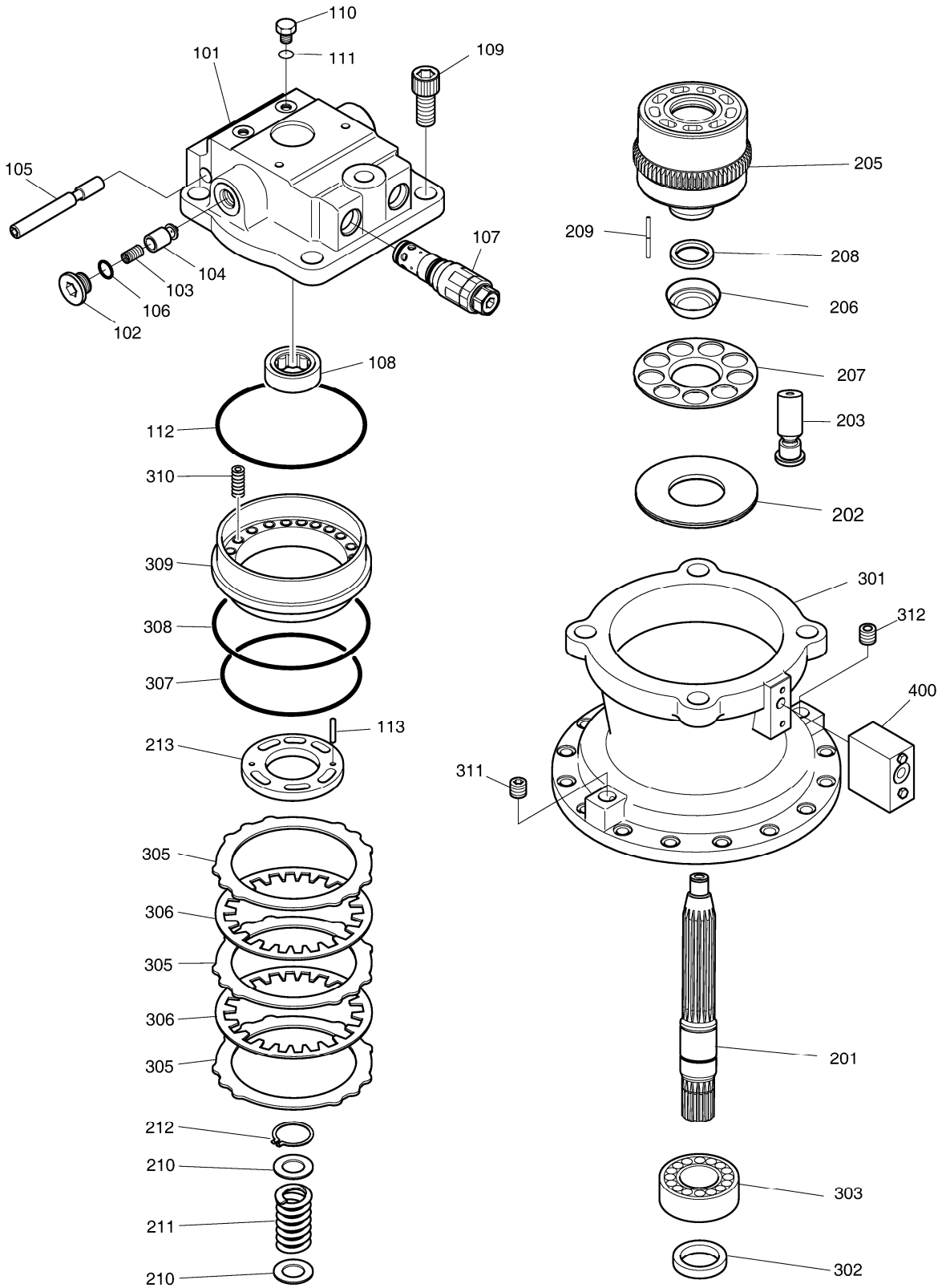

DATE	JUN. 01, 2010
3rd EDITION	

Fig. 4131 SWING MOTOR MOTEUR D'ORIENTATION

Serial No. ; 5496 ~

Key No.	Part No.	Description	Description	Q'ty	S.C	Serial No.	ICA	Replaceable part	
								Part No.	Q'ty
4131 -*	K9008336	SEAL KIT;SWING MOTOR	KIT D`ETANCHEITE	1					

DATE	JUN. 01, 2010
3rd EDITION	

Fig. 4140 SWING REDUCTION GEAR REDEUTEUR D'ORIENTATION

Serial No. ; 5001 ~ 5495

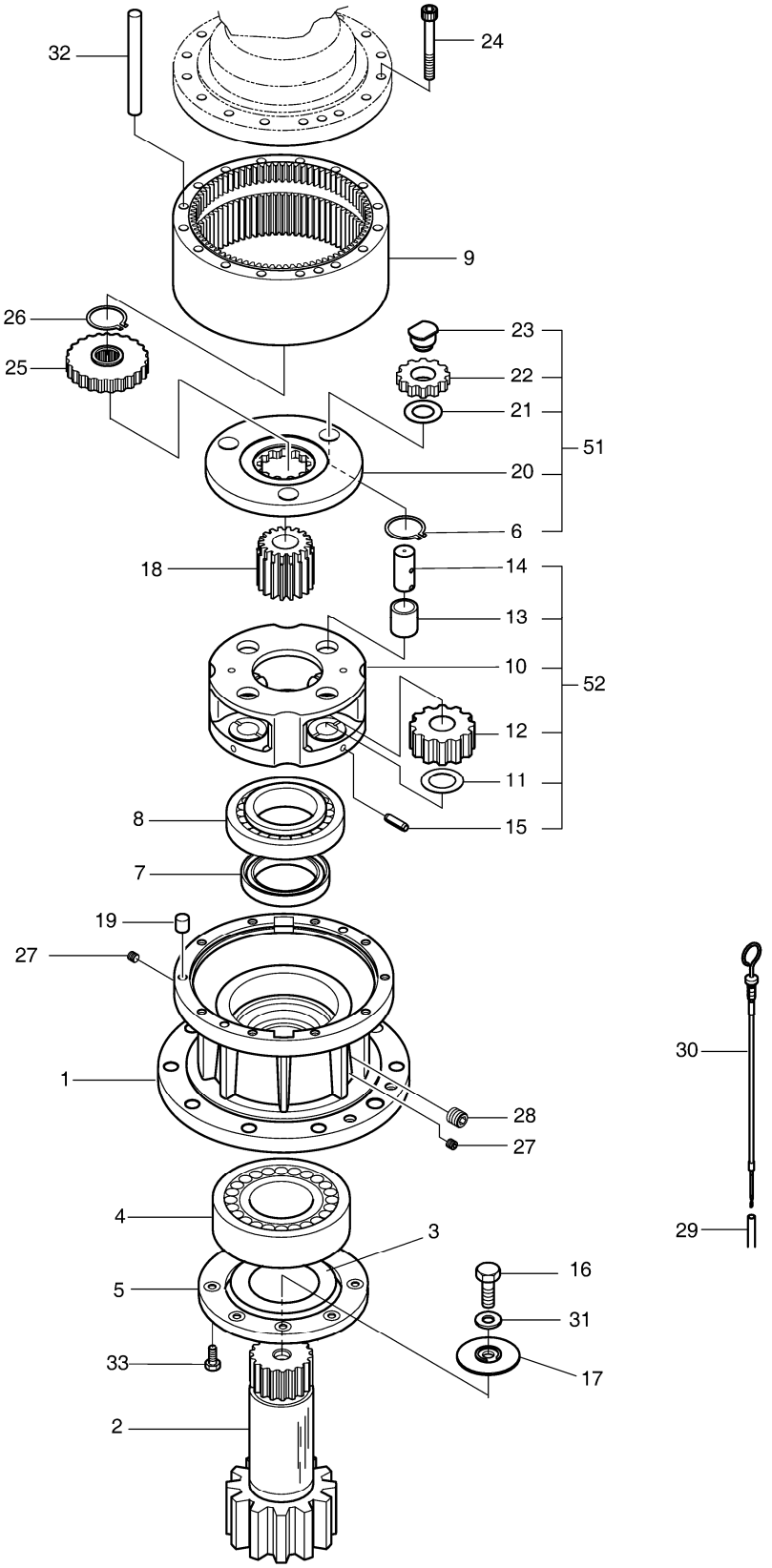

DATE	JUN. 01, 2010
3rd EDITION	

Fig. 4140 SWING REDUCTION GEAR
REDEUTEUR D'ORIENTATION

Serial No. ; 5001 ~ 5495

Key No.	Part No.	Description	Description	Q'ty	S.C	Serial No.	ICA	Replaceable part	
								Part No.	Q'ty
4140 --	404-00097C	REDUCTION GEAR ASS'Y	REDUCTEUR	1		5001-5495			
1	K1001235	CASING	CARTER	1					
2	2112-1248E	SHAFT;DRIVE	AXE	1					
3	2412-1040	PLATE	PLAQUE	1					
4	2109-9033	BEARING;ROLLER	ROULEMENT	1					
5	2891-1421B	PLATE;COVER	PLAQUE	1					
6	S6500380	RING;SNAP	ANNEAU	3					
7	2180-1254	SEAL;OIL	CACHET	1					
8	109-00174	BEARING;ROLLER	ROULEMENT	1					
9	104-00051A	GEAR;RING	PIGNON	1					
10	230-00061	CARRIER NO.2	PORTEUR	1					
11	2114-1901A	WASHER;THRUST NO.2	RONDELLE	4					
12	104-00050	GEAR;PLANET NO.2	VITESSE	4					
13	110-00219	BUSH NO.2	BUSH	4					
14	123-00437A	PIN NO.2	GOUPILLE	4					
15	S5741341	PIN;SPRING	GOUPILLE	4					
16	S0121061	BOLT	BOULON	1					
17	114-00548	WASHER;THRUST NO.3	RONDELLE	1					
18	104-00048	GEAR;SUN NO.2	VITESSE	1					
19	2705-1030	PIN;KNOCK	GOUPILLE	4					
20	230-00060A	CARRIER NO.1	SUPPORT	1					
21	114-00527	WASHER;THRUST NO.1	RONDELLE	3					
22	104-00049A	GEAR;PLANET NO.1	PIGNON	3					
23	123-00435A	PIN ASS`Y NO.1	GOUJON	3					
24	S2217471	BOLT;SOCKET M12X150	BOULON A 6 PANS CREUX	16					
25	104-00047A	GEAR;SUN NO.1	PIGNON	1					
26	S6500450	RING;SNAP	ANNEAU	1					
27	2181-1116D2	PLUG	BOUCHON	2					
28	2181-1116D4	PLUG	BOUCHON	1					
29	2140-1406	PIPE;LEVEL GAUGE	TUYAU	1					
30	2119-1065	GAUGE;LEVEL	MESURE	1					
31	S5231090	WASHER;DOUBLE TAP	RONDELLE	1					
32	140-01374A	PIPE	TUYAU	4					
33	120-00144	BOLT	BOULON	8					
51	K9006810	CARRIER NO1 ASS'Y	PORTEUR	1					
52	K9006811	CARRIER NO2 ASS`Y	PORTEUR	1					

DATE	JUN. 01, 2010
3rd EDITION	

Fig. 4141 SWING REDUCTION GEAR
REDEUTEUR D'ORIENTATION

Serial No. ; 5496 ~

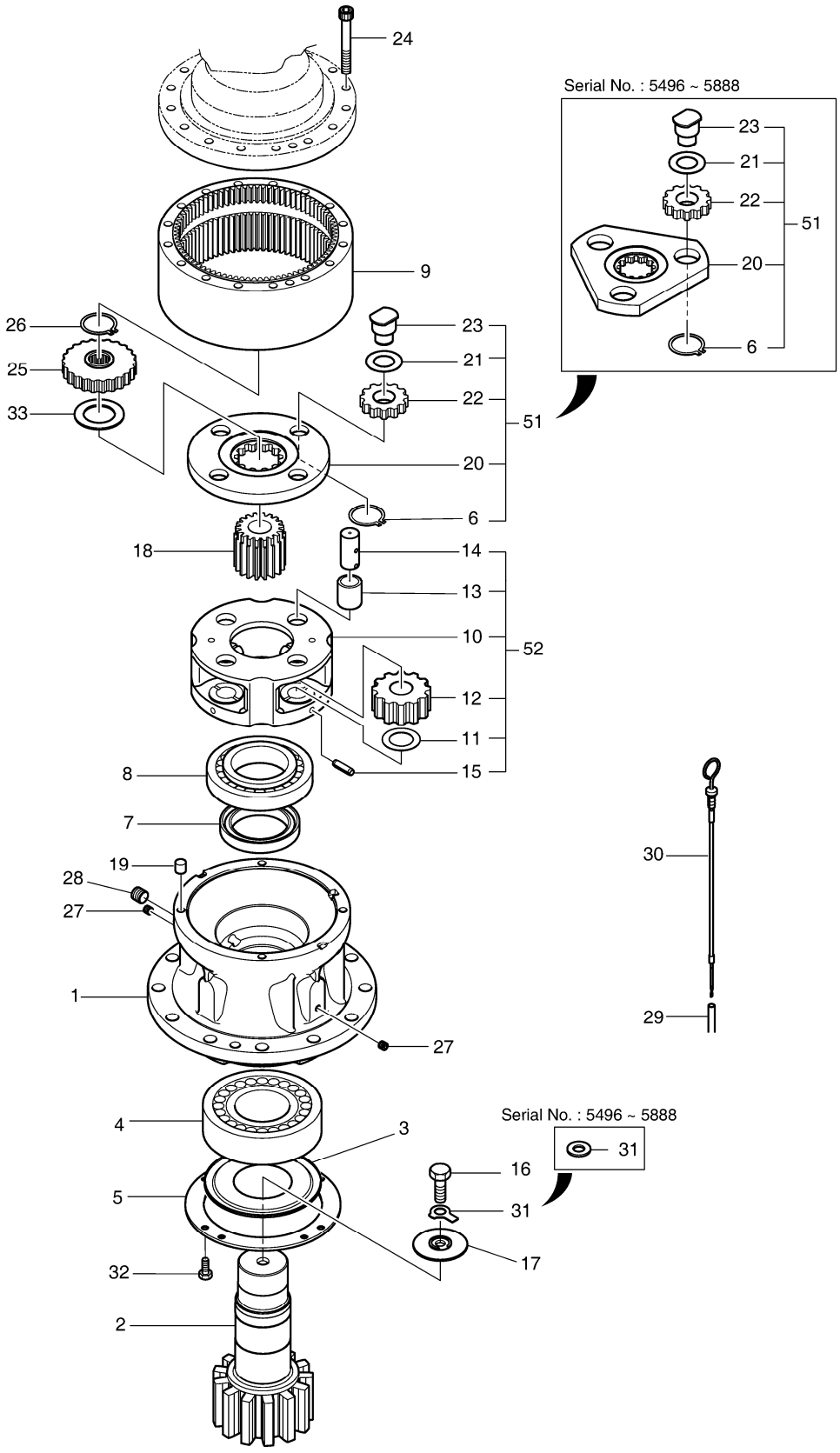

DATE	JUN. 01, 2010
3rd EDITION	

Fig. 4141 SWING REDUCTION GEAR REDEUTEUR D'ORIENTATION

Serial No. ; 5496 ~

Key No.	Part No.	Description	Description	Q'ty	S.C	Serial No.	ICA	Replaceable part	
								Part No.	Q'ty
4141 --	K1038203	SWING REDUCTION GEAR ASS`	ENSEMBLE DE REDUCTEU	1		5496-5888	I	130426-00010	1
	130426-00010	GEAR ASSY,REDUCTION	ENSEMBLE DE REDUCTEU	1		5889-			
1	K1038206	CASING	CARTER	1					
2	K1038207	SHAFT;DRIVE	AXE	1					
3	2412-1040	PLATE	PLAQUE	1					
4	2109-9033	BEARING;ROLLER	ROULEMENT	1					
5	K1038685	PLATE;COVER	PLAQUE	1					
6	S6500380	RING;SNAP	ANNEAU	3		5496-5888			
	S6500380	RING;SNAP	ANNEAU	4		5889-			
7	2180-1254	SEAL;OIL	CACHET	1					
8	109-00174	BEARING;ROLLER	ROULEMENT	1					
9	K1038210	GEAR;RING	PIGNON	1		5496-5888			
	130422-00001A	GEAR,RING	VITESSE	1		5889-			
10	K1038205	CARRIER NO.2	PORTEUR	1					
11	2114-1901A	WASHER;THRUST NO.2	RONDELLE	4					
12	104-00050	GEAR;PLANET NO.2	VITESSE	4					
13	110-00219	BUSH NO.2	BUSH	4					
14	K1038208	PIN NO.2	GOUPILLE	4					
15	S5741200	PIN;SPRING	GOUPILLE	4					
16	S0121061	BOLT	BOULON	1					
17	114-00548	WASHER;THRUST NO.3	RONDELLE	1					
18	104-00048	GEAR;SUN NO.2	VITESSE	1					
19	2705-1030	PIN;KNOCK	GOUPILLE	4					
20	K1038204	CARRIER NO.1	SUPPORT	1		5496-5888			
	100502-00001	CARRIER NO.1	PORTEUR	1		5889-			
21	114-00527	WASHER;THRUST NO.1	RONDELLE	3		5496-5888			
	114-00527	WASHER;THRUST NO.1	RONDELLE	4		5889-			
22	104-00049A	GEAR;PLANET NO.1	PIGNON	3		5496-5888			
	130424-00001	GEAR;PLANET NO.1	VITESSE	4		5889-			
23	123-00435A	PIN ASS`Y NO.1	GOUJON	3		5496-5888			
	120501-00009	PIN ASS'Y;NO1	GOUPILLE	4		5889-			
24	S2217471	BOLT;SOCKET M12X150	BOULON A 6 PANS CREUX	16		5496-5888			
	120107-00002	BOLT,HEX SOCKET	BOULON	16		5889-			
25	104-00047A	GEAR;SUN NO.1	PIGNON	1		5496-5888	I	130425-00001	1
	130425-00001	GEAR,SUN;NO1	VITESSE	1		5889-			
26	S6500450	RING;SNAP	ANNEAU	1					
27	2181-1116D2	PLUG	BOUCHON	2					
28	2181-1116D4	PLUG	BOUCHON	1					

Fig. 4141 SWING REDUCTION GEAR REDEUTEUR D'ORIENTATION

Serial No. ; 5496 ~

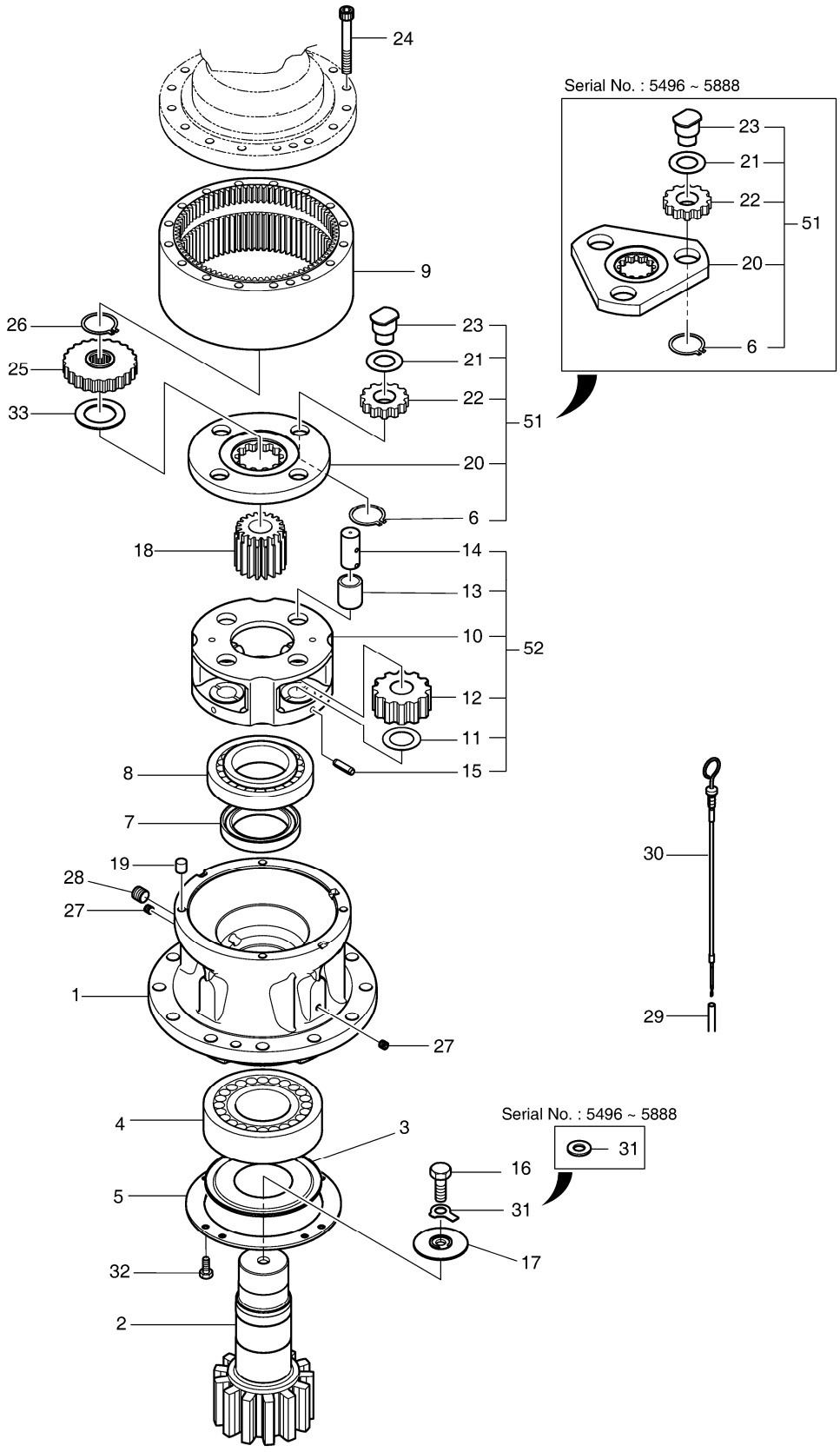

DATE	JUN. 01, 2010
3rd EDITION	

Fig. 4141 SWING REDUCTION GEAR REDEUTEUR D'ORIENTATION

Serial No. ; 5496 ~

Key No.	Part No.	Description	Description	Q'ty	S.C	Serial No.	ICA	Replaceable part	
								Part No.	Q'ty
4141 -29	2140-1406	PIPE;LEVEL GAUGE	TUYAU	1					
30	2119-1065	GAUGE;LEVEL	MESURE	1					
31	S5231090	WASHER;DOUBLE TAP	RONDELLE	1		5496-5888			
	120811-00001	WASHER,DOUBLE TAB	RONDELLE	1		5889-			
32	120-00144	BOLT	BOULON	8					
33	120816-00001	WASHER,THRUST	RONDELLE	1		5889-			
51	K9008337	CARRIER NO1 ASS`Y	PORTEUR	1		5496-5888			
	100502-00022	CARRIER ASS'Y;NO.1	PORTEUR	1		5889-			
52	K9008338	CARRIER NO2 ASS`Y	PORTEUR	1					

DATE	JUN. 01, 2010
3rd EDITION	

Fig. 4150 TRAVEL MOTOR
MOTEUR DE TRANSLATION

Serial No. ;

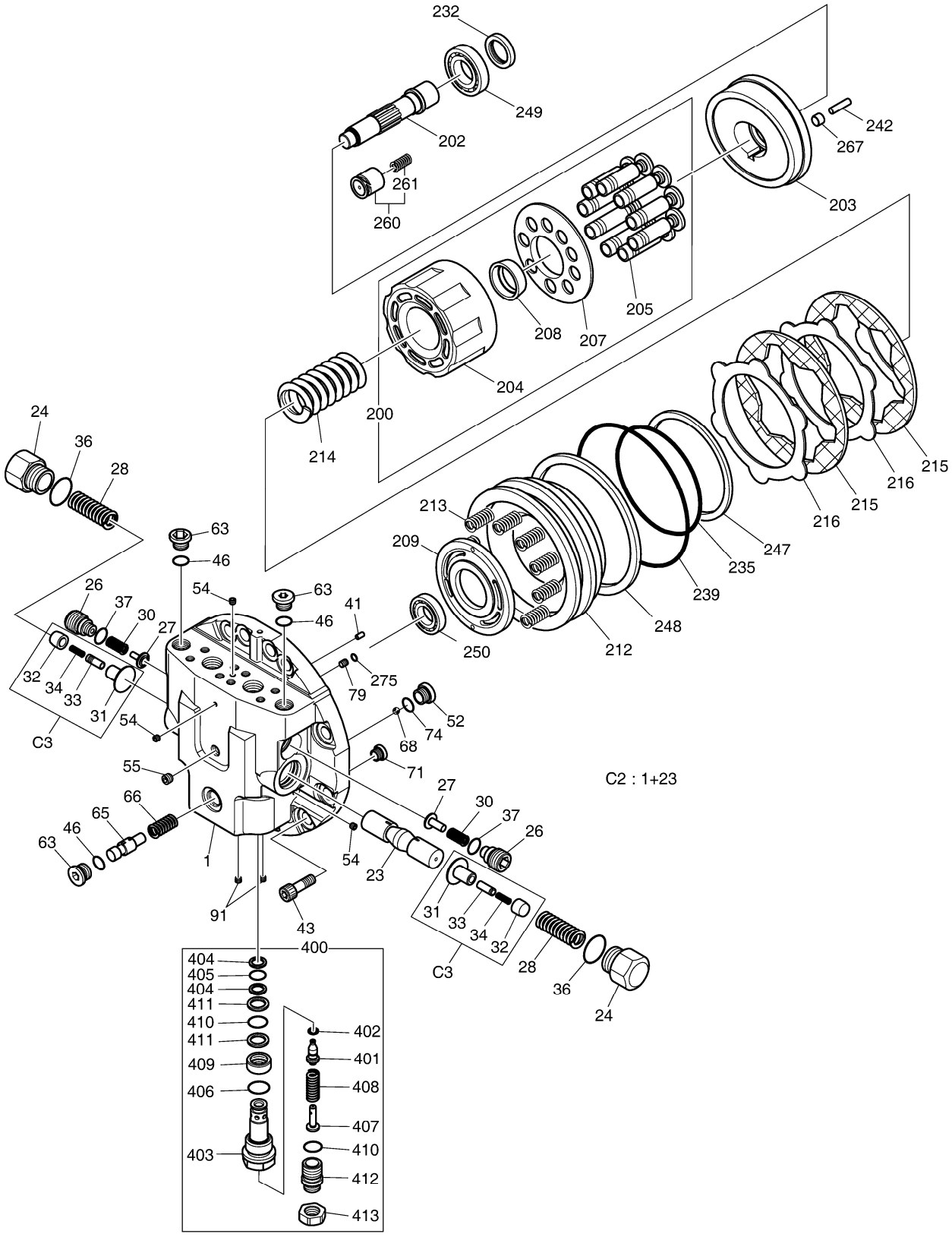

DATE	JUN. 01, 2010
3rd EDITION	

Fig. 4150 TRAVEL MOTOR MOTEUR DE TRANSLATION

Serial No. ;

Key No.	Part No.	Description	Description	Q'ty	S.C	Serial No.	ICA	Replaceable part	
								Part No.	Q'ty
4150 -C	K9007410	CONTROL PART ASS`Y	PANNEAU	1					
C-1	K9007408	. REAR FLANGE ASS`Y	. RESERVOIR DESSICATEU	1					
C-2	K9007409	. REAR FLANGE KIT	. BRIDE ARRIERE	1					
1	-	REAR FLANGE	AMORTISSEUR	1	D				
23	K9007399	MAIN SPOOL	KIT DE RESSORT	1					
24	1.181-00059	PLUG;FOR MAIN	BOUCHON	2					
26	1.181-00067	PLUG;CHECK	BOUCHON	2					
27	1.420-00013	VALVE;CHECK	VALVE	2					
28	1.131-00058	SPRING;FOR MAIN	RESSORT	2					
30	1.129-00006	SPRING;CHECK	RESSORT	2					
C-3	K9007414	. STOPPER ASS`Y	. ARRET	2					
31	K9004995	STOPPER A	ARRET	1					
32	K9007381	STOPPER B	ARRET	1					
33	K9007416	SPOOL	PLUNGEUR	1					
34	K9007380	SPRING	RESSORT	1					
36	S8000321	O-RING	JOINT CIRCULAIRE	2	K				
37	S8002731	O-RING	JOINT CIRCULAIRE	2	K				
41	S5700891	PIN;PARALLEL	GOUPILLE	1					
43	S2221471	BOLT;SOCKET	BOULON	12					
46	S8000181	O-RING	JOINT CIRCULAIRE	2	K				
52	2181-1890D2	PLUG	BOUCHON	2					
54	2181-1116D10	PLUG	BOUCHON	5					
55	2181-1116D2	PLUG	BOUCHON	2					
63	2181-1890D4	PLUG	BOUCHON	2					
65	1.424-00041	SPOOL;2 SPEED	SPOOL	1					
66	1.131-00001	SPRING	RESSORT	1					
68	S6250182	BALL;STEEL	BILLE	2					
71	1.415-00005	ORIFICE	ORIFICE	1					
74	S8000111	O-RING	JOINT CIRCULAIRE	2	K				
79	1.471-00001	FILTER	FILTRE	1					
91	2181-1116D1	PLUG	BOUCHON	2					
-	K9007405	MOTOR;TRAVEL	MOTEUR	1					
200	K9007407	CYL BLOCK & PISTON KIT	CYLINDRES	1					
205	K9007406	PISTON ASS`Y	PISTON	1					
204	K9007397	BLOCK;CYLINDER	BLOC-CYLINDRES	1					
207	K9004447	PLATE;RETAINER	PLAQUE	1					
208	K9004448	BALL;THRUST	BILLE	1					
202	K9007415	SHAFT;DRIVE	AXE	1					

DATE	JUN. 01, 2010
3rd EDITION	

Fig. 4150 TRAVEL MOTOR
MOTEUR DE TRANSLATION

Serial No. ;

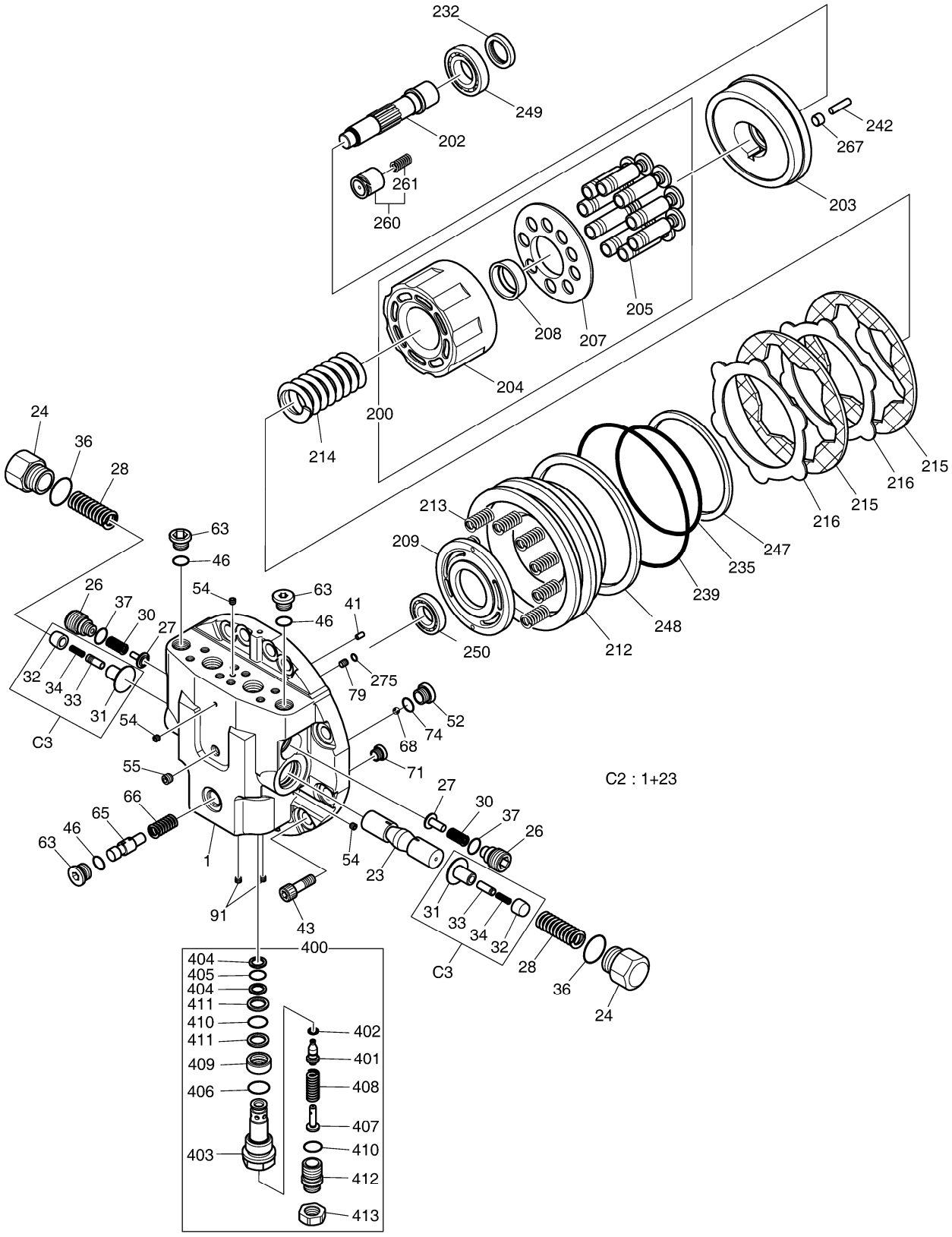

DATE	JUN. 01, 2010
3rd EDITION	

Fig. 4150 TRAVEL MOTOR MOTEUR DE TRANSLATION

Serial No. ;

Key No.	Part No.	Description	Description	Q'ty	S.C	Serial No.	ICA	Replaceable part	
								Part No.	Q'ty
4150 -203	K9007382	PLATE;SWASH	PLAQUE	1					
209	K9007398	PLATE;TIMING	PLAQUE	1					
212	K9004453	PISTON;PARKING	PISTON	1					
213	1.131-00049	SPRING	RESSORT	12					
214	K9004449	SPRING	RESSORT	1					
215	412-00013	PLATE;FRICTION	PLAQUE	2					
216	352-00014	PLATE;SEPARATION	PLAQUE	2					
232	K9007401	SEAL;OIL	JOINT D'HUILE	1	K				
235	S8001801	O-RING	JOINT TORIQUE	1	K				
239	S8002101	O-RING	JOINT CIRCULAIRE	1	K				
242	1.123-00053	PIN;PARALLEL	GOUPILLE	4					
247	S8061800	RING;BACK UP	BAGUE ANTIEXTRUSION	1	K				
248	S8062100	RING;BACK UP	BAGUE ANTIEXTRUSION	1	K				
249	K9007400	BEARING;BALL	PALIER	1					
250	1.109-00026	BEARING;BALL	ROULEMENT	1					
260	1.409-00180	PISTON KIT;2 SPEED	PISTON	1					
261	1.131-00042	SPRING	RESSORT	1					
267	1.540-00006	PIVOT	PIVOT	2					
275	S8000081	O-RING	JOINT CIRCULAIRE	2	K				
400	K9007413	RELIEF VALVE ASS`Y	CLAPET DE DECHARGE	2					
401	-	PLUNGER	PLONGEUR	1	D				
402	1.180-00527	SEAL;PISTON	JOINT DE PISTON	1					
403	-	BODY	CORPS	1	D				
404	S8060161	RING;BACK-UP	ANNEAU	2					
405	S8000161	O-RING	JOINT CIRCULAIRE	3					
406	S8010291	O-RING	JOINT TORIQUE	1					
407	-	RETAINER;SPRING	ARRETOIR	1	D				
408	-	SPRING	RESSORT	1	D				
409	-	PISTON	PISTON	1	D				
410	S8000221	O-RING	JOINT CIRCULAIRE	2					
411	S8060221	RING;BACK UP	BAGUE ANTIEXTRUSION	3					
412	-	PLUG;ADJUST	BOUCHON	1	D				
413	-	NUT;LOCK	ECROU	1	D				
*	K9008310	SEAL KIT;TRAVEL MOTOR	KIT D`ETANCHEITE	1					

DATE	JUN. 01, 2010
3rd EDITION	

Fig. 4160 TRAVEL REDUCTION GEAR BOITE REDUCTEUR

Serial No. ;

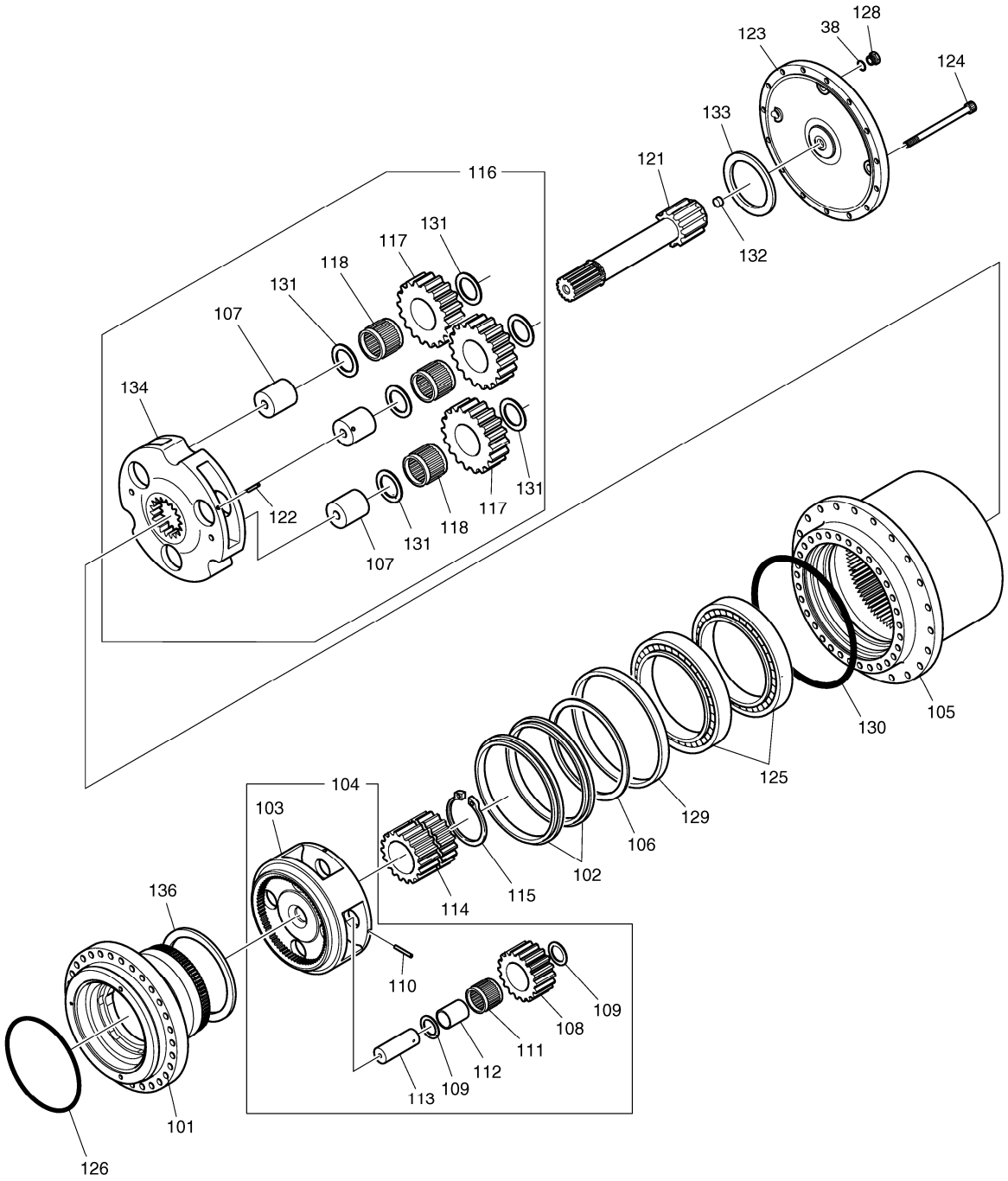

DATE	JUN. 01, 2010
3rd EDITION	

Fig. 4160 TRAVEL REDUCTION GEAR BOITE REDUCTEUR

Serial No. ;

Key No.	Part No.	Description	Description	Q'ty	S.C	Serial No.	ICA	Replaceable part	
								Part No.	Q'ty
4160 --	K9007404	REDUCTION GEAR	CLAPET DE TROP-PLEIN	1					
38	S8000181	O-RING	JOINT CIRCULAIRE	3	K				
101	K9007383	SPINDLE	TOUPIE	1					
102	1.180-00512	SEAL;FLOATING	CACHET	1					
105	K9007384	HUB	PIVOT	1					
106	1.540-00003	PIECE;DISTANCE	GUIDE	1					
104	K9007412	CARRIER NO 2 ASSY	PORTEUR	1					
103	-	CARRIER NO2	PORTEUR	1	D				
108	K9007393	GEAR;PLANETARY	PIGNON	4					
109	K9007394	WASHER;THRUST	RONDELLE	8					
110	S5740960	PIN;SPRING	GOUPILLE	4					
111	K9007402	BEARING;NEEDLE	ROULEMENT A AIGUILLE	4					
112	K9007396	BUSH;FLOATING	DOUILLE	4					
113	K9007392	SHAFT	AXE	4					
114	K9007391	GEAR;SUN	PIGNON	1					
115	S6500750	RING;RETAINING	RONDELLE DE RETENUE	1					
116	K9007411	CARRIER NO 1 ASSY	PORTEUR	1					
107	K9007388	BEARING;SHAFT	ROULEMENT A AIGUILLES	3					
117	K9007387	GEAR;PLANETARY	PIGNON	3					
118	1.216-00017	CAGE;NEEDLE	ROULEMENT A AIGUILLES	3					
122	S5740770	PIN;SPRING	GOUPILLE	3					
131	K9007389	WASHER;THRUST	RONDELLE	6					
134	-	CARRIER NO1.	PORTEUR	1	D				
121	K9007390	GEAR;DRIVE	PIGNON MOTEUR	1					
123	K9007385	COVER	COUVERCLE	1					
124	S2212266	BOLT;SOCKET	BOULON	16					
125	K9007403	BEARING;ANGULAR BALL	A BILLES ROULEMENT	2					
126	S8010230	O-RING	JOINT CIRCULAIRE	1	K				
128	2181-1890D4	PLUG	BOUCHON	3					
129	K9007386	RING;SEAL	BAGUE D'ETANCHEITE	1					
130	1.180-00144	O-RING	JOINT TORIQUE	1	K				
132	K9004304	WASHER;THRUST	RONDELLE DE BUTEE	1					
133	1.412-00157	PLATE;THRUST	PLAQUE	1					
136	K9007395	PLATE;SHIM	PLAQUE D'IDENTIFICATION	2					

DATE	JUN. 01, 2010
3rd EDITION	

Fig. 4170 CONTROL VALVE(1) DISTRIBUTEUR

Serial No. ;

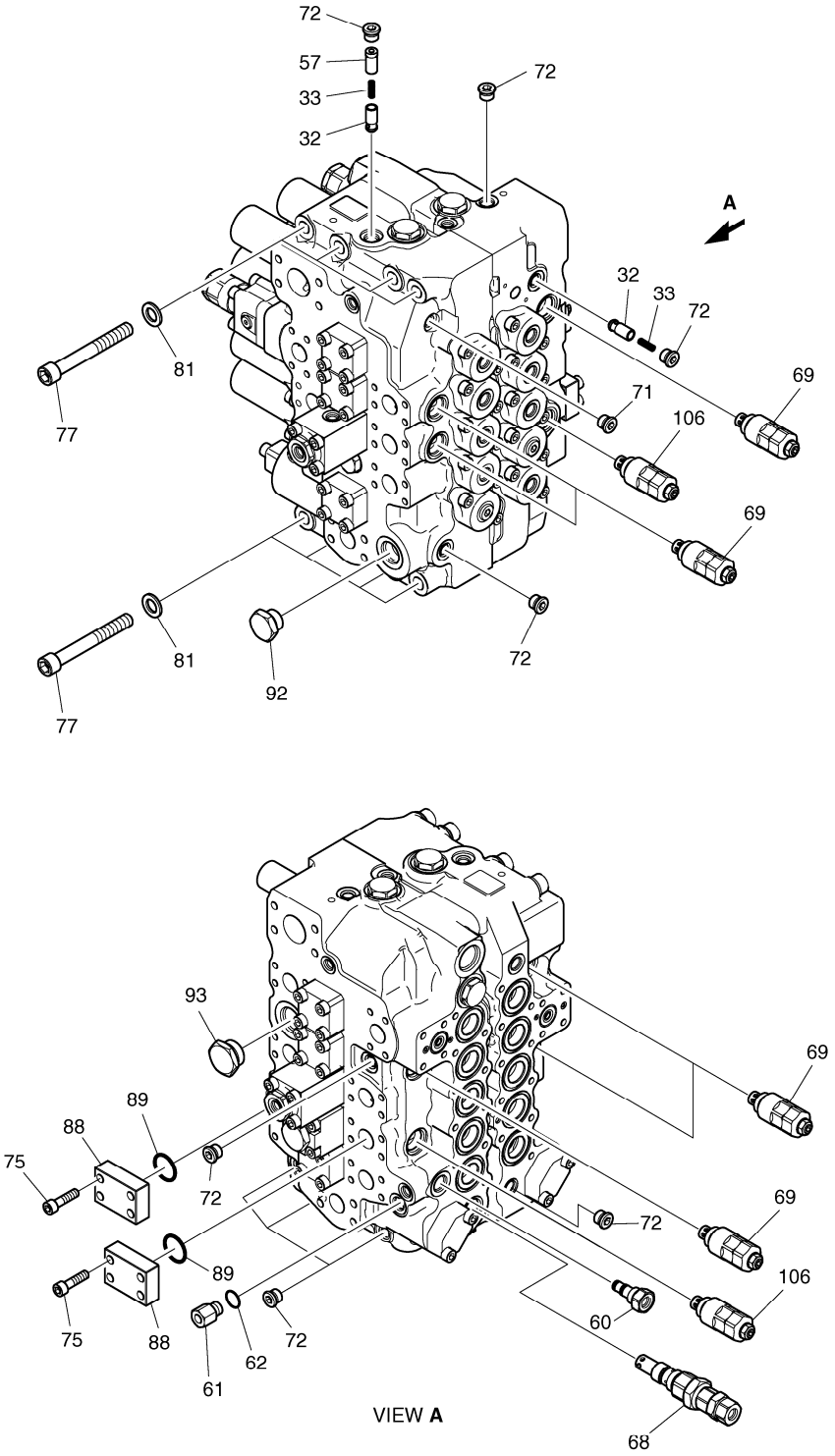

DATE	JUN. 01, 2010
3rd EDITION	

Fig. 4170 CONTROL VALVE(1) DISTRIBUTEUR

Serial No. ;

Key No.	Part No.	Description	Description	Q'ty	S.C	Serial No.	ICA	Replaceable part	
								Part No.	Q'ty
4170 --	K1025391	VALVE;CONTROL	VALVE	1					
32	426-00168	POPET	POPET	2					
33	129-00126	SPRING	RESSORT	2					
57	114-00414	SPACER	ENTRETOISE	1					
60	181-00633	PLUG ASS'Y	BOUCHON	1					
61	2181-2337D13	REDUCER	REDUCTEUR	1					
62	S8000141	O-RING	JOINT CIRCULAIRE	1	K				
68	K9001804	VALVE;MAIN RELIEF	VALVE	1					
69	420-00258	VALVE;OVERLOAD RELIEF	VANNE	6					
71	181-00565	PLUG ASS`Y	BOUCHON	1					
72	181-00701	PLUG ASS`Y	BOUCHON	12					
75	S2212466	BOLT;SOCKET M10X1.5X40	BOULON	8					
77	S2223266	BOLT;SOCKET M16X130L	BOULON	8					
81	S5010913	WASHER	RONDELLE	8					
88	2181-2434	FLANGE	BRIDE	2					
89	2180-1217D109	O-RING	JOINT CIRCULAIRE	2	K				
92	181-00647	PLUG ASS`Y	BOUCHON	1					
93	181-00649	PLUG ASS`Y	BOUCHON	1					
106	K9001805	VALVE;OVERLOAD RELIEF	VANNE	2					
*	420-00295KT	SEAL KIT;CONTROL VALVE	KIT DE JOINT	1					

DATE	JUN. 01, 2010
3rd EDITION	

Fig. 4180 CONTROL VALVE(2) DISTRIBUTEUR

Serial No. ;

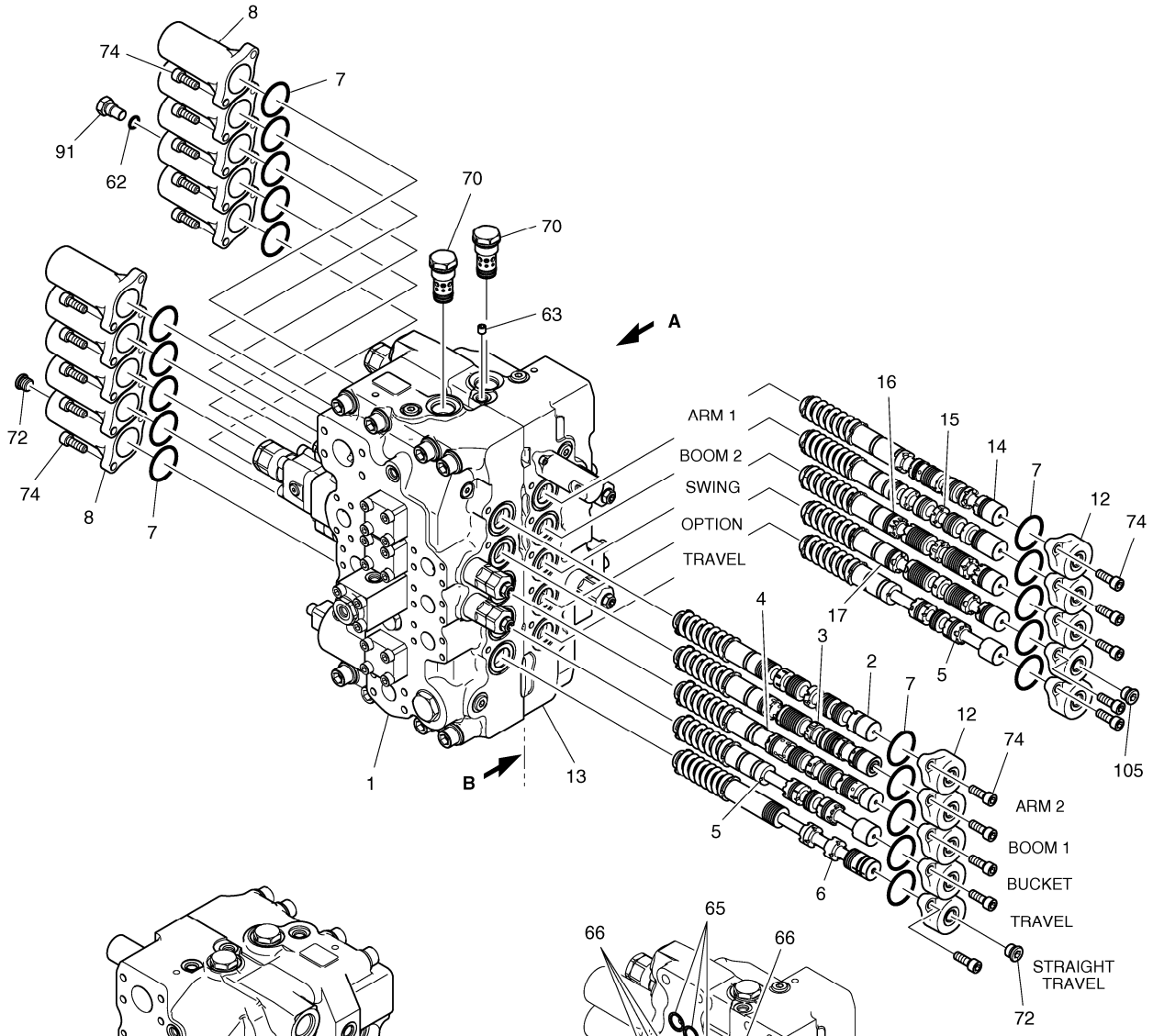

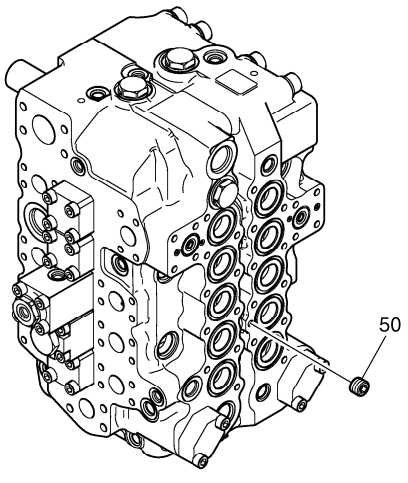

VIEW **A**

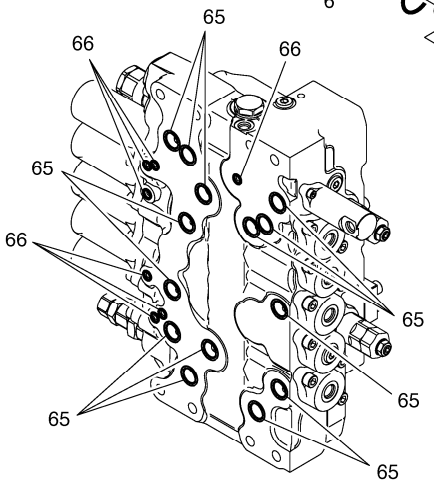

SECTION **B**

DATE	JUN. 01, 2010
3rd EDITION	

Fig. 4180 CONTROL VALVE(2) DISTRIBUTEUR

Serial No. ;

Key No.	Part No.	Description	Description	Q'ty	S.C	Serial No.	ICA	Replaceable part	
								Part No.	Q'ty
4180 --	K1025391	VALVE;CONTROL	VALVE	1					
1	423-00096	HOUSING;VALVE	LOGEMENT	1	D				
2	424-00185	SPOOL ASS`Y-ARM2	SPOOL	1					
3	K9003671	SPOOL ASS'Y-BOOM1	SPOOL	1					
4	424-00199	SPOOL ASS`Y-BUCKET	SPOOL	1					
5	K9001807	SPOOL ASS`Y-TRAVEL	SPOOL	2					
6	424-00115	SPOOL ASS`Y-T/S	SPOOL	1					
7	S8010451	O-RING	JOINT CIRCULAIRE	20	K				
8	430-00033	CAP	CHAPEAU	10					
12	430-00035	CAP	CHAPEAU	10					
13	423-00097	HOUSING;VALVE	LOGEMENT	1	D				
14	K9003672	SPOOL ASS'Y-ARM1	SPOOL	1					
15	K9003673	SPOOL ASS'Y-BOOM2	SPOOL	1					
16	K9001809	SPOOL ASS`Y-SWING	SPOOL	1					
17	K9001810	SPOOL ASS`Y-OPTION	SPOOL	1					
50	K9001199	PLUG	BOUCHON	1					
62	S8000141	O-RING	JOINT CIRCULAIRE	1	K				
63	415-00037	PLUG;ORIFICE	BOUCHON	1					
65	180-00403	O-RING	JOINT CIRCULAIRE	14	K				
66	180-00402	O-RING	JOINT CIRCULAIRE	7	K				
70	420-00259	FOOT RELIFE VALVE	CLAPET DE DECHARGE	2					
72	181-00701	PLUG ASS`Y	BOUCHON	2					
74	S2212266	BOLT;SOCKET	BOULON	40					
91	181-00646	PLUG	BOUCHON	1					
105	181-00701	PLUG ASS`Y	BOUCHON	1					

DATE	JUN. 01, 2010
3rd EDITION	

Fig. 4190 CONTROL VALVE(3) DISTRIBUTEUR

Serial No. ;

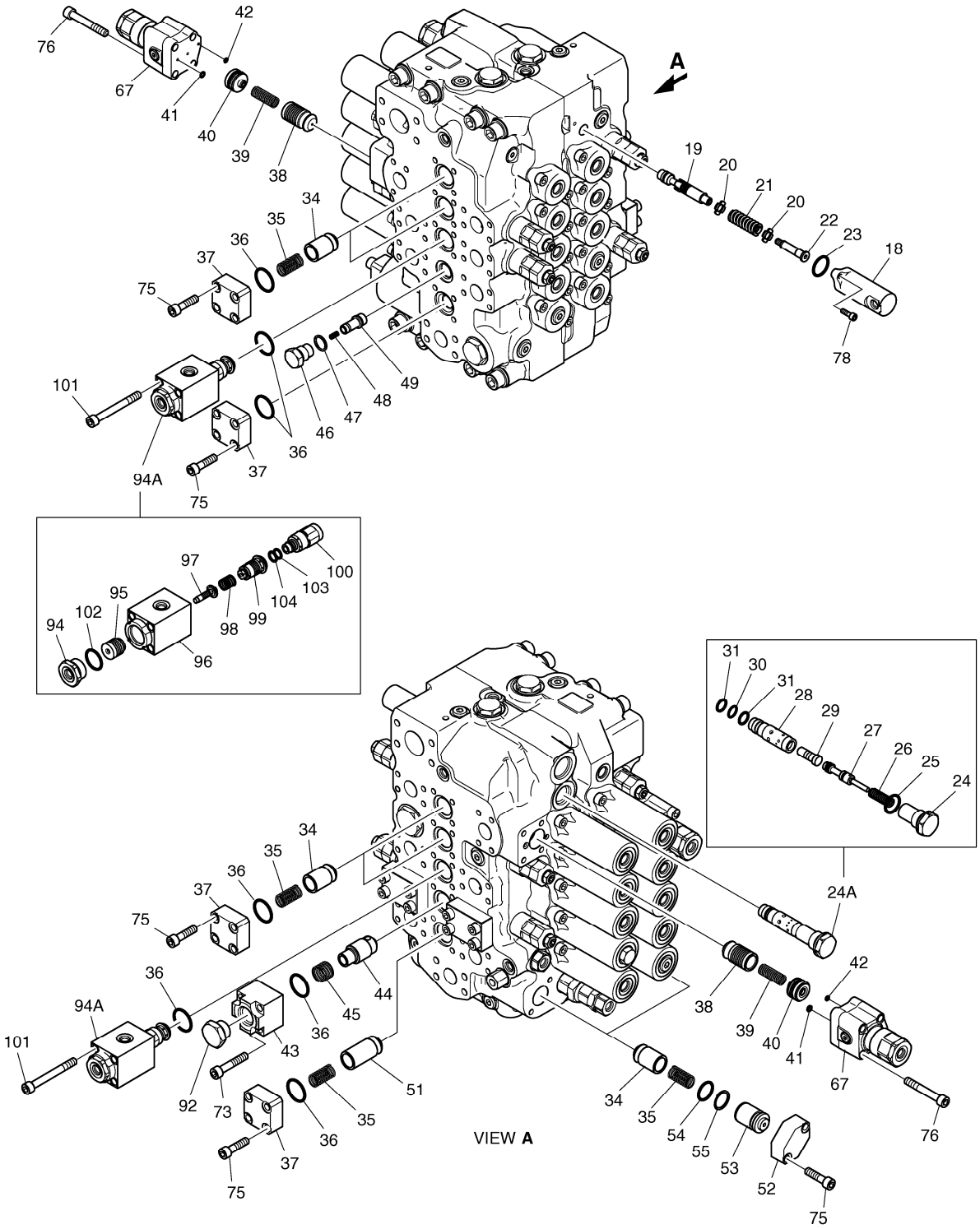

DATE	JUN. 01, 2010
3rd EDITION	

Fig. 4190 CONTROL VALVE(3) DISTRIBUTEUR

Serial No. ;

Key No.	Part No.	Description	Description	Q'ty	S.C	Serial No.	ICA	Replaceable part	
								Part No.	Q'ty
4190 --	K1025391	VALVE;CONTROL	VALVE	1					
18	430-00038	CAP	CHAPEAU	1					
19	-	SPOOL	SPOOL	1	D				
20	429-00024	SEAT;SPRING	SIEGE	2					
21	129-00124	SPRING	RESSORT	1					
22	430-00040	SPOOL END	SPOOL	1					
23	S8000261	O-RING	JOINT CIRCULAIRE	1	K				
24A	420-00314	. ARM REGEN ASS'Y	. REPOS DE BRAS	1					
24	430-00041	PLUG	BOUCHON	1					
25	S8000241	O-RING	JOINT CIRCULAIRE	1	K				
26	129-00125	SPRING	RESSORT	1					
27	-	SPOOL	SPOOL	1	D				
28	-	SLEEVE	DOUILLE	1	D				
29	-	PISTON	PISTON	1	D				
30	S8000161	O-RING	JOINT CIRCULAIRE	1	K				
31	S8060161	RING;BACK-UP	ANNEAU	2	K				
34	426-00169	POPET	POPET	6					
35	129-00127	SPRING	RESSORT	7					
36	S8000321	O-RING	JOINT CIRCULAIRE	9	K				
37	181-00628	FLANGE	BRIDE	6					
38	426-00170	POPET	POPET	2					
39	129-00128	SPRING	RESSORT	2					
40	114-00411	SPACER ASS`Y	ENTRETOISE	2					
41	S8000061	O-RING	JOINT CIRCULAIRE	2	K				
42	S8000041	O-RING	JOINT CIRCULAIRE	2	K				
43	181-00630	FLANGE	BRIDE	1					
44	426-00171	POPET	POPET	1					
45	129-00130	SPRING	RESSORT	1					
46	430-00042	PLUG	BOUCHON	1					
47	180-00398	O-RING	JOINT CIRCULAIRE	1	K				
48	129-00129	SPRING	RESSORT	1					
49	426-00172	POPET	POPET	1					
51	426-00173	POPET	POPET	1					
52	181-00631	FLANGE	BRIDE	2					
53	114-00413	SPACER	ENTRETOISE	2					
54	S8010250	O-RING	JOINT CIRCULAIRE	2	K				
55	180-00445	RING;BACK-UP	ANNEAU	2	K				
67	420-00246	ANTI-DRIFT VALVE ASS'Y	VANNE	2					

DATE	JUN. 01, 2010
3rd EDITION	

Fig. 4190 CONTROL VALVE(3) DISTRIBUTEUR

Serial No. ;

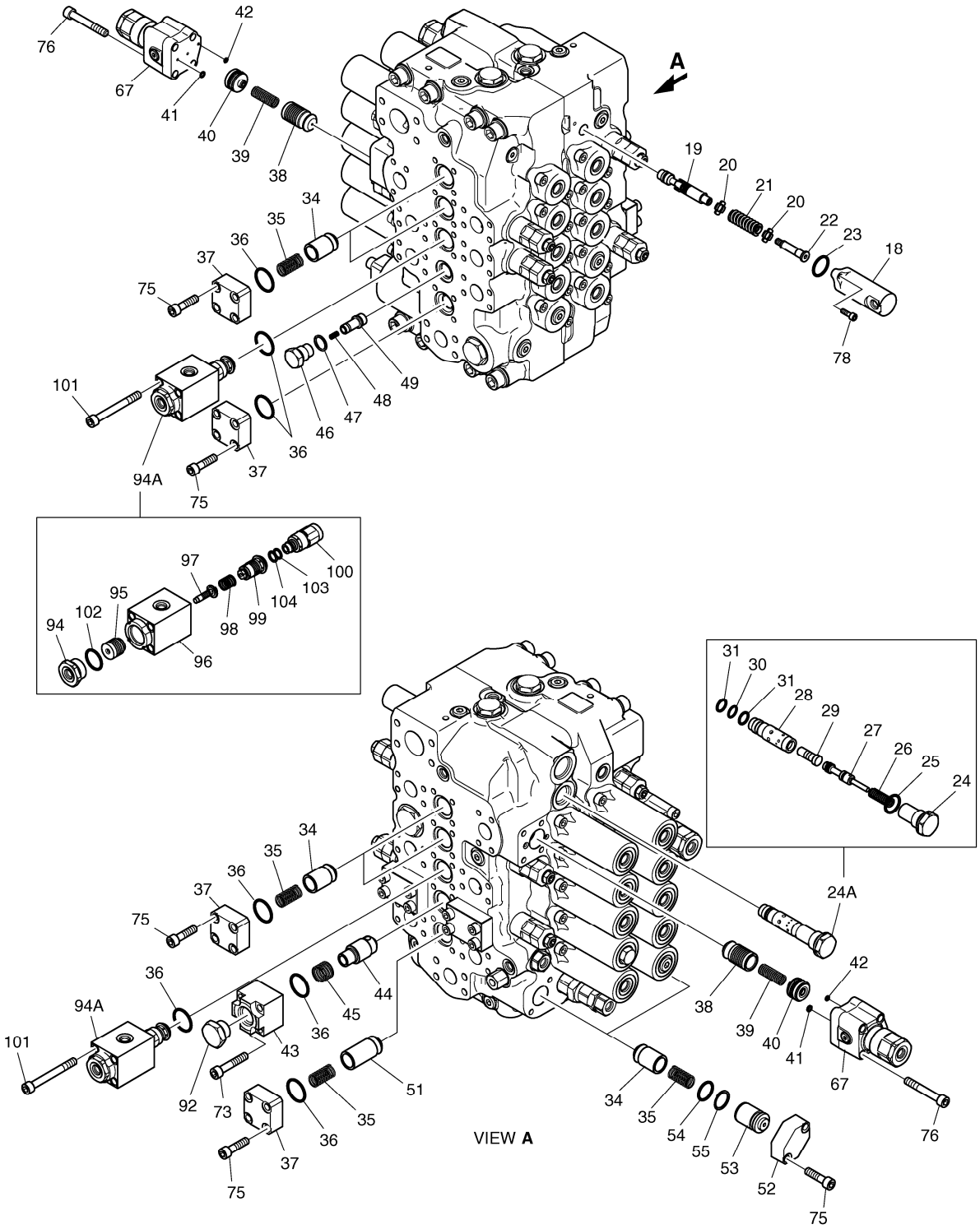

DATE	JUN. 01, 2010
3rd EDITION	

Fig. 4190 CONTROL VALVE(3) DISTRIBUTEUR

Serial No. ;

Key No.	Part No.	Description	Description	Q'ty	S.C	Serial No.	ICA	Replaceable part	
								Part No.	Q'ty
4190 -73	S2212766	BOLT;SOCKET	BOULON	4					
75	S2212466	BOLT;SOCKET M10X1.5X40	BOULON	28					
76	S2213066	BOLT;SOCKET M10X1.5X70	BOULON	8					
78	S2204866	BOLT;SOCKET	BOULON	2					
92	181-00647	PLUG ASS`Y	BOUCHON	1					
94A	420-00309	. BOOM PRIORITY VALVE	. VANNE	2					
94	430-00045	PLUG	BOUCHON	2					
95	409-00049	PISTON	PISTON	2					
96	-	BODY	CORPS	2	D				
97	409-00050	PISTON	PISTON	2					
98	129-00139	SPRING	RESSORT	2					
99	-	SLEEVE	DOUILLE	2	D				
100	426-00182	POPET ASS`Y	POPET	2					
102	180-00400	O-RING	JOINT CIRCULAIRE	2	K				
103	S8060121	RING;BACK UP	ANNEAU	2	K				
104	S8000121	O-RING	JOINT CIRCULAIRE	2	K				
101	S2213466	BOLT;SOCKET M10X90	BOULON	8					

DATE	JUN. 01, 2010
3rd EDITION	

Fig. 4200 REMOTE CONTROL VALVE
VANNE DE COMMAND A DISTANCE

Serial No. ;

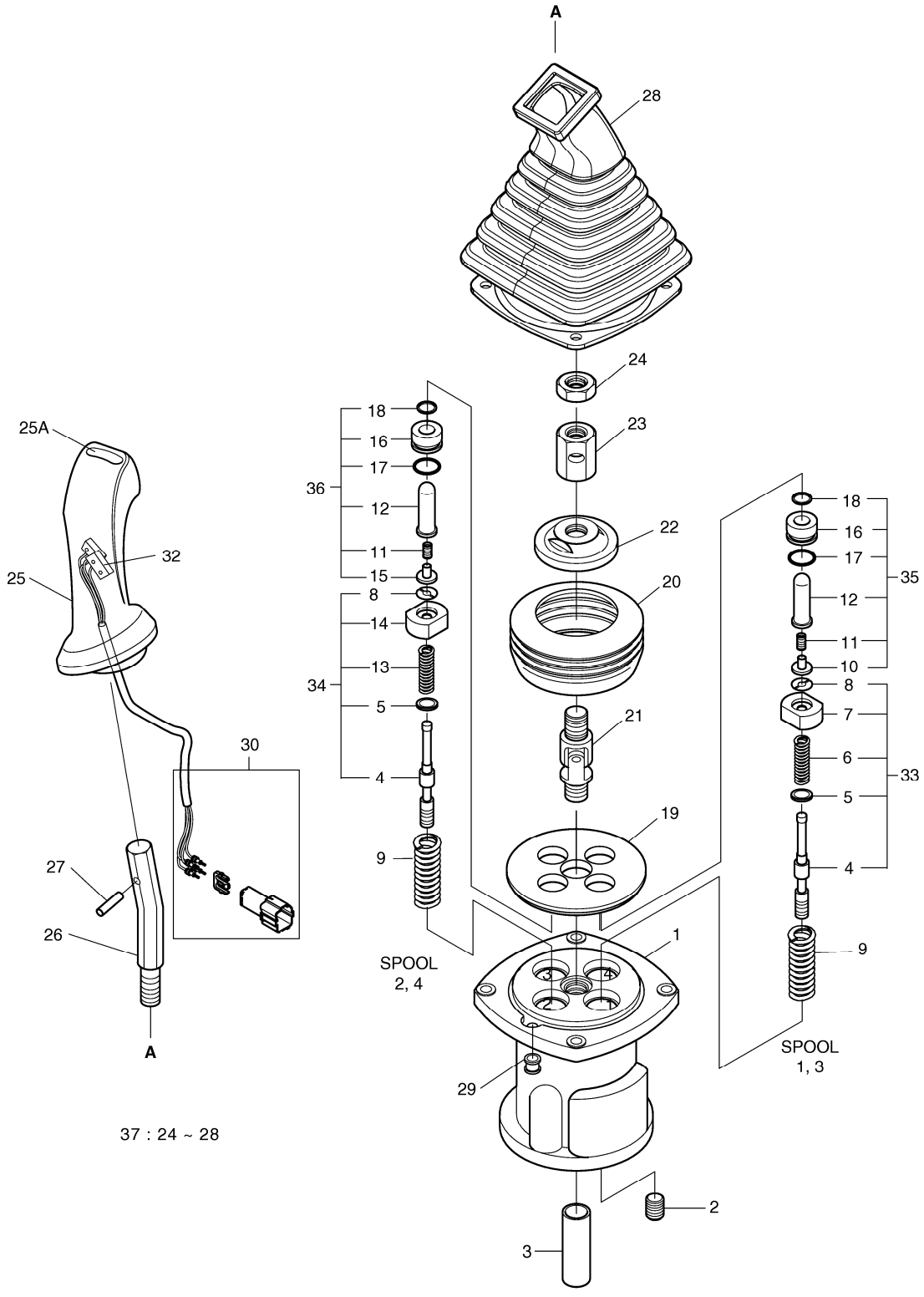

DATE	JUN. 01, 2010
3rd EDITION	

Fig. 4200 REMOTE CONTROL VALVE
VANNE DE COMMAND A DISTANCE

Serial No. ;

Key No.	Part No.	Description	Description	Q'ty	S.C	Serial No.	ICA	Replaceable part	
								Part No.	Q'ty
4200 --	K1000556H	REMOTE CONTROL VALVE(L.H)	VALVE DE REMOCON	1					
	K1000555H	REMOTE CONTROL VALVE(R.H)	VALVE DE REMOCON	1					
1	K9001114	CASE	CARTER	1	D				
2	2181-1116D2	PLUG	BOUCHON	4					
3	K9001115	BUSHING	BUSHING	1					
4	K9001116	SPOOL	PLUNGEUR	4	D				
5	1.114-00012	SHIM	CALE	1	D				
6	K9001117	SPRING	RESSORT	2	D				
7	K9001762	SEAT;SPRING	SIEGE	2	D				
8	K9001763	STOPPER	CHAPEAU	4	D				
9	K9001119	SPRING	RESSORT	4					
10	1.416-00017	STOPPER	CHAPEAU	2	D				
11	K9001121	SPRING	RESSORT	4	D				
12	K9001766	ROD;PUSH	TIGE DE POUSSOIR	4	D				
13	K9001123	SPRING	RESSORT	2	D				
14	K9001767	SEAT;SPRING	SIEGE	2	D				
15	1.416-00018	STOPPER	CHAPEAU	2	D				
16	K9001768	PLUG	BOUCHON	4	D				
17	S8000205	O-RING	JOINT CIRCULAIRE	4					
18	180-00198	SEAL;ROD	CACHET	4					
19	1.412-00017	PLATE	PLAQUE	1					
20	K9001128	BOOT	BOTTE	1					
21	1.138-00004	JOINT ASS`Y	ENSEMBLE DE JOINT	1					
22	K9001129	PLATE;SWASH	PLAQUE	1					
23	1.121-00028	NUT	ECROU	1					
24	S4012833	NUT	ECROU	1					
25	K9001130	HANDLE ASS`Y(L.H)	HANDLE	1					
	K9001131	HANDLE ASS`Y(R.H)	HANDLE	1					
25A	1.161-00021	. CAP;PEANUT	. CHAPEAU	1					
26	1.178-00004	BAR;HANDLE	BARRE	1					
27	S5740800	PIN;SPRING	GOUPILLE	1					
28	K9001132	BELLOWS	SOUFFLETS	1					
29	1.110-00169	BUSHING	BUSHING	1					
30	K9001133	CONNECTOR ASS`Y	CONNECTOR	1					
32	K9001001	SWITCH ASS`Y	INTERRUPTEUR	1					
33	K9003998	KIT;SPOOL(1,3)	KIT	1					
34	K9003999	KIT;SPOOL(2,4)	KIT	1					
35	K9006480	KIT;PLUG(1,3)	KIT	1					

Fig. 4200 REMOTE CONTROL VALVE
VANNE DE COMMAND A DISTANCE

Serial No. ;

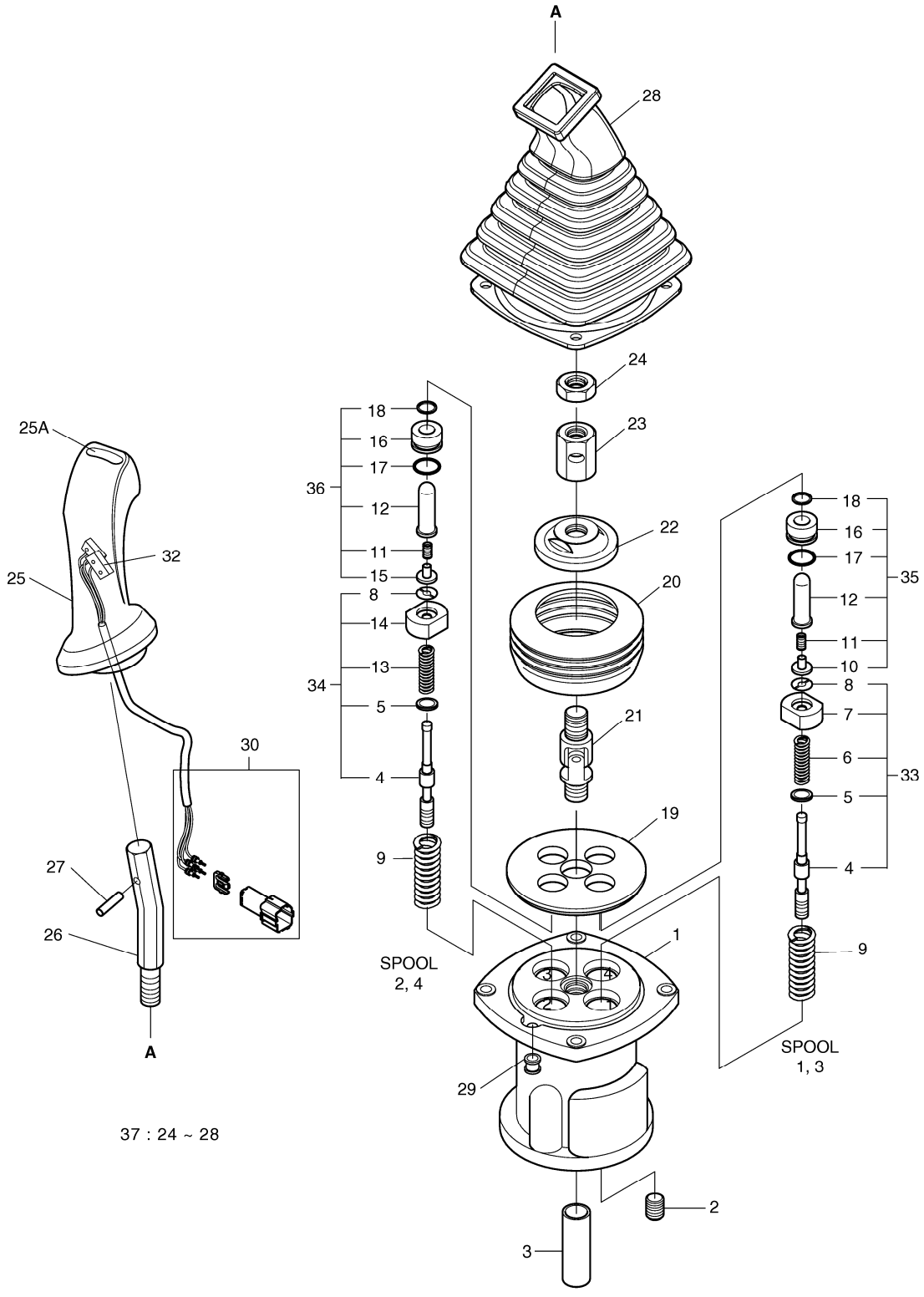

DATE	JUN. 01, 2010
3rd EDITION	

Fig. 4200 REMOTE CONTROL VALVE
VANNE DE COMMAND A DISTANCE

Serial No. ;

Key No.	Part No.	Description	Description	Q'ty	S.C	Serial No.	ICA	Replaceable part	
								Part No.	Q'ty
4200 -36	K9006481	KIT;PLUG(2,4)	KIT	1					
37	K9001139	KIT;HANDLE(R.H)	KIT	1					
	K9001140	KIT;HANDLE(L.H)	KIT	1					

DATE	JUN. 01, 2010
3rd EDITION	

Fig. 4210 PEDAL VALVE VANNE

Serial No. ;

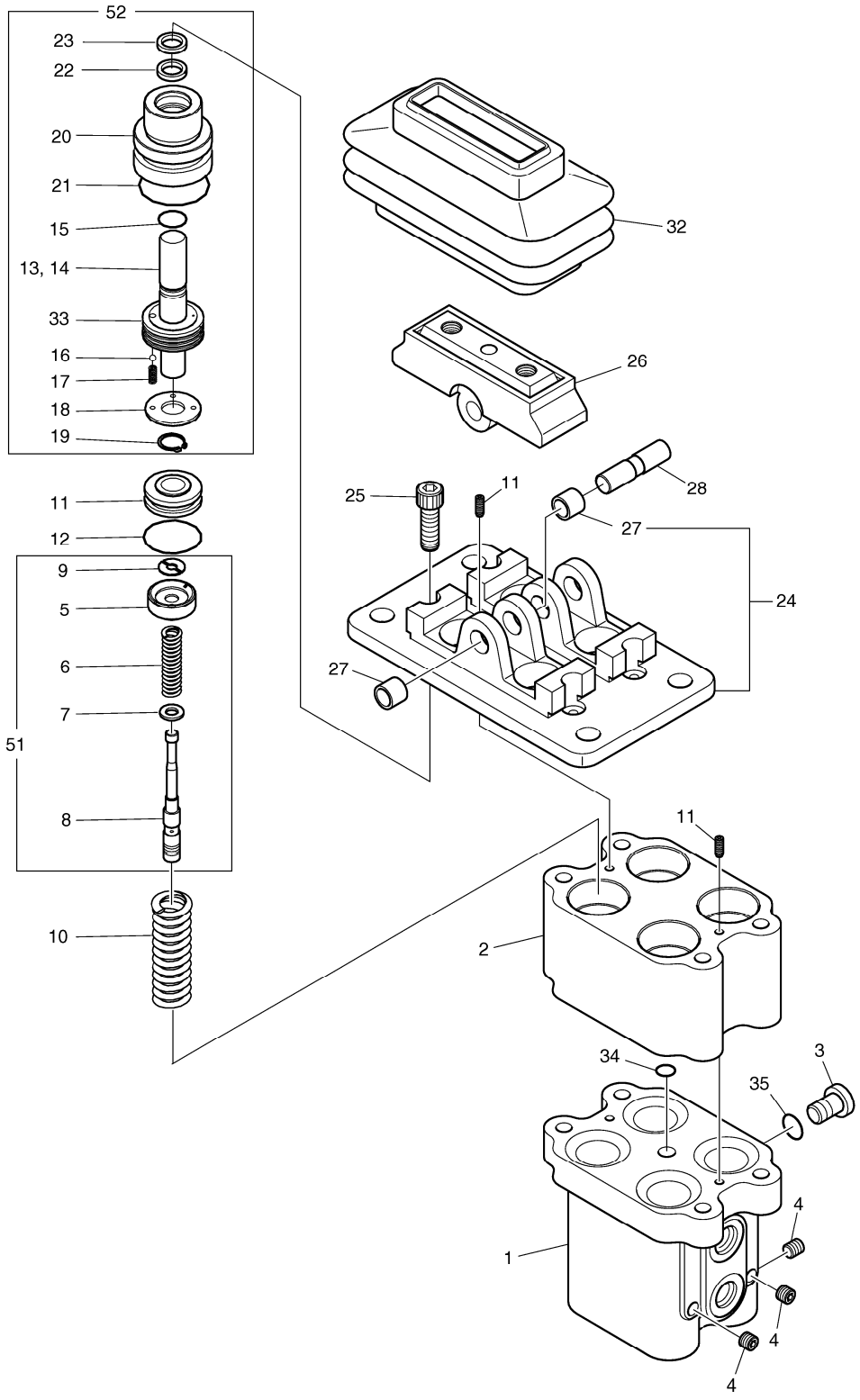

DATE	JUN. 01, 2010
3rd EDITION	

Fig. 4210 PEDAL VALVE VANNE

Serial No. ;

Key No.	Part No.	Description	Description	Q'ty	S.C	Serial No.	ICA	Replaceable part	
								Part No.	Q'ty
4210 --	420-00467A	VALVE;PEDAL	VALVE	1					
1	-	BODY	CORPS	1	D				
2	-	BODY	CORPS	1	D				
3	420-00112	PLUG	BOUCHON	1					
4	2181-1116D1	PLUG	BOUCHON	3					
51	K9006863	KIT;SPOOL	KIT	4					
5	429-00004	SEAT;SPRING	SIEGE	4					
6	K9001141	SPRING	RESSORT	4					
7	429-00005	SEAT;SPRING	SIEGE	4					
8	424-00042	SPOOL	SPOOL	4					
9	161-00080	STOPPER	TAQUET	4					
10	K9006860	SPRING	RESSORT	4					
11	S5740600	PIN;SPRING	GOUPILLE	4					
12	S8000261	O-RING	JOINT CIRCULAIRE	4					
52	K9006864	KIT;PLUG	KIT	4					
13	-	ROD;PUSH	TIGE	4	D				
14	S5740480	PIN;SPRING	GOUPILLE	4					
15	-	SEAL	CACHET	4	D				
16	148-00012	BALL;STEEL	BOULE	4					
17	129-00043	SPRING	RESSORT	4					
18	159-00017	PLATE	PLAQUE	4					
19	115-00042	RING;SNAP	ANNEAU	4					
20	-	PLUG	BOUCHON	4	D				
21	S8010251	O-RING	JOINT CIRCULAIRE	4					
22	180-00198	SEAL;ROD	CACHET	4					
23	180-00199	SEAL;DUST	CACHET	4					
33	1.409-00225	PISTON	PISTON	4					
24	K9006865	KIT;COVER	KIT	1					
27	2110-1184D7	BUSH;DU 10X10	BUSH	4					
25	S2210071	BOLT;SOCKET	BOULON	4					
26	K9006866	KIT;CAM	KIT	2					
28	K9006861	SHAFT;CAM	AXE	2					
32	K9006862	BELLOWS	SOUFFLETS	2					
34	S8000081	O-RING	JOINT CIRCULAIRE	1					
35	S8000111	O-RING	JOINT CIRCULAIRE	1					

DATE	JUN. 01, 2010
3rd EDITION	

Fig. 4220 SOLENOID VALVE
VANNE

Serial No. ;

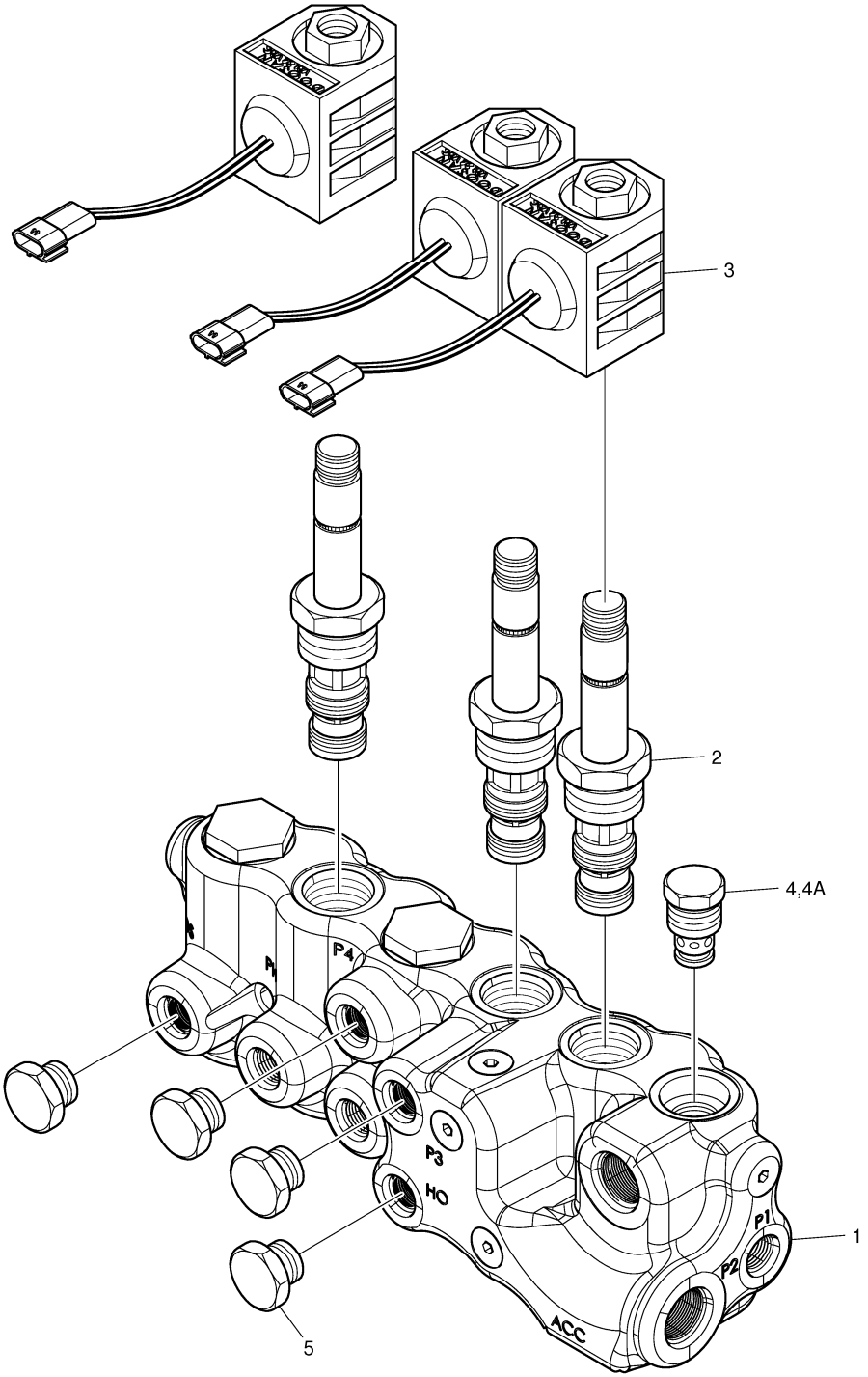

DATE	JUN. 01, 2010
3rd EDITION	

Fig. 4220 SOLENOID VALVE VANNE

Serial No. ;

Key No.	Part No.	Description	Description	Q'ty	S.C	Serial No.	ICA	Replaceable part	
								Part No.	Q'ty
4220 --	K1047557	VALVE;SOLENOID	VALVE	1					
1	-	BLOCK	BLOC	1	D				
2	K9007363	SPOOL;SOLENOID	SPOOL	3					
3	1.519-00001	COIL	ENROULEMENT	3					
4	K9002065	VALVE;CHECK	VALVE	1					
4A	1.180-00447	. KIT;SEAL	. KIT	1					
5	2181-1950D1	PLUG	BOUCHON	4					

DATE	JUN. 01, 2010
3rd EDITION	

Fig. 4230 BOOM CYLINDER - L.H.
VERIN DE FLECHE

Serial No. ;

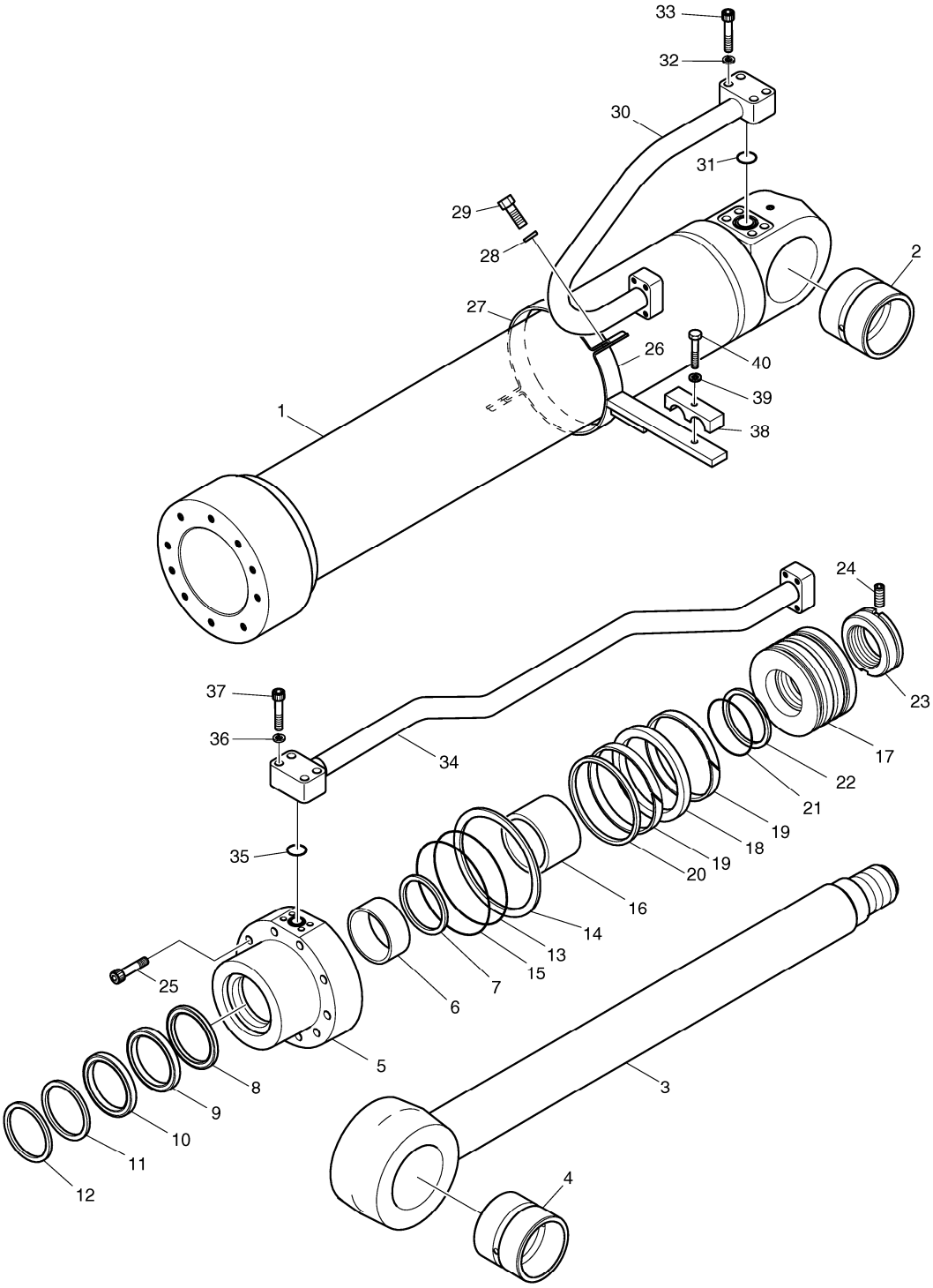

DATE	JUN. 01, 2010
3rd EDITION	

Fig. 4230 BOOM CYLINDER - L.H.
VERIN DE FLECHE

Serial No. ;

Key No.	Part No.	Description	Description	Q'ty	S.C	Serial No.	ICA	Replaceable part	
								Part No.	Q'ty
4230 --	K1044989B	CYLINDER;BOOM (LH)	CYLINDRE	1					
1	K9007361	TUBE ASS'Y	ENSEMBLE TUBE	1					
2	K1037853A	BUSH	BUSH	1					
3	K9007362	ROD ASS'Y	ENSEMBLE TIGE	1					
4	K1037853A	BUSH	BUSH	1					
5	K9001856	ROD;COVER	TIGE	1					
6	110-00079	DD-BUSH	COUSSINET	1					
7	115-00050	RING;RETAINING	BAGUE	1					
8	K9001857	SEAL;BUFFER	ETANCHEITE A GRADINS	1	K				
9	K9001858	U-PACKING	JOINT EN U	1	K				
10	K9001877	RING;BACK UP	BAGUE ANTIEXTRUSION	1	K				
11	115-00059	WIPER;DUST	PARE-POUSSIERE	1	K				
12	115-00051	RING;RETAINING	BAGUE D'ARRET	1					
13	S8011201	O-RING	JOINT CIRCULAIRE	1	K				
14	K9001859	RING;BACK UP	ANNEAU	1	K				
15	S8011251	O-RING	JOINT CIRCULAIRE	1	K				
16	1.115-00204	RING;CUSHION	BAGUE D'AMORTISSEMEN	1					
17	K9001860	PISTON	PISTON	1					
18	K9001890	SEAL;SLIPPER	CACHET	1	K				
19	115-00087	RING;WEAR	ANNEAU	2	K				
20	K9001861	RING;DUST	BAGUE	1	K				
21	S8010651	O-RING	JOINT TORIQUE	1	K				
22	1.180-00277	RING;BACK UP	BAGUE ANTIEXTRUSION	2	K				
23	K9001862	NUT;PISTON	ECROU	1					
24	1.120-00219	SCREW;SET	VIS	1					
25	S2222272	BOLT;SOCKET	BOULON	10					
26	K9007358	PIPE BAND ASS'Y	BANDE ASS'Y DE PIPE	1					
27	124-00088	BAND;PIPE	ATTACHE	1					
28	S5100603	WASHER;SPRING	RONDELLE	2					
29	S0558153	BOLT	BOULON	2					
30	K9007360	PIPE ASS'Y-H(L.H)	ENSEMBLE CONDUITES	1					
31	S8000281	O-RING	JOINT CIRCULAIRE	1					
32	S5100603	WASHER;SPRING	RONDELLE	4					
33	S2212761	BOLT;SOCKET M10X1.5X55	BOULON	4					
34	K9007357	PIPE ASS'Y-R(L.H)	ENSEMBLE CONDUITES	1					
35	S8000281	O-RING	JOINT CIRCULAIRE	1					
36	S5100603	WASHER;SPRING	RONDELLE	4					
37	S2212761	BOLT;SOCKET M10X1.5X55	BOULON	4					

DATE	JUN. 01, 2010
3rd EDITION	

Fig. 4230 BOOM CYLINDER - L.H.
VERIN DE FLECHE

Serial No. ;

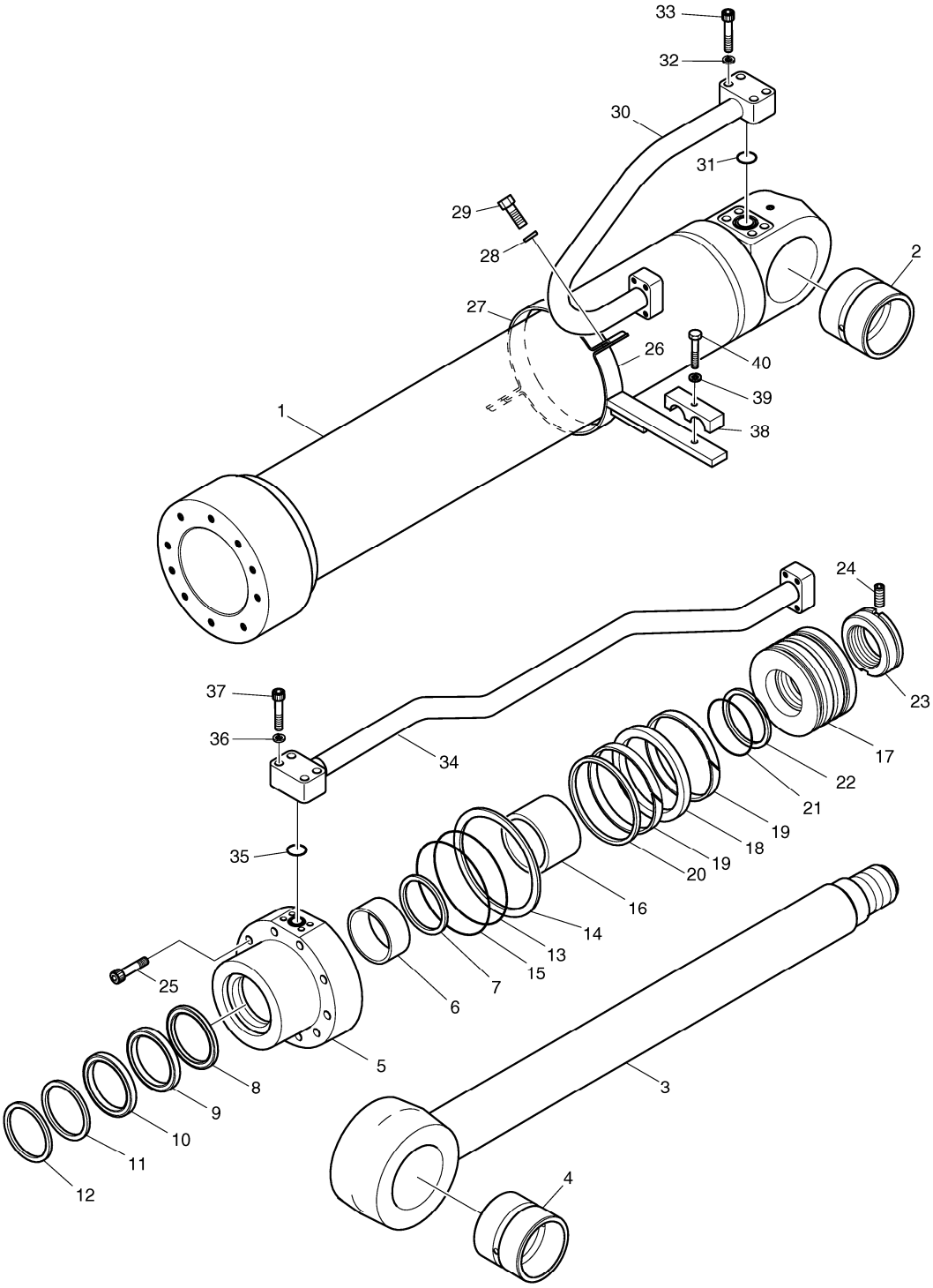

DATE	JUN. 01, 2010
3rd EDITION	

Fig. 4230 BOOM CYLINDER - L.H.
VERIN DE FLECHE

Serial No. ;

Key No.	Part No.	Description	Description	Q'ty	S.C	Serial No.	ICA	Replaceable part	
								Part No.	Q'ty
4230 -38	1.124-00157	CLAMP;PIPE	COLLIER	1					
39	S5100703	WASHER;SPRING	RONDELLE	1					
40	S0561053	BOLT M12X1.75X65	BOULON	1					
*	K9001878	SEAL KIT;BOOM CYLINDER	JOINT	1					

DATE	JUN. 01, 2010
3rd EDITION	

Fig. 4240 BOOM CYLINDER - R.H.
VERIN DE FLECHE

Serial No. ;

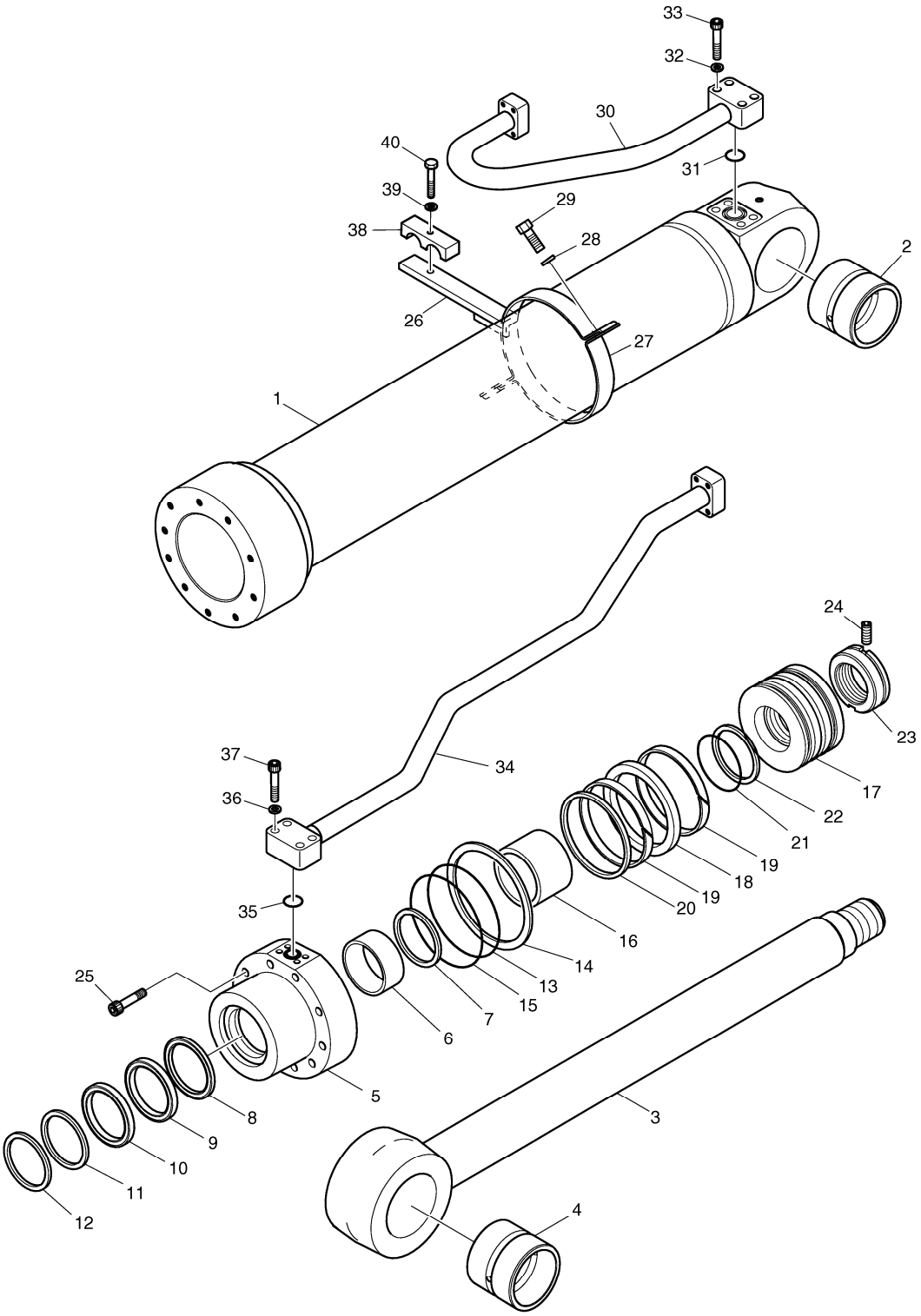

DATE	JUN. 01, 2010
3rd EDITION	

Fig. 4240 BOOM CYLINDER - R.H.
VERIN DE FLECHE

Serial No. ;

Key No.	Part No.	Description	Description	Q'ty	S.C	Serial No.	ICA	Replaceable part	
								Part No.	Q'ty
4240 --	K1044990B	CYLINDER;BOOM (RH)	CYLINDRE	1					
1	K9007361	TUBE ASS'Y	ENSEMBLE TUBE	1					
2	K1037853A	BUSH	BUSH	1					
3	K9007362	ROD ASS'Y	ENSEMBLE TIGE	1					
4	K1037853A	BUSH	BUSH	1					
5	K9001856	ROD;COVER	TIGE	1					
6	110-00079	DD-BUSH	COUSSINET	1					
7	115-00050	RING;RETAINING	BAGUE	1					
8	K9001857	SEAL;BUFFER	ETANCHEITE A GRADINS	1	K				
9	K9001858	U-PACKING	JOINT EN U	1	K				
10	K9001877	RING;BACK UP	BAGUE ANTIEXTRUSION	1	K				
11	115-00059	WIPER;DUST	PARE-POUSSIERE	1	K				
12	115-00051	RING;RETAINING	BAGUE D'ARRET	1					
13	S8011201	O-RING	JOINT CIRCULAIRE	1	K				
14	K9001859	RING;BACK UP	ANNEAU	1	K				
15	S8011251	O-RING	JOINT CIRCULAIRE	1	K				
16	1.115-00204	RING;CUSHION	BAGUE D'AMORTISSEMEN	1					
17	K9001860	PISTON	PISTON	1					
18	K9001890	SEAL;SLIPPER	CACHET	1	K				
19	115-00087	RING;WEAR	ANNEAU	2	K				
20	K9001861	RING;DUST	BAGUE	1	K				
21	S8010651	O-RING	JOINT TORIQUE	1	K				
22	1.180-00277	RING;BACK UP	BAGUE ANTIEXTRUSION	2	K				
23	K9001862	NUT;PISTON	ECROU	1					
24	1.120-00219	SCREW;SET	VIS	1					
25	S2222272	BOLT;SOCKET	BOULON	10					
26	K9007358	PIPE BAND ASS'Y	BANDE ASS'Y DE PIPE	1					
27	124-00088	BAND;PIPE	ATTACHE	1					
28	S5100603	WASHER;SPRING	RONDELLE	2					
29	S0558153	BOLT	BOULON	2					
30	K9007359	PIPE ASS'Y-H(L.H)	ENSEMBLE CONDUITES	1					
31	S8000281	O-RING	JOINT CIRCULAIRE	1					
32	S5100603	WASHER;SPRING	RONDELLE	4					
33	S2212761	BOLT;SOCKET M10X1.5X55	BOULON	4					
34	K9007356	PIPE ASS'Y-R(L.H)	ENSEMBLE CONDUITES	1					
35	S8000281	O-RING	JOINT CIRCULAIRE	1					
36	S5100603	WASHER;SPRING	RONDELLE	4					
37	S2212761	BOLT;SOCKET M10X1.5X55	BOULON	4					

DATE	JUN. 01, 2010
3rd EDITION	

Fig. 4240 BOOM CYLINDER - R.H.
VERIN DE FLECHE

Serial No. ;

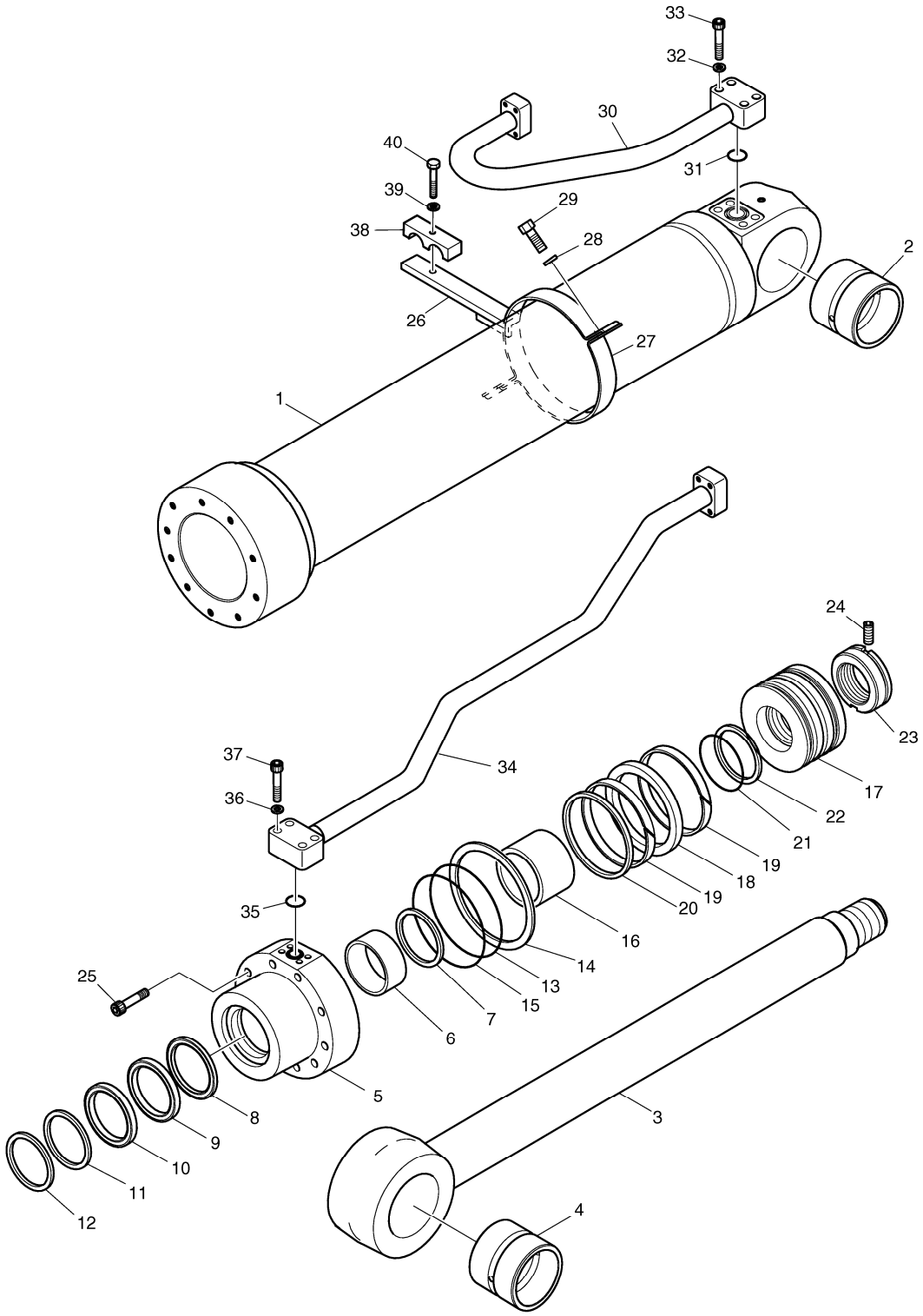

DATE	JUN. 01, 2010
3rd EDITION	

Fig. 4240 BOOM CYLINDER - R.H.
VERIN DE FLECHE

Serial No. ;

Key No.	Part No.	Description	Description	Q'ty	S.C	Serial No.	ICA	Replaceable part	
								Part No.	Q'ty
4240 -38	1.124-00157	CLAMP;PIPE	COLLIER	1					
39	S5100703	WASHER;SPRING	RONDELLE	1					
40	S0561053	BOLT M12X1.75X65	BOULON	1					
*	K9001878	SEAL KIT;BOOM CYLINDER	JOINT	1					

DATE	JUN. 01, 2010
3rd EDITION	

Fig. 4250 ARM CYLINDER VERIN DE BALANCIER

Serial No. ;

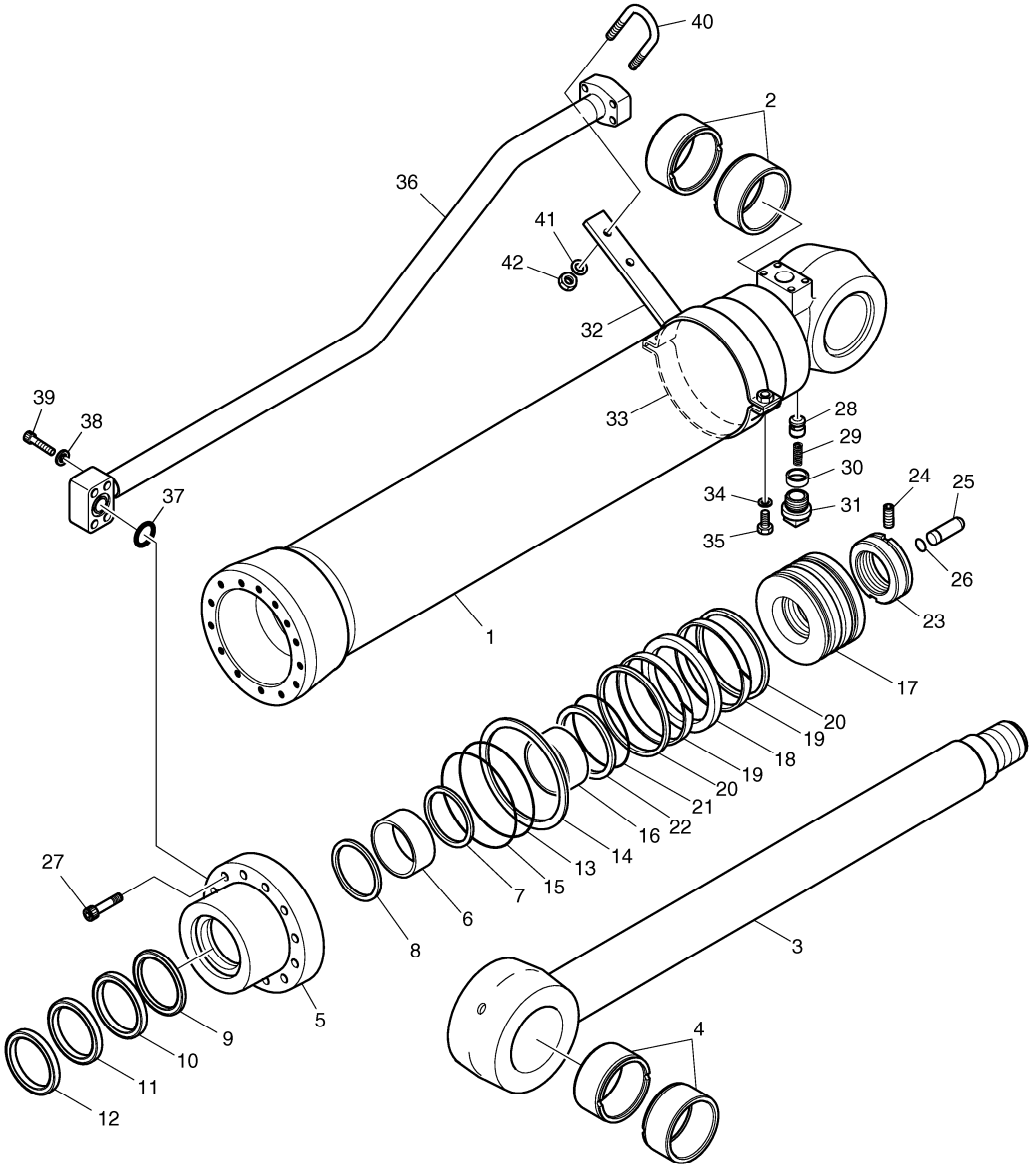

DATE	JUN. 01, 2010
3rd EDITION	

Fig. 4250 ARM CYLINDER VERIN DE BALANCIER

Serial No. ;

Key No.	Part No.	Description	Description	Q'ty	S.C	Serial No.	ICA	Replaceable part	
								Part No.	Q'ty
4250 --	K1044991A	CYLINDER;ARM	VERIN DE BALANCIER	1					
1	K9001879A	TUBE ASS'Y	DOUILLE ACIER	1					
2	K1037854A	BUSH	BUSH	2					
3	K9001880	ROD ASS`Y	TIGE	1					
4	K1037854A	BUSH	BUSH	2					
5	K9001881	ROD;COVER	TIGE	1					
6	110-00081	DD-BUSH	DD-BUSH	1					
7	115-00073	RING;RETAINING	ANNEAU	1					
8	K9001882	SEAL;BUFFER	CACHET	1	K				
9	K9001883	U-PACKING	U-EMBALLAGE	1	K				
10	K9001884	RING;BACK UP	ANNEAU	1	K				
11	115-00077	WIPER;DUST	ESSUIE-GLACE	1	K				
12	115-00078	RING;RETAINING	ANNEAU	1					
13	S8011351	O-RING	JOINT CIRCULAIRE	1	K				
14	1.180-00662	RING;BACK UP	ANNEAU	1	K				
15	2180-1217D96	O-RING	JOINT CIRCULAIRE	1	K				
16	K9001893	RING;CUSHION	ANNEAU	1					
17	K9001894	PISTON	PISTON	1					
18	K9001148	SEAL;SLIPPER	CACHET	1	K				
19	115-00079	RING;WEAR	ANNEAU	2	K				
20	K9001149	RING;DUST	ANNEAU	2	K				
21	S8010801	O-RING	JOINT CIRCULAIRE	1	K				
22	K9001895	RING;BACK UP	ANNEAU	2	K				
23	K9001896	NUT;RISTON	ECROU	1					
24	1.120-00219	SCREW;SET	VIS	1					
25	K9001897	PLUNGER;CUSHION	PLONGEUR	1					
26	115-00081	RING;STOP	ANNEAU	1					
27	S2222272	BOLT;SOCKET	BOULON	14					
28	1.420-00050	VALVE;CHECK	VALVE	1					
29	129-00071	SPRING	RESSORT	1					
30	1.195-00022	SUPPORT;SPRING	APPUI	1					
31	2181-1116D3	PLUG;HEX. SOCKET	BOUCHON	1					
32	K9001898	PIPE BAND ASS'Y-B	ENSEMBLE DE FIXATION	1					
33	124-00052	BAND;PIPE	BANDE	1					
34	S5100703	WASHER;SPRING	RONDELLE	2					
35	S0560563	BOLT;HEX	BOULON	2					
36	K9001900	PIPE ASS`Y-R	TUYAU	1					
37	S8000341	O-RING	JOINT CIRCULAIRE	1					

DATE	JUN. 01, 2010
3rd EDITION	

Fig. 4250 ARM CYLINDER VERIN DE BALANCIER

Serial No. ;

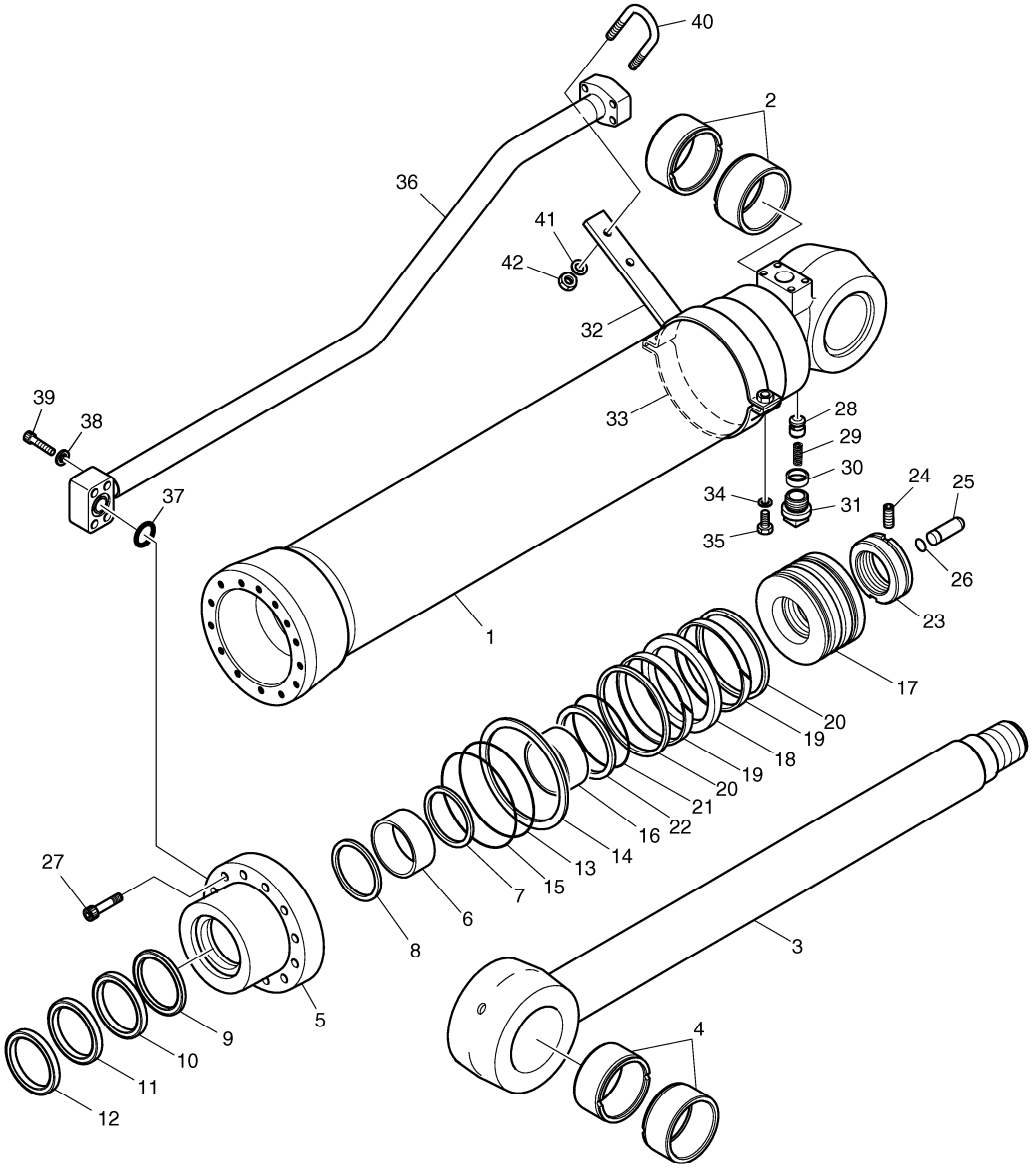

DATE	JUN. 01, 2010
3rd EDITION	

Fig. 4250 ARM CYLINDER VERIN DE BALANCIER

Serial No. ;

Key No.	Part No.	Description	Description	Q'ty	S.C	Serial No.	ICA	Replaceable part	
								Part No.	Q'ty
4250 -38	S5100703	WASHER;SPRING	RONDELLE	4					
39	S2215961	BOLT;SOCKET	BOULON	4					
40	K9001158	U-BOLT	U-BOULON	1					
41	S5100603	WASHER;SPRING	RONDELLE	2					
42	S4012633	NUT	ECROU	2					
*	K9001901	SEAL KIT;ARM CYLINDER	KIT DE JOINT	1					

DATE	JUN. 01, 2010
3rd EDITION	

Fig. 4260 BUCKET CYLINDER - ARM 2.9m VERIN DE GODET

Serial No. ;

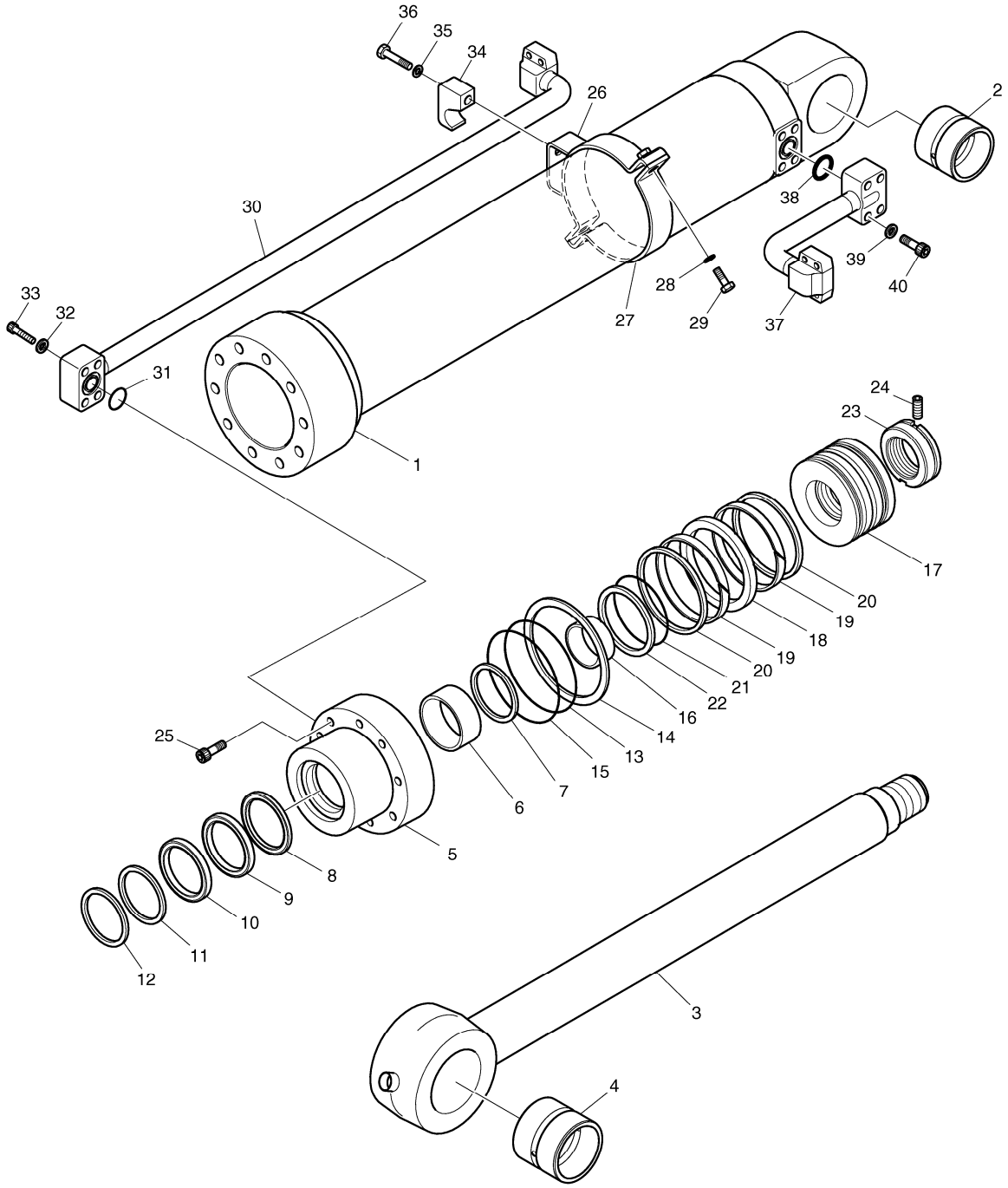

DATE	JUN. 01, 2010
3rd EDITION	

Fig. 4260 BUCKET CYLINDER - ARM 2.9m VERIN DE GODET

Serial No. ;

Key No.	Part No.	Description	Description	Q'ty	S.C	Serial No.	ICA	Replaceable part	
								Part No.	Q'ty
4260 --	K1041218A	BUCKET CYLINDER	VERIN DE GODET	1					
1	K9001868	TUBE ASS`Y	ENSEMBLE TUBE	1					
2	K1037853A	BUSH	BUSH	1					
3	K9001869A	ROD ASS'Y	TIGE	1					
4	K1037853A	BUSH	BUSH	1					
5	K9001870	COVER;ROD	COUVERTURE	1					
6	110-00097	DD-BUSH	DD-BUSH	1					
7	K9001401	RING;RETAINING	ANNEAU	1					
8	K9001402	SEAL;BUFFER	CACHET	1	K				
9	K9001403	U-PACKING	U-EMBALLAGE	1	K				
10	K9001404	RING;BACK UP	ANNEAU	1	K				
11	115-00084	WIPER;DUST	ESSUIE-GLACE	1	K				
12	115-00063	RING;RETAINING	ANNEAU	1					
13	S8011151	O-RING	JOINT CIRCULAIRE	1	K				
14	1.180-00278	RING;BACK UP	ANNEAU	1	K				
15	S8011201	O-RING	JOINT CIRCULAIRE	1	K				
16	K9001406	RING;CUSHION	ANNEAU	1					
17	K9001871	PISTON	PISTON	1					
18	K9001891	SEAL;SLIPPER	CACHET	1	K				
19	115-00055	RING;WEAR	ANNEAU	2	K				
20	K9001872	RING;DUST	ANNEAU	2	K				
21	180-00276	O-RING	JOINT CIRCULAIRE	1	K				
22	K9001410	RING;BACK UP	ANNEAU	2	K				
23	K9001862	NUT;PISTON	ECROU	1					
24	1.120-00219	SCREW;SET	VIS	1					
25	S2222171	BOLT;HEX. SOCKET	BOULON	10					
26	K9001873	PIPE BAND ASS`Y	ENSEMBLE DE FIXATION	1					
27	K9001874	BAND;PIPE	BANDE	1					
28	S5100703	WASHER;SPRING	RONDELLE	2					
29	S0560563	BOLT;HEX	BOULON	2					
30	K9001875	PIPE ASS`Y-R	TUYAU	1					
31	S8000281	O-RING	JOINT CIRCULAIRE	1					
32	S5100603	WASHER;SPRING	RONDELLE	4					
33	S2212761	BOLT;SOCKET M10X1.5X55	BOULON	4					
34	K9001413	CLAMP;PIPE	BRIDE	1					
35	S5100603	WASHER;SPRING	RONDELLE	1					
36	S2221873	BOLT	BOULON	1					
37	K9001876	PIPE ASS`Y-H	TUYAU	1					

DATE	JUN. 01, 2010
3rd EDITION	

Fig. 4260 BUCKET CYLINDER - ARM 2.9m VERIN DE GODET

Serial No. ;

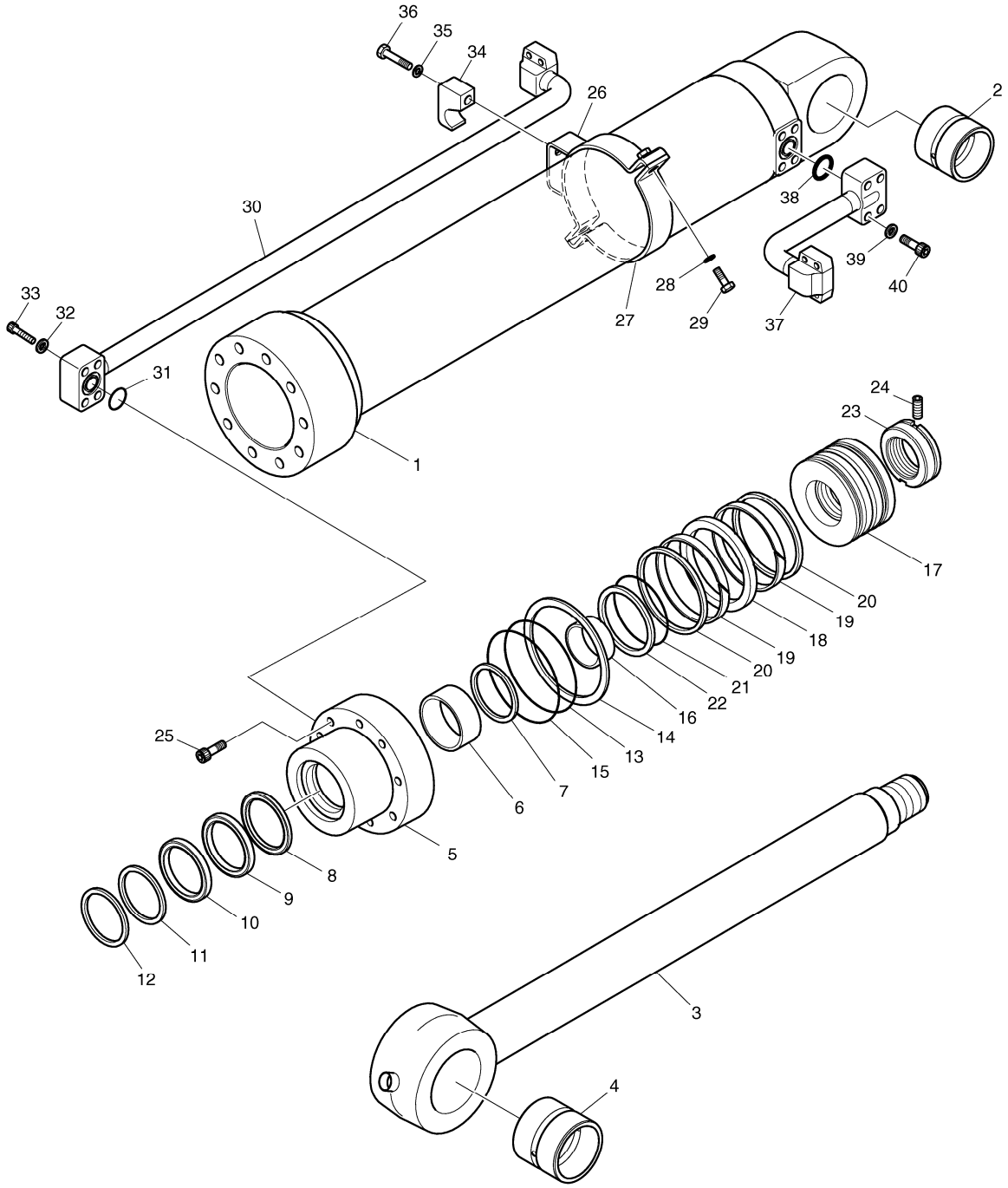

DATE	JUN. 01, 2010
3rd EDITION	

Fig. 4260 BUCKET CYLINDER - ARM 2.9m VERIN DE GODET

Serial No. ;

Key No.	Part No.	Description	Description	Q'ty	S.C	Serial No.	ICA	Replaceable part	
								Part No.	Q'ty
4260 -38	S8000281	O-RING	JOINT CIRCULAIRE	1					
39	S5100603	WASHER;SPRING	RONDELLE	4					
40	S2212761	BOLT;SOCKET M10X1.5X55	BOULON	4					
*	K9001892	SEAL KIT;BUCKET CYLINDER	KIT DE JOINT	1					

DATE	JUN. 01, 2010
3rd EDITION	

Fig. 4270 PEDAL VALVE - TWO WAY
VANNE DE PEDALE

Serial No. ;

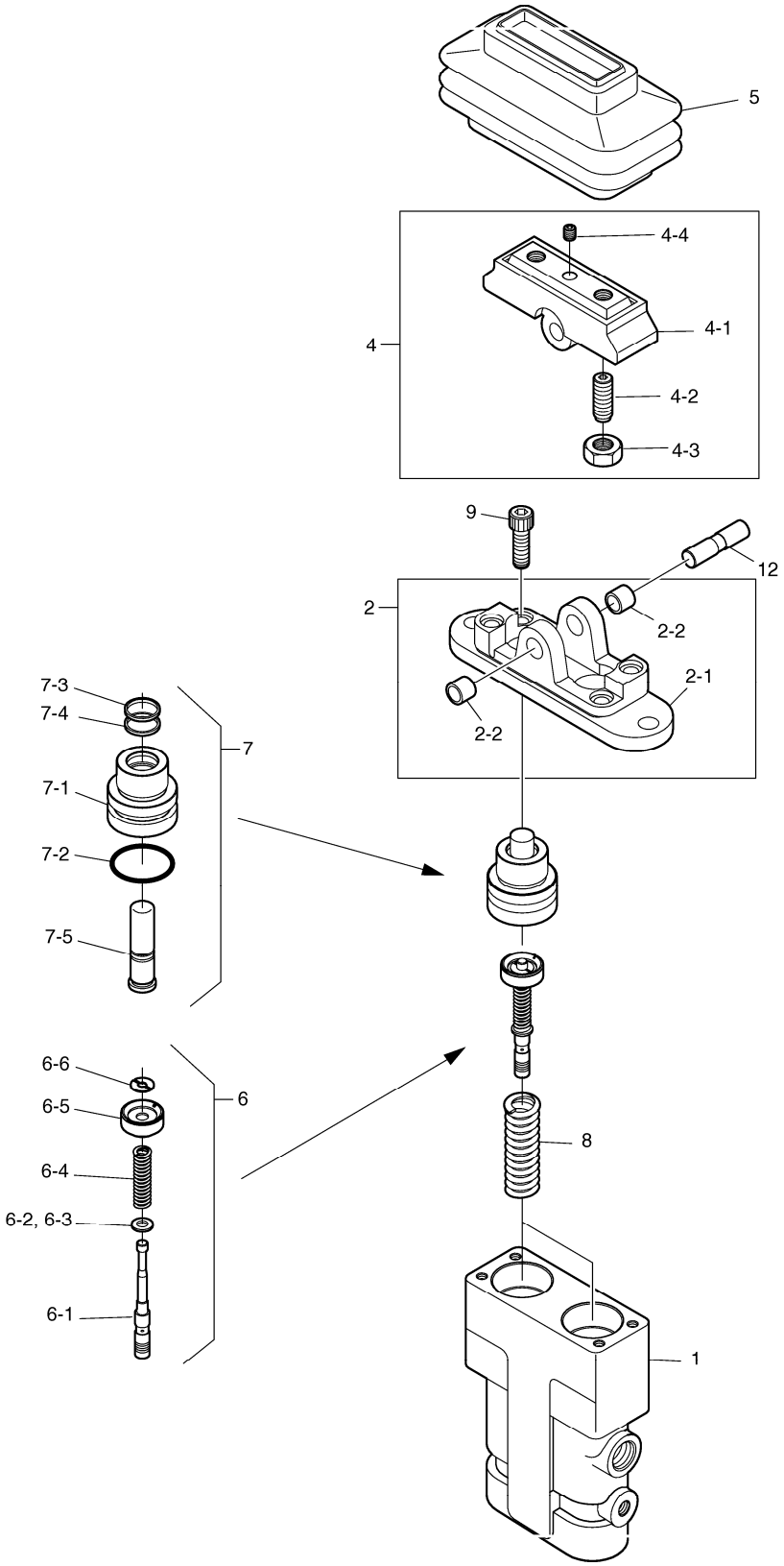

DATE	JUN. 01, 2010
3rd EDITION	

Fig. 4270 PEDAL VALVE - TWO WAY VANNE DE PEDALE

Serial No. ;

Key No.	Part No.	Description	Description	Q'ty	S.C	Serial No.	ICA	Replaceable part	
								Part No.	Q'ty
4270 --	K1017382A	PEDAL VALVE	VALVE DE PEDALE	1					
1	-	CASING	CARTER	1	D				
2	K9002934	COVER KIT	COUVERCLE	1					
2-1	-	. COVER	. COUVERCLE	1	D				
2-2	2110-1184D7	. BUSH;DU 10X10	. BUSH	2					
4	K9003465	CAM KIT	CAME	1					
4-1	-	. CAM	. CAME	1	D				
4-2	-	. SCREW;SET	. VIS	2	D				
4-3	S4014633	. NUT M10	. ECROU	2					
4-4	S3523601	. SCREW;SET M8X12	. VIS	1					
5	160-00008	BELLOW	SOUFFLET	1					
6	402-00036	SPOOL ASS'Y	PLUNGEUR	2					
6-1	-	. SPOOL	. SPOOL	1	D				
6-2	-	. SHIM	. CALE	1	D				
6-3	-	. SEAT;SPRING	. SIEGE	1	D				
6-4	-	. SPRING	. RESSORT	1	D				
6-5	-	. SEAT;SPRING	. SIEGE	1	D				
6-6	-	. STOPPER	. TAQUET	1	D				
7	1.428-00241A	PLUG ASS'Y	BOUCHON	2					
7-1	-	. PLUG	. BOUCHON	1	D				
7-2	-	. O-RING	. JOINT TORIQUE	1	D				
7-3	-	. SEAL;DUST	. CACHET	1	D				
7-4	-	. SEAL;ROD	. JOINT	1	D				
7-5	-	. ROD;PUSH	. TIGE	1	D				
8	K9002935	SPRING	RESSORT	2					
9	S2209261	BOLT;WRENCH M8X30	BOULON A 6 PANS CREUX	2					
12	354-00003	SHAFT;CAM	AXE	1					

DATE	JUN. 01, 2010
3rd EDITION	

Fig. 4280 BUCKET CYLINDER - ARM 2.4m VERIN DE GODET

Serial No. ;

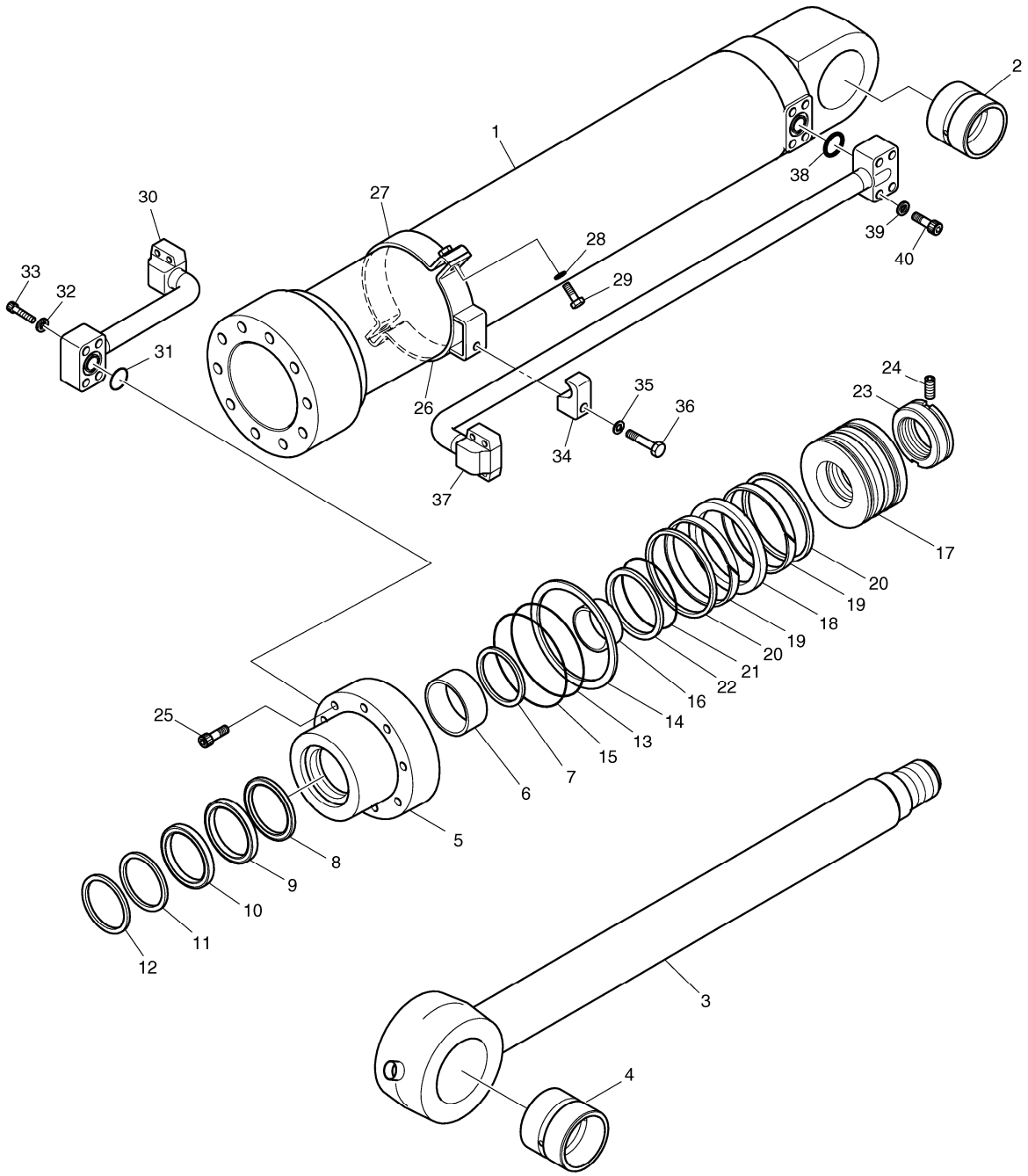

DATE	JUN. 01, 2010
3rd EDITION	

Fig. 4280 BUCKET CYLINDER - ARM 2.4m VERIN DE GODET

Serial No. ;

Key No.	Part No.	Description	Description	Q'ty	S.C	Serial No.	ICA	Replaceable part	
								Part No.	Q'ty
4280 --	K1046326	CYLINDER;BUCKET	VERIN DE GODET	1					
1	K9007373	TUBE ASS'Y	ENSEMBLE TUBE	1					
2	K1037853A	BUSH	BUSH	1					
3	K9007371	ROD ASS'Y	ENSEMBLE TIGE	1					
4	K1037853A	BUSH	BUSH	1					
5	K9001870	COVER;ROD	COUVERTURE	1					
6	110-00097	DD-BUSH	DD-BUSH	1					
7	K9001401	RING;RETAINING	ANNEAU	1					
8	K9001402	SEAL;BUFFER	CACHET	1	K				
9	K9001403	U-PACKING	U-EMBALLAGE	1	K				
10	K9001404	RING;BACK UP	ANNEAU	1	K				
11	115-00084	WIPER;DUST	ESSUIE-GLACE	1	K				
12	115-00063	RING;RETAINING	ANNEAU	1					
13	S8011151	O-RING	JOINT CIRCULAIRE	1	K				
14	1.180-00278	RING;BACK UP	ANNEAU	1	K				
15	S8011201	O-RING	JOINT CIRCULAIRE	1	K				
16	K9001406	RING;CUSHION	ANNEAU	1					
17	K9001871	PISTON	PISTON	1					
18	K9001891	SEAL;SLIPPER	CACHET	1	K				
19	115-00055	RING;WEAR	ANNEAU	2	K				
20	K9001872	RING;DUST	ANNEAU	2	K				
21	180-00276	O-RING	JOINT CIRCULAIRE	1	K				
22	K9001410	RING;BACK UP	ANNEAU	2	K				
23	K9001862	NUT;PISTON	ECROU	1					
24	1.120-00219	SCREW;SET	VIS	1					
25	S2222171	BOLT;HEX. SOCKET	BOULON	10					
26	K9001873	PIPE BAND ASS`Y	ENSEMBLE DE FIXATION	1					
27	K9001874	BAND;PIPE	BANDE	1					
28	S5100703	WASHER;SPRING	RONDELLE	2					
29	S0560563	BOLT;HEX	BOULON	2					
30	K9003467	PIPE ASS'Y-R	ENSEMBLE CONDUITES	1					
31	S8000281	O-RING	JOINT CIRCULAIRE	1					
32	S5100603	WASHER;SPRING	RONDELLE	4					
33	S2212761	BOLT;SOCKET M10X1.5X55	BOULON	4					
34	K9001413	CLAMP;PIPE	BRIDE	1					
35	S5100603	WASHER;SPRING	RONDELLE	1					
36	S2221873	BOLT	BOULON	1					
37	K9003468	PIPE ASS'Y-H	ENSEMBLE CONDUITES	1					

Fig. 4280 BUCKET CYLINDER - ARM 2.4m
VERIN DE GODET

Serial No. ;

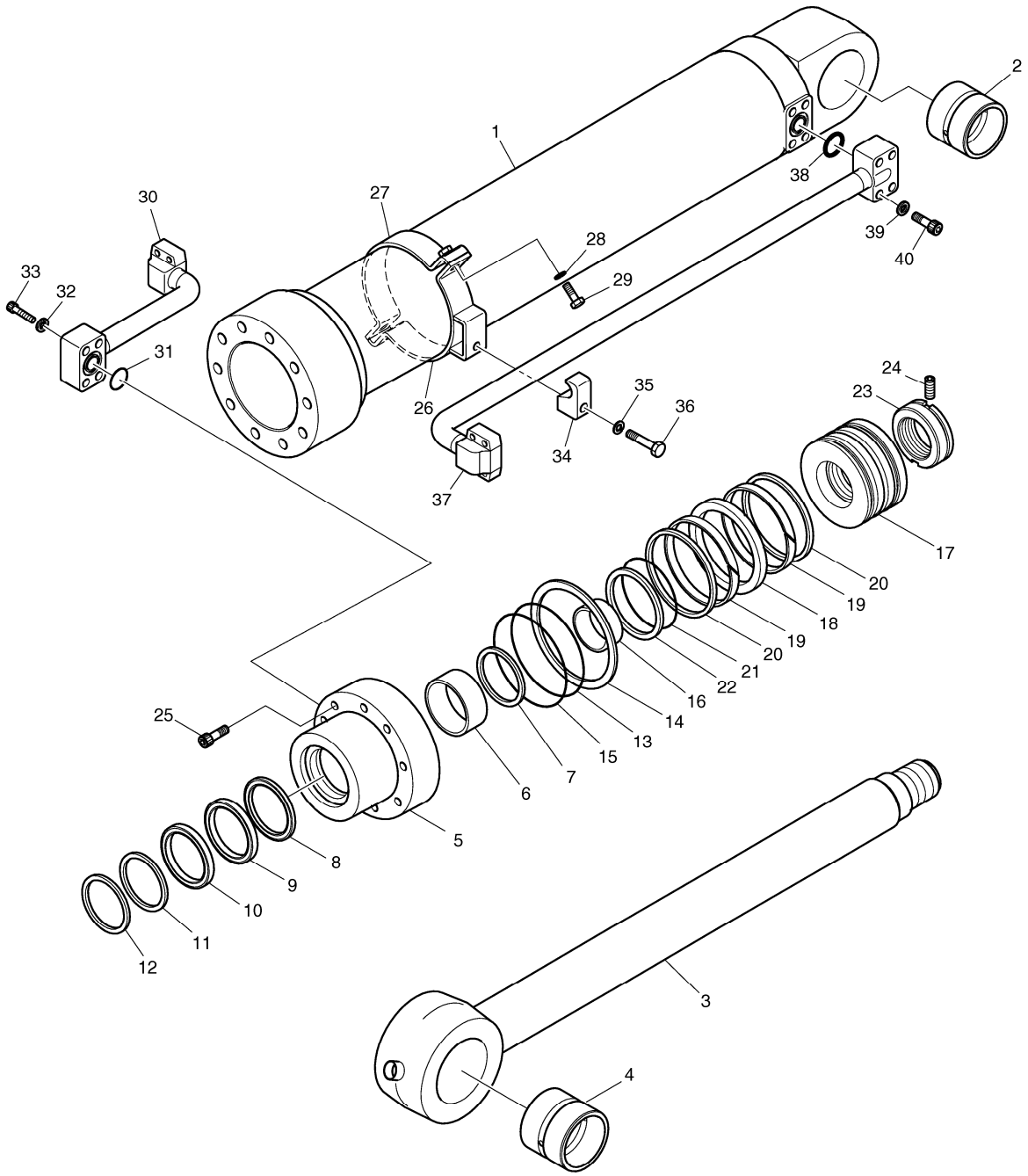

DATE	JUN. 01, 2010
3rd EDITION	

Fig. 4280 BUCKET CYLINDER - ARM 2.4m
VERIN DE GODET

Serial No. ;

Key No.	Part No.	Description	Description	Q'ty	S.C	Serial No.	ICA	Replaceable part	
								Part No.	Q'ty
4280 -38	S8000281	O-RING	JOINT CIRCULAIRE	1					
39	S5100603	WASHER;SPRING	RONDELLE	4					
40	S2212761	BOLT;SOCKET M10X1.5X55	BOULON	4					
*	K9001892	SEAL KIT;BUCKET CYLINDER	KIT DE JOINT	1					

DATE	JUN. 01, 2010
3rd EDITION	

Fig. 4290 BUCKET CYLINDER - ARM 3.5m
VERIN DE GODET

Serial No. ;

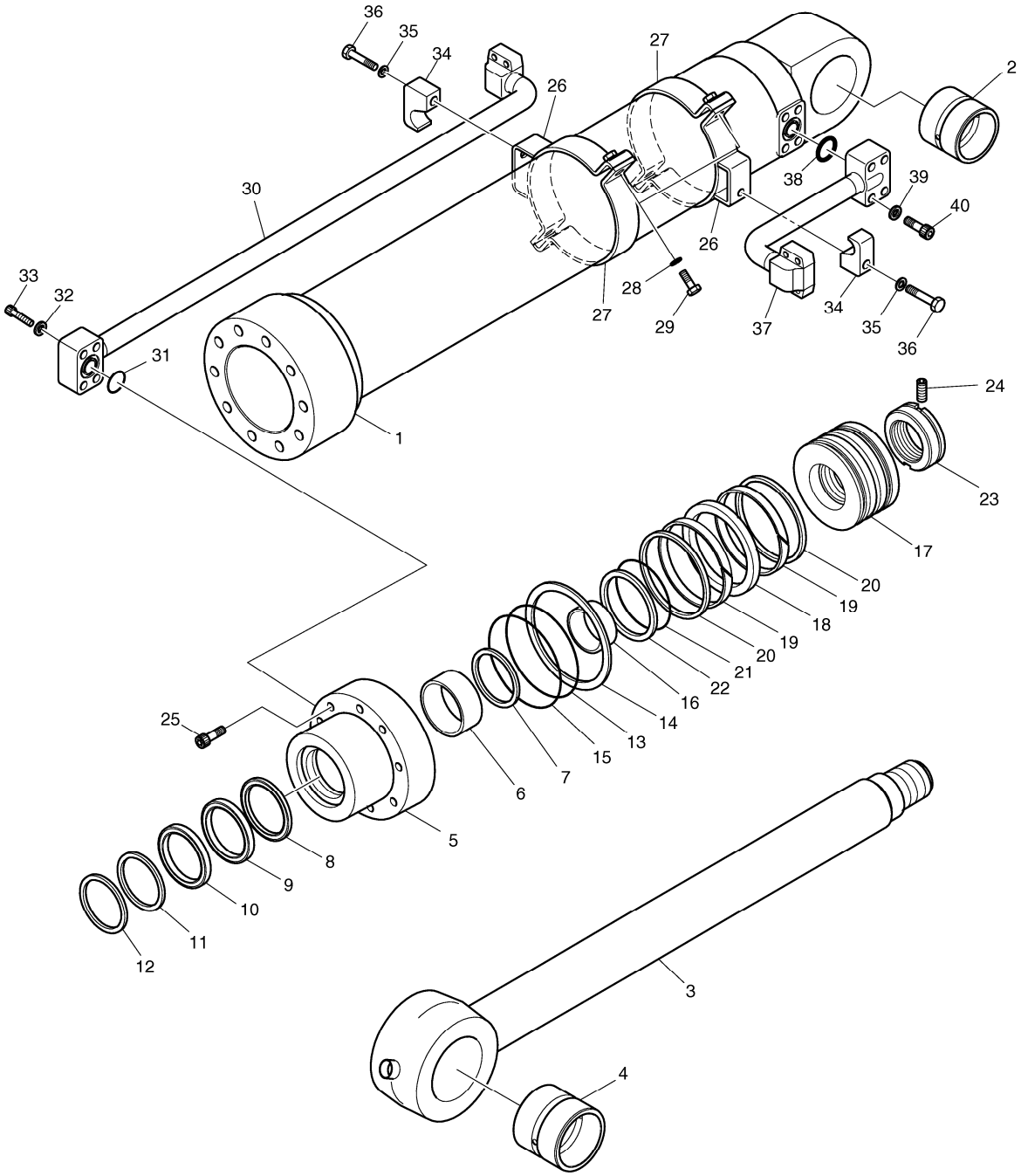

DATE	JUN. 01, 2010
3rd EDITION	

Fig. 4290 BUCKET CYLINDER - ARM 3.5m VERIN DE GODET

Serial No. ;

Key No.	Part No.	Description	Description	Q'ty	S.C	Serial No.	ICA	Replaceable part	
								Part No.	Q'ty
4290 --	K1046333	BUCKET CYLINDER	VERIN DE GODET	1					
1	K9007372	TUBE ASS'Y	ENSEMBLE TUBE	1					
2	K1037853A	BUSH	BUSH	1					
3	K9007371	ROD ASS'Y	ENSEMBLE TIGE	1					
4	K1037853A	BUSH	BUSH	1					
5	K9001870	COVER;ROD	COUVERTURE	1					
6	110-00097	DD-BUSH	DD-BUSH	1					
7	K9001401	RING;RETAINING	ANNEAU	1					
8	K9001402	SEAL;BUFFER	CACHET	1	K				
9	K9001403	U-PACKING	U-EMBALLAGE	1	K				
10	K9001404	RING;BACK UP	ANNEAU	1	K				
11	115-00084	WIPER;DUST	ESSUIE-GLACE	1	K				
12	115-00063	RING;RETAINING	ANNEAU	1					
13	S8011151	O-RING	JOINT CIRCULAIRE	1	K				
14	1.180-00278	RING;BACK UP	ANNEAU	1	K				
15	S8011201	O-RING	JOINT CIRCULAIRE	1	K				
16	K9001406	RING;CUSHION	ANNEAU	1					
17	K9001871	PISTON	PISTON	1					
18	K9001891	SEAL;SLIPPER	CACHET	1	K				
19	115-00055	RING;WEAR	ANNEAU	2	K				
20	K9001872	RING;DUST	ANNEAU	2	K				
21	180-00276	O-RING	JOINT CIRCULAIRE	1	K				
22	K9001410	RING;BACK UP	ANNEAU	2	K				
23	K9001862	NUT;PISTON	ECROU	1					
24	1.120-00219	SCREW;SET	VIS	1					
25	S2222171	BOLT;HEX. SOCKET	BOULON	10					
26	K9001873	PIPE BAND ASS`Y	ENSEMBLE DE FIXATION	2					
27	K9001874	BAND;PIPE	BANDE	2					
28	S5100703	WASHER;SPRING	RONDELLE	4					
29	S0560563	BOLT;HEX	BOULON	4					
30	K9003470	PIPE ASS'Y-R	ENSEMBLE CONDUITES	1					
31	S8000281	O-RING	JOINT CIRCULAIRE	1					
32	S5100603	WASHER;SPRING	RONDELLE	4					
33	S2212761	BOLT;SOCKET M10X1.5X55	BOULON	4					
34	K9001413	CLAMP;PIPE	BRIDE	2					
35	S5100603	WASHER;SPRING	RONDELLE	2					
36	S2221873	BOLT	BOULON	2					
37	K9003471	PIPE ASS'Y-H	ENSEMBLE CONDUITES	1					

DATE	JUN. 01, 2010
3rd EDITION	

Fig. 4290 BUCKET CYLINDER - ARM 3.5m VERIN DE GODET

Serial No. ;

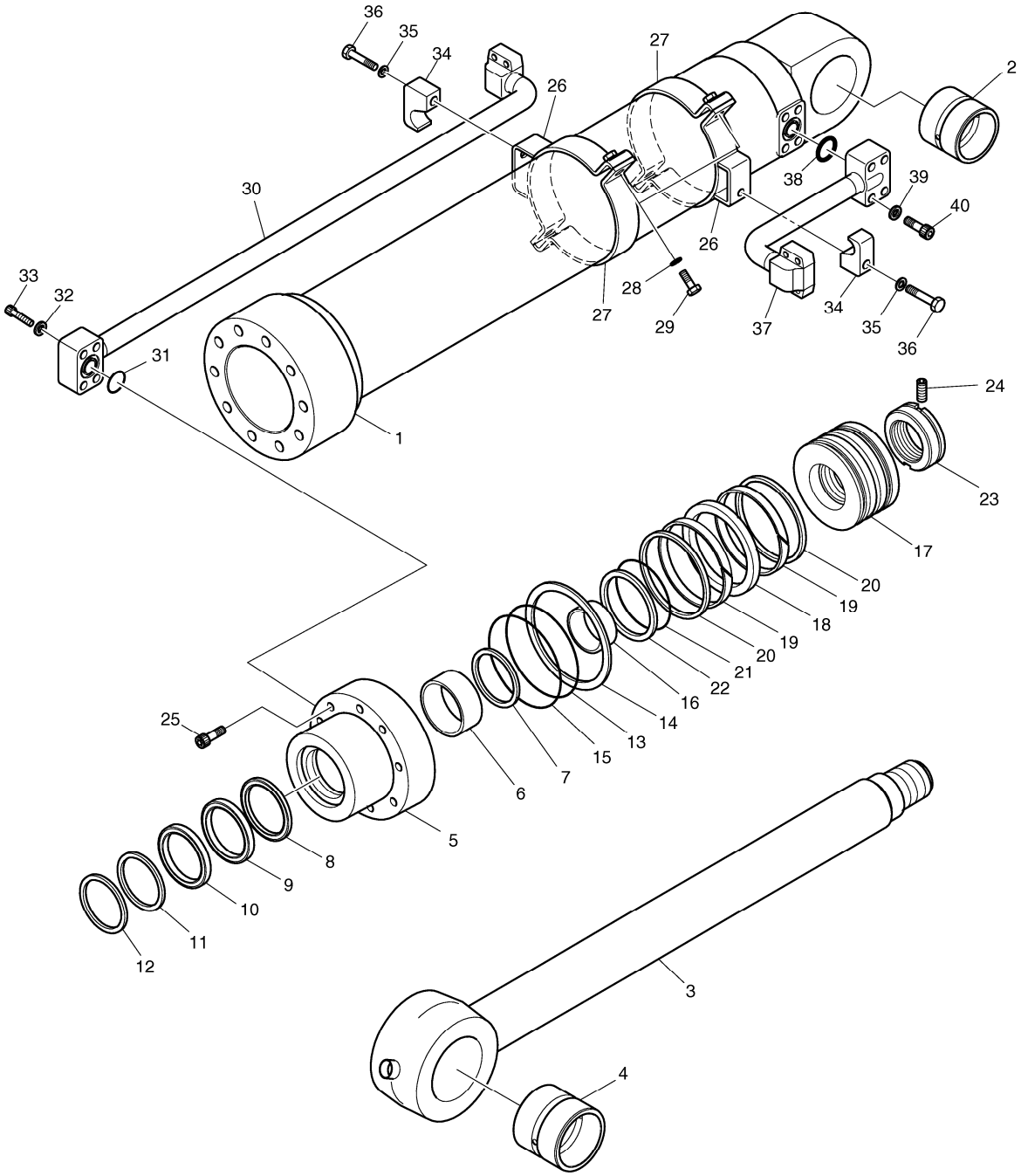

DATE	JUN. 01, 2010
3rd EDITION	

Fig. 4290 BUCKET CYLINDER - ARM 3.5m VERIN DE GODET

Serial No. ;

Key No.	Part No.	Description	Description	Q'ty	S.C	Serial No.	ICA	Replaceable part	
								Part No.	Q'ty
4290 -38	S8000281	O-RING	JOINT CIRCULAIRE	1					
39	S5100603	WASHER;SPRING	RONDELLE	4					
40	S2212761	BOLT;SOCKET M10X1.5X55	BOULON	4					
*	K9001892	SEAL KIT;BUCKET CYLINDER	KIT DE JOINT	1					

DATE	JUN. 01, 2010
3rd EDITION	

Fig. 4300 BUCKET CYLINDER - ARM 6.2m VERIN DE GODET

Serial No. ;

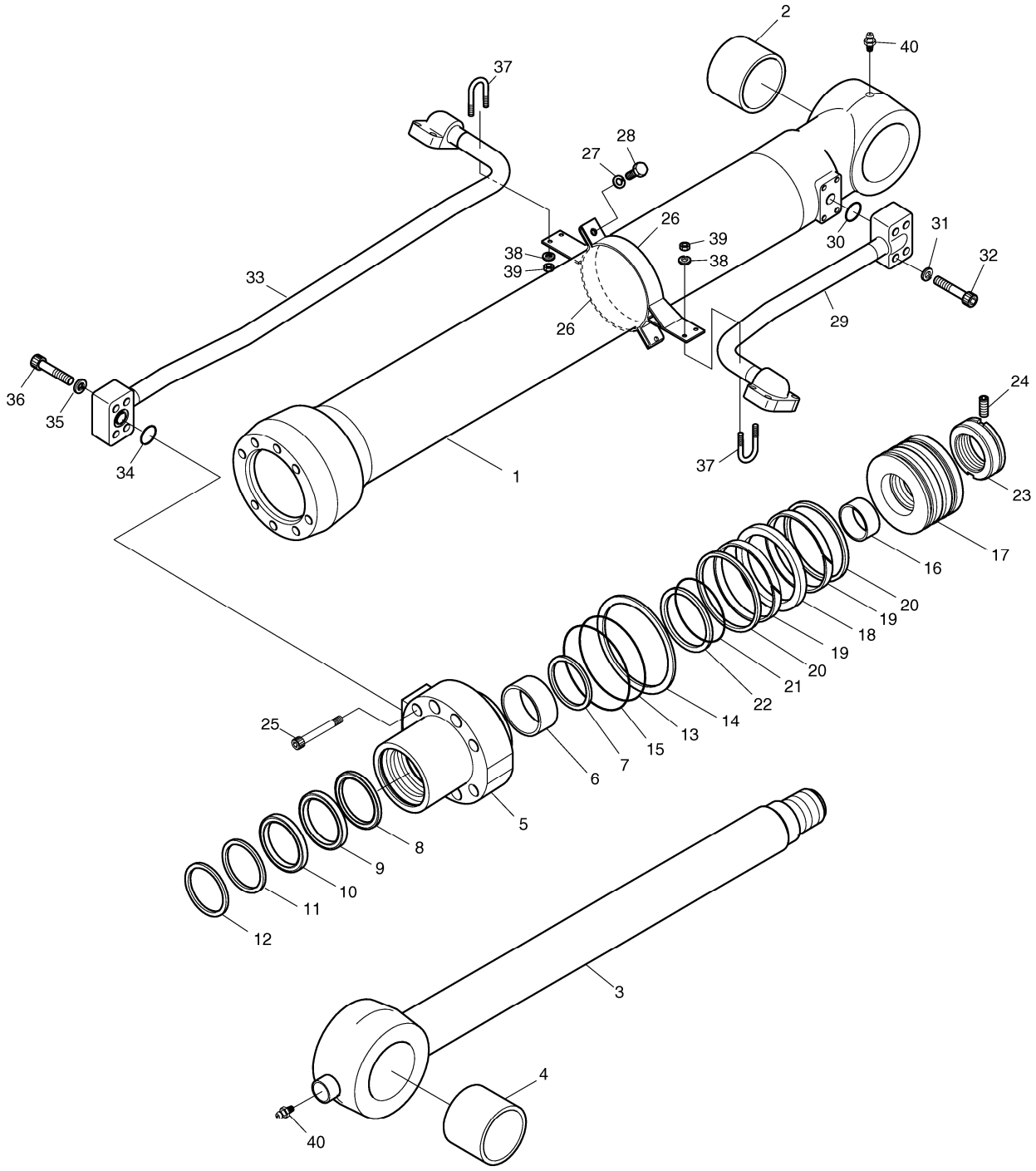

DATE	JUN. 01, 2010
3rd EDITION	

Fig. 4300 BUCKET CYLINDER - ARM 6.2m VERIN DE GODET

Serial No. ;

Key No.	Part No.	Description	Description	Q'ty	S.C	Serial No.	ICA	Replaceable part	
								Part No.	Q'ty
4300 --	K1011434A	BUCKET CYLINDER	VERIN DE GODET	1					
1	K9001753	TUBE ASS`Y	DOUILLE ACIER	1					
2	K1004106	BUSH;ROLLED	DOUILLE	1					
3	K9001754A	ROD ASS`Y	TIGE	1					
4	K1004106	BUSH;ROLLED	DOUILLE	1					
5	110508-00989	COVER,ROD	COUVERCLE	1					
6	1.110-00068	DD-BUSH	COUSSINET	1					
7	1.115-00032	RING;RETAINING	BAGUE	1					
8	K9001424	SEAL;BUFFER	ETANCHEITE A GRADINS	1	K				
9	K9001425	U-PACKING	JOINT EN U	1	K				
10	K9001426	RING;BACK UP	BAGUE	1	K				
11	1.180-00496	WIPER;DUST	PARE-POUSSIERE	1	K				
12	115-00052	RING;RETAINING	BAGUE	1					
13	S8010901	O-RING	JOINT TORIQUE	1	K				
14	K9001427	RING;BACK UP	BAGUE	1	K				
15	S8010951	O-RING	JOINT CIRCULAIRE	1	K				
16	K9001428	RING;CUSHION	BAGUE	1					
17	K9001429	PISTON	PISTON	1					
18	K9001430	SEAL;SLIPPER	PATIN D'ETANCHEITE	1	K				
19	1.180-00415	RING;WEAR	SEGMENT D'USURE	2	K				
20	K9001431	RING;DUST	BAGUE DE SOUTIEN	2	K				
21	1.180-00117	O-RING	JOINT TORIQUE	1	K				
22	K9001374	RING;BACK UP	BAGUE	2	K				
23	K9001375	NUT;PISTION	ECROU	1					
24	1.120-00219	SCREW;SET	VIS	1					
25	S2218961	BOLT	BOULON A 6 PANS CREUX	8					
26	K9001755	PIPE BAND ASS`Y	ENSEMBLE DE FIXATION	2					
27	S5100703	WASHER;SPRING	RONDELLE	4					
28	S0560563	BOLT;HEX	BOULON	4					
29	K9001756	PIPE ASS`Y-H	ENSEMBLE CONDUITES	1					
30	S8000251	O-RING	JOINT TORIQUE	1					
31	S5100703	WASHER;SPRING	RONDELLE	4					
32	S2212761	BOLT;SOCKET M10X1.5X55	BOULON	4					
33	K9001757	PIPE ASS`Y-R	ENSEMBLE CONDUITES	1					
34	S8000251	O-RING	JOINT TORIQUE	1					
35	S5100703	WASHER;SPRING	RONDELLE	4					
36	S2212761	BOLT;SOCKET M10X1.5X55	BOULON	4					
37	K9001435	CLAMP;PIPE	COLLIER	2					

DATE	JUN. 01, 2010
3rd EDITION	

Fig. 4300 BUCKET CYLINDER - ARM 6.2m VERIN DE GODET

Serial No. ;

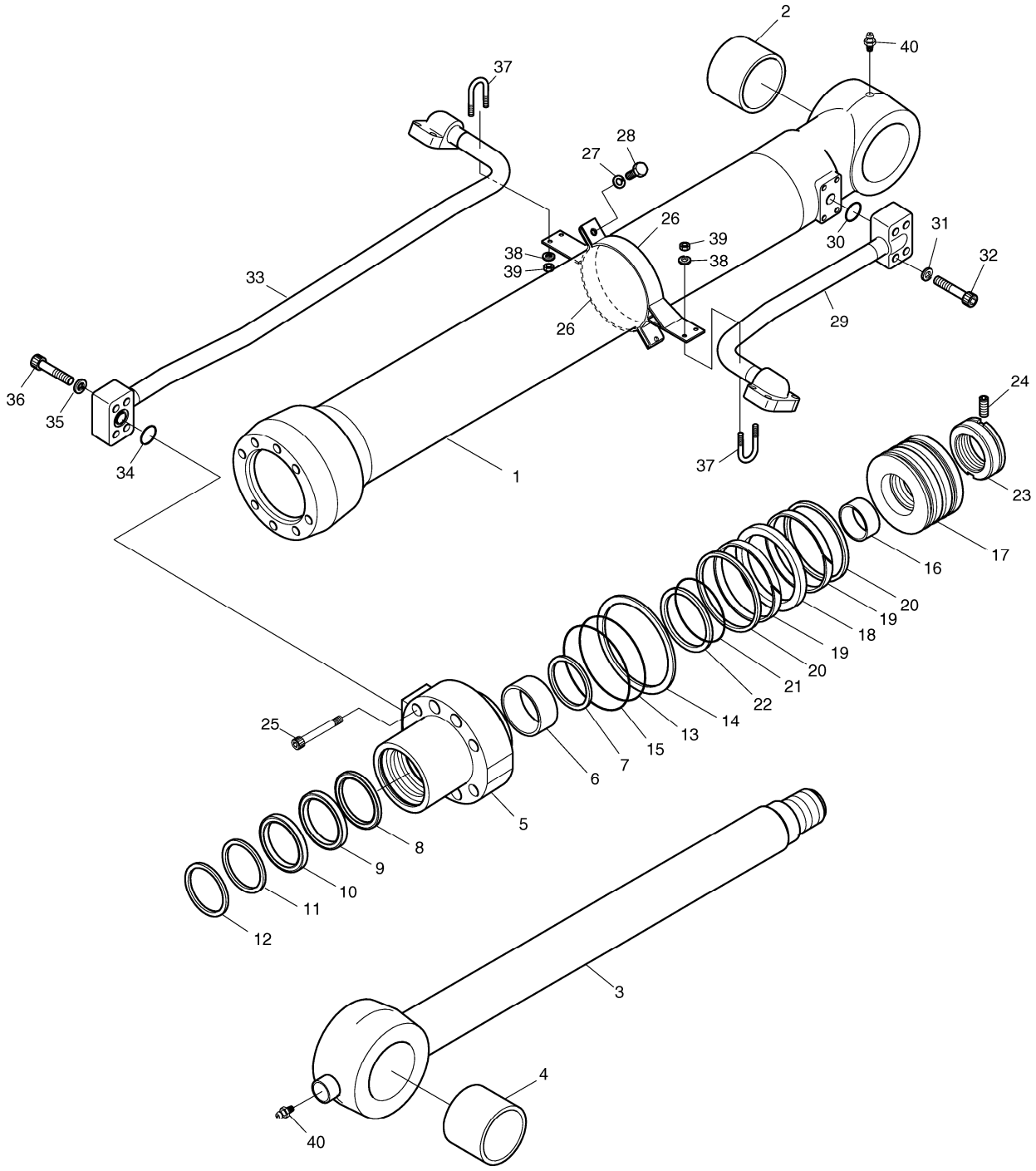

Fig. 4300 BUCKET CYLINDER - ARM 6.2m VERIN DE GODET

Serial No. ;

Key No.	Part No.	Description	Description	Q'ty	S.C	Serial No.	ICA	Replaceable part	
								Part No.	Q'ty
4300 -38	S5100603	WASHER;SPRING	RONDELLE	4					
39	S4012633	NUT	ECROU	4					
40	S6710032	NIPPLE;GREASE	MAMELON	2					
*	K9001752	SEAL KIT;BUCKET CYL.	KIT DE JOINT	1					

DATE	JUN. 01, 2010
3rd EDITION	

Fig. 4310 BOOM CYLINDER - L.H (LOCK VALVE) VERIN DE FLECHE

Serial No. ;

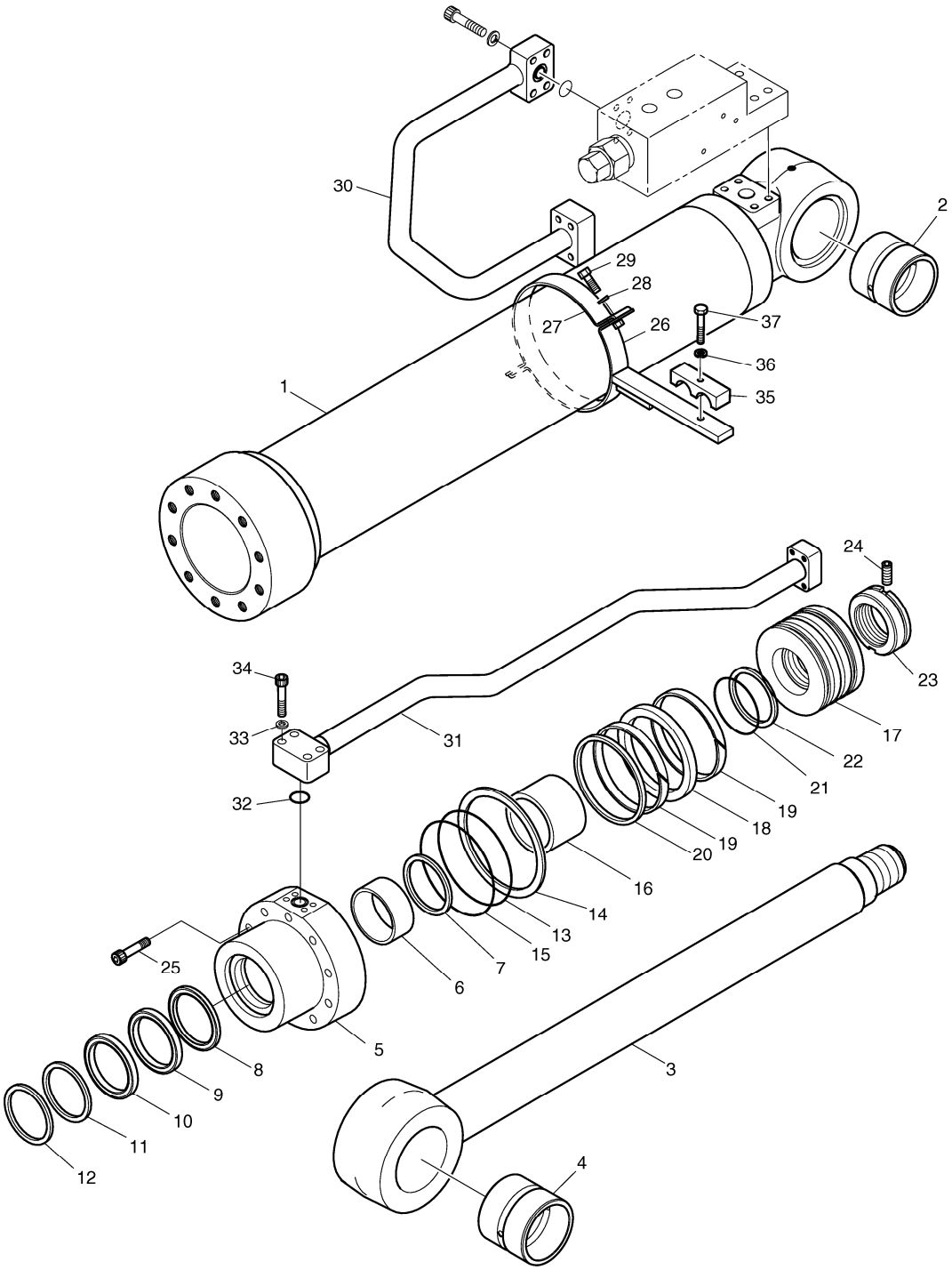

Fig. 4310 BOOM CYLINDER - L.H (LOCK VALVE) VERIN DE FLECHE

Serial No. ;

Key No.	Part No.	Description	Description	Q'ty	S.C	Serial No.	ICA	Replaceable part	
								Part No.	Q'ty
4310 --	K1041220B	BOOM CYLINDER(L.H)	CYLINDRE	1					
1	K9007361	TUBE ASS'Y	ENSEMBLE TUBE	1					
2	K1037853A	BUSH	BUSH	1					
3	K9007362	ROD ASS'Y	ENSEMBLE TIGE	1					
4	K1037853A	BUSH	BUSH	1					
5	K9001856	ROD;COVER	TIGE	1					
6	110-00079	DD-BUSH	COUSSINET	1					
7	115-00050	RING;RETAINING	BAGUE	1					
8	K9001857	SEAL;BUFFER	ETANCHEITE A GRADINS	1	K				
9	K9001858	U-PACKING	JOINT EN U	1	K				
10	K9001877	RING;BACK UP	BAGUE ANTIEXTRUSION	1	K				
11	115-00059	WIPER;DUST	PARE-POUSSIERE	1	K				
12	115-00051	RING;RETAINING	BAGUE D'ARRET	1					
13	S8011201	O-RING	JOINT CIRCULAIRE	1	K				
14	K9001859	RING;BACK UP	ANNEAU	1	K				
15	S8011251	O-RING	JOINT CIRCULAIRE	1	K				
16	1.115-00204	RING;CUSHION	BAGUE D'AMORTISSEMEN	1					
17	K9001860	PISTON	PISTON	1					
18	K9001890	SEAL;SLIPPER	CACHET	1	K				
19	115-00087	RING;WEAR	ANNEAU	2	K				
20	K9001861	RING;DUST	BAGUE	1	K				
21	S8010651	O-RING	JOINT TORIQUE	1	K				
22	1.180-00277	RING;BACK UP	BAGUE ANTIEXTRUSION	2	K				
23	K9001862	NUT;PISTON	ECROU	1					
24	1.120-00219	SCREW;SET	VIS	1					
25	S2222272	BOLT;SOCKET	BOULON	10					
26	K9007358	PIPE BAND ASS'Y	BANDE ASS'Y DE PIPE	1					
27	124-00088	BAND;PIPE	ATTACHE	1					
28	S5100603	WASHER;SPRING	RONDELLE	2					
29	S0558153	BOLT	BOULON	2					
30	K9007370	PIPE ASS'Y-H(L.H)	ENSEMBLE CONDUITES	1					
31	K9007368	PIPE ASS'Y-R(L.H)	ENSEMBLE CONDUITES	1					
32	S8000281	O-RING	JOINT CIRCULAIRE	1					
33	S5100603	WASHER;SPRING	RONDELLE	4					
34	S2212761	BOLT;SOCKET M10X1.5X55	BOULON	4					
35	1.124-00157	CLAMP;PIPE	COLLIER	1					
36	S5100703	WASHER;SPRING	RONDELLE	1					
37	S0561053	BOLT M12X1.75X65	BOULON	1					

DATE	JUN. 01, 2010
3rd EDITION	

Fig. 4310 BOOM CYLINDER - L.H (LOCK VALVE) VERIN DE FLECHE

Serial No. ;

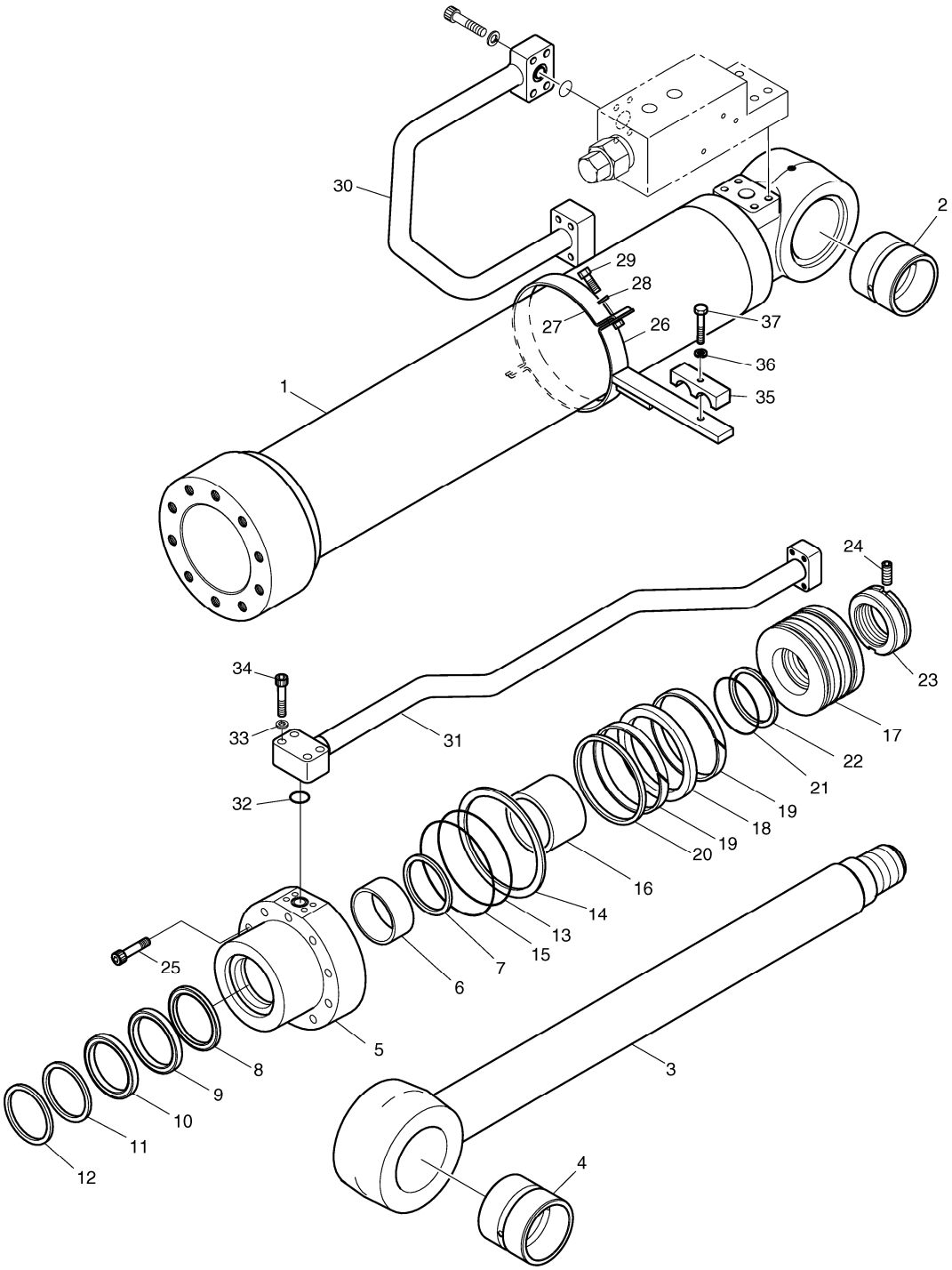

DATE	JUN. 01, 2010
3rd EDITION	

Fig. 4310 BOOM CYLINDER - L.H (LOCK VALVE) VERIN DE FLECHE

Serial No. ;

Key No.	Part No.	Description	Description	Q'ty	S.C	Serial No.	ICA	Replaceable part	
								Part No.	Q'ty
4310 -*	K9001878	SEAL KIT;BOOM CYLINDER	JOINT	1					

DATE	JUN. 01, 2010
3rd EDITION	

Fig. 4320 BOOM CYLINDER - R.H (LOCK VALVE)
VERIN DE FLECHE

Serial No. ;

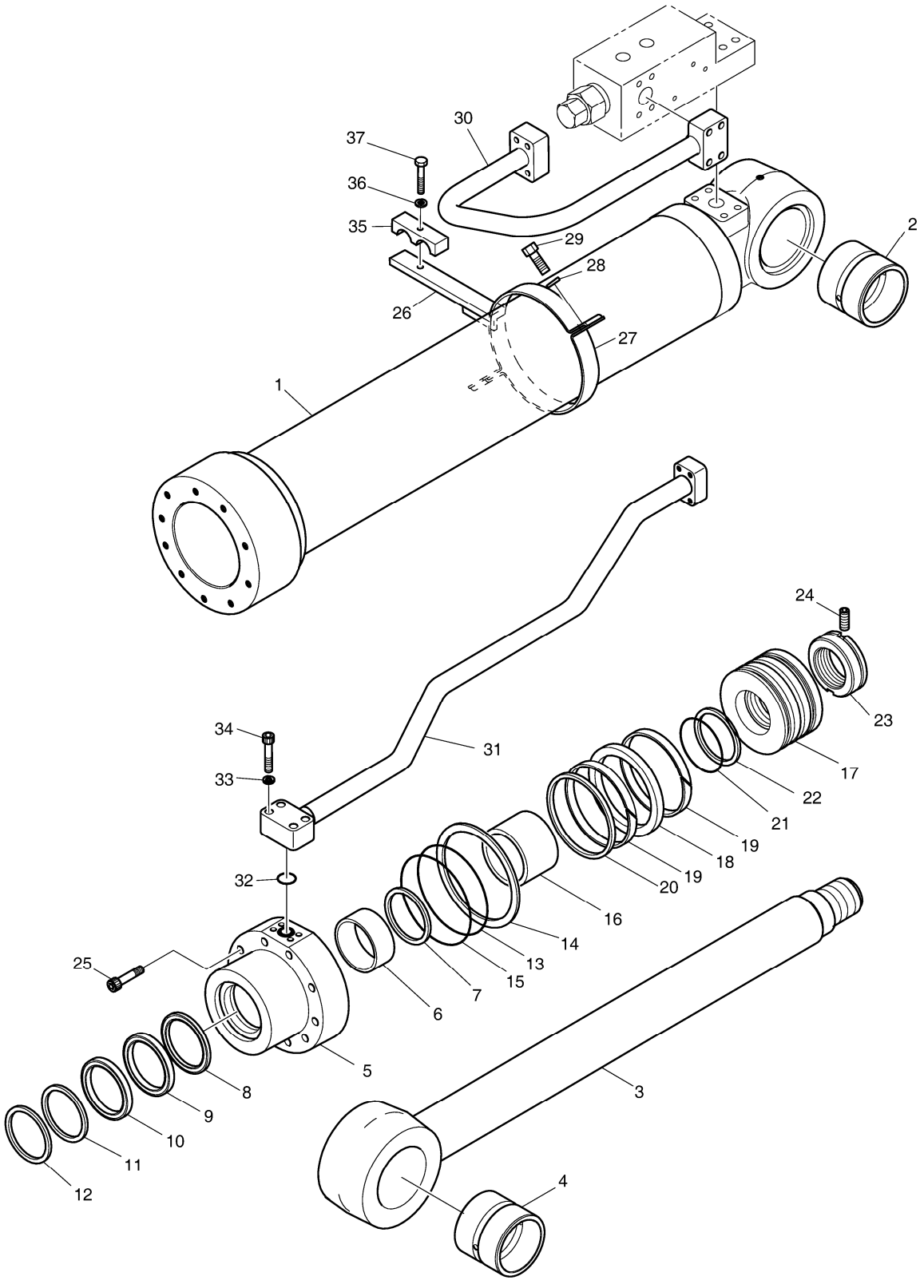

DATE	JUN. 01, 2010
3rd EDITION	

Fig. 4320 BOOM CYLINDER - R.H (LOCK VALVE) VERIN DE FLECHE

Serial No. ;

Key No.	Part No.	Description	Description	Q'ty	S.C	Serial No.	ICA	Replaceable part	
								Part No.	Q'ty
4320 --	K1041221B	BOOM CYLINDER(R.H)	CYLINDRE	1					
1	K9007361	TUBE ASS'Y	ENSEMBLE TUBE	1					
2	K1037853A	BUSH	BUSH	1					
3	K9007362	ROD ASS'Y	ENSEMBLE TIGE	1					
4	K1037853A	BUSH	BUSH	1					
5	K9001856	ROD;COVER	TIGE	1					
6	110-00079	DD-BUSH	COUSSINET	1					
7	115-00050	RING;RETAINING	BAGUE	1					
8	K9001857	SEAL;BUFFER	ETANCHEITE A GRADINS	1	K				
9	K9001858	U-PACKING	JOINT EN U	1	K				
10	K9001877	RING;BACK UP	BAGUE ANTIEXTRUSION	1	K				
11	115-00059	WIPER;DUST	PARE-POUSSIERE	1	K				
12	115-00051	RING;RETAINING	BAGUE D'ARRET	1					
13	S8011201	O-RING	JOINT CIRCULAIRE	1	K				
14	K9001859	RING;BACK UP	ANNEAU	1	K				
15	S8011251	O-RING	JOINT CIRCULAIRE	1	K				
16	1.115-00204	RING;CUSHION	BAGUE D'AMORTISSEMEN	1					
17	K9001860	PISTON	PISTON	1					
18	K9001890	SEAL;SLIPPER	CACHET	1	K				
19	115-00087	RING;WEAR	ANNEAU	2	K				
20	K9001861	RING;DUST	BAGUE	1	K				
21	S8010651	O-RING	JOINT TORIQUE	1	K				
22	1.180-00277	RING;BACK UP	BAGUE ANTIEXTRUSION	2	K				
23	K9001862	NUT;PISTON	ECROU	1					
24	1.120-00219	SCREW;SET	VIS	1					
25	S2222272	BOLT;SOCKET	BOULON	10					
26	K9007358	PIPE BAND ASS'Y	BANDE ASS'Y DE PIPE	1					
27	124-00088	BAND;PIPE	ATTACHE	1					
28	S5100603	WASHER;SPRING	RONDELLE	2					
29	S0558153	BOLT	BOULON	2					
30	K9007369	PIPE ASS'Y-H(R.H)	ENSEMBLE CONDUITES	1					
31	K9007367	PIPE ASS'Y-R(R.H)	ENSEMBLE CONDUITES	1					
32	S8000281	O-RING	JOINT CIRCULAIRE	1					
33	S5100603	WASHER;SPRING	RONDELLE	4					
34	S2212761	BOLT;SOCKET M10X1.5X55	BOULON	4					
35	1.124-00157	CLAMP;PIPE	COLLIER	1					
36	S5100703	WASHER;SPRING	RONDELLE	1					
37	S0561053	BOLT M12X1.75X65	BOULON	1					

DATE	JUN. 01, 2010
3rd EDITION	

Fig. 4320 BOOM CYLINDER - R.H (LOCK VALVE) VERIN DE FLECHE

Serial No. ;

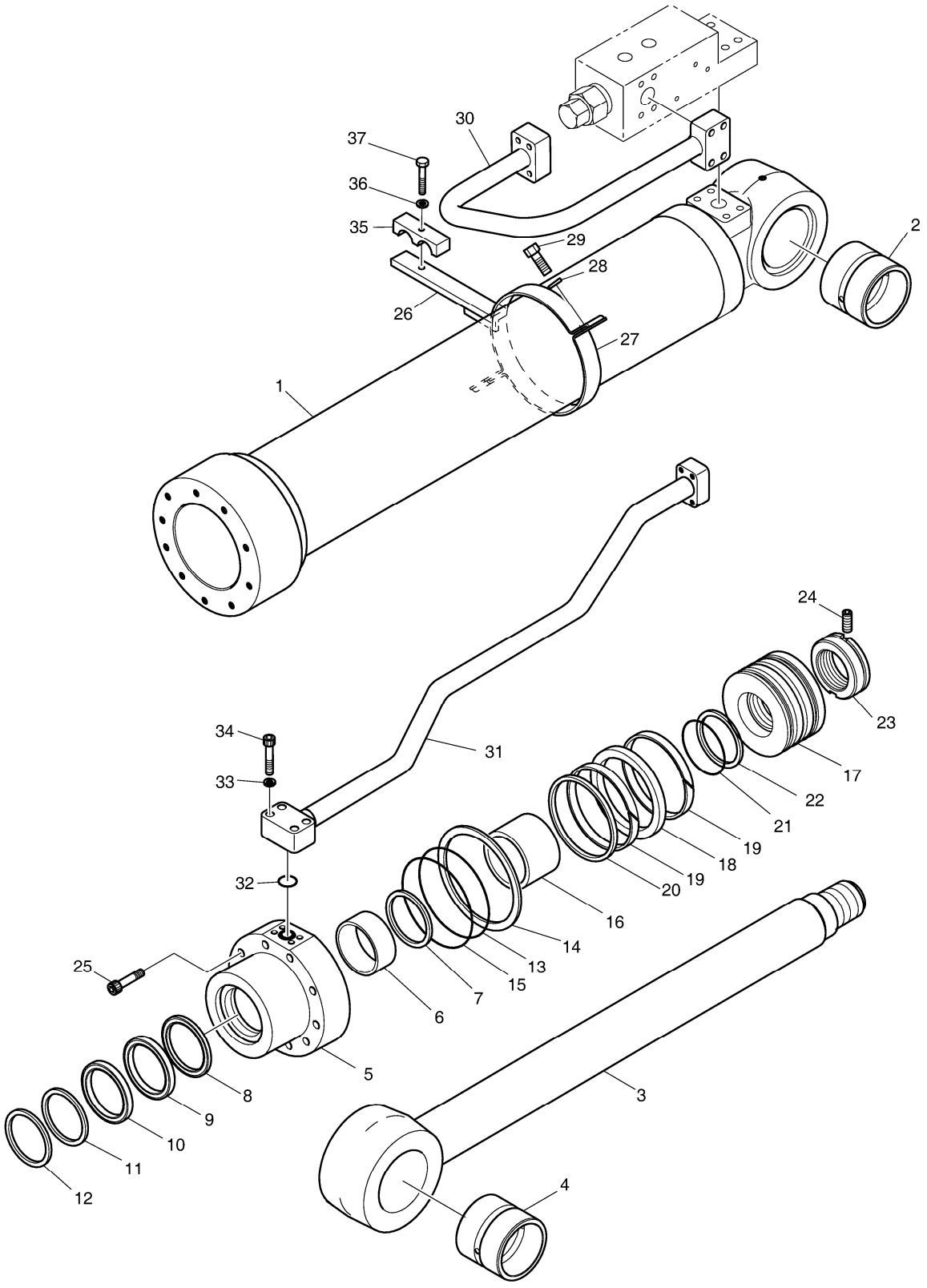

DATE	JUN. 01, 2010
3rd EDITION	

Fig. 4320 BOOM CYLINDER - R.H (LOCK VALVE) VERIN DE FLECHE

Serial No. ;

Key No.	Part No.	Description	Description	Q'ty	S.C	Serial No.	ICA	Replaceable part	
								Part No.	Q'ty
4320 -*	K9001878	SEAL KIT;BOOM CYLINDER	JOINT	1					

DATE	JUN. 01, 2010
3rd EDITION	

Fig. 4330 ARM CYLINDER - LOCK VALVE
VERIN DE BALANCIER

Serial No. ;

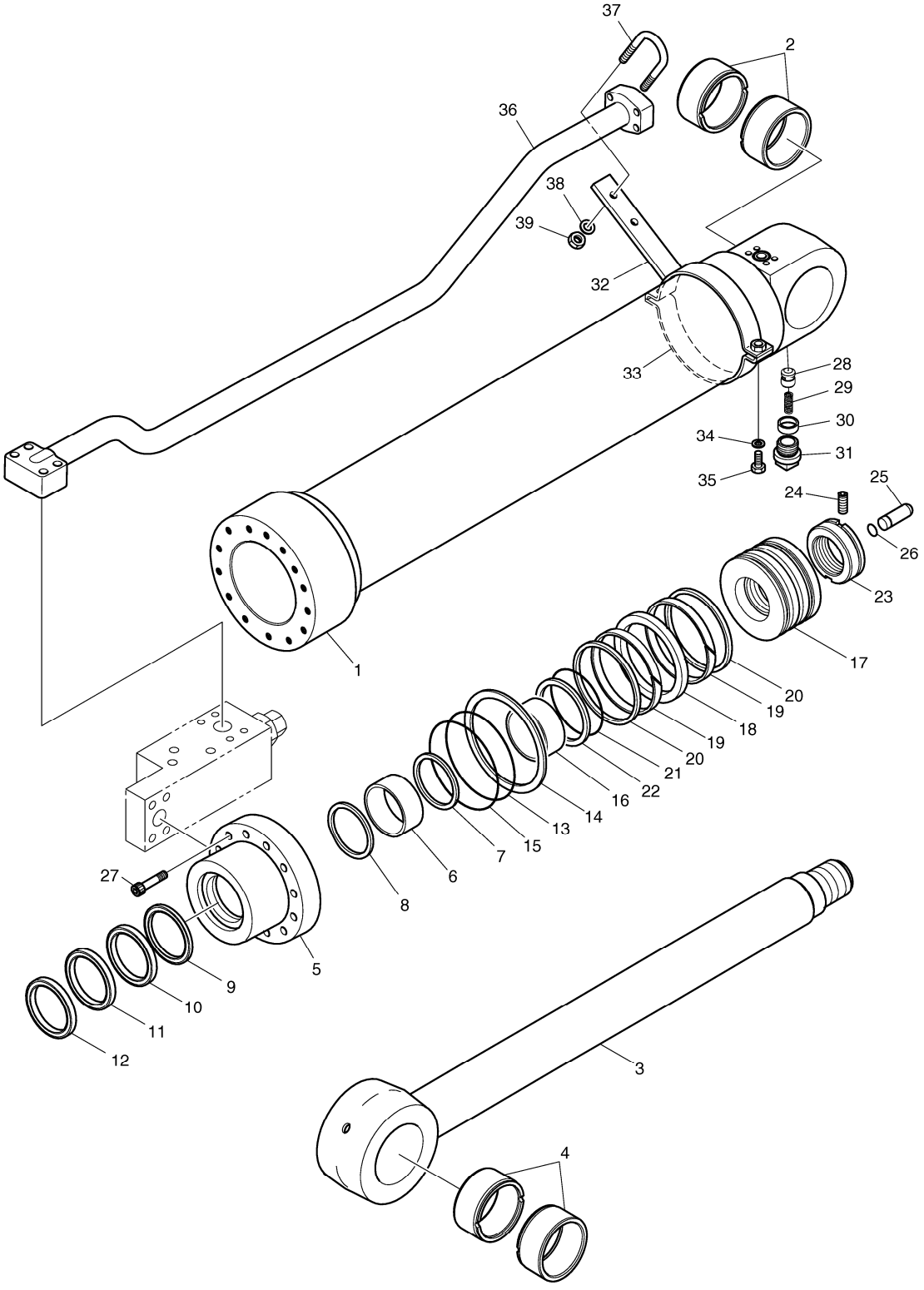

DATE	JUN. 01, 2010
3rd EDITION	

Fig. 4330 ARM CYLINDER - LOCK VALVE VERIN DE BALANCIER

Serial No. ;

Key No.	Part No.	Description	Description	Q'ty	S.C	Serial No.	ICA	Replaceable part	
								Part No.	Q'ty
4330 --	K1041222A	CYLINDER;ARM(LOCK V/V)	CYLINDRE	1					
1	K9003676	TUBE ASS'Y	ENSEMBLE TUBE	1					
2	K1037854A	BUSH	BUSH	1					
3	K9001880	ROD ASS`Y	TIGE	1					
4	K1037854A	BUSH	BUSH	1					
5	K9001881	ROD;COVER	TIGE	1					
6	110-00081	DD-BUSH	DD-BUSH	1					
7	115-00073	RING;RETAINING	ANNEAU	1					
8	K9001882	SEAL;BUFFER	CACHET	1	K				
9	K9001883	U-PACKING	U-EMBALLAGE	1	K				
10	K9001884	RING;BACK UP	ANNEAU	1	K				
11	115-00077	WIPER;DUST	ESSUIE-GLACE	1	K				
12	115-00078	RING;RETAINING	ANNEAU	1					
13	S8011351	O-RING	JOINT CIRCULAIRE	1	K				
14	1.180-00662	RING;BACK UP	ANNEAU	1	K				
15	2180-1217D96	O-RING	JOINT CIRCULAIRE	1	K				
16	K9001893	RING;CUSHION	ANNEAU	1					
17	K9001894	PISTON	PISTON	1					
18	K9001148	SEAL;SLIPPER	CACHET	1	K				
19	115-00079	RING;WEAR	ANNEAU	2	K				
20	K9001149	RING;DUST	ANNEAU	2	K				
21	S8010801	O-RING	JOINT CIRCULAIRE	1	K				
22	K9001895	RING;BACK UP	ANNEAU	2	K				
23	K9001896	NUT;RISTON	ECROU	1					
24	1.120-00219	SCREW;SET	VIS	1					
25	K9001897	PLUNGER;CUSHION	PLONGEUR	1					
26	115-00081	RING;STOP	ANNEAU	1					
27	S2222272	BOLT;SOCKET	BOULON	14					
28	1.420-00050	VALVE;CHECK	VALVE	1					
29	129-00071	SPRING	RESSORT	1					
30	1.195-00022	SUPPORT;SPRING	APPUI	1					
31	2181-1116D3	PLUG;HEX. SOCKET	BOUCHON	1					
32	K9001898	PIPE BAND ASS'Y-B	ENSEMBLE DE FIXATION	1					
33	124-00052	BAND;PIPE	BANDE	1					
34	S5100703	WASHER;SPRING	RONDELLE	2					
35	S0560563	BOLT;HEX	BOULON	2					
36	K9003677	PIPE ASS'Y-R	ENSEMBLE CONDUITES	1					
37	K9001158	U-BOLT	U-BOULON	1					

DATE	JUN. 01, 2010
3rd EDITION	

Fig. 4330 ARM CYLINDER - LOCK VALVE
VERIN DE BALANCIER

Serial No. ;

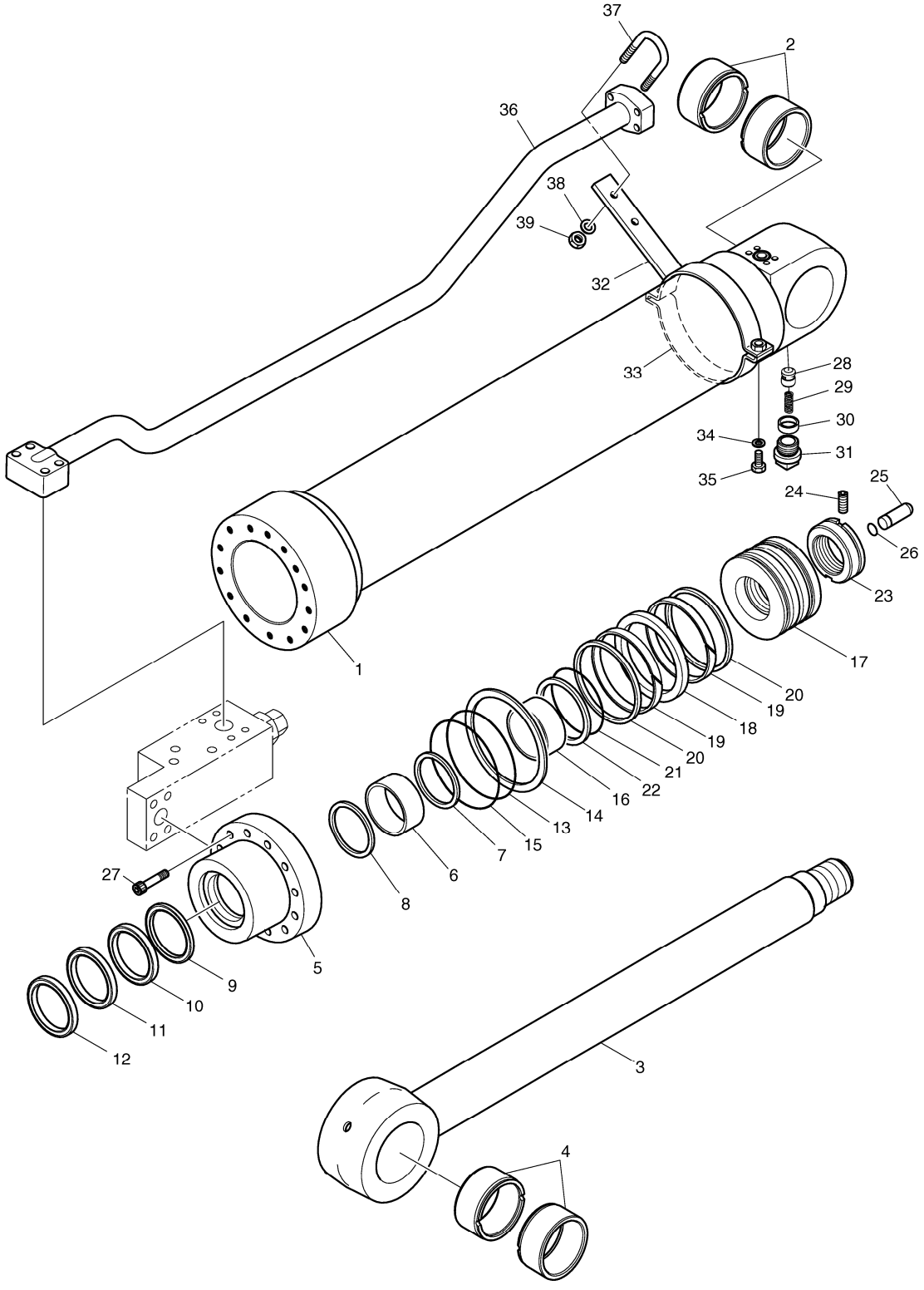

Fig. 4330 ARM CYLINDER - LOCK VALVE
VERIN DE BALANCIER

Serial No. ;

Key No.	Part No.	Description	Description	Q'ty	S.C	Serial No.	ICA	Replaceable part	
								Part No.	Q'ty
4330 -38	S5100603	WASHER;SPRING	RONDELLE	2					
39	S4012633	NUT	ECROU	2					
*	K9001901	SEAL KIT;ARM CYLINDER	KIT DE JOINT	1					

DATE	JUN. 01, 2010
3rd EDITION	

Fig. 4340 ARTI. BOOM CYLINDER VERIN DE ARTICULAIRE FLECHE

Serial No. ;

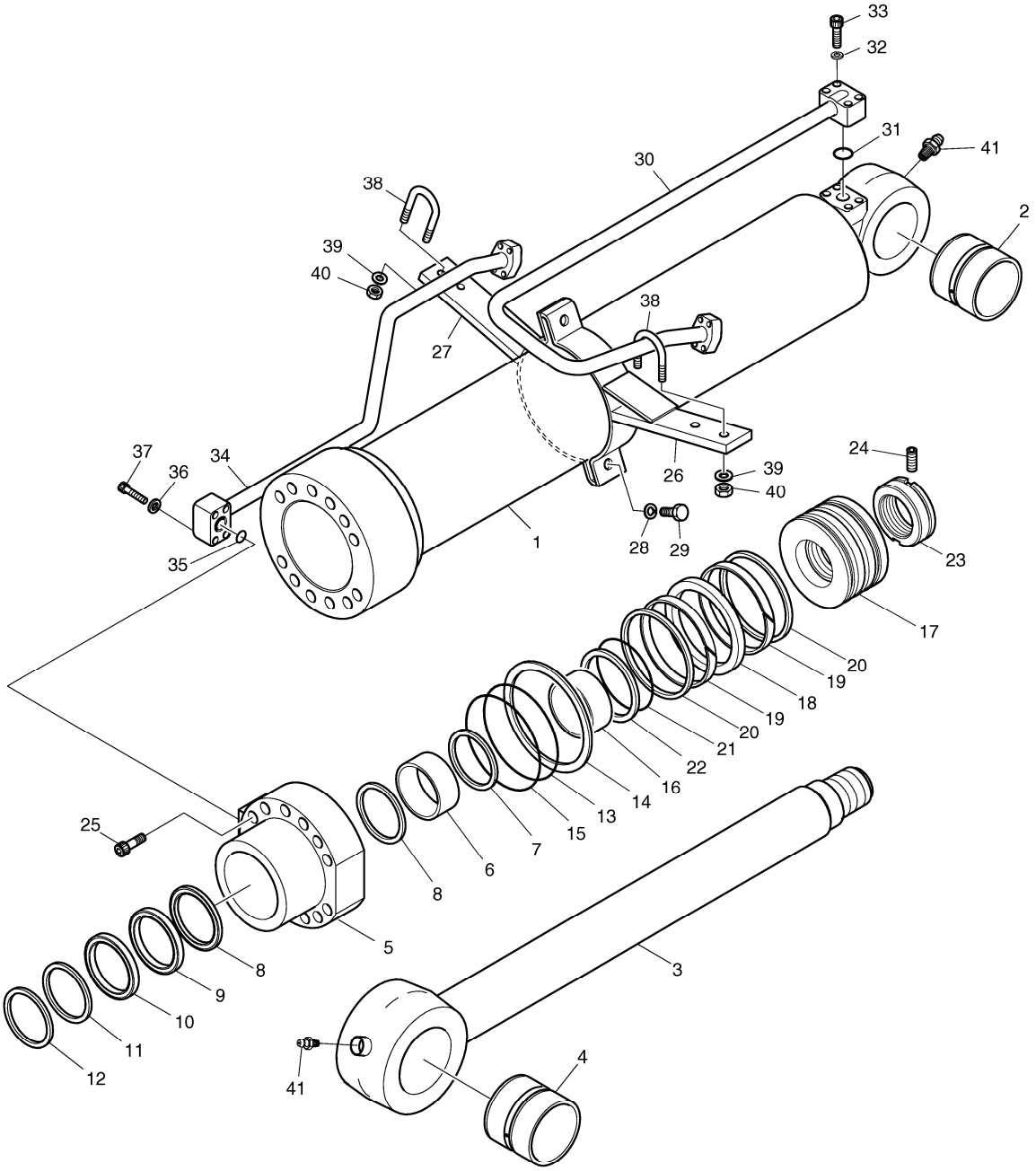

DATE	JUN. 01, 2010
3rd EDITION	

Fig. 4340 ARTI. BOOM CYLINDER VERIN DE ARTICULAIRE FLECHE

Serial No. ;

Key No.	Part No.	Description	Description	Q'ty	S.C	Serial No.	ICA	Replaceable part	
								Part No.	Q'ty
4340 --	K1023535A	CYLINDER;ARTI BOOM	CYLINDRES	1					
1	K9003678	TUBE ASS'Y	DOUILLE ACIER	1					
2	K1003914	BUSH	BUSH	1					
3	K9002284	ROD ASS'Y	TIGE	1					
4	K1003914	BUSH	BUSH	1					
5	K9002267	COVER;ROD	COUVERCLE	1					
6	110-00081	DD-BUSH	DD-BUSH	1					
7	115-00073	RING;RETAINING	ANNEAU	1					
8	K9001882	SEAL;BUFFER	CACHET	1	K				
9	K9001883	U-PACKING	U-EMBALLAGE	1	K				
10	K9001884	RING;BACK UP	ANNEAU	1	K				
11	115-00077	WIPER;DUST	ESSUIE-GLACE	1	K				
12	115-00078	RING;RETAINING	ANNEAU	1					
13	S8011451	O-RING	JOINT CIRCULAIRE	1	K				
14	K9001164	RING;BACK UP	ANNEAU	1	K				
15	180-00363	O-RING	JOINT CIRCULAIRE	1	K				
16	K9002285	RING;CUSHION	ANNEAU	1					
17	K9002269	PISTON	PISTON	1					
18	K9001166	SEAL;SLIPPER	CACHET	1	K				
19	115-00121	RING;WEAR	ANNEAU	2	K				
20	115-00122	RING;SLYD	ANNEAU	2	K				
21	S8010801	O-RING	JOINT CIRCULAIRE	1	K				
22	K9001895	RING;BACK UP	ANNEAU	2	K				
23	121-00044	NUT;PISTON	ECROU	1					
24	S3523836	SCREW;SET	VIS	1					
25	S2225271	BOLT;HEX SOCKET	BOULON	12					
26	K9003679A	PIPE BAND ASS'Y-H	BANDE DE PIPE	1					
27	K9003680A	PIPE BAND ASS'Y-R	BANDE DE PIPE	1					
28	S5100703	WASHER;SPRING	RONDELLE	2					
29	S0560563	BOLT;HEX	BOULON	2					
30	K9003681A	PIPE ASS'Y-H	ENSEMBLE CONDUITES	1					
31	S8000341	O-RING	JOINT CIRCULAIRE	1					
32	S5100703	WASHER;SPRING	RONDELLE	4					
33	S2215961	BOLT;SOCKET	BOULON	4					
34	K9003682A	PIPE ASS'Y-R	CONDUITE	1					
35	S8000341	O-RING	JOINT CIRCULAIRE	1					
36	S5100703	WASHER;SPRING	RONDELLE	4					
37	S2215961	BOLT;SOCKET	BOULON	4					

DATE	JUN. 01, 2010
3rd EDITION	

Fig. 4340 ARTI. BOOM CYLINDER VERIN DE ARTICULAIRE FLECHE

Serial No. ;

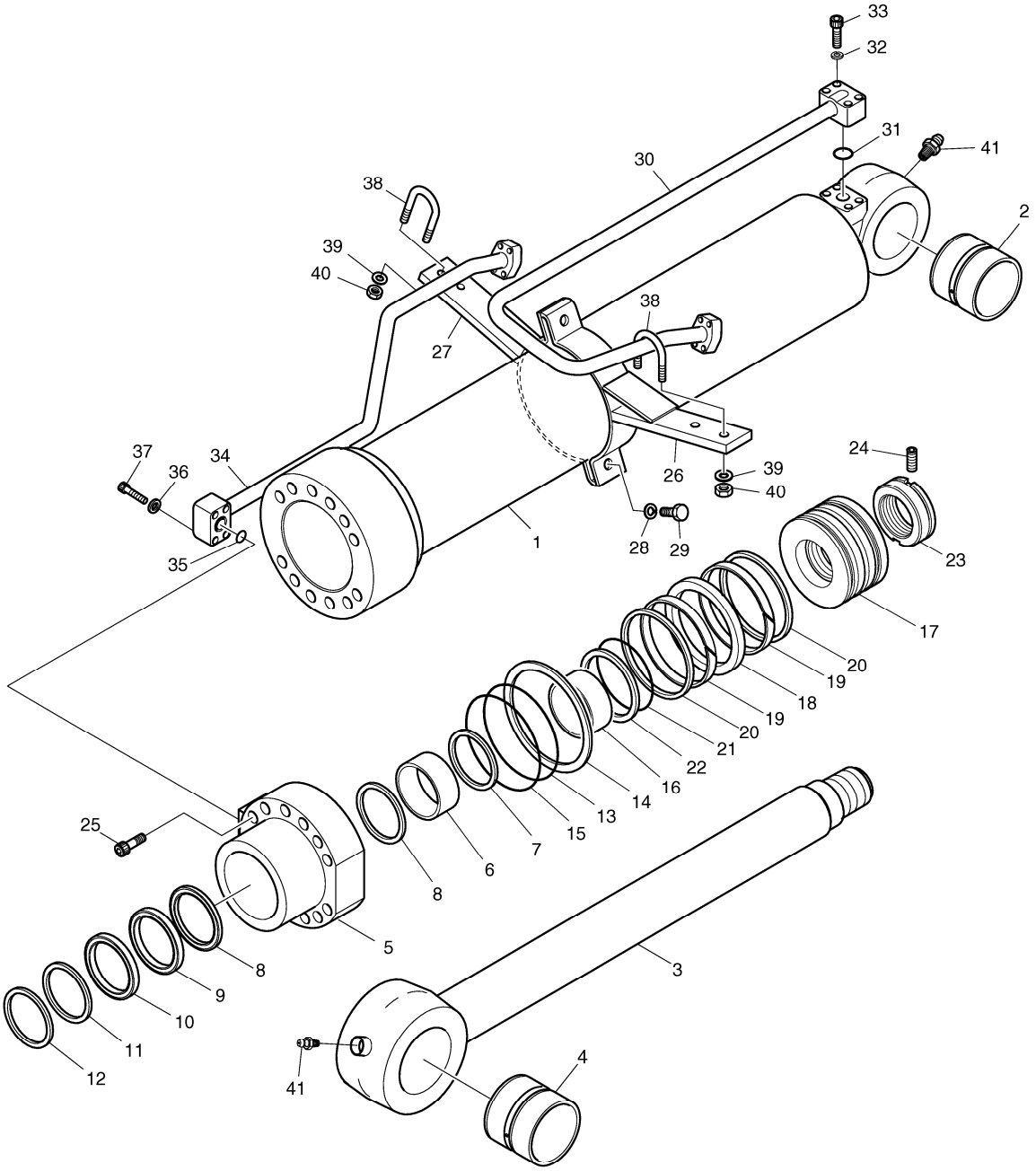

DATE	JUN. 01, 2010
3rd EDITION	

Fig. 4340 ARTI. BOOM CYLINDER VERIN DE ARTICULAIRE FLECHE

Serial No. ;

Key No.	Part No.	Description	Description	Q'ty	S.C	Serial No.	ICA	Replaceable part	
								Part No.	Q'ty
4340 -38	K9001158	U-BOLT	U-BOULON	2					
39	S5100603	WASHER;SPRING	RONDELLE	4					
40	S4012633	NUT	ECROU	4					
41	S6710032	NIPPLE;GREASE	MAMELON	2					
*	K9002289	SEAL KIT;BOOM CYL.	KIT DE JOINT	1					

DATE	JUN. 01, 2010
3rd EDITION	

Fig. 4350 ARM CYLINDER - ARTI. BOOM(ARM 2m) VERIN DE BALANCIER

Serial No. ;

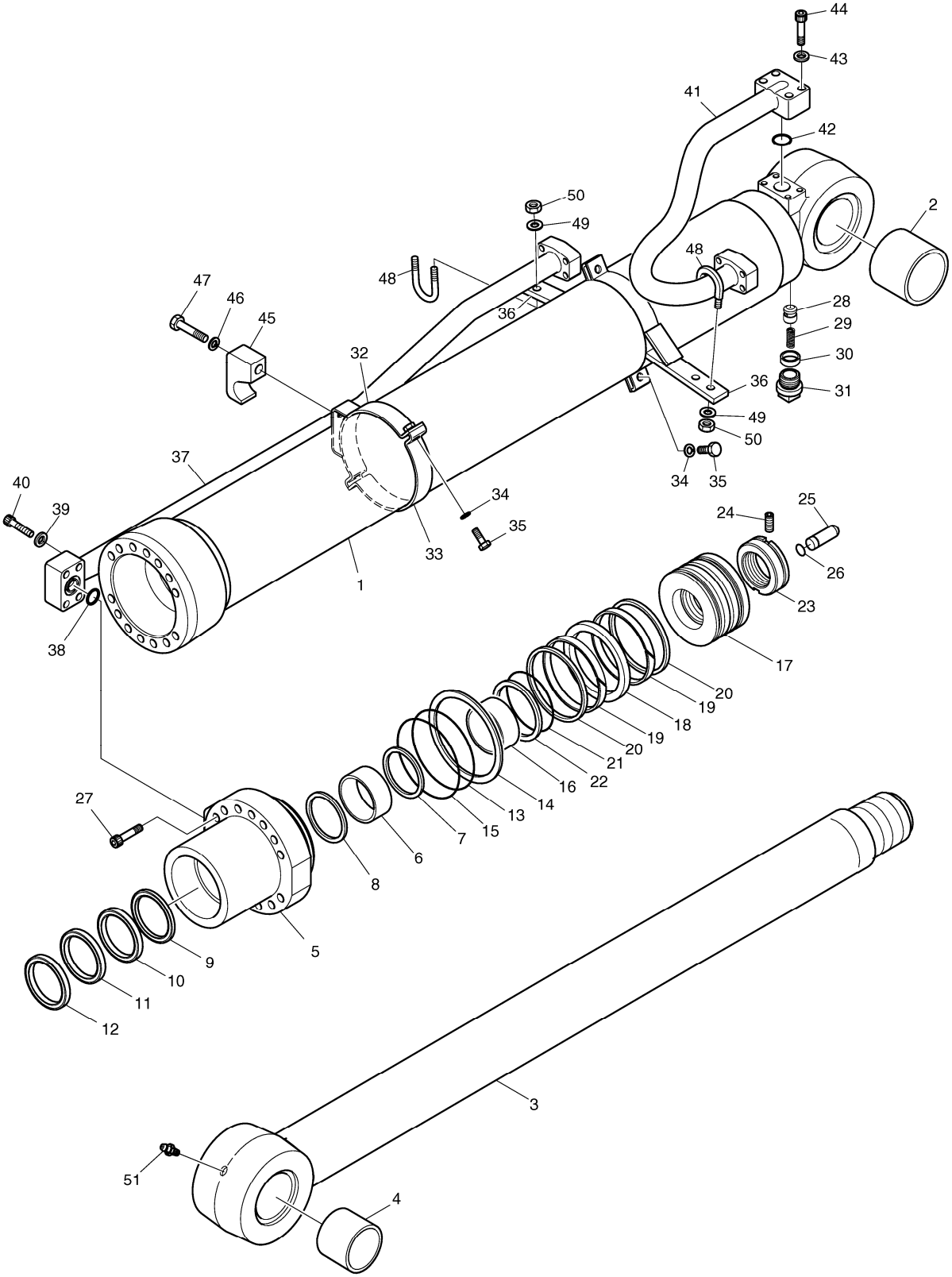

DATE	JUN. 01, 2010
3rd EDITION	

Fig. 4350 ARM CYLINDER - ARTI. BOOM(ARM 2m) VERIN DE BALANCIER

Serial No. ;

Key No.	Part No.	Description	Description	Q'ty	S.C	Serial No.	ICA	Replaceable part	
								Part No.	Q'ty
4350 --	K1023861	ARM CYLINDER	VERIN DE BALANCIER	1					
1	K9003683	TUBE ASS'Y	DOUILLE ACIER	1					
2	K1000737	BUSH	BUSH	1					
3	K9001880	ROD ASS`Y	TIGE	1					
4	K1000737	BUSH	BUSH	1					
5	K9001881	ROD;COVER	TIGE	1					
6	110-00081	DD-BUSH	DD-BUSH	1					
7	115-00073	RING;RETAINING	ANNEAU	1					
8	K9001882	SEAL;BUFFER	CACHET	1	K				
9	K9001883	U-PACKING	U-EMBALLAGE	1	K				
10	K9001884	RING;BACK UP	ANNEAU	1	K				
11	115-00077	WIPER;DUST	ESSUIE-GLACE	1	K				
12	115-00078	RING;RETAINING	ANNEAU	1					
13	S8011351	O-RING	JOINT CIRCULAIRE	1	K				
14	1.180-00662	RING;BACK UP	ANNEAU	1	K				
15	2180-1217D96	O-RING	JOINT CIRCULAIRE	1	K				
16	K9001893	RING;CUSHION	ANNEAU	1					
17	K9001894	PISTON	PISTON	1					
18	K9001148	SEAL;SLIPPER	CACHET	1	K				
19	115-00079	RING;WEAR	ANNEAU	2	K				
20	K9001149	RING;DUST	ANNEAU	2	K				
21	S8010801	O-RING	JOINT CIRCULAIRE	1	K				
22	K9001895	RING;BACK UP	ANNEAU	2	K				
23	K9001896	NUT;RISTON	ECROU	1					
24	1.120-00219	SCREW;SET	VIS	1					
25	K9001897	PLUNGER;CUSHION	PLONGEUR	1					
26	115-00081	RING;STOP	ANNEAU	1					
27	S2222272	BOLT;SOCKET	BOULON	14					
28	1.420-00050	VALVE;CHECK	VALVE	1					
29	129-00071	SPRING	RESSORT	1					
30	1.195-00022	SUPPORT;SPRING	APPUI	1					
31	2181-1116D3	PLUG;HEX. SOCKET	BOUCHON	1					
32	K9001899	PIPE BAND ASS`Y-A	ENSEMBLE DE FIXATION	1					
33	124-00052	BAND;PIPE	BANDE	1					
34	S5100703	WASHER;SPRING	RONDELLE	4					
35	S0560563	BOLT;HEX	BOULON	4					
36	K9003684	PIPE BAND ASS'Y	BANDE DE PIPE	2					
37	K9003685	PIPE ASS'Y-R	ENSEMBLE CONDUITES	1					

DATE	JUN. 01, 2010
3rd EDITION	

Fig. 4350 ARM CYLINDER - ARTI. BOOM(ARM 2m) VERIN DE BALANCIER

Serial No. ;

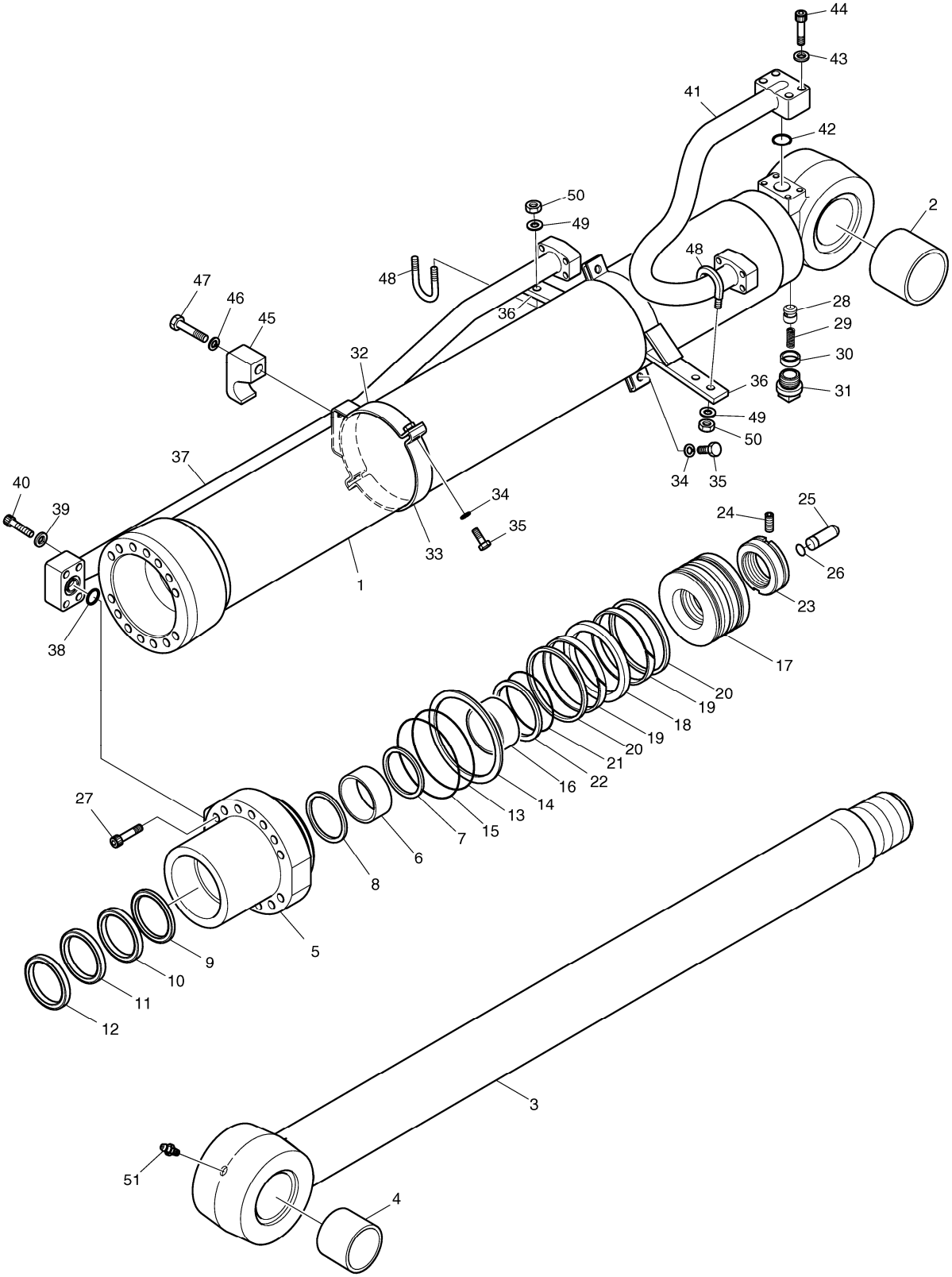

DATE	JUN. 01, 2010
3rd EDITION	

Fig. 4350 ARM CYLINDER - ARTI. BOOM(ARM 2m) VERIN DE BALANCIER

Serial No. ;

Key No.	Part No.	Description	Description	Q'ty	S.C	Serial No.	ICA	Replaceable part	
								Part No.	Q'ty
4350 -38	S8000341	O-RING	JOINT CIRCULAIRE	1					
39	S5100703	WASHER;SPRING	RONDELLE	4					
40	S2215961	BOLT;SOCKET	BOULON	4					
41	K9003686	PIPE ASS'Y-H	ENSEMBLE CONDUITES	1					
42	S8000341	O-RING	JOINT CIRCULAIRE	1					
43	S5100603	WASHER;SPRING	RONDELLE	4					
44	S2212861	BOLT;SOCKET	BOULON	4					
45	K9001159	CLAMP;PIPE	BRIDE	1					
46	S5102903	WASHER	RONDELLE	1					
47	S0521853	BOLT	BOULON	1					
48	K9001158	U-BOLT	U-BOULON	2					
49	S5100603	WASHER;SPRING	RONDELLE	4					
50	S4012633	NUT	ECROU	4					
51	S6710032	NIPPLE;GREASE	MAMELON	1					
*	K9001901	SEAL KIT;ARM CYLINDER	KIT DE JOINT	1					

DATE	JUN. 01, 2010
3rd EDITION	

Fig. 4360 ARM CYLINDER - ARTI. BOOM(ARM 2.4m)
VERIN DE BALANCIER

Serial No. ;

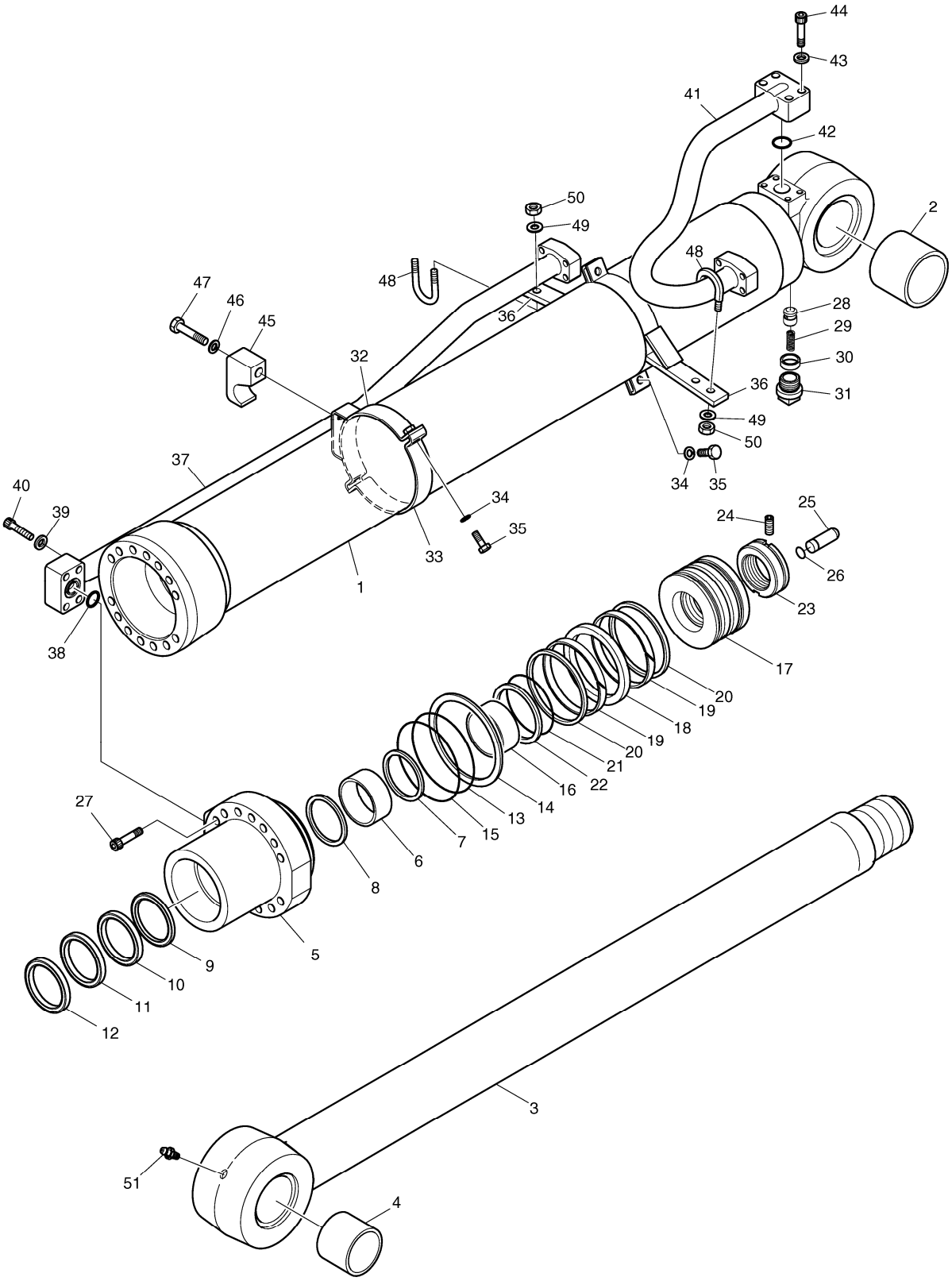

DATE	JUN. 01, 2010
3rd EDITION	

Fig. 4360 ARM CYLINDER - ARTI. BOOM(ARM 2.4m) VERIN DE BALANCIER

Serial No. ;

Key No.	Part No.	Description	Description	Q'ty	S.C	Serial No.	ICA	Replaceable part	
								Part No.	Q'ty
4360 --	K1023538	ARM CYLINDER	VERIN DE BALANCIER	1					
1	K9003687	TUBE ASS'Y	DOUILLE ACIER	1					
2	K1000737	BUSH	BUSH	1					
3	K9001880	ROD ASS`Y	TIGE	1					
4	K1000737	BUSH	BUSH	1					
5	K9001881	ROD;COVER	TIGE	1					
6	110-00081	DD-BUSH	DD-BUSH	1					
7	115-00073	RING;RETAINING	ANNEAU	1					
8	K9001882	SEAL;BUFFER	CACHET	1	K				
9	K9001883	U-PACKING	U-EMBALLAGE	1	K				
10	K9001884	RING;BACK UP	ANNEAU	1	K				
11	115-00077	WIPER;DUST	ESSUIE-GLACE	1	K				
12	115-00078	RING;RETAINING	ANNEAU	1					
13	S8011351	O-RING	JOINT CIRCULAIRE	1	K				
14	1.180-00662	RING;BACK UP	ANNEAU	1	K				
15	2180-1217D96	O-RING	JOINT CIRCULAIRE	1	K				
16	K9001893	RING;CUSHION	ANNEAU	1					
17	K9001894	PISTON	PISTON	1					
18	K9001148	SEAL;SLIPPER	CACHET	1	K				
19	115-00079	RING;WEAR	ANNEAU	2	K				
20	K9001149	RING;DUST	ANNEAU	2	K				
21	S8010801	O-RING	JOINT CIRCULAIRE	1	K				
22	K9001895	RING;BACK UP	ANNEAU	2	K				
23	K9001896	NUT;RISTON	ECROU	1					
24	1.120-00219	SCREW;SET	VIS	1					
25	K9001897	PLUNGER;CUSHION	PLONGEUR	1					
26	115-00081	RING;STOP	ANNEAU	1					
27	S2222272	BOLT;SOCKET	BOULON	14					
28	1.420-00050	VALVE;CHECK	VALVE	1					
29	129-00071	SPRING	RESSORT	1					
30	1.195-00022	SUPPORT;SPRING	APPUI	1					
31	2181-1116D3	PLUG;HEX. SOCKET	BOUCHON	1					
32	K9001899	PIPE BAND ASS`Y-A	ENSEMBLE DE FIXATION	1					
33	124-00052	BAND;PIPE	BANDE	1					
34	S5100703	WASHER;SPRING	RONDELLE	4					
35	S0560563	BOLT;HEX	BOULON	4					
36	K9003684	PIPE BAND ASS'Y	BANDE DE PIPE	2					
37	K9003688	PIPE ASS'Y-R	ENSEMBLE CONDUITES	1					

DATE	JUN. 01, 2010
3rd EDITION	

Fig. 4360 ARM CYLINDER - ARTI. BOOM(ARM 2.4m)
VERIN DE BALANCIER

Serial No. ;

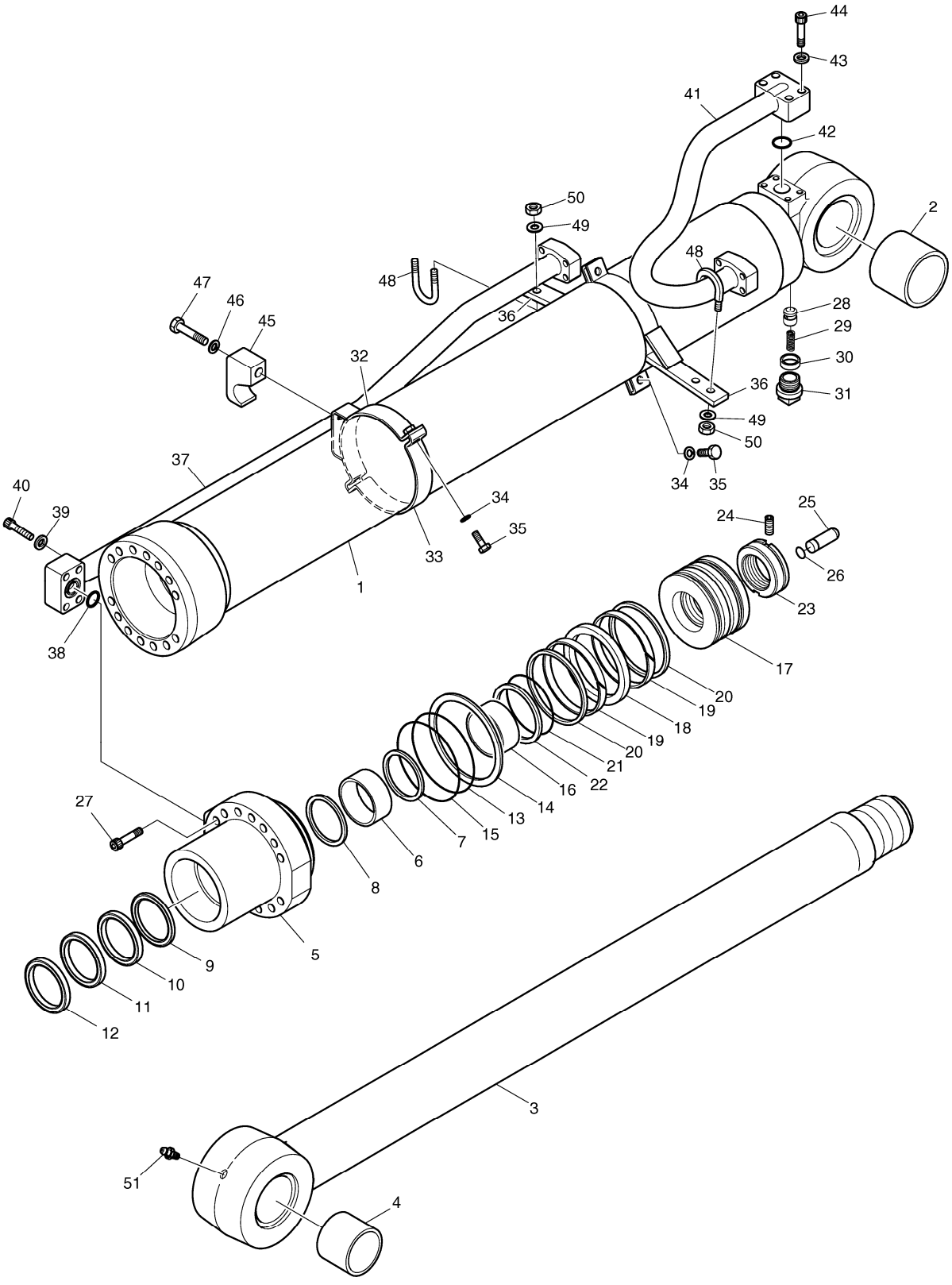

DATE	JUN. 01, 2010
3rd EDITION	

Fig. 4360 ARM CYLINDER - ARTI. BOOM(ARM 2.4m) VERIN DE BALANCIER

Serial No. ;

Key No.	Part No.	Description	Description	Q'ty	S.C	Serial No.	ICA	Replaceable part	
								Part No.	Q'ty
4360 -38	S8000341	O-RING	JOINT CIRCULAIRE	1					
39	S5100703	WASHER;SPRING	RONDELLE	4					
40	S2215961	BOLT;SOCKET	BOULON	4					
41	K9003686	PIPE ASS'Y-H	ENSEMBLE CONDUITES	1					
42	S8000341	O-RING	JOINT CIRCULAIRE	1					
43	S5100603	WASHER;SPRING	RONDELLE	4					
44	S2212861	BOLT;SOCKET	BOULON	4					
45	K9001159	CLAMP;PIPE	BRIDE	1					
46	S5102903	WASHER	RONDELLE	1					
47	S0521853	BOLT	BOULON	1					
48	K9001158	U-BOLT	U-BOULON	2					
49	S5100603	WASHER;SPRING	RONDELLE	4					
50	S4012633	NUT	ECROU	4					
51	S6710032	NIPPLE;GREASE	MAMELON	1					
*	K9001901	SEAL KIT;ARM CYLINDER	KIT DE JOINT	1					

DATE	JUN. 01, 2010
3rd EDITION	

Fig. 4370 ARTI BOOM CYLINDER - LOCK VALVE
VERIN DE ARTICULAIRE FLECHE

Serial No. ;

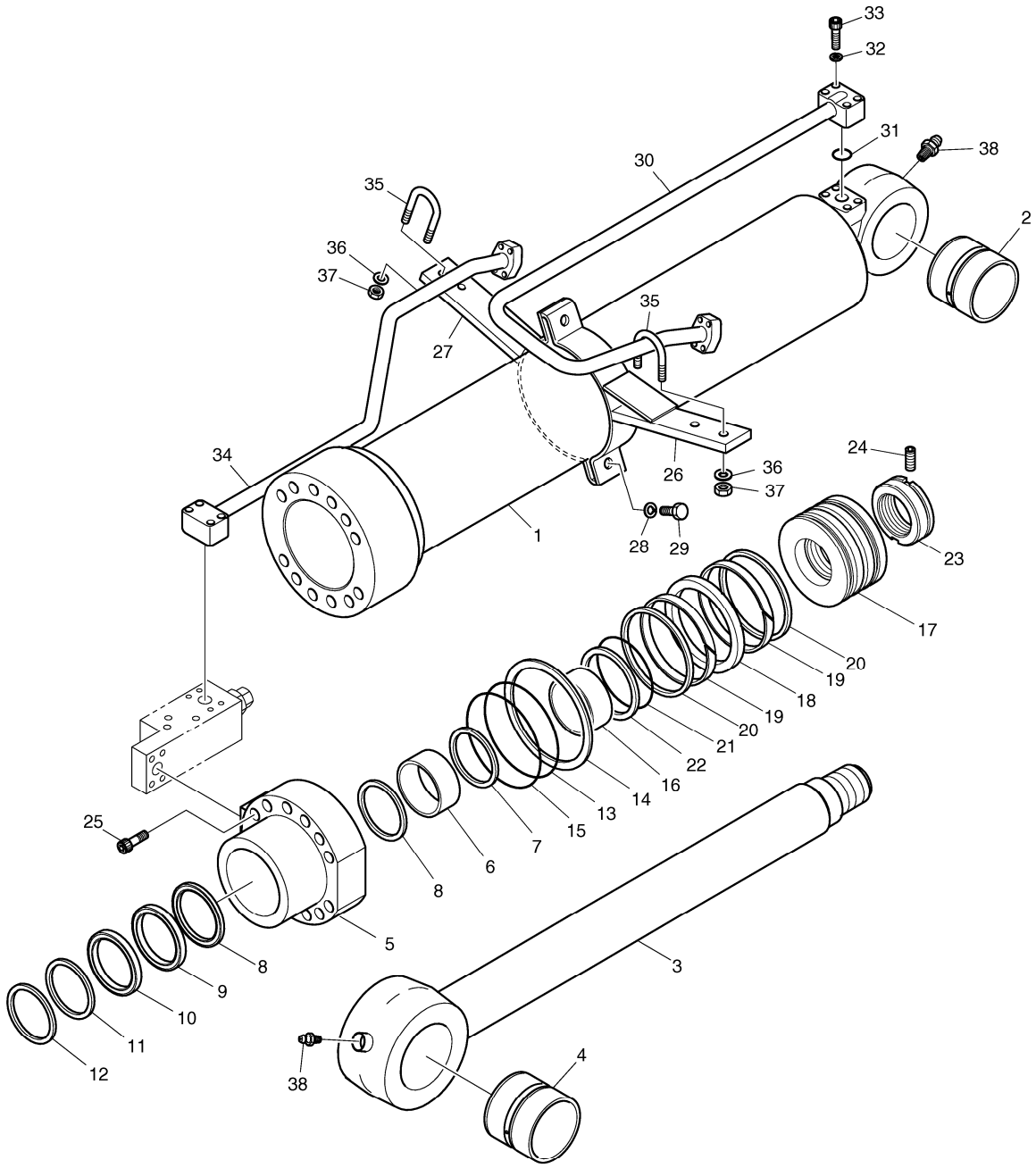

Fig. 4370 ARTI BOOM CYLINDER - LOCK VALVE
VERIN DE ARTICULAIRE FLECHE

Serial No. ;

Key No.	Part No.	Description	Description	Q'ty	S.C	Serial No.	ICA	Replaceable part	
								Part No.	Q'ty
4370 --	K1023537A	CYLINDER;ARTI BOOM	CYLINDRE	1					
1	K9003689	TUBE ASS'Y	ENSEMBLE TUBE	1					
2	K1003914	BUSH	BUSH	1					
3	K9002284	ROD ASS'Y	TIGE	1					
4	K1003914	BUSH	BUSH	1					
5	K9002267	COVER;ROD	COUVERCLE	1					
6	110-00081	DD-BUSH	DD-BUSH	1					
7	115-00073	RING;RETAINING	ANNEAU	1					
8	K9001882	SEAL;BUFFER	CACHET	1	K				
9	K9001883	U-PACKING	U-EMBALLAGE	1	K				
10	K9001884	RING;BACK UP	ANNEAU	1	K				
11	115-00077	WIPER;DUST	ESSUIE-GLACE	1	K				
12	115-00078	RING;RETAINING	ANNEAU	1					
13	S8011451	O-RING	JOINT CIRCULAIRE	1	K				
14	K9001164	RING;BACK UP	ANNEAU	1	K				
15	180-00363	O-RING	JOINT CIRCULAIRE	1	K				
16	K9002285	RING;CUSHION	ANNEAU	1					
17	K9002269	PISTON	PISTON	1					
18	K9001166	SEAL;SLIPPER	CACHET	1	K				
19	115-00121	RING;WEAR	ANNEAU	2	K				
20	115-00122	RING;SLYD	ANNEAU	2	K				
21	S8010801	O-RING	JOINT CIRCULAIRE	1	K				
22	K9001895	RING;BACK UP	ANNEAU	2	K				
23	121-00044	NUT;PISTON	ECROU	1					
24	S3523836	SCREW;SET	VIS	1					
25	S2225271	BOLT;HEX SOCKET	BOULON	12					
26	K9003679A	PIPE BAND ASS'Y-H	BANDE DE PIPE	1					
27	K9003680A	PIPE BAND ASS'Y-R	BANDE DE PIPE	1					
28	S5100703	WASHER;SPRING	RONDELLE	2					
29	S0560563	BOLT;HEX	BOULON	2					
30	K9003681A	PIPE ASS'Y-H	ENSEMBLE CONDUITES	1					
31	S8000341	O-RING	JOINT CIRCULAIRE	1					
32	S5100703	WASHER;SPRING	RONDELLE	4					
33	S2215961	BOLT;SOCKET	BOULON	4					
34	K9003690A	PIPE ASS'Y-R	ENSEMBLE CONDUITES	1					
35	K9001158	U-BOLT	U-BOULON	2					
36	S5100603	WASHER;SPRING	RONDELLE	4					
37	S4012633	NUT	ECROU	4					

DATE	JUN. 01, 2010
3rd EDITION	

Fig. 4370 ARTI BOOM CYLINDER - LOCK VALVE
VERIN DE ARTICULAIRE FLECHE

Serial No. ;

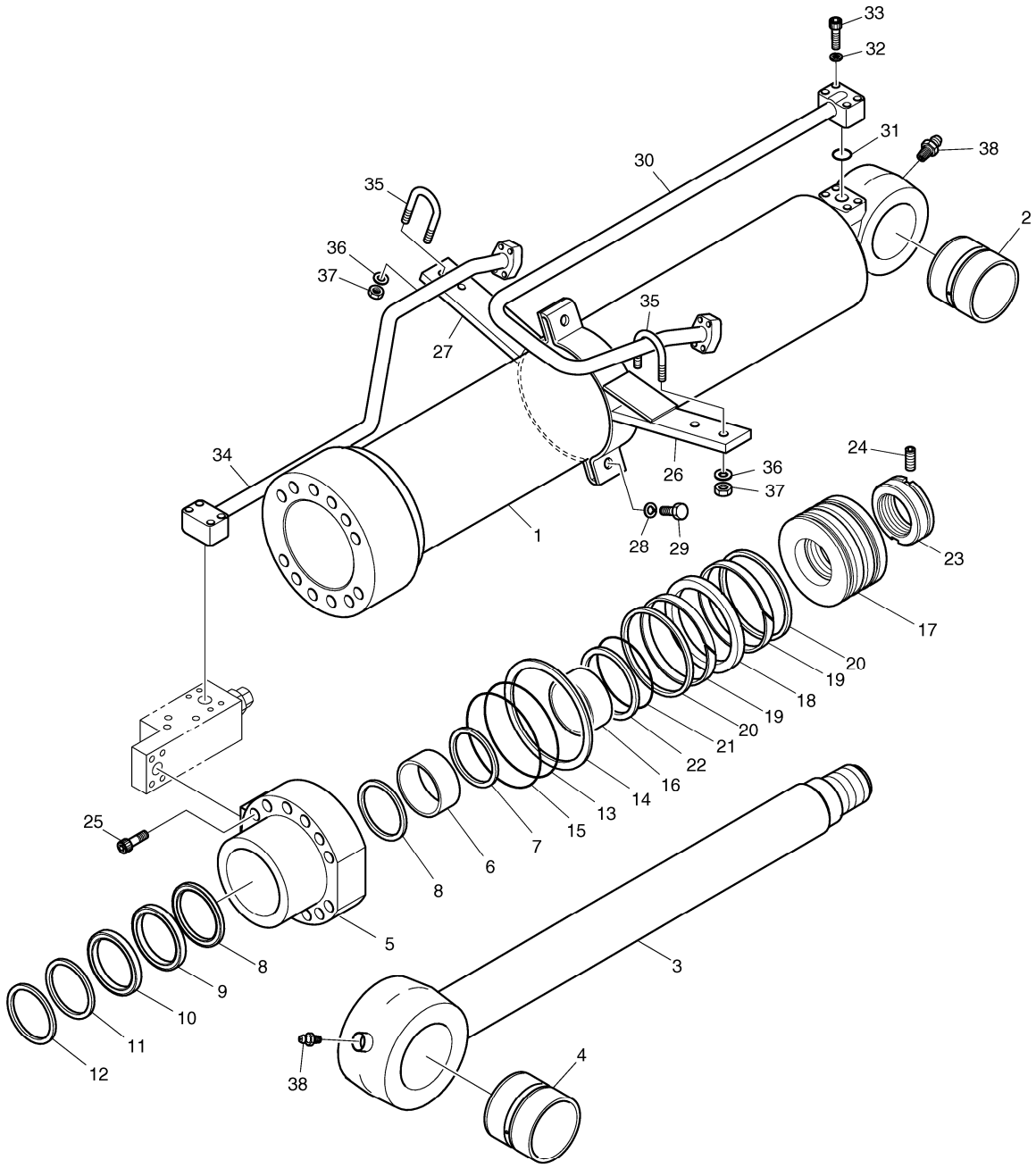

DATE	JUN. 01, 2010
3rd EDITION	

Fig. 4370 ARTI BOOM CYLINDER - LOCK VALVE
VERIN DE ARTICULAIRE FLECHE

Serial No. ;

Key No.	Part No.	Description	Description	Q'ty	S.C	Serial No.	ICA	Replaceable part	
								Part No.	Q'ty
4370 -38	S6710032	NIPPLE;GREASE	MAMELON	2					
*	K9002289	SEAL KIT;BOOM CYL.	KIT DE JOINT	1					

DATE	JUN. 01, 2010
3rd EDITION	

Fig. 4380 ARM CYL - ARM 2.0m (ARTI BOOM)(LOCK V/V) VERIN DE BALANCIER

Serial No. ;

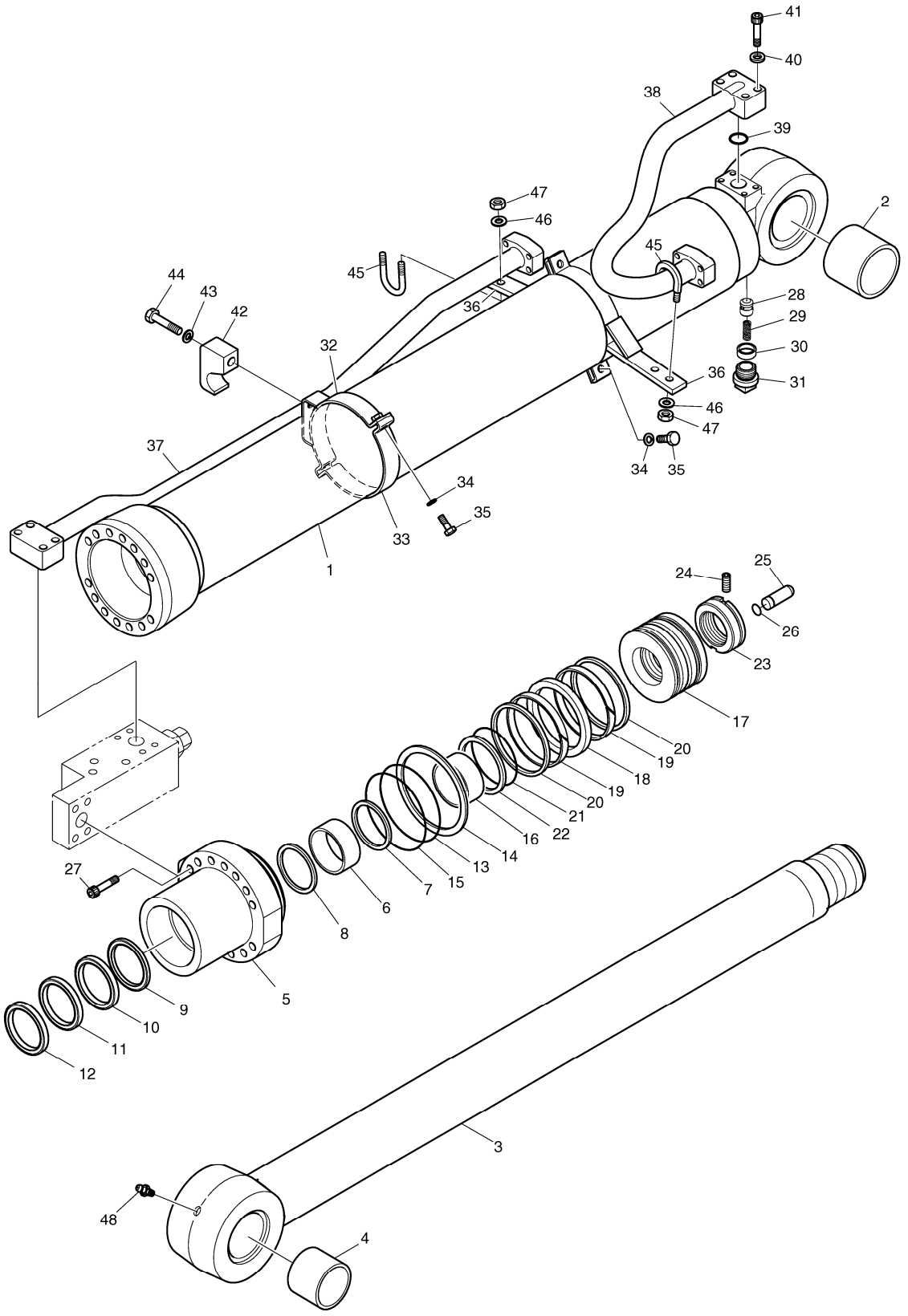

DATE	JUN. 01, 2010
3rd EDITION	

Fig. 4380 ARM CYL - ARM 2.0m (ARTI BOOM)(LOCK V/V)
VERIN DE BALANCIER

Serial No. ;

Key No.	Part No.	Description	Description	Q'ty	S.C	Serial No.	ICA	Replaceable part	
								Part No.	Q'ty
4380 --	K1023866	ARM CYLINDER	VERIN DE BALANCIER	1					
1	K9003691	TUBE ASS'Y	DOUILLE ACIER	1					
2	K1000737	BUSH	BUSH	1					
3	K9001880	ROD ASS`Y	TIGE	1					
4	K1000737	BUSH	BUSH	1					
5	K9001881	ROD;COVER	TIGE	1					
6	110-00081	DD-BUSH	DD-BUSH	1					
7	115-00073	RING;RETAINING	ANNEAU	1					
8	K9001882	SEAL;BUFFER	CACHET	1	K				
9	K9001883	U-PACKING	U-EMBALLAGE	1	K				
10	K9001884	RING;BACK UP	ANNEAU	1	K				
11	115-00077	WIPER;DUST	ESSUIE-GLACE	1	K				
12	115-00078	RING;RETAINING	ANNEAU	1					
13	S8011351	O-RING	JOINT CIRCULAIRE	1	K				
14	1.180-00662	RING;BACK UP	ANNEAU	1	K				
15	2180-1217D96	O-RING	JOINT CIRCULAIRE	1	K				
16	K9001893	RING;CUSHION	ANNEAU	1					
17	K9001894	PISTON	PISTON	1					
18	K9001148	SEAL;SLIPPER	CACHET	1	K				
19	115-00079	RING;WEAR	ANNEAU	2	K				
20	K9001149	RING;DUST	ANNEAU	2	K				
21	S8010801	O-RING	JOINT CIRCULAIRE	1	K				
22	K9001895	RING;BACK UP	ANNEAU	2	K				
23	K9001896	NUT;RISTON	ECROU	1					
24	1.120-00219	SCREW;SET	VIS	1					
25	K9001897	PLUNGER;CUSHION	PLONGEUR	1					
26	115-00081	RING;STOP	ANNEAU	1					
27	S2222272	BOLT;SOCKET	BOULON	14					
28	1.420-00050	VALVE;CHECK	VALVE	1					
29	129-00071	SPRING	RESSORT	1					
30	1.195-00022	SUPPORT;SPRING	APPUI	1					
31	2181-1116D3	PLUG;HEX. SOCKET	BOUCHON	1					
32	K9001899	PIPE BAND ASS`Y-A	ENSEMBLE DE FIXATION	1					
33	124-00052	BAND;PIPE	BANDE	1					
34	S5100703	WASHER;SPRING	RONDELLE	4					
35	S0560563	BOLT;HEX	BOULON	4					
36	K9003684	PIPE BAND ASS'Y	BANDE DE PIPE	2					
37	K9003692	PIPE ASS'Y-R	ENSEMBLE CONDUITES	1					

DATE	JUN. 01, 2010
3rd EDITION	

Fig. 4380 ARM CYL - ARM 2.0m (ARTI BOOM)(LOCK V/V) VERIN DE BALANCIER

Serial No. ;

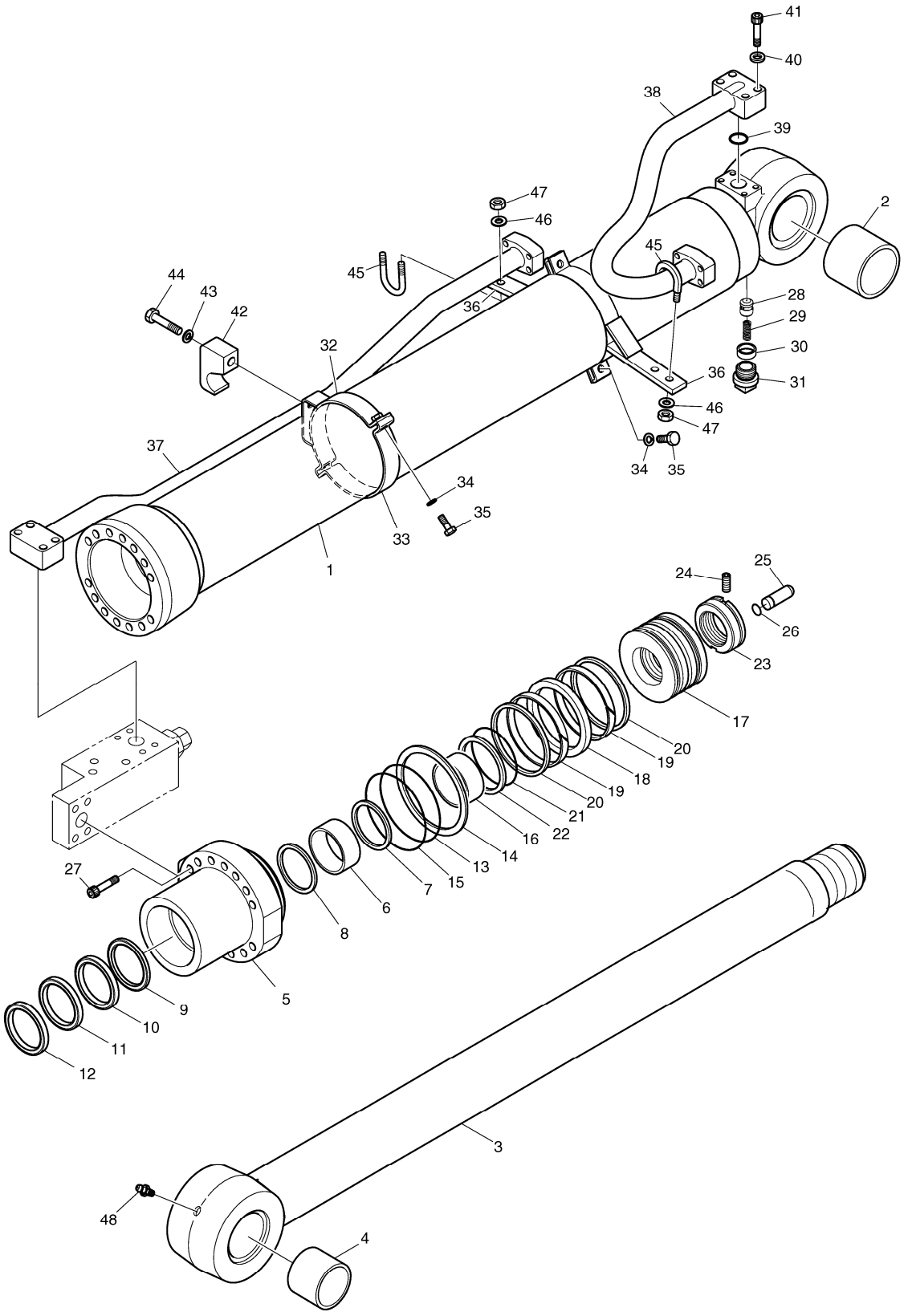

DATE	JUN. 01, 2010
3rd EDITION	

Fig. 4380 ARM CYL - ARM 2.0m (ARTI BOOM)(LOCK V/V) VERIN DE BALANCIER

Serial No. ;

Key No.	Part No.	Description	Description	Q'ty	S.C	Serial No.	ICA	Replaceable part	
								Part No.	Q'ty
4380 -38	K9003686	PIPE ASS'Y-H	ENSEMBLE CONDUITES	1					
39	S8000341	O-RING	JOINT CIRCULAIRE	1					
40	S5100603	WASHER;SPRING	RONDELLE	4					
41	S2212861	BOLT;SOCKET	BOULON	4					
42	K9001159	CLAMP;PIPE	BRIDE	1					
43	S5102903	WASHER	RONDELLE	1					
44	S0521853	BOLT	BOULON	1					
45	K9001158	U-BOLT	U-BOULON	2					
46	S5100603	WASHER;SPRING	RONDELLE	4					
47	S4012633	NUT	ECROU	4					
48	S6710032	NIPPLE;GREASE	MAMELON	1					
*	K9001901	SEAL KIT;ARM CYLINDER	KIT DE JOINT	1					

DATE	JUN. 01, 2010
3rd EDITION	

Fig. 4390 ARM CYL - ARM 2.4m (ARTI BOOM)(LOCK V/V)
VERIN DE BALANCIER

Serial No. ;

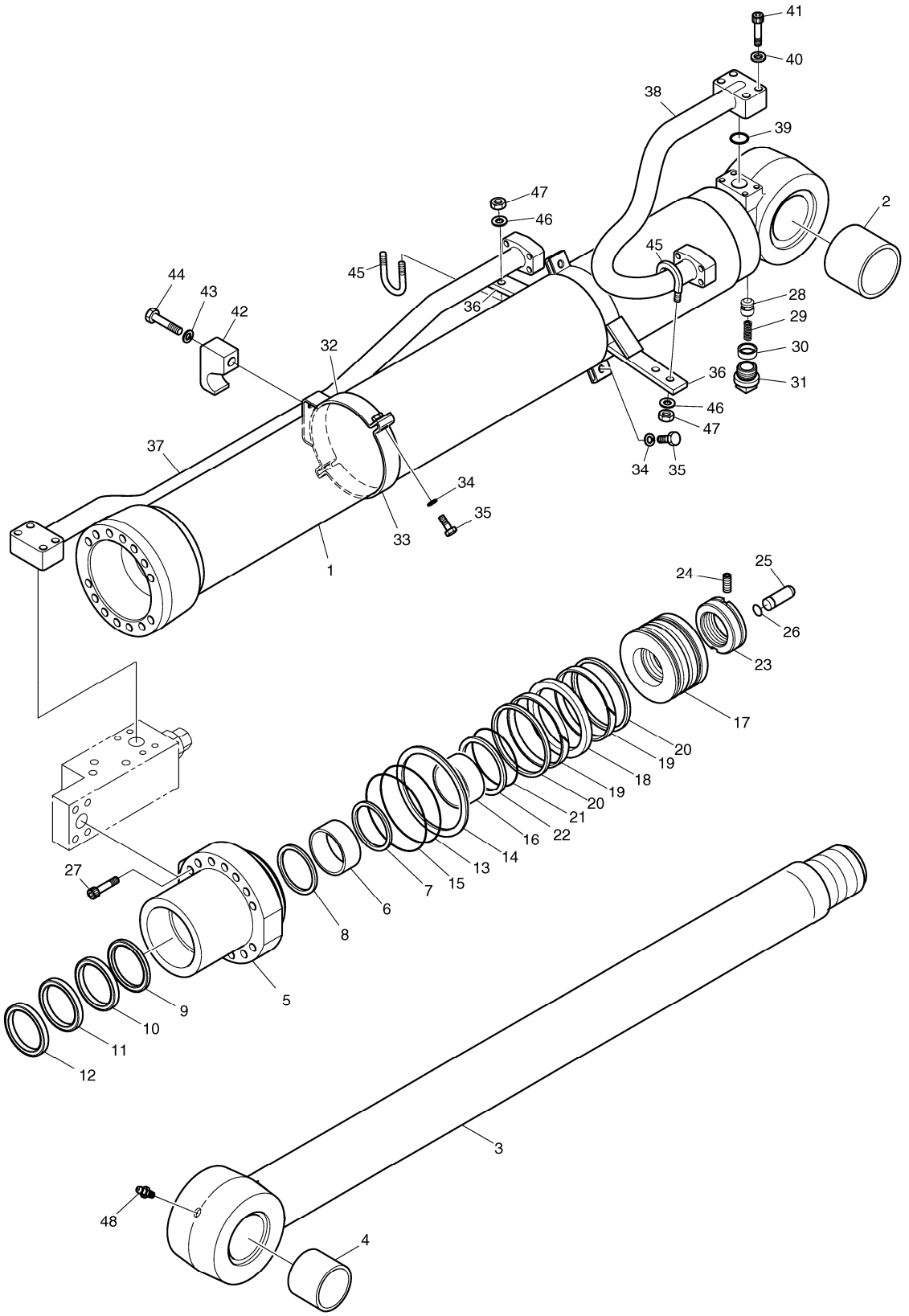

DATE	JUN. 01, 2010
3rd EDITION	

Fig. 4390 ARM CYL - ARM 2.4m (ARTI BOOM)(LOCK V/V) VERIN DE BALANCIER

Serial No. ;

Key No.	Part No.	Description	Description	Q'ty	S.C	Serial No.	ICA	Replaceable part	
								Part No.	Q'ty
4390 --	K1023540	ARM CYLINDER	CYLINDRE DE BRAS	1					
1	K9003693	TUBE ASS'Y	ENSEMBLE TUBE	1					
2	K1000737	BUSH	BUSH	1					
3	K9001880	ROD ASS`Y	TIGE	1					
4	K1000737	BUSH	BUSH	1					
5	K9001881	ROD;COVER	TIGE	1					
6	110-00081	DD-BUSH	DD-BUSH	1					
7	115-00073	RING;RETAINING	ANNEAU	1					
8	K9001882	SEAL;BUFFER	CACHET	1	K				
9	K9001883	U-PACKING	U-EMBALLAGE	1	K				
10	K9001884	RING;BACK UP	ANNEAU	1	K				
11	115-00077	WIPER;DUST	ESSUIE-GLACE	1	K				
12	115-00078	RING;RETAINING	ANNEAU	1					
13	S8011351	O-RING	JOINT CIRCULAIRE	1	K				
14	1.180-00662	RING;BACK UP	ANNEAU	1	K				
15	2180-1217D96	O-RING	JOINT CIRCULAIRE	1	K				
16	K9001893	RING;CUSHION	ANNEAU	1					
17	K9001894	PISTON	PISTON	1					
18	K9001148	SEAL;SLIPPER	CACHET	1	K				
19	115-00079	RING;WEAR	ANNEAU	2	K				
20	K9001149	RING;DUST	ANNEAU	2	K				
21	S8010801	O-RING	JOINT CIRCULAIRE	1	K				
22	K9001895	RING;BACK UP	ANNEAU	2	K				
23	K9001896	NUT;RISTON	ECROU	1					
24	1.120-00219	SCREW;SET	VIS	1					
25	K9001897	PLUNGER;CUSHION	PLONGEUR	1					
26	115-00081	RING;STOP	ANNEAU	1					
27	S2222272	BOLT;SOCKET	BOULON	14					
28	1.420-00050	VALVE;CHECK	VALVE	1					
29	129-00071	SPRING	RESSORT	1					
30	1.195-00022	SUPPORT;SPRING	APPUI	1					
31	2181-1116D3	PLUG;HEX. SOCKET	BOUCHON	1					
32	K9001899	PIPE BAND ASS`Y-A	ENSEMBLE DE FIXATION	1					
33	124-00052	BAND;PIPE	BANDE	1					
34	S5100703	WASHER;SPRING	RONDELLE	4					
35	S0560563	BOLT;HEX	BOULON	4					
36	K9003684	PIPE BAND ASS'Y	BANDE DE PIPE	2					
37	K9003702	PIPE ASS'Y-R	ENSEMBLE CONDUITES	1					

DATE	JUN. 01, 2010
3rd EDITION	

Fig. 4390 ARM CYL - ARM 2.4m (ARTI BOOM)(LOCK V/V) VERIN DE BALANCIER

Serial No. ;

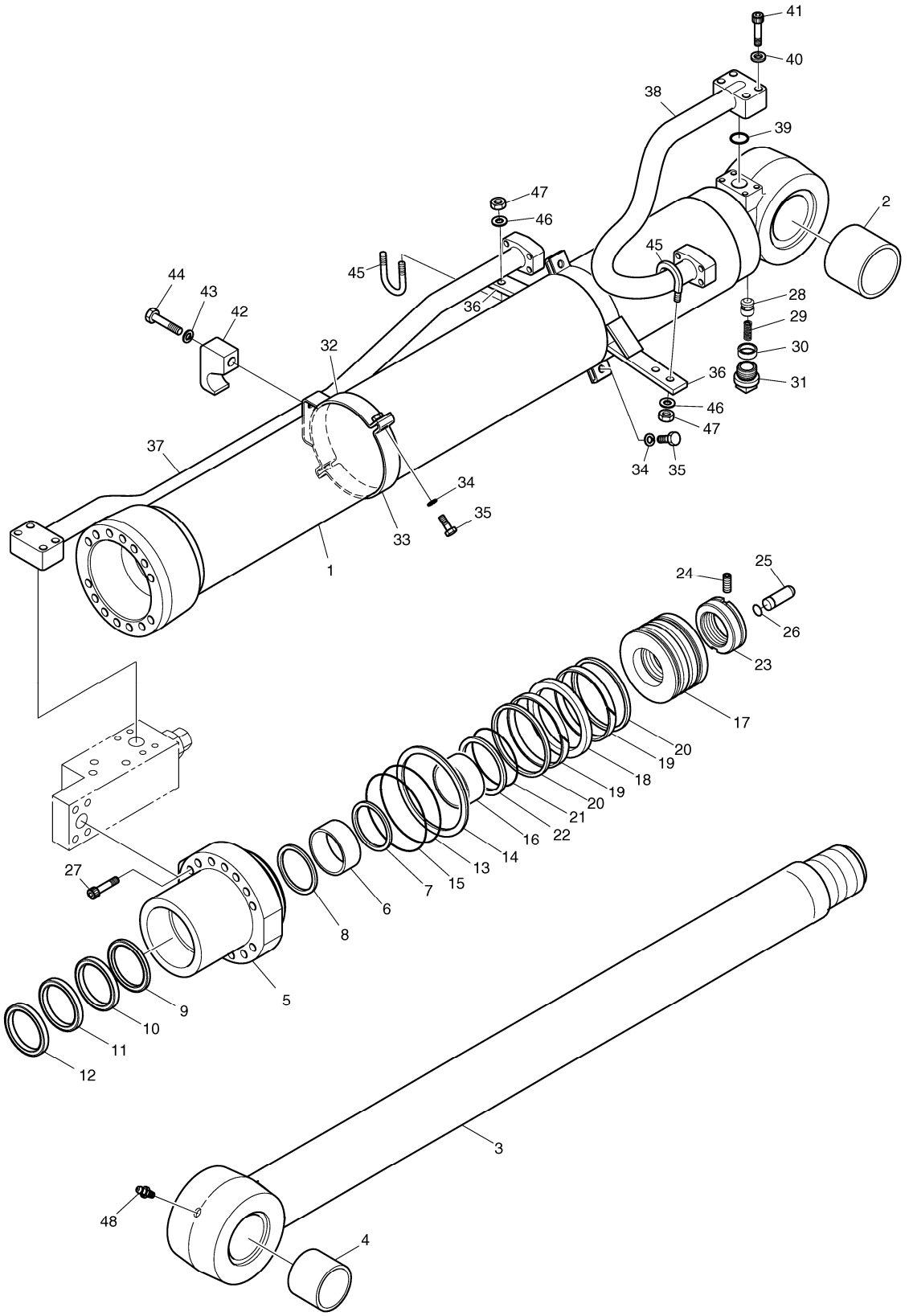

Fig. 4390 ARM CYL - ARM 2.4m (ARTI BOOM)(LOCK V/V)
VERIN DE BALANCIER

Serial No. ;

Key No.	Part No.	Description	Description	Q'ty	S.C	Serial No.	ICA	Replaceable part	
								Part No.	Q'ty
4390 -38	K9003686	PIPE ASS'Y-H	ENSEMBLE CONDUITES	1					
39	S8000341	O-RING	JOINT CIRCULAIRE	1					
40	S5100603	WASHER;SPRING	RONDELLE	4					
41	S2212861	BOLT;SOCKET	BOULON	4					
42	K9001159	CLAMP;PIPE	BRIDE	1					
43	S5102903	WASHER	RONDELLE	1					
44	S0521853	BOLT	BOULON	1					
45	K9001158	U-BOLT	U-BOULON	2					
46	S5100603	WASHER;SPRING	RONDELLE	4					
47	S4012633	NUT	ECROU	4					
48	S6710032	NIPPLE;GREASE	MAMELON	1					
*	K9001901	SEAL KIT;ARM CYLINDER	KIT DE JOINT	1					

DATE	JUN. 01, 2010
3rd EDITION	

Fig. 4400 GEAR PUMP-ROTATION POMPE

Serial No. ;

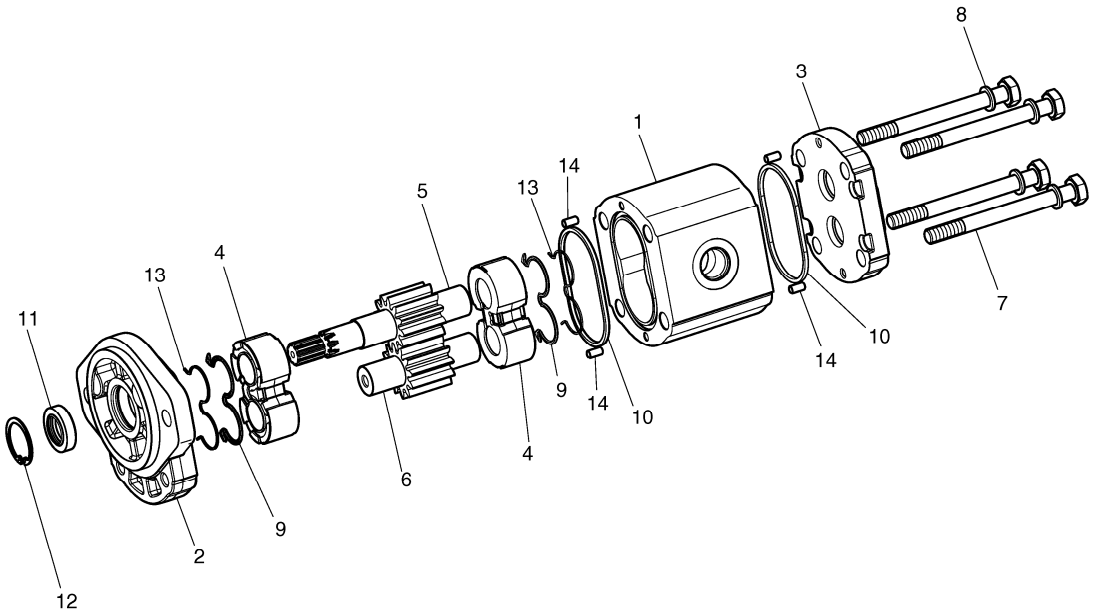

DATE	JUN. 01, 2010
3rd EDITION	

Fig. 4400 GEAR PUMP-ROTATION POMPE

Serial No. ;

Key No.	Part No.	Description	Description	Q'ty	S.C	Serial No.	ICA	Replaceable part	
								Part No.	Q'ty
4400 --	K1000410	GEAR PUMP	POMPE A ENGRENAGES	1					
1	-	BODY	CORPS	1	D				
2	-	COVER;FRONT	COUVERTURE	1	D				
3	-	COVER;REAR	COUVERTURE	1	D				
4	-	PLATE;THRUST	PLAQUE	2	D				
5	-	SHAFT;DRIVE	AXE	1	D				
6	-	GEAR;DRIVEN	VITESSE	1	D				
7	S0559553	BOLT	BOULON	4					
8	S5102603	WASHER	RONDELLE	4					
9	-	SEAL	CACHET	2	K				
10	-	SEAL	CACHET	2	K				
11	-	SEAL;SHAFT	CACHET	1	K				
12	-	RING;SNAP	ANNEAU	1	D				
13	-	RING;BACK UP	ANNEAU	2	K				
14	-	PIN;DOWEL	GOUPILLE	4	D				
*	K9001457	SEAL KIT;GEAR PUMP	KIT DE JOINT	1					

DATE	JUN. 01, 2010
3rd EDITION	

Fig. 4410 CONTROL VALVE-ARTI.BOOM
TIROIRS DE COMMANDE

Serial No. ;

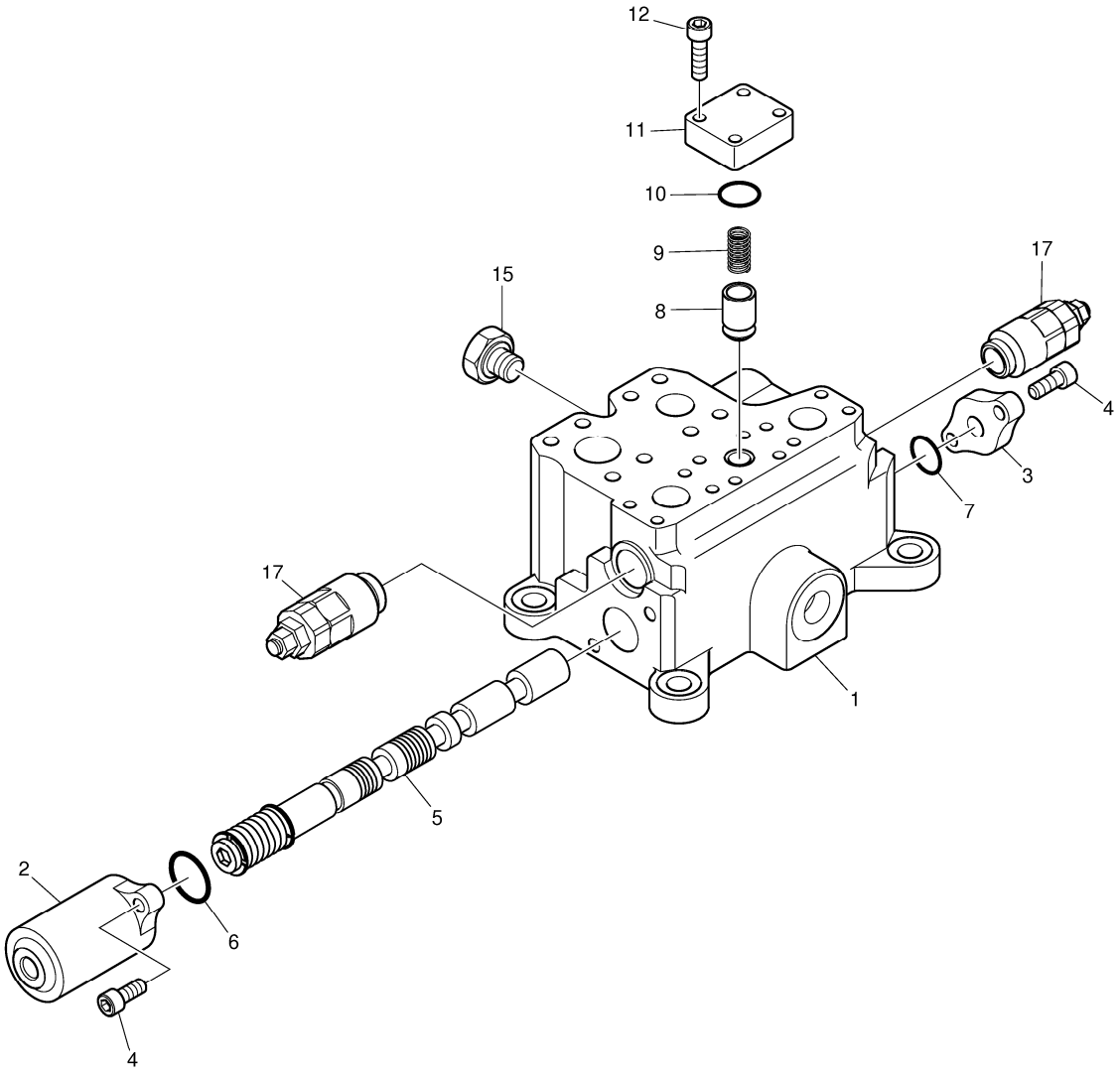

DATE	JUN. 01, 2010
3rd EDITION	

Fig. 4410 CONTROL VALVE-ARTI.BOOM
TIROIRS DE COMMANDE

Serial No. ;

Key No.	Part No.	Description	Description	Q'ty	S.C	Serial No.	ICA	Replaceable part	
								Part No.	Q'ty
4410 --	K1033235A	VALVE;CONTROL	VALVE	1					
1	-	HOUSING	CARTER	1	D				
2	K9006624	CAP	CHAPEAU	1					
3	K9006623	CAP	CHAPEAU	1					
4	S2212066	BOLT;SOCKET	BOULON	4					
5	K9006622	SPOOL ASS'Y	PLUNGEUR	1					
6	2180-1217D67	O-RING	JOINT TORIQUE	1					
7	2180-1217D63	O-RING	JOINT TORIQUE	1					
8	K9006625	POPPET	SOUPAPE SOULEVANTE	1					
9	K9006626	SPRING	RESSORT	1					
10	S8000321	O-RING	JOINT CIRCULAIRE	1					
11	-	FLANGE	BRIDE	1	D				
12	S2212366	BOLT;SOCKET M10X1.5X35	BOULON	4					
15	K9006620	PLUG	BOUCHON	1					
17	K9006621	VALVE;OVER LOAD	VANNE	2					

DATE	JUN. 01, 2010
3rd EDITION	

Fig. 4420 REMOTE CONTROL VALVE - ROPS
VANNE DE COMMAND A DISTANCE

Serial No. ;

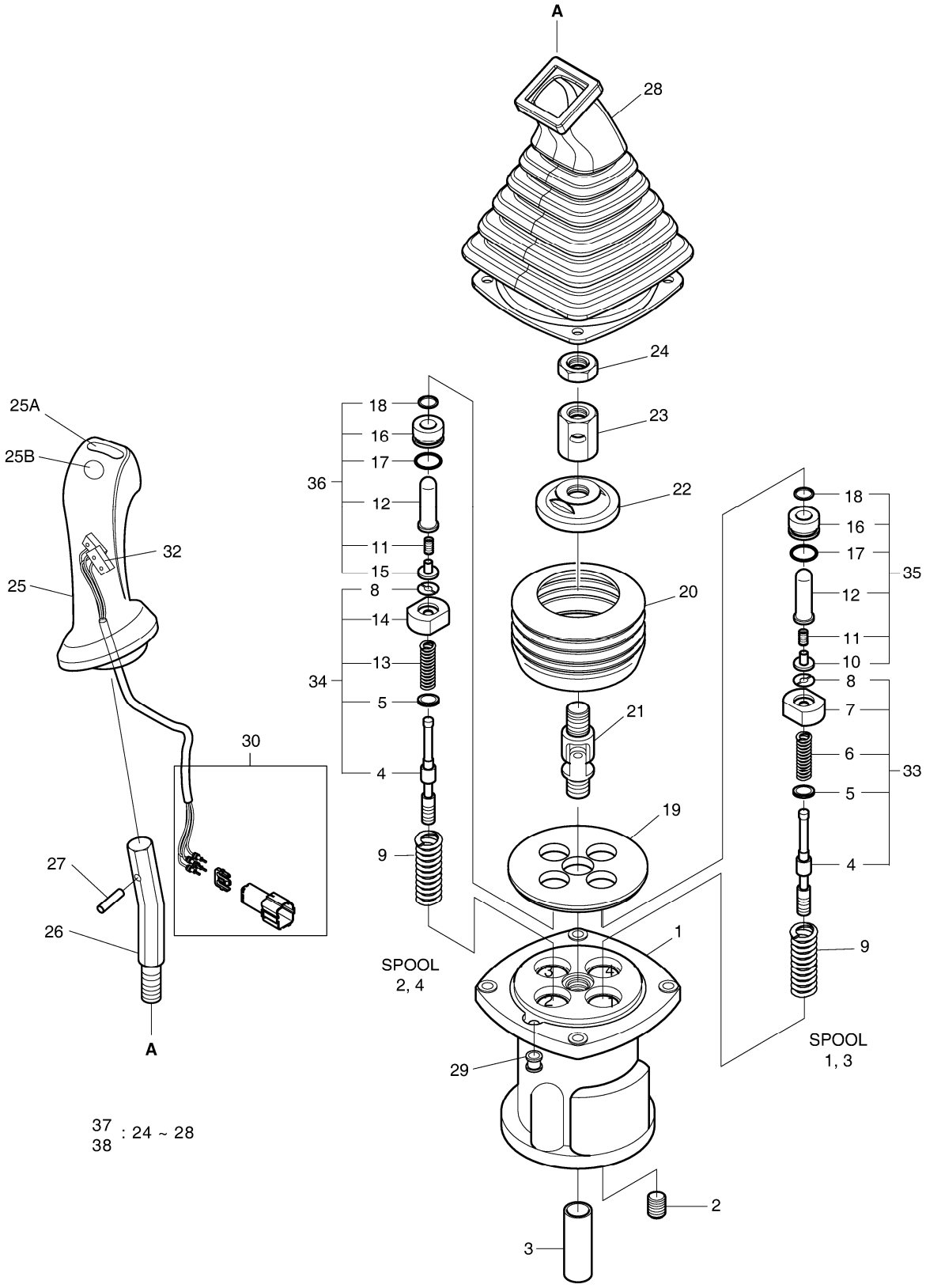

DATE	JUN. 01, 2010
3rd EDITION	

Fig. 4420 REMOTE CONTROL VALVE - ROPS
VANNE DE COMMAND A DISTANCE

Serial No. ;

Key No.	Part No.	Description	Description	Q'ty	S.C	Serial No.	ICA	Replaceable part	
								Part No.	Q'ty
4420 --	410113-00043	VALVE,JOYSTICK;ROPS(L.H)	VALVE DE MANCHE	1					
	410113-00044	VALVE,JOYSTICK;ROPS(R.H)	VALVE DE MANCHE	1					
1	K9001114	CASE	CARTER	1					
2	2181-1116D1	PLUG	BOUCHON	4					
3	K9001115	BUSHING	BUSHING	1					
4	-	SPOOL	SPOOL	4	D				
5	-	SHIM	CALE	4	D				
6	-	SPRING	RESSORT	2	D				
7	-	SEAT;SPRING(1.3)	SIEGE	2	D				
8	161-00171	STOPPER	TAQUET	4					
9	K9001119	SPRING	RESSORT	4					
10	-	STOPPER(1.3)	TAQUET	2	D				
11	K9001121	SPRING	RESSORT	4					
12	-	ROD;PUSH	TIGE	4	D				
13	-	SPRING	RESSORT	2	D				
14	1.427-00022	SEAT;SPRING(2.4)	SIEGE	2					
15	-	STOPPER(2.4)	TAQUET	2	D				
16	-	PLUG	BOUCHON	4	D				
17	S8000201	O-RING	JOINT CIRCULAIRE	4					
18	401107-00682	SEAL,ROD	CACHET	4					
19	1.412-00017	PLATE	PLAQUE	1					
20	K9001128	BOOT	BOTTE	1					
21	1.138-00004	JOINT ASS`Y	ENSEMBLE DE JOINT	1					
22	K9001129A	PLATE;SWASH	PLAQUE	1					
23	1.121-00028	NUT	ECROU	1					
24	S4012833	NUT	ECROU	1					
25	K9001130	HANDLE ASS`Y(L.H)	HANDLE	1					
	K9001131	HANDLE ASS`Y(R.H)	HANDLE	1					
25A	1.161-00021	. CAP;PEANUT	. CHAPEAU	1					
25B	1.161-00017	. CAP;ROUND	. CHAPEAU	1					
26	1.178-00004	BAR;HANDLE	BARRE	1					
27	S5740800	PIN;SPRING	GOUPILLE	1					
28	430205-00010	BELLOWS	SOUFFLETS	1					
29	1.110-00169	BUSHING	BUSHING	1					
30	K9001133	CONNECTOR ASS`Y	CONNECTOR	1					
32	K9001002	SWITCH ASS'Y	COMMUTATEUR	1					
33	410207-00175	SPOOL KIT;(1,3)	KIT DE SPOOL	1					
34	410207-00176	SPOOL KIT;(2,4)	KIT DE SPOOL	1					

Fig. 4420 REMOTE CONTROL VALVE - ROPS
VANNE DE COMMAND A DISTANCE

Serial No. ;

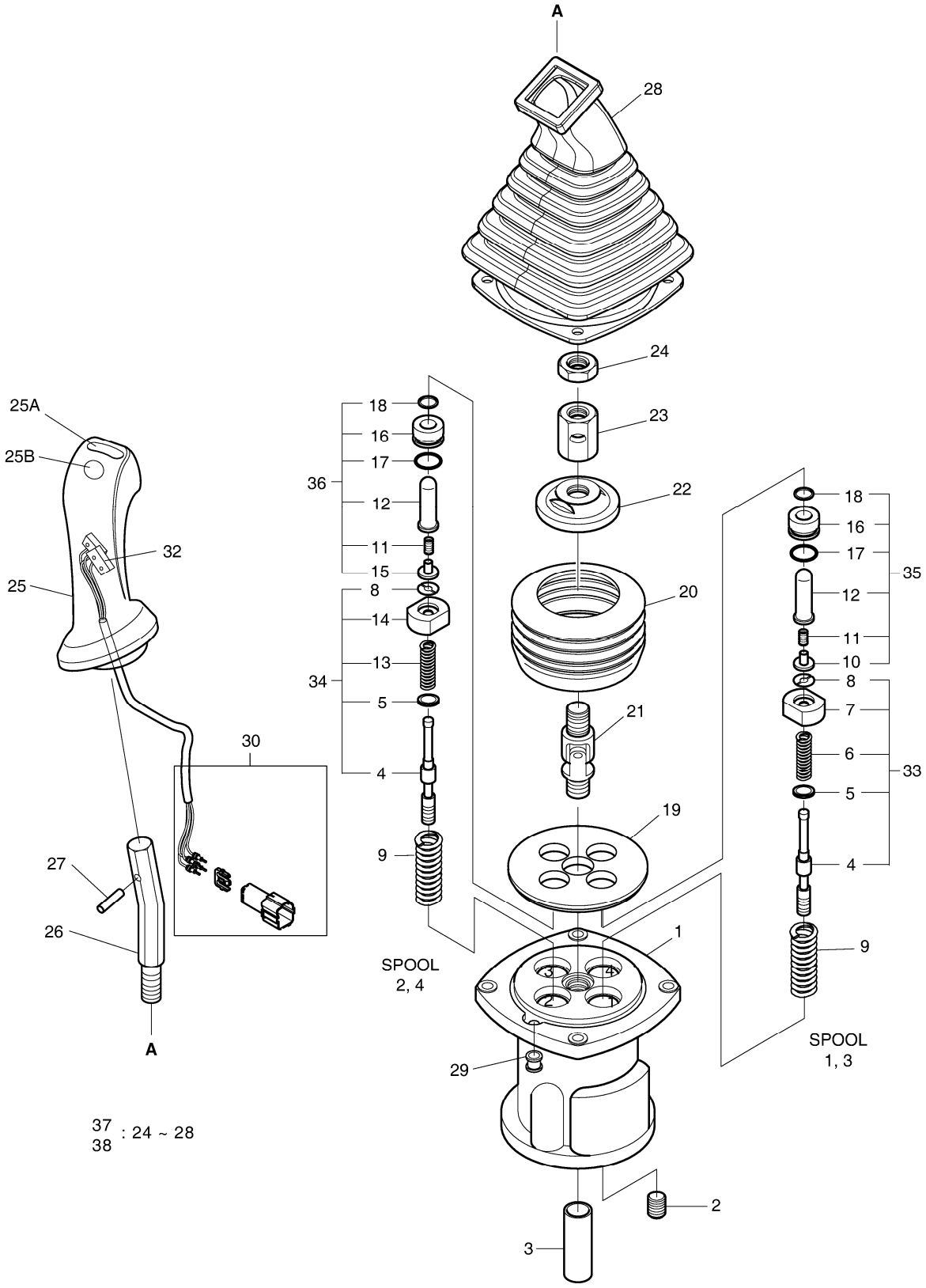

DATE	JUN. 01, 2010
3rd EDITION	

Fig. 4420 REMOTE CONTROL VALVE - ROPS
VANNE DE COMMAND A DISTANCE

Serial No. ;

Key No.	Part No.	Description	Description	Q'ty	S.C	Serial No.	ICA	Replaceable part	
								Part No.	Q'ty
4420 -35	K9004000	KIT;PLUG(1,3)	KIT	1					
36	K9004001	KIT;PLUG(2,4)	KIT	1					
37	110925-00043	HANDLE KIT;(L.H)	KIT DE POIGNEE	1					
38	110925-00044	HANDLE KIT;(R.H)	KIT DE POIGNEE	1					

DATE	JUN. 01, 2010
3rd EDITION	

Fig. 5100 TOOLS OUTILLAGE

Serial No. ;

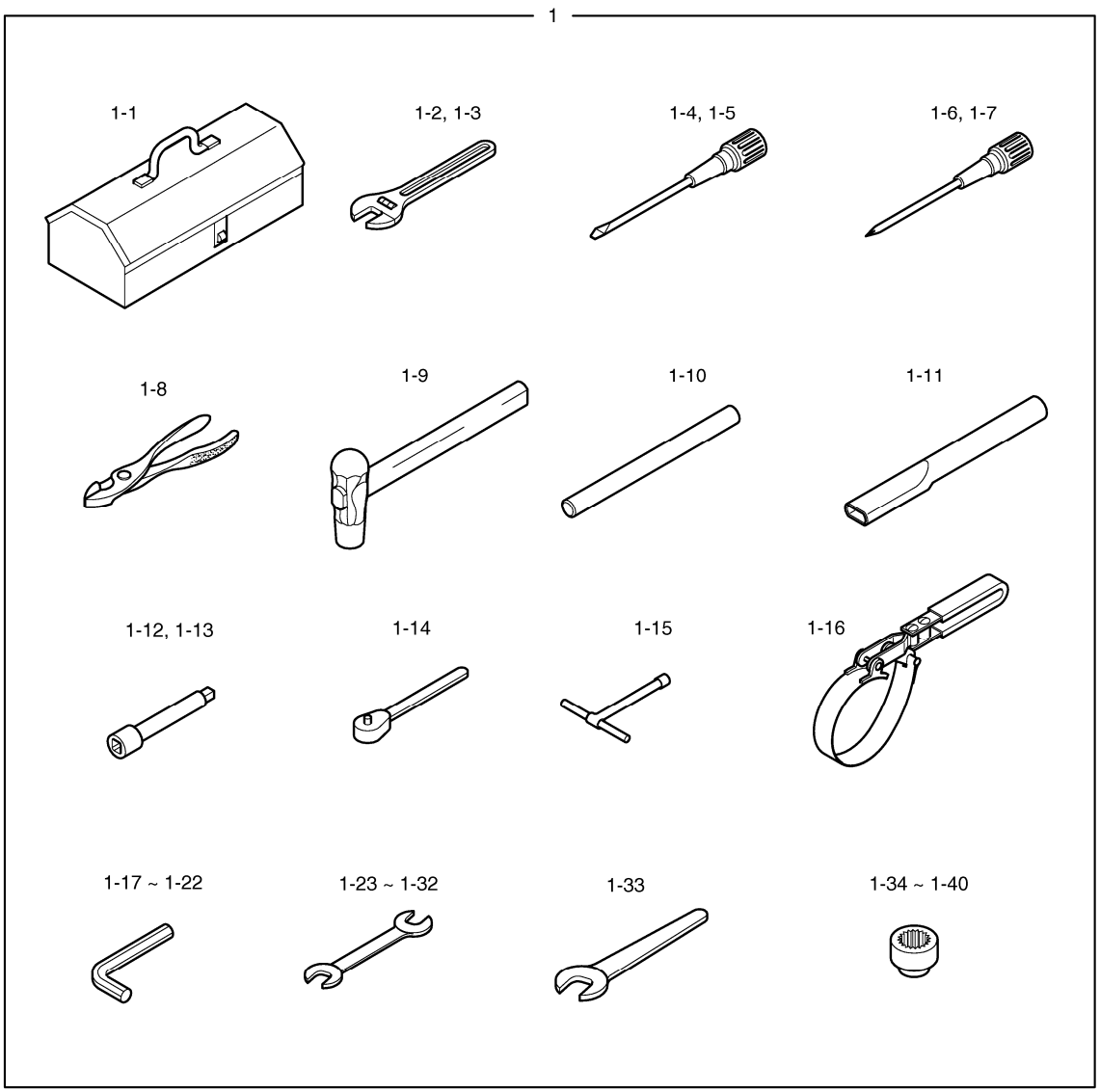

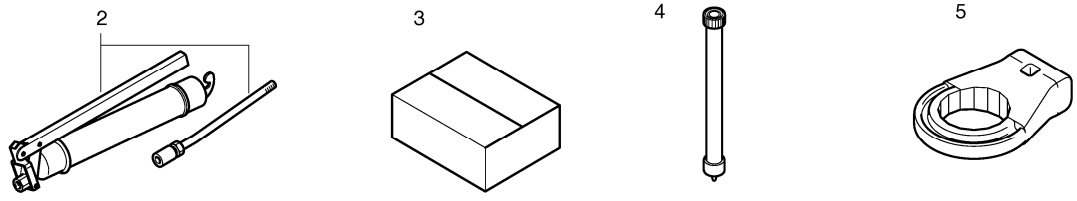

Fig. 5100 TOOLS OUTILLAGE

Serial No. ;

Key No.	Part No.	Description	Description	Q'ty	S.C	Serial No.	ICA	Replaceable part	
								Part No.	Q'ty
5100 --	K1015436	ASSEMBLY;TOOLS	ENSEMBLE OUTILLAGE	-	D				
1	2199-1063F34A	TOOL ASS`Y	OUTILLAGE	1					
1-1	2199-9043	. BOX;TOOL	. BOITE	1	D				
1-2	T6580008	. WRENCH;ADJUSTABLE 6'	. CLE A MOLETTE	1	D				
1-3	T6580020	. WRENCH;ADJUST	. CLE A MOLETTE	1	D				
1-4	T7050003	. DRIVER(-)	. TOURNEVIS(-)	1	D				
1-5	T7050013	. DRIVER	. TOURNEVIS(-)	1	D				
1-6	T7050021	. DRIVER	. TOURNEVIS(-)	1	D				
1-7	T7050022	. DRIVER	. TOURNEVIS(+)	1	D				
1-8	T7500004	. PILER;COMBI	. PINCE	1	D				
1-9	T7260057	. HAMMER	. MARTEAU	1	D				
1-10	2199-1004	. BAR	. BARRE	1					
1-11	2199-1005	. PIPE	. TUYAU	1					
1-12	T6690012	. BAR;EXTENSION	. RALLONGE	1	D				
1-13	T6690013	. BAR;EXTENSION	. RALLONGE	1	D				
1-14	T6750003	. HANDLE;RATCHET	. POIGNEE A CLIQUET	1	D				
1-15	2199-9009	. CLIP;DRIVER	. ATTACHE	1	D				
1-16	K1008167	. WRENCH;FILTER	. CLE A FILTRE	1					
1-17	T6550005	. L-WRENCH	. CLE MALE	1	D				
1-18	T6550006	. L-WRENCH	. CLE MALE	1	D				
1-19	T6550007	. L-WRENCH	. CLE MALE	1	D				
1-20	T6550009	. L-WRENCH	. .	1	D				
1-21	T6550011	. L-WRENCH	. CLE 6 PANS MALE	1	D				
1-22	T6550018	. L-WRENCH 17	. CLE MALE	1	D				
1-23	T6510062	. SPANNER	. CLE PLATE	1	D				
1-24	T6510066	. SPANNER	. CLE PLATE	1	D				
1-25	T6510070	. SPANNER	. CLE PLATE	1	D				
1-26	T6510072	. SPANNER	. CLE PLATE	1	D				
1-27	T6510075	. SPANNER	. CLE PLATE	1	D				
1-28	T6510081	. SPANNER	. CLE PLATE	1	D				
1-29	T6510085	. SPANNER 27X30	. CLE PLATE	1	D				
1-30	T6510089	. SPANNER 32X36	. CLE PLATE	1	D				
1-31	T6510091	. SPANNER	. CLE PLATE	1	D				
1-32	T6510018	. SPANNER 24	. CLE PLATE	1	D				
1-33	T6510027	. SPANNER	. CLE PLATE	1	D				
1-34	T6600183	. SOCKET M6	. CLE A DOUILLE	1	D				
1-35	T6600189	. SOCKET M8	. CLE A DOUILLE	1	D				
1-36	T6600197	. SOCKET;WRENCH	. CLE A DOUILLE	1	D				

Fig. 5100 TOOLS OUTILLAGE

Serial No. ;

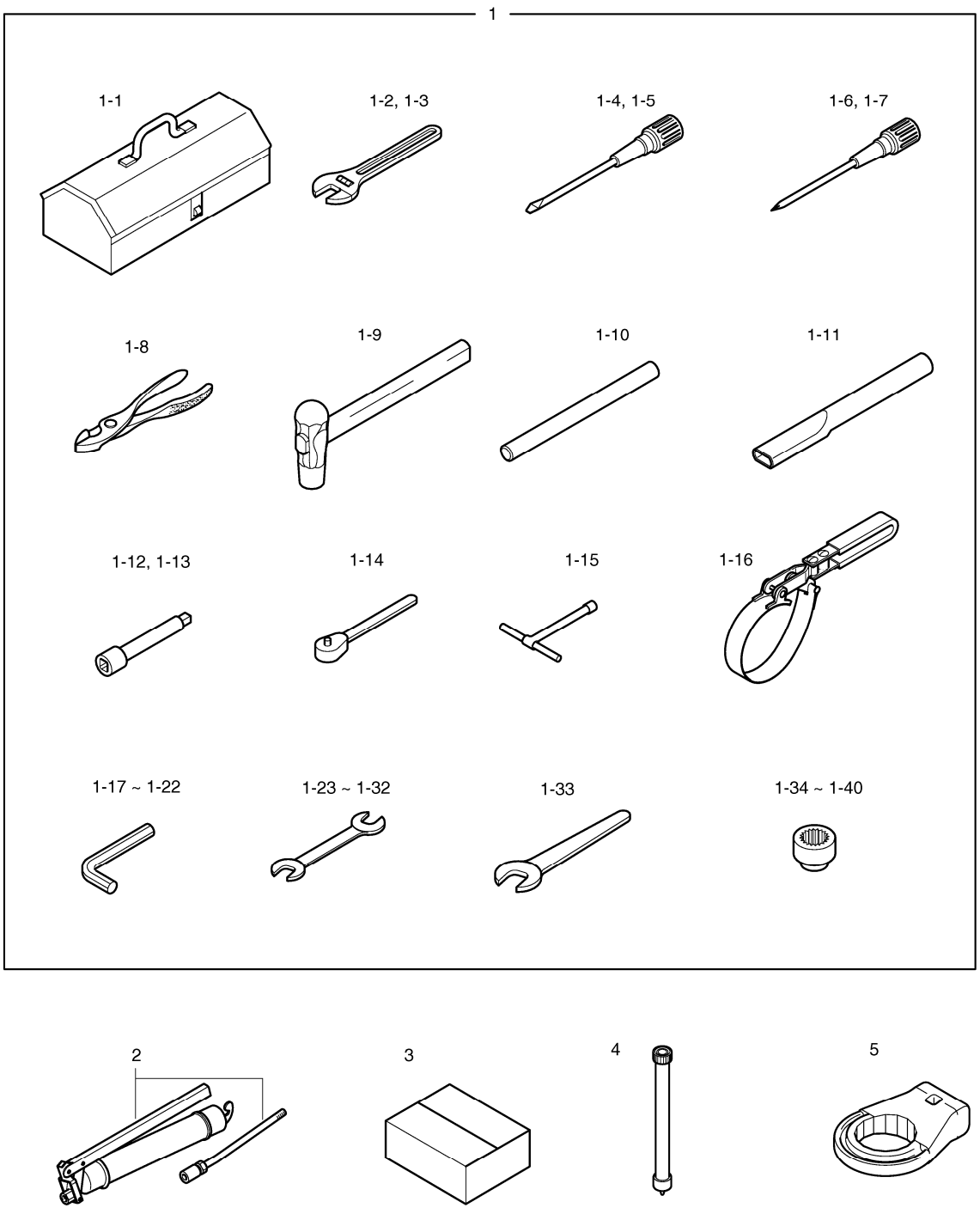

Fig. 5100 TOOLS OUTILLAGE

Serial No. ;

Key No.	Part No.	Description	Description	Q'ty	S.C	Serial No.	ICA	Replaceable part	
								Part No.	Q'ty
5100 -1-37	T6600201	. SOCKET;WRENCH	. CLE A DOUILLE	1	D				
1-38	T6600211	. SOCKET;WRENCH	. CLE A DOUILLE	1	D				
1-39	T6600223	. SOCKET;WRENCH	. CLE A DOUILLE	1	D				
1-40	T6600217	. SOCKET;WRENCH	. CLE A DOUILLE	1	D				
2	2199-9008	GREASE GUN	PISTOLET DE GRAISSAGE	1					
3	2199-9007	BOX	BOITE	1					
4	184-00120	HOSE;OIL CHANGE	TUYAU FLEXIBLE	1					
5	K1006586	TOOL;PRE FILTER	FILTRE D'ESSENCE DE WR	1					

DATE	JUN. 01, 2010
3rd EDITION	

Fig. 5110 SPARE PARTS PIECES DE RECHANGE

Serial No. ;

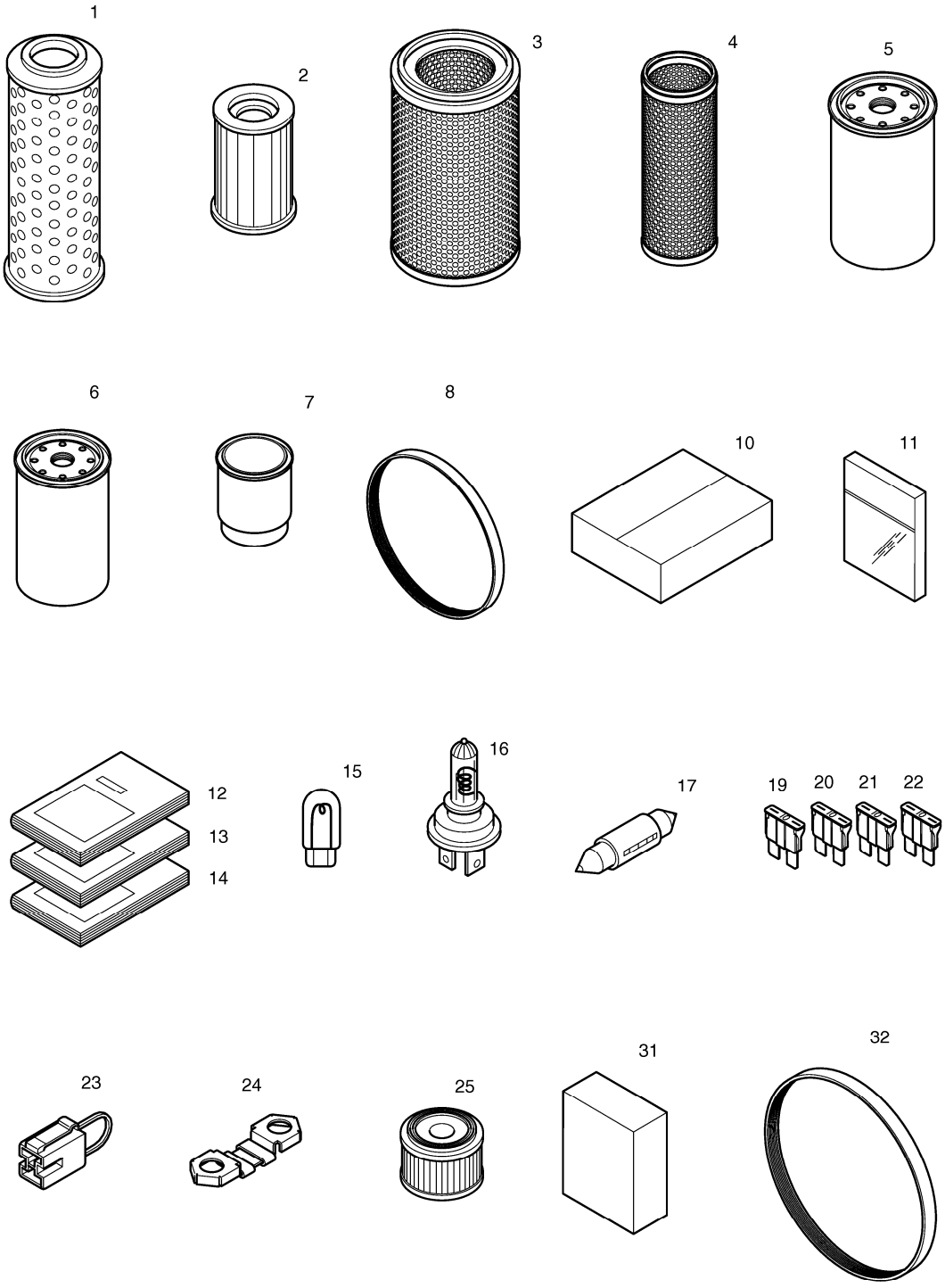

DATE	JUN. 01, 2010
3rd EDITION	

Fig. 5110 SPARE PARTS PIECES DE RECHANGE

Serial No. ;

Key No.	Part No.	Description	Description	Q'ty	S.C	Serial No.	ICA	Replaceable part	
								Part No.	Q'ty
5110 --	K1048000	SPARE PARTS	BAGUE D'ECARTEMENT	-	D				
1	474-00055	ELEMENT;RETURN FILTER	ELEMENT	1					
2	2471-1154	ELEMENT;FILTER(PILOT)	ELEMENT	1					
3	474-00040	ELEMENT;OUTER	ELEMENT	1					
4	474-00039	ELEMENT;INNER	ELEMENT	1					
5	65.05510-5032A	FILTER;E/G OIL	FILTRE D'HUILE	1					
6	65.12503-5026	FILTER;E/G FUEL	FILTRE A GAZOLE	1					
7	K1006530	FILTER;PRE FUEL	FILTRE	1					
8	2106-1019D25	V-BELT;POLY(4PK-1210L)	V-BELT	1					
10	2512-1095D1	BOX;SPARE PARTS	BOITE DE PIECES DE RECH	1					
11	2180-9153	O-RING KIT	KIT DE REPARATION	1					
12	K1048001EF	PARTS BOOK	MANUEL DE PIECES	1					
13	K1048002E	OPERATION MANUAL	MANUEL D'UTILISATION	1					
14	K1048003E	SHOP MANUAL	MANUEL DE MAGASIN	1					
15	515-00012A	BULB	AMPOULE	2					
16	2515-1022D1	BULB;HALOGEN	AMPOULE	1					
17	2515-1016D4	BLUB;HALOGEN	AMPOULE	1					
19	2527-1016	FUSE;BLADE 10A	FUSIBLE	2					
20	2527-1017	FUSE;BLADE 15A	FUSIBLE	2					
21	2527-1018	FUSE;BLADE 20A	FUSIBLE	1					
22	2527-1025	FUSE;BLADE 30A	FUSIBLE	1					
23	2527-1023A	LINK;FUSIBLE	LIEN	1					
24	527-00005	FUSE;PREHEAT RELAY	FUSIBLE	1					
25	K1029257	ELEMENT;AIR BREATHER	ELEMENT	1					
31	K1006854	OIL;ENGINE	RESERVOIR D'HUILE	6					
32	65.96801-0194	BELT;FAN	COURROIE	1					

DATE	JUN. 01, 2010
3rd EDITION	

Fig. 5120 NAME PLATE - CABIN(EXPORT) PLAQUE D'IDENTIFICATION

Serial No. ;

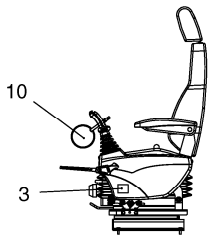

LEFT SIDE VIEW OF
LEFT CONTROL STAND

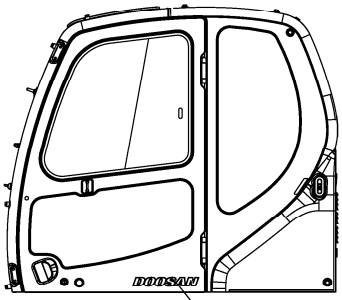

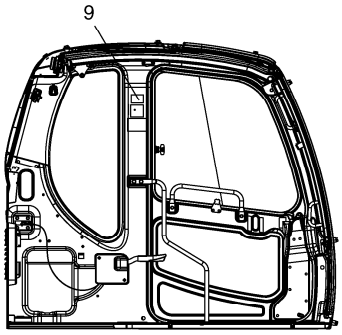

LEFT SIDE VIEW
OF CABIN INSIDE

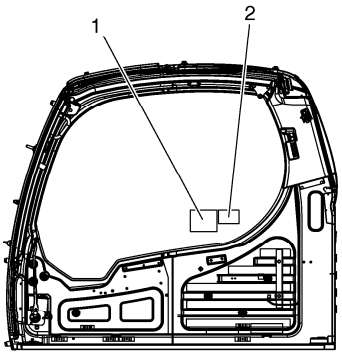

RIGHT SIDE VIEW
OF CABIN INSIDE

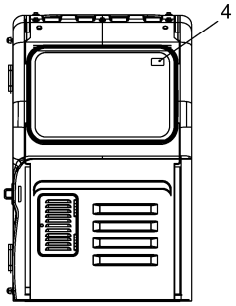

DATE	JUN. 01, 2010
3rd EDITION	

Fig. 5120 NAME PLATE - CABIN(EXPORT) PLAQUE D'IDENTIFICATION

Serial No. ;

Key No.	Part No.	Description	Description	Q'ty	S.C	Serial No.	ICA	Replaceable part	
								Part No.	Q'ty
5120 --	K1007342J	NAME PLATE ASS'Y	PLAQUE D'IDENTIFICATION	-	D				
1	K1034000	PLATE;NAME	PLAQUE D'IDENTIFICATION	1					
2	2190-3297	PLATE;NAME	PLAQUE	1					
3	K1005909	PLATE;NAME	PLAQUE	1					
4	2190-2480	PLATE;NAME	PLAQUE D'IDENTIFICATION	1					
9	2190-3388	PLATE;NAME	PLAQUE D'IDENTIFICATION	1					
10	190-00695A	PLATE;NAME	PLAQUE D'IDENTIFICATION	1					
13	K1011743D6	PLATE;NAME	PLAQUE	1					

DATE	JUN. 01, 2010
3rd EDITION	

Fig. 5130 NAME PLATE - EXPORT
PLAQUE D'IDENTIFICATION

Serial No. ;

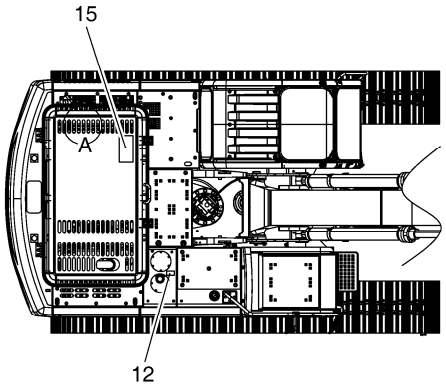

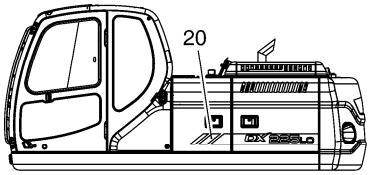

Serial No. : 5001 ~ 5711

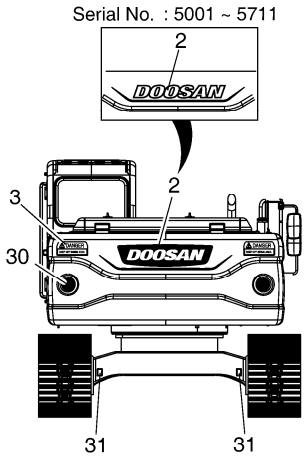

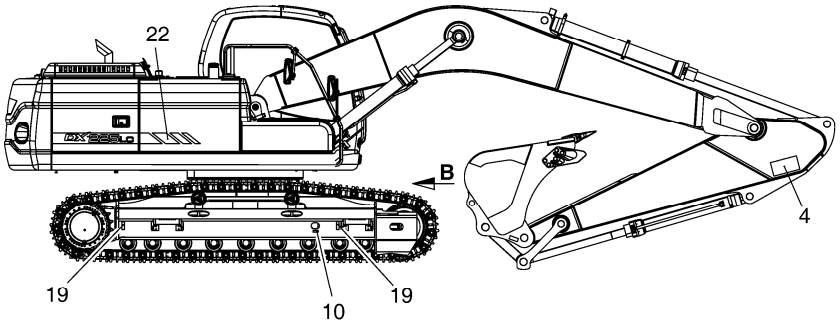

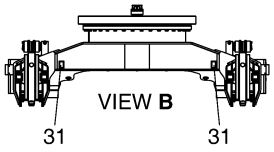

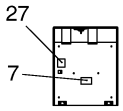

BATTERY DOOR

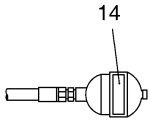

ACCUMULATOR

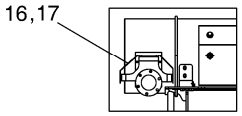

TOP VIEW OF
TURBO CHARGER COVER

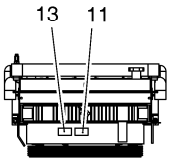

DETAIL A

DATE	JUN. 01, 2010
3rd EDITION	

Fig. 5130 NAME PLATE - EXPORT PLAQUE D'IDENTIFICATION

Serial No. ;

Key No.	Part No.	Description	Description	Q'ty	S.C	Serial No.	ICA	Replaceable part	
								Part No.	Q'ty
5130 --	K1023656K	NAME PLATE ASS'Y	PLAQUE D'IDENTIFICATION	-	D	5001-5700			
	950209-00252	DECAL & NAME PLATE ASSY	PLAQUE D'IDENTIFICATION	-	D	5701-			
2	K1011645D1	PLATE;NAME	PLAQUE D`IDENTIFICATIOI	1		5001-5711	I	950205-00662	1
	950205-00662	DECAL(DOOSAN)	DECALQUE	1		5712-			
3	2190-3379A	PLATE;NAME	PLAQUE D'IDENTIFICATION	2					
4	190-00652	PLATE;NAME	PLAQUE	2					
7	2190-2533A	PLATE;NAME	PLAQUE D'IDENTIFICATION	1					
10	190-00122	PLATE;NAME	PLAQUE	2					
11	190-00694	PLATE;NAME	PLAQUE D'IDENTIFICATION	1					
12	190-00691A	PLATE;NAME	PLAQUE D'IDENTIFICATION	1					
13	190-00692	PLATE;NAME	PLAQUE D'IDENTIFICATION	1					
14	190-00703	PLATE;NAME	PLAQUE D'IDENTIFICATION	1					
15	190-00522A	PLATE;NAME	PLAQUE	1					
16	190-00648A	PLATE;NAME	PLAQUE	1					
17	2122-1002D4	RIVET	RIVET	4					
19	K1042074	PLATE;NAME	PLAQUE D'IDENTIFICATION	4		5001-5483	I	K1042074A	4
	K1042074A	PLATE;NAME	PLAQUE	4		5484-			
20	K1011000	DECAL	DECALQUE	1					
22	K1011002	DECAL	DECALQUE	1					
27	K1015739	PLATE;NAME	PLAQUE D'IDENTIFICATION	1					
30	K1039697	DECAL	DECALQUE	2					
31	950209-00205	PLATE,NAME;TIE DOWN	PLAQUE D'IDENTIFICATION	4		5701-			

DATE	JUN. 01, 2010
3rd EDITION	

Fig. 5140 NAME PLATE - CABIN(EUROPE) PLAQUE D'IDENTIFICATION

Serial No. ;

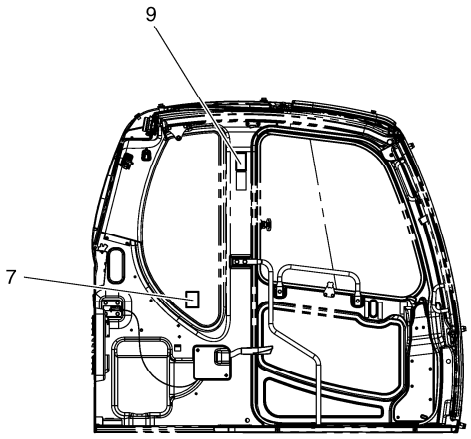

LEFT SIDE VIEW
OF CABIN INSIDE

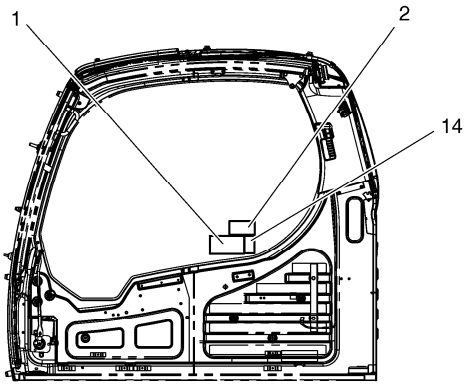

RIGHT SIDE VIEW
OF CABIN INSIDE

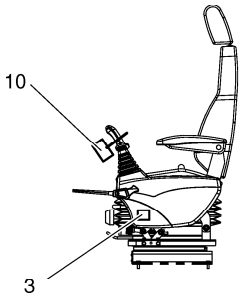

LEFT SIDE VIEW OF
LEFT CONTROL STAND

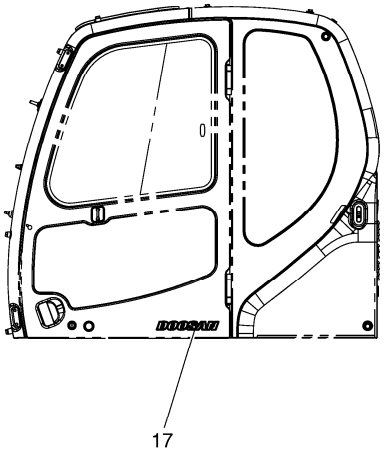

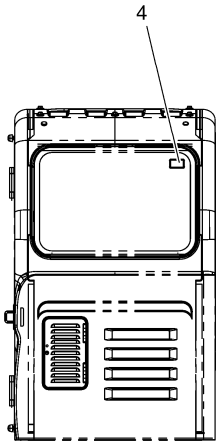

DATE	JUN. 01, 2010
3rd EDITION	

Fig. 5140 NAME PLATE - CABIN(EUROPE) PLAQUE D'IDENTIFICATION

Serial No. ;

Key No.	Part No.	Description	Description	Q'ty	S.C	Serial No.	ICA	Replaceable part	
								Part No.	Q'ty
5140 --	K1008464G	NAME PLATE ASS'Y	PLAQUE D'IDENTIFICATION	-	D				
1	K1034001	PLATE;NAME	PLAQUE	1					
2	2190-3297	PLATE;NAME	PLAQUE	1					
3	K1005909	PLATE;NAME	PLAQUE	1					
4	190-00101	PLATE;NAME(HAMMER)	PLAQUE	1					
7	2190-2524	PLATE;NAME	PLAQUE	1					
9	190-00093	PLATE;NAME(SLIDE WINDOW)	PLAQUE	1					
10	190-00098A	PLATE;NAME	PLAQUE	1					
14	190-00521	PLATE;NAME	PLAQUE	1					
17	K1011743D6	PLATE;NAME	PLAQUE	1					

DATE	JUN. 01, 2010
3rd EDITION	

Fig. 5150 NAME PLATE - EUROPE
PLAQUE D'IDENTIFICATION

Serial No. ;

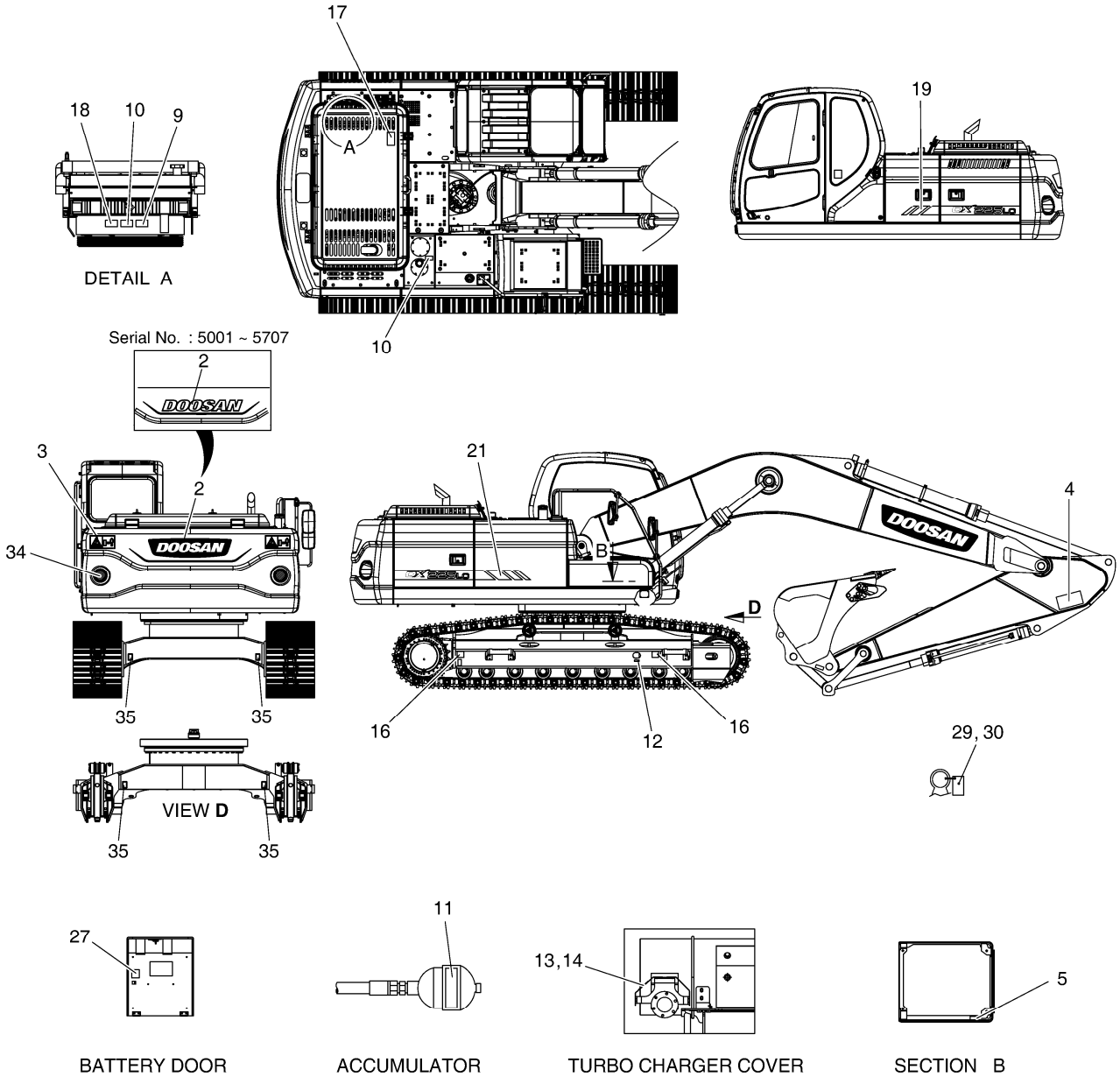

DATE	JUN. 01, 2010
3rd EDITION	

Fig. 5150 NAME PLATE - EUROPE PLAQUE D'IDENTIFICATION

Serial No. ;

Key No.	Part No.	Description	Description	Q'ty	S.C	Serial No.	ICA	Replaceable part	
								Part No.	Q'ty
5150 --	K1018994K	NAME PLATE ASS'Y	PLAQUE D'IDENTIFICATION	-	D	5001-5707			
	950209-00253	DECAL & NAME PLATE ASSY	PLAQUE D'IDENTIFICATION	-	D	5708-			
2	K1011645D1	PLATE;NAME	PLAQUE D`IDENTIFICATIOI	1		5001-5707	I	950205-00662	1
	950205-00662	DECAL(DOOSAN)	DECALQUE	1		5708-			
3	K1008571	DECAL	DECALQUE	2					
4	190-00652	PLATE;NAME	PLAQUE	2					
5	190-00100	PLATE;NAME(BATTERY)	PLAQUE	1					
9	190-00095	PLATE;NAME	PLAQUE	1					
10	190-00097	NAME PLATE	PLAQUE D'IDENTIFICATION	2					
11	190-00099	PLATE;NAME	PLAQUE	1					
12	190-00122	PLATE;NAME	PLAQUE	2					
13	190-00648A	PLATE;NAME	PLAQUE	1					
14	2122-1002D4	RIVET	RIVET	4					
16	K1042074	PLATE;NAME	PLAQUE D'IDENTIFICATION	4		5001-5483	I	K1042074A	4
	K1042074A	PLATE;NAME	PLAQUE	4		5484-			
17	190-00522A	PLATE;NAME	PLAQUE	1					
18	190-00557	PLATE;NAME	PLAQUE	1					
19	K1011000	DECAL	DECALQUE	1					
21	K1011002	DECAL	DECALQUE	1					
27	K1016102	DECAL	DECALQUE	1					
29	190-00509BD25	PLATE;NAME	PLAQUE D'IDENTIFICATION	1					
30	2124-1622D1	CLIP;BAND	AGRAFE	1					
34	K1039697	DECAL	DECALQUE	2					
35	950209-00205	PLATE,NAME;TIE DOWN	PLAQUE D'IDENTIFICATION	4		5708-			

DATE	JUN. 01, 2010
3rd EDITION	

Fig. 5160 DECAL - SPEC DECAL

Serial No. ;

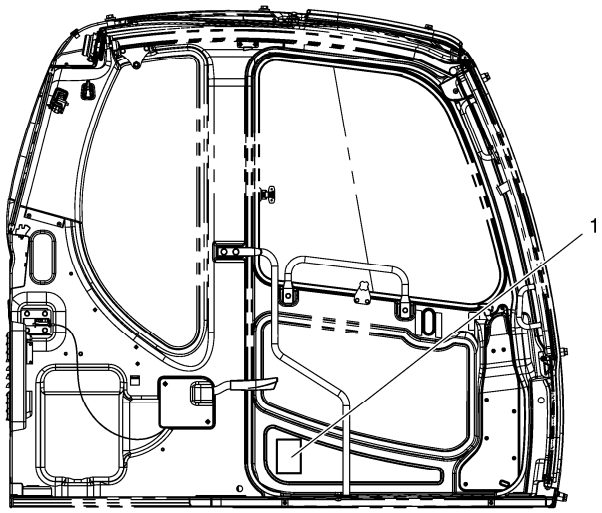

LEFT SIDE VIEW
OF CABIN INSIDE

DATE	JUN. 01, 2010
3rd EDITION	

Fig. 5160 DECAL - SPEC DECAL

Serial No. ;

Key No.	Part No.	Description	Description	Q'ty	S.C	Serial No.	ICA	Replaceable part	
								Part No.	Q'ty
5160 --	K1048626	NAME PLATE ASS'Y	PLAQUE D'IDENTIFICATION	-	D				
1	2190-2556D143	PLATE;NAME	PLAQUE D'IDENTIFICATION	1					

DATE	JUN. 01, 2010
3rd EDITION	

Fig. 5170 DECAL - FUSE BOX DECAL

Serial No. ;

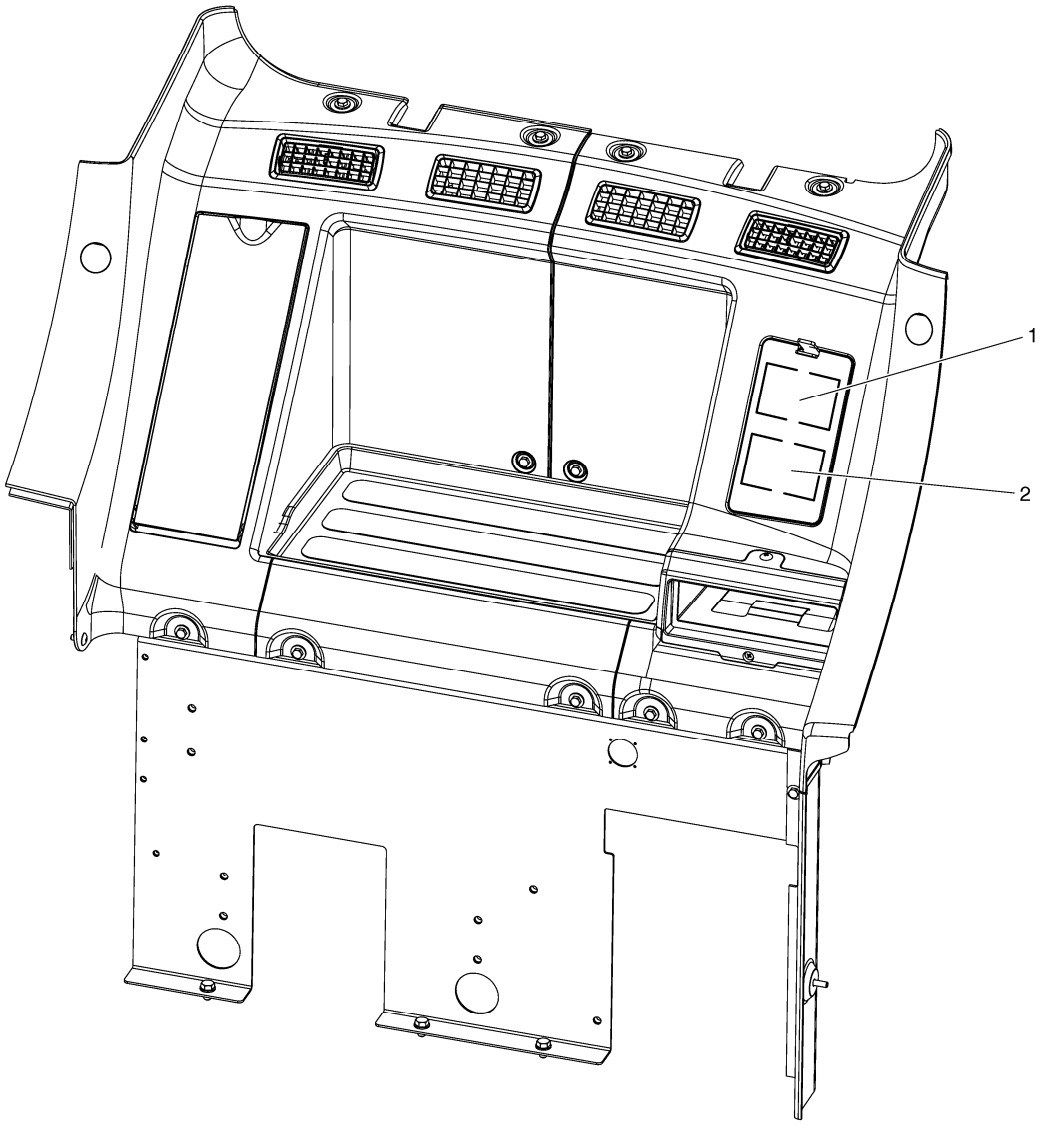

CABIN REAR COVER VIEW

DATE	JUN. 01, 2010
3rd EDITION	

Fig. 5170 DECAL - FUSE BOX DECAL

Serial No. ;

Key No.	Part No.	Description	Description	Q'ty	S.C	Serial No.	ICA	Replaceable part	
								Part No.	Q'ty
5170 --	K1046439	NAME PLATE ASS`Y	PLAQUE D'IDENTIFICATION	-	D				
1	K1008019D4	PLATE;NAME	PLAQUE	1					
2	K1008019D3	PLATE;NAME	PLAQUE	1					

DATE	JUN. 01, 2010
3rd EDITION	

Fig. 5180 DECAL - PATTERN CHANGE DECAL

Serial No. ;

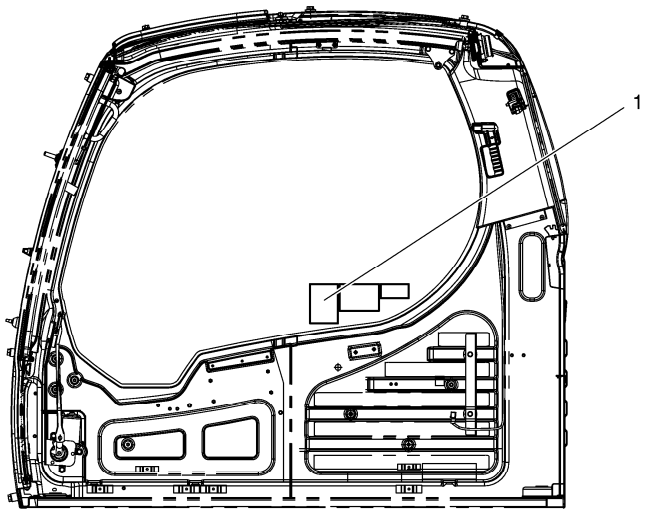

RIGHT SIDE VIEW OF CABIN INSIDE

DATE	JUN. 01, 2010
3rd EDITION	

Fig. 5180 DECAL - PATTERN CHANGE DECAL

Serial No. ;

Key No.	Part No.	Description	Description	Q'ty	S.C	Serial No.	ICA	Replaceable part	
								Part No.	Q'ty
5180 --	K1046440	NAME PLATE ASS'Y	PLAQUE D'IDENTIFICATION	-	D				
1	K1016614	PLATE;NAME	PLAQUE D'IDENTIFICATION	1					

DATE	JUN. 01, 2010
3rd EDITION	

Fig. 5190 DECAL - SOUND DECAL

Serial No. ;

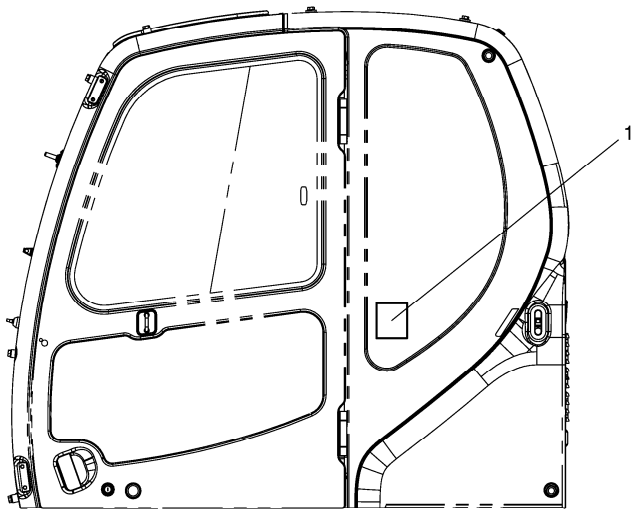

DATE	JUN. 01, 2010
3rd EDITION	

Fig. 5190 DECAL - SOUND DECAL

Serial No. ;

Key No.	Part No.	Description	Description	Q'ty	S.C	Serial No.	ICA	Replaceable part	
								Part No.	Q'ty
5190 --	K1047922	NAME PLATE ASS'Y	PLAQUE D'IDENTIFICATION	-	D				
1	190-01059D14	PLATE;NAME	PLAQUE	1					

DATE	JUN. 01, 2010
3rd EDITION	

Fig. 5200 DECAL - ARTI BOOM DECAL

Serial No. ;

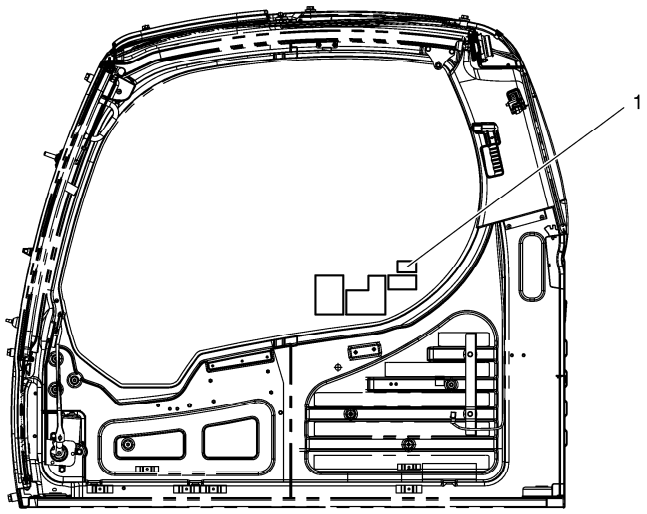

RIGHT SIDE VIEW OF CABIN INSIDE

DATE	JUN. 01, 2010
3rd EDITION	

Fig. 5200 DECAL - ARTI BOOM DECAL

Serial No. ;

Key No.	Part No.	Description	Description	Q'ty	S.C	Serial No.	ICA	Replaceable part	
								Part No.	Q'ty
5200 --	K1047877	NAME PLATE ASS'Y	PLAQUE D'IDENTIFICATION	-	D				
1	190-00123	PLATE;NAME(ARTI.BOOM)	PLAQUE D'IDENTIFICATION	1					

DATE	JUN. 01, 2010
3rd EDITION	

Fig. 5210 DECAL - MACHINE NAME DECAL

Serial No. ;

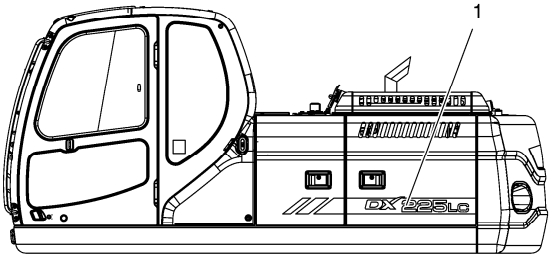

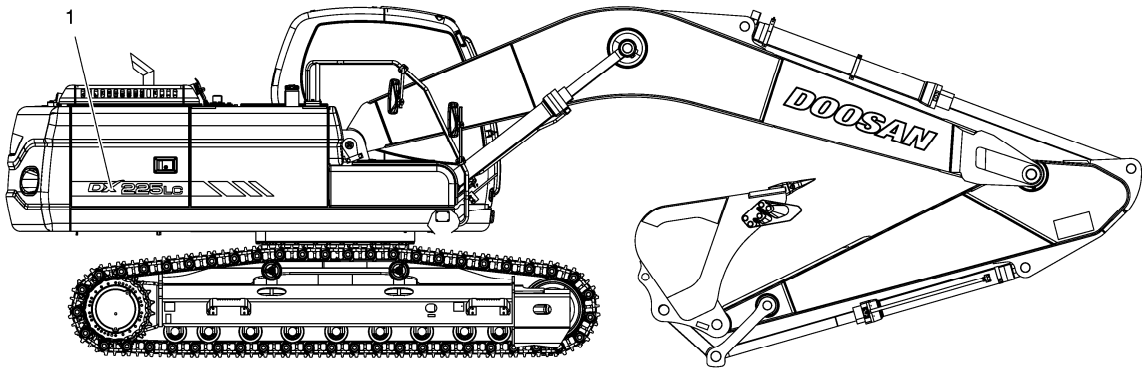

DATE	JUN. 01, 2010
3rd EDITION	

Fig. 5210 DECAL - MACHINE NAME DECAL

Serial No. ;

Key No.	Part No.	Description	Description	Q'ty	S.C	Serial No.	ICA	Replaceable part	
								Part No.	Q'ty
5210 --	K1048627	NAME PLATE ASS'Y	PLAQUE D'IDENTIFICATION	-	D				
1	K1011001A	DECAL	DECAL	1					

DATE	JUN. 01, 2010
3rd EDITION	

Fig. 5220 DECAL - SERIAL(EXPORT) DECAL

Serial No. ;

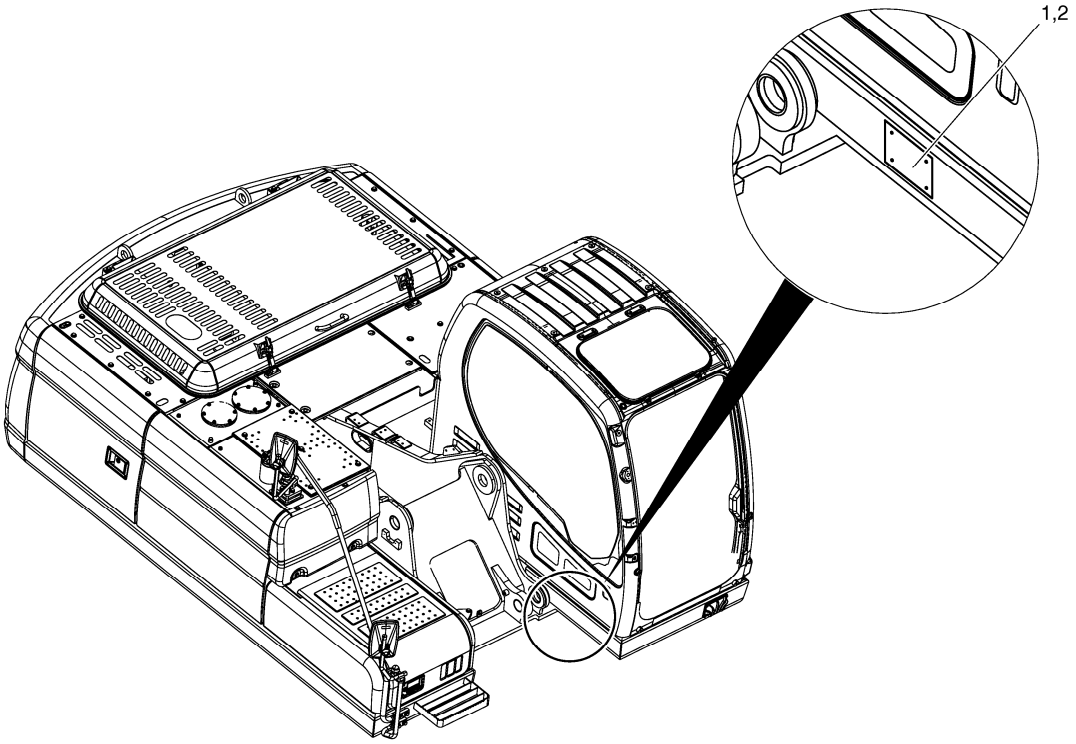

DATE	JUN. 01, 2010
3rd EDITION	

Fig. 5220 DECAL - SERIAL(EXPORT) DECAL

Serial No. ;

Key No.	Part No.	Description	Description	Q'ty	S.C	Serial No.	ICA	Replaceable part	
								Part No.	Q'ty
5220 --	K1046256	NAME PLATE ASS'Y	PLAQUE D'IDENTIFICATION	-	D				
1	K1011647C	DECAL	DECALQUE	1					
2	2122-1002D2	RIVET	RIVET	4					

DATE	JUN. 01, 2010
3rd EDITION	

Fig. 5230 DECAL - SERIAL(EUROPE) DECAL

Serial No. ;

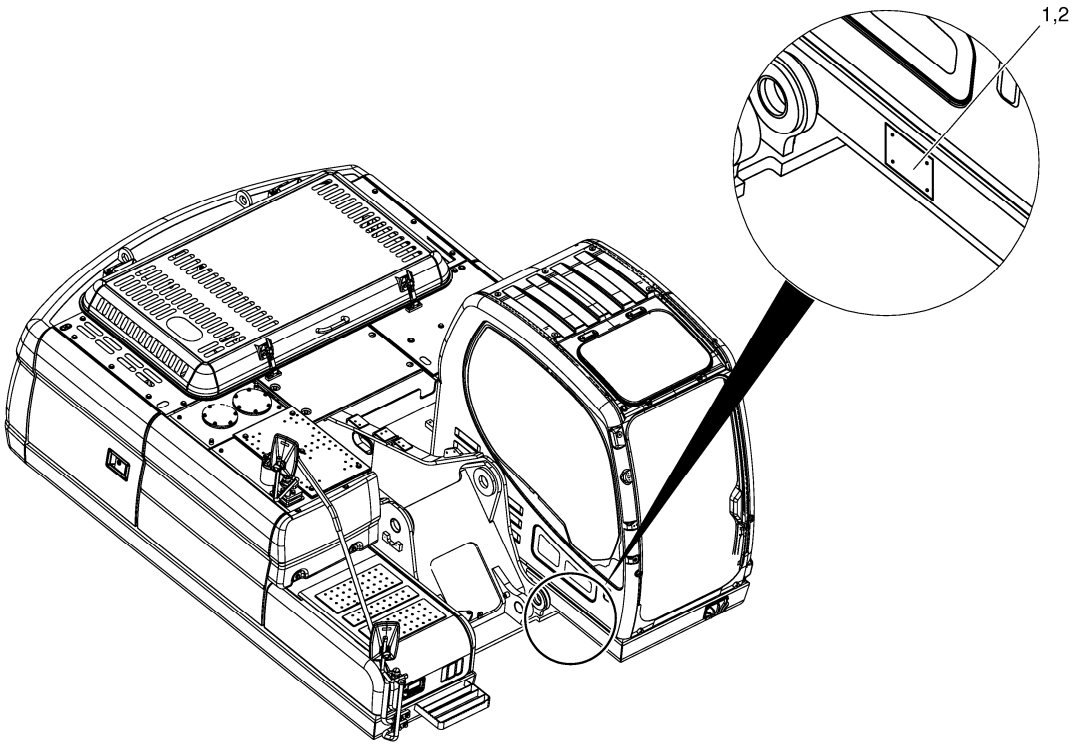

DATE	JUN. 01, 2010
3rd EDITION	

Fig. 5230 DECAL - SERIAL(EUROPE) DECAL

Serial No. ;

Key No.	Part No.	Description	Description	Q'ty	S.C	Serial No.	ICA	Replaceable part	
								Part No.	Q'ty
5230 --	K1046129	NAME PLATE ASS'Y	PLAQUE D'IDENTIFICATION	-	D				
1	K1012204B	PLATE;NAME	PLAQUE D'IDENTIFICATION	1					
2	2122-1002D2	RIVET	RIVET	4					

DATE	JUN. 01, 2010
3rd EDITION	

Fig. 5240 DECAL - SERIAL(TURKEY) DECALQUE

Serial No. ;

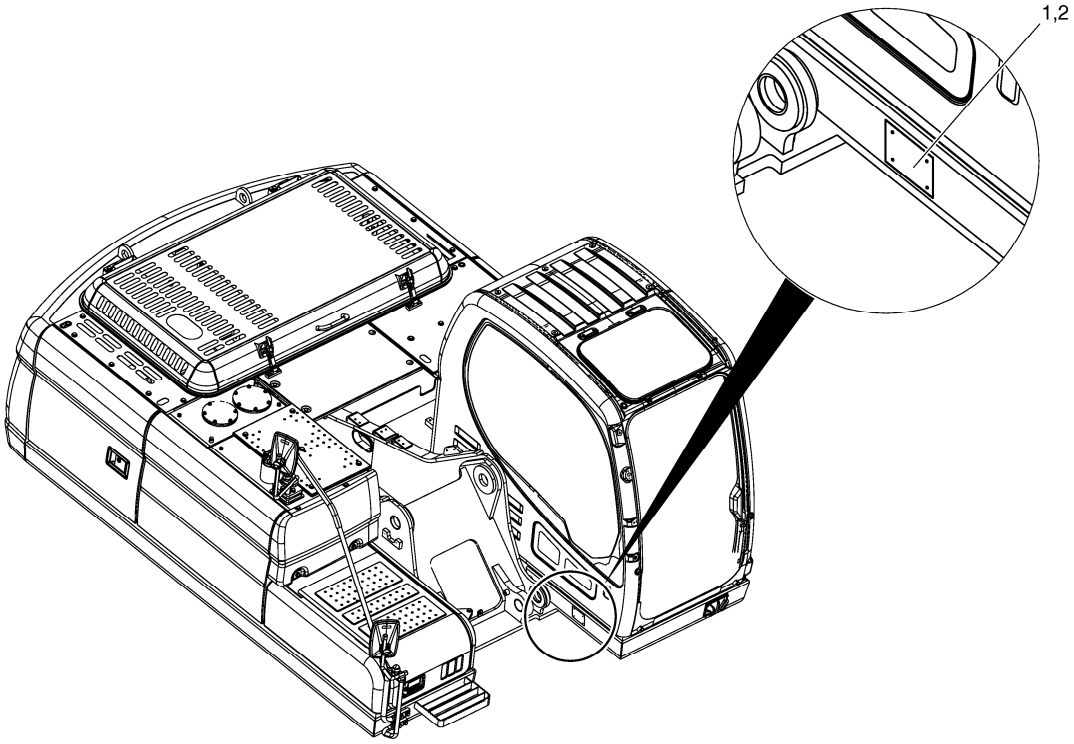

DATE	JUN. 01, 2010
3rd EDITION	

Fig. 5240 DECAL - SERIAL(TURKEY) DECALQUE

Serial No. ;

Key No.	Part No.	Description	Description	Q'ty	S.C	Serial No.	ICA	Replaceable part	
								Part No.	Q'ty
5240 --	K1046121	NAME PLATE ASS'Y	PLAQUE D'IDENTIFICATION	-	D				
1	K1012205B	PLATE;NAME	PLAQUE D'IDENTIFICATION	1					
2	2122-1002D2	RIVET	RIVET	4					

DATE	JUN. 01, 2010
3rd EDITION	

Fig. 5250 DECAL - PATTERN CHANGE DECAL

Serial No. ;

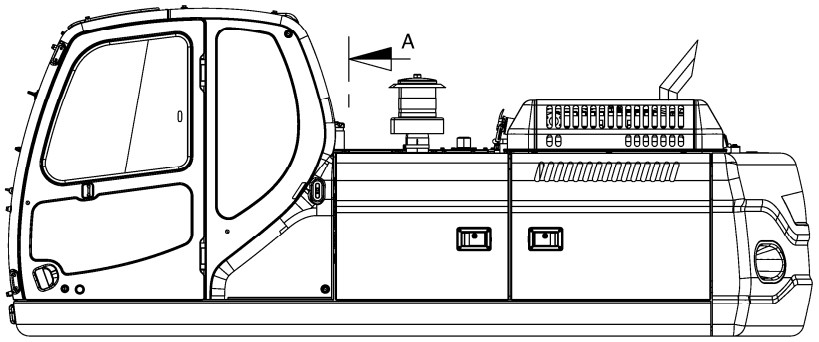

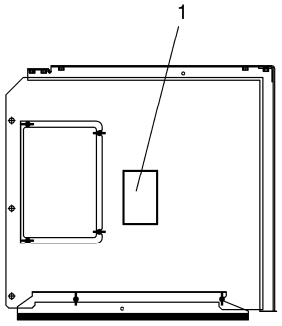

SECTION A

DATE	JUN. 01, 2010
3rd EDITION	

Fig. 5250 DECAL - PATTERN CHANGE DECAL

Serial No. ;

Key No.	Part No.	Description	Description	Q'ty	S.C	Serial No.	ICA	Replaceable part	
								Part No.	Q'ty
5250 --	K1046456	NAME PLATE ASS'Y	PLAQUE D'IDENTIFICATION	-	D				
1	K1016614	PLATE;NAME	PLAQUE D'IDENTIFICATION	1					

DATE	JUN. 01, 2010
3rd EDITION	

Fig. 5260 DECAL - LUBRICATION(EXPORT) DECAL

Serial No. ;

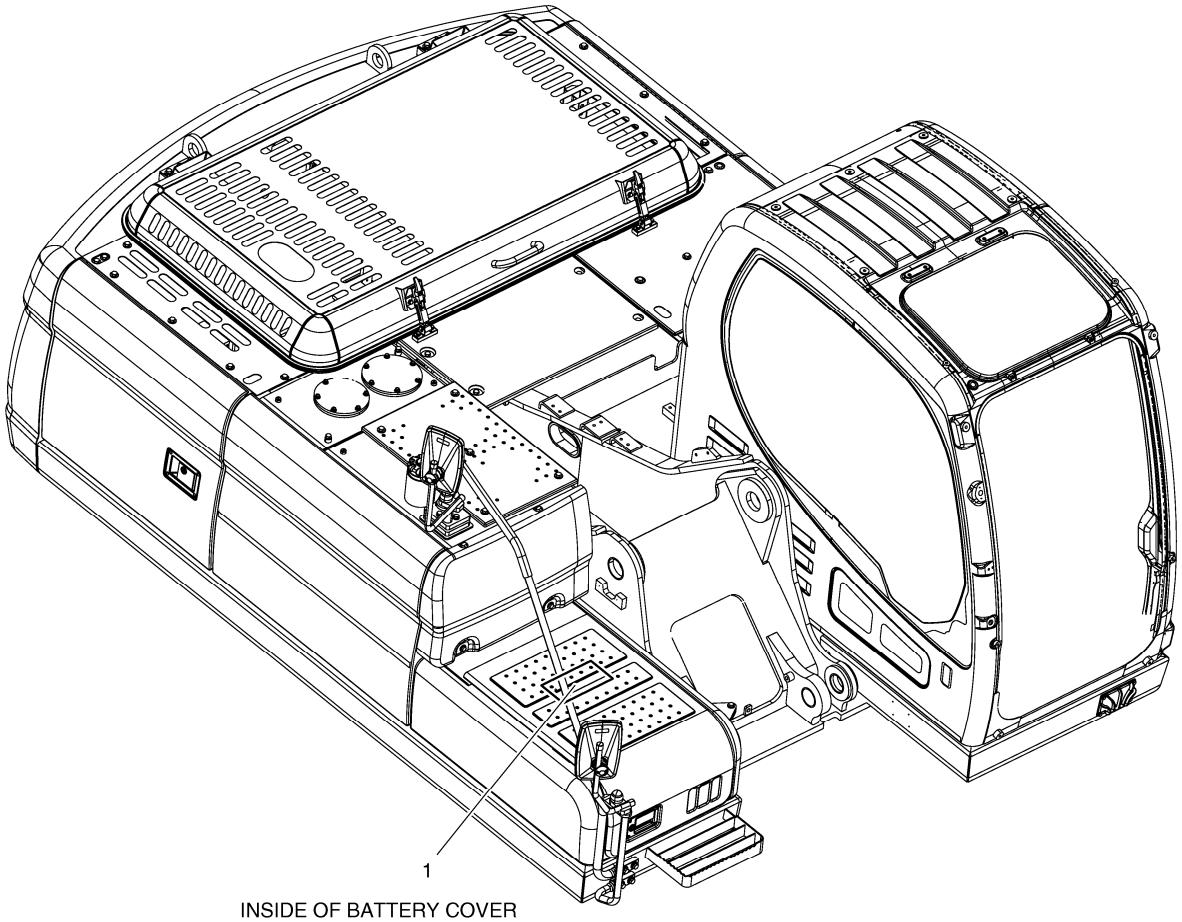

DATE	JUN. 01, 2010
3rd EDITION	

Fig. 5260 DECAL - LUBRICATION(EXPORT) DECAL

Serial No. ;

Key No.	Part No.	Description	Description	Q'ty	S.C	Serial No.	ICA	Replaceable part	
								Part No.	Q'ty
5260 --	K1048566A	NAME PLATE ASS'Y	PLAQUE D'IDENTIFICATION	-	D				
1	K1023643B	PLATE;NAME	PLAQUE D'IDENTIFICATION	1					

DATE	JUN. 01, 2010
3rd EDITION	

Fig. 5270 DECAL - LUBRICATION(EUROPE) DECAL

Serial No. ;

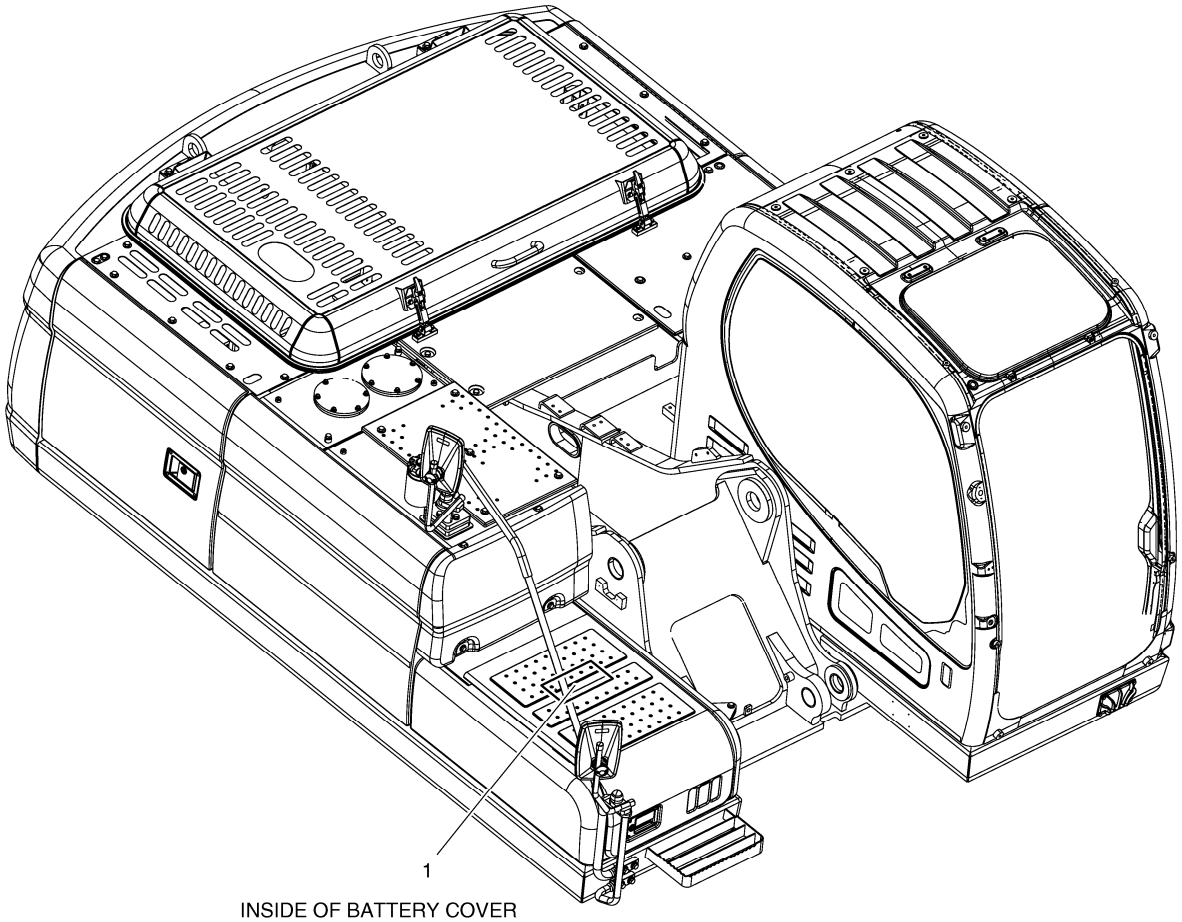

DATE	JUN. 01, 2010
3rd EDITION	

Fig. 5270 DECAL - LUBRICATION(EUROPE) DECAL

Serial No. ;

Key No.	Part No.	Description	Description	Q'ty	S.C	Serial No.	ICA	Replaceable part	
								Part No.	Q'ty
5270 --	K1047970	NAME PLATE ASS'Y	PLAQUE D'IDENTIFICATION	-	D				
1	K1019009A	DECAL	DECALQUE	1					

DATE	JUN. 01, 2010
3rd EDITION	

Fig. 5280 DECAL - LUBRICATION(ARTI BOOM) DECAL

Serial No. ;

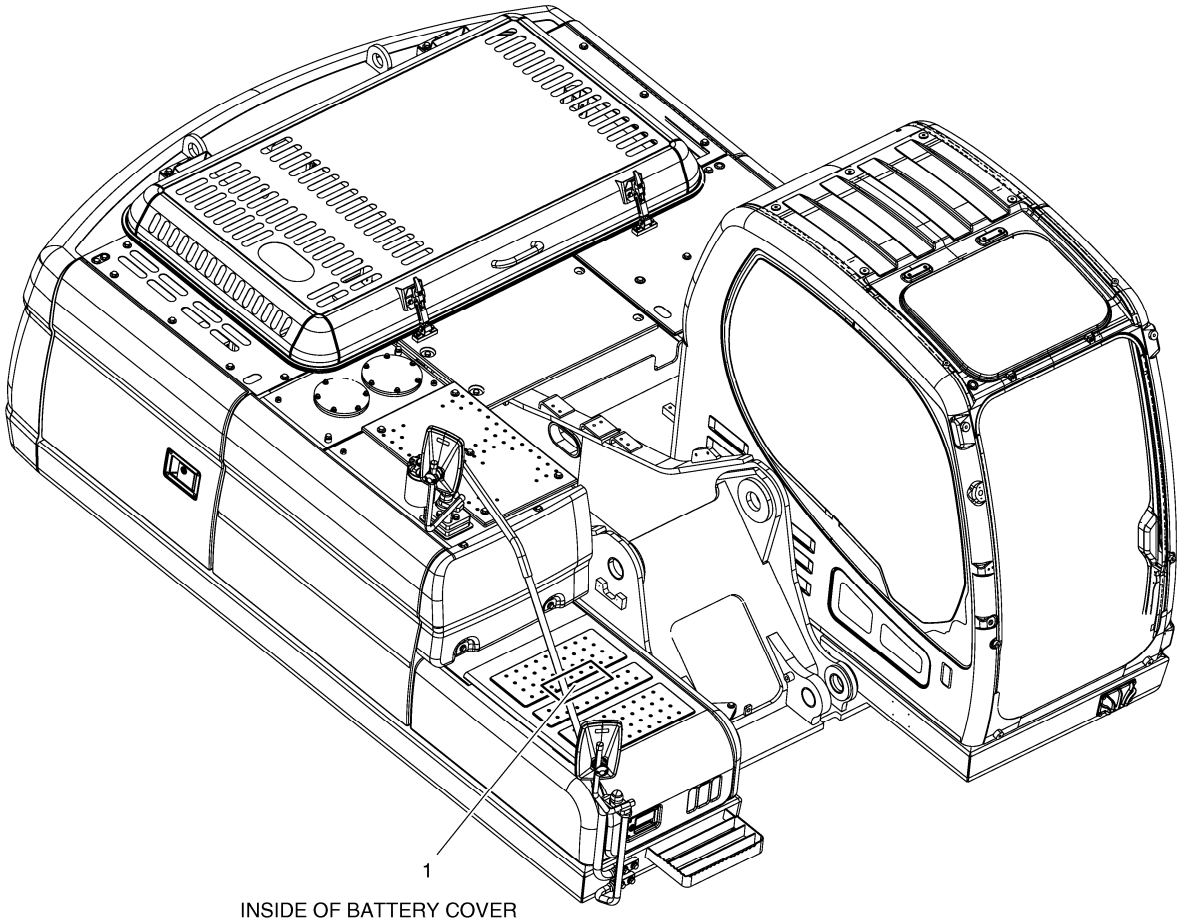

DATE	JUN. 01, 2010
3rd EDITION	

Fig. 5280 DECAL - LUBRICATION(ARTI BOOM) DECAL

Serial No. ;

Key No.	Part No.	Description	Description	Q'ty	S.C	Serial No.	ICA	Replaceable part	
								Part No.	Q'ty
5280 --	K1047971	NAME PLATE ASS'Y	PLAQUE D'IDENTIFICATION	-	D				
1	K1027533	PLATE;NAME	PLAQUE	1					

DATE	JUN. 01, 2010
3rd EDITION	

Fig. 5290 DECAL - BOOM DECAL

Serial No. ;

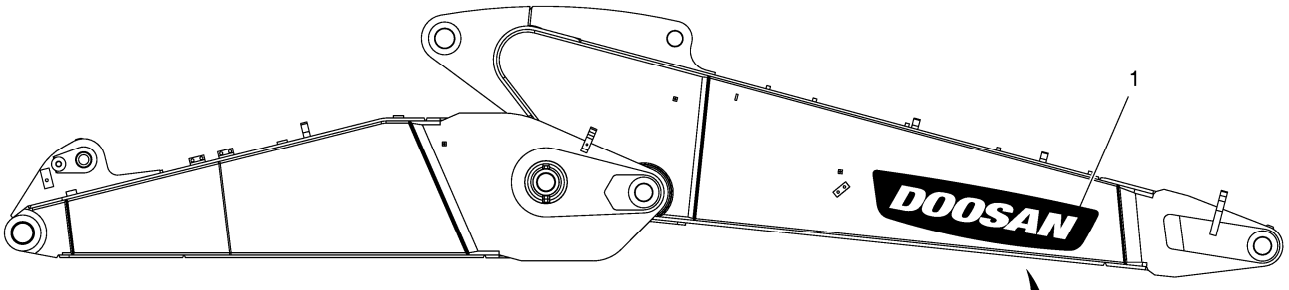

ARTI BOOM

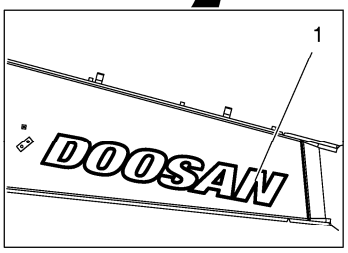

Serial No. : 5001 ~ 5707

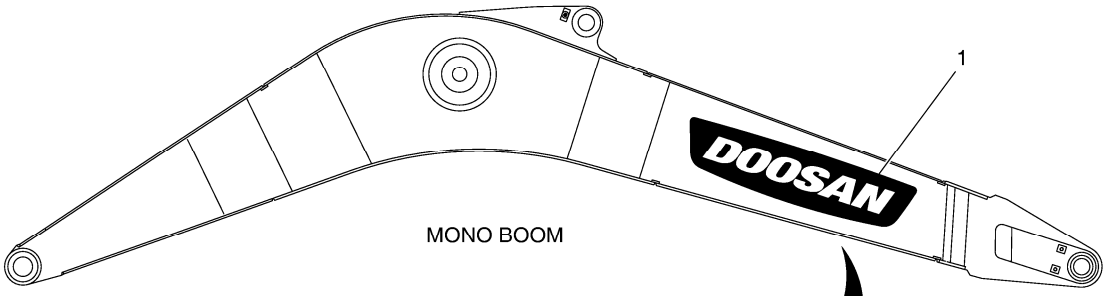

MONO BOOM

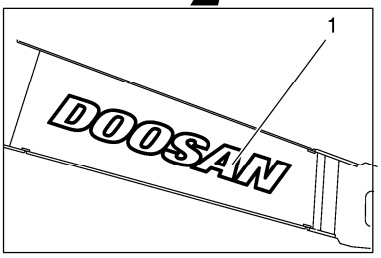

Serial No. : 5001 ~ 5707

DATE	JUN. 01, 2010
3rd EDITION	

Fig. 5290 DECAL - BOOM DECAL

Serial No. ;

Key No.	Part No.	Description	Description	Q'ty	S.C	Serial No.	ICA	Replaceable part	
								Part No.	Q'ty
5290 --	K1047926	NAME PLATE ASS'Y	PLAQUE D'IDENTIFICATION	-	D	5001-5707			
	950205-00670	DECAL ASS'Y;BOOM	DECALQUE D'IDENTIFICAT	-	D	5708-			
1	K1011645D12	PLATE;NAME	PLAQUE D'IDENTIFICATION	2		5001-5707	I	950205-00661	2
	950205-00661	DECAL(DOOSAN)	DECALQUE	2		5708-			

DATE	JUN. 01, 2010
3rd EDITION	

Fig. 5300 DECAL - LIFTING CAPA DECALQUE

Serial No. ;

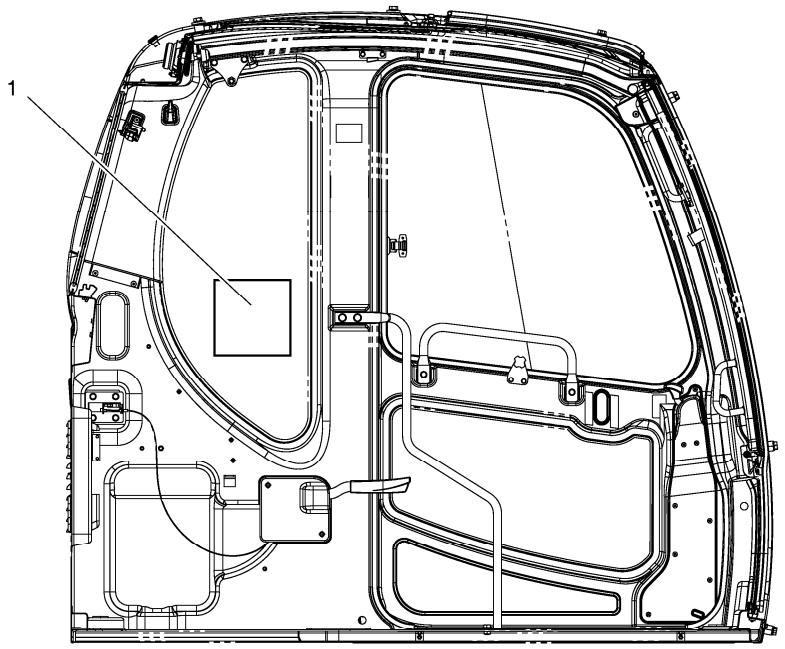

LEFT SIDE VIEW OF CABIN INSIDE

DATE	JUN. 01, 2010
3rd EDITION	

Fig. 5300 DECAL - LIFTING CAPA DECALQUE

Serial No. ;

Key No.	Part No.	Description	Description	Q'ty	S.C	Serial No.	ICA	Replaceable part	
								Part No.	Q'ty
5300 --	K1052028	NAME PLATE ASS'Y	PLAQUE D'IDENTIFICATION	-	D	5001-5632			
	950209-00571	PLATE,NAME;LIFTING CAPA.	PLAQUE D'IDENTIFICATION	-	D	5633-			
1	K1051911	PLATE;NAME	PLAQUE D'IDENTIFICATION	1		5001-5632	I	950205-00462	1
	950205-00462	DECAL	DECALQUE	1		5633-			

DATE	JUN. 01, 2010
3rd EDITION	

Fig. 5310 NAME PLATE - CABIN(ROPS) PLAQUE D'IDENTIFICATION

Serial No. ;

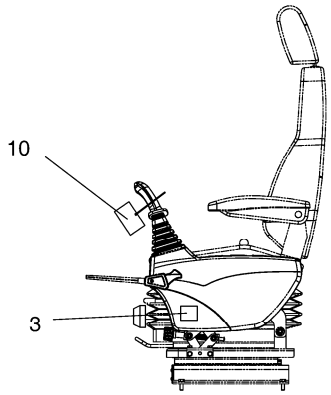

LEFT SIDE VIEW OF
LEFT CONTROL STAND

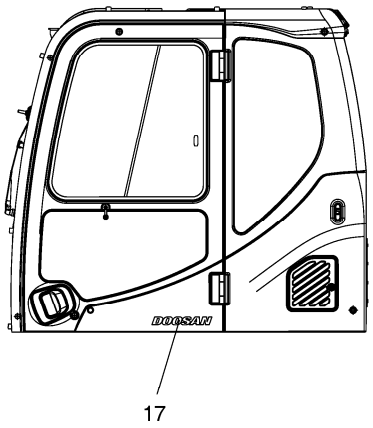

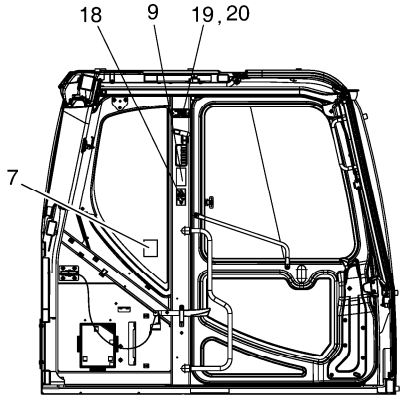

LEFT SIDE VIEW
OF CABIN INSIDE

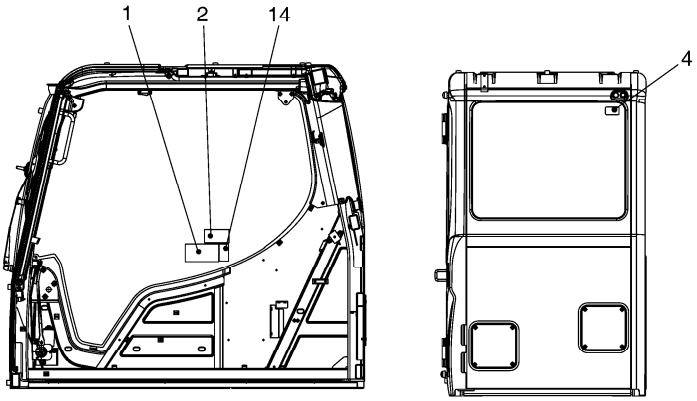

RIGHT SIDE VIEW
OF CABIN INSIDE

DATE	JUN. 01, 2010
3rd EDITION	

Fig. 5310 NAME PLATE - CABIN(ROPS) PLAQUE D'IDENTIFICATION

Serial No. ;

Key No.	Part No.	Description	Description	Q'ty	S.C	Serial No.	ICA	Replaceable part	
								Part No.	Q'ty
5310 --	950205-00890	DECAL ASS'Y;EUROPE CABIN	PLAQUE D`IDENTIFICATIOI	-	D				
1	K1034001	PLATE;NAME	PLAQUE	1					
2	2190-3297	PLATE;NAME	PLAQUE	1					
3	K1005909	PLATE;NAME	PLAQUE	1					
4	190-00101	PLATE;NAME(HAMMER)	PLAQUE	1					
7	2190-2524	PLATE;NAME	PLAQUE	1					
9	190-00093	PLATE;NAME(SLIDE WINDOW)	PLAQUE	1					
10	190-00098A	PLATE;NAME	PLAQUE	1					
14	190-00521	PLATE;NAME	PLAQUE	1					
17	K1011743D6	PLATE;NAME	PLAQUE	1					
18	950205-00863	DECAL	DECALQUE	1					
19	950209-00762	PLATE,NAME	PLAQUE D'IDENTIFICATIOI	1					
20	2122-1002D2	RIVET	RIVET	2					

DATE	JUN. 01, 2010
3rd EDITION	

Fig. 6100 FUEL FILLER PUMP
POMPE

Serial No. ;

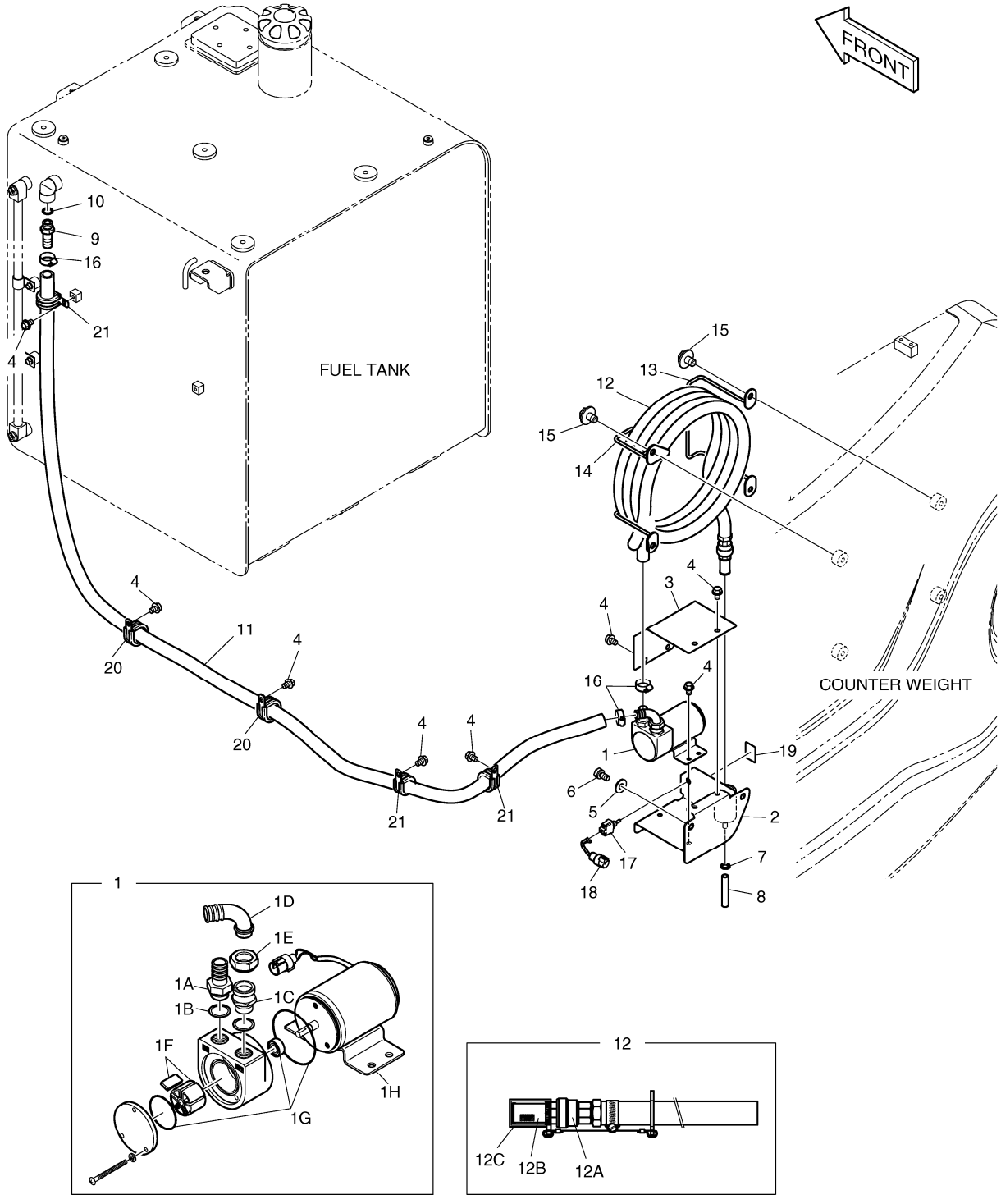

DATE	JUN. 01, 2010
3rd EDITION	

Fig. 6100 FUEL FILLER PUMP POMPE

Serial No. ;

Key No.	Part No.	Description	Description	Q'ty	S.C	Serial No.	ICA	Replaceable part	
								Part No.	Q'ty
6100 --	K1000378B	FUEL FILLER PUMP ASS'Y	POMPE	-	D				
1	401-00449	PUMP;FUEL FILLER	POMPE	1					
1A	2181-2755B	. ADAPTER	. ADAPTEUR	1					
1B	S8180321	. RING;SEAL	. ANNEAU	2					
1C	181-00809	. ADAPTER	. ADAPTEUR	1					
1D	181-00810	. ELBOW	. COUDE	1					
1E	121-00085	. NUT	. ECROU	1					
1F	407-00001	. VANE KIT	. KIT DE PALETTE	1					
1G	2401-1276KT	. SEAL KIT	. KIT DE JOINT	1					
1H	523-00012	. MOTOR;FUEL TRANS. PUMP	. MOTEUR	1					
2	195-02662B	BRACKET	SUPPORT	1					
3	621-02739B	COVER	COUVERTURE	1					
4	K1001029	BOLT	BOULON	11					
5	2114-1058D72	WASHER;PLAIN	RONDELLE	2					
6	DS0025021	BOLT;SET	BOULON	2					
7	S8470014	CLAMP;HOSE	BRIDE	1					
8	DS2079153	HOSE	TUYAU	1					
9	2181-2104D6	ADAPTER	ADAPTEUR	1					
10	S8000181	O-RING	JOINT CIRCULAIRE	1					
11	DS2079171	HOSE	TUYAU	1					
12	185-00167D3	HOSE ASS`Y	TUYAU FLEXIBLE	1					
12A	2420-1258	. VALVE;CHECK	. VALVE	1					
12B	2471-1152	. STRAINER	. TAMIS	1					
12C	2160-1336	. CAP;STRAINER	. CHAPEAU	1					
13	K1011080	BRACKET	SUPPORT	1					
14	K1011081	BRACKET	SUPPORT	1					
15	DS0025019	BOLT;SET	BOULON	4					
16	S8470032	CLAMP;HOSE	BRIDE	3					
17	549-00093	SWITCH;TOGGLE	COMMUTATEUR	1					
18	530-00214A	HARNESS;JOINT(F/P SWITCH)	HARNAIS	1					
19	190-01172	PLATE;NAME(FUEL PUMP)	PLAQUE	1					
20	124-00208D6	CLIP	AGRAFE	2					
21	124-00208D5	CLIP	AGRAFE	3					

DATE	JUN. 01, 2010
3rd EDITION	

Fig. 6110 MAIN PIPING - ONE WAY
CONDUITES DE BATI PRINCIPAL

Serial No. ;

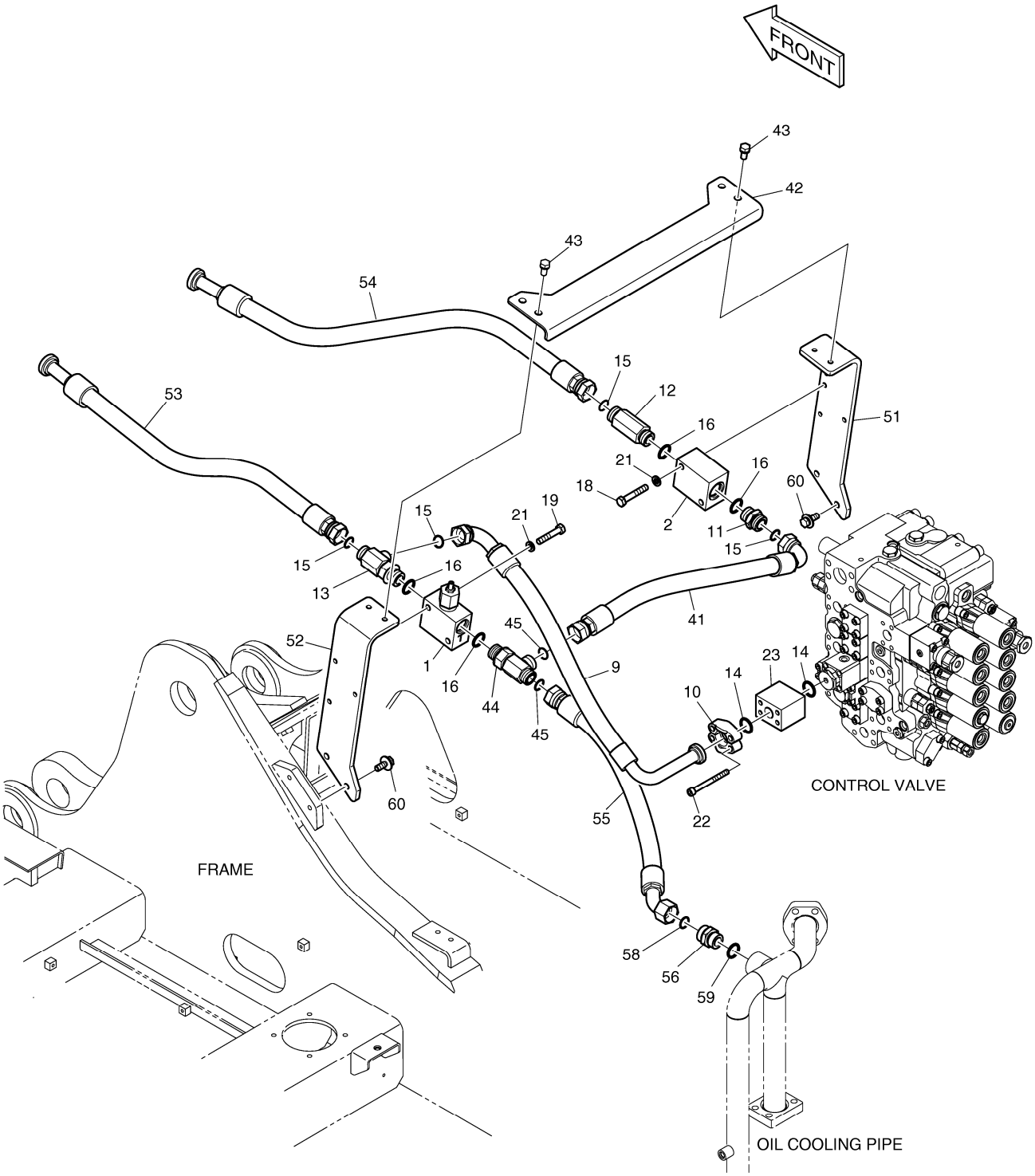

DATE	JUN. 01, 2010
3rd EDITION	

Fig. 6110 MAIN PIPING - ONE WAY
CONDUITES DE BATI PRINCIPAL

Serial No. ;

Key No.	Part No.	Description	Description	Q'ty	S.C	Serial No.	ICA	Replaceable part	
								Part No.	Q'ty
6110 --	K1044599	MAIN PIPING-ONE WAY	CONDUITES DE BATI PRIN(	-	D	5001-5570			
	420212-00336	PIPING,MAIN;ONE WAY	CONDUITES DE BATI PRIN(	-	D	5571-			
1	426-00267A	VALVE;RELIEF	CLAPET DE RECHARGE	1		5001-5570	I	426-00267B	1
	426-00267B	VALVE;RELIEF	VALVE	1		5571-			
2	423-00193B	BLOCK	BLOC	1					
9	DS2026201	HOSE	TUYAU	1					
10	2181-9078	FLANGE	BRIDE	2					
11	2181-4133D6	ADAPTER	ADAPTEUR	1					
12	DS2232107	ADAPTER	ADAPTEUR	1					
13	2181-2293D4	TEE	TE	1					
14	2180-1026D19	O-RING	JOINT CIRCULAIRE	2					
15	S8030161	O-RING	JOINT CIRCULAIRE	4					
16	S8000291	O-RING	JOINT CIRCULAIRE	4					
18	S0561266	BOLT	BOULON	2					
19	S0561066	BOLT	BOULON	2					
21	S5102703	WASHER;SPRING	RONDELLE	4					
22	S2213466	BOLT;SOCKET M10X90	BOULON	4					
23	2181-2170	BLOCK;SPACER	BLOC	1					
41	DS2013834	HOSE	TUYAU	1					
42	K1000358B	BRACKET	SUPPORT	1					
43	DS0025019	BOLT;SET	BOULON	4					
44	2181-2293D4	TEE	TE	1					
45	S8030161	O-RING	JOINT CIRCULAIRE	2					
51	195-03436B	BRACKET	SUPPORT	1					
52	195-03435B	BRACKET	SUPPORT	1					
53	DS2016055	HOSE	TUYAU	1					
54	DS2016055	HOSE	TUYAU	1					
55	DS2012300	HOSE	TUYAU	1					
56	2181-4133D6	ADAPTER	ADAPTEUR	1					
58	S8030161	O-RING	JOINT CIRCULAIRE	1					
59	S8000291	O-RING	JOINT CIRCULAIRE	1					
60	DS0025020	BOLT;SET	BOULON	4					

DATE	JUN. 01, 2010
3rd EDITION	

Fig. 6120 ONE WAY PIPING - WITH FILTER
TUYAUTERIE A SENS UNIQUE

Serial No. ;

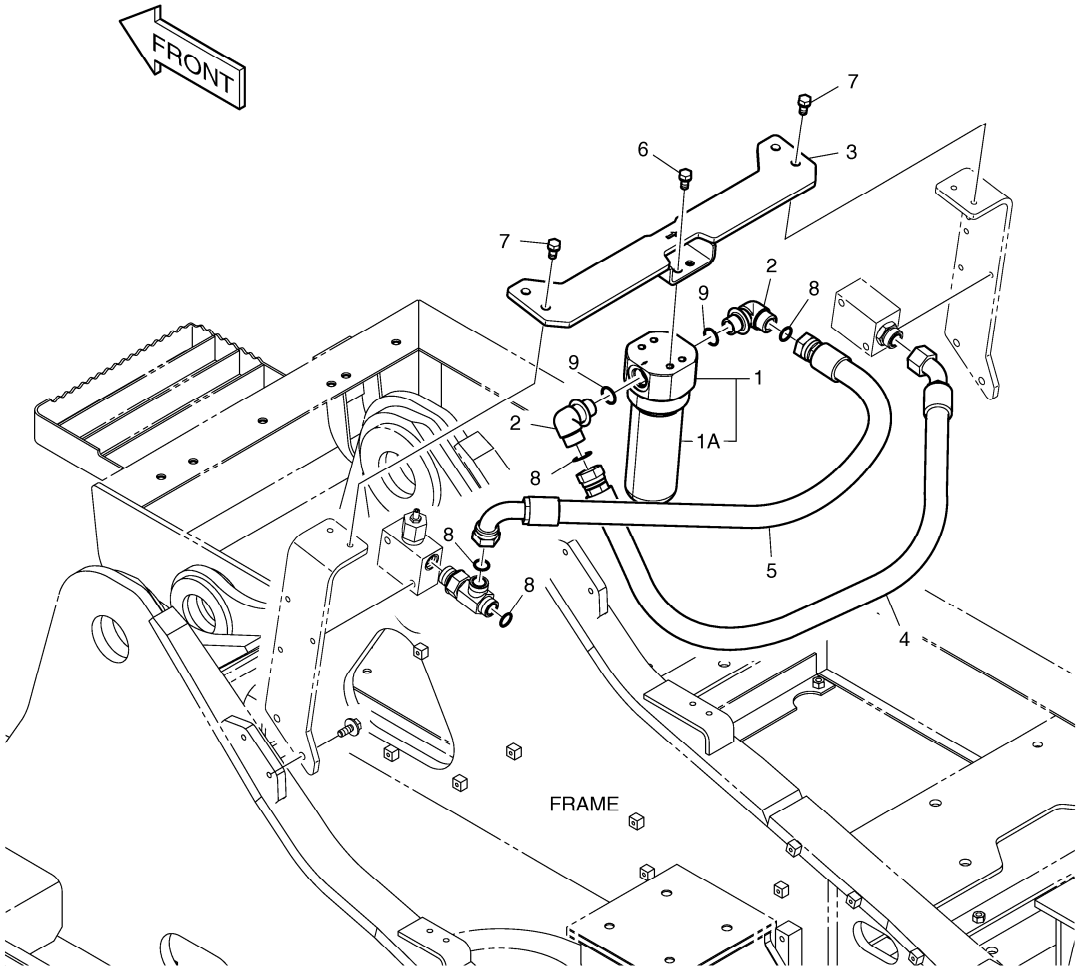

DATE	JUN. 01, 2010
3rd EDITION	

Fig. 6120 ONE WAY PIPING - WITH FILTER
TUYAUTERIE A SENS UNIQUE

Serial No. ;

Key No.	Part No.	Description	Description	Q'ty	S.C	Serial No.	ICA	Replaceable part	
								Part No.	Q'ty
6120 --	K1007293C	ONE WAY PIPING-WITH FILTER	TUYAUTERIE A SENS UNIQ	-	D				
1	471-00114	FILTER;BREAKER	FILTRE	1					
1A	474-00046	. ELEMENT;BREAKER FILTER	. ELEMENT	1					
2	2181-2815D1	ELBOW	COUDE	2					
3	195-03437E	BRACKET	SUPPORT	1					
4	DS2012217	HOSE	TUYAU	1					
5	DS2013220	HOSE	TUYAU	1					
6	DS0025021	BOLT;SET	BOULON	4					
7	DS0025018	BOLT;SET	BOULON	4					
8	S8030161	O-RING	JOINT CIRCULAIRE	4					
9	S8000291	O-RING	JOINT CIRCULAIRE	2					

DATE	JUN. 01, 2010
3rd EDITION	

Fig. 6130 MAIN PIPING - TWO WAY
CONDUITES DE BATI PRINCIPAL

Serial No. ;

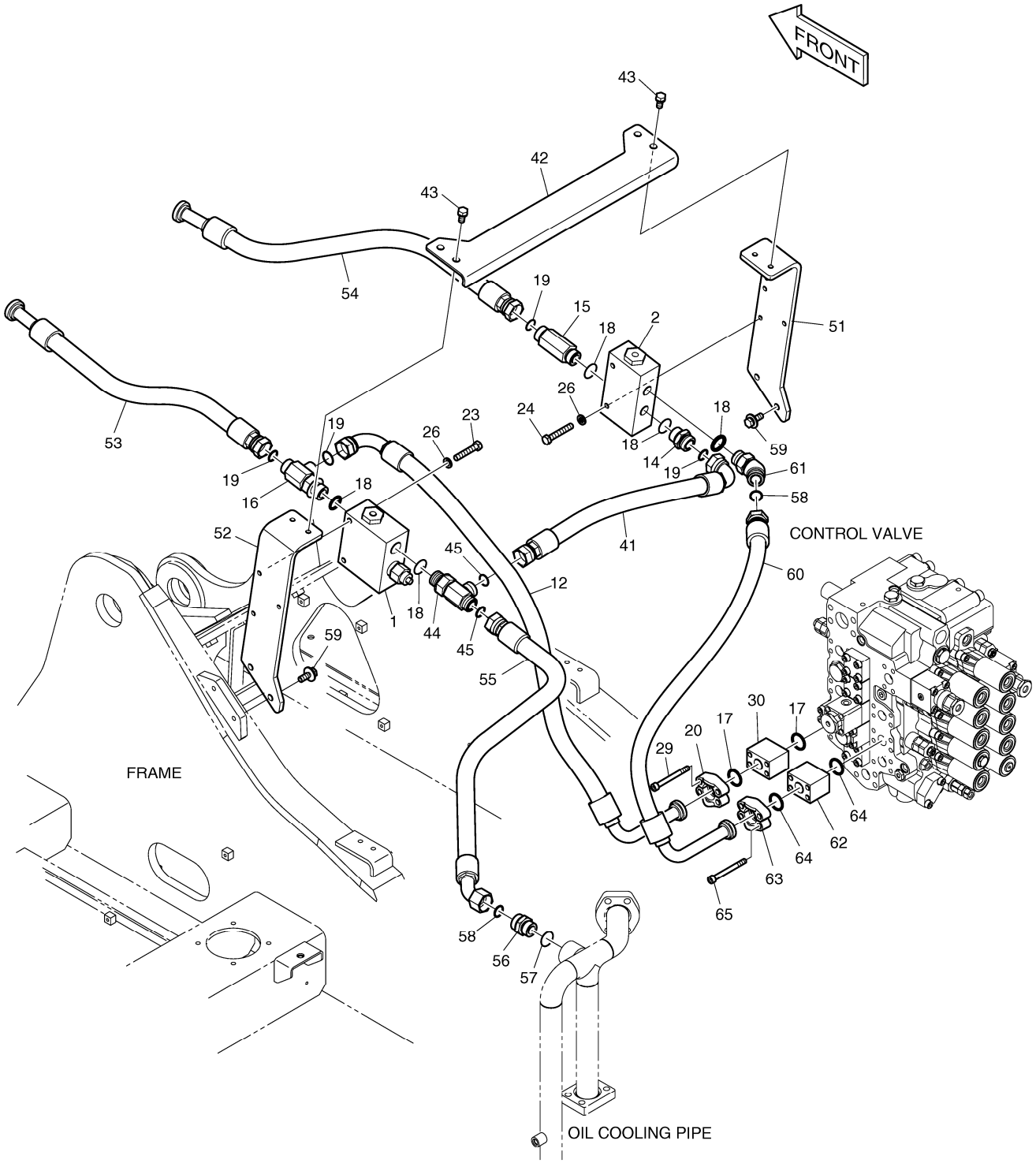

DATE	JUN. 01, 2010
3rd EDITION	

Fig. 6130 MAIN PIPING - TWO WAY
CONDUITES DE BATI PRINCIPAL

Serial No. ;

Key No.	Part No.	Description	Description	Q'ty	S.C	Serial No.	ICA	Replaceable part	
								Part No.	Q'ty
6130 --	K1044602A	MAIN PIPING-TWO WAY	CONDUITES DE BATI PRIN(	-	D				
1	426-00248A	VALVE;SELECT	VALVE	1					
2	426-00249A	VALVE;SELECT	VALVE	1					
12	DS2026201	HOSE	TUYAU	1					
14	2181-4133D6	ADAPTER	ADAPTEUR	1					
15	DS2232107	ADAPTER	ADAPTEUR	1					
16	2181-2293D4	TEE	TE	1					
17	2180-1026D19	O-RING	JOINT CIRCULAIRE	2					
18	S8000291	O-RING	JOINT CIRCULAIRE	5					
19	S8030161	O-RING	JOINT CIRCULAIRE	4					
20	2181-9078	FLANGE	BRIDE	2					
23	S0561466	BOLT	BOULON	2					
24	S0561266	BOLT	BOULON	2					
26	S5102703	WASHER;SPRING	RONDELLE	4					
29	S2213466	BOLT;SOCKET M10X90	BOULON	4					
30	2181-2170	BLOCK;SPACER	BLOC	1					
41	DS2013834	HOSE	TUYAU	1					
42	K1000358B	BRACKET	SUPPORT	1					
43	DS0025019	BOLT;SET	BOULON	4					
44	2181-2293D4	TEE	TE	1					
45	S8030161	O-RING	JOINT CIRCULAIRE	2					
51	195-03436B	BRACKET	SUPPORT	1					
52	195-03435B	BRACKET	SUPPORT	1					
53	DS2016055	HOSE	TUYAU	1					
54	DS2016055	HOSE	TUYAU	1					
55	DS2012387	HOSE	TUYAU	1					
56	2181-4133D6	ADAPTER	ADAPTEUR	1					
57	S8000291	O-RING	JOINT CIRCULAIRE	1					
58	S8030161	O-RING	JOINT CIRCULAIRE	2					
59	DS0025020	BOLT;SET	BOULON	4					
60	DS2018201	HOSE	TUYAU	1					
61	2181-2816D2	ELBOW	COUDE	1					
62	2181-2170	BLOCK;SPACER	BLOC	1					
63	2181-9078	FLANGE	BRIDE	2					
64	2180-1026D19	O-RING	JOINT CIRCULAIRE	2					
65	S2213466	BOLT;SOCKET M10X90	BOULON	4					

DATE	JUN. 01, 2010
3rd EDITION	

Fig. 6140 TWO WAY PIPING - WITH FILTER
TUYAUTERIE DE DEUX MANIERES

Serial No. ;

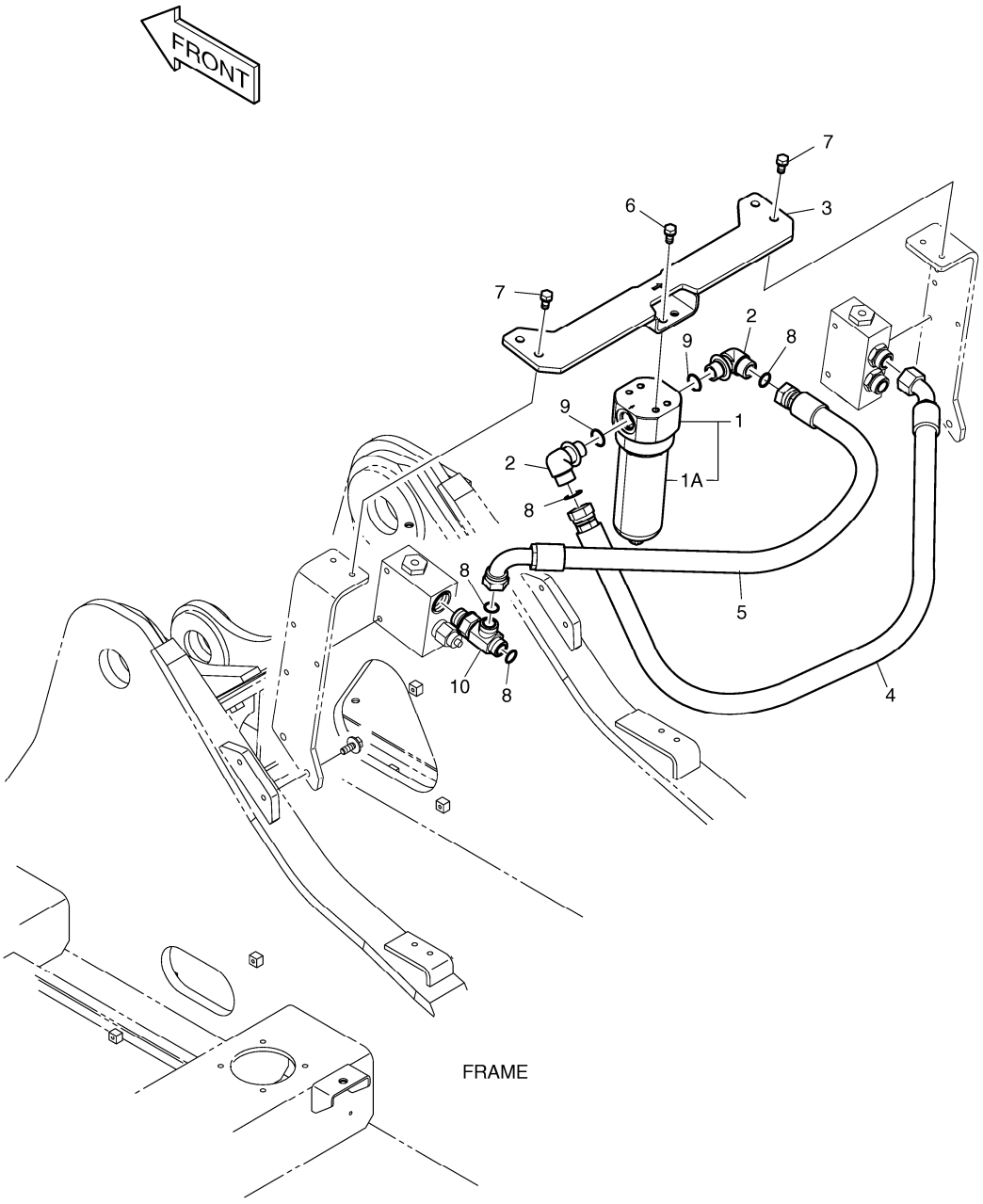

DATE	JUN. 01, 2010
3rd EDITION	

Fig. 6140 TWO WAY PIPING - WITH FILTER
TUYAUTERIE DE DEUX MANIERES

Serial No. ;

Key No.	Part No.	Description	Description	Q'ty	S.C	Serial No.	ICA	Replaceable part	
								Part No.	Q'ty
6140 --	K1000097E	TWO WAY PIPING-WITH FILTER	TUYAUTERIE DE DEUX MA	-	D				
1	471-00114	FILTER;BREAKER	FILTRE	1					
1A	474-00046	. ELEMENT;BREAKER FILTER	. ELEMENT	1					
2	2181-2815D1	ELBOW	COUDE	2					
3	195-03437E	BRACKET	SUPPORT	1					
4	DS2012217	HOSE	TUYAU	1					
5	DS2013220	HOSE	TUYAU	1					
6	DS0025021	BOLT;SET	BOULON	4					
7	DS0025018	BOLT;SET	BOULON	4					
8	S8030161	O-RING	JOINT CIRCULAIRE	4					
9	S8000291	O-RING	JOINT CIRCULAIRE	2					
10	2181-2293D4	TEE	TE	1					

DATE	JUN. 01, 2010
3rd EDITION	

Fig. 6150 PILOT PIPING - ONE OR TWO WAY
CONDUITES DE PILOTE

Serial No. ;

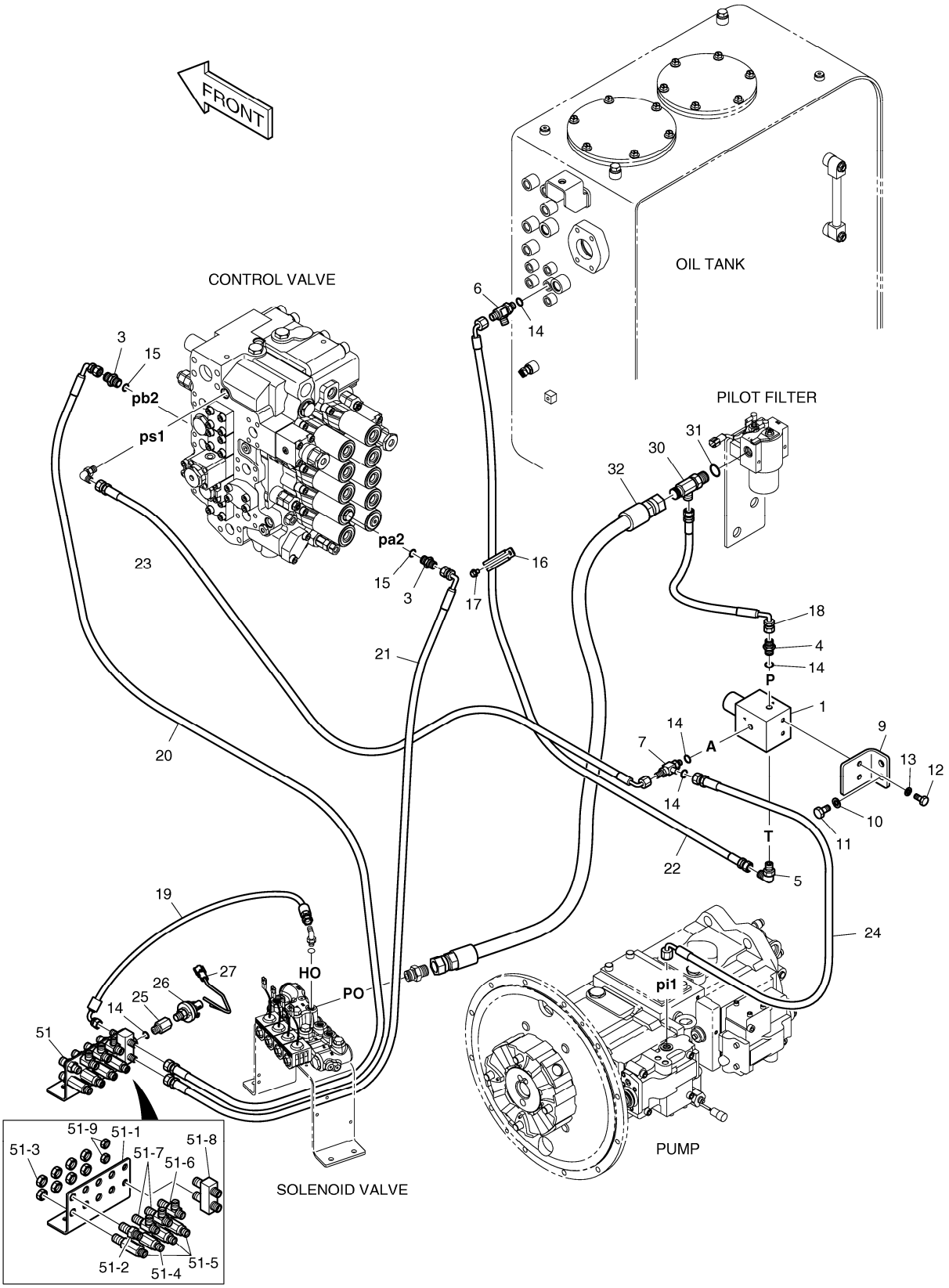

DATE	JUN. 01, 2010
3rd EDITION	

Fig. 6150 PILOT PIPING - ONE OR TWO WAY CONDUITES DE PILOTE

Serial No. ;

Key No.	Part No.	Description	Description	Q'ty	S.C	Serial No.	ICA	Replaceable part	
								Part No.	Q'ty
6150 --	K1044672A	PILOT PIPING-ONE & TWO WAY	CONDUITES DE PILOTE	-	D				
1	426-00266	VALVE;EPPR	VALVE	1					
3	2181-1126D36	ADAPTER	ADAPTEUR	2					
4	2471-1133	ADAPTER;FILTER	ADAPTEUR	1					
5	2181-1702D4	ELBOW PFO1/4-PF1/4	COUDE	1					
6	2181-1951D1	TEE	TE	1					
7	181-00779	TEE;SHUTTLE	TE	1					
9	195-02711B	BRACKET	SUPPORT	1					
10	S5102603	WASHER	RONDELLE	2					
11	S0511866	BOLT	BOULON	2					
12	S0508766	BOLT	BOULON	2					
13	S5102503	WASHER	RONDELLE	2					
14	S8000111	O-RING	JOINT CIRCULAIRE	5					
15	S8000141	O-RING	JOINT CIRCULAIRE	2					
16	124-00208D6	CLIP	AGRAFE	1					
17	K1001029	BOLT	BOULON	1					
18	DS2093115	HOSE	TUYAU FLEXIBLE	1					
19	DS2093027	HOSE	TUYAU	1		5001-5495			
	DS2093040	HOSE PF 1/4-550L	TUYAU FLEXIBLE	1		5496-			
20	DS2093021	HOSE	TUYAU	1					
21	DS2093044	HOSE	TUYAU	1					
22	DS2093124	HOSE	TUYAU FLEXIBLE	1					
23	DS2093114	HOSE	TUYAU FLEXIBLE	1					
24	DS2093090	HOSE PF1/4-800L	TUYAU	1					
25	DS2242017	REDUCER	REDUCTEUR	1					
26	549-00010	SWITCH;PRESSURE	COMMUTATEUR	1					
27	530-00067	HARNESS;STOP LAMP S/W	HARNAIS	1					
30	2181-1951D19	TEE	TE	1					
31	S8000181	O-RING	JOINT CIRCULAIRE	1					
32	DS2054336	HOSE	TUYAU FLEXIBLE	1					
51	K1044992	JOINT PLATE SUB ASS`Y	SOUS-MARIN COMMUN AS	1		5433-5592	Y	430216-00006	1
	430216-00006	JOINT PLATE SUB ASS`Y	SOUS-MARIN COMMUN AS	1		5593-			
51-1	K1000354	. BRACKET;JOINT	. SUPPORT	1					
51-2	181-00078D1	. ADAPTER	. ADAPTEUR	1					
51-3	121-00010D1	. NUT	. ECROU	8					
51-4	420-00352D1	. VALVE;SHOCKLESS	. VALVE	1					
51-5	DS2410009	. ADAPTER	. ADAPTEUR	3					
51-6	181-00086D1	. TEE	. TE	1					

DATE	JUN. 01, 2010
3rd EDITION	

Fig. 6150 PILOT PIPING - ONE OR TWO WAY
CONDUITES DE PILOTE

Serial No. ;

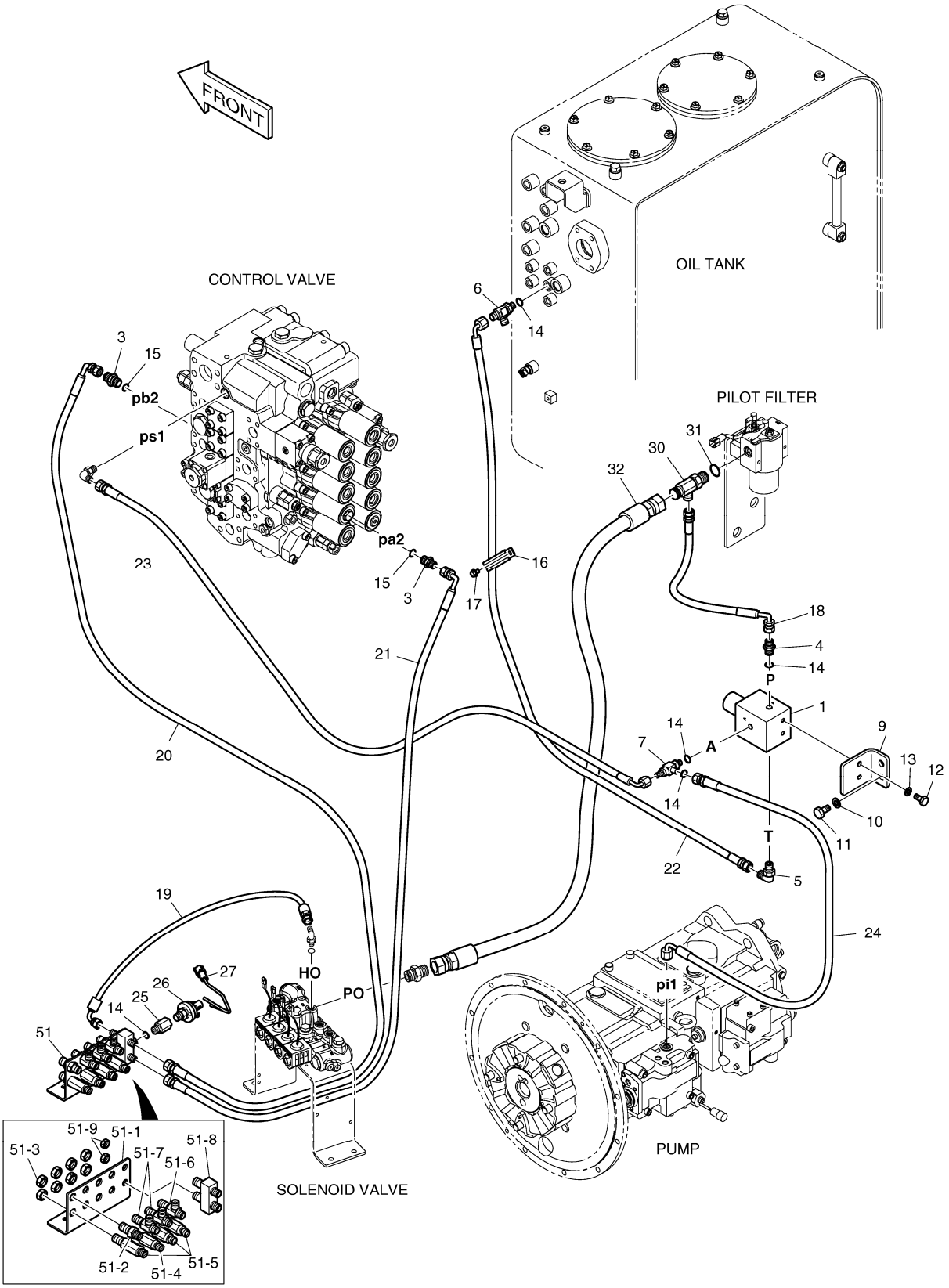

DATE	JUN. 01, 2010
3rd EDITION	

Fig. 6150 PILOT PIPING - ONE OR TWO WAY
CONDUITES DE PILOTE

Serial No. ;

Key No.	Part No.	Description	Description	Q'ty	S.C	Serial No.	ICA	Replaceable part	
								Part No.	Q'ty
6150 -51-7	181-00086D2	. TEE	. TE	2					
51-8	420-00476	. VALVE;SHUTTLE	. VALVE	1					
51-9	121-00010D7	. NUT	. ECROU	2					

DATE	JUN. 01, 2010
3rd EDITION	

Fig. 6155 PILOT PIPING - ONE WAY
CONDUITES DE PILOTE

Serial No. ;

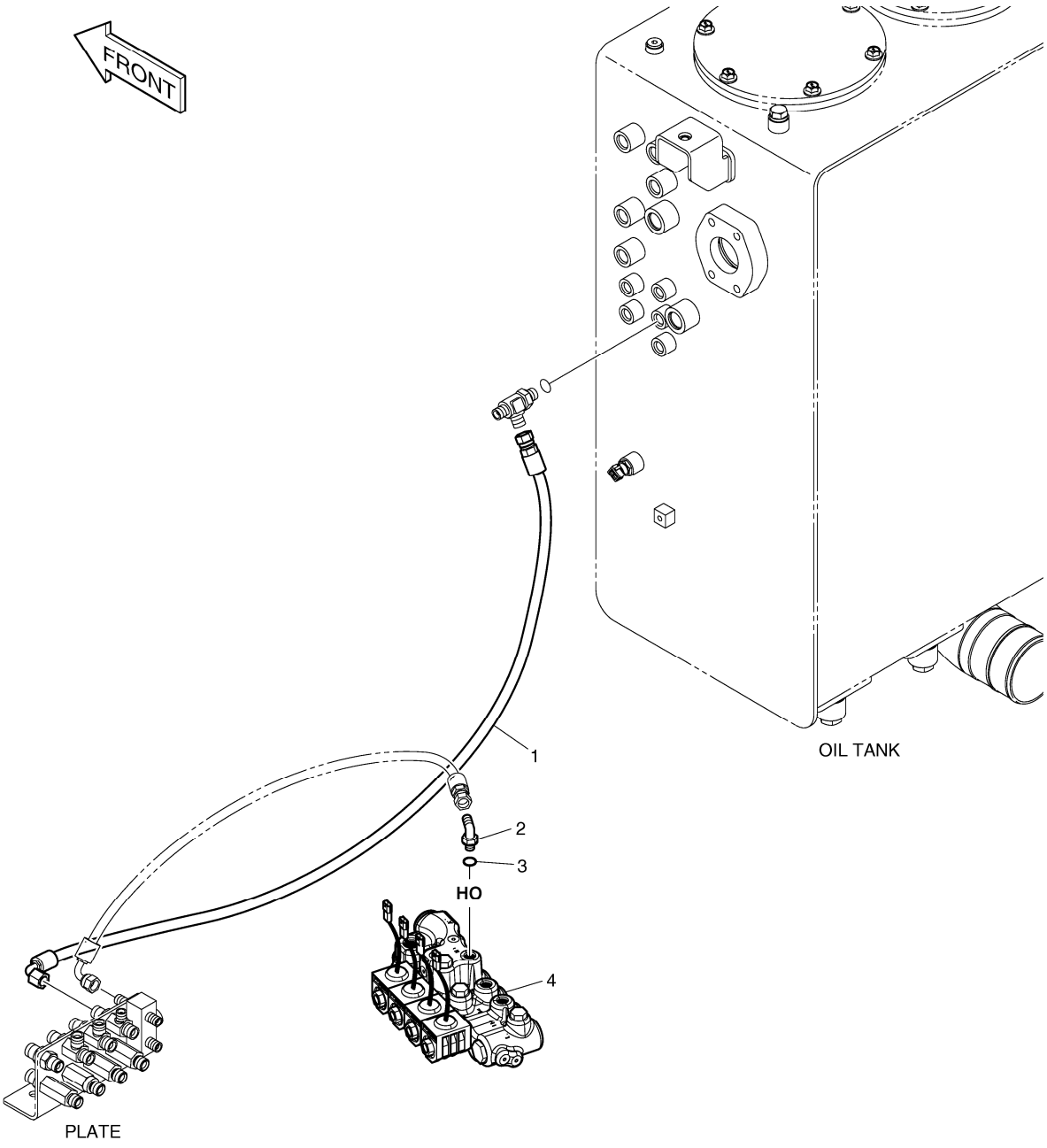

DATE	JUN. 01, 2010
3rd EDITION	

Fig. 6155 PILOT PIPING - ONE WAY CONDUITES DE PILOTE

Serial No. ;

Key No.	Part No.	Description	Description	Q'ty	S.C	Serial No.	ICA	Replaceable part	
								Part No.	Q'ty
6155 --	K1044715A	PILOT PIPING;ONE WAY	CONDUITES DE PILOTE	-	D				
1	DS2093391	HOSE	TUYAU FLEXIBLE	1					
2	2181-1702D4	ELBOW PFO1/4-PF1/4	COUDE	1					
3	S8000111	O-RING	JOINT CIRCULAIRE	1					
4	K1047556	VALVE;SOLENOID	VALVE	1					

DATE	JUN. 01, 2010
3rd EDITION	

Fig. 6160 PILOT PIPING - TWO WAY(1)
CONDUITES DE PILOTE

Serial No. ;

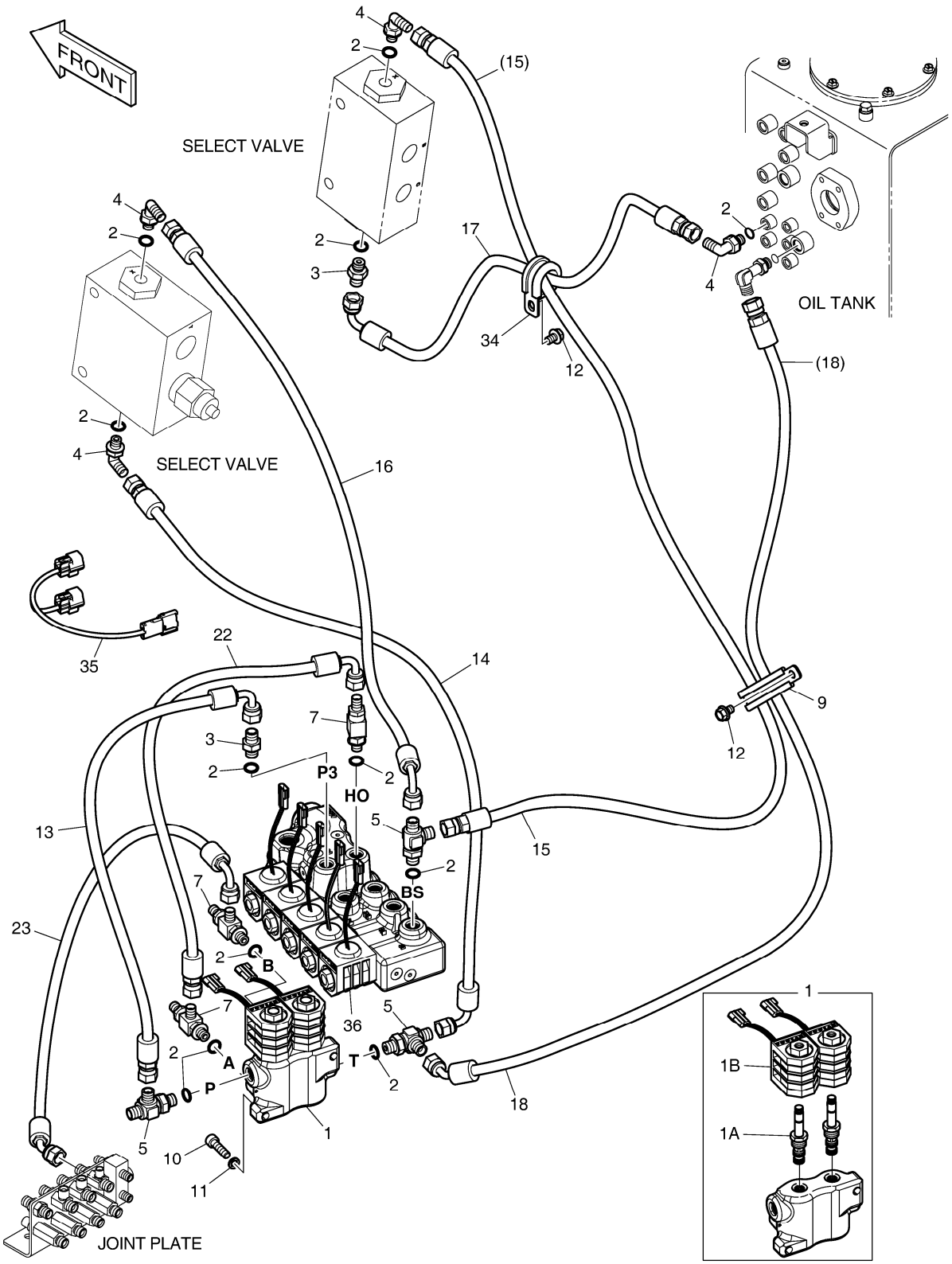

DATE	JUN. 01, 2010
3rd EDITION	

Fig. 6160 PILOT PIPING - TWO WAY(1) CONDUITES DE PILOTE

Serial No. ;

Key No.	Part No.	Description	Description	Q'ty	S.C	Serial No.	ICA	Replaceable part	
								Part No.	Q'ty
6160 --	K1044674C	PILOT PIPING;TWO WAY	CONDUITES DE PILOTE	-	D				
1	426-00247B	VALVE;SOLENOID	VALVE	1					
1A	K9007363	. SPOOL;SOLENOID	. SPOOL	2					
1B	1.519-00001	. COIL	. ENROULEMENT	2					
2	S8000111	O-RING	JOINT CIRCULAIRE	11					
3	2181-1126D14	ADAPTER PF1/4	ADAPTEUR	2					
4	2181-1702D4	ELBOW PFO1/4-PF1/4	COUDE	4					
5	2181-1951D1	TEE	TE	3					
7	181-00779	TEE;SHUTTLE	TE	3					
9	124-00208D6	CLIP	AGRAFE	1					
10	S2209266	BOLT	BOULON	2					
11	S5110503	WASHER;SPRING	RONDELLE	2					
12	K1001029	BOLT	BOULON	2					
13	DS2093035	HOSE	TUYAU	1					
14	DS2093193	HOSE	TUYAU	1					
15	DS2094327	HOSE	TUYAU FLEXIBLE	1					
16	DS2093256	HOSE	TUYAU FLEXIBLE	1					
17	DS2093028	HOSE	TUYAU	1					
18	DS2092045	HOSE	TUYAU	1					
22	DS2093202	HOSE PF1/4-480L	TUYAU	1					
23	DS2090008	HOSE	TUYAU FLEXIBLE	1					
34	124-00208D4	CLIP	AGRAFE	1					
35	K1000816	HARNESS	HARNAIS	1		5001-5472			
	K1003638B	HARNESS;JOINT	HARNAIS	1		5473-			
36	K1045023	VALVE;SOLENOID	VALVE	1					

DATE	JUN. 01, 2010
3rd EDITION	

Fig. 6170 PILOT PIPING - TWO WAY(2)
CONDUITES DE PILOTE

Serial No. ;

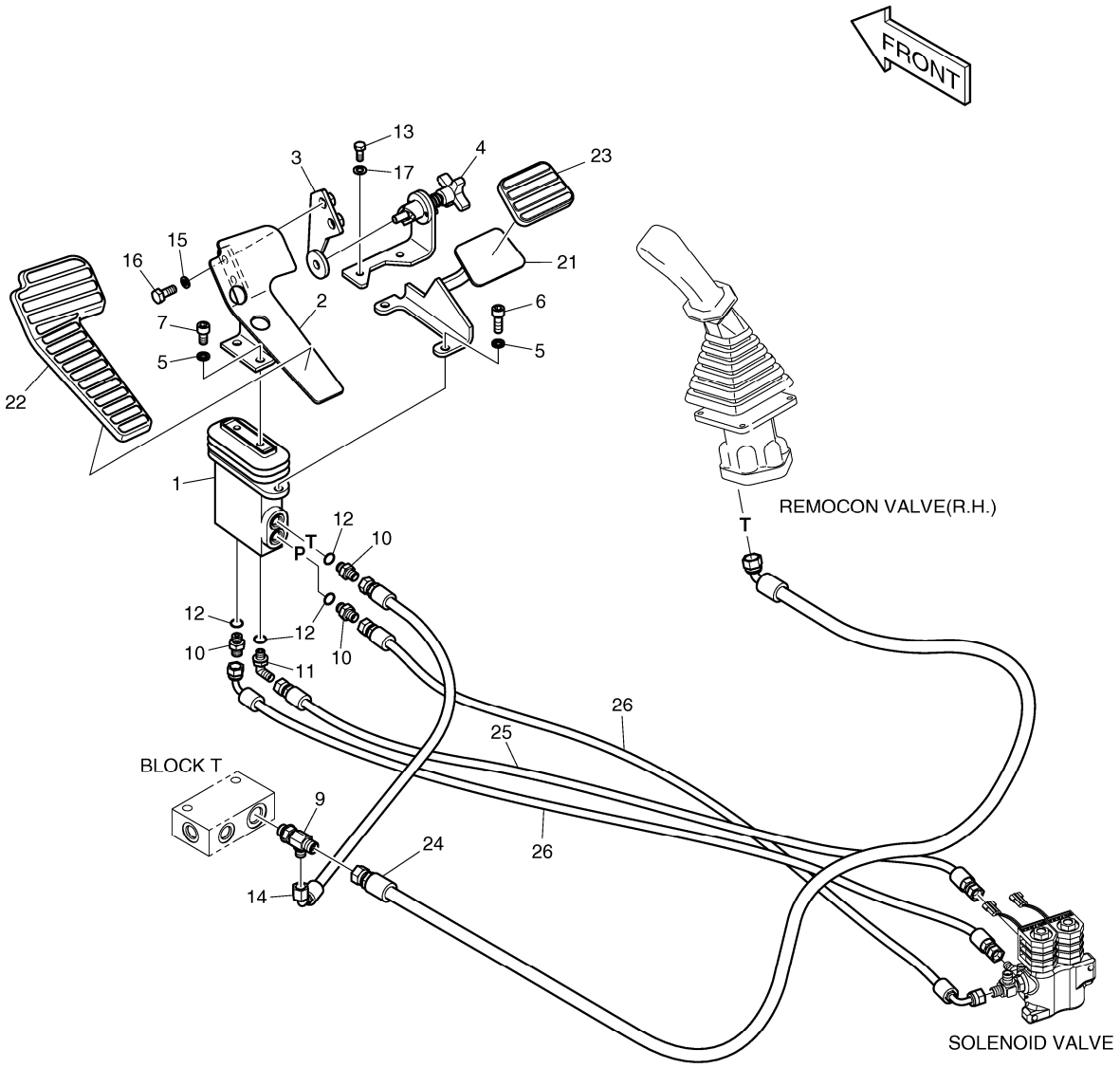

DATE	JUN. 01, 2010
3rd EDITION	

Fig. 6170 PILOT PIPING - TWO WAY(2) CONDUITES DE PILOTE

Serial No. ;

Key No.	Part No.	Description	Description	Q'ty	S.C	Serial No.	ICA	Replaceable part	
								Part No.	Q'ty
6170 --	K1044710B	PILOT PIPING-TWO WAY(2)	CIRCUIT DE PILOTE	-	D				
1	K1017382A	PEDAL VALVE	VALVE DE PEDALE	1					
2	195-01683A	BRACKET;PEDAL(R.H)	SUPPORT	1					
3	K1000695A	PLATE	PLAQUE	1					
4	K1000696C	LOCK ASS`Y	SERRURE	1					
5	S5110603	WASHER;SPRING	RONDELLE	4					
6	S2212266	BOLT;SOCKET	BOULON	2					
7	S2211866	BOLT;SOCKET	BOULON	2					
9	2181-1951D6	TEE	TE	1					
10	2181-1126D14	ADAPTER PF1/4	ADAPTEUR	3					
11	2181-1702D4	ELBOW PFO1/4-PF1/4	COUDE	1					
12	S8000111	O-RING	JOINT CIRCULAIRE	4					
13	S0508866	BOLT	BOULON	2					
14	DS2093200	HOSE	TUYAU	1					
15	S5102603	WASHER	RONDELLE	2					
16	S0512066	BOLT	BOULON	2					
17	S5102503	WASHER	RONDELLE	2					
21	K1003947A	FOOT REST	REPOS DE PIED	1					
22	161-00381	RUBBER;PEDAL(R.H)	LE CAOUTCHOUC	1					
23	K1006656	RUBBER;PEDAL	LE CAOUTCHOUC	1					
24	DS2095003	HOSE	TUYAU	1					
25	DS2094136	HOSE	TUYAU	1					
26	DS2093219	HOSE	TUYAU FLEXIBLE	2					

DATE	JUN. 01, 2010
3rd EDITION	

Fig. 6180 BOOM PIPING - BOOM 5.7m(ONE & TWO WAY) CONDUITES DE FLECHE

Serial No. ;

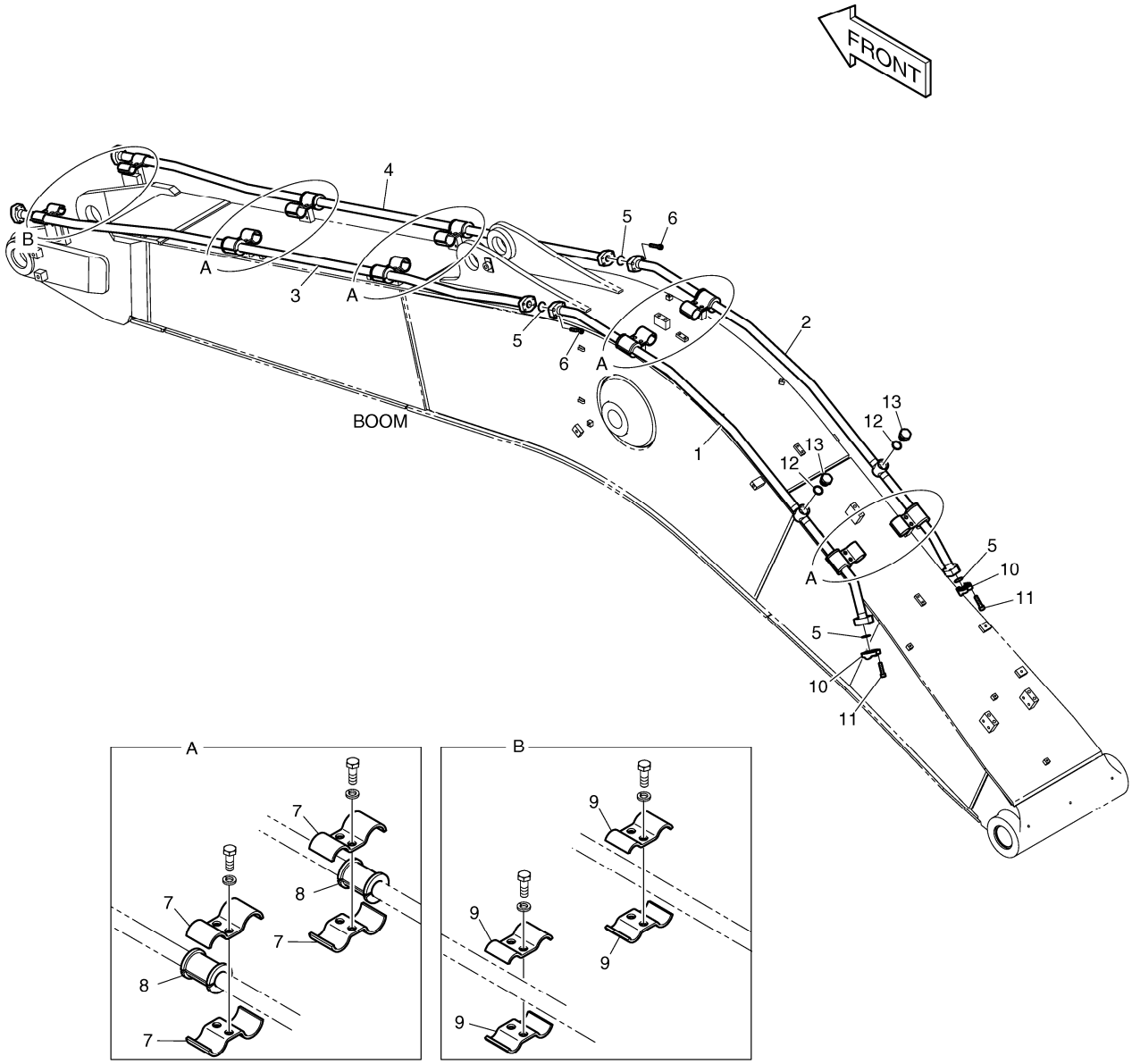

DATE	JUN. 01, 2010
3rd EDITION	

Fig. 6180 BOOM PIPING - BOOM 5.7m(ONE & TWO WAY) CONDUITES DE FLECHE

Serial No. ;

Key No.	Part No.	Description	Description	Q'ty	S.C	Serial No.	ICA	Replaceable part	
								Part No.	Q'ty
6180 --	K1041835	BOOM PIPING;ONE & TWO WAY	TUYAUTERIE DE PERCHE	-	D				
1	K1033269	PIPE	TUYAU	1					
2	K1033270	PIPE	TUYAU	1					
3	K1033271	PIPE	TUYAU	1					
4	K1033272	PIPE	TUYAU	1					
5	2180-1026D19	O-RING	JOINT CIRCULAIRE	4					
6	S2212666	BOLT	BOULON	8					
7	124-00368	CLAMP;PIPE	BRIDE	16					
8	161-00281	RUBBER	LE CAOUTCHOUC	8					
9	124-00367	CLAMP;PIPE	BRIDE	4					
10	2181-9078	FLANGE	BRIDE	4					
11	S2212466	BOLT;SOCKET M10X1.5X40	BOULON	8					
12	S8000291	O-RING	JOINT CIRCULAIRE	2					
13	2181-1950D9	PLUG	BOUCHON	2					

DATE	JUN. 01, 2010
3rd EDITION	

Fig. 6190 ARM PIPING - ARM 2.9m(ONE & TWO WAY)
CONDUITES DE BALANCIER

Serial No. ;

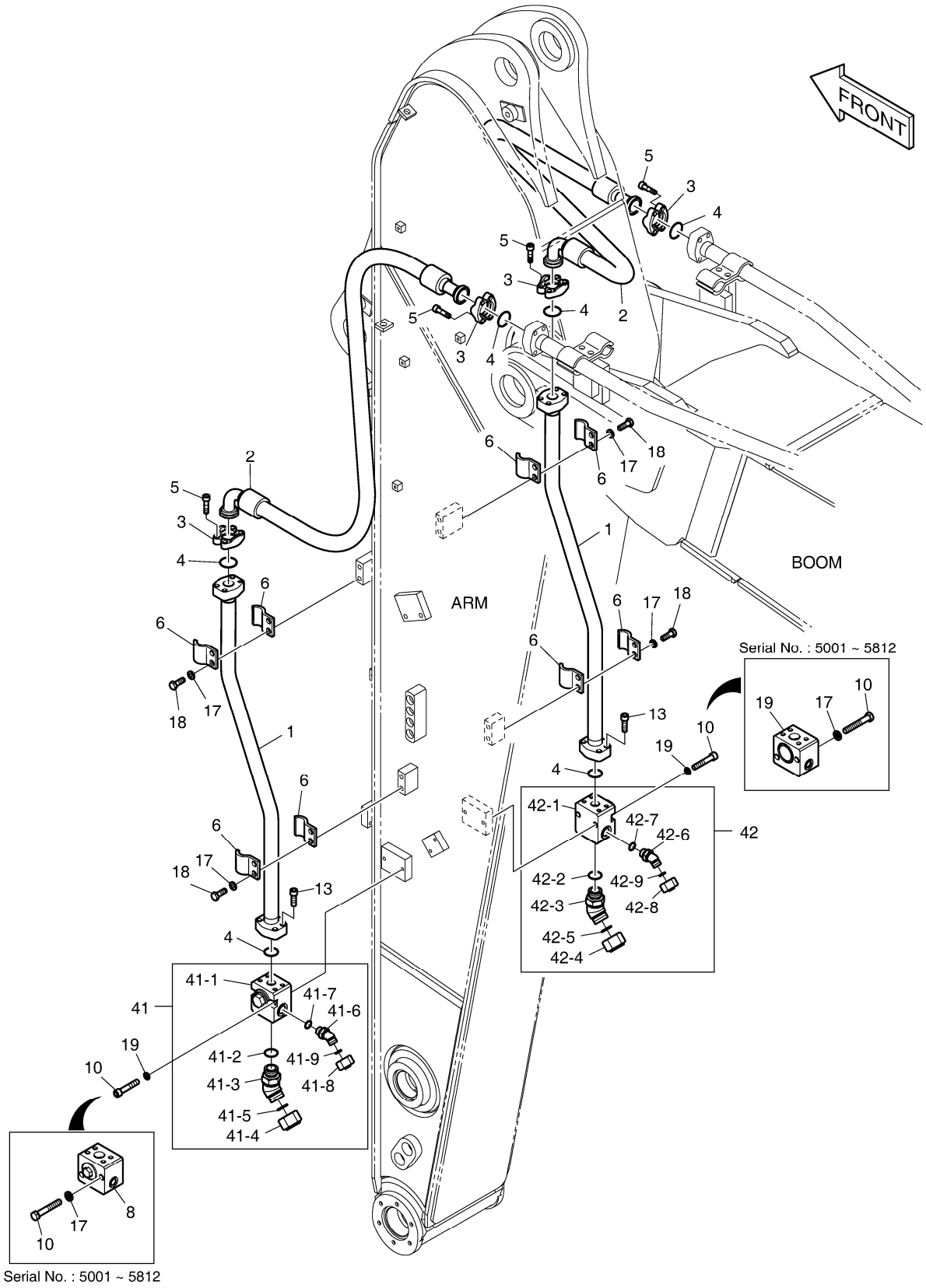

DATE	JUN. 01, 2010
3rd EDITION	

Fig. 6190 ARM PIPING - ARM 2.9m(ONE & TWO WAY) CONDUITES DE BALANCIER

Serial No. ;

Key No.	Part No.	Description	Description	Q'ty	S.C	Serial No.	ICA	Replaceable part	
								Part No.	Q'ty
6190 --	K1041907	ARM PIPING-ONE & TWO WAY	CONDUITES DE BALANCIE	-	D	5001-5812			
	420212-01713	PIPING,ONE & TWO WAY,ARM	CONDUITES DE BALANCIE	-	D	5813-			
1	K1000886A	PIPE	TUYAU	2					
2	2184-1100D78	HOSE	TUYAU	2					
3	2181-9078	FLANGE	BRIDE	8					
4	2180-1026D19	O-RING	JOINT CIRCULAIRE	6					
5	S2212466	BOLT;SOCKET M10X1.5X40	BOULON	16					
6	K1004057	CLAMP;PIPE	BRIDE	8					
8	K1000334A	VALVE;STOP(L.H)	VANNE	1		5001-5812			
10	S0563666	BOLT	BOULON A 6 PANS	4		5001-5812			
	S2215966	BOLT;SOCKET	BOULON	4		5813-			
13	S2212366	BOLT;SOCKET M10X1.5X35	BOULON	8					
17	S5102803	WASHER;SPRING	RONDELLE	12		5001-5812			
	S5102803	WASHER;SPRING	RONDELLE	8		5813-			
18	S0562766	BOLT	BOULON	8					
19	K1000338A	VALVE;STOP(R.H)	VANNE	1		5001-5812			
	S5110703	WASHER;SPRING	RONDELLE	4		5813-			
41	410137-00030	VALVE ASSY,STOP(L.H)	VANNE	1		5813-			
41-1	K1033252	. VALVE;STOP(L.H)	. VANNE	1		5813-			
41-2	S8000291	. O-RING	. JOINT CIRCULAIRE	1		5813-			
41-3	2181-2816D2	. ELBOW	. COUDE	1		5813-			
41-4	2181-2817D2	. CAP	. CHAPEAU	1		5813-			
41-5	S8030161	. O-RING	. JOINT CIRCULAIRE	1		5813-			
41-6	2181-2816D4	. ELBOW	. COUDE	1		5813-			
41-7	S8000181	. O-RING	. JOINT CIRCULAIRE	1		5813-			
41-8	2181-2817D4	. CAP	. CHAPEAU	1		5813-			
41-9	S8030081	. O-RING	. JOINT CIRCULAIRE	1		5813-			
42	410137-00031	VALVE ASSY,STOP(R.H)	VANNE	1		5813-			
42-1	K1033254	. VALVE,STOP(R.H)	. VANNE	1		5813-			
42-2	S8000291	. O-RING	. JOINT CIRCULAIRE	1		5813-			
42-3	2181-2816D2	. ELBOW	. COUDE	1		5813-			
42-4	2181-2817D2	. CAP	. CHAPEAU	1		5813-			
42-5	S8030161	. O-RING	. JOINT CIRCULAIRE	1		5813-			
42-6	2181-2816D4	. ELBOW	. COUDE	1		5813-			
42-7	S8000181	. O-RING	. JOINT CIRCULAIRE	1		5813-			
42-8	2181-2817D4	. CAP	. CHAPEAU	1		5813-			
42-9	S8030081	. O-RING	. JOINT CIRCULAIRE	1		5813-			

DATE	JUN. 01, 2010
3rd EDITION	

Fig. 6200 MAIN PIPING - QUICK FIT
CONDUITES DE BATI PRINCIPAL

Serial No. ;

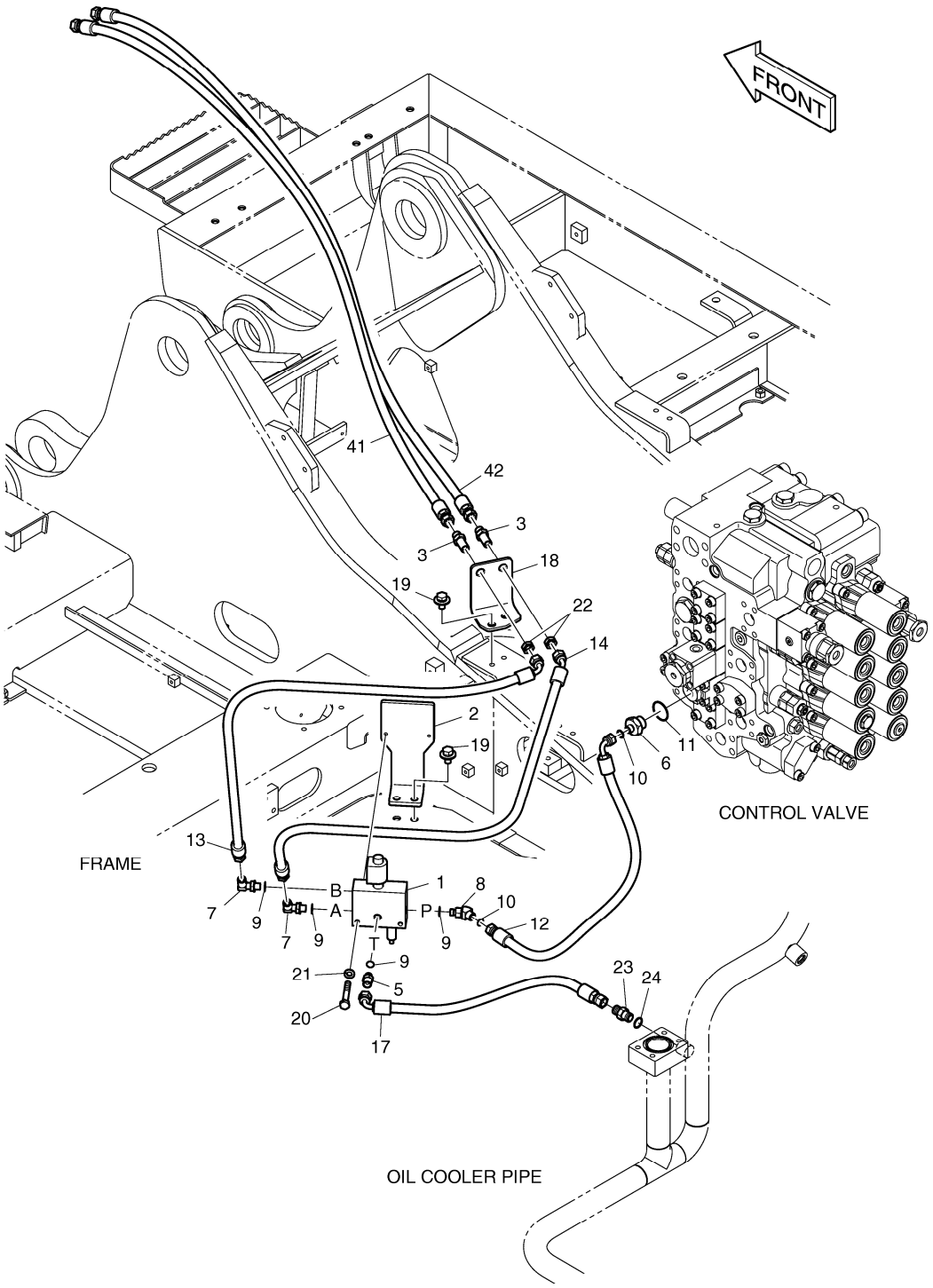

DATE	JUN. 01, 2010
3rd EDITION	

Fig. 6200 MAIN PIPING - QUICK FIT
CONDUITES DE BATI PRINCIPAL

Serial No. ;

Key No.	Part No.	Description	Description	Q'ty	S.C	Serial No.	ICA	Replaceable part	
								Part No.	Q'ty
6200 --	K1027502A	MAIN PIPING-QUICK FIT	CONDUITES DE BATI PRIN(	-	D				
1	426-00287	VALVE;QUICK-FIT	VALVE	1					
2	195-03123E	BRACKET	SUPPORT	1					
3	181-00078D1	ADAPTER	ADAPTEUR	2					
5	2181-1126D85	ADAPTER	ADAPTEUR	1					
6	DS2404024	ADAPTER	ADAPTEUR	1					
7	2181-1702D3	ELBOW PFO1/4XPF3/8	COUDE	2					
8	DS2338029	ELBOW	COUDE	1					
9	S8000111	O-RING	JOINT CIRCULAIRE	4					
10	S8030061	O-RING	JOINT CIRCULAIRE	2					
11	S8000231	O-RING	JOINT CIRCULAIRE	1					
12	DS2013515	HOSE	TUYAU	1					
13	DS2054293	HOSE	TUYAU	1					
14	DS2054394	HOSE	TUYAU FLEXIBLE	1					
17	DS2093403	HOSE	TUYAU FLEXIBLE	1					
18	K1000351A	PLATE	PLAQUE	1					
19	DS0025019	BOLT;SET	BOULON	4					
20	S0556466	BOLT	BOULON	2					
21	S5102503	WASHER	RONDELLE	2					
22	121-00010D1	NUT	ECROU	2					
23	2181-1126D7	ADAPTER	ADAPTEUR	1					
24	S8000141	O-RING	JOINT CIRCULAIRE	1					
41	DS2053868	HOSE	TUYAU	1					
42	DS2053869	HOSE	TUYAU	1					

DATE	JUN. 01, 2010
3rd EDITION	

Fig. 6210 ELECTRIC PARTS - QUICK CLAMP BRIDE RAPIDE

Serial No. ;

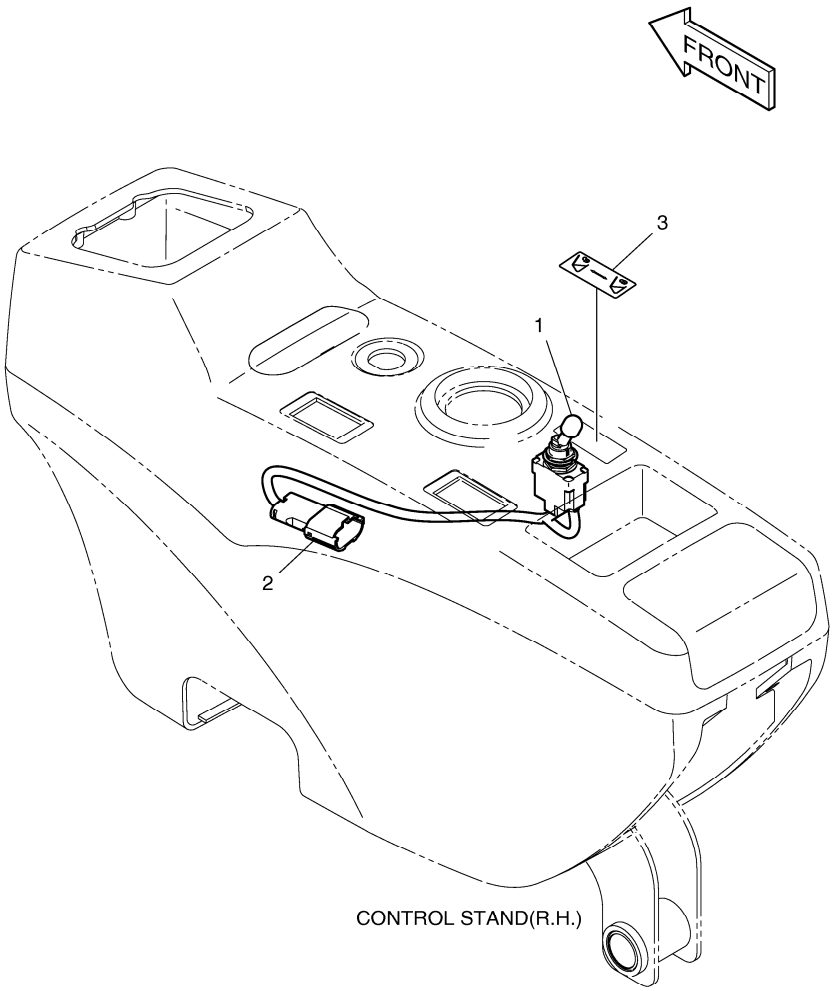

DATE	JUN. 01, 2010
3rd EDITION	

Fig. 6210 ELECTRIC PARTS - QUICK CLAMP BRIDE RAPIDE

Serial No. ;

Key No.	Part No.	Description	Description	Q'ty	S.C	Serial No.	ICA	Replaceable part	
								Part No.	Q'ty
6210 --	K1007413	QUICK CLAMP PIPING	BRIDE RAPIDE	-	D				
1	549-00092	SWITCH;LOCKOUT TOGGLE	COMMUTATEUR	1					
2	530-00432A	HARNESS;JOINT	HARNAIS	1					
3	K1005776	PLATE;NAME	PLAQUE	1					

DATE	JUN. 01, 2010
3rd EDITION	

Fig. 6220 BOOM PIPING - BOOM 5.7m(QUICK CLAMP) CONDUITES DE FLECHE

Serial No. ;

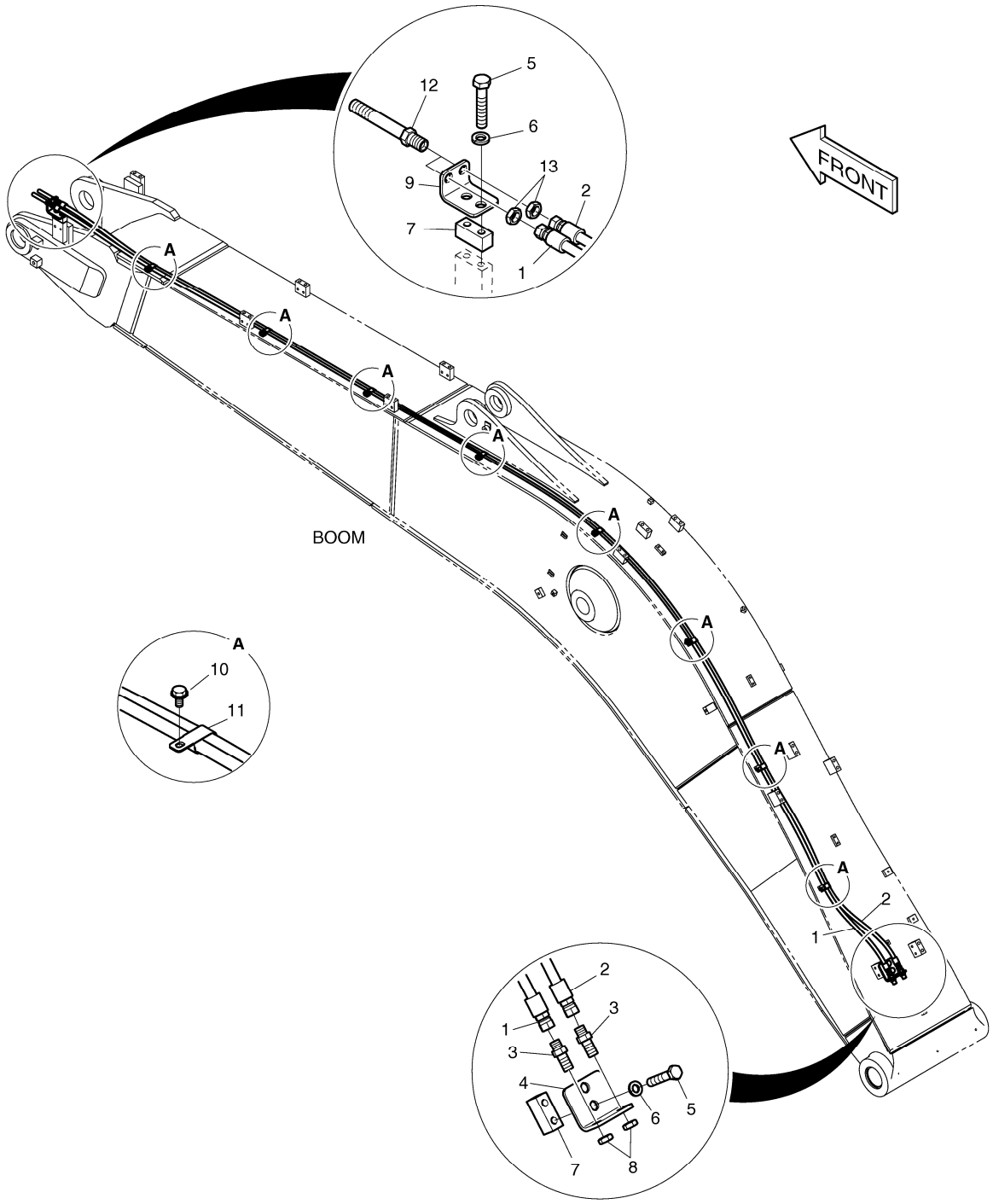

DATE	JUN. 01, 2010
3rd EDITION	

Fig. 6220 BOOM PIPING - BOOM 5.7m(QUICK CLAMP) CONDUITES DE FLECHE

Serial No. ;

Key No.	Part No.	Description	Description	Q'ty	S.C	Serial No.	ICA	Replaceable part	
								Part No.	Q'ty
6220 --	K1041837	BOOM PIPING-QUICK FIT	TUYAUTERIE DE PERCHE	-	D				
1	DS2053849	HOSE	TUYAU	1					
2	DS2053953	HOSE	TUYAU	1					
3	181-00078D5	ADAPTER	ADAPTEUR	2					
4	195-00163	BRACKET	SUPPORT	1					
5	S0563366	BOLT	BOULON	4					
6	S5102803	WASHER;SPRING	RONDELLE	4					
7	K1004006	PLATE	PLAQUE	2					
8	121-00010D1	NUT	ECROU	2					
9	K1010847	BRACKET	SUPPORT	1					
10	K1001029	BOLT	BOULON	8					
11	DS2805009	CLIP	AGRAFE	8					
12	K1000356	ADAPTER	ADAPTEUR	2					
13	121-00010D7	NUT	ECROU	2					

DATE	JUN. 01, 2010
3rd EDITION	

Fig. 6230 ARM PIPING - ARM 2.9m(QUICK CLAMP)
CONDUITES DE BALANCIER

Serial No. ;

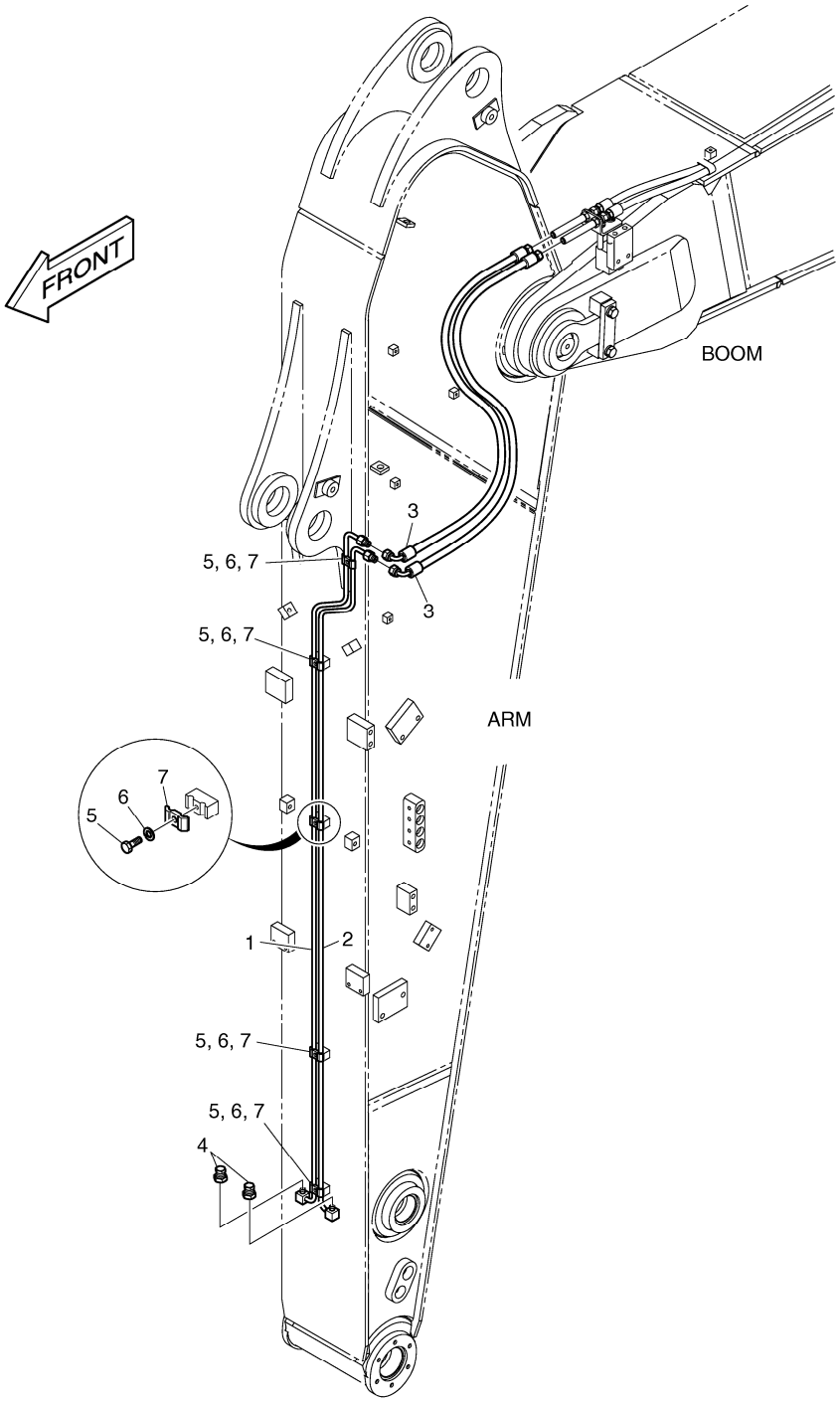

DATE	JUN. 01, 2010
3rd EDITION	

Fig. 6230 ARM PIPING - ARM 2.9m(QUICK CLAMP)
CONDUITES DE BALANCIER

Serial No. ;

Key No.	Part No.	Description	Description	Q'ty	S.C	Serial No.	ICA	Replaceable part	
								Part No.	Q'ty
6230 --	K1041933	ARM PIPING-QUICK CLAMP	TUYAUTERIE DU BRAS	-	D				
1	K1001052	PIPE	TUYAU	1					
2	K1001053	PIPE	TUYAU	1					
3	DS2055866	HOSE	TUYAU	2					
4	2181-2820D1	PLUG	BOUCHON	2					
5	S0508866	BOLT	BOULON	5					
6	S5102503	WASHER	RONDELLE	5					
7	K1004011	CLAMP;PIPE	BRIDE	5					

DATE	JUN. 01, 2010
3rd EDITION	

Fig. 6240 ALTERNATOR - 80A
ALTERNATEUR

Serial No. ;

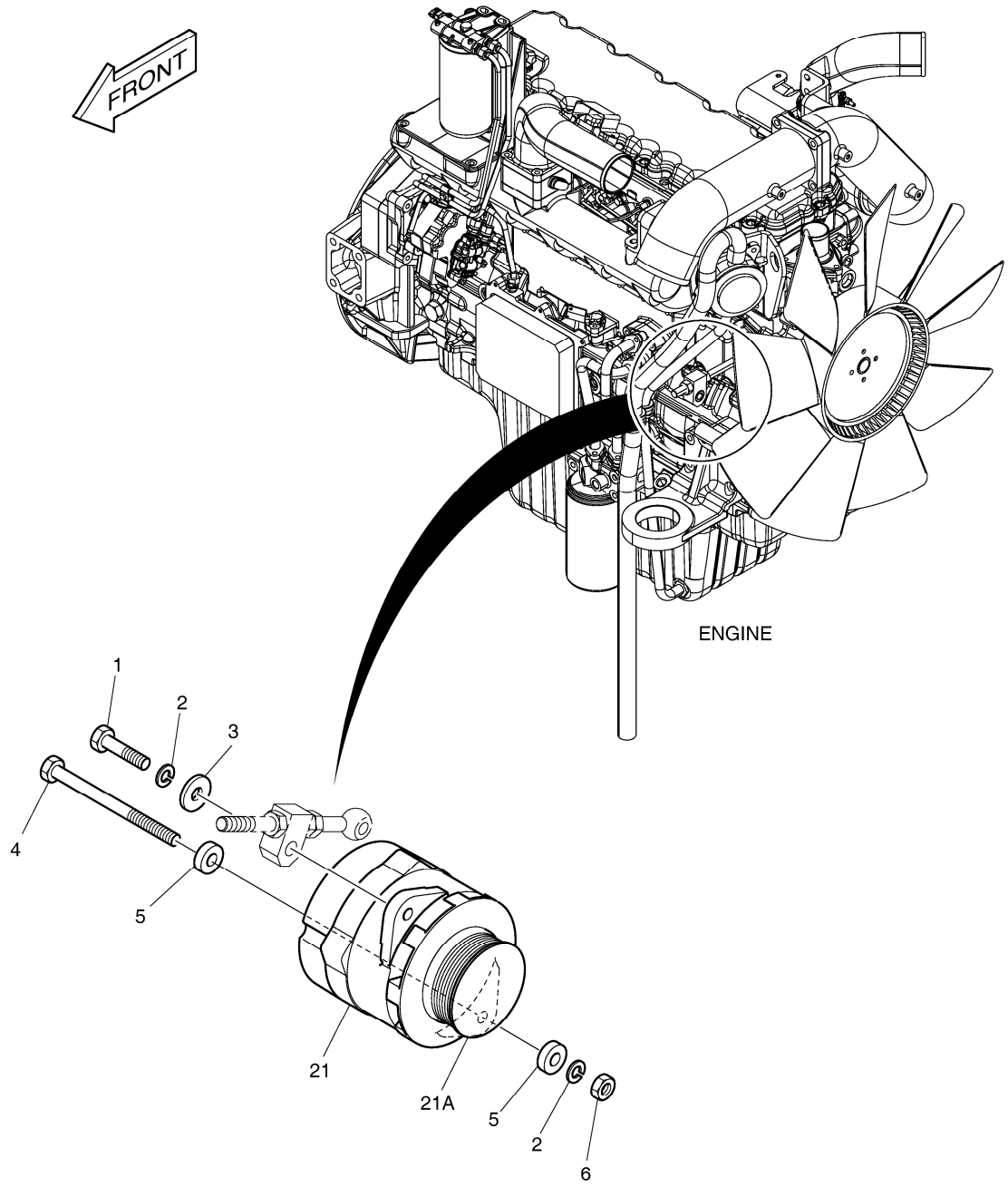

DATE	JUN. 01, 2010
3rd EDITION	

Fig. 6240 ALTERNATOR - 80A ALTERNATEUR

Serial No. ;

Key No.	Part No.	Description	Description	Q'ty	S.C	Serial No.	ICA	Replaceable part	
								Part No.	Q'ty
6240 --	K1008715	ALTERNATOR MOUNTING	SUPPORT D'ALTERNATEU	-	D				
1	S0760853	BOLT	BOULON	1					
2	S5102703	WASHER;SPRING	RONDELLE	2					
3	2114-1058D54	WASHER	RONDELLE	1					
4	S0562653	BOLT M12X1.75X160	BOULON	1					
5	S5010713	WASHER;PLAIN	RONDELLE	2					
6	S4012733	NUT	ECROU	1					
21	K1010703	ALTERNATOR 80A	ALTERNATEUR	1		5001-5781	Y	300901-00033	1
	300901-00033	ALTERNATOR;80A	ALTERNATEUR	1		5782-			
21A	130707-00030	. PULLEY,ALTERNATOR	. POULIE	1		5001-5781	Y	130707-00042	1
	130707-00042	. PULLEY,ALTERNATOR	. POULIE	1		5782-			

DATE	JUN. 01, 2010
3rd EDITION	

Fig. 6250 CD PLAYER PLAQUEUR DE CD

Serial No. ;

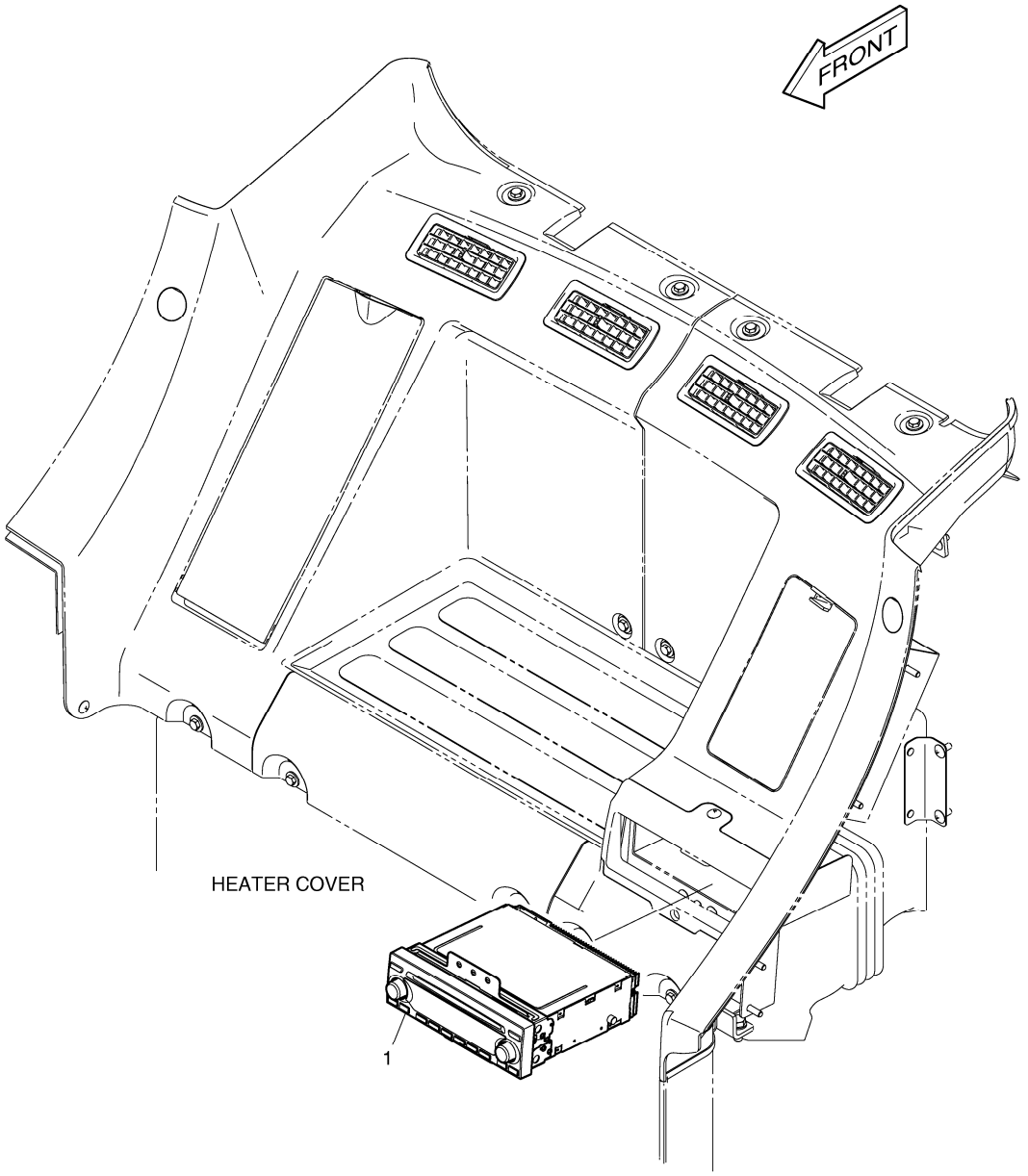

DATE	JUN. 01, 2010
3rd EDITION	

Fig. 6250 CD PLAYER PLAQUEUR DE CD

Serial No. ;

Key No.	Part No.	Description	Description	Q'ty	S.C	Serial No.	ICA	Replaceable part	
								Part No.	Q'ty
6250 --	K1007416	CD PLAYER	LECTEUR DE CD	-	D				
1	K1000982	CD PLAYER	LECTEUR DE CD	1					

DATE	JUN. 01, 2010
3rd EDITION	

Fig. 6260 SUN ROOF COVER
COUVERTURE DE TOIT DU SOLEIL

Serial No. ;

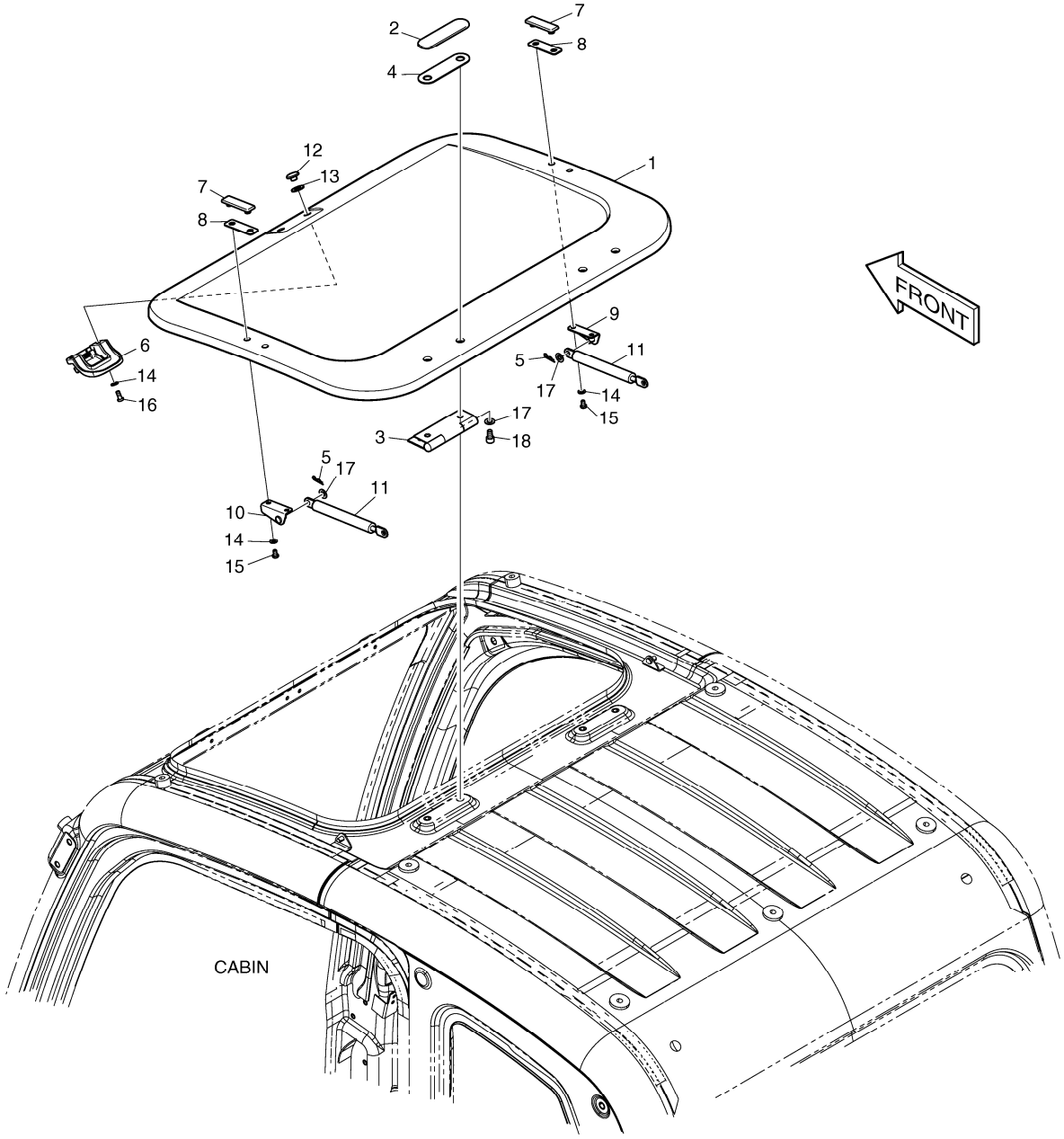

DATE	JUN. 01, 2010
3rd EDITION	

Fig. 6260 SUN ROOF COVER
COUVERTURE DE TOIT DU SOLEIL

Serial No. ;

Key No.	Part No.	Description	Description	Q'ty	S.C	Serial No.	ICA	Replaceable part	
								Part No.	Q'ty
6260 --	621-02870C	SUN ROOF COVER	COUVERTURE DE TOIT DU	-	D				
1	621-02871B	COVER;SUN ROOF	COUVERTURE	1					
2	621-02872	COVER;ROOF HINGE	COUVERTURE	2					
3	171-00060A	HINGE;ROOF COVER	CHARNIERE	2					
4	161-00599	PAD;RUBBER	GARNITURE	2					
5	123-00523	PIN;GAS-SPRING	GOUPILLE	2					
6	123-00516B	LOCK ASS'Y;ROOF COVER	SERRURE	1					
7	621-02873	COVER;ROOF GAS-CYLINDER	COUVERTURE	2					
8	161-00600	PAD;RUBBER	GARNITURE	2					
9	191-03279A	PLATE;ROOF GAS-SPRING RH	PLAQUE	1					
10	191-03280A	PLATE;ROOF GAS-SPRING LH	PLAQUE	1					
11	DS1003008	GAS-SPRING	GAS-SPRING	2					
12	621-03103	COVER;ROOF HANDLE	COUVERTURE	2					
13	161-00639	RUBBER;ROOF HANDLE	LE CAOUTCHOUC	2					
14	2114-1898D3	WASHER;PLAIN	RONDELLE	6					
15	S3450943	SCREW	VIS	4					
16	2120-2166D7	SCREW	VIS	2					
17	2114-1898D14	WASHER;PLAIN	RONDELLE	6					
18	S2208561	BOLT;SOCKET	BOULON	4					

DATE	JUN. 01, 2010
3rd EDITION	

Fig. 6270 RAIN SHIELD
BOUCLIER DE PLUIE

Serial No. ;

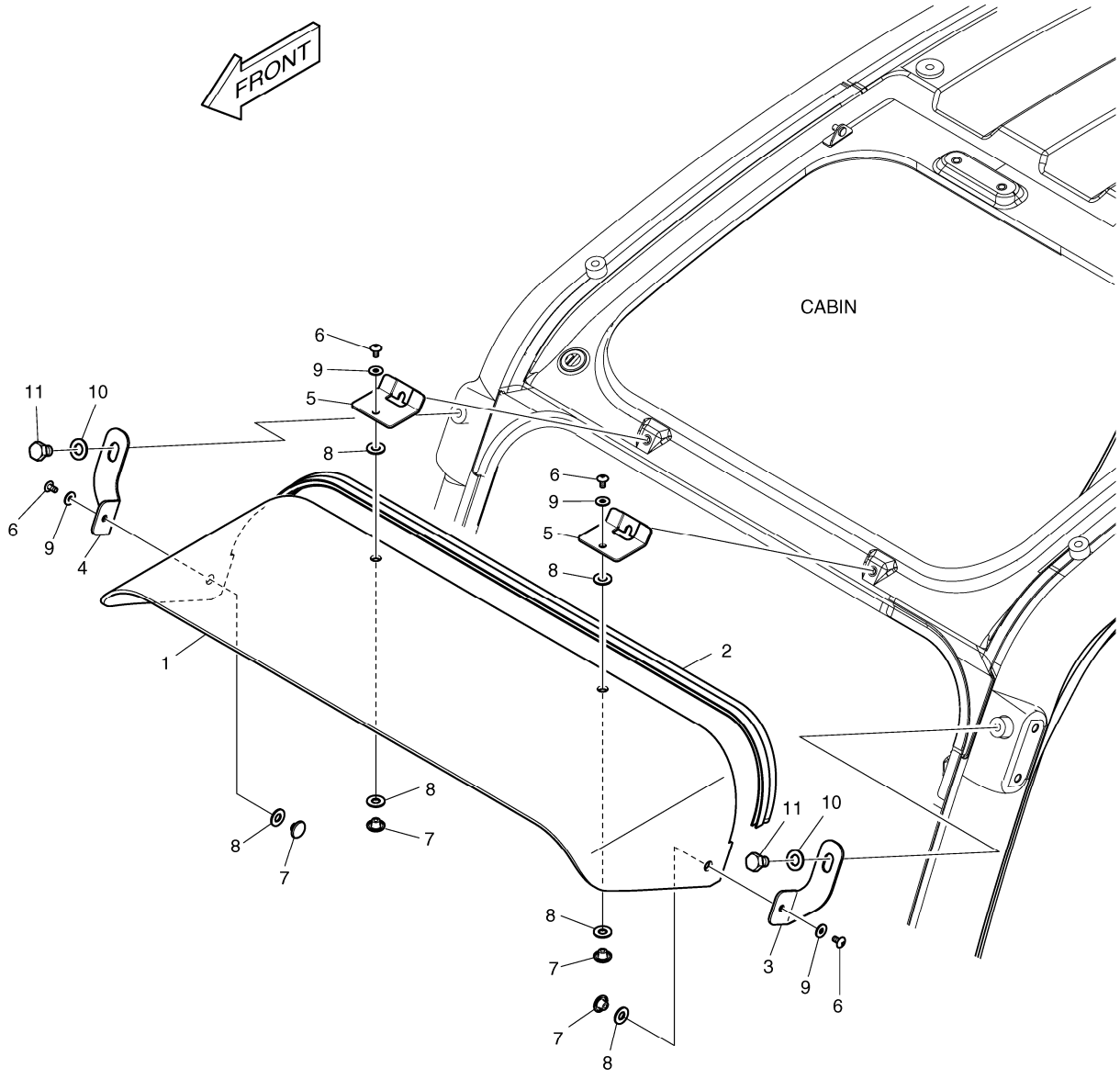

DATE	JUN. 01, 2010
3rd EDITION	

Fig. 6270 RAIN SHIELD
BOUCLIER DE PLUIE

Serial No. ;

Key No.	Part No.	Description	Description	Q'ty	S.C	Serial No.	ICA	Replaceable part	
								Part No.	Q'ty
6270 --	K1002561B	RAIN SHIELD	BOUCLIER DE PLUIE	-	D				
1	159-00294C	COVER;RAIN SHIELD	COUVERTURE	1					
2	162-00040A	STRIP;WEATHER	BANDE	1					
3	K1002574A	BRACKET(L.H)	SUPPORT	1					
4	K1002575A	BRACKET(R.H)	SUPPORT	1					
5	195-03374C	BRACKET;RAIN SHIELD	SUPPORT	2					
6	2120-2166D52	BOLT	BOULON	4					
7	621-03103	COVER;ROOF HANDLE	COUVERTURE	4					
8	161-00639	RUBBER;ROOF HANDLE	LE CAOUTCHOUC	6					
9	2114-1898D5	WASHER M6	RONDELLE	4					
10	2114-1898D6	WASHER;PLAIN	RONDELLE	2					
11	2120-2166D37	BOLT	BOULON	2					

DATE	JUN. 01, 2010
3rd EDITION	

Fig. 6280 RAIN SHIELD & LAMP MOUNTING
BOUCLIER ET DE LAMPE DE PLUIE

Serial No. ;

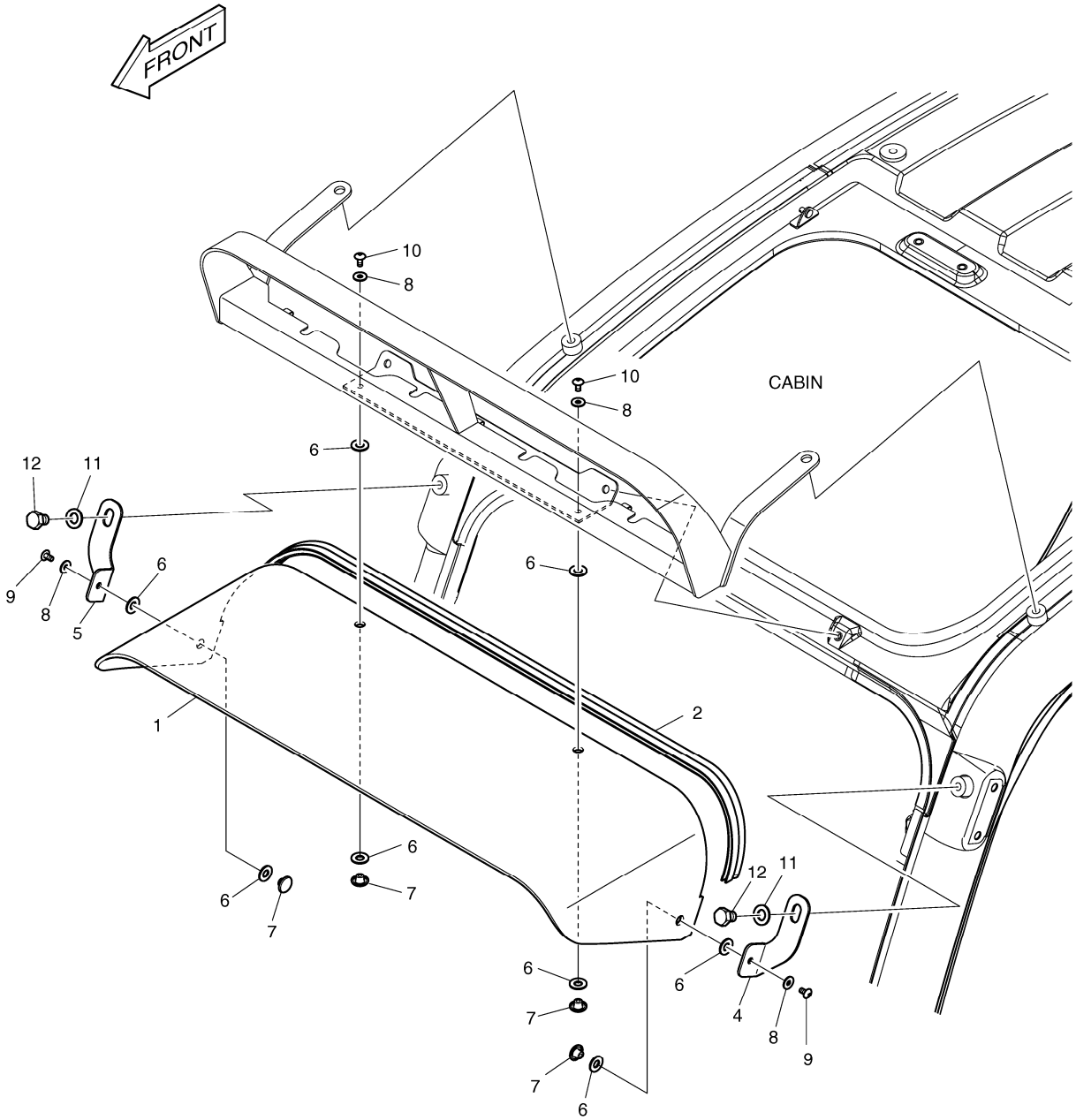

DATE	JUN. 01, 2010
3rd EDITION	

Fig. 6280 RAIN SHIELD & LAMP MOUNTING
BOUCLIER ET DE LAMPE DE PLUIE

Serial No. ;

Key No.	Part No.	Description	Description	Q'ty	S.C	Serial No.	ICA	Replaceable part	
								Part No.	Q'ty
6280 --	534-00117B	RAIN SHIELD & LAMP ASS'Y	BOUCLIER DE PLUIE	-	D				
1	159-00294C	COVER;RAIN SHIELD	COUVERTURE	1					
2	162-00040A	STRIP;WEATHER	BANDE	1					
4	K1002574A	BRACKET(L.H)	SUPPORT	1					
5	K1002575A	BRACKET(R.H)	SUPPORT	1					
6	161-00639	RUBBER;ROOF HANDLE	LE CAOUTCHOUC	8					
7	621-03103	COVER;ROOF HANDLE	COUVERTURE	4					
8	2114-1898D5	WASHER M6	RONDELLE	4					
9	2120-2166D52	BOLT	BOULON	2					
10	2120-2166D10	SCREW M6X1.0X14	VIS	2					
11	2114-1898D6	WASHER;PLAIN	RONDELLE	2					
12	2120-2166D37	BOLT	BOULON	2					

DATE	JUN. 01, 2010
3rd EDITION	

Fig. 6290 CABIN LOWER GUARD
LA CARLINGUE ABAISSENT LA GARDE

Serial No. ;

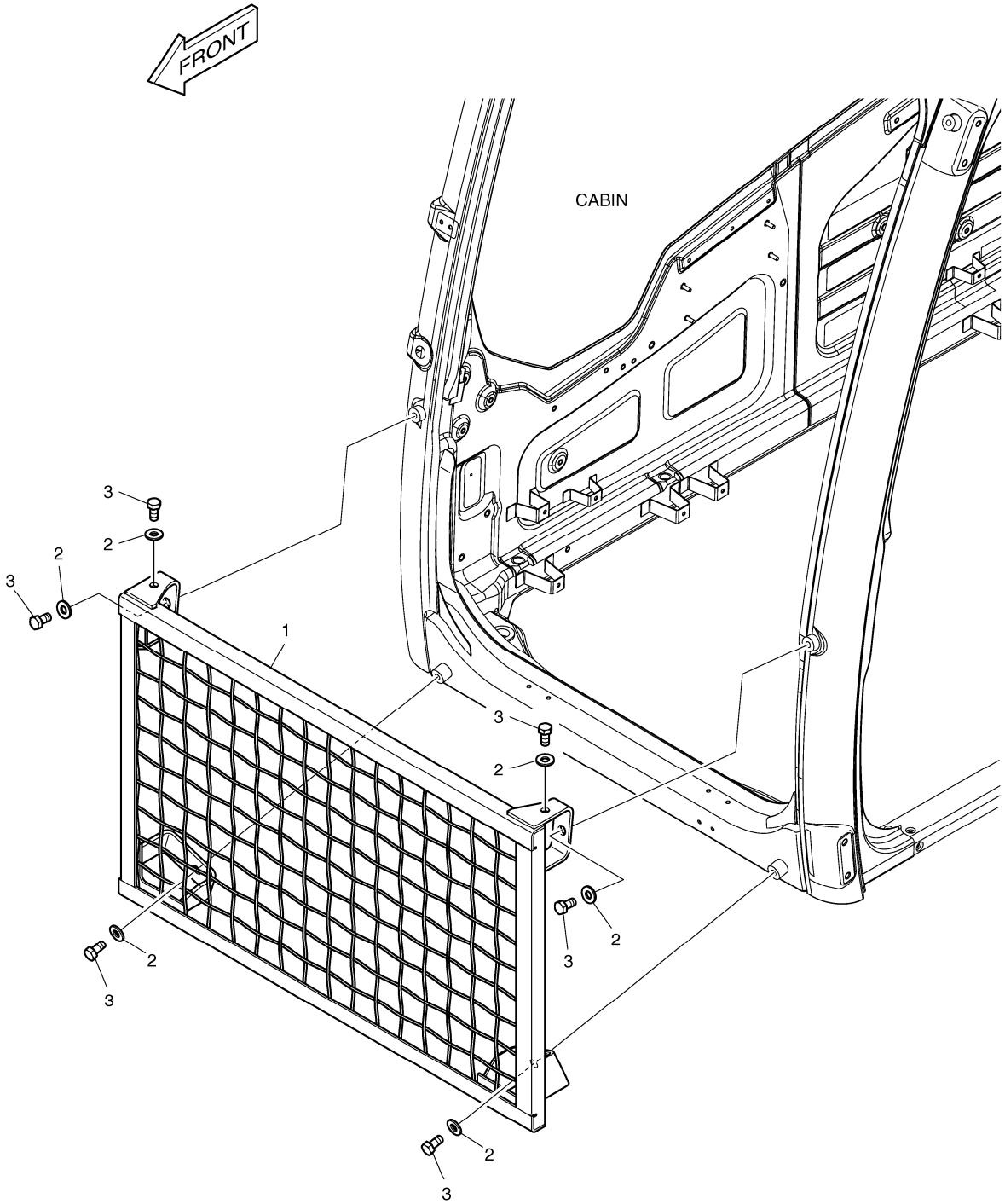

DATE	JUN. 01, 2010
3rd EDITION	

Fig. 6290 CABIN LOWER GUARD
LA CARLINGUE ABAISSENT LA GARDE

Serial No. ;

Key No.	Part No.	Description	Description	Q'ty	S.C	Serial No.	ICA	Replaceable part	
								Part No.	Q'ty
6290 --	623-00086	GUARD;FRONT LOWER	GARDE	-	D				
1	623-00085A	GUARD;FRONT LOWER	GARDE	1					
2	2114-1898D17	WASHER M12	RONDELLE	6					
3	2120-2166D27	BOLT	BOULON	6					

DATE	JUN. 01, 2010
3rd EDITION	

Fig. 6300 WINDOW GUARD
GARDE DE FENETRE

Serial No. ;

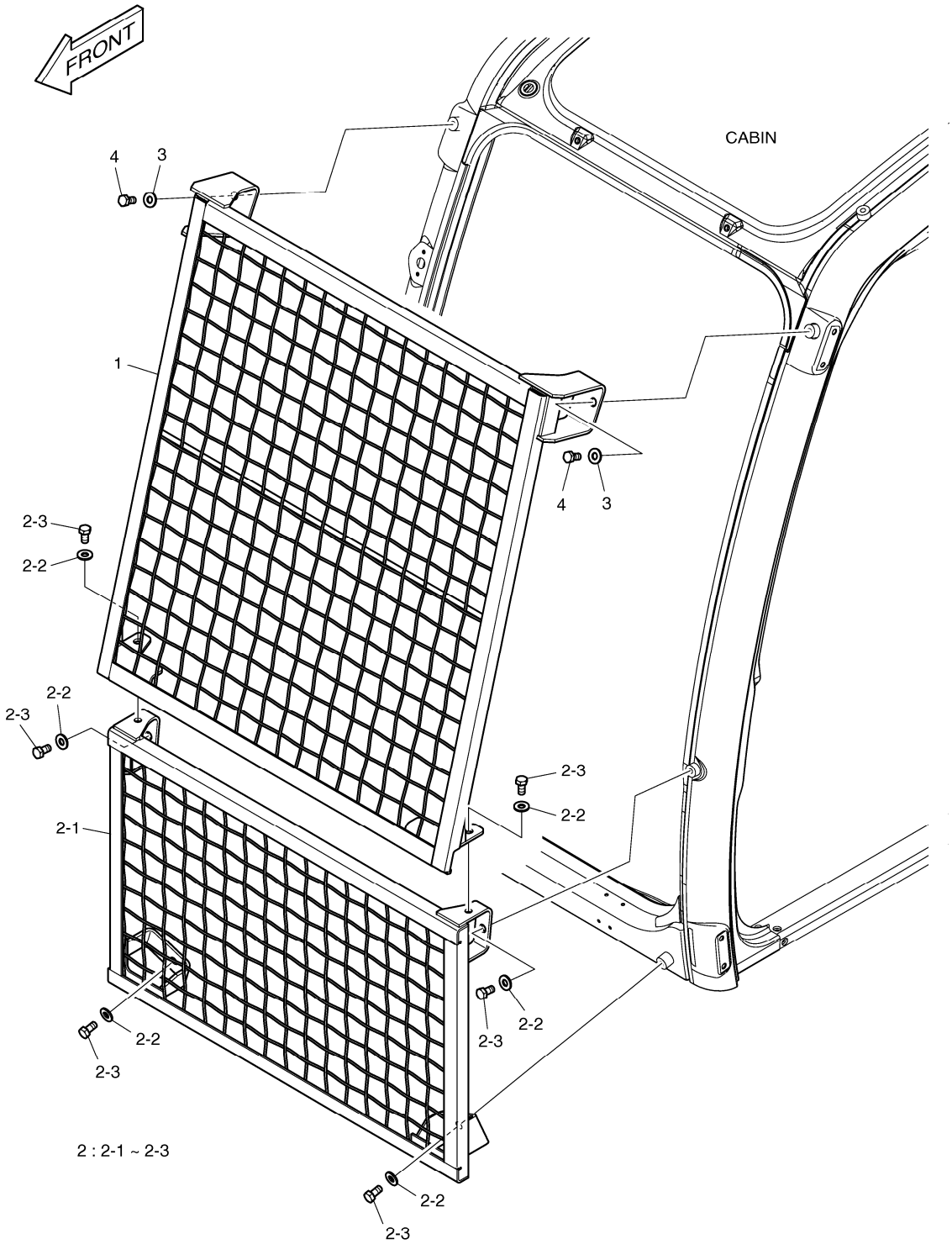

DATE	JUN. 01, 2010
3rd EDITION	

Fig. 6300 WINDOW GUARD GARDE DE FENETRE

Serial No. ;

Key No.	Part No.	Description	Description	Q'ty	S.C	Serial No.	ICA	Replaceable part	
								Part No.	Q'ty
6300 --	K1002771	WINDOW GUARD	GARDE DE FENETRE	-	D				
1	K1002759A	GUARD;FRONT UPPER	GARDE	1					
2	623-00086	GUARD;FRONT LOWER	GARDE	1	D				
2-1	623-00085A	. GUARD;FRONT LOWER	. GARDE	1					
2-2	2114-1898D17	. WASHER M12	. RONDELLE	6					
2-3	2120-2166D27	. BOLT	. BOULON	6					
3	2114-1898D17	WASHER M12	RONDELLE	2					
4	2120-2166D27	BOLT	BOULON	2					

DATE	JUN. 01, 2010
3rd EDITION	

Fig. 6310 FLOOR MAT - TWO WAY
PLANCHER

Serial No. ;

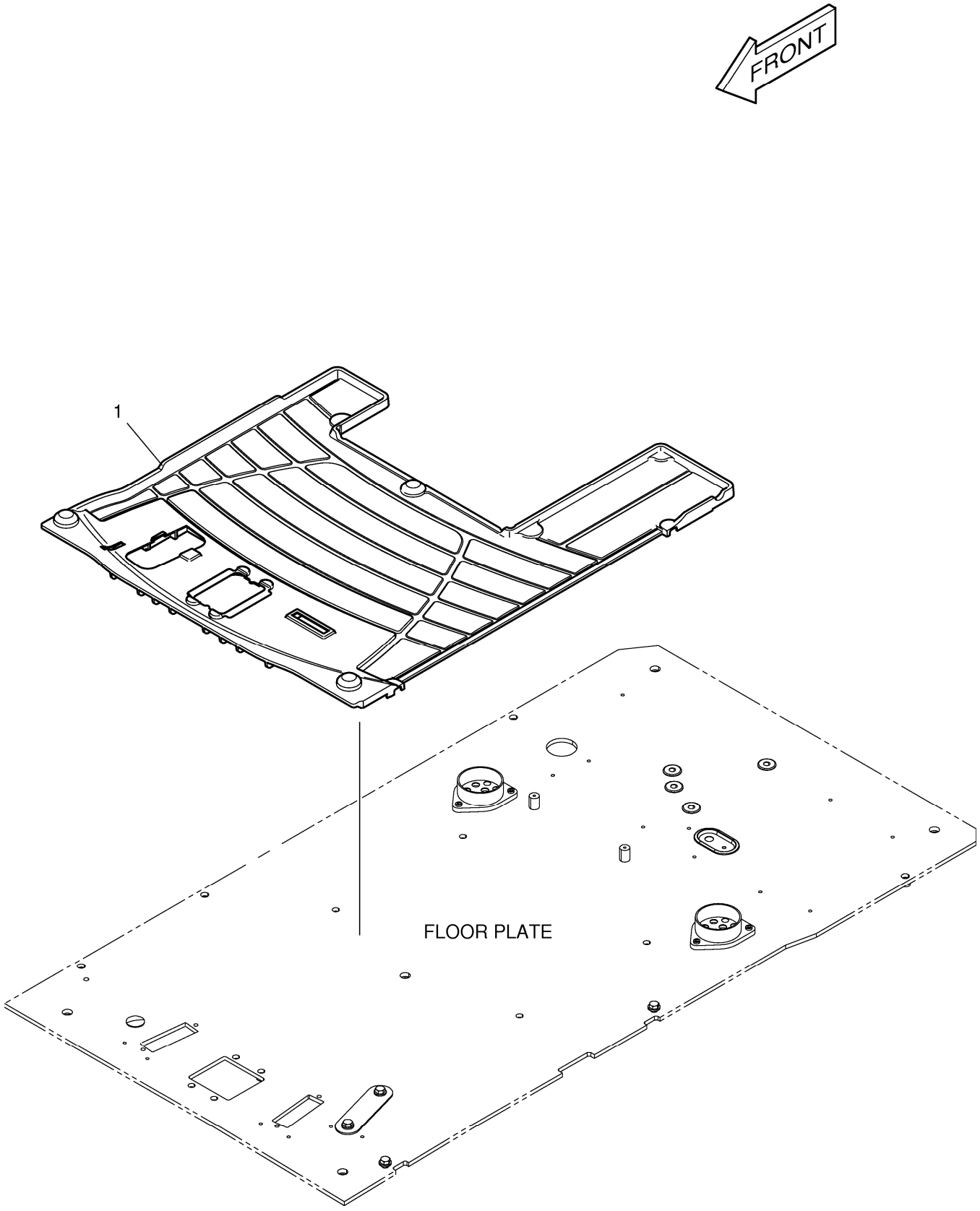

DATE	JUN. 01, 2010
3rd EDITION	

Fig. 6310 FLOOR MAT - TWO WAY PLANCHER

Serial No. ;

Key No.	Part No.	Description	Description	Q'ty	S.C	Serial No.	ICA	Replaceable part	
								Part No.	Q'ty
6310 -1	K1007092B	MAT;FLOOR	PLAQUE	1					

DATE	JUN. 01, 2010
3rd EDITION	

Fig. 6320 FLOOR MAT - ROTATING PLANCHER

Serial No. ;

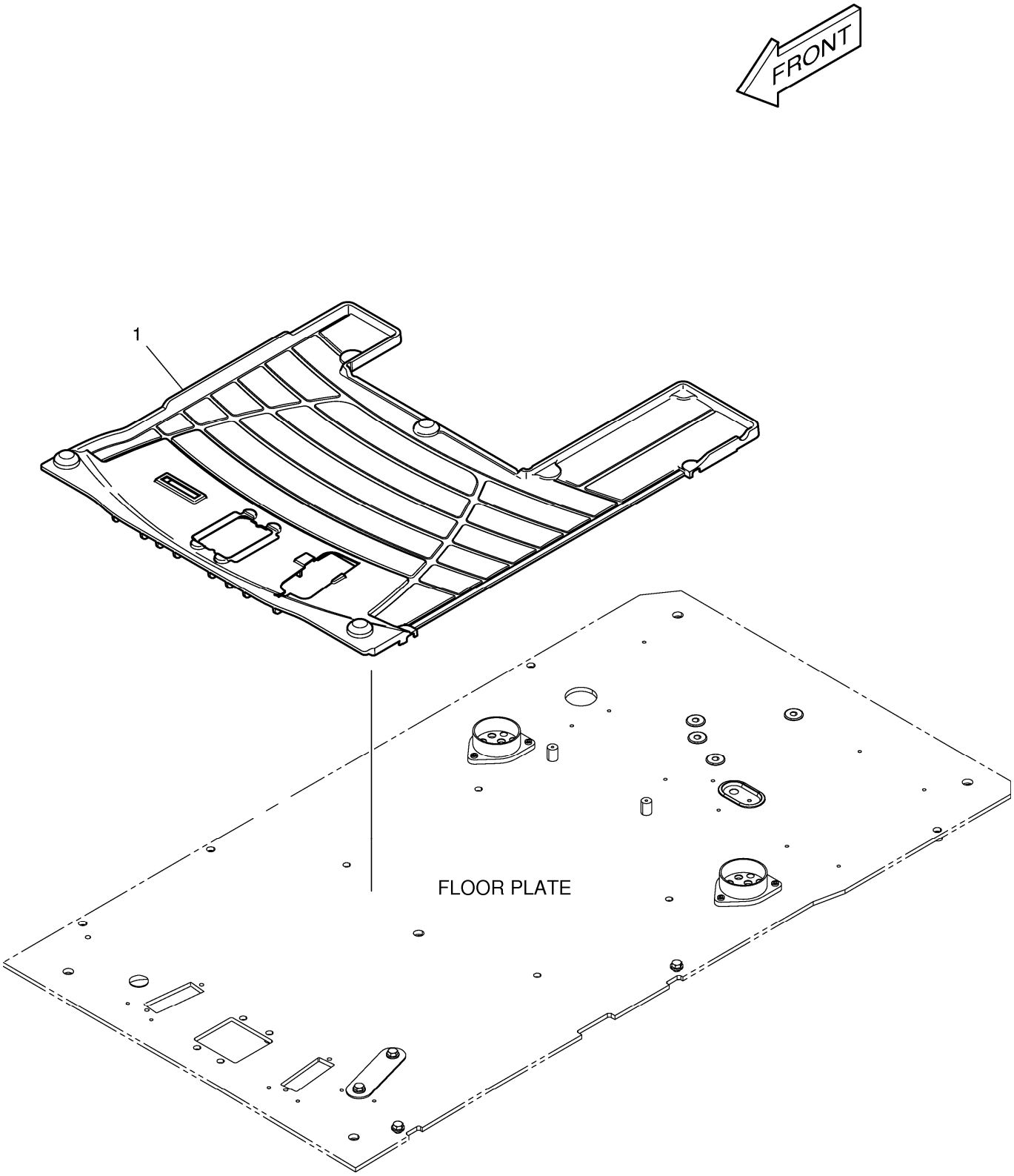

DATE	JUN. 01, 2010
3rd EDITION	

Fig. 6320 FLOOR MAT - ROTATING PLANCHER

Serial No. ;

Key No.	Part No.	Description	Description	Q'ty	S.C	Serial No.	ICA	Replaceable part	
								Part No.	Q'ty
6320 -1	K1007093B	MAT;FLOOR	PLAQUE	1					

DATE	JUN. 01, 2010
3rd EDITION	

Fig. 6330 FLOOR MAT - TWO WAY & ROTATING PLANCHER

Serial No. ;

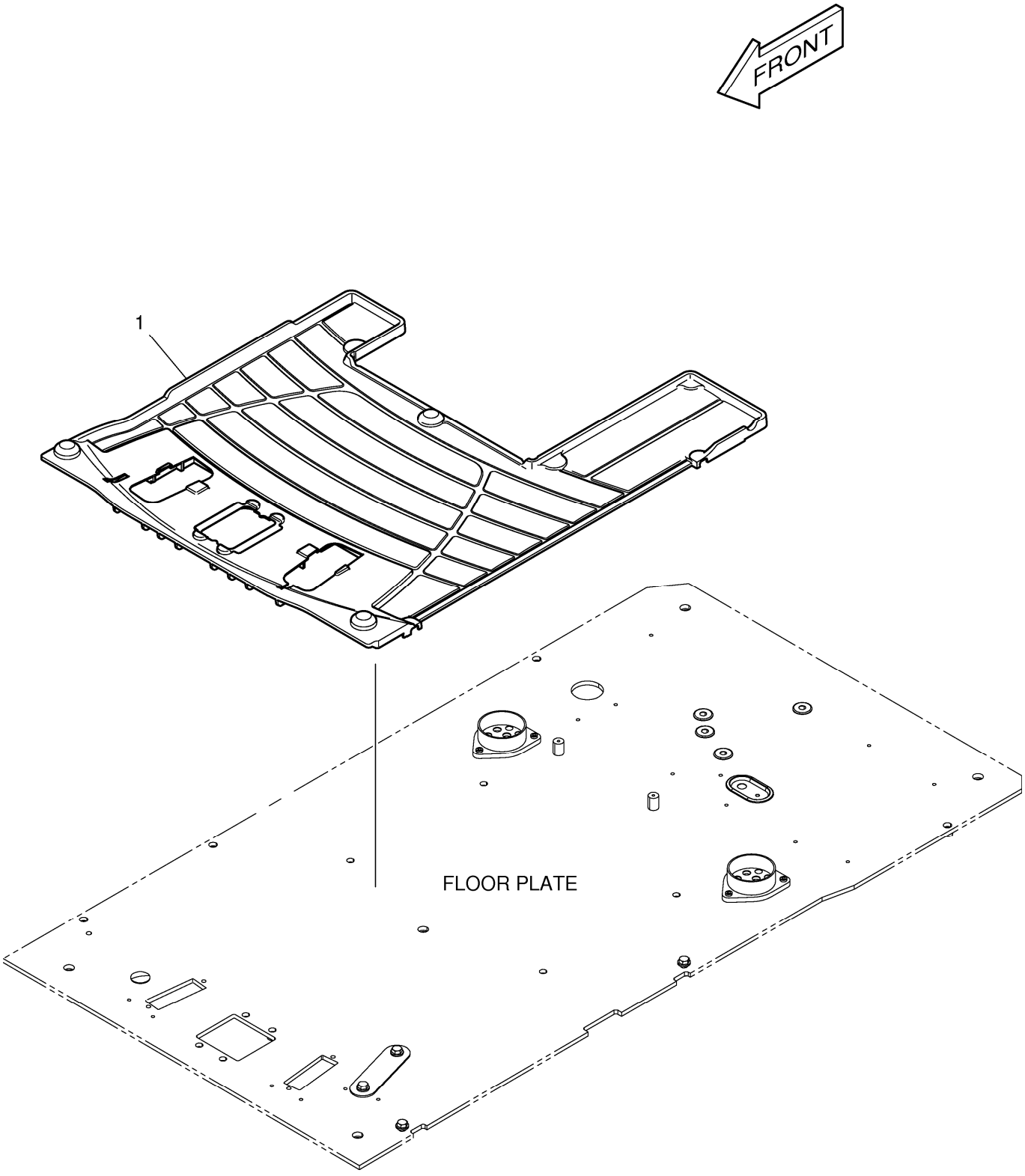

DATE	JUN. 01, 2010
3rd EDITION	

Fig. 6330 FLOOR MAT - TWO WAY & ROTATING PLANCHER

Serial No. ;

Key No.	Part No.	Description	Description	Q'ty	S.C	Serial No.	ICA	Replaceable part	
								Part No.	Q'ty
6330 -1	K1007094B	MAT;FLOOR	PLAQUE	1					

DATE	JUN. 01, 2010
3rd EDITION	

Fig. 6340 FOGS GUARD ASS'Y
EMBRUME LA GARDE ASS'Y

Serial No. ;

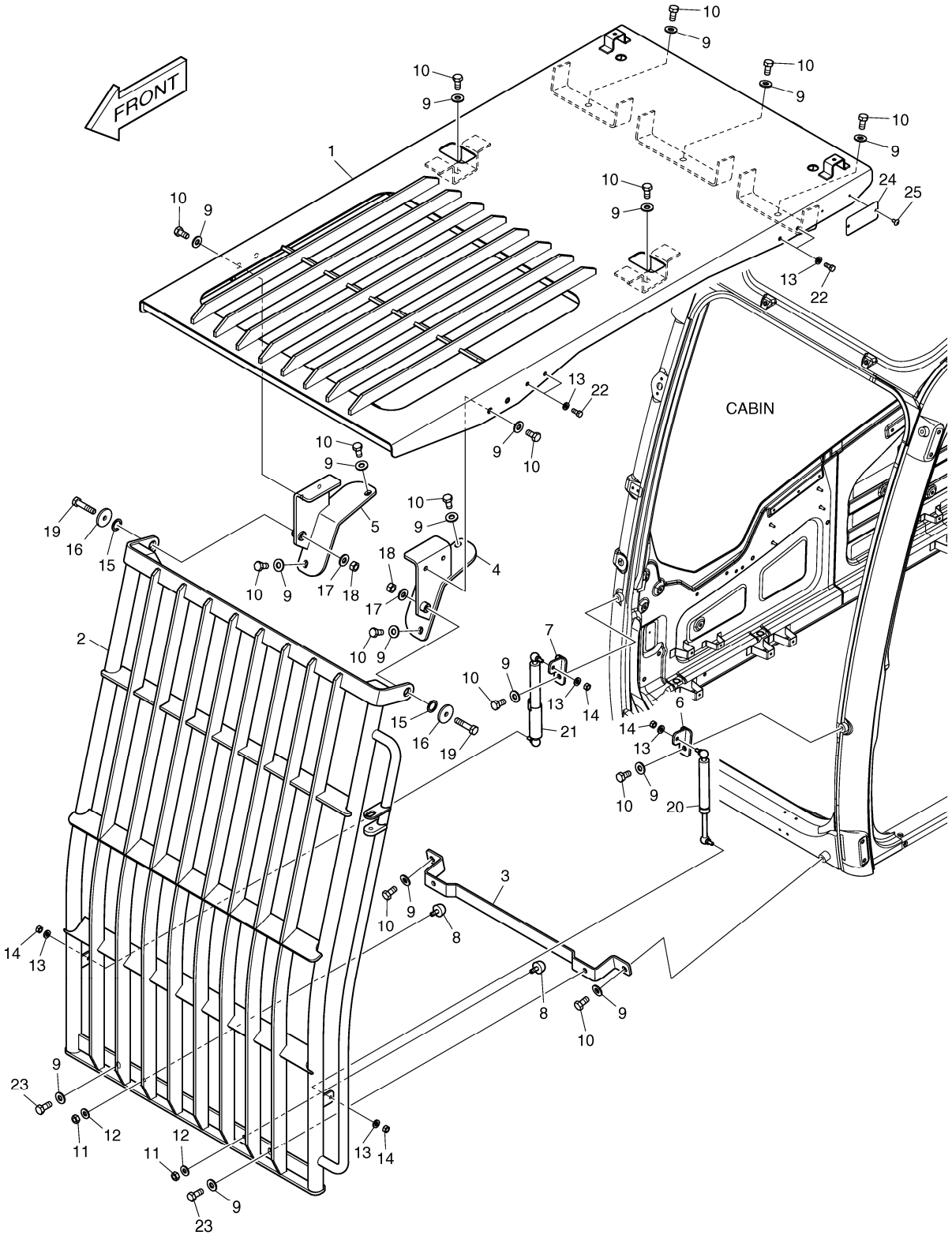

Fig. 6340 FOGS GUARD ASS'Y
EMBRUME LA GARDE ASS'Y

Serial No. ;

Key No.	Part No.	Description	Description	Q'ty	S.C	Serial No.	ICA	Replaceable part	
								Part No.	Q'ty
6340 --	K1002883A	FOGS GUARD ASS'Y	EMBRUME LA GARDE ASS'	-	D				
1	K1002811A	GUARD;ROOF	GARDE	1					
2	K1002846	GUARD;FRONT	GARDE	1					
3	K1002842A	BRACKET	SUPPORT	1					
4	K1002838	BRACKET(L.H)	SUPPORT	1					
5	K1002839A	BRACKET(R.H)	SUPPORT	1					
6	K1002840	BRACKET(L.H)	SUPPORT	1					
7	K1002841	BRACKET(R.H)	SUPPORT	1					
8	161-00195	STOPPER	TAQUET	2					
9	2114-1898D17	WASHER M12	RONDELLE	19					
10	2120-2166D27	BOLT	BOULON	17					
11	2121-1311D4	NUT	ECROU	2					
12	2114-1898D1	WASHER	RONDELLE	2					
13	2114-1898D2	WASHER	RONDELLE	8					
14	2121-1311D2	NUT	ECROU	4					
15	2114-1058D31	WASHER	RONDELLE	2					
16	2114-1898D10	WASHER M12	RONDELLE	2					
17	2114-1898D6	WASHER;PLAIN	RONDELLE	2					
18	2121-1311D1	NUT	ECROU	2					
19	S0515766	BOLT M12X1.75X55	BOULON	2					
20	K1005823	CYLINDER;GAS	CYLINDRE	1					
21	K1005822	CYLINDER;GAS	CYLINDRE	1					
22	2120-2166D5	BOLT	BOULON	4					
23	2120-2166D32	BOLT	BOULON	2					
24	K1007231A	NAME;PLATE	PLAQUE D'IDENTIFICATION	1					
25	2120-2166D52	BOLT	BOULON	2					

DATE	JUN. 01, 2010
3rd EDITION	

Fig. 6350 TRACK SHOE ASS'Y - 700G
MAILLON DE CHAINE

Serial No. ;

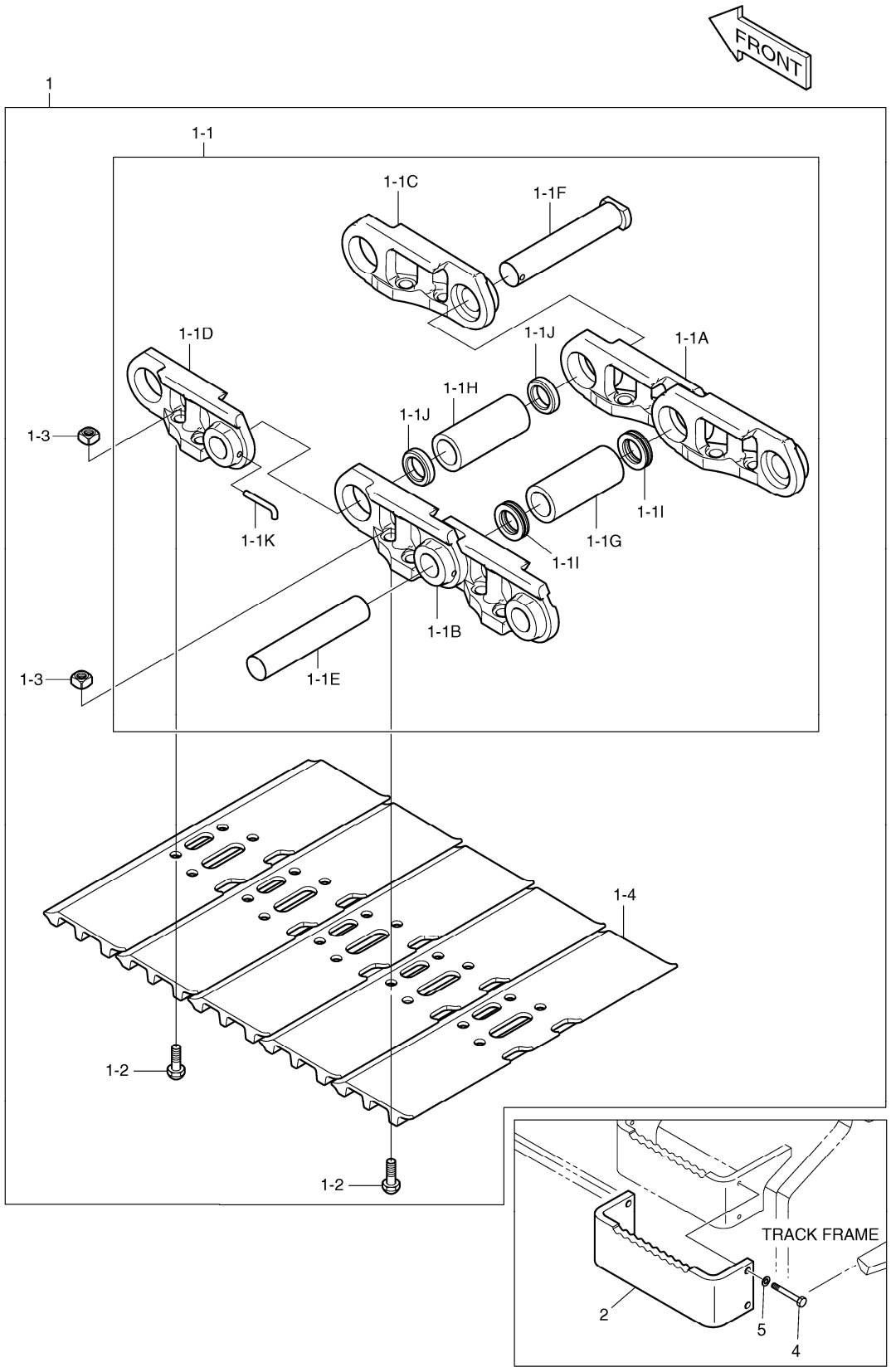

DATE	JUN. 01, 2010
3rd EDITION	

Fig. 6350 TRACK SHOE ASS'Y - 700G
MAILLON DE CHAINE

Serial No. ;

Key No.	Part No.	Description	Description	Q'ty	S.C	Serial No.	ICA	Replaceable part	
								Part No.	Q'ty
6350 --	K1045589A	TRACK SHOE ASS'Y	MAILLON DE CHAINE	-	D				
1	K1045506	TRACK SHOE ASS'Y	MAILLON DE CHAINE	2					
1-1	K1038366	. TRACK LINK ASS`Y	. ENSEMBLE MAILLON DE C	1					
1-1A	K1038367	.. LINK;TRACK(RH)	.. PIECE DE JONCTION	48					
1-1B	K1038368	.. LINK;TRACK(LH)	.. PIECE DE JONCTION	48					
1-1C	K1038429	.. LINK;MASTER(RH)	.. PIECE DE JONCTION	1					
1-1D	K1038430	.. LINK;MASTER(LH)	.. PIECE DE JONCTION	1					
1-1E	K1038369	.. PIN	.. GOUPILLE	48					
1-1F	K1038370	.. PIN;MASTER	.. GOUPILLE	1					
1-1G	K1038371	.. BUSHING	.. DOUILLE	48					
1-1H	K1038372	.. BUSHING;MASTER	.. DOUILLE	1					
1-1I	K1038373	.. SEAL;DUST	.. CACHET	96					
1-1J	K1038374	.. SPACER	.. ENTRETOISE	2					
1-1K	K1038376	.. PIN;SMALL	.. GOUPILLE	1					
1-2	K1038377	. BOLT	. BOULON	196					
1-3	K1038378	. NUT	. ECROU	196					
1-4	K1045478	. SHOE 700mm	. SABOT	49					
2	K1050307	STEP	ETAPE	4					
4	S0558266	BOLT	BOULON	16					
5	S5102603	WASHER	RONDELLE	16					

DATE	JUN. 01, 2010
3rd EDITION	

Fig. 6360 TRACK SHOE ASS'Y - 800G
MAILLON DE CHAINE

Serial No. ;

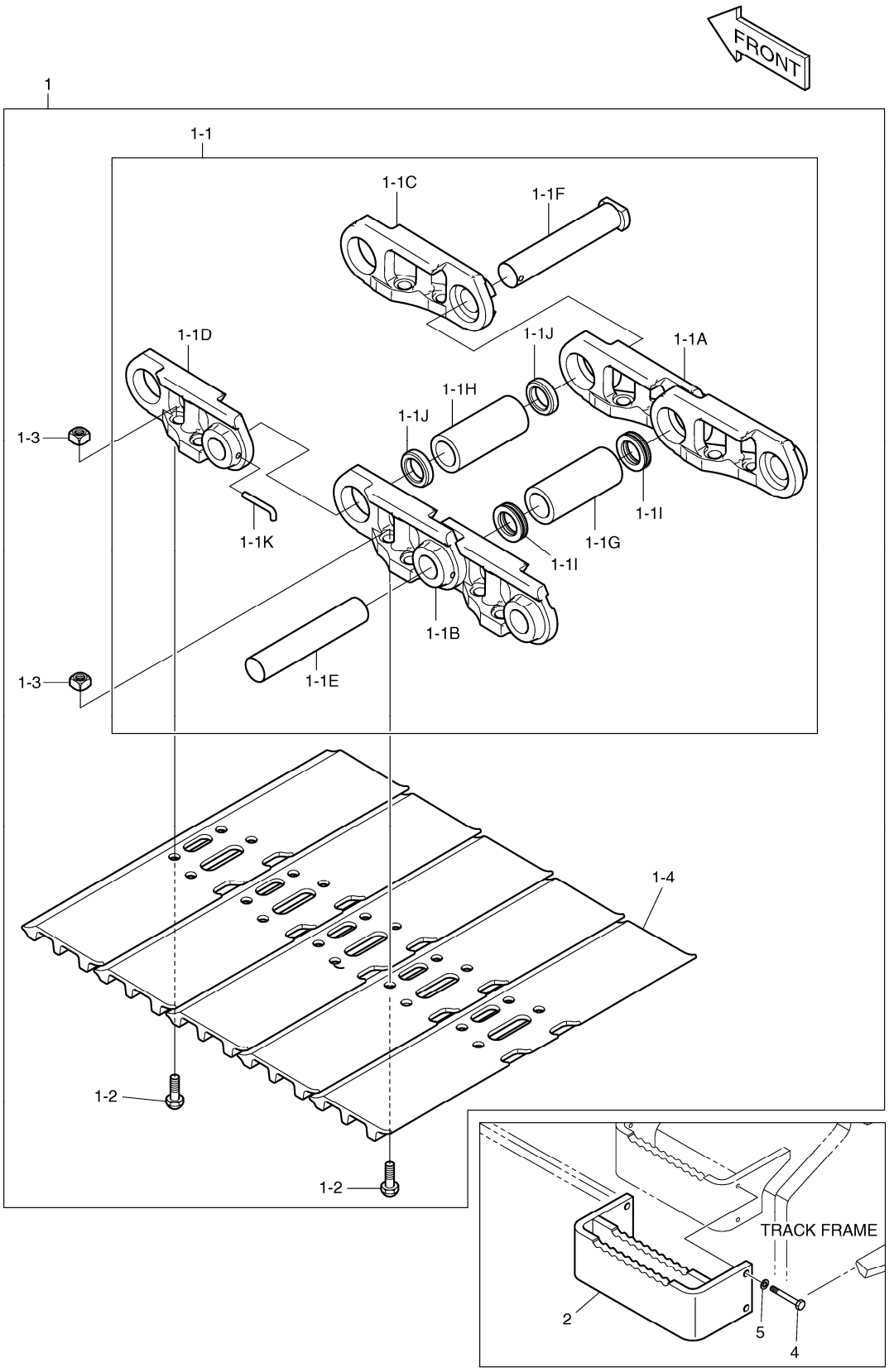

DATE	JUN. 01, 2010
3rd EDITION	

Fig. 6360 TRACK SHOE ASS'Y - 800G
MAILLON DE CHAINE

Serial No. ;

Key No.	Part No.	Description	Description	Q'ty	S.C	Serial No.	ICA	Replaceable part	
								Part No.	Q'ty
6360 --	K1045590A	TRACK SHOE ASS`Y	MAILLON DE CHAINE	-	D				
1	K1045507	TRACK SHOE ASS`Y	MAILLON DE CHAINE	2					
1-1	K1038366	. TRACK LINK ASS`Y	. ENSEMBLE MAILLON DE C	1					
1-1A	K1038367	.. LINK;TRACK(RH)	.. PIECE DE JONCTION	48					
1-1B	K1038368	.. LINK;TRACK(LH)	.. PIECE DE JONCTION	48					
1-1C	K1038429	.. LINK;MASTER(RH)	.. PIECE DE JONCTION	1					
1-1D	K1038430	.. LINK;MASTER(LH)	.. PIECE DE JONCTION	1					
1-1E	K1038369	.. PIN	.. GOUPILLE	48					
1-1F	K1038370	.. PIN;MASTER	.. GOUPILLE	1					
1-1G	K1038371	.. BUSHING	.. DOUILLE	48					
1-1H	K1038372	.. BUSHING;MASTER	.. DOUILLE	1					
1-1I	K1038373	.. SEAL;DUST	.. CACHET	96					
1-1J	K1038374	.. SPACER	.. ENTRETOISE	2					
1-1K	K1038376	.. PIN;SMALL	.. GOUPILLE	1					
1-2	K1038377	. BOLT	. BOULON	196					
1-3	K1038378	. NUT	. ECROU	196					
1-4	K1045479	. SHOE 800mm	. SABOT	49					
2	K1050308	STEP	MARCHER	4					
4	S0558266	BOLT	BOULON	16					
5	S5102603	WASHER	RONDELLE	16					

DATE	JUN. 01, 2010
3rd EDITION	

Fig. 6370 TRACK SHOE ASS'Y - 900G
MAILLON DE CHAINE

Serial No. ;

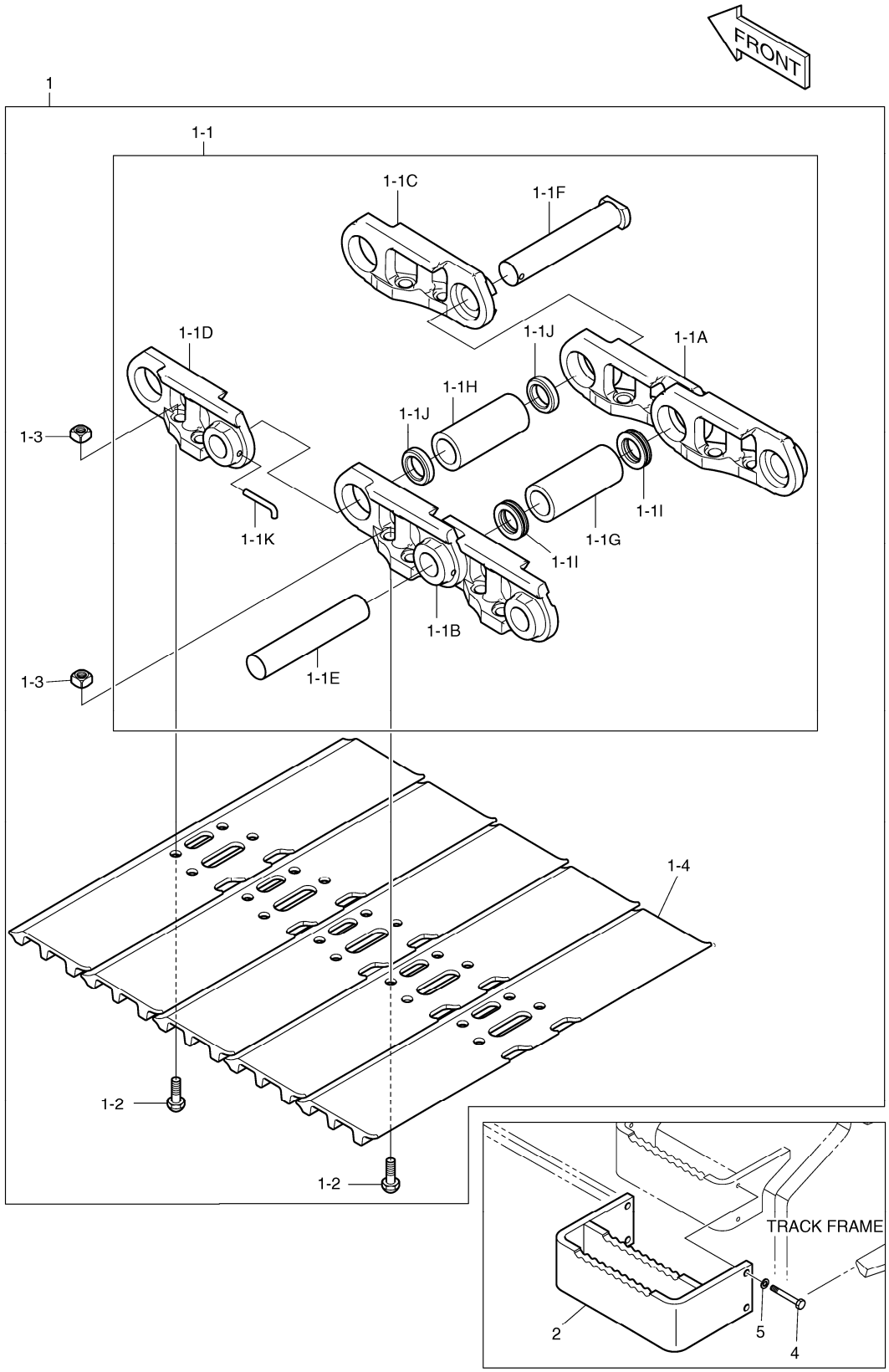

DATE	JUN. 01, 2010
3rd EDITION	

Fig. 6370 TRACK SHOE ASS'Y - 900G
MAILLON DE CHAINE

Serial No. ;

Key No.	Part No.	Description	Description	Q'ty	S.C	Serial No.	ICA	Replaceable part	
								Part No.	Q'ty
6370 --	K1045591A	TRACK SHOE ASS'Y	MAILLON DE CHAINE	-	D				
1	K1045508	TRACK SHOE ASS'Y	MAILLON DE CHAINE	2					
1-1	K1038366	. TRACK LINK ASS`Y	. ENSEMBLE MAILLON DE C	1					
1-1A	K1038367	.. LINK;TRACK(RH)	.. PIECE DE JONCTION	48					
1-1B	K1038368	.. LINK;TRACK(LH)	.. PIECE DE JONCTION	48					
1-1C	K1038429	.. LINK;MASTER(RH)	.. PIECE DE JONCTION	1					
1-1D	K1038430	.. LINK;MASTER(LH)	.. PIECE DE JONCTION	1					
1-1E	K1038369	.. PIN	.. GOUPILLE	48					
1-1F	K1038370	.. PIN;MASTER	.. GOUPILLE	1					
1-1G	K1038371	.. BUSHING	.. DOUILLE	48					
1-1H	K1038372	.. BUSHING;MASTER	.. DOUILLE	1					
1-1I	K1038373	.. SEAL;DUST	.. CACHET	96					
1-1J	K1038374	.. SPACER	.. ENTRETOISE	2					
1-1K	K1038376	.. PIN;SMALL	.. GOUPILLE	1					
1-2	K1038377	. BOLT	. BOULON	196					
1-3	K1038378	. NUT	. ECROU	196					
1-4	K1045480	. SHOE 900mm	. SABOT	49					
2	K1050309	STEP	MARCHER	4					
4	S0558266	BOLT	BOULON	16					
5	S5102603	WASHER	RONDELLE	16					

DATE	JUN. 01, 2010
3rd EDITION	

Fig. 6380 SWING ALARM - NOT ONE OR TWO WAY AVERTISSEUR

Serial No. ;

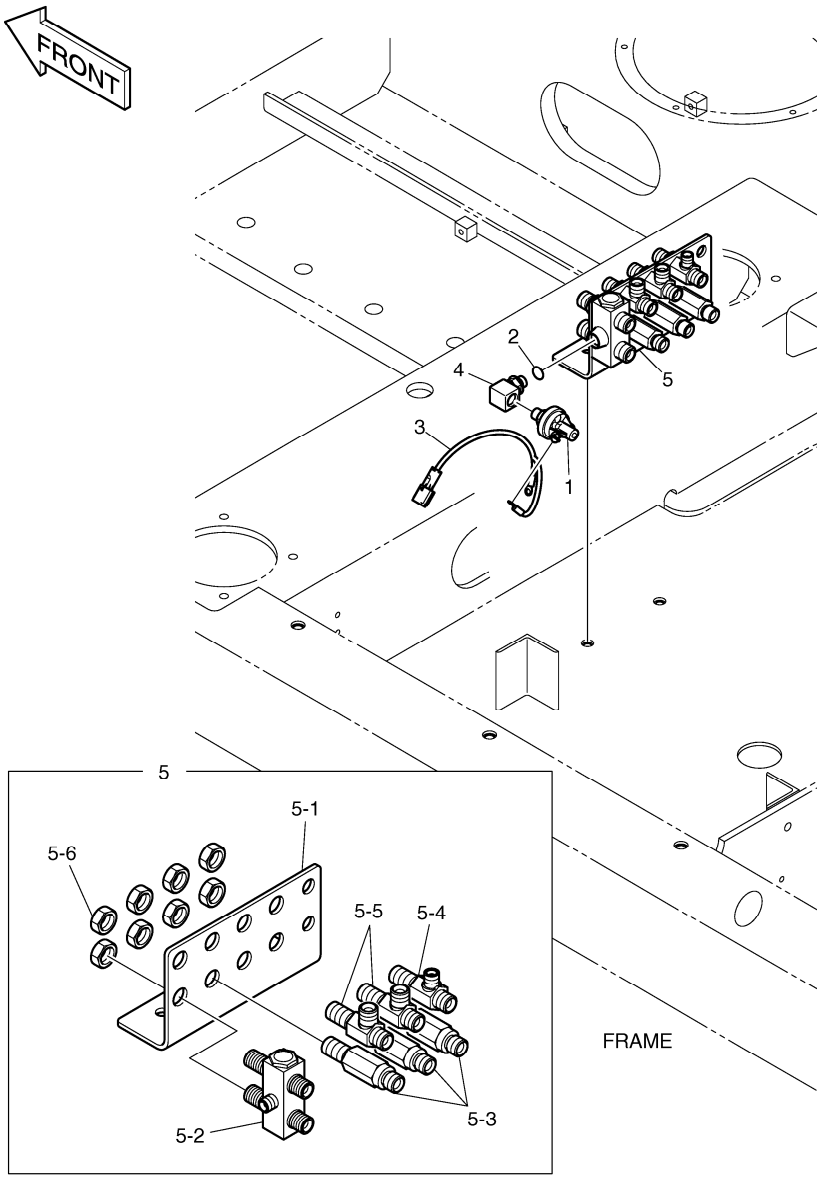

DATE	JUN. 01, 2010
3rd EDITION	

Fig. 6380 SWING ALARM - NOT ONE OR TWO WAY AVERTISSEUR

Serial No. ;

Key No.	Part No.	Description	Description	Q'ty	S.C	Serial No.	ICA	Replaceable part	
								Part No.	Q'ty
6380 --	K1044685	SWING ALARM	AVERTISSEUR	-	D	5433-5592			
	420212-00478	PIPING,PILOT;S/ALARM	AVERTISSEUR	-	D	5593-			
1	549-00010	SWITCH;PRESSURE	COMMUTATEUR	1					
2	S8000111	O-RING	JOINT CIRCULAIRE	1					
3	530-00067	HARNESS;STOP LAMP S/W	HARNAIS	1					
4	2181-2295D4	ELBOW	COUDE	1		5433-5592			
	K1002778	ELBOW PF1/4-UNF1/2-20	COUDE	1		5593-			
5	K1044409	JOINT PLATE;SUB ASS'Y	SUPPORT	1		5433-5592	Y	430216-00005	1
	430216-00005	JOINT PLATE SUB ASS'Y	SOUS-MARIN COMMUN AS	1		5593-			
5-1	K1000354	. BRACKET;JOINT	. SUPPORT	1					
5-2	420-00282	. VALVE;SHUTTLE	. VALVE	1					
5-3	DS2410009	. ADAPTER	. ADAPTEUR	3					
5-4	181-00086D1	. TEE	. TE	1					
5-5	181-00086D2	. TEE	. TE	2					
5-6	121-00010D1	. NUT	. ECROU	8					

DATE	JUN. 01, 2010
3rd EDITION	

Fig. 6385 SWING ALARM - ONE OR TWO WAY
AVERTISSEUR

Serial No. ;

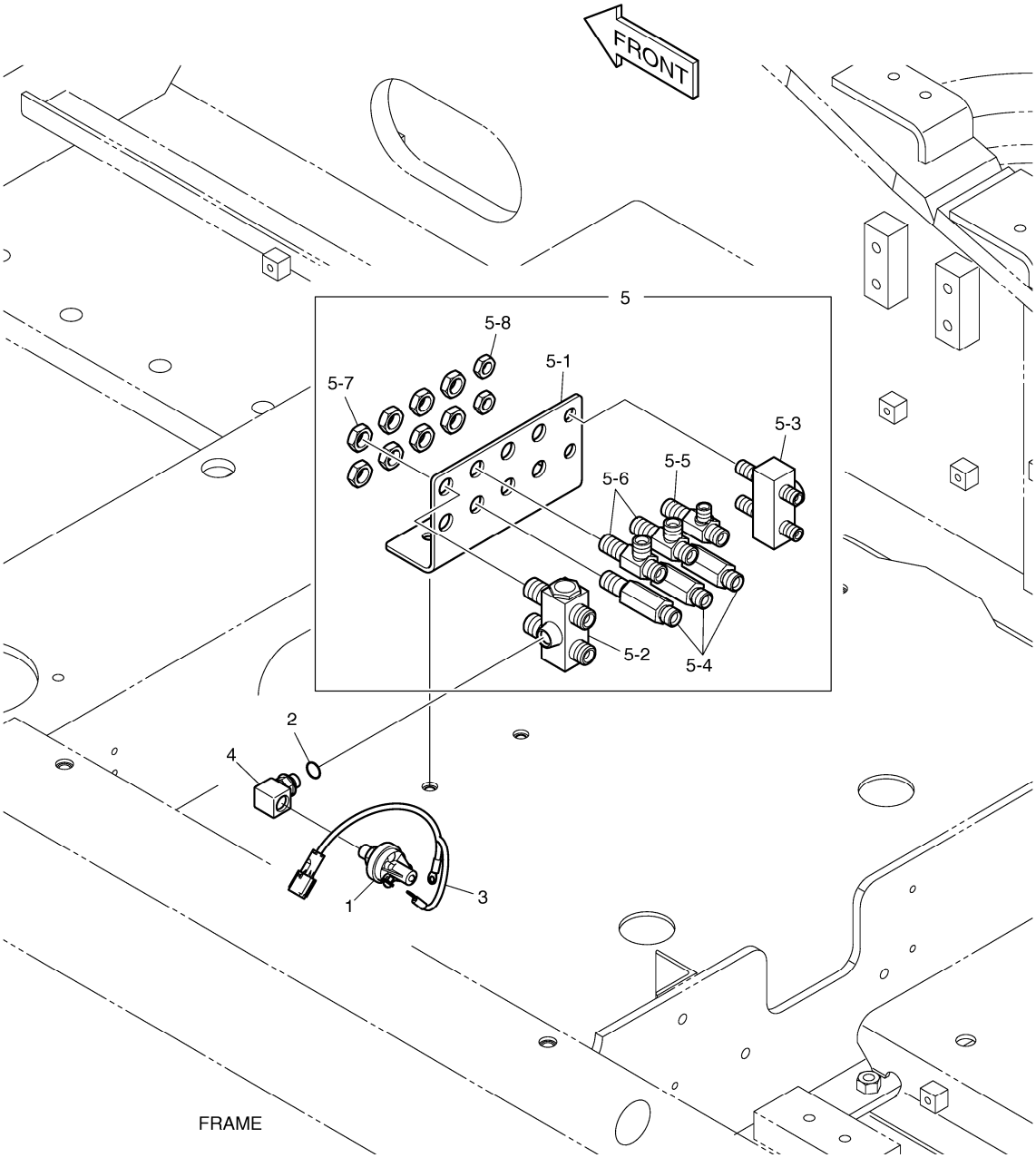

DATE	JUN. 01, 2010
3rd EDITION	

Fig. 6385 SWING ALARM - ONE OR TWO WAY AVERTISSEUR

Serial No. ;

Key No.	Part No.	Description	Description	Q'ty	S.C	Serial No.	ICA	Replaceable part	
								Part No.	Q'ty
6385 --	K1044995	PILOT PIPING;SWING ALARM	CONDUITES DE PILOTE	-	D	5433-5583			
	420212-00266	PIPING,PILOT;ONE OR TWO WAY	CONDUITES DE PILOTE	-	D	5584-			
1	549-00010	SWITCH;PRESSURE	COMMUTATEUR	1					
2	S8000111	O-RING	JOINT CIRCULAIRE	1					
3	530-00067	HARNESS;STOP LAMP S/W	HARNAIS	1					
4	K1002778	ELBOW PF1/4-UNF1/2-20	COUDE	1					
5	K1044993	PILOT JOINT PLATE;SUB ASS'Y	PLAT COMMUN PILOTE	1		5433-5597	Y	430216-00007	1
	430216-00007	JOINT PLATE SUB ASS'Y	SOUS-MARIN COMMUN AS	1		5598-			
5-1	K1000354	. BRACKET;JOINT	. SUPPORT	1					
5-2	420-00282	. VALVE;SHUTTLE	. VALVE	1					
5-3	420-00476	. VALVE;SHUTTLE	. VALVE	1					
5-4	DS2410009	. ADAPTER	. ADAPTEUR	3					
5-5	181-00086D1	. TEE	. TE	1					
5-6	181-00086D2	. TEE	. TE	2					
5-7	121-00010D1	. NUT	. ECROU	8					
5-8	121-00010D7	. NUT	. ECROU	2					

DATE	JUN. 01, 2010
3rd EDITION	

Fig. 6390 PATTERN CHANGE PIPING(1)
TUYAUTERIE DE CHANGEMENT DE MODELE

Serial No. ;

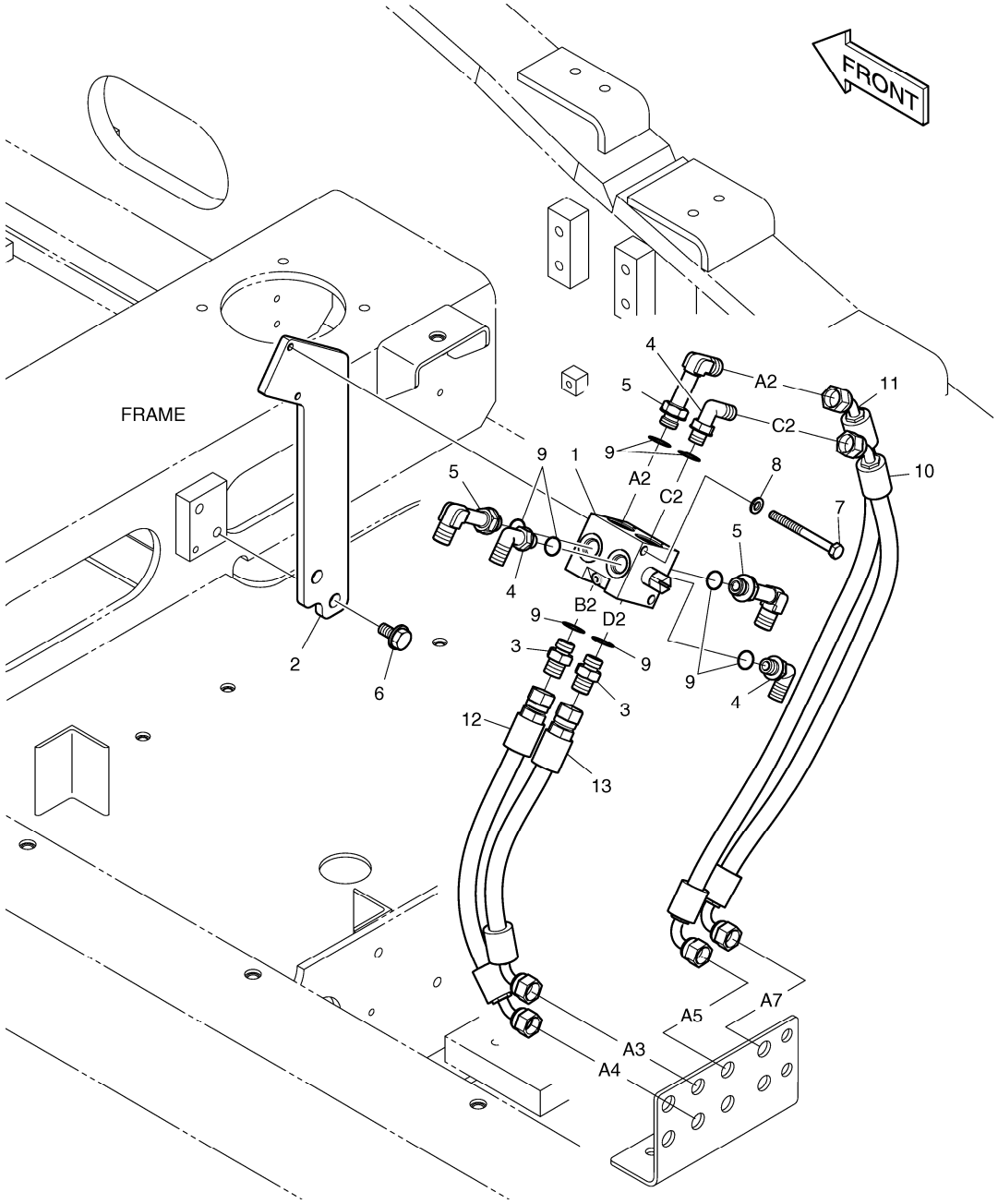

DATE	JUN. 01, 2010
3rd EDITION	

Fig. 6390 PATTERN CHANGE PIPING(1)
TUYAUTERIE DE CHANGEMENT DE MODELE

Serial No. ;

Key No.	Part No.	Description	Description	Q'ty	S.C	Serial No.	ICA	Replaceable part	
								Part No.	Q'ty
6390 --	K1024375	PATTERN CHANGE PIPING	TUYAUTERIE DE CHANGEI	-	D				
1	K1014874	VALVE;SELECTOR	CLAPET SELECTEUR	1					
2	K1015780	BRACKET	SUPPORT	1					
3	2181-1126D7	ADAPTER	ADAPTEUR	2					
4	2181-1702D5	ELBOW	COUDE	3					
5	2181-1702D51	ELBOW	COUDE	3					
6	DS0025018	BOLT;SET	BOULON	2					
7	S0557066	BOLT	BOULON A 6 PANS	2					
8	S5102503	WASHER	RONDELLE	2					
9	S8000141	O-RING	JOINT CIRCULAIRE	8					
10	DS2090019	HOSE	TUYAU FLEXIBLE	1					
11	DS2090022	HOSE	TUYAU FLEXIBLE	1					
12	DS2092080	HOSE	TUYAU FLEXIBLE	1					
13	DS2095031	HOSE	TUYAU FLEXIBLE	1					

DATE	JUN. 01, 2010
3rd EDITION	

Fig. 6400 PATTERN CHANGE PIPING(2)
TUYAUTERIE DE CHANGEMENT DE MODELE

Serial No. ;

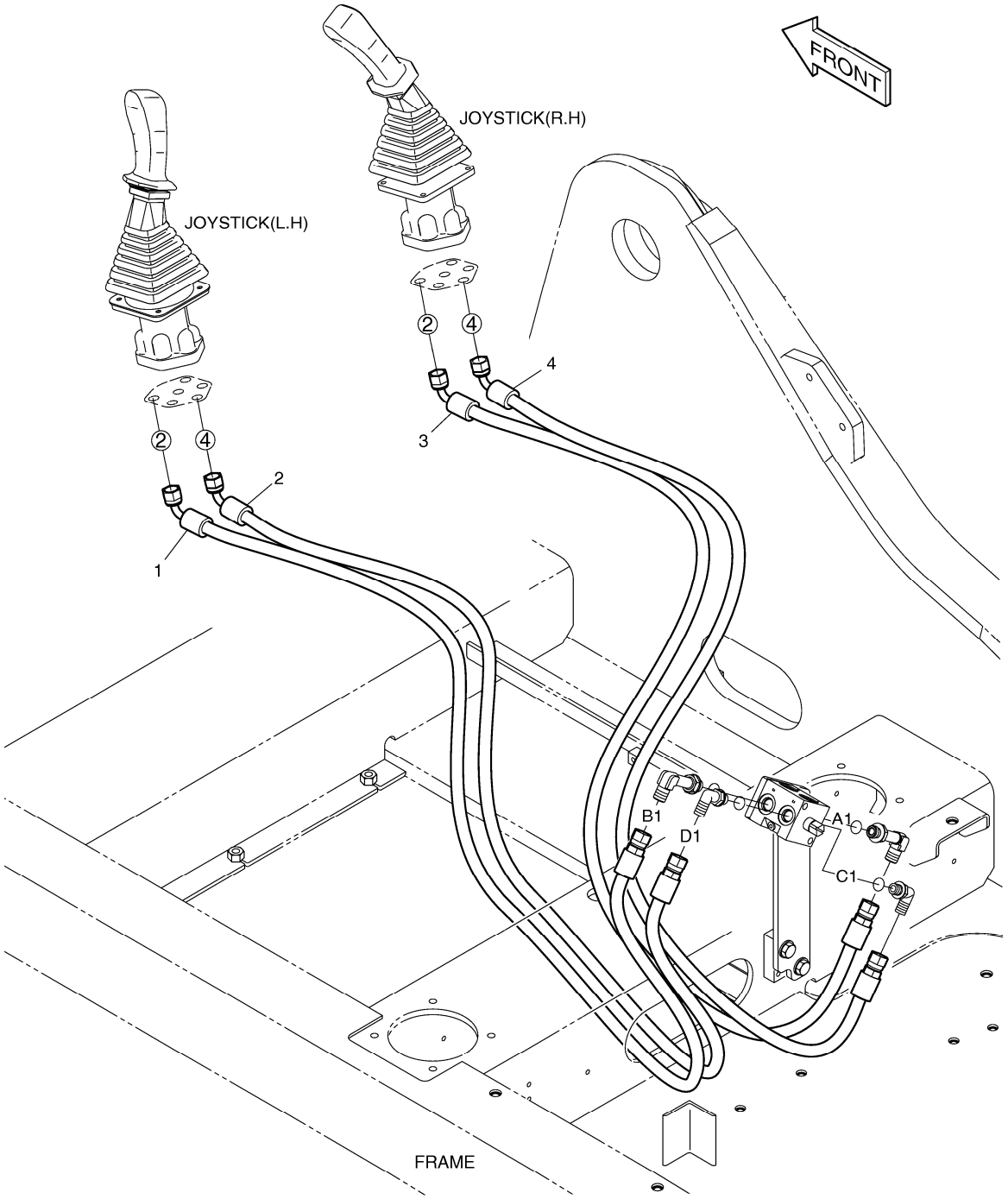

DATE	JUN. 01, 2010
3rd EDITION	

Fig. 6400 PATTERN CHANGE PIPING(2)
TUYAUTERIE DE CHANGEMENT DE MODELE

Serial No. ;

Key No.	Part No.	Description	Description	Q'ty	S.C	Serial No.	ICA	Replaceable part	
								Part No.	Q'ty
6400 --	K1024370	PATTERN CHANGE PIPING	TUYAUTERIE DE CHANGEI	-	D				
1	DS2095029	HOSE	TUYAU FLEXIBLE	1					
2	DS2095029	HOSE	TUYAU FLEXIBLE	1					
3	DS2095030	HOSE	TUYAU FLEXIBLE	1					
4	DS2095030	HOSE	TUYAU FLEXIBLE	1					

DATE	JUN. 01, 2010
3rd EDITION	

Fig. 6410 LOCK VALVE PIPING - BOOM
CONDUITES DE VERROU VANNE

Serial No. ;

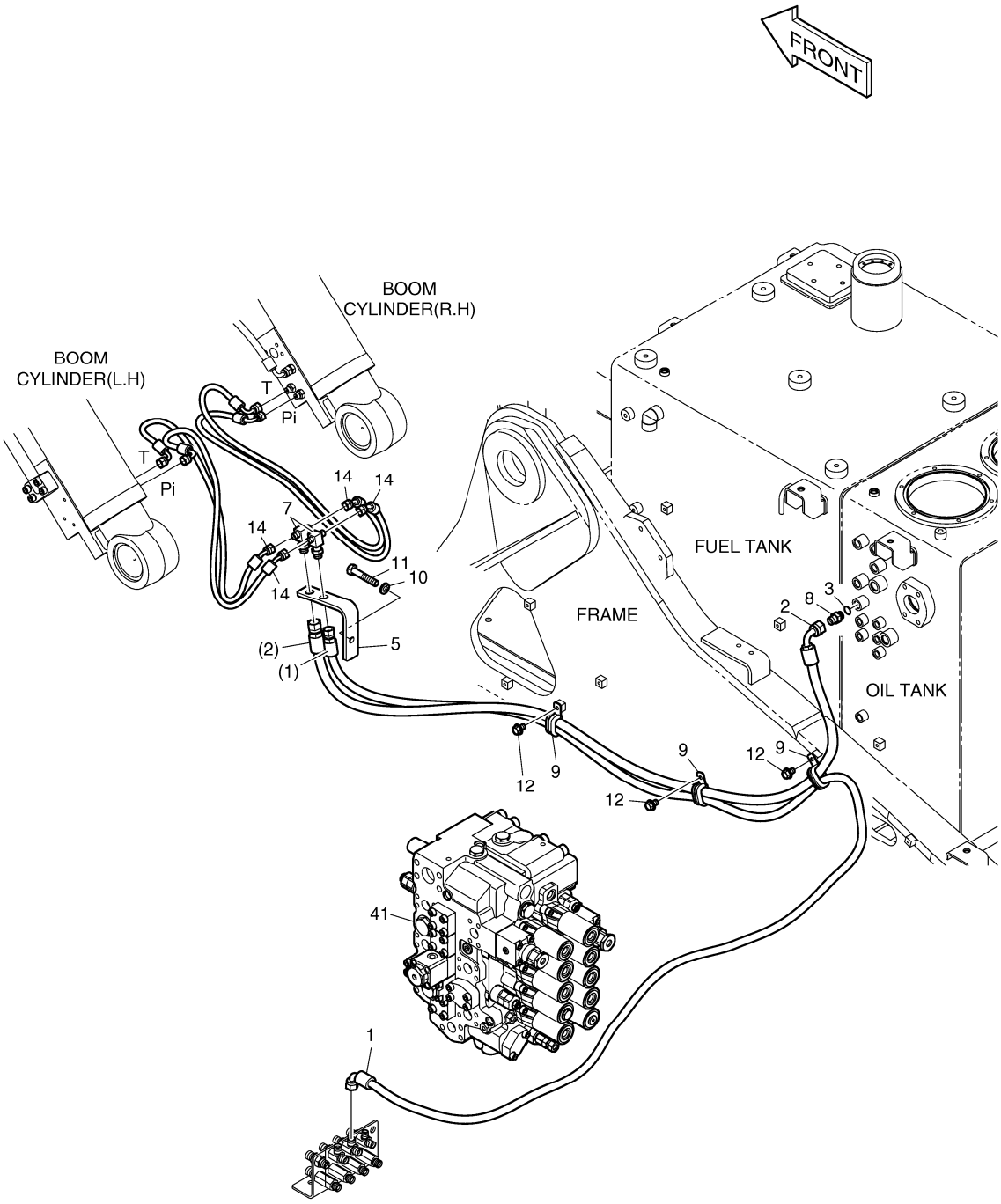

DATE	JUN. 01, 2010
3rd EDITION	

Fig. 6410 LOCK VALVE PIPING - BOOM
CONDUITES DE VERROU VANNE

Serial No. ;

Key No.	Part No.	Description	Description	Q'ty	S.C	Serial No.	ICA	Replaceable part	
								Part No.	Q'ty
6410 --	K1044690	LOCK VALVE PIPING;BOOM	FERMEZ LA TUYAUTERIE A	-	D				
1	DS2093438	HOSE	TUYAU FLEXIBLE	1					
2	DS2093104	HOSE	TUYAU	1					
3	S8000141	O-RING	JOINT CIRCULAIRE	1					
5	K1000140A	PLATE	PLAQUE	1					
7	181-00008	TEE	TE	2					
8	2181-1126D7	ADAPTER	ADAPTEUR	1					
9	124-00209D1	CLIP	AGRAFE	3					
10	S5102703	WASHER;SPRING	RONDELLE	1					
11	S0561066	BOLT	BOULON	1					
12	K1001029	BOLT	BOULON	3					
14	DS2090009	HOSE	TUYAU	4					
41	K1044591	VALVE;CONTROL	VANNE	1					

DATE	JUN. 01, 2010
3rd EDITION	

Fig. 6420 BOOM PIPING - LOCK VALVE
DONDUITER DE FLECHE

Serial No. ;

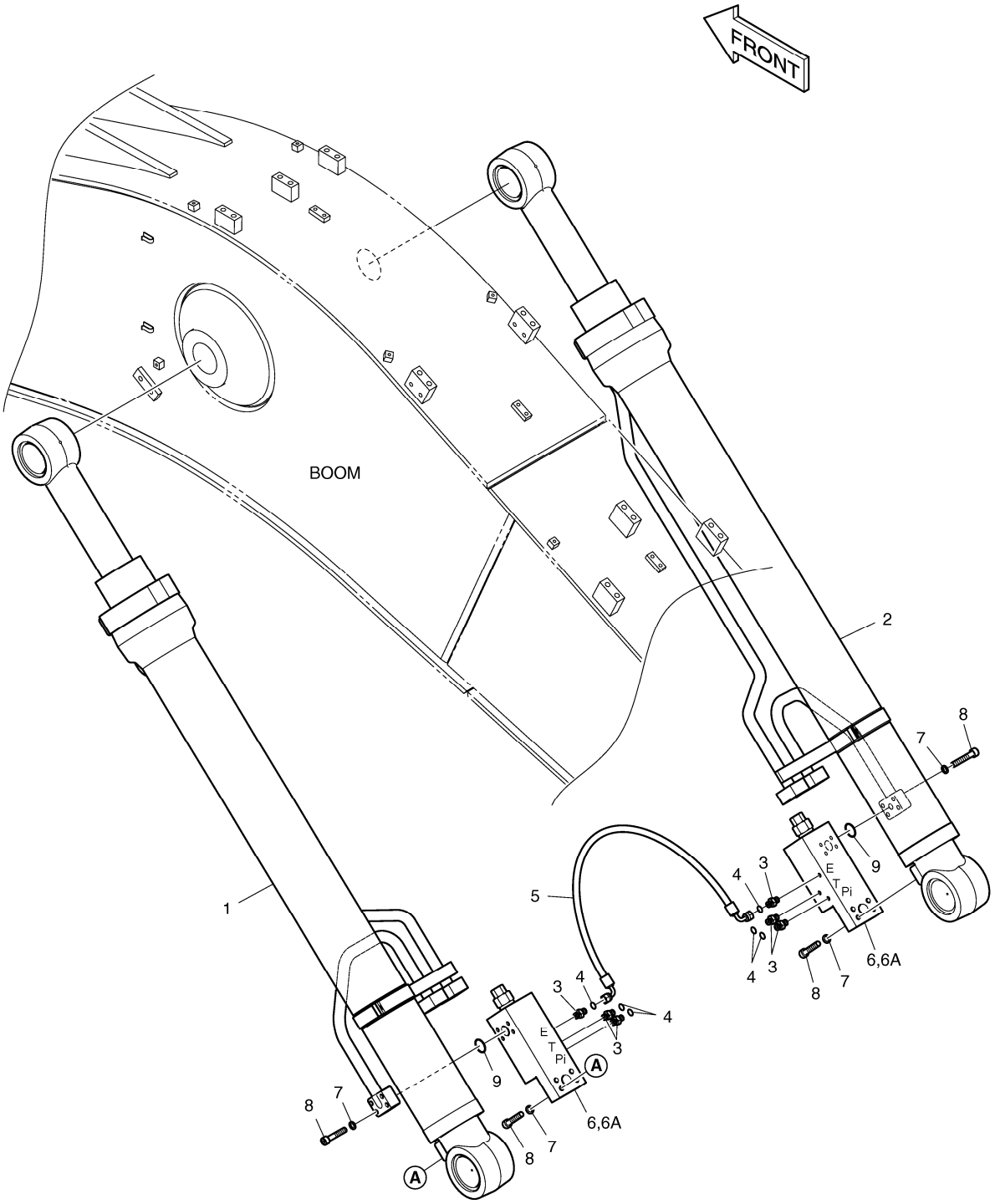

DATE	JUN. 01, 2010
3rd EDITION	

Fig. 6420 BOOM PIPING - LOCK VALVE DONDUITER DE FLECHE

Serial No. ;

Key No.	Part No.	Description	Description	Q'ty	S.C	Serial No.	ICA	Replaceable part	
								Part No.	Q'ty
6420 --	K1041838B	BOOM LOCK V/V PIPING(5.7M)	CONDUITES DE PILOTE	-	D				
1	K1041220B	BOOM CYLINDER(L.H)	CYLINDRE	1					
2	K1041221B	BOOM CYLINDER(R.H)	CYLINDRE	1					
3	2181-1126D14	ADAPTER PF1/4	ADAPTEUR	6					
4	S8000111	O-RING	JOINT CIRCULAIRE	6					
5	DS2059383	HOSE PF1/4-800L	TUYAU	1					
6	420-00226	VALVE;LOCK	VALVE	2					
6A	K9000998	. SEAL KIT	. KIT DE JOINT	1					
7	S5110603	WASHER;SPRING	RONDELLE	16					
8	S2212766	BOLT;SOCKET	BOULON	16					
9	S8000281	O-RING	JOINT CIRCULAIRE	2					

DATE	JUN. 01, 2010
3rd EDITION	

Fig. 6430 PILOT PIPING - ARM LOCK V/V
CONDUITES DE PILOTE

Serial No. ;

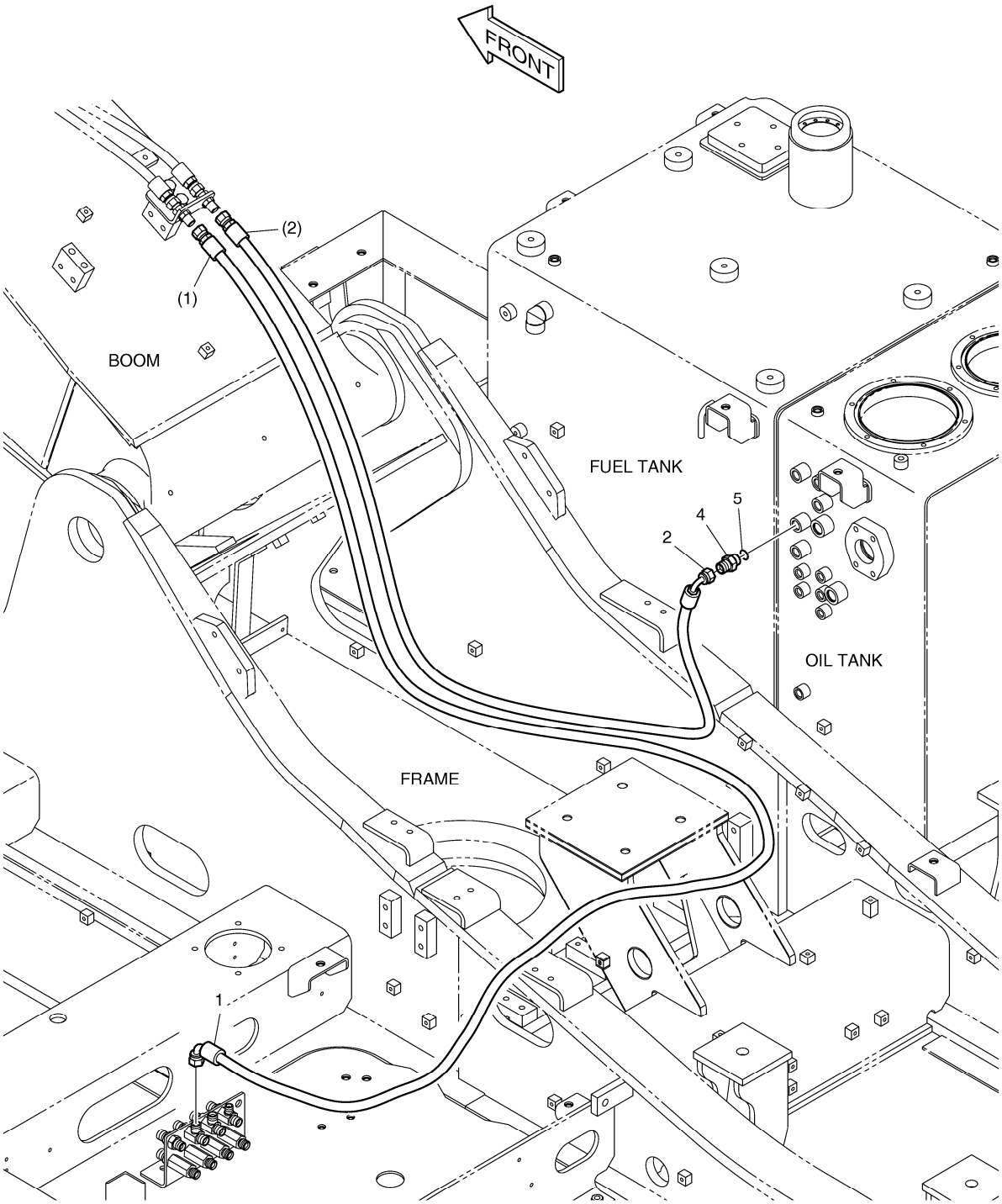

Fig. 6430 PILOT PIPING - ARM LOCK V/V CONDUITES DE PILOTE

Serial No. ;

Key No.	Part No.	Description	Description	Q'ty	S.C	Serial No.	ICA	Replaceable part	
								Part No.	Q'ty
6430 --	K1044691	LOCK VALVE PIPING;ARM	FERMEZ LA TUYAUTERIE A	-	D				
1	DS2093240	HOSE	TUYAU FLEXIBLE	1					
2	DS2093196	HOSE	TUYAU	1					
4	2181-1126D7	ADAPTER	ADAPTEUR	1					
5	S8000141	O-RING	JOINT CIRCULAIRE	1					

DATE	JUN. 01, 2010
3rd EDITION	

Fig. 6440 ARM PIPING - LOCK VALVE
CONDUITES DE BALANCIER

Serial No. ;

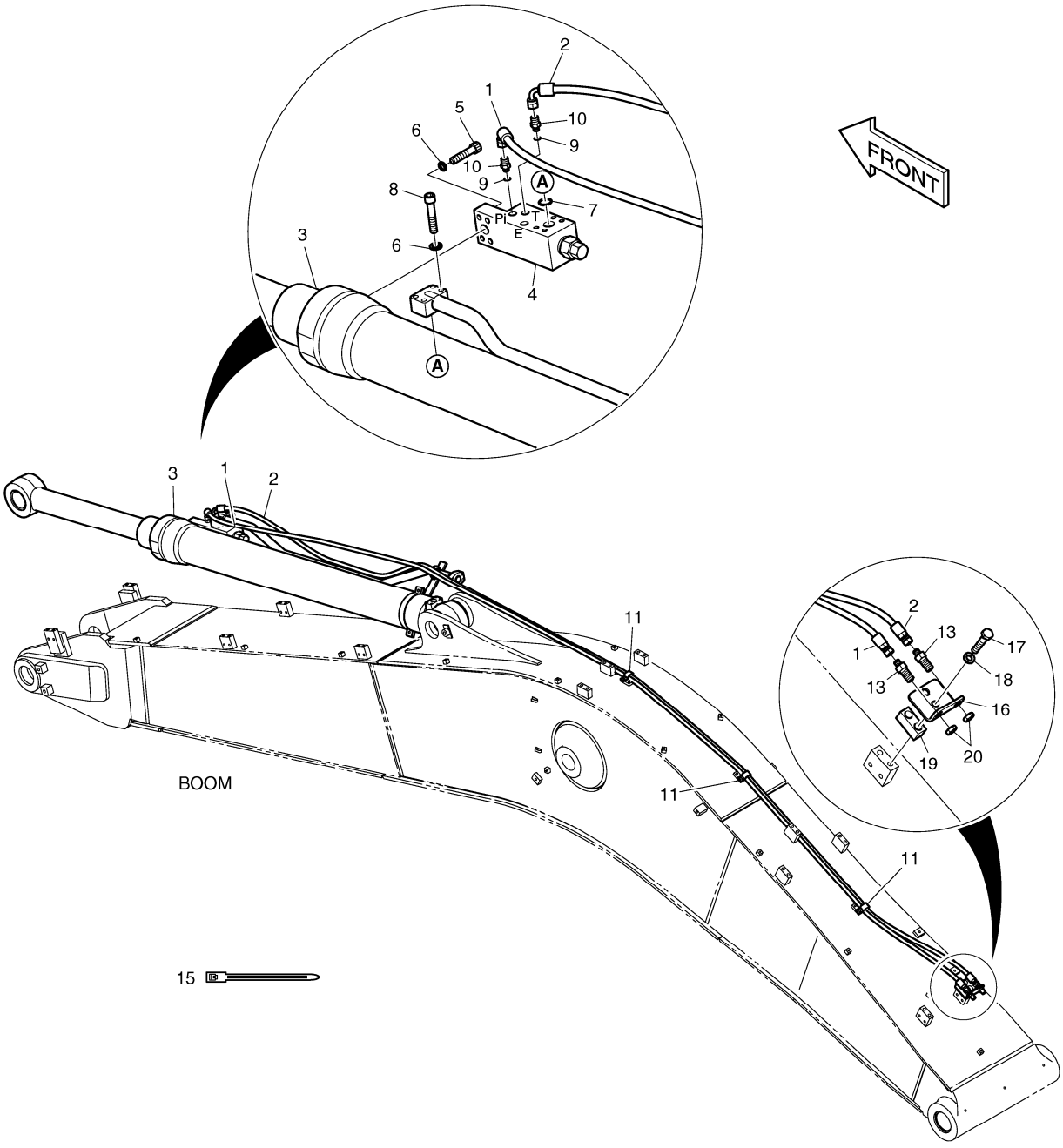

DATE	JUN. 01, 2010
3rd EDITION	

Fig. 6440 ARM PIPING - LOCK VALVE
CONDUITES DE BALANCIER

Serial No. ;

Key No.	Part No.	Description	Description	Q'ty	S.C	Serial No.	ICA	Replaceable part	
								Part No.	Q'ty
6440 --	K1041839A	ARM;LOCK V/V PIPING	CONDUITES DE BALANCIE	-	D				
1	DS2055666	HOSE	TUYAU	1					
2	DS2055666	HOSE	TUYAU	1					
3	K1041222A	CYLINDER;ARM(LOCK V/V)	CYLINDRE	1					
4	420-00004A	VALVE;LOCK	VALVE	1					
5	S2215766	BOLT;SOCKET M12X1.75X55	BOULON	4					
6	S5110703	WASHER;SPRING	RONDELLE	8					
7	S8000341	O-RING	JOINT CIRCULAIRE	1					
8	S2215966	BOLT;SOCKET	BOULON	8					
9	S8000111	O-RING	JOINT CIRCULAIRE	2					
10	2181-1126D85	ADAPTER	ADAPTEUR	2					
11	DS2805009	CLIP	AGRAFE	4					
13	181-00078D1	ADAPTER	ADAPTEUR	2					
15	2124-1084D2	CLIP;BAND	AGRAFE	30					
16	195-00163	BRACKET	SUPPORT	1					
17	S0563366	BOLT	BOULON	2					
18	S5102803	WASHER;SPRING	RONDELLE	2					
19	K1004006	PLATE	PLAQUE	1					
20	121-00010D1	NUT	ECROU	2					

DATE	JUN. 01, 2010
3rd EDITION	

Fig. 6450 ARM PIPING - ARM 2.9m(CLAMSHELL)
CONDUITES DE BALANCIER

Serial No. ;

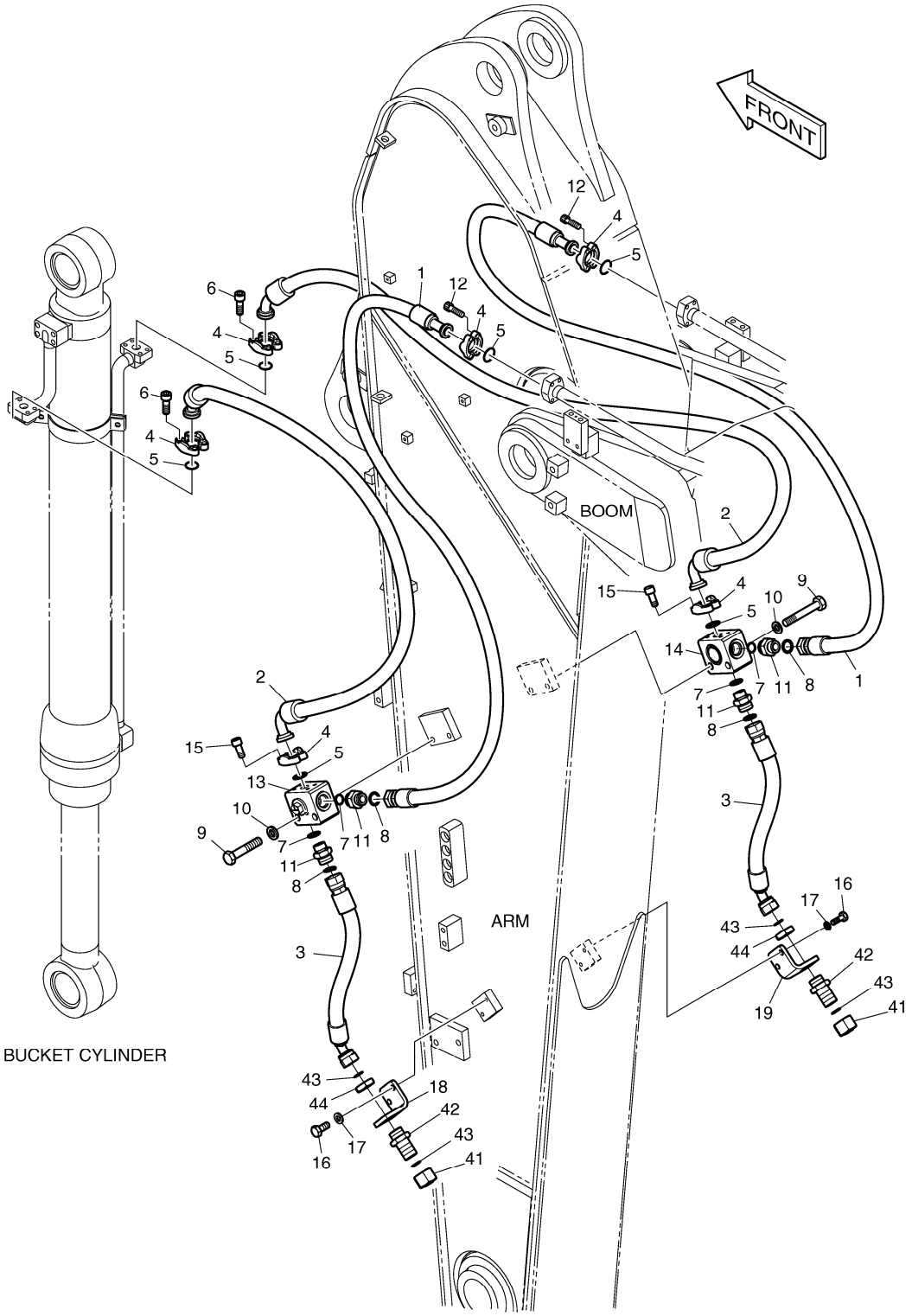

DATE	JUN. 01, 2010
3rd EDITION	

Fig. 6450 ARM PIPING - ARM 2.9m(CLAMSHELL)
CONDUITES DE BALANCIER

Serial No. ;

Key No.	Part No.	Description	Description	Q'ty	S.C	Serial No.	ICA	Replaceable part	
								Part No.	Q'ty
6450 --	K1041937A	ARM PIPING-CLAMSHELL	TUYAUTERIE DU BRAS	-	D				
1	DS2016092	HOSE	TUYAU	2					
2	DS2043128	HOSE	TUYAU	2					
3	DS2012518	HOSE	TUYAU	2					
4	2181-9079	FLANGE	BRIDE	12					
5	2180-1026D2	O-RING	JOINT CIRCULAIRE	6					
6	S2212266	BOLT;SOCKET	BOULON	8					
7	S8030121	O-RING	JOINT CIRCULAIRE	4					
8	S8000231	O-RING	JOINT CIRCULAIRE	4					
9	S0563466	BOLT	BOULON	4					
10	S5102803	WASHER;SPRING	RONDELLE	4					
11	2181-4133D5	ADAPTER	ADAPTEUR	4					
12	S2212366	BOLT;SOCKET M10X1.5X35	BOULON	8					
13	K1002939	VALVE;SWITCH(L.H)	VALVE	1					
14	K1002940	VALVE;SWITCH(R.H)	VALVE	1					
15	S2212066	BOLT;SOCKET	BOULON	8					
16	S0512066	BOLT	BOULON	4					
17	S5102603	WASHER	RONDELLE	4					
18	K1014759	BRACKET	SUPPORT	1					
19	K1015093	BRACKET	SUPPORT	1					
41	2181-2817D1	CAP	CHAPEAU	2					
42	DS2415007	ADAPTER	ADAPTEUR	2					
43	S8030121	O-RING	JOINT CIRCULAIRE	4					
44	121-00010D8	NUT	ECROU	2					

DATE	JUN. 01, 2010
3rd EDITION	

Fig. 6460 MAIN PIPING-ROTATION
CONDUITES DE BATI PRINCIPAL

Serial No. ;

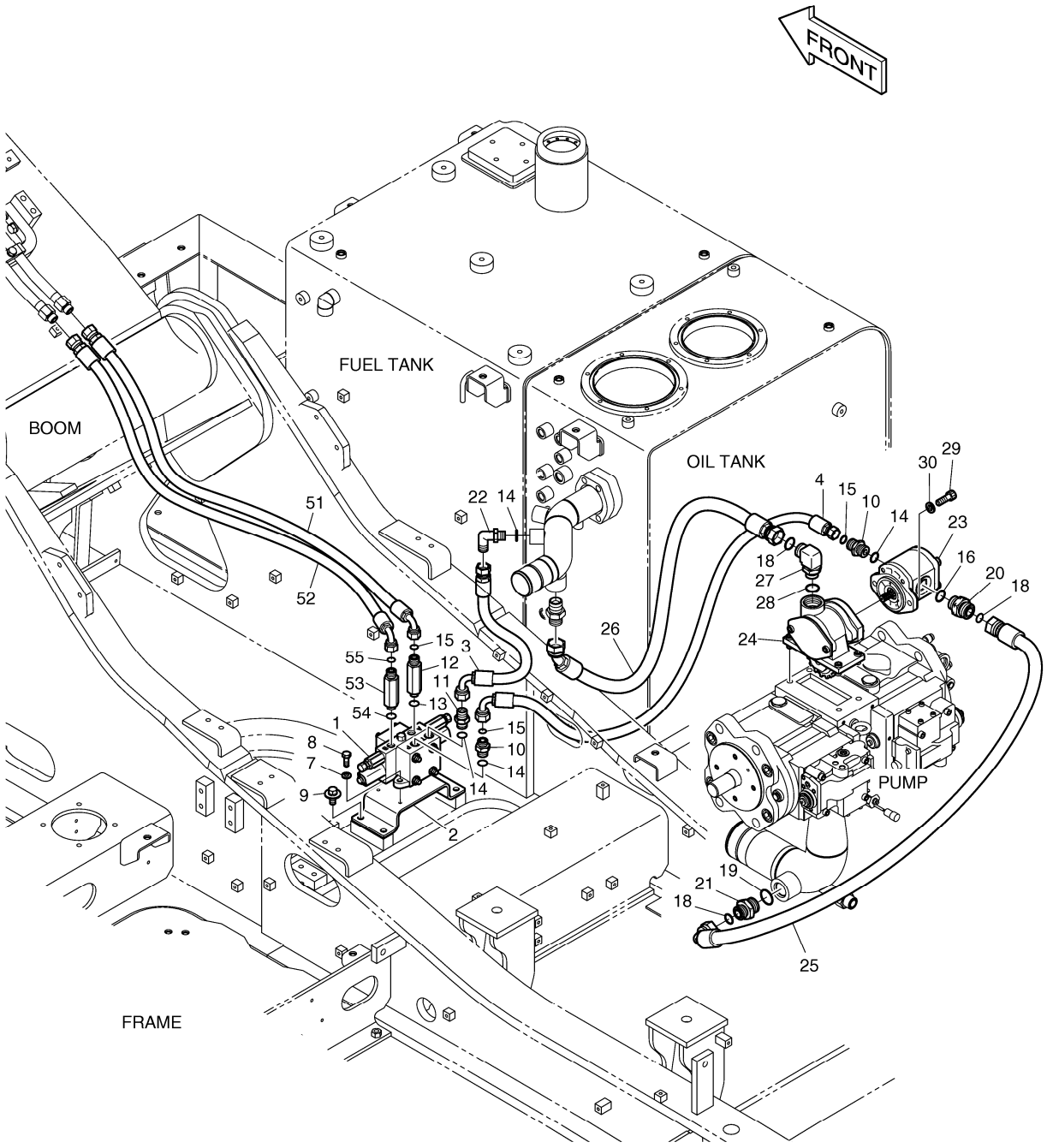

DATE	JUN. 01, 2010
3rd EDITION	

Fig. 6460 MAIN PIPING-ROTATION
CONDUITES DE BATI PRINCIPAL

Serial No. ;

Key No.	Part No.	Description	Description	Q'ty	S.C	Serial No.	ICA	Replaceable part	
								Part No.	Q'ty
6460 --	K1027501	MAIN PIPING;ROTATING	CIRCUIT HYDRAULIQUE PF	-	D				
1	426-00284B	VALVE;ONE SPOOL	VALVE	1					
2	K1000352A	BRACKET	SUPPORT	1					
3	DS2055292	HOSE	TUYAU	1					
4	DS2013517	HOSE	TUYAU FLEXIBLE	1					
7	S5102503	WASHER	RONDELLE	3					
8	S0508966	BOLT	BOULON	3					
9	DS0025017	BOLT;SET	BOULON	4					
10	2181-4133D3	ADAPTER	ADAPTEUR	2					
11	2181-1126D6	ADAPTER	ADAPTEUR	1					
12	DS2232108	ADAPTER	ADAPTEUR	1					
13	S8000141	O-RING	JOINT CIRCULAIRE	1					
14	S8000181	O-RING	JOINT CIRCULAIRE	4					
15	S8030081	O-RING	JOINT CIRCULAIRE	3					
16	S8000231	O-RING	JOINT CIRCULAIRE	1					
18	S8030121	O-RING	JOINT CIRCULAIRE	3					
19	S8000291	O-RING	JOINT CIRCULAIRE	1					
20	2181-2627D1	ADAPTER	ADAPTEUR	1					
21	2181-4133D12	ADAPTER	ADAPTEUR	1					
22	2181-1702D2	ELBOW	COUDE	1					
23	K1000410	GEAR PUMP	POMPE A ENGRENAGES	1					
24	K1001252B	PTO ASS'Y	PTO ASS'Y	1					
25	2184-1197D31	HOSE	TUYAU FLEXIBLE	1					
26	DS2012392	HOSE	TUYAU FLEXIBLE	1					
27	2181-2294D2	ELBOW	COUDE	1					
28	S8000241	O-RING	JOINT CIRCULAIRE	1					
29	S2212266	BOLT;SOCKET	BOULON	2					
30	S5102603	WASHER	RONDELLE	2					
51	DS2013672	HOSE	TUYAU	1					
52	DS2013672	HOSE	TUYAU	1					
53	DS2232108	ADAPTER	ADAPTEUR	1					
54	S8000141	O-RING	JOINT CIRCULAIRE	1					
55	S8030081	O-RING	JOINT CIRCULAIRE	1					

DATE	JUN. 01, 2010
3rd EDITION	

Fig. 6470 PILOT PIPING(1) - ROTATING
CONDUITES DE PILOTE

Serial No. ;

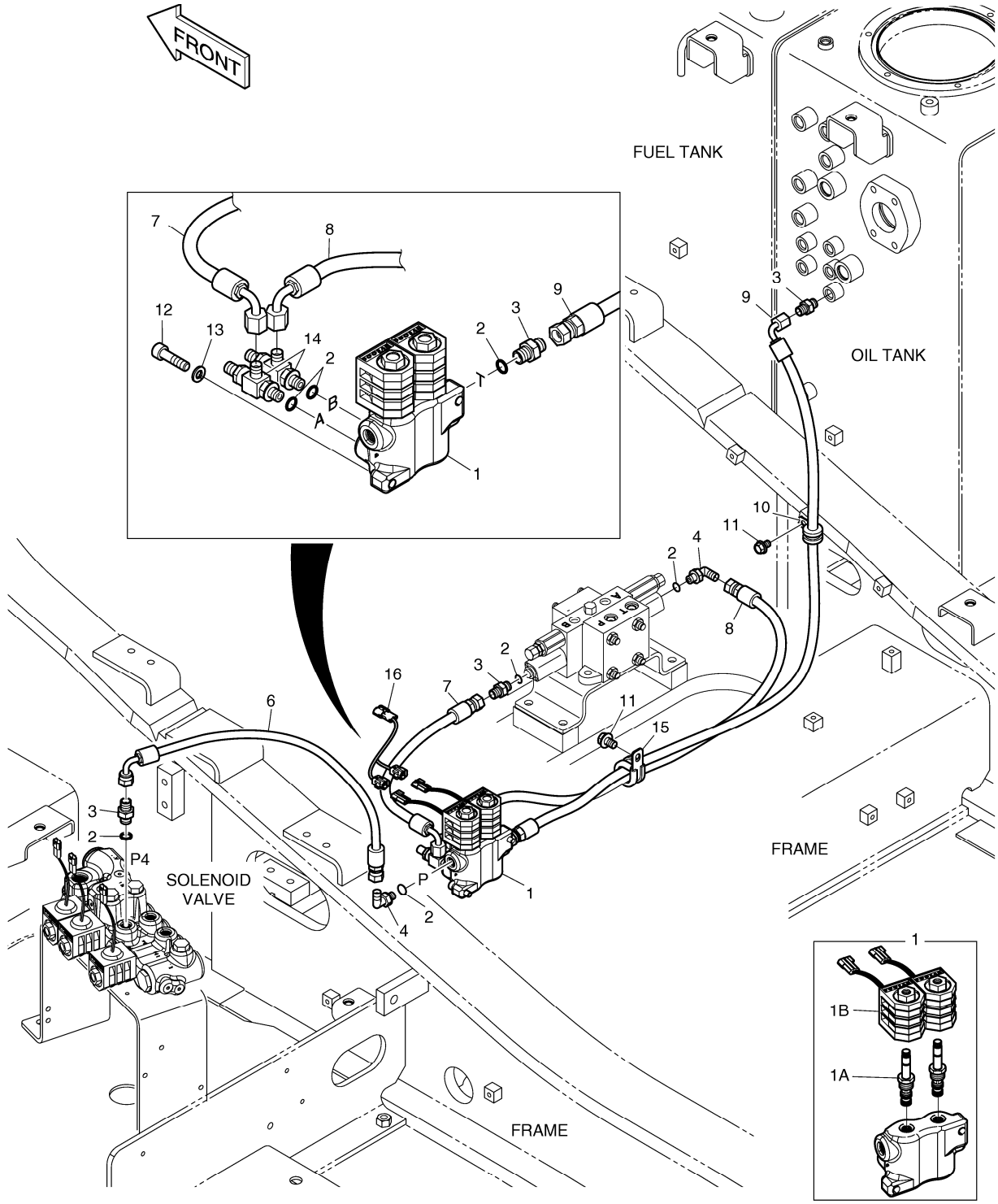

DATE	JUN. 01, 2010
3rd EDITION	

Fig. 6470 PILOT PIPING(1) - ROTATING
CONDUITES DE PILOTE

Serial No. ;

Key No.	Part No.	Description	Description	Q'ty	S.C	Serial No.	ICA	Replaceable part	
								Part No.	Q'ty
6470 --	K1044684	PILOT PIPING;ROTATING	CONDUITES DE PILOTE	-	D				
1	426-00247B	VALVE;SOLENOID	VALVE	1					
1A	K9007363	. SPOOL;SOLENOID	. SPOOL	2					
1B	1.519-00001	. COIL	. ENROULEMENT	2					
2	S8000111	O-RING	JOINT CIRCULAIRE	7					
3	2181-1126D14	ADAPTER PF1/4	ADAPTEUR	4					
4	2181-1702D4	ELBOW PFO1/4-PF1/4	COUDE	2					
6	DS2093040	HOSE PF 1/4-550L	TUYAU FLEXIBLE	1					
7	DS2093027	HOSE	TUYAU	1					
8	DS2093074	HOSE	TUYAU	1					
9	DS2093201	HOSE	TUYAU	1					
10	124-00208D2	CLIP	AGRAFE	1					
11	K1001029	BOLT	BOULON	2					
12	S2209266	BOLT	BOULON	2					
13	S5110503	WASHER;SPRING	RONDELLE	2					
14	181-00779	TEE;SHUTTLE	TE	2					
15	124-00208D4	CLIP	AGRAFE	1					
16	K1000817	HARNESS	HARNAIS	1					

DATE	JUN. 01, 2010
3rd EDITION	

Fig. 6480 PILOT PIPING(2) - ROTATING
CONDUITES DE PILOTE

Serial No. ;

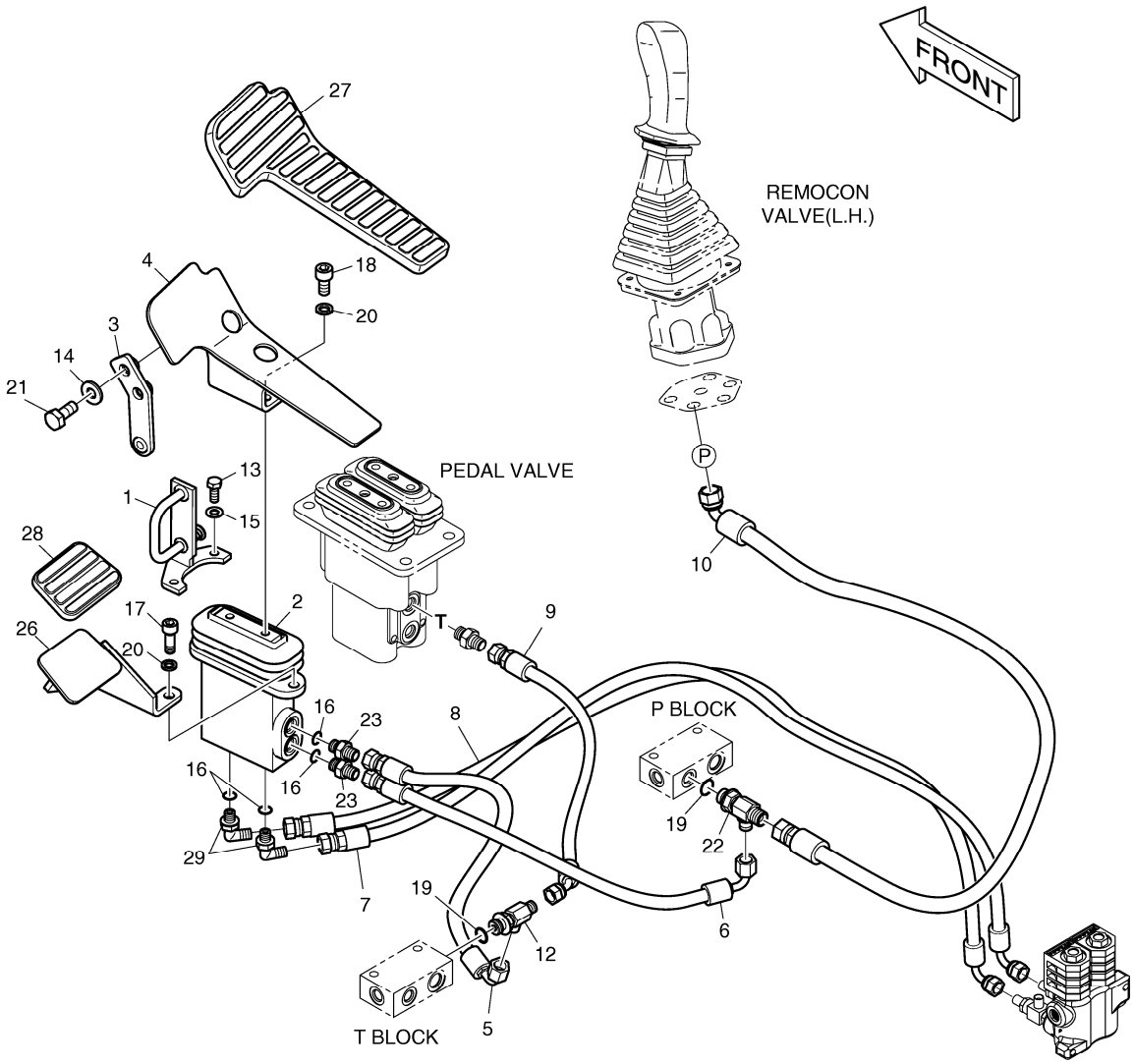

DATE	JUN. 01, 2010
3rd EDITION	

Fig. 6480 PILOT PIPING(2) - ROTATING
CONDUITES DE PILOTE

Serial No. ;

Key No.	Part No.	Description	Description	Q'ty	S.C	Serial No.	ICA	Replaceable part	
								Part No.	Q'ty
6480 --	K1007262E	PILOT PIPING-ROTATING	CIRCUIT DE PILOTE	-	D				
1	K1001873A	PLATE	PLAQUE	1					
2	K1017382A	PEDAL VALVE	VALVE DE PEDALE	1					
3	K1001871B	PLATE	PLAQUE	1					
4	195-01684A	BRACKET;PEDAL(L.H)	SUPPORT	1					
5	DS2093130	HOSE	TUYAU	1					
6	DS2093202	HOSE PF1/4-480L	TUYAU	1					
7	DS2093204	HOSE	TUYAU FLEXIBLE	1					
8	DS2093205	HOSE	TUYAU	1					
9	DS2092046	HOSE	TUYAU	1					
10	DS2095003	HOSE	TUYAU	1					
12	2181-1951D7	TEE	TE	1					
13	S0508866	BOLT	BOULON	2					
14	S5102603	WASHER	RONDELLE	2					
15	S5102503	WASHER	RONDELLE	2					
16	S8000111	O-RING	JOINT CIRCULAIRE	4					
17	S2212266	BOLT;SOCKET	BOULON	2					
18	S2211866	BOLT;SOCKET	BOULON	2					
19	S8000141	O-RING	JOINT CIRCULAIRE	2					
20	S5110603	WASHER;SPRING	RONDELLE	4					
21	S0512066	BOLT	BOULON	2					
22	2181-1951D6	TEE	TE	1					
23	2181-1126D14	ADAPTER PF1/4	ADAPTEUR	2					
26	K1003948A	FOOT REST	REPOS DE PIED	1					
27	161-00382	RUBBER;PEDAL(L.H)	LE CAOUTCHOUC	1					
28	K1006656	RUBBER;PEDAL	LE CAOUTCHOUC	1					
29	2181-1702D4	ELBOW PFO1/4-PF1/4	COUDE	2					

DATE	JUN. 01, 2010
3rd EDITION	

Fig. 6490 BOOM PIPING - ROTATING(BOOM 5.7m)
CONDUITES DE FLECHE

Serial No. ;

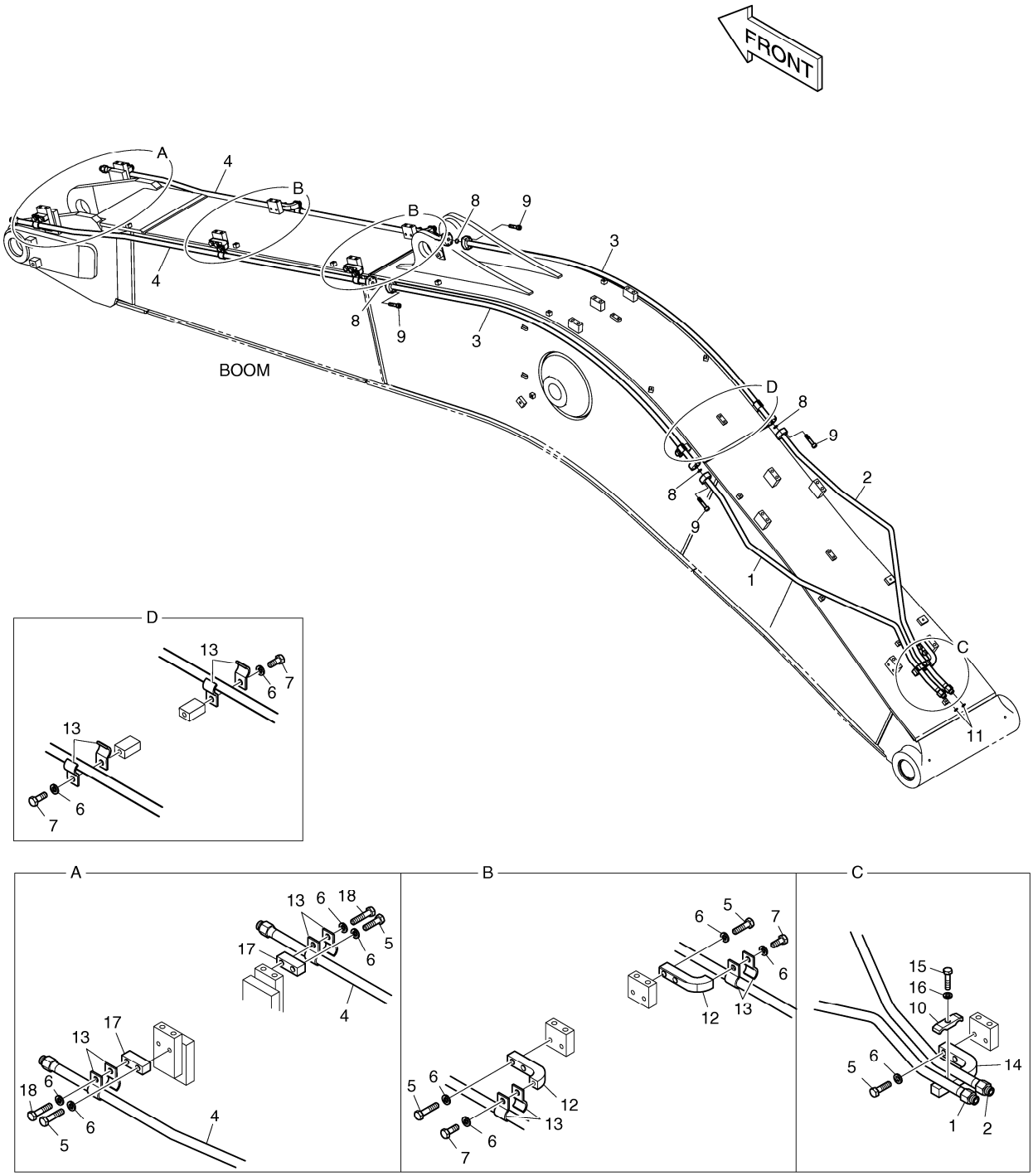

DATE	JUN. 01, 2010
3rd EDITION	

Fig. 6490 BOOM PIPING - ROTATING(BOOM 5.7m)
CONDUITES DE FLECHE

Serial No. ;

Key No.	Part No.	Description	Description	Q'ty	S.C	Serial No.	ICA	Replaceable part	
								Part No.	Q'ty
6490 --	K1041836	BOOM PIPING;ROTATING	BOOM PIPING	-	D				
1	K1038610	PIPE	TUYAU	1					
2	K1038611	PIPE	TUYAU	1					
3	K1038612	PIPE	TUYAU	2					
4	K1001048	PIPE	TUYAU	2					
5	S0560666	BOLT	BOULON	12					
6	S5102703	WASHER;SPRING	RONDELLE	20					
7	S0515266	BOLT	BOULON	6					
8	2180-1026D30	O-RING	JOINT CIRCULAIRE	4					
9	S2209466	BOLT;SOCKET	BOULON	16					
10	K1004028	CLAMP;PIPE	BRIDE	1					
11	S8030081	O-RING	JOINT CIRCULAIRE	2					
12	621-02700A	PLATE	PLAQUE	4					
13	124-00299A	CLAMP;PIPE	BRIDE	16					
14	621-02798	PLATE	PLAQUE	1					
15	S0558466	BOLT	BOULON	1					
16	S5102603	WASHER	RONDELLE	1					
17	K1002121	PLATE	PLAQUE	2					
18	S0560866	BOLT	BOULON	2					

DATE	JUN. 01, 2010
3rd EDITION	

Fig. 6500 ARM PIPING - ROTATING(ARM 2.9m)
CONDUITES DE BALANCIER

Serial No. ;

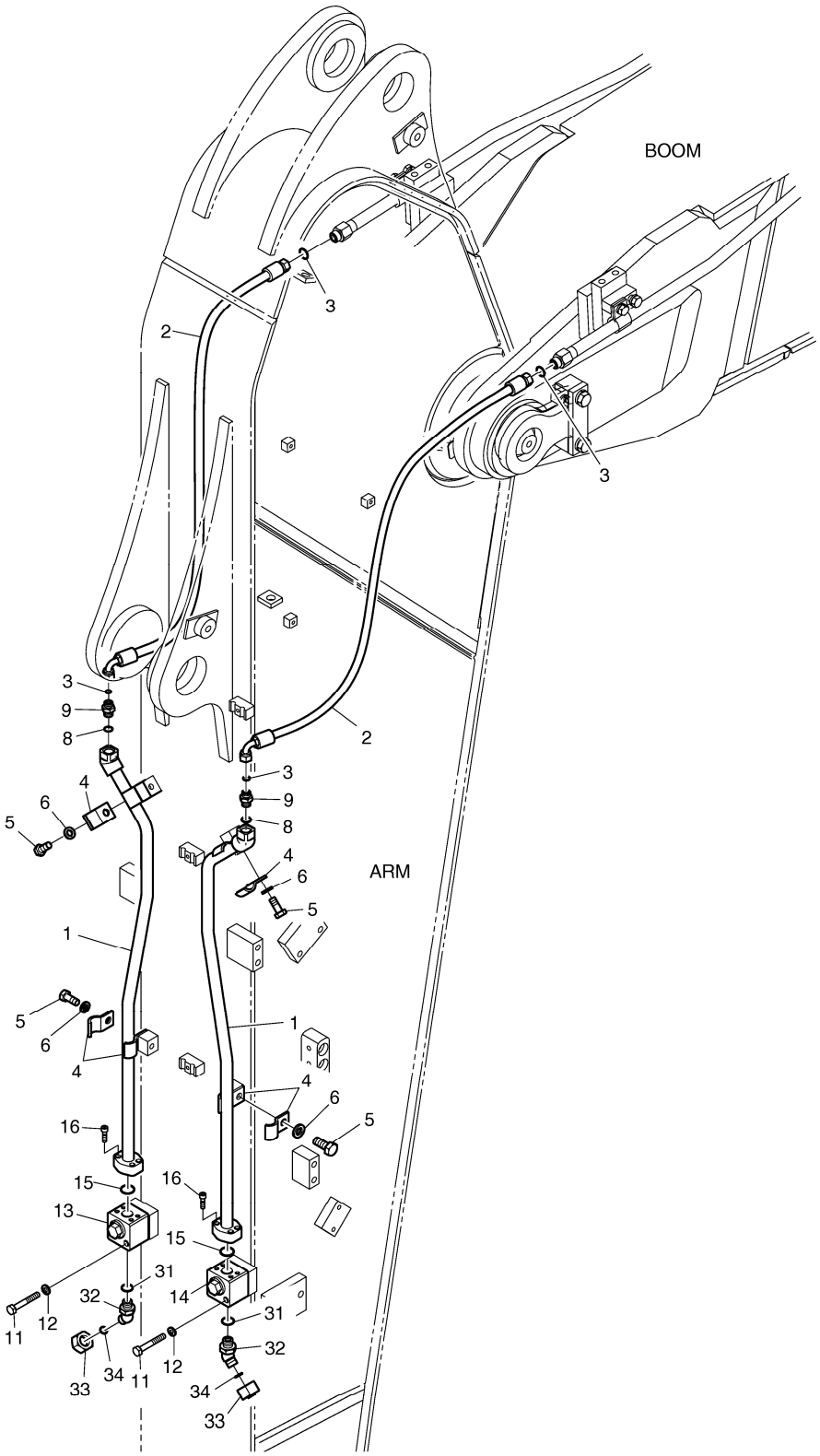

DATE	JUN. 01, 2010
3rd EDITION	

Fig. 6500 ARM PIPING - ROTATING(ARM 2.9m) CONDUITES DE BALANCIER

Serial No. ;

Key No.	Part No.	Description	Description	Q'ty	S.C	Serial No.	ICA	Replaceable part	
								Part No.	Q'ty
6500 --	K1041925	ARM PIPING-ROTATION	CONDUITES DE BALANCIE	-	D				
1	K1001050A	PIPE	TUYAU	2					
2	DS2013387	HOSE	TUYAU	2					
3	S8030081	O-RING	JOINT CIRCULAIRE	4					
4	124-00299A	CLAMP;PIPE	BRIDE	8					
5	S0515266	BOLT	BOULON	4					
6	S5102703	WASHER;SPRING	RONDELLE	4					
8	S8000181	O-RING	JOINT CIRCULAIRE	2					
9	2181-4133D3	ADAPTER	ADAPTEUR	2					
11	S0558966	BOLT M10X1.5X70	BOULON	4					
12	S5102603	WASHER	RONDELLE	4					
13	K1006227	VALVE;SWITCH(R.H)	VALVE	1					
14	K1006228	VALVE;SWITCH(L.H)	VALVE	1					
15	2180-1026D30	O-RING	JOINT CIRCULAIRE	2					
16	S2209266	BOLT	BOULON	8					
31	S8000181	O-RING	JOINT CIRCULAIRE	2					
32	2181-2816D4	ELBOW	COUDE	2					
33	2181-2817D4	CAP	CHAPEAU	2					
34	S8030081	O-RING	JOINT CIRCULAIRE	2					

DATE	JUN. 01, 2010
3rd EDITION	

Fig. 6510 BUCKET ASS'Y - 0.67m³(36") - SIDE PIN
ENSEMBLE DE GODET

Serial No. ;

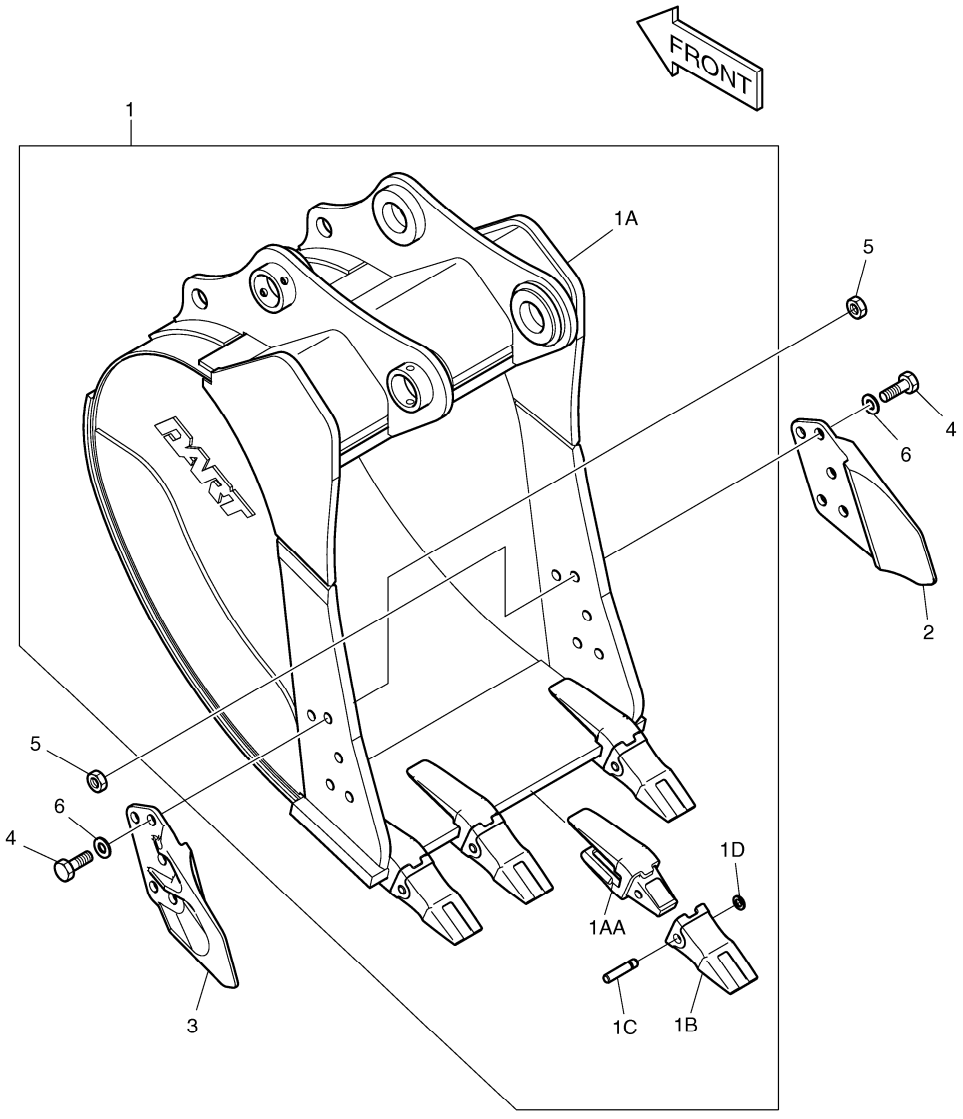

DATE	JUN. 01, 2010
3rd EDITION	

Fig. 6510 BUCKET ASS'Y - 0.67m³(36") - SIDE PIN ENSEMBLE DE GODET

Serial No. ;

Key No.	Part No.	Description	Description	Q'ty	S.C	Serial No.	ICA	Replaceable part	
								Part No.	Q'ty
6510 --	K1013100A	BUCKET ASS'Y-0.73m³(H.D)	GODET	1					
1	K1013101A	BUCKET;WITH TOOTH-0.67㎥	GODET	1	D				
1A	K1013102	. BUCKET;WELD-0.67㎥	. GODET	1					
1AA	2713-1218A	.. ADAPTER;TOOTH	.. ADAPTEUR	4					
1B	713-00024A	. TOOTH;POINT	. DENT	4					
1C	2705-1020	. PIN;LOCKING	. GOUPILLE	4					
1D	2114-1848A	. WASHER;LOCKING	. RONDELLE	4					
2	2713-1059A	CUTTER;SIDE(R.H)	COUPEUR	1					
3	2713-1060A	CUTTER;SIDE(L.H)	COUPEUR	1					
4	S0574861	BOLT M24X3.0X75	BOULON	10					
5	S4013333	NUT	ECROU	10					
6	2114-1831A	WASHER;HARDEN	RONDELLE	10					

DATE	JUN. 01, 2010
3rd EDITION	

Fig. 6520 BUCKET ASS'Y - 0.8m³(42") - SIDE PIN
ENSEMBLE DE GODET

Serial No. ;

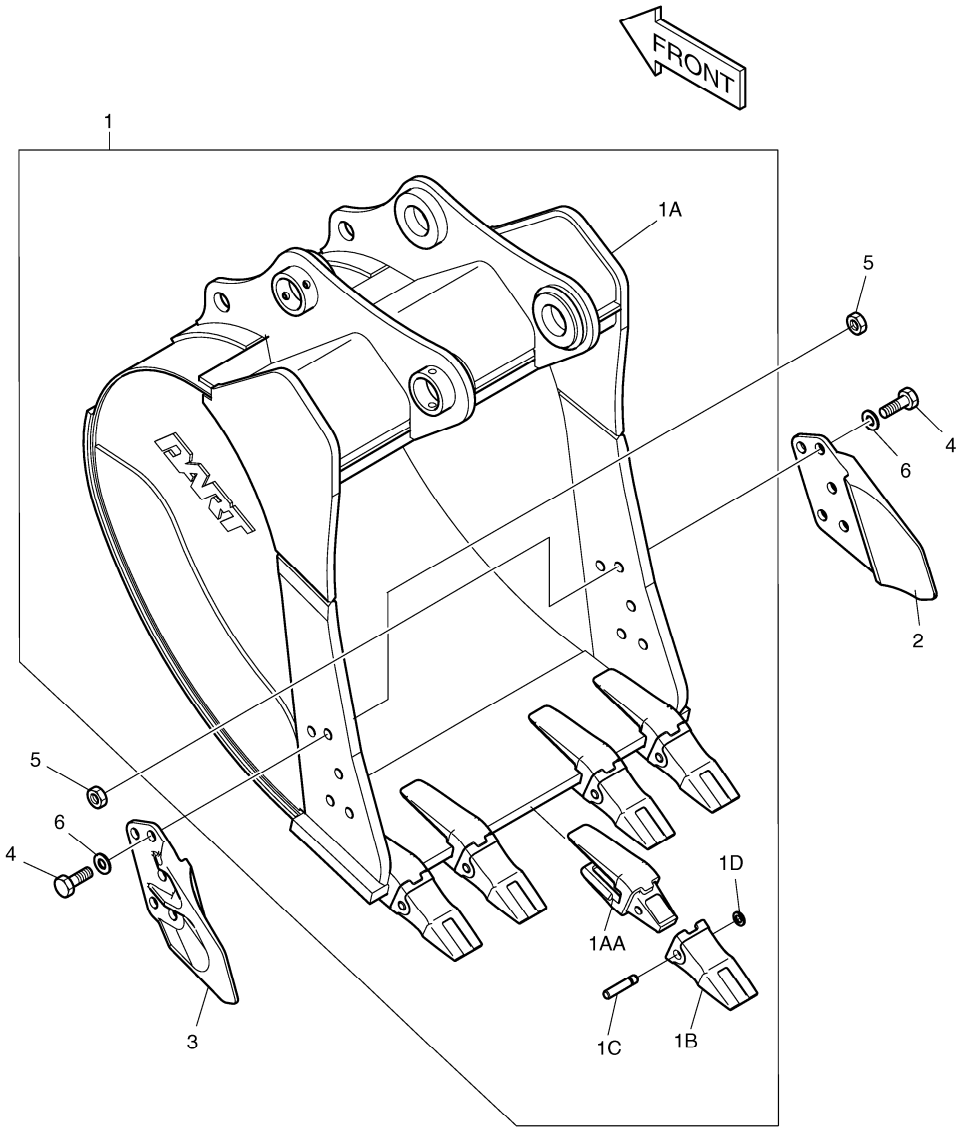

DATE	JUN. 01, 2010
3rd EDITION	

Fig. 6520 BUCKET ASS'Y - 0.8m³(42") - SIDE PIN
ENSEMBLE DE GODET

Serial No. ;

Key No.	Part No.	Description	Description	Q'ty	S.C	Serial No.	ICA	Replaceable part	
								Part No.	Q'ty
6520 --	K1013103A	BUCKET ASS'Y-0.90m³(H.D)	GODET	1					
1	K1013104A	BUCKET;WITH TOOTH-0.8㎥	GODET	1	D				
1A	K1013105	. BUCKET;WELD-0.8㎥	. GODET	1					
1AA	2713-1218A	.. ADAPTER;TOOTH	.. ADAPTEUR	5					
1B	713-00024A	. TOOTH;POINT	. DENT	5					
1C	2705-1020	. PIN;LOCKING	. GOUPILLE	5					
1D	2114-1848A	. WASHER;LOCKING	. RONDELLE	5					
2	2713-1059A	CUTTER;SIDE(R.H)	COUPEUR	1					
3	2713-1060A	CUTTER;SIDE(L.H)	COUPEUR	1					
4	S0574861	BOLT M24X3.0X75	BOULON	10					
5	S4013333	NUT	ECROU	10					
6	2114-1831A	WASHER;HARDEN	RONDELLE	10					

DATE	JUN. 01, 2010
3rd EDITION	

Fig. 6530 BUCKET ASS'Y - 0.95m³(48") - SIDE PIN
ENSEMBLE DE GODET

Serial No. ;

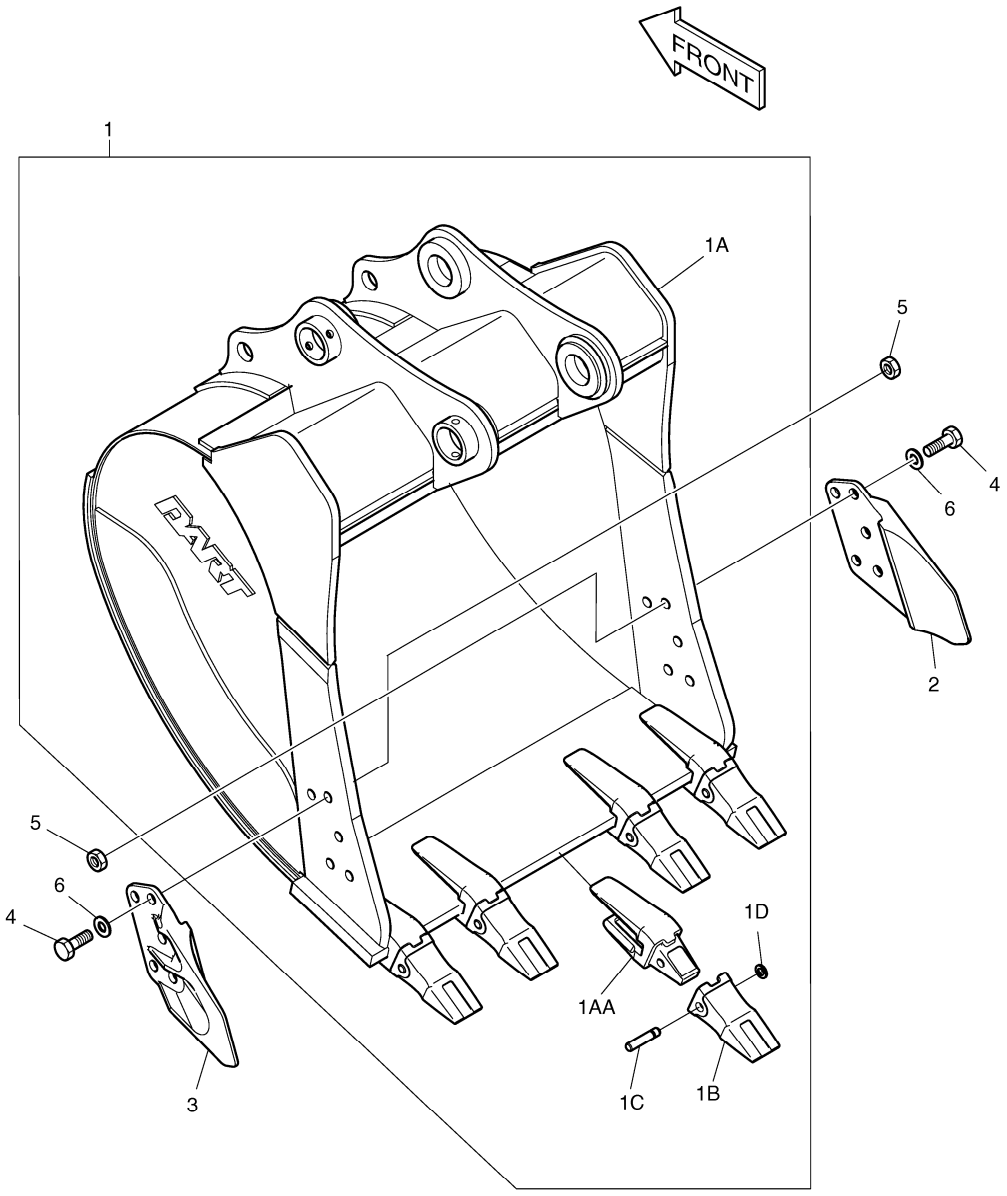

DATE	JUN. 01, 2010
3rd EDITION	

Fig. 6530 BUCKET ASS'Y - 0.95m³(48") - SIDE PIN
ENSEMBLE DE GODET

Serial No. ;

Key No.	Part No.	Description	Description	Q'ty	S.C	Serial No.	ICA	Replaceable part	
								Part No.	Q'ty
6530 --	K1013106A	BUCKET ASS`Y-0.95m³	GODET	1					
1	K1013108A	BUCKET;WITH TOOTH-0.95m³	GODET	1	D				
1A	K1013109A	. BUCKET;WELD (48")	. GODET	1					
1AA	2713-1218A	.. ADAPTER;TOOTH	.. ADAPTEUR	5					
1B	713-00024A	. TOOTH;POINT	. DENT	5					
1C	2705-1020	. PIN;LOCKING	. GOUPILLE	5					
1D	2114-1848A	. WASHER;LOCKING	. RONDELLE	5					
2	2713-1059A	CUTTER;SIDE(R.H)	COUPEUR	1					
3	2713-1060A	CUTTER;SIDE(L.H)	COUPEUR	1					
4	S0574861	BOLT M24X3.0X75	BOULON	10					
5	S4013333	NUT	ECROU	10					
6	2114-1831A	WASHER;HARDEN	RONDELLE	10					

DATE	JUN. 01, 2010
3rd EDITION	

Fig. 6540 BUCKET ASS'Y - 1.1m³(54") - SIDE PIN
ENSEMBLE DE GODET

Serial No. ;

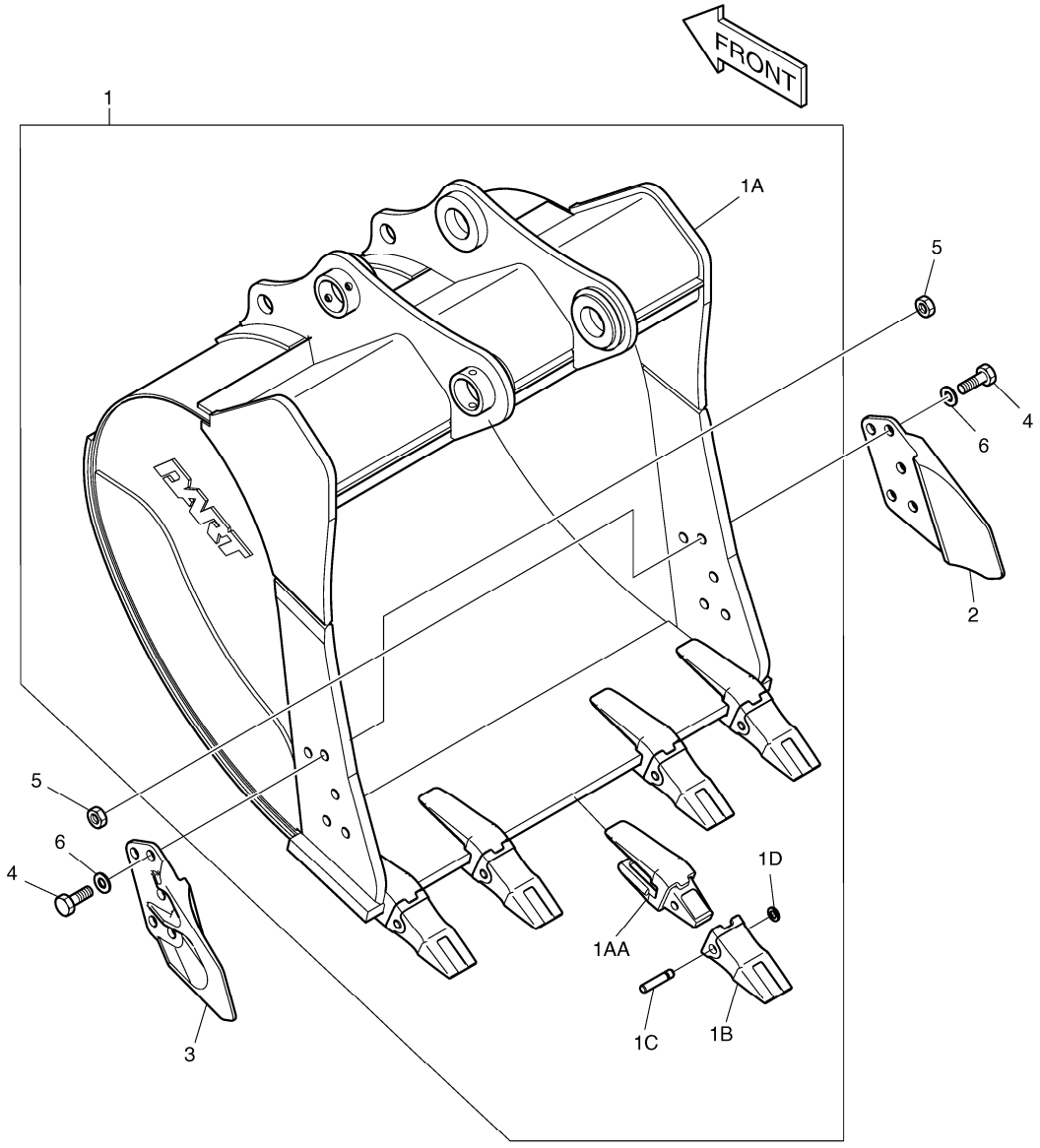

DATE	JUN. 01, 2010
3rd EDITION	

Fig. 6540 BUCKET ASS'Y - 1.1m³(54") - SIDE PIN
ENSEMBLE DE GODET

Serial No. ;

Key No.	Part No.	Description	Description	Q'ty	S.C	Serial No.	ICA	Replaceable part	
								Part No.	Q'ty
6540 --	K1013110A	BUCKET ASS'Y-1.24m³(H.D)	GODET	1					
1	K1013111A	BUCKET;WITH TOOTH-1.1㎥	GODET	1	D				
1A	K1013112	. BUCKET;WELD-1.1㎥	. GODET	1					
1AA	2713-1218A	.. ADAPTER;TOOTH	.. ADAPTEUR	5					
1B	713-00024A	. TOOTH;POINT	. DENT	5					
1C	2705-1020	. PIN;LOCKING	. GOUPILLE	5					
1D	2114-1848A	. WASHER;LOCKING	. RONDELLE	5					
2	2713-1059A	CUTTER;SIDE(R.H)	COUPEUR	1					
3	2713-1060A	CUTTER;SIDE(L.H)	COUPEUR	1					
4	S0574861	BOLT M24X3.0X75	BOULON	10					
5	S4013333	NUT	ECROU	10					
6	2114-1831A	WASHER;HARDEN	RONDELLE	10					

DATE	JUN. 01, 2010
3rd EDITION	

Fig. 6550 BUCKET ASS'Y - 1.17m³(57") - SIDE PIN
ENSEMBLE DE GODET

Serial No. ;

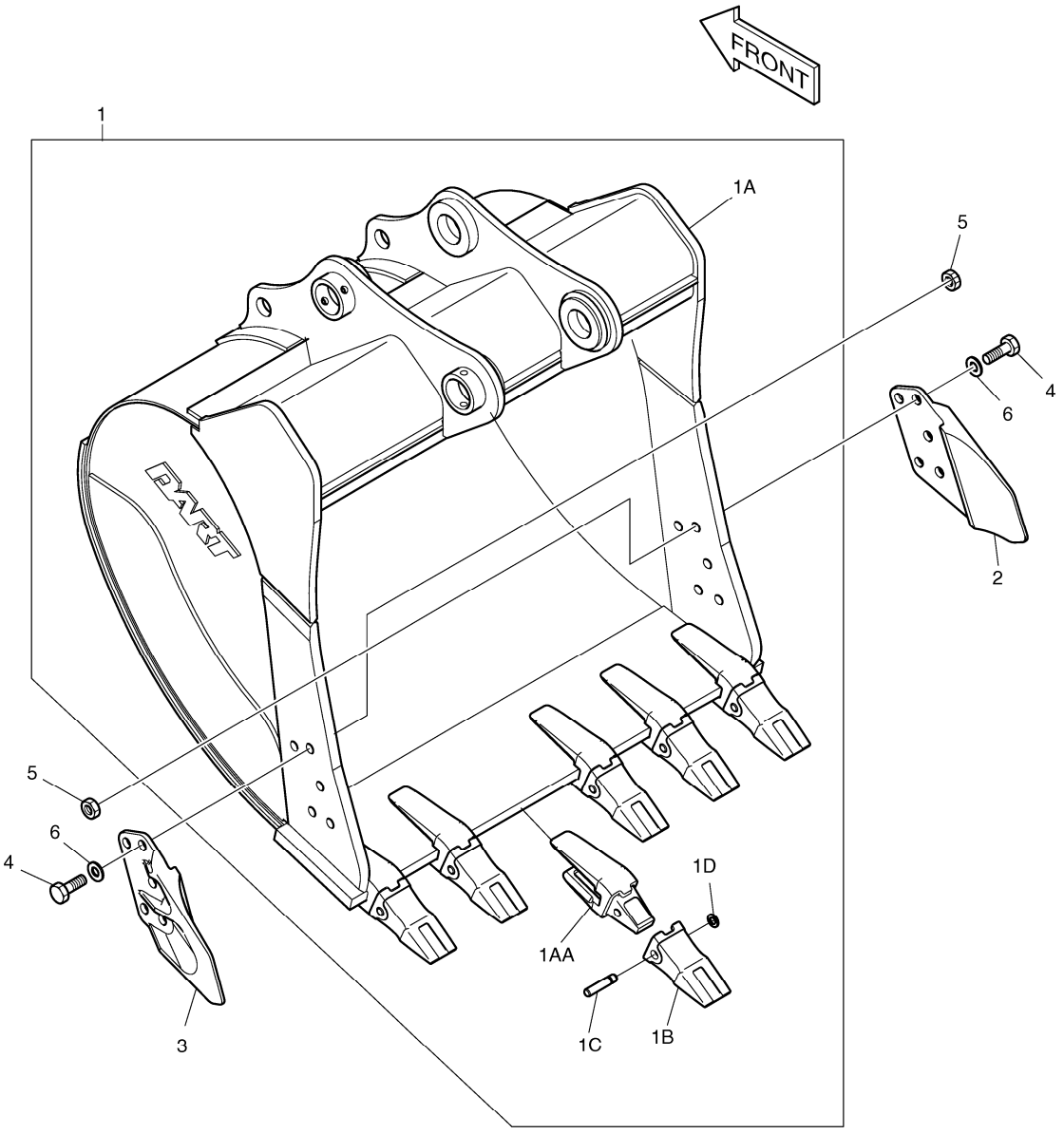

DATE	JUN. 01, 2010
3rd EDITION	

Fig. 6550 BUCKET ASS'Y - 1.17m³(57") - SIDE PIN
ENSEMBLE DE GODET

Serial No. ;

Key No.	Part No.	Description	Description	Q'ty	S.C	Serial No.	ICA	Replaceable part	
								Part No.	Q'ty
6550 --	K1013113A	BUCKET ASS'Y-1.32m³(H.D)	GODET	1					
1	K1013114A	BUCKET;WITH TOOTH-1.17㎥	GODET	1	D				
1A	K1013115	. BUCKET;WELD-1.17㎥	. GODET	1					
1AA	2713-1218A	.. ADAPTER;TOOTH	.. ADAPTEUR	6					
1B	713-00024A	. TOOTH;POINT	. DENT	6					
1C	2705-1020	. PIN;LOCKING	. GOUPILLE	6					
1D	2114-1848A	. WASHER;LOCKING	. RONDELLE	6					
2	2713-1059A	CUTTER;SIDE(R.H)	COUPEUR	1					
3	2713-1060A	CUTTER;SIDE(L.H)	COUPEUR	1					
4	S0574861	BOLT M24X3.0X75	BOULON	10					
5	S4013333	NUT	ECROU	10					
6	2114-1831A	WASHER;HARDEN	RONDELLE	10					

DATE	JUN. 01, 2010
3rd EDITION	

Fig. 6560 BUCKET ASS'Y - 1.31m³(63") - SIDE PIN
ENSEMBLE DE GODET

Serial No. ;

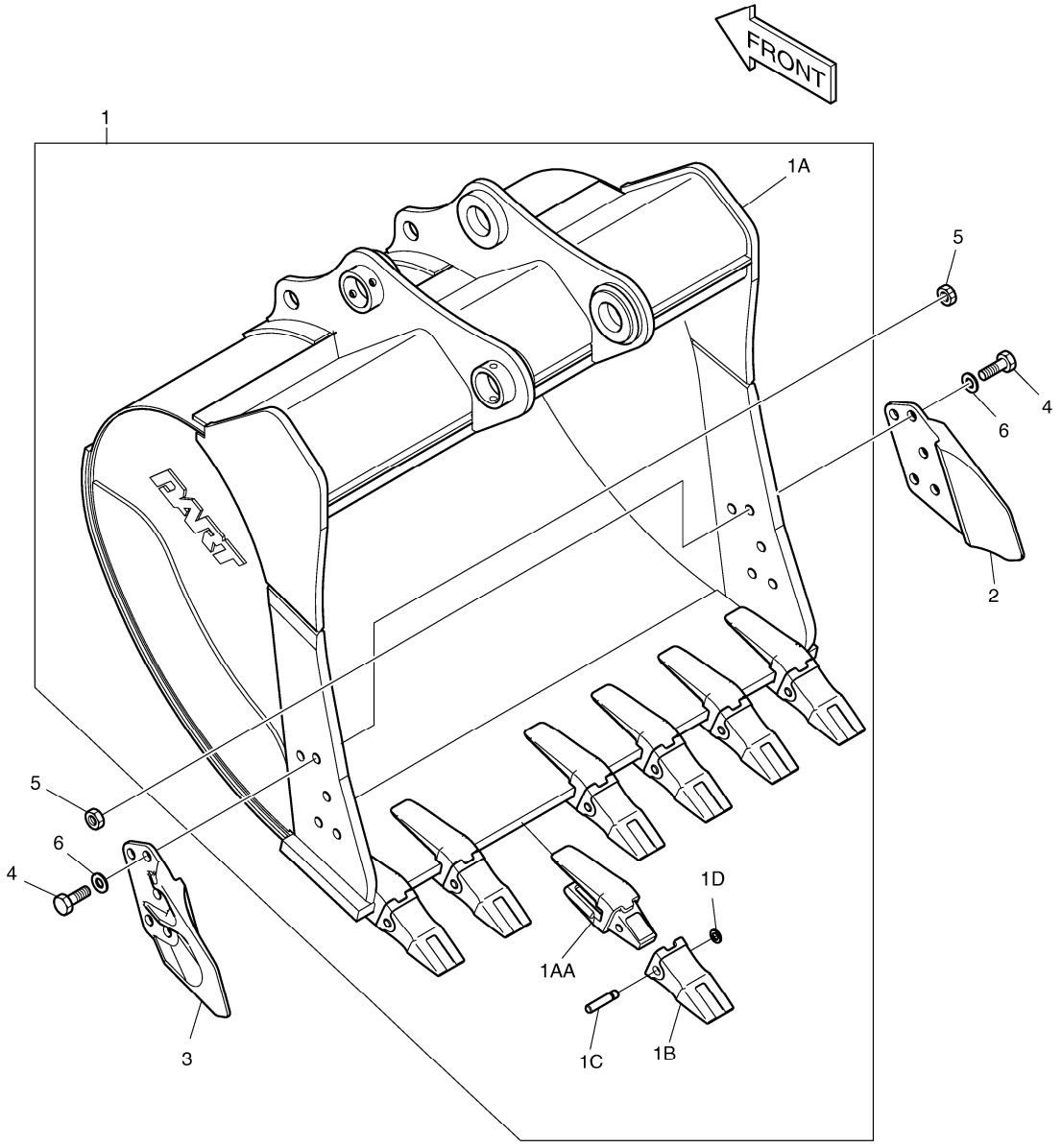

DATE	JUN. 01, 2010
3rd EDITION	

Fig. 6560 BUCKET ASS'Y - 1.31m³(63") - SIDE PIN
ENSEMBLE DE GODET

Serial No. ;

Key No.	Part No.	Description	Description	Q'ty	S.C	Serial No.	ICA	Replaceable part	
								Part No.	Q'ty
6560 --	K1013117A	BUCKET ASS'Y-1.49m³(H.D)	GODET	1					
1	K1013118A	BUCKET;WITH TOOTH-1.31㎥	GODET	1	D				
1A	K1013119	. BUCKET;WELD-1.31㎥	. GODET	1					
1AA	2713-1218A	.. ADAPTER;TOOTH	.. ADAPTEUR	7					
1B	713-00024A	. TOOTH;POINT	. DENT	7					
1C	2705-1020	. PIN;LOCKING	. GOUPILLE	7					
1D	2114-1848A	. WASHER;LOCKING	. RONDELLE	7					
2	2713-1059A	CUTTER;SIDE(R.H)	COUPEUR	1					
3	2713-1060A	CUTTER;SIDE(L.H)	COUPEUR	1					
4	S0574861	BOLT M24X3.0X75	BOULON	10					
5	S4013333	NUT	ECROU	10					
6	2114-1831A	WASHER;HARDEN	RONDELLE	10					

DATE	JUN. 01, 2010
3rd EDITION	

Fig. 6570 ARM - 2.0m BALANCIER

Serial No. ;

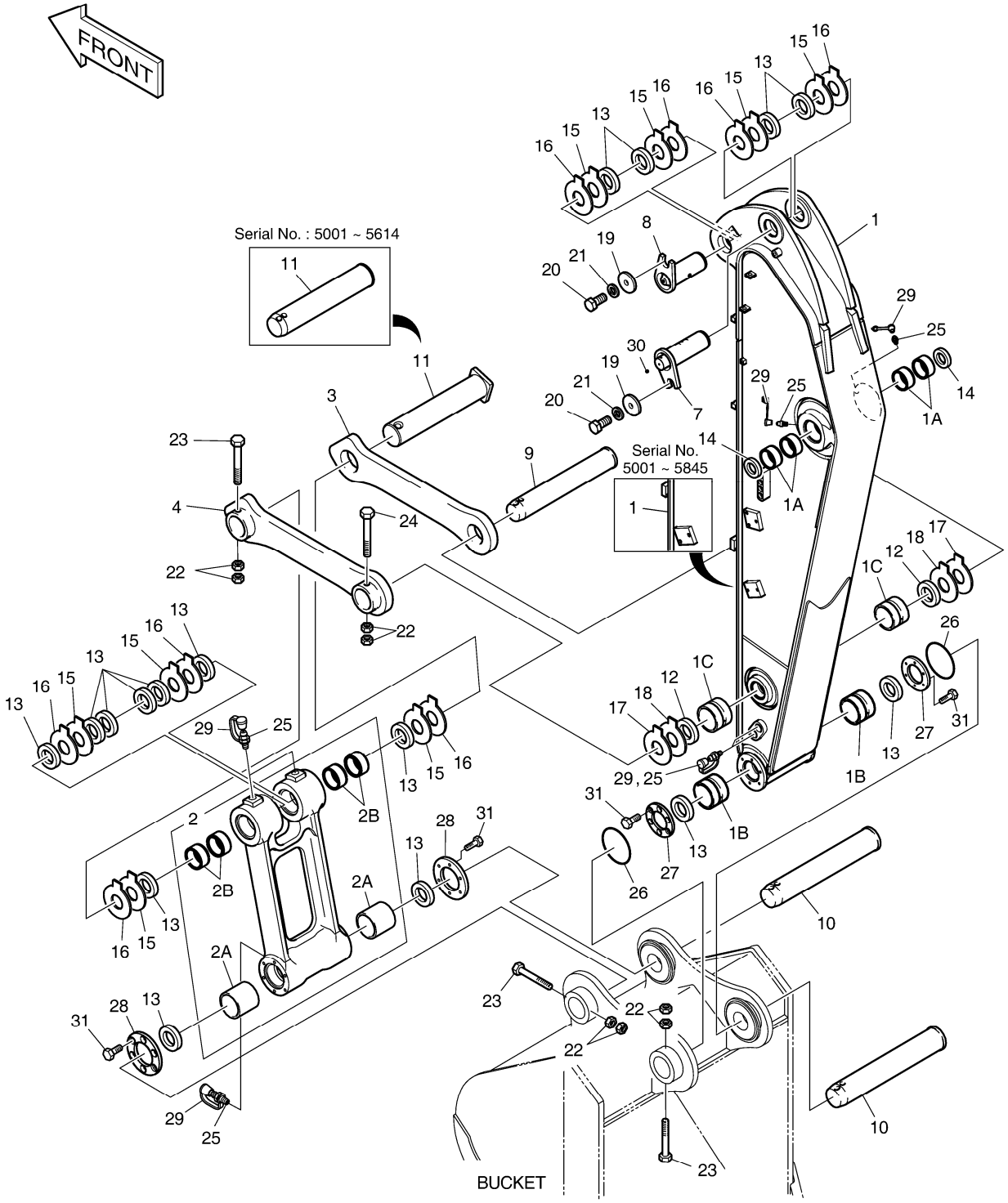

DATE	JUN. 01, 2010
3rd EDITION	

Fig. 6570 ARM - 2.0m BALANCIER

Serial No. ;

Key No.	Part No.	Description	Description	Q'ty	S.C	Serial No.	ICA	Replaceable part	
								Part No.	Q'ty
6570 --	K1046238E	ARM ASS'Y	BALANCIER	-	D	5001-5614			
	230201-00106	ARM ASSY;2.0M	BALANCIER	-	D	5615-			
1	K1046248B	ARM SUB ASS'Y-2.0m	ENSEMBLE BALANCIER	1		5001-5845			
	230204-00085A	ARM,MACHINE;2.0M	ENSEMBLE BALANCIER	1		5846-			
1A	K1037848A	. BUSHING	. BUSHING	4					
1B	K1037849A	. BUSHING	. BUSHING	2					
1C	K1037850A	. BUSHING	. BUSHING	2					
2	K1041214A	PUSH LINK ASS'Y	ENSEMBLE DE ARTICULAT	1					
2A	K1037852A	. BUSHING	. BUSHING	2					
2B	K1037851A	. BUSHING	. BUSHING	4					
3	2155-1299B	LINK;GUIDE(R.H)	ARTICULATION	1		5001-5614	Y	101540-00012	1
	101540-00012	LINK,GUIDE(R.H)	ARTICULATION	1		5615-			
4	2155-1300B	LINK;GUIDE(L.H)	LIEN	1					
7	K1046927	PIN	GOUPILLE	1					
8	K1002130A	PIN	GOUPILLE	1					
9	K1007255A	PIN	GOUPILLE	1					
10	2123-2192E	PIN	GOUPILLE	2					
11	K1007256A	PIN	GOUPILLE	1		5001-5614	Y	120501-00130	1
	120501-00130	PIN;BUCKET CYL ROD	GOUPILLE	1		5615-			
12	2180-1106BD4	SEAL;DUST	CACHET	2					
13	2180-1106BD24	SEAL;DUST	CACHET	14					
14	2180-1106BD6	SEAL;DUST	CACHET	2					
15	DS7752012	SHIM	CALE	8					
16	DS7752013	SHIM	CALE	8					
17	DS7752006	SHIM	CALE	2					
18	DS7752007	SHIM	CALE	2					
19	2116-1060D6	STOPPER	TAQUET	2					
20	S0521366	BOLT	BOULON	2					
21	S5102903	WASHER	RONDELLE	2					
22	S4012933	NUT	ECROU	8					
23	DS0001084	BOLT	BOULON	3					
24	DS0001083	BOLT	BOULON	1					
25	S6710041	NIPPLE;GREASE	MAMELON	7					
26	180-00077D5	O-RING	JOINT CIRCULAIRE	2					
27	K1000911	SPACER	ENTRETOISE	2					
28	K1000912B	SPACER	ENTRETOISE	2					
29	160-00020	CAP;GREASE NIPPLE	CHAPEAU	7					
30	2181-1116D1	PLUG	BOUCHON	1					

Fig. 6570 ARM - 2.0m BALANCIER

Serial No. ;

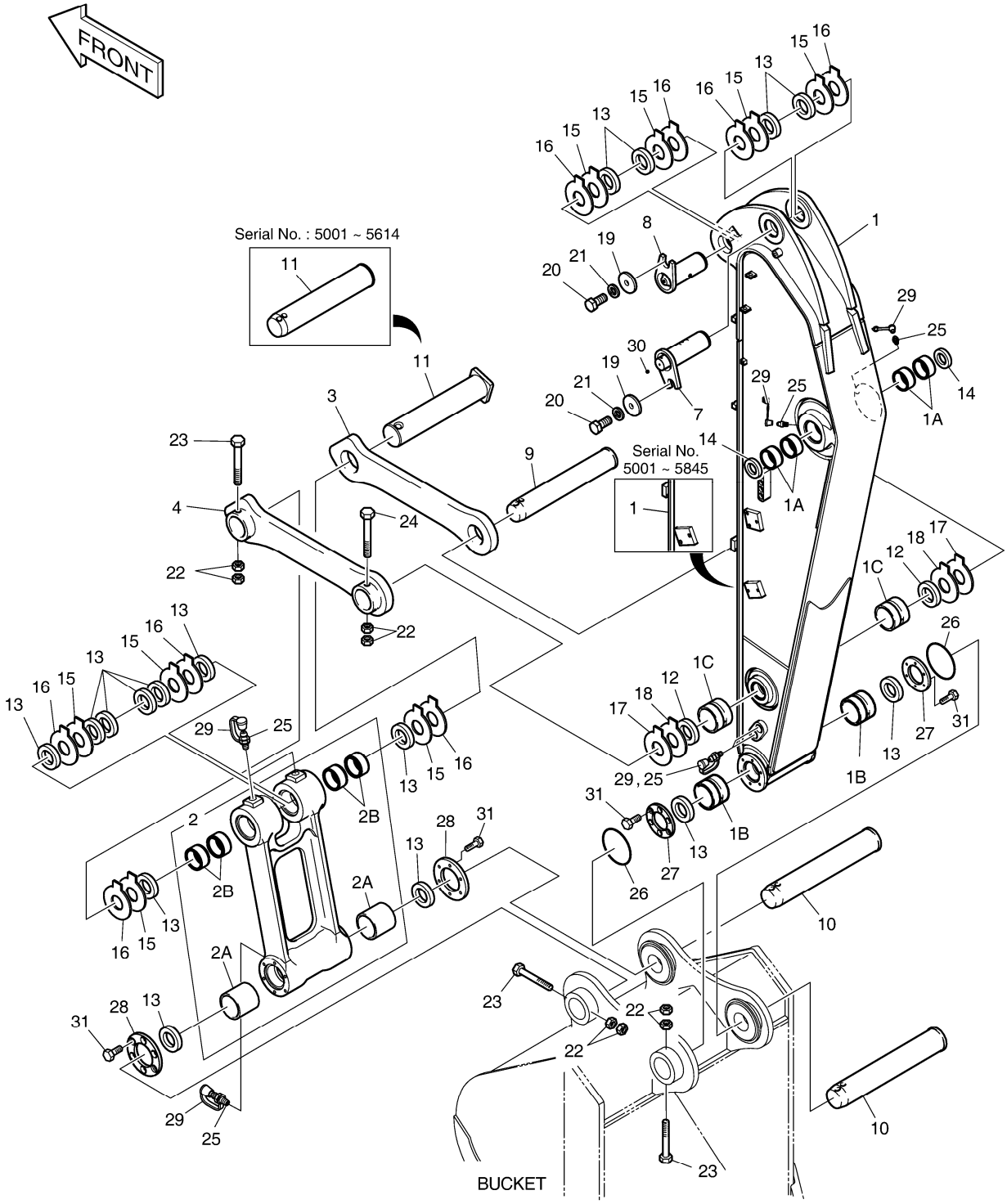

DATE	JUN. 01, 2010
3rd EDITION	

Fig. 6570 ARM - 2.0m BALANCIER

Serial No. ;

Key No.	Part No.	Description	Description	Q'ty	S.C	Serial No.	ICA	Replaceable part	
								Part No.	Q'ty
6570 -31	S0712066	BOLT	BOULON	24					

DATE	JUN. 01, 2010
3rd EDITION	

Fig. 6580 ARM PIPING - ARM 2.0m
CONDUITES DE BALANCIER

Serial No. ;

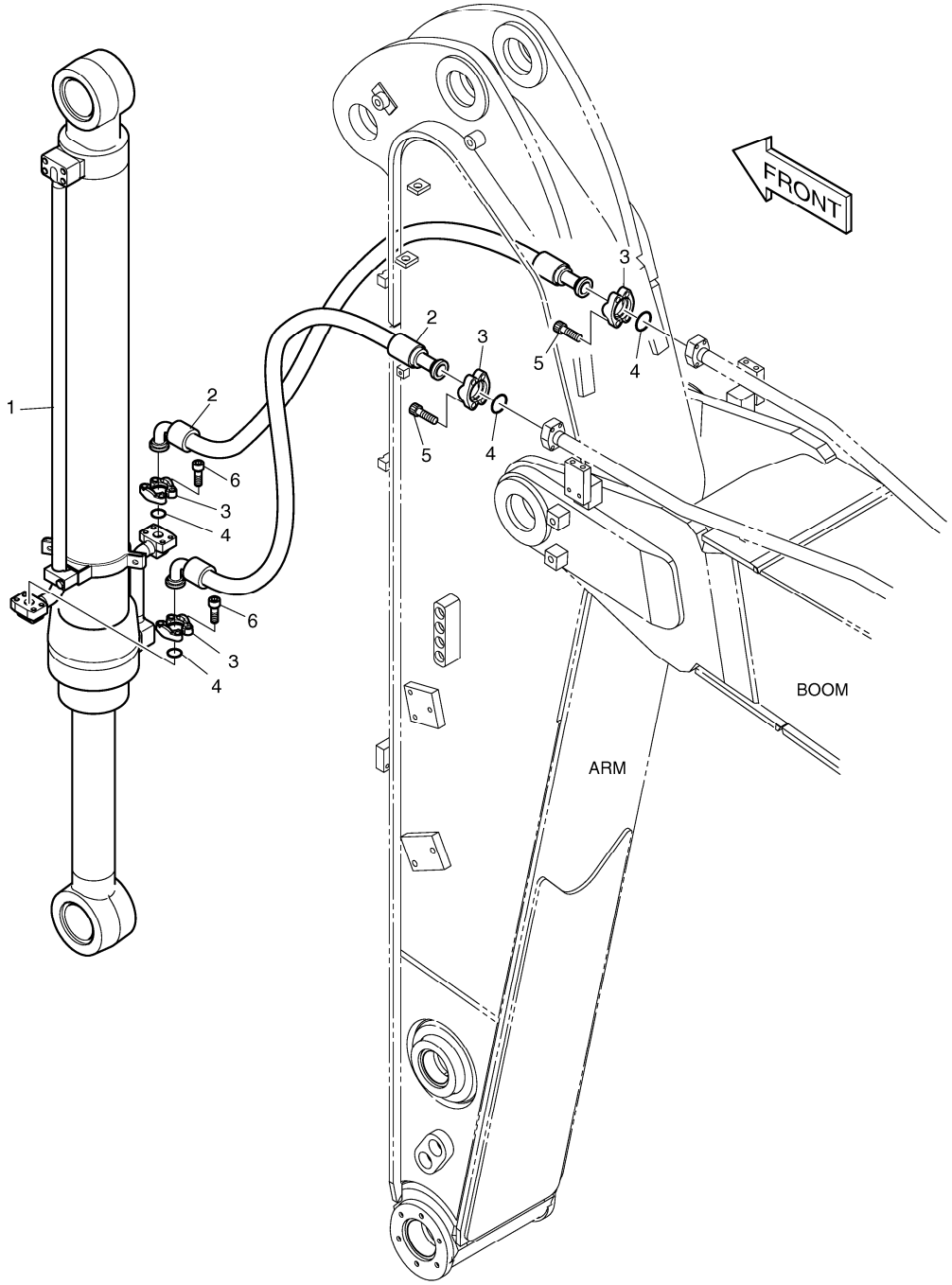

DATE	JUN. 01, 2010
3rd EDITION	

Fig. 6580 ARM PIPING - ARM 2.0m CONDUITES DE BALANCIER

Serial No. ;

Key No.	Part No.	Description	Description	Q'ty	S.C	Serial No.	ICA	Replaceable part	
								Part No.	Q'ty
6580 --	K1046325	ARM PIPING	CONDUITES DE BALANCIE	-	D				
1	K1046326	CYLINDER;BUCKET	VERIN DE GODET	1					
2	DS2040368	HOSE	TUYAU FLEXIBLE	2					
3	2181-9079	FLANGE	BRIDE	8					
4	2180-1026D2	O-RING	JOINT CIRCULAIRE	4					
5	S2212366	BOLT;SOCKET M10X1.5X35	BOULON	8					
6	S2212266	BOLT;SOCKET	BOULON	8					

DATE	JUN. 01, 2010
3rd EDITION	

Fig. 6590 LUBRICATION PIPING - ARM 2.0m
LUBRIFICATION

Serial No. ;

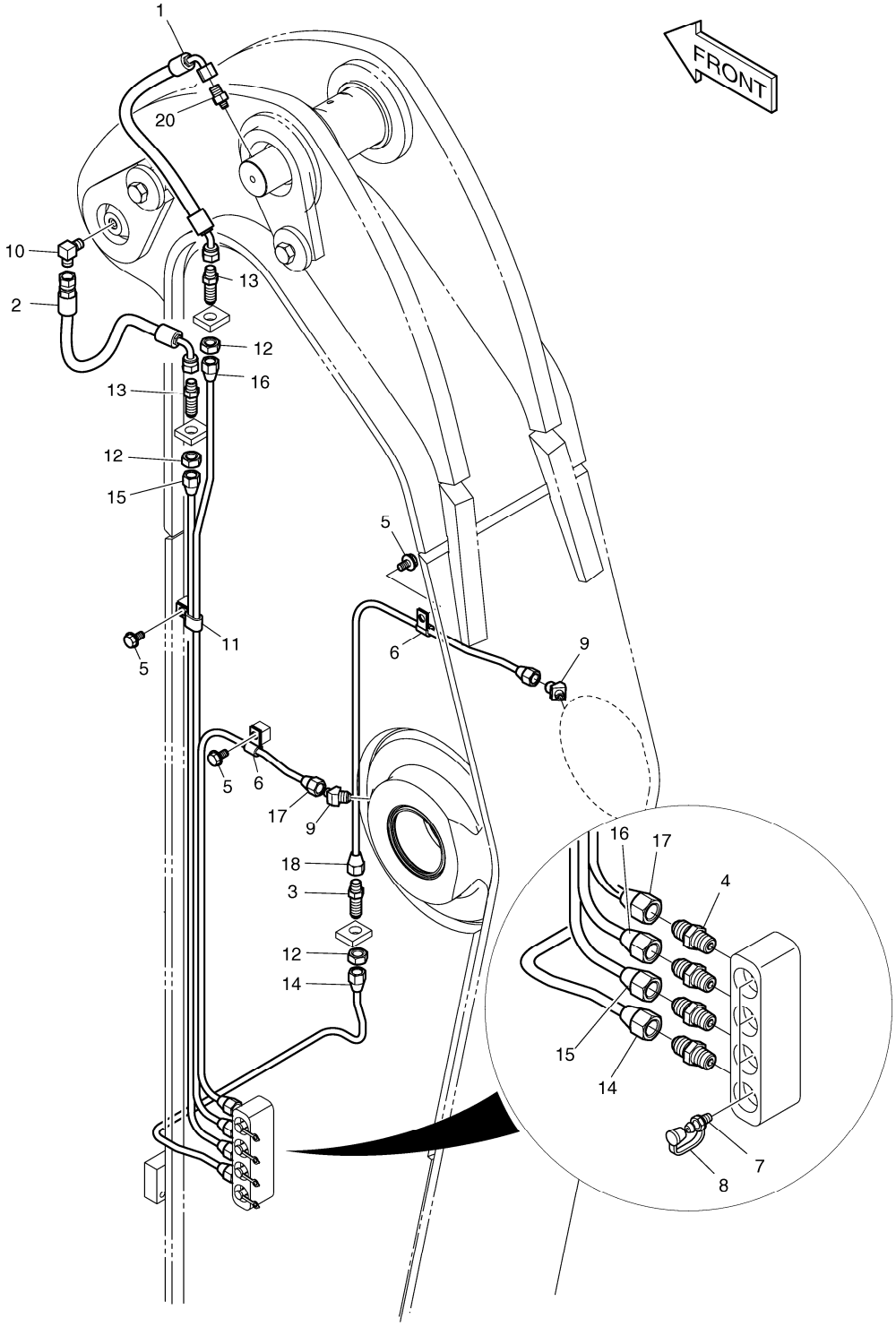

DATE	JUN. 01, 2010
3rd EDITION	

Fig. 6590 LUBRICATION PIPING - ARM 2.0m
LUBRIFICATION

Serial No. ;

Key No.	Part No.	Description	Description	Q'ty	S.C	Serial No.	ICA	Replaceable part	
								Part No.	Q'ty
6590 --	K1013396A	LUBRICATION PIPING-ARM	LUBRIFICATION	-	D				
1	DS2058279	HOSE	TUYAU FLEXIBLE	1					
2	2184-1036D11	HOSE	TUYAU	1					
3	DS2225009	ADAPTER	ADAPTEUR	1					
4	2181-1184	ADAPTER	ADAPTEUR	4					
5	K1001029	BOLT	BOULON	3					
6	DS2802023	CLIP	AGRAFE	2					
7	S6710041	NIPPLE;GREASE	MAMELON	4					
8	160-00020	CAP;GREASE NIPPLE	CHAPEAU	4					
9	K1010730	ELBOW	COUDE	2					
10	2181-1111D11	ELBOW	COUDE	1					
11	DS2805007	CLIP	AGRAFE	1					
12	S4032833	NUT	ECROU	3					
13	2181-1923D12	ADAPTER	ADAPTEUR	2					
14	K1013397	PIPE	TUYAU	1					
15	K1025403	PIPE	TUYAU	1					
16	K1025404	PIPE	TUYAU	1					
17	K1025405	PIPE	TUYAU	1					
18	K1025406	PIPE	TUYAU	1					
20	2181-4112	ADAPTER	ADAPTEUR	1					

DATE	JUN. 01, 2010
3rd EDITION	

Fig. 6600 ARM PIPING - ARM 2.0m(ONE & TWO WAY)
CONDUITES DE BALANCIER

Serial No. ;

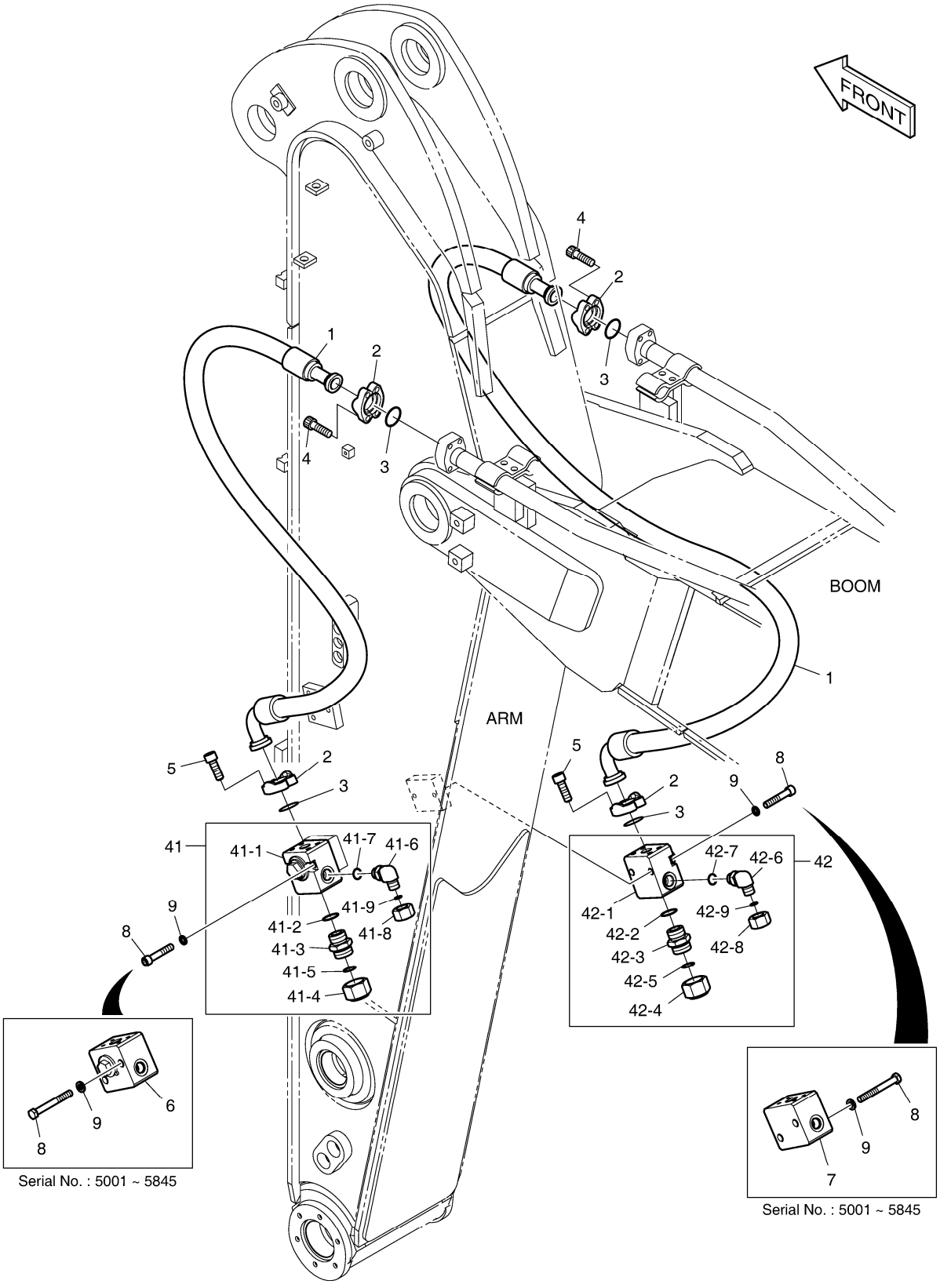

DATE	JUN. 01, 2010
3rd EDITION	

Fig. 6600 ARM PIPING - ARM 2.0m(ONE & TWO WAY) CONDUITES DE BALANCIER

Serial No. ;

Key No.	Part No.	Description	Description	Q'ty	S.C	Serial No.	ICA	Replaceable part	
								Part No.	Q'ty
6600 --	K1013398A	ARM PIPING-ONE & TWO WAY	CONDUITES DE BALANCIE	-	D	5001-5845			
	420212-01715	ARM PIPING,ONE & TWO WAY	CONDUITES DE BALANCIE	-	D	5846-			
1	2184-1100D78	HOSE	TUYAU	2					
2	2181-9078	FLANGE	BRIDE	8					
3	2180-1026D19	O-RING	JOINT CIRCULAIRE	4					
4	S2212466	BOLT;SOCKET M10X1.5X40	BOULON	8					
5	S2212266	BOLT;SOCKET	BOULON	8					
6	K1000334A	VALVE;STOP(L.H)	VANNE	1		5001-5845			
7	K1000338A	VALVE;STOP(R.H)	VANNE	1		5001-5845			
8	S0563666	BOLT	BOULON A 6 PANS	4		5001-5845			
	S2215966	BOLT;SOCKET	BOULON	4		5846-			
9	S5102803	WASHER;SPRING	RONDELLE	4		5001-5845			
	S5110703	WASHER;SPRING	RONDELLE	4		5846-			
41	410137-00032	VALVE ASS'Y,STOP(L.H)	VANNE	1		5846-			
41-1	K1033252	. VALVE;STOP(L.H)	. VANNE	1		5846-			
41-2	S8000291	. O-RING	. JOINT CIRCULAIRE	1		5846-			
41-3	2181-4133D6	. ADAPTER	. ADAPTEUR	1		5846-			
41-4	2181-2817D2	. CAP	. CHAPEAU	1		5846-			
41-5	S8030161	. O-RING	. JOINT CIRCULAIRE	1		5846-			
41-6	2181-2815D3	. ELBOW	. COUDE	1		5846-			
41-7	S8000181	. O-RING	. JOINT CIRCULAIRE	1		5846-			
41-8	2181-2817D4	. CAP	. CHAPEAU	1		5846-			
41-9	S8030081	. O-RING	. JOINT CIRCULAIRE	1		5846-			
42	410137-00033	VALVE ASS'Y,STOP(R.H)	VANNE	1		5846-			
42-1	K1033254	. VALVE,STOP(R.H)	. VANNE	1		5846-			
42-2	S8000291	. O-RING	. JOINT CIRCULAIRE	1		5846-			
42-3	2181-4133D6	. ADAPTER	. ADAPTEUR	1		5846-			
42-4	2181-2817D2	. CAP	. CHAPEAU	1		5846-			
42-5	S8030161	. O-RING	. JOINT CIRCULAIRE	1		5846-			
42-6	2181-2815D3	. ELBOW	. COUDE	1		5846-			
42-7	S8000181	. O-RING	. JOINT CIRCULAIRE	1		5846-			
42-8	2181-2817D4	. CAP	. CHAPEAU	1		5846-			
42-9	S8030081	. O-RING	. JOINT CIRCULAIRE	1		5846-			

DATE	JUN. 01, 2010
3rd EDITION	

Fig. 6610 ARM PIPING - ARM 2.0m(QUICK CLAMP)
CONDUITES DE BALANCIER

Serial No. ;

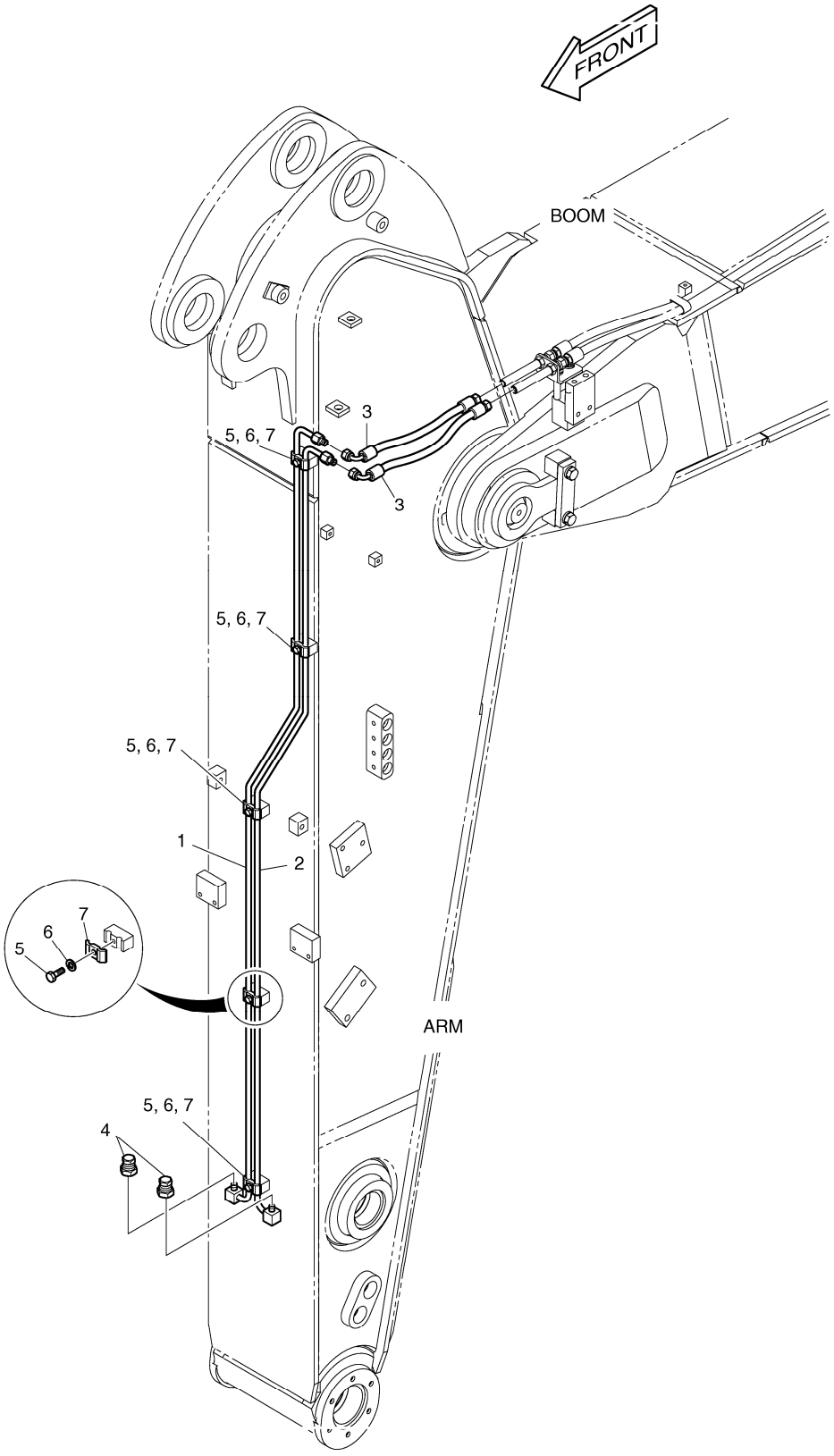

DATE	JUN. 01, 2010
3rd EDITION	

Fig. 6610 ARM PIPING - ARM 2.0m(QUICK CLAMP) CONDUITES DE BALANCIER

Serial No. ;

Key No.	Part No.	Description	Description	Q'ty	S.C	Serial No.	ICA	Replaceable part	
								Part No.	Q'ty
6610 --	K1013404A	ARM PIPING-QUICK CLAMP	CONDUITES DE BALANCIE	-	D				
1	K1025408	PIPE	TUYAU	1					
2	K1025409	PIPE	TUYAU	1					
3	DS2055691	HOSE	TUYAU FLEXIBLE	2					
4	2181-2820D1	PLUG	BOUCHON	2					
5	S0508866	BOLT	BOULON	5					
6	S5102503	WASHER	RONDELLE	5					
7	K1004011	CLAMP;PIPE	BRIDE	5					

DATE	JUN. 01, 2010
3rd EDITION	

Fig. 6620 ARM PIPING - ARM 2.0m(CLAMSHELL)
CONDUITES DE BALANCIER

Serial No. ;

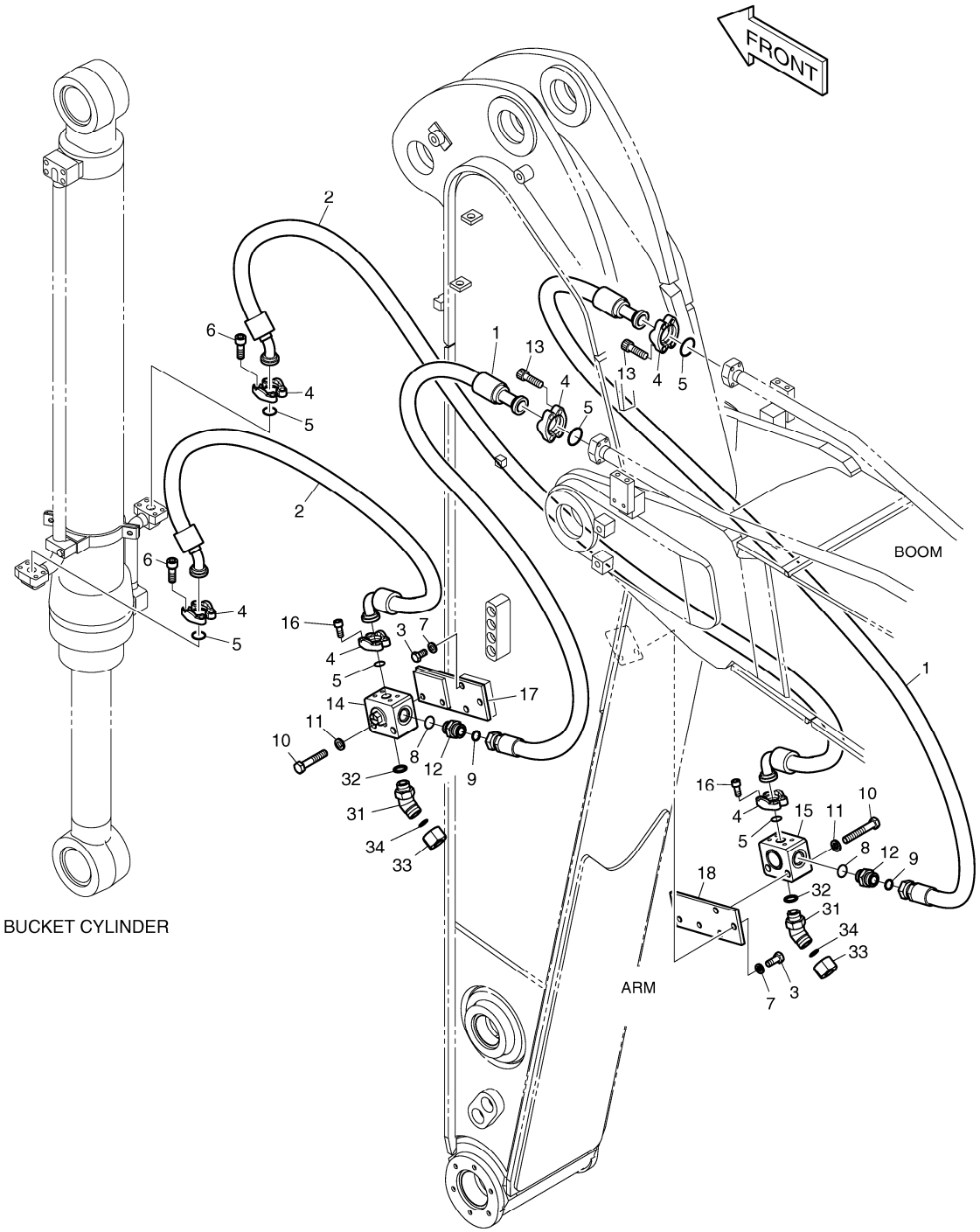

DATE	JUN. 01, 2010
3rd EDITION	

Fig. 6620 ARM PIPING - ARM 2.0m(CLAMSHELL) CONDUITES DE BALANCIER

Serial No. ;

Key No.	Part No.	Description	Description	Q'ty	S.C	Serial No.	ICA	Replaceable part	
								Part No.	Q'ty
6620 --	K1013405A	ARM PIPING-CLAMSHELL	CONDUITES DE BALANCIE	-	D				
1	DS2016045	HOSE	TUYAU FLEXIBLE	2					
2	DS2043108	HOSE	TUYAU FLEXIBLE	2					
3	S0515066	BOLT M12X25	BOULON	6					
4	2181-9079	FLANGE	BRIDE	12					
5	2180-1026D2	O-RING	JOINT CIRCULAIRE	6					
6	S2212266	BOLT;SOCKET	BOULON	8					
7	S5102703	WASHER;SPRING	RONDELLE	6					
8	S8030121	O-RING	JOINT CIRCULAIRE	2					
9	S8000231	O-RING	JOINT CIRCULAIRE	2					
10	S0563466	BOLT	BOULON	4					
11	S5102803	WASHER;SPRING	RONDELLE	4					
12	2181-4133D5	ADAPTER	ADAPTEUR	2					
13	S2212366	BOLT;SOCKET M10X1.5X35	BOULON	8					
14	K1002939	VALVE;SWITCH(L.H)	VALVE	1					
15	K1002940	VALVE;SWITCH(R.H)	VALVE	1					
16	S2212066	BOLT;SOCKET	BOULON	8					
17	K1025286	BRACKET(L.H)	SUPPORT	1					
18	K1025336	BRACKET(R.H)	SUPPORT	1					
31	2181-2816D1	ELBOW	COUDE	2					
32	S8000231	O-RING	JOINT CIRCULAIRE	2					
33	2181-2817D1	CAP	CHAPEAU	2					
34	S8030121	O-RING	JOINT CIRCULAIRE	2					

DATE	JUN. 01, 2010
3rd EDITION	

Fig. 6630 ARM PIPING - ARM 2.0m(ROTATING)
CONDUITES DE BALANCIER

Serial No. ;

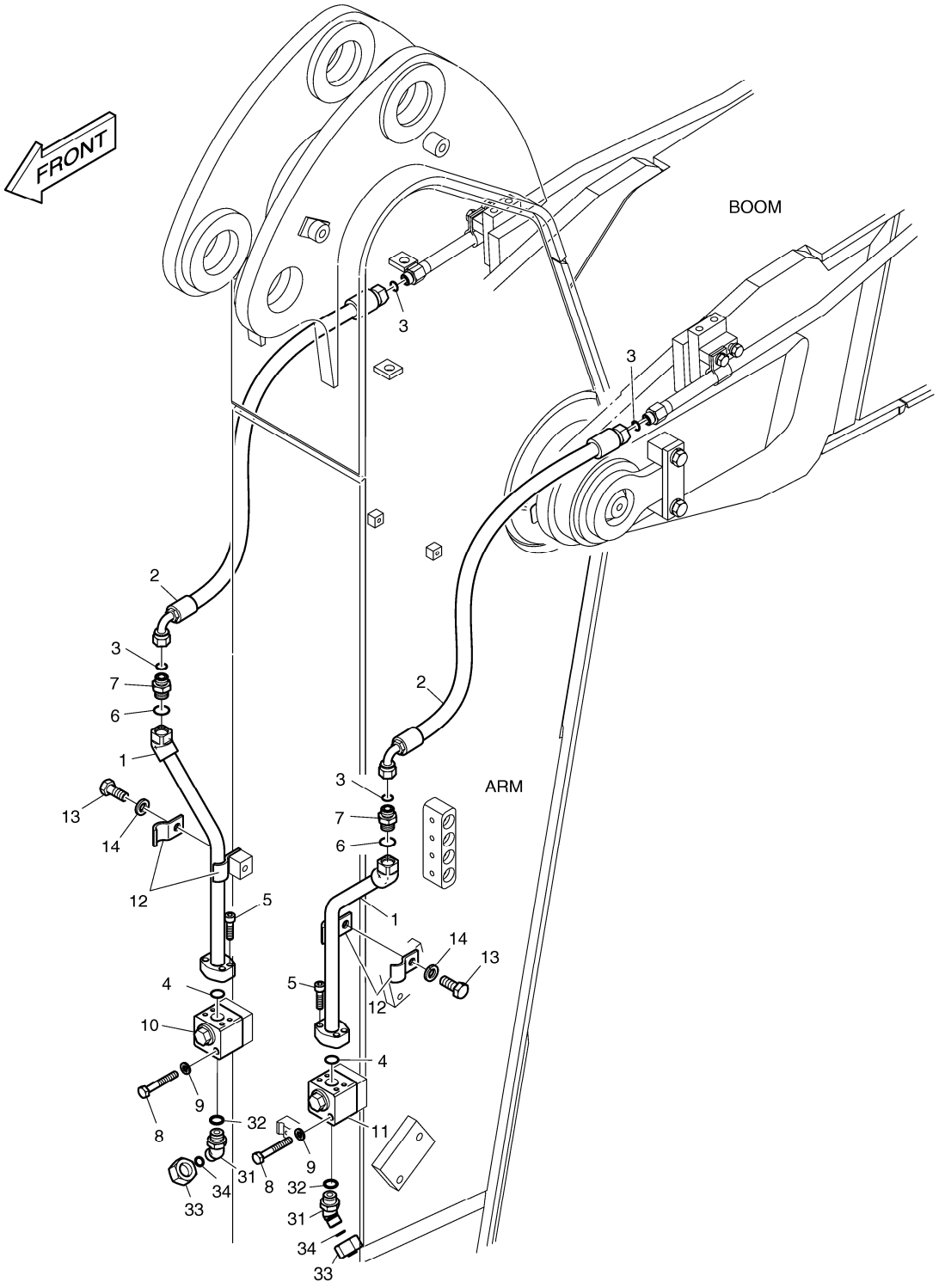

DATE	JUN. 01, 2010
3rd EDITION	

Fig. 6630 ARM PIPING - ARM 2.0m(ROTATING) CONDUITES DE BALANCIER

Serial No. ;

Key No.	Part No.	Description	Description	Q'ty	S.C	Serial No.	ICA	Replaceable part	
								Part No.	Q'ty
6630 --	K1013401A	ARM PIPING;ROTATING	CONDUITES DE BALANCIE	-	D				
1	K1025407	PIPE	TUYAU	2					
2	DS2013893	HOSE	TUYAU FLEXIBLE	2					
3	S8030081	O-RING	JOINT CIRCULAIRE	4					
4	2180-1026D30	O-RING	JOINT CIRCULAIRE	2					
5	S2209266	BOLT	BOULON	8					
6	S8000181	O-RING	JOINT CIRCULAIRE	2					
7	2181-4133D3	ADAPTER	ADAPTEUR	2					
8	S0558966	BOLT M10X1.5X70	BOULON	4					
9	S5102603	WASHER	RONDELLE	4					
10	K1006227	VALVE;SWITCH(R.H)	VALVE	1					
11	K1006228	VALVE;SWITCH(L.H)	VALVE	1					
12	124-00299A	CLAMP;PIPE	BRIDE	2					
13	S0515266	BOLT	BOULON	2					
14	S5102703	WASHER;SPRING	RONDELLE	2					
31	2181-2816D4	ELBOW	COUDE	2					
32	S8000181	O-RING	JOINT CIRCULAIRE	2					
33	2181-2817D4	CAP	CHAPEAU	2					
34	S8030081	O-RING	JOINT CIRCULAIRE	2					

DATE	JUN. 01, 2010
3rd EDITION	

Fig. 6640 ARM - 2.4m BALANCIER

Serial No. ;

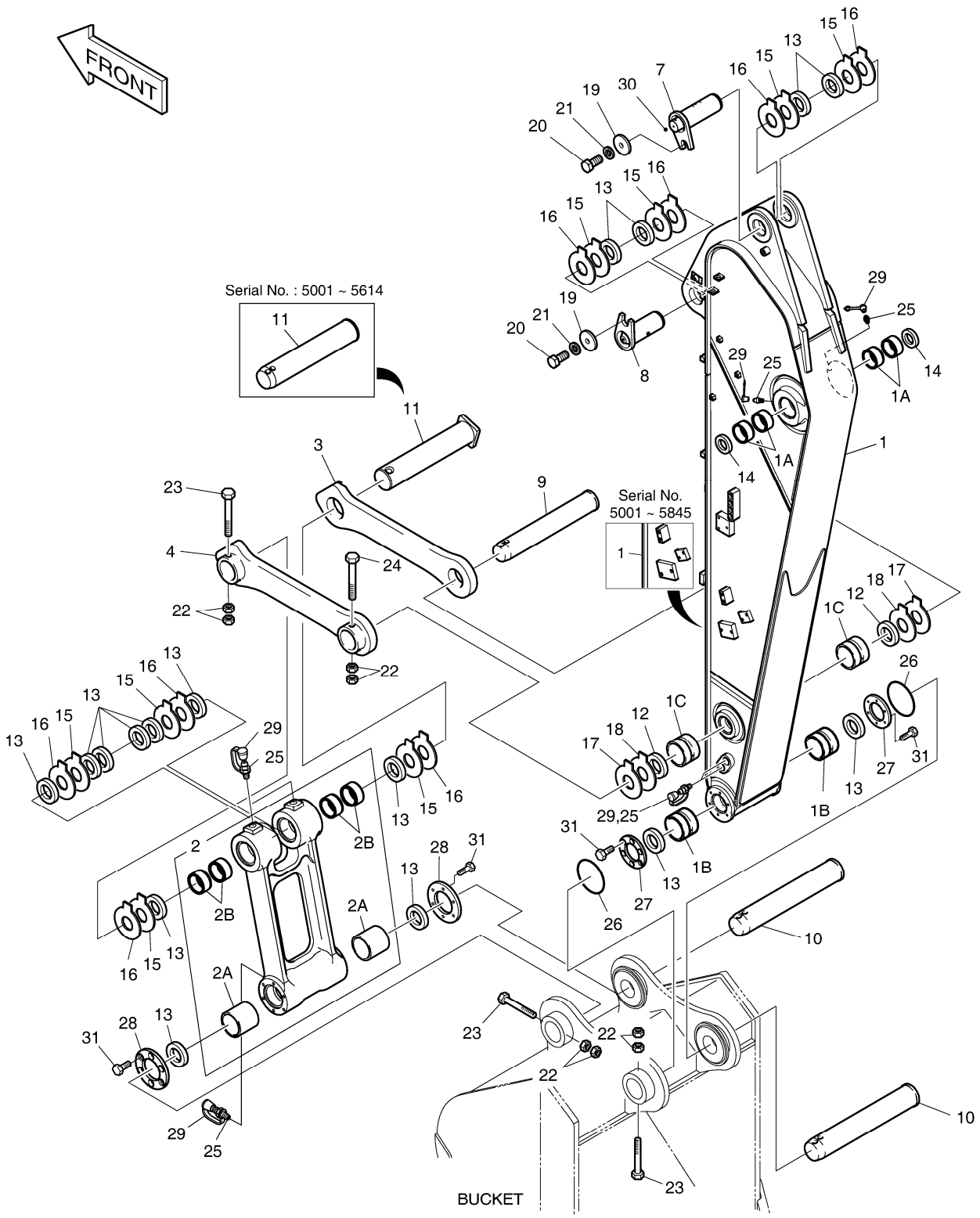

DATE	JUN. 01, 2010
3rd EDITION	

Fig. 6640 ARM - 2.4m BALANCIER

Serial No. ;

Key No.	Part No.	Description	Description	Q'ty	S.C	Serial No.	ICA	Replaceable part	
								Part No.	Q'ty
6640 --	K1046237E	ARM ASS'Y	BALANCIER	-	D	5001-5614			
	230201-00105	ARM ASS'Y;2.4M	BALANCIER	-	D	5615-			
1	K1046246B	ARM SUB ASS'Y-2.4m	ENSEMBLE BALANCIER	1		5001-5845			
	230204-00084A	ARM,MACHINE;2.4M	ENSEMBLE BALANCIER	1		5846-			
1A	K1037848A	. BUSHING	. BUSHING	4					
1B	K1037849A	. BUSHING	. BUSHING	2					
1C	K1037850A	. BUSHING	. BUSHING	2					
2	K1041214A	PUSH LINK ASS'Y	ENSEMBLE DE ARTICULAT	1					
2A	K1037852A	. BUSHING	. BUSHING	2					
2B	K1037851A	. BUSHING	. BUSHING	4					
3	2155-1299B	LINK;GUIDE(R.H)	ARTICULATION	1		5001-5614	Y	101540-00012	1
	101540-00012	LINK,GUIDE(R.H)	ARTICULATION	1		5615-			
4	2155-1300B	LINK;GUIDE(L.H)	LIEN	1					
7	K1046927	PIN	GOUPILLE	1					
8	K1002130A	PIN	GOUPILLE	1					
9	K1007255A	PIN	GOUPILLE	1					
10	2123-2192E	PIN	GOUPILLE	2					
11	K1007256A	PIN	GOUPILLE	1		5001-5614	Y	120501-00130	1
	120501-00130	PIN;BUCKET CYL ROD	GOUPILLE	1		5615-			
12	2180-1106BD4	SEAL;DUST	CACHET	2					
13	2180-1106BD24	SEAL;DUST	CACHET	14					
14	2180-1106BD6	SEAL;DUST	CACHET	2					
15	DS7752012	SHIM	CALE	8					
16	DS7752013	SHIM	CALE	8					
17	DS7752006	SHIM	CALE	2					
18	DS7752007	SHIM	CALE	2					
19	2116-1060D6	STOPPER	TAQUET	2					
20	S0521366	BOLT	BOULON	2					
21	S5102903	WASHER	RONDELLE	2					
22	S4012933	NUT	ECROU	8					
23	DS0001084	BOLT	BOULON	3					
24	DS0001083	BOLT	BOULON	1					
25	S6710041	NIPPLE;GREASE	MAMELON	7					
26	180-00077D5	O-RING	JOINT CIRCULAIRE	2					
27	K1000911	SPACER	ENTRETOISE	2					
28	K1000912B	SPACER	ENTRETOISE	2					
29	160-00020	CAP;GREASE NIPPLE	CHAPEAU	7					
30	2181-1116D1	PLUG	BOUCHON	1					

DATE	JUN. 01, 2010
3rd EDITION	

Fig. 6640 ARM - 2.4m BALANCIER

Serial No. ;

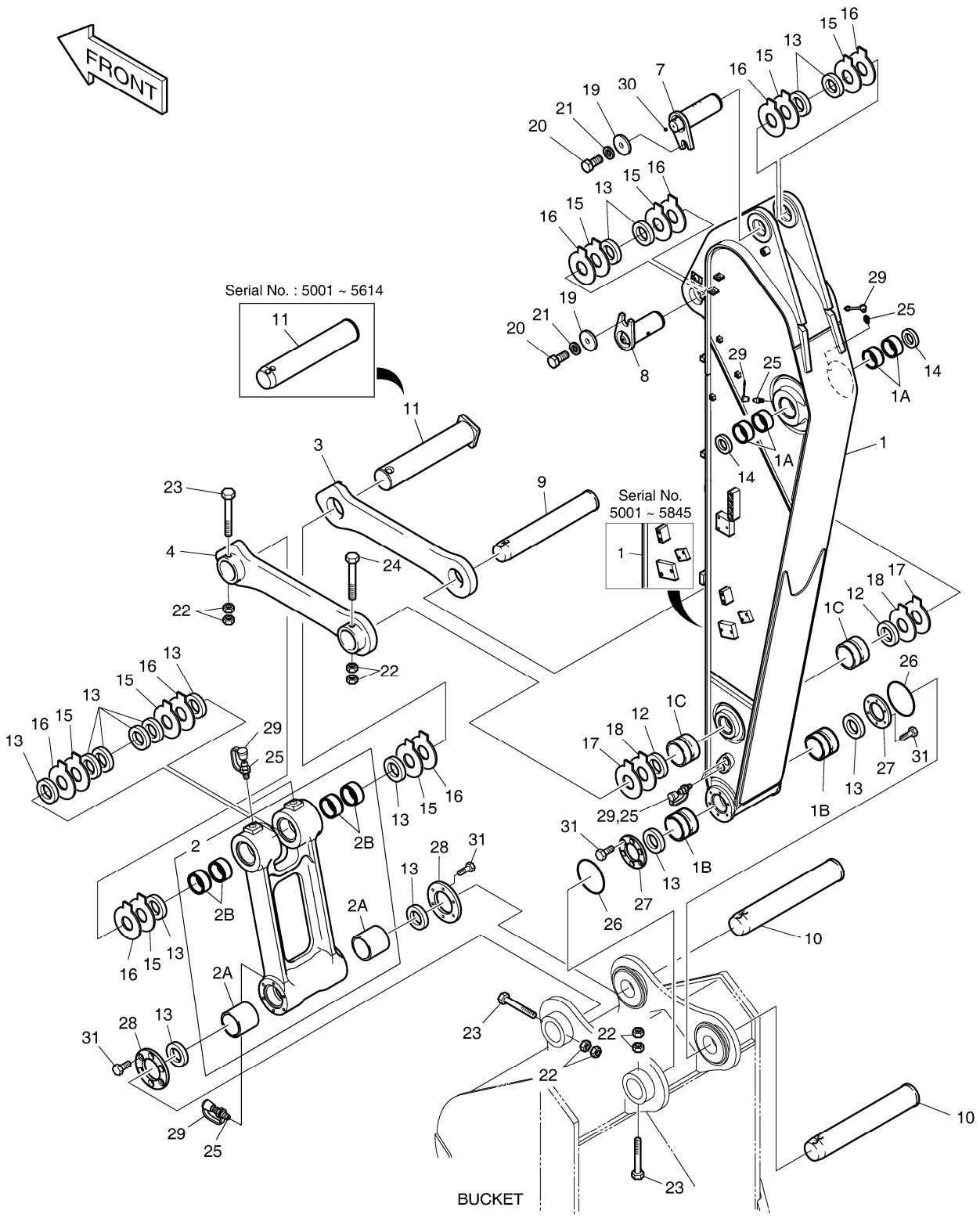

Fig. 6640 ARM - 2.4m BALANCIER

Serial No. ;

Key No.	Part No.	Description	Description	Q'ty	S.C	Serial No.	ICA	Replaceable part	
								Part No.	Q'ty
6640 -31	S0712066	BOLT	BOULON	24					

DATE	JUN. 01, 2010
3rd EDITION	

Fig. 6650 ARM PIPING - ARM 2.4m
CONDUITES DE BALANCIER

Serial No. ;

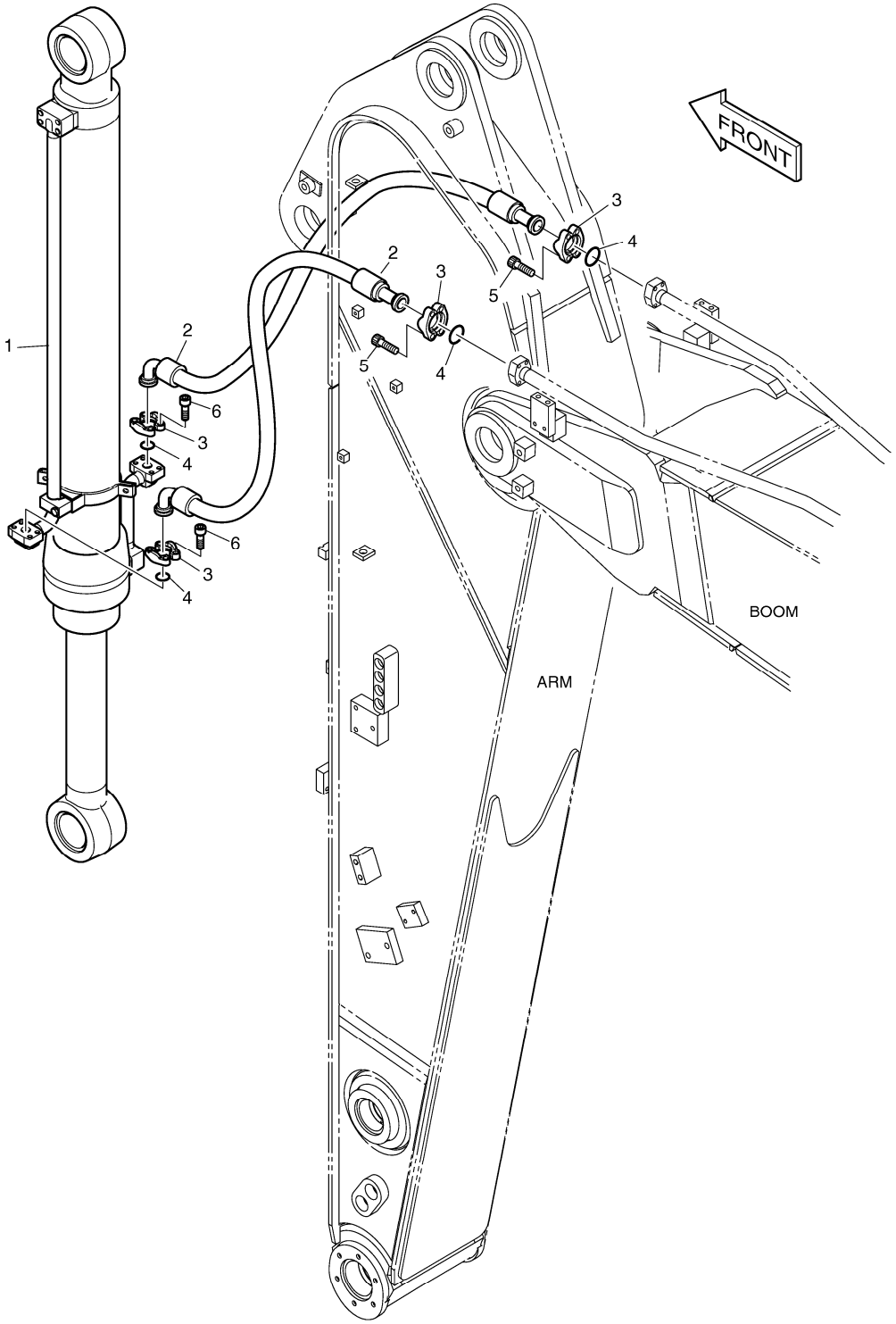

DATE	JUN. 01, 2010
3rd EDITION	

Fig. 6650 ARM PIPING - ARM 2.4m CONDUITES DE BALANCIER

Serial No. ;

Key No.	Part No.	Description	Description	Q'ty	S.C	Serial No.	ICA	Replaceable part	
								Part No.	Q'ty
6650 --	K1046328	ARM PIPING	CONDUITES DE BALANCIE	-	D				
1	K1046326	CYLINDER;BUCKET	VERIN DE GODET	1					
2	2184-1100D59	HOSE	TUYAU	2					
3	2181-9079	FLANGE	BRIDE	8					
4	2180-1026D2	O-RING	JOINT CIRCULAIRE	4					
5	S2212366	BOLT;SOCKET M10X1.5X35	BOULON	8					
6	S2212266	BOLT;SOCKET	BOULON	8					

DATE	JUN. 01, 2010
3rd EDITION	

Fig. 6660 LUBRICATION PIPING - ARM 2.4m
LUBRIFICATION

Serial No. ;

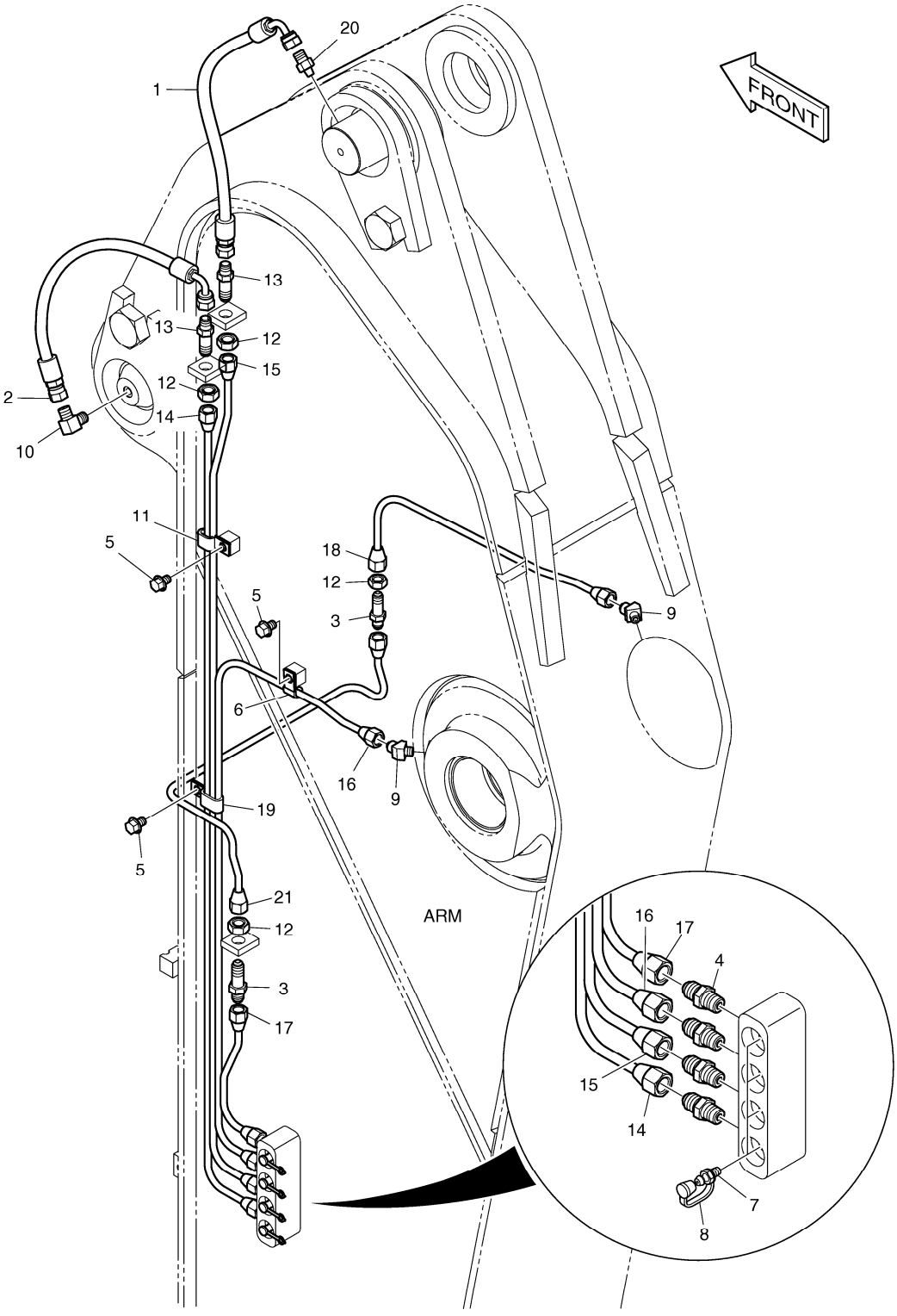

DATE	JUN. 01, 2010
3rd EDITION	

Fig. 6660 LUBRICATION PIPING - ARM 2.4m
LUBRIFICATION

Serial No. ;

Key No.	Part No.	Description	Description	Q'ty	S.C	Serial No.	ICA	Replaceable part	
								Part No.	Q'ty
6660 --	K1013410A	LUBRICATION PIPING-ARM	LUBRIFICATION	-	D				
1	DS2055920	HOSE	TUYAU	1					
2	DS2055891	HOSE	TUYAU	1					
3	DS2225009	ADAPTER	ADAPTEUR	2					
4	2181-1184	ADAPTER	ADAPTEUR	4					
5	K1001029	BOLT	BOULON	3					
6	DS2802023	CLIP	AGRAFE	1					
7	S6710041	NIPPLE;GREASE	MAMELON	4					
8	160-00020	CAP;GREASE NIPPLE	CHAPEAU	4					
9	K1010730	ELBOW	COUDE	2					
10	2181-1111D11	ELBOW	COUDE	1					
11	DS2805007	CLIP	AGRAFE	1					
12	S4032833	NUT	ECROU	4					
13	2181-1923D12	ADAPTER	ADAPTEUR	2					
14	K1025464	PIPE	TUYAU	1					
15	K1025465	PIPE	TUYAU	1					
16	K1025466	PIPE	TUYAU	1					
17	K1010271	PIPE	TUYAU	1					
18	K1025467	PIPE	TUYAU	1					
19	DS2805008	CLIP	AGRAFE	1					
20	2181-4112	ADAPTER	ADAPTEUR	1					
21	K1013687	PIPE	TUYAU	1					

DATE	JUN. 01, 2010
3rd EDITION	

Fig. 6670 ARM PIPING - ARM 2.4m(ONE & TWO WAY)
CONDUITES DE BALANCIER

Serial No. ;

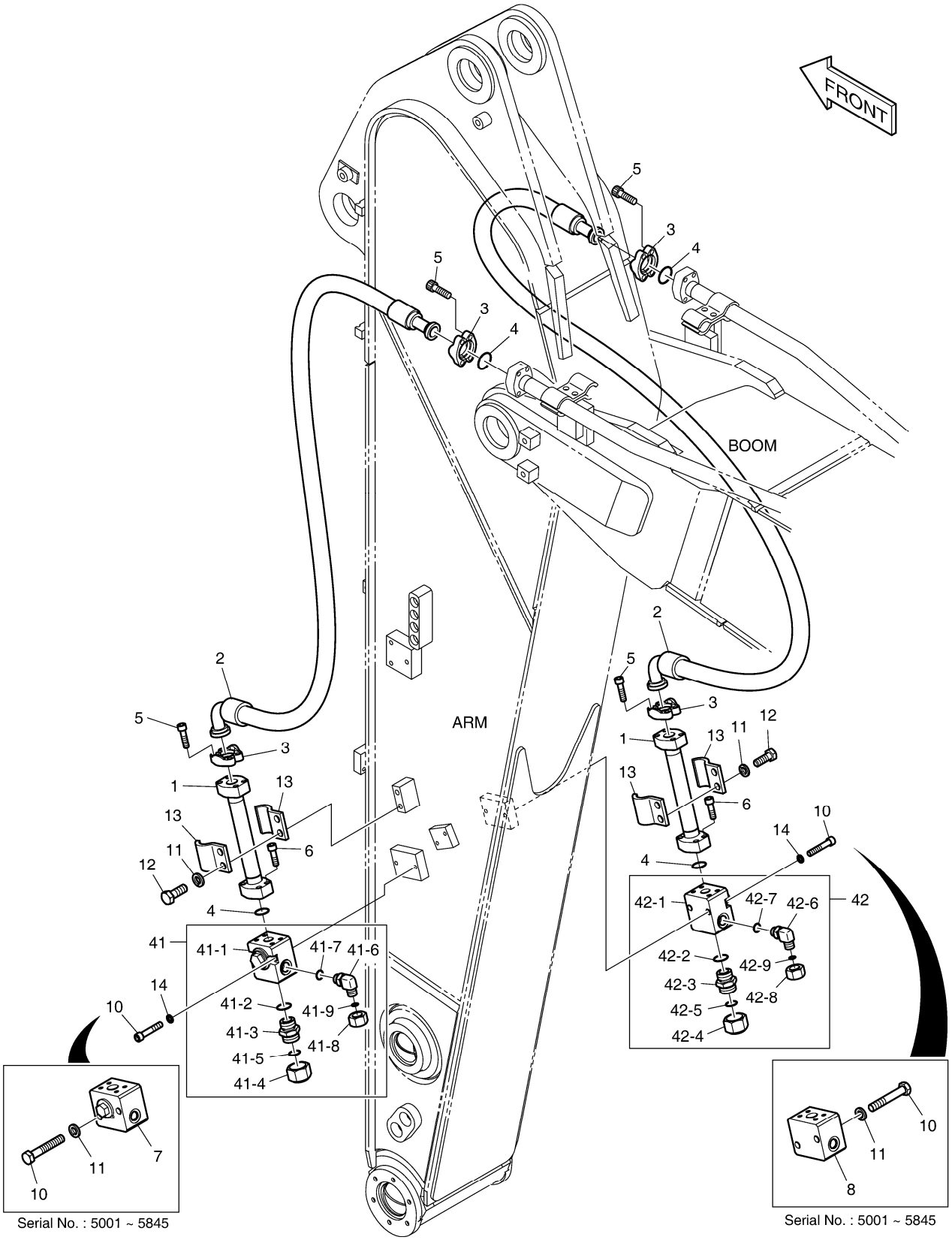

DATE	JUN. 01, 2010
3rd EDITION	

Fig. 6670 ARM PIPING - ARM 2.4m(ONE & TWO WAY) CONDUITES DE BALANCIER

Serial No. ;

Key No.	Part No.	Description	Description	Q'ty	S.C	Serial No.	ICA	Replaceable part	
								Part No.	Q'ty
6670 --	K1013411B	ARM PIPING-ONE & TWO WAY	CONDUITES DE BALANCIE	-	D	5001-5845			
	420212-01717	ARM PIPING,ONE & TWO WAY	CONDUITES DE BALANCIE	-	D	5846-			
1	K1025246	PIPE	TUYAU	2					
2	2184-1100D90	HOSE	TUYAU	2					
3	2181-9078	FLANGE	BRIDE	8					
4	2180-1026D19	O-RING	JOINT CIRCULAIRE	6					
5	S2212466	BOLT;SOCKET M10X1.5X40	BOULON	16					
6	S2212366	BOLT;SOCKET M10X1.5X35	BOULON	8					
7	K1000334A	VALVE;STOP(L.H)	VANNE	1		5001-5845			
8	K1000338A	VALVE;STOP(R.H)	VANNE	1		5001-5845			
10	S0563666	BOLT	BOULON A 6 PANS	4		5001-5845			
	S2215966	BOLT;SOCKET	BOULON	4		5846-			
11	S5102803	WASHER;SPRING	RONDELLE	8		5001-5845			
	S5102803	WASHER;SPRING	RONDELLE	4		5846-			
12	S0562766	BOLT	BOULON	4					
13	K1004057	CLAMP;PIPE	BRIDE	4					
14	S5110703	WASHER;SPRING	RONDELLE	4		5846-			
41	410137-00032	VALVE ASS'Y,STOP(L.H)	VANNE	1		5846-			
41-1	K1033252	. VALVE;STOP(L.H)	. VANNE	1		5846-			
41-2	S8000291	. O-RING	. JOINT CIRCULAIRE	1		5846-			
41-3	2181-4133D6	. ADAPTER	. ADAPTEUR	1		5846-			
41-4	2181-2817D2	. CAP	. CHAPEAU	1		5846-			
41-5	S8030161	. O-RING	. JOINT CIRCULAIRE	1		5846-			
41-6	2181-2815D3	. ELBOW	. COUDE	1		5846-			
41-7	S8000181	. O-RING	. JOINT CIRCULAIRE	1		5846-			
41-8	2181-2817D4	. CAP	. CHAPEAU	1		5846-			
41-9	S8030081	. O-RING	. JOINT CIRCULAIRE	1		5846-			
42	410137-00033	VALVE ASS'Y,STOP(R.H)	VANNE	1		5846-			
42-1	K1033254	. VALVE,STOP(R.H)	. VANNE	1		5846-			
42-2	S8000291	. O-RING	. JOINT CIRCULAIRE	1		5846-			
42-3	2181-4133D6	. ADAPTER	. ADAPTEUR	1		5846-			
42-4	2181-2817D2	. CAP	. CHAPEAU	1		5846-			
42-5	S8030161	. O-RING	. JOINT CIRCULAIRE	1		5846-			
42-6	2181-2815D3	. ELBOW	. COUDE	1		5846-			
42-7	S8000181	. O-RING	. JOINT CIRCULAIRE	1		5846-			
42-8	2181-2817D4	. CAP	. CHAPEAU	1		5846-			
42-9	S8030081	. O-RING	. JOINT CIRCULAIRE	1		5846-			

DATE	JUN. 01, 2010
3rd EDITION	

Fig. 6680 ARM PIPING - ARM 2.4m(QUICK CLAMP)
CONDUITES DE BALANCIER

Serial No. ;

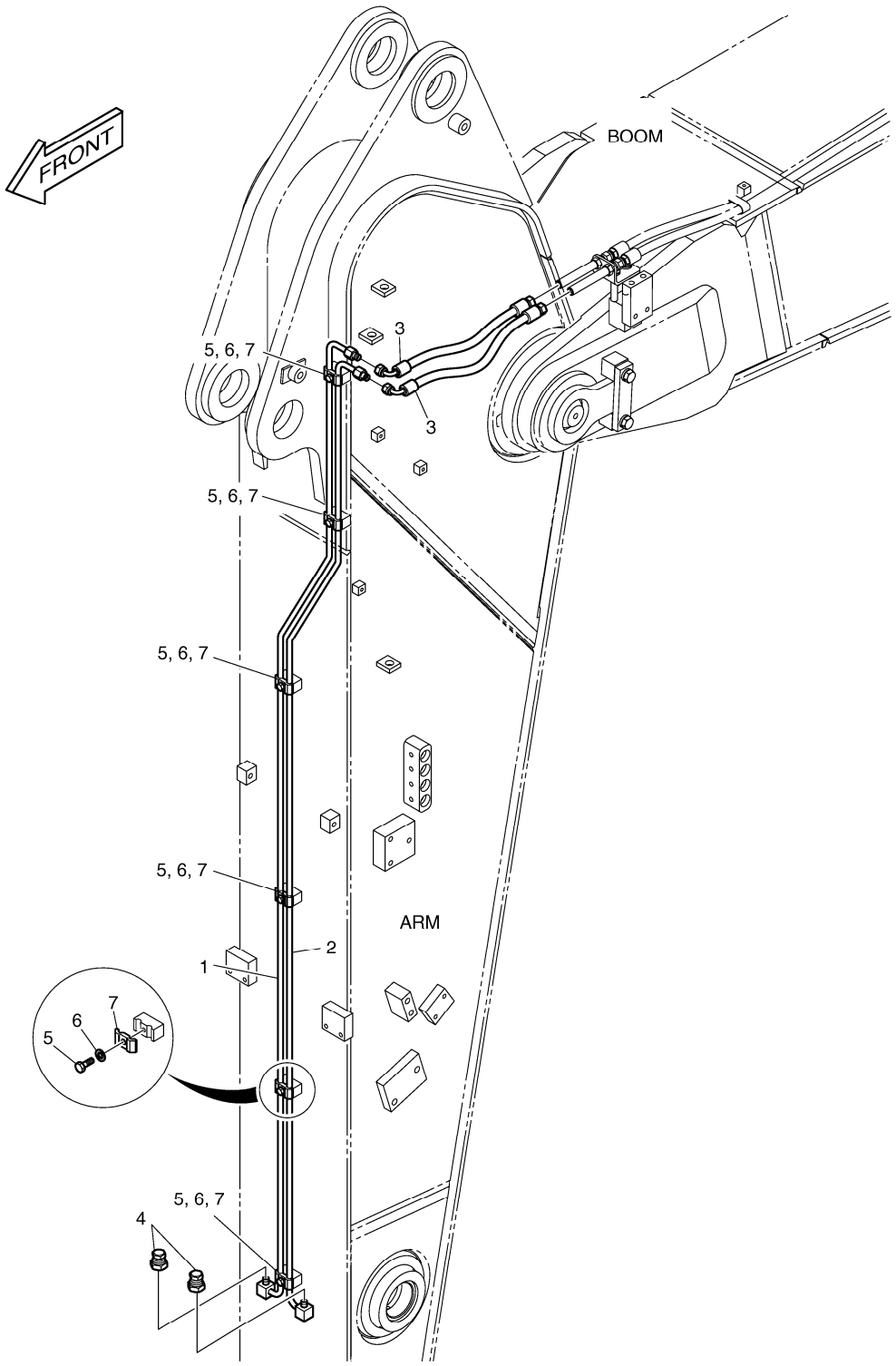

DATE	JUN. 01, 2010
3rd EDITION	

Fig. 6680 ARM PIPING - ARM 2.4m(QUICK CLAMP)
CONDUITES DE BALANCIER

Serial No. ;

Key No.	Part No.	Description	Description	Q'ty	S.C	Serial No.	ICA	Replaceable part	
								Part No.	Q'ty
6680 --	K1013434A	ARM PIPING-QUICK CLAMP	TUYAUTERIE DU BRAS	-	D				
1	K1025462	PIPE	TUYAU	1					
2	K1025463	PIPE	TUYAU	1					
3	DS2055867	HOSE	TUYAU	2					
4	2181-2820D1	PLUG	BOUCHON	2					
5	S0508866	BOLT	BOULON	6					
6	S5102503	WASHER	RONDELLE	6					
7	K1004011	CLAMP;PIPE	BRIDE	6					

DATE	JUN. 01, 2010
3rd EDITION	

Fig. 6690 ARM PIPING - ARM 2.4m(CLAMSHELL)
CONDUITES DE BALANCIER

Serial No. ;

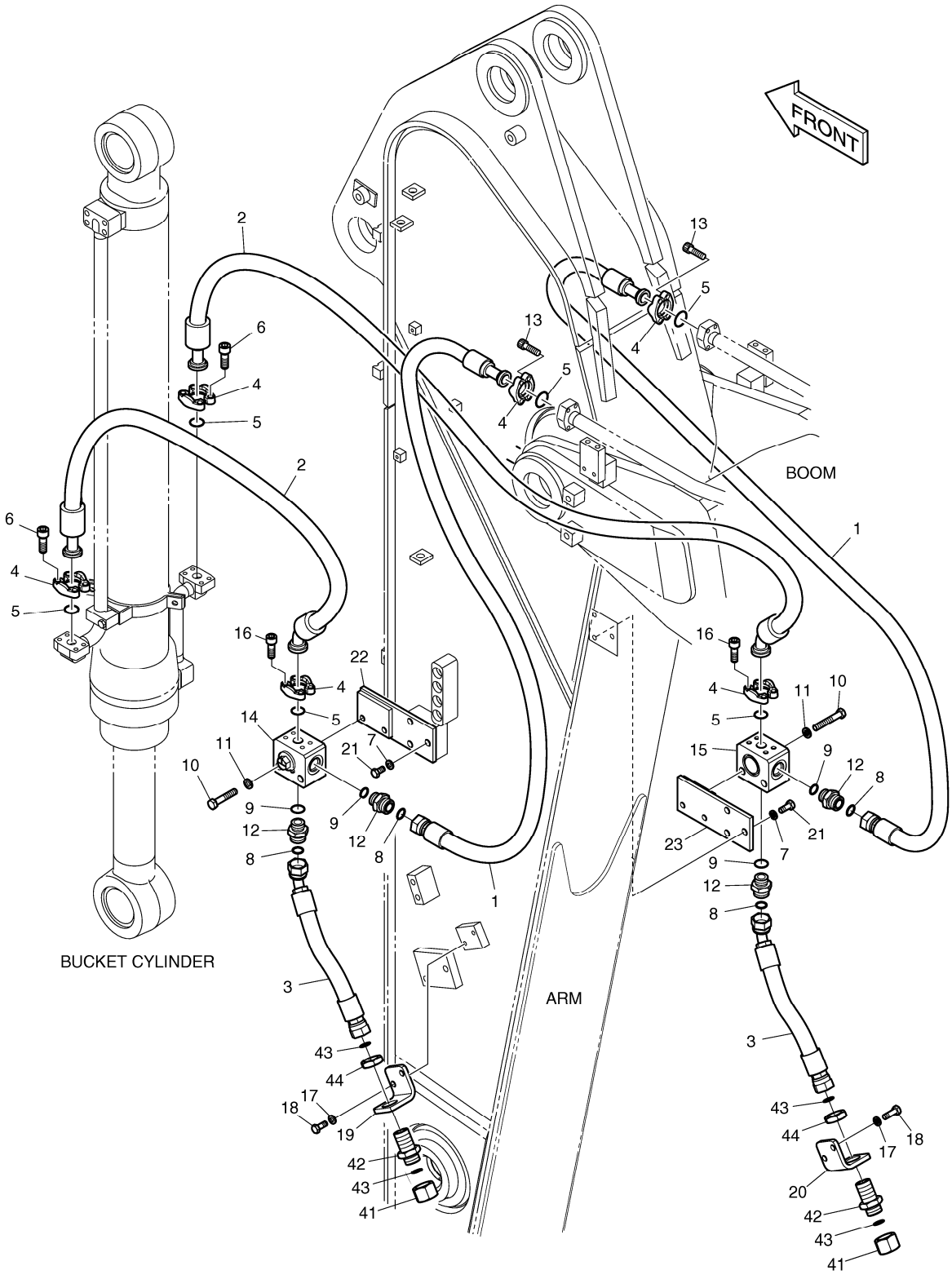

DATE	JUN. 01, 2010
3rd EDITION	

Fig. 6690 ARM PIPING - ARM 2.4m(CLAMSHELL)
CONDUITES DE BALANCIER

Serial No. ;

Key No.	Part No.	Description	Description	Q'ty	S.C	Serial No.	ICA	Replaceable part	
								Part No.	Q'ty
6690 --	K1013436B	ARM PIPING-CLAMSHELL	TUYAUTERIE DU BRAS	-	D				
1	DS2016074	HOSE	TUYAU	2					
2	DS2039122	HOSE	TUYAU	2					
3	DS2012342	HOSE	TUYAU	2					
4	2181-9079	FLANGE	BRIDE	12					
5	2180-1026D2	O-RING	JOINT CIRCULAIRE	6					
6	S2212266	BOLT;SOCKET	BOULON	8					
7	S5102703	WASHER;SPRING	RONDELLE	6					
8	S8030121	O-RING	JOINT CIRCULAIRE	4					
9	S8000231	O-RING	JOINT CIRCULAIRE	4					
10	S0563466	BOLT	BOULON	4					
11	S5102803	WASHER;SPRING	RONDELLE	4					
12	2181-4133D5	ADAPTER	ADAPTEUR	4					
13	S2212366	BOLT;SOCKET M10X1.5X35	BOULON	8					
14	K1002939	VALVE;SWITCH(L.H)	VALVE	1					
15	K1002940	VALVE;SWITCH(R.H)	VALVE	1					
16	S2212066	BOLT;SOCKET	BOULON	8					
17	S5102603	WASHER	RONDELLE	4					
18	S0512066	BOLT	BOULON	4					
19	K1014759	BRACKET	SUPPORT	1					
20	K1015093	BRACKET	SUPPORT	1					
21	S0515066	BOLT M12X25	BOULON	6					
22	K1025286	BRACKET(L.H)	SUPPORT	1					
23	K1025336	BRACKET(R.H)	SUPPORT	1					
41	2181-2817D1	CAP	CHAPEAU	2					
42	DS2415007	ADAPTER	ADAPTEUR	2					
43	S8030121	O-RING	JOINT CIRCULAIRE	4					
44	121-00010D8	NUT	ECROU	2					

DATE	JUN. 01, 2010
3rd EDITION	

Fig. 6700 ARM PIPING - ARM 2.4m(ROTATING)
CONDUITES DE BALANCIER

Serial No. ;

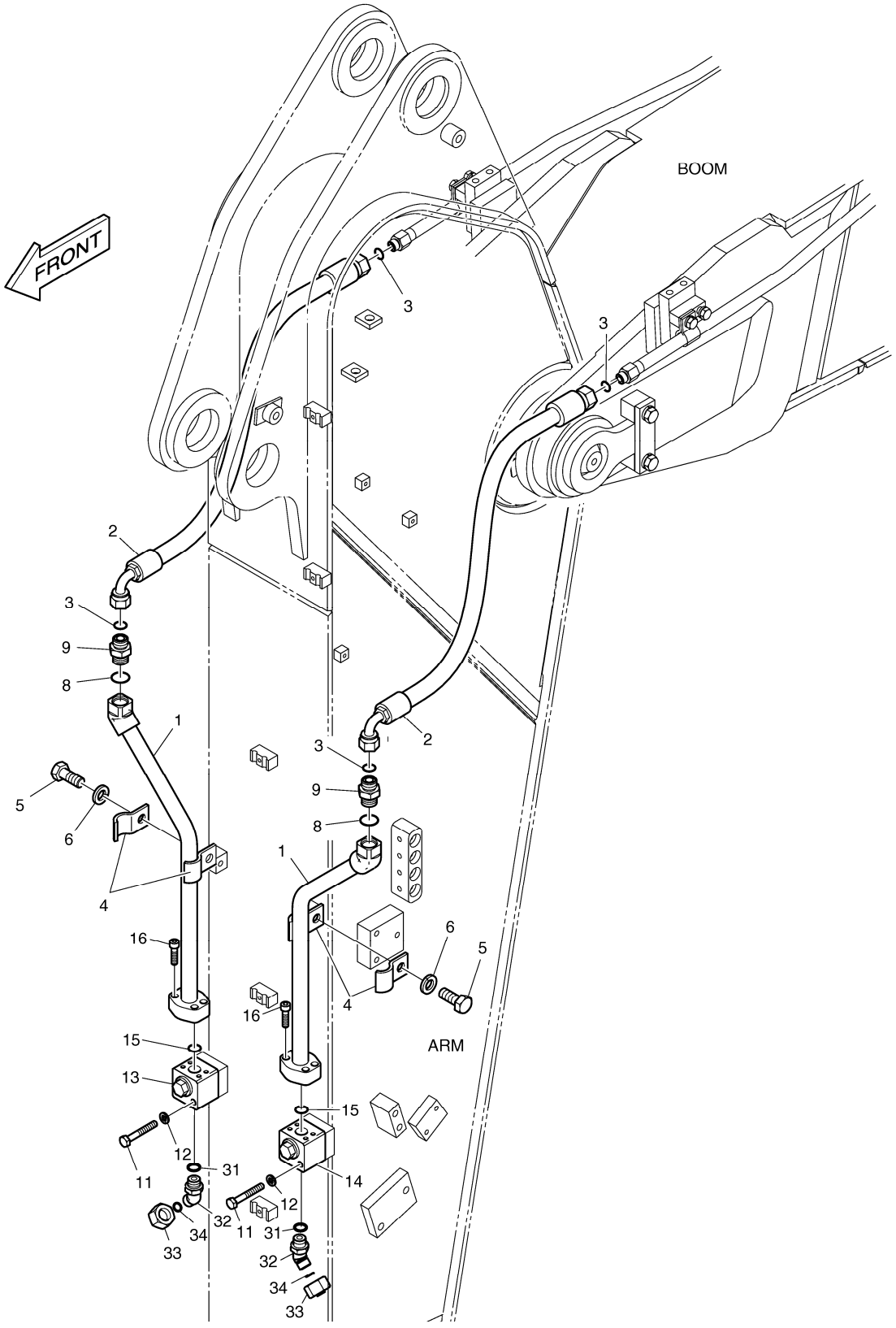

DATE	JUN. 01, 2010
3rd EDITION	

Fig. 6700 ARM PIPING - ARM 2.4m(ROTATING)
CONDUITES DE BALANCIER

Serial No. ;

Key No.	Part No.	Description	Description	Q'ty	S.C	Serial No.	ICA	Replaceable part	
								Part No.	Q'ty
6700 --	K1013414A	ARM PIPING;ROTATING	TUYAUTERIE DU BRAS	-	D				
1	K1025460	PIPE	TUYAU	2					
2	DS2013356	HOSE ORS1/2-1250L	TUYAU	2					
3	S8030081	O-RING	JOINT CIRCULAIRE	4					
4	124-00299A	CLAMP;PIPE	BRIDE	4					
5	S0515266	BOLT	BOULON	2					
6	S5102703	WASHER;SPRING	RONDELLE	2					
8	S8000181	O-RING	JOINT CIRCULAIRE	2					
9	2181-4133D3	ADAPTER	ADAPTEUR	2					
11	S0558966	BOLT M10X1.5X70	BOULON	4					
12	S5102603	WASHER	RONDELLE	4					
13	K1006227	VALVE;SWITCH(R.H)	VALVE	1					
14	K1006228	VALVE;SWITCH(L.H)	VALVE	1					
15	2180-1026D30	O-RING	JOINT CIRCULAIRE	2					
16	S2209266	BOLT	BOULON	8					
31	S8000181	O-RING	JOINT CIRCULAIRE	2					
32	2181-2816D4	ELBOW	COUDE	2					
33	2181-2817D4	CAP	CHAPEAU	2					
34	S8030081	O-RING	JOINT CIRCULAIRE	2					

DATE	JUN. 01, 2010
3rd EDITION	

Fig. 6710 ARM - 3.5m BALANCIER

Serial No. ;

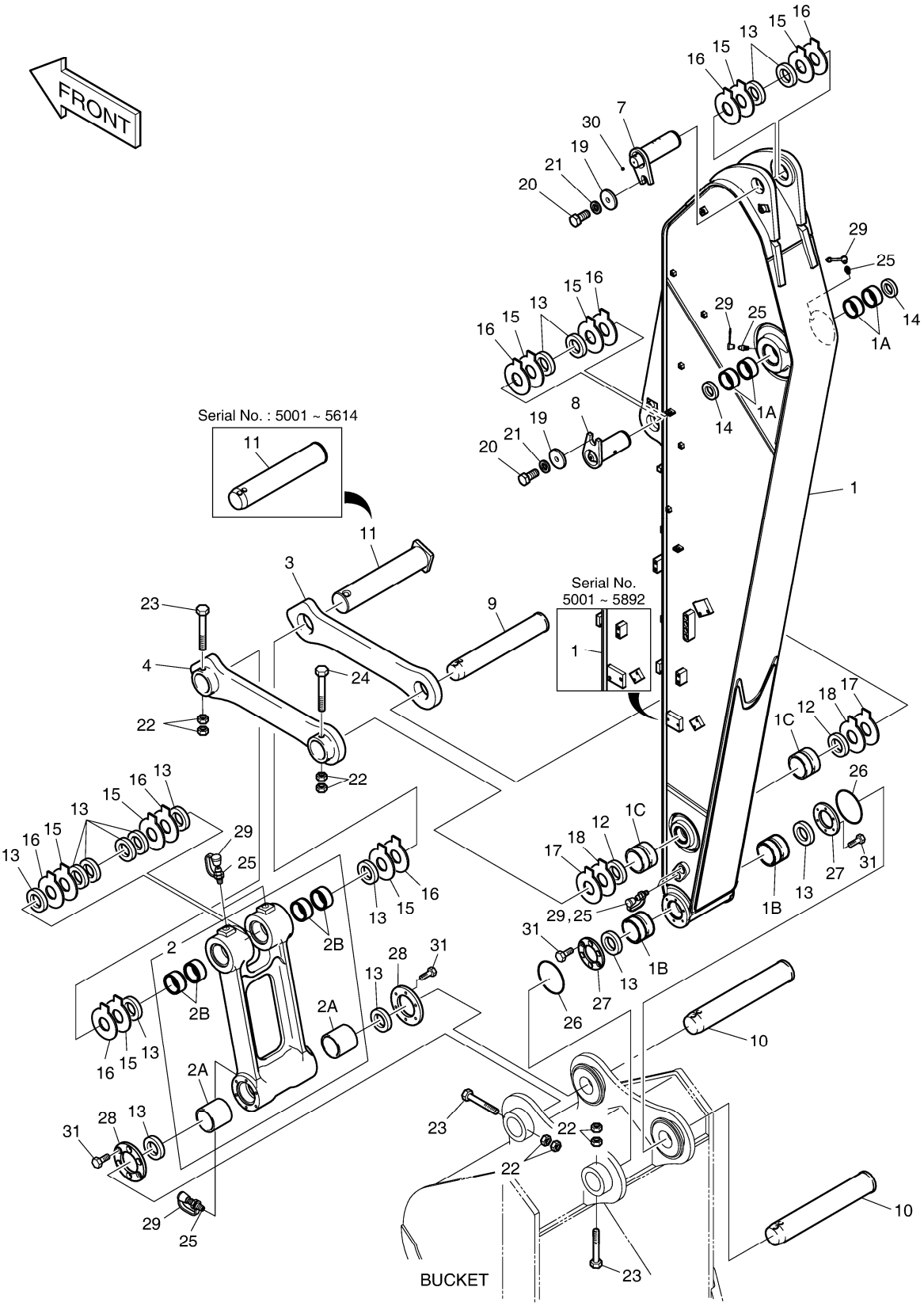

DATE	JUN. 01, 2010
3rd EDITION	

Fig. 6710 ARM - 3.5m BALANCIER

Serial No. ;

Key No.	Part No.	Description	Description	Q'ty	S.C	Serial No.	ICA	Replaceable part	
								Part No.	Q'ty
6710 --	K1046239E	ARM ASS'Y	BALANCIER	-	D	5001-5614			
	230201-00107	ARM ASSY;3.5M	BALANCIER	-	D	5615-			
1	K1046250B	ARM SUB ASS'Y-3.5m	ENSEMBLE BALANCIER	1		5001-5892			
	230204-00086A	ARM,MACHINE;3.5M	ENSEMBLE BALANCIER	1		5893-			
1A	K1037848A	. BUSHING	. BUSHING	4					
1B	K1037849A	. BUSHING	. BUSHING	2					
1C	K1037850A	. BUSHING	. BUSHING	2					
2	K1041214A	PUSH LINK ASS'Y	ENSEMBLE DE ARTICULAT	1					
2A	K1037852A	. BUSHING	. BUSHING	2					
2B	K1037851A	. BUSHING	. BUSHING	4					
3	2155-1299B	LINK;GUIDE(R.H)	ARTICULATION	1		5001-5614	Y	101540-00012	1
	101540-00012	LINK,GUIDE(R.H)	ARTICULATION	1		5615-			
4	2155-1300B	LINK;GUIDE(L.H)	LIEN	1					
7	K1046927	PIN	GOUPILLE	1					
8	K1002130A	PIN	GOUPILLE	1					
9	K1007255A	PIN	GOUPILLE	1					
10	2123-2192E	PIN	GOUPILLE	2					
11	K1007256A	PIN	GOUPILLE	1		5001-5614	Y	120501-00130	1
	120501-00130	PIN;BUCKET CYL ROD	GOUPILLE	1		5615-			
12	2180-1106BD4	SEAL;DUST	CACHET	2					
13	2180-1106BD24	SEAL;DUST	CACHET	14					
14	2180-1106BD6	SEAL;DUST	CACHET	2					
15	DS7752012	SHIM	CALE	8					
16	DS7752013	SHIM	CALE	8					
17	DS7752006	SHIM	CALE	2					
18	DS7752007	SHIM	CALE	2					
19	2116-1060D6	STOPPER	TAQUET	2					
20	S0521366	BOLT	BOULON	2					
21	S5102903	WASHER	RONDELLE	2					
22	S4012933	NUT	ECROU	8					
23	DS0001084	BOLT	BOULON	3					
24	DS0001083	BOLT	BOULON	1					
25	S6710041	NIPPLE;GREASE	MAMELON	7					
26	180-00077D5	O-RING	JOINT CIRCULAIRE	2					
27	K1000911	SPACER	ENTRETOISE	2					
28	K1000912B	SPACER	ENTRETOISE	2					
29	160-00020	CAP;GREASE NIPPLE	CHAPEAU	7					
30	2181-1116D1	PLUG	BOUCHON	1					

DATE	JUN. 01, 2010
3rd EDITION	

Fig. 6710 ARM - 3.5m BALANCIER

Serial No. ;

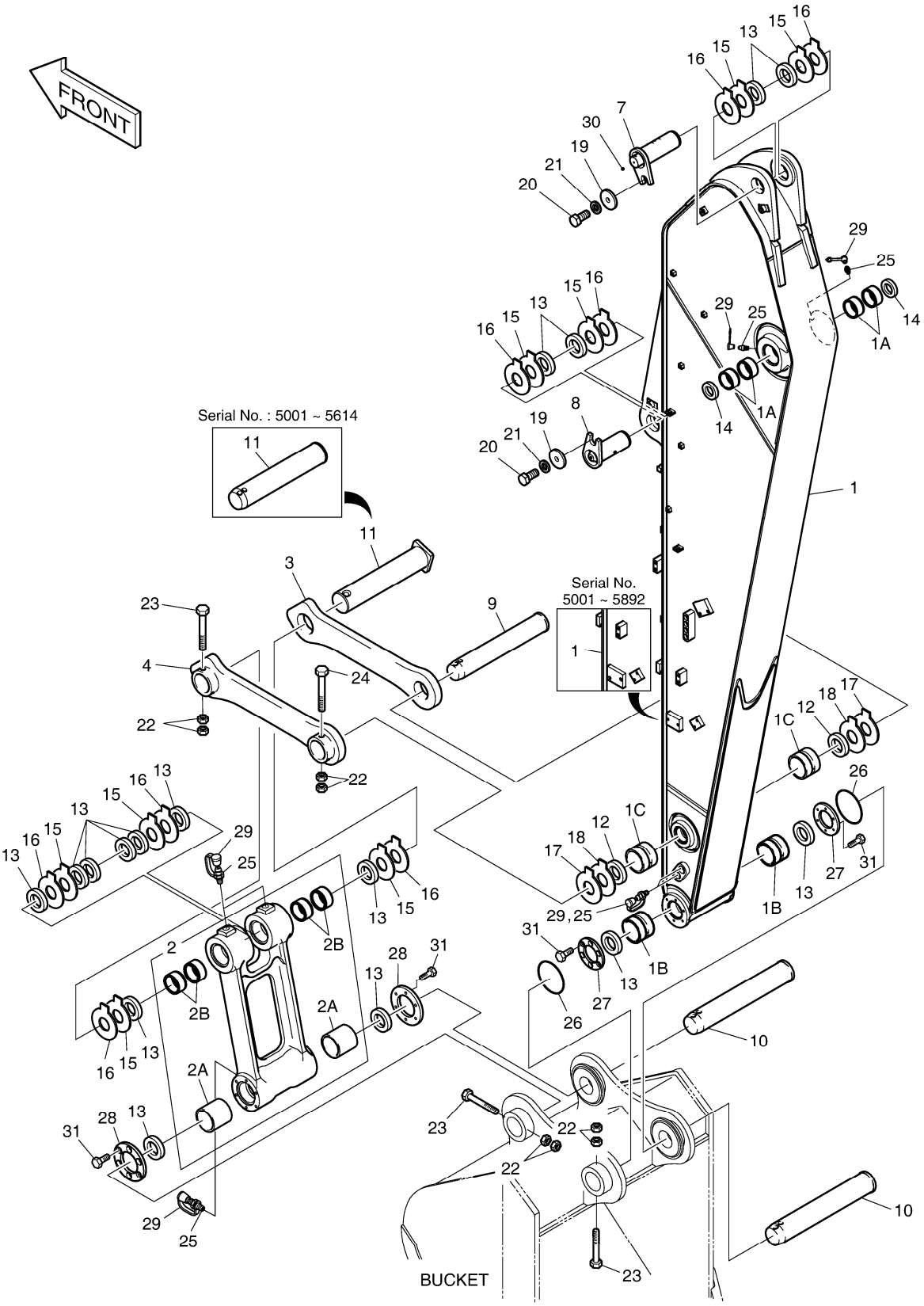

Fig. 6710 ARM - 3.5m BALANCIER

Serial No. ;

Key No.	Part No.	Description	Description	Q'ty	S.C	Serial No.	ICA	Replaceable part	
								Part No.	Q'ty
6710 -31	S0712066	BOLT	BOULON	24					

DATE	JUN. 01, 2010
3rd EDITION	

Fig. 6720 ARM PIPING - ARM 3.5m
CONDUITES DE BALANCIER

Serial No. ;

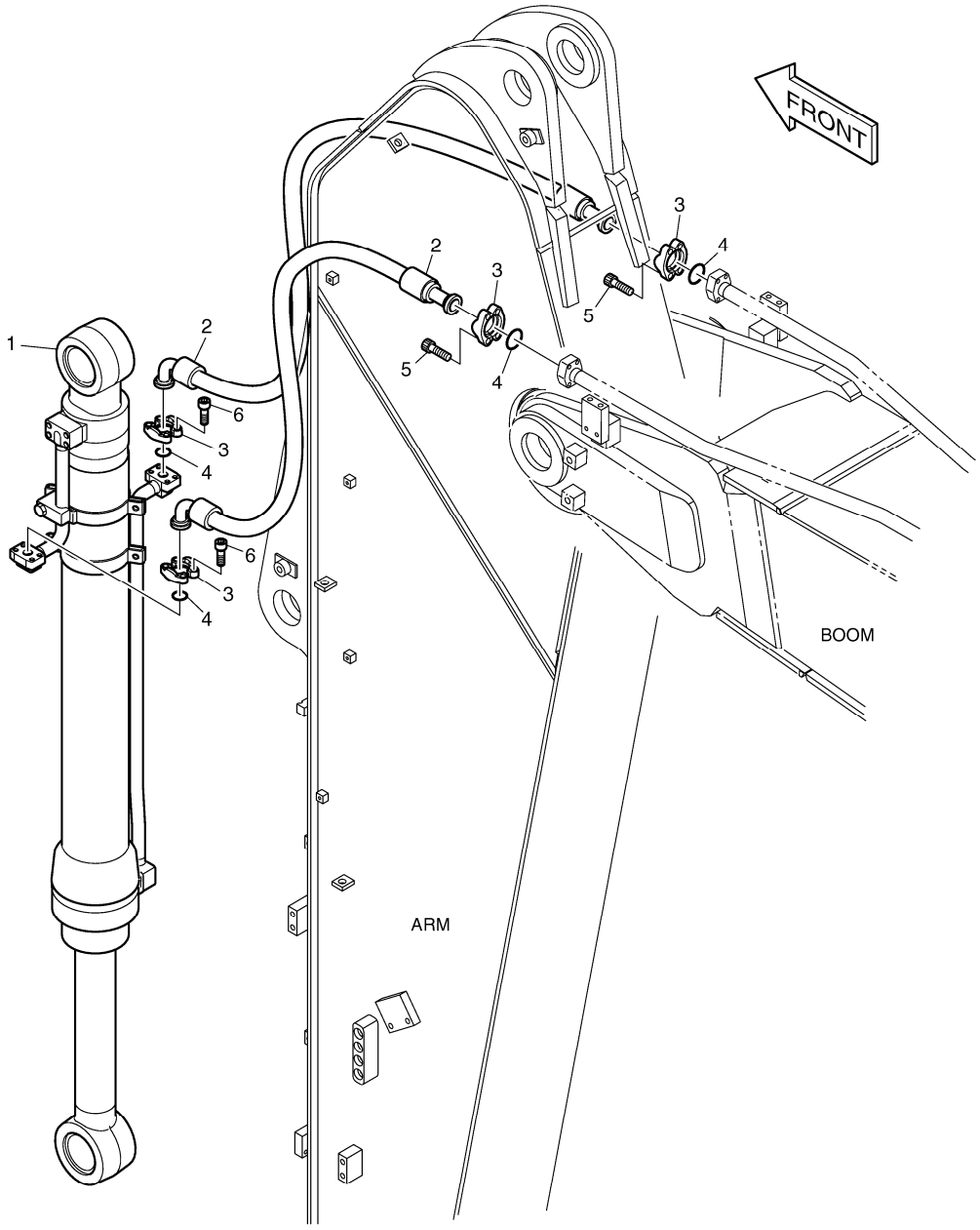

DATE	JUN. 01, 2010
3rd EDITION	

Fig. 6720 ARM PIPING - ARM 3.5m CONDUITES DE BALANCIER

Serial No. ;

Key No.	Part No.	Description	Description	Q'ty	S.C	Serial No.	ICA	Replaceable part	
								Part No.	Q'ty
6720 --	K1046332	ARM PIPING	CONDUITES DE BALANCIE	-	D				
1	K1046333	BUCKET CYLINDER	VERIN DE GODET	1					
2	DS2040488	HOSE	TUYAU FLEXIBLE	2					
3	2181-9079	FLANGE	BRIDE	8					
4	2180-1026D2	O-RING	JOINT CIRCULAIRE	4					
5	S2212366	BOLT;SOCKET M10X1.5X35	BOULON	8					
6	S2212266	BOLT;SOCKET	BOULON	8					

DATE	JUN. 01, 2010
3rd EDITION	

Fig. 6730 LUBRICATION PIPING - ARM 3.5m
LUBRIFICATION

Serial No. ;

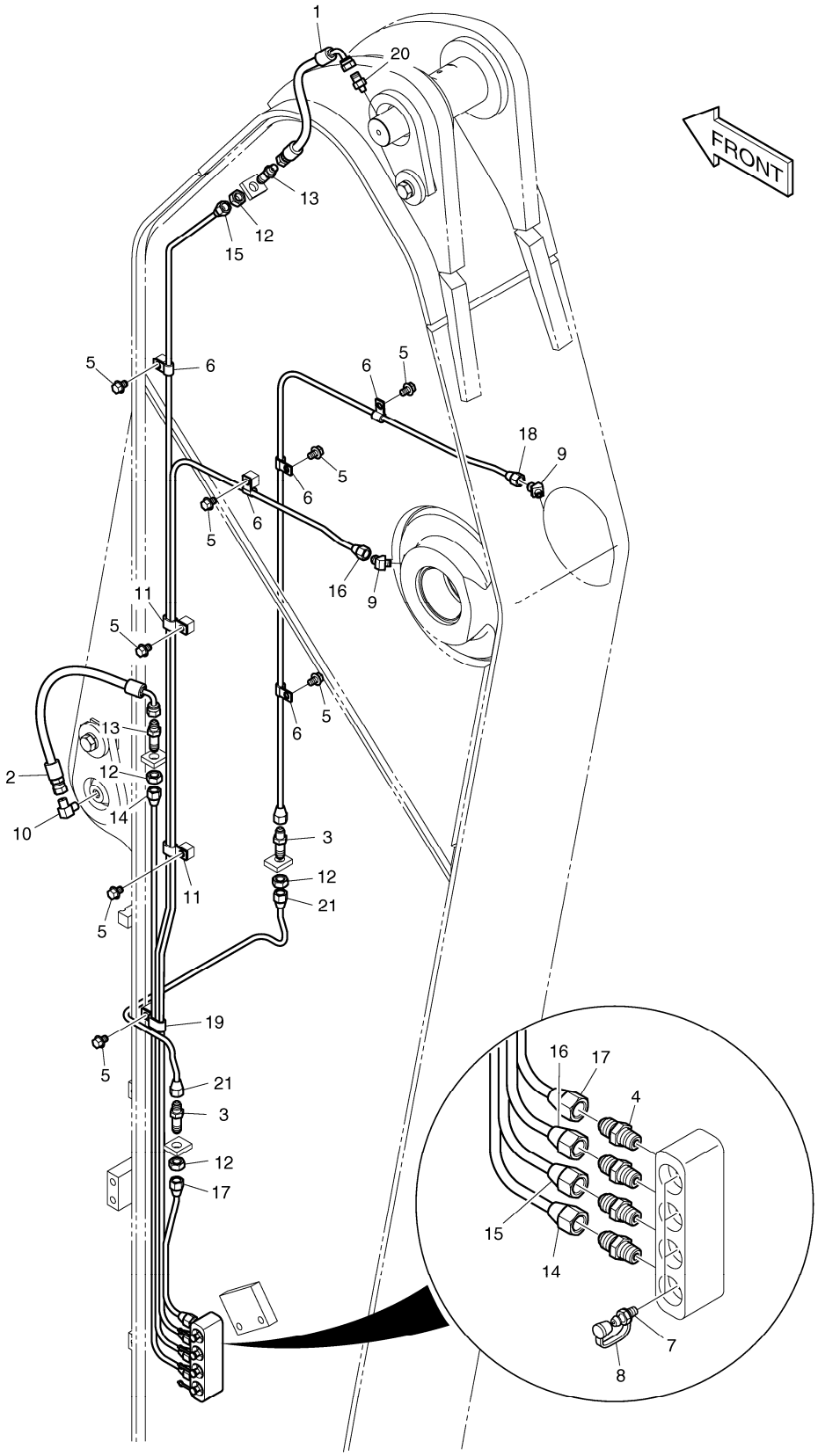

Fig. 6730 LUBRICATION PIPING - ARM 3.5m LUBRIFICATION

Serial No. ;

Key No.	Part No.	Description	Description	Q'ty	S.C	Serial No.	ICA	Replaceable part	
								Part No.	Q'ty
6730 --	K1013379	LUBRICATION PIPING	LUBRIFICATION	-	D				
1	DS2055849	HOSE	TUYAU	1					
2	DS2055822	HOSE	TUYAU FLEXIBLE	1					
3	DS2225009	ADAPTER	ADAPTEUR	2					
4	2181-1184	ADAPTER	ADAPTEUR	4					
5	K1001029	BOLT	BOULON	9					
6	DS2802023	CLIP	AGRAFE	6					
7	S6710041	NIPPLE;GREASE	MAMELON	4					
8	160-00020	CAP;GREASE NIPPLE	CHAPEAU	4					
9	K1000057	ELBOW	COUDE	2					
10	2181-1111D11	ELBOW	COUDE	1					
11	DS2805007	CLIP	AGRAFE	2					
12	S4032833	NUT	ECROU	4					
13	2181-1923D12	ADAPTER	ADAPTEUR	2					
14	K1010218	PIPE	TUYAU	1					
15	K1013684	PIPE	TUYAU	1					
16	K1013685	PIPE	TUYAU	1					
17	K1010221	PIPE	TUYAU	1					
18	K1013686	PIPE	TUYAU	1					
19	DS2805008	CLIP	AGRAFE	1					
20	2181-4112	ADAPTER	ADAPTEUR	1					
21	K1013687	PIPE	TUYAU	1					

DATE	JUN. 01, 2010
3rd EDITION	

Fig. 6740 ARM PIPING - ARM 3.5m(ONE & TWO WAY)
CONDUITES DE BALANCIER

Serial No. ;

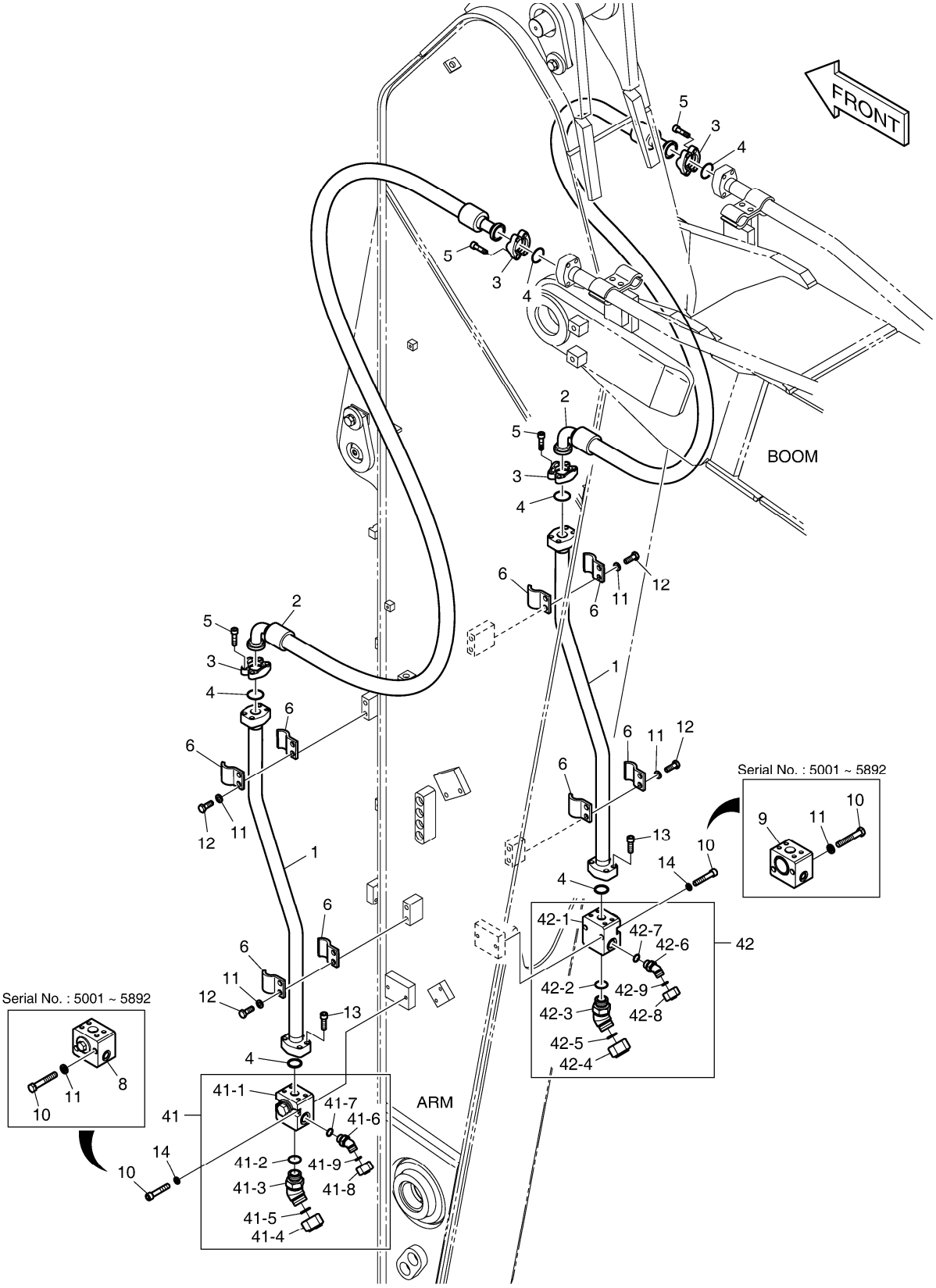

DATE	JUN. 01, 2010
3rd EDITION	

Fig. 6740 ARM PIPING - ARM 3.5m(ONE & TWO WAY) CONDUITES DE BALANCIER

Serial No. ;

Key No.	Part No.	Description	Description	Q'ty	S.C	Serial No.	ICA	Replaceable part	
								Part No.	Q'ty
6740 --	K1013382A	ARM PIPING-ONE & TWO WAY	CONDUITES DE BALANCIE	-	D	5001-5892			
	420212-01719	ARM PIPING,ONE & TWO WAY	CONDUITES DE BALANCIE	-	D	5893-			
1	K1008100	PIPE	TUYAU	2					
2	DS2040489	HOSE	TUYAU FLEXIBLE	2					
3	2181-9078	FLANGE	BRIDE	8					
4	2180-1026D19	O-RING	JOINT CIRCULAIRE	6					
5	S2212466	BOLT;SOCKET M10X1.5X40	BOULON	16					
6	K1004057	CLAMP;PIPE	BRIDE	8					
8	K1000334A	VALVE;STOP(L.H)	VANNE	1		5001-5892			
9	K1000338A	VALVE;STOP(R.H)	VANNE	1		5001-5892			
10	S0563666	BOLT	BOULON A 6 PANS	4		5001-5892			
	S2215966	BOLT;SOCKET	BOULON	4		5893-			
11	S5102803	WASHER;SPRING	RONDELLE	12		5001-5892			
	S5102803	WASHER;SPRING	RONDELLE	8		5893-			
12	S0562766	BOLT	BOULON	8					
13	S2212366	BOLT;SOCKET M10X1.5X35	BOULON	8					
14	S5110703	WASHER;SPRING	RONDELLE	4		5893-			
41	410137-00030	VALVE ASSY,STOP(L.H)	VANNE	1		5893-			
41-1	K1033252	. VALVE;STOP(L.H)	. VANNE	1		5893-			
41-2	S8000291	. O-RING	. JOINT CIRCULAIRE	1		5893-			
41-3	2181-2816D2	. ELBOW	. COUDE	1		5893-			
41-4	2181-2817D2	. CAP	. CHAPEAU	1		5893-			
41-5	S8030161	. O-RING	. JOINT CIRCULAIRE	1		5893-			
41-6	2181-2816D4	. ELBOW	. COUDE	1		5893-			
41-7	S8000181	. O-RING	. JOINT CIRCULAIRE	1		5893-			
41-8	2181-2817D4	. CAP	. CHAPEAU	1		5893-			
41-9	S8030081	. O-RING	. JOINT CIRCULAIRE	1		5893-			
42	410137-00031	VALVE ASSY,STOP(R.H)	VANNE	1		5893-			
42-1	K1033254	. VALVE,STOP(R.H)	. VANNE	1		5893-			
42-2	S8000291	. O-RING	. JOINT CIRCULAIRE	1		5893-			
42-3	2181-2816D2	. ELBOW	. COUDE	1		5893-			
42-4	2181-2817D2	. CAP	. CHAPEAU	1		5893-			
42-5	S8030161	. O-RING	. JOINT CIRCULAIRE	1		5893-			
42-6	2181-2816D4	. ELBOW	. COUDE	1		5893-			
42-7	S8000181	. O-RING	. JOINT CIRCULAIRE	1		5893-			
42-8	2181-2817D4	. CAP	. CHAPEAU	1		5893-			
42-9	S8030081	. O-RING	. JOINT CIRCULAIRE	1		5893-			

DATE	JUN. 01, 2010
3rd EDITION	

Fig. 6750 ARM PIPING - ARM 3.5m(QUICK CLAMP)
CONDUITES DE BALANCIER

Serial No. ;

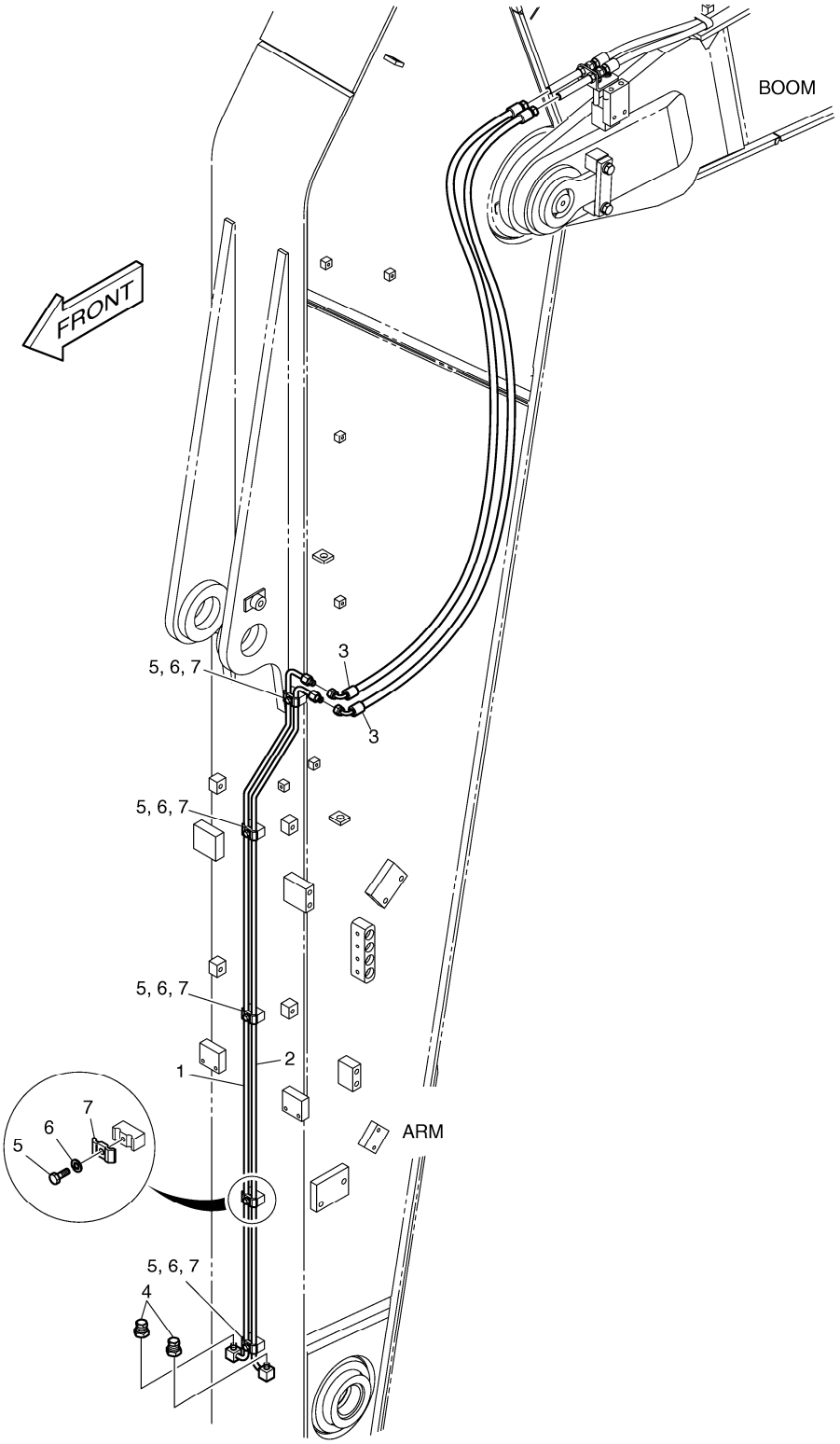

DATE	JUN. 01, 2010
3rd EDITION	

Fig. 6750 ARM PIPING - ARM 3.5m(QUICK CLAMP)
CONDUITES DE BALANCIER

Serial No. ;

Key No.	Part No.	Description	Description	Q'ty	S.C	Serial No.	ICA	Replaceable part	
								Part No.	Q'ty
6750 --	K1013389	ARM PIPING-QUICK CLAMP	CONDUITES DE BALANCIE	-	D				
1	K1008111	PIPE	TUYAU	1					
2	K1008112	PIPE	TUYAU	1					
3	DS2055921	HOSE	TUYAU FLEXIBLE	2					
4	2181-2820D1	PLUG	BOUCHON	2					
5	S0508866	BOLT	BOULON	5					
6	S5102503	WASHER	RONDELLE	5					
7	K1004011	CLAMP;PIPE	BRIDE	5					

DATE	JUN. 01, 2010
3rd EDITION	

Fig. 6760 ARM PIPING - ARM 3.5m(CLAMSHELL)
CONDUITES DE BALANCIER

Serial No. ;

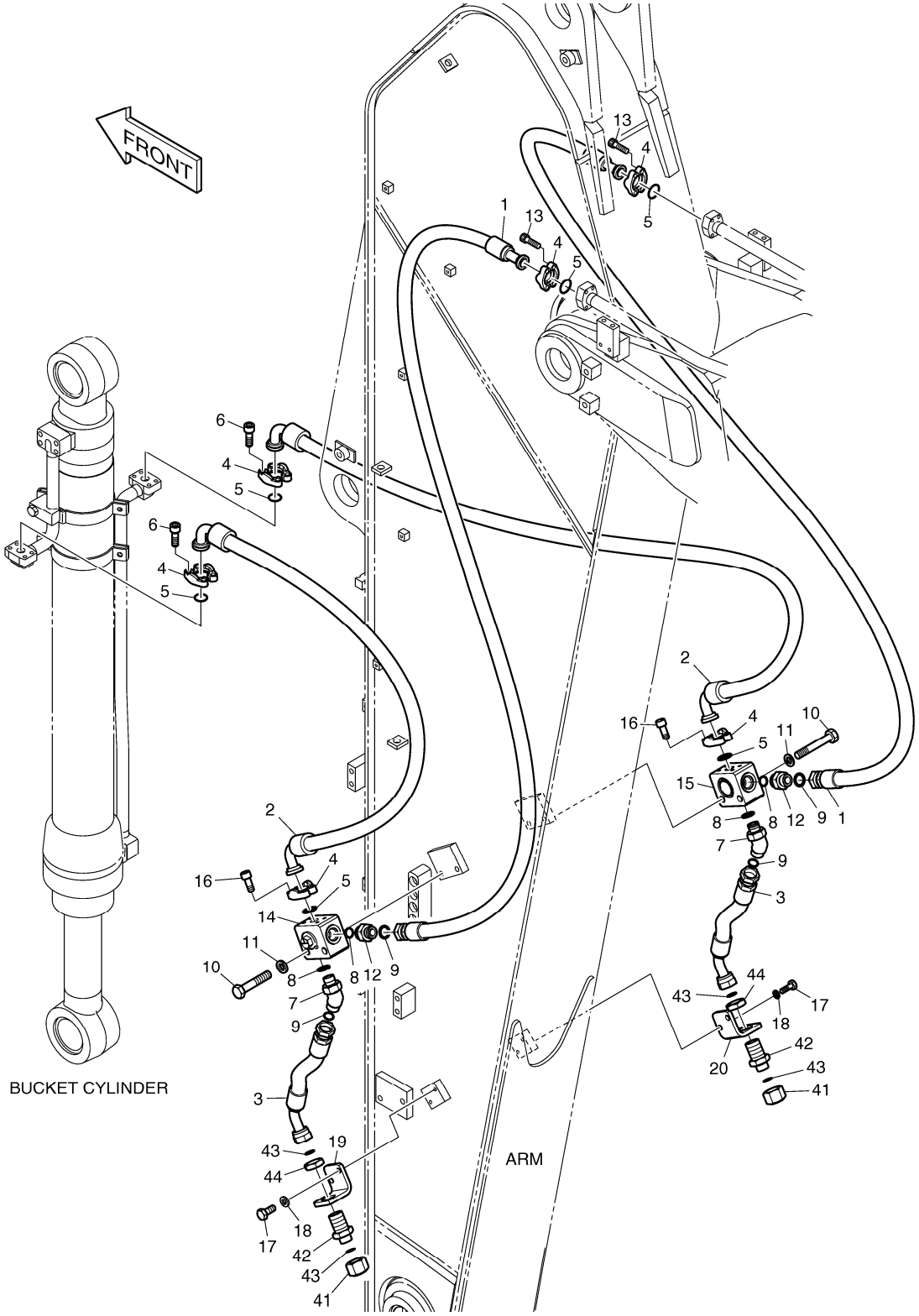

DATE	JUN. 01, 2010
3rd EDITION	

Fig. 6760 ARM PIPING - ARM 3.5m(CLAMSHELL)
CONDUITES DE BALANCIER

Serial No. ;

Key No.	Part No.	Description	Description	Q'ty	S.C	Serial No.	ICA	Replaceable part	
								Part No.	Q'ty
6760 --	K1013391	ARM PIPING-CLAMSHELL	CONDUITES DE BALANCIE	-	D				
1	DS2016065	HOSE	TUYAU FLEXIBLE	2					
2	DS2045406	HOSE	TUYAU FLEXIBLE	2					
3	DS2012341	HOSE	TUYAU FLEXIBLE	2					
4	2181-9079	FLANGE	BRIDE	12					
5	2180-1026D2	O-RING	JOINT CIRCULAIRE	6					
6	S2212266	BOLT;SOCKET	BOULON	8					
7	2181-2816D1	ELBOW	COUDE	2					
8	S8030121	O-RING	JOINT CIRCULAIRE	4					
9	S8000231	O-RING	JOINT CIRCULAIRE	4					
10	S0563466	BOLT	BOULON	4					
11	S5102803	WASHER;SPRING	RONDELLE	4					
12	2181-4133D5	ADAPTER	ADAPTEUR	2					
13	S2212366	BOLT;SOCKET M10X1.5X35	BOULON	8					
14	K1002939	VALVE;SWITCH(L.H)	VALVE	1					
15	K1002940	VALVE;SWITCH(R.H)	VALVE	1					
16	S2212066	BOLT;SOCKET	BOULON	8					
17	S0512066	BOLT	BOULON	4					
18	S5102603	WASHER	RONDELLE	4					
19	K1014759	BRACKET	SUPPORT	1					
20	K1015093	BRACKET	SUPPORT	1					
41	2181-2817D1	CAP	CHAPEAU	2					
42	DS2415007	ADAPTER	ADAPTEUR	2					
43	S8030121	O-RING	JOINT CIRCULAIRE	4					
44	121-00010D8	NUT	ECROU	2					

DATE	JUN. 01, 2010
3rd EDITION	

Fig. 6770 ARM PIPING - ARM 3.5m(ROTATING)
CONDUITES DE BALANCIER

Serial No. ;

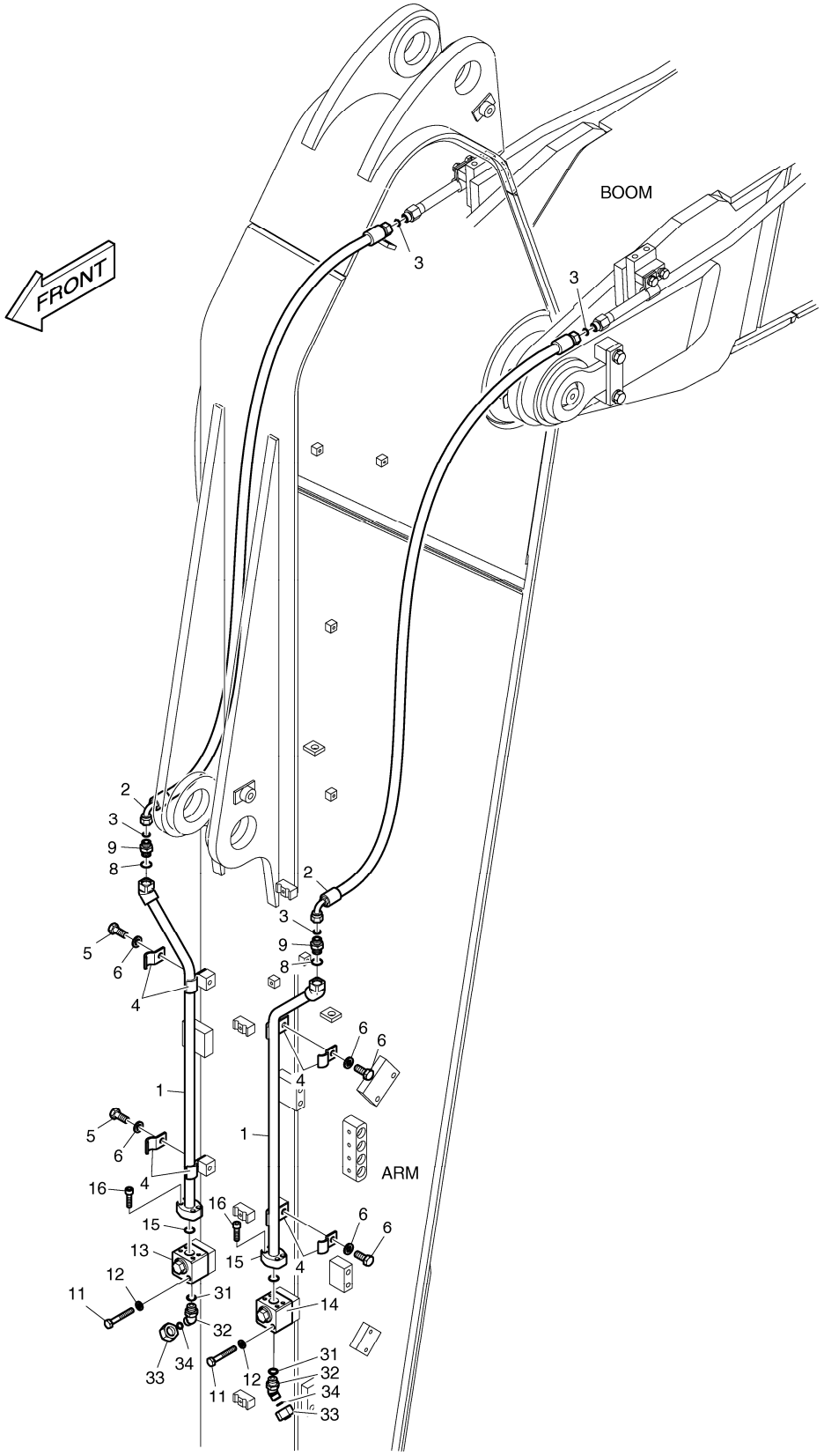

DATE	JUN. 01, 2010
3rd EDITION	

Fig. 6770 ARM PIPING - ARM 3.5m(ROTATING) CONDUITES DE BALANCIER

Serial No. ;

Key No.	Part No.	Description	Description	Q'ty	S.C	Serial No.	ICA	Replaceable part	
								Part No.	Q'ty
6770 --	K1013385	ARM PIPING;ROTATING	CONDUITES DE BALANCIE	-	D				
1	K1010215	PIPE	TUYAU	2					
2	DS2013700	HOSE	TUYAU FLEXIBLE	2					
3	S8030081	O-RING	JOINT CIRCULAIRE	4					
4	124-00299A	CLAMP;PIPE	BRIDE	8					
5	S0515266	BOLT	BOULON	4					
6	S5102703	WASHER;SPRING	RONDELLE	4					
8	S8000181	O-RING	JOINT CIRCULAIRE	2					
9	2181-4133D3	ADAPTER	ADAPTEUR	2					
11	S0558966	BOLT M10X1.5X70	BOULON	4					
12	S5102603	WASHER	RONDELLE	4					
13	K1006227	VALVE;SWITCH(R.H)	VALVE	1					
14	K1006228	VALVE;SWITCH(L.H)	VALVE	1					
15	2180-1026D30	O-RING	JOINT CIRCULAIRE	2					
16	S2209266	BOLT	BOULON	8					
31	S8000181	O-RING	JOINT CIRCULAIRE	2					
32	2181-2816D4	ELBOW	COUDE	2					
33	2181-2817D4	CAP	CHAPEAU	2					
34	S8030081	O-RING	JOINT CIRCULAIRE	2					

DATE	JUN. 01, 2010
3rd EDITION	

Fig. 6780 BUCKET ASS'Y - 0.47m³ ENSEMBLE DE GODET

Serial No. ;

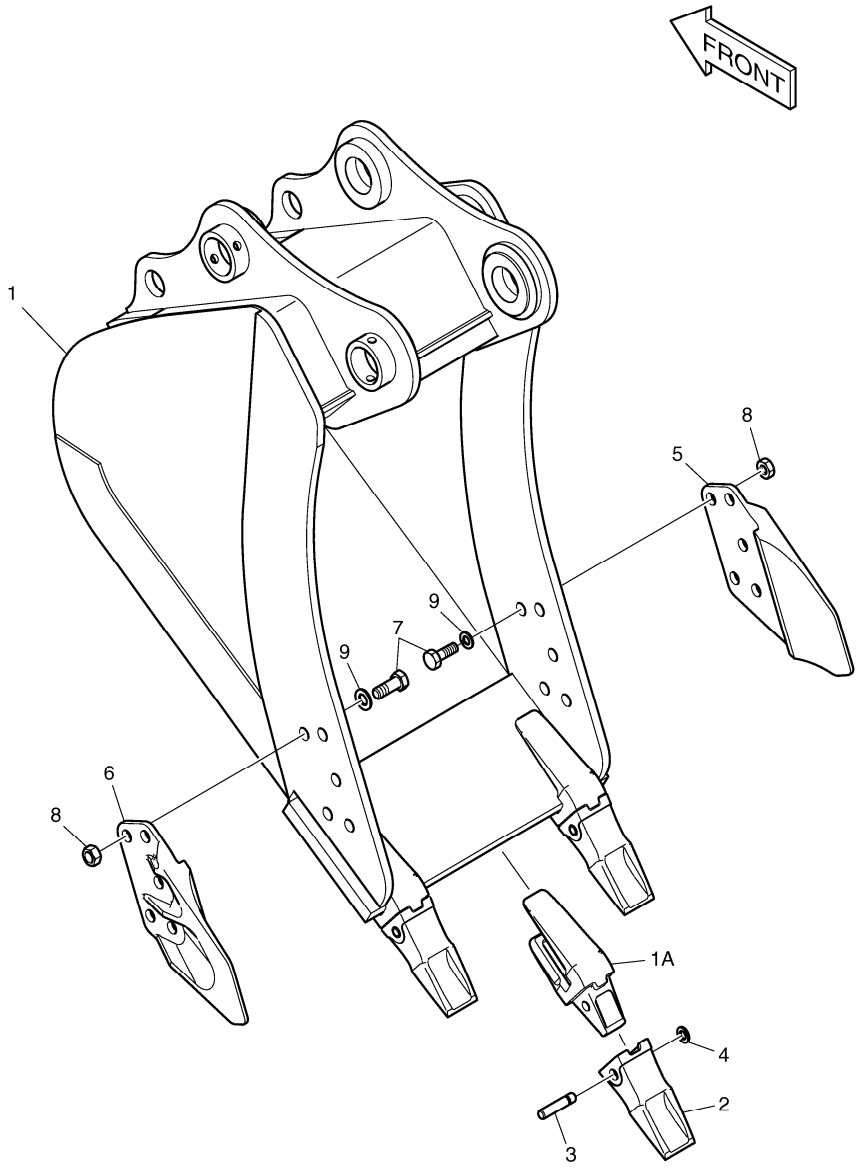

DATE	JUN. 01, 2010
3rd EDITION	

Fig. 6780 BUCKET ASS'Y - 0.47m³ ENSEMBLE DE GODET

Serial No. ;

Key No.	Part No.	Description	Description	Q'ty	S.C	Serial No.	ICA	Replaceable part	
								Part No.	Q'ty
6780 --	K1011476E	BUCKET ASS'Y-0.47㎥	GODET	1					
1	K1011477E	BUCKET-0.47㎥	GODET	1					
1A	2713-1218A	. ADAPTER;TOOTH	. ADAPTEUR	3					
2	K1038006A	TOOTH	DENT	3					
3	2705-1020	PIN;LOCKING	GOUPILLE	3					
4	2114-1848A	WASHER;LOCKING	RONDELLE	3					
5	2713-1059A	CUTTER;SIDE(R.H)	COUPEUR	1					
6	2713-1060A	CUTTER;SIDE(L.H)	COUPEUR	1					
7	S0574661	BOLT M24X3.0X65	BOULON	10					
8	S4013333	NUT	ECROU	10					
9	2114-1831A	WASHER;HARDEN	RONDELLE	10					

DATE	JUN. 01, 2010
3rd EDITION	

Fig. 6790 BUCKET ASS'Y - 0.72m³ ENSEMBLE DE GODET

Serial No. ;

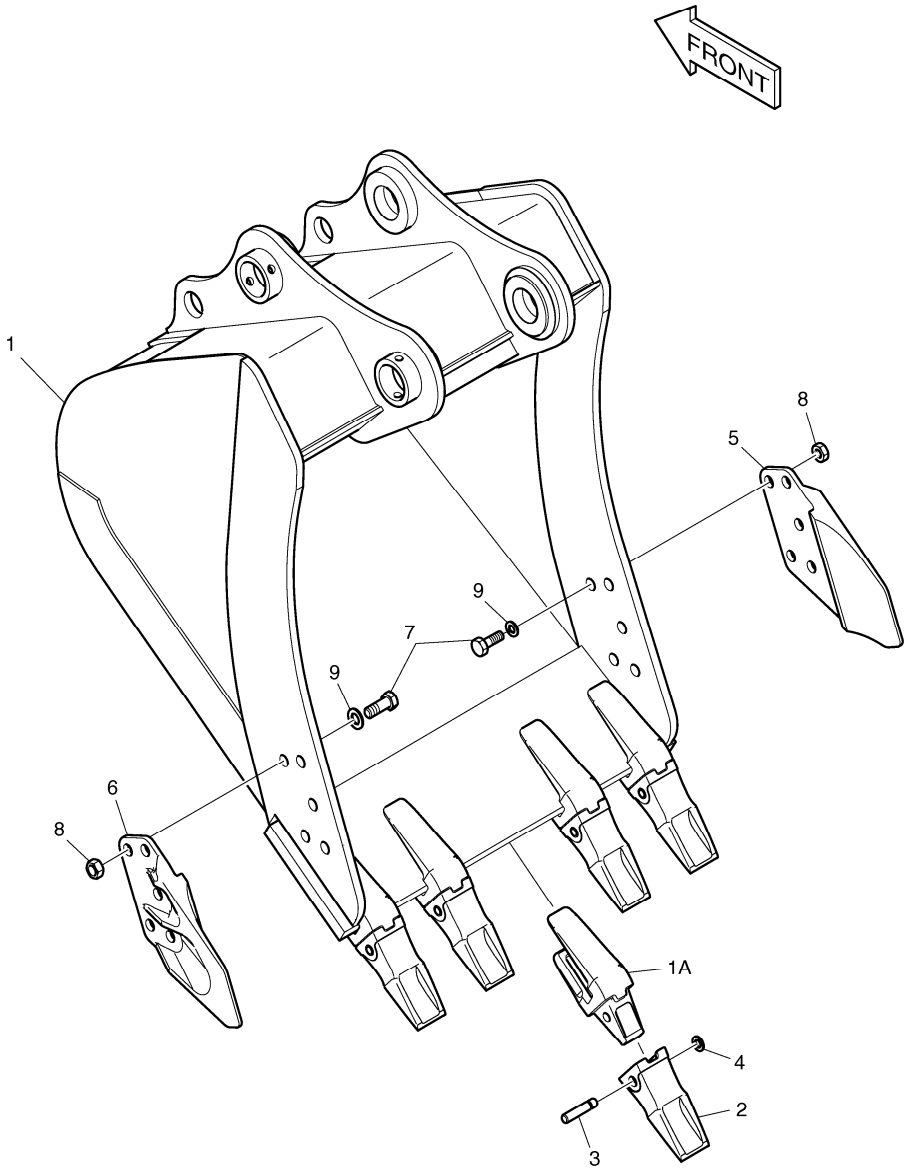

DATE	JUN. 01, 2010
3rd EDITION	

Fig. 6790 BUCKET ASS'Y - 0.72m³ ENSEMBLE DE GODET

Serial No. ;

Key No.	Part No.	Description	Description	Q'ty	S.C	Serial No.	ICA	Replaceable part	
								Part No.	Q'ty
6790 --	K1011478E	BUCKET ASS'Y-0.72㎥	GODET	1					
1	K1011479E	BUCKET-0.72㎥	GODET	1					
1A	2713-1218A	. ADAPTER;TOOTH	. ADAPTEUR	5					
2	K1038006A	TOOTH	DENT	5					
3	2705-1020	PIN;LOCKING	GOUPILLE	5					
4	2114-1848A	WASHER;LOCKING	RONDELLE	5					
5	2713-1059A	CUTTER;SIDE(R.H)	COUPEUR	1					
6	2713-1060A	CUTTER;SIDE(L.H)	COUPEUR	1					
7	S0574661	BOLT M24X3.0X65	BOULON	10					
8	S4013333	NUT	ECROU	10					
9	2114-1831A	WASHER;HARDEN	RONDELLE	10					

DATE	JUN. 01, 2010
3rd EDITION	

Fig. 6800 BUCKET ASS'Y - 0.92m³ ENSEMBLE DE GODET

Serial No. ;

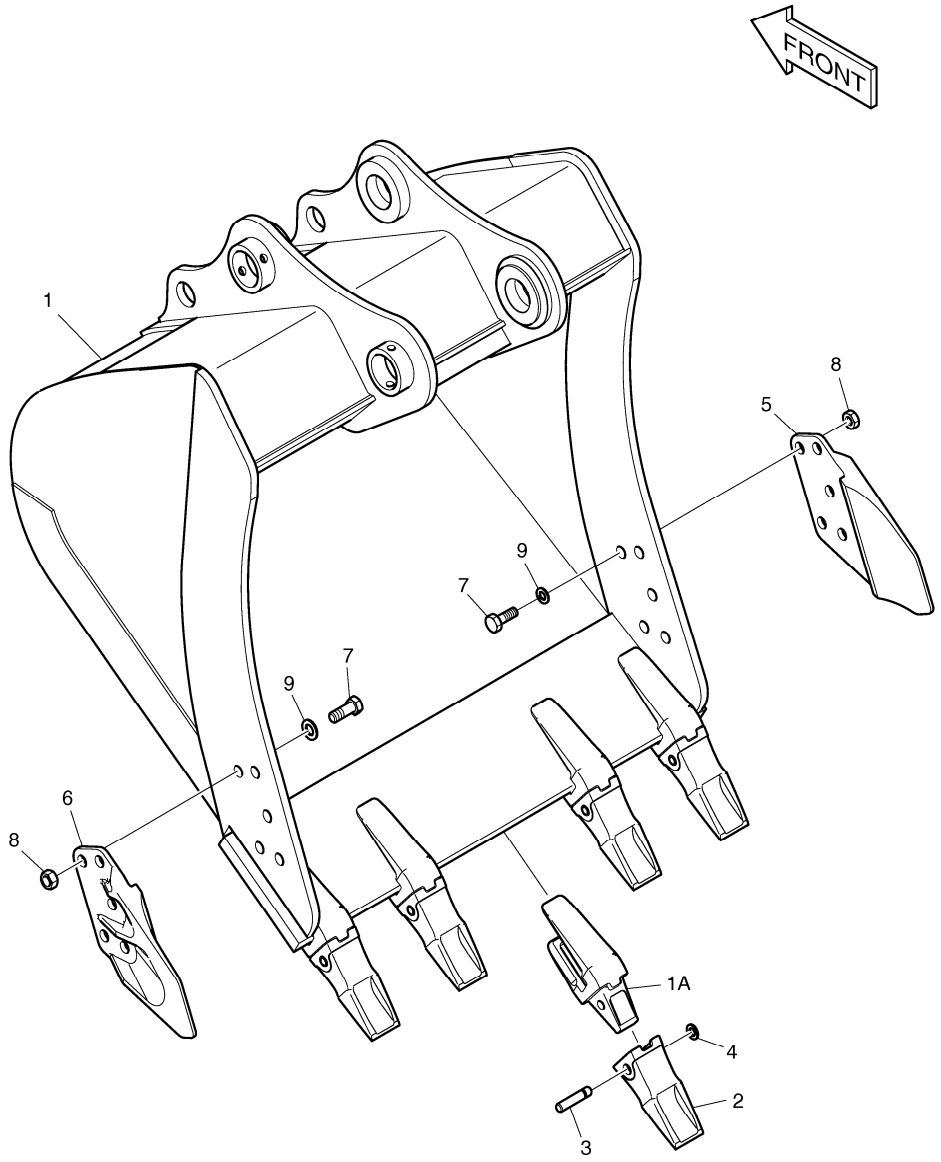

DATE	JUN. 01, 2010
3rd EDITION	

Fig. 6800 BUCKET ASS'Y - 0.92m³ ENSEMBLE DE GODET

Serial No. ;

Key No.	Part No.	Description	Description	Q'ty	S.C	Serial No.	ICA	Replaceable part	
								Part No.	Q'ty
6800 --	K1011480E	BUCKET ASS'Y-0.92㎥	GODET	1					
1	K1011481E	BUCKET-0.92㎥	GODET	1					
1A	2713-1218A	. ADAPTER;TOOTH	. ADAPTEUR	5					
2	K1038006A	TOOTH	DENT	5					
3	2705-1020	PIN;LOCKING	GOUPILLE	5					
4	2114-1848A	WASHER;LOCKING	RONDELLE	5					
5	2713-1059A	CUTTER;SIDE(R.H)	COUPEUR	1					
6	2713-1060A	CUTTER;SIDE(L.H)	COUPEUR	1					
7	S0574661	BOLT M24X3.0X65	BOULON	10					
8	S4013333	NUT	ECROU	10					
9	2114-1831A	WASHER;HARDEN	RONDELLE	10					

DATE	JUN. 01, 2010
3rd EDITION	

Fig. 6810 BUCKET ASS'Y - 1.0m³ ENSEMBLE DE GODET

Serial No. ;

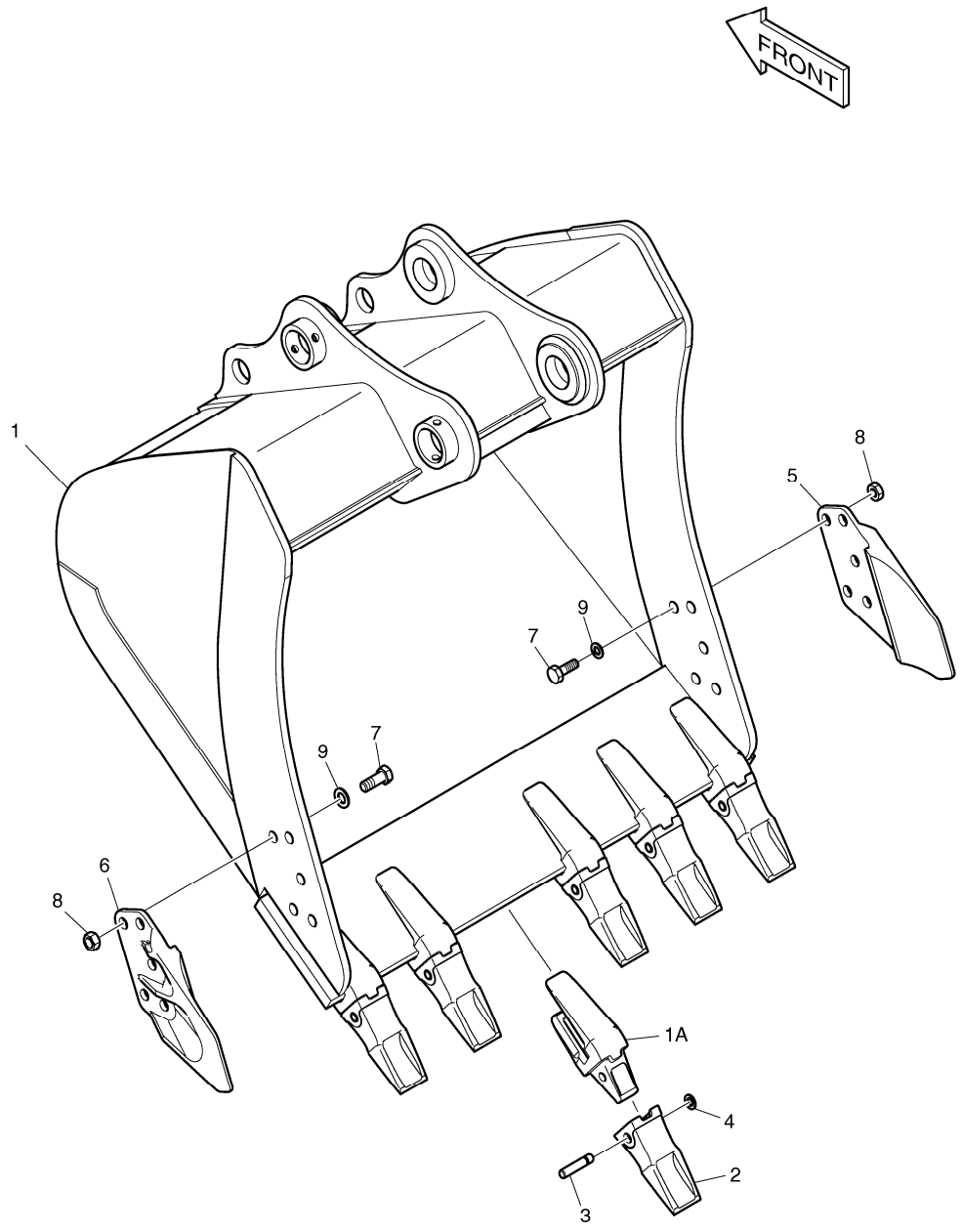

DATE	JUN. 01, 2010
3rd EDITION	

Fig. 6810 BUCKET ASS'Y - 1.0m³ ENSEMBLE DE GODET

Serial No. ;

Key No.	Part No.	Description	Description	Q'ty	S.C	Serial No.	ICA	Replaceable part	
								Part No.	Q'ty
6810 --	K1011482E	BUCKET ASS'Y-1.0㎥	GODET	1					
1	K1011483E	BUCKET-1.0㎥	GODET	1					
1A	2713-1218A	. ADAPTER;TOOTH	. ADAPTEUR	6					
2	K1038006A	TOOTH	DENT	6					
3	2705-1020	PIN;LOCKING	GOUPILLE	6					
4	2114-1848A	WASHER;LOCKING	RONDELLE	6					
5	2713-1059A	CUTTER;SIDE(R.H)	COUPEUR	1					
6	2713-1060A	CUTTER;SIDE(L.H)	COUPEUR	1					
7	S0574661	BOLT M24X3.0X65	BOULON	10					
8	S4013333	NUT	ECROU	10					
9	2114-1831A	WASHER;HARDEN	RONDELLE	10					

DATE	JUN. 01, 2010
3rd EDITION	

Fig. 6820 BUCKET ASS'Y - 1.1m³ ENSEMBLE DE GODET

Serial No. ;

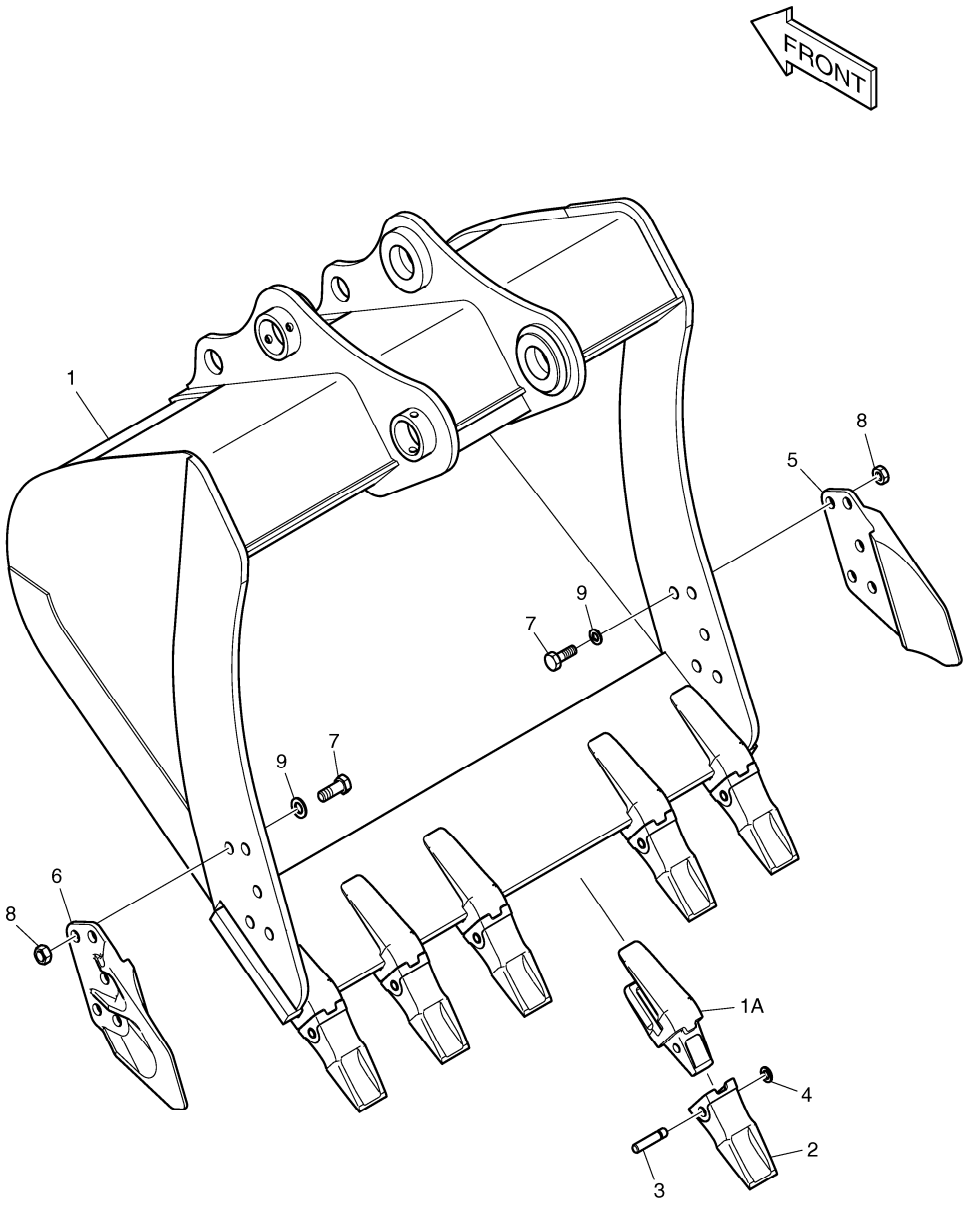

DATE	JUN. 01, 2010
3rd EDITION	

Fig. 6820 BUCKET ASS'Y - 1.1m³ ENSEMBLE DE GODET

Serial No. ;

Key No.	Part No.	Description	Description	Q'ty	S.C	Serial No.	ICA	Replaceable part	
								Part No.	Q'ty
6820 --	K1011484E	BUCKET ASS'Y-1.1㎥	GODET	1					
1	K1011485E	BUCKET-1.1㎥	GODET	1					
1A	2713-1218A	. ADAPTER;TOOTH	. ADAPTEUR	6					
2	K1038006A	TOOTH	DENT	6					
3	2705-1020	PIN;LOCKING	GOUPILLE	6					
4	2114-1848A	WASHER;LOCKING	RONDELLE	6					
5	2713-1059A	CUTTER;SIDE(R.H)	COUPEUR	1					
6	2713-1060A	CUTTER;SIDE(L.H)	COUPEUR	1					
7	S0574661	BOLT M24X3.0X65	BOULON	10					
8	S4013333	NUT	ECROU	10					
9	2114-1831A	WASHER;HARDEN	RONDELLE	10					

DATE	JUN. 01, 2010
3rd EDITION	

Fig. 6830 BOOM - 5.2m
ENSEMBLE FLECHE

Serial No. ;

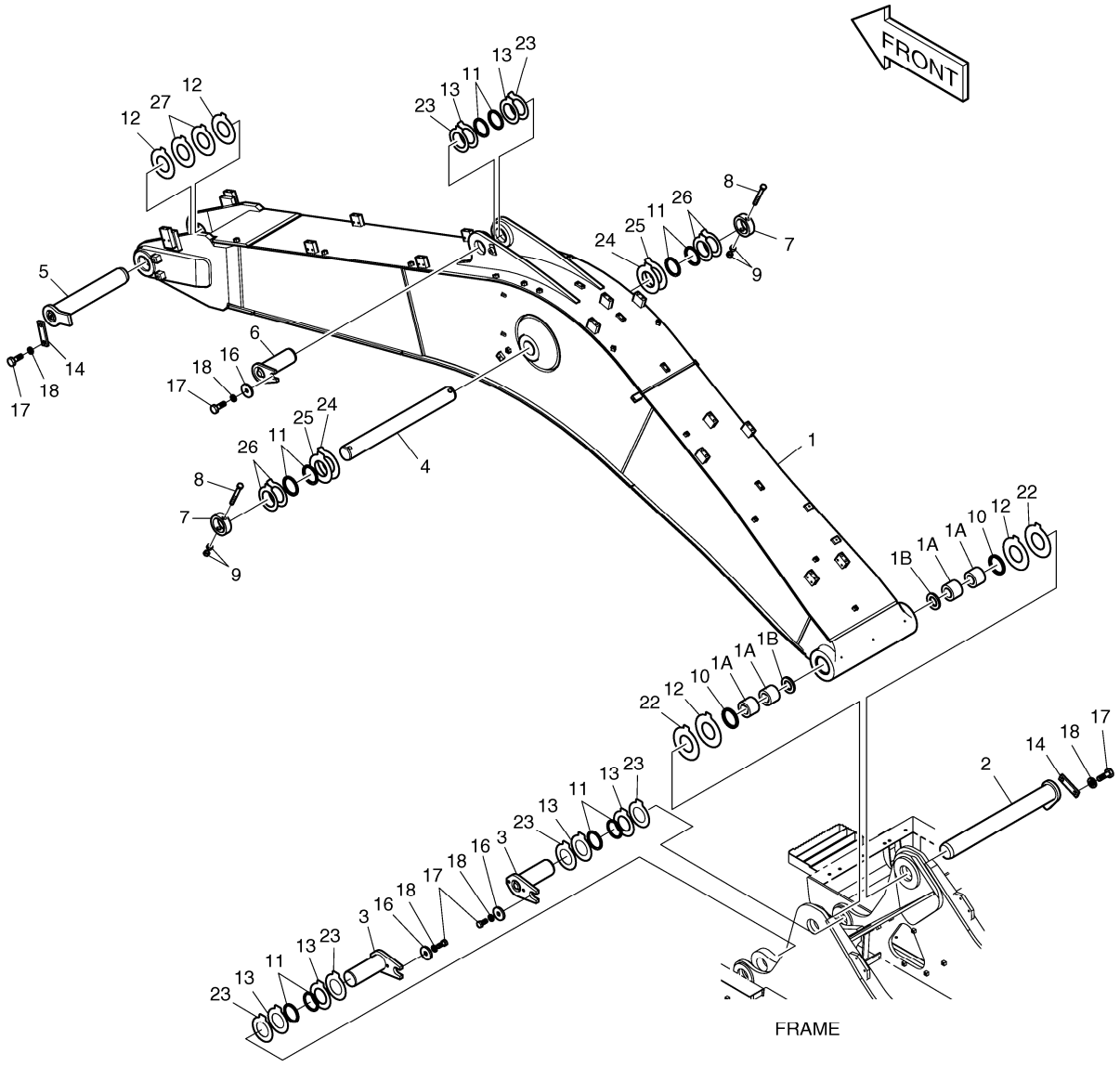

DATE	JUN. 01, 2010
3rd EDITION	

Fig. 6830 BOOM - 5.2m ENSEMBLE FLECHE

Serial No. ;

Key No.	Part No.	Description	Description	Q'ty	S.C	Serial No.	ICA	Replaceable part	
								Part No.	Q'ty
6830 --	K1045659E	BOOM ASS'Y	FLECHE	-	D	5001-5736			
	230207-00082	BOOM ASSY;(5.2M)	FLECHE	-	D	5737-			
1	K1045661C	BOOM SUB ASS'Y-5.2M	ENSEMBLE FLECHE	1		5001-5736	I	230211-00055	1
	230211-00055	BOOM,MACHINE;(5.2M)	ENSEMBLE FLECHE	1		5737-			
1A	K1037847A	. BUSHING	. BUSHING	4					
1B	2180-1106BD6	. SEAL;DUST	. CACHET	2					
2	2123-2180G	PIN	GOUPILLE	1					
3	123-00409A	PIN	GOUPILLE	2					
4	K1007253B	PIN	GOUPILLE	1					
5	2123-2185G	PIN	GOUPILLE	1					
6	2123-2187E	PIN	GOUPILLE	1					
7	2116-1531A	STOPPER	TAQUET	2					
8	S0567066	BOLT	BOULON	2					
9	S4012933	NUT	ECROU	4					
10	2180-1106BD6	SEAL;DUST	CACHET	2					
11	2180-1106BD24	SEAL;DUST	CACHET	10					
12	DS7752018	SHIM	CALE	4					
13	DS7752012	SHIM	CALE	6					
14	621-03710A	PLATE;STOPPER	PLAQUE	2					
16	2116-1060D6	STOPPER	TAQUET	3					
17	S0521366	BOLT	BOULON	7					
18	S5102903	WASHER	RONDELLE	7					
22	DS7752017	SHIM	CALE	2					
23	DS7752013	SHIM	CALE	6					
24	DS7752026	SHIM	CALE	2					
25	DS7752027	SHIM	CALE	2					
26	DS7752025	SHIM	CALE	4					
27	DS7752017	SHIM	CALE	2					

DATE	JUN. 01, 2010
3rd EDITION	

Fig. 6840 BOOM PIPING - BOOM 5.2m
CONDUITES DE FLECHE

Serial No. ;

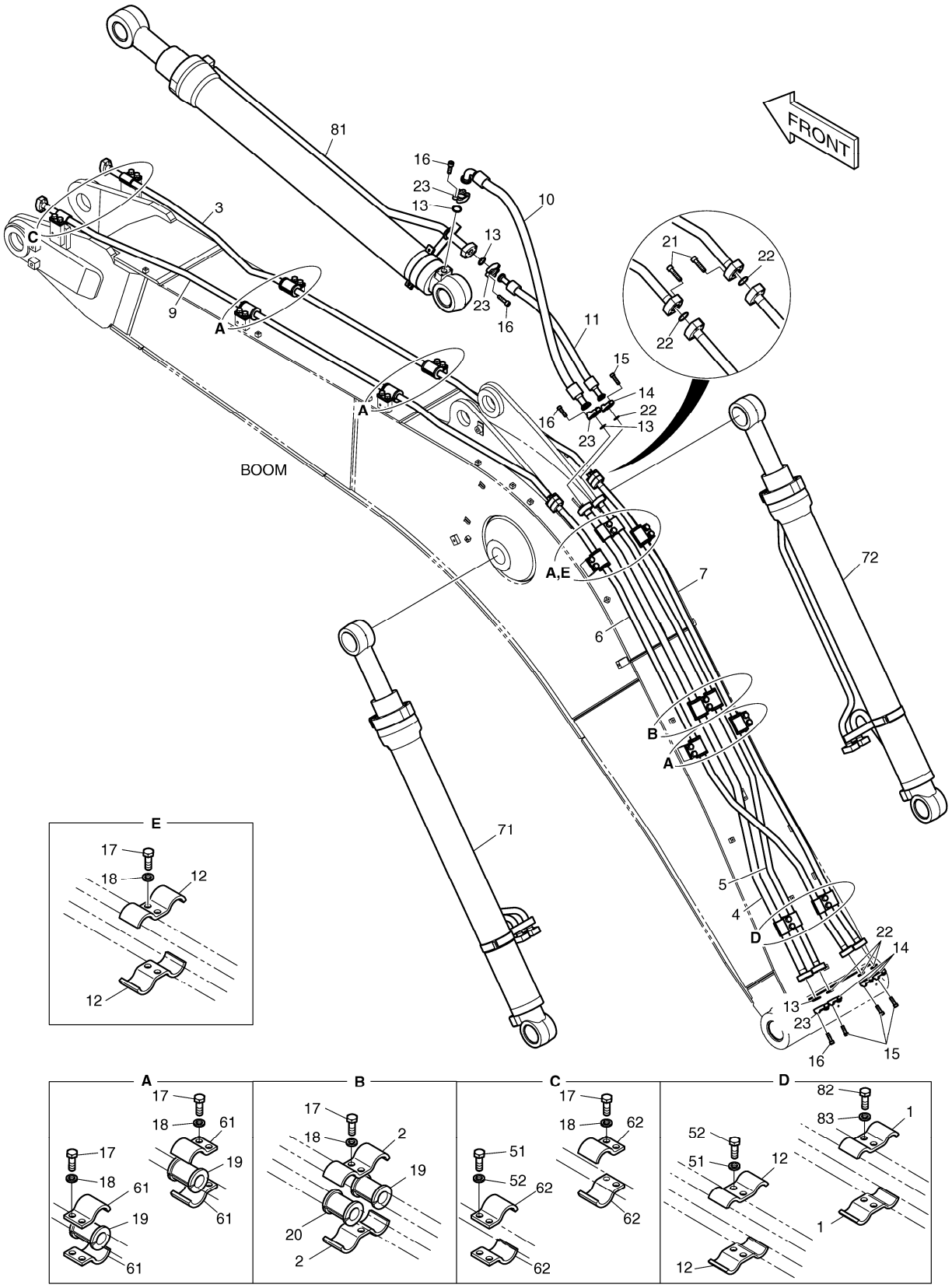

DATE	JUN. 01, 2010
3rd EDITION	

Fig. 6840 BOOM PIPING - BOOM 5.2m CONDUITES DE FLECHE

Serial No. ;

Key No.	Part No.	Description	Description	Q'ty	S.C	Serial No.	ICA	Replaceable part	
								Part No.	Q'ty
6840 --	K1045913	BOOM PIPING	BOOM PIPING	-	D				
1	124-00300	CLAMP;PIPE	BRIDE	2					
2	124-00368	CLAMP;PIPE	BRIDE	2					
3	K1046104	PIPE	CONDUITES	1					
4	K1045927	PIPE	CONDUITES	1					
5	K1045928	PIPE	CONDUITES	1					
6	K1045937	PIPE	CONDUITES	1					
7	K1045938	PIPE	CONDUITES	1					
9	K1046162	PIPE	CONDUITES	1					
10	DS2040638	HOSE	TUYAU FLEXIBLE	1					
11	DS2038193	HOSE	TUYAU FLEXIBLE	1					
12	124-00367	CLAMP;PIPE	BRIDE	4					
13	2180-1026D19	O-RING	JOINT CIRCULAIRE	4					
14	2181-9079	FLANGE	BRIDE	8					
15	S2212366	BOLT;SOCKET M10X1.5X35	BOULON	20					
16	S2212466	BOLT;SOCKET M10X1.5X40	BOULON	12					
17	S0562766	BOLT	BOULON	22					
18	S5102803	WASHER;SPRING	RONDELLE	22					
19	161-00574	RUBBER	LE CAOUTCHOUC	9					
20	161-00281	RUBBER	LE CAOUTCHOUC	1					
21	S2212566	BOLT;SOCKET	BOULON	8					
22	2180-1026D2	O-RING	JOINT CIRCULAIRE	6					
23	2181-9078	FLANGE	BRIDE	8					
51	S0562766	BOLT	BOULON	4					
52	S5102803	WASHER;SPRING	RONDELLE	4					
61	124-00302	CLAMP;PIPE	BRIDE	16					
62	124-00303	CLAMP;PIPE	BRIDE	4					
71	K1044989B	CYLINDER;BOOM (LH)	CYLINDRE	1					
72	K1044990B	CYLINDER;BOOM (RH)	CYLINDRE	1					
81	K1044991A	CYLINDER;ARM	VERIN DE BALANCIER	1					
82	S0562766	BOLT	BOULON	2					
83	S5102803	WASHER;SPRING	RONDELLE	2					

DATE	JUN. 01, 2010
3rd EDITION	

Fig. 6850 LUBRICATION PIPING - BOOM 5.2m
LUBRIFICATION

Serial No. ;

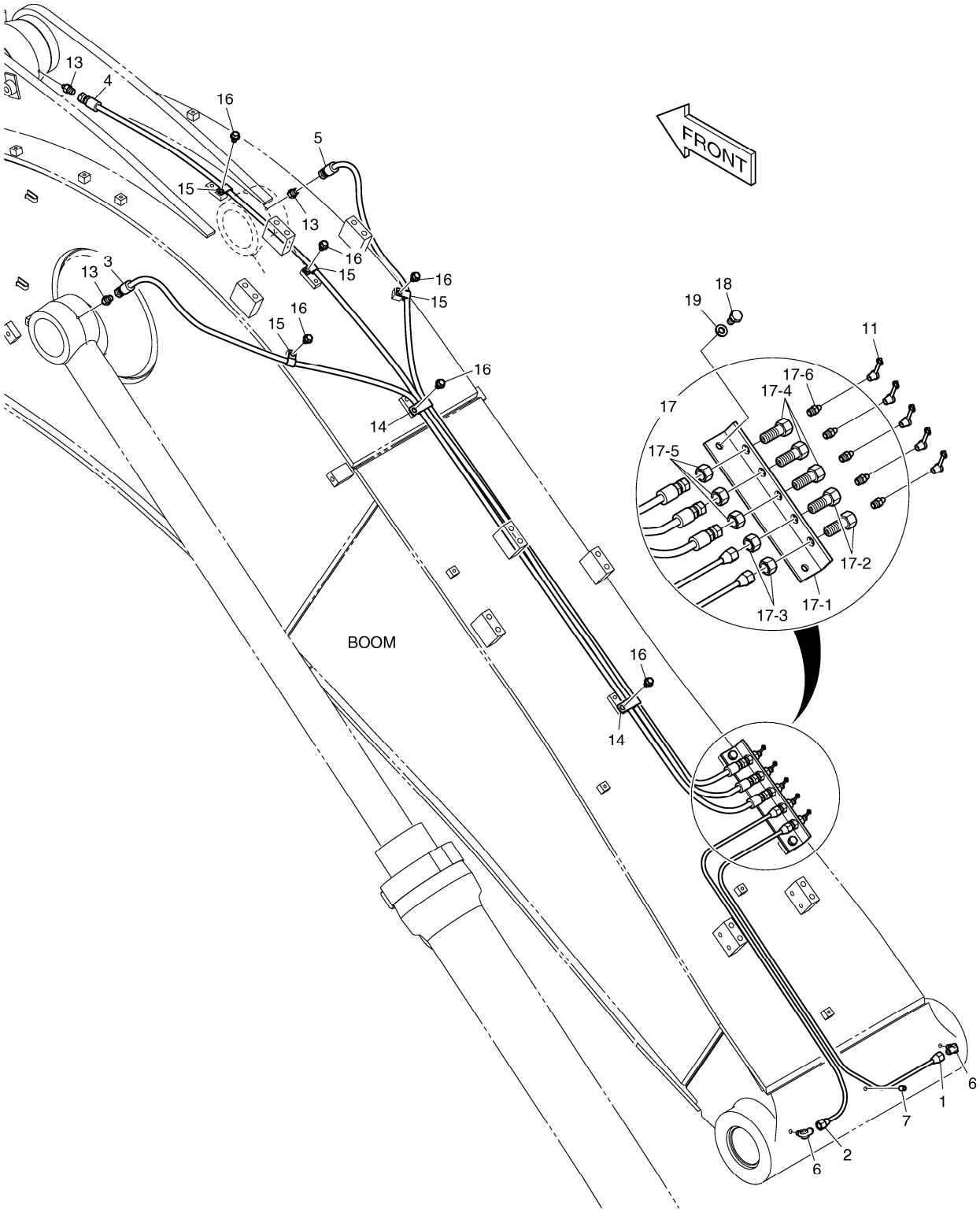

DATE	JUN. 01, 2010
3rd EDITION	

Fig. 6850 LUBRICATION PIPING - BOOM 5.2m LUBRIFICATION

Serial No. ;

Key No.	Part No.	Description	Description	Q'ty	S.C	Serial No.	ICA	Replaceable part	
								Part No.	Q'ty
6850 --	K1045915	LUBRICATION PIPING-BOOM 5.2	LUBRIFICATION	-	D				
1	K1038814	PIPE	TUYAU	1					
2	K1038815	PIPE	TUYAU	1					
3	DS20531021	HOSE	TUYAU FLEXIBLE	1					
4	DS2053997	HOSE	TUYAU FLEXIBLE	1					
5	DS2053867	HOSE PF1/4-2140L	TUYAU FLEXIBLE	1					
6	2181-1925	ELBOW	COUDE	2					
7	S3524403	PLUG	BOUCHON	1					
11	160-00020	CAP;GREASE NIPPLE	CHAPEAU	5					
13	2181-4112	ADAPTER	ADAPTEUR	3					
14	124-00199D4	CLIP	AGRAFE	2					
15	2124-1353D2	CLIP	AGRAFE	4					
16	K1001029	BOLT	BOULON	6					
17	K1038003	GREASE PLATE ASS'Y	TUYAUTERIE DE GRAISSE	1					
17-1	K1037887	. PLATE	. PLAQUE	1					
17-2	181-00525	. REDUCER	. REDUCTEUR	2					
17-3	S4032833	. NUT	. ECROU	2					
17-4	181-00103	. REDUCER	. REDUCTEUR	3					
17-5	121-00006	. NUT	. ECROU	3					
17-6	S6710041	. NIPPLE;GREASE	. MAMELON	5					
18	S0511866	BOLT	BOULON	2					
19	S5102603	WASHER	RONDELLE	2					

DATE	JUN. 01, 2010
3rd EDITION	

Fig. 6860 BOOM PIPING - BOOM 5.2m(ONE & TWO WAY) CONDUITES DE FLECHE

Serial No. ;

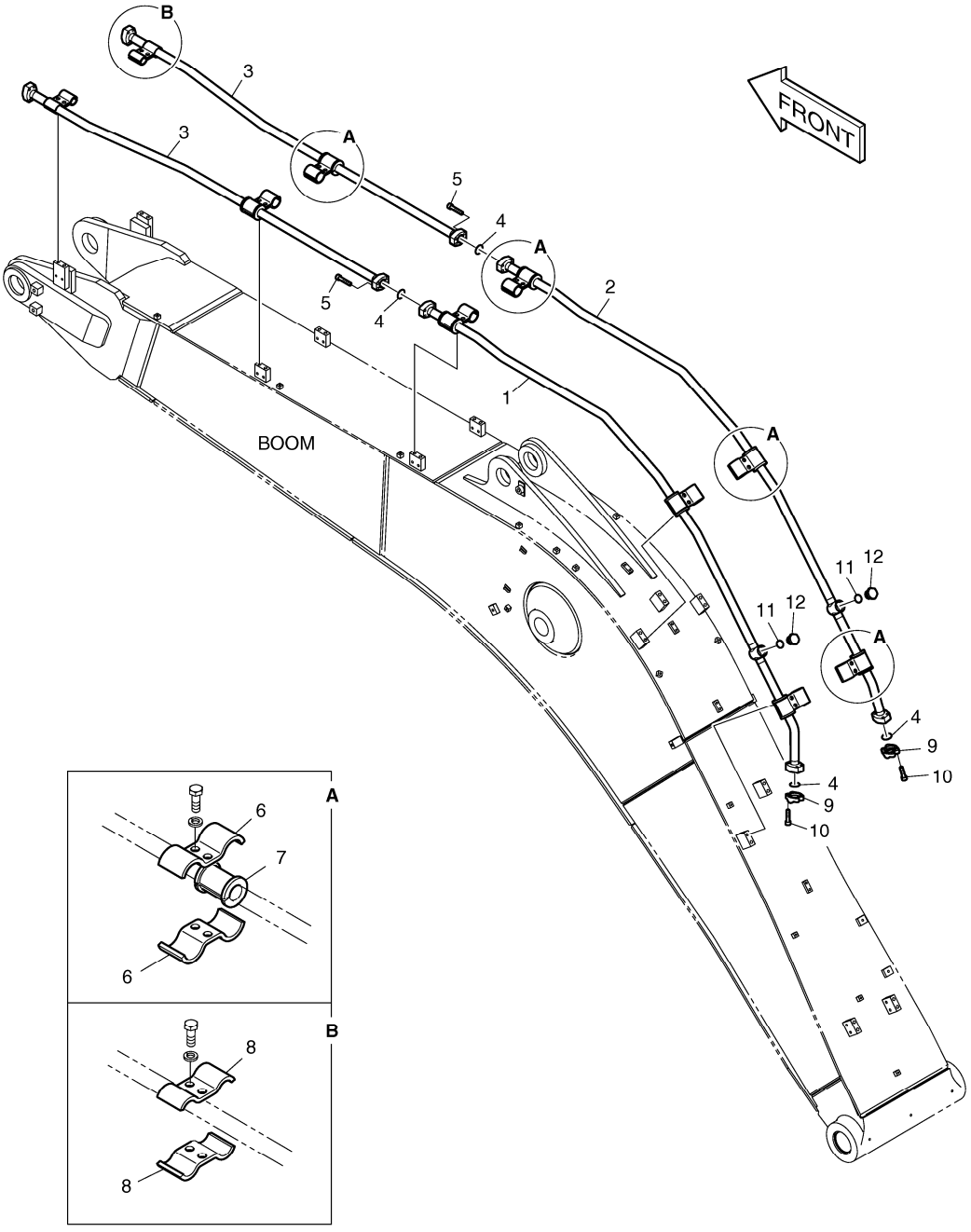

DATE	JUN. 01, 2010
3rd EDITION	

Fig. 6860 BOOM PIPING - BOOM 5.2m(ONE & TWO WAY) CONDUITES DE FLECHE

Serial No. ;

Key No.	Part No.	Description	Description	Q'ty	S.C	Serial No.	ICA	Replaceable part	
								Part No.	Q'ty
6860 --	K1045916	BOOM PIPING-ONE & TWO WAY	BOOM PIPING	-	D				
1	K1045959	PIPE	TUYAU	1					
2	K1045960	PIPE	TUYAU	1					
3	K1000882A	PIPE	TUYAU	2					
4	2180-1026D19	O-RING	JOINT CIRCULAIRE	4					
5	S2212666	BOLT	BOULON	8					
6	124-00368	CLAMP;PIPE	BRIDE	16					
7	161-00281	RUBBER	LE CAOUTCHOUC	8					
8	124-00367	CLAMP;PIPE	BRIDE	4					
9	2181-9078	FLANGE	BRIDE	4					
10	S2212466	BOLT;SOCKET M10X1.5X40	BOULON	8					
11	S8000291	O-RING	JOINT CIRCULAIRE	2					
12	2181-1950D9	PLUG	BOUCHON	2					

DATE	JUN. 01, 2010
3rd EDITION	

Fig. 6870 BOOM PIPING - BOOM 5.2m(QUICK FIT) CONDUITES DE FLECHE

Serial No. ;

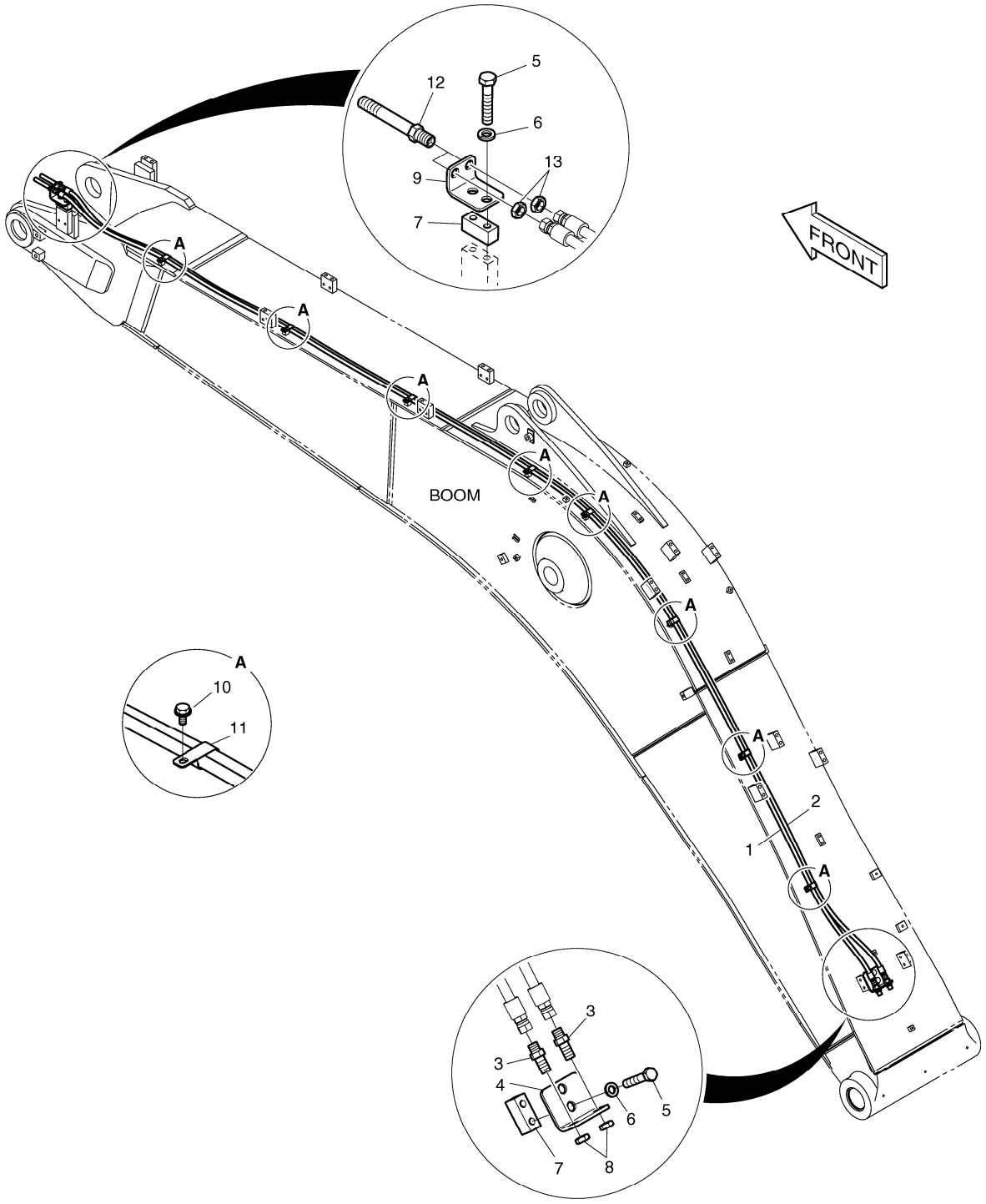

DATE	JUN. 01, 2010
3rd EDITION	

Fig. 6870 BOOM PIPING - BOOM 5.2m(QUICK FIT) CONDUITES DE FLECHE

Serial No. ;

Key No.	Part No.	Description	Description	Q'ty	S.C	Serial No.	ICA	Replaceable part	
								Part No.	Q'ty
6870 --	K1046026	BOOM PIPING-QUICK FIT	CONDUITES DE FLECHE	-	D				
1	DS2053854	HOSE	TUYAU FLEXIBLE	1					
2	DS2053878	HOSE	TUYAU FLEXIBLE	1					
3	181-00078D5	ADAPTER	ADAPTEUR	2					
4	195-00163	BRACKET	SUPPORT	1					
5	S0563366	BOLT	BOULON	4					
6	S5102803	WASHER;SPRING	RONDELLE	4					
7	K1004006	PLATE	PLAQUE	2					
8	121-00010D1	NUT	ECROU	2					
9	K1010847	BRACKET	SUPPORT	1					
10	K1001029	BOLT	BOULON	8					
11	DS2805009	CLIP	AGRAFE	8					
12	K1000356	ADAPTER	ADAPTEUR	2					
13	121-00010D7	NUT	ECROU	2					

DATE	JUN. 01, 2010
3rd EDITION	

Fig. 6880 BOOM PIPING - BOOM 5.2m(ROTATING) CONDUITES DE FLECHE

Serial No. ;

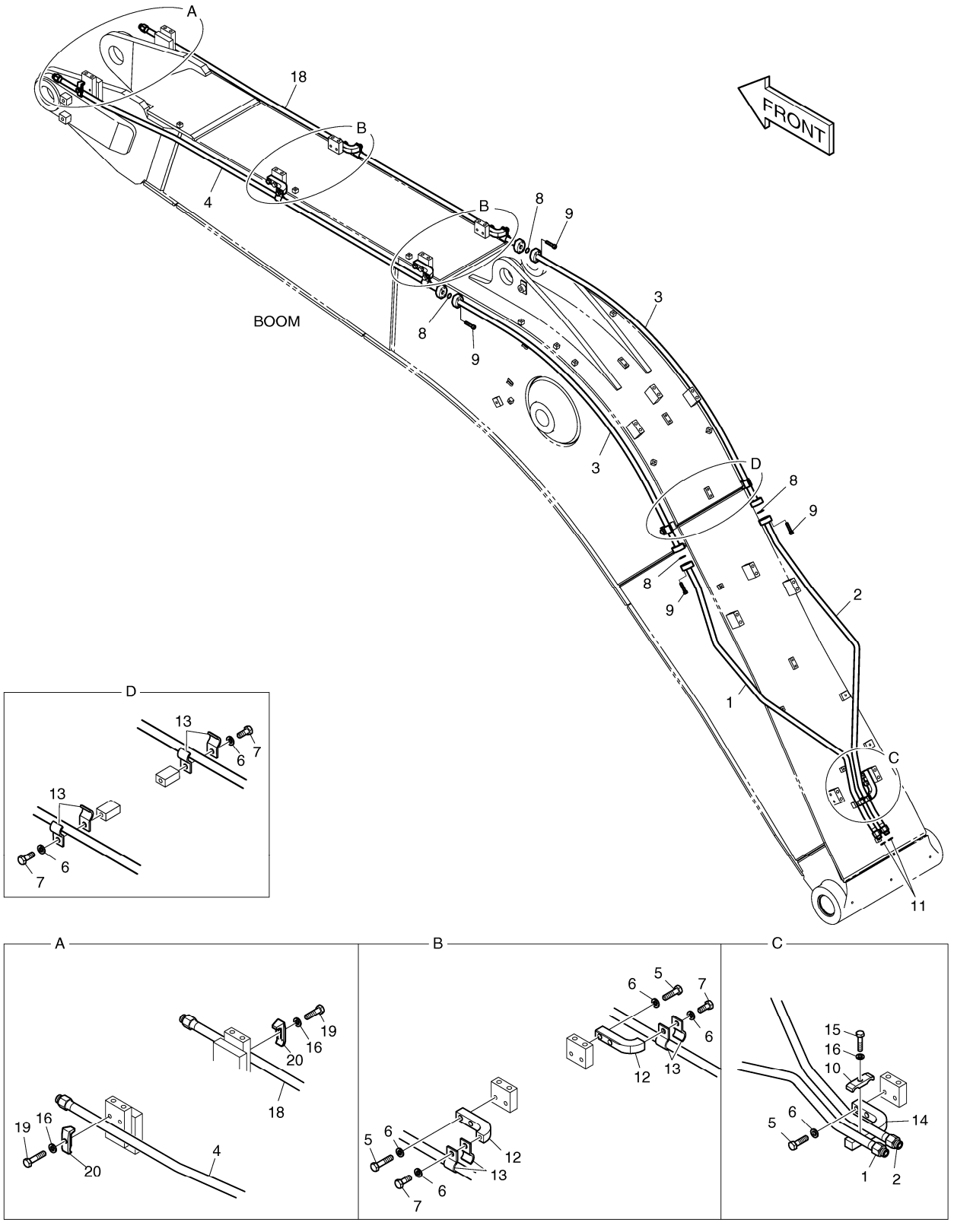

DATE	JUN. 01, 2010
3rd EDITION	

Fig. 6880 BOOM PIPING - BOOM 5.2m(ROTATING) CONDUITES DE FLECHE

Serial No. ;

Key No.	Part No.	Description	Description	Q'ty	S.C	Serial No.	ICA	Replaceable part	
								Part No.	Q'ty
6880 --	K1045914	BOOM PIPING;ROTATING	BOOM PIPING	-	D				
1	K1038610	PIPE	TUYAU	1					
2	K1038611	PIPE	TUYAU	1					
3	K1046013	PIPE	TUYAU	2					
4	K1025402	PIPE	TUYAU	1					
5	S0560666	BOLT	BOULON	10					
6	S5102703	WASHER;SPRING	RONDELLE	16					
7	S0515266	BOLT	BOULON	6					
8	2180-1026D30	O-RING	JOINT CIRCULAIRE	4					
9	S2209466	BOLT;SOCKET	BOULON	16					
10	K1004028	CLAMP;PIPE	BRIDE	1					
11	S8030081	O-RING	JOINT CIRCULAIRE	2					
12	621-02700A	PLATE	PLAQUE	4					
13	124-00299A	CLAMP;PIPE	BRIDE	12					
14	621-02798	PLATE	PLAQUE	1					
15	S0558466	BOLT	BOULON	1					
16	S5102603	WASHER	RONDELLE	3					
18	K1025450	PIPE	TUYAU	1					
19	S0558566	BOLT	BOULON	2					
20	2124-1026D1	CLAMP;PIPE	BRIDE	2					

DATE	JUN. 01, 2010
3rd EDITION	

Fig. 6890 LOCK VALVE PIPING - BOOM 5.2m
CONDUITES DE BALANCIER

Serial No. ;

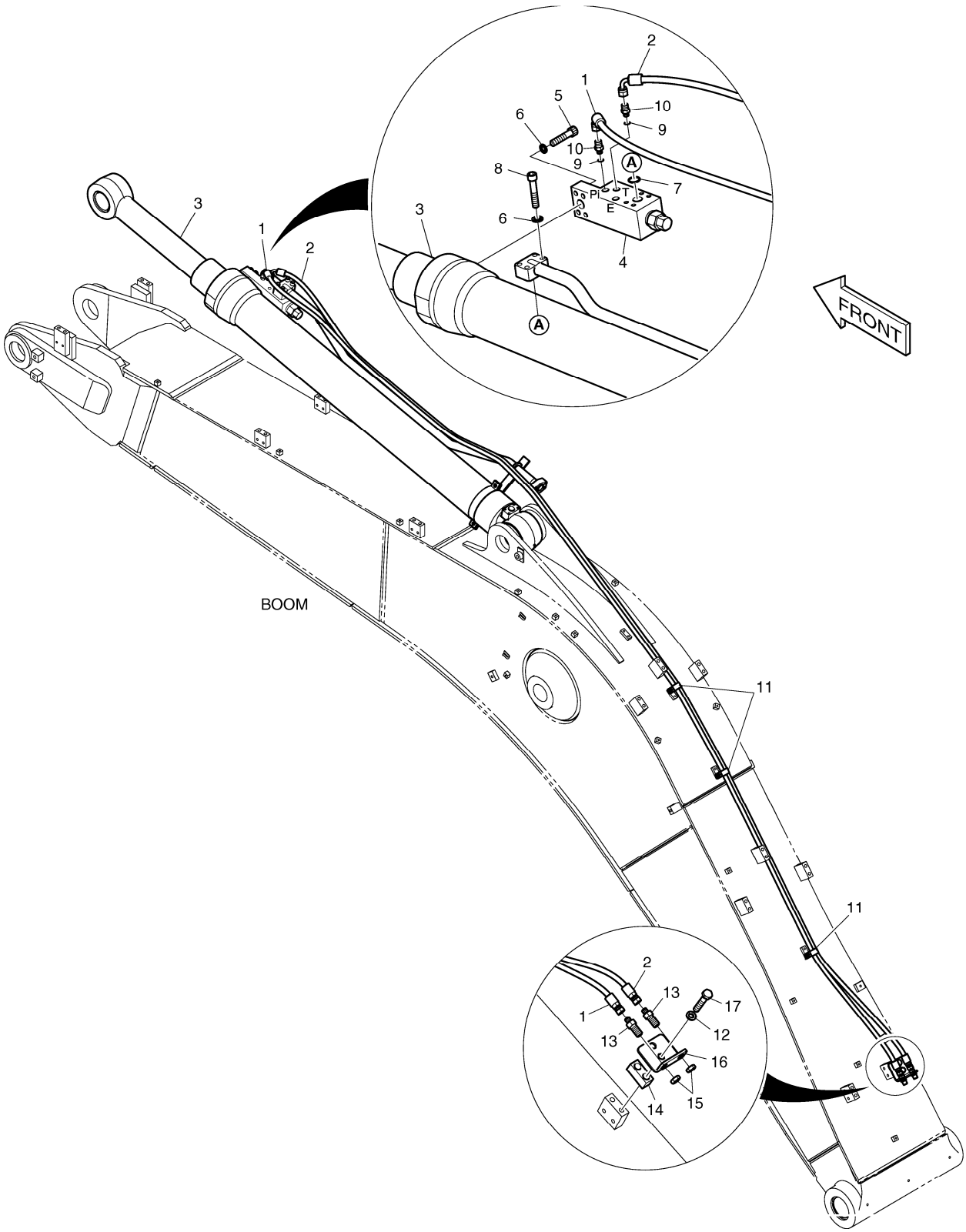

DATE	JUN. 01, 2010
3rd EDITION	

Fig. 6890 LOCK VALVE PIPING - BOOM 5.2m CONDUITES DE BALANCIER

Serial No. ;

Key No.	Part No.	Description	Description	Q'ty	S.C	Serial No.	ICA	Replaceable part	
								Part No.	Q'ty
6890 --	K1046041A	LOCK VALVE PIPING;ARM	FERMEZ LA TUYAUTERIE A	-	D				
1	DS2055672	HOSE	TUYAU FLEXIBLE	1					
2	DS2055672	HOSE	TUYAU FLEXIBLE	1					
3	K1041222A	CYLINDER;ARM(LOCK V/V)	CYLINDRE	1					
4	420-00004A	VALVE;LOCK	VALVE	1					
5	S2215766	BOLT;SOCKET M12X1.75X55	BOULON	4					
6	S5110703	WASHER;SPRING	RONDELLE	8					
7	S8000341	O-RING	JOINT CIRCULAIRE	1					
8	S2215966	BOLT;SOCKET	BOULON	4					
9	S8000111	O-RING	JOINT CIRCULAIRE	2					
10	2181-1126D85	ADAPTER	ADAPTEUR	2					
11	DS2805009	CLIP	AGRAFE	3					
12	S5102803	WASHER;SPRING	RONDELLE	2					
13	181-00078D1	ADAPTER	ADAPTEUR	2					
14	K1004006	PLATE	PLAQUE	1					
15	121-00010D1	NUT	ECROU	2					
16	195-00163	BRACKET	SUPPORT	1					
17	S0563366	BOLT	BOULON	2					

DATE	JUN. 01, 2010
3rd EDITION	

Fig. 6900 BOOM - 8.5m
ENSEMBLE FLECHE

Serial No. ;

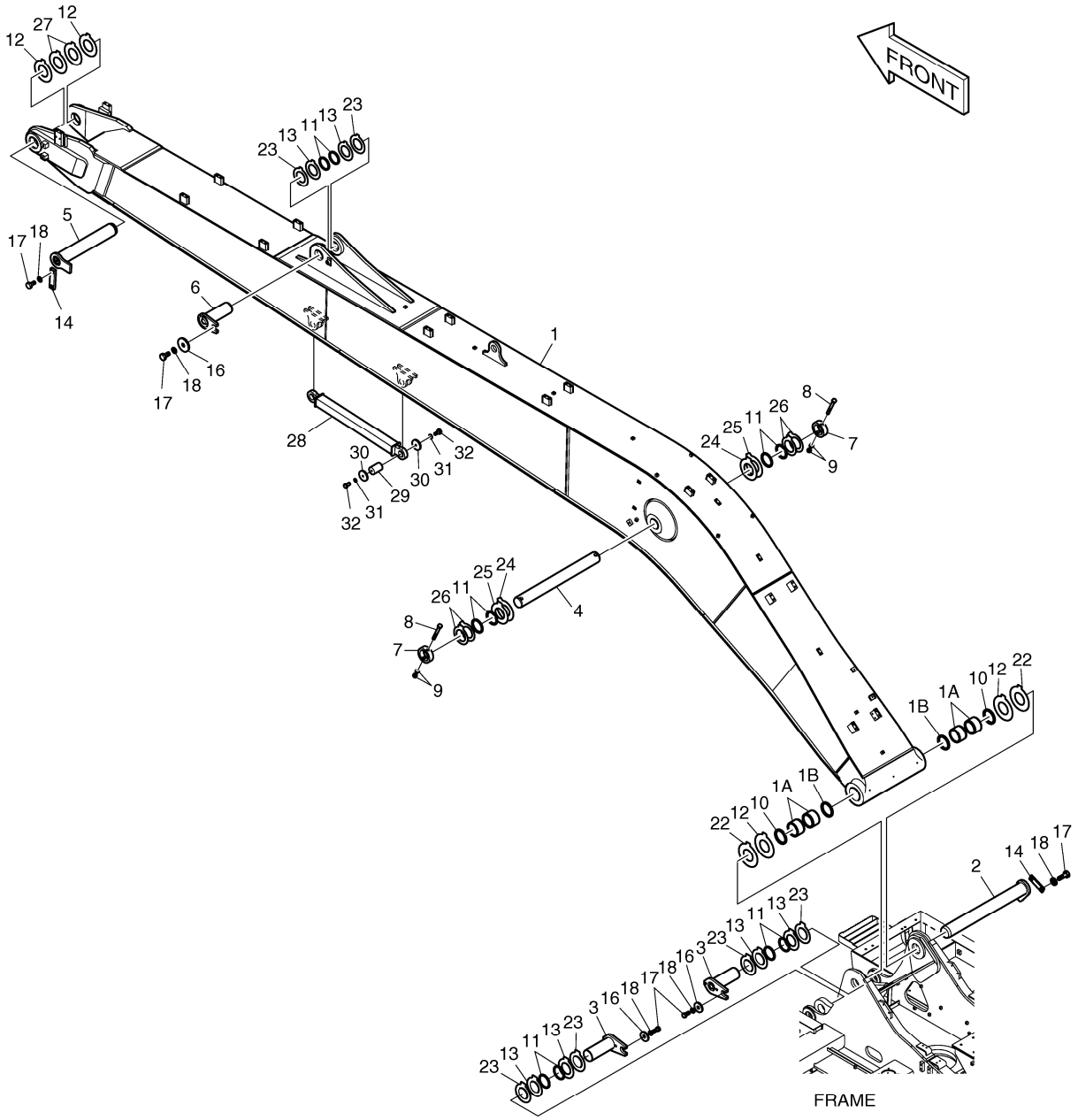

DATE	JUN. 01, 2010
3rd EDITION	

Fig. 6900 BOOM - 8.5m ENSEMBLE FLECHE

Serial No. ;

Key No.	Part No.	Description	Description	Q'ty	S.C	Serial No.	ICA	Replaceable part	
								Part No.	Q'ty
6900 --	K1045700C	BOOM ASS'Y	FLECHE	-	D				
1	K1045701C	BOOM SUB ASS'Y-8.5M	ENSEMBLE FLECHE	1					
1A	K1037847A	. BUSHING	. BUSHING	4					
1B	2180-1106BD6	. SEAL;DUST	. CACHET	2					
2	2123-2180G	PIN	GOUPILLE	1					
3	123-00409A	PIN	GOUPILLE	2					
4	K1007253B	PIN	GOUPILLE	1					
5	2123-2185G	PIN	GOUPILLE	1					
6	2123-2187E	PIN	GOUPILLE	1					
7	2116-1531A	STOPPER	TAQUET	2					
8	S0567066	BOLT	BOULON	2					
9	S4012933	NUT	ECROU	4					
10	2180-1106BD6	SEAL;DUST	CACHET	2					
11	2180-1106BD24	SEAL;DUST	CACHET	10					
12	DS7752018	SHIM	CALE	4					
13	DS7752012	SHIM	CALE	6					
14	621-03710A	PLATE;STOPPER	PLAQUE	2					
16	2116-1060D6	STOPPER	TAQUET	3					
17	S0521366	BOLT	BOULON	7					
18	S5102903	WASHER	RONDELLE	7					
22	DS7752017	SHIM	CALE	2					
23	DS7752013	SHIM	CALE	6					
24	DS7752026	SHIM	CALE	2					
25	DS7752027	SHIM	CALE	2					
26	DS7752025	SHIM	CALE	4					
27	DS7752017	SHIM	CALE	2					
28	K1017764	ROD;TIE	GERBEUR COMBI	1					
29	2123-1915A	PIN	GOUJON	2					
30	2116-1472A	PLATE;STOPPER	PLAQUE	4					
31	S5102703	WASHER;SPRING	RONDELLE	4					
32	S0515053	BOLT M12X1.75X25	BOULON A 6 PANS	4					

DATE	JUN. 01, 2010
3rd EDITION	

Fig. 6910 ARM - 6.2m BALANCIER

Serial No. ;

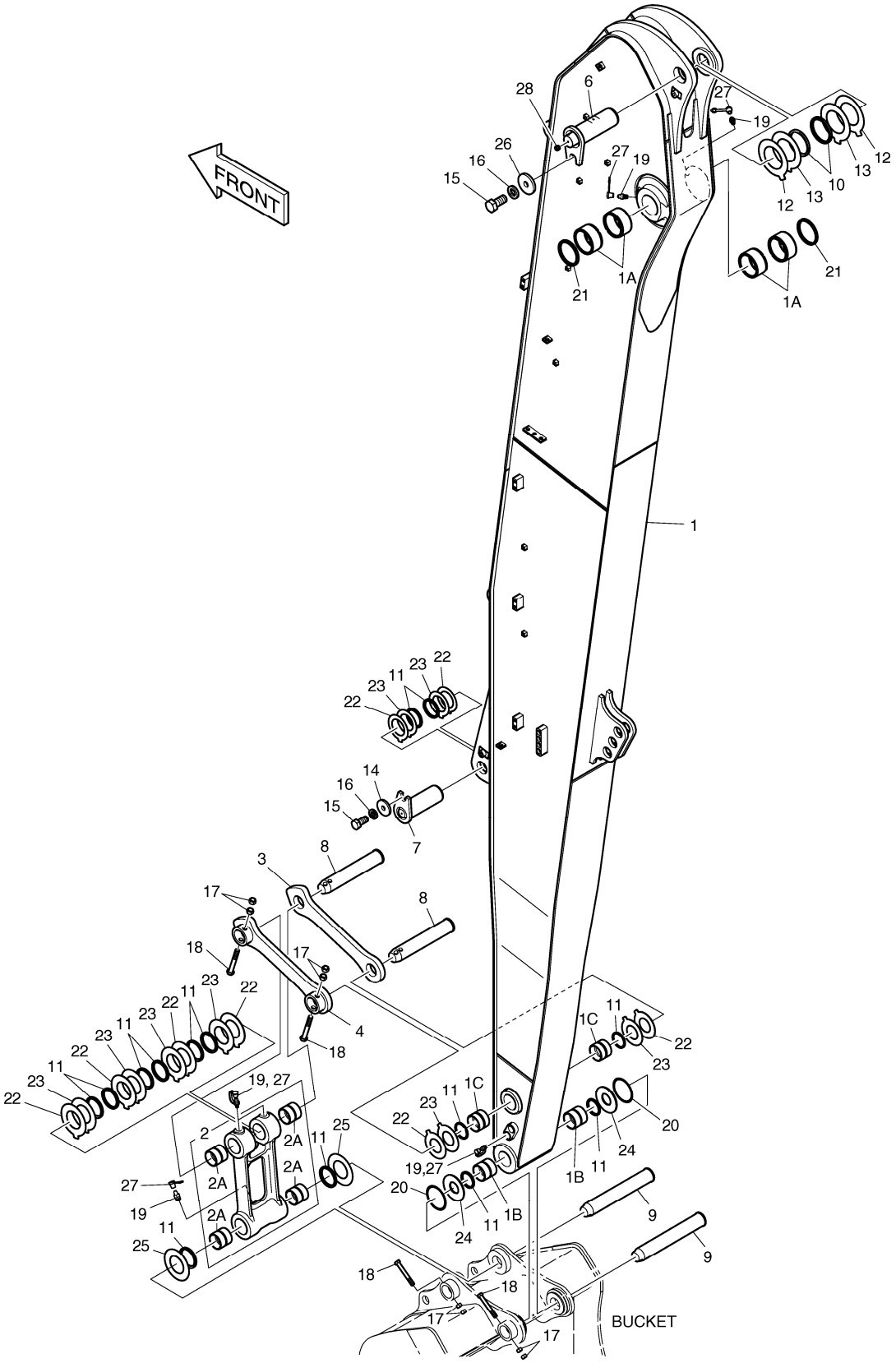

DATE	JUN. 01, 2010
3rd EDITION	

Fig. 6910 ARM - 6.2m BALANCIER

Serial No. ;

Key No.	Part No.	Description	Description	Q'ty	S.C	Serial No.	ICA	Replaceable part	
								Part No.	Q'ty
6910 --	K1046272B	ARM ASS'Y (6.2m)	ENSEMBLE BALANCIER	-	D	5001-5940			
	230201-00137	ARM ASSY;(6.2M)	ENSEMBLE BALANCIER	-	D	5941-			
1	K1046275B	ARM;MACH-6.2m	BALANCIER	1		5001-5940	I	230204-00067	1
	230204-00067	ARM,MACHINE;(6.2M)	BALANCIER	1		5941-			
1A	K1037848A	. BUSHING	. BUSHING	4					
1B	110-00242	. BUSHING	. DOUILLE	2		5001-5940	I	2110-1329A	2
	2110-1329A	. BUSHING	. DOUILLE	2		5941-			
1C	110-00243	. BUSHING	. DOUILLE	2		5001-5940	I	2110-1330A	2
	2110-1330A	. BUSHING	. DOUILLE	2		5941-			
2	155-00061	LINK;PUSH ASS`Y	ARTICULATION	1		5001-5940	I	101541-00012	1
	101541-00012	LINK,PUSH	ARTICULATION	1		5941-			
2A	110-00245	. BUSHING	. DOUILLE	4		5001-5940	I	2110-1366A	4
	2110-1366A	. BUSHING	. MANCHON	4		5941-			
3	2155-1306B	LINK;GUIDE(R.H)	ARTICULATION	1					
4	2155-1307B	LINK;GUIDE(L.H)	ARTICULATION	1					
6	K1046927	PIN	GOUPILLE	1					
7	K1014836	PIN	GOUPILLE	1					
8	K1007038A	PIN	GOUPILLE	2					
9	K1038517	PIN	GOUPILLE	2					
10	2180-1106BD24	SEAL;DUST	CACHET	2					
11	2180-1106BD3	SEAL;DUST	JOINT	14					
12	DS7752012	SHIM	CALE	2					
13	DS7752013	SHIM	CALE	2					
14	2116-1060D6	STOPPER	TAQUET	1					
15	S0521366	BOLT	BOULON	2					
16	S5102903	WASHER	RONDELLE	2					
17	S4012933	NUT	ECROU	8					
18	S0566766	BOLT	BOULON A 6 PANS	4					
19	S6710041	NIPPLE;GREASE	MAMELON	7					
20	180-00077D3	O-RING	JOINT TORIQUE	2					
21	2180-1106BD14	SEAL;DUST	CACHET	2					
22	DS7752001	SHIM	CALE	8					
23	DS7752002	SHIM	CALE	8					
24	2114-1994B	SPACER	ENTRETOISE	2					
25	2114-1995B	SPACER	ENTRETOISE	2					
26	2116-1060D6	STOPPER	TAQUET	1					
27	160-00020	CAP;GREASE NIPPLE	CHAPEAU	7					
28	2181-1116D1	PLUG	BOUCHON	1					

DATE	JUN. 01, 2010
3rd EDITION	

Fig. 6920 COUNTER WEIGHT - SUPER LONG
MASSE D'EQUILIBRAGE

Serial No. ;

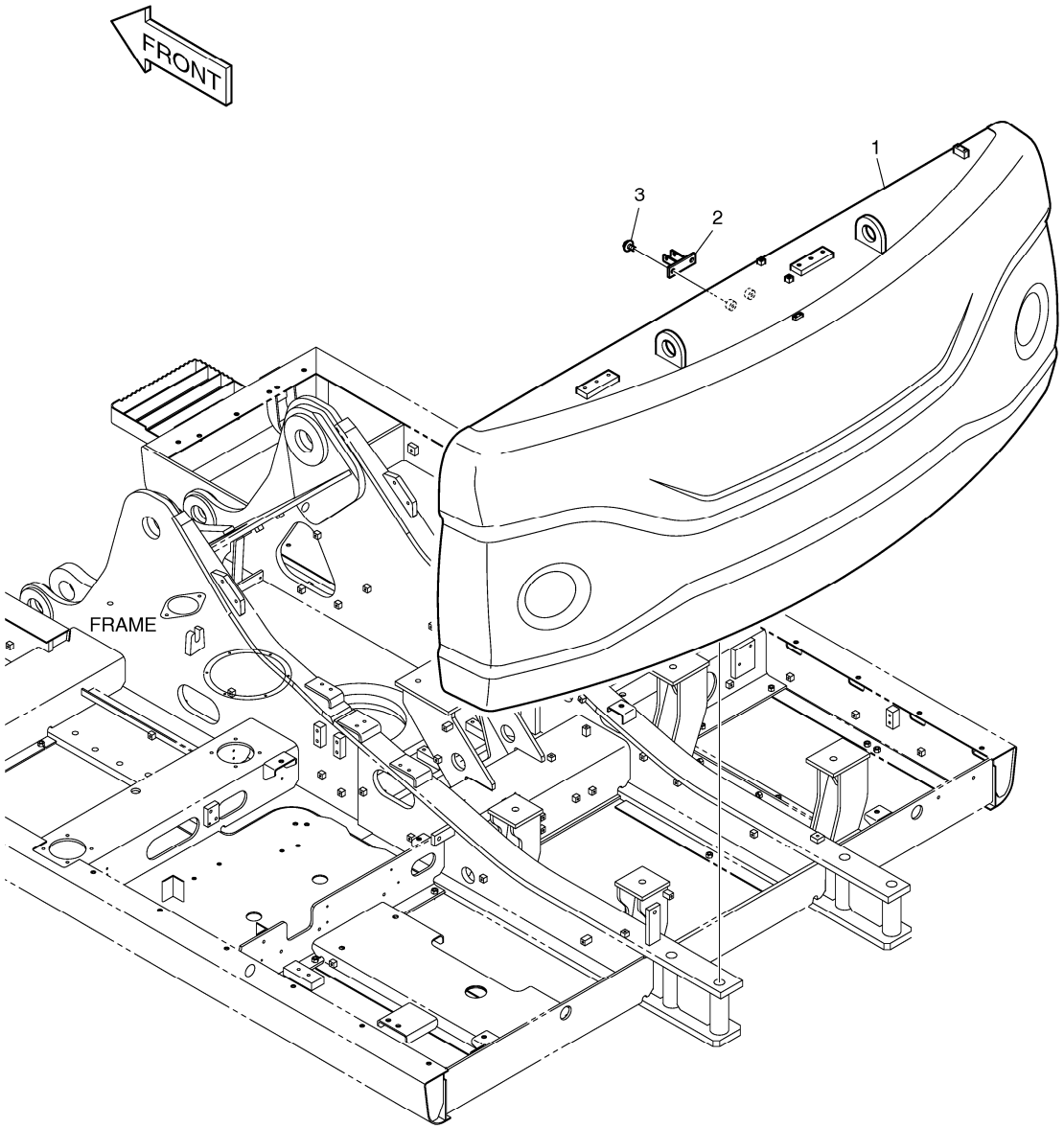

DATE	JUN. 01, 2010
3rd EDITION	

Fig. 6920 COUNTER WEIGHT - SUPER LONG
MASSE D'EQUILIBRAGE

Serial No. ;

Key No.	Part No.	Description	Description	Q'ty	S.C	Serial No.	ICA	Replaceable part	
								Part No.	Q'ty
6920 --	K1045677A	COUNTER WEIGHT;5.3ton	MASSE D'EQUILIBRAGE	1		5001-5495	I	K1045677B	1
	K1045677B	COUNTER WEIGHT;5.3ton	MASSE D'EQUILIBRAGE	1		5496-5645	Y	160702-00056	1
	160702-00056	WEIGHT ASSY,COUNTER;5.3TON	MASSE D'EQUILIBRAGE	1		5646-			
1	K1044939B	COUNTER WEIGHT;5.3ton	MASSE D'EQUILIBRAGE	1		5001-5495	I	K1044939C	1
	K1044939C	COUNTER WEIGHT;5.3ton	MASSE D'EQUILIBRAGE	1		5496-5645	Y	160702-00055	1
	160702-00055	WEIGHT,COUNTER;5.3TON	MASSE D'EQUILIBRAGE	1		5646-			
2	K1002454B	BRACKET	SUPPORT	1					
3	DS0025015	BOLT;SET	BOULON	2					

DATE	JUN. 01, 2010
3rd EDITION	

Fig. 6930 COUNTER WEIGHT - 5.3TON(NOISE KIT) MASSE D'EQUILIBRAGE

Serial No. ;

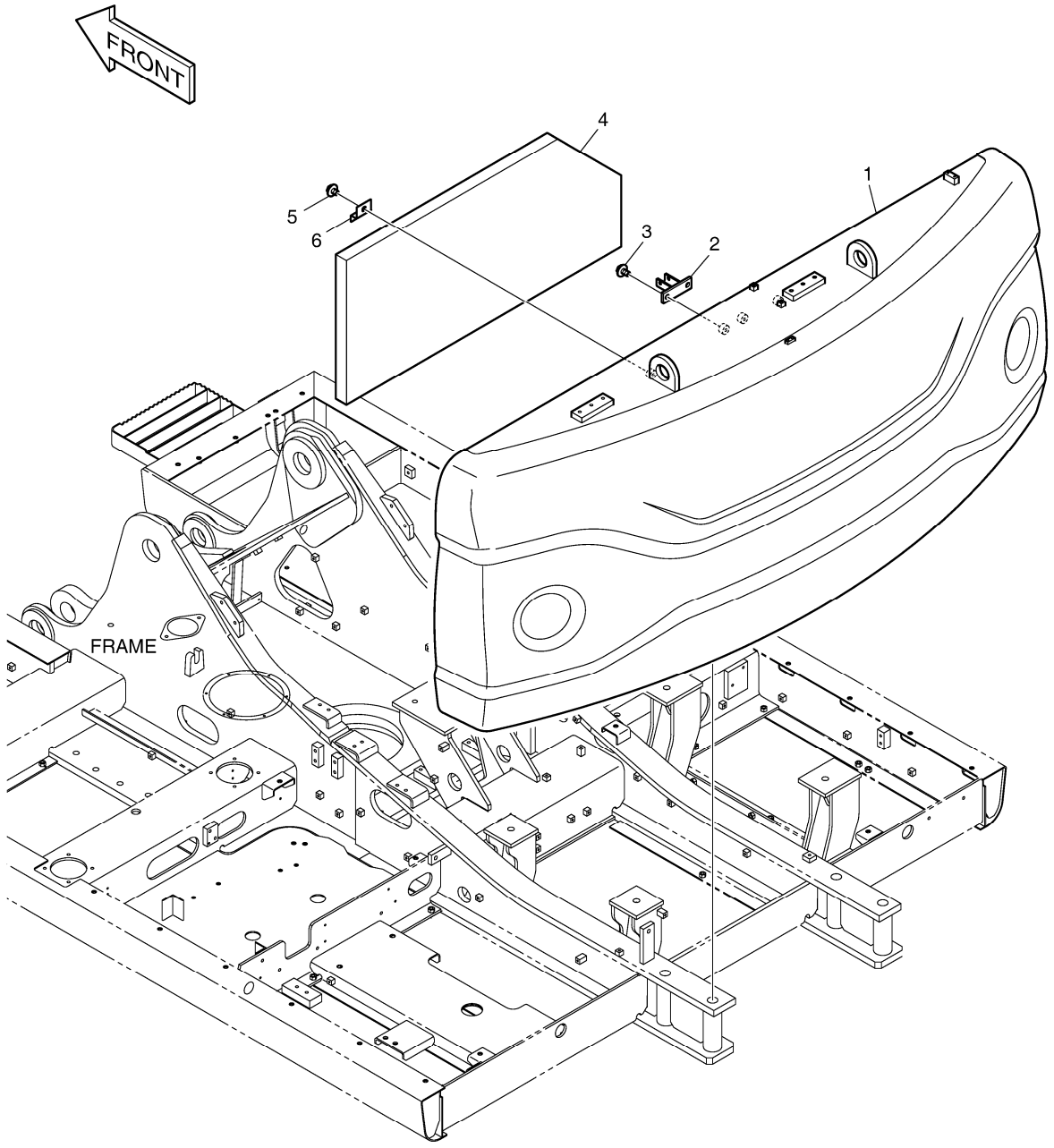

DATE	JUN. 01, 2010
3rd EDITION	

Fig. 6930 COUNTER WEIGHT - 5.3TON(NOISE KIT) MASSE D'EQUILIBRAGE

Serial No. ;

Key No.	Part No.	Description	Description	Q'ty	S.C	Serial No.	ICA	Replaceable part	
								Part No.	Q'ty
6930 --	K1045678A	COUNTER WEIGHT ASS'Y;FOAM	MASSE D'EQUILIBRAGE	1		5001-5495	I	K1045678B	1
	K1045678B	COUNTER WEIGHT ASS'Y;FOAM	MASSE D'EQUILIBRAGE	1		5496-5645	Y	160702-00057	1
	160702-00057	WEIGHT ASSY,COUNTER;5.3TON	MASSE D'EQUILIBRAGE	1		5646-			
1	K1044939B	COUNTER WEIGHT;5.3ton	MASSE D'EQUILIBRAGE	1		5001-5495	I	K1044939C	1
	K1044939C	COUNTER WEIGHT;5.3ton	MASSE D'EQUILIBRAGE	1		5496-5645	Y	160702-00055	1
	160702-00055	WEIGHT,COUNTER;5.3TON	MASSE D'EQUILIBRAGE	1		5646-			
2	K1002454B	BRACKET	SUPPORT	1					
3	DS0025015	BOLT;SET	BOULON	2					
4	K1011304	FOAM	EPONGE	1					
5	DS0025022	BOLT;SET	BOULON	2					
6	621-01572	PLATE	PLAQUE	2					

DATE	JUN. 01, 2010
3rd EDITION	

Fig. 6940 BUCKET ASS'Y - 0.39m³ ENSEMBLE DE GODET

Serial No. ;

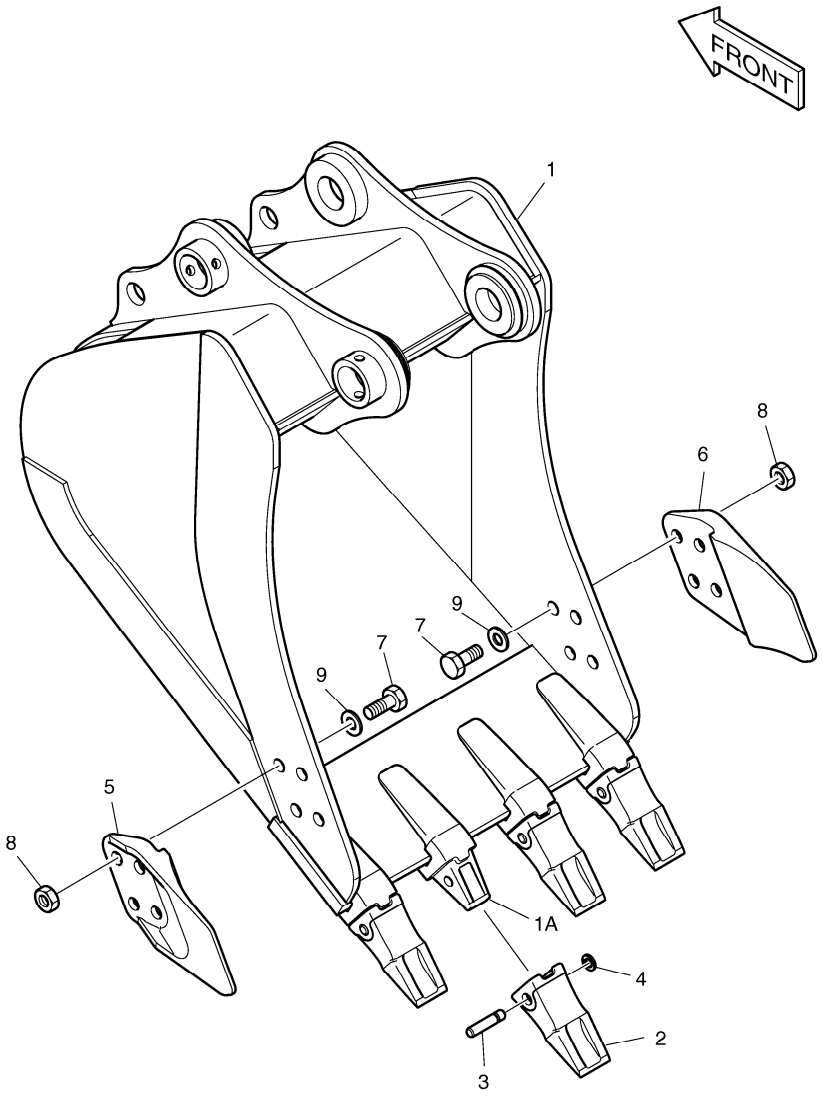

DATE	JUN. 01, 2010
3rd EDITION	

Fig. 6940 BUCKET ASS'Y - 0.39m³ ENSEMBLE DE GODET

Serial No. ;

Key No.	Part No.	Description	Description	Q'ty	S.C	Serial No.	ICA	Replaceable part	
								Part No.	Q'ty
6940 --	K1007635E	BUCKET ASS'Y- 0.39㎥	GODET	1					
1	K1007636E	BUCKET - 0.39㎥	GODET	1					
1A	2713-1222B	. ADAPTER;TOOTH	. DENT DE ADAPTEUR	4					
2	713-00057C	POINT;TOOTH	DENT	4					
3	2705-1022	PIN;LOCKING	GOUPILLE DE BLOCAGE	4					
4	2114-1859	WASHER;LOCKING	RONDELLE	4					
5	2713-1229A	CUTTER;SIDE(L.H)	COIN DE GODET GAUCHE	1					
6	2713-1228A	CUTTER;SIDE(R.H)	COIN DE GODET DROIT	1					
7	S0574561	BOLT	BOULON A 6 PANS	8					
8	S4013333	NUT	ECROU	8					
9	2114-1831A	WASHER;HARDEN	RONDELLE	8					

DATE	JUN. 01, 2010
3rd EDITION	

Fig. 6950 BUCKET ASS'Y - 0.38m³ - DITCH CLEANING
ENSEMBLE DE GODET

Serial No. ;

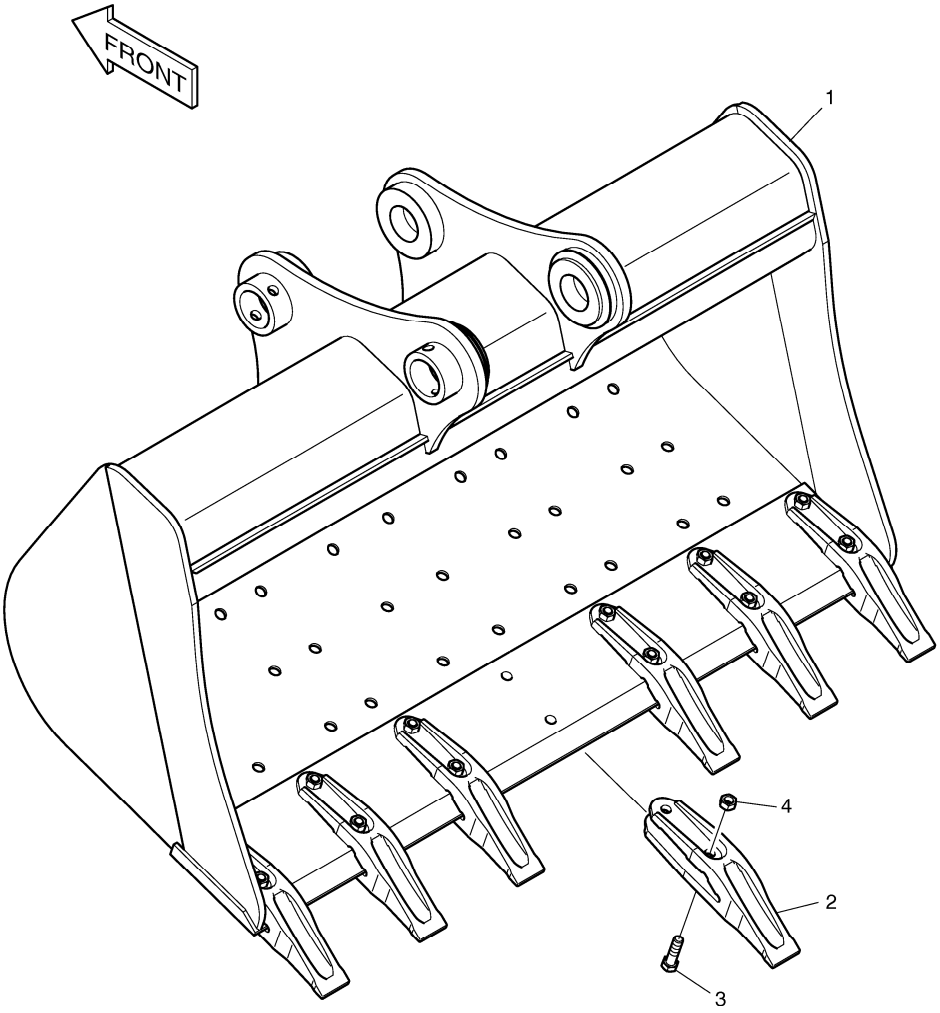

DATE	JUN. 01, 2010
3rd EDITION	

Fig. 6950 BUCKET ASS'Y - 0.38m³ - DITCH CLEANING
ENSEMBLE DE GODET

Serial No. ;

Key No.	Part No.	Description	Description	Q'ty	S.C	Serial No.	ICA	Replaceable part	
								Part No.	Q'ty
6950 --	K1010821B	BUCKET ASS`Y-0.38㎥	GODET	1					
1	K1010822B	BUCKET-0.38㎥	GODET	1					
2	4713-4004B	TOOTH	OUTILLAGE	7					
3	S0565466	BOLT	BOULON	14					
4	S4012933	NUT	ECROU	14					

DATE	JUN. 01, 2010
3rd EDITION	

Fig. 6960 BUCKET ASS'Y - 0.46m³ - DITCH CLEANING
ENSEMBLE DE GODET

Serial No. ;

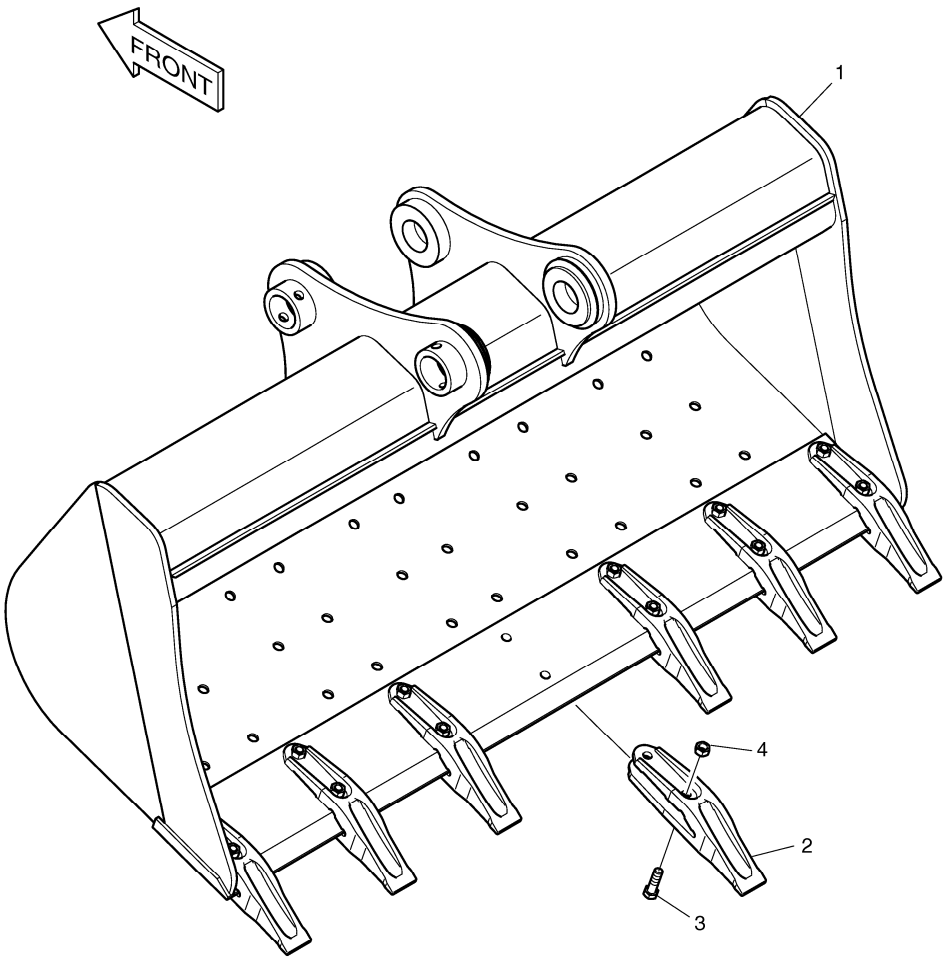

DATE	JUN. 01, 2010
3rd EDITION	

Fig. 6960 BUCKET ASS'Y - 0.46m³ - DITCH CLEANING
ENSEMBLE DE GODET

Serial No. ;

Key No.	Part No.	Description	Description	Q'ty	S.C	Serial No.	ICA	Replaceable part	
								Part No.	Q'ty
6960 --	K1010823B	BUCKET ASS`Y-0.46㎥	GODET	1					
1	K1010824B	BUCKET-0.46㎥	GODET	1					
2	4713-4004B	TOOTH	OUTILLAGE	7					
3	S0565466	BOLT	BOULON	14					
4	S4012933	NUT	ECROU	14					

DATE	JUN. 01, 2010
3rd EDITION	

Fig. 6970 BOOM PIPING - BOOM 8.5m
CONDUITES DE FLECHE

Serial No. ;

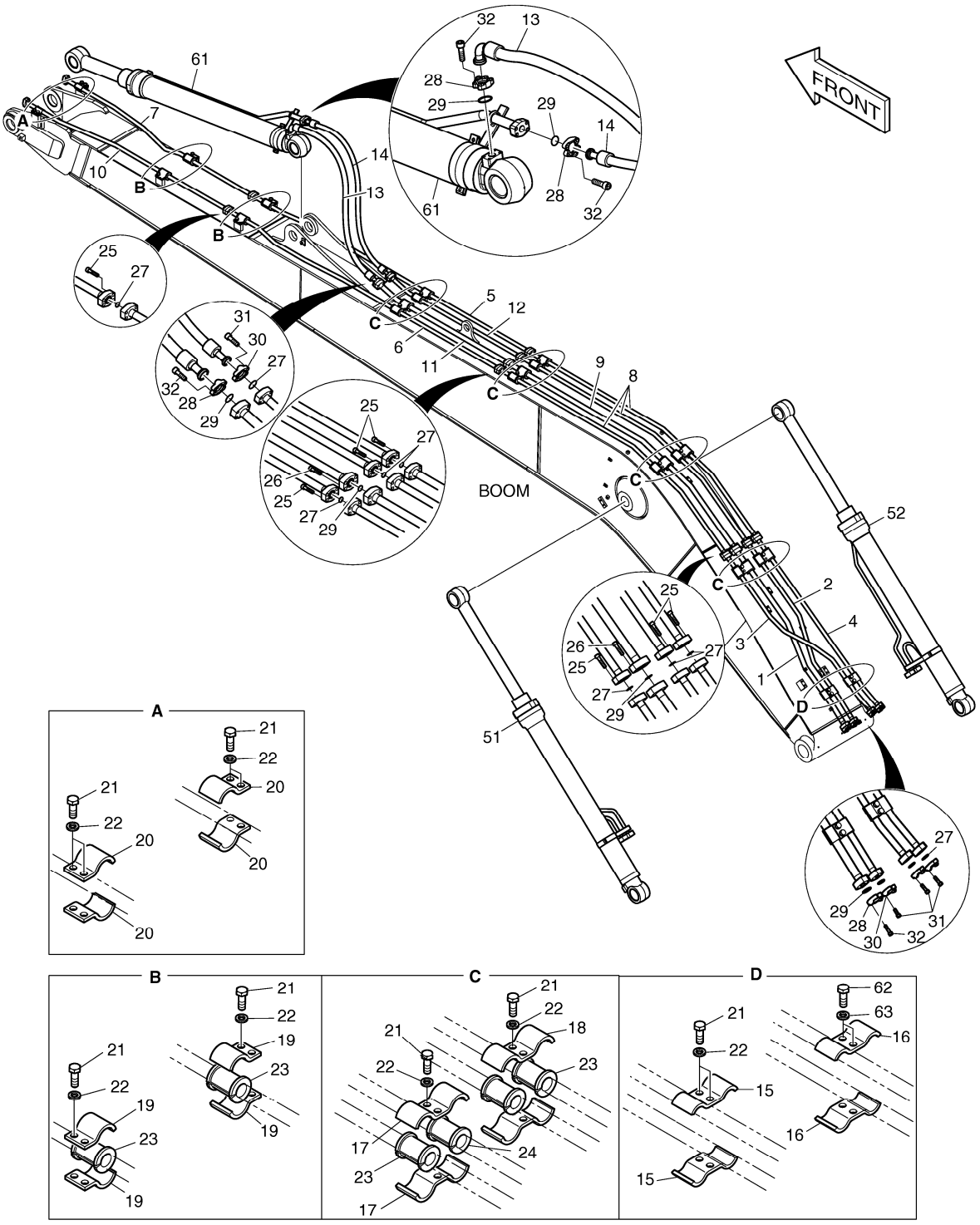

DATE	JUN. 01, 2010
3rd EDITION	

Fig. 6970 BOOM PIPING - BOOM 8.5m CONDUITES DE FLECHE

Serial No. ;

Key No.	Part No.	Description	Description	Q'ty	S.C	Serial No.	ICA	Replaceable part	
								Part No.	Q'ty
6970 --	K1045837	BOOM PIPING	BOOM PIPING	-	D				
1	K1045852	PIPE	TUYAU	1					
2	K1045853	PIPE	TUYAU	1					
3	K1045854	PIPE	TUYAU	1					
4	K1045855	PIPE	TUYAU	1					
5	K1018659	PIPE	TUYAU	1					
6	K1018660	PIPE	TUYAU	1					
7	K1018706	PIPE	TUYAU	1					
8	K1045856	PIPE	TUYAU	3					
9	K1045857	PIPE	TUYAU	1					
10	K1018109	PIPE	TUYAU	1					
11	K1018709	PIPE	TUYAU	1					
12	K1018710	PIPE	TUYAU	1					
13	DS2040637	HOSE	TUYAU FLEXIBLE	1					
14	DS2038226	HOSE	TUYAU FLEXIBLE	1					
15	124-00367	CLAMP;PIPE	BRIDE	2					
16	124-00300	CLAMP;PIPE	BRIDE	2					
17	124-00368	CLAMP;PIPE	BRIDE	8					
18	K1011211	CLAMP	COLLIER	8					
19	124-00302	CLAMP;PIPE	BRIDE	8					
20	124-00303	CLAMP;PIPE	BRIDE	4					
21	S0562766	BOLT	BOULON	18					
22	S5102803	WASHER;SPRING	RONDELLE	18					
23	161-00574	RUBBER	LE CAOUTCHOUC	16					
24	161-00281	RUBBER	LE CAOUTCHOUC	4					
25	S2212566	BOLT;SOCKET	BOULON	32					
26	S2212666	BOLT	BOULON	8					
27	2180-1026D2	O-RING	JOINT CIRCULAIRE	12					
28	2181-9078	FLANGE	BRIDE	8					
29	2180-1026D19	O-RING	JOINT CIRCULAIRE	6					
30	2181-9079	FLANGE	BRIDE	8					
31	S2212366	BOLT;SOCKET M10X1.5X35	BOULON	16					
32	S2212466	BOLT;SOCKET M10X1.5X40	BOULON	16					
51	K1044989B	CYLINDER;BOOM (LH)	CYLINDRE	1					
52	K1044990B	CYLINDER;BOOM (RH)	CYLINDRE	1					
61	K1044991A	CYLINDER;ARM	VERIN DE BALANCIER	1					
62	S0562766	BOLT	BOULON	2					
63	S5102803	WASHER;SPRING	RONDELLE	2					

DATE	JUN. 01, 2010
3rd EDITION	

Fig. 6980 LUBRICATION PIPING - BOOM 8.5m
LUBRIFICATION

Serial No. ;

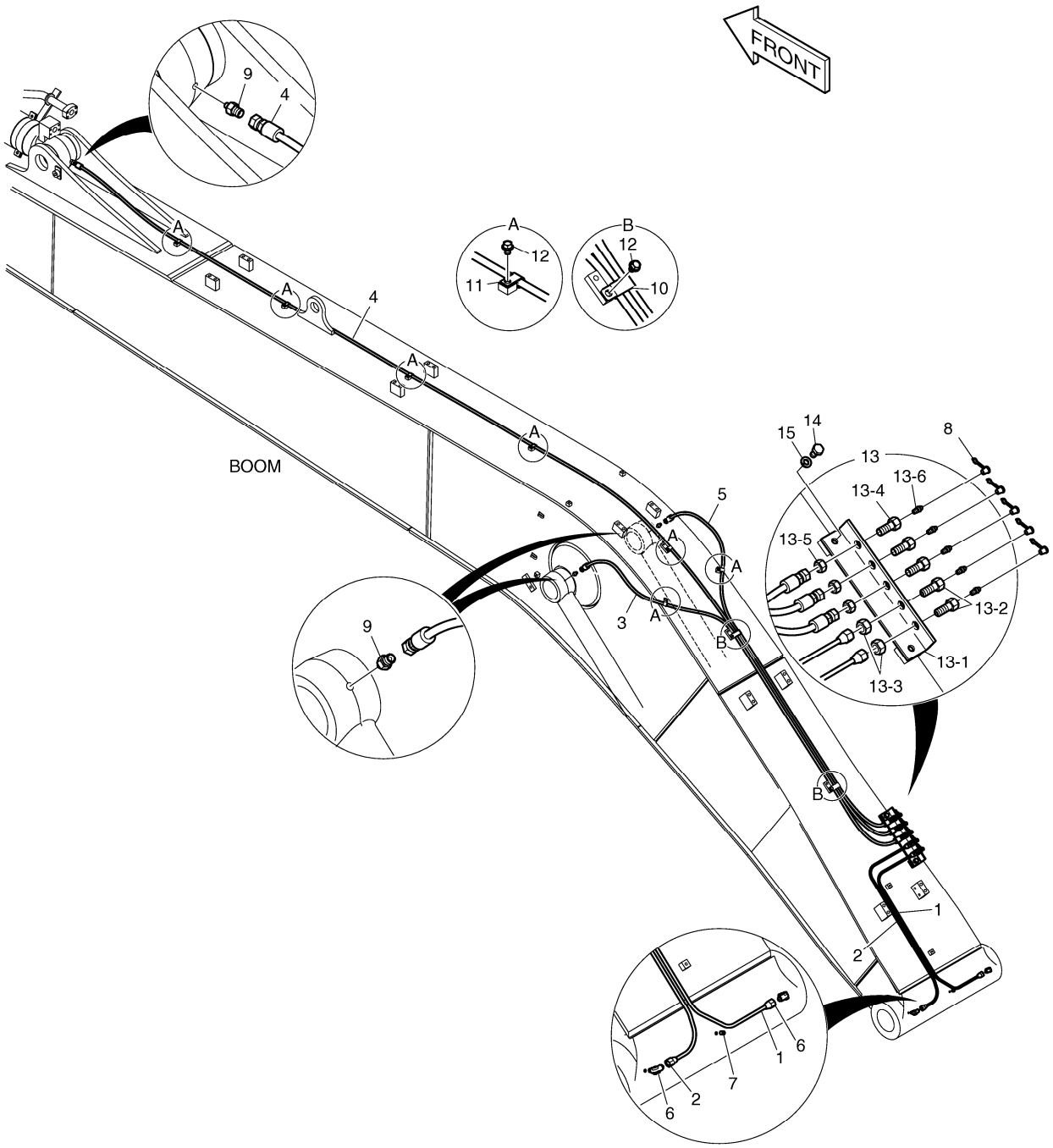

DATE	JUN. 01, 2010
3rd EDITION	

Fig. 6980 LUBRICATION PIPING - BOOM 8.5m LUBRIFICATION

Serial No. ;

Key No.	Part No.	Description	Description	Q'ty	S.C	Serial No.	ICA	Replaceable part	
								Part No.	Q'ty
6980 --	K1045838	LUBRICATION PIPING(8.5M BOO	LUBRIFICATION	-	D				
1	K1038814	PIPE	TUYAU	1					
2	K1038815	PIPE	TUYAU	1					
3	DS2053864	HOSE	TUYAU	1					
4	DS2053884	HOSE	TUYAU FLEXIBLE	1					
5	2184-1045D254	HOSE	TUYAU	1					
6	2181-1925	ELBOW	COUDE	2					
7	S3524403	PLUG	BOUCHON	1					
8	160-00020	CAP;GREASE NIPPLE	CHAPEAU	5					
9	2181-4112	ADAPTER	ADAPTEUR	3					
10	124-00199D4	CLIP	AGRAFE	2					
11	2124-1353D2	CLIP	AGRAFE	7					
12	K1001029	BOLT	BOULON	9					
13	K1038003	GREASE PLATE ASS'Y	TUYAUTERIE DE GRAISSE	1					
13-1	K1037887	. PLATE	. PLAQUE	1					
13-2	181-00525	. REDUCER	. REDUCTEUR	2					
13-3	S4032833	. NUT	. ECROU	2					
13-4	181-00103	. REDUCER	. REDUCTEUR	3					
13-5	121-00006	. NUT	. ECROU	3					
13-6	S6710041	. NIPPLE;GREASE	. MAMELON	5					
14	S0511866	BOLT	BOULON	2					
15	S5102603	WASHER	RONDELLE	2					

DATE	JUN. 01, 2010
3rd EDITION	

Fig. 6990 LOCK VALVE PIPING - BOOM 8.5m
CONDUITES DE BALANCIER

Serial No. ;

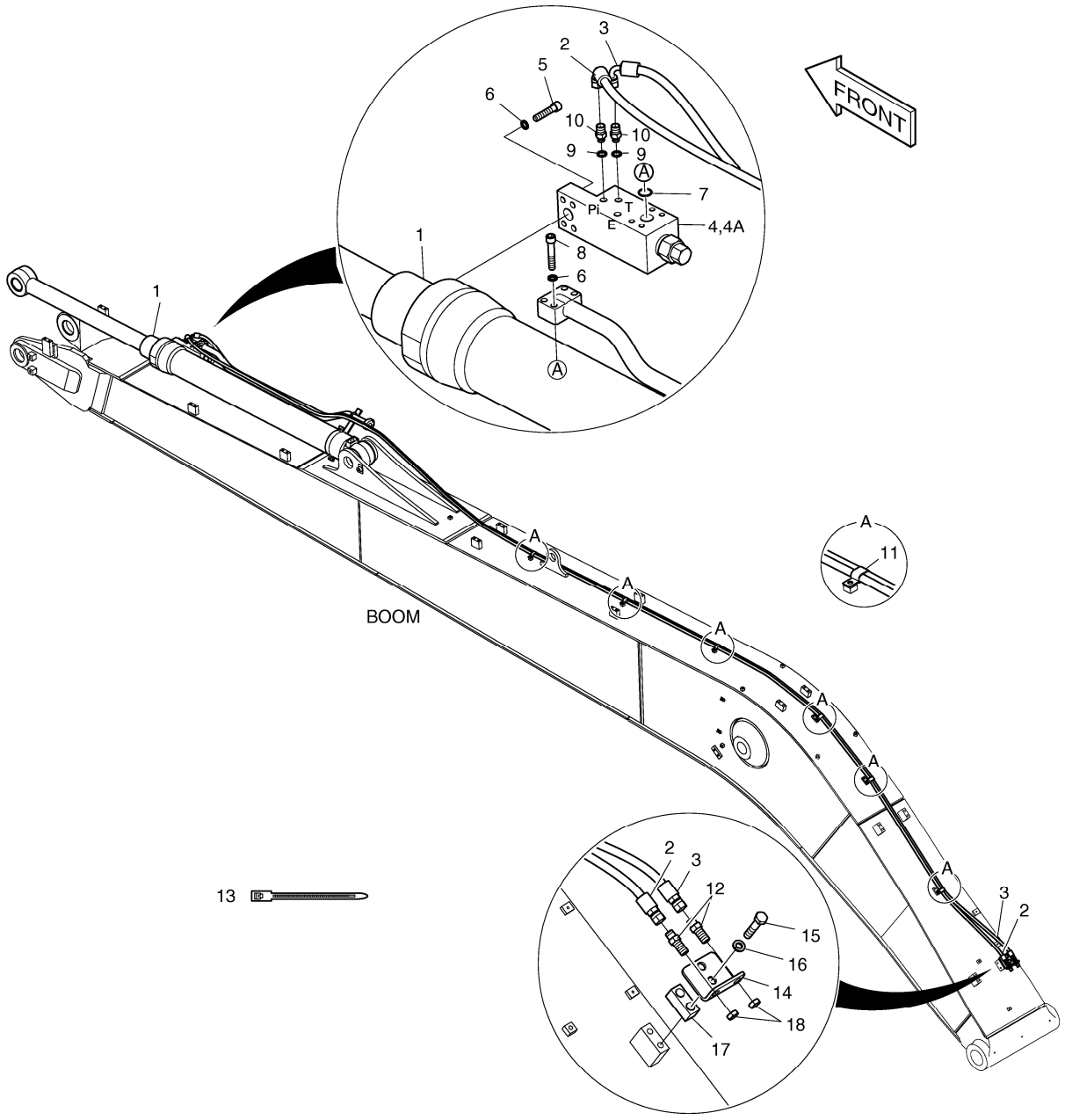

DATE	JUN. 01, 2010
3rd EDITION	

Fig. 6990 LOCK VALVE PIPING - BOOM 8.5m
CONDUITES DE BALANCIER

Serial No. ;

Key No.	Part No.	Description	Description	Q'ty	S.C	Serial No.	ICA	Replaceable part	
								Part No.	Q'ty
6990 --	K1045842A	LOCK VALVE PIPING	FERMEZ LA TUYAUTERIE A	-	D				
1	K1041222A	CYLINDER;ARM(LOCK V/V)	CYLINDRE	1					
2	DS2055957	HOSE	TUYAU FLEXIBLE	1					
3	DS2055957	HOSE	TUYAU FLEXIBLE	1					
4	420-00004A	VALVE;LOCK	VALVE	1					
4A	K9000999	. SEAL KIT	. KIT DE JOINT	1					
5	S2215766	BOLT;SOCKET M12X1.75X55	BOULON	4					
6	S5110703	WASHER;SPRING	RONDELLE	8					
7	S8000341	O-RING	JOINT CIRCULAIRE	1					
8	S2215966	BOLT;SOCKET	BOULON	4					
9	S8000111	O-RING	JOINT CIRCULAIRE	2					
10	2181-1126D85	ADAPTER	ADAPTEUR	2					
11	DS2805009	CLIP	AGRAFE	7					
12	181-00078D1	ADAPTER	ADAPTEUR	2					
13	2124-1084D2	CLIP;BAND	AGRAFE	30					
14	195-00163	BRACKET	SUPPORT	1					
15	S0563366	BOLT	BOULON	2					
16	S5102803	WASHER;SPRING	RONDELLE	2					
17	K1004006	PLATE	PLAQUE	1					
18	121-00010D1	NUT	ECROU	2					

DATE	JUN. 01, 2010
3rd EDITION	

Fig. 7000 BOOM PIPING - BOOM 8.5m(ROTATING)
CONDUITES DE FLECHE

Serial No. ;

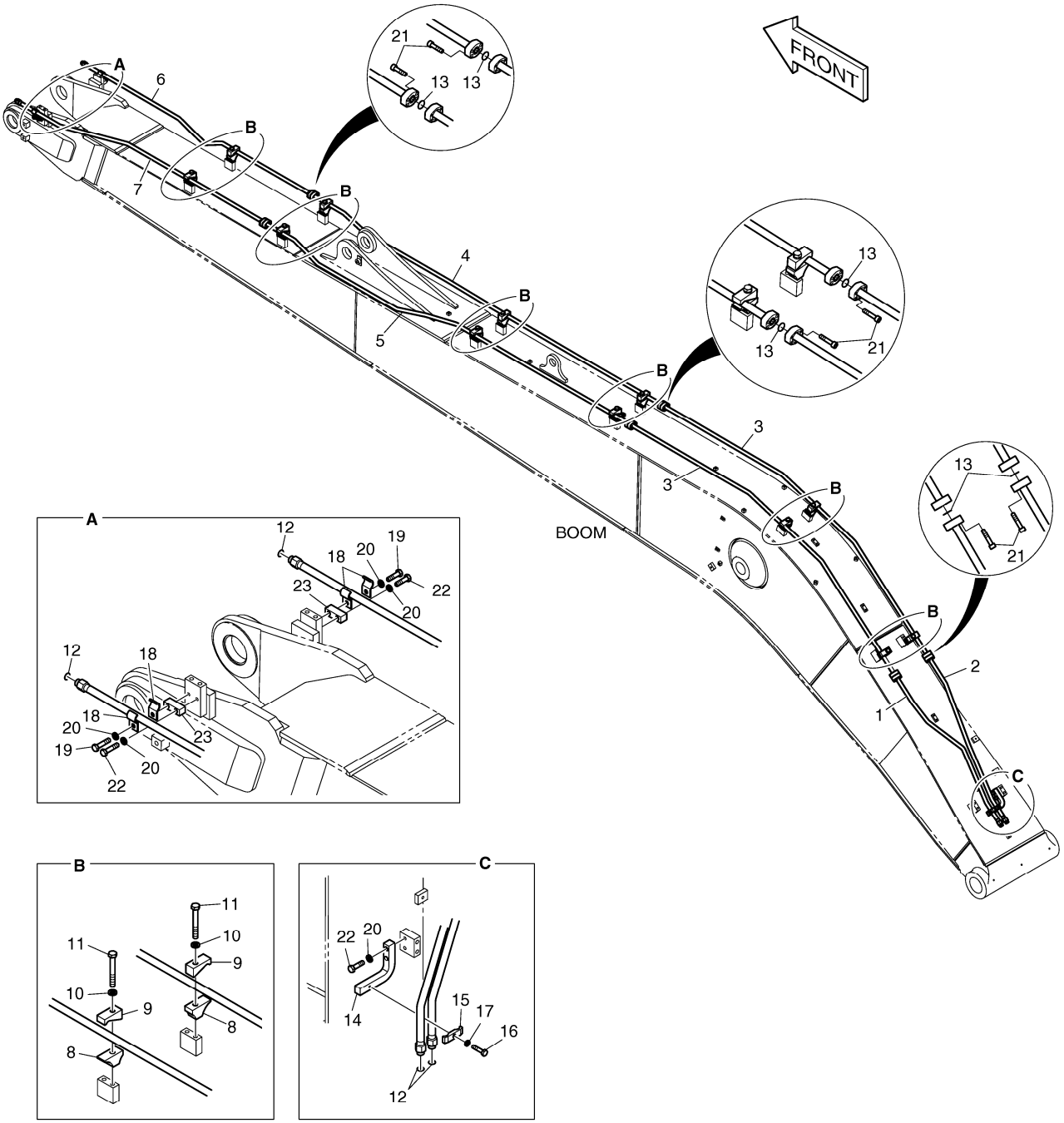

DATE	JUN. 01, 2010
3rd EDITION	

Fig. 7000 BOOM PIPING - BOOM 8.5m(ROTATING) CONDUITES DE FLECHE

Serial No. ;

Key No.	Part No.	Description	Description	Q'ty	S.C	Serial No.	ICA	Replaceable part	
								Part No.	Q'ty
7000 --	K1045843	ROTATION PIPING	TUYAUTERIE DE ROTATIO	-	D				
1	K1042763	PIPE	TUYAU	1					
2	K1042764	PIPE	TUYAU	1					
3	K1046064	PIPE	TUYAU	2					
4	K1036841	PIPE	TUYAU	1					
5	K1036842	PIPE	TUYAU	1					
6	K1036843	PIPE	TUYAU	1					
7	K1036844	PIPE	TUYAU	1					
8	K1006930	CLAMP;PIPE	COLLIER	12					
9	K1006931	CLAMP;PIPE	COLLIER	12					
10	S5102803	WASHER;SPRING	RONDELLE	12					
11	S0564166	BOLT	BOULON A 6 PANS	12					
12	S8030081	O-RING	JOINT CIRCULAIRE	4					
13	2180-1026D30	O-RING	JOINT CIRCULAIRE	6					
14	621-02798	PLATE	PLAQUE	1					
15	K1004028	CLAMP;PIPE	BRIDE	1					
16	S0558466	BOLT	BOULON	1					
17	S5102603	WASHER	RONDELLE	1					
18	124-00299A	CLAMP;PIPE	BRIDE	4					
19	S0560866	BOLT	BOULON	2					
20	S5102703	WASHER;SPRING	RONDELLE	6					
21	S2209466	BOLT;SOCKET	BOULON	24					
22	S0560666	BOLT	BOULON	4					
23	K1002121	PLATE	PLAQUE	2					

DATE	JUN. 01, 2010
3rd EDITION	

Fig. 7010 ARM PIPING - ARM 6.2m
CONDUITES DE BALANCIER

Serial No. ;

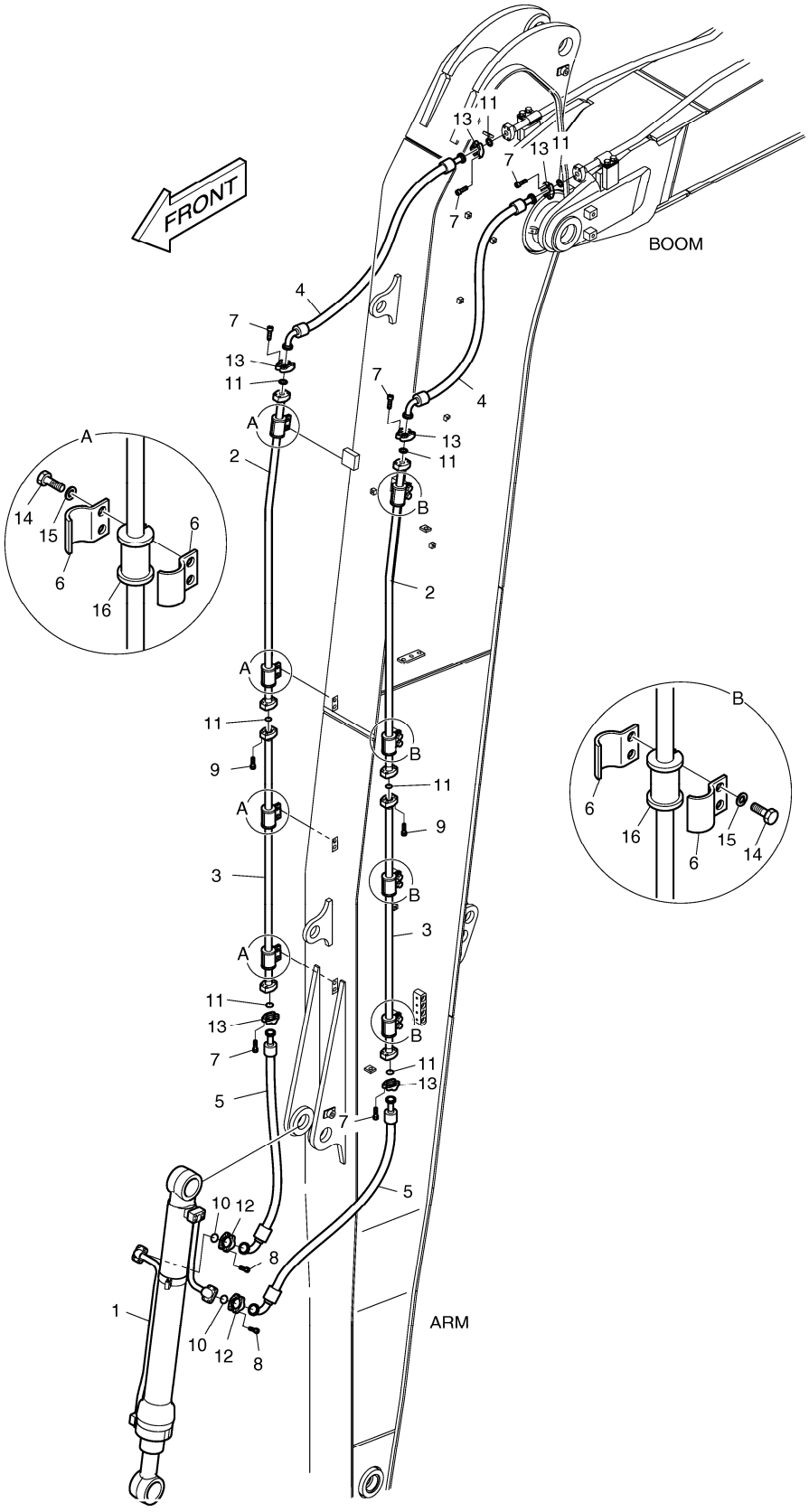

DATE	JUN. 01, 2010
3rd EDITION	

Fig. 7010 ARM PIPING - ARM 6.2m CONDUITES DE BALANCIER

Serial No. ;

Key No.	Part No.	Description	Description	Q'ty	S.C	Serial No.	ICA	Replaceable part	
								Part No.	Q'ty
7010 --	K1046335A	ARM PIPING (ARM 6.2m)	CONDUITES DE BALANCIE	-	D				
1	K1011434A	BUCKET CYLINDER	VERIN DE GODET	1					
2	K1018712	PIPE	TUYAU	2					
3	K1018713	PIPE	TUYAU	2					
4	DS2040543	HOSE	TUYAU FLEXIBLE	2					
5	DS2040544	HOSE	TUYAU FLEXIBLE	2					
6	124-00302	CLAMP;PIPE	BRIDE	16					
7	S2212366	BOLT;SOCKET M10X1.5X35	BOULON	24					
8	S2212466	BOLT;SOCKET M10X1.5X40	BOULON	8					
9	S2212566	BOLT;SOCKET	BOULON	8					
10	2180-1026D19	O-RING	JOINT CIRCULAIRE	2					
11	2180-1026D2	O-RING	JOINT CIRCULAIRE	8					
12	2181-9078	FLANGE	BRIDE	4					
13	2181-9079	FLANGE	BRIDE	12					
14	S0562766	BOLT	BOULON	16					
15	S5102803	WASHER;SPRING	RONDELLE	16					
16	161-00574	RUBBER	LE CAOUTCHOUC	8					

DATE	JUN. 01, 2010
3rd EDITION	

Fig. 7020 LUBRICATION PIPING - ARM 6.2m
LUBRIFICATION

Serial No. ;

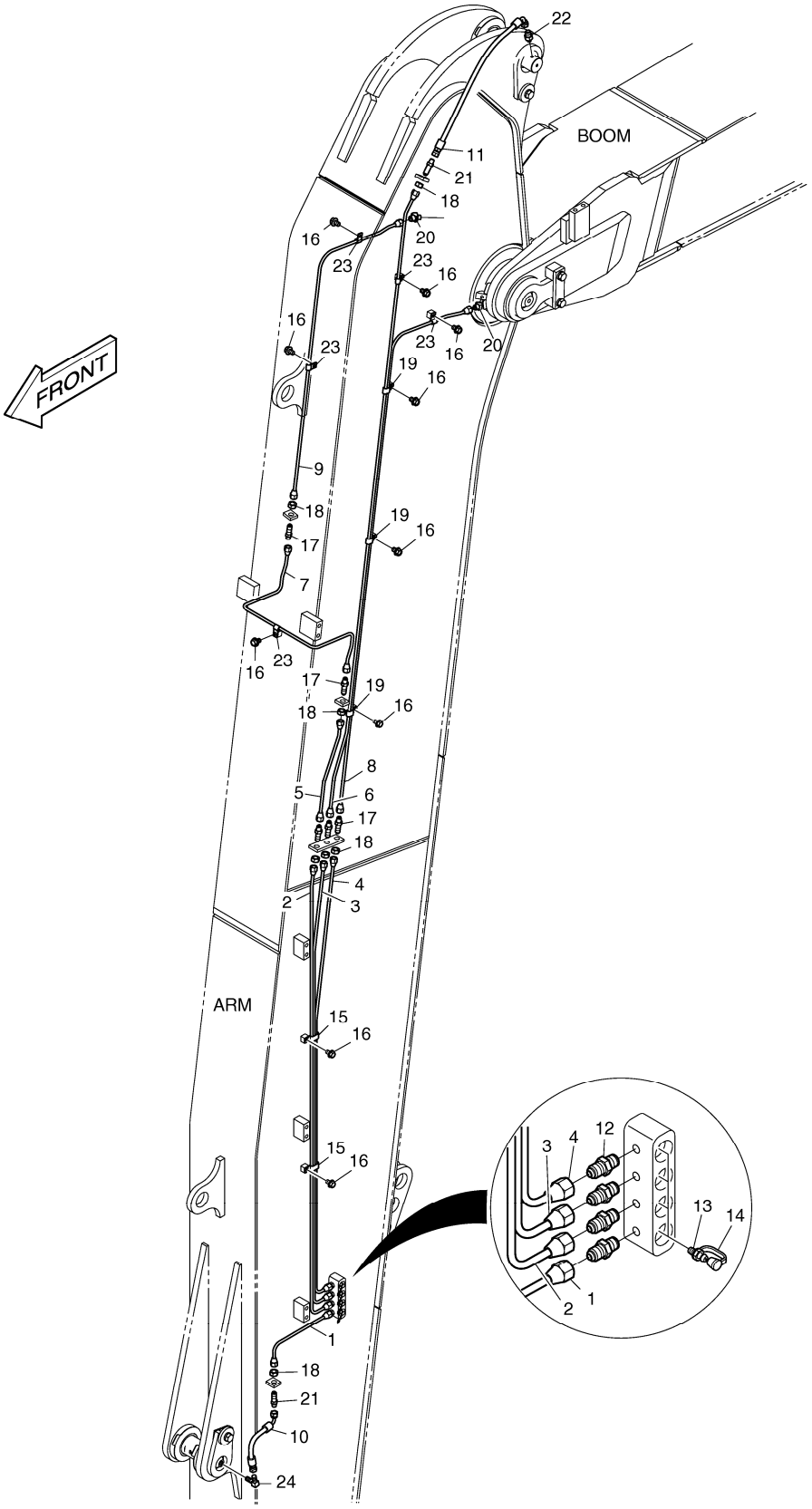

DATE	JUN. 01, 2010
3rd EDITION	

Fig. 7020 LUBRICATION PIPING - ARM 6.2m LUBRIFICATION

Serial No. ;

Key No.	Part No.	Description	Description	Q'ty	S.C	Serial No.	ICA	Replaceable part	
								Part No.	Q'ty
7020 --	K1018590	LUBRICATION PIPING (6.2M_ARI	LUBRIFICATION	-	D				
1	K1011522	PIPE	TUYAU	1					
2	K1018714	PIPE	TUYAU	1					
3	K1018715	PIPE	TUYAU	1					
4	K1018762	PIPE	TUYAU	1					
5	K1011527	PIPE	TUYAU	1					
6	K1018763	PIPE	TUYAU	1					
7	K1018764	PIPE	TUYAU	1					
8	K1018765	PIPE	TUYAU	1					
9	K1018766	PIPE	TUYAU	1					
10	2184-1036D38	HOSE	TUYAU FLEXIBLE	1					
11	2184-1036D199	HOSE	TUYAU FLEXIBLE	1					
12	2181-1184	ADAPTER	ADAPTEUR	4					
13	S6710041	NIPPLE;GREASE	MAMELON	4					
14	160-00020	CAP;GREASE NIPPLE	CHAPEAU	4					
15	DS2805008	CLIP	AGRAFE	2					
16	K1001029	BOLT	BOULON	10					
17	DS2225009	ADAPTER	ADAPTEUR	5					
18	S4032833	NUT	ECROU	7					
19	DS2805007	CLIP	AGRAFE	3					
20	K1010730	ELBOW	COUDE	2					
21	2181-1923D12	ADAPTER	ADAPTEUR	2					
22	2181-4112	ADAPTER	ADAPTEUR	1					
23	DS2802023	CLIP	AGRAFE	5					
24	2181-1111D11	ELBOW	COUDE	1					

DATE	JUN. 01, 2010
3rd EDITION	

Fig. 7025 ARM PIPING - ARM 6.2m(ROTATING)
CONDUITES DE BALANCIER

Serial No. ;

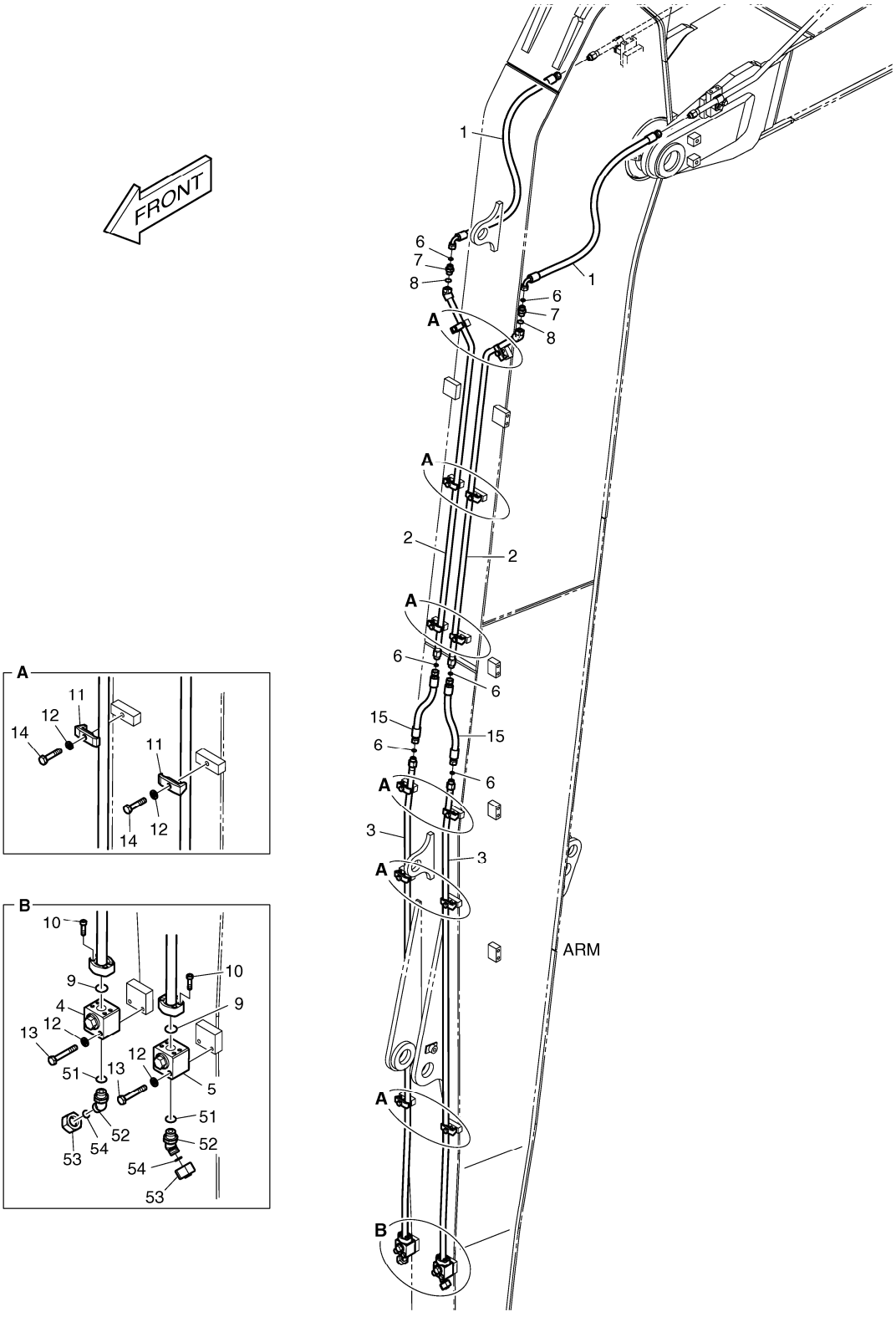

DATE	JUN. 01, 2010
3rd EDITION	

Fig. 7025 ARM PIPING - ARM 6.2m(ROTATING) CONDUITES DE BALANCIER

Serial No. ;

Key No.	Part No.	Description	Description	Q'ty	S.C	Serial No.	ICA	Replaceable part	
								Part No.	Q'ty
7025 --	K1042809	ROTATION PIPING	TUYAUTERIE DE ROTATIO	-	D				
1	DS20131208	HOSE	TUYAU FLEXIBLE	2					
2	K1042810	PIPE	TUYAU	2					
3	K1042813	PIPE	TUYAU	2					
4	K1006227	VALVE;SWITCH(R.H)	VALVE	1					
5	K1006228	VALVE;SWITCH(L.H)	VALVE	1					
6	S8030081	O-RING	JOINT CIRCULAIRE	6					
7	2181-4133D3	ADAPTER	ADAPTEUR	2					
8	S8000181	O-RING	JOINT CIRCULAIRE	2					
9	2180-1026D30	O-RING	JOINT CIRCULAIRE	2					
10	S2209266	BOLT	BOULON	8					
11	2124-1026D1	CLAMP;PIPE	BRIDE	12					
12	S5102603	WASHER	RONDELLE	16					
13	S0558966	BOLT M10X1.5X70	BOULON	4					
14	S0558566	BOLT	BOULON	12					
15	DS2011770	HOSE	TUYAU FLEXIBLE	2					
51	S8000181	O-RING	JOINT CIRCULAIRE	2					
52	2181-2816D4	ELBOW	COUDE	2					
53	2181-2817D4	CAP	CHAPEAU	2					
54	S8030081	O-RING	JOINT CIRCULAIRE	2					

DATE	JUN. 01, 2010
3rd EDITION	

Fig. 7030 FUEL HEATER
RECHAUFFEUR DE CARBURANT

Serial No. ;

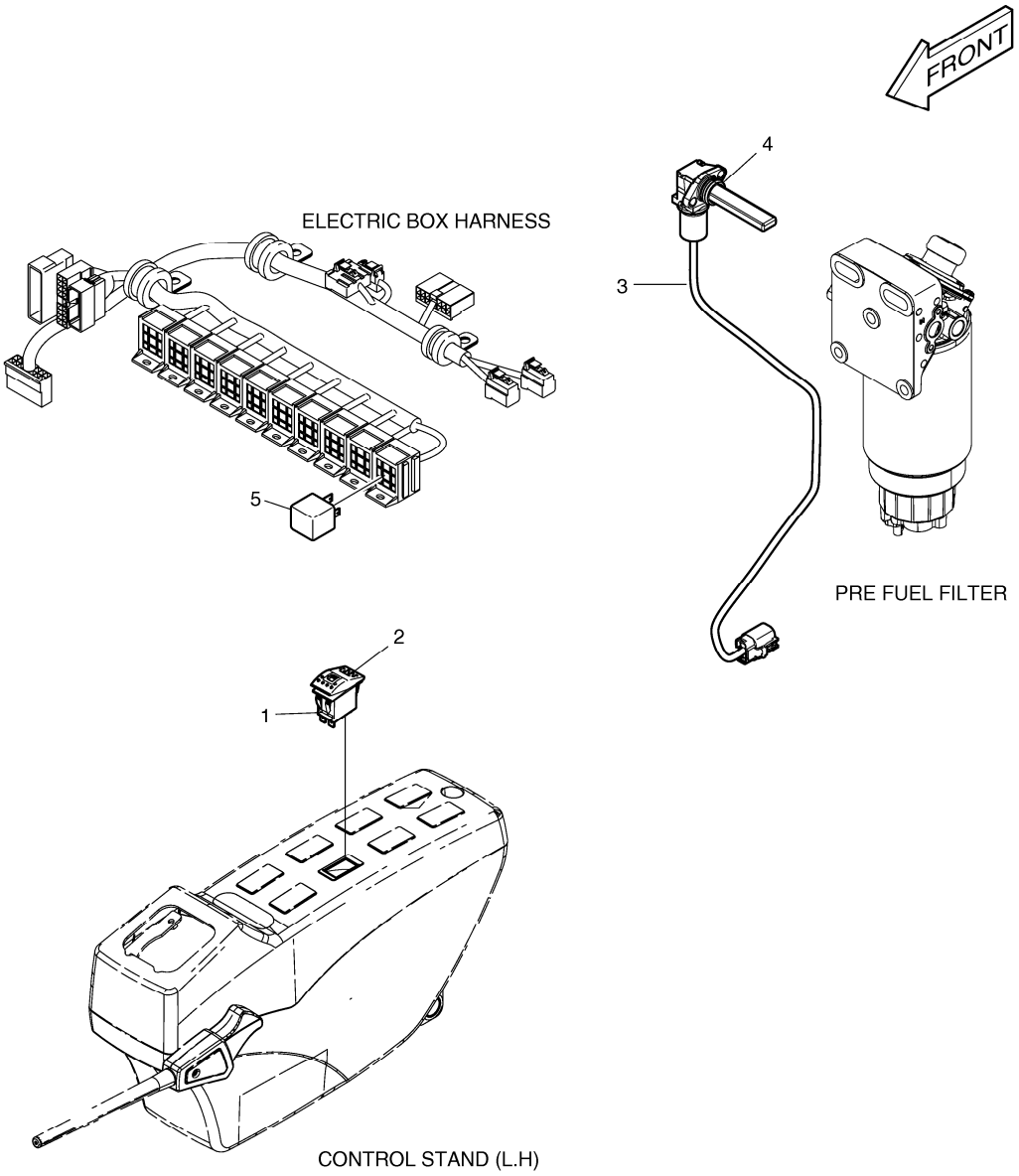

DATE	JUN. 01, 2010
3rd EDITION	

Fig. 7030 FUEL HEATER
RECHAUFFEUR DE CARBURANT

Serial No. ;

Key No.	Part No.	Description	Description	Q'ty	S.C	Serial No.	ICA	Replaceable part	
								Part No.	Q'ty
7030 --	K1008718A	FUEL HEATER	RECHAUFFEUR DE CARBU	-	D				
1	549-00101	SWITCH;ROCKER(1STEP)	COMMUTATEUR	1					
2	K1002406D2	ACTUATOR;SWITCH	ACTIONNEUR	1					
3	K1006668	HARNESS;JOINT	HARNAIS	1					
4	K1004716	HEATER;FUEL	RECHAUFFEUR	1					
5	2544-9033	RELAY	RELAIS	1					

DATE	JUN. 01, 2010
3rd EDITION	

Fig. 7040 TRAVEL ALARM
ALARME DE VOYAGE

Serial No. ;

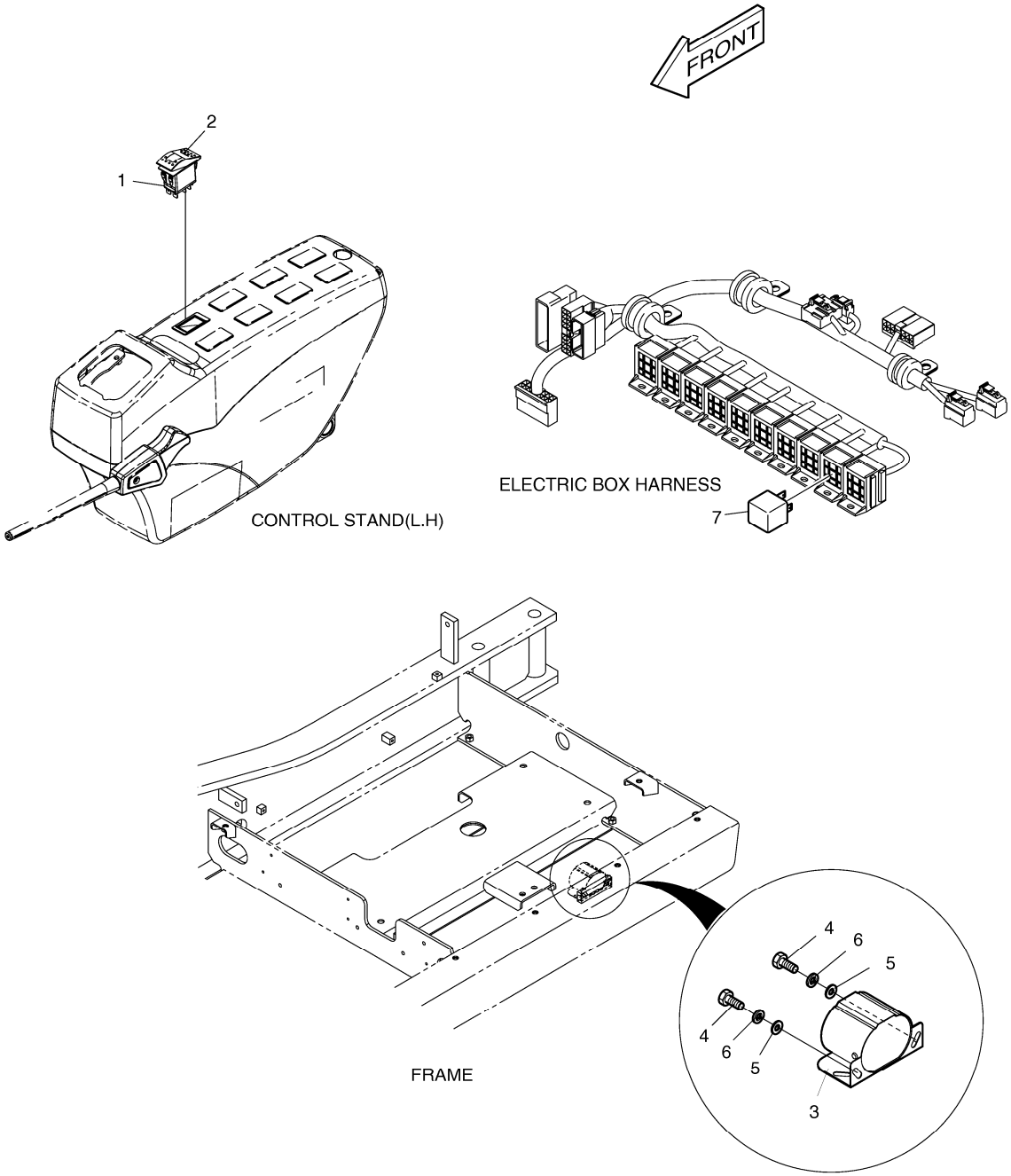

DATE	JUN. 01, 2010
3rd EDITION	

Fig. 7040 TRAVEL ALARM ALARME DE VOYAGE

Serial No. ;

Key No.	Part No.	Description	Description	Q'ty	S.C	Serial No.	ICA	Replaceable part	
								Part No.	Q'ty
7040 --	K1007400B	TRAVEL ALARM	ALARME DE VOYAGE	-	D				
1	549-00103	SWITCH;ROCKER(2STEP)	COMMUTATEUR	1					
2	K1002406D14	ACTUATOR;SWITCH	ACTIONNEUR	1					
3	516-00011	BUZZER;ALARM	VIBREUR	1					
4	S0508653	BOLT	BOULON	2					
5	S5010513	WASHER	RONDELLE	2					
6	S5102503	WASHER	RONDELLE	2					
7	2544-9033	RELAY	RELAIS	1					

DATE	JUN. 01, 2010
3rd EDITION	

Fig. 7050 WORKING LAMP(2-LAMP) LAMPE FONCTIONNANTE

Serial No. ;

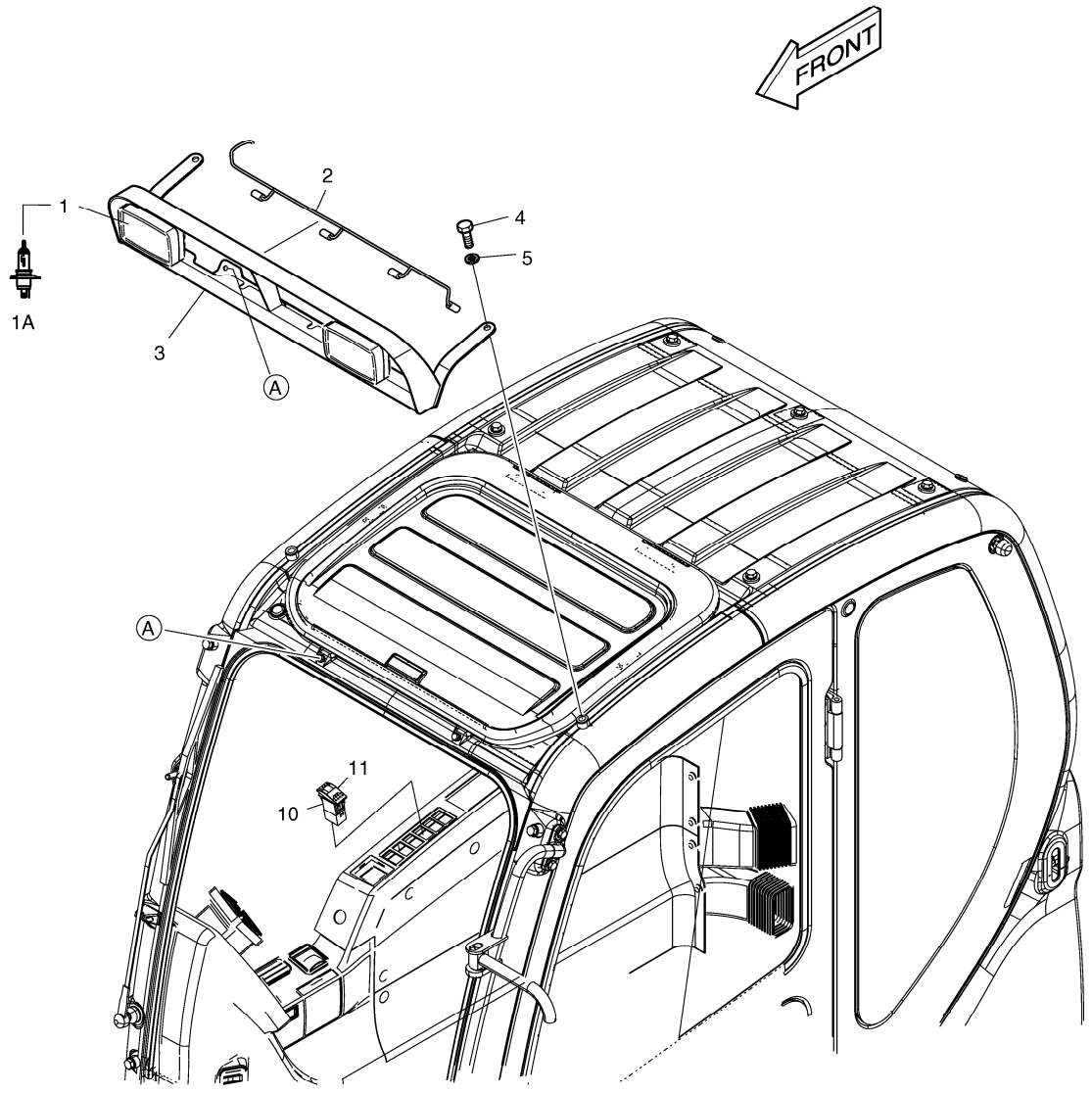

DATE	JUN. 01, 2010
3rd EDITION	

Fig. 7050 WORKING LAMP(2-LAMP) LAMPE FONCTIONNANTE

Serial No. ;

Key No.	Part No.	Description	Description	Q'ty	S.C	Serial No.	ICA	Replaceable part	
								Part No.	Q'ty
7050 --	K1007403B	WORKING LAMP-2 LAMP	LAMPE FONCTIONNANTE	-	D				
1	534-00085	LAMP;HEAD	LAMPE	2					
1A	2515-1016D4	. BLUB;HALOGEN	. AMPOULE	1					
2	530-00430A	HARNESS;FRONT CABIN LAMP	HARNAIS	1					
3	195-02908E	BRACKET;FRONT LAMP	SUPPORT	1					
4	2120-2166D54	BOLT;GREEN	BOULON	2					
5	2114-1898D6	WASHER;PLAIN	RONDELLE	2					
10	549-00103	SWITCH;ROCKER(2STEP)	COMMUTATEUR	1					
11	K1002406D13	ACTUATOR;SWITCH	ACTIONNEUR	1					

DATE	JUN. 01, 2010
3rd EDITION	

Fig. 7060 WORKING LAMP(4-LAMP) LAMPE FONCTIONNANTE

Serial No. ;

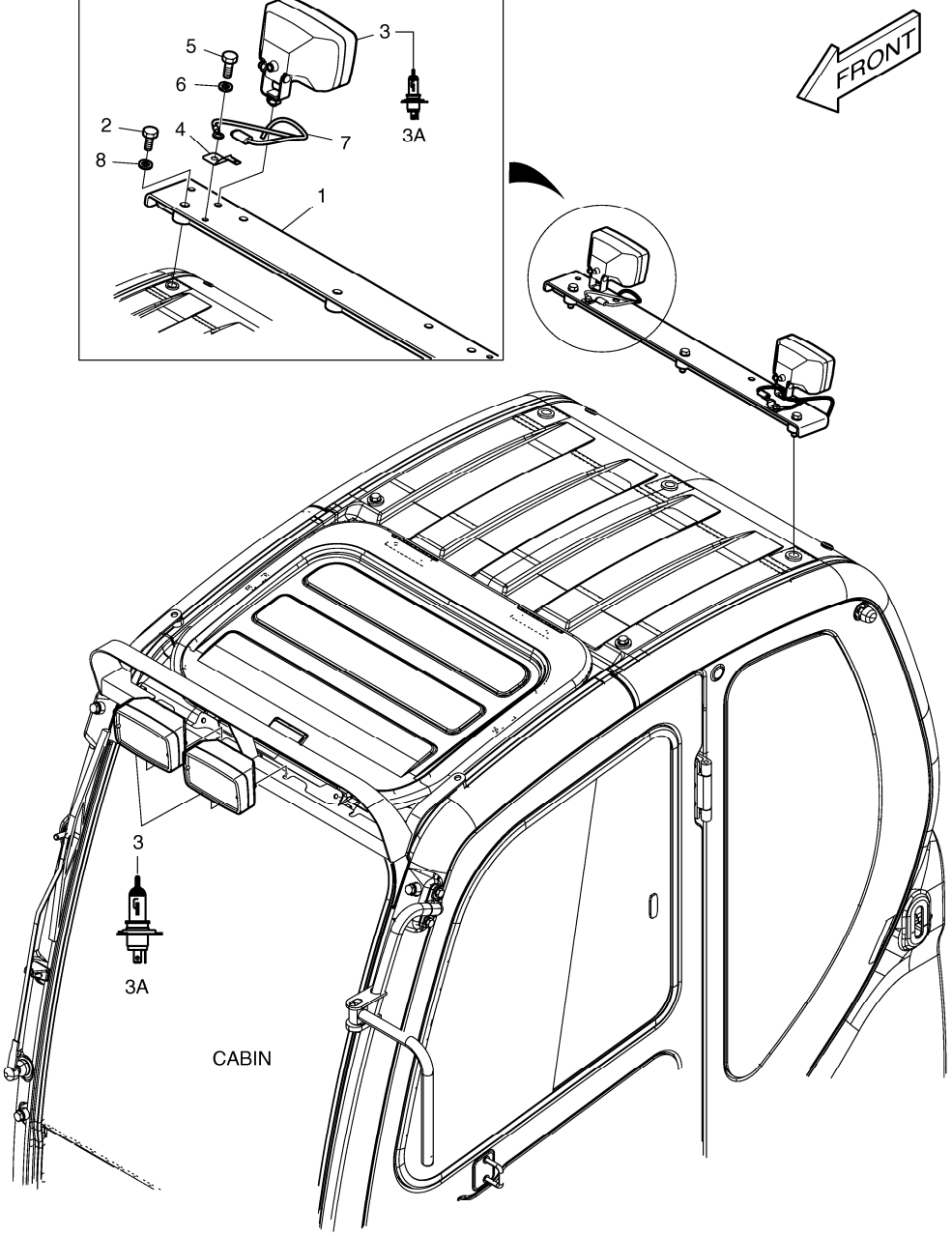

DATE	JUN. 01, 2010
3rd EDITION	

Fig. 7060 WORKING LAMP(4-LAMP) LAMPE FONCTIONNANTE

Serial No. ;

Key No.	Part No.	Description	Description	Q'ty	S.C	Serial No.	ICA	Replaceable part	
								Part No.	Q'ty
7060 --	K1007404A	WORKING LAMP	LAMPE FONCTIONNANTE	-	D				
1	195-02910C	BRACKET;REAR LAMP	SUPPORT	1					
2	S0515653	BOLT M12X1.75X50	BOULON	3					
3	534-00085	LAMP;HEAD	LAMPE	4					
3A	2515-1016D4	. BLUB;HALOGEN	. AMPOULE	1					
4	2197-1661	BRACKET	SUPPORT	2					
5	S0508853	BOLT	BOULON	2					
6	S5102503	WASHER	RONDELLE	2					
7	530-00463A	HARNESS;REAR CABIN LAMP	HARNAIS	2					
8	S5010713	WASHER;PLAIN	RONDELLE	3					

DATE	JUN. 01, 2010
3rd EDITION	

Fig. 7070 WORKING LAMP - REAR AVERTISSEUR RELAIS

Serial No. ;

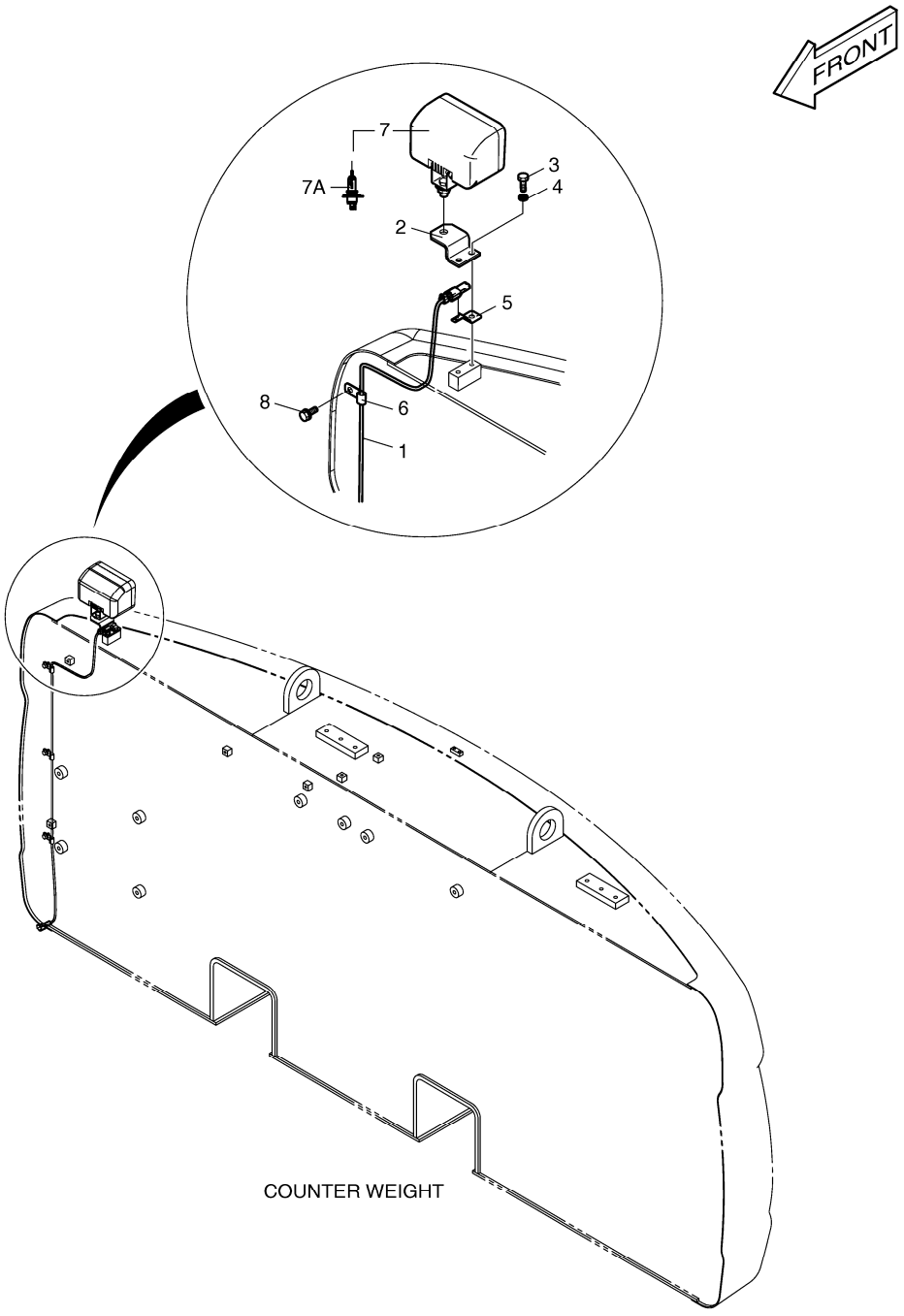

DATE	JUN. 01, 2010
3rd EDITION	

Fig. 7070 WORKING LAMP - REAR AVERTISSEUR RELAIS

Serial No. ;

Key No.	Part No.	Description	Description	Q'ty	S.C	Serial No.	ICA	Replaceable part	
								Part No.	Q'ty
7070 --	K1007405	WORKING LAMP-REAR LAMP	AVERTISSEUR RELAIS	-	D				
1	530-00431	HARNESS;REAR LAMP	HARNAIS	1					
2	195-02775A	PLATE	PLAQUE	1					
3	S0508853	BOLT	BOULON	2					
4	S5102503	WASHER	RONDELLE	2					
5	2197-1661	BRACKET	SUPPORT	1					
6	2124-1509D1	CLIP	AGRAFE	3					
7	534-00085	LAMP;HEAD	LAMPE	1					
7A	2515-1016D4	. BLUB;HALOGEN	. AMPOULE	1					
8	K1001029	BOLT	BOULON	3					

DATE	JUN. 01, 2010
3rd EDITION	

Fig. 7080 ROTATING BEACON
FEU DE CIRCULATION

Serial No. ;

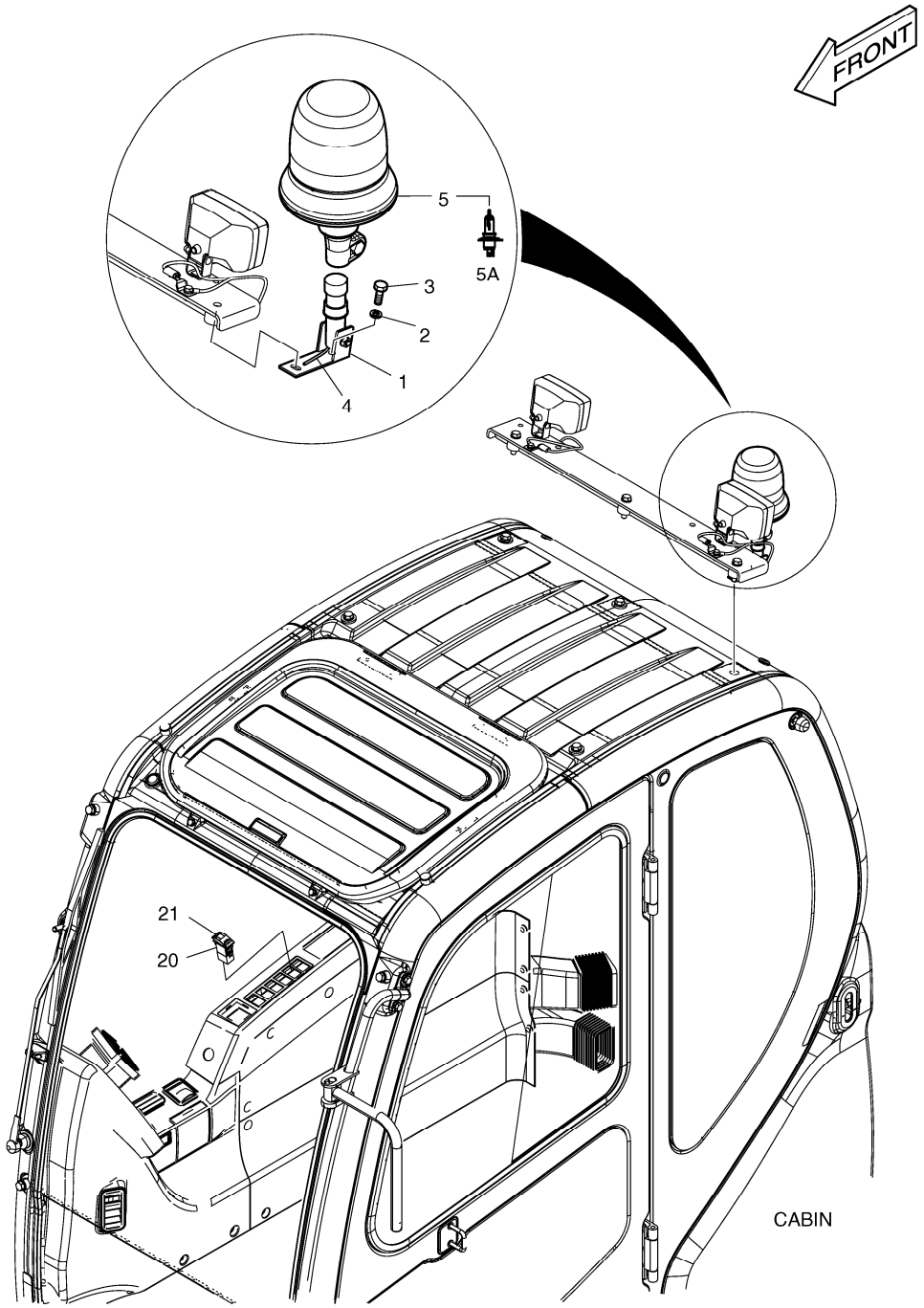

DATE	JUN. 01, 2010
3rd EDITION	

Fig. 7080 ROTATING BEACON FEU DE CIRCULATION

Serial No. ;

Key No.	Part No.	Description	Description	Q'ty	S.C	Serial No.	I	C	A	Replaceable part	
										Part No.	Q'ty
7080 --	500-00307A	BEACON;ROTATING	FEU DE CIRCULATION	-	D	5433-5747					
	300705-00013	BEACON ASS'Y,ROTATING;6LAM	FEU DE CIRCULATION	-	D	5748-					
1	160-00061	BUSH;MOUNTING	DOUILLE	1		5433-5747	I			131002-00085	1
	131002-00085	BUSHING ASS'Y	ENSEMBLE DE DOUILLE	1		5748-					
2	S5102503	WASHER	RONDELLE	1							
3	S0508853	BOLT	BOULON	1							
4	530-00464	HARNESS;ROTATING BEACON	HARNAIS	1							
5	K1038193	BEACON;ROTATING	FEU DE CIRCULATION	1							
5A	K9007240	. BULB;HALOGEN 24V 70W	. AMPOULE	1							
20	549-00101	SWITCH;ROCKER(1STEP)	COMMUTATEUR	1							
21	K1002406D3	ACTUATOR	ACTIONNEUR	1							

DATE	JUN. 01, 2010
3rd EDITION	

Fig. 7090 ROTATING BEACON MOUNTING SUPPORT TOURNANT DE BALISE

Serial No. ;

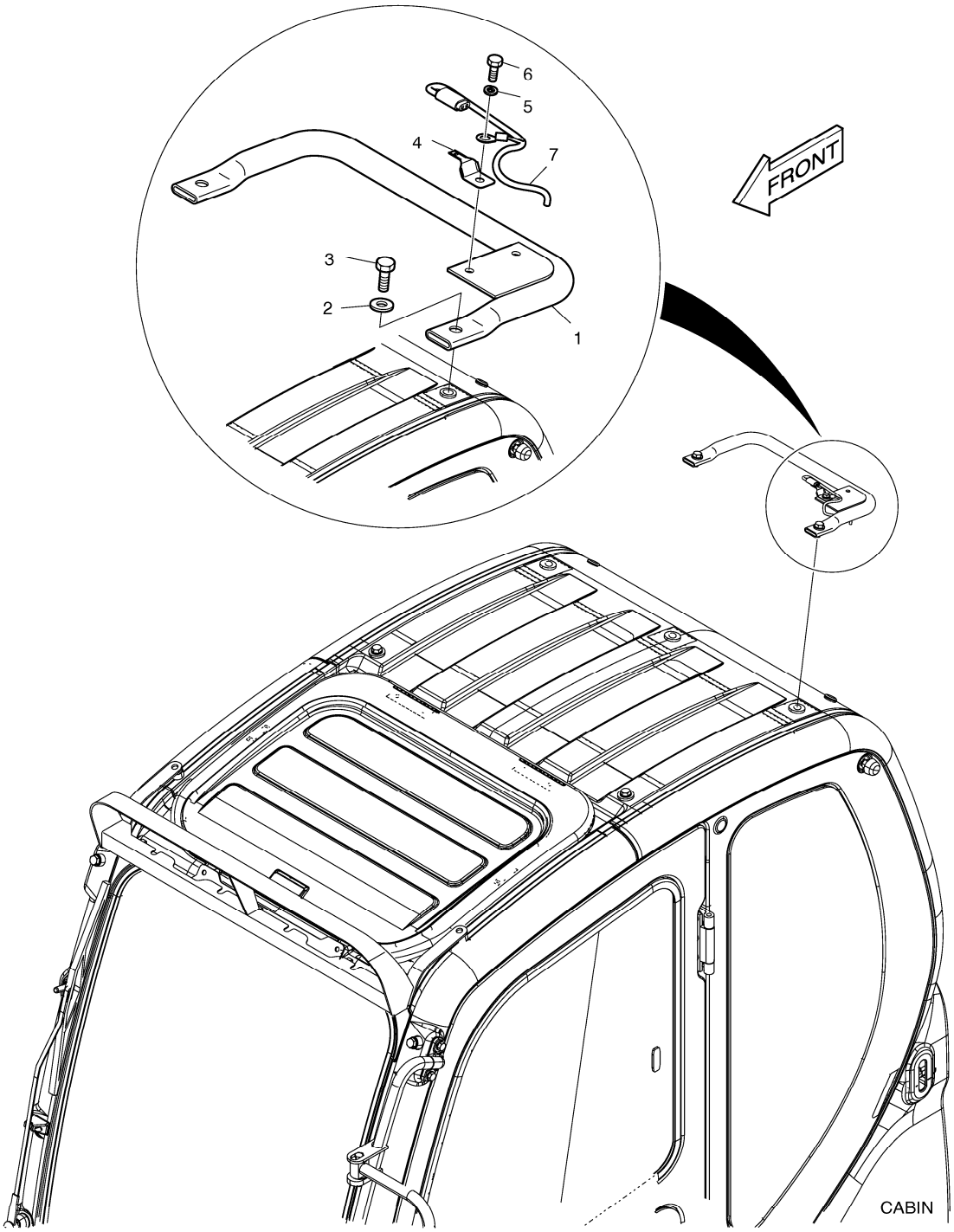

DATE	JUN. 01, 2010
3rd EDITION	

Fig. 7090 ROTATING BEACON MOUNTING SUPPORT TOURNANT DE BALISE

Serial No. ;

Key No.	Part No.	Description	Description	Q'ty	S.C	Serial No.	ICA	Replaceable part	
								Part No.	Q'ty
7090 --	K1007408	ROTATING BEACON MOUNTING	SUPPORT TOURNANT DE I	-	D				
1	195-02909A	BRACKET;BEACON	SUPPORT	1					
2	2114-1898D1	WASHER	RONDELLE	2					
3	S0512053	BOLT	BOULON	2					
4	2197-1661	BRACKET	SUPPORT	1					
5	S5102503	WASHER	RONDELLE	1					
6	S0508853	BOLT	BOULON	1					
7	530-00463A	HARNESS;REAR CABIN LAMP	HARNAIS	1					

DATE	JUN. 01, 2010
3rd EDITION	

Fig. 7100 ROTATING BEACON(TELESCOPIC) WITH LAMP FEU DE CIRCULATION

Serial No. ;

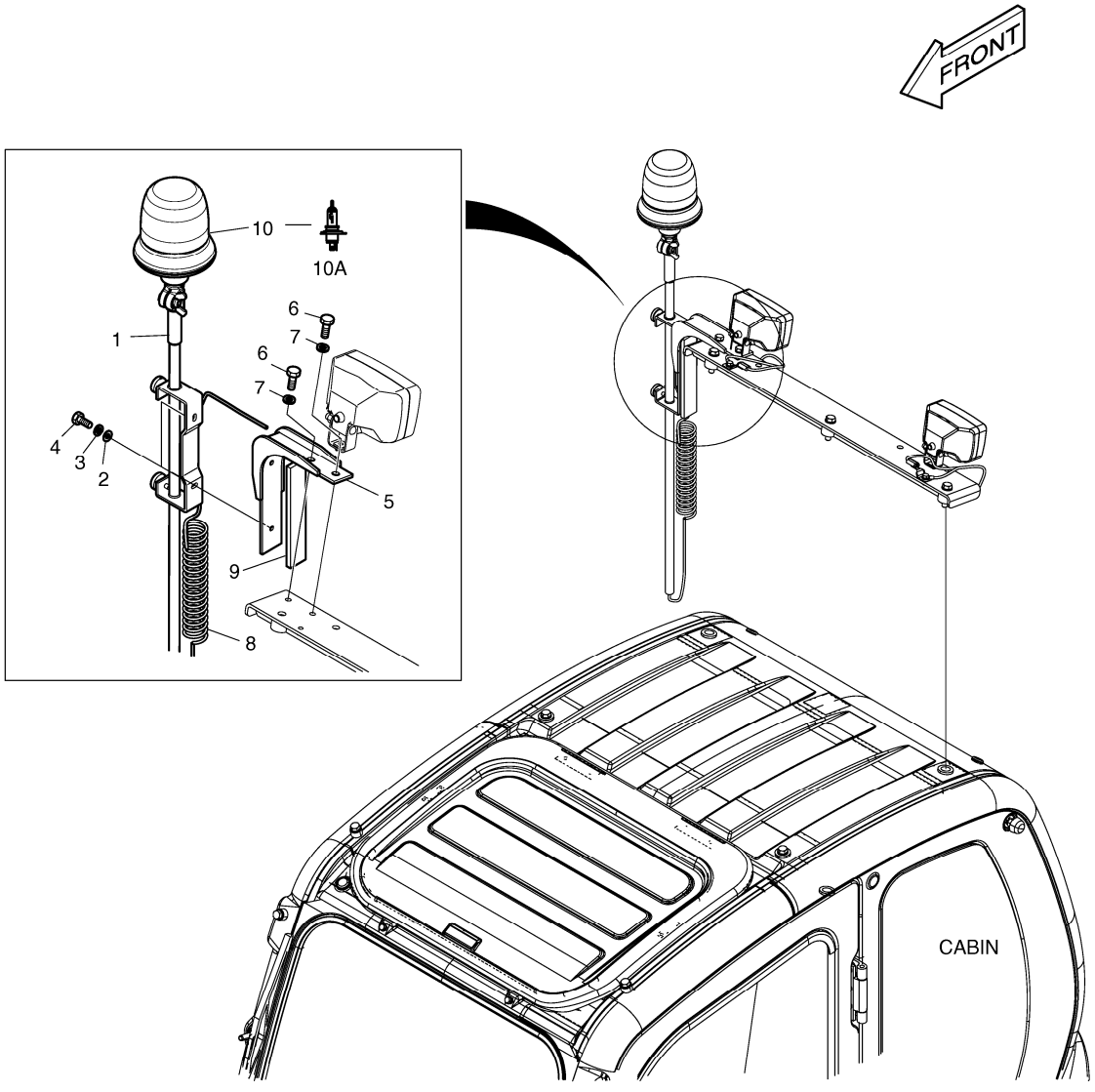

DATE	JUN. 01, 2010
3rd EDITION	

Fig. 7100 ROTATING BEACON(TELESCOPIC) WITH LAMP FEU DE CIRCULATION

Serial No. ;

Key No.	Part No.	Description	Description	Q'ty	S.C	Serial No.	ICA	Replaceable part	
								Part No.	Q'ty
7100 --	500-00309C	BEACON;ROTATING	FEU DE CIRCULATION	-	D				
1	195-01805	SUPPORT;BEACON	APPUI	1					
2	S5010513	WASHER	RONDELLE	2					
3	S5102503	WASHER	RONDELLE	2					
4	S0508653	BOLT	BOULON	2					
5	195-02925A	BRACKET	SUPPORT	1					
6	S0512053	BOLT	BOULON	2					
7	S5100603	WASHER;SPRING	RONDELLE	2					
8	K1010065	HARNESS;JOINT	HARNAIS	1					
9	161-00404	RUBBER	LE CAOUTCHOUC	1					
10	K1038193	BEACON;ROTATING	FEU DE CIRCULATION	1					
10A	K9007240	. BULB;HALOGEN 24V 70W	. AMPOULE	1					

DATE	JUN. 01, 2010
3rd EDITION	

Fig. 7110 ROTATING BEACON(TELESCOPIC) W/O LAMP
FEU DE CIRCULATION

Serial No. ;

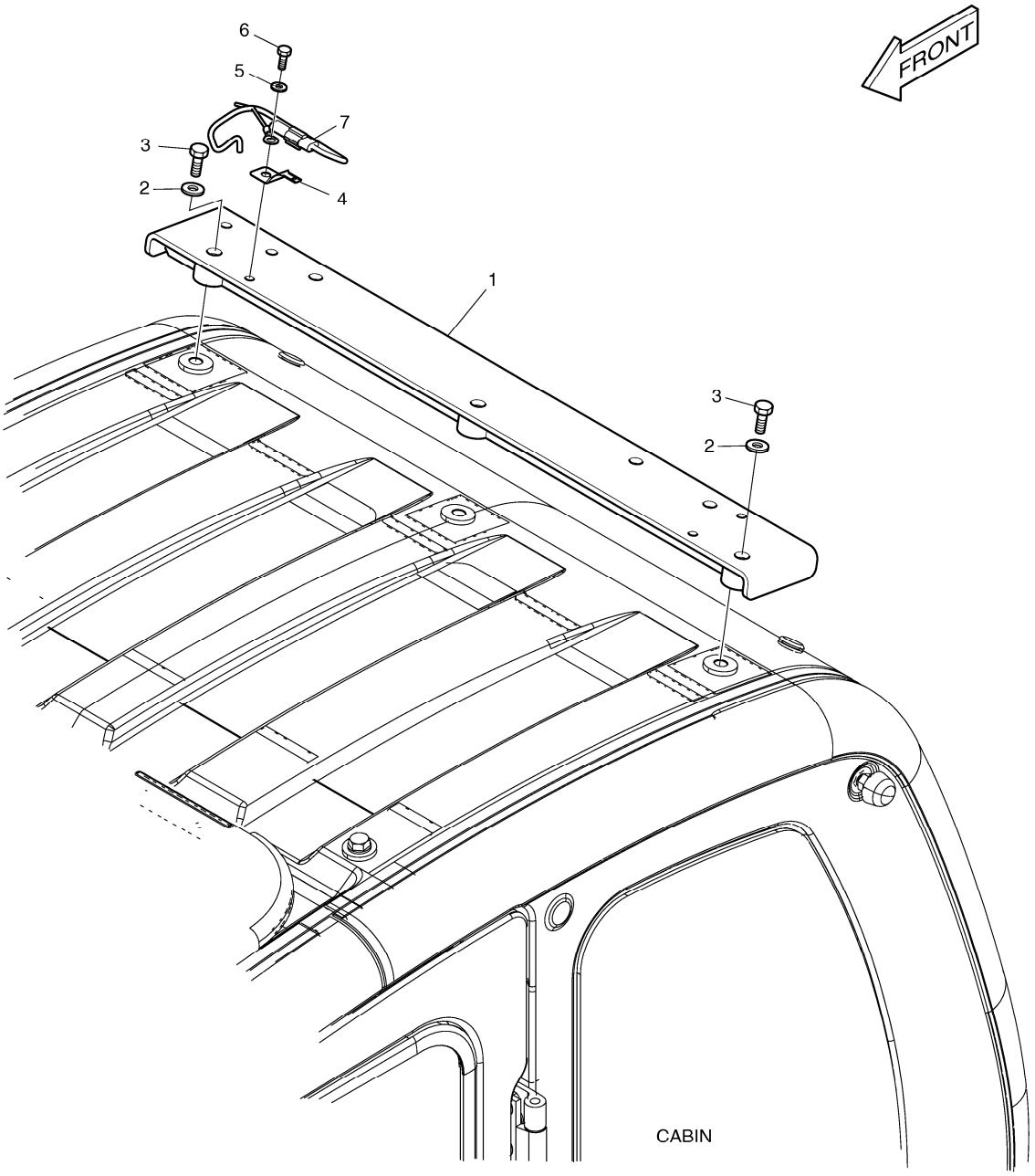

DATE	JUN. 01, 2010
3rd EDITION	

Fig. 7110 ROTATING BEACON(TELESCOPIC) W/O LAMP FEU DE CIRCULATION

Serial No. ;

Key No.	Part No.	Description	Description	Q'ty	S.C	Serial No.	ICA	Replaceable part	
								Part No.	Q'ty
7110 --	K1007410A	ROTATING BEACON-TELESCOP	FEU DE CIRCULATION	-	D				
1	195-02910C	BRACKET;REAR LAMP	SUPPORT	1					
2	S5010713	WASHER;PLAIN	RONDELLE	3					
3	S0515653	BOLT M12X1.75X50	BOULON	3					
4	2197-1661	BRACKET	SUPPORT	1					
5	S5102503	WASHER	RONDELLE	1					
6	S0508853	BOLT	BOULON	1					
7	530-00463A	HARNESS;REAR CABIN LAMP	HARNAIS	1					

DATE	JUN. 01, 2010
3rd EDITION	

Fig. 7120 OVERLOAD WARNING
AVERTISSEMENT DE SURCHARGE

Serial No. ;

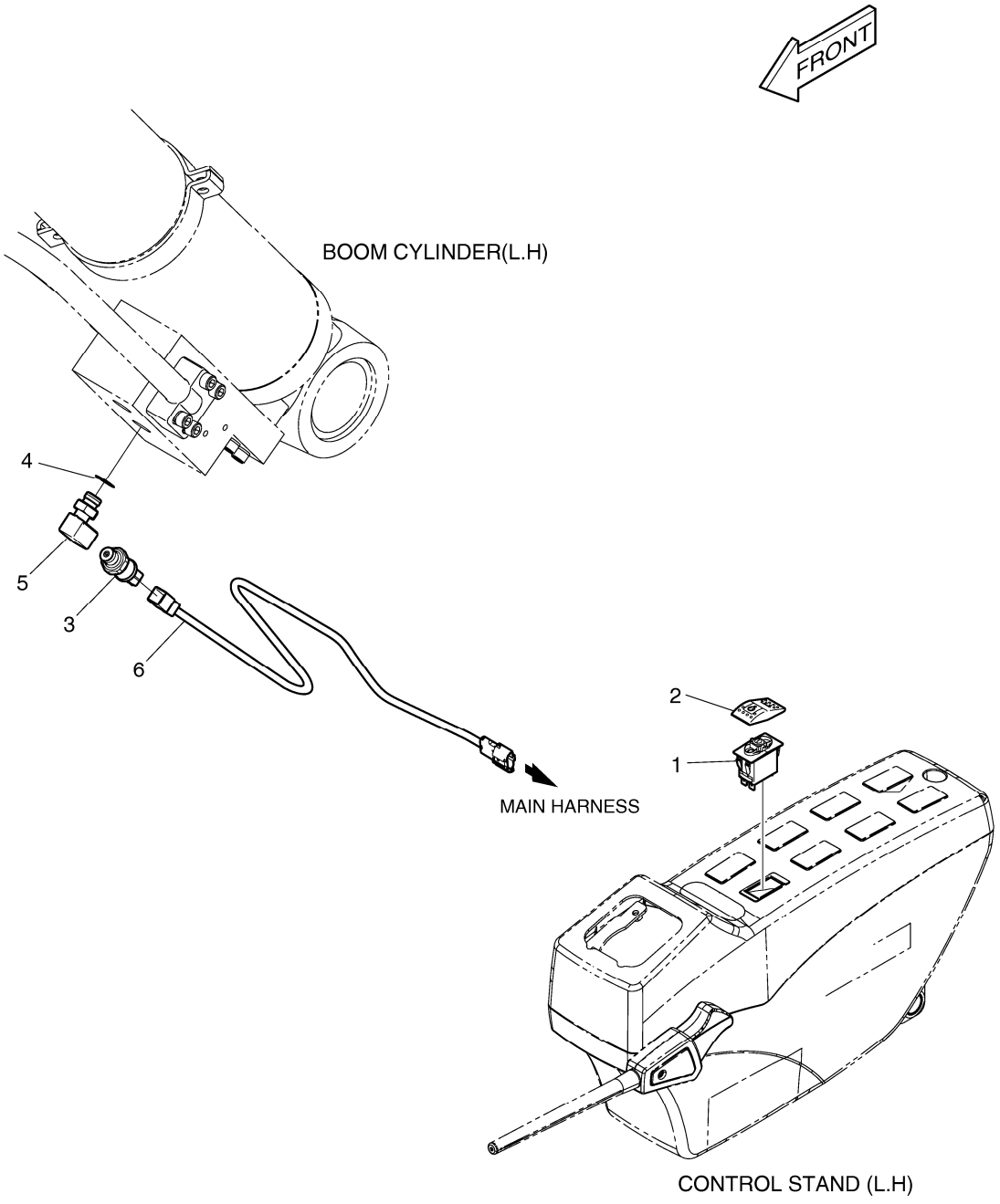

DATE	JUN. 01, 2010
3rd EDITION	

Fig. 7120 OVERLOAD WARNING AVERTISSEMENT DE SURCHARGE

Serial No. ;

Key No.	Part No.	Description	Description	Q'ty	S.C	Serial No.	ICA	Replaceable part	
								Part No.	Q'ty
7120 --	K1007411	OVER LOAD WARNING	AVERTISSEMENT DE SURC	-	D				
1	549-00102	SWITCH	COMMUTATEUR	1					
2	K1002406D4	ACTUATOR	ACTIONNEUR	1					
3	2547-9045	SENSOR;PRESSURE	SONDE	1					
4	S8000161	O-RING	JOINT CIRCULAIRE	1					
5	DS2308021	ELBOW	COUDE	1					
6	K1002153	HARNESS;JOINT	HARNAIS	1					

DATE	JUN. 01, 2010
3rd EDITION	

Fig. 7130 LOWER WIPER
ABAISSEZ L'ESSUIE-GLACE

Serial No. ;

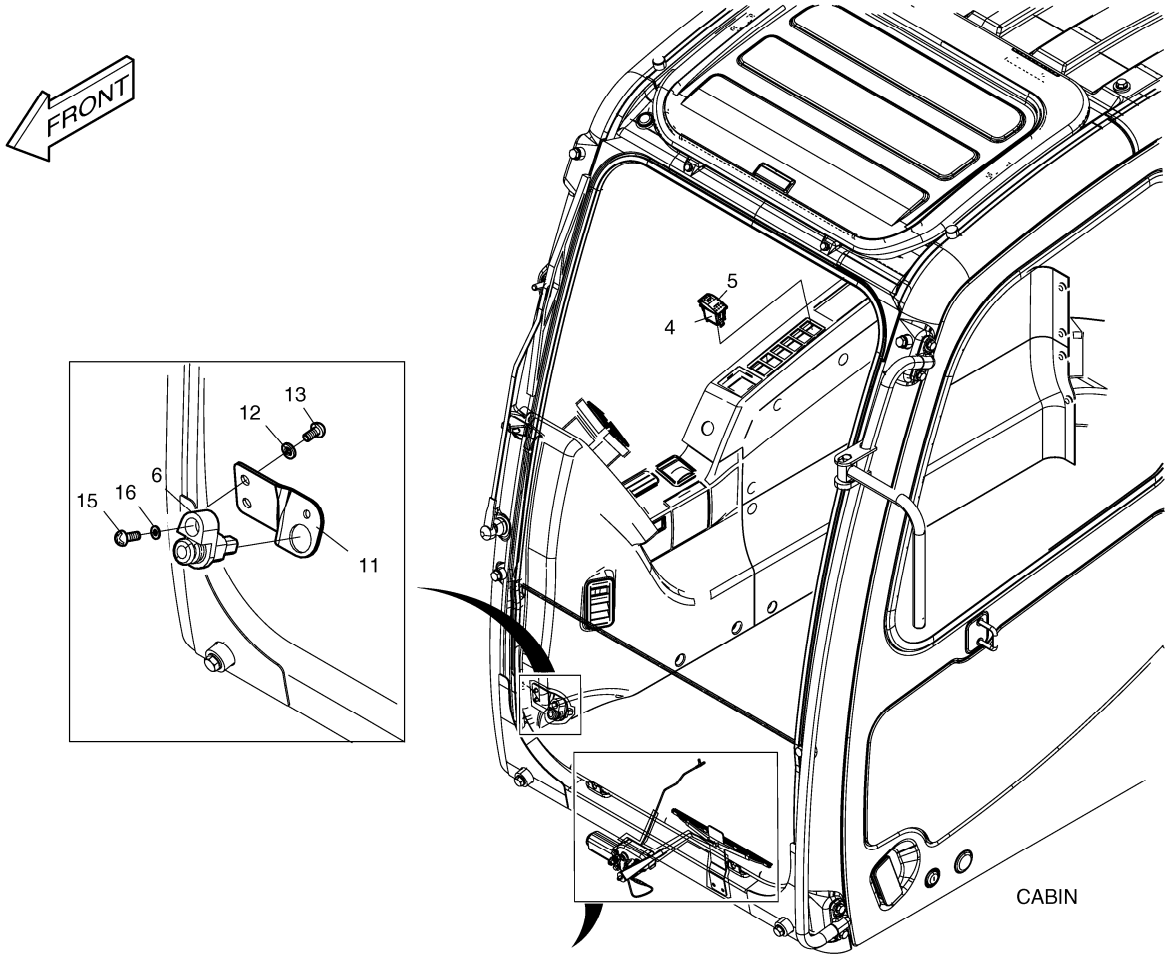

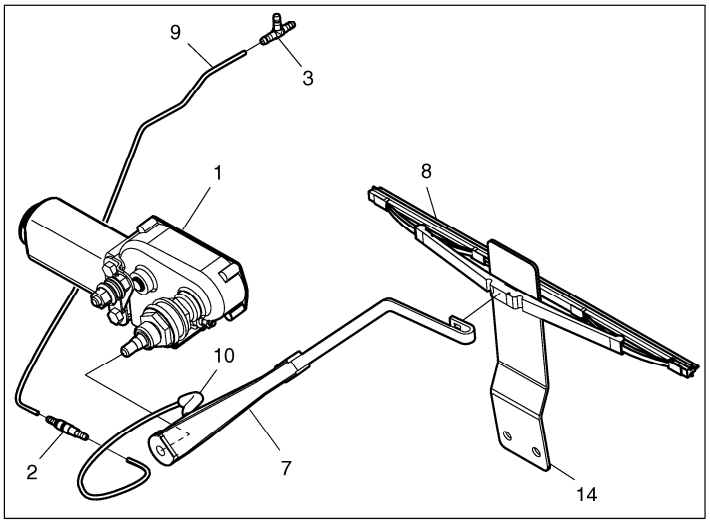

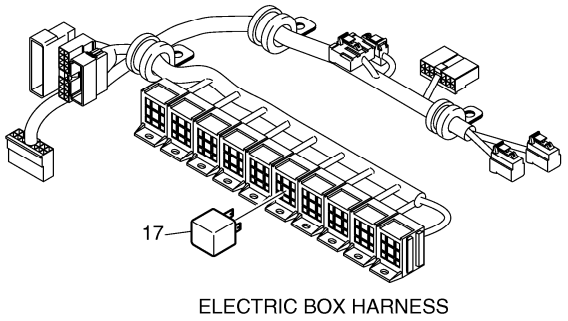

DATE	JUN. 01, 2010
3rd EDITION	

Fig. 7130 LOWER WIPER
ABAISSEZ L'ESSUIE-GLACE

Serial No. ;

Key No.	Part No.	Description	Description	Q'ty	S.C	Serial No.	ICA	Replaceable part	
								Part No.	Q'ty
7130 --	K1007412E	LOWER WIPER ASS'Y	ABAISSEZ L'ESSUIE-GLA	-	D				
1	538-00012	MOTOR;WIPER	MOTEUR	1					
2	426-00282	VALVE;LOWER WIPER CHECK	VALVE	1					
3	181-00804	TEE	TE	1					
4	549-00101	SWITCH;ROCKER(1STEP)	COMMUTATEUR	1					
5	K1002406D5	ACTUATOR	ACTIONNEUR	1					
6	549-00077	SWITCH	COMMUTATEUR	1					
7	541-00016	ARM;WIPER	BRAS	1					
8	507-00007	BLADE;WIPER	LAME	1					
9	K1002866	HOSE	TUYAU	1					
10	K1002867D1	TUBE	TUBE	1					
11	195-03444	BRACKET;SWITCH	SUPPORT	1					
12	2114-1898D3	WASHER;PLAIN	RONDELLE	2					
13	2120-2166D9	SCREW	VIS	2					
14	191-03736E	PLATE;STOPPER	PLAQUE	1					
15	S3450833	SCREW	VIS	1					
16	S5100203	WASHER;SPRING	RONDELLE	1					
17	2544-9033	RELAY	RELAIS	1					

DATE	JUN. 01, 2010
3rd EDITION	

Fig. 7140 WORKING LAMP(2-LAMP) LAMPE FONCTIONNANTE

Serial No. ;

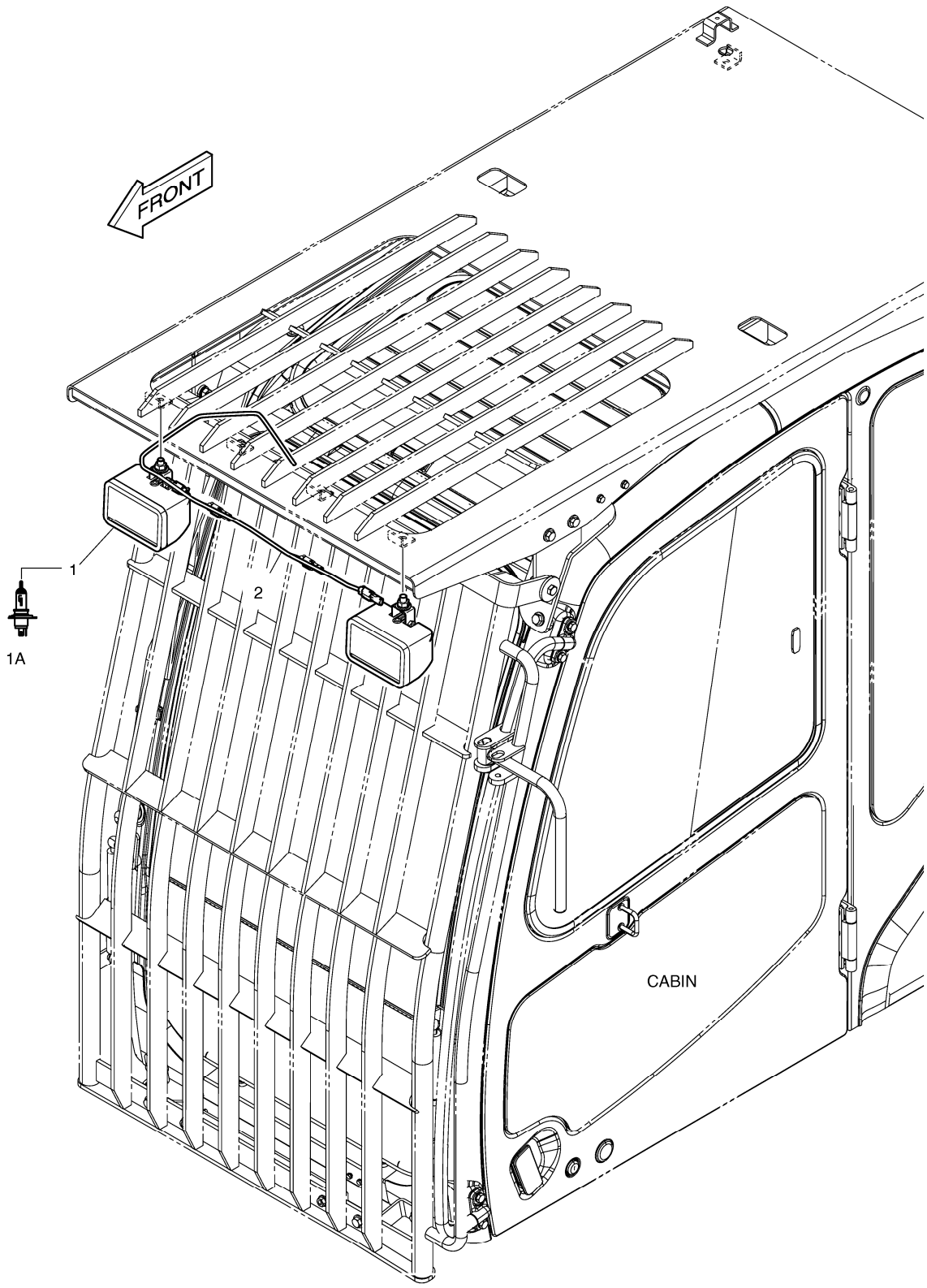

DATE	JUN. 01, 2010
3rd EDITION	

Fig. 7140 WORKING LAMP(2-LAMP) LAMPE FONCTIONNANTE

Serial No. ;

Key No.	Part No.	Description	Description	Q'ty	S.C	Serial No.	ICA	Replaceable part	
								Part No.	Q'ty
7140 --	K1007418	WORKING LAMP ASS'Y	LAMPE FONCTIONNANTE	-	D				
1	534-00085	LAMP;HEAD	LAMPE	2					
1A	2515-1016D4	. BLUB;HALOGEN	. AMPOULE	1					
2	K1006663	HARNESS;JOINT	HARNAIS	1					

DATE	JUN. 01, 2010
3rd EDITION	

Fig. 7150 WORKING LAMP(4-LAMP) LAMPE FONCTIONNANTE

Serial No. ;

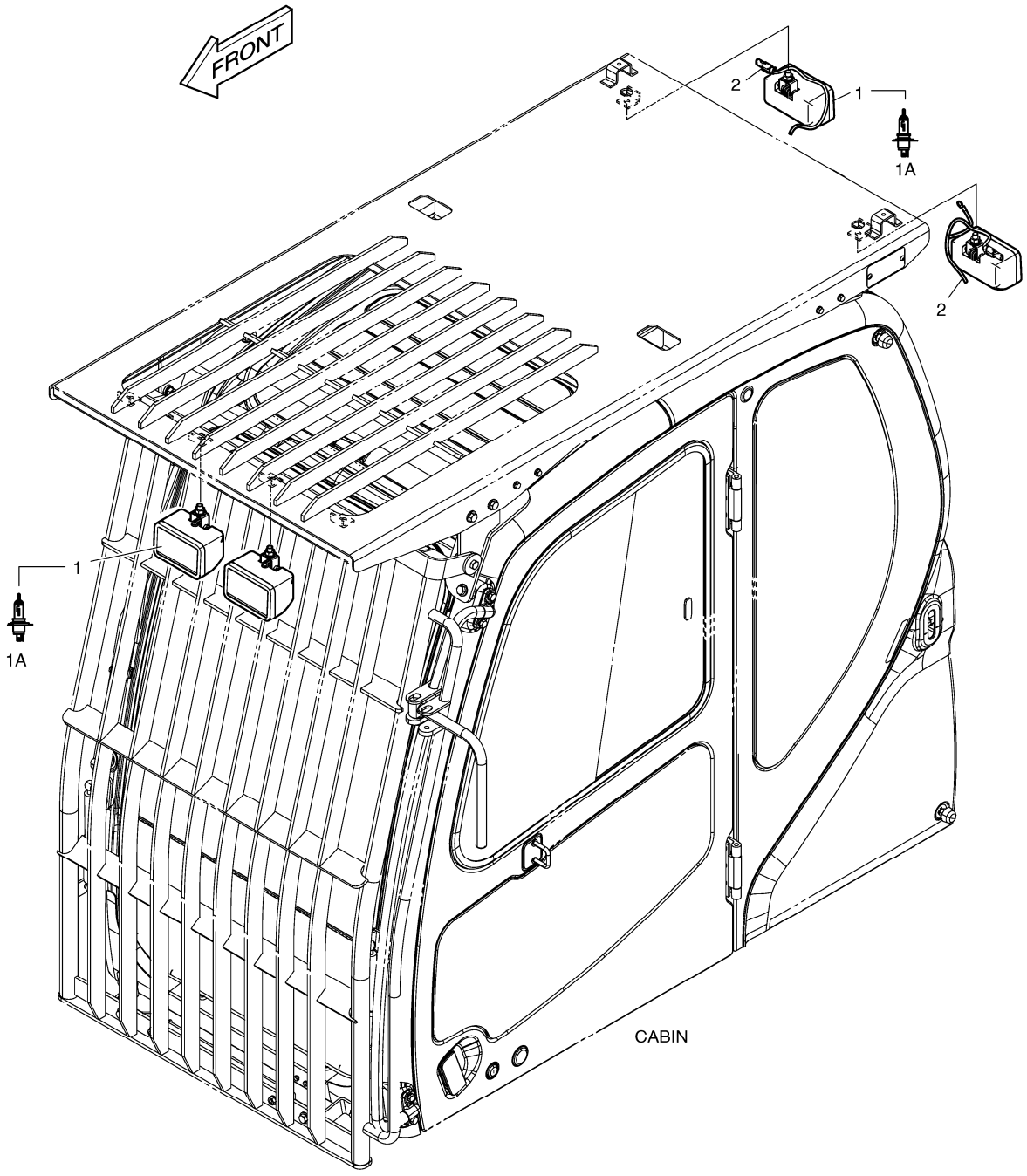

DATE	JUN. 01, 2010
3rd EDITION	

Fig. 7150 WORKING LAMP(4-LAMP) LAMPE FONCTIONNANTE

Serial No. ;

Key No.	Part No.	Description	Description	Q'ty	S.C	Serial No.	ICA	Replaceable part	
								Part No.	Q'ty
7150 --	K1007419	WORKING LAMP ASS'Y	LAMPE FONCTIONNANTE	-	D				
1	534-00085	LAMP;HEAD	LAMPE	4					
1A	2515-1016D4	. BLUB;HALOGEN	. AMPOULE	1					
2	530-00463A	HARNESS;REAR CABIN LAMP	HARNAIS	2					

DATE	JUN. 01, 2010
3rd EDITION	

Fig. 7160 ROTATING BEACON-WITH FOGS
FEU DE CIRCULATION

Serial No. ;

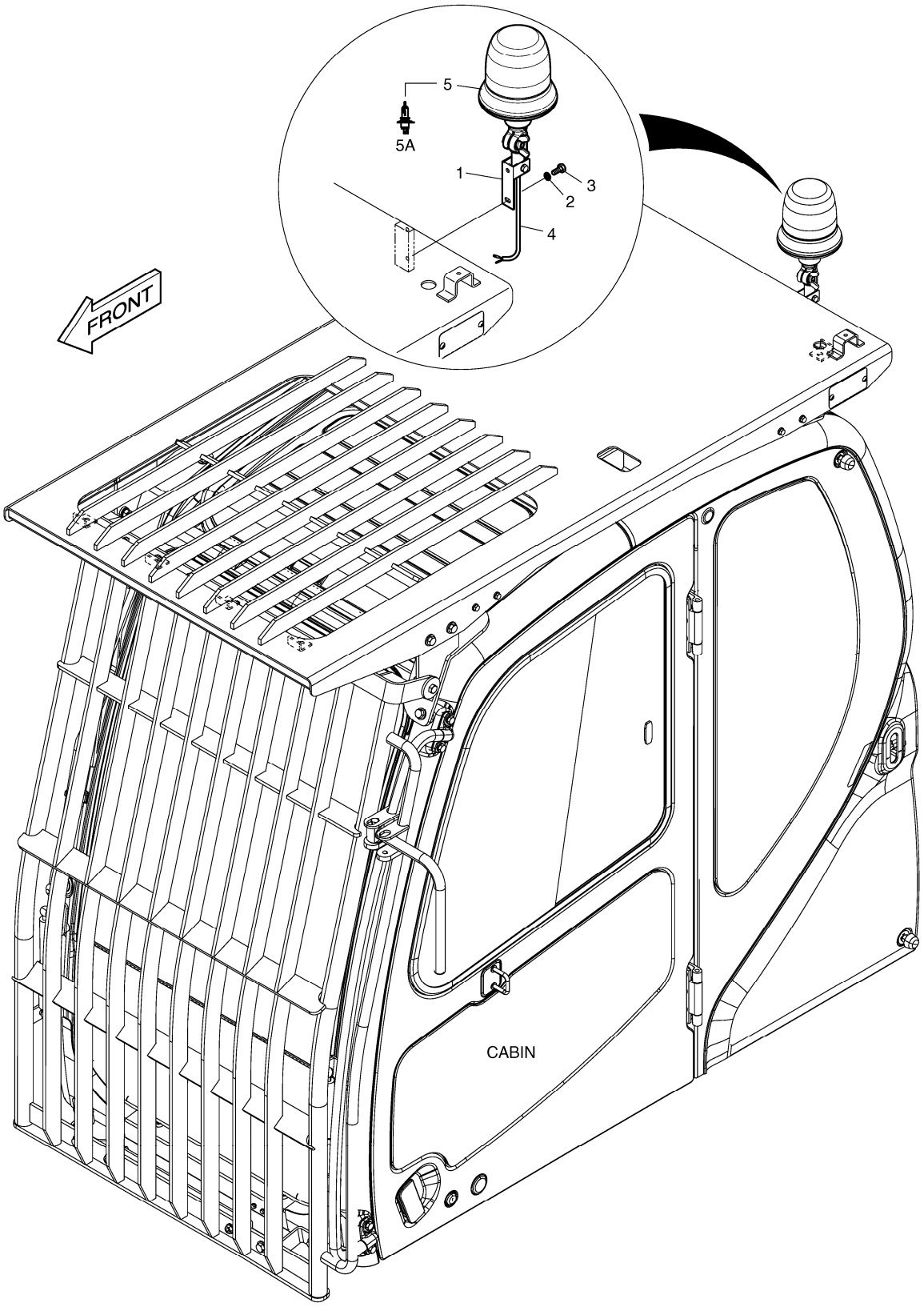

DATE	JUN. 01, 2010
3rd EDITION	

Fig. 7160 ROTATING BEACON-WITH FOGS FEU DE CIRCULATION

Serial No. ;

Key No.	Part No.	Description	Description	Q'ty	S.C	Serial No.	I	C	A	Replaceable part	
										Part No.	Q'ty
7160 --	K1006803A	ROTATING BEACON	FEU DE CIRCULATION	-	D	5433-5747					
	300705-00014	BEACON ASS'Y,ROTATING;6LAM	FEU DE CIRCULATION	-	D	5748-					
1	160-00061	BUSH;MOUNTING	DOUILLE	1		5433-5747	I			131002-00085	1
	131002-00085	BUSHING ASS'Y	ENSEMBLE DE DOUILLE	1		5748-					
2	S5102503	WASHER	RONDELLE	2							
3	S0508853	BOLT	BOULON	2							
4	530-00464	HARNESS;ROTATING BEACON	HARNAIS	1							
5	K1038193	BEACON;ROTATING	FEU DE CIRCULATION	1							
5A	K9007240	. BULB;HALOGEN 24V 70W	. AMPOULE	1							

DATE	JUN. 01, 2010
3rd EDITION	

Fig. 7170 CCD CAMERA
APPAREIL-PHOTO DE CCD

Serial No. ;

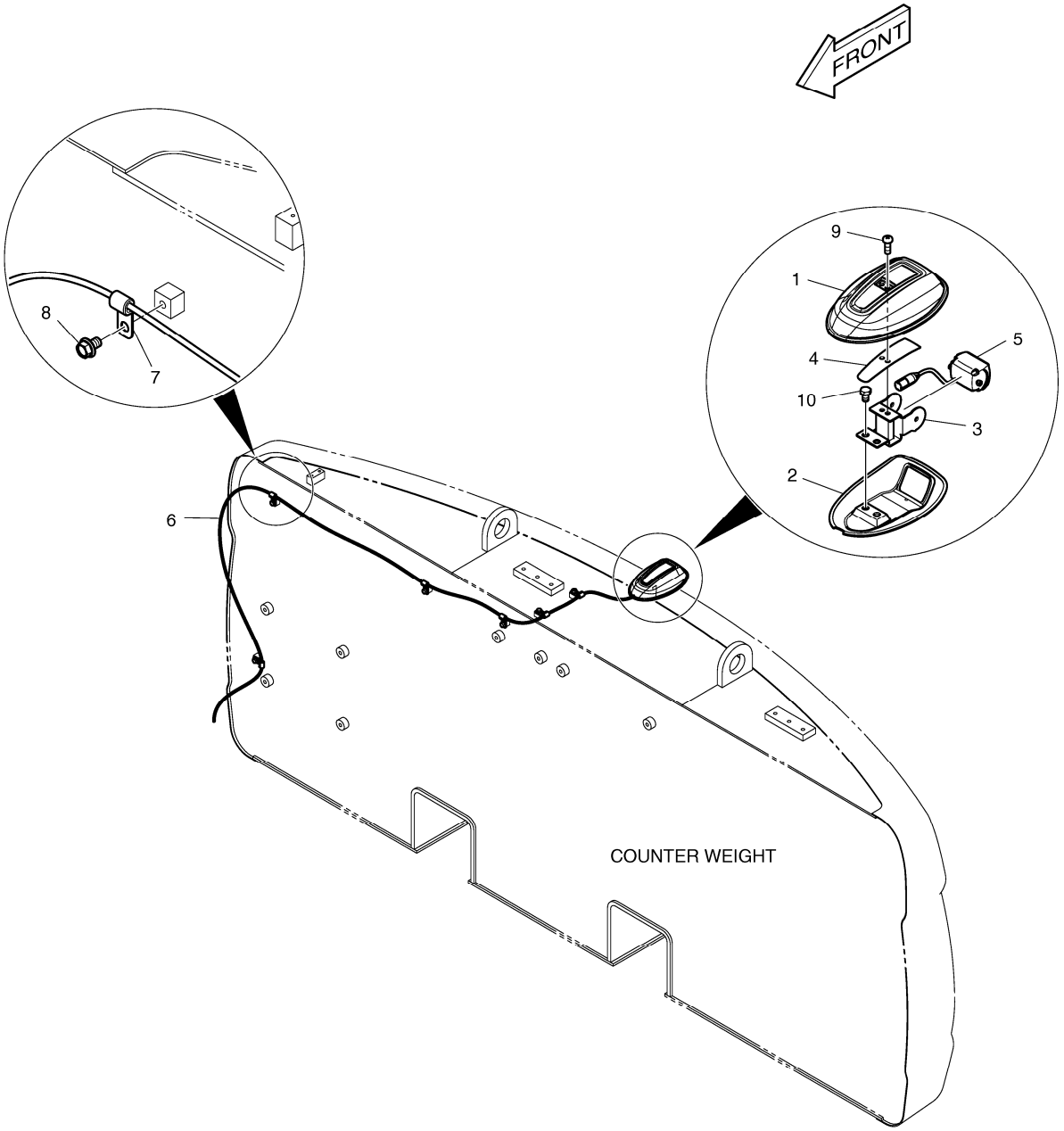

DATE	JUN. 01, 2010
3rd EDITION	

Fig. 7170 CCD CAMERA APPAREIL-PHOTO DE CCD

Serial No. ;

Key No.	Part No.	Description	Description	Q'ty	S.C	Serial No.	ICA	Replaceable part	
								Part No.	Q'ty
7170 --	K1045009B	ELECTRIC;CCD CAMERA	ELECTRIQUE	-	D				
1	K1044160A	COVER	COUVERTURE	1					
2	K1044180A	COVER	COUVERTURE	1					
3	K1044181A	BRACKET	SUPPORT	1					
4	K1044481A	TAPE	BANDE	1					
5	K1039941	CAMERA;CCTV	APPAREIL-PHOTO	1					
6	K1045037	HARNESS;CCD CAMERA	HARNAIS	1					
7	2124-1509D1	CLIP	AGRAFE	6					
8	K1001029	BOLT	BOULON	6					
9	2120-2166D8	SCREW M5X0.8X14	VIS	2					
10	2120-2166D12	BOLT;HEX	BOULON	2					

DATE	JUN. 01, 2010
3rd EDITION	

Fig. 7180 MAIN PIPING-ARTI.BOOM
CONDUITES DE BATI PRINCIPAL

Serial No. ;

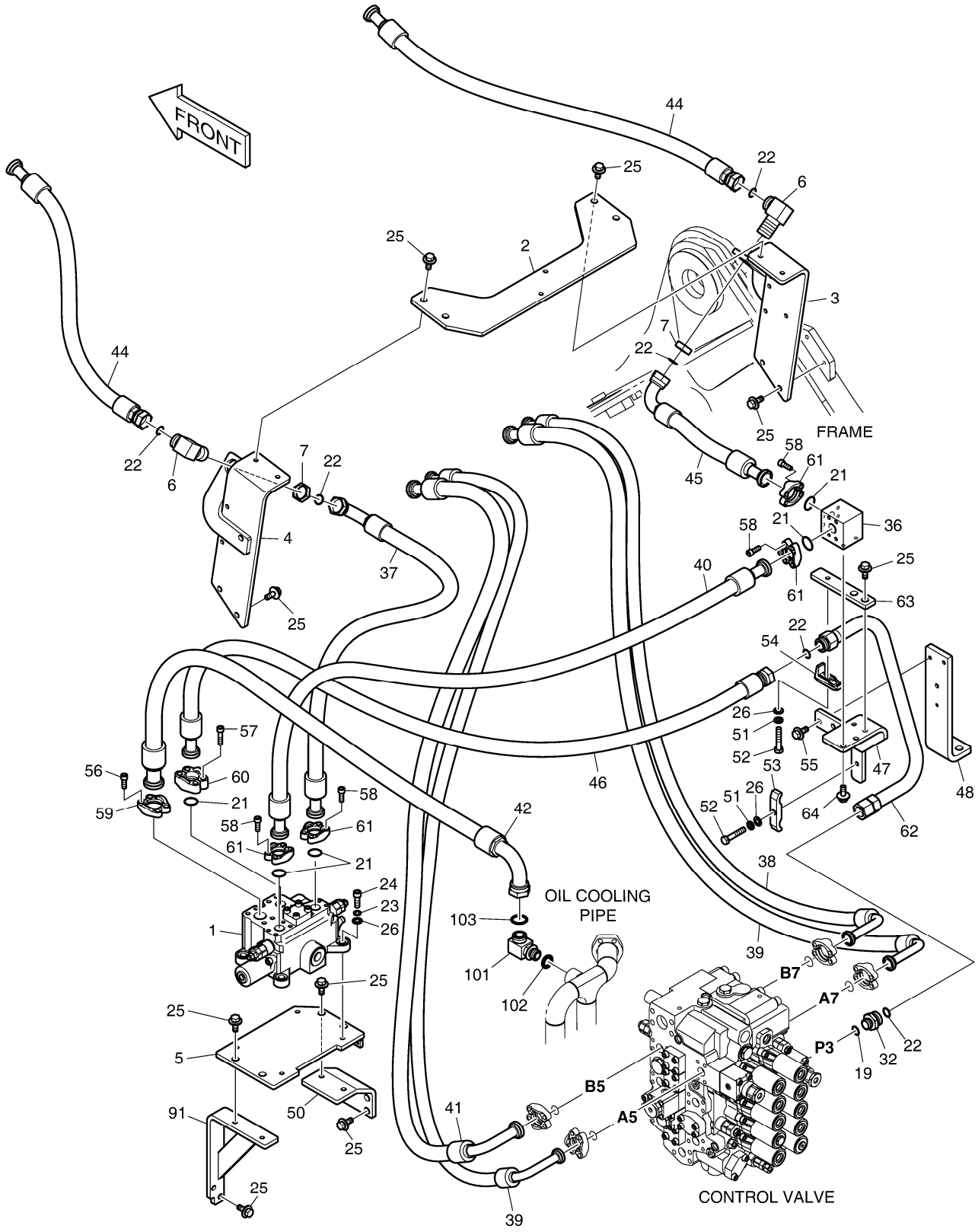

Fig. 7180 MAIN PIPING-ARTI.BOOM
CONDUITES DE BATI PRINCIPAL

Serial No. ;

Key No.	Part No.	Description	Description	Q'ty	S.C	Serial No.	ICA	Replaceable part	
								Part No.	Q'ty
7180 --	K1044632	ARTI BOOM PIPING	PERCHE ASS'Y D'ARTI	-	D				
1	K1033235A	VALVE;CONTROL	VALVE	1					
2	K1023207B	BRACKET	SUPPORT	1					
3	K1023208A	BRACKET	SUPPORT	1					
4	K1023209A	BRACKET	SUPPORT	1					
5	K1024011C	BRACKET	SUPPORT	1					
6	DS2290010	ELBOW	COUDE	2					
7	121-00010D9	NUT	ECROU	2					
19	S8000241	O-RING	JOINT CIRCULAIRE	1					
21	2180-1026D19	O-RING	JOINT CIRCULAIRE	5					
22	S8030161	O-RING	JOINT CIRCULAIRE	6					
23	S5110703	WASHER;SPRING	RONDELLE	4					
24	S2215366	BOLT	BOULON	4					
25	DS0025020	BOLT;SET	BOULON	20					
26	S5010713	WASHER;PLAIN	RONDELLE	6					
32	2181-4133D7	ADAPTER	ADAPTEUR	1					
36	423-00180	BLOCK	BLOC	1					
37	DS2025095	HOSE	TUYAU	1					
38	DS2040690	HOSE	TUYAU	1					
39	DS2040691	HOSE	TUYAU	2					
40	DS2038252	HOSE	TUYAU	1					
41	DS2040689	HOSE	TUYAU	1					
42	DS2025094	HOSE	TUYAU	1					
44	DS2016110	HOSE	TUYAU FLEXIBLE	2					
45	DS2025096	HOSE	TUYAU	1					
46	DS2016109	HOSE	TUYAU	1					
47	K1029830	BRACKET	SUPPORT	1					
48	K1029829	BRACKET	SUPPORT	1					
50	K1029831B	BRACKET	SUPPORT	1					
51	S5102703	WASHER;SPRING	RONDELLE	2					
52	S0561066	BOLT	BOULON	2					
53	2124-1025D5	CLAMP;PIPE	BRIDE	1					
54	2124-1026D3	CLAMP;PIPE	BRIDE	1					
55	DS0025034	BOLT	BOULON	2					
56	S2215266	BOLT;SOCKET	BOULON	4					
57	S2215466	BOLT;SOCKET	BOULON	4					
58	S2212266	BOLT;SOCKET	BOULON	16					
59	4215-1003D7	FLANGE;HALF	BRIDE	2					

DATE	JUN. 01, 2010
3rd EDITION	

Fig. 7180 MAIN PIPING-ARTI.BOOM
CONDUITES DE BATI PRINCIPAL

Serial No. ;

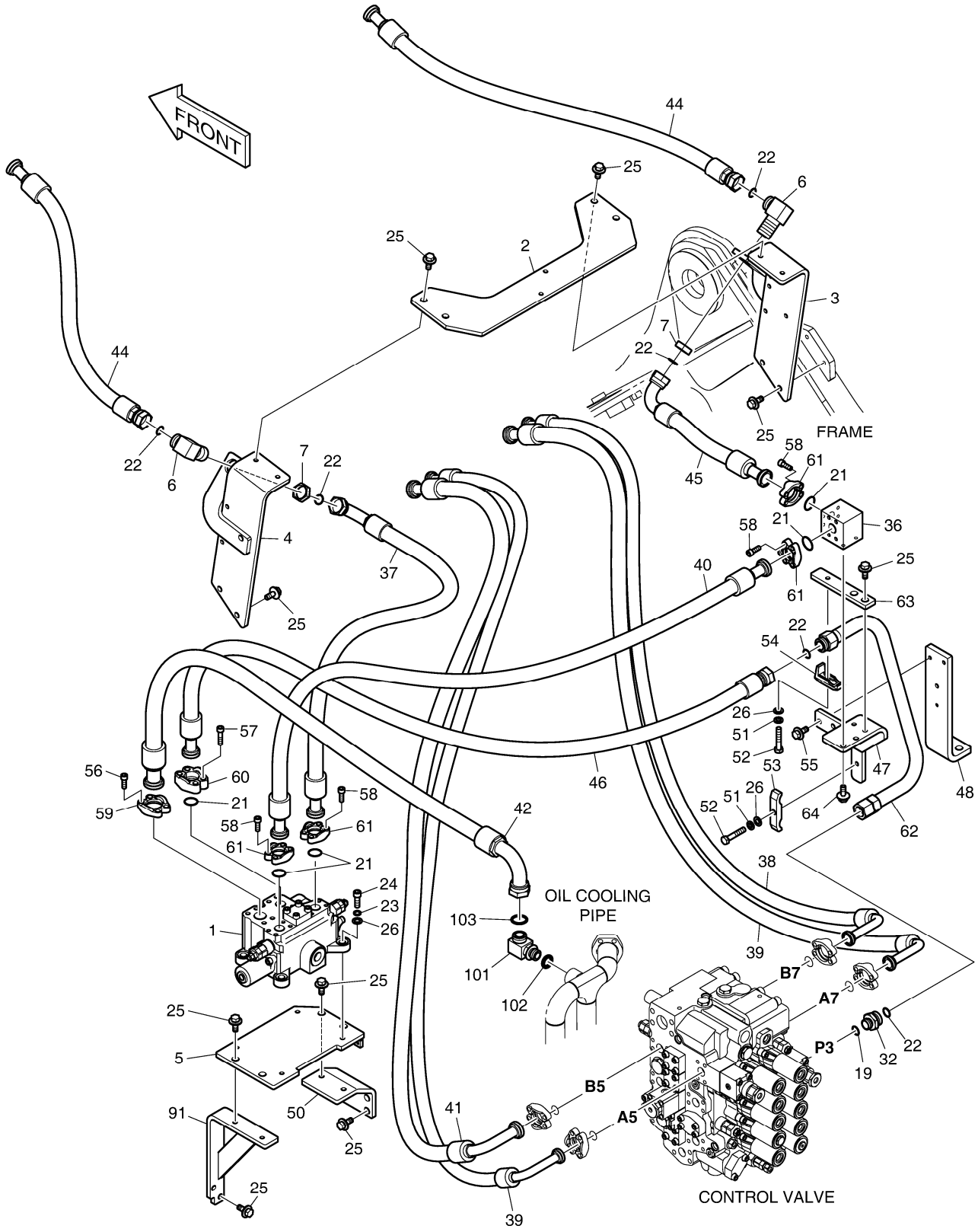

Fig. 7180 MAIN PIPING-ARTI.BOOM
CONDUITES DE BATI PRINCIPAL

Serial No. ;

Key No.	Part No.	Description	Description	Q'ty	S.C	Serial No.	ICA	Replaceable part	
								Part No.	Q'ty
7180 -60	2181-9081	FLANGE;SPLIT	BRIDE	2					
61	2181-9078	FLANGE	BRIDE	8					
62	K1029852	PIPE	TUYAU	1					
63	K1029832	BRACKET	SUPPORT	1					
64	DS0025016	BOLT;SET	BOULON	2					
91	K1029828A	BRACKET	SUPPORT	1					
101	DS2304096	ELBOW	COUDE	1					
102	S8000291	O-RING	JOINT CIRCULAIRE	1					
103	2180-1026D37	O-RING	JOINT TORIQUE	1					

DATE	JUN. 01, 2010
3rd EDITION	

Fig. 7190 PILOT PIPING(1) - ARTI.BOOM
CONDUITES DE PILOTE

Serial No. ;

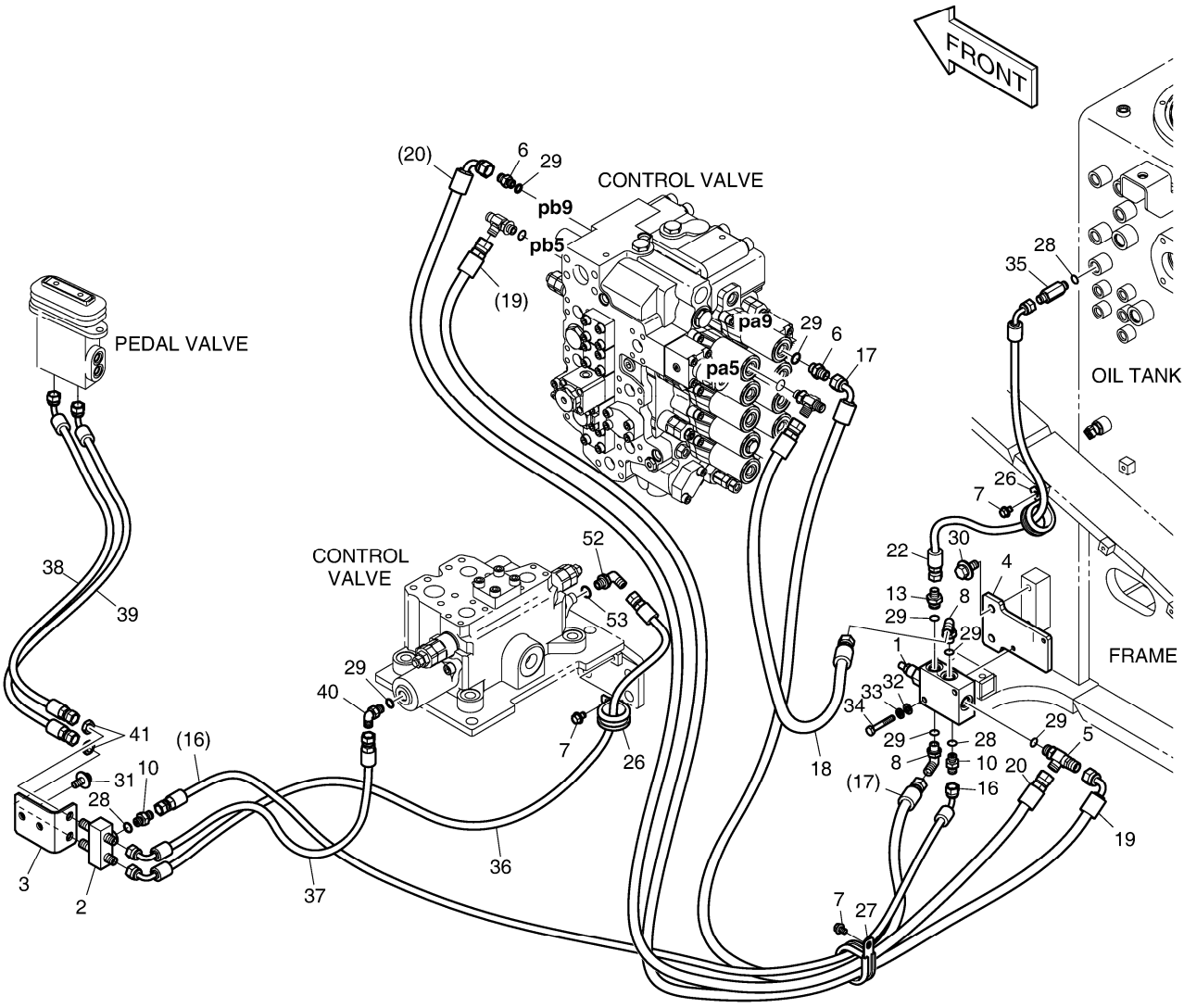

DATE	JUN. 01, 2010
3rd EDITION	

Fig. 7190 PILOT PIPING(1) - ARTI.BOOM
CONDUITES DE PILOTE

Serial No. ;

Key No.	Part No.	Description	Description	Q'ty	S.C	Serial No.	ICA	Replaceable part	
								Part No.	Q'ty
7190 --	K1027362C	PILOT PIPING;ARTI BOOM	CONDUITES DE PILOTE	-	D				
1	K1014266	VALVE;PILOT	VANNE	1					
2	420-00476	VALVE;SHUTTLE	VALVE	1					
3	K1023823	BRACKET	SUPPORT	1					
4	K1023824A	BRACKET	SUPPORT	1					
5	181-00811	TEE;SHUTTLE	TE	1					
6	2181-1126D7	ADAPTER	ADAPTEUR	3					
7	K1001029	BOLT	BOULON	3					
8	2181-1702D5	ELBOW	COUDE	2					
10	2181-1126D14	ADAPTER PF1/4	ADAPTEUR	2					
13	2181-1126D36	ADAPTER	ADAPTEUR	1					
16	DS2093338	HOSE	TUYAU	1					
17	DS2093134	HOSE	TUYAU	1					
18	DS2094074	HOSE	TUYAU	1					
19	DS2093372	HOSE	TUYAU	1					
20	DS2093010	HOSE	TUYAU	1					
22	DS2093374	HOSE	TUYAU	1					
26	124-00208D6	CLIP	AGRAFE	2					
27	124-00208D9	CLIP	AGRAFE	1					
28	S8000111	O-RING	JOINT CIRCULAIRE	3					
29	S8000141	O-RING	JOINT CIRCULAIRE	7					
30	DS0025018	BOLT;SET	BOULON	2					
31	DS0025017	BOLT;SET	BOULON	2					
32	S5010513	WASHER	RONDELLE	2					
33	S5102503	WASHER	RONDELLE	2					
34	S0556366	BOLT	BOULON	2					
35	2181-1126D34	ADAPTER	ADAPTEUR	1					
36	DS2093336	HOSE	TUYAU	1					
37	DS2093186	HOSE	TUYAU FLEXIBLE	1					
38	DS2093021	HOSE	TUYAU	1					
39	DS2093350	HOSE	TUYAU	1					
40	2181-1702D10	ELBOW	COUDE	1					
41	121-00010D7	NUT	ECROU	2					
52	2181-1702D10	ELBOW	COUDE	1					
53	S8000141	O-RING	JOINT CIRCULAIRE	1					

DATE	JUN. 01, 2010
3rd EDITION	

Fig. 7200 PILOT PIPING(2) - ARTI.BOOM
CONDUITES DE PILOTE

Serial No. ;

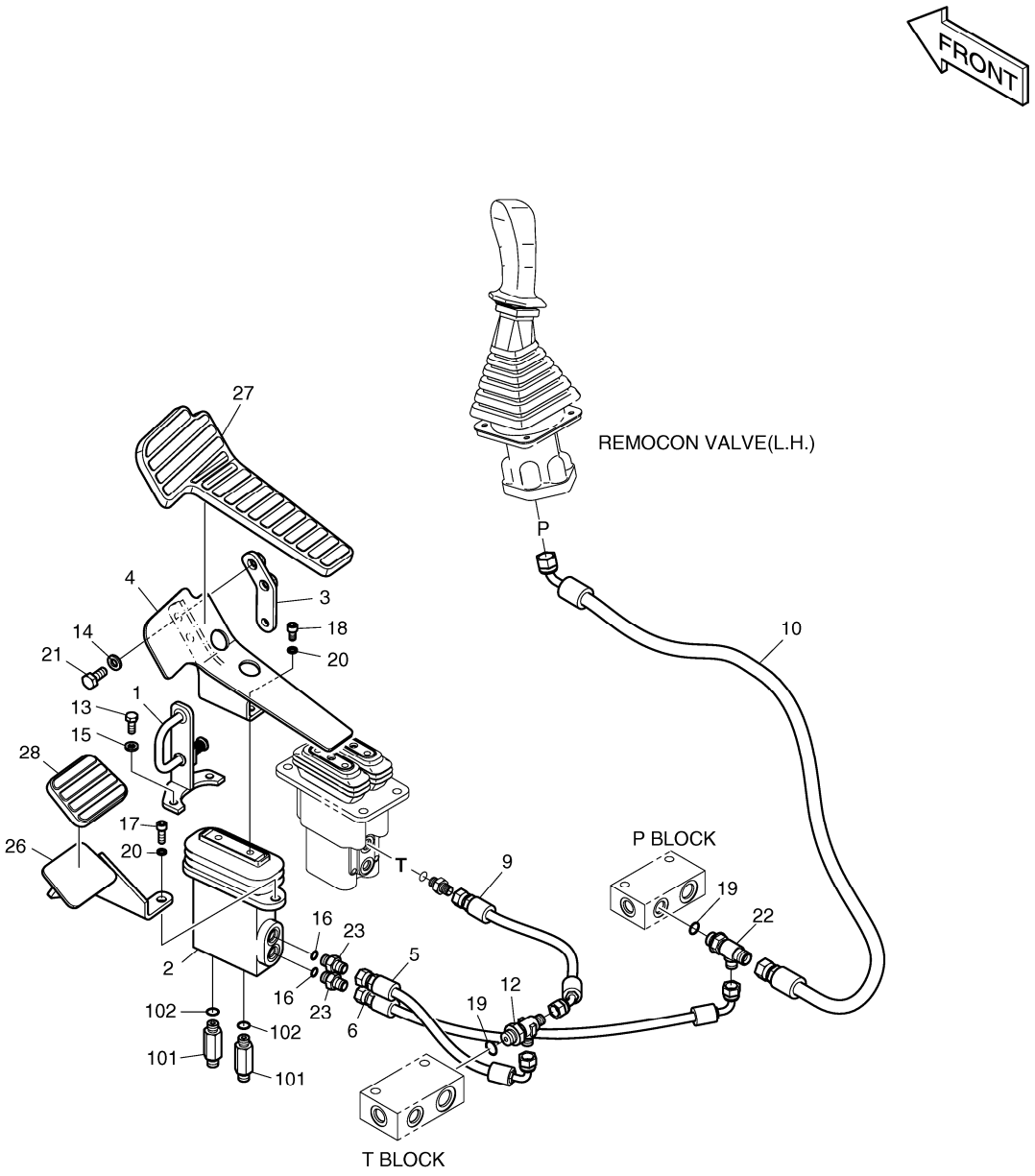

DATE	JUN. 01, 2010
3rd EDITION	

Fig. 7200 PILOT PIPING(2) - ARTI.BOOM
CONDUITES DE PILOTE

Serial No. ;

Key No.	Part No.	Description	Description	Q'ty	S.C	Serial No.	ICA	Replaceable part	
								Part No.	Q'ty
7200 --	K1027368B	PILOT PIPING;SINGLE PEDAL	CONDUITES DE PILOTE	-	D				
1	K1001873A	PLATE	PLAQUE	1					
2	K1017382A	PEDAL VALVE	VALVE DE PEDALE	1					
3	K1001871B	PLATE	PLAQUE	1					
4	195-01684A	BRACKET;PEDAL(L.H)	SUPPORT	1					
5	DS2093130	HOSE	TUYAU	1					
6	DS2093202	HOSE PF1/4-480L	TUYAU	1					
9	DS2092046	HOSE	TUYAU	1					
10	DS2095003	HOSE	TUYAU	1					
12	2181-1951D7	TEE	TE	1					
13	S0508866	BOLT	BOULON	2					
14	S5102603	WASHER	RONDELLE	2					
15	S5102503	WASHER	RONDELLE	2					
16	S8000111	O-RING	JOINT CIRCULAIRE	2					
17	S2212266	BOLT;SOCKET	BOULON	2					
18	S2211866	BOLT;SOCKET	BOULON	2					
19	S8000141	O-RING	JOINT CIRCULAIRE	2					
20	S5110603	WASHER;SPRING	RONDELLE	4					
21	S0512066	BOLT	BOULON	2					
22	2181-1951D6	TEE	TE	1					
23	2181-1126D14	ADAPTER PF1/4	ADAPTEUR	2					
26	K1003948A	FOOT REST	REPOS DE PIED	1					
27	161-00382	RUBBER;PEDAL(L.H)	LE CAOUTCHOUC	1					
28	K1006656	RUBBER;PEDAL	LE CAOUTCHOUC	1					
101	2181-1126D34	ADAPTER	ADAPTEUR	2					
102	S8000111	O-RING	JOINT CIRCULAIRE	2					

DATE	JUN. 01, 2010
3rd EDITION	

Fig. 7205 FLOOR MAT - THREE PEDAL PLANCHER

Serial No. ; 5433 ~

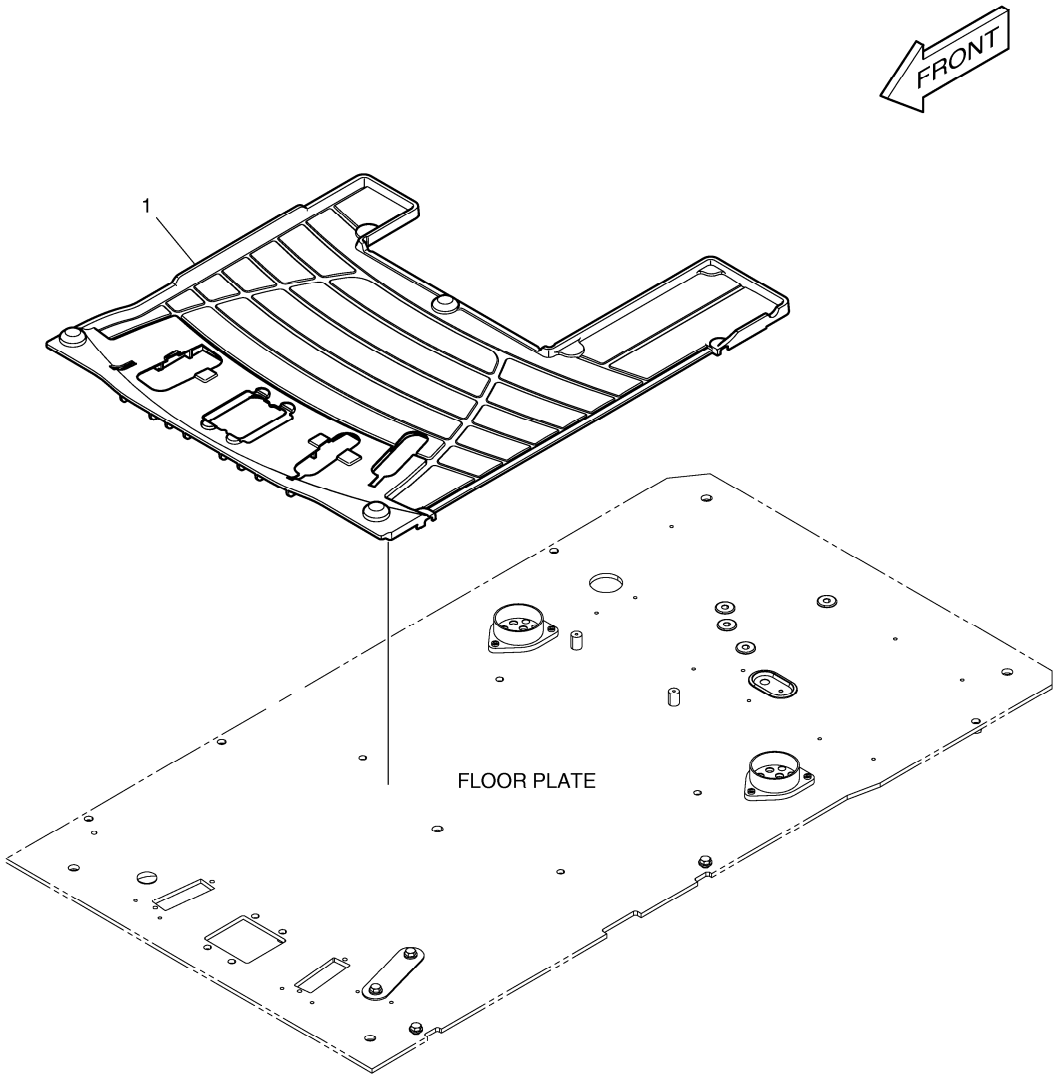

DATE	JUN. 01, 2010
3rd EDITION	

Fig. 7205 FLOOR MAT - THREE PEDAL PLANCHER

Serial No. ; 5433 ~

Key No.	Part No.	Description	Description	Q'ty	S.C	Serial No.	ICA	Replaceable part	
								Part No.	Q'ty
7205 -1	K1007095B	MAT;FLOOR	PLAQUE	1		5433-			

DATE	JUN. 01, 2010
3rd EDITION	

Fig. 7210 ARTI.BOOM
PERCHE ASS'Y D'ARTI

Serial No. ;

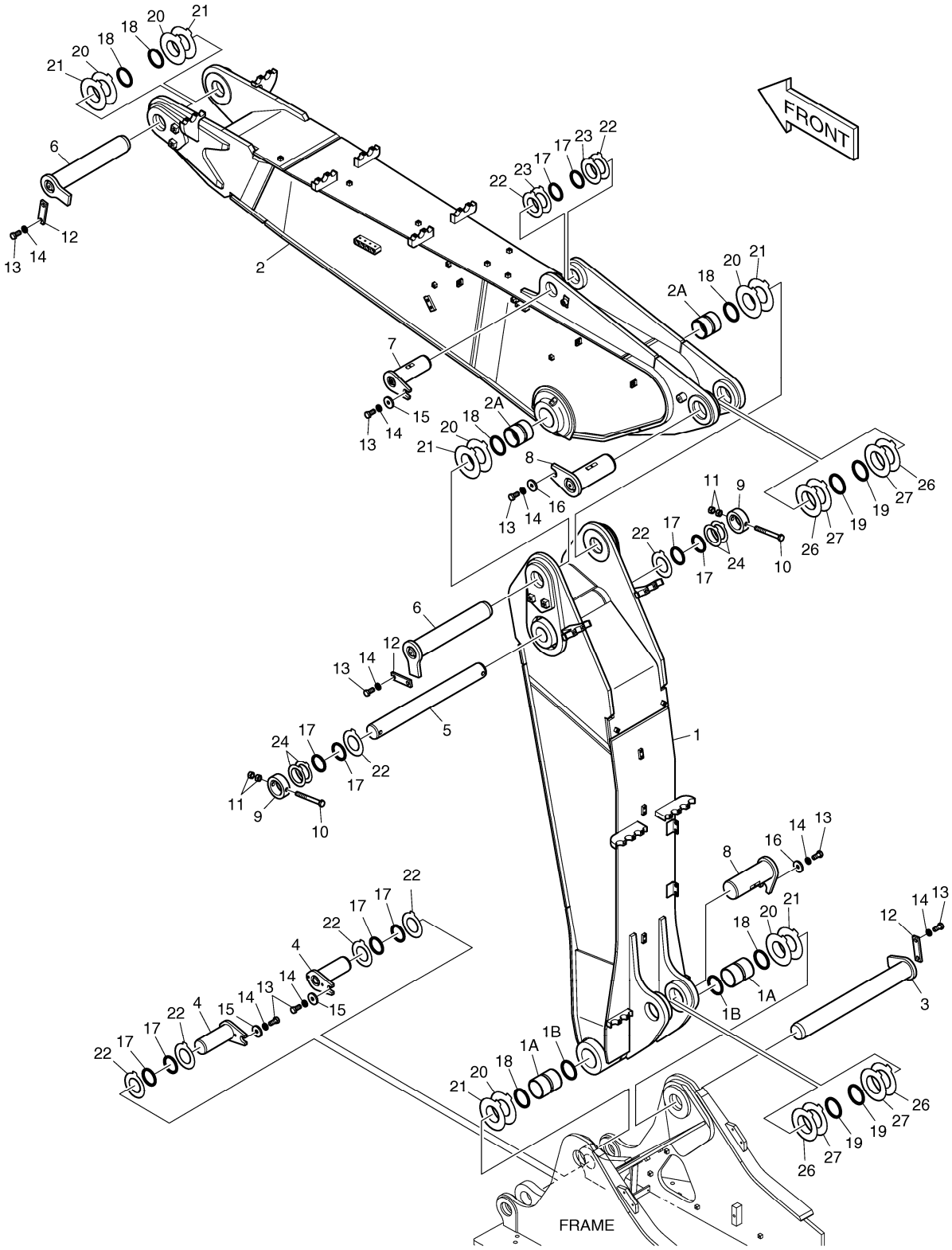

DATE	JUN. 01, 2010
3rd EDITION	

Fig. 7210 ARTI.BOOM PERCHE ASS'Y D'ARTI

Serial No. ;

Key No.	Part No.	Description	Description	Q'ty	S.C	Serial No.	ICA	Replaceable part	
								Part No.	Q'ty
7210 --	K1018361K	ARTI.BOOM ASS'Y	PERCHE ASS'Y D'ARTI	-	D				
1	K1018366A	BOOM;LOWER	LA PERCHE S'ABAISSENT	1					
1A	K1000732	. BUSHING	. BUSHING	2					
1B	2180-1106BD6	. SEAL;DUST	. CACHET	2					
2	K1018392B	BOOM;UPPER	PERCHE	1					
2A	110-00252	. BUSHING	. BUSHING	2					
3	2123-2180G	PIN	GOUPILLE	1					
4	123-00409A	PIN	GOUPILLE	2					
5	K1007253B	PIN	GOUPILLE	1					
6	2123-2185G	PIN	GOUPILLE	2					
7	K1023963	PIN	GOUPILLE	1					
8	K1000543	PIN	GOUPILLE	2					
9	2116-1531A	STOPPER	TAQUET	2					
10	S0567066	BOLT	BOULON	2					
11	S4012933	NUT	ECROU	4					
12	621-03710A	PLATE;STOPPER	PLAQUE	3					
13	S0521366	BOLT	BOULON	11					
14	S5102903	WASHER	RONDELLE	11					
15	2116-1060D6	STOPPER	TAQUET	3					
16	2116-1060D5	STOPPER	TAQUET	2					
17	2180-1106BD24	SEAL;DUST	CACHET	10					
18	2180-1106BD6	SEAL;DUST	CACHET	6					
19	2180-1106BD14	SEAL;DUST	CACHET	4					
20	DS7752017	SHIM	CALE	6					
21	DS7752018	SHIM	CALE	6					
22	DS7752012	SHIM	CALE	8					
23	DS7752013	SHIM	CALE	2					
24	DS7752025	SHIM	CALE	4					
26	DS7752045	SHIM	CALE	4					
27	DS7752046	SHIM	CALE	4					

DATE	JUN. 01, 2010
3rd EDITION	

Fig. 7220 ARTI.BOOM PIPING
PERCHE ASS'Y D'ARTI

Serial No. ;

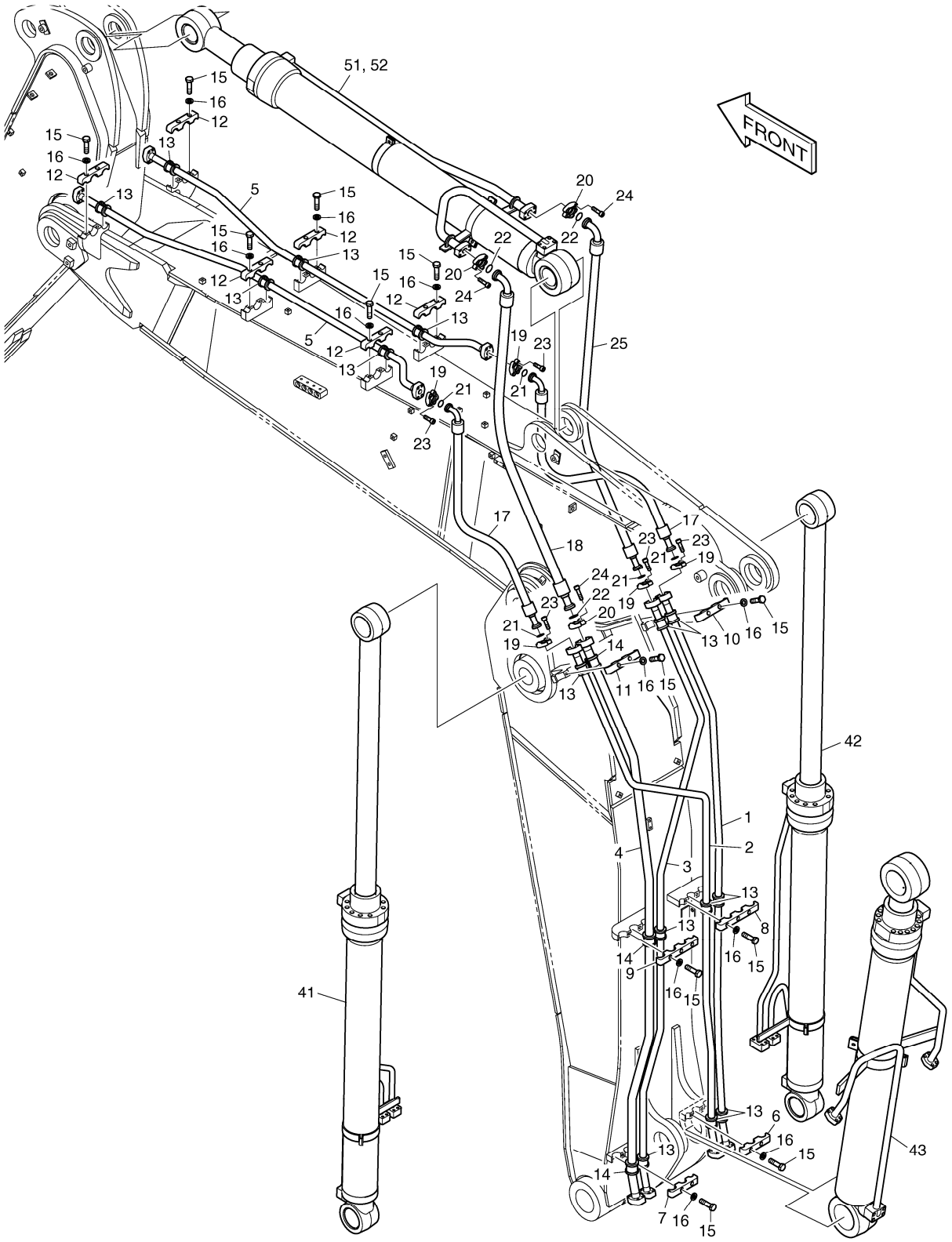

DATE	JUN. 01, 2010
3rd EDITION	

Fig. 7220 ARTI.BOOM PIPING PERCHE ASS'Y D'ARTI

Serial No. ;

Key No.	Part No.	Description	Description	Q'ty	S.C	Serial No.	ICA	Replaceable part	
								Part No.	Q'ty
7220 --	K1018403A	ARTI BOOM PIPING	PERCHE ASS'Y D'ARTI	-	D				
1	K1018404	PIPE	TUYAU	1					
2	K1018405	PIPE	TUYAU	1					
3	K1018406	PIPE	TUYAU	1					
4	K1018407	PIPE	TUYAU	1					
5	K1018408	PIPE	TUYAU	2					
6	K1018409	CLAMP;PIPE	BRIDE	1					
7	K1018410	CLAMP;PIPE	BRIDE	1					
8	K1018411	CLAMP;PIPE	BRIDE	1					
9	K1018412	CLAMP;PIPE	BRIDE	1					
10	K1018413	CLAMP;PIPE	BRIDE	1					
11	K1018414	CLAMP;PIPE	BRIDE	1					
12	K1018415	CLAMP;PIPE	BRIDE	6					
13	K1000294A	RUBBER	LE CAOUTCHOUC	15					
14	K1010532	RUBBER;PIPE	LE CAOUTCHOUC	3					
15	S0563066	BOLT	BOULON	26					
16	S5102803	WASHER;SPRING	RONDELLE	26					
17	2184-1082D8	HOSE	TUYAU	2					
18	DS2040550	HOSE	TUYAU	1					
19	2181-9079	FLANGE	BRIDE	10					
20	2181-9078	FLANGE	BRIDE	6					
21	2180-1026D2	O-RING	JOINT CIRCULAIRE	5					
22	2180-1026D19	O-RING	JOINT CIRCULAIRE	3					
23	S2212366	BOLT;SOCKET M10X1.5X35	BOULON	20					
24	S2212466	BOLT;SOCKET M10X1.5X40	BOULON	12					
25	DS2040551	HOSE	TUYAU	1					
41	K1000870A	CYLINDER;BOOM(L.H)	VERIN DE FLECHE	1					
42	K1000871A	CYLINDER;BOOM(R.H)	VERIN DE FLECHE	1					
43	K1023535A	CYLINDER;ARTI BOOM	CYLINDRES	1					
51	K1023861	ARM CYLINDER	VERIN DE BALANCIER	1					
52	K1023538	ARM CYLINDER	VERIN DE BALANCIER	1					

DATE	JUN. 01, 2010
3rd EDITION	

Fig. 7230 LUBRICATION PIPING - LOWER BOOM
LUBRIFICATION

Serial No. ;

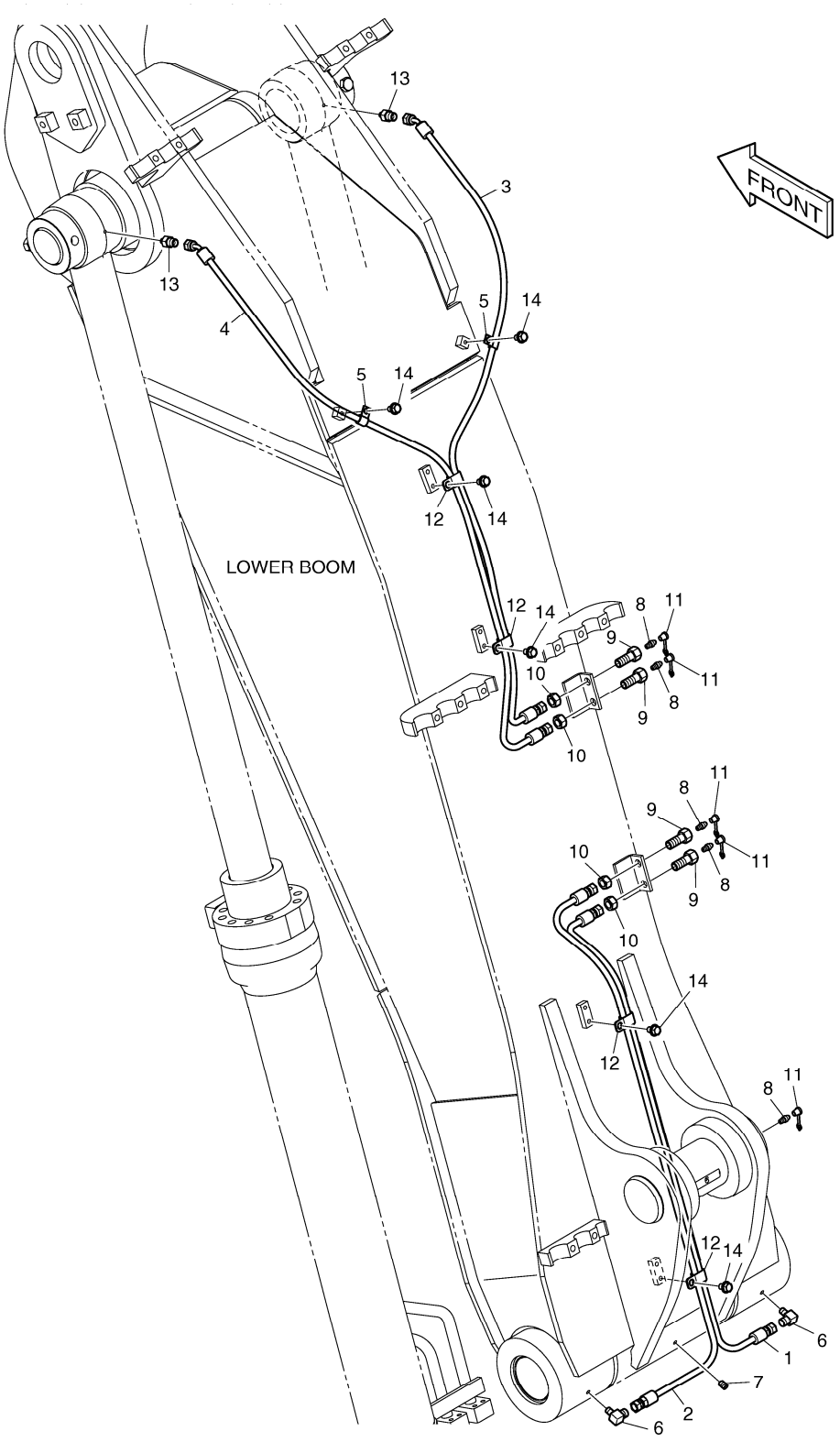

DATE	JUN. 01, 2010
3rd EDITION	

Fig. 7230 LUBRICATION PIPING - LOWER BOOM
LUBRIFICATION

Serial No. ;

Key No.	Part No.	Description	Description	Q'ty	S.C	Serial No.	ICA	Replaceable part	
								Part No.	Q'ty
7230 --	K1018438	LUBRICATION PIPING	LUBRIFICATION	-	D				
1	DS2053900	HOSE	TUYAU FLEXIBLE	1					
2	DS2053838	HOSE	TUYAU FLEXIBLE	1					
3	DS2092107	HOSE	TUYAU	1					
4	DS2092108	HOSE	TUYAU	1					
5	2124-1353D2	CLIP	AGRAFE	2					
6	2181-1186D12	ELBOW	COUDE	2					
7	S3524403	PLUG	BOUCHON	1					
8	S6710041	NIPPLE;GREASE	MAMELON	5					
9	181-00103	REDUCER	REDUCTEUR	4					
10	121-00006	NUT	ECROU	4					
11	160-00020	CAP;GREASE NIPPLE	CHAPEAU	5					
12	124-00199D5	CLIP	AGRAFE	4					
13	2181-4112	ADAPTER	ADAPTEUR	2					
14	K1001029	BOLT	BOULON	6					

DATE	JUN. 01, 2010
3rd EDITION	

Fig. 7240 LUBRICATION PIPING - UPPER BOOM LUBRIFICATION

Serial No. ;

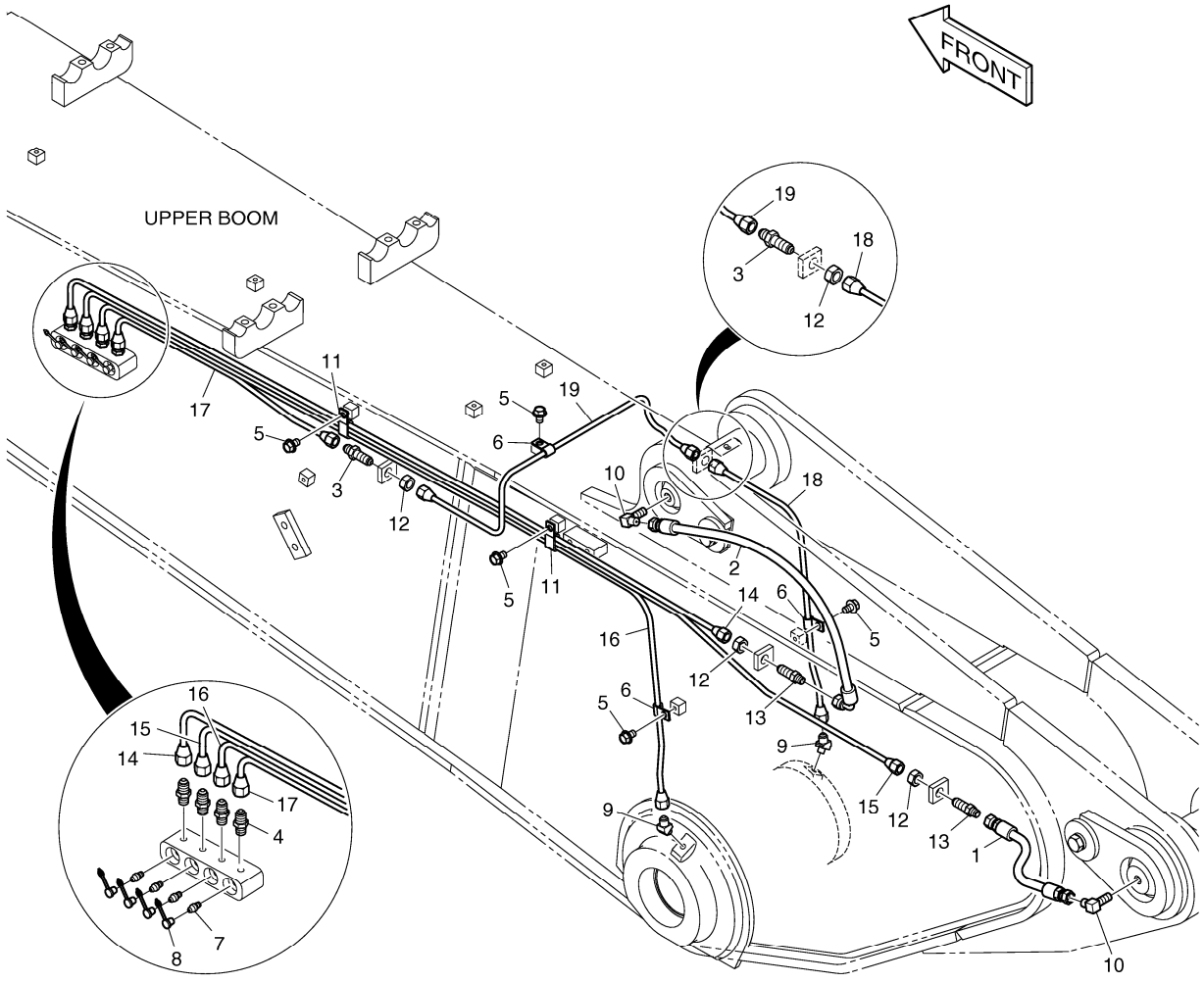

DATE	JUN. 01, 2010
3rd EDITION	

Fig. 7240 LUBRICATION PIPING - UPPER BOOM
LUBRIFICATION

Serial No. ;

Key No.	Part No.	Description	Description	Q'ty	S.C	Serial No.	ICA	Replaceable part	
								Part No.	Q'ty
7240 --	K1018416	LUBRICATION PIPING	TUYAUTERIE DE LUBRIFIC	-	D				
1	DS2053899	HOSE	TUYAU	1					
2	2184-1036D64	HOSE	TUYAU	1					
3	DS2225009	ADAPTER	ADAPTEUR	2					
4	2181-1184	ADAPTER	ADAPTEUR	4					
5	K1001029	BOLT	BOULON	5					
6	DS2802023	CLIP	AGRAFE	3					
7	S6710041	NIPPLE;GREASE	MAMELON	4					
8	160-00020	CAP;GREASE NIPPLE	CHAPEAU	4					
9	K1010730	ELBOW	COUDE	2					
10	2181-1111D11	ELBOW	COUDE	2					
11	DS2805008	CLIP	AGRAFE	2					
12	S4032833	NUT	ECROU	4					
13	2181-1923D12	ADAPTER	ADAPTEUR	2					
14	K1018417	PIPE	TUYAU	1					
15	K1018418	PIPE	TUYAU	1					
16	K1018419	PIPE	TUYAU	1					
17	K1018420	PIPE	TUYAU	1					
18	K1018421	PIPE	TUYAU	1					
19	K1018422	PIPE	TUYAU	1					

DATE	JUN. 01, 2010
3rd EDITION	

Fig. 7250 ONE WAY PIPING - ARTI.BOOM
TUYAUTERIE A SENS UNIQUE

Serial No. ;

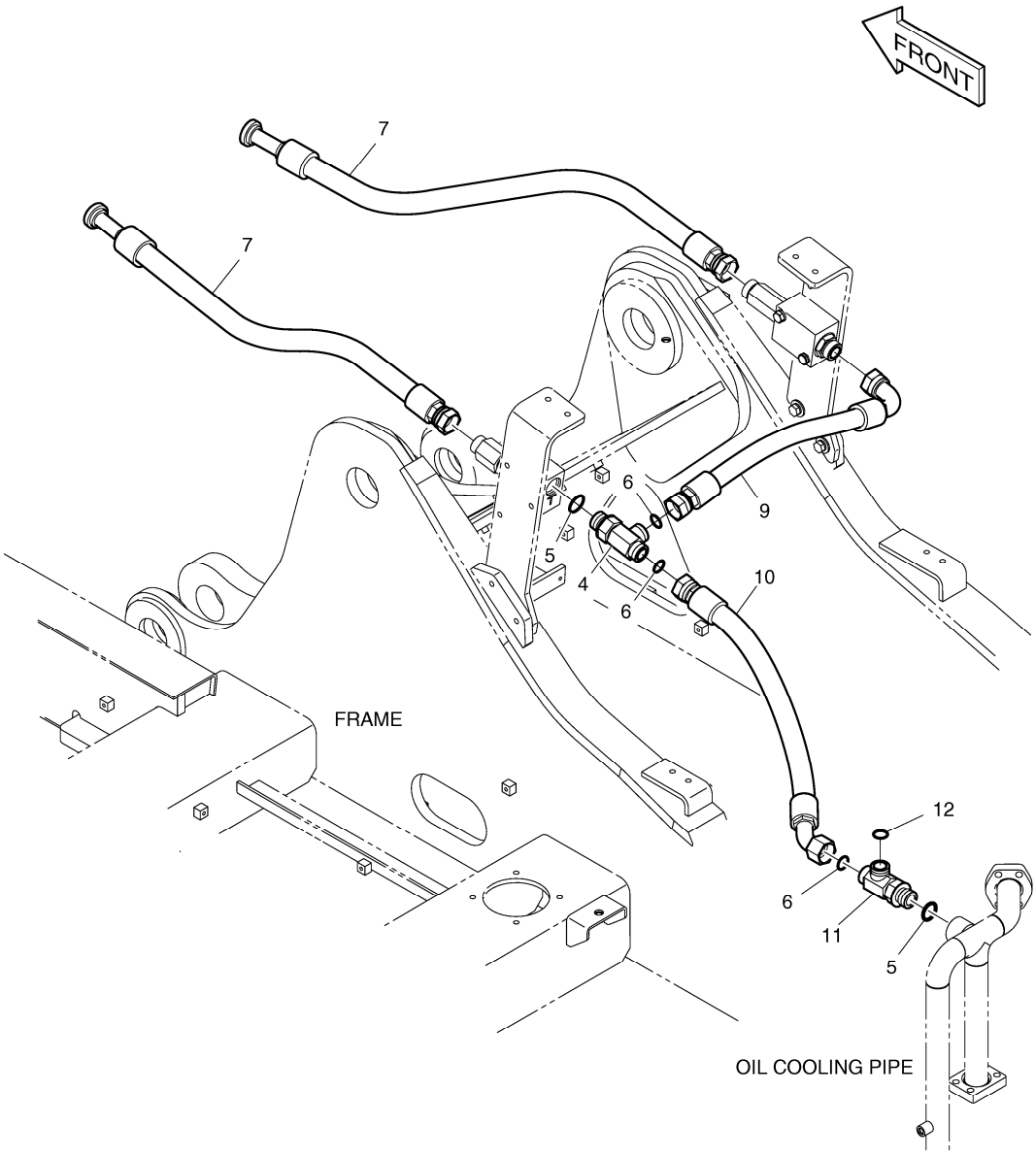

DATE	JUN. 01, 2010
3rd EDITION	

Fig. 7250 ONE WAY PIPING - ARTI.BOOM
TUYAUTERIE A SENS UNIQUE

Serial No. ;

Key No.	Part No.	Description	Description	Q'ty	S.C	Serial No.	ICA	Replaceable part	
								Part No.	Q'ty
7250 --	K1027350A	BREAKER PIPING;ARTI BOOM	TUYAUTERIE A SENS UNIQ	-	D				
4	2181-2293D4	TEE	TE	1					
5	S8000291	O-RING	JOINT CIRCULAIRE	2					
6	S8030161	O-RING	JOINT CIRCULAIRE	3					
7	DS2016096	HOSE	TUYAU	2					
9	DS2013200	HOSE	TUYAU FLEXIBLE	1					
10	DS2012442	HOSE	TUYAU FLEXIBLE	1					
11	DS2412024	TEE	TE	1					
12	2180-1026D37	O-RING	JOINT TORIQUE	1					

DATE	JUN. 01, 2010
3rd EDITION	

Fig. 7260 TWO WAY PIPING - ARTI.BOOM
TUYAUTERIE DE DEUX MANIERES

Serial No. ;

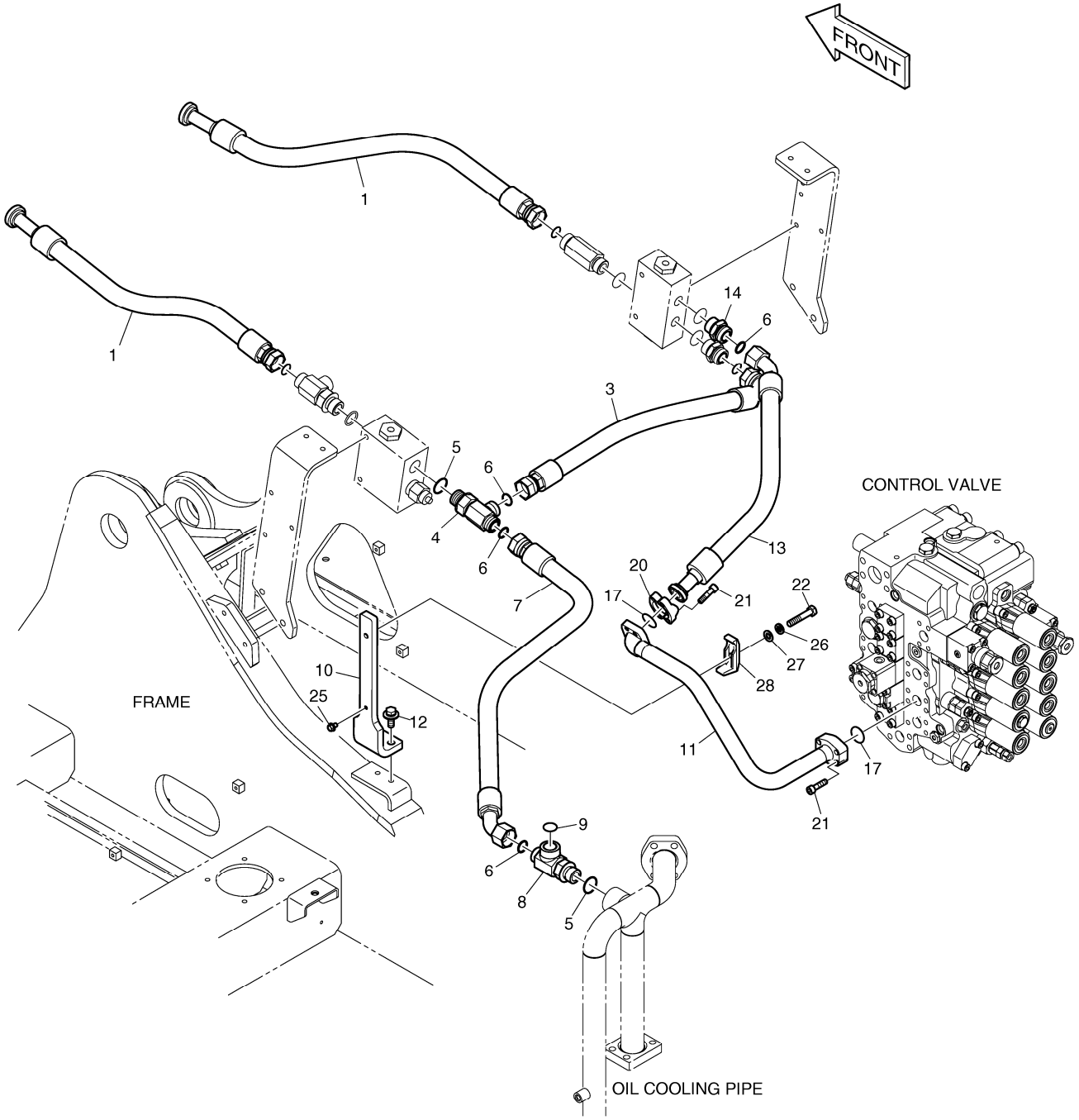

DATE	JUN. 01, 2010
3rd EDITION	

Fig. 7260 TWO WAY PIPING - ARTI.BOOM
TUYAUTERIE DE DEUX MANIERES

Serial No. ;

Key No.	Part No.	Description	Description	Q'ty	S.C	Serial No.	ICA	Replaceable part	
								Part No.	Q'ty
7260 --	K1044634	TWO WAY PIPING;ARTI BOOM	TUYAUTERIE DE DEUX MA	-	D				
1	DS2016096	HOSE	TUYAU	2					
3	DS2013834	HOSE	TUYAU	1					
4	2181-2293D4	TEE	TE	1					
5	S8000291	O-RING	JOINT CIRCULAIRE	2					
6	S8030161	O-RING	JOINT CIRCULAIRE	4					
7	DS2012217	HOSE	TUYAU	1					
8	DS2412024	TEE	TE	1					
9	2180-1026D37	O-RING	JOINT TORIQUE	1					
10	195-03438A	BRACKET	SUPPORT	1					
11	140-02011A	PIPE	TUYAU	1					
12	DS0025020	BOLT;SET	BOULON	2					
13	DS2082010	HOSE	TUYAU	1					
14	2181-4133D6	ADAPTER	ADAPTEUR	1					
17	2180-1026D19	O-RING	JOINT CIRCULAIRE	2					
20	2181-9078	FLANGE	BRIDE	2					
21	S2212466	BOLT;SOCKET M10X1.5X40	BOULON	8					
22	S0561066	BOLT	BOULON	1					
25	K1001029	BOLT	BOULON	1					
26	S5102703	WASHER;SPRING	RONDELLE	1					
27	S5010713	WASHER;PLAIN	RONDELLE	1					
28	2124-1026D3	CLAMP;PIPE	BRIDE	1					

DATE	JUN. 01, 2010
3rd EDITION	

Fig. 7270 ARTI.BOOM PIPING - ONE & TWO WAY
PERCHE ASS'Y D'ARTI

Serial No. ;

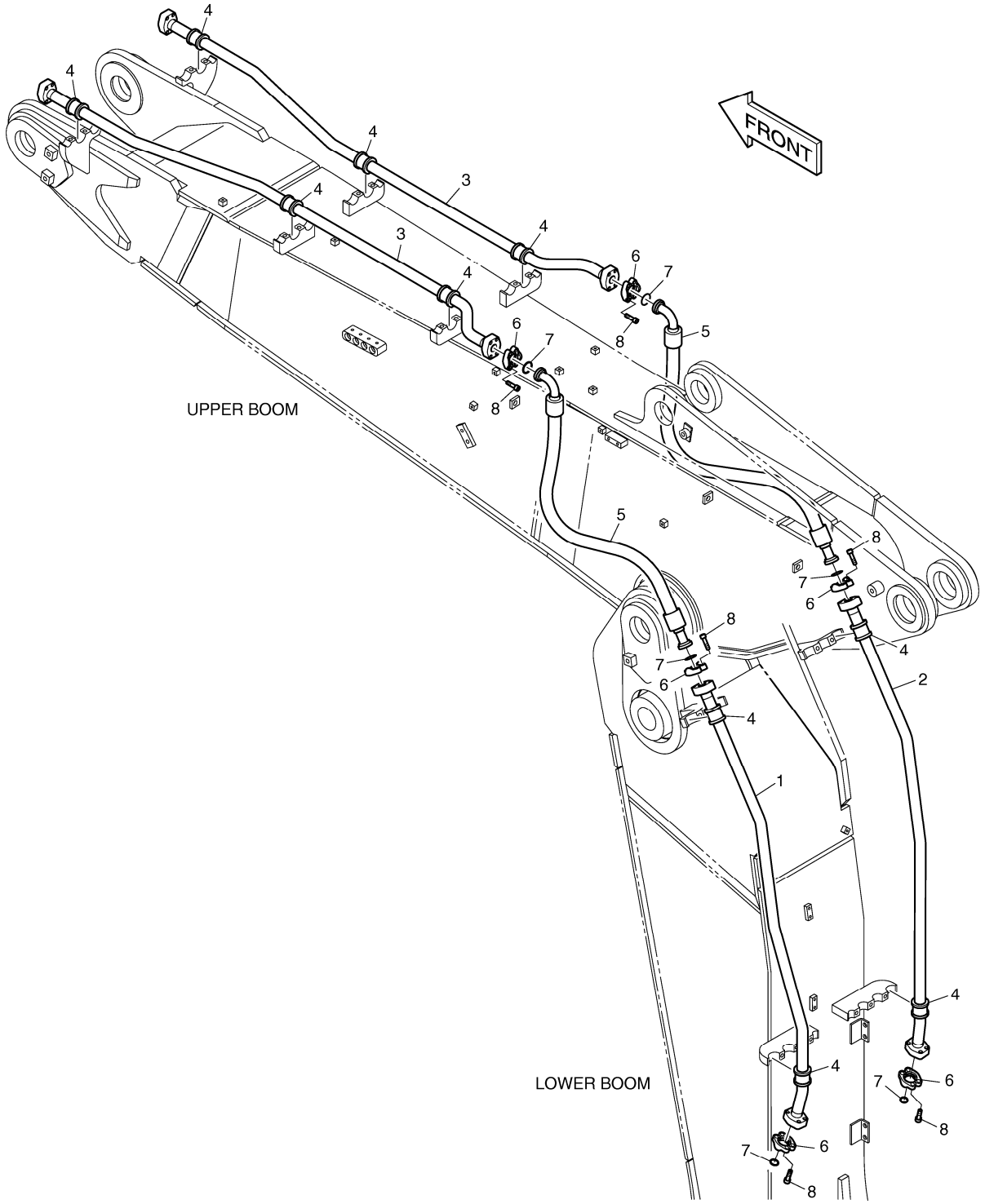

DATE	JUN. 01, 2010
3rd EDITION	

Fig. 7270 ARTI.BOOM PIPING - ONE & TWO WAY
PERCHE ASS'Y D'ARTI

Serial No. ;

Key No.	Part No.	Description	Description	Q'ty	S.C	Serial No.	ICA	Replaceable part	
								Part No.	Q'ty
7270 --	K1018424A	ONE & TWO WAY PIPING;ARTI. B	PERCHE ASS'Y D'ARTI	-	D				
1	K1018425	PIPE	TUYAU	1					
2	K1018426	PIPE	TUYAU	1					
3	K1018427	PIPE	TUYAU	2					
4	K1010532	RUBBER;PIPE	LE CAOUTCHOUC	10					
5	DS2040552	HOSE	TUYAU	2					
6	2181-9078	FLANGE	BRIDE	12					
7	2180-1026D19	O-RING	JOINT CIRCULAIRE	6					
8	S2212466	BOLT;SOCKET M10X1.5X40	BOULON	24					

DATE	JUN. 01, 2010
3rd EDITION	

Fig. 7280 ROTATING PIPING - ARTI.BOOM
TUYAUTERIE TOURNANTE - ARTI.BOOM

Serial No. ;

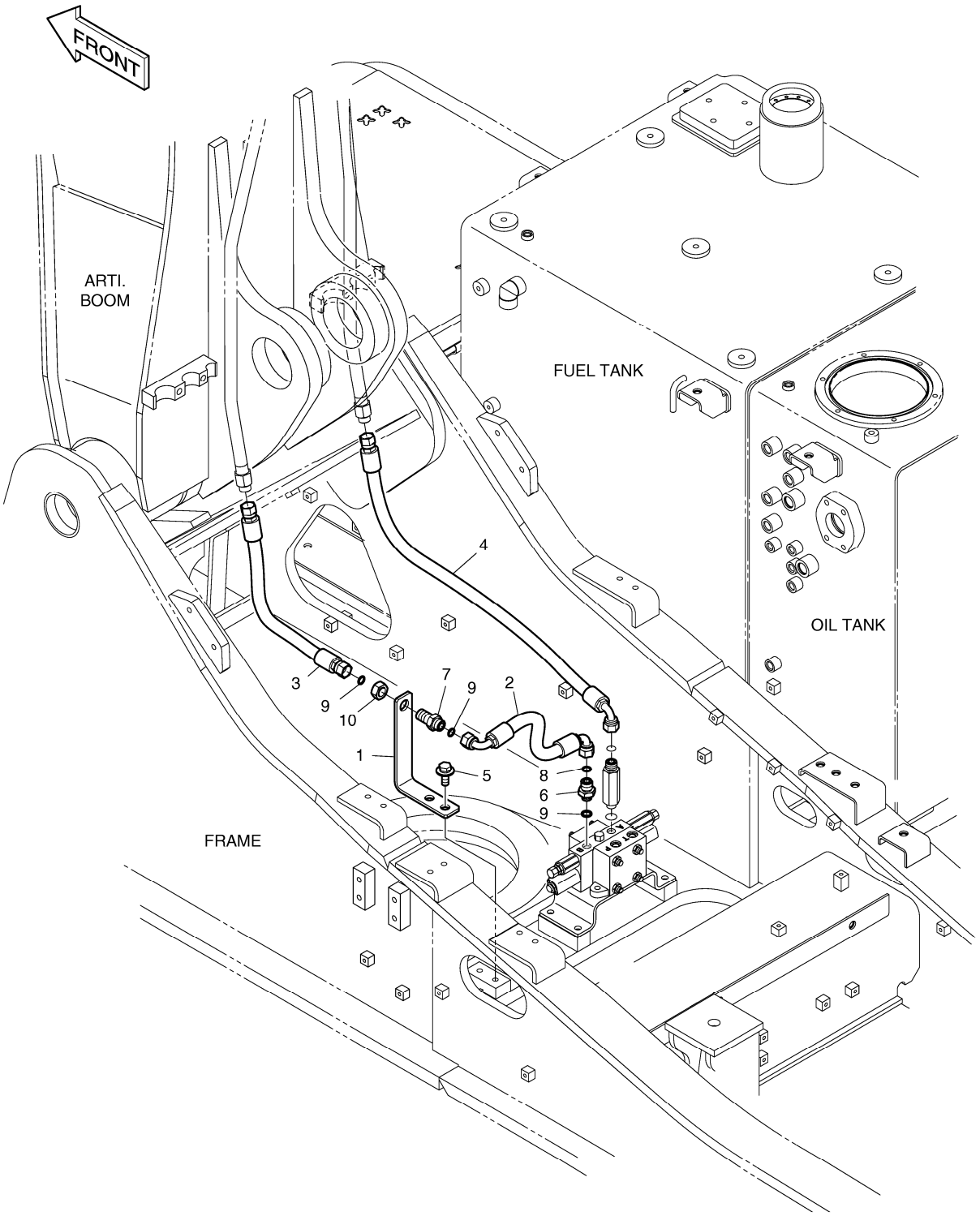

DATE	JUN. 01, 2010
3rd EDITION	

Fig. 7280 ROTATING PIPING - ARTI.BOOM
TUYAUTERIE TOURNANTE - ARTI.BOOM

Serial No. ;

Key No.	Part No.	Description	Description	Q'ty	S.C	Serial No.	ICA	Replaceable part	
								Part No.	Q'ty
7280 --	K1027343	ROTATING PIPING;ARTI	TUYAUTERIE TOURNANTE	-	D				
1	K1023868	BRACKET	SUPPORT	1					
2	DS2023274	HOSE	TUYAU	1					
3	DS2011556	HOSE	TUYAU	1					
4	DS2013835	HOSE	TUYAU	1					
5	DS0025020	BOLT;SET	BOULON	2					
6	2181-4133D38	ADAPTER	ADAPTEUR	1					
7	181-00128D3	ADAPTER;CONNECTOR	ADAPTEUR	1					
8	S8000141	O-RING	JOINT CIRCULAIRE	1					
9	S8030081	O-RING	JOINT CIRCULAIRE	3					
10	121-00010D5	NUT	ECROU	1					

DATE	JUN. 01, 2010
3rd EDITION	

Fig. 7290 PILOT PIPING - ARTI & ROTATING
CONDUITES DE PILOTE

Serial No. ;

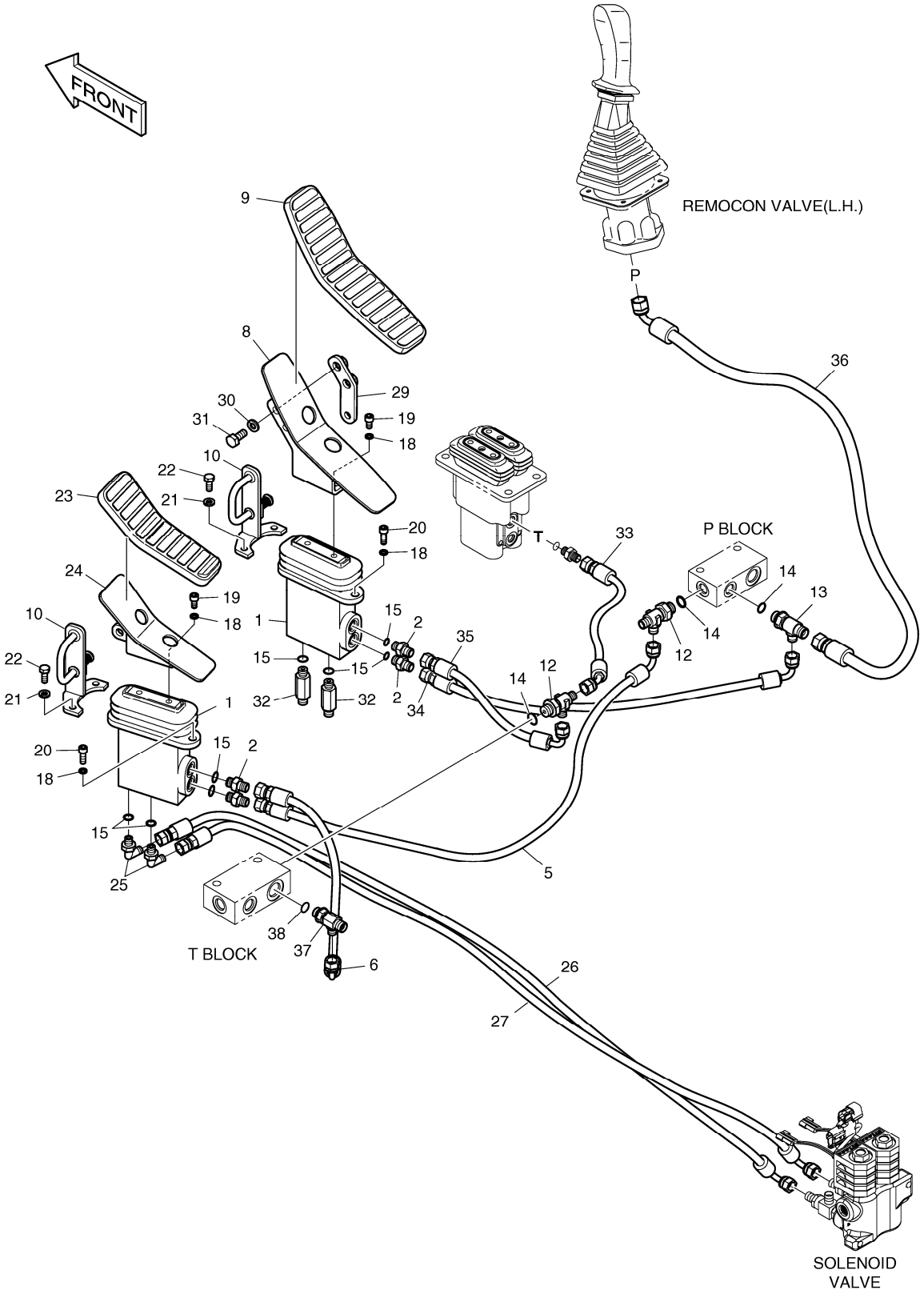

DATE	JUN. 01, 2010
3rd EDITION	

Fig. 7290 PILOT PIPING - ARTI & ROTATING
CONDUITES DE PILOTE

Serial No. ;

Key No.	Part No.	Description	Description	Q'ty	S.C	Serial No.	ICA	Replaceable part	
								Part No.	Q'ty
7290 --	K1027367E	PILOT PIPING;ARTI PERO	CONDUITES DE PILOTE	-	D				
1	K1017382A	PEDAL VALVE	VALVE DE PEDALE	2					
2	2181-1126D14	ADAPTER PF1/4	ADAPTEUR	4					
5	DS2093013	HOSE	TUYAU	1					
6	DS2093130	HOSE	TUYAU	1					
8	K1015404	BRACKET	SUPPORT	1					
9	161-00386	RUBBER;PEDAL	LE CAOUTCHOUC	1					
10	K1001873A	PLATE	PLAQUE	2					
12	2181-1951D7	TEE	TE	2					
13	2181-1951D6	TEE	TE	1					
14	S8000141	O-RING	JOINT CIRCULAIRE	3					
15	S8000111	O-RING	JOINT CIRCULAIRE	8					
18	S5110603	WASHER;SPRING	RONDELLE	8					
19	S2211866	BOLT;SOCKET	BOULON	4					
20	S2212266	BOLT;SOCKET	BOULON	4					
21	S5102503	WASHER	RONDELLE	4					
22	S0508866	BOLT	BOULON	4					
23	K1017235	RUBBER;PEDAL	LE CAOUTCHOUC	1					
24	K1015486	BRACKET	SUPPORT	1					
25	2181-1702D4	ELBOW PFO1/4-PF1/4	COUDE	2					
26	DS2093426	HOSE	TUYAU	1					
27	DS2093205	HOSE	TUYAU	1					
29	K1001871B	PLATE	PLAQUE	1					
30	S5102603	WASHER	RONDELLE	2					
31	S0512066	BOLT	BOULON	2					
32	2181-1126D34	ADAPTER	ADAPTEUR	2					
33	DS2092046	HOSE	TUYAU	1					
34	DS2093202	HOSE PF1/4-480L	TUYAU	1					
35	DS2093130	HOSE	TUYAU	1					
36	DS2095003	HOSE	TUYAU	1					
37	2181-1951D19	TEE	TE	1					
38	S8000181	O-RING	JOINT CIRCULAIRE	1					

DATE	JUN. 01, 2010
3rd EDITION	

Fig. 7300 ARTI.BOOM PIPING - ROTATING
PERCHE ASS'Y D'ARTI

Serial No. ;

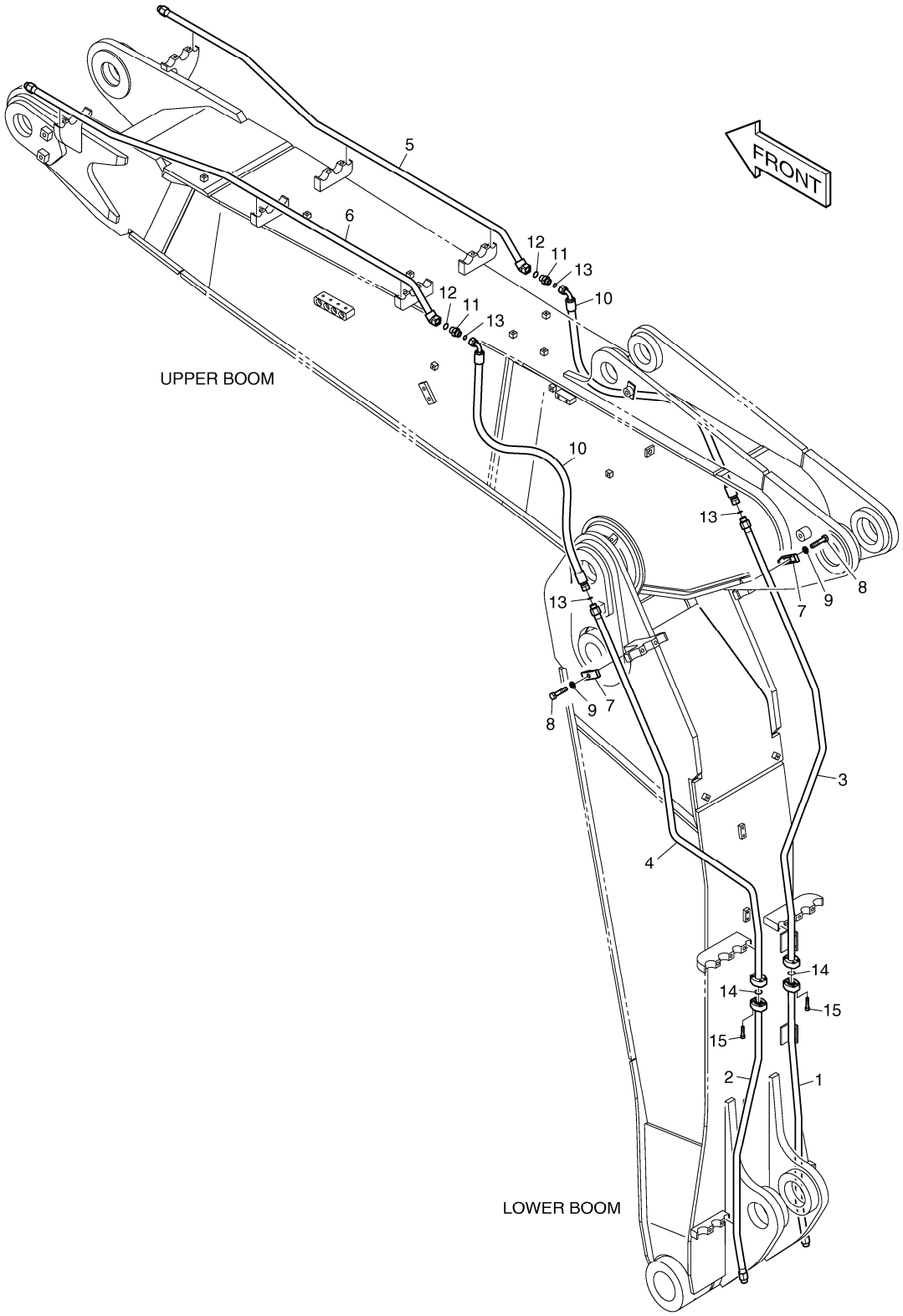

DATE	JUN. 01, 2010
3rd EDITION	

Fig. 7300 ARTI.BOOM PIPING - ROTATING
PERCHE ASS'Y D'ARTI

Serial No. ;

Key No.	Part No.	Description	Description	Q'ty	S.C	Serial No.	ICA	Replaceable part	
								Part No.	Q'ty
7300 --	K1018428	ROTATING PIPING;ARTI. BOOM	PERCHE ASS'Y D'ARTI	-	D				
1	K1018429	PIPE	TUYAU	1					
2	K1018430	PIPE	TUYAU	1					
3	K1018431	PIPE	TUYAU	1					
4	K1018432	PIPE	TUYAU	1					
5	K1018433	PIPE	TUYAU	1					
6	K1018434	PIPE	TUYAU	1					
7	2124-1026D1	CLAMP;PIPE	BRIDE	2					
8	S0558566	BOLT	BOULON	2					
9	S5102603	WASHER	RONDELLE	2					
10	DS2013387	HOSE	TUYAU	2					
11	2181-4133D3	ADAPTER	ADAPTEUR	2					
12	S8000181	O-RING	JOINT CIRCULAIRE	2					
13	S8030081	O-RING	JOINT CIRCULAIRE	4					
14	2180-1026D30	O-RING	JOINT CIRCULAIRE	2					
15	S2209466	BOLT;SOCKET	BOULON	8					

DATE	JUN. 01, 2010
3rd EDITION	

Fig. 7310 QUICK FIT PIPING - ARTI.BOOM
TUYAUTERIE CONVENABLE RAPIDE

Serial No. ;

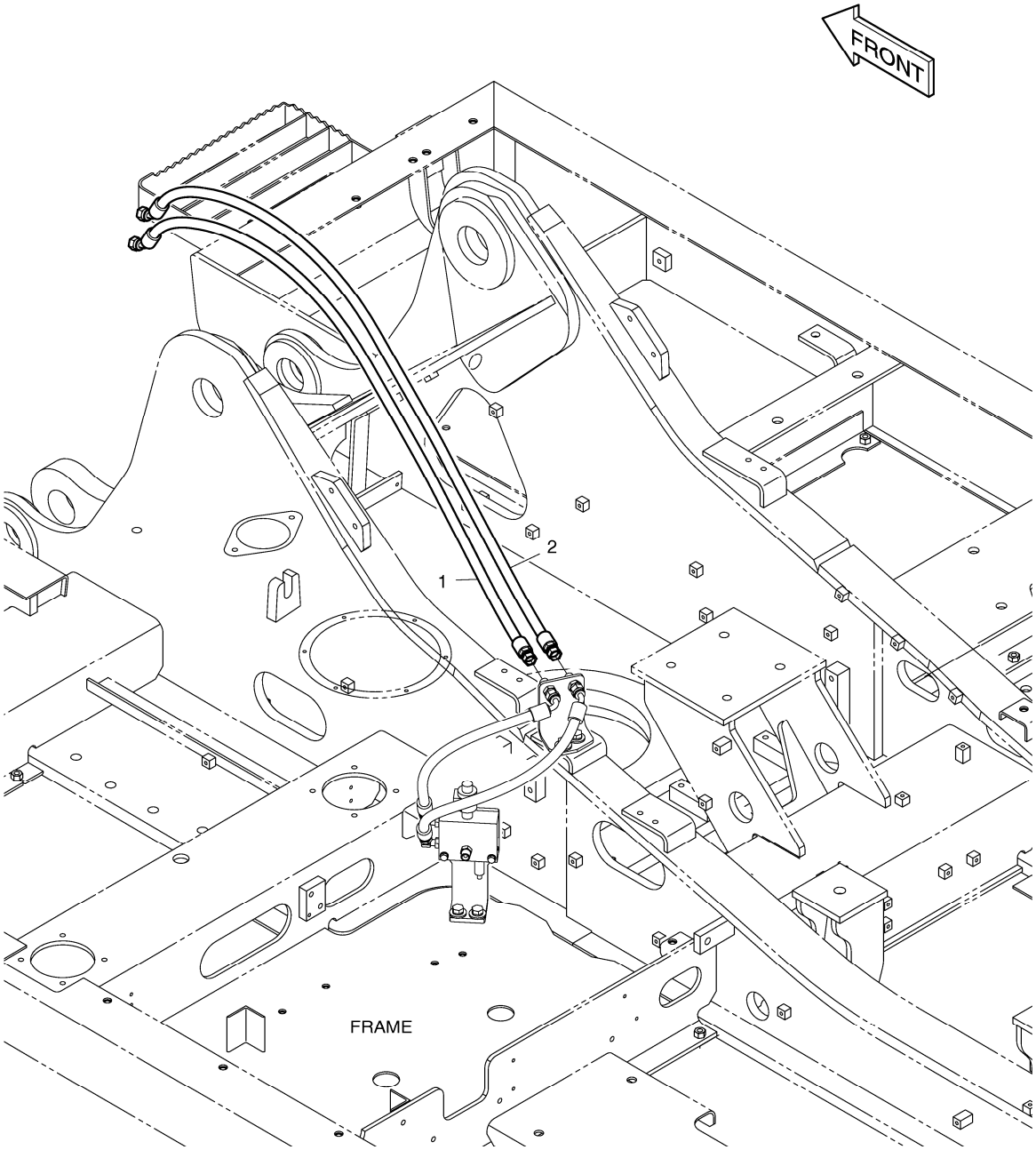

Fig. 7310 QUICK FIT PIPING - ARTI.BOOM
TUYAUTERIE CONVENABLE RAPIDE

Serial No. ;

Key No.	Part No.	Description	Description	Q'ty	S.C	Serial No.	ICA	Replaceable part	
								Part No.	Q'ty
7310 --	K1023607A	QUICK FIT PIPING	TUYAUTERIE CONVENABL	-	D				
1	DS2054380	HOSE	TUYAU	1					
2	DS2054381	HOSE	TUYAU	1					

DATE	JUN. 01, 2010
3rd EDITION	

Fig. 7320 ARTI.BOOM PIPING - QUICK FIT
PERCHE ASS'Y D'ARTI

Serial No. ;

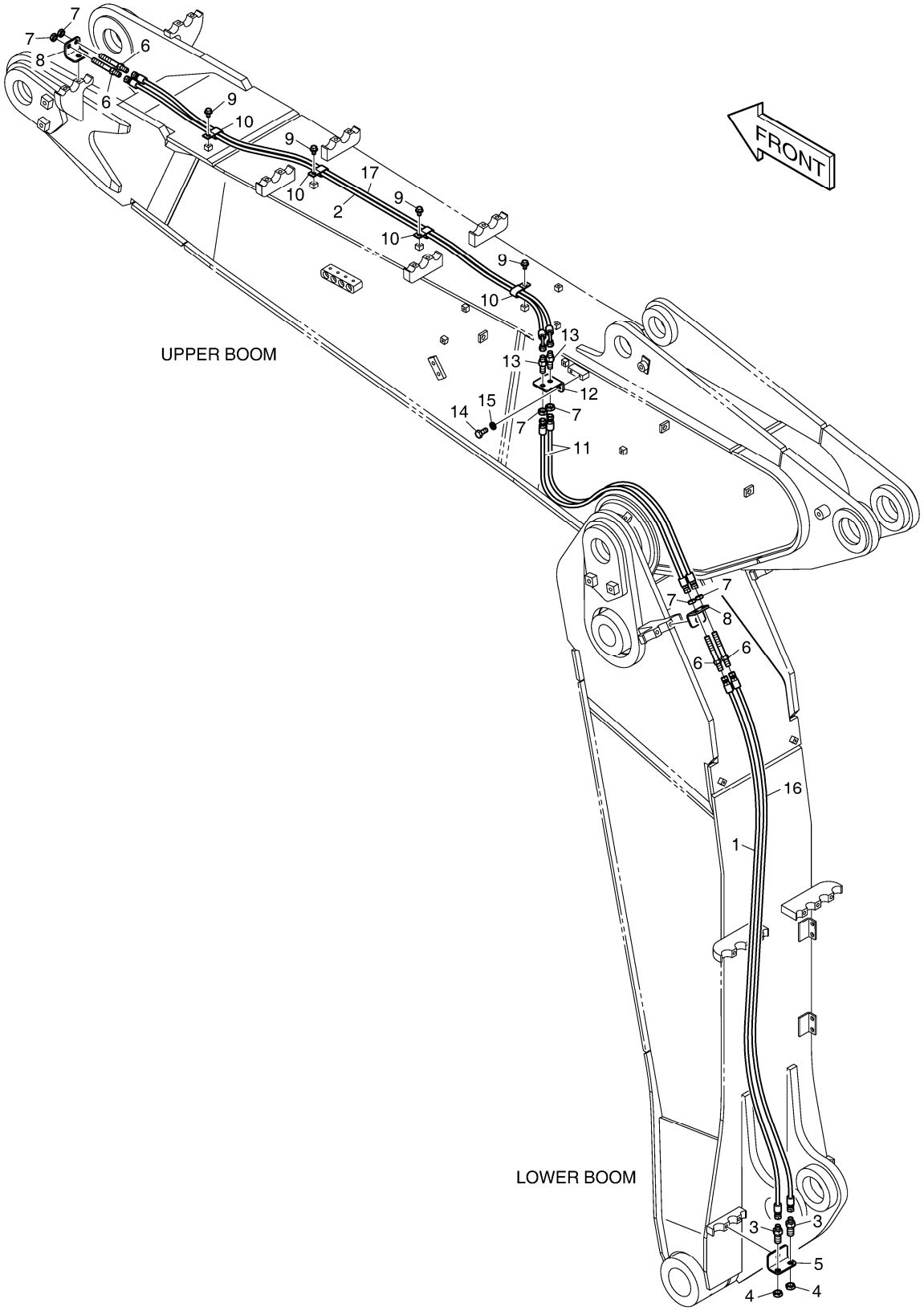

DATE	JUN. 01, 2010
3rd EDITION	

Fig. 7320 ARTI.BOOM PIPING - QUICK FIT
PERCHE ASS'Y D'ARTI

Serial No. ;

Key No.	Part No.	Description	Description	Q'ty	S.C	Serial No.	ICA	Replaceable part	
								Part No.	Q'ty
7320 --	K1018435A	QUICK CLAMP PIPING;ARTI. BOO	PERCHE ASS'Y D'ARTI	-	D				
1	DS2053901	HOSE	TUYAU FLEXIBLE	1					
2	DS2055959	HOSE	TUYAU	1					
3	181-00078D5	ADAPTER	ADAPTEUR	2					
4	121-00010D1	NUT	ECROU	2					
5	K1011074	BRACKET	SUPPORT	1					
6	K1000356	ADAPTER	ADAPTEUR	4					
7	121-00010D7	NUT	ECROU	6					
8	K1018437	PLATE	PLAQUE	2					
9	K1001029	BOLT	BOULON	4					
10	DS2805009	CLIP	AGRAFE	4					
11	DS2053902	HOSE	TUYAU	2					
12	K1018716	PLATE	PLAQUE	1					
13	DS2410007	ADAPTER	ADAPTEUR	2					
14	S0512066	BOLT	BOULON	2					
15	S5102603	WASHER	RONDELLE	2					
16	DS2053940	HOSE	TUYAU FLEXIBLE	1					
17	DS2055984	HOSE	TUYAU	1					

DATE	JUN. 01, 2010
3rd EDITION	

Fig. 7330 LOCK VALVE PIPING - ARTI.BOOM
CONDUITES DE VERROU VANNE

Serial No. ;

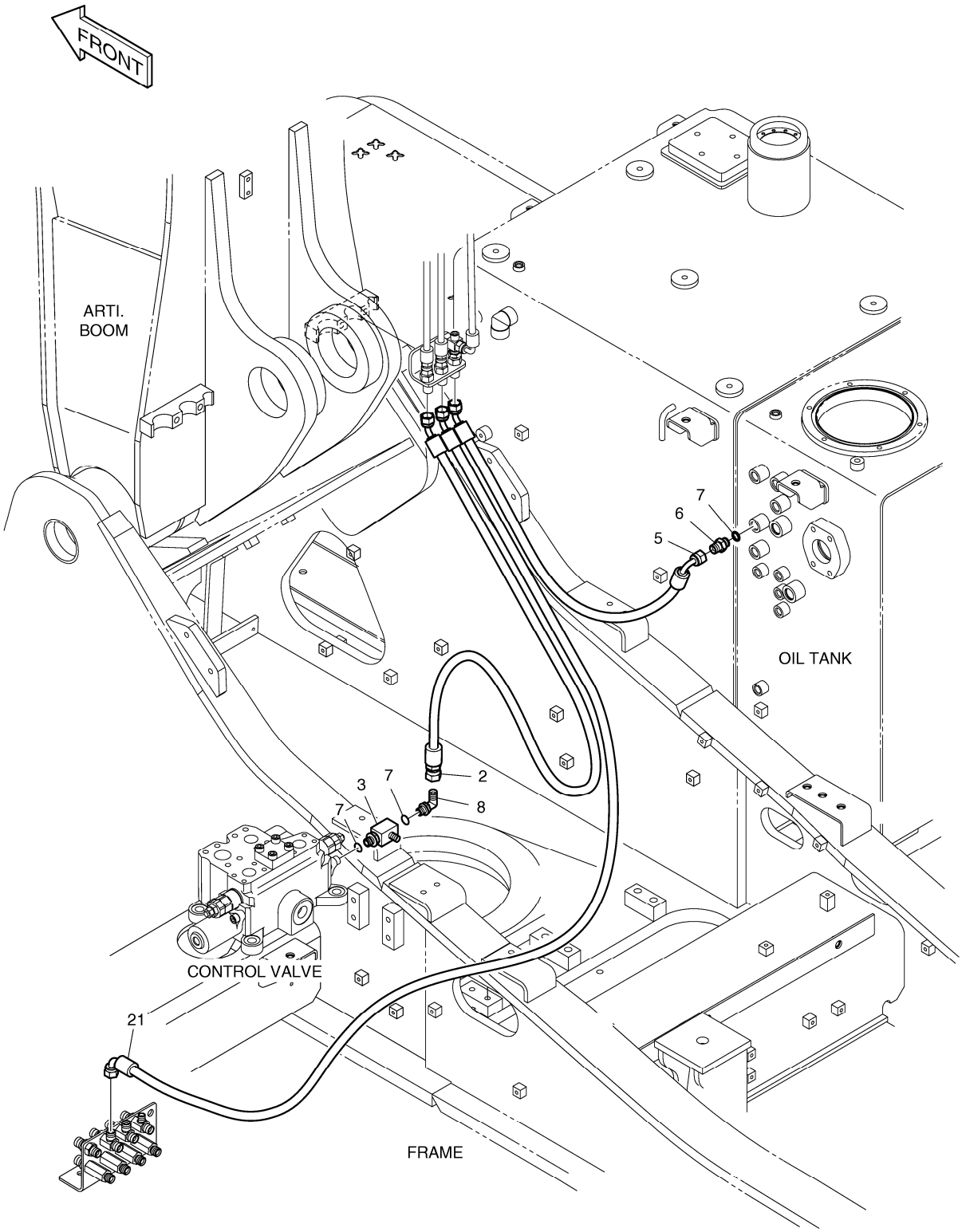

DATE	JUN. 01, 2010
3rd EDITION	

Fig. 7330 LOCK VALVE PIPING - ARTI.BOOM
CONDUITES DE VERROU VANNE

Serial No. ;

Key No.	Part No.	Description	Description	Q'ty	S.C	Serial No.	ICA	Replaceable part	
								Part No.	Q'ty
7330 --	K1027364B	LOCK VALVE PIPING	FERMEZ LA TUYAUTERIE A	-	D				
2	DS2092203	HOSE	TUYAU	1					
3	DS2365003	TEE	TE	1					
5	DS2090032	HOSE	TUYAU	1					
6	2181-1126D7	ADAPTER	ADAPTEUR	1					
7	S8000141	O-RING	JOINT CIRCULAIRE	3					
8	2181-1702D5	ELBOW	COUDE	1					
21	DS2090093	HOSE	TUYAU FLEXIBLE	1					

DATE	JUN. 01, 2010
3rd EDITION	

Fig. 7340 ARTI.BOOM PIPING - LOCK VALVE
PERCHE ASS'Y D'ARTI

Serial No. ;

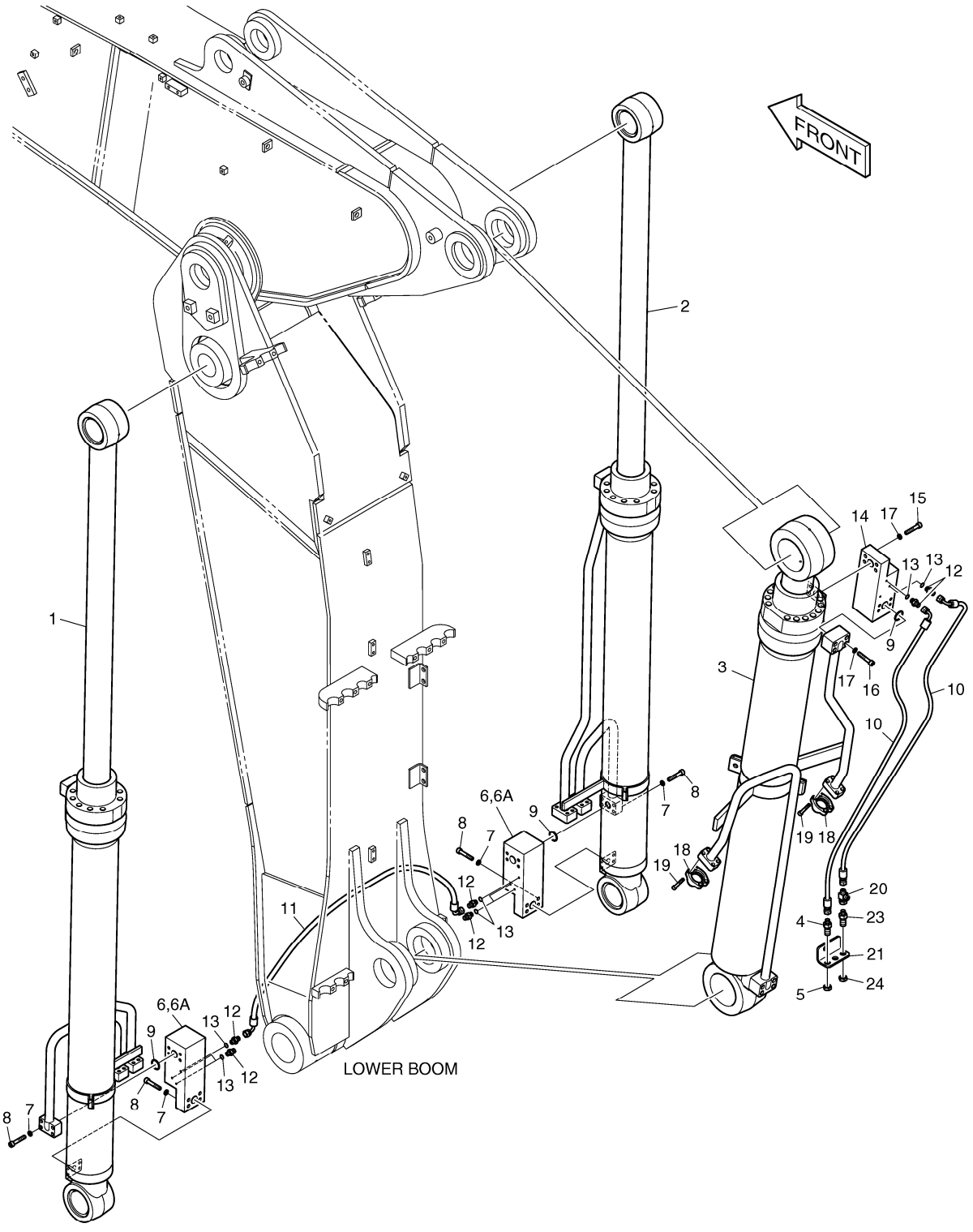

DATE	JUN. 01, 2010
3rd EDITION	

Fig. 7340 ARTI.BOOM PIPING - LOCK VALVE
PERCHE ASS'Y D'ARTI

Serial No. ;

Key No.	Part No.	Description	Description	Q'ty	S.C	Serial No.	ICA	Replaceable part	
								Part No.	Q'ty
7340 --	K1023864C	ARTI BOOM PIPING;LOCK VALVE	PERCHE ASS'Y D'ARTI	-	D				
1	K1001218A	CYLINDER;BOOM(L.H)	VERIN DE FLECHE	1					
2	K1001219A	CYLINDER;BOOM(R.H)	VERIN DE FLECHE	1					
3	K1023537A	CYLINDER;ARTI BOOM	CYLINDRE	1					
4	181-00078D5	ADAPTER	ADAPTEUR	2					
5	121-00010D1	NUT	ECROU	2					
6	420-00226	VALVE;LOCK	VALVE	2					
6A	K9000998	. SEAL KIT	. KIT DE JOINT	1					
7	S5110603	WASHER;SPRING	RONDELLE	16					
8	S2212766	BOLT;SOCKET	BOULON	16					
9	S8000281	O-RING	JOINT CIRCULAIRE	3					
10	2184-1046D117	HOSE PF1/4-1700L	TUYAU FLEXIBLE	2					
11	DS2059383	HOSE PF1/4-800L	TUYAU	1					
12	2181-1126D14	ADAPTER PF1/4	ADAPTEUR	8					
13	S8000111	O-RING	JOINT CIRCULAIRE	8					
14	420-00004A	VALVE;LOCK	VALVE	1					
15	S2215766	BOLT;SOCKET M12X1.75X55	BOULON	4					
16	S2215866	BOLT;SOCKET M12X1.75X60	BOULON	4					
17	S5110703	WASHER;SPRING	RONDELLE	8					
18	2181-9078	FLANGE	BRIDE	4					
19	S2212466	BOLT;SOCKET M10X1.5X40	BOULON	8					
20	181-00673D1	TEE;UNION	TE	1					
21	K1018440	PLATE	PLAQUE	1					
23	181-00078D5	ADAPTER	ADAPTEUR	1					
24	121-00010D1	NUT	ECROU	1					

DATE	JUN. 01, 2010
3rd EDITION	

Fig. 7350 ARTI.ARM PIPING - LOCK VALVE
CONDUITES DE VERROU VANNE

Serial No. ;

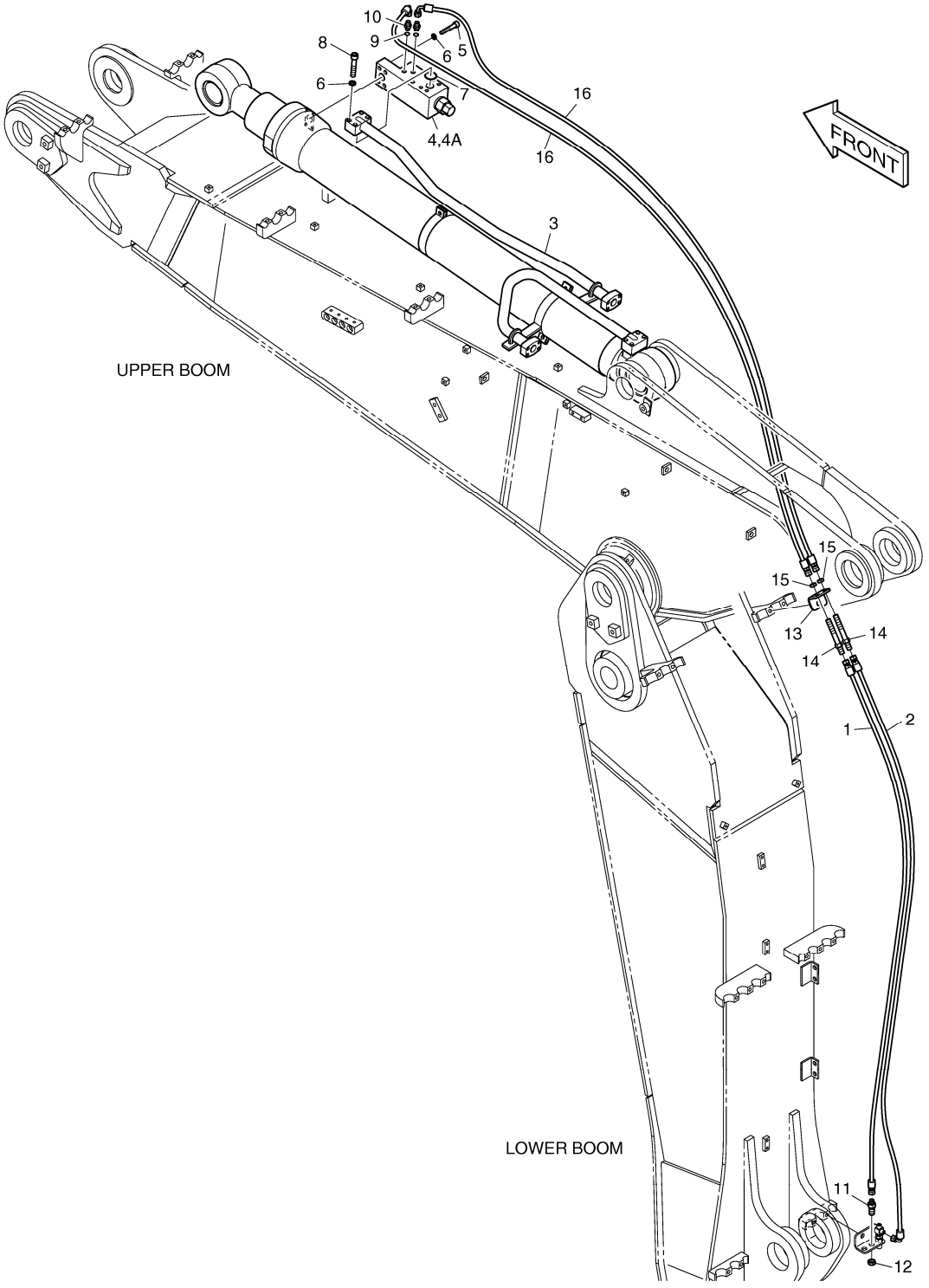

DATE	JUN. 01, 2010
3rd EDITION	

Fig. 7350 ARTI.ARM PIPING - LOCK VALVE
CONDUITES DE VERROU VANNE

Serial No. ;

Key No.	Part No.	Description	Description	Q'ty	S.C	Serial No.	ICA	Replaceable part	
								Part No.	Q'ty
7350 --	K1023865	ARTI BOOM PIPING;ARM LOCK V	PERCHE ASS'Y D'ARTI	-	D				
1	2184-1045D251	HOSE	TUYAU FLEXIBLE	1					
2	2184-1046D135	HOSE PF1/4-2500L	TUYAU FLEXIBLE	1					
3	K1023866	ARM CYLINDER	VERIN DE BALANCIER	1					
	K1023540	ARM CYLINDER	CYLINDRE DE BRAS	1					
4	420-00004A	VALVE;LOCK	VALVE	1					
4A	K9000999	. SEAL KIT	. KIT DE JOINT	1					
5	S2215766	BOLT;SOCKET M12X1.75X55	BOULON	4					
6	S5110703	WASHER;SPRING	RONDELLE	8					
7	S8000341	O-RING	JOINT CIRCULAIRE	1					
8	S2215966	BOLT;SOCKET	BOULON	4					
9	S8000111	O-RING	JOINT CIRCULAIRE	2					
10	2181-1126D14	ADAPTER PF1/4	ADAPTEUR	2					
11	181-00078D5	ADAPTER	ADAPTEUR	1					
12	121-00010D1	NUT	ECROU	1					
13	K1018437	PLATE	PLAQUE	1					
14	K1000356	ADAPTER	ADAPTEUR	2					
15	121-00010D7	NUT	ECROU	2					
16	2184-1046D180	HOSE PF1/4-2700L	TUYAU	2					

DATE	JUN. 01, 2010
3rd EDITION	

Fig. 7360 WORKING LAMP - ARTI. BOOM AVERTISSEUR RELAIS

Serial No. ;

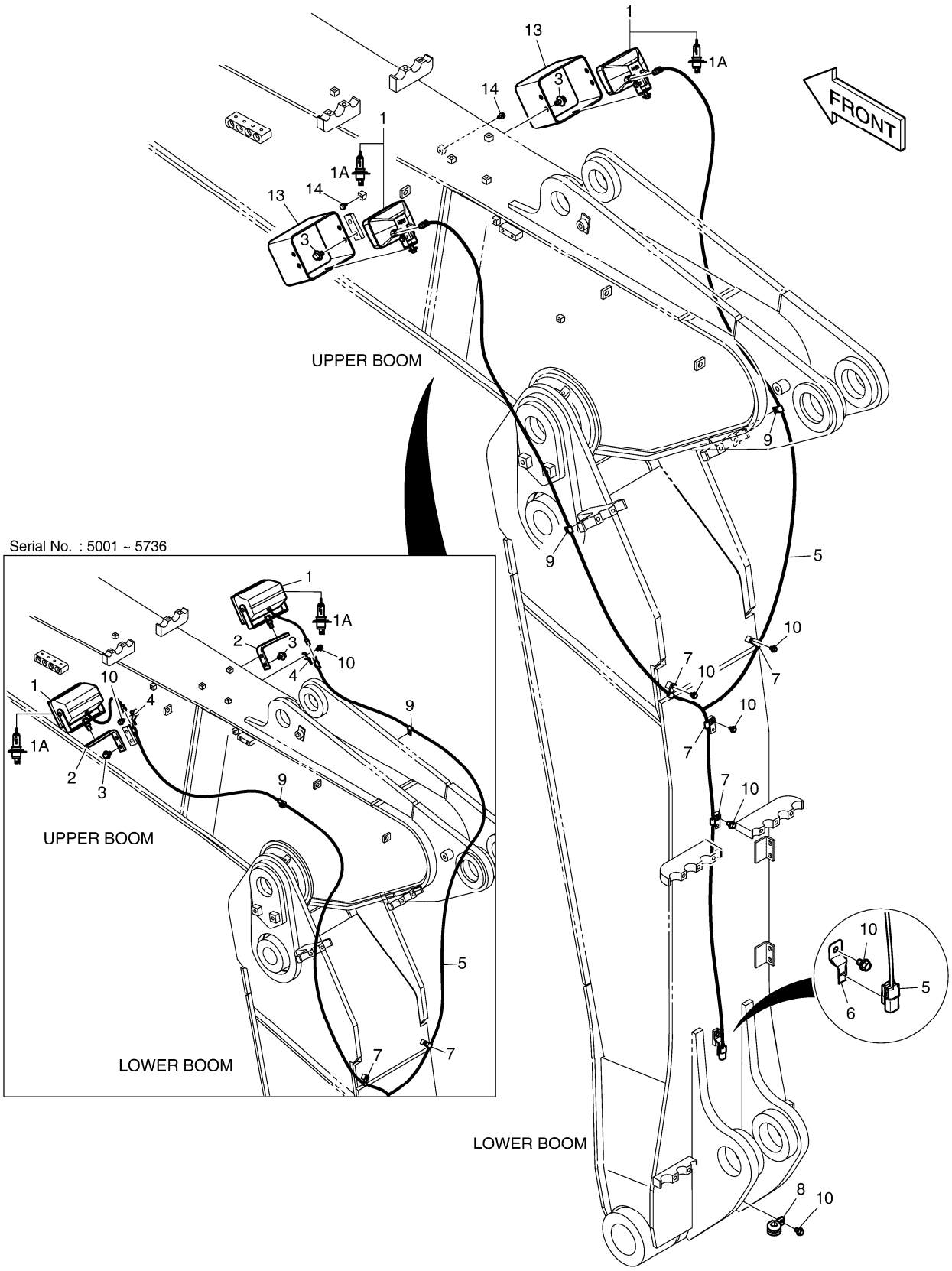

DATE	JUN. 01, 2010
3rd EDITION	

Fig. 7360 WORKING LAMP - ARTI. BOOM
AVERTISSEUR RELAIS

Serial No. ;

Key No.	Part No.	Description	Description	Q'ty	S.C	Serial No.	ICA	Replaceable part	
								Part No.	Q'ty
7360 --	K1027549	WORKING LAMP	LAMPE ACTIVE	-	D	5001-5736			
	300619-00609	ELECTRIC ASSY;WORKING LAMI	LAMPE FONCTIONNANTE	-	D	5737-			
1	534-00064	LAMP ASS'Y;WORKING	LAMPE	2		5001-5736			
	301005-00132	LAMP;WORKING	LAMPE	2		5737-			
1A	2515-1022D1	. BULB;HALOGEN	. AMPOULE	1		5001-5736			
	2515-1016D4	. BLUB;HALOGEN	. AMPOULE	1		5737-			
2	2195-2394B	BRACKET	SUPPORT	2		5001-5736			
3	DS0025019	BOLT;SET	BOULON	4		5001-5736			
	DS0025022	BOLT;SET	BOULON	4		5737-			
4	2197-1661	BRACKET	SUPPORT	2		5001-5736			
5	530-00418D8	HARNESS;WORK LAMP	HARNAIS	1		5001-5736			
	310207-00541	HARNESS;WORKING LAMP	FAISCEAU	1		5737-			
6	2197-1660	BRACKET;HOUSING	SUPPORT	1					
7	2124-1509D1	CLIP	AGRAFE	4					
8	124-00208D2	CLIP	AGRAFE	1					
9	2124-1353D1	CLIP	AGRAFE	2					
10	K1001029	BOLT	BOULON	6					
13	110921-00091	GUARD;LAMP	GARDE	2		5737-			
14	DS0025044	BOLT;SET	BOULON	2		5737-			

DATE	JUN. 01, 2010
3rd EDITION	

Fig. 7370 SIDE DOOR - L.H (TROPICAL)
ENSEMBLE DE PORTE

Serial No. ;

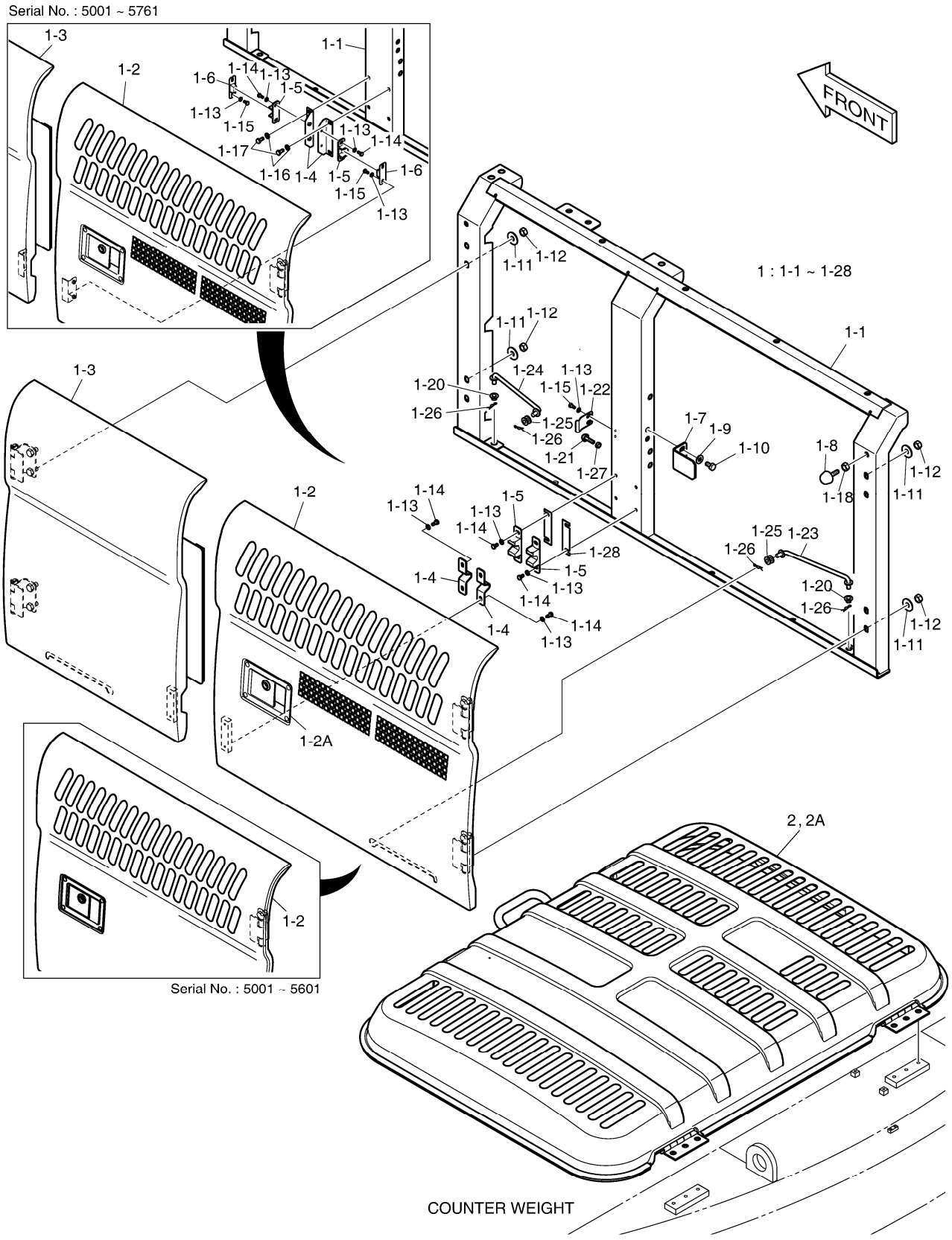

DATE	JUN. 01, 2010
3rd EDITION	

Fig. 7370 SIDE DOOR - L.H (TROPICAL) ENSEMBLE DE PORTE

Serial No. ;

Key No.	Part No.	Description	Description	Q'ty	S.C	Serial No.	ICA	Replaceable part	
								Part No.	Q'ty
7370 --	K1046175A	COVER;TROPICAL	COUVERCLE	-	D	5433-5601			
	110508-00306	COVER ASSY;TROPICAL	COUVERCLE	-	D	5602-			
1	K1046174A	DOOR ASS'Y;SIDE(L.H)	ENSEMBLE PORTE	1		5433-5601	I	K1052774	1
	K1052774	DOOR ASS'Y;SIDE(L.H)	ENSEMBLE PORTE	1		5602-5762	I	110982-00132	1
	110982-00132	DOOR ASSY,SIDE(L.H)	ENSEMBLE DE PORTE	1		5763-			
1-1	K1038917B	. SUPPORT(L.H)	. SUPPORT	1		5433-5762			
	110958-00230	. SUPPORT	. SUPPORT	1		5763-			
1-2	K1045433	. DOOR;SIDE	. PORTE	1		5433-5601	I	K1052775	1
	K1052775	. DOOR;SIDE	. PORTE	1		5602-5762			
	110982-00133	. DOOR,SIDE	. PORTE	1		5763-			
1-2A	125-00034A	.. LOCK	.. SERRURE	1					
1-3	K1038919B	. DOOR(L.H)	. DIODE	1		5433-5762			
	110982-00131	. DOOR,SIDE(L.H)	. PORTE	1		5763-			
1-4	2116-1522	. PLATE	. PLAQUE	2		5433-5762			
	250201-00028	. PLATE;STOPPER	. PLAQUE	2		5763-			
1-5	2161-9052	. STOPPER;PLATE	. ARRET	2		5433-5762			
	110956-00002	. STOPPER,RUBBER	. TAQUET	2		5763-			
1-6	2161-9053	. STOPPER;RUBBER	. ARRET	2		5433-5762			
1-7	K1038920	. PLATE;LOCK	. PLAQUE	1					
1-8	K1001260A	. STOPPER;RUBBER	. TAQUET	1					
1-9	2114-1058D45	. WASHER	. RONDELLE	2					
1-10	S0511853	. BOLT M10X1.5X20	. BOULON	2					
1-11	2114-1058D30	. WASHER;PLAIN	. RONDELLE	8					
1-12	S4012733	. NUT	. ECROU	8					
1-13	S5010313	. WASHER	. RONDELLE	10					
1-14	S0504553	. BOLT M6X1.0X14	. BOULON	4		5433-5762			
	S0504553	. BOLT M6X1.0X14	. BOULON	8		5763-			
1-15	S0504453	. BOLT M6X1.0X12	. BOULON	6		5433-5762			
	S0504453	. BOLT M6X1.0X12	. BOULON	2		5763-			
1-16	S5010513	. WASHER	. RONDELLE	4		5433-5762			
1-17	S0508753	. BOLT M8X1.25X18	. BOULON A 6 PANS	4		5433-5762			
1-18	S4012633	. NUT	. ECROU	3					
1-20	K1000602	. BUSHING	. BUSHING	2					
1-21	K1048085	. STOPPER;RUBBER	. TAQUET	1					
1-22	K1039869B	. PLATE;LOCK	. PLAQUE	1					
1-23	623-00074B	. STAY	. SEJOUR	1					
1-24	623-00075B	. STAY	. SEJOUR	1					
1-25	K1008335	. BUSHING	. BUSHING	2					

Fig. 7370 SIDE DOOR - L.H (TROPICAL)
ENSEMBLE DE PORTE

Serial No. ;

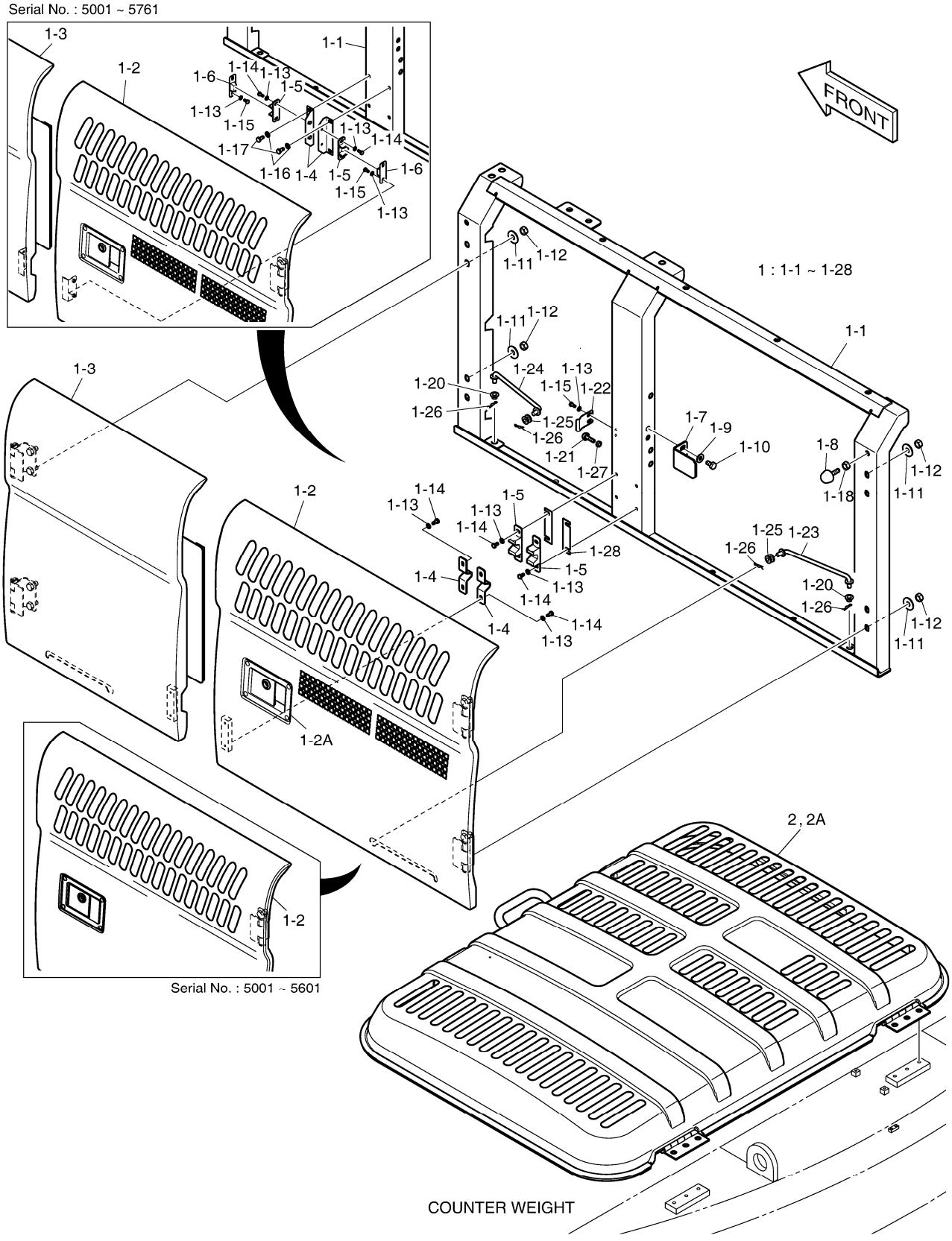

Fig. 7370 SIDE DOOR - L.H (TROPICAL) ENSEMBLE DE PORTE

Serial No. ;

Key No.	Part No.	Description	Description	Q'ty	S.C	Serial No.	ICA	Replaceable part	
								Part No.	Q'ty
7370 -1-26	2705-9002	. PIN;LOCK	. GOUPILLE	4					
1-27	S4012533	. NUT	. ECROU	1					
1-28	110947-00027	. SHIM	. CALE	2		5763-			
2	110506-00019	ENGINE COVER ASS`Y	ENSEMBLE DE COUVERTU	1		5602-			
2A	1.162-00001	. RUBBER;CUSHION	. LE CAOUTCHOUC	1		5602-			

DATE	JUN. 01, 2010
3rd EDITION	

Fig. 7380 PATTERN CHANGE PIPING(1) - ARTI BOOM
TUYAUTERIE DE CHANGEMENT DE MODELE

Serial No. ;

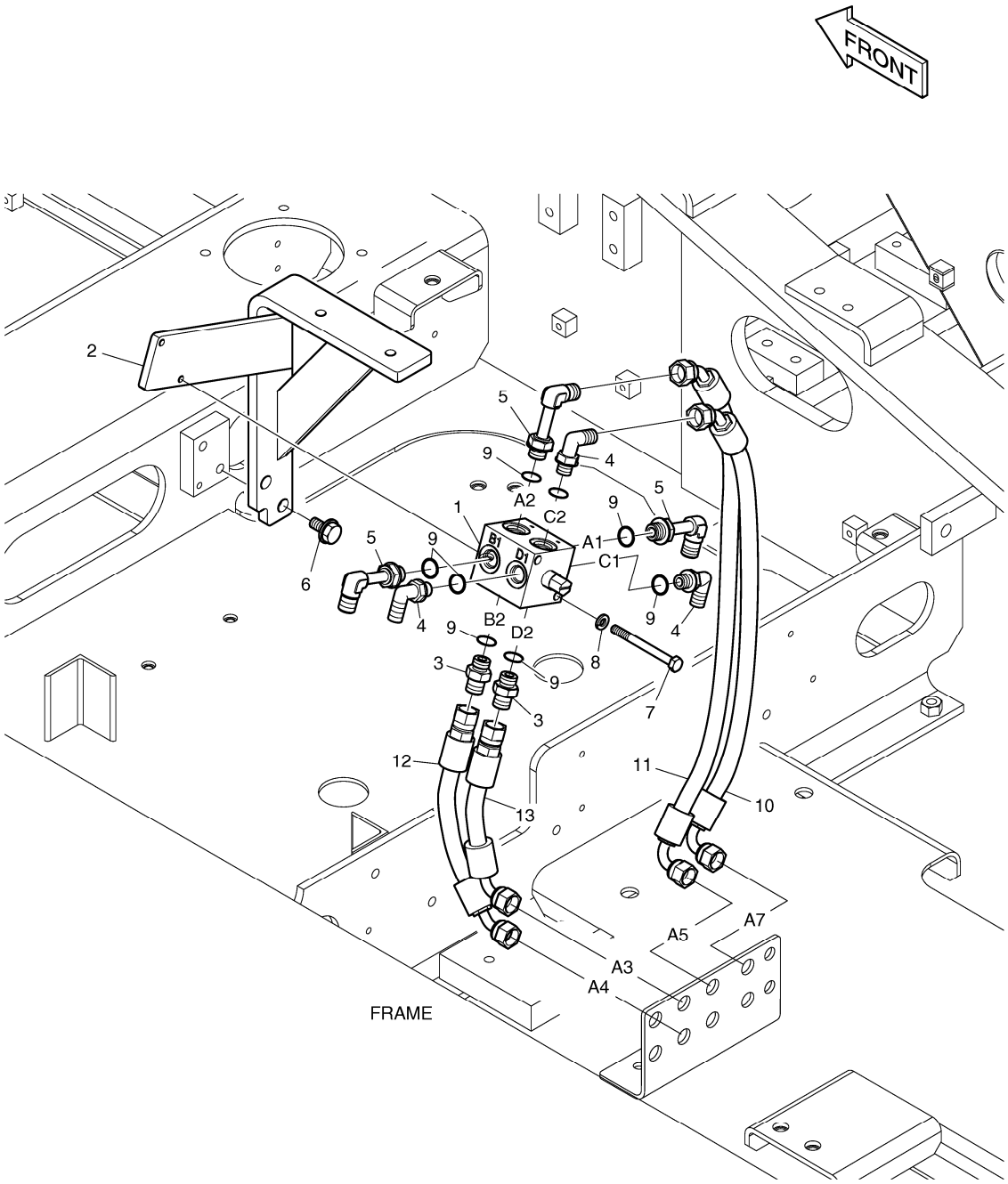

DATE	JUN. 01, 2010
3rd EDITION	

Fig. 7380 PATTERN CHANGE PIPING(1) - ARTI BOOM
TUYAUTERIE DE CHANGEMENT DE MODELE

Serial No. ;

Key No.	Part No.	Description	Description	Q'ty	S.C	Serial No.	ICA	Replaceable part	
								Part No.	Q'ty
7380 --	K1030468A	PATTERN CHANGE PIPING	TUYAUTERIE DE CHANGEI	-	D				
1	K1014874	VALVE;SELECTOR	CLAPET SELECTEUR	1					
2	K1030489A	BRACKET	SUPPORT	1					
3	2181-1126D7	ADAPTER	ADAPTEUR	2					
4	2181-1702D5	ELBOW	COUDE	3					
5	2181-1702D51	ELBOW	COUDE	3					
6	DS0025018	BOLT;SET	BOULON	2					
7	S0557066	BOLT	BOULON A 6 PANS	2					
8	S5102503	WASHER	RONDELLE	2					
9	S8000141	O-RING	JOINT CIRCULAIRE	8					
10	DS2090039	HOSE	TUYAU FLEXIBLE	1					
11	DS2090040	HOSE	TUYAU FLEXIBLE	1					
12	DS2092140	HOSE	TUYAU FLEXIBLE	1					
13	DS2095044	HOSE	TUYAU FLEXIBLE	1					

DATE	JUN. 01, 2010
3rd EDITION	

Fig. 7390 PATTERN CHANGE PIPING(2) - ARTI BOOM
TUYAUTERIE DE CHANGEMENT DE MODELE

Serial No. ;

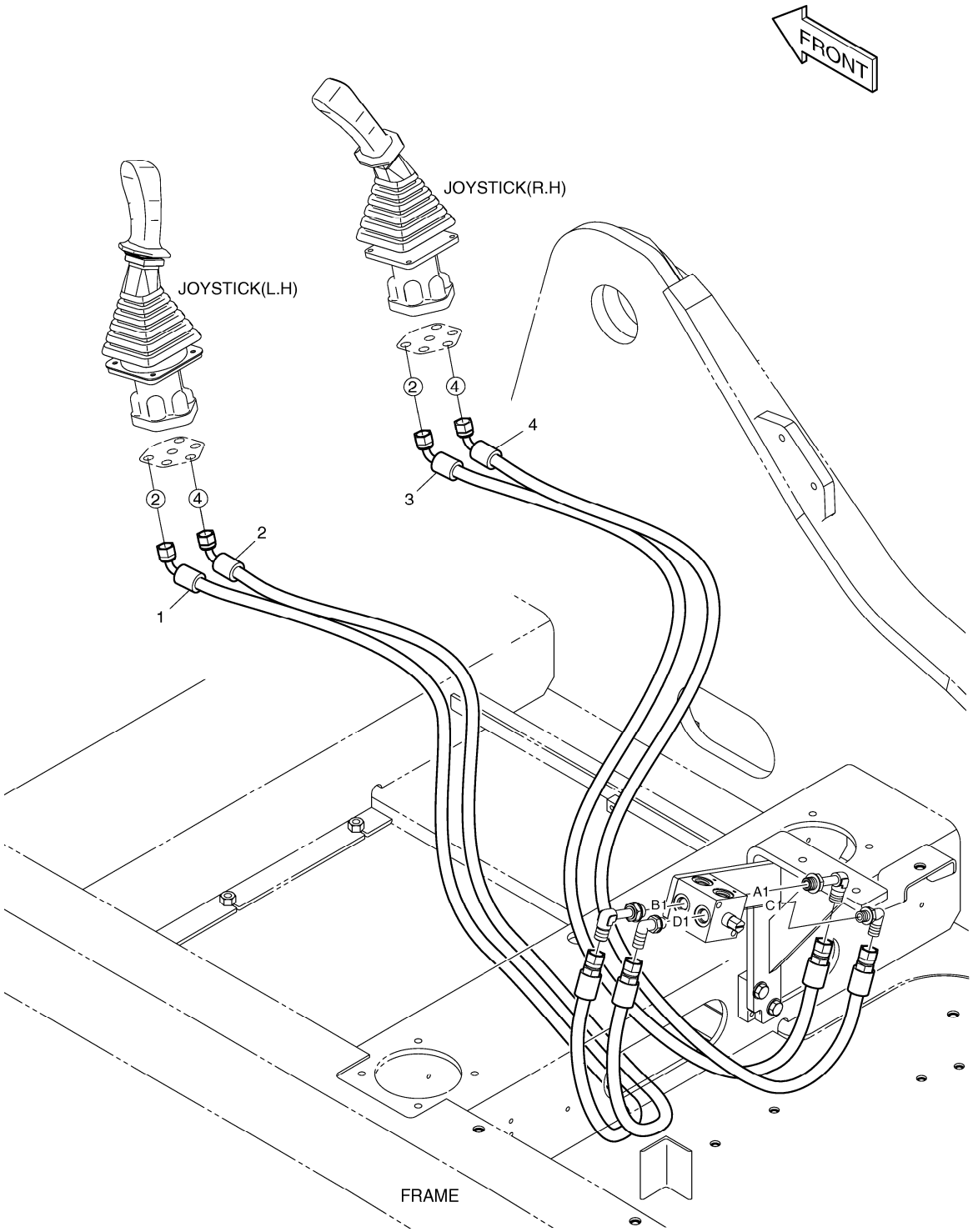

Fig. 7390 PATTERN CHANGE PIPING(2) - ARTI BOOM
TUYAUTERIE DE CHANGEMENT DE MODELE

Serial No. ;

Key No.	Part No.	Description	Description	Q'ty	S.C	Serial No.	ICA	Replaceable part	
								Part No.	Q'ty
7390 --	K1030503	PATTERN CHANGE PIPING	TUYAUTERIE DE CHANGEI	-	D				
1	DS2095036	HOSE	TUYAU FLEXIBLE	1					
2	DS2095029	HOSE	TUYAU FLEXIBLE	1					
3	DS2095036	HOSE	TUYAU FLEXIBLE	1					
4	DS2095027	HOSE	TUYAU FLEXIBLE	1					

DATE	JUN. 01, 2010
3rd EDITION	

Fig. 7400 RADIO
RADIO

Serial No. ;

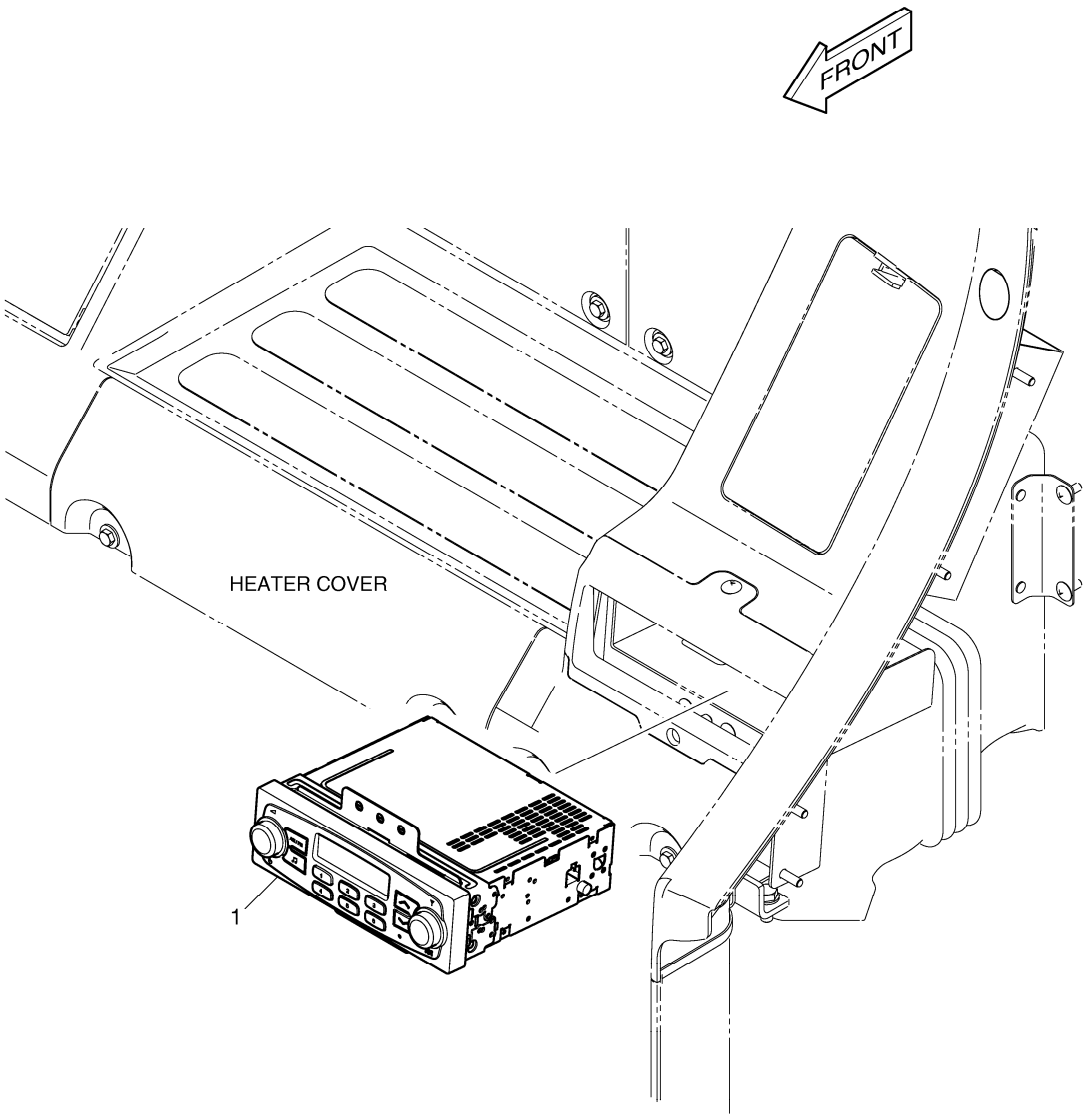

DATE	JUN. 01, 2010
3rd EDITION	

Fig. 7400 RADIO
RADIO

Serial No. ;

Key No.	Part No.	Description	Description	Q'ty	S.C	Serial No.	ICA	Replaceable part	
								Part No.	Q'ty
7400 --	K1033652	RADIO;STEREO	RADIO	-	D				
1	K1033644	RADIO;STEREO(12V)	RADIO	1					

DATE	JUN. 01, 2010
3rd EDITION	

Fig. 7410 TROPICAL PARTS PIECES TROPICALES

Serial No. ;

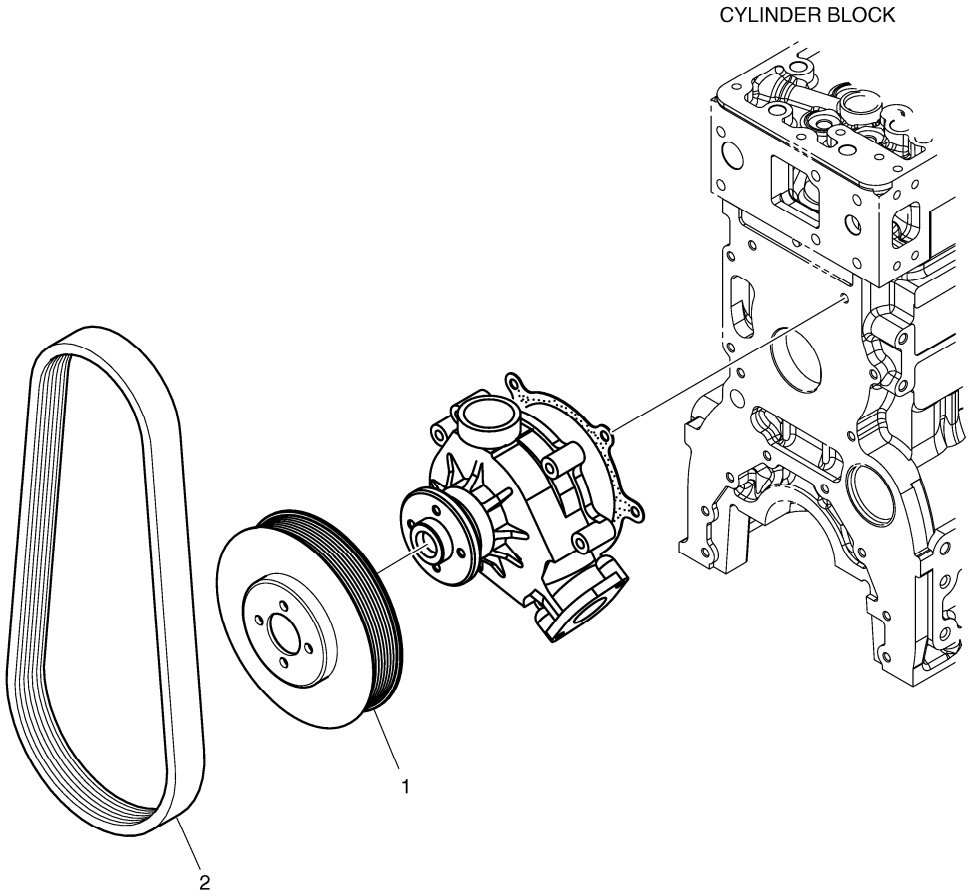

DATE	JUN. 01, 2010
3rd EDITION	

Fig. 7410 TROPICAL PARTS PIECES TROPICALES

Serial No. ;

Key No.	Part No.	Description	Description	Q'ty	S.C	Serial No.	ICA	Replaceable part	
								Part No.	Q'ty
7410 --	K1030081A	TROPICAL PARTS	PIECES TROPICALES	-	D				
1	K1030095A	PULLEY;BELT	POULIE	1					
2	DS3201029	BELT;RIBBED(8PK 1200L)	CEINTURE	1					

DATE	JUN. 01, 2010
3rd EDITION	

Fig. 7420 ACOUSTIC FOAM - NOISE KIT
MOUSSE ACOUSTIQUE - KIT DE BRUIT

Serial No. ;

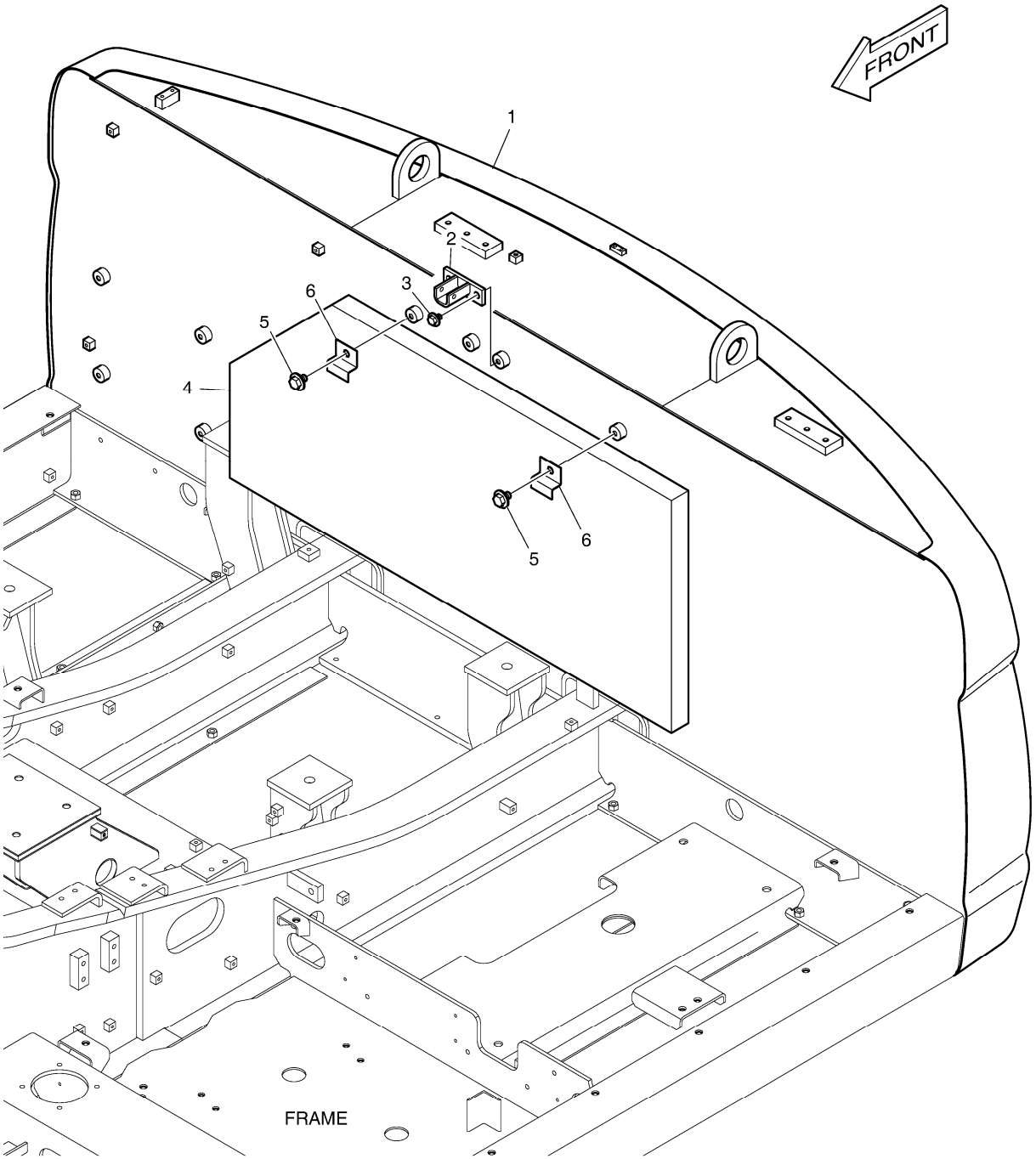

Fig. 7420 ACOUSTIC FOAM - NOISE KIT
MOUSSE ACOUSTIQUE - KIT DE BRUIT

Serial No. ;

Key No.	Part No.	Description	Description	Q'ty	S.C	Serial No.	ICA	Replaceable part	
								Part No.	Q'ty
7420 --	K1045676A	COUNTER WEIGHT ASS'Y	MASSE D'EQUILIBRAGE	1		5001-5495	I	K1045676B	1
	K1045676B	COUNTER WEIGHT ASS'Y	MASSE D'EQUILIBRAGE	1		5496-5645	Y	160702-00049	1
	160702-00049	WEIGHT ASSY,COUNTER;4.1ton \	MASSE D'EQUILIBRAGE	1		5646-			
1	K1039183C	COUNTER WEIGHT;4.1ton	MASSE D'EQUILIBRAGE	1		5001-5495	I	K1039183E	1
	K1039183E	COUNTER WEIGHT;4.1ton	MASSE D'EQUILIBRAGE	1		5496-5645	Y	160702-00046	1
	160702-00046	WEIGHT,COUNTER;4.1ton	MASSE D'EQUILIBRAGE	1		5646-			
2	K1002454B	BRACKET	SUPPORT	1					
3	DS0025015	BOLT;SET	BOULON	2					
4	K1011304	FOAM	EPONGE	1					
5	DS0025022	BOLT;SET	BOULON	2					
6	621-01572	PLATE	PLAQUE	2					

DATE	JUN. 01, 2010
3rd EDITION	

Fig. 7430 MIRROR - ADDITIONAL
MIROIR - ADDITIONNEL

Serial No. ;

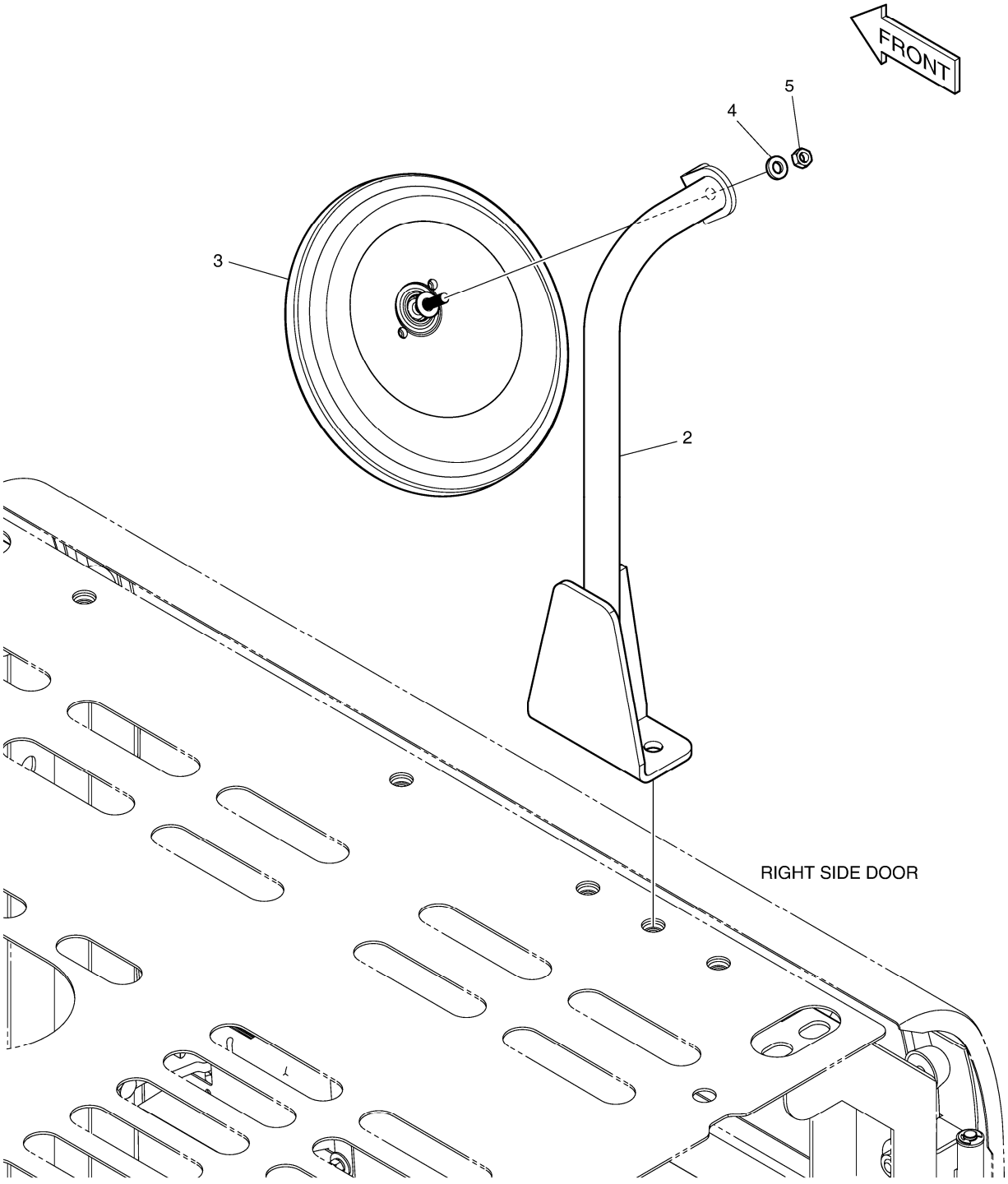

DATE	JUN. 01, 2010
3rd EDITION	

Fig. 7430 MIRROR - ADDITIONAL
MIROIR - ADDITIONNEL

Serial No. ;

Key No.	Part No.	Description	Description	Q'ty	S.C	Serial No.	ICA	Replaceable part	
								Part No.	Q'ty
7430 --	110969-00018	MIRROR ASS'Y	ENSEMBLE DE MIROIR	-	D				
2	101582-00036	STAY;MIRROR	SEJOUR	1					
3	K1041643	MIRROR	MIROIR	1					
4	2114-1898D2	WASHER	RONDELLE	1					
5	2121-1311D2	NUT	ECROU	1					

DATE	JUN. 01, 2010
3rd EDITION	

Fig. 7440 MIRROR - ADDITIONAL(CABIN)
MIROIR - ADDITIONNEL

Serial No. ;

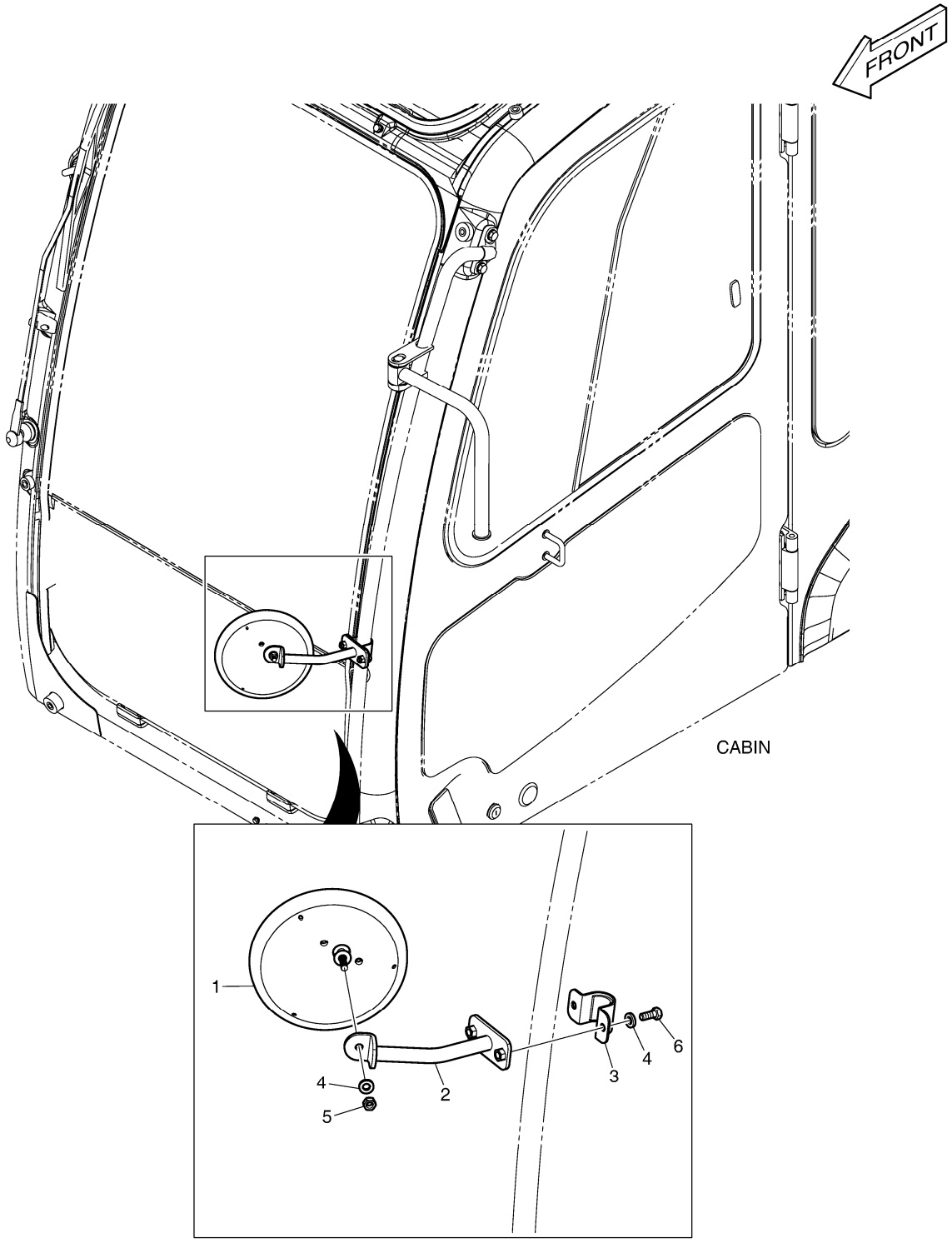

Fig. 7440 MIRROR - ADDITIONAL(CABIN)
MIROIR - ADDITIONNEL

Serial No. ;

Key No.	Part No.	Description	Description	Q'ty	S.C	Serial No.	ICA	Replaceable part	
								Part No.	Q'ty
7440 --	K1054793	MIRROR ASS`Y;SIDE	RETROVISEUR	-	D				
1	K1041645	MIRROR	MIROIR	1					
2	K1054796	STAY;MIRROR	SEJOUR	1					
3	K1054803	PLATE	PLAQUE	1					
4	2114-1898D2	WASHER	RONDELLE	3					
5	2121-1311D2	NUT	ECROU	1					
6	2120-2166D5	BOLT	BOULON	2					

DATE	JUN. 01, 2010
3rd EDITION	

Fig. 7450 CONTROL STAND - L.H(ROPS)
CONSOLE DE COMMANDE

Serial No. ;

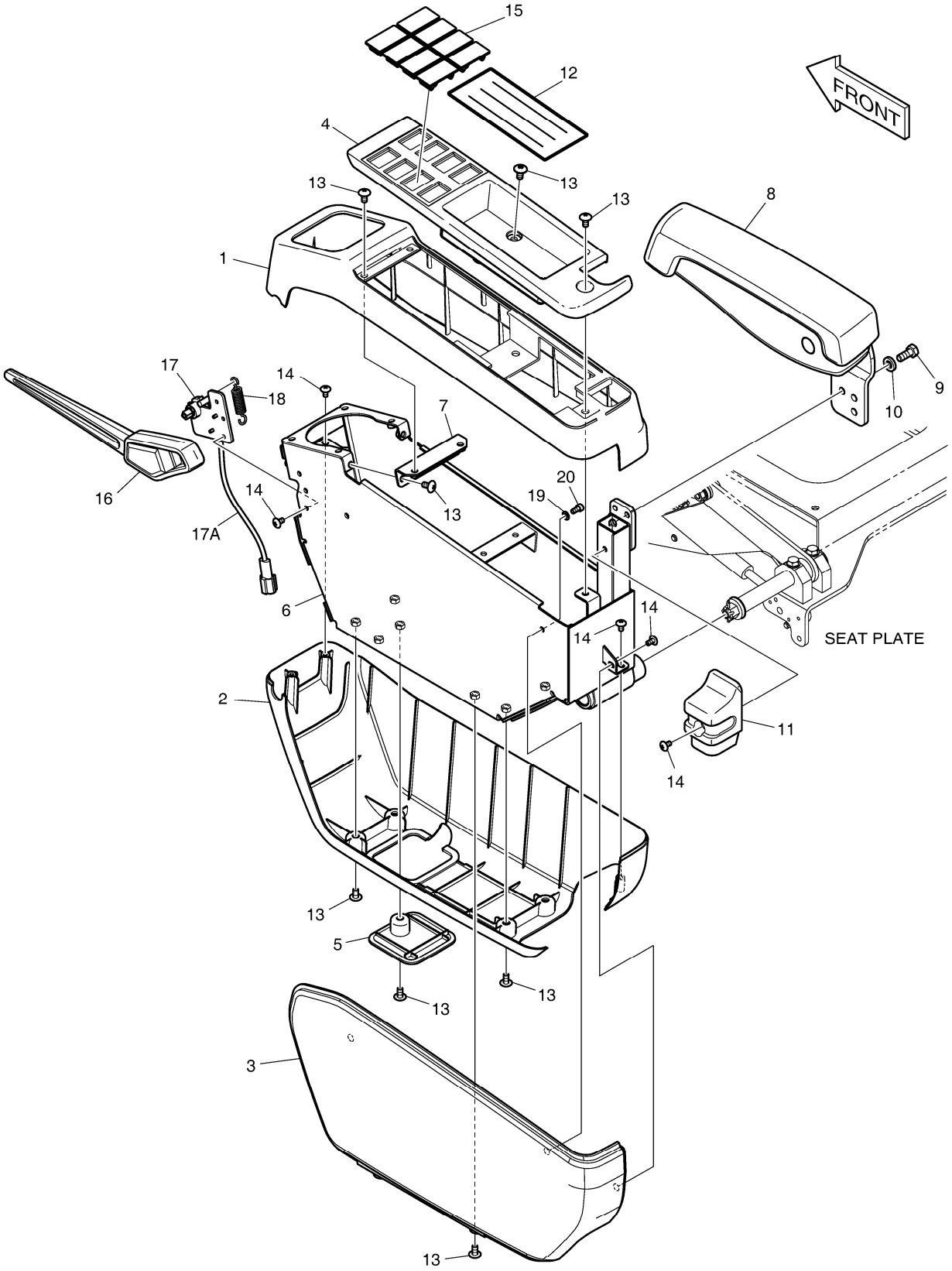

DATE	JUN. 01, 2010
3rd EDITION	

Fig. 7450 CONTROL STAND - L.H(ROPS)
CONSOLE DE COMMANDE

Serial No. ;

Key No.	Part No.	Description	Description	Q'ty	S.C	Serial No.	ICA	Replaceable part	
								Part No.	Q'ty
7450 --	220111-00032	STAND ASS'Y,CONTROL(L.H)	CONSOLE DE COMMANDE	-	D				
1	220204-00050A	COVER,STAND;UPPER(L.H)	COUVERTURE	1					
2	220204-00051A	COVER,STAND;LOWER(L.H)	COUVERTURE	1					
3	220204-00052A	COVER,STAND;SIDE(L.H)	COUVERTURE	1					
4	220204-00053A	COVER,STAND;S/W(L.H)	COUVERTURE	1					
5	220204-00057A	COVER,STAND;LOWER	COUVERTURE	1					
6	110431-00027B	BRACKET,STAND;(L.H)	SUPPORT	1					
7	250105-00162	PLATE;COVER MOUNT	PLAQUE	1					
8	220106-00012	REST,ARM	REPOS	1					
9	2120-2166D5	BOLT	BOULON	3					
10	2114-1898D2	WASHER	RONDELLE	3					
11	220204-00060B	COVER,STAND;ARM REST	COUVERTURE	1					
12	101555-00042A	PAD,RUBBER	GARNITURE	1					
13	2120-2166D52	BOLT	BOULON	14					
14	2120-2166D53	SCREW	VIS	8					
15	621-02801	COVER;SWITCH	COUVERTURE	8					
16	101101-00056A	LEVER ASS'Y,SAFETY	LEVIER	1					
17	301417-00002A	SWITCH,SAFETY	COMMUTATEUR	1					
17A	549-00089	. SWITCH;MICRO	. COMMUTATEUR	1					
18	K1057731	SPRING;SAFETY LEVER	RESSORT	1					
19	2114-1898D4	WASHER	RONDELLE	2					
20	S2202866	BOLT;SOCKET M5X0.8X10	BOULON	2					

DATE	JUN. 01, 2010
3rd EDITION	

Fig. 7460 CONTROL STAND - R.H(ROPS)
CONSOLE DE COMMANDE

Serial No. ;

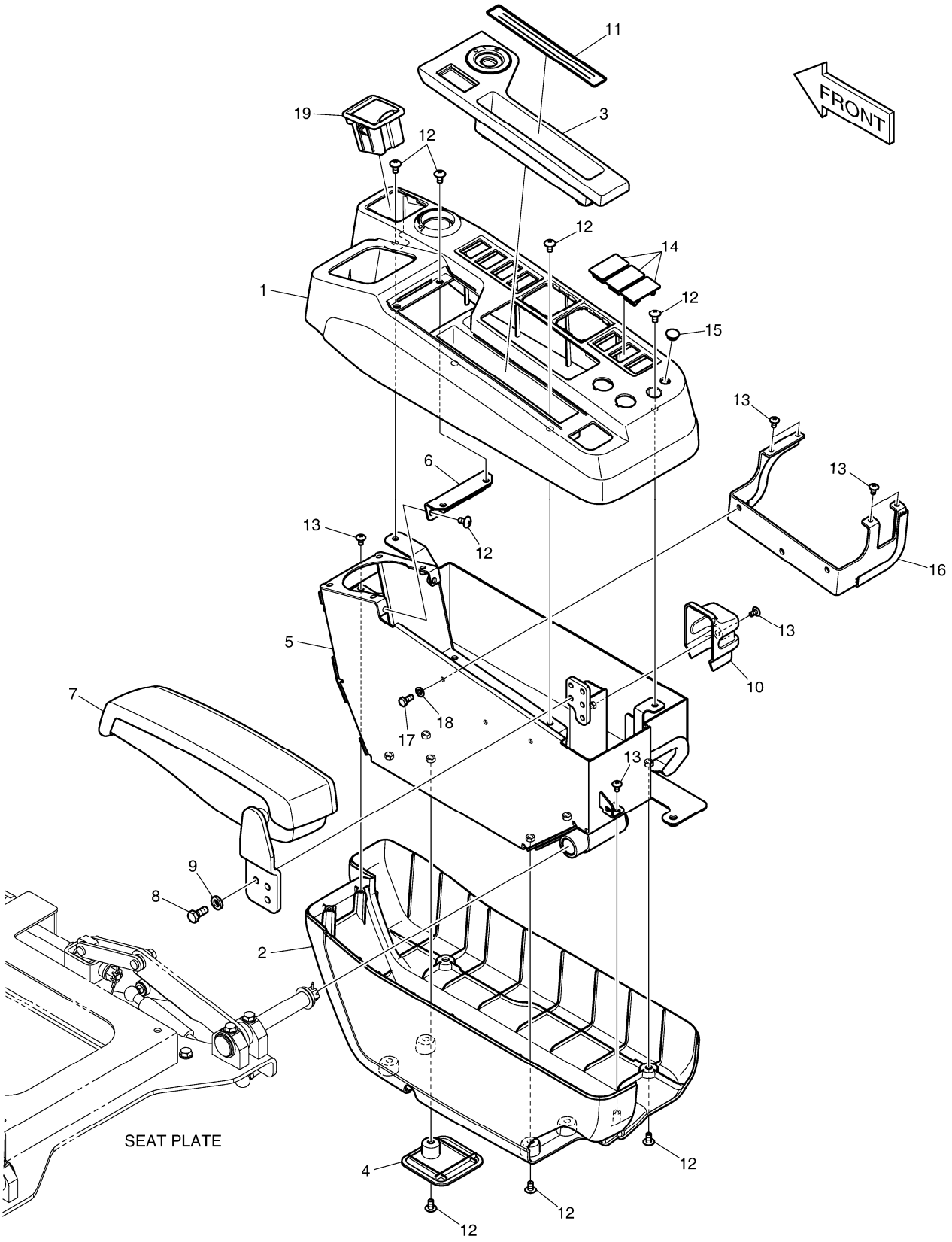

DATE	JUN. 01, 2010
3rd EDITION	

Fig. 7460 CONTROL STAND - R.H(ROPS)
CONSOLE DE COMMANDE

Serial No. ;

Key No.	Part No.	Description	Description	Q'ty	S.C	Serial No.	ICA	Replaceable part	
								Part No.	Q'ty
7460 --	K1057720	STAND ASS'Y,CONTROL(R.H)	CONSOLE DE COMMANDE	-	D				
1	220204-00054A	COVER,STAND;UPPER(R.H)	COUVERTURE	1					
2	220204-00055A	COVER,STAND;LOWER(R.H)	COUVERTURE	1					
3	220204-00056A	COVER,STAND;S/W(R.H)	COUVERTURE	1					
4	220204-00057A	COVER,STAND;LOWER	COUVERTURE	1					
5	110431-00028B	BRACKET,STAND(R.H)	SUPPORT	1					
6	250105-00162	PLATE;COVER MOUNT	PLAQUE	1					
7	220106-00013	REST,ARM	REPOS	1					
8	2120-2166D5	BOLT	BOULON	3					
9	2114-1898D2	WASHER	RONDELLE	3					
10	220204-00060B	COVER,STAND;ARM REST	COUVERTURE	1					
11	101555-00043A	PAD,RUBBER	GARNITURE	1					
12	2120-2166D52	BOLT	BOULON	15					
13	2120-2166D53	SCREW	VIS	8					
14	621-02801	COVER;SWITCH	COUVERTURE	3					
15	K1006995	CAP	CHAPEAU	1					
16	110431-00039B	BRACKET,STAND;AIRCON PANE	SUPPORT	1					
17	2120-2166D28	BOLT;HEX	BOULON	3					
18	2114-1898D3	WASHER;PLAIN	RONDELLE	3					
19	906-00002A	ASHTRAY ASM	CENDRIER	1					

DATE	JUN. 01, 2010
3rd EDITION	

Fig. 7470 SEAT SLIDING PLATE - ROPS
POSEZ GLISSER LE PLAT

Serial No. ;

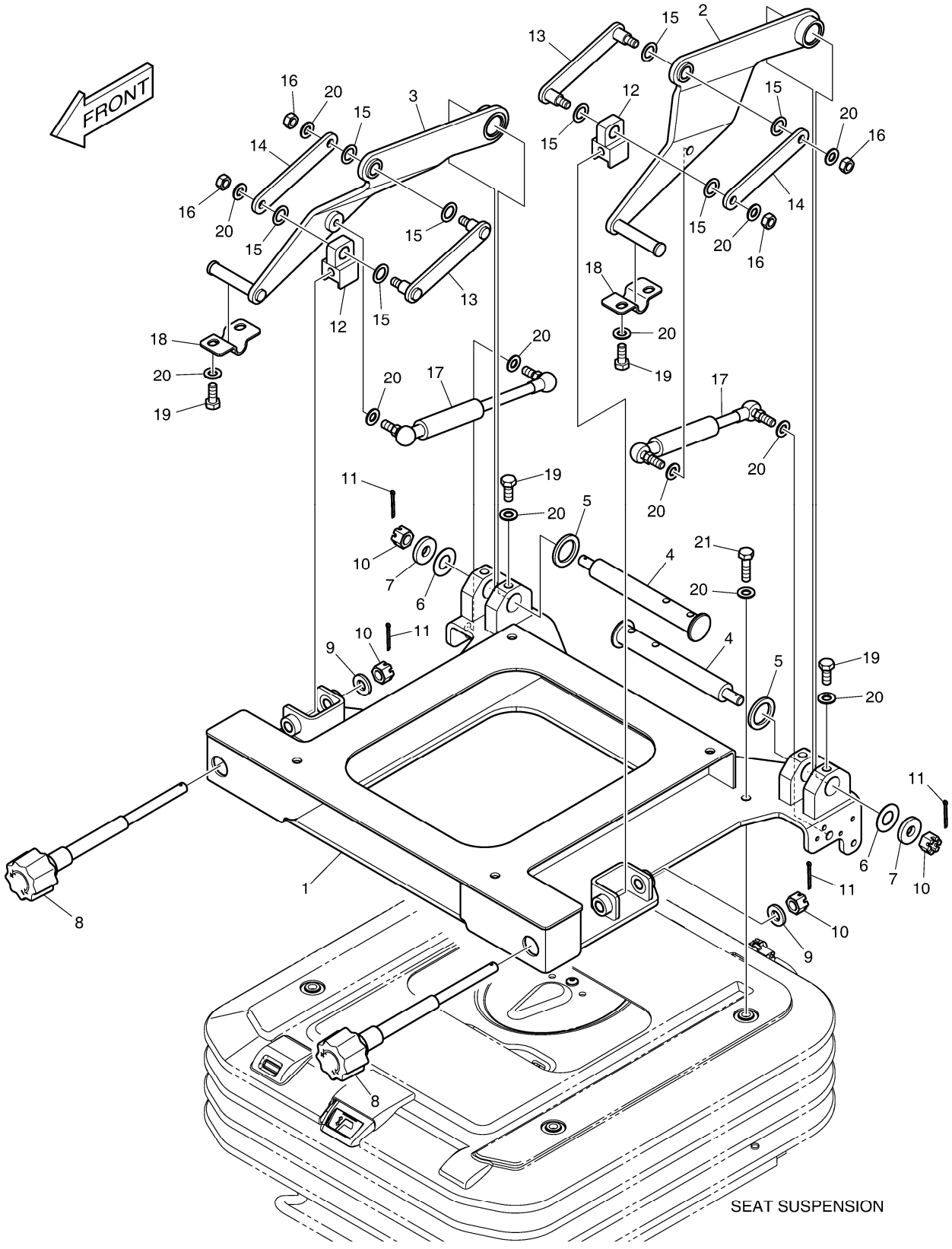

DATE	JUN. 01, 2010
3rd EDITION	

Fig. 7470 SEAT SLIDING PLATE - ROPS
POSEZ GLISSER LE PLAT

Serial No. ;

Key No.	Part No.	Description	Description	Q'ty	S.C	Serial No.	ICA	Replaceable part	
								Part No.	Q'ty
7470 --	250110-00031A	PLATE ASS'Y,SEAT	PLAQUE	-	D				
1	250110-00013E	PLATE,SEAT	PLAQUE	1					
2	110431-00029C	BRACKET,STAND(L.H)	SUPPORT	1					
3	110431-00030C	BRACKET,STAND(R.H)	SUPPORT	1					
4	120501-00160A	PIN	GOUPILLE	2					
5	2114-1898D18	WASHER	RONDELLE	2					
6	114-00590	WASHER	RONDELLE	2					
7	120810-00047	WASHER,PLAIN	RONDELLE	2					
8	110920-00007	GRIP	POIGNEE	2					
9	2114-1058D63	WASHER	RONDELLE	2					
10	S4214603	NUT;CASTLE M10X1.5	ECROU CRENELE	4					
11	S5735371	PIN;SNAP	GOUPILLE	4					
12	100202-00003B	BLOCK,SLIDING;STAND ADJUST	BLOC	2					
13	110406-00414	BRACKET	SUPPORT	2					
14	110406-00415	BRACKET	SUPPORT	2					
15	120810-00050	WASHER;NYLON	RONDELLE	8					
16	2121-1311D2	NUT	ECROU	4					
17	440-00237A	SPRING;GAS	RESSORT	2					
18	250201-00363	PLATE	PLAQUE	2					
19	2120-2166D5	BOLT	BOULON	8					
20	2114-1898D14	WASHER;PLAIN	RONDELLE	20					
21	2120-2166D30	BOLT M8X1.25X30	BOULON	4					

DATE	JUN. 01, 2010
3rd EDITION	

Fig. 7480 SEAT PLATE - ROPS
POSEZ LE PLAT

Serial No. ;

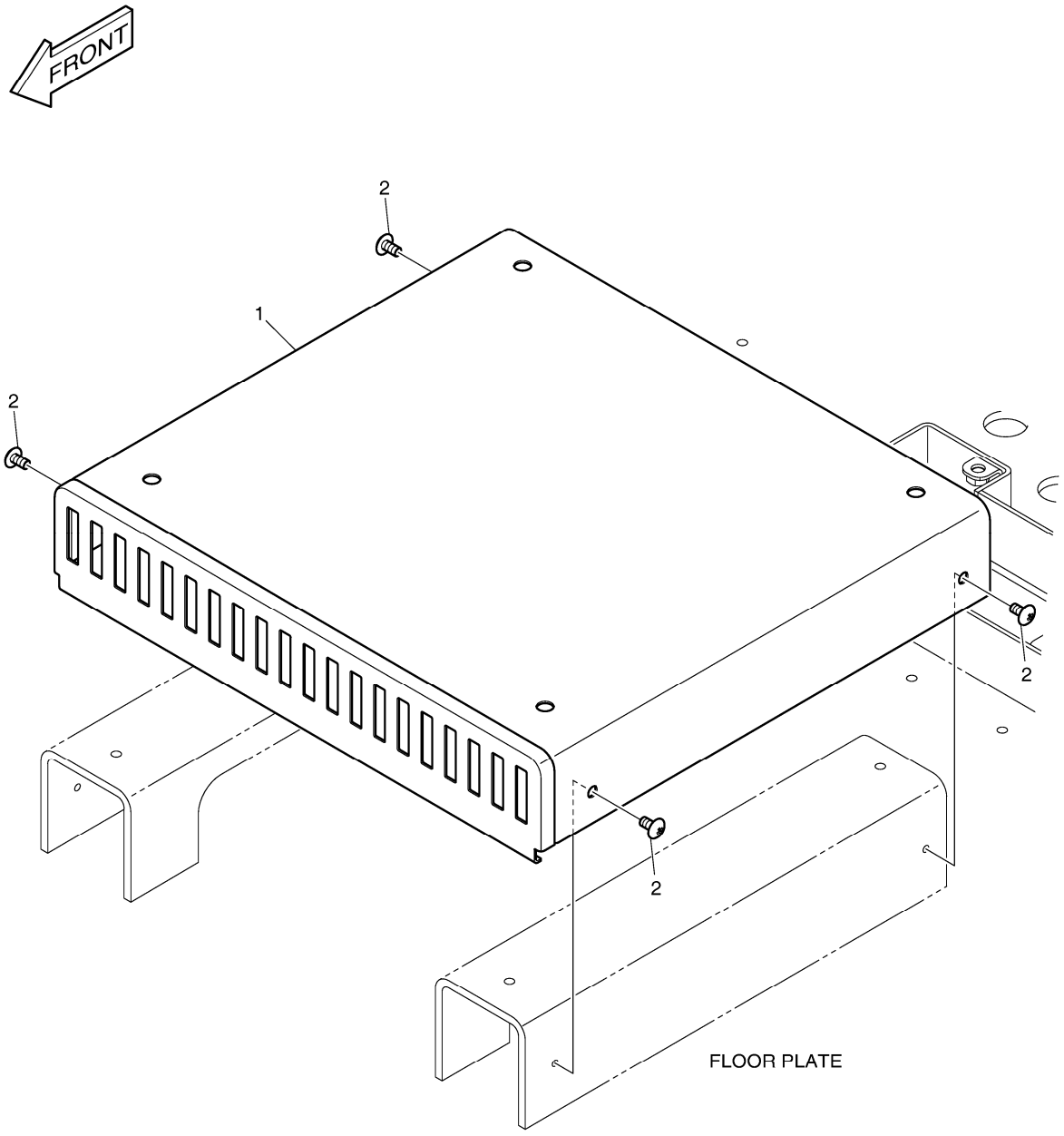

DATE	JUN. 01, 2010
3rd EDITION	

Fig. 7480 SEAT PLATE - ROPS POSEZ LE PLAT

Serial No. ;

Key No.	Part No.	Description	Description	Q'ty	S.C	Serial No.	ICA	Replaceable part	
								Part No.	Q'ty
7480 --	160102-00008	BASE ASS'Y,SEAT	BASE	-	D				
1	220204-00096A	COVER ASS'Y,SEAT BASE	COUVERTURE	1					
2	2120-2166D52	BOLT	BOULON	4					

DATE	JUN. 01, 2010
3rd EDITION	

Fig. 7490 SUSPENSION - ROPS SUSPENSION

Serial No. ;

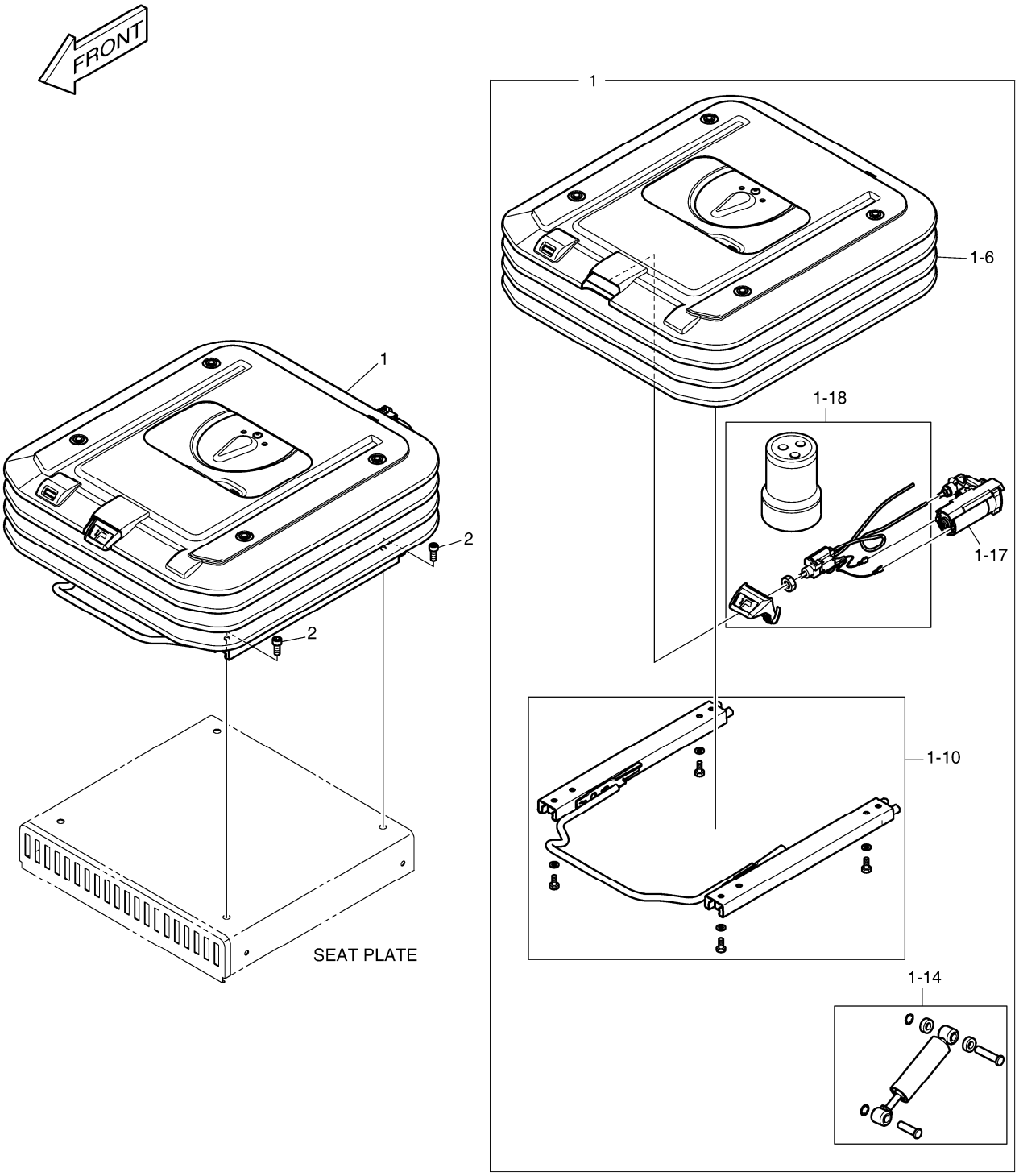

DATE	JUN. 01, 2010
3rd EDITION	

Fig. 7490 SUSPENSION - ROPS SUSPENSION

Serial No. ;

Key No.	Part No.	Description	Description	Q'ty	S.C	Serial No.	ICA	Replaceable part	
								Part No.	Q'ty
7490 --	190112-00001	SUSPENSION ASS'Y	SOUS-MARIN DE SUPPOT	-	D				
1	K1057718	SUSPENSION,SEAT	SOUS-MARIN DE SUPPOT	1					
1-6	430205-00011	. BELLOWS	. SOUFFLETS	1					
1-10	900130-00005	. RAIL,SLIDE;SUSPENSION	. GLISSEZ LE RAIL	1					
1-14	180313-00034	. DAMPER SET	. ENSEMBLE D'AMORTISSE	1					
1-17	400102-00105	. COMPRESSOR;24V	. COMPRESSEUR	1					
1-18	101529-00137	. KIT;AIR SPRING & VALVE	. RESSORT PNEUMATIQUE	1					
2	S2208866	BOLT;SOCKET	BOULON	4					

DATE	JUN. 01, 2010
3rd EDITION	

Fig. 7500 SEAT MOUNTING - ROPS
SIEGE LE SUPPORT

Serial No. ;

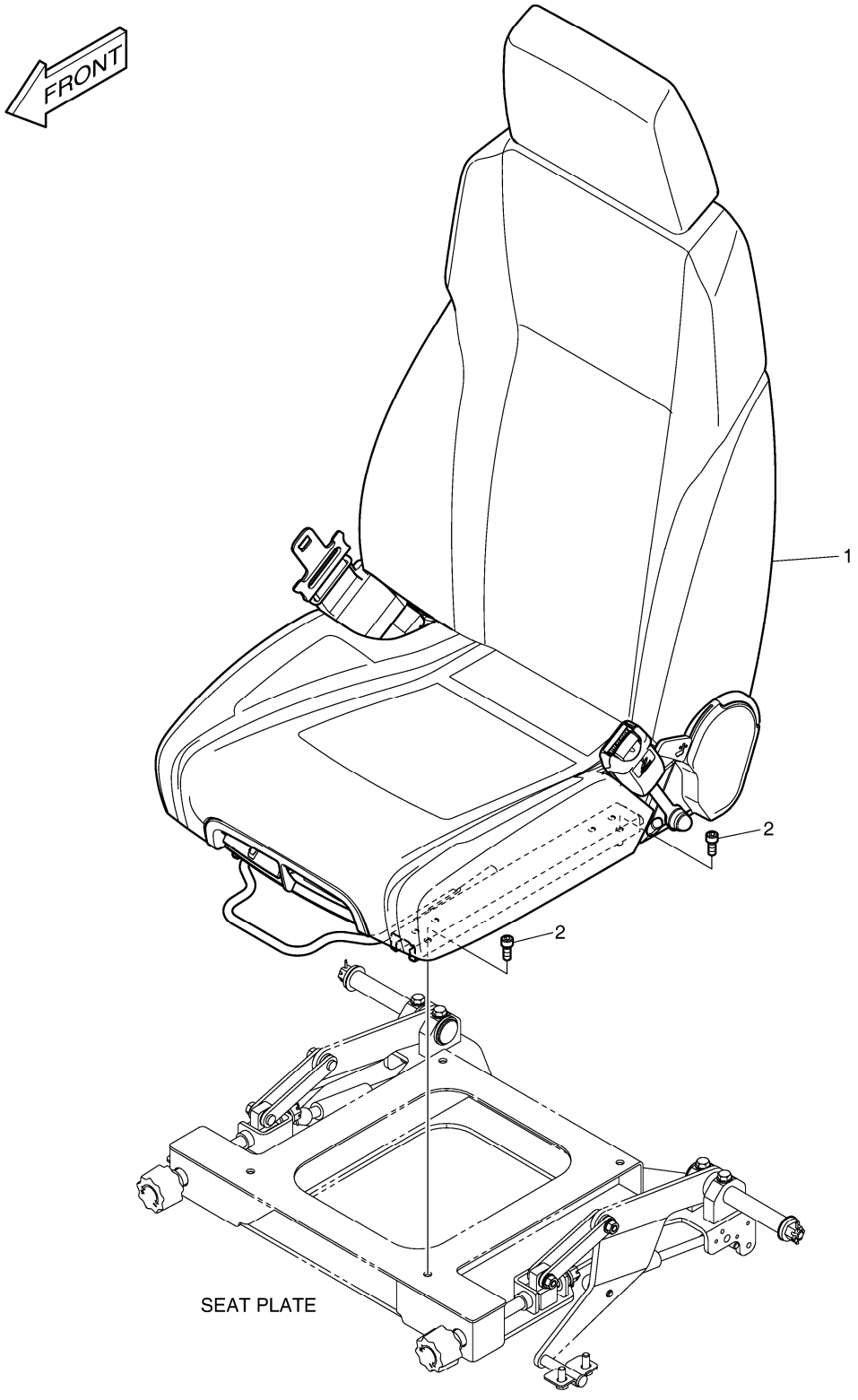

DATE	JUN. 01, 2010
3rd EDITION	

Fig. 7500 SEAT MOUNTING - ROPS
SIEGE LE SUPPORT

Serial No. ;

Key No.	Part No.	Description	Description	Q'ty	S.C	Serial No.	ICA	Replaceable part	
								Part No.	Q'ty
7500 --	220110-00016	SEAT ASS'Y,OPERATER	SIEGE	-	D				
1	220110-00029	SEAT,OPERATOR	POSEZ GLISSER LE PLAT	1					
2	S2208866	BOLT;SOCKET	BOULON	4					

DATE	JUN. 01, 2010
3rd EDITION	

Fig. 7510 SEAT - ROPS
SIEGE

Serial No. ;

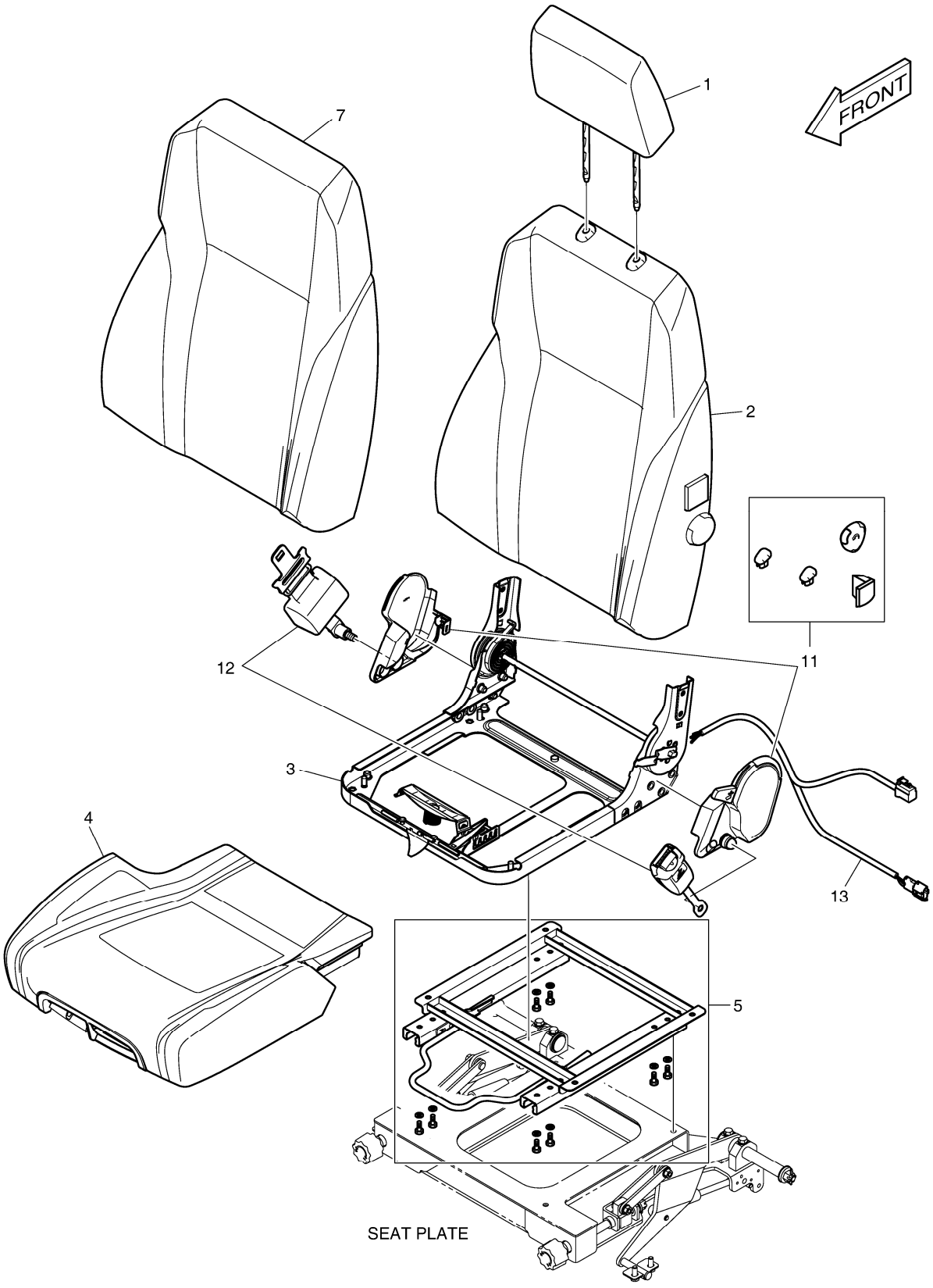

DATE	JUN. 01, 2010
3rd EDITION	

Fig. 7510 SEAT - ROPS SIEGE

Serial No. ;

Key No.	Part No.	Description	Description	Q'ty	S.C	Serial No.	ICA	Replaceable part	
								Part No.	Q'ty
7510 --	220110-00029	SEAT,OPERATOR	POSEZ GLISSER LE PLAT	1					
1	220108-00003	REST,HEAD	REPOS PRINCIPAL	1					
2	180304-00015	CUSHION;BACK	COUSSIN ; DOS	1					
3	160102-00011	BASE,SEAT	POSEZ LA BASE	1					
4	180304-00016	CUSHION;SEAT	COUSSIN DE SIÈGE	1					
5	900130-00004	RAIL,SLIDE	GLISSEZ LE RAIL	1					
7	110508-02901	COVER,BACK	COUVERTURE ARRIÈRE	1					
11	110508-02902	COVER KIT	KIT DE COUVERTURE	1					
12	220213-00003	BELT,SEAT	CEINTURE	1					
13	310207-00891	HARNESS	HARNAIS	1					

DATE	JUN. 01, 2010
3rd EDITION	

Fig. 7520 DUCT COVER - ROPS
CONDUITES COUVERCLE

Serial No. ;

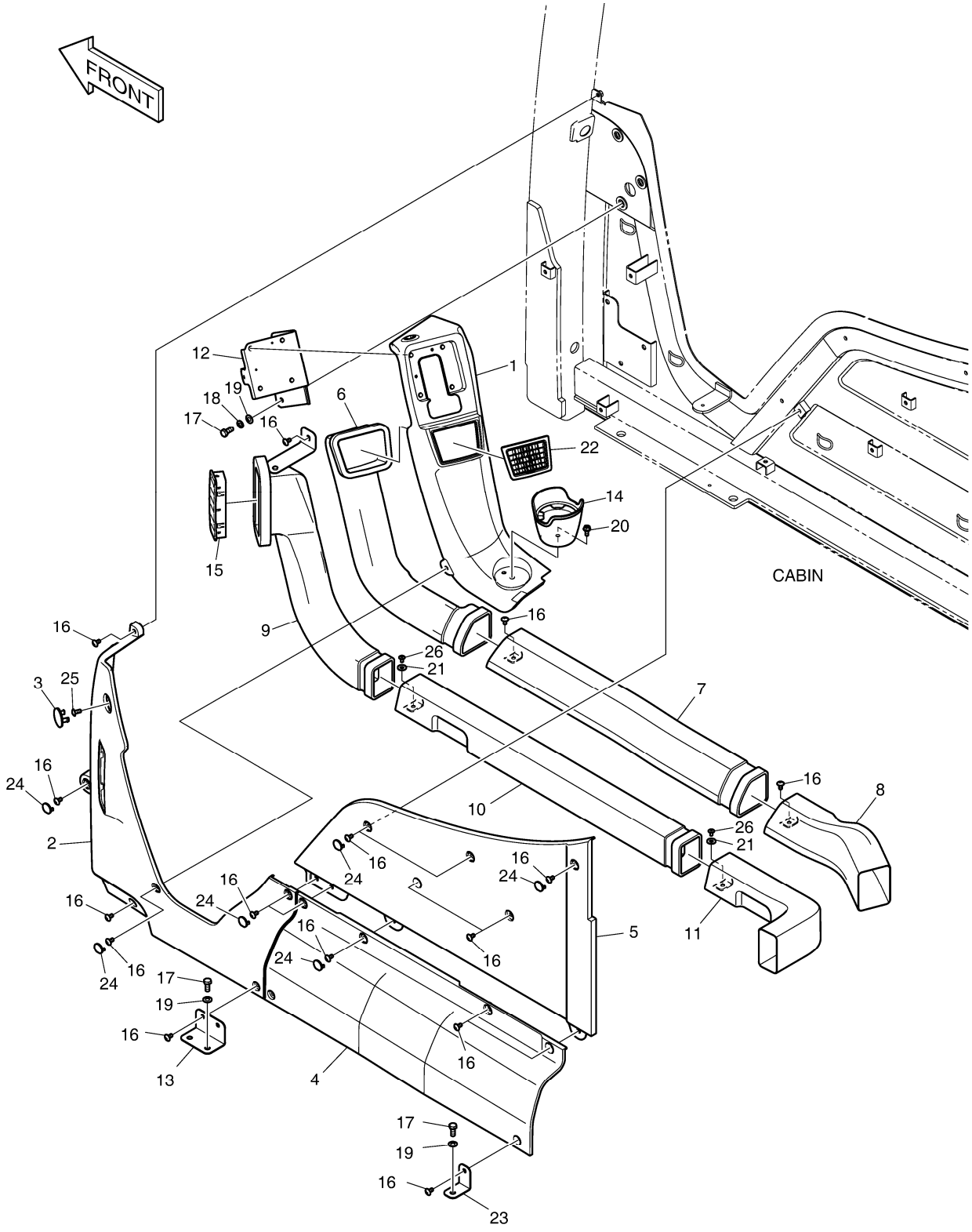

DATE	JUN. 01, 2010
3rd EDITION	

Fig. 7520 DUCT COVER - ROPS
CONDUITES COUVERCLE

Serial No. ;

Key No.	Part No.	Description	Description	Q'ty	S.C	Serial No.	ICA	Replaceable part	
								Part No.	Q'ty
7520 --	110517-00198	COVER ASS'Y,SIDE	COUVERTURE	-	D				
1	110517-00003B	COVER,SIDE;UPPER	COUVERTURE	1					
2	110517-00004C	COVER,SIDE;LOWER	COUVERTURE	1					
3	110517-00005C	COVER,SIDE;CAP	COUVERTURE	1					
4	110517-00006C	COVER,SIDE;MID	COUVERTURE	1					
5	110517-00007C	COVER,SIDE;PANEL	COUVERTURE	1					
6	460103-00003A	DUCT,FACE;FRONT	CONDUIT	1					
7	460103-00004A	DUCT,FACE;MID	CONDUIT	1					
8	460103-00005A	DUCT,FACE;REAR	CONDUIT	1					
9	460103-00006A	DUCT,DEFROST;FRONT	CONDUIT	1					
10	460103-00007A	DUCT,DEFROST;MID	CONDUIT	1					
11	460103-00008A	DUCT,DEFROST;REAR	CONDUIT	1					
12	250127-00026B	PLATE,MOUNTING;MONITOR	PLAQUE	1					
13	250127-00027B	PLATE,MOUNTING;SIDE COVER	PLAQUE	1					
14	110929-00002C	HOLDER,CUP;SIDE	SUPPORT	1					
15	430218-00008B	NOZZLE,DUCT;DEF	BEC	1					
16	2120-2166D52	BOLT	BOULON	21					
17	2120-2166D5	BOLT	BOULON	6					
18	2114-2031D4	WASHER;SPRING	RONDELLE	3					
19	2114-1898D14	WASHER;PLAIN	RONDELLE	6					
20	K1010304	BOLT;FLANGE	BOULON	1					
21	2114-1898D5	WASHER M6	RONDELLE	2					
22	415-00044B	LOUVER FACE	AUVENT	1					
23	250127-00096A	PLATE,MOUNTING;SIDE	PLAQUE	1					
24	110910-00050B	CAP,PLASTIC;SIDE	CHAPEAU	8					
25	2120-2166D10	SCREW M6X1.0X14	VIS	1					
26	2120-2166D53	SCREW	VIS	2					

DATE	JUN. 01, 2010
3rd EDITION	

Fig. 7530 HEATER COVER - ROPS
BOITIES DE CHAUFFAGE

Serial No. ;

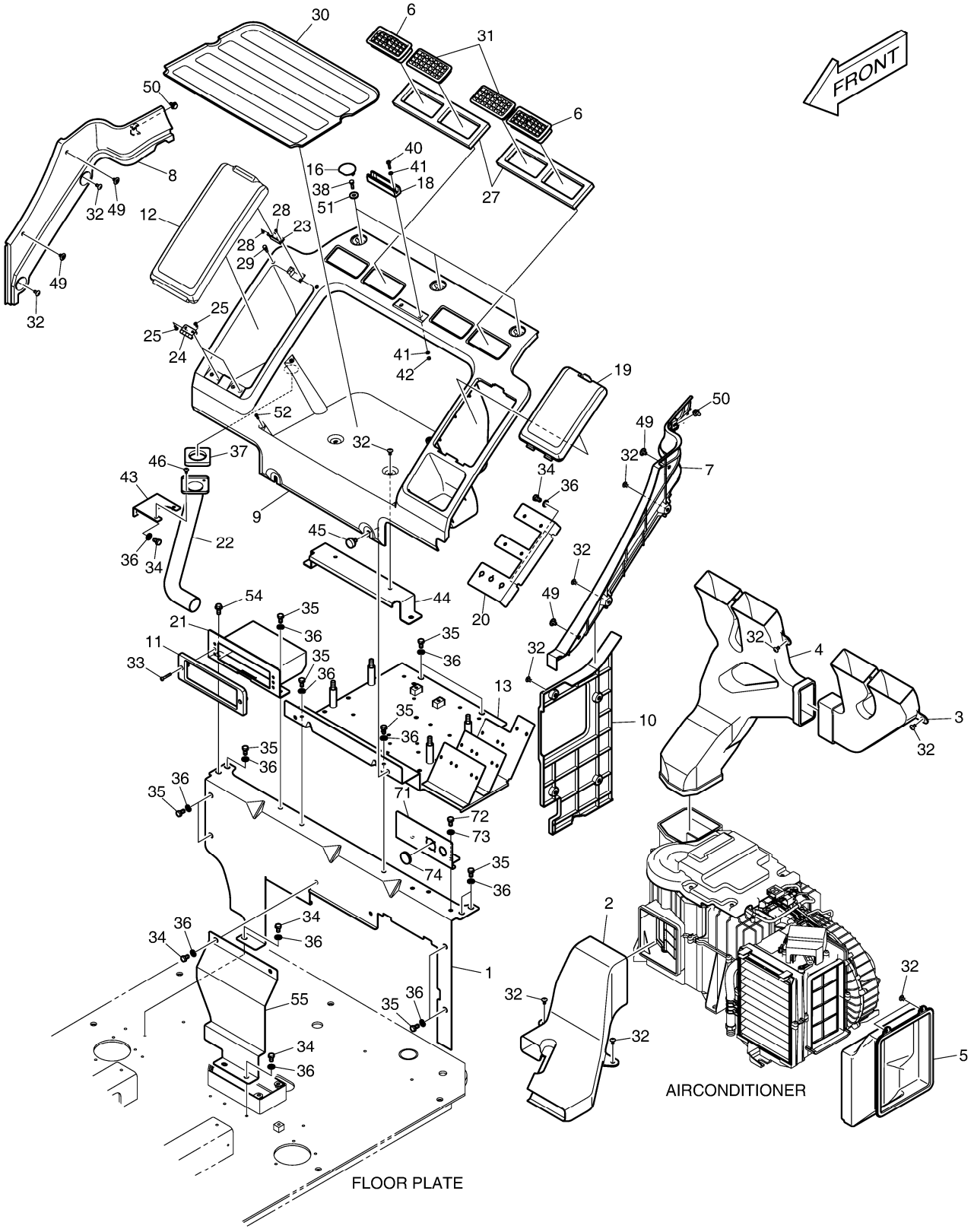

DATE	JUN. 01, 2010
3rd EDITION	

Fig. 7530 HEATER COVER - ROPS
BOITIES DE CHAUFFAGE

Serial No. ;

Key No.	Part No.	Description	Description	Q'ty	S.C	Serial No.	ICA	Replaceable part	
								Part No.	Q'ty
7530 --	220204-00106B	COVER ASS'Y,REAR	COUVERTURE	-	D				
1	250120-00072	PLATE,REAR;MAIN	PLAQUE	1					
2	460103-00039	DUCT,FOOT	COUVERCLE	1					
3	460103-00015A	DUCT,REAR;(L.H)	CONDUIT	1					
4	460103-00012A	DUCT,REAR	CONDUIT	1					
5	460103-00014A	DUCT,AIR INLET	CONDUIT	1					
6	415-00043B	NOZZLE;REAR	BEC	2					
7	220204-00009C	COVER,CABIN;REAR(L.H)	COUVERTURE	1					
8	220204-00010C	COVER,CABIN;REAR(R.H)	COUVERTURE	1					
9	220204-00008C	COVER,CABIN;CENTER	COUVERTURE	1					
10	220204-00023C	COVER;BACK LOCK	COUVERTURE	1					
11	220204-00016B	COVER,CABIN;CASSETTE	COUVERTURE	1					
12	220204-00011C	COVER,CABIN;REFRIGERATOR	COUVERTURE	1					
13	250120-00015C	PLATE,REAR;EBOX	PLAQUE	1					
16	110508-00204C	COVER;REAR	COUVERTURE	3					
18	250122-00008A	PLATE,SUPPORT;GLASS	PLAQUE	1					
19	220204-00012C	COVER,CABIN;FUSE	COUVERTURE	1					
20	250105-00048A	PLATE;FUSE BOX	PLAQUE	1					
21	250120-00003B	PLATE,REAR;CASSTTE	PLAQUE	1					
22	460103-00020A	DUCT,AIR BOX	CONDUIT	1					
23	2125-1095A	CATCH;MAGNETIC	CROCHET	1					
24	110927-00026	HINGE	CHARNIERE	2					
25	S3452573	SCREW M4X0.7X10	VIS	8					
27	180102-00052	FOAM,SPONGE	MOUSSE	2					
28	S3644163	SCREW	VIS	4					
29	K1002385	STOPPER	TAQUET	2					
30	101555-00019A	PAD,RUBBER	GARNITURE	1					
31	K1043726	NOZZLE;REAR	BEC	2					
32	2120-2166D52	BOLT	BOULON	18					
33	2120-2166D15	BOLT	BOULON	2					
34	2120-2166D12	BOLT;HEX	BOULON	9					
35	2120-2166D25	BOLT M8X1.25X16	BOULON	12					
36	2114-1898D14	WASHER;PLAIN	RONDELLE	21					
37	161-00622	FOAM;AIR SEAL	MOUSSE	1					
38	2120-2166D36	BOLT	BOULON	3					
40	2120-2166D23	SCREW	VIS	2					
41	2114-1898D4	WASHER	RONDELLE	4					
42	S4012233	NUT M5X0.8	ECROU	2					

DATE	JUN. 01, 2010
3rd EDITION	

Fig. 7530 HEATER COVER - ROPS
BOITIES DE CHAUFFAGE

Serial No. ;

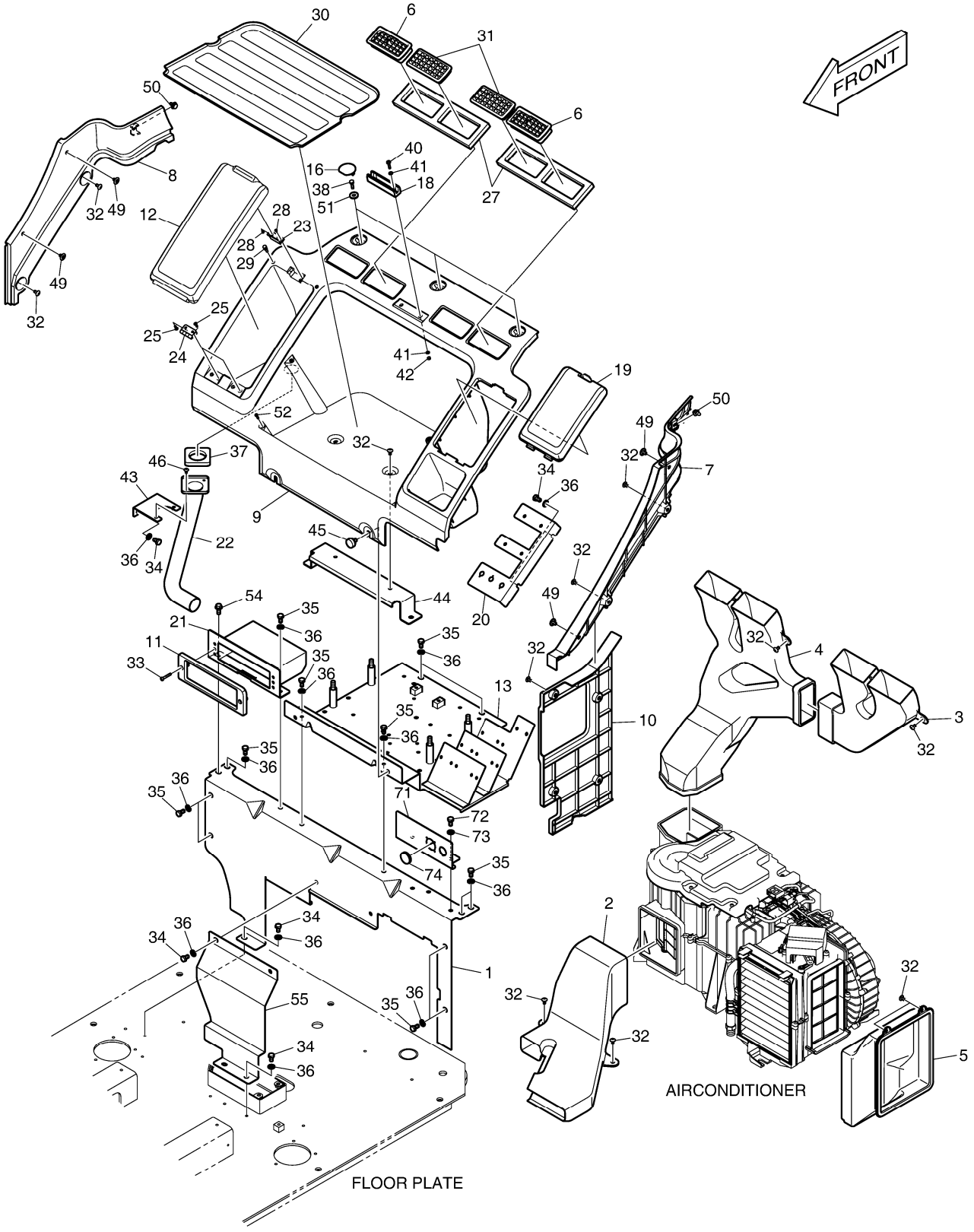

DATE	JUN. 01, 2010
3rd EDITION	

Fig. 7530 HEATER COVER - ROPS
BOITIES DE CHAUFFAGE

Serial No. ;

Key No.	Part No.	Description	Description	Q'ty	S.C	Serial No.	ICA	Replaceable part	
								Part No.	Q'ty
7530 -43	110423-00011	BRACKET	SUPPORT	1					
44	250120-00011	PLATE,REAR;COVER	PLAQUE	1					
45	K1003427	BOLT;KNOB	BOULON	2					
46	2120-2166D53	SCREW	VIS	2					
49	K1006933	SCRIVET	SCRIVET	4					
50	2124-1607	CLIP;TRIM	AGRAFE	2					
51	120808-00070	WASHER,SPACER	RONDELLE	3					
52	S3450593	SCREW	VIS	4					
54	S2008856	BOLT M8X1.25X20	BOULON	1					
55	250120-00073	PLATE,REAR;CONNECTOR	PLAQUE	1					
71	250120-00040	PLATE,REAR	PLAQUE	1					
72	2120-2166D25	BOLT M8X1.25X16	BOULON	2					
73	2114-1898D14	WASHER;PLAIN	RONDELLE	2					
74	K1026510	CAP;RUBBER	CHAPEAU	1					

DATE	JUN. 01, 2010
3rd EDITION	

Fig. 7540 CABIN MOUNTING - ROPS
SUPPORT DE CABINE

Serial No. ;

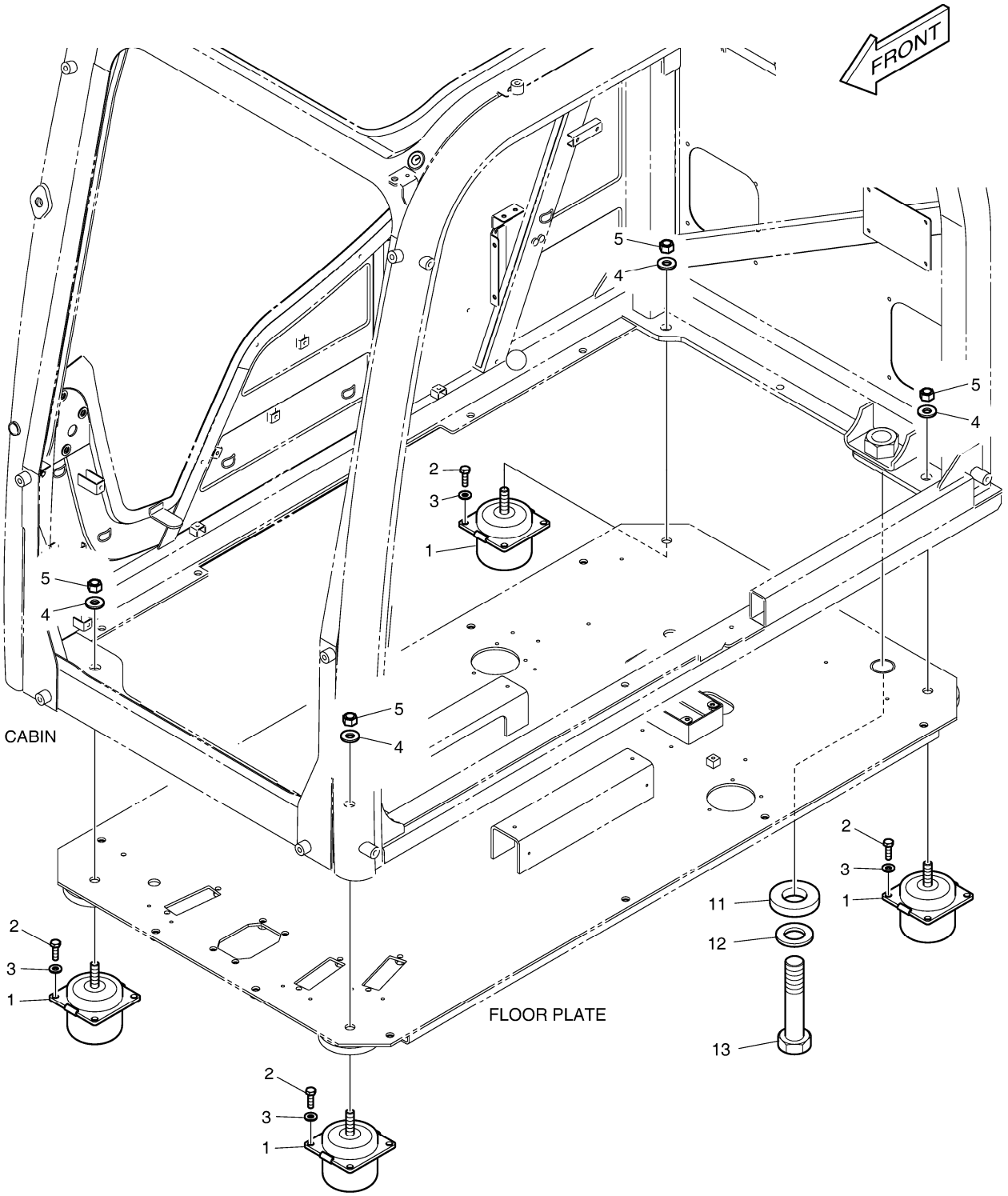

DATE	JUN. 01, 2010
3rd EDITION	

Fig. 7540 CABIN MOUNTING - ROPS
SUPPORT DE CABINE

Serial No. ;

Key No.	Part No.	Description	Description	Q'ty	S.C	Serial No.	ICA	Replaceable part	
								Part No.	Q'ty
7540 --	180204-00044A	CABIN MOUNT	SUPPORT DE CARLINGUE	-	D				
1	180204-00002	RUBBER,CABIN MOUNT	LE CAOUTCHOUC	4					
2	S0512366	BOLT	BOULON	16					
3	2114-1898D1	WASHER	RONDELLE	16					
4	2114-1058D2	WAHSER	RONDELLE	4					
5	2121-9007	NUT	ECROU	4					
11	250105-00015	PLATE;ROPS STOPPER	PLAQUE	1					
12	114-00055	WASHER;HARDEN	RONDELLE	1					
13	120106-00166B	BOLT,HEX	BOULON	1					

DATE	JUN. 01, 2010
3rd EDITION	

Fig. 7550 CABIN(1) - ROPS CABINE

Serial No. ;

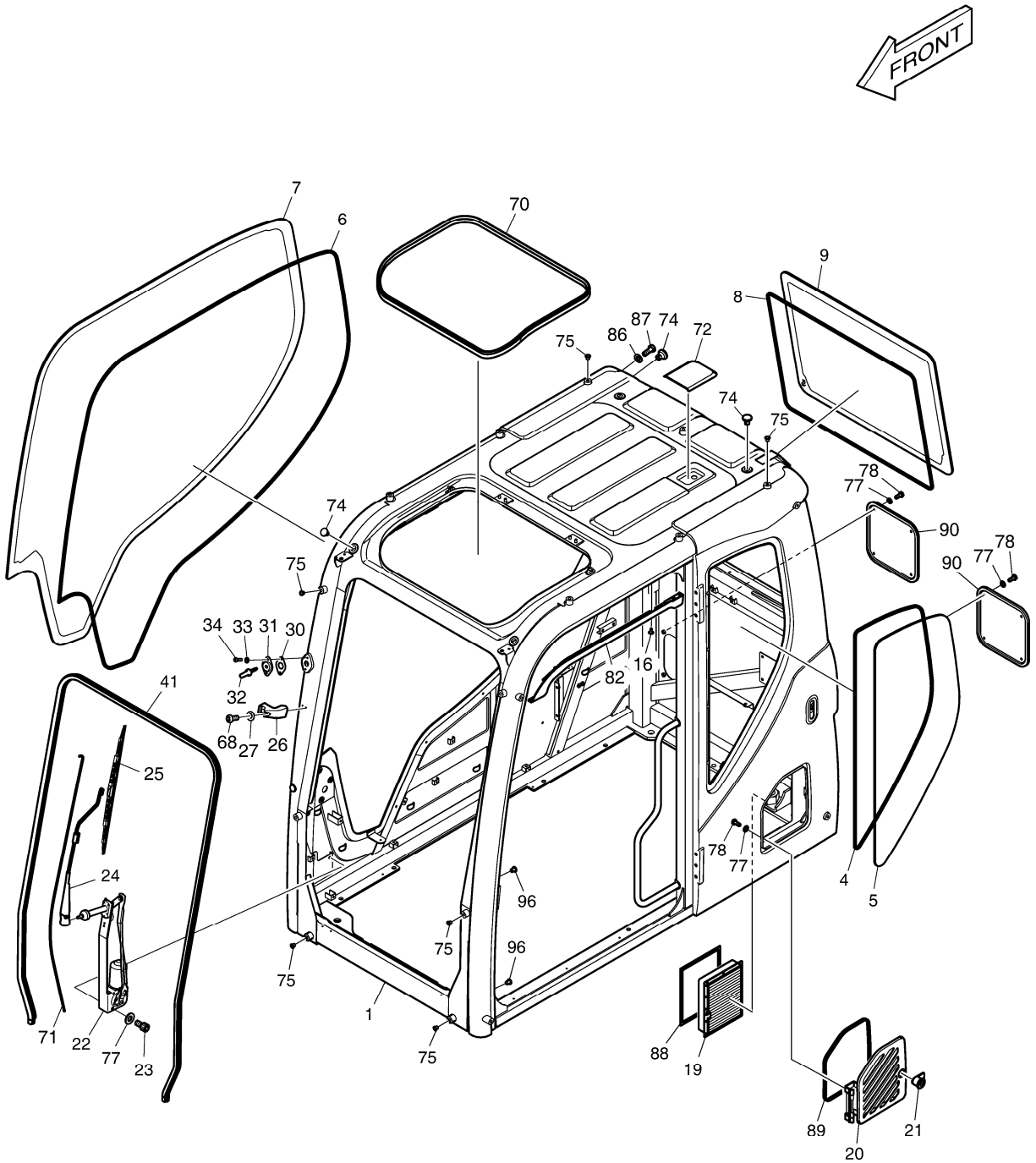

DATE	JUN. 01, 2010
3rd EDITION	

Fig. 7550 CABIN(1) - ROPS CABINE

Serial No. ;

Key No.	Part No.	Description	Description	Q'ty	S.C	Serial No.	ICA	Replaceable part	
								Part No.	Q'ty
7550 --	220101-00503A	CABIN ASS'Y;ROPS	CABINE	1					
1	-	BODY,CABIN	CORPS	1	D				
4	K1057517	DAMPER;GLASS LH	AMORTISSEUR	1					
5	K1057516	GLASS;LH	VERRE	1					
6	K1057521	DAMPER;GLASS RH	AMORTISSEUR	1					
7	K1057520	GLASS;RH	VERRE	1					
8	K1057519	DAMPER;GLASS REAR	AMORTISSEUR	1					
9	500119-00067A	GLASS,REAR	VERRE	1					
16	2120-2166D53	SCREW	VIS	3					
19	400402-00005	FILTER,AIRCON;FRESH AIR	FILTRE	1					
20	220204-00036C	COVER,CABIN;FILTER	COUVERTURE	1					
21	K1006160	CYLINDER;KEY	CYLINDRE	1					
22	538-00011	MOTOR;WIPER	MOTEUR	1					
23	S2208561	BOLT;SOCKET	BOULON	3					
24	300704-00006	ARM,WIPER;FRONT	BRAS	1					
25	220202-00009	BLADE,WIPER	LAME	1					
26	110958-00371	SUPPORT;WIPER ARM	APPUI	1					
27	S5000213	WASHER;PLAIN M5	RONDELLE	2					
30	161-00598A	RUBBER;WASHER NOZZLE	LE CAOUTCHOUC	1					
31	621-02837A	COVER;WASHER NOZZLE	COUVERTURE	1					
32	554-00005	NOZZLE;WASHER	BEC	1					
33	2114-1898D13	WASHER;PLAIN	RONDELLE	2					
34	2120-2166D33	SCREW M4X0.7X10	VIS	2					
41	101588-00017A	TRIM,RUBBER;FRONT OUTER	EQUILIBRE	1					
68	S3450863	SCREW	VIS	2					
70	K1057058	TRIM;ROOF COVER	EQUILIBRE	1					
71	2185-1660	HOSE	TUYAU	1					
72	K1057195	COVER;GPS ANTENNA	COUVERCLE	1					
74	2160-1310	BUSHING;RUBBER	DOUILLE	5					
75	110910-00077	CAP,PLASTIC;(M12)	CHAPEAU	13					
77	2114-1898D14	WASHER;PLAIN	RONDELLE	13					
78	2120-2166D5	BOLT	BOULON	10					
82	220204-00014B	COVER;SLIDE RAIL	COUVERTURE	1					
86	2114-1898D17	WASHER M12	RONDELLE	1					
87	2120-2166D27	BOLT	BOULON	1					
88	180102-00058	FOAM;FILTER	MOUSSE	1					
89	101588-00016	TRIM,RUBBER;FILTER COVER	EQUILIBRE	1					
90	110508-00526A	COVER;CABIN MOUNT	COUVERTURE	2					

DATE	JUN. 01, 2010
3rd EDITION	

Fig. 7550 CABIN(1) - ROPS CABINE

Serial No. ;

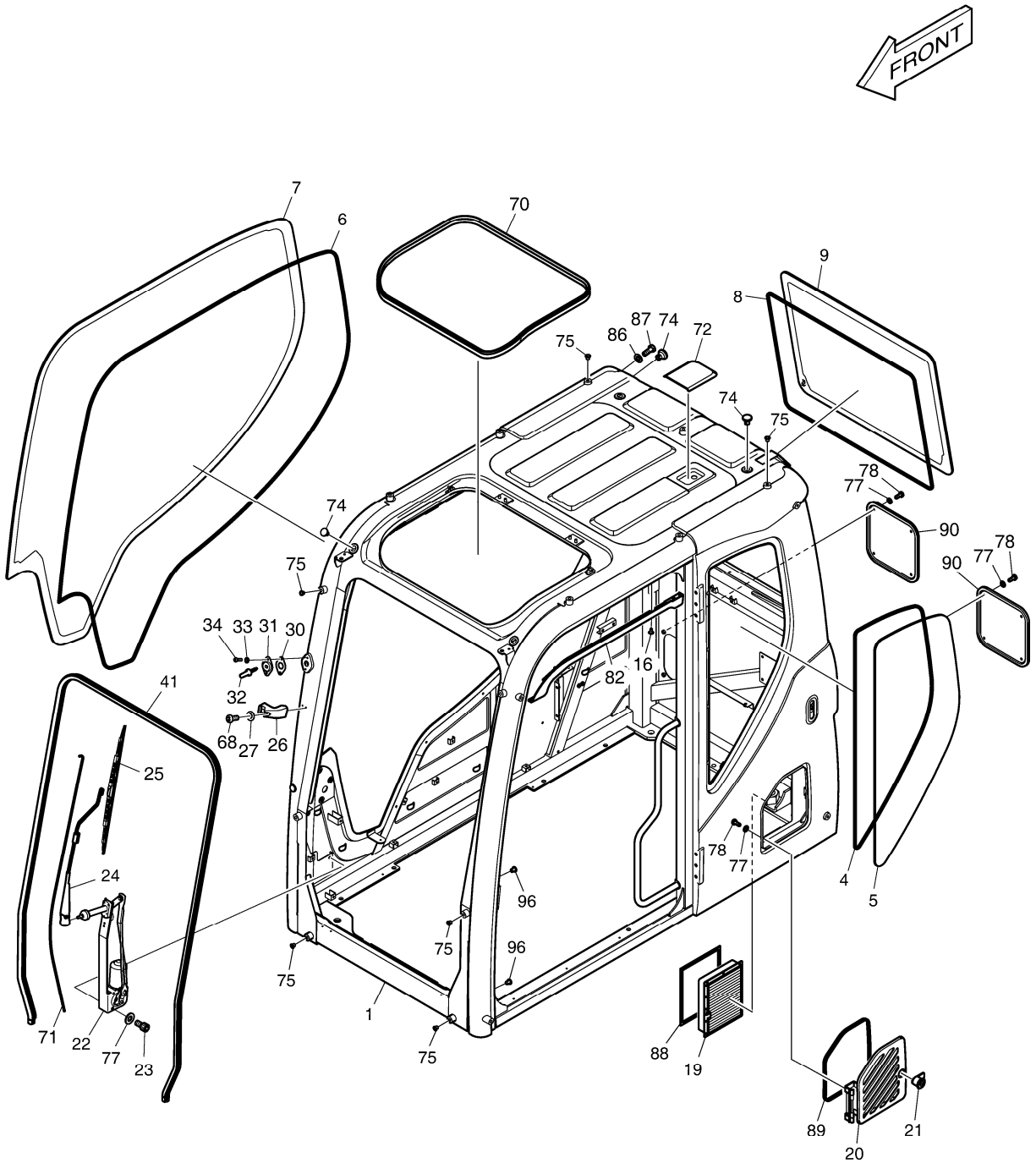

Fig. 7550 CABIN(1) - ROPS
CABINE

Serial No. ;

Key No.	Part No.	Description	Description	Q'ty	S.C	Serial No.	ICA	Replaceable part	
								Part No.	Q'ty
7550 -96	110910-00038A	CAP,PLASTIC;(M10)	CHAPEAU	2					

DATE	JUN. 01, 2010
3rd EDITION	

Fig. 7560 CABIN(2) - ROPS CABINE

Serial No. ;

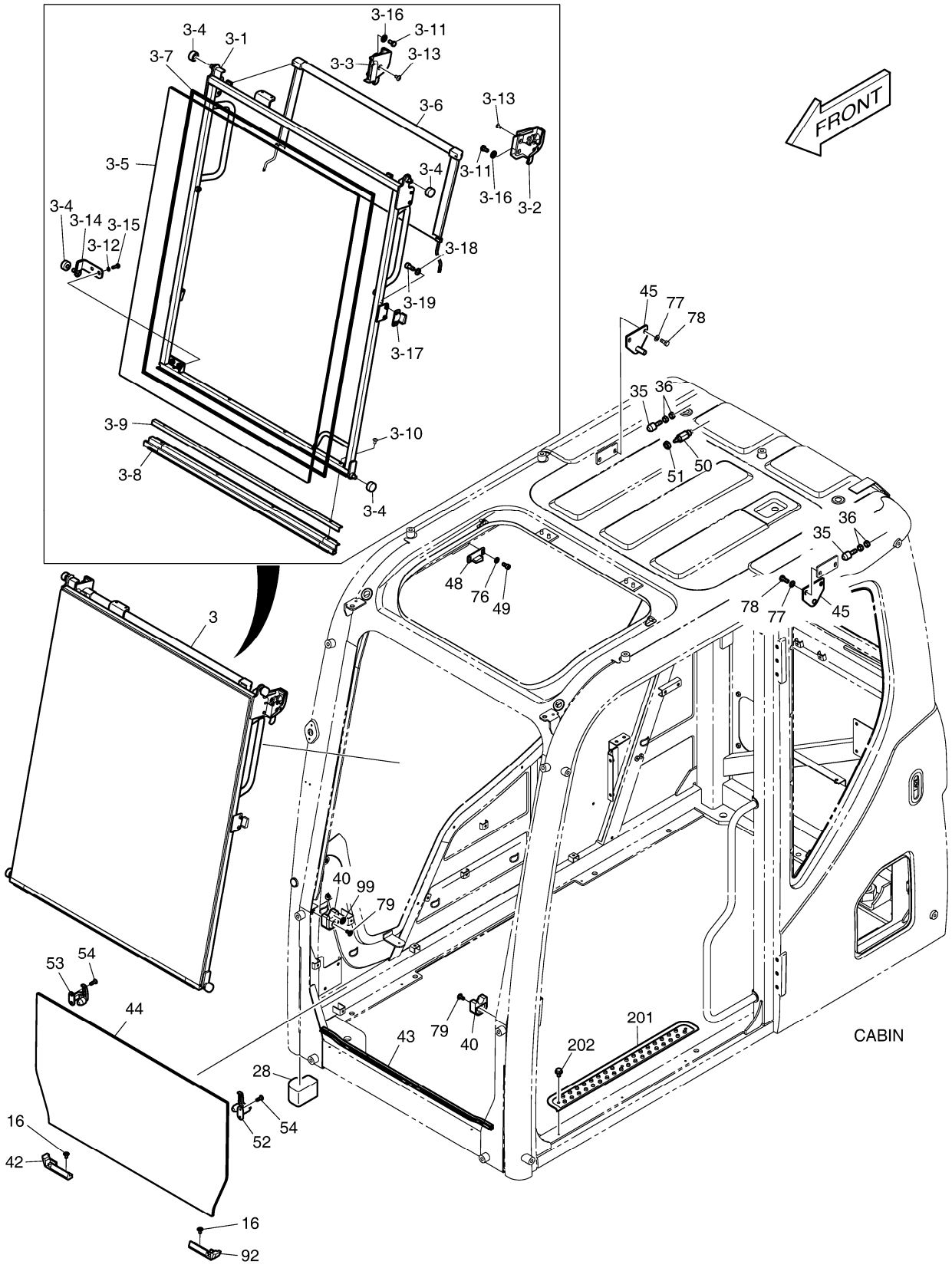

DATE	JUN. 01, 2010
3rd EDITION	

Fig. 7560 CABIN(2) - ROPS
CABINE

Serial No. ;

Key No.	Part No.	Description	Description	Q'ty	S.C	Serial No.	ICA	Replaceable part	
								Part No.	Q'ty
7560 --	220101-00503A	CABIN ASS'Y;ROPS	CABINE	1					
3	220205-00025E	DOOR ASS'Y,SLIDE	PORTE	1					
3-1	-	. FRAME;SLIDE DOOR	. ARMATURE	1	D				
3-2	100601-00023	. CATCH ASS'Y;SLIDE(L.H)	. CROCHET	1					
3-3	100601-00024	. CATCH ASS'Y;SLIDE(R.H)	. CROCHET	1					
3-4	900131-00014A	. ROLLER;SLIDE DOOR	. ROULEAU	4					
3-5	500119-00064	. GLASS,SLIDE DOOR	. VERRE	1					
3-6	220208-00002A	. SUNVISOR	. ECRAN DE SOLEIL	1					
3-7	180313-00003A	. DAMPER;GLASS	. AMORTISSEUR	1					
3-8	101588-00011A	. TRIM,RUBBER;SLIDE DOOR	. EQUILIBRE	1					
3-9	250105-00066B	. PLATE;TRIM	. PLAQUE	1					
3-10	2120-2166D53	. SCREW	. VIS	4					
3-11	2120-2166D56	. BOLT M10X1.5X16	. BOULON	4					
3-12	2114-1898D2	. WASHER	. RONDELLE	2					
3-13	2120-2166D52	. BOLT	. BOULON	2					
3-14	110406-00337A	. BRACKET,ROLLER	. SUPPORT	1					
3-15	2120-2166D5	. BOLT	. BOULON	2					
3-16	2114-1898D15	. WASHER;PLAIN	. RONDELLE	4					
3-17	110956-00028	. STOPPER,DOOR;SLIDE	. TAQUET	1					
3-18	2114-1898D3	. WASHER;PLAIN	. RONDELLE	2					
3-19	S2204566	. BOLT;SOCKET	. BOULON	2					
16	2120-2166D53	SCREW	VIS	4					
28	K1057869	FOAM	MOUSSE	1					
35	K1057644	STOPPER;RUBBER	TAQUET	2					
36	2121-1311D2	NUT	ECROU	4					
40	110956-00029A	STOPPER;ROLLER	TAQUET	2					
42	110956-00030A	STOPPER,RUBBER;LOWER GLAS	TAQUET	1					
43	101588-00015A	TRIM;FRONT INNER	EQUILIBRE	1					
44	500119-00063A	GLASS,FRONT;LOWER	VERRE	1					
45	K1026121A	STRIKER	BUTEE	2					
48	161-00619B	STOPPER;SLIDE DOOR OPEN(R	TAQUET	1					
49	S2204566	BOLT;SOCKET	BOULON	2					
50	549-00086	SWITCH;SLIDE	COMMUTATEUR	1					
51	S4034833	NUT	ECROU	1					
52	100601-00013	CATCH;LOWER GLASS(R.H)	LOQUET	1					
53	100601-00014	CATCH;LOWER GLASS(L.H)	LOQUET	1					
54	S3452843	SCREW M5X0.0X14	VIS	4					
76	2114-1898D3	WASHER;PLAIN	RONDELLE	2					

DATE	JUN. 01, 2010
3rd EDITION	

Fig. 7560 CABIN(2) - ROPS
CABINE

Serial No. ;

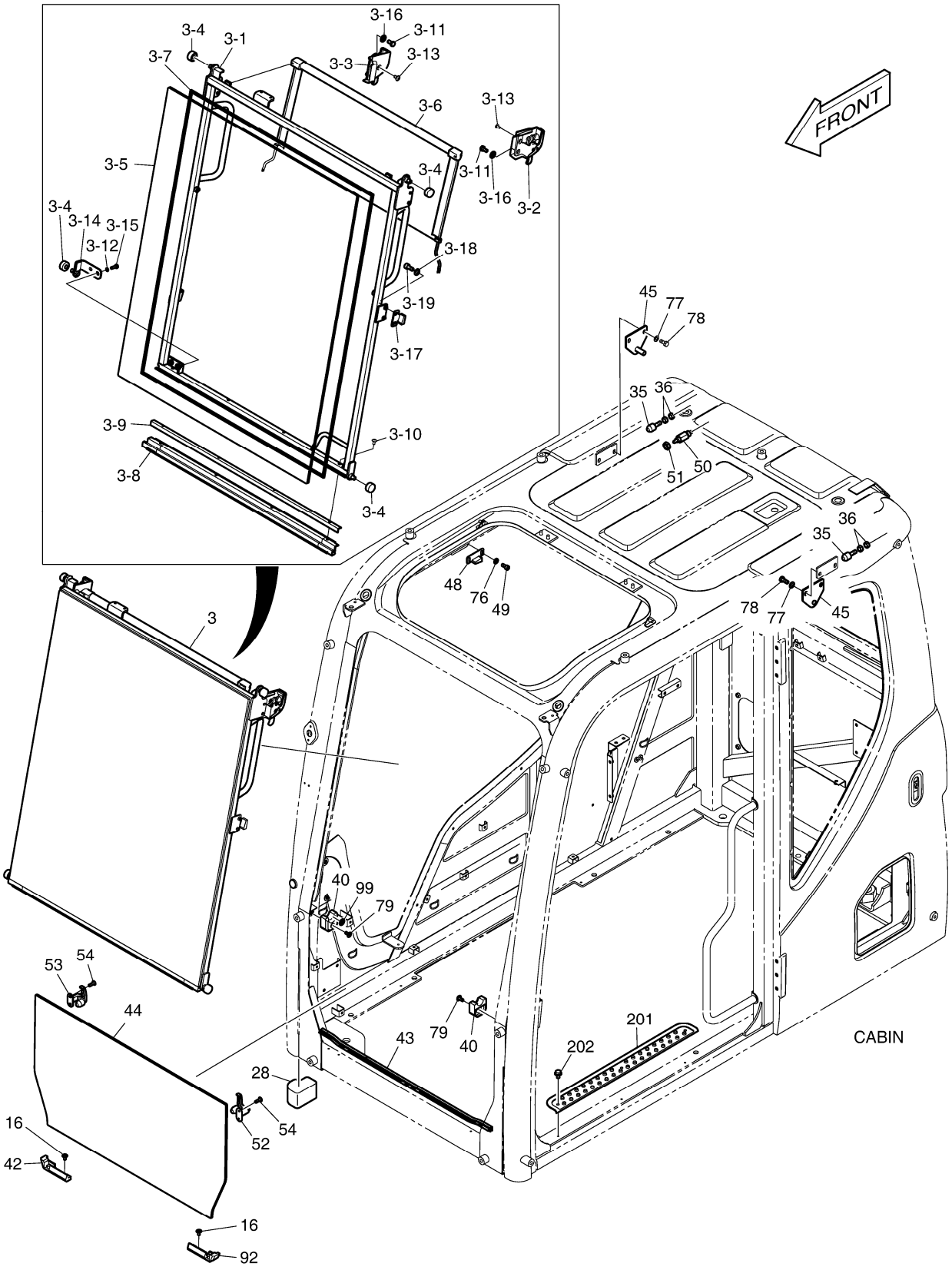

Fig. 7560 CABIN(2) - ROPS
CABINE

Serial No. ;

Key No.	Part No.	Description	Description	Q'ty	S.C	Serial No.	ICA	Replaceable part	
								Part No.	Q'ty
7560 -77	2114-1898D14	WASHER;PLAIN	RONDELLE	4					
78	2120-2166D5	BOLT	BOULON	4					
79	2120-2166D10	SCREW M6X1.0X14	VIS	2					
92	110956-00031A	STOPPER,RUBBER;LOWER GLAS	TAQUET	1					
99	120808-00157	WASHER;ASSIST WIRE	RONDELLE	1					
201	110955-00048	STEP;CABIN DOOR	ETAPE	1					
202	S2004366	BOLT,HEX FLANGE	BOULON	3					

DATE	JUN. 01, 2010
3rd EDITION	

Fig. 7570 CABIN(3) - ROPS CABINE

Serial No. ;

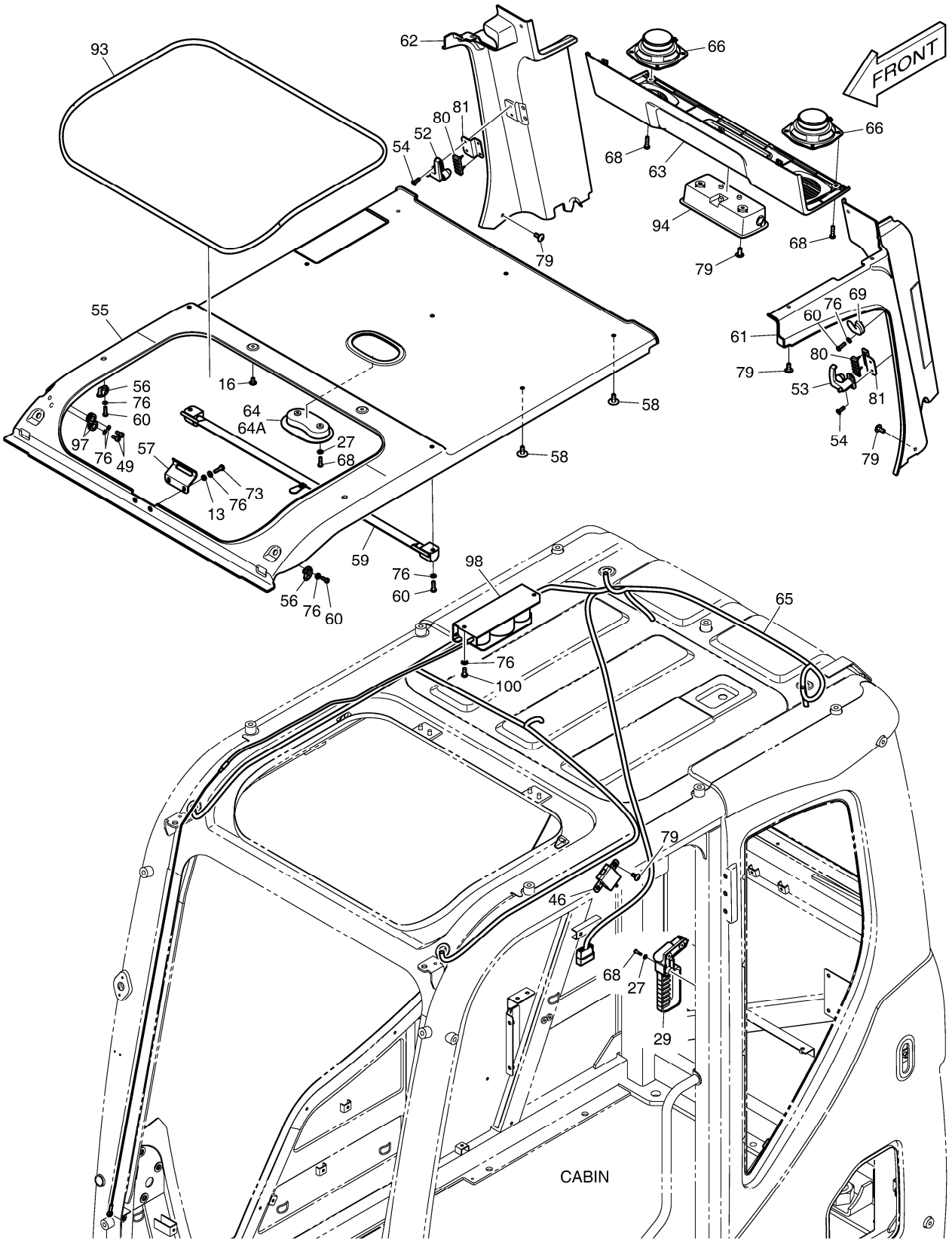

DATE	JUN. 01, 2010
3rd EDITION	

Fig. 7570 CABIN(3) - ROPS
CABINE

Serial No. ;

Key No.	Part No.	Description	Description	Q'ty	S.C	Serial No.	ICA	Replaceable part	
								Part No.	Q'ty
7570 --	220101-00503A	CABIN ASS'Y;ROPS	CABINE	1					
13	420210-00082A	PIPE;LEVER	TUYAU	2					
16	2120-2166D53	SCREW	VIS	2					
27	S5000213	WASHER;PLAIN M5	RONDELLE	4					
29	2199-9058	HAMMER	MARTEAU	1					
46	K1002641	MODULE ASS'Y	MODULE	1					
49	S2204566	BOLT;SOCKET	BOULON	2					
52	100601-00013	CATCH;LOWER GLASS(R.H)	LOQUET	1					
53	100601-00014	CATCH;LOWER GLASS(L.H)	LOQUET	1					
54	S3452843	SCREW M5X0.0X14	VIS	4					
55	220204-00044C	COVER,CABIN;ROOF	COUVERTURE	1					
56	120404-00029	HOOK;SUN-VISOR	CROCHET	4					
57	100601-00007A	CATCH;ROOF COVER	CROCHET	1					
58	K1006936	SCRIVET	SCRIVET	6					
59	220208-00001A	SUNVISOR	ECRAN DE SOLEIL	1					
60	S3450983	SCREW M16X20	VIS	7					
61	220204-00003B	COVER;PILLAR(L.H)	COUVERTURE	1					
62	220204-00004B	COVER;PILLAR(R.H)	COUVERTURE	1					
63	220204-00002B	COVER;REAR ROOF	COUVERTURE	1					
64	534-00079	ROOM LAMP	LAMPE DE PIECE	1					
64A	2515-1021D1	. BULB	. AMPOULE	1					
65	310207-00115A	HARNESS,JOINT;CABIN SUB	HARNAIS	1					
66	2541-9020	SPEAKER	ORATEUR	2					
68	S3450863	SCREW	VIS	12					
69	K1014609A	HOOK;COAT	CROCHET	1					
73	2120-2166D36	BOLT	BOULON	2					
76	2114-1898D3	WASHER;PLAIN	RONDELLE	13					
79	2120-2166D10	SCREW M6X1.0X14	VIS	13					
80	K1000794	STOPPER;RUBBER	TAQUET	2					
81	250122-00006A	PLATE,SUPPORT	PLAQUE	2					
93	101588-00022	TRIM,RUBBER;ROOF	EQUILIBRE	1					
94	110913-00030B	CASE ASS'Y;SUNGLASSES	CARTER	1					
97	110922-00043	GUIDE;ASSIST WIRE	GARDE	2					
98	111601-00160	SPRING;ASSIST	RESSORT	1					
100	2120-2166D9	SCREW	VIS	2					

DATE	JUN. 01, 2010
3rd EDITION	

Fig. 7580 CABIN(4) - ROPS CABINE

Serial No. ;

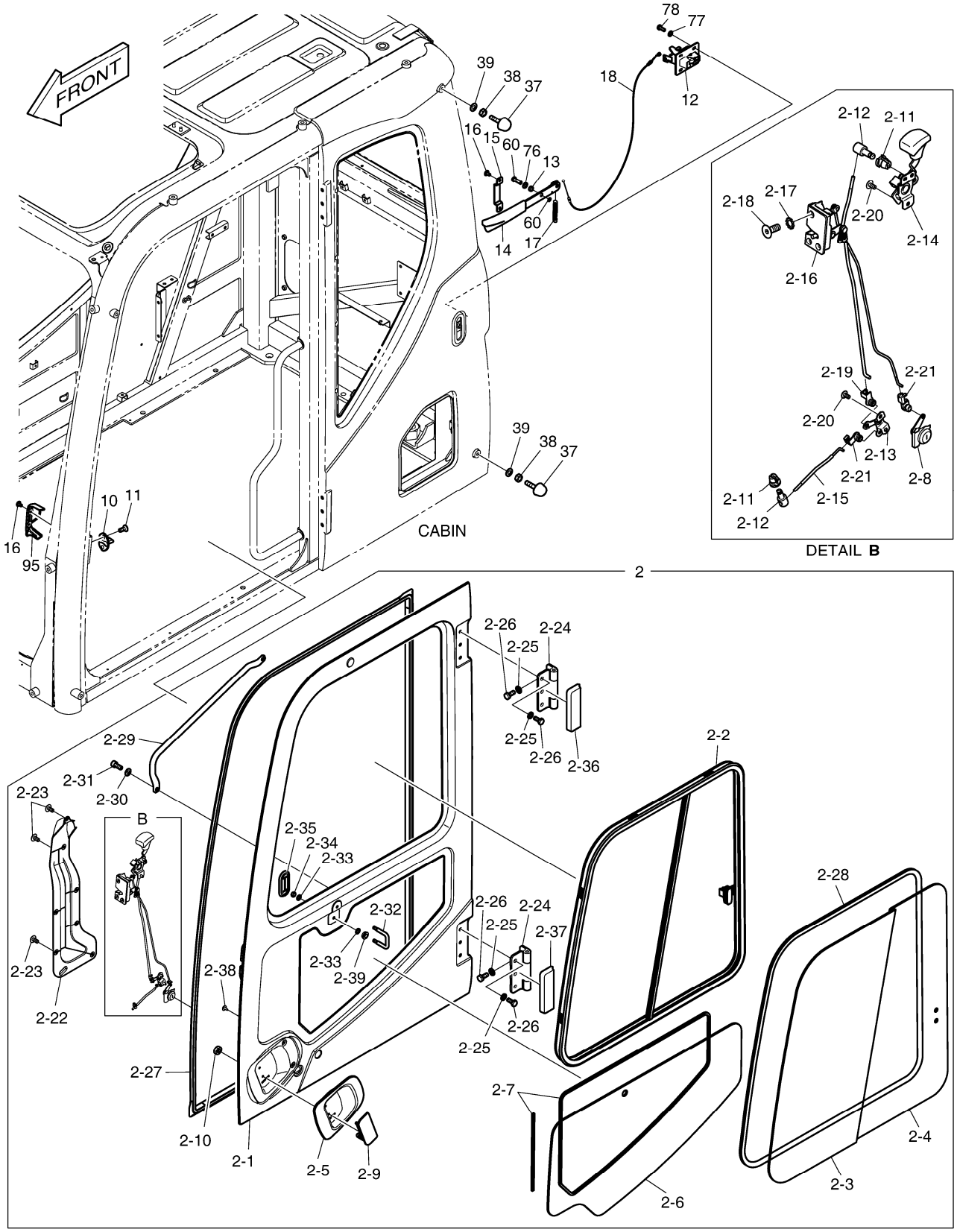

DATE	JUN. 01, 2010
3rd EDITION	

Fig. 7580 CABIN(4) - ROPS CABINE

Serial No. ;

Key No.	Part No.	Description	Description	Q'ty	S.C	Serial No.	ICA	Replaceable part	
								Part No.	Q'ty
7580 --	220101-00503A	CABIN ASS'Y;ROPS	CABINE	1					
2	110982-00065E	DOOR ASS'Y,SIDE	PORTE	1					
2-1	-	. PANEL ASS'Y,DOOR	. PANNEAU	1	D				
2-2	220109-00017	. SASH ASS'Y,DOOR	. SASH	1					
2-3	500119-00086	. GLASS;SASH(FRONT)	. VERRE	1					
2-4	500119-00087	. GLASS;SASH(REAR)	. VERRE	1					
2-5	110508-00765	. COVER;DOOR HANDLE	. COUVERTURE	1					
2-6	500119-00040	. GLASS,DOOR;LOWER	. VERRE	1					
2-7	180313-00002	. DAMPER;DOOR WINDOW	. AMORTISSEUR	1					
2-8	K1003900	. KEY ASS`Y;DOOR	. CLE	1					
2-9	2172-9021	. HANDLE;OUTER	. POIGNEE	1					
2-10	S4012333	. NUT	. ECROU	2					
2-11	2124-1689A	. SNAP	. RUPTURE	2					
2-12	2123-2247	. PIN	. GOUPILLE	2					
2-13	137-00092	. LINK;DOOR INNER	. LIEN	1					
2-14	133-00221	. LEVER ASS'Y;INNER HANDLE	. LEVIER	1					
2-15	136-00055A	. ROD;OUTER HANDLE	. TIGE	1					
2-16	125-00072	. CATCH ASS'Y;DOOR INNER	. CROCHET	1					
2-17	S5210303	. WASHER;TOOTHED	. RONDELLE	3					
2-18	2120-2150D3	. SCREW	. VIS	3					
2-19	124-00344	. CLIP;ROD	. AGRAFE	1					
2-20	2120-2166D52	. BOLT	. BOULON	5					
2-21	124-00010	. CLIP;ROD	. AGRAFE	2					
2-22	621-02869C	. COVER;LOCK	. COUVERTURE	1					
2-23	2120-2166D53	. SCREW	. VIS	7					
2-24	110927-00083A	. HINGE,DOOR;CABIN	. CHARNIERE	2					
2-25	2114-1898D15	. WASHER;PLAIN	. RONDELLE	12					
2-26	2120-2166D2	. BOLT	. BOULON	12					
2-27	220214-00009B	. STRIP,WEATHER;DOOR	. TAQUET	1					
2-28	K1057618	. TRIM,RUBBER;SASH DOOR	. EQUILIBRE	1					
2-29	220206-00002B	. HANDLE,DOOR;INNER	. POIGNEE	1					
2-30	2114-1898D14	. WASHER;PLAIN	. RONDELLE	2					
2-31	S2208861	. BOLT;SOCKET M8X1.25X20	. BOULON	2					
2-32	101583-00002	. STRIKER;DOOR	. BUTEE	1					
2-33	2891-1311	. PLATE	. PLAQUE	4					
2-34	S4012533	. NUT	. ECROU	2					
2-35	621-02867A	. COVER;DOOR INNER	. COUVERTURE	1					
2-36	220204-00006A	. COVER;DOOR HINGE	. COUVERTURE	1					

DATE	JUN. 01, 2010
3rd EDITION	

Fig. 7580 CABIN(4) - ROPS CABINE

Serial No. ;

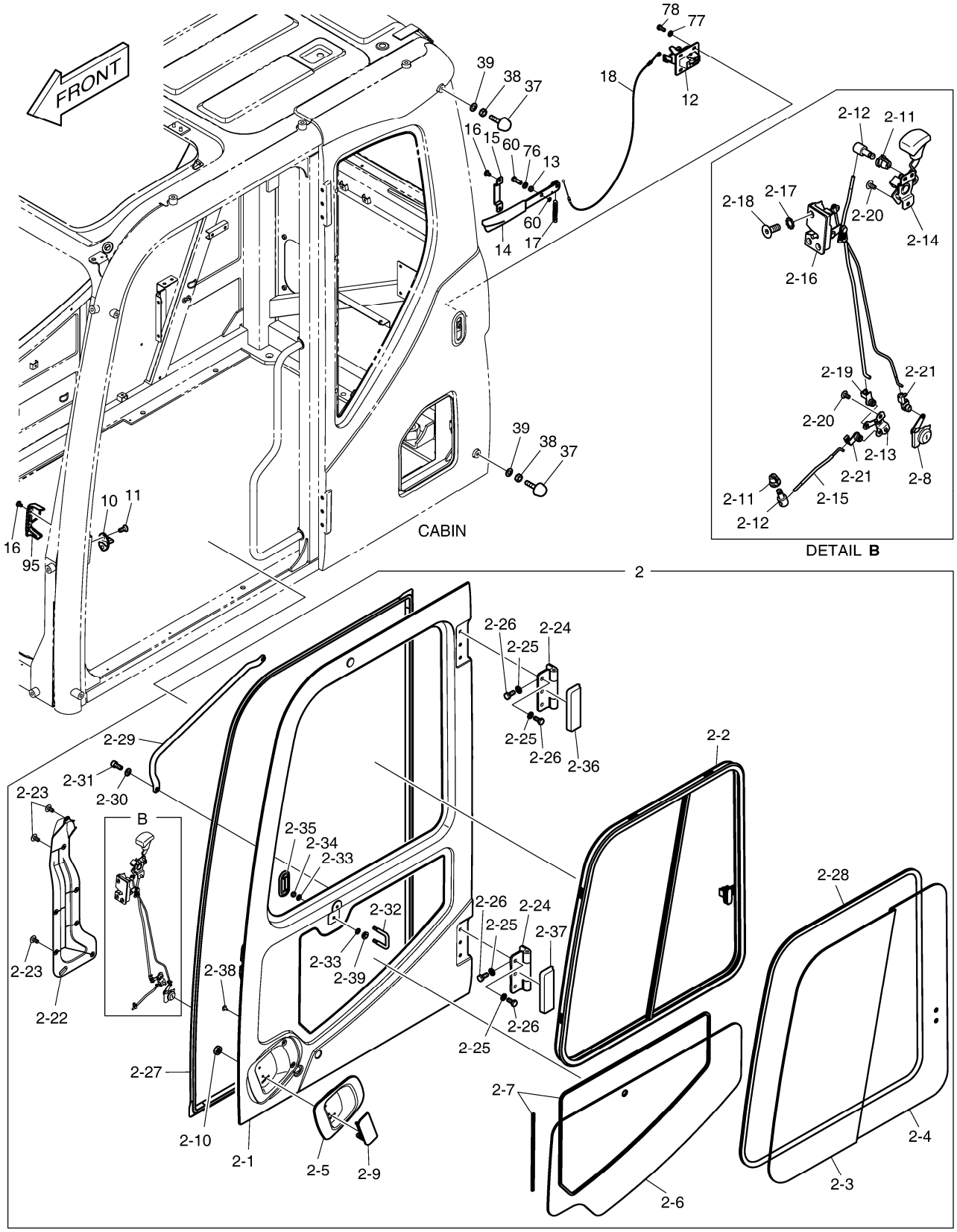

Fig. 7580 CABIN(4) - ROPS CABINE

Serial No. ;

Key No.	Part No.	Description	Description	Q'ty	S.C	Serial No.	ICA	Replaceable part	
								Part No.	Q'ty
7580 -2-37	220204-00007A	. COVER;DOOR HINGE	. COUVERTURE	1					
2-38	S3640333	. SCREW,TAPPING	. VIS	2					
2-39	110508-00536	. COVER;STRIKER	. COUVERTURE	1					
10	2142-9005	STRIKER;DOOR	BUTEE	1					
11	2120-2150D1	BOLT	BOULON	2					
12	100601-00022	CATCH,DOOR;BACK-LOCK	CROCHET	1					
13	420210-00082A	PIPE;LEVER	TUYAU	1					
14	101101-00025A	LEVER;BACK-LOCK	LEVIER	1					
15	110406-00114B	BRACKET;BACK-LOCK	SUPPORT	1					
16	2120-2166D53	SCREW	VIS	4					
17	111601-00187	SPRING	RESSORT	1					
18	2127-1002A	CABLE;BACK LOCK	CABLE	1					
37	K1001260A	STOPPER;RUBBER	TAQUET	2					
38	2121-1311D4	NUT	ECROU	2					
39	2114-1898D15	WASHER;PLAIN	RONDELLE	2					
60	S3450983	SCREW M16X20	VIS	1					
76	2114-1898D3	WASHER;PLAIN	RONDELLE	2					
77	2114-1898D14	WASHER;PLAIN	RONDELLE	4					
78	2120-2166D5	BOLT	BOULON	4					
95	110508-00905A	COVER;DOOR STRIKER	COUVERTURE	1					

DATE	JUN. 01, 2010
3rd EDITION	

Fig. 7590 FLOOR MAT - ROPS
PLANCHER

Serial No. ;

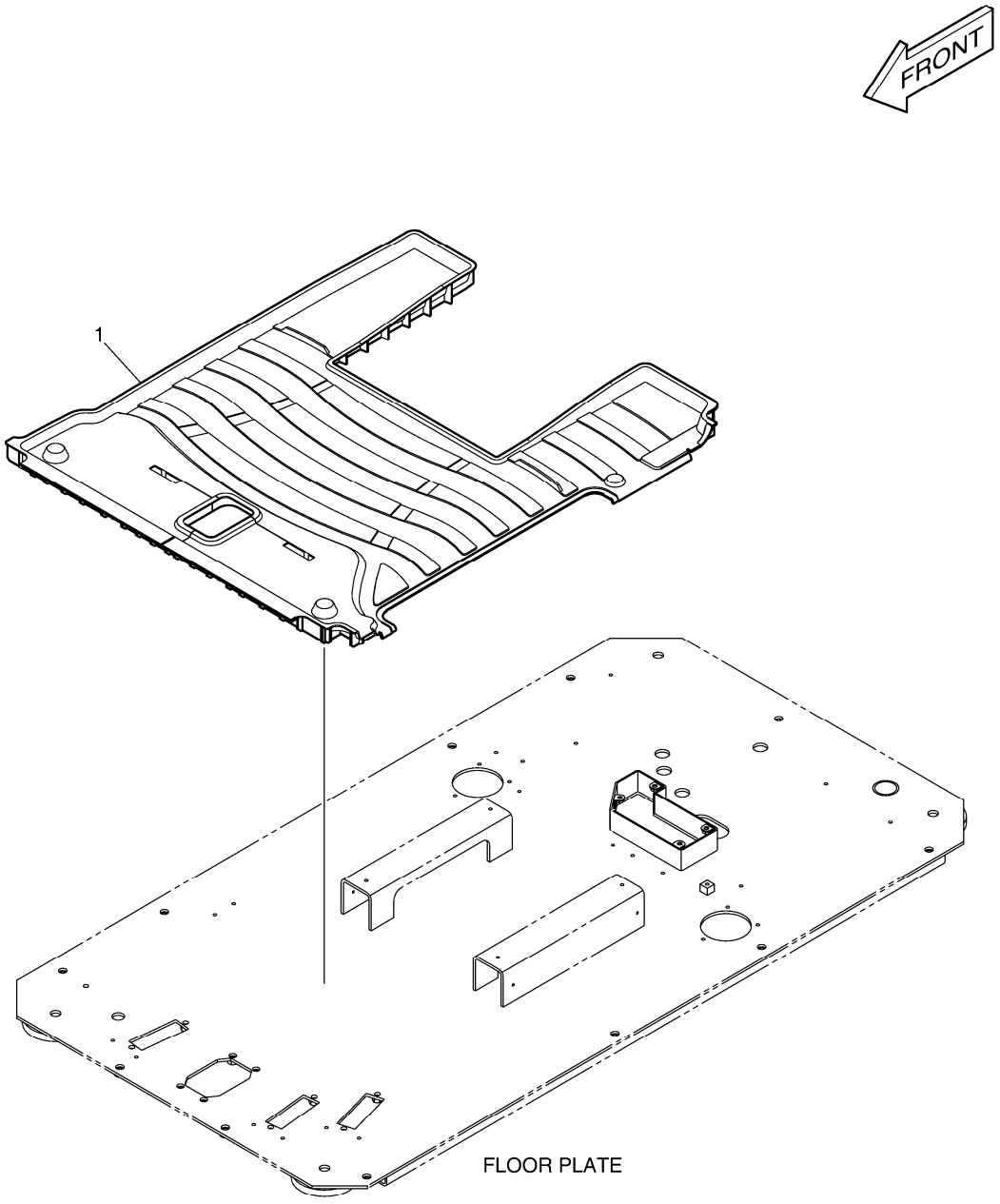

DATE	JUN. 01, 2010
3rd EDITION	

Fig. 7590 FLOOR MAT - ROPS PLANCHER

Serial No. ;

Key No.	Part No.	Description	Description	Q'ty	S.C	Serial No.	ICA	Replaceable part	
								Part No.	Q'ty
7590 -1	110935-00070	MAT,FLOOR	TAPIS	1					

DATE	JUN. 01, 2010
3rd EDITION	

Fig. 7600 FLOOR MAT - ONE PEDAL(R.H)(ROPS) PLANCHER

Serial No. ;

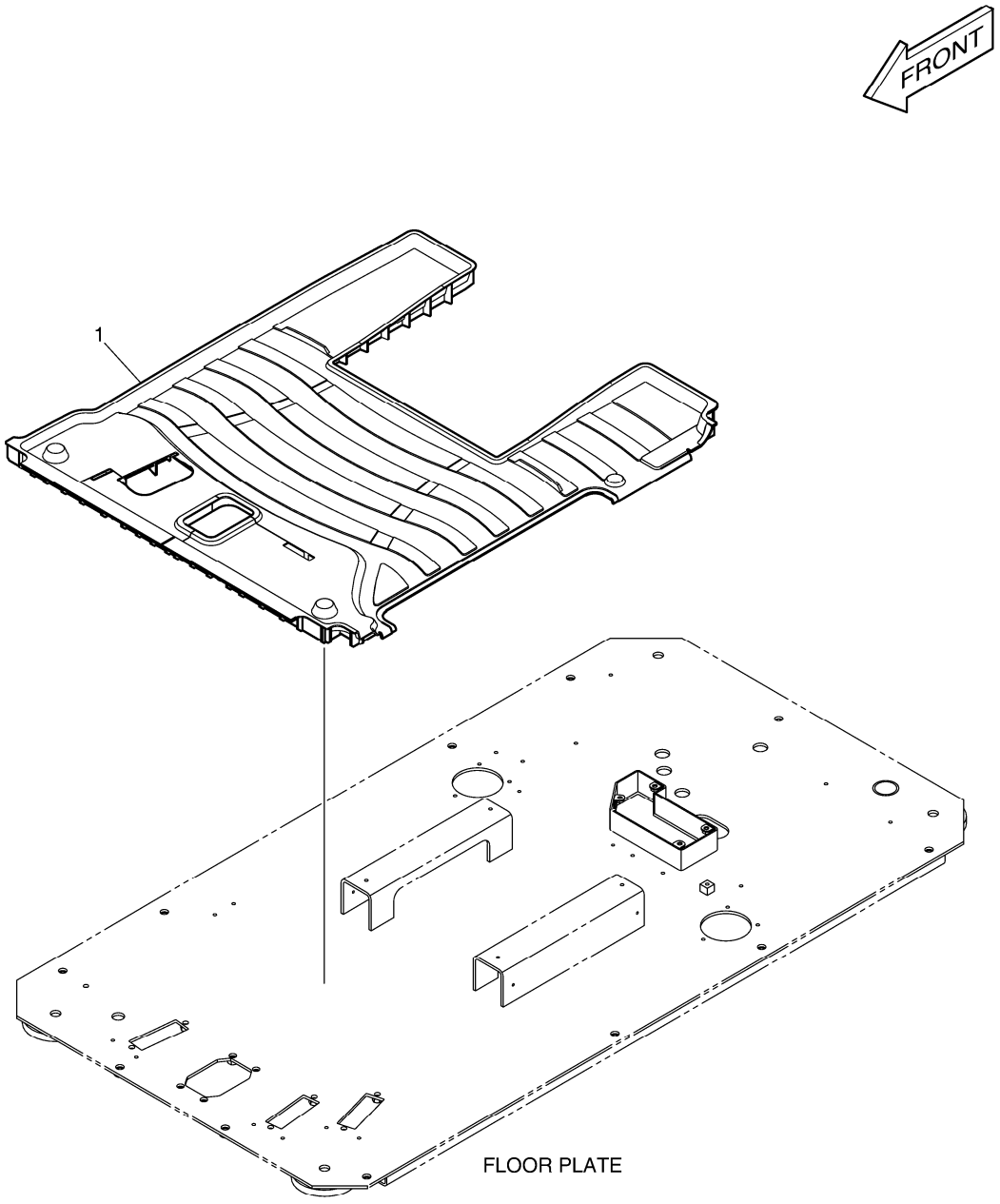

DATE	JUN. 01, 2010
3rd EDITION	

Fig. 7600 FLOOR MAT - ONE PEDAL(R.H)(ROPS) PLANCHER

Serial No. ;

Key No.	Part No.	Description	Description	Q'ty	S.C	Serial No.	ICA	Replaceable part	
								Part No.	Q'ty
7600 -1	110935-00071	MAT,FLOOR;ONE PEDAL(R.H)	TAPIS	1					

DATE	JUN. 01, 2010
3rd EDITION	

Fig. 7610 FLOOR MAT - ONE PEDAL(L.H)(ROPS) PLANCHER

Serial No. ;

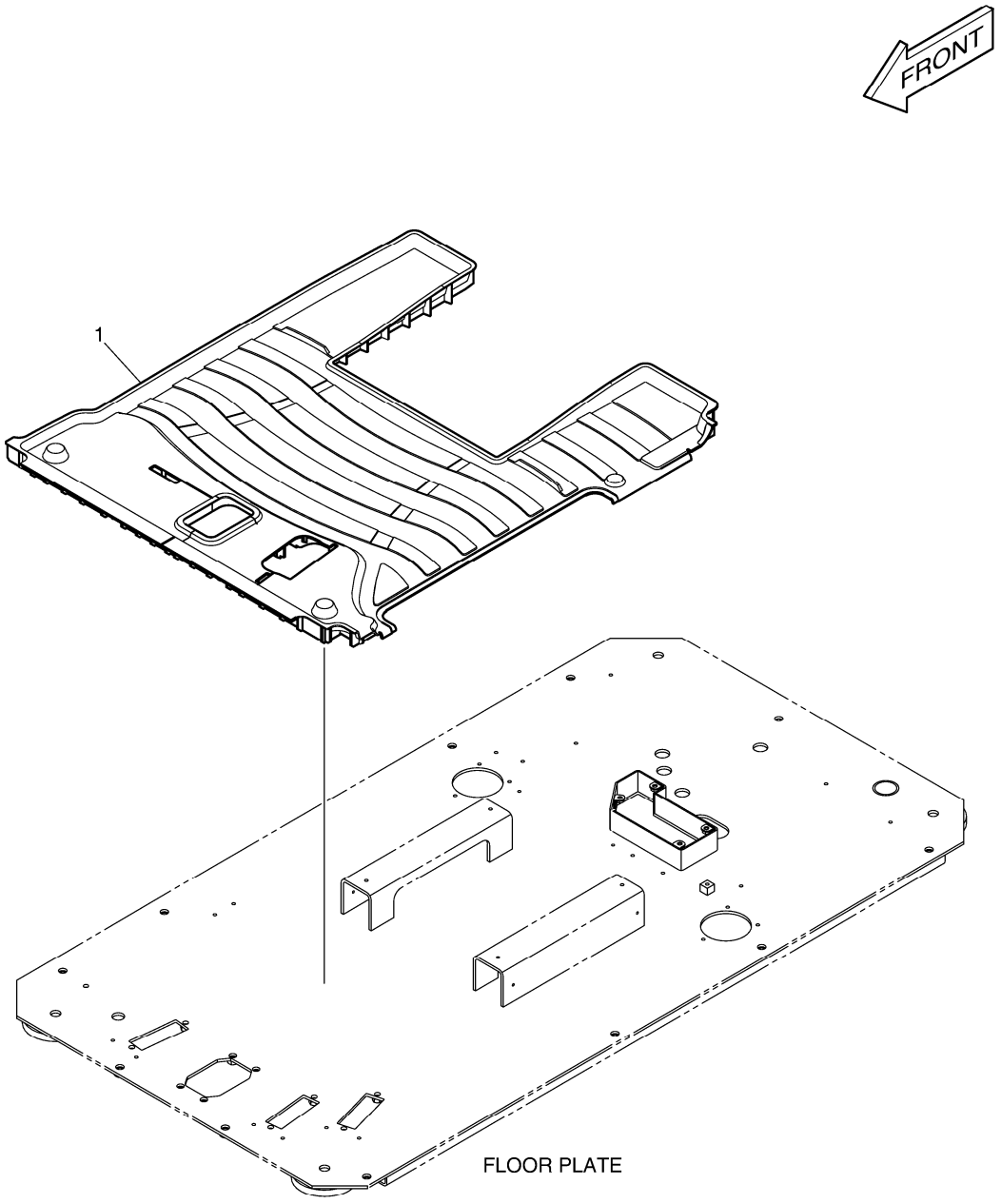

DATE	JUN. 01, 2010
3rd EDITION	

Fig. 7610 FLOOR MAT - ONE PEDAL(L.H)(ROPS) PLANCHER

Serial No. ;

Key No.	Part No.	Description	Description	Q'ty	S.C	Serial No.	ICA	Replaceable part	
								Part No.	Q'ty
7610 -1	110935-00072	MAT,FLOOR;ONE PEDAL(L.H)	TAPIS	1					

DATE	JUN. 01, 2010
3rd EDITION	

Fig. 7620 FLOOR MAT - TWO PEDAL(ROPS) PLANCHER

Serial No. ;

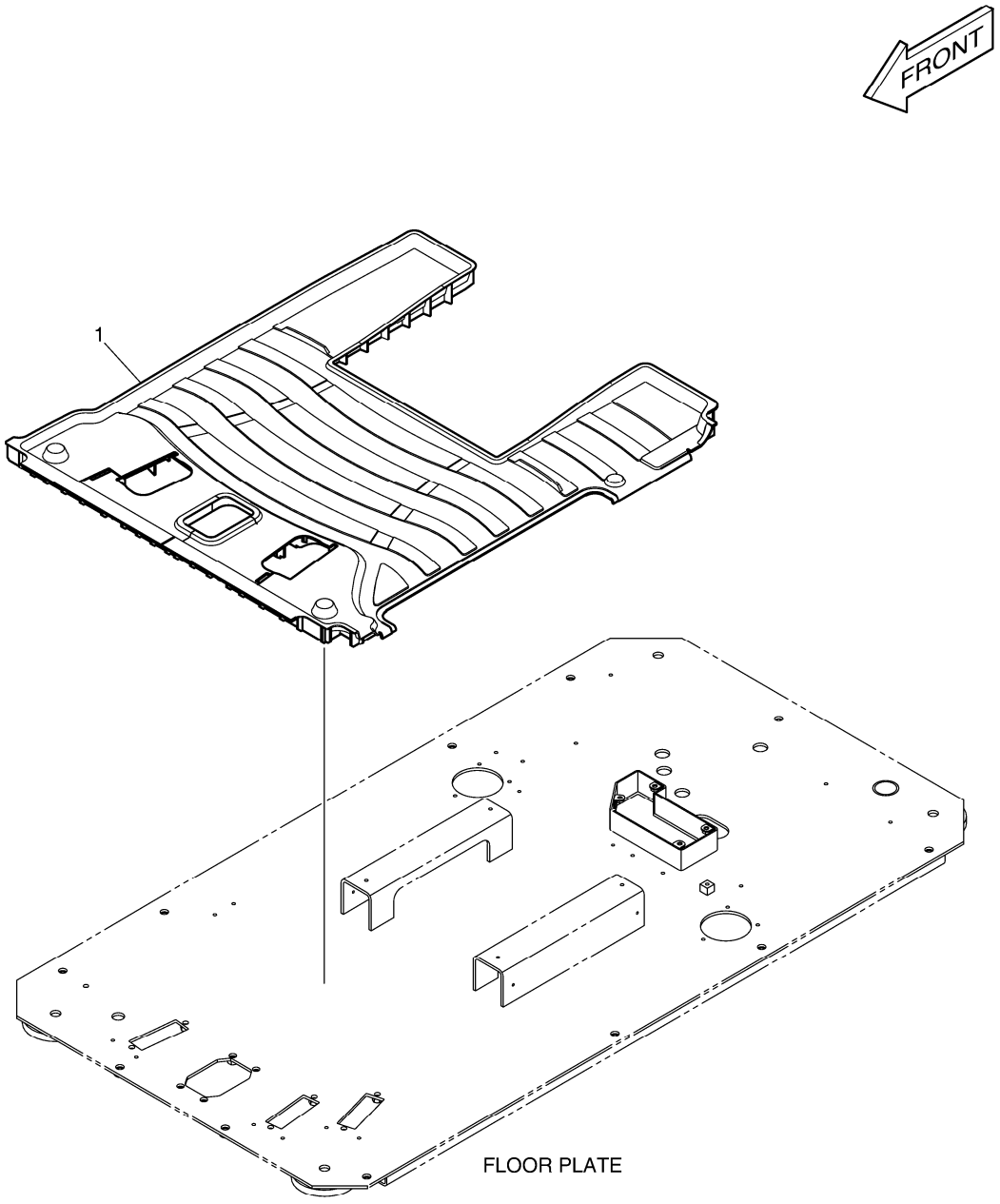

DATE	JUN. 01, 2010
3rd EDITION	

Fig. 7620 FLOOR MAT - TWO PEDAL(ROPS) PLANCHER

Serial No. ;

Key No.	Part No.	Description	Description	Q'ty	S.C	Serial No.	ICA	Replaceable part	
								Part No.	Q'ty
7620 -1	110935-00073	MAT,FLOOR;TWO PEDAL	TAPIS	1					

DATE	JUN. 01, 2010
3rd EDITION	

Fig. 7630 FLOOR MAT - THREE PEDAL(ROPS) PLANCHER

Serial No. ;

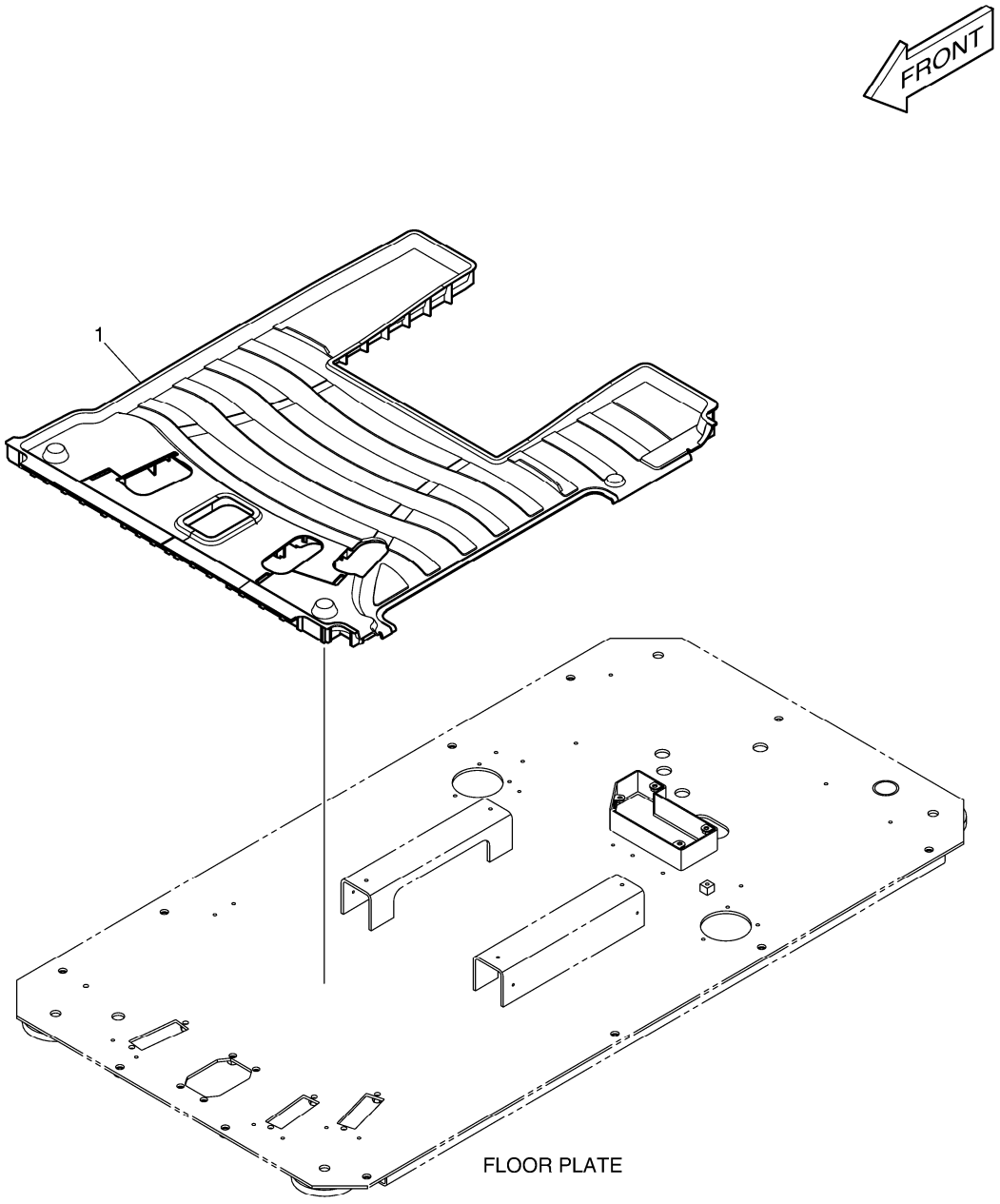

DATE	JUN. 01, 2010
3rd EDITION	

Fig. 7630 FLOOR MAT - THREE PEDAL(ROPS) PLANCHER

Serial No. ;

Key No.	Part No.	Description	Description	Q'ty	S.C	Serial No.	ICA	Replaceable part	
								Part No.	Q'ty
7630 -1	110935-00074	MAT,FLOOR;THREE PEDAL	TAPIS	1					

DATE	JUN. 01, 2010
3rd EDITION	

Fig. 7640 FLOOR PLATE - ROPS
TOLE DE PLANCHER

Serial No. ;

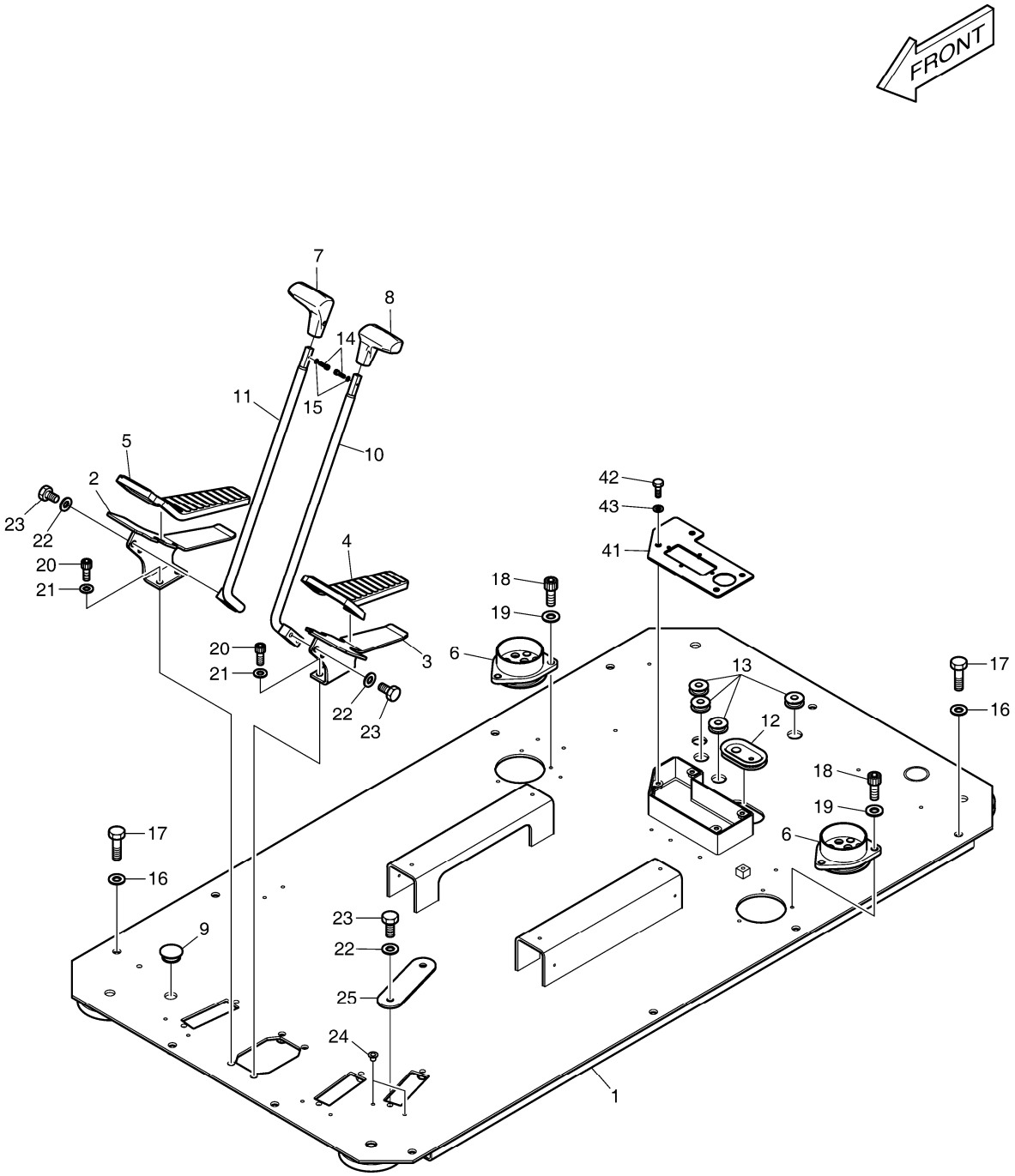

DATE	JUN. 01, 2010
3rd EDITION	

Fig. 7640 FLOOR PLATE - ROPS
TOLE DE PLANCHER

Serial No. ;

Key No.	Part No.	Description	Description	Q'ty	S.C	Serial No.	ICA	Replaceable part	
								Part No.	Q'ty
7640 --	250106-00152A	PLATE ASS'Y,FLOOR	PLAQUE	-	D				
1	250106-00149A	PLATE,FLOOR	PLAQUE	1					
2	220105-00008	PEDAL,TRAVEL(R.H)	PEDALE	1					
3	220105-00007	PEDAL,TRAVEL(L.H)	PEDALE	1					
4	161-00382	RUBBER;PEDAL(L.H)	LE CAOUTCHOUC	1					
5	161-00381	RUBBER;PEDAL(R.H)	LE CAOUTCHOUC	1					
6	160-00080B	BUSHING;RUBBER	DOUILLE	2					
7	2132-1134B	GRIP;LEVER(R.H)	POIGNEE	1					
8	2132-1133B	GRIP;LEVER(L.H)	POIGNEE	1					
9	2161-2487	CAP;RUBBER	CHAPEAU	1					
10	133-00229A	LEVER;TRAVEL (L.H)	LEVIER	1					
11	133-00230A	LEVER;TRAVEL (R.H)	LEVIER	1					
12	160-00071	BUSHING;RUBBER	DOUILLE	1					
13	160-00072	BUSHING;RUBBER	DOUILLE	4					
14	S2201766	BOLT	BOULON	2					
15	S5000113	WASHER;PLAIN	RONDELLE	2					
16	2114-1898D17	WASHER M12	RONDELLE	11					
17	2120-2166D35	BOLT M12X1.75X35	BOULON	11					
18	S2208866	BOLT;SOCKET	BOULON	6					
19	2114-1898D14	WASHER;PLAIN	RONDELLE	6					
20	S2211866	BOLT;SOCKET	BOULON	4					
21	S5110603	WASHER;SPRING	RONDELLE	4					
22	2114-1898D1	WASHER	RONDELLE	6					
23	2120-2166D4	BOLT	BOULON	6					
24	160-00073A	CAP	CHAPEAU	2					
25	621-01507A	PLATE	PLAQUE	1					
41	250106-00154	PLATE,FLOOR;CONNECTOR	PLAQUE	1					
42	2120-2166D25	BOLT M8X1.25X16	BOULON	4					
43	2114-1898D14	WASHER;PLAIN	RONDELLE	4					

DATE	JUN. 01, 2010
3rd EDITION	

Fig. 7650 HANDLE - CABIN(ROPS)
HANDLE

Serial No. ;

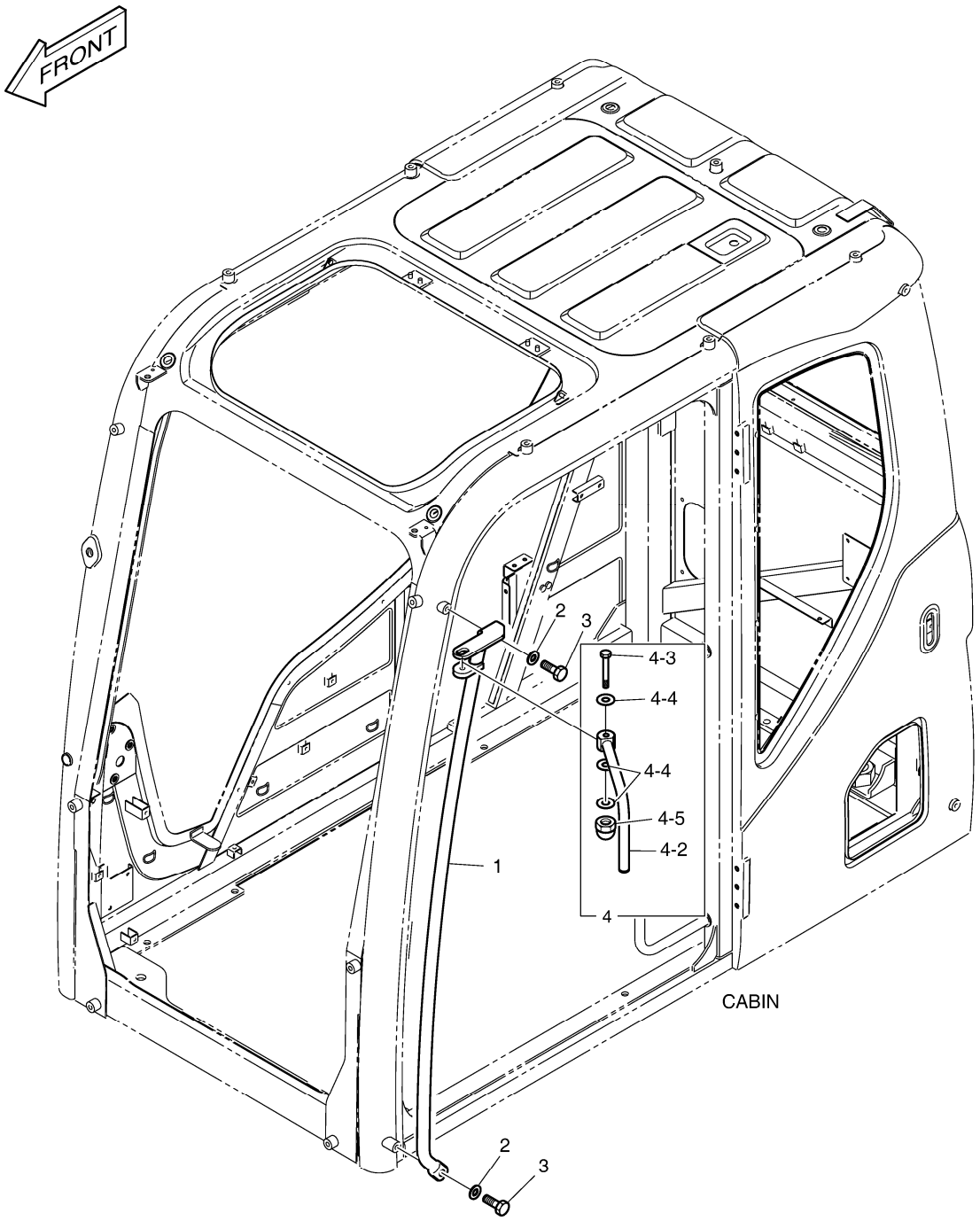

DATE	JUN. 01, 2010
3rd EDITION	

Fig. 7650 HANDLE - CABIN(ROPS) HANDLE

Serial No. ;

Key No.	Part No.	Description	Description	Q'ty	S.C	Serial No.	ICA	Replaceable part	
								Part No.	Q'ty
7650 --	110925-00012B	HANDLE ASS'Y;DRIVER	POIGNEE	1					
1	110925-00013B	HANDLE,CABIN;OUTER	POIGNEE	1					
2	2114-1898D6	WASHER;PLAIN	RONDELLE	2					
3	2120-2166D32	BOLT	BOULON	2					
4	K1030442A	STAY,SIDE MIRROR	SEJOUR	1	D				
4-2	K1029838	. STAY;MIRROR	. SEJOUR	1					
4-3	2120-2166D3	. BOLT M10X1.5X65	. BOULON	1					
4-4	2114-1898D16	. WASHER	. RONDELLE	3					
4-5	2121-1311D5	. NUT;CAP	. ECROU	1					

DATE	JUN. 01, 2010
3rd EDITION	

Fig. 7660 ROOF COVER - PC(ROPS) COUVERTURE DE TOIT

Serial No. ;

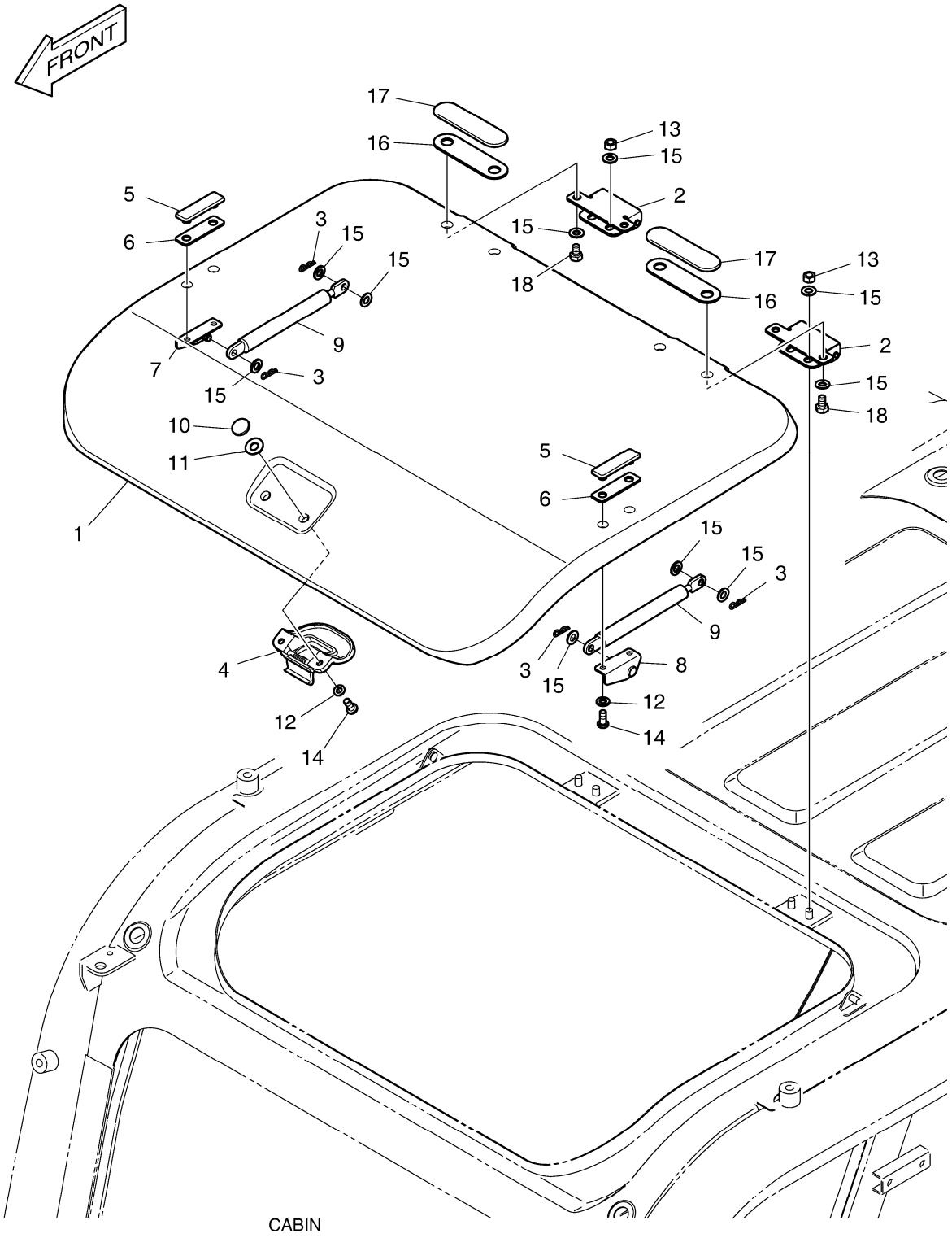

DATE	JUN. 01, 2010
3rd EDITION	

Fig. 7660 ROOF COVER - PC(ROPS) COUVERTURE DE TOIT

Serial No. ;

Key No.	Part No.	Description	Description	Q'ty	S.C	Serial No.	ICA	Replaceable part	
								Part No.	Q'ty
7660 --	220204-00047	COVER ASS'Y;ROOF PC	COUVERTURE	-	D				
1	K1056035	COVER;ROOF	COUVERTURE	1					
2	110927-00014	HINGE;ROOF COVER	CHARNIERE	2					
3	123-00523	PIN;GAS-SPRING	GOUPILLE	4					
4	123-00516B	LOCK ASS'Y;ROOF COVER	SERRURE	1					
5	621-02873	COVER;ROOF GAS-CYLINDER	COUVERTURE	2					
6	161-00600	PAD;RUBBER	GARNITURE	2					
7	250122-00002	PLATE,SUPPORT;COVER	PLAQUE	1					
8	250122-00003	PLATE,SUPPORT;COVER	PLAQUE	1					
9	DS1003009	GAS-SPRING	GAS-SPRING	2					
10	621-03103	COVER;ROOF HANDLE	COUVERTURE	2					
11	161-00639	RUBBER;ROOF HANDLE	LE CAOUTCHOUC	2					
12	2114-1898D3	WASHER;PLAIN	RONDELLE	6					
13	2121-1311D2	NUT	ECROU	4					
14	2120-2166D7	SCREW	VIS	6					
15	2114-1898D14	WASHER;PLAIN	RONDELLE	14					
16	161-00599	PAD;RUBBER	GARNITURE	2					
17	621-02872	COVER;ROOF HINGE	COUVERTURE	2					
18	S0508553	BOLT M8X1.25X14	BOULON	4					

DATE	JUN. 01, 2010
3rd EDITION	

Fig. 7670 ROOF COVER - STEEL(ROPS) COUVERTURE DE TOIT

Serial No. ;

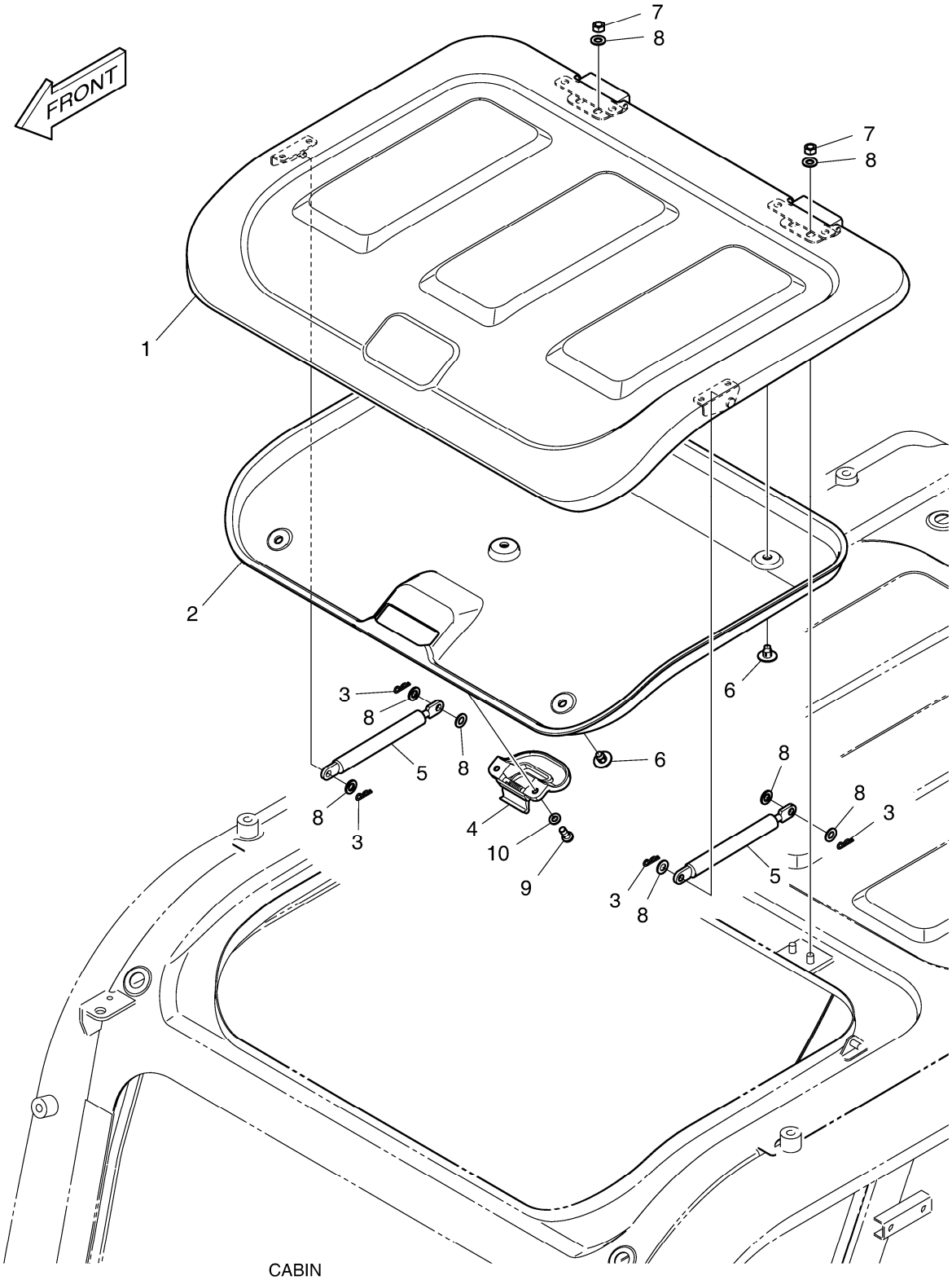

DATE	JUN. 01, 2010
3rd EDITION	

Fig. 7670 ROOF COVER - STEEL(ROPS) COUVERTURE DE TOIT

Serial No. ;

Key No.	Part No.	Description	Description	Q'ty	S.C	Serial No.	ICA	Replaceable part	
								Part No.	Q'ty
7670 --	220204-00048	COVER ASS'Y,ROOF STEEL	COUVERTURE	-	D				
1	K1057196	COVER,CABIN;ROOF STEEL	COUVERTURE	1					
2	220204-00031	COVER,CABIN;ROOF STEEL	COUVERTURE	1					
3	123-00523	PIN;GAS-SPRING	GOUPILLE	4					
4	123-00516B	LOCK ASS'Y;ROOF COVER	SERRURE	1					
5	DS1003010	SPRING;GAS	RESSORT	2					
6	K1006933	SCRIVET	SCRIVET	5					
7	2121-1311D2	NUT	ECROU	4					
8	2114-1898D14	WASHER;PLAIN	RONDELLE	10					
9	2120-2166D9	SCREW	VIS	2					
10	2114-1898D3	WASHER;PLAIN	RONDELLE	2					

DATE	JUN. 01, 2010
3rd EDITION	

Fig. 7680 FOOT REST - L.H(ROPS)
REPOS DE PIED

Serial No. ;

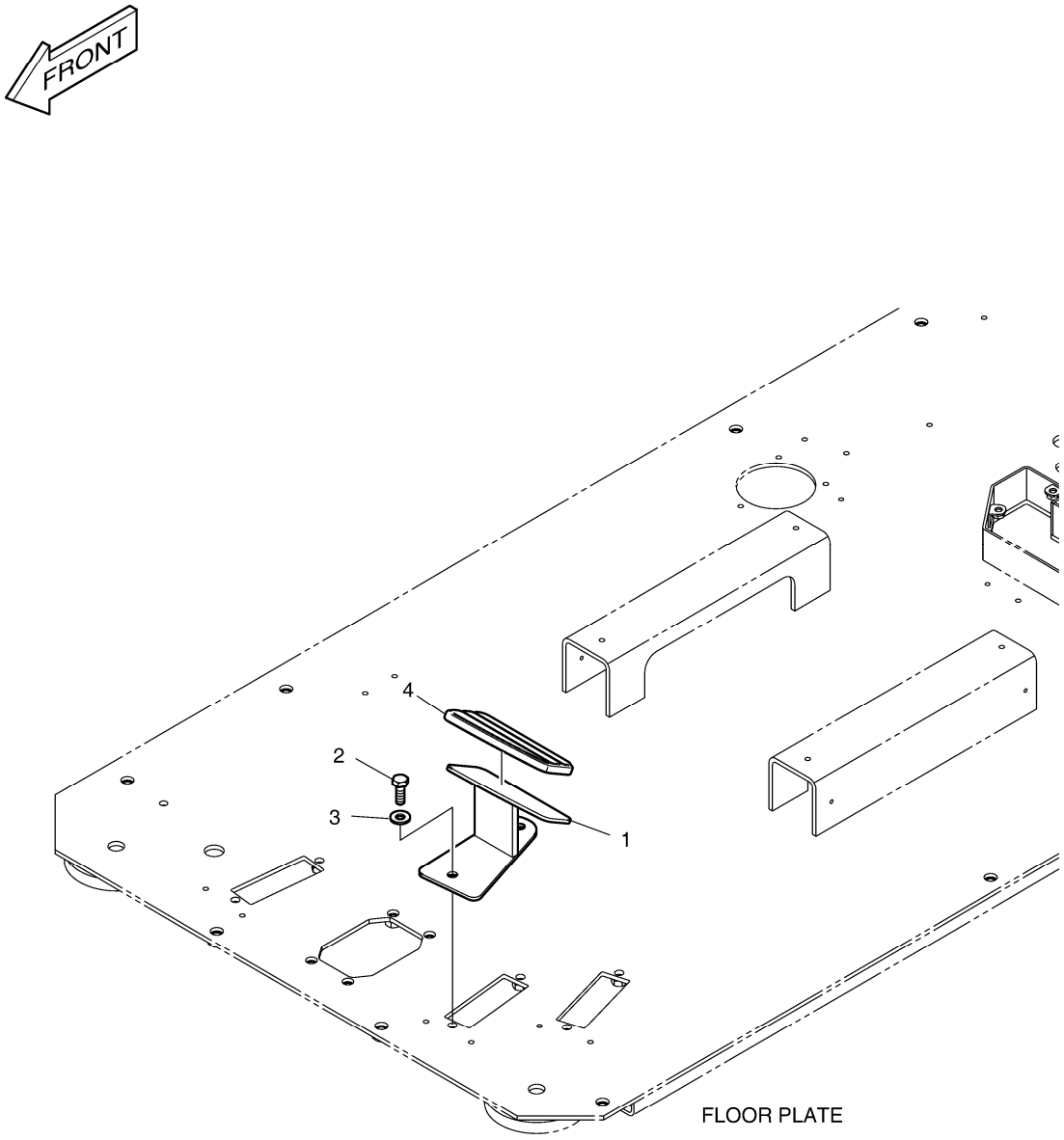

DATE	JUN. 01, 2010
3rd EDITION	

Fig. 7680 FOOT REST - L.H(ROPS) REPOS DE PIED

Serial No. ;

Key No.	Part No.	Description	Description	Q'ty	S.C	Serial No.	ICA	Replaceable part	
								Part No.	Q'ty
7680 --	220107-00005	REST,FOOT(L.H)	REPOS,PIED	-	D				
1	220107-00004	REST,FOOT;BRACKET(LH)	REPOS,PIED	1					
2	2120-2166D1	BOLT	BOULON	2					
3	2114-1898D1	WASHER	RONDELLE	2					
4	2160-1345	COVER;FOOT REST	COUVERTURE	1					

DATE	JUN. 01, 2010
3rd EDITION	

Fig. 7690 FOOT REST - R.H(ROPS) REPOS DE PIED

Serial No. ;

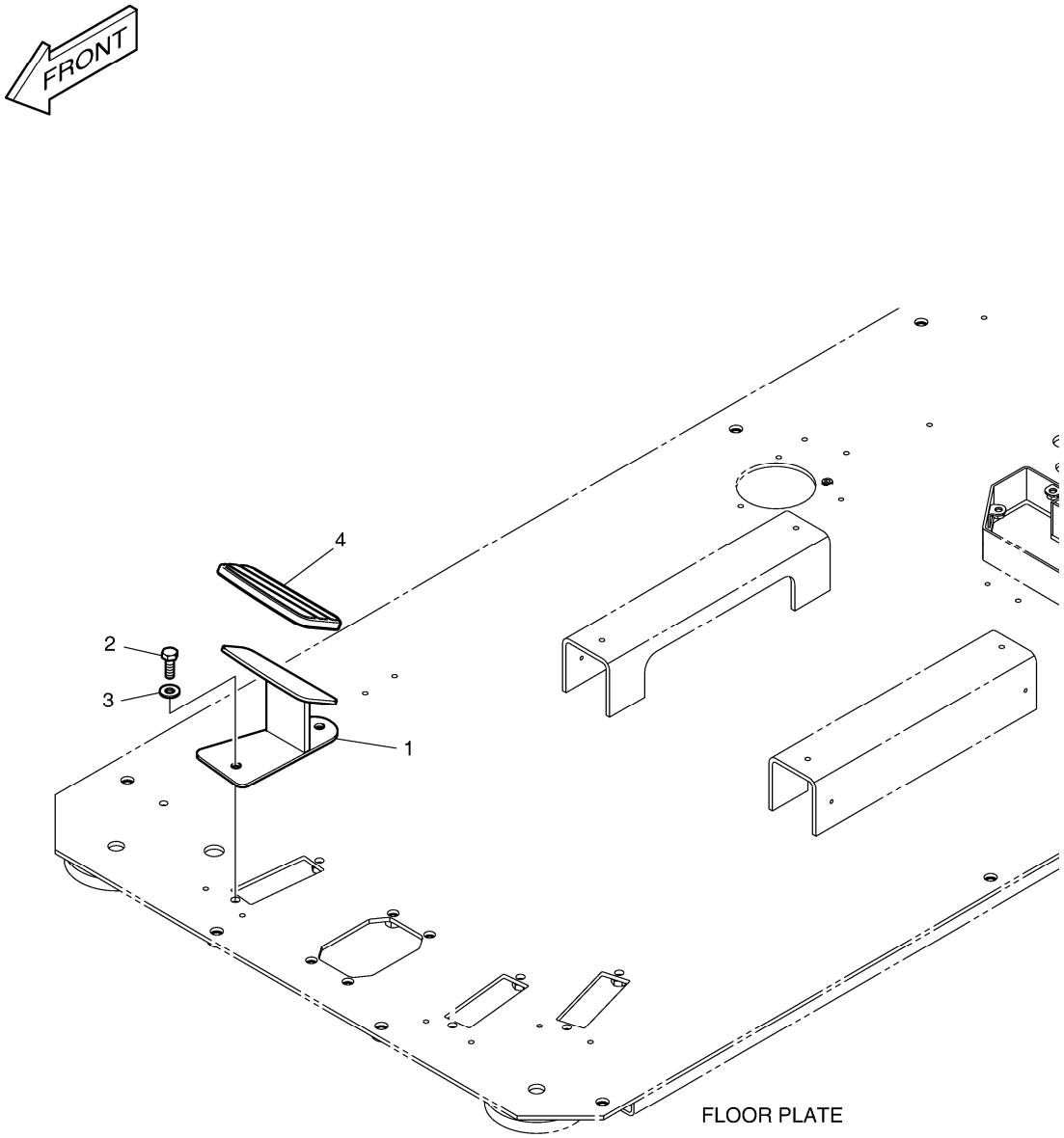

DATE	JUN. 01, 2010
3rd EDITION	

Fig. 7690 FOOT REST - R.H(ROPS) REPOS DE PIED

Serial No. ;

Key No.	Part No.	Description	Description	Q'ty	S.C	Serial No.	ICA	Replaceable part	
								Part No.	Q'ty
7690 --	220107-00006	REST,FOOT(R.H)	REPOS,PIED	-	D				
1	220107-00003	REST,FOOT;BRACKET(RH)	REPOS,PIED	1					
2	2120-2166D1	BOLT	BOULON	2					
3	2114-1898D1	WASHER	RONDELLE	2					
4	2160-1346	COVER;FOOT REST	COUVERTURE	1					

DATE	JUN. 01, 2010
3rd EDITION	

Fig. 7700 RAIN SHIELD - ROPS
BOUCLIER DE PLUIE

Serial No. ;

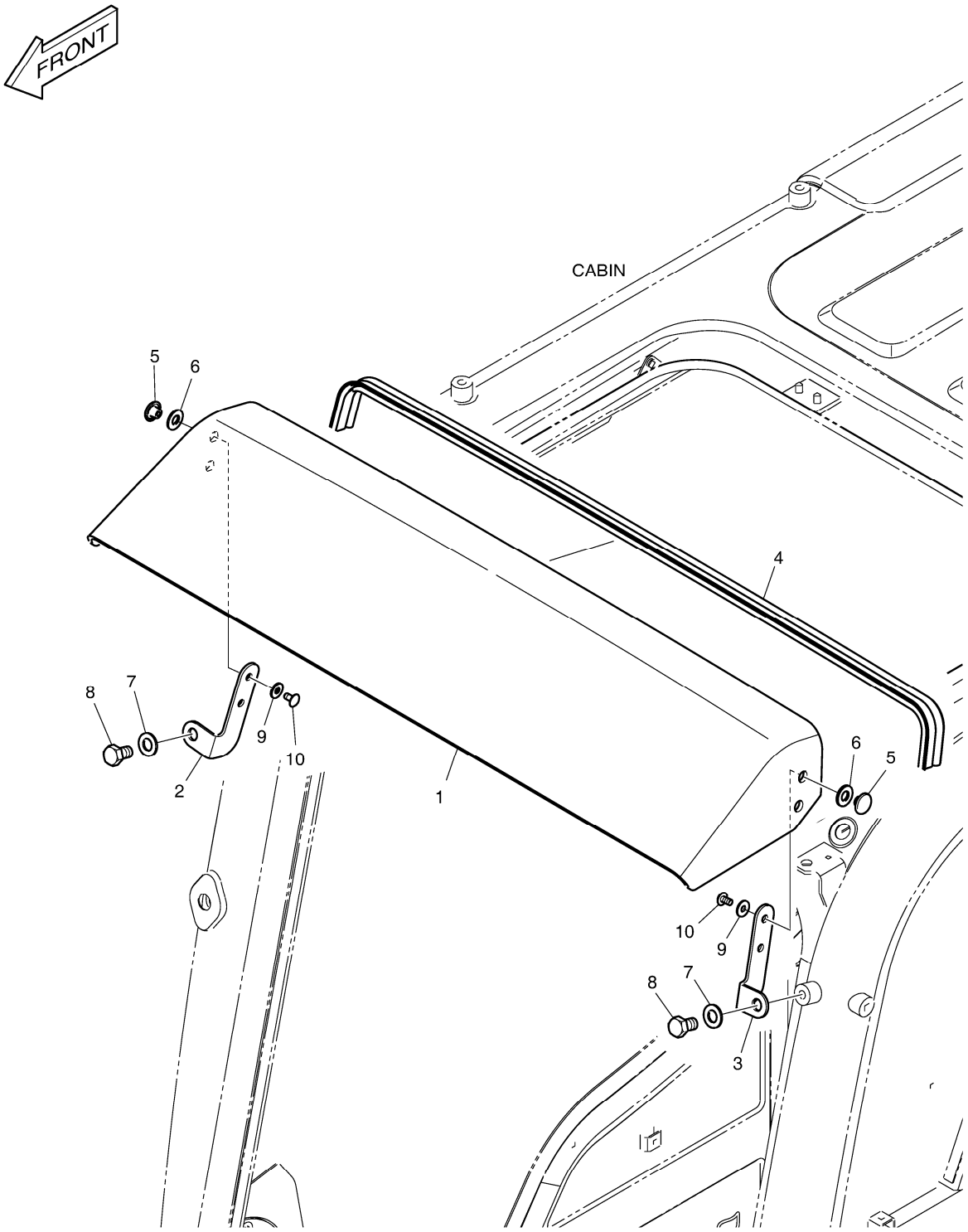

DATE	JUN. 01, 2010
3rd EDITION	

Fig. 7700 RAIN SHIELD - ROPS
BOUCLIER DE PLUIE

Serial No. ;

Key No.	Part No.	Description	Description	Q'ty	S.C	Serial No.	ICA	Replaceable part	
								Part No.	Q'ty
7700 --	102202-00002	SHIELD ASS'Y,RAIN	BOUCLIER	-	D				
1	102202-00001	SHIELD,RAIN	BOUCLIER	1					
2	110420-00008	BRACKET;RAIN SHIELD(R.H)	SUPPORT	1					
3	110420-00009	BRACKET;RAIN SHIELD(L.H)	SUPPORT	1					
4	101588-00001	TRIM,RUBBER;RAIN SHIELD	EQUILIBRE	1					
5	621-03103	COVER;ROOF HANDLE	COUVERTURE	4					
6	161-00639	RUBBER;ROOF HANDLE	LE CAOUTCHOUC	4					
7	2114-1898D6	WASHER;PLAIN	RONDELLE	2					
8	2120-2166D54	BOLT;GREEN	BOULON	2					
9	2114-1898D5	WASHER M6	RONDELLE	4					
10	2120-2166D52	BOLT	BOULON	4					

DATE	JUN. 01, 2010
3rd EDITION	

Fig. 7710 CABIN LOW GUARD - ROPS GARDE

Serial No. ;

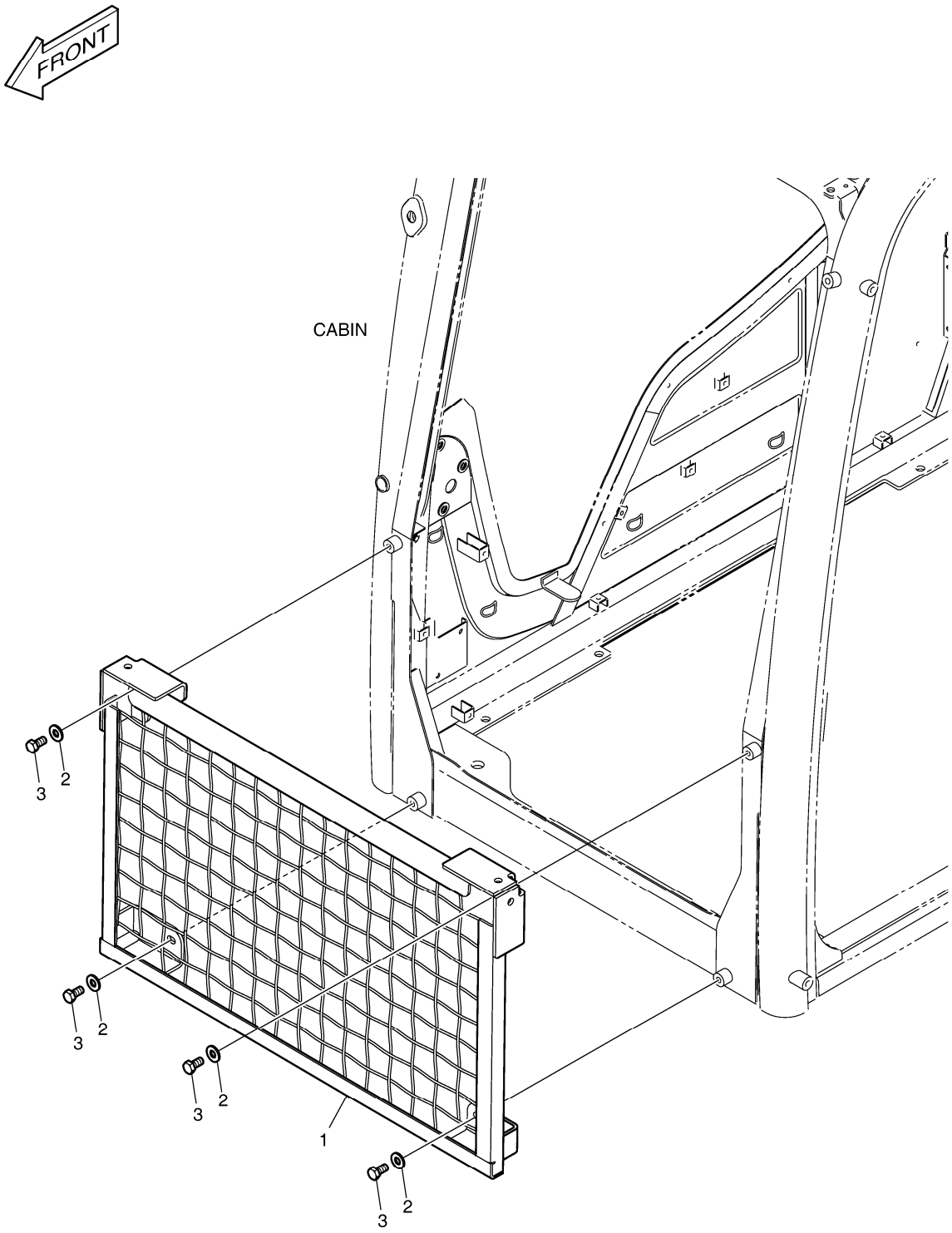

DATE	JUN. 01, 2010
3rd EDITION	

Fig. 7710 CABIN LOW GUARD - ROPS GARDE

Serial No. ;

Key No.	Part No.	Description	Description	Q'ty	S.C	Serial No.	ICA	Replaceable part	
								Part No.	Q'ty
7710 --	110921-00053	GUARD ASS'Y;LOWER	GARDE	-	D				
1	110921-00055	GUARD;FRONT WINDOW	GARDE	1					
2	2114-1898D17	WASHER M12	RONDELLE	4					
3	2120-2166D27	BOLT	BOULON	4					

DATE	JUN. 01, 2010
3rd EDITION	

Fig. 7720 WINDOW GUARD - ROPS
GARDE DE FENETRE

Serial No. ;

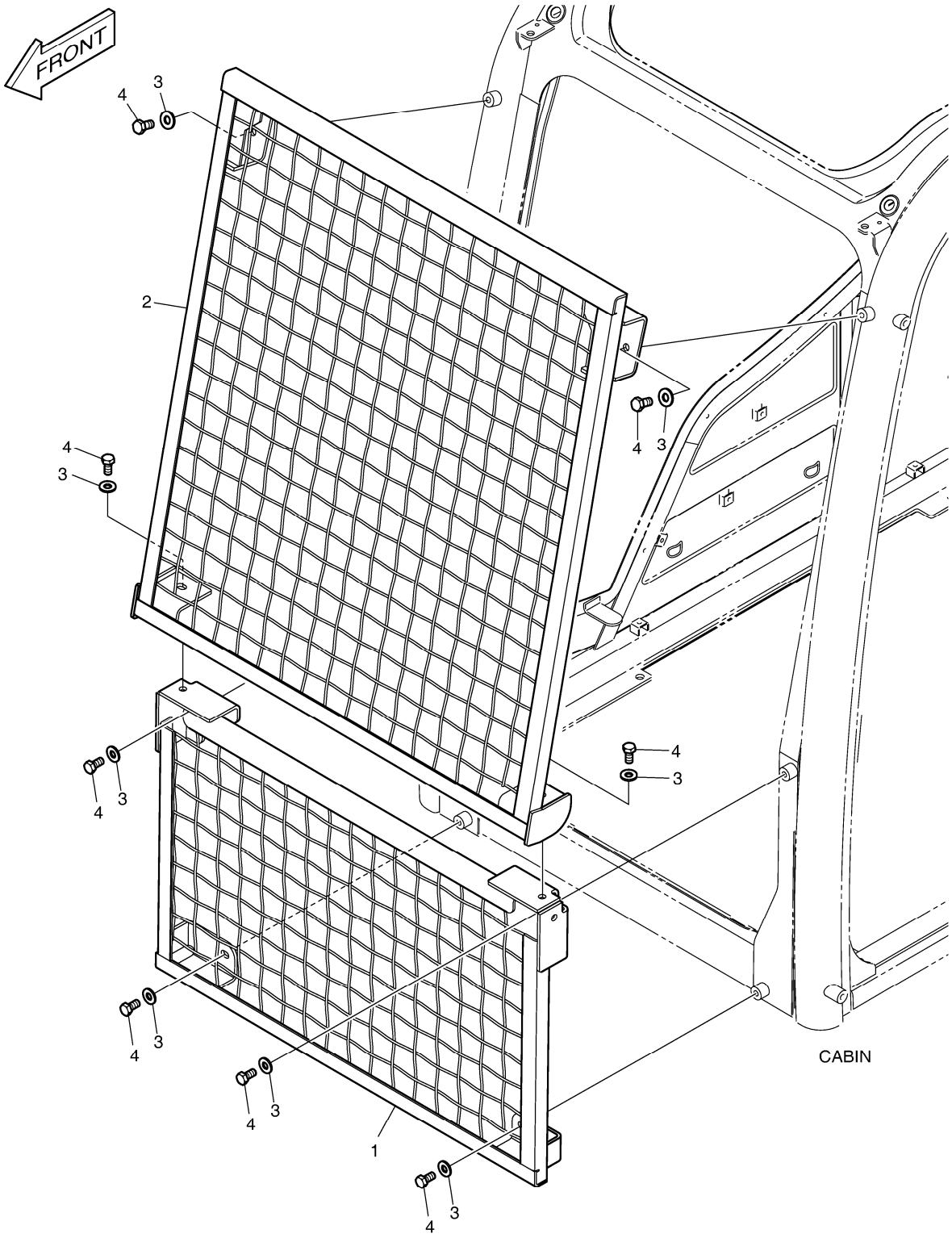

DATE	JUN. 01, 2010
3rd EDITION	

Fig. 7720 WINDOW GUARD - ROPS GARDE DE FENETRE

Serial No. ;

Key No.	Part No.	Description	Description	Q'ty	S.C	Serial No.	ICA	Replaceable part	
								Part No.	Q'ty
7720 --	110921-00054	GUARD ASS'Y;FRONT	GARDE	-	D				
1	110921-00055	GUARD;FRONT WINDOW	GARDE	1					
2	110921-00056	GUARD;FRONT WINDOW	GARDE	1					
3	2114-1898D17	WASHER M12	RONDELLE	8					
4	2120-2166D27	BOLT	BOULON	8					

DATE	JUN. 01, 2010
3rd EDITION	

Fig. 7730 FOGS GUARD - ROPS
EMBRUME LA GARDE

Serial No. ;

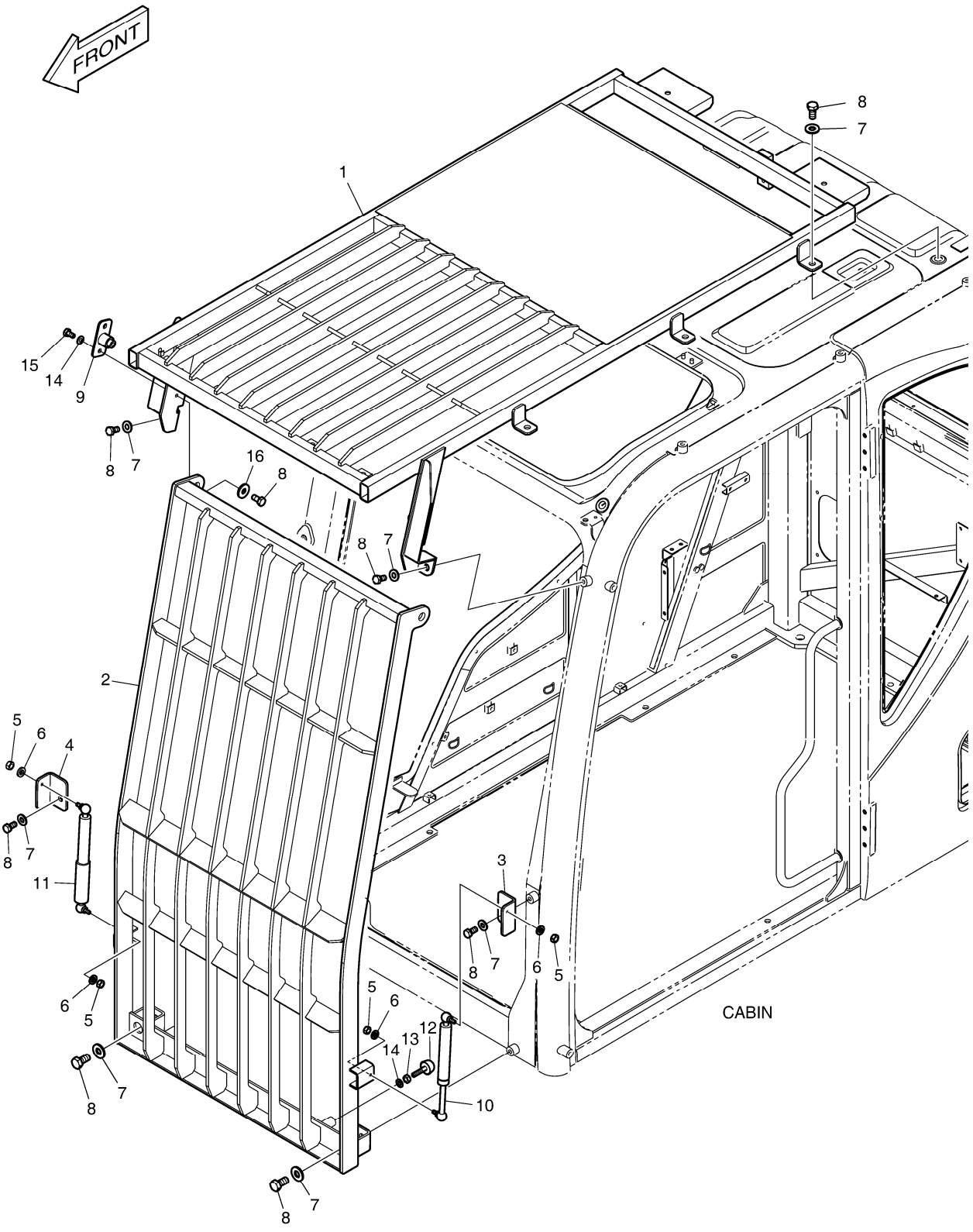

DATE	JUN. 01, 2010
3rd EDITION	

Fig. 7730 FOGS GUARD - ROPS
EMBRUME LA GARDE

Serial No. ;

Key No.	Part No.	Description	Description	Q'ty	S.C	Serial No.	ICA	Replaceable part	
								Part No.	Q'ty
7730 --	110921-00008B	GUARD ASS'Y;FOGS	GARDE	-	D				
1	110921-00003A	GUARD ASS'Y;ROOF	GARDE	1					
2	110921-00004A	GUARD ASS'Y;FRONT	GARDE	1					
3	250105-00010A	PLATE;FOGS(L.H)	PLAQUE	1					
4	250117-00003A	PLATE;FOGS(R.H)	PLAQUE	1					
5	2121-1311D2	NUT	ECROU	4					
6	2114-1898D2	WASHER	RONDELLE	4					
7	2114-1898D17	WASHER M12	RONDELLE	12					
8	2120-2166D27	BOLT	BOULON	14					
9	120503-00001	PIN,HEAD	GOUPILLE	1					
10	K1005823	CYLINDER;GAS	CYLINDRE	1					
11	K1005822	CYLINDER;GAS	CYLINDRE	1					
12	K1001260A	STOPPER;RUBBER	TAQUET	2					
13	2121-1311D4	NUT	ECROU	2					
14	2114-1898D15	WASHER;PLAIN	RONDELLE	4					
15	2120-2166D4	BOLT	BOULON	2					
16	2114-1898D11	WASHER	RONDELLE	2					

DATE	JUN. 01, 2010
3rd EDITION	

Fig. 7740 ELECTRIC PARTS - CABIN(ROPS)
PIECES ELECTRIQUES

Serial No. ;

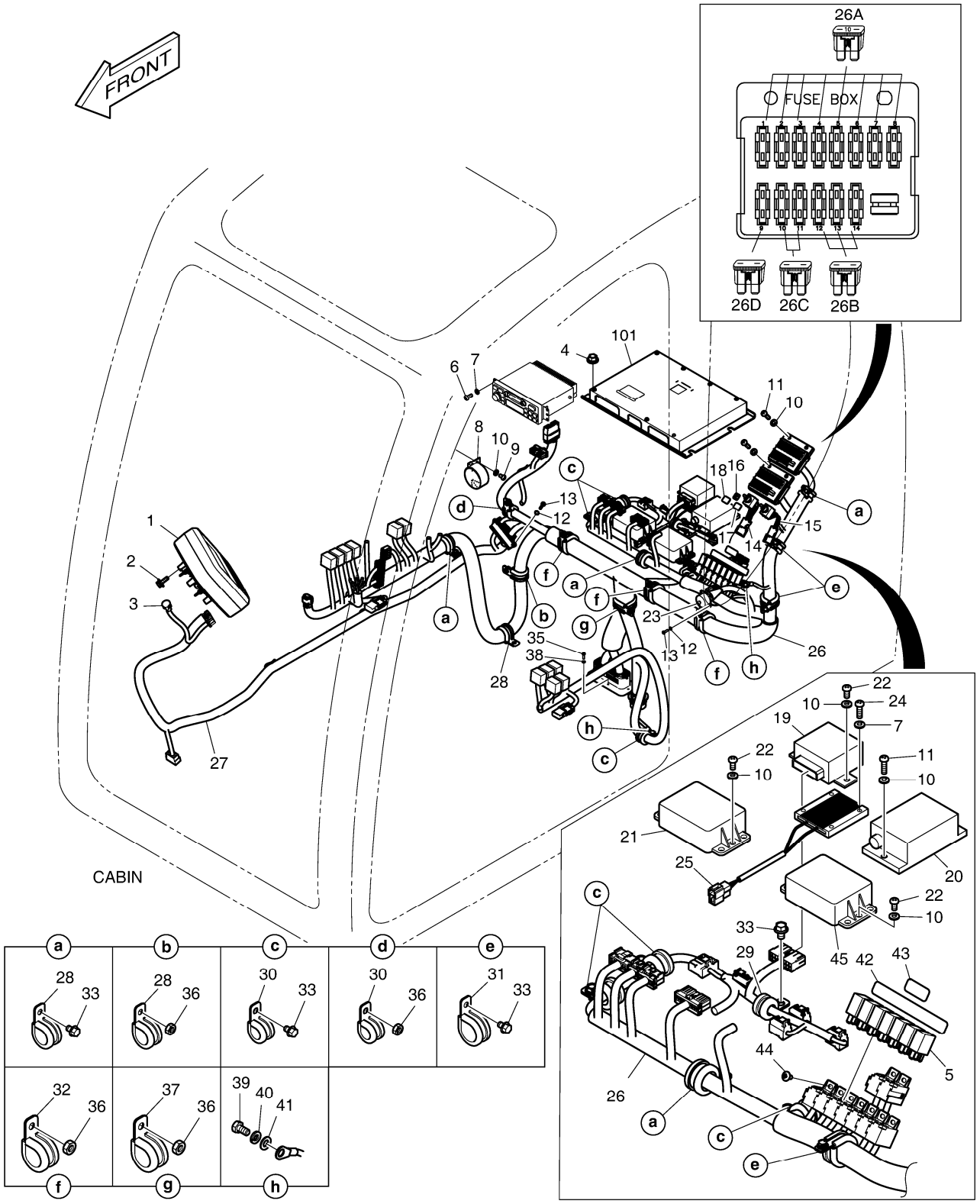

Fig. 7740 ELECTRIC PARTS - CABIN(ROPS) PIECES ELECTRIQUES

Serial No. ;

Key No.	Part No.	Description	Description	Q'ty	S.C	Serial No.	ICA	Replaceable part	
								Part No.	Q'ty
7740 --	300619-00673	ELECTRIC ASS'Y;CABIN	ELECTRIQUE	-	D				
1	300426-00049	PANEL,GAUGE;7 INCH	PANNEAU	1					
2	DS0025056	BOLT M6x1.0x20	BOULON	4					
3	547-00023	SENSOR;SUN	SONDE	1					
4	D913109	NUT,FLANGE	ECROU	4					
5	K1053326	RELAY	RELAIS	7					
6	S3450833	SCREW	VIS	4					
7	S5100203	WASHER;SPRING	RONDELLE	6					
8	2516-1116	BUZZER;PILOT	VIBREUR	1					
9	S3450943	SCREW	VIS	2					
10	S5102303	WASHER;SPRING	RONDELLE	14					
11	S3450983	SCREW M16X20	VIS	6					
12	S5100003	WASHER;SPRING	RONDELLE	6					
13	S3450343	SCREW	VIS	6					
14	549-00090A	SWITCH;TOGGLE	COMMUTATEUR	1					
15	K1001702A	SWITCH;TOGGLE	COMMUTATEUR	1					
16	K1004427	PLATE;NAME	PLAQUE	1					
17	K1004425	PLATE;NAME	PLAQUE	1					
18	K1004426	PLATE;NAME	PLAQUE	1					
19	543-00106	CONTROLLER;WIPER	CONTROLEUR	1					
20	300612-00001A	CONVERTER;DC	CONVERTISSEUR	1					
21	2543-9015	CONTROLLER;STARTER	CONTROLEUR	1					
22	S3450953	SCREW M16X12	VIS	6					
23	530-00435B	HARNESS;CHECK CONNECTOR	HARNAIS	1					
24	S3450863	SCREW	VIS	2					
25	545-00011	RESISTOR;AUXILIARY	RESISTANCE	1					
26	310207-00616	HARNESS,CABIN;ROPS	HARNAIS	1					
26A	2527-1016	. FUSE;BLADE 10A	. FUSIBLE	16					
26B	2527-1017	. FUSE;BLADE 15A	. FUSIBLE	6					
26C	2527-1018	. FUSE;BLADE 20A	. FUSIBLE	4					
26D	2527-1025	. FUSE;BLADE 30A	. FUSIBLE	2					
27	310207-00617	HARNESS,JOINT;ROPS(FRONT)	HARNAIS	1					
28	124-00208D4	CLIP	AGRAFE	5					
29	124-00208D2	CLIP	AGRAFE	1					
30	124-00208D3	CLIP	AGRAFE	5					
31	124-00208D5	CLIP	AGRAFE	3					
32	124-00208D6	CLIP	AGRAFE	3					
33	K1001029	BOLT	BOULON	10					

Fig. 7740 ELECTRIC PARTS - CABIN(ROPS)
PIECES ELECTRIQUES

Serial No. ;

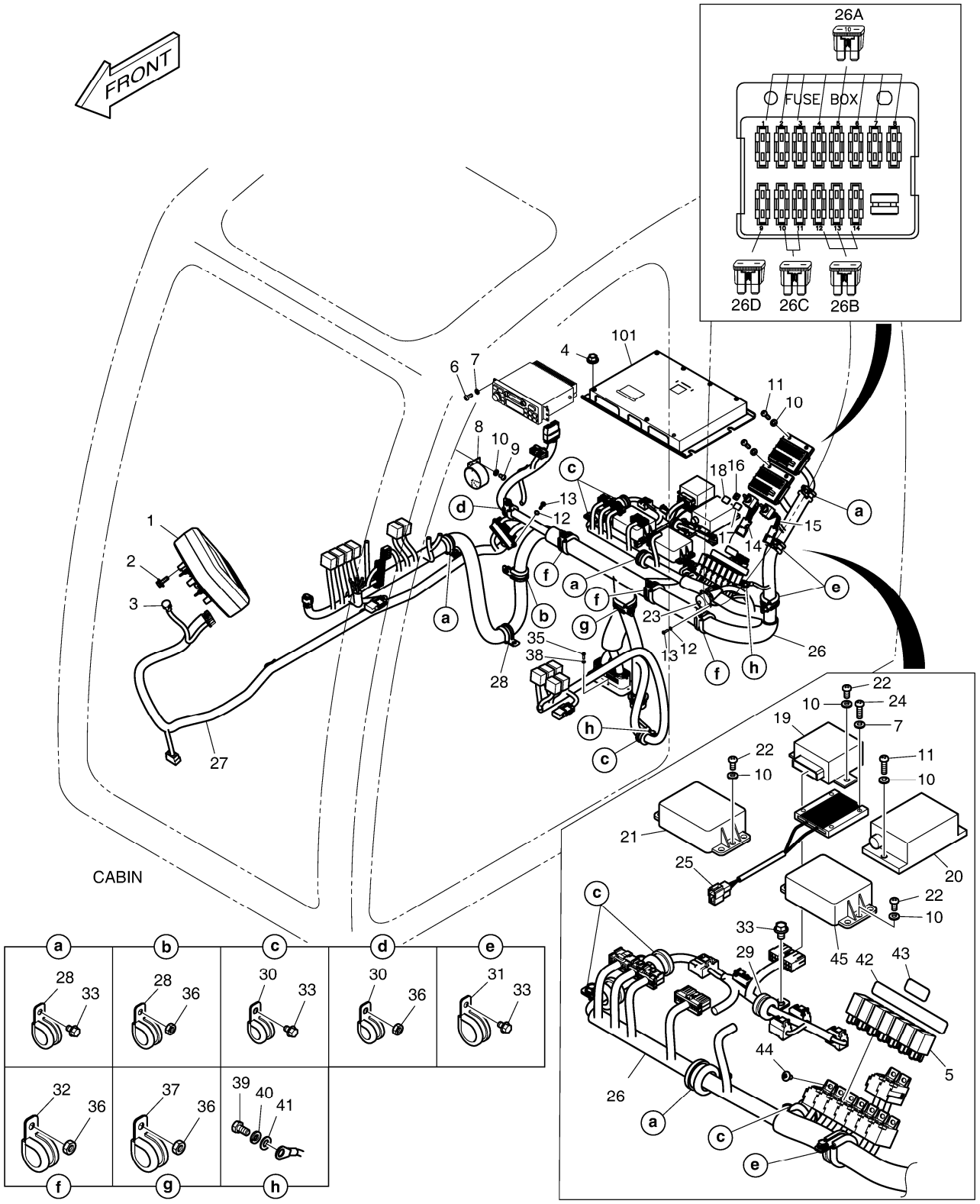

Fig. 7740 ELECTRIC PARTS - CABIN(ROPS)
PIECES ELECTRIQUES

Serial No. ;

Key No.	Part No.	Description	Description	Q'ty	S.C	Serial No.	ICA	Replaceable part	
								Part No.	Q'ty
7740 -35	S3450603	SCREW M4X0.7X16	VIS	4					
36	2121-1305	NUT	ECROU	6					
37	124-00208D7	CLIP	AGRAFE	1					
38	S5102103	WASHER;SPRING M4	RONDELLE	4					
39	S0508653	BOLT	BOULON	2					
40	S5102503	WASHER	RONDELLE	2					
41	S5010513	WASHER	RONDELLE	2					
42	K1052850D14	PLATE,NAME	PLAQUE D'IDENTIFICATION	1					
43	K1052850D15	PLATE,NAME	PLAQUE D'IDENTIFICATION	1					
44	2120-2166D53	SCREW	VIS	5					
45	2531-1003	CONVERTER;DC-DC	CONVERTISSEUR	1					
101	300611-00035	CONTROLLER,EPOS	CONTROLEUR	1					

DATE	JUN. 01, 2010
3rd EDITION	

Fig. 7750 ELECTRIC PARTS - CONTROL STAND(ROPS) PIECES ELECTRIQUES

Serial No. ;

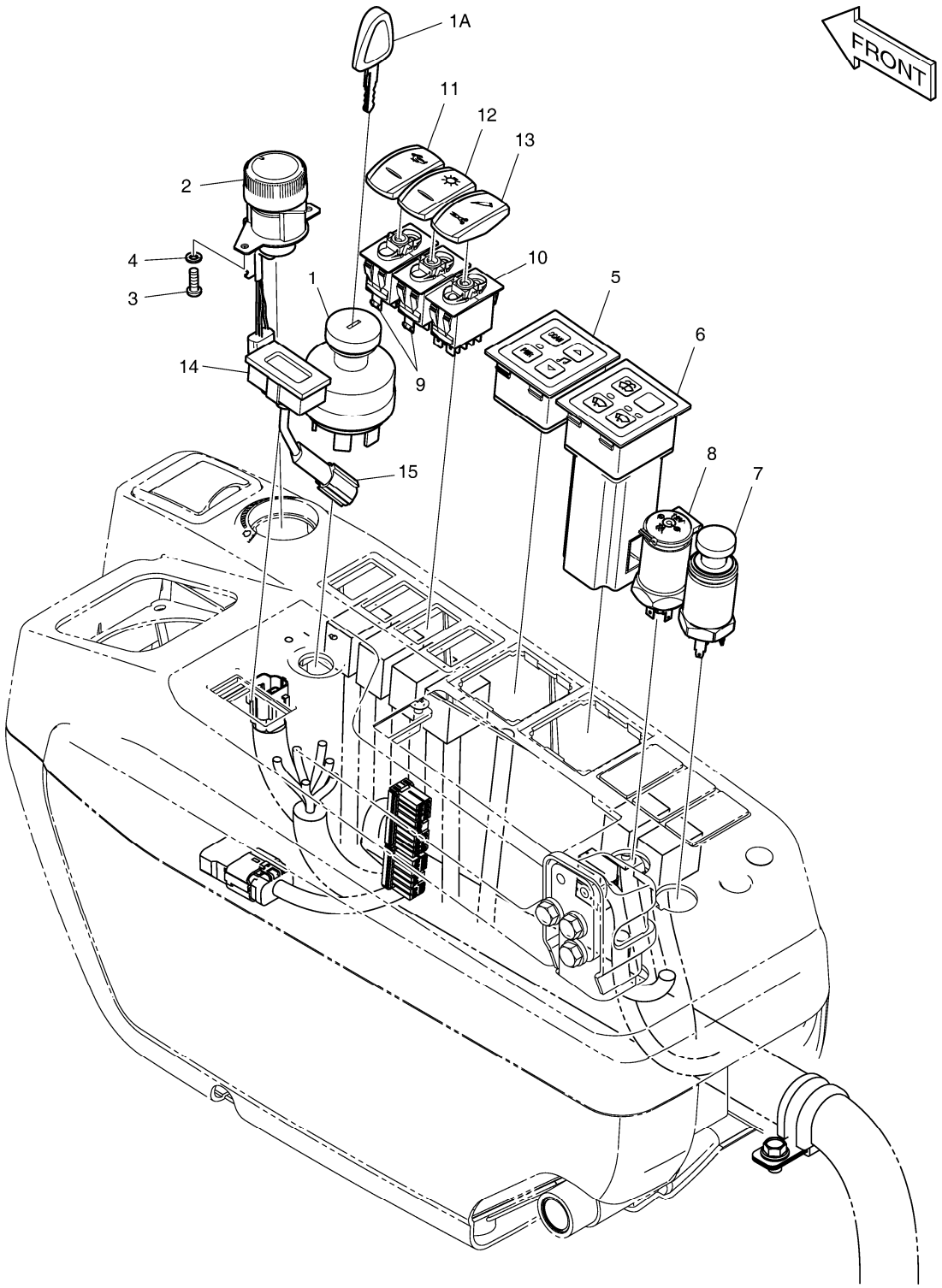

DATE	JUN. 01, 2010
3rd EDITION	

Fig. 7750 ELECTRIC PARTS - CONTROL STAND(ROPS) PIECES ELECTRIQUES

Serial No. ;

Key No.	Part No.	Description	Description	Q'ty	S.C	Serial No.	ICA	Replaceable part	
								Part No.	Q'ty
7750 --	300619-00696	ELECTRIC ASS'Y,STAND	ELECTRIQUE	-	D				
1	K1001858A	SWITCH;STARTER	COMMUTATEUR	1					
1A	K1009605B	. KEY;STARTER	. CLAVETTE	1					
2	300661-00003	DIAL,ENGINE CONTROL	CADRAN	1					
3	S3450583	SCREW	VIS	2					
4	S5100103	WASHER;SPRING	RONDELLE	2					
5	543-00096	RADIO CONTROL PANEL ASS'Y	PANNEAU DE COMMANDE	1					
6	543-00095	PANEL ASS'Y;WIPER CONTROL	PANNEAU	1					
7	545-00001	LIGHTER;CIGAR	PLUS LEGER	1					
8	K1053423	SOCKET;12V POWER	DOUILLE	1					
9	549-00103	SWITCH;ROCKER(2STEP)	COMMUTATEUR	2					
10	K1006572	SWITCH;BREAKER/SHEAR SELE	COMMUTATEUR	1					
11	301401-00008	ACTUATOR,SWITCH;HIGH SPEE	ACTIONNEUR	1					
12	K1056625	ACTUATOR;HEADLIGHT	ACTIONNEUR	1					
13	301401-00017	ACTUATOR,SWITCH;HAMMER&	ACTIONNEUR	1					
14	2528-9040	METER;HOUR	METRE	1					
15	530-00434B	HARNESS;HOUR METER JOINT	HARNAIS	1					

DATE	JUN. 01, 2010
3rd EDITION	

Fig. 7760 AUDIO - ROPS AUDIO

Serial No. ;

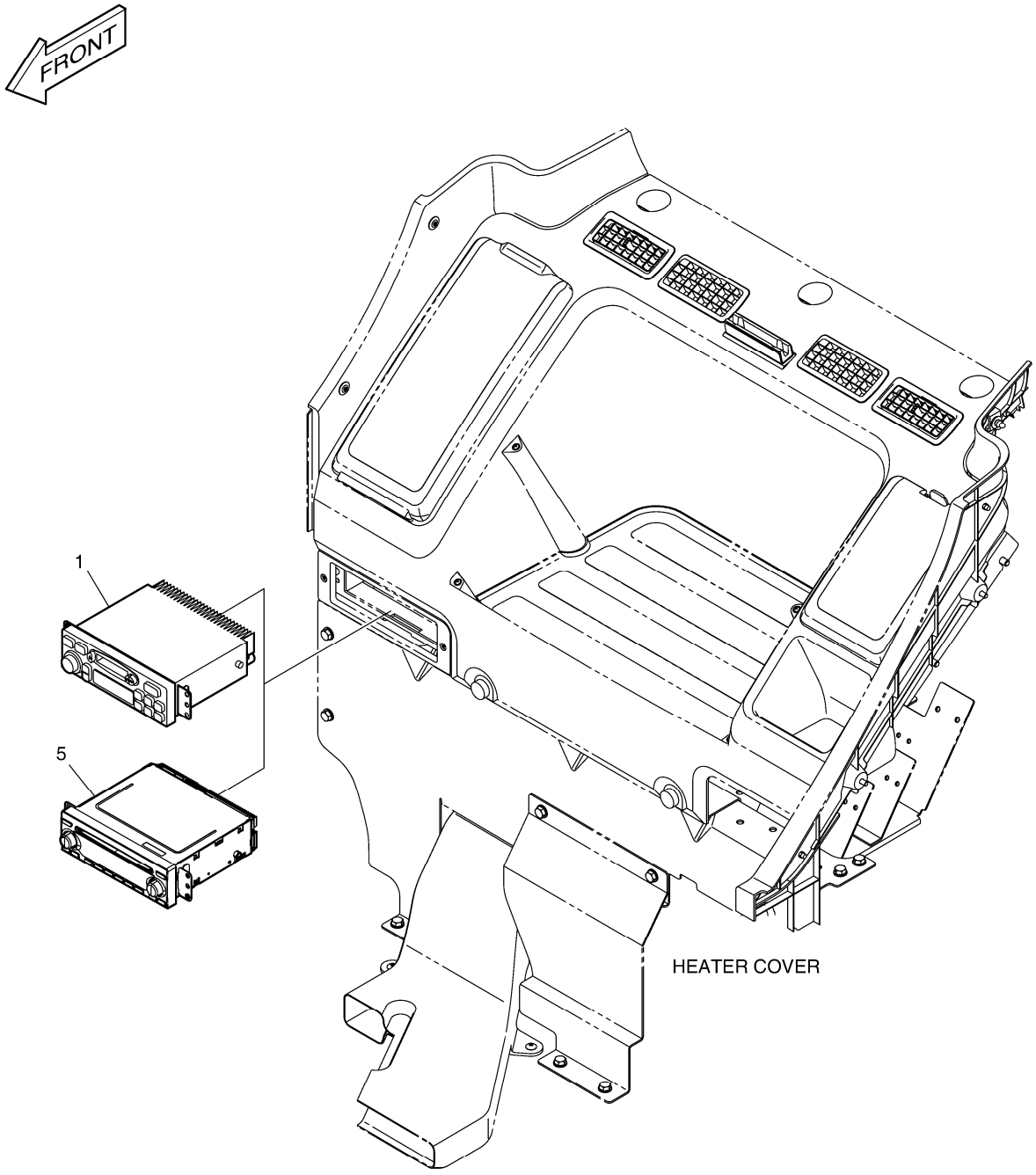

DATE	JUN. 01, 2010
3rd EDITION	

Fig. 7760 AUDIO - ROPS
AUDIO

Serial No. ;

Key No.	Part No.	Description	Description	Q'ty	S.C	Serial No.	ICA	Replaceable part	
								Part No.	Q'ty
7760 --	K1011604	OPTION;CASETTE PLAYER	LECTEUR DE	-	D				
1	K1013232	STEREO;CAR	STEREO	1					
5	K1010982	CD PLAYER	LECTEUR DE CD	1					

DATE	JUN. 01, 2010
3rd EDITION	

Fig. 7770 WORKING LAMP(2-LAMP) - ROPS
LAMPE FONCTIONNANTE

Serial No. ;

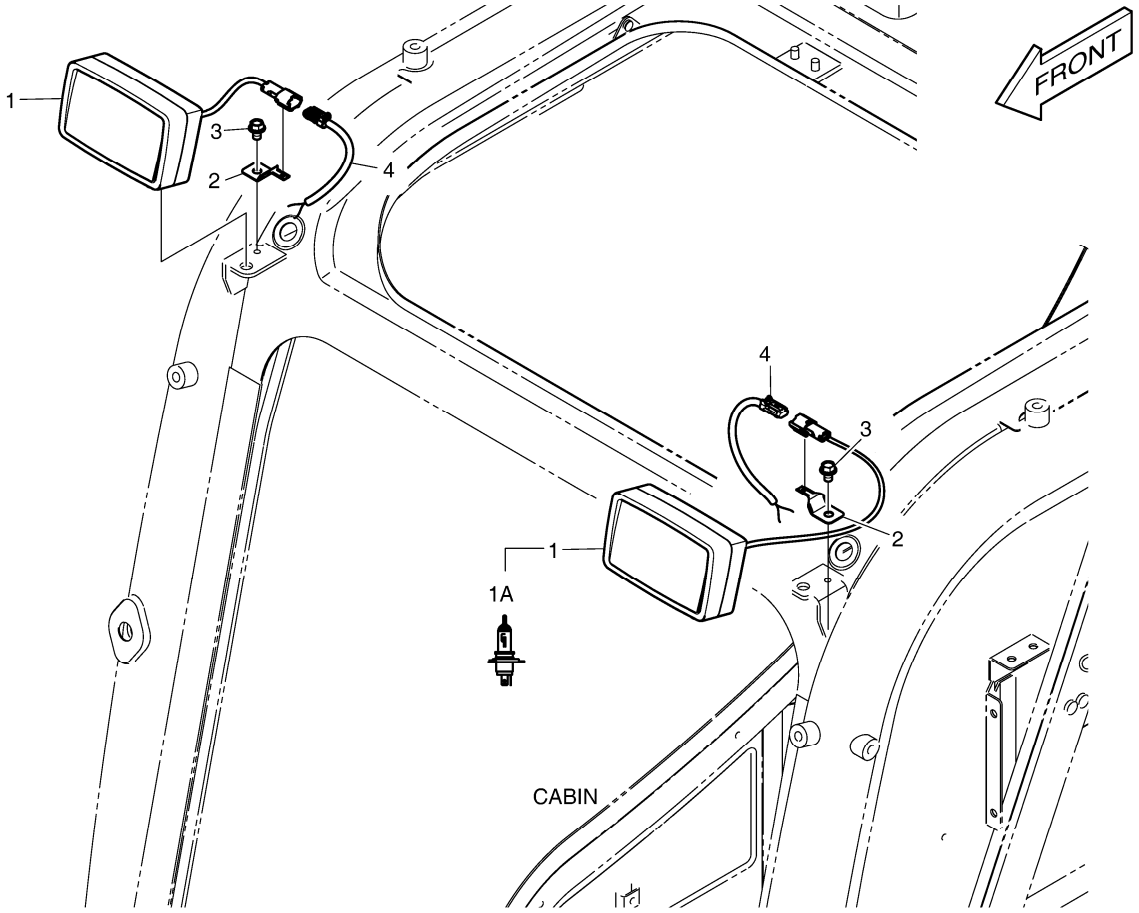

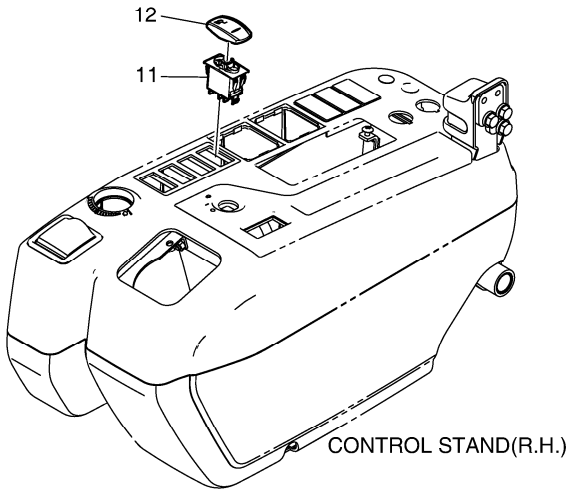

DATE	JUN. 01, 2010
3rd EDITION	

Fig. 7770 WORKING LAMP(2-LAMP) - ROPS
LAMPE FONCTIONNANTE

Serial No. ;

Key No.	Part No.	Description	Description	Q'ty	S.C	Serial No.	ICA	Replaceable part	
								Part No.	Q'ty
7770 --	300619-00075	LAMP ASS'Y,ADD WORKING	LAMPE	-	D				
1	K1055454	LAMP ASS'Y,HEAD	LAMPE	2					
1A	2515-1016D4	. BLUB;HALOGEN	. AMPOULE	1					
2	2197-1661	BRACKET	SUPPORT	2					
3	K1001029	BOLT	BOULON	2					
4	K1030700	HARNESS;JOINT	HARNAIS	2					
11	549-00103	SWITCH;ROCKER(2STEP)	COMMUTATEUR	1					
12	301401-00009	ACTUATOR,SWITCH;CABIN LAM	ACTIONNEUR	1					

DATE	JUN. 01, 2010
3rd EDITION	

Fig. 7780 WORKING LAMP(6-LAMP) - ROPS
LAMPE FONCTIONNANTE

Serial No. ;

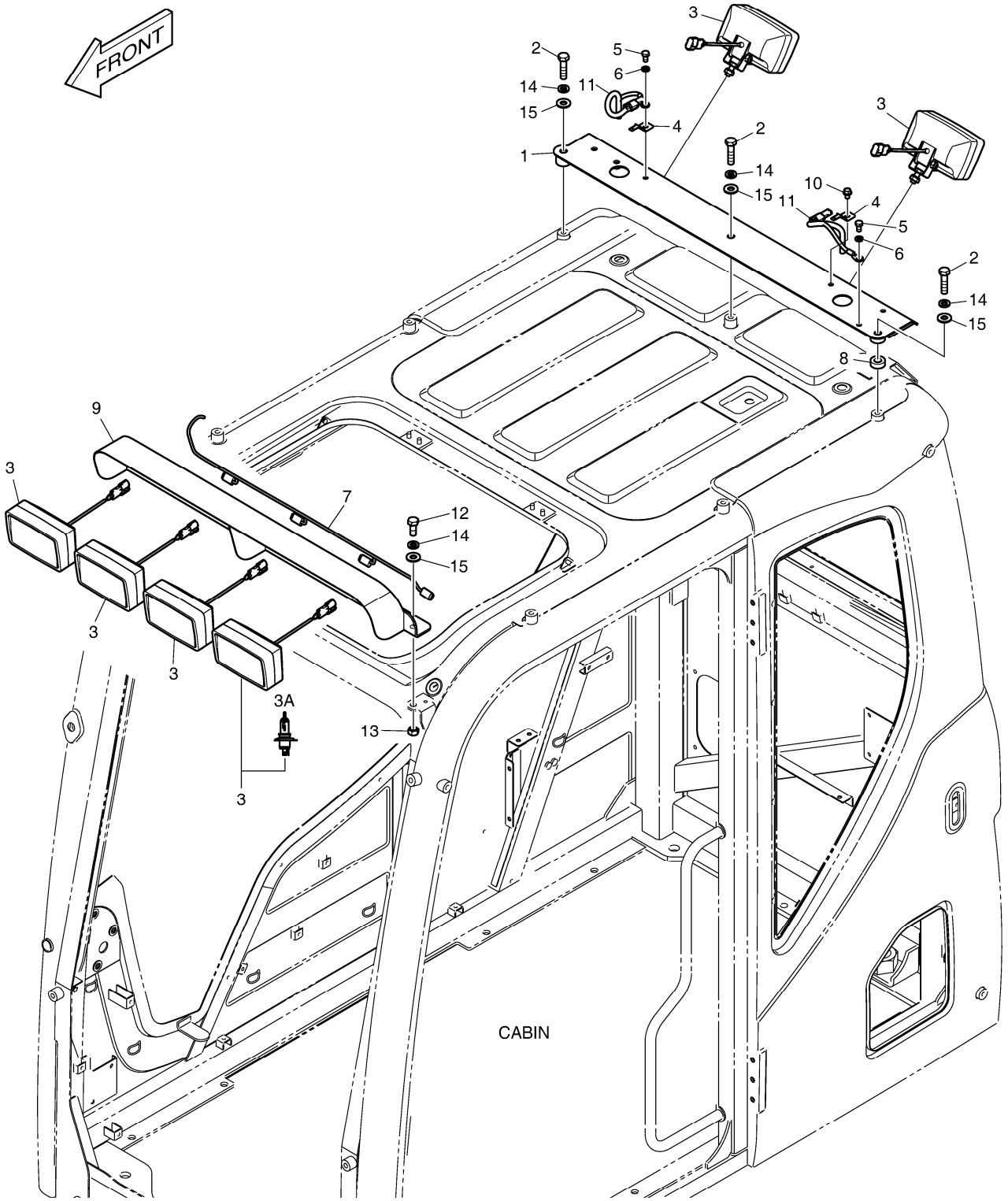

DATE	JUN. 01, 2010
3rd EDITION	

Fig. 7780 WORKING LAMP(6-LAMP) - ROPS
LAMPE FONCTIONNANTE

Serial No. ;

Key No.	Part No.	Description	Description	Q'ty	S.C	Serial No.	ICA	Replaceable part	
								Part No.	Q'ty
7780 --	300619-00076	LAMP ASS'Y,ADD WORKING	LAMPE	-	D				
1	110429-00002B	BRACKET,LAMP;REAR	SUPPORT	1					
2	2120-2166D11	BOLT	BOULON	3					
3	K1055454	LAMP ASS'Y,HEAD	LAMPE	6					
3A	2515-1016D4	. BLUB;HALOGEN	. AMPOULE	1					
4	2197-1661	BRACKET	SUPPORT	2					
5	S0508653	BOLT	BOULON	2					
6	S5102503	WASHER	RONDELLE	2					
7	530-00430A	HARNESS;FRONT CABIN LAMP	HARNAIS	1					
8	131002-00109	BUSHING;LAMP BRACKET	DOUILLE	1					
9	110429-00050	BRACKET,LAMP;FRONT	SUPPORT	1					
10	K1001029	BOLT	BOULON	1					
11	310207-00392	HARNESS,LAMP;REAR	HARNAIS, LAMPE	2					
12	2120-2166D32	BOLT	BOULON	2					
13	2121-1311D1	NUT	ECROU	2					
14	2114-2031D6	WASHER;SPRING	RONDELLE	5					
15	2114-1898D17	WASHER M12	RONDELLE	5					

DATE	JUN. 01, 2010
3rd EDITION	

Fig. 7790 WORKING LAMP(2-LAMP) - ROPS GUARD
LAMPE FONCTIONNANTE

Serial No. ;

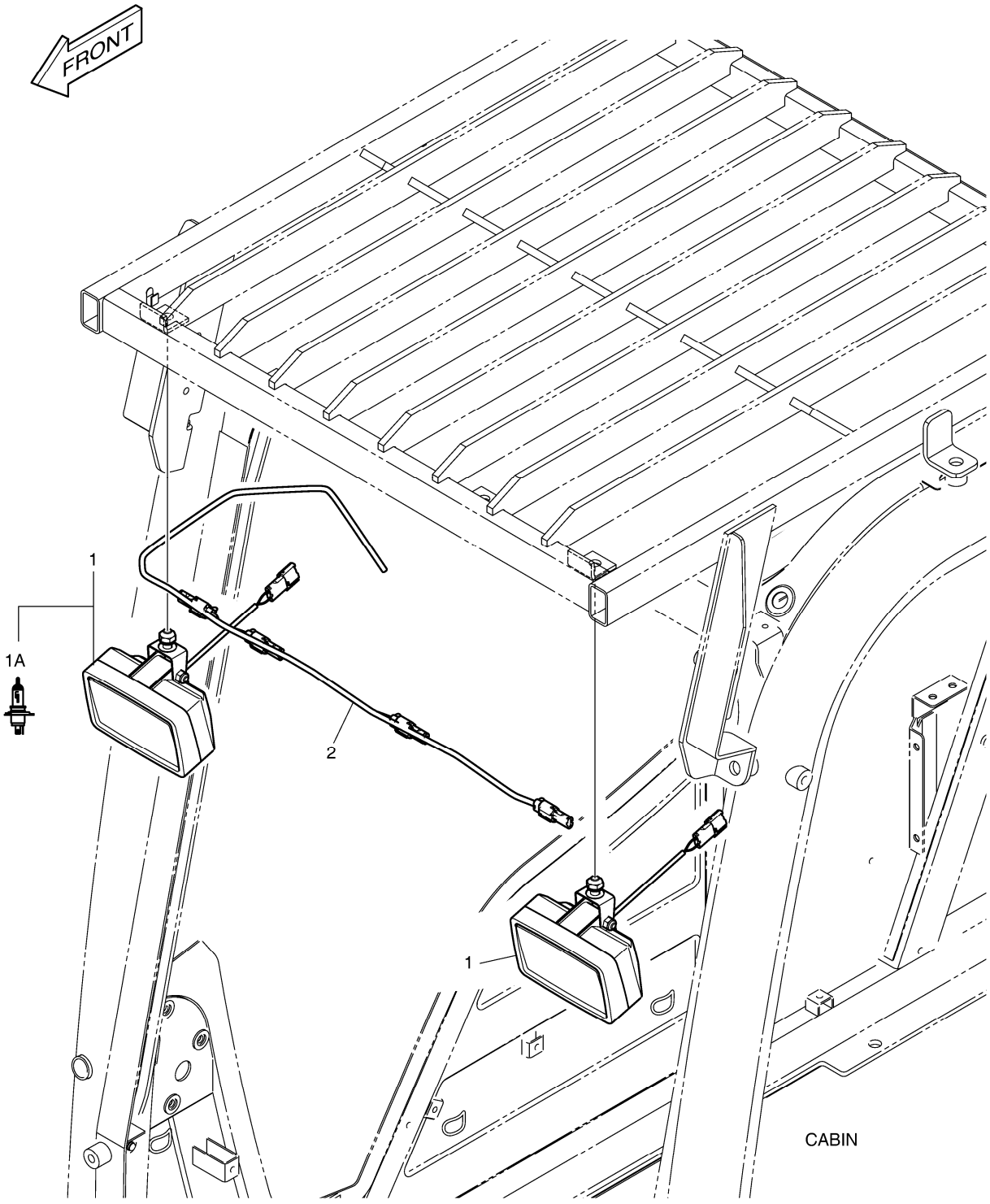

DATE	JUN. 01, 2010
3rd EDITION	

Fig. 7790 WORKING LAMP(2-LAMP) - ROPS GUARD
LAMPE FONCTIONNANTE

Serial No. ;

Key No.	Part No.	Description	Description	Q'ty	S.C	Serial No.	ICA	Replaceable part	
								Part No.	Q'ty
7790 --	300619-00077	LAMP ASS'Y,ADD WORKING	LAMPE	-	D				
1	K1055454	LAMP ASS'Y,HEAD	LAMPE	2					
1A	2515-1016D4	. BLUB;HALOGEN	. AMPOULE	1					
2	K1006663	HARNESS;JOINT	HARNAIS	1					

DATE	JUN. 01, 2010
3rd EDITION	

Fig. 7800 WORKING LAMP(6-LAMP) - ROPS GUARD
LAMPE FONCTIONNANTE

Serial No. ;

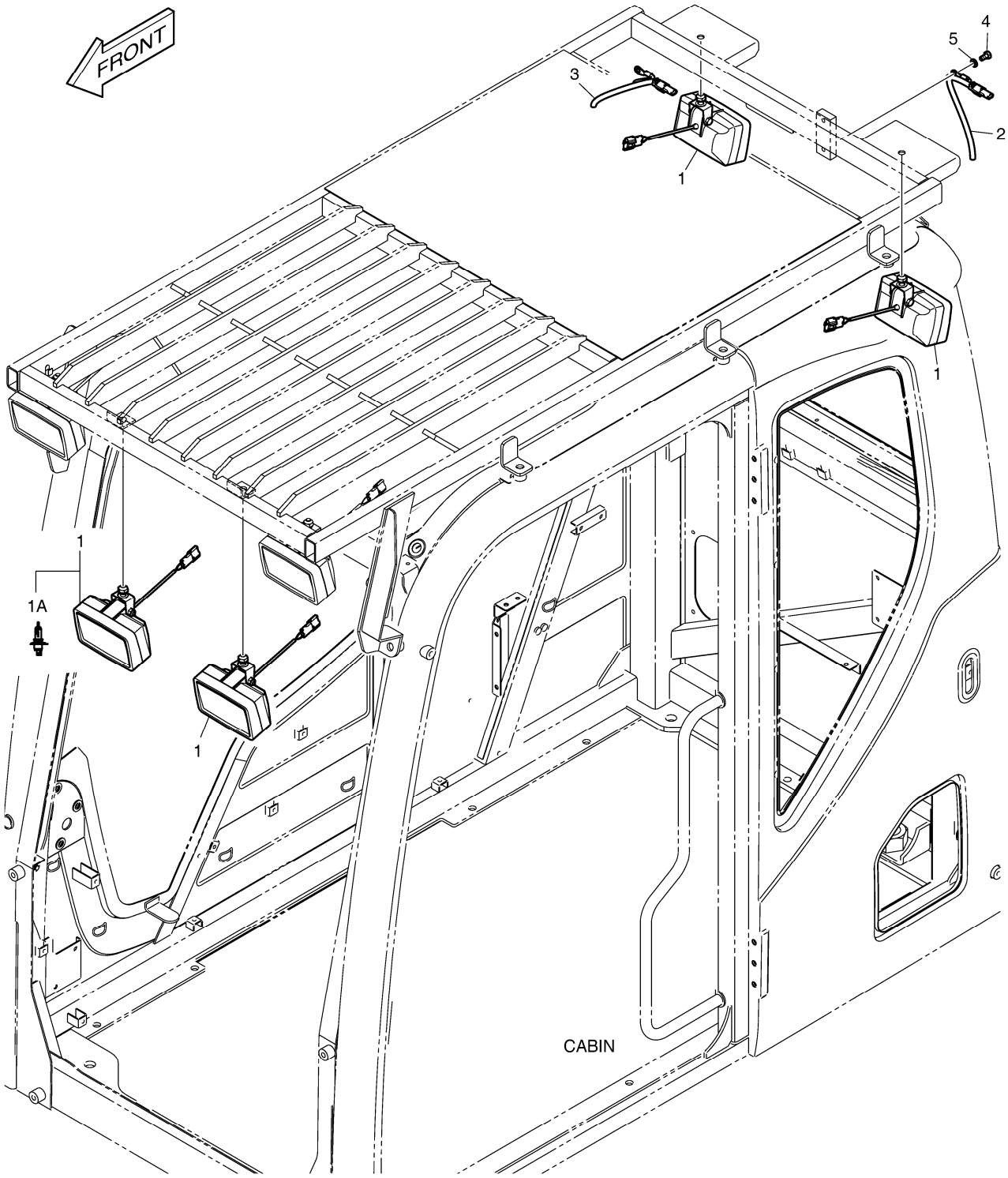

Fig. 7800 WORKING LAMP(6-LAMP) - ROPS GUARD
LAMPE FONCTIONNANTE

Serial No. ;

Key No.	Part No.	Description	Description	Q'ty	S.C	Serial No.	ICA	Replaceable part	
								Part No.	Q'ty
7800 --	300619-00078	LAMP ASS'Y,ADD WORKING	LAMPE	-	D				
1	K1055454	LAMP ASS'Y,HEAD	LAMPE	4					
1A	2515-1016D4	. BLUB;HALOGEN	. AMPOULE	1					
2	K1055342	HARNESS;REAR CABIN LAMP	HARNAIS	1					
3	K1055342	HARNESS;REAR CABIN LAMP	HARNAIS	1					
4	S0508653	BOLT	BOULON	1					
5	S5102503	WASHER	RONDELLE	1					

DATE	JUN. 01, 2010
3rd EDITION	

Fig. 7810 TELESCOPIC BEACON - ROPS
TELESCOPIQUE BEACON

Serial No. ;

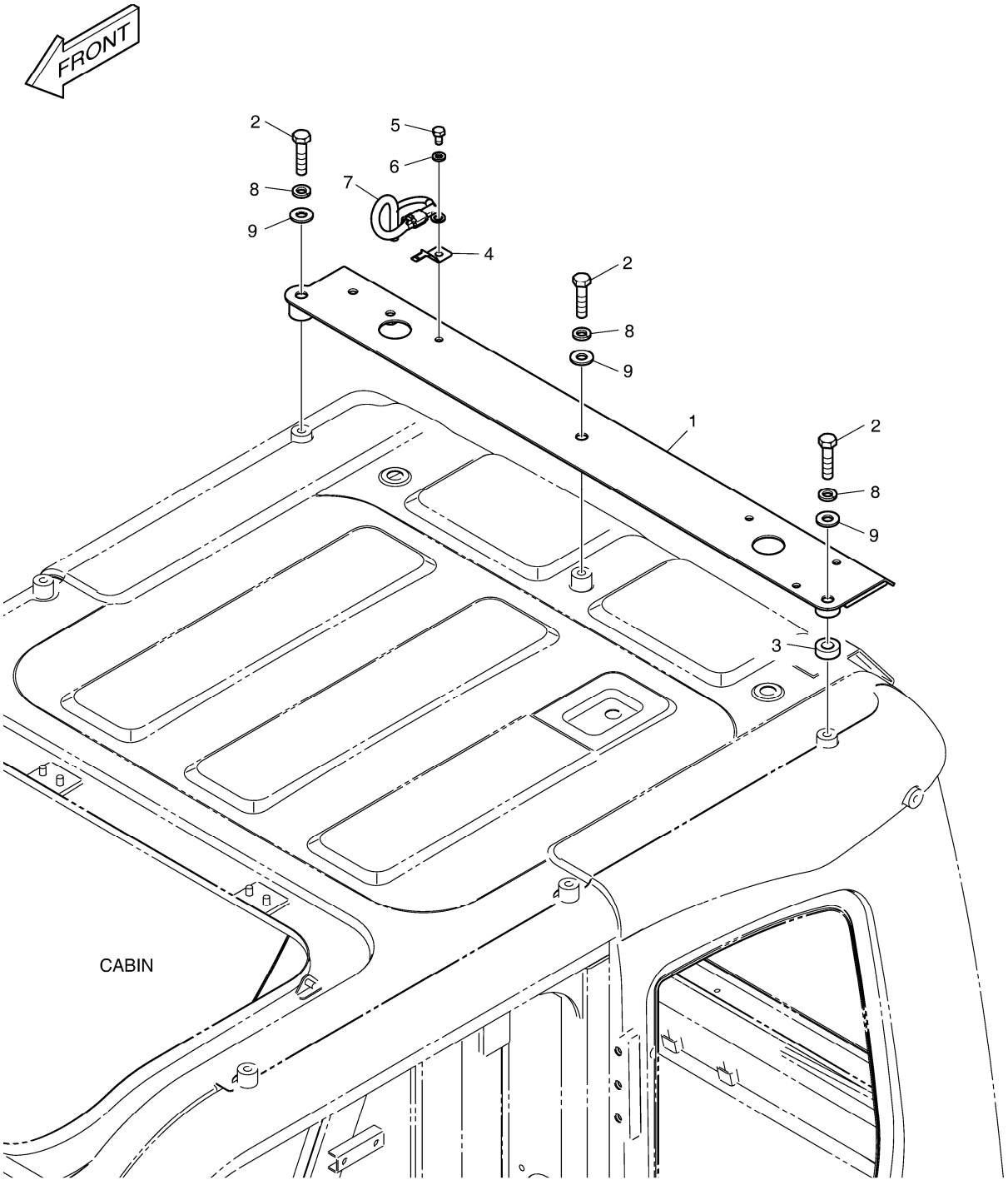

Fig. 7810 TELESCOPIC BEACON - ROPS
TELESCOPIQUE BEACON

Serial No. ;

Key No.	Part No.	Description	Description	Q'ty	S.C	Serial No.	ICA	Replaceable part	
								Part No.	Q'ty
7810 --	300619-00085	TELESCOPIC BEACON ASS'Y	BALISE	-	D				
1	110429-00002B	BRACKET,LAMP;REAR	SUPPORT	1					
2	2120-2166D11	BOLT	BOULON	3					
3	131002-00109	BUSHING;LAMP BRACKET	DOUILLE	1					
4	2197-1661	BRACKET	SUPPORT	1					
5	S5102503	WASHER	RONDELLE	1					
6	S0508653	BOLT	BOULON	1					
7	310207-00392	HARNESS,LAMP;REAR	HARNAIS, LAMPE	1					
8	2114-2031D6	WASHER;SPRING	RONDELLE	3					
9	2114-1898D17	WASHER M12	RONDELLE	3					

DATE	JUN. 01, 2010
3rd EDITION	

Fig. 7820 TELESCOPIC BEACON - ROPS(WITH LAMP) TELESCOPIQUE BEACON

Serial No. ;

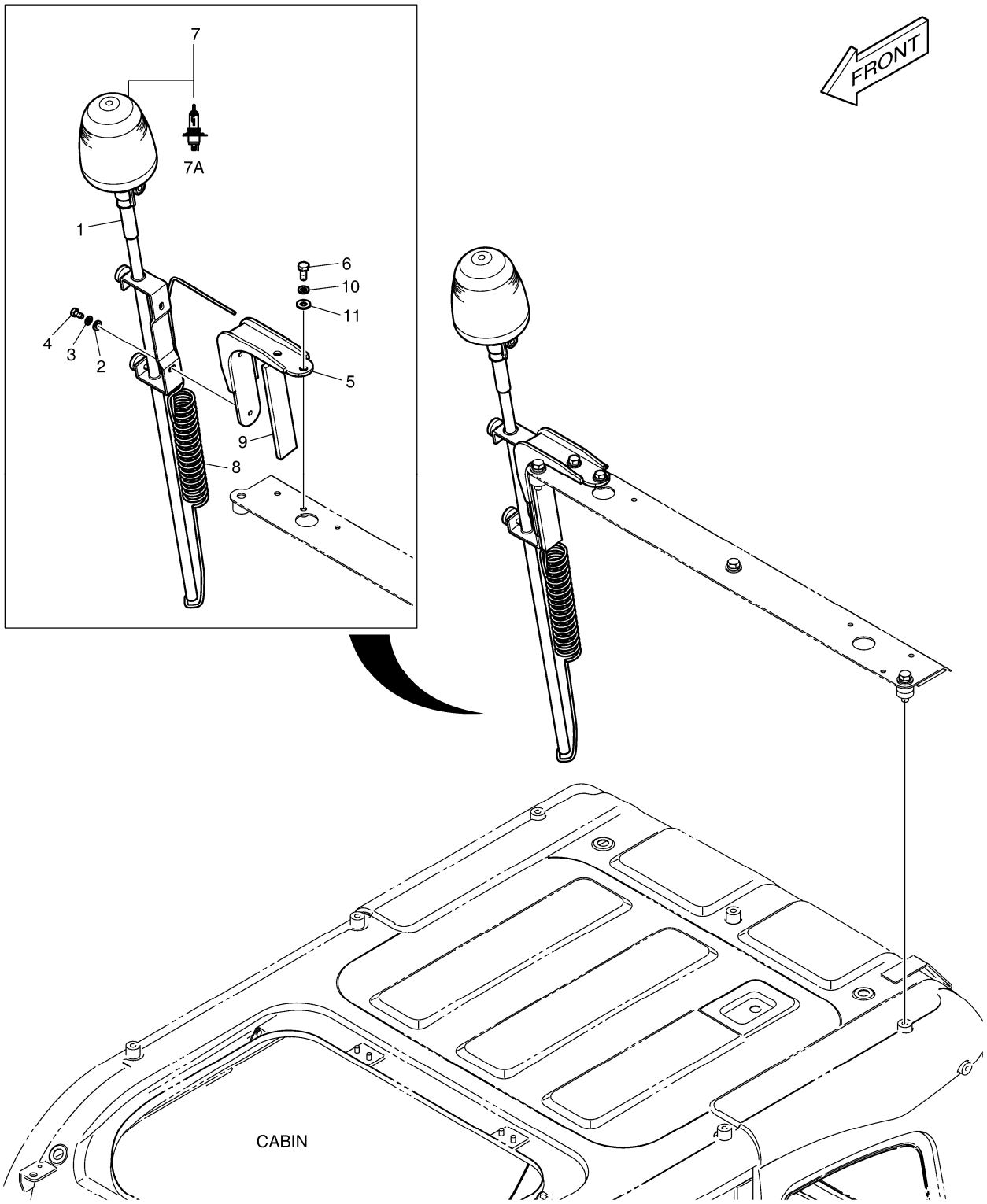

DATE	JUN. 01, 2010
3rd EDITION	

Fig. 7820 TELESCOPIC BEACON - ROPS(WITH LAMP) TELESCOPIQUE BEACON

Serial No. ;

Key No.	Part No.	Description	Description	Q'ty	S.C	Serial No.	ICA	Replaceable part	
								Part No.	Q'ty
7820 --	300619-00084A	TELESCOPIC BEACON;6 LAMP	BALISE TÉLESCOPIQUE	-	D				
1	195-01805	SUPPORT;BEACON	APPUI	1					
2	2114-1898D2	WASHER	RONDELLE	2					
3	2114-2031D4	WASHER;SPRING	RONDELLE	2					
4	2120-2166D25	BOLT M8X1.25X16	BOULON	2					
5	110429-00056	BRACKET,LAMP;TELESCOPIC	SUPPORT	1					
6	2120-2166D2	BOLT	BOULON	2					
7	534-00062	LAMP;ROTATING BEACON	LAMPE	1					
7A	515-00013	. BULB;HALOGEN 24V 70W	. AMPOULE	1					
8	K1010065	HARNESS;JOINT	HARNAIS	1					
9	161-00404	RUBBER	LE CAOUTCHOUC	1					
10	2114-2031D5	WASHER;SPRING	RONDELLE	2					
11	2114-1898D1	WASHER	RONDELLE	2					

DATE	JUN. 01, 2010
3rd EDITION	

Fig. 7830 ROTATING BEACON - ROPS
FEU DE CIRCULATION

Serial No. ;

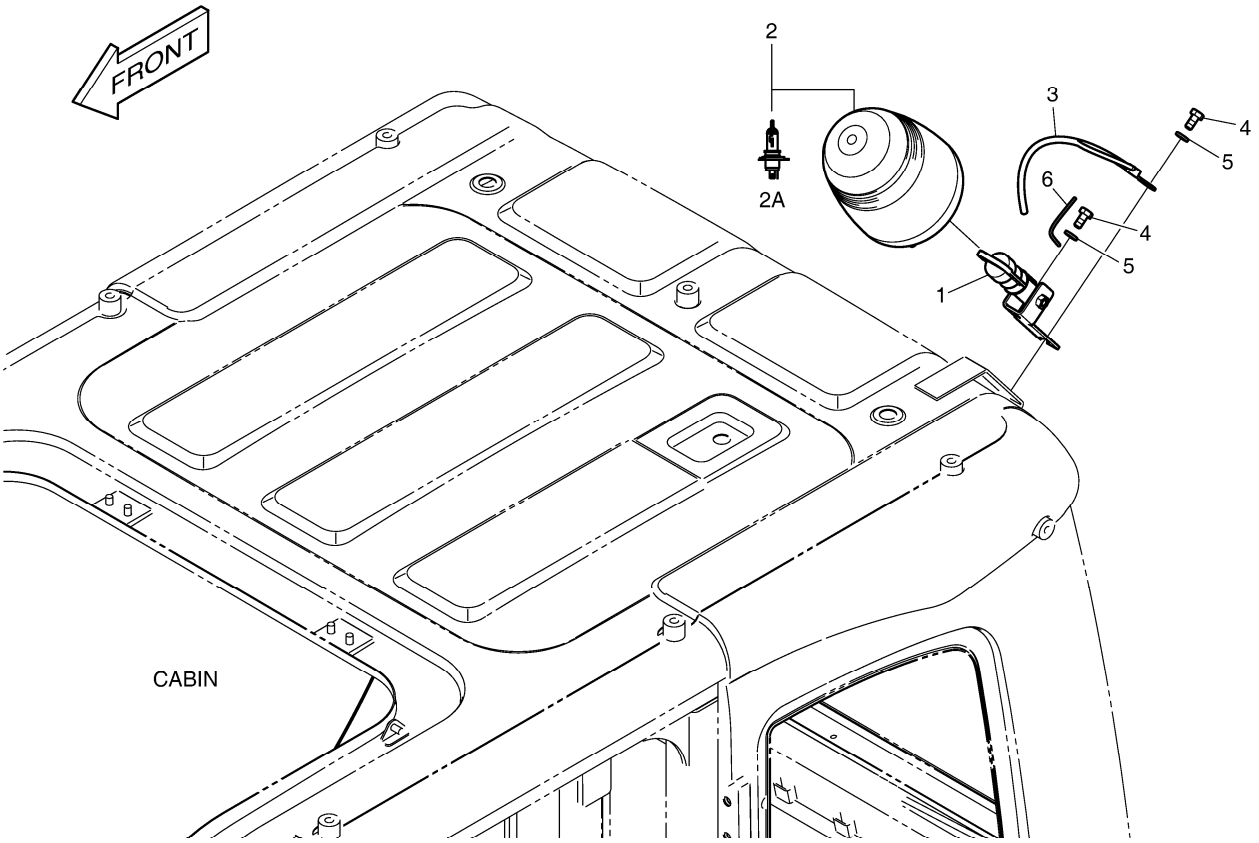

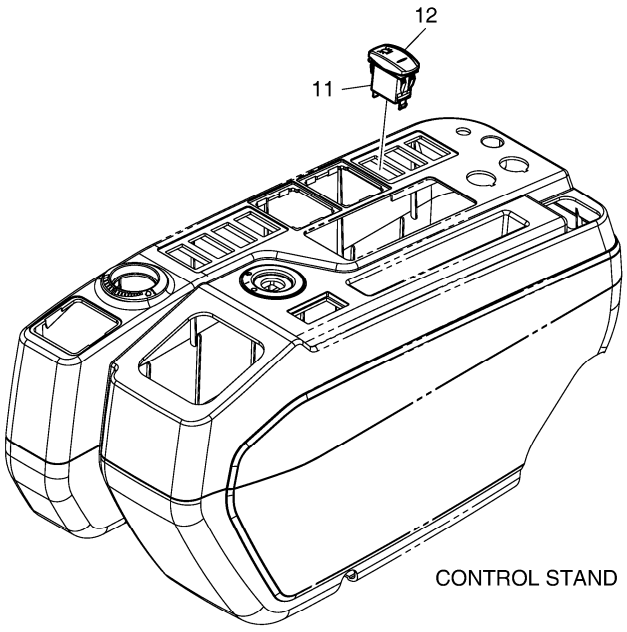

DATE	JUN. 01, 2010
3rd EDITION	

Fig. 7830 ROTATING BEACON - ROPS
FEU DE CIRCULATION

Serial No. ;

Key No.	Part No.	Description	Description	Q'ty	S.C	Serial No.	ICA	Replaceable part	
								Part No.	Q'ty
7830 --	300619-00081A	ROTATING BEACON ASS'Y	BALISE	-	D				
1	131002-00085	BUSHING ASS'Y	ENSEMBLE DE DOUILLE	1					
2	534-00062	LAMP;ROTATING BEACON	LAMPE	1					
2A	515-00013	. BULB;HALOGEN 24V 70W	. AMPOULE	1					
3	K1051191	HARNESS;JOINT	HARNAIS	1					
4	S0508653	BOLT	BOULON	2					
5	S5102503	WASHER	RONDELLE	2					
6	530-00464	HARNESS;ROTATING BEACON	HARNAIS	1					
11	549-00101	SWITCH;ROCKER(1STEP)	COMMUTATEUR	1					
12	K1056645	ACTUATOR;ROTATING BEACON	ACTIONNEUR	1					

DATE	JUN. 01, 2010
3rd EDITION	

Fig. 7840 ROTATING BEACON - ROPS(WITH LAMP) FEU DE CIRCULATION

Serial No. ;

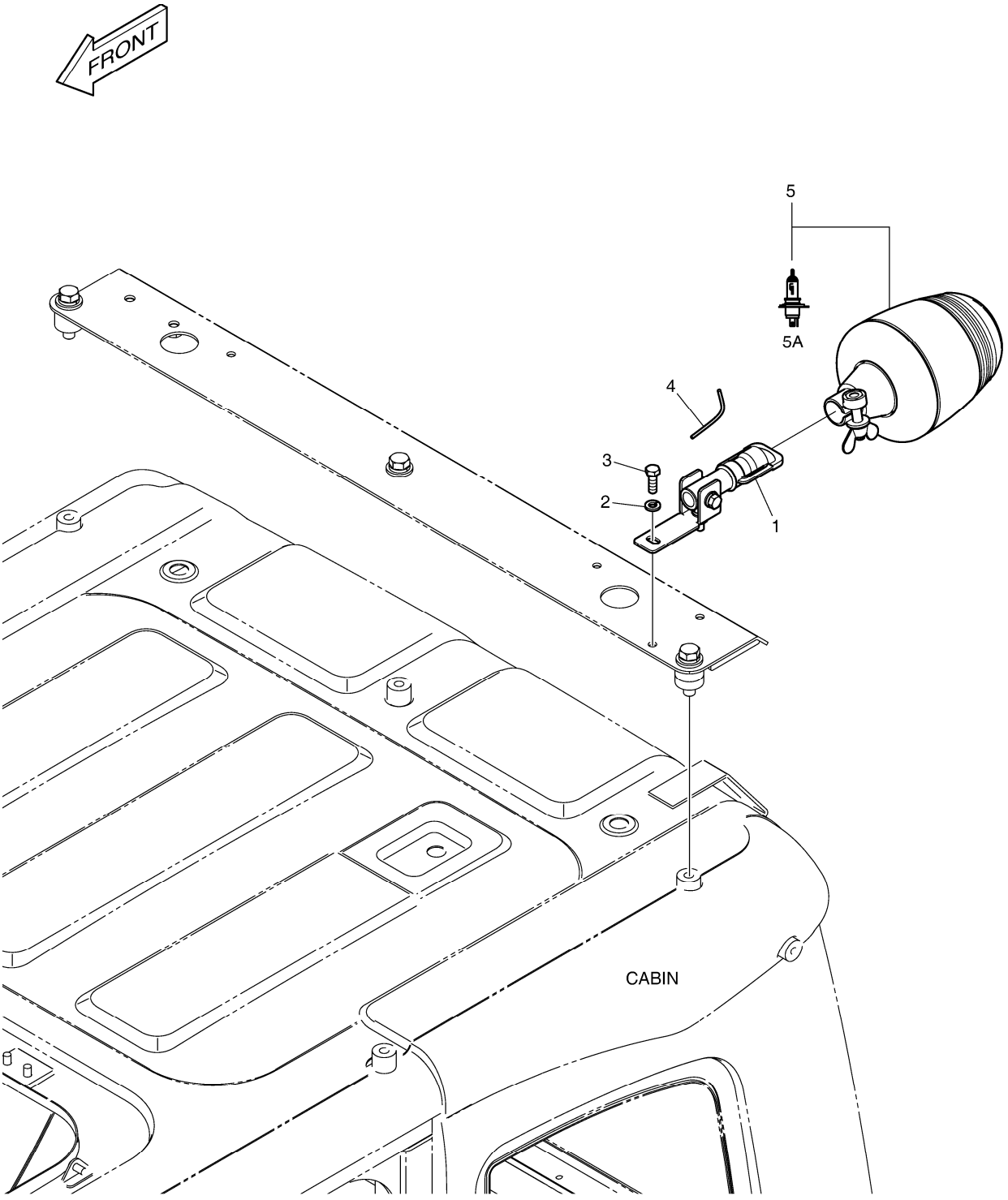

DATE	JUN. 01, 2010
3rd EDITION	

Fig. 7840 ROTATING BEACON - ROPS(WITH LAMP) FEU DE CIRCULATION

Serial No. ;

Key No.	Part No.	Description	Description	Q'ty	S.C	Serial No.	ICA	Replaceable part	
								Part No.	Q'ty
7840 --	300619-00080A	ROTATING BEACON ASS'Y	BALISE	-	D				
1	131002-00085	BUSHING ASS'Y	ENSEMBLE DE DOUILLE	1					
2	S5102503	WASHER	RONDELLE	1					
3	S0508653	BOLT	BOULON	1					
4	530-00464	HARNESS;ROTATING BEACON	HARNAIS	1					
5	534-00062	LAMP;ROTATING BEACON	LAMPE	1					
5A	515-00013	. BULB;HALOGEN 24V 70W	. AMPOULE	1					

DATE	JUN. 01, 2010
3rd EDITION	

Fig. 7850 ROTATING BEACON - ROPS(GUARD) SUPPORT TOURNANT DE BALISE

Serial No. ;

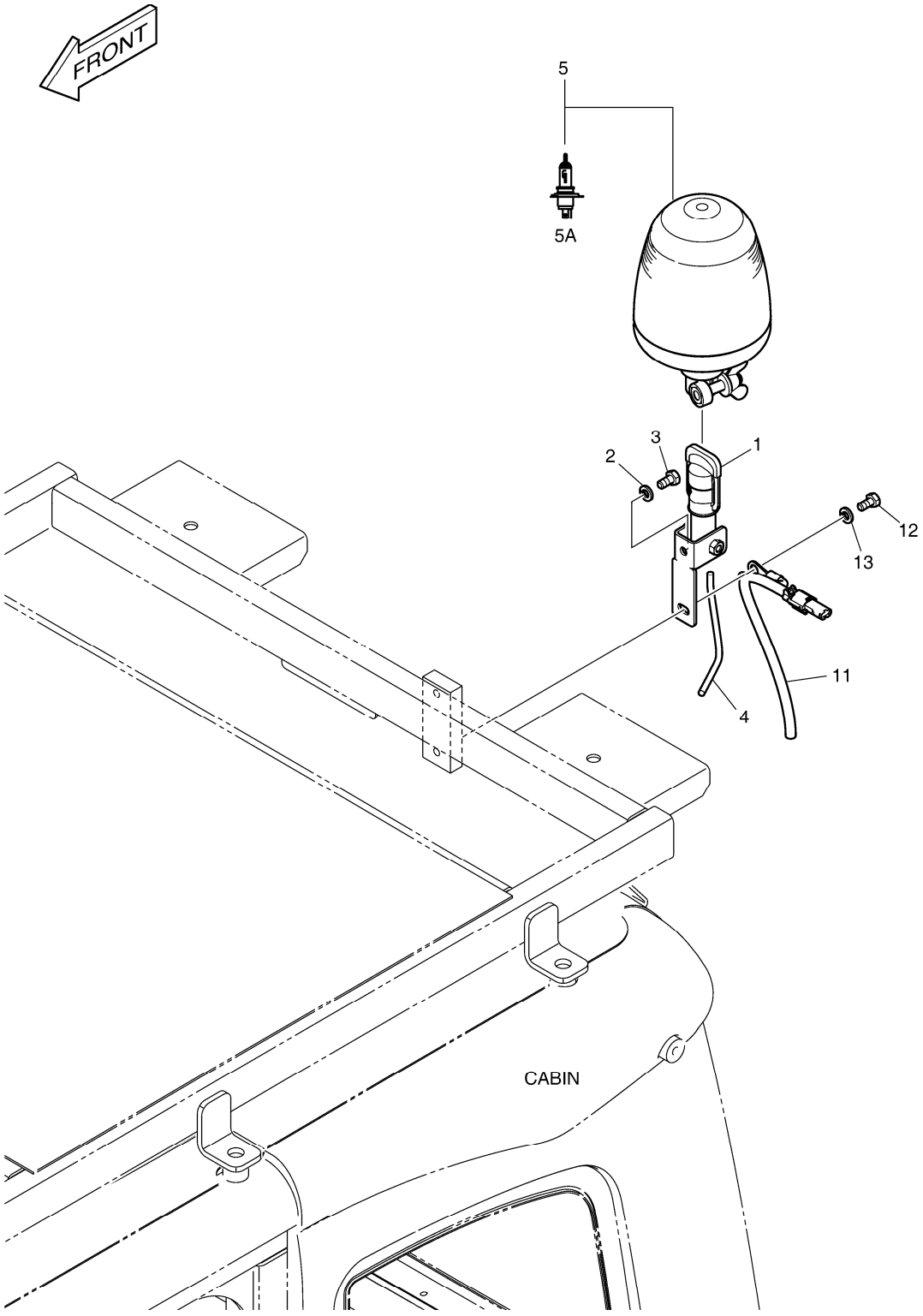

DATE	JUN. 01, 2010
3rd EDITION	

Fig. 7850 ROTATING BEACON - ROPS(GUARD) SUPPORT TOURNANT DE BALISE

Serial No. ;

Key No.	Part No.	Description	Description	Q'ty	S.C	Serial No.	ICA	Replaceable part	
								Part No.	Q'ty
7850 --	300619-00082A	ROTATING BEACON;GUARD	BALISE	-	D				
1	131002-00085	BUSHING ASS'Y	ENSEMBLE DE DOUILLE	1					
2	S5102503	WASHER	RONDELLE	1					
3	S0508653	BOLT	BOULON	1					
4	530-00464	HARNESS;ROTATING BEACON	HARNAIS	1					
5	534-00062	LAMP;ROTATING BEACON	LAMPE	1					
5A	515-00013	. BULB;HALOGEN 24V 70W	. AMPOULE	1					
11	K1055342	HARNESS;REAR CABIN LAMP	HARNAIS	1					
12	S0508653	BOLT	BOULON	1					
13	S5102503	WASHER	RONDELLE	1					

DATE	JUN. 01, 2010
3rd EDITION	

Fig. 7860 VENTILATION - ROPS
VENTILATION

Serial No. ;

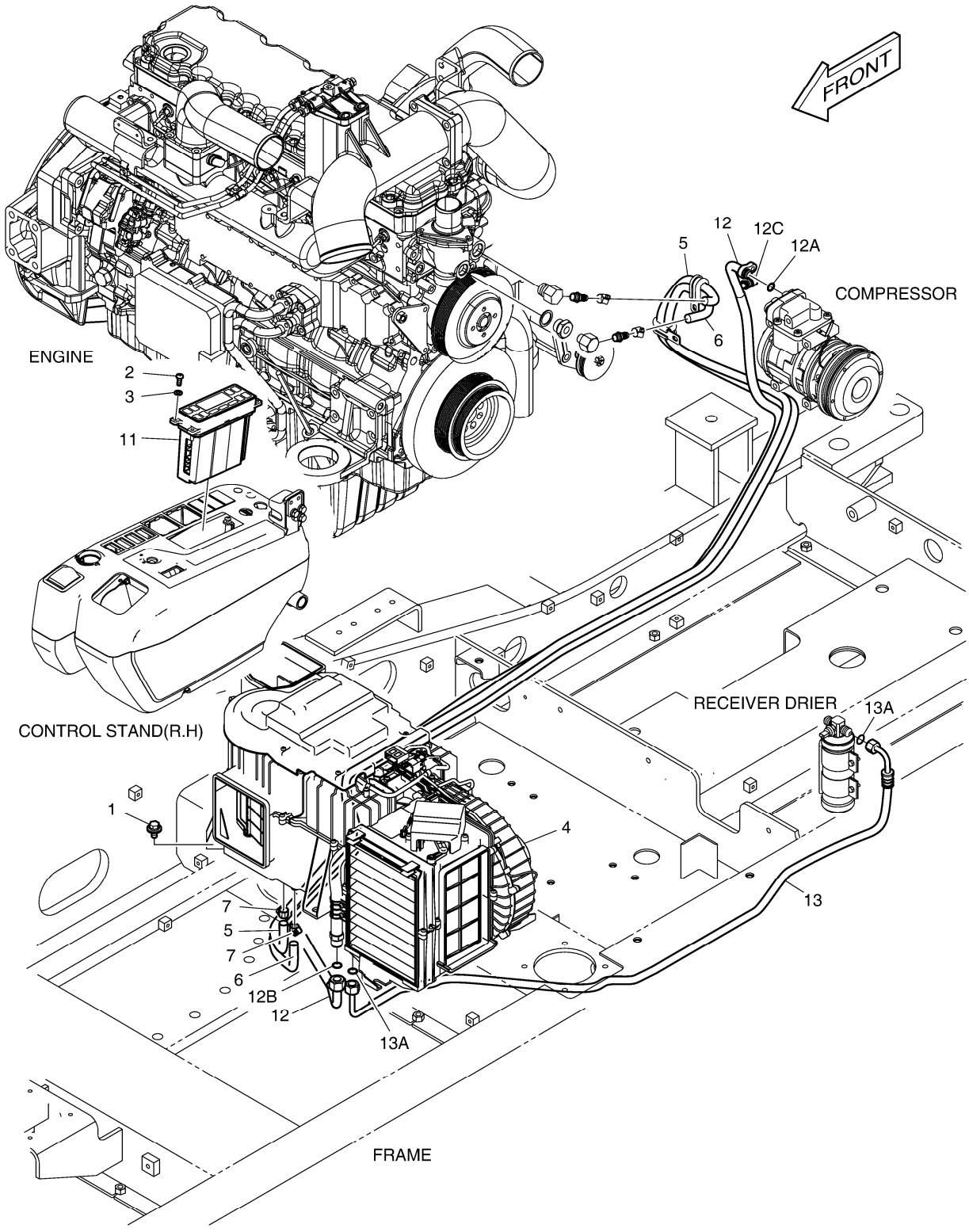

DATE	JUN. 01, 2010
3rd EDITION	

Fig. 7860 VENTILATION - ROPS
VENTILATION

Serial No. ;

Key No.	Part No.	Description	Description	Q'ty	S.C	Serial No.	ICA	Replaceable part	
								Part No.	Q'ty
7860 --	440213-00147	VENTILATION ASSY,CABIN	VENTILATION	-	D				
1	DS0025033	BOLT;SET	BOULON	6					
2	S3450833	SCREW	VIS	4					
3	S5000213	WASHER;PLAIN M5	RONDELLE	4					
4	440205-00033	CONDITIONER,AIR	CLIMATISEUR	1					
5	2185-1308D7	HOSE;RUBBER	TUYAU	1					
6	2185-1308D7	HOSE;RUBBER	TUYAU	1					
7	S8450016	CLAMP	BRIDE	2					
11	543-00107	CONTROL PANEL;AIR CON	PANNEAU DE COMMANDE	1					
12	K1008517A	HOSE;SUCTION	TUYAU FLEXIBLE	1					
12A	2180-6086	. O-RING;SUCTION(COMP)	. JOINT CIRCULAIRE	1					
12B	K1011385	. O-RING;EVAPORATOR	. JOINT CIRCULAIRE	1					
12C	1.161-00019	. CAP;CHECK PORT(L)	. CHAPEAU	1					
13	K1001280C	HOSE;LIQUID(2)	TUYAU	1					
13A	K1011388	. O-RING	. JOINT CIRCULAIRE	2					

DATE	JUN. 01, 2010
3rd EDITION	

Fig. 7870 AIRCONDITIONER - ROPS REFRIGERATION

Serial No. ;

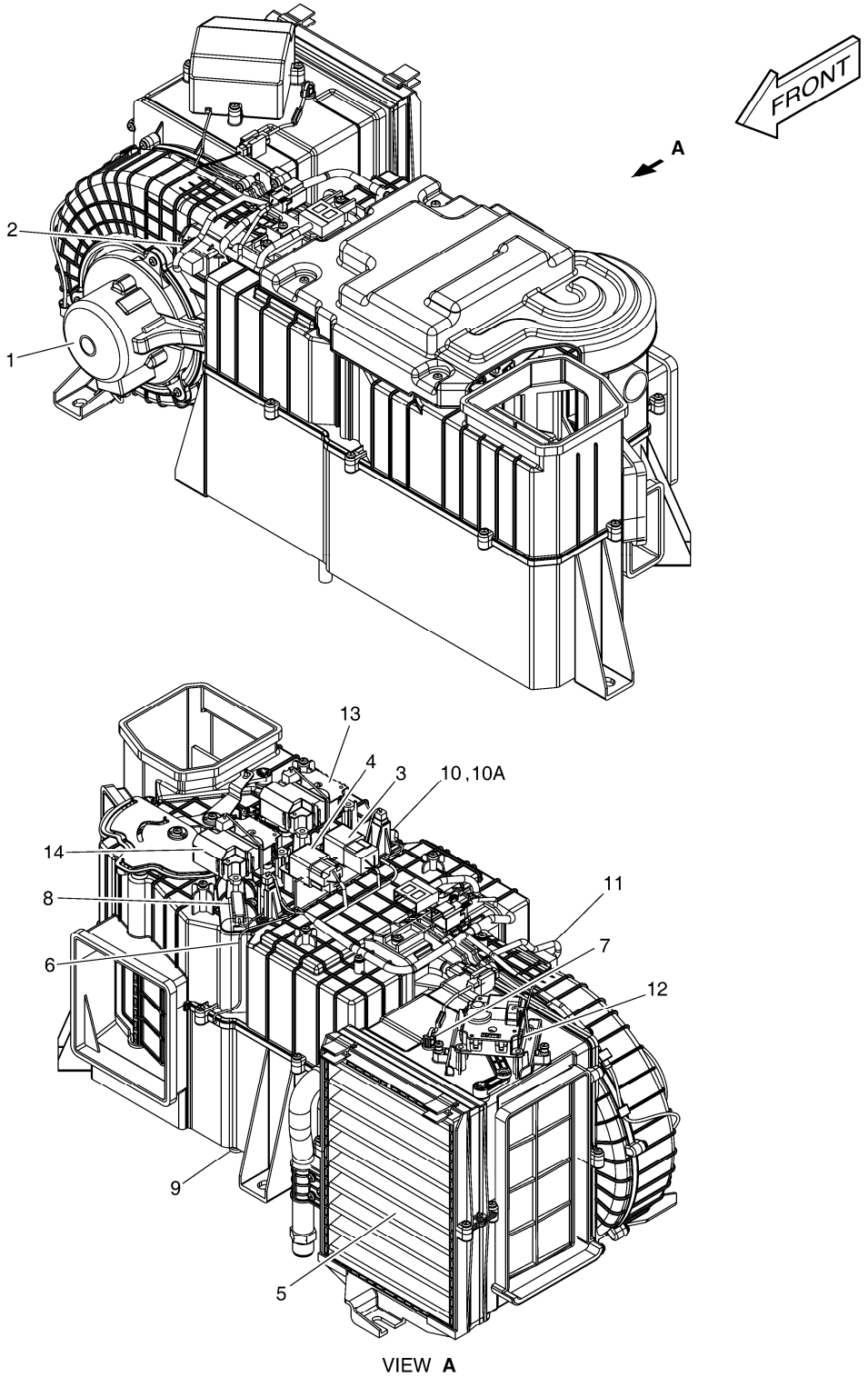

VIEW **A**

DATE	JUN. 01, 2010
3rd EDITION	

Fig. 7870 AIRCONDITIONER - ROPS REFRIGERATION

Serial No. ;

Key No.	Part No.	Description	Description	Q'ty	S.C	Serial No.	ICA	Replaceable part	
								Part No.	Q'ty
7870 --	440205-00033	CONDITIONER,AIR	CLIMATISEUR	1					
1	K1002206	MOTOR;BLOWER;24V	MOTEUR	1					
2	K1002207	POWER FET	PIGNON	1					
3	K1002208	RELAY;BLOWER 24V	RELAIS	1					
4	K1002209	RELAY;AIRCON 24V	RELAIS	1					
5	400402-00006	FILTER,AIRCON	FILTRE	1					
6	K1002211	SENSOR;TEMP EVAPORATOR	SONDE	1					
7	301317-00019	SENSOR,TEMPERATURE;INCAR	SONDE	1					
8	K1002213	SENSOR;WATER TEMPERATUR	SONDE	1					
9	K1002214	CORE;HEATER	NOYAU	1					
10	K1002215	EVAPORATOR	NOYAU DE VAPORISATEUR	1					
10A	410116-00099	. VALVE,EXPANSION	. VALVE D'EXPANSION	1					
11	310207-00447	HARNESS;AIRCON UNIT	HARNAIS	1					
12	440213-00120	ACTUATOR;INTAKE	ACTIONNEUR	1					
13	K1002218	ACTUATOR;AIR MIX	ACTIONNEUR	1					
14	K1002219	ACTUATOR;MODE	ACTIONNEUR	1					

DATE	JUN. 01, 2010
3rd EDITION	

Fig. 7880 TRAVEL ALARM - ROPS
ALARME DE VOYAGE

Serial No. ;

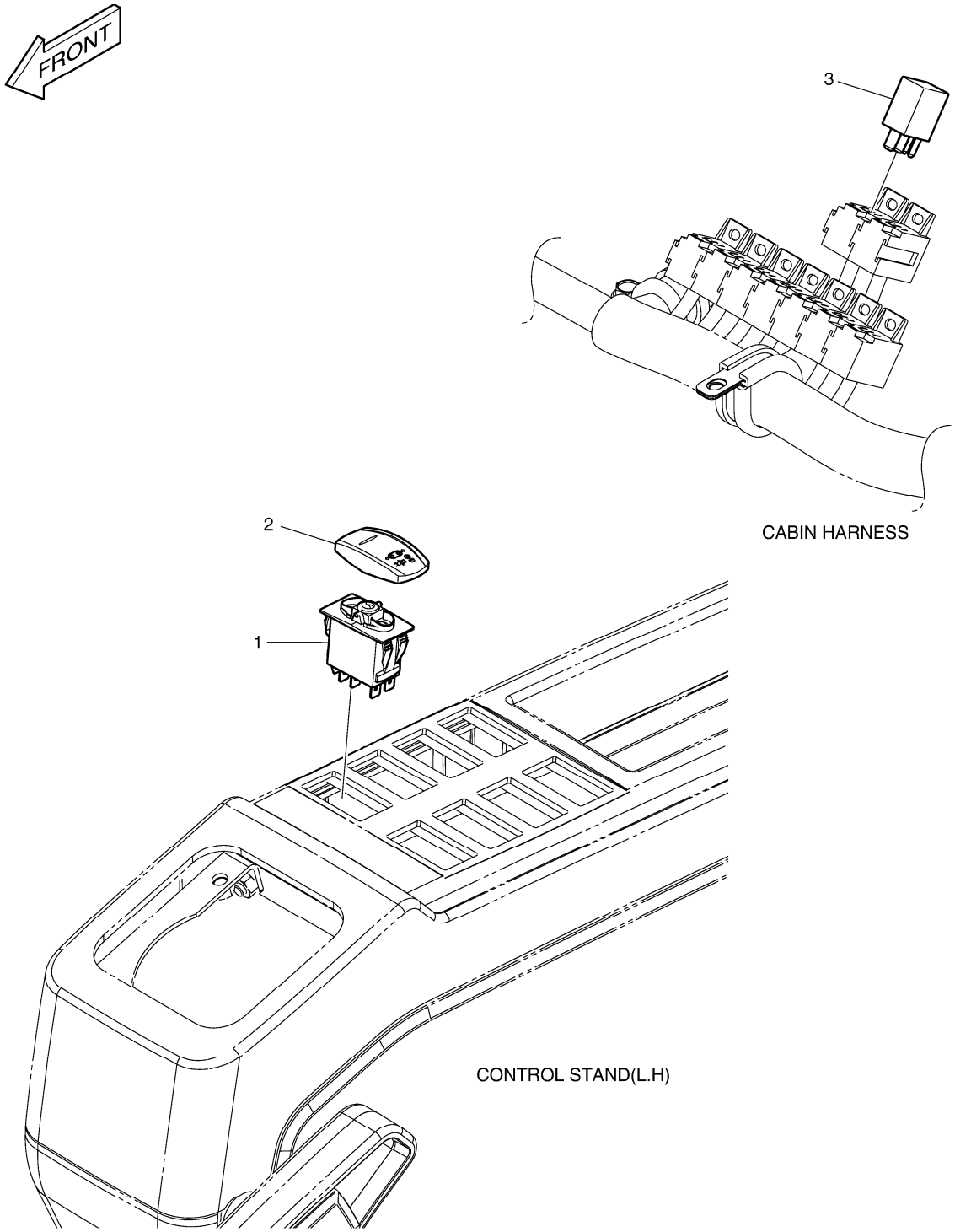

DATE	JUN. 01, 2010
3rd EDITION	

Fig. 7880 TRAVEL ALARM - ROPS
ALARME DE VOYAGE

Serial No. ;

Key No.	Part No.	Description	Description	Q'ty	S.C	Serial No.	ICA	Replaceable part	
								Part No.	Q'ty
7880 --	300619-00676	ELECTRIC ASS'Y;ALARM	ELECTRIQUE	-	D				
1	549-00103	SWITCH;ROCKER(2STEP)	COMMUTATEUR	1					
2	301401-00010	ACTUATOR,SWITCH;ALARM	ACTIONNEUR	1					
3	K1053326	RELAY	RELAIS	1					

DATE	JUN. 01, 2010
3rd EDITION	

Fig. 7890 FUEL HEATER - ROPS
RECHAUFFEUR DE CARBURANT

Serial No. ;

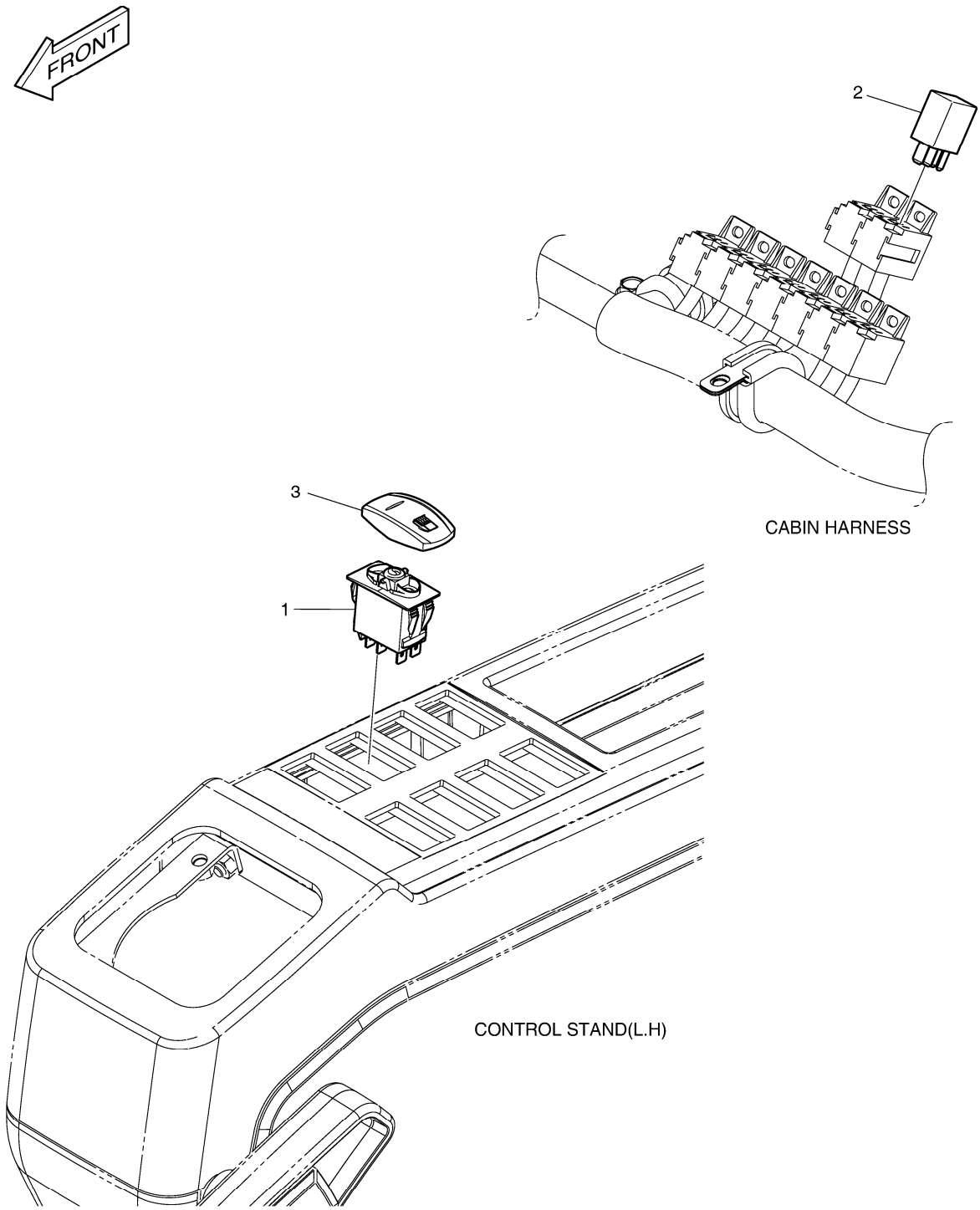

DATE	JUN. 01, 2010
3rd EDITION	

Fig. 7890 FUEL HEATER - ROPS
RECHAUFFEUR DE CARBURANT

Serial No. ;

Key No.	Part No.	Description	Description	Q'ty	S.C	Serial No.	ICA	Replaceable part	
								Part No.	Q'ty
7890 --	300619-00677	ELECTRIC ASS'Y;FUEL HEATER	ELECTRIQUE	-	D				
1	549-00101	SWITCH;ROCKER(1STEP)	COMMUTATEUR	1					
2	K1053326	RELAY	RELAIS	1					
3	K1056653	ACTUATOR;FUEL HEATER	ACTIONNEUR	1					

DATE	JUN. 01, 2010
3rd EDITION	

Fig. 7900 QUICK CLAMP SWITCH - ROPS
COMMUTATEUR RAPIDE DE BRIDE

Serial No. ;

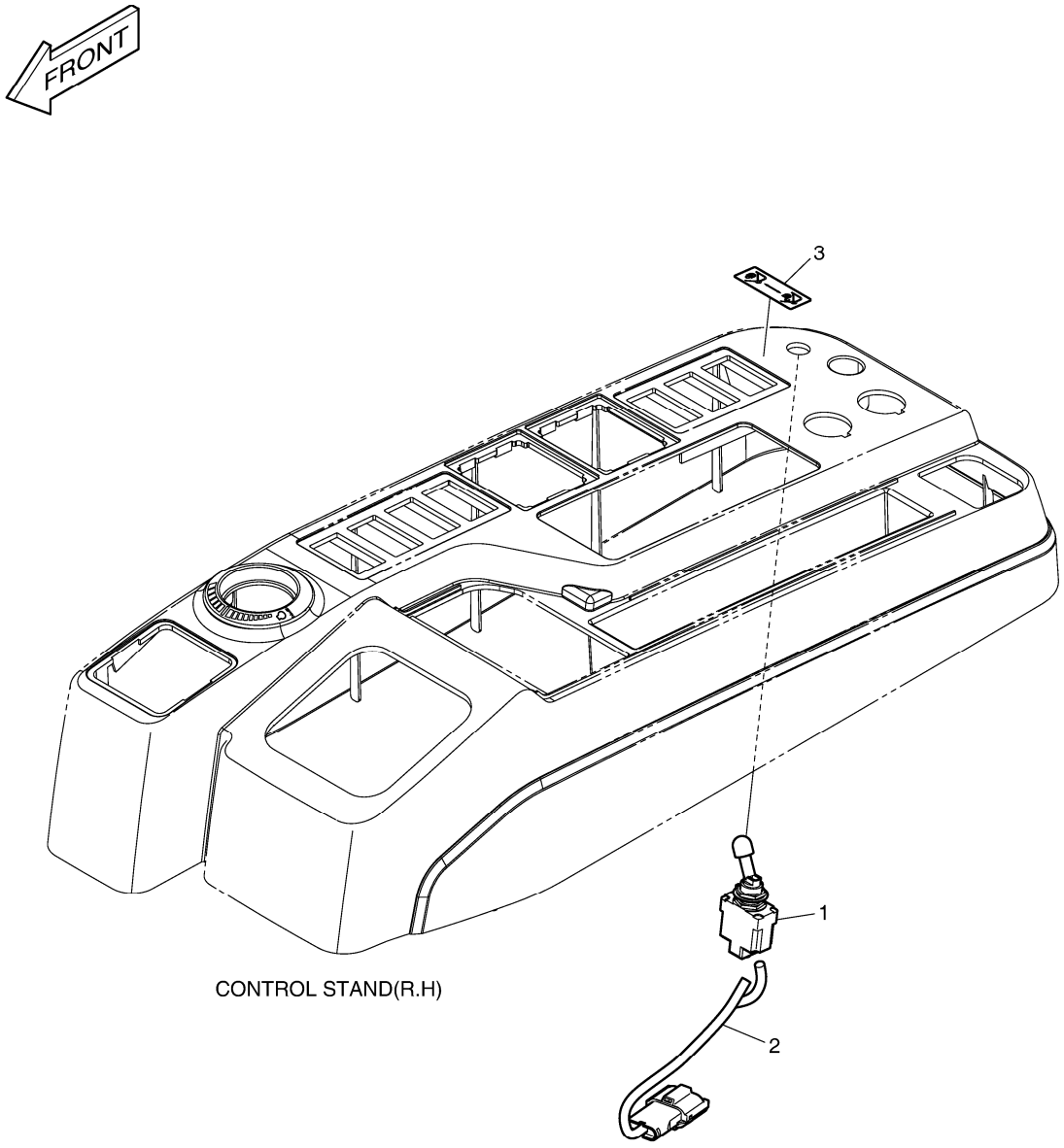

Fig. 7900 QUICK CLAMP SWITCH - ROPS
COMMUTATEUR RAPIDE DE BRIDE

Serial No. ;

Key No.	Part No.	Description	Description	Q'ty	S.C	Serial No.	ICA	Replaceable part	
								Part No.	Q'ty
7900 --	300619-00089	ELECTRIC ASS'Y;QUICK CLAMP	ELECTRIQUE	-	D				
1	549-00092	SWITCH;LOCKOUT TOGGLE	COMMUTATEUR	1					
2	530-00432A	HARNESS;JOINT	HARNAIS	1					
3	K1023854	NAME PLATE;QUICK CLAMP	PLAQUE D'IDENTIFICATION	1					

DATE	JUN. 01, 2010
3rd EDITION	

Fig. 7910 OVERLOAD WARNING - ROPS
AVERTISSEMENT DE SURCHARGE

Serial No. ;

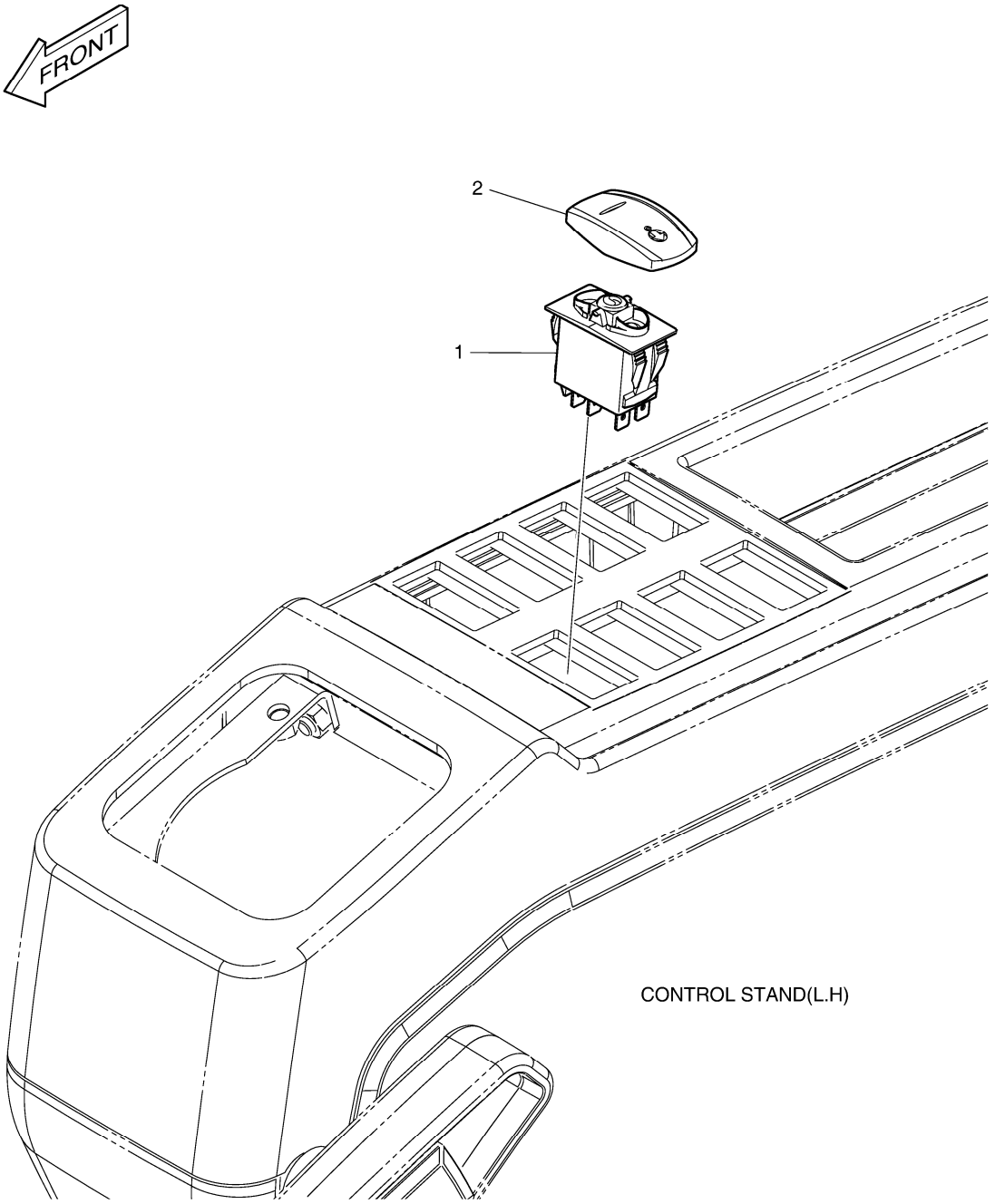

DATE	JUN. 01, 2010
3rd EDITION	

Fig. 7910 OVERLOAD WARNING - ROPS
AVERTISSEMENT DE SURCHARGE

Serial No. ;

Key No.	Part No.	Description	Description	Q'ty	S.C	Serial No.	ICA	Replaceable part	
								Part No.	Q'ty
7910 --	300619-00090	ELECTRIC ASS'Y;OVERLOAD WA	ELECTRIQUE	-	D				
1	549-00102	SWITCH	COMMUTATEUR	1					
2	301401-00006	ACTUATOR,SWITCH;OVERLOAD	ACTIONNEUR	1					

DATE	JUN. 01, 2010
3rd EDITION	

Fig. 7920 LOWER WIPER - ROPS
ABAISSEZ L'ESSUIE-GLACE

Serial No. ;

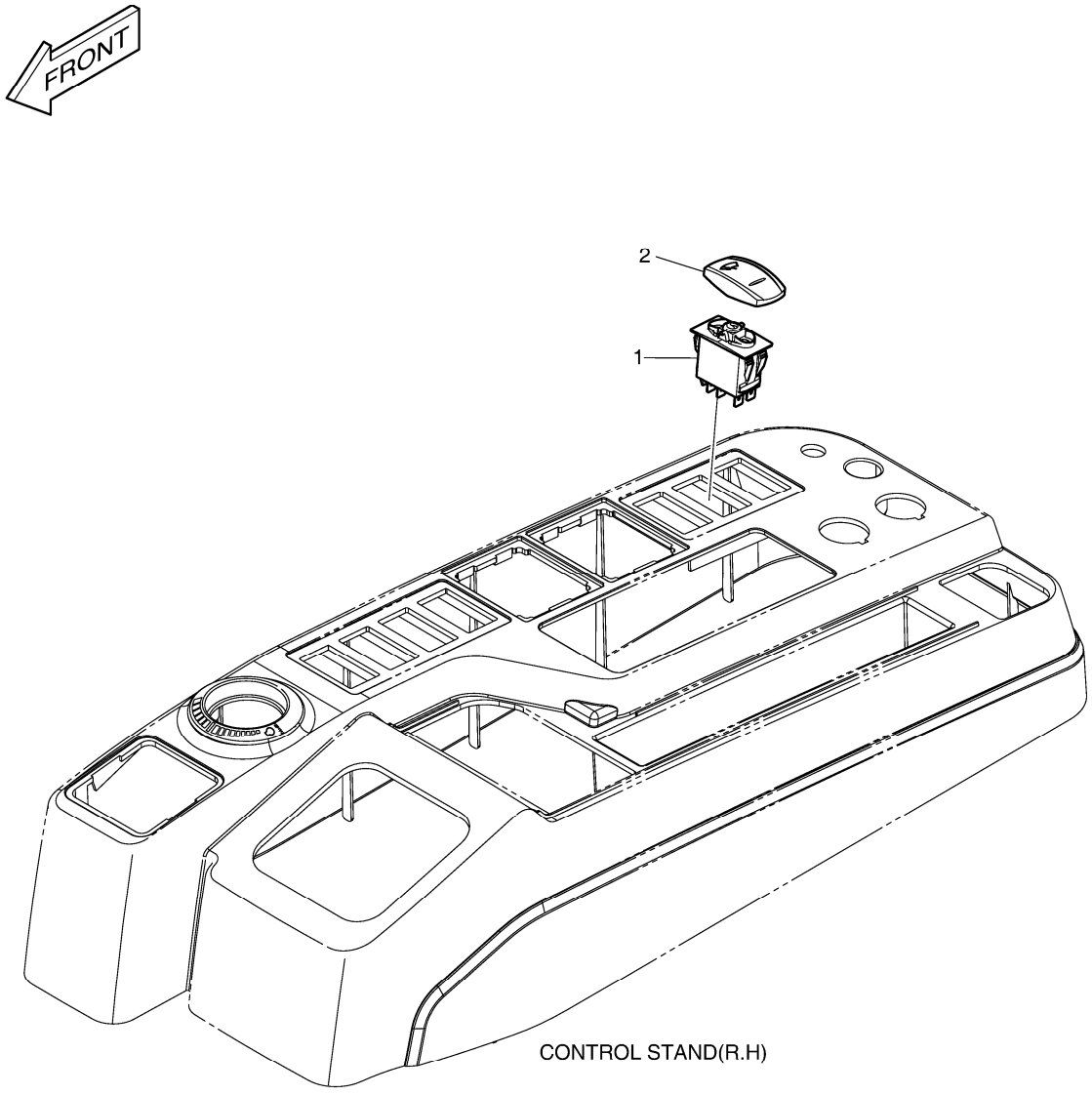

DATE	JUN. 01, 2010
3rd EDITION	

Fig. 7920 LOWER WIPER - ROPS
ABAISSEZ L'ESSUIE-GLACE

Serial No. ;

Key No.	Part No.	Description	Description	Q'ty	S.C	Serial No.	ICA	Replaceable part	
								Part No.	Q'ty
7920 --	300619-00680	ELECTRIC ASS'Y;LOWER WIPER	ELECTRIQUE	-	D				
1	549-00101	SWITCH;ROCKER(1STEP)	COMMUTATEUR	1					
2	301401-00022	ACTUATOR,SWITCH;LOWER WIP	ACTIONNEUR	1					

DATE	JUN. 01, 2010
3rd EDITION	

Fig. 7930 12V SOCKET - ROPS
DOUILLE 12V

Serial No. ;

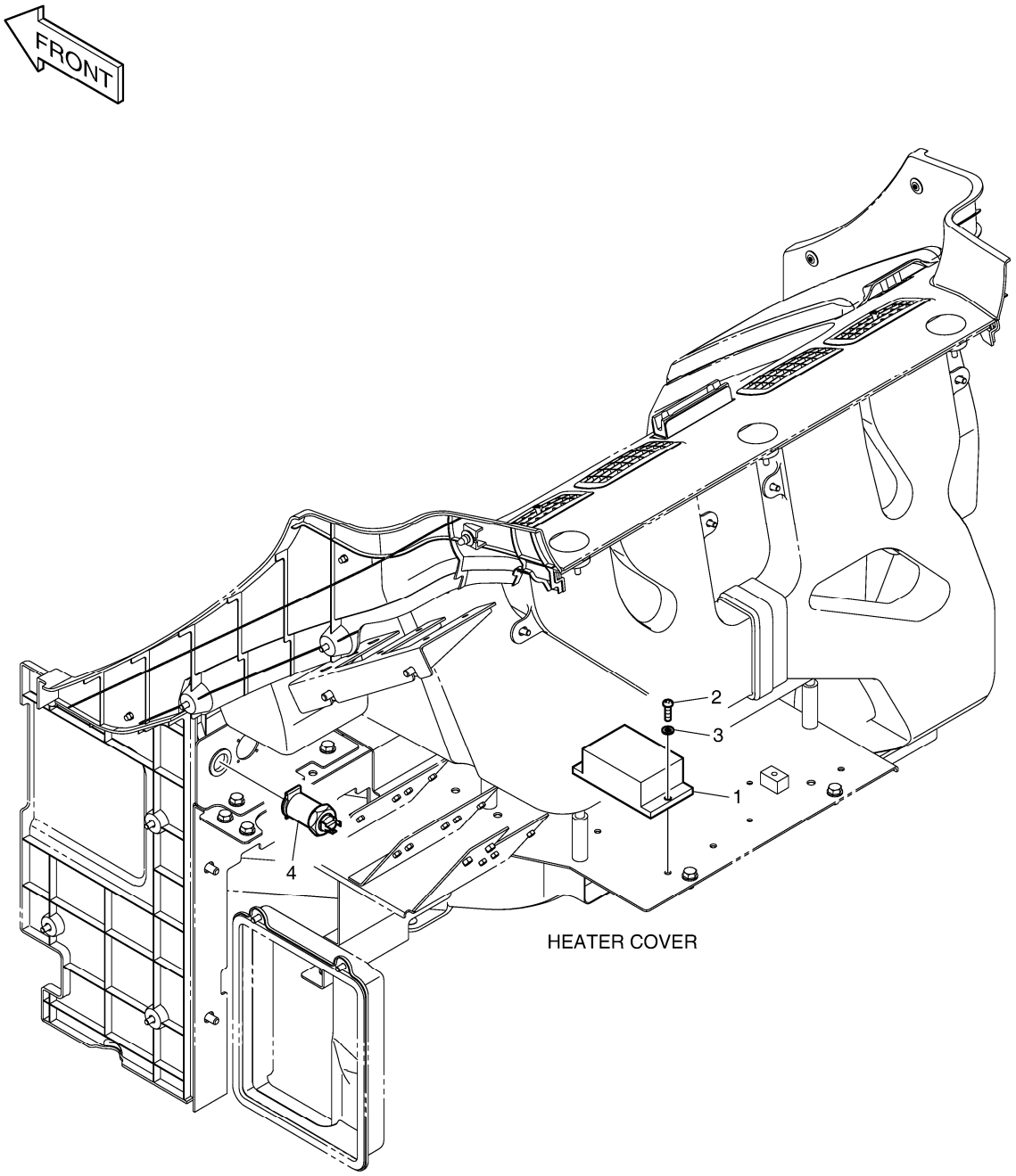

DATE	JUN. 01, 2010
3rd EDITION	

Fig. 7930 12V SOCKET - ROPS
DOUILLE 12V

Serial No. ;

Key No.	Part No.	Description	Description	Q'ty	S.C	Serial No.	ICA	Replaceable part	
								Part No.	Q'ty
7930 --	300619-00774	ELECTRIC ASS'Y;(12V SOCKET)	ELECTRIQUE	-	D				
1	300612-00001A	CONVERTER;DC	CONVERTISSEUR	1					
2	S3450983	SCREW M16X20	VIS	2					
3	S5102303	WASHER;SPRING	RONDELLE	2					
4	K1053423	SOCKET;12V POWER	DOUILLE	1					

DATE	JUN. 01, 2010
3rd EDITION	

Fig. 7940 PILOT PIPING - ROPS
CONDUITES DE PILOTE

Serial No. ;

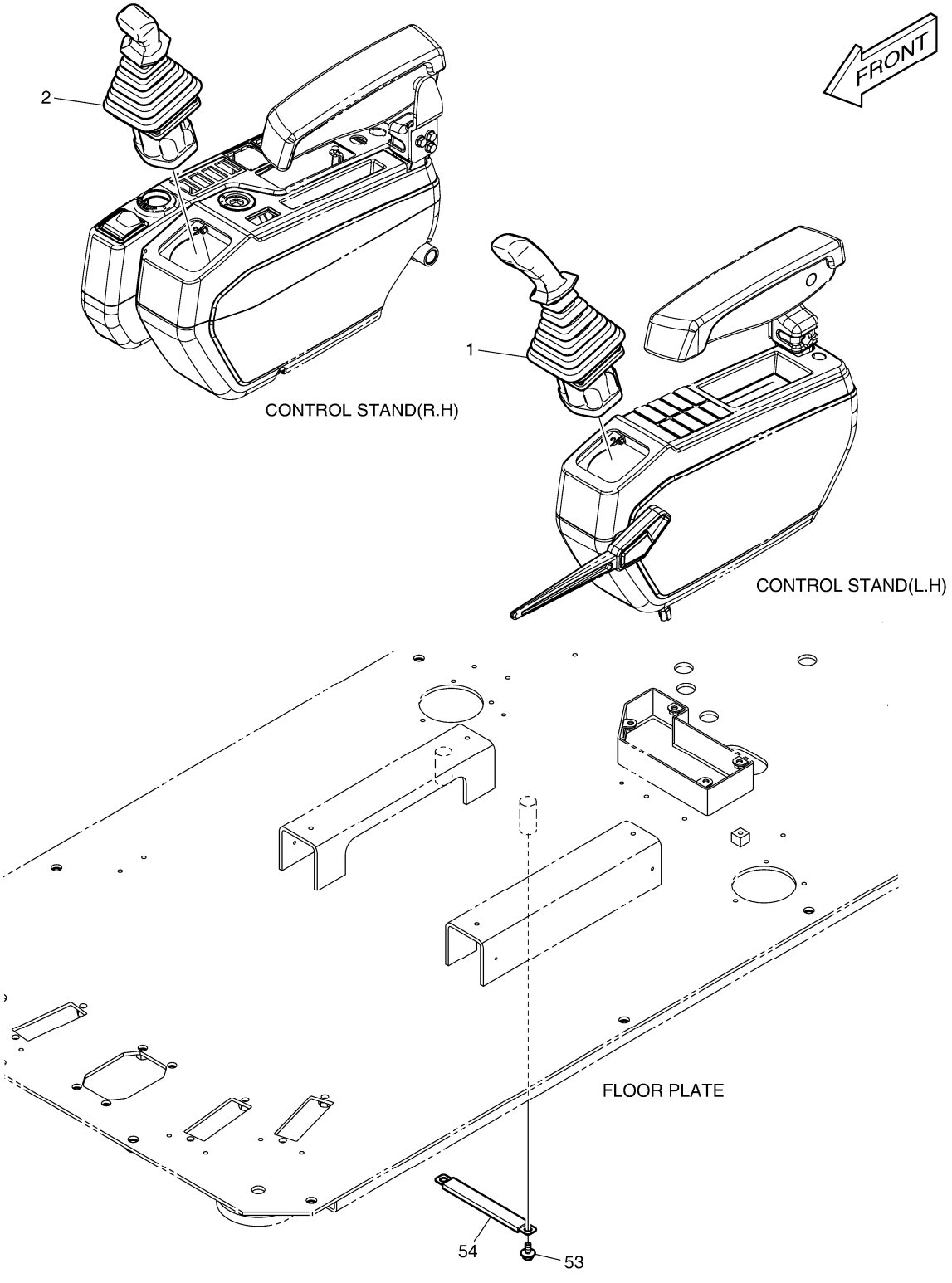

DATE	JUN. 01, 2010
3rd EDITION	

Fig. 7940 PILOT PIPING - ROPS
CONDUITES DE PILOTE

Serial No. ;

Key No.	Part No.	Description	Description	Q'ty	S.C	Serial No.	ICA	Replaceable part	
								Part No.	Q'ty
7940 --	420212-02771	PIPING,PILOT;ROPS	CONDUITES DE PILOTE	-	D				
1	410113-00043	VALVE,JOYSTICK;ROPS(L.H)	VALVE DE MANCHE	1					
2	410113-00044	VALVE,JOYSTICK;ROPS(R.H)	VALVE DE MANCHE	1					
53	DS0025042	BOLT	BOULON	2					
54	120202-00009	CLAMP,HOSE	BRIDE	1					

Part No.	Fig No.	Key No.
06.01013-9127	021	38
06.01013-9129	025	3
06.01283-7115	022	12
06.01913-2911	019	35
	037	3
06.01913-3114	020	8
	021	14
	027	17
06.01913-3115	022	16
06.01913-3117	024	15
06.01913-3118	029	31
06.01913-3119	022	17
	029	32
06.01913-3120	024	11
06.01913-3121	024	12
06.01913-3128	021	34
06.01913-3129	021	39
06.01913-3213	026	13
06.01913-3217	032	55
06.01923-2910	026	22
06.01923-2911	031	9
06.01923-2913	036	11
	036	13
	036	4
06.01923-2917	031	3
06.01923-2919	036	5
06.01923-3111	013	9
	015	22
	032	38
	037	24
06.01923-3114	015	3
	023	7
06.01923-3116	014	4
06.01923-3117	021	32
06.01923-3118	030	9
06.01923-3119	021	24
	021	33
06.01923-3120	022	5
06.01923-3125	026	17
06.01923-3215	027	34
	027	41
	027	43
06.01923-3217	032	53
06.01923-3218	023	3
	026	15
	027	39
06.01923-3222	021	8
06.01923-3225	021	9
06.01923-3228	021	10
06.01924-3217	015	4
06.01924-3217	034	2
	038	2
	038	4
06.01943-3318	012	11
06.01943-3319	033	8
06.01943-3323	033	2
06.01953-3318	035	20
06.02097-8306	021	29
06.02106-0723	016	42
06.06125-8709	030	6
06.08092-2405	023	8
06.11063-8212	031	10
06.11063-8214	015	15
	029	10
	030	7
	037	22
	037	8
06.11063-9217	033	7
06.15010-2311	021	36
	022	13
	026	19
	037	18
	037	20
	037	6
06.16110-0106	019	21
06.16731-2105	021	30
06.16731-2106	031	11
06.16731-2107	015	14
	021	37
	025	4
	026	20
	027	19
	029	11
	030	8
	037	17
	037	21
	037	7
06.22022-0907	020	6
06.22022-0909	020	9
06.22022-1016	019	33
06.22022-1018	016	2
06.22022-1063	014	5
06.29010-0120	019	19
06.29020-0125	016	37
06.29020-0132	024	5
06.31641-0618	011	17
06.56020-0115	030	5
	040	28
06.56021-0102	011	24
	040	1
06.56180-0712	032	33
	040	30
	041	15
06.56190-0704	027	10
	027	8
	032	12
	032	4
06.56190-0705	011	29
	039	2
06.56190-0709	023	9
	027	6
06.56190-0719	015	17
06.56190-0726	021	6
06.56190-0732	022	3
06.67020-0104	027	14
06.67020-0105	015	10
	015	6
06.67020-0116	027	45
06.78144-2204	032	10
06.78144-2403	027	7
	027	9
06.78190-0206	032	15
1.109-00026	4150	250
1.109-00124	4100	127
1.109-00134	4130	209
	4131	209
1.110-00068	4300	6
1.110-00169	4200	29
	4420	29
1.114-00009	4130	208
	4131	208
1.114-00012	4200	5
1.114-00286	4130	210
	4131	210
1.115-00032	4300	7
1.115-00171	4110	645
1.115-00204	4230	16
	4240	16
	4310	16
	4320	16
1.115-00366	4110	836
1.120-00219	4230	24
	4240	24
	4250	24
	4260	24
	4280	24
	4290	24
	4300	24
	4310	24
	4320	24

Part No.	Fig No.	Key No.
1.120-00219	4330	24
	4350	24
	4360	24
	4380	24
	4390	24
1.121-00028	4200	23
	4420	23
1.121-00044	4110	630
1.123-00007	4110	874
1.123-00009	4110	887
1.123-00012	4110	875
1.123-00014	4110	876
1.123-00016	4110	897
1.123-00053	4130	304
	4150	242
1.124-00157	4230	38
	4240	38
	4310	35
	4320	35
1.129-00006	4150	30
1.131-00001	4150	66
1.131-00042	4150	261
1.131-00048	4130	211
	4131	211
1.131-00049	4150	213
1.131-00058	4150	28
1.131-00139	4110	626
1.131-00143	4110	625
1.131-00157	4110	646
1.131-00160	4110	654
1.131-00165	4110	624
1.131-00166	4110	653
1.131-00170	4110	644
1.131-00172	4110	655
1.138-00004	4200	21
	4420	21
1.148-00015	4130	206
	4131	206
1.161-00017	4420	25B
1.161-00018	1790	26C
1.161-00019	1790	92C
	7860	12C
1.161-00021	4200	25A
	4420	25A
1.162-00001	1640	1A
	7370	2A
1.178-00004	4200	26
	4420	26
1.180-00117	4300	21
1.180-00144	4160	130
1.180-00277	4230	22
	4240	22
	4310	22
	4320	22
1.180-00278	4260	14
	4280	14
	4290	14
1.180-00415	4300	19
1.180-00447	4220	4A
1.180-00496	4300	11
1.180-00512	4160	102
1.180-00527	4150	402
1.180-00662	4250	14
	4330	14
	4350	14
	4360	14
	4380	14
	4390	14
1.181-00059	4150	24
1.181-00067	4150	26
1.181-00090	4110	615
1.181-00136	4110	614
1.195-00022	4250	30
	4330	30
	4350	30
	4360	30
	4380	30
	4390	30
1.197-00005	4100	250
1.216-00017	4160	118
1.357-00005	4110	612
1.357-00008	4110	613
1.357-00014	4110	611
1.402-00017	4120	361
1.402-00036	4110	622
1.402-00055	4110	601
1.403-00037	4120	353
1.403-00040	4120	354
1.405-00060	4100	111
1.409-00167	4100	11
1.409-00180	4150	260
1.409-00189	4110	621
1.409-00204	4110	643
1.409-00225	4210	33
1.412-00017	4200	19
	4420	19
1.412-00083	4100	153
1.412-00092	4130	207
	4131	207
1.412-00157	4160	133
1.415-00005	4150	71
1.416-00017	4200	10
1.416-00018	4200	15
1.420-00013	4150	27
1.420-00016	4130	105
1.420-00050	4250	28
	4330	28
	4350	28
	4360	28
	4380	28
	4390	28
1.420-00111	4130	107
1.424-00038	4110	652
1.424-00041	4150	65
1.425-00001	4110	651
1.426-00005	4120	307
1.427-00002	4120	308
1.427-00022	4420	14
1.428-00208	4110	623
1.428-00241A	4270	7
1.430-00017	4110	656
1.430-00212	4100	261
1.451-00060	4100	14
1.451-00063	4100	13
1.471-00001	4150	79
1.519-00001	4220	3
	6160	1B
	6470	1B
1.540-00003	4160	106
1.540-00006	4150	267
100202-00003B	7470	12
100502-00001	4141	20
100502-00022	4141	51
100601-00007A	7570	57
100601-00013	7560	52
	7570	52
100601-00014	7560	53
	7570	53
100601-00022	7580	12
100601-00023	7560	3-2
100601-00024	7560	3-3
101-00006	4100	114
101101-00025A	7580	14
101101-00056A	7450	16
101529-00137	7490	1-18
101540-00012	3110	3
	6570	3
	6640	3
	6710	3
101541-00012	6910	2

Part No.	Fig No.	Key No.
101555-00019A	7530	30
101555-00042A	7450	12
101555-00043A	7460	11
101582-00036	7430	2
101583-00002	7580	2-32
101588-00001	7700	4
101588-00011A	7560	3-8
101588-00015A	7560	43
101588-00016	7550	89
101588-00017A	7550	41
101588-00022	7570	93
102202-00001	7700	1
102202-00002	7700	-
104-00047A	4140	25
	4141	25
104-00048	4140	18
	4141	18
104-00049A	4140	22
	4141	22
104-00050	4140	12
	4141	12
104-00051A	4140	9
109-00097	4100	123
109-00098	4100	124
109-00162A	2100	2
109-00174	4140	8
	4141	8
110-00079	4230	6
	4240	6
	4310	6
	4320	6
110-00081	4250	6
	4330	6
	4340	6
	4350	6
	4360	6
	4370	6
	4380	6
	4390	6
110-00097	4260	6
	4280	6
	4290	6
110-00219	4140	13
	4141	13
110-00242	6910	1B
110-00243	6910	1C
110-00245	6910	2A
110-00252	7210	2A
110406-00039	1240	8
110406-00114B	7580	15
110406-00337A	7560	3-14
110406-00414	7470	13
110406-00415	7470	14
110406-00608	1710	37
110420-00008	7700	2
110420-00009	7700	3
110423-00011	7530	43
110429-00002B	7780	1
	7810	1
110429-00050	7780	9
110429-00056	7820	5
110431-00027B	7450	6
110431-00028B	7460	5
110431-00029C	7470	2
110431-00030C	7470	3
110431-00039B	7460	16
110502-00025	1580	10
110503-00008A	1620	4-2
110503-00016A	1620	4
110506-00019	7370	2
110506-00047	1640	1
110508-00204C	7530	16
110508-00250	1610	-
	1620	-
	1630	-
	1640	-
110508-00306	7370	-
110508-00409	1630	7
110508-00526A	7550	90
110508-00536	7580	2-39
110508-00765	7580	2-5
110508-00905A	7580	95
110508-00989	4300	5
110508-02901	7510	7
110508-02902	7510	11
110517-00003B	7520	1
110517-00004C	7520	2
110517-00005C	7520	3
110517-00006C	7520	4
110517-00007C	7520	5
110517-00198	7520	-
110910-00038A	7550	96
110910-00050B	7520	24
110910-00077	7550	75
110913-00030B	7570	94
110917-00013	2150	7-2
110917-00014	2150	7-3
110920-00007	7470	8
110921-00003A	7730	1
110921-00004A	7730	2
110921-00008B	7730	-
110921-00053	7710	-
110921-00054	7720	-
110921-00055	7710	1
	7720	1
110921-00056	7720	2
110921-00091	1740	13
	7360	13
110922-00043	7570	97
110925-00007	1540	1
110925-00012B	7650	-
110925-00013B	7650	1
110925-00043	4420	37
110925-00044	4420	38
110927-00014	7660	2
110927-00026	7530	24
110927-00083A	7580	2-24
110929-00002C	7520	14
110935-00070	7590	1
110935-00071	7600	1
110935-00072	7610	1
110935-00073	7620	1
110935-00074	7630	1
110947-00027	1600	3-28
	1610	2-22
	7370	1-28
110955-00048	7560	201
110956-00002	1600	3-5
	1610	2-4
	7370	1-5
110956-00028	7560	3-17
110956-00029A	7560	40
110956-00030A	7560	42
110956-00031A	7560	92
110958-00015	1580	6
110958-00022	1580	-
	1590	-
110958-00181	1610	2-1
110958-00181A	1610	2-1
110958-00230	1600	3-1
	7370	1-1
110958-00371	7550	26
110969-00018	7430	-
110982-00065E	7580	2
110982-00103	1610	2
110982-00103A	1610	2
110982-00128	1610	2-2
110982-00129	1600	3
110982-00130	1600	3-2
110982-00131	1600	3-3

Part No.	Fig No.	Key No.
110982-00131	7370	1-3
110982-00132	7370	1
110982-00133	7370	1-2
111601-00160	7570	98
111601-00187	7580	17
114-00055	7540	12
114-00228	4100	158
114-00411	4190	40
114-00413	4190	53
114-00414	4170	57
114-00425	1200	16
	1220	19
	1260	36
	1261	36
114-00527	4140	21
	4141	21
114-00529	1630	34
114-00548	4140	17
	4141	17
114-00590	1410	13
	7470	6
115-00042	4210	19
115-00043	4120	700
115-00050	4230	7
	4240	7
	4310	7
	4320	7
115-00051	4230	12
	4240	12
	4310	12
	4320	12
115-00052	4300	12
115-00055	4260	19
	4280	19
	4290	19
115-00059	4230	11
	4240	11
	4310	11
	4320	11
115-00063	4260	12
	4280	12
	4290	12
115-00073	4250	7
	4330	7
	4340	7
	4350	7
	4360	7
	4370	7
	4380	7
	4390	7
115-00077	4250	11
	4330	11
	4340	11
	4350	11
	4360	11
	4370	11
	4380	11
	4390	11
115-00078	4250	12
	4330	12
	4340	12
	4350	12
	4360	12
	4370	12
	4380	12
	4390	12
115-00079	4250	19
	4330	19
	4350	19
	4360	19
	4380	19
	4390	19
115-00081	4250	26
	4330	26
	4350	26
	4360	26
	4380	26
	4390	26
115-00084	4260	11
	4280	11
	4290	11
115-00087	4230	19
	4240	19
	4310	19
	4320	19
115-00121	4340	19
	4370	19
115-00122	4340	20
	4370	20
116-00089B	1490	53
116-00090B	1490	54
116-00092A	1510	32-28D
119-00014AD1	1200	6
119-00025B	1220	13
120-00050B	2110	21
120-00130	4100	954
120-00131	4120	311
120-00144	4140	33
	4141	32
120-00199	4110	925
120-00246	1720	5
	1770	13
120-00317	1240	29
120106-00166B	7540	13
120107-00002	4141	24
120202-00009	7940	54
120404-00029	7570	56
120501-00009	4141	23
120501-00130	3110	11
	6570	11
	6640	11
	6710	11
120501-00160A	7470	4
120503-00001	7730	9
120705-00042	030	1-3
120808-00070	7530	51
120808-00157	7560	99
120810-00047	7470	7
120810-00050	7470	15
120811-00001	4141	31
120816-00001	4141	33
121-00006	1190	6
	3140	18-5
	6850	17-5
	6980	13-5
	7230	10
121-00010D1	1330	177-3
	6150	51-3
	6200	22
	6220	8
	6380	5-6
	6385	5-7
	6440	20
	6870	8
	6890	15
	6990	18
	7320	4
	7340	24
	7340	5
	7350	12
121-00010D3	1190	1E
121-00010D5	7280	10
121-00010D7	6150	51-9
	6220	13
	6385	5-8
	6870	13
	7190	41
	7320	7
	7350	15
121-00010D8	6450	44

Part No.	Fig No.	Key No.
121-00010D8	6690	44
	6760	44
121-00010D9	7180	7
121-00038	4120	312
121-00044	4340	23
	4370	23
121-00085	6100	1E
123-00150	4100	530
123-00151	4100	885
123-00409A	3100	3
	6830	3
	6900	3
	7210	4
123-00435A	4140	23
	4141	23
123-00437A	4140	14
123-00516B	1550	2
	6260	6
	7660	4
	7670	4
123-00523	1480	66
	1550	7
	6260	5
	7660	3
	7670	3
123-00524B	1410	2
124-00010	1510	32-35
	7580	2-21
124-00052	4250	33
	4330	33
	4350	33
	4360	33
	4380	33
	4390	33
124-00070	1650	11
124-00088	4230	27
	4240	27
	4310	27
	4320	27
124-00192	1300	63
124-00194	1160	6
124-00199D4	3140	14
	6850	14
	6980	10
124-00199D5	7230	12
124-00208D2	1130	31
	1190	8
	1210	8
	1680	31
	1740	7
124-00208D2	1750	26
	6470	10
	7360	8
	7740	29
124-00208D3	1680	30
	1690	36
	1720	12
	1750	27
	1790	30
	7740	30
124-00208D4	1690	37
	1750	28
	6160	34
	6470	15
	7740	28
124-00208D5	1690	52
	1750	29
	6100	21
	7740	31
124-00208D6	6100	20
	6150	16
	6160	9
	7190	26
	7740	32
124-00208D7	1320	42
	1770	8
	7740	37
124-00208D8	1340	95
124-00208D9	1310	44
	7190	27
124-00209D1	1210	31
	1210	9
	1770	15
	1770	7
	1790	31
	6410	9
124-00209D2	1380	35
124-00209D3	1380	47
124-00209D8	1380	51
124-00218	1261	34
124-00247	1260	82
124-00298B	1170	2
124-00299A	6490	13
	6500	4
	6630	12
	6700	4
	6770	4
	6880	13
	7000	18
124-00300	3130	13
124-00300	6840	1
	6970	16
124-00302	3130	61
	6840	61
	6970	19
	7010	6
124-00303	3130	62
	6840	62
	6970	20
124-00310A	1150	33
124-00344	1510	32-36
	7580	2-19
124-00367	3130	12
	6180	9
	6840	12
	6860	8
	6970	15
124-00368	3130	15
	6180	7
	6840	2
	6860	6
	6970	17
125-00034A	1600	3-2A
	7370	1-2A
125-00035A	1610	2-2A
125-00071B	1620	4-2A
125-00072	1510	32-11
	7580	2-16
125-00073B	1490	49-4A
125-00074B	1490	49-5A
125-00075A	1640	13
125-00077	1500	70
125-00078	1500	71
125-00096A	1490	49-4
125-00097A	1490	49-5
129-00043	4210	17
129-00044	4100	157
129-00045	4120	310
129-00062	4130	310
	4131	310
129-00071	4250	29
	4330	29
	4350	29
	4360	29
	4380	29
	4390	29
129-00124	4190	21
129-00125	4190	26
129-00126	4170	33
129-00127	4190	35

Part No.	Fig No.	Key No.
129-00128	4190	39
129-00129	4190	48
129-00130	4190	45
129-00139	4190	98
130422-00001A	4141	9
130424-00001	4141	22
130425-00001	4141	25
130426-00010	1190	1B
	4141	–
130707-00030	1730	21A
	6240	21A
130707-00042	1730	21A
	6240	21A
130712-00125	2150	7-4
130712-00208	2140	6-2
131002-00085	7080	1
	7160	1
	7830	1
	7840	1
	7850	1
131002-00109	7780	8
	7810	3
133-00220E	1510	37
133-00221	1510	32-9
	7580	2-14
133-00229A	1530	10
	7640	10
133-00230A	1530	11
	7640	11
133-00248	1490	49-4C
	1490	49-5C
136-00002	1220	11
136-00055A	1510	32-12
	7580	2-15
137-00092	1510	32-10
	7580	2-13
140-01374A	4140	32
140-01484B	1261	2
140-01485B	1261	3
140-01601C	1270	4
140-01602C	1270	5
140-01603A	1230	6
140-01604C	1240	4
140-02009A	1250	2
140-02011A	7260	11
140204-00005	2120	5-2B
142-00126A	2100	9
142-00127C	1490	52
142-00128B	1490	51
145-00124A	1510	32-18
148-00012	4210	16
155-00061	6910	2
159-00017	4210	18
159-00287B	1390	8
	1400	8
159-00290B	1390	7
	1400	7
159-00294C	6270	1
	6280	1
160-00008	4270	5
160-00020	1190	7
	1670	8
	3110	29
	3140	11
	3160	8
	6570	29
	6590	8
	6640	29
	6660	8
	6710	29
	6730	8
	6850	11
	6910	27
	6980	8
	7020	14
	7230	11
	7240	8
160-00027	1190	12
160-00061	7080	1
	7160	1
160-00068A	1100	6
160-00069	2180	16
160-00071	1530	5
	7640	12
160-00072	1530	6
	7640	13
160-00073A	1530	26
	7640	24
160-00074A	1480	121
160-00075A	1480	122
160-00080B	1530	7
	7640	6
160-00081	1100	33
160102-00008	7480	–
160102-00011	7510	3
160617-00115	2100	1
160620-00078	1100	–
160620-00079	1100	1
160620-00079A	1100	1
160702-00046	1110	1
160702-00048	1110	–
160702-00049	7420	–
160702-00055	6920	1
	6930	1
160702-00056	6920	–
160702-00057	6930	–
161-00010	1470	1
161-00011	1470	2
161-00080	4210	9
161-00171	4420	8
161-00195	1490	34
	1510	34
	6340	8
161-00281	1261	35
	3130	20
	6180	8
	6840	20
	6860	7
	6970	24
161-00381	1530	14
	6170	22
	7640	5
161-00382	1530	15
	6480	27
	7200	27
	7640	4
161-00386	7290	9
161-00404	7100	9
	7820	9
161-00548	1120	18
161-00550	1120	19
161-00574	3130	19
	6840	19
	6970	23
	7010	16
161-00580	1620	29
161-00598A	1480	59
	7550	30
161-00599	6260	4
	7660	16
161-00600	6260	8
	7660	6
161-00609E	1500	84
161-00610E	1500	85
161-00613B	1500	90
161-00614	1650	15
161-00618B	1490	63
161-00619B	1490	64
	7560	48

Part No.	Fig No.	Key No.
161-00620	1510	32-28C
161-00621B	1510	32-28
161-00622	1460	23
	7530	37
161-00623	1510	32-6
161-00624	1460	34
161-00639	6260	13
	6270	8
	6280	6
	7660	11
	7700	6
161-00640A	1480	30
162-00033A	1510	32-3C
162-00034B	1490	7
162-00035A	1480	6
162-00038	1480	9
162-00039A	1480	8
162-00040A	6270	2
	6280	2
170-00004	1170	5
170301-00109	1190	1
171-00060A	6260	3
172-00053B	1540	1-1
172-00055A	1500	91
180-00077D3	6910	20
180-00077D5	3110	26
	6570	26
	6640	26
	6710	26
180-00198	4200	18
	4210	22
180-00199	4210	23
180-00211	4120	309
180-00219	4130	302
180-00220	4130	307
	4131	307
180-00221	4130	308
	4131	308
180-00276	4260	21
	4280	21
	4290	21
180-00363	4340	15
	4370	15
180-00398	4190	47
180-00400	4190	102
180-00402	4180	66
180-00403	4180	65
180-00445	4190	55
180-00463	1100	7
	2100	11
180102-00052	7530	27
180102-00058	7550	88
180204-00002	7540	1
180204-00044A	7540	-
180304-00015	7510	2
180304-00016	7510	4
180313-00002	7580	2-7
180313-00003A	7560	3-7
180313-00034	7490	1-14
181-00008	6410	7
181-00078D1	1330	177-2
	6150	51-2
	6200	3
	6440	13
	6890	13
	6990	12
181-00078D5	6220	3
	6870	3
	7320	3
	7340	23
	7340	4
	7350	11
181-00086D1	1330	177-6
	6150	51-6
	6380	5-4
	6385	5-5
181-00086D2	1330	177-7
	6150	51-7
	6380	5-5
	6385	5-6
181-00103	1190	4
	3140	18-4
	6850	17-4
	6980	13-4
	7230	9
181-00128D3	7280	7
181-00144D5	1330	92
181-00318	4110	496
181-00346	4130	311
181-00519	4100	490
181-00525	3140	18-2
	6850	17-2
	6980	13-2
181-00565	4170	71
181-00628	4190	37
181-00630	4190	43
181-00631	4190	52
181-00633	4170	60
181-00646	4180	91
181-00647	4170	92
181-00647	4190	92
181-00649	4170	93
181-00673D1	7340	20
181-00701	4170	72
	4180	105
	4180	72
181-00717	1190	1D
181-00779	6150	7
	6160	7
	6470	14
181-00804	7130	3
181-00809	6100	1C
181-00810	6100	1D
181-00811	7190	5
184-00120	5100	4
185-00167D3	6100	12
186-00017A	1200	9
190-00093	5140	9
	5310	9
190-00095	5150	9
190-00097	5150	10
190-00098A	5140	10
	5310	10
190-00099	5150	11
190-00100	5150	5
190-00101	5140	4
	5310	4
190-00122	5130	10
	5150	12
190-00123	5200	1
190-00509BD25	5150	29
190-00521	5140	14
	5310	14
190-00522A	5130	15
	5150	17
190-00557	5150	18
190-00648A	5130	16
	5150	13
190-00652	5130	4
	5150	4
190-00691A	5130	12
190-00692	5130	13
190-00694	5130	11
190-00695A	5120	10
190-00703	5130	14
190-01059D14	5190	1
190-01172	6100	19
190-01192D2	1680	28
190-01192D9	1680	27
190112-00001	7490	-

Part No.	Fig No.	Key No.	Part No.	Fig No.	Key No.	Part No.	Fig No.	Key No.
191-02990C	1100	28	195-03123E	6200	2	2114-1058D45	7370	1-9
191-03166C	1500	17	195-03374C	6270	5	2114-1058D46	1240	54
191-03279A	6260	9	195-03434E	1580	8	2114-1058D52	1790	25
191-03280A	6260	10	195-03435B	6110	52	2114-1058D54	1620	52
191-03283	1510	32-28A		6130	52		1640	52
191-03736E	7130	14	195-03436B	6110	51		1730	3
195-00163	6220	4		6130	51		6240	3
	6440	16	195-03437E	6120	3	2114-1058D56	1640	23
	6870	4		6140	3	2114-1058D63	7470	9
	6890	16	195-03438A	7260	10	2114-1058D68	1620	19
	6990	14	195-03444	7130	11	2114-1058D70	1730	5
195-00463	4100	251	198-00016	1310	9	2114-1058D72	1240	54
195-01683A	6170	2		1380	6		6100	5
195-01684A	6480	4	198-00053A	1510	32-8	2114-1154	1620	37
	7200	4	198-00054A	1480	5	2114-1737	1300	64
195-01805	7100	1	2.121-00009	4130	102	2114-1813	1200	14
	7820	1		4131	102		1220	17
195-02622C	1710	30	2.172-00003	1440	9	2114-1814	1200	15
195-02623B	1100	31	200101-00033	2120	5		1220	18
195-02624C	1620	41	200102-00052	2120	5-2	2114-1816A	1130	28
195-02643C	1120	26	200104-00021	2150	7		2110	26
195-02662B	6100	2	200105-00022	2140	6	2114-1831A	3120	9
195-02706C	1620	27	200112-00022	2100	9		6510	6
195-02711B	6150	9	204-00067	1170	1		6520	6
195-02716C	1310	8	204-00070	1170	1D		6530	6
195-02719C	1510	38	204-00075	1170	1C		6540	6
195-02729	1480	58	210101-00029	025	1		6550	6
195-02739C	1490	49-2	2106-1019D25	1790	33		6560	6
195-02740E	1490	49-3		5110	8		6780	9
195-02753C	1390	1	2107-6006	1790	16		6790	9
195-02755C	1400	1	2109-9033	4140	4		6800	9
195-02768E	1450	14		4141	4		6810	9
195-02769E	1450	15	2110-1184D7	4210	27		6820	9
195-02770E	1450	18		4270	2-2		6940	9
195-02771C	1460	14	2110-1329A	6910	1B	2114-1848A	3120	4
195-02772G	1460	15	2110-1330A	6910	1C		6510	1D
195-02774A	1460	22	2110-1366A	6910	2A		6520	1D
195-02775A	7070	2	2112-1248E	4140	2		6530	1D
195-02785E	1460	24	2114-1058D10	1310	39		6540	1D
195-02868C	1390	5		1380	38		6550	1D
195-02883B	1270	23	2114-1058D2	1470	4		6560	1D
195-02884B	1270	105		7540	4		6780	4
195-02904C	1410	1-2	2114-1058D29	1760	4		6790	4
195-02908E	7050	3		1790	22		6800	4
195-02909A	7090	1	2114-1058D30	1600	3-11		6810	4
195-02910C	7060	1		1610	2-12		6820	4
	7110	1		7370	1-11	2114-1856	1510	42
195-02925A	7100	5	2114-1058D31	6340	15	2114-1859	6940	4
195-02948A	1570	1	2114-1058D45	1600	3-9	2114-1898D1	1470	7
195-02949A	1560	1		1610	2-10		1530	4

Part No.	Fig No.	Key No.
2114-1898D1	1560	3
	1570	3
	6340	12
	7090	2
	7540	3
	7640	22
	7680	3
	7690	3
	7820	11
2114-1898D10	6340	16
2114-1898D11	7730	16
2114-1898D13	1480	76
	1500	76
	7550	33
2114-1898D14	1410	1-5
	1410	5
	1450	31
	1460	28
	1480	18
	1490	18
	1510	18
	1530	9
	1550	6
	6260	17
	7470	20
	7520	19
	7530	36
	7530	73
	7550	77
	7560	77
	7580	2-30
	7580	77
	7640	19
	7640	43
	7660	15
	7670	8
2114-1898D15	1420	4
	1510	23
	1510	32-22
	1515	3
	1540	1-3
	7560	3-16
	7580	2-25
	7580	39
	7730	14
2114-1898D16	7650	4-4
2114-1898D17	1410	8
	1530	2
	6290	2
	6300	2-2
2114-1898D17	6300	3
	6340	9
	7550	86
	7640	16
	7710	2
	7720	3
	7730	7
	7780	15
	7810	9
2114-1898D18	1410	11
	7470	5
2114-1898D2	1490	49-13
	1510	32-25
	1510	46
	6340	13
	7430	4
	7440	4
	7450	10
	7460	9
	7560	3-12
	7730	6
	7820	2
2114-1898D3	1480	19
	1490	19
	1490	49-10
	1500	19
	1510	19
	1510	32-29
	1550	3
	6260	14
	7130	12
	7460	18
	7560	3-18
	7560	76
	7570	76
	7580	76
	7660	12
	7670	10
2114-1898D4	1390	19
	7450	19
	7530	41
2114-1898D5	1450	36
	1460	31
	1500	113
	6270	9
	6280	8
	7520	21
	7700	9
2114-1898D6	1490	26
	6270	10
2114-1898D6	6280	11
	6340	17
	7050	5
	7650	2
	7700	7
2114-1901A	4140	11
	4141	11
2114-1929	1120	17
2114-1994B	6910	24
2114-1995B	6910	25
2114-2031D1	1500	97
2114-2031D4	1410	6
	1450	33
	7520	18
	7820	3
2114-2031D5	1380	36
	7820	10
2114-2031D6	7780	14
	7810	8
2114-9012A	1100	21
	1120	25
	1190	10
	2100	27
2116-1060D5	7210	16
2116-1060D6	3100	16
	3110	19
	6570	19
	6640	19
	6710	19
	6830	16
	6900	16
	6910	14
	6910	26
	7210	15
2116-1472A	6900	30
2116-1522	1600	3-4
	1610	2-3
	7370	1-4
2116-1531A	3100	7
	6830	7
	6900	7
	7210	9
2119-1063B	1190	1J
2119-1065	4140	30
	4141	30
2120-1354	1710	13
2120-1413D12	1240	53
2120-2150D1	1510	43
	7580	11
2120-2150D3	1510	28

Part No.	Fig No.	Key No.
2120-2150D3	1510	32-33
	7580	2-18
2120-2166D1	1510	32-23
	1510	41
	1530	3
	1560	2
	1570	2
	7680	2
	7690	2
2120-2166D10	1390	10
	1400	10
	1420	3
	1460	26
	1500	14
	6280	10
	7520	25
	7560	79
	7570	79
2120-2166D11	7780	2
	7810	2
2120-2166D12	1460	29
	1480	25
	1490	25
	1490	49-12
	1510	25
	7170	10
	7530	34
2120-2166D15	7530	33
2120-2166D18	1500	99
2120-2166D2	1470	6
	1540	1-2
	7580	2-26
	7820	6
2120-2166D23	1450	26
	7530	40
2120-2166D25	7530	35
	7530	72
	7640	42
	7820	4
2120-2166D26	1480	77
	1500	77
2120-2166D27	6290	3
	6300	2-3
	6300	4
	6340	10
	7550	87
	7710	3
	7720	4
	7730	8
2120-2166D28	1480	20
2120-2166D28	1490	20
	1490	49-11
	1500	20
	1510	20
	1510	32-30
	7460	17
2120-2166D3	7650	4-3
2120-2166D30	7470	21
2120-2166D32	6340	23
	7650	3
	7780	12
2120-2166D33	7550	34
2120-2166D35	7640	17
2120-2166D36	1450	35
	1460	30
	7530	38
	7570	73
2120-2166D37	6270	11
	6280	12
2120-2166D4	1515	2
	1530	16
	7640	23
	7730	15
2120-2166D41	1220	22
2120-2166D5	1410	1-3
	1410	10
	1450	32
	1460	35
	1480	47
	1510	32-24
	1510	47
	6340	22
	7440	6
	7450	9
	7460	8
	7470	19
	7520	17
	7550	78
	7560	3-15
	7560	78
	7580	78
2120-2166D52	1390	16
	1400	11
	1450	23
	1490	49-15
	1490	80
	1500	80
	1510	32-31
	6270	6
	6280	9
2120-2166D52	6340	25
	7450	13
	7460	12
	7480	2
	7520	16
	7530	32
	7560	3-13
	7580	2-20
	7700	10
2120-2166D53	1390	9
	1400	9
	1420	5
	1450	24
	1460	27
	1480	111
	1500	111
	1510	32-37
	7450	14
	7460	13
	7520	26
	7530	46
	7550	16
	7560	16
	7560	3-10
	7570	16
	7580	16
	7580	2-23
	7740	44
2120-2166D54	7050	4
	7700	8
2120-2166D55	1530	1
2120-2166D56	7560	3-11
2120-2166D57	1450	38
2120-2166D58	1460	36
2120-2166D6	1690	2
2120-2166D7	1480	31
	1500	31
	6260	16
	7660	14
2120-2166D8	7170	9
2120-2166D9	1550	4
	7130	13
	7570	100
	7670	9
2120-2187	1770	10
2121-1305	1690	53
	1720	15
	1770	16
	7740	36
2121-1311D1	1410	9

Part No.	Fig No.	Key No.
2121-1311D1	6340	18
	7780	13
2121-1311D2	1410	7
	6340	14
	7430	5
	7440	5
	7470	16
	7560	36
	7660	13
	7670	7
	7730	5
2121-1311D4	1490	39
	1510	39
	6340	11
	7580	38
	7730	13
2121-1311D5	7650	4-5
2121-9007	1470	5
	7540	5
2122-1002D2	5220	2
	5230	2
	5240	2
	5310	20
2122-1002D4	5130	17
	5150	14
2123-1011	2120	5-2G
2123-1107D7	1100	14
2123-1915A	6900	29
2123-2180G	3100	2
	6830	2
	6900	2
	7210	3
2123-2185G	3100	5
	6830	5
	6900	5
	7210	6
2123-2187E	3100	6
	6830	6
	6900	6
2123-2192E	3110	10
	6570	10
	6640	10
	6710	10
2123-2247	1510	32-19
	7580	2-12
2123-4030	1190	13
2123-6119	1510	32-3B
2124-1025D5	1270	33
	7180	53
2124-1025D6	1270	32
2124-1026D1	6880	20
	7025	11
	7300	7
2124-1026D3	7180	54
	7260	28
2124-1084D2	6440	15
	6990	13
2124-1353D1	7360	9
2124-1353D2	3140	15
	6850	15
	6980	11
	7230	5
2124-1509D1	1740	8
	1750	24
	7070	6
	7170	7
	7360	7
2124-1607	7530	50
2124-1622D1	5150	30
2124-1689A	1510	32-20
	7580	2-11
2125-1095A	1460	16
	7530	23
2125-9055	1510	35
2127-1002A	1510	48
	7580	18
2129-1008	1220	12
2129-1236	2130	6
2129-1393	1220	4
2129-1446	1510	117
213-00029C	1450	13
213-00030B	1450	8
213-00031E	1450	9
213-00032B	1450	10
213-00033B	1450	11
213-00034E	1450	12
213-00035B	1450	7
213-00036B	1460	2
213-00037B	1460	3
213-00038B	1460	4
213-00039B	1460	5
213-00040A	1460	21
2132-1133B	1530	22
	7640	8
2132-1134B	1530	21
	7640	7
2140-1338	1490	55
	1500	55
2140-1406	4140	29
	4141	29
2142-9005	1510	33
	7580	10
2150-1132A	1510	32-14
2150-1133	1500	93
2155-1299B	3110	3
	6570	3
	6640	3
	6710	3
2155-1300B	3110	4
	6570	4
	6640	4
	6710	4
2155-1306B	6910	3
2155-1307B	6910	4
2160-1004D31	1100	38
2160-1004D48	1100	15
2160-1004D55	1100	27
2160-1004D62	1100	41
2160-1201D11	1100	17
2160-1201D12	1100	26
2160-1201D13	1100	25
2160-1212	1750	4
2160-1213	1750	5
2160-1310	1480	21
	7550	74
2160-1336	6100	12C
2160-1345	1560	4
	7680	4
2160-1346	1570	4
	7690	4
2161-2212	1500	72
2161-2487	1530	25
	7640	9
2161-9052	1600	3-5
	1610	2-4
	7370	1-5
2161-9053	1600	3-6
	1610	2-5
	7370	1-6
2172-9021	1510	32-17
	7580	2-9
2180-1026D19	1260	59
	1261	59
	1270	59
	1280	59
	1290	59
	1300	59
	2180	9
	3130	24
	6110	14

Part No.	Fig No.	Key No.
2180-1026D19	6130	17
	6130	64
	6180	5
	6190	4
	6600	3
	6670	4
	6740	4
	6840	13
	6860	4
	6970	29
	7010	10
	7180	21
	7220	22
	7260	17
	7270	7
2180-1026D2	1270	58
	1290	58
	3130	22
	3150	4
	6450	5
	6580	4
	6620	5
	6650	4
	6690	5
	6720	4
	6760	5
	6840	22
	6970	27
	7010	11
	7220	21
2180-1026D24	1240	34
	1250	34
2180-1026D27	1240	35
2180-1026D28	1240	51
2180-1026D30	6490	8
	6500	15
	6630	4
	6700	15
	6770	15
	6880	8
	7000	13
	7025	9
	7300	14
2180-1026D31	1230	37
	1240	37
2180-1026D37	7180	103
	7250	12
	7260	9
2180-1106BD14	6910	21
	7210	19
2180-1106BD24	3100	11
	3110	13
	6570	13
	6640	13
	6710	13
	6830	11
	6900	11
	6910	10
	7210	17
2180-1106BD3	6910	11
2180-1106BD4	3110	12
	6570	12
	6640	12
	6710	12
2180-1106BD6	3100	10
	3100	1B
	3110	14
	6570	14
	6640	14
	6710	14
	6830	10
	6830	1B
	6900	10
	6900	1B
	7210	18
	7210	1B
2180-1217D109	4170	89
2180-1217D63	4410	7
2180-1217D67	4410	6
2180-1217D96	4250	15
	4330	15
	4350	15
	4360	15
	4380	15
	4390	15
2180-1254	4140	7
	4141	7
2180-6086	1790	92A
	7860	12A
2180-6088	1790	26A
2180-9005B	2140	6-14
2180-9020	2120	5-2E
2180-9098	2150	7-9
2180-9153	5110	11
2181-1110D3	1190	1C
2181-1111D11	3160	10
	6590	10
	6660	10
	6730	10
	7020	24
2181-1111D11	7240	10
2181-1116D1	3110	30
	4150	91
	4210	4
	4420	2
	6570	30
	6640	30
	6710	30
	6910	28
2181-1116D10	4150	54
2181-1116D2	2120	5-2H
	2140	6-12
	2150	7-7
	2160	8-15
	4130	312
	4131	312
	4140	27
	4141	27
	4150	55
	4200	2
2181-1116D3	4250	31
	4330	31
	4350	31
	4360	31
	4380	31
	4390	31
2181-1116D4	4131	311
	4140	28
	4141	28
2181-1126D103	1350	28
2181-1126D14	1310	25
	1320	25
	1350	25
	1380	29
	2180	13
	6160	3
	6170	10
	6420	3
	6470	3
	6480	23
	7190	10
	7200	23
	7290	2
	7340	12
	7350	10
2181-1126D27	1350	26
	1360	26
	1370	26
2181-1126D28	1360	27
	1370	27

Part No.	Fig No.	Key No.
2181-1126D34	7190	35
	7200	101
	7290	32
2181-1126D36	1360	84
	1380	31
	6150	3
	7190	13
2181-1126D38	1320	27
2181-1126D6	1230	14
	1250	14
	1310	23
	1320	135
	1320	23
	1350	23
	1380	30
	2180	12
	6460	11
2181-1126D7	1330	24
	1340	24
	1350	24
	1360	83
	1370	91
	6200	23
	6390	3
	6410	8
	6430	4
	7190	6
	7330	6
	7380	3
2181-1126D85	6200	5
	6440	10
	6890	10
	6990	10
2181-1159	1770	3
2181-1160A	1770	4
2181-1161A	1770	5
2181-1184	3160	4
	6590	4
	6660	4
	6730	4
	7020	12
	7240	4
2181-1186D12	7230	6
2181-1702D10	1350	17
	7190	40
	7190	52
2181-1702D2	1310	19
	6460	22
2181-1702D3	1330	142
	1340	162
2181-1702D3	6200	7
2181-1702D34	1350	21
2181-1702D36	1230	58
2181-1702D4	1310	18
	1320	18
	1330	18
	1340	18
	6150	5
	6155	2
	6160	4
	6170	11
	6470	4
	6480	29
	7290	25
2181-1702D5	1370	24
	6390	4
	7190	8
	7330	8
	7380	4
2181-1702D51	6390	5
	7380	5
2181-1702D56	2180	17
2181-1702D73	1250	19
2181-1702D9	1350	96
2181-1890D2	1200	21
	1220	27
	4100	468
	4150	52
2181-1890D4	4150	63
	4160	128
2181-1913D24	1190	1H
2181-1923D12	3160	13
	6590	13
	6660	13
	6730	13
	7020	21
	7240	13
2181-1925	1670	2
	3140	6
	6850	6
	6980	6
2181-1950D1	1230	83
	1240	101
	1240	20
	1240	92
	1320	137
	4120	466
	4130	110
	4130	313
	4131	110
2181-1950D1	4220	5
2181-1950D2	1240	111
	1330	141
	1340	161
	4100	467
2181-1950D3	1230	81
2181-1950D5	4100	466
2181-1950D7	1190	1G
	1210	32
	1220	24
2181-1950D9	1230	82
	1240	91
	1260	77
	1261	77
	6180	13
	6860	12
2181-1951D1	1330	151
	6150	6
	6160	5
2181-1951D16	1330	15
	1340	15
2181-1951D19	6150	30
	7290	37
2181-1951D5	1250	61
2181-1951D6	1310	14
	1350	14
	6170	9
	6480	22
	7200	22
	7290	13
2181-1951D7	6480	12
	7200	12
	7290	12
2181-2104D6	6100	9
2181-2170	6110	23
	6130	30
	6130	62
2181-2218D6	1261	76
2181-2281D10	2180	11
2181-2281D21	1350	16
2181-2293D4	6110	13
	6110	44
	6130	16
	6130	44
	6140	10
	7250	4
	7260	4
2181-2294D2	1230	85
	6460	27
2181-2295D4	6380	4

Part No.	Fig No.	Key No.
2181-2337D13	4170	61
2181-2434	4170	88
2181-2527	1670	6
2181-2627D1	1300	38
	6460	20
2181-2627D3	1300	39
2181-2627D5	1240	18
2181-2635	1330	22
2181-2755B	6100	1A
2181-2774	1770	1
2181-2815D1	6120	2
	6140	2
2181-2815D3	6600	41-6
	6600	42-6
	6670	41-6
	6670	42-6
2181-2816D1	6620	31
	6760	7
2181-2816D2	6130	61
	6190	41-3
	6190	42-3
	6740	41-3
	6740	42-3
2181-2816D4	6190	41-6
	6190	42-6
	6500	32
	6630	31
	6700	32
	6740	41-6
	6740	42-6
	6770	32
	7025	52
2181-2817D1	6450	41
	6620	33
	6690	41
	6760	41
2181-2817D2	6190	41-4
	6190	42-4
	6600	41-4
	6600	42-4
	6670	41-4
	6670	42-4
	6740	41-4
	6740	42-4
2181-2817D4	6190	41-8
	6190	42-8
	6500	33
	6600	41-8
	6600	42-8
	6630	33
2181-2817D4	6670	41-8
	6670	42-8
	6700	33
	6740	41-8
	6740	42-8
	6770	33
	7025	53
2181-2820D1	6230	4
	6610	4
	6680	4
	6750	4
2181-4112	3140	13
	3160	20
	6590	20
	6660	20
	6730	20
	6850	13
	6980	9
	7020	22
	7230	13
2181-4125	2180	15
2181-4133D12	6460	21
2181-4133D3	6460	10
	6500	9
	6630	7
	6700	9
	6770	9
	7025	7
	7300	11
2181-4133D38	7280	6
2181-4133D5	1230	15
	6450	11
	6620	12
	6690	12
	6760	12
2181-4133D6	6110	11
	6110	56
	6130	14
	6130	56
	6600	41-3
	6600	42-3
	6670	41-3
	6670	42-3
	7260	14
2181-4133D7	7180	32
2181-9078	1261	29
	1280	29
	1290	29
	1300	29
	2180	5
2181-9078	3130	23
	6110	10
	6130	20
	6130	63
	6180	10
	6190	3
	6600	2
	6670	3
	6740	3
	6840	23
	6860	9
	6970	28
	7010	12
	7180	61
	7220	20
	7260	20
	7270	6
	7340	18
2181-9079	1270	30
	1290	30
	3130	25
	3150	3
	6450	4
	6580	3
	6620	4
	6650	3
	6690	4
	6720	3
	6760	4
	6840	14
	6970	30
	7010	13
	7220	19
2181-9081	1260	28
	1261	28
	2180	6
	7180	60
2181-9083	1280	31
	1290	31
2184-1036D11	3160	2
	6590	2
2184-1036D199	7020	11
2184-1036D293	1250	39
2184-1036D38	7020	10
2184-1036D43	1190	1K
2184-1036D64	7240	2
2184-1045D126	3140	4
2184-1045D251	7350	1
2184-1045D254	3140	5
	6980	5

Part No.	Fig No.	Key No.	Part No.	Fig No.	Key No.	Part No.	Fig No.	Key No.
2184-1046D117	7340	10	2199-1063F34A	5100	1	220204-00056A	7460	3
2184-1046D135	7350	2	2199-9007	5100	3	220204-00057A	7450	5
2184-1046D180	7350	16	2199-9008	5100	2		7460	4
2184-1046D50	1190	2	2199-9009	5100	1-15	220204-00060B	7450	11
2184-1082D8	7220	17	2199-9043	5100	1-1		7460	10
2184-1100D178	3150	2	2199-9058	1500	92	220204-00096A	7480	1
2184-1100D59	6650	2		7570	29	220204-00106B	7530	-
2184-1100D78	6190	2	220101-00503A	7550	-	220205-00025E	7560	3
	6600	1		7560	-	220206-00002B	7580	2-29
2184-1100D90	6670	2		7570	-	220208-00001A	7570	59
2184-1197D31	6460	25		7580	-	220208-00002A	7560	3-6
2185-1308D7	1760	7	220105-00007	7640	3	220213-00003	7510	12
	1760	8	220105-00008	7640	2	220214-00009B	7580	2-27
	7860	5	220106-00012	7450	8	2204-6039A	1790	2
	7860	6	220106-00013	7460	7	2208-6013B	1790	12
2185-1660	1480	106	220107-00003	7690	1	2220-1013	2120	5-2C
	7550	71	220107-00004	7680	1	229-00025C	1180	2
2185-1737D8	1230	38	220107-00005	7680	-	230-00060A	4140	20
2185-1776D2	1240	12	220107-00006	7690	-	230-00061	4140	10
2190-2480	5120	4	220108-00003	7510	1	230201-00104	3110	-
2190-2524	5140	7	220109-00017	7580	2-2	230201-00105	6640	-
	5310	7	220110-00016	7500	-	230201-00106	6570	-
2190-2533A	5130	7	220110-00029	7500	1	230201-00107	6710	-
2190-2556D143	5160	1		7510	-	230201-00137	6910	-
2190-3297	5120	2	220111-00032	7450	-	230204-00067	6910	1
	5140	2	220202-00009	7550	25	230204-00083A	3110	1
	5310	2	220204-00002B	7570	63	230204-00084A	6640	1
2190-3379A	5130	3	220204-00003B	7570	61	230204-00085A	6570	1
2190-3388	5120	9	220204-00004B	7570	62	230204-00086A	6710	1
2191-3705C	1260	84	220204-00006A	7580	2-36	230207-00081	3100	-
2195-1534	1710	22	220204-00007A	7580	2-37	230207-00082	6830	-
2195-2394B	7360	2	220204-00008C	7530	9	230211-00054	3100	1
2195-3500	1750	17	220204-00009C	7530	7	230211-00055	6830	1
2197-1660	1740	10	220204-00010C	7530	8	2401-1276KT	6100	1G
	1750	20	220204-00011C	7530	12	2412-1040	4140	3
	7360	6	220204-00012C	7530	19		4141	3
2197-1661	1310	3I	220204-00014B	7550	82	2415-1018	1710	35
	1720	16	220204-00016B	7530	11	2420-1258	6100	12A
	1740	5	220204-00023C	7530	10	2423-1470	1380	4
	1750	21	220204-00031	7670	2	2426-1175	1220	6
	7060	4	220204-00036C	7550	20	2426-1237	1310	3D
	7070	5	220204-00044C	7570	55	2460-9057A	1320	4
	7090	4	220204-00047	7660	-	2471-1133	6150	4
	7110	4	220204-00048	7670	-	2471-1135	1380	23
	7360	4	220204-00050A	7450	1	2471-1152	6100	12B
	7770	2	220204-00051A	7450	2	2471-1154	1310	3C
	7780	4	220204-00052A	7450	3		5110	2
	7810	4	220204-00053A	7450	4	2471-1155A	1310	3E
2199-1004	5100	1-10	220204-00054A	7460	1	2472-7003	1310	3B
2199-1005	5100	1-11	220204-00055A	7460	2	2474-7009	1180	3B

Part No.	Fig No.	Key No.
2474-7009K	1180	3H
2474-9016A	1220	10
250105-00010A	7730	3
250105-00015	7540	11
250105-00048A	7530	20
250105-00066B	7560	3-9
250105-00162	7450	7
	7460	6
250106-00149A	7640	1
250106-00152A	7640	-
250106-00154	7640	41
250110-00013E	7470	1
250110-00031A	7470	-
250117-00003A	7730	4
250120-00003B	7530	21
250120-00011	7530	44
250120-00015C	7530	13
250120-00040	7530	71
250120-00072	7530	1
250120-00073	7530	55
250122-00002	7660	7
250122-00003	7660	8
250122-00006A	7570	81
250122-00008A	7530	18
250127-00026B	7520	12
250127-00027B	7520	13
250127-00096A	7520	23
250201-00028	1600	3-4
	1610	2-3
	7370	1-4
250201-00363	7470	18
2512-1095D1	5110	10
2515-1016D4	1710	25A
	1740	1A
	5110	17
	7050	1A
	7060	3A
	7070	7A
	7140	1A
	7150	1A
	7360	1A
	7770	1A
	7780	3A
	7790	1A
	7800	1A
2515-1021D1	1500	75A
	7570	64A
2515-1022D1	1740	1A
	5110	16
	7360	1A
2516-1116	1690	32
	7740	8
2527-1016	1690	5A
	1690	6A
	5110	19
	7740	26A
2527-1017	1690	5B
	1690	6B
	5110	20
	7740	26B
2527-1018	1690	5C
	1690	6C
	5110	21
	7740	26C
2527-1023A	1710	14
	5110	23
2527-1025	1690	5D
	1690	6D
	5110	22
	7740	26D
2527-9004	1710	12
2528-9040	1690	18
	7750	14
2531-1003	1680	8
	1680	9
	7740	45
2541-9020	1500	81
	7570	66
2543-9015	1680	6
	7740	21
2544-1022	1710	15
2544-9024	1710	8
2544-9033	1680	15
	1680	16
	1680	17
	1680	18
	1680	19
	1680	20
	1680	21
	1680	22
	1680	23
	1680	24
	7030	5
	7040	7
	7130	17
2547-9045	7120	3
2548-1027	1750	1A
2549-9112	1330	10
2550-1014D1	1750	2
2550-1014D2	1750	3
2553-1275D39	1750	10
2553-1275D46	1750	14
2553-1275D7	1750	15
2553-1275D78	1750	6
2553-1275D82	1720	19
2553-1275D88	1750	16
270-00054B	1490	49-6
270-00063B	2120	5-2
2705-1020	3120	3
	6510	1C
	6520	1C
	6530	1C
	6540	1C
	6550	1C
	6560	1C
	6780	3
	6790	3
	6800	3
	6810	3
	6820	3
2705-1022	6940	3
2705-1030	4140	19
	4141	19
2705-9002	1600	3-26
	1610	2-9
	1640	36
	7370	1-26
271-00026	2120	5-2B
2713-1059A	3120	5
	6510	2
	6520	2
	6530	2
	6540	2
	6550	2
	6560	2
	6780	5
	6790	5
	6800	5
	6810	5
	6820	5
2713-1060A	3120	6
	6510	3
	6520	3
	6530	3
	6540	3
	6550	3
	6560	3
	6780	6
	6790	6
	6800	6

Part No.	Fig No.	Key No.
2713-1060A	6810	6
	6820	6
2713-1218A	3120	1A
	6510	1AA
	6520	1AA
	6530	1AA
	6540	1AA
	6550	1AA
	6560	1AA
	6780	1A
	6790	1A
	6800	1A
	6810	1A
	6820	1A
2713-1222B	6940	1A
2713-1228A	6940	6
2713-1229A	6940	5
284-00005	4100	30
2891-1311	1510	32-26
	7580	2-33
2891-1421B	4140	5
300426-00010	1690	1
300426-00049	7740	1
300611-00035	1680	2
	7740	101
300612-00001A	7740	20
	7930	1
300619-00075	7770	-
300619-00076	7780	-
300619-00077	7790	-
300619-00078	7800	-
300619-00080A	7840	-
300619-00081A	7830	-
300619-00082A	7850	-
300619-00084A	7820	-
300619-00085	7810	-
300619-00089	7900	-
300619-00090	7910	-
300619-00125	1720	-
300619-00300	1680	-
300619-00306	1690	-
300619-00609	7360	-
300619-00673	7740	-
300619-00676	7880	-
300619-00677	7890	-
300619-00680	7920	-
300619-00696	7750	-
300619-00774	7930	-
300661-00003	7750	2
300704-00006	7550	24
300705-00013	7080	-
300705-00014	7160	-
300726-00002	1710	26
300726-00003	1710	27
300901-00033	6240	21
300901-00034	1730	21
301005-00132	1740	1
	7360	1
301317-00019	7870	7
301401-00006	7910	2
301401-00008	7750	11
301401-00009	7770	12
301401-00010	7880	2
301401-00017	7750	13
301401-00022	7920	2
301417-00002A	7450	17
310203-00020	1750	31
310207-00115A	7570	65
310207-00127	1720	17
310207-00392	7780	11
	7810	7
310207-00447	7870	11
310207-00539	1740	6
310207-00541	7360	5
310207-00616	7740	26
310207-00617	7740	27
310207-00891	7510	13
352-00014	4130	305
	4131	305
	4150	216
354-00003	4270	12
359-00021A	1500	87
359-00022A	1500	86
400102-00105	7490	1-17
400402-00005	7550	19
400402-00006	7870	5
400911-00005	1180	-
401-00449	6100	1
401-00502H	1180	-
401002-00195	030	1-2A
401002-00196	030	1-2B
401003-00094	2140	6-6
401107-00682	4420	18
402-00036	4270	6
404-00097C	1190	1B
	4140	-
405-00008	4100	113
407-00001	6100	1F
408-00013	4100	156
409-00003	4100	532
409-00049	4190	95
409-00050	4190	97
410113-00043	4420	-
	7940	1
410113-00044	4420	-
	7940	2
410116-00099	7870	10A
410127-00040	012	7
410137-00030	6190	41
	6740	41
410137-00031	6190	42
	6740	42
410137-00032	6600	41
	6670	41
410137-00033	6600	42
	6670	42
410207-00175	4420	33
410207-00176	4420	34
412-00006	4100	211
412-00011	4131	202
412-00013	4130	306
	4131	306
	4150	215
4132-1138	1510	32-28B
415-00037	4180	63
415-00043B	1460	6
	7530	6
415-00044B	1450	19
	7520	22
415-00045B	1450	17
415-00046B	1450	16
416-00004	4100	534
416-00005	4100	535
416-00019B	1490	29
4185-1777	1710	34
420-00004A	6440	4
	6890	4
	6990	4
	7340	14
	7350	4
420-00110	4130	400
	4131	400
420-00112	4210	3
420-00127	4100	79
420-00226	6420	6
	7340	6
420-00246	4190	67
420-00258	4170	69
420-00259	4180	70
420-00282	6380	5-2

Part No.	Fig No.	Key No.
420-00282	6385	5-2
420-00295KT	4170	*
420-00309	4190	94A
420-00314	4190	24A
420-00352D1	1330	177-4
	6150	51-4
420-00467A	1380	3
	4210	-
420-00476	6150	51-8
	6385	5-3
	7190	2
420202-00015	1240	1
420210-00082A	7570	13
	7580	13
420212-00225	1240	-
420212-00266	6385	-
420212-00336	6110	-
420212-00478	6380	-
420212-00576	1261	-
420212-01713	6190	-
420212-01715	6600	-
420212-01717	6670	-
420212-01719	6740	-
420212-02771	7940	-
4215-1003D7	7180	59
422-00055	2100	14
423-00096	4180	1
423-00097	4180	13
423-00180	7180	36
423-00193B	6110	2
423-00202	1290	24
424-00042	4210	8
424-00115	4180	6
424-00185	4180	2
424-00199	4180	4
426-00168	4170	32
426-00169	4190	34
426-00170	4190	38
426-00171	4190	44
426-00172	4190	49
426-00173	4190	51
426-00182	4190	100
426-00247B	6160	1
	6470	1
426-00248A	6130	1
426-00249A	6130	2
426-00266	6150	1
426-00267A	6110	1
426-00267B	6110	1
426-00282	7130	2
426-00284B	6460	1
426-00287	6200	1
429-00004	4210	5
429-00005	4210	7
429-00024	4190	20
430-00033	4180	8
430-00035	4180	12
430-00038	4190	18
430-00040	4190	22
430-00041	4190	24
430-00042	4190	46
430-00045	4190	94
430205-00010	4420	28
430205-00011	7490	1-6
430216-00004	1330	177
430216-00005	6380	5
430216-00006	6150	51
430216-00007	6385	5
430218-00008B	7520	15
440-00237A	7470	17
440205-00033	7860	4
	7870	-
440213-00120	7870	12
440213-00147	7860	-
452-00020	4130	309
	4131	309
460103-00003A	7520	6
460103-00004A	7520	7
460103-00005A	7520	8
460103-00006A	7520	9
460103-00007A	7520	10
460103-00008A	7520	11
460103-00012A	7530	4
460103-00014A	7530	5
460103-00015A	7530	3
460103-00020A	7530	22
460103-00039	7530	2
471-00030	4120	355
471-00075A	1310	3
471-00105A	1200	4
471-00114	6120	1
	6140	1
471-00119	1480	13
471-00127	1220	21
4713-4004B	6950	2
	6960	2
473-00033	1200	2
473-00052	1220	7
474-00039	1170	1A
	5110	4
474-00040	1170	1B
	5110	3
474-00044A	1490	49-16
474-00046	6120	1A
	6140	1A
474-00055	1220	5
	5110	1
500-00307A	7080	-
500-00309C	7100	-
500119-00040	7580	2-6
500119-00063A	7560	44
500119-00064	7560	3-5
500119-00067A	7550	9
500119-00086	7580	2-3
500119-00087	7580	2-4
506-00006	1710	1
507-00006	1480	102
507-00007	7130	8
515-00012A	5110	15
515-00013	7820	7A
	7830	2A
	7840	5A
	7850	5A
516-00011	7040	3
516-00014	1710	26
516-00015	1710	27
520-00004	1790	19
523-00012	6100	1H
527-00005	1720	1A
	5110	24
527-00006	1690	17
530-00067	6150	27
	6380	3
	6385	3
530-00214A	6100	18
530-00236	1310	3H
530-00417B	1500	62
530-00418D2	1740	6
530-00418D8	7360	5
530-00430A	7050	2
	7780	7
530-00431	7070	1
530-00432A	6210	2
	7900	2
530-00434B	1690	27
	7750	15
530-00435B	7740	23
530-00463A	7060	7
	7090	7
	7110	7

Part No.	Fig No.	Key No.
530-00463A	7150	2
530-00464	7080	4
	7160	4
	7830	6
	7840	4
	7850	4
534-00062	7820	7
	7830	2
	7840	5
	7850	5
534-00064	1740	1
	7360	1
534-00079	1500	75
	7570	64
534-00085	1710	25
	7050	1
	7060	3
	7070	7
	7140	1
	7150	1
534-00117B	6280	–
538-00011	1480	73
	7550	22
538-00012	7130	1
541-00015	1480	101
541-00016	7130	7
543-00095	1690	14
	7750	6
543-00096	1690	15
	7750	5
543-00106	1680	7
	7740	19
543-00107	1790	91
	7860	11
544-00007	1720	1
545-00001	1690	16
	7750	7
545-00011	1680	12
	7740	25
547-00023	1690	49
	7740	3
547-00024A	1770	12
547-00026	1200	18
548-00003A	1750	1B
549-00010	6150	26
	6380	1
	6385	1
549-00077	7130	6
549-00086	1490	57
	7560	50
549-00089	1390	5A
	7450	17A
549-00090A	1700	6
	7740	14
549-00092	6210	1
	7900	1
549-00093	6100	17
549-00095	1240	11
549-00101	7030	1
	7080	20
	7130	4
	7830	11
	7890	1
	7920	1
549-00102	7120	1
	7910	1
549-00103	1690	19
	1690	21
	7040	1
	7050	10
	7750	9
	7770	11
	7880	1
554-00005	1480	60
	7550	32
604-00277H	2100	1
621-01507A	1530	13
	7640	25
621-01572	6930	6
	7420	6
621-02151	1380	5
621-02643C	1710	32
621-02700A	6490	12
	6880	12
621-02726A	1610	2-6
621-02739B	6100	3
621-02798	6490	14
	6880	14
	7000	14
621-02801	1390	17
	1400	14
	1450	27
	7450	15
	7460	14
621-02837A	1480	61
	7550	31
621-02849A	1510	36
621-02850B	1300	65
621-02864	1480	12
621-02867A	1510	32-21
621-02867A	7580	2-35
621-02869C	1510	32-7
	7580	2-22
621-02870C	6260	–
621-02871B	6260	1
621-02872	6260	2
	7660	17
621-02873	6260	7
	7660	5
621-02892J	1530	12
621-02894G	1460	1
621-02895C	1410	1-1
621-02896K	1460	–
621-02900B	1400	3
621-02901B	1390	2
621-02903C	1450	1
621-02904C	1450	3
621-02905C	1450	2
621-02907B	1460	10
621-02908B	1450	6
621-02909G	1450	4
621-02910C	1500	94
621-02911C	1500	95
621-02912B	1500	96
621-02913C	1460	7
621-02914C	1460	8
621-02915B	1460	9
621-02917C	1460	11
621-02919B	1460	13
621-02920C	1460	19
621-02925A	1410	1-4
621-02926E	1400	2
621-02938B	1100	8
	2100	10
621-02955C	1680	1
621-02957B	1390	6
	1400	6
621-03005A	1410	4
621-03011E	1410	1
621-03012G	1390	3
621-03014B	1390	4
	1400	5
621-03103	6260	12
	6270	7
	6280	7
	7660	10
	7700	5
621-03113B	1500	67
621-03114B	1500	68
621-03166	2100	12

Part No.	Fig No.	Key No.	Part No.	Fig No.	Key No.	Part No.	Fig No.	Key No.
621-03167	2100	13	65.01401-0253B	013	1	65.03901-0071	017	13
621-03224B	1470	-	65.01414-0004A	013	8		040	8
621-03449E	1610	2-2	65.01501-5003A	014	1		041	1
621-03642C	1610	5	65.01510-0040	013	2	65.03905-0037A	018	3
621-03657B	1620	11		040	4		040	10
621-03707	2130	8	65.01510-0157	014	2		041	3
621-03710A	3100	14		040	6	65.03905-0041	018	6
	6830	14	65.01601-5020	011	20		040	11
	6900	14	65.01801-5043A	015	20		041	4
	7210	12	65.01801-5100	015	1	65.03905-5002	018	4
621-03724	1490	49-4B	65.01810-5011	018	8		040	9
621-03725	1490	49-5B	65.01840-0017	015	2		041	2
621-03727B	1550	1	65.01903-0034	012	3	65.04101-0065B	019	1
621-03732C	1550	-		040	2	65.04101-0066B	019	2
621-03733C	1390	12	65.01904-0032	013	3	65.04102-0024	019	3
	1400	13		040	5	65.04103-0018	019	4
621-03734A	1450	28	65.01905-0009	014	3	65.04104-0009	019	6
622-00351M	1480	-		040	7	65.04130-0009A	019	8
	1490	-	65.02101-0069A	016	1	65.04130-0011	019	9
	1500	-	65.02115-0016	016	3	65.04200-6038C	019	10
	1510	-	65.02130-0004	016	18	65.04200-6038D	019	10
622-00353J	1510	32	65.02201-0002	016	10	65.04201-5042C	019	11
622-00355A	1510	32-3	65.02301-0291A	016	16	65.04201-5043C	019	12
622-00356	1510	32-3A	65.02301-5148A	016	15	65.04202-0033	019	14
622-00359K	1490	49	65.02310-0006	016	17	65.04202-0034	019	15
622-00426G	1530	-	65.02401-6032B	016	20	65.04202-0035	019	16
623-00074B	1600	3-23	65.02410-0040	016	22	65.04203-5020A	019	13
	7370	1-23	65.02410-0041	016	22	65.04205-0014	019	22
623-00075B	1600	3-24	65.02410-0042	016	22	65.04209-0006	019	25
	1610	2-8	65.02410-0050	016	23	65.04209-5002	019	24
	7370	1-24	65.02410-0051	016	23	65.04301-5003C	019	30
623-00085A	6290	1	65.02410-0052	016	23	65.04302-5015	019	31
	6300	2-1	65.02411-0009	016	21	65.04401-0045A	019	32
623-00086	6290	-	65.02501-0476	016	30	65.04410-0021A	011	10
	6300	2	65.02501-0477	016	31	65.04410-0022	011	11
625-00159B	1510	11	65.02501-0478	016	32	65.04501-0017	019	40
65.01101-0054A	011	2	65.02502-0017A	016	36	65.04505-5018	019	42
65.01101-6092A	011	1	65.02503-0132A	016	33	65.04506-0015	019	47
65.01105-1051B	011	4	65.02503-0133A	016	34	65.04506-0016	019	43
65.01105-1052B	011	7	65.02503-0134	016	35	65.04902-0016	019	7
65.01105-6005B	011	3	65.02601-0225B	016	40	65.05100-6063A	020	1
65.01105-6006B	011	6	65.03101-1068C	017	2	65.05102-0030	020	2
65.01110-6140A	016	4	65.03101-6090F	017	1	65.05103-0034	020	7
65.01150-6008	016	5	65.03201-1016B	017	5	65.05104-0022	020	3
65.01201-0075A	011	30	65.03203-1062	017	3	65.05104-0023	020	4
65.01201-0076	011	31	65.03203-1063	017	4	65.05201-0016	020	5
65.01201-0077	011	32	65.03205-0006A	017	8	65.05401-5002G	011	23
65.01201-0078	011	33	65.03401-5010B	018	1	65.05401-5031	011	21
65.01201-0079	011	34	65.03402-0008B	018	5	65.05401-5032	012	7
65.01304-0029A	012	1	65.03402-0009	018	5	65.05401-5032A	012	7

Part No.	Fig No.	Key No.	Part No.	Fig No.	Key No.	Part No.	Fig No.	Key No.
65.05501-7089A	021	1	65.06904-0003	041	6	65.11308-0007	036	3
65.05503-5056	021	3	65.06904-0021	023	2	65.11308-0008	036	3
65.05510-5032A	021	2		040	16	65.12301-5268	032	17
	5110	5		041	5	65.12301-5288B	032	31
65.05518-0006	021	4	65.08100-6088B	026	1	65.12301-5289	032	14
65.05601-7079B	021	20	65.08101-0263	026	2	65.12301-5291	032	7
65.05604-0030A	021	21	65.08101-0264A	026	3	65.12303-0009	026	12
65.05606-5032A	021	22	65.08201-5075	026	11	65.12501-7042B	032	50
65.05607-5003	021	26	65.08202-0183A	026	16	65.12501-7042C	032	50
65.05610-0007A	021	28	65.08204-0004A	026	21	65.12503-5026	032	52
65.05701-5567	027	5	65.08901-0045	026	5		5110	6
65.05701-5568	027	11		040	21	65.12503-5026A	032	52
65.05701-5569	027	12		041	8	65.12504-5028	032	51
65.05701-5573B	021	11	65.08902-0030A	026	14	65.12540-0061	032	54
65.05701-5574	021	12		040	22	65.19102-0103	033	1
65.05701-6121	022	8		041	9	65.19103-5049	033	9
65.05740-0041	022	10	65.09100-7110	027	1	65.19103-6010A	033	3
65.05801-5244	022	1	65.09140-0005	027	20	65.19107-0001A	033	5
65.05805-5233C	022	7	65.09411-5094	027	30	65.19202-0057A	034	1
65.05806-5118A	022	6	65.09411-5102	027	37	65.26201-7075A	035	1
65.05901-0027	040	15	65.09411-5104	027	36	65.26201-7093	035	1
65.05901-0031	021	27	65.09411-7012	027	35	65.26212-0006	035	9
65.05901-0032	022	15	65.09440-0056	027	42	65.26214-0004	035	10
65.05902-0022	021	23	65.09440-0057	027	40	65.26803-7028B	026	30
65.05902-0023	021	31	65.09440-0058	027	33	65.27103-7014	036	1
	040	13	65.09901-0018A	027	2		036	2
65.05903A0001	021	13		040	23	65.27114-5002	029	21
	040	12		041	10	65.27423-7003	036	10
65.05904-0035	022	4	65.09904-0008	026	31	65.27427-7001	036	12
	040	14		040	31	65.27444-7001	036	14
65.06301-0257	023	11		041	16	65.29101-6184C	037	1
65.06301-0258A	024	13	65.09904-0009	027	38	65.29101-6201A	037	4
65.06402-5015	023	4	65.10205-0006A	028	4	65.29101-6201C	037	4
65.06404-0039A	023	1	65.10301-6191	029	1	65.29101-6209	037	15
65.06405-0039	023	6	65.10301-6192	029	2	65.29101-6209B	037	15
65.06500-6271A	024	1	65.10301-6193	029	3	65.29150-5006	031	7
65.06501-0300	024	2	65.10301-6194	029	4	65.38901-0018A	012	10
65.06503-0113	024	8	65.10301-6195	029	5		040	3
65.06504-0033	024	6	65.10401-7004A	028	1	65.41530-0185	038	1
65.06506-0032	024	7	65.10410-6003A	029	15		038	3
65.06520-6008	024	3	65.10415-0001	029	17	65.52122-6002	029	22
65.06601-5070	025	1	65.10501-7005A	030	1	65.54109-0005A	021	25
65.06611-0136	025	2	65.10601-6004A	029	20	65.90020-0062B	016	11
65.06611-0167	025	2	65.10610-0003	029	30	65.90020-0063B	012	4
65.06901-0042	024	10	65.11210-0003B	031	2	65.90020-0066A	011	9
	040	19	65.11301-0038	030	15	65.90020-0080	012	5
65.06903-0029	024	14	65.11301-5002	019	46	65.90020-0085	020	10
	040	20	65.11304-0001	030	3	65.90020-0095	031	5
65.06904-0003	023	5	65.11308-0005	036	3	65.90020-0100	013	4
	040	17	65.11308-0006	036	3	65.90020-0101	013	5

Part No.	Fig No.	Key No.	Part No.	Fig No.	Key No.	Part No.	Fig No.	Key No.
65.90020-0105	013	6	65.91710-0001	011	8	65.97401-0188	037	5
65.90020-0109	018	2	65.91710-0009	013	7	65.97401-0196	037	19
65.90020-0117	019	41	65.91710-0016	012	2	65.97401-5019	015	13
65.90020-0118	019	45	65.93020-0055	033	6		032	37
	019	49	65.93410-0027	024	4	65.97401-5024	015	12
65.90020-0119	019	50	65.96210-6001A	031	4		037	25
65.90020-0120	019	26		040	29	65.97401-6039	029	8
65.90020-0121	030	4	65.96301-0035	027	44	65.97402-0003	032	36
65.90020-0136	028	5	65.96301-0327A	027	13	65.97402-0025	015	8
65.90020-0138	018	7	65.96301-0441A	015	9	65.97440-0045	032	9
65.90020-0140A	016	19	65.96301-0455A	015	7	65.97450-5003	027	32
65.90021-0009	017	11	65.96301-0462	032	35	65.97460-0005	037	23
65.90030-0018	019	20	65.96301-0462A	032	35	65.97460-0008	037	2
65.90201-0073	026	9	65.96301-0478	015	5	65.97480-0220	029	9
65.90201-0075	027	18	65.96301-6003	027	31	65.97601-0075	021	5
65.90201-0076	026	8	65.96330-0018	032	8	65.97601-0124	019	17
65.90201-0122	015	11	65.96330-0018B	032	8	65.98125-5022A	022	2
65.90201-0128	037	16	65.96340-5079	032	1	65.98130-0154	032	32
65.90201-0134	017	12	65.96340-5080	032	2	65.98130-0159A	032	11
65.90201-0135	021	35	65.96501-0033B	015	21	65.98130-0200A	027	4
65.90201-0136	026	18	65.96501-0074	012	8	65.98130-0211	032	3
65.90302-0009	011	12	65.96501-0088	017	9	65.98130-0229	032	15
65.90302-0029	017	7	65.96501-0099A	023	12		032	18
65.90302-0034	011	14		040	18		032	5
65.90302-0041	011	15		041	7		032	56
65.90302-0042	011	13	65.96501-0102	031	6	65.98130-0241	012	6
65.90302-0048	017	6	65.96501-0431	029	23	65.98131-0119	015	16
65.90310-0065	021	7	65.96501-0437	028	2	65.98150-0042A	032	34
65.90310-0134	011	26	65.96501-0438	029	16	65.99497-8634	031	1
65.90310-0135	011	28	65.96501-0439	030	1-1	65.99601-8071	040	-
	039	1	65.96507-0043	032	13	65.99605-8042	041	-
65.90320-0022	011	22		032	16	650105-00059	2100	-
65.90441-0009A	033	4		032	19		2150	-
65.90441-0066	031	12		032	57	713-00024A	6510	1B
65.90501-0003	019	23		032	6		6520	1B
65.90510-0012	022	14	65.96507-0053	028	3		6530	1B
65.90535-0001	027	3		040	27		6540	1B
65.90535-0003	026	6		041	14		6550	1B
65.90701-0098	019	5	65.96507-0055	032	30		6560	1B
65.90701-0099	016	41	65.96507-0059	026	4	713-00057C	6940	2
65.90701-0136B	019	18	65.96601-0052	027	16	719212KT	4120	*
65.90720-0032	019	34		040	25	800215-00004	030	1-2
65.90720-0033A	019	48		041	12	900130-00004	7510	5
65.90720-0034B	019	44	65.96601-0067	027	15	900130-00005	7490	1-10
65.91030-0005	017	10		040	24	900131-00014A	7560	3-4
65.91601-0011	012	9		041	11	901-00045	1430	1
65.91605-0002	011	25	65.96801-0194	025	5		1440	-
65.91606-0041	011	16		5110	32	903-00069A	1510	32-2
65.91701-0086	026	7	65.97401-0137	022	11	903-00070B	1510	32-4
65.91710-0001	011	5	65.97401-0188	031	8	903-00071B	1510	32-5

Part No.	Fig No.	Key No.
903-00072A	1480	2
903-00073A	1480	3
903-00074	1490	50
903-00075	1480	4
906-00002A	1450	5
	7460	19
920-00127A	1760	1
	1780	–
950205-00462	5300	1
950205-00661	5290	1
950205-00662	5130	2
	5150	2
950205-00670	5290	–
950205-00863	5310	18
950205-00890	5310	–
950209-00205	5130	31
	5150	35
950209-00252	5130	–
950209-00253	5150	–
950209-00571	5300	–
950209-00762	5310	19
D913109	7740	4
DS0001079	1710	4
DS0001083	3110	24
	6570	24
	6640	24
	6710	24
DS0001084	3110	23
	6570	23
	6640	23
	6710	23
DS0025013	1150	12-7
	1710	33
DS0025014	1620	25
DS0025015	1100	32
	1110	3
	1580	18
	1590	18
	1600	26
	1610	26
	1620	26
	1630	26
	1640	26
	1710	40
	6920	3
	6930	3
	7420	3
DS0025016	1130	35
	2100	22
	7180	64
DS0025017	1150	52
	1320	32
	1330	32
	6460	9
	7190	31
DS0025018	1240	46
	6120	7
	6140	7
	6390	6
	7190	30
	7380	6
DS0025019	1640	48
	1710	31
	1740	3
	2100	23
	6100	15
	6110	43
	6130	43
	6200	19
	7360	3
DS0025020	1270	42
	6110	60
	6130	59
	7180	25
	7260	12
	7280	5
DS0025021	6100	6
	6120	6
	6140	6
DS0025022	1580	22
	1630	51
	1740	3
	6930	5
	7360	3
	7420	5
DS0025023	1100	9
	1160	7
DS0025024	1220	20
DS0025025	1620	58
DS0025027	1620	42
	1630	42
DS0025033	7860	1
DS0025034	7180	55
DS0025042	7940	53
DS0025044	1740	14
	7360	14
DS0025056	7740	2
DS0401188	1660	13
DS1001061	1620	4-11
DS1001083	1640	57
DS1001088	1640	57
DS1003008	6260	11
DS1003009	1550	5
	7660	9
DS1003010	7670	5
DS2011556	7280	3
DS2011770	7025	15
DS2012070	1230	84
DS2012136	1230	42
DS2012217	6120	4
	6140	4
	7260	7
DS2012300	6110	55
DS2012341	6760	3
DS2012342	6690	3
DS2012387	6130	55
DS2012392	6460	26
DS2012442	7250	10
DS2012518	6450	3
DS20131208	7025	1
DS2013200	7250	9
DS2013220	6120	5
	6140	5
DS2013356	6700	2
DS2013387	6500	2
	7300	10
DS2013515	6200	12
DS2013517	6460	4
DS2013672	6460	51
	6460	52
DS2013700	6770	2
DS2013834	6110	41
	6130	41
	7260	3
DS2013835	7280	4
DS2013893	6630	2
DS2016045	6620	1
DS2016055	6110	53
	6110	54
	6130	53
	6130	54
DS2016065	6760	1
DS2016074	6690	1
DS2016092	6450	1
DS2016096	7250	7
	7260	1
DS2016109	7180	46
DS2016110	7180	44
DS2018100	1261	73
	1261	74

Part No.	Fig No.	Key No.
DS2018201	6130	60
DS2023274	7280	2
DS2025094	7180	42
DS2025095	7180	37
DS2025096	7180	45
DS2026127	1300	15
DS2026129	1300	13
DS2026145	1300	14
DS2026146	1300	12
DS2026201	6110	9
	6130	12
DS2038144	1270	18
	1270	19
DS2038190	3130	11
DS2038193	6840	11
DS2038222	1270	16
	1270	17
DS2038226	6970	14
DS2038252	7180	40
DS2039122	6690	2
DS2040368	6580	2
DS2040488	6720	2
DS2040489	6740	2
DS2040543	7010	4
DS2040544	7010	5
DS2040550	7220	18
DS2040551	7220	25
DS2040552	7270	5
DS2040610	3130	10
DS2040637	6970	13
DS2040638	6840	10
DS2040683	1280	101
DS2040684	1280	102
DS2040685	1280	104
DS2040686	1280	103
DS2040687	1260	20
DS2040689	7180	41
DS2040690	7180	38
DS2040691	7180	39
DS2040709	1260	21
DS2043108	6620	2
DS2043128	6450	2
DS2045337	1290	10
DS2045338	1290	11
DS2045406	6760	2
DS20531021	6850	3
DS2053833	1380	49
DS2053838	7230	2
DS2053849	6220	1
DS2053854	6870	1
DS2053864	3140	3
	6980	3
DS2053867	6850	5
DS2053868	6200	41
DS2053869	6200	42
DS2053878	6870	2
DS2053884	6980	4
DS2053899	7240	1
DS2053900	7230	1
DS2053901	7320	1
DS2053902	7320	11
DS2053940	7320	16
DS2053953	6220	2
DS2053997	6850	4
DS2054133	1310	74
DS2054217	2180	4
DS2054293	6200	13
DS2054336	1320	134
	6150	32
DS2054356	1380	9
DS2054380	7310	1
DS2054381	7310	2
DS2054394	6200	14
DS20551024	1250	40
DS2055292	6460	3
DS2055666	6440	1
	6440	2
DS2055672	6890	1
	6890	2
DS2055691	6610	3
DS2055822	6730	2
DS2055849	3160	1
	6730	1
DS2055866	6230	3
DS2055867	6680	3
DS2055891	6660	2
DS2055920	6660	1
DS2055921	6750	3
DS2055950	1230	56
DS2055957	6990	2
	6990	3
DS2055959	7320	2
DS2055976	1250	41
DS2055984	7320	17
DS2058279	6590	1
DS2059383	6420	5
	7340	11
DS2079153	6100	8
DS2079171	6100	11
DS2082010	7260	13
DS2090008	6160	23
DS2090009	6410	14
DS2090019	6390	10
DS2090022	6390	11
DS2090032	7330	5
DS2090039	7380	10
DS2090040	7380	11
DS2090093	7330	21
DS2092045	6160	18
DS2092046	6480	9
	7200	9
	7290	33
DS2092080	6390	12
DS2092107	7230	3
DS2092108	7230	4
DS2092140	7380	12
DS2092177	2180	3
DS2092203	7330	2
DS2093003	1310	71
DS2093010	7190	20
DS2093013	7290	5
DS2093017	1320	67
DS2093021	6150	20
	7190	38
DS2093022	1340	55
DS2093026	1340	59
DS2093027	6150	19
	6470	7
DS2093028	6160	17
DS2093030	1350	79
DS2093034	1320	84
DS2093035	6160	13
DS2093040	6150	19
	6470	6
DS2093044	6150	21
DS2093074	6470	8
DS2093080	1320	65
DS2093090	1330	61
	6150	24
DS2093104	6410	2
DS2093114	6150	23
DS2093115	6150	18
DS2093124	6150	22
DS2093130	1350	77
	6480	5
	7200	5
	7290	35
	7290	6
DS2093134	1330	145
	1330	49

Part No.	Fig No.	Key No.
DS2093134	7190	17
DS2093139	1340	53
DS2093155	1330	153
DS2093173	1340	56
DS2093174	1330	50
DS2093175	1330	51
DS2093178	1330	52
	1340	165
DS2093180	1310	68
DS2093181	1320	132
DS2093182	1310	69
DS2093184	1330	154
DS2093185	1350	76
DS2093186	7190	37
DS2093189	1380	43
DS2093190	1380	45
DS2093191	1380	44
DS2093192	1380	46
DS2093193	1320	62
	6160	14
DS2093196	6430	2
DS2093200	6170	14
DS2093201	6470	9
DS2093202	6160	22
	6480	6
	7200	6
	7290	34
DS2093204	6480	7
DS2093205	6480	8
	7290	27
DS2093212	1320	66
DS2093219	6170	26
DS2093222	1340	54
DS2093240	6430	1
DS2093256	6160	16
DS2093336	7190	36
DS2093338	7190	16
DS2093350	7190	39
DS2093372	7190	19
DS2093374	7190	22
DS2093391	6155	1
DS2093403	6200	17
DS2093426	7290	26
DS2093438	6410	1
DS2094004	1350	63
DS2094006	1360	81
	1380	7
DS2094037	1350	78
DS2094053	1310	64
DS2094055	1350	75
DS2094074	7190	18
DS2094136	6170	25
DS2094327	6160	15
DS2095001	1360	101
	1360	11
	1370	101
	1370	11
DS2095002	1370	22
DS2095003	1360	82
	1370	93
	6170	24
	6480	10
	7200	10
	7290	36
DS2095004	1360	19
DS2095027	7390	4
DS2095029	6400	1
	6400	2
	7390	2
DS2095030	6400	3
	6400	4
DS2095031	6390	13
DS2095036	7390	1
	7390	3
DS2095044	7380	13
DS2097013	1261	20
DS2097014	1261	21
DS2105015	1210	12
DS2105018	1210	7
DS2105021	1210	5
DS2105026	1210	6
DS2105053	1200	22
DS2112002	2180	1
DS2213165	1360	25
	1370	25
DS2213167	1250	16
DS2214051	1190	3
DS2225009	3160	3
	6590	3
	6660	3
	6730	3
	7020	17
	7240	3
DS2232107	6110	12
	6130	15
DS2232108	6460	12
	6460	53
DS2242017	6150	25
DS2242029	1260	79
	1261	79
DS2290010	7180	6
DS2304096	7180	101
DS2308021	7120	5
DS2338029	6200	8
DS2365003	7330	3
DS2404024	6200	6
DS2410007	7320	13
DS2410009	1330	177-5
	6150	51-5
	6380	5-3
	6385	5-4
DS2412024	7250	11
	7260	8
DS2415007	6450	42
	6690	42
	6760	42
DS2479004	1210	3
DS2802021	1200	7
DS2802023	3160	6
	6590	6
	6660	6
	6730	6
	7020	23
	7240	6
DS2805007	3160	11
	6590	11
	6660	11
	6730	11
	7020	19
DS2805008	3160	19
	6660	19
	6730	19
	7020	15
	7240	11
DS2805009	6220	11
	6440	11
	6870	11
	6890	11
	6990	11
	7320	10
DS3201029	7410	2
DS7601020	1100	36
DS7601021	1100	37
DS7601046	1100	42
DS7752001	6910	22
DS7752002	6910	23
DS7752006	3110	17
	6570	17
	6640	17
	6710	17

Part No.	Fig No.	Key No.	Part No.	Fig No.	Key No.	Part No.	Fig No.	Key No.
DS7752007	3110	18	K1000294A	7220	13	K1000697A	4130	–
	6570	18	K1000321G	3120	–	K1000698E	1180	1
	6640	18	K1000322G	3120	1		4100	–
	6710	18	K1000334A	6190	8	K1000698G	1180	1
DS7752012	3100	13		6600	6		4100	–
	3110	15		6670	7	K1000704A	1160	5
	6570	15		6740	8	K1000732	7210	1A
	6640	15	K1000338A	6190	19	K1000737	4350	2
	6710	15		6600	7		4350	4
	6830	13		6670	8		4360	2
	6900	13		6740	9		4360	4
	6910	12	K1000351A	6200	18		4380	2
	7210	22	K1000352A	6460	2		4380	4
DS7752013	3100	23	K1000354	1330	177–1		4390	2
	3110	16		6150	51–1		4390	4
	6570	16		6380	5–1	K1000789	1710	21
	6640	16		6385	5–1	K1000794	1500	56
	6710	16	K1000356	6220	12		7570	80
	6830	23		6870	12	K1000814	1750	1C
	6900	23		7320	6	K1000815	1750	1D
	6910	13		7350	14	K1000816	6160	35
	7210	23	K1000358B	6110	42	K1000817	6470	16
DS7752017	3100	22		6130	42	K1000840	1390	13
	3100	27	K1000378B	6100	–	K1000842A	1390	14
	6830	22	K1000410	4400	–	K1000870A	7220	41
	6830	27		6460	23	K1000871A	7220	42
	6900	22	K1000485A	1650	2	K1000882A	6860	3
	6900	27	K1000488A	1650	4	K1000886A	6190	1
	7210	20	K1000489A	1650	5	K1000911	3110	27
DS7752018	3100	12	K1000490A	1650	6		6570	27
	6830	12	K1000491	1650	7		6640	27
	6900	12	K1000492A	1650	8		6710	27
	7210	21	K1000500	1650	10	K1000912B	3110	28
DS7752025	3100	26	K1000543	7210	8		6570	28
	6830	26	K1000555H	1370	2		6640	28
	6900	26		4200	–		6710	28
	7210	24	K1000556H	1360	1	K1000982	6250	1
DS7752026	3100	24		4200	–	K1001023	1390	11
	6830	24	K1000563B	1130	15		1400	12
	6900	24	K1000591A	1660	1	K1001029	1130	34
DS7752027	3100	25	K1000592A	1660	2		1150	34
	6830	25	K1000600B	1660	10		1190	9
	6900	25	K1000602	1600	3–20		1200	12
DS7752045	7210	26		1610	2–20		1210	13
DS7752046	7210	27		7370	1–20		1310	36
K1000057	6730	9	K1000644B	1240	13		1320	36
K1000097E	6140	–	K1000682	2110	4		1380	40
K1000140A	6410	5	K1000695A	6170	3		1650	14
K1000266	1190	1I	K1000696C	6170	4		1680	32
K1000269A	1220	9	K1000697A	1190	1A		1690	38

Part No.	Fig No.	Key No.
K1001029	1720	14
	1740	9
	1750	30
	1770	9
	1790	32
	3140	16
	3160	5
	6100	4
	6150	17
	6160	12
	6220	10
	6410	12
	6470	11
	6590	5
	6660	5
	6730	5
	6850	16
	6870	10
	6980	12
	7020	16
	7070	8
	7170	8
	7190	7
	7230	14
	7240	5
	7260	25
	7320	9
	7360	10
	7740	33
	7770	3
	7780	10
K1001048	6490	4
K1001050A	6500	1
K1001052	6230	1
K1001053	6230	2
K1001068	1450	20
K1001218A	7340	1
K1001219A	7340	2
K1001235	4140	1
K1001252B	6460	24
K1001260A	1600	3-8
	1610	2-7
	7370	1-8
	7580	37
	7730	12
K1001263A	1690	5
	1690	6
K1001280C	1790	93
	7860	13
K1001295B	1460	12
K1001310	1460	20
K1001702A	1700	7
	7740	15
K1001858A	1700	1
	7750	1
K1001871B	6480	3
	7200	3
	7290	29
K1001873A	6480	1
	7200	1
	7290	10
K1001968	1620	4-7
K1002081B	1520	1
K1002082	1560	-
K1002083	1570	-
K1002084A	1430	-
K1002121	6490	17
	7000	23
K1002130A	3110	8
	6570	8
	6640	8
	6710	8
K1002153	7120	6
K1002202H	1390	-
K1002204C	1410	-
K1002206	1780	1
	7870	1
K1002207	1780	2
	7870	2
K1002208	1780	3
	7870	3
K1002209	1780	4
	7870	4
K1002210	1780	5
K1002211	1780	6
	7870	6
K1002212	1780	7
K1002213	1780	8
	7870	8
K1002214	1780	9
	7870	9
K1002215	1780	10
	7870	10
K1002216	1780	11
K1002217	1780	12
K1002218	1780	13
	7870	13
K1002219	1780	14
	7870	14
K1002229A	1420	-
K1002230A	1420	1
K1002231A	1420	2
K1002341	1240	9
K1002385	1460	33
	7530	29
K1002406D11	1690	20
K1002406D12	1690	22
K1002406D13	7050	11
K1002406D14	7040	2
K1002406D2	7030	2
K1002406D21	1690	24
K1002406D3	7080	21
K1002406D4	7120	2
K1002406D5	7130	5
K1002454B	1110	2
	6920	2
	6930	2
	7420	2
K1002561B	6270	-
K1002574A	6270	3
	6280	4
K1002575A	6270	4
	6280	5
K1002635	1480	104
K1002636	1480	105
K1002637	1510	32-13
K1002641	1500	100
	7570	46
K1002759A	6300	1
K1002771	6300	-
K1002778	6380	4
	6385	4
K1002811A	6340	1
K1002838	6340	4
K1002839A	6340	5
K1002840	6340	6
K1002841	6340	7
K1002842A	6340	3
K1002846	6340	2
K1002864	1210	4
K1002866	7130	9
K1002867D1	7130	10
K1002883A	6340	-
K1002939	6450	13
	6620	14
	6690	14
	6760	14
K1002940	6450	14
	6620	15
	6690	15

Part No.	Fig No.	Key No.
K1002940	6760	15
K1002943	1630	38
K1003284	1490	88
K1003296	1220	28
K1003381	1410	3
K1003427	1480	89
	7530	45
K1003522	1480	109
K1003618	1170	7
K1003638B	6160	35
K1003664D1	1340	97
K1003676B	1500	107
K1003900	1510	32-16
	7580	2-8
K1003914	4340	2
	4340	4
	4370	2
	4370	4
K1003945	1360	52
	1370	52
K1003947A	6170	21
K1003948A	6480	26
	7200	26
K1004006	6220	7
	6440	19
	6870	7
	6890	14
	6990	17
K1004011	6230	7
	6610	7
	6680	7
	6750	7
K1004028	6490	10
	6880	10
	7000	15
K1004057	6190	6
	6670	13
	6740	6
K1004061	1480	108
K1004106	4300	2
	4300	4
K1004266	1200	5
K1004272	1540	3
K1004425	1700	11
	7740	17
K1004426	1700	12
	7740	18
K1004427	1700	8
	7740	16
K1004515	1130	22
K1004630	1600	44
	1610	44
	1620	44
	1640	44
K1004716	7030	4
K1005007A	1450	30
K1005305A	1620	4-10
K1005343C	1400	4
K1005344A	1460	17
K1005345A	1460	18
K1005468E	1400	-
K1005776	6210	3
K1005822	6340	21
	7730	11
K1005823	6340	20
	7730	10
K1005909	5120	3
	5140	3
	5310	3
K1006160	7550	21
K1006227	6500	13
	6630	10
	6700	13
	6770	13
	7025	4
K1006228	6500	14
	6630	11
	6700	14
	6770	14
	7025	5
K1006368	1490	49-18
K1006370	1510	32-38
K1006396B	1261	70
K1006530	1210	1A
	5110	7
K1006572	1690	23
	7750	10
K1006586	5100	5
K1006656	6170	23
	6480	28
	7200	28
K1006663	7140	2
	7790	2
K1006668	7030	3
K1006803A	7160	-
K1006854	5110	31
K1006930	7000	8
K1006931	7000	9
K1006933	1500	114
	7530	49
K1006933	7670	6
K1006936	1500	98
	7570	58
K1006962	1130	8
K1006995	1400	15
	7460	15
K1007038A	6910	8
K1007044	1650	16
K1007092B	6310	1
K1007093B	6320	1
K1007094B	6330	1
K1007095B	7205	1
K1007164B	1261	71
K1007197	1240	10
K1007231A	6340	24
K1007253B	3100	4
	6830	4
	6900	4
	7210	5
K1007255A	3110	9
	6570	9
	6640	9
	6710	9
K1007256A	3110	11
	6570	11
	6640	11
	6710	11
K1007262E	6480	-
K1007293C	6120	-
K1007342J	5120	-
K1007400B	7040	-
K1007403B	7050	-
K1007404A	7060	-
K1007405	7070	-
K1007408	7090	-
K1007410A	7110	-
K1007411	7120	-
K1007412E	7130	-
K1007413	6210	-
K1007416	6250	-
K1007418	7140	-
K1007419	7150	-
K1007600B	1670	-
K1007635E	6940	-
K1007636E	6940	1
K1007665B	1670	1
K1007668	1710	18
K1007957	1220	31
K1008019D3	5170	2
K1008019D4	5170	1

Part No.	Fig No.	Key No.
K1008100	6740	1
K1008111	6750	1
K1008112	6750	2
K1008126	1140	1
K1008128	1140	10
K1008129	1140	17
K1008130	1140	32
K1008131	1140	33
K1008132	1140	41
K1008167	5100	1-16
K1008289C	1130	2
	1140	-
K1008335	1600	3-25
	1610	2-21
	7370	1-25
K1008464G	5140	-
K1008516B	1790	26
K1008517A	1790	92
	7860	12
K1008518B	1790	28
K1008555H	1210	-
K1008571	5150	3
K1008713	1730	-
K1008715	6240	-
K1008718A	7030	-
K1008873E	1680	2
K1009605B	1700	1A
	7750	1A
K1009627	1450	34
K1010065	7100	8
	7820	8
K1010215	6770	1
K1010218	6730	14
K1010221	6730	17
K1010271	6660	17
K1010304	1450	37
	7520	20
K1010466	1390	20
	1400	16
K1010532	7220	14
	7270	4
K1010702	1730	21
K1010703	6240	21
K1010730	3160	9
	6590	9
	6660	9
	7020	20
	7240	9
K1010767A	1140	12
K1010768	1140	34
K1010769	1140	5
K1010821B	6950	-
K1010822B	6950	1
K1010823B	6960	-
K1010824B	6960	1
K1010839	1500	116
K1010847	6220	9
	6870	9
K1010982	7760	5
K1011000	5130	20
	5150	19
K1011001A	5210	1
K1011002	5130	22
	5150	21
K1011074	7320	5
K1011080	6100	13
K1011081	6100	14
K1011211	6970	18
K1011304	6930	4
	7420	4
K1011384	1790	26B
K1011385	1790	92B
	7860	12B
K1011388	1790	28A
	1790	93A
	7860	13A
K1011434A	4300	-
	7010	1
K1011476E	6780	-
K1011477E	6780	1
K1011478E	6790	-
K1011479E	6790	1
K1011480E	6800	-
K1011481E	6800	1
K1011482E	6810	-
K1011483E	6810	1
K1011484E	6820	-
K1011485E	6820	1
K1011522	7020	1
K1011527	7020	5
K1011604	7760	-
K1011645D1	5130	2
	5150	2
K1011645D12	5290	1
K1011647C	5220	1
K1011675A	1220	2
K1011743D6	5120	13
	5140	17
	5310	17
K1012204B	5230	1
K1012205B	5240	1
K1012685A	1220	14
K1013100A	6510	-
K1013101A	6510	1
K1013102	6510	1A
K1013103A	6520	-
K1013104A	6520	1
K1013105	6520	1A
K1013106A	6530	-
K1013108A	6530	1
K1013109A	6530	1A
K1013110A	6540	-
K1013111A	6540	1
K1013112	6540	1A
K1013113A	6550	-
K1013114A	6550	1
K1013115	6550	1A
K1013117A	6560	-
K1013118A	6560	1
K1013119	6560	1A
K1013232	7760	1
K1013266B	1620	15
K1013379	6730	-
K1013382A	6740	-
K1013385	6770	-
K1013389	6750	-
K1013391	6760	-
K1013396A	6590	-
K1013397	6590	14
K1013398A	6600	-
K1013401A	6630	-
K1013404A	6610	-
K1013405A	6620	-
K1013410A	6660	-
K1013411B	6670	-
K1013414A	6700	-
K1013434A	6680	-
K1013436B	6690	-
K1013684	6730	15
K1013685	6730	16
K1013686	6730	18
K1013687	6660	21
	6730	21
K1013713A	2150	7-5
K1013714	2150	7-6
K1013812	1640	53
K1013825	1180	3
K1013846	1700	3
K1014266	7190	1
K1014609A	7570	69

Part No.	Fig No.	Key No.
K1014759	6450	18
	6690	19
	6760	19
K1014836	6910	7
K1014874	6390	1
	7380	1
K1015093	6450	19
	6690	20
	6760	20
K1015201	1720	4
K1015210	1140	45
K1015211	1140	21
K1015212	1140	44
K1015366B	1660	–
K1015404	7290	8
K1015415A	1150	12-6
K1015436	5100	–
K1015486	7290	24
K1015489E	1190	–
K1015490A	1190	1
K1015516	1120	1
K1015627A	1600	47
K1015739	5130	27
K1015780	6390	2
K1016102	5150	27
K1016614	5180	1
	5250	1
K1017235	7290	23
K1017382A	4270	–
	6170	1
	6480	2
	7200	2
	7290	1
K1017764	6900	28
K1018109	6970	10
K1018361K	7210	–
K1018366A	7210	1
K1018392B	7210	2
K1018403A	7220	–
K1018404	7220	1
K1018405	7220	2
K1018406	7220	3
K1018407	7220	4
K1018408	7220	5
K1018409	7220	6
K1018410	7220	7
K1018411	7220	8
K1018412	7220	9
K1018413	7220	10
K1018414	7220	11
K1018415	7220	12
K1018416	7240	–
K1018417	7240	14
K1018418	7240	15
K1018419	7240	16
K1018420	7240	17
K1018421	7240	18
K1018422	7240	19
K1018424A	7270	–
K1018425	7270	1
K1018426	7270	2
K1018427	7270	3
K1018428	7300	–
K1018429	7300	1
K1018430	7300	2
K1018431	7300	3
K1018432	7300	4
K1018433	7300	5
K1018434	7300	6
K1018435A	7320	–
K1018437	7320	8
	7350	13
K1018438	7230	–
K1018440	7340	21
K1018590	7020	–
K1018659	6970	5
K1018660	6970	6
K1018706	6970	7
K1018709	6970	11
K1018710	6970	12
K1018712	7010	2
K1018713	7010	3
K1018714	7020	2
K1018715	7020	3
K1018716	7320	12
K1018762	7020	4
K1018763	7020	6
K1018764	7020	7
K1018765	7020	8
K1018766	7020	9
K1018994K	5150	–
K1019009A	5270	1
K1023207B	7180	2
K1023208A	7180	3
K1023209A	7180	4
K1023535A	4340	–
	7220	43
K1023537A	4370	–
	7340	3
K1023538	4360	–
K1023538	7220	52
K1023540	4390	–
	7350	3
K1023607A	7310	–
K1023643B	5260	1
K1023656K	5130	–
K1023823	7190	3
K1023824A	7190	4
K1023854	7900	3
K1023861	4350	–
	7220	51
K1023864C	7340	–
K1023865	7350	–
K1023866	4380	–
	7350	3
K1023868	7280	1
K1023963	7210	7
K1024011C	7180	5
K1024182	1150	53
K1024370	6400	–
K1024375	6390	–
K1024692	1660	3
K1024956	2130	7
K1025246	6670	1
K1025286	6620	17
	6690	22
K1025336	6620	18
	6690	23
K1025391	1260	101
	1261	101
	4170	–
	4180	–
	4190	–
K1025402	6880	4
K1025403	6590	15
K1025404	6590	16
K1025405	6590	17
K1025406	6590	18
K1025407	6630	1
K1025408	6610	1
K1025409	6610	2
K1025450	6880	18
K1025460	6700	1
K1025462	6680	1
K1025463	6680	2
K1025464	6660	14
K1025465	6660	15
K1025466	6660	16
K1025467	6660	18
K1026121A	7560	45

Part No.	Fig No.	Key No.
K1026510	7530	74
K1026654	1690	91
K1027343	7280	–
K1027350A	7250	–
K1027362C	7190	–
K1027364B	7330	–
K1027367E	7290	–
K1027368B	7200	–
K1027501	6460	–
K1027502A	6200	–
K1027533	5280	1
K1027549	7360	–
K1027765	1510	32-15
K1027768	1490	118
K1027769	1490	119
K1029257	1220	14B
	5110	25
K1029828A	7180	91
K1029829	7180	48
K1029830	7180	47
K1029831B	7180	50
K1029832	7180	63
K1029838	7650	4-2
K1029852	7180	62
K1030081A	7410	–
K1030095A	7410	1
K1030239	1150	16
K1030273B	1750	1
K1030291A	1150	12-2
K1030442A	7650	4
K1030455	1170	3
K1030468A	7380	–
K1030489A	7380	2
K1030497B	1580	2
K1030503	7390	–
K1030506B	1580	7
K1030528B	1580	3
K1030529A	1580	6
K1030530B	1590	5
K1030700	7770	4
K1030731	1590	14
K1030732	1590	15
K1030733	1590	13
K1030734	1590	17
K1030735	1590	16
K1030736A	1590	12
K1030750A	1580	4
K1033235A	4410	–
	7180	1
K1033252	6190	41-1
K1033252	6600	41-1
	6670	41-1
	6740	41-1
K1033254	6190	42-1
	6600	42-1
	6670	42-1
	6740	42-1
K1033265	3130	6
K1033266	3130	8
K1033267	3130	7
K1033268	3130	9
K1033269	6180	1
K1033270	6180	2
K1033271	6180	3
K1033272	6180	4
K1033273	3130	4
K1033274	3130	5
K1033424	1130	7
K1033644	7400	1
K1033652	7400	–
K1033880	1490	49-8
K1033991	1490	49-1
K1034000	5120	1
K1034001	5140	1
	5310	1
K1036143A	1240	48
K1036299A	1240	49
K1036301	1240	1
K1036302B	1240	5
K1036303B	1240	3
K1036331	1490	49-7
K1036466	2120	5-2D
K1036841	7000	4
K1036842	7000	5
K1036843	7000	6
K1036844	7000	7
K1036967	1490	49-17
K1037354A	1120	3
K1037356A	1790	5
K1037713A	2150	7
K1037728	2140	6
K1037757	2110	3
K1037847A	3100	1A
	6830	1A
	6900	1A
K1037848A	3110	1A
	6570	1A
	6640	1A
	6710	1A
	6910	1A
K1037849A	3110	1B
	6570	1B
	6640	1B
	6710	1B
K1037850A	3110	1C
	6570	1C
	6640	1C
	6710	1C
K1037851A	3110	2B
	6570	2B
	6640	2B
	6710	2B
K1037852A	3110	2A
	6570	2A
	6640	2A
	6710	2A
K1037853A	4230	2
	4230	4
	4240	2
	4240	4
	4260	2
	4260	4
	4280	2
	4280	4
	4290	2
	4290	4
	4310	2
	4310	4
	4320	2
	4320	4
K1037854A	4250	2
	4250	4
	4330	2
	4330	4
K1037857E	3100	1
K1037858E	3100	–
K1037887	3140	18-1
	6850	17-1
	6980	13-1
K1037930	1150	9
K1037998C	3110	–
K1037999B	3110	1
K1038003	3140	18
	6850	17
	6980	13
K1038006A	3120	2
	6780	2
	6790	2
	6800	2
	6810	2

Part No.	Fig No.	Key No.
K1038006A	6820	2
K1038009	1650	17
K1038010	1650	18
K1038011	1650	19
K1038032	1320	12
K1038107A	1620	18
K1038110A	1620	17
K1038193	7080	5
	7100	10
	7160	5
K1038203	1190	1B
	4141	–
K1038204	4141	20
K1038205	4141	10
K1038206	4141	1
K1038207	4141	2
K1038208	4141	14
K1038210	4141	9
K1038240	1515	–
K1038247	1515	1
K1038365	2170	–
K1038366	2170	1
	6350	1-1
	6360	1-1
	6370	1-1
K1038367	2170	1A
	6350	1-1A
	6360	1-1A
	6370	1-1A
K1038368	2170	1B
	6350	1-1B
	6360	1-1B
	6370	1-1B
K1038369	2170	1E
	6350	1-1E
	6360	1-1E
	6370	1-1E
K1038370	2170	1F
	6350	1-1F
	6360	1-1F
	6370	1-1F
K1038371	2170	1G
	6350	1-1G
	6360	1-1G
	6370	1-1G
K1038372	2170	1H
	6350	1-1H
	6360	1-1H
	6370	1-1H
K1038373	2170	1I
K1038373	6350	1-1I
	6360	1-1I
	6370	1-1I
K1038374	2170	1J
	6350	1-1J
	6360	1-1J
	6370	1-1J
K1038375	1160	3
K1038376	2170	1K
	6350	1-1K
	6360	1-1K
	6370	1-1K
K1038377	2170	2
	6350	1-2
	6360	1-2
	6370	1-2
K1038378	2170	3
	6350	1-3
	6360	1-3
	6370	1-3
K1038379	2170	4
K1038383A	2150	7-2
K1038386A	2150	7-3
K1038387	2150	7-4
K1038389	2140	6-2
K1038390	2140	6-3
K1038391	2140	6-4
K1038392	2140	6-5
K1038393	2140	6-6
K1038394	2140	6-7
K1038409	1130	13
K1038429	2170	1C
	6350	1-1C
	6360	1-1C
	6370	1-1C
K1038430	2170	1D
	6350	1-1D
	6360	1-1D
	6370	1-1D
K1038517	6910	9
K1038559	1160	4
K1038610	6490	1
	6880	1
K1038611	6490	2
	6880	2
K1038612	6490	3
K1038685	4141	5
K1038688C	1640	1
K1038697A	1620	4-2
K1038697B	1620	4-2
K1038790	2160	8
K1038790KT	2160	*
K1038791	2160	8-1
K1038792	2160	8-2
K1038793	2160	8-3
K1038794	2160	8-4
K1038814	3140	1
	6850	1
	6980	1
K1038815	3140	2
	6850	2
	6980	2
K1038864	2130	–
K1038865	2130	1
K1038870B	1640	6
K1038917B	1600	3-1
	7370	1-1
K1038918	1600	3-2
K1038919B	1600	3-3
	7370	1-3
K1038920	1600	3-7
	7370	1-7
K1038922B	1600	3
K1038931	1160	1
K1038932	1160	2
K1038954B	1580	1
K1038966	1590	23
K1038968	1260	83
K1039014A	1320	7
K1039067B	1620	4
K1039067C	1620	4
K1039068	1710	5
K1039117A	1150	12-3
K1039124	1160	–
K1039132B	1650	9
K1039134	1660	4
K1039136	1660	5
K1039137	1660	6
K1039183C	1110	1
	7420	1
K1039183E	1110	1
	7420	1
K1039208A	1630	8
K1039209A	1630	9
K1039212C	1450	22
K1039295A	1150	12
K1039296A	1150	12-1
K1039373	1190	1
K1039406A	1230	–
	1240	–

Part No.	Fig No.	Key No.
K1039406A	1250	–
K1039418	1170	–
K1039427A	1580	19
K1039429C	1580	–
	1590	–
K1039430C	1640	12
K1039446B	1120	–
	1130	–
	1150	–
K1039448G	1610	–
	1620	–
	1630	–
K1039448H	1640	–
K1039450	2130	2
K1039451	2130	3
K1039452	2130	4
K1039453	2130	5
K1039456A	1240	8
K1039462C	1100	1
K1039462E	1100	1
K1039463E	1100	–
K1039465	1580	10
K1039468B	1630	10
K1039514	1530	20
K1039515	1530	19
K1039519	1100	61
K1039520	1100	62
K1039521A	1710	2
K1039697	5130	30
	5150	34
K1039702	2120	5
K1039703B	2100	–
	2110	–
	2120	–
	2140	–
	2150	–
	2160	–
K1039721A	1650	12
K1039722A	1650	13
K1039723B	1690	25
K1039724A	1680	29
K1039725A	1720	17
K1039799B	1600	–
K1039869B	1600	3-22
	7370	1-22
K1039941	7170	5
K1040048	1130	20
K1040096	1410	3
K1040606	1540	11
	1620	81
K1041204	1690	54
K1041214A	3110	2
	6570	2
	6640	2
	6710	2
K1041218A	3150	1
	4260	–
K1041220B	4310	–
	6420	1
K1041221B	4320	–
	6420	2
K1041222A	4330	–
	6440	3
	6890	3
	6990	1
K1041250	1660	7
K1041251	1660	8
K1041252	1660	9
K1041643	7430	3
K1041645	7440	1
K1041795	3130	–
K1041817A	3150	–
K1041834	3140	–
K1041835	6180	–
K1041836	6490	–
K1041837	6220	–
K1041838B	6420	–
K1041839A	6440	–
K1041849B	1650	–
K1041907	6190	–
K1041925	6500	–
K1041933	6230	–
K1041937A	6450	–
K1042074	5130	19
	5150	16
K1042074A	5130	19
	5150	16
K1042763	7000	1
K1042764	7000	2
K1042809	7025	–
K1042810	7025	2
K1042813	7025	3
K1043726	1460	38
	7530	31
K1043854A	1610	2
K1043855A	1610	2-1
K1044160A	7170	1
K1044180A	7170	2
K1044181A	7170	3
K1044408	1330	177
K1044409	6380	5
K1044481A	7170	4
K1044576B	2180	–
K1044586B	1260	–
	1270	–
	1280	–
	1290	–
	1300	–
K1044591	6410	41
K1044599	6110	–
K1044602A	6130	–
K1044605	1210	1
K1044617	1240	7
K1044632	7180	–
K1044634	7260	–
K1044664A	1310	–
	1320	–
	1330	–
	1340	–
	1350	–
K1044672A	6150	–
K1044674C	6160	–
K1044684	6470	–
K1044685	6380	–
K1044690	6410	–
K1044691	6430	–
K1044708	1360	–
	1370	–
	1380	–
K1044710B	6170	–
K1044715A	6155	–
K1044848A	1750	–
K1044850A	1680	–
K1044908B	1690	–
K1044911	1700	–
K1044912A	1710	–
K1044913A	1720	–
K1044917	1740	–
K1044920A	1760	–
K1044921B	1790	–
K1044939B	6920	1
	6930	1
K1044939C	6920	1
	6930	1
K1044948A	1200	1
K1044950	1220	1
K1044989B	3130	71
	4230	–
	6840	71
	6970	51

Part No.	Fig No.	Key No.
K1044990B	3130	72
	4240	–
	6840	72
	6970	52
K1044991A	3130	81
	4250	–
	6840	81
	6970	61
K1044992	6150	51
K1044993	6385	5
K1044995	6385	–
K1045009B	7170	–
K1045023	6160	36
K1045024	1190	1A
	4131	–
K1045025	1700	9
K1045026	1700	10
K1045028	1740	4
K1045037	7170	6
K1045318A	1200	–
K1045319	1220	–
K1045433	7370	1–2
K1045478	6350	1–4
K1045479	6360	1–4
K1045480	6370	1–4
K1045506	6350	1
K1045507	6360	1
K1045508	6370	1
K1045589A	6350	–
K1045590A	6360	–
K1045591A	6370	–
K1045659E	6830	–
K1045661C	6830	1
K1045675A	1110	–
K1045675B	1110	–
K1045676A	7420	–
K1045676B	7420	–
K1045677A	6920	–
K1045677B	6920	–
K1045678A	6930	–
K1045678B	6930	–
K1045700C	6900	–
K1045701C	6900	1
K1045837	6970	–
K1045838	6980	–
K1045842A	6990	–
K1045843	7000	–
K1045852	6970	1
K1045853	6970	2
K1045854	6970	3
K1045855	6970	4
K1045856	6970	8
K1045857	6970	9
K1045913	6840	–
K1045914	6880	–
K1045915	6850	–
K1045916	6860	–
K1045927	6840	4
K1045928	6840	5
K1045937	6840	6
K1045938	6840	7
K1045959	6860	1
K1045960	6860	2
K1046013	6880	3
K1046026	6870	–
K1046041A	6890	–
K1046064	7000	3
K1046104	6840	3
K1046121	5240	–
K1046129	5230	–
K1046162	6840	9
K1046174A	7370	1
K1046175A	7370	–
K1046237E	6640	–
K1046238E	6570	–
K1046239E	6710	–
K1046246B	6640	1
K1046248B	6570	1
K1046250B	6710	1
K1046256	5220	–
K1046267	1770	–
K1046272B	6910	–
K1046275B	6910	1
K1046325	6580	–
K1046326	4280	–
	6580	1
	6650	1
K1046328	6650	–
K1046332	6720	–
K1046333	4290	–
	6720	1
K1046335A	7010	–
K1046350	1210	1C
K1046352	1210	1B
K1046439	5170	–
K1046440	5180	–
K1046456	5250	–
K1046927	3110	7
	6570	7
	6640	7
K1046927	6710	7
	6910	6
K1047299	3160	–
K1047301	3160	14
K1047302	3160	15
K1047303	3160	16
K1047304	3160	17
K1047305	3160	18
K1047556	6155	4
K1047557	1320	131
	4220	–
K1047760	1690	1
K1047774	1130	11
K1047790	1630	7
K1047877	5200	–
K1047915	1690	28
K1047922	5190	–
K1047926	5290	–
K1047970	5270	–
K1047971	5280	–
K1048000	5110	–
K1048001EF	5110	12
K1048002E	5110	13
K1048003E	5110	14
K1048085	1600	3–21
	7370	1–21
K1048096	1720	18
K1048145	1260	41
	1261	41
K1048349	1590	11
K1048566A	5260	–
K1048626	5160	–
K1048627	5210	–
K1048688	1450	–
K1048689	1450	21
K1049858	1100	29
K1050297	1260	81
K1050307	6350	2
K1050308	6360	2
K1050309	6370	2
K1051191	7830	3
K1051911	5300	1
K1052028	5300	–
K1052774	7370	1
K1052775	7370	1–2
K1052850D14	7740	42
K1052850D15	7740	43
K1053326	7740	5
	7880	3
	7890	2

Part No.	Fig No.	Key No.
K1053423	7750	8
	7930	4
K1054793	7440	–
K1054796	7440	2
K1054803	7440	3
K1055342	7800	2
	7800	3
	7850	11
K1055454	7770	1
	7780	3
	7790	1
	7800	1
K1056035	7660	1
K1056625	7750	12
K1056645	7830	12
K1056653	7890	3
K1057058	7550	70
K1057195	7550	72
K1057196	7670	1
K1057516	7550	5
K1057517	7550	4
K1057519	7550	8
K1057520	7550	7
K1057521	7550	6
K1057605	1710	38
K1057618	7580	2-28
K1057644	7560	35
K1057718	7490	1
K1057720	7460	–
K1057731	7450	18
K1057869	7560	28
K9000422	1180	3E
K9000998	6420	6A
	7340	6A
K9000999	6990	4A
	7350	4A
K9001001	4200	32
K9001002	4420	32
K9001114	4200	1
	4420	1
K9001115	4200	3
	4420	3
K9001116	4200	4
K9001117	4200	6
K9001119	4200	9
	4420	9
K9001121	4200	11
	4420	11
K9001123	4200	13
K9001128	4200	20
K9001128	4420	20
K9001129	4200	22
K9001129A	4420	22
K9001130	4200	25
	4420	25
K9001131	4200	25
	4420	25
K9001132	4200	28
K9001133	4200	30
	4420	30
K9001139	4200	37
K9001140	4200	37
K9001141	4210	6
K9001148	4250	18
	4330	18
	4350	18
	4360	18
	4380	18
	4390	18
K9001149	4250	20
	4330	20
	4350	20
	4360	20
	4380	20
	4390	20
K9001158	4250	40
	4330	37
	4340	38
	4350	48
	4360	48
	4370	35
	4380	45
	4390	45
K9001159	4350	45
	4360	45
	4380	42
	4390	42
K9001164	4340	14
	4370	14
K9001166	4340	18
	4370	18
K9001199	4180	50
K9001201	1440	2
K9001202	1440	3
K9001203	1440	4
K9001204	1440	5
K9001206	1440	7
K9001207	1440	8
K9001208	1440	10
K9001209	1440	11
K9001210	1440	12
K9001211	1440	13
K9001212	1440	14
K9001213	1440	15
K9001214	1440	16
K9001215	1440	17
K9001216	1440	18
K9001217	1440	19
K9001218	1440	20
K9001219	1440	21
K9001220	1440	22
K9001221	1440	23
K9001374	4300	22
K9001375	4300	23
K9001401	4260	7
	4280	7
	4290	7
K9001402	4260	8
	4280	8
	4290	8
K9001403	4260	9
	4280	9
	4290	9
K9001404	4260	10
	4280	10
	4290	10
K9001406	4260	16
	4280	16
	4290	16
K9001410	4260	22
	4280	22
	4290	22
K9001413	4260	34
	4280	34
	4290	34
K9001424	4300	8
K9001425	4300	9
K9001426	4300	10
K9001427	4300	14
K9001428	4300	16
K9001429	4300	17
K9001430	4300	18
K9001431	4300	20
K9001435	4300	37
K9001457	4400	*
K9001695	1440	1
K9001752	4300	*
K9001753	4300	1
K9001754A	4300	3
K9001755	4300	26

Part No.	Fig No.	Key No.	Part No.	Fig No.	Key No.	Part No.	Fig No.	Key No.
K9001756	4300	29	K9001858	4310	9	K9001880	4330	3
K9001757	4300	33		4320	9		4350	3
K9001762	4200	7	K9001859	4230	14		4360	3
K9001763	4200	8		4240	14		4380	3
K9001766	4200	12		4310	14		4390	3
K9001767	4200	14		4320	14	K9001881	4250	5
K9001768	4200	16	K9001860	4230	17		4330	5
K9001804	4170	68		4240	17		4350	5
K9001805	4170	106		4310	17		4360	5
K9001807	4180	5		4320	17		4380	5
K9001809	4180	16	K9001861	4230	20		4390	5
K9001810	4180	17		4240	20	K9001882	4250	8
K9001811	4120	–		4310	20		4330	8
K9001833	4110	–		4320	20		4340	8
K9001834	4110	627	K9001862	4230	23		4350	8
K9001835	4110	628		4240	23		4360	8
K9001836	4110	629		4260	23		4370	8
K9001837	4110	631		4280	23		4380	8
K9001838	4110	641		4290	23		4390	8
K9001839	4110	898		4310	23	K9001883	4250	9
K9001840	4130	103		4320	23		4330	9
	4131	103	K9001868	4260	1		4340	9
K9001841	4130	104	K9001869A	4260	3		4350	9
	4131	104	K9001870	4260	5		4360	9
K9001842	4130	112		4280	5		4370	9
	4131	112		4290	5		4380	9
K9001843	4130	201	K9001871	4260	17		4390	9
	4131	201		4280	17	K9001884	4250	10
K9001844	4130	202		4290	17		4330	10
K9001845	4130	203	K9001872	4260	20		4340	10
	4131	203		4280	20		4350	10
K9001846	4130	205		4290	20		4360	10
	4131	205	K9001873	4260	26		4370	10
K9001847	4130	213		4280	26		4380	10
	4131	213		4290	26		4390	10
K9001848	4130	301	K9001874	4260	27	K9001890	4230	18
K9001849	4100	41		4280	27		4240	18
K9001850	4100	42		4290	27		4310	18
K9001851	4100	774	K9001875	4260	30		4320	18
K9001852	4100	985	K9001876	4260	37	K9001891	4260	18
K9001856	4230	5	K9001877	4230	10		4280	18
	4240	5		4240	10		4290	18
	4310	5		4310	10	K9001892	4260	*
	4320	5		4320	10		4280	*
K9001857	4230	8	K9001878	4230	*		4290	*
	4240	8		4240	*	K9001893	4250	16
	4310	8		4310	*		4330	16
	4320	8		4320	*		4350	16
K9001858	4230	9	K9001879A	4250	1		4360	16
	4240	9	K9001880	4250	3		4380	16

Part No.	Fig No.	Key No.
K9001893	4390	16
K9001894	4250	17
	4330	17
	4350	17
	4360	17
	4380	17
	4390	17
K9001895	4250	22
	4330	22
	4340	22
	4350	22
	4360	22
	4370	22
	4380	22
	4390	22
K9001896	4250	23
	4330	23
	4350	23
	4360	23
	4380	23
	4390	23
K9001897	4250	25
	4330	25
	4350	25
	4360	25
	4380	25
	4390	25
K9001898	4250	32
	4330	32
K9001899	4350	32
	4360	32
	4380	32
	4390	32
K9001900	4250	36
K9001901	4250	*
	4330	*
	4350	*
	4360	*
	4380	*
	4390	*
K9001902	4100	*
K9001903	4130	*
K9002065	4220	4
K9002267	4340	5
	4370	5
K9002269	4340	17
	4370	17
K9002284	4340	3
	4370	3
K9002285	4340	16
K9002285	4370	16
K9002289	4340	*
	4370	*
K9002934	4270	2
K9002935	4270	8
K9003465	4270	4
K9003467	4280	30
K9003468	4280	37
K9003470	4290	30
K9003471	4290	37
K9003671	4180	3
K9003672	4180	14
K9003673	4180	15
K9003676	4330	1
K9003677	4330	36
K9003678	4340	1
K9003679A	4340	26
	4370	26
K9003680A	4340	27
	4370	27
K9003681A	4340	30
	4370	30
K9003682A	4340	34
K9003683	4350	1
K9003684	4350	36
	4360	36
	4380	36
	4390	36
K9003685	4350	37
K9003686	4350	41
	4360	41
	4380	38
	4390	38
K9003687	4360	1
K9003688	4360	37
K9003689	4370	1
K9003690A	4370	34
K9003691	4380	1
K9003692	4380	37
K9003693	4390	1
K9003702	4390	37
K9003878	1140	19
K9003998	4200	33
K9003999	4200	34
K9004000	4420	35
K9004001	4420	36
K9004304	4160	132
K9004447	4150	207
K9004448	4150	208
K9004449	4150	214
K9004453	4150	212
K9004995	4150	31
K9005662	1220	14A
K9006399	4131	302
K9006480	4200	35
K9006481	4200	36
K9006620	4410	15
K9006621	4410	17
K9006622	4410	5
K9006623	4410	3
K9006624	4410	2
K9006625	4410	8
K9006626	4410	9
K9006810	4140	51
K9006811	4140	52
K9006860	4210	10
K9006861	4210	28
K9006862	4210	32
K9006863	4210	51
K9006864	4210	52
K9006865	4210	24
K9006866	4210	26
K9006882	2130	*
K9006883	2160	8-12
K9006884	2160	8-11
K9006899	4131	105
K9007240	7080	5A
	7100	10A
	7160	5A
K9007356	4240	34
K9007357	4230	34
K9007358	4230	26
	4240	26
	4310	26
	4320	26
K9007359	4240	30
K9007360	4230	30
K9007361	4230	1
	4240	1
	4310	1
	4320	1
K9007362	4230	3
	4240	3
	4310	3
	4320	3
K9007363	4220	2
	6160	1A
	6470	1A
K9007364	4100	13
K9007365	4100	14

Part No.	Fig No.	Key No.	Part No.	Fig No.	Key No.	Part No.	Fig No.	Key No.
K9007367	4320	31	K9008337	4141	51	S0508866	6680	5
K9007368	4310	31	K9008338	4141	52		6750	5
K9007369	4320	30	S0121061	4140	16		7200	13
K9007370	4310	30		4141	16		7290	22
K9007371	4280	3	S0504366	1670	4	S0508966	6460	8
	4290	3	S0504453	1600	3-15	S0509066	1710	9
K9007372	4290	1		1610	2-16	S0509366	1790	20
K9007373	4280	1		1710	16	S0511653	1720	20
K9007380	4150	34		1710	23		1750	11
K9007381	4150	32		1750	18		1750	7
K9007382	4150	203		7370	1-15	S0511666	1190	14
K9007383	4160	101	S0504553	1600	3-14		1720	6
K9007384	4160	105		1610	2-15	S0511853	1600	3-10
K9007385	4160	123		7370	1-14		1610	2-11
K9007386	4160	129	S0504666	1720	2		7370	1-10
K9007387	4160	117		1790	23	S0511866	3140	19
K9007388	4160	107	S0508553	7660	18		6150	11
K9007389	4160	131	S0508653	1310	3J		6850	18
K9007390	4160	121		1690	42		6980	14
K9007391	4160	114		1690	50	S0512053	7090	3
K9007392	4160	113		1760	2		7100	6
K9007393	4160	108		7040	4	S0512066	1200	10
K9007394	4160	109		7100	4		1620	4-3
K9007395	4160	136		7740	39		1790	17
K9007396	4160	112		7780	5		6170	16
K9007397	4150	204		7800	4		6450	16
K9007398	4150	209		7810	6		6480	21
K9007399	4150	23		7830	4		6690	18
K9007400	4150	249		7840	3		6760	17
K9007401	4150	232		7850	12		7200	21
K9007402	4160	111		7850	3		7290	31
K9007403	4160	125	S0508666	1710	19		7320	14
K9007404	4160	-		1710	28	S0512263	2130	9
K9007405	4150	-		1790	3	S0512266	1180	4
K9007406	4150	205	S0508753	1600	3-17		1310	35
K9007407	4150	200		1610	2-18		1380	39
K9007408	4150	C-1		7370	1-17	S0512366	1180	5
K9007409	4150	C-2	S0508766	6150	12		7540	2
K9007410	4150	C	S0508853	7060	5	S0514666	1220	29
K9007411	4160	116		7070	3	S0515053	6900	32
K9007412	4160	104		7080	3	S0515066	6620	3
K9007413	4150	400		7090	6		6690	21
K9007414	4150	C-3		7110	6	S0515166	1620	49
K9007415	4150	202		7160	3	S0515253	2160	8-13
K9007416	4150	33	S0508861	2140	6-9	S0515266	1630	39
K9008310	4150	*	S0508866	1640	24		6490	7
K9008333	4131	107		6170	13		6500	5
K9008334	4131	301		6230	5		6630	13
K9008335	4131	303		6480	13		6700	5
K9008336	4131	*		6610	5		6770	5

Part No.	Fig No.	Key No.
S0515266	6880	7
S0515653	7060	2
	7110	3
S0515766	6340	19
S0515866	1150	44
S0521366	1130	29
	3100	17
	3110	20
	6570	20
	6640	20
	6710	20
	6830	17
	6900	17
	6910	15
	7210	13
S0521566	1120	41
S0521853	4350	47
	4360	47
	4380	44
	4390	44
S0553766	1310	34
S0556366	7190	34
S0556466	6200	20
S0557066	6390	7
	7380	7
S0557166	1790	13
S0558153	4230	29
	4240	29
	4310	29
	4320	29
S0558266	6350	4
	6360	4
	6370	4
S0558466	6490	15
	6880	15
	7000	16
S0558566	6880	19
	7025	14
	7300	8
S0558666	1380	37
S0558766	1380	41
S0558966	1790	6
	6500	11
	6630	8
	6700	11
	6770	11
	7025	13
S0559553	4400	7
S0560466	1660	11
S0560563	4250	35
S0560563	4260	29
	4280	29
	4290	29
	4300	28
	4330	35
	4340	29
	4350	35
	4360	35
	4370	29
	4380	35
	4390	35
S0560566	1620	33
S0560666	1620	31
	6490	5
	6880	5
	7000	22
S0560866	1270	101
	6490	18
	7000	19
S0561053	4230	40
	4240	40
	4310	37
	4320	37
S0561066	1270	44
	1620	30
	6110	19
	6410	11
	7180	52
	7260	22
S0561266	1210	2
	6110	18
	6130	24
S0561466	6130	23
S0562653	1730	4
	6240	4
S0562766	1261	45
	3130	17
	3130	51
	6190	18
	6670	12
	6740	12
	6840	17
	6840	51
	6840	82
	6970	21
	6970	62
	7010	14
S0563066	7220	15
S0563366	6220	5
	6440	17
S0563366	6870	5
	6890	17
	6990	15
S0563466	6450	9
	6620	10
	6690	10
	6760	10
S0563666	6190	10
	6600	8
	6670	10
	6740	10
S0564166	7000	11
S0565466	1200	13
	1220	16
	1260	46
	1261	46
	2120	5-3
	6950	3
	6960	3
S0565666	2110	16
S0566066	1300	68
S0566266	1260	85
S0566766	6910	18
S0567066	3100	8
	6830	8
	6900	8
	7210	10
S0570166	1190	11
S0571166	2100	17
S0571266	1100	5
S0572166	1100	13
S0574561	6940	7
S0574661	3120	7
	6780	7
	6790	7
	6800	7
	6810	7
	6820	7
S0574861	6510	4
	6520	4
	6530	4
	6540	4
	6550	4
	6560	4
S0712061	2140	6-8
S0712066	3110	31
	6570	31
	6640	31
	6710	31
S0721466	2100	18

Part No.	Fig No.	Key No.
S0760853	1730	1
	6240	1
S0765966	2100	19
S0770266	2100	20
S0771466	1120	27
S0786366	1790	9
S2004366	7560	202
S2008856	7530	54
S2201766	1530	23
	7640	14
S2202866	7450	20
S2202966	1390	18
S2204566	7560	3-19
	7560	49
	7570	49
S2204861	4110	438
S2204866	4190	78
S2205066	1360	48
	1370	48
S2205261	4110	436
S2208466	1480	110
S2208561	1480	24
	6260	18
	7550	23
S2208861	7580	2-31
S2208866	1410	12
	1430	2
	1530	8
	7490	2
	7500	2
	7640	18
S2208871	4100	406
	4120	435
S2209261	4270	9
S2209266	6160	10
	6470	12
	6500	16
	6630	5
	6700	16
	6770	16
	7025	10
S2209466	6490	9
	6880	9
	7000	21
	7300	15
S2209661	4110	412
S2209666	1320	33
	4120	433
S2209961	4120	434
S2210071	4110	413
S2210071	4210	25
S2211866	1530	17
	6170	7
	6480	18
	7200	18
	7290	19
	7640	20
S2212061	4100	986
S2212066	4410	4
	6450	15
	6620	16
	6690	16
	6760	16
S2212266	1261	50
	1270	50
	1280	50
	1290	50
	1300	50
	1380	42
	2180	7
	3150	6
	4160	124
	4180	74
	6170	6
	6450	6
	6460	29
	6480	17
	6580	6
	6600	5
	6620	6
	6650	6
	6690	6
	6720	6
	6760	6
	7180	58
	7200	17
	7290	20
S2212366	3130	26
	3150	5
	4410	12
	6190	13
	6450	12
	6580	5
	6620	13
	6650	5
	6670	6
	6690	13
	6720	5
	6740	13
	6760	13
S2212366	6840	15
	6970	31
	7010	7
	7220	23
S2212466	1270	49
	3130	28
	4170	75
	4190	75
	6180	11
	6190	5
	6600	4
	6670	5
	6740	5
	6840	16
	6860	10
	6970	32
	7010	8
	7220	24
	7260	21
	7270	8
	7340	19
S2212566	3130	21
	6840	21
	6970	25
	7010	9
S2212666	6180	6
	6860	5
	6970	26
S2212761	4230	33
	4230	37
	4240	33
	4240	37
	4260	33
	4260	40
	4280	33
	4280	40
	4290	33
	4290	40
	4300	32
	4300	36
	4310	34
	4320	34
S2212766	4190	73
	6420	8
	7340	8
S2212861	4350	44
	4360	44
	4380	41
	4390	41
S2213066	4190	76

Part No.	Fig No.	Key No.
S2213166	1290	62
S2213466	4190	101
	6110	22
	6130	29
	6130	65
S2215266	7180	56
S2215366	1230	22
	1240	22
	1250	22
	7180	24
S2215466	1260	47
	1261	47
	2180	8
	7180	57
S2215766	1261	51
	6440	5
	6890	5
	6990	5
	7340	15
	7350	5
S2215866	7340	16
S2215961	4250	39
	4340	33
	4340	37
	4350	40
	4360	40
	4370	33
S2215966	6190	10
	6440	8
	6600	8
	6670	10
	6740	10
	6890	8
	6990	8
	7350	8
S2217066	1261	72
S2217471	4140	24
	4141	24
S2218961	4300	25
S2221471	4150	43
S2221873	4260	36
	4280	36
	4290	36
S2222171	4260	25
	4280	25
	4290	25
S2222272	4230	25
	4240	25
	4250	27
	4310	25
S2222272	4320	25
	4330	27
	4350	27
	4360	27
	4380	27
	4390	27
S2223266	4170	77
S2225271	4340	25
	4370	25
S2227561	4130	109
	4131	109
S2227866	1180	7
S2229071	4100	401
S3050863	1710	7
S3140025	4100	901
S3450343	1690	30
	7740	13
S3450583	1700	4
	7750	3
S3450593	7530	52
S3450603	7740	35
S3450823	1390	15
S3450833	1200	19
	1500	82
	1680	25
	1690	12
	1760	5
	7130	15
	7740	6
	7860	2
S3450863	1680	13
	7550	68
	7570	68
	7740	24
S3450943	1690	34
	6260	15
	7740	9
S3450953	1680	10
	1690	40
	7740	22
S3450983	1690	7
	7570	60
	7580	60
	7740	11
	7930	2
S3450993	1490	78
	1500	78
S3452573	7530	25
S3452843	7560	54
	7570	54
S3452853	1500	79
S3458843	1500	65
S3523601	4270	4-4
S3523836	4340	24
	4370	24
S3524008	4110	924
S3524403	3140	7
	6850	7
	6980	7
	7230	7
S3527808	4100	953
S3640333	7580	2-38
S3644163	1460	32
	7530	28
S3654523	1450	25
S4012233	7530	42
S4012303	1790	34
S4012333	1510	32-32
	1620	4-12
	7580	2-10
S4012533	1510	32-27
	1600	3-27
	1620	4-9
	1640	56
	4110	801
	7370	1-27
	7580	2-34
S4012633	1150	12-5
	1600	3-18
	1610	2-19
	1680	5
	4250	42
	4300	39
	4330	39
	4340	40
	4350	50
	4360	50
	4370	37
	4380	47
	4390	47
	7370	1-18
S4012733	1150	43
	1220	25
	1240	28
	1600	3-12
	1610	2-13
	1620	40
	1730	6
	6240	6
	7370	1-12

Part No.	Fig No.	Key No.
S4012833	4200	24
	4420	24
S4012933	3100	9
	3110	22
	4100	806
	6570	22
	6640	22
	6710	22
	6830	9
	6900	9
	6910	17
	6950	4
	6960	4
	7210	11
S4013133	1100	39
	2100	28
	4100	808
S4013333	3120	8
	6510	5
	6520	5
	6530	5
	6540	5
	6550	5
	6560	5
	6780	8
	6790	8
	6800	8
	6810	8
	6820	8
	6940	8
S4014633	4270	4-3
S4032833	3140	18-3
	3160	12
	6590	12
	6660	12
	6730	12
	6850	17-3
	6980	13-3
	7020	18
	7240	12
S4034833	1490	103
	7560	51
S4214603	7470	10
S5000113	1530	24
	7640	15
S5000213	1760	6
	7550	27
	7570	27
	7860	3
S5000313	1790	36
S5010303	1790	24
S5010313	1500	115
	1600	3-13
	1610	2-14
	1690	4
	7370	1-13
S5010503	1710	11
S5010513	1600	3-16
	1610	2-17
	1640	46
	1710	36
	1790	15
	7040	5
	7100	2
	7190	32
	7370	1-16
	7740	41
S5010613	1150	12-4
	1620	4-4
	1680	3
	1720	22
	1750	13
	1750	9
	1790	8
S5010713	1150	37
	1210	17
	1270	55
	1620	43
	1790	11
	6240	5
	7060	8
	7110	2
	7180	26
	7260	27
S5010913	1130	47
	1260	88
	1300	66
	4170	81
S5011113	1190	1L
S5100003	1690	29
	7740	12
S5100103	1700	5
	7750	4
S5100203	1200	20
	1680	14
	1680	26
	1690	13
	7130	16
	7740	7
S5100603	4230	28
S5100603	4230	32
	4230	36
	4240	28
	4240	32
	4240	36
	4250	41
	4260	32
	4260	35
	4260	39
	4280	32
	4280	35
	4280	39
	4290	32
	4290	35
	4290	39
	4300	38
	4310	28
	4310	33
	4320	28
	4320	33
	4330	38
	4340	39
	4350	43
	4350	49
	4360	43
	4360	49
	4370	36
	4380	40
	4380	46
	4390	40
	4390	46
	7100	7
S5100703	4230	39
	4240	39
	4250	34
	4250	38
	4260	28
	4280	28
	4290	28
	4300	27
	4300	31
	4300	35
	4310	36
	4320	36
	4330	34
	4340	28
	4340	32
	4340	36
	4350	34
	4350	39

Part No.	Fig No.	Key No.
S5100703	4360	34
	4360	39
	4370	28
	4370	32
	4380	34
	4390	34
S5102103	7740	38
S5102303	1310	38
	1620	4-13
	1670	5
	1680	11
	1690	33
	1690	39
	1690	8
	1710	17
	1710	24
	1720	3
	1750	19
	1790	35
	7740	10
	7930	3
S5102503	1310	3K
	1620	4-8
	1640	22
	1690	41
	1690	51
	1710	10
	1710	20
	1710	29
	1760	3
	1770	11
	1790	14
	1790	21
	1790	4
	2140	6-11
	6150	13
	6170	17
	6200	21
	6230	6
	6390	8
	6460	7
	6480	15
	6610	6
	6680	6
	6750	6
	7040	6
	7060	6
	7070	4
	7080	2
	7090	5

Part No.	Fig No.	Key No.
S5102503	7100	3
	7110	5
	7160	2
	7190	33
	7200	15
	7290	21
	7380	8
	7740	40
	7780	6
	7800	5
	7810	5
	7830	5
	7840	2
	7850	13
	7850	2
S5102603	1180	6
	1200	11
	1680	4
	1710	3
	1720	21
	1720	7
	1750	12
	1750	8
	1770	14
	1790	18
	1790	7
	2130	11
	2140	6-10
	3140	20
	4400	8
	6150	10
	6170	15
	6350	5
	6360	5
	6370	5
	6450	17
	6460	30
	6480	14
	6490	16
	6500	12
	6630	9
	6690	17
	6700	12
	6760	18
	6770	12
	6850	19
	6880	16
	6980	15
	7000	17
	7025	12

Part No.	Fig No.	Key No.
S5102603	7200	14
	7290	30
	7300	9
	7320	15
S5102703	1210	16
	1220	30
	1240	27
	1270	102
	1270	54
	1620	32
	1660	12
	1730	2
	1790	10
	2160	8-14
	6110	21
	6130	26
	6240	2
	6410	10
	6490	6
	6500	6
	6620	7
	6630	14
	6690	7
	6700	6
	6770	6
	6880	6
	6900	31
	7000	20
	7180	51
	7260	26
S5102803	1261	56
	3130	18
	3130	52
	6190	17
	6220	6
	6440	18
	6450	10
	6600	9
	6620	11
	6670	11
	6690	11
	6740	11
	6760	11
	6840	18
	6840	52
	6840	83
	6870	6
	6890	12
	6970	22
	6970	63

Part No.	Fig No.	Key No.
S5102803	6990	16
	7000	10
	7010	15
	7220	16
S5102903	1120	30
	1130	30
	1260	87
	1300	67
	2100	25
	2120	5-4
	3100	18
	3110	21
	4350	46
	4360	46
	4380	43
	4390	43
	6570	21
	6640	21
	6710	21
	6830	18
	6900	18
	6910	16
	7210	14
S5110503	1320	37
	6160	11
	6470	13
S5110603	1530	18
	6170	5
	6420	7
	6480	20
	7200	20
	7290	18
	7340	7
	7640	21
S5110703	6190	19
	6440	6
	6600	9
	6670	14
	6740	14
	6890	6
	6990	6
	7180	23
	7340	17
	7350	6
S5111103	1180	8
S5210303	1510	32-34
	7580	2-17
S5231090	4140	31
	4141	31
S5700891	4150	41
S5735371	7470	11
S5740480	4210	14
S5740600	4210	11
S5740770	4160	122
S5740800	4200	27
	4420	27
S5740870	4100	886
S5740960	4160	110
S5741162	4130	113
	4131	113
S5741200	4141	15
S5741250	2130	10
S5741341	4140	15
S6005050	4130	108
	4131	108
S6005090	4130	303
S6250182	4150	68
S6500100	4110	814
S6500380	4140	6
	4141	6
S6500400	4100	824
S6500450	4140	26
	4141	26
S6500600	2160	8-5
S6500750	4160	115
S6510150	4110	858
S6510180	4120	850
S6510620	4130	212
	4131	212
S6710032	4300	40
	4340	41
	4350	51
	4360	51
	4370	38
	4380	48
	4390	48
S6710041	1190	5
	1670	7
	3110	25
	3140	18-6
	3160	7
	6570	25
	6590	7
	6640	25
	6660	7
	6710	25
	6730	7
	6850	17-6
	6910	19
	6980	13-6
S6710041	7020	13
	7230	8
	7240	7
S8000041	4190	42
S8000061	4110	722
	4190	41
S8000081	4100	724
	4150	275
	4210	34
S8000085	4110	724
S8000111	1200	8
	1220	26
	1230	90
	1240	102
	1240	60
	1240	94
	1310	30
	1320	138
	1320	30
	1330	143
	1330	152
	1330	30
	1340	163
	1340	30
	1350	30
	1380	34
	2180	14
	4100	725
	4110	725
	4110	755
	4120	725
	4130	111
	4130	314
	4131	111
	4150	74
	4210	35
	6150	14
	6155	3
	6160	2
	6170	12
	6200	9
	6380	2
	6385	2
	6420	4
	6440	9
	6470	2
	6480	16
	6890	9
	6990	9
	7190	28

Part No.	Fig No.	Key No.
S8000111	7200	102
	7200	16
	7290	15
	7340	13
	7350	9
S8000121	4190	104
S8000141	1240	112
	1260	80
	1261	80
	1310	29
	1330	144
	1330	29
	1340	164
	1340	29
	1350	29
	1360	32
	1360	85
	1370	32
	1370	94
	1380	32
	4100	727
	4170	62
	4180	62
	6150	15
	6200	24
	6390	9
	6410	3
	6430	5
	6460	13
	6460	54
	6480	19
	7190	29
	7190	53
	7200	19
	7280	8
	7290	14
	7330	7
	7380	9
S8000161	4110	732
	4120	732
	4150	405
	4190	30
	7120	4
S8000181	1190	1F
	1210	33
	1220	23
	1230	31
	1230	89
	1250	31
	1310	31
S8000181	1320	136
	1320	31
	1350	31
	1380	33
	2180	10
	4110	728
	4150	46
	4160	38
	6100	10
	6150	31
	6190	41-7
	6190	42-7
	6460	14
	6500	31
	6500	8
	6600	41-7
	6600	42-7
	6630	32
	6630	6
	6670	41-7
	6670	42-7
	6700	31
	6700	8
	6740	41-7
	6740	42-7
	6770	31
	6770	8
	7025	51
	7025	8
	7290	38
	7300	12
S8000185	4100	732
S8000201	4110	733
	4420	17
S8000205	4200	17
S8000221	4110	730
	4150	410
S8000231	1240	50
	1300	61
	6200	11
	6450	8
	6460	16
	6620	32
	6620	9
	6690	9
	6760	9
S8000241	1230	32
	1230	87
	4100	728
	4190	25
S8000241	6460	28
	7180	19
S8000251	4300	30
	4300	34
S8000261	4110	756
	4190	23
	4210	12
S8000281	4230	31
	4230	35
	4240	31
	4240	35
	4260	31
	4260	38
	4280	31
	4280	38
	4290	31
	4290	38
	4310	32
	4320	32
	6420	9
	7340	9
S8000291	1230	88
	1240	93
	1250	33
	1260	78
	1261	78
	6110	16
	6110	59
	6120	9
	6130	18
	6130	57
	6140	9
	6180	12
	6190	41-2
	6190	42-2
	6460	19
	6600	41-2
	6600	42-2
	6670	41-2
	6670	42-2
	6740	41-2
	6740	42-2
	6860	11
	7180	102
	7250	5
	7260	5
S8000321	4150	36
	4190	36
	4410	10
S8000341	4130	106

Part No.	Fig No.	Key No.
S8000341	4131	106
	4250	37
	4340	31
	4340	35
	4350	38
	4350	42
	4360	38
	4360	42
	4370	31
	4380	39
	4390	39
	6440	7
	6890	7
	6990	7
	7350	7
S8000901	2160	8-7
S8001050	2160	8-10
S8001801	4150	235
S8002101	4150	239
S8002721	4110	735
S8002731	4150	37
S8010230	4160	126
S8010250	4190	54
S8010251	4110	734
	4210	21
S8010291	4150	406
S8010351	4110	763
S8010355	4100	702
S8010451	4180	7
S8010600	2150	7-8
S8010650	2140	6-13
S8010651	4230	21
	4240	21
	4310	21
	4320	21
S8010700	2120	5-2F
S8010755	4110	708
S8010801	4250	21
	4330	21
	4340	21
	4350	21
	4360	21
	4370	21
	4380	21
	4390	21
S8010901	4300	13
S8010951	4100	710
	4120	710
	4300	15
S8011000	2160	8-9
S8011151	4260	13
	4280	13
	4290	13
S8011200	1220	15
S8011201	4230	13
	4240	13
	4260	15
	4280	15
	4290	15
	4310	13
	4320	13
S8011251	4230	15
	4240	15
	4310	15
	4320	15
S8011351	4250	13
	4330	13
	4350	13
	4360	13
	4380	13
	4390	13
S8011450	1200	3
S8011451	4100	717
	4340	13
	4370	13
S8011650	1220	8
S8011850	1220	3
S8030061	6200	10
S8030081	6190	41-9
	6190	42-9
	6460	15
	6460	55
	6490	11
	6500	3
	6500	34
	6600	41-9
	6600	42-9
	6630	3
	6630	34
	6670	41-9
	6670	42-9
	6700	3
	6700	34
	6740	41-9
	6740	42-9
	6770	3
	6770	34
	6880	11
	7000	12
	7025	54
S8030081	7025	6
	7280	9
	7300	13
S8030121	1230	36
	1230	86
	1240	36
	1300	60
	6450	43
	6450	7
	6460	18
	6620	34
	6620	8
	6690	43
	6690	8
	6760	43
	6760	8
S8030161	1261	75
	6110	15
	6110	45
	6110	58
	6120	8
	6130	19
	6130	45
	6130	58
	6140	8
	6190	41-5
	6190	42-5
	6600	41-5
	6600	42-5
	6670	41-5
	6670	42-5
	6740	41-5
	6740	42-5
	7180	22
	7250	6
	7260	6
S8060121	4190	103
S8060161	4150	404
	4190	31
S8060181	4100	789
S8060221	4150	411
S8061800	4150	247
S8062100	4150	248
S8090350	4100	792
S8180321	6100	1B
S8180411	1770	6
S8450012	1200	23
S8450016	1760	10
	1770	2
	7860	7

Part No.	Fig No.	Key No.	Part No.	Fig No.	Key No.	Part No.	Fig No.	Key No.
S8470014	1130	45						
	1210	10						
	6100	7						
S8470032	6100	16						
S8470075	1130	46						
S8470165	1100	40						
S8500079	1240	24						
S8500118	1230	30						
S8510118	1170	4						
S8510143	1170	6						
T6510018	5100	1-32						
T6510027	5100	1-33						
T6510062	5100	1-23						
T6510066	5100	1-24						
T6510070	5100	1-25						
T6510072	5100	1-26						
T6510075	5100	1-27						
T6510081	5100	1-28						
T6510085	5100	1-29						
T6510089	5100	1-30						
T6510091	5100	1-31						
T6550005	5100	1-17						
T6550006	5100	1-18						
T6550007	5100	1-19						
T6550009	5100	1-20						
T6550011	5100	1-21						
T6550018	5100	1-22						
T6580008	5100	1-2						
T6580020	5100	1-3						
T6600183	5100	1-34						
T6600189	5100	1-35						
T6600197	5100	1-36						
T6600201	5100	1-37						
T6600211	5100	1-38						
T6600217	5100	1-40						
T6600223	5100	1-39						
T6690012	5100	1-12						
T6690013	5100	1-13						
T6750003	5100	1-14						
T7050003	5100	1-4						
T7050013	5100	1-5						
T7050021	5100	1-6						
T7050022	5100	1-7						
T7260057	5100	1-9						
T7500004	5100	1-8						
Y-3738-04	1310	3F						
Y-3738-05	1310	3G						