RUTHZIL TRATOR COMERCIAL DE PEÇAS LTDA 11 97083-6812 ROLANDO

K1028287CEF
January 2013

DX27Z

EXCAVATOR

Parts Manual

DX27Z

Serial Number 5001 and Up

(THIS PARTS BOOK IS FOR REFERENCE ONLY.
PART NUMBERS AND SERAIL NUMBERS MAY BE
OUTDATED. ALWAYS USE THE ONLINE PARTS SYSTEM)

Doosan Infracore
Construction Equipment

(THIS PARTS BOOK IS FOR REFERENCE ONLY.
PART NUMBERS AND SERAIL NUMBERS MAY BE
OUTDATED. ALWAYS USE THE ONLINE PARTS SYSTEM)

Parts Manual
DX27Z EXCAVATOR

Serial Number 5001 and Up

DOOSAN and the DOOSAN logo are registered trademarks of DOOSAN Corporation in the United States and various other countries around the world.

K1028287CEF

January 2013

Copyright DOOSAN 2013

(THIS PARTS BOOK IS FOR REFERENCE ONLY.
PART NUMBERS AND SERAIL NUMBERS MAY BE
OUTDATED. ALWAYS USE THE ONLINE PARTS SYSTEM)

(THIS PARTS BOOK IS FOR REFERENCE ONLY.
PART NUMBERS AND SERAIL NUMBERS MAY BE
OUTDATED. ALWAYS USE THE ONLINE PARTS SYSTEM)

DX27Z

Serial Number 5001 and Up

Pub.No. K1028287CEF

DOOSAN

Product Label

Instructions

Trim Out The Label Along The Lines And Insert Into Pocket On The Binder Spine

(THIS PARTS BOOK IS FOR REFERENCE ONLY.
PART NUMBERS AND SERAIL NUMBERS MAY BE
OUTDATED. ALWAYS USE THE ONLINE PARTS SYSTEM)

Pub. No. K1028287CEF

(THIS PARTS BOOK IS FOR REFERENCE ONLY.
PART NUMBERS AND SERAIL NUMBERS MAY BE
OUTDATED. ALWAYS USE THE ONLINE PARTS SYSTEM)

CONTENTS

● ENGINE PARTS

Fig.	001	CYLINDER BLOCK	BLOC CYLINDRE	001-1
	002	GEAR HOUSING	CARTER DE DISTRIBUTION	002-1
	003	FLYWHEEL HOUSING & OIL PAN	CARTER DE VOLANT MOTEUR	003-1
	004	CYLINDER HEAD & COVER	COUVERTURE DE CULASSE	004-1
	005	INTAKE MANIFOLD	TUBULURE D'CENTREE	005-1
	006	EXHAUST MANIFOLD & MUFFLER	TUBULURE ET SILENCIEUX D'ECHAPPEMENT	006-1
	007	CAMSHAFT & DRIVING GEAR	ARBRE DE CAME	007-1
	008	CRANKSHAFT & PISTON	VILEBREQUIN & PISTON	008-1
	009	LUB.OIL SYSTEM	SYSTEME D'HUILE	009-1
	010	COOLING WATER SYSTEM	SYSTEME DE REFROIDISSEMENT	010-1
	011	FUEL INJECTION PUMP	POMPE D'INJECTION	011-1
	012	GOVERNOR	GOUVERNEUR	012-1
	013	FUEL INJECTION VALVE	VANNE D'INJECTION	013-1
	014	FUEL LINE	LIGNE DE CARBURANT	014-1
	015	STARTING MOTOR	DEMARREUR	015-1
	016	GENERATOR	ALTERNATEUR	016-1
	017	GASKET SET	ENSEMBLE DE GARNITURE	017-1

● BODY PARTS

Fig.	1100	MAIN FRAME	BATI PRINCIPAL	1100-1
	1110	ENGINE MOUNTING	MOTEUR	1110-1
	1120	RADIATOR MOUNTING	SUPPORT DE RADIATEUR	1120-1
	1130	AIR CLEANER	FILTRE A AIR	1130-1
	1140	PUMP MOUNTING	POMPE	1140-1
	1150	FUEL TANK	RESERVOIR DE GAZOLE	1150-1
	1160	FUEL PIPING	CONDUITES DE GAZOLE	1160-1
	1170	OIL TANK	RESERVOIR D'HUILE	1170-1
	1180	OIL COOLER PIPING	TUYAUTERIE DE RADIATEUR D'HUILE	1180-1
	1190	MAIN PIPING (1)	CONDUITES DE PRINCIPAL	1190-1
	1200	MAIN PIPING (2)	CONDUITES DE PRINCIPAL	1200-1

(THIS PARTS BOOK IS FOR REFERENCE ONLY.
PART NUMBERS AND SERIAL NUMBERS MAY BE
OUTDATED. ALWAYS USE THE ONLINE PARTS SYSTEM)

1210	MAIN PIPING (3)	CONDUITES DE PRINCIPAL	1210-1
1220	PILOT PIPING (1)	CONDUITES DE PILOTE	1220-1
1230	PILOT PIPING (2)	CONDUITES DE PILOTE	1230-1
1240	PILOT PIPING (3)	CONDUITES DE PILOTE	1240-1
1250	PILOT PIPING (4)	CONDUITES DE PILOTE	1250-1
1260	PILOT PIPING (5) - NOT TRAVEL ALARM	CONDUITES DE PILOTE	1260-1
1270	ENGINE CONTROL	COMMANDE REGIME MOTEUR	1270-1
1280	BONNET	COUVERCLE	1280-1
1290	COVER ASS'Y	ENSEMBLE DE COUVERCLE	1290-1
1300	UNDER COVER	TOLES IMFERIEVRES	1300-1
1310	LUBRICATION PIPING	LUBRIFICATION	1310-1
1320	BOOM SWING	VIRAGE DE FRONTALE	1320-1
1330	PEDAL ASS'Y	ENSEMBLE DE PEDALE	1330-1
1340	FLOOR PLATE	TOLE DE PLANCHER	1340-1
1350	SEAT BASE ASS'Y	ENSEMBLE DE POSEZ LA BASE	1350-1
1360	SEAT ASS'Y	SIEGE	1360-1
1370	SEAT	SIEGE	1370-1
1380	CONTROL STAND MOUNTING	CONSOLE DE COMMANDE	1380-1
1390	CONTROL STAND - L.H	COMMANDEZ STAND - L.H	1390-1
1400	CONTROL STAND - R.H	COMMANDEZ STAND - R.H	1400-1
1410	CANOPY	VERRIERE	1410-1
1420	FLOOR MAT	PLANCHER	1420-1
1430	ELECTRIC BOX	EQUIPMENT ELECTRIQUE	1430-1
1440	ELECTRIC PARTS - CONTROL STAND	PIECES ELECTRIQUES	1440-1
1450	ELECTRIC PARTS - BATTERY	EQUIPMENT ELECTRIQUE	1450-1
1460	ELECTRIC WIRING	POSE DE FILES ELECTRIQUES	1460-1
1470	WORKING LAMP	LAMPE FONCTIONNANTE	1470-1
1480	WORKING LAMP HARNESS	LAMPE FONCTIONNANTE	1480-1
1490	ELECTRIC PARTS - CANOPY	EQUIPMENT ELECTRIQUE	1490-1
1500	SPONGE ASS'Y	ENSEMBLE EPONGE	1500-1

● TRACK PARTS

Fig. 2100	TRACK FRAME	TRAIN DE ROULEMENT	2100-1
2110	TRACK COMPONENTS	COMPOSANTS DE VOIE	2110-1
2120	TRACK SPRING - L.H	TENDEUR DE CHENILLE	2120-1
2130	TRACK SPRING - R.H	TENDEUR DE CHENILLE	2130-1

(THIS PARTS BOOK IS FOR REFERENCE ONLY.
PART NUMBERS AND SERIAL NUMBERS MAY BE
OUTDATED. ALWAYS USE THE ONLINE PARTS SYSTEM)

2140	RUBBER TRACK - 250mm	VOIE EN CAOUTCHOUC	2140-1
2150	RUBBER TRACK - 300mm	VOIE EN CAOUTCHOUC	2150-1
2160	TRAVELING PIPING	CONDUITES DE TRANSLATION	2160-1

● FRONT PARTS

Fig. 3100	BOOM	PERCHE	3100-1
3110	ARM - 1.1m	BALANCIER	3110-1
3120	BUCKET - 0.08m³	GODET	3120-1
3130	FRONT PIPING	CONDUITES DE FRONTALES	3130-1
3140	FRONT PIPING - BREAKER	CONDUITES FRONTALES	3140-1

● HYDRAULIC PARTS

Fig. 4100	MAIN PUMP	POMPE	4100-1
4110	MAIN PUMP - SHAFT	POMPE PRINCIPAL	4110-1
4120	MAIN PUMP - SWASH PLATE	POMPE PRINCIPAL	4120-1
4130	MAIN PUMP - ROTARY	POMPE PRINCIPAL	4130-1
4140	MAIN PUMP - PORT PLATE	POMPE PRINCIPAL	4140-1
4150	MAIN PUMP - SPRING SEAT	POMPE PRINCIPAL	4150-1
4160	MAIN PUMP - GEAR PUMP	POMPE PRINCIPAL	4160-1
4170	MAIN PUMP - HOUSING	POMPE PRINCIPAL	4170-1
4180	MAIN PUMP - PILOT PUMP	POMPE PRINCIPAL	4180-1
4190	MAIN PUMP - SOLENOID VALVE	POMPE PRINCIPAL	4190-1
4200	SWING MOTOR	MOTEUR D'ORIENTATION	4200-1
4210	SWING REDUCTION GEAR	REDEUTEUR D'ORIENTATION	4210-1
4220	TRAVEL REDUCTION GEAR	BOITE REDUCTEUR	4220-1
4230	TRAVEL MOTOR	MOTEUR DE TRANSLATION	4230-1
4240	CENTER JOINT	JOINT CENTRAL	4240-1
4250	REMOCON VALVE	VANNE DE PILOTE	4250-1
4260	PEDAL VALVE	VANNE	4260-1
4261	PEDAL VALVE	VANNE	4261-1
4270	PEDAL VALVE	VANNE	4270-1
4280	REMOCON VALVE - DOZER	VANNE DE PILOTE	4280-1
4290	BOOM CYLINDER	VERIN DE FLECHE	4290-1
4300	ARM CYLINDER	VERIN DE BALANCIER	4300-1
4310	BUCKET CYLINDER	VERIN DE GODET	4310-1
4320	BOOM SWING CYLINDER	VERIN DE FLECHE	4320-1

(THIS PARTS BOOK IS FOR REFERENCE ONLY.
PART NUMBERS AND SERAIL NUMBERS MAY BE
OUTDATED. ALWAYS USE THE ONLINE PARTS SYSTEM)

4330	DOZER CYLINDER	CYLINDRE DE DOZER	4330-1
4340	CONTROL VALVE	DISTRIBUTEUR	4340-1
4350	BOOM CYLINDER - LOCK VALVE	VERIN DE FLECHE	4350-1
4360	ARM CYLINDER - LOCK VALVE	VERIN DE BALANCIER	4360-1

● OTHER PARTS

Fig. 5100	TOOLS	OUTILLAGE	5100-1
5110	SPARE PARTS	PIECES DE RECHANGE	5110-1
5120	DECAL - EXPORT	DECALQUE	5120-1
5130	DECAL - EUROPE	DECALQUE	5130-1
5140	DECAL - LIFTING CAPA	DECALQUE	5140-1
5150	DECAL - SERIAL(EUROPE)	DECAL	5150-1
5160	MANUAL - SAFETY	MANUEL DE SÛRETÉ	5160-1
5170	DECAL - ROPS(EUROPE) - CANOPY	DECALQUE	5170-1

● OPTION PARTS

Fig. 6100	COUNTER WEIGHT	MASSE D'EQUILIBRAGE	6100-1
6110	ACCUMULATOR	ACCUMULATEUR	6110-1
6120	ARM PIPING - ARM 1.3m	CONDUITES DE BALANCIER	6120-1
6130	ROTATING BEACON	FEU DE CIRCULATION	6130-1
6140	CAR STEREO	STEREO	6140-1
6150	PILOT PIPING - PATTERN CHANGE(1)	CONDUITES DE PILOTE	6150-1
6160	PILOT PIPING - PATTERN CHANGE(2)	CONDUITES DE PILOTE	6160-1
6170	PILOT PIPING - TRAVEL ALARM	CONDUITES DE PILOTE	6170-1
6180	TRAVEL ALARM - ELECTRIC PARTS	ALARME DE VOYAGE	6180-1
6190	ELECTRIC PARTS - CABIN	PIECES ELECTRIQUES	6190-1
6200	WINDOW WASHER	RONDELLE DE FENETRE	6200-1
6210	CABIN MOUNTING	SUPPORT DE CABINE	6210-1
6220	COVER - CABIN	CABINE DE COUVERCLE	6220-1
6230	FLOOR MAT - CABIN	CABINE DE PLANCHER	6230-1
6240	CABIN (1)	CABINE	6240-1
6250	CABIN (2)	CABINE	6250-1
6260	CABIN (3)	CABINE	6260-1
6270	CABIN (4)	CABINE	6270-1
6280	MIRROR	MIROIR	6280-1
6290	PILOT PIPING - QUICK CLAMP	CONDUITES DE PILOTE	6290-1

(THIS PARTS BOOK IS FOR REFERENCE ONLY.
PART NUMBERS AND SERAIL NUMBERS MAY BE
OUTDATED. ALWAYS USE THE ONLINE PARTS SYSTEM)

6300	ELECTRIC PARTS - QUICK CLAMP	BRIDE RAPIDE	6300-1
6310	FRONT PIPING - QUICK CLAMP	CONDUITES DE FRONTALES	6310-1
6320	HEATER - CABIN	CHAUFFAGE	6320-1
6330	HEATER	CHAUFFAGE	6330-1
6340	HEATER COVER	BOITIES DE CHAUFFAGE	6340-1
6350	HEATER PIPING	CONDUITES DE CHAUFFAGE	6350-1
6360	CABIN LAMP	LAMPE	6360-1
6370	WORKING LAMP	LAMPE FONCTIONNANTE	6370-1
6380	BOOM SWING	VIRAGE DE FRONTALE	6380-1
6390	DOZER BLADE - 1570mm	DOZER	6390-1
6400	ENGINE - Tier3	MOTEUR	6400-1
6410	MAIN PIPING - QUICK CLAMP	CONDUITES DE BATI PRINCIPAL	6410-1
6420	PILOT PIPING - BOOM LOCK VALVE	CONDUITES DE PILOTE	6420-1
6430	PILOT PIPING - ARM LOCK VALVE	CONDUITES DE PILOTE	6430-1
6440	BOOM PIPING - LOCK VALVE	DONDUITER DE FLECHE	6440-1
6450	BOOM PIPING - ARM LOCK VALVE	TUYAUTERIE DE PERCHE	6450-1
6460	OVERLOAD WARNING	AVERTISSEMENT DE SURCHARGE	6460-1

● **WORLDWIDE NETWORK**

(THIS PARTS BOOK IS FOR REFERENCE ONLY.
PART NUMBERS AND SERAIL NUMBERS MAY BE
OUTDATED. ALWAYS USE THE ONLINE PARTS SYSTEM)

DATE	JAN. 04, 2013
3rd EDITION	

Fig. 001 CYLINDER BLOCK
BLOC CYLINDRE

Serial No. ;

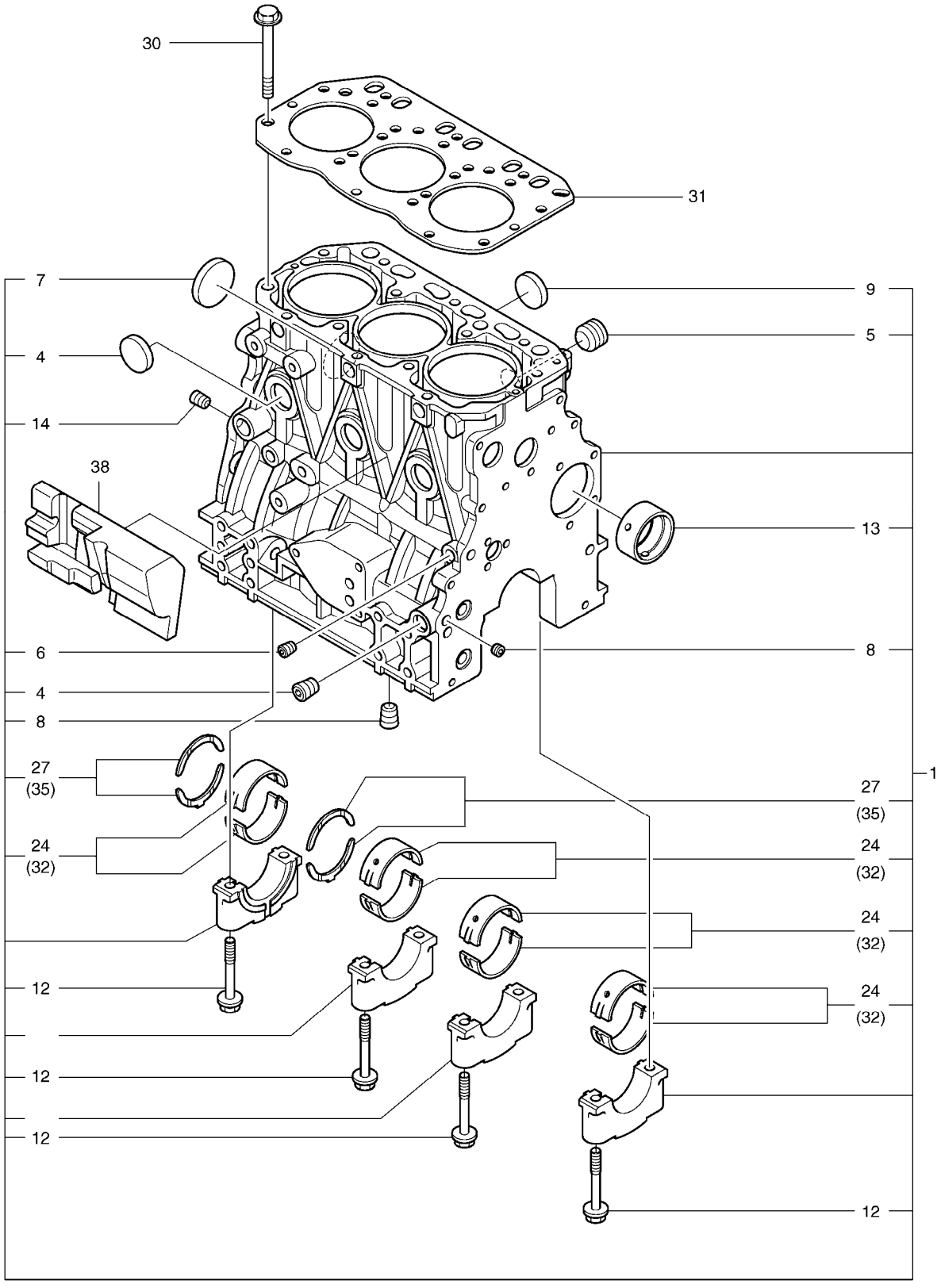

(THIS PARTS BOOK IS FOR REFERENCE ONLY.
PART NUMBERS AND SERAIL NUMBERS MAY BE
OUTDATED. ALWAYS USE THE ONLINE PARTS SYSTEM)

DATE	JAN. 04, 2013
3rd EDITION	

Fig. 001 CYLINDER BLOCK
BLOC CYLINDRE

Serial No. ;

Key No.	Part No.	Description	Description	Q'ty	S.C	Serial No.	ICA	Replaceable part	
								Part No.	Q'ty
001 -1	K9005223	CYLINDER BLOCK ASS'Y	ENSEMBLE DE BLOC CYLI	1					
4	K9004678	PLUG PT1/4	BOUCHON	2					
5	2.181-00306	PLUG	BOUCHON	1					
6	2.181-00163	PLUG PT1/8	BOUCHON	1					
7	K9004685	PLUG	BOUCHON	1					
8	K9004860	PLUG	BOUCHON	2					
9	2.181-00314	PLUG	BOUCHON	6					
12	K9005148	BOLT	BOULON	8					
13	K9004797	BUSH;CAMSHAFT	DOUILLE	1					
14	K9004678	PLUG PT1/4	BOUCHON	1					
24	K9005226	MAIN METAL SET	ENSEMBLE PRINCIPAL EN	4					
27	K9005186	WASHER;THRUST	RONDELLE DE BUTEE	1					
30	K9005182	BOLT;CYLINDER HEAD	BOULON	14					
31	K9005201	GASKET;HEAD	JOINT	1					
32	K9005185	MAIN METAL 0.25	ROULEMENT PRINCIPAL	4	US				
35	K9005187	WASHER;THRUST 0.25	ROULEMENT	2	OS				
38	K9005149	SPACER	DOUILLE D'ECARTEMENT	1					

(THIS PARTS BOOK IS FOR REFERENCE ONLY.
PART NUMBERS AND SERAIL NUMBERS MAY BE
OUTDATED. ALWAYS USE THE ONLINE PARTS SYSTEM)

DATE	JAN. 04, 2013
3rd EDITION	

Fig. 002 GEAR HOUSING
CARTER DE DISTRIBUTION

Serial No. ;

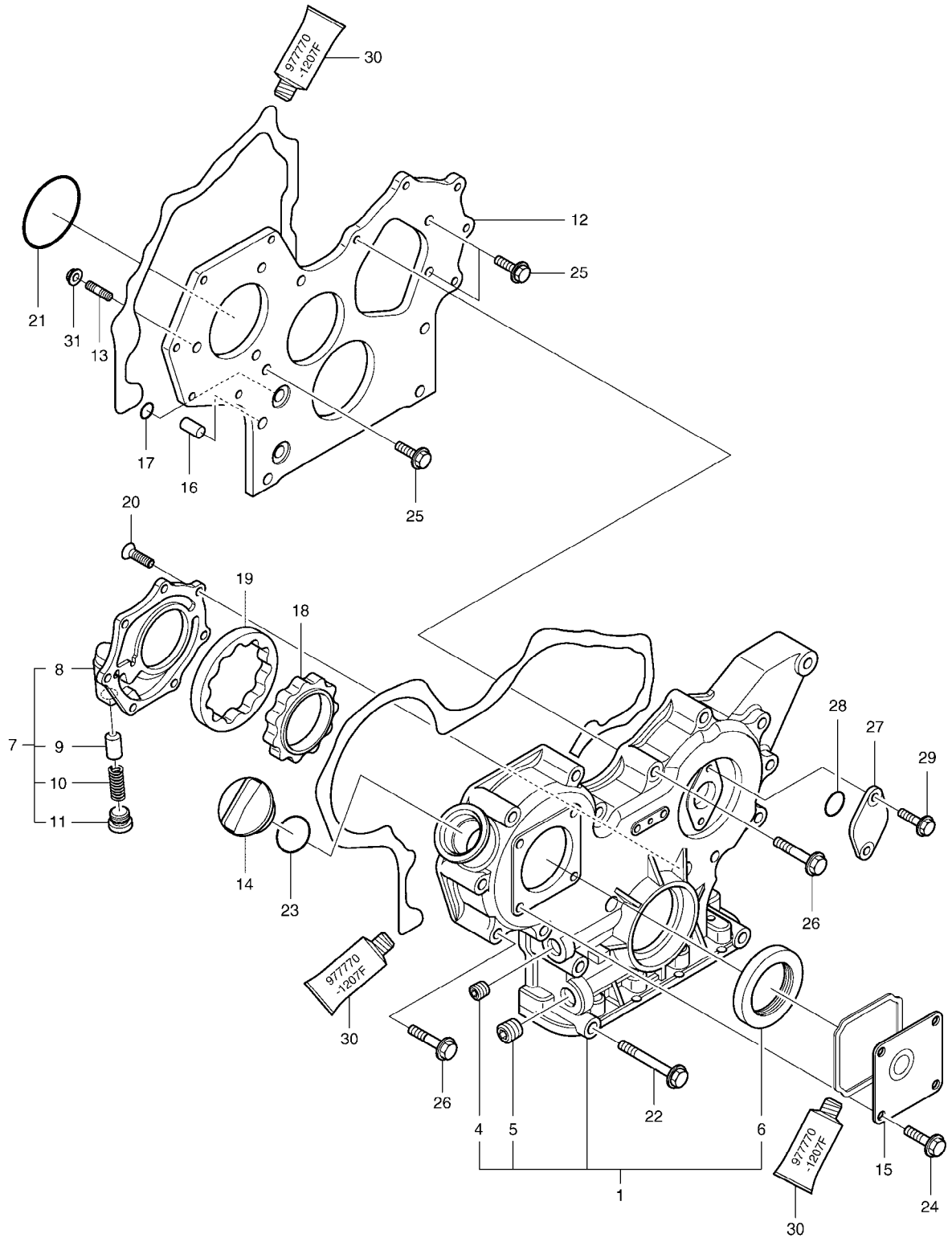

(THIS PARTS BOOK IS FOR REFERENCE ONLY.
PART NUMBERS AND SERAIL NUMBERS MAY BE
OUTDATED. ALWAYS USE THE ONLINE PARTS SYSTEM)

DATE	JAN. 04, 2013
3rd EDITION	

Fig. 002 GEAR HOUSING
CARTER DE DISTRIBUTION

Serial No. ;

Key No.	Part No.	Description	Description	Q'ty	S.C	Serial No.	ICA	Replaceable part	
								Part No.	Q'ty
002 -1	K9004864	GEAR HOUSING ASS'Y	CARTER DE PINGNON	1					
4	2181-1116D3	PLUG;HEX. SOCKET	BOUCHON	1					
5	K9004849	PLUG PT1/2	BOUCHON	1					
6	K9004667	SEAL;OIL	JOINT	1					
7	K9004646	PUMP COVER ASS'Y	COUVERCLE DE POMPE	1					
8	K9004645	COVER;LUB.OIL PUMP	COUVERCLE	1					
9	K9004801	VALVE;RELIEF	VANNE	1					
10	K9004777	SPRING	RESSORT	1					
11	K9004689	PLUG	BOUCHON	1					
12	K9004631	FLANGE;GEAR CASE	BRIDE	1					
13	K9004632	STUD	BOULON	3					
14	D460483	CAP;FILLER	COUVERCLE	1					
15	2.304-00001	COVER	COUVERCLE	1					
16	K9004796	PIPE	TUYAU	2					
17	K9004606	O-RING	JOINT TORIQUE	4					
18	K9004647	ROTOR;INNER	ROTOR INTERIEUR	1					
19	K9004648	ROTOR;OUTER	ROTOR EXTERNE	1					
20	K9004649	SCREW	VIS	7					
21	K9004676	O-RING	JOINT TORIQUE	1					
22	K9004690	BOLT M8X85	BOULON	3					
23	S8000320	O-RING	JOINT TORIQUE	1					
24	2.120-00136	BOLT;PLATED M8X16	BOULON	4					
25	2.120-00136	BOLT;PLATED M8X16	BOULON	3					
26	2.120-00148	BOLT;PLATED M8X55	BOULON	12					
27	K9004671	COVER;BLIND	COUVERCLE	1					
28	2.180-00355	O-RING	JOINT TORIQUE	1					
29	2.120-00029	BOLT M6X16	BOULON	2					
30	K9004868	GASKET;LIQUID	JOINT	1					
31	2.121-00267	NUT	ECROU	3					

(THIS PARTS BOOK IS FOR REFERENCE ONLY.
PART NUMBERS AND SERAIL NUMBERS MAY BE
OUTDATED. ALWAYS USE THE ONLINE PARTS SYSTEM)

DATE	JAN. 04, 2013
3rd EDITION	

Fig. 003 FLYWHEEL HOUSING & OIL PAN
CARTER DE VOLANT MOTEUR

Serial No. ;

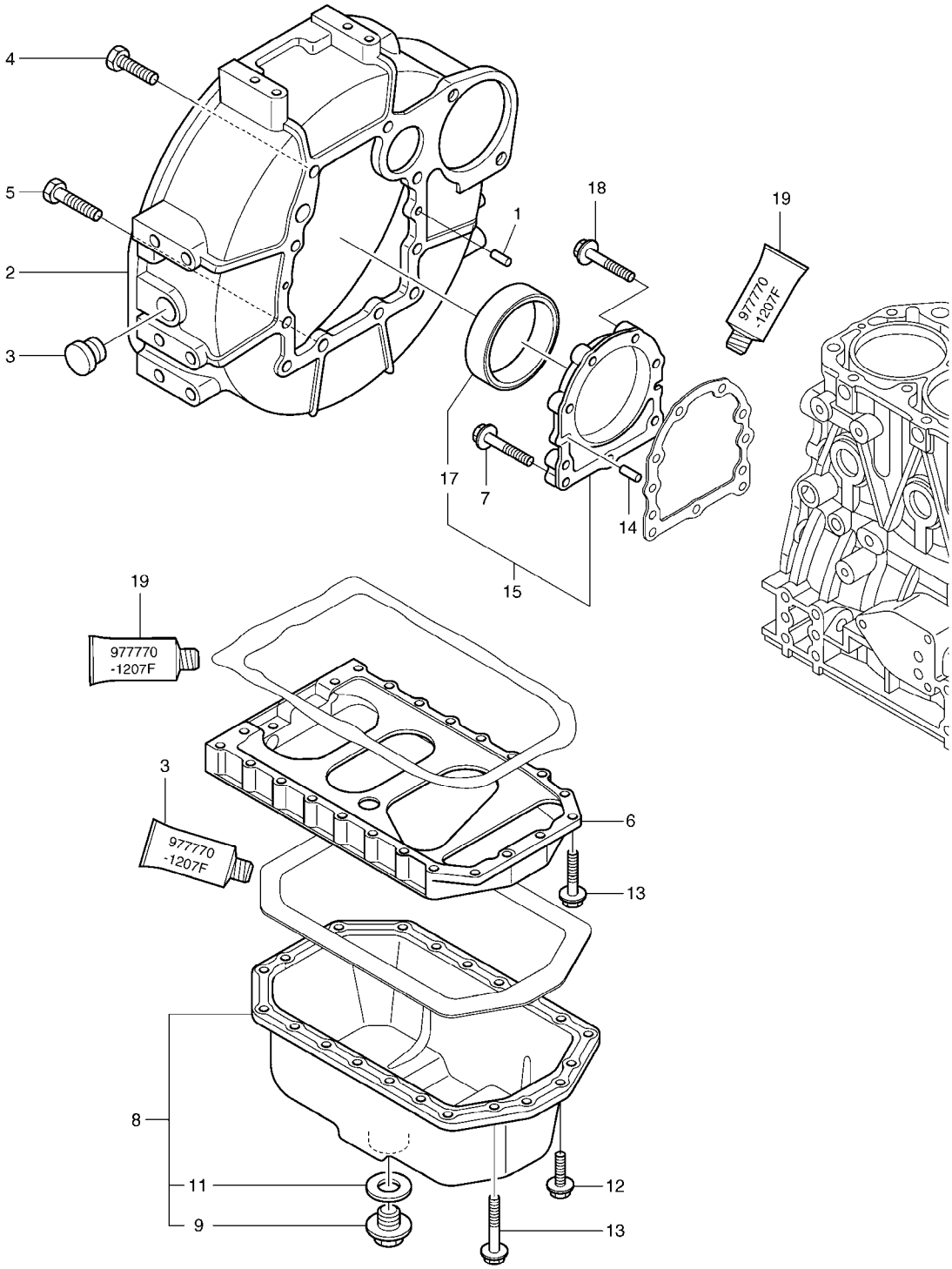

(THIS PARTS BOOK IS FOR REFERENCE ONLY.
PART NUMBERS AND SERAIL NUMBERS MAY BE
OUTDATED. ALWAYS USE THE ONLINE PARTS SYSTEM)

DATE	JAN. 04, 2013
3rd EDITION	

Fig. 003 FLYWHEEL HOUSING & OIL PAN
CARTER DE VOLANT MOTEUR

Serial No. ;

Key No.	Part No.	Description	Description	Q'ty	S.C	Serial No.	ICA	Replaceable part	
								Part No.	Q'ty
003 -1	S5701041	PIN;PARALLEL	GOUPILLE	2					
2	K9004785	HOUSING;FLYWHEEL	LOGEMENT	1					
3	2.430-00083	CAP;FLYWHEEL COVER	CHAPEAU	1					
4	2.120-00037	BOLT M10X25	BOULON	6					
5	K9004856	BOLT M10X30	BOULON	4					
6	K9005183	SPACER;OIL SUMP	ENTERTOISE	1					
7	2.120-00145	BOLT M8X35	BOULON	3					
8	K9005184	PAN;OIL	CAOUTCHOUC	1					
9	2.181-00355	PLUG;DRAIN	BOUCHON	1					
11	2.180-00910	SEAL;WASHER	BAGUE D`ETANCHEITE	1					
12	2.120-00136	BOLT;PLATED M8X16	BOULON	6					
13	2.120-00044	BOLT M8X45	BOULON	22					
14	S5701041	PIN;PARALLEL	GOUPILLE	2					
15	K9004723	CASE ASS'Y	CARTER	1					
17	D460678	SEAL;OIL	JOINT	1					
18	K9004781	BOLT M8X30	BOULON	6					
19	K9004868	GASKET;LIQUID	JOINT	1					

(THIS PARTS BOOK IS FOR REFERENCE ONLY.
PART NUMBERS AND SERAIL NUMBERS MAY BE
OUTDATED. ALWAYS USE THE ONLINE PARTS SYSTEM)

DATE	JAN. 04, 2013
3rd EDITION	

Fig. 004 CYLINDER HEAD & COVER
COUVERTURE DE CULASSE

Serial No. ;

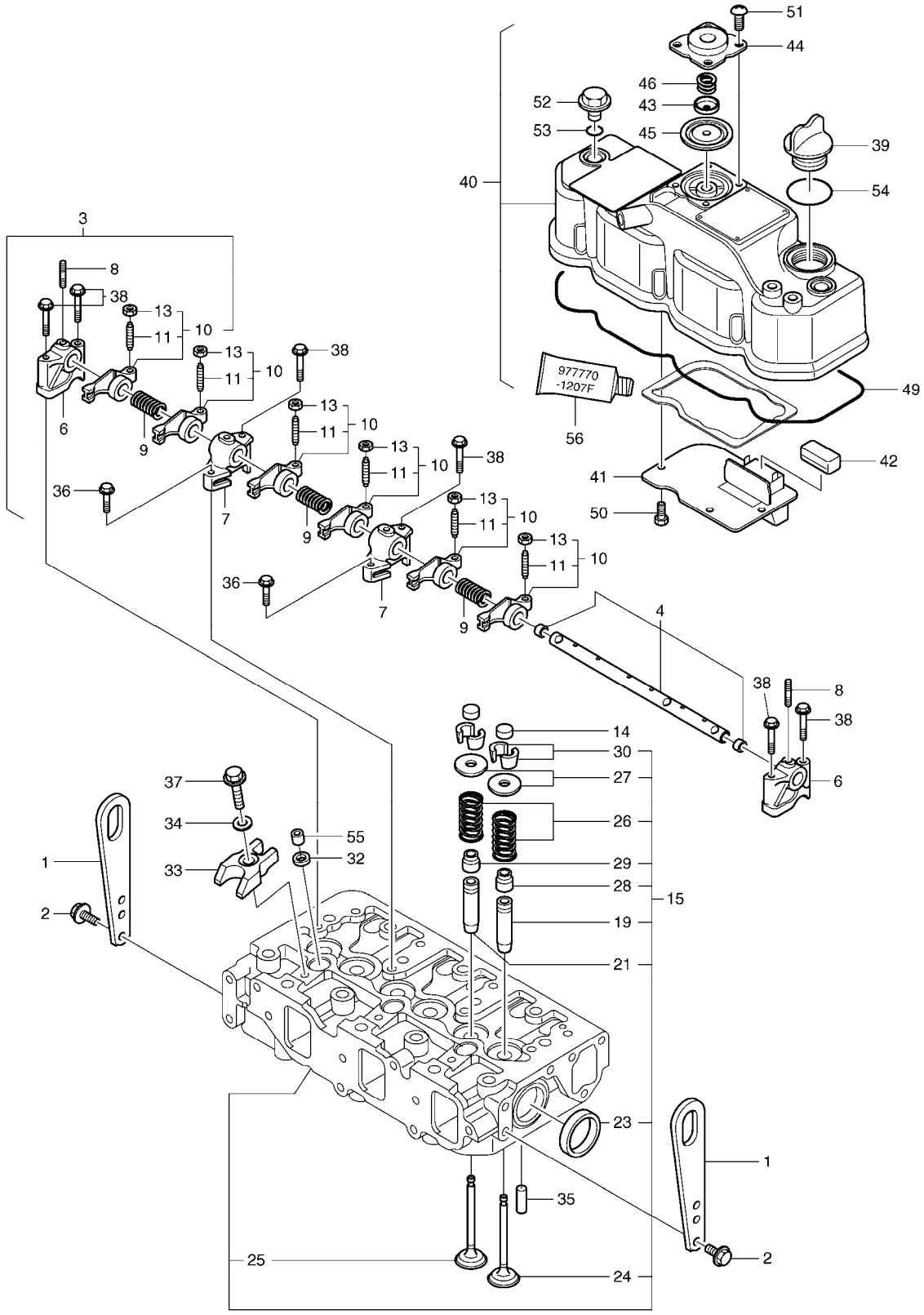

(THIS PARTS BOOK IS FOR REFERENCE ONLY.
PART NUMBERS AND SERAIL NUMBERS MAY BE
OUTDATED. ALWAYS USE THE ONLINE PARTS SYSTEM)

DATE	JAN. 04, 2013
3rd EDITION	

Fig. 004 CYLINDER HEAD & COVER
COUVERTURE DE CULASSE

Serial No. ;

Key No.	Part No.	Description	Description	Q'ty	S.C	Serial No.	ICA	Replaceable part	
								Part No.	Q'ty
004 -1	2.197-00046	LIFTER;ENGINE	POUSSOIR	2					
2	2.120-00136	BOLT;PLATED M8X16	BOULON	4					
3	K9005154	ROCKER ARM SHAFT ASS'Y	BRAS DE CULBUTEUR	1					
4	K9005155	SHAFT;ROCKER ARM	ARBRE	1					
6	K9004637	SUPPORT;ROCKER ARM	SUPPORT	2					
7	K9004638	SUPPORT;ROCKER ARM	SUPPORT	2					
8	K9004639	STUD	BOULON	3					
9	K9004742	SPRING	RESSORT	3					
10	K9005159	ROCKER ARM ASS'Y	BRAS DE CULBUTEUR	6					
11	2.120-00694	SCREW;VALVE	VIS	6					
13	2.121-00084	NUT	ECROU	6					
14	K9005147	CAP;VALVE	CHAPEAU	6					
15	K9005160	CYLINDER HEAD ASS'Y	CULLASSE	1					
19	K9005208	GUIDE;VALVE	GUIDE	3					
21	K9005161	GUIDE;VALVE	GUIDE	3					
23	2.181-00308	PLUG	BOUCHON	2					
24	K9005152	VALVE;INTAKE	SOUPAPE D'ADMISSION	3					
25	K9005153	VALVE;EXHAUST	VANNE	3					
26	K9005188	SPRING;VALVE	RESSORT	6					
27	K9005146	RETAINER;SPRING	ARRETOIR	6					
28	2.180-01240	SEAL;VALVE STEM	JOINT	3					
29	2.180-01241	SEAL;VALVE STEM (EXHAUST)	JOINT	3					
30	2.217-00072	COTTER ASS'Y	CLAVETTE	6					
32	2.427-00018	SEAT;NOZZLE	SIEGE	3					
33	K9005162	RETAINER;NOZZLE	ARRETOIR	3					
34	K9004670	WASHER	RONDELLE	3					
35	S5740860	PIN;SPRING	GOUPILLE	2					
36	K9004854	BOLT M8X25	BOULON	2					
37	2.120-00044	BOLT M8X45	BOULON	3					
38	K9004855	BOLT M8X50	BOULON	6					
39	D460483	CAP;FILLER	COUVERCLE	1					
40	K9005158	CYL.HEAD COVER ASS'Y	CULASSE	1					
41	K9005150	PLATE;BAFFLE	PLAQUE	1					
42	K9004741	BAFFLE;BREATHER	CLOISON DE RENIFLARD	1					
43	K9004633	PLATE;DIAPHRAGM	PLAQUE	1					
44	K9004634	COVER;DIAPHRAGM	COUVERCLE	1					
45	K9004635	DIAPHRAGM	DIAPHRAGME	1					
46	K9004636	SPRING;DIAPHRAGM	RESSORT	1					

(THIS PARTS BOOK IS FOR REFERENCE ONLY.
PART NUMBERS AND SERIAL NUMBERS MAY BE
OUTDATED. ALWAYS USE THE ONLINE PARTS SYSTEM)

DATE	JAN. 04, 2013
3rd EDITION	

Fig. 004 CYLINDER HEAD & COVER
COUVERTURE DE CULASSE

Serial No. ;

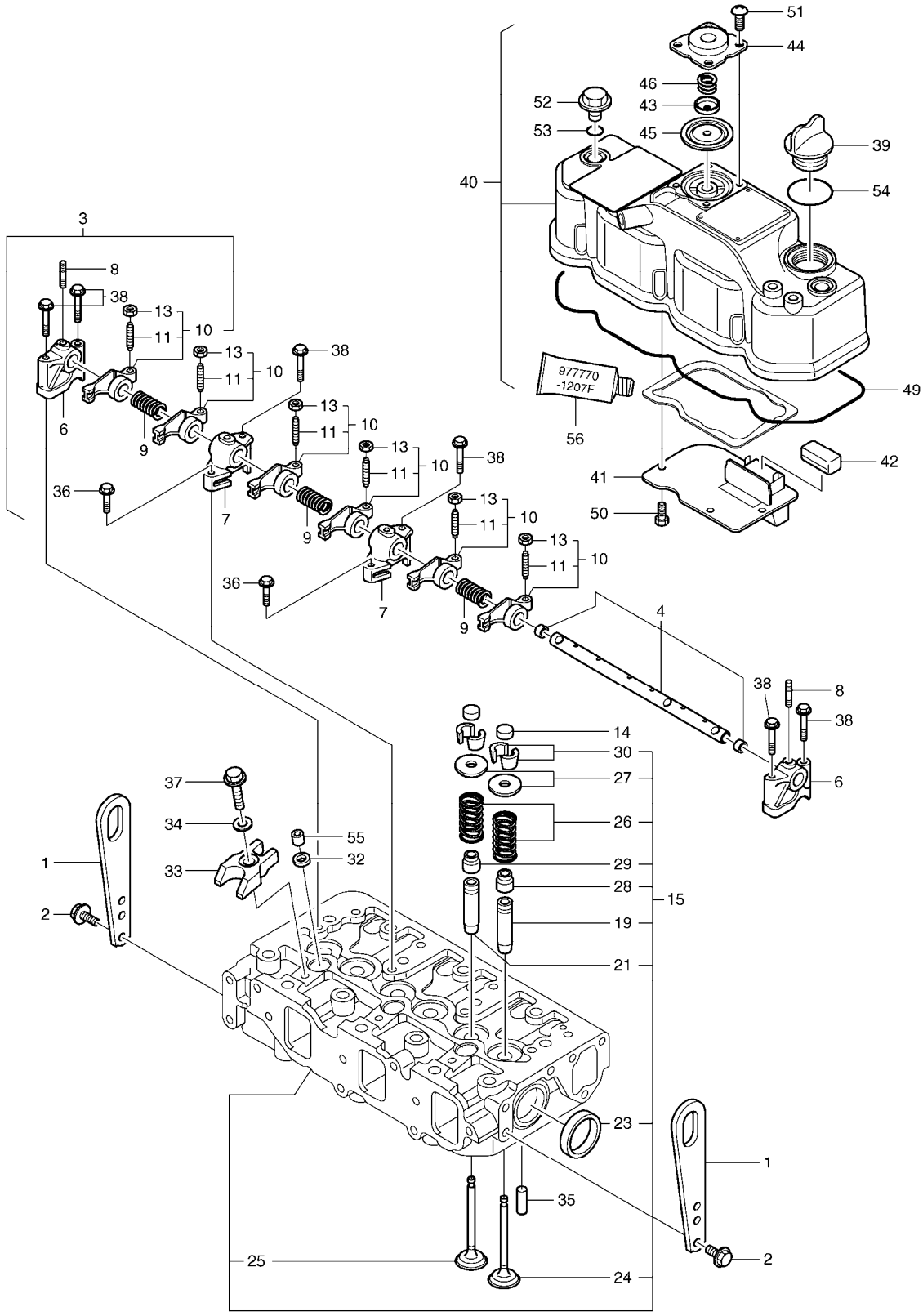

(THIS PARTS BOOK IS FOR REFERENCE ONLY.
PART NUMBERS AND SERAIL NUMBERS MAY BE
OUTDATED. ALWAYS USE THE ONLINE PARTS SYSTEM)

DATE	JAN. 04, 2013
3rd EDITION	

Fig. 004 CYLINDER HEAD & COVER
COUVERTURE DE CULASSE

Serial No. ;

Key No.	Part No.	Description	Description	Q'ty	S.C	Serial No.	ICA	Replaceable part	
								Part No.	Q'ty
004 -49	K9005156	GASKET;COVER	JOINT	1					
50	2.120-00496	SCREW	VIS	4					
51	2.120-00496	SCREW	VIS	4					
52	2.132-00005	KNOB	BOUTON	3					
53	S8000120	O-RING	JOINT TORIQUE	3					
54	S8000320	O-RING	JOINT TORIQUE	1					
55	2.158-00004	PROTECTOR;NOZZLE	PROTECTEUR	3					
56	K9004868	GASKET;LIQUID	JOINT	1					

(THIS PARTS BOOK IS FOR REFERENCE ONLY.
PART NUMBERS AND SERAIL NUMBERS MAY BE
OUTDATED. ALWAYS USE THE ONLINE PARTS SYSTEM)

DATE	JAN. 04, 2013
3rd EDITION	

Fig. 005 INTAKE MANIFOLD TUBULURE D'CENTREE

Serial No. ;

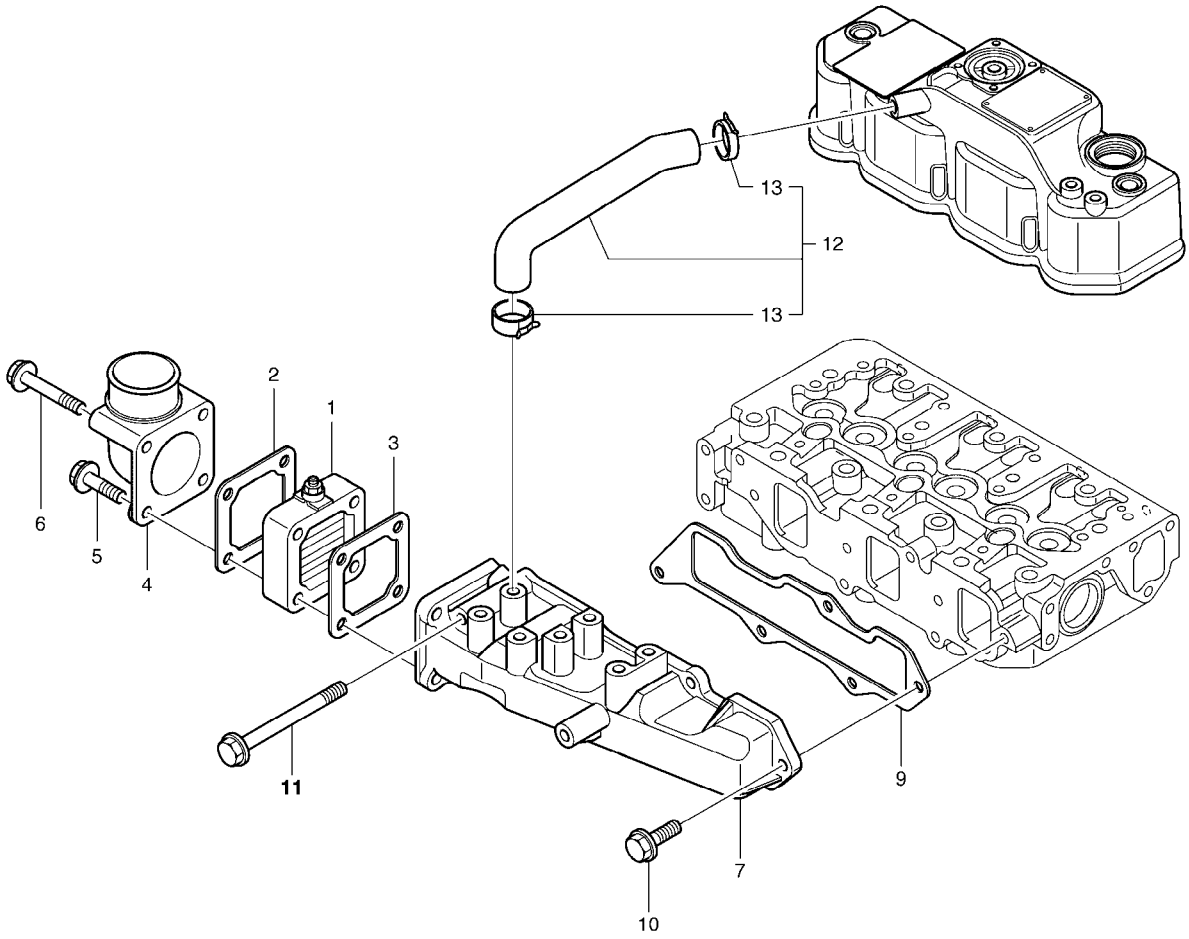

(THIS PARTS BOOK IS FOR REFERENCE ONLY.
PART NUMBERS AND SERAIL NUMBERS MAY BE
OUTDATED. ALWAYS USE THE ONLINE PARTS SYSTEM)

DATE	JAN. 04, 2013
3rd EDITION	

Fig. 005 INTAKE MANIFOLD TUBULURE D'CENTREE

Serial No. ;

Key No.	Part No.	Description	Description	Q'ty	S.C	Serial No.	ICA	Replaceable part	
								Part No.	Q'ty
005 -1	K9005211	HEATER;AIR	RECHAUFFEUR	1					
2	K9004732	GASKET;AIR HEATER	JOINT	1					
3	K9004753	GASKET	JOINT	1					
4	K9004836	BEND	COURBURE	1					
5	2.120-00139	BOLT;PLATED M8X40	BOULON	2					
6	2.120-00146	BOLT M8X80	BOULON	2					
7	K9005163	MAINFOLD;INTAKE	MAINFOLD	1					
9	K9005203	GASKET;INT.MANIFOLD	JOINT	1					
10	2.120-00137	BOLT M8X20	BOULON	4					
11	2.120-00146	BOLT M8X80	BOULON	2					
12	K9005151	PIPE;BREATHER	TUYAU	1					
13	K9004776	CLAMP	BRIDE	2					

(THIS PARTS BOOK IS FOR REFERENCE ONLY.
PART NUMBERS AND SERAIL NUMBERS MAY BE
OUTDATED. ALWAYS USE THE ONLINE PARTS SYSTEM)

DATE	JAN. 04, 2013
3rd EDITION	

Fig. 006 EXHAUST MANIFOLD & MUFFLER
TUBULURE ET SILENCIEUX D'ECHAPPEMENT

Serial No. ;

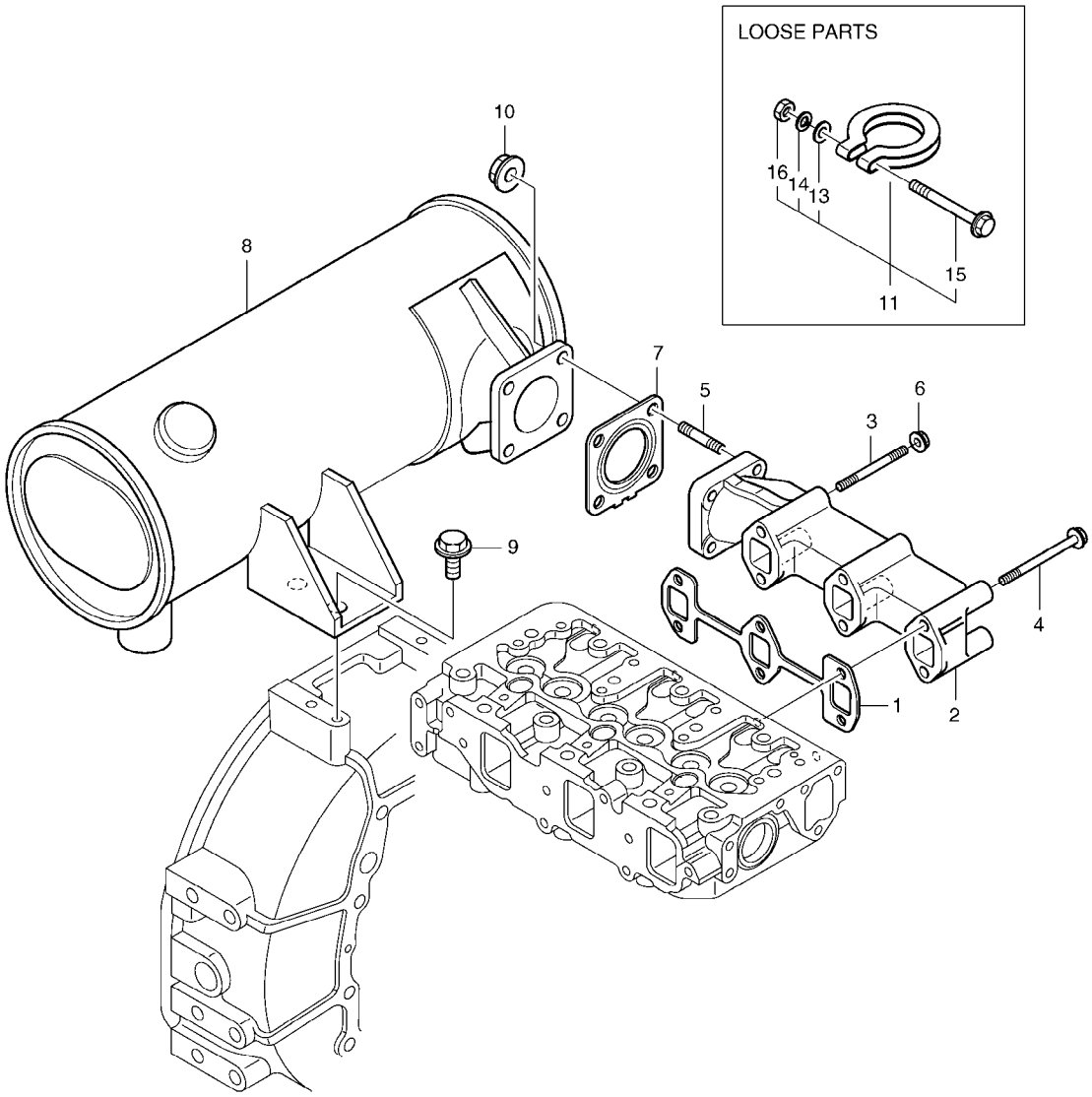

(THIS PARTS BOOK IS FOR REFERENCE ONLY.
PART NUMBERS AND SERAIL NUMBERS MAY BE
OUTDATED. ALWAYS USE THE ONLINE PARTS SYSTEM)

DATE	JAN. 04, 2013
3rd EDITION	

Fig. 006 EXHAUST MANIFOLD & MUFFLER
TUBULURE ET SILENCIEUX D'ECHAPPEMENT

Serial No. ;

Key No.	Part No.	Description	Description	Q'ty	S.C	Serial No.	ICA	Replaceable part	
								Part No.	Q'ty
006 -1	K9005189	GASKET;EXHAUST MANIFOLD	JOINT	1					
2	K9005164	MANIFOLD;EXHAUST	COLLECTEUR	1					
3	2.120-00856	BOLT;STUD	BOULON	2					
4	2.120-00855	BOLT M8X80	BOULON	4					
5	2.120-00147	BOLT M8X22	BOULON	4					
6	2.121-00267	NUT	ECROU	2					
7	K9004704	GASKET;MUFFLER	JOINT	1					
8	K9005213	MUFFLER	SILENCIEUX	1					
9	2.120-00862	BOLT M10X20	BOULON	2					
10	2.121-00267	NUT	ECROU	4					
11	K9004672	CLAMP	BRIDE	2					
13	K9004837	WASHER	RONDELLE	1					
14	K9004842	WASHER;SPRING	RONDELLE ELASTIQUE	1					
15	2.120-00144	BOLT M10X65	BOULON	1					
16	K9004858	NUT	ECROU	1					

(THIS PARTS BOOK IS FOR REFERENCE ONLY.
PART NUMBERS AND SERAIL NUMBERS MAY BE
OUTDATED. ALWAYS USE THE ONLINE PARTS SYSTEM)

DATE	JAN. 04, 2013
3rd EDITION	

Fig. 007 CAMSHAFT & DRIVING GEAR
ARBRE DE CAME

Serial No. ;

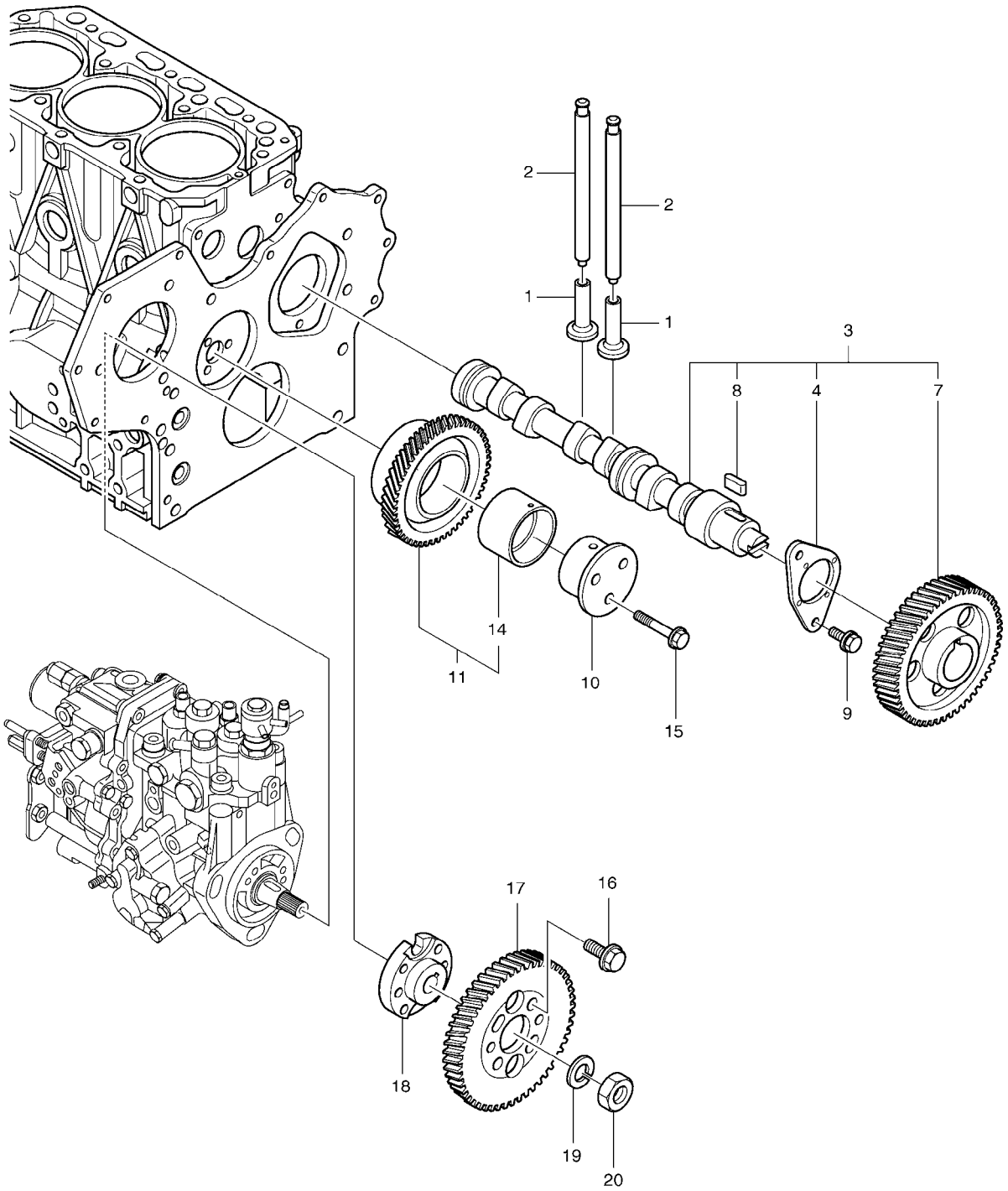

(THIS PARTS BOOK IS FOR REFERENCE ONLY.
PART NUMBERS AND SERAIL NUMBERS MAY BE
OUTDATED. ALWAYS USE THE ONLINE PARTS SYSTEM)

DATE	JAN. 04, 2013
3rd EDITION	

Fig. 007 CAMSHAFT & DRIVING GEAR
ARBRE DE CAME

Serial No. ;

Key No.	Part No.	Description	Description	Q'ty	S.C	Serial No.	ICA	Replaceable part	
								Part No.	Q'ty
007 -1	2.429-00133	TAPPET	TRINGLERIE	6					
2	K9005191	ROD;PUSH	TIGE DE POUSSOIR	6					
3	K9005165	CAMSHAFT ASS'Y	ENSEMBLE DE ARBRE A C/	1					
4	2.177-00050	METAL;THRUST	METAL	1					
7	K9004744	GEAR;CAMSHAFT	PIGNON	1					
8	2.113-00005	KEY	CLE	1					
9	2.120-00041	BOLT M8X14	BOULON	2					
10	K9004641	SHAFT;IDLE GEAR	ARBRE	1					
11	K9004643	IDLE GEAR ASS'Y	VITESSE A VIDE	1					
14	K9004642	BUSH;IDLE GEAR	DOUILLE	1					
15	2.120-00139	BOLT;PLATED M8X40	BOULON	3					
16	K9004748	BOLT	BOULON	4					
17	K9004644	GEAR;PUMP	PIGNON	1					
18	K9004804	FLANGE	BRIDE	1					
19	K9004843	WASHER;SPRING	RONDELLE ELASTIQUE	1					
20	K9004859	NUT;LOCK	ECROU	1					

(THIS PARTS BOOK IS FOR REFERENCE ONLY.
PART NUMBERS AND SERAIL NUMBERS MAY BE
OUTDATED. ALWAYS USE THE ONLINE PARTS SYSTEM)

DATE	JAN. 04, 2013
3rd EDITION	

Fig. 008 CRANKSHAFT & PISTON
VILEBREQUIN & PISTON

Serial No. ;

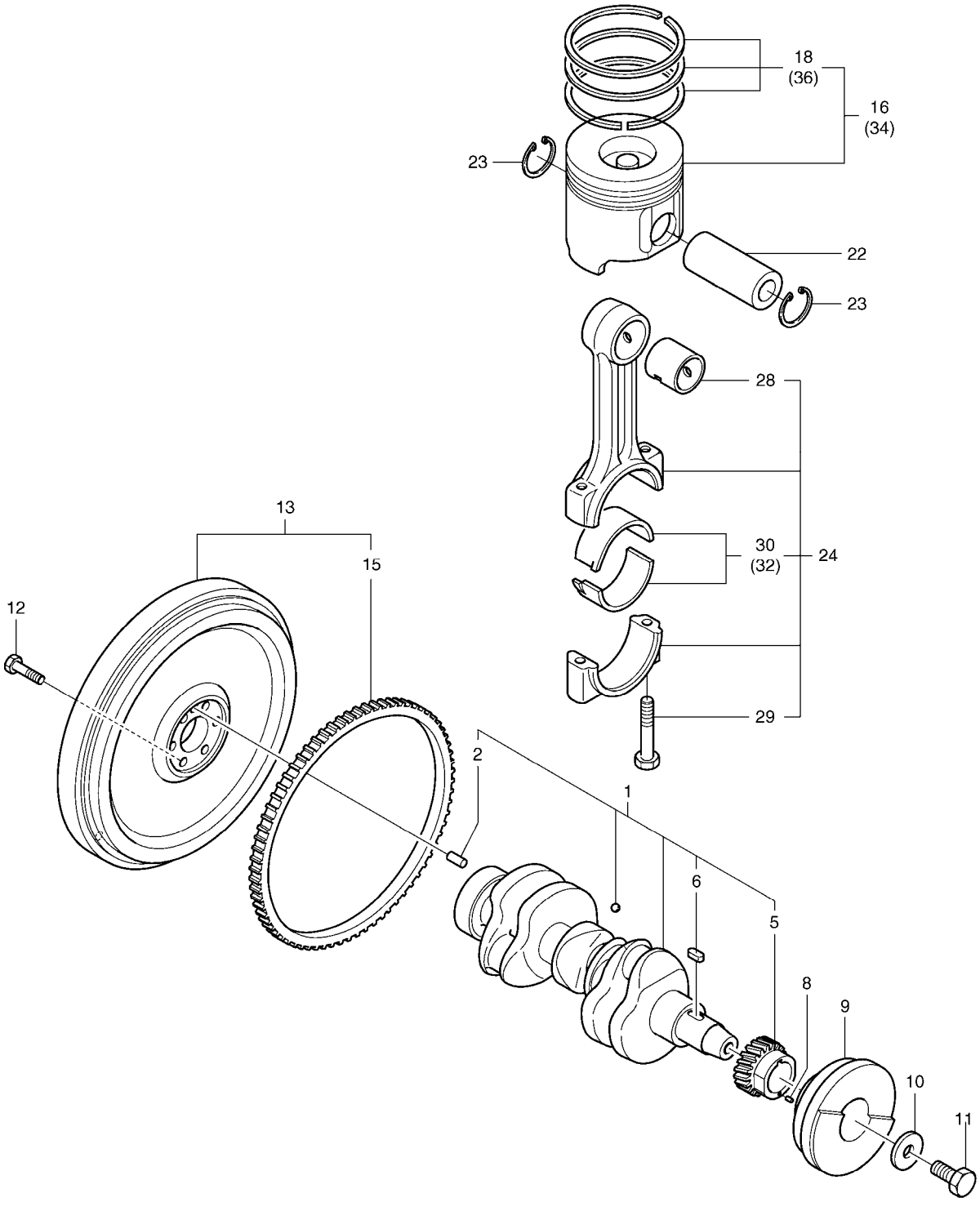

(THIS PARTS BOOK IS FOR REFERENCE ONLY.
PART NUMBERS AND SERAIL NUMBERS MAY BE
OUTDATED. ALWAYS USE THE ONLINE PARTS SYSTEM)

DATE	JAN. 04, 2013
3rd EDITION	

Fig. 008 CRANKSHAFT & PISTON VILEBREQUIN & PISTON

Serial No. ;

Key No.	Part No.	Description	Description	Q'ty	S.C	Serial No.	ICA	Replaceable part	
								Part No.	Q'ty
008 -1	K9005166	CRANKSHAFT ASS'Y	VILEBREQUIN	1					
2	S5701041	PIN;PARALLEL	GOUPILLE	1					
5	K9004640	GEAR;CRANKSHAFT	PIGNON	1					
6	2.113-00005	KEY	CLE	1					
8	S5740490	PIN;SPRING	GOUPILLE	1					
9	K9005167	PULLEY;CRANKSHAFT	POULIE	1					
10	K9004799	WASHER	RONDELLE	1					
11	2.120-00858	BOLT;V-PULLEY	BOULON	1					
12	2.120-00225	BOLT;FLYWHEEL	BOULON	6					
13	K9005217	FLYWEEL ASS'Y	FLYWEEL	1					
15	K9004666	GEAR;RING	PIGNON	1					
16	K9005168	PISTON ASS'Y	ENSEMBLE PISTON	3					
18	K9005169	PISTON RING SET	BAGUE	3					
22	K9005205	PIN;PISTON	GOUPILLE	3					
23	K9005221	RING	BAGUE	6					
24	K9005227	CONNECTING ROD ASS'Y	BIELLE ASS'Y	3					
28	K9005195	BUSH;PISTON PIN	DOUILLE	3					
29	K9005192	BOLT;CONNECTING ROD	BOULON	6					
30	K9005193	METAL;CRANK	METAL	3					
32	K9005194	METAL;CRANK (0.25)	METAL DETRAQUE	3	US				
34	K9005224	PISTON;W/RING (0.25)	PISTON	3	OS				
36	K9005225	RING;SET (0.25)	BAGUE	3	OS				

(THIS PARTS BOOK IS FOR REFERENCE ONLY.
PART NUMBERS AND SERAIL NUMBERS MAY BE
OUTDATED. ALWAYS USE THE ONLINE PARTS SYSTEM)

DATE	JAN. 04, 2013
3rd EDITION	

Fig. 009 LUB.OIL SYSTEM SYSTEME D'HUILE

Serial No. ;

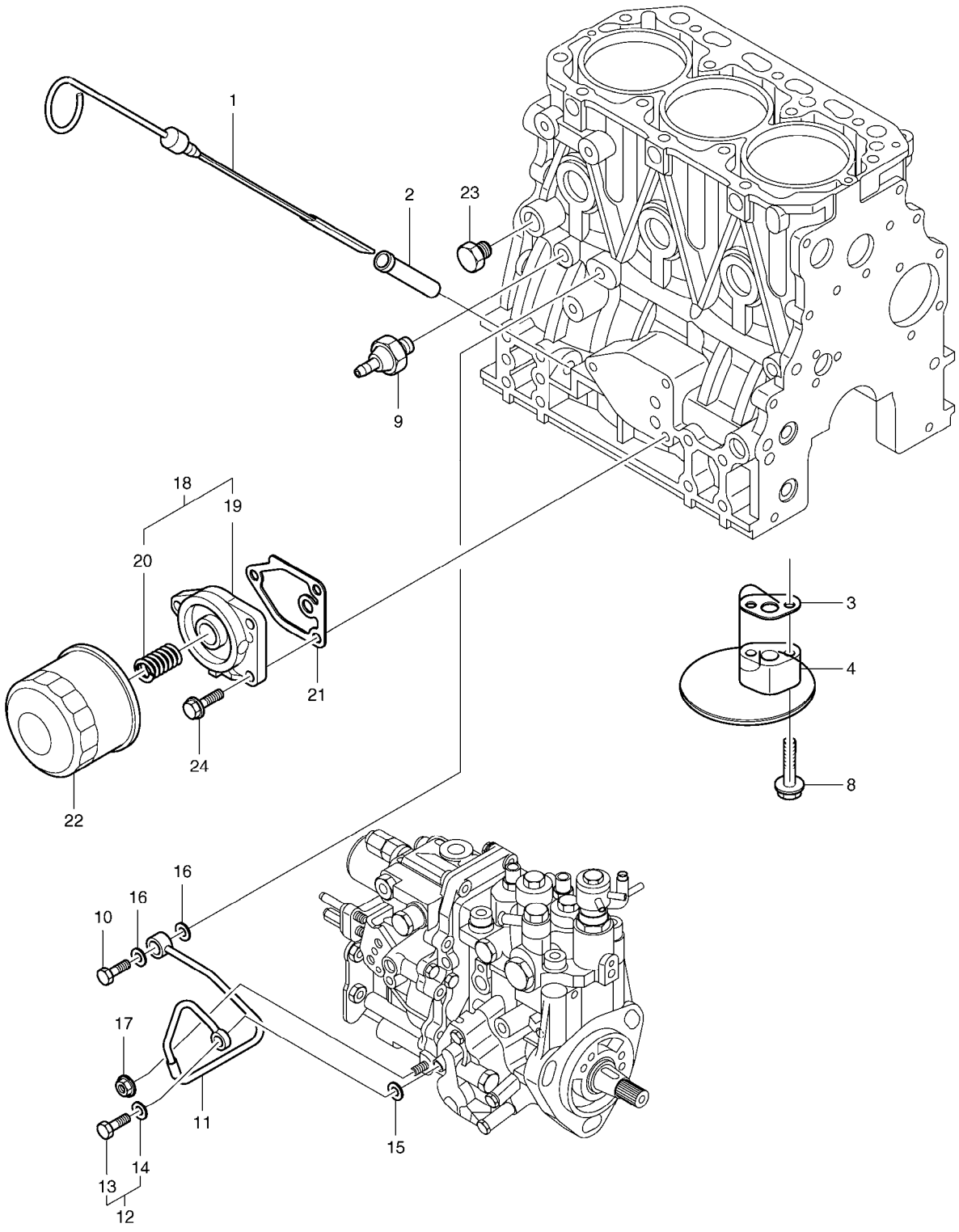

(THIS PARTS BOOK IS FOR REFERENCE ONLY.
PART NUMBERS AND SERAIL NUMBERS MAY BE
OUTDATED. ALWAYS USE THE ONLINE PARTS SYSTEM)

DATE	JAN. 04, 2013
3rd EDITION	

Fig. 009 LUB.OIL SYSTEM SYSTEME D'HUILE

Serial No. ;

Key No.	Part No.	Description	Description	Q'ty	S.C	Serial No.	ICA	Replaceable part	
								Part No.	Q'ty
009 -1	K9005170	DIPSTICK;LUB.OIL	JAUGEUR	1					
2	2.429-00043	GUIDE;OIL GAUGE	GUIDE	1					
3	K9004749	GASKET	JOINT	1					
4	K9005196	PIPE ASS'Y;OIL INLET	ENSEMBLE DE TUYAU	1					
8	2.120-00145	BOLT M8X35	BOULON	2					
9	2.549-00005	SWITCH;OIL PRESS	COMMUTATEUR	1					
10	K9004679	BOLT	BOULON	1					
11	K9004651	PIPE ASS'Y;LUB.OIL	ENSEMBLE DE TUYAU	1					
12	2.313-00001	BOLT ASS'Y;JOINT	BOULON	1					
13	2.120-00258	BOLT;JOINT	BOULON	1					
14	2.114-00889	WASHER;SEAL	RONDELLE	1					
15	2.114-00889	WASHER;SEAL	RONDELLE	1					
16	K9004838	SEAL;WASHER	BAGUE D'ETANCHEITE	2					
17	2.121-00092	NUT	ECROU	1					
18	K9004650	BRACKET ASS'Y;FILTER	SUPPORT	1					
19	K9005171	BRACKET;FILTER	SUPPORT	1					
20	K9004727	STUD	BOULON	1					
21	K9004750	GASKET	JOINT	1					
22	K1025334	FILTER;OIL	FILTRE	1					
23	2.181-00353	PLUG;DRAIN	BOUCHON	1					
24	2.120-00137	BOLT M8X20	BOULON	3					

(THIS PARTS BOOK IS FOR REFERENCE ONLY.
PART NUMBERS AND SERAIL NUMBERS MAY BE
OUTDATED. ALWAYS USE THE ONLINE PARTS SYSTEM)

DATE	JAN. 04, 2013
3rd EDITION	

Fig. 010 COOLING WATER SYSTEM
SYSTEME DE REFROIDISSEMENT

Serial No. ;

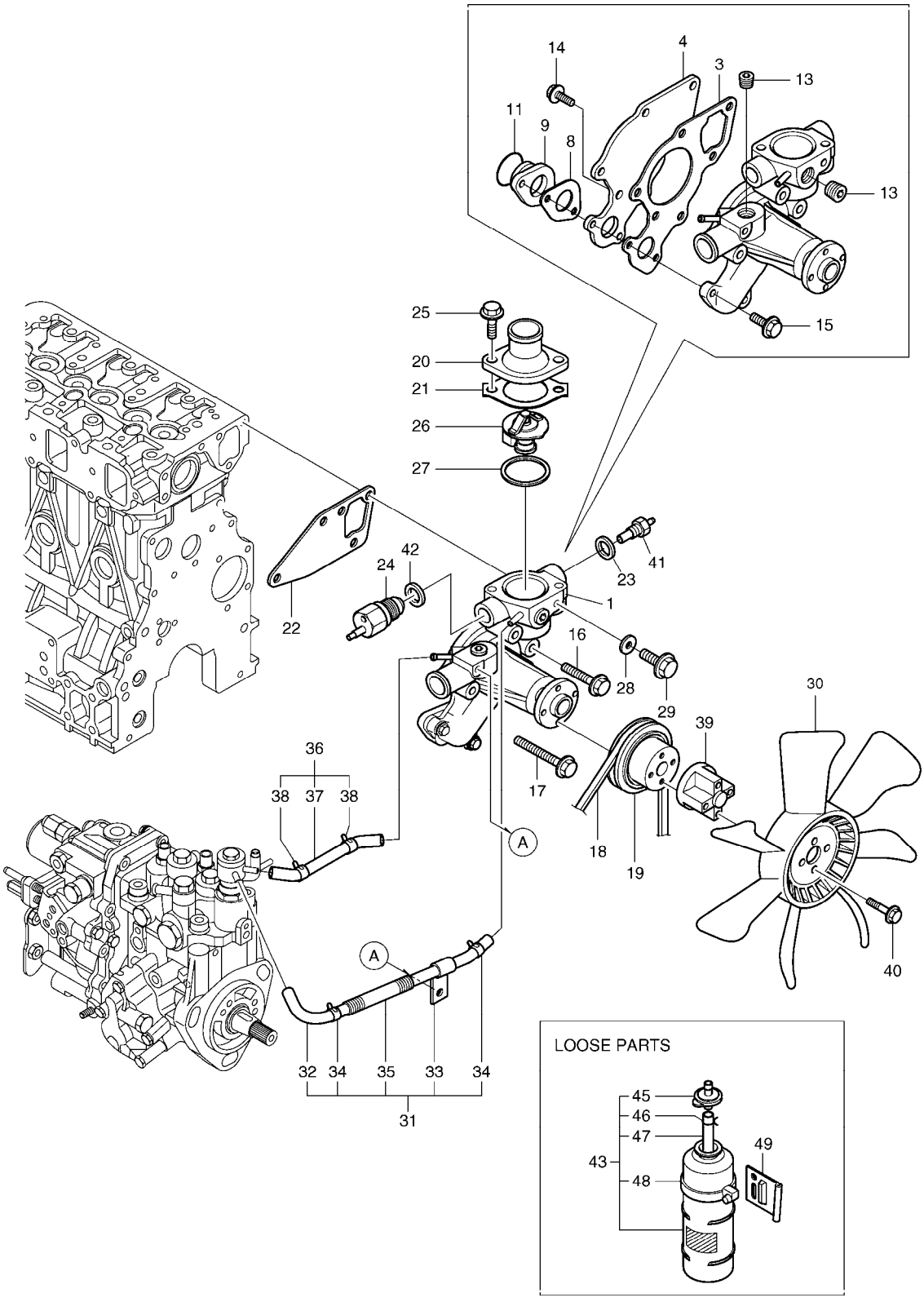

(THIS PARTS BOOK IS FOR REFERENCE ONLY.
PART NUMBERS AND SERAIL NUMBERS MAY BE
OUTDATED. ALWAYS USE THE ONLINE PARTS SYSTEM)

DATE	JAN. 04, 2013
3rd EDITION	

Fig. 010 COOLING WATER SYSTEM
SYSTEME DE REFROIDISSEMENT

Serial No. ;

Key No.	Part No.	Description	Description	Q'ty	S.C	Serial No.	ICA	Replaceable part	
								Part No.	Q'ty
010 -1	K9005172	WATER PUMP ASS'Y	ENSEMBLE POMPE A EAU	1					
3	K9005197	GASKET	JOINT	1					
4	K9005198	PLATE	PLAQUE	1					
8	K9005199	GASKET	JOINT	1					
9	K9005200	PIPE	TUYAU	1					
11	K9005210	O-RING	JOINT TORIQUE	1					
13	2181-1116D3	PLUG;HEX. SOCKET	BOUCHON	2					
14	K9002144	BOLT M6X14	BOULON	2					
15	2.120-00150	BOLT M6X20	BOULON	2					
16	2.120-00145	BOLT M8X35	BOULON	1					
17	2.120-00148	BOLT;PLATED M8X55	BOULON	3					
18	DS3202026	BELT;FAN	COURROIE	1					
19	K9005218	PULLEY	POULIE	1					
20	K9004773	COVER;THERMOSTAT	COUVERCLE	1					
21	D465096	GASKET	JOINT	1					
22	K9005215	GASKET	JOINT	1					
23	2.180-00054	GASKET	JOINT	1					
24	2.549-00027	SWITCH;THERMO	COMMUTATEUR	1					
25	2.120-00861	BOLT M8X22	BOULON	2					
26	K9004754	THERMOSTAT	THERMOSTAT	1					
27	K9004751	GASKET	JOINT	1					
28	2.180-00100	GASKET	JOINT	1					
29	2.120-00143	BOLT M8X12	BOULON	1					
30	K9005206	FAN;COOLING	VENTILATEUR	1					
31	K9005173	PIPE ASS'Y	ENSEMBLE DE TUYAU	1					
32	K9005175	PIPE ASS'Y	ENSEMBLE DE TUYAU	1					
33	K9004653	CLAMP	BRIDE	1					
34	2.124-00086	CLAMP	BRIDE	2					
35	K9005178	TUBE;CORRUGATED	TUYAU FLEXIBLE	1					
36	K9005174	PIPE ASS'Y	ENSEMBLE DE TUYAU	1					
37	K9005176	PIPE;WATER	TUYAU	1					
38	2.124-00086	CLAMP	BRIDE	2					
39	K9005207	SPACER	DOUILLE D'ECARTEMENT	1					
40	2.120-00031	BOLT M 6X 40 PLATED	BOULON	4					
41	2.549-00029	THERMOMETER	THERMOMETRE	1					
42	180-00222	GASKET	JOINT	1					
43	K9004681	TANK;RESERVE	RESERVOIR	1					
45	K9004682	CAP	CHAPEAU	1					

(THIS PARTS BOOK IS FOR REFERENCE ONLY.
PART NUMBERS AND SERIAL NUMBERS MAY BE
OUTDATED. ALWAYS USE THE ONLINE PARTS SYSTEM)

Fig. 010 COOLING WATER SYSTEM
SYSTEME DE REFROIDISSEMENT

Serial No. ;

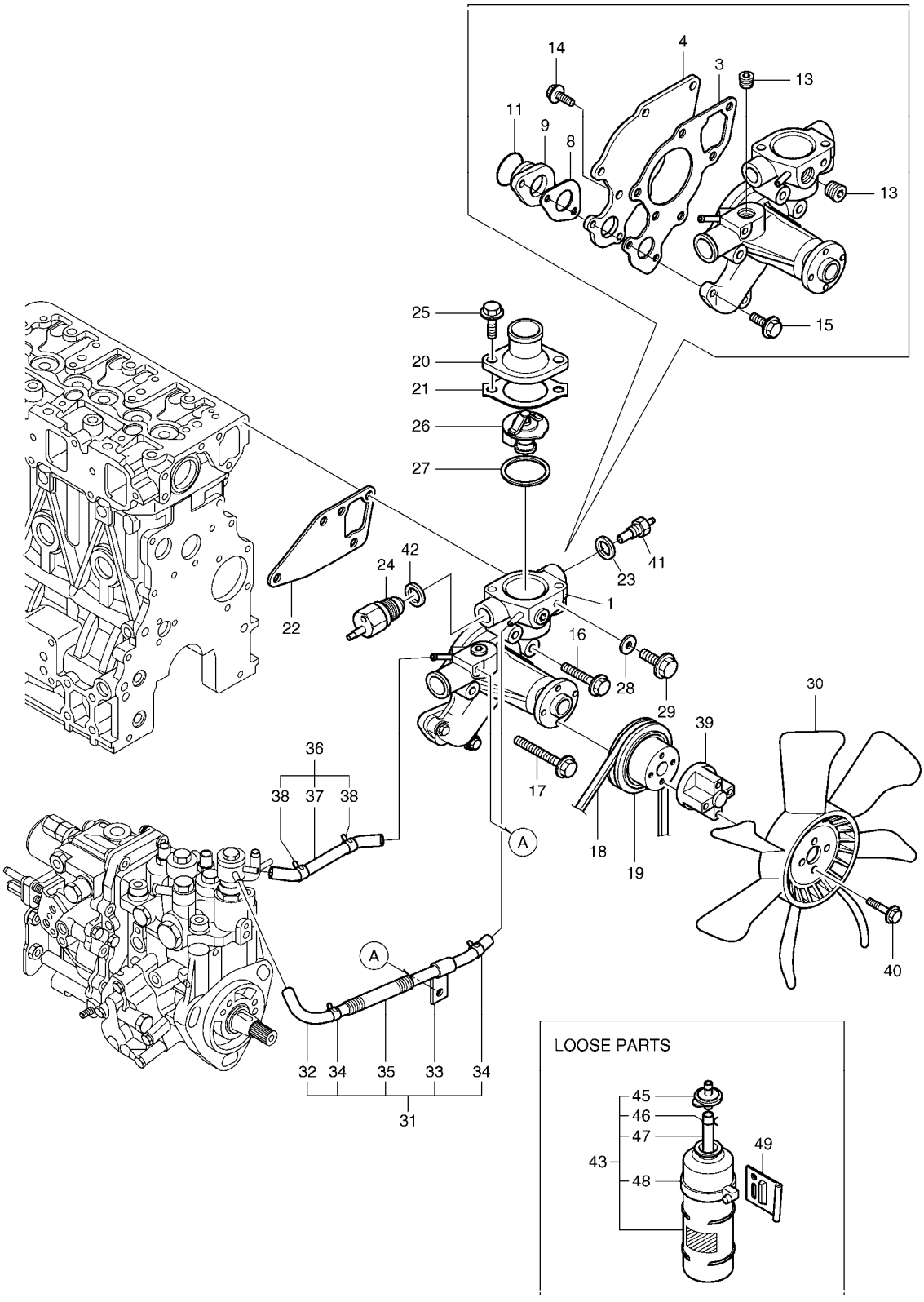

(THIS PARTS BOOK IS FOR REFERENCE ONLY.
PART NUMBERS AND SERAIL NUMBERS MAY BE
OUTDATED. ALWAYS USE THE ONLINE PARTS SYSTEM)

Fig. 010 COOLING WATER SYSTEM
SYSTEME DE REFROIDISSEMENT

Serial No. ;

Key No.	Part No.	Description	Description	Q'ty	S.C	Serial No.	ICA	Replaceable part	
								Part No.	Q'ty
010 -46	K9004684	CLAMP	BRIDE	1					
47	K9004847	PIPE	TUYAU	1					
48	K9004683	CLAMP;SUB TANK	COLLIER	1					
49	K9004673	BRACKET;SUB TANK	SUPPORT	1					

(THIS PARTS BOOK IS FOR REFERENCE ONLY.
PART NUMBERS AND SERAIL NUMBERS MAY BE
OUTDATED. ALWAYS USE THE ONLINE PARTS SYSTEM)

DATE	JAN. 04, 2013
3rd EDITION	

Fig. 011 FUEL INJECTION PUMP
POMPE D'INJECTION

Serial No. ;

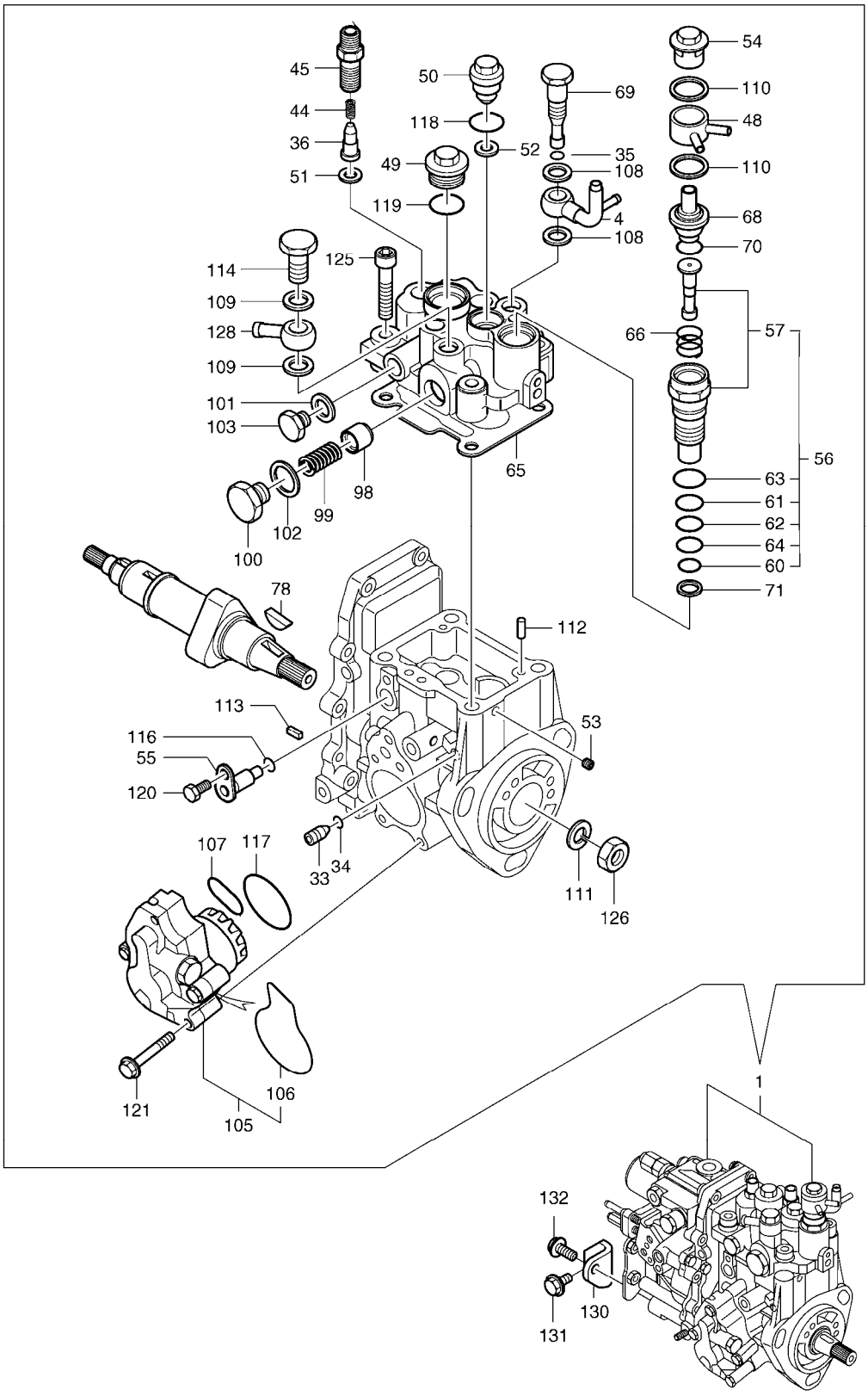

(THIS PARTS BOOK IS FOR REFERENCE ONLY.
PART NUMBERS AND SERAIL NUMBERS MAY BE
OUTDATED. ALWAYS USE THE ONLINE PARTS SYSTEM)

DATE	JAN. 04, 2013
3rd EDITION	

Fig. 011 FUEL INJECTION PUMP
POMPE D'INJECTION

Serial No. ;

Key No.	Part No.	Description	Description	Q'ty	S.C	Serial No.	ICA	Replaceable part	
								Part No.	Q'ty
011 -1	K9005229	INJECTION PUMP ASS'Y	PIPE D'INJECTION	1					
4	K9004808	JOINT	JOINT	1					
33	K9004830	STOPPER	ARRET	1					
34	K9004828	O-RING	JOINT TORIQUE	1					
35	K9004828	O-RING	JOINT TORIQUE	1					
36	K9004827	DELIVERY VALVE ASS'Y	SOUPAPE DE MANOEUVRE	3					
44	K9004829	SPRING	RESSORT	3					
45	K9004832	HOLDER;DELIVERY	SUPPORT	3					
48	K9004817	JOINT;COOLING WATER	L'EAU DE REFROIDISSEME	1					
49	K9004833	PLUG	BOUCHON	1					
50	K9004656	BARREL;PLUG	BARIL DE PRISE	1					
51	K9004805	WASHER	RONDELLE	3					
52	K9004805	WASHER	RONDELLE	1					
53	K9004826	PLUG	BOUCHON	1					
54	K9004883	PLUG	BOUCHON	1					
55	K9004806	LIFTER	POUSSOIR	1					
56	K9004657	TIMER;SET	TEMPORISATEUR	1					
57	-	TIMER;CMP	TEMPORISATEUR	1	D				
60	K9004821	O-RING	JOINT TORIQUE	1					
61	K9004659	RING;BACKUP	BAGUE	1					
62	K9004660	O-RING	JOINT TORIQUE	1					
63	K9004852	PACKING	EMBALLAGE	1					
64	K9004853	RING;BACKUP	BAGUE	1					
65	K9004807	PACKING;HEAD	EMBALLAGE	1					
66	K9004818	SPRING;TIMER	RESSORT	1					
68	K9004819	ELEMENT;THERMO	ELEMENT	1					
69	K9004834	JOINT	JOINT	1					
70	K9004820	O-RING	JOINT TORIQUE	1					
71	K9004822	PACKING;TIMER	EMBALLAGE	1					
78	K9004654	KEY	CLE	1					
98	K9004831	PISTON	PISTON	1					
99	K9004809	DAMPER ASS'Y	AMORTISSEUR	1					
100	K9004835	PLUG	BOUCHON	1					
101	2.114-01090	SEAL;WASHER	BAGUE D`ETANCHEITE	1					
102	K9004841	SEAL;WASHER	BAGUE D`ETANCHEITE	1					
103	K9004850	PLUG	BOUCHON	1					
105	K9004810	PUMP;FUEL FEED	ALIMENTATION DE PUMP;F	1					
106	K9004813	O-RING	JOINT TORIQUE	1					

(THIS PARTS BOOK IS FOR REFERENCE ONLY.
PART NUMBERS AND SERIAL NUMBERS MAY BE
OUTDATED. ALWAYS USE THE ONLINE PARTS SYSTEM)

DATE	JAN. 04, 2013
3rd EDITION	

Fig. 011 FUEL INJECTION PUMP
POMPE D'INJECTION

Serial No. ;

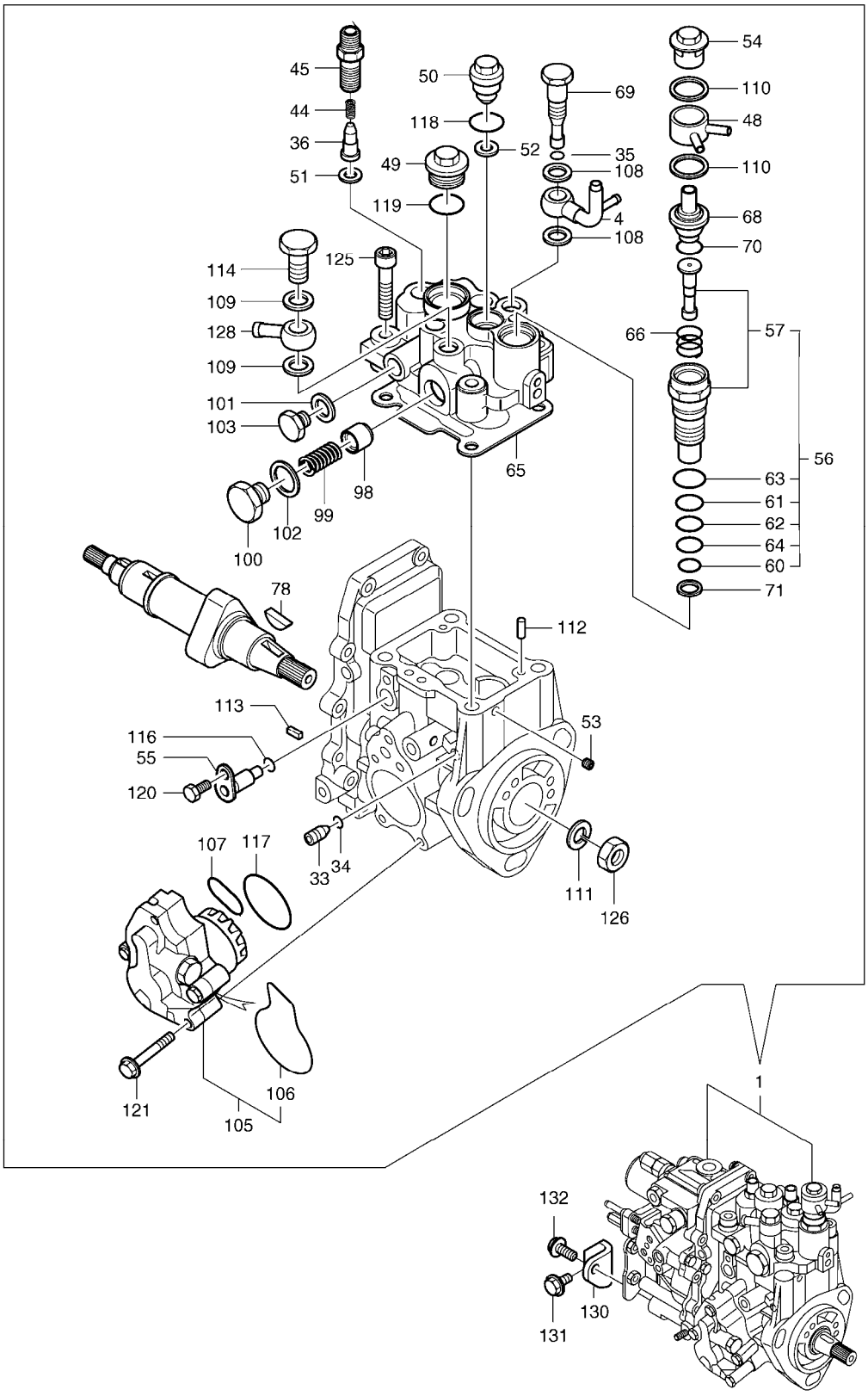

(THIS PARTS BOOK IS FOR REFERENCE ONLY.
PART NUMBERS AND SERAIL NUMBERS MAY BE
OUTDATED. ALWAYS USE THE ONLINE PARTS SYSTEM)

Fig. 011 FUEL INJECTION PUMP
POMPE D'INJECTION

Serial No. ;

Key No.	Part No.	Description	Description	Q'ty	S.C	Serial No.	ICA	Replaceable part	
								Part No.	Q'ty
011 -107	K9004811	O-RING	JOINT TORIQUE	1					
108	2.114-01090	SEAL;WASHER	BAGUE D`ETANCHEITE	2					
109	2.114-01090	SEAL;WASHER	BAGUE D`ETANCHEITE	2					
110	K9004841	SEAL;WASHER	BAGUE D`ETANCHEITE	2					
111	K9004843	WASHER;SPRING	RONDELLE ELASTIQUE	1					
112	K9004845	PIN;PARALLEL	GOUPILLE	2					
113	K9004846	PIN;SPRING	GOUPILLE	2					
114	2.120-00259	BOLT;JOINT	BOULON	1					
116	S8000070	O-RING	JOINT TORIQUE	1					
117	K9004812	O-RING	JOINT TORIQUE	1					
118	K9004851	O-RING	JOINT TORIQUE	1					
119	K9004852	PACKING	EMBALLAGE	1					
120	2.120-00039	BOLT M6X10	BOULON	1					
121	K9004823	BOLT	BOULON	4					
125	K9004857	BOLT M8X45	BOULON	4					
126	K9004859	NUT;LOCK	ECROU	1					
128	K9005222	JOINT	JOINT	1					
130	K9004655	BRACKET;PUMP	SUPPORT	1					
131	2.120-00136	BOLT;PLATED M8X16	BOULON	1					
132	2.120-00137	BOLT M8X20	BOULON	1					

(THIS PARTS BOOK IS FOR REFERENCE ONLY.
PART NUMBERS AND SERAIL NUMBERS MAY BE
OUTDATED. ALWAYS USE THE ONLINE PARTS SYSTEM)

DATE	JAN. 04, 2013
3rd EDITION	

Fig. 012 GOVERNOR GOUVERNEUR

Serial No. ;

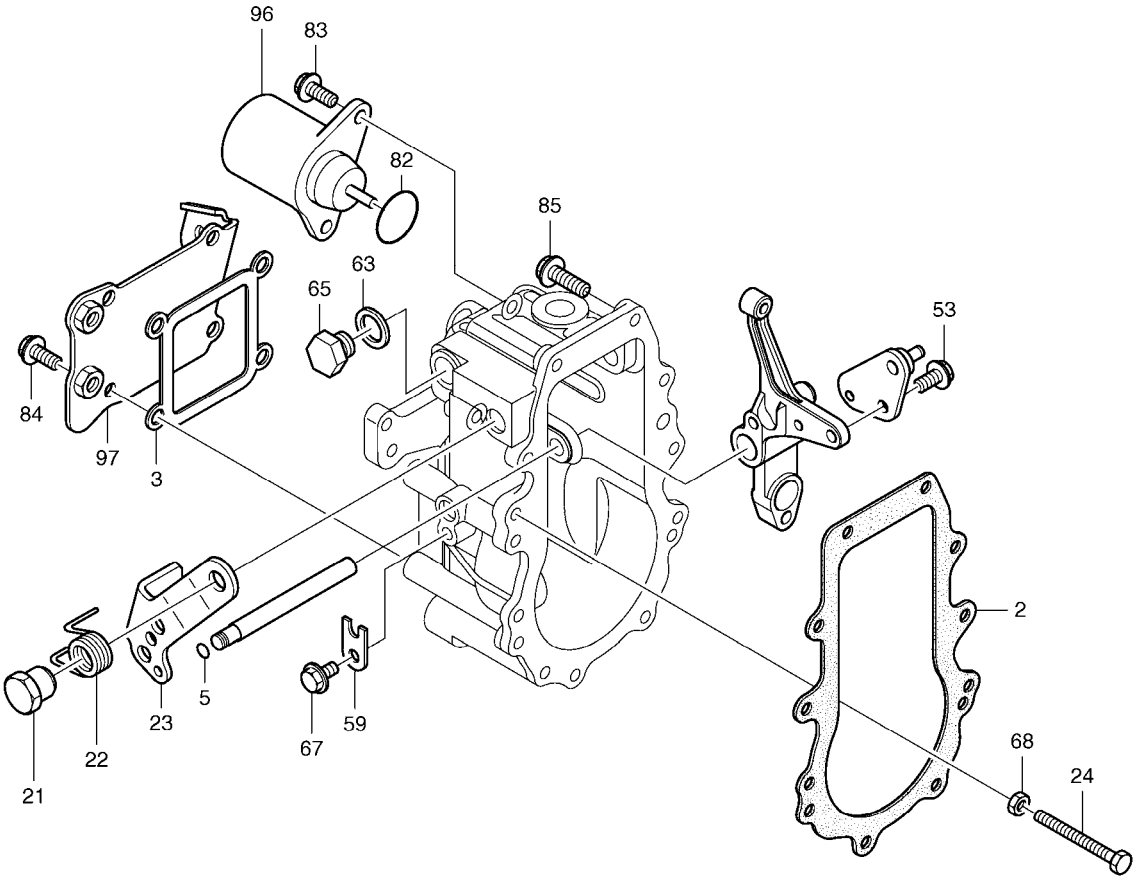

(THIS PARTS BOOK IS FOR REFERENCE ONLY.
PART NUMBERS AND SERAIL NUMBERS MAY BE
OUTDATED. ALWAYS USE THE ONLINE PARTS SYSTEM)

DATE	JAN. 04, 2013
3rd EDITION	

Fig. 012 GOVERNOR GOUVERNEUR

Serial No. ;

Key No.	Part No.	Description	Description	Q'ty	S.C	Serial No.	ICA	Replaceable part	
								Part No.	Q'ty
012 -2	K9004824	PACKING;CASE	EMBALLAGE DE CAS	1					
3	K9004825	PACKING	EMBALLAGE	1					
5	2.180-00359	O-RING	JOINT TORIQUE	1					
21	K9002134	NUT	ECROU	1					
22	K9002135	SPRING	RESSORT	1					
23	K9004815	LEVER;REGULATOR	LEVIER DE REGULATEUR	1					
24	K9002138	BOLT;IDEL LIMIT	BOULON	1					
53	2.120-00039	BOLT M6X10	BOULON	1					
59	2.115-00054	RETAINER;SHAFT	ARRETOIR	1					
63	K9004840	SEAL;WASHER	BAGUE D'ETANCHEITE	1					
65	K9004850	PLUG	BOUCHON	1					
67	2.120-00039	BOLT M6X10	BOULON	1					
68	2.121-00176	NUT;LOCK	ECROU	1					
82	K9004816	O-RING	JOINT TORIQUE	1					
83	K9002144	BOLT M6X14	BOULON	2					
84	K9002144	BOLT M6X14	BOULON	4					
85	2.120-00150	BOLT M6X20	BOULON	10					
96	K9004603	SOLENOID;STOP	SOLENOIDE	1					
97	K9005219	COVER;CASE	COUVERCLE	1					

(THIS PARTS BOOK IS FOR REFERENCE ONLY.
PART NUMBERS AND SERAIL NUMBERS MAY BE
OUTDATED. ALWAYS USE THE ONLINE PARTS SYSTEM)

DATE	JAN. 04, 2013
3rd EDITION	

Fig. 013 FUEL INJECTION VALVE
VANNE D'INJECTION

Serial No. ;

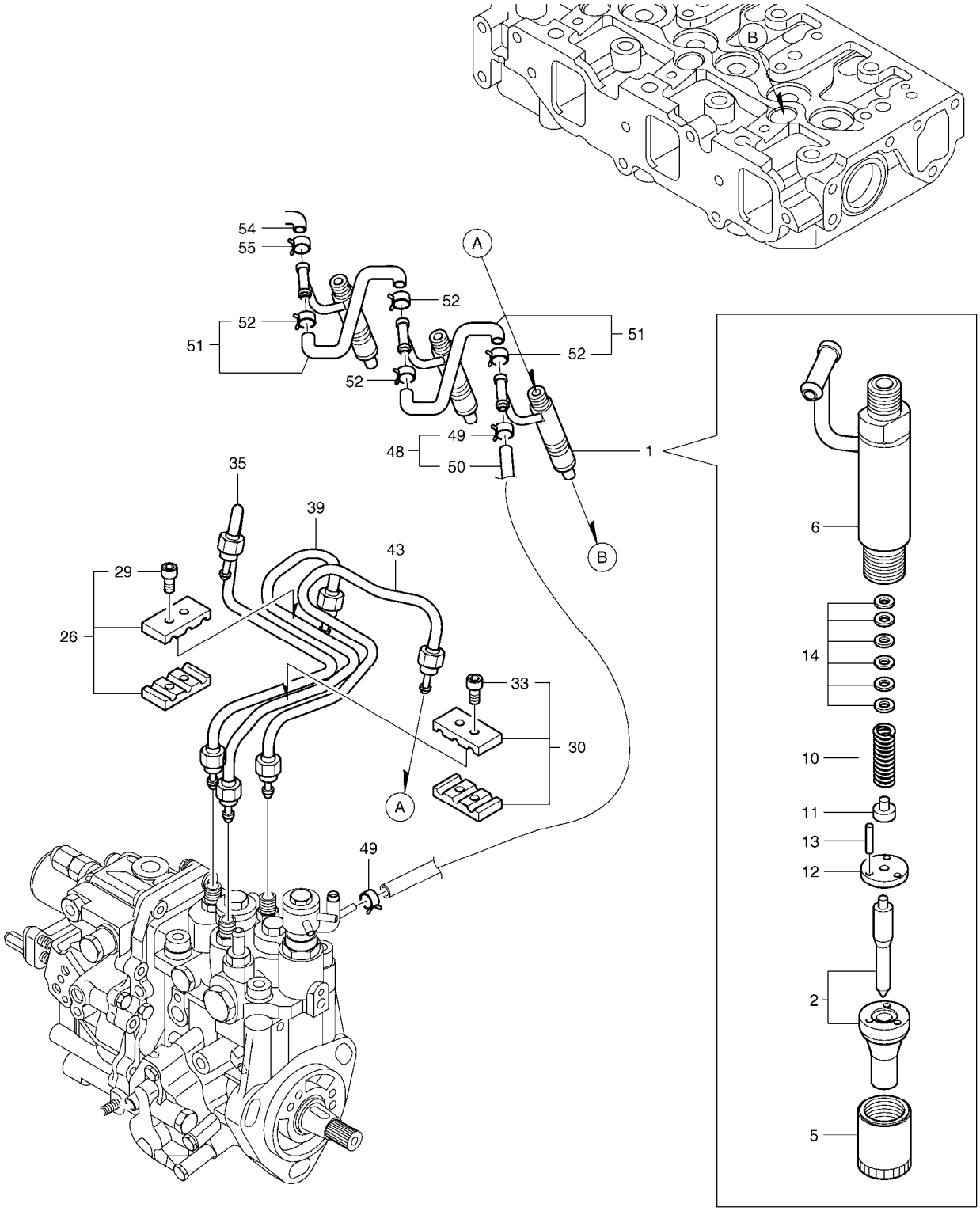

(THIS PARTS BOOK IS FOR REFERENCE ONLY.
PART NUMBERS AND SERAIL NUMBERS MAY BE
OUTDATED. ALWAYS USE THE ONLINE PARTS SYSTEM)

DATE	JAN. 04, 2013
3rd EDITION	

Fig. 013 FUEL INJECTION VALVE VANNE D'INJECTION

Serial No. ;

Key No.	Part No.	Description	Description	Q'ty	S.C	Serial No.	ICA	Replaceable part	
								Part No.	Q'ty
013 -1	K9005143	INJECTOR;FUEL	INJECTEUR DE CARBURAI	3					
2	K9005220	NOZZLE;CMP	BEC	3					
5	2.121-00085	NUT	ECROU	3					
6	K9004661	HOLDER NOZZLE ASS'Y	BEC DE SUPPORT	3					
10	2.131-00258	SPRING	RESSORT	3					
11	2.427-00019	SEAT;NOZZLE SPRING	SIEGE	3					
12	2.412-00266	PLATE;STOP	PLAQUE	3					
13	2.123-00088	PIN	GOUPILLE	6					
14	2.180-00611	SHIM ASS'Y	CALE	3					
26	2.115-00008	RETAINER	ARRETOIR	1					
29	2.120-00050	BOLT M4X14	BOULON	1					
30	K9004752	RETAINER;INJ PIPE	ARRETOIR	1					
33	2.120-00050	BOLT M4X14	BOULON	2					
35	K9005179	INJECTION PIPE	PIPE D'INJECTION	1					
39	K9005180	INJECTION PIPE	PIPE D'INJECTION	1					
43	K9005181	INJECTION PIPE	PIPE D'INJECTION	1					
48	K9004662	RETURN PIPE ASS'Y	PIPE DE RETOUR	1					
49	2.124-00086	CLAMP	BRIDE	2					
50	K9004663	PIPE;FUEL RETURN	TUYAU	1					
51	2.140-00105	PIPE;FUEL RETURN	PIPE DE RETOUR DE CARE	2					
52	2.124-00086	CLAMP	BRIDE	4					
54	K9004605	CAP	CHAPEAU	1					
55	K9004677	CLAMP	BRIDE	1					

(THIS PARTS BOOK IS FOR REFERENCE ONLY.
PART NUMBERS AND SERAIL NUMBERS MAY BE
OUTDATED. ALWAYS USE THE ONLINE PARTS SYSTEM)

DATE	JAN. 04, 2013
3rd EDITION	

Fig. 014 FUEL LINE
LIGNE DE CARBURANT

Serial No. ;

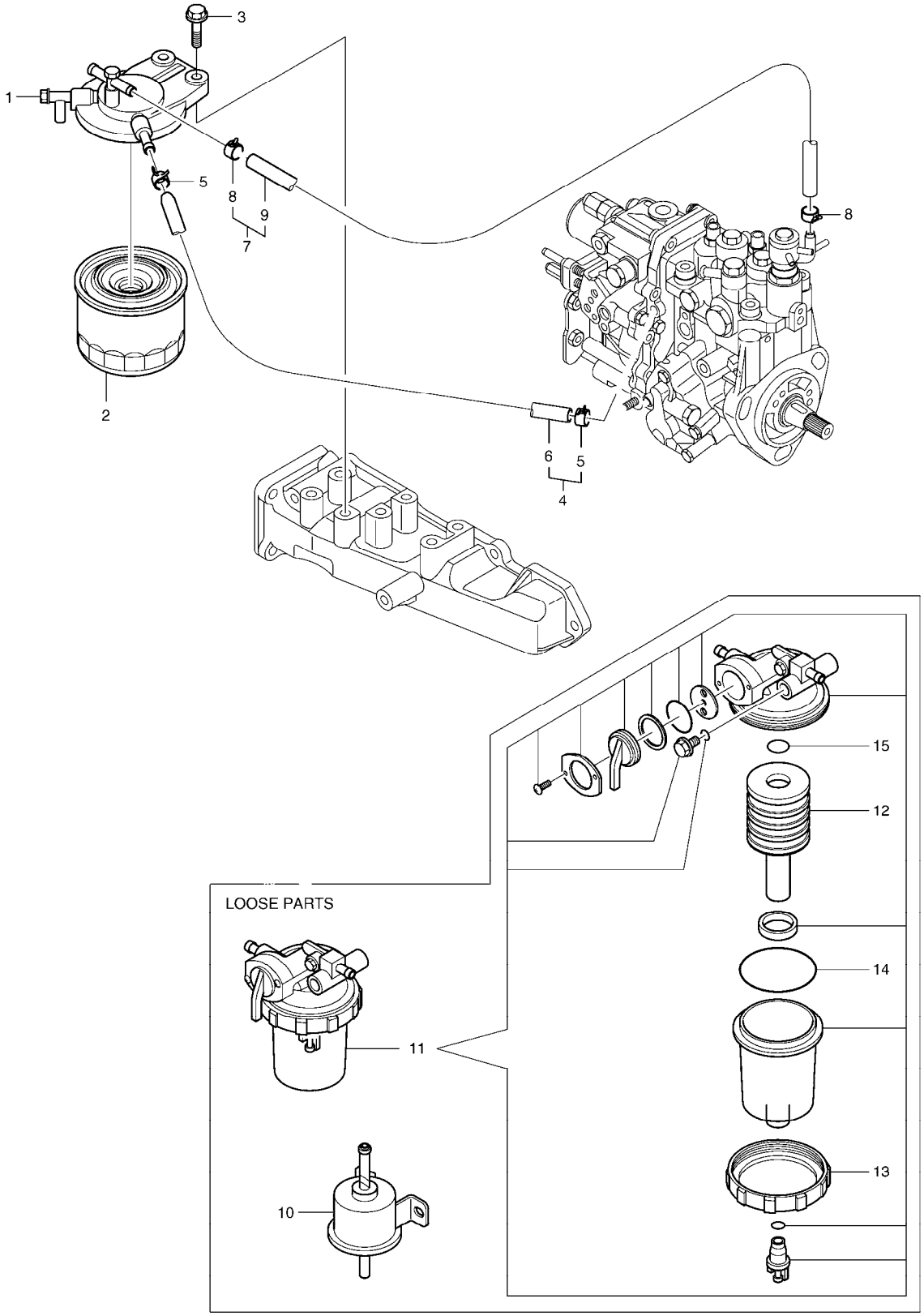

(THIS PARTS BOOK IS FOR REFERENCE ONLY.
PART NUMBERS AND SERAIL NUMBERS MAY BE
OUTDATED. ALWAYS USE THE ONLINE PARTS SYSTEM)

DATE	JAN. 04, 2013
3rd EDITION	

Fig. 014 FUEL LINE
LIGNE DE CARBURANT

Serial No. ;

Key No.	Part No.	Description	Description	Q'ty	S.C	Serial No.	ICA	Replaceable part	
								Part No.	Q'ty
014 -1	K9004714	BRACKET;FUEL FILTER	SUPPORT	1					
2	K1025335	FILTER;FUEL	FILTRE	1					
3	2.120-00138	BOLT M8X30	BOULON	2					
4	K9004756	FUEL PIPE ASS'Y	PIPE DE CARBURANT	1					
5	2.124-00020	CLAMP	BRIDE	2					
6	K9004600	PIPE;FUEL OIL	TUYAU	1					
7	K9004757	FUEL PIPE ASS'Y	PIPE DE CARBURANT	1					
8	2.124-00020	CLAMP	BRIDE	2					
9	K9004784	PIPE;FUEL	TUYAU	1					
10	K9004786	PUMP;FUEL FEED	POMPE	1					
11	2.471-00037	SEPARATOR ASS'Y	SEPARATEUR D'EAU	1					
12	2.474-00028	ELEMENT	ELEMENT	1					
13	2.115-00546	RING;RETAINING	BAGUE	1					
14	S8010651	O-RING	JOINT TORIQUE	1					
15	S8000161	O-RING	JOINT TORIQUE	1					

(THIS PARTS BOOK IS FOR REFERENCE ONLY.
PART NUMBERS AND SERAIL NUMBERS MAY BE
OUTDATED. ALWAYS USE THE ONLINE PARTS SYSTEM)

DATE	JAN. 04, 2013
3rd EDITION	

Fig. 015 STARTING MOTOR DEMARREUR

Serial No. ;

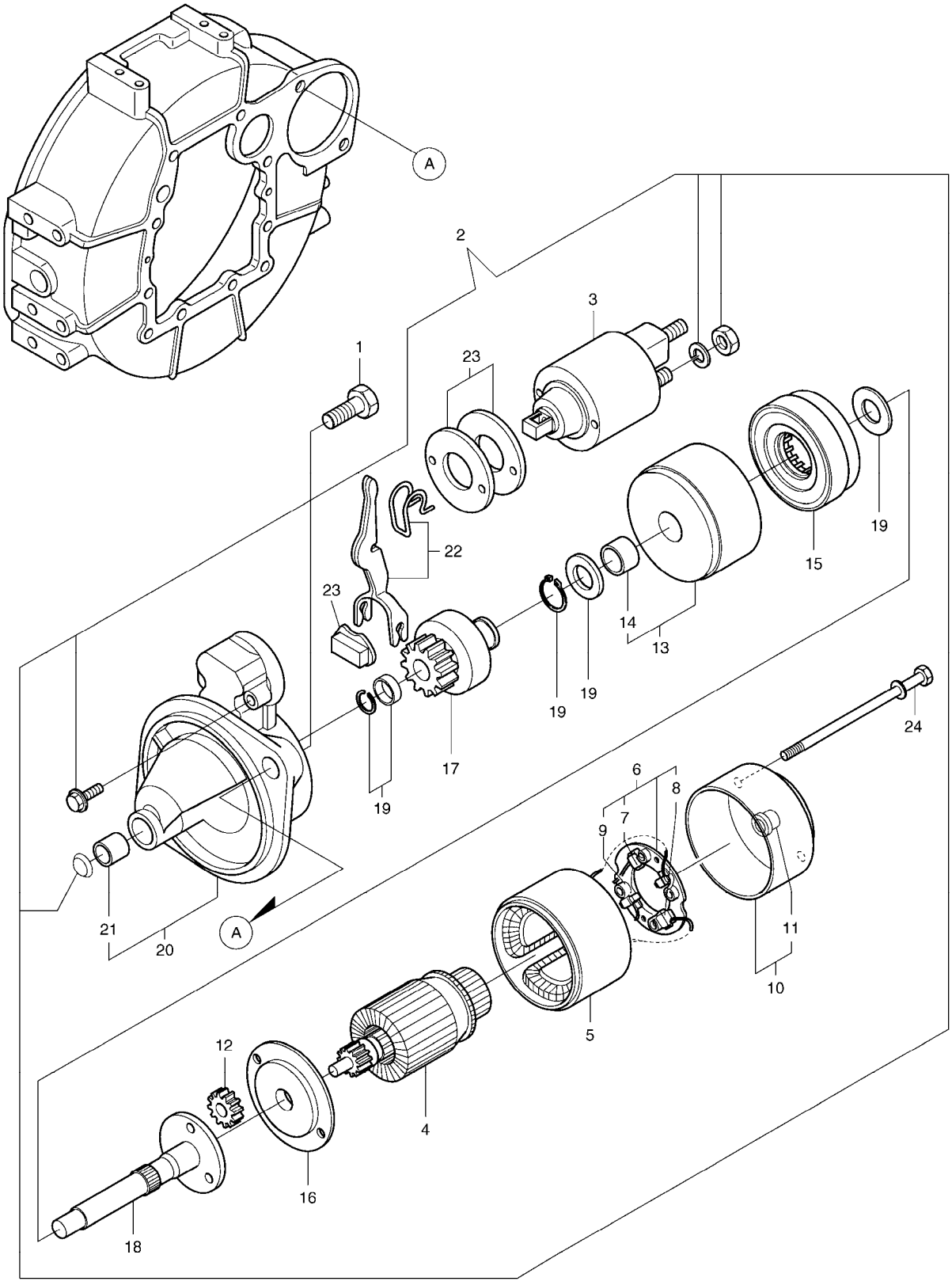

(THIS PARTS BOOK IS FOR REFERENCE ONLY.
PART NUMBERS AND SERAIL NUMBERS MAY BE
OUTDATED. ALWAYS USE THE ONLINE PARTS SYSTEM)

DATE	JAN. 04, 2013
3rd EDITION	

Fig. 015 STARTING MOTOR DEMARREUR

Serial No. ;

Key No.	Part No.	Description	Description	Q'ty	S.C	Serial No.	ICA	Replaceable part	
								Part No.	Q'ty
015 -1	2.120-00052	BOLT M12X25	BOULON	2					
2	K9004758	STARTER	DEMARREUR	1					
3	K9004788	MAGNETIC SWITCH ASS'Y	COMMUTATEUR MAGNETI	1					
4	K9004884	ARMATURE ASS'Y	ARMATURE	1					
5	K9004759	YOKE ASS'Y	JOUG	1					
6	K9004760	BRUSH HOLDER ASS'Y	SUPPORT DE BROSSE	1					
7	K9004761	BRUSH	BROSSE	2					
8	K9004762	BRUSH;SET	BROSSE	1					
9	K9004763	BRUSH;SPRING	BROSSE	4					
10	K9004764	REAR COVER ASS'Y	COUVERCLE	1					
11	K9004765	REAR COVER METAL	METAL DE COUVERTURE A	1					
12	K9004602	PLANET;GEAR	PIGNON DE PLANETE	3					
13	K9004766	BRACKET;CENTER(P)	SUPPORT	1					
14	K9004789	BRACKET	SUPPORT	1					
15	K9004790	INTERNAL;GEAR	VITESSE INTERNE	1					
16	K9004767	BRACKET;CENTER(A)	SUPPORT	1					
17	K9004791	PINION ASS'Y	PIGNON	1					
18	K9004792	SHAFT	ARBRE	1					
19	K9004793	WASHER	RONDELLE	1					
20	K9004768	GEAR CASE ASS'Y	CAISSE DE PIGNON	1					
21	K9004870	METAL;STARTER	METAL	1					
22	K9004769	SHIFT LEVER SET	DECALEZ L'ENSEMBLE DE	1					
23	K9004770	DUST;COVER KIT	KIT DE COUVERTURE	1					
24	2.120-00331	BOLT;THROUGH	BOULON	2					

(THIS PARTS BOOK IS FOR REFERENCE ONLY.
PART NUMBERS AND SERAIL NUMBERS MAY BE
OUTDATED. ALWAYS USE THE ONLINE PARTS SYSTEM)

DATE	JAN. 04, 2013
3rd EDITION	

Fig. 016 GENERATOR ALTERNATEUR

Serial No. ;

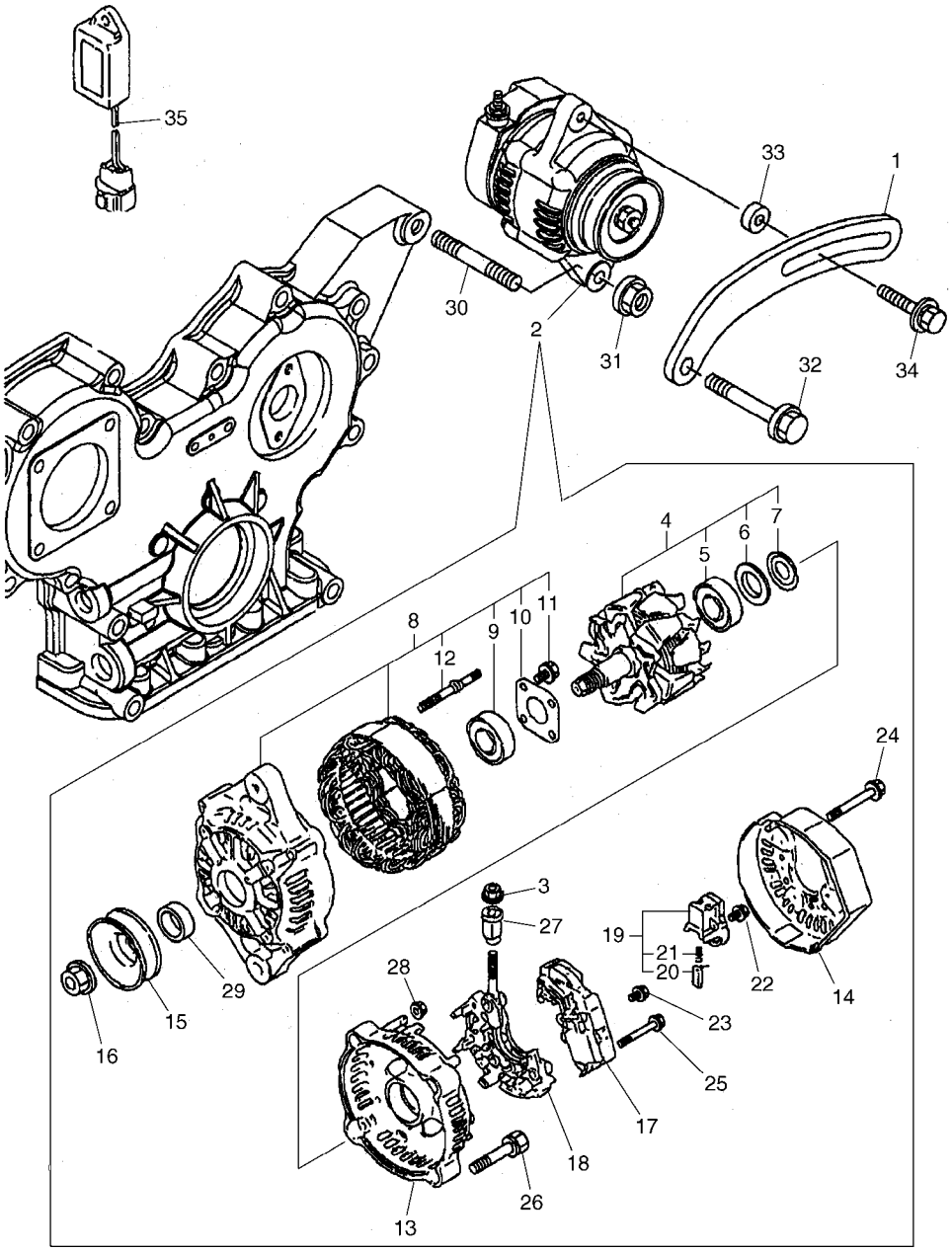

(THIS PARTS BOOK IS FOR REFERENCE ONLY.
PART NUMBERS AND SERAIL NUMBERS MAY BE
OUTDATED. ALWAYS USE THE ONLINE PARTS SYSTEM)

DATE	JAN. 04, 2013
3rd EDITION	

Fig. 016 GENERATOR ALTERNATEUR

Serial No. ;

Key No.	Part No.	Description	Description	Q'ty	S.C	Serial No.	ICA	Replaceable part	
								Part No.	Q'ty
016 -1	K9004665	ADJUSTER;BELT	AJUSTEZ	1					
2	K9004778	GENERATOR	GENERATEUR	1					
3	K9004871	NUT	ECROU	1					
4	K9004607	ROTOR ASS'Y	GROUPE ROTATIF	1					
5	K9004618	BEARING;BALL	ROULEMENT	1					
6	K9004619	COVER;BEARING	COUVERCLE	1					
7	K9004630	WASHER;THRUST	RONDELLE DE BUTEE	1					
8	K9004608	FLAME DRIVE ASS'Y	COMMANDE DE FLAMME	1					
9	K9004614	BEARING;BALL	ROULEMENT	1					
10	K9004615	PLATE	PLAQUE	1					
11	K9004616	SCREW	VIS	4					
12	K9004617	BOLT;STUD	BOULON DE GOUJON	2					
13	K9004609	FLAME REAR ASS'Y	ARRIERE DE FLAMME	1					
14	K9004779	COVER	COUVERCLE	1					
15	K9004610	PULLEY	POULIE	1					
16	K9004611	NUT	ECROU	1					
17	K9004780	REGULATOR ASS'Y	REGULATEUR	1					
18	K9004620	HOLDER	SUPPORT	1					
19	K9004621	HOLDER;BRUSH	SUPPORT	1					
20	K9004612	BRUSH ASS'Y	BROSSE	2					
21	K9004622	SPRING	RESSORT	2					
22	K9004623	SCREW	VIS	1					
23	K9004624	SCREW	VIS	1					
24	K9004625	BOLT	BOULON	3					
25	K9004626	SCREW;W/WASHER	VIS	2					
26	K9004627	BOLT	BOULON	2					
27	K9004628	INSULATION;BUSH	ISOLATION	1					
28	K9004629	NUT	ECROU	2					
29	K9004613	COLLAR	COLLIER	1					
30	K9004795	STUD	BOULON	1					
31	2.121-00268	NUT	ECROU	1					
32	2.120-00044	BOLT M8X45	BOULON	1					
33	K9004668	ADJUSTER;BELT	AJUSTEZ	1					
34	K9004803	BOLT;ADJUSTING	BOULON	1					
35	537-00071	TIMER;ENGINE STOP	TEMPORISATEUR	1					

(THIS PARTS BOOK IS FOR REFERENCE ONLY.
PART NUMBERS AND SERAIL NUMBERS MAY BE
OUTDATED. ALWAYS USE THE ONLINE PARTS SYSTEM)

DATE	JAN. 04, 2013
3rd EDITION	

Fig. 017 GASKET SET
ENSEMBLE DE GARNITURE

Serial No. ;

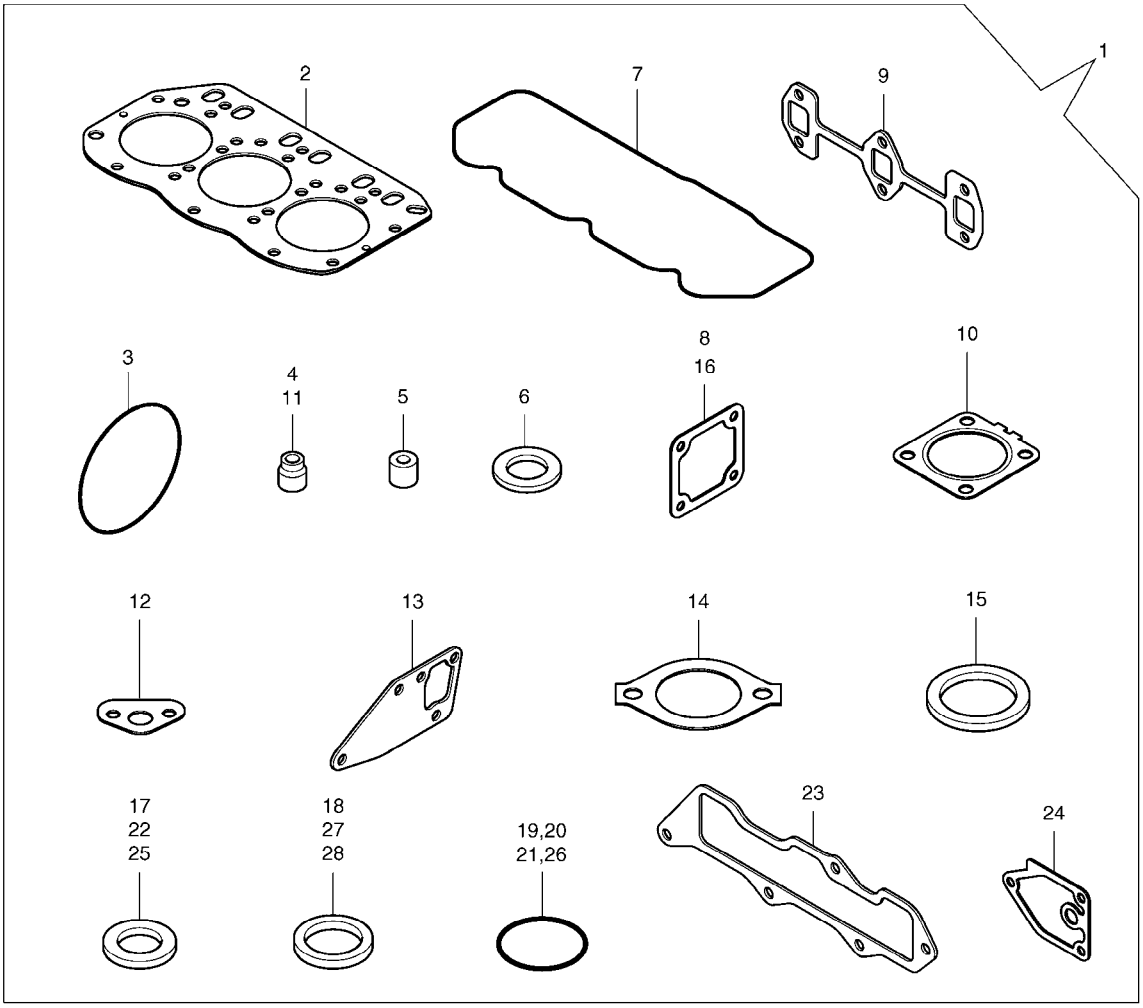

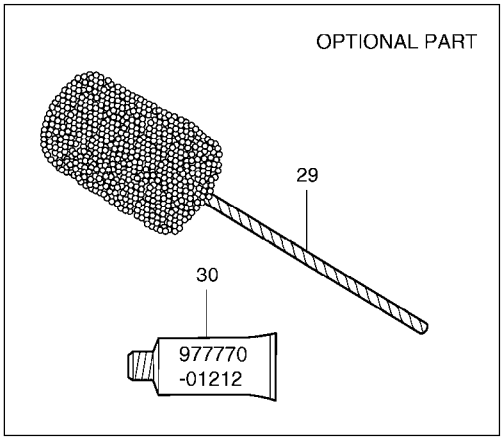

(THIS PARTS BOOK IS FOR REFERENCE ONLY.
PART NUMBERS AND SERAIL NUMBERS MAY BE
OUTDATED. ALWAYS USE THE ONLINE PARTS SYSTEM)

DATE	JAN. 04, 2013
3rd EDITION	

Fig. 017 GASKET SET
ENSEMBLE DE GARNITURE

Serial No. ;

Key No.	Part No.	Description	Description	Q'ty	S.C	Serial No.	ICA	Replaceable part	
								Part No.	Q'ty
017 -1	K9005228	GASKET SET(T-2)	JOINT	1					
2	K9005201	GASKET;HEAD	JOINT	1					
3	K9004676	O-RING	JOINT TORIQUE	1					
4	2.180-01241	SEAL;VALVE STEM (EXHAUST)	JOINT	3					
5	2.158-00004	PROTECTOR;NOZZLE	PROTECTEUR	3					
6	2.427-00018	SEAT;NOZZLE	SIEGE	3					
7	K9005156	GASKET;COVER	JOINT	1					
8	K9004753	GASKET	JOINT	1					
9	K9005189	GASKET;EXHAUST MANIFOLD	JOINT	1					
10	K9004704	GASKET;MUFFLER	JOINT	1					
11	2.180-01240	SEAL;VALVE STEM	JOINT	3					
12	K9004749	GASKET	JOINT	1					
13	K9005215	GASKET	JOINT	1					
14	D465096	GASKET	JOINT	1					
15	K9004751	GASKET	JOINT	1					
16	K9004732	GASKET;AIR HEATER	JOINT	1					
17	2.114-00889	WASHER;SEAL	RONDELLE	2					
18	2.180-00054	GASKET	JOINT	1					
19	S8000120	O-RING	JOINT TORIQUE	3					
20	S8000320	O-RING	JOINT TORIQUE	2					
21	2.180-00355	O-RING	JOINT TORIQUE	1					
22	K9004838	SEAL;WASHER	BAGUE D'ETANCHEITE	2					
23	K9005203	GASKET;INT.MANIFOLD	JOINT	1					
24	K9004750	GASKET	JOINT	1					
25	2.180-00910	SEAL;WASHER	BAGUE D`ETANCHEITE	1					
26	K9004606	O-RING	JOINT TORIQUE	4					
27	2.180-00100	GASKET	JOINT	1					
28	180-00222	GASKET	JOINT	1					
29	K9005214	HORN;FLEX	AVERTISSEUR	1					
30	K9004868	GASKET;LIQUID	JOINT	1					

(THIS PARTS BOOK IS FOR REFERENCE ONLY.
PART NUMBERS AND SERAIL NUMBERS MAY BE
OUTDATED. ALWAYS USE THE ONLINE PARTS SYSTEM)

DATE	JAN. 04, 2013
3rd EDITION	

Fig. 1100 MAIN FRAME
BATI PRINCIPAL

Serial No. ;

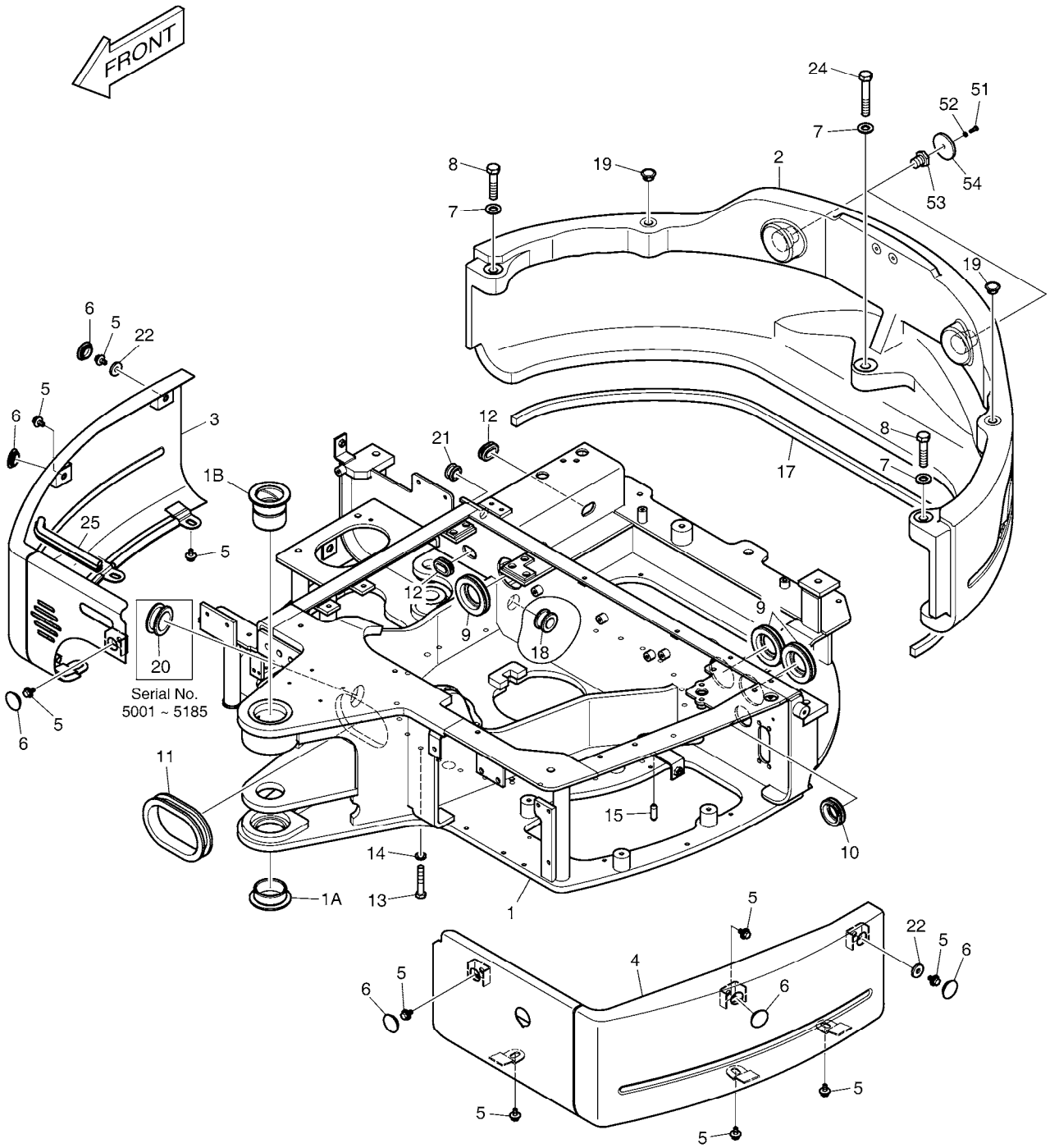

(THIS PARTS BOOK IS FOR REFERENCE ONLY.
PART NUMBERS AND SERAIL NUMBERS MAY BE
OUTDATED. ALWAYS USE THE ONLINE PARTS SYSTEM)

DATE	JAN. 04, 2013
3rd EDITION	

Fig. 1100 MAIN FRAME
BATI PRINCIPAL

Serial No. ;

Key No.	Part No.	Description	Description	Q'ty	S.C	Serial No.	ICA	Replaceable part	
								Part No.	Q'ty
1100 --	K1015406H	MAIN FRAME	ARMATURE PRINCIPALE	-	D				
1	K1016606E	FRAME;MAIN	ARMATURE PRINCIPALE	1		5001-5362	I	K1016606G	1
	K1016606G	FRAME;MAIN	ARMATURE PRINCIPALE	1		5363-			
1A	K1026524	. BUSHING	. DOUILLE	1					
1B	K1026203	. BUSHING	. DOUILLE	1					
2	K1025347	COUNTER WEIGHT	CONTRE- POIDS	1					
3	K1016482A	COVER;SIDE(R.H)	COUVERCLE	1					
4	K1016483B	COVER;SIDE(L.H)	COUVERCLE	1					
5	DS0025033	BOLT;SET	BOULON	12					
6	K1008307	RUBBER	CAOUTCHOUC	6					
7	2114-1816A	WASHER	RONDELLE	3					
8	S0565666	BOLT M16X2.0X70	BOULON	2					
9	K1018322	BUSHING	DOUILLE	3					
10	K1018323	BUSHING	DOUILLE	1					
11	DS7601042	BUSHING;RUBBER	DOUILLE EN CAOUTCHOU	1					
12	DS7601043	BUSHING;RUBBER	DOUILLE EN CAOUTCHOU	2					
13	S0561166	BOLT M12X1.75X70	BOULON A 6 PANS	24					
14	S5102703	WASHER;SPRING	RONDELLE	24					
15	2123-2132	PIN;KNOCK	BROCHE	2					
17	K1017757B	RUBBER	CAOUTCHOUC	1					
18	K1018003	GROMMET	CANON ISOLANT	1					
19	K1026691	CAP	CHAPEAU	2					
20	K1025608	GROMMET	CANON ISOLANT	1		5001-5185			
21	2160-1004D48	BUSHING;RUBBER	BOUCHON	1					
22	DS5201079	SPACER	DOUILLE D'ECARTEMENT	2					
24	S0565966	BOLT	BOULON	1					
25	K1030389	TRIM;RUBBER	EQUILIBRE EN CAOUTCHO	1					
51	S3450853	SCREW	VIS	2					
52	S5102203	WASHER;SPRING	RONDELLE ELASTIQUE	2					
53	K1025394	PLUG	BOUCHON	2					
54	190-00078	REFLECTOR	REFLECTEUR	2					

(THIS PARTS BOOK IS FOR REFERENCE ONLY.
PART NUMBERS AND SERAIL NUMBERS MAY BE
OUTDATED. ALWAYS USE THE ONLINE PARTS SYSTEM)

DATE	JAN. 04, 2013
3rd EDITION	

Fig. 1110 ENGINE MOUNTING
MOTEUR

Serial No. ;

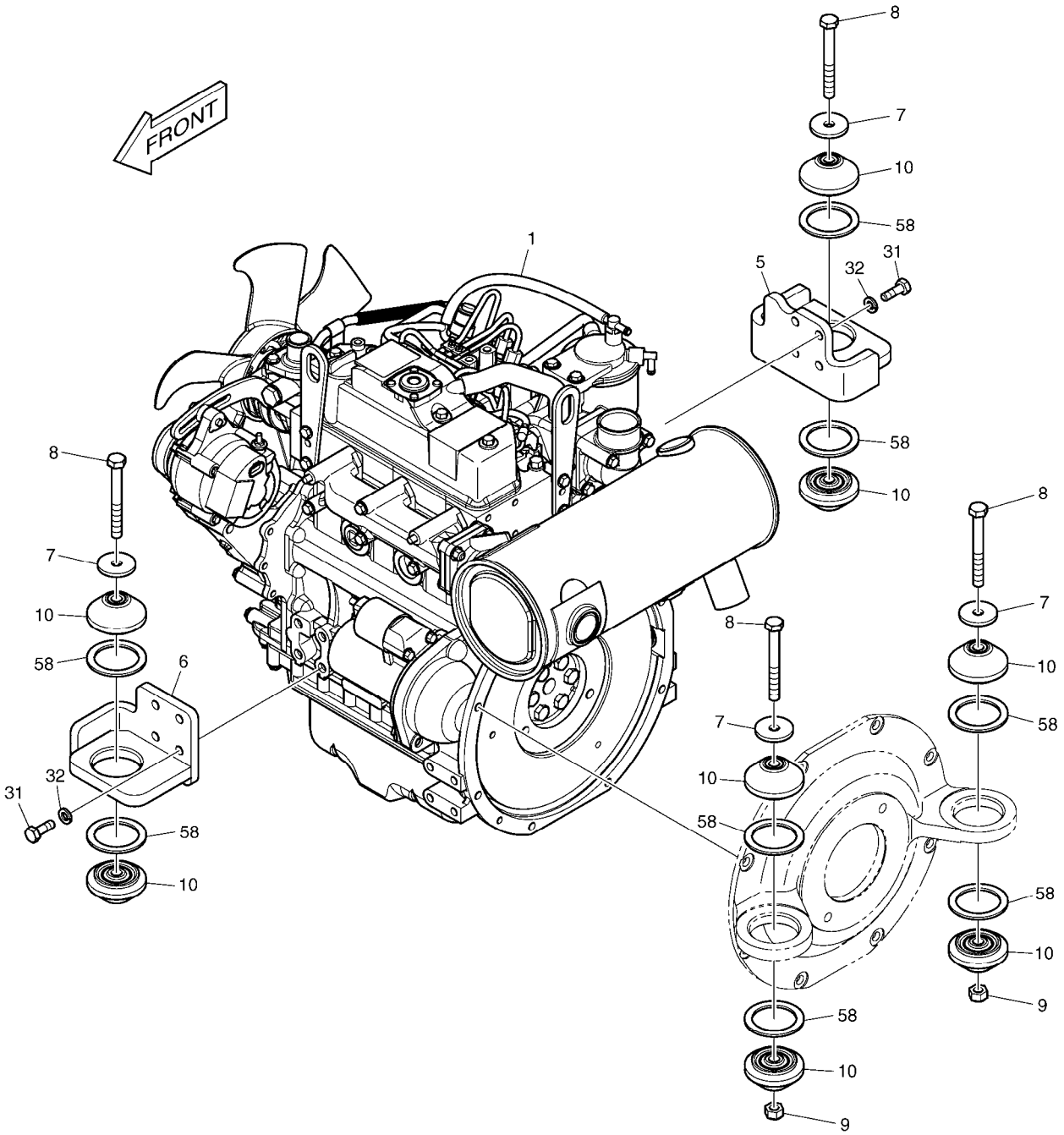

(THIS PARTS BOOK IS FOR REFERENCE ONLY.
PART NUMBERS AND SERAIL NUMBERS MAY BE
OUTDATED. ALWAYS USE THE ONLINE PARTS SYSTEM)

Fig. 1110 ENGINE MOUNTING MOTEUR

Serial No. ;

Key No.	Part No.	Description	Description	Q'ty	S.C	Serial No.	ICA	Replaceable part	
								Part No.	Q'ty
1110 --	K1017509C	ENGINE MOUNTING	SUPPORT DE MOTEUR	-	D				
1	K1017510A	ENGINE ASS'Y	ENSEMBLE MOTEUR	1					
5	K1026277A	BRACKET	SUPPORT	1					
6	K1026278A	BRACKET	SUPPORT	1					
7	K1018496A	WASHER	RONDELLE	4					
8	S0561766	BOLT	BOULON	4					
9	2121-9019A	NUT	ECROU	2					
10	K1010888	RUBBER;MOUNTING	CAOUTCHOUC	8					
31	S0512266	BOLT M10X1.5X30	BOULON	8					
32	S5102703	WASHER;SPRING	RONDELLE	8					
58	K1029457	RUBBER	CAOUTCHOUC	8					

(THIS PARTS BOOK IS FOR REFERENCE ONLY.
PART NUMBERS AND SERAIL NUMBERS MAY BE
OUTDATED. ALWAYS USE THE ONLINE PARTS SYSTEM)

DATE	JAN. 04, 2013
3rd EDITION	

Fig. 1120 RADIATOR MOUNTING
SUPPORT DE RADIATEUR

Serial No. ;

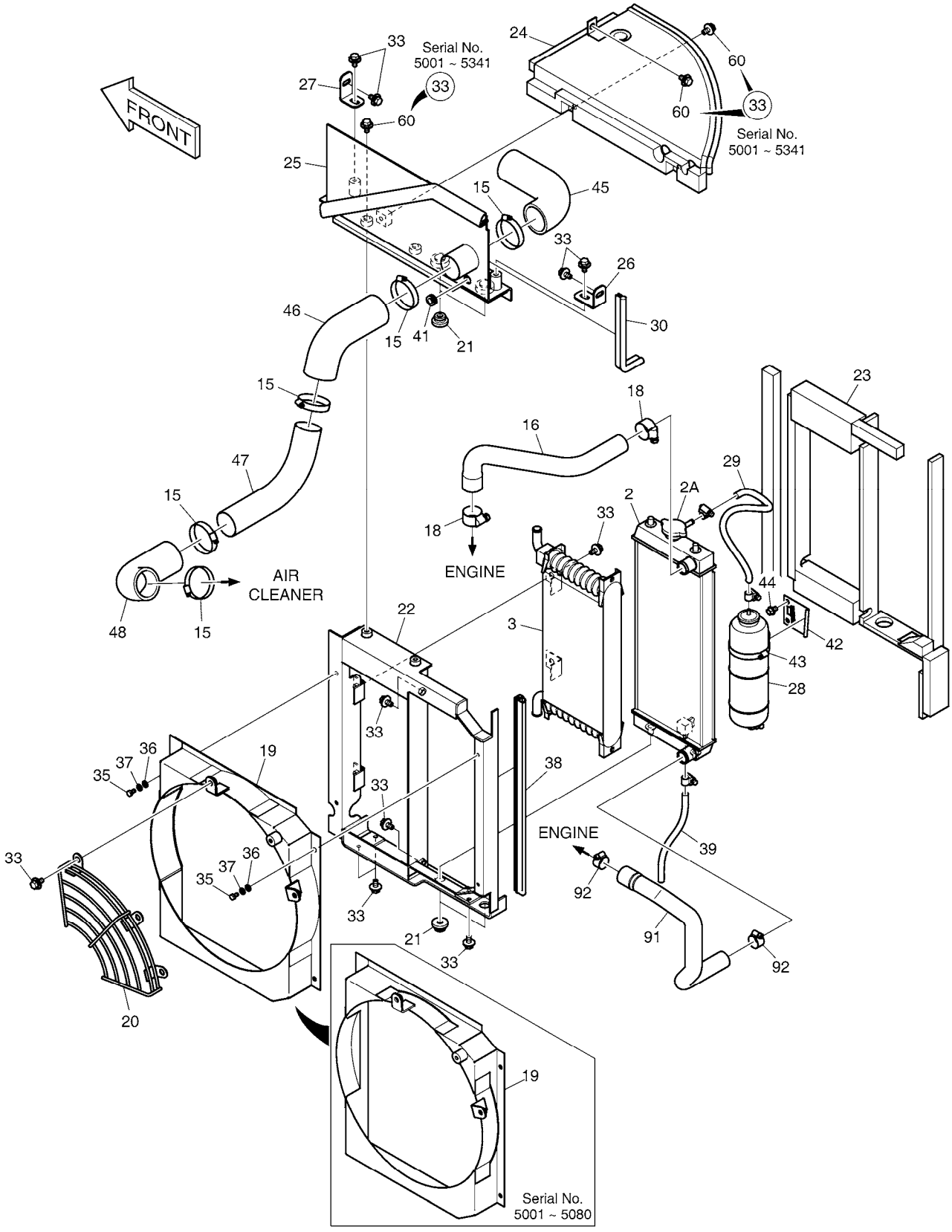

(THIS PARTS BOOK IS FOR REFERENCE ONLY.
PART NUMBERS AND SERAIL NUMBERS MAY BE
OUTDATED. ALWAYS USE THE ONLINE PARTS SYSTEM)

DATE	JAN. 04, 2013
3rd EDITION	

Fig. 1120 RADIATOR MOUNTING
SUPPORT DE RADIATEUR

Serial No. ;

Key No.	Part No.	Description	Description	Q'ty	S.C	Serial No.	ICA	Replaceable part	
								Part No.	Q'ty
1120 --	K1017509L	ENGINE ASS'Y	ENSEMBLE MOTEUR	-	D	5001-5341			
	150109-00075	ENGINE ASSY	ENSEMBLE MOTEUR	-	D	5342-			
2	K1017512A	RADIATOR ASS'Y	ENSEMBLE RADIATEUR	1					
2A	K9003717	. CAP	. CHAPEAU	1					
3	K1017514	COOLER	REFROIDISSEUR	1					
15	S8450053	CLAMP;HOSE	COLLIER	5					
16	K1017521	HOSE;AIR	TUYAU FLEXIBLE	1					
18	S8450023	CLAMP	COLLIER	2					
19	K1017524B	SHROUD;FAN	COUVERCLE	1		5001-5080	I	K1017524C	1
	K1017524C	SHROUD;FAN	COUVERCLE	1		5081-			
20	K1010890A	GUARD;FAN	GARDE	1					
21	K1017535	RUBBER	CAOUTCHOUC	4					
22	K1017536B	BRACKET	SUPPORT	1					
23	K1017547B	SPONGE ASS'Y	EPONGE	1					
24	K1017549B	COVER	COUVERCLE	1					
25	K1017554B	COVER	COUVERCLE	1		5001-5205	I	K1017554C	1
	K1017554C	COVER	COUVERCLE	1		5206-5299	I	K1017554E	1
	K1017554E	COVER	COUVERCLE	1		5300-			
26	K1017561A	BRACKET	SUPPORT	1					
27	K1017562A	BRACKET	SUPPORT	1					
28	K9004681	TANK;RESERVE	RESERVOIR	1					
29	DS2076159	HOSE;RADIATOR	TUYAU FLEXIBLE	1					
30	K1018423A	STRIP;WEATHER	SURVIVEZ DE BANDE	1					
33	DS0025033	BOLT;SET	BOULON	20		5001-5341			
	DS0025033	BOLT;SET	BOULON	15		5342-			
35	S0504453	BOLT M6X1.0X12	BOULON	4					
36	S5010313	WASHER	RONDELLE	4					
37	S5102303	WASHER;SPRING	RONDELLE	4					
38	K1018296	STRIP;WEATHER	SURVIVEZ DE BANDE	1					
39	DS2076160	HOSE;RADIATOR	TUYAU FLEXIBLE	1					
41	2160-1004D9	GROMMET	MANCHON CAOUTCHOUC	1					
42	K9004673	BRACKET;SUB TANK	SUPPORT	1					
43	K9004683	CLAMP;SUB TANK	COLLIER	1					
44	K1001029	BOLT	BOULON	2					
45	K1026358A	HOSE;AIR	TUYAU FLEXIBLE	1					
46	K1026271A	HOSE;AIR	TUYAU FLEXIBLE	1					
47	K1026272A	PIPE;AIR	TUYAU	1					
48	K1026270	HOSE;AIR	TUYAU FLEXIBLE	1					

(THIS PARTS BOOK IS FOR REFERENCE ONLY.
PART NUMBERS AND DETAIL NUMBERS MAY BE
OUTDATED. ALWAYS USE THE ONLINE PARTS SYSTEM)

DATE	JAN. 04, 2013
3rd EDITION	

Fig. 1120 RADIATOR MOUNTING
SUPPORT DE RADIATEUR

Serial No. ;

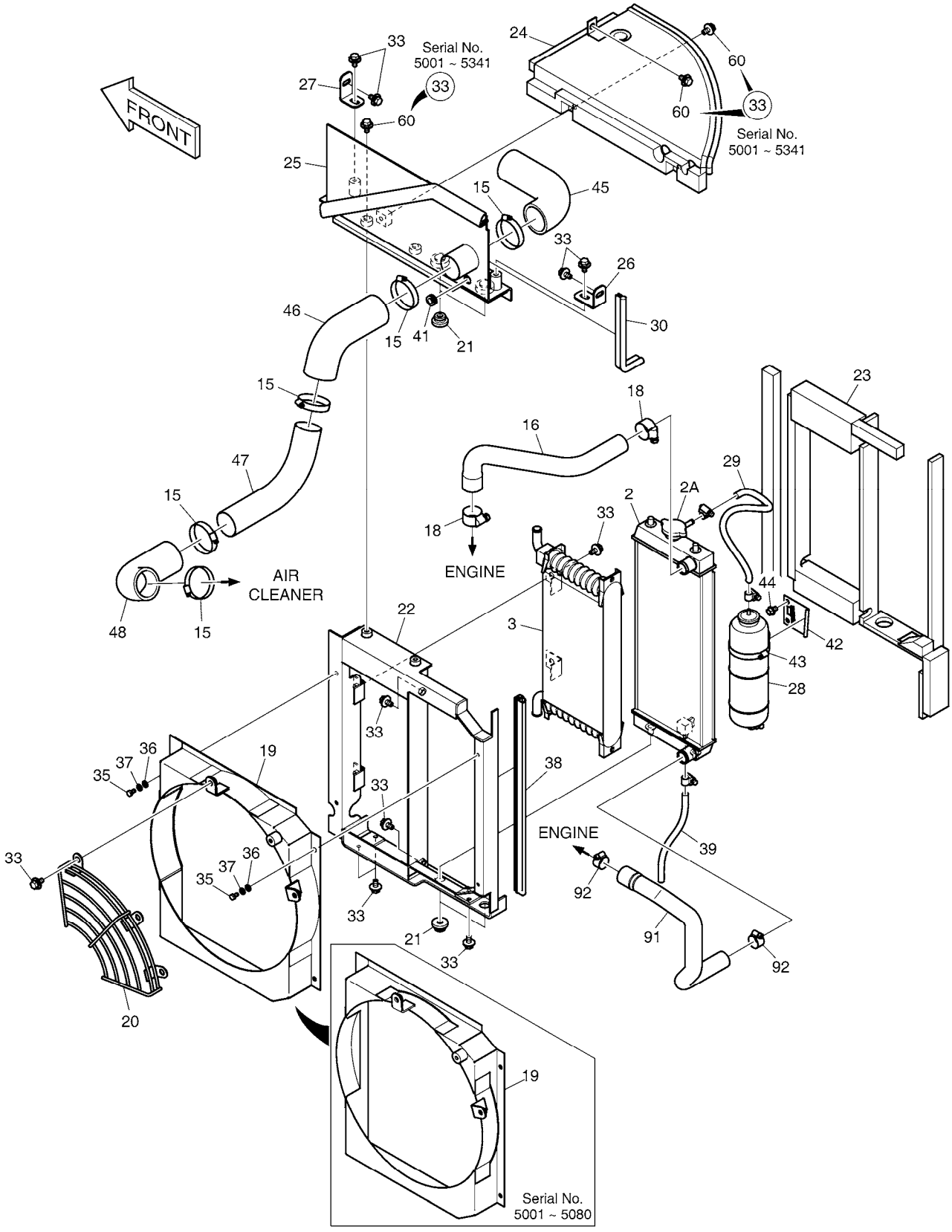

(THIS PARTS BOOK IS FOR REFERENCE ONLY.
PART NUMBERS AND SERAIL NUMBERS MAY BE
OUTDATED. ALWAYS USE THE ONLINE PARTS SYSTEM)

DATE	JAN. 04, 2013
3rd EDITION	

Fig. 1120 RADIATOR MOUNTING
SUPPORT DE RADIATEUR

Serial No. ;

Key No.	Part No.	Description	Description	Q'ty	S.C	Serial No.	ICA	Replaceable part	
								Part No.	Q'ty
1120 -60	K1049808	BOLT,FLANGE	BOULON	5		5342-			
91	K1017522A	HOSE;WATER	TUYAU FLEXIBLE	1					
92	S8450023	CLAMP	COLLIER	2					

(THIS PARTS BOOK IS FOR REFERENCE ONLY.
PART NUMBERS AND SERAIL NUMBERS MAY BE
OUTDATED. ALWAYS USE THE ONLINE PARTS SYSTEM)

DATE	JAN. 04, 2013
3rd EDITION	

Fig. 1130 AIR CLEANER
FILTRE A AIR

Serial No. ;

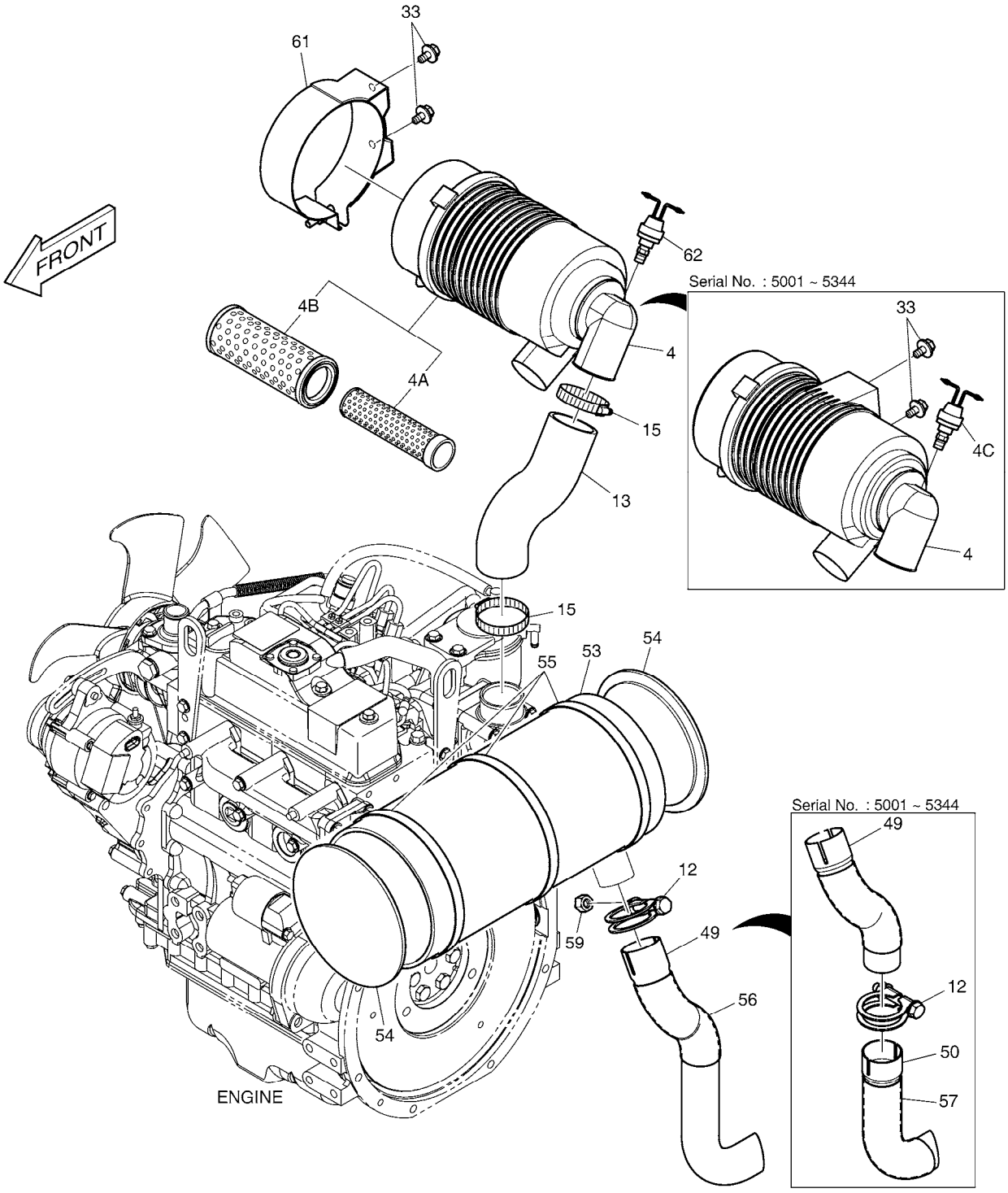

(THIS PARTS BOOK IS FOR REFERENCE ONLY.
PART NUMBERS AND SERAIL NUMBERS MAY BE
OUTDATED. ALWAYS USE THE ONLINE PARTS SYSTEM)

DATE	JAN. 04, 2013
3rd EDITION	

Fig. 1130 AIR CLEANER
FILTRE A AIR

Serial No. ;

Key No.	Part No.	Description	Description	Q'ty	S.C	Serial No.	ICA	Replaceable part	
								Part No.	Q'ty
1130 --	K1017509L	ENGINE ASS'Y	ENSEMBLE MOTEUR	-	D	5001-5344			
	150109-00075	ENGINE ASSY	ENSEMBLE MOTEUR	-	D	5345-			
4	K1017516A	AIR CLEANER	FILTRE A AIR	1		5001-5344			
	K1024911	AIR CLEANER	FILTRE A AIR	1		5345-			
4A	K1025337	. ELEMENT;AIR(INNER)	. ELEMENT	1					
4B	K1025338	. ELEMENT;AIR(OUTER)	. ELEMENT	1					
4C	K1024913	. INDICATOR	. INDICATEUR	1		5001-5344			
12	K9004672	CLAMP	BRIDE	2		5001-5344			
	K9004672	CLAMP	BRIDE	1		5345-			
13	K1018178B	HOSE;AIR	TUYAU FLEXIBLE	1					
15	S8450053	CLAMP;HOSE	COLLIER	2					
33	DS0025033	BOLT;SET	BOULON	2					
49	K1026293	PIPE;MUFFLER	CONDUITE	1		5001-5344	I	420203-00019	1
	420203-00019	PIPE,EXHAUST	CONDUITE	1		5345-			
50	K1026294	PIPE;MUFFLER	CONDUITE	1		5001-5344			
53	K1027657	MAT	TAPIS DE SOL	1		5001-5299	I	K1027657A	1
	K1027657A	MAT	TAPIS DE SOL	1		5300-			
54	K1027658	MAT	TAPIS DE SOL	2		5001-5230	I	K1027658A	1
	K1027658A	MAT	TAPIS DE SOL	2		5231-			
55	S8450140	CLAMP;HOSE	BRIDE	3					
56	K1029222	PROTECTOR;HOSE	PROTECTEUR	1					
57	K1029223	PROTECTOR;HOSE	PROTECTEUR	1		5001-5344			
59	S4012633	NUT	ECROU	1		5052-			
61	110902-00010	BAND,AIR CLEANER	ATTACHE DE TUYAU	1		5345-			
62	K1024913	INDICATOR	INDICATEUR	1		5345-			

(THIS PARTS BOOK IS FOR REFERENCE ONLY.
PART NUMBERS AND SERAIL NUMBERS MAY BE
OUTDATED. ALWAYS USE THE ONLINE PARTS SYSTEM)

DATE	JAN. 04, 2013
3rd EDITION	

Fig. 1140 PUMP MOUNTING
POMPE

Serial No. ;

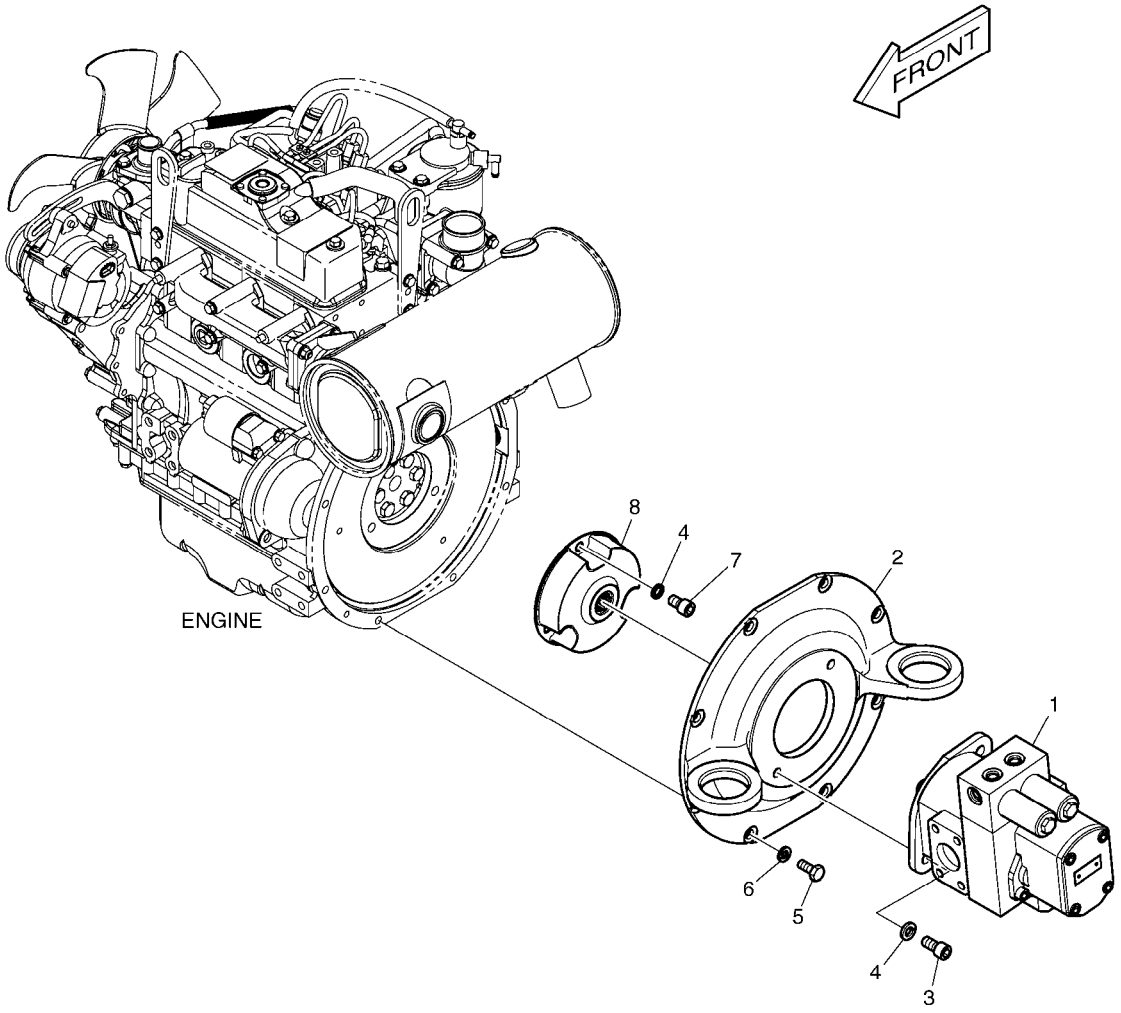

(THIS PARTS BOOK IS FOR REFERENCE ONLY.
PART NUMBERS AND SERAIL NUMBERS MAY BE
OUTDATED. ALWAYS USE THE ONLINE PARTS SYSTEM)

DATE	JAN. 04, 2013
3rd EDITION	

Fig. 1140 PUMP MOUNTING
POMPE

Serial No. ;

Key No.	Part No.	Description	Description	Q'ty	S.C	Serial No.	ICA	Replaceable part	
								Part No.	Q'ty
1140 --	K1015501B	PUMP ASS'Y	ENSEMBLE POMPE	-	D				
1	K1016110	PUMP;MAIN	POMPE	1					
2	K1003908B	COVER;PUMP	COUVERCLE	1					
3	S2265066	BOLT;SOCKET	BOULON A 6 PANS CREUX	2					
4	S5110703	WASHER;SPRING	RONDELLE	5					
5	S0512066	BOLT M10X1.5X25	BOULON	8					
6	S5102603	WASHER,SPRING	RONDELLE	8					
7	S2214866	BOLT;SOCKET M12X1.75X20	BOULON A 6 PANS CREUX	3					
8	K1004134	COUPLING	ACCOUPLEMENT	1					

(THIS PARTS BOOK IS FOR REFERENCE ONLY.
PART NUMBERS AND SERAIL NUMBERS MAY BE
OUTDATED. ALWAYS USE THE ONLINE PARTS SYSTEM)

DATE	JAN. 04, 2013
3rd EDITION	

Fig. 1150 FUEL TANK
RESERVOIR DE GAZOLE

Serial No. ;

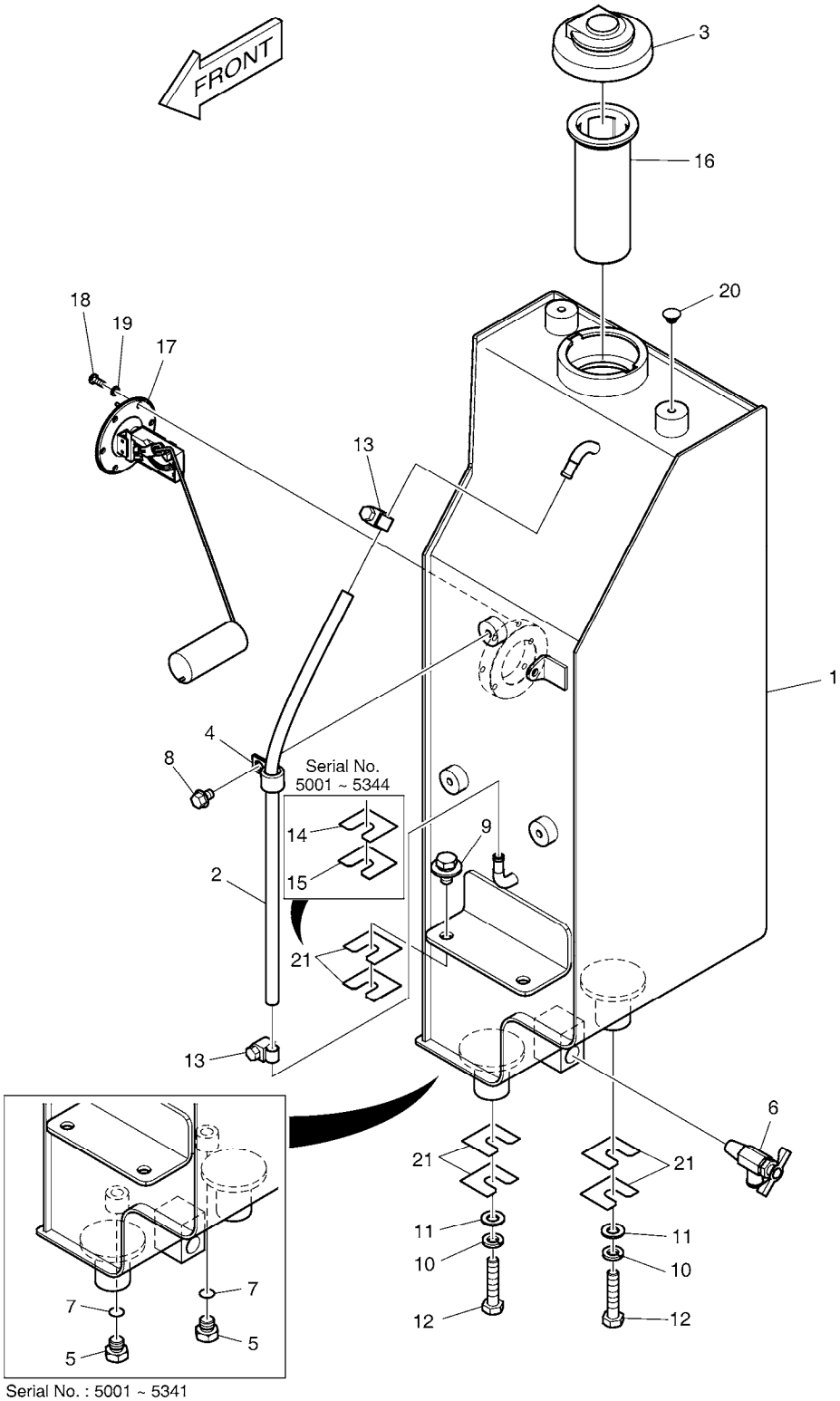

Serial No. : 5001 ~ 5341

(THIS PARTS BOOK IS FOR REFERENCE ONLY.
PART NUMBERS AND SERAIL NUMBERS MAY BE
OUTDATED. ALWAYS USE THE ONLINE PARTS SYSTEM)

DATE	JAN. 04, 2013
3rd EDITION	

Fig. 1150 FUEL TANK
RESERVOIR DE GAZOLE

Serial No. ;

Key No.	Part No.	Description	Description	Q'ty	S.C	Serial No.	ICA	Replaceable part	
								Part No.	Q'ty
1150 --	K1014118C	FUEL TANK ASS'Y	RESERVOIR D'GAZOLE	-	D	5001-5341			
	450103-00041	TANK ASSY,FUEL	RESERVOIR DE GAZOLE	-	D	5342-			
1	K1014110B	TANK;FUEL	RESERVOIR A GAZOLE	1		5001-5230	I	K1014110C	1
	K1014110C	TANK;FUEL	RESERVOIR A GAZOLE	1		5231-5341	Y	450103-00044	1
	450103-00044	TANK,FUEL	RESERVOIR DE GAZOLE	1		5342-			
2	185-00376	HOSE;FUEL LEVEL	TUYAU FLEXIBLE	1					
3	K1025369	CAP;FUEL	CHAPEAU	1					
4	2124-1353D3	CLIP	AGRAFE	1					
5	2181-1950D1	PLUG	BOUCHON	2		5001-5341			
6	2186-9003	VALVE	VANNE	1					
7	S8000111	O-RING	JOINT CIRCULAIRE	2		5001-5341			
8	K1001029	BOLT	BOULON	1					
9	2120-2196D1	BOLT;SET M10X1.5X20	BOULON A 6 PANS	2					
10	S5102603	WASHER,SPRING	RONDELLE	2					
11	S5010613	WASHER;PLAIN	RONDELLE	2					
12	S0512653	BOLT M10X1.5X50	BOULON A 6 PANS	2					
13	S8450066	CLAMP;HOSE	CLAMP;HOSE	2					
14	K1011783	SHIM	CALE	4		5001-5299	I	K1011783A	4
	K1011783A	SHIM	CALE	4		5300-5344			
15	2114-1300	SHIM	CALE	4		5001-5299	I	2114-1300A	4
	2114-1300A	SHIM	CALE	4		5300-5344			
16	2471-9010A	FILTER	FILTRE	1					
17	K1026167	SENSOR;FUEL	CAPTEUR	1		5001-5495	Y	301316-00019	1
	301316-00019	SENSOR,FUEL	CAPTEUR	1		5496-			
18	S3450833	SCREW	VIS	6					
19	S5100203	WASHER;SPRING	RONDELLE	6					
20	K1027224	CAP	CHAPEAU	1					
21	DS7718012	SHIM 0.6t	CALE	8		5345-			

(THIS PARTS BOOK IS FOR REFERENCE ONLY.
PART NUMBERS AND SERAIL NUMBERS MAY BE
OUTDATED. ALWAYS USE THE ONLINE PARTS SYSTEM)

DATE	JAN. 04, 2013
3rd EDITION	

Fig. 1160 FUEL PIPING
CONDUITES DE GAZOLE

Serial No. ;

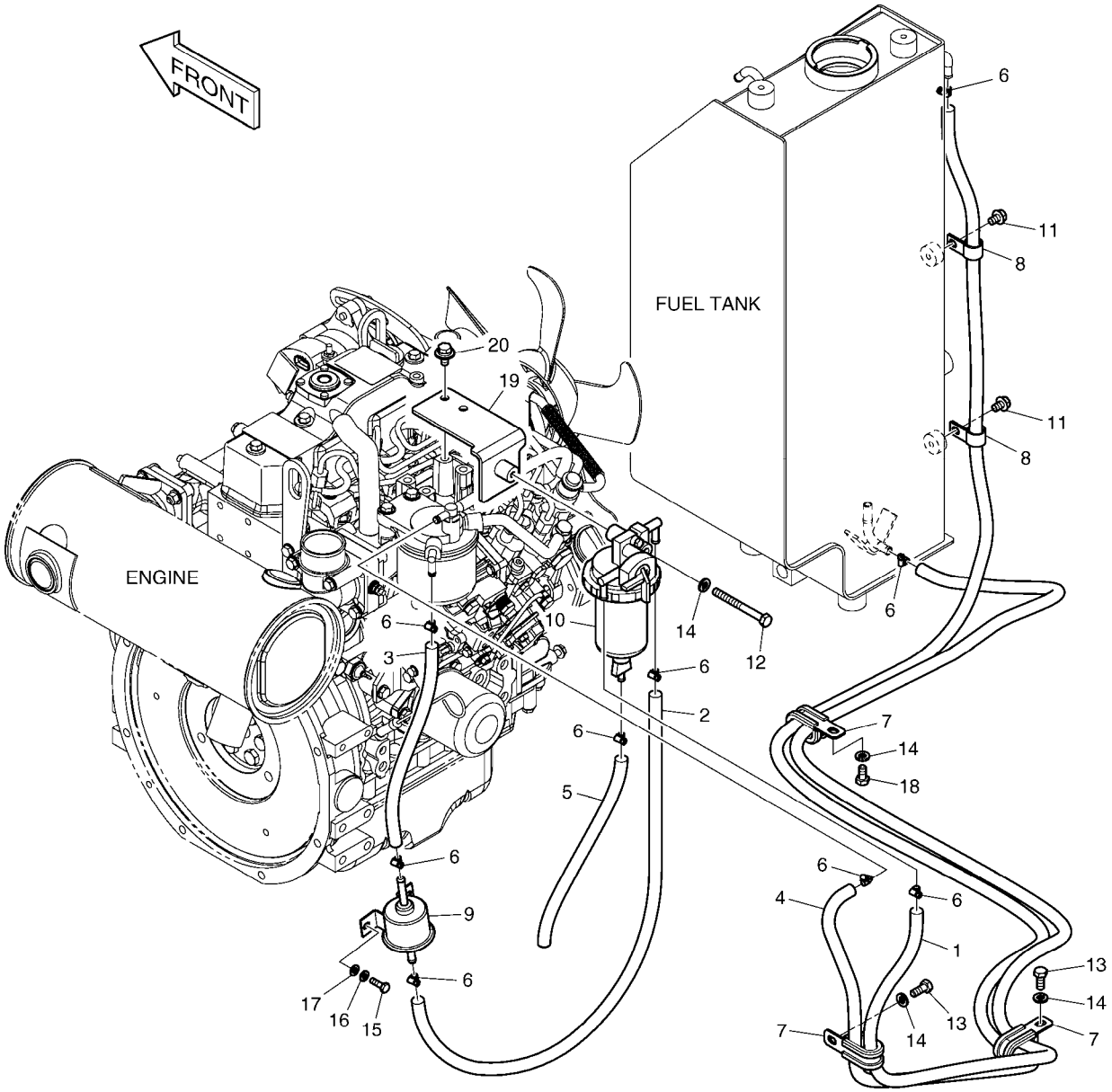

(THIS PARTS BOOK IS FOR REFERENCE ONLY.
PART NUMBERS AND SERAIL NUMBERS MAY BE
OUTDATED. ALWAYS USE THE ONLINE PARTS SYSTEM)

DATE	JAN. 04, 2013
3rd EDITION	

Fig. 1160 FUEL PIPING
CONDUITES DE GAZOLE

Serial No. ;

Key No.	Part No.	Description	Description	Q'ty	S.C	Serial No.	ICA	Replaceable part	
								Part No.	Q'ty
1160 --	K1018510B	FUEL PIPING	TUYAUTERIE DE CARBUR/	-	D				
1	DS2105081	HOSE	TUYAU FLEXIBLE	1					
2	DS2105066	HOSE	TUYAU A GAZOLE	1					
3	DS2105067	HOSE	TUYAU FLEXIBLE	1					
4	DS2105077	HOSE	TUYAU FLEXIBLE	1					
5	DS2105064	HOSE;FUEL	TUYAU FLEXIBLE	1					
6	S8450006	CLAMP;HOSE	COLLIER DE LA CONDUITE	9					
7	124-00209D1	CLIP	AGRAFE	3					
8	2124-1353D3	CLIP	AGRAFE	2					
9	K9004786	PUMP;FUEL FEED	POMPE	1					
10	2.471-00037	SEPARATOR ASS'Y	SEPARATEUR D'EAU	1					
11	K1001029	BOLT	BOULON	2					
12	S0556966	BOLT	BOULON	1					
13	S0508853	BOLT	BOULON	2					
14	S5102503	WASHER,SPRING	RONDELLE	4					
15	S0504853	BOLT M6X1.0X20	BOULON A 6 PANS	2					
16	S5102303	WASHER;SPRING	RONDELLE	2					
17	S5010313	WASHER	RONDELLE	2					
18	S0508653	BOLT	BOULON	1					
19	K1018512A	BRACKET	SUPPORT	1		5001-6029	I	110406-02509	1
	110406-02509	BRACKET	SUPPORT	1		6030-			
20	DS0025033	BOLT;SET	BOULON	2					

(THIS PARTS BOOK IS FOR REFERENCE ONLY.
PART NUMBERS AND SERAIL NUMBERS MAY BE
OUTDATED. ALWAYS USE THE ONLINE PARTS SYSTEM)

DATE	JAN. 04, 2013
3rd EDITION	

Fig. 1170 OIL TANK
RESERVOIR D'HUILE

Serial No. ;

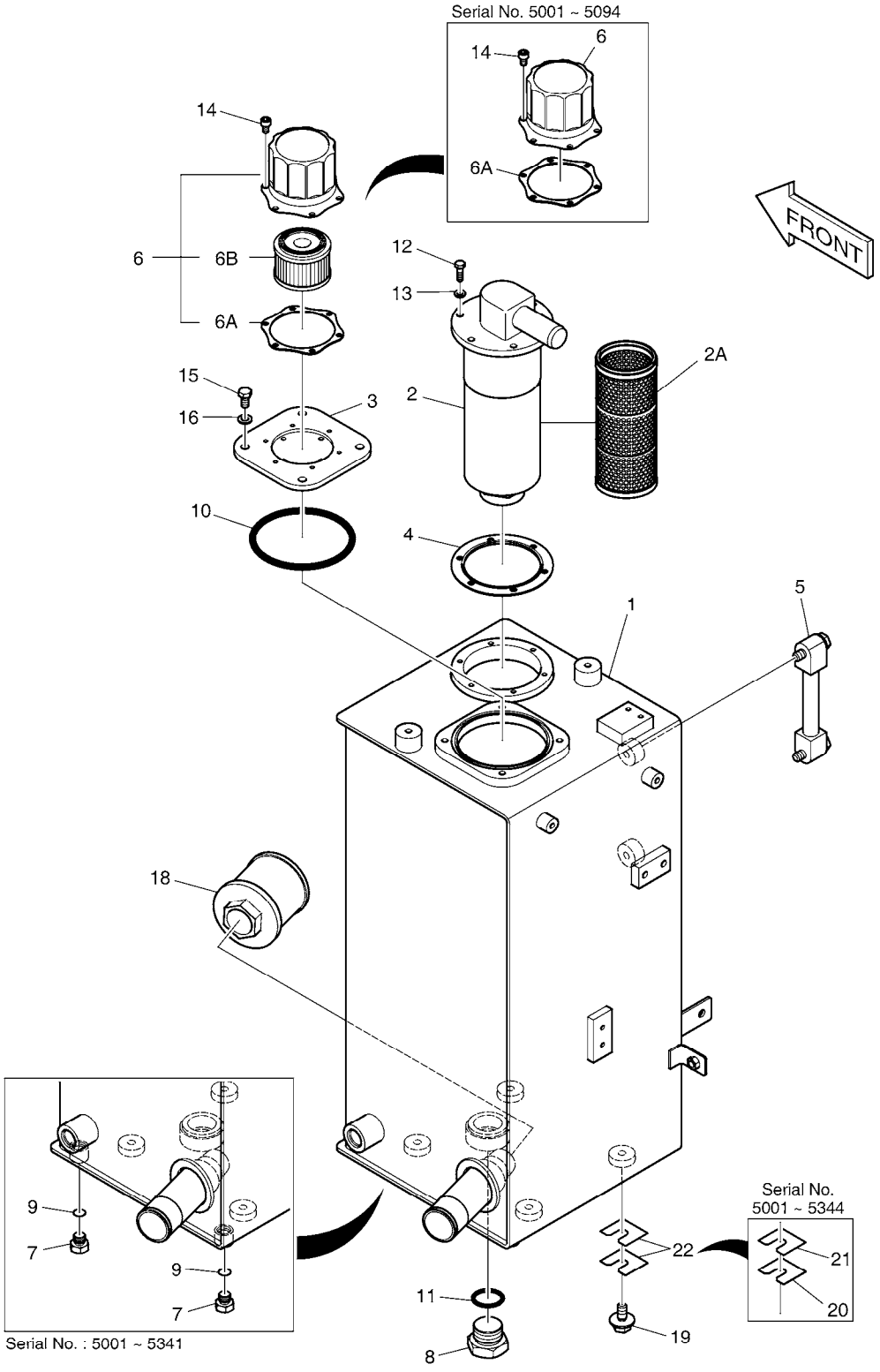

(THIS PARTS BOOK IS FOR REFERENCE ONLY.
PART NUMBERS AND SERAIL NUMBERS MAY BE
OUTDATED. ALWAYS USE THE ONLINE PARTS SYSTEM)

DATE	JAN. 04, 2013
3rd EDITION	

Fig. 1170 OIL TANK RESERVOIR D'HUILE

Serial No. ;

Key No.	Part No.	Description	Description	Q'ty	S.C	Serial No.	ICA	Replaceable part	
								Part No.	Q'ty
1170 --	K1014488E	OIL TANK ASS'Y	ENSEMBLE RESERVOIR D'	-	D	5001-5341			
	450105-00031	TANK ASSY,OIL	RESERVOIR DE HUILE	-	D	5342-			
1	K1014489B	TANK;OIL	RESERVOIR D'HUILE	1		5001-5230	I	K1014489C	1
	K1014489C	TANK;OIL	RESERVOIR D'HUILE	1		5231-5341	Y	450105-00034	1
	450105-00034	TANK,OIL	RESERVOIR DE HUILE	1		5342-			
2	K1007598	FILTER;RETURN	FILTRE	1					
2A	K1011327	. ELEMENT;RETURN FILTER	. ELEMENT	1					
3	K1027781	PLATE	PLAQUE	1					
4	K1011328	PACKING	EMBALLAGE	1					
5	119-00027A	GAUGE;LEVEL	INDICATEUR DE NIVEAU	1					
6	422-00027A	BREATHER;AIR	RENIFLARD	1		5001-5094	I	K1012685A	1
6A	180-00200	. PACKING	. JOINT	1		5001-5094	I	K9005662	1
6	K1012685A	BREATHER;AIR	RENIFLARD D'AIR	1		5095-			
6A	K9005662	. GASKET	. JOINT	1		5095-			
6B	K1029257	. ELEMENT;AIR BREATHER	. ELEMENT	1		5095-			
7	2181-1950D1	PLUG	BOUCHON	2		5001-5341			
8	2181-1950D9	PLUG	BOUCHON	1					
9	S8000111	O-RING	JOINT CIRCULAIRE	2		5001-5341			
10	S8011101	O-RING	JOINT CIRCULAIRE	1					
11	S8000291	O-RING	JOINT CIRCULAIRE	1					
12	S0504953	BOLT	BOULON	6					
13	S5102303	WASHER;SPRING	RONDELLE	6					
14	S2202766	BOLT	BOULON A 6 PANS	6					
15	S0508753	BOLT M8X1.25X18	BOULON A 6 PANS	4					
16	S5102503	WASHER,SPRING	RONDELLE	4					
18	K1011555	FILTER;SUCTION	FILTRE	1					
19	2120-2196D2	BOLT;SET M10X1.5X25	BOULON A 6 PANS	4					
20	2114-1300	SHIM	CALE	4		5001-5299	I	2114-1300A	4
	2114-1300A	SHIM	CALE	4		5300-5344			
21	K1011783	SHIM	CALE	4		5001-5299	I	K1011783A	4
	K1011783A	SHIM	CALE	4		5300-5344			
22	DS7718012	SHIM 0.6t	CALE	8		5345-			

(THIS PARTS BOOK IS FOR REFERENCE ONLY.
PART NUMBERS AND SERAIL NUMBERS MAY BE
OUTDATED. ALWAYS USE THE ONLINE PARTS SYSTEM)

DATE	JAN. 04, 2013
3rd EDITION	

Fig. 1180 OIL COOLER PIPING
TUYAUTERIE DE RADIATEUR D'HUILE

Serial No. ;

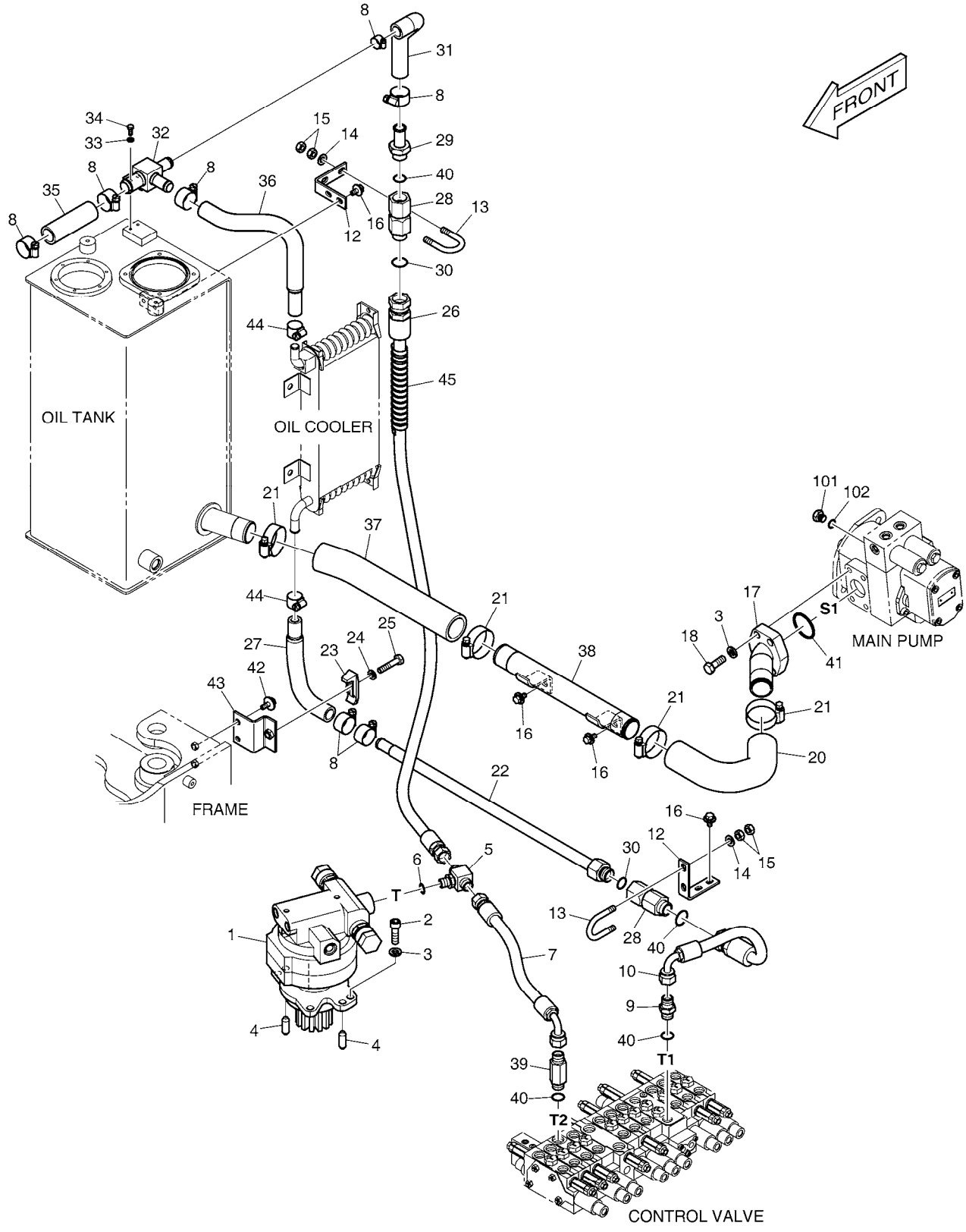

(THIS PARTS BOOK IS FOR REFERENCE ONLY.
PART NUMBERS AND SERAIL NUMBERS MAY BE
OUTDATED. ALWAYS USE THE ONLINE PARTS SYSTEM)

DATE	JAN. 04, 2013
3rd EDITION	

Fig. 1180 OIL COOLER PIPING
TUYAUTERIE DE RADIATEUR D'HUILE

Serial No. ;

Key No.	Part No.	Description	Description	Q'ty	S.C	Serial No.	ICA	Replaceable part	
								Part No.	Q'ty
1180 --	K1015523G	OIL COOLER PIPING	CONDUITES	-	D	5001-5341			
	420212-00627	PIPING,LOW PRESSURE	TUYAUTERIE DE BASSE PR	-	D	5342-			
1	K1015302B	MOTOR;SWING	MOTEUR	1					
2	S2215466	BOLT;SOCKET M12X1.75X40	BOULON	4					
3	S5102703	WASHER;SPRING	RONDELLE	8					
4	2123-2132	PIN;KNOCK	BROCHE	2					
5	2181-2281D16	TEE	TE	1					
6	S8000141	O-RING	JOINT TORIQUE	1					
7	DS2093471	HOSE	TUYAU FLEXIBLE	1					
8	S8450023	CLAMP	COLLIER	7					
9	2181-1126D6	ADAPTER	ADAPTEUR	1					
10	DS2093485	HOSE	TUYAU FLEXIBLE	1					
12	K1015538	PLATE	PLAQUE	2					
13	2120-1413D3	BOLT;U M10X1.5	BOULON A 6 PANS	2					
14	S5010613	WASHER;PLAIN	RONDELLE	4					
15	S4012633	NUT	ECROU	8					
16	DS0025033	BOLT;SET	BOULON	6					
17	K1015539A	PIPE;SUCTION	TUYAU	1					
18	S0515366	BOLT	BOULON A 6 PANS	4					
20	K1015525	HOSE	TUYAU FLEXIBLE	1					
21	S8450044	CLAMP;HOSE	COLLIER	4					
22	K1015536A	PIPE;RETURN	TUYAU	1					
23	2124-1026D1	CLAMP;PIPE	BRIDE	1					
24	S5102603	WASHER,SPRING	RONDELLE	1					
25	S0558553	BOLT;HEX.	BOULON	1					
26	DS2094260	HOSE	TUYAU FLEXIBLE	1		5001-5341	I	DS2094407	1
	DS2094407	HOSE(ST-ST)	TUYAU FLEXIBLE	1		5342-			
27	K1018209A	HOSE	TUYAU FLEXIBLE	1					
28	K1010875	VALVE;CHECK	CAPTEUR	2					
29	DS2239001	ADAPTER	ADAPTEUR	1					
30	S8000231	O-RING	JOINT CIRCULAIRE	2					
31	K1015528A	HOSE	TUYAU FLEXIBLE	1					
32	K1010292A	MANIFOLD	COLLECTEUR	1					
33	S5100303	WASHER;SPRING M6	RONDELLE ELASTIQUE	2					
34	S0504653	BOLT M6X1.0X16	BOULON	2					
35	DS2087066	HOSE	TUYAU FLEXIBLE	1					
36	K1015527B	HOSE	TUYAU FLEXIBLE	1					
37	K1015533	HOSE	TUYAU FLEXIBLE	1					

(THIS PARTS BOOK IS FOR REFERENCE ONLY.
PART NUMBERS AND SERIAL NUMBERS MAY BE
OUTDATED. ALWAYS USE THE ONLINE PARTS SYSTEM)

Fig. 1180 OIL COOLER PIPING
TUYAUTERIE DE RADIATEUR D'HUILE

Serial No. ;

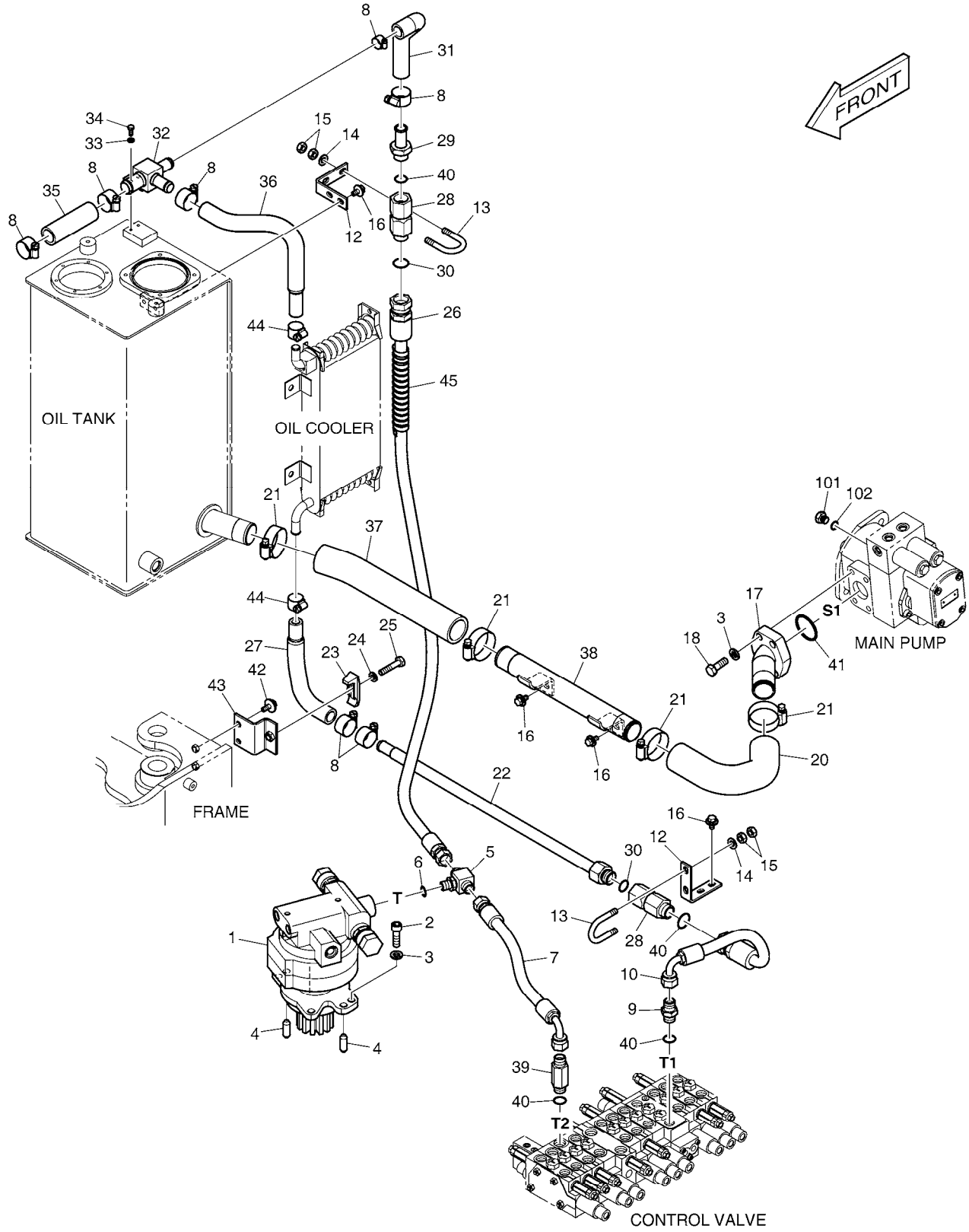

(THIS PARTS BOOK IS FOR REFERENCE ONLY.
PART NUMBERS AND SERAIL NUMBERS MAY BE
OUTDATED. ALWAYS USE THE ONLINE PARTS SYSTEM)

DATE	JAN. 04, 2013
3rd EDITION	

Fig. 1180 OIL COOLER PIPING
TUYAUTERIE DE RADIATEUR D'HUILE

Serial No. ;

Key No.	Part No.	Description	Description	Q'ty	S.C	Serial No.	ICA	Replaceable part	
								Part No.	Q'ty
1180 -38	K1009435A	PIPE;SUCTION	TUYAU	1					
39	2181-1126D83	ADAPTER	RACCORD ADAPTATEUR	1					
40	S8000181	O-RING	JOINT CIRCULAIRE	4					
41	2180-1026D28	O-RING	JOINT TORIQUE	1					
42	DS0025032	BOLT;SET	BOULON	2					
43	K1018384A	BRACKET	SUPPORT	1					
44	S8450018	CLAMP;HOSE	COLLIER	2					
45	DS2101040	PROTECTOR;HOSE	PROTECTEUR	1		5206-			
101	2181-1950D1	PLUG	BOUCHON	1					
102	S8000111	O-RING	JOINT CIRCULAIRE	1					

(THIS PARTS BOOK IS FOR REFERENCE ONLY.
PART NUMBERS AND SERAIL NUMBERS MAY BE
OUTDATED. ALWAYS USE THE ONLINE PARTS SYSTEM)

DATE	JAN. 04, 2013
3rd EDITION	

Fig. 1190 MAIN PIPING (1)
CONDUITES DE PRINCIPAL

Serial No. ;

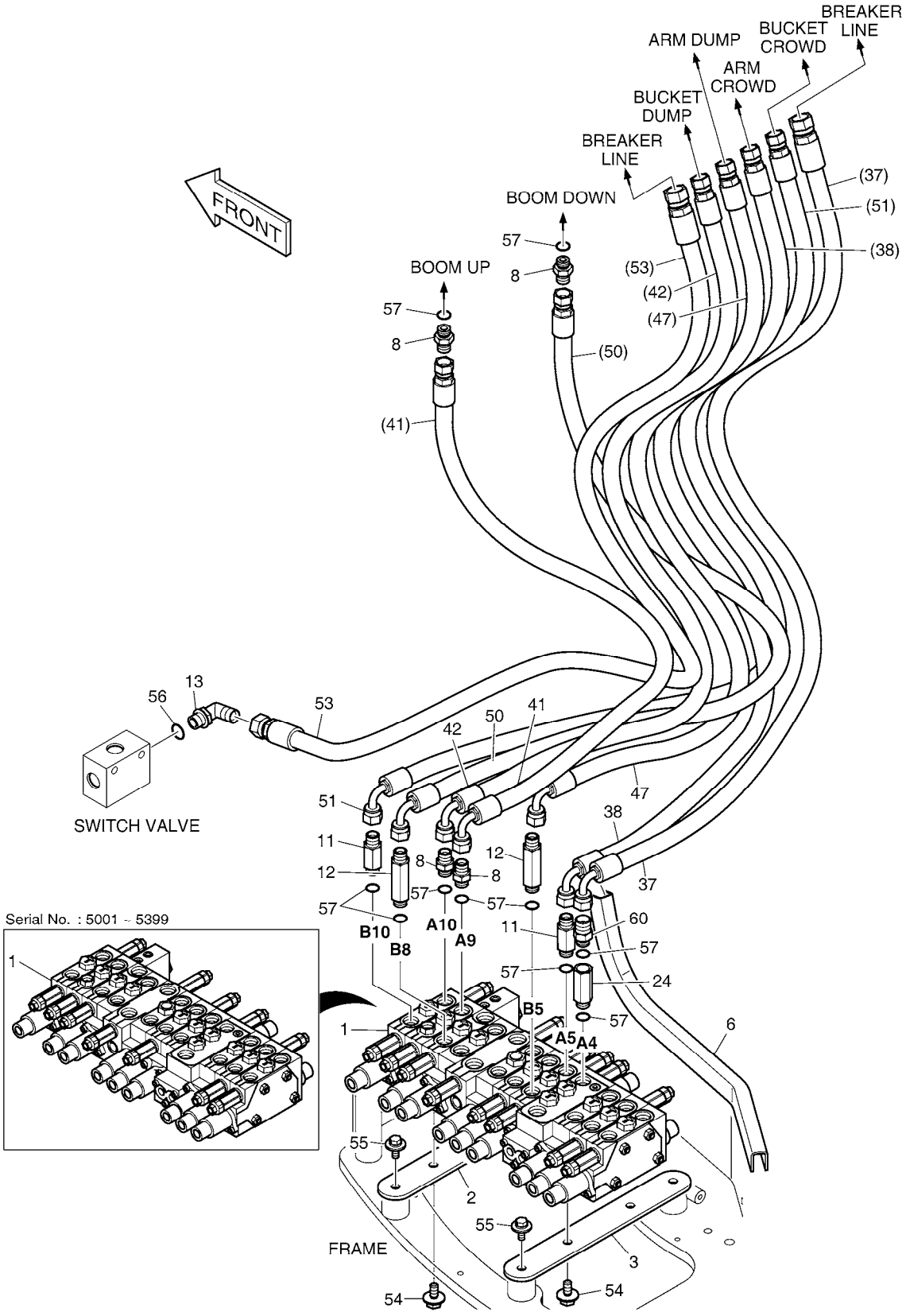

(THIS PARTS BOOK IS FOR REFERENCE ONLY.
PART NUMBERS AND SERAIL NUMBERS MAY BE
OUTDATED. ALWAYS USE THE ONLINE PARTS SYSTEM)

DATE	JAN. 04, 2013
3rd EDITION	

Fig. 1190 MAIN PIPING (1) CONDUITES DE PRINCIPAL

Serial No. ;

Key No.	Part No.	Description	Description	Q'ty	S.C	Serial No.	ICA	Replaceable part	
								Part No.	Q'ty
1190 --	K1015682G	MAIN PIPING	TUYAUTERIE PRINCIPALE	-	D	5001-5341			
	420212-00624	PIPING,MAIN	TUYAUTERIE PRINCIPALE	-	D	5342-			
1	K1017285B	CONTROL VALVE	TIROIR DE COMMANDE	1		5001-5399	I	410105-00144	1
	410105-00144	VALVE,CONTROL	TIROIR DE COMMANDE	1		5400-			
2	K1011377	PLATE	PLAQUE	1					
3	K1011378	PLATE	PLAQUE	1					
6	K1018335A	WEATHER STRIP	SURVIVEZ A A LA BANDE	1					
8	2181-1126D7	ADAPTER	ADAPTEUR	4					
11	2181-1126D27	ADAPTER	ADAPTEUR	2					
12	2181-1126D28	ADAPTER	ADAPTEUR	2					
13	2181-1702D2	ELBOW	COUDE	1					
24	2181-2337D12	ADAPTER	REDUCTEUR	1					
37	DS2093473	HOSE	TUYAU FLEXIBLE	1		5001-5205			
	DS2093633	HOSE	TUYAU FLEXIBLE	1		5206-			
38	DS2093418	HOSE	TUYAU FLEXIBLE	1		5001-5205			
	DS2093276	HOSE	TUYAU FLEXIBLE	1		5206-			
41	DS2093450	HOSE	TUYAU FLEXIBLE	1		5001-5341	I	DS2093763	1
	DS2093763	HOSE(ST-90)	TUYAU FLEXIBLE	1		5342-			
42	DS2093309	HOSE	TUYAU FLEXIBLE	1					
47	DS2093417	HOSE	TUYAU FLEXIBLE	1					
50	DS2093451	HOSE	TUYAU FLEXIBLE	1		5001-5341	I	DS2093764	1
	DS2093764	HOSE(ST-90)	TUYAU FLEXIBLE	1		5342-			
51	DS2093416	HOSE	TUYAU FLEXIBLE	1		5001-5205			
	DS2093311	HOSE	TUYAU FLEXIBLE	1		5206-			
53	DS2094261	HOSE	TUYAU FLEXIBLE	1					
54	DS0025017	BOLT	BOULON	4					
55	DS0025032	BOLT;SET	BOULON	4					
56	S8000181	O-RING	JOINT CIRCULAIRE	1					
57	S8000141	O-RING	JOINT TORIQUE	10					
60	2181-1126D115	ADAPTER	ADAPTEUR	1					

(THIS PARTS BOOK IS FOR REFERENCE ONLY.
PART NUMBERS AND SERAIL NUMBERS MAY BE
OUTDATED. ALWAYS USE THE ONLINE PARTS SYSTEM)

DATE	JAN. 04, 2013
3rd EDITION	

Fig. 1200 MAIN PIPING (2)
CONDUITES DE PRINCIPAL

Serial No. ;

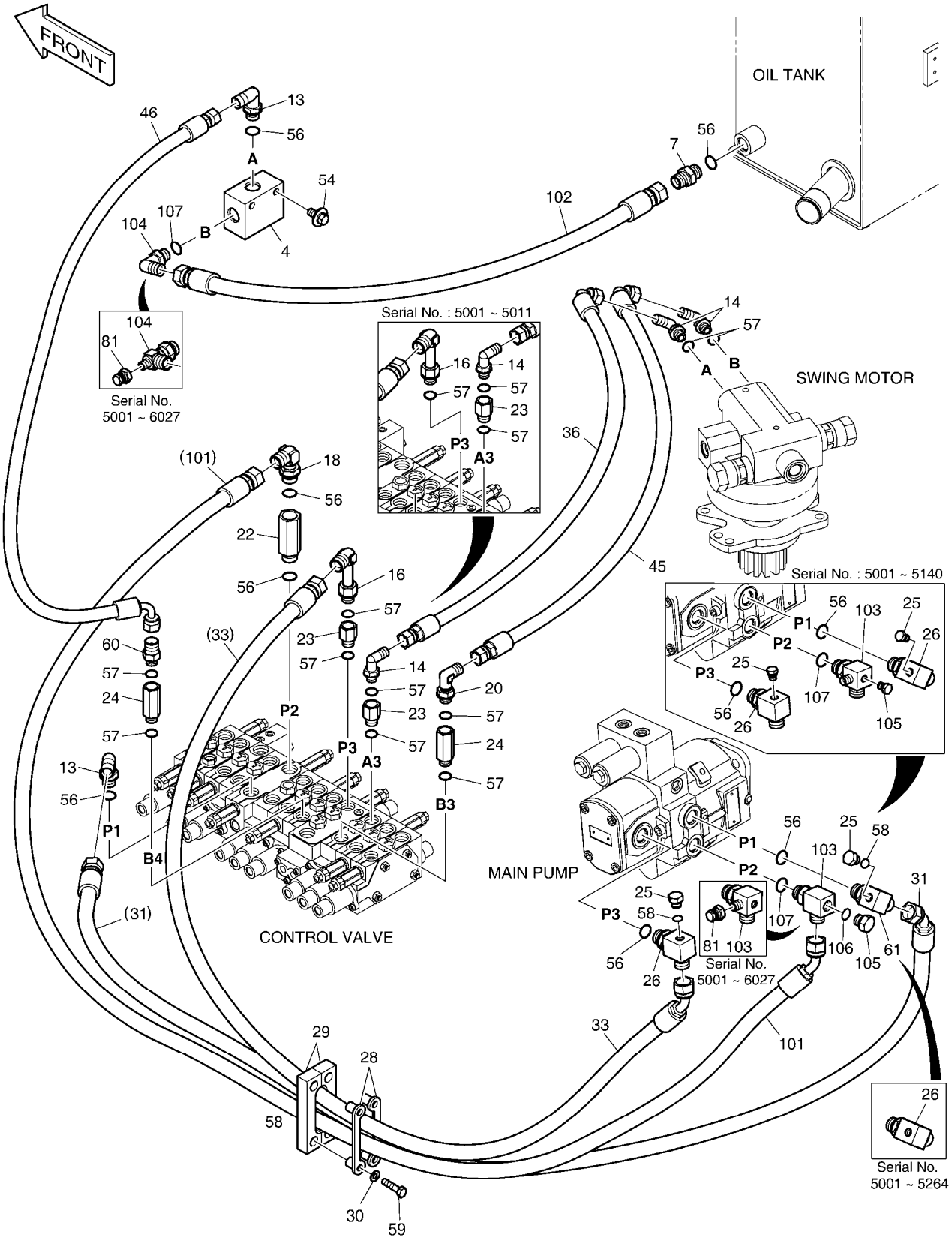

(THIS PARTS BOOK IS FOR REFERENCE ONLY.
PART NUMBERS AND SERAIL NUMBERS MAY BE
OUTDATED. ALWAYS USE THE ONLINE PARTS SYSTEM)

DATE	JAN. 04, 2013
3rd EDITION	

Fig. 1200 MAIN PIPING (2)
CONDUITES DE PRINCIPAL

Serial No. ;

Key No.	Part No.	Description	Description	Q'ty	S.C	Serial No.	ICA	Replaceable part	
								Part No.	Q'ty
1200 --	K1015682H	MAIN PIPING	TUYAUTERIE PRINCIPALE	-	D	5001-5341			
	420212-00624	PIPING,MAIN	TUYAUTERIE PRINCIPALE	-	D	5342-			
4	420-00291	VALVE;SWITCH	VANNE	1					
7	2181-1126D6	ADAPTER	ADAPTEUR	1					
13	2181-1702D2	ELBOW	COUDE	2					
14	2181-1702D5	ELBOW	COUDE	3					
16	2181-1702D36	ELBOW	COUDE	1					
18	2181-1702D50	ELBOW	COUDE	1					
20	2181-1702D55	ELBOW	COUDE	1					
22	2181-2337D10	REDUCER	REDUCTEUR	1					
23	2181-2337D2	REDUCER	REDUCEUR	1		5001-5011			
	2181-2337D2	REDUCER	REDUCEUR	2		5012-			
24	2181-2337D12	ADAPTER	REDUCTEUR	2					
25	2181-2047A	PLUG	PRISE	3		5001-5140			
	2181-1950D1	PLUG	BOUCHON	2		5141-			
26	2181-2576D1	TEE	TE	2		5001-5140			
	K1040063	TEE	TE	2		5141-5264			
	K1040063	TEE	TE	1		5265-			
28	K1012040A	PLATE	PLAQUE	2					
29	K1012041B	RUBBER	CAOUTCHOUC	2					
30	S5010513	WASHER,PLAIN	RONDELLE	4					
31	DS2092125	HOSE	TUYAU FLEXIBLE	1					
33	DS2092126	HOSE	TUYAU FLEXIBLE	1		5001-5341	I	DS2092236	1
	DS2092236	HOSE	TUYAU FLEXIBLE	1		5342-			
36	DS2093273	HOSE	TUYAU FLEXIBLE	1					
45	DS2093412	HOSE	TUYAU FLEXIBLE	1					
46	DS2093304	HOSE	TUYAU FLEXIBLE	1					
54	DS0025017	BOLT	BOULON	2					
56	S8000181	O-RING	JOINT CIRCULAIRE	7					
57	S8000141	O-RING	JOINT TORIQUE	9		5001-5011			
	S8000141	O-RING	JOINT TORIQUE	10		5012-			
58	S8000111	O-RING	JOINT CIRCULAIRE	2		5141-			
59	S0509353	BOLT M8X1.25X35	BOULON A 6 PANS	4					
60	2181-1126D115	ADAPTER	ADAPTEUR	1					
61	K1046415	ELBOW	COUDE	1		5265-			
81	2181-2820D1	PLUG	BOUCHON	2		5001-6027			
101	DS2092125	HOSE	TUYAU FLEXIBLE	1		5001-5341			
	DS2092235	HOSE	TUYAU FLEXIBLE	1		5342-			

(THIS PARTS BOOK IS FOR REFERENCE ONLY.
PART NUMBERS AND SERIAL NUMBERS MAY BE
OUTDATED. ALWAYS USE THE ONLINE PARTS SYSTEM)

DATE	JAN. 04, 2013
3rd EDITION	

Fig. 1200 MAIN PIPING (2)
CONDUITES DE PRINCIPAL

Serial No. ;

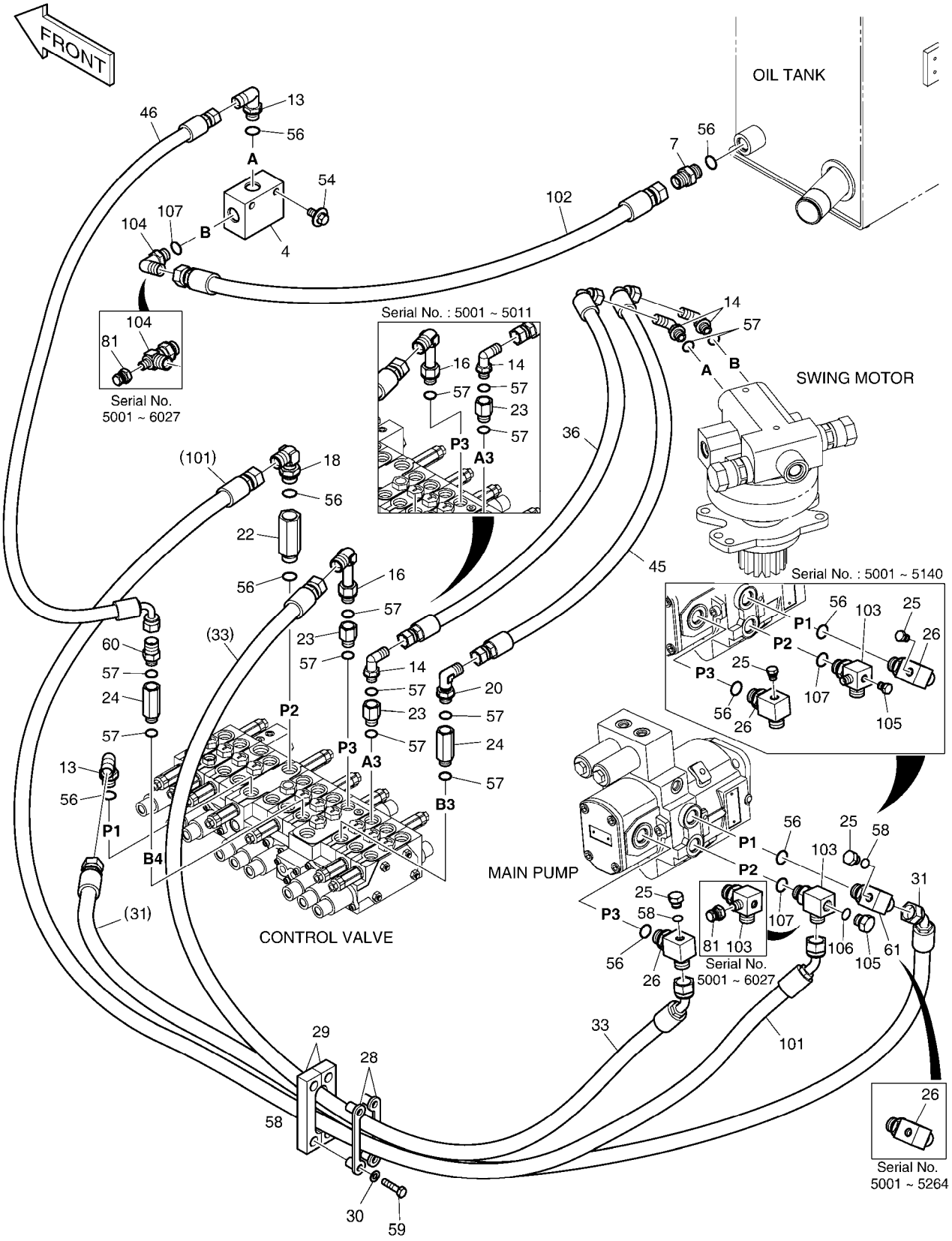

(THIS PARTS BOOK IS FOR REFERENCE ONLY.
PART NUMBERS AND SERAIL NUMBERS MAY BE
OUTDATED. ALWAYS USE THE ONLINE PARTS SYSTEM)

Fig. 1200 MAIN PIPING (2)
CONDUITES DE PRINCIPAL

Serial No. ;

Key No.	Part No.	Description	Description	Q'ty	S.C	Serial No.	ICA	Replaceable part	
								Part No.	Q'ty
1200 -102	DS2094219	HOSE	TUYAU FLEXIBLE	1		5001-5341	I	DS2094409	1
	DS2094409	HOSE(ST-ST)	TUYAU FLEXIBLE	1		5342-			
103	K1013674A	TEE	TE	1		5001-5140			
	K1040064	TEE	TE	1		5141-6027			
	DS2365002	TEE	TE	1		6028-			
104	2181-1951D8	TEE	TE	1		5001-6027			
	2181-1702D2	ELBOW	COUDE	1		6028-			
105	2181-1950D1	PLUG	BOUCHON	1					
106	S8000111	O-RING	JOINT CIRCULAIRE	1					
107	S8000181	O-RING	JOINT CIRCULAIRE	2					

(THIS PARTS BOOK IS FOR REFERENCE ONLY.
PART NUMBERS AND SERAIL NUMBERS MAY BE
OUTDATED. ALWAYS USE THE ONLINE PARTS SYSTEM)

DATE	JAN. 04, 2013
3rd EDITION	

Fig. 1210 MAIN PIPING (3)
CONDUITES DE PRINCIPAL

Serial No. ;

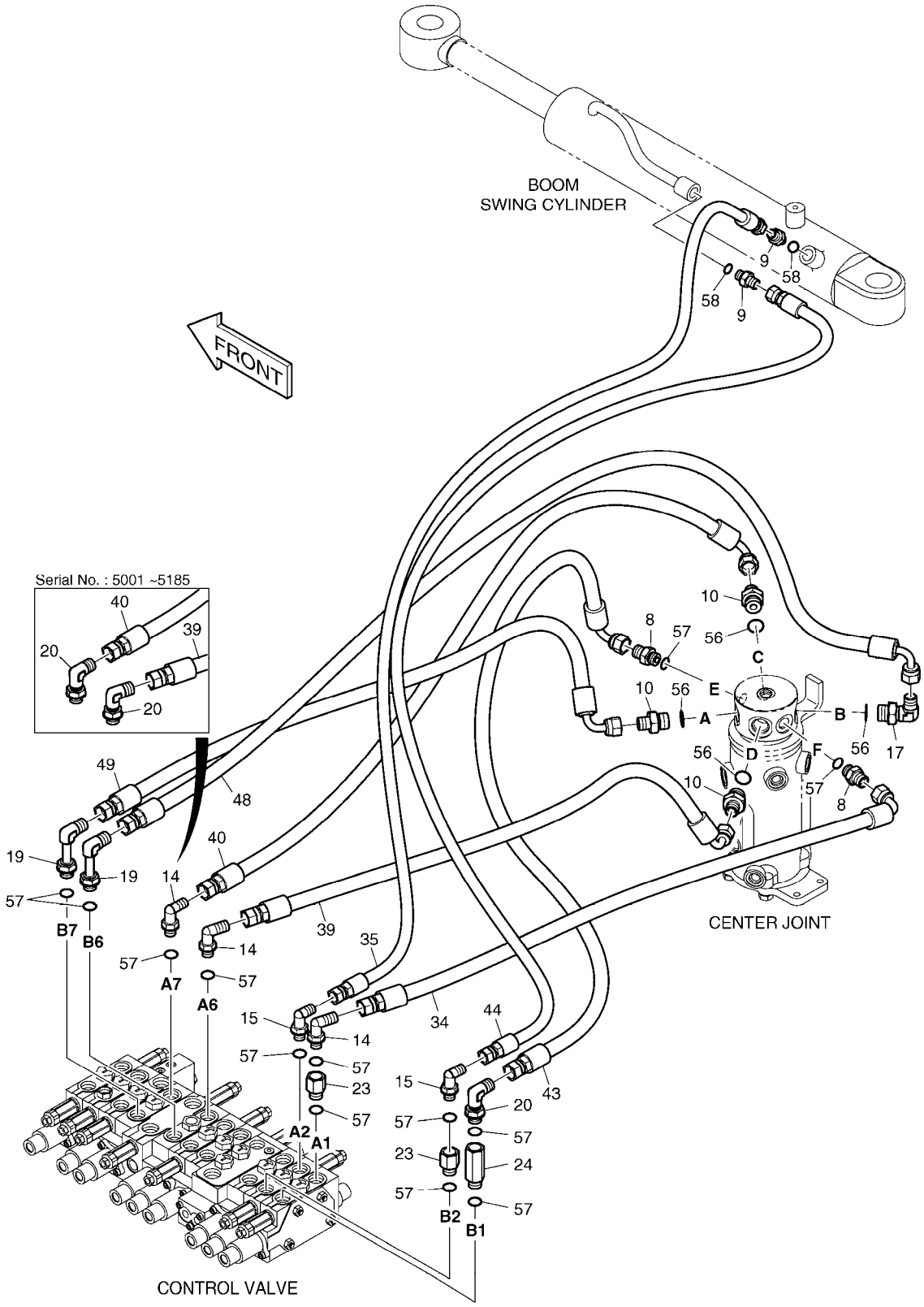

(THIS PARTS BOOK IS FOR REFERENCE ONLY.
PART NUMBERS AND SERAIL NUMBERS MAY BE
OUTDATED. ALWAYS USE THE ONLINE PARTS SYSTEM)

DATE	JAN. 04, 2013
3rd EDITION	

Fig. 1210 MAIN PIPING (3)
CONDUITES DE PRINCIPAL

Serial No. ;

Key No.	Part No.	Description	Description	Q'ty	S.C	Serial No.	ICA	Replaceable part	
								Part No.	Q'ty
1210 --	K1015682B	MAIN PIPING	TUYAUTERIE PRINCIPALE	-	D	5001-5341			
	420212-00624	PIPING,MAIN	TUYAUTERIE PRINCIPALE	-	D	5342-			
8	2181-1126D7	ADAPTER	ADAPTEUR	2					
9	2181-1126D14	ADAPTER	ADAPTEUR	2					
10	2181-1126D23	ADAPTER	ADAPTEUR	3					
14	2181-1702D5	ELBOW	COUDE	1		5001-5185			
	2181-1702D5	ELBOW	COUDE	3		5186-			
15	2181-1702D10	ELBOW	COUDE	2					
17	2181-1702D44	ELBOW PFO1/2-PF3/8	COUDE	1					
19	2181-1702D51	ELBOW	COUDE	2					
20	2181-1702D55	ELBOW	COUDE	3		5001-5185			
	2181-1702D55	ELBOW	COUDE	1		5186-			
23	2181-2337D2	REDUCER	REDUCEUR	2					
24	2181-2337D12	ADAPTER	REDUCTEUR	1					
34	DS2093413	HOSE	TUYAU FLEXIBLE	1					
35	DS2094207	HOSE	TUYAU FLEXIBLE	1					
39	DS2093269	HOSE	TUYAU FLEXIBLE	1					
40	DS2093303	HOSE	TUYAU FLEXIBLE	1					
43	DS2093303	HOSE	TUYAU FLEXIBLE	1					
44	DS2094208	HOSE	TUYAU FLEXIBLE	1					
48	DS2093367	HOSE	TUYAU FLEXIBLE	1					
49	DS2093273	HOSE	TUYAU FLEXIBLE	1					
56	S8000181	O-RING	JOINT CIRCULAIRE	4					
57	S8000141	O-RING	JOINT TORIQUE	13					
58	S8000111	O-RING	JOINT CIRCULAIRE	2					

(THIS PARTS BOOK IS FOR REFERENCE ONLY.
PART NUMBERS AND SERAIL NUMBERS MAY BE
OUTDATED. ALWAYS USE THE ONLINE PARTS SYSTEM)

DATE	JAN. 04, 2013
3rd EDITION	

Fig. 1220 PILOT PIPING (1)
CONDUITES DE PILOTE

Serial No. ;

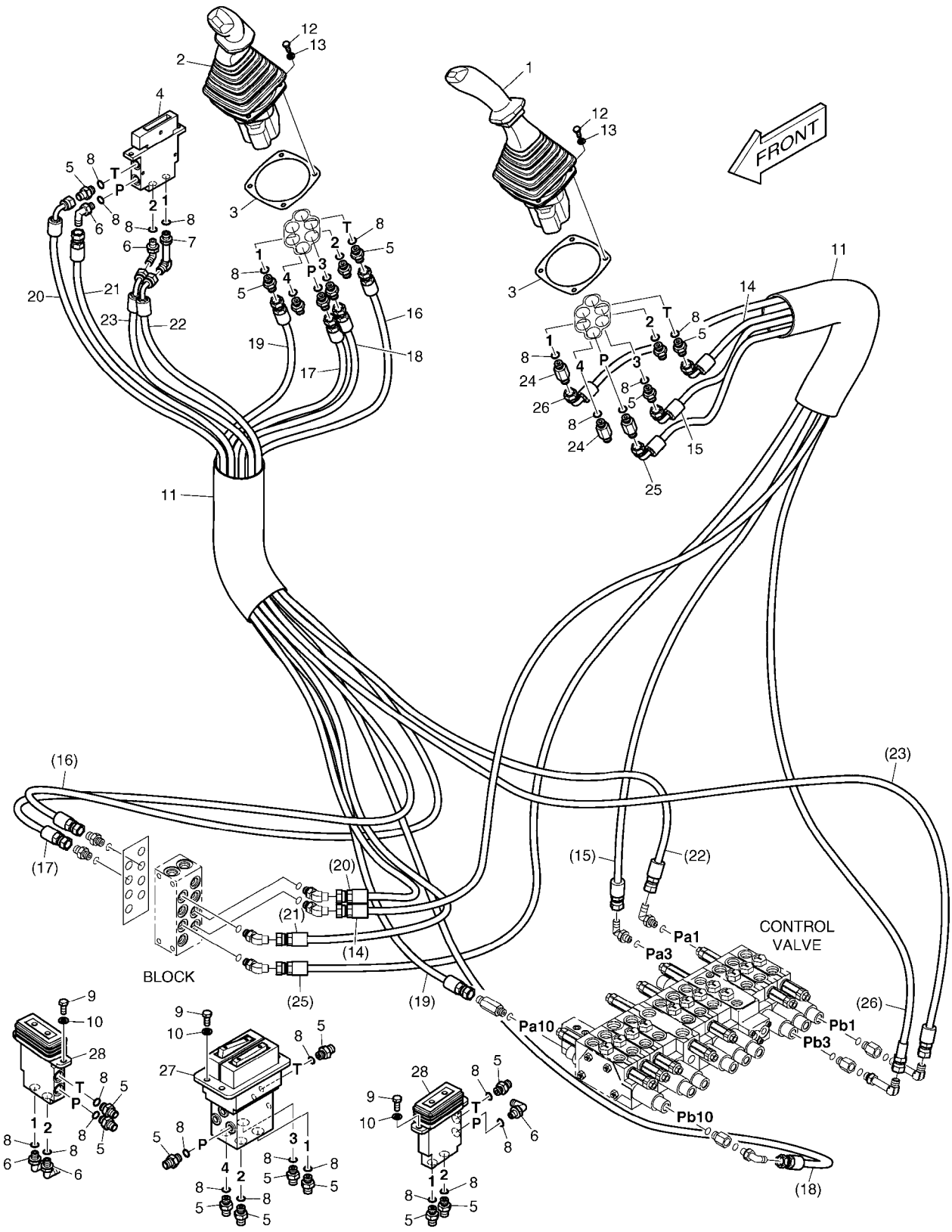

(THIS PARTS BOOK IS FOR REFERENCE ONLY.
PART NUMBERS AND SERAIL NUMBERS MAY BE
OUTDATED. ALWAYS USE THE ONLINE PARTS SYSTEM)

DATE	JAN. 04, 2013
3rd EDITION	

Fig. 1220 PILOT PIPING (1)
CONDUITES DE PILOTE

Serial No. ;

Key No.	Part No.	Description	Description	Q'ty	S.C	Serial No.	ICA	Replaceable part	
								Part No.	Q'ty
1220 --	K1025607C	PILOT PIPING	TUYAUTERIE PILOTE	-	D	5001-5408			
	420212-01340	PIPING,PILOT	TUYAUTERIE PILOTE	-	D	5409-5785			
	420212-01340A	PIPING,PILOT	TUYAUTERIE PILOTE	-	D	5786-6029			
	420212-01340B	PIPING,PILOT;(2)COMMON	TUYAUTERIE PILOTE	-	D	6030-			
1	K1014372A	VALVE;JOY STICK(L.H)	VANNE	1		5001-6029	I	410113-00130	1
	410113-00130	VALVE,JOYSTICK;LH	VANNE	1		6030-			
2	K1014373A	VALVE;JOY STICK(R.H)	VANNE	1		5001-6029	I	410113-00131	1
	410113-00131	VALVE,JOYSTICK;RH	VANNE	1		6030-			
3	2621-2752	PLATE	PLAQUE CAOUTCHOUC	2					
4	K1027491	VALVE;REMOCON (DOZER)	VANNE	1					
5	2181-1126D14	ADAPTER	ADAPTEUR	21					
6	2181-1702D4	ELBOW	COUDE	5					
7	2181-1702D56	ELBOW	COUDE	1					
8	S8000111	O-RING	JOINT CIRCULAIRE	30					
9	S0508866	BOLT	BOULON	8					
10	S5102503	WASHER,SPRING	RONDELLE	8					
11	K1003945	PROTECTOR	PROTECTEUR	2					
12	S0504666	BOLT M6X1.0X16	BOULON	6					
13	S5102303	WASHER;SPRING	RONDELLE	6					
14	DS2093420	HOSE	TUYAU FLEXIBLE	1					
15	DS2093119	HOSE	TUYAU FLEXIBLE	1					
16	DS2094220	HOSE	TUYAU FLEXIBLE	1					
17	DS2094214	HOSE PF1/4-1560L	TUYAU FLEXIBLE	1					
18	DS2094221	HOSE	TUYAU FLEXIBLE	1					
19	DS2094215	HOSE	TUYAU FLEXIBLE	1					
20	DS2093288	HOSE	TUYAU FLEXIBLE	1					
21	DS2094113	HOSE	TUYAU FLEXIBLE	1					
22	DS2093025	HOSE	TUYAU FLEXIBLE	1					
23	DS2093034	HOSE	TUYAU FLEXIBLE	1					
24	2181-1126D75	ADAPTER	ADAPTEUR	3					
25	DS2093420	HOSE	TUYAU FLEXIBLE	1					
26	DS2093330	HOSE	TUYAU FLEXIBLE	1					
27	K1011188	VALVE;PEDAL	VANNE	1		5001-5408	I	K1027918B	1
	K1027918B	PEDAL VALVE	VANNE	1		5409-5785	Y	410119-00008	1
	410119-00008	PEDAL VALVE	VANNE	1		5786-			
28	K1013569A	VALVE;PEDAL	VANNE	2		5001-5130	I	K1013569B	2
	K1013569B	VALVE;PEDAL	VANNE	2		5131-			

(THIS PARTS BOOK IS FOR REFERENCE ONLY.
PART NUMBERS AND DETAIL NUMBERS MAY BE
OUTDATED. ALWAYS USE THE ONLINE PARTS SYSTEM)

DATE	JAN. 04, 2013
3rd EDITION	

Fig. 1230 PILOT PIPING (2)
CONDUITES DE PILOTE

Serial No. ;

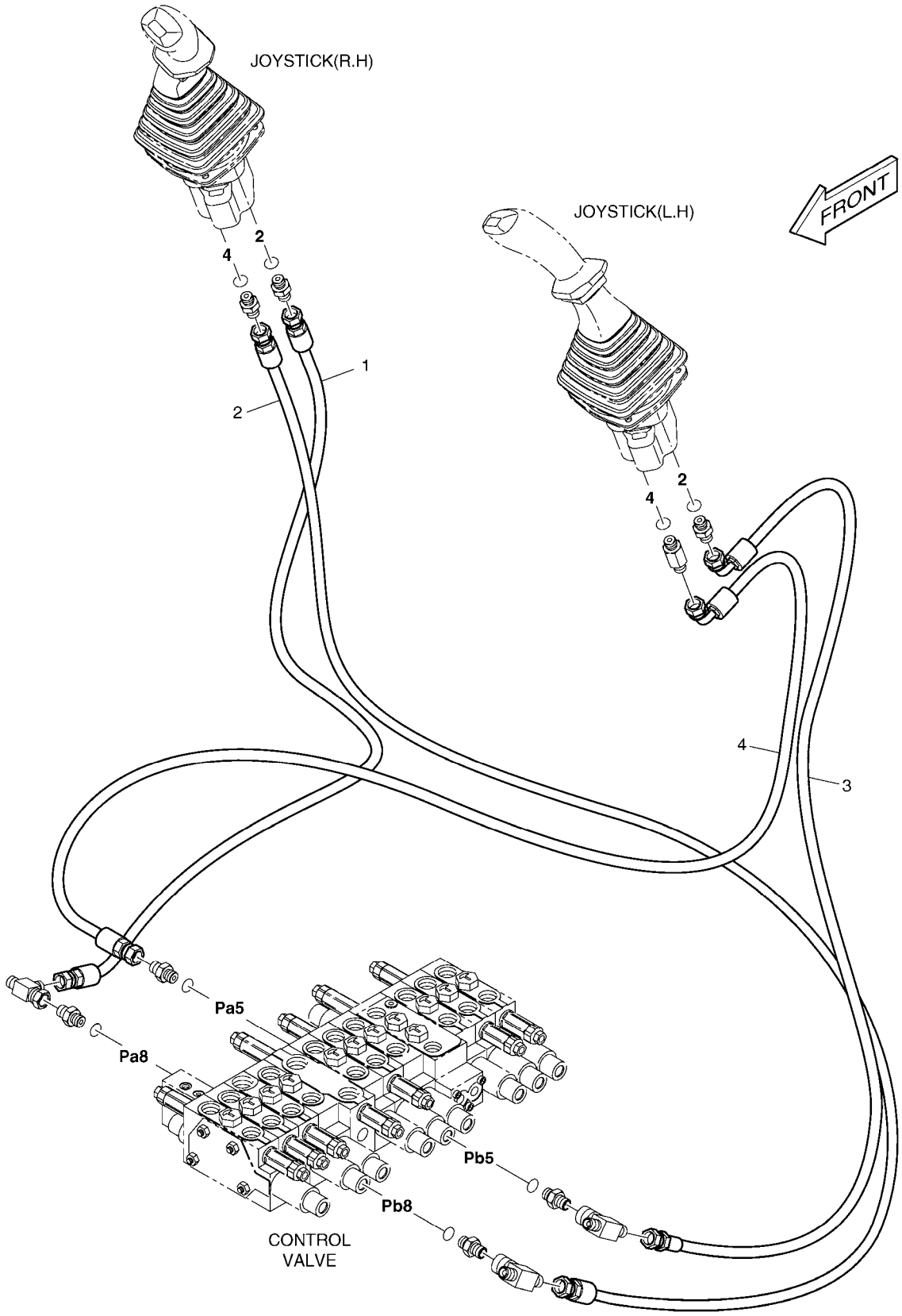

(THIS PARTS BOOK IS FOR REFERENCE ONLY.
PART NUMBERS AND SERAIL NUMBERS MAY BE
OUTDATED. ALWAYS USE THE ONLINE PARTS SYSTEM)

DATE	JAN. 04, 2013
3rd EDITION	

Fig. 1230 PILOT PIPING (2)
CONDUITES DE PILOTE

Serial No. ;

Key No.	Part No.	Description	Description	Q'ty	S.C	Serial No.	ICA	Replaceable part	
								Part No.	Q'ty
1230 --	K1026634	PILOT PIPING	TUYAUTERIE PILOTE	-	D				
1	DS2094017	HOSE	TUYAU FLEXIBLE	1					
2	DS2094222	HOSE PF1/4-1720L	TUYAU FLEXIBLE	1					
3	DS2093234	HOSE	TUYAU FLEXIBLE	1					
4	DS2093421	HOSE PF1/4-1510L	TUYAU FLEXIBLE	1					

(THIS PARTS BOOK IS FOR REFERENCE ONLY.
PART NUMBERS AND SERAIL NUMBERS MAY BE
OUTDATED. ALWAYS USE THE ONLINE PARTS SYSTEM)

DATE	JAN. 04, 2013
3rd EDITION	

Fig. 1240 PILOT PIPING (3)
CONDUITES DE PILOTE

Serial No. ;

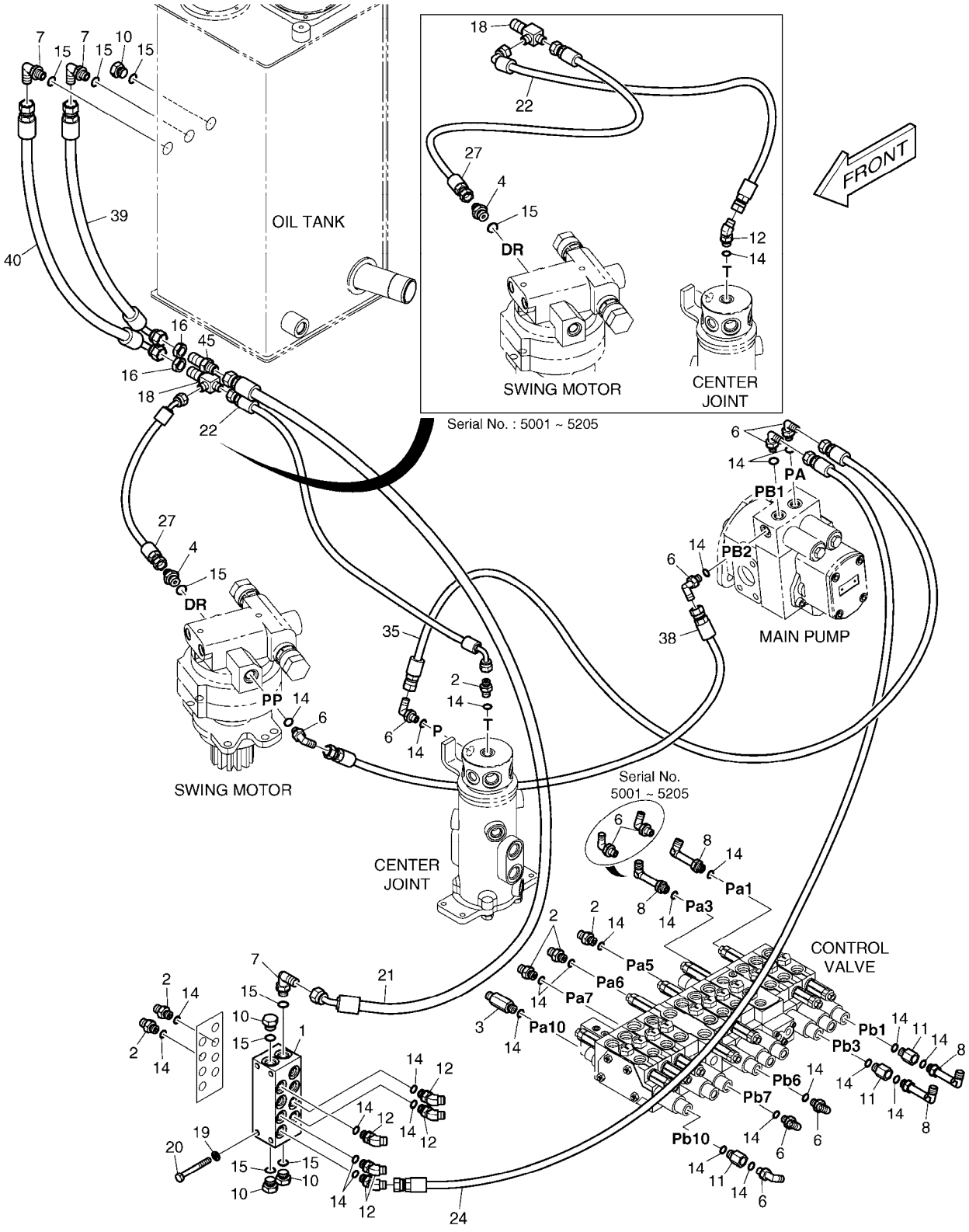

(THIS PARTS BOOK IS FOR REFERENCE ONLY.
PART NUMBERS AND SERAIL NUMBERS MAY BE
OUTDATED. ALWAYS USE THE ONLINE PARTS SYSTEM)

DATE	JAN. 04, 2013
3rd EDITION	

Fig. 1240 PILOT PIPING (3)
CONDUITES DE PILOTE

Serial No. ;

Key No.	Part No.	Description	Description	Q'ty	S.C	Serial No.	ICA	Replaceable part	
								Part No.	Q'ty
1240 --	K1025603C	PILOT PIPING	TUYAUTERIE PILOTE	-	D				
1	K1025585	BLOCK	BLOC	1					
2	2181-1126D14	ADAPTER	ADAPTEUR	5		5001-5205			
	2181-1126D14	ADAPTER	ADAPTEUR	6		5206-			
3	2181-1126D34	ADAPTER	ADAPTEUR	1					
4	2181-1126D36	ADAPTER	ADAPTEUR	1					
6	2181-1702D4	ELBOW	COUDE	10		5001-5205			
	2181-1702D4	ELBOW	COUDE	8		5206-			
7	2181-1702D5	ELBOW	COUDE	3					
8	2181-1702D56	ELBOW	COUDE	2		5001-5205			
	2181-1702D56	ELBOW	COUDE	4		5206-			
10	2181-1950D2	PLUG	BOUCHON	4					
11	2181-2337D1	REDUCER	REDUCTEUR	3					
12	2181-2419D1	ELBOW	COUDE	6		5001-5205			
	2181-2419D1	ELBOW	COUDE	5		5206-			
14	S8000111	O-RING	JOINT CIRCULAIRE	27					
15	S8000141	O-RING	JOINT TORIQUE	8					
16	121-00010D1	NUT	ECROU	2					
18	DS2411008	TEE	TE	1					
19	S5102503	WASHER,SPRING	RONDELLE	3					
20	S0556766	BOLT	BOULON A 6 PANS	3					
21	DS2092117	HOSE	TUYAU FLEXIBLE	1					
22	DS2093006	HOSE	TUYAU FLEXIBLE	1		5001-5205			
	DS2093115	HOSE	TUYAU FLEXIBLE	1		5206-			
24	DS2094024	HOSE	TUYAU FLEXIBLE	1					
27	DS2094224	HOSE	TUYAU FLEXIBLE	1		5001-5205			
	DS2093430	HOSE	TUYAU FLEXIBLE	1		5206-			
35	DS2094033	HOSE PF1/4-1150L	TUYAU FLEXIBLE	1					
38	DS2094184	HOSE PF 1/4-1100L	TUYAU FLEXIBLE	1					
39	DS2093299	HOSE	TUYAU FLEXIBLE	1					
40	DS2093300	HOSE	TUYAU FLEXIBLE	1					
45	181-00078D1	ADAPTER	ADAPTEUR	1					

(THIS PARTS BOOK IS FOR REFERENCE ONLY.
PART NUMBERS AND SERAIL NUMBERS MAY BE
OUTDATED. ALWAYS USE THE ONLINE PARTS SYSTEM)

DATE	JAN. 04, 2013
3rd EDITION	

Fig. 1250 PILOT PIPING (4)
CONDUITES DE PILOTE

Serial No. ;

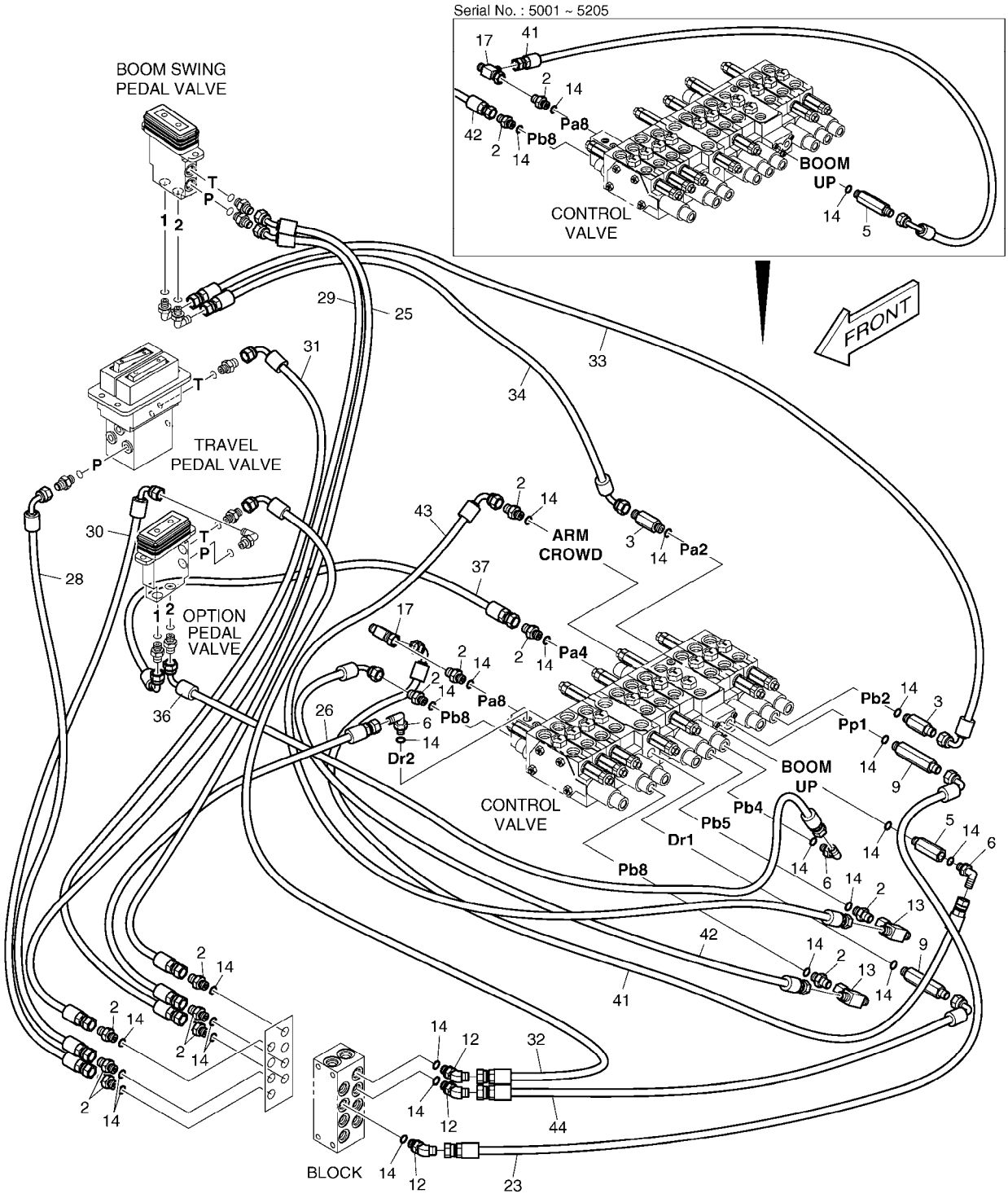

(THIS PARTS BOOK IS FOR REFERENCE ONLY.
PART NUMBERS AND SERAIL NUMBERS MAY BE
OUTDATED. ALWAYS USE THE ONLINE PARTS SYSTEM)

Fig. 1250 PILOT PIPING (4)
CONDUITES DE PILOTE

Serial No. ;

Key No.	Part No.	Description	Description	Q'ty	S.C	Serial No.	ICA	Replaceable part	
								Part No.	Q'ty
1250 --	K1025603C	PILOT PIPING	TUYAUTERIE PILOTE	-	D				
2	2181-1126D14	ADAPTER	ADAPTEUR	12					
3	2181-1126D34	ADAPTER	ADAPTEUR	2					
5	2181-1126D98	ADAPTER	ADAPTEUR	1		5001-5205			
	DS2242022	ADAPTER	ADAPTEUR	1		5206-			
6	2181-1702D4	ELBOW	COUDE	2		5001-5205			
	2181-1702D4	ELBOW	COUDE	3		5206-			
9	2181-1126D51	ADAPTER	ADAPTEUR	2					
12	2181-2419D1	ELBOW	COUDE	3					
13	2181-4125	TEE	TE	2					
14	S8000111	O-RING	JOINT CIRCULAIRE	22		5001-5205			
	S8000111	O-RING	JOINT CIRCULAIRE	23		5206-			
17	181-00837D1	TEE;UNION	TE	1					
23	DS2093027	HOSE PF1/4-500L	TUYAU FLEXIBLE	1					
25	DS2092118	HOSE	TUYAU FLEXIBLE	1					
26	DS2094223	HOSE	TUYAU FLEXIBLE	1					
28	DS2093197	HOSE	TUYAU FLEXIBLE	1					
29	DS2092119	HOSE	TUYAU FLEXIBLE	1					
30	DS2093028	HOSE	TUYAU FLEXIBLE	1		5001-5205			
	DS2093071	HOSE PF1/4-420L	TUYAU FLEXIBLE	1		5206-			
31	DS2093365	HOSE PF1/4-590L	TUYAU FLEXIBLE	1					
32	DS2093427	HOSE PF1/4-470L	TUYAU FLEXIBLE	1		5001-5205			
	DS2093197	HOSE	TUYAU FLEXIBLE	1		5206-			
33	DS2093098	HOSE	TUYAU FLEXIBLE	1		5001-5205			
	DS2093193	HOSE	TUYAU	1		5206-			
34	DS2093017	HOSE	TUYAU	1					
36	DS2093427	HOSE PF1/4-470L	TUYAU FLEXIBLE	1		5001-5205			
	DS2093375	HOSE	TUYAU FLEXIBLE	1		5206-			
37	DS2093397	HOSE	TUYAU FLEXIBLE	1					
41	DS2093032	HOSE	TUYAU FLEXIBLE	1		5001-5205			
	DS2093036	HOSE	TUYAU FLEXIBLE	1		5206-			
42	DS2094225	HOSE	TUYAU FLEXIBLE	1		5001-5205			
	DS2093032	HOSE	TUYAU FLEXIBLE	1		5206-5813			
	DS2093115	HOSE	TUYAU FLEXIBLE	1		5814-			
43	DS2093318	HOSE	TUYAU FLEXIBLE	1		5001-5813			
	DS2093249	HOSE	TUYAU FLEXIBLE	1		5814-			
44	DS2093024	HOSE	TUYAU FLEXIBLE	1					

(THIS PARTS BOOK IS FOR REFERENCE ONLY. PART NUMBERS AND SERIAL NUMBERS MAY BE OUTDATED. ALWAYS USE THE ONLINE PARTS SYSTEM)

DATE	JAN. 04, 2013
3rd EDITION	

Fig. 1260 PILOT PIPING (5) - NOT TRAVEL ALARM
CONDUITES DE PILOTE

Serial No. ;

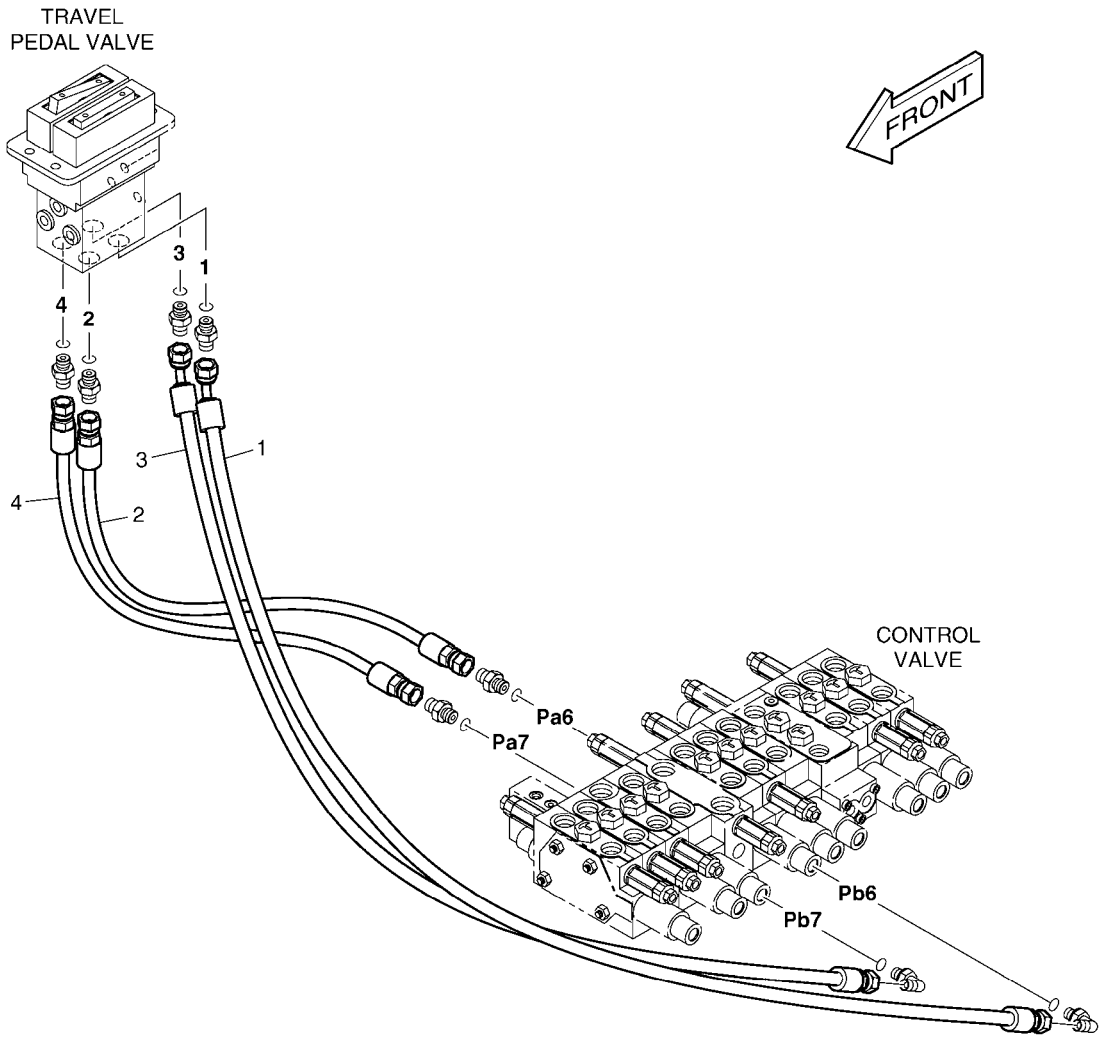

(THIS PARTS BOOK IS FOR REFERENCE ONLY.
PART NUMBERS AND SERAIL NUMBERS MAY BE
OUTDATED. ALWAYS USE THE ONLINE PARTS SYSTEM)

DATE	JAN. 04, 2013
3rd EDITION	

Fig. 1260 PILOT PIPING (5) - NOT TRAVEL ALARM
CONDUITES DE PILOTE

Serial No. ;

Key No.	Part No.	Description	Description	Q'ty	S.C	Serial No.	ICA	Replaceable part	
								Part No.	Q'ty
1260 --	K1026619	PILOT PIPING	TUYAUTERIE PILOTE	-	D				
1	DS2092091	HOSE	TUYAU FLEXIBLE	1					
2	DS2094137	HOSE	TUYAU FLEXIBLE	1					
3	DS2092092	HOSE	TUYAU FLEXIBLE	1					
4	DS2094006	HOSE	TUYAU FLEXIBLE	1					

(THIS PARTS BOOK IS FOR REFERENCE ONLY.
PART NUMBERS AND SERAIL NUMBERS MAY BE
OUTDATED. ALWAYS USE THE ONLINE PARTS SYSTEM)

DATE	JAN. 04, 2013
3rd EDITION	

Fig. 1270 ENGINE CONTROL
COMMANDE REGIME MOTEUR

Serial No. ;

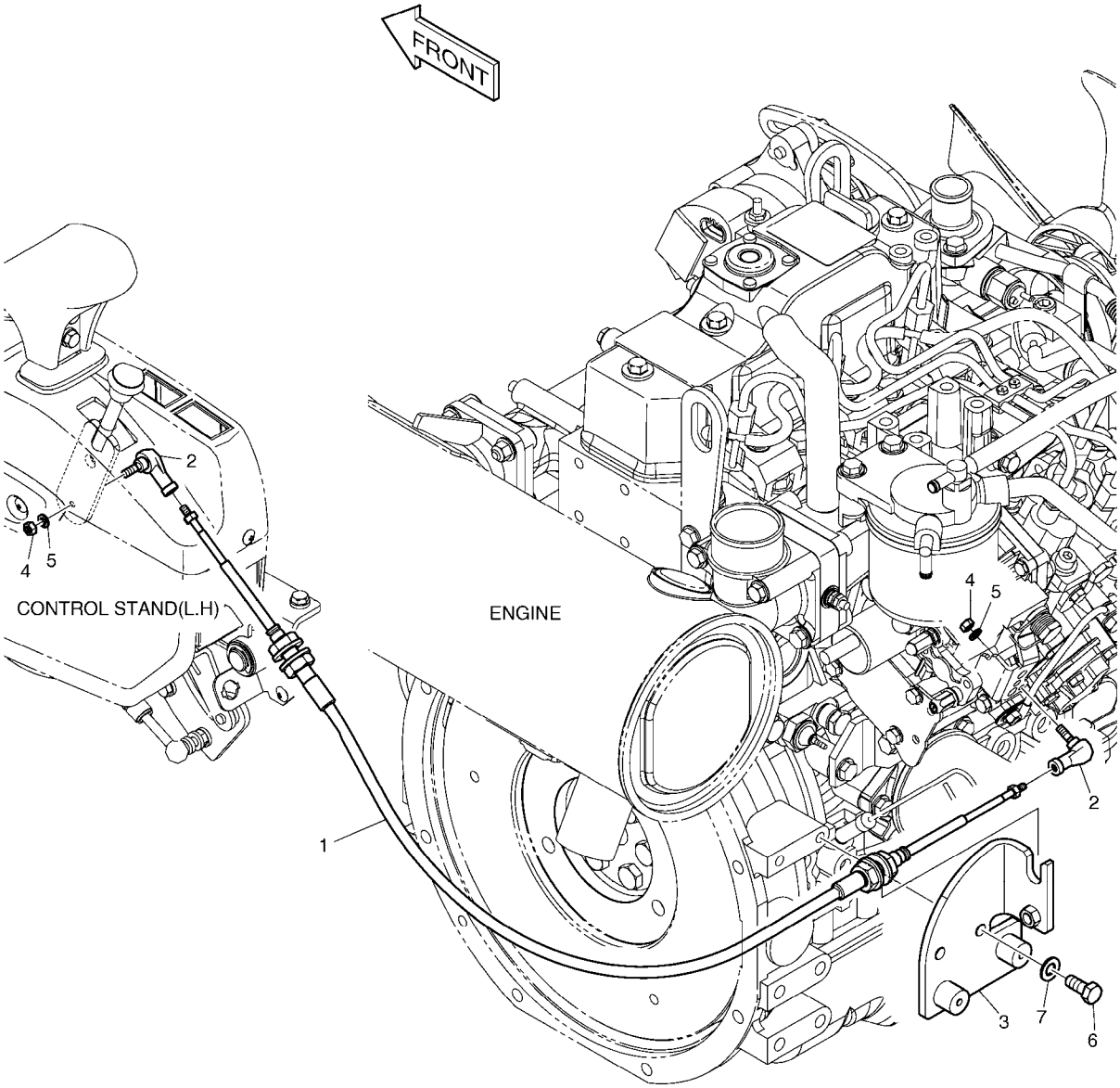

(THIS PARTS BOOK IS FOR REFERENCE ONLY.
PART NUMBERS AND SERAIL NUMBERS MAY BE
OUTDATED. ALWAYS USE THE ONLINE PARTS SYSTEM)

Fig. 1270 ENGINE CONTROL
COMMANDE REGIME MOTEUR

Serial No. ;

Key No.	Part No.	Description	Description	Q'ty	S.C	Serial No.	ICA	Replaceable part	
								Part No.	Q'ty
1270 --	K1017996B	ENGINE CONTROL	LE MOTEUR SE RELIENT	-	D				
1	K1012050A	CABLE;ENGINE CONTROL	CABLE	1					
2	2138-9006B	JOINT;BALL	JOINT SPHERIQUE	2					
3	K1017997A	BRACKET	SUPPORT	1					
4	S4012233	NUT	ECROU	2					
5	S5102203	WASHER;SPRING	RONDELLE ELASTIQUE	2					
6	S0508853	BOLT	BOULON	2					
7	S5010513	WASHER,PLAIN	RONDELLE	2					

(THIS PARTS BOOK IS FOR REFERENCE ONLY.
PART NUMBERS AND SERAIL NUMBERS MAY BE
OUTDATED. ALWAYS USE THE ONLINE PARTS SYSTEM)

DATE	JAN. 04, 2013
3rd EDITION	

Fig. 1280 BONNET
COUVERCLE

Serial No. ;

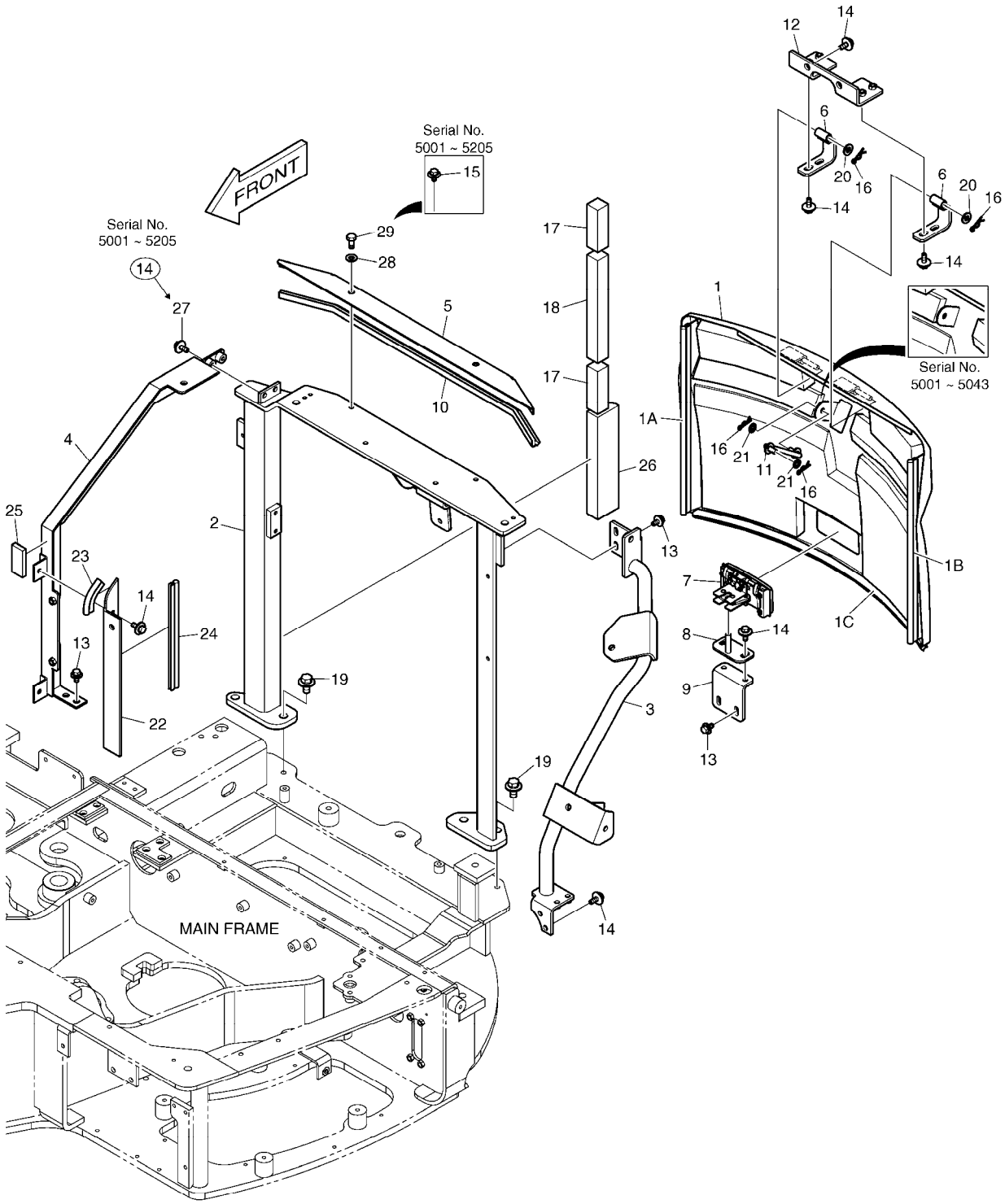

(THIS PARTS BOOK IS FOR REFERENCE ONLY.
PART NUMBERS AND SERAIL NUMBERS MAY BE
OUTDATED. ALWAYS USE THE ONLINE PARTS SYSTEM)

DATE	JAN. 04, 2013
3rd EDITION	

Fig. 1280 BONNET COUVERCLE

Serial No. ;

Key No.	Part No.	Description	Description	Q'ty	S.C	Serial No.	ICA	Replaceable part	
								Part No.	Q'ty
1280 --	K1016530M	ARCH & BONNET ASS'Y	ENSEMBLE DE VO?TE ET D	-	D	5001-5341			
	110501-00027	BONNET ASSY	CAPOT	-	D	5342-			
1	K1016533B	BONNET ASS'Y	COUVERCLE	1		5001-5043	I	K1016533C	1
	K1016533C	BONNET ASS'Y	COUVERCLE	1		5044-5130			
	K1016533E	BONNET ASS'Y	CAPOT ASS'Y	1		5131-			
1A	K1016546	. WEATHER STRIP	. SURVIVEZ A A LA BANDE	1					
1B	K1016547A	. WEATHER STRIP	. SURVIVEZ A A LA BANDE	1					
1C	K1016548	. WEATHER STRIP	. SURVIVEZ A A LA BANDE	1					
2	K1016534C	ARCH	VOUTE	1		5001-5038	I	K1016534E	1
	K1016534E	ARCH	VOUTE	1		5039-5299	I	K1016534G	1
	K1016534G	ARCH	VOUTE	1		5300-5341	Y	110958-00054	1
	110958-00054	ARCH	VOUTE	1		5342-			
3	K1016535B	SUPPORT	APPUI	1		5001-5341	Y	110958-00068	1
	110958-00068	SUPPORT	APPUI	1		5342-			
4	K1016536A	SUPPORT	LAMPE	1		5001-5205	I	K1016536B	1
	K1016536B	SUPPORT	LAMPE	1		5206-5341	Y	110958-00069	1
	110958-00069	SUPPORT	LAMPE	1		5342-			
5	K1016537B	PLATE	PLAQUE	1					
6	K1016538B	HINGE	CHARNIRE	2					
7	K1011350A	HANDLE	POIGNEE	1					
8	K1026044	STRIKER	FRAPPER	1		5001-5212	I	K1026044A	1
	K1026044A	STRIKER	FRAPPER	1		5213-			
9	K1026045	BRACKET	SUPPORT	1					
10	K1016540	WEATHER STRIP	SURVIVEZ A A LA BANDE	1					
11	K1016541	STAY	SEJOUR	1					
12	K1016564A	PLATE	PLAQUE	1					
13	DS0025033	BOLT;SET	BOULON	6					
14	DS0025032	BOLT;SET	BOULON	14		5001-5205			
	DS0025032	BOLT;SET	BOULON	12		5206-			
15	2120-2196D12	BOLT;SET	BOULON	2		5001-5205			
16	2705-9002	PIN;LOCK	GOUPILLE	4					
17	K1018250	FOAM	EPONGE	2					
18	K1018251	FOAM	EPONGE	1					
19	2120-2196D8	BOLT;SET	BOULON A 6 PANS	4		5001-5205			
	DS0025018	BOLT;SET	BOULON	4		5206-			
20	S5020603	WASHER;PLAIN M10	RONDELLE PLATE	2					
21	2114-1058D63	WASHER	RONDELLE	2					
22	K1012079A	BRACKET	SUPPORT	1					

(THIS PARTS BOOK IS FOR REFERENCE ONLY.
PART NUMBERS AND SERIAL NUMBERS MAY BE
OUTDATED. ALWAYS USE THE ONLINE PARTS SYSTEM)

DATE	JAN. 04, 2013
3rd EDITION	

Fig. 1280 BONNET
COUVERCLE

Serial No. ;

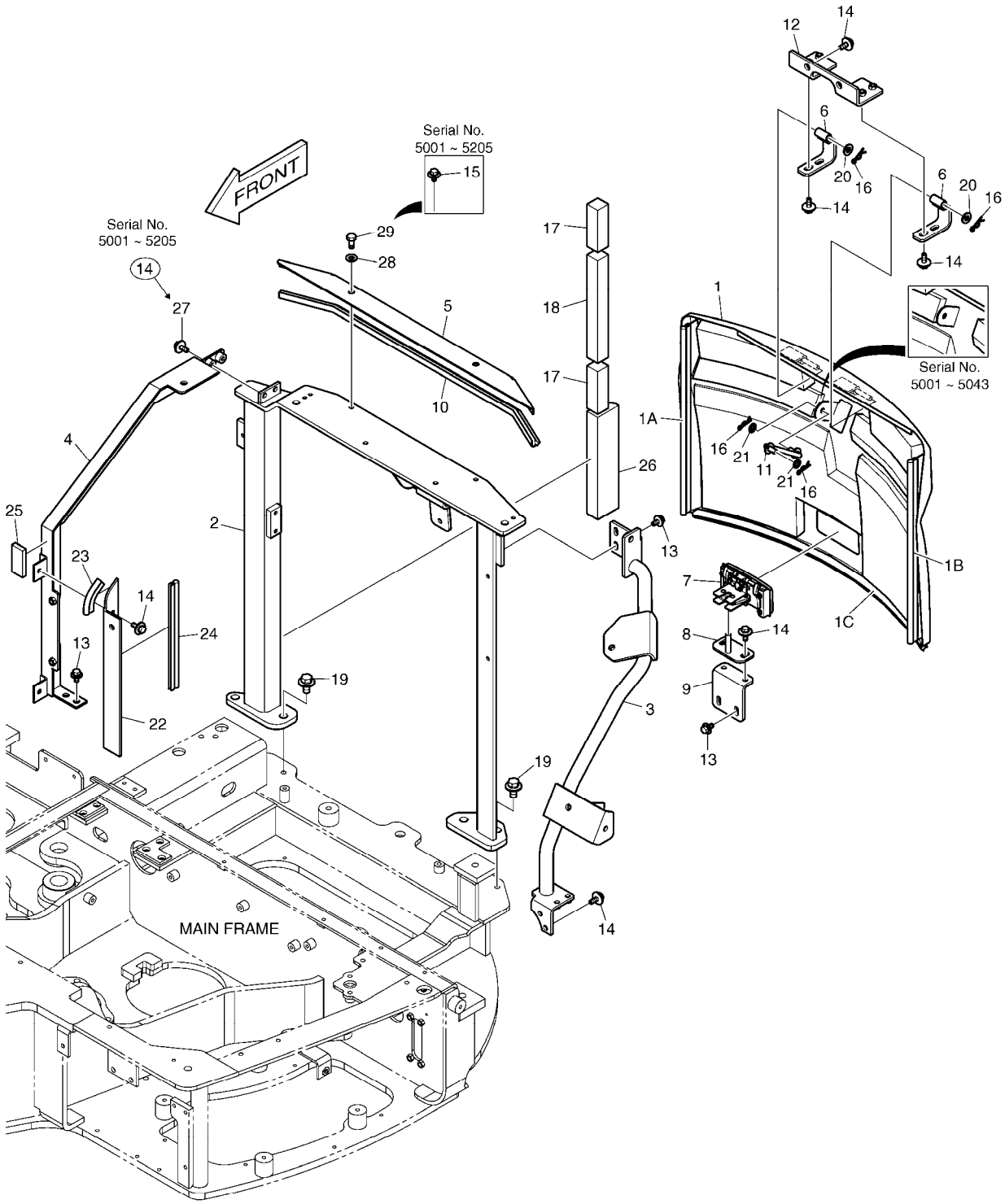

(THIS PARTS BOOK IS FOR REFERENCE ONLY.
PART NUMBERS AND SERAIL NUMBERS MAY BE
OUTDATED. ALWAYS USE THE ONLINE PARTS SYSTEM)

Fig. 1280 BONNET COUVERCLE

Serial No. ;

Key No.	Part No.	Description	Description	Q'ty	S.C	Serial No.	ICA	Replaceable part	
								Part No.	Q'ty
1280 -23	K1016577	WEATHER STRIP	SURVIVEZ A A LA BANDE	1					
24	K1016578	WEATHER STRIP	SURVIVEZ A A LA BANDE	1					
25	K1016579	FOAM	EPONGE	1					
26	K1026046	SPONGE	EPONGE	1					
27	DS0025039	BOLT;SET	BOULON	2		5206-			
28	2114-1058D29	WASHER	RONDELLE	2		5206-			
29	S0508666	BOLT	BOULON	2		5206-			

(THIS PARTS BOOK IS FOR REFERENCE ONLY.
PART NUMBERS AND SERAIL NUMBERS MAY BE
OUTDATED. ALWAYS USE THE ONLINE PARTS SYSTEM)

DATE	JAN. 04, 2013
3rd EDITION	

Fig. 1290 COVER ASS'Y
ENSEMBLE DE COUVERCLE

Serial No. ;

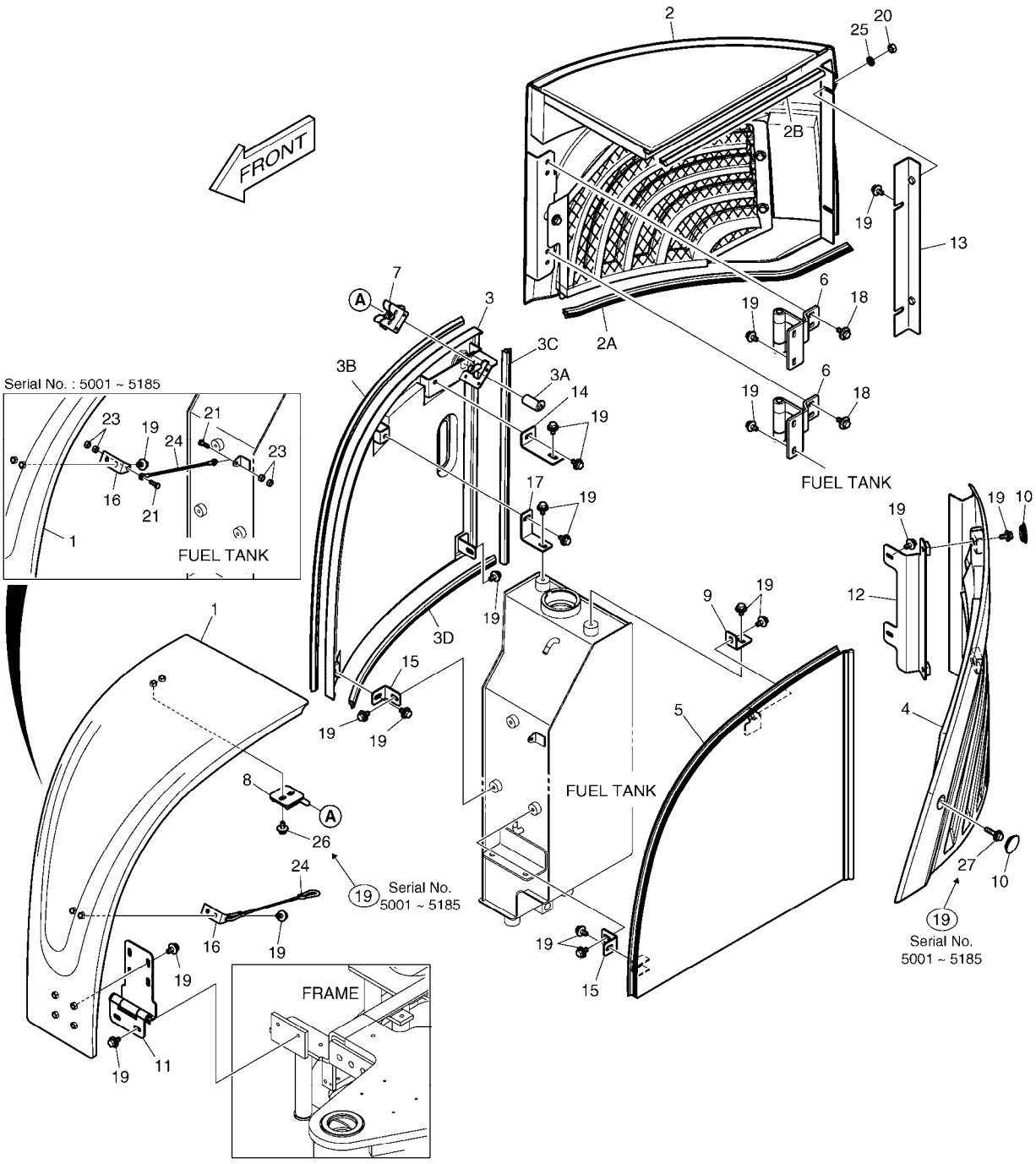

(THIS PARTS BOOK IS FOR REFERENCE ONLY.
PART NUMBERS AND SERAIL NUMBERS MAY BE
OUTDATED. ALWAYS USE THE ONLINE PARTS SYSTEM)

DATE	JAN. 04, 2013
3rd EDITION	

Fig. 1290 COVER ASS'Y
ENSEMBLE DE COUVERCLE

Serial No. ;

Key No.	Part No.	Description	Description	Q'ty	S.C	Serial No.	ICA	Replaceable part	
								Part No.	Q'ty
1290 --	K1016926E	COVER ASS'Y	COUVERCLE	-	D				
1	K1016927B	COVER	COUVERCLE	1		5001-5195			
	K1016927C	COVER	COUVERCLE	1		5196-			
2	K1016928B	COVER	COUVERCLE	1		5001-5205			
	K1038804A	COVER	COUVERCLE	1		5206-			
2A	K1016948	. WEATHER STRIP	. SURVIVEZ A A LA BANDE	1					
2B	K1016949	. WEATHER STRIP	. SURVIVEZ A A LA BANDE	1					
3	K1016929B	COVER	COUVERCLE	1					
3A	K1049665	. CYLINDER;KEY(F900)	. CYLINDER;KEY	1					
3B	K1016956	. WEATHER STRIP	. SURVIVEZ A A LA BANDE	1					
3C	K1017736	. WEATHER STRIP	. SURVIVEZ A A LA BANDE	1					
3D	K1030177	. WEATHER STRIP	. SURVIVEZ A A LA BANDE	1					
4	K1016930B	COVER	COUVERCLE	1					
5	K1016931B	COVER	COUVERCLE	1					
6	K1016932A	HINGE	CHARNIRE	2					
7	K1008938	CATCH	CROCHET	1		5001-5185	I	K1008938A	1
	K1008938A	CATCH	CROCHET	1		5186-			
8	K1016933A	STRIKER	FRAPPER	1					
9	K1027155	PLATE	PLAQUE	1					
10	K1012673	RUBBER	CAOUTCHOUC	3					
11	K1017631C	HINGE	CHARNIRE	1					
12	K1016934A	BRACKET	SUPPORT	1					
13	K1016935A	BRACKET	SUPPORT	1					
14	K1016936A	PLATE	PLAQUE	1					
15	K1016937A	PLATE	PLAQUE	2					
16	K1026012	BRACKET	SUPPORT	1					
17	K1018212A	PLATE	PLAQUE	1					
18	DS0025032	BOLT;SET	BOULON	4					
19	DS0025033	BOLT;SET	BOULON	32		5001-5185			
	DS0025033	BOLT;SET	BOULON	29		5186-			
20	S4012533	NUT	ECROU	2					
21	S0504853	BOLT M6X1.0X20	BOULON A 6 PANS	2		5001-5185			
23	S4012333	NUT	ECROU	4		5001-5185			
24	K1017749A	CABLE	CABLE	1		5001-5349			
	K1043331	CABLE	CABLE	1		5350-			
25	S5010513	WASHER,PLAIN	RONDELLE	2		5186-			
26	K1001029	BOLT	BOULON	2		5186-			
27	DS0025039	BOLT;SET	BOULON	1		5186-			

(THIS PARTS BOOK IS FOR REFERENCE ONLY.
PART NUMBERS AND SERIAL NUMBERS MAY BE
OUTDATED. ALWAYS USE THE ONLINE PARTS SYSTEM)

DATE	JAN. 04, 2013
3rd EDITION	

Fig. 1300 UNDER COVER TOLES IMFERIEVRES

Serial No. ;

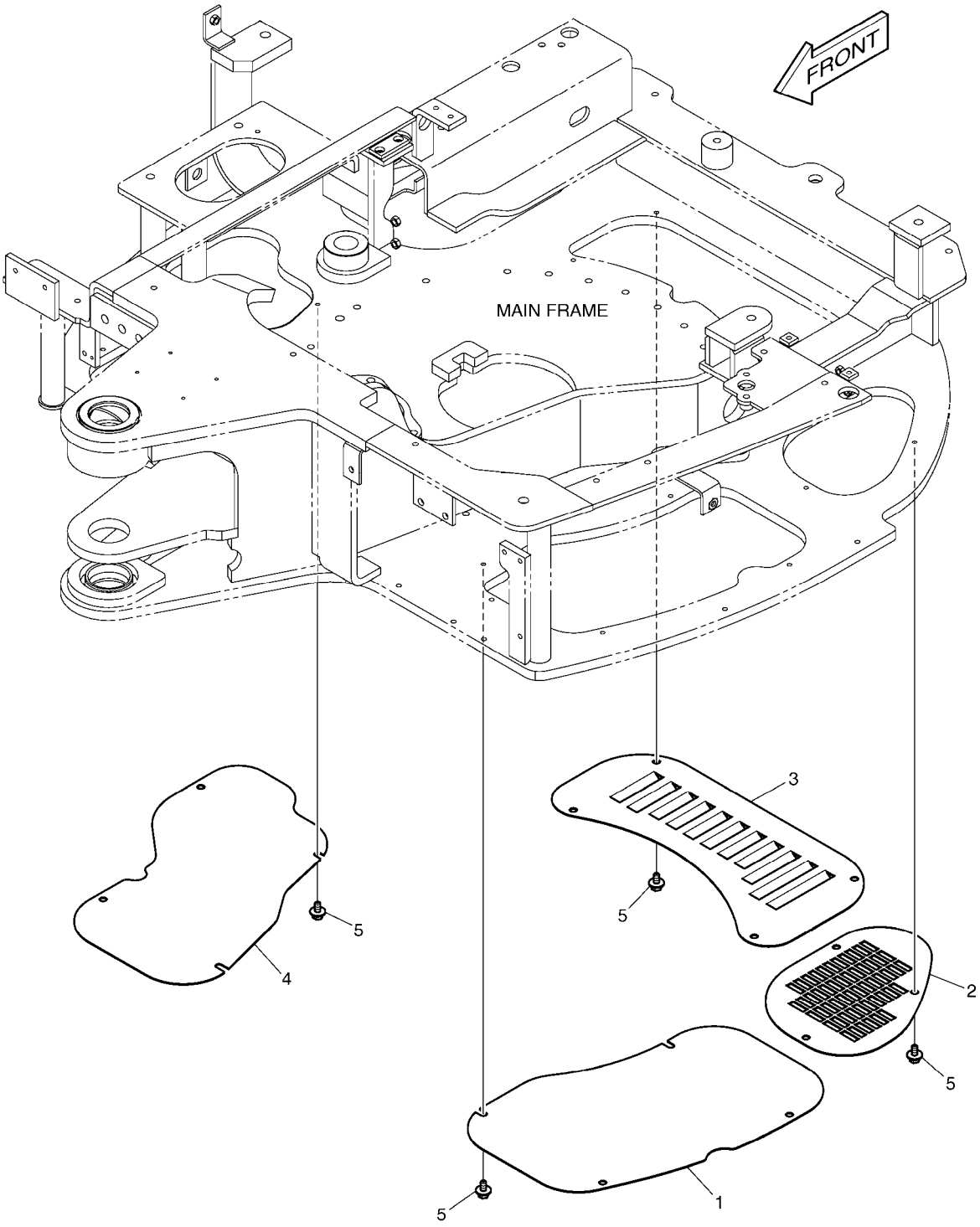

(THIS PARTS BOOK IS FOR REFERENCE ONLY.
PART NUMBERS AND SERAIL NUMBERS MAY BE
OUTDATED. ALWAYS USE THE ONLINE PARTS SYSTEM)

DATE	JAN. 04, 2013
3rd EDITION	

Fig. 1300 UNDER COVER TOLES IMFERIEVRES

Serial No. ;

Key No.	Part No.	Description	Description	Q'ty	S.C	Serial No.	ICA	Replaceable part	
								Part No.	Q'ty
1300 --	K1017635A	UNDER COVER ASS'Y	COUVERCLE	-	D	5001-5341			
	110513-00043	COVER ASSY,UNDER	COUVERCLE	-	D	5342-			
1	K1017653A	COVER;UNDER	COUVERCLE	1					
2	K1017654	COVER;UNDER	COUVERCLE	1					
3	K1009418	COVER;UNDER	COUVERCLE	1					
4	K1017655A	COVER;UNDER	COUVERCLE	1					
5	DS0025033	BOLT;SET	BOULON	15		5001-5341			
	K1049808	BOLT,FLANGE	BOULON	15		5342-			

(THIS PARTS BOOK IS FOR REFERENCE ONLY.
PART NUMBERS AND SERAIL NUMBERS MAY BE
OUTDATED. ALWAYS USE THE ONLINE PARTS SYSTEM)

DATE	JAN. 04, 2013
3rd EDITION	

Fig. 1310 LUBRICATION PIPING
LUBRIFICATION

Serial No. ;

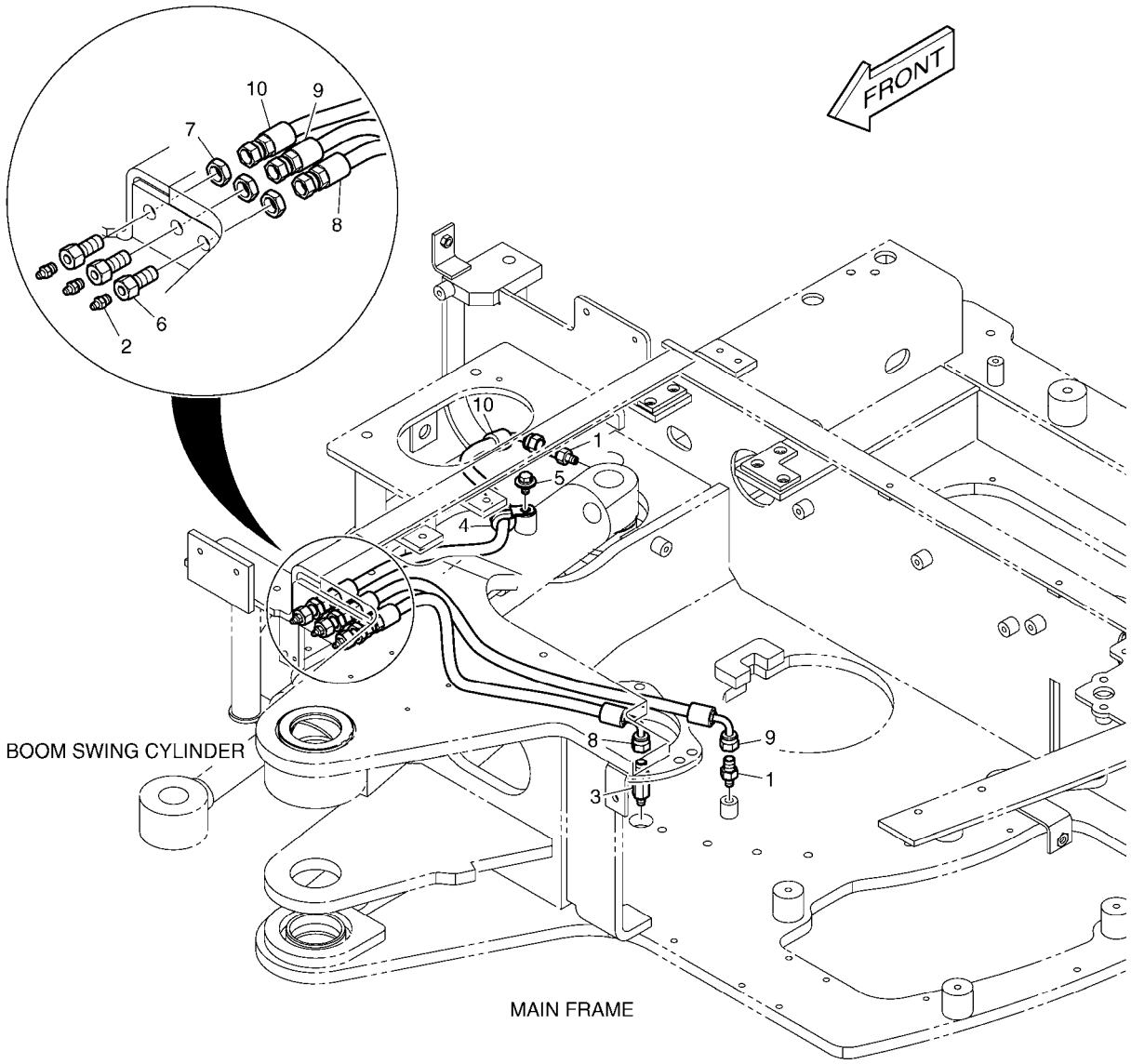

(THIS PARTS BOOK IS FOR REFERENCE ONLY.
PART NUMBERS AND SERAIL NUMBERS MAY BE
OUTDATED. ALWAYS USE THE ONLINE PARTS SYSTEM)

Fig. 1310 LUBRICATION PIPING LUBRIFICATION

Serial No. ;

Key No.	Part No.	Description	Description	Q'ty	S.C	Serial No.	ICA	Replaceable part	
								Part No.	Q'ty
1310 --	K1015546	LUBRICATION PIPING	LUBRIFICATION	-	D				
1	2181-1110D30	ADAPTER	ADAPTEUR	2					
2	S6710042	NIPPLE;GREASE	GRAISSEUR	3					
3	2181-1110D42	ADAPTER	ADAPTEUR	1					
4	124-00208D2	CLIP	AGRAFE	1					
5	K1001029	BOLT	BOULON	1					
6	181-00103	REDUCER	REDUCTEUR	3					
7	121-00010D7	NUT	ECROU	3					
8	DS2093040	HOSE	TUYAU FLEXIBLE	1					
9	DS2093115	HOSE	TUYAU FLEXIBLE	1					
10	DS2093028	HOSE	TUYAU FLEXIBLE	1					

(THIS PARTS BOOK IS FOR REFERENCE ONLY.
PART NUMBERS AND SERAIL NUMBERS MAY BE
OUTDATED. ALWAYS USE THE ONLINE PARTS SYSTEM)

DATE	JAN. 04, 2013
3rd EDITION	

Fig. 1320 BOOM SWING
VIRAGE DE FRONTALE

Serial No. ;

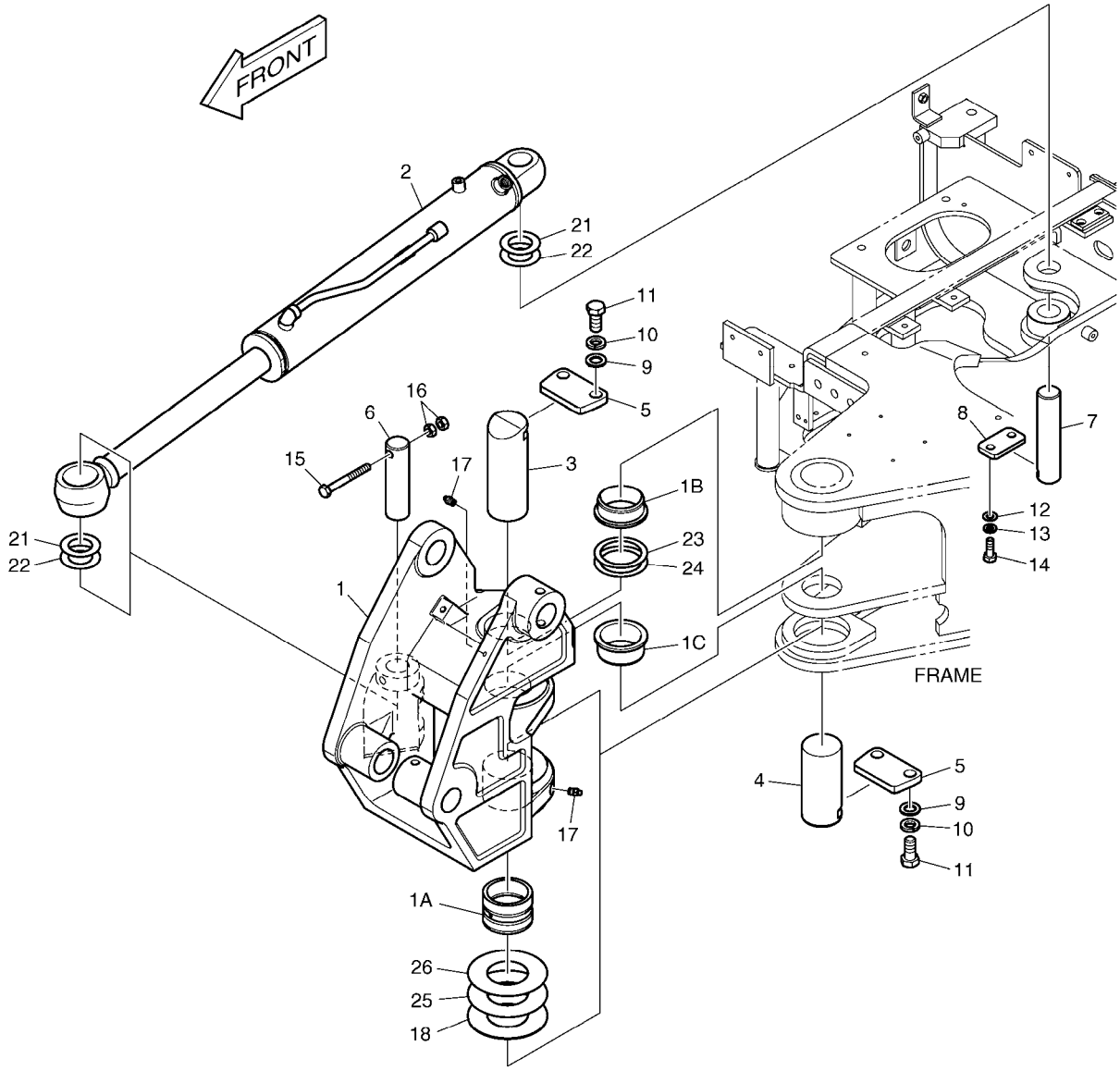

(THIS PARTS BOOK IS FOR REFERENCE ONLY.
PART NUMBERS AND SERAIL NUMBERS MAY BE
OUTDATED. ALWAYS USE THE ONLINE PARTS SYSTEM)

DATE	JAN. 04, 2013
3rd EDITION	

Fig. 1320 BOOM SWING VIRAGE DE FRONTALE

Serial No. ;

Key No.	Part No.	Description	Description	Q'ty	S.C	Serial No.	ICA	Replaceable part	
								Part No.	Q'ty
1320 --	K1015243E	BOOM SWING ASS'Y	VIRAGE DE FRONTALE	-	D	5001-6072			
	230207-00265	BOOM;SWING	VIRAGE DE FRONTALE	-	D	6073-			
1	K1015407E	BRACKET;SWING	PARENTHESE D'OSCILLAT	1					
1A	K1018208A	. BUSHING	. DOUILLE	1					
1B	K1026472	. BUSHING	. DOUILLE	1					
1C	K1026473	. BUSHING	. DOUILLE	1					
2	K1015455A	CYLINDER;BOOM SWING	CYLINDRE	1					
3	K1015216A	PIN	GOUPILLE	1		5001-6072	Y	120501-02677	1
	120501-02677	PIN;SWING BRACKET	GOUPILLE	1		6073-			
4	K1015217A	PIN	GOUPILLE	1		5001-6072	Y	120501-02678	1
	120501-02678	PIN;SWING BRACKET	GOUPILLE	1		6073-			
5	K1018255	PLATE;LOCK	PLAQUE	2					
6	K1015218A	PIN	GOUPILLE	1		5001-6072	Y	120501-02679	1
	120501-02679	PIN	GOUPILLE	1		6073-			
7	K1015219	PIN	GOUPILLE	1		5001-6072	Y	120501-02681	1
	120501-02681	PIN	GOUPILLE	1		6073-			
8	K1011685	PLATE;LOCK	PLAQUE	1					
9	S5010913	WASHER,PLAIN	RONDELLE	4					
10	S5102903	WASHER,SPRING	RONDELLE	4					
11	S0521353	BOLT M16X2.0X35	BOULON A 6 PANS	4					
12	S5010613	WASHER;PLAIN	RONDELLE	2					
13	S5102603	WASHER,SPRING	RONDELLE	2					
14	S0512253	BOLT M10X1.5X30	BOULON A 6 PANS	2					
15	S0559353	BOLT M10X1.5X90	BOULON A 6 PANS	1					
16	S4012633	NUT	ECROU	2					
17	S6710042	NIPPLE;GREASE	GRAISSEUR	2					
18	K1018297	WASHER;THRUST	RONDELLE DE BUTEE	1					
21	2114-1059D212	SHIM	CALE	2					
22	DS7701432	SHIM	CALE	2					
23	DS7701442	SHIM	CALE	1					
24	DS7701443	SHIM	CALE	1					
25	DS7701444	SHIM	CALE	1					
26	DS7701445	SHIM	CALE	1					

(THIS PARTS BOOK IS FOR REFERENCE ONLY.
PART NUMBERS AND SERAIL NUMBERS MAY BE
OUTDATED. ALWAYS USE THE ONLINE PARTS SYSTEM)

DATE	JAN. 04, 2013
3rd EDITION	

Fig. 1330 PEDAL ASS'Y
ENSEMBLE DE PEDALE

Serial No. ;

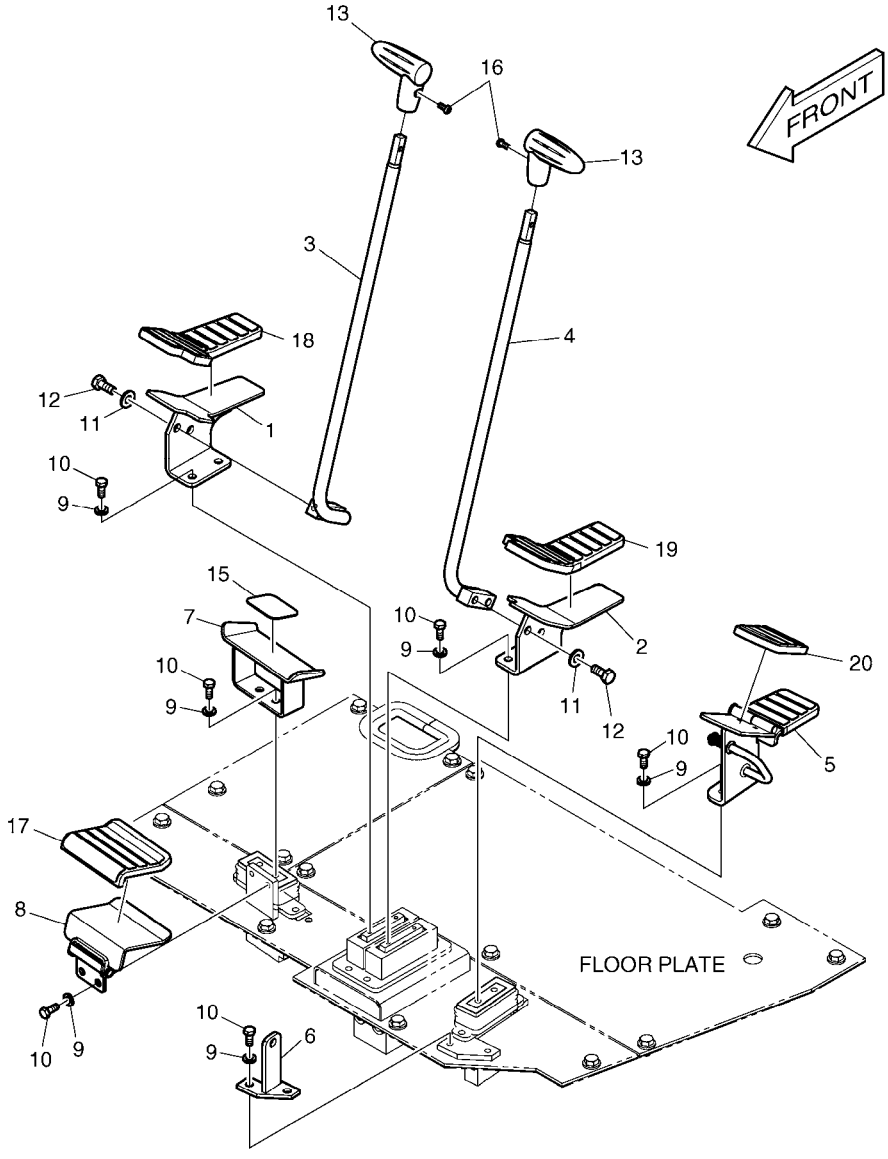

(THIS PARTS BOOK IS FOR REFERENCE ONLY.
PART NUMBERS AND SERAIL NUMBERS MAY BE
OUTDATED. ALWAYS USE THE ONLINE PARTS SYSTEM)

DATE	JAN. 04, 2013
3rd EDITION	

Fig. 1330 PEDAL ASS'Y ENSEMBLE DE PEDALE

Serial No. ;

Key No.	Part No.	Description	Description	Q'ty	S.C	Serial No.	ICA	Replaceable part	
								Part No.	Q'ty
1330 --	K1013952C	PEDAL ASS'Y	PANNEAU	-	D	5001-6067			
	220105-00106	PEDAL ASS'Y	PANNEAU	-	D	6068-			
1	K1013853C	PEDAL;TRAVEL(R.H)	PEDALE	1					
2	K1013854C	PEDAL;TRAVEL(L.H)	PEDALE	1					
3	K1013855B	LEVER(R.H)	LEVIER	1					
4	K1013856B	LEVER(L.H)	LEVIER	1					
5	K1013866C	PEDAL	PEDALE	1		5001-6067	Y	220105-00107	1
	220105-00107	PEDAL	PEDALE	1		6068-			
6	K1013675A	PLATE	PLAQUE	1					
7	K1013943A	PEDAL	PEDALE	1					
8	K1013948C	COVER	COUVERCLE	1					
9	2114-1898D2	WASHER	RONDELLE	12					
10	2120-2166D5	BOLT	BOULON	12					
11	2114-1898D1	WASHER	RONDELLE	4					
12	2120-2166D2	BOLT	BOULON	4					
13	K1013961A	GRIP	POIGNEE	2					
15	K1013963	TAPE;ANTI-SKID	PLAQUE ANTI-DERAPANTE	1					
16	2120-2166D7	SCREW	VIS	2					
17	K1027170	RUBBER;PEDAL	CAOUTCHOUC	1		5001-6067	Y	180308-00467	1
	180308-00467	RUBBER	CAOUTCHOUC	1		6068-			
18	K1027169	RUBBER;PEDAL	CAOUTCHOUC	1		5001-6067	Y	180308-00468	1
	180308-00468	RUBBER	CAOUTCHOUC	1		6068-			
19	K1027168	RUBBER;PEDAL	CAOUTCHOUC	1		5001-6067	Y	180308-00469	1
	180308-00469	RUBBER	CAOUTCHOUC	1		6068-			
20	K1027166A	RUBBER;PEDAL	CAOUTCHOUC	1		5001-6067	Y	180308-00470	1
	180308-00470	RUBBER	CAOUTCHOUC	1		6068-			

(THIS PARTS BOOK IS FOR REFERENCE ONLY.
PART NUMBERS AND SERAIL NUMBERS MAY BE
OUTDATED. ALWAYS USE THE ONLINE PARTS SYSTEM)

DATE	JAN. 04, 2013
3rd EDITION	

Fig. 1340 FLOOR PLATE
TOLE DE PLANCHER

Serial No. ;

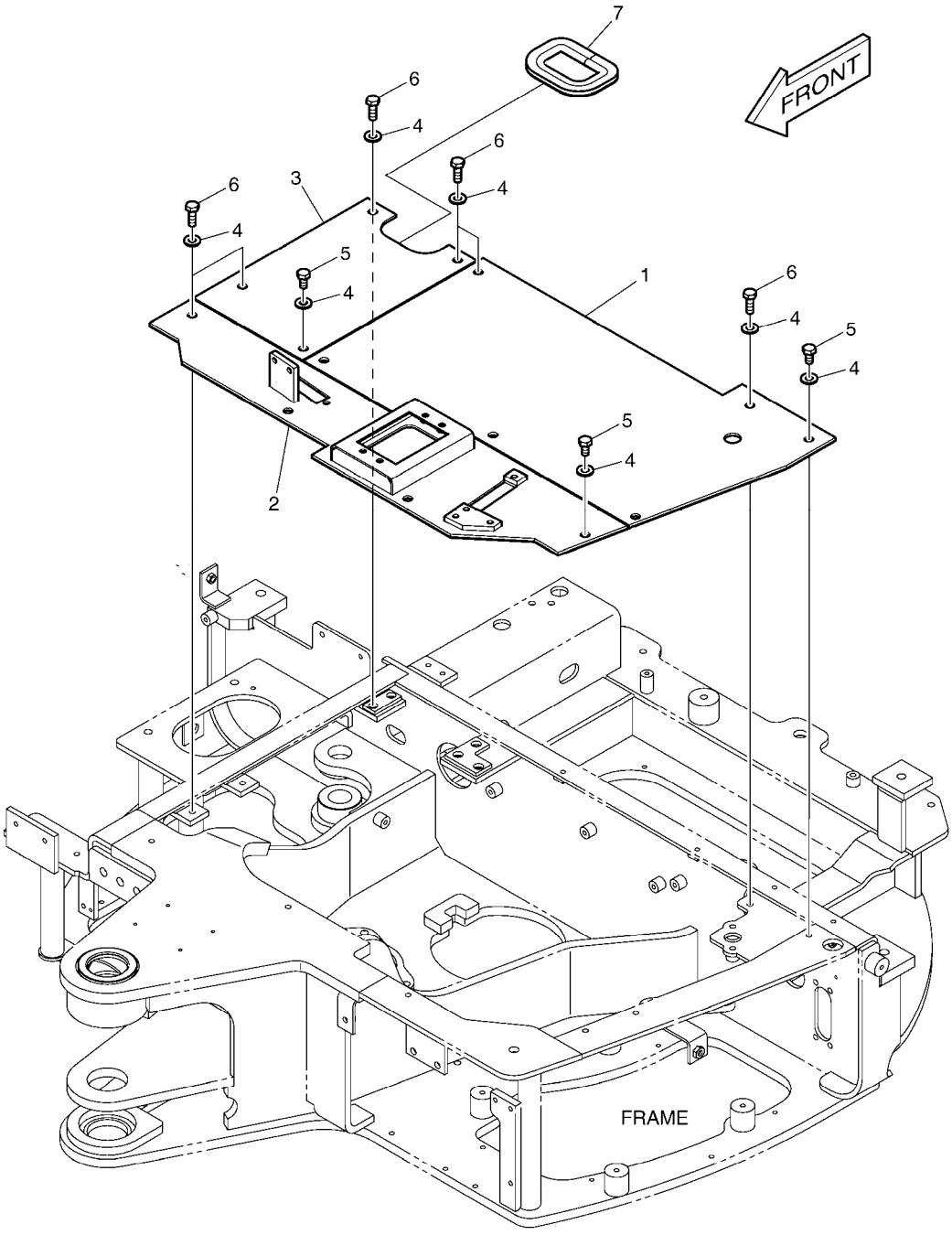

(THIS PARTS BOOK IS FOR REFERENCE ONLY.
PART NUMBERS AND SERAIL NUMBERS MAY BE
OUTDATED. ALWAYS USE THE ONLINE PARTS SYSTEM)

DATE	JAN. 04, 2013
3rd EDITION	

Fig. 1340 FLOOR PLATE
TOLE DE PLANCHER

Serial No. ;

Key No.	Part No.	Description	Description	Q'ty	S.C	Serial No.	ICA	Replaceable part	
								Part No.	Q'ty
1340 --	K1011797B	PLATE;FLOOR ASS'Y	PLAQUE	-	D				
1	K1011802A	PLATE;FLOOR(L.H)	PLAQUE	1					
2	K1011808A	PLATE;FLOOR(FRONT)	PLAQUE	1					
3	K1011809A	PLATE;FLOOR(R.H)	PLAQUE	1					
4	2114-1898D1	WASHER	RONDELLE	14					
5	2120-2166D4	BOLT M10X1.5X20	BOULON	8					
6	2120-2166D1	BOLT	BOULON	6					
7	K1011885	TRIM;RUBBER	EQUILIBRE EN CAOUTCHC	1					

(THIS PARTS BOOK IS FOR REFERENCE ONLY.
PART NUMBERS AND SERAIL NUMBERS MAY BE
OUTDATED. ALWAYS USE THE ONLINE PARTS SYSTEM)

DATE	JAN. 04, 2013
3rd EDITION	

Fig. 1350 SEAT BASE ASS'Y
ENSEMBLE DE POSEZ LA BASE

Serial No. ;

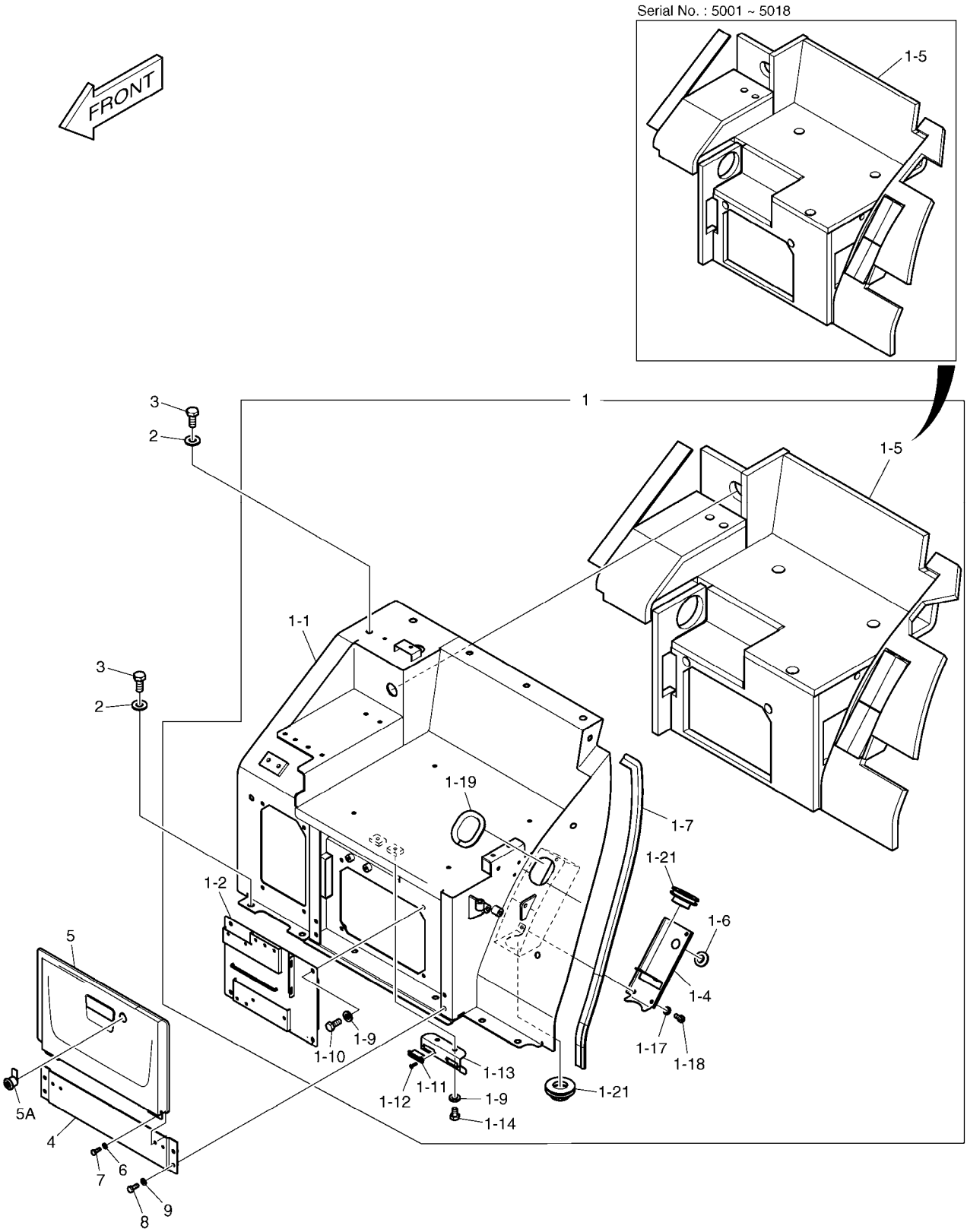

(THIS PARTS BOOK IS FOR REFERENCE ONLY.
PART NUMBERS AND SERAIL NUMBERS MAY BE
OUTDATED. ALWAYS USE THE ONLINE PARTS SYSTEM)

DATE	JAN. 04, 2013
3rd EDITION	

Fig. 1350 SEAT BASE ASS'Y
ENSEMBLE DE POSEZ LA BASE

Serial No. ;

Key No.	Part No.	Description	Description	Q'ty	S.C	Serial No.	ICA	Replaceable part	
								Part No.	Q'ty
1350 --	K1024299G	SEAT BASE ASS'Y	SIEGE	-	D	5001-6067			
	250110-00079A	PLATE ASSY,SEAT;BASE ASSY	SIEGE	-	D	6068-			
1	K1024300E	SEAT BASE ASS'Y	SIEGE	1		5001-5018	I	K1024300G	1
	K1024300G	SEAT BASE ASS'Y	SIEGE	1		5019-6067	I	250110-00080A	1
	250110-00080A	PLATE ASSY,SEAT;BASE ASSY	SIEGE	1		6068-			
1-1	K1024301B	. SEAT;BASE	. SIEGE	1					
1-2	K1027474B	. COVER	. COUVERCLE	1					
1-4	K1012879A	. COVER	. COUVERCLE	1					
1-5	K1024371E	. FOAM ASS'Y	. EPONGE	1		5001-5018	I	K1024371G	1
	K1024371G	. FOAM ASS'Y	. EPONGE	1		5019-6067	I	180309-00182A	1
	180309-00182A	. SPONGE ASSY;SEAT BASE	. EPONGE	1		6068-			
1-6	160-00059	. BUSHING;RUBBER	. DOUILLE EN CAOUTCHOU	1					
1-7	K1024374A	. TRIM	. ATTACHE	1					
1-9	2114-1898D2	. WASHER	. RONDELLE	6					
1-10	2120-2166D5	. BOLT	. BOULON	4					
1-11	2125-1095A	. CATCH;MAGNETIC	. CROCHET	2					
1-12	S3452353	. SCREW M3X0.5X12	. VIS	4					
1-13	K1014332	. PLATE	. PLAQUE	1					
1-14	2120-2166D12	. BOLT;HEX	. BOULON	2					
1-17	2114-1898D3	. WASHER;PLAIN	. RONDELLE	4					
1-18	2120-2166D6	. BOLT	. BOULON	4					
1-19	2161-1744	. RUBBER	. CAOUTCHOUC	1					
1-21	2160-1227D1	. BUSHING;RUBBER	. DOUILLE EN CAOUTCHOU	2					
2	2114-1898D1	WASHER	RONDELLE	12					
3	2120-2166D2	BOLT	BOULON	12					
4	K1027477	PLATE	PLAQUE	1					
5	K1027478	COVER	COUVERCLE	1		5001-6067	Y	110508-15887	1
	110508-15887	COVER ASSY	COUVERCLE	1		6068-			
5A	K1006160	. CYLINDER;KEY	. CYLINDRE	1					
6	2114-1898D3	WASHER;PLAIN	RONDELLE	4					
7	2120-2166D6	BOLT	BOULON	4					
8	2120-2166D5	BOLT	BOULON	4					
9	2114-1898D2	WASHER	RONDELLE	4					

(THIS PARTS BOOK IS FOR REFERENCE ONLY.
PART NUMBERS AND SERAIL NUMBERS MAY BE
OUTDATED. ALWAYS USE THE ONLINE PARTS SYSTEM)

DATE	JAN. 04, 2013
3rd EDITION	

Fig. 1360 SEAT ASS'Y
SIEGE

Serial No. ;

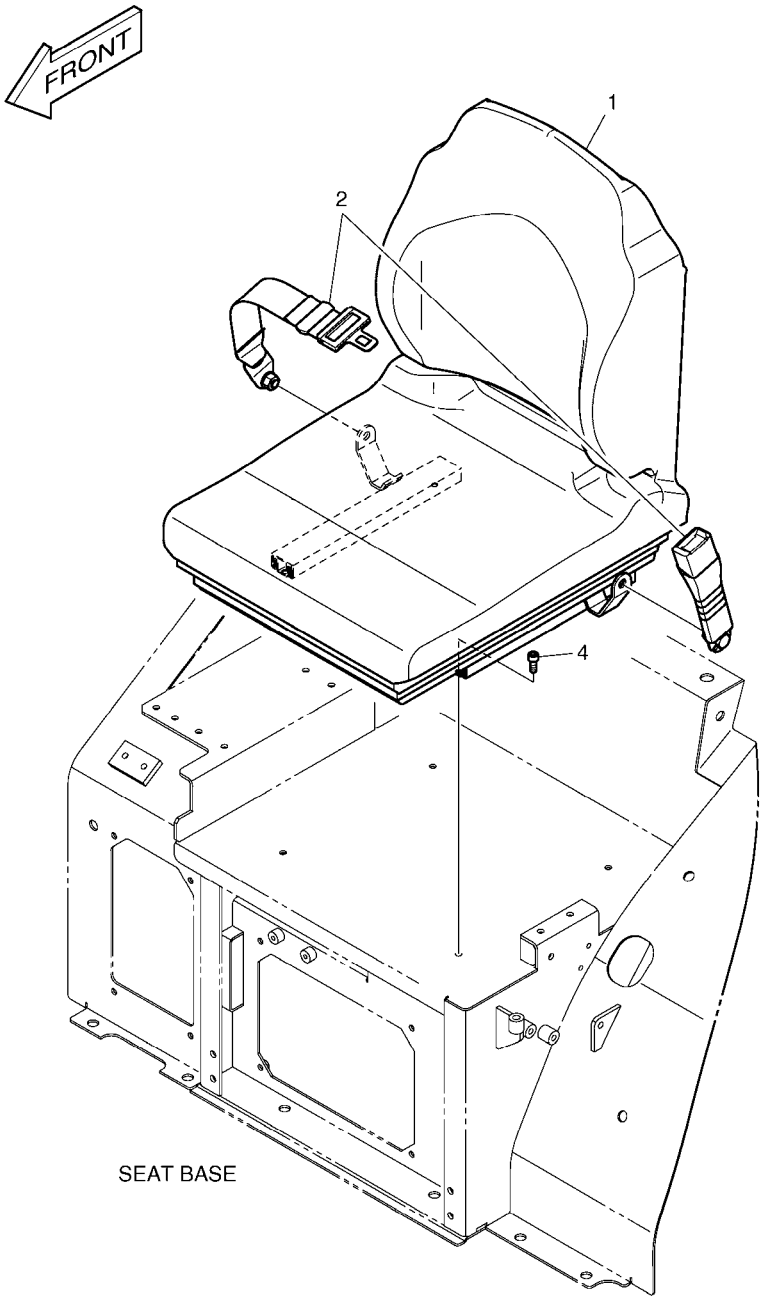

(THIS PARTS BOOK IS FOR REFERENCE ONLY.
PART NUMBERS AND SERAIL NUMBERS MAY BE
OUTDATED. ALWAYS USE THE ONLINE PARTS SYSTEM)

DATE	JAN. 04, 2013
3rd EDITION	

Fig. 1360 SEAT ASS'Y SIEGE

Serial No. ;

Key No.	Part No.	Description	Description	Q'ty	S.C	Serial No.	ICA	Replaceable part	
								Part No.	Q'ty
1360 --	K1011886A	SEAT ASS'Y	SIEGE	-	D				
1	901-00042	SEAT	SIEGE	1					
2	901-00050	BELT;SEAT	COURROIE	1					
4	S2208866	BOLT;SOCKET	BOULON	4					

(THIS PARTS BOOK IS FOR REFERENCE ONLY.
PART NUMBERS AND SERAIL NUMBERS MAY BE
OUTDATED. ALWAYS USE THE ONLINE PARTS SYSTEM)

DATE	JAN. 04, 2013
3rd EDITION	

Fig. 1370 SEAT
SIEGE

Serial No. ;

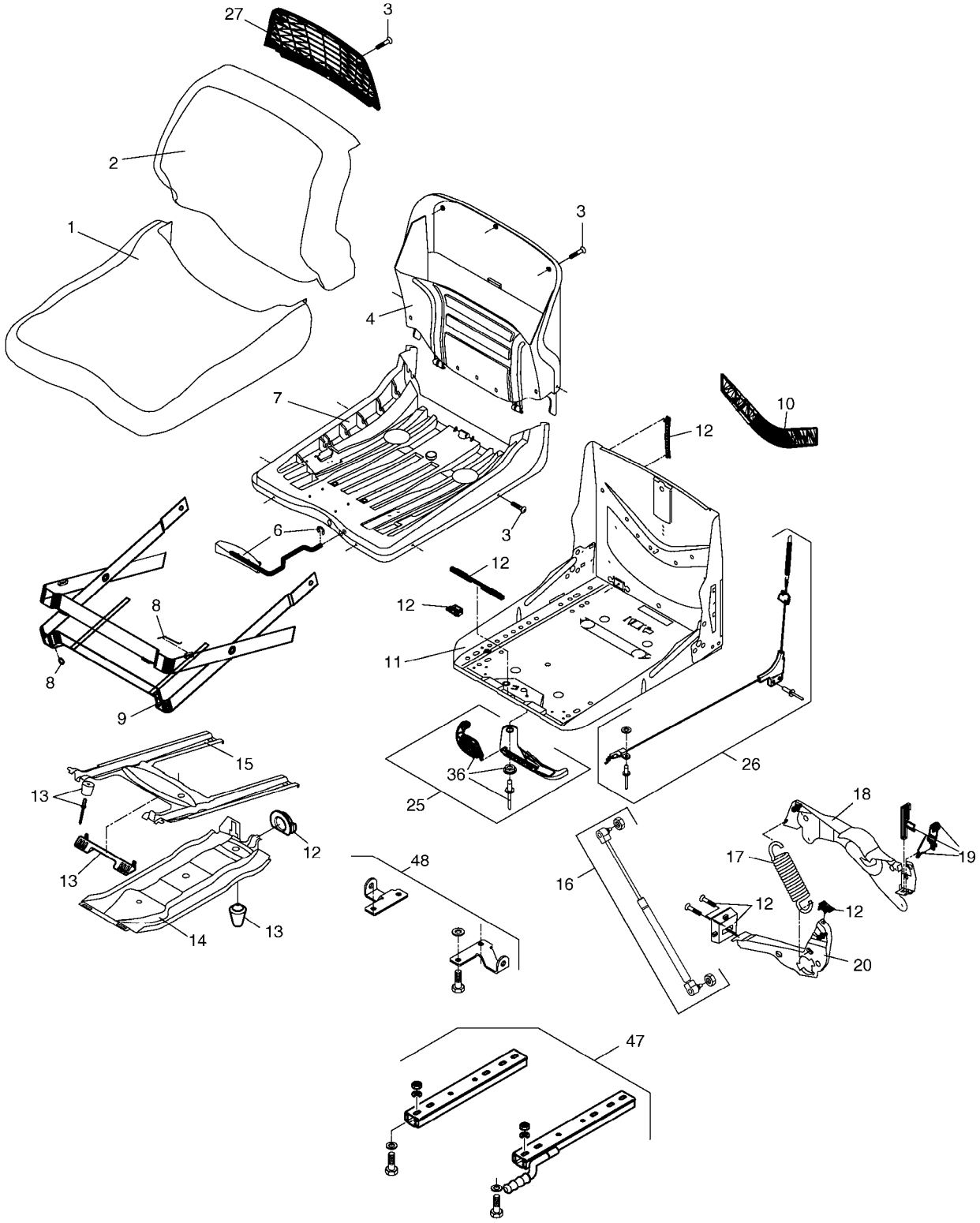

(THIS PARTS BOOK IS FOR REFERENCE ONLY.
PART NUMBERS AND SERAIL NUMBERS MAY BE
OUTDATED. ALWAYS USE THE ONLINE PARTS SYSTEM)

DATE	JAN. 04, 2013
3rd EDITION	

Fig. 1370 SEAT SIEGE

Serial No. ;

Key No.	Part No.	Description	Description	Q'ty	S.C	Serial No.	ICA	Replaceable part	
								Part No.	Q'ty
1370 --	901-00042	SEAT	SIEGE	1					
1	K9000356	PAD	CAOUTCHOUC	1					
2	K9000357	PAD	CAOUTCHOUC	1					
3	K9000358	ATTACHMENT	ATTACHMENT	1					
4	K9000359	PLATE;BACK	PLAQUE	1					
6	K9000360	LEVER;ADJUST	LEVIER	1					
7	K9000361	PLATE;SEAT	PLAQUE	1					
8	K9000362	SET;REPAIR	SET	1					
9	K9000363	SUSPENSION;COVER	COUVERCLE	1					
10	K9000364	COVER	COUVERCLE	1					
11	K9000365	RACK;SEAT	SUPPORT	1					
12	K9000366	PARTS;WEARING	PIECES DE RECHANGE	1					
13	K9000367	KIT;BUMPER	KIT	1					
14	K9000368	ROCKER;INTERIOR	ROCKER;INTERIOR	1					
15	K9000369	ROCKER;EXTERNAL	ROCKER;EXTERNAL	1					
16	K9000370	SPRING;GAS	RESSORT	1					
17	K9000371	SPRING;TENSION	RESSORT	1					
18	K9000372	LIFT;WEIGHT ADJUST	LIFT;WEIGHT ADJUST	1					
19	K9000373	GRID	GRID	1					
20	K9000374	LEVER	LEVIER	1					
25	K9000375	LEVER;ADJUSTING	LEVIER	1					
26	K9000376	CABLE;PUSH PULL	CABLE	1					
27	K9000377	COVER	COUVERCLE	1					
36	K9000378	GAUGE;WEIGHT	INDICATEUR	1					
47	K9000379	SET;ADJUSTMENT RAIL	SET	1					
48	K9000380	LATCHES;BELT	LOQUET	1					

(THIS PARTS BOOK IS FOR REFERENCE ONLY.
PART NUMBERS AND SERAIL NUMBERS MAY BE
OUTDATED. ALWAYS USE THE ONLINE PARTS SYSTEM)

DATE	JAN. 04, 2013
3rd EDITION	

Fig. 1380 CONTROL STAND MOUNTING
CONSOLE DE COMMANDE

Serial No. ;

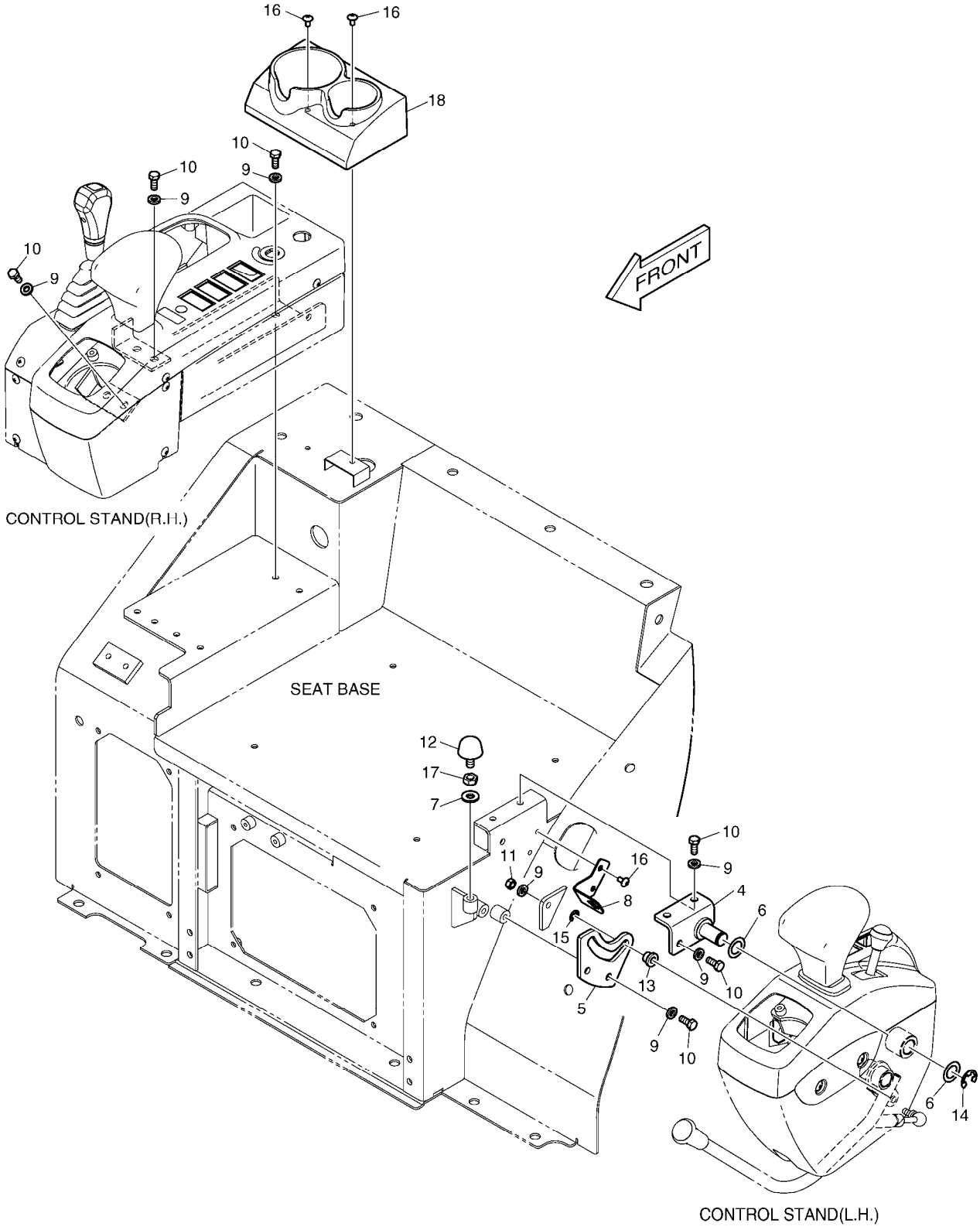

(THIS PARTS BOOK IS FOR REFERENCE ONLY.
PART NUMBERS AND SERAIL NUMBERS MAY BE
OUTDATED. ALWAYS USE THE ONLINE PARTS SYSTEM)

DATE	JAN. 04, 2013
3rd EDITION	

Fig. 1380 CONTROL STAND MOUNTING
CONSOLE DE COMMANDE

Serial No. ;

Key No.	Part No.	Description	Description	Q'ty	S.C	Serial No.	ICA	Replaceable part	
								Part No.	Q'ty
1380 --	K1012531C	CONTROL STAND	LEVIER	-	D	5001-6067			
	110953-00106	STAND ASS'Y;CONTROL	LEVIER	-	D	6068-			
4	K1012785A	PLATE	PLAQUE	1					
5	K1012786A	PLATE	PLAQUE	1					
6	K1012816	SHIM	CALE	2					
7	2114-1898D1	WASHER	RONDELLE	1					
8	K1012829A	PLATE	PLAQUE	1					
9	2114-1898D2	WASHER	RONDELLE	14					
10	2120-2166D5	BOLT	BOULON	13					
11	2121-1311D2	NUT	ECROU	1					
12	161-00195	STOPPER	TAQUET	1					
13	K1012877	ROLLER	GALET	1					
14	K1012878	RING	BAGUE	1					
15	K1012883	RING	BAGUE	1					
16	2120-2166D10	SCREW	VIS	4					
17	2121-1311D4	NUT	ECROU	1					
18	K1014323A	COVER	COUVERCLE	1		5001-6067	Y	110508-15889	1
	110508-15889	COVER	COUVERCLE	1		6068-			

(THIS PARTS BOOK IS FOR REFERENCE ONLY.
PART NUMBERS AND SERAIL NUMBERS MAY BE
OUTDATED. ALWAYS USE THE ONLINE PARTS SYSTEM)

DATE	JAN. 04, 2013
3rd EDITION	

Fig. 1390 CONTROL STAND - L.H
COMMANDEZ STAND - L.H

Serial No. ;

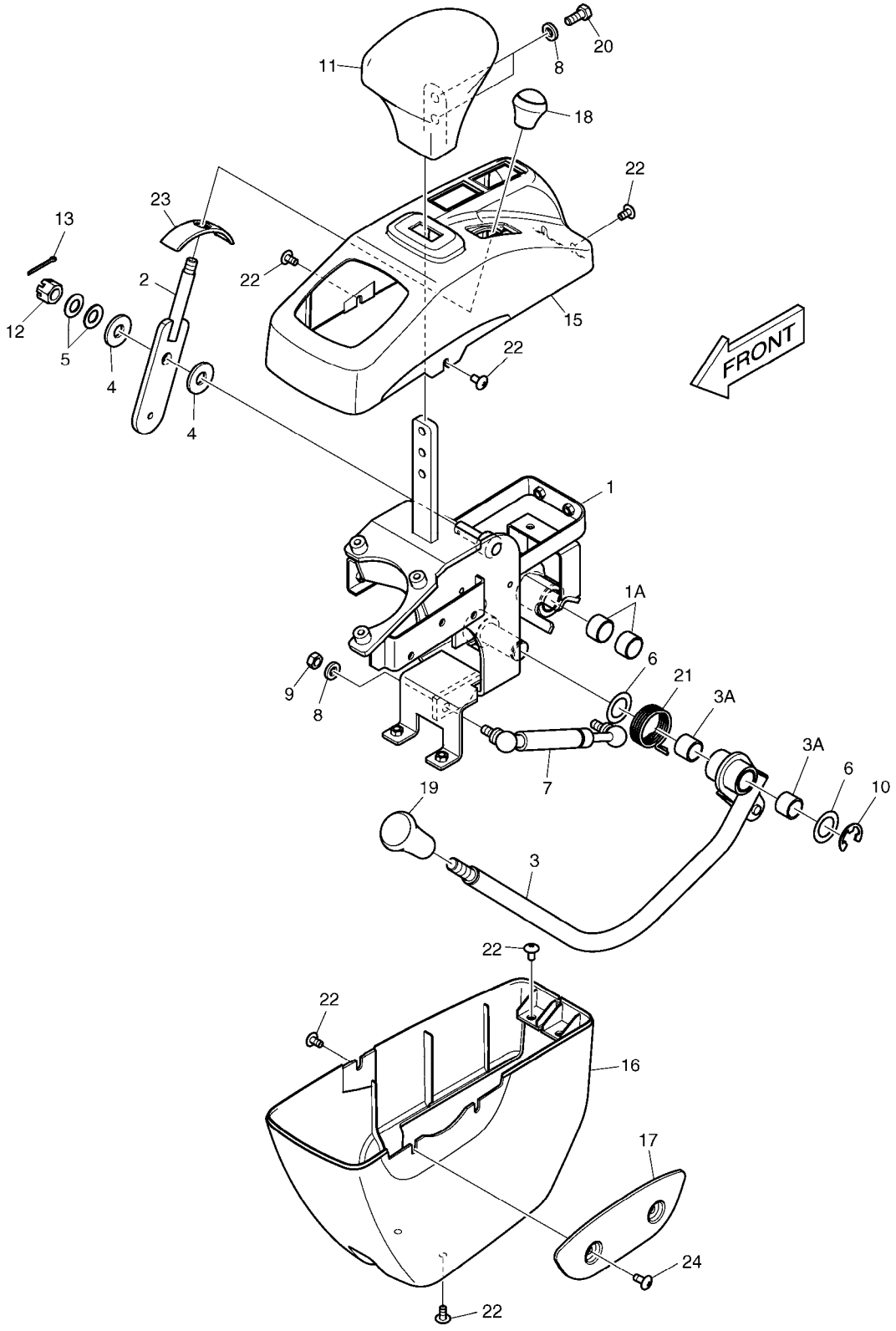

(THIS PARTS BOOK IS FOR REFERENCE ONLY.
PART NUMBERS AND SERAIL NUMBERS MAY BE
OUTDATED. ALWAYS USE THE ONLINE PARTS SYSTEM)

DATE	JAN. 04, 2013
3rd EDITION	

Fig. 1390 CONTROL STAND - L.H
COMMANDEZ STAND - L.H

Serial No. ;

Key No.	Part No.	Description	Description	Q'ty	S.C	Serial No.	ICA	Replaceable part	
								Part No.	Q'ty
1390 --	K1012834B	CONTROL STAND(L.H)	CONSOLE DE COMMANDE	-	D	5001-6067			
	110953-00107	STAND ASSY(L.H)	CONSOLE DE COMMANDE	-	D	6068-			
1	K1012723B	BRACKET	SUPPORT	1					
1A	2110-1184D37	. BUSH;DU	. DOUILLE	2					
2	K1012830	LEVER	LEVIER	1					
3	K1012787B	LEVER;SAFETY	LEVIER DE SURETE	1					
3A	2110-1184D37	. BUSH;DU	. DOUILLE	2					
4	2114-1058D72	WASHER;PLAIN	RONDELLE	2					
5	S5130703	WASHER;SPRING	RONDELLE ELASTIQUE	2					
6	K1012816	SHIM	CALE	2					
7	DS1001069	GAS SPRING	AMORTISSEUR	1					
8	2114-1898D2	WASHER	RONDELLE	3					
9	2121-1311D2	NUT	ECROU	1					
10	K1012878	RING	BAGUE	1					
11	K1012887	REST;ARM	REPOS DE BRAS	1					
12	S4210733	NUT;CASTLE	ECROU	1					
13	S5735481	PIN;SPLIT	GOUPILLE FENDUE	1					
15	K1014496B	CASE;UPPER	CARTER	1		5001-6067	Y	110913-00278	1
	110913-00278	CASE,STAND(UPPER)	CARTER	1		6068-			
16	K1014497B	CASE;LOWER	CARTER	1		5001-6067	Y	110913-00279	1
	110913-00279	CASE,STAND(LOWER)	CARTER	1		6068-			
17	K1014551B	COVER	COUVERCLE	1		5001-6067	Y	110508-15885	1
	110508-15885	COVER	COUVERCLE	1		6068-			
18	K1014552A	GRIP	POIGNEE	1					
19	K1014553B	GRIP	POIGNEE	1					
20	2120-2166D5	BOLT	BOULON	2					
21	K1012884B	SPRING	RESSORT	1					
22	2120-2166D52	BOLT M6X1.0X12	BOULON	9					
23	K1023706A	COVER	COUVERCLE	1		5001-6067	Y	110508-15886	1
	110508-15886	COVER	COUVERCLE	1		6068-			
24	2120-2166D10	SCREW	VIS	2					

(THIS PARTS BOOK IS FOR REFERENCE ONLY.
PART NUMBERS AND SERAIL NUMBERS MAY BE
OUTDATED. ALWAYS USE THE ONLINE PARTS SYSTEM)

DATE	JAN. 04, 2013
3rd EDITION	

Fig. 1400 CONTROL STAND - R.H
COMMANDEZ STAND - R.H

Serial No. ;

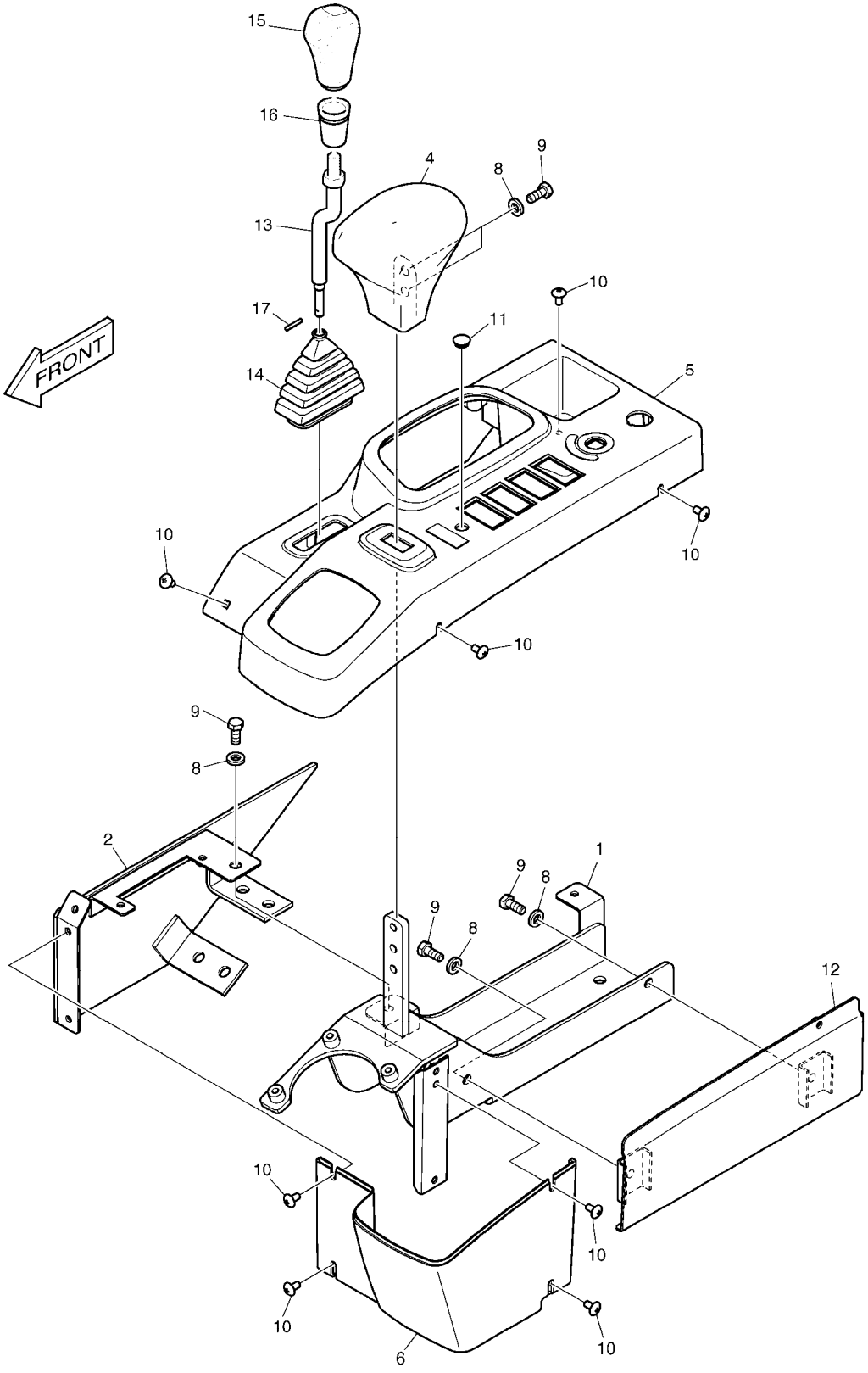

(THIS PARTS BOOK IS FOR REFERENCE ONLY.
PART NUMBERS AND SERAIL NUMBERS MAY BE
OUTDATED. ALWAYS USE THE ONLINE PARTS SYSTEM)

DATE	JAN. 04, 2013
3rd EDITION	

Fig. 1400 CONTROL STAND - R.H
COMMANDEZ STAND - R.H

Serial No. ;

Key No.	Part No.	Description	Description	Q'ty	S.C	Serial No.	ICA	Replaceable part	
								Part No.	Q'ty
1400 --	K1012835C	CONTROL STAND(R.H)	CONSOLE DE COMMANDE	-	D	5001-6067			
	110953-00108	STAND ASSY(R.H)	CONSOLE DE COMMANDE	-	D	6068-			
1	K1012724B	BRACKET	SUPPORT	1					
2	K1012978A	PLATE	PLAQUE	1					
4	K1012887	REST;ARM	REPOS DE BRAS	1					
5	K1014316B	CASE;UPPER	CARTER	1		5001-6067	Y	110913-00280	1
	110913-00280	CASE,STAND(UPPER)	CARTER	1		6068-			
6	K1014317B	COVER	COUVERCLE	1		5001-6067	Y	110913-00281	1
	110913-00281	CASE,STAND;RH LOWER	COUVERCLE	1		6068-			
8	2114-1898D2	WASHER	RONDELLE	5					
9	2120-2166D5	BOLT	BOULON	5					
10	2120-2166D52	BOLT M6X1.0X12	BOULON	8					
11	K1006995	CAP	CHAPEAU	1					
12	K1019026	COVER	COUVERCLE	1					
13	K1028344	LEVER	LEVIER	1					
14	K1023199	BOOT	INITIALISATION	1					
15	132-00010	GRIP	POIGNEE	1					
16	160-00055	BOOT	INITIALISATION	1					
17	S5740530	PIN;SPRING	GOUPILLE	1					

(THIS PARTS BOOK IS FOR REFERENCE ONLY.
PART NUMBERS AND SERAIL NUMBERS MAY BE
OUTDATED. ALWAYS USE THE ONLINE PARTS SYSTEM)

DATE	JAN. 04, 2013
3rd EDITION	

Fig. 1410 CANOPY VERRIERE

Serial No. ;

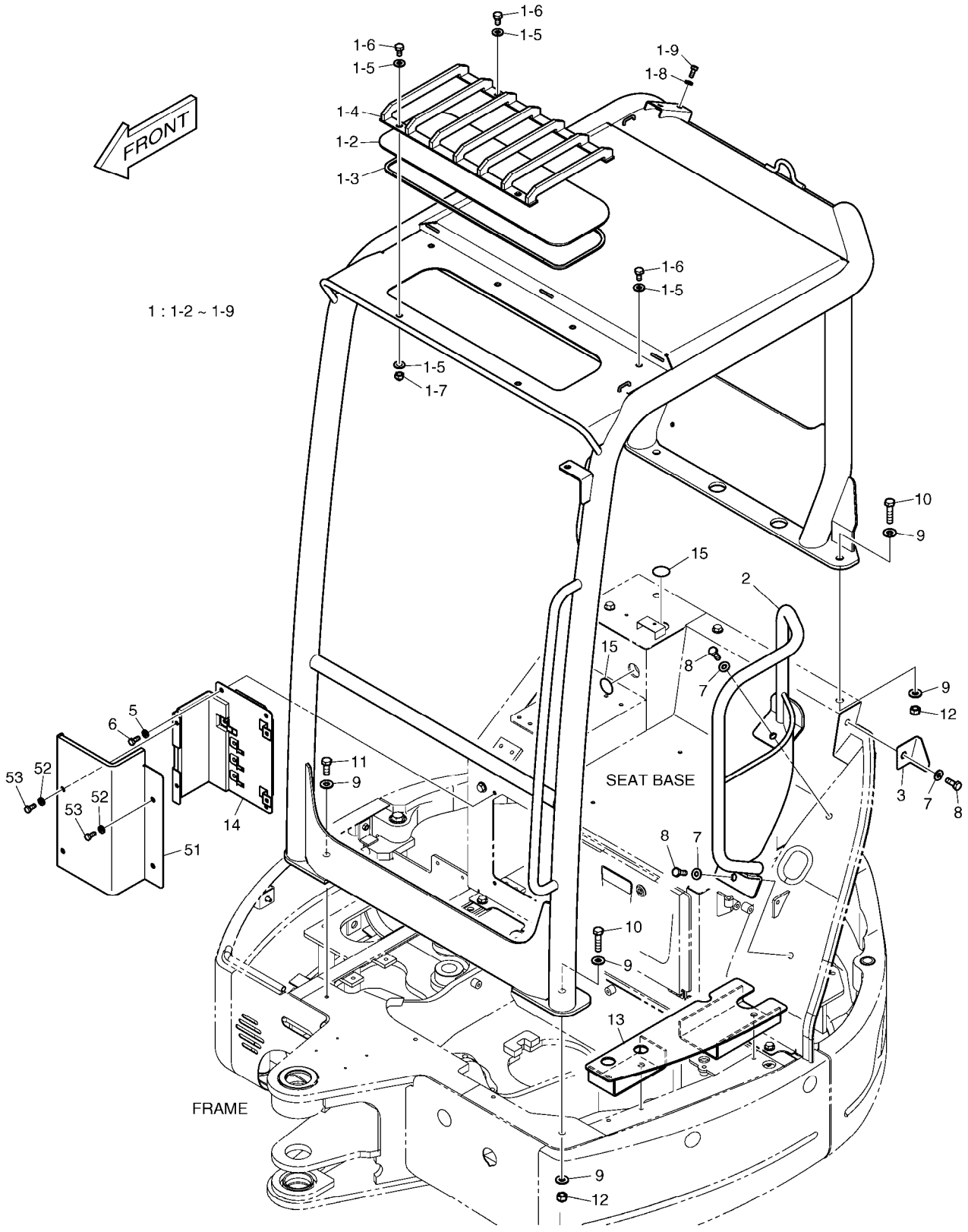

(THIS PARTS BOOK IS FOR REFERENCE ONLY.
PART NUMBERS AND SERAIL NUMBERS MAY BE
OUTDATED. ALWAYS USE THE ONLINE PARTS SYSTEM)

DATE	JAN. 04, 2013
3rd EDITION	

Fig. 1410 CANOPY VERRIERE

Serial No. ;

Key No.	Part No.	Description	Description	Q'ty	S.C	Serial No.	ICA	Replaceable part	
								Part No.	Q'ty
1410 --	K1023916C	CANOPY	VERRIERE	-	D				
1	K1015912B	CANOPY ASS'Y;ROPS	VERRI?RE	1					
1-2	K1017042	. GLASS	. VERRE	1					
1-3	K1017044	. DAMPER	. AMORTISSEUR	1					
1-4	K1017046A	. GUARD;ROOF	. GARDE	1					
1-5	2114-1898D1	. WASHER	. RONDELLE	8					
1-6	2120-2166D4	. BOLT M10X1.5X20	. BOULON	6					
1-7	2121-1311D5	. NUT;CAP	. ECROU	2					
1-8	2114-1898D2	. WASHER	. RONDELLE	2					
1-9	2120-2166D5	. BOLT	. BOULON	2					
2	K1017132A	STAY	SEJOUR	1					
3	K1017141	PLATE	PLAQUE	1					
5	2114-1898D2	WASHER	RONDELLE	4					
6	2120-2166D5	BOLT	BOULON	4					
7	2114-1898D1	WASHER	RONDELLE	3					
8	2120-2166D1	BOLT	BOULON	3					
9	2114-1898D17	WASHER M12	RONDELLE	7					
10	2120-2166D11	BOLT	BOULON	3					
11	2120-2166D32	BOLT	BOULON	1					
12	2121-9019	NUT;LOCK	ECROU	3					
13	K1026991	PLATE	PLAQUE	1					
14	K1012836B	COVER	COUVERCLE	1		5001-6067	Y	110508-15884	1
	110508-15884	COVER	COUVERCLE	1		6068-			
15	190-00727	LABEL	PLAQUE D'IDENTIFICATION	2					
51	K1030043	COVER	COUVERCLE	1					
52	2114-1898D2	WASHER	RONDELLE	4					
53	2120-2166D5	BOLT	BOULON	4					

(THIS PARTS BOOK IS FOR REFERENCE ONLY.
PART NUMBERS AND SERAIL NUMBERS MAY BE
OUTDATED. ALWAYS USE THE ONLINE PARTS SYSTEM)

DATE	JAN. 04, 2013
3rd EDITION	

Fig. 1420 FLOOR MAT PLANCHER

Serial No. ;

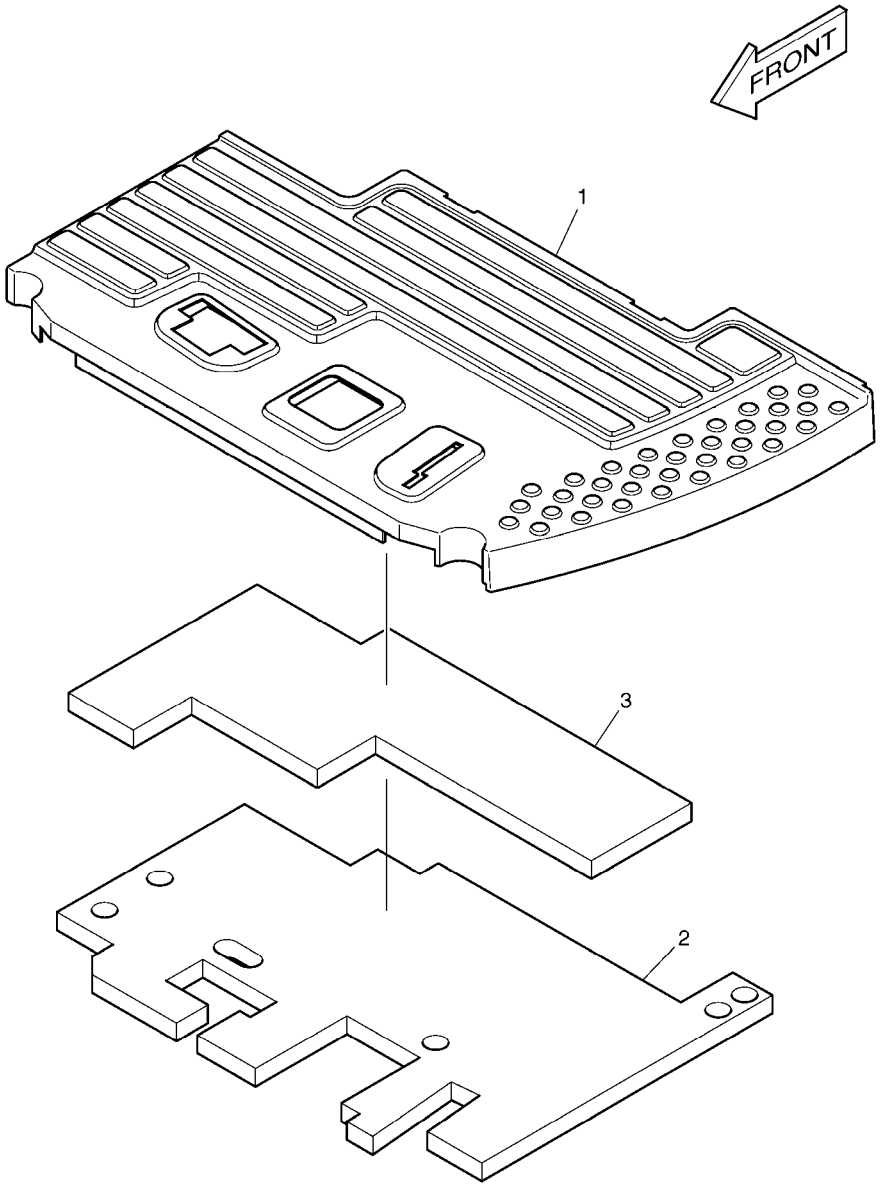

(THIS PARTS BOOK IS FOR REFERENCE ONLY.
PART NUMBERS AND SERAIL NUMBERS MAY BE
OUTDATED. ALWAYS USE THE ONLINE PARTS SYSTEM)

DATE	JAN. 04, 2013
3rd EDITION	

Fig. 1420 FLOOR MAT PLANCHER

Serial No. ;

Key No.	Part No.	Description	Description	Q'ty	S.C	Serial No.	ICA	Replaceable part	
								Part No.	Q'ty
1420 --	K1023914B	FLOOR MAT ASS'Y	PLANCHER	-	D	5001-6067			
	110935-00266	MAT,FLOOR	PLANCHER	-	D	6068-			
1	K1023959A	MAT;FLOOR	TAPIS DE SOL	1		5001-6067	Y	110935-00267	1
	110935-00267	MAT,FLOOR	TAPIS DE SOL	1		6068-			
2	K1026998	FOAM	EPONGE	1		5001-6067	Y	180102-00897	1
	180102-00897	FOAM	EPONGE	1		6068-			
3	K1026999	FOAM	EPONGE	1		5001-6067	Y	180102-00898	1
	180102-00898	FOAM	EPONGE	1		6068-			

(THIS PARTS BOOK IS FOR REFERENCE ONLY.
PART NUMBERS AND SERAIL NUMBERS MAY BE
OUTDATED. ALWAYS USE THE ONLINE PARTS SYSTEM)

DATE	JAN. 04, 2013
3rd EDITION	

Fig. 1430 ELECTRIC BOX
EQUIPMENT ELECTRIQUE

Serial No. ;

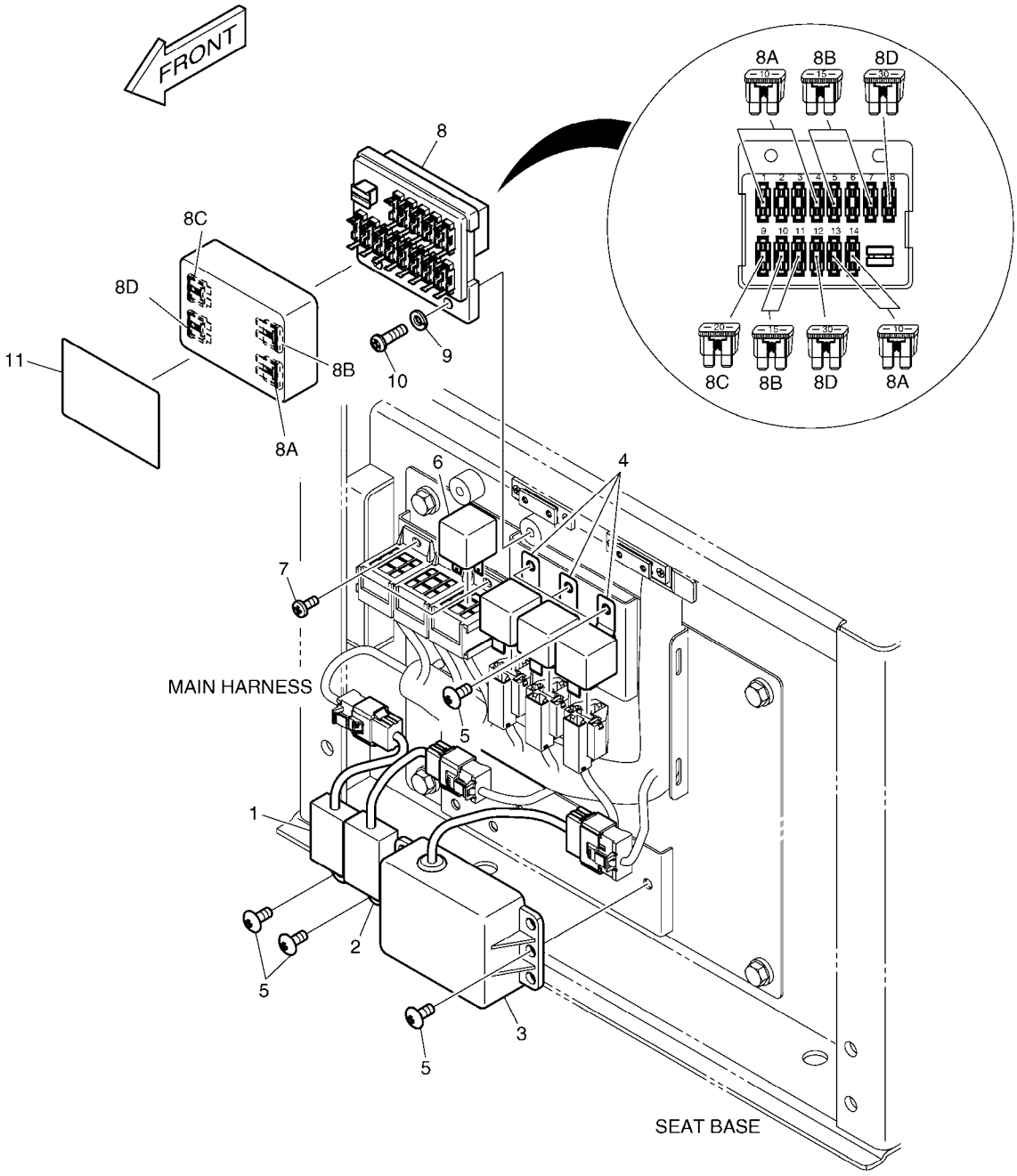

(THIS PARTS BOOK IS FOR REFERENCE ONLY.
PART NUMBERS AND SERAIL NUMBERS MAY BE
OUTDATED. ALWAYS USE THE ONLINE PARTS SYSTEM)

DATE	JAN. 04, 2013
3rd EDITION	

Fig. 1430 ELECTRIC BOX
EQUIPMENT ELECTRIQUE

Serial No. ;

Key No.	Part No.	Description	Description	Q'ty	S.C	Serial No.	ICA	Replaceable part	
								Part No.	Q'ty
1430 --	K1026788A	ELECTRIC BOX ASS'Y	BOITIER ELECTRIQUE	-	D	5001-5406			
	300619-00163	ELECTRIC ASSY;ELECTRIC BOX	BOITIER ELECTRIQUE	-	D	5407-			
1	537-00010	TIMER;PREHEAT	TEMPORISATEUR	1					
2	537-00071	TIMER;ENGINE STOP	TEMPORISATEUR	1					
3	2523-9005	CONTROLLER;STARTER	CONTROLEUR	1					
4	K1023526	RELAY 70A	RELAIS	3		5001-5406	Y	K1053575	3
	K1053575	RELAY 70A	RELAIS	3		5407-			
5	2120-2166D10	SCREW	VIS	7					
6	2544-9032	RELAY	RELAIS	1		5001-5406			
	K1053324	RELAY	RELAIS	1		5407-			
7	2120-2166D18	SCREW	VIS	2					
8	K1029323	BOX;FUSE 12V	BOITE DE FUSIBLE	1					
8A	2527-1016	. FUSE;BLADE 10A	. FUSIBLE	7					
8B	2527-1017	. FUSE;BLADE 15A	. FUSIBLE	6					
8C	2527-1018	. FUSE;BLADE 20A	. FUSIBLE	2					
8D	2527-1025	. FUSE;BLADE 30A	. FUSIBLE	3					
9	S5102303	WASHER;SPRING	RONDELLE	2					
10	S3450983	SCREW M16X20	VIS	2					
11	K1030452	NAME PLATE;FUSE BOX	PLAQUE	1					

(THIS PARTS BOOK IS FOR REFERENCE ONLY.
PART NUMBERS AND SERAIL NUMBERS MAY BE
OUTDATED. ALWAYS USE THE ONLINE PARTS SYSTEM)

DATE	JAN. 04, 2013
3rd EDITION	

Fig. 1440 ELECTRIC PARTS - CONTROL STAND
PIECES ELECTRIQUES

Serial No. ;

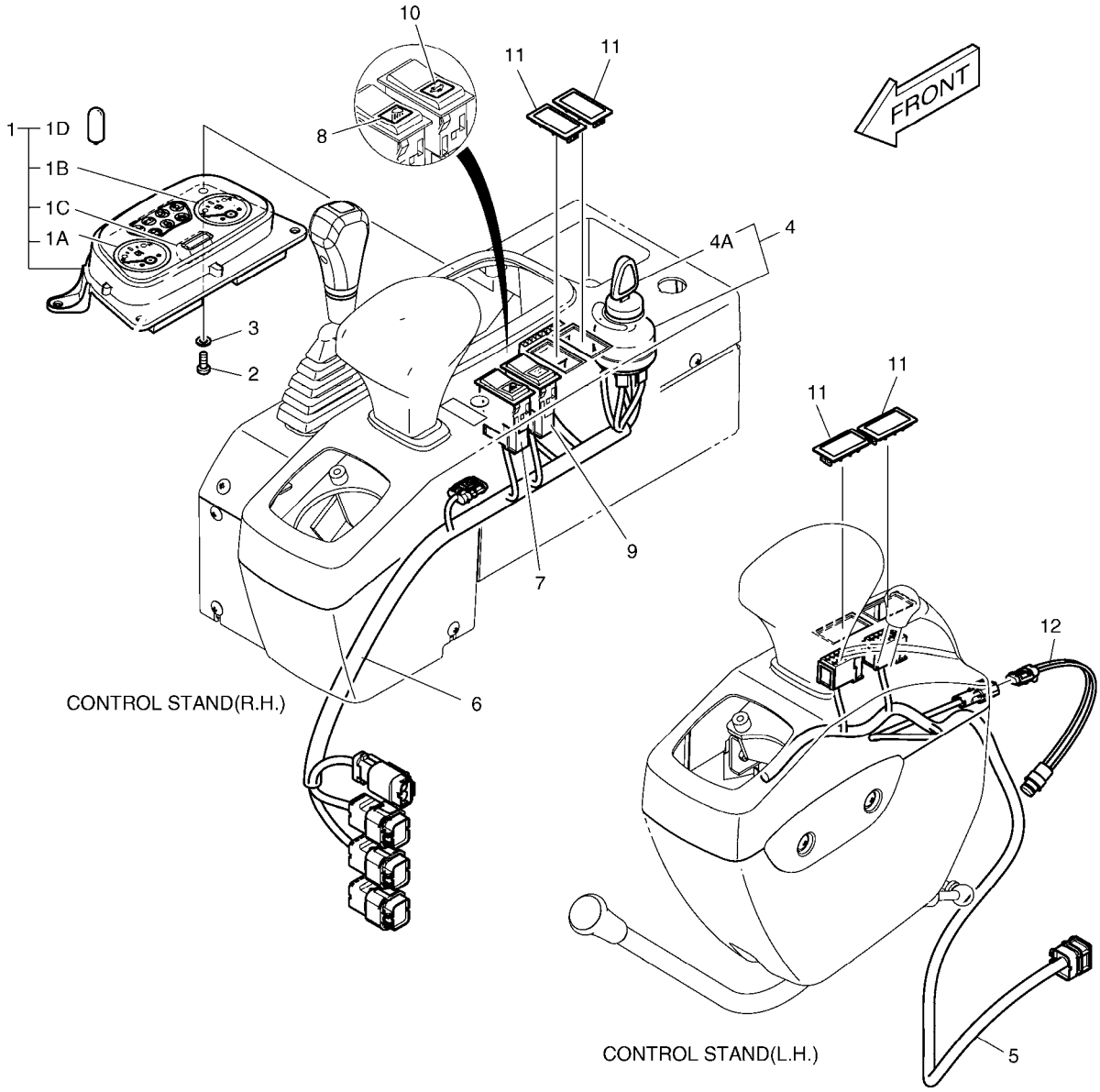

(THIS PARTS BOOK IS FOR REFERENCE ONLY.
PART NUMBERS AND SERAIL NUMBERS MAY BE
OUTDATED. ALWAYS USE THE ONLINE PARTS SYSTEM)

DATE	JAN. 04, 2013
3rd EDITION	

Fig. 1440 ELECTRIC PARTS - CONTROL STAND
PIECES ELECTRIQUES

Serial No. ;

Key No.	Part No.	Description	Description	Q'ty	S.C	Serial No.	ICA	Replaceable part	
								Part No.	Q'ty
1440 --	K1026789	ELECTRIC PARTS-STAND	EQUIPMENT ELECTRIQUE	-	D	5001-6067			
	300619-01969	ELECTRIC ASSY;STAND	EQUIPMENT ELECTRIQUE	-	D	6068-			
1	K1014175	PANEL;GAUGE	PANNEAU	1					
1A	K1014201	. GAUGE;TEMP	. MESURE	1					
1B	K1014202	. GAUGE;FUEL	. MESURE	1					
1C	2528-9040	. METER;HOUR	. METRE	1					
1D	515-00001A	. BULB	. AMPOULE	9					
2	S3450973	SCREW M6X1.0X16	VIS	4					
3	S5010313	WASHER	RONDELLE	4					
4	K1001858A	SWITCH;STARTER	COMMUTATEUR	1					
4A	K1009605B	. KEY;STARTER	. CLAVETTE	2					
5	K1013762	HARNESS;CONTROL STAND(L.H	HARNAIS	1					
6	K1013763	HARNESS;CONTROL STAND(R.H	HARNAIS	1		5001-6067	I	310207-02481	1
	310207-02481	HARNESS,CONTROL STAND;R.H	HARNAIS	1		6068-			
7	549-00040	SWITCH;ROCKER	COMMUTATEUR	1					
8	2190-2036D5	INSERT;WORKING LAMP	INSERTION	1					
9	2549-9115	SWITCH;ROCKER(12V)	INTERRUPTEUR	1					
10	2190-2036D13	INSERT;HIGH SPEED	INSERTION	1					
11	2621-9002	COVER	COUVERCLE	4					
12	K1014544	SWITCH;PILOT CUTOFF	COMMUTATEUR	1					

(THIS PARTS BOOK IS FOR REFERENCE ONLY.
PART NUMBERS AND SERAIL NUMBERS MAY BE
OUTDATED. ALWAYS USE THE ONLINE PARTS SYSTEM)

DATE	JAN. 04, 2013
3rd EDITION	

Fig. 1450 ELECTRIC PARTS - BATTERY
EQUIPMENT ELECTRIQUE

Serial No. ;

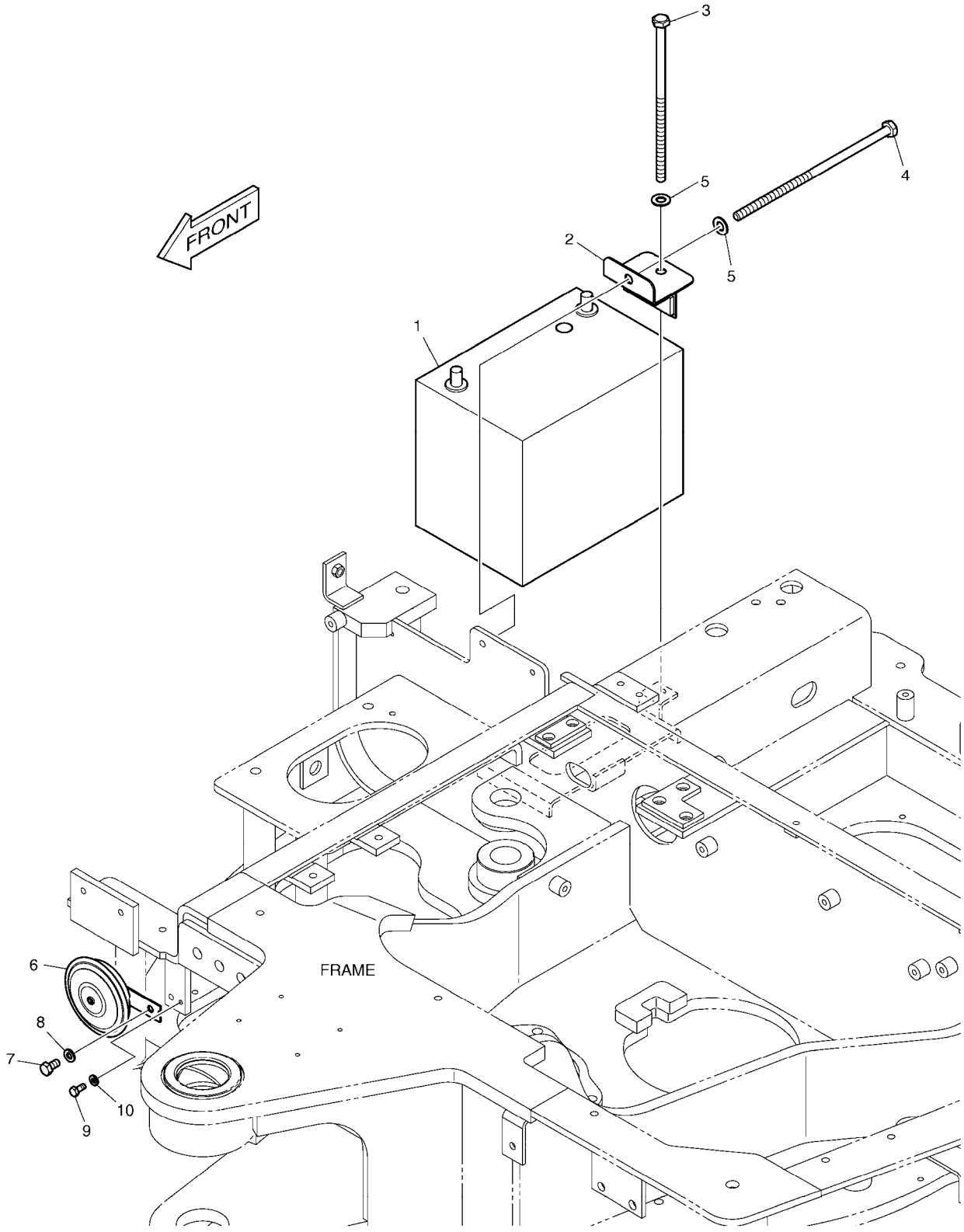

(THIS PARTS BOOK IS FOR REFERENCE ONLY.
PART NUMBERS AND SERAIL NUMBERS MAY BE
OUTDATED. ALWAYS USE THE ONLINE PARTS SYSTEM)

DATE	JAN. 04, 2013
3rd EDITION	

Fig. 1450 ELECTRIC PARTS - BATTERY
EQUIPMENT ELECTRIQUE

Serial No. ;

Key No.	Part No.	Description	Description	Q'ty	S.C	Serial No.	ICA	Replaceable part	
								Part No.	Q'ty
1450 --	K1026790	ELECTRIC PARTS-CHASSIS	EQUIPMENT ELECTRIQUE	-	D	5001-5412			
	300619-00606	ELECTRIC ASSY;CHASSIS	EQUIPMENT ELECTRIQUE	-	D	5413-			
1	2506-9009	BATTERY	BATTERIE	1					
2	K1023533	BRACKET	SUPPORT	1		5001-5080	I	K1023533A	1
	K1023533A	BRACKET	SUPPORT	1		5081-			
3	DS0001089	BOLT M10X1.5X220	BOULON A 6 PANS	1					
4	DS0001079	BOLT	BOULON	1					
5	S5010613	WASHER;PLAIN	RONDELLE	2					
6	516-00009	HORN	AVERTISSEUR	1		5001-5412	I	300726-00004	1
	300726-00004	HORN;HIGH	AVERTISSEUR	1		5413-			
7	S0508666	BOLT	BOULON	1					
8	S5102503	WASHER,SPRING	RONDELLE	1					
9	S0504566	BOLT M6X1.0X14	BOULON A 6 PANS	1					
10	S5102303	WASHER;SPRING	RONDELLE	1		5001-5043			

(THIS PARTS BOOK IS FOR REFERENCE ONLY.
PART NUMBERS AND SERAIL NUMBERS MAY BE
OUTDATED. ALWAYS USE THE ONLINE PARTS SYSTEM)

DATE	JAN. 04, 2013
3rd EDITION	

Fig. 1460 ELECTRIC WIRING
POSE DE FILES ELECTRIQUES

Serial No. ;

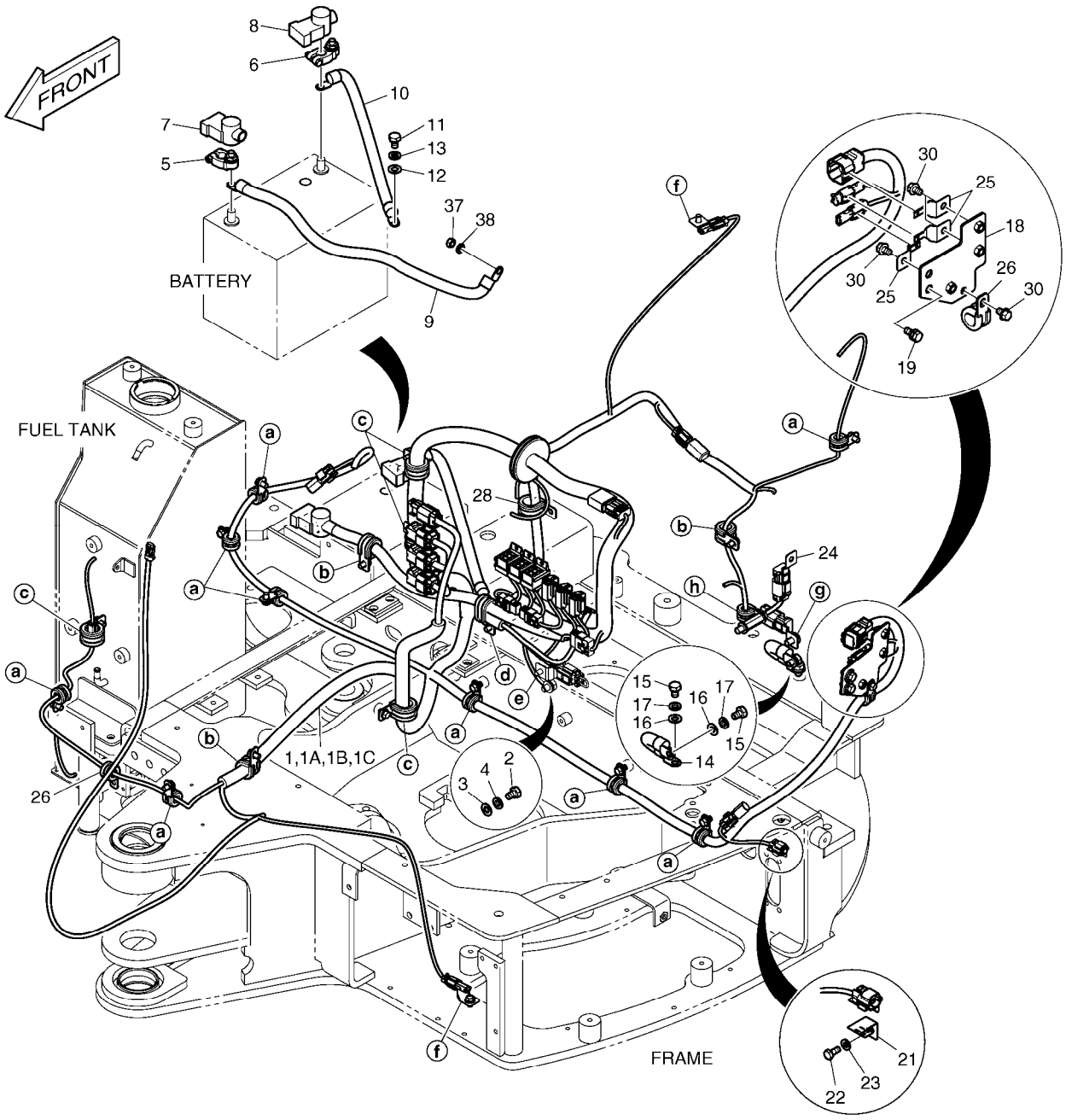

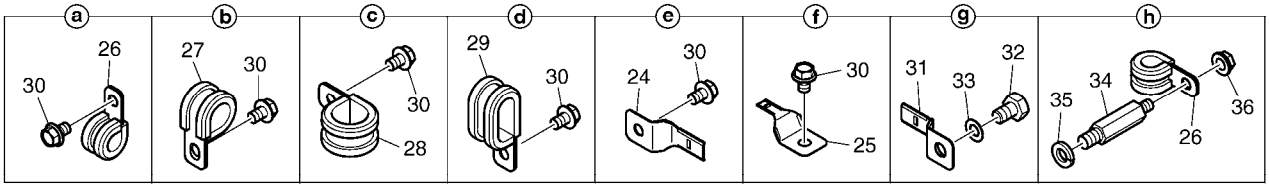

(THIS PARTS BOOK IS FOR REFERENCE ONLY.
PART NUMBERS AND SERAIL NUMBERS MAY BE
OUTDATED. ALWAYS USE THE ONLINE PARTS SYSTEM)

DATE	JAN. 04, 2013
3rd EDITION	

Fig. 1460 ELECTRIC WIRING
POSE DE FILES ELECTRIQUES

Serial No. ;

Key No.	Part No.	Description	Description	Q'ty	S.C	Serial No.	ICA	Replaceable part	
								Part No.	Q'ty
1460 --	K1026792A	ELECTRIC WIRING HARNESS	CABLAGE ELECTRIQUE	-	D	5001-5406			
	300619-00166	ELECTRIC ASSY;WIRING HARNE	CABLAGE ELECTRIQUE	-	D	5407-			
1	K1024504B	HARNESS;MAIN	HARNAIS	1		5001-5406			
	310207-00148	HARNESS,MAIN	HARNAIS	1		5407-6067	I	310207-00148A	1
	310207-00148A	HARNESS,MAIN	HARNAIS	1		6068-			
1A	2548-1027	. DIODE	. DIODE	2					
1B	K1000814	. DIODE;4 PIN	. DIODE	1					
1C	K1000815	. DIODE;8 PIN	. DIODE	1					
2	S0511653	BOLT	BOULON	1					
3	S5010613	WASHER;PLAIN	RONDELLE	1					
4	S5102603	WASHER,SPRING	RONDELLE	1					
5	2550-1014D1	TERMINAL;BATTERY(+)	BORNE	1					
6	2550-1014D2	TERMINAL;BATTERY(-)	BORNE	1					
7	2160-1212	CAP;BATT. TML (+)	CHAPEAU	1					
8	2160-1213	CAP;BATT. TML (-)	CHAPEAU	1					
9	2553-1275D96	CABLE;STARTER	CABLE	1					
10	2553-1275D97	CABLE;EARTH(BATTERY)	CABLE	1					
11	S0511653	BOLT	BOULON	1					
12	S5010613	WASHER;PLAIN	RONDELLE	1					
13	S5102603	WASHER,SPRING	RONDELLE	1					
14	553-00001D1	CABLE;E/G EARTH	CABLE	1					
15	S0511653	BOLT	BOULON	2					
16	S5010613	WASHER;PLAIN	RONDELLE	2					
17	S5102603	WASHER,SPRING	RONDELLE	2					
18	K1014279A	BRACKET;CONNECTOR	SUPPORT	1					
19	DS0025033	BOLT;SET	BOULON	2					
21	2195-3500	BRACKET	SUPPORT	1					
22	S0504566	BOLT M6X1.0X14	BOULON A 6 PANS	1					
23	S5102303	WASHER;SPRING	RONDELLE	1					
24	2197-1660	BRACKET	SUPPORT	2					
25	2197-1661	BRACKET	SUPPORT	5					
26	124-00208D2	CLIP	AGRAFE	12					
27	124-00208D3	CLIP	AGRAFE	3					
28	124-00208D4	CLIP	ATTACHE	6					
29	124-00209D1	CLIP	AGRAFE	1					
30	K1001029	BOLT	BOULON	24					
31	K1026565	BRACKET	SUPPORT	1					
32	S0511666	BOLT	BOULON	1					

(THIS PARTS BOOK IS FOR REFERENCE ONLY. PART NUMBERS AND SERIAL NUMBERS MAY BE OUTDATED. ALWAYS USE THE ONLINE PARTS SYSTEM)

DATE	JAN. 04, 2013
3rd EDITION	

Fig. 1460 ELECTRIC WIRING
POSE DE FILES ELECTRIQUES

Serial No. ;

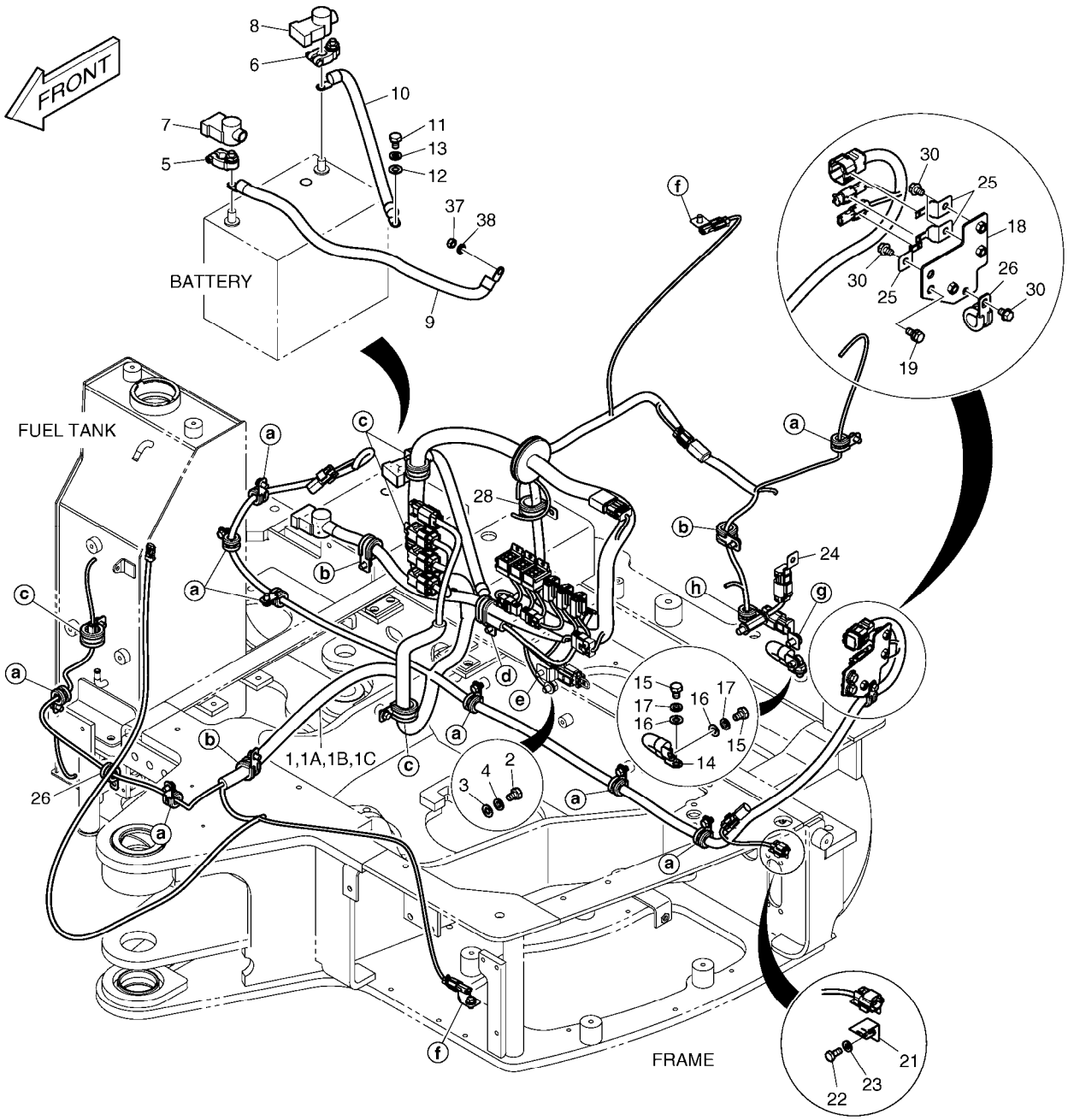

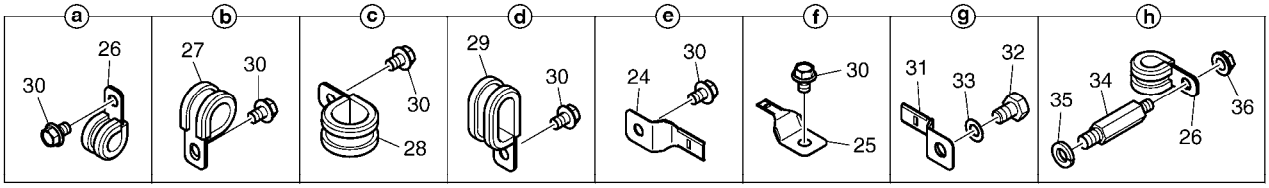

(THIS PARTS BOOK IS FOR REFERENCE ONLY.
PART NUMBERS AND SERAIL NUMBERS MAY BE
OUTDATED. ALWAYS USE THE ONLINE PARTS SYSTEM)

Fig. 1460 ELECTRIC WIRING
POSE DE FILES ELECTRIQUES

Serial No. ;

Key No.	Part No.	Description	Description	Q'ty	S.C	Serial No.	ICA	Replaceable part	
								Part No.	Q'ty
1460 -33	S5010613	WASHER;PLAIN	RONDELLE	1					
34	120-00246	BOLT;STUD	BOULON	1					
35	S5102603	WASHER,SPRING	RONDELLE	1					
36	2121-1305	NUT	ECROU	1					
37	S4012533	NUT	ECROU	1					
38	S5102503	WASHER,SPRING	RONDELLE	1					

(THIS PARTS BOOK IS FOR REFERENCE ONLY.
PART NUMBERS AND SERAIL NUMBERS MAY BE
OUTDATED. ALWAYS USE THE ONLINE PARTS SYSTEM)

DATE	JAN. 04, 2013
3rd EDITION	

Fig. 1470 WORKING LAMP
LAMPE FONCTIONNANTE

Serial No. ;

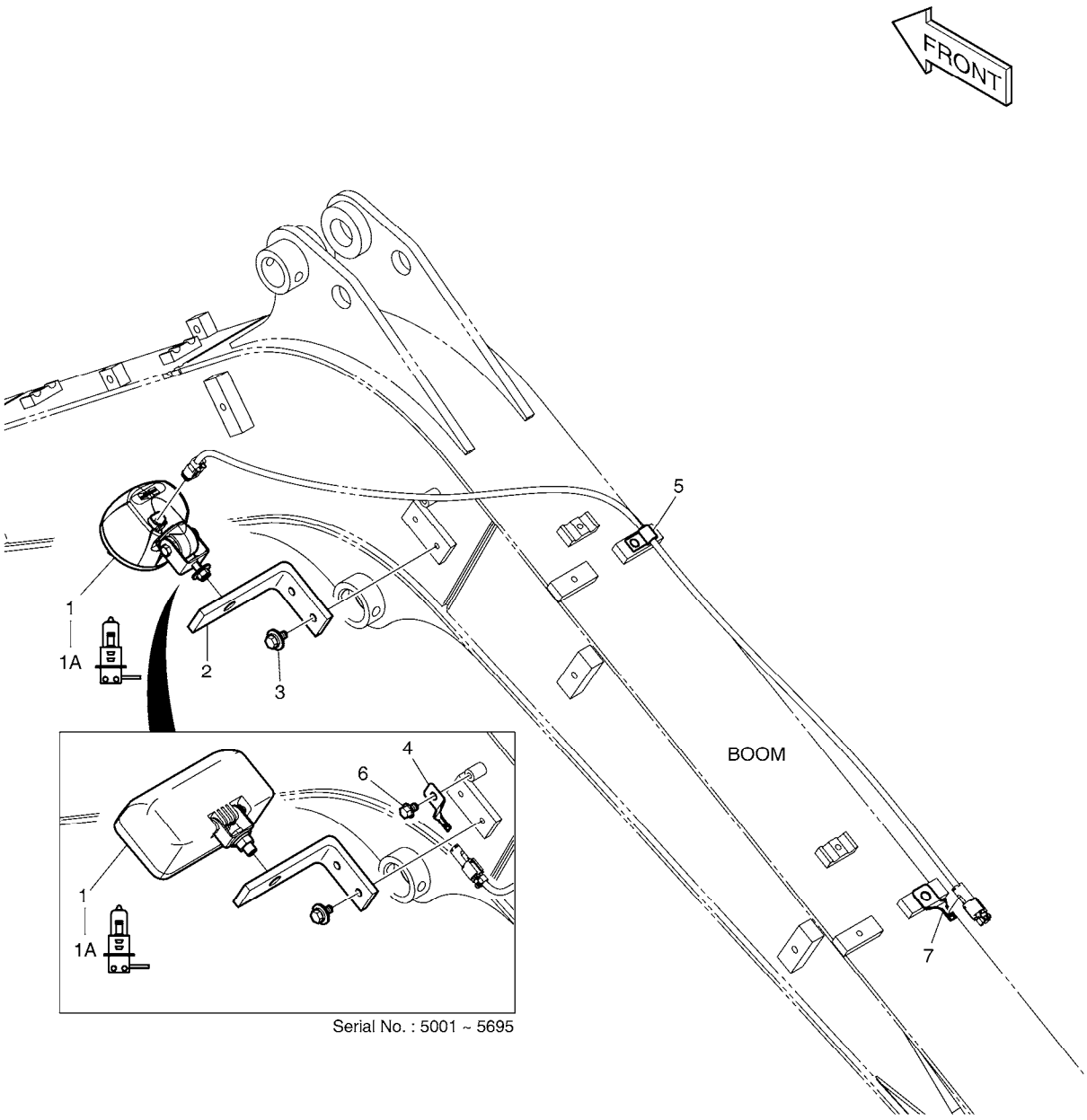

(THIS PARTS BOOK IS FOR REFERENCE ONLY.
PART NUMBERS AND SERAIL NUMBERS MAY BE
OUTDATED. ALWAYS USE THE ONLINE PARTS SYSTEM)

DATE	JAN. 04, 2013
3rd EDITION	

Fig. 1470 WORKING LAMP
LAMPE FONCTIONNANTE

Serial No. ;

Key No.	Part No.	Description	Description	Q'ty	S.C	Serial No.	ICA	Replaceable part	
								Part No.	Q'ty
1470 --	K1026802A	WORKING LAMP ASS'Y	LAMPE FONCTIONNANTE	-	D	5001-5695			
	300619-01050	ELECTRIC ASSY;WORKING LAMP	LAMPE FONCTIONNANTE	-	D	5696-			
1	534-00029	LAMP;WORKING	LAMPE	1		5001-5695			
	301005-00181	LAMP ASSY,WORKING;(12V)	LAMPE	1		5696-			
1A	2515-1016D2	. BULB 12V 55W	. AMPOULE	1					
2	195-03420	BRACKET;LAMP	SUPPORT	1					
3	DS0025033	BOLT;SET	BOULON	2					
4	2197-1661	BRACKET	SUPPORT	1		5001-5695			
5	2124-1353D1	CLIP	AGRAFE	1					
6	K1001029	BOLT	BOULON	1		5001-5695			
7	K1026566	BRACKET;CONNECTOR	SUPPORT	1					

(THIS PARTS BOOK IS FOR REFERENCE ONLY.
PART NUMBERS AND SERAIL NUMBERS MAY BE
OUTDATED. ALWAYS USE THE ONLINE PARTS SYSTEM)

DATE	JAN. 04, 2013
3rd EDITION	

Fig. 1480 WORKING LAMP HARNESS
LAMPE FONCTIONNANTE

Serial No. ;

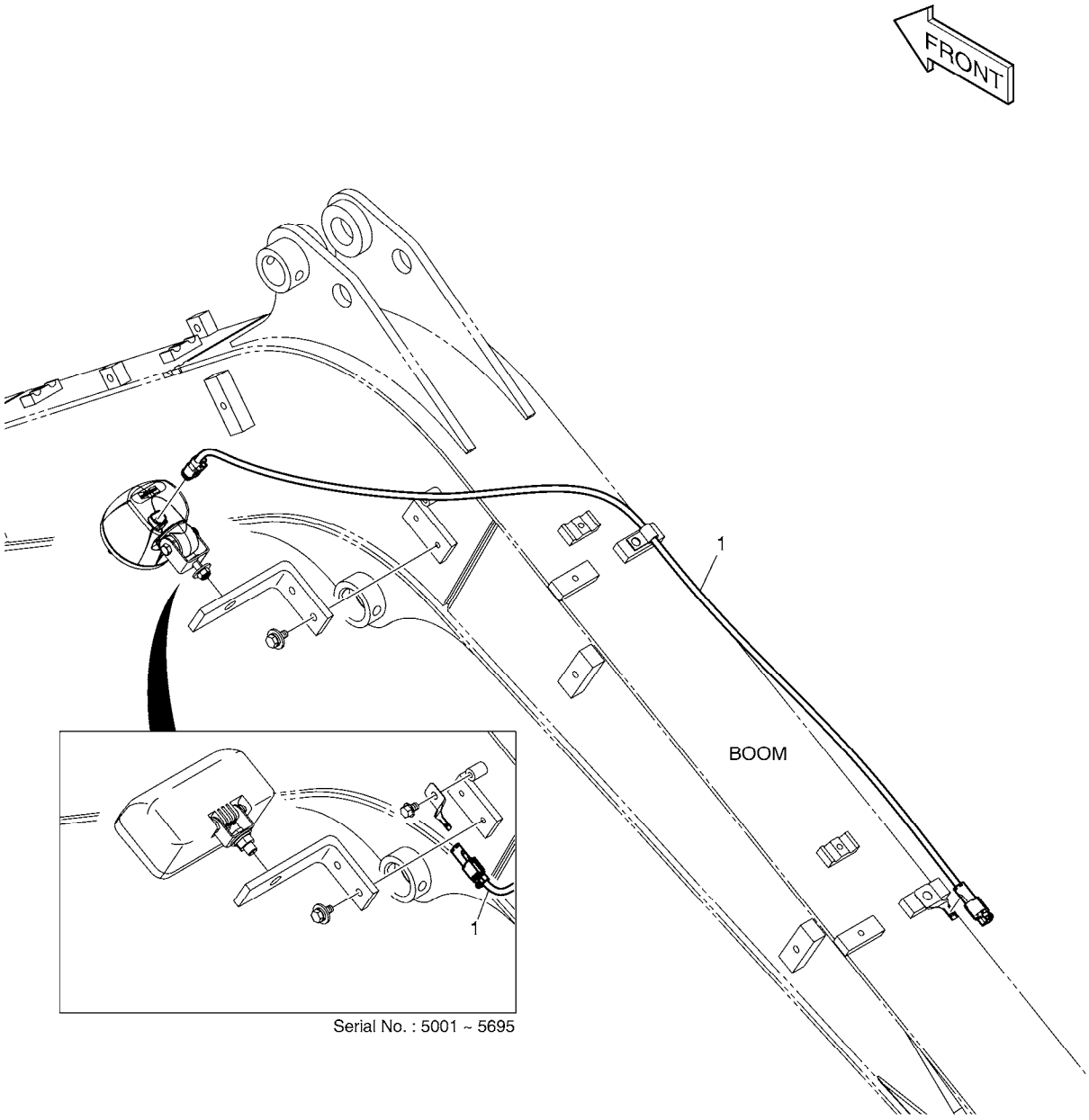

(THIS PARTS BOOK IS FOR REFERENCE ONLY.
PART NUMBERS AND SERAIL NUMBERS MAY BE
OUTDATED. ALWAYS USE THE ONLINE PARTS SYSTEM)

DATE	JAN. 04, 2013
3rd EDITION	

Fig. 1480 WORKING LAMP HARNESS
LAMPE FONCTIONNANTE

Serial No. ;

Key No.	Part No.	Description	Description	Q'ty	S.C	Serial No.	ICA	Replaceable part	
								Part No.	Q'ty
1480 --	K1026803A	WORKING LAMP	LAMPE FONCTIONNANTE	-	D	5001-5695			
	300619-01051	ELECTRIC ASSY;WORKING LAMP	LAMPE FONCTIONNANTE	-	D	5696-			
1	K1014462A	HARNESS;WORKING LAMP	HARNAIS	1		5001-5695			
	310207-01093	HARNESS,LAMP;WORK	HARNAIS	1		5696-			

(THIS PARTS BOOK IS FOR REFERENCE ONLY.
PART NUMBERS AND SERAIL NUMBERS MAY BE
OUTDATED. ALWAYS USE THE ONLINE PARTS SYSTEM)

DATE	JAN. 04, 2013
3rd EDITION	

Fig. 1490 ELECTRIC PARTS - CANOPY EQUIPMENT ELECTRIQUE

Serial No. ;

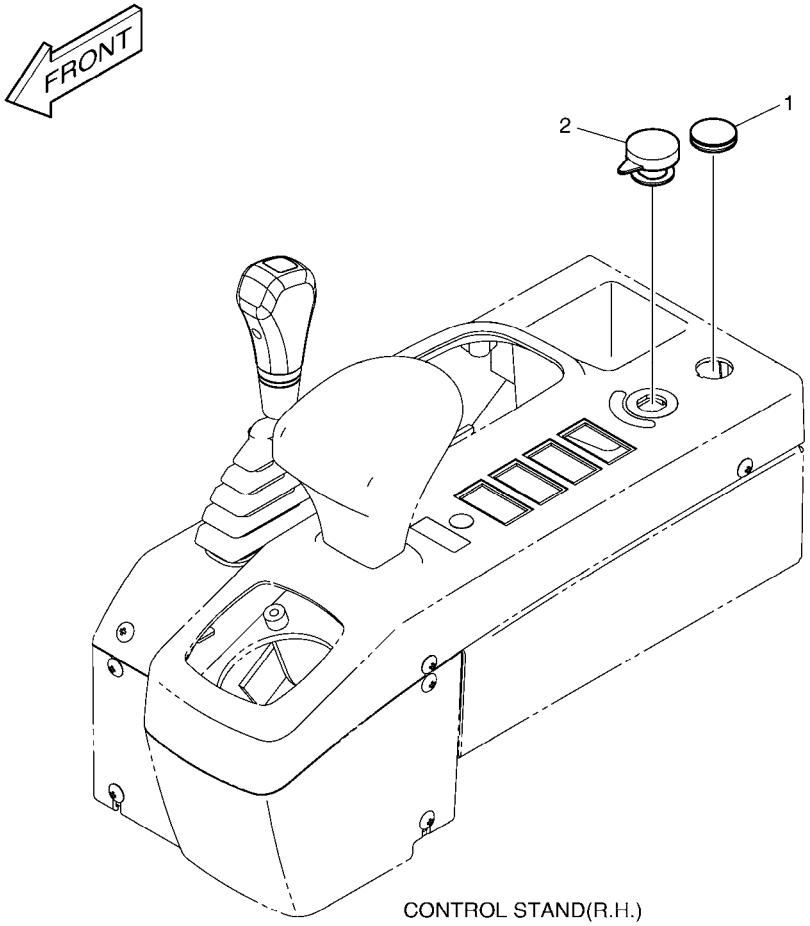

CONTROL STAND(R.H.)

(THIS PARTS BOOK IS FOR REFERENCE ONLY.
PART NUMBERS AND SERAIL NUMBERS MAY BE
OUTDATED. ALWAYS USE THE ONLINE PARTS SYSTEM)

Fig. 1490 ELECTRIC PARTS - CANOPY
EQUIPMENT ELECTRIQUE

Serial No. ;

Key No.	Part No.	Description	Description	Q'ty	S.C	Serial No.	ICA	Replaceable part	
								Part No.	Q'ty
1490 --	K1026793	ELECTRIC PARTS	EQUIPMENT ELECTRIQUE	-	D				
1	K1026510	CAP;RUBBER	CHAPEAU	1					
2	2160-1218	CAP	BOUCHON	1					

(THIS PARTS BOOK IS FOR REFERENCE ONLY.
PART NUMBERS AND SERAIL NUMBERS MAY BE
OUTDATED. ALWAYS USE THE ONLINE PARTS SYSTEM)

DATE	JAN. 04, 2013
3rd EDITION	

Fig. 1500 SPONGE ASS'Y
ENSEMBLE EPONGE

Serial No. ;

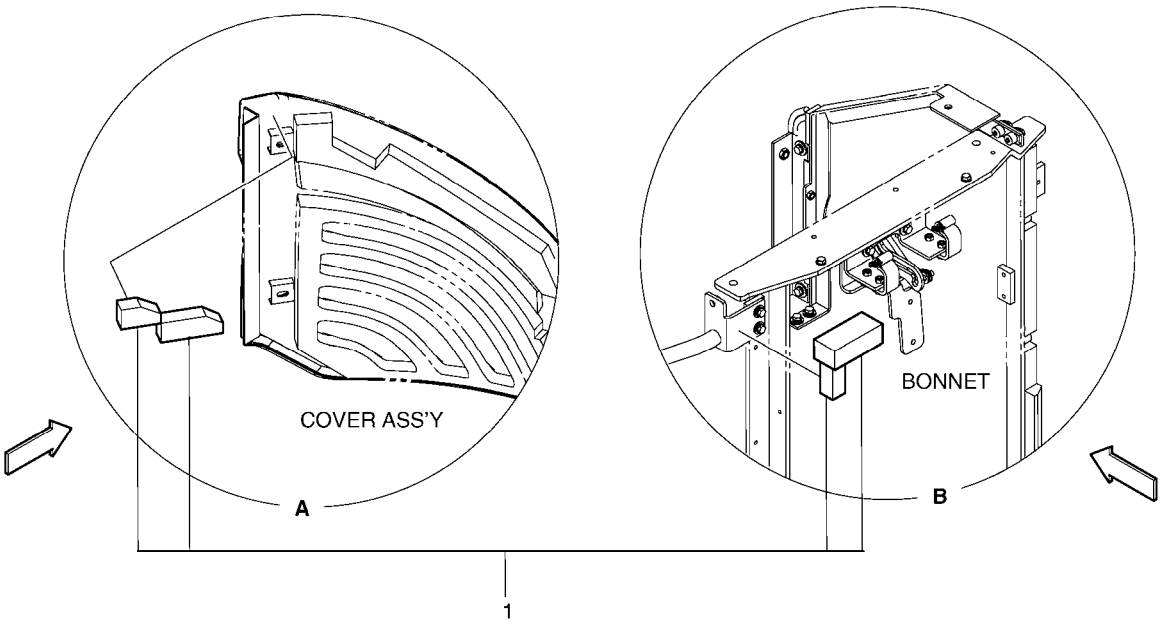

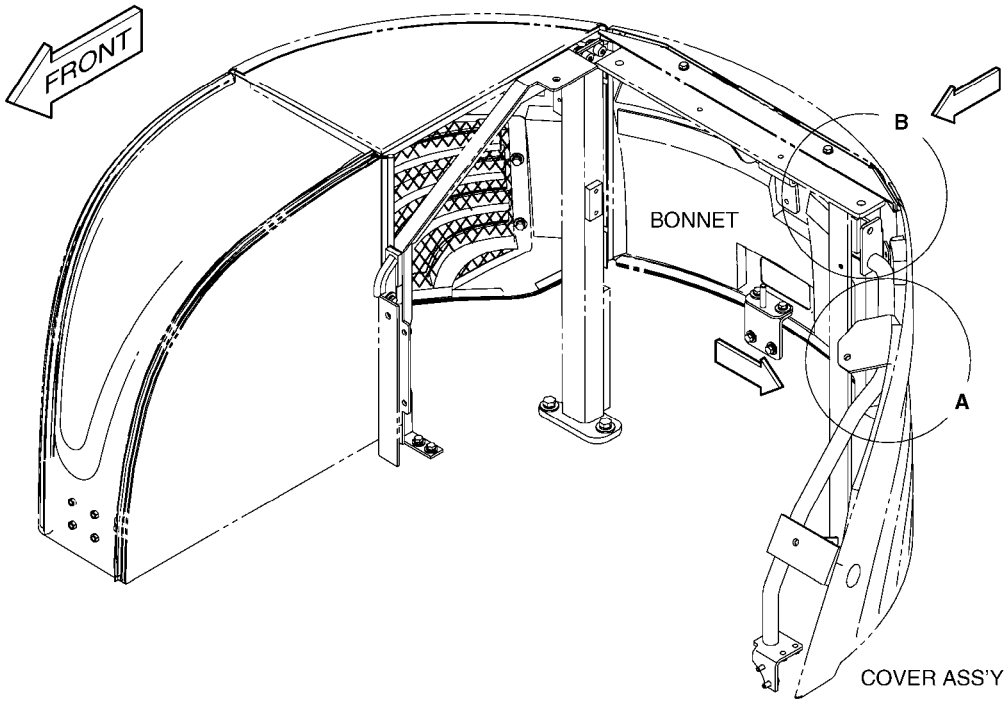

(THIS PARTS BOOK IS FOR REFERENCE ONLY.
PART NUMBERS AND SERAIL NUMBERS MAY BE
OUTDATED. ALWAYS USE THE ONLINE PARTS SYSTEM)

DATE	JAN. 04, 2013
3rd EDITION	

Fig. 1500 SPONGE ASS'Y
ENSEMBLE EPONGE

Serial No. ;

Key No.	Part No.	Description	Description	Q'ty	S.C	Serial No.	ICA	Replaceable part	
								Part No.	Q'ty
1500 -1	K1039286	SPONGE ASS'Y	EPONGE	1		5001-5300	I	K1039286A	1
	K1039286A	SPONGE ASS'Y	EPONGE	1		5301-			

(THIS PARTS BOOK IS FOR REFERENCE ONLY.
PART NUMBERS AND SERAIL NUMBERS MAY BE
OUTDATED. ALWAYS USE THE ONLINE PARTS SYSTEM)

DATE	JAN. 04, 2013
3rd EDITION	

Fig. 2100 TRACK FRAME
TRAIN DE ROULEMENT

Serial No. ;

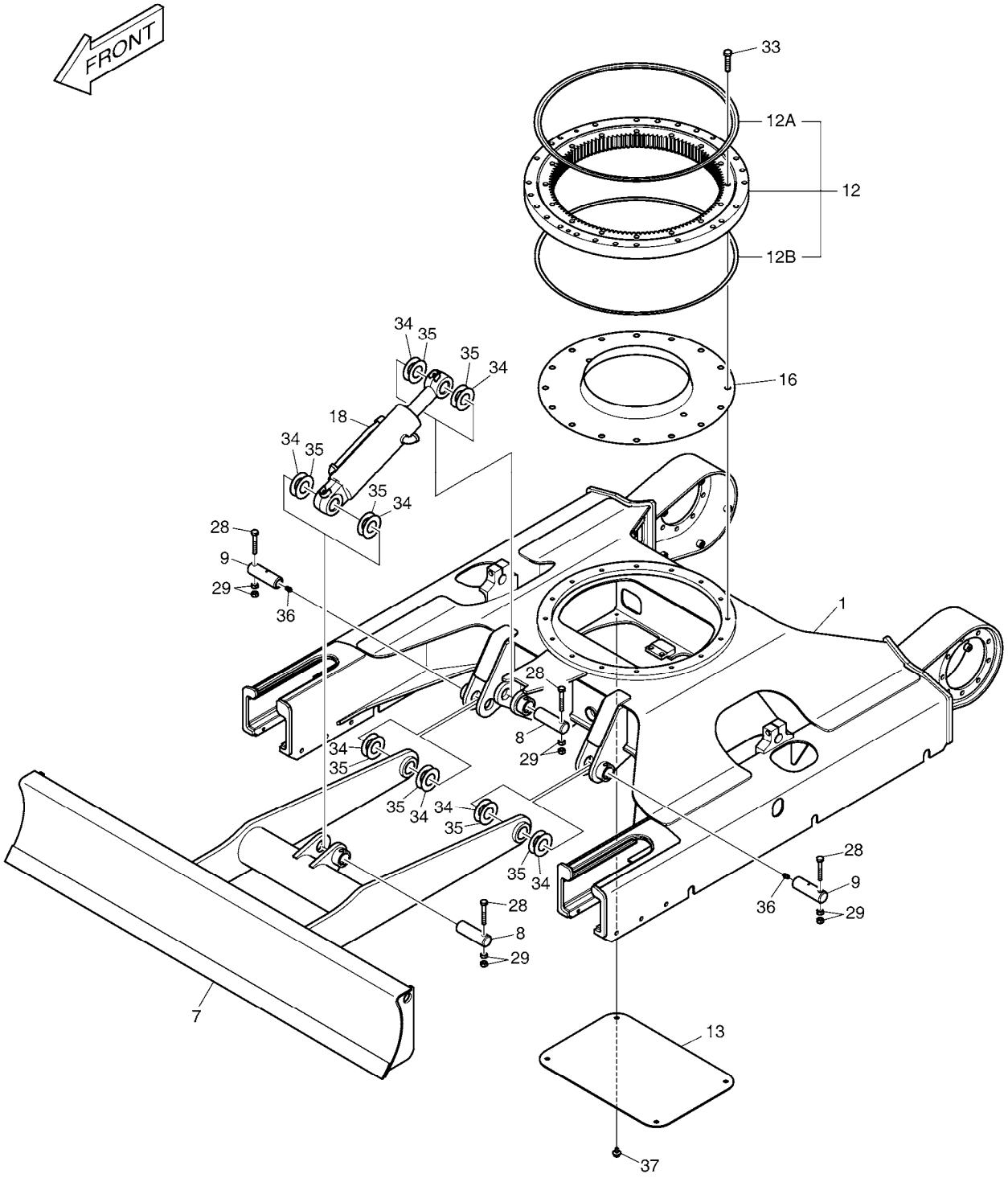

(THIS PARTS BOOK IS FOR REFERENCE ONLY.
PART NUMBERS AND SERAIL NUMBERS MAY BE
OUTDATED. ALWAYS USE THE ONLINE PARTS SYSTEM)

DATE	JAN. 04, 2013
3rd EDITION	

Fig. 2100 TRACK FRAME
TRAIN DE ROULEMENT

Serial No. ;

Key No.	Part No.	Description	Description	Q'ty	S.C	Serial No.	ICA	Replaceable part	
								Part No.	Q'ty
2100 --	K1015318G	UNDER CARRIAGE ASS'Y	SOUS LE CHARIOT	-	D	5001-5341			
	650105-00024	UNDERCARRIAGE ASSY	SOUS LE CHARIOT	-	D	5342-			
1	K1014350C	TRACK FRAME	TRAIN DE ROULEMENT	1					
7	K1014358C	BLADE;DOZER	LAME DE DOZER	1					
8	K1014360	PIN	GOUPILLE	2		5001-6072	Y	120501-02682	2
	120501-02682	PIN	GOUPILLE	2		6073-			
9	K1014361	PIN	GOUPILLE	2		5001-6072	Y	120501-02683	2
	120501-02683	PIN	GOUPILLE	2		6073-			
12	K1017318B	BEARING;SWING	ROULEMENT	1		5001-5725	I	140109-00023	1
	140109-00023	BEARING,SWING	ROULEMENT	1		5726-			
12A	401107-00749	. SEAL,SWING BEARING	. JOINT	1		5726-			
12B	401107-00750	. SEAL	. JOINT	1		5726-			
13	K1008072A	COVER;UNDER	COUVERCLE	1					
16	K1014362A	BATH;GREASE	BATH DE GRAISSE	1		5001-5344	Y	110964-00001	1
	110964-00001	BATH;GREASE	BATH DE GRAISSE	1		5345-			
18	K1014432	CYLINDER;DOZER	CYLINDRE DE DOZER	1					
28	S0558966	BOLT	BOULON	4					
29	S4012633	NUT	ECROU	8					
33	S0560966	BOLT M12X1.75X60	BOULON	16					
34	DS7701430	SHIM	CALE	8					
35	2114-1059D228	SHIM	CALE	8					
36	S6710042	NIPPLE;GREASE	GRAISSEUR	2					
37	DS0025033	BOLT;SET	BOULON	4		5001-5341			
	K1049808	BOLT,FLANGE	BOULON	4		5342-			

(THIS PARTS BOOK IS FOR REFERENCE ONLY.
PART NUMBERS AND SERAIL NUMBERS MAY BE
OUTDATED. ALWAYS USE THE ONLINE PARTS SYSTEM)

DATE	JAN. 04, 2013
3rd EDITION	

Fig. 2110 TRACK COMPONENTS
COMPOSANTS DE VOIE

Serial No. ;

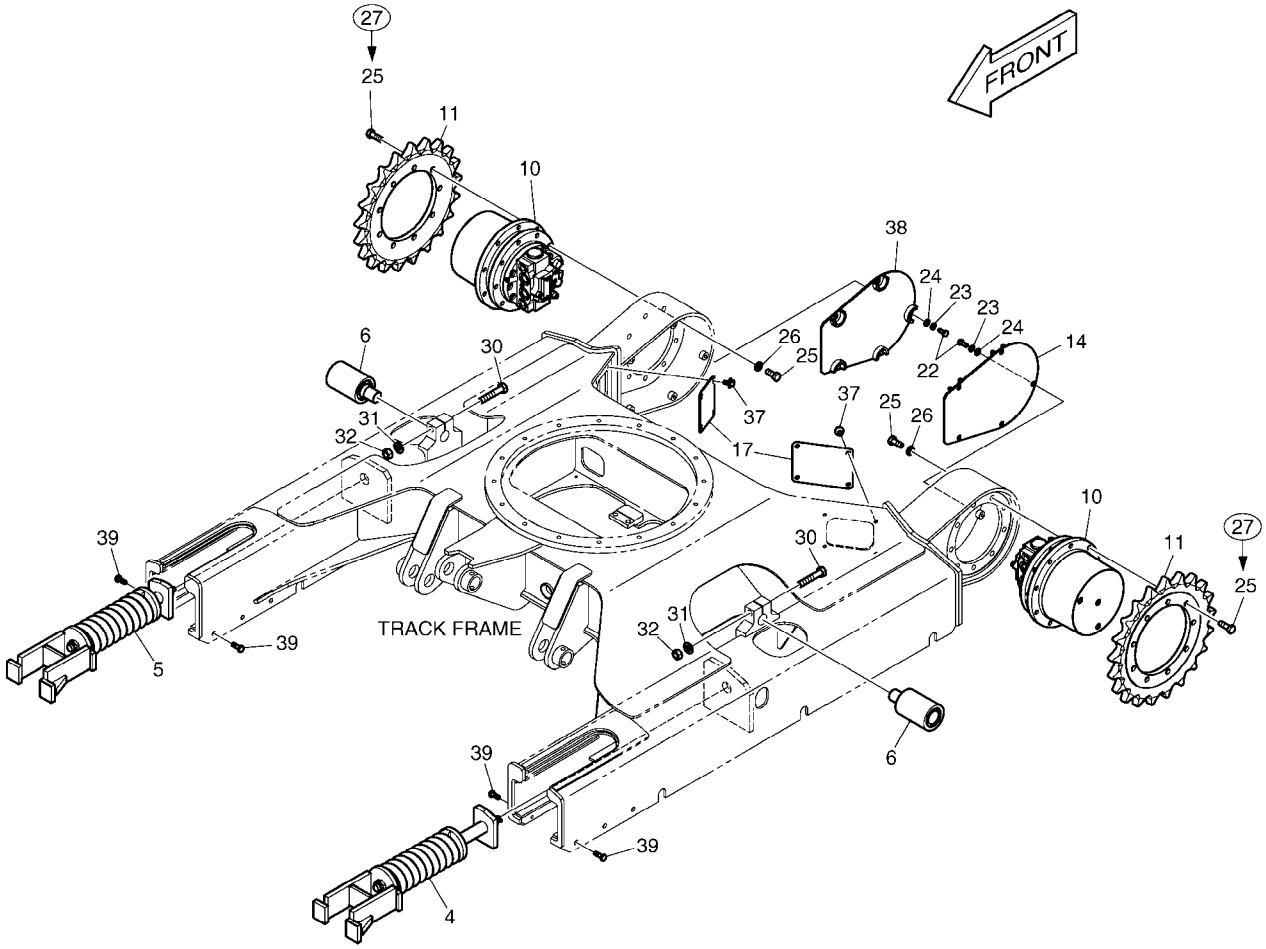

(THIS PARTS BOOK IS FOR REFERENCE ONLY.
PART NUMBERS AND SERAIL NUMBERS MAY BE
OUTDATED. ALWAYS USE THE ONLINE PARTS SYSTEM)

DATE	JAN. 04, 2013
3rd EDITION	

Fig. 2110 TRACK COMPONENTS COMPOSANTS DE VOIE

Serial No. ;

Key No.	Part No.	Description	Description	Q'ty	S.C	Serial No.	ICA	Replaceable part	
								Part No.	Q'ty
2110 --	K1015318M	UNDER CARRIAGE ASS'Y	SOUS LE CHARIOT	-	D	5001-5341			
	650105-00024	UNDERCARRIAGE ASSY	SOUS LE CHARIOT	-	D	5342-			
4	K1014353A	TRACK SPRING ASS'Y(L.H)	TENDEUR DE CHENILLE	1		5001-5150	I	K1014353B	1
	K1014353B	TRACK SPRING ASS'Y(L.H)	TENDEUR DE CHENILLE	1		5151-5341	Y	200101-00010	1
	200101-00010	SPRING ASSY,TRACK;(L.H)	TENDEUR DE CHENILLE	1		5342-5343	I	200101-00010B	1
	200101-00010B	SPRING ASSY,TRACK;(L.H)	TENDEUR DE CHENILLE	1		5344-			
5	K1014354B	TRACK SPRING ASS'Y(R.H)	TENDEUR DE CHENILLE	1		5001-5150	I	K1014354C	1
	K1014354C	TRACK SPRING ASS'Y(R.H)	TENDEUR DE CHENILLE	1		5151-5341	Y	200101-00011	1
	200101-00011	SPRING ASSY,TRACK;(R.H)	TENDEUR DE CHENILLE	1		5342-5343	I	200101-00011B	1
	200101-00011B	SPRING ASSY,TRACK;(R.H)	TENDEUR DE CHENILLE	1		5344-			
6	K1014356	ROLLER;UPPER	ENSEMBLE GALET INFERIE	2					
10	K1013467	MOTOR;TRAVEL	MOTEUR	2					
11	K1014434	SPROCKET	COURONNE DENTEE	2					
14	K1008074B	COVER (L.H)	COUVERCLE	1					
17	K1015362	COVER	COUVERCLE	2					
22	S0508866	BOLT	BOULON	10					
23	S5102503	WASHER,SPRING	RONDELLE	10					
24	S5010513	WASHER,PLAIN	RONDELLE	10					
25	S0515266	BOLT	BOULON	18		5001-5051			
	S0515266	BOLT	BOULON	36		5052-			
26	S5102703	WASHER;SPRING	RONDELLE	18					
27	S0515366	BOLT	BOULON A 6 PANS	18		5001-5051			
30	S0563466	BOLT	BOULON	2					
31	K1015638	WASHER;HARDENED	RONDELLE	2					
32	S4012833	NUT	ECROU	2					
37	DS0025033	BOLT;SET	BOULON	8		5001-5341			
	K1049808	BOLT,FLANGE	BOULON	8		5342-			
38	K1026707	COVER (R.H)	COUVERCLE	1					
39	S0511866	BOLT	BOULON	12		5181-			

(THIS PARTS BOOK IS FOR REFERENCE ONLY.
PART NUMBERS AND SERAIL NUMBERS MAY BE
OUTDATED. ALWAYS USE THE ONLINE PARTS SYSTEM)

DATE	JAN. 04, 2013
3rd EDITION	

Fig. 2120 TRACK SPRING - L.H
TENDEUR DE CHENILLE

Serial No. ;

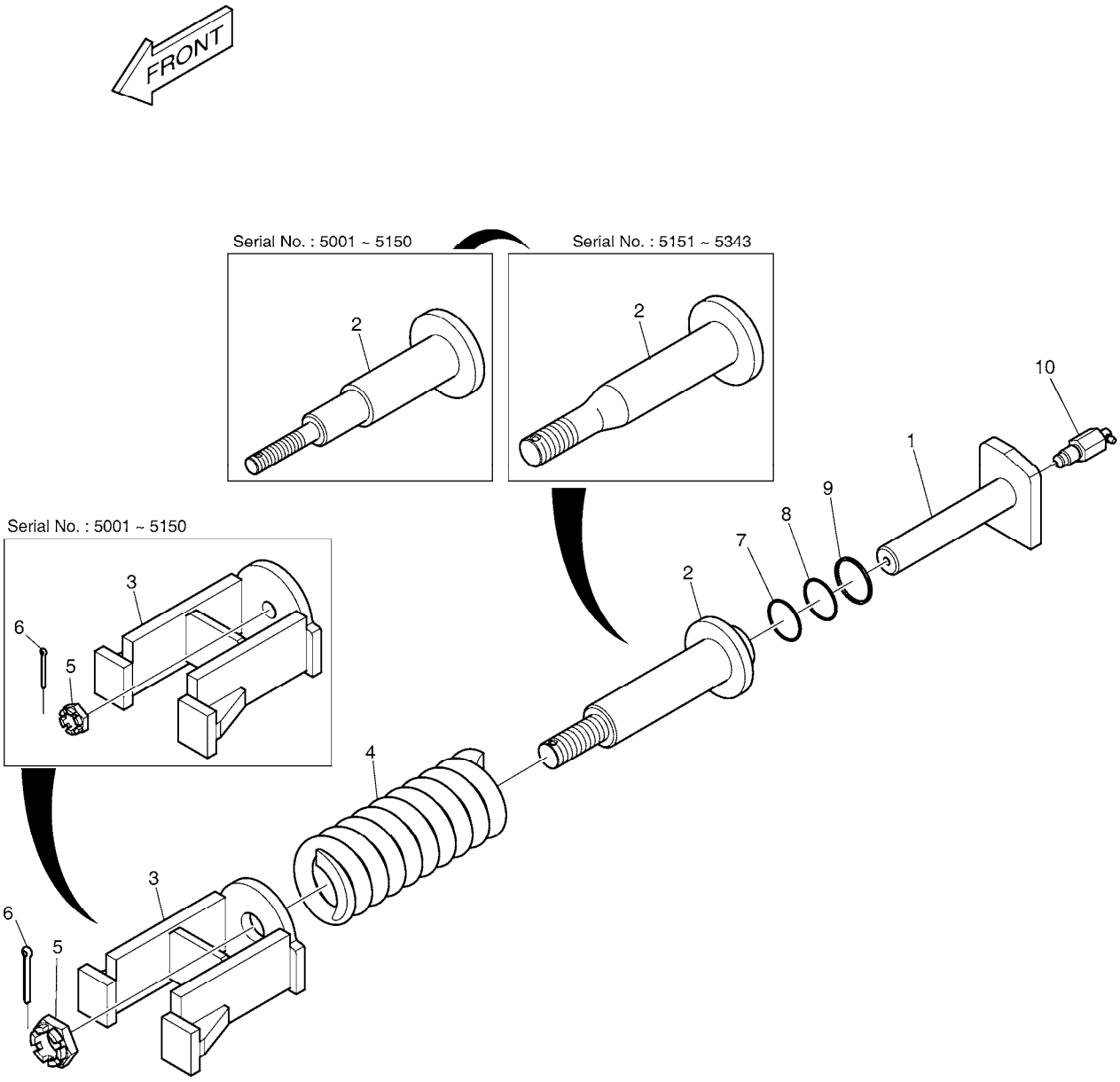

(THIS PARTS BOOK IS FOR REFERENCE ONLY.
PART NUMBERS AND SERAIL NUMBERS MAY BE
OUTDATED. ALWAYS USE THE ONLINE PARTS SYSTEM)

DATE	JAN. 04, 2013
3rd EDITION	

Fig. 2120 TRACK SPRING - L.H
TENDEUR DE CHENILLE

Serial No. ;

Key No.	Part No.	Description	Description	Q'ty	S.C	Serial No.	ICA	Replaceable part	
								Part No.	Q'ty
2120 --	K1014353A	TRACK SPRING ASS'Y(L.H)	TENDEUR DE CHENILLE	1		5001-5150	I	K1014353B	1
	K1014353B	TRACK SPRING ASS'Y(L.H)	TENDEUR DE CHENILLE	1		5151-5341	Y	200101-00010	1
	200101-00010	SPRING ASSY,TRACK;(L.H)	TENDEUR DE CHENILLE	1		5342-5343	I	200101-00010B	1
	200101-00010B	SPRING ASSY,TRACK;(L.H)	TENDEUR DE CHENILLE	1		5344-			
1	K1011036A	ROD	TIGE	1					
2	K1011040	BODY;CYLINDER	CYLINDRE DE CARTER	1		5001-5150			
	K1011040A	BODY;CYLINDER	CYLINDRE DE CARTER	1		5151-5343	I	420402-00011A	1
	420402-00011A	BODY;CYLINDER	CYLINDRE DE CARTER	1		5344-			
3	K1011055A	YOKE	JOUG	1		5001-5150			
	K1011055B	YOKE	JOUG	1		5151-			
4	K1015740	SPRING	RESSORT	1					
5	S4267043	NUT;LOCK	ECROU	1		5001-5150			
	S4277943	NUT	ECROU	1		5151-			
6	S5735601	PIN;SPLIT	GOUPILLE FENDUE	1		5001-5150			
	S5735911	PIN;SPLIT	GOUPILLE	1		5151-			
7	-	O-RING	JOINT TORIQUE	1	K				
8	-	RING;BACK UP	ANNEAU	1	K				
9	-	PACKING	EMBALLAGE	1	K				
10	K1015508	VALVE;GREASE	VANNE	1					
*	2440-9266AKT	SEAL KIT;TRACK SPRING	KIT DE JOINT	1					

(THIS PARTS BOOK IS FOR REFERENCE ONLY.
PART NUMBERS AND SERAIL NUMBERS MAY BE
OUTDATED. ALWAYS USE THE ONLINE PARTS SYSTEM)

DATE	JAN. 04, 2013
3rd EDITION	

Fig. 2130 TRACK SPRING - R.H
TENDEUR DE CHENILLE

Serial No. ;

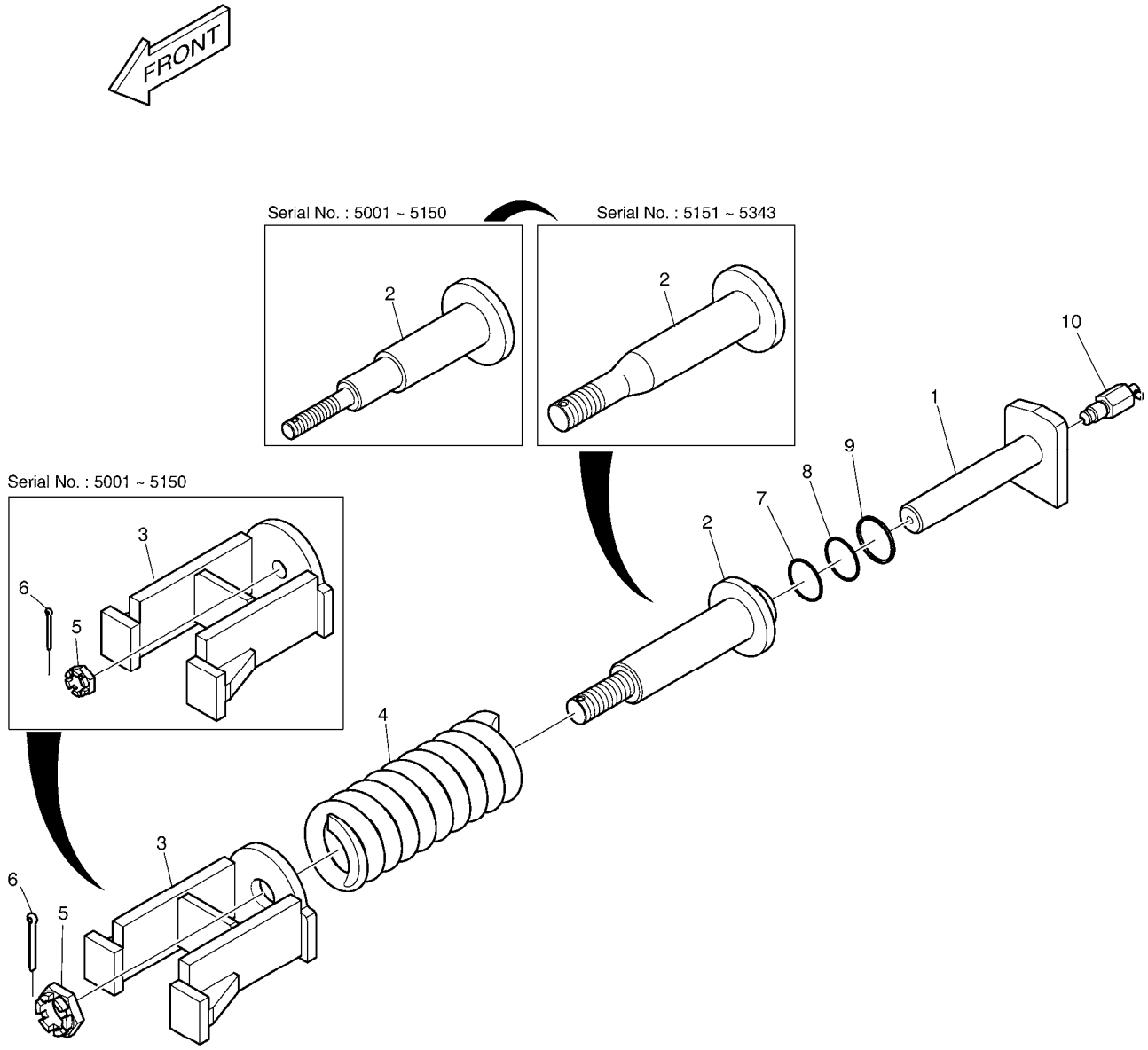

(THIS PARTS BOOK IS FOR REFERENCE ONLY.
PART NUMBERS AND SERAIL NUMBERS MAY BE
OUTDATED. ALWAYS USE THE ONLINE PARTS SYSTEM)

DATE	JAN. 04, 2013
3rd EDITION	

Fig. 2130 TRACK SPRING - R.H
TENDEUR DE CHENILLE

Serial No. ;

Key No.	Part No.	Description	Description	Q'ty	S.C	Serial No.	ICA	Replaceable part	
								Part No.	Q'ty
2130 --	K1014354B	TRACK SPRING ASS'Y(R.H)	TENDEUR DE CHENILLE	1		5001-5150	I	K1014354C	1
	K1014354C	TRACK SPRING ASS'Y(R.H)	TENDEUR DE CHENILLE	1		5151-5341	Y	200101-00011	1
	200101-00011	SPRING ASSY,TRACK;(R.H)	TENDEUR DE CHENILLE	1		5342-5343	I	200101-00011B	1
	200101-00011B	SPRING ASSY,TRACK;(R.H)	TENDEUR DE CHENILLE	1		5344-			
1	K1015151A	ROD	TIGE	1					
2	K1011040	BODY;CYLINDER	CYLINDRE DE CARTER	1		5001-5150			
	K1011040A	BODY;CYLINDER	CYLINDRE DE CARTER	1		5151-5343	I	420402-00011A	1
	420402-00011A	BODY;CYLINDER	CYLINDRE DE CARTER	1		5344-			
3	K1011055A	YOKE	JOUG	1		5001-5150			
	K1011055B	YOKE	JOUG	1		5151-			
4	K1015740	SPRING	RESSORT	1					
5	S4267043	NUT;LOCK	ECROU	1		5001-5150			
	S4277943	NUT	ECROU	1		5151-			
6	S5735601	PIN;SPLIT	GOUPILLE FENDUE	1		5001-5150			
	S5735911	PIN;SPLIT	GOUPILLE	1		5151-			
7	-	O-RING	JOINT TORIQUE	1	K				
8	-	RING;BACK UP	ANNEAU	1	K				
9	-	PACKING	EMBALLAGE	1	K				
10	K1015508	VALVE;GREASE	VANNE	1					
*	2440-9266AKT	SEAL KIT;TRACK SPRING	KIT DE JOINT	1					

(THIS PARTS BOOK IS FOR REFERENCE ONLY.
PART NUMBERS AND SERAIL NUMBERS MAY BE
OUTDATED. ALWAYS USE THE ONLINE PARTS SYSTEM)

DATE	JAN. 04, 2013
3rd EDITION	

Fig. 2140 RUBBER TRACK - 250mm
VOIE EN CAOUTCHOUC

Serial No. ;

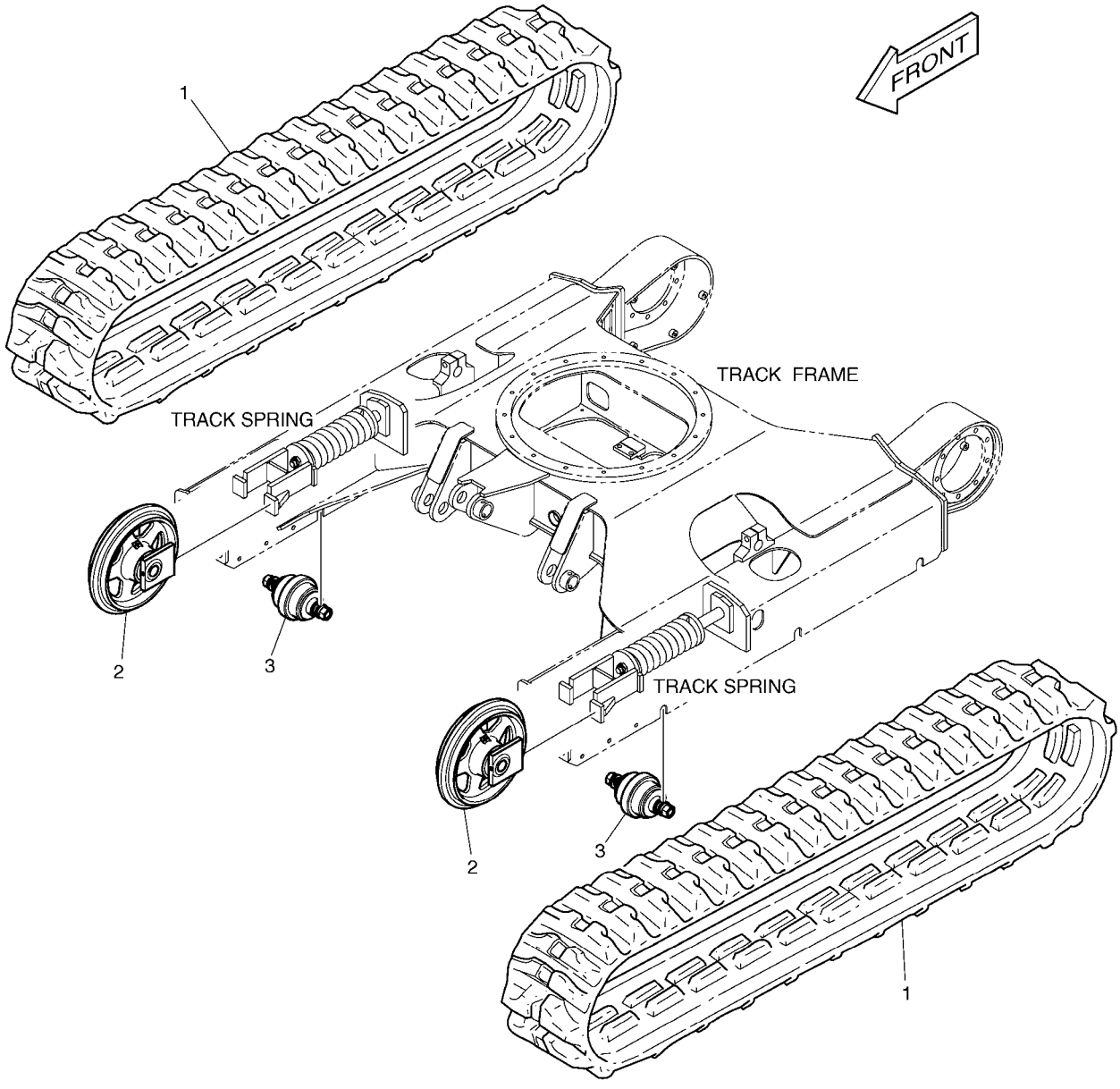

(THIS PARTS BOOK IS FOR REFERENCE ONLY.
PART NUMBERS AND SERAIL NUMBERS MAY BE
OUTDATED. ALWAYS USE THE ONLINE PARTS SYSTEM)

Fig. 2140 RUBBER TRACK - 250mm VOIE EN CAOUTCHOUC

Serial No. ;

Key No.	Part No.	Description	Description	Q'ty	S.C	Serial No.	ICA	Replaceable part	
								Part No.	Q'ty
2140 --	K1026042B	TRACK SHOE	CHAUSSURE DE VOIE	-	D				
1	K1014357	SHOE;RUBBER(250mm)	CHAUSSURE EN CAOUTCI	2					
2	K1014352A	IDLER;TRACK	OISIF	2					
3	K1014351B	ROLLER;LOWER	GALET	6		5001-5252	I	K1014351C	6
	K1014351C	ROLLER;LOWER	GALET	6		5253-			

(THIS PARTS BOOK IS FOR REFERENCE ONLY.
PART NUMBERS AND SERAIL NUMBERS MAY BE
OUTDATED. ALWAYS USE THE ONLINE PARTS SYSTEM)

DATE	JAN. 04, 2013
3rd EDITION	

Fig. 2150 RUBBER TRACK - 300mm
VOIE EN CAOUTCHOUC

Serial No. ;

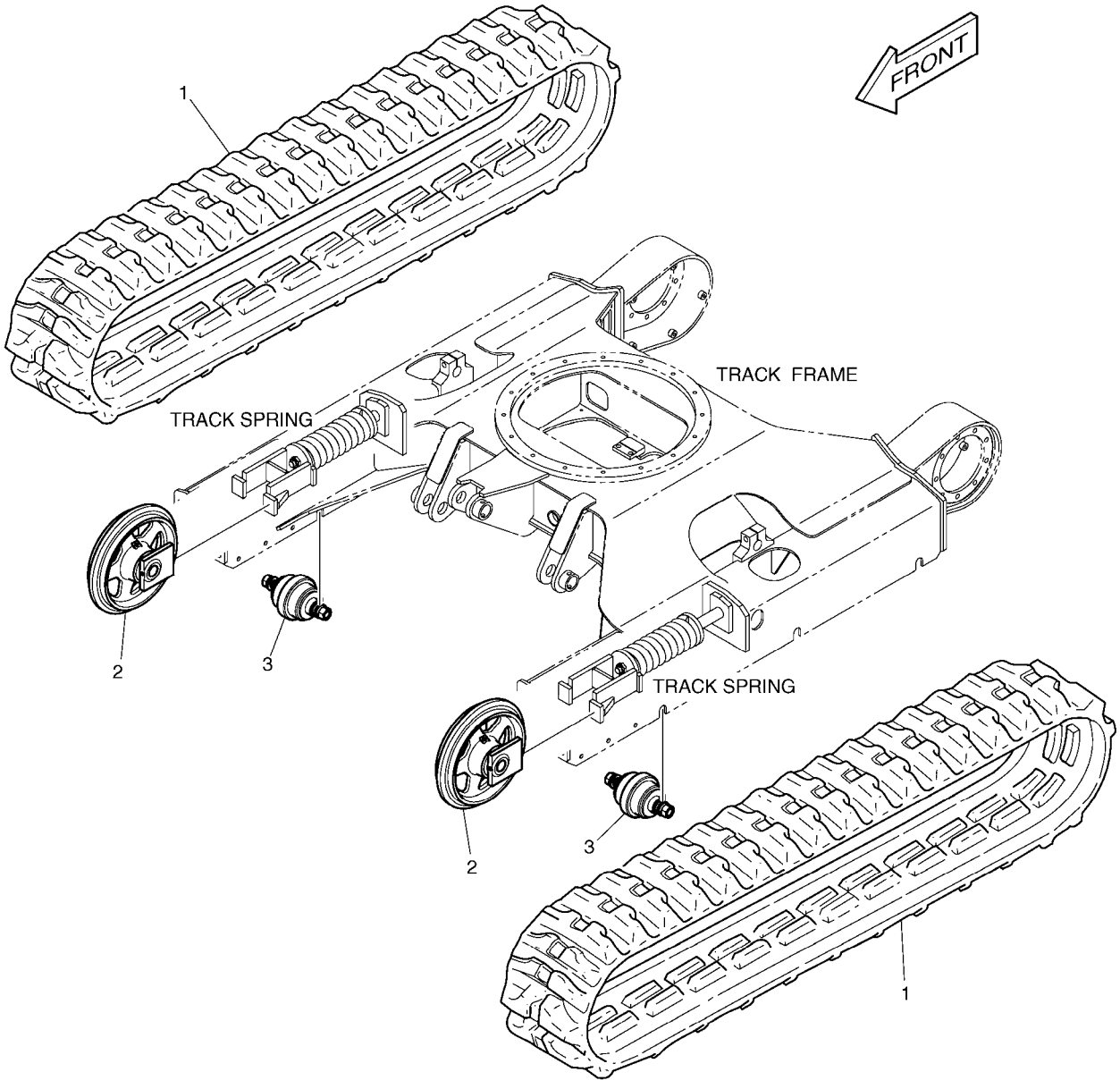

(THIS PARTS BOOK IS FOR REFERENCE ONLY.
PART NUMBERS AND SERAIL NUMBERS MAY BE
OUTDATED. ALWAYS USE THE ONLINE PARTS SYSTEM)

DATE	JAN. 04, 2013
3rd EDITION	

Fig. 2150 RUBBER TRACK - 300mm VOIE EN CAOUTCHOUC

Serial No. ;

Key No.	Part No.	Description	Description	Q'ty	S.C	Serial No.	ICA	Replaceable part	
								Part No.	Q'ty
2150 --	K1026043A	TRACK SHOE	CHAUSSURE DE VOIE	-	D	5001-5399			
	200106-00118	SHOE,TRACK;300MM	CHAUSSURE DE VOIE	-	D	5400-			
1	K1025569	SHOE;RUBBER(300mm)	CHAUSSURE EN CAOUTCI	2		5001-5399	I	200106-00115	2
	200106-00115	SHOE,RUBBER(300mm)	CHAUSSURE EN CAOUTCI	2		5400-			
2	K1014352A	IDLER;TRACK	OISIF	2					
3	K1014351B	ROLLER;LOWER	GALET	6		5001-5252	I	K1014351C	6
	K1014351C	ROLLER;LOWER	GALET	6		5253-			

(THIS PARTS BOOK IS FOR REFERENCE ONLY.
PART NUMBERS AND SERAIL NUMBERS MAY BE
OUTDATED. ALWAYS USE THE ONLINE PARTS SYSTEM)

DATE	JAN. 04, 2013
3rd EDITION	

Fig. 2160 TRAVELING PIPING
CONDUITES DE TRANSLATION

Serial No. ;

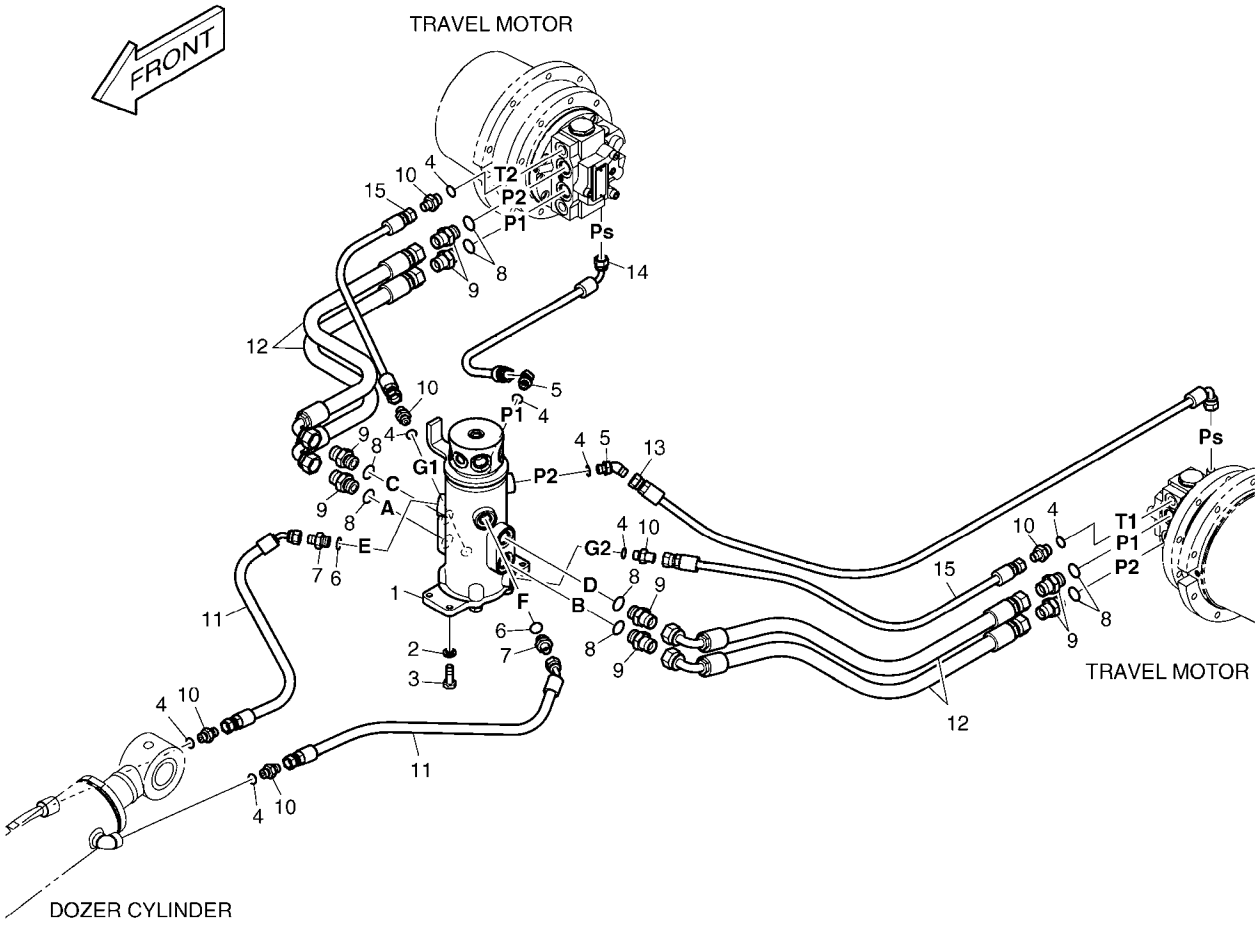

(THIS PARTS BOOK IS FOR REFERENCE ONLY.
PART NUMBERS AND SERAIL NUMBERS MAY BE
OUTDATED. ALWAYS USE THE ONLINE PARTS SYSTEM)

DATE	JAN. 04, 2013
3rd EDITION	

Fig. 2160 TRAVELING PIPING
CONDUITES DE TRANSLATION

Serial No. ;

Key No.	Part No.	Description	Description	Q'ty	S.C	Serial No.	ICA	Replaceable part	
								Part No.	Q'ty
2160 --	K1018113E	TRAVEL PIPING	CONDUITES	-	D				
1	K1008451	CENTER JOINT	JOINT CENTRAL	1		5001-5252	I	K1008451A	1
	K1008451A	CENTER JOINT	JOINT CENTRAL	1		5253-			
2	S5102603	WASHER,SPRING	RONDELLE	4					
3	S0512166	BOLT	BOULON	4					
4	S8000111	O-RING	JOINT CIRCULAIRE	8					
5	2181-2419D1	ELBOW	COUDE	2					
6	S8000141	O-RING	JOINT TORIQUE	2					
7	2181-1126D36	ADAPTER	ADAPTEUR	2					
8	S8000181	O-RING	JOINT CIRCULAIRE	8					
9	2181-1126D23	ADAPTER	ADAPTEUR	8					
10	2181-1126D14	ADAPTER	ADAPTEUR	6					
11	DS2092100	HOSE	TUYAU FLEXIBLE	2		5001-5230			
	DS2092202	HOSE	TUYAU FLEXIBLE	2		5231-			
12	DS2093354	HOSE	TUYAU FLEXIBLE	4					
13	DS2093355	HOSE	TUYAU FLEXIBLE	1					
14	DS2093356	HOSE	TUYAU FLEXIBLE	1					
15	DS2094168	HOSE	TUYAU FLEXIBLE	2					

(THIS PARTS BOOK IS FOR REFERENCE ONLY.
PART NUMBERS AND SERAIL NUMBERS MAY BE
OUTDATED. ALWAYS USE THE ONLINE PARTS SYSTEM)

DATE	JAN. 04, 2013
3rd EDITION	

Fig. 3100 BOOM
PERCHE

Serial No. ;

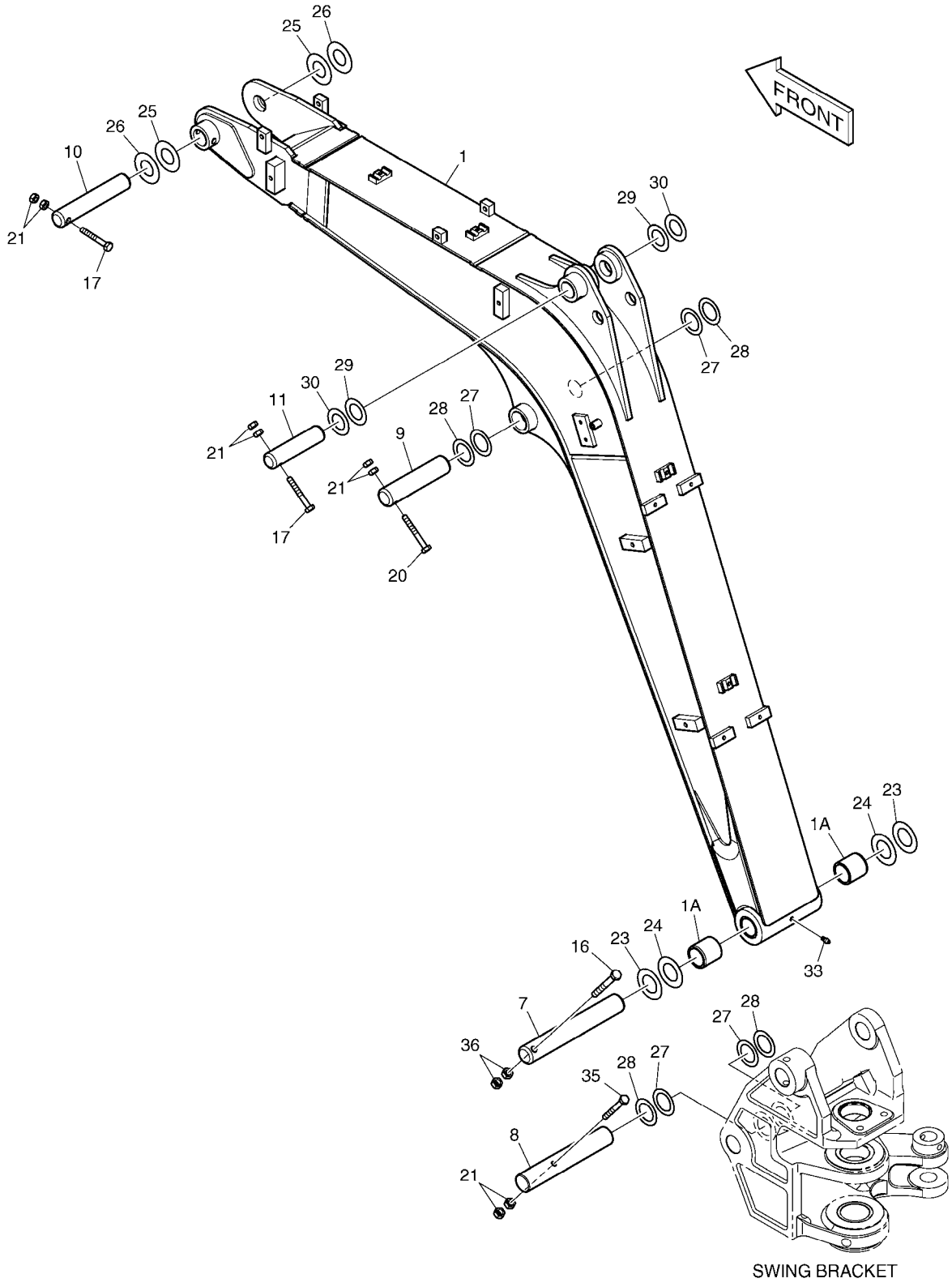

(THIS PARTS BOOK IS FOR REFERENCE ONLY.
PART NUMBERS AND SERAIL NUMBERS MAY BE
OUTDATED. ALWAYS USE THE ONLINE PARTS SYSTEM)

Fig. 3100 BOOM PERCHE

Serial No. ;

Key No.	Part No.	Description	Description	Q'ty	S.C	Serial No.	ICA	Replaceable part	
								Part No.	Q'ty
3100 --	K1015749C	FRONT ATTACHMENTS	ATTACHEMENT AVANT	-	D				
1	K1015750C	BOOM ASSY;(2.0M)	ENSEMBLE FLECHE	1		5001-5864	Y	230207-00196	1
	230207-00196	BOOM ASSY;(2.0M)	ENSEMBLE FLECHE	1		5865-5979	Y	230207-00196A	1
	230207-00196A	BOOM ASSY;(2.0M)	ENSEMBLE FLECHE	1		5980-			
1A	K1018514	. BUSH	. DOUILLE	2		5001-5979	Y	131008-00131	2
	131008-00131	. BUSHING	. DOUILLE	2		5980-			
7	K1015759B	PIN	GOUPILLE	1					
8	K1015760A	PIN	GOUPILLE	1					
9	K1015761B	PIN	GOUPILLE	1					
10	K1015762A	PIN	GOUPILLE	1					
11	K1015763A	PIN	GOUPILLE	1					
16	S0561753	BOLT M12X1.75X100	BOULON A 6 PANS	1		5001-5749			
	S0561853	BOLT M12X1.75X105	BOULON A 6 PANS	1		5750-			
17	S0559053	BOLT M10X1.5X75	BOULON A 6 PANS	2					
20	S0559153	BOLT M10X1.5X80	BOULON A 6 PANS	1					
21	S4012633	NUT	ECROU	8					
23	DS7701428	SHIM	CALE	2					
24	DS7701429	SHIM	CALE	2					
25	2114-1059D228	SHIM	CALE	2					
26	DS7701430	SHIM	CALE	2					
27	2114-1059D186	SHIM	CALE	4					
28	DS7701431	SHIM	CALE	4					
29	2114-1059D212	SHIM	CALE	2					
30	DS7701432	SHIM	CALE	2					
33	S6710041	NIPPLE;GREASE	GRAISSEUR	1					
35	S0559363	BOLT	BOULON	1					
36	S4012733	NUT	ECROU	2					

(THIS PARTS BOOK IS FOR REFERENCE ONLY.
PART NUMBERS AND SERAIL NUMBERS MAY BE
OUTDATED. ALWAYS USE THE ONLINE PARTS SYSTEM)

DATE	JAN. 04, 2013
3rd EDITION	

Fig. 3110 ARM - 1.1m BALANCIER

Serial No. ;

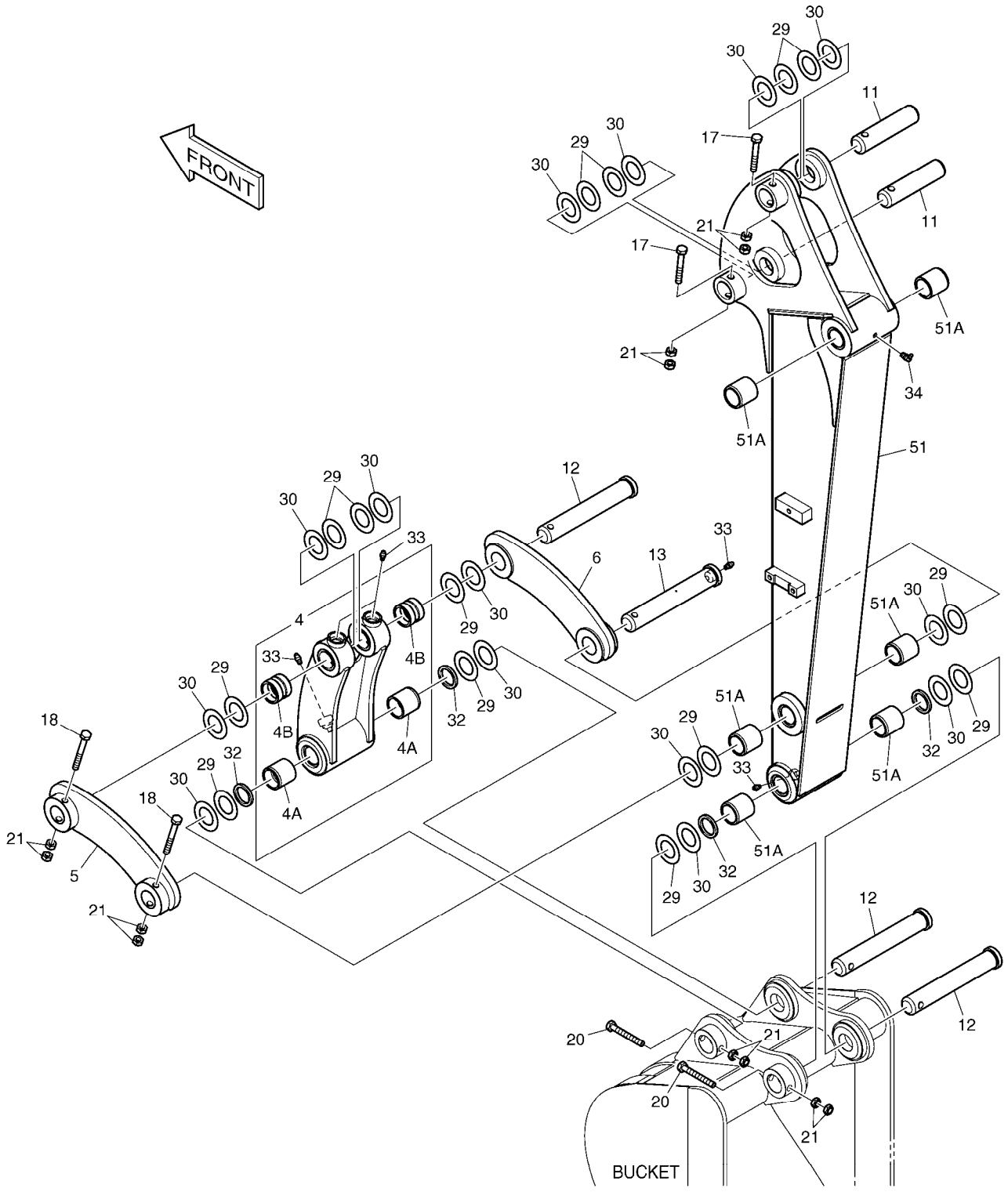

(THIS PARTS BOOK IS FOR REFERENCE ONLY.
PART NUMBERS AND SERAIL NUMBERS MAY BE
OUTDATED. ALWAYS USE THE ONLINE PARTS SYSTEM)

DATE	JAN. 04, 2013
3rd EDITION	

Fig. 3110 ARM - 1.1m BALANCIER

Serial No. ;

Key No.	Part No.	Description	Description	Q'ty	S.C	Serial No.	ICA	Replaceable part	
								Part No.	Q'ty
3110 --	K1015749H	FRONT ATTACHMENTS	ATTACHEMENT AVANT	-	D	5001-5749			
	230207-00161	FRONT ATTACHMENTS	ATTACHEMENT AVANT	-	D	5750-			
4	K1015756A	LINK;PUSH	ARTICULATION	1		5001-5979	Y	101541-00087	1
	101541-00087	LINK,PUSH	ARTICULATION	1		5980-			
4A	K1018517	. BUSH	. DOUILLE	2		5001-5979	Y	131008-00132	2
	131008-00132	. BUSH	. DOUILLE	2		5980-			
4B	K1018518	. BUSH	. DOUILLE	2		5001-5979	Y	131008-00135	2
	131008-00135	. BUSH	. DOUILLE	2		5980-			
5	155-00038	LINK;BUCKET(L.H)	ARTICULATION	1		5001-5165	I	K1040397	1
	K1040397	LINK;GUIDE(L.H)	ARTICULATION	1		5166-			
6	155-00037	LINK;BUCKET(R.H)	ARTICULATION	1		5001-5165	I	K1040396	1
	K1040396	LINK;GUIDE(R.H)	ARTICULATION	1		5166-			
11	K1015763A	PIN	GOUPILLE	2					
12	K1026558	PIN	GOUPILLE	3					
13	K1026559	PIN	GOUPILLE	1					
17	S0559053	BOLT M10X1.5X75	BOULON A 6 PANS	2					
18	S0559353	BOLT M10X1.5X90	BOULON A 6 PANS	2					
20	S0559153	BOLT M10X1.5X80	BOULON A 6 PANS	2					
21	S4012633	NUT	ECROU	12					
29	2114-1059D212	SHIM	CALE	14					
30	DS7701432	SHIM	CALE	14					
32	2180-1106BD21	SEAL;DUST	JOINT	4					
33	S6710041	NIPPLE;GREASE	GRAISSEUR	5					
34	S6710101	NIPPLE;GREASE	GRAISSEUR	1					
51	K1015753C	ARM 1.1m	BALANCIER	1		5001-5051	I	K1015753E	1
	K1015753E	ARM 1.1m	BALANCIER	1		5052-5979	Y	230201-00572	1
	230201-00572	ARM 1.1m	BALANCIER	1		5980-			
51A	K1018517	. BUSH	. DOUILLE	6		5001-5979	Y	131008-00132	6
	131008-00132	. BUSH	. DOUILLE	6		5980-			

(THIS PARTS BOOK IS FOR REFERENCE ONLY.
PART NUMBERS AND SERAIL NUMBERS MAY BE
OUTDATED. ALWAYS USE THE ONLINE PARTS SYSTEM)

DATE	JAN. 04, 2013
3rd EDITION	

Fig. 3120 BUCKET - 0.08m³ GODET

Serial No. ;

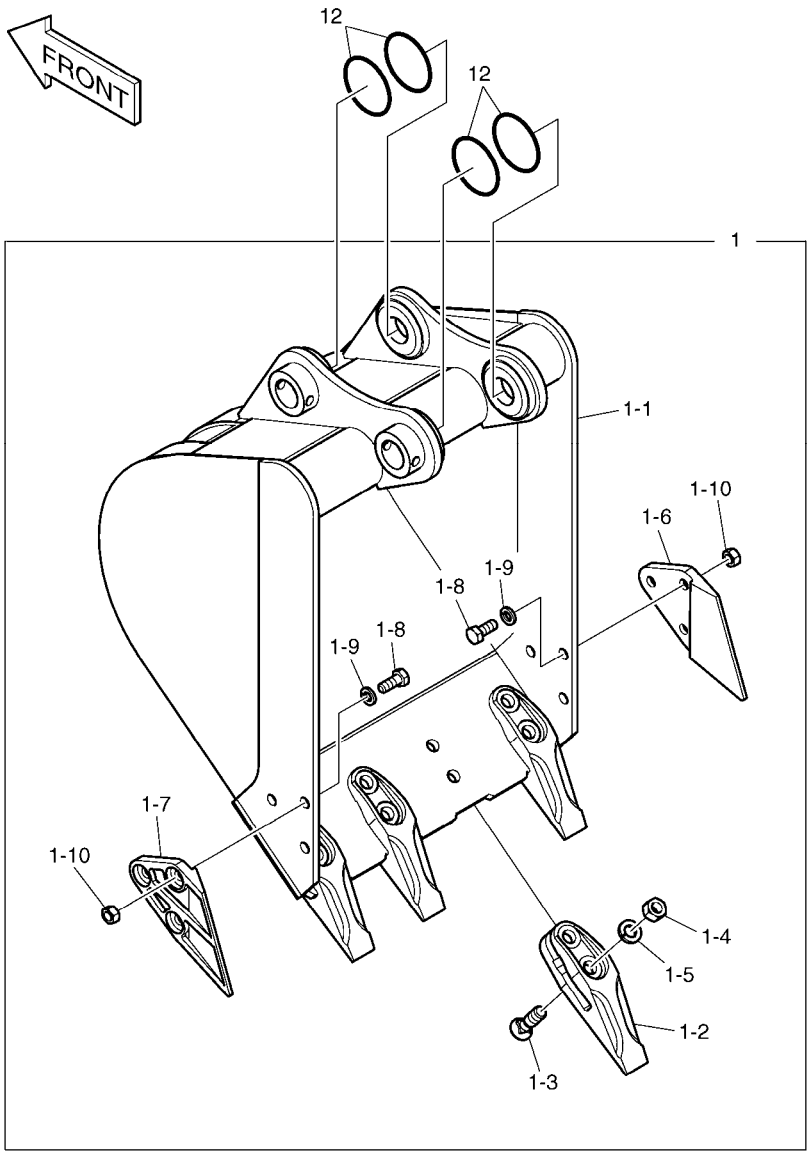

(THIS PARTS BOOK IS FOR REFERENCE ONLY.
PART NUMBERS AND SERAIL NUMBERS MAY BE
OUTDATED. ALWAYS USE THE ONLINE PARTS SYSTEM)

DATE	JAN. 04, 2013
3rd EDITION	

Fig. 3120 BUCKET - 0.08m³ GODET

Serial No. ;

Key No.	Part No.	Description	Description	Q'ty	S.C	Serial No.	ICA	Replaceable part	
								Part No.	Q'ty
3120 -1	K1015892C	BUCKET ASS'Y - 0.08m3	ENSEMBLE GODET	1		5001-5749	Y	230104-00837	1
	230104-00837	BUCKET ASS'Y - 0.08m3	ENSEMBLE GODET	1		5750-			
1-1	K1015914C	. BUCKET	. GODET	1					
1-2	2713-1212B	. TOOTH	. CHEVILLE DE DENT	4					
1-3	2120-2124	. BOLT	. BOULON A 6 PANS	8		5001-5749	Y	2120-2138	8
	2120-2138	. BOLT	. BOULON	8		5750-			
1-4	2121-1301	. NUT	. ECROU	8					
1-5	S5102901	. WASHER;SPRING	. RONDELLE ELASTIQUE	8					
1-6	2713-1206B	. CUTTER;SIDE(L.H)	. COIN DE GODET DROIT	1					
1-7	2713-1207B	. CUTTER;SIDE(R.H)	. COIN DE GODET DROIT	1					
1-8	S0515253	. BOLT M12X1.75X30	. BOULON	6					
1-9	S5102703	. WASHER;SPRING	. RONDELLE	6					
1-10	S4012733	. NUT	. ECROU	6					
12	S8000651	O-RING	JOINT TORIQUE	4					

(THIS PARTS BOOK IS FOR REFERENCE ONLY.
PART NUMBERS AND SERAIL NUMBERS MAY BE
OUTDATED. ALWAYS USE THE ONLINE PARTS SYSTEM)

DATE	JAN. 04, 2013
3rd EDITION	

Fig. 3130 FRONT PIPING
CONDUITES DE FRONTALES

Serial No. ;

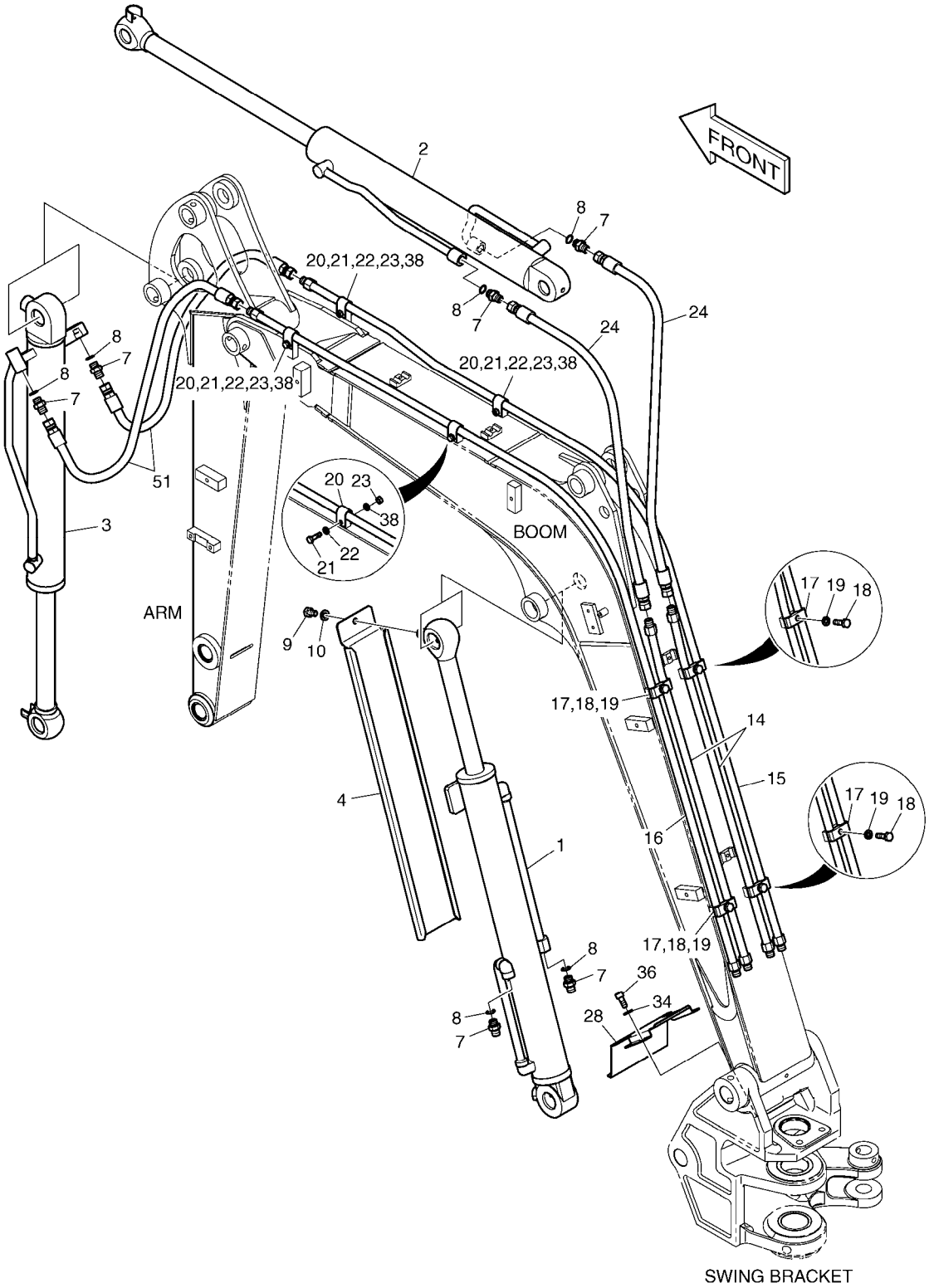

(THIS PARTS BOOK IS FOR REFERENCE ONLY.
PART NUMBERS AND SERAIL NUMBERS MAY BE
OUTDATED. ALWAYS USE THE ONLINE PARTS SYSTEM)

DATE	JAN. 04, 2013
3rd EDITION	

Fig. 3130 FRONT PIPING
CONDUITES DE FRONTALES

Serial No. ;

Key No.	Part No.	Description	Description	Q'ty	S.C	Serial No.	ICA	Replaceable part	
								Part No.	Q'ty
3130 --	K1018202H	FRONT PIPING	TUYAUTERIE AVANT	-	D				
1	K1015831B	CYLINDER;BOOM	CYLINDRE	1		5001-5979	Y	400309-00393	1
	400309-00393	CYLINDER,BOOM	CYLINDRE	1		5980-			
2	K1015832	CYLINDER;ARM	VERIN DE BALANCIER	1		5001-5979	Y	400305-00223	1
	400305-00223	CYLINDER,ARM	VERIN DE BALANCIER	1		5980-			
3	K1015833A	CYLINDER;BUCKET	VERIN DE GODET	1		5001-5979	Y	400310-00219	1
	400310-00219	CYLINDER,BUCKET	VERIN DE GODET	1		5980-			
4	2621-3313E	COVER	COUVERCLE	1					
7	2181-1126D7	ADAPTER	ADAPTEUR	6					
8	S8000141	O-RING	JOINT TORIQUE	6					
9	S0514866	BOLT	BOULON	1					
10	S5102703	WASHER;SPRING	RONDELLE	1					
14	K1018203	PIPE	TUYAU	2					
15	K1015872A	PIPE	TUYAU	1					
16	K1015873A	PIPE	TUYAU	1					
17	K1017755	CLAMP	BRIDE	4					
18	S0558266	BOLT	BOULON	4					
19	S5102603	WASHER,SPRING	RONDELLE	4					
20	K1015874	CLAMP	BRIDE	4					
21	S0555953	BOLT M8X1.25X30	BOULON A 6 PANS	4		5001-5213			
	S0556066	BOLT	BOULON A 6 PANS	4		5214-			
22	S5102503	WASHER,SPRING	RONDELLE	4					
23	S4012533	NUT	ECROU	4					
24	DS2094227	HOSE	TUYAU FLEXIBLE	2		5001-5316	I	DS2094212	2
	DS2094212	HOSE	TUYAU FLEXIBLE	2		5317-			
28	K1018204A	COVER	COUVERCLE	1		5001-5213	I	K1018204B	1
	K1018204B	COVER	COUVERCLE	1		5214-			
34	S5010603	WASHER;PLAIN M10	RONDELLE	2					
36	S2212066	BOLT;SOCKET M10X1.5X25	BOULON	2					
38	S5010513	WASHER,PLAIN	RONDELLE	4		5214-			
51	DS2094256	HOSE	TUYAU FLEXIBLE	2					

(THIS PARTS BOOK IS FOR REFERENCE ONLY.
PART NUMBERS AND SERAIL NUMBERS MAY BE
OUTDATED. ALWAYS USE THE ONLINE PARTS SYSTEM)

DATE	JAN. 04, 2013
3rd EDITION	

Fig. 3140 FRONT PIPING - BREAKER
CONDUITES FRONTALES

Serial No. ;

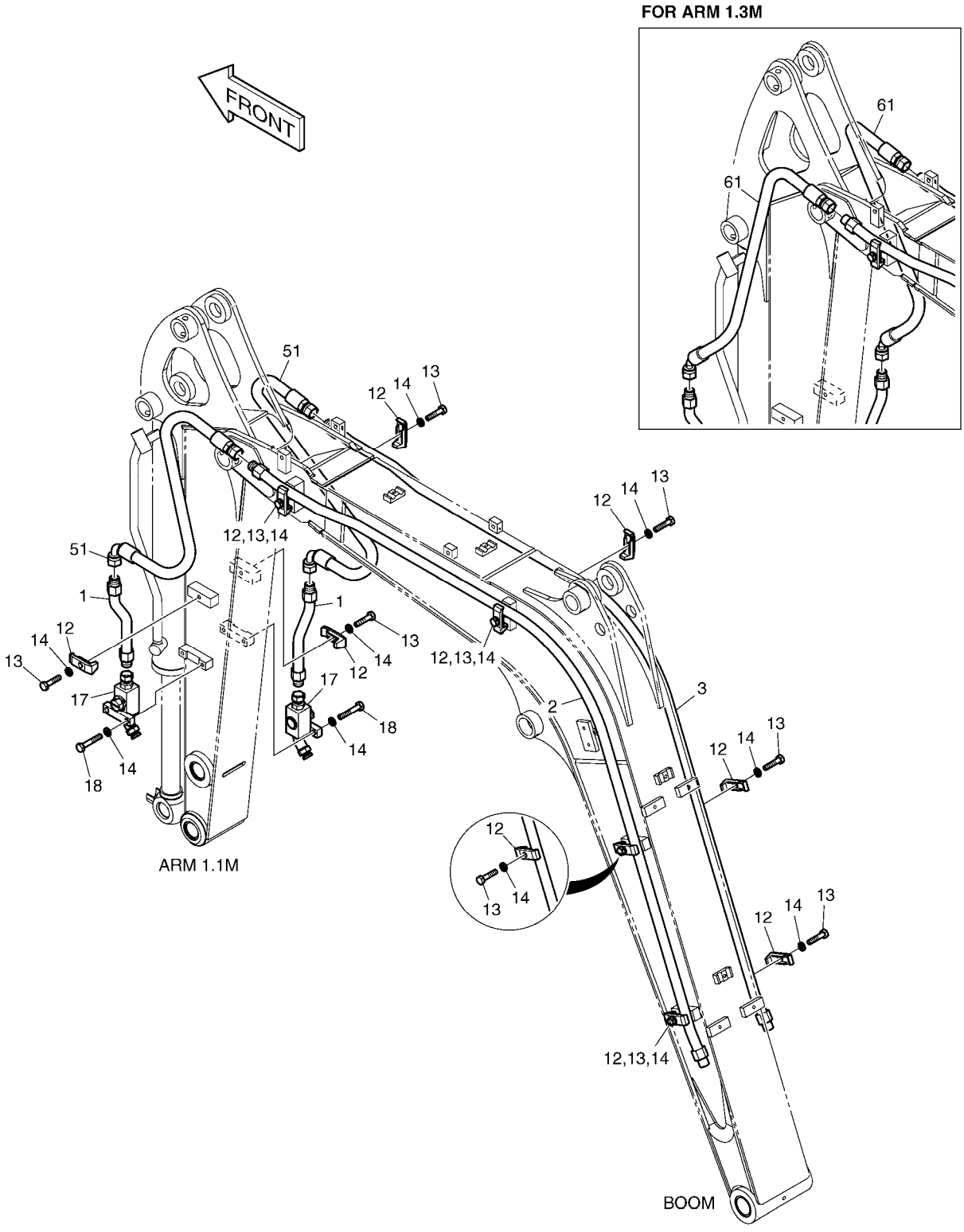

(THIS PARTS BOOK IS FOR REFERENCE ONLY.
PART NUMBERS AND SERAIL NUMBERS MAY BE
OUTDATED. ALWAYS USE THE ONLINE PARTS SYSTEM)

DATE	JAN. 04, 2013
3rd EDITION	

Fig. 3140 FRONT PIPING - BREAKER
CONDUITES FRONTALES

Serial No. ;

Key No.	Part No.	Description	Description	Q'ty	S.C	Serial No.	ICA	Replaceable part	
								Part No.	Q'ty
3140 --	K1015812C	BREAKER PIPING	TUYAUTERIE A SENS UNIQ	-	D				
1	K1015814A	PIPE	TUYAU	2					
2	K1015815B	PIPE	TUYAU	1					
3	K1015816B	PIPE	TUYAU	1					
12	2124-1026D1	CLAMP;PIPE	BRIDE	10					
13	S0558453	BOLT M10X1.5X45	BOULON A 6 PANS	10					
14	S5102603	WASHER,SPRING	RONDELLE	14					
17	2420-9612B	STOP VALVE ASS'Y	VANNE	2					
18	S0558753	BOLT M10X1.5X60	BOULON A 6 PANS	4					
51	DS2093472	HOSE	TUYAU FLEXIBLE	2		5001-5341	I	DS2093761	2
	DS2093761	HOSE(ST-90)	TUYAU FLEXIBLE	2		5342-			
61	DS2092139	HOSE	TUYAU FLEXIBLE	2		5001-5341	I	DS2092234	2
	DS2092234	HOSE(ST-45)	TUYAU FLEXIBLE	2		5342-			

(THIS PARTS BOOK IS FOR REFERENCE ONLY.
PART NUMBERS AND SERAIL NUMBERS MAY BE
OUTDATED. ALWAYS USE THE ONLINE PARTS SYSTEM)

DATE	JAN. 04, 2013
3rd EDITION	

Fig. 4100 MAIN PUMP POMPE

Serial No. ;

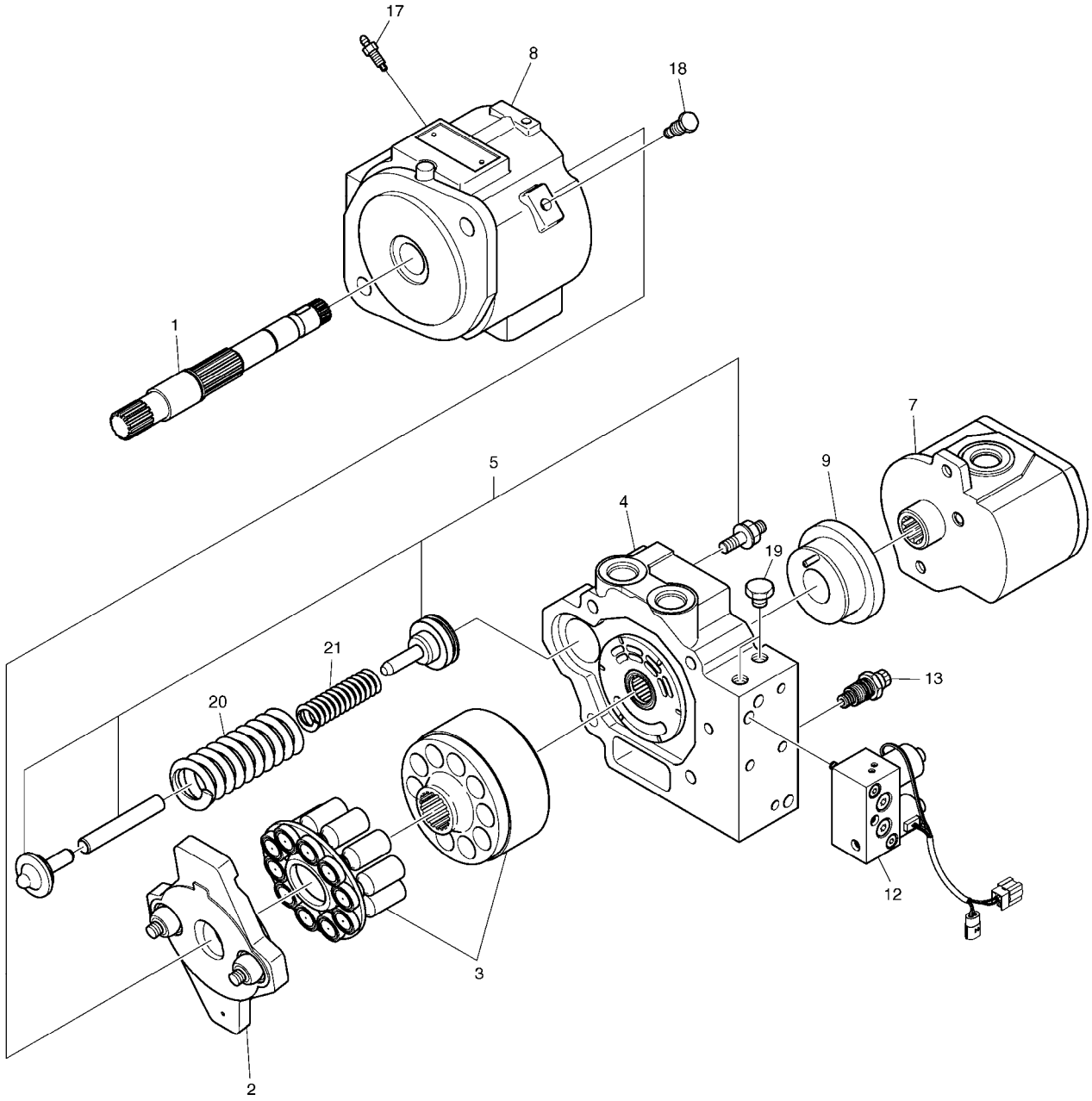

(THIS PARTS BOOK IS FOR REFERENCE ONLY.
PART NUMBERS AND SERAIL NUMBERS MAY BE
OUTDATED. ALWAYS USE THE ONLINE PARTS SYSTEM)

DATE	JAN. 04, 2013
3rd EDITION	

Fig. 4100 MAIN PUMP POMPE

Serial No. ;

Key No.	Part No.	Description	Description	Q'ty	S.C	Serial No.	ICA	Replaceable part	
								Part No.	Q'ty
4100 --	K1016110	PUMP;MAIN	POMPE	1					
1	2.405-00242	SHAFT ASS'Y	ARBRE	1					
2	2.150-00014	HANGER ASS'Y	CINTRE	1					
3	2.409-00248	ROTARY GROUP	ROTATOIRE GROUPE	1					
4	K9005239	PORT PLATE ASS'Y	PLAT GAUCHE	1					
5	2.429-00145	SPRING SEAT ASS'Y	RESSORT	1					
7	K9005241	PUMP;GEAR	POMPE DE PIGNON	1					
8	K9005240	HOUSING ASS'Y	LOGEMENT	1					
9	2.401-00057	PUMP;PILOT	POMPE	1					
12	K9003845	VALVE;SOLENOID	SOUPAPE A SOLENOIDE	1					
13	2.421-00265	VALVE;RELIEF	CLAPET DE RECHARGE	1					
17	2.421-00061	BREATHER;AIR	VANNE	1					
18	2.181-00331	PLUG	BOUCHON	1					
19	2.181-00324	PLUG	BOUCHON	1					
20	K9005237	SPRING	RESSORT	1					
21	K9005238	SPRING	RESSORT	1					

(THIS PARTS BOOK IS FOR REFERENCE ONLY.
PART NUMBERS AND SERAIL NUMBERS MAY BE
OUTDATED. ALWAYS USE THE ONLINE PARTS SYSTEM)

DATE	JAN. 04, 2013
3rd EDITION	

Fig. 4110 MAIN PUMP - SHAFT
POMPE PRINCIPAL

Serial No. ;

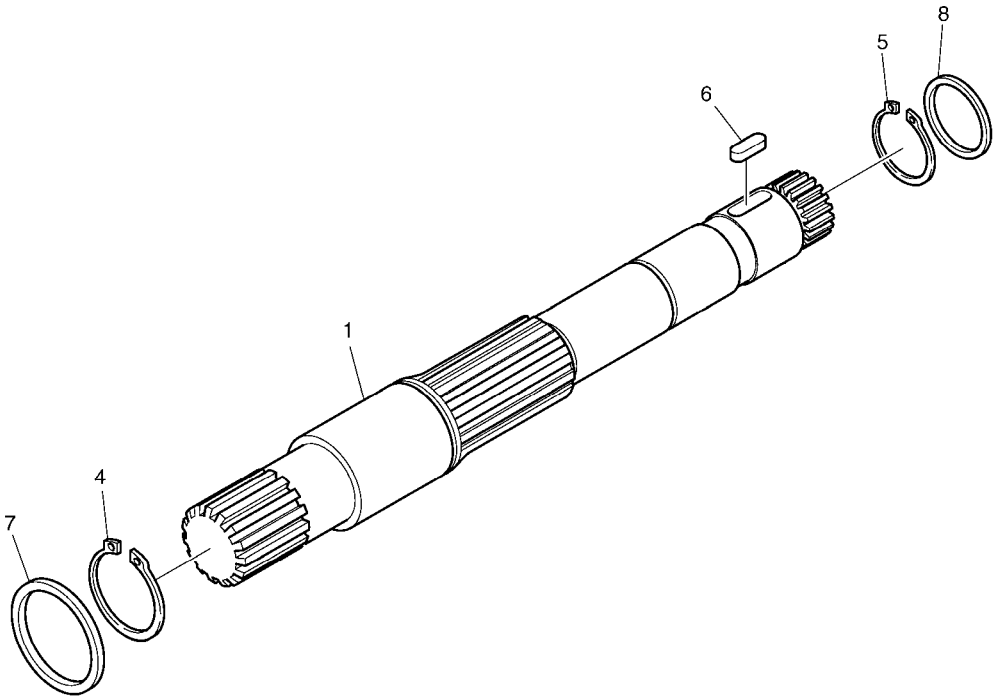

(THIS PARTS BOOK IS FOR REFERENCE ONLY.
PART NUMBERS AND SERAIL NUMBERS MAY BE
OUTDATED. ALWAYS USE THE ONLINE PARTS SYSTEM)

DATE	JAN. 04, 2013
3rd EDITION	

Fig. 4110 MAIN PUMP - SHAFT
POMPE PRINCIPAL

Serial No. ;

Key No.	Part No.	Description	Description	Q'ty	S.C	Serial No.	ICA	Replaceable part	
								Part No.	Q'ty
4110 --	2.405-00242	SHAFT ASS'Y	ARBRE	1					
1	2.405-00243	SHAFT	ARBRE	1					
4	2.411-00001	RING	BAGUE	1					
5	S6500180	RING;C	BAGUE	1					
6	2.113-00021	KEY	CLE	1					
7	2.114-01353	SHIM	CALE	1					
8	2.114-01354	SHIM	CALE	1					

(THIS PARTS BOOK IS FOR REFERENCE ONLY.
PART NUMBERS AND SERAIL NUMBERS MAY BE
OUTDATED. ALWAYS USE THE ONLINE PARTS SYSTEM)

DATE	JAN. 04, 2013
3rd EDITION	

Fig. 4120 MAIN PUMP - SWASH PLATE
POMPE PRINCIPAL

Serial No. ;

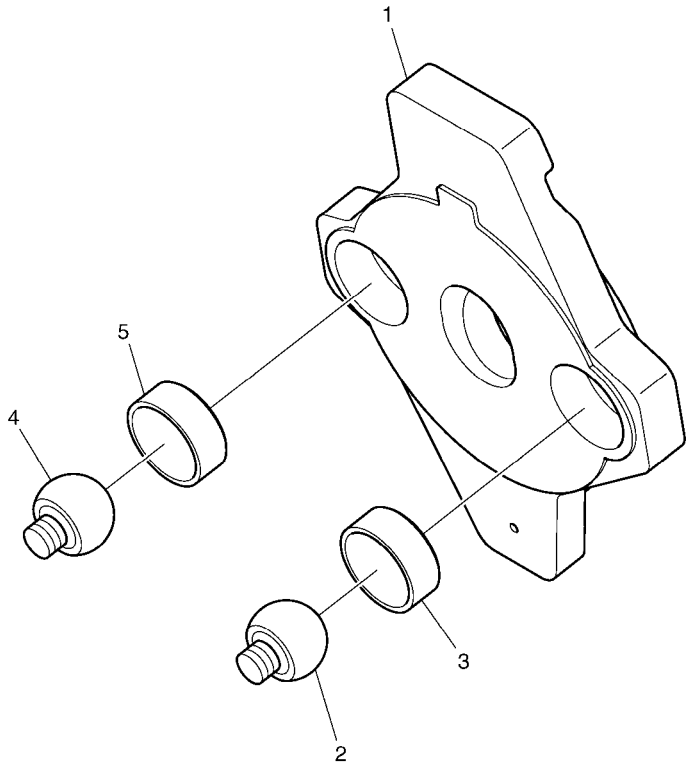

(THIS PARTS BOOK IS FOR REFERENCE ONLY.
PART NUMBERS AND SERAIL NUMBERS MAY BE
OUTDATED. ALWAYS USE THE ONLINE PARTS SYSTEM)

DATE	JAN. 04, 2013
3rd EDITION	

Fig. 4120 MAIN PUMP - SWASH PLATE
POMPE PRINCIPAL

Serial No. ;

Key No.	Part No.	Description	Description	Q'ty	S.C	Serial No.	ICA	Replaceable part	
								Part No.	Q'ty
4120 --	2.150-00014	HANGER ASS'Y	CINTRE	1					
1	2.150-00015	HANGER	CINTRE	1					
2	2.429-00146	GUIDE	GUIDE	1					
3	2.110-00026	BUSH	BUSH	1					
4	2.429-00147	GUIDE	GUIDE	1					
5	2.110-00027	BUSH	BUSH	1					

(THIS PARTS BOOK IS FOR REFERENCE ONLY.
PART NUMBERS AND SERAIL NUMBERS MAY BE
OUTDATED. ALWAYS USE THE ONLINE PARTS SYSTEM)

DATE	JAN. 04, 2013
3rd EDITION	

Fig. 4130 MAIN PUMP - ROTARY
POMPE PRINCIPAL

Serial No. ;

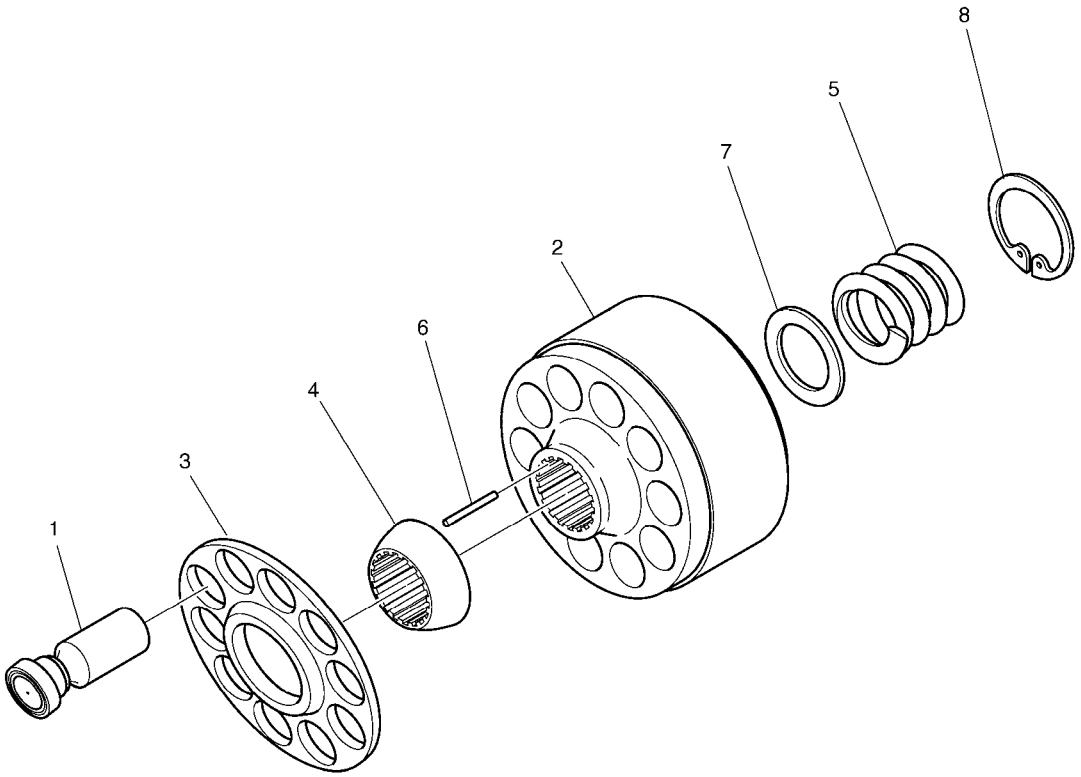

(THIS PARTS BOOK IS FOR REFERENCE ONLY.
PART NUMBERS AND SERAIL NUMBERS MAY BE
OUTDATED. ALWAYS USE THE ONLINE PARTS SYSTEM)

DATE	JAN. 04, 2013
3rd EDITION	

Fig. 4130 MAIN PUMP - ROTARY
POMPE PRINCIPAL

Serial No. ;

Key No.	Part No.	Description	Description	Q'ty	S.C	Serial No.	ICA	Replaceable part	
								Part No.	Q'ty
4130 --	2.409-00248	ROTARY GROUP	ROTATOIRE GROUPE	1					
1	2.409-00249	PISTON	PISTON	10					
2	2.410-00155	BLOCK;CYLINDER	BLOC	1					
3	2.229-00001	RETAINER	ARRETOIR	1					
4	2.429-00148	GUIDE	GUIDE	1					
5	2.129-00024	SPRING	RESSORT	1					
6	2.123-00302	PIN;PARALLEL	GOUPILLE	3					
7	2.114-01355	WASHER	RONDELLE	1					
8	S6510320	RING;RETAINER(C-TYPE)	BAGUE CIRCLIPS	1					

(THIS PARTS BOOK IS FOR REFERENCE ONLY.
PART NUMBERS AND SERAIL NUMBERS MAY BE
OUTDATED. ALWAYS USE THE ONLINE PARTS SYSTEM)

DATE	JAN. 04, 2013
3rd EDITION	

Fig. 4140 MAIN PUMP - PORT PLATE
POMPE PRINCIPAL

Serial No. ;

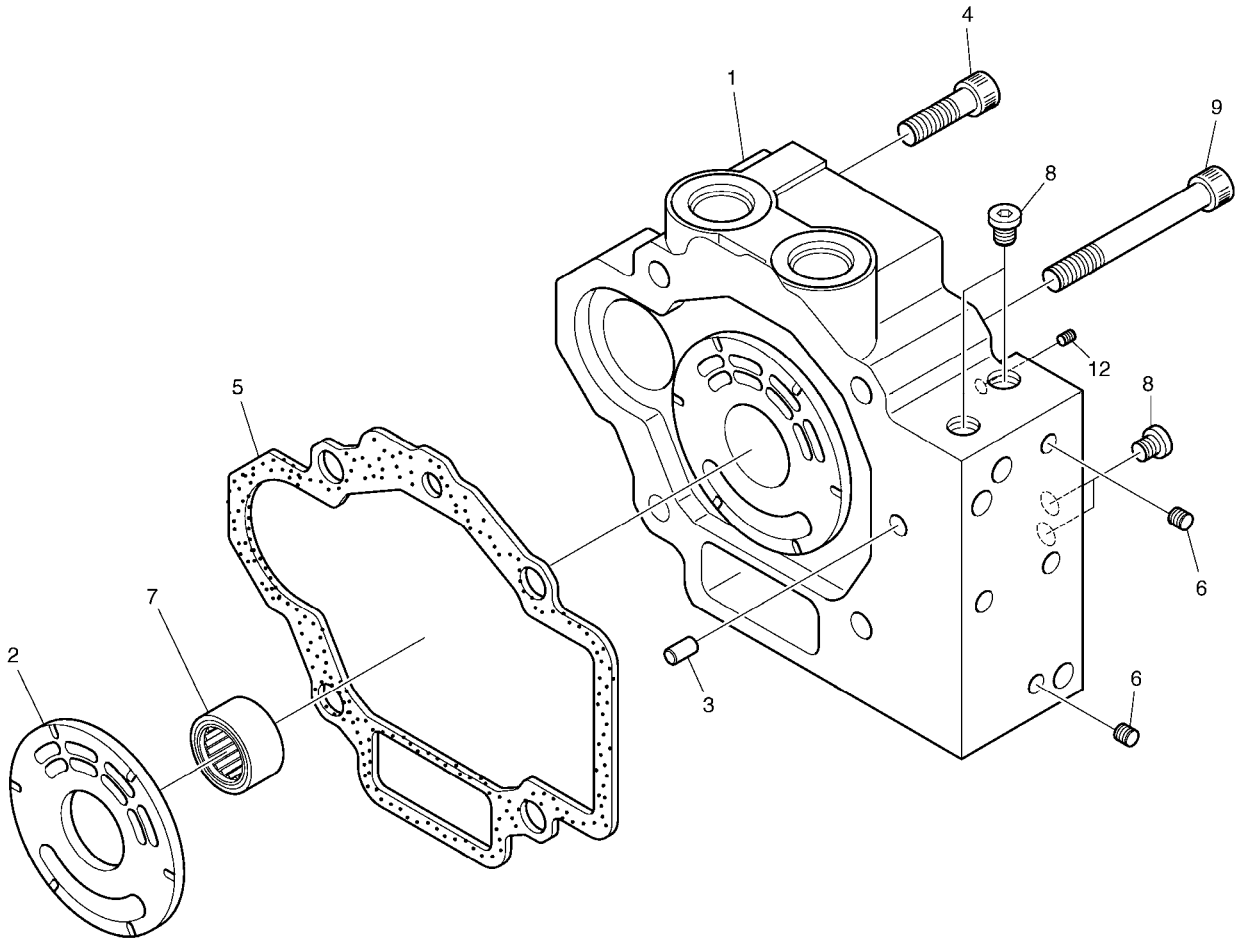

(THIS PARTS BOOK IS FOR REFERENCE ONLY.
PART NUMBERS AND SERAIL NUMBERS MAY BE
OUTDATED. ALWAYS USE THE ONLINE PARTS SYSTEM)

DATE	JAN. 04, 2013
3rd EDITION	

Fig. 4140 MAIN PUMP - PORT PLATE
POMPE PRINCIPAL

Serial No. ;

Key No.	Part No.	Description	Description	Q'ty	S.C	Serial No.	ICA	Replaceable part	
								Part No.	Q'ty
4140 --	K9005239	PORT PLATE ASS'Y	PLAT GAUCHE	1					
1	-	HOUSING	CARTER	1	D				
2	2.159-00001	PLATE	PLAQUE	1					
3	S5700521	PIN;PARALLEL	GOUPILLE	1					
4	S2212471	BOLT;SOCKET	BOULON A 6 PANS CREUX	1					
5	2.180-01230	PACKING	JOINT	1					
6	2.181-00183	PLUG	PRISE	2					
7	2.109-00337	BEARING	ROULEMENT	1					
8	2.181-00184	PLUG	BOUCHON	3					
9	S2212666	BOLT	BOULON	3					
12	2.415-00057	ORIFICE	ORIFICE	1					

(THIS PARTS BOOK IS FOR REFERENCE ONLY.
PART NUMBERS AND SERAIL NUMBERS MAY BE
OUTDATED. ALWAYS USE THE ONLINE PARTS SYSTEM)

DATE	JAN. 04, 2013
3rd EDITION	

Fig. 4150 MAIN PUMP - SPRING SEAT
POMPE PRINCIPAL

Serial No. ;

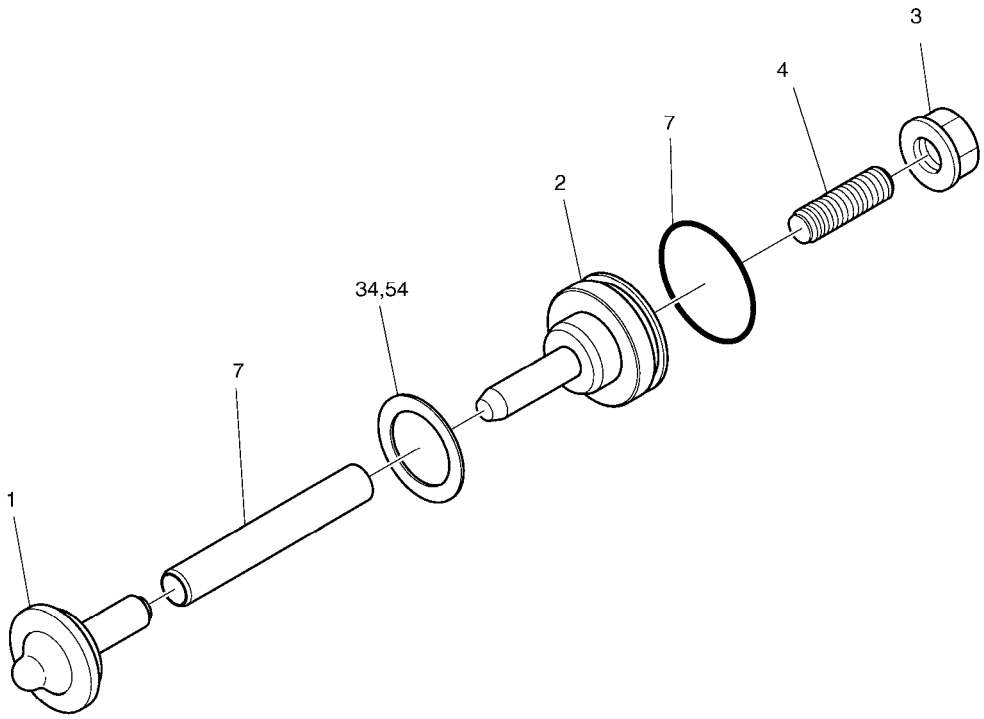

(THIS PARTS BOOK IS FOR REFERENCE ONLY.
PART NUMBERS AND SERAIL NUMBERS MAY BE
OUTDATED. ALWAYS USE THE ONLINE PARTS SYSTEM)

Fig. 4150 MAIN PUMP - SPRING SEAT
POMPE PRINCIPAL

Serial No. ;

Key No.	Part No.	Description	Description	Q'ty	S.C	Serial No.	ICA	Replaceable part	
								Part No.	Q'ty
4150 --	2.429-00145	SPRING SEAT ASS'Y	RESSORT	1					
1	2.429-00149	SEAT;SPRING	SUPPORT	1					
2	2.429-00150	SEAT;SPRING	SUPPORT	1					
3	2.121-00266	NUT;LOCK	ECROU	1					
4	S3524101	SCREW;SET	VIS	1					
7	2.429-00151	GUIDE;SPRING	GUIDE	1					
34	2.114-00350	SHIM	CALE	2					
54	2.114-01356	SHIM	CALE	2					

(THIS PARTS BOOK IS FOR REFERENCE ONLY.
PART NUMBERS AND SERAIL NUMBERS MAY BE
OUTDATED. ALWAYS USE THE ONLINE PARTS SYSTEM)

DATE	JAN. 04, 2013
3rd EDITION	

Fig. 4160 MAIN PUMP - GEAR PUMP
POMPE PRINCIPAL

Serial No. ;

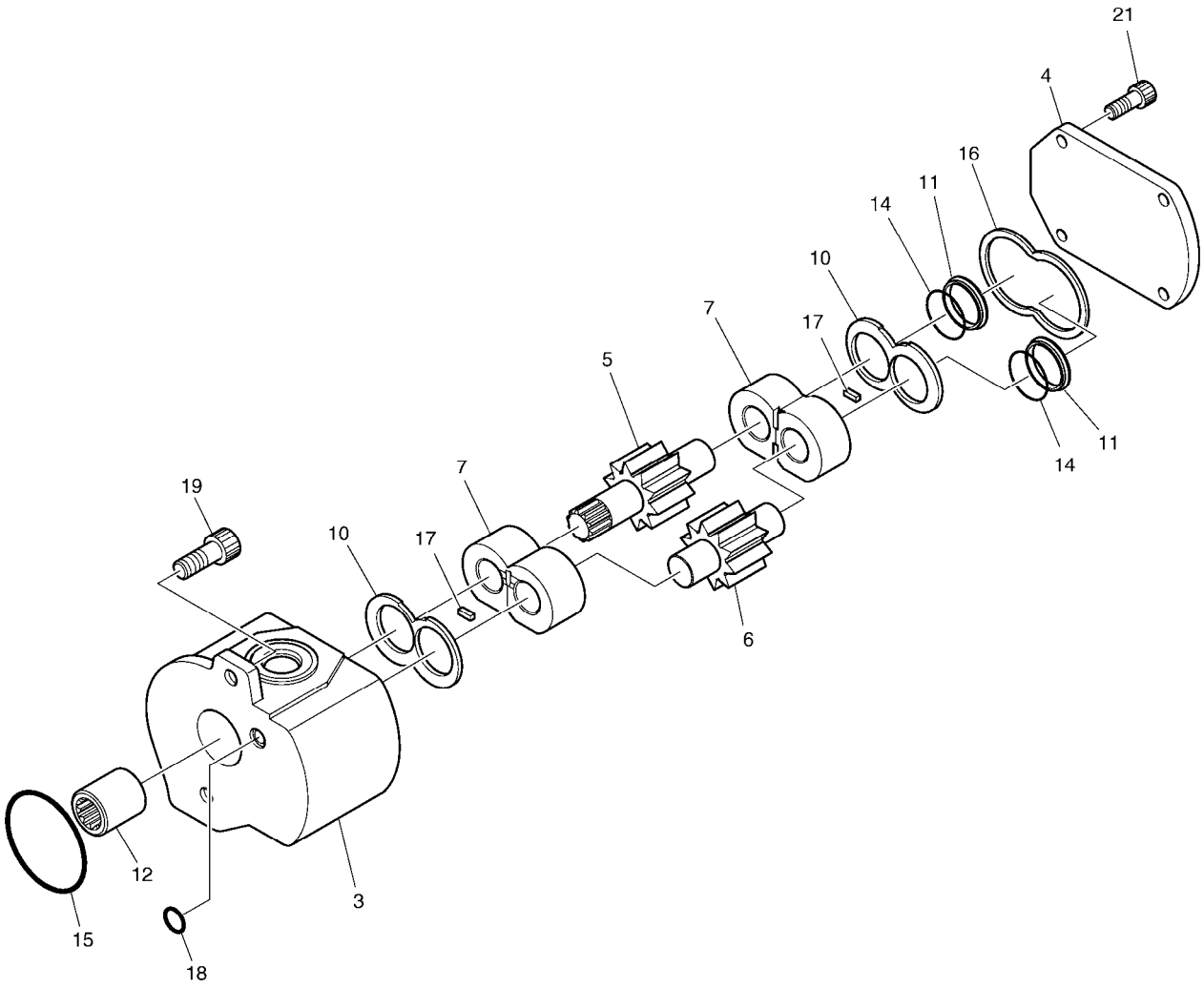

(THIS PARTS BOOK IS FOR REFERENCE ONLY.
PART NUMBERS AND SERAIL NUMBERS MAY BE
OUTDATED. ALWAYS USE THE ONLINE PARTS SYSTEM)

Fig. 4160 MAIN PUMP - GEAR PUMP
POMPE PRINCIPAL

Serial No. ;

Key No.	Part No.	Description	Description	Q'ty	S.C	Serial No.	ICA	Replaceable part	
								Part No.	Q'ty
4160 --	K9005241	PUMP;GEAR	POMPE DE PIGNON	1					
3	-	HOUSING	CARTER	1	D				
4	2.430-00169	COVER	COUVERCLE	1					
5	K9005235	GEAR	PIGNON	1					
6	2.403-00017	GEAR	PIGNON	1					
7	2.412-00252	SIDE PLATE ASS'Y	PLAQUE	2					
10	2.412-00356	PLATE	PLAQUE	2					
11	2.429-00017	GUIDE	GUIDE	2					
12	2.414-00024	COUPLING	ACCOUPLEMENT	1					
14	2.180-00388	O-RING	JOINT TORIQUE	2					
15	S8010900	O-RING	JOINT TORIQUE	1					
16	2.180-01054	RING;SQUARE	BAGUE	1					
17	2.180-01055	RING;SQUARE	BAGUE	2					
18	S8000061	O-RING	JOINT CIRCULAIRE	1					
19	S2212066	BOLT;SOCKET M10X1.5X25	BOULON	2					
21	S2211861	BOLT;SOCKET M10X1.5X20	BOULON	4					

(THIS PARTS BOOK IS FOR REFERENCE ONLY.
PART NUMBERS AND SERAIL NUMBERS MAY BE
OUTDATED. ALWAYS USE THE ONLINE PARTS SYSTEM)

DATE	JAN. 04, 2013
3rd EDITION	

Fig. 4170 MAIN PUMP - HOUSING
POMPE PRINCIPAL

Serial No. ;

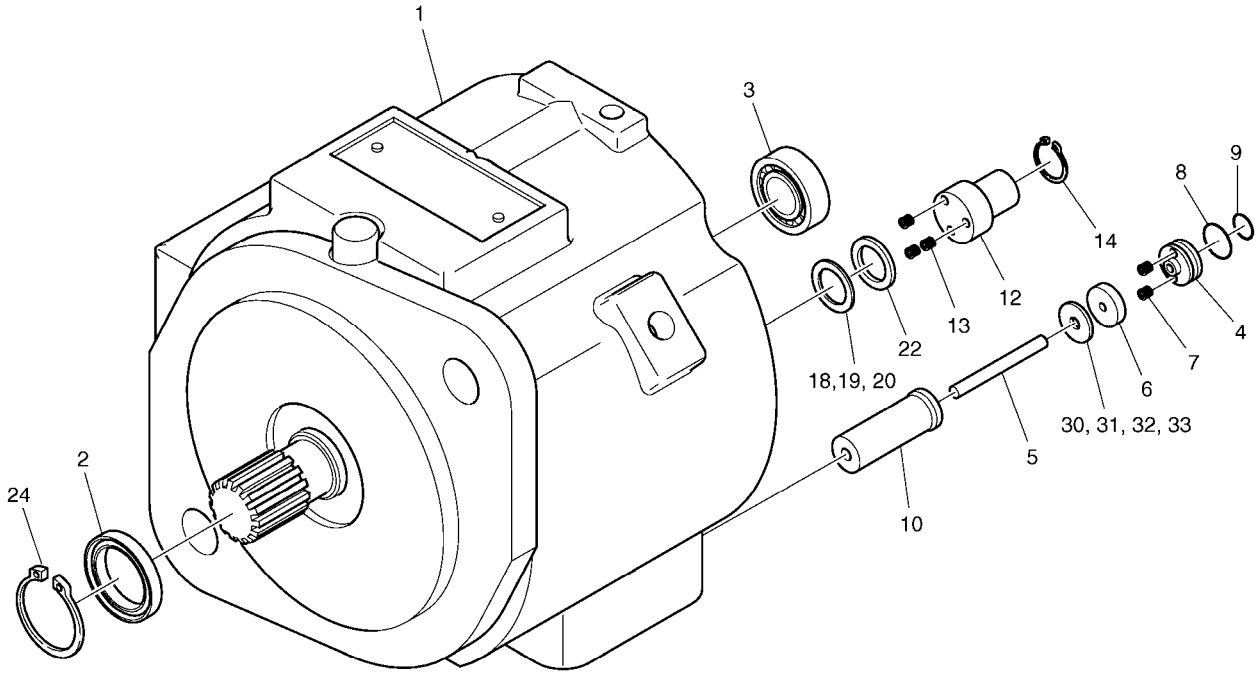

(THIS PARTS BOOK IS FOR REFERENCE ONLY.
PART NUMBERS AND SERAIL NUMBERS MAY BE
OUTDATED. ALWAYS USE THE ONLINE PARTS SYSTEM)

DATE	JAN. 04, 2013
3rd EDITION	

Fig. 4170 MAIN PUMP - HOUSING
POMPE PRINCIPAL

Serial No. ;

Key No.	Part No.	Description	Description	Q'ty	S.C	Serial No.	ICA	Replaceable part	
								Part No.	Q'ty
4170 --	K9005240	HOUSING ASS'Y	LOGEMENT	1					
1	-	HOUSING	CARTER	1	D				
2	2.180-01231	SEAL;OIL	JOINT D'HUILE	1					
3	2.109-00338	BEARING	ROULEMENT	1					
4	2.452-00011	PISTON	PISTON	1					
5	K9005236	PIN;PARALLEL	GOUPILLE	1					
6	2.540-00022	PIECE;DISTANCE	CALE DE BLOCAGE	1					
7	2.114-00978	WASHER;SPRING	RONDELLE ELASTIQUE	3					
8	S8000111	O-RING	JOINT CIRCULAIRE	1					
9	S8000071	O-RING	JOINT TORIQUE	1					
10	K9005234	SLEEVE	MANCHON	1					
12	2.429-00152	GUIDE	GUIDE	1					
13	2.114-01357	WASHER;CONICAL SPRING	RESSORT DE DISQUE	2					
14	2.115-00543	RING;RETAINER C TYPE	BAGUE	1					
18	2.114-01358	SHIM	CALE	1					
19	2.114-01359	SHIM	CALE	1					
20	2.114-01360	SHIM	CALE	1					
22	2.540-00023	PIECE;DISTANCE	CALE DE BLOCAGE	1					
24	S6510380	RING;RETAINER C-TYPE	BAGUE D'ARRET	1					
30	2.114-01361	SHIM	CALE	1					
31	2.114-01362	SHIM	CALE	1					
32	2.114-00414	SHIM	CALE	1					
33	2.114-01363	SHIM	CALE	1					

(THIS PARTS BOOK IS FOR REFERENCE ONLY.
PART NUMBERS AND SERAIL NUMBERS MAY BE
OUTDATED. ALWAYS USE THE ONLINE PARTS SYSTEM)

DATE	JAN. 04, 2013
3rd EDITION	

Fig. 4180 MAIN PUMP - PILOT PUMP
POMPE PRINCIPAL

Serial No. ;

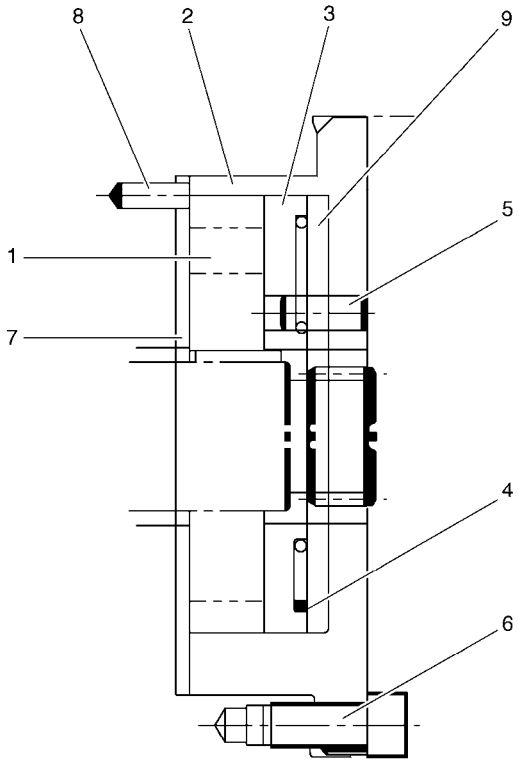

(THIS PARTS BOOK IS FOR REFERENCE ONLY.
PART NUMBERS AND SERAIL NUMBERS MAY BE
OUTDATED. ALWAYS USE THE ONLINE PARTS SYSTEM)

Fig. 4180 MAIN PUMP - PILOT PUMP
POMPE PRINCIPAL

Serial No. ;

Key No.	Part No.	Description	Description	Q'ty	S.C	Serial No.	ICA	Replaceable part	
								Part No.	Q'ty
4180 --	2.401-00057	PUMP;PILOT	POMPE	1					
1	2.404-00004	GEAR	PIGNON	1					
2	2.402-00342	CASE	CARTER	1					
3	2.412-00248	PLATE(A);SIDE	PLAQUE	1					
4	2.180-01232	RING;SQARE	BAGUE	1					
5	S5740600	PIN;SPRING	GOUPILLE	1					
6	2.120-00302	BOLT;SOCKET	BOULON A 6 PANS CREUX	3					
7	2.412-00249	PLATE(B);SIDE	PLAQUE	1					
8	S5740480	PIN;SPRING	GOUPILLE	1					
9	2.412-00357	PLATE	PLAQUE	1					

(THIS PARTS BOOK IS FOR REFERENCE ONLY.
PART NUMBERS AND SERAIL NUMBERS MAY BE
OUTDATED. ALWAYS USE THE ONLINE PARTS SYSTEM)

DATE	JAN. 04, 2013
3rd EDITION	

Fig. 4190 MAIN PUMP - SOLENOID VALVE
POMPE PRINCIPAL

Serial No. ;

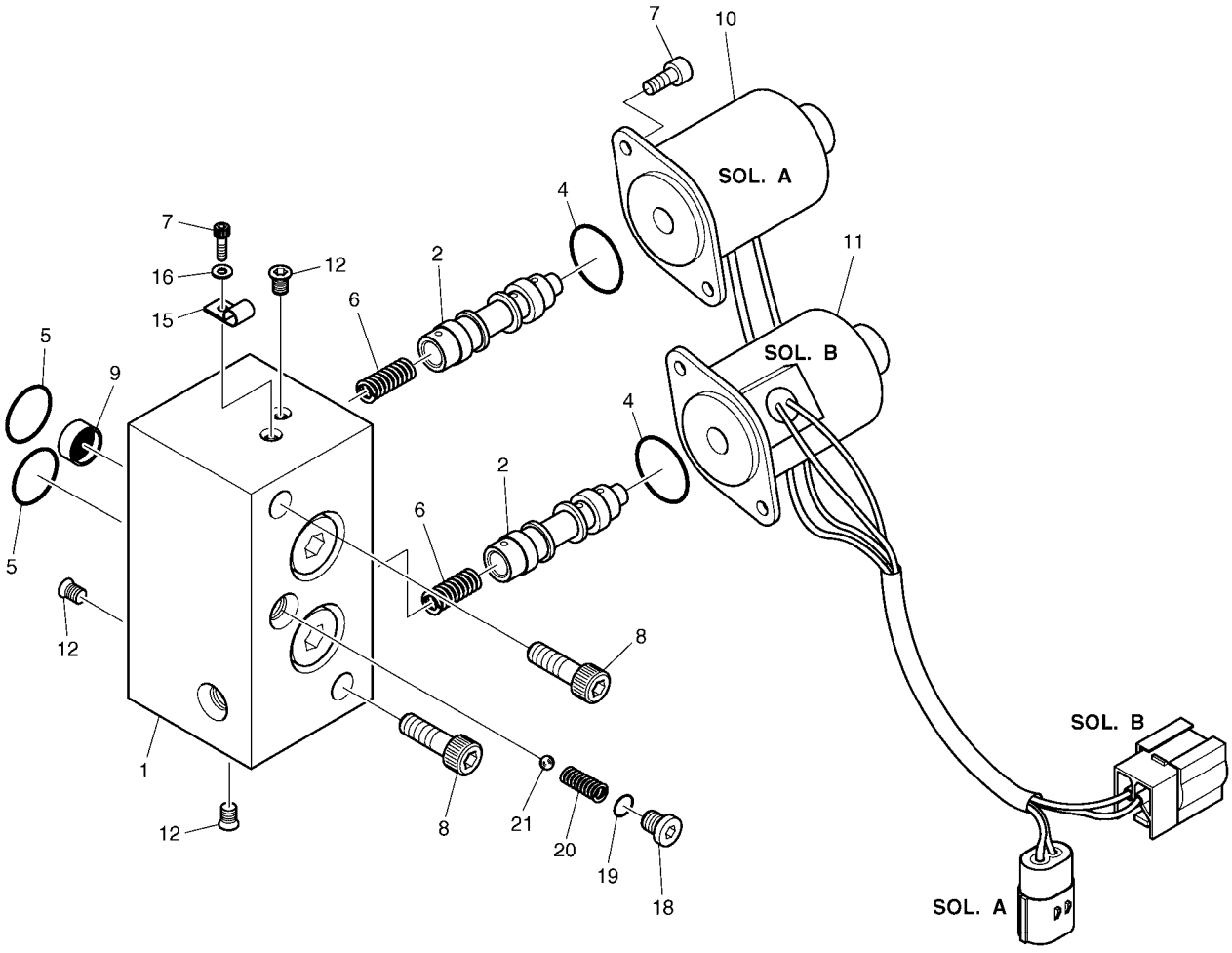

(THIS PARTS BOOK IS FOR REFERENCE ONLY.
PART NUMBERS AND SERAIL NUMBERS MAY BE
OUTDATED. ALWAYS USE THE ONLINE PARTS SYSTEM)

DATE	JAN. 04, 2013
3rd EDITION	

Fig. 4190 MAIN PUMP - SOLENOID VALVE
POMPE PRINCIPAL

Serial No. ;

Key No.	Part No.	Description	Description	Q'ty	S.C	Serial No.	ICA	Replaceable part	
								Part No.	Q'ty
4190 --	K9003845	VALVE;SOLENOID	SOUPAPE A SOLENOIDE	1					
1	-	BODY	CORPS	1	D				
2	K9003838	SPOOL	BOBINE	2					
4	S8010141	O-RING	JOINT TORIQUE	2					
5	2180-1216D17	O-RING	JONT TORIQUE	2					
6	K9003839	SPRING	RESSORT	2					
7	S2201561	BOLT;SOCKET	BOULON A 6 PANS CREUX	1					
8	S2209071	BOLT;SOCKET M8X25	BOULON A 6 PANS CREUX	2					
9	2.474-00011	FILTER	FILTRE	1					
10	K9003840	SOLENOID (A)	SOLENOIDE	1					
11	K9003841	SOLENOID (B)	SOLENOIDE	1					
12	2.181-00183	PLUG	PRISE	3					
15	2.124-00021	CLAMP	BRIDE	1					
16	K9003842	WASHER;PLAIN	RONDELLE	1					
18	2.181-00225	PLUG	BOUCHON	1					
19	S8000081	O-RING	JOINT CIRCULAIRE	1					
20	2.131-00115	SPRING	RESSORT	1					
21	S6250150	BALL;STEEL	BILLE	1					

(THIS PARTS BOOK IS FOR REFERENCE ONLY.
PART NUMBERS AND SERAIL NUMBERS MAY BE
OUTDATED. ALWAYS USE THE ONLINE PARTS SYSTEM)

DATE	JAN. 04, 2013
3rd EDITION	

Fig. 4200 SWING MOTOR
MOTEUR D'ORIENTATION

Serial No. ;

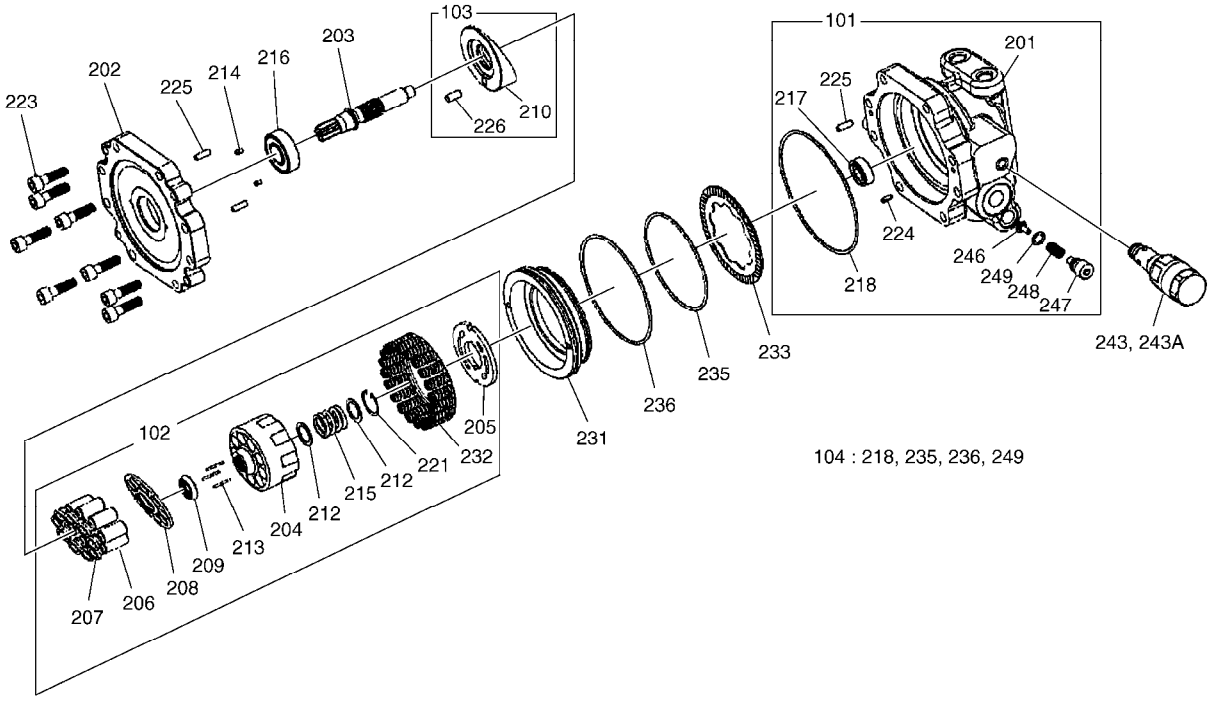

(THIS PARTS BOOK IS FOR REFERENCE ONLY.
PART NUMBERS AND SERAIL NUMBERS MAY BE
OUTDATED. ALWAYS USE THE ONLINE PARTS SYSTEM)

DATE	JAN. 04, 2013
3rd EDITION	

Fig. 4200 SWING MOTOR
MOTEUR D'ORIENTATION

Serial No. ;

Key No.	Part No.	Description	Description	Q'ty	S.C	Serial No.	ICA	Replaceable part	
								Part No.	Q'ty
4200 --	K9005232	SWING MOTOR	COMMUTATEUR	1					
101	K9005216	BODY KIT	KIT DE CARTER	1					
102	K9005230	CYLINDER BARREL KIT	BARIL DE CYLINDRE	1					
103	K9005231	SWASH PLATE KIT	PLATEAU OSCILLANT	1					
104	K9005209	SEAL KIT;SWING MOTOR	KIT DE JOINT	1					
201	-	BODY	CORPS	1	D				
202	-	PLATE	PLAQUE	1	D				
203	-	SHAFT	REMARQUES	1	D				
204	-	BARREL;CYLINDER	CYLINDRE	1	D				
205	-	PLATE;VALVE	PLAQUE	1	D				
206	-	PISTON	PISTON	9	D				
207	-	SHOE	SABOT	9	D				
208	-	HOLDER;SHOE	POSSESSEUR	1	D				
209	-	HOLDER;BARREL	POSSESSEUR	1	D				
210	-	PLATE;SWASH	PLAQUE	1	D				
212	-	RETAINER	ARRETOIR	2	D				
213	-	PIN	REMARQUES	3	D				
214	2.471-00001	FILTER	FILTRE	2					
215	-	SPRING	RESSORT	1	D				
216	S6003440	BEARING	ROULEMENT	1					
217	S6000210	BEARING	ROULEMENT	1					
218	S8011401	O-RING	JOINT TORIQUE	1	K				
221	S6510280	RING;SNAP	BAGUE D'ARRET	1					
223	S2212361	BOLT;SOCKET M10X1.5X35	BOULON A 6 PANS CREUX	8					
224	S5740730	PIN;SPRING	GOUPILLE	1					
225	-	PIN	REMARQUES	3	D				
226	S5711041	PIN	GOUPILLE	1					
231	-	PISTON;BRAKE	PISTON	1	D				
232	-	SPRING ASS'Y	RESSORT	1	D				
233	-	PLATE;DISC	PLAQUE	1	D				
235	S8011101	O-RING	JOINT CIRCULAIRE	1	K				
236	S8011251	O-RING	JOINT CIRCULAIRE	1	K				
243	K9005233	VALVE;RELIEF	VANNE	2					
243A	K9005212	. SEAL KIT;RELIEF VALVE	. SOUPAPE DE SECURITE	1					
246	-	VALVE;CHECK	VALVE	2	D				
247	-	PLUG	PRISE	2	D				
248	-	SPRING	RESSORT	2	D				
249	S8000111	O-RING	JOINT CIRCULAIRE	2	K				

(THIS PARTS BOOK IS FOR REFERENCE ONLY.
PART NUMBERS AND SERIAL NUMBERS MAY BE
OUTDATED. ALWAYS USE THE ONLINE PARTS SYSTEM)

DATE	JAN. 04, 2013
3rd EDITION	

Fig. 4210 SWING REDUCTION GEAR REDEUTEUR D'ORIENTATION

Serial No. ;

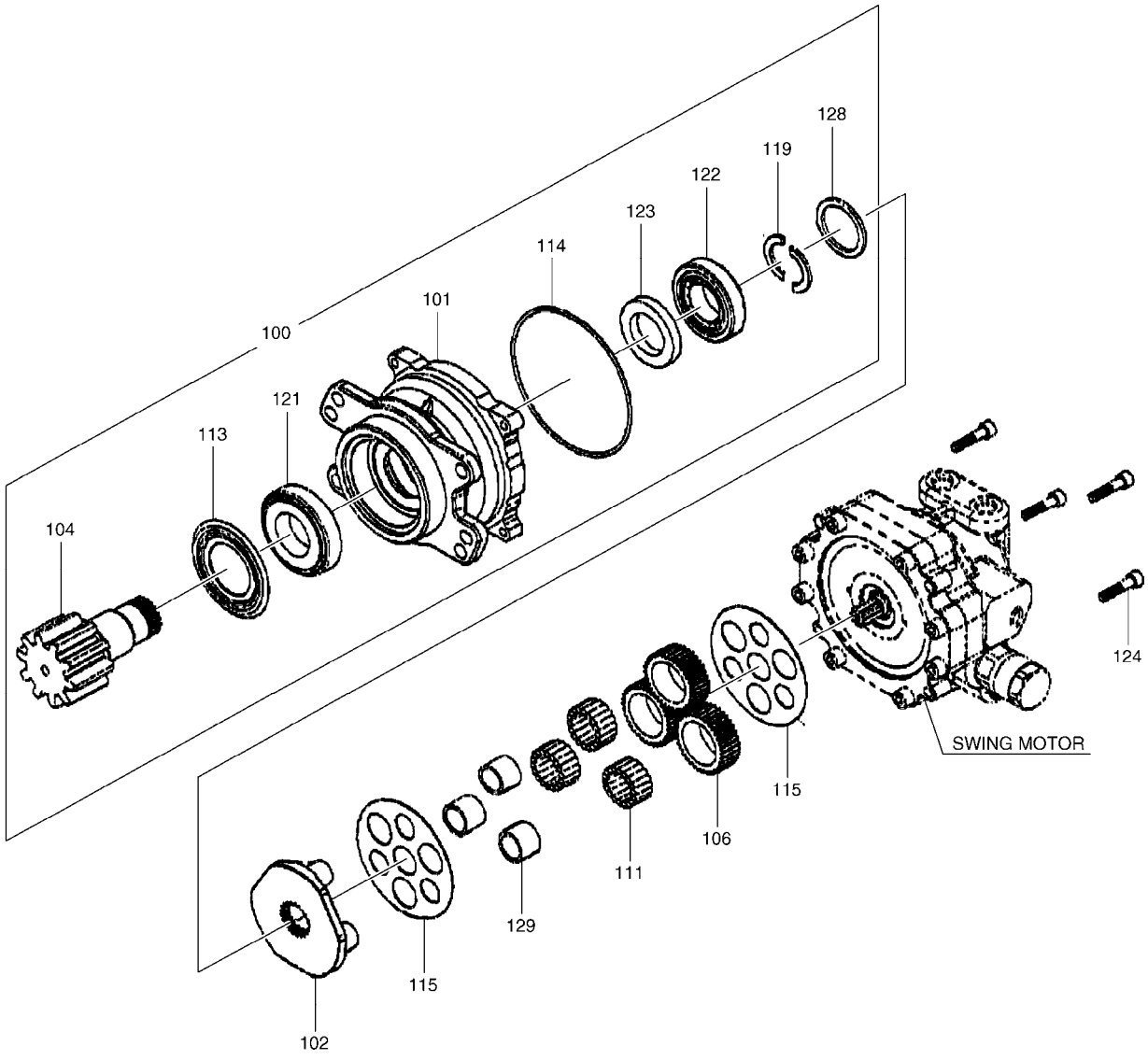

(THIS PARTS BOOK IS FOR REFERENCE ONLY.
PART NUMBERS AND SERAIL NUMBERS MAY BE
OUTDATED. ALWAYS USE THE ONLINE PARTS SYSTEM)

Fig. 4210 SWING REDUCTION GEAR
REDEUTEUR D'ORIENTATION

Serial No. ;

Key No.	Part No.	Description	Description	Q'ty	S.C	Serial No.	ICA	Replaceable part	
								Part No.	Q'ty
4210 --	K9005202	REDUCTION GEAR	VITESSE DE REDUCTION	1					
100	K9005204	KIT;PINION	PIGNON	1					
101	-	BODY	CORPS	1	D				
102	-	CARRIER	PORTE-SATELLITES	1	D				
104	-	SHAFT;PINION	ARBRE	1	D				
106	-	GEAR	PIGNON	3	D				
111	-	NEEDLE	AIGUILLE	54	D				
113	K9005177	SEAL;RING	BAGUE	1					
114	S8011351	O-RING	JOINT CIRCULAIRE	1					
115	-	PLATE;THRUST	PLAQUE	2	D				
119	-	COLLAR;PRE-LOAD	COLLIER	2	D				
121	-	BEARING	PALIER	1	D				
122	-	BEARING	PALIER	1	D				
123	-	SEAL;OIL	JOINT D'HUILE	1	D				
124	S2209371	BOLT;SOCKET	BOULON A 6 PANS CREUX	4					
128	K9005190	RING	BAGUE	1					
129	-	RING	RING	3	D				

(THIS PARTS BOOK IS FOR REFERENCE ONLY.
PART NUMBERS AND SERAIL NUMBERS MAY BE
OUTDATED. ALWAYS USE THE ONLINE PARTS SYSTEM)

DATE	JAN. 04, 2013
3rd EDITION	

Fig. 4220 TRAVEL REDUCTION GEAR
BOITE REDUCTEUR

Serial No. ;

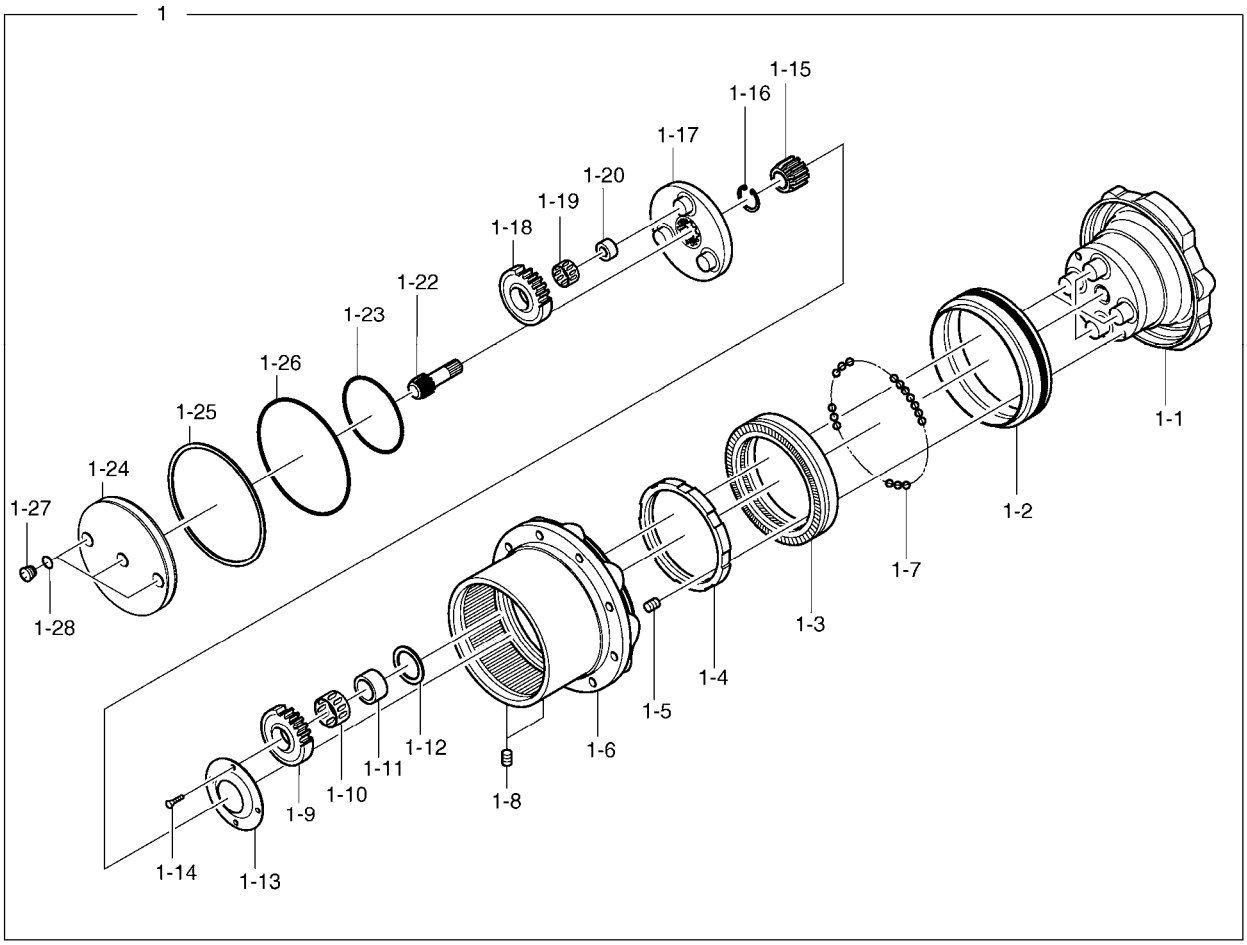

(THIS PARTS BOOK IS FOR REFERENCE ONLY.
PART NUMBERS AND SERAIL NUMBERS MAY BE
OUTDATED. ALWAYS USE THE ONLINE PARTS SYSTEM)

DATE	JAN. 04, 2013
3rd EDITION	

Fig. 4220 TRAVEL REDUCTION GEAR
BOITE REDUCTEUR

Serial No. ;

Key No.	Part No.	Description	Description	Q'ty	S.C	Serial No.	ICA	Replaceable part	
								Part No.	Q'ty
4220 --	K1013467	MOTOR;TRAVEL	MOTEUR	2					
1	K9005304	REDUCTION GEAR	VITESSE DE REDUCTION	1					
1-1	-	. HOLDER;FLANGE	. SUPPORT	1	D				
1-2	K9003721	. SEAL;FLOATING	. JOINT	2					
1-3	K9005287	. BEARING;ANGULAR	. ROULEMENT	1					
1-4	K9003723	. NUT;RING	. ECROU	1					
1-5	K9005285	. PLUG	. BOUCHON	2					
1-6	-	. HOUSING	. CARTER	1	D				
1-7	S6250110	. BALL;STEEL	. BILLE	132					
1-8	2181-1116D1	. PLUG	. BOUCHON	2					
1-9	K9005308	. GEAR;PLANETARY	. PIGNON	4					
1-10	K9005294	. BEARING;NEEDLE	. ROULEMENT	4					
1-11	K9005296	. RACE;INNER	. RACE INTERIEUR	4					
1-12	K9005310	. PLATE;THRUST	. PLAQUE	4					
1-13	K9005286	. WASHER;THRUST	. RONDELLE DE BUTEE	1					
1-14	K9003730	. SCREW	. VIS	4					
1-15	K9005307	. GEAR;SUN	. PIGNON	1					
1-16	S6500350	. RING;SNAP	. BAGUE D'ARRET	1					
1-17	K9005305	. HOLDER	. SUPPORT	1					
1-18	K9005309	. GEAR;PLANETARY	. PIGNON	3					
1-19	K9005295	. BEARING;NEEDLE	. ROULEMENT	3					
1-20	K9005297	. RACE;INNER	. RACE INTERIEUR	3					
1-22	K9005306	. GEAR;DRIVE	. PIGNON	1					
1-23	-	. PLATE;THRUST	. PLAQUE	1	D				
1-24	K9005311	. COVER	. COUVERCLE	1					
1-25	S8011551	. O-RING	. JOINT TORIQUE	1					
1-26	K9003739	. WIRE	. FIL	1					
1-27	K9003803	. PLUG	. PRISE	2					
1-28	S8000111	. O-RING	. JOINT CIRCULAIRE	3					

(THIS PARTS BOOK IS FOR REFERENCE ONLY.
PART NUMBERS AND SERAIL NUMBERS MAY BE
OUTDATED. ALWAYS USE THE ONLINE PARTS SYSTEM)

DATE	JAN. 04, 2013
3rd EDITION	

Fig. 4230 TRAVEL MOTOR
MOTEUR DE TRANSLATION

Serial No. ;

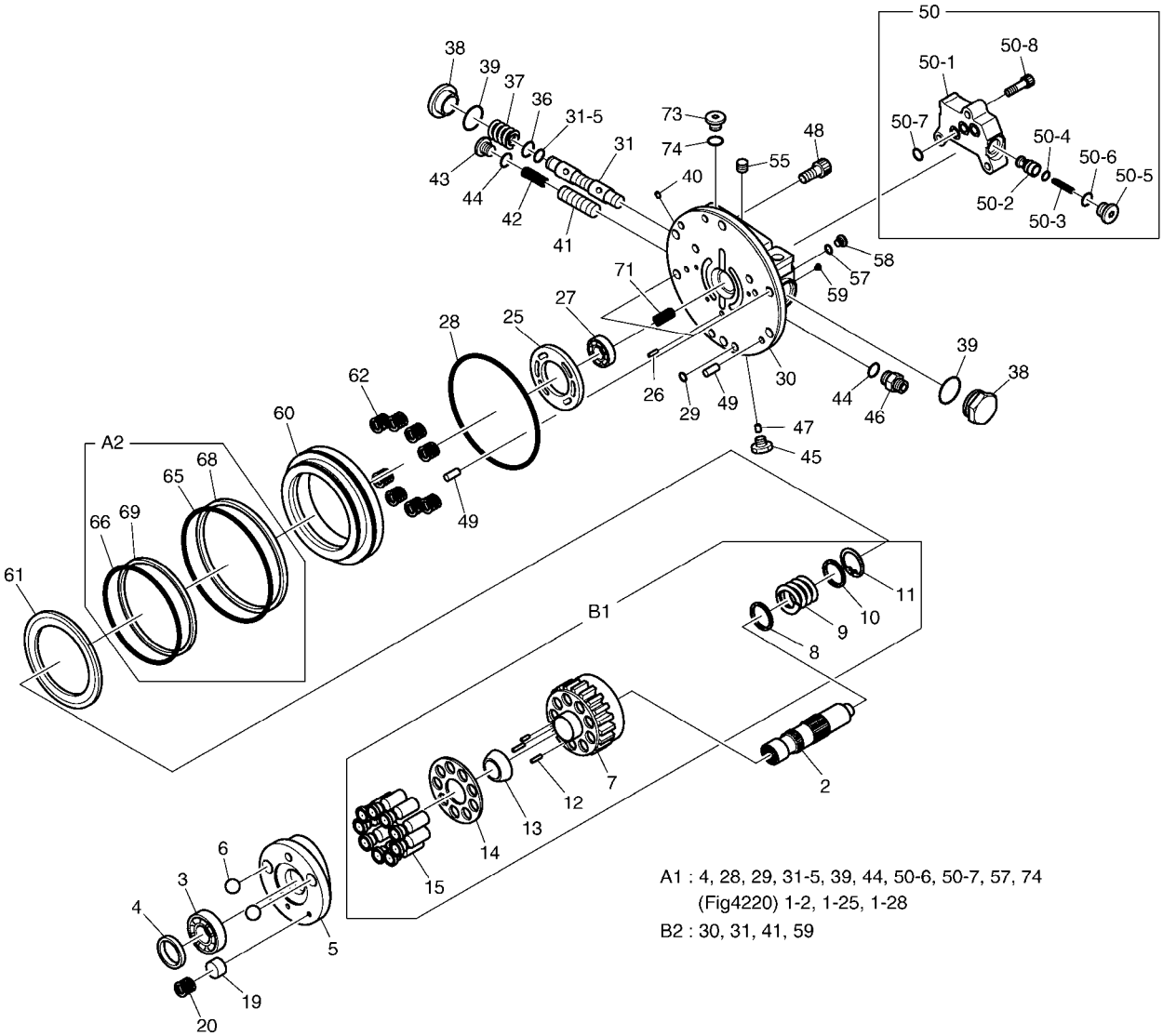

A1 : 4, 28, 29, 31-5, 39, 44, 50-6, 50-7, 57, 74
(Fig4220) 1-2, 1-25, 1-28
B2 : 30, 31, 41, 59

(THIS PARTS BOOK IS FOR REFERENCE ONLY.
PART NUMBERS AND SERAIL NUMBERS MAY BE
OUTDATED. ALWAYS USE THE ONLINE PARTS SYSTEM)

DATE	JAN. 04, 2013
3rd EDITION	

Fig. 4230 TRAVEL MOTOR
MOTEUR DE TRANSLATION

Serial No. ;

Key No.	Part No.	Description	Description	Q'ty	S.C	Serial No.	ICA	Replaceable part	
								Part No.	Q'ty
4230 -2	K9005278	SHAFT	ARBRE	1					
3	K9005283	BEARING;BALL	ROULEMENT	1					
4	K9005280	SEAL;OIL	JOINT	1					
5	K9005292	PLATE;SWASH	PLAQUE	1					
6	K9005293	BALL;STEEL	BOULE	2					
7	-	CYLINDER;BLOCK	BLOC DE CYLINDRE	1	D				
8	-	SEAT;SPRING	SIEGE	1	D				
9	-	SPRING	RESSORT	1	D				
10	-	WASHER	RONDELLE	1	D				
11	-	RING;SNAP	ANNEAU	1	D				
12	-	PIN	REMARQUES	3	D				
13	-	HOLDER;RETAINER	HOLDER;RETAINER	1	D				
14	-	PLATE;RETAINER	PLAQUE	1	D				
15	-	PISTON ASS`Y	ENSEMBLE DE PISTON	9	D				
19	K9005290	PISTON ASS'Y(2 SPEED)	ENSEMBLE PISTON	2					
20	K9005291	SPRING	RESSORT	2					
25	K9005281	PLATE;VALVE	PLAQUE	1					
26	K9003747	PIN	GOUPILLE	1					
27	K9005284	BEARING;BALL	ROULEMENT	1					
28	S8011200	O-RING	JOINT CIRCULAIRE	1					
29	S8000071	O-RING	JOINT TORIQUE	4					
30	-	PLATE;BASE	PLAQUE	1	D				
31	-	SPOOL ASS'Y	SPOOL	1	D				
31-5	S8000101	. O-RING	. JOINT TORIQUE	2					
36	K9003749	SEAT;SPRING	SIEGE	2					
37	K9005288	SPRING	RESSORT	2					
38	K9003751	CAP	CHAPEAU	2					
39	S8000291	O-RING	JOINT CIRCULAIRE	2					
40	2.415-00040	ORIFICE	ORIFICE	2					
41	-	SPOOL	PLUNGEUR	1	D				
42	K9003753	SPRING	RESSORT	1					
43	2.181-00286	PLUG	BOUCHON	1					
44	S8000141	O-RING	JOINT TORIQUE	2					
45	2.181-00280	PLUG	BOUCHON	3					
46	K9003754	PLUG	BOUCHON	1					
47	2.415-00040	ORIFICE	ORIFICE	4					
48	S2211861	BOLT;SOCKET M10X1.5X20	BOULON	6					
49	S5701041	PIN;PARALLEL	GOUPILLE	4					

(THIS PARTS BOOK IS FOR REFERENCE ONLY.
PART NUMBERS AND SERIAL NUMBERS MAY BE
OUTDATED. ALWAYS USE THE ONLINE PARTS SYSTEM)

DATE	JAN. 04, 2013
3rd EDITION	

Fig. 4230 TRAVEL MOTOR
MOTEUR DE TRANSLATION

Serial No. ;

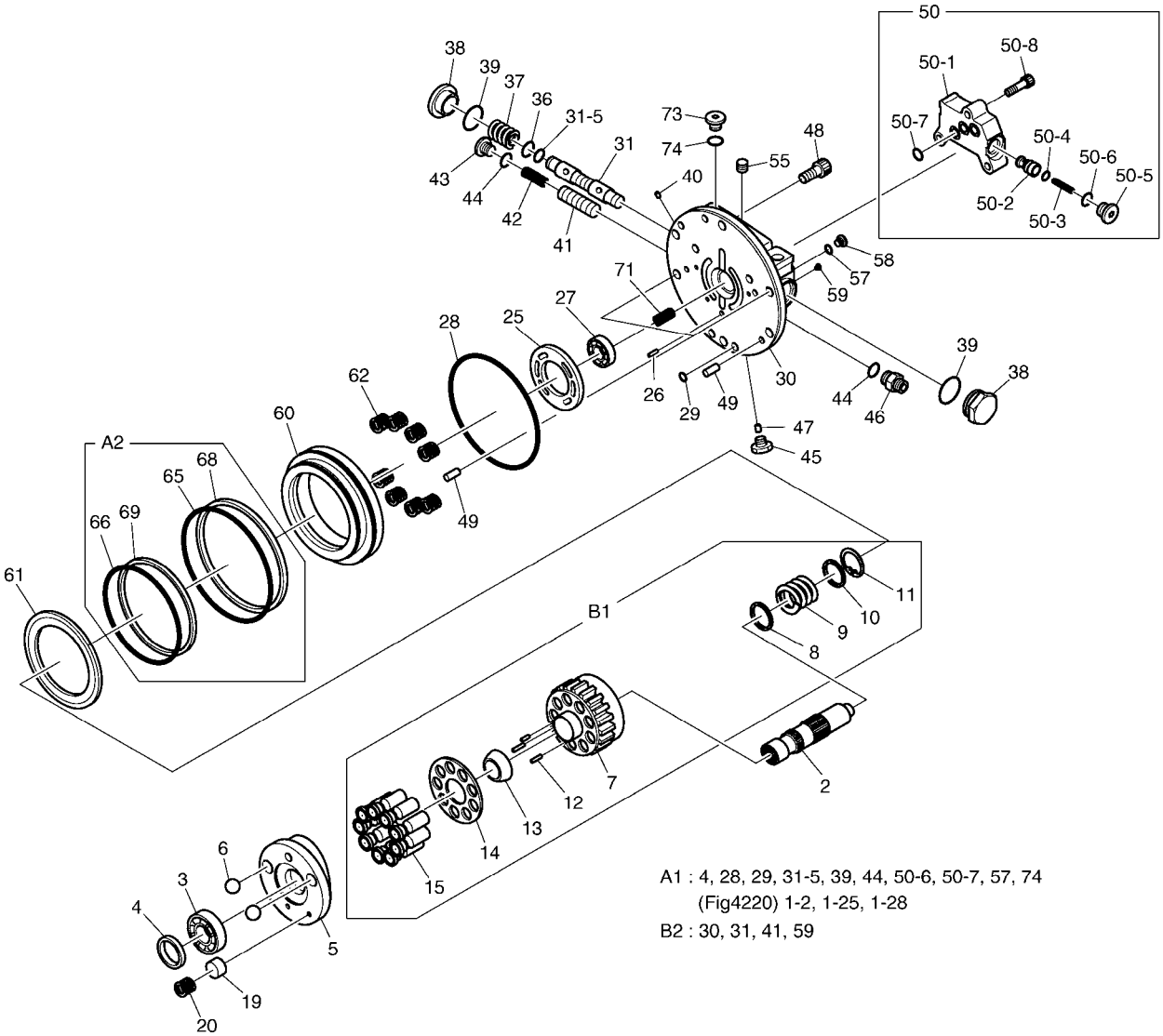

(THIS PARTS BOOK IS FOR REFERENCE ONLY.
PART NUMBERS AND SERAIL NUMBERS MAY BE
OUTDATED. ALWAYS USE THE ONLINE PARTS SYSTEM)

DATE	JAN. 04, 2013
3rd EDITION	

Fig. 4230 TRAVEL MOTOR
MOTEUR DE TRANSLATION

Serial No. ;

Key No.	Part No.	Description	Description	Q'ty	S.C	Serial No.	ICA	Replaceable part	
								Part No.	Q'ty
4230 -50	K9003756	VALVE;COUNTER BALANCE	VANNE	1					
50-1	-	. BODY	. CORPS	1	D				
50-2	-	. VALVE;CHECK	. VALVE	1	D				
50-3	-	. SPRING	. RESSORT	2	D				
50-4	-	. SEAT;SPRING	. SIEGE	2	D				
50-5	-	. PLUG	. PRISE	2	D				
50-6	S8000141	. O-RING	. JOINT TORIQUE	2					
50-7	S8000121	. O-RING	. JOINT CIRCULAIRE	3					
50-8	S2209261	. BOLT;WRENCH M8X30	. BOULON A 6 PANS CREUX	3					
55	2181-1116D1	PLUG	BOUCHON	1					
57	S8000081	O-RING	JOINT CIRCULAIRE	2					
58	K9003757	PLUG	BOUCHON	2					
59	K9005289	PLUG	BOUCHON	2					
60	K9005299	PISTON;BRAKE	PISTON	1					
61	K9005282	DISC	DISQUE	1					
62	K9005279	SPRING	RESSORT	8					
65	S8011101	O-RING	JOINT CIRCULAIRE	1					
66	S8010951	O-RING	JOINT TORIQUE	1					
68	K9005298	RING;BACK UP	BAGUE	1					
69	S8070950	RING;BACK UP	BAGUE	1					
71	2.415-00040	ORIFICE	ORIFICE	2					
73	K9003803	PLUG	PRISE	2					
74	S8000111	O-RING	JOINT CIRCULAIRE	2					
A1	K9005300	SEAL KIT;TRAVEL MOTOR	KIT DE JOINT	1					
A2	K9005301	SEAL KIT;PARKING BRAKE	FREIN DE STATIONNEMEN	1					
B1	K9005302	CYLINDER BLOCK KIT	KIT DE BLOC CYLINDRE	1					
B2	K9005303	BASE PLATE KIT	KIT D'EMBASE	1					

(THIS PARTS BOOK IS FOR REFERENCE ONLY.
PART NUMBERS AND SERAIL NUMBERS MAY BE
OUTDATED. ALWAYS USE THE ONLINE PARTS SYSTEM)

DATE	JAN. 04, 2013
3rd EDITION	

Fig. 4240 CENTER JOINT
JOINT CENTRAL

Serial No. ;

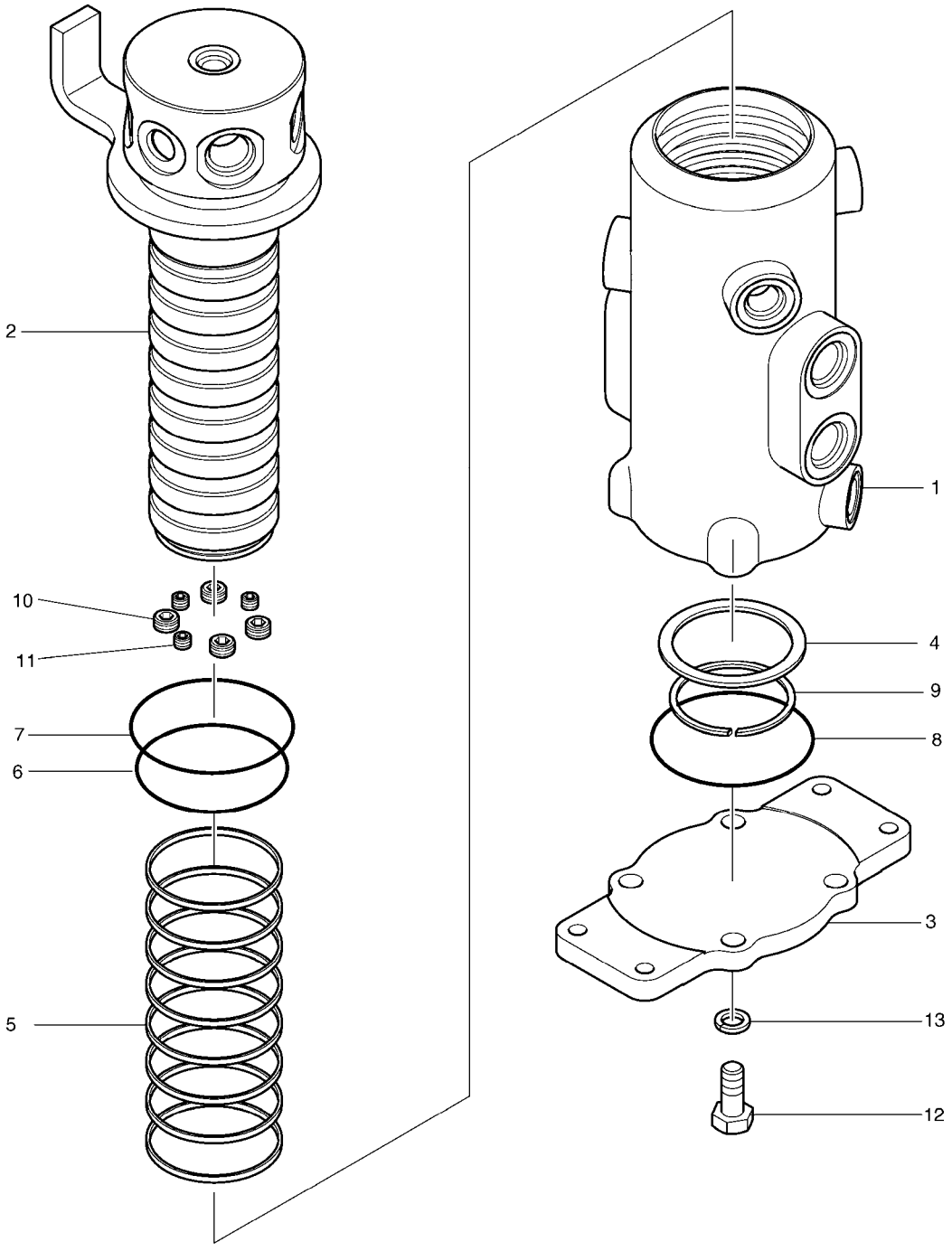

(THIS PARTS BOOK IS FOR REFERENCE ONLY.
PART NUMBERS AND SERAIL NUMBERS MAY BE
OUTDATED. ALWAYS USE THE ONLINE PARTS SYSTEM)

DATE	JAN. 04, 2013
3rd EDITION	

Fig. 4240 CENTER JOINT
JOINT CENTRAL

Serial No. ;

Key No.	Part No.	Description	Description	Q'ty	S.C	Serial No.	ICA	Replaceable part	
								Part No.	Q'ty
4240 --	K1008451	CENTER JOINT	JOINT CENTRAL	1		5001-5252	I	K1008451A	1
	K1008451A	CENTER JOINT	JOINT CENTRAL	1		5253-			
1	K1025477	HUB	MOYEU	1					
2	K1025478	SHAFT	ARBRE	1					
3	K1025479	COVER	COUVERCLE	1					
4	K1025480	SPACER	DOUILLE D'ECARTEMENT	1					
5	K1025481	SEAL;SLIPPER	JOINT	8	K	5001-5252	I	K1048682	8
	K1048682	SEAL;SLIPPER	JOINT	8	K	5253-			
6	S8000601	O-RING	JOINT TORIQUE	1	K				
7	S8000750	O-RING	JOINT TORIQUE	1	K				
8	S8010751	O-RING	JOINT TORIQUE	1	K				
9	S6500550	RING;RETAINER	ANNEAU	1					
10	2181-1116D2	PLUG	BOUCHON	4					
11	2181-1116D1	PLUG	BOUCHON	3					
12	S0512053	BOLT	BOULON	4					
13	S5102603	WASHER,SPRING	RONDELLE	4					
*	K9004888	SEAL KIT;CENTER JOINT	JOINT CENTRAL	1		5001-5252	I	K9004888A	1
	K9004888A	SEAL KIT;CENTER JOINT	JOINT CENTRAL	1		5253-			

(THIS PARTS BOOK IS FOR REFERENCE ONLY.
PART NUMBERS AND SERAIL NUMBERS MAY BE
OUTDATED. ALWAYS USE THE ONLINE PARTS SYSTEM)

DATE	JAN. 04, 2013
3rd EDITION	

Fig. 4250 REMOCON VALVE VANNE DE PILOTE

Serial No. ;

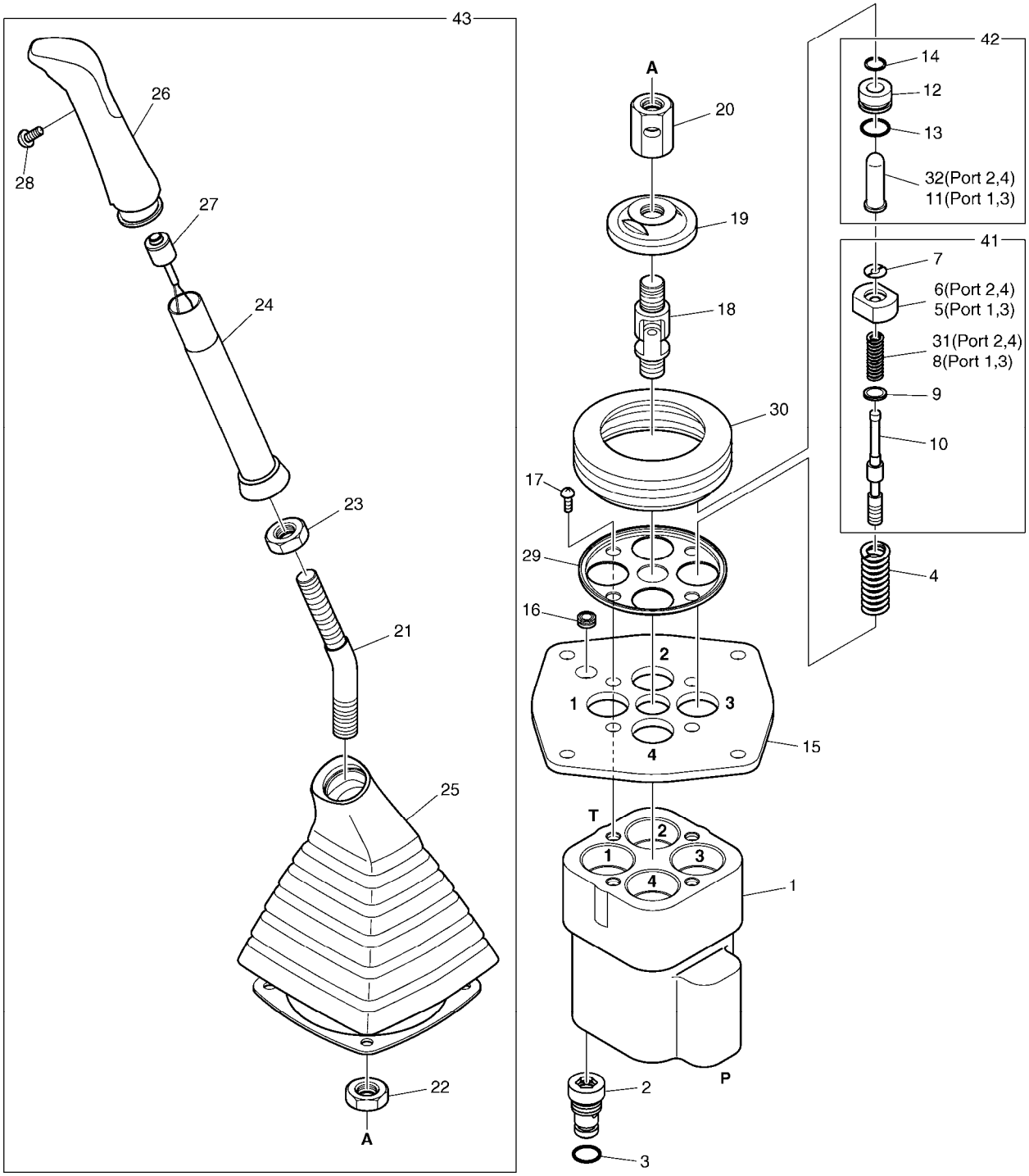

(THIS PARTS BOOK IS FOR REFERENCE ONLY.
PART NUMBERS AND SERAIL NUMBERS MAY BE
OUTDATED. ALWAYS USE THE ONLINE PARTS SYSTEM)

DATE	JAN. 04, 2013
3rd EDITION	

Fig. 4250 REMOCON VALVE VANNE DE PILOTE

Serial No. ;

Key No.	Part No.	Description	Description	Q'ty	S.C	Serial No.	ICA	Replaceable part	
								Part No.	Q'ty
4250 --	K1014372A	VALVE;JOY STICK(L.H)	VANNE	1		5001-6029	I	410113-00130	1
	410113-00130	VALVE,JOYSTICK;LH	VANNE	1		6030-			
	K1014373A	VALVE;JOY STICK(R.H)	VANNE	1		5001-6029	I	410113-00131	1
	410113-00131	VALVE,JOYSTICK;RH	VANNE	1		6030-			
1	1.451-00125	BODY	CARTER	1					
2	181-00471	PLUG	BOUCHON	4					
3	S8000081	O-RING	JOINT CIRCULAIRE	4					
4	K9003918	SPRING	RESSORT	4					
5	1.427-00009	SEAT;SPRING(PORT 1,3)	SIEGE	2					
6	K9004285	SEAT;SPRING(PORT 2,4)	SIEGE	2					
7	1.416-00002	STOPPER	ARRET	4					
8	K9003919	SPRING	RESSORT	2					
9	429-00017	SEAT;SPRING	SIEGE	4					
10	429-00016	SPOOL	BOBINE	4					
11	K9003920	ROD;PUSH	TIGE DE POUSSOIR	2					
12	K9003921	PLUG	BOUCHON	4					
13	S8000205	O-RING	JOINT CIRCULAIRE	4					
14	K9001127	SEAL;ROD	CACHET	4					
15	1.412-00013	PLATE	PLAQUE	1					
16	1.110-00167	BUSHING	DOUILLE	1					
17	S3450983	SCREW M16X20	VIS	4					
18	1.138-00004	JOINT ASS`Y	ENSEMBLE DE JOINT	1					
19	1.412-00131	PLATE;SWASH	PLAQUE	1		5001-6029	Y	K9001129A	1
	K9001129A	PLATE;SWASH	PLAQUE	1		6030-			
20	1.121-00028	NUT	ECROU	1					
21	K9003922	CONNECTOR	CONNECTEUR	1					
22	S4032833	NUT	ECROU	1					
23	S4032733	NUT	ECROU	1					
24	K9003923	INSERT	INSERTION	1					
25	K9003924	BOOT	INITIALISATION	1					
26	110925-00363	HANDLE(L.H)	POIGNEE	1					
	K9003925	HANDLE(R.H)	POIGNEE	1					
27	1.549-00002	SWITCH ASS'Y	COMMUTATEUR	1					
28	S3450333	SCREW M3X0.8X8	VIS	1					
29	1.412-00014	PLATE	PLAQUE	1					
30	1.160-00004	BOOT	BOTTE	1		5001-6029	Y	K9001128	1
	K9001128	BOOT	BOTTE	1		6030-			
31	K9003926	SPRING	RESSORT	2					

(THIS PARTS BOOK IS FOR REFERENCE ONLY.
PART NUMBERS AND DETAIL NUMBERS MAY BE
OUTDATED. ALWAYS USE THE ONLINE PARTS SYSTEM)

DATE	JAN. 04, 2013
3rd EDITION	

Fig. 4250 REMOCON VALVE VANNE DE PILOTE

Serial No. ;

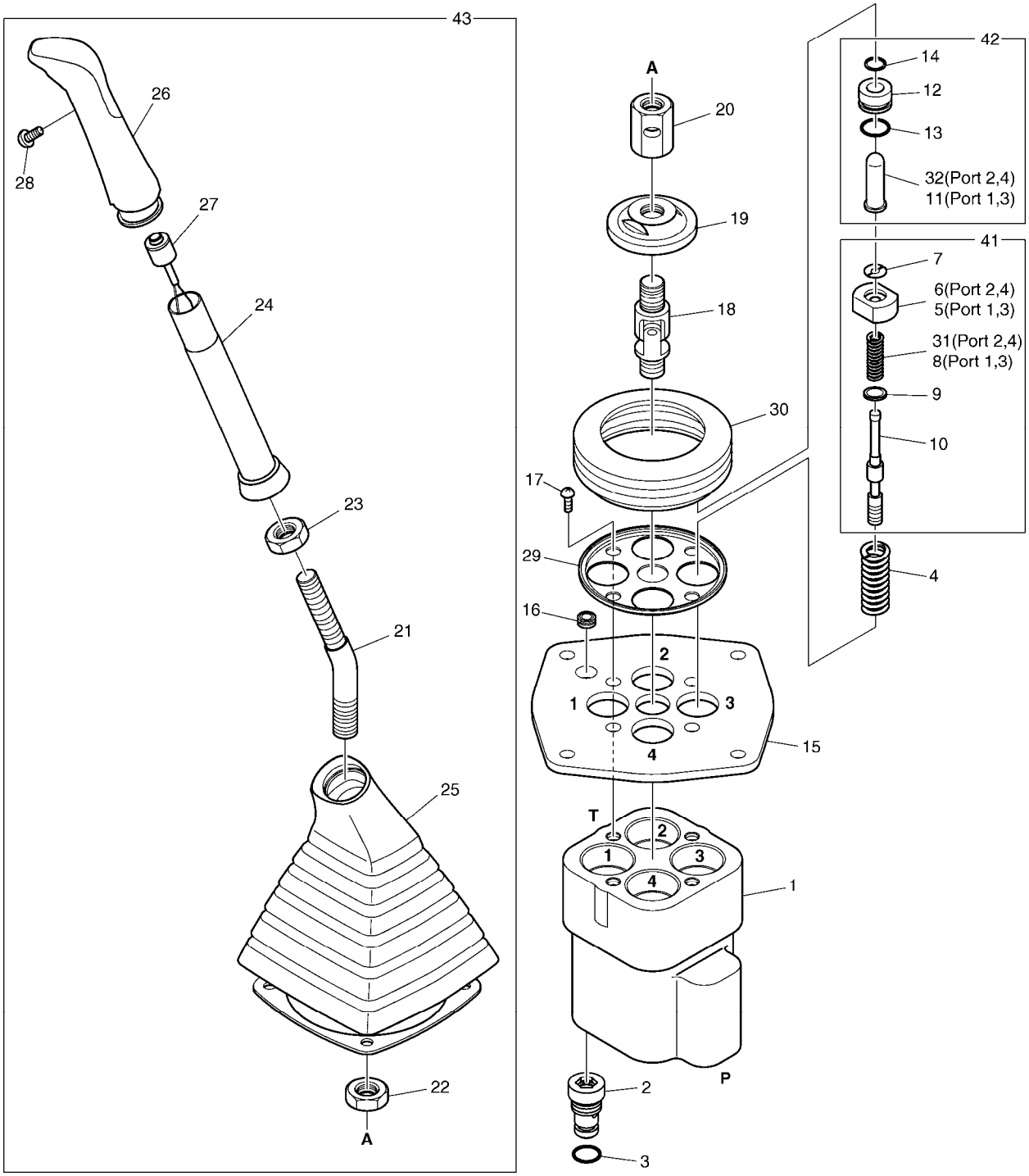

(THIS PARTS BOOK IS FOR REFERENCE ONLY.
PART NUMBERS AND SERAIL NUMBERS MAY BE
OUTDATED. ALWAYS USE THE ONLINE PARTS SYSTEM)

DATE	JAN. 04, 2013
3rd EDITION	

Fig. 4250 REMOCON VALVE VANNE DE PILOTE

Serial No. ;

Key No.	Part No.	Description	Description	Q'ty	S.C	Serial No.	ICA	Replaceable part	
								Part No.	Q'ty
4250 -32	K9003927	ROD;PUSH	TIGE DE POUSSOIR	2					
41	K9003928	KIT;SPOOL(PORT 1,3)	KIT DE BOBINE	2		5001-6029	Y	410207-00525	2
	410207-00525	SPOOL KIT;1,3	KIT DE BOBINE	2		6030-			
	K9003929	KIT;SPOOL(PORT 2,4)	KIT DE BOBINE	2		5001-6029	Y	410207-00526	2
	410207-00526	SPOOL KIT;2,4	KIT DE BOBINE	2		6030-			
42	K9003930	KIT;PLUG(PORT 1,3)	KIT DE PRISE	2		5001-6029	Y	430221-00918	2
	430221-00918	PLUG KIT;1,3	KIT DE PRISE	2		6030-			
	K9003931	KIT;PLUG(PORT 2,4)	KIT DE PRISE	2		5001-6029	Y	430221-00919	2
	430221-00919	PLUG KIT;2,4	KIT DE PRISE	2		6030-			
43	K9003932	HANDLE KIT;R.H	KIT DE POIGNEE	1		5001-6029	Y	110925-00378	1
	110925-00378	HANDLE KIT;R.H	KIT DE POIGNEE	1		6030-			
	K9003933	HANDLE KIT;L.H	KIT DE POIGNEE	1		5001-6029	Y	110925-00364	1
	110925-00364	HANDLE KIT;L.H	KIT DE POIGNEE	1		6030-			

(THIS PARTS BOOK IS FOR REFERENCE ONLY.
PART NUMBERS AND SERAIL NUMBERS MAY BE
OUTDATED. ALWAYS USE THE ONLINE PARTS SYSTEM)

DATE	JAN. 04, 2013
3rd EDITION	

Fig. 4260 PEDAL VALVE VANNE

Serial No. ; 5001 ~ 5408

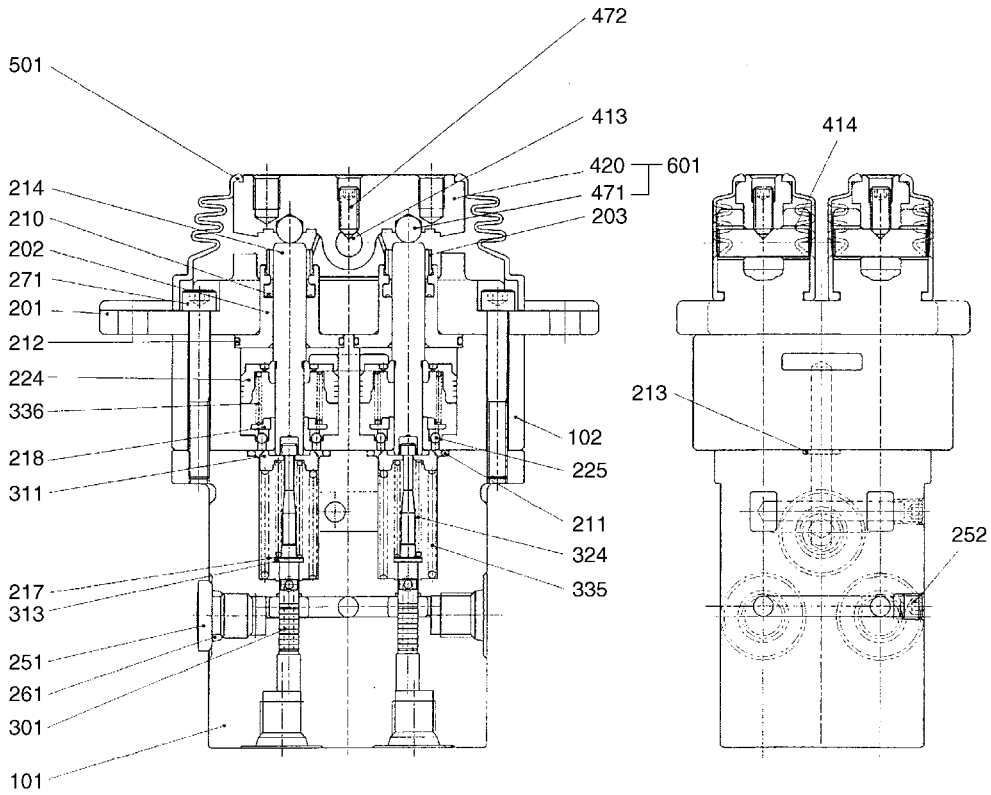

(THIS PARTS BOOK IS FOR REFERENCE ONLY.
PART NUMBERS AND SERAIL NUMBERS MAY BE
OUTDATED. ALWAYS USE THE ONLINE PARTS SYSTEM)

DATE	JAN. 04, 2013
3rd EDITION	

Fig. 4260 PEDAL VALVE VANNE

Serial No. ; 5001 ~ 5408

Key No.	Part No.	Description	Description	Q'ty	S.C	Serial No.	ICA	Replaceable part	
								Part No.	Q'ty
4260 --	K1011188	VALVE;PEDAL	VANNE	1					
101	-	CASING	CARTER	1	D				
102	-	CASING	CARTER	1	D				
201	K9003856	COVER	COUVERCLE	2					
202	K9003857	PLUG	BOUCHON	4					
203	K9003858	CAP;GREASE	CHAPEAU	4					
210	K9003859	PACKING	EMBALLAGE	4					
211	2180-1216D20	O-RING	JOINT TORIQUE	4					
212	2180-1216D25	O-RING	JOINT TORIQUE	4					
213	S8000081	O-RING	JOINT CIRCULAIRE	2					
214	K9003860	ROD;PUSH	TIGE DE POUSSOIR	4					
217	K9003861	SHIM	CALE	4					
218	K9003862	SEAT;SPRING	SIEGE	4					
224	K9003863	PISTON	PISTON	4	D				
225	S6250092	BALL;STEEL	BOULE	12					
251	2181-1890D2	PLUG	BOUCHON	3					
252	2.181-00214	PLUG	PRISE	2					
261	S8000111	O-RING	JOINT CIRCULAIRE	3					
271	K9003864	BOLT;SOCKET	BOULON A 6 PANS CREUX	4					
301	K9003865	SPOOL	BOBINE	4	D				
311	K9003866	SEAT;SPRING	SIEGE	4					
313	K9003867	WASHER	RONDELLE	4					
324	K9003868	SPRING	RESSORT	4					
335	K9003869	SPRING	RESSORT	4					
336	K9003870	SPRING	RESSORT	4					
413	K9003871	CAM;SHAFT	CAME	2					
414	K9003872	BUSH	DOUILLE	4					
420	K9003873	CAM	CAME	2					
471	S6250161	BALL;STEEL	BOULE	4					
472	K9003874	SET SCREW	VIS	2					
501	K9003875	BELLOWS	SOUFFLET	2					
601	K9003876	CAM ASS'Y	CAME	1					

(THIS PARTS BOOK IS FOR REFERENCE ONLY.
PART NUMBERS AND SERAIL NUMBERS MAY BE
OUTDATED. ALWAYS USE THE ONLINE PARTS SYSTEM)

DATE	JAN. 04, 2013
3rd EDITION	

Fig. 4261 PEDAL VALVE VANNE

Serial No. ; 5409 ~

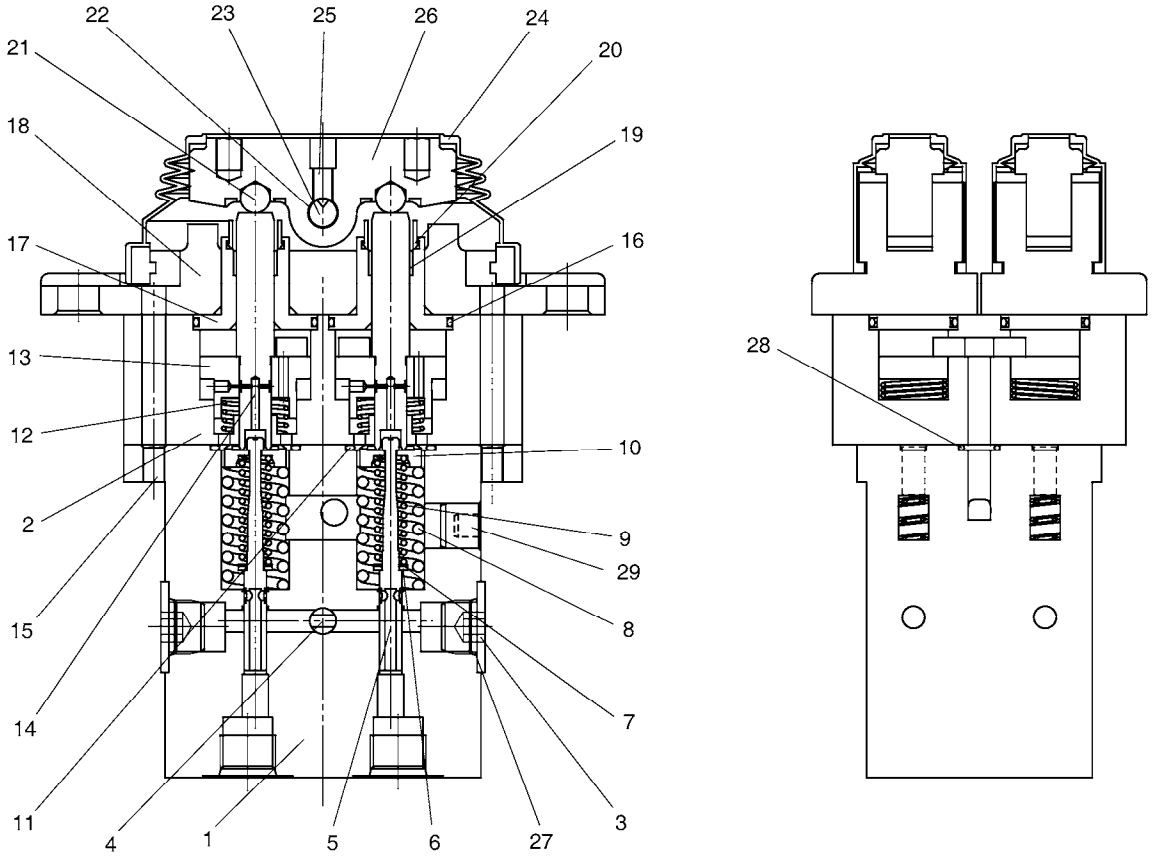

(THIS PARTS BOOK IS FOR REFERENCE ONLY.
PART NUMBERS AND SERAIL NUMBERS MAY BE
OUTDATED. ALWAYS USE THE ONLINE PARTS SYSTEM)

DATE	JAN. 04, 2013
3rd EDITION	

Fig. 4261 PEDAL VALVE VANNE

Serial No. ; 5409 ~

Key No.	Part No.	Description	Description	Q'ty	S.C	Serial No.	ICA	Replaceable part	
								Part No.	Q'ty
4261 --	K1027918B	PEDAL VALVE	VANNE	1		5409-5785	Y	410119-00008	1
	410119-00008	PEDAL VALVE	VANNE	1		5786-			
1	-	CASING(1)	ENVELOPPE	1	D				
2	-	CASING(2)	ENVELOPPE	1	D				
3	2181-1890D2	PLUG	BOUCHON	3					
4	181-00519	PLUG	BOUCHON	2					
5	K9005883	SPOOL	BOBINE	4					
6	K9005884	WASHER	RONDELLE	4					
7	K9005885	WASHER	RONDELLE	4					
8	K9005886	SPRING	RESSORT	4					
9	K9005887	SPRING	RESSORT	4					
10	K9005888	SPRING SEAT	RESSORT	4					
11	S8000201	O-RING	JOINT TORIQUE	4					
12	K9005889	SPRING	RESSORT	4					
13	K9005890	PISTON	PISTON	4					
14	K9005891	ROD;PUSH	TIGE DE POUSSOIR	4					
15	S2205661	BOLT;SOCKET	BOULON A 6 PANS CREUX	4					
16	2180-1217D25	O-RING	JOINT TORIQUE	4					
17	K9005892	PLUG	BOUCHON	4					
18	K9005893A	COVER	COUVERCLE	2					
19	K9005894	PACKING	EMBALLAGE	4					
20	K9005895	CAP;GREASE	CHAPEAU	4					
21	S6250161	BALL;STEEL	BOULE	4					
22	2110-1184D2	BUSH	DOUILLE	4					
23	K9005896	SHAFT;CAM	ARBRE A CAMES	2					
24	K9005897	BELLOWS	SOUFFLET	2					
25	S3522706	SCREW	VIS	2					
26	K9005898	CAM	CAME	2					
27	S8000111	O-RING	JOINT CIRCULAIRE	3					
28	S8000081	O-RING	JOINT CIRCULAIRE	2					
29	2181-1116D2	PLUG	BOUCHON	2					

(THIS PARTS BOOK IS FOR REFERENCE ONLY.
PART NUMBERS AND SERAIL NUMBERS MAY BE
OUTDATED. ALWAYS USE THE ONLINE PARTS SYSTEM)

DATE	JAN. 04, 2013
3rd EDITION	

Fig. 4270 PEDAL VALVE VANNE

Serial No. ;

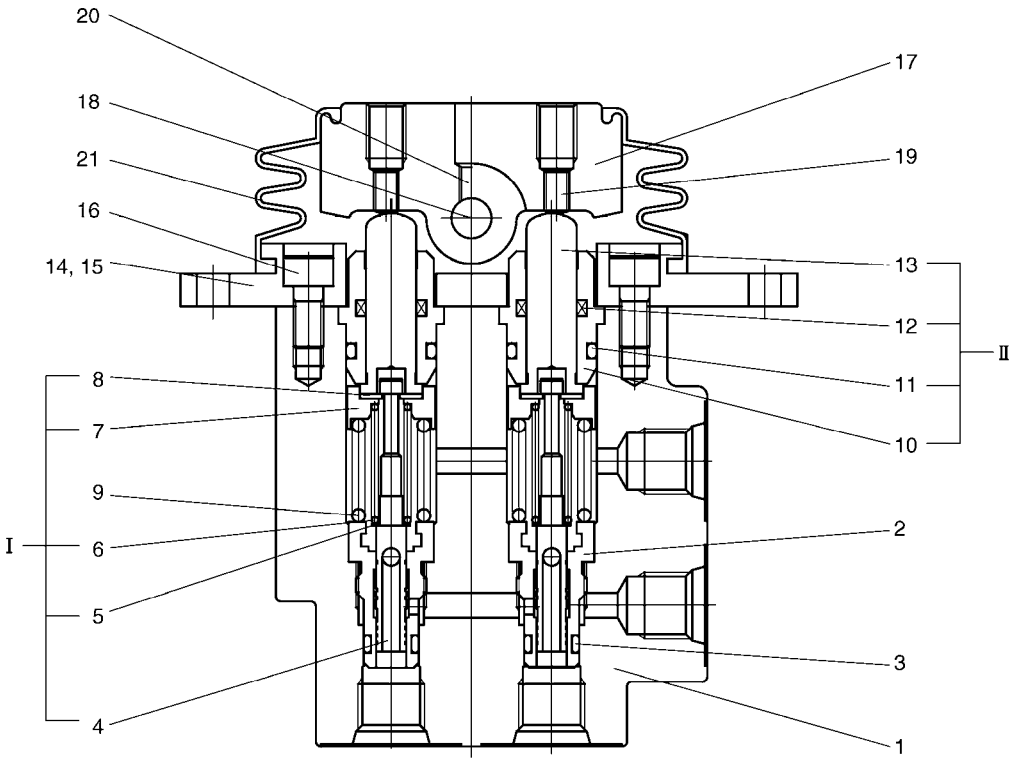

(THIS PARTS BOOK IS FOR REFERENCE ONLY.
PART NUMBERS AND SERAIL NUMBERS MAY BE
OUTDATED. ALWAYS USE THE ONLINE PARTS SYSTEM)

DATE	JAN. 04, 2013
3rd EDITION	

Fig. 4270 PEDAL VALVE VANNE

Serial No. ;

Key No.	Part No.	Description	Description	Q'ty	S.C	Serial No.	ICA	Replaceable part	
								Part No.	Q'ty
4270 --	K1013569A	VALVE;PEDAL	VANNE	1		5001-5130	I	K1013569B	1
	K1013569B	VALVE;PEDAL	VANNE	1		5131-			
1	-	BODY	CORPS	1	D				
2	1.181-00055	PLUG	BOUCHON	2					
3	S8000081	O-RING	JOINT CIRCULAIRE	2					
I	K9003938	KIT;SPOOL	KIT DE BOBINE	2		5001-5130	I	K9003938A	2
	K9003938A	KIT;SPOOL	KIT DE BOBINE	2		5131-			
4	429-00016	SPOOL	BOBINE	2					
5	429-00017	SEAT;SPRING	SIEGE	2					
6	K9003939	SPRING	RESSORT	2					
7	K9003940	SEAT;SPRING	SIEGE	2					
8	416-00008	STOPPER	ARRET	2					
9	K9003941	SPRING	RESSORT	2					
II	K9003942	KIT;PLUG	KIT DE PRISE	2					
10	1.181-00056	PLUG	BOUCHON	2					
11	S8000141	O-RING	JOINT TORIQUE	2					
12	1.180-00528	SEAL;ROD	CACHET	2					
13	K9003943	ROD;PUSH	TIGE DE POUSSOIR	2					
14	K9003944	COVER	COUVERCLE	1					
15	2110-1184D3	BUSH;DU	DOUILLE	2					
16	S2204671	BOLT;SOCKET	BOULON A 6 PANS CREUX	2					
17	K9003945	CAM	CAME	1					
18	K9003946	PIN	GOUPILLE	1					
19	K9003947	SCREW;ADJUST	VIS	2					
20	S3521901	SCREW;SET	VIS	3					
21	K9003948	BELLOWS	SOUFFLET	1					

(THIS PARTS BOOK IS FOR REFERENCE ONLY.
PART NUMBERS AND SERAIL NUMBERS MAY BE
OUTDATED. ALWAYS USE THE ONLINE PARTS SYSTEM)

DATE	JAN. 04, 2013
3rd EDITION	

Fig. 4280 REMOCON VALVE - DOZER
VANNE DE PILOTE

Serial No. ;

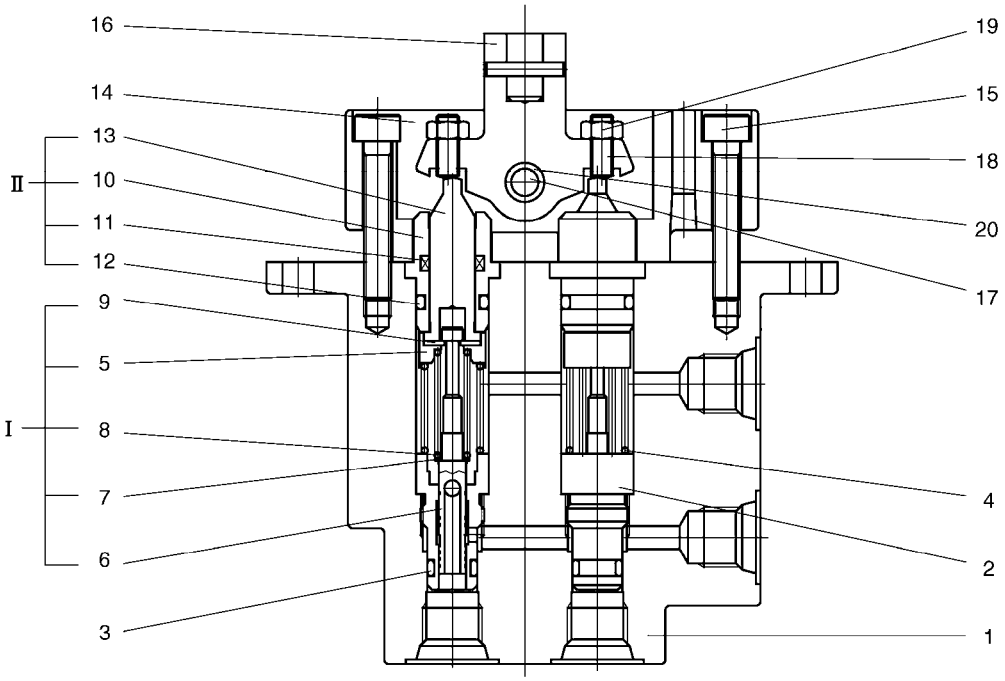

(THIS PARTS BOOK IS FOR REFERENCE ONLY.
PART NUMBERS AND SERAIL NUMBERS MAY BE
OUTDATED. ALWAYS USE THE ONLINE PARTS SYSTEM)

DATE	JAN. 04, 2013
3rd EDITION	

Fig. 4280 REMOCON VALVE - DOZER VANNE DE PILOTE

Serial No. ;

Key No.	Part No.	Description	Description	Q'ty	S.C	Serial No.	ICA	Replaceable part	
								Part No.	Q'ty
4280 --	K1027491	VALVE;REMOCON (DOZER)	VANNE	1					
1	-	BODY	CORPS	1	D				
2	1.181-00055	PLUG	BOUCHON	2					
3	S8000081	O-RING	JOINT CIRCULAIRE	2					
4	K9004286	SPRING	RESSORT	2					
I	K9004287	KIT;SPOOL	KIT DE BOBINE	2					
5	1.427-00015	SEAT;SPRING	SIEGE	2					
6	429-00016	SPOOL	BOBINE	2					
7	429-00017	SEAT;SPRING	SIEGE	2					
8	K9000458	SPRING	RESSORT	2					
9	416-00008	STOPPER	ARRET	2					
II	K9004288	KIT;PLUG	KIT DE PRISE	2					
10	1.181-00056	PLUG	BOUCHON	2					
11	1.180-00528	SEAL;ROD	CACHET	2					
12	S8000141	O-RING	JOINT TORIQUE	2					
13	1.428-00240	ROD;PUSH	TIGE DE POUSSOIR	2					
14	K9004289	COVER	COUVERCLE	1					
15	S2205361	BOLT	BOULON	2					
16	1.429-00003	GUIDE	GUIDE	1					
17	K9004290	PIN	GOUPILLE	1					
18	1.120-00010	BOLT	BOULON	2					
19	S4014233	NUT	ECROU	2					
20	K9004291	RING;SNAP	BAGUE D'ARRET	2					

(THIS PARTS BOOK IS FOR REFERENCE ONLY.
PART NUMBERS AND SERAIL NUMBERS MAY BE
OUTDATED. ALWAYS USE THE ONLINE PARTS SYSTEM)

DATE	JAN. 04, 2013
3rd EDITION	

Fig. 4290 BOOM CYLINDER VERIN DE FLECHE

Serial No. ;

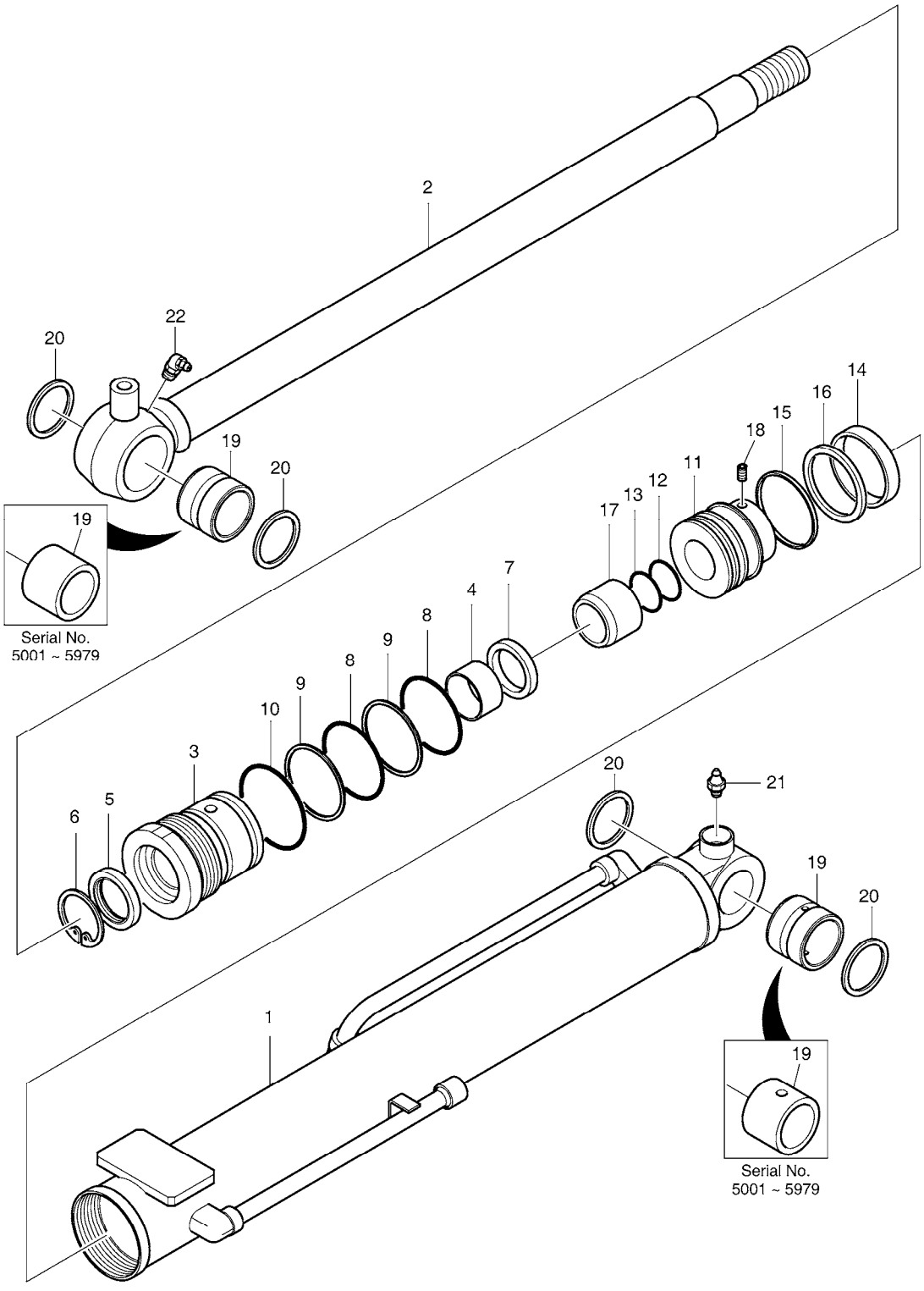

(THIS PARTS BOOK IS FOR REFERENCE ONLY.
PART NUMBERS AND SERAIL NUMBERS MAY BE
OUTDATED. ALWAYS USE THE ONLINE PARTS SYSTEM)

DATE	JAN. 04, 2013
3rd EDITION	

Fig. 4290 BOOM CYLINDER VERIN DE FLECHE

Serial No. ;

Key No.	Part No.	Description	Description	Q'ty	S.C	Serial No.	ICA	Replaceable part	
								Part No.	Q'ty
4290 --	K1015831B	CYLINDER;BOOM	CYLINDRE	1		5001-5979	Y	400309-00393	1
	400309-00393	CYLINDER,BOOM	CYLINDRE	1		5980-			
1	K9005249	TUBE ASS'Y	TUYAU FLEXIBLE	1					
2	K9005254	ROD ASS'Y	ENSEMBLE TIGE	1					
3	K9005264	COVER;ROD	COUVERCLE	1					
4	1.110-00013	DU-BUSH	DOUILLE DU	1					
5	1.180-00492	WIPER;DUST	RACCORD ADAPTATEUR	1	K				
6	1.416-00004	STOPPER	ARRET	1					
7	K9005272	U-PACKING	JOINT EN U	1	K				
8	S8010651	O-RING	JOINT TORIQUE	2	K				
9	S8090650	RING;BACK-UP	BAGUE DE SOUTIEN	2	K				
10	S8010701	O-RING	JOINT CIRCULAIRE	1	K				
11	K9005259	PISTON	PISTON	1					
12	S8000351	O-RING	JOINT TORIQUE	1	K				
13	1.180-00257	RING;BACK UP	BAGUE	1	K				
14	1.180-00406	RING;WEAR	BAGUE D'USURE	1	K				
15	1.180-00329	RING;DUST	BAGUE	1	K				
16	K9004956	RING;GLYD	BAGUE	1	K				
17	1.115-00187	RING;CUSHION	BAGUE	1					
18	1.120-00191	SCREW;SET	VIS	1					
19	K1024124	BUSHING	DOUILLE	2		5001-5979	Y	131008-00134	2
	131008-00134	BUSHING	DOUILLE	2		5980-			
20	1.123-00094	PIN;WIPER	GOUPILLE	4					
21	S6710041	NIPPLE;GREASE	GRAISSEUR	1					
22	S6710102	NIPPLE;GREASE	GRAISSEUR	1					
*	K9005267	SEAL KIT;BOOM CYL.	KIT DE JOINT	1					

(THIS PARTS BOOK IS FOR REFERENCE ONLY.
PART NUMBERS AND SERAIL NUMBERS MAY BE
OUTDATED. ALWAYS USE THE ONLINE PARTS SYSTEM)

DATE	JAN. 04, 2013
3rd EDITION	

Fig. 4300 ARM CYLINDER
VERIN DE BALANCIER

Serial No. ;

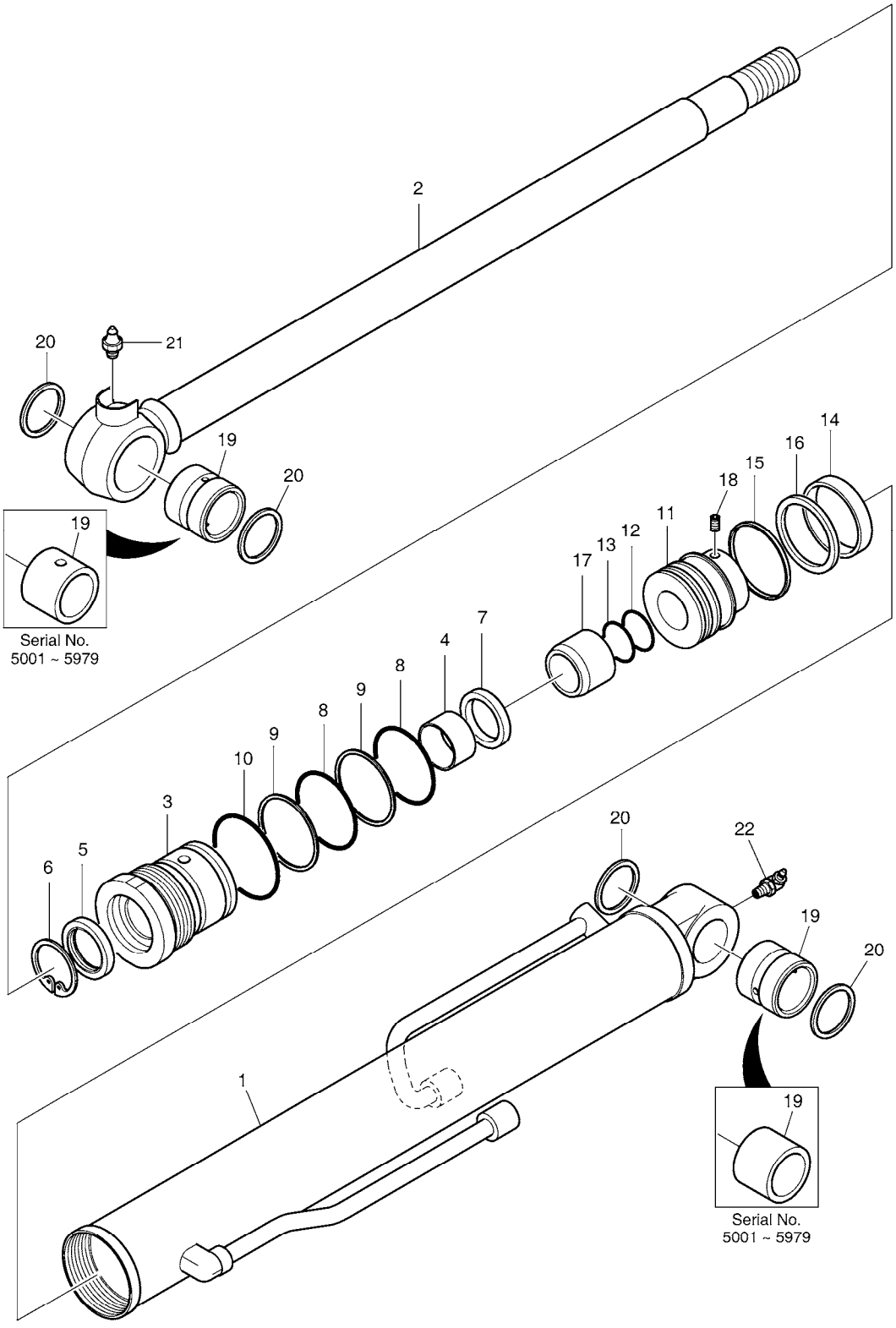

(THIS PARTS BOOK IS FOR REFERENCE ONLY.
PART NUMBERS AND SERAIL NUMBERS MAY BE
OUTDATED. ALWAYS USE THE ONLINE PARTS SYSTEM)

DATE	JAN. 04, 2013
3rd EDITION	

Fig. 4300 ARM CYLINDER VERIN DE BALANCIER

Serial No. ;

Key No.	Part No.	Description	Description	Q'ty	S.C	Serial No.	ICA	Replaceable part	
								Part No.	Q'ty
4300 --	K1015832	CYLINDER;ARM	VERIN DE BALANCIER	1		5001-5979	Y	400305-00223	1
	400305-00223	CYLINDER,ARM	VERIN DE BALANCIER	1		5980-			
1	K9005250	TUBE ASS'Y	TUYAU FLEXIBLE	1		5001-5979	Y	420406-01053	1
	420406-01053	TUBE ASSY	TUYAU FLEXIBLE	1		5980-			
2	K9005253	ROD ASS'Y	ENSEMBLE TIGE	1		5001-5979	Y	400337-00438	1
	400337-00438	ROD ASS'Y	ENSEMBLE TIGE	1		5980-			
3	K9005261	COVER;ROD	COUVERCLE	1		5001-5979	Y	K9005264	1
	K9005264	COVER;ROD	COUVERCLE	1		5980-			
4	1.110-00013	DU-BUSH	DOUILLE DU	1					
5	1.180-00492	WIPER;DUST	RACCORD ADAPTATEUR	1	K				
6	1.416-00004	STOPPER	ARRET	1					
7	K9005272	U-PACKING	JOINT EN U	1	K				
8	S8010651	O-RING	JOINT TORIQUE	2	K				
9	S8090650	RING;BACK-UP	BAGUE DE SOUTIEN	2	K				
10	S8010701	O-RING	JOINT CIRCULAIRE	1	K				
11	K9005259	PISTON	PISTON	1					
12	S8000351	O-RING	JOINT TORIQUE	1	K				
13	1.180-00257	RING;BACK UP	BAGUE	1	K				
14	1.180-00406	RING;WEAR	BAGUE D'USURE	1	K				
15	1.180-00329	RING;DUST	BAGUE	1	K				
16	K9005275	SEAL;SLIPPER	JOINT	1	K				
17	1.115-00186	RING;CUSHION	BAGUE	1					
18	1.120-00191	SCREW;SET	VIS	1		5001-5979			
	S3523806	SCREW;SET	VIS	1		5980-			
19	K1024127	BUSH	DOUILLE	2		5001-5979	Y	131008-00135	1
	131008-00135	BUSH	DOUILLE	2		5980-			
20	1.123-00095	PIN;WIPER	GOUPILLE	4					
21	S6710041	NIPPLE;GREASE	GRAISSEUR	1					
22	S6710153	NIPPLE;GREASE	GRAISSEUR	1					
*	K9005266	SEAL KIT;ARM CYL.	KIT DE JOINT	1					

(THIS PARTS BOOK IS FOR REFERENCE ONLY.
PART NUMBERS AND SERAIL NUMBERS MAY BE
OUTDATED. ALWAYS USE THE ONLINE PARTS SYSTEM)

DATE	JAN. 04, 2013
3rd EDITION	

Fig. 4310 BUCKET CYLINDER
VERIN DE GODET

Serial No. ;

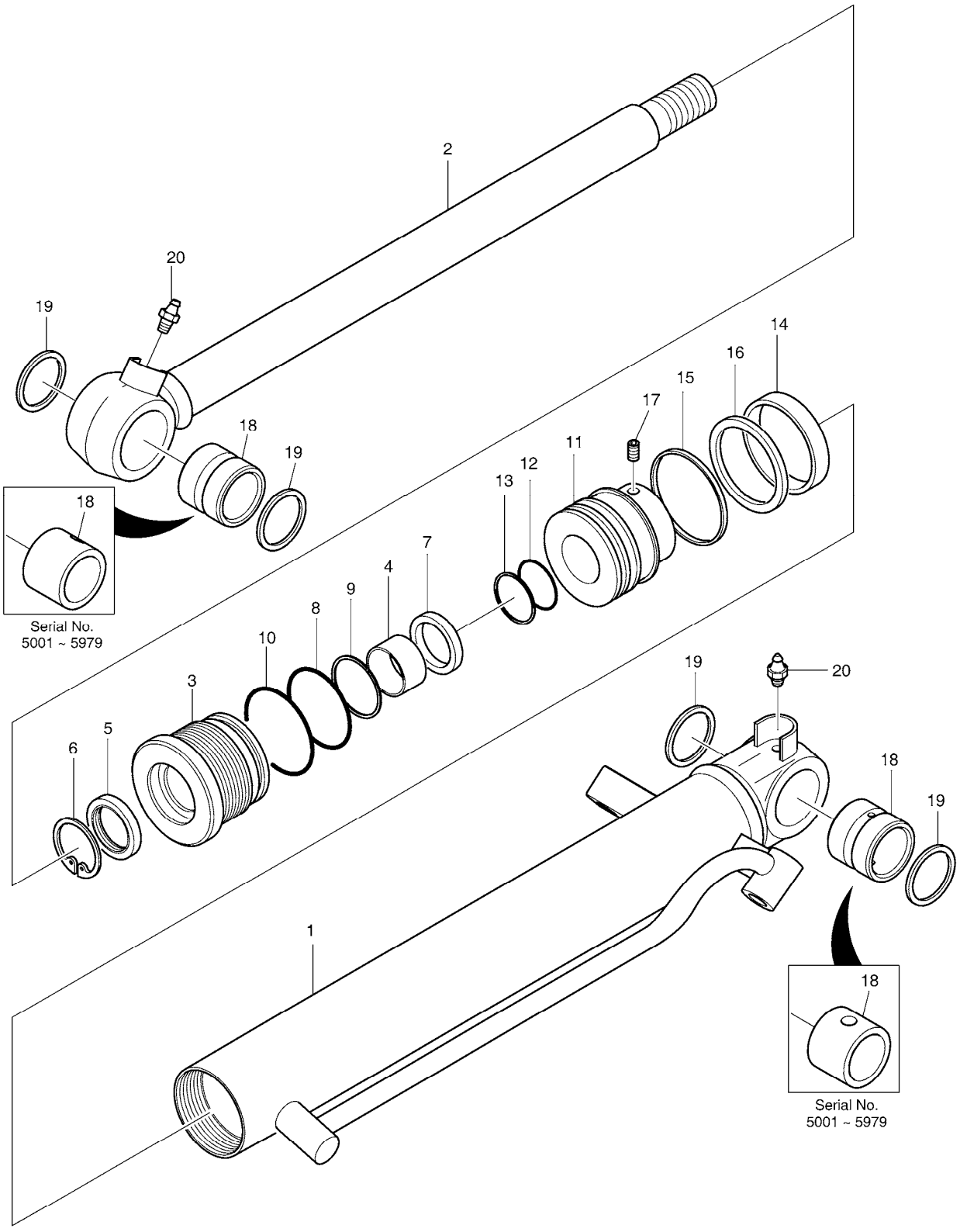

(THIS PARTS BOOK IS FOR REFERENCE ONLY.
PART NUMBERS AND SERAIL NUMBERS MAY BE
OUTDATED. ALWAYS USE THE ONLINE PARTS SYSTEM)

DATE	JAN. 04, 2013
3rd EDITION	

Fig. 4310 BUCKET CYLINDER VERIN DE GODET

Serial No. ;

Key No.	Part No.	Description	Description	Q'ty	S.C	Serial No.	ICA	Replaceable part	
								Part No.	Q'ty
4310 --	K1015833A	CYLINDER;BUCKET	VERIN DE GODET	1		5001-5979	Y	400310-00219	1
	400310-00219	CYLINDER,BUCKET	VERIN DE GODET	1		5980-			
1	K9005251	TUBE ASS'Y	TUYAU FLEXIBLE	1					
2	K9005256	ROD ASS'Y	ENSEMBLE TIGE	1					
3	K9005263	COVER;ROD	COUVERCLE	1					
4	1.110-00016	DU-BUSH	DOUILLE DU	1					
5	1.180-00493	WIPER;DUST	RACCORD ADAPTATEUR	1	K				
6	1.416-00005	STOPPER	ARRET	1					
7	K9005271	U-PACKING	JOINT EN U	1	K				
8	S8010601	O-RING 1BG-60	JOINT TORIQUE	1	K				
9	D501220	RING;BACK UP	BAGUE	1	K				
10	S8010651	O-RING	JOINT TORIQUE	1	K				
11	K9005260	PISTON	PISTON	1					
12	S8000351	O-RING	JOINT TORIQUE	1	K				
13	1.180-00257	RING;BACK UP	BAGUE	1	K				
14	D510117	RING;WEAR	BAGUE D'USURE	1	K				
15	K9005273	RING;DUST	BAGUE	1	K				
16	K9005274	SEAL;SLIPPER	JOINT	1	K				
17	K9005276	SCREW;SET	VIS	1		5001-5979			
	S3523806	SCREW;SET	VIS	1		5980-			
18	K1024127	BUSH	DOUILLE	2		5001-5979	Y	131008-00135	2
	131008-00135	BUSH	DOUILLE	2		5980-			
19	1.123-00095	PIN;WIPER	GOUPILLE	4					
20	S6710041	NIPPLE;GREASE	GRAISSEUR	2					
*	K9005268	SEAL KIT;BUCKET CYL	KIT DE JOINT	1					

(THIS PARTS BOOK IS FOR REFERENCE ONLY.
PART NUMBERS AND SERAIL NUMBERS MAY BE
OUTDATED. ALWAYS USE THE ONLINE PARTS SYSTEM)

DATE	JAN. 04, 2013
3rd EDITION	

Fig. 4320 BOOM SWING CYLINDER VERIN DE FLECHE

Serial No. ;

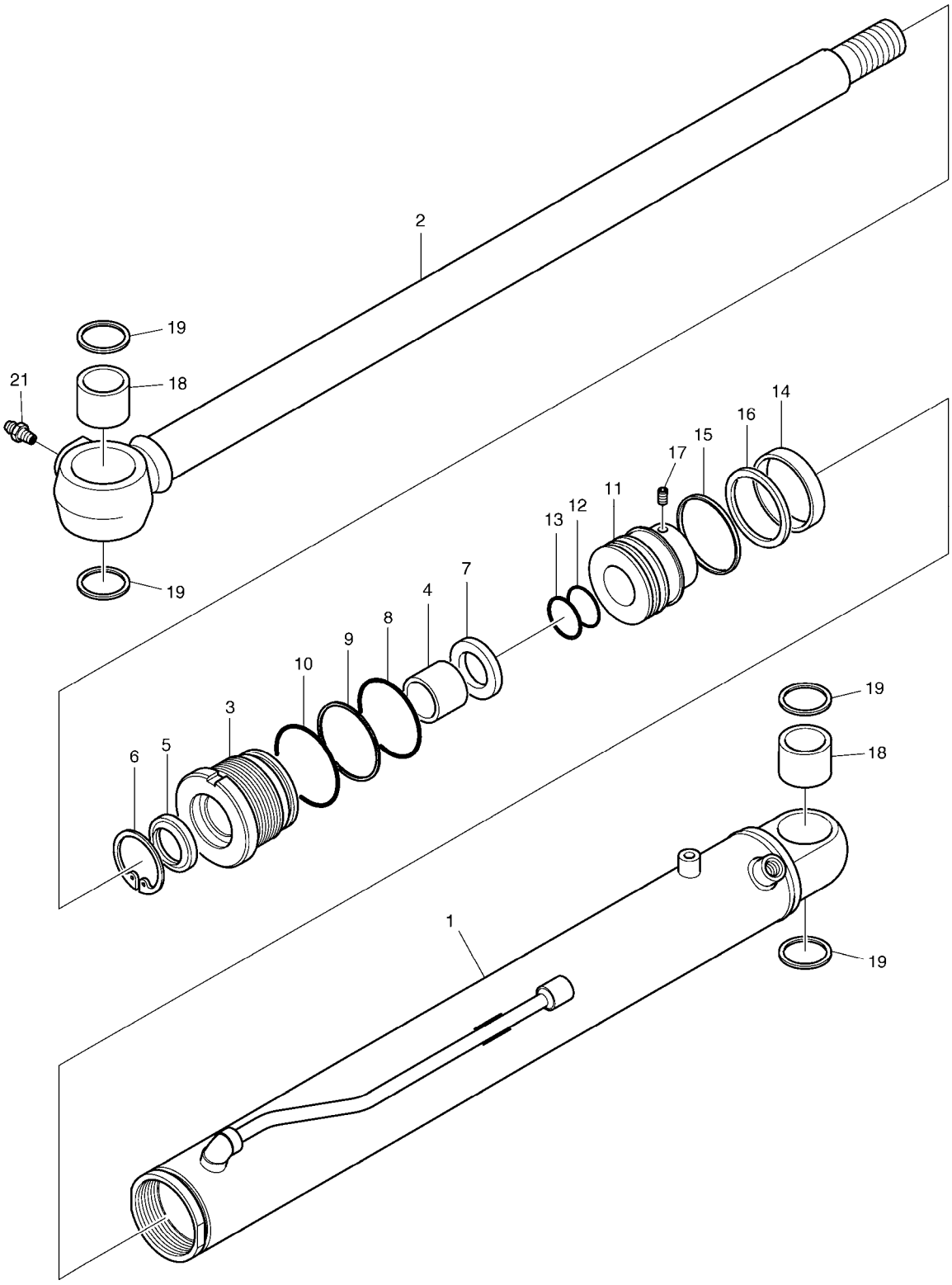

(THIS PARTS BOOK IS FOR REFERENCE ONLY.
PART NUMBERS AND SERAIL NUMBERS MAY BE
OUTDATED. ALWAYS USE THE ONLINE PARTS SYSTEM)

DATE	JAN. 04, 2013
3rd EDITION	

Fig. 4320 BOOM SWING CYLINDER VERIN DE FLECHE

Serial No. ;

Key No.	Part No.	Description	Description	Q'ty	S.C	Serial No.	ICA	Replaceable part	
								Part No.	Q'ty
4320 --	K1015455A	CYLINDER;BOOM SWING	CYLINDRE	1					
1	K9005252	TUBE ASS'Y	TUYAU FLEXIBLE	1					
2	K9005257	ROD ASS'Y	ENSEMBLE TIGE	1					
3	K9005265	COVER;ROD	COUVERCLE	1					
4	1.110-00016	DU-BUSH	DOUILLE DU	1					
5	1.180-00493	WIPER;DUST	RACCORD ADAPTATEUR	1	K				
6	1.416-00005	STOPPER	ARRET	1					
7	K9005271	U-PACKING	JOINT EN U	1	K				
8	S8010651	O-RING	JOINT TORIQUE	1	K				
9	D501220	RING;BACK UP	BAGUE	1	K				
10	S8010701	O-RING	JOINT CIRCULAIRE	1	K				
11	K9005258	PISTON	PISTON	1					
12	S8000351	O-RING	JOINT TORIQUE	1	K				
13	1.180-00257	RING;BACK UP	BAGUE	1	K				
14	1.180-00406	RING;WEAR	BAGUE D'USURE	1	K				
15	1.180-00329	RING;DUST	BAGUE	1	K				
16	1.180-00444	SEAL;SLIPPER	JOINT	1	K				
17	1.120-00191	SCREW;SET	VIS	1					
18	K9005277	BUSH	DOUILLE	2					
19	1.123-00095	PIN;WIPER	GOUPILLE	4					
21	S6710041	NIPPLE;GREASE	GRAISSEUR	1					
*	K9005270	SEAL KIT;BOOM SWING CYL.	KIT DE JOINT	1					

(THIS PARTS BOOK IS FOR REFERENCE ONLY.
PART NUMBERS AND SERAIL NUMBERS MAY BE
OUTDATED. ALWAYS USE THE ONLINE PARTS SYSTEM)

DATE	JAN. 04, 2013
3rd EDITION	

Fig. 4330 DOZER CYLINDER
CYLINDRE DE DOZER

Serial No. ;

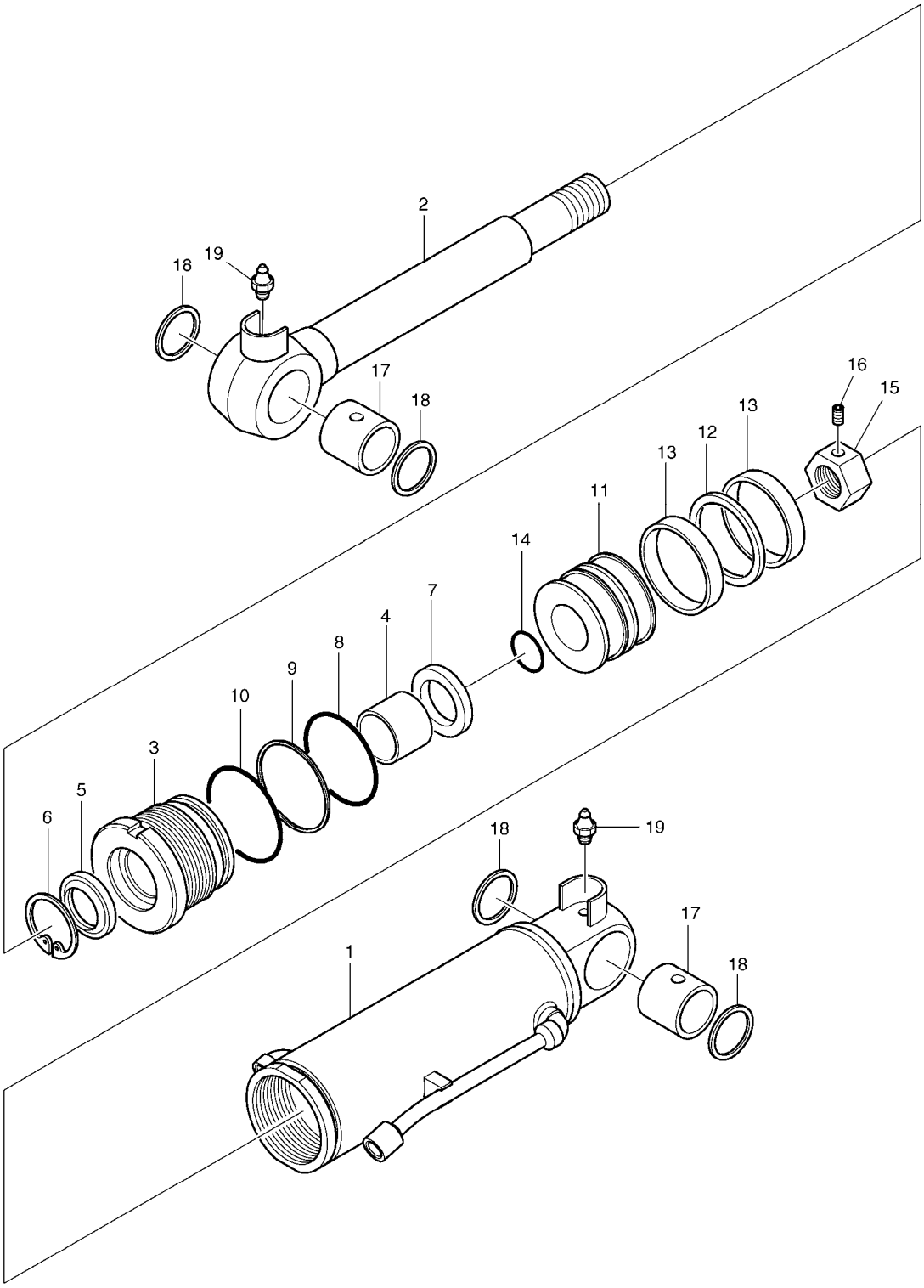

(THIS PARTS BOOK IS FOR REFERENCE ONLY.
PART NUMBERS AND SERAIL NUMBERS MAY BE
OUTDATED. ALWAYS USE THE ONLINE PARTS SYSTEM)

DATE	JAN. 04, 2013
3rd EDITION	

Fig. 4330 DOZER CYLINDER / CYLINDRE DE DOZER

Serial No. ;

Key No.	Part No.	Description	Description	Q'ty	S.C	Serial No.	ICA	Replaceable part	
								Part No.	Q'ty
4330 --	K1014432	CYLINDER;DOZER	CYLINDRE DE DOZER	1					
1	K9005248	TUBE ASS'Y	TUYAU FLEXIBLE	1					
2	K9005255	ROD ASS'Y	ENSEMBLE TIGE	1					
3	K9005262	COVER;ROD	COUVERCLE	1					
4	1.110-00017	DU-BUSH	DOUILLE DU	1					
5	1.180-00492	WIPER;DUST	RACCORD ADAPTATEUR	1	K				
6	1.416-00004	STOPPER	ARRET	1					
7	K9005272	U-PACKING	JOINT EN U	1	K				
8	S8010701	O-RING	JOINT CIRCULAIRE	1	K				
9	1.180-00259	RING;BACK UP	BAGUE	1	K				
10	S8010751	O-RING	JOINT TORIQUE	1	K				
11	1.409-00061	PISTON	PISTON	1					
12	1.180-00562	SEAL;SLIPPER	JOINT	1	K				
13	1.180-00407	RING;WEAR	BAGUE D'USURE	2	K				
14	S8000315	O-RING	JOINT TORIQUE	1	K				
15	K9004934	NUT	ECROU	1					
16	S3523403	SCREW;SET	VIS	1					
17	1.110-00015	BUSH	DOUILLE	2					
18	1.123-00095	PIN;WIPER	GOUPILLE	4					
19	S6710041	NIPPLE;GREASE	GRAISSEUR	2					
*	K9005269	SEAL KIT;DOZER CYL.	CYLINDRE DE DOZER	1					

(THIS PARTS BOOK IS FOR REFERENCE ONLY.
PART NUMBERS AND SERAIL NUMBERS MAY BE
OUTDATED. ALWAYS USE THE ONLINE PARTS SYSTEM)

DATE	JAN. 04, 2013
3rd EDITION	

Fig. 4340 CONTROL VALVE DISTRIBUTEUR

Serial No. ;

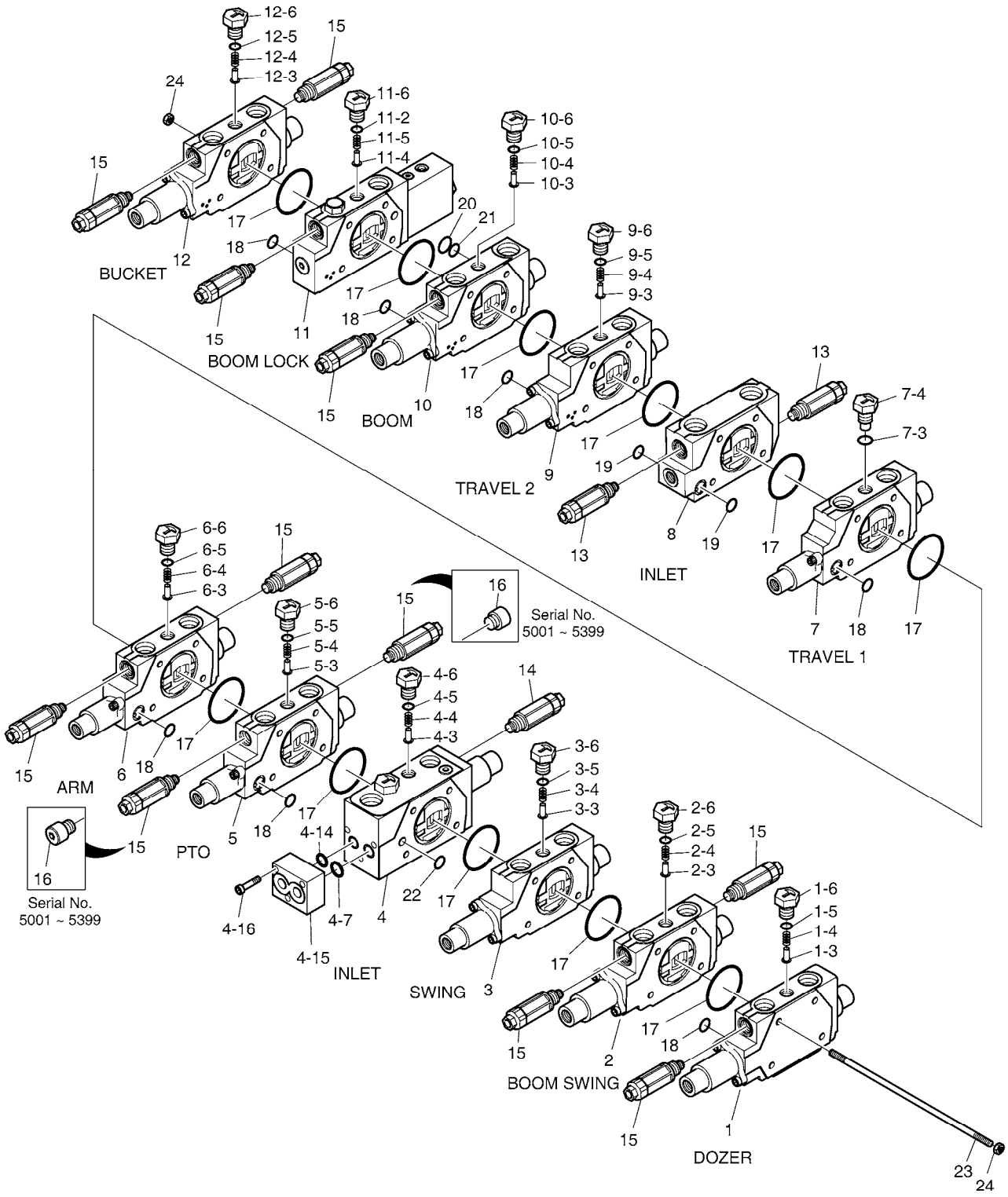

(THIS PARTS BOOK IS FOR REFERENCE ONLY.
PART NUMBERS AND SERAIL NUMBERS MAY BE
OUTDATED. ALWAYS USE THE ONLINE PARTS SYSTEM)

DATE	JAN. 04, 2013
3rd EDITION	

Fig. 4340 CONTROL VALVE DISTRIBUTEUR

Serial No. ;

Key No.	Part No.	Description	Description	Q'ty	S.C	Serial No.	ICA	Replaceable part	
								Part No.	Q'ty
4340 --	K1017285B	CONTROL VALVE	TIROIR DE COMMANDE	1		5001-5399	I	410105-00144	1
	410105-00144	VALVE,CONTROL	TIROIR DE COMMANDE	1		5400-			
1	K9005331	BLOCK ASS'Y-DOZER	ENSEMBLE DE BLOC	1					
1-3	K9004977	. POPPET;CHECK	. POUPEE	1					
1-4	K9004988	. SPRING;CHECK	. RESSORT	1					
1-5	S8000111	. O-RING	. JOINT CIRCULAIRE	1					
1-6	K9004981	. PLUG;CHECK	. BOUCHON	1					
2	K9005332	BLOCK ASS'Y-BOOM SWING	ENSEMBLE DE BLOC	1					
2-3	K9004977	. POPPET;CHECK	. POUPEE	1					
2-4	K9004988	. SPRING;CHECK	. RESSORT	1					
2-5	S8000111	. O-RING	. JOINT CIRCULAIRE	1					
2-6	K9004981	. PLUG;CHECK	. BOUCHON	1					
3	K9005333	BLOCK ASS'Y-SWING	ENSEMBLE DE BLOC	1					
3-3	K9004977	. POPPET;CHECK	. POUPEE	1					
3-4	K9004988	. SPRING;CHECK	. RESSORT	1					
3-5	S8000111	. O-RING	. JOINT CIRCULAIRE	1					
3-6	K9004981	. PLUG;CHECK	. BOUCHON	1					
4	K9005334	BLOCK P	BLOC	1					
4-3	K9004976	. POPPET;CHECK	. POUPEE	2					
4-4	K9004989	. SPRING;CHECK	. RESSORT	2					
4-5	S8000111	. O-RING	. JOINT CIRCULAIRE	2					
4-6	K9004982	. PLUG;CHECK	. BOUCHON	2					
4-7	K9004987	. O-RING	. JOINT TORIQUE	2					
4-14	S8000101	. O-RING	. JOINT TORIQUE	1					
4-15	K9004965	. BODY;PILOT	. CORPS PILOTE	1					
4-16	S2203763	. BOLT;SOCKET	. BOULON A 6 PANS CREUX	3					
5	K9004969	BLOCK ASS'Y-PTO	ENSEMBLE DE BLOC	1					
5-3	K9004983	. POPPET;CHECK	. POUPEE	1					
5-4	K9004990	. SPRING;CHECK	. RESSORT	1					
5-5	S8000111	. O-RING	. JOINT CIRCULAIRE	1					
5-6	K9004984	. PLUG;CHECK	. BOUCHON	1					
6	K9005335	BLOCK ASS'Y-ARM	ENSEMBLE DE BLOC	1					
6-3	K9004977	. POPPET;CHECK	. POUPEE	1					
6-4	K9004988	. SPRING;CHECK	. RESSORT	1					
6-5	S8000111	. O-RING	. JOINT CIRCULAIRE	1					
6-6	K9004981	. PLUG;CHECK	. BOUCHON	1					
7	K9005336	BLOCK ASS'Y-TRAVEL	ENSEMBLE DE BLOC	1					
7-3	S8000111	. O-RING	. JOINT CIRCULAIRE	1					

(THIS PARTS BOOK IS FOR REFERENCE ONLY.
PART NUMBERS AND SERIAL NUMBERS MAY BE
OUTDATED. ALWAYS USE THE ONLINE PARTS SYSTEM)

DATE	JAN. 04, 2013
3rd EDITION	

Fig. 4340 CONTROL VALVE DISTRIBUTEUR

Serial No. ;

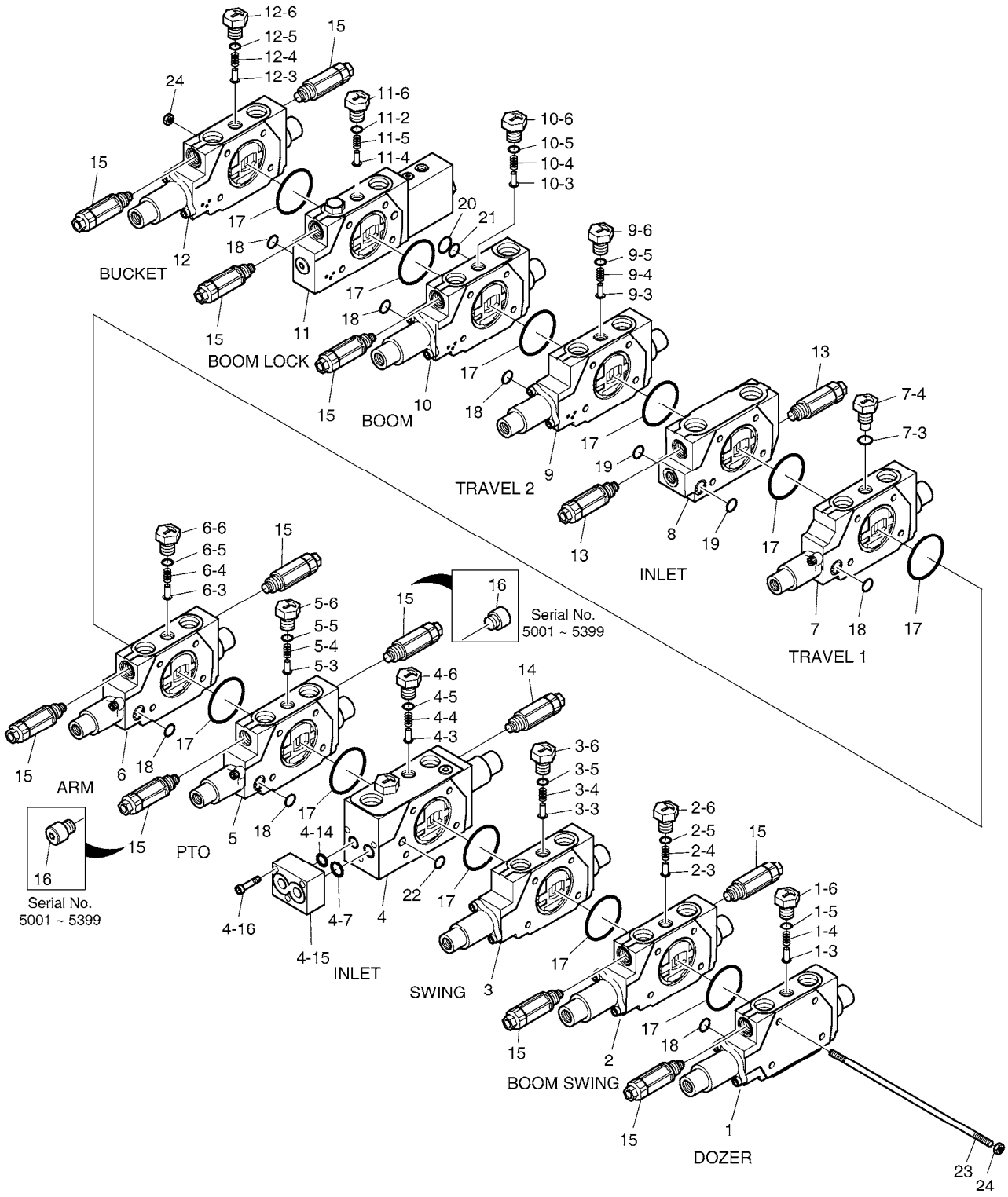

(THIS PARTS BOOK IS FOR REFERENCE ONLY.
PART NUMBERS AND SERAIL NUMBERS MAY BE
OUTDATED. ALWAYS USE THE ONLINE PARTS SYSTEM)

Fig. 4340 CONTROL VALVE DISTRIBUTEUR

Serial No. ;

Key No.	Part No.	Description	Description	Q'ty	S.C	Serial No.	ICA	Replaceable part	
								Part No.	Q'ty
4340 -7-4	K9004982	. PLUG;CHECK	. BOUCHON	1					
8	K9004964	BLOCK ASS'Y-INLET	ENSEMBLE DE BLOC	1					
9	K9005337	BLOCK ASS'Y-TRAVEL	ENSEMBLE DE BLOC	1					
9-3	K9004976	. POPPET;CHECK	. POUPEE	1					
9-4	K9004989	. SPRING;CHECK	. RESSORT	1					
9-5	S8000111	. O-RING	. JOINT CIRCULAIRE	1					
9-6	K9004982	. PLUG;CHECK	. BOUCHON	1					
10	K9005338	BLOCK ASS'Y-BOOM	ENSEMBLE DE BLOC	1					
10-3	K9004977	. POPPET;CHECK	. POUPEE	1					
10-4	K9004988	. SPRING;CHECK	. RESSORT	1					
10-5	S8000111	. O-RING	. JOINT CIRCULAIRE	1					
10-6	K9004981	. PLUG;CHECK	. BOUCHON	1					
11	K9004974	BLOCK ASS'Y-BOOM LOCK VALV	ENSEMBLE DE BLOC	1					
11-2	S8000111	. O-RING	. JOINT CIRCULAIRE	2					
11-4	K9004976	. POPPET;CHECK	. POUPEE	1					
11-5	K9004989	. SPRING;CHECK	. RESSORT	1					
11-6	K9004982	. PLUG;CHECK	. BOUCHON	1					
12	K9005339	BLOCK ASS'Y-BUCKET	ENSEMBLE DE BLOC	1					
12-3	K9004977	. POPPET;CHECK	. POUPEE	1					
12-4	K9004988	. SPRING;CHECK	. RESSORT	1					
12-5	S8000111	. O-RING	. JOINT CIRCULAIRE	1					
12-6	K9004981	. PLUG;CHECK	. BOUCHON	1					
13	K9005342	VALVE;MAIN RELIEF	VANNE	2					
14	K9005340	VALVE;MAIN RELIEF	VANNE	1					
15	K9005341	VALVE;OVERLOAD RELIEF	CLAPET DE DECHARGE	9		5001-5399			
	K9005341	VALVE;OVERLOAD RELIEF	CLAPET DE DECHARGE	11		5400-			
16	K9004980	PLUG;RELIEF	BOUCHON	2		5001-5399			
17	2180-1217D116	O-RING	JOINT TORIQUE	11					
18	S8000180	O-RING	JOINT TORIQUE	7					
19	S8000201	O-RING	JOINT TORIQUE	2					
20	S8000101	O-RING	JOINT TORIQUE	1					
21	S8000091	O-RING	JOINT CIRCULAIRE	1					
22	S8000060	O-RING	JOINT TORIQUE	1					
23	K9004986	BOLT;TIE	BOULON	4					
24	S4010503	NUT	ECROU	4					

(THIS PARTS BOOK IS FOR REFERENCE ONLY.
PART NUMBERS AND SERAIL NUMBERS MAY BE
OUTDATED. ALWAYS USE THE ONLINE PARTS SYSTEM)

DATE	JAN. 04, 2013
3rd EDITION	

Fig. 4350 BOOM CYLINDER - LOCK VALVE
VERIN DE FLECHE

Serial No. ;

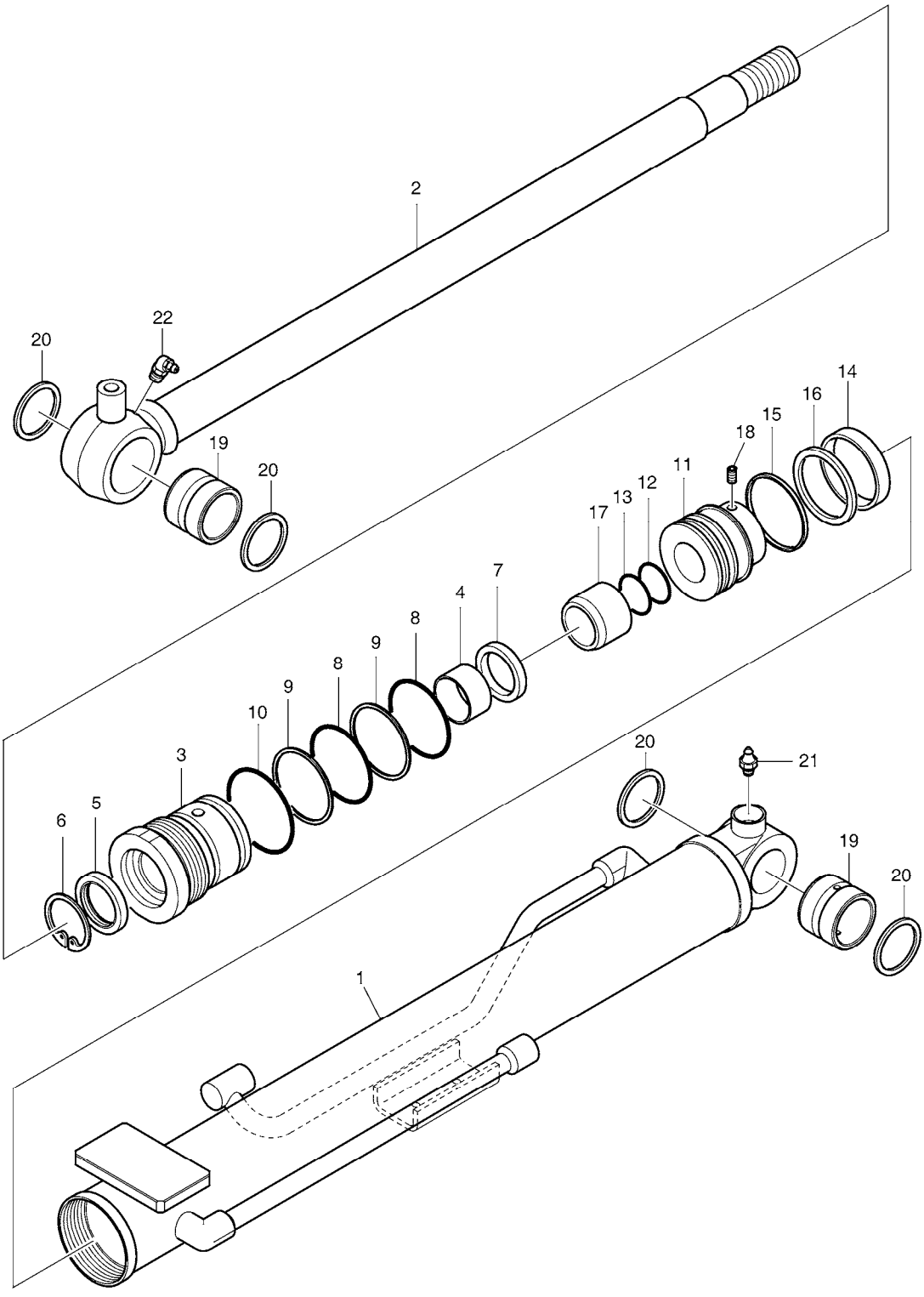

(THIS PARTS BOOK IS FOR REFERENCE ONLY.
PART NUMBERS AND SERAIL NUMBERS MAY BE
OUTDATED. ALWAYS USE THE ONLINE PARTS SYSTEM)

DATE	JAN. 04, 2013
3rd EDITION	

Fig. 4350 BOOM CYLINDER - LOCK VALVE VERIN DE FLECHE

Serial No. ;

Key No.	Part No.	Description	Description	Q'ty	S.C	Serial No.	ICA	Replaceable part	
								Part No.	Q'ty
4350 --	400309-00443	CYLINDER,BOOM;LOCK VALVE	VERIN DE FLECHE	1					
1	420406-01246	TUBE ASSY	TUYAU FLEXIBLE	1					
2	K9005254	ROD ASS'Y	ENSEMBLE TIGE	1					
3	K9005264	COVER;ROD	COUVERCLE	1					
4	1.110-00013	DU-BUSH	DOUILLE DU	1					
5	1.180-00492	WIPER;DUST	RACCORD ADAPTATEUR	1	K				
6	1.416-00004	STOPPER	ARRET	1					
7	K9005272	U-PACKING	JOINT EN U	1	K				
8	S8010651	O-RING	JOINT TORIQUE	2	K				
9	S8090650	RING;BACK-UP	BAGUE DE SOUTIEN	2	K				
10	S8010701	O-RING	JOINT CIRCULAIRE	1	K				
11	K9005259	PISTON	PISTON	1					
12	S8000351	O-RING	JOINT TORIQUE	1	K				
13	1.180-00257	RING;BACK UP	BAGUE	1	K				
14	1.180-00406	RING;WEAR	BAGUE D'USURE	1	K				
15	1.180-00329	RING;DUST	BAGUE	1	K				
16	K9004956	RING;GLYD	BAGUE	1	K				
17	1.115-00187	RING;CUSHION	BAGUE	1					
18	1.120-00191	SCREW;SET	VIS	1					
19	131008-00134	BUSHING	DOUILLE	2					
20	1.123-00094	PIN;WIPER	GOUPILLE	4					
21	S6710041	NIPPLE;GREASE	GRAISSEUR	1					
22	S6710102	NIPPLE;GREASE	GRAISSEUR	1					
*	K9005267	SEAL KIT;BOOM CYL.	KIT DE JOINT	1					

(THIS PARTS BOOK IS FOR REFERENCE ONLY.
PART NUMBERS AND SERAIL NUMBERS MAY BE
OUTDATED. ALWAYS USE THE ONLINE PARTS SYSTEM)

DATE	JAN. 04, 2013
3rd EDITION	

Fig. 4360 ARM CYLINDER - LOCK VALVE
VERIN DE BALANCIER

Serial No. ;

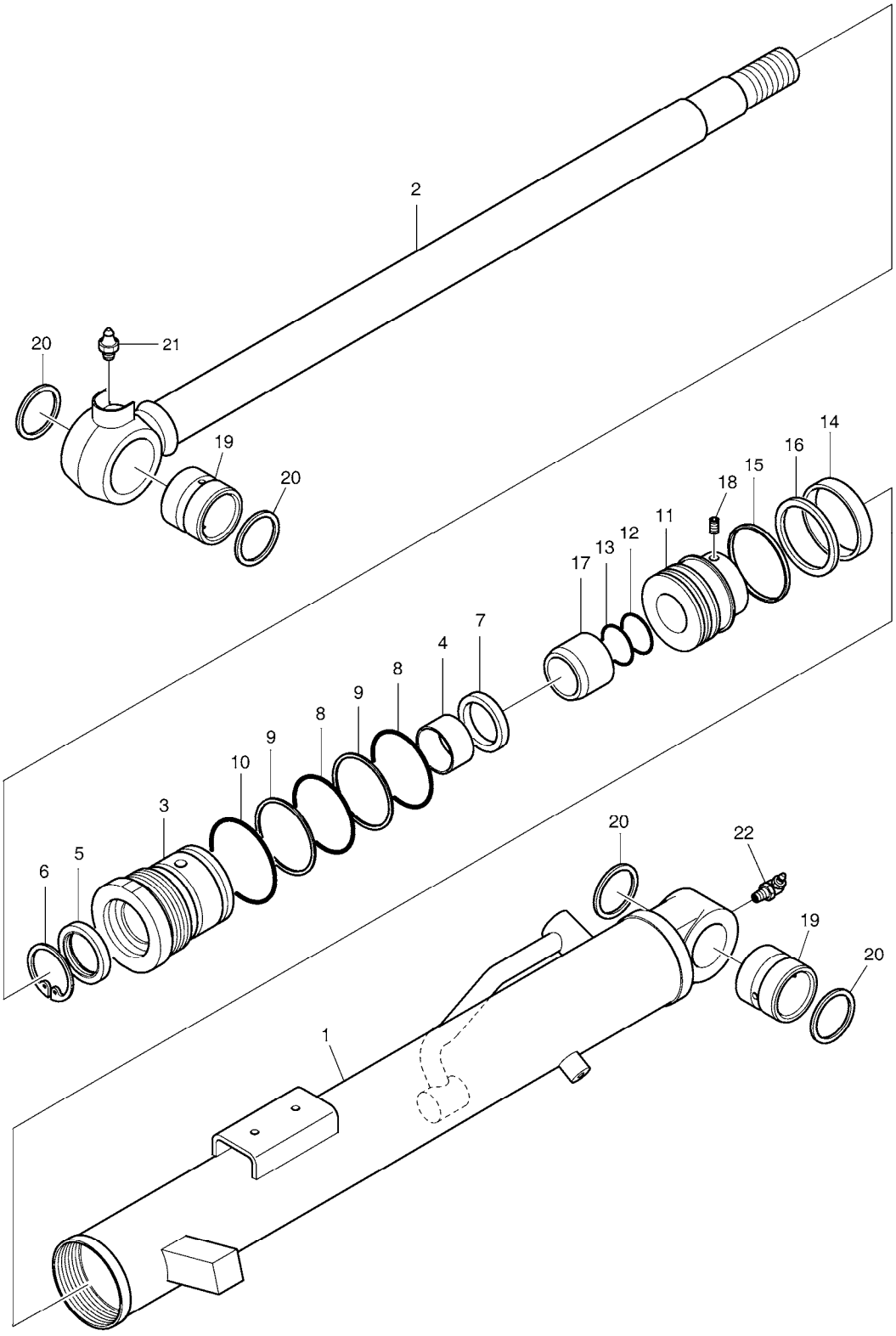

(THIS PARTS BOOK IS FOR REFERENCE ONLY.
PART NUMBERS AND SERAIL NUMBERS MAY BE
OUTDATED. ALWAYS USE THE ONLINE PARTS SYSTEM)

DATE	JAN. 04, 2013
3rd EDITION	

Fig. 4360 ARM CYLINDER - LOCK VALVE VERIN DE BALANCIER

Serial No. ;

Key No.	Part No.	Description	Description	Q'ty	S.C	Serial No.	ICA	Replaceable part	
								Part No.	Q'ty
4360 --	400305-00277	CYLINDER,ARM;LOCK VALVE	VERIN DE BALANCIER	1					
1	420406-01247	TUBE ASSY	TUYAU FLEXIBLE	1					
2	400337-00438	ROD ASS'Y	ENSEMBLE TIGE	1					
3	K9005264	COVER;ROD	COUVERCLE	1					
4	1.110-00013	DU-BUSH	DOUILLE DU	1					
5	1.180-00492	WIPER;DUST	RACCORD ADAPTATEUR	1	K				
6	1.416-00004	STOPPER	ARRET	1					
7	K9005272	U-PACKING	JOINT EN U	1	K				
8	S8010651	O-RING	JOINT TORIQUE	2	K				
9	S8090650	RING;BACK-UP	BAGUE DE SOUTIEN	2	K				
10	S8010701	O-RING	JOINT CIRCULAIRE	1	K				
11	K9005259	PISTON	PISTON	1					
12	S8000351	O-RING	JOINT TORIQUE	1	K				
13	1.180-00257	RING;BACK UP	BAGUE	1	K				
14	1.180-00406	RING;WEAR	BAGUE D'USURE	1	K				
15	1.180-00329	RING;DUST	BAGUE	1	K				
16	K9005275	SEAL;SLIPPER	JOINT	1	K				
17	1.115-00186	RING;CUSHION	BAGUE	1					
18	S3523806	SCREW;SET	VIS	1					
19	131008-00135	BUSH	DOUILLE	2					
20	1.123-00095	PIN;WIPER	GOUPILLE	4					
21	S6710041	NIPPLE;GREASE	GRAISSEUR	1					
22	S6710153	NIPPLE;GREASE	GRAISSEUR	1					
*	K9005266	SEAL KIT;ARM CYL.	KIT DE JOINT	1					

(THIS PARTS BOOK IS FOR REFERENCE ONLY.
PART NUMBERS AND SERAIL NUMBERS MAY BE
OUTDATED. ALWAYS USE THE ONLINE PARTS SYSTEM)

DATE	JAN. 04, 2013
3rd EDITION	

Fig. 5100 TOOLS OUTILLAGE

Serial No. ;

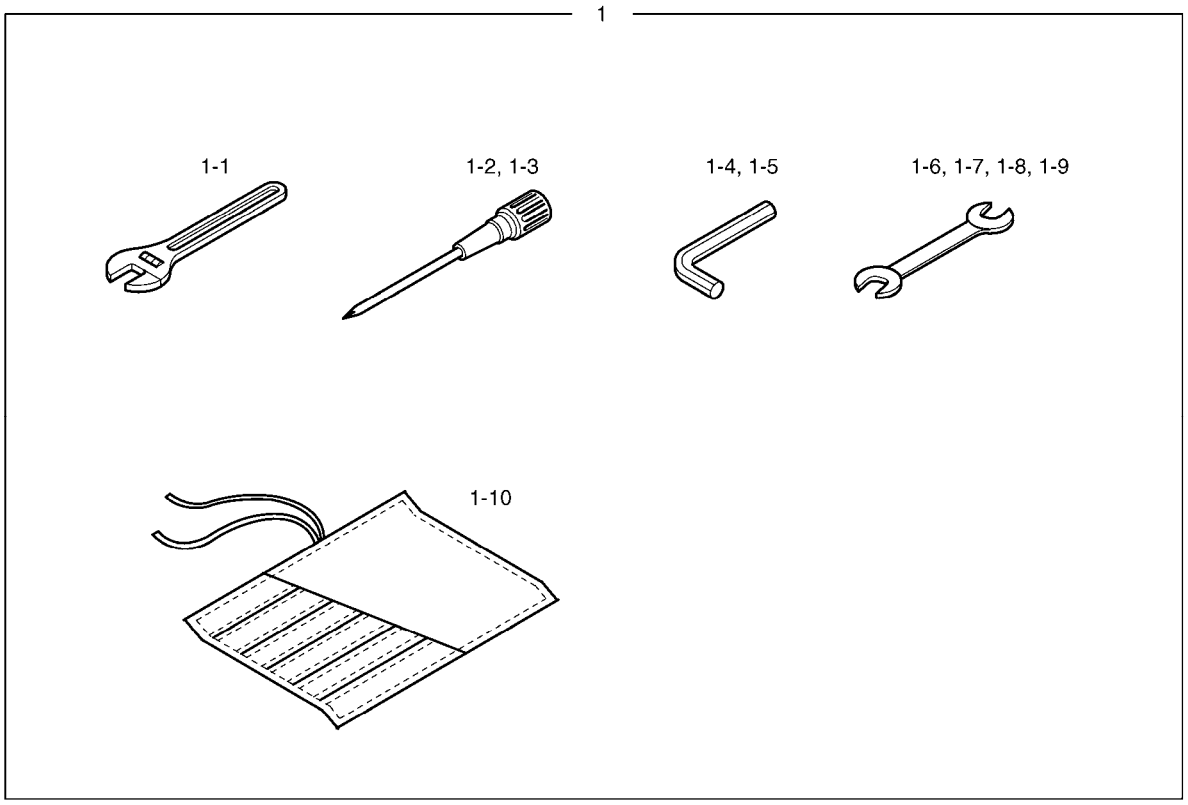

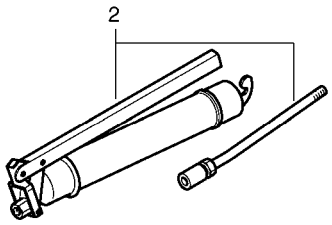

(THIS PARTS BOOK IS FOR REFERENCE ONLY.
PART NUMBERS AND SERAIL NUMBERS MAY BE
OUTDATED. ALWAYS USE THE ONLINE PARTS SYSTEM)

DATE	JAN. 04, 2013
3rd EDITION	

Fig. 5100 TOOLS OUTILLAGE

Serial No. ;

Key No.	Part No.	Description	Description	Q'ty	S.C	Serial No.	ICA	Replaceable part	
								Part No.	Q'ty
5100 --	K1030863	TOOLS	OUTILLAGE	-	D				
1	2199-1063F41	TOOL ASS'Y	ENSEMBLE OUTILLAGE	1					
1-1	T6580016	. WRENCH;ADJUST	. CLE A MOLETTE	1					
1-2	T7050003	. DRIVER(-)	. CONDUCTEUR	1					
1-3	T7050021	. DRIVER	. CONDUCTEUR	1					
1-4	T6550005	. L-WRENCH	. CLE MALE	1					
1-5	T6550009	. L-WRENCH	. CLE MALE	1					
1-6	T6510062	. SPANNER	. CLE PLATE	1					
1-7	T6500066	. SPANNER 10X13	. CLE PLATE	1					
1-8	T6510072	. SPANNER	. CLE PLATE	1					
1-9	T6510079	. SPANNER 22x24	. CLE PLATE	1					
1-10	K1033244	. SACK;TOOL	. ENSEMBLE OUTILLAGE	1					
2	2199-9008	GREASE GUN	PISTOLET DE GRAISSAGE	1					

(THIS PARTS BOOK IS FOR REFERENCE ONLY.
PART NUMBERS AND SERAIL NUMBERS MAY BE
OUTDATED. ALWAYS USE THE ONLINE PARTS SYSTEM)

DATE	JAN. 04, 2013
3rd EDITION	

Fig. 5110 SPARE PARTS PIECES DE RECHANGE

Serial No. ;

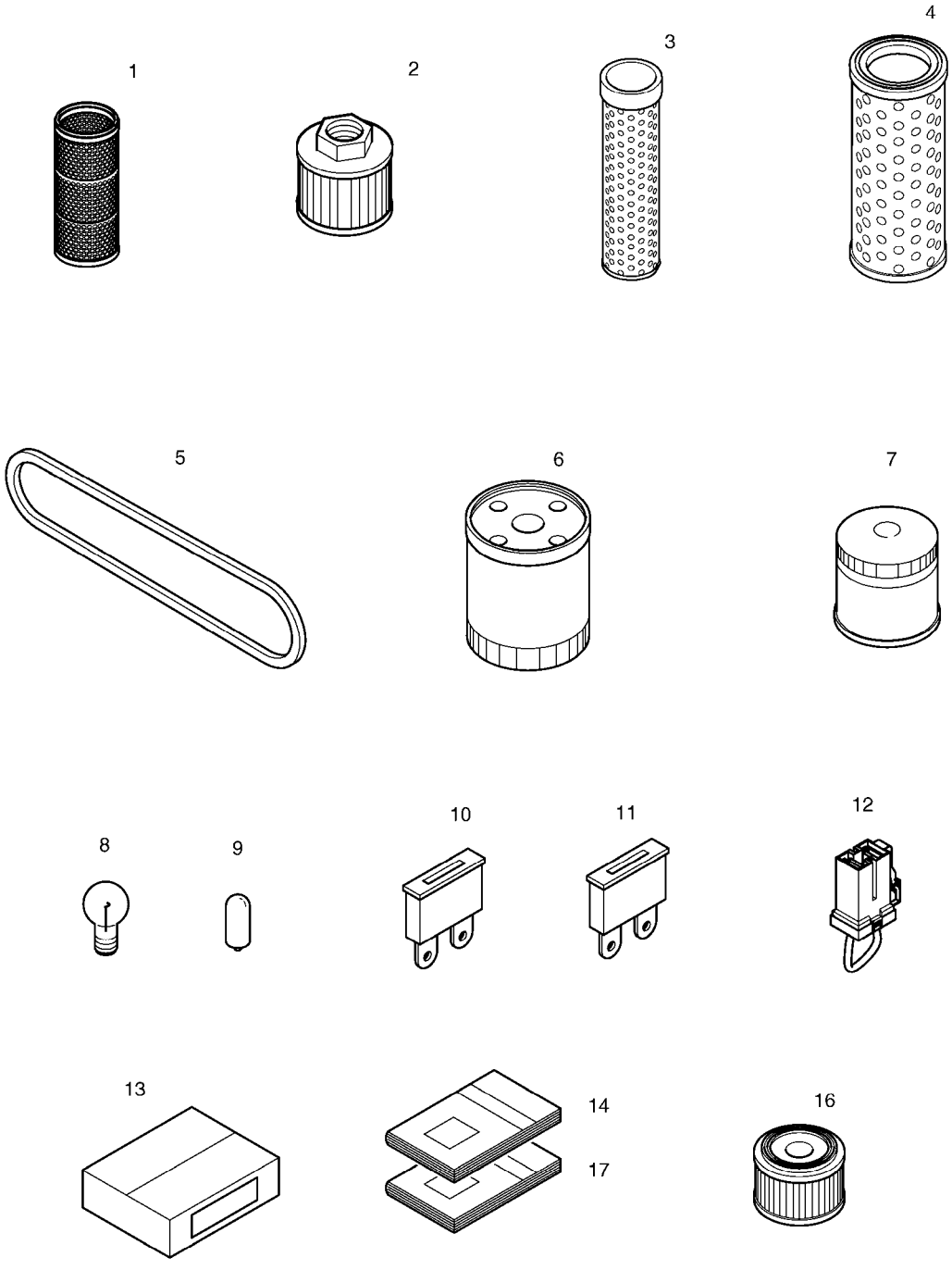

(THIS PARTS BOOK IS FOR REFERENCE ONLY.
PART NUMBERS AND SERAIL NUMBERS MAY BE
OUTDATED. ALWAYS USE THE ONLINE PARTS SYSTEM)

DATE	JAN. 04, 2013
3rd EDITION	

Fig. 5110 SPARE PARTS PIECES DE RECHANGE

Serial No. ;

Key No.	Part No.	Description	Description	Q'ty	S.C	Serial No.	ICA	Replaceable part	
								Part No.	Q'ty
5110 --	K1030807B	SPARE PARTS	PIECES DE RECHANGE	-	D				
1	K1011327	ELEMENT;RETURN FILTER	ELEMENT	1					
2	K1011555	FILTER;SUCTION	FILTRE	1					
3	K1025337	ELEMENT;AIR(INNER)	ELEMENT	1					
4	K1025338	ELEMENT;AIR(OUTER)	ELEMENT	1					
5	DS3202026	BELT;FAN	COURROIE	1					
6	K1025335	FILTER;FUEL	FILTRE	1		5001-5252	I	K1045098	1
	K1045098	FILTER;E/G FUEL	FILTRE	1		5253-			
7	K1025334	FILTER;OIL	FILTRE	1					
8	2515-1016D2	BULB 12V 55W	AMPOULE	1					
9	515-00001A	BULB	AMPOULE	2					
10	2527-1017	FUSE;BLADE 15A	FUSIBLE	2					
11	2527-1016	FUSE;BLADE 10A	FUSIBLE	2					
12	527-00004	FUSIBLE LINK	FUSIBLE	1					
13	2512-9007	BOX;SPARE	BOITE	1					
14	K1028287EF	PARTS BOOK	CATALOGUE DES PIECES D	1					
16	K1029257	ELEMENT;AIR BREATHER	ELEMENT	1		5095-			
17	K1028289E	OPERATION MANUAL	MANUEL D'OPERATION	1					

(THIS PARTS BOOK IS FOR REFERENCE ONLY.
PART NUMBERS AND SERAIL NUMBERS MAY BE
OUTDATED. ALWAYS USE THE ONLINE PARTS SYSTEM)

DATE	JAN. 04, 2013
3rd EDITION	

Fig. 5120 DECAL - EXPORT DECALQUE

Serial No. ;

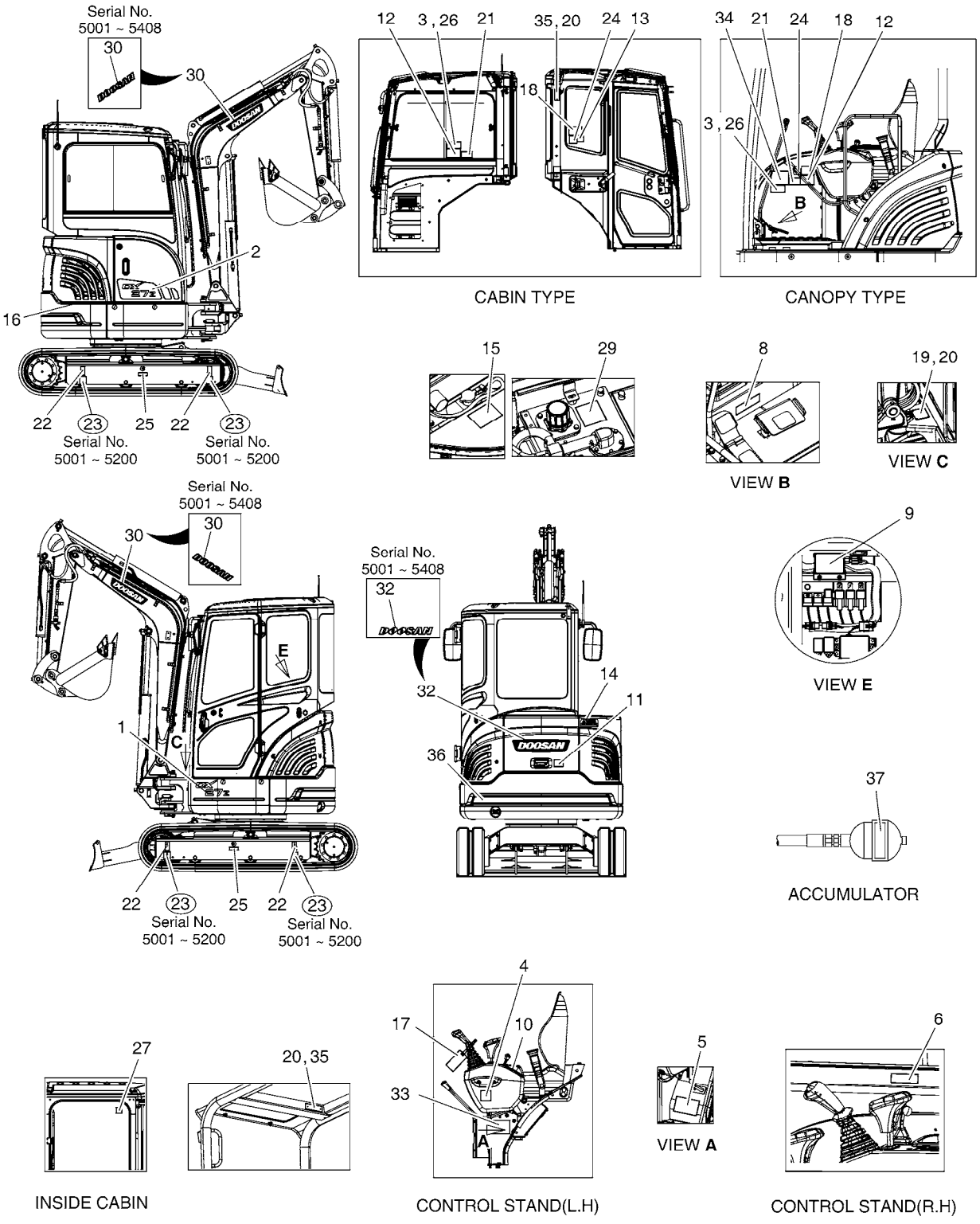

(THIS PARTS BOOK IS FOR REFERENCE ONLY.
PART NUMBERS AND SERAIL NUMBERS MAY BE
OUTDATED. ALWAYS USE THE ONLINE PARTS SYSTEM)

DATE	JAN. 04, 2013
3rd EDITION	

Fig. 5120 DECAL - EXPORT DECALQUE

Serial No. ;

Key No.	Part No.	Description	Description	Q'ty	S.C	Serial No.	ICA	Replaceable part	
								Part No.	Q'ty
5120 --	K1029428J	NAME PLATE ASS'Y	PLAQUE D'IDENTIFICATION	-	D	5001-5408			
	950205-00681	DECAL ASSY;EXPORT	DECALQUE D'IDENTIFICAT	-	D	5409-			
1	K1029404	PLATE;NAME	PLAQUE	1					
2	K1029405	PLATE;NAME	PLAQUE	1					
3	2190-3297	PLATE;NAME	PLAQUE	1					
4	2190-3309	PLATE;NAME(LEVER LOCK)	PLAQUE D`IDENTIFICATION	1					
5	K1029444	DECAL	DECALQUE	1		5001-5200	I	K1029444A	1
	K1029444A	DECAL	DECALQUE	1		5201-			
6	2190-2878	PLATE;NAME	PLAQUE D`IDENTIFICATION	1					
8	K1028331	PLATE;NAME	PLAQUE	1					
9	K1030452	NAME PLATE;FUSE BOX	PLAQUE	1					
10	2190-2633	PLATE;NAME	PLAQUE D'IDENTIFICATION	1					
11	190-00694	PLATE;NAME	PLAQUE D'IDENTIFICATION	1					
12	190-00688	PLATE;NAME	PLAQUE D'IDENTIFICATION	1					
13	2190-3388	PLATE;NAME	PLAQUE D'IDENTIFICATION	1					
14	K1033082	DECAL(DANGER)	DECALQUE	1					
15	190-00692	PLATE;NAME	PLAQUE D'IDENTIFICATION	1					
16	2190-2533A	PLATE;NAME	PLAQUE D'IDENTIFICATION	1					
17	190-00695	PLATE;NAME	PLAQUE D'IDENTIFICATION	1					
18	2190-3386A	PLATE;NAME	PLAQUE D'IDENTIFICATION	1					
19	K1011647B	PLATE;NAME	PLAQUE D'IDENTIFICATION	1		5001-5235	I	K1011647C	1
	K1011647C	DECAL	DECALQUE	1		5236-			
20	2122-1002D2	RIVET	RIVET	6					
21	190-00689	PLATE;NAME	PLAQUE D'IDENTIFICATION	1					
22	2190-2476	PLATE;NAME(TIE DOWN)	PLAQUE D'IDENTIFICATION	4		5001-5200	I	K1042074	4
	K1042074	PLATE;NAME	PLAQUE D'IDENTIFICATION	4		5201-5344	I	K1042074A	4
	K1042074A	PLATE;NAME	PLAQUE D'IDENTIFICATION	4		5345-			
23	2190-2477	PLATE;NAME(LIFTING)	PLAQUE D'IDENTIFICATION	4		5001-5200			
24	190-00693	PLATE;NAME	PLAQUE D'IDENTIFICATION	1					
25	190-00122	PLATE;NAME	PLAQUE	2					
26	K1028095	PLATE;NAME	PLAQUE	1					
27	2190-2480	PLATE;NAME	PLAQUE D'IDENTIFICATION	1					
29	190-00691	PLATE;NAME(HOT OIL)	PLAQUE D'IDENTIFICATION	1		5001-5200			
	190-00691A	PLATE;NAME	PLAQUE D'IDENTIFICATION	1		5201-			
30	K1011645D10	PLATE;NAME	PLAQUE D'IDENTIFICATION	2		5001-5408	I	950205-00657	2
	950205-00657	DECAL(DOOSAN)	DECALQUE	2		5409-			
32	K1011743D4	PLATE;NAME(DOOSAN)	PLAQUE D'IDENTIFICATION	1		5001-5200	I	K1011645D15	1
	K1011645D15	PLATE;NAME	PLAQUE	1		5201-5408	I	950205-00658	1

(THIS PARTS BOOK IS FOR REFERENCE ONLY. PART NUMBERS AND SERIAL NUMBERS MAY BE OUTDATED. ALWAYS USE THE ONLINE PARTS SYSTEM)

DATE	JAN. 04, 2013
3rd EDITION	

Fig. 5120 DECAL - EXPORT
DECALQUE

Serial No. ;

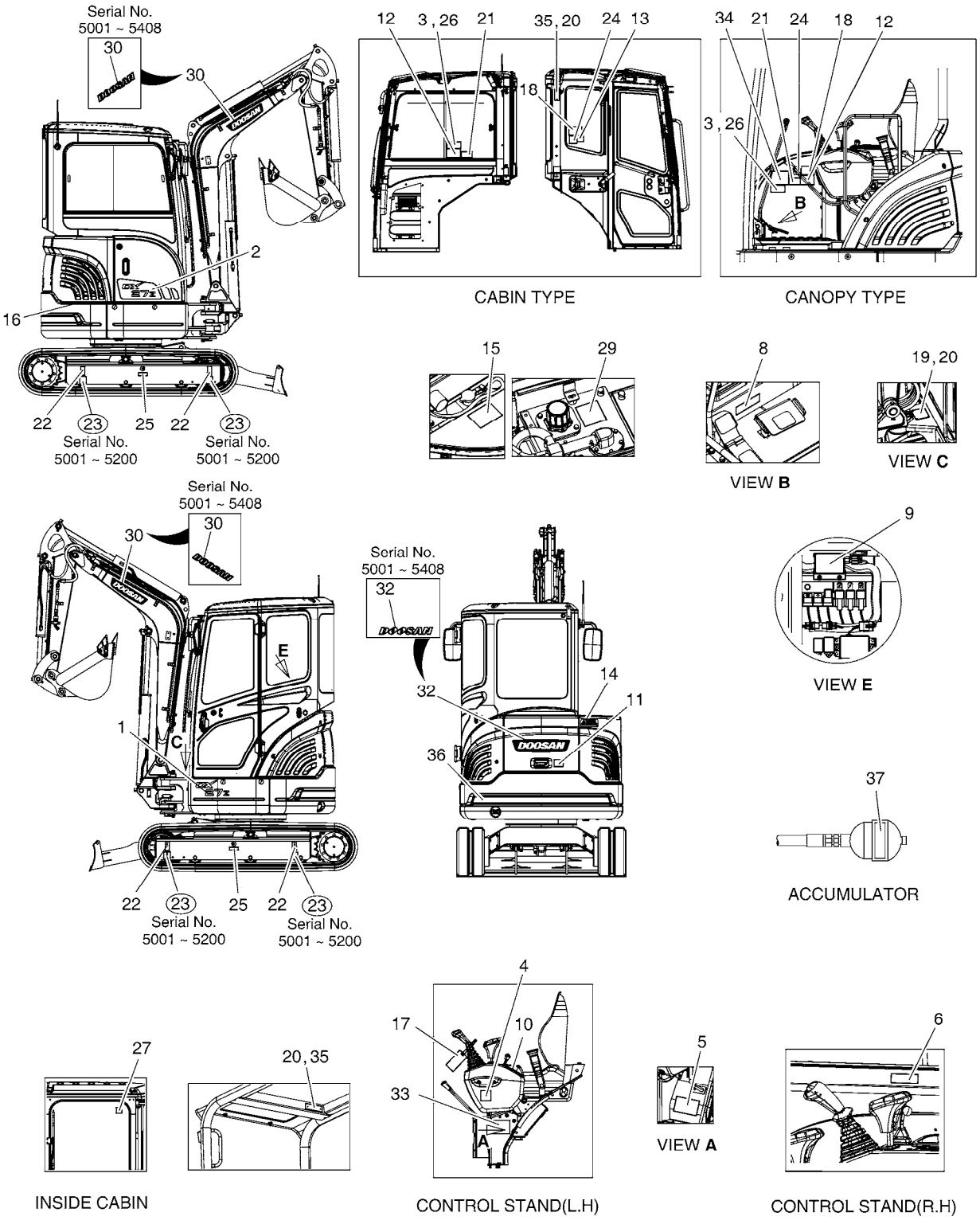

(THIS PARTS BOOK IS FOR REFERENCE ONLY.
PART NUMBERS AND SERAIL NUMBERS MAY BE
OUTDATED. ALWAYS USE THE ONLINE PARTS SYSTEM)

Fig. 5120 DECAL - EXPORT DECALQUE

Serial No. ;

Key No.	Part No.	Description	Description	Q'ty	S.C	Serial No.	ICA	Replaceable part	
								Part No.	Q'ty
5120 -	950205-00658	DECAL(DOOSAN)	DECALQUE	1		5409-			
33	2190-2556D154	PLATE;NAME	PLAQUE	1					
34	2190-2556D155	PLATE;NAME	PLAQUE	1					
35	K1028065	DECAL	DECALQUE	1		5001-5453			
	950209-01145	PLATE,NAME	PLAQUE	1		5454-6072	I	950209-01145B	1
	950209-01145B	PLATE,NAME	PLAQUE D'IDENTIFICATION	1		6073-			
36	K1029125	DECAL	DECALQUE	1					
37	190-00703	PLATE;NAME	PLAQUE D'IDENTIFICATION	1					

(THIS PARTS BOOK IS FOR REFERENCE ONLY.
PART NUMBERS AND SERAIL NUMBERS MAY BE
OUTDATED. ALWAYS USE THE ONLINE PARTS SYSTEM)

DATE	JAN. 04, 2013
3rd EDITION	

Fig. 5130 DECAL - EUROPE
DECALQUE

Serial No. ;

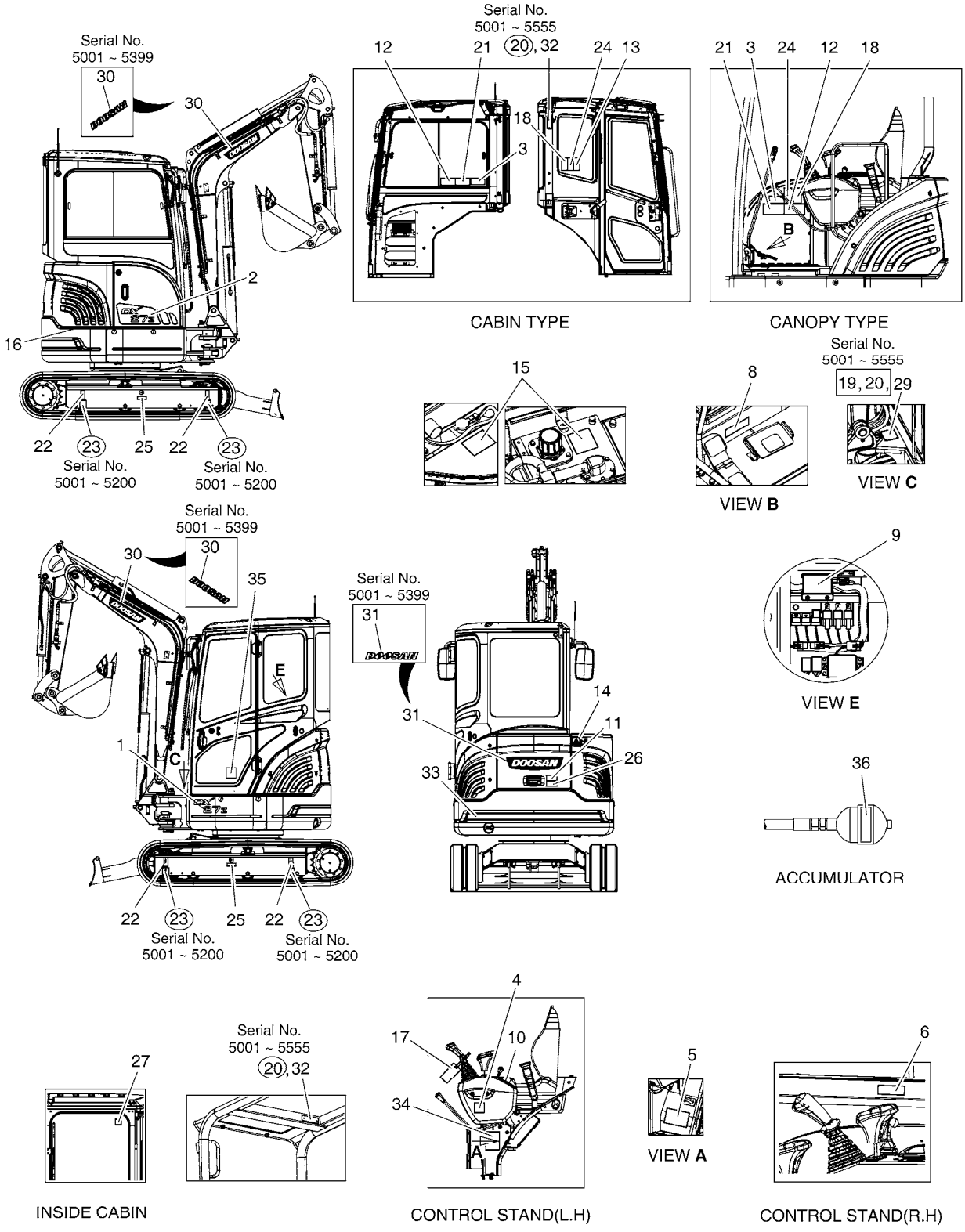

(THIS PARTS BOOK IS FOR REFERENCE ONLY.
PART NUMBERS AND SERAIL NUMBERS MAY BE
OUTDATED. ALWAYS USE THE ONLINE PARTS SYSTEM)

DATE	JAN. 04, 2013
3rd EDITION	

Fig. 5130 DECAL - EUROPE
DECALQUE

Serial No. ;

Key No.	Part No.	Description	Description	Q'ty	S.C	Serial No.	ICA	Replaceable part	
								Part No.	Q'ty
5130 --	K1029425H	NAME PLATE ASS'Y	PLAQUE D'IDENTIFICATION	-	D	5001-5399			
	950205-00682	DECAL ASSY;EUROPE	DECALQUE D'IDENTIFICAT	-	D	5400-			
1	K1029404	PLATE;NAME	PLAQUE	1					
2	K1029405	PLATE;NAME	PLAQUE	1					
3	2190-3297	PLATE;NAME	PLAQUE	1					
4	2190-3309	PLATE;NAME(LEVER LOCK)	PLAQUE D`IDENTIFICATION	1					
5	K1026650	PLATE;NAME	PLAQUE	1		5001-5200	I	K1026650A	1
	K1026650A	PLATE;NAME	PLAQUE	1		5201-			
6	2190-2878	PLATE;NAME	PLAQUE D`IDENTIFICATION	1					
8	K1028331	PLATE;NAME	PLAQUE	1					
9	K1030452	NAME PLATE;FUSE BOX	PLAQUE	1					
10	2190-2633	PLATE;NAME	PLAQUE D'IDENTIFICATION	1					
11	190-00095	PLATE;NAME	PLAQUE D'IDENTIFICATION	1					
12	190-00092	PLATE;NAME	PLAQUE D'IDENTIFICATION	1					
13	190-00093	PLATE;NAME(SLIDE WINDOW)	PLAQUE	1					
14	K1029440	PLATE;NAME	PLAQUE	1					
15	190-00097	NAME PLATE	PLAQUE D'IDENTIFICATION	2					
16	190-00100	PLATE;NAME(BATTERY)	PLAQUE	1					
17	190-00098	PLATE;NAME	PLAQUE D'IDENTIFICATION	1					
18	190-00521	PLATE;NAME	PLAQUE	1					
19	K1012204A	PLATE;NAME	PLAQUE D'IDENTIFICATION	1		5001-5235	I	K1012204B	1
	K1012204B	PLATE;NAME	PLAQUE D'IDENTIFICATION	1		5236-5344	I	K1012204C	1
	K1012204C	PLATE;NAME	PLAQUE D'IDENTIFICATION	1		5345-5555			
20	2122-1002D2	RIVET	RIVET	6		5001-5555			
21	190-00096	PLATE;NAME(ELEC. LINE)	PLAQUE D'IDENTIFICATION	1					
22	2190-2476	PLATE;NAME(TIE DOWN)	PLAQUE D'IDENTIFICATION	4		5001-5200	I	K1042074	4
	K1042074	PLATE;NAME	PLAQUE D'IDENTIFICATION	4		5201-5344	I	K1042074A	4
	K1042074A	PLATE;NAME	PLAQUE D'IDENTIFICATION	4		5345-			
23	2190-2477	PLATE;NAME(LIFTING)	PLAQUE D'IDENTIFICATION	4		5001-5200			
24	190-00094	PLATE;NAME(CAUTION)	PLAQUE D'IDENTIFICATION	1					
25	190-00122	PLATE;NAME	PLAQUE	2					
26	190-00557	PLATE;NAME	PLAQUE	1					
27	190-00101	PLATE;NAME(HAMMER)	PLAQUE	1					
29	K1012205A	PLATE;NAME	PLAQUE D'IDENTIFICATION	1		5001-5235	I	K1012205B	1
	K1012205B	PLATE;NAME	PLAQUE D'IDENTIFICATION	1		5236-5344	I	K1012205C	1
	K1012205C	PLATE;NAME	PLAQUE D'IDENTIFICATION	1		5345-			
30	K1011645D10	PLATE;NAME	PLAQUE D'IDENTIFICATION	2		5001-5399	I	950205-00657	2
	950205-00657	DECAL(DOOSAN)	DECALQUE	2		5400-			

(THIS PARTS BOOK IS FOR REFERENCE ONLY.
PART NUMBERS AND SERIAL NUMBERS MAY BE
OUTDATED. ALWAYS USE THE ONLINE PARTS SYSTEM)

DATE	JAN. 04, 2013
3rd EDITION	

Fig. 5130 DECAL - EUROPE
DECALQUE

Serial No. ;

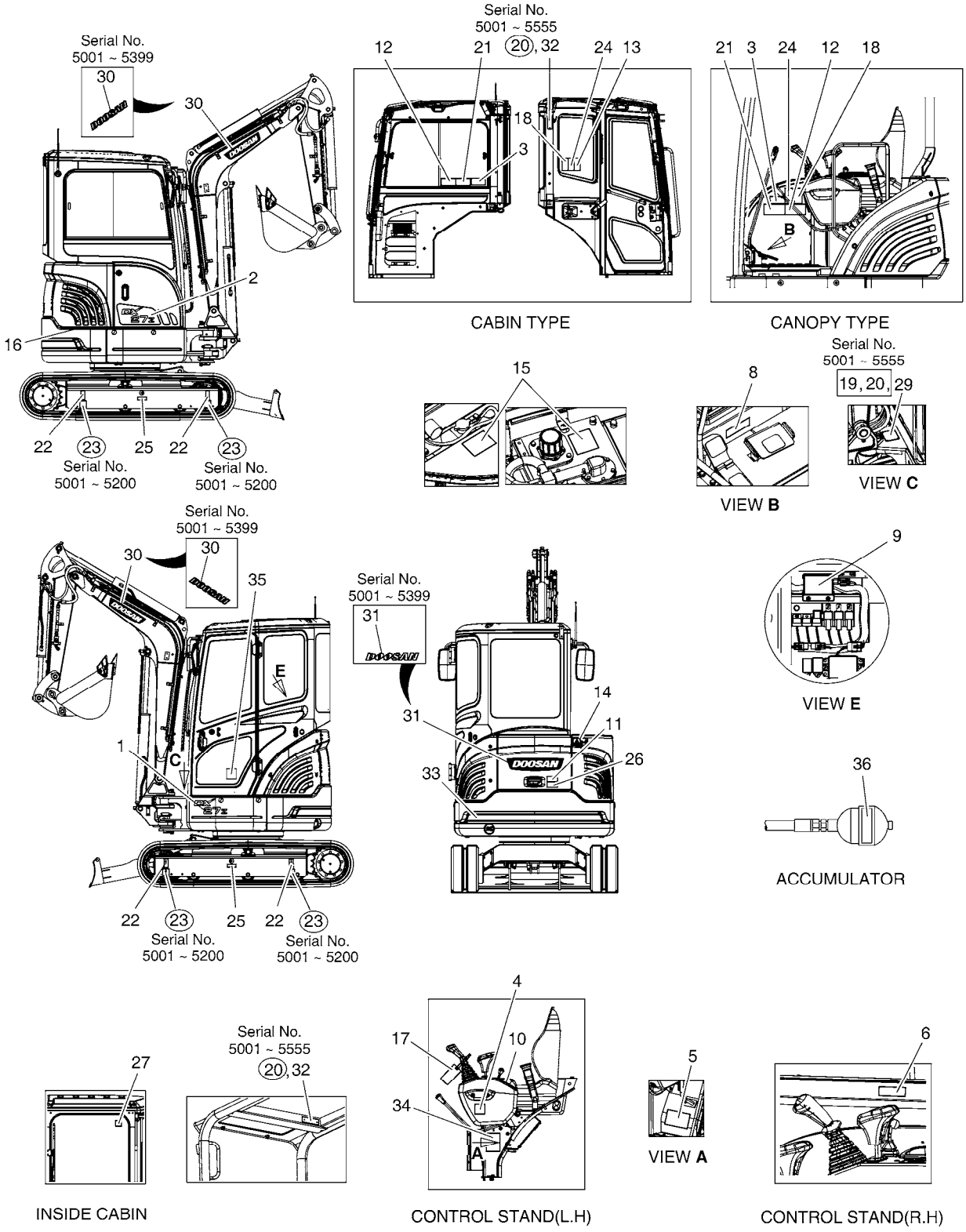

(THIS PARTS BOOK IS FOR REFERENCE ONLY.
PART NUMBERS AND SERAIL NUMBERS MAY BE
OUTDATED. ALWAYS USE THE ONLINE PARTS SYSTEM)

DATE	JAN. 04, 2013
3rd EDITION	

Fig. 5130 DECAL - EUROPE
DECALQUE

Serial No. ;

Key No.	Part No.	Description	Description	Q'ty	S.C	Serial No.	ICA	Replaceable part	
								Part No.	Q'ty
5130 -31	K1011743D4	PLATE;NAME(DOOSAN)	PLAQUE D'IDENTIFICATION	1		5001-5200	I	K1011645D15	1
	K1011645D15	PLATE;NAME	PLAQUE	1		5201-5399	I	950205-00658	1
	950205-00658	DECAL(DOOSAN)	DECALQUE	1		5400-			
32	K1028065	DECAL	DECALQUE	1		5001-5453			
	950209-01145	PLATE,NAME	PLAQUE	1		5454-6072	I	950209-01145B	1
	950209-01145B	PLATE,NAME	PLAQUE D'IDENTIFICATION	1		6073-			
33	K1029125	DECAL	DECALQUE	1					
34	190-00730D4	PLATE;NAME	PLAQUE	1					
35	190-01059D4	PLATE;NAME	PLAQUE	1					
36	190-00099	PLATE;NAME	PLAQUE	1					

(THIS PARTS BOOK IS FOR REFERENCE ONLY.
PART NUMBERS AND SERAIL NUMBERS MAY BE
OUTDATED. ALWAYS USE THE ONLINE PARTS SYSTEM)

DATE	JAN. 04, 2013
3rd EDITION	

Fig. 5140 DECAL - LIFTING CAPA DECALQUE

Serial No. ;

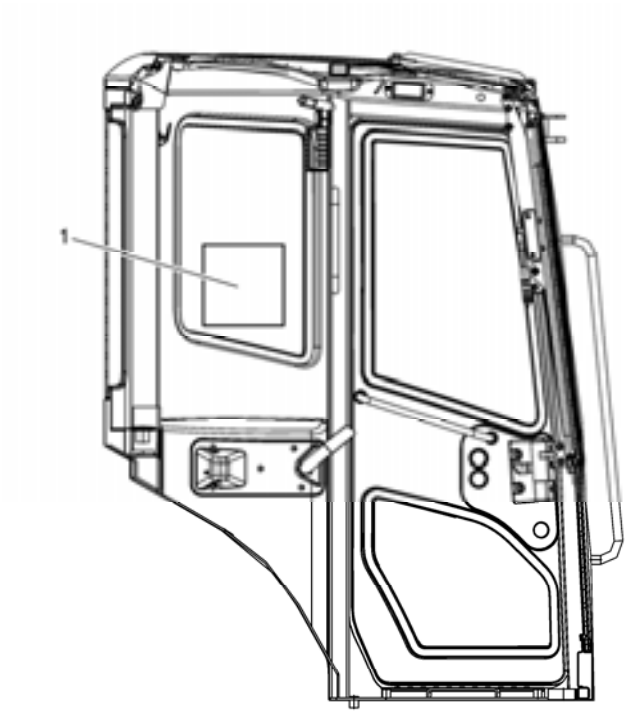

CABIN TYPE(INSIDE L.H)



CABIN TYPE(ROOF INNER)

(THIS PARTS BOOK IS FOR REFERENCE ONLY.
PART NUMBERS AND SERAIL NUMBERS MAY BE
OUTDATED. ALWAYS USE THE ONLINE PARTS SYSTEM)

Fig. 5140 DECAL - LIFTING CAPA DECALQUE

Serial No. ;

Key No.	Part No.	Description	Description	Q'ty	S.C	Serial No.	ICA	Replaceable part	
								Part No.	Q'ty
5140 --	K1052010	NAME PLATE ASS'Y	PLAQUE D'IDENTIFICATION	-	D				
1	K1051896	PLATE;NAME	PLAQUE	1					

(THIS PARTS BOOK IS FOR REFERENCE ONLY.
PART NUMBERS AND SERAIL NUMBERS MAY BE
OUTDATED. ALWAYS USE THE ONLINE PARTS SYSTEM)

DATE	JAN. 04, 2013
3rd EDITION	

Fig. 5150 DECAL - SERIAL(EUROPE) DECAL

Serial No. ;

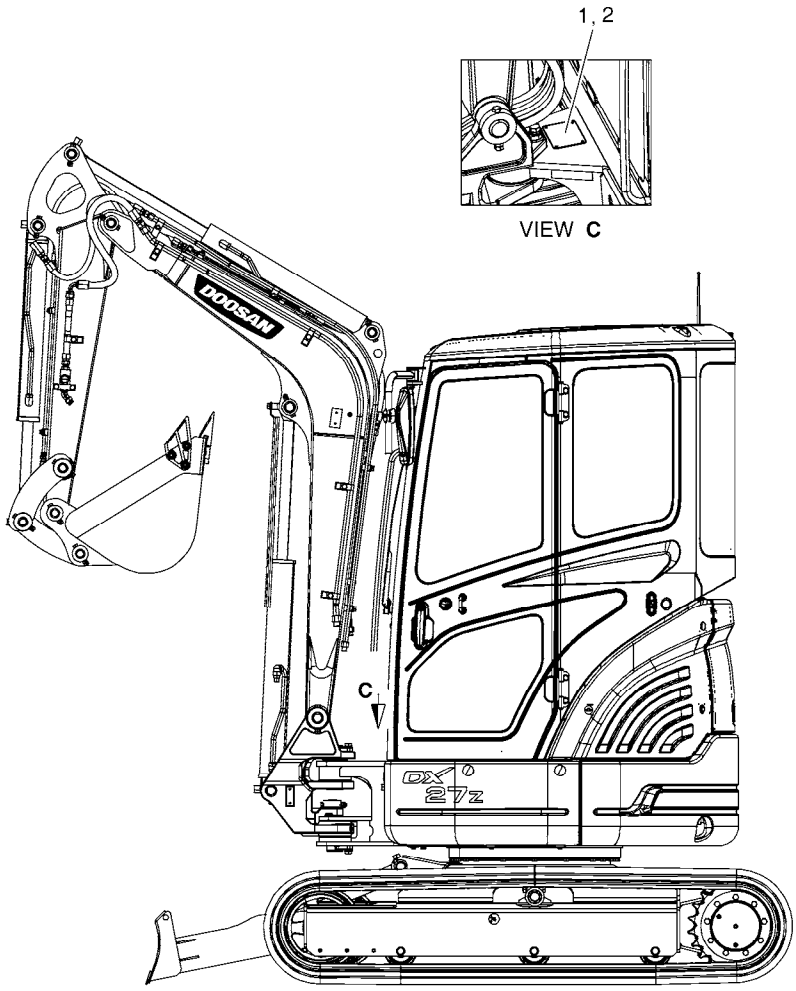

(THIS PARTS BOOK IS FOR REFERENCE ONLY.
PART NUMBERS AND SERAIL NUMBERS MAY BE
OUTDATED. ALWAYS USE THE ONLINE PARTS SYSTEM)

Fig. 5150 DECAL - SERIAL(EUROPE)
DECAL

Serial No. ;

Key No.	Part No.	Description	Description	Q'ty	S.C	Serial No.	ICA	Replaceable part	
								Part No.	Q'ty
5150 --	950209-02414	DECAL & NAME PLATE ASSY	PLAQUE D'IDENTIFICATION	-	D				
1	950205-01325	DECAL	PLAQUE D'IDENTIFICATION	1		5001-5979	I	950205-01325A	1
	950205-01325A	DECAL	PLAQUE D'IDENTIFICATION	1		5980-			
2	2122-1002D2	RIVET	RIVET	4					

(THIS PARTS BOOK IS FOR REFERENCE ONLY.
PART NUMBERS AND SERAIL NUMBERS MAY BE
OUTDATED. ALWAYS USE THE ONLINE PARTS SYSTEM)

DATE	JAN. 04, 2013
3rd EDITION	

Fig. 5160 MANUAL - SAFETY
MANUEL DE SÛRETÉ

Serial No. ;

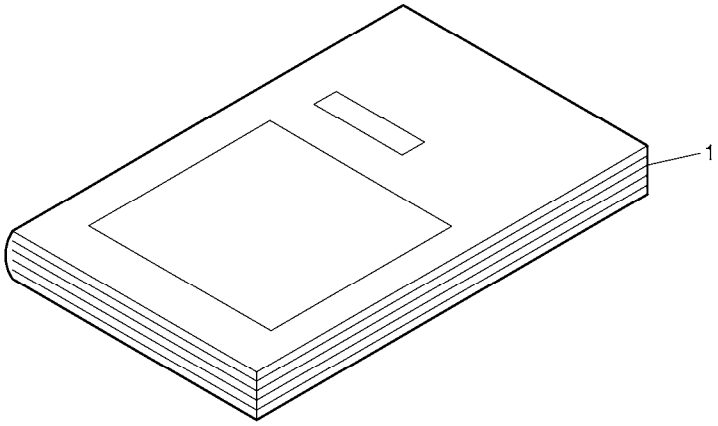

(THIS PARTS BOOK IS FOR REFERENCE ONLY.
PART NUMBERS AND SERAIL NUMBERS MAY BE
OUTDATED. ALWAYS USE THE ONLINE PARTS SYSTEM)

Fig. 5160 MANUAL - SAFETY MANUEL DE SÛRETÉ

Serial No. ;

Key No.	Part No.	Description	Description	Q'ty	S.C	Serial No.	ICA	Replaceable part	
								Part No.	Q'ty
5160 --	950106-00326	MANUAL ASSY;SAFETY	MANUEL DE SÛRETÉ	-	D				
1	950106-00324	MANUAL;AEM SAFETY	MANUEL DE SÛRETÉ	1					

(THIS PARTS BOOK IS FOR REFERENCE ONLY.
PART NUMBERS AND SERAIL NUMBERS MAY BE
OUTDATED. ALWAYS USE THE ONLINE PARTS SYSTEM)

DATE	JAN. 04, 2013
3rd EDITION	

Fig. 5170 DECAL - ROPS(EUROPE) - CANOPY
DECALQUE

Serial No. ;

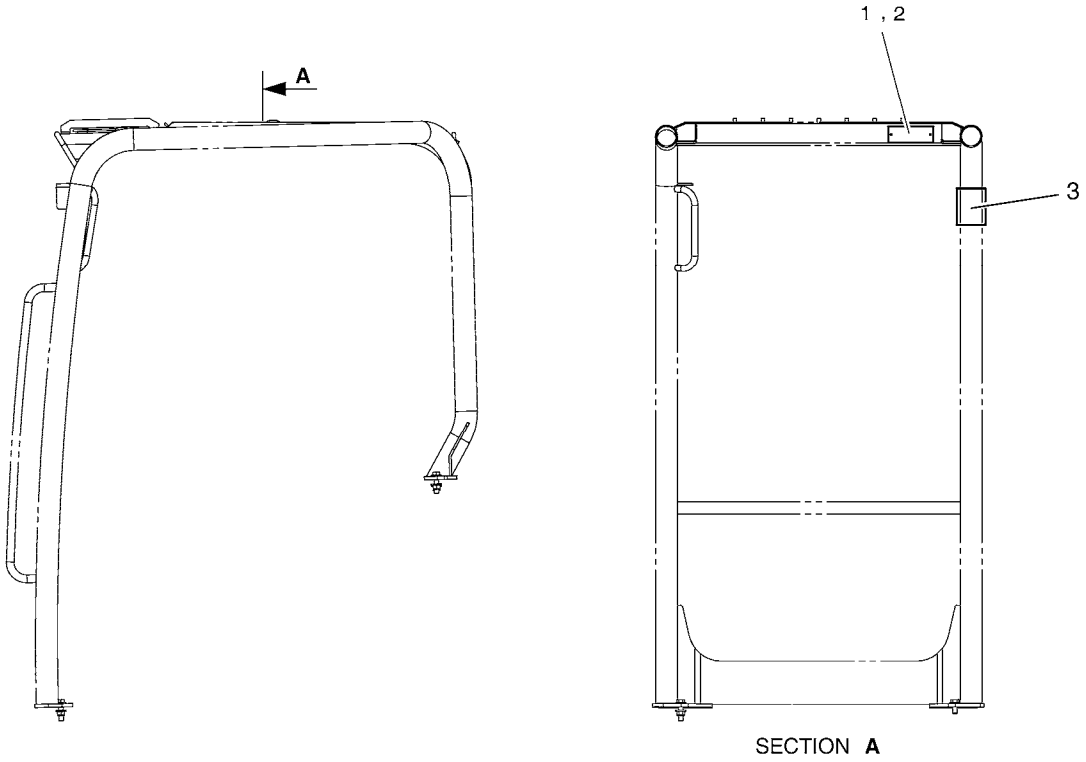

(THIS PARTS BOOK IS FOR REFERENCE ONLY.
PART NUMBERS AND SERAIL NUMBERS MAY BE
OUTDATED. ALWAYS USE THE ONLINE PARTS SYSTEM)

Fig. 5170 DECAL - ROPS(EUROPE) - CANOPY DECALQUE

Serial No. ;

Key No.	Part No.	Description	Description	Q'ty	S.C	Serial No.	ICA	Replaceable part	
								Part No.	Q'ty
5170 --	950209-04106	NAME PLATE ASSY;ROPS EURO	PLAQUE D'IDENTIFICATION	-	D				
1	950209-01145B	PLATE,NAME	PLAQUE D'IDENTIFICATION	1					
2	2122-1002D2	RIVET	RIVET	2					
3	950205-01169	DECAL	DECALQUE	1					

(THIS PARTS BOOK IS FOR REFERENCE ONLY.
PART NUMBERS AND SERAIL NUMBERS MAY BE
OUTDATED. ALWAYS USE THE ONLINE PARTS SYSTEM)

DATE	JAN. 04, 2013
3rd EDITION	

Fig. 6100 COUNTER WEIGHT
MASSE D'EQUILIBRAGE

Serial No. ;

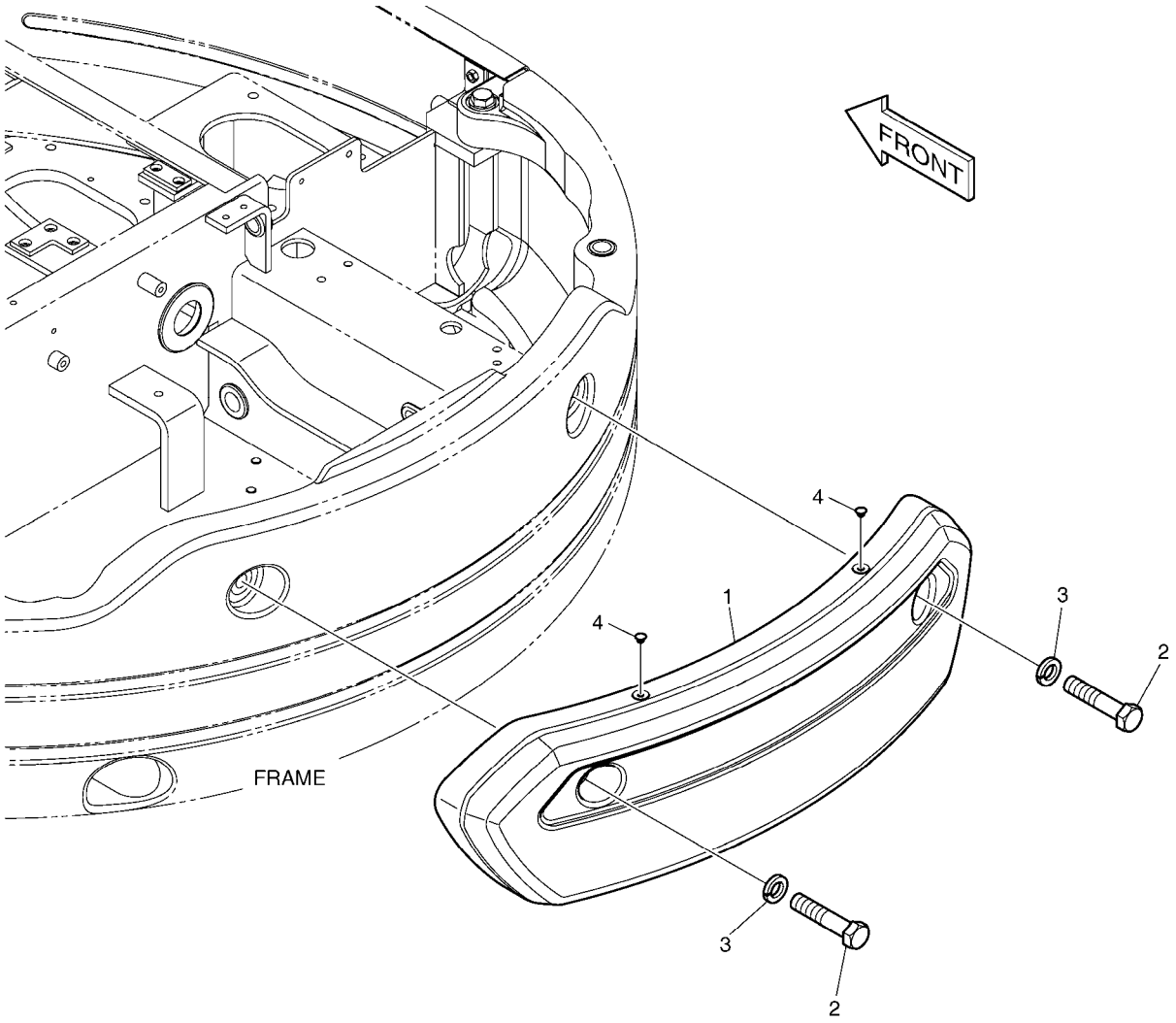

(THIS PARTS BOOK IS FOR REFERENCE ONLY.
PART NUMBERS AND SERAIL NUMBERS MAY BE
OUTDATED. ALWAYS USE THE ONLINE PARTS SYSTEM)

DATE	JAN. 04, 2013
3rd EDITION	

Fig. 6100 COUNTER WEIGHT
MASSE D'EQUILIBRAGE

Serial No. ;

Key No.	Part No.	Description	Description	Q'ty	S.C	Serial No.	ICA	Replaceable part	
								Part No.	Q'ty
6100 --	K1027858	COUNTER WEIGHT;OPT.	MASSE D'EQUILIBRAGE	-	D				
1	K1025348	COUNTER WEIGHT	CONTRE- POIDS	1					
2	S0570766	BOLT M20X2.5X95	BOULON	2					
3	S5103103	WASHER;SPRING	RONDELLE	2					
4	K1027224	CAP	CHAPEAU	2					

(THIS PARTS BOOK IS FOR REFERENCE ONLY.
PART NUMBERS AND SERAIL NUMBERS MAY BE
OUTDATED. ALWAYS USE THE ONLINE PARTS SYSTEM)

DATE	JAN. 04, 2013
3rd EDITION	

Fig. 6110 ACCUMULATOR ACCUMULATEUR

Serial No. ;

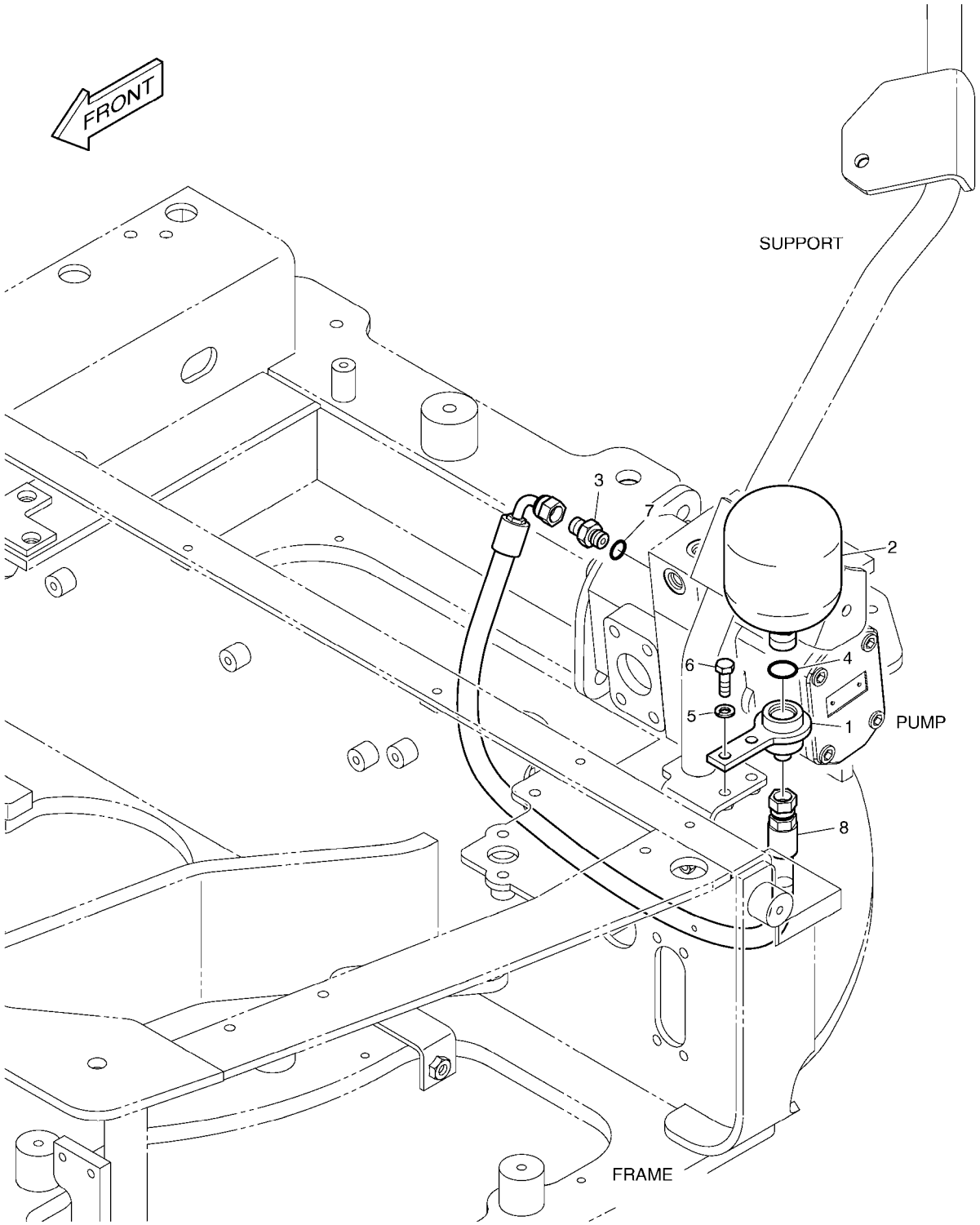

(THIS PARTS BOOK IS FOR REFERENCE ONLY.
PART NUMBERS AND SERAIL NUMBERS MAY BE
OUTDATED. ALWAYS USE THE ONLINE PARTS SYSTEM)

DATE	JAN. 04, 2013
3rd EDITION	

Fig. 6110 ACCUMULATOR ACCUMULATEUR

Serial No. ;

Key No.	Part No.	Description	Description	Q'ty	S.C	Serial No.	ICA	Replaceable part	
								Part No.	Q'ty
6110 --	K1026006	ACCUMULATOR ASS'Y	ACCUMULATEUR	-	D				
1	K1013795	BLOCK	BLOC	1					
2	2460-9057A	ACCUMULATOR	ACCUMULATEUR	1					
3	2181-1126D14	ADAPTER	ADAPTEUR	1					
4	S8000181	O-RING	JOINT CIRCULAIRE	1					
5	S5102503	WASHER,SPRING	RONDELLE	2					
6	S0509053	BOLT	BOULON	2					
7	S8000111	O-RING	JOINT CIRCULAIRE	1					
8	DS2093430	HOSE	TUYAU FLEXIBLE	1					

(THIS PARTS BOOK IS FOR REFERENCE ONLY.
PART NUMBERS AND SERAIL NUMBERS MAY BE
OUTDATED. ALWAYS USE THE ONLINE PARTS SYSTEM)

DATE	JAN. 04, 2013
3rd EDITION	

Fig. 6120 ARM PIPING - ARM 1.3m
CONDUITES DE BALANCIER

Serial No. ;

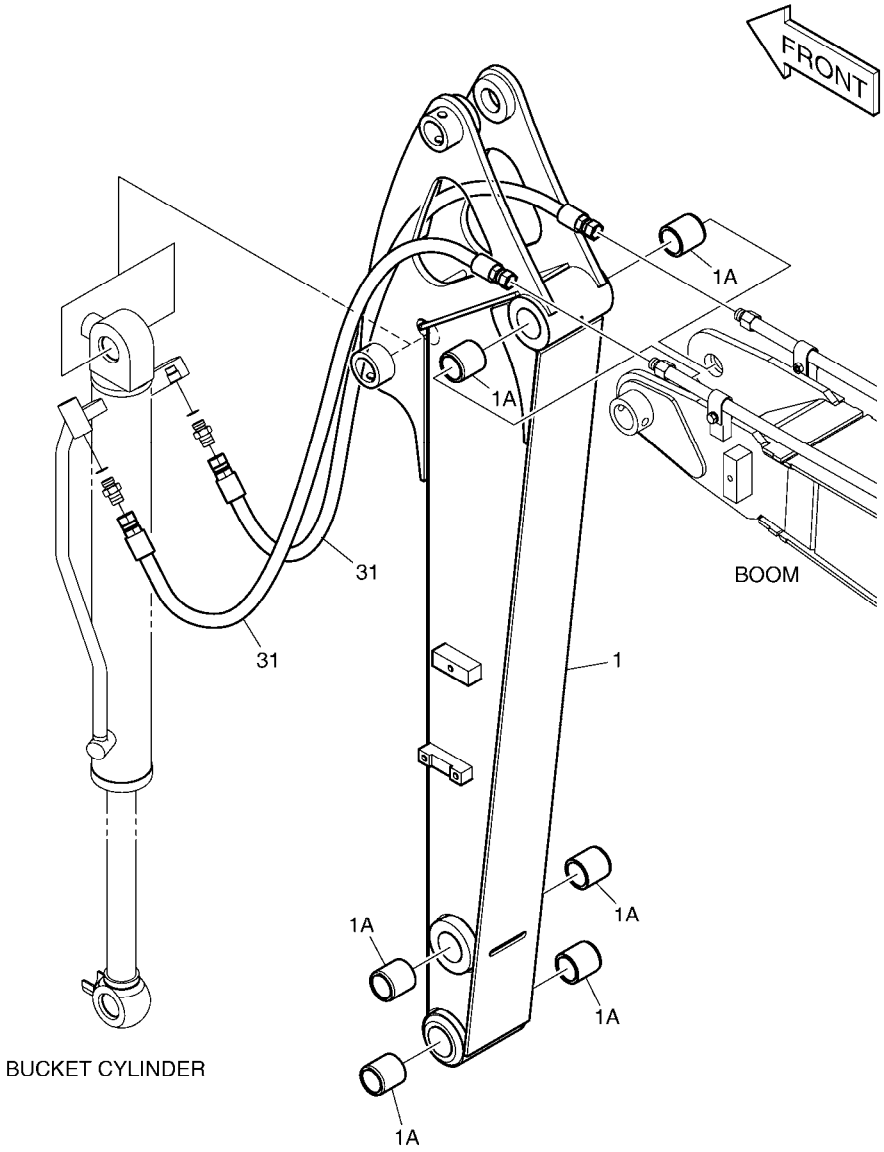

(THIS PARTS BOOK IS FOR REFERENCE ONLY.
PART NUMBERS AND SERAIL NUMBERS MAY BE
OUTDATED. ALWAYS USE THE ONLINE PARTS SYSTEM)

DATE	JAN. 04, 2013
3rd EDITION	

Fig. 6120 ARM PIPING - ARM 1.3m
CONDUITES DE BALANCIER

Serial No. ;

Key No.	Part No.	Description	Description	Q'ty	S.C	Serial No.	ICA	Replaceable part	
								Part No.	Q'ty
6120 --	K1027966C	ARM ASS'Y	ENSEMBLE DE BRAS	-	D	5001-5979			
	230201-00573	ARM ASS'Y	ENSEMBLE DE BRAS	-	D	5980-			
1	K1015891C	ARM 1.3m	BALANCIER	1		5001-5051	I	K1015891E	1
	K1015891E	ARM 1.3m	BALANCIER	1		5052-5979	Y	230201-00574	1
	230201-00574	ARM 1.3m	BALANCIER	1		5980-			
1A	K1018517	. BUSH	. DOUILLE	6		5001-5979	Y	131008-00132	6
	131008-00132	. BUSH	. DOUILLE	6		5980-			
31	DS2094263	HOSE	TUYAU FLEXIBLE	2					

(THIS PARTS BOOK IS FOR REFERENCE ONLY.
PART NUMBERS AND SERAIL NUMBERS MAY BE
OUTDATED. ALWAYS USE THE ONLINE PARTS SYSTEM)

DATE	JAN. 04, 2013
3rd EDITION	

Fig. 6130 ROTATING BEACON
FEU DE CIRCULATION

Serial No. ;

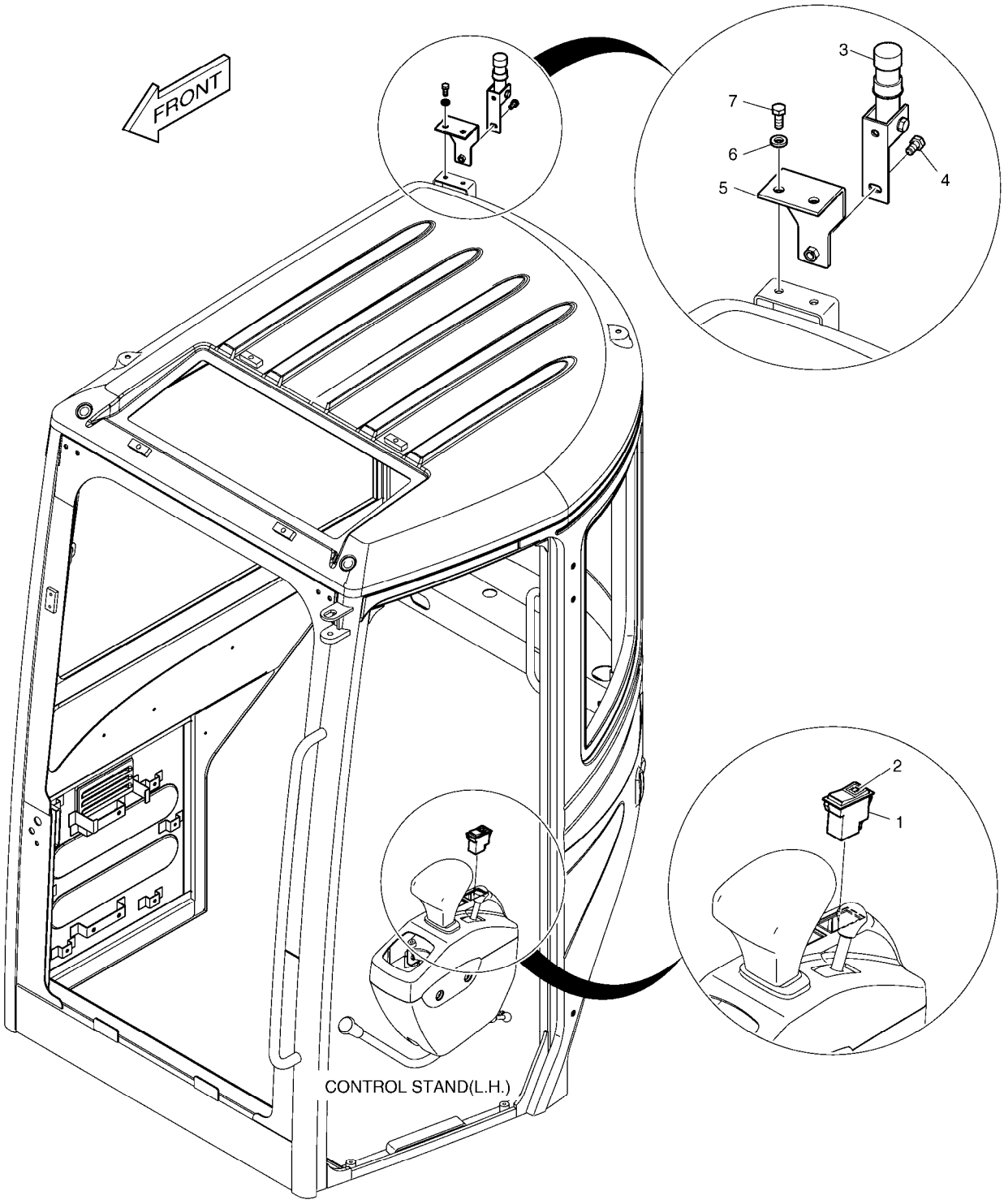

(THIS PARTS BOOK IS FOR REFERENCE ONLY.
PART NUMBERS AND SERAIL NUMBERS MAY BE
OUTDATED. ALWAYS USE THE ONLINE PARTS SYSTEM)

DATE	JAN. 04, 2013
3rd EDITION	

Fig. 6130 ROTATING BEACON FEU DE CIRCULATION

Serial No. ;

Key No.	Part No.	Description	Description	Q'ty	S.C	Serial No.	ICA	Replaceable part	
								Part No.	Q'ty
6130 --	K1026807	ROTATING BEACON ASS'Y	FEU DE CIRCULATION	-	D				
1	2549-9115	SWITCH;ROCKER(12V)	INTERRUPTEUR	1					
2	2190-2036D10	INSERT;ROTATING BEACON	INSERTION	1					
3	160-00061	BUSH;MOUNTING	DOUILLE	1					
4	2120-2166D25	BOLT M8X1.25X16	BOULON A 6 PANS	2					
5	K1017965	PLATE	PLAQUE	1					
6	2114-1898D2	WASHER	RONDELLE	2					
7	2120-2166D5	BOLT	BOULON	2					

(THIS PARTS BOOK IS FOR REFERENCE ONLY.
PART NUMBERS AND SERAIL NUMBERS MAY BE
OUTDATED. ALWAYS USE THE ONLINE PARTS SYSTEM)

DATE	JAN. 04, 2013
3rd EDITION	

Fig. 6140 CAR STEREO
STEREO

Serial No. ;

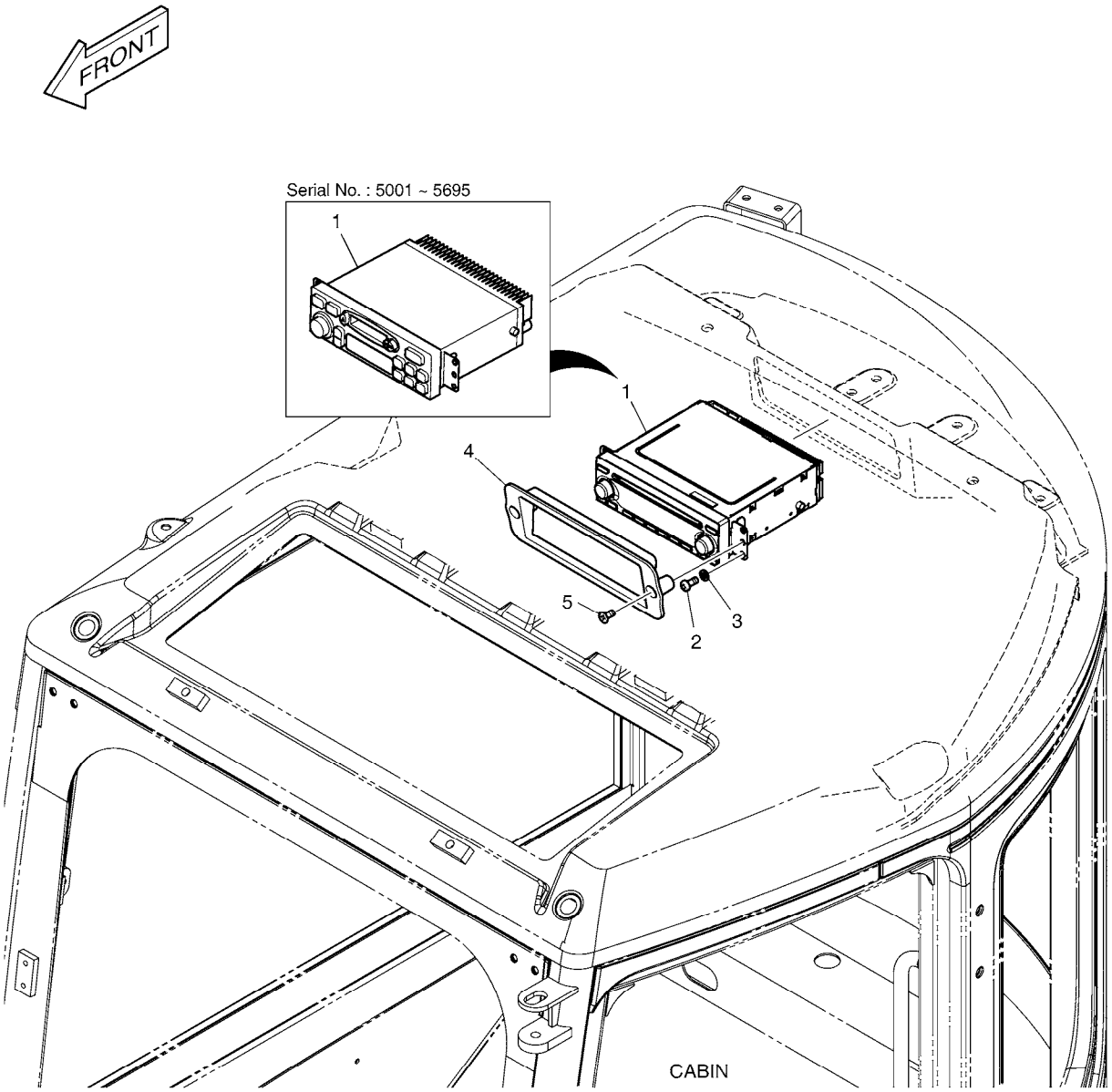

(THIS PARTS BOOK IS FOR REFERENCE ONLY.
PART NUMBERS AND SERAIL NUMBERS MAY BE
OUTDATED. ALWAYS USE THE ONLINE PARTS SYSTEM)

DATE	JAN. 04, 2013
3rd EDITION	

Fig. 6140 CAR STEREO STEREO

Serial No. ;

Key No.	Part No.	Description	Description	Q'ty	S.C	Serial No.	ICA	Replaceable part	
								Part No.	Q'ty
6140 --	K1026809	STEREO;CAR	STEREO VOITURE	-	D	5001-5695			
	300619-01098	ELECTRIC ASSY;CASSETTE PLA	STEREO VOITURE	-	D	5696-			
1	K1013232	STEREO;CAR	STEREO	1		5001-5695	I	300637-00003	1
	300637-00003	PLAYER,CD;12V	PLAQUEUR DE CD	1		5696-			
2	S3450833	SCREW	VIS	4					
3	S5100203	WASHER;SPRING	RONDELLE	4					
4	K1014622B	COVER	COUVERCLE	1					
5	2120-2166D44	SCREW M5X0.8X12	VIS	2					

(THIS PARTS BOOK IS FOR REFERENCE ONLY.
PART NUMBERS AND SERAIL NUMBERS MAY BE
OUTDATED. ALWAYS USE THE ONLINE PARTS SYSTEM)

DATE	JAN. 04, 2013
3rd EDITION	

Fig. 6150 PILOT PIPING - PATTERN CHANGE(1)
CONDUITES DE PILOTE

Serial No. ;

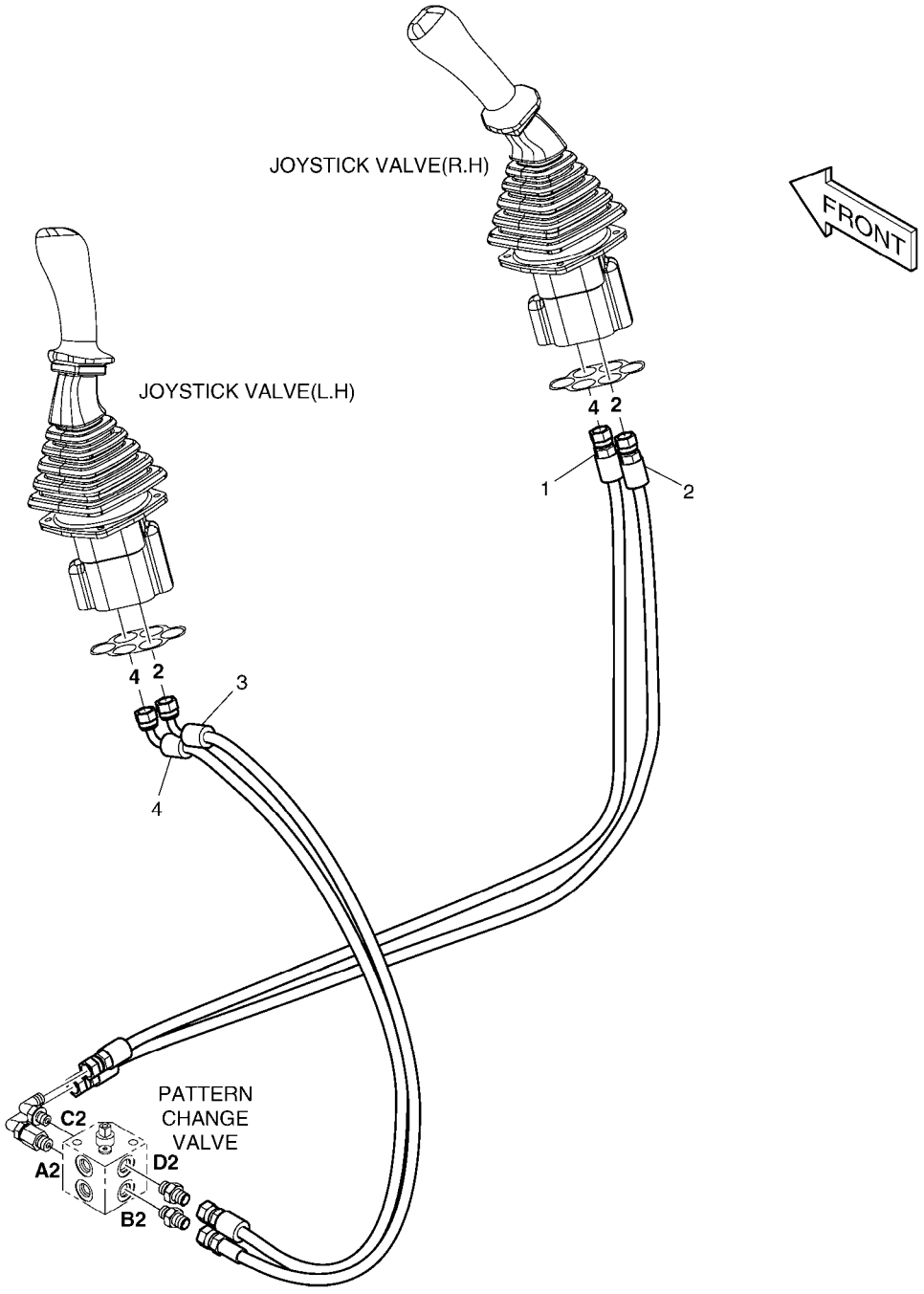

(THIS PARTS BOOK IS FOR REFERENCE ONLY.
PART NUMBERS AND SERAIL NUMBERS MAY BE
OUTDATED. ALWAYS USE THE ONLINE PARTS SYSTEM)

DATE	JAN. 04, 2013
3rd EDITION	

Fig. 6150 PILOT PIPING - PATTERN CHANGE(1)
CONDUITES DE PILOTE

Serial No. ;

Key No.	Part No.	Description	Description	Q'ty	S.C	Serial No.	ICA	Replaceable part	
								Part No.	Q'ty
6150 --	K1026003	PILOT PIPING	TUYAUTERIE PILOTE	-	D				
1	DS2094097	HOSE PF1/4-1190L	TUYAU FLEXIBLE	1					
2	DS2094003	HOSE PF1/4-1220L	TUYAU FLEXIBLE	1					
3	DS2093053	HOSE	TUYAU FLEXIBLE	1					
4	DS2093253	HOSE	TUYAU FLEXIBLE	1					

(THIS PARTS BOOK IS FOR REFERENCE ONLY.
PART NUMBERS AND SERAIL NUMBERS MAY BE
OUTDATED. ALWAYS USE THE ONLINE PARTS SYSTEM)

DATE	JAN. 04, 2013
3rd EDITION	

Fig. 6160 PILOT PIPING - PATTERN CHANGE(2)
CONDUITES DE PILOTE

Serial No. ;

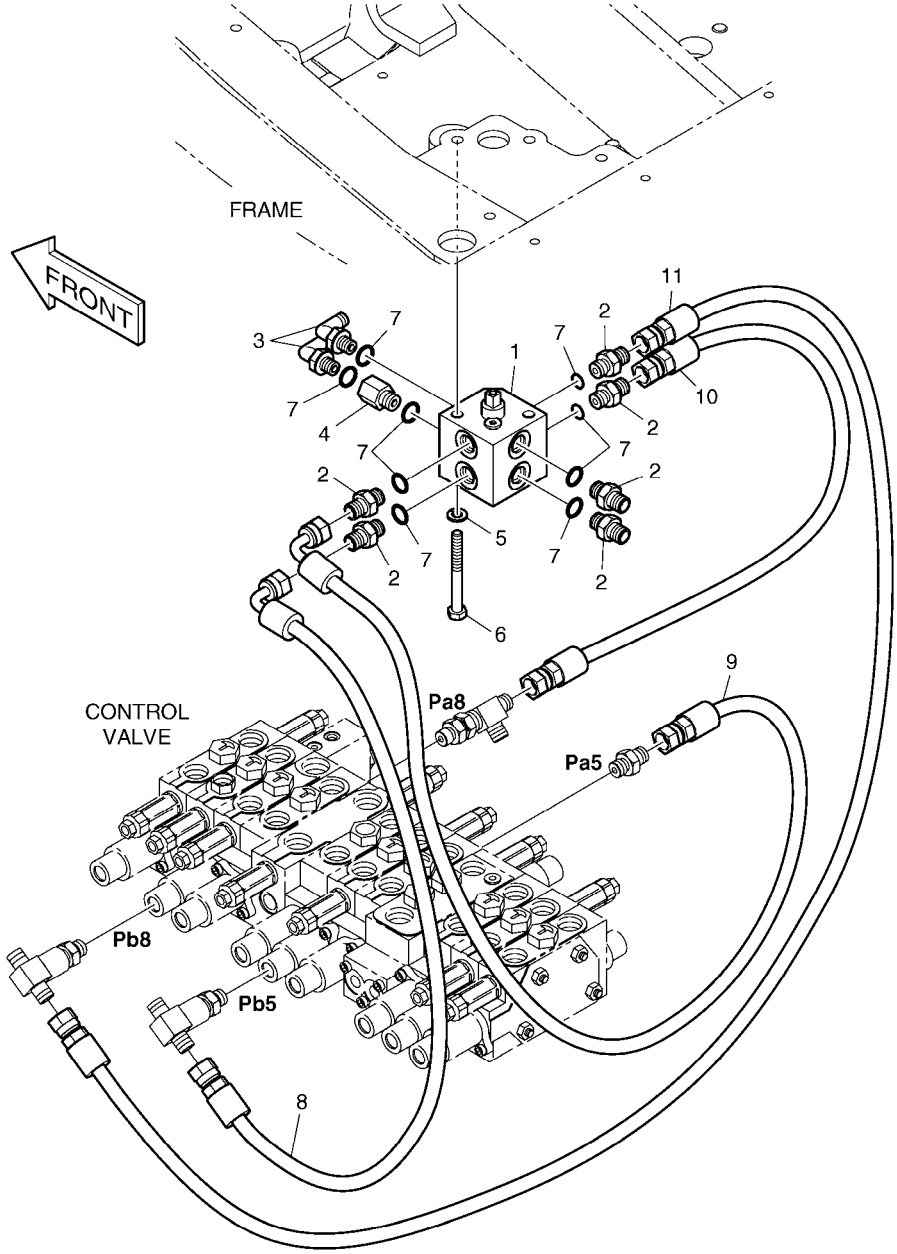

(THIS PARTS BOOK IS FOR REFERENCE ONLY.
PART NUMBERS AND SERAIL NUMBERS MAY BE
OUTDATED. ALWAYS USE THE ONLINE PARTS SYSTEM)

DATE	JAN. 04, 2013
3rd EDITION	

Fig. 6160 PILOT PIPING - PATTERN CHANGE(2)
CONDUITES DE PILOTE

Serial No. ;

Key No.	Part No.	Description	Description	Q'ty	S.C	Serial No.	ICA	Replaceable part	
								Part No.	Q'ty
6160 --	K1026004	PILOT PIPING;PATTERN CHANG	TUYAUTERIE PILOTE	-	D				
1	K1014318	VALVE;PATTERN CHANGE	VANNE	1					
2	2181-1126D14	ADAPTER	ADAPTEUR	6					
3	2181-1702D4	ELBOW	COUDE	2					
4	2181-2337D1	REDUCER	REDUCTEUR	1					
5	S5102503	WASHER,SPRING	RONDELLE	2					
6	S0556853	BOLT M8X1.25X75	BOULON A 6 PANS	2					
7	S8000111	O-RING	JOINT CIRCULAIRE	9					
8	DS2093200	HOSE	TUYAU	1					
9	DS2093053	HOSE	TUYAU FLEXIBLE	1					
10	DS2094226	HOSE	TUYAU FLEXIBLE	1					
11	DS2094054	HOSE	TUYAU FLEXIBLE	1		5001-5205			
	DS2094242	HOSE	TUYAU FLEXIBLE	1		5206-			

(THIS PARTS BOOK IS FOR REFERENCE ONLY.
PART NUMBERS AND SERAIL NUMBERS MAY BE
OUTDATED. ALWAYS USE THE ONLINE PARTS SYSTEM)

DATE	JAN. 04, 2013
3rd EDITION	

Fig. 6170 PILOT PIPING - TRAVEL ALARM
CONDUITES DE PILOTE

Serial No. ;

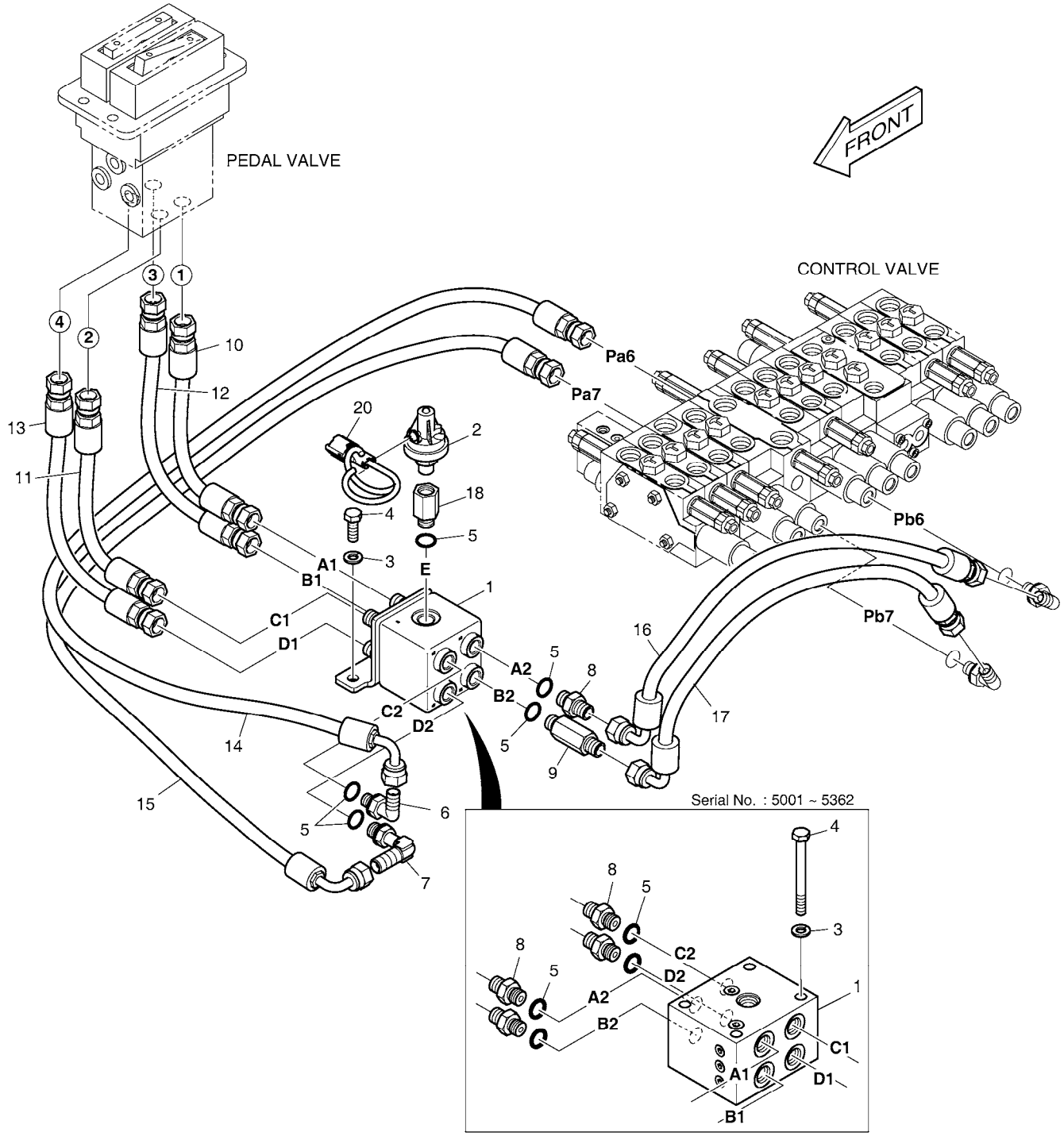

(THIS PARTS BOOK IS FOR REFERENCE ONLY.
PART NUMBERS AND SERAIL NUMBERS MAY BE
OUTDATED. ALWAYS USE THE ONLINE PARTS SYSTEM)

DATE	JAN. 04, 2013
3rd EDITION	

Fig. 6170 PILOT PIPING - TRAVEL ALARM
CONDUITES DE PILOTE

Serial No. ;

Key No.	Part No.	Description	Description	Q'ty	S.C	Serial No.	ICA	Replaceable part	
								Part No.	Q'ty
6170 --	K1026002B	PILOT PIPING-TRAVEL ALARM	CONDUITES DE PILOTE	-	D				
1	2420-9351B	VALVE;SHUTTLE	VANNE	1		5001-5362			
	K1050271	VALVE;SHUTTLE	VANNE	1		5363-			
2	549-00010	SWITCH;PRESSURE	COMMUTATEUR	1					
3	S5102503	WASHER,SPRING	RONDELLE	4		5001-5362			
	S5102503	WASHER,SPRING	RONDELLE	2		5363-			
4	S0556953	BOLT	BOULON A 6 PANS	4		5001-5362			
	S0508853	BOLT	BOULON	2		5363-			
5	S8000111	O-RING	JOINT CIRCULAIRE	9		5001-5362			
	S8000111	O-RING	JOINT CIRCULAIRE	5		5363-			
6	2181-1702D4	ELBOW	COUDE	1					
7	2181-1702D82	ELBOW	COUDE	1					
8	2181-1126D14	ADAPTER	ADAPTEUR	5		5001-5362			
	2181-1126D14	ADAPTER	ADAPTEUR	1		5363-			
9	2181-1126D34	ADAPTER	ADAPTEUR	1					
10	DS2094138	HOSE	TUYAU FLEXIBLE	1					
11	DS2094138	HOSE	TUYAU FLEXIBLE	1					
12	DS2094139	HOSE	TUYAU FLEXIBLE	1					
13	DS2094139	HOSE	TUYAU FLEXIBLE	1					
14	DS2093233	HOSE	TUYAU FLEXIBLE	1					
15	DS2093157	HOSE	TUYAU	1					
16	DS2093127	HOSE	TUYAU FLEXIBLE	1					
17	DS2093024	HOSE	TUYAU FLEXIBLE	1					
18	DS2242017	REDUCER	REDUCTEUR	1					
20	530-00067	HARNESS	HARNAIS	1					

(THIS PARTS BOOK IS FOR REFERENCE ONLY.
PART NUMBERS AND SERAIL NUMBERS MAY BE
OUTDATED. ALWAYS USE THE ONLINE PARTS SYSTEM)

DATE	JAN. 04, 2013
3rd EDITION	

Fig. 6180 TRAVEL ALARM - ELECTRIC PARTS
ALARME DE VOYAGE

Serial No. ;

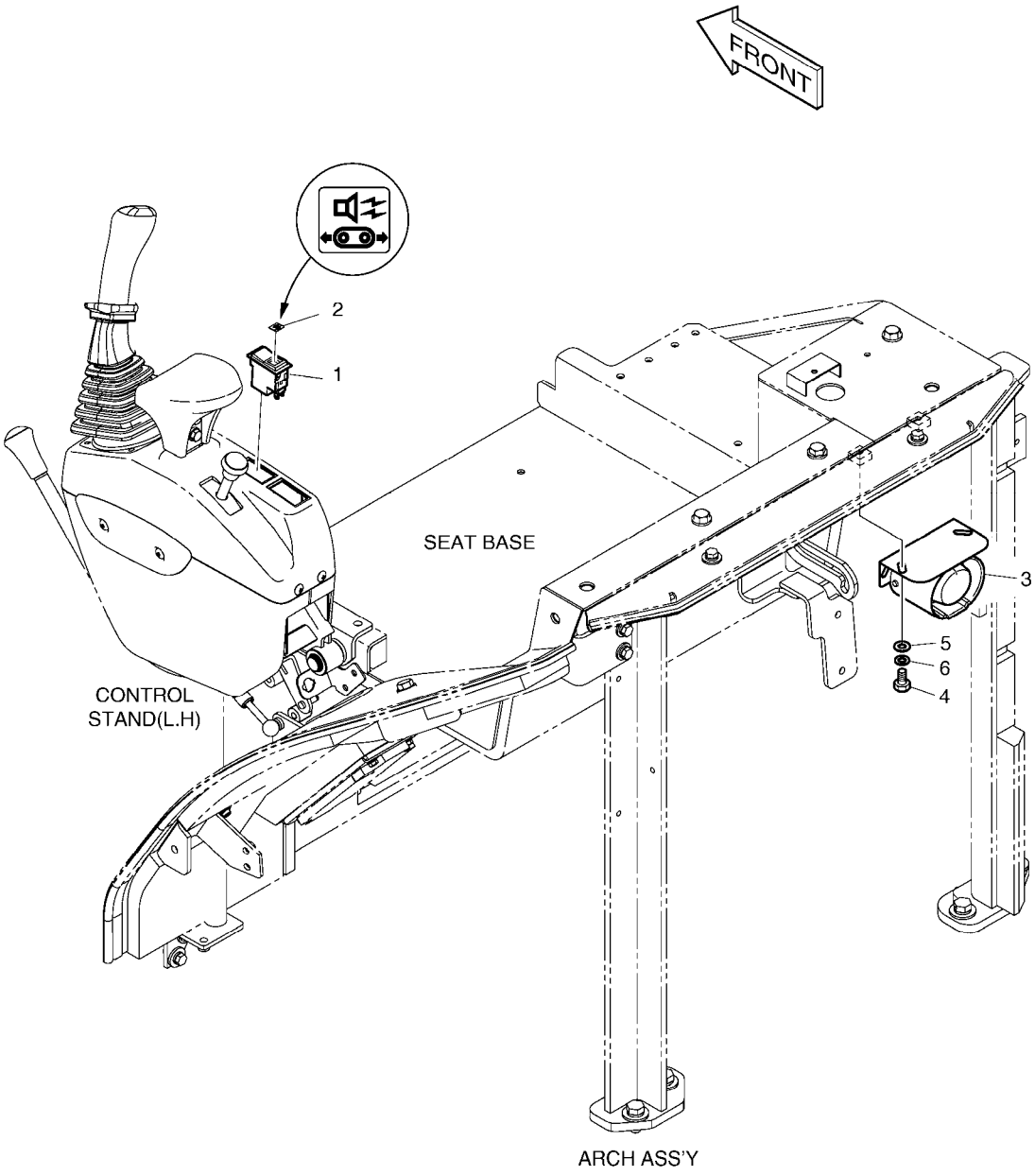

(THIS PARTS BOOK IS FOR REFERENCE ONLY.
PART NUMBERS AND SERAIL NUMBERS MAY BE
OUTDATED. ALWAYS USE THE ONLINE PARTS SYSTEM)

DATE	JAN. 04, 2013
3rd EDITION	

Fig. 6180 TRAVEL ALARM - ELECTRIC PARTS
ALARME DE VOYAGE

Serial No. ;

Key No.	Part No.	Description	Description	Q'ty	S.C	Serial No.	ICA	Replaceable part	
								Part No.	Q'ty
6180 --	K1026801	TRAVEL ALARM ASS'Y	ALARME DE VOYAGE	-	D				
1	2549-9115	SWITCH;ROCKER(12V)	INTERRUPTEUR	1					
2	2190-2584D2	INSERT;ALARM	INSERTION	1					
3	516-00011	BUZZER;ALARM	VIBREUR	1					
4	S0508466	BOLT	BOULON A 6 PANS	2					
5	S5010513	WASHER,PLAIN	RONDELLE	2					
6	S5102503	WASHER,SPRING	RONDELLE	2					

(THIS PARTS BOOK IS FOR REFERENCE ONLY.
PART NUMBERS AND SERAIL NUMBERS MAY BE
OUTDATED. ALWAYS USE THE ONLINE PARTS SYSTEM)

DATE	JAN. 04, 2013
3rd EDITION	

Fig. 6190 ELECTRIC PARTS - CABIN
PIECES ELECTRIQUES

Serial No. ;

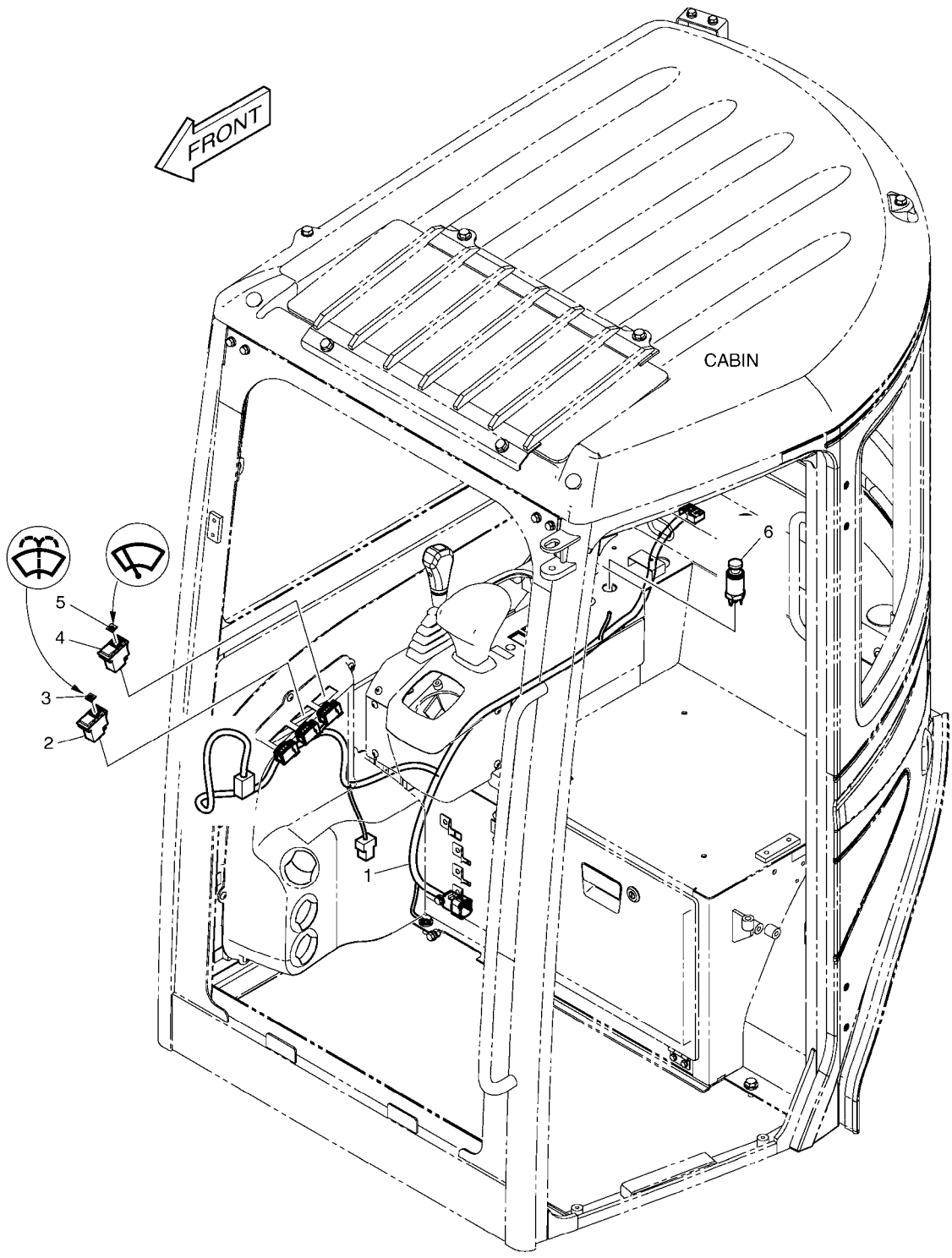

(THIS PARTS BOOK IS FOR REFERENCE ONLY.
PART NUMBERS AND SERAIL NUMBERS MAY BE
OUTDATED. ALWAYS USE THE ONLINE PARTS SYSTEM)

Fig. 6190 ELECTRIC PARTS - CABIN
PIECES ELECTRIQUES

Serial No. ;

Key No.	Part No.	Description	Description	Q'ty	S.C	Serial No.	ICA	Replaceable part	
								Part No.	Q'ty
6190 --	K1026794	ELECTRIC PARTS	EQUIPMENT ELECTRIQUE	-	D	5001-6067			
	300619-01963	ELECTRIC ASSY;CABIN	EQUIPMENT ELECTRIQUE	-	D	6068-			
1	K1013764	HARNESS;CABIN	HARNAIS	1		5001-6067	I	310207-02477	1
	310207-02477	HARNESS;CABIN	HARNAIS	1		6068-			
2	549-00073	SWITCH;WIPER	COMMUTATEUR	1					
3	2190-2036D11	INSERT;WIPER	INSERTION	1					
4	549-00041	SWITCH;ROCKER	COMMUTATEUR	1					
5	2190-2036D12	INSERT;WASHER	INSERTION	1					
6	545-00002	LIGHTER;CIGAR	ALLUMEUR DE CIGARE	1		5001-5695	I	300730-00005	1
	300730-00005	LIGHTER,CIGAR	ALLUMEUR DE CIGARE	1		5696-			

(THIS PARTS BOOK IS FOR REFERENCE ONLY.
PART NUMBERS AND SERAIL NUMBERS MAY BE
OUTDATED. ALWAYS USE THE ONLINE PARTS SYSTEM)

DATE	JAN. 04, 2013
3rd EDITION	

Fig. 6200 WINDOW WASHER
RONDELLE DE FENETRE

Serial No. ;

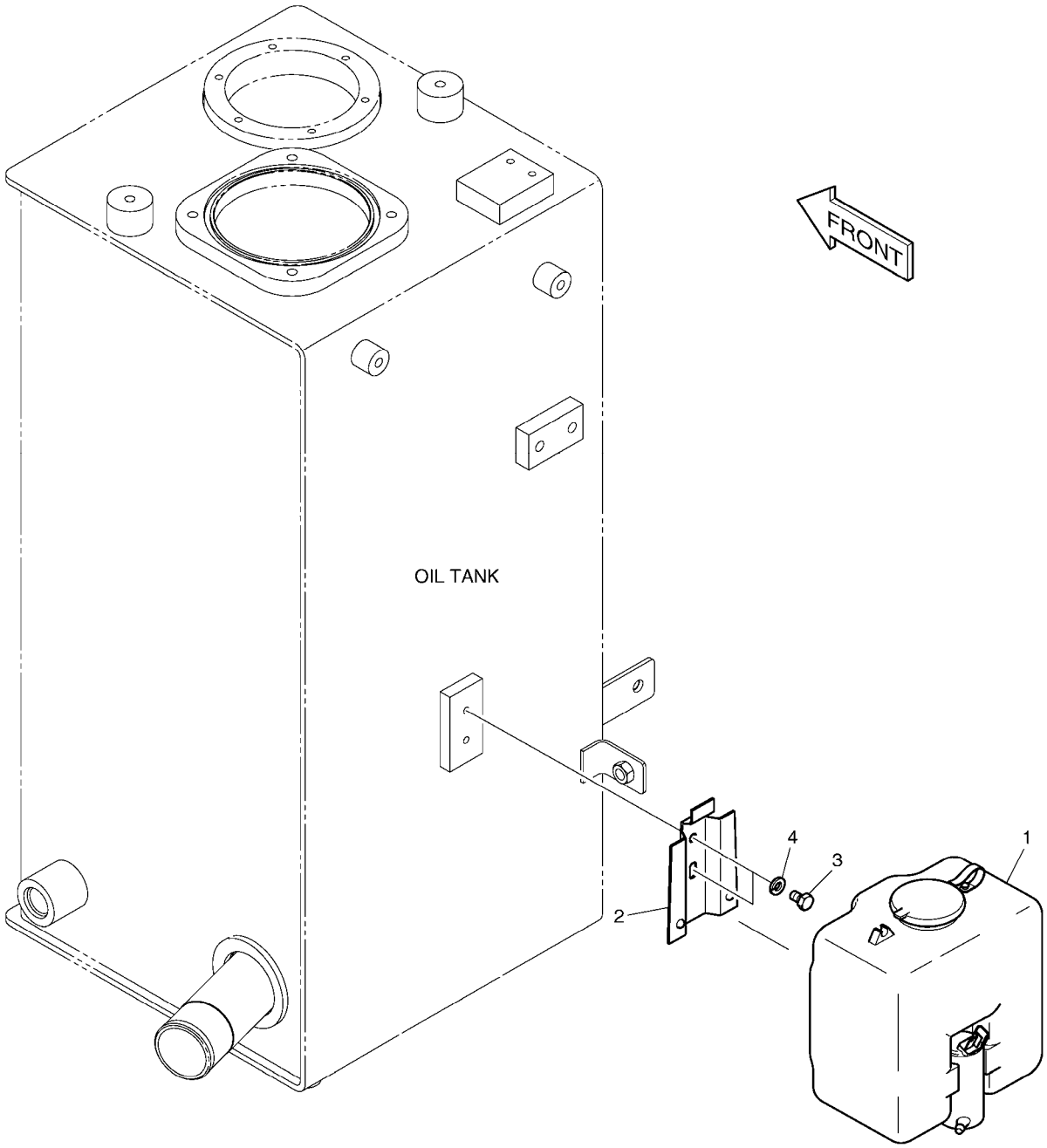

(THIS PARTS BOOK IS FOR REFERENCE ONLY.
PART NUMBERS AND SERAIL NUMBERS MAY BE
OUTDATED. ALWAYS USE THE ONLINE PARTS SYSTEM)

DATE	JAN. 04, 2013
3rd EDITION	

Fig. 6200 WINDOW WASHER
RONDELLE DE FENETRE

Serial No. ;

Key No.	Part No.	Description	Description	Q'ty	S.C	Serial No.	ICA	Replaceable part	
								Part No.	Q'ty
6200 --	K1026795	WINDOW WASHER	RONDELLE DE FENETRE	-	D				
1	2916-9002A	TANK;WASHER	LAVE-GLACE	1					
2	2195-1534	BRACKET	SUPPORT	1					
3	S0504366	BOLT	BOULON	2					
4	S5102303	WASHER;SPRING	RONDELLE	2					

(THIS PARTS BOOK IS FOR REFERENCE ONLY.
PART NUMBERS AND SERAIL NUMBERS MAY BE
OUTDATED. ALWAYS USE THE ONLINE PARTS SYSTEM)

DATE	JAN. 04, 2013
3rd EDITION	

Fig. 6210 CABIN MOUNTING SUPPORT DE CABINE

Serial No. ;

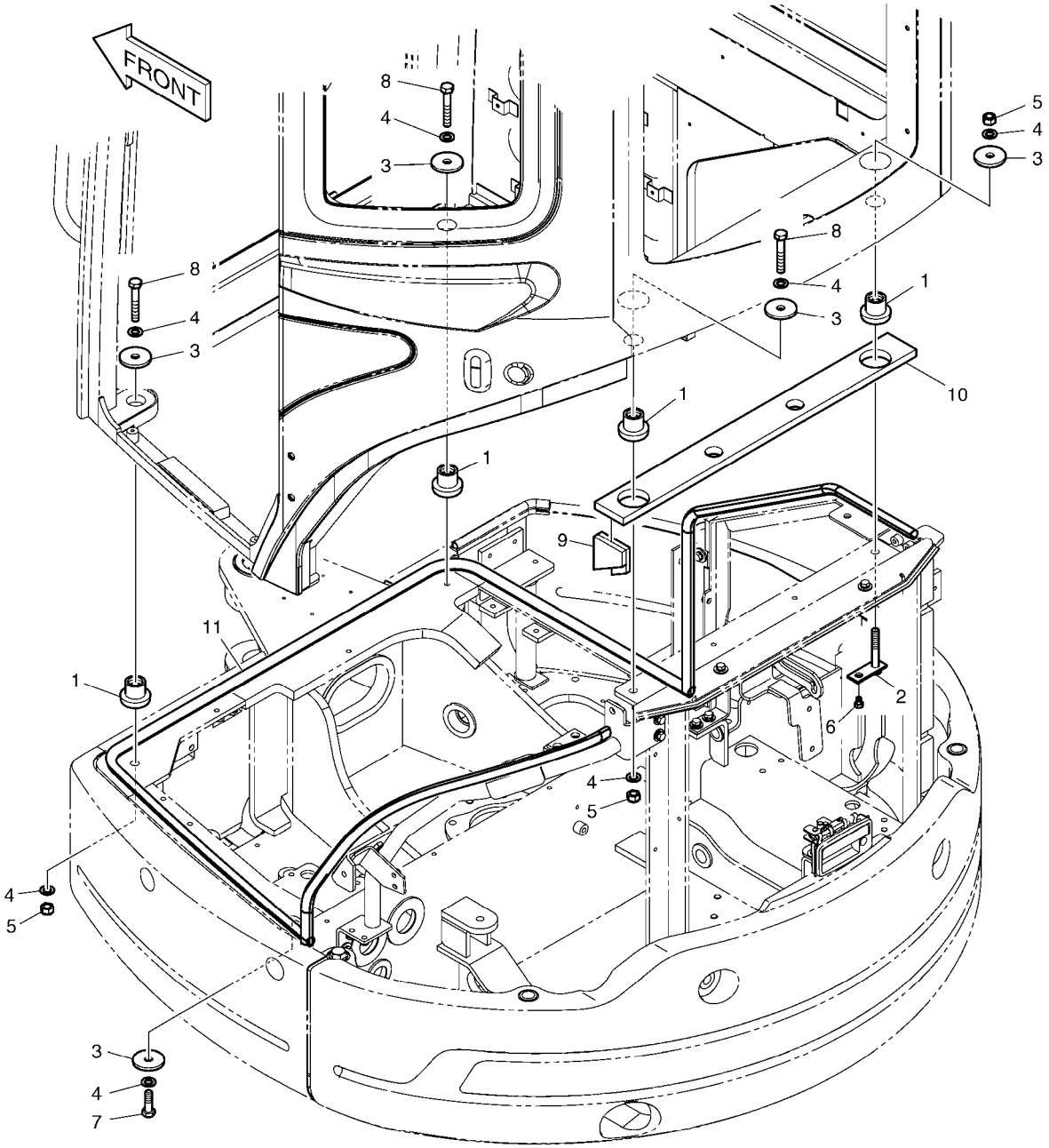

FRAME

(THIS PARTS BOOK IS FOR REFERENCE ONLY.
PART NUMBERS AND SERAIL NUMBERS MAY BE
OUTDATED. ALWAYS USE THE ONLINE PARTS SYSTEM)

DATE	JAN. 04, 2013
3rd EDITION	

Fig. 6210 CABIN MOUNTING SUPPORT DE CABINE

Serial No. ;

Key No.	Part No.	Description	Description	Q'ty	S.C	Serial No.	ICA	Replaceable part	
								Part No.	Q'ty
6210 --	K1011305G	CABIN MOUNTING	MONTAGE DE CABINE	-	D	5001-5626			
	220101-00684	CABIN ASSY,MOUNT	MONTAGE DE CABINE	-	D	5627-			
1	161-00284	RUBBER;CABIN MOUNTING	CAOUTCHOUC	4					
2	120-00255	BOLT	BOULON	1					
3	2114-1058D73	WASHER	RONDELLE PLATE	5					
4	2114-1058D54	WASHER	RONDELLE	7		5001-5626			
	120810-00122	WASHER,PLAIN	RONDELLE	7		5627-			
5	2121-9019	NUT;LOCK	ECROU	3					
6	S0508453	BOLT M8X1.25X12	BOULON A 6 PANS	1					
7	2120-2166D50	BOLT	BOULON A 6 PANS	1					
8	S0561253	BOLT M12X1.75X75	BOLT M12X1.75X75	3					
9	K1015632B	FOAM	EPONGE	1		5001-5234	I	K1015632C	1
	K1015632C	FOAM	EPONGE	1		5235-			
10	K1015633A	FOAM	EPONGE	1					
11	K1023901A	TRIM	ATTACHE	1					

(THIS PARTS BOOK IS FOR REFERENCE ONLY.
PART NUMBERS AND SERAIL NUMBERS MAY BE
OUTDATED. ALWAYS USE THE ONLINE PARTS SYSTEM)

DATE	JAN. 04, 2013
3rd EDITION	

Fig. 6220 COVER - CABIN
CABINE DE COUVERCLE

Serial No. ;

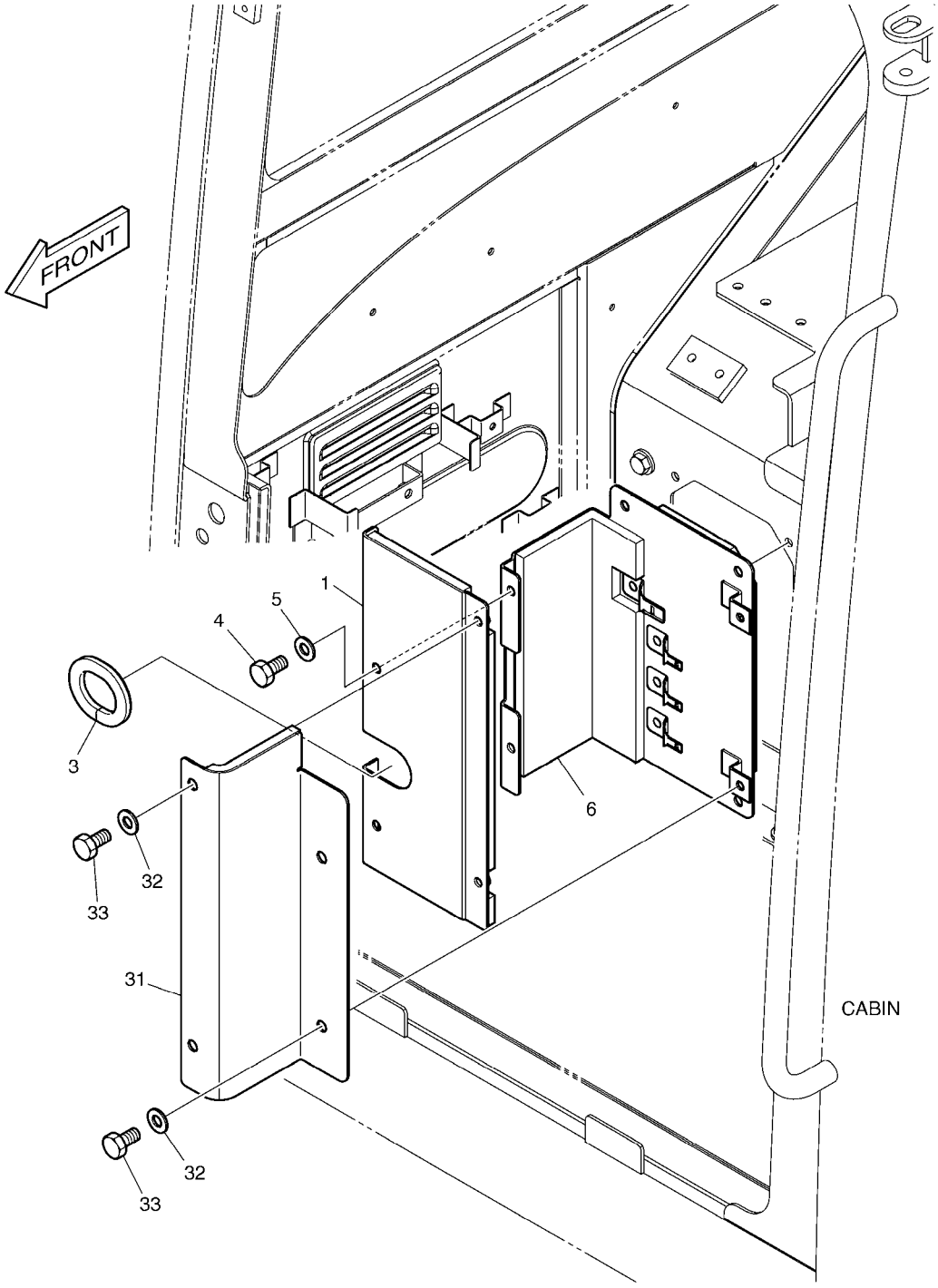

(THIS PARTS BOOK IS FOR REFERENCE ONLY.
PART NUMBERS AND SERAIL NUMBERS MAY BE
OUTDATED. ALWAYS USE THE ONLINE PARTS SYSTEM)

DATE	JAN. 04, 2013
3rd EDITION	

Fig. 6220 COVER - CABIN
CABINE DE COUVERCLE

Serial No. ;

Key No.	Part No.	Description	Description	Q'ty	S.C	Serial No.	ICA	Replaceable part	
								Part No.	Q'ty
6220 --	K1023912C	COVER ASS'Y	COUVERCLE	-	D	5001-6067			
	220204-00278	COVER,CABIN	COUVERCLE	-	D	6068-			
1	K1014172C	COVER	COUVERCLE	1					
3	2161-1744	RUBBER	CAOUTCHOUC	1					
4	2120-2166D5	BOLT	BOULON	6					
5	2114-1898D2	WASHER	RONDELLE	6					
6	K1012836B	COVER	COUVERCLE	1		5001-6067	Y	110508-15884	1
	110508-15884	COVER	COUVERCLE	1		6068-			
31	K1030060	COVER	COUVERCLE	1					
32	2114-1898D2	WASHER	RONDELLE	4					
33	2120-2166D5	BOLT	BOULON	4					

(THIS PARTS BOOK IS FOR REFERENCE ONLY.
PART NUMBERS AND SERAIL NUMBERS MAY BE
OUTDATED. ALWAYS USE THE ONLINE PARTS SYSTEM)

DATE	JAN. 04, 2013
3rd EDITION	

Fig. 6230 FLOOR MAT - CABIN
CABINE DE PLANCHER

Serial No. ;

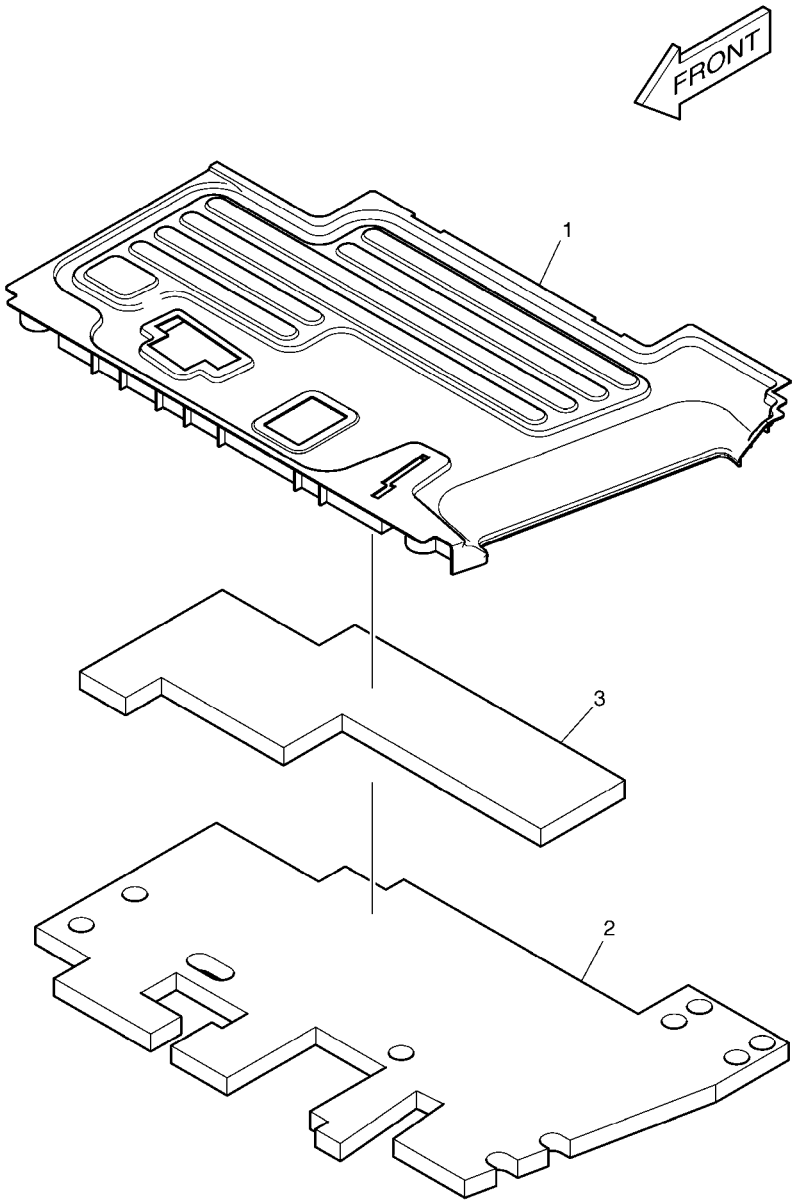

(THIS PARTS BOOK IS FOR REFERENCE ONLY.
PART NUMBERS AND SERAIL NUMBERS MAY BE
OUTDATED. ALWAYS USE THE ONLINE PARTS SYSTEM)

DATE	JAN. 04, 2013
3rd EDITION	

Fig. 6230 FLOOR MAT - CABIN
CABINE DE PLANCHER

Serial No. ;

Key No.	Part No.	Description	Description	Q'ty	S.C	Serial No.	ICA	Replaceable part	
								Part No.	Q'ty
6230 --	K1027805	MAT FLOOR ASS'Y	PLANCHER	-	D	5001-6067			
	110935-00264	MAT,FLOOR	PLANCHER	-	D	6068-			
1	K1029122	MAT;CABIN	TAPIS DE SOL	1		5001-6067	Y	110935-00265	1
	110935-00265	MAT,FLOOR	PLANCHER	1		6068-			
2	K1023873	FOAM;MAT FLOOR	EPONGE	1		5001-6067	Y	180102-00895	1
	180102-00895	FOAM	EPONGE	1		6068-			
3	K1023874B	FOAM;MAT FLOOR	EPONGE	1		5001-6067	Y	180102-00896	1
	180102-00896	FOAM	EPONGE	1		6068-			

(THIS PARTS BOOK IS FOR REFERENCE ONLY.
PART NUMBERS AND SERAIL NUMBERS MAY BE
OUTDATED. ALWAYS USE THE ONLINE PARTS SYSTEM)

DATE	JAN. 04, 2013
3rd EDITION	

Fig. 6240 CABIN (1)
CABINE

Serial No. ;

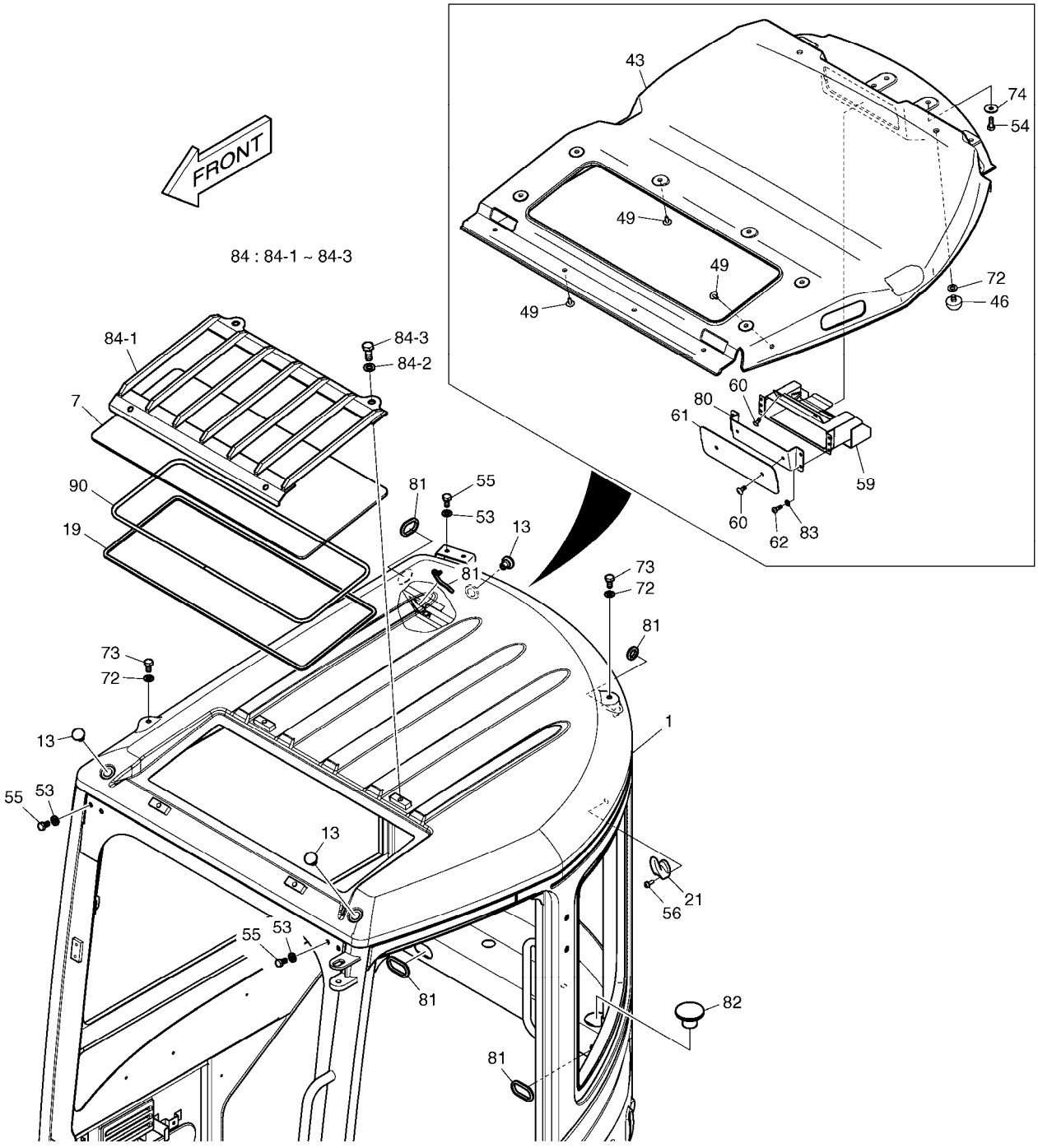

(THIS PARTS BOOK IS FOR REFERENCE ONLY.
PART NUMBERS AND SERAIL NUMBERS MAY BE
OUTDATED. ALWAYS USE THE ONLINE PARTS SYSTEM)

DATE	JAN. 04, 2013
3rd EDITION	

Fig. 6240 CABIN (1) CABINE

Serial No. ;

Key No.	Part No.	Description	Description	Q'ty	S.C	Serial No.	ICA	Replaceable part	
								Part No.	Q'ty
6240 --	K1011306E	CABIN ASS'Y	ENSEMBLE CABINE	1		5001-5028	I	K1011306G	1
	K1011306G	CABIN ASS'Y	ENSEMBLE CABINE	1		5029-5344	I	K1011306H	1
	K1011306H	CABIN ASS'Y	ENSEMBLE CABINE	1		5345-5725	I	220101-00724	1
	220101-00724	CABIN ASSY	ENSEMBLE CABINE	1		5726-6017	I	220101-00724A	1
	220101-00724A	CABIN ASSY	ENSEMBLE CABINE	1		6018-6067	Y	220101-00724B	1
	220101-00724B	CABIN ASSY	ENSEMBLE CABINE	1		6068-			
1	-	BODY;CABIN	CORPS	1	D				
7	K1013088A	GLASS;ROOF	VERRE	1					
13	2160-1310	BUSHING;RUBBER	MANCHON CAOUTCHOUC	3					
19	K1013534	DAMPER	AMORTISSEUR	1					
21	K1014609B	HOOK;COAT	CROCHET	1					
43	K1014590C	PANEL;ROOF	PANNEAU DE TOIT	1					
46	4161-2507	STOPPER;RUBBER	TAQUET	2					
49	K1006936	SCRIVET	SCRIVET	14					
53	2114-1898D2	WASHER	RONDELLE	6					
54	2120-2166D5	BOLT	BOULON	4					
55	2120-2166D25	BOLT M8X1.25X16	BOULON A 6 PANS	6					
56	2120-2166D7	SCREW	VIS	1					
59	K1015107A	BRACKET;CASSETTE	SUPPORT	1					
60	2120-2166D10	SCREW	VIS	4					
61	K1015113B	COVER;CASSETTE	COUVERCLE	1					
62	2120-2166D8	SCREW M5X0.8X14	VIS	4					
72	2114-1898D15	WASHER;PLAIN	RONDELLE	4					
73	2120-2166D4	BOLT M10X1.5X20	BOULON	2					
74	2114-1898D8	WASHER	RONDELLE	4					
80	K1018881	PLATE;CASSETTE	PLAQUE	1					
81	K1018827A	TRIM;RUBBER	ATTACHE	1					
82	K1018810	GROMMET	CANON ISOLANT	2					
83	2114-1898D4	WASHER	RONDELLE	4					
84	K1024126	ROOF GUARD ASS'Y	GARDE DE TOIT	1	D				
84-1	K1017222	. GUARD;ROOF	. GARDE	1					
84-2	2114-1898D1	. WASHER	. RONDELLE	4					
84-3	2120-2166D56	. BOLT M10X1.5X16	. BOULON	4					
90	K1029458	RUBBER;TRIM	CAOUTCHOUC	1					

(THIS PARTS BOOK IS FOR REFERENCE ONLY.
PART NUMBERS AND SERAIL NUMBERS MAY BE
OUTDATED. ALWAYS USE THE ONLINE PARTS SYSTEM)

DATE	JAN. 04, 2013
3rd EDITION	

Fig. 6250 CABIN (2) CABINE

Serial No. ;

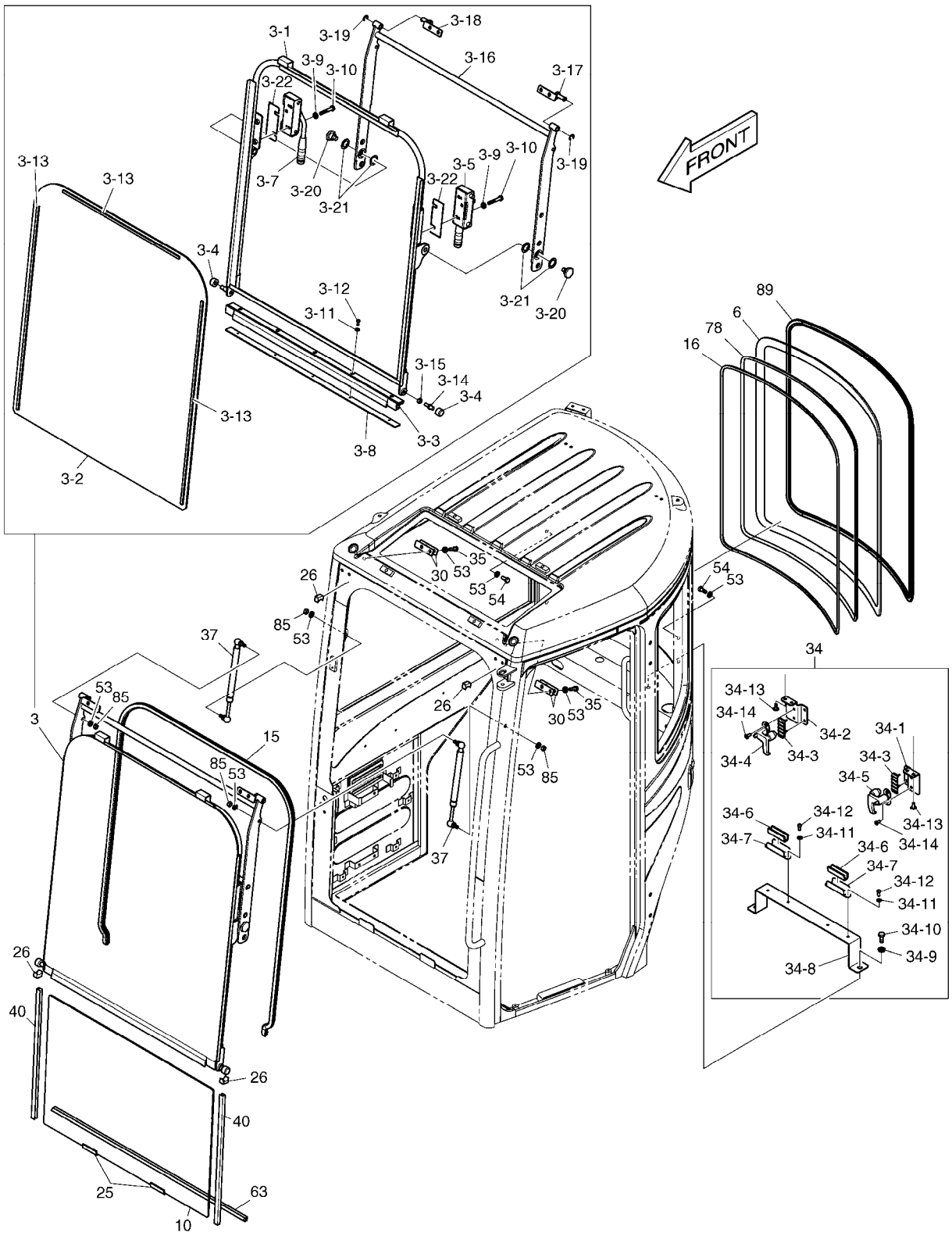

(THIS PARTS BOOK IS FOR REFERENCE ONLY.
PART NUMBERS AND SERAIL NUMBERS MAY BE
OUTDATED. ALWAYS USE THE ONLINE PARTS SYSTEM)

DATE	JAN. 04, 2013
3rd EDITION	

Fig. 6250 CABIN (2) CABINE

Serial No. ;

Key No.	Part No.	Description	Description	Q'ty	S.C	Serial No.	ICA	Replaceable part	
								Part No.	Q'ty
6250 --	K1011306E	CABIN ASS'Y	ENSEMBLE CABINE	1		5001-5028	I	K1011306G	1
	K1011306G	CABIN ASS'Y	ENSEMBLE CABINE	1		5029-5344	I	K1011306H	1
	K1011306H	CABIN ASS'Y	ENSEMBLE CABINE	1		5345-5725	I	220101-00724	1
	220101-00724	CABIN ASSY	ENSEMBLE CABINE	1		5726-6017	I	220101-00724A	1
	220101-00724A	CABIN ASSY	ENSEMBLE CABINE	1		6018-6067	Y	220101-00724B	1
	220101-00724B	CABIN ASSY	ENSEMBLE CABINE	1		6068-			
3	K1011310E	FRONT DOOR ASS'Y	PORTE AVANT	1		5001-5028	I	K1011310G	1
	K1011310G	FRONT DOOR ASS'Y	PORTE AVANT	1		5029-			
3-1	-	. BODY;DOOR	. PORTE	1	D				
3-2	K1013178B	. GLASS;SLIDE DOOR	. VERRE	1					
3-3	K1014709E	. SEAL;SLIDE DOOR	. GLISSEZ LE JOINT DE POR	1					
3-4	270-00028	. ROLLER	. GALET	2					
3-5	K1014748C	. LATCH;SLIDE DOOR(L.H)	. VERROU	1					
3-7	K1014747C	. LATCH;SLIDE DOOR(R.H)	. VERROU	1					
3-8	K1014988B	. PLATE	. PLAQUE	1					
3-9	2114-1898D2	. WASHER	. RONDELLE	4					
3-10	2120-2166D59	. BOLT	. BOULON	4					
3-11	2114-1898D13	. WASHER;PLAIN	. RONDELLE	5					
3-12	2120-2166D33	. SCREW M4X0.7X10	. VIS	5					
3-13	K1014990A	. DAMPER	. AMORTISSEUR	1					
3-14	K1024117A	. PIN;SLIDE DOOR	. GOUPILLE	1					
3-15	2121-1311D2	. NUT	. ECROU	1					
3-16	K1024128A	. BAR	. BARRE	1		5001-5028	I	K1024128C	1
	K1024128C	. BAR	. BARRE	1		5029-			
3-17	K1013051B	. BRACKET;L.H	. SUPPORT	1					
3-18	K1013050B	. BRACKET;R.H	. SUPPORT	1					
3-19	S6540700	. RING;RETAINING	. BAGUE	2					
3-20	K1014736A	. PIN	. GOUPILLE	2					
3-21	K1012816	. SHIM	. CALE	4					
3-22	K1030174	. SHIM	. CALE	2					
6	K1013087A	GLASS;REAR	VERRE	1					
10	K1013174B	GLASS;LOWER	VERRE	1					
15	K1013270A	TRIM;FRONT	EQUILIBRE AVANT	1					
16	K1013531A	DAMPER;REAR	AMORTISSEUR	1					
25	2161-2178	STOPPER	ARRET	2					
26	161-00208A	STOPPER;RUBBER	ARRET	4					
30	K1026395	PLATE	PLAQUE	4					
34	K1014737A	BRACKET ASS'Y	SUPPORT	1	D				

(THIS PARTS BOOK IS FOR REFERENCE ONLY.
PART NUMBERS AND SERIAL NUMBERS MAY BE
OUTDATED. ALWAYS USE THE ONLINE PARTS SYSTEM)

DATE	JAN. 04, 2013
3rd EDITION	

Fig. 6250 CABIN (2)
CABINE

Serial No. ;

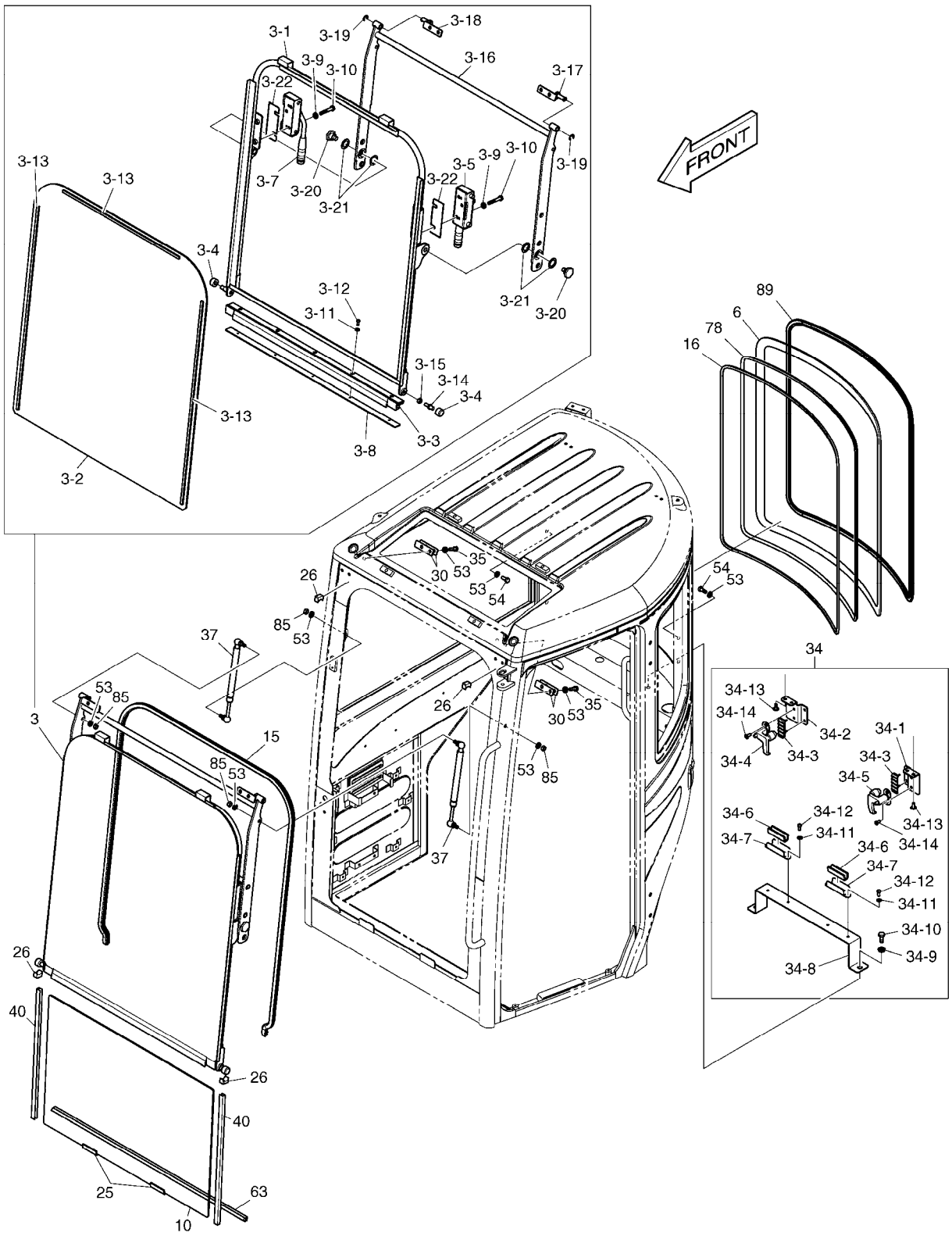

(THIS PARTS BOOK IS FOR REFERENCE ONLY.
PART NUMBERS AND SERAIL NUMBERS MAY BE
OUTDATED. ALWAYS USE THE ONLINE PARTS SYSTEM)

DATE	JAN. 04, 2013
3rd EDITION	

Fig. 6250 CABIN (2)
CABINE

Serial No. ;

Key No.	Part No.	Description	Description	Q'ty	S.C	Serial No.	ICA	Replaceable part	
								Part No.	Q'ty
6250 -34-1	621-03113B	. PLATE;STOPPER (R.H)	. PLAQUE	1					
34-2	621-03114B	. PLATE;STOPPER (L.H)	. PLAQUE	1					
34-3	K1000794	. STOPPER;RUBBER	. TAQUET	2					
34-4	125-00077	. LOCK;REAR GLASS (L.H)	. SERRURE	1					
34-5	125-00078	. LOCK;REAR GLASS (R.H)	. SERRURE	1					
34-6	2161-2178	. STOPPER	. ARRET	2					
34-7	2891-1232B	. PLATE	. PLAQUE	2					
34-8	K1014735A	. BRACKET	. SUPPORT	1					
34-9	2114-1898D2	. WASHER	. RONDELLE	2					
34-10	2120-2166D5	. BOLT	. BOULON	2					
34-11	2114-1898D13	. WASHER;PLAIN	. RONDELLE	4					
34-12	2120-2166D33	. SCREW M4X0.7X10	. VIS	4					
34-13	2120-2166D10	. SCREW	. VIS	4					
34-14	2120-2166D44	. SCREW M5X0.8X12	. VIS	4					
35	2120-2166D16	BOLT M8X1.25X25	BOULON A 6 PANS	4					
37	K1014743A	GAS SPRING	AMORTISSEUR	2					
40	2160-1026	TRIM	CANAL	2					
53	2114-1898D2	WASHER	RONDELLE	12					
54	2120-2166D5	BOLT	BOULON	4					
63	2198-1061	RUBBER;TRIM	CAOUTCHOUC	1					
78	K1018782	TRIM;RUBBER	EQUILIBRE EN CAOUTCHC	1					
85	2121-1311D2	NUT	ECROU	3					
89	K1029450	RUBBER;TRIM	CAOUTCHOUC	1					

(THIS PARTS BOOK IS FOR REFERENCE ONLY.
PART NUMBERS AND SERAIL NUMBERS MAY BE
OUTDATED. ALWAYS USE THE ONLINE PARTS SYSTEM)

DATE	JAN. 04, 2013
3rd EDITION	

Fig. 6260 CABIN (3)
CABINE

Serial No. ;

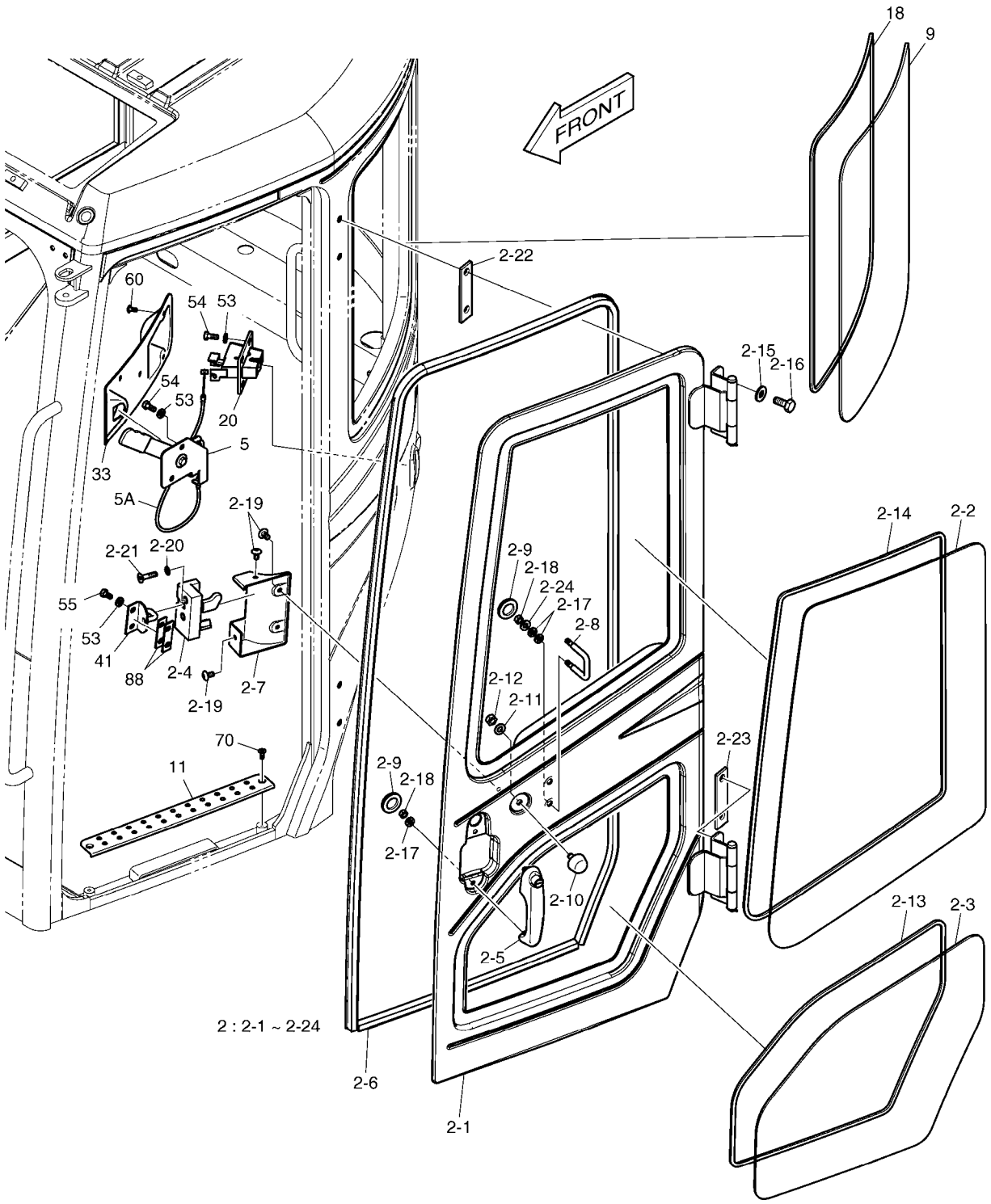

(THIS PARTS BOOK IS FOR REFERENCE ONLY.
PART NUMBERS AND SERAIL NUMBERS MAY BE
OUTDATED. ALWAYS USE THE ONLINE PARTS SYSTEM)

DATE	JAN. 04, 2013
3rd EDITION	

Fig. 6260 CABIN (3) CABINE

Serial No. ;

Key No.	Part No.	Description	Description	Q'ty	S.C	Serial No.	ICA	Replaceable part	
								Part No.	Q'ty
6260 --	K1011306E	CABIN ASS'Y	ENSEMBLE CABINE	1		5001-5028	I	K1011306G	1
	K1011306G	CABIN ASS'Y	ENSEMBLE CABINE	1		5029-5344	I	K1011306H	1
	K1011306H	CABIN ASS'Y	ENSEMBLE CABINE	1		5345-5725	I	220101-00724	1
	220101-00724	CABIN ASSY	ENSEMBLE CABINE	1		5726-6017	I	220101-00724A	1
	220101-00724A	CABIN ASSY	ENSEMBLE CABINE	1		6018-6067	Y	220101-00724B	1
	220101-00724B	CABIN ASSY	ENSEMBLE CABINE	1		6068-			
2	K1011308E	SIDE DOOR ASS'Y(L.H)	ASSEMBLEE LATERALE DE	1		5001-5028	I	K1011308G	1
	K1011308G	SIDE DOOR ASS'Y(L.H)	ENSEMBLE LATERALE DE F	1		5029-5344	I	K1011308H	1
	K1011308H	SIDE DOOR ASS'Y(L.H)	ENSEMBLE LATERALE DE F	1		5345-6017	I	220205-00317	1
	220205-00317	SIDE DOOR ASS'Y(L.H)	ENSEMBLE LATERALE DE F	1		6018-6067	Y	220205-00317A	1
	220205-00317A	DOOR ASSY	ENSEMBLE LATERALE DE F	1		6068-			
2-1	-	. BODY;DOOR	. PORTE	1	D				
2-2	K1013075	. GLASS;DOOR UPPER	. VERRE	1					
2-3	K1013076A	. GLASS;DOOR LOWER	. VERRE	1					
2-4	K1013077	. CATCH;DOOR INNER	. CATCH;DOOR INTERIEUR	1					
2-5	K1013078B	. HANDLE ASS'Y;DOOR OUTER	. POIGNEE	1		5001-5028			
	K1037200	. HANDLE;DOOR	. HANDLE;DOOR	1		5029-6017	I	110925-00223	1
	110925-00223	. HANDLE;DOOR	. HANDLE;DOOR	1		6018-			
2-6	K1013079A	. TRIM RUBBER;DOOR INNER	. LE CAOUTCHOUC D'EQUI	1					
2-7	K1013567	. COVER;DOOR INNER	. COUVERCLE	1		5001-6067	Y	110508-16051	1
	110508-16051	. COVER;DOOR INNER	. COUVERCLE	1		6068-			
2-8	K1013081C	. U-BOLT	. BOULON U	1					
2-9	2160-1219	. GROMMET	. MANCHON CAOUTCHOU	3					
2-10	161-00195	. STOPPER	. TAQUET	1					
2-11	2114-1898D15	. WASHER;PLAIN	. RONDELLE	1					
2-12	2121-1311D4	. NUT	. ECROU	1					
2-13	K1013498	. DAMPER	. AMORTISSEUR	1					
2-14	K1013499	. DAMPER	. AMORTISSEUR	1					
2-15	2114-1898D1	. WASHER	. RONDELLE	4					
2-16	2120-2166D2	. BOLT	. BOULON	4					
2-17	2114-1898D2	. WASHER	. RONDELLE	6					
2-18	2121-1311D2	. NUT	. ECROU	4					
2-19	2120-2166D52	. BOLT M6X1.0X12	. BOULON	4					
2-20	S5210503	. WASHER M8	. RONDELLE ELASTIQUE	2					
2-21	2120-2150D4	. BOLT M8X1.25X35	. BOULON	2					
2-22	K1029442A	. SHIM	. CALE	1					
2-23	K1029443A	. SHIM	. CALE	1					
2-24	K1029447	. RUBBER	. CAOUTCHOUC	2					

(THIS PARTS BOOK IS FOR REFERENCE ONLY.
PART NUMBERS AND DETAIL NUMBERS MAY BE
OUTDATED. ALWAYS USE THE ONLINE PARTS SYSTEM)

DATE	JAN. 04, 2013
3rd EDITION	

Fig. 6260 CABIN (3)
CABINE

Serial No. ;

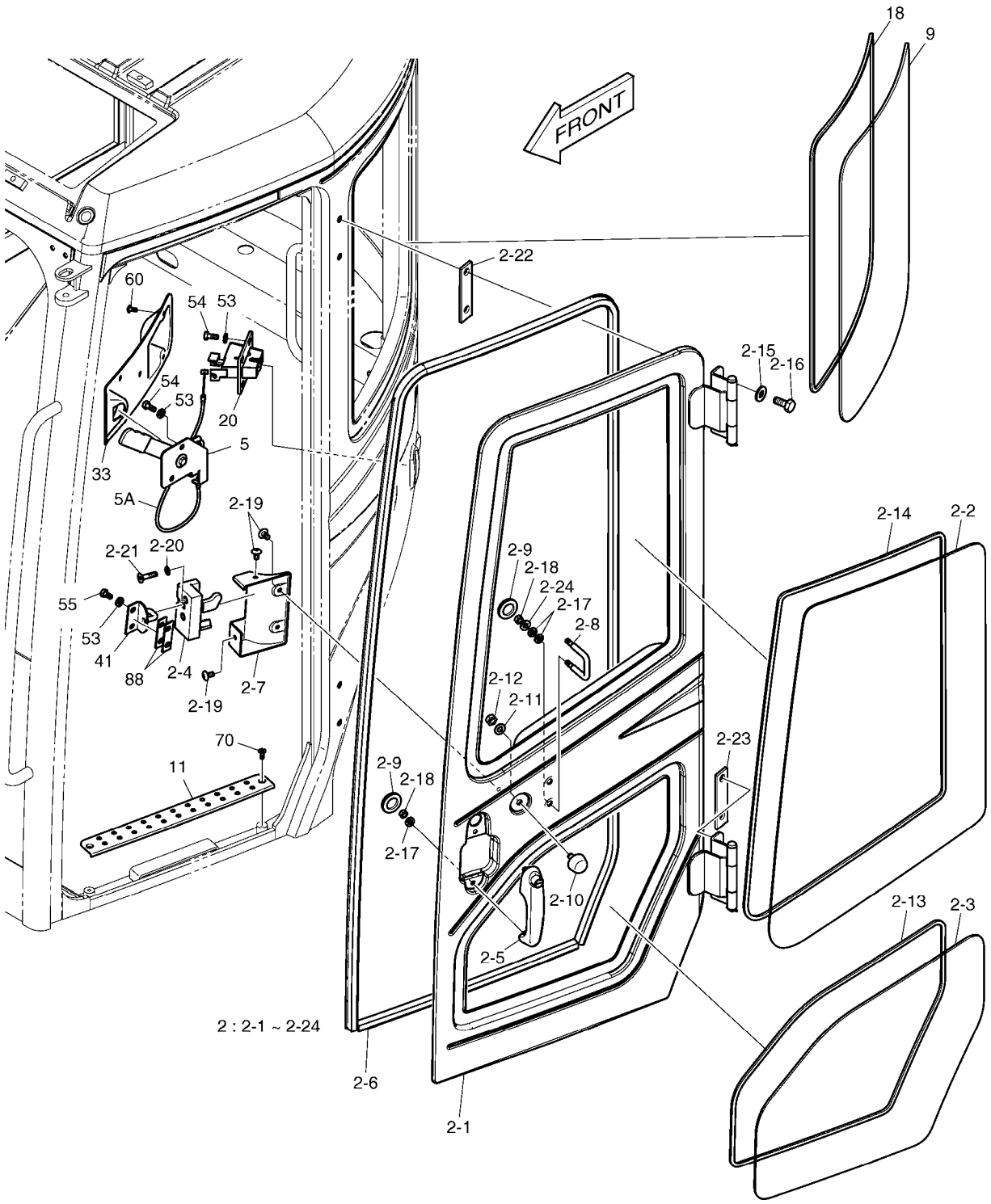

(THIS PARTS BOOK IS FOR REFERENCE ONLY.
PART NUMBERS AND SERAIL NUMBERS MAY BE
OUTDATED. ALWAYS USE THE ONLINE PARTS SYSTEM)

Fig. 6260 CABIN (3) CABINE

Serial No. ;

Key No.	Part No.	Description	Description	Q'ty	S.C	Serial No.	ICA	Replaceable part	
								Part No.	Q'ty
6260 -5	K1013564A	LEVER ASS'Y;BACK LOCK	VARECH ARRIERE DE SER	1					
5A	127-00009	. WIRE ASS'Y	. FIL	1					
9	K1013090	GLASS;L.H	VERRE	1					
11	K1013073	STEP;CABIN DOOR	MARCHER	1					
18	K1013533	DAMPER	AMORTISSEUR	1					
20	2125-9055	LOCK;BACK	SERRURE	1					
33	K1014293A	COVER;BACK LOCK INNER	COUVERCLE	1		5001-6067	Y	110508-16052	1
	110508-16052	COVER;BACK LOCK INNER	COUVERCLE	1		6068-			
41	K1014785B	STRIKER;DOOR INNER	BUTEE	1					
53	2114-1898D2	WASHER	RONDELLE	8					
54	2120-2166D5	BOLT	BOULON	6					
55	2120-2166D25	BOLT M8X1.25X16	BOULON A 6 PANS	2					
60	2120-2166D10	SCREW	VIS	5					
70	2120-2150D3	SCREW	VIS	2					
88	K1029156A	PLATE	PLAQUE	2					

(THIS PARTS BOOK IS FOR REFERENCE ONLY.
PART NUMBERS AND SERAIL NUMBERS MAY BE
OUTDATED. ALWAYS USE THE ONLINE PARTS SYSTEM)

DATE	JAN. 04, 2013
3rd EDITION	

Fig. 6270 CABIN (4)
CABINE

Serial No. ;

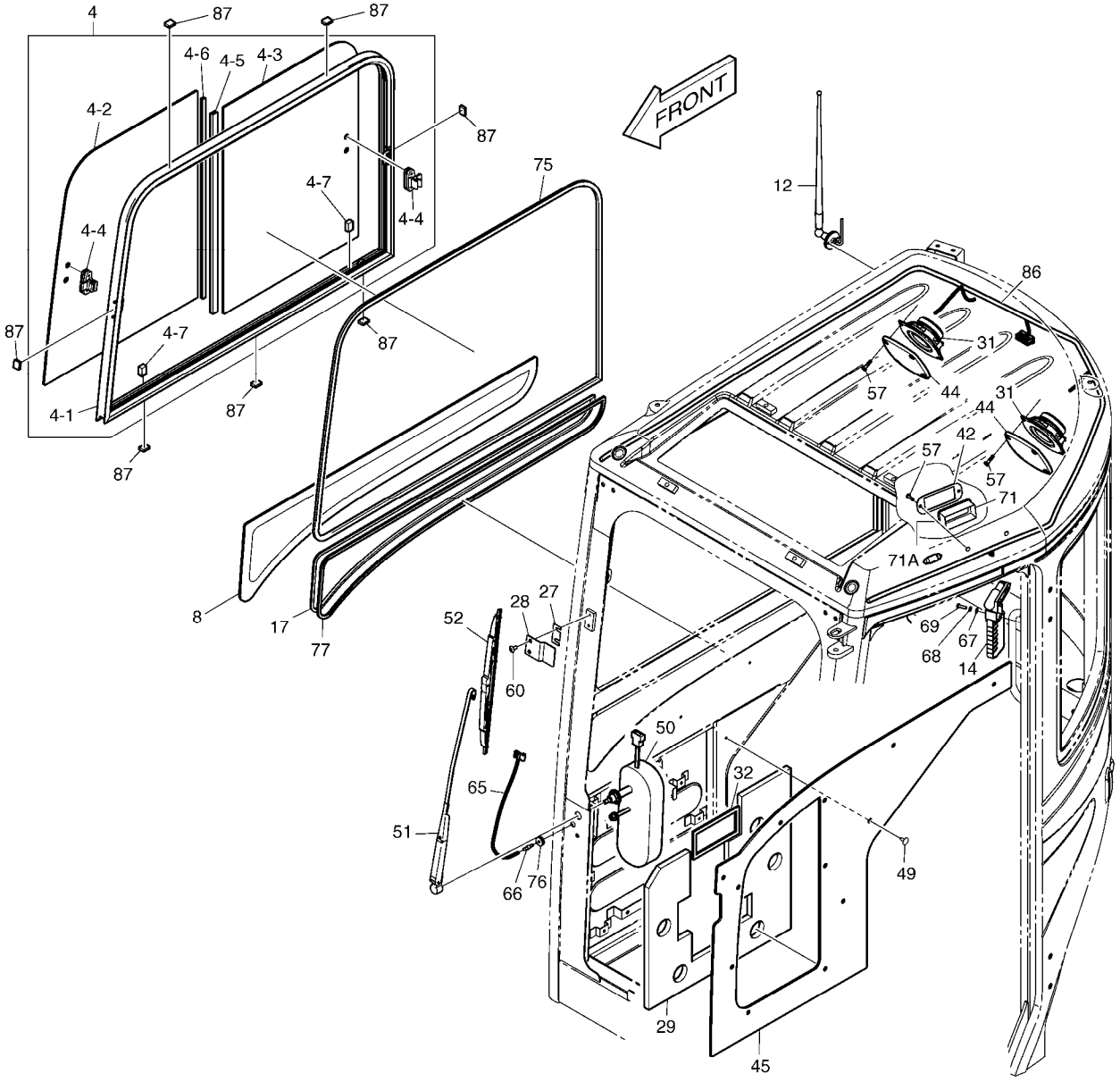

(THIS PARTS BOOK IS FOR REFERENCE ONLY.
PART NUMBERS AND SERAIL NUMBERS MAY BE
OUTDATED. ALWAYS USE THE ONLINE PARTS SYSTEM)

DATE	JAN. 04, 2013
3rd EDITION	

Fig. 6270 CABIN (4) CABINE

Serial No. ;

Key No.	Part No.	Description	Description	Q'ty	S.C	Serial No.	ICA	Replaceable part	
								Part No.	Q'ty
6270 --	K1011306E	CABIN ASS'Y	ENSEMBLE CABINE	1		5001-5028	I	K1011306G	1
	K1011306G	CABIN ASS'Y	ENSEMBLE CABINE	1		5029-5344	I	K1011306H	1
	K1011306H	CABIN ASS'Y	ENSEMBLE CABINE	1		5345-5725	I	220101-00724	1
	220101-00724	CABIN ASSY	ENSEMBLE CABINE	1		5726-6017	I	220101-00724A	1
	220101-00724A	CABIN ASSY	ENSEMBLE CABINE	1		6018-6067	Y	220101-00724B	1
	220101-00724B	CABIN ASSY	ENSEMBLE CABINE	1		6068-			
4	K1011312A	SIDE DOOR ASS'Y(R.H)	ENSEMBLE LATERALE DE F	1					
4-1	K1013082A	. FRAME;SASH	. ARMATURE DE SASH	1					
4-2	K1013084A	. GLASS (FRONT)	. VERRE	1					
4-3	K1013086A	. GLASS (REAR)	. VERRE	1					
4-4	2123-6119	. LOCK;SASH	. SERRURE	2					
4-5	2622-1265	. BAR	. BARRE	1					
4-6	2161-1041	. STRIP	. BANDE	1					
4-7	2161-6065	. STOPPER;GLASS	. ARRET	2					
8	K1013089A	GLASS;R.H	VERRE	1					
12	541-00013	ANTENNA	ANTENNE	1					
14	2199-9058	HAMMER	MARTEAU	1					
17	K1013532A	DAMPER	AMORTISSEUR	1					
27	621-01889A	PLATE;WIPER	PLAQUE	1					
28	K1018804	PLATE	PLAQUE	1					
29	K1026392	FOAM	EPONGE	1		5001-6067	Y	180102-00927	1
	180102-00927	FOAM	EPONGE	1		6068-			
31	2541-9020	SPEAKER	ORATEUR	2					
32	K1013265	SPONGE;FRESH AIR	EPONGE	1					
42	K1014787A	PLATE;LAMP	PLAQUE	1					
44	K1014591B	COVER;SPEAKER	COUVERCLE	2		5001-6067	Y	110508-15848	2
	110508-15848	COVER;SPEAKER	COUVERCLE	2		6068-			
45	K1014901B	PAD;SIDE (R.H)	GARNITURE LATERALE	1		5001-6067	Y	101555-00252	1
	101555-00252	PAD;SIDE(R.H)	GARNITURE LATERALE	1		6068-			
49	K1006936	SCRIVET	SCRIVET	5					
50	K1024109	MOTOR;WIPER	MOTEUR	1					
51	541-00011A	ARM;WIPER MOTOR	BALANCIER	1		5001-5725	I	300704-00016	1
	300704-00016	ARM ASSY,WIPER	BALANCIER	1		5726-			
52	2507-6006	BLADE;WIPER	BALAI D'ESSUIE-GLACE	1					
57	2120-2166D23	SCREW	VIS	10					
60	2120-2166D10	SCREW	VIS	2					
65	415-00040	NOZZLE;WIPER MOTOR	MOTEUR DE NOZZLE;WIPE	1					
66	2415-1018	ADAPTER;HOSE	ADAPTEUR	1					

(THIS PARTS BOOK IS FOR REFERENCE ONLY.
PART NUMBERS AND SERIAL NUMBERS MAY BE
OUTDATED. ALWAYS USE THE ONLINE PARTS SYSTEM)

DATE	JAN. 04, 2013
3rd EDITION	

Fig. 6270 CABIN (4)
CABINE

Serial No. ;

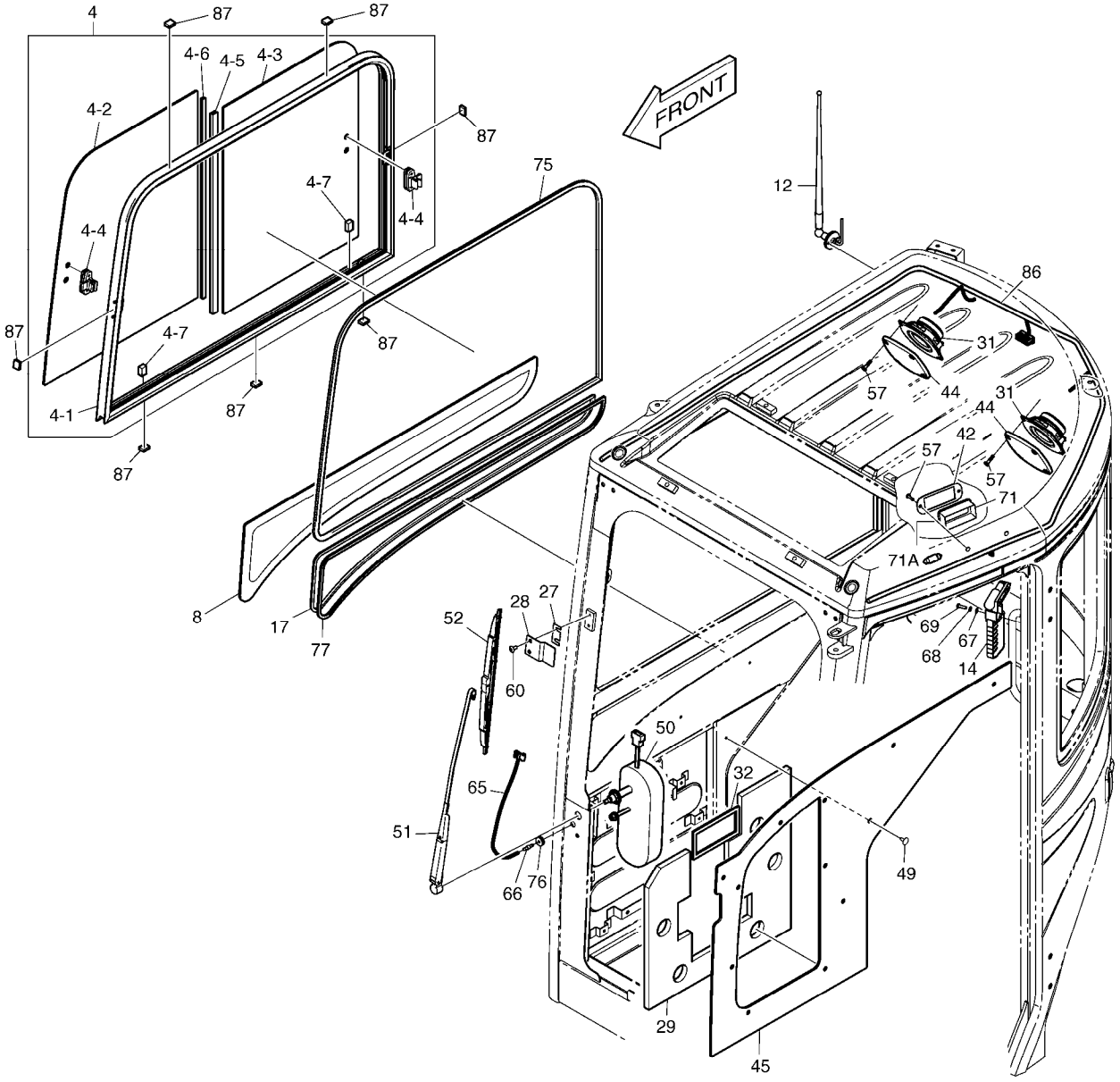

(THIS PARTS BOOK IS FOR REFERENCE ONLY.
PART NUMBERS AND SERAIL NUMBERS MAY BE
OUTDATED. ALWAYS USE THE ONLINE PARTS SYSTEM)

Fig. 6270 CABIN (4) CABINE

Serial No. ;

Key No.	Part No.	Description	Description	Q'ty	S.C	Serial No.	ICA	Replaceable part	
								Part No.	Q'ty
6270 -67	2114-1898D13	WASHER;PLAIN	RONDELLE	3					
68	2114-2031D1	WASHER;SPRING	RONDELLE	3					
69	2120-2166D26	SCREW	VIS	3					
71	2534-9068	LAMP;ROOM	LAMPE	1					
71A	2515-1021D6	. BULB	. AMPOULE	1					
75	2161-1744	RUBBER	CAOUTCHOUC	1					
76	K1018803	GROMMET	CANON ISOLANT	1					
77	K1018777	TRIM;RUBBER	EQUILIBRE EN CAOUTCHC	1					
86	K1013765	HARNESS;CABIN SUB	HARNAIS	1					
87	2114-1838	SPACER	BAGUE D'ECARTEMENT	7					

(THIS PARTS BOOK IS FOR REFERENCE ONLY.
PART NUMBERS AND SERAIL NUMBERS MAY BE
OUTDATED. ALWAYS USE THE ONLINE PARTS SYSTEM)

DATE	JAN. 04, 2013
3rd EDITION	

Fig. 6280 MIRROR MIROIR

Serial No. ;

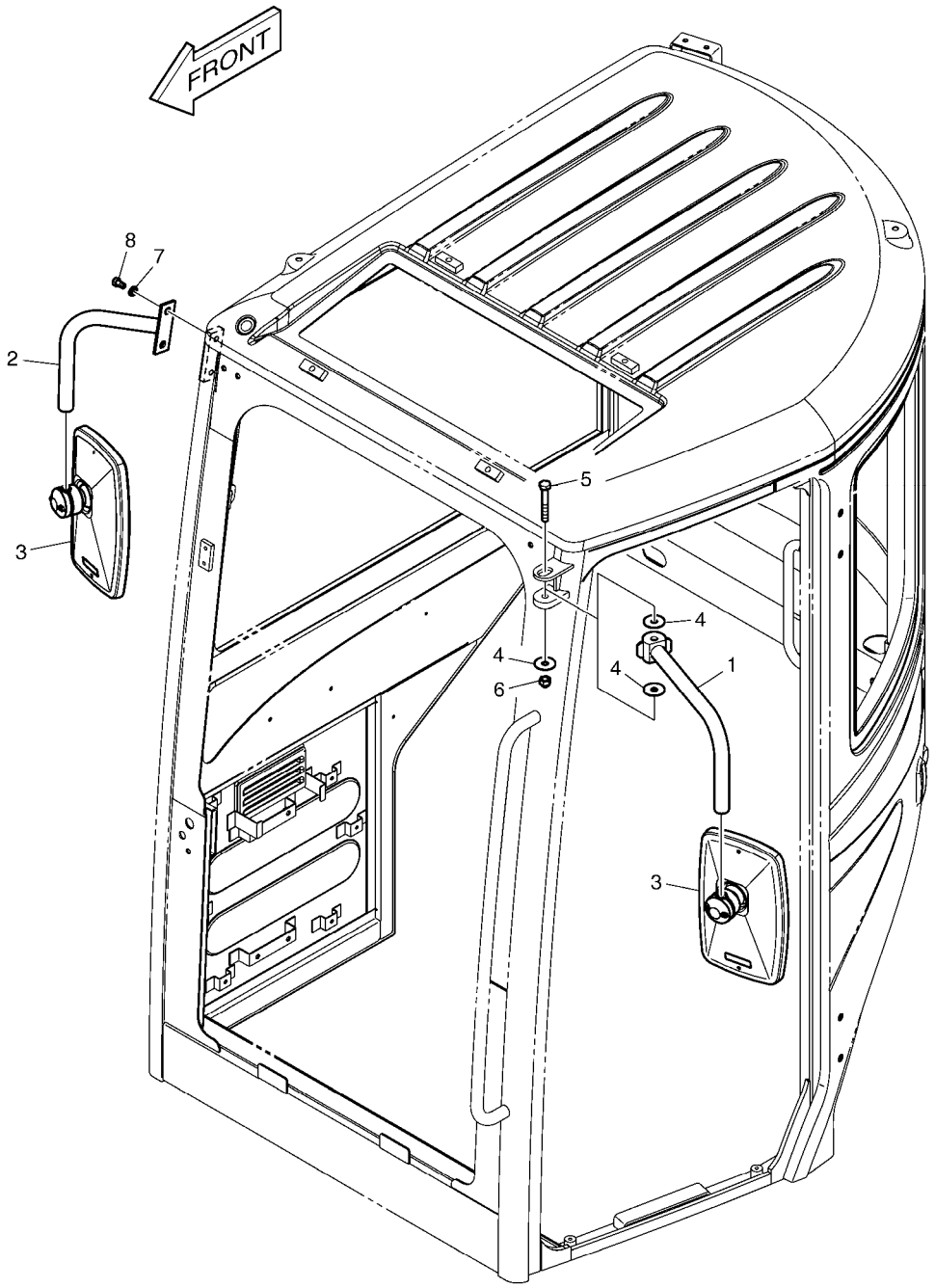

(THIS PARTS BOOK IS FOR REFERENCE ONLY.
PART NUMBERS AND SERAIL NUMBERS MAY BE
OUTDATED. ALWAYS USE THE ONLINE PARTS SYSTEM)

DATE	JAN. 04, 2013
3rd EDITION	

Fig. 6280 MIRROR MIROIR

Serial No. ;

Key No.	Part No.	Description	Description	Q'ty	S.C	Serial No.	ICA	Replaceable part	
								Part No.	Q'ty
6280 --	K1013176C	MIRROR ASS'Y	MIROIR	-	D	5001-5340			
	110969-00003	MIRROR ASS'Y	MIROIR	-	D	5341-			
1	K1013070A	STAY;MIRROR (L.H)	ENTRETOISE	1					
2	K1013177A	STAY;MIRROR (R.H)	SEJOUR DE MIROIR	1					
3	903-00068	MIRROR;SIDE	RETROVISEUR	2		5001-5340	I	K1040606	2
	K1040606	MIRROR;SIDE	MAIN COURANTE	2		5341-			
4	2114-1898D16	WASHER	RONDELLE	3					
5	2120-2166D60	BOLT	BOULON	1					
6	2121-1311D5	NUT;CAP	ECROU	1					
7	2114-1898D2	WASHER	RONDELLE	2		5001-5018			
	2114-1898D1	WASHER	RONDELLE	2		5019-			
8	2120-2166D25	BOLT M8X1.25X16	BOULON A 6 PANS	2		5001-5018			
	2120-2166D56	BOLT M10X1.5X16	BOULON	2		5019-			

(THIS PARTS BOOK IS FOR REFERENCE ONLY.
PART NUMBERS AND SERAIL NUMBERS MAY BE
OUTDATED. ALWAYS USE THE ONLINE PARTS SYSTEM)

DATE	JAN. 04, 2013
3rd EDITION	

Fig. 6290 PILOT PIPING - QUICK CLAMP
CONDUITES DE PILOTE

Serial No. ;

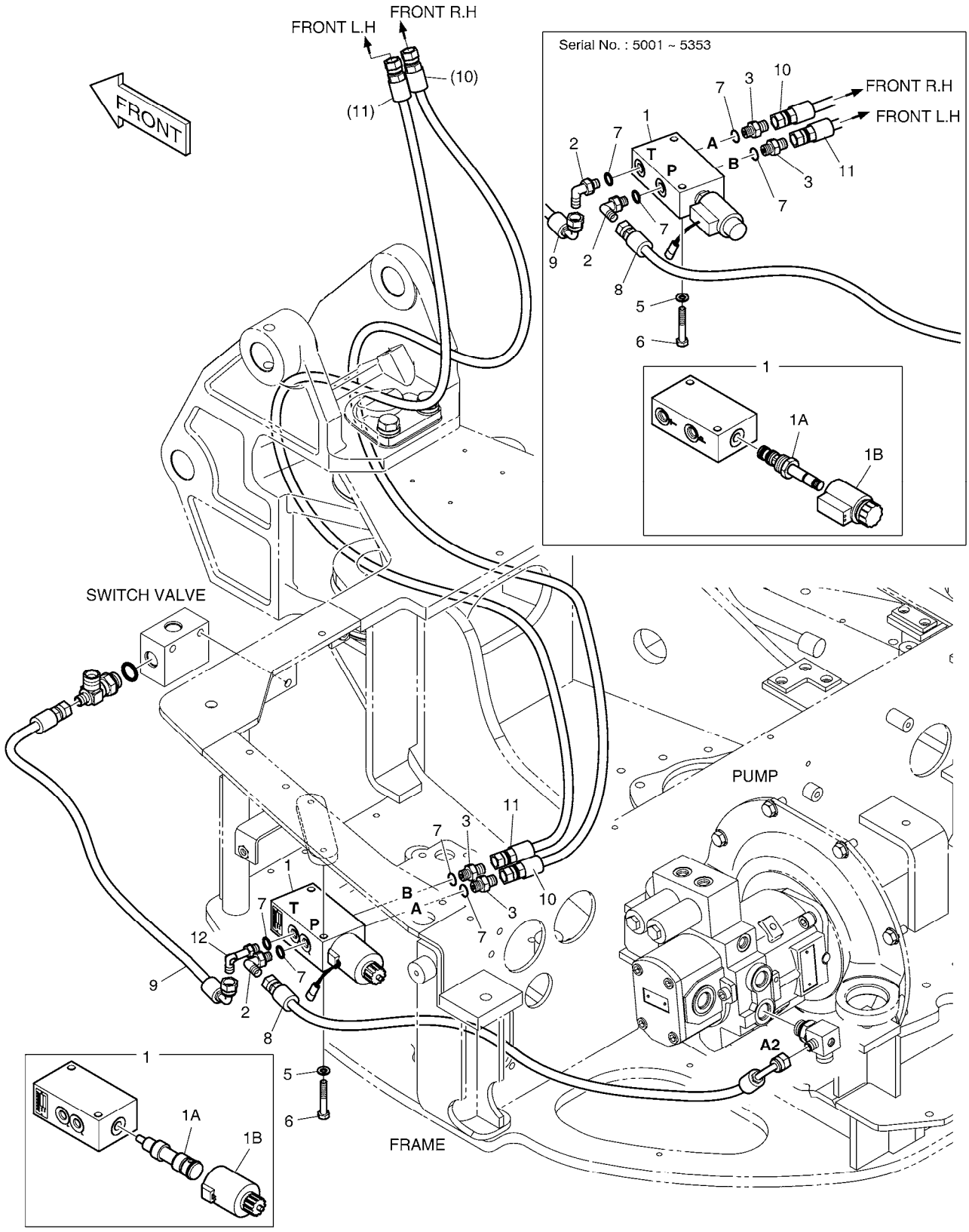

(THIS PARTS BOOK IS FOR REFERENCE ONLY.
PART NUMBERS AND SERAIL NUMBERS MAY BE
OUTDATED. ALWAYS USE THE ONLINE PARTS SYSTEM)

DATE	JAN. 04, 2013
3rd EDITION	

Fig. 6290 PILOT PIPING - QUICK CLAMP
CONDUITES DE PILOTE

Serial No. ;

Key No.	Part No.	Description	Description	Q'ty	S.C	Serial No.	ICA	Replaceable part	
								Part No.	Q'ty
6290 --	K1026001	PILOT PIPING;QUICK CLAMP	TUYAUTERIE PILOTE	-	D	5001-5353			
	420212-01352	PIPING,QUICK CLAMP	TUYAUTERIE PILOTE	-	D	5354-			
1	426-00236	VALVE;SOLENOID	SOUPAPE A SOLENOIDE	1		5001-5353			
	410135-00031	VALVE,SOLENOID	SOUPAPE A SOLENOIDE	1		5354-			
1A	K9006321	. SPOOL;SOLENOID	. BOBINE	1		5001-5353			
	410207-00060	. SPOOL,SOLENOID	. BOBINE	1		5354-			
1B	K9006322	. COIL	. ENROULEMENT	1		5001-5353			
	300715-00009	. COIL	. ENROULEMENT	1		5354-			
2	2181-1702D4	ELBOW	COUDE	1					
3	2181-1126D14	ADAPTER	ADAPTEUR	2					
5	S5102503	WASHER,SPRING	RONDELLE	2					
6	S0556353	BOLT M8X1.25X50	BOULON A 6 PANS	2		5001-5353			
	S0556566	BOLT M8X1.25X60	BOULON	2		5354-			
7	S8000111	O-RING	JOINT CIRCULAIRE	4					
8	DS2093408	HOSE	TUYAU FLEXIBLE	1					
9	DS2093410	HOSE PF1/4-410L	TUYAU FLEXIBLE	1		5001-5383			
	DS2093180	HOSE PF1/4-450L	TUYAU FLEXIBLE	1		5384-			
10	DS2094206	HOSE	TUYAU FLEXIBLE	1					
11	DS2094206	HOSE	TUYAU FLEXIBLE	1					
12	DS2281082	ELBOW	COUDE	1					

(THIS PARTS BOOK IS FOR REFERENCE ONLY.
PART NUMBERS AND SERAIL NUMBERS MAY BE
OUTDATED. ALWAYS USE THE ONLINE PARTS SYSTEM)

DATE	JAN. 04, 2013
3rd EDITION	

Fig. 6300 ELECTRIC PARTS - QUICK CLAMP
BRIDE RAPIDE

Serial No. ;

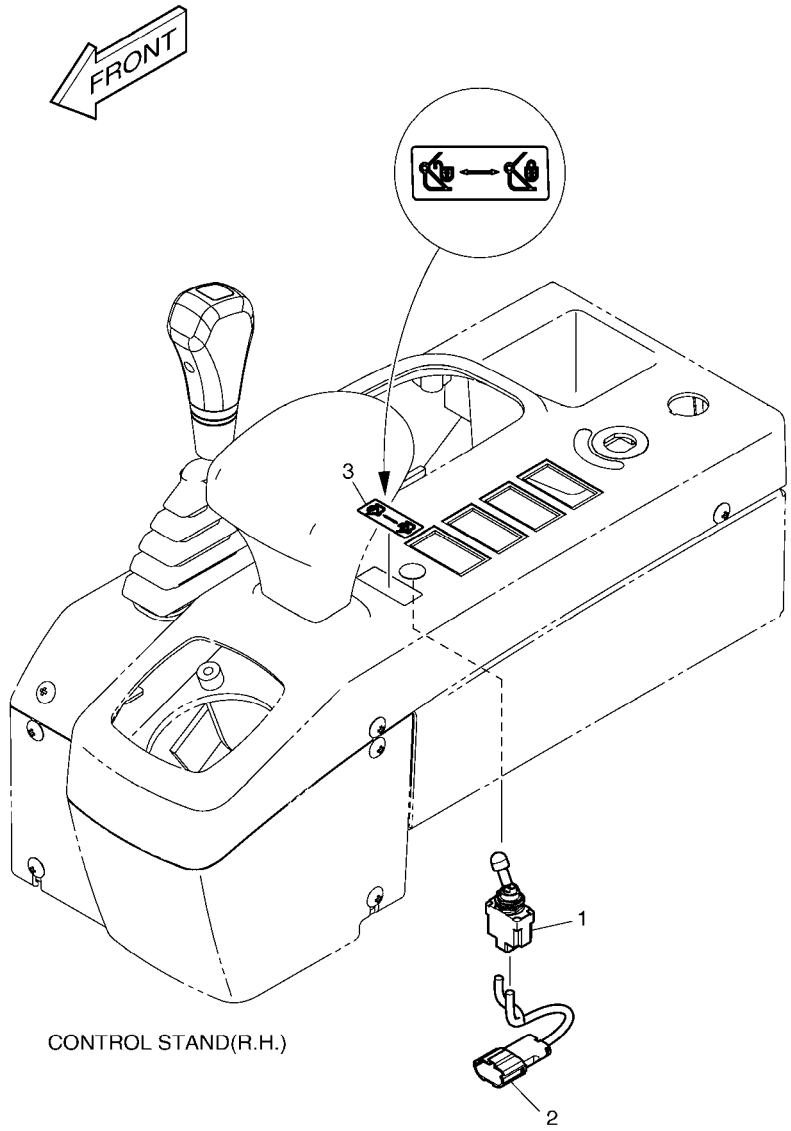

(THIS PARTS BOOK IS FOR REFERENCE ONLY.
PART NUMBERS AND SERAIL NUMBERS MAY BE
OUTDATED. ALWAYS USE THE ONLINE PARTS SYSTEM)

DATE	JAN. 04, 2013
3rd EDITION	

Fig. 6300 ELECTRIC PARTS - QUICK CLAMP
BRIDE RAPIDE

Serial No. ;

Key No.	Part No.	Description	Description	Q'ty	S.C	Serial No.	ICA	Replaceable part	
								Part No.	Q'ty
6300 --	K1026800	ELECTRIC PARTS	EQUIPMENT ELECTRIQUE	-	D				
1	549-00092	SWITCH;LOCKOUT TOGGLE	COMMUTATEUR	1					
2	530-00432A	HARNESS;JOINT	HARNAIS	1					
3	K1023854	NAME PLATE;QUICK CLAMP	PLAQUE D'IDENTIFICATION	1					

(THIS PARTS BOOK IS FOR REFERENCE ONLY.
PART NUMBERS AND SERAIL NUMBERS MAY BE
OUTDATED. ALWAYS USE THE ONLINE PARTS SYSTEM)

DATE	JAN. 04, 2013
3rd EDITION	

Fig. 6310 FRONT PIPING - QUICK CLAMP
CONDUITES DE FRONTALES

Serial No. ;

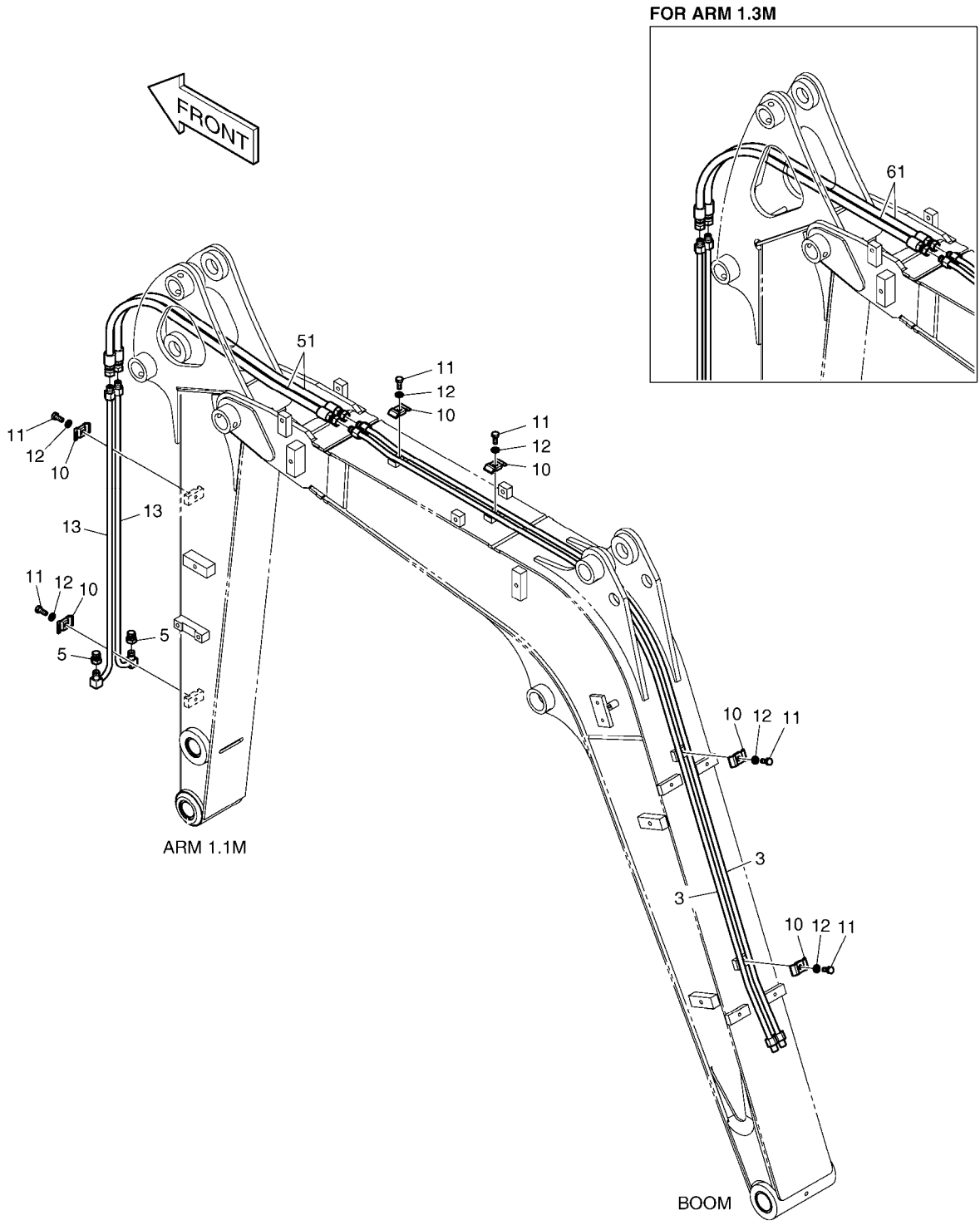

(THIS PARTS BOOK IS FOR REFERENCE ONLY.
PART NUMBERS AND SERAIL NUMBERS MAY BE
OUTDATED. ALWAYS USE THE ONLINE PARTS SYSTEM)

Fig. 6310 FRONT PIPING - QUICK CLAMP
CONDUITES DE FRONTALES

Serial No. ;

Key No.	Part No.	Description	Description	Q'ty	S.C	Serial No.	ICA	Replaceable part	
								Part No.	Q'ty
6310 --	K1017372E	QUICK CLAMP PIPING	BRIDE RAPIDE	-	D				
3	K1017696A	PIPE	TUYAU	2					
5	2181-2820D1	PLUG	BOUCHON	2					
10	K1004011	CLAMP;PIPE	COLLIER	6					
11	S0508853	BOLT	BOULON	6					
12	S5102503	WASHER,SPRING	RONDELLE	6					
13	K1017694	PIPE	TUYAU	2		5001-5051			
	K1017694A	PIPE	TUYAU	2		5052-			
51	DS2094207	HOSE	TUYAU FLEXIBLE	2					
61	DS2094216	HOSE	TUYAU FLEXIBLE	2					

(THIS PARTS BOOK IS FOR REFERENCE ONLY.
PART NUMBERS AND SERAIL NUMBERS MAY BE
OUTDATED. ALWAYS USE THE ONLINE PARTS SYSTEM)

DATE	JAN. 04, 2013
3rd EDITION	

Fig. 6320 HEATER - CABIN CHAUFFAGE

Serial No. ;

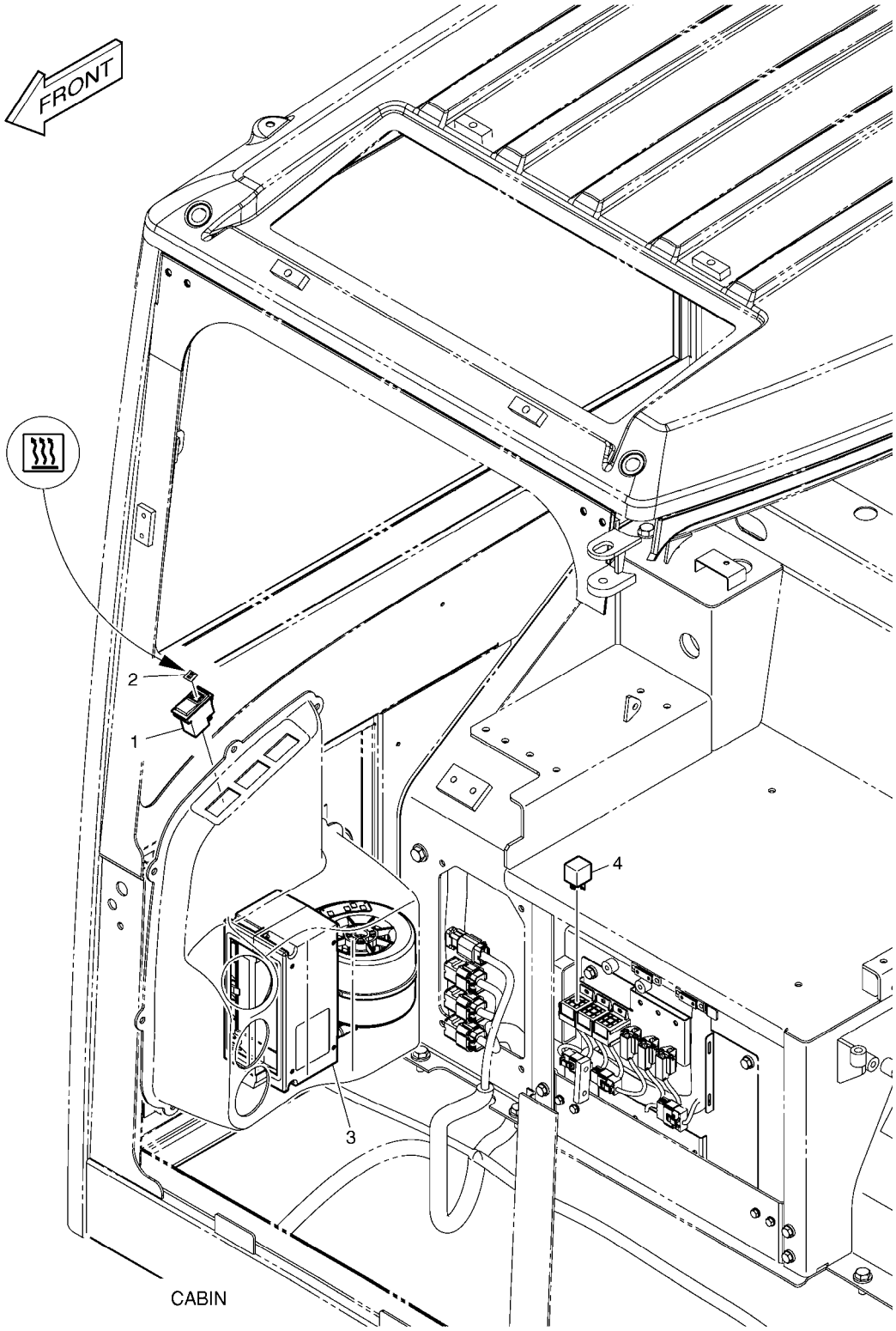

(THIS PARTS BOOK IS FOR REFERENCE ONLY.
PART NUMBERS AND SERAIL NUMBERS MAY BE
OUTDATED. ALWAYS USE THE ONLINE PARTS SYSTEM)

Fig. 6320 HEATER - CABIN CHAUFFAGE

Serial No. ;

Key No.	Part No.	Description	Description	Q'ty	S.C	Serial No.	ICA	Replaceable part	
								Part No.	Q'ty
6320 --	K1026796	HEATER ASS'Y	RECHAUFFEUR	-	D				
1	549-00040	SWITCH;ROCKER	COMMUTATEUR	1					
2	2190-2584D5	INSERT;HEATER	INSERTION	1					
3	K1013609	HEATER ASS'Y	RECHAUFFEUR	1					
4	2544-9032	RELAY	RELAIS	1		5001-5399			
	K1053324	RELAY	RELAIS	1		5400-			

(THIS PARTS BOOK IS FOR REFERENCE ONLY.
PART NUMBERS AND SERAIL NUMBERS MAY BE
OUTDATED. ALWAYS USE THE ONLINE PARTS SYSTEM)

DATE	JAN. 04, 2013
3rd EDITION	

Fig. 6330 HEATER CHAUFFAGE

Serial No. ;

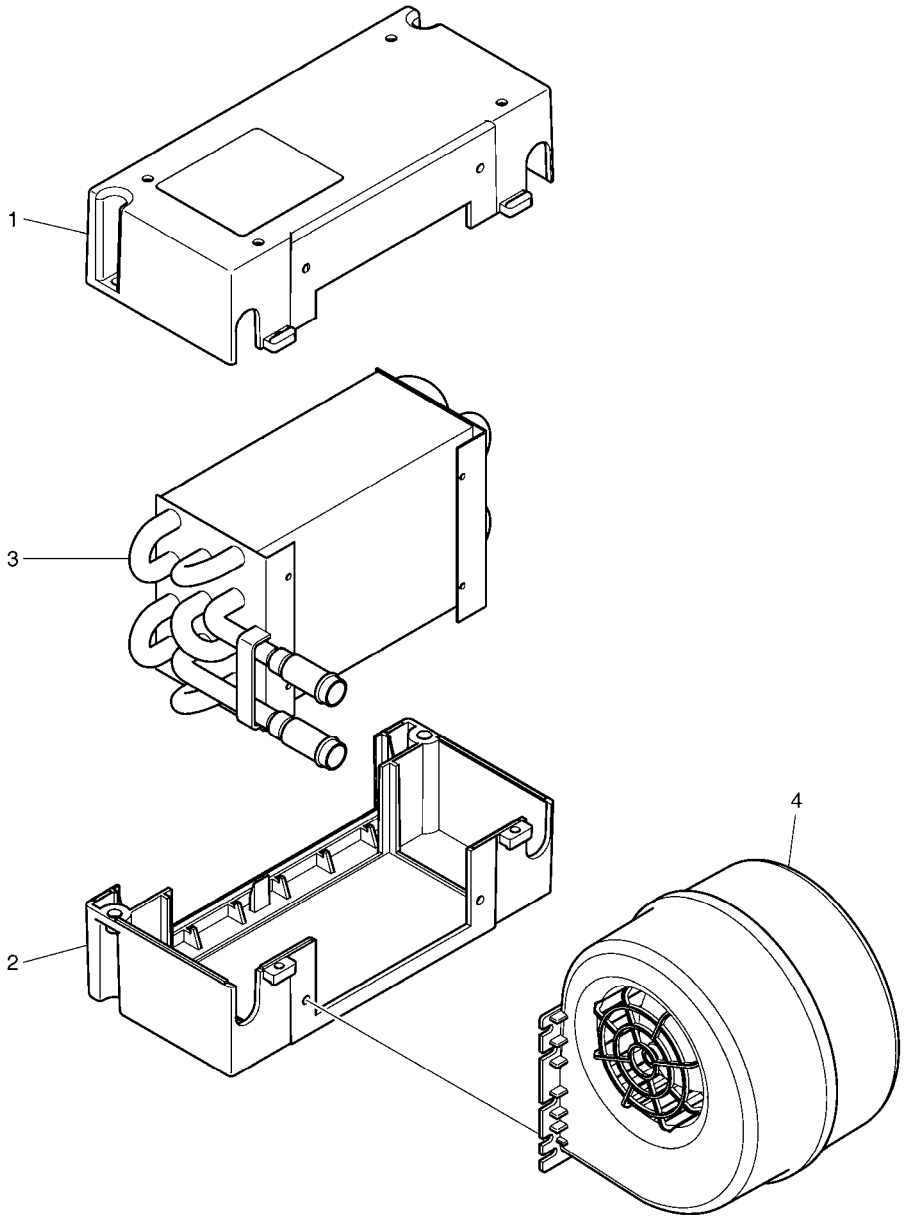

(THIS PARTS BOOK IS FOR REFERENCE ONLY.
PART NUMBERS AND SERAIL NUMBERS MAY BE
OUTDATED. ALWAYS USE THE ONLINE PARTS SYSTEM)

DATE	JAN. 04, 2013
3rd EDITION	

Fig. 6330 HEATER CHAUFFAGE

Serial No. ;

Key No.	Part No.	Description	Description	Q'ty	S.C	Serial No.	ICA	Replaceable part	
								Part No.	Q'ty
6330 --	K1013609	HEATER ASS'Y	RECHAUFFEUR	1					
1	K9005244	CASE	CARTER	1					
2	K9005245	CASE	CARTER	1					
3	K9005246	EVAPORATOR	CHAUFFAGE	1					
4	K9005247	MOTOR;BLOWER	MOTEUR	1					

(THIS PARTS BOOK IS FOR REFERENCE ONLY.
PART NUMBERS AND SERAIL NUMBERS MAY BE
OUTDATED. ALWAYS USE THE ONLINE PARTS SYSTEM)

DATE	JAN. 04, 2013
3rd EDITION	

Fig. 6340 HEATER COVER
BOITIES DE CHAUFFAGE

Serial No. ;

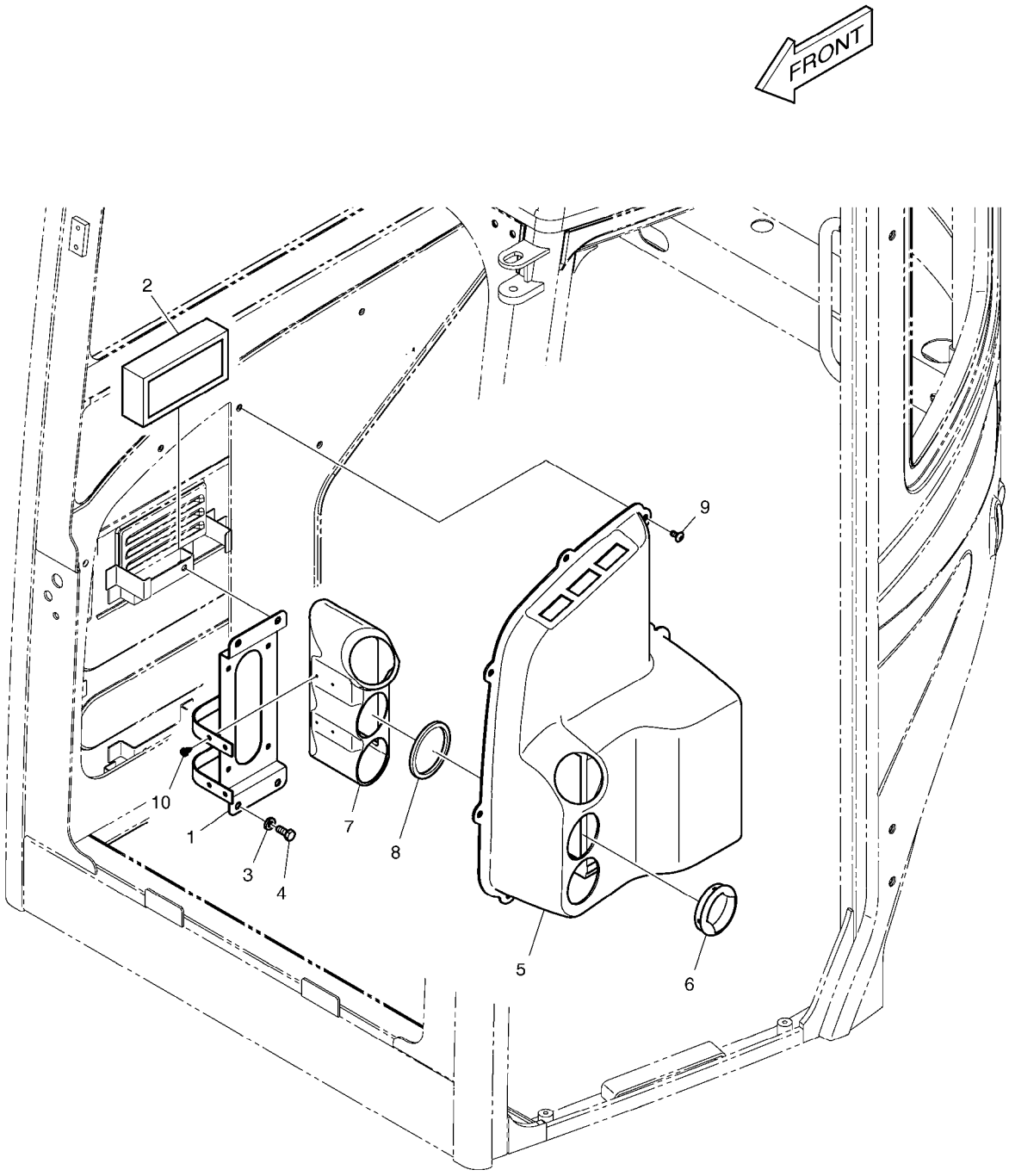

(THIS PARTS BOOK IS FOR REFERENCE ONLY.
PART NUMBERS AND SERAIL NUMBERS MAY BE
OUTDATED. ALWAYS USE THE ONLINE PARTS SYSTEM)

DATE	JAN. 04, 2013
3rd EDITION	

Fig. 6340 HEATER COVER
BOITIES DE CHAUFFAGE

Serial No. ;

Key No.	Part No.	Description	Description	Q'ty	S.C	Serial No.	ICA	Replaceable part	
								Part No.	Q'ty
6340 --	K1015073B	HEATER COVER	RECHAUFFEUR	-	D	5001-6067			
	110508-15882	COVER,HEATER	RECHAUFFEUR	-	D	6068-			
1	K1013225	PLATE;HEATER MOUNTING	PLAQUE	1					
2	2471-9040	FILTER;AIR	FILTRE	1					
3	2114-1898D2	WASHER	RONDELLE	4					
4	2120-2166D5	BOLT	BOULON	4					
5	K1014582B	COVER;HEATER	COUVERCLE	1		5001-6067	Y	110508-15883	1
	110508-15883	COVER,HEATER	COUVERCLE	1		6068-			
6	K1006041	NOZZLE;VENT SMALL	INJECTEUR	3					
7	K1014597	DUCT;HEATER	CONDUIT DE RECHAUFFE	1		5001-6067	Y	460103-00818	1
	460103-00818	DUCT,HEATER	CONDUIT DE RECHAUFFE	1		6068-			
8	K1015076	FOAM	EPONGE	3		5001-6067	Y	180102-00893	3
	180102-00893	FOAM	EPONGE	3		6068-			
9	2120-2166D10	SCREW	VIS	7					
10	S3640523	SCREW;TAPPING M5X10	VIS TARAUDEUSE	4					

(THIS PARTS BOOK IS FOR REFERENCE ONLY.
PART NUMBERS AND SERAIL NUMBERS MAY BE
OUTDATED. ALWAYS USE THE ONLINE PARTS SYSTEM)

DATE	JAN. 04, 2013
3rd EDITION	

Fig. 6350 HEATER PIPING
CONDUITES DE CHAUFFAGE

Serial No. ;

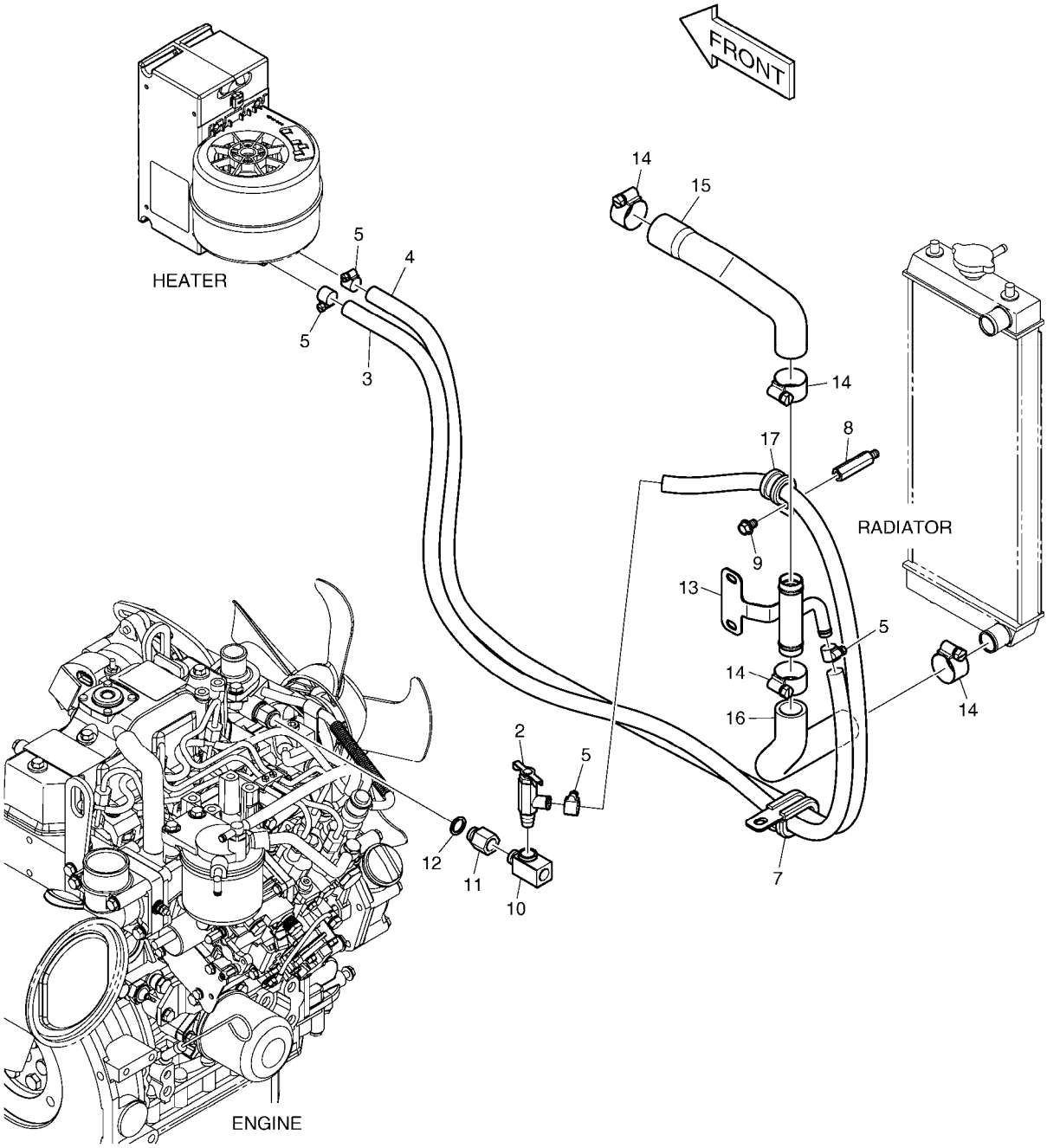

(THIS PARTS BOOK IS FOR REFERENCE ONLY.
PART NUMBERS AND SERAIL NUMBERS MAY BE
OUTDATED. ALWAYS USE THE ONLINE PARTS SYSTEM)

DATE	JAN. 04, 2013
3rd EDITION	

Fig. 6350 HEATER PIPING
CONDUITES DE CHAUFFAGE

Serial No. ;

Key No.	Part No.	Description	Description	Q'ty	S.C	Serial No.	ICA	Replaceable part	
								Part No.	Q'ty
6350 --	K1026797A	HEATER PIPING	TUYAUTERIE DE RECHAUI	-	D				
2	2186-9003	VALVE	VANNE	1					
3	2185-1308D13	HOSE	TUYAU FLEXIBLE	1					
4	2185-1308D13	HOSE	TUYAU FLEXIBLE	1					
5	S8450016	CLAMP	COLLIER	4					
7	124-00209D1	CLIP	AGRAFE	1					
8	2120-2187	BOLT;STUD	BOULON	1					
9	K1001029	BOLT	BOULON	1					
10	K1029709A	ADAPTER PT3/8-PT3/8	ADAPTEUR	1					
11	2181-1913D2	REDUCER	REDUCTEUR	1					
12	S8180251	PACKING	RONDELLE D'ETANCHEITE	1					
13	K1029710	PIPE;WATER	TUYAU	1					
14	S8450023	CLAMP	COLLIER	4					
15	K1030282	HOSE;WATER	TUYAU FLEXIBLE	1					
16	K1030283	HOSE;WATER	TUYAU FLEXIBLE	1					
17	124-00208D3	CLIP	AGRAFE	1					

(THIS PARTS BOOK IS FOR REFERENCE ONLY.
PART NUMBERS AND SERAIL NUMBERS MAY BE
OUTDATED. ALWAYS USE THE ONLINE PARTS SYSTEM)

DATE	JAN. 04, 2013
3rd EDITION	

Fig. 6360 CABIN LAMP
LAMPE

Serial No. ;

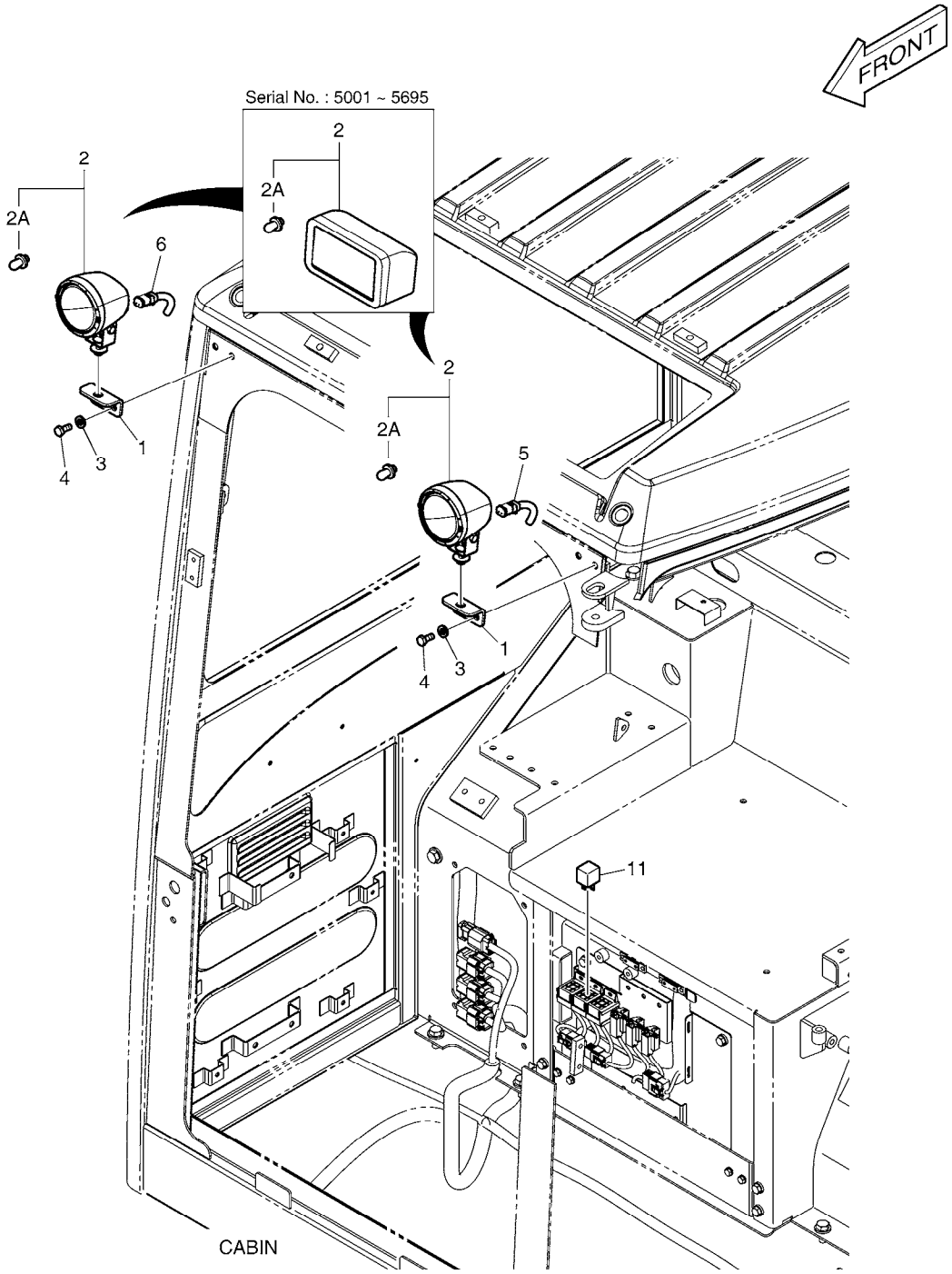

(THIS PARTS BOOK IS FOR REFERENCE ONLY.
PART NUMBERS AND SERAIL NUMBERS MAY BE
OUTDATED. ALWAYS USE THE ONLINE PARTS SYSTEM)

DATE	JAN. 04, 2013
3rd EDITION	

Fig. 6360 CABIN LAMP
LAMPE

Serial No. ;

Key No.	Part No.	Description	Description	Q'ty	S.C	Serial No.	ICA	Replaceable part	
								Part No.	Q'ty
6360 --	K1026805	WORKING LAMP ASS'Y	LAMPE FONCTIONNANTE	-	D	5001-5695			
	300619-01054	ELECTRIC ASSY;WORKING LAMP	LAMPE FONCTIONNANTE	-	D	5696-			
1	K1013067	BRACKET;CABIN LAMP	SUPPORT	2					
2	2534-9048	LAMP;WORKING	LAMPE 24V 55W	2		5001-5695			
	301005-00181	LAMP ASSY,WORKING;(12V)	LAMPE	2		5696-			
2A	2515-1016D2	. BULB 12V 55W	. AMPOULE	1					
3	2114-1898D2	WASHER	RONDELLE	4					
4	2120-2166D5	BOLT	BOULON	4					
5	310207-01094	HARNESS,JOINT;CABIN LAMP	HARNAIS	1		5696-			
6	310207-01094	HARNESS,JOINT;CABIN LAMP	HARNAIS	1		5696-			
11	2544-9032	RELAY	RELAIS	1		5001-5399			
	K1053324	RELAY	RELAIS	1		5400-			

(THIS PARTS BOOK IS FOR REFERENCE ONLY.
PART NUMBERS AND SERAIL NUMBERS MAY BE
OUTDATED. ALWAYS USE THE ONLINE PARTS SYSTEM)

DATE	JAN. 04, 2013
3rd EDITION	

Fig. 6370 WORKING LAMP
LAMPE FONCTIONNANTE

Serial No. ;

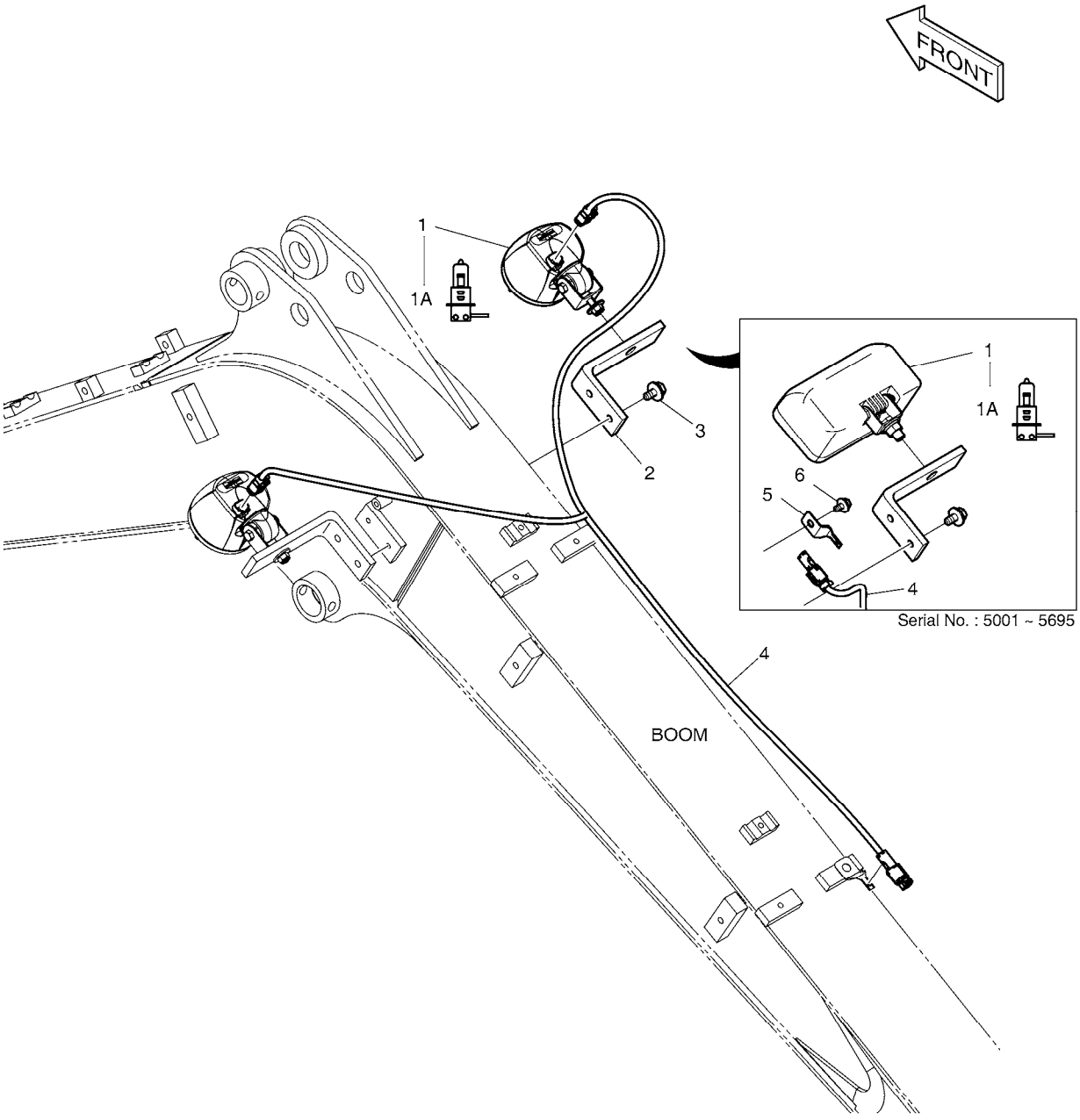

(THIS PARTS BOOK IS FOR REFERENCE ONLY.
PART NUMBERS AND SERAIL NUMBERS MAY BE
OUTDATED. ALWAYS USE THE ONLINE PARTS SYSTEM)

DATE	JAN. 04, 2013
3rd EDITION	

Fig. 6370 WORKING LAMP
LAMPE FONCTIONNANTE

Serial No. ;

Key No.	Part No.	Description	Description	Q'ty	S.C	Serial No.	ICA	Replaceable part	
								Part No.	Q'ty
6370 --	K1026804A	WORKING LAMP ASS'Y	LAMPE FONCTIONNANTE	-	D	5001-5695			
	300619-01052	LAMP ASSY,ADDITIONAL WORKI	LAMPE FONCTIONNANTE	-	D	5696-			
1	534-00029	LAMP;WORKING	LAMPE	1		5001-5695			
	301005-00181	LAMP ASSY,WORKING;(12V)	LAMPE	1		5696-			
1A	2515-1016D2	. BULB 12V 55W	. AMPOULE	1					
2	195-03420	BRACKET;LAMP	SUPPORT	1					
3	DS0025033	BOLT;SET	BOULON	2					
4	K1023845A	HARNESS;WORK LAMP	HARNAIS	1		5001-5695			
	310207-01092	HARNESS,LAMP;WORK	HARNAIS	1		5696-			
5	2197-1661	BRACKET	SUPPORT	1		5001-5695			
6	K1001029	BOLT	BOULON	1		5001-5695			

(THIS PARTS BOOK IS FOR REFERENCE ONLY.
PART NUMBERS AND SERAIL NUMBERS MAY BE
OUTDATED. ALWAYS USE THE ONLINE PARTS SYSTEM)

DATE	JAN. 04, 2013
3rd EDITION	

Fig. 6380 BOOM SWING
VIRAGE DE FRONTALE

Serial No. ;

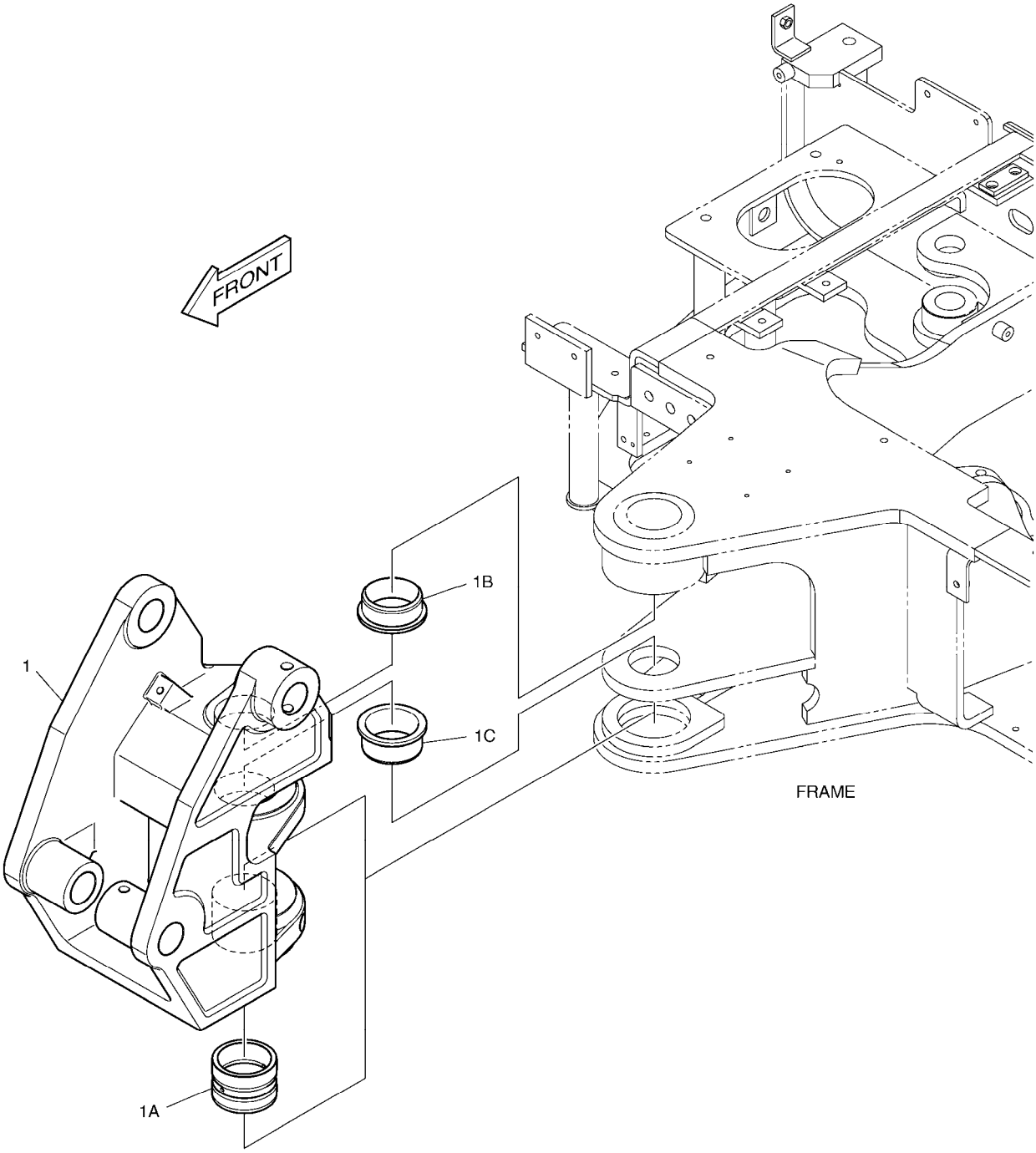

(THIS PARTS BOOK IS FOR REFERENCE ONLY.
PART NUMBERS AND SERAIL NUMBERS MAY BE
OUTDATED. ALWAYS USE THE ONLINE PARTS SYSTEM)

Fig. 6380 BOOM SWING
VIRAGE DE FRONTALE

Serial No. ;

Key No.	Part No.	Description	Description	Q'ty	S.C	Serial No.	ICA	Replaceable part	
								Part No.	Q'ty
6380 -1	K1033587	BRACKET;SWING	PARENTHESE D'OSCILLAT	1					
1A	K1018208A	. BUSHING	. DOUILLE	1					
1B	K1026472	. BUSHING	. DOUILLE	1					
1C	K1026473	. BUSHING	. DOUILLE	1					

(THIS PARTS BOOK IS FOR REFERENCE ONLY.
PART NUMBERS AND SERAIL NUMBERS MAY BE
OUTDATED. ALWAYS USE THE ONLINE PARTS SYSTEM)

DATE	JAN. 04, 2013
3rd EDITION	

Fig. 6390 DOZER BLADE - 1570mm DOZER

Serial No. ;

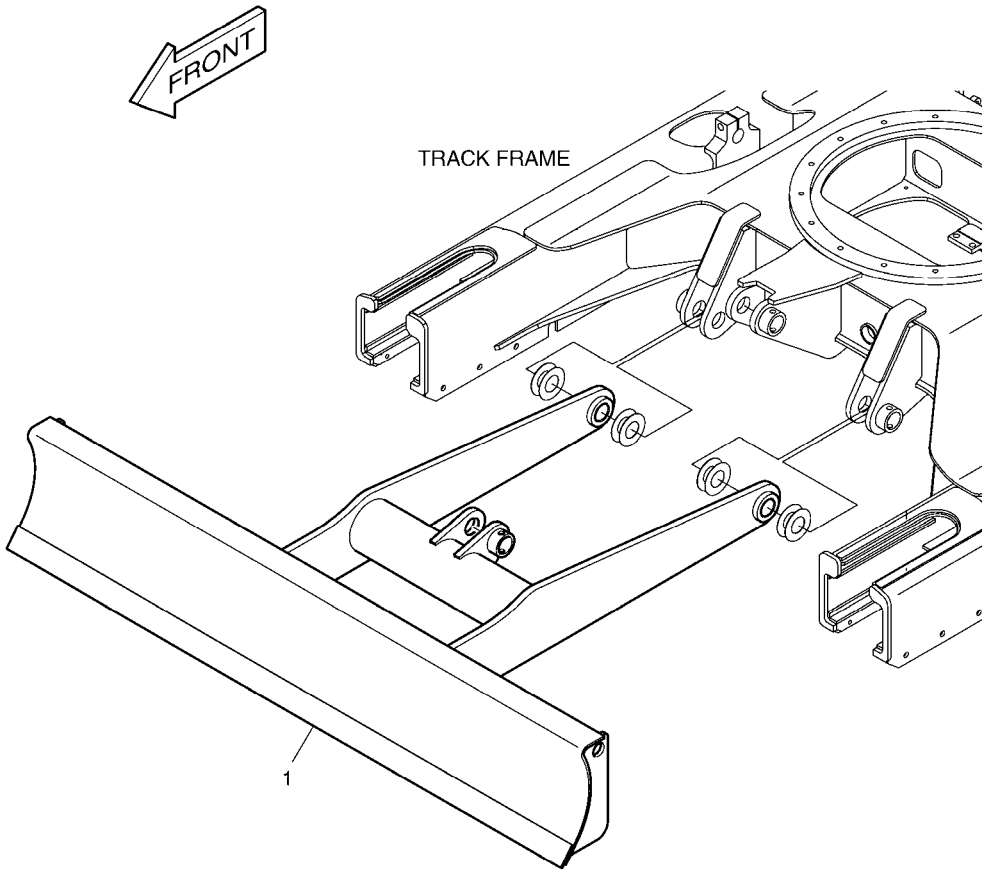

(THIS PARTS BOOK IS FOR REFERENCE ONLY.
PART NUMBERS AND SERAIL NUMBERS MAY BE
OUTDATED. ALWAYS USE THE ONLINE PARTS SYSTEM)

DATE	JAN. 04, 2013
3rd EDITION	

Fig. 6390 DOZER BLADE - 1570mm DOZER

Serial No. ;

Key No.	Part No.	Description	Description	Q'ty	S.C	Serial No.	ICA	Replaceable part	
								Part No.	Q'ty
6390 -1	K1038695	BLADE;DOZER-1570mm	DOZER	1					

(THIS PARTS BOOK IS FOR REFERENCE ONLY.
PART NUMBERS AND SERAIL NUMBERS MAY BE
OUTDATED. ALWAYS USE THE ONLINE PARTS SYSTEM)

DATE	JAN. 04, 2013
3rd EDITION	

Fig. 6400 ENGINE - Tier3 MOTEUR

Serial No. ;

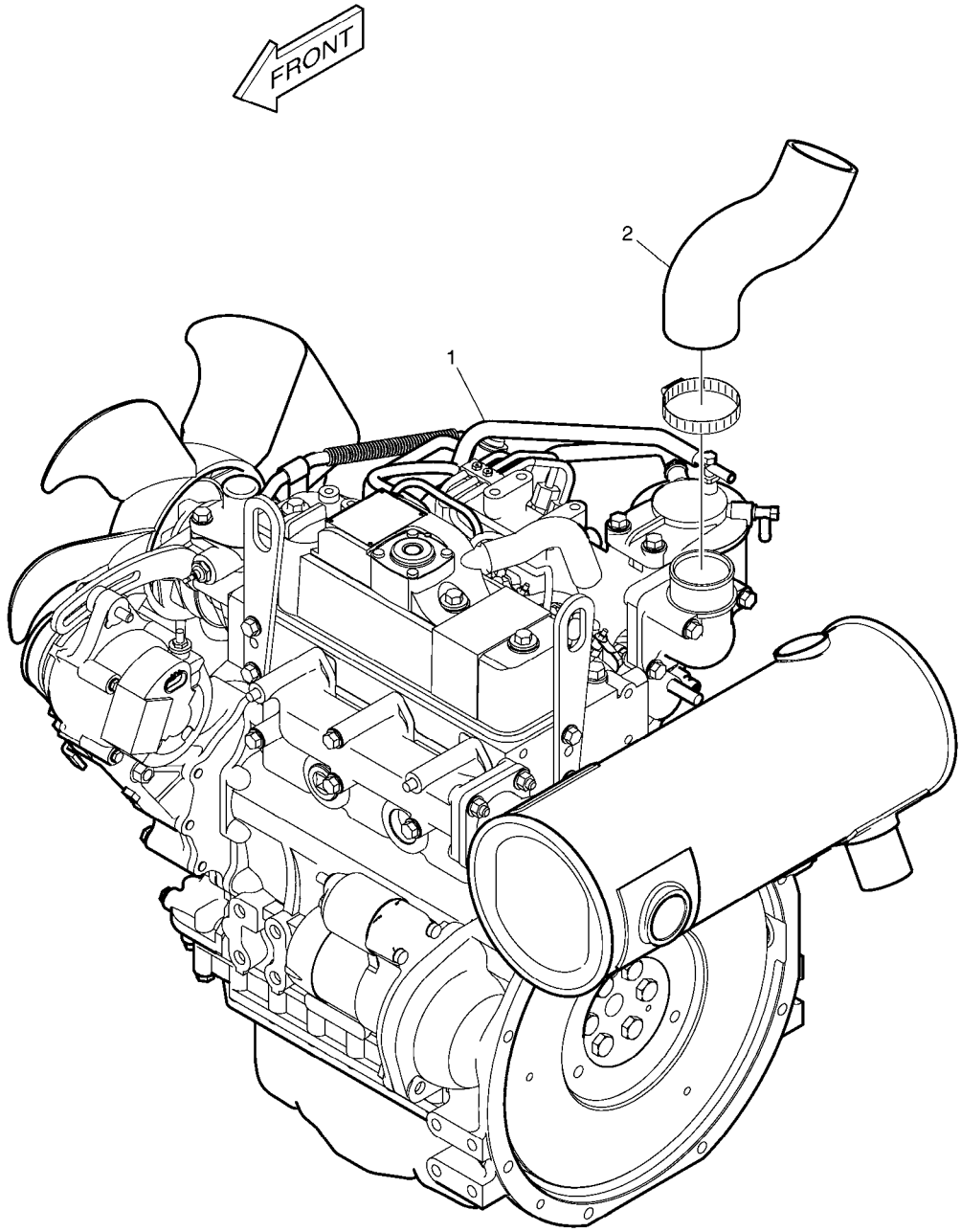

(THIS PARTS BOOK IS FOR REFERENCE ONLY.
PART NUMBERS AND SERAIL NUMBERS MAY BE
OUTDATED. ALWAYS USE THE ONLINE PARTS SYSTEM)

DATE	JAN. 04, 2013
3rd EDITION	

Fig. 6400 ENGINE - Tier3 MOTEUR

Serial No. ;

Key No.	Part No.	Description	Description	Q'ty	S.C	Serial No.	ICA	Replaceable part	
								Part No.	Q'ty
6400 -1	K1030463	ENGINE (T-3)	MOTEUR	1					
2	K1039682	HOSE;AIR	TUYAU FLEXIBLE	1					

(THIS PARTS BOOK IS FOR REFERENCE ONLY.
PART NUMBERS AND SERAIL NUMBERS MAY BE
OUTDATED. ALWAYS USE THE ONLINE PARTS SYSTEM)

DATE	JAN. 04, 2013
3rd EDITION	

Fig. 6410 MAIN PIPING - QUICK CLAMP
CONDUITES DE BATI PRINCIPAL

Serial No. ;

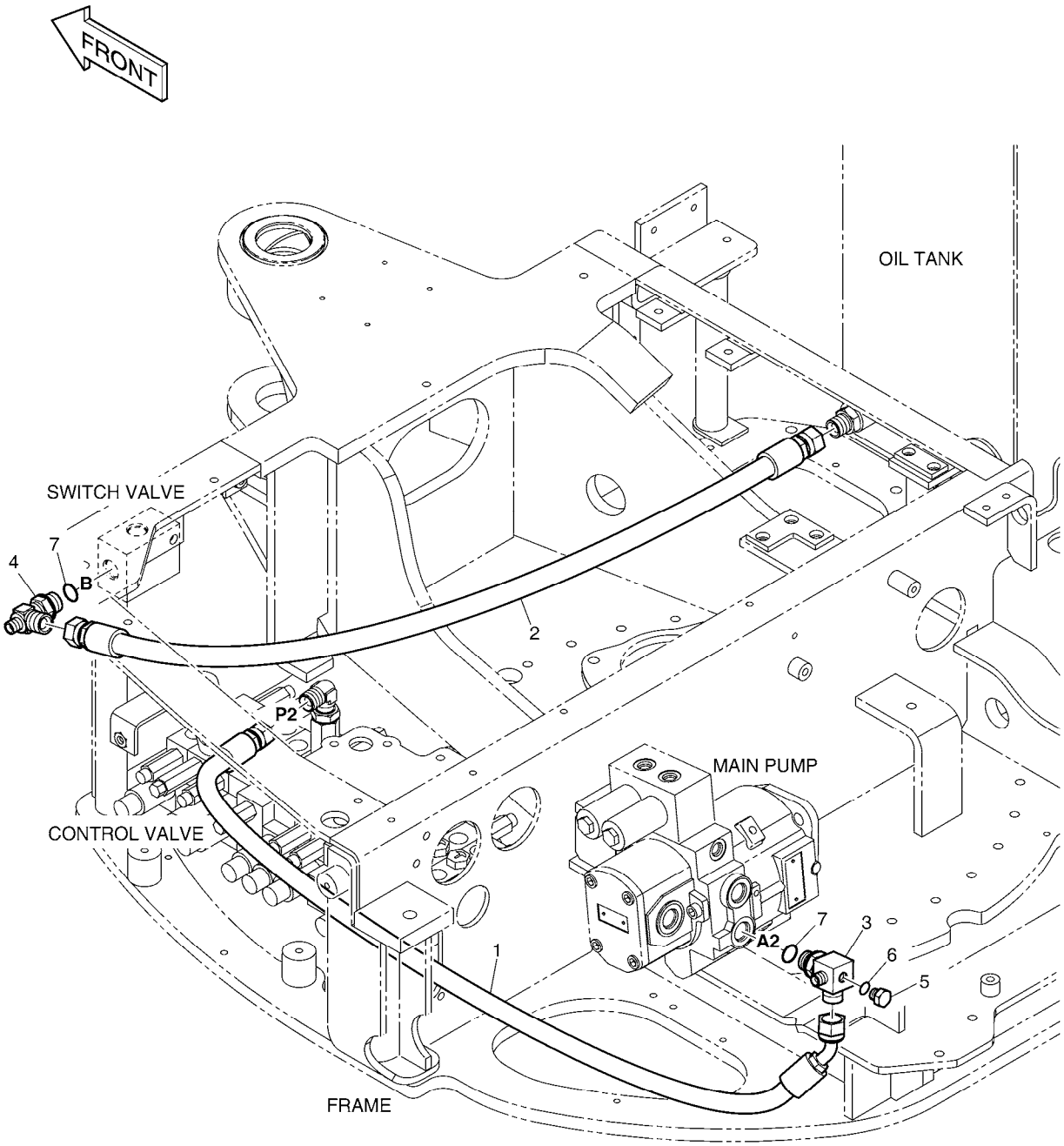

(THIS PARTS BOOK IS FOR REFERENCE ONLY.
PART NUMBERS AND SERAIL NUMBERS MAY BE
OUTDATED. ALWAYS USE THE ONLINE PARTS SYSTEM)

DATE	JAN. 04, 2013
3rd EDITION	

Fig. 6410 MAIN PIPING - QUICK CLAMP
CONDUITES DE BATI PRINCIPAL

Serial No. ;

Key No.	Part No.	Description	Description	Q'ty	S.C	Serial No.	ICA	Replaceable part	
								Part No.	Q'ty
6410 --	420212-09326	PIPING,MAIN;QUICK CLAMP	CONDUITES DE BATI PRIN(	-	D				
1	DS2092235	HOSE	TUYAU FLEXIBLE	1					
2	DS2094409	HOSE(ST-ST)	TUYAU FLEXIBLE	1					
3	K1043645	TEE	TE	1					
4	2181-1951D8	TEE	TE	1					
5	2181-1950D1	PLUG	BOUCHON	1					
6	S8000111	O-RING	JOINT CIRCULAIRE	1					
7	S8000181	O-RING	JOINT CIRCULAIRE	2					

(THIS PARTS BOOK IS FOR REFERENCE ONLY.
PART NUMBERS AND SERAIL NUMBERS MAY BE
OUTDATED. ALWAYS USE THE ONLINE PARTS SYSTEM)

DATE	JAN. 04, 2013
3rd EDITION	

Fig. 6420 PILOT PIPING - BOOM LOCK VALVE
CONDUITES DE PILOTE

Serial No. ;

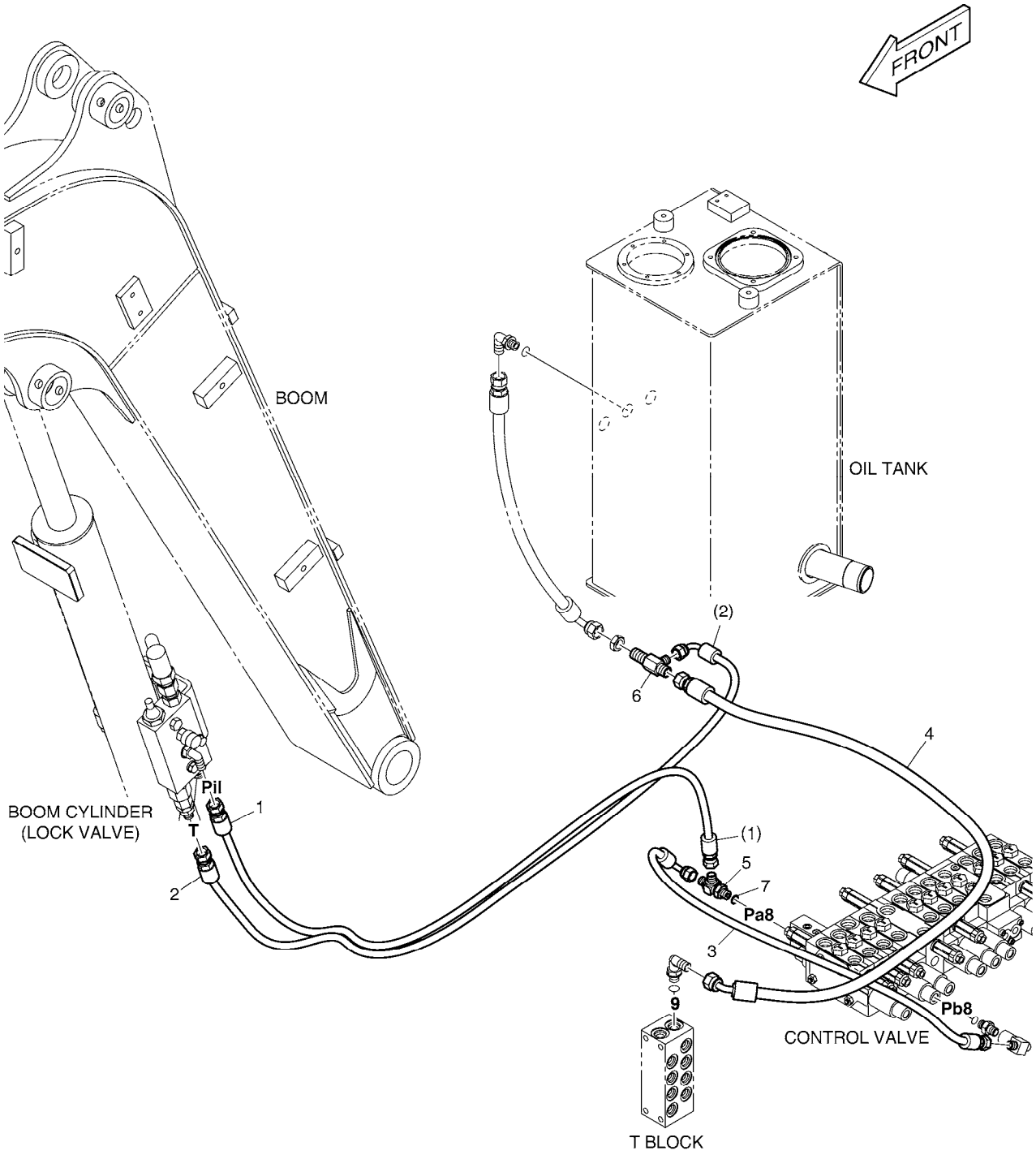

(THIS PARTS BOOK IS FOR REFERENCE ONLY.
PART NUMBERS AND SERAIL NUMBERS MAY BE
OUTDATED. ALWAYS USE THE ONLINE PARTS SYSTEM)

DATE	JAN. 04, 2013
3rd EDITION	

Fig. 6420 PILOT PIPING - BOOM LOCK VALVE
CONDUITES DE PILOTE

Serial No. ;

Key No.	Part No.	Description	Description	Q'ty	S.C	Serial No.	ICA	Replaceable part	
								Part No.	Q'ty
6420 --	420212-08640	PIPING,PILOT;BOOM LOCK VALV	CONDUITES DE PILOTE	-	D				
1	DS2094016	HOSE	TUYAU FLEXIBLE	1					
2	DS2093126	HOSE	TUYAU FLEXIBLE	1					
3	DS2093115	HOSE	TUYAU FLEXIBLE	1					
4	DS2092008	HOSE	TUYAU FLEXIBLE	1					
5	2181-1951D1	TEE	TE	1					
6	DS2411001	TEE	TE	1					
7	S8000111	O-RING	JOINT CIRCULAIRE	1					

(THIS PARTS BOOK IS FOR REFERENCE ONLY.
PART NUMBERS AND SERAIL NUMBERS MAY BE
OUTDATED. ALWAYS USE THE ONLINE PARTS SYSTEM)

DATE	JAN. 04, 2013
3rd EDITION	

Fig. 6430 PILOT PIPING - ARM LOCK VALVE
CONDUITES DE PILOTE

Serial No. ;

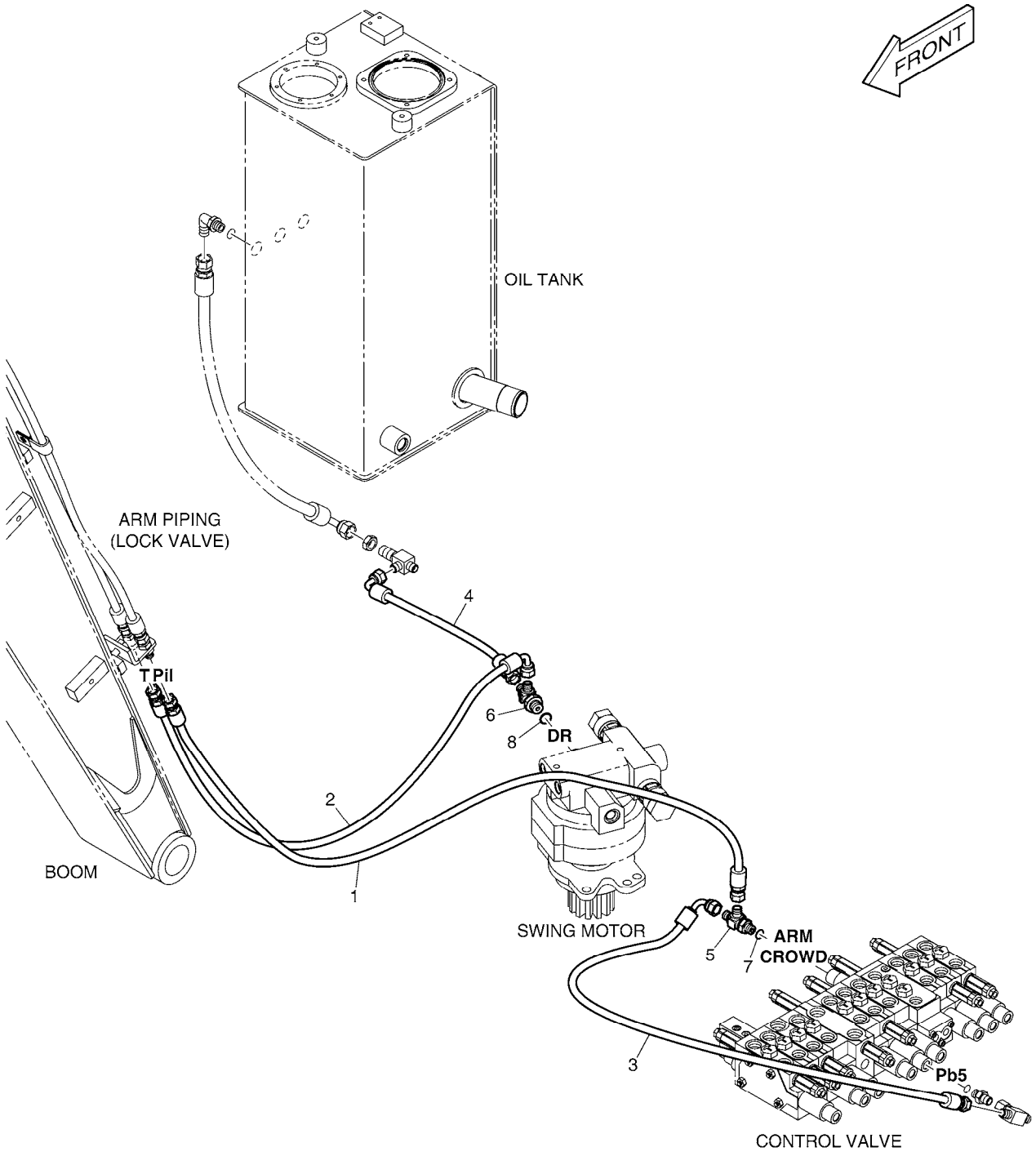

(THIS PARTS BOOK IS FOR REFERENCE ONLY.
PART NUMBERS AND SERAIL NUMBERS MAY BE
OUTDATED. ALWAYS USE THE ONLINE PARTS SYSTEM)

DATE	JAN. 04, 2013
3rd EDITION	

Fig. 6430 PILOT PIPING - ARM LOCK VALVE
CONDUITES DE PILOTE

Serial No. ;

Key No.	Part No.	Description	Description	Q'ty	S.C	Serial No.	ICA	Replaceable part	
								Part No.	Q'ty
6430 --	420212-08653	PIPING,PILOT;ARM LOCK VALVE	CONDUITES DE PILOTE	-	D				
1	DS2094221	HOSE	TUYAU FLEXIBLE	1					
2	DS2093008	HOSE	TUYAU FLEXIBLE	1					
3	DS2093249	HOSE	TUYAU FLEXIBLE	1					
4	DS2093375	HOSE	TUYAU FLEXIBLE	1					
5	2181-1951D1	TEE	TE	1					
6	2181-1951D7	TEE	TE	1					
7	S8000111	O-RING	JOINT CIRCULAIRE	1					
8	S8000141	O-RING	JOINT TORIQUE	1					

(THIS PARTS BOOK IS FOR REFERENCE ONLY.
PART NUMBERS AND SERAIL NUMBERS MAY BE
OUTDATED. ALWAYS USE THE ONLINE PARTS SYSTEM)

DATE	JAN. 04, 2013
3rd EDITION	

Fig. 6440 BOOM PIPING - LOCK VALVE
DONDUITER DE FLECHE

Serial No. ;

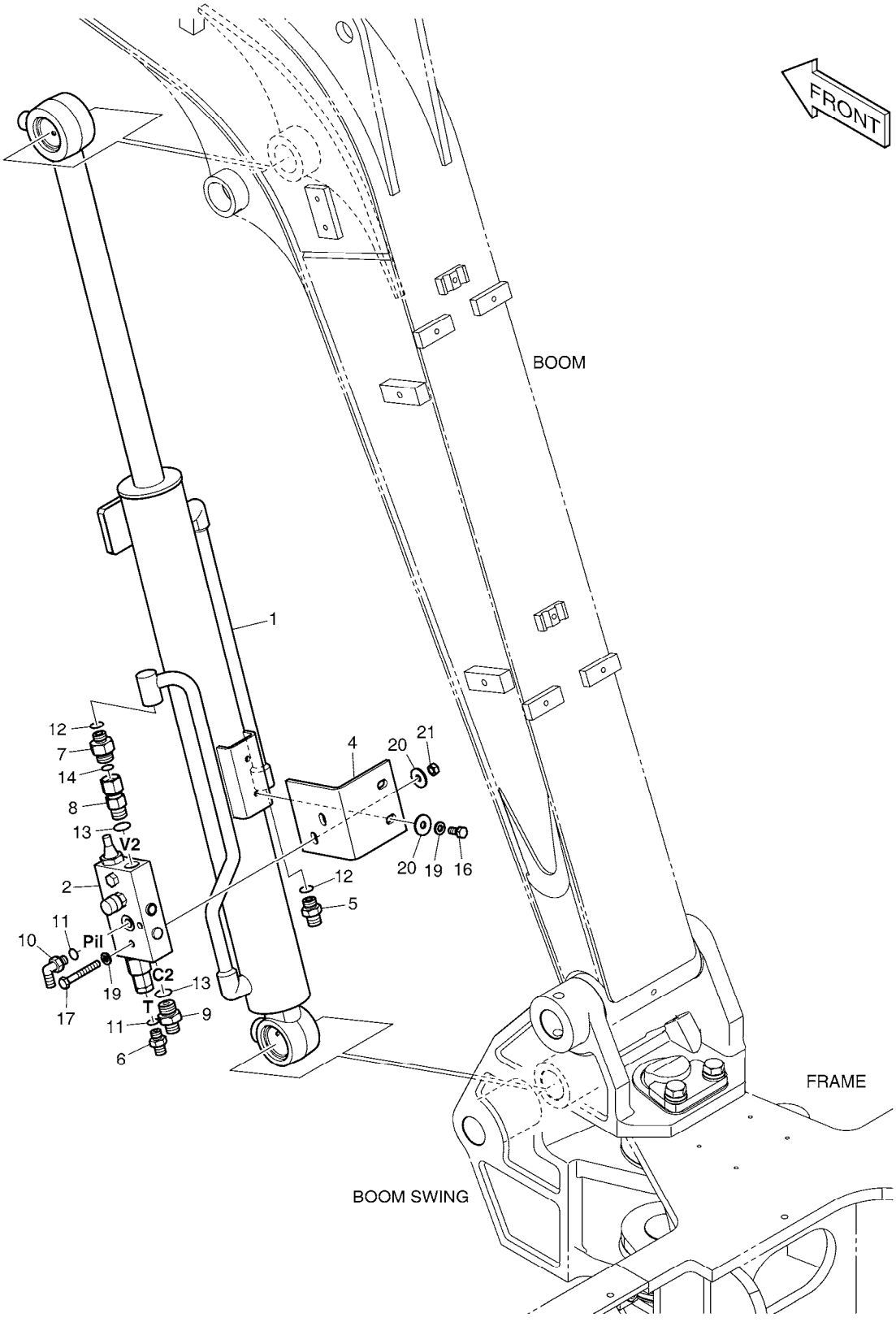

(THIS PARTS BOOK IS FOR REFERENCE ONLY.
PART NUMBERS AND SERAIL NUMBERS MAY BE
OUTDATED. ALWAYS USE THE ONLINE PARTS SYSTEM)

DATE	JAN. 04, 2013
3rd EDITION	

Fig. 6440 BOOM PIPING - LOCK VALVE
DONDUITER DE FLECHE

Serial No. ;

Key No.	Part No.	Description	Description	Q'ty	S.C	Serial No.	ICA	Replaceable part	
								Part No.	Q'ty
6440 --	420212-07772	PIPING,BOOM LOCK VALVE	CONDUITES DE FLECHE	-	D				
1	400309-00443	CYLINDER,BOOM;LOCK VALVE	VERIN DE FLECHE	1					
2	410114-00173	VALVE,LOCK	FERMEZ À CLEF LA VALVE	1					
4	110406-02367	BRACKET	SUPPORT	1					
5	2181-1126D7	ADAPTER	ADAPTEUR	1					
6	2181-1126D14	ADAPTER	ADAPTEUR	1					
7	2181-4133D38	ADAPTER	ADAPTEUR	1					
8	DS2235002	ADAPTER	ADAPTEUR	1					
9	2181-1126D23	ADAPTER	ADAPTEUR	1					
10	2181-1702D4	ELBOW	COUDE	1					
11	S8000111	O-RING	JOINT CIRCULAIRE	2					
12	S8000141	O-RING	JOINT TORIQUE	2					
13	S8000181	O-RING	JOINT CIRCULAIRE	2					
14	S8030081	O-RING	JOINT CIRCULAIRE	1					
16	S0508866	BOLT	BOULON	2					
17	S0556566	BOLT M8X1.25X60	BOULON	2					
19	S5102503	WASHER,SPRING	RONDELLE	4					
20	2114-1058D29	WASHER	RONDELLE	4					
21	S4012533	NUT	ECROU	2					

(THIS PARTS BOOK IS FOR REFERENCE ONLY.
PART NUMBERS AND SERAIL NUMBERS MAY BE
OUTDATED. ALWAYS USE THE ONLINE PARTS SYSTEM)

DATE	JAN. 04, 2013
3rd EDITION	

Fig. 6450 BOOM PIPING - ARM LOCK VALVE
TUYAUTERIE DE PERCHE

Serial No. ;

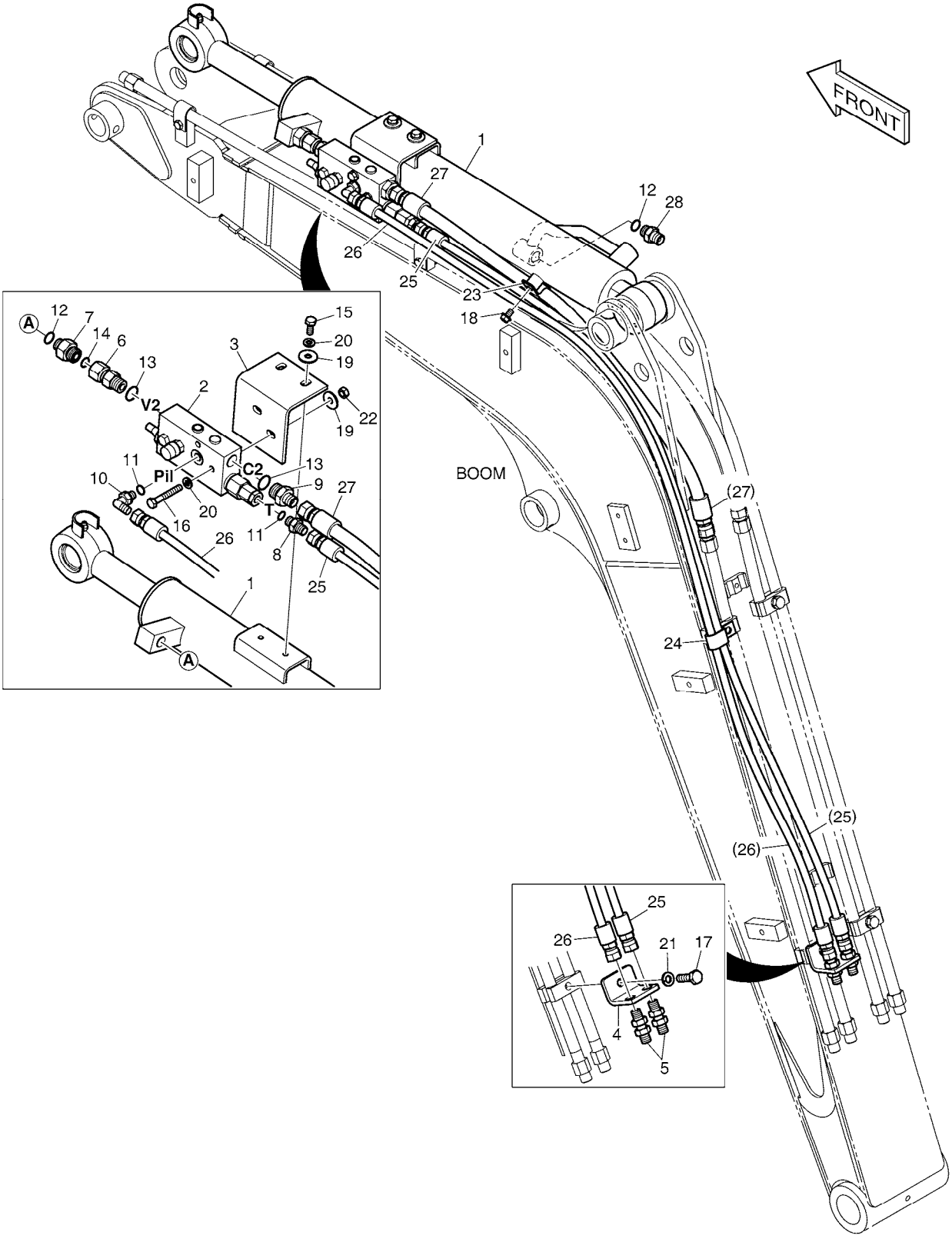

(THIS PARTS BOOK IS FOR REFERENCE ONLY.
PART NUMBERS AND SERAIL NUMBERS MAY BE
OUTDATED. ALWAYS USE THE ONLINE PARTS SYSTEM)

DATE	JAN. 04, 2013
3rd EDITION	

Fig. 6450 BOOM PIPING - ARM LOCK VALVE
TUYAUTERIE DE PERCHE

Serial No. ;

Key No.	Part No.	Description	Description	Q'ty	S.C	Serial No.	ICA	Replaceable part	
								Part No.	Q'ty
6450 --	420212-07727	PIPING,ARM LOCK VALVE	CONDUITES DE BALANCIE	-	D				
1	400305-00277	CYLINDER,ARM;LOCK VALVE	VERIN DE BALANCIER	1					
2	410114-00171	VALVE,LOCK	FERMEZ À CLEF LA VALVE	1					
3	110406-02375	BRACKET	SUPPORT	1					
4	K1033141	BRACKET	SUPPORT	1					
5	181-00020	ADAPTER	ADAPTEUR	2					
6	DS2235002	ADAPTER	ADAPTEUR	1					
7	2181-4133D38	ADAPTER	ADAPTEUR	1					
8	2181-1126D14	ADAPTER	ADAPTEUR	1					
9	2181-1126D23	ADAPTER	ADAPTEUR	1					
10	2181-1702D4	ELBOW	COUDE	1					
11	S8000111	O-RING	JOINT CIRCULAIRE	2					
12	S8000141	O-RING	JOINT TORIQUE	2					
13	S8000181	O-RING	JOINT CIRCULAIRE	2					
14	S8030081	O-RING	JOINT CIRCULAIRE	1					
15	S0508866	BOLT	BOULON	2					
16	S0556466	BOLT	BOULON	2					
17	S0558366	BOLT M10X1.5X40	BOULON A 6 PANS	1					
18	K1001029	BOLT	BOULON	1					
19	2114-1058D29	WASHER	RONDELLE	4					
20	S5102503	WASHER,SPRING	RONDELLE	4					
21	S5102603	WASHER,SPRING	RONDELLE	1					
22	S4012533	NUT	ECROU	2					
23	2124-1353D12	CLAMP	ATTACHE	1					
24	DS2805009	CLIP	AGRAFE	1					
25	DS2094508	HOSE ASSY	TUYAU FLEXIBLE	1					
26	DS2094509	HOSE ASSY	TUYAU FLEXIBLE	1					
27	DS2094506	HOSE ASSY,HYDRAULIC	TUYAU FLEXIBLE	1					
28	2181-1126D7	ADAPTER	ADAPTEUR	1					

(THIS PARTS BOOK IS FOR REFERENCE ONLY.
PART NUMBERS AND SERAIL NUMBERS MAY BE
OUTDATED. ALWAYS USE THE ONLINE PARTS SYSTEM)

DATE	JAN. 04, 2013
3rd EDITION	

Fig. 6460 OVERLOAD WARNING
AVERTISSEMENT DE SURCHARGE

Serial No. ;

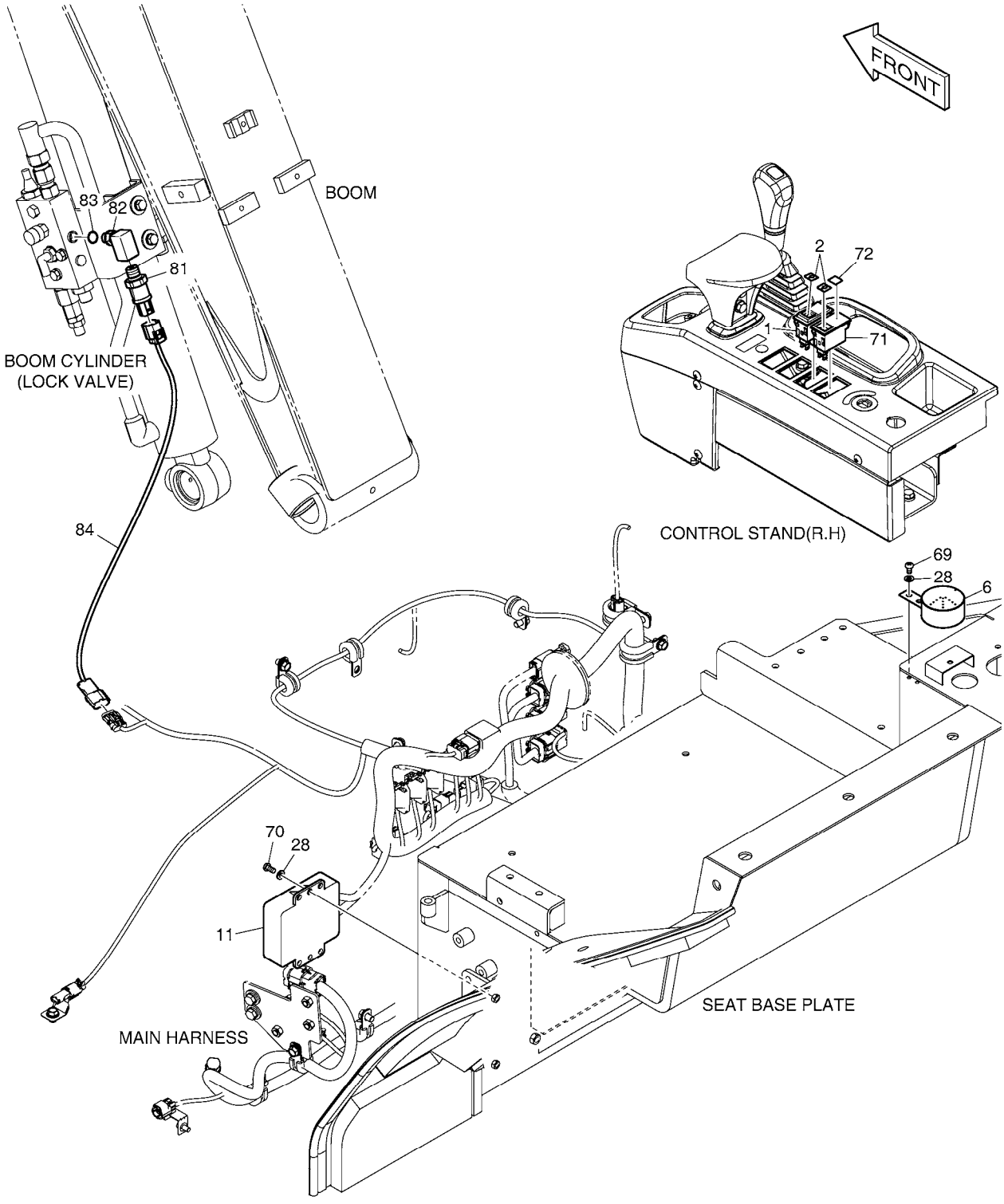

(THIS PARTS BOOK IS FOR REFERENCE ONLY.
PART NUMBERS AND SERAIL NUMBERS MAY BE
OUTDATED. ALWAYS USE THE ONLINE PARTS SYSTEM)

Fig. 6460 OVERLOAD WARNING
AVERTISSEMENT DE SURCHARGE

Serial No. ;

Key No.	Part No.	Description	Description	Q'ty	S.C	Serial No.	ICA	Replaceable part	
								Part No.	Q'ty
6460 --	300619-01968	ELECTRIC ASSY;OVERLOAD WA	AVERTISSEMENT DE SURC	-	D				
1	2549-9115	SWITCH;ROCKER(12V)	INTERRUPTEUR	1					
2	2190-2036D25	INSERT;OVERLOAD WARNING	INSERTION	2					
6	2516-1104	BUZZER;PILOT	VIBREUR PILOTE	1					
11	300611-00511	CONTROLLER UNIT	MODULE DE COMMANDE	1					
28	S5102303	WASHER;SPRING	RONDELLE	4					
69	S3450943	SCREW	VIS	2					
70	S3450953	SCREW M6X12	VIS	2					
71	301423-00045	SWITCH,ROCKER	COMMUTATEUR	1					
72	2190-2036D32	INSERT,SWITCH;BLACK	INSERTION	1					
81	2547-9045	SENSOR;PRESSURE	SONDE	1					
82	DS2308018	ELBOW	COUDE	1					
83	S8000111	O-RING	JOINT CIRCULAIRE	1					
84	310207-02493	HARNESS;OWD PRESSURE SEN	FAISCEAU	1					

(THIS PARTS BOOK IS FOR REFERENCE ONLY.
PART NUMBERS AND SERAIL NUMBERS MAY BE
OUTDATED. ALWAYS USE THE ONLINE PARTS SYSTEM)

(THIS PARTS BOOK IS FOR REFERENCE ONLY.
PART NUMBERS AND SERAIL NUMBERS MAY BE
OUTDATED. ALWAYS USE THE ONLINE PARTS SYSTEM)

Part No.	Fig No.	Key No.	Part No.	Fig No.	Key No.	Part No.	Fig No.	Key No.
1.110-00013	4290	4	1.180-00492	4350	5	110913-00280	1400	5
	4300	4		4360	5	110913-00281	1400	6
	4350	4	1.180-00493	4310	5	110925-00223	6260	2-5
	4360	4		4320	5	110925-00363	4250	26
1.110-00015	4330	17	1.180-00528	4270	12	110925-00364	4250	43
1.110-00016	4310	4		4280	11	110925-00378	4250	43
	4320	4	1.180-00562	4330	12	110935-00264	6230	-
1.110-00017	4330	4	1.181-00055	4270	2	110935-00265	6230	1
1.110-00167	4250	16		4280	2	110935-00266	1420	-
1.115-00186	4300	17	1.181-00056	4270	10	110935-00267	1420	1
	4360	17		4280	10	110953-00106	1380	-
1.115-00187	4290	17	1.409-00061	4330	11	110953-00107	1390	-
	4350	17	1.412-00013	4250	15	110953-00108	1400	-
1.120-00010	4280	18	1.412-00014	4250	29	110958-00054	1280	2
1.120-00191	4290	18	1.412-00131	4250	19	110958-00068	1280	3
	4300	18	1.416-00002	4250	7	110958-00069	1280	4
	4320	17	1.416-00004	4290	6	110964-00001	2100	16
	4350	18		4300	6	110969-00003	6280	-
1.121-00028	4250	20		4330	6	119-00027A	1170	5
1.123-00094	4290	20		4350	6	120-00246	1460	34
	4350	20		4360	6	120-00255	6210	2
1.123-00095	4300	20	1.416-00005	4310	6	120501-02677	1320	3
	4310	19		4320	6	120501-02678	1320	4
	4320	19	1.427-00009	4250	5	120501-02679	1320	6
	4330	18	1.427-00015	4280	5	120501-02681	1320	7
	4360	20	1.428-00240	4280	13	120501-02682	2100	8
1.138-00004	4250	18	1.429-00003	4280	16	120501-02683	2100	9
1.160-00004	4250	30	1.451-00125	4250	1	120810-00122	6210	4
1.180-00257	4290	13	1.549-00002	4250	27	121-00010D1	1240	16
	4300	13	101541-00087	3110	4	121-00010D7	1310	7
	4310	13	101555-00252	6270	45	124-00208D2	1310	4
	4320	13	110406-02367	6440	4		1460	26
	4350	13	110406-02375	6450	3	124-00208D3	1460	27
	4360	13	110406-02509	1160	19		6350	17
1.180-00259	4330	9	110501-00027	1280	-	124-00208D4	1460	28
1.180-00329	4290	15	110508-15848	6270	44	124-00209D1	1160	7
	4300	15	110508-15882	6340	-		1460	29
	4320	15	110508-15883	6340	5		6350	7
	4350	15	110508-15884	1410	14	125-00077	6250	34-4
	4360	15		6220	6	125-00078	6250	34-5
1.180-00406	4290	14	110508-15885	1390	17	127-00009	6260	5A
	4300	14	110508-15886	1390	23	131008-00131	3100	1A
	4320	14	110508-15887	1350	5	131008-00132	3110	4A
	4350	14	110508-15889	1380	18		3110	51A
	4360	14	110508-16051	6260	2-7		6120	1A
1.180-00407	4330	13	110508-16052	6260	33	131008-00134	4290	19
1.180-00444	4320	16	110513-00043	1300	-		4350	19
1.180-00492	4290	5	110902-00010	1130	61	131008-00135	3110	4B
	4300	5	110913-00278	1390	15		4300	19
	4330	5	110913-00279	1390	16		4310	18

(THIS PARTS BOOK IS FOR REFERENCE ONLY.
PART NUMBERS AND SERIAL NUMBERS MAY BE
OUTDATED. ALWAYS USE THE ONLINE PARTS SYSTEM)

Part No.	Fig No.	Key No.	Part No.	Fig No.	Key No.	Part No.	Fig No.	Key No.
131008-00135	4360	19	190-00688	5120	12	2.120-00039	012	67
132-00010	1400	15	190-00689	5120	21	2.120-00041	007	9
140109-00023	2100	12	190-00691	5120	29	2.120-00044	003	13
150109-00075	1120	-	190-00691A	5120	29		004	37
	1130	-	190-00692	5120	15		016	32
155-00037	3110	6	190-00693	5120	24	2.120-00050	013	29
155-00038	3110	5	190-00694	5120	11		013	33
160-00055	1400	16	190-00695	5120	17	2.120-00052	015	1
160-00059	1350	1-6	190-00703	5120	37	2.120-00136	002	24
160-00061	6130	3	190-00727	1410	15		002	25
161-00195	1380	12	190-00730D4	5130	34		003	12
	6260	2-10	190-01059D4	5130	35		004	2
161-00208A	6250	26	195-03420	1470	2		011	131
161-00284	6210	1		6370	2	2.120-00137	005	10
180-00200	1170	6A	2.109-00337	4140	7		009	24
180-00222	010	42	2.109-00338	4170	3		011	132
	017	28	2.110-00026	4120	3	2.120-00138	014	3
180102-00893	6340	8	2.110-00027	4120	5	2.120-00139	005	5
180102-00895	6230	2	2.113-00005	007	8		007	15
180102-00896	6230	3		008	6	2.120-00143	010	29
180102-00897	1420	2	2.113-00021	4110	6	2.120-00144	006	15
180102-00898	1420	3	2.114-00350	4150	34	2.120-00145	003	7
180102-00927	6270	29	2.114-00414	4170	32		009	8
180308-00467	1330	17	2.114-00889	009	14		010	16
180308-00468	1330	18		009	15	2.120-00146	005	11
180308-00469	1330	19		017	17		005	6
180308-00470	1330	20	2.114-00978	4170	7	2.120-00147	006	5
180309-00182A	1350	1-5	2.114-01090	011	101	2.120-00148	002	26
181-00020	6450	5		011	108		010	17
181-00078D1	1240	45		011	109	2.120-00150	010	15
181-00103	1310	6	2.114-01353	4110	7		012	85
181-00471	4250	2	2.114-01354	4110	8	2.120-00225	008	12
181-00519	4261	4	2.114-01355	4130	7	2.120-00258	009	13
181-00837D1	1250	17	2.114-01356	4150	54	2.120-00259	011	114
185-00376	1150	2	2.114-01357	4170	13	2.120-00302	4180	6
190-00078	1100	54	2.114-01358	4170	18	2.120-00331	015	24
190-00092	5130	12	2.114-01359	4170	19	2.120-00496	004	50
190-00093	5130	13	2.114-01360	4170	20		004	51
190-00094	5130	24	2.114-01361	4170	30	2.120-00694	004	11
190-00095	5130	11	2.114-01362	4170	31	2.120-00855	006	4
190-00096	5130	21	2.114-01363	4170	33	2.120-00856	006	3
190-00097	5130	15	2.115-00008	013	26	2.120-00858	008	11
190-00098	5130	17	2.115-00054	012	59	2.120-00861	010	25
190-00099	5130	36	2.115-00543	4170	14	2.120-00862	006	9
190-00100	5130	16	2.115-00546	014	13	2.121-00084	004	13
190-00101	5130	27	2.120-00029	002	29	2.121-00085	013	5
190-00122	5120	25	2.120-00031	010	40	2.121-00092	009	17
	5130	25	2.120-00037	003	4	2.121-00176	012	68
190-00521	5130	18	2.120-00039	011	120	2.121-00266	4150	3
190-00557	5130	26		012	53	2.121-00267	002	31

(THIS PARTS BOOK IS FOR REFERENCE ONLY.
PART NUMBERS AND SERIAL NUMBERS MAY BE
OUTDATED. ALWAYS USE THE ONLINE PARTS SYSTEM)

Part No.	Fig No.	Key No.	Part No.	Fig No.	Key No.	Part No.	Fig No.	Key No.
2.121-00267	006	10	2.181-00280	4230	45	2.429-00148	4130	4
	006	6	2.181-00286	4230	43	2.429-00149	4150	1
2.121-00268	016	31	2.181-00306	001	5	2.429-00150	4150	2
2.123-00088	013	13	2.181-00308	004	23	2.429-00151	4150	7
2.123-00302	4130	6	2.181-00314	001	9	2.429-00152	4170	12
2.124-00020	014	5	2.181-00324	4100	19	2.430-00083	003	3
	014	8	2.181-00331	4100	18	2.430-00169	4160	4
2.124-00021	4190	15	2.181-00353	009	23	2.452-00011	4170	4
2.124-00086	010	34	2.181-00355	003	9	2.471-00001	4200	214
	010	38	2.197-00046	004	1	2.471-00037	014	11
	013	49	2.217-00072	004	30		1160	10
	013	52	2.229-00001	4130	3	2.474-00011	4190	9
2.129-00024	4130	5	2.304-00001	002	15	2.474-00028	014	12
2.131-00115	4190	20	2.313-00001	009	12	2.540-00022	4170	6
2.131-00258	013	10	2.401-00057	4100	9	2.540-00023	4170	22
2.132-00005	004	52		4180	-	2.549-00005	009	9
2.140-00105	013	51	2.402-00342	4180	2	2.549-00027	010	24
2.150-00014	4100	2	2.403-00017	4160	6	2.549-00029	010	41
	4120	-	2.404-00004	4180	1	200101-00010	2110	4
2.150-00015	4120	1	2.405-00242	4100	1		2120	-
2.158-00004	004	55		4110	-	200101-00010B	2110	4
	017	5	2.405-00243	4110	1		2120	-
2.159-00001	4140	2	2.409-00248	4100	3	200101-00011	2110	5
2.177-00050	007	4		4130	-		2130	-
2.180-00054	010	23	2.409-00249	4130	1	200101-00011B	2110	5
	017	18	2.410-00155	4130	2		2130	-
2.180-00100	010	28	2.411-00001	4110	4	200106-00115	2150	1
	017	27	2.412-00248	4180	3	200106-00118	2150	-
2.180-00355	002	28	2.412-00249	4180	7	2110-1184D2	4261	22
	017	21	2.412-00252	4160	7	2110-1184D3	4270	15
2.180-00359	012	5	2.412-00266	013	12	2110-1184D37	1390	1A
2.180-00388	4160	14	2.412-00356	4160	10		1390	3A
2.180-00611	013	14	2.412-00357	4180	9	2114-1058D29	1280	28
2.180-00910	003	11	2.414-00024	4160	12		6440	20
	017	25	2.415-00040	4230	40		6450	19
2.180-01054	4160	16		4230	47	2114-1058D54	6210	4
2.180-01055	4160	17		4230	71	2114-1058D63	1280	21
2.180-01230	4140	5	2.415-00057	4140	12	2114-1058D72	1390	4
2.180-01231	4170	2	2.421-00061	4100	17	2114-1058D73	6210	3
2.180-01232	4180	4	2.421-00265	4100	13	2114-1059D186	3100	27
2.180-01240	004	28	2.427-00018	004	32	2114-1059D212	1320	21
	017	11		017	6		3100	29
2.180-01241	004	29	2.427-00019	013	11		3110	29
	017	4	2.429-00017	4160	11	2114-1059D228	2100	35
2.181-00163	001	6	2.429-00043	009	2		3100	25
2.181-00183	4140	6	2.429-00133	007	1	2114-1300	1150	15
	4190	12	2.429-00145	4100	5		1170	20
2.181-00184	4140	8		4150	-	2114-1300A	1150	15
2.181-00214	4260	252	2.429-00146	4120	2		1170	20
2.181-00225	4190	18	2.429-00147	4120	4	2114-1816A	1100	7

(THIS PARTS BOOK IS FOR REFERENCE ONLY.
PART NUMBERS AND SERIAL NUMBERS MAY BE
OUTDATED. ALWAYS USE THE ONLINE PARTS SYSTEM)

Part No.	Fig No.	Key No.
2114-1838	6270	87
2114-1898D1	1330	11
	1340	4
	1350	2
	1380	7
	1410	1-5
	1410	7
	6240	84-2
	6260	2-15
	6280	7
2114-1898D13	6250	3-11
	6250	34-11
	6270	67
2114-1898D15	6240	72
	6260	2-11
2114-1898D16	6280	4
2114-1898D17	1410	9
2114-1898D2	1330	9
	1350	1-9
	1350	9
	1380	9
	1390	8
	1400	8
	1410	1-8
	1410	5
	1410	52
	6130	6
	6220	32
	6220	5
	6240	53
	6250	3-9
	6250	34-9
	6250	53
	6260	2-17
	6260	53
	6280	7
	6340	3
	6360	3
2114-1898D3	1350	1-17
	1350	6
2114-1898D4	6240	83
2114-1898D8	6240	74
2114-2031D1	6270	68
2120-1413D3	1180	13
2120-2124	3120	1-3
2120-2138	3120	1-3
2120-2150D3	6260	70
2120-2150D4	6260	2-21
2120-2166D1	1340	6
	1410	8
2120-2166D10	1380	16
	1390	24
	1430	5
	6240	60
	6250	34-13
	6260	60
	6270	60
	6340	9
2120-2166D11	1410	10
2120-2166D12	1350	1-14
2120-2166D16	6250	35
2120-2166D18	1430	7
2120-2166D2	1330	12
	1350	3
	6260	2-16
2120-2166D23	6270	57
2120-2166D25	6130	4
	6240	55
	6260	55
	6280	8
2120-2166D26	6270	69
2120-2166D32	1410	11
2120-2166D33	6250	3-12
	6250	34-12
2120-2166D4	1340	5
	1410	1-6
	6240	73
2120-2166D44	6140	5
	6250	34-14
2120-2166D5	1330	10
	1350	1-10
	1350	8
	1380	10
	1390	20
	1400	9
	1410	1-9
	1410	53
	1410	6
	6130	7
	6220	33
	6220	4
	6240	54
	6250	34-10
	6250	54
	6260	54
	6340	4
	6360	4
2120-2166D50	6210	7
2120-2166D52	1390	22
	1400	10
2120-2166D52	6260	2-19
2120-2166D56	6240	84-3
	6280	8
2120-2166D59	6250	3-10
2120-2166D6	1350	1-18
	1350	7
2120-2166D60	6280	5
2120-2166D7	1330	16
	6240	56
2120-2166D8	6240	62
2120-2187	6350	8
2120-2196D1	1150	9
2120-2196D12	1280	15
2120-2196D2	1170	19
2120-2196D8	1280	19
2121-1301	3120	1-4
2121-1305	1460	36
2121-1311D2	1380	11
	1390	9
	6250	3-15
	6250	85
	6260	2-18
2121-1311D4	1380	17
	6260	2-12
2121-1311D5	1410	1-7
	6280	6
2121-9019	1410	12
	6210	5
2121-9019A	1110	9
2122-1002D2	5120	20
	5130	20
	5150	2
	5170	2
2123-2132	1100	15
	1180	4
2123-6119	6270	4-4
2124-1026D1	1180	23
	3140	12
2124-1353D1	1470	5
2124-1353D12	6450	23
2124-1353D3	1150	4
	1160	8
2125-1095A	1350	1-11
2125-9055	6260	20
2138-9006B	1270	2
2160-1004D48	1100	21
2160-1004D9	1120	41
2160-1026	6250	40
2160-1212	1460	7
2160-1213	1460	8

(THIS PARTS BOOK IS FOR REFERENCE ONLY
PART NUMBERS AND SERIAL NUMBERS MAY BE
OUTDATED. ALWAYS USE THE ONLINE PARTS SYSTEM)

Part No.	Fig No.	Key No.
2160-1218	1490	2
2160-1219	6260	2-9
2160-1227D1	1350	1-21
2160-1310	6240	13
2161-1041	6270	4-6
2161-1744	1350	1-19
	6220	3
	6270	75
2161-2178	6250	25
	6250	34-6
2161-6065	6270	4-7
2180-1026D28	1180	41
2180-1106BD21	3110	32
2180-1216D17	4190	5
2180-1216D20	4260	211
2180-1216D25	4260	212
2180-1217D116	4340	17
2180-1217D25	4261	16
2181-1110D30	1310	1
2181-1110D42	1310	3
2181-1116D1	4220	1-8
	4230	55
	4240	11
2181-1116D2	4240	10
	4261	29
2181-1116D3	002	4
	010	13
2181-1126D115	1190	60
	1200	60
2181-1126D14	1210	9
	1220	5
	1240	2
	1250	2
	2160	10
	6110	3
	6160	2
	6170	8
	6290	3
	6440	6
	6450	8
2181-1126D23	1210	10
	2160	9
	6440	9
	6450	9
2181-1126D27	1190	11
2181-1126D28	1190	12
2181-1126D34	1240	3
	1250	3
	6170	9
2181-1126D36	1240	4
2181-1126D36	2160	7
2181-1126D51	1250	9
2181-1126D6	1180	9
	1200	7
2181-1126D7	1190	8
	1210	8
	3130	7
	6440	5
	6450	28
2181-1126D75	1220	24
2181-1126D83	1180	39
2181-1126D98	1250	5
2181-1702D10	1210	15
2181-1702D2	1190	13
	1200	104
	1200	13
2181-1702D36	1200	16
2181-1702D4	1220	6
	1240	6
	1250	6
	6160	3
	6170	6
	6290	2
	6440	10
	6450	10
2181-1702D44	1210	17
2181-1702D5	1200	14
	1210	14
	1240	7
2181-1702D50	1200	18
2181-1702D51	1210	19
2181-1702D55	1200	20
	1210	20
2181-1702D56	1220	7
	1240	8
2181-1702D82	6170	7
2181-1890D2	4260	251
	4261	3
2181-1913D2	6350	11
2181-1950D1	1150	5
	1170	7
	1180	101
	1200	105
	1200	25
	6410	5
2181-1950D2	1240	10
2181-1950D9	1170	8
2181-1951D1	6420	5
	6430	5
2181-1951D7	6430	6
2181-1951D8	1200	104
	6410	4
2181-2047A	1200	25
2181-2281D16	1180	5
2181-2337D1	1240	11
	6160	4
2181-2337D10	1200	22
2181-2337D12	1190	24
	1200	24
	1210	24
2181-2337D2	1200	23
	1210	23
2181-2419D1	1240	12
	1250	12
	2160	5
2181-2576D1	1200	26
2181-2820D1	1200	81
	6310	5
2181-4125	1250	13
2181-4133D38	6440	7
	6450	7
2185-1308D13	6350	3
	6350	4
2186-9003	1150	6
	6350	2
2190-2036D10	6130	2
2190-2036D11	6190	3
2190-2036D12	6190	5
2190-2036D13	1440	10
2190-2036D25	6460	2
2190-2036D32	6460	72
2190-2036D5	1440	8
2190-2476	5120	22
	5130	22
2190-2477	5120	23
	5130	23
2190-2480	5120	27
2190-2533A	5120	16
2190-2556D154	5120	33
2190-2556D155	5120	34
2190-2584D2	6180	2
2190-2584D5	6320	2
2190-2633	5120	10
	5130	10
2190-2878	5120	6
	5130	6
2190-3297	5120	3
	5130	3
2190-3309	5120	4
	5130	4

(THIS PARTS BOOK IS FOR REFERENCE ONLY.
PART NUMBERS AND SERIAL NUMBERS MAY BE
OUTDATED. ALWAYS USE THE ONLINE PARTS SYSTEM)

Part No.	Fig No.	Key No.	Part No.	Fig No.	Key No.	Part No.	Fig No.	Key No.
2190-3386A	5120	18	2512-9007	5110	13	300619-01098	6140	-
2190-3388	5120	13	2515-1016D2	1470	1A	300619-01963	6190	-
2195-1534	6200	2		5110	8	300619-01968	6460	-
2195-3500	1460	21		6360	2A	300619-01969	1440	-
2197-1660	1460	24		6370	1A	300637-00003	6140	1
2197-1661	1460	25	2515-1021D6	6270	71A	300704-00016	6270	51
	1470	4	2516-1104	6460	6	300715-00009	6290	1B
	6370	5	2523-9005	1430	3	300726-00004	1450	6
2198-1061	6250	63	2527-1016	1430	8A	300730-00005	6190	6
2199-1063F41	5100	1		5110	11	301005-00181	1470	1
2199-9008	5100	2	2527-1017	1430	8B		6360	2
2199-9058	6270	14		5110	10		6370	1
220101-00684	6210	-	2527-1018	1430	8C	301316-00019	1150	17
220101-00724	6240	-	2527-1025	1430	8D	301423-00045	6460	71
	6250	-	2528-9040	1440	1C	310207-00148	1460	1
	6260	-	2534-9048	6360	2	310207-00148A	1460	1
	6270	-	2534-9068	6270	71	310207-01092	6370	4
220101-00724A	6240	-	2541-9020	6270	31	310207-01093	1480	1
	6250	-	2544-9032	1430	6	310207-01094	6360	5
	6260	-		6320	4		6360	6
	6270	-		6360	11	310207-02477	6190	1
220101-00724B	6240	-	2547-9045	6460	81	310207-02481	1440	6
	6250	-	2548-1027	1460	1A	310207-02493	6460	84
	6260	-	2549-9115	1440	9	400305-00223	3130	2
	6270	-		6130	1		4300	-
220105-00106	1330	-		6180	1	400305-00277	4360	-
220105-00107	1330	5		6460	1		6450	1
220204-00278	6220	-	2550-1014D1	1460	5	400309-00393	3130	1
220205-00317	6260	2	2550-1014D2	1460	6		4290	-
220205-00317A	6260	2	2553-1275D96	1460	9	400309-00443	4350	-
230104-00837	3120	1	2553-1275D97	1460	10		6440	1
230201-00572	3110	51	2621-2752	1220	3	400310-00219	3130	3
230201-00573	6120	-	2621-3313E	3130	4		4310	-
230201-00574	6120	1	2621-9002	1440	11	400337-00438	4300	2
230207-00161	3110	-	2622-1265	6270	4-5		4360	2
230207-00196	3100	1	270-00028	6250	3-4	401107-00749	2100	12A
230207-00196A	3100	1	2705-9002	1280	16	401107-00750	2100	12B
230207-00265	1320	-	2713-1206B	3120	1-6	410105-00144	1190	1
2415-1018	6270	66	2713-1207B	3120	1-7		4340	-
2420-9351B	6170	1	2713-1212B	3120	1-2	410113-00130	1220	1
2420-9612B	3140	17	2891-1232B	6250	34-7		4250	-
2440-9266AKT	2120	*	2916-9002A	6200	1	410113-00131	1220	2
	2130	*	300611-00511	6460	11		4250	-
2460-9057A	6110	2	300619-00163	1430	-	410114-00171	6450	2
2471-9010A	1150	16	300619-00166	1460	-	410114-00173	6440	2
2471-9040	6340	2	300619-00606	1450	-	410119-00008	1220	27
250110-00079A	1350	-	300619-01050	1470	-		4261	-
250110-00080A	1350	1	300619-01051	1480	-	410135-00031	6290	1
2506-9009	1450	1	300619-01052	6370	-	410207-00060	6290	1A
2507-6006	6270	52	300619-01054	6360	-	410207-00525	4250	41

(THIS PARTS BOOK IS FOR REFERENCE ONLY
PART NUMBERS AND SERIAL NUMBERS MAY BE
OUTDATED. ALWAYS USE THE ONLINE PARTS SYSTEM)

Part No.	Fig No.	Key No.
410207-00526	4250	41
415-00040	6270	65
416-00008	4270	8
	4280	9
4161-2507	6240	46
420-00291	1200	4
420203-00019	1130	49
420212-00624	1190	-
	1200	-
	1210	-
420212-00627	1180	-
420212-01340	1220	-
420212-01340A	1220	-
420212-01340B	1220	-
420212-01352	6290	-
420212-07727	6450	-
420212-07772	6440	-
420212-08640	6420	-
420212-08653	6430	-
420212-09326	6410	-
420402-00011A	2120	2
	2130	2
420406-01053	4300	1
420406-01246	4350	1
420406-01247	4360	1
422-00027A	1170	6
426-00236	6290	1
429-00016	4250	10
	4270	4
	4280	6
429-00017	4250	9
	4270	5
	4280	7
430221-00918	4250	42
430221-00919	4250	42
450103-00041	1150	-
450103-00044	1150	1
450105-00031	1170	-
450105-00034	1170	1
460103-00818	6340	7
515-00001A	1440	1D
	5110	9
516-00009	1450	6
516-00011	6180	3
527-00004	5110	12
530-00067	6170	20
530-00432A	6300	2
534-00029	1470	1
	6370	1
537-00010	1430	1
537-00071	016	35
	1430	2
541-00011A	6270	51
541-00013	6270	12
545-00002	6190	6
549-00010	6170	2
549-00040	1440	7
	6320	1
549-00041	6190	4
549-00073	6190	2
549-00092	6300	1
553-00001D1	1460	14
621-01889A	6270	27
621-03113B	6250	34-1
621-03114B	6250	34-2
650105-00024	2100	-
	2110	-
901-00042	1360	1
	1370	-
901-00050	1360	2
903-00068	6280	3
950106-00324	5160	1
950106-00326	5160	-
950205-00657	5120	30
	5130	30
950205-00658	5120	32
	5130	31
950205-00681	5120	-
950205-00682	5130	-
950205-01169	5170	3
950205-01325	5150	1
950205-01325A	5150	1
950209-01145	5120	35
	5130	32
950209-01145B	5120	35
	5130	32
	5170	1
950209-02414	5150	-
950209-04106	5170	-
D460483	002	14
	004	39
D460678	003	17
D465096	010	21
	017	14
D501220	4310	9
	4320	9
D510117	4310	14
DS0001079	1450	4
DS0001089	1450	3
DS0025017	1190	54
DS0025017	1200	54
DS0025018	1280	19
DS0025032	1180	42
	1190	55
	1280	14
	1290	18
DS0025033	1100	5
	1120	33
	1130	33
	1160	20
	1180	16
	1280	13
	1290	19
	1300	5
	1460	19
	1470	3
	2100	37
	2110	37
	6370	3
DS0025039	1280	27
	1290	27
DS1001069	1390	7
DS2076159	1120	29
DS2076160	1120	39
DS2087066	1180	35
DS2092008	6420	4
DS2092091	1260	1
DS2092092	1260	3
DS2092100	2160	11
DS2092117	1240	21
DS2092118	1250	25
DS2092119	1250	29
DS2092125	1200	101
	1200	31
DS2092126	1200	33
DS2092139	3140	61
DS2092202	2160	11
DS2092234	3140	61
DS2092235	1200	101
	6410	1
DS2092236	1200	33
DS2093006	1240	22
DS2093008	6430	2
DS2093017	1250	34
DS2093024	1250	44
	6170	17
DS2093025	1220	22
DS2093027	1250	23
DS2093028	1250	30
	1310	10

(THIS PARTS BOOK IS FOR REFERENCE ONLY
PART NUMBERS AND SERIAL NUMBERS MAY BE
OUTDATED. ALWAYS USE THE ONLINE PARTS SYSTEM)

Part No.	Fig No.	Key No.
DS2093032	1250	41
	1250	42
DS2093034	1220	23
DS2093036	1250	41
DS2093040	1310	8
DS2093053	6150	3
	6160	9
DS2093071	1250	30
DS2093098	1250	33
DS2093115	1240	22
	1250	42
	1310	9
	6420	3
DS2093119	1220	15
DS2093126	6420	2
DS2093127	6170	16
DS2093157	6170	15
DS2093180	6290	9
DS2093193	1250	33
DS2093197	1250	28
	1250	32
DS2093200	6160	8
DS2093233	6170	14
DS2093234	1230	3
DS2093249	1250	43
	6430	3
DS2093253	6150	4
DS2093269	1210	39
DS2093273	1200	36
	1210	49
DS2093276	1190	38
DS2093288	1220	20
DS2093299	1240	39
DS2093300	1240	40
DS2093303	1210	40
	1210	43
DS2093304	1200	46
DS2093309	1190	42
DS2093311	1190	51
DS2093318	1250	43
DS2093330	1220	26
DS2093354	2160	12
DS2093355	2160	13
DS2093356	2160	14
DS2093365	1250	31
DS2093367	1210	48
DS2093375	1250	36
	6430	4
DS2093397	1250	37
DS2093408	6290	8
DS2093410	6290	9
DS2093412	1200	45
DS2093413	1210	34
DS2093416	1190	51
DS2093417	1190	47
DS2093418	1190	38
DS2093420	1220	14
	1220	25
DS2093421	1230	4
DS2093427	1250	32
	1250	36
DS2093430	1240	27
	6110	8
DS2093450	1190	41
DS2093451	1190	50
DS2093471	1180	7
DS2093472	3140	51
DS2093473	1190	37
DS2093485	1180	10
DS2093633	1190	37
DS2093761	3140	51
DS2093763	1190	41
DS2093764	1190	50
DS2094003	6150	2
DS2094006	1260	4
DS2094016	6420	1
DS2094017	1230	1
DS2094024	1240	24
DS2094033	1240	35
DS2094054	6160	11
DS2094097	6150	1
DS2094113	1220	21
DS2094137	1260	2
DS2094138	6170	10
	6170	11
DS2094139	6170	12
	6170	13
DS2094168	2160	15
DS2094184	1240	38
DS2094206	6290	10
	6290	11
DS2094207	1210	35
	6310	51
DS2094208	1210	44
DS2094212	3130	24
DS2094214	1220	17
DS2094215	1220	19
DS2094216	6310	61
DS2094219	1200	102
DS2094220	1220	16
DS2094221	1220	18
	6430	1
DS2094222	1230	2
DS2094223	1250	26
DS2094224	1240	27
DS2094225	1250	42
DS2094226	6160	10
DS2094227	3130	24
DS2094242	6160	11
DS2094256	3130	51
DS2094260	1180	26
DS2094261	1190	53
DS2094263	6120	31
DS2094407	1180	26
DS2094409	1200	102
	6410	2
DS2094506	6450	27
DS2094508	6450	25
DS2094509	6450	26
DS2101040	1180	45
DS2105064	1160	5
DS2105066	1160	2
DS2105067	1160	3
DS2105077	1160	4
DS2105081	1160	1
DS2235002	6440	8
	6450	6
DS2239001	1180	29
DS2242017	6170	18
DS2242022	1250	5
DS2281082	6290	12
DS2308018	6460	82
DS2365002	1200	103
DS2411001	6420	6
DS2411008	1240	18
DS2805009	6450	24
DS3202026	010	18
	5110	5
DS5201079	1100	22
DS7601042	1100	11
DS7601043	1100	12
DS7701428	3100	23
DS7701429	3100	24
DS7701430	2100	34
	3100	26
DS7701431	3100	28
DS7701432	1320	22
	3100	30
	3110	30
DS7701442	1320	23

(THIS PARTS BOOK IS FOR REFERENCE ONLY.
PART NUMBERS AND SERIAL NUMBERS MAY BE
OUTDATED. ALWAYS USE THE ONLINE PARTS SYSTEM)

Part No.	Fig No.	Key No.
DS7701443	1320	24
DS7701444	1320	25
DS7701445	1320	26
DS7718012	1150	21
	1170	22
K1000794	6250	34-3
K1000814	1460	1B
K1000815	1460	1C
K1001029	1120	44
	1150	8
	1160	11
	1290	26
	1310	5
	1460	30
	1470	6
	6350	9
	6370	6
	6450	18
K1001858A	1440	4
K1003908B	1140	2
K1003945	1220	11
K1004011	6310	10
K1004134	1140	8
K1006041	6340	6
K1006160	1350	5A
K1006936	6240	49
	6270	49
K1006995	1400	11
K1007598	1170	2
K1008072A	2100	13
K1008074B	2110	14
K1008307	1100	6
K1008451	2160	1
	4240	-
K1008451A	2160	1
	4240	-
K1008938	1290	7
K1008938A	1290	7
K1009418	1300	3
K1009435A	1180	38
K1009605B	1440	4A
K1010292A	1180	32
K1010875	1180	28
K1010888	1110	10
K1010890A	1120	20
K1011036A	2120	1
K1011040	2120	2
	2130	2
K1011040A	2120	2
	2130	2
K1011055A	2120	3
	2130	3
K1011055B	2120	3
	2130	3
K1011188	1220	27
	4260	-
K1011305G	6210	-
K1011306E	6240	-
	6250	-
	6260	-
	6270	-
K1011306G	6240	-
	6250	-
	6260	-
	6270	-
K1011306H	6240	-
	6250	-
	6260	-
	6270	-
K1011308E	6260	2
K1011308G	6260	2
K1011308H	6260	2
K1011310E	6250	3
K1011310G	6250	3
K1011312A	6270	4
K1011327	1170	2A
	5110	1
K1011328	1170	4
K1011350A	1280	7
K1011377	1190	2
K1011378	1190	3
K1011555	1170	18
	5110	2
K1011645D10	5120	30
	5130	30
K1011645D15	5120	32
	5130	31
K1011647B	5120	19
K1011647C	5120	19
K1011685	1320	8
K1011743D4	5120	32
	5130	31
K1011783	1150	14
	1170	21
K1011783A	1150	14
	1170	21
K1011797B	1340	-
K1011802A	1340	1
K1011808A	1340	2
K1011809A	1340	3
K1011885	1340	7
K1011886A	1360	-
K1012040A	1200	28
K1012041B	1200	29
K1012050A	1270	1
K1012079A	1280	22
K1012204A	5130	19
K1012204B	5130	19
K1012204C	5130	19
K1012205A	5130	29
K1012205B	5130	29
K1012205C	5130	29
K1012531C	1380	-
K1012673	1290	10
K1012685A	1170	6
K1012723B	1390	1
K1012724B	1400	1
K1012785A	1380	4
K1012786A	1380	5
K1012787B	1390	3
K1012816	1380	6
	1390	6
	6250	3-21
K1012829A	1380	8
K1012830	1390	2
K1012834B	1390	-
K1012835C	1400	-
K1012836B	1410	14
	6220	6
K1012877	1380	13
K1012878	1380	14
	1390	10
K1012879A	1350	1-4
K1012883	1380	15
K1012884B	1390	21
K1012887	1390	11
	1400	4
K1012978A	1400	2
K1013050B	6250	3-18
K1013051B	6250	3-17
K1013067	6360	1
K1013070A	6280	1
K1013073	6260	11
K1013075	6260	2-2
K1013076A	6260	2-3
K1013077	6260	2-4
K1013078B	6260	2-5
K1013079A	6260	2-6
K1013081C	6260	2-8
K1013082A	6270	4-1

(THIS PARTS BOOK IS FOR REFERENCE ONLY
PART NUMBERS AND SERIAL NUMBERS MAY BE
OUTDATED. ALWAYS USE THE ONLINE PARTS SYSTEM)

Part No.	Fig No.	Key No.
K1013084A	6270	4-2
K1013086A	6270	4-3
K1013087A	6250	6
K1013088A	6240	7
K1013089A	6270	8
K1013090	6260	9
K1013174B	6250	10
K1013176C	6280	-
K1013177A	6280	2
K1013178B	6250	3-2
K1013225	6340	1
K1013232	6140	1
K1013265	6270	32
K1013270A	6250	15
K1013467	2110	10
	4220	-
K1013498	6260	2-13
K1013499	6260	2-14
K1013531A	6250	16
K1013532A	6270	17
K1013533	6260	18
K1013534	6240	19
K1013564A	6260	5
K1013567	6260	2-7
K1013569A	1220	28
	4270	-
K1013569B	1220	28
	4270	-
K1013609	6320	3
	6330	-
K1013674A	1200	103
K1013675A	1330	6
K1013762	1440	5
K1013763	1440	6
K1013764	6190	1
K1013765	6270	86
K1013795	6110	1
K1013853C	1330	1
K1013854C	1330	2
K1013855B	1330	3
K1013856B	1330	4
K1013866C	1330	5
K1013943A	1330	7
K1013948C	1330	8
K1013952C	1330	-
K1013961A	1330	13
K1013963	1330	15
K1014110B	1150	1
K1014110C	1150	1
K1014118C	1150	-
K1014172C	6220	1
K1014175	1440	1
K1014201	1440	1A
K1014202	1440	1B
K1014279A	1460	18
K1014293A	6260	33
K1014316B	1400	5
K1014317B	1400	6
K1014318	6160	1
K1014323A	1380	18
K1014332	1350	1-13
K1014350C	2100	1
K1014351B	2140	3
	2150	3
K1014351C	2140	3
	2150	3
K1014352A	2140	2
	2150	2
K1014353A	2110	4
	2120	-
K1014353B	2110	4
	2120	-
K1014354B	2110	5
	2130	-
K1014354C	2110	5
	2130	-
K1014356	2110	6
K1014357	2140	1
K1014358C	2100	7
K1014360	2100	8
K1014361	2100	9
K1014362A	2100	16
K1014372A	1220	1
	4250	-
K1014373A	1220	2
	4250	-
K1014432	2100	18
	4330	-
K1014434	2110	11
K1014462A	1480	1
K1014488E	1170	-
K1014489B	1170	1
K1014489C	1170	1
K1014496B	1390	15
K1014497B	1390	16
K1014544	1440	12
K1014551B	1390	17
K1014552A	1390	18
K1014553B	1390	19
K1014582B	6340	5
K1014590C	6240	43
K1014591B	6270	44
K1014597	6340	7
K1014609B	6240	21
K1014622B	6140	4
K1014709E	6250	3-3
K1014735A	6250	34-8
K1014736A	6250	3-20
K1014737A	6250	34
K1014743A	6250	37
K1014747C	6250	3-7
K1014748C	6250	3-5
K1014785B	6260	41
K1014787A	6270	42
K1014901B	6270	45
K1014988B	6250	3-8
K1014990A	6250	3-13
K1015073B	6340	-
K1015076	6340	8
K1015107A	6240	59
K1015113B	6240	61
K1015151A	2130	1
K1015216A	1320	3
K1015217A	1320	4
K1015218A	1320	6
K1015219	1320	7
K1015243E	1320	-
K1015302B	1180	1
K1015318G	2100	-
K1015318M	2110	-
K1015362	2110	17
K1015406H	1100	-
K1015407E	1320	1
K1015455A	1320	2
	4320	-
K1015501B	1140	-
K1015508	2120	10
	2130	10
K1015523G	1180	-
K1015525	1180	20
K1015527B	1180	36
K1015528A	1180	31
K1015533	1180	37
K1015536A	1180	22
K1015538	1180	12
K1015539A	1180	17
K1015546	1310	-
K1015632B	6210	9
K1015632C	6210	9
K1015633A	6210	10

(THIS PARTS BOOK IS FOR REFERENCE ONLY
PART NUMBERS AND SERIAL NUMBERS MAY BE
OUTDATED. ALWAYS USE THE ONLINE PARTS SYSTEM)

Part No.	Fig No.	Key No.
K1015638	2110	31
K1015682B	1210	-
K1015682G	1190	-
K1015682H	1200	-
K1015740	2120	4
	2130	4
K1015749C	3100	-
K1015749H	3110	-
K1015750C	3100	1
K1015753C	3110	51
K1015753E	3110	51
K1015756A	3110	4
K1015759B	3100	7
K1015760A	3100	8
K1015761B	3100	9
K1015762A	3100	10
K1015763A	3100	11
	3110	11
K1015812C	3140	-
K1015814A	3140	1
K1015815B	3140	2
K1015816B	3140	3
K1015831B	3130	1
	4290	-
K1015832	3130	2
	4300	-
K1015833A	3130	3
	4310	-
K1015872A	3130	15
K1015873A	3130	16
K1015874	3130	20
K1015891C	6120	1
K1015891E	6120	1
K1015892C	3120	1
K1015912B	1410	1
K1015914C	3120	1-1
K1016110	1140	1
	4100	-
K1016482A	1100	3
K1016483B	1100	4
K1016530M	1280	-
K1016533B	1280	1
K1016533C	1280	1
K1016533E	1280	1
K1016534C	1280	2
K1016534E	1280	2
K1016534G	1280	2
K1016535B	1280	3
K1016536A	1280	4
K1016536B	1280	4
K1016537B	1280	5
K1016538B	1280	6
K1016540	1280	10
K1016541	1280	11
K1016546	1280	1A
K1016547A	1280	1B
K1016548	1280	1C
K1016564A	1280	12
K1016577	1280	23
K1016578	1280	24
K1016579	1280	25
K1016606E	1100	1
K1016606G	1100	1
K1016926E	1290	-
K1016927B	1290	1
K1016927C	1290	1
K1016928B	1290	2
K1016929B	1290	3
K1016930B	1290	4
K1016931B	1290	5
K1016932A	1290	6
K1016933A	1290	8
K1016934A	1290	12
K1016935A	1290	13
K1016936A	1290	14
K1016937A	1290	15
K1016948	1290	2A
K1016949	1290	2B
K1016956	1290	3B
K1017042	1410	1-2
K1017044	1410	1-3
K1017046A	1410	1-4
K1017132A	1410	2
K1017141	1410	3
K1017222	6240	84-1
K1017285B	1190	1
	4340	-
K1017318B	2100	12
K1017372E	6310	-
K1017509C	1110	-
K1017509L	1120	-
	1130	-
K1017510A	1110	1
K1017512A	1120	2
K1017514	1120	3
K1017516A	1130	4
K1017521	1120	16
K1017522A	1120	91
K1017524B	1120	19
K1017524C	1120	19
K1017535	1120	21
K1017536B	1120	22
K1017547B	1120	23
K1017549B	1120	24
K1017554B	1120	25
K1017554C	1120	25
K1017554E	1120	25
K1017561A	1120	26
K1017562A	1120	27
K1017631C	1290	11
K1017635A	1300	-
K1017653A	1300	1
K1017654	1300	2
K1017655A	1300	4
K1017694	6310	13
K1017694A	6310	13
K1017696A	6310	3
K1017736	1290	3C
K1017749A	1290	24
K1017755	3130	17
K1017757B	1100	17
K1017965	6130	5
K1017996B	1270	-
K1017997A	1270	3
K1018003	1100	18
K1018113E	2160	-
K1018178B	1130	13
K1018202H	3130	-
K1018203	3130	14
K1018204A	3130	28
K1018204B	3130	28
K1018208A	1320	1A
	6380	1A
K1018209A	1180	27
K1018212A	1290	17
K1018250	1280	17
K1018251	1280	18
K1018255	1320	5
K1018296	1120	38
K1018297	1320	18
K1018322	1100	9
K1018323	1100	10
K1018335A	1190	6
K1018384A	1180	43
K1018423A	1120	30
K1018496A	1110	7
K1018510B	1160	-
K1018512A	1160	19
K1018514	3100	1A
K1018517	3110	4A

(THIS PARTS BOOK IS FOR REFERENCE ONLY
PART NUMBERS AND SERIAL NUMBERS MAY BE
OUTDATED. ALWAYS USE THE ONLINE PARTS SYSTEM)

Part No.	Fig No.	Key No.
K1018517	3110	51A
	6120	1A
K1018518	3110	4B
K1018777	6270	77
K1018782	6250	78
K1018803	6270	76
K1018804	6270	28
K1018810	6240	82
K1018827A	6240	81
K1018881	6240	80
K1019026	1400	12
K1023199	1400	14
K1023526	1430	4
K1023533	1450	2
K1023533A	1450	2
K1023706A	1390	23
K1023845A	6370	4
K1023854	6300	3
K1023873	6230	2
K1023874B	6230	3
K1023901A	6210	11
K1023912C	6220	-
K1023914B	1420	-
K1023916C	1410	-
K1023959A	1420	1
K1024109	6270	50
K1024117A	6250	3-14
K1024124	4290	19
K1024126	6240	84
K1024127	4300	19
	4310	18
K1024128A	6250	3-16
K1024128C	6250	3-16
K1024299G	1350	-
K1024300E	1350	1
K1024300G	1350	1
K1024301B	1350	1-1
K1024371E	1350	1-5
K1024371G	1350	1-5
K1024374A	1350	1-7
K1024504B	1460	1
K1024911	1130	4
K1024913	1130	4C
	1130	62
K1025334	009	22
	5110	7
K1025335	014	2
	5110	6
K1025337	1130	4A
	5110	3
K1025338	1130	4B
	5110	4
K1025347	1100	2
K1025348	6100	1
K1025369	1150	3
K1025394	1100	53
K1025477	4240	1
K1025478	4240	2
K1025479	4240	3
K1025480	4240	4
K1025481	4240	5
K1025569	2150	1
K1025585	1240	1
K1025603C	1240	-
	1250	-
K1025607C	1220	-
K1025608	1100	20
K1026001	6290	-
K1026002B	6170	-
K1026003	6150	-
K1026004	6160	-
K1026006	6110	-
K1026012	1290	16
K1026042B	2140	-
K1026043A	2150	-
K1026044	1280	8
K1026044A	1280	8
K1026045	1280	9
K1026046	1280	26
K1026167	1150	17
K1026203	1100	1B
K1026270	1120	48
K1026271A	1120	46
K1026272A	1120	47
K1026277A	1110	5
K1026278A	1110	6
K1026293	1130	49
K1026294	1130	50
K1026358A	1120	45
K1026392	6270	29
K1026395	6250	30
K1026472	1320	1B
	6380	1B
K1026473	1320	1C
	6380	1C
K1026510	1490	1
K1026524	1100	1A
K1026558	3110	12
K1026559	3110	13
K1026565	1460	31
K1026566	1470	7
K1026619	1260	-
K1026634	1230	-
K1026650	5130	5
K1026650A	5130	5
K1026691	1100	19
K1026707	2110	38
K1026788A	1430	-
K1026789	1440	-
K1026790	1450	-
K1026792A	1460	-
K1026793	1490	-
K1026794	6190	-
K1026795	6200	-
K1026796	6320	-
K1026797A	6350	-
K1026800	6300	-
K1026801	6180	-
K1026802A	1470	-
K1026803A	1480	-
K1026804A	6370	-
K1026805	6360	-
K1026807	6130	-
K1026809	6140	-
K1026991	1410	13
K1026998	1420	2
K1026999	1420	3
K1027155	1290	9
K1027166A	1330	20
K1027168	1330	19
K1027169	1330	18
K1027170	1330	17
K1027224	1150	20
	6100	4
K1027474B	1350	1-2
K1027477	1350	4
K1027478	1350	5
K1027491	1220	4
	4280	-
K1027657	1130	53
K1027657A	1130	53
K1027658	1130	54
K1027658A	1130	54
K1027781	1170	3
K1027805	6230	-
K1027858	6100	-
K1027918B	1220	27
	4261	-
K1027966C	6120	-
K1028065	5120	35

(THIS PARTS BOOK IS FOR REFERENCE ONLY
PART NUMBERS AND SERIAL NUMBERS MAY BE
OUTDATED. ALWAYS USE THE ONLINE PARTS SYSTEM)

Part No.	Fig No.	Key No.
K1028065	5130	32
K1028095	5120	26
K1028287EF	5110	14
K1028289E	5110	17
K1028331	5120	8
	5130	8
K1028344	1400	13
K1029122	6230	1
K1029125	5120	36
	5130	33
K1029156A	6260	88
K1029222	1130	56
K1029223	1130	57
K1029257	1170	6B
	5110	16
K1029323	1430	8
K1029404	5120	1
	5130	1
K1029405	5120	2
	5130	2
K1029425H	5130	-
K1029428J	5120	-
K1029440	5130	14
K1029442A	6260	2-22
K1029443A	6260	2-23
K1029444	5120	5
K1029444A	5120	5
K1029447	6260	2-24
K1029450	6250	89
K1029457	1110	58
K1029458	6240	90
K1029709A	6350	10
K1029710	6350	13
K1030043	1410	51
K1030060	6220	31
K1030174	6250	3-22
K1030177	1290	3D
K1030282	6350	15
K1030283	6350	16
K1030389	1100	25
K1030452	1430	11
	5120	9
	5130	9
K1030463	6400	1
K1030807B	5110	-
K1030863	5100	-
K1033082	5120	14
K1033141	6450	4
K1033244	5100	1-10
K1033587	6380	1

Part No.	Fig No.	Key No.
K1037200	6260	2-5
K1038695	6390	1
K1038804A	1290	2
K1039286	1500	1
K1039286A	1500	1
K1039682	6400	2
K1040063	1200	26
K1040064	1200	103
K1040396	3110	6
K1040397	3110	5
K1040606	6280	3
K1042074	5120	22
	5130	22
K1042074A	5120	22
	5130	22
K1043331	1290	24
K1043645	6410	3
K1045098	5110	6
K1046415	1200	61
K1048682	4240	5
K1049665	1290	3A
K1049808	1120	60
	1300	5
	2100	37
	2110	37
K1050271	6170	1
K1051896	5140	1
K1052010	5140	-
K1053324	1430	6
	6320	4
	6360	11
K1053575	1430	4
K9000356	1370	1
K9000357	1370	2
K9000358	1370	3
K9000359	1370	4
K9000360	1370	6
K9000361	1370	7
K9000362	1370	8
K9000363	1370	9
K9000364	1370	10
K9000365	1370	11
K9000366	1370	12
K9000367	1370	13
K9000368	1370	14
K9000369	1370	15
K9000370	1370	16
K9000371	1370	17
K9000372	1370	18
K9000373	1370	19

Part No.	Fig No.	Key No.
K9000374	1370	20
K9000375	1370	25
K9000376	1370	26
K9000377	1370	27
K9000378	1370	36
K9000379	1370	47
K9000380	1370	48
K9000458	4280	8
K9001127	4250	14
K9001128	4250	30
K9001129A	4250	19
K9002134	012	21
K9002135	012	22
K9002138	012	24
K9002144	010	14
	012	83
	012	84
K9003717	1120	2A
K9003721	4220	1-2
K9003723	4220	1-4
K9003730	4220	1-14
K9003739	4220	1-26
K9003747	4230	26
K9003749	4230	36
K9003751	4230	38
K9003753	4230	42
K9003754	4230	46
K9003756	4230	50
K9003757	4230	58
K9003803	4220	1-27
	4230	73
K9003838	4190	2
K9003839	4190	6
K9003840	4190	10
K9003841	4190	11
K9003842	4190	16
K9003845	4100	12
	4190	-
K9003856	4260	201
K9003857	4260	202
K9003858	4260	203
K9003859	4260	210
K9003860	4260	214
K9003861	4260	217
K9003862	4260	218
K9003863	4260	224
K9003864	4260	271
K9003865	4260	301
K9003866	4260	311
K9003867	4260	313

(THIS PARTS BOOK IS FOR REFERENCE ONLY
PART NUMBERS AND SERIAL NUMBERS MAY BE
OUTDATED. ALWAYS USE THE ONLINE PARTS SYSTEM)

Part No.	Fig No.	Key No.
K9003868	4260	324
K9003869	4260	335
K9003870	4260	336
K9003871	4260	413
K9003872	4260	414
K9003873	4260	420
K9003874	4260	472
K9003875	4260	501
K9003876	4260	601
K9003918	4250	4
K9003919	4250	8
K9003920	4250	11
K9003921	4250	12
K9003922	4250	21
K9003923	4250	24
K9003924	4250	25
K9003925	4250	26
K9003926	4250	31
K9003927	4250	32
K9003928	4250	41
K9003929	4250	41
K9003930	4250	42
K9003931	4250	42
K9003932	4250	43
K9003933	4250	43
K9003938	4270	I
K9003938A	4270	I
K9003939	4270	6
K9003940	4270	7
K9003941	4270	9
K9003942	4270	II
K9003943	4270	13
K9003944	4270	14
K9003945	4270	17
K9003946	4270	18
K9003947	4270	19
K9003948	4270	21
K9004285	4250	6
K9004286	4280	4
K9004287	4280	I
K9004288	4280	II
K9004289	4280	14
K9004290	4280	17
K9004291	4280	20
K9004600	014	6
K9004602	015	12
K9004603	012	96
K9004605	013	54
K9004606	002	17
	017	26

Part No.	Fig No.	Key No.
K9004607	016	4
K9004608	016	8
K9004609	016	13
K9004610	016	15
K9004611	016	16
K9004612	016	20
K9004613	016	29
K9004614	016	9
K9004615	016	10
K9004616	016	11
K9004617	016	12
K9004618	016	5
K9004619	016	6
K9004620	016	18
K9004621	016	19
K9004622	016	21
K9004623	016	22
K9004624	016	23
K9004625	016	24
K9004626	016	25
K9004627	016	26
K9004628	016	27
K9004629	016	28
K9004630	016	7
K9004631	002	12
K9004632	002	13
K9004633	004	43
K9004634	004	44
K9004635	004	45
K9004636	004	46
K9004637	004	6
K9004638	004	7
K9004639	004	8
K9004640	008	5
K9004641	007	10
K9004642	007	14
K9004643	007	11
K9004644	007	17
K9004645	002	8
K9004646	002	7
K9004647	002	18
K9004648	002	19
K9004649	002	20
K9004650	009	18
K9004651	009	11
K9004653	010	33
K9004654	011	78
K9004655	011	130
K9004656	011	50
K9004657	011	56

Part No.	Fig No.	Key No.
K9004659	011	61
K9004660	011	62
K9004661	013	6
K9004662	013	48
K9004663	013	50
K9004665	016	1
K9004666	008	15
K9004667	002	6
K9004668	016	33
K9004670	004	34
K9004671	002	27
K9004672	006	11
	1130	12
K9004673	010	49
	1120	42
K9004676	002	21
	017	3
K9004677	013	55
K9004678	001	14
	001	4
K9004679	009	10
K9004681	010	43
	1120	28
K9004682	010	45
K9004683	010	48
	1120	43
K9004684	010	46
K9004685	001	7
K9004689	002	11
K9004690	002	22
K9004704	006	7
	017	10
K9004714	014	1
K9004723	003	15
K9004727	009	20
K9004732	005	2
	017	16
K9004741	004	42
K9004742	004	9
K9004744	007	7
K9004748	007	16
K9004749	009	3
	017	12
K9004750	009	21
	017	24
K9004751	010	27
	017	15
K9004752	013	30
K9004753	005	3
	017	8

(THIS PARTS BOOK IS FOR REFERENCE ONLY
PART NUMBERS AND SERIAL NUMBERS MAY BE
OUTDATED. ALWAYS USE THE ONLINE PARTS SYSTEM)

Part No.	Fig No.	Key No.	Part No.	Fig No.	Key No.	Part No.	Fig No.	Key No.
K9004754	010	26	K9004815	012	23	K9004864	002	1
K9004756	014	4	K9004816	012	82	K9004868	002	30
K9004757	014	7	K9004817	011	48		003	19
K9004758	015	2	K9004818	011	66		004	56
K9004759	015	5	K9004819	011	68		017	30
K9004760	015	6	K9004820	011	70	K9004870	015	21
K9004761	015	7	K9004821	011	60	K9004871	016	3
K9004762	015	8	K9004822	011	71	K9004883	011	54
K9004763	015	9	K9004823	011	121	K9004884	015	4
K9004764	015	10	K9004824	012	2	K9004888	4240	*
K9004765	015	11	K9004825	012	3	K9004888A	4240	*
K9004766	015	13	K9004826	011	53	K9004934	4330	15
K9004767	015	16	K9004827	011	36	K9004956	4290	16
K9004768	015	20	K9004828	011	34		4350	16
K9004769	015	22		011	35	K9004964	4340	8
K9004770	015	23	K9004829	011	44	K9004965	4340	4-15
K9004773	010	20	K9004830	011	33	K9004969	4340	5
K9004776	005	13	K9004831	011	98	K9004974	4340	11
K9004777	002	10	K9004832	011	45	K9004976	4340	11-4
K9004778	016	2	K9004833	011	49		4340	4-3
K9004779	016	14	K9004834	011	69		4340	9-3
K9004780	016	17	K9004835	011	100	K9004977	4340	1-3
K9004781	003	18	K9004836	005	4		4340	10-3
K9004784	014	9	K9004837	006	13		4340	12-3
K9004785	003	2	K9004838	009	16		4340	2-3
K9004786	014	10		017	22		4340	3-3
	1160	9	K9004840	012	63		4340	6-3
K9004788	015	3	K9004841	011	102	K9004980	4340	16
K9004789	015	14		011	110	K9004981	4340	1-6
K9004790	015	15	K9004842	006	14		4340	10-6
K9004791	015	17	K9004843	007	19		4340	12-6
K9004792	015	18		011	111		4340	2-6
K9004793	015	19	K9004845	011	112		4340	3-6
K9004795	016	30	K9004846	011	113		4340	6-6
K9004796	002	16	K9004847	010	47	K9004982	4340	11-6
K9004797	001	13	K9004849	002	5		4340	4-6
K9004799	008	10	K9004850	011	103		4340	7-4
K9004801	002	9		012	65		4340	9-6
K9004803	016	34	K9004851	011	118	K9004983	4340	5-3
K9004804	007	18	K9004852	011	119	K9004984	4340	5-6
K9004805	011	51		011	63	K9004986	4340	23
	011	52	K9004853	011	64	K9004987	4340	4-7
K9004806	011	55	K9004854	004	36	K9004988	4340	1-4
K9004807	011	65	K9004855	004	38		4340	10-4
K9004808	011	4	K9004856	003	5		4340	12-4
K9004809	011	99	K9004857	011	125		4340	2-4
K9004810	011	105	K9004858	006	16		4340	3-4
K9004811	011	107	K9004859	007	20		4340	6-4
K9004812	011	117	011	126		K9004989	4340	11-5
K9004813	011	106	K9004860	001	8		4340	4-4

(THIS PARTS BOOK IS FOR REFERENCE ONLY
PART NUMBERS AND SERIAL NUMBERS MAY BE
OUTDATED. ALWAYS USE THE ONLINE PARTS SYSTEM)

Part No.	Fig No.	Key No.	Part No.	Fig No.	Key No.	Part No.	Fig No.	Key No.
K9004989	4340	9-4	K9005192	008	29	K9005239	4100	4
K9004990	4340	5-4	K9005193	008	30		4140	-
K9005143	013	1	K9005194	008	32	K9005240	4100	8
K9005146	004	27	K9005195	008	28		4170	-
K9005147	004	14	K9005196	009	4	K9005241	4100	7
K9005148	001	12	K9005197	010	3		4160	-
K9005149	001	38	K9005198	010	4	K9005244	6330	1
K9005150	004	41	K9005199	010	8	K9005245	6330	2
K9005151	005	12	K9005200	010	9	K9005246	6330	3
K9005152	004	24	K9005201	001	31	K9005247	6330	4
K9005153	004	25		017	2	K9005248	4330	1
K9005154	004	3	K9005202	4210	-	K9005249	4290	1
K9005155	004	4	K9005203	005	9	K9005250	4300	1
K9005156	004	49		017	23	K9005251	4310	1
	017	7	K9005204	4210	100	K9005252	4320	1
K9005158	004	40	K9005205	008	22	K9005253	4300	2
K9005159	004	10	K9005206	010	30	K9005254	4290	2
K9005160	004	15	K9005207	010	39		4350	2
K9005161	004	21	K9005208	004	19	K9005255	4330	2
K9005162	004	33	K9005209	4200	104	K9005256	4310	2
K9005163	005	7	K9005210	010	11	K9005257	4320	2
K9005164	006	2	K9005211	005	1	K9005258	4320	11
K9005165	007	3	K9005212	4200	243A	K9005259	4290	11
K9005166	008	1	K9005213	006	8		4300	11
K9005167	008	9	K9005214	017	29		4350	11
K9005168	008	16	K9005215	010	22		4360	11
K9005169	008	18		017	13	K9005260	4310	11
K9005170	009	1	K9005216	4200	101	K9005261	4300	3
K9005171	009	19	K9005217	008	13	K9005262	4330	3
K9005172	010	1	K9005218	010	19	K9005263	4310	3
K9005173	010	31	K9005219	012	97	K9005264	4290	3
K9005174	010	36	K9005220	013	2		4300	3
K9005175	010	32	K9005221	008	23		4350	3
K9005176	010	37	K9005222	011	128		4360	3
K9005177	4210	113	K9005223	001	1	K9005265	4320	3
K9005178	010	35	K9005224	008	34	K9005266	4300	*
K9005179	013	35	K9005225	008	36		4360	*
K9005180	013	39	K9005226	001	24	K9005267	4290	*
K9005181	013	43	K9005227	008	24		4350	*
K9005182	001	30	K9005228	017	1	K9005268	4310	*
K9005183	003	6	K9005229	011	1	K9005269	4330	*
K9005184	003	8	K9005230	4200	102	K9005270	4320	*
K9005185	001	32	K9005231	4200	103	K9005271	4310	7
K9005186	001	27	K9005232	4200	-		4320	7
K9005187	001	35	K9005233	4200	243	K9005272	4290	7
K9005188	004	26	K9005234	4170	10		4300	7
K9005189	006	1	K9005235	4160	5		4330	7
	017	9	K9005236	4170	5		4350	7
K9005190	4210	128	K9005237	4100	20		4360	7
K9005191	007	2	K9005238	4100	21	K9005273	4310	15

(THIS PARTS BOOK IS FOR REFERENCE ONLY.
PART NUMBERS AND SERIAL NUMBERS MAY BE
OUTDATED. ALWAYS USE THE ONLINE PARTS SYSTEM)

Part No.	Fig No.	Key No.	Part No.	Fig No.	Key No.	Part No.	Fig No.	Key No.
K9005274	4310	16	K9005342	4340	13	S0512053	4240	12
K9005275	4300	16	K9005662	1170	6A	S0512066	1140	5
	4360	16	K9005883	4261	5	S0512166	2160	3
K9005276	4310	17	K9005884	4261	6	S0512253	1320	14
K9005277	4320	18	K9005885	4261	7	S0512266	1110	31
K9005278	4230	2	K9005886	4261	8	S0512653	1150	12
K9005279	4230	62	K9005887	4261	9	S0514866	3130	9
K9005280	4230	4	K9005888	4261	10	S0515253	3120	1-8
K9005281	4230	25	K9005889	4261	12	S0515266	2110	25
K9005282	4230	61	K9005890	4261	13	S0515366	1180	18
K9005283	4230	3	K9005891	4261	14		2110	27
K9005284	4230	27	K9005892	4261	17	S0521353	1320	11
K9005285	4220	1-5	K9005893A	4261	18	S0555953	3130	21
K9005286	4220	1-13	K9005894	4261	19	S0556066	3130	21
K9005287	4220	1-3	K9005895	4261	20	S0556353	6290	6
K9005288	4230	37	K9005896	4261	23	S0556466	6450	16
K9005289	4230	59	K9005897	4261	24	S0556566	6290	6
K9005290	4230	19	K9005898	4261	26		6440	17
K9005291	4230	20	K9006321	6290	1A	S0556766	1240	20
K9005292	4230	5	K9006322	6290	1B	S0556853	6160	6
K9005293	4230	6	S0504366	6200	3	S0556953	6170	4
K9005294	4220	1-10	S0504453	1120	35	S0556966	1160	12
K9005295	4220	1-19	S0504566	1450	9	S0558266	3130	18
K9005296	4220	1-11		1460	22	S0558366	6450	17
K9005297	4220	1-20	S0504653	1180	34	S0558453	3140	13
K9005298	4230	68	S0504666	1220	12	S0558553	1180	25
K9005299	4230	60	S0504853	1160	15	S0558753	3140	18
K9005300	4230	A1		1290	21	S0558966	2100	28
K9005301	4230	A2	S0504953	1170	12	S0559053	3100	17
K9005302	4230	B1	S0508453	6210	6		3110	17
K9005303	4230	B2	S0508466	6180	4	S0559153	3100	20
K9005304	4220	1	S0508653	1160	18		3110	20
K9005305	4220	1-17	S0508666	1280	29	S0559353	1320	15
K9005306	4220	1-22		1450	7		3110	18
K9005307	4220	1-15	S0508753	1170	15	S0559363	3100	35
K9005308	4220	1-9	S0508853	1160	13	S0560966	2100	33
K9005309	4220	1-18		1270	6	S0561166	1100	13
K9005310	4220	1-12		6170	4	S0561253	6210	8
K9005311	4220	1-24		6310	11	S0561753	3100	16
K9005331	4340	1	S0508866	1220	9	S0561766	1110	8
K9005332	4340	2		2110	22	S0561853	3100	16
K9005333	4340	3		6440	16	S0563466	2110	30
K9005334	4340	4		6450	15	S0565666	1100	8
K9005335	4340	6	S0509053	6110	6	S0565966	1100	24
K9005336	4340	7	S0509353	1200	59	S0570766	6100	2
K9005337	4340	9	S0511653	1460	11	S2201561	4190	7
K9005338	4340	10		1460	15	S2202766	1170	14
K9005339	4340	12		1460	2	S2203763	4340	4-16
K9005340	4340	14	S0511666	1460	32	S2204671	4270	16
K9005341	4340	15	S0511866	2110	39	S2205361	4280	15

(THIS PARTS BOOK IS FOR REFERENCE ONLY
PART NUMBERS AND SERIAL NUMBERS MAY BE
OUTDATED. ALWAYS USE THE ONLINE PARTS SYSTEM)

Part No.	Fig No.	Key No.
S2205661	4261	15
S2208866	1360	4
S2209071	4190	8
S2209261	4230	50-8
S2209371	4210	124
S2211861	4160	21
	4230	48
S2212066	3130	36
	4160	19
S2212361	4200	223
S2212471	4140	4
S2212666	4140	9
S2214866	1140	7
S2215466	1180	2
S2265066	1140	3
S3450333	4250	28
S3450833	1150	18
	6140	2
S3450853	1100	51
S3450943	6460	69
S3450953	6460	70
S3450973	1440	2
S3450983	1430	10
	4250	17
S3452353	1350	1-12
S3521901	4270	20
S3522706	4261	25
S3523403	4330	16
S3523806	4300	18
	4310	17
	4360	18
S3524101	4150	4
S3640523	6340	10
S4010503	4340	24
S4012233	1270	4
S4012333	1290	23
S4012533	1290	20
	1460	37
	3130	23
	6440	21
	6450	22
S4012633	1130	59
	1180	15
	1320	16
	2100	29
	3100	21
	3110	21
S4012733	3100	36
	3120	1-10
S4012833	2110	32
S4014233	4280	19
S4032733	4250	23
S4032833	4250	22
S4210733	1390	12
S4267043	2120	5
	2130	5
S4277943	2120	5
	2130	5
S5010313	1120	36
	1160	17
	1440	3
S5010513	1200	30
	1270	7
	1290	25
	2110	24
	3130	38
	6180	5
S5010603	3130	34
S5010613	1150	11
	1180	14
	1320	12
	1450	5
	1460	12
	1460	16
	1460	3
	1460	33
S5010913	1320	9
S5020603	1280	20
S5100203	1150	19
	6140	3
S5100303	1180	33
S5102203	1100	52
	1270	5
S5102303	1120	37
	1160	16
	1170	13
	1220	13
	1430	9
	1450	10
	1460	23
	6200	4
	6460	28
S5102503	1160	14
	1170	16
	1220	10
	1240	19
	1450	8
	1460	38
	2110	23
	3130	22
S5102503	6110	5
	6160	5
	6170	3
	6180	6
	6290	5
	6310	12
	6440	19
	6450	20
S5102603	1140	6
	1150	10
	1180	24
	1320	13
	1460	13
	1460	17
	1460	35
	1460	4
	2160	2
	3130	19
	3140	14
	4240	13
	6450	21
S5102703	1100	14
	1110	32
	1180	3
	2110	26
	3120	1-9
	3130	10
S5102901	3120	1-5
S5102903	1320	10
S5103103	6100	3
S5110703	1140	4
S5130703	1390	5
S5210503	6260	2-20
S5700521	4140	3
S5701041	003	1
	003	14
	008	2
	4230	49
S5711041	4200	226
S5735481	1390	13
S5735601	2120	6
	2130	6
S5735911	2120	6
	2130	6
S5740480	4180	8
S5740490	008	8
S5740530	1400	17
S5740600	4180	5
S5740730	4200	224
S5740860	004	35

(THIS PARTS BOOK IS FOR REFERENCE ONLY
PART NUMBERS AND SERIAL NUMBERS MAY BE
OUTDATED. ALWAYS USE THE ONLINE PARTS SYSTEM)

Part No.	Fig No.	Key No.
S6000210	4200	217
S6003440	4200	216
S6250092	4260	225
S6250110	4220	1-7
S6250150	4190	21
S6250161	4260	471
	4261	21
S6500180	4110	5
S6500350	4220	1-16
S6500550	4240	9
S6510280	4200	221
S6510320	4130	8
S6510380	4170	24
S6540700	6250	3-19
S6710041	3100	33
	3110	33
	4290	21
	4300	21
	4310	20
	4320	21
	4330	19
	4350	21
	4360	21
S6710042	1310	2
	1320	17
	2100	36
S6710101	3110	34
S6710102	4290	22
	4350	22
S6710153	4300	22
	4360	22
S8000060	4340	22
S8000061	4160	18
S8000070	011	116
S8000071	4170	9
	4230	29
S8000081	4190	19
	4230	57
	4250	3
	4260	213
	4261	28
	4270	3
	4280	3
S8000091	4340	21
S8000101	4230	31-5
	4340	20
	4340	4-14
S8000111	1150	7
	1170	9
	1180	102
S8000111	1200	106
	1200	58
	1210	58
	1220	8
	1240	14
	1250	14
	2160	4
	4170	8
	4200	249
	4220	1-28
	4230	74
	4260	261
	4261	27
	4340	1-5
	4340	10-5
	4340	11-2
	4340	12-5
	4340	2-5
	4340	3-5
	4340	4-5
	4340	5-5
	4340	6-5
	4340	7-3
	4340	9-5
	6110	7
	6160	7
	6170	5
	6290	7
	6410	6
	6420	7
	6430	7
	6440	11
	6450	11
	6460	83
S8000120	004	53
	017	19
S8000121	4230	50-7
S8000141	1180	6
	1190	57
	1200	57
	1210	57
	1240	15
	2160	6
	3130	8
	4230	44
	4230	50-6
	4270	11
	4280	12
	6430	8
	6440	12
S8000141	6450	12
S8000161	014	15
S8000180	4340	18
S8000181	1180	40
	1190	56
	1200	107
	1200	56
	1210	56
	2160	8
	6110	4
	6410	7
	6440	13
	6450	13
S8000201	4261	11
	4340	19
S8000205	4250	13
S8000231	1180	30
S8000291	1170	11
	4230	39
S8000315	4330	14
S8000320	002	23
	004	54
	017	20
S8000351	4290	12
	4300	12
	4310	12
	4320	12
	4350	12
	4360	12
S8000601	4240	6
S8000651	3120	12
S8000750	4240	7
S8010141	4190	4
S8010601	4310	8
S8010651	014	14
	4290	8
	4300	8
	4310	10
	4320	8
	4350	8
	4360	8
S8010701	4290	10
	4300	10
	4320	10
	4330	8
	4350	10
	4360	10
S8010751	4240	8
	4330	10
S8010900	4160	15

(THIS PARTS BOOK IS FOR REFERENCE ONLY.
PART NUMBERS AND SERIAL NUMBERS MAY BE
OUTDATED. ALWAYS USE THE ONLINE PARTS SYSTEM)

Part No.	Fig No.	Key No.	Part No.	Fig No.	Key No.	Part No.	Fig No.	Key No.
S8010951	4230	66						
S8011101	1170	10						
	4200	235						
	4230	65						
S8011200	4230	28						
S8011251	4200	236						
S8011351	4210	114						
S8011401	4200	218						
S8011551	4220	1-25						
S8030081	6440	14						
	6450	14						
S8070950	4230	69						
S8090650	4290	9						
	4300	9						
	4350	9						
	4360	9						
S8180251	6350	12						
S8450006	1160	6						
S8450016	6350	5						
S8450018	1180	44						
S8450023	1120	18						
	1120	92						
	1180	8						
	6350	14						
S8450044	1180	21						
S8450053	1120	15						
	1130	15						
S8450066	1150	13						
S8450140	1130	55						
T6500066	5100	1-7						
T6510062	5100	1-6						
T6510072	5100	1-8						
T6510079	5100	1-9						
T6550005	5100	1-4						
T6550009	5100	1-5						
T6580016	5100	1-1						
T7050003	5100	1-2						
T7050021	5100	1-3						

(THIS PARTS BOOK IS FOR REFERENCE ONLY.
PART NUMBERS AND SERAIL NUMBERS MAY BE
OUTDATED. ALWAYS USE THE ONLINE PARTS SYSTEM)