RUTHZIL TRATOR COMERCIAL DE PEÇAS LTDA 11 97083-6812 ROLANDO

K1036953CEF
January 2013

DX30Z

EXCAVATOR

Parts Manual

DX30Z

Serial Number 5001 and Up

(THIS PARTS BOOK IS FOR REFERENCE ONLY.
PART NUMBERS AND SERAIL NUMBERS MAY BE
OUTDATED. ALWAYS USE THE ONLINE PARTS SYSTEM)

Doosan Infracore
Construction Equipment

(THIS PARTS BOOK IS FOR REFERENCE ONLY.
PART NUMBERS AND SERAIL NUMBERS MAY BE
OUTDATED. ALWAYS USE THE ONLINE PARTS SYSTEM)

Parts Manual
DX30Z EXCAVATOR

Serial Number 5001 and Up

DOOSAN and the DOOSAN logo are registered trademarks of DOOSAN Corporation in the United States and various other countries around the world.

K1036953CEF

January 2013

Copyright DOOSAN 2013

(THIS PARTS BOOK IS FOR REFERENCE ONLY.
PART NUMBERS AND SERAIL NUMBERS MAY BE
OUTDATED. ALWAYS USE THE ONLINE PARTS SYSTEM)

(THIS PARTS BOOK IS FOR REFERENCE ONLY.
PART NUMBERS AND SERAIL NUMBERS MAY BE
OUTDATED. ALWAYS USE THE ONLINE PARTS SYSTEM)

DX30Z

Serial Number 5001 and Up

Pub.No. K1036953CEF

DOOSAN

Product Label

Instructions

Trim Out The Label Along The Lines And Insert Into Pocket On The Binder Spine

(THIS PARTS BOOK IS FOR REFERENCE ONLY.
PART NUMBERS AND SERAIL NUMBERS MAY BE
OUTDATED. ALWAYS USE THE ONLINE PARTS SYSTEM)

Pub. No. K1036953CEF

(THIS PARTS BOOK IS FOR REFERENCE ONLY.
PART NUMBERS AND SERAIL NUMBERS MAY BE
OUTDATED. ALWAYS USE THE ONLINE PARTS SYSTEM)

CONTENTS

● ENGINE PARTS - Tier-2

Fig.	001	CYLINDER BLOCK	BLOC CYLINDRE	001-1
	002	GEAR HOUSING	CARTER DE DISTRIBUTION	002-1
	003	FLYWHEEL HOUSING & OIL PAN	CARTER DE VOLANT MOTEUR	003-1
	004	CYLINDER HEAD & COVER	COUVERTURE DE CULASSE	004-1
	005	INTAKE MANIFOLD	TUBULURE D'CENTREE	005-1
	006	EXHAUST MANIFOLD & MUFFLER	TUBULURE ET SILENCIEUX D'ECHAPPEMENT	006-1
	007	CAMSHAFT & DRIVING GEAR	ARBRE DE CAME	007-1
	008	CRANKSHAFT & PISTON	VILEBREQUIN & PISTON	008-1
	009	LUB.OIL SYSTEM	SYSTEME D'HUILE	009-1
	010	COOLING WATER SYSTEM	SYSTEME DE REFROIDISSEMENT	010-1
	011	FUEL INJECTION PUMP	POMPE D'INJECTION	011-1
	012	GOVERNOR	GOUVERNEUR	012-1
	013	FUEL INJECTION VALVE	VANNE D'INJECTION	013-1
	014	FUEL LINE	LIGNE DE CARBURANT	014-1
	015	STARTING MOTOR	DEMARREUR	015-1
	016	GENERATOR	ALTERNATEUR	016-1
	017	GASKET SET	ENSEMBLE DE GARNITURE	017-1

● ENGINE PARTS - Tier-3

Fig.	031	CYLINDER BLOCK	BLOC CYLINDRE	031-1
	032	GEAR HOUSING	CARTER DE DISTRIBUTION	032-1
	033	FLYWHEEL HOUSING & OIL PAN	CARTER DE VOLANT MOTEUR	033-1
	034	CYLINDER HEAD & COVER	COUVERTURE DE CULASSE	034-1
	035	INTAKE MANIFOLD	TUBULURE D'CENTREE	035-1
	036	EXHAUST MANIFOLD & MUFFLER	TUBULURE ET SILENCIEUX D'ECHAPPEMENT	036-1
	037	CAMSHAFT & DRIVING GEAR	ARBRE DE CAME	037-1
	038	CRANKSHAFT & PISTON	VILEBREQUIN & PISTON	038-1
	039	LUB.OIL SYSTEM	SYSTEME D'HUILE	039-1
	040	COOLING WATER SYSTEM	SYSTEME DE REFROIDISSEMENT	040-1
	041	FUEL INJECTION PUMP	POMPE D'INJECTION	041-1

(THIS PARTS BOOK IS FOR REFERENCE ONLY.
PART NUMBERS AND SERIAL NUMBERS MAY BE
OUTDATED. ALWAYS USE THE ONLINE PARTS SYSTEM)

042	GOVERNOR	GOUVERNEUR	042-1
043	FUEL INJECTION VALVE	VANNE D'INJECTION	043-1
044	FUEL LINE	LIGNE DE CARBURANT	044-1
045	STARTING MOTOR	DEMARREUR	045-1
046	GENERATOR	ALTERNATEUR	046-1
047	GASKET SET	ENSEMBLE DE GARNITURE	047-1

● BODY PARTS

Fig. 1100	MAIN FRAME	BATI PRINCIPAL	1100-1
1110	ENGINE MOUNTING	MOTEUR	1110-1
1120	RADIATOR MOUNTING	SUPPORT DE RADIATEUR	1120-1
1130	AIR CLEANER - Tier 2	FILTRE A AIR	1130-1
1135	AIR CLEANER - Tier 3	FILTRE A AIR	1135-1
1140	PUMP MOUNTING	POMPE	1140-1
1150	FUEL TANK	RESERVOIR DE GAZOLE	1150-1
1160	FUEL PIPING	CONDUITES DE GAZOLE	1160-1
1170	OIL TANK	RESERVOIR D'HUILE	1170-1
1180	OIL COOLER PIPING	TUYAUTERIE DE RADIATEUR D'HUILE	1180-1
1190	MAIN PIPING (1)	CONDUITES DE PRINCIPAL	1190-1
1200	MAIN PIPING (2)	CONDUITES DE PRINCIPAL	1200-1
1210	MAIN PIPING (3)	CONDUITES DE PRINCIPAL	1210-1
1220	PILOT PIPING (1)	CONDUITES DE PILOTE	1220-1
1230	PILOT PIPING (2)	CONDUITES DE PILOTE	1230-1
1240	PILOT PIPING (3)	CONDUITES DE PILOTE	1240-1
1250	PILOT PIPING (4)	CONDUITES DE PILOTE	1250-1
1260	PILOT PIPING (5) - NOT TRAVEL ALARM	CONDUITES DE PILOTE	1260-1
1270	ENGINE CONTROL	COMMANDE REGIME MOTEUR	1270-1
1280	BONNET	COUVERCLE	1280-1
1290	COVER ASS'Y	ENSEMBLE DE COUVERCLE	1290-1
1300	UNDER COVER	TOLES IMFERIEVRES	1300-1
1310	LUBRICATION PIPING	LUBRIFICATION	1310-1
1320	BOOM SWING	VIRAGE DE FRONTALE	1320-1
1330	PEDAL ASS'Y	ENSEMBLE DE PEDALE	1330-1
1340	FLOOR PLATE	TOLE DE PLANCHER	1340-1
1350	SEAT BASE ASS'Y	ENSEMBLE DE POSEZ LA BASE	1350-1
1360	SEAT ASS'Y	SIEGE	1360-1

(THIS PARTS BOOK IS FOR REFERENCE ONLY.
PART NUMBERS AND SERIAL NUMBERS MAY BE
OUTDATED. ALWAYS USE THE ONLINE PARTS SYSTEM)

1370	SEAT	SIEGE	1370-1
1380	CONTROL STAND MOUNTING	CONSOLE DE COMMANDE	1380-1
1390	CONTROL STAND - L.H	COMMANDEZ STAND - L.H	1390-1
1400	CONTROL STAND - R.H	COMMANDEZ STAND - R.H	1400-1
1410	CANOPY	VERRIERE	1410-1
1420	FLOOR MAT	PLANCHER	1420-1
1430	ELECTRIC BOX	EQUIPMENT ELECTRIQUE	1430-1
1440	ELECTRIC PARTS - CONTROL STAND	PIECES ELECTRIQUES	1440-1
1450	ELECTRIC PARTS - BATTERY	EQUIPMENT ELECTRIQUE	1450-1
1460	ELECTRIC WIRING - Tier 2	CABLAGE ELECTRIQUE	1460-1
1470	WORKING LAMP	LAMPE FONCTIONNANTE	1470-1
1480	WORKING LAMP HARNESS	LAMPE FONCTIONNANTE	1480-1
1490	ELECTRIC PARTS - CANOPY	EQUIPMENT ELECTRIQUE	1490-1
1500	LICENSE PLATE	PLAT DE PERMIS	1500-1
1510	ELECTRIC WIRING - Tier 3	CABLAGE ELECTRIQUE	1510-1

● TRACK PARTS

Fig. 2100	TRACK FRAME	TRAIN DE ROULEMENT	2100-1
2110	TRACK COMPONENTS	COMPOSANTS DE VOIE	2110-1
2120	TRACK ADJUSTER	REGLEUR DE VOIE	2120-1
2130	RUBBER TRACK - 300mm	VOIE EN CAOUTCHOUC	2130-1
2140	TRAVELING PIPING	CONDUITES DE TRANSLATION	2140-1

● FRONT PARTS

Fig. 3100	BOOM - 2.28m	FLECHE	3100-1
3110	ARM - 1.19m	BALANCIER	3110-1
3120	BUCKET - 0.079m³	GODET	3120-1
3130	FRONT PIPING	CONDUITES DE FRONTALES	3130-1
3140	FRONT PIPING - BREAKER	CONDUITES FRONTALES	3140-1

● HYDRAULIC PARTS

Fig. 4100	MAIN PUMP	POMPE	4100-1
4110	SWING MOTOR	MOTEUR D'ORIENTATION	4110-1
4120	TRAVEL REDUCTION GEAR	BOITE REDUCTEUR	4120-1
4130	TRAVEL MOTOR	MOTEUR DE TRANSLATION	4130-1

(THIS PARTS BOOK IS FOR REFERENCE ONLY.
PART NUMBERS AND SERIAL NUMBERS MAY BE
OUTDATED. ALWAYS USE THE ONLINE PARTS SYSTEM)

4140	CONTROL VALVE	DISTRIBUTEUR	4140-1
4150	CENTER JOINT	JOINT CENTRAL	4150-1
4160	REMOCON VALVE	VANNE DE PILOTE	4160-1
4170	PEDAL VALVE	VANNE	4170-1
4171	PEDAL VALVE	VANNE	4171-1
4180	PEDAL VALVE	VANNE	4180-1
4190	REMOCON VALVE - DOZER	VANNE DE PILOTE	4190-1
4200	BOOM CYLINDER	VERIN DE FLECHE	4200-1
4210	ARM CYLINDER	VERIN DE BALANCIER	4210-1
4220	BUCKET CYLINDER	VERIN DE GODET	4220-1
4230	BOOM SWING CYLINDER	VERIN DE FLECHE	4230-1
4240	DOZER CYLINDER	CYLINDRE DE DOZER	4240-1
4250	BOOM CYLINDER - LOCK VALVE	VERIN DE FLECHE	4250-1
4260	ARM CYLINDER - LOCK VALVE	VERIN DE BALANCIER	4260-1

● OTHER PARTS

Fig. 5100	TOOLS	OUTILLAGE	5100-1
5110	SPARE PARTS	PIECES DE RECHANGE	5110-1
5120	NAME PLATE - EXPORT	PLAQUE D'IDENTIFICATION	5120-1
5130	NAME PLATE - EUROPE	PLAQUE D'IDENTIFICATION	5130-1
5140	DECAL - LIFTING CAPA	DECALQUE	5140-1
5150	DECAL - SERIAL(EUROPE)	DECAL	5150-1
5160	DECAL - ROPS(EUROPE) - CANOPY	DECALQUE	5160-1

● OPTION PARTS

Fig. 6100	COUNTER WEIGHT	MASSE D'EQUILIBRAGE	6100-1
6110	ACCUMULATOR	ACCUMULATEUR	6110-1
6120	ARM PIPING - ARM 1.3m	CONDUITES DE BALANCIER	6120-1
6130	FRONT PIPING - BREAKER(ARM 1.3m)	CONDUITES FRONTALES	6130-1
6140	PILOT PIPING - QUICK CLAMP	CONDUITES DE PILOTE	6140-1
6150	ELECTRIC PARTS - QUICK CLAMP	BRIDE RAPIDE	6150-1
6160	FRONT PIPING - QUICK CLAMP	CONDUITES DE FRONTALES	6160-1
6170	PILOT PIPING - TRAVEL ALARM	CONDUITES DE PILOTE	6170-1
6180	TRAVEL ALARM - ELECTRIC PARTS	ALARME DE VOYAGE	6180-1
6190	ELECTRIC PARTS - CABIN	PIECES ELECTRIQUES	6190-1
6200	WINDOW WASHER	RONDELLE DE FENETRE	6200-1

(THIS PARTS BOOK IS FOR REFERENCE ONLY.
PART NUMBERS AND SERAIL NUMBERS MAY BE
OUTDATED. ALWAYS USE THE ONLINE PARTS SYSTEM)

6210	ROTATING BEACON	FEU DE CIRCULATION	6210-1
6220	CAR STEREO	STEREO	6220-1
6230	CABIN LAMP	LAMPE	6230-1
6240	WORKING LAMP	LAMPE FONCTIONNANTE	6240-1
6250	HEATER - CABIN	CHAUFFAGE	6250-1
6260	HEATER	CHAUFFAGE	6260-1
6270	HEATER COVER	BOITIES DE CHAUFFAGE	6270-1
6280	HEATER PIPING	CONDUITES DE CHAUFFAGE	6280-1
6290	CABIN MOUNTING	SUPPORT DE CABINE	6290-1
6300	COVER - CABIN	CABINE DE COUVERCLE	6300-1
6310	MIRROR	MIROIR	6310-1
6320	FLOOR MAT - CABIN	CABINE DE PLANCHER	6320-1
6330	CABIN (1)	CABINE	6330-1
6340	CABIN (2)	CABINE	6340-1
6350	CABIN (3)	CABINE	6350-1
6360	CABIN (4)	CABINE	6360-1
6370	PILOT PIPING - PATTERN CHANGE(1)	CONDUITES DE PILOTE	6370-1
6380	PILOT PIPING - PATTERN CHANGE(2)	CONDUITES DE PILOTE	6380-1
6390	MAIN PIPING - QUICK CLAMP	CONDUITES DE BATI PRINCIPAL	6390-1
6400	PILOT PIPING - BOOM LOCK VALVE	CONDUITES DE PILOTE	6400-1
6410	PILOT PIPING - ARM LOCK VALVE	CONDUITES DE PILOTE	6410-1
6420	BOOM PIPING - LOCK VALVE	DONDUITER DE FLECHE	6420-1
6430	BOOM PIPING - ARM LOCK VALVE	TUYAUTERIE DE PERCHE	6430-1
6440	OVERLOAD WARNING	AVERTISSEMENT DE SURCHARGE	6440-1

● **WORLDWIDE NETWORK**

(THIS PARTS BOOK IS FOR REFERENCE ONLY.
PART NUMBERS AND SERAIL NUMBERS MAY BE
OUTDATED. ALWAYS USE THE ONLINE PARTS SYSTEM)

DATE	JAN. 04, 2013
3rd EDITION	

Fig. 001 CYLINDER BLOCK
BLOC CYLINDRE

Serial No. ;

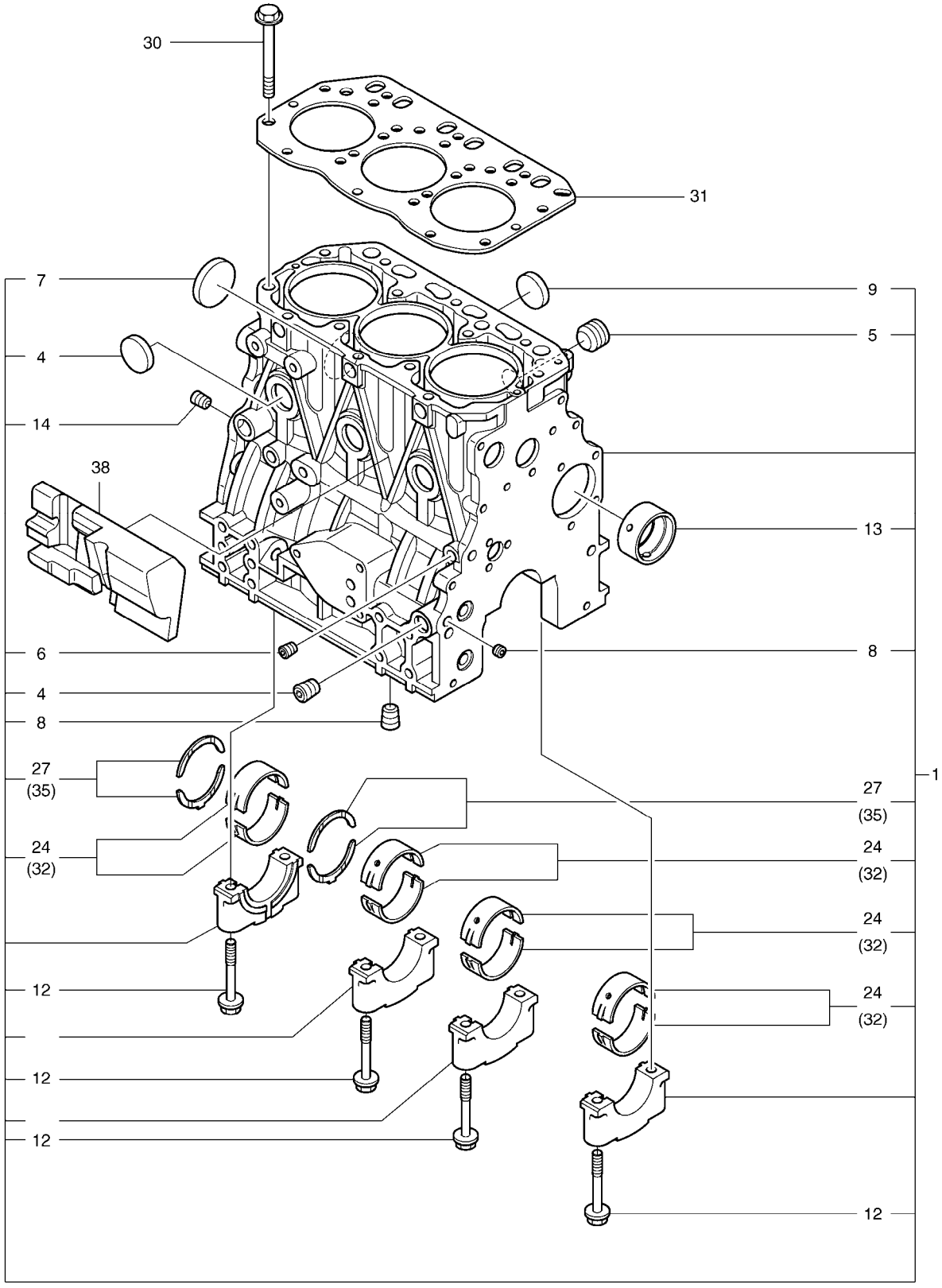

(THIS PARTS BOOK IS FOR REFERENCE ONLY.
PART NUMBERS AND SERAIL NUMBERS MAY BE
OUTDATED. ALWAYS USE THE ONLINE PARTS SYSTEM)

DATE	JAN. 04, 2013
3rd EDITION	

Fig. 001 CYLINDER BLOCK
BLOC CYLINDRE

Serial No. ;

Key No.	Part No.	Description	Description	Q'ty	S.C	Serial No.	ICA	Replaceable part	
								Part No.	Q'ty
001 -1	K9005223	CYLINDER BLOCK ASS'Y	ENSEMBLE DE BLOC CYLI	1					
4	K9004678	PLUG PT1/4	BOUCHON	2					
5	2.181-00306	PLUG	BOUCHON	1					
6	2.181-00163	PLUG PT1/8	BOUCHON	1					
7	K9004685	PLUG	BOUCHON	1					
8	K9004860	PLUG	BOUCHON	2					
9	2.181-00314	PLUG	BOUCHON	6					
12	K9005148	BOLT	BOULON	8					
13	K9004797	BUSH;CAMSHAFT	DOUILLE	1					
14	K9004678	PLUG PT1/4	BOUCHON	1					
24	K9005226	MAIN METAL SET	ENSEMBLE PRINCIPAL EN	4					
27	K9005186	WASHER;THRUST	RONDELLE DE BUTEE	1					
30	K9005182	BOLT;CYLINDER HEAD	BOULON	14					
31	K9005201	GASKET;HEAD	JOINT	1					
32	K9005185	MAIN METAL 0.25	ROULEMENT PRINCIPAL	4	US				
35	K9005187	WASHER;THRUST 0.25	ROULEMENT	2	OS				
38	K9005149	SPACER	DOUILLE D'ECARTEMENT	1					

(THIS PARTS BOOK IS FOR REFERENCE ONLY.
PART NUMBERS AND SERAIL NUMBERS MAY BE
OUTDATED. ALWAYS USE THE ONLINE PARTS SYSTEM)

DATE	JAN. 04, 2013
3rd EDITION	

Fig. 002 GEAR HOUSING
CARTER DE DISTRIBUTION

Serial No. ;

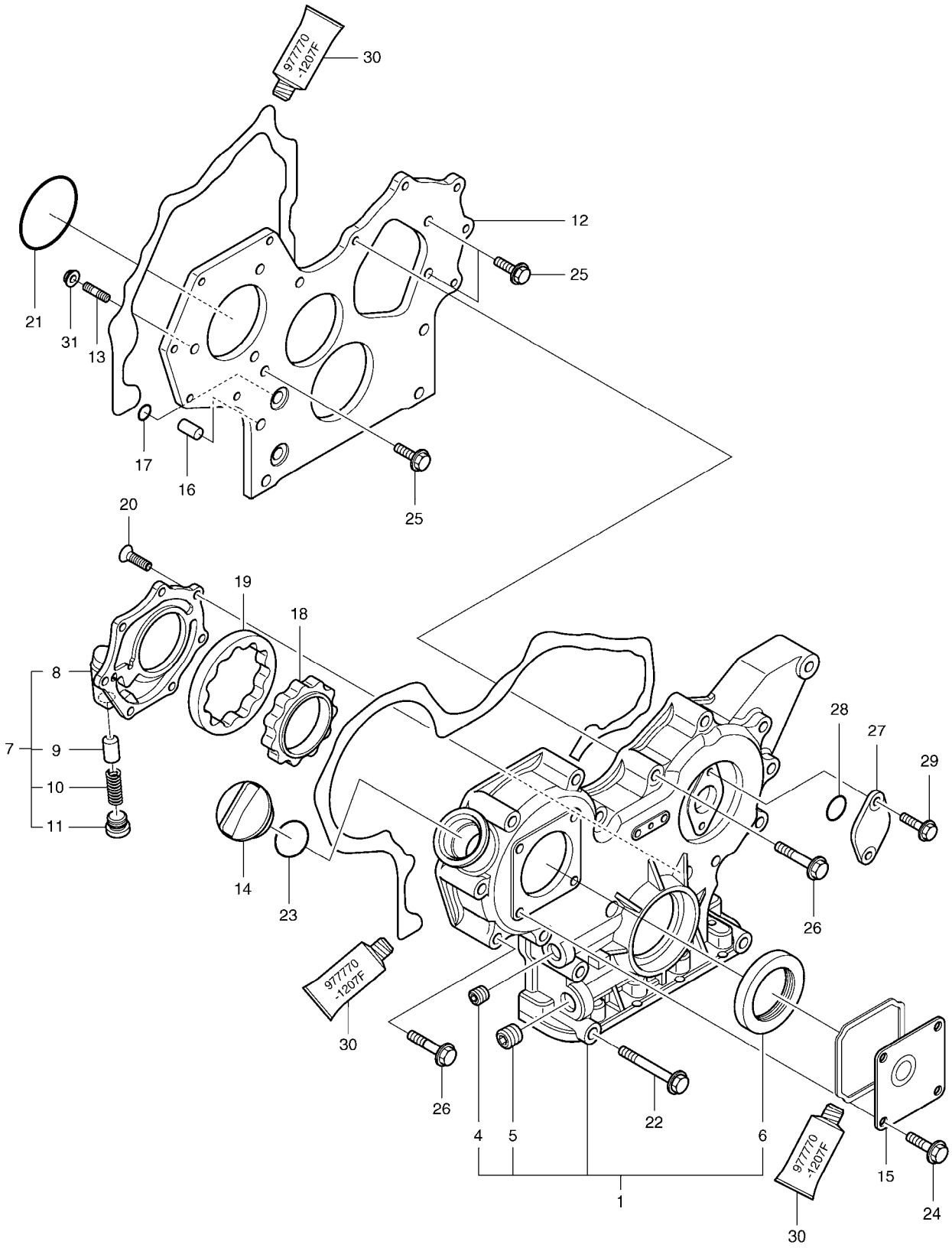

(THIS PARTS BOOK IS FOR REFERENCE ONLY.
PART NUMBERS AND SERAIL NUMBERS MAY BE
OUTDATED. ALWAYS USE THE ONLINE PARTS SYSTEM)

DATE	JAN. 04, 2013
3rd EDITION	

Fig. 002 GEAR HOUSING
CARTER DE DISTRIBUTION

Serial No. ;

Key No.	Part No.	Description	Description	Q'ty	S.C	Serial No.	ICA	Replaceable part	
								Part No.	Q'ty
002 -1	K9004864	GEAR HOUSING ASS'Y	CARTER DE PINGNON	1					
4	2181-1116D3	PLUG;HEX. SOCKET	BOUCHON	1					
5	K9004849	PLUG PT1/2	BOUCHON	1					
6	K9004667	SEAL;OIL	JOINT	1					
7	K9004646	PUMP COVER ASS'Y	COUVERCLE DE POMPE	1					
8	K9004645	COVER;LUB.OIL PUMP	COUVERCLE	1					
9	K9004801	VALVE;RELIEF	VANNE	1					
10	K9004777	SPRING	RESSORT	1					
11	K9004689	PLUG	BOUCHON	1					
12	K9004631	FLANGE;GEAR CASE	BRIDE	1					
13	K9004632	STUD	BOULON	3					
14	D460483	CAP;FILLER	COUVERCLE	1					
15	2.304-00001	COVER	COUVERCLE	1					
16	K9004796	PIPE	TUYAU	2					
17	K9004606	O-RING	JOINT TORIQUE	4					
18	K9004647	ROTOR;INNER	ROTOR INTERIEUR	1					
19	K9004648	ROTOR;OUTER	ROTOR EXTERNE	1					
20	K9004649	SCREW	VIS	7					
21	K9004676	O-RING	JOINT TORIQUE	1					
22	K9004690	BOLT M8X85	BOULON	3					
23	S8000320	O-RING	JOINT TORIQUE	1					
24	2.120-00136	BOLT;PLATED M8X16	BOULON	4					
25	2.120-00136	BOLT;PLATED M8X16	BOULON	3					
26	2.120-00148	BOLT;PLATED M8X55	BOULON	12					
27	K9004671	COVER;BLIND	COUVERCLE	1					
28	2.180-00355	O-RING	JOINT TORIQUE	1					
29	2.120-00029	BOLT M6X16	BOULON	2					
30	K9004868	GASKET;LIQUID	JOINT	1					
31	2.121-00267	NUT	ECROU	3					

(THIS PARTS BOOK IS FOR REFERENCE ONLY.
PART NUMBERS AND SERAIL NUMBERS MAY BE
OUTDATED. ALWAYS USE THE ONLINE PARTS SYSTEM)

DATE	JAN. 04, 2013
3rd EDITION	

Fig. 003 FLYWHEEL HOUSING & OIL PAN
CARTER DE VOLANT MOTEUR

Serial No. ;

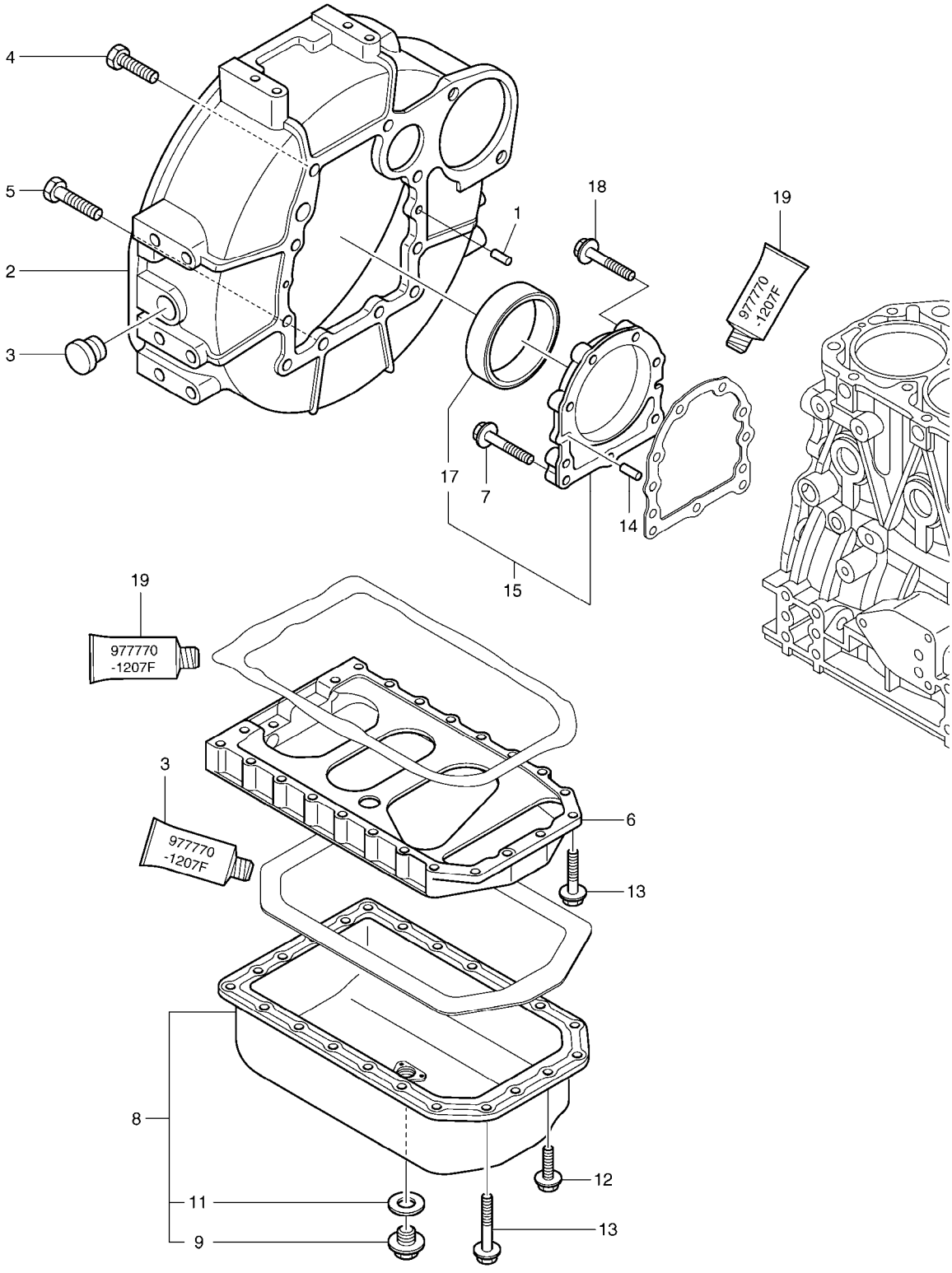

(THIS PARTS BOOK IS FOR REFERENCE ONLY.
PART NUMBERS AND SERAIL NUMBERS MAY BE
OUTDATED. ALWAYS USE THE ONLINE PARTS SYSTEM)

DATE	JAN. 04, 2013
3rd EDITION	

Fig. 003 FLYWHEEL HOUSING & OIL PAN
CARTER DE VOLANT MOTEUR

Serial No. ;

Key No.	Part No.	Description	Description	Q'ty	S.C	Serial No.	ICA	Replaceable part	
								Part No.	Q'ty
003 -1	S5701041	PIN;PARALLEL	GOUPILLE	2					
2	K9004785	HOUSING;FLYWHEEL	LOGEMENT	1					
3	2.430-00083	CAP;FLYWHEEL COVER	CHAPEAU	1					
4	2.120-00037	BOLT M10X25	BOULON	6					
5	K9004856	BOLT M10X30	BOULON	4					
6	K9005183	SPACER;OIL SUMP	ENTERTOISE	1					
7	2.120-00145	BOLT M8X35	BOULON	3					
8	K9006308	PAN;OIL	CAOUTCHOUC	1					
9	2.181-00355	PLUG;DRAIN	BOUCHON	1					
11	2.180-00910	SEAL;WASHER	BAGUE D`ETANCHEITE	1					
12	2.120-00136	BOLT;PLATED M8X16	BOULON	6					
13	2.120-00044	BOLT M8X45	BOULON	22					
14	S5701041	PIN;PARALLEL	GOUPILLE	2					
15	K9004723	CASE ASS'Y	CARTER	1					
17	D460678	SEAL;OIL	JOINT	1					
18	K9004781	BOLT M8X30	BOULON	6					
19	K9004868	GASKET;LIQUID	JOINT	1					

(THIS PARTS BOOK IS FOR REFERENCE ONLY.
PART NUMBERS AND SERAIL NUMBERS MAY BE
OUTDATED. ALWAYS USE THE ONLINE PARTS SYSTEM)

DATE	JAN. 04, 2013
3rd EDITION	

Fig. 004 CYLINDER HEAD & COVER
COUVERTURE DE CULASSE

Serial No. ;

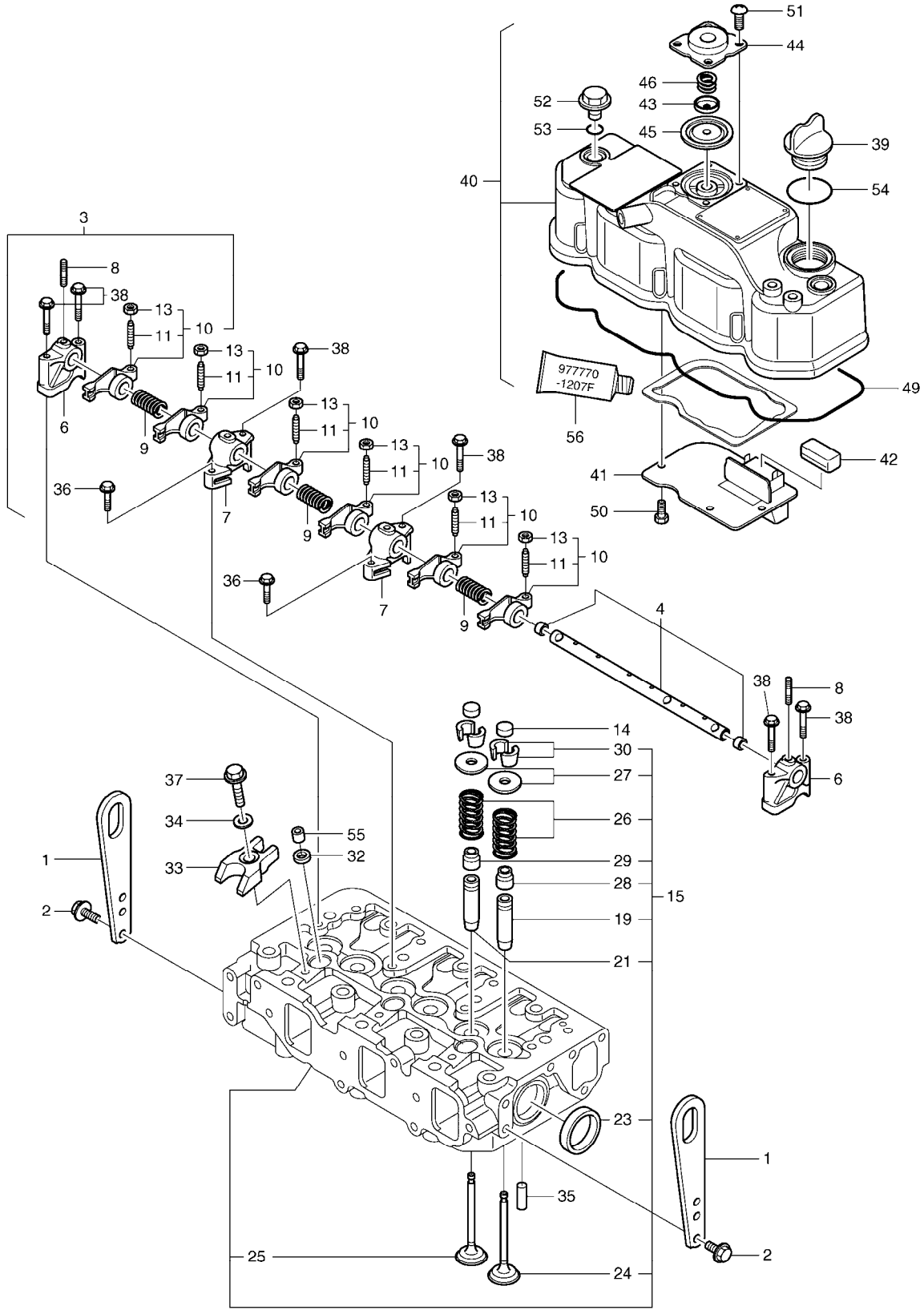

(THIS PARTS BOOK IS FOR REFERENCE ONLY.
PART NUMBERS AND SERAIL NUMBERS MAY BE
OUTDATED. ALWAYS USE THE ONLINE PARTS SYSTEM)

DATE	JAN. 04, 2013
3rd EDITION	

Fig. 004 CYLINDER HEAD & COVER
COUVERTURE DE CULASSE

Serial No. ;

Key No.	Part No.	Description	Description	Q'ty	S.C	Serial No.	ICA	Replaceable part	
								Part No.	Q'ty
004 -1	2.197-00046	LIFTER;ENGINE	POUSSOIR	2					
2	2.120-00136	BOLT;PLATED M8X16	BOULON	4					
3	K9005154	ROCKER ARM SHAFT ASS'Y	BRAS DE CULBUTEUR	1					
4	K9005155	SHAFT;ROCKER ARM	ARBRE	1					
6	K9004637	SUPPORT;ROCKER ARM	SUPPORT	2					
7	K9004638	SUPPORT;ROCKER ARM	SUPPORT	2					
8	K9004639	STUD	BOULON	3					
9	K9004742	SPRING	RESSORT	3					
10	K9005159	ROCKER ARM ASS'Y	BRAS DE CULBUTEUR	6					
11	2.120-00694	SCREW;VALVE	VIS	6					
13	2.121-00084	NUT	ECROU	6					
14	K9005147	CAP;VALVE	CHAPEAU	6					
15	K9005160	CYLINDER HEAD ASS'Y	CULLASSE	1					
19	K9005208	GUIDE;VALVE	GUIDE	3					
21	K9005161	GUIDE;VALVE	GUIDE	3					
23	2.181-00308	PLUG	BOUCHON	2					
24	K9005152	VALVE;INTAKE	SOUPAPE D'ADMISSION	3					
25	K9005153	VALVE;EXHAUST	VANNE	3					
26	K9005188	SPRING;VALVE	RESSORT	6					
27	K9005146	RETAINER;SPRING	ARRETOIR	6					
28	2.180-01240	SEAL;VALVE STEM	JOINT	3					
29	2.180-01241	SEAL;VALVE STEM (EXHAUST)	JOINT	3					
30	2.217-00072	COTTER ASS'Y	CLAVETTE	6					
32	2.427-00018	SEAT;NOZZLE	SIEGE	3					
33	K9005162	RETAINER;NOZZLE	ARRETOIR	3					
34	K9004670	WASHER	RONDELLE	3					
35	S5740860	PIN;SPRING	GOUPILLE	2					
36	K9004854	BOLT M8X25	BOULON	2					
37	2.120-00044	BOLT M8X45	BOULON	3					
38	K9004855	BOLT M8X50	BOULON	6					
39	D460483	CAP;FILLER	COUVERCLE	1					
40	K9005158	CYL.HEAD COVER ASS'Y	CULASSE	1					
41	K9005150	PLATE;BAFFLE	PLAQUE	1					
42	K9004741	BAFFLE;BREATHER	CLOISON DE RENIFLARD	1					
43	K9004633	PLATE;DIAPHRAGM	PLAQUE	1					
44	K9004634	COVER;DIAPHRAGM	COUVERCLE	1					
45	K9004635	DIAPHRAGM	DIAPHRAGME	1					
46	K9004636	SPRING;DIAPHRAGM	RESSORT	1					

(THIS PARTS BOOK IS FOR REFERENCE ONLY.
PART NUMBERS AND SERIAL NUMBERS MAY BE
OUTDATED. ALWAYS USE THE ONLINE PARTS SYSTEM)

DATE	JAN. 04, 2013
3rd EDITION	

Fig. 004 CYLINDER HEAD & COVER
COUVERTURE DE CULASSE

Serial No. ;

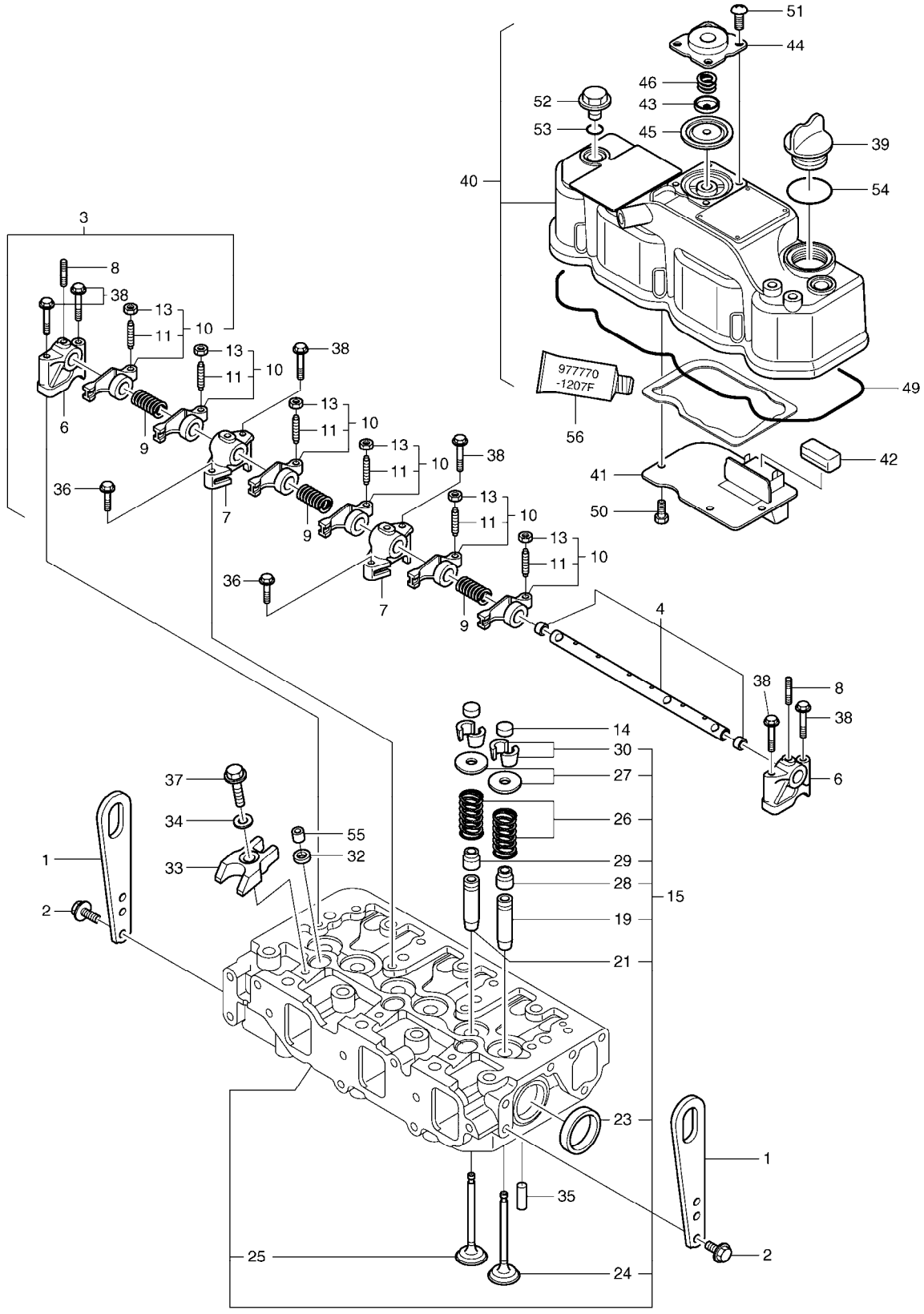

(THIS PARTS BOOK IS FOR REFERENCE ONLY.
PART NUMBERS AND SERAIL NUMBERS MAY BE
OUTDATED. ALWAYS USE THE ONLINE PARTS SYSTEM)

DATE	JAN. 04, 2013
3rd EDITION	

Fig. 004 CYLINDER HEAD & COVER
COUVERTURE DE CULASSE

Serial No. ;

Key No.	Part No.	Description	Description	Q'ty	S.C	Serial No.	ICA	Replaceable part	
								Part No.	Q'ty
004 -49	K9005156	GASKET;COVER	JOINT	1					
50	2.120-00496	SCREW	VIS	4					
51	2.120-00496	SCREW	VIS	4					
52	2.132-00005	KNOB	BOUTON	3					
53	S8000120	O-RING	JOINT TORIQUE	3					
54	S8000320	O-RING	JOINT TORIQUE	1					
55	2.158-00004	PROTECTOR;NOZZLE	PROTECTEUR	3					
56	K9004868	GASKET;LIQUID	JOINT	1					

(THIS PARTS BOOK IS FOR REFERENCE ONLY.
PART NUMBERS AND SERAIL NUMBERS MAY BE
OUTDATED. ALWAYS USE THE ONLINE PARTS SYSTEM)

DATE	JAN. 04, 2013
3rd EDITION	

Fig. 005 INTAKE MANIFOLD TUBULURE D'CENTREE

Serial No. ;

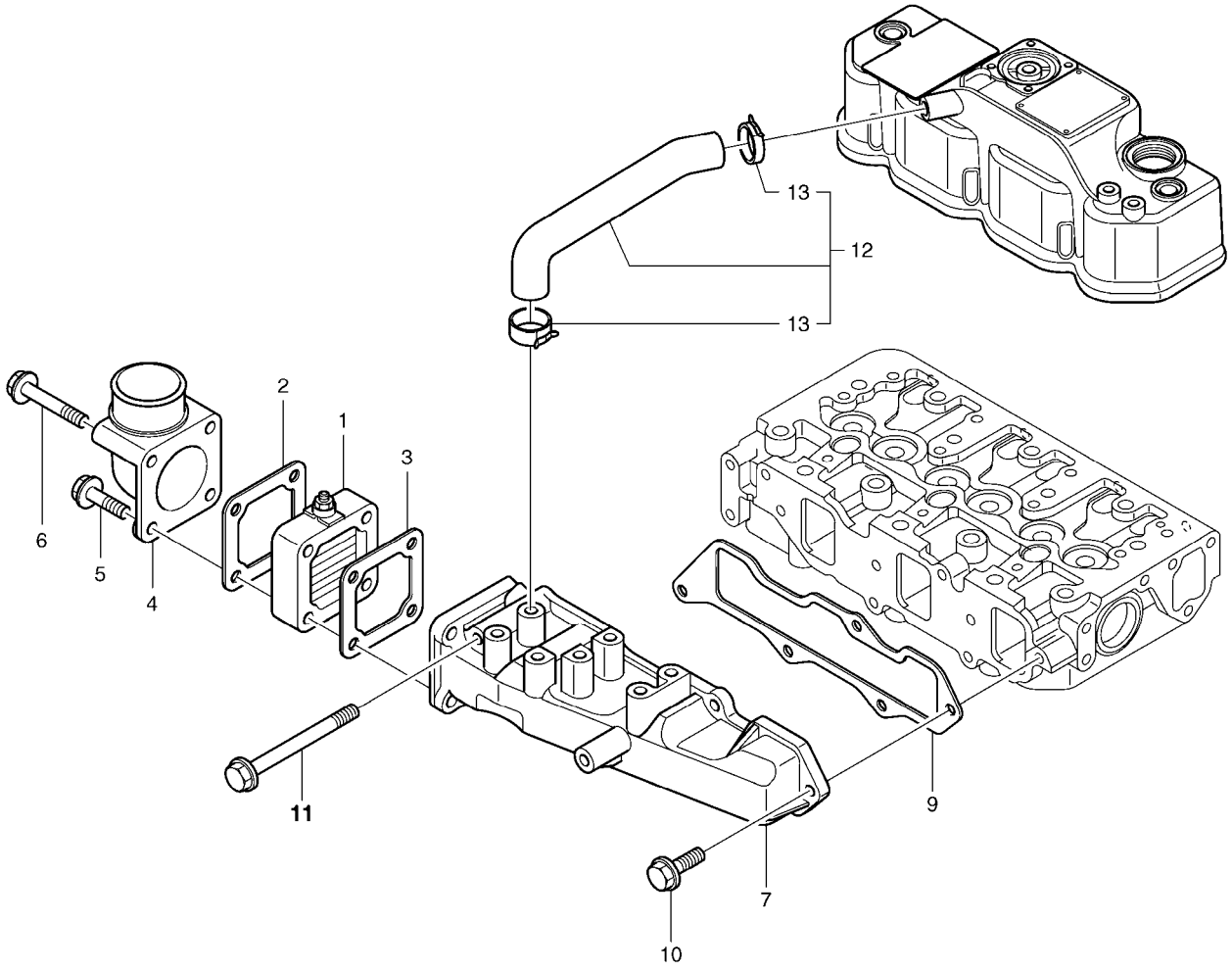

(THIS PARTS BOOK IS FOR REFERENCE ONLY.
PART NUMBERS AND SERAIL NUMBERS MAY BE
OUTDATED. ALWAYS USE THE ONLINE PARTS SYSTEM)

DATE	JAN. 04, 2013
3rd EDITION	

Fig. 005 INTAKE MANIFOLD TUBULURE D'CENTREE

Serial No. ;

Key No.	Part No.	Description	Description	Q'ty	S.C	Serial No.	ICA	Replaceable part	
								Part No.	Q'ty
005 -1	K9005211	HEATER;AIR	RECHAUFFEUR	1					
2	K9004732	GASKET;AIR HEATER	JOINT	1					
3	K9004753	GASKET	JOINT	1					
4	K9004836	BEND	COURBURE	1					
5	2.120-00139	BOLT;PLATED M8X40	BOULON	2					
6	2.120-00146	BOLT M8X80	BOULON	2					
7	K9005163	MAINFOLD;INTAKE	MAINFOLD	1					
9	K9005203	GASKET;INT.MANIFOLD	JOINT	1					
10	2.120-00137	BOLT M8X20	BOULON	4					
11	2.120-00146	BOLT M8X80	BOULON	2					
12	K9005151	PIPE;BREATHER	TUYAU	1					
13	K9004776	CLAMP	BRIDE	2					

(THIS PARTS BOOK IS FOR REFERENCE ONLY.
PART NUMBERS AND SERAIL NUMBERS MAY BE
OUTDATED. ALWAYS USE THE ONLINE PARTS SYSTEM)

DATE	JAN. 04, 2013
3rd EDITION	

Fig. 006 EXHAUST MANIFOLD & MUFFLER
TUBULURE ET SILENCIEUX D'ECHAPPEMENT

Serial No. ;

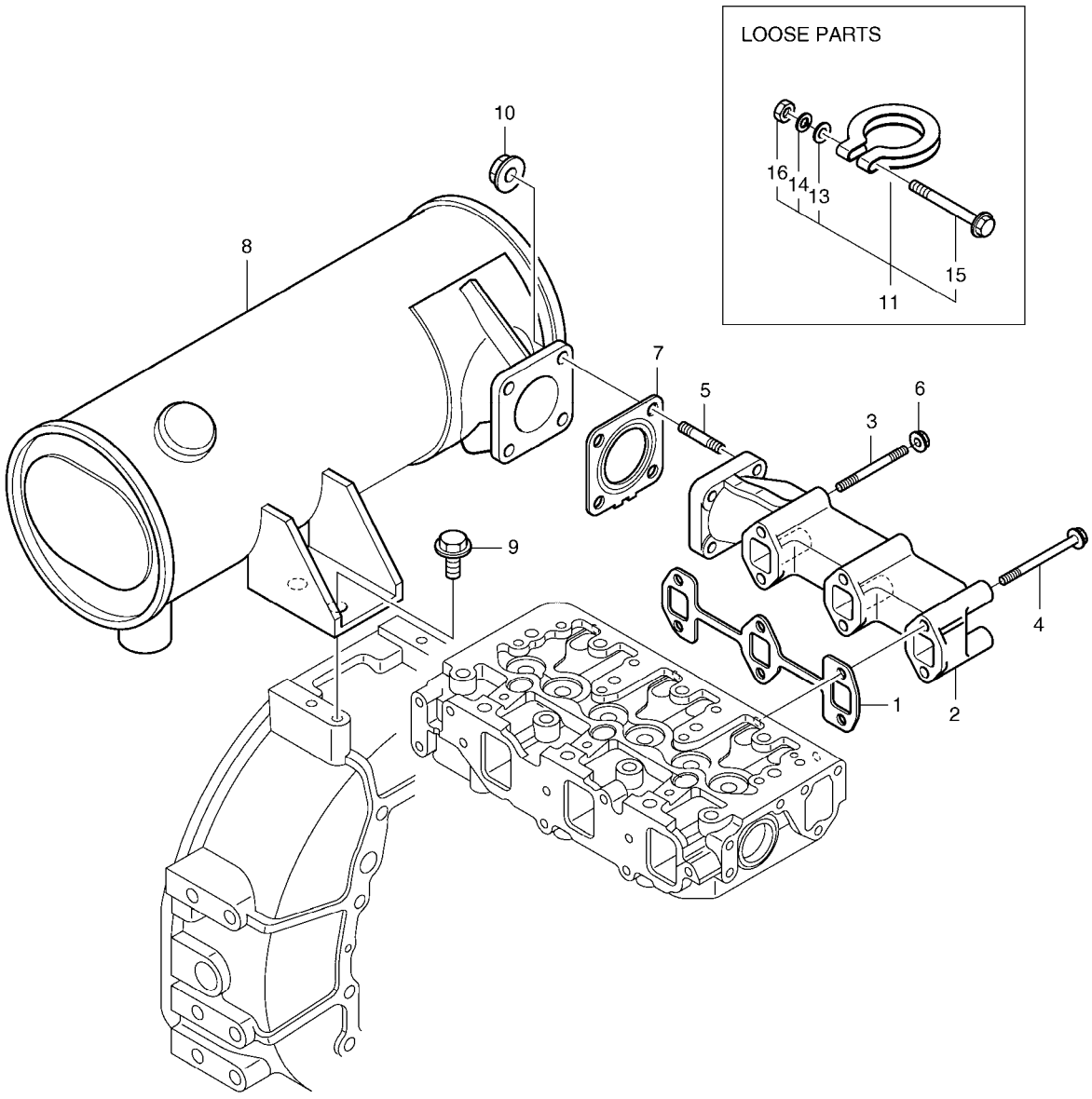

(THIS PARTS BOOK IS FOR REFERENCE ONLY.
PART NUMBERS AND SERAIL NUMBERS MAY BE
OUTDATED. ALWAYS USE THE ONLINE PARTS SYSTEM)

DATE	JAN. 04, 2013
3rd EDITION	

Fig. 006 EXHAUST MANIFOLD & MUFFLER
TUBULURE ET SILENCIEUX D'ECHAPPEMENT

Serial No. ;

Key No.	Part No.	Description	Description	Q'ty	S.C	Serial No.	ICA	Replaceable part	
								Part No.	Q'ty
006 -1	K9005189	GASKET;EXHAUST MANIFOLD	JOINT	1					
2	K9005164	MANIFOLD;EXHAUST	COLLECTEUR	1					
3	2.120-00856	BOLT;STUD	BOULON	2					
4	2.120-00855	BOLT M8X80	BOULON	4					
5	2.120-00147	BOLT M8X22	BOULON	4					
6	2.121-00267	NUT	ECROU	2					
7	K9004704	GASKET;MUFFLER	JOINT	1					
8	K9005213	MUFFLER	SILENCIEUX	1					
9	2.120-00862	BOLT M10X20	BOULON	2					
10	2.121-00267	NUT	ECROU	4					
11	K9004672	CLAMP	BRIDE	1					
13	K9004837	WASHER	RONDELLE	1					
14	K9004842	WASHER;SPRING	RONDELLE ELASTIQUE	1					
15	2.120-00144	BOLT M10X65	BOULON	1					
16	K9004858	NUT	ECROU	1					

(THIS PARTS BOOK IS FOR REFERENCE ONLY.
PART NUMBERS AND SERAIL NUMBERS MAY BE
OUTDATED. ALWAYS USE THE ONLINE PARTS SYSTEM)

DATE	JAN. 04, 2013
3rd EDITION	

Fig. 007 CAMSHAFT & DRIVING GEAR
ARBRE DE CAME

Serial No. ;

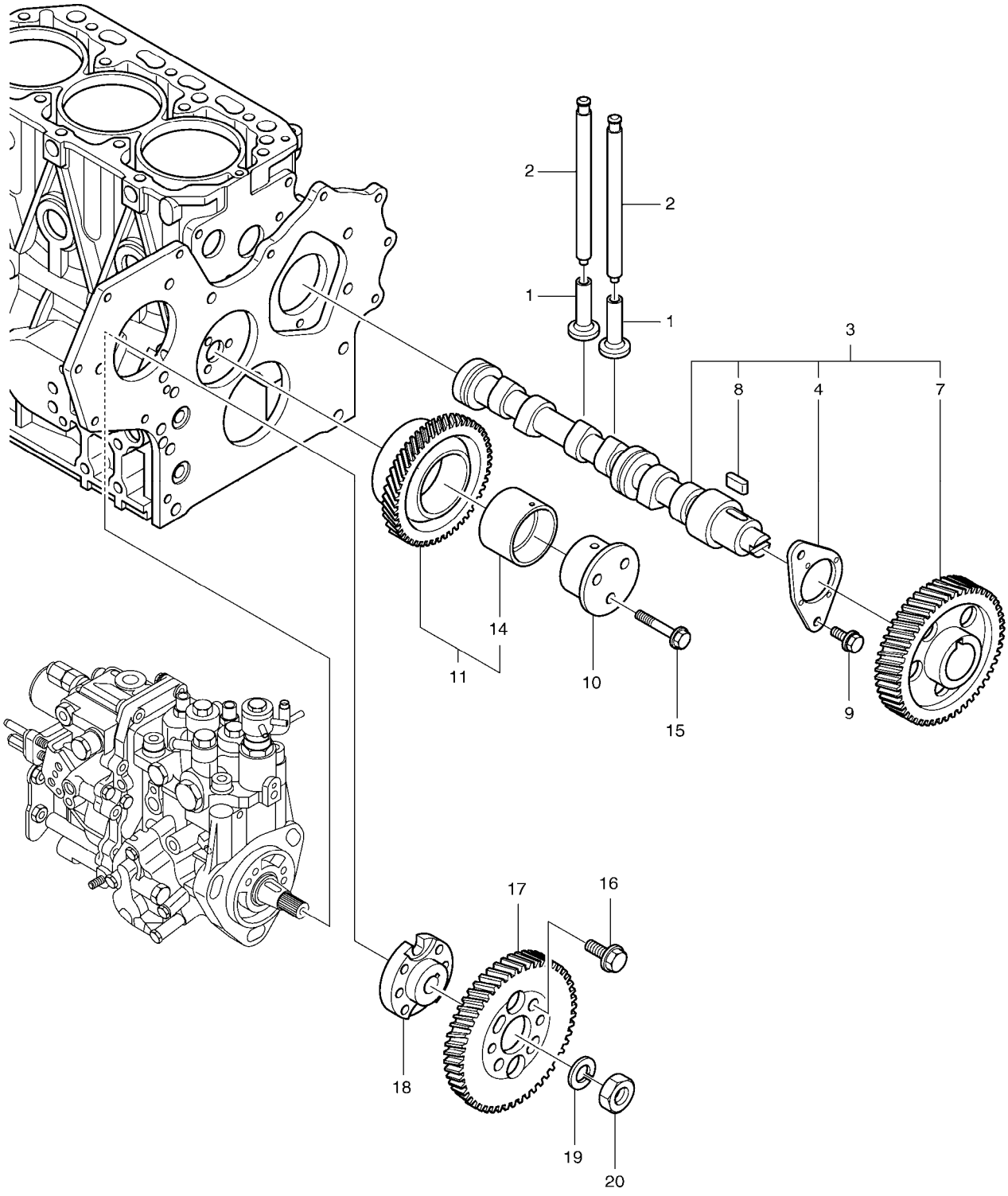

(THIS PARTS BOOK IS FOR REFERENCE ONLY.
PART NUMBERS AND SERAIL NUMBERS MAY BE
OUTDATED. ALWAYS USE THE ONLINE PARTS SYSTEM)

DATE	JAN. 04, 2013
3rd EDITION	

Fig. 007 CAMSHAFT & DRIVING GEAR
ARBRE DE CAME

Serial No. ;

Key No.	Part No.	Description	Description	Q'ty	S.C	Serial No.	ICA	Replaceable part	
								Part No.	Q'ty
007 -1	2.429-00133	TAPPET	TRINGLERIE	6					
2	K9005191	ROD;PUSH	TIGE DE POUSSOIR	6					
3	K9005165	CAMSHAFT ASS'Y	ENSEMBLE DE ARBRE A C/	1					
4	2.177-00050	METAL;THRUST	METAL	1					
7	K9004744	GEAR;CAMSHAFT	PIGNON	1					
8	2.113-00005	KEY	CLE	1					
9	2.120-00041	BOLT M8X14	BOULON	2					
10	K9004641	SHAFT;IDLE GEAR	ARBRE	1					
11	K9004643	IDLE GEAR ASS'Y	VITESSE A VIDE	1					
14	K9004642	BUSH;IDLE GEAR	DOUILLE	1					
15	2.120-00139	BOLT;PLATED M8X40	BOULON	3					
16	K9004748	BOLT	BOULON	4					
17	K9004644	GEAR;PUMP	PIGNON	1					
18	K9004804	FLANGE	BRIDE	1					
19	K9004843	WASHER;SPRING	RONDELLE ELASTIQUE	1					
20	K9004859	NUT;LOCK	ECROU	1					

(THIS PARTS BOOK IS FOR REFERENCE ONLY.
PART NUMBERS AND SERAIL NUMBERS MAY BE
OUTDATED. ALWAYS USE THE ONLINE PARTS SYSTEM)

DATE	JAN. 04, 2013
3rd EDITION	

Fig. 008 CRANKSHAFT & PISTON
VILEBREQUIN & PISTON

Serial No. ;

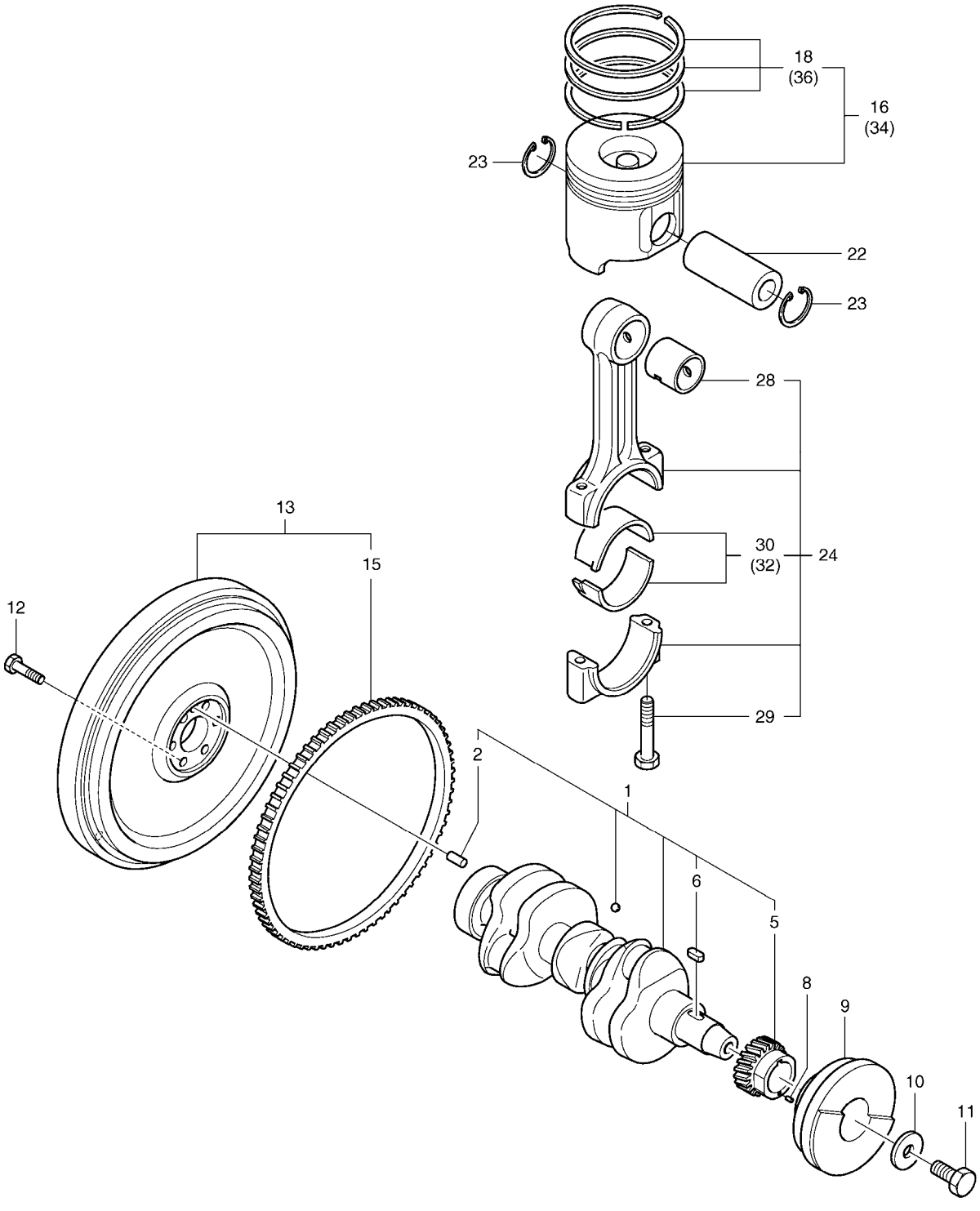

(THIS PARTS BOOK IS FOR REFERENCE ONLY.
PART NUMBERS AND SERAIL NUMBERS MAY BE
OUTDATED. ALWAYS USE THE ONLINE PARTS SYSTEM)

DATE	JAN. 04, 2013
3rd EDITION	

Fig. 008 CRANKSHAFT & PISTON
VILEBREQUIN & PISTON

Serial No. ;

Key No.	Part No.	Description	Description	Q'ty	S.C	Serial No.	ICA	Replaceable part	
								Part No.	Q'ty
008 -1	K9005166	CRANKSHAFT ASS'Y	VILEBREQUIN	1					
2	S5701041	PIN;PARALLEL	GOUPILLE	1					
5	K9004640	GEAR;CRANKSHAFT	PIGNON	1					
6	2.113-00005	KEY	CLE	1					
8	S5740490	PIN;SPRING	GOUPILLE	1					
9	K9005167	PULLEY;CRANKSHAFT	POULIE	1					
10	K9004799	WASHER	RONDELLE	1					
11	2.120-00858	BOLT;V-PULLEY	BOULON	1					
12	2.120-00225	BOLT;FLYWHEEL	BOULON	6					
13	K9005217	FLYWEEL ASS'Y	FLYWEEL	1					
15	K9004666	GEAR;RING	PIGNON	1					
16	K9005168	PISTON ASS'Y	ENSEMBLE PISTON	3					
18	K9005169	PISTON RING SET	BAGUE	3					
22	K9005205	PIN;PISTON	GOUPILLE	3					
23	K9005221	RING	BAGUE	6					
24	K9005227	CONNECTING ROD ASS'Y	BIELLE ASS'Y	3					
28	K9005195	BUSH;PISTON PIN	DOUILLE	3					
29	K9005192	BOLT;CONNECTING ROD	BOULON	6					
30	K9005193	METAL;CRANK	METAL	3					
32	K9005194	METAL;CRANK (0.25)	METAL DETRAQUE	3	US				
34	K9005224	PISTON;W/RING (0.25)	PISTON	3	OS				
36	K9005225	RING;SET (0.25)	BAGUE	3	OS				

(THIS PARTS BOOK IS FOR REFERENCE ONLY.
PART NUMBERS AND SERAIL NUMBERS MAY BE
OUTDATED. ALWAYS USE THE ONLINE PARTS SYSTEM)

DATE	JAN. 04, 2013
3rd EDITION	

Fig. 009 LUB.OIL SYSTEM SYSTEME D'HUILE

Serial No. ;

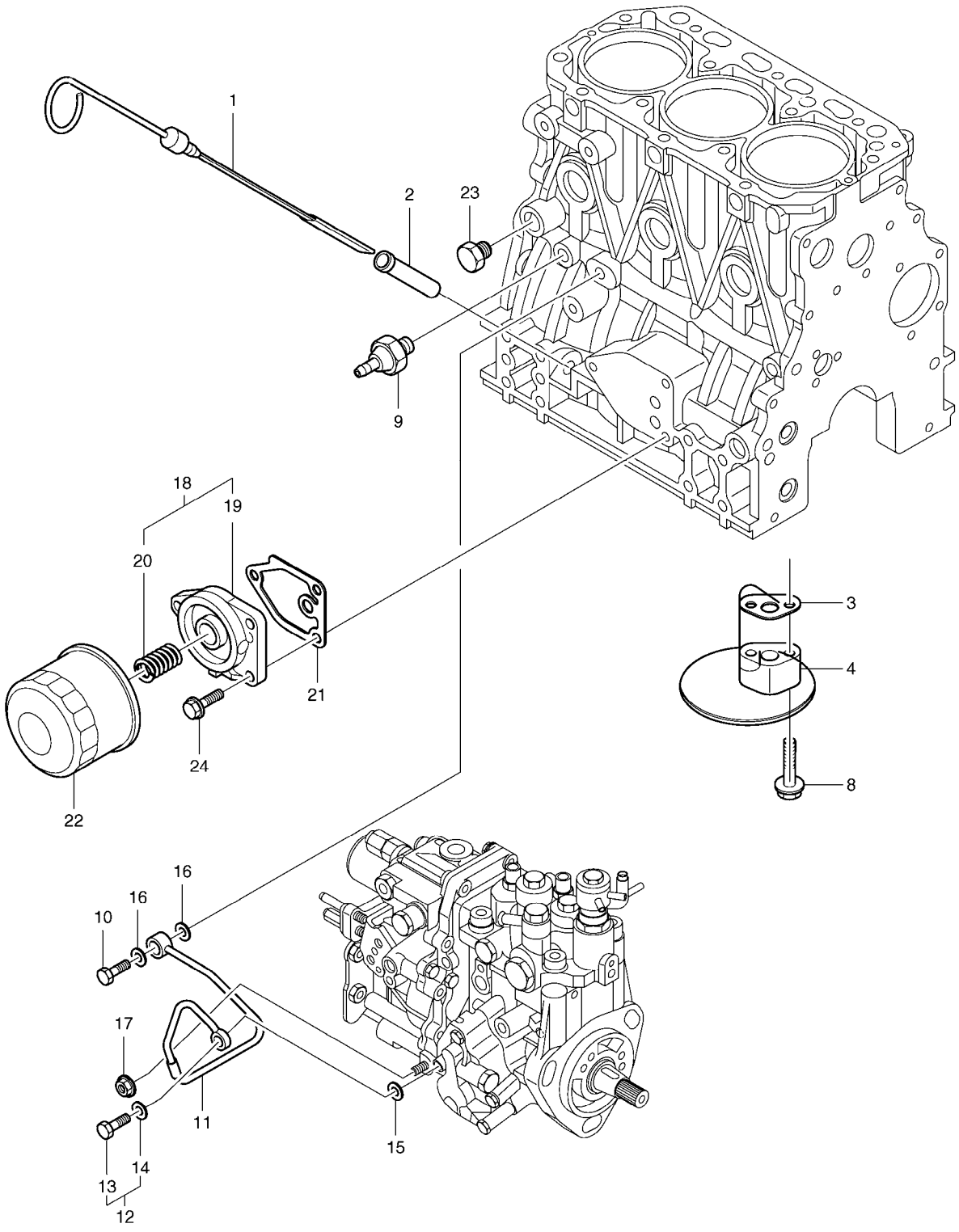

(THIS PARTS BOOK IS FOR REFERENCE ONLY.
PART NUMBERS AND SERAIL NUMBERS MAY BE
OUTDATED. ALWAYS USE THE ONLINE PARTS SYSTEM)

DATE	JAN. 04, 2013
3rd EDITION	

Fig. 009 LUB.OIL SYSTEM SYSTEME D'HUILE

Serial No. ;

Key No.	Part No.	Description	Description	Q'ty	S.C	Serial No.	ICA	Replaceable part	
								Part No.	Q'ty
009 -1	K9005170	DIPSTICK;LUB.OIL	JAUGEUR	1					
2	2.429-00043	GUIDE;OIL GAUGE	GUIDE	1					
3	K9004749	GASKET	JOINT	1					
4	K9005196	PIPE ASS'Y;OIL INLET	ENSEMBLE DE TUYAU	1					
8	2.120-00145	BOLT M8X35	BOULON	2					
9	2.549-00005	SWITCH;OIL PRESS	COMMUTATEUR	1					
10	K9004679	BOLT	BOULON	1					
11	K9004651	PIPE ASS'Y;LUB.OIL	ENSEMBLE DE TUYAU	1					
12	2.313-00001	BOLT ASS'Y;JOINT	BOULON	1					
13	2.120-00258	BOLT;JOINT	BOULON	1					
14	2.114-00889	WASHER;SEAL	RONDELLE	1					
15	2.114-00889	WASHER;SEAL	RONDELLE	1					
16	K9004838	SEAL;WASHER	BAGUE D'ETANCHEITE	2					
17	2.121-00092	NUT	ECROU	1					
18	K9004650	BRACKET ASS'Y;FILTER	SUPPORT	1					
19	K9005171	BRACKET;FILTER	SUPPORT	1					
20	K9004727	STUD	BOULON	1					
21	K9004750	GASKET	JOINT	1					
22	K1025334	FILTER;OIL	FILTRE	1					
23	2.181-00353	PLUG;DRAIN	BOUCHON	1					
24	2.120-00137	BOLT M8X20	BOULON	3					

(THIS PARTS BOOK IS FOR REFERENCE ONLY.
PART NUMBERS AND SERAIL NUMBERS MAY BE
OUTDATED. ALWAYS USE THE ONLINE PARTS SYSTEM)

DATE	JAN. 04, 2013
3rd EDITION	

Fig. 010 COOLING WATER SYSTEM
SYSTEME DE REFROIDISSEMENT

Serial No. ;

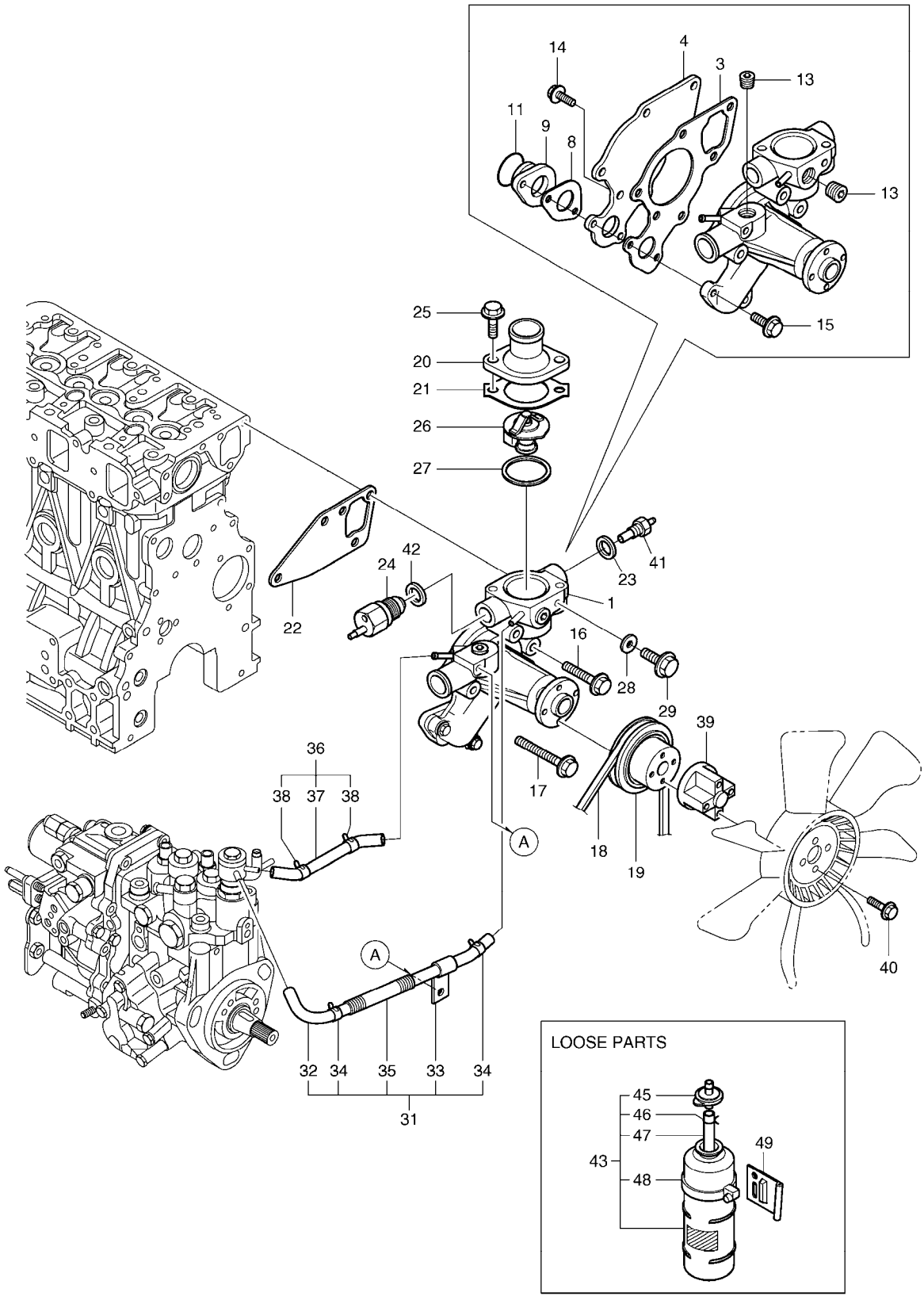

(THIS PARTS BOOK IS FOR REFERENCE ONLY.
PART NUMBERS AND SERAIL NUMBERS MAY BE
OUTDATED. ALWAYS USE THE ONLINE PARTS SYSTEM)

DATE	JAN. 04, 2013
3rd EDITION	

Fig. 010 COOLING WATER SYSTEM
SYSTEME DE REFROIDISSEMENT

Serial No. ;

Key No.	Part No.	Description	Description	Q'ty	S.C	Serial No.	ICA	Replaceable part	
								Part No.	Q'ty
010 -1	K9005172	WATER PUMP ASS'Y	ENSEMBLE POMPE A EAU	1					
3	K9005197	GASKET	JOINT	1					
4	K9005198	PLATE	PLAQUE	1					
8	K9005199	GASKET	JOINT	1					
9	K9005200	PIPE	TUYAU	1					
11	K9005210	O-RING	JOINT TORIQUE	1					
13	2181-1116D3	PLUG;HEX. SOCKET	BOUCHON	2					
14	K9002144	BOLT M6X14	BOULON	2					
15	2.120-00150	BOLT M6X20	BOULON	2					
16	2.120-00145	BOLT M8X35	BOULON	1					
17	2.120-00148	BOLT;PLATED M8X55	BOULON	3					
18	DS3202026	BELT;FAN	COURROIE	1					
19	K9005967	PULLEY	POULIE	1					
20	K9004773	COVER;THERMOSTAT	COUVERCLE	1					
21	D465096	GASKET	JOINT	1					
22	K9005215	GASKET	JOINT	1					
23	2.180-00054	GASKET	JOINT	1					
24	2.549-00027	SWITCH;THERMO	COMMUTATEUR	1					
25	2.120-00861	BOLT M8X22	BOULON	2					
26	K9004754	THERMOSTAT	THERMOSTAT	1					
27	K9004751	GASKET	JOINT	1					
28	2.180-00100	GASKET	JOINT	1					
29	2.120-00143	BOLT M8X12	BOULON	1					
31	K9005173	PIPE ASS'Y	ENSEMBLE DE TUYAU	1					
32	K9005175	PIPE ASS'Y	ENSEMBLE DE TUYAU	1					
33	K9004653	CLAMP	BRIDE	1					
34	2.124-00086	CLAMP	BRIDE	2					
35	K9005178	TUBE;CORRUGATED	TUYAU FLEXIBLE	1					
36	K9005174	PIPE ASS'Y	ENSEMBLE DE TUYAU	1					
37	K9005176	PIPE;WATER	TUYAU	1					
38	2.124-00086	CLAMP	BRIDE	2					
39	K9005968	SPACER	DOUILLE D'ECARTEMENT	1					
40	2.120-00150	BOLT M6X20	BOULON	4					
41	2.549-00029	THERMOMETER	THERMOMETRE	1					
42	180-00222	GASKET	JOINT	1					
43	K9004681	TANK;RESERVE	RESERVOIR	1					
45	K9004682	CAP	CHAPEAU	1					
46	K9004684	CLAMP	BRIDE	1					

(THIS PARTS BOOK IS FOR REFERENCE ONLY.
PART NUMBERS AND SERIAL NUMBERS MAY BE
OUTDATED. ALWAYS USE THE ONLINE PARTS SYSTEM)

DATE	JAN. 04, 2013
3rd EDITION	

Fig. 010 COOLING WATER SYSTEM
SYSTEME DE REFROIDISSEMENT

Serial No. ;

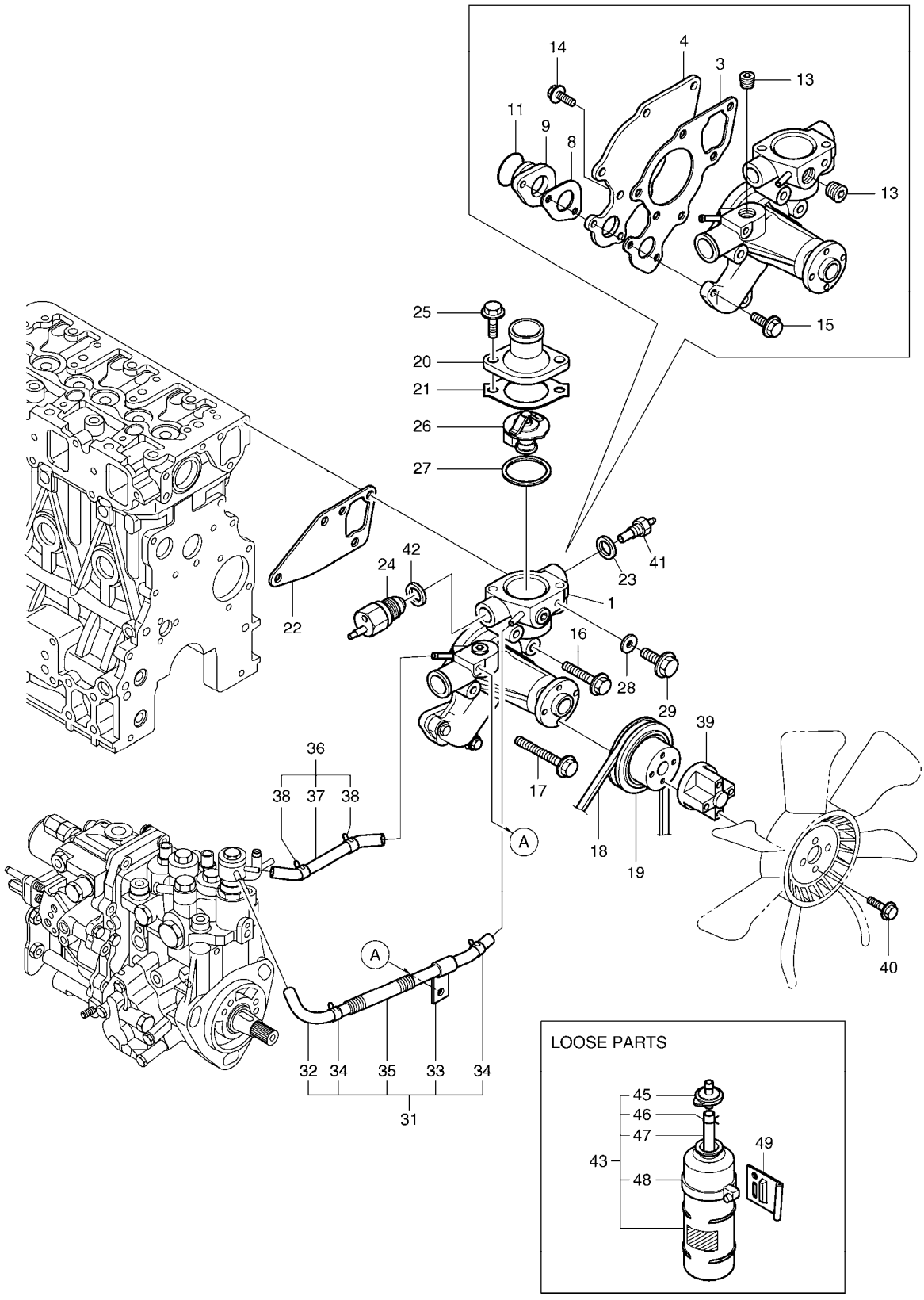

(THIS PARTS BOOK IS FOR REFERENCE ONLY.
PART NUMBERS AND SERAIL NUMBERS MAY BE
OUTDATED. ALWAYS USE THE ONLINE PARTS SYSTEM)

Fig. 010 COOLING WATER SYSTEM
SYSTEME DE REFROIDISSEMENT

Serial No. ;

Key No.	Part No.	Description	Description	Q'ty	S.C	Serial No.	ICA	Replaceable part	
								Part No.	Q'ty
010 -47	K9004847	PIPE	TUYAU	1					
48	K9004683	CLAMP;SUB TANK	COLLIER	1					
49	K9004673	BRACKET;SUB TANK	SUPPORT	1					

(THIS PARTS BOOK IS FOR REFERENCE ONLY.
PART NUMBERS AND SERAIL NUMBERS MAY BE
OUTDATED. ALWAYS USE THE ONLINE PARTS SYSTEM)

DATE	JAN. 04, 2013
3rd EDITION	

Fig. 011 FUEL INJECTION PUMP
POMPE D'INJECTION

Serial No. ;

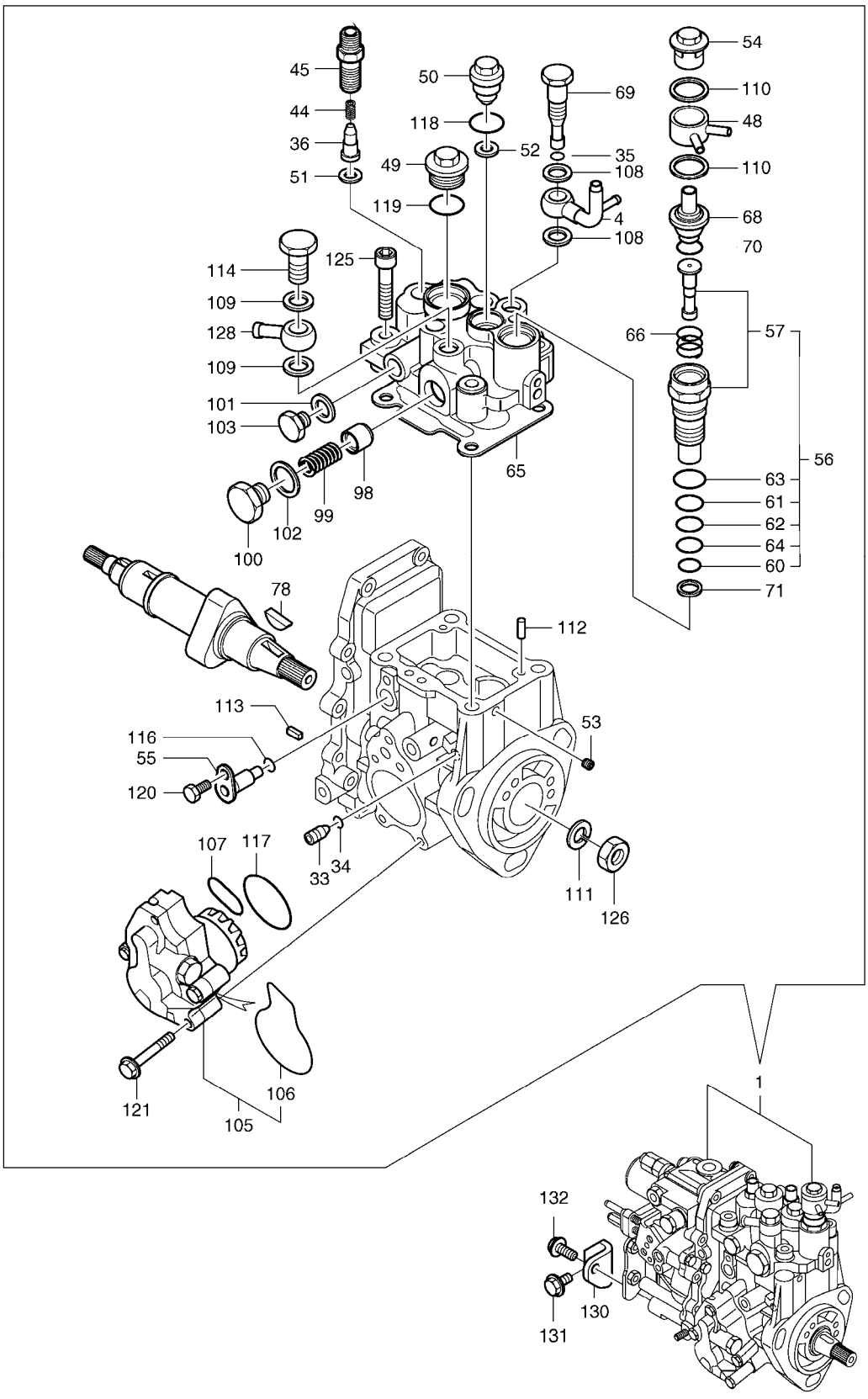

(THIS PARTS BOOK IS FOR REFERENCE ONLY.
PART NUMBERS AND SERAIL NUMBERS MAY BE
OUTDATED. ALWAYS USE THE ONLINE PARTS SYSTEM)

DATE	JAN. 04, 2013
3rd EDITION	

Fig. 011 FUEL INJECTION PUMP
POMPE D'INJECTION

Serial No. ;

Key No.	Part No.	Description	Description	Q'ty	S.C	Serial No.	ICA	Replaceable part	
								Part No.	Q'ty
011 -1	K9005969	INJECTION PUMP ASS'Y	PIPE D'INJECTION	1					
4	K9004808	JOINT	JOINT	1					
33	K9004830	STOPPER	ARRET	1					
34	K9004828	O-RING	JOINT TORIQUE	1					
35	K9004828	O-RING	JOINT TORIQUE	1					
36	K9004827	DELIVERY VALVE ASS'Y	SOUPAPE DE MANOEUVRE	3					
44	K9004829	SPRING	RESSORT	3					
45	K9004832	HOLDER;DELIVERY	SUPPORT	3					
48	K9004817	JOINT;COOLING WATER	L'EAU DE REFROIDISSEME	1					
49	K9004833	PLUG	BOUCHON	1					
50	K9004656	BARREL;PLUG	BARIL DE PRISE	1					
51	K9004805	WASHER	RONDELLE	3					
52	K9004805	WASHER	RONDELLE	1					
53	K9004826	PLUG	BOUCHON	1					
54	K9004883	PLUG	BOUCHON	1					
55	K9004806	LIFTER	POUSSOIR	1					
56	K9004657	TIMER;SET	TEMPORISATEUR	1					
57	-	TIMER;CMP	TEMPORISATEUR	1	D				
60	K9004821	O-RING	JOINT TORIQUE	1					
61	K9004659	RING;BACKUP	BAGUE	1					
62	K9004660	O-RING	JOINT TORIQUE	1					
63	K9004852	PACKING	EMBALLAGE	1					
64	K9004853	RING;BACKUP	BAGUE	1					
65	K9004807	PACKING;HEAD	EMBALLAGE	1					
66	K9004818	SPRING;TIMER	RESSORT	1					
68	K9004819	ELEMENT;THERMO	ELEMENT	1					
69	K9004834	JOINT	JOINT	1					
70	K9004820	O-RING	JOINT TORIQUE	1					
71	K9004822	PACKING;TIMER	EMBALLAGE	1					
78	K9004654	KEY	CLE	1					
98	K9004831	PISTON	PISTON	1					
99	K9004809	DAMPER ASS'Y	AMORTISSEUR	1					
100	K9004835	PLUG	BOUCHON	1					
101	2.114-01090	SEAL;WASHER	BAGUE D`ETANCHEITE	1					
102	K9004841	SEAL;WASHER	BAGUE D`ETANCHEITE	1					
103	K9004850	PLUG	BOUCHON	1					
105	K9004810	PUMP;FUEL FEED	ALIMENTATION DE PUMP;F	1					
106	K9004813	O-RING	JOINT TORIQUE	1					

(THIS PARTS BOOK IS FOR REFERENCE ONLY.
PART NUMBERS AND SERIAL NUMBERS MAY BE
OUTDATED. ALWAYS USE THE ONLINE PARTS SYSTEM)

DATE	JAN. 04, 2013
3rd EDITION	

Fig. 011 FUEL INJECTION PUMP
POMPE D'INJECTION

Serial No. ;

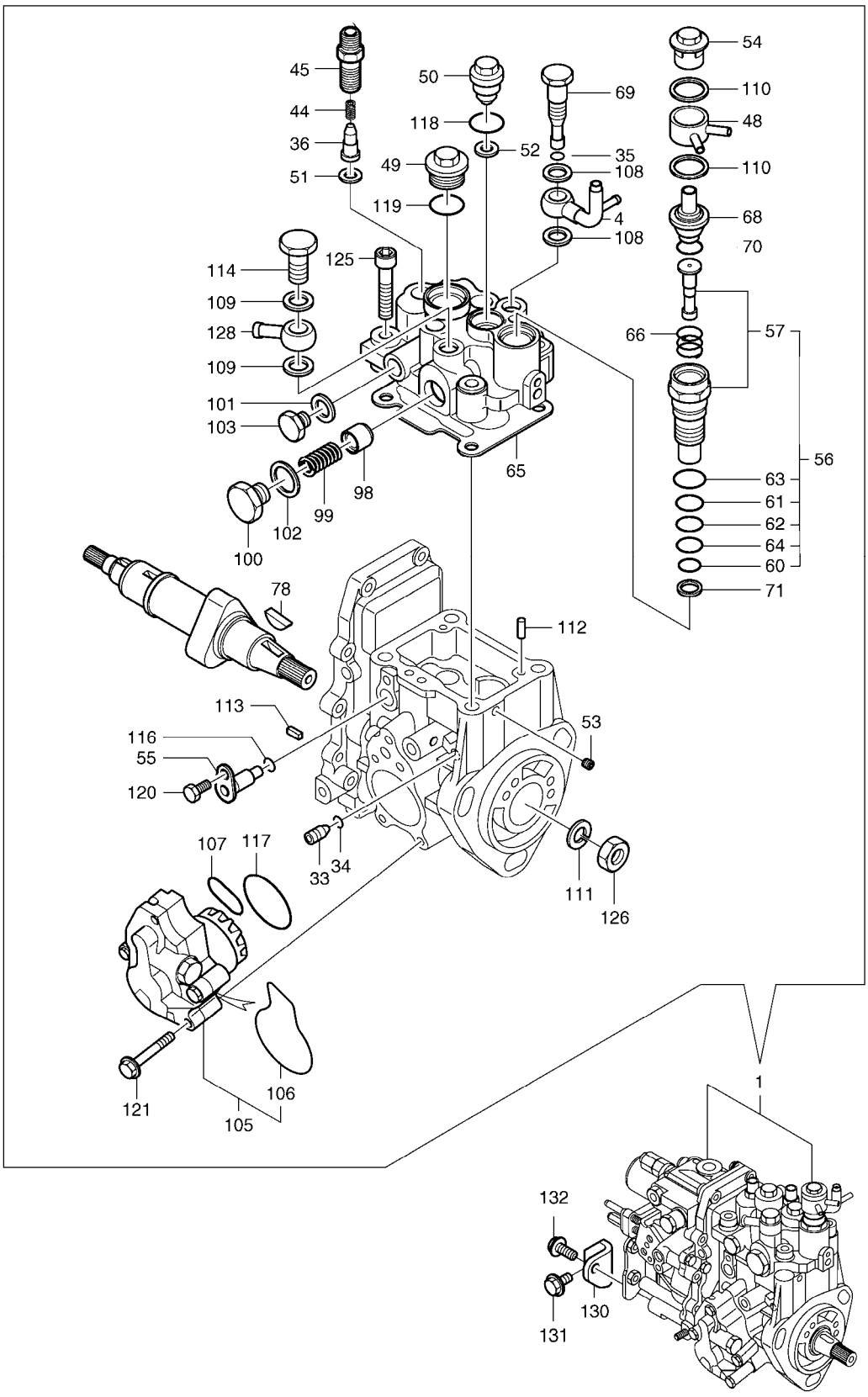

(THIS PARTS BOOK IS FOR REFERENCE ONLY.
PART NUMBERS AND SERAIL NUMBERS MAY BE
OUTDATED. ALWAYS USE THE ONLINE PARTS SYSTEM)

Fig. 011 FUEL INJECTION PUMP
POMPE D'INJECTION

Serial No. ;

Key No.	Part No.	Description	Description	Q'ty	S.C	Serial No.	ICA	Replaceable part	
								Part No.	Q'ty
011 -107	K9004811	O-RING	JOINT TORIQUE	1					
108	2.114-01090	SEAL;WASHER	BAGUE D`ETANCHEITE	2					
109	2.114-01090	SEAL;WASHER	BAGUE D`ETANCHEITE	2					
110	K9004841	SEAL;WASHER	BAGUE D`ETANCHEITE	2					
111	K9004843	WASHER;SPRING	RONDELLE ELASTIQUE	1					
112	K9004845	PIN;PARALLEL	GOUPILLE	2					
113	K9004846	PIN;SPRING	GOUPILLE	2					
114	2.120-00259	BOLT;JOINT	BOULON	1					
116	S8000070	O-RING	JOINT TORIQUE	1					
117	K9004812	O-RING	JOINT TORIQUE	1					
118	K9004851	O-RING	JOINT TORIQUE	1					
119	K9004852	PACKING	EMBALLAGE	1					
120	2.120-00039	BOLT M6X10	BOULON	1					
121	K9004823	BOLT	BOULON	4					
125	K9004857	BOLT M8X45	BOULON	4					
126	K9004859	NUT;LOCK	ECROU	1					
128	K9005222	JOINT	JOINT	1					
130	K9004655	BRACKET;PUMP	SUPPORT	1					
131	2.120-00136	BOLT;PLATED M8X16	BOULON	1					
132	2.120-00137	BOLT M8X20	BOULON	1					

(THIS PARTS BOOK IS FOR REFERENCE ONLY.
PART NUMBERS AND SERAIL NUMBERS MAY BE
OUTDATED. ALWAYS USE THE ONLINE PARTS SYSTEM)

DATE	JAN. 04, 2013
3rd EDITION	

Fig. 012 GOVERNOR GOUVERNEUR

Serial No. ;

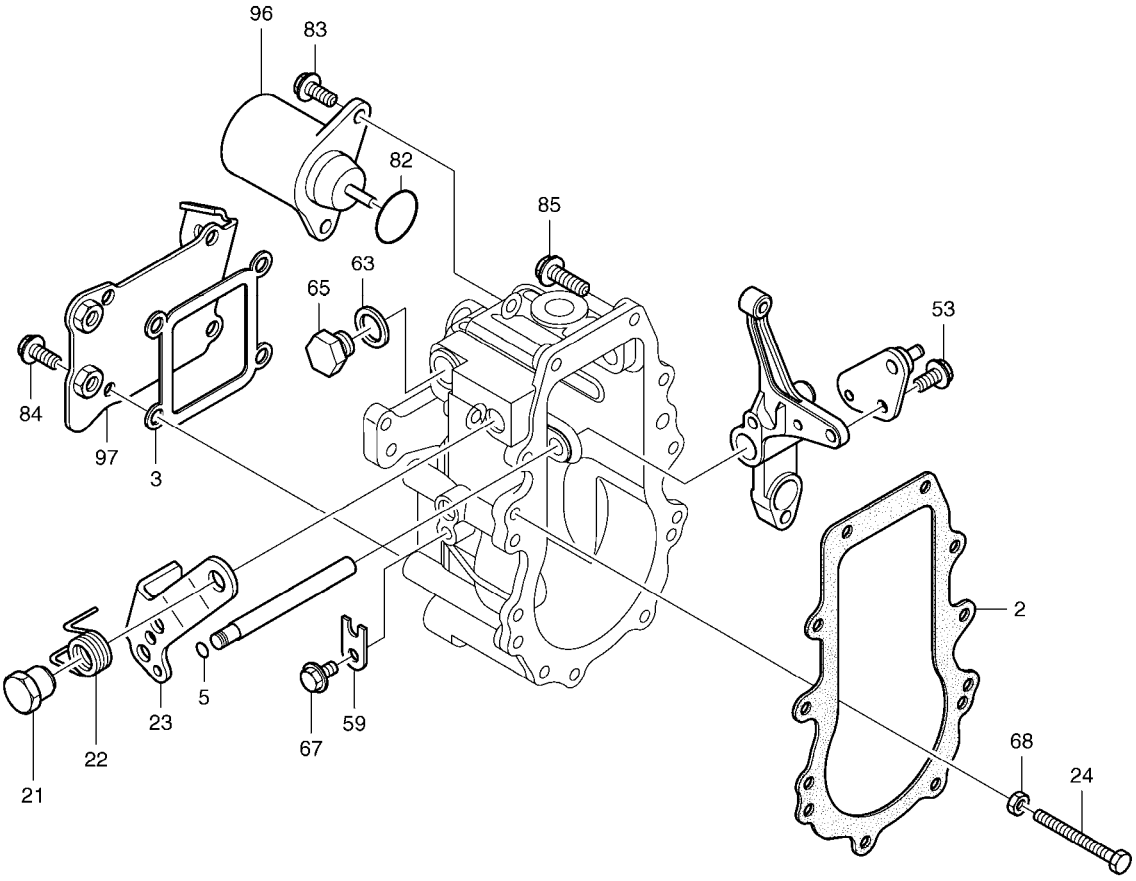

(THIS PARTS BOOK IS FOR REFERENCE ONLY.
PART NUMBERS AND SERAIL NUMBERS MAY BE
OUTDATED. ALWAYS USE THE ONLINE PARTS SYSTEM)

DATE	JAN. 04, 2013
3rd EDITION	

Fig. 012 GOVERNOR GOUVERNEUR

Serial No. ;

Key No.	Part No.	Description	Description	Q'ty	S.C	Serial No.	ICA	Replaceable part	
								Part No.	Q'ty
012 -2	K9004824	PACKING;CASE	EMBALLAGE DE CAS	1					
3	K9004825	PACKING	EMBALLAGE	1					
5	2.180-00359	O-RING	JOINT TORIQUE	1					
21	K9002134	NUT	ECROU	1					
22	K9002135	SPRING	RESSORT	1					
23	K9004815	LEVER;REGULATOR	LEVIER DE REGULATEUR	1					
24	K9002138	BOLT;IDEL LIMIT	BOULON	1					
53	2.120-00039	BOLT M6X10	BOULON	1					
59	2.115-00054	RETAINER;SHAFT	ARRETOIR	1					
63	K9004840	SEAL;WASHER	BAGUE D'ETANCHEITE	1					
65	K9004850	PLUG	BOUCHON	1					
67	2.120-00039	BOLT M6X10	BOULON	1					
68	2.121-00176	NUT;LOCK	ECROU	1					
82	K9004816	O-RING	JOINT TORIQUE	1					
83	K9002144	BOLT M6X14	BOULON	2					
84	K9002144	BOLT M6X14	BOULON	4					
85	2.120-00150	BOLT M6X20	BOULON	10					
96	K9004603	SOLENOID;STOP	SOLENOIDE	1					
97	K9005219	COVER;CASE	COUVERCLE	1					

(THIS PARTS BOOK IS FOR REFERENCE ONLY.
PART NUMBERS AND SERAIL NUMBERS MAY BE
OUTDATED. ALWAYS USE THE ONLINE PARTS SYSTEM)

DATE	JAN. 04, 2013
3rd EDITION	

Fig. 013 FUEL INJECTION VALVE
VANNE D'INJECTION

Serial No. ;

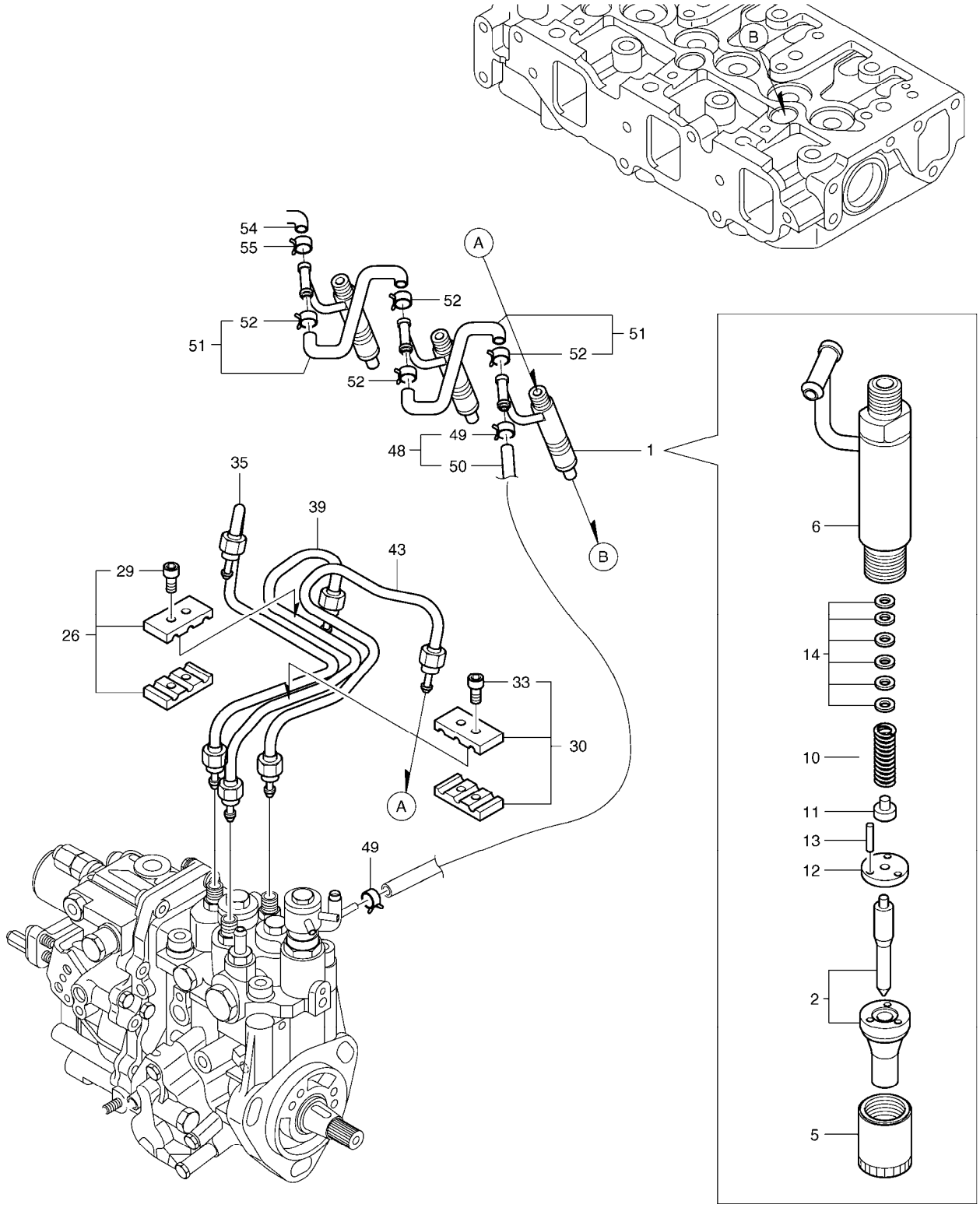

(THIS PARTS BOOK IS FOR REFERENCE ONLY.
PART NUMBERS AND SERAIL NUMBERS MAY BE
OUTDATED. ALWAYS USE THE ONLINE PARTS SYSTEM)

DATE	JAN. 04, 2013
3rd EDITION	

Fig. 013 FUEL INJECTION VALVE
VANNE D'INJECTION

Serial No. ;

Key No.	Part No.	Description	Description	Q'ty	S.C	Serial No.	ICA	Replaceable part	
								Part No.	Q'ty
013 -1	K9005970	INJECTOR;FUEL	INJECTEUR DE CARBURAI	3					
2	K9005220	NOZZLE;CMP	BEC	3					
5	2.121-00085	NUT	ECROU	3					
6	K9004661	HOLDER NOZZLE ASS'Y	BEC DE SUPPORT	3					
10	2.131-00258	SPRING	RESSORT	3					
11	2.427-00019	SEAT;NOZZLE SPRING	SIEGE	3					
12	2.412-00266	PLATE;STOP	PLAQUE	3					
13	2.123-00088	PIN	GOUPILLE	6					
14	2.180-00611	SHIM ASS'Y	CALE	3					
26	2.115-00008	RETAINER	ARRETOIR	1					
29	2.120-00050	BOLT M4X14	BOULON	1					
30	K9004752	RETAINER;INJ PIPE	ARRETOIR	1					
33	2.120-00050	BOLT M4X14	BOULON	2					
35	K9005179	INJECTION PIPE	PIPE D'INJECTION	1					
39	K9005180	INJECTION PIPE	PIPE D'INJECTION	1					
43	K9005181	INJECTION PIPE	PIPE D'INJECTION	1					
48	K9004662	RETURN PIPE ASS'Y	PIPE DE RETOUR	1					
49	2.124-00086	CLAMP	BRIDE	2					
50	K9004663	PIPE;FUEL RETURN	TUYAU	1					
51	2.140-00105	PIPE;FUEL RETURN	PIPE DE RETOUR DE CARE	2					
52	2.124-00086	CLAMP	BRIDE	4					
54	K9004605	CAP	CHAPEAU	1					
55	K9004677	CLAMP	BRIDE	1					

(THIS PARTS BOOK IS FOR REFERENCE ONLY.
PART NUMBERS AND SERAIL NUMBERS MAY BE
OUTDATED. ALWAYS USE THE ONLINE PARTS SYSTEM)

DATE	JAN. 04, 2013
3rd EDITION	

Fig. 014 FUEL LINE
LIGNE DE CARBURANT

Serial No. ;

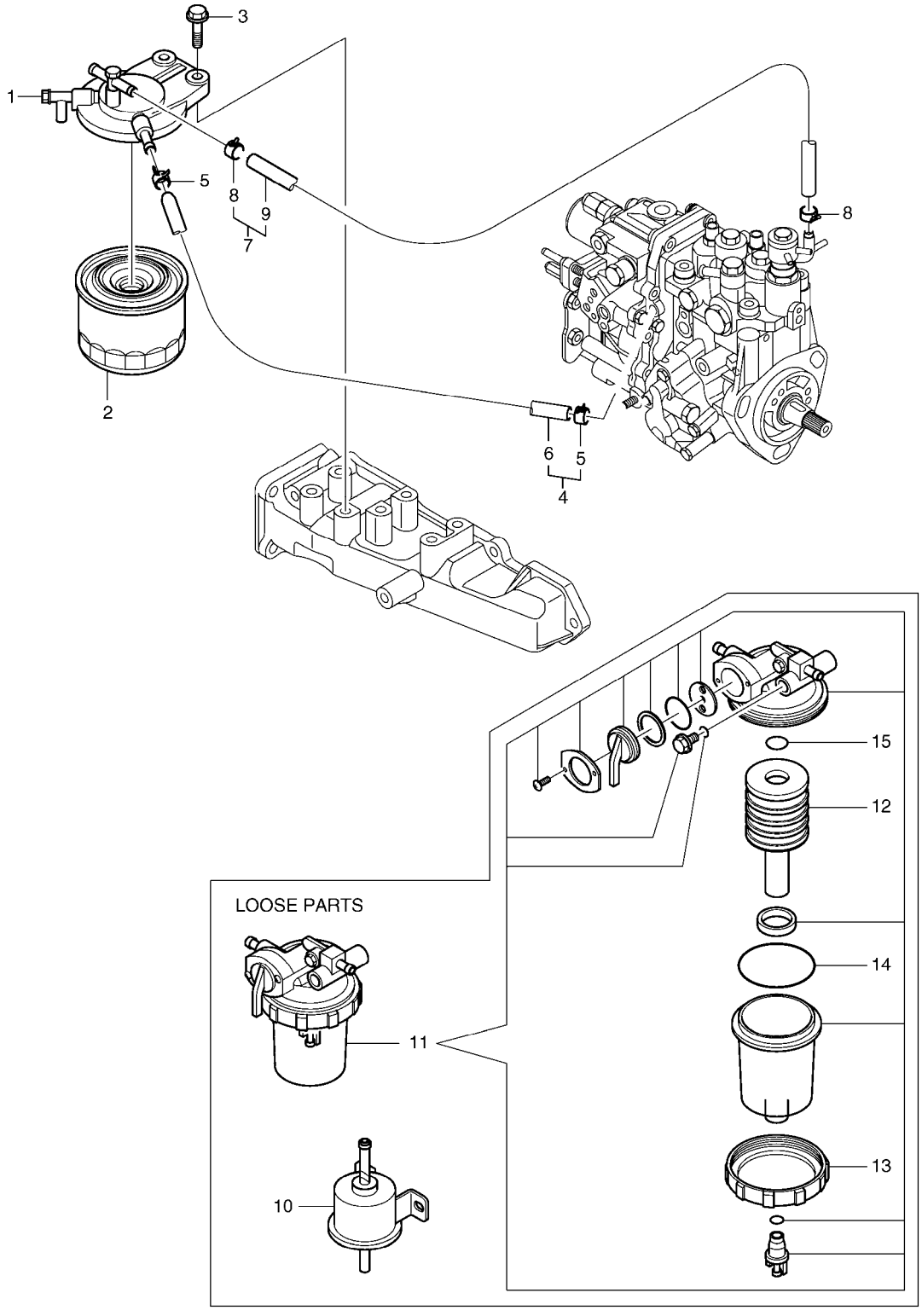

(THIS PARTS BOOK IS FOR REFERENCE ONLY.
PART NUMBERS AND SERAIL NUMBERS MAY BE
OUTDATED. ALWAYS USE THE ONLINE PARTS SYSTEM)

DATE	JAN. 04, 2013
3rd EDITION	

Fig. 014 FUEL LINE
LIGNE DE CARBURANT

Serial No. ;

Key No.	Part No.	Description	Description	Q'ty	S.C	Serial No.	ICA	Replaceable part	
								Part No.	Q'ty
014 -1	K9004714	BRACKET;FUEL FILTER	SUPPORT	1					
2	K1025335	FILTER;FUEL	FILTRE	1					
3	2.120-00138	BOLT M8X30	BOULON	2					
4	K9004756	FUEL PIPE ASS'Y	PIPE DE CARBURANT	1					
5	2.124-00020	CLAMP	BRIDE	2					
6	K9004600	PIPE;FUEL OIL	TUYAU	1					
7	K9004757	FUEL PIPE ASS'Y	PIPE DE CARBURANT	1					
8	2.124-00020	CLAMP	BRIDE	2					
9	K9004784	PIPE;FUEL	TUYAU	1					
10	K9004786	PUMP;FUEL FEED	POMPE	1					
11	2.471-00037	SEPARATOR ASS'Y	SEPARATEUR D'EAU	1					
12	2.474-00028	ELEMENT	ELEMENT	1					
13	2.115-00546	RING;RETAINING	BAGUE	1					
14	S8010651	O-RING	JOINT TORIQUE	1					
15	S8000161	O-RING	JOINT TORIQUE	1					

(THIS PARTS BOOK IS FOR REFERENCE ONLY.
PART NUMBERS AND SERAIL NUMBERS MAY BE
OUTDATED. ALWAYS USE THE ONLINE PARTS SYSTEM)

DATE	JAN. 04, 2013
3rd EDITION	

Fig. 015 STARTING MOTOR DEMARREUR

Serial No. ;

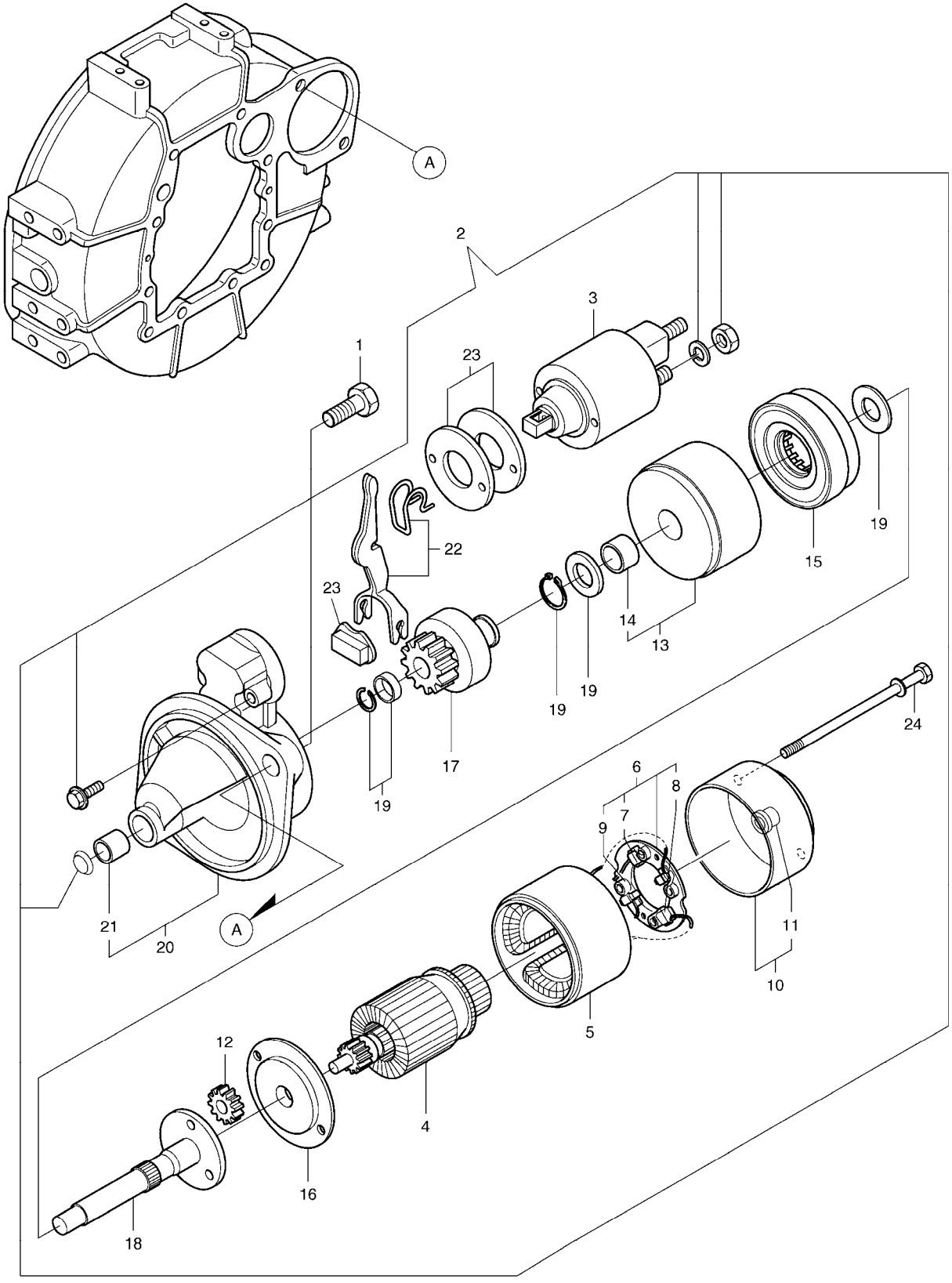

(THIS PARTS BOOK IS FOR REFERENCE ONLY.
PART NUMBERS AND SERAIL NUMBERS MAY BE
OUTDATED. ALWAYS USE THE ONLINE PARTS SYSTEM)

DATE	JAN. 04, 2013
3rd EDITION	

Fig. 015 STARTING MOTOR DEMARREUR

Serial No. ;

Key No.	Part No.	Description	Description	Q'ty	S.C	Serial No.	ICA	Replaceable part	
								Part No.	Q'ty
015 -1	2.120-00052	BOLT M12X25	BOULON	2					
2	K9004758	STARTER	DEMARREUR	1					
3	K9004788	MAGNETIC SWITCH ASS'Y	COMMUTATEUR MAGNETI	1					
4	K9004884	ARMATURE ASS'Y	ARMATURE	1					
5	K9004759	YOKE ASS'Y	JOUG	1					
6	K9004760	BRUSH HOLDER ASS'Y	SUPPORT DE BROSSE	1					
7	K9004761	BRUSH	BROSSE	2					
8	K9004762	BRUSH;SET	BROSSE	1					
9	K9004763	BRUSH;SPRING	BROSSE	4					
10	K9004764	REAR COVER ASS'Y	COUVERCLE	1					
11	K9004765	REAR COVER METAL	METAL DE COUVERTURE A	1					
12	K9004602	PLANET;GEAR	PIGNON DE PLANETE	3					
13	K9004766	BRACKET;CENTER(P)	SUPPORT	1					
14	K9004789	BRACKET	SUPPORT	1					
15	K9004790	INTERNAL;GEAR	VITESSE INTERNE	1					
16	K9004767	BRACKET;CENTER(A)	SUPPORT	1					
17	K9004791	PINION ASS'Y	PIGNON	1					
18	K9004792	SHAFT	ARBRE	1					
19	K9004793	WASHER	RONDELLE	1					
20	K9004768	GEAR CASE ASS'Y	CAISSE DE PIGNON	1					
21	K9004870	METAL;STARTER	METAL	1					
22	K9004769	SHIFT LEVER SET	DECALEZ L'ENSEMBLE DE	1					
23	K9004770	DUST;COVER KIT	KIT DE COUVERTURE	1					
24	2.120-00331	BOLT;THROUGH	BOULON	2					

(THIS PARTS BOOK IS FOR REFERENCE ONLY.
PART NUMBERS AND SERAIL NUMBERS MAY BE
OUTDATED. ALWAYS USE THE ONLINE PARTS SYSTEM)

DATE	JAN. 04, 2013
3rd EDITION	

Fig. 016 GENERATOR ALTERNATEUR

Serial No. ;

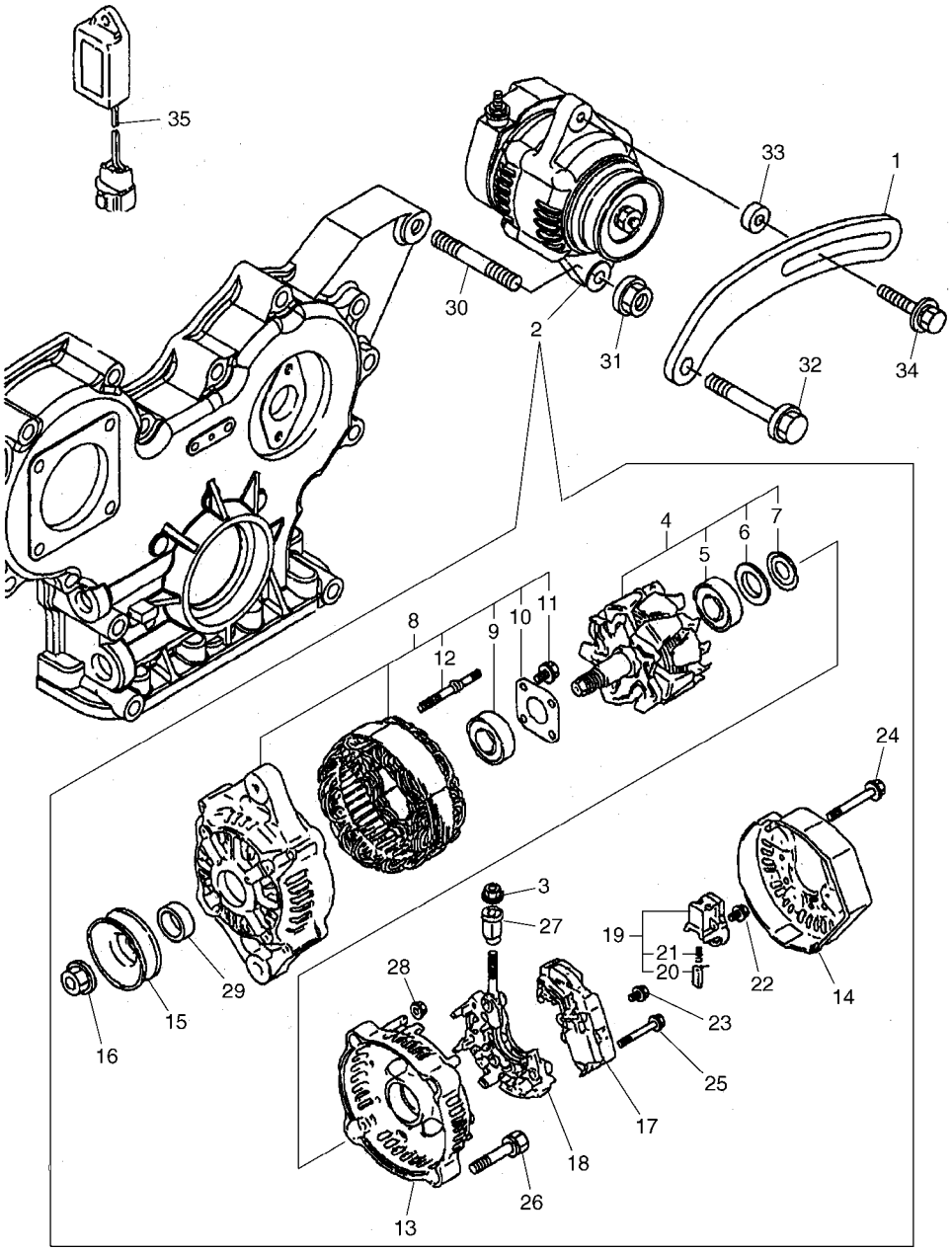

(THIS PARTS BOOK IS FOR REFERENCE ONLY.
PART NUMBERS AND SERAIL NUMBERS MAY BE
OUTDATED. ALWAYS USE THE ONLINE PARTS SYSTEM)

DATE	JAN. 04, 2013
3rd EDITION	

Fig. 016 GENERATOR ALTERNATEUR

Serial No. ;

Key No.	Part No.	Description	Description	Q'ty	S.C	Serial No.	ICA	Replaceable part	
								Part No.	Q'ty
016 -1	K9004665	ADJUSTER;BELT	AJUSTEZ	1					
2	K9004778	GENERATOR	GENERATEUR	1					
3	K9004871	NUT	ECROU	1					
4	K9004607	ROTOR ASS'Y	GROUPE ROTATIF	1					
5	K9004618	BEARING;BALL	ROULEMENT	1					
6	K9004619	COVER;BEARING	COUVERCLE	1					
7	K9004630	WASHER;THRUST	RONDELLE DE BUTEE	1					
8	K9004608	FLAME DRIVE ASS'Y	COMMANDE DE FLAMME	1					
9	K9004614	BEARING;BALL	ROULEMENT	1					
10	K9004615	PLATE	PLAQUE	1					
11	K9004616	SCREW	VIS	4					
12	K9004617	BOLT;STUD	BOULON DE GOUJON	2					
13	K9004609	FLAME REAR ASS'Y	ARRIERE DE FLAMME	1					
14	K9004779	COVER	COUVERCLE	1					
15	K9004610	PULLEY	POULIE	1					
16	K9004611	NUT	ECROU	1					
17	K9004780	REGULATOR ASS'Y	REGULATEUR	1					
18	K9004620	HOLDER	SUPPORT	1					
19	K9004621	HOLDER;BRUSH	SUPPORT	1					
20	K9004612	BRUSH ASS'Y	BROSSE	2					
21	K9004622	SPRING	RESSORT	2					
22	K9004623	SCREW	VIS	1					
23	K9004624	SCREW	VIS	1					
24	K9004625	BOLT	BOULON	3					
25	K9004626	SCREW;W/WASHER	VIS	2					
26	K9004627	BOLT	BOULON	2					
27	K9004628	INSULATION;BUSH	ISOLATION	1					
28	K9004629	NUT	ECROU	2					
29	K9004613	COLLAR	COLLIER	1					
30	K9004795	STUD	BOULON	1					
31	2.121-00268	NUT	ECROU	1					
32	2.120-00044	BOLT M8X45	BOULON	1					
33	K9004668	ADJUSTER;BELT	AJUSTEZ	1					
34	K9004803	BOLT;ADJUSTING	BOULON	1					
35	537-00071	TIMER;ENGINE STOP	TEMPORISATEUR	1					

(THIS PARTS BOOK IS FOR REFERENCE ONLY.
PART NUMBERS AND SERAIL NUMBERS MAY BE
OUTDATED. ALWAYS USE THE ONLINE PARTS SYSTEM)

DATE	JAN. 04, 2013
3rd EDITION	

Fig. 017 GASKET SET
ENSEMBLE DE GARNITURE

Serial No. ;

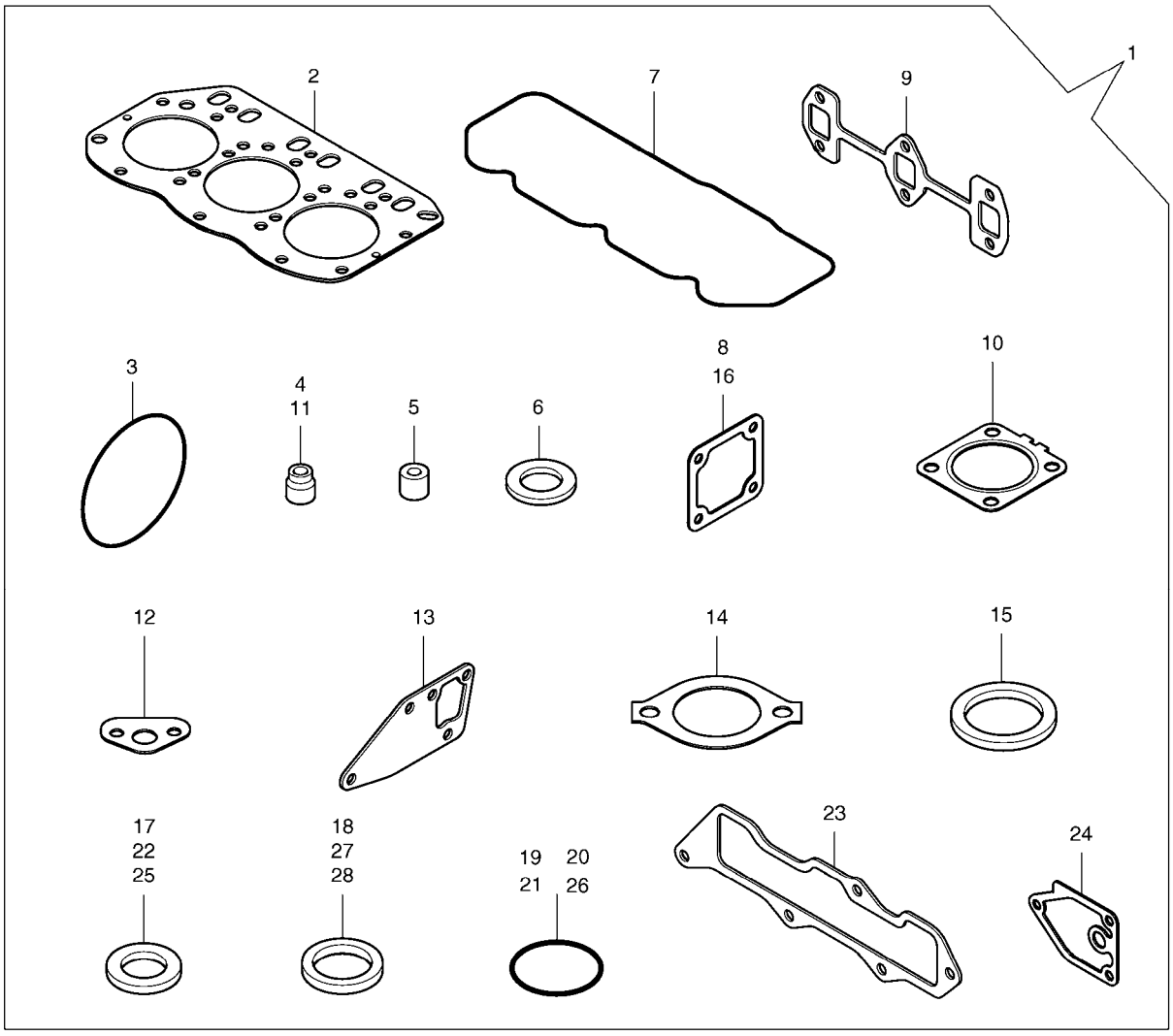

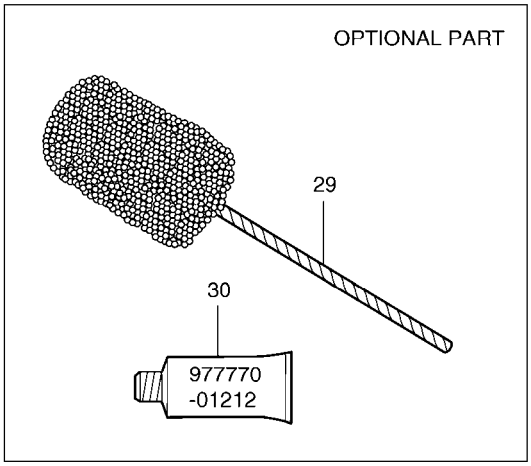

(THIS PARTS BOOK IS FOR REFERENCE ONLY.
PART NUMBERS AND SERAIL NUMBERS MAY BE
OUTDATED. ALWAYS USE THE ONLINE PARTS SYSTEM)

DATE	JAN. 04, 2013
3rd EDITION	

Fig. 017 GASKET SET
ENSEMBLE DE GARNITURE

Serial No. ;

Key No.	Part No.	Description	Description	Q'ty	S.C	Serial No.	ICA	Replaceable part	
								Part No.	Q'ty
017 -1	K9005228	GASKET SET(T-2)	JOINT	1					
2	K9005201	GASKET;HEAD	JOINT	1					
3	K9004676	O-RING	JOINT TORIQUE	1					
4	2.180-01241	SEAL;VALVE STEM (EXHAUST)	JOINT	3					
5	2.158-00004	PROTECTOR;NOZZLE	PROTECTEUR	3					
6	2.427-00018	SEAT;NOZZLE	SIEGE	3					
7	K9005156	GASKET;COVER	JOINT	1					
8	K9004753	GASKET	JOINT	1					
9	K9005189	GASKET;EXHAUST MANIFOLD	JOINT	1					
10	K9004704	GASKET;MUFFLER	JOINT	1					
11	2.180-01240	SEAL;VALVE STEM	JOINT	3					
12	K9004749	GASKET	JOINT	1					
13	K9005215	GASKET	JOINT	1					
14	D465096	GASKET	JOINT	1					
15	K9004751	GASKET	JOINT	1					
16	K9004732	GASKET;AIR HEATER	JOINT	1					
17	2.114-00889	WASHER;SEAL	RONDELLE	2					
18	2.180-00054	GASKET	JOINT	1					
19	S8000120	O-RING	JOINT TORIQUE	3					
20	S8000320	O-RING	JOINT TORIQUE	2					
21	2.180-00355	O-RING	JOINT TORIQUE	1					
22	K9004838	SEAL;WASHER	BAGUE D'ETANCHEITE	2					
23	K9005203	GASKET;INT.MANIFOLD	JOINT	1					
24	K9004750	GASKET	JOINT	1					
25	2.180-00910	SEAL;WASHER	BAGUE D`ETANCHEITE	1					
26	K9004606	O-RING	JOINT TORIQUE	4					
27	2.180-00100	GASKET	JOINT	1					
28	180-00222	GASKET	JOINT	1					
29	K9005214	HORN;FLEX	AVERTISSEUR	1					
30	K9004868	GASKET;LIQUID	JOINT	1					

(THIS PARTS BOOK IS FOR REFERENCE ONLY.
PART NUMBERS AND SERAIL NUMBERS MAY BE
OUTDATED. ALWAYS USE THE ONLINE PARTS SYSTEM)

DATE	JAN. 04, 2013
3rd EDITION	

Fig. 031 CYLINDER BLOCK
BLOC CYLINDRE

Serial No. ;

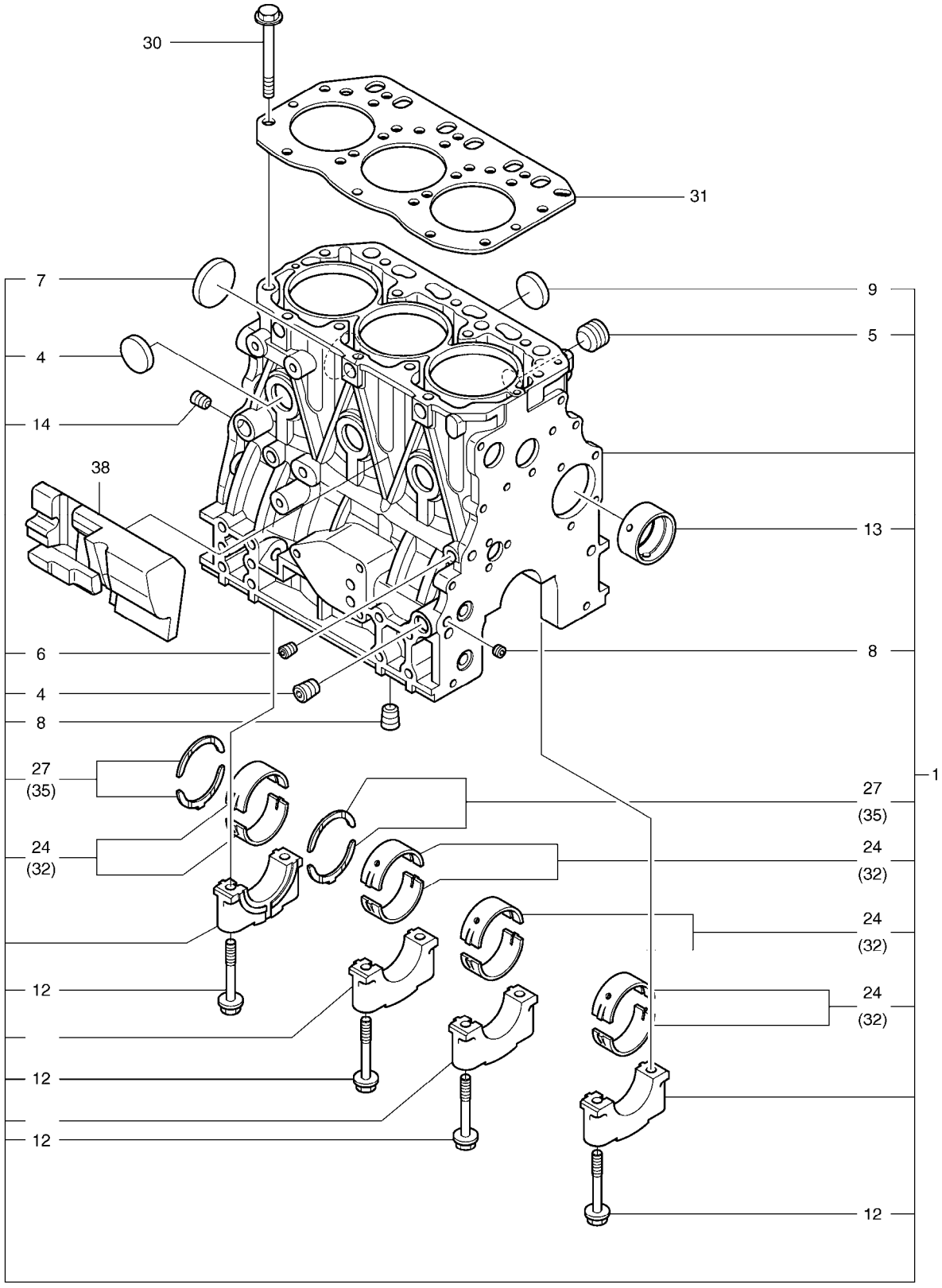

(THIS PARTS BOOK IS FOR REFERENCE ONLY.
PART NUMBERS AND SERAIL NUMBERS MAY BE
OUTDATED. ALWAYS USE THE ONLINE PARTS SYSTEM)

DATE	JAN. 04, 2013
3rd EDITION	

Fig. 031 CYLINDER BLOCK
BLOC CYLINDRE

Serial No. ;

Key No.	Part No.	Description	Description	Q'ty	S.C	Serial No.	ICA	Replaceable part	
								Part No.	Q'ty
031 -1	K9005223	CYLINDER BLOCK ASS'Y	ENSEMBLE DE BLOC CYLI	1					
4	K9004678	PLUG PT1/4	BOUCHON	2					
5	2.181-00306	PLUG	BOUCHON	1					
6	2.181-00163	PLUG PT1/8	BOUCHON	1					
7	K9004685	PLUG	BOUCHON	1					
8	K9004860	PLUG	BOUCHON	2					
9	2.181-00314	PLUG	BOUCHON	6					
12	K9005148	BOLT	BOULON	8					
13	K9004797	BUSH;CAMSHAFT	DOUILLE	1					
14	K9004678	PLUG PT1/4	BOUCHON	1					
24	K9005226	MAIN METAL SET	ENSEMBLE PRINCIPAL EN	4					
27	K9005186	WASHER;THRUST	RONDELLE DE BUTEE	1					
30	K9005182	BOLT;CYLINDER HEAD	BOULON	14					
31	K9005201	GASKET;HEAD	JOINT	1					
32	K9005185	MAIN METAL 0.25	ROULEMENT PRINCIPAL	4	US				
35	K9005187	WASHER;THRUST 0.25	ROULEMENT	2	OS				
38	K9005149	SPACER	DOUILLE D'ECARTEMENT	1					

(THIS PARTS BOOK IS FOR REFERENCE ONLY.
PART NUMBERS AND SERAIL NUMBERS MAY BE
OUTDATED. ALWAYS USE THE ONLINE PARTS SYSTEM)

DATE	JAN. 04, 2013
3rd EDITION	

Fig. 032 GEAR HOUSING
CARTER DE DISTRIBUTION

Serial No. ;

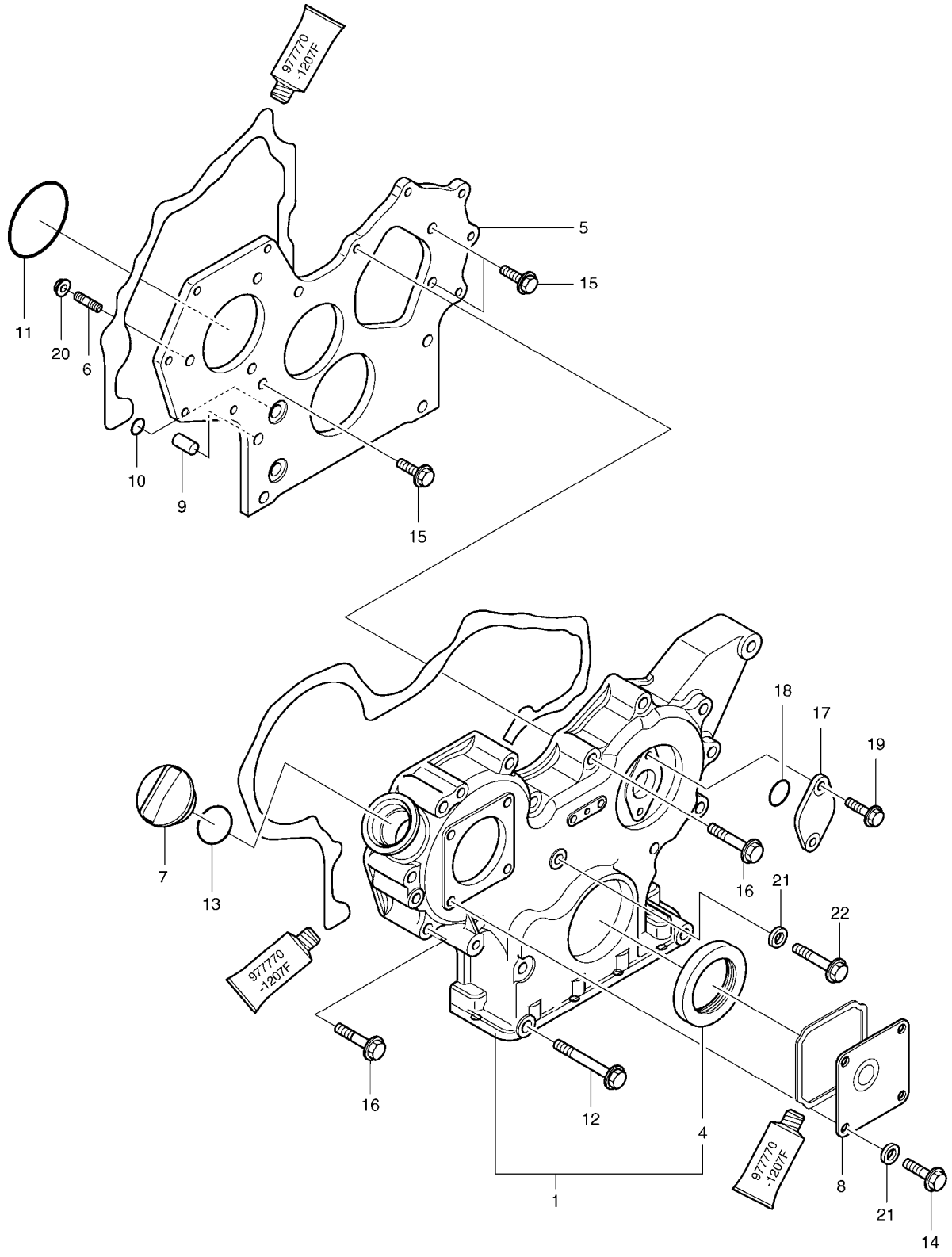

(THIS PARTS BOOK IS FOR REFERENCE ONLY.
PART NUMBERS AND SERAIL NUMBERS MAY BE
OUTDATED. ALWAYS USE THE ONLINE PARTS SYSTEM)

DATE	JAN. 04, 2013
3rd EDITION	

Fig. 032 GEAR HOUSING
CARTER DE DISTRIBUTION

Serial No. ;

Key No.	Part No.	Description	Description	Q'ty	S.C	Serial No.	ICA	Replaceable part	
								Part No.	Q'ty
032 -1	K9006462	GEAR HOUSING ASS'Y	CARTER DE PINGNON	1					
4	K9004667	SEAL;OIL	JOINT	1					
5	K9006434	FLANGE;GEAR CASE	BRIDE	1					
6	K9004632	STUD	BOULON	3					
7	D460483	CAP;FILLER	COUVERCLE	1					
8	2.304-00001	COVER	COUVERCLE	1					
9	K9004796	PIPE	TUYAU	2					
10	K9004606	O-RING	JOINT TORIQUE	2					
11	K9004676	O-RING	JOINT TORIQUE	1					
12	K9004690	BOLT M8X85	BOULON	3					
13	S8000320	O-RING	JOINT TORIQUE	1					
14	2.120-00136	BOLT;PLATED M8X16	BOULON	4					
15	2.120-00136	BOLT;PLATED M8X16	BOULON	3					
16	2.120-00148	BOLT;PLATED M8X55	BOULON	12					
17	K9004671	COVER;BLIND	COUVERCLE	1					
18	2.180-00355	O-RING	JOINT TORIQUE	1					
19	2.120-00029	BOLT M6X16	BOULON	2					
20	2.121-00267	NUT	ECROU	3					
21	2.114-00889	WASHER;SEAL	RONDELLE	5					
22	2.120-00138	BOLT M8X30	BOULON	1					

(THIS PARTS BOOK IS FOR REFERENCE ONLY.
PART NUMBERS AND SERAIL NUMBERS MAY BE
OUTDATED. ALWAYS USE THE ONLINE PARTS SYSTEM)

DATE	JAN. 04, 2013
3rd EDITION	

Fig. 033 FLYWHEEL HOUSING & OIL PAN
CARTER DE VOLANT MOTEUR

Serial No. ;

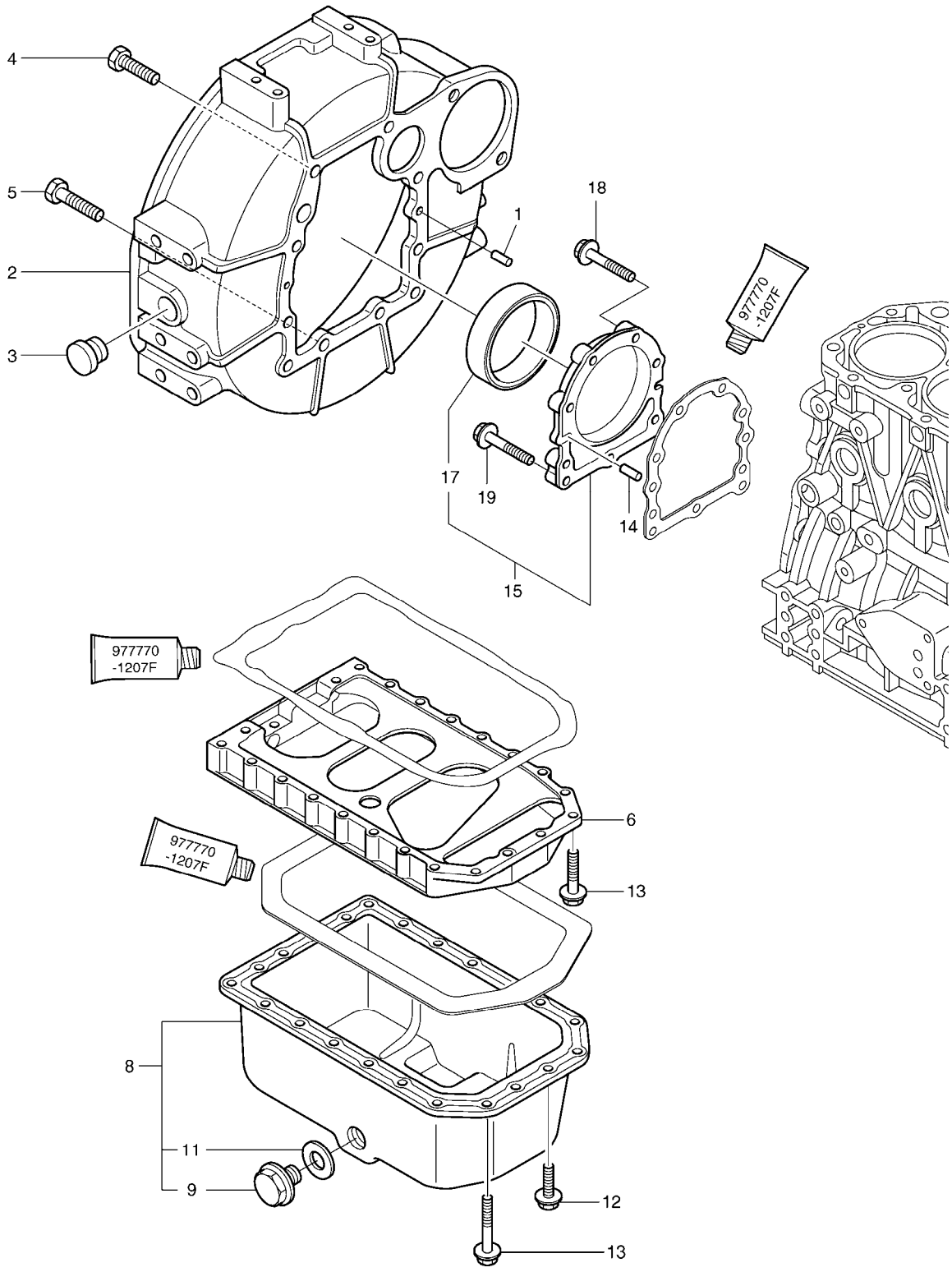

(THIS PARTS BOOK IS FOR REFERENCE ONLY.
PART NUMBERS AND SERAIL NUMBERS MAY BE
OUTDATED. ALWAYS USE THE ONLINE PARTS SYSTEM)

DATE	JAN. 04, 2013
3rd EDITION	

Fig. 033 FLYWHEEL HOUSING & OIL PAN
CARTER DE VOLANT MOTEUR

Serial No. ;

Key No.	Part No.	Description	Description	Q'ty	S.C	Serial No.	ICA	Replaceable part	
								Part No.	Q'ty
033 -1	S5701041	PIN;PARALLEL	GOUPILLE	2					
2	K9004785	HOUSING;FLYWHEEL	LOGEMENT	1					
3	2.430-00083	CAP;FLYWHEEL COVER	CHAPEAU	1					
4	2.120-00037	BOLT M10X25	BOULON	6					
5	K9004856	BOLT M10X30	BOULON	4					
6	K9005183	SPACER;OIL SUMP	ENTERTOISE	1					
8	K9005184	PAN;OIL	CAOUTCHOUC	1					
9	2.181-00355	PLUG;DRAIN	BOUCHON	1					
11	2.180-00910	SEAL;WASHER	BAGUE D`ETANCHEITE	1					
12	2.120-00136	BOLT;PLATED M8X16	BOULON	6					
13	2.120-00044	BOLT M8X45	BOULON	22					
14	S5701041	PIN;PARALLEL	GOUPILLE	2					
15	K9004723	CASE ASS'Y	CARTER	1					
17	D460678	SEAL;OIL	JOINT	1					
18	K9004781	BOLT M8X30	BOULON	6					
19	2.120-00145	BOLT M8X35	BOULON	3					

(THIS PARTS BOOK IS FOR REFERENCE ONLY.
PART NUMBERS AND SERAIL NUMBERS MAY BE
OUTDATED. ALWAYS USE THE ONLINE PARTS SYSTEM)

DATE	JAN. 04, 2013
3rd EDITION	

Fig. 034 CYLINDER HEAD & COVER
COUVERTURE DE CULASSE

Serial No. ;

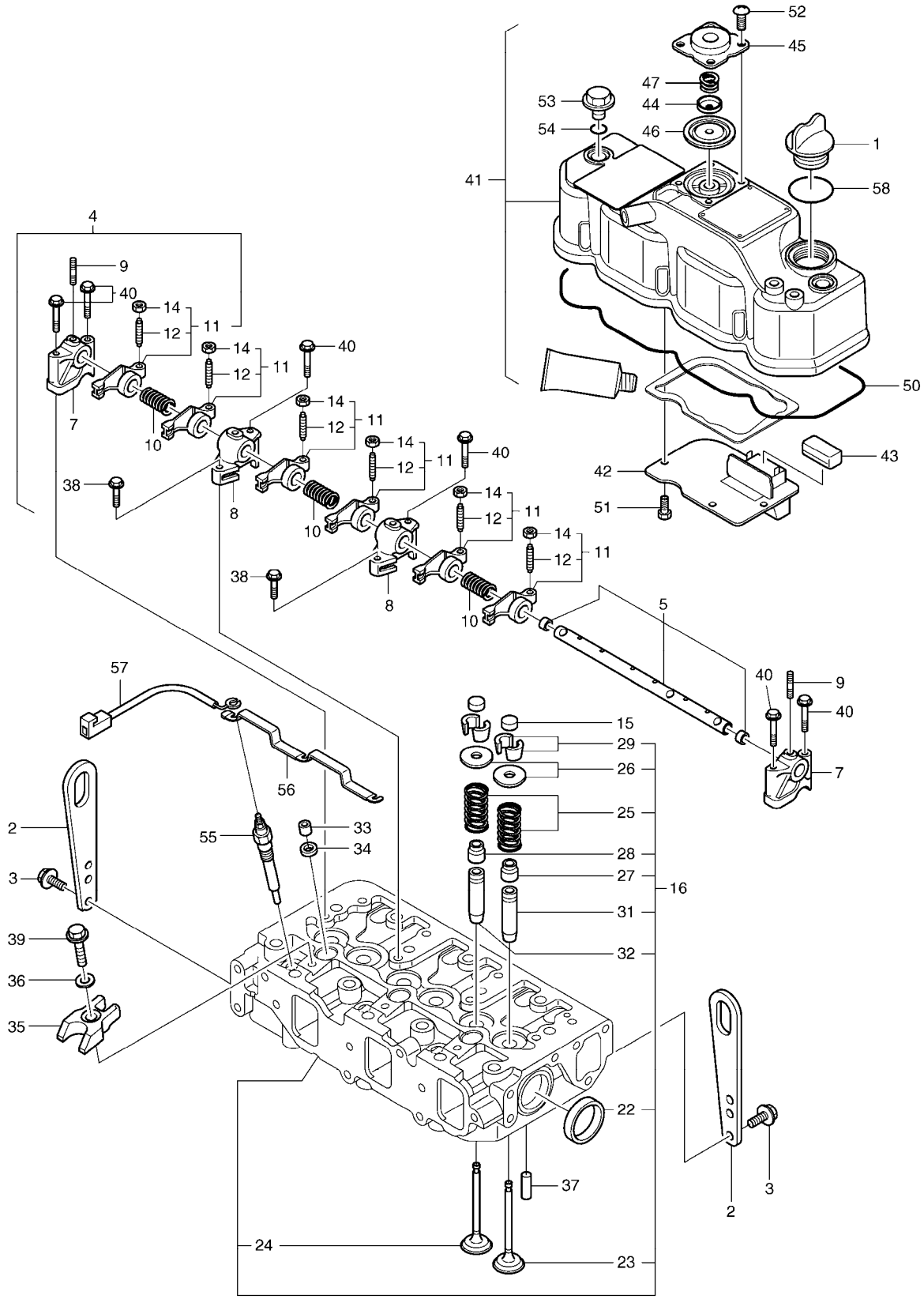

(THIS PARTS BOOK IS FOR REFERENCE ONLY.
PART NUMBERS AND SERAIL NUMBERS MAY BE
OUTDATED. ALWAYS USE THE ONLINE PARTS SYSTEM)

DATE	JAN. 04, 2013
3rd EDITION	

Fig. 034 CYLINDER HEAD & COVER
COUVERTURE DE CULASSE

Serial No. ;

Key No.	Part No.	Description	Description	Q'ty	S.C	Serial No.	ICA	Replaceable part	
								Part No.	Q'ty
034 -1	D460483	CAP;FILLER	COUVERCLE	1					
2	2.197-00046	LIFTER;ENGINE	POUSSOIR	2					
3	2.120-00136	BOLT;PLATED M8X16	BOULON	4					
4	K9005154	ROCKER ARM SHAFT ASS'Y	BRAS DE CULBUTEUR	1					
5	K9005155	SHAFT;ROCKER ARM	ARBRE	1					
7	K9004637	SUPPORT;ROCKER ARM	SUPPORT	2					
8	K9004638	SUPPORT;ROCKER ARM	SUPPORT	2					
9	K9004639	STUD	BOULON	3					
10	K9004742	SPRING	RESSORT	3					
11	K9005159	ROCKER ARM ASS'Y	BRAS DE CULBUTEUR	6					
12	2.120-00694	SCREW;VALVE	VIS	6					
14	2.121-00084	NUT	ECROU	6					
15	K9005147	CAP;VALVE	CHAPEAU	6					
16	K9006435	CYLINDER HEAD ASS'Y	CULLASSE	1					
22	2.181-00308	PLUG	BOUCHON	2					
23	K9005152	VALVE;INTAKE	SOUPAPE D'ADMISSION	3					
24	K9005153	VALVE;EXHAUST	VANNE	3					
25	K9005188	SPRING;VALVE	RESSORT	6					
26	K9005146	RETAINER;SPRING	ARRETOIR	6					
27	2.180-01240	SEAL;VALVE STEM	JOINT	3					
28	A408289	SEAL;VALVE STEM	JOINT	3					
29	2.217-00072	COTTER ASS'Y	CLAVETTE	6					
31	K9005208	GUIDE;VALVE	GUIDE	3					
32	K9005161	GUIDE;VALVE	GUIDE	3					
33	2.158-00004	PROTECTOR;NOZZLE	PROTECTEUR	3					
34	2.427-00018	SEAT;NOZZLE	SIEGE	3					
35	K9005162	RETAINER;NOZZLE	ARRETOIR	3					
36	K9004670	WASHER	RONDELLE	3					
37	S5740860	PIN;SPRING	GOUPILLE	2					
38	K9004854	BOLT M8X25	BOULON	2					
39	2.120-00044	BOLT M8X45	BOULON	3					
40	K9004855	BOLT M8X50	BOULON	6					
41	K9005158	CYL.HEAD COVER ASS'Y	CULASSE	1					
42	K9005150	PLATE;BAFFLE	PLAQUE	1					
43	K9004741	BAFFLE;BREATHER	CLOISON DE RENIFLARD	1					
44	K9004633	PLATE;DIAPHRAGM	PLAQUE	1					
45	K9004634	COVER;DIAPHRAGM	COUVERCLE	1					
46	K9004635	DIAPHRAGM	DIAPHRAGME	1					

(THIS PARTS BOOK IS FOR REFERENCE ONLY.
PART NUMBERS AND SERIAL NUMBERS MAY BE
OUTDATED. ALWAYS USE THE ONLINE PARTS SYSTEM)

DATE	JAN. 04, 2013
3rd EDITION	

Fig. 034 CYLINDER HEAD & COVER
COUVERTURE DE CULASSE

Serial No. ;

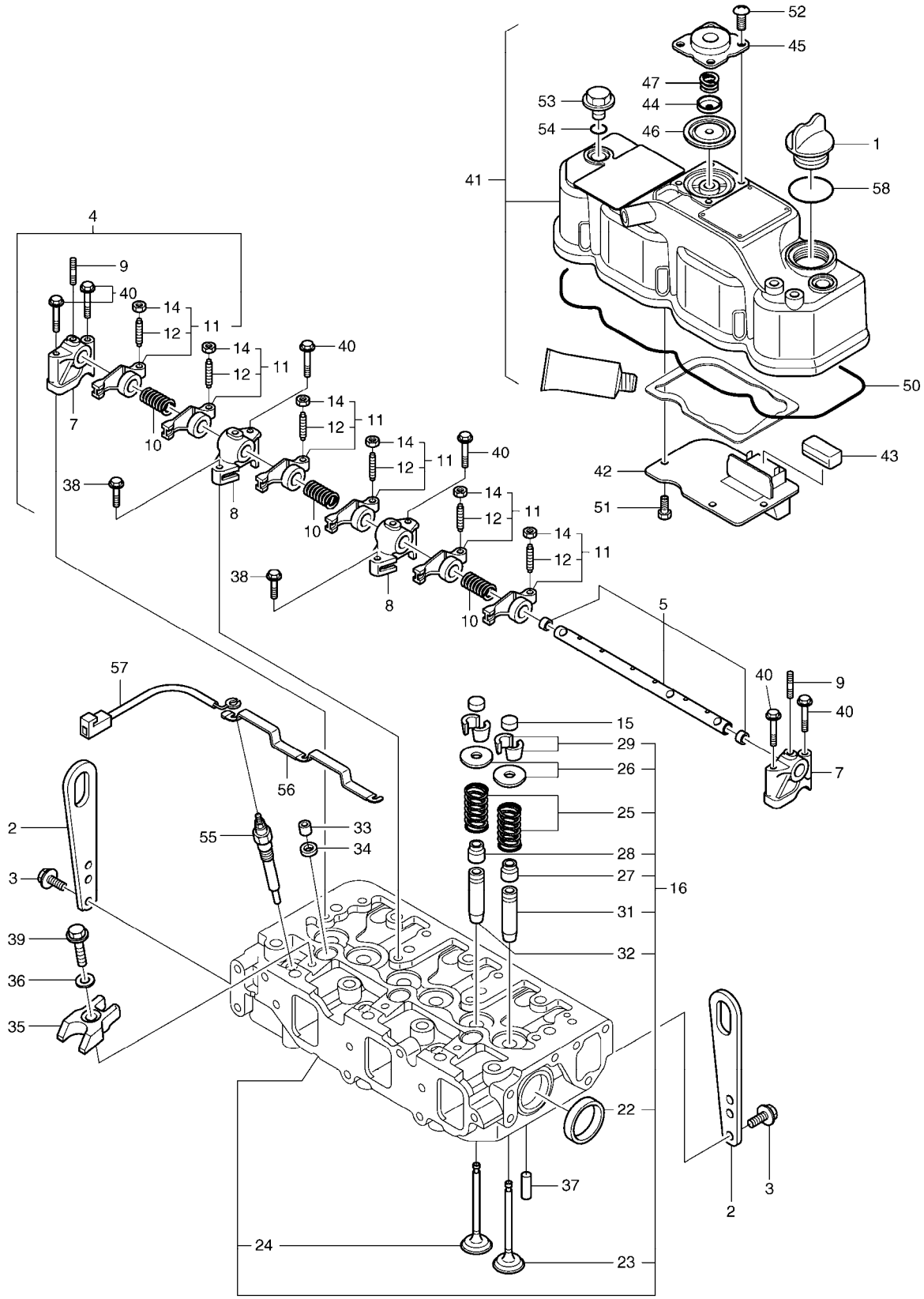

(THIS PARTS BOOK IS FOR REFERENCE ONLY.
PART NUMBERS AND SERAIL NUMBERS MAY BE
OUTDATED. ALWAYS USE THE ONLINE PARTS SYSTEM)

Fig. 034 CYLINDER HEAD & COVER
COUVERTURE DE CULASSE

Serial No. ;

Key No.	Part No.	Description	Description	Q'ty	S.C	Serial No.	ICA	Replaceable part	
								Part No.	Q'ty
034 -47	K9004636	SPRING;DIAPHRAGM	RESSORT	1					
50	K9005156	GASKET;COVER	JOINT	1					
51	2.120-00496	SCREW	VIS	4					
52	2.120-00496	SCREW	VIS	4					
53	2.132-00005	KNOB	BOUTON	3					
54	S8000120	O-RING	JOINT TORIQUE	3					
55	K9006450	PLUG;GLOW	BOUCHON	3					
56	K9006444	CONNECTOR	CONNECTEUR	1					
57	K9006445	HARNESS;GLOW PLUG	HARNAIS	1					
58	S8000320	O-RING	JOINT TORIQUE	1					

(THIS PARTS BOOK IS FOR REFERENCE ONLY.
PART NUMBERS AND SERAIL NUMBERS MAY BE
OUTDATED. ALWAYS USE THE ONLINE PARTS SYSTEM)

DATE	JAN. 04, 2013
3rd EDITION	

Fig. 035 INTAKE MANIFOLD TUBULURE D'CENTREE

Serial No. ;

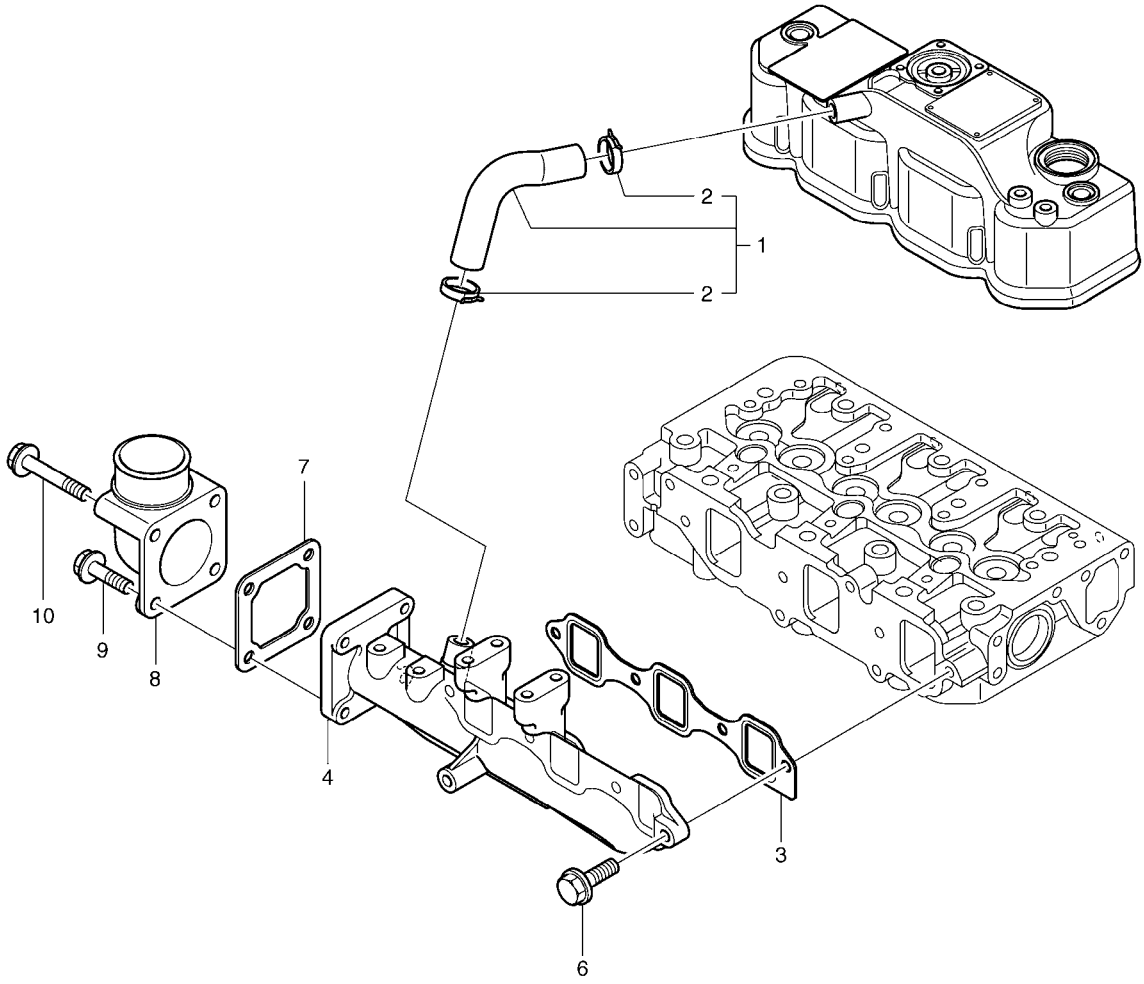

(THIS PARTS BOOK IS FOR REFERENCE ONLY.
PART NUMBERS AND SERAIL NUMBERS MAY BE
OUTDATED. ALWAYS USE THE ONLINE PARTS SYSTEM)

DATE	JAN. 04, 2013
3rd EDITION	

Fig. 035 INTAKE MANIFOLD
TUBULURE D'CENTREE

Serial No. ;

Key No.	Part No.	Description	Description	Q'ty	S.C	Serial No.	ICA	Replaceable part	
								Part No.	Q'ty
035 -1	K9006431	PIPE;BREATHER	TUYAU	1					
2	K9004776	CLAMP	BRIDE	2					
3	K9006446	GASKET;INT.MANIFOLD	JOINT	1					
4	K9006432	MAINFOLD;INTAKE	MAINFOLD	1					
6	K9004854	BOLT M8X25	BOULON	4					
7	K9004753	GASKET	JOINT	1					
8	K9004836	BEND	COURBURE	1					
9	K9004854	BOLT M8X25	BOULON	2					
10	K9006456	BOLT M8X65	BOULON	2					

(THIS PARTS BOOK IS FOR REFERENCE ONLY.
PART NUMBERS AND SERAIL NUMBERS MAY BE
OUTDATED. ALWAYS USE THE ONLINE PARTS SYSTEM)

DATE	JAN. 04, 2013
3rd EDITION	

Fig. 036 EXHAUST MANIFOLD & MUFFLER
TUBULURE ET SILENCIEUX D'ECHAPPEMENT

Serial No. ;

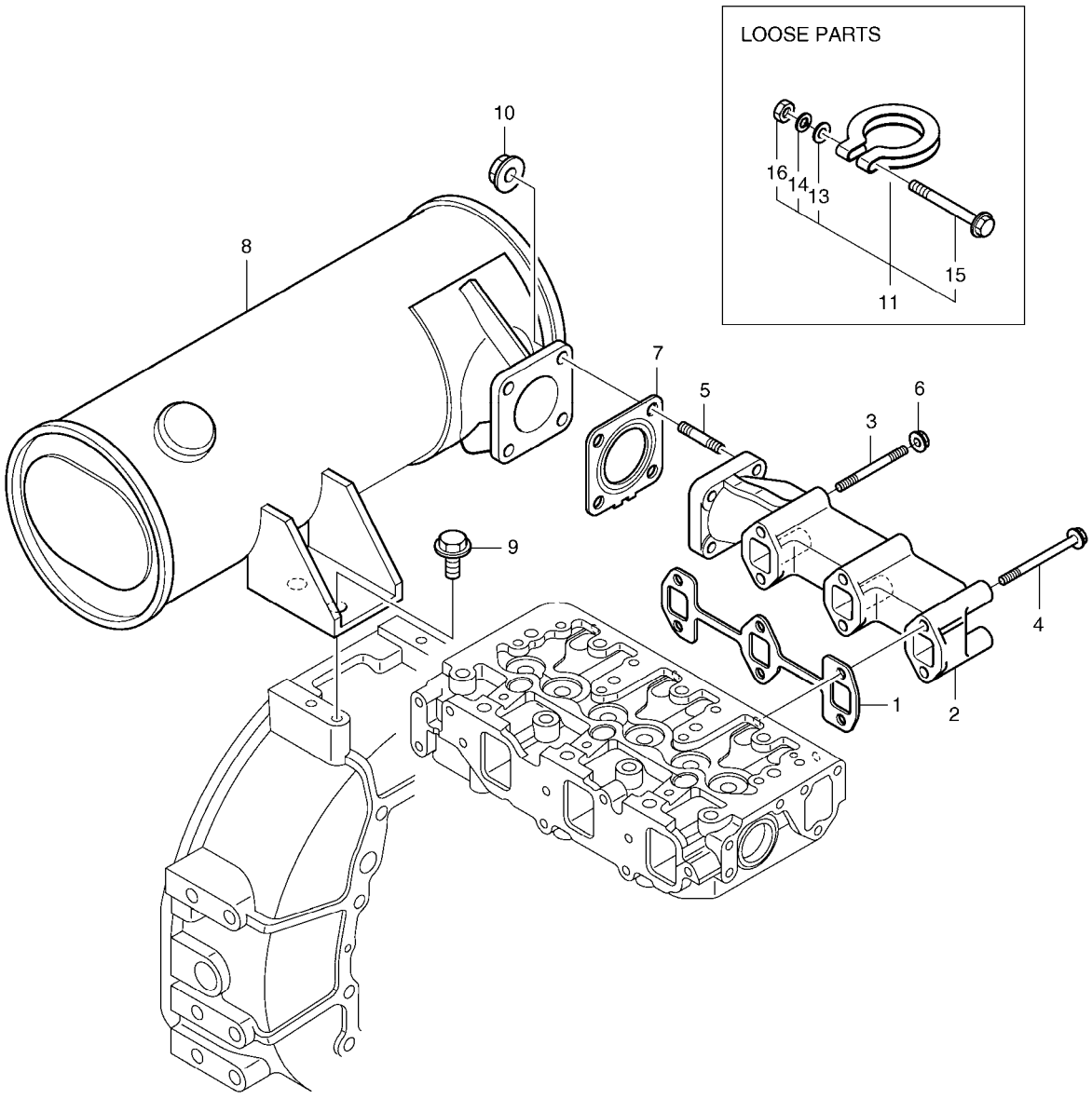

(THIS PARTS BOOK IS FOR REFERENCE ONLY.
PART NUMBERS AND SERAIL NUMBERS MAY BE
OUTDATED. ALWAYS USE THE ONLINE PARTS SYSTEM)

DATE	JAN. 04, 2013
3rd EDITION	

Fig. 036 EXHAUST MANIFOLD & MUFFLER
TUBULURE ET SILENCIEUX D'ECHAPPEMENT

Serial No. ;

Key No.	Part No.	Description	Description	Q'ty	S.C	Serial No.	ICA	Replaceable part	
								Part No.	Q'ty
036 -1	K9005189	GASKET;EXHAUST MANIFOLD	JOINT	1					
2	K9005164	MANIFOLD;EXHAUST	COLLECTEUR	1					
3	2.120-00856	BOLT;STUD	BOULON	2					
4	2.120-00855	BOLT M8X80	BOULON	4					
5	2.120-00147	BOLT M8X22	BOULON	4					
6	2.121-00267	NUT	ECROU	2					
7	K9004704	GASKET;MUFFLER	JOINT	1					
8	K9004771	MUFFLER	SILENCIEUX	1					
9	2.120-00862	BOLT M10X20	BOULON	2					
10	2.121-00267	NUT	ECROU	4					
11	K9004672	CLAMP	BRIDE	1					
13	K9004837	WASHER	RONDELLE	1					
14	K9004842	WASHER;SPRING	RONDELLE ELASTIQUE	1					
15	2.120-00144	BOLT M10X65	BOULON	1					
16	K9004858	NUT	ECROU	1					

(THIS PARTS BOOK IS FOR REFERENCE ONLY.
PART NUMBERS AND SERAIL NUMBERS MAY BE
OUTDATED. ALWAYS USE THE ONLINE PARTS SYSTEM)

DATE	JAN. 04, 2013
3rd EDITION	

Fig. 037 CAMSHAFT & DRIVING GEAR
ARBRE DE CAME

Serial No. ;

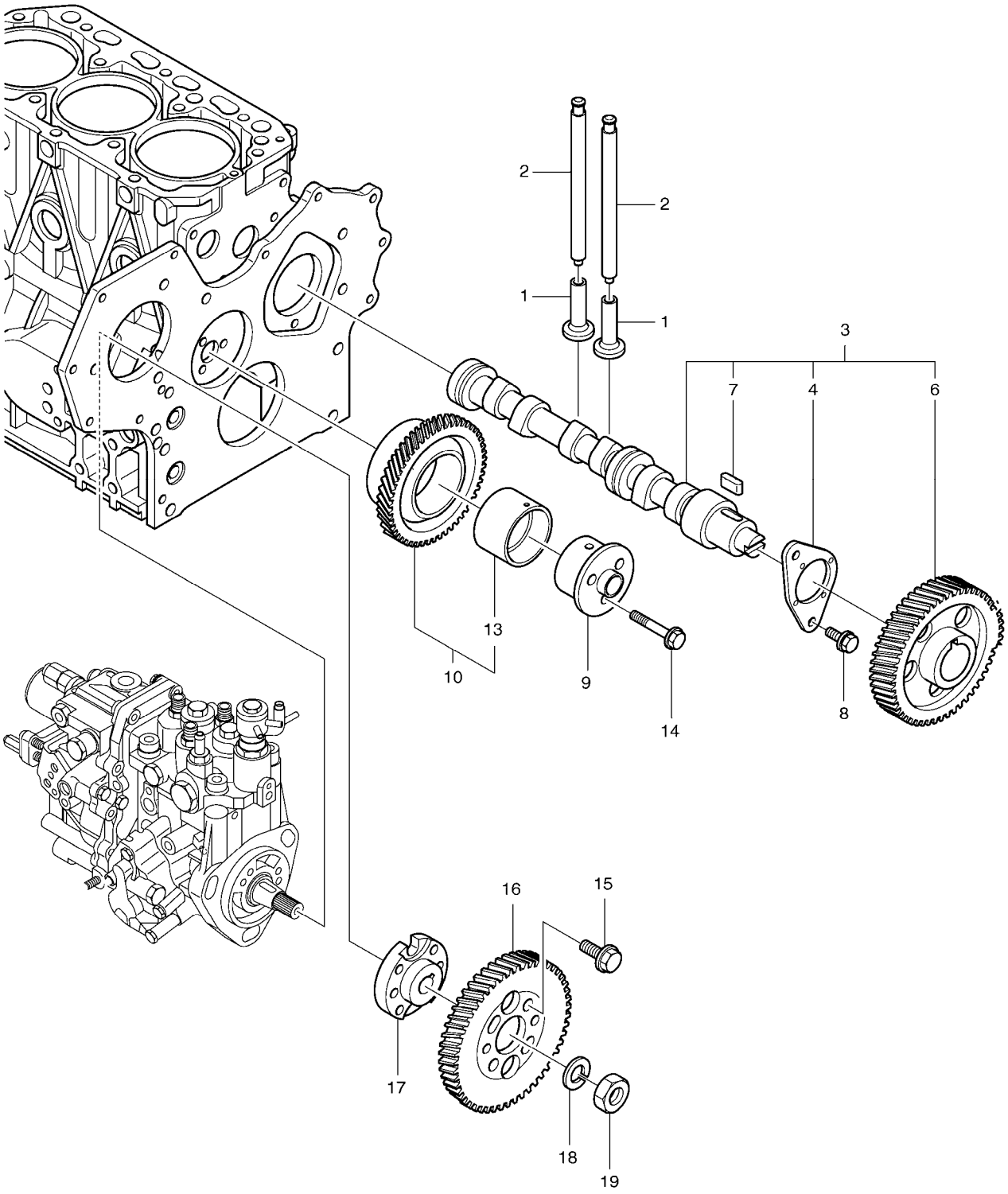

(THIS PARTS BOOK IS FOR REFERENCE ONLY.
PART NUMBERS AND SERAIL NUMBERS MAY BE
OUTDATED. ALWAYS USE THE ONLINE PARTS SYSTEM)

DATE	JAN. 04, 2013
3rd EDITION	

Fig. 037 CAMSHAFT & DRIVING GEAR
ARBRE DE CAME

Serial No. ;

Key No.	Part No.	Description	Description	Q'ty	S.C	Serial No.	ICA	Replaceable part	
								Part No.	Q'ty
037 -1	2.429-00133	TAPPET	TRINGLERIE	6					
2	K9005191	ROD;PUSH	TIGE DE POUSSOIR	6					
3	K9005165	CAMSHAFT ASS'Y	ENSEMBLE DE ARBRE A C/	1					
4	2.177-00050	METAL;THRUST	METAL	1					
6	K9004744	GEAR;CAMSHAFT	PIGNON	1					
7	2.113-00005	KEY	CLE	1					
8	2.120-00041	BOLT M8X14	BOULON	2					
9	K9006439	SHAFT;IDLE GEAR	ARBRE	1					
10	K9004643	IDLE GEAR ASS'Y	VITESSE A VIDE	1					
13	K9004642	BUSH;IDLE GEAR	DOUILLE	1					
14	2.120-00139	BOLT;PLATED M8X40	BOULON	3					
15	K9004748	BOLT	BOULON	4					
16	K9004644	GEAR;PUMP	PIGNON	1					
17	K9004804	FLANGE	BRIDE	1					
18	K9004843	WASHER;SPRING	RONDELLE ELASTIQUE	1					
19	K9004859	NUT;LOCK	ECROU	1					

(THIS PARTS BOOK IS FOR REFERENCE ONLY.
PART NUMBERS AND SERAIL NUMBERS MAY BE
OUTDATED. ALWAYS USE THE ONLINE PARTS SYSTEM)

DATE	JAN. 04, 2013
3rd EDITION	

Fig. 038 CRANKSHAFT & PISTON
VILEBREQUIN & PISTON

Serial No. ;

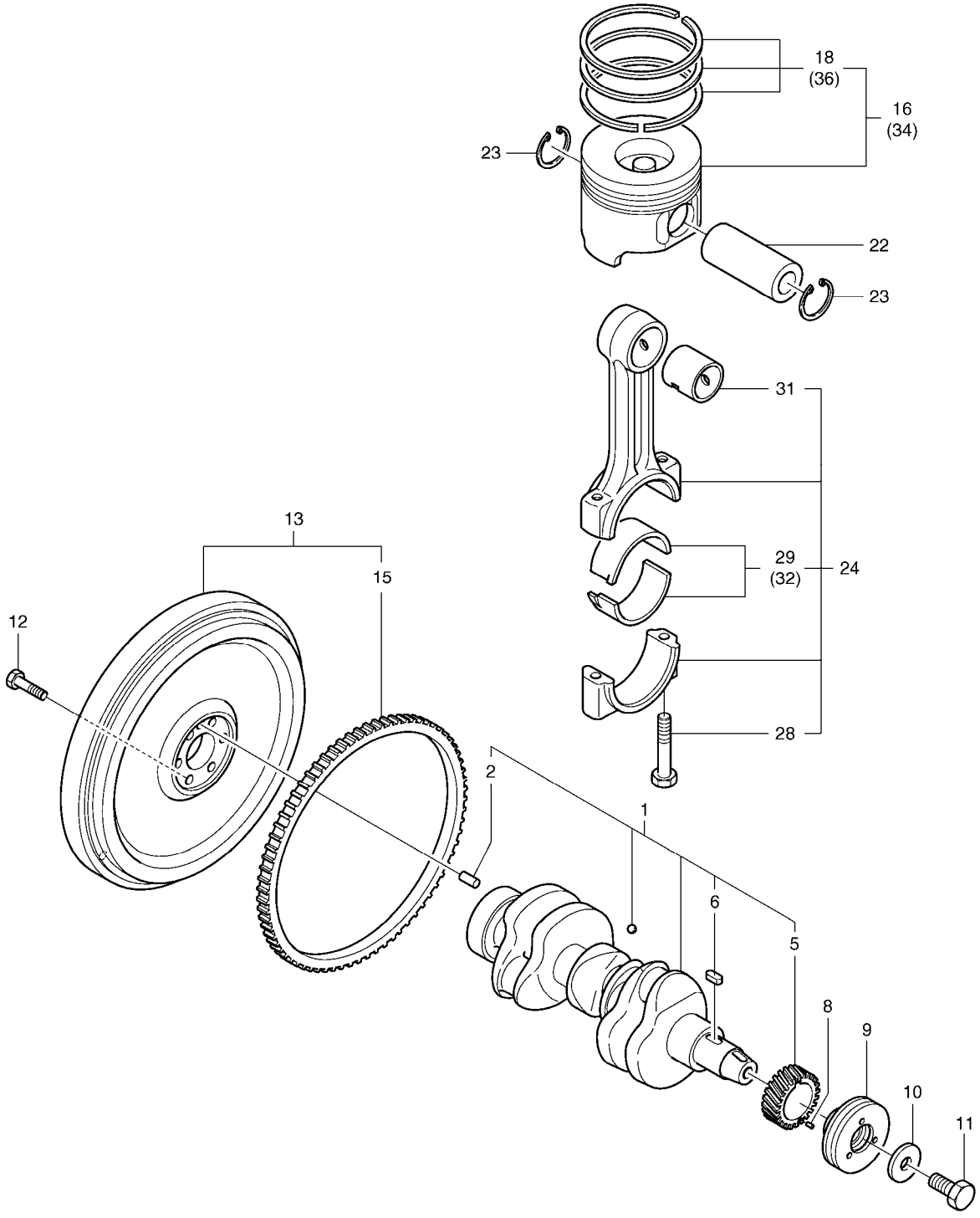

(THIS PARTS BOOK IS FOR REFERENCE ONLY.
PART NUMBERS AND SERAIL NUMBERS MAY BE
OUTDATED. ALWAYS USE THE ONLINE PARTS SYSTEM)

DATE	JAN. 04, 2013
3rd EDITION	

Fig. 038 CRANKSHAFT & PISTON
VILEBREQUIN & PISTON

Serial No. ;

Key No.	Part No.	Description	Description	Q'ty	S.C	Serial No.	ICA	Replaceable part	
								Part No.	Q'ty
038 -1	K9006436	CRANKSHAFT ASS'Y	VILEBREQUIN	1					
2	S5701041	PIN;PARALLEL	GOUPILLE	1					
5	K9006437	GEAR;CRANKSHAFT	PIGNON	1					
6	2.113-00005	KEY	CLE	1					
8	S5740490	PIN;SPRING	GOUPILLE	1					
9	K9005167	PULLEY;CRANKSHAFT	POULIE	1					
10	K9004799	WASHER	RONDELLE	1					
11	2.120-00858	BOLT;V-PULLEY	BOULON	1					
12	2.120-00225	BOLT;FLYWHEEL	BOULON	6					
13	K9005217	FLYWEEL ASS'Y	FLYWEEL	1					
15	K9004666	GEAR;RING	PIGNON	1					
16	K9006438	PISTON ASS'Y	ENSEMBLE PISTON	3					
18	K9005169	PISTON RING SET	BAGUE	3					
22	K9005205	PIN;PISTON	GOUPILLE	3					
23	K9005221	RING	BAGUE	6					
24	K9005227	CONNECTING ROD ASS'Y	BIELLE ASS'Y	3					
28	K9005192	BOLT;CONNECTING ROD	BOULON	6					
29	K9005193	METAL;CRANK	METAL	3					
31	K9005195	BUSH;PISTON PIN	DOUILLE	3					
32	K9005194	METAL;CRANK (0.25)	METAL DETRAQUE	3	US				
34	K9006458	PISTON;W/RING (0.25)	PISTON	3	OS				
36	K9005225	RING;SET (0.25)	BAGUE	3	OS				

(THIS PARTS BOOK IS FOR REFERENCE ONLY.
PART NUMBERS AND SERAIL NUMBERS MAY BE
OUTDATED. ALWAYS USE THE ONLINE PARTS SYSTEM)

DATE	JAN. 04, 2013
3rd EDITION	

Fig. 039 LUB.OIL SYSTEM SYSTEME D'HUILE

Serial No. ;

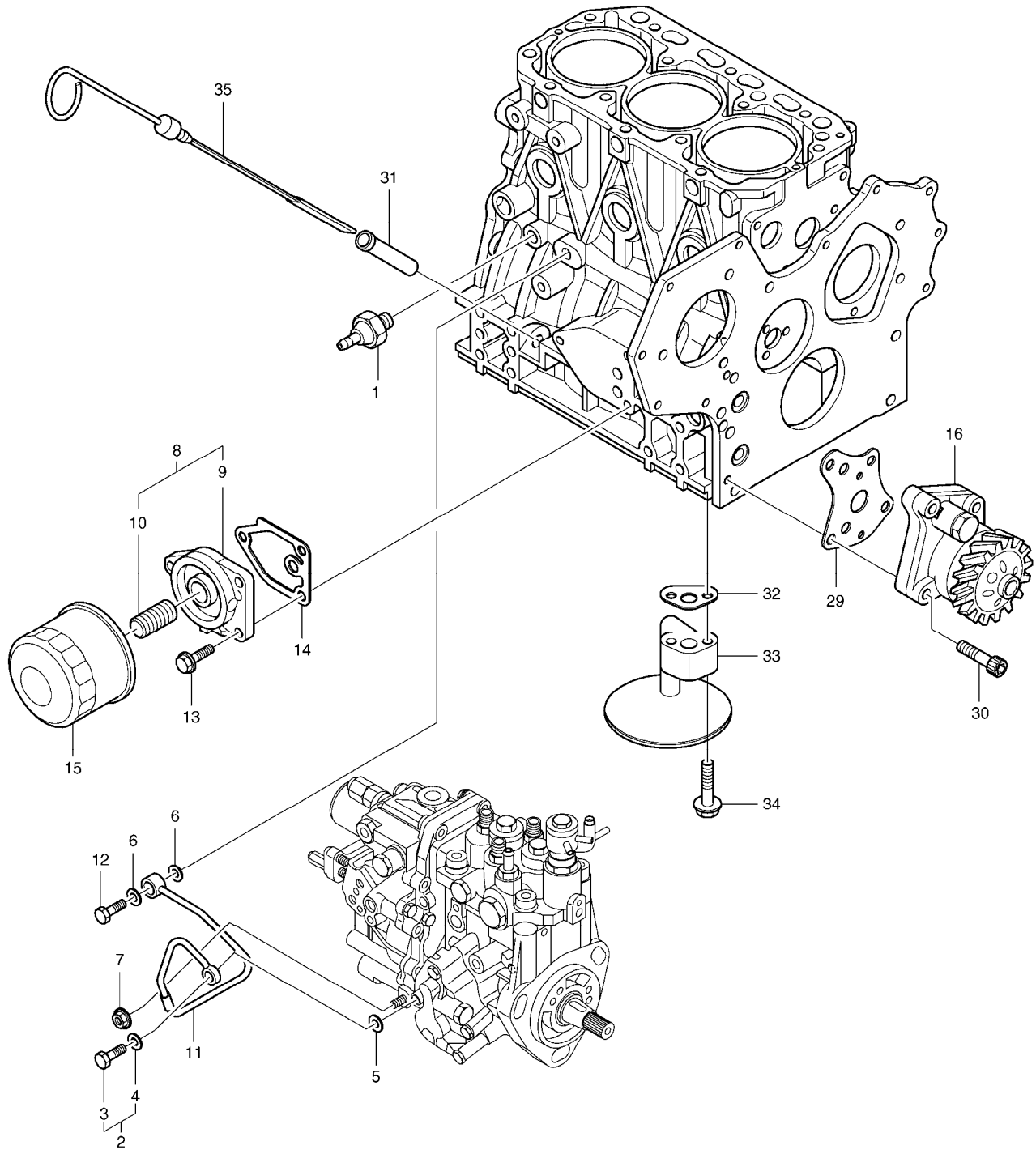

(THIS PARTS BOOK IS FOR REFERENCE ONLY.
PART NUMBERS AND SERAIL NUMBERS MAY BE
OUTDATED. ALWAYS USE THE ONLINE PARTS SYSTEM)

DATE	JAN. 04, 2013
3rd EDITION	

Fig. 039 LUB.OIL SYSTEM SYSTEME D'HUILE

Serial No. ;

Key No.	Part No.	Description	Description	Q'ty	S.C	Serial No.	ICA	Replaceable part	
								Part No.	Q'ty
039 -1	A408117	SWITCH;OIL PRESS	COMMUTATEUR	1					
2	2.313-00001	BOLT ASS'Y;JOINT	BOULON	1					
3	2.120-00258	BOLT;JOINT	BOULON	1					
4	2.114-00889	WASHER;SEAL	RONDELLE	1					
5	2.114-00889	WASHER;SEAL	RONDELLE	1					
6	K9004838	SEAL;WASHER	BAGUE D'ETANCHEITE	2					
7	2.121-00092	NUT	ECROU	1					
8	K9004650	BRACKET ASS'Y;FILTER	SUPPORT	1					
9	K9005171	BRACKET;FILTER	SUPPORT	1					
10	K9004727	STUD	BOULON	1					
11	K9004651	PIPE ASS'Y;LUB.OIL	ENSEMBLE DE TUYAU	1					
12	K9004679	BOLT	BOULON	1					
13	2.120-00137	BOLT M8X20	BOULON	3					
14	K9004750	GASKET	JOINT	1					
15	K1025334	FILTER;OIL	FILTRE	1					
16	K9006447	PUMP;OIL	POMPE DE HUILE	1					
29	K9006453	GASKET	JOINT	1					
30	K9006457	BOLT	BOULON	4					
31	2.429-00043	GUIDE;OIL GAUGE	GUIDE	1					
32	K9004749	GASKET	JOINT	1					
33	K9005196	PIPE ASS'Y;OIL INLET	ENSEMBLE DE TUYAU	1					
34	2.120-00145	BOLT M8X35	BOULON	2					
35	K9005170	DIPSTICK;LUB.OIL	JAUGEUR	1					

(THIS PARTS BOOK IS FOR REFERENCE ONLY.
PART NUMBERS AND SERAIL NUMBERS MAY BE
OUTDATED. ALWAYS USE THE ONLINE PARTS SYSTEM)

DATE	JAN. 04, 2013
3rd EDITION	

Fig. 040 COOLING WATER SYSTEM
SYSTEME DE REFROIDISSEMENT

Serial No. ;

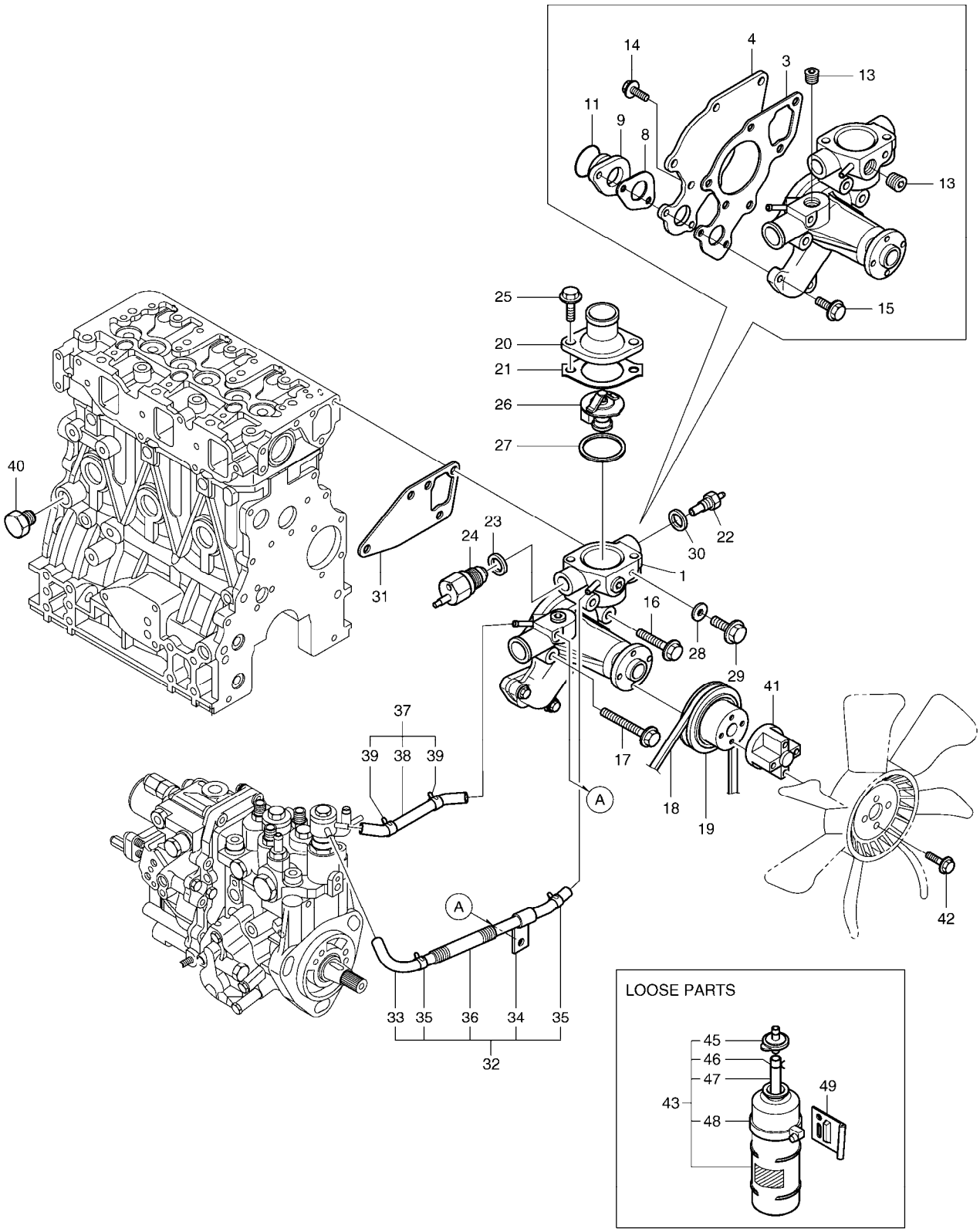

(THIS PARTS BOOK IS FOR REFERENCE ONLY.
PART NUMBERS AND SERAIL NUMBERS MAY BE
OUTDATED. ALWAYS USE THE ONLINE PARTS SYSTEM)

DATE	JAN. 04, 2013
3rd EDITION	

Fig. 040 COOLING WATER SYSTEM
SYSTEME DE REFROIDISSEMENT

Serial No. ;

Key No.	Part No.	Description	Description	Q'ty	S.C	Serial No.	ICA	Replaceable part	
								Part No.	Q'ty
040 -1	K9006433	WATER PUMP ASS'Y	ENSEMBLE POMPE A EAU	1					
3	K9005197	GASKET	JOINT	1					
4	K9005198	PLATE	PLAQUE	1					
8	K9005199	GASKET	JOINT	1					
9	K9005200	PIPE	TUYAU	1					
11	K9005210	O-RING	JOINT TORIQUE	1					
13	2181-1116D3	PLUG;HEX. SOCKET	BOUCHON	2					
14	K9002144	BOLT M6X14	BOULON	2					
15	2.120-00150	BOLT M6X20	BOULON	2					
16	2.120-00145	BOLT M8X35	BOULON	1					
17	2.120-00148	BOLT;PLATED M8X55	BOULON	3					
18	DS3202026	BELT;FAN	COURROIE	1					
19	K9005967	PULLEY	POULIE	1					
20	K9004773	COVER;THERMOSTAT	COUVERCLE	1					
21	D465096	GASKET	JOINT	1					
22	2.549-00029	THERMOMETER	THERMOMETRE	1					
23	180-00222	GASKET	JOINT	1					
24	2.549-00027	SWITCH;THERMO	COMMUTATEUR	1					
25	2.120-00861	BOLT M8X22	BOULON	2					
26	K9004754	THERMOSTAT	THERMOSTAT	1					
27	K9004751	GASKET	JOINT	1					
28	2.180-00100	GASKET	JOINT	1					
29	2.120-00143	BOLT M8X12	BOULON	1					
30	2.180-00054	GASKET	JOINT	1					
31	K9005215	GASKET	JOINT	1					
32	K9005173	PIPE ASS'Y	ENSEMBLE DE TUYAU	1					
33	K9005175	PIPE ASS'Y	ENSEMBLE DE TUYAU	1					
34	K9004653	CLAMP	BRIDE	1					
35	2.124-00086	CLAMP	BRIDE	2					
36	K9005178	TUBE;CORRUGATED	TUYAU FLEXIBLE	1					
37	K9005174	PIPE ASS'Y	ENSEMBLE DE TUYAU	1					
38	K9005176	PIPE;WATER	TUYAU	1					
39	2.124-00086	CLAMP	BRIDE	2					
40	2.181-00353	PLUG;DRAIN	BOUCHON	1					
41	K9005968	SPACER	DOUILLE D'ECARTEMENT	1					
42	2.120-00150	BOLT M6X20	BOULON	4					
43	K9004681	TANK;RESERVE	RESERVOIR	1					
45	K9004682	CAP	CHAPEAU	1					

(THIS PARTS BOOK IS FOR REFERENCE ONLY.
PART NUMBERS AND SERIAL NUMBERS MAY BE
OUTDATED. ALWAYS USE THE ONLINE PARTS SYSTEM)

DATE	JAN. 04, 2013
3rd EDITION	

Fig. 040 COOLING WATER SYSTEM
SYSTEME DE REFROIDISSEMENT

Serial No. ;

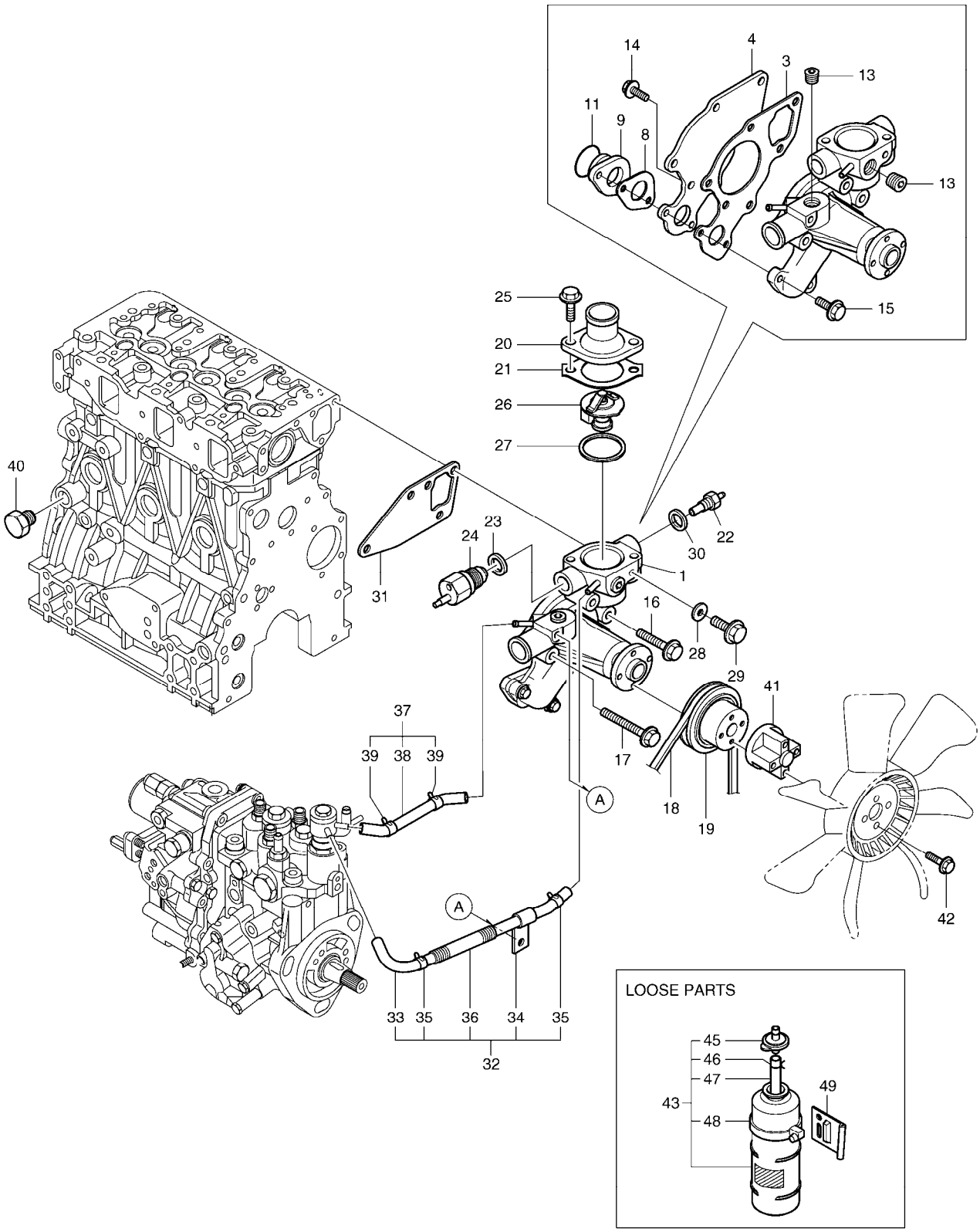

(THIS PARTS BOOK IS FOR REFERENCE ONLY.
PART NUMBERS AND SERAIL NUMBERS MAY BE
OUTDATED. ALWAYS USE THE ONLINE PARTS SYSTEM)

Fig. 040 COOLING WATER SYSTEM
SYSTEME DE REFROIDISSEMENT

Serial No. ;

Key No.	Part No.	Description	Description	Q'ty	S.C	Serial No.	ICA	Replaceable part	
								Part No.	Q'ty
040 -46	K9004684	CLAMP	BRIDE	1					
47	K9004847	PIPE	TUYAU	1					
48	K9004683	CLAMP;SUB TANK	COLLIER	1					
49	K9004673	BRACKET;SUB TANK	SUPPORT	1					

(THIS PARTS BOOK IS FOR REFERENCE ONLY.
PART NUMBERS AND SERAIL NUMBERS MAY BE
OUTDATED. ALWAYS USE THE ONLINE PARTS SYSTEM)

DATE	JAN. 04, 2013
3rd EDITION	

Fig. 041 FUEL INJECTION PUMP
POMPE D'INJECTION

Serial No. ;

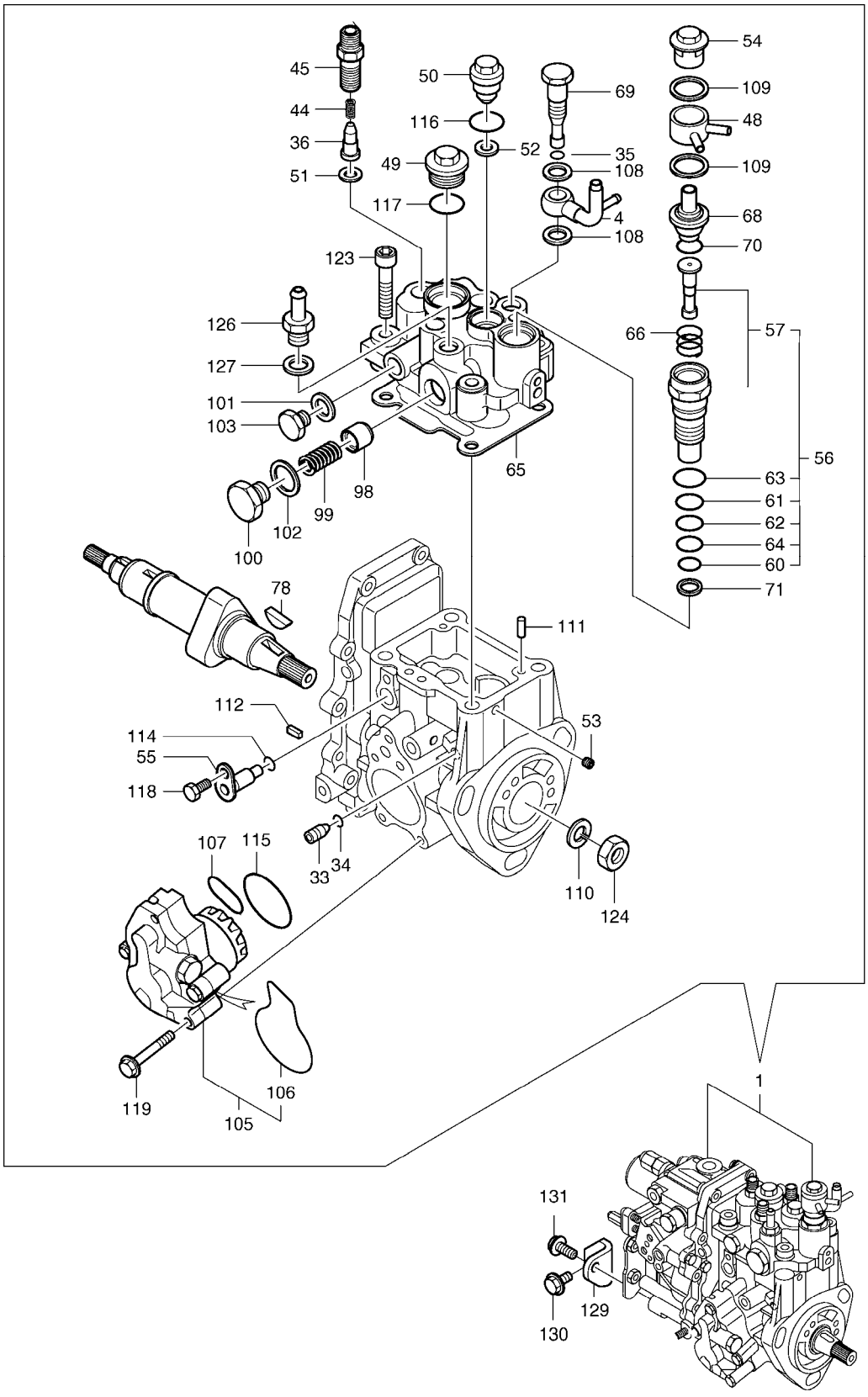

(THIS PARTS BOOK IS FOR REFERENCE ONLY.
PART NUMBERS AND SERAIL NUMBERS MAY BE
OUTDATED. ALWAYS USE THE ONLINE PARTS SYSTEM)

DATE	JAN. 04, 2013
3rd EDITION	

Fig. 041 FUEL INJECTION PUMP
POMPE D'INJECTION

Serial No. ;

Key No.	Part No.	Description	Description	Q'ty	S.C	Serial No.	ICA	Replaceable part	
								Part No.	Q'ty
041 -1	K9006460	INJECTION PUMP ASS'Y	PIPE D'INJECTION	1					
4	K9004808	JOINT	JOINT	1					
33	K9004830	STOPPER	ARRET	1					
34	K9004828	O-RING	JOINT TORIQUE	1					
35	K9004828	O-RING	JOINT TORIQUE	1					
36	K9006448	DELIVERY VALVE ASS'Y	SOUPAPE DE MANOEUVRE	3					
44	K9004829	SPRING	RESSORT	3					
45	K9006449	HOLDER;DELIVERY	SUPPORT	3					
48	K9004817	JOINT;COOLING WATER	L'EAU DE REFROIDISSEME	1					
49	K9004833	PLUG	BOUCHON	1					
50	K9004656	BARREL;PLUG	BARIL DE PRISE	1					
51	K9004805	WASHER	RONDELLE	3					
52	K9004805	WASHER	RONDELLE	1					
53	K9004826	PLUG	BOUCHON	1					
54	K9004883	PLUG	BOUCHON	1					
55	K9004806	LIFTER	POUSSOIR	1					
56	K9004657	TIMER;SET	TEMPORISATEUR	1					
57	-	TIMER;CMP	TEMPORISATEUR	1	D				
60	K9004821	O-RING	JOINT TORIQUE	1					
61	K9004659	RING;BACKUP	BAGUE	1					
62	K9004660	O-RING	JOINT TORIQUE	1					
63	K9004852	PACKING	EMBALLAGE	1					
64	K9004853	RING;BACKUP	BAGUE	1					
65	K9004807	PACKING;HEAD	EMBALLAGE	1					
66	K9004818	SPRING;TIMER	RESSORT	1					
68	K9004819	ELEMENT;THERMO	ELEMENT	1					
69	K9004834	JOINT	JOINT	1					
70	K9004820	O-RING	JOINT TORIQUE	1					
71	K9004822	PACKING;TIMER	EMBALLAGE	1					
78	K9004654	KEY	CLE	1					
98	K9004831	PISTON	PISTON	1					
99	K9006145	SPRING	AMORTISSEUR ASS`Y	1					
100	K9004835	PLUG	BOUCHON	1					
101	2.114-01090	SEAL;WASHER	BAGUE D`ETANCHEITE	1					
102	K9004841	SEAL;WASHER	BAGUE D`ETANCHEITE	1					
103	K9004850	PLUG	BOUCHON	1					
105	K9004810	PUMP;FUEL FEED	ALIMENTATION DE PUMP;F	1					
106	K9004813	O-RING	JOINT TORIQUE	1					

(THIS PARTS BOOK IS FOR REFERENCE ONLY.
PART NUMBERS AND SERIAL NUMBERS MAY BE
OUTDATED. ALWAYS USE THE ONLINE PARTS SYSTEM)

DATE	JAN. 04, 2013
3rd EDITION	

Fig. 041 FUEL INJECTION PUMP
POMPE D'INJECTION

Serial No. ;

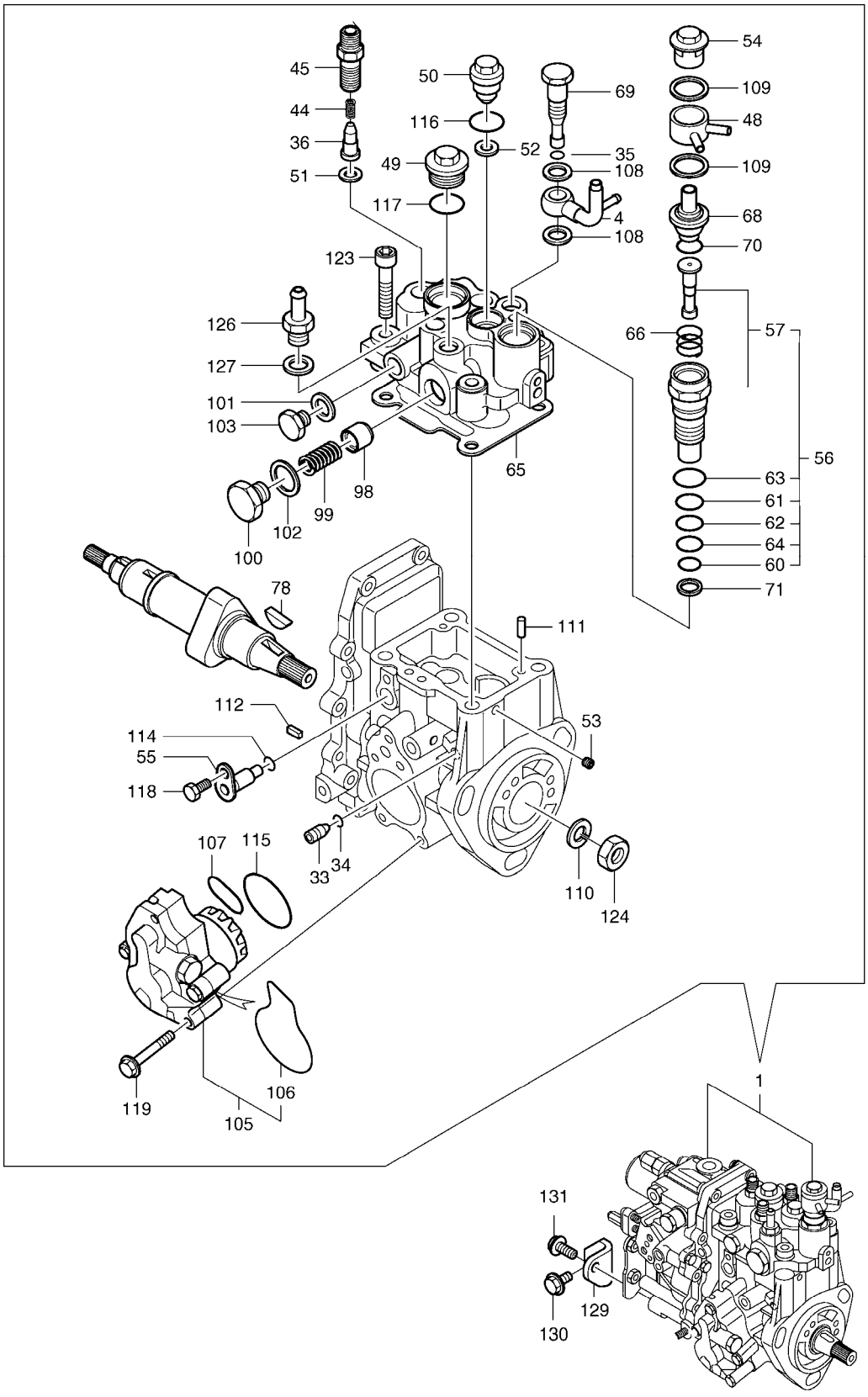

(THIS PARTS BOOK IS FOR REFERENCE ONLY.
PART NUMBERS AND SERAIL NUMBERS MAY BE
OUTDATED. ALWAYS USE THE ONLINE PARTS SYSTEM)

Fig. 041 FUEL INJECTION PUMP
POMPE D'INJECTION

Serial No. ;

Key No.	Part No.	Description	Description	Q'ty	S.C	Serial No.	ICA	Replaceable part	
								Part No.	Q'ty
041 -107	K9004811	O-RING	JOINT TORIQUE	1					
108	2.114-01090	SEAL;WASHER	BAGUE D`ETANCHEITE	2					
109	K9004841	SEAL;WASHER	BAGUE D`ETANCHEITE	2					
110	K9004843	WASHER;SPRING	RONDELLE ELASTIQUE	1					
111	K9004845	PIN;PARALLEL	GOUPILLE	2					
112	K9004846	PIN;SPRING	GOUPILLE	2					
114	S8000070	O-RING	JOINT TORIQUE	1					
115	K9004812	O-RING	JOINT TORIQUE	1					
116	K9004851	O-RING	JOINT TORIQUE	1					
117	K9004852	PACKING	EMBALLAGE	1					
118	2.120-00039	BOLT M6X10	BOULON	1					
119	K9004823	BOLT	BOULON	4					
123	K9004857	BOLT M8X45	BOULON	4					
124	K9004859	NUT;LOCK	ECROU	1					
126	K9006070	JOINT;PIPE	JOINT DE TUYAU	1					
127	2.114-01090	SEAL;WASHER	BAGUE D`ETANCHEITE	1					
129	K9004655	BRACKET;PUMP	SUPPORT	1					
130	2.120-00136	BOLT;PLATED M8X16	BOULON	1					
131	2.120-00137	BOLT M8X20	BOULON	1					

(THIS PARTS BOOK IS FOR REFERENCE ONLY.
PART NUMBERS AND SERAIL NUMBERS MAY BE
OUTDATED. ALWAYS USE THE ONLINE PARTS SYSTEM)

DATE	JAN. 04, 2013
3rd EDITION	

Fig. 042 GOVERNOR GOUVERNEUR

Serial No. ;

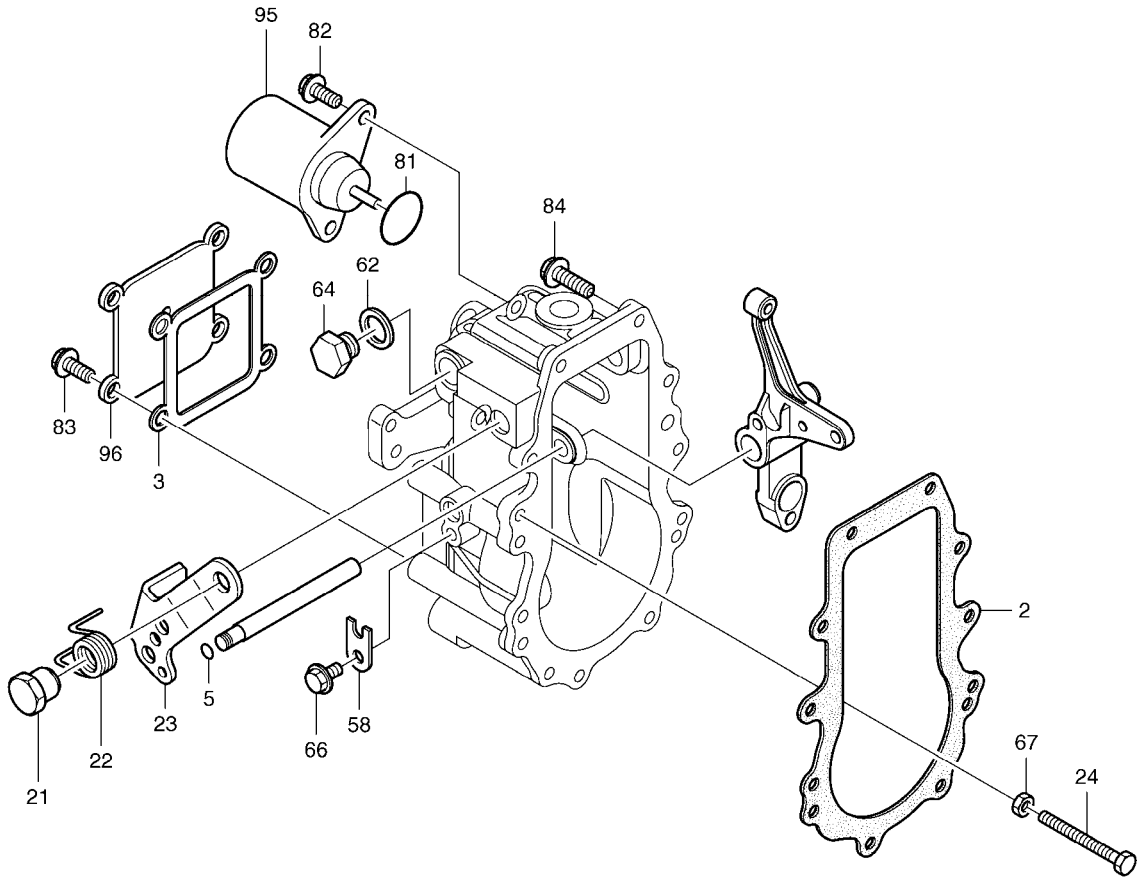

(THIS PARTS BOOK IS FOR REFERENCE ONLY.
PART NUMBERS AND SERAIL NUMBERS MAY BE
OUTDATED. ALWAYS USE THE ONLINE PARTS SYSTEM)

DATE	JAN. 04, 2013
3rd EDITION	

Fig. 042 GOVERNOR GOUVERNEUR

Serial No. ;

Key No.	Part No.	Description	Description	Q'ty	S.C	Serial No.	ICA	Replaceable part	
								Part No.	Q'ty
042 -2	K9004824	PACKING;CASE	EMBALLAGE DE CAS	1					
3	K9004825	PACKING	EMBALLAGE	1					
5	2.180-00359	O-RING	JOINT TORIQUE	1					
21	K9002134	NUT	ECROU	1					
22	K9002135	SPRING	RESSORT	1					
23	K9004815	LEVER;REGULATOR	LEVIER DE REGULATEUR	1					
24	K9002138	BOLT;IDEL LIMIT	BOULON	1					
58	2.115-00054	RETAINER;SHAFT	ARRETOIR	1					
62	K9004840	SEAL;WASHER	BAGUE D'ETANCHEITE	1					
64	K9004850	PLUG	BOUCHON	1					
66	2.120-00039	BOLT M6X10	BOULON	1					
67	2.121-00176	NUT;LOCK	ECROU	1					
81	K9004816	O-RING	JOINT TORIQUE	1					
82	K9002144	BOLT M6X14	BOULON	2					
83	K9002144	BOLT M6X14	BOULON	4					
84	2.120-00150	BOLT M6X20	BOULON	10					
95	K9004603	SOLENOID;STOP	SOLENOIDE	1					
96	K9005219	COVER;CASE	COUVERCLE	1					

(THIS PARTS BOOK IS FOR REFERENCE ONLY.
PART NUMBERS AND SERAIL NUMBERS MAY BE
OUTDATED. ALWAYS USE THE ONLINE PARTS SYSTEM)

DATE	JAN. 04, 2013
3rd EDITION	

Fig. 043 FUEL INJECTION VALVE
VANNE D'INJECTION

Serial No. ;

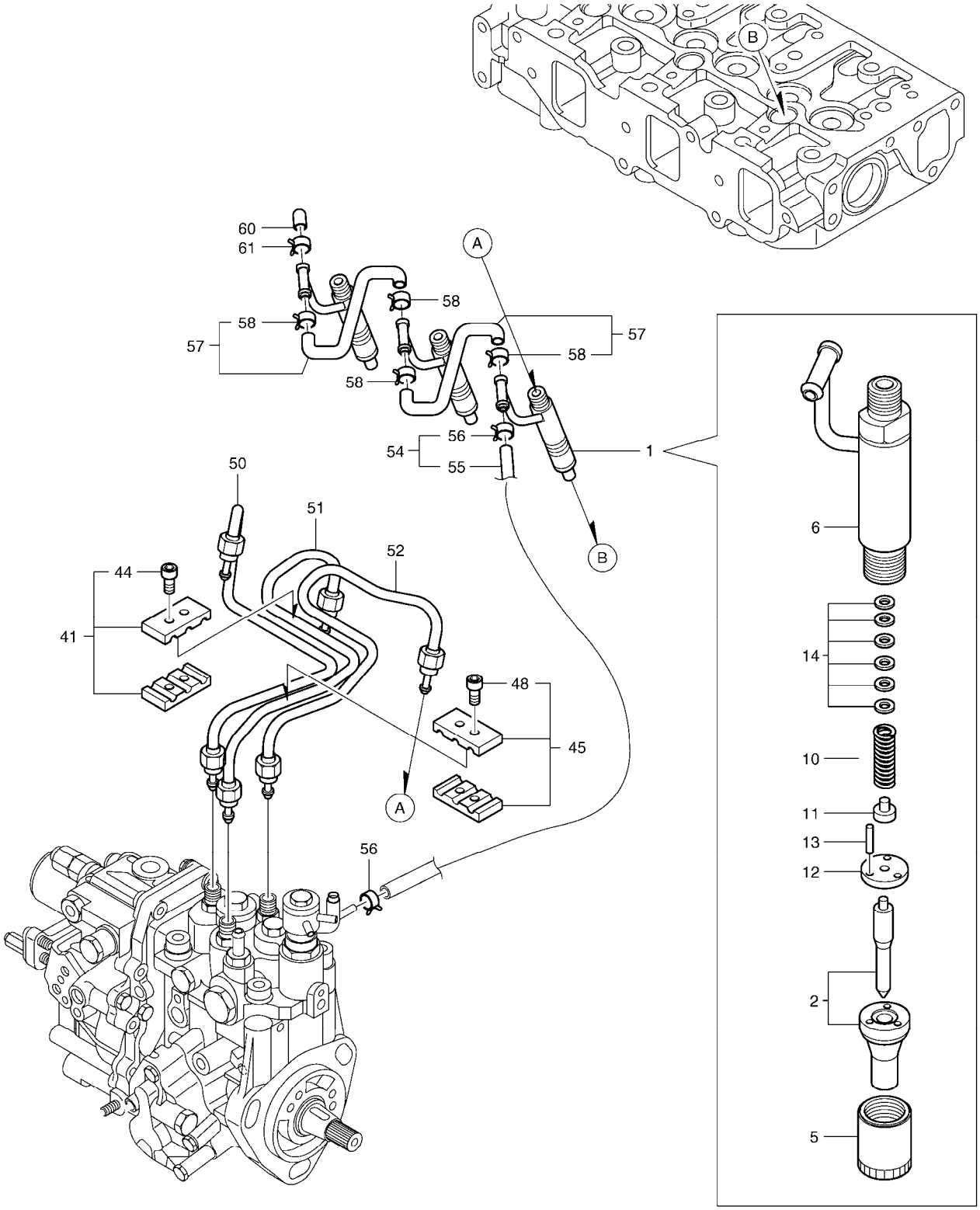

(THIS PARTS BOOK IS FOR REFERENCE ONLY.
PART NUMBERS AND SERAIL NUMBERS MAY BE
OUTDATED. ALWAYS USE THE ONLINE PARTS SYSTEM)

DATE	JAN. 04, 2013
3rd EDITION	

Fig. 043 FUEL INJECTION VALVE
VANNE D'INJECTION

Serial No. ;

Key No.	Part No.	Description	Description	Q'ty	S.C	Serial No.	ICA	Replaceable part	
								Part No.	Q'ty
043 -1	K9006461	INJECTOR;FUEL	INJECTEUR DE CARBURAI	3					
2	K9006454	NOZZLE;CMP	BEC	3					
5	2.121-00085	NUT	ECROU	3					
6	K9004661	HOLDER NOZZLE ASS'Y	BEC DE SUPPORT	3					
10	2.131-00258	SPRING	RESSORT	3					
11	2.427-00019	SEAT;NOZZLE SPRING	SIEGE	3					
12	2.412-00266	PLATE;STOP	PLAQUE	3					
13	2.123-00088	PIN	GOUPILLE	6					
14	K9006440	SHIM;PACK	CALE	3					
41	2.115-00008	RETAINER	ARRETOIR	1					
44	2.120-00050	BOLT M4X14	BOULON	1					
45	K9004752	RETAINER;INJ PIPE	ARRETOIR	1					
48	2.120-00050	BOLT M4X14	BOULON	2					
50	K9006441	INJECTION PIPE	PIPE D'INJECTION	1					
51	K9006442	INJECTION PIPE	PIPE D'INJECTION	1					
52	K9006443	INJECTION PIPE	PIPE D'INJECTION	1					
54	K9004662	RETURN PIPE ASS'Y	PIPE DE RETOUR	1					
55	K9004663	PIPE;FUEL RETURN	TUYAU	1					
56	2.124-00086	CLAMP	BRIDE	2					
57	2.140-00105	PIPE;FUEL RETURN	PIPE DE RETOUR DE CARE	2					
58	2.124-00086	CLAMP	BRIDE	4					
60	K9004605	CAP	CHAPEAU	1					
61	K9004677	CLAMP	BRIDE	1					

(THIS PARTS BOOK IS FOR REFERENCE ONLY.
PART NUMBERS AND SERAIL NUMBERS MAY BE
OUTDATED. ALWAYS USE THE ONLINE PARTS SYSTEM)

DATE	JAN. 04, 2013
3rd EDITION	

Fig. 044 FUEL LINE
LIGNE DE CARBURANT

Serial No. ;

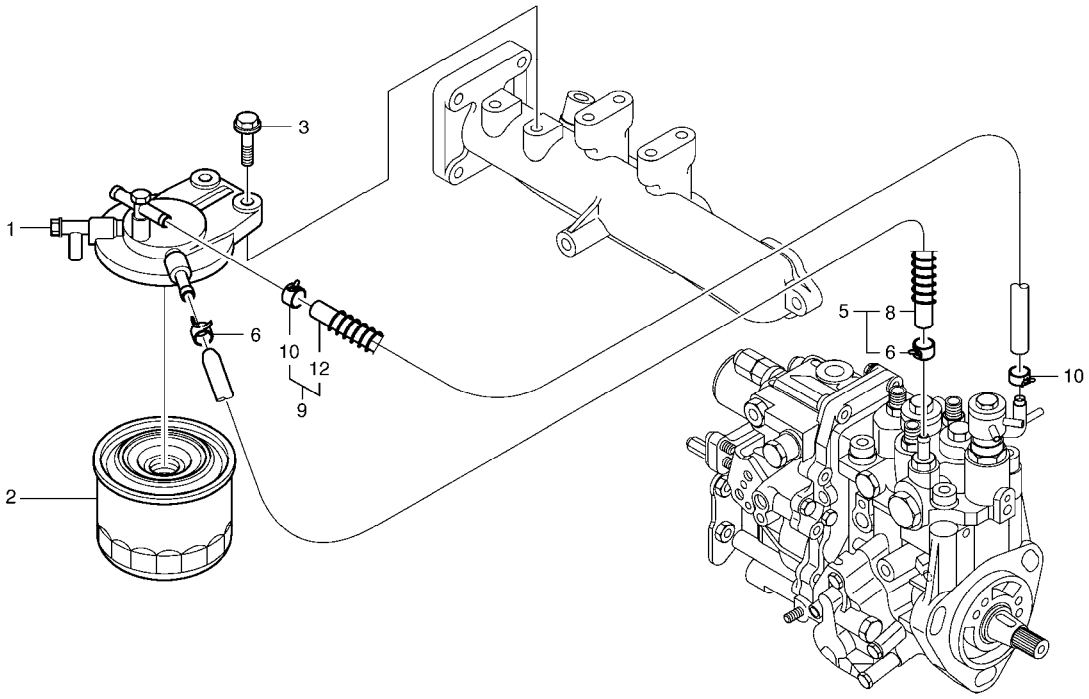

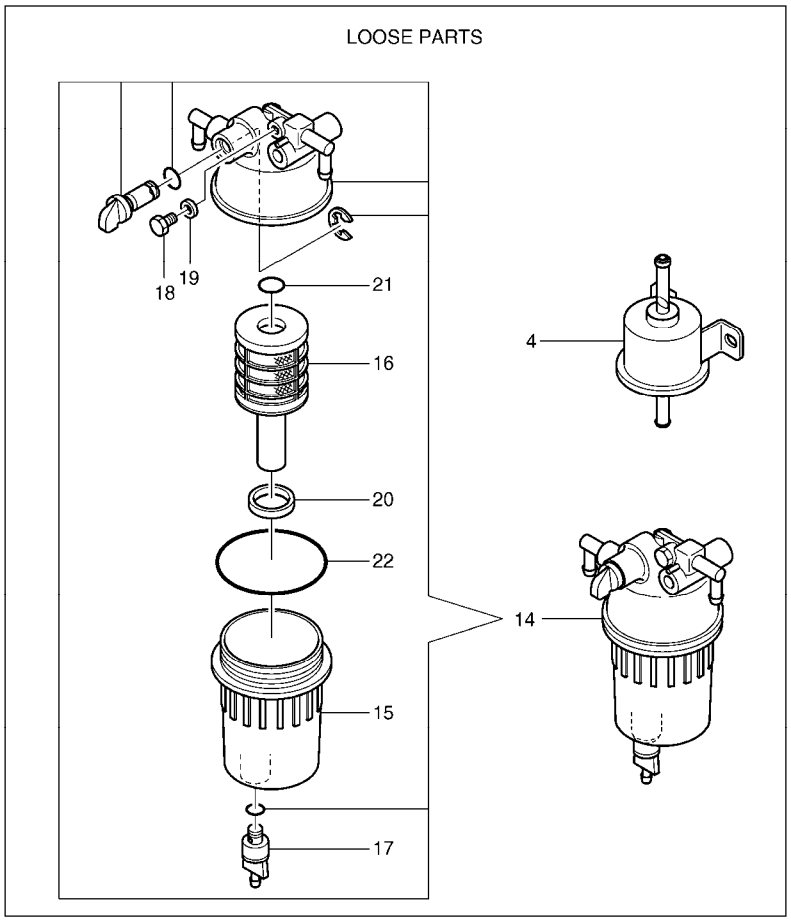

(THIS PARTS BOOK IS FOR REFERENCE ONLY.
PART NUMBERS AND SERAIL NUMBERS MAY BE
OUTDATED. ALWAYS USE THE ONLINE PARTS SYSTEM)

DATE	JAN. 04, 2013
3rd EDITION	

Fig. 044 FUEL LINE
LIGNE DE CARBURANT

Serial No. ;

Key No.	Part No.	Description	Description	Q'ty	S.C	Serial No.	ICA	Replaceable part	
								Part No.	Q'ty
044 -1	K9004714	BRACKET;FUEL FILTER	SUPPORT	1					
2	K1045098	FILTER;E/G FUEL	FILTRE	1					
3	2.120-00138	BOLT M8X30	BOULON	2					
5	K9006451	FUEL PIPE ASS'Y	PIPE DE CARBURANT	1					
6	2.124-00020	CLAMP	BRIDE	2					
8	K9006452	PIPE;FUEL OIL	TUYAU	1					
9	K9006455	FUEL PIPE ASS'Y	PIPE DE CARBURANT	1					
10	2.124-00020	CLAMP	BRIDE	2					
12	K9006429	PIPE;FUEL	TUYAU	1					
4	K9004786	PUMP;FUEL FEED	POMPE	1					
14	K9005937	SEPARATOR ASS'Y	SEPARATEUR	1					
15	A408253	CUP	TASSE	1					
16	A408254	ELEMENT	ELEMENT	1					
17	A408255	PLUG;DRAIN	BOUCHON	1					
18	A408256	PLUG;BREATHER	BOUCHON	1					
19	A408257	PACKING;BREATHER	EMBALLAGE	1					
20	A408258	PACKING	DOUILLE D`ECARTEMENT	1					
21	S8000161	O-RING	JOINT TORIQUE	1					
22	A408260	O-RING	JOINT TORIQUE	1					

(THIS PARTS BOOK IS FOR REFERENCE ONLY.
PART NUMBERS AND SERAIL NUMBERS MAY BE
OUTDATED. ALWAYS USE THE ONLINE PARTS SYSTEM)

DATE	JAN. 04, 2013
3rd EDITION	

Fig. 045 STARTING MOTOR DEMARREUR

Serial No. ;

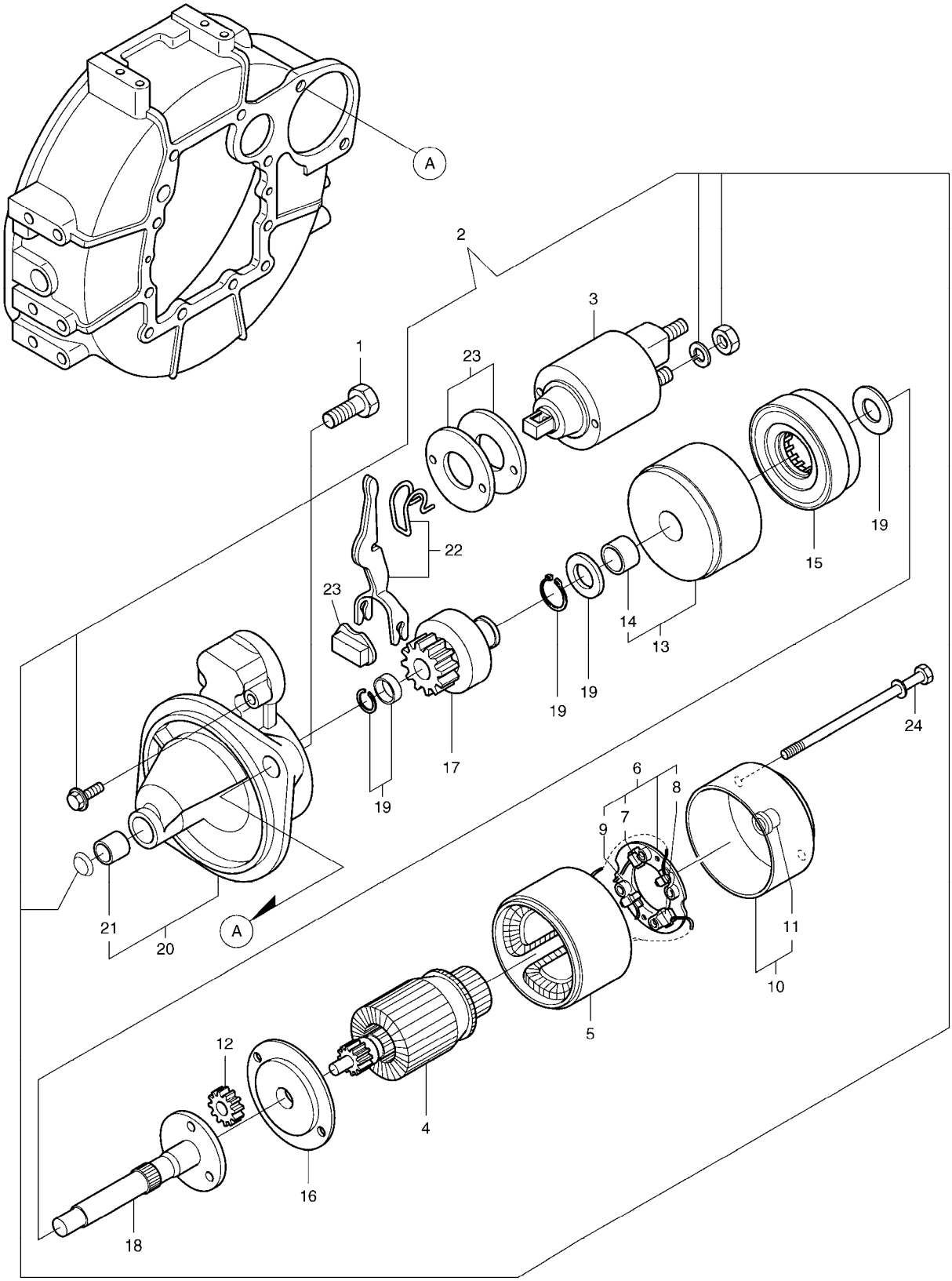

(THIS PARTS BOOK IS FOR REFERENCE ONLY.
PART NUMBERS AND SERAIL NUMBERS MAY BE
OUTDATED. ALWAYS USE THE ONLINE PARTS SYSTEM)

DATE	JAN. 04, 2013
3rd EDITION	

Fig. 045 STARTING MOTOR DEMARREUR

Serial No. ;

Key No.	Part No.	Description	Description	Q'ty	S.C	Serial No.	ICA	Replaceable part	
								Part No.	Q'ty
045 -1	2.120-00052	BOLT M12X25	BOULON	2					
2	K9004758	STARTER	DEMARREUR	1					
3	K9004788	MAGNETIC SWITCH ASS'Y	COMMUTATEUR MAGNETI	1					
4	K9004884	ARMATURE ASS'Y	ARMATURE	1					
5	K9004759	YOKE ASS'Y	JOUG	1					
6	K9004760	BRUSH HOLDER ASS'Y	SUPPORT DE BROSSE	1					
7	K9004761	BRUSH	BROSSE	2					
8	K9004762	BRUSH;SET	BROSSE	1					
9	K9004763	BRUSH;SPRING	BROSSE	4					
10	K9004764	REAR COVER ASS'Y	COUVERCLE	1					
11	K9004765	REAR COVER METAL	METAL DE COUVERTURE A	1					
12	K9004602	PLANET;GEAR	PIGNON DE PLANETE	3					
13	K9004766	BRACKET;CENTER(P)	SUPPORT	1					
14	K9004789	BRACKET	SUPPORT	1					
15	K9004790	INTERNAL;GEAR	VITESSE INTERNE	1					
16	K9004767	BRACKET;CENTER(A)	SUPPORT	1					
17	K9004791	PINION ASS'Y	PIGNON	1					
18	K9004792	SHAFT	ARBRE	1					
19	K9004793	WASHER	RONDELLE	1					
20	K9004768	GEAR CASE ASS'Y	CAISSE DE PIGNON	1					
21	K9004870	METAL;STARTER	METAL	1					
22	K9004769	SHIFT LEVER SET	DECALEZ L'ENSEMBLE DE	1					
23	K9004770	DUST;COVER KIT	KIT DE COUVERTURE	1					
24	2.120-00331	BOLT;THROUGH	BOULON	2					

(THIS PARTS BOOK IS FOR REFERENCE ONLY.
PART NUMBERS AND SERAIL NUMBERS MAY BE
OUTDATED. ALWAYS USE THE ONLINE PARTS SYSTEM)

DATE	JAN. 04, 2013
3rd EDITION	

Fig. 046 GENERATOR ALTERNATEUR

Serial No. ;

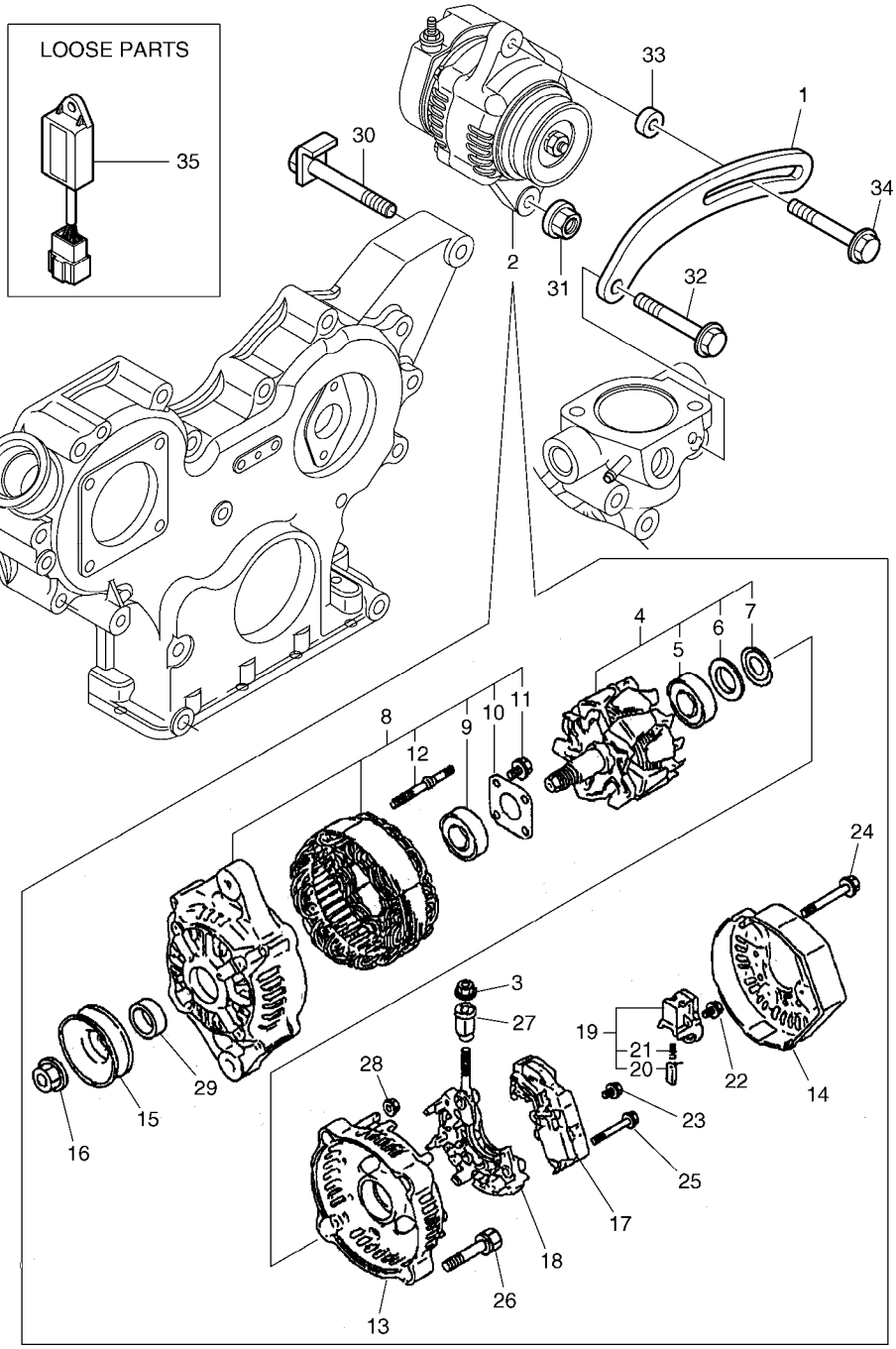

(THIS PARTS BOOK IS FOR REFERENCE ONLY.
PART NUMBERS AND SERAIL NUMBERS MAY BE
OUTDATED. ALWAYS USE THE ONLINE PARTS SYSTEM)

DATE	JAN. 04, 2013
3rd EDITION	

Fig. 046 GENERATOR ALTERNATEUR

Serial No. ;

Key No.	Part No.	Description	Description	Q'ty	S.C	Serial No.	ICA	Replaceable part	
								Part No.	Q'ty
046 -1	K9004665	ADJUSTER;BELT	AJUSTEZ	1					
2	K9004778	GENERATOR	GENERATEUR	1					
3	K9004871	NUT	ECROU	1					
4	K9004607	ROTOR ASS'Y	GROUPE ROTATIF	1					
5	K9004618	BEARING;BALL	ROULEMENT	1					
6	K9004619	COVER;BEARING	COUVERCLE	1					
7	K9004630	WASHER;THRUST	RONDELLE DE BUTEE	1					
8	K9004608	FLAME DRIVE ASS'Y	COMMANDE DE FLAMME	1					
9	K9004614	BEARING;BALL	ROULEMENT	1					
10	K9004615	PLATE	PLAQUE	1					
11	K9004616	SCREW	VIS	4					
12	K9004617	BOLT;STUD	BOULON DE GOUJON	2					
13	K9004609	FLAME REAR ASS'Y	ARRIERE DE FLAMME	1					
14	K9004779	COVER	COUVERCLE	1					
15	K9004610	PULLEY	POULIE	1					
16	K9004611	NUT	ECROU	1					
17	K9004780	REGULATOR ASS'Y	REGULATEUR	1					
18	K9004620	HOLDER	SUPPORT	1					
19	K9004621	HOLDER;BRUSH	SUPPORT	1					
20	K9004612	BRUSH ASS'Y	BROSSE	2					
21	K9004622	SPRING	RESSORT	2					
22	K9004623	SCREW	VIS	1					
23	K9004624	SCREW	VIS	1					
24	K9004625	BOLT	BOULON	3					
25	K9004626	SCREW;W/WASHER	VIS	2					
26	K9004627	BOLT	BOULON	2					
27	K9004628	INSULATION;BUSH	ISOLATION	1					
28	K9004629	NUT	ECROU	2					
29	K9004613	COLLAR	COLLIER	1					
30	K9006430	BOLT	BOULON	1					
31	2.121-00268	NUT	ECROU	1					
32	2.120-00044	BOLT M8X45	BOULON	1					
33	K9004668	ADJUSTER;BELT	AJUSTEZ	1					
34	K9004803	BOLT;ADJUSTING	BOULON	1					
35	537-00071	TIMER;ENGINE STOP	TEMPORISATEUR	1					

(THIS PARTS BOOK IS FOR REFERENCE ONLY.
PART NUMBERS AND SERAIL NUMBERS MAY BE
OUTDATED. ALWAYS USE THE ONLINE PARTS SYSTEM)

DATE	JAN. 04, 2013
3rd EDITION	

Fig. 047 GASKET SET
ENSEMBLE DE GARNITURE

Serial No. ;

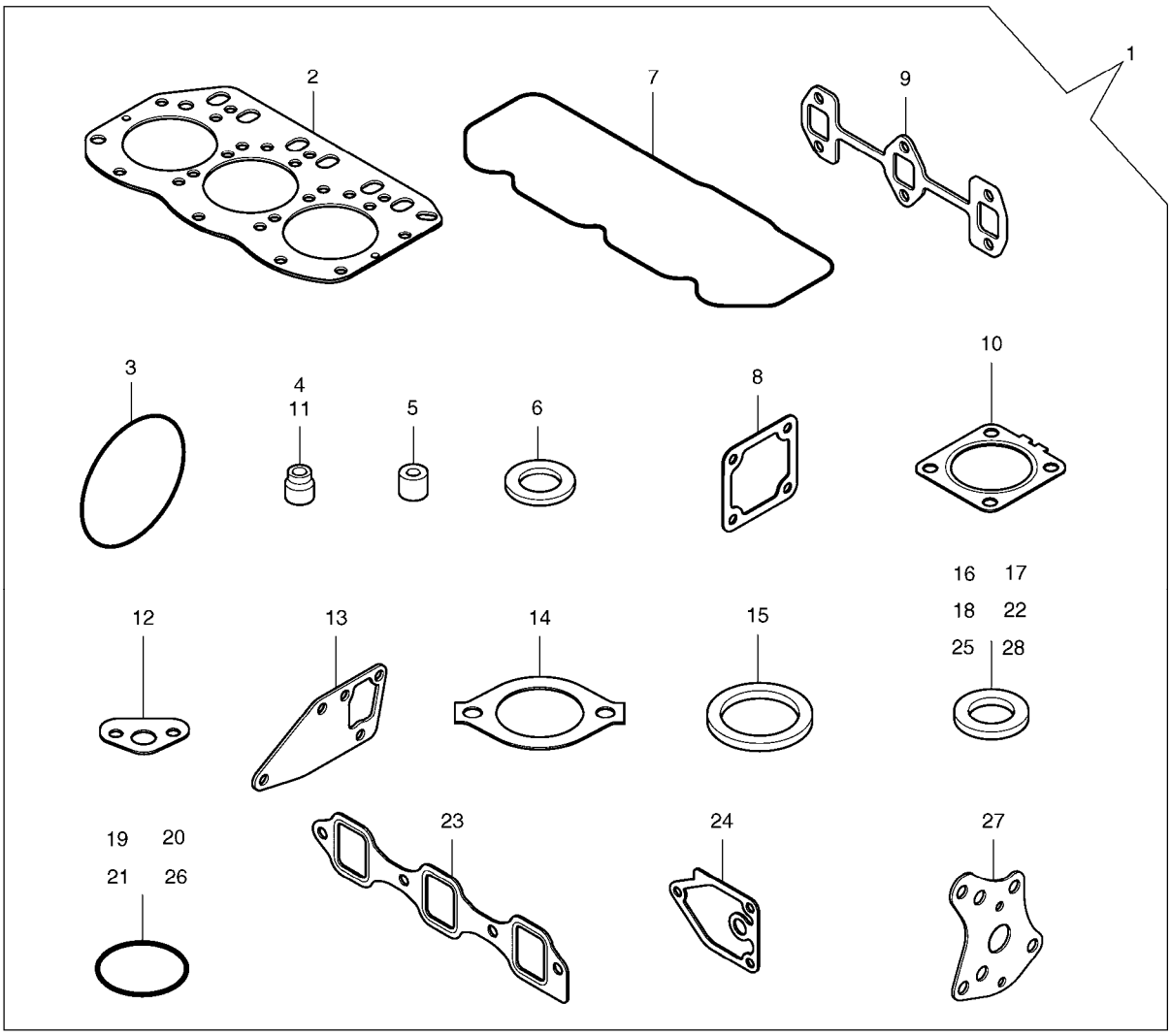

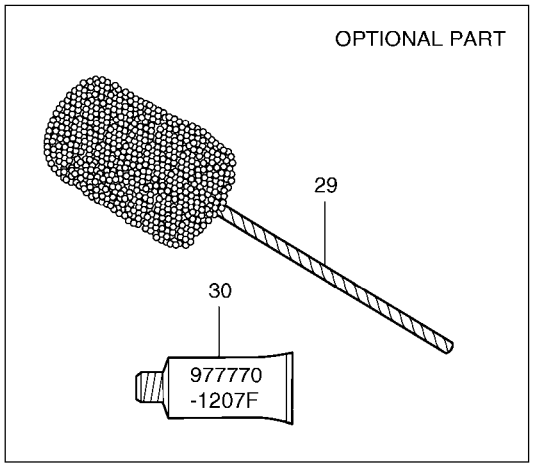

(THIS PARTS BOOK IS FOR REFERENCE ONLY.
PART NUMBERS AND SERAIL NUMBERS MAY BE
OUTDATED. ALWAYS USE THE ONLINE PARTS SYSTEM)

DATE	JAN. 04, 2013
3rd EDITION	

Fig. 047 GASKET SET
ENSEMBLE DE GARNITURE

Serial No. ;

Key No.	Part No.	Description	Description	Q'ty	S.C	Serial No.	ICA	Replaceable part	
								Part No.	Q'ty
047 -1	K9006459	GASKET SET(T-3)	JOINT	1					
2	K9005201	GASKET;HEAD	JOINT	1					
3	K9004676	O-RING	JOINT TORIQUE	1					
4	A408289	SEAL;VALVE STEM	JOINT	3					
5	2.158-00004	PROTECTOR;NOZZLE	PROTECTEUR	3					
6	2.427-00018	SEAT;NOZZLE	SIEGE	3					
7	K9005156	GASKET;COVER	JOINT	1					
8	K9004753	GASKET	JOINT	1					
9	K9005189	GASKET;EXHAUST MANIFOLD	JOINT	1					
10	K9004704	GASKET;MUFFLER	JOINT	3					
11	2.180-01240	SEAL;VALVE STEM	JOINT	3					
12	K9004749	GASKET	JOINT	1					
13	K9005215	GASKET	JOINT	1					
14	D465096	GASKET	JOINT	1					
15	K9004751	GASKET	JOINT	1					
16	2.180-00100	GASKET	JOINT	1					
17	2.114-00889	WASHER;SEAL	RONDELLE	7					
18	180-00222	GASKET	JOINT	1					
19	S8000120	O-RING	JOINT TORIQUE	3					
20	S8000320	O-RING	JOINT TORIQUE	2					
21	2.180-00355	O-RING	JOINT TORIQUE	1					
22	K9004838	SEAL;WASHER	BAGUE D'ETANCHEITE	2					
23	K9006446	GASKET;INT.MANIFOLD	JOINT	1					
24	K9004750	GASKET	JOINT	1					
25	2.180-00910	SEAL;WASHER	BAGUE D`ETANCHEITE	1					
26	K9004606	O-RING	JOINT TORIQUE	2					
27	K9006453	GASKET	JOINT	1					
28	2.180-00054	GASKET	JOINT	1					
29	K9005214	HORN;FLEX	AVERTISSEUR	1					
30	K9004868	GASKET;LIQUID	JOINT	1					

(THIS PARTS BOOK IS FOR REFERENCE ONLY.
PART NUMBERS AND SERAIL NUMBERS MAY BE
OUTDATED. ALWAYS USE THE ONLINE PARTS SYSTEM)

DATE	JAN. 04, 2013
3rd EDITION	

Fig. 1100 MAIN FRAME
BATI PRINCIPAL

Serial No. ;

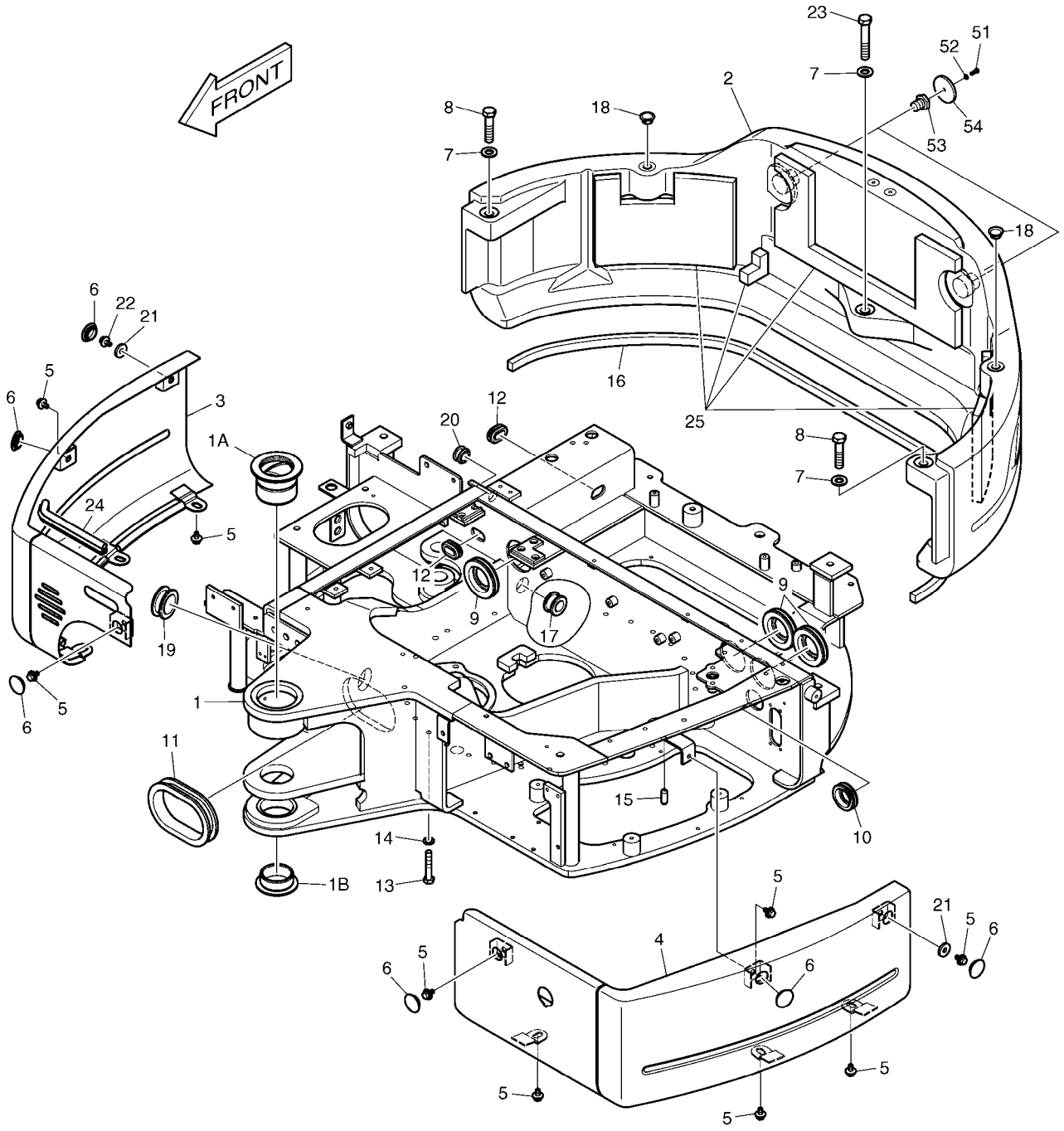

(THIS PARTS BOOK IS FOR REFERENCE ONLY.
PART NUMBERS AND SERAIL NUMBERS MAY BE
OUTDATED. ALWAYS USE THE ONLINE PARTS SYSTEM)

DATE	JAN. 04, 2013
3rd EDITION	

Fig. 1100 MAIN FRAME
BATI PRINCIPAL

Serial No. ;

Key No.	Part No.	Description	Description	Q'ty	S.C	Serial No.	ICA	Replaceable part	
								Part No.	Q'ty
1100 --	K1027376H	MAIN FRAME	ARMATURE PRINCIPALE	-	D				
1	K1027262C	FRAME;MAIN	ARMATURE PRINCIPALE	1		5001-5095			
	K1027262E	FRAME;MAIN	ARMATURE PRINCIPALE	1		5096-			
1A	K1011563A	. BUSH	. DOUILLE	1					
1B	K1036575	. BUSHING	. DOUILLE	1					
2	K1026033B	COUNTER WEIGHT(428kg)	CONTRE- POIDS	1					
3	K1016482A	COVER;SIDE(R.H)	COUVERCLE	1					
4	K1016483B	COVER;SIDE(L.H)	COUVERCLE	1					
5	DS0025033	BOLT;SET	BOULON	11					
6	K1008307	RUBBER	CAOUTCHOUC	6					
7	2114-1816A	WASHER	RONDELLE	3					
8	S0565666	BOLT M16X2.0X70	BOULON	2					
9	K1018322	BUSHING	DOUILLE	3					
10	K1018323	BUSHING	DOUILLE	1					
11	DS7601049	BUSHING;RUBBER	DOUILLE EN CAOUTCHOU	1					
12	DS7601043	BUSHING;RUBBER	DOUILLE EN CAOUTCHOU	2					
13	S0561166	BOLT M12X1.75X70	BOULON A 6 PANS	24					
14	S5102703	WASHER;SPRING	RONDELLE	24					
15	2123-2132	PIN;KNOCK	BROCHE	2					
16	K1017757B	RUBBER	CAOUTCHOUC	1					
17	K1010914A	GROMMET	CANON ISOLANT	1		5001-5066	I	K1010914B	1
	K1010914B	GROMMET	CANON ISOLANT	1		5067-			
18	K1026691	CAP	CHAPEAU	2					
19	K1028629	GROMMET	CANON ISOLANT	1					
20	2160-1004D48	BUSHING;RUBBER	BOUCHON	1					
21	DS5201079	SPACER	DOUILLE D'ECARTEMENT	2					
22	DS0025039	BOLT;SET	BOULON	1					
23	S0565966	BOLT	BOULON	1					
24	K1030389	TRIM;RUBBER	EQUILIBRE EN CAOUTCHC	1					
25	K1038892A	SPONGE	EPONGE	1		5001-5076	I	K1038892B	1
	K1038892B	SPONGE	EPONGE	1		5077-			
51	S3450853	SCREW	VIS	2					
52	S5102203	WASHER;SPRING	RONDELLE ELASTIQUE	2					
53	K1025394	PLUG	BOUCHON	2					
54	190-00078	REFLECTOR	REFLECTEUR	2					

(THIS PARTS BOOK IS FOR REFERENCE ONLY.
PART NUMBERS AND SERAIL NUMBERS MAY BE
OUTDATED. ALWAYS USE THE ONLINE PARTS SYSTEM)

DATE	JAN. 04, 2013
3rd EDITION	

Fig. 1110 ENGINE MOUNTING
MOTEUR

Serial No. ;

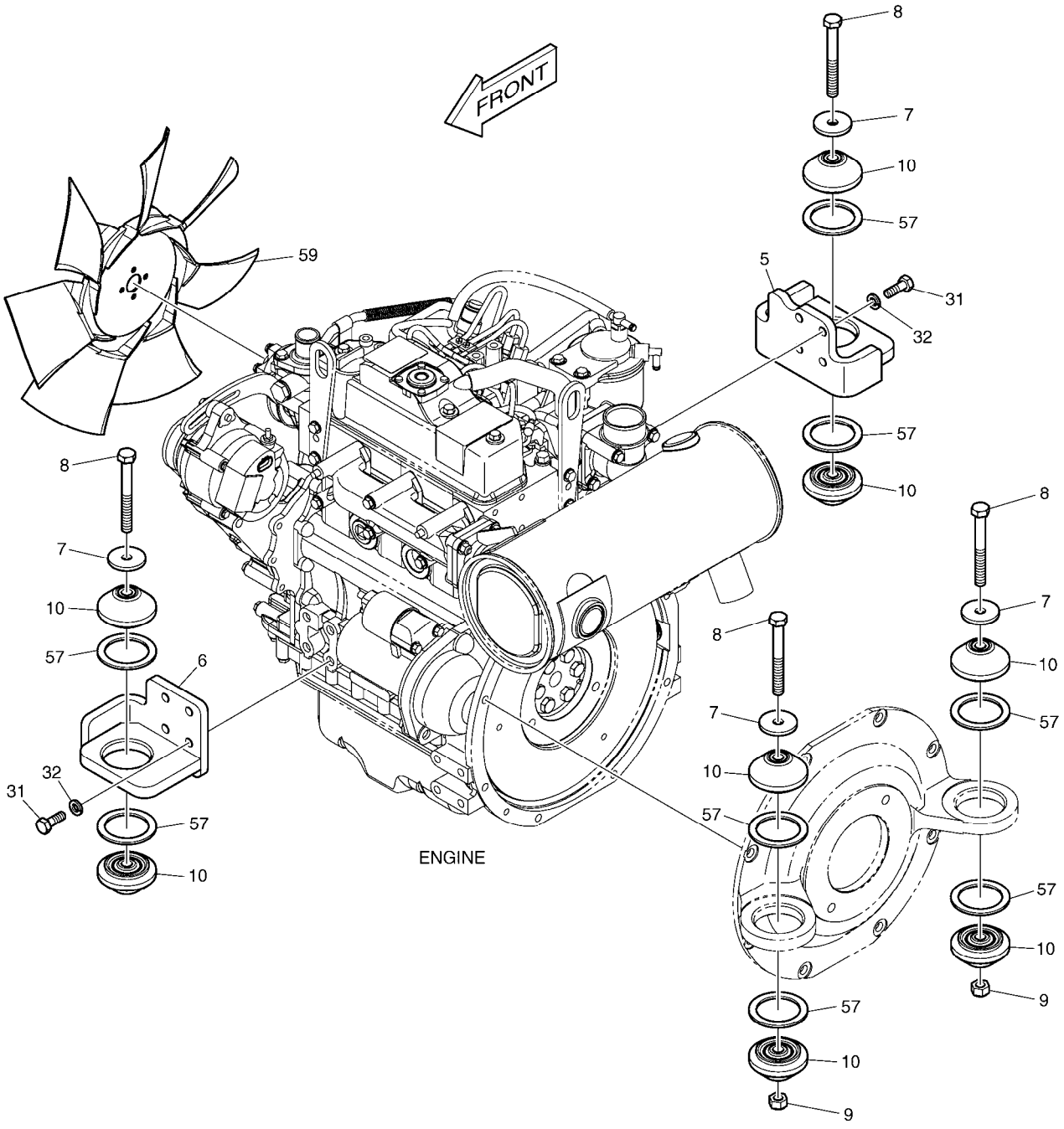

(THIS PARTS BOOK IS FOR REFERENCE ONLY.
PART NUMBERS AND SERAIL NUMBERS MAY BE
OUTDATED. ALWAYS USE THE ONLINE PARTS SYSTEM)

Fig. 1110 ENGINE MOUNTING MOTEUR

Serial No. ;

Key No.	Part No.	Description	Description	Q'ty	S.C	Serial No.	ICA	Replaceable part	
								Part No.	Q'ty
1110 --	K1027158E	ENGINE ASS'Y	ENSEMBLE DE MOTEUR	-	D				
5	K1026277A	BRACKET	SUPPORT	1					
6	K1026278A	BRACKET	SUPPORT	1					
7	K1018496A	WASHER	RONDELLE	4					
8	S0561766	BOLT	BOULON	4					
9	2121-9019A	NUT	ECROU	2					
10	K1010888	RUBBER;MOUNTING	CAOUTCHOUC	8					
31	S0512266	BOLT M10X1.5X30	BOULON	8					
32	S5102703	WASHER;SPRING	RONDELLE	8					
57	K1029457	RUBBER	CAOUTCHOUC	8					
59	K1038726	FAN;COOLING	VENTILATEUR	1					

(THIS PARTS BOOK IS FOR REFERENCE ONLY.
PART NUMBERS AND SERAIL NUMBERS MAY BE
OUTDATED. ALWAYS USE THE ONLINE PARTS SYSTEM)

DATE	JAN. 04, 2013
3rd EDITION	

Fig. 1120 RADIATOR MOUNTING
SUPPORT DE RADIATEUR

Serial No. ;

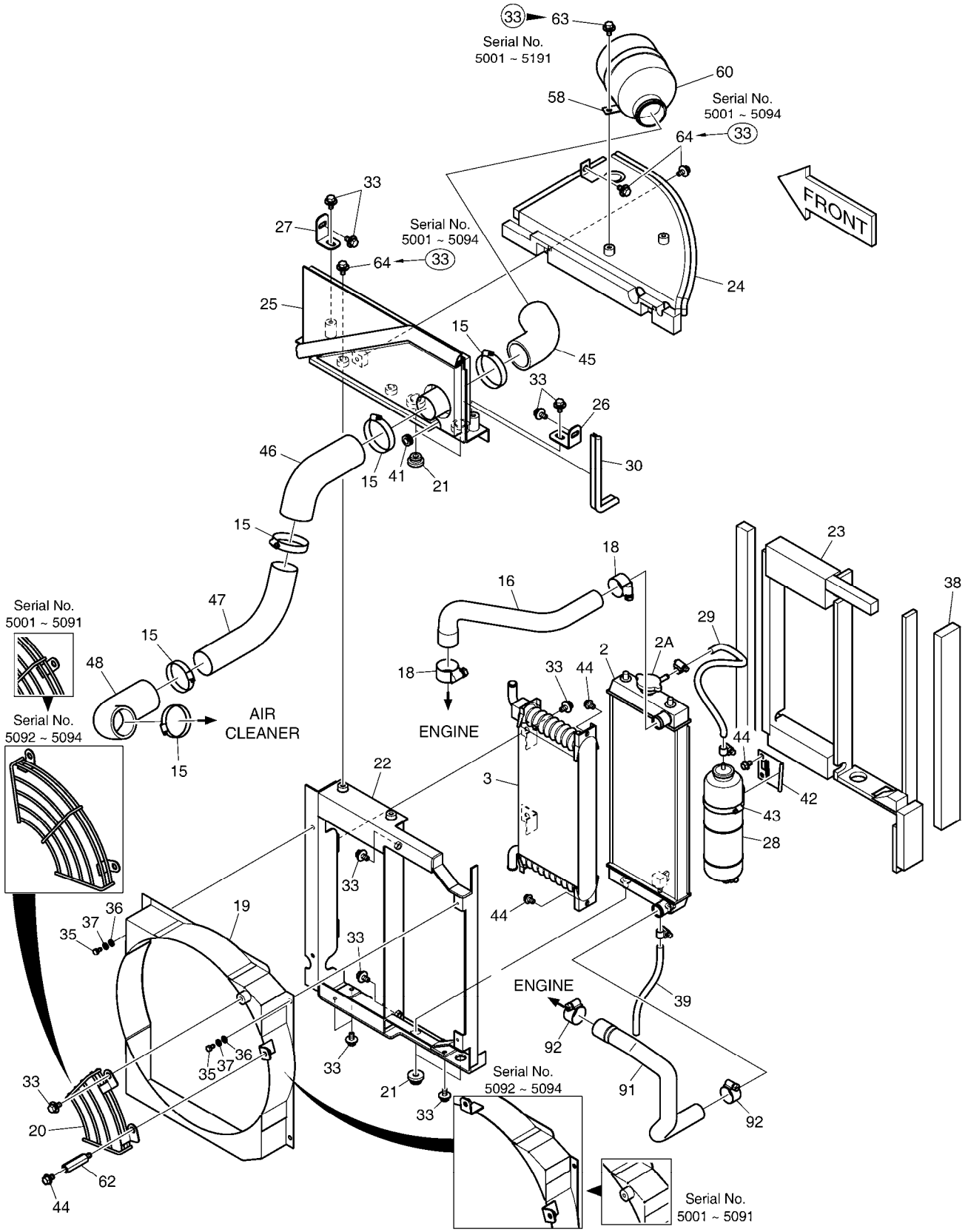

(THIS PARTS BOOK IS FOR REFERENCE ONLY.
PART NUMBERS AND SERAIL NUMBERS MAY BE
OUTDATED. ALWAYS USE THE ONLINE PARTS SYSTEM)

DATE	JAN. 04, 2013
3rd EDITION	

Fig. 1120 RADIATOR MOUNTING
SUPPORT DE RADIATEUR

Serial No. ;

Key No.	Part No.	Description	Description	Q'ty	S.C	Serial No.	ICA	Replaceable part	
								Part No.	Q'ty
1120 --	K1027158E	ENGINE ASS'Y	ENSEMBLE DE MOTEUR	-	D	5001-5094			
	150109-00024	ENGINE ASSY	ENSEMBLE DE MOTEUR	-	D	5095-			
2	K1036836A	RADIATOR ASS'Y	ENSEMBLE RADIATEUR	1					
2A	K9003717	. CAP	. CHAPEAU	1					
3	K1017514	COOLER	REFROIDISSEUR	1					
15	S8450053	CLAMP;HOSE	COLLIER	5					
16	K1017521	HOSE;AIR	TUYAU FLEXIBLE	1					
18	S8450023	CLAMP	COLLIER	2					
19	K1028853C	SHROUD;FAN	COUVERCLE	1		5001-5091			
	K1028853E	SHROUD;FAN	COUVERCLE	1		5092-5094			
	110948-00001	SHROUD,FAN	COUVERCLE	1		5095-			
20	K1010890A	GUARD;FAN	GARDE	1		5001-5091	I	K1010890B	1
	K1010890B	GUARD;FAN	GARDE	1		5092-5094			
	110921-00006	GUARD,FAN	GARDE	1		5095-			
21	K1017535	RUBBER	CAOUTCHOUC	4					
22	K1037272	BRACKET	SUPPORT	1					
23	K1038706	SPONGE ASS'Y	EPONGE	1		5001-5091	I	K1038706A	1
	K1038706A	SPONGE ASS'Y	EPONGE	1		5092-5094			
	K1038706B	SPONGE ASSY;RADIATOR	EPONGE	1		5095-			
24	K1027122C	COVER	COUVERCLE	1					
25	K1027181E	COVER	COUVERCLE	1					
26	K1041490	BRACKET	SUPPORT	1					
27	K1017562A	BRACKET	SUPPORT	1					
28	K9004681	TANK;RESERVE	RESERVOIR	1					
29	DS2076159	HOSE;RADIATOR	TUYAU FLEXIBLE	1					
30	K1018423A	STRIP;WEATHER	SURVIVEZ DE BANDE	1					
33	DS0025033	BOLT;SET	BOULON	21		5001-5091	I	DS0025033	19
	DS0025033	BOLT;SET	BOULON	19		5092-5094			
	DS0025033	BOLT;SET	BOULON	28		5095-			
35	S0504453	BOLT M6X1.0X12	BOULON	4					
36	S5010313	WASHER	RONDELLE	4					
37	S5102303	WASHER;SPRING	RONDELLE	4					
38	K1041791	FOAM	EPONGE	1					
39	DS2076160	HOSE;RADIATOR	TUYAU FLEXIBLE	1					
41	2160-1004D9	GROMMET	MANCHON CAOUTCHOUC	1					
42	K9004673	BRACKET;SUB TANK	SUPPORT	1					
43	K9004683	CLAMP;SUB TANK	COLLIER	1					
44	K1001029	BOLT	BOULON	5					

(THIS PARTS BOOK IS FOR REFERENCE ONLY.
PART NUMBERS AND SERIAL NUMBERS MAY BE
OUTDATED. ALWAYS USE THE ONLINE PARTS SYSTEM)

DATE	JAN. 04, 2013
3rd EDITION	

Fig. 1120 RADIATOR MOUNTING
SUPPORT DE RADIATEUR

Serial No. ;

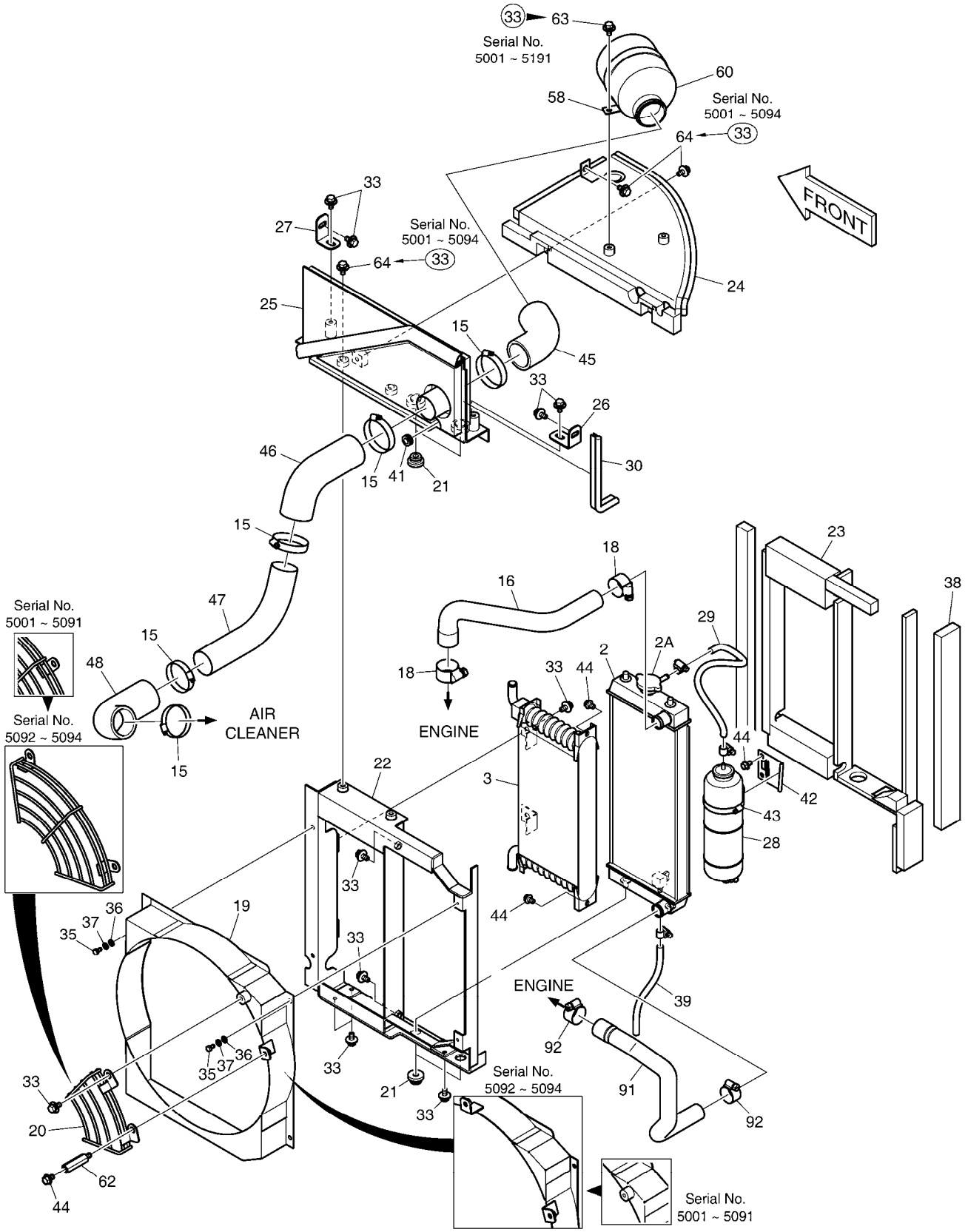

(THIS PARTS BOOK IS FOR REFERENCE ONLY.
PART NUMBERS AND SERAIL NUMBERS MAY BE
OUTDATED. ALWAYS USE THE ONLINE PARTS SYSTEM)

DATE	JAN. 04, 2013
3rd EDITION	

Fig. 1120 RADIATOR MOUNTING
SUPPORT DE RADIATEUR

Serial No. ;

Key No.	Part No.	Description	Description	Q'ty	S.C	Serial No.	ICA	Replaceable part	
								Part No.	Q'ty
1120 -45	K1038653	HOSE;AIR	TUYAU FLEXIBLE	1					
46	K1026271A	HOSE;AIR	TUYAU FLEXIBLE	1					
47	K1026272A	PIPE;AIR	TUYAU	1					
48	K1026270	HOSE;AIR	TUYAU FLEXIBLE	1					
58	K1038674	BAND;RESONATOR	BANDE	1		5001-5124	I	K1038674A	1
	K1038674A	BAND;RESONATOR	BANDE	1		5125-			
60	K9005971	SILENCER;INTAKE	SILENCIEUX	1					
62	2120-2187	BOLT;STUD	BOULON	1					
63	DS0025044	BOLT;SET	BOULON	2		5192-			
64	K1049808	BOLT,FLANGE	BOULON	5		5095-			
91	K1017522A	HOSE;WATER	TUYAU FLEXIBLE	1					
92	S8450023	CLAMP	COLLIER	2					

(THIS PARTS BOOK IS FOR REFERENCE ONLY.
PART NUMBERS AND SERAIL NUMBERS MAY BE
OUTDATED. ALWAYS USE THE ONLINE PARTS SYSTEM)

DATE	JAN. 04, 2013
3rd EDITION	

Fig. 1130 AIR CLEANER - Tier 2
FILTRE A AIR

Serial No. ;

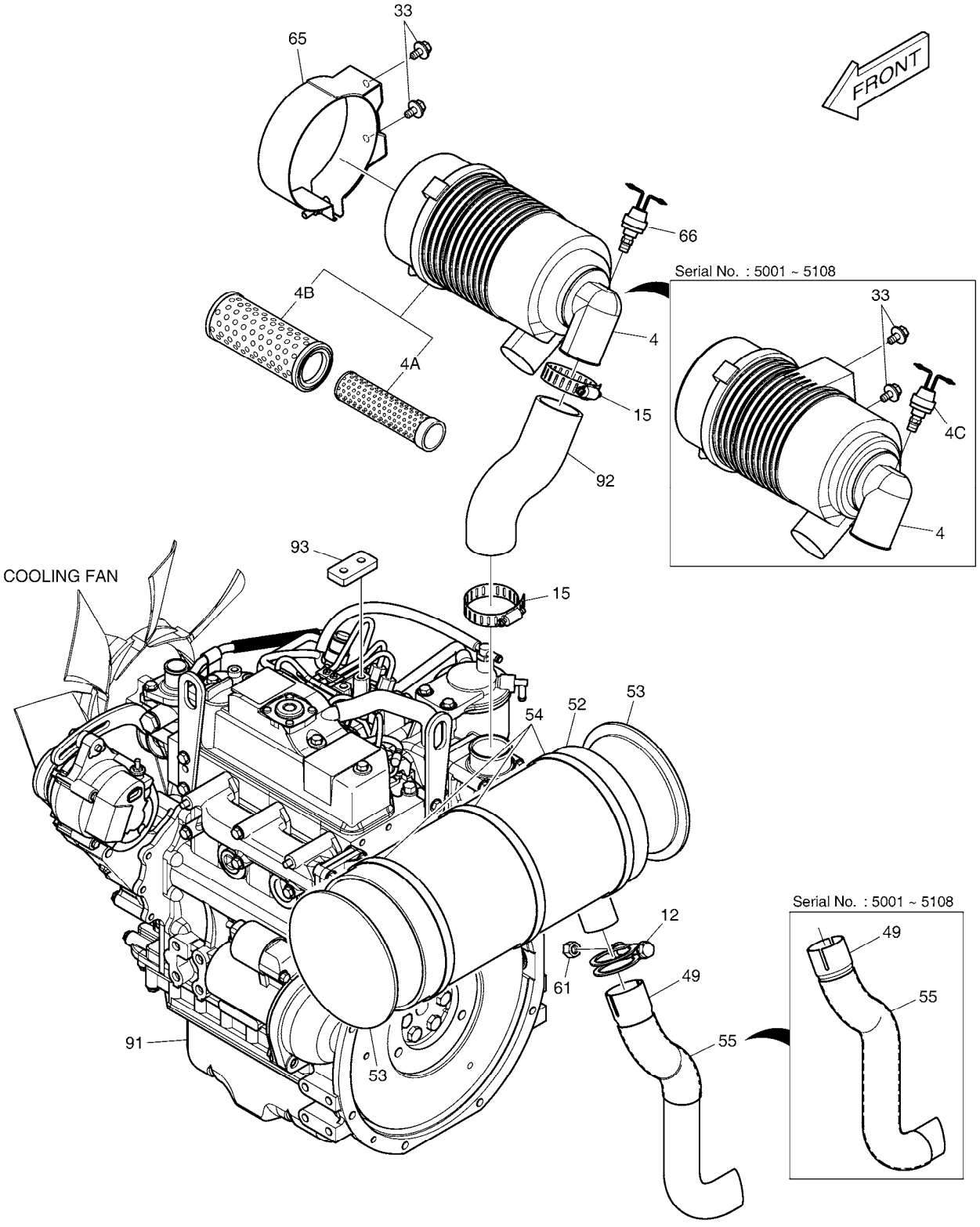

(THIS PARTS BOOK IS FOR REFERENCE ONLY.
PART NUMBERS AND SERAIL NUMBERS MAY BE
OUTDATED. ALWAYS USE THE ONLINE PARTS SYSTEM)

DATE	JAN. 04, 2013
3rd EDITION	

Fig. 1130 AIR CLEANER - Tier 2
FILTRE A AIR

Serial No. ;

Key No.	Part No.	Description	Description	Q'ty	S.C	Serial No.	ICA	Replaceable part	
								Part No.	Q'ty
1130 --	K1027158G	ENGINE ASS'Y	ENSEMBLE MOTEUR	-	D				
4	K1017516A	AIR CLEANER	FILTRE A AIR	1		5001-5108			
	K1024911	AIR CLEANER	FILTRE A AIR	1		5109-			
4A	K1025337	. ELEMENT;AIR(INNER)	. ELEMENT	1					
4B	K1025338	. ELEMENT;AIR(OUTER)	. ELEMENT	1					
4C	K1024913	. INDICATOR	. INDICATEUR	1		5001-5108			
12	K9004672	CLAMP	BRIDE	1					
15	S8450053	CLAMP;HOSE	COLLIER	2					
33	DS0025033	BOLT;SET	BOULON	2					
49	K1033430A	PIPE;MUFFLER	CONDUITE	1		5001-5108	I	420203-00019	1
	420203-00019	PIPE,EXHAUST	CONDUITE	1		5109-			
52	K1027657	MAT	TAPIS DE SOL	1		5001-5091	I	K1027657A	1
	K1027657A	MAT	TAPIS DE SOL	1		5092-			
53	K1027658A	MAT	TAPIS DE SOL	2					
54	S8450140	CLAMP;HOSE	BRIDE	3					
55	K1041489	PROTECTOR;HOSE	PROTECTEUR	1		5001-5108			
	K1029222	PROTECTOR;HOSE	PROTECTEUR	1		5109-			
61	S4012633	NUT	ECROU	1					
65	110902-00010	BAND,AIR CLEANER	ATTACHE DE TUYAU	1		5109-			
66	K1024913	INDICATOR	INDICATEUR	1		5109-			
91	K1028320A	ENGINE ASS'Y	ENSEMBLE MOTEUR	1					
92	K1018178B	HOSE;AIR	TUYAU FLEXIBLE	1					
93	DS5231015	SPACER	DOUILLE D'ECARTEMENT	1					

(THIS PARTS BOOK IS FOR REFERENCE ONLY.
PART NUMBERS AND SERAIL NUMBERS MAY BE
OUTDATED. ALWAYS USE THE ONLINE PARTS SYSTEM)

DATE	JAN. 04, 2013
3rd EDITION	

Fig. 1135 AIR CLEANER - Tier 3
FILTRE A AIR

Serial No. ;

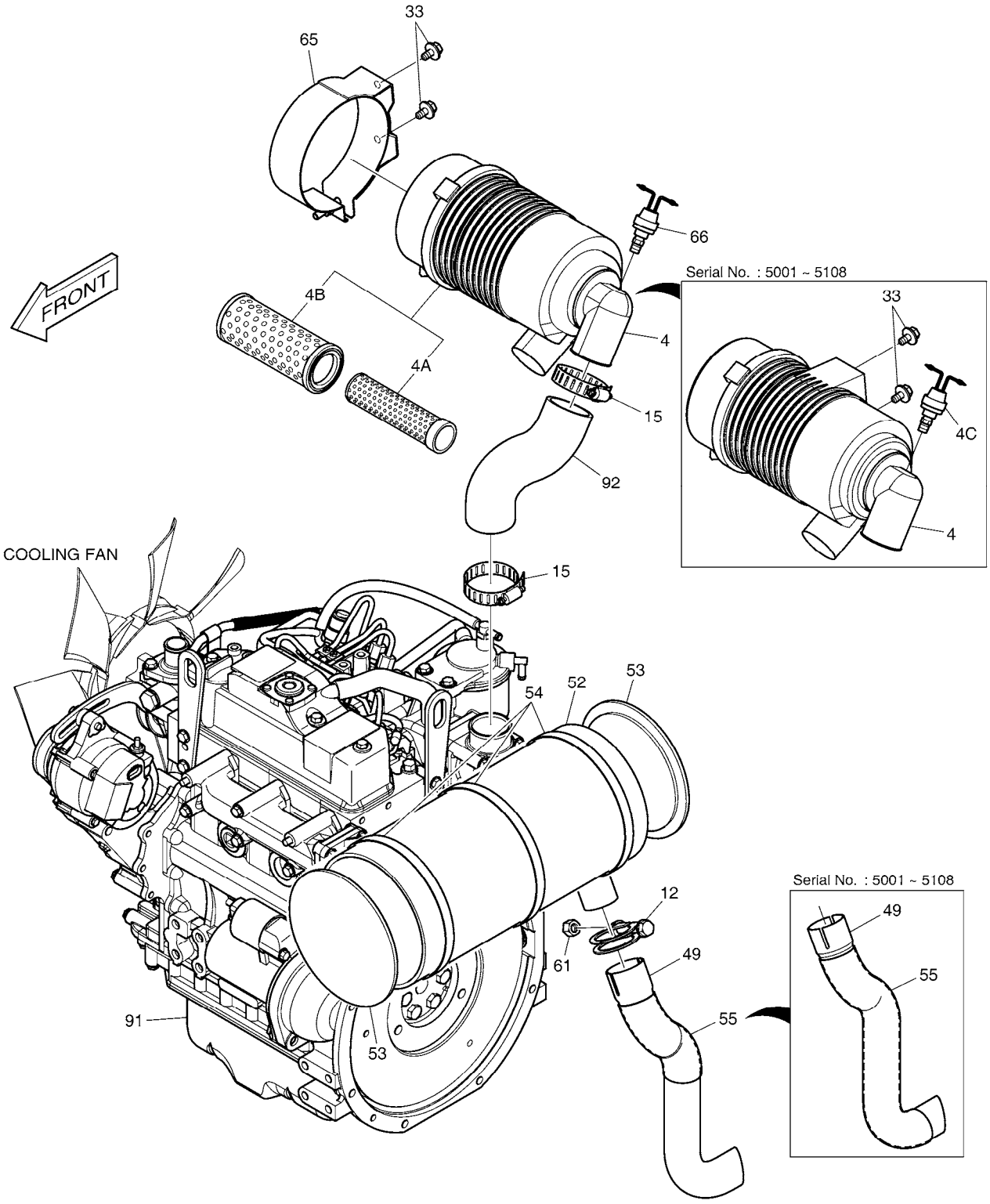

(THIS PARTS BOOK IS FOR REFERENCE ONLY.
PART NUMBERS AND SERAIL NUMBERS MAY BE
OUTDATED. ALWAYS USE THE ONLINE PARTS SYSTEM)

DATE	JAN. 04, 2013
3rd EDITION	

Fig. 1135 AIR CLEANER - Tier 3
FILTRE A AIR

Serial No. ;

Key No.	Part No.	Description	Description	Q'ty	S.C	Serial No.	ICA	Replaceable part	
								Part No.	Q'ty
1135 --	K1027158G	ENGINE ASS'Y	ENSEMBLE MOTEUR	-	D				
4	K1017516A	AIR CLEANER	FILTRE A AIR	1		5001-5108			
	K1024911	AIR CLEANER	FILTRE A AIR	1		5109-			
4A	K1025337	. ELEMENT;AIR(INNER)	. ELEMENT	1					
4B	K1025338	. ELEMENT;AIR(OUTER)	. ELEMENT	1					
4C	K1024913	. INDICATOR	. INDICATEUR	1		5001-5108			
12	K9004672	CLAMP	BRIDE	1					
15	S8450053	CLAMP;HOSE	COLLIER	2					
33	DS0025033	BOLT;SET	BOULON	2					
49	K1033430A	PIPE;MUFFLER	CONDUITE	1		5001-5108	I	420203-00019	1
	420203-00019	PIPE,EXHAUST	CONDUITE	1		5109-			
52	K1027657	MAT	TAPIS DE SOL	1		5001-5091	I	K1027657A	1
	K1027657A	MAT	TAPIS DE SOL	1		5092-			
53	K1027658A	MAT	TAPIS DE SOL	2					
54	S8450140	CLAMP;HOSE	BRIDE	3					
55	K1041489	PROTECTOR;HOSE	PROTECTEUR	1		5001-5108			
	K1029222	PROTECTOR;HOSE	PROTECTEUR	1		5109-			
61	S4012633	NUT	ECROU	1					
65	110902-00010	BAND,AIR CLEANER	ATTACHE DE TUYAU	1		5109-			
66	K1024913	INDICATOR	INDICATEUR	1		5109-			
91	K1038224	ENGINE ASS'Y(T-3)	ENSEMBLE MOTEUR	1					
92	K1039682	HOSE;AIR	TUYAU FLEXIBLE	1					

(THIS PARTS BOOK IS FOR REFERENCE ONLY.
PART NUMBERS AND SERAIL NUMBERS MAY BE
OUTDATED. ALWAYS USE THE ONLINE PARTS SYSTEM)

DATE	JAN. 04, 2013
3rd EDITION	

Fig. 1140 PUMP MOUNTING
POMPE

Serial No. ;

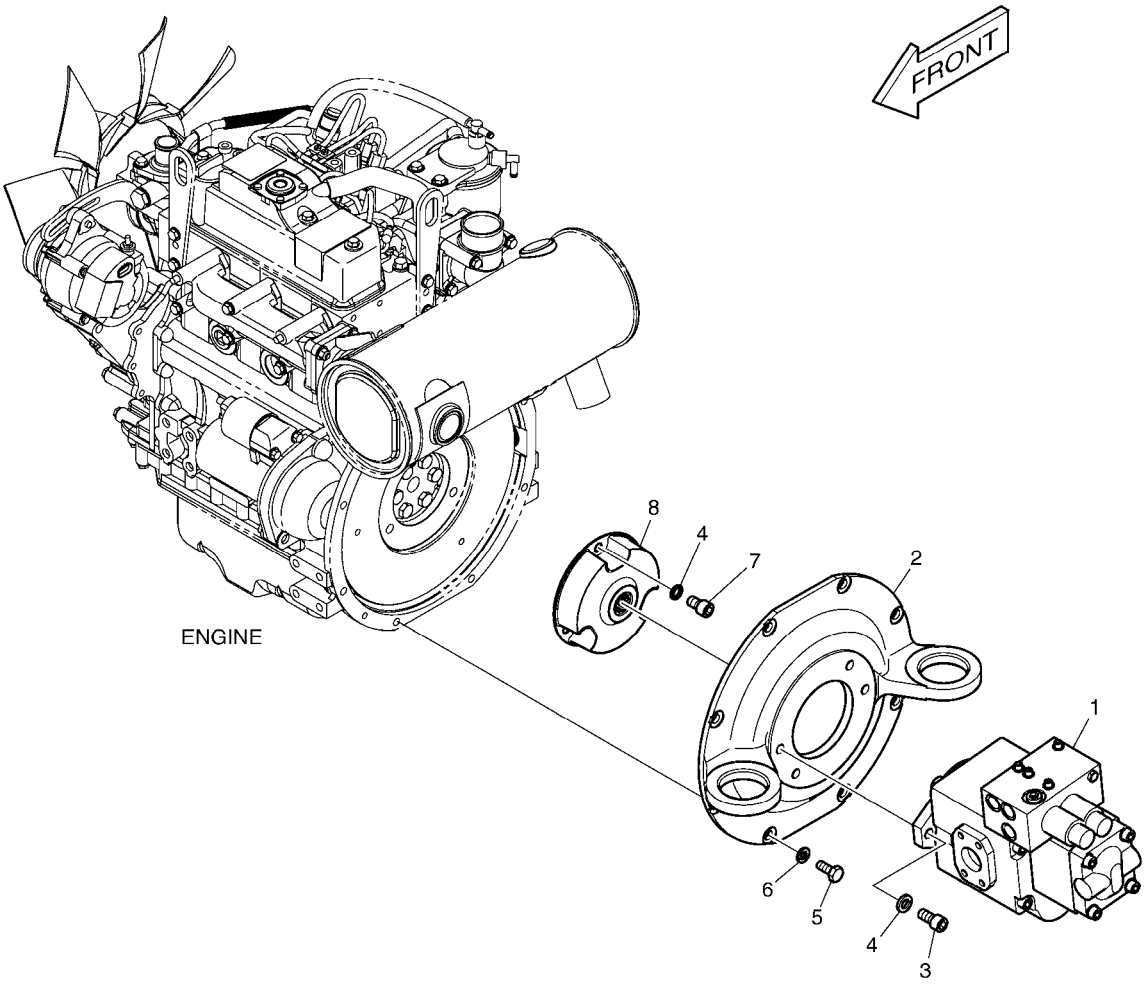

(THIS PARTS BOOK IS FOR REFERENCE ONLY.
PART NUMBERS AND SERAIL NUMBERS MAY BE
OUTDATED. ALWAYS USE THE ONLINE PARTS SYSTEM)

Fig. 1140 PUMP MOUNTING
POMPE

Serial No. ;

Key No.	Part No.	Description	Description	Q'ty	S.C	Serial No.	ICA	Replaceable part	
								Part No.	Q'ty
1140 --	K1027165C	PUMP ASS'Y	ENSEMBLE POMPE	-	D				
1	K1028324A	MAIN PUMP	POMPE	1					
2	K1026196A	COVER;PUMP	COUVERCLE	1					
3	S2265266	BOLT;SOCKET M12X1.25X30	BOULON DE PLOT	2					
4	S5110703	WASHER;SPRING	RONDELLE	5					
5	S0512066	BOLT M10X1.5X25	BOULON	8					
6	S5102603	WASHER,SPRING	RONDELLE	8					
7	S2214866	BOLT;SOCKET M12X1.75X20	BOULON A 6 PANS CREUX	3					
8	K1004134	COUPLING	ACCOUPLEMENT	1					

(THIS PARTS BOOK IS FOR REFERENCE ONLY.
PART NUMBERS AND SERAIL NUMBERS MAY BE
OUTDATED. ALWAYS USE THE ONLINE PARTS SYSTEM)

DATE	JAN. 04, 2013
3rd EDITION	

Fig. 1150 FUEL TANK
RESERVOIR DE GAZOLE

Serial No. ;

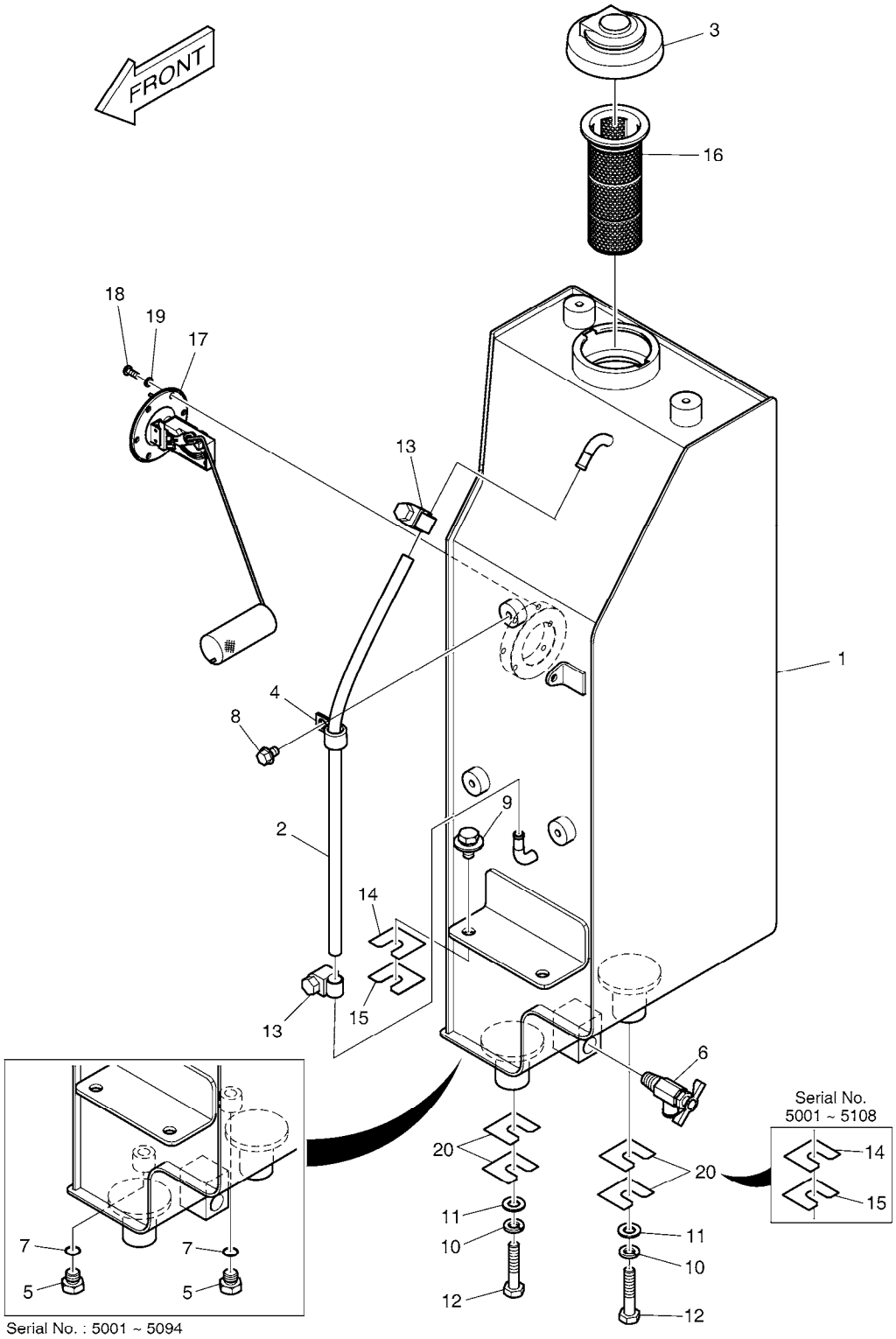

(THIS PARTS BOOK IS FOR REFERENCE ONLY.
PART NUMBERS AND SERAIL NUMBERS MAY BE
OUTDATED. ALWAYS USE THE ONLINE PARTS SYSTEM)

DATE	JAN. 04, 2013
3rd EDITION	

Fig. 1150 FUEL TANK
RESERVOIR DE GAZOLE

Serial No. ;

Key No.	Part No.	Description	Description	Q'ty	S.C	Serial No.	ICA	Replaceable part	
								Part No.	Q'ty
1150 --	K1025373B	FUEL TANK ASS'Y	RESERVOIR D'GAZOLE	-	D	5001-5094			
	450103-00042	TANK ASSY,FUEL	RESERVOIR DE GAZOLE	-	D	5095-			
1	K1025339A	TANK;FUEL	RESERVOIR A GAZOLE	1		5001-5094	Y	450103-00045	1
	450103-00045	TANK,FUEL	RESERVOIR DE GAZOLE	1		5095-			
2	185-00376	HOSE;FUEL LEVEL	TUYAU FLEXIBLE	1					
3	K1025369	CAP;FUEL	CHAPEAU	1					
4	2124-1353D3	CLIP	AGRAFE	1					
5	2181-1950D1	PLUG	BOUCHON	2		5001-5094			
6	2186-9003	VALVE	VANNE	1					
7	S8000111	O-RING	JOINT CIRCULAIRE	2		5001-5094			
8	K1001029	BOLT	BOULON	1					
9	2120-2196D1	BOLT;SET M10X1.5X20	BOULON A 6 PANS	2					
10	S5102603	WASHER,SPRING	RONDELLE	2					
11	S5010613	WASHER;PLAIN	RONDELLE	2					
12	S0512666	BOLT	BOULON A 6 PANS	2					
13	S8450006	CLAMP;HOSE	COLLIER DE LA CONDUITE	2					
14	K1011783	SHIM	CALE	4		5001-5094	I	K1011783A	4
	K1011783A	SHIM	CALE	4		5095-5108			
15	2114-1300	SHIM	CALE	4		5001-5094	I	2114-1300A	4
	2114-1300A	SHIM	CALE	4		5095-5108			
16	2471-9010A	FILTER	FILTRE	1					
17	K1026167	SENSOR;FUEL	CAPTEUR	1		5001-5134	Y	301316-00019	1
	301316-00019	SENSOR,FUEL	CAPTEUR	1		5135-			
18	S3450833	SCREW	VIS	6					
19	S5100203	WASHER;SPRING	RONDELLE	6					
20	DS7718012	SHIM 0.6t	CALE	8		5109-			

(THIS PARTS BOOK IS FOR REFERENCE ONLY.
PART NUMBERS AND SERAIL NUMBERS MAY BE
OUTDATED. ALWAYS USE THE ONLINE PARTS SYSTEM)

DATE	JAN. 04, 2013
3rd EDITION	

Fig. 1160 FUEL PIPING
CONDUITES DE GAZOLE

Serial No. ;

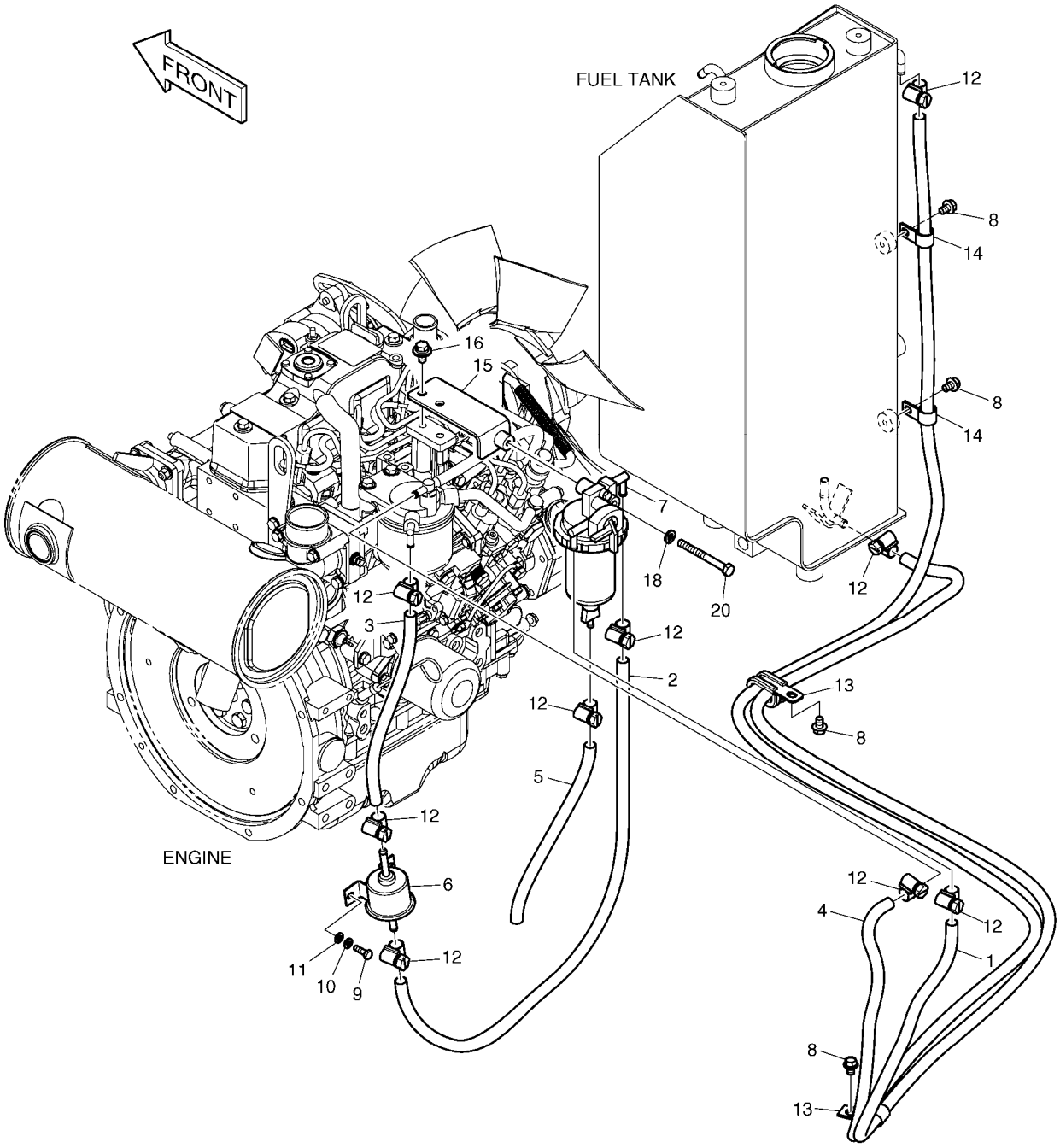

(THIS PARTS BOOK IS FOR REFERENCE ONLY.
PART NUMBERS AND SERAIL NUMBERS MAY BE
OUTDATED. ALWAYS USE THE ONLINE PARTS SYSTEM)

DATE	JAN. 04, 2013
3rd EDITION	

Fig. 1160 FUEL PIPING
CONDUITES DE GAZOLE

Serial No. ;

Key No.	Part No.	Description	Description	Q'ty	S.C	Serial No.	ICA	Replaceable part	
								Part No.	Q'ty
1160 --	K1027867B	FUEL PIPING	TUYAUTERIE DE CARBUR/	-	D				
1	DS2105056	HOSE;FUEL	TUYAU	1					
2	DS2105014	HOSE;FUEL	TUYAU FLEXIBLE	1					
3	DS2105067	HOSE	TUYAU FLEXIBLE	1					
4	DS2105061	HOSE;FUEL	TUYAU FLEXIBLE	1					
5	DS2105064	HOSE;FUEL	TUYAU FLEXIBLE	1					
6	K9004786	PUMP;FUEL FEED	POMPE	1					
7	2.471-00037	SEPARATOR ASS'Y	SEPARATEUR D'EAU	1					
8	K1001029	BOLT	BOULON	4					
9	S0504866	BOLT	BOULON A 6 PANS	2					
10	S5102303	WASHER;SPRING	RONDELLE	2					
11	S5010313	WASHER	RONDELLE	2					
12	S8450006	CLAMP;HOSE	COLLIER DE LA CONDUITE	9					
13	DS2805009	CLIP	AGRAFE	2					
14	2124-1353D3	CLIP	AGRAFE	2					
15	K1033594A	BRACKET	SUPPORT	1					
16	DS0025039	BOLT;SET	BOULON	2					
18	S5102503	WASHER,SPRING	RONDELLE	1					
20	S0556866	BOLT	BOULON	1					

(THIS PARTS BOOK IS FOR REFERENCE ONLY.
PART NUMBERS AND SERAIL NUMBERS MAY BE
OUTDATED. ALWAYS USE THE ONLINE PARTS SYSTEM)

DATE	JAN. 04, 2013
3rd EDITION	

Fig. 1170 OIL TANK
RESERVOIR D'HUILE

Serial No. ;

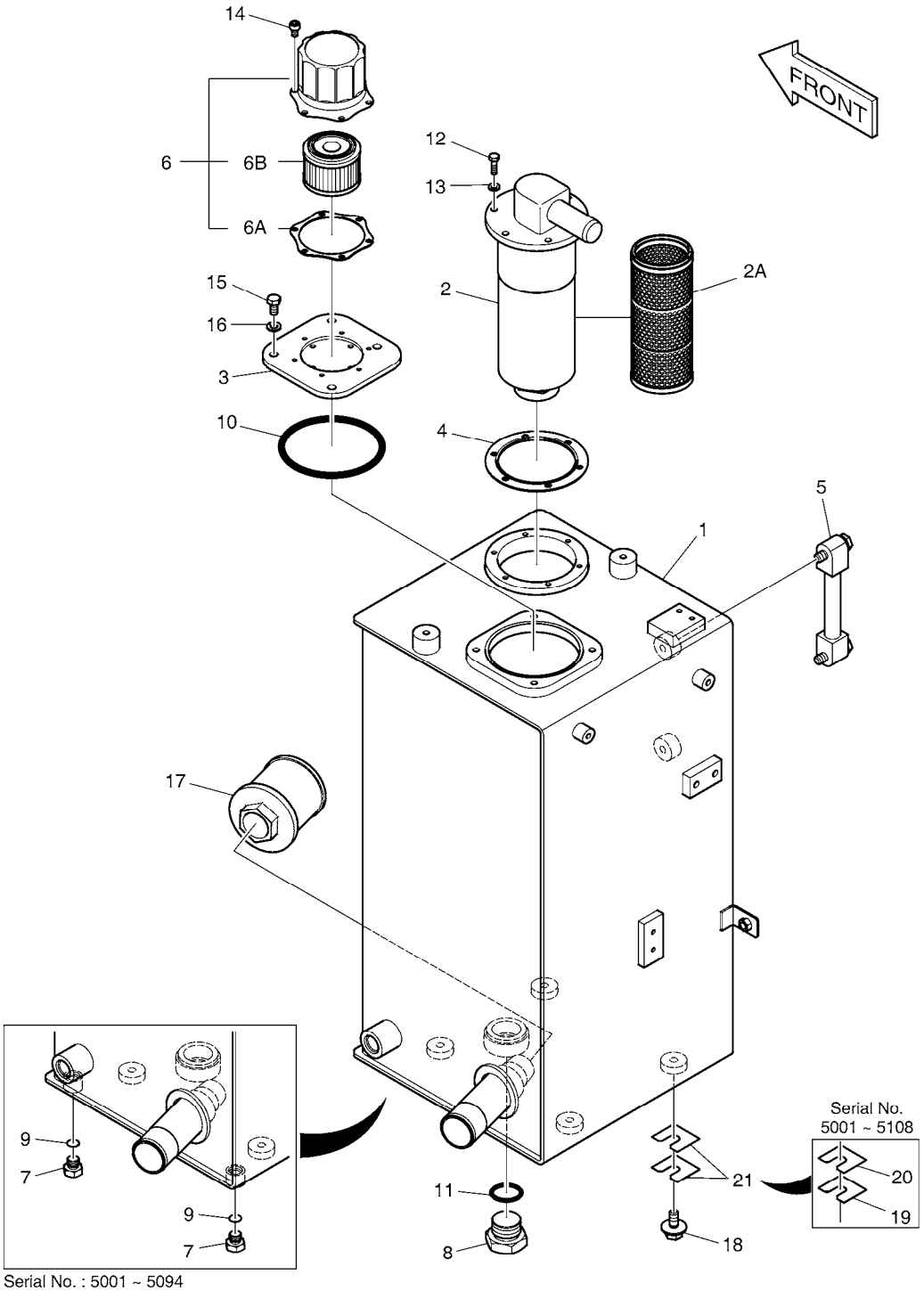

Serial No. : 5001 ~ 5094

(THIS PARTS BOOK IS FOR REFERENCE ONLY.
PART NUMBERS AND SERAIL NUMBERS MAY BE
OUTDATED. ALWAYS USE THE ONLINE PARTS SYSTEM)

DATE	JAN. 04, 2013
3rd EDITION	

Fig. 1170 OIL TANK RESERVOIR D'HUILE

Serial No. ;

Key No.	Part No.	Description	Description	Q'ty	S.C	Serial No.	ICA	Replaceable part	
								Part No.	Q'ty
1170 --	K1025431C	OIL TANK ASS'Y	ENSEMBLE RESERVOIR D'	-	D	5001-5094			
	450105-00032	TANK ASSY,OIL	RESERVOIR DE HUILE	-	D	5095-			
1	K1025413B	TANK;OIL	RESERVOIR D'HUILE	1		5001-5094	Y	K1025413B	1
	450105-00041	TANK,OIL	RESERVOIR DE HUILE	1		5095-			
2	K1007598	FILTER;RETURN	FILTRE	1					
2A	K1011327	. ELEMENT;RETURN FILTER	. ELEMENT	1					
3	K1007920A	PLATE	PLAQUE	1					
4	K1011328	PACKING	EMBALLAGE	1					
5	119-00027A	GAUGE;LEVEL	INDICATEUR DE NIVEAU	1					
6	K1012685A	BREATHER;AIR	RENIFLARD D'AIR	1					
6A	K9005662	. GASKET	. JOINT	1					
6B	K1029257	. ELEMENT;AIR BREATHER	. ELEMENT	1					
7	2181-1950D1	PLUG	BOUCHON	2		5001-5094			
8	2181-1950D9	PLUG	BOUCHON	1					
9	S8000111	O-RING	JOINT CIRCULAIRE	2		5001-5094			
10	S8011101	O-RING	JOINT CIRCULAIRE	1					
11	S8000291	O-RING	JOINT CIRCULAIRE	1					
12	S0504953	BOLT	BOULON	6					
13	S5102303	WASHER;SPRING	RONDELLE	6					
14	S2202766	BOLT	BOULON A 6 PANS	6					
15	S0508766	BOLT	BOULON	4					
16	S5102503	WASHER,SPRING	RONDELLE	4					
17	K1011555	FILTER;SUCTION	FILTRE	1					
18	2120-2196D2	BOLT;SET M10X1.5X25	BOULON A 6 PANS	4					
19	2114-1300	SHIM	CALE	4		5001-5094	I	2114-1300A	4
	2114-1300A	SHIM	CALE	4		5095-5108			
20	K1011783	SHIM	CALE	4		5001-5094	I	K1011783A	4
	K1011783A	SHIM	CALE	4		5095-5108			
21	DS7718012	SHIM 0.6t	CALE	8		5109-			

(THIS PARTS BOOK IS FOR REFERENCE ONLY.
PART NUMBERS AND SERAIL NUMBERS MAY BE
OUTDATED. ALWAYS USE THE ONLINE PARTS SYSTEM)

DATE	JAN. 04, 2013
3rd EDITION	

Fig. 1180 OIL COOLER PIPING
TUYAUTERIE DE RADIATEUR D'HUILE

Serial No. ;

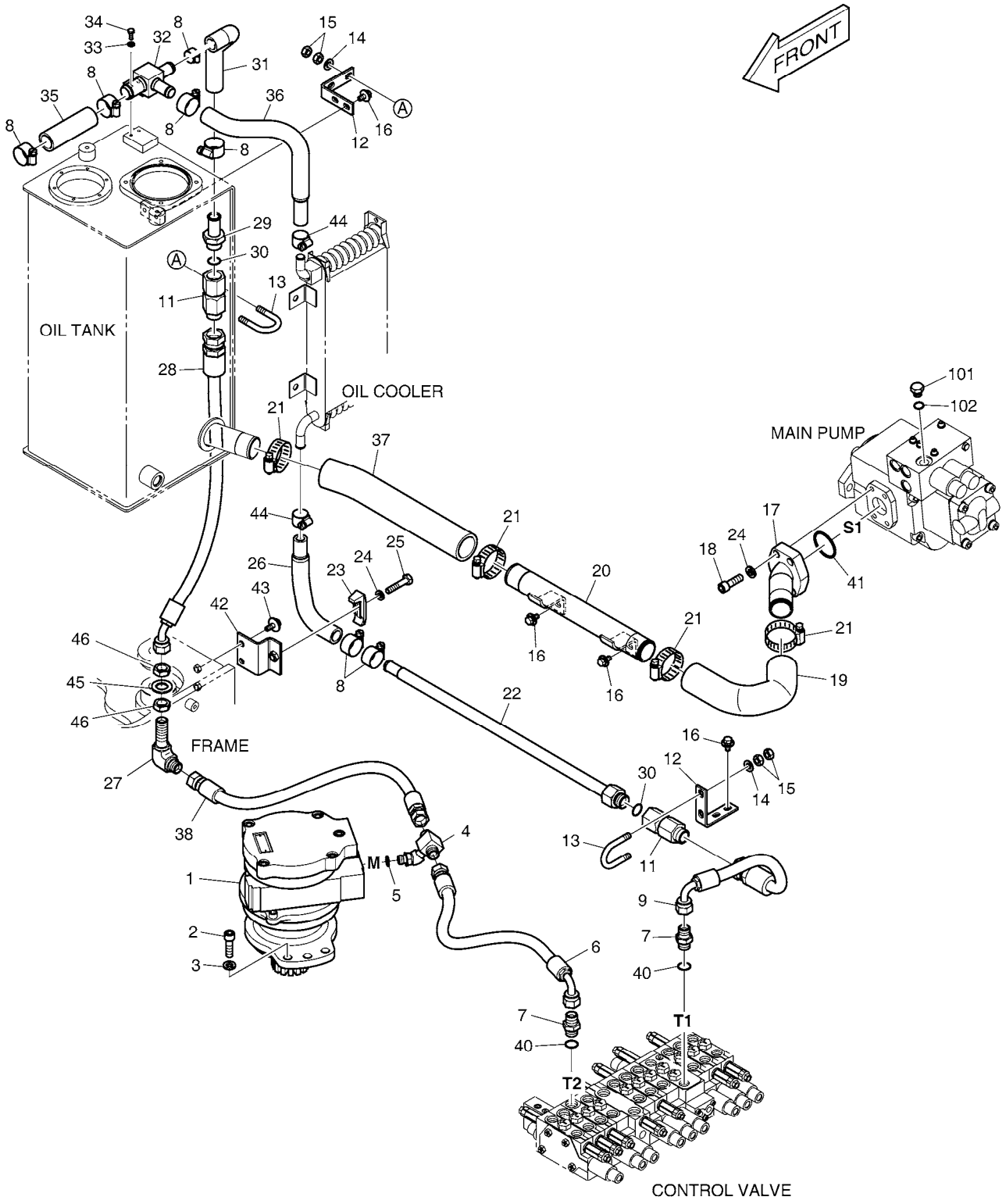

(THIS PARTS BOOK IS FOR REFERENCE ONLY.
PART NUMBERS AND SERAIL NUMBERS MAY BE
OUTDATED. ALWAYS USE THE ONLINE PARTS SYSTEM)

DATE	JAN. 04, 2013
3rd EDITION	

Fig. 1180 OIL COOLER PIPING
TUYAUTERIE DE RADIATEUR D'HUILE

Serial No. ;

Key No.	Part No.	Description	Description	Q'ty	S.C	Serial No.	ICA	Replaceable part	
								Part No.	Q'ty
1180 --	K1027547B	OIL COOLER PIPING	CONDUITES	-	D	5001-5094			
	420212-00628	PIPING,LOW PRESSURE	TUYAUTERIE DE BASSE PR	-	D	5095-			
1	K1026973A	MOTOR;SWING	MOTEUR	1					
2	S2215466	BOLT;SOCKET M12X1.75X40	BOULON	6					
3	S5102703	WASHER;SPRING	RONDELLE	6					
4	K1010603A	TEE	TE	1					
5	S8000141	O-RING	JOINT TORIQUE	1					
6	DS20551026	HOSE PF1/2-430L	TUYAU FLEXIBLE	1					
7	2181-1126D6	ADAPTER	ADAPTEUR	2					
8	S8450023	CLAMP	COLLIER	7					
9	DS2093485	HOSE	TUYAU FLEXIBLE	1					
11	K1010875	VALVE;CHECK	CAPTEUR	2					
12	K1015538	PLATE	PLAQUE	2					
13	2120-1413D3	BOLT;U M10X1.5	BOULON A 6 PANS	2					
14	S5010613	WASHER;PLAIN	RONDELLE	4					
15	S4012633	NUT	ECROU	8					
16	DS0025033	BOLT;SET	BOULON	6					
17	K1027600A	PIPE;SUCTION	TUYAU	1					
18	S2212366	BOLT;SOCKET M10X1.5X35	BOULON A 6 PANS CREUX	4					
19	K1027708A	HOSE	TUYAU FLEXIBLE	1					
20	K1009435A	PIPE;SUCTION	TUYAU	1					
21	S8450044	CLAMP;HOSE	COLLIER	4					
22	K1015536A	PIPE;RETURN	TUYAU	1					
23	2124-1026D1	CLAMP;PIPE	BRIDE	1					
24	S5102603	WASHER,SPRING	RONDELLE	5					
25	S0558466	BOLT	BOULON	1					
26	K1018209B	HOSE	TUYAU FLEXIBLE	1					
27	K1027673	ELBOW	COUDE	1					
28	DS2092142	HOSE	TUYAU FLEXIBLE	1					
29	DS2239012	ADAPTER	ADAPTEUR	1					
30	S8000231	O-RING	JOINT CIRCULAIRE	2					
31	K1027526	HOSE	TUYAU FLEXIBLE	1					
32	K1010292A	MANIFOLD	COLLECTEUR	1					
33	S5100303	WASHER;SPRING M6	RONDELLE ELASTIQUE	2					
34	S0504666	BOLT M6X1.0X16	BOULON	2					
35	DS2087066	HOSE	TUYAU FLEXIBLE	1					
36	K1027515	HOSE	TUYAU FLEXIBLE	1					
37	K1015533	HOSE	TUYAU FLEXIBLE	1					

(THIS PARTS BOOK IS FOR REFERENCE ONLY.
PART NUMBERS AND SERIAL NUMBERS MAY BE
OUTDATED. ALWAYS USE THE ONLINE PARTS SYSTEM)

DATE	JAN. 04, 2013
3rd EDITION	

Fig. 1180 OIL COOLER PIPING
TUYAUTERIE DE RADIATEUR D'HUILE

Serial No. ;

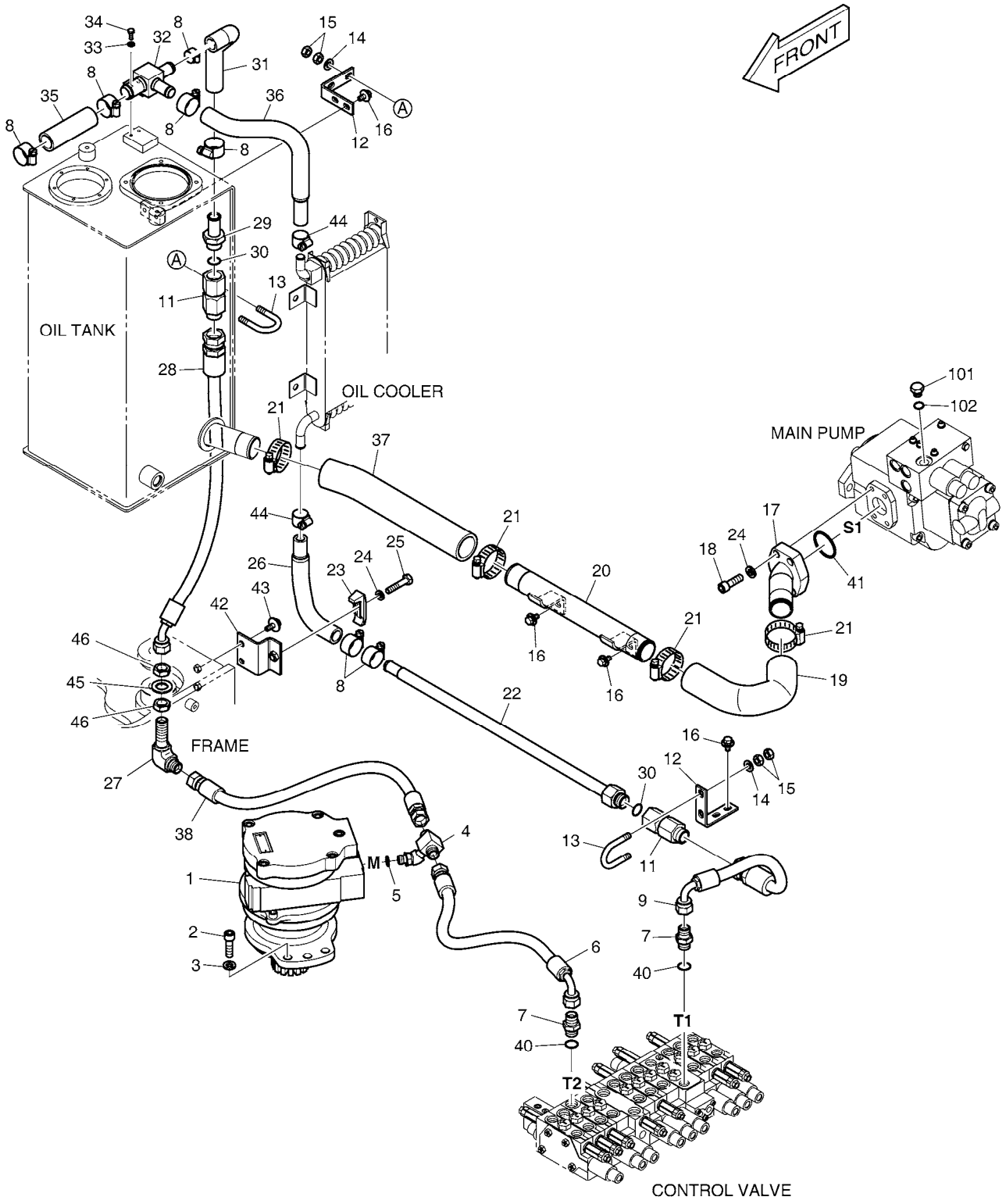

(THIS PARTS BOOK IS FOR REFERENCE ONLY.
PART NUMBERS AND SERAIL NUMBERS MAY BE
OUTDATED. ALWAYS USE THE ONLINE PARTS SYSTEM)

Fig. 1180 OIL COOLER PIPING
TUYAUTERIE DE RADIATEUR D'HUILE

Serial No. ;

Key No.	Part No.	Description	Description	Q'ty	S.C	Serial No.	ICA	Replaceable part	
								Part No.	Q'ty
1180 -38	DS2094265	HOSE	TUYAU FLEXIBLE	1		5001-5094	I	DS2094408	1
	DS2094408	HOSE	TUYAU FLEXIBLE	1		5095-			
40	S8000181	O-RING	JOINT CIRCULAIRE	2					
41	2180-1026D23	O-RING	JOINT TORIQUE	1					
42	K1018384A	BRACKET	SUPPORT	1					
43	DS0025032	BOLT;SET	BOULON	2					
44	S8450018	CLAMP;HOSE	COLLIER	2					
45	S5011113	WASHER;PLAIN	RONDELLE	1					
46	121-00010D3	NUT	ECROU	2					
101	2181-1950D1	PLUG	BOUCHON	1					
102	S8000111	O-RING	JOINT CIRCULAIRE	1					

(THIS PARTS BOOK IS FOR REFERENCE ONLY.
PART NUMBERS AND SERAIL NUMBERS MAY BE
OUTDATED. ALWAYS USE THE ONLINE PARTS SYSTEM)

DATE	JAN. 04, 2013
3rd EDITION	

Fig. 1190 MAIN PIPING (1)
CONDUITES DE PRINCIPAL

Serial No. ;

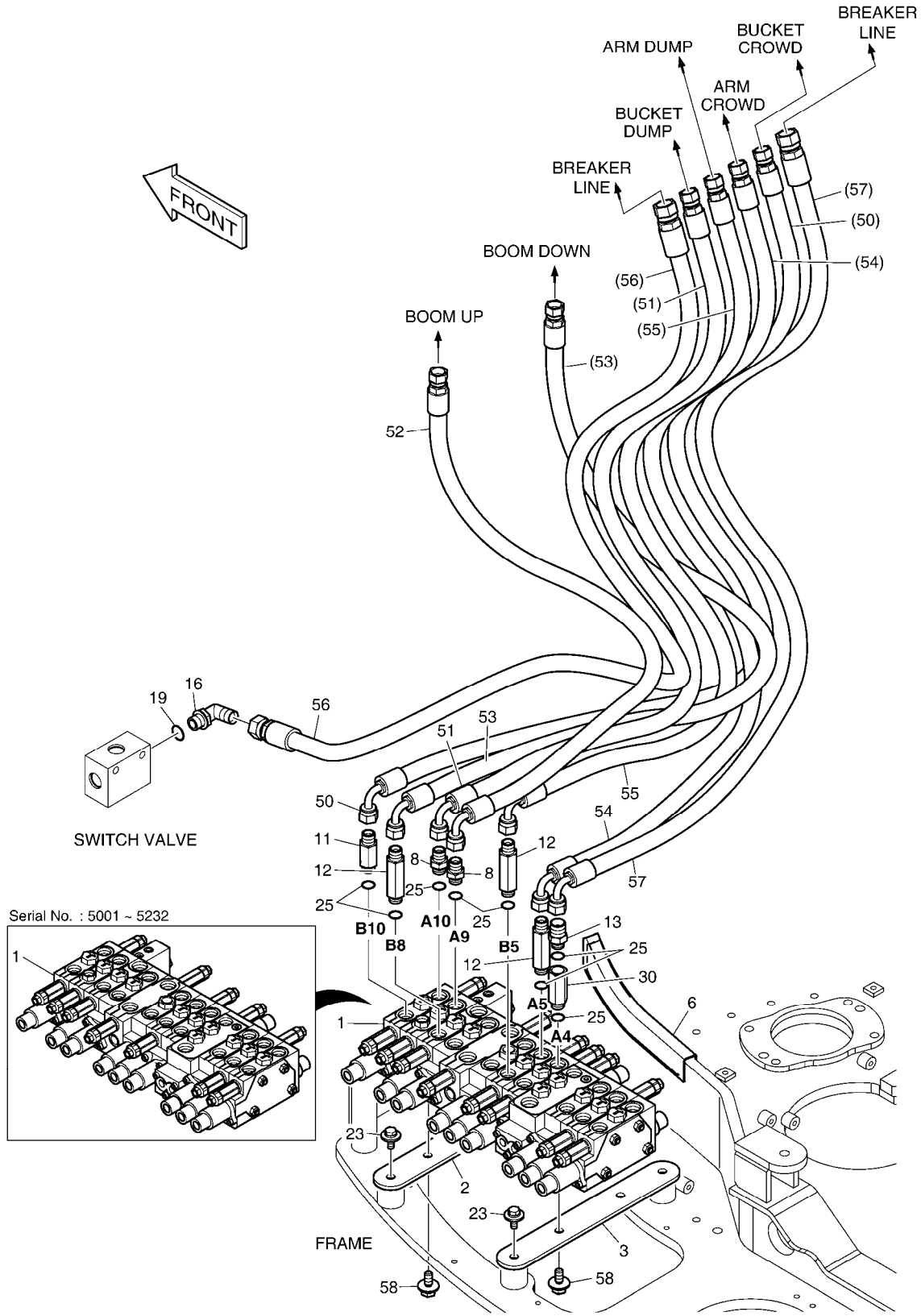

(THIS PARTS BOOK IS FOR REFERENCE ONLY.
PART NUMBERS AND SERAIL NUMBERS MAY BE
OUTDATED. ALWAYS USE THE ONLINE PARTS SYSTEM)

DATE	JAN. 04, 2013
3rd EDITION	

Fig. 1190 MAIN PIPING (1)
CONDUITES DE PRINCIPAL

Serial No. ;

Key No.	Part No.	Description	Description	Q'ty	S.C	Serial No.	ICA	Replaceable part	
								Part No.	Q'ty
1190 --	K1028025E	MAIN PIPING	TUYAUTERIE PRINCIPALE	-	D	5001-5094			
	420212-00625	PIPING,MAIN	TUYAUTERIE PRINCIPALE	-	D	5095-			
1	K1028369A	CONTROL VALVE	SOUPAPE DE COMMANDE	1		5001-5232	I	410105-00145	1
	410105-00145	VALVE,CONTROL	SOUPAPE DE COMMANDE	1		5233-			
2	K1011377	PLATE	PLAQUE	1					
3	K1011378	PLATE	PLAQUE	1					
6	K1011379A	STRIP;WEATHER	BANDE	1		5001-5232			
	220214-00051	STRIP,WEATHER	BANDE	1		5233-			
8	2181-1126D7	ADAPTER	ADAPTEUR	2					
11	2181-1126D27	ADAPTER	ADAPTEUR	1					
12	2181-1126D28	ADAPTER	ADAPTEUR	3					
13	2181-1126D115	ADAPTER	ADAPTEUR	1					
16	2181-1702D2	ELBOW	COUDE	1					
19	S8000181	O-RING	JOINT CIRCULAIRE	1					
23	DS0025032	BOLT;SET	BOULON	4					
25	S8000141	O-RING	JOINT TORIQUE	8					
30	2181-2337D12	ADAPTER	REDUCTEUR	1					
50	DS2093417	HOSE	TUYAU FLEXIBLE	1					
51	DS2093416	HOSE	TUYAU FLEXIBLE	1					
52	DS2093500	HOSE	TUYAU FLEXIBLE	1		5001-5094	I	DS2093765	1
	DS2093765	HOSE	TUYAU FLEXIBLE	1		5095-			
53	DS2093495	HOSE	TUYAU FLEXIBLE	1		5001-5094	I	DS2093766	1
	DS2093766	HOSE	TUYAU FLEXIBLE	1		5095-			
54	DS2093418	HOSE	TUYAU FLEXIBLE	1					
55	DS2093276	HOSE	TUYAU FLEXIBLE	1					
56	DS2094271	HOSE	TUYAU FLEXIBLE	1					
57	DS2093496	HOSE	TUYAU FLEXIBLE	1					
58	DS0025017	BOLT	BOULON	4					

(THIS PARTS BOOK IS FOR REFERENCE ONLY.
PART NUMBERS AND SERAIL NUMBERS MAY BE
OUTDATED. ALWAYS USE THE ONLINE PARTS SYSTEM)

DATE	JAN. 04, 2013
3rd EDITION	

Fig. 1200 MAIN PIPING (2)
CONDUITES DE PRINCIPAL

Serial No. ;

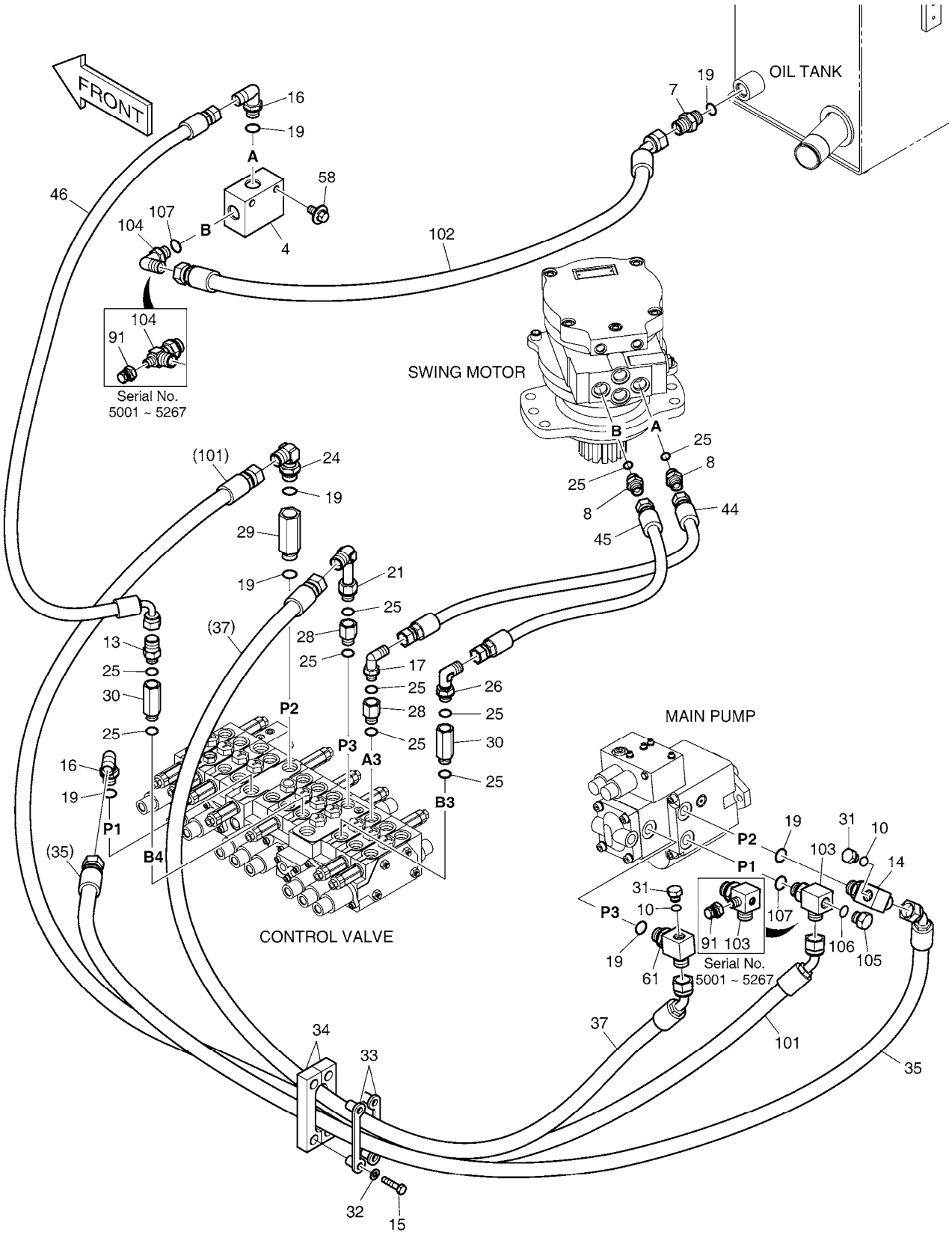

(THIS PARTS BOOK IS FOR REFERENCE ONLY.
PART NUMBERS AND SERAIL NUMBERS MAY BE
OUTDATED. ALWAYS USE THE ONLINE PARTS SYSTEM)

DATE	JAN. 04, 2013
3rd EDITION	

Fig. 1200 MAIN PIPING (2)
CONDUITES DE PRINCIPAL

Serial No. ;

Key No.	Part No.	Description	Description	Q'ty	S.C	Serial No.	ICA	Replaceable part	
								Part No.	Q'ty
1200 --	K1028025E	MAIN PIPING	TUYAUTERIE PRINCIPALE	-	D	5001-5094			
	420212-00625	PIPING,MAIN	TUYAUTERIE PRINCIPALE	-	D	5095-			
4	420-00291	VALVE;SWITCH	VANNE	1					
7	2181-1126D6	ADAPTER	ADAPTEUR	1					
8	2181-1126D7	ADAPTER	ADAPTEUR	2					
10	S8000111	O-RING	JOINT CIRCULAIRE	2					
13	2181-1126D115	ADAPTER	ADAPTEUR	1					
14	K1040063	TEE	TE	1					
15	S0509366	BOLT	BOULON	4					
16	2181-1702D2	ELBOW	COUDE	2					
17	2181-1702D5	ELBOW	COUDE	1					
19	S8000181	O-RING	JOINT CIRCULAIRE	7					
21	2181-1702D36	ELBOW	COUDE	1					
24	2181-1702D50	ELBOW	COUDE	1					
25	S8000141	O-RING	JOINT TORIQUE	10					
26	2181-1702D55	ELBOW	COUDE	1					
28	2181-2337D2	REDUCER	REDUCEUR	2					
29	2181-2337D10	REDUCER	REDUCTEUR	1					
30	2181-2337D12	ADAPTER	REDUCTEUR	2					
31	2181-1950D1	PLUG	BOUCHON	2					
32	S5010513	WASHER,PLAIN	RONDELLE	4					
33	K1012040A	PLATE	PLAQUE	2					
34	K1012041B	RUBBER	CAOUTCHOUC	2					
35	DS2092125	HOSE	TUYAU FLEXIBLE	1		5001-5094	I	DS2092235	1
	DS2092235	HOSE	TUYAU FLEXIBLE	1		5095-			
37	DS2092126	HOSE	TUYAU FLEXIBLE	1		5001-5094	I	DS2092236	1
	DS2092236	HOSE	TUYAU FLEXIBLE	1		5095-			
44	DS2094115	HOSE	TUYAU FLEXIBLE	1					
45	DS2094166	HOSE	TUYAU FLEXIBLE	1					
46	DS2093304	HOSE	TUYAU FLEXIBLE	1					
58	DS0025017	BOLT	BOULON	2					
61	K1040818	TEE	TE	1					
91	2181-2820D1	PLUG	BOUCHON	2		5001-5267			
101	DS2092125	HOSE	TUYAU FLEXIBLE	1		5001-5094	I	DS2092235	1
	DS2092235	HOSE	TUYAU FLEXIBLE	1		5095-			
102	DS2092178	HOSE	TUYAU FLEXIBLE	1		5001-5094	I	DS2092239	1
	DS2092239	HOSE	TUYAU FLEXIBLE	1		5095-			
103	K1043645	TEE	TE	1		5001-5267			

(THIS PARTS BOOK IS FOR REFERENCE ONLY.
PART NUMBERS AND SERIAL NUMBERS MAY BE
OUTDATED. ALWAYS USE THE ONLINE PARTS SYSTEM)

DATE	JAN. 04, 2013
3rd EDITION	

Fig. 1200 MAIN PIPING (2)
CONDUITES DE PRINCIPAL

Serial No. ;

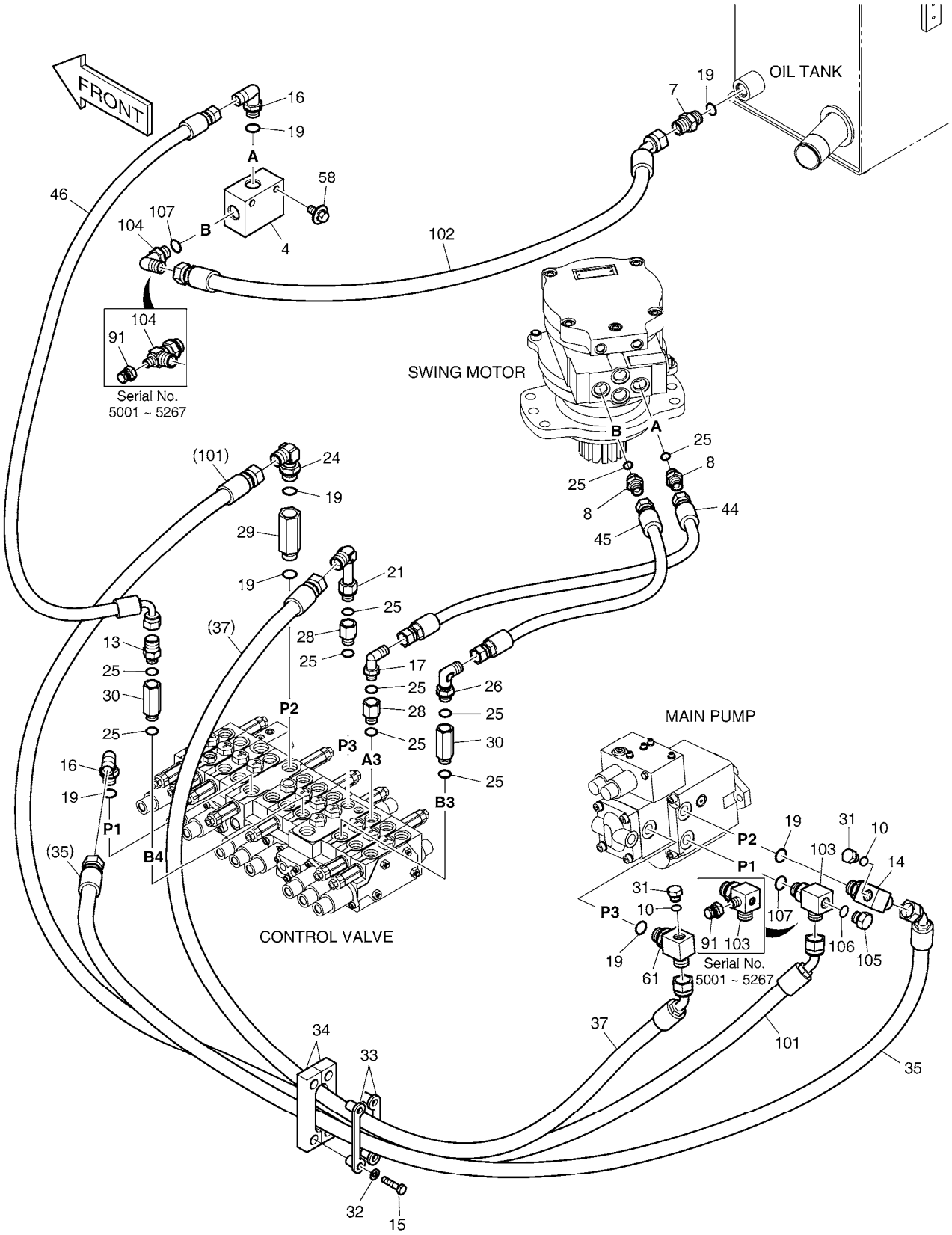

(THIS PARTS BOOK IS FOR REFERENCE ONLY.
PART NUMBERS AND SERAIL NUMBERS MAY BE
OUTDATED. ALWAYS USE THE ONLINE PARTS SYSTEM)

Fig. 1200 MAIN PIPING (2)
CONDUITES DE PRINCIPAL

Serial No. ;

Key No.	Part No.	Description	Description	Q'ty	S.C	Serial No.	ICA	Replaceable part	
								Part No.	Q'ty
1200 -	DS2365002	TEE	TE	1		5268-			
104	2181-1951D8	TEE	TE	1		5001-5267			
	2181-1702D2	ELBOW	COUDE	1		5268-			
105	2181-1950D1	PLUG	BOUCHON	1					
106	S8000111	O-RING	JOINT CIRCULAIRE	1					
107	S8000181	O-RING	JOINT CIRCULAIRE	2					

(THIS PARTS BOOK IS FOR REFERENCE ONLY.
PART NUMBERS AND SERAIL NUMBERS MAY BE
OUTDATED. ALWAYS USE THE ONLINE PARTS SYSTEM)

DATE	JAN. 04, 2013
3rd EDITION	

Fig. 1210 MAIN PIPING (3)
CONDUITES DE PRINCIPAL

Serial No. ;

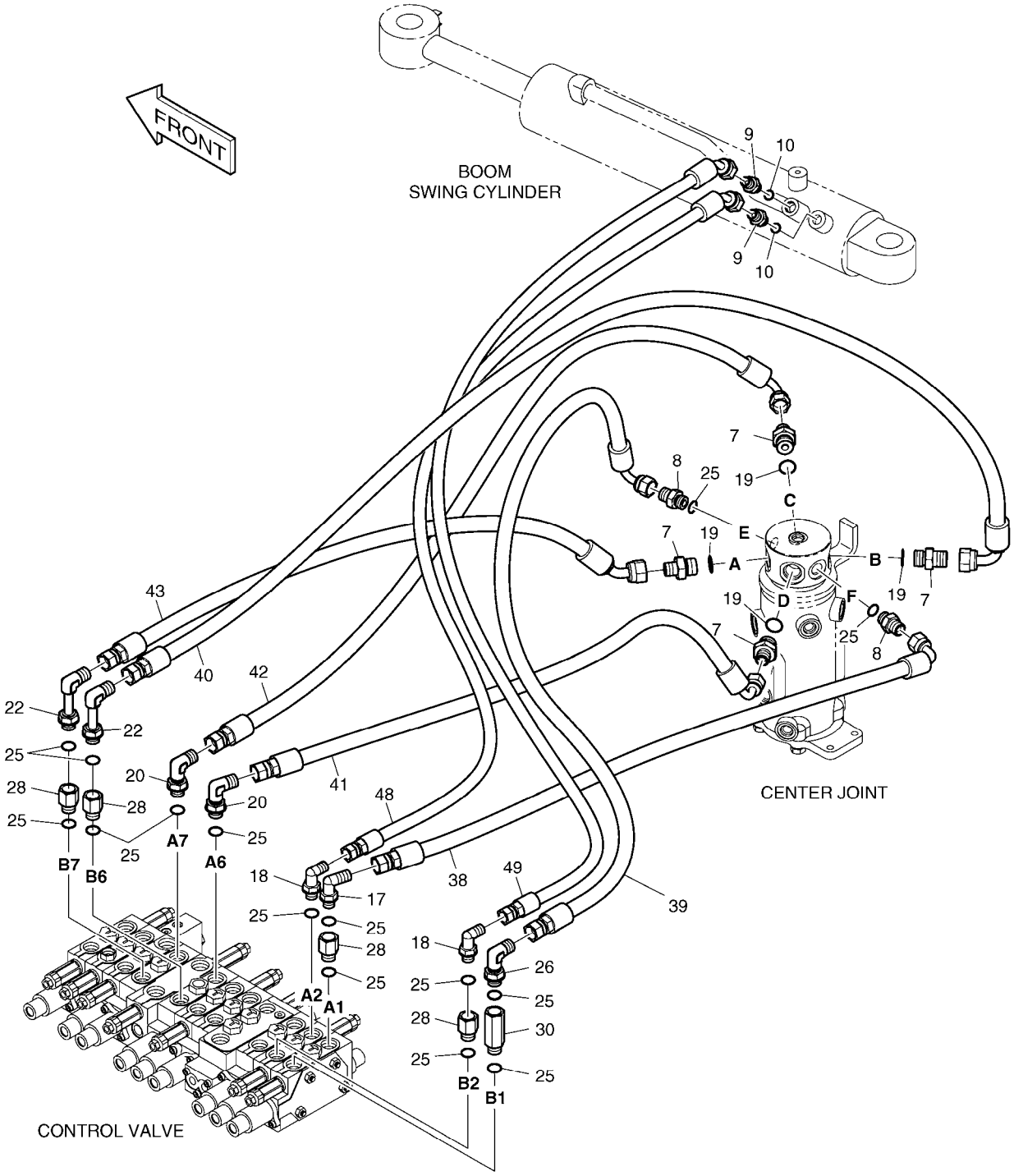

(THIS PARTS BOOK IS FOR REFERENCE ONLY.
PART NUMBERS AND SERAIL NUMBERS MAY BE
OUTDATED. ALWAYS USE THE ONLINE PARTS SYSTEM)

DATE	JAN. 04, 2013
3rd EDITION	

Fig. 1210 MAIN PIPING (3)
CONDUITES DE PRINCIPAL

Serial No. ;

Key No.	Part No.	Description	Description	Q'ty	S.C	Serial No.	ICA	Replaceable part	
								Part No.	Q'ty
1210 --	K1028025E	MAIN PIPING	TUYAUTERIE PRINCIPALE	-	D	5001-5094			
	420212-00625	PIPING,MAIN	TUYAUTERIE PRINCIPALE	-	D	5095-			
7	2181-1126D6	ADAPTER	ADAPTEUR	4					
8	2181-1126D7	ADAPTER	ADAPTEUR	2					
9	2181-1126D14	ADAPTER	ADAPTEUR	2					
10	S8000111	O-RING	JOINT CIRCULAIRE	2					
17	2181-1702D5	ELBOW	COUDE	1					
18	2181-1702D10	ELBOW	COUDE	2					
19	S8000181	O-RING	JOINT CIRCULAIRE	4					
20	2181-1702D35	ELBOW	COUDE	2					
22	2181-1702D41	ELBOW	COUDE	2					
25	S8000141	O-RING	JOINT TORIQUE	13					
26	2181-1702D55	ELBOW	COUDE	1					
28	2181-2337D2	REDUCER	REDUCEUR	4					
30	2181-2337D12	ADAPTER	REDUCTEUR	1					
38	DS2093413	HOSE	TUYAU FLEXIBLE	1					
39	DS2093302	HOSE	TUYAU FLEXIBLE	1					
40	DS2093431	HOSE	TUYAU FLEXIBLE	1					
41	DS2093301	HOSE	TUYAU FLEXIBLE	1					
42	DS2093498	HOSE	TUYAU FLEXIBLE	1					
43	DS2092144	HOSE	TUYAU FLEXIBLE	1					
48	DS2092179	HOSE	TUYAU FLEXIBLE	1					
49	DS2092180	HOSE	TUYAU FLEXIBLE	1					

(THIS PARTS BOOK IS FOR REFERENCE ONLY.
PART NUMBERS AND SERAIL NUMBERS MAY BE
OUTDATED. ALWAYS USE THE ONLINE PARTS SYSTEM)

DATE	JAN. 04, 2013
3rd EDITION	

Fig. 1220 PILOT PIPING (1)
CONDUITES DE PILOTE

Serial No. ;

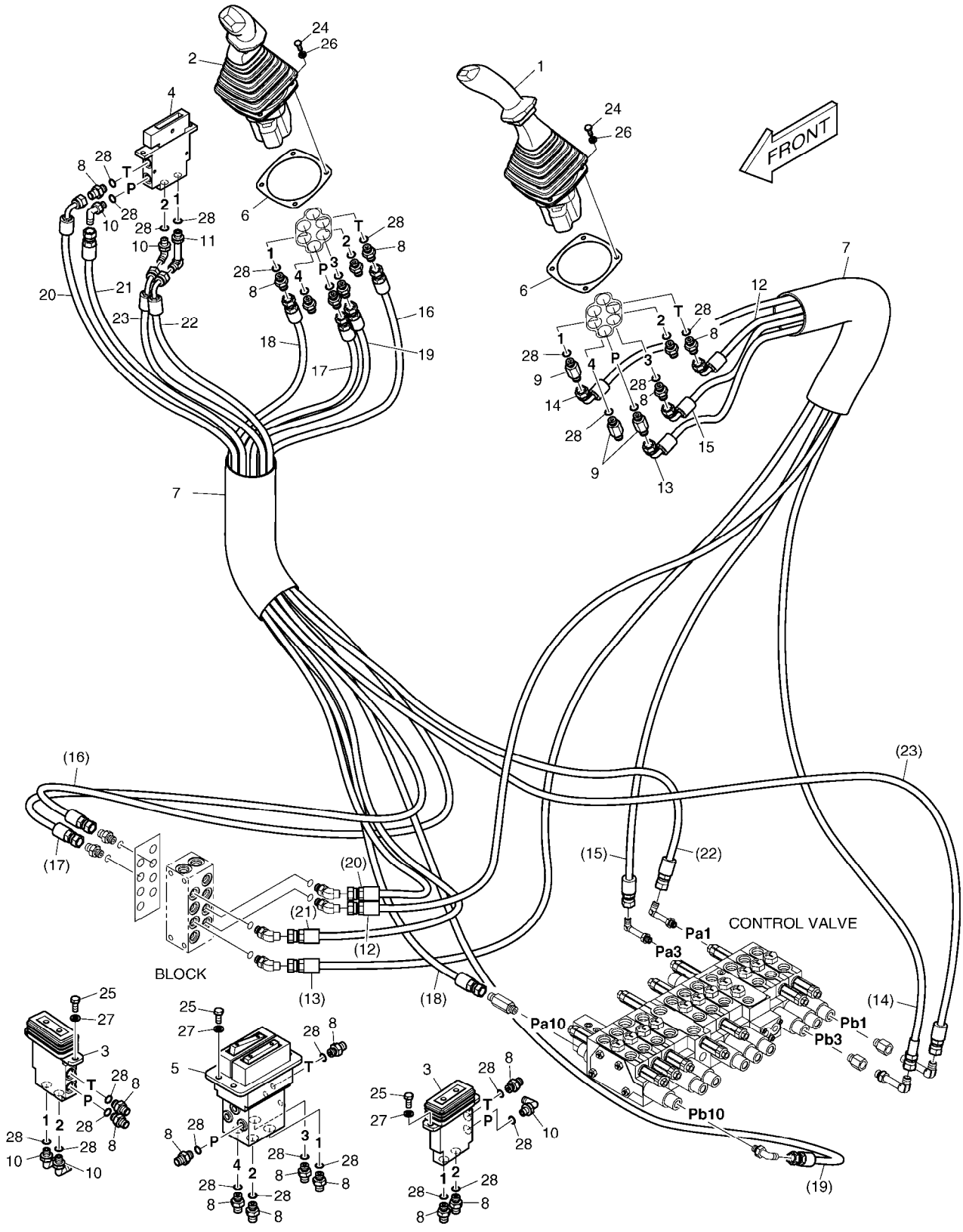

(THIS PARTS BOOK IS FOR REFERENCE ONLY.
PART NUMBERS AND SERAIL NUMBERS MAY BE
OUTDATED. ALWAYS USE THE ONLINE PARTS SYSTEM)

DATE	JAN. 04, 2013
3rd EDITION	

Fig. 1220 PILOT PIPING (1)
CONDUITES DE PILOTE

Serial No. ;

Key No.	Part No.	Description	Description	Q'ty	S.C	Serial No.	ICA	Replaceable part	
								Part No.	Q'ty
1220 --	K1029136B	PILOT PIPING	TUYAUTERIE PILOTE	-	D	5001-5109			
	420212-01341	PIPING,PILOT	TUYAUTERIE PILOTE	-	D	5110-5227			
	420212-01341A	PIPING,PILOT	TUYAUTERIE PILOTE	-	D	5228-5266			
	420212-01341B	PIPING,PILOT;(2)COMMON	TUYAUTERIE PILOTE	-	D	5267-			
1	K1014372A	VALVE;JOY STICK(L.H)	VANNE	1		5001-5266	I	410113-00130	1
	410113-00130	VALVE,JOYSTICK;LH	VANNE	1		5267-			
2	K1014373A	VALVE;JOY STICK(R.H)	VANNE	1		5001-5266	I	410113-00131	1
	410113-00131	VALVE,JOYSTICK;RH	VANNE	1		5267-			
3	K1013569B	VALVE;PEDAL	VANNE	2					
4	K1027491	VALVE;REMOCON (DOZER)	VANNE	1					
5	K1011188	VALVE;PEDAL	VANNE	1		5001-5109	I	K1027918B	1
	K1027918B	PEDAL VALVE	VANNE	1		5110-5227	Y	410119-00008	1
	410119-00008	PEDAL VALVE	VANNE	1		5228-			
6	2621-2752	PLATE	PLAQUE CAOUTCHOUC	2					
7	K1003945	PROTECTOR	PROTECTEUR	2					
8	2181-1126D14	ADAPTER	ADAPTEUR	21					
9	2181-1126D75	ADAPTER	ADAPTEUR	3					
10	2181-1702D4	ELBOW	COUDE	5					
11	2181-1702D56	ELBOW	COUDE	1					
12	DS2093420	HOSE	TUYAU FLEXIBLE	1					
13	DS2093420	HOSE	TUYAU FLEXIBLE	1					
14	DS2093330	HOSE	TUYAU FLEXIBLE	1					
15	DS2093119	HOSE	TUYAU FLEXIBLE	1					
16	DS2094220	HOSE	TUYAU FLEXIBLE	1					
17	DS2094214	HOSE PF1/4-1560L	TUYAU FLEXIBLE	1					
18	DS2094215	HOSE	TUYAU FLEXIBLE	1					
19	DS2094221	HOSE	TUYAU FLEXIBLE	1					
20	DS2093288	HOSE	TUYAU FLEXIBLE	1					
21	DS2094113	HOSE	TUYAU FLEXIBLE	1					
22	DS2093025	HOSE	TUYAU FLEXIBLE	1					
23	DS2093034	HOSE	TUYAU FLEXIBLE	1					
24	S0504666	BOLT M6X1.0X16	BOULON	6					
25	S0508866	BOLT	BOULON	8					
26	S5102303	WASHER;SPRING	RONDELLE	6					
27	S5102503	WASHER,SPRING	RONDELLE	8					
28	S8000111	O-RING	JOINT CIRCULAIRE	30					

(THIS PARTS BOOK IS FOR REFERENCE ONLY.
PART NUMBERS AND SERAIL NUMBERS MAY BE
OUTDATED. ALWAYS USE THE ONLINE PARTS SYSTEM)

DATE	JAN. 04, 2013
3rd EDITION	

Fig. 1230 PILOT PIPING (2)
CONDUITES DE PILOTE

Serial No. ;

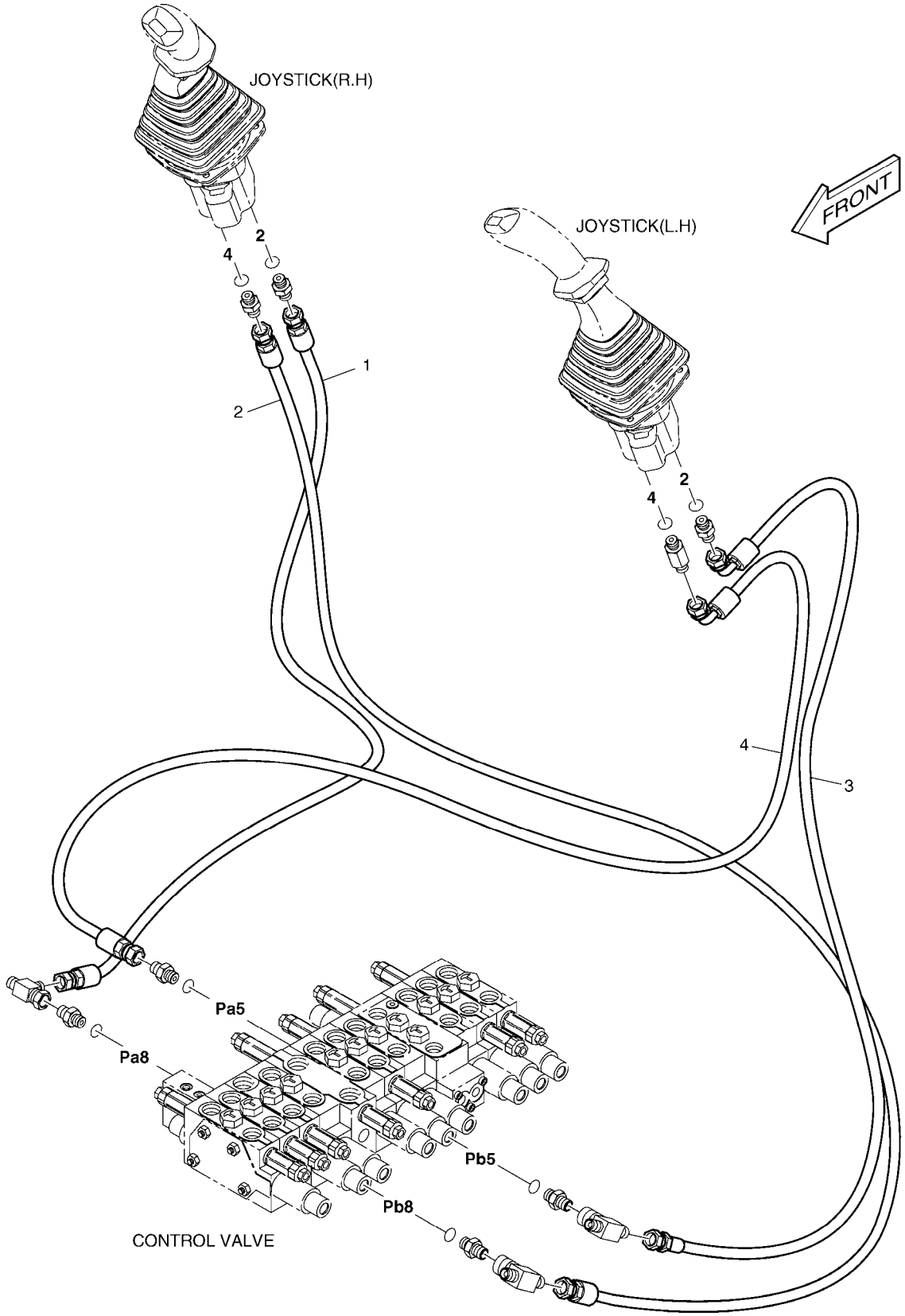

(THIS PARTS BOOK IS FOR REFERENCE ONLY.
PART NUMBERS AND SERAIL NUMBERS MAY BE
OUTDATED. ALWAYS USE THE ONLINE PARTS SYSTEM)

DATE	JAN. 04, 2013
3rd EDITION	

Fig. 1230 PILOT PIPING (2)
CONDUITES DE PILOTE

Serial No. ;

Key No.	Part No.	Description	Description	Q'ty	S.C	Serial No.	ICA	Replaceable part	
								Part No.	Q'ty
1230 --	K1029140	PILOT PIPING	TUYAUTERIE PILOTE	-	D				
1	DS2094017	HOSE	TUYAU FLEXIBLE	1					
2	DS2094222	HOSE PF1/4-1720L	TUYAU FLEXIBLE	1					
3	DS2093234	HOSE	TUYAU FLEXIBLE	1					
4	DS2093421	HOSE PF1/4-1510L	TUYAU FLEXIBLE	1					

(THIS PARTS BOOK IS FOR REFERENCE ONLY.
PART NUMBERS AND SERAIL NUMBERS MAY BE
OUTDATED. ALWAYS USE THE ONLINE PARTS SYSTEM)

DATE	JAN. 04, 2013
3rd EDITION	

Fig. 1240 PILOT PIPING (3)
CONDUITES DE PILOTE

Serial No. ;

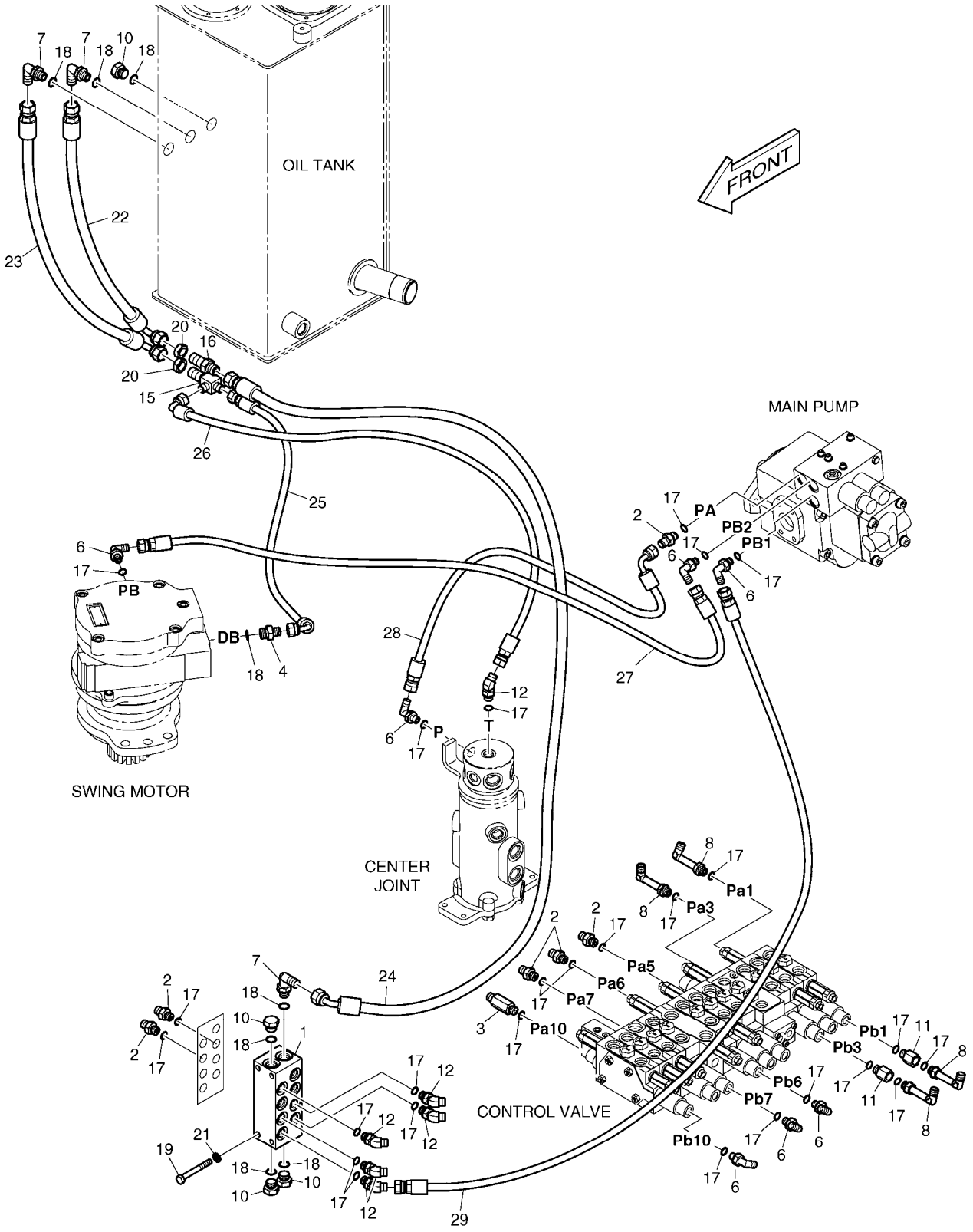

(THIS PARTS BOOK IS FOR REFERENCE ONLY.
PART NUMBERS AND SERAIL NUMBERS MAY BE
OUTDATED. ALWAYS USE THE ONLINE PARTS SYSTEM)

DATE	JAN. 04, 2013
3rd EDITION	

Fig. 1240 PILOT PIPING (3)
CONDUITES DE PILOTE

Serial No. ;

Key No.	Part No.	Description	Description	Q'ty	S.C	Serial No.	ICA	Replaceable part	
								Part No.	Q'ty
1240 --	K1029141C	PILOT PIPING	TUYAUTERIE PILOTE	-	D				
1	K1025585	BLOCK	BLOC	1					
2	2181-1126D14	ADAPTER	ADAPTEUR	6					
3	2181-1126D34	ADAPTER	ADAPTEUR	1					
4	2181-1126D36	ADAPTER	ADAPTEUR	1					
6	2181-1702D4	ELBOW	COUDE	7					
7	2181-1702D5	ELBOW	COUDE	3					
8	2181-1702D56	ELBOW	COUDE	4					
10	2181-1950D2	PLUG	BOUCHON	4					
11	2181-2337D1	REDUCER	REDUCTEUR	2					
12	2181-2419D1	ELBOW	COUDE	6					
15	DS2411008	TEE	TE	1					
16	181-00078D1	ADAPTER	ADAPTEUR	1					
17	S8000111	O-RING	JOINT CIRCULAIRE	27					
18	S8000141	O-RING	JOINT TORIQUE	8					
19	S0556753	BOLT M8X1.25X70	BOULON A 6 PANS	3					
20	121-00010D1	NUT	ECROU	2					
21	S5102503	WASHER,SPRING	RONDELLE	3					
22	DS2093299	HOSE	TUYAU FLEXIBLE	1					
23	DS2093300	HOSE	TUYAU FLEXIBLE	1					
24	DS2092117	HOSE	TUYAU FLEXIBLE	1					
25	DS2093069	HOSE	TUYAU FLEXIBLE	1					
26	DS2093006	HOSE	TUYAU FLEXIBLE	1					
27	DS2094184	HOSE PF 1/4-1100L	TUYAU FLEXIBLE	1					
28	DS2093043	HOSE	TUYAU FLEXIBLE	1					
29	DS2094024	HOSE	TUYAU FLEXIBLE	1					

(THIS PARTS BOOK IS FOR REFERENCE ONLY.
PART NUMBERS AND SERAIL NUMBERS MAY BE
OUTDATED. ALWAYS USE THE ONLINE PARTS SYSTEM)

DATE	JAN. 04, 2013
3rd EDITION	

Fig. 1250 PILOT PIPING (4)
CONDUITES DE PILOTE

Serial No. ;

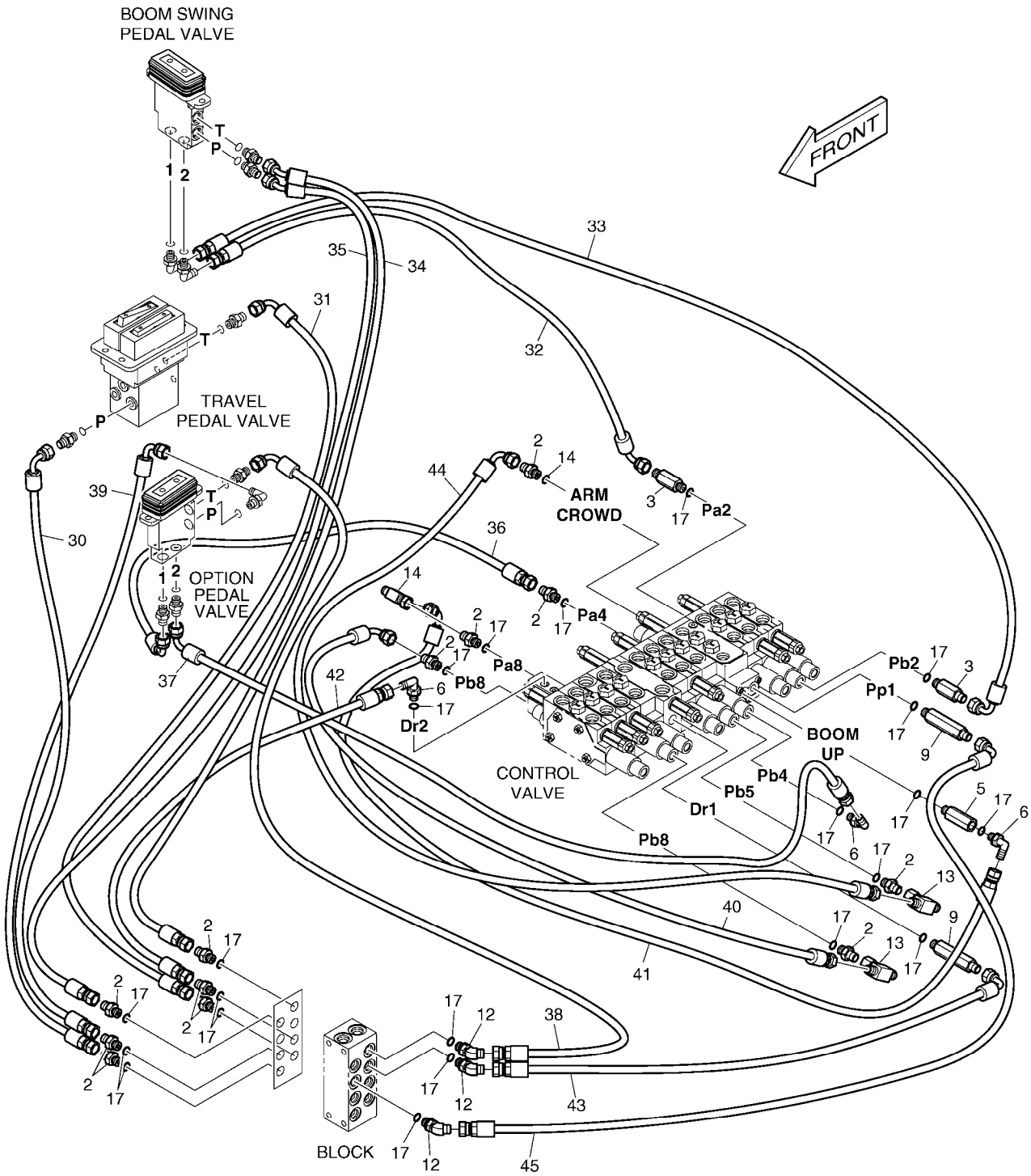

(THIS PARTS BOOK IS FOR REFERENCE ONLY.
PART NUMBERS AND SERAIL NUMBERS MAY BE
OUTDATED. ALWAYS USE THE ONLINE PARTS SYSTEM)

DATE	JAN. 04, 2013
3rd EDITION	

Fig. 1250 PILOT PIPING (4) CONDUITES DE PILOTE

Serial No. ;

Key No.	Part No.	Description	Description	Q'ty	S.C	Serial No.	ICA	Replaceable part	
								Part No.	Q'ty
1250 --	K1029141C	PILOT PIPING	TUYAUTERIE PILOTE	-	D				
2	2181-1126D14	ADAPTER	ADAPTEUR	12					
3	2181-1126D34	ADAPTER	ADAPTEUR	2					
5	DS2242022	ADAPTER	ADAPTEUR	1					
6	2181-1702D4	ELBOW	COUDE	3					
9	2181-1126D51	ADAPTER	ADAPTEUR	2					
12	2181-2419D1	ELBOW	COUDE	3					
13	2181-4125	TEE	TE	2					
14	181-00837D1	TEE;UNION	TE	1					
17	S8000111	O-RING	JOINT CIRCULAIRE	22					
30	DS2093197	HOSE	TUYAU FLEXIBLE	1					
31	DS2093427	HOSE PF1/4-470L	TUYAU FLEXIBLE	1					
32	DS2093017	HOSE	TUYAU	1					
33	DS2093098	HOSE	TUYAU FLEXIBLE	1					
34	DS2092118	HOSE	TUYAU FLEXIBLE	1					
35	DS2092119	HOSE	TUYAU FLEXIBLE	1					
36	DS2093397	HOSE	TUYAU FLEXIBLE	1					
37	DS2093375	HOSE	TUYAU FLEXIBLE	1					
38	DS2093261	HOSE	TUYAU FLEXIBLE	1					
39	DS2093366	HOSE	TUYAU FLEXIBLE	1					
40	DS2093032	HOSE	TUYAU FLEXIBLE	1		5001-5232			
	DS2093115	HOSE	TUYAU FLEXIBLE	1		5233-			
41	DS2093036	HOSE	TUYAU FLEXIBLE	1					
42	DS2094223	HOSE	TUYAU FLEXIBLE	1					
43	DS2093024	HOSE	TUYAU FLEXIBLE	1					
44	DS2093318	HOSE	TUYAU FLEXIBLE	1		5001-5232			
	DS2093249	HOSE	TUYAU FLEXIBLE	1		5233-			
45	DS2093027	HOSE PF1/4-500L	TUYAU FLEXIBLE	1					

(THIS PARTS BOOK IS FOR REFERENCE ONLY.
PART NUMBERS AND SERAIL NUMBERS MAY BE
OUTDATED. ALWAYS USE THE ONLINE PARTS SYSTEM)

DATE	JAN. 04, 2013
3rd EDITION	

Fig. 1260 PILOT PIPING (5) - NOT TRAVEL ALARM
CONDUITES DE PILOTE

Serial No. ;

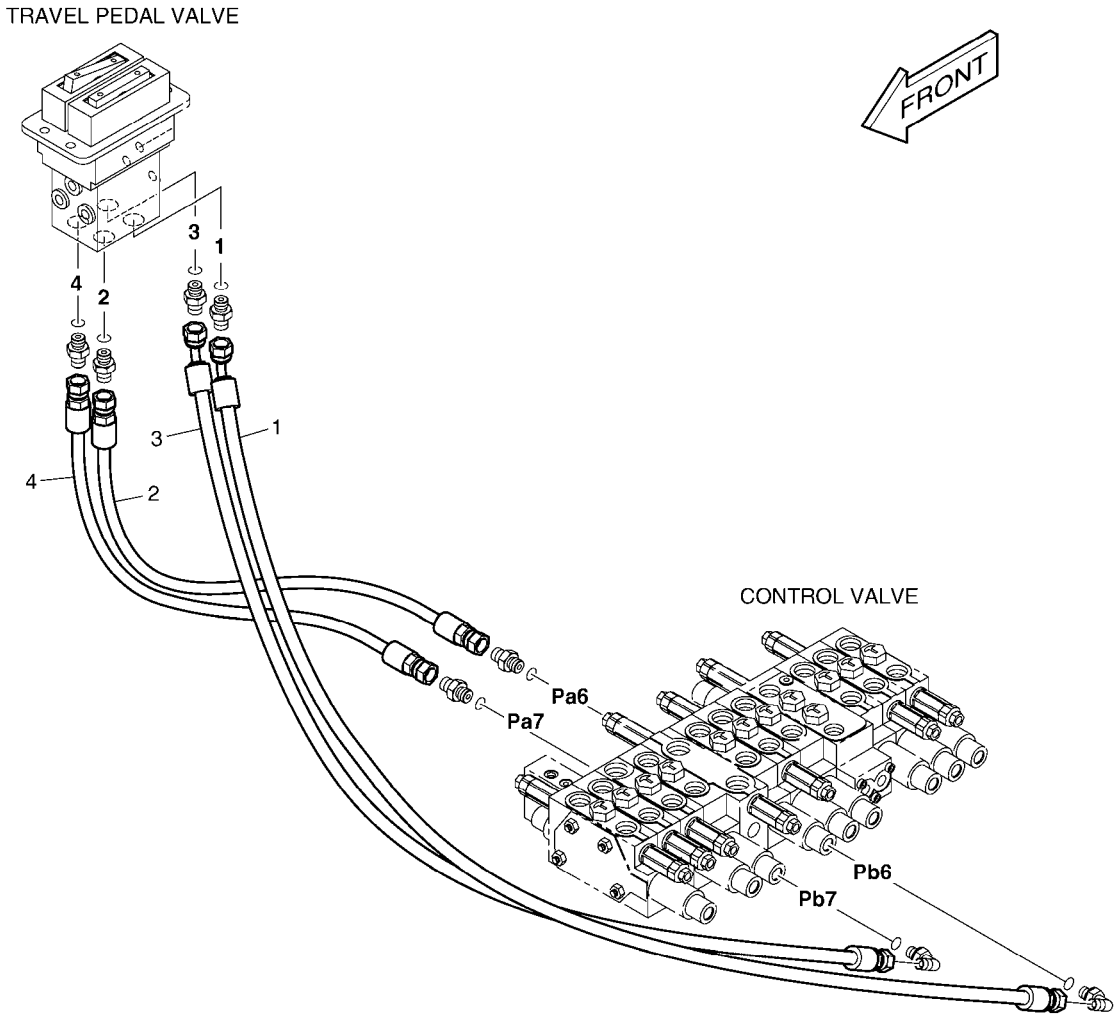

(THIS PARTS BOOK IS FOR REFERENCE ONLY.
PART NUMBERS AND SERAIL NUMBERS MAY BE
OUTDATED. ALWAYS USE THE ONLINE PARTS SYSTEM)

DATE	JAN. 04, 2013
3rd EDITION	

Fig. 1260 PILOT PIPING (5) - NOT TRAVEL ALARM
CONDUITES DE PILOTE

Serial No. ;

Key No.	Part No.	Description	Description	Q'ty	S.C	Serial No.	ICA	Replaceable part	
								Part No.	Q'ty
1260 --	K1029143	PILOT PIPING	TUYAUTERIE PILOTE	-	D				
1	DS2092091	HOSE	TUYAU FLEXIBLE	1					
2	DS2094137	HOSE	TUYAU FLEXIBLE	1					
3	DS2092092	HOSE	TUYAU FLEXIBLE	1					
4	DS2094006	HOSE	TUYAU FLEXIBLE	1					

(THIS PARTS BOOK IS FOR REFERENCE ONLY.
PART NUMBERS AND SERAIL NUMBERS MAY BE
OUTDATED. ALWAYS USE THE ONLINE PARTS SYSTEM)

DATE	JAN. 04, 2013
3rd EDITION	

Fig. 1270 ENGINE CONTROL
COMMANDE REGIME MOTEUR

Serial No. ;

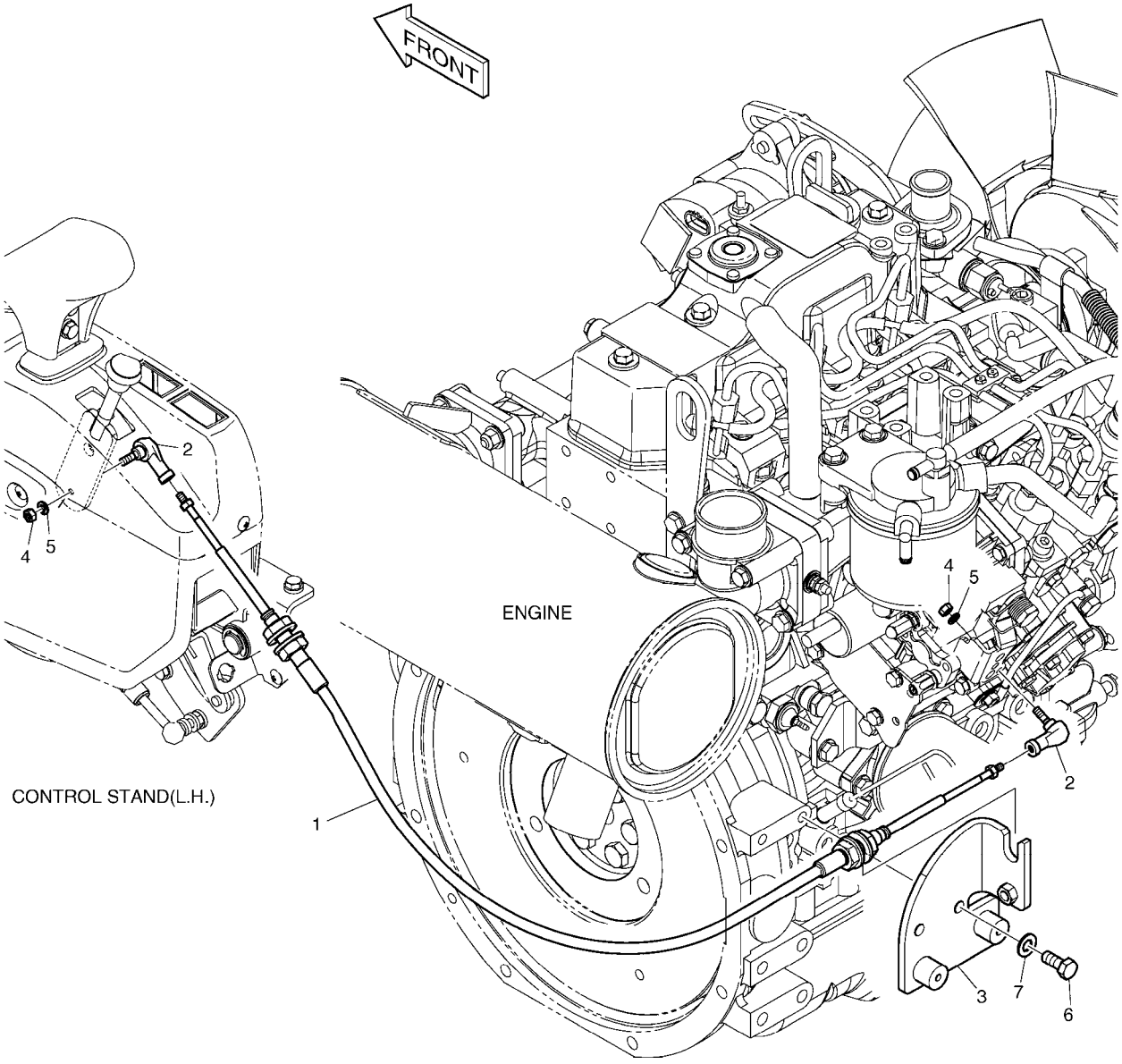

(THIS PARTS BOOK IS FOR REFERENCE ONLY.
PART NUMBERS AND SERAIL NUMBERS MAY BE
OUTDATED. ALWAYS USE THE ONLINE PARTS SYSTEM)

Fig. 1270 ENGINE CONTROL
COMMANDE REGIME MOTEUR

Serial No. ;

Key No.	Part No.	Description	Description	Q'ty	S.C	Serial No.	ICA	Replaceable part	
								Part No.	Q'ty
1270 --	K1017996B	ENGINE CONTROL	LE MOTEUR SE RELIENT	-	D				
1	K1012050A	CABLE;ENGINE CONTROL	CABLE	1					
2	2138-9006B	JOINT;BALL	JOINT SPHERIQUE	2					
3	K1017997A	BRACKET	SUPPORT	1					
4	S4012233	NUT	ECROU	2					
5	S5102203	WASHER;SPRING	RONDELLE ELASTIQUE	2					
6	S0508853	BOLT	BOULON	2					
7	S5010513	WASHER,PLAIN	RONDELLE	2					

(THIS PARTS BOOK IS FOR REFERENCE ONLY.
PART NUMBERS AND SERAIL NUMBERS MAY BE
OUTDATED. ALWAYS USE THE ONLINE PARTS SYSTEM)

DATE	JAN. 04, 2013
3rd EDITION	

Fig. 1280 BONNET
COUVERCLE

Serial No. ;

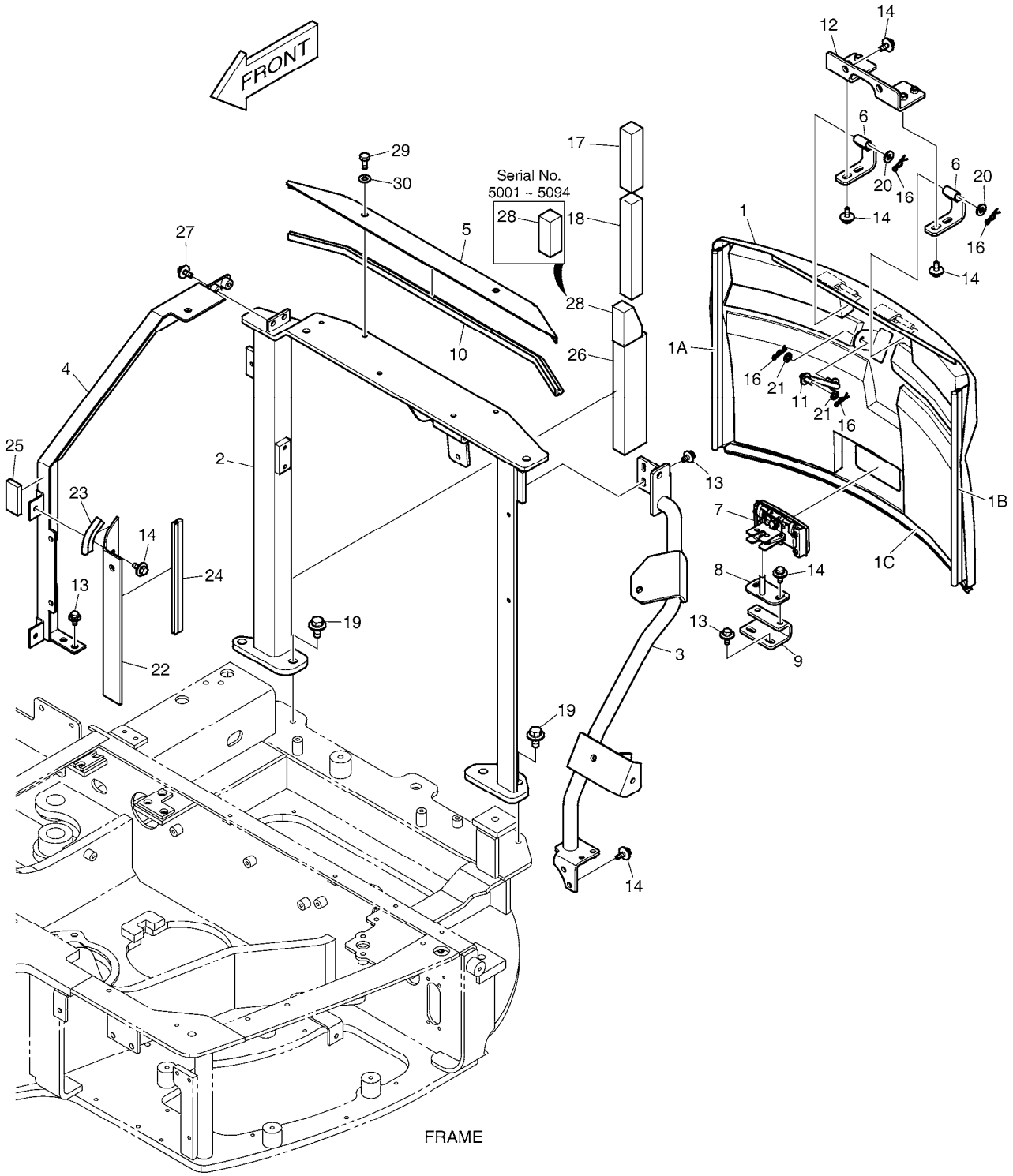

(THIS PARTS BOOK IS FOR REFERENCE ONLY.
PART NUMBERS AND SERAIL NUMBERS MAY BE
OUTDATED. ALWAYS USE THE ONLINE PARTS SYSTEM)

DATE	JAN. 04, 2013
3rd EDITION	

Fig. 1280 BONNET COUVERCLE

Serial No. ;

Key No.	Part No.	Description	Description	Q'ty	S.C	Serial No.	ICA	Replaceable part	
								Part No.	Q'ty
1280 --	K1026989G	ARCH & BONNET ASS'Y	VOUTE & CAPOT ASS'Y	-	D	5001-5094			
	110501-00018	ARCH & BONNET ASSY	VOUTE & CAPOT ASS'Y	-	D	5095-			
1	K1016533E	BONNET ASS'Y	CAPOT ASS'Y	1					
1A	K1016546	. WEATHER STRIP	. SURVIVEZ A A LA BANDE	1					
1B	K1016547A	. WEATHER STRIP	. SURVIVEZ A A LA BANDE	1					
1C	K1016548	. WEATHER STRIP	. SURVIVEZ A A LA BANDE	1					
2	K1037756	ARCH	VOUTE	1		5001-5076	I	K1037756A	1
	K1037756A	ARCH	VOUTE	1		5077-5094	Y	110958-00055	1
	110958-00055	ARCH	VOUTE	1		5095-			
3	K1016535B	SUPPORT	APPUI	1		5001-5094	Y	110958-00068	1
	110958-00068	SUPPORT	APPUI	1		5095-			
4	K1029226B	SUPPORT	APPUI	1		5001-5094	Y	110958-00070	1
	110958-00070	SUPPORT	APPUI	1		5095-			
5	K1016537C	PLATE	PLAQUE	1					
6	K1016538B	HINGE	CHARNIRE	2					
7	K1011350A	HANDLE	POIGNEE	1					
8	K1026044A	STRIKER	FRAPPER	1					
9	K1026990A	BRACKET	SUPPORT	1					
10	K1016540	WEATHER STRIP	SURVIVEZ A A LA BANDE	1					
11	K1016541	STAY	SEJOUR	1					
12	K1016564A	PLATE	PLAQUE	1					
13	DS0025033	BOLT;SET	BOULON	6					
14	DS0025032	BOLT;SET	BOULON	12					
16	2705-9002	PIN;LOCK	GOUPILLE	4					
17	K1041335	FOAM	EPONGE	1					
18	K1041337	FOAM	EPONGE	1					
19	DS0025018	BOLT;SET	BOULON	4					
20	S5020603	WASHER;PLAIN M10	RONDELLE PLATE	2					
21	2114-1058D63	WASHER	RONDELLE	2					
22	K1012079A	BRACKET	SUPPORT	1					
23	K1016577	WEATHER STRIP	SURVIVEZ A A LA BANDE	1					
24	K1016578	WEATHER STRIP	SURVIVEZ A A LA BANDE	1					
25	K1016579	FOAM	EPONGE	1					
26	K1026046	SPONGE	EPONGE	1					
27	DS0025039	BOLT;SET	BOULON	2					
28	K1041336	FOAM	EPONGE	1		5001-5094			
	180102-00006	FOAM	EPONGE	1		5095-			
29	S0508666	BOLT	BOULON	2					

(THIS PARTS BOOK IS FOR REFERENCE ONLY.
PART NUMBERS AND SERIAL NUMBERS MAY BE
OUTDATED. ALWAYS USE THE ONLINE PARTS SYSTEM)

DATE	JAN. 04, 2013
3rd EDITION	

Fig. 1280 BONNET
COUVERCLE

Serial No. ;

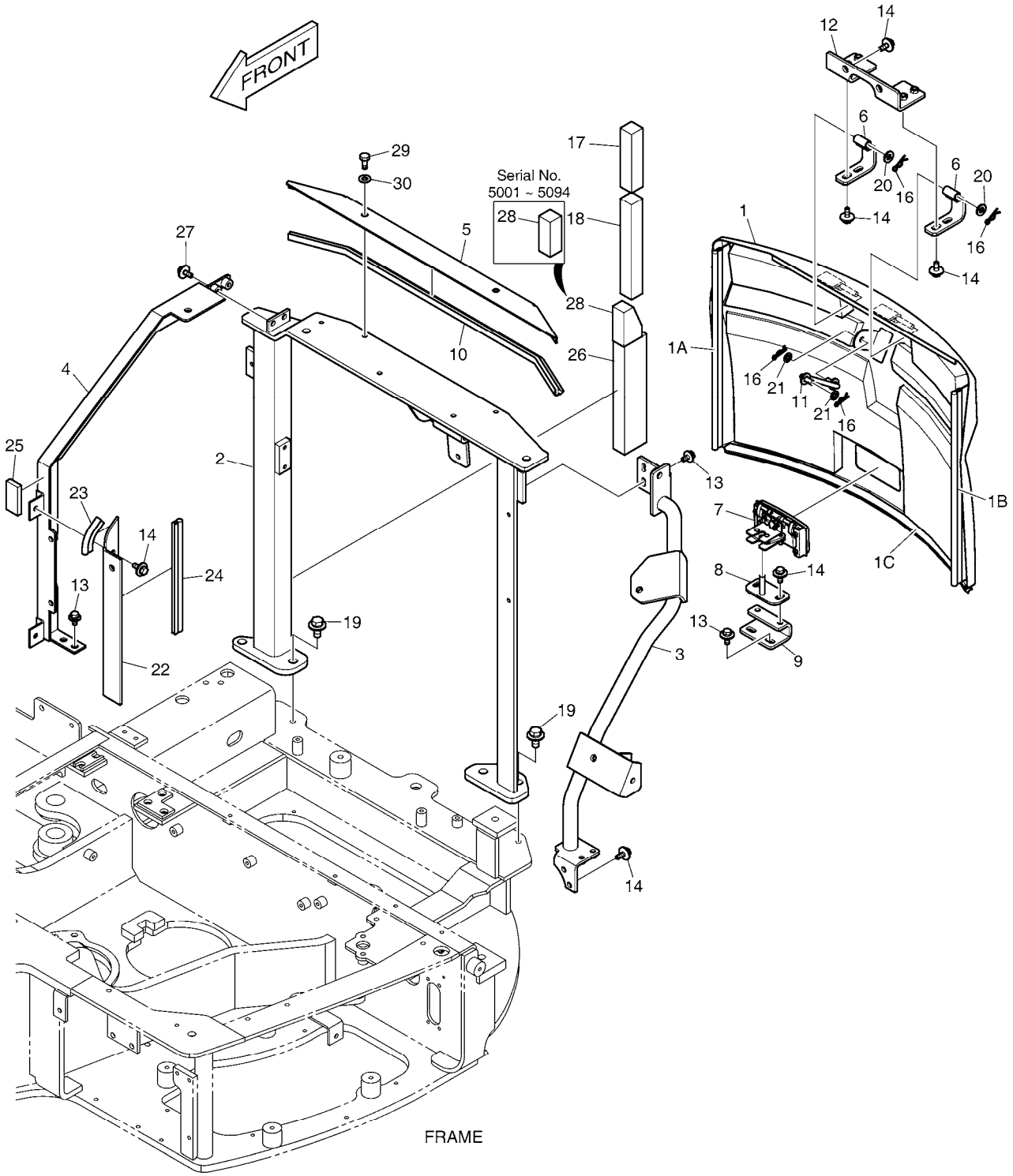

(THIS PARTS BOOK IS FOR REFERENCE ONLY.
PART NUMBERS AND SERAIL NUMBERS MAY BE
OUTDATED. ALWAYS USE THE ONLINE PARTS SYSTEM)

Fig. 1280 BONNET COUVERCLE

Serial No. ;

Key No.	Part No.	Description	Description	Q'ty	S.C	Serial No.	ICA	Replaceable part	
								Part No.	Q'ty
1280 -30	2114-1058D29	WASHER	RONDELLE	2					

(THIS PARTS BOOK IS FOR REFERENCE ONLY.
PART NUMBERS AND SERAIL NUMBERS MAY BE
OUTDATED. ALWAYS USE THE ONLINE PARTS SYSTEM)

DATE	JAN. 04, 2013
3rd EDITION	

Fig. 1290 COVER ASS'Y
ENSEMBLE DE COUVERCLE

Serial No. ;

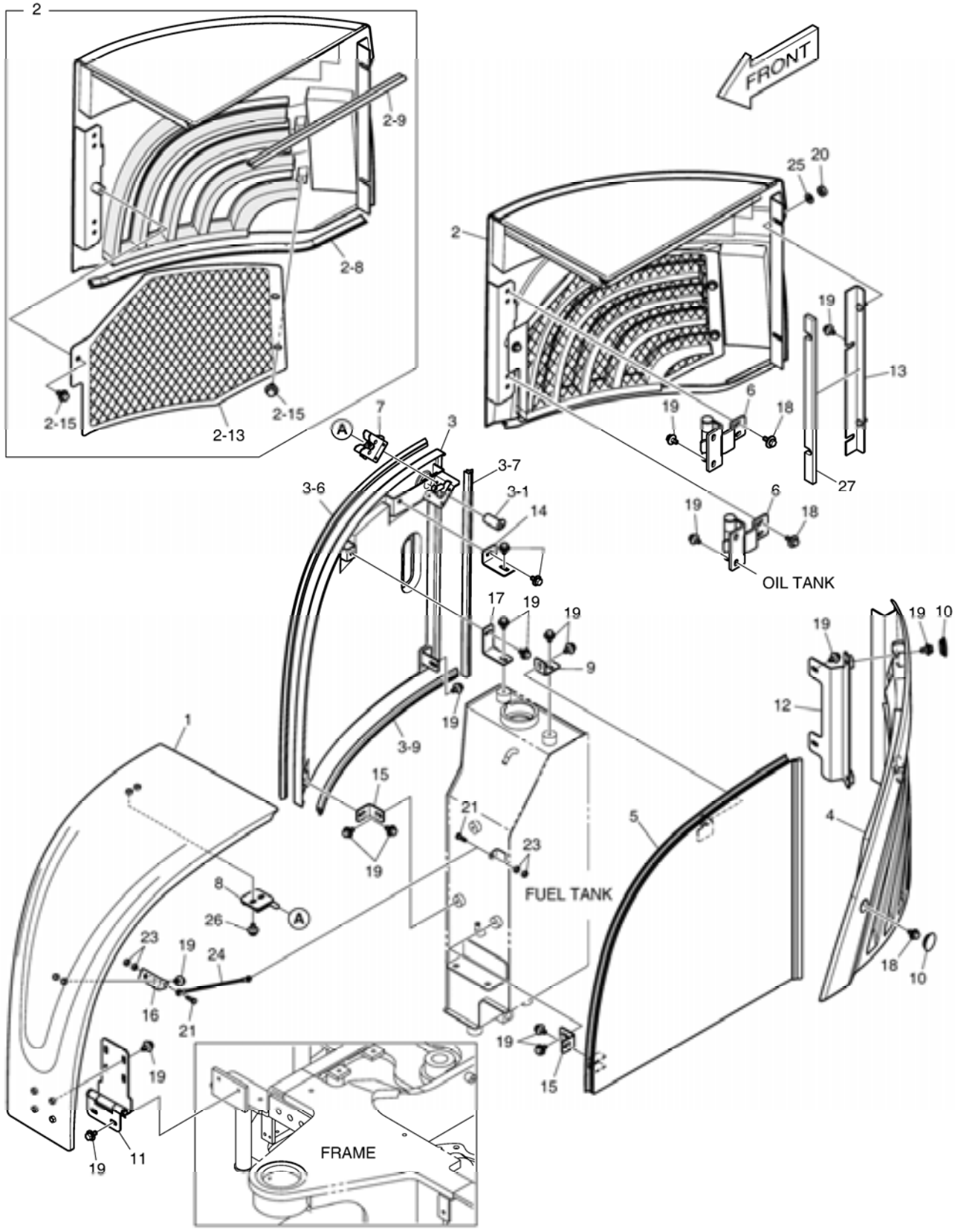

(THIS PARTS BOOK IS FOR REFERENCE ONLY.
PART NUMBERS AND SERAIL NUMBERS MAY BE
OUTDATED. ALWAYS USE THE ONLINE PARTS SYSTEM)

DATE	JAN. 04, 2013
3rd EDITION	

Fig. 1290 COVER ASS'Y
ENSEMBLE DE COUVERCLE

Serial No. ;

Key No.	Part No.	Description	Description	Q'ty	S.C	Serial No.	ICA	Replaceable part	
								Part No.	Q'ty
1290 --	K1026968G	COVER ASS'Y	COUVERCLE	-	D	5001-5094			
	110508-00050	COVER ASS'Y	COUVERCLE	-	D	5095-			
1	K1016927C	COVER	COUVERCLE	1					
2	K1038804A	COVER	COUVERCLE	1					
2-8	K1016948	. WEATHER STRIP	. SURVIVEZ A A LA BANDE	1					
2-9	K1016949	. WEATHER STRIP	. SURVIVEZ A A LA BANDE	1					
2-13	K1027027A	. NET;COVER	. NET;COVER	1					
2-15	DS0025033	. BOLT;SET	. BOULON	3					
3	K1016929B	COVER	COUVERCLE	1					
3-1	K1049665	. CYLINDER;KEY(F900)	. CYLINDER;KEY	1					
3-6	K1016956	. WEATHER STRIP	. SURVIVEZ A A LA BANDE	1					
3-7	K1017736	. WEATHER STRIP	. SURVIVEZ A A LA BANDE	1					
3-9	K1030177	. WEATHER STRIP	. SURVIVEZ A A LA BANDE	1					
4	K1016930B	COVER	COUVERCLE	1					
5	K1016931B	COVER	COUVERCLE	1					
6	K1026965A	HINGE	CHARNIRE	2					
7	K1008938A	CATCH	CROCHET	1					
8	K1016933A	STRIKER	FRAPPER	1					
9	K1027155	PLATE	PLAQUE	1					
10	K1012673	RUBBER	CAOUTCHOUC	3					
11	K1017631C	HINGE	CHARNIRE	1					
12	K1016934A	BRACKET	SUPPORT	1					
13	K1037267	BRACKET	SUPPORT	1					
14	K1026964B	PLATE	PLAQUE	1					
15	K1016937A	PLATE	PLAQUE	2					
16	K1026012	BRACKET	SUPPORT	1					
17	K1026963B	PLATE	PLAQUE	1					
18	DS0025032	BOLT;SET	BOULON	5					
19	DS0025033	BOLT;SET	BOULON	29					
20	S4012533	NUT	ECROU	2					
21	S0504866	BOLT	BOULON A 6 PANS	2					
23	S4012333	NUT	ECROU	4					
24	K1017749B	CABLE	CABLE	1					
25	S5010513	WASHER,PLAIN	RONDELLE	2					
26	K1001029	BOLT	BOULON	2					
27	180102-00007	FOAM	CAOUTCHOUC	1		5095-			

(THIS PARTS BOOK IS FOR REFERENCE ONLY.
PART NUMBERS AND SERAIL NUMBERS MAY BE
OUTDATED. ALWAYS USE THE ONLINE PARTS SYSTEM)

DATE	JAN. 04, 2013
3rd EDITION	

Fig. 1300 UNDER COVER TOLES IMFERIEVRES

Serial No. ;

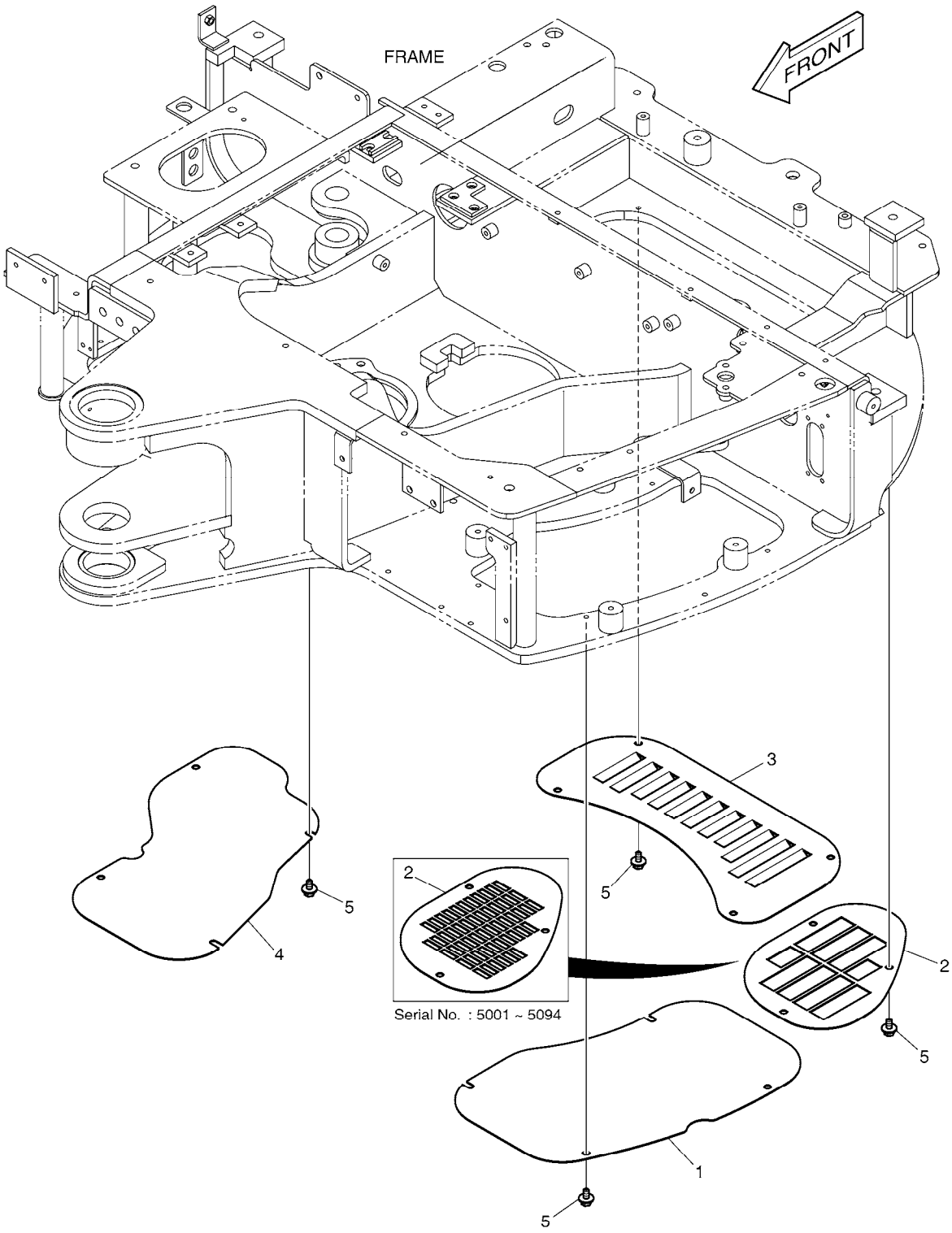

(THIS PARTS BOOK IS FOR REFERENCE ONLY.
PART NUMBERS AND SERAIL NUMBERS MAY BE
OUTDATED. ALWAYS USE THE ONLINE PARTS SYSTEM)

DATE	JAN. 04, 2013
3rd EDITION	

Fig. 1300 UNDER COVER TOLES IMFERIEVRES

Serial No. ;

Key No.	Part No.	Description	Description	Q'ty	S.C	Serial No.	ICA	Replaceable part	
								Part No.	Q'ty
1300 --	K1028121B	UNDER COVER ASS'Y	COUVERCLE	-	D	5001-5094			
	110513-00012	COVER ASSY,UNDER	COUVERCLE	-	D	5095-			
1	K1017653A	COVER;UNDER	COUVERCLE	1					
2	K1017654	COVER;UNDER	COUVERCLE	1		5001-5094	I	110513-00045	1
	110513-00045	COVER,UNDER	COUVERCLE	1		5095-			
3	K1009418	COVER;UNDER	COUVERCLE	1					
4	K1017655A	COVER;UNDER	COUVERCLE	1					
5	DS0025033	BOLT;SET	BOULON	15		5001-5094			
	K1049808	BOLT,FLANGE	BOULON	15		5095-			

(THIS PARTS BOOK IS FOR REFERENCE ONLY.
PART NUMBERS AND SERAIL NUMBERS MAY BE
OUTDATED. ALWAYS USE THE ONLINE PARTS SYSTEM)

DATE	JAN. 04, 2013
3rd EDITION	

Fig. 1310 LUBRICATION PIPING
LUBRIFICATION

Serial No. ;

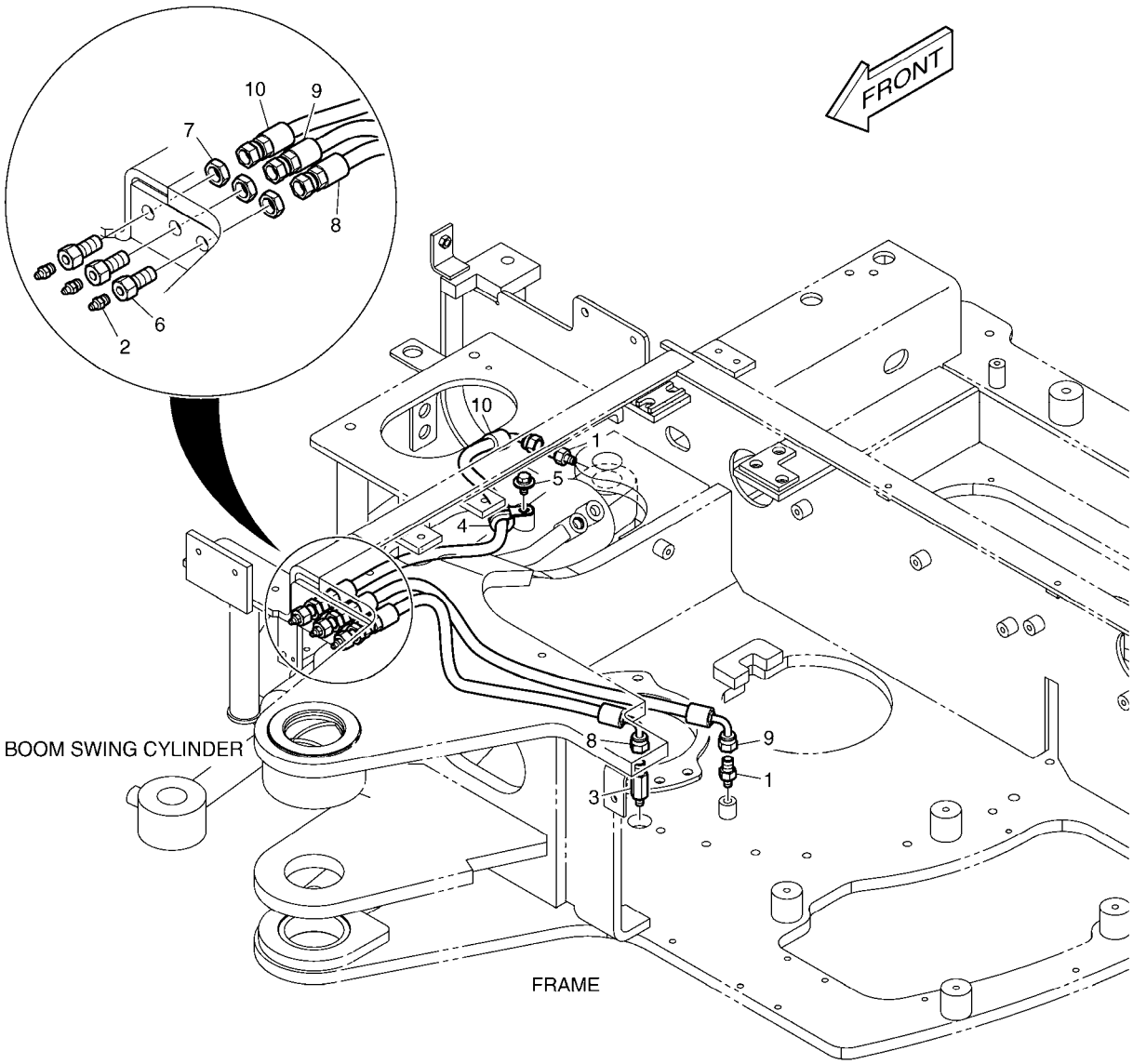

(THIS PARTS BOOK IS FOR REFERENCE ONLY.
PART NUMBERS AND SERAIL NUMBERS MAY BE
OUTDATED. ALWAYS USE THE ONLINE PARTS SYSTEM)

Fig. 1310 LUBRICATION PIPING LUBRIFICATION

Serial No. ;

Key No.	Part No.	Description	Description	Q'ty	S.C	Serial No.	ICA	Replaceable part	
								Part No.	Q'ty
1310 --	K1027978	LUBRICATION PIPING	LUBRIFICATION	-	D				
1	2181-1110D30	ADAPTER	ADAPTEUR	2					
2	S6710042	NIPPLE;GREASE	GRAISSEUR	3					
3	2181-1110D42	ADAPTER	ADAPTEUR	1					
4	124-00208D2	CLIP	AGRAFE	1					
5	K1001029	BOLT	BOULON	1					
6	181-00103	REDUCER	REDUCTEUR	3					
7	121-00010D7	NUT	ECROU	3					
8	DS2093040	HOSE	TUYAU FLEXIBLE	1					
9	DS2093115	HOSE	TUYAU FLEXIBLE	1					
10	DS2093028	HOSE	TUYAU FLEXIBLE	1					

(THIS PARTS BOOK IS FOR REFERENCE ONLY.
PART NUMBERS AND SERAIL NUMBERS MAY BE
OUTDATED. ALWAYS USE THE ONLINE PARTS SYSTEM)

DATE	JAN. 04, 2013
3rd EDITION	

Fig. 1320 BOOM SWING
VIRAGE DE FRONTALE

Serial No. ;

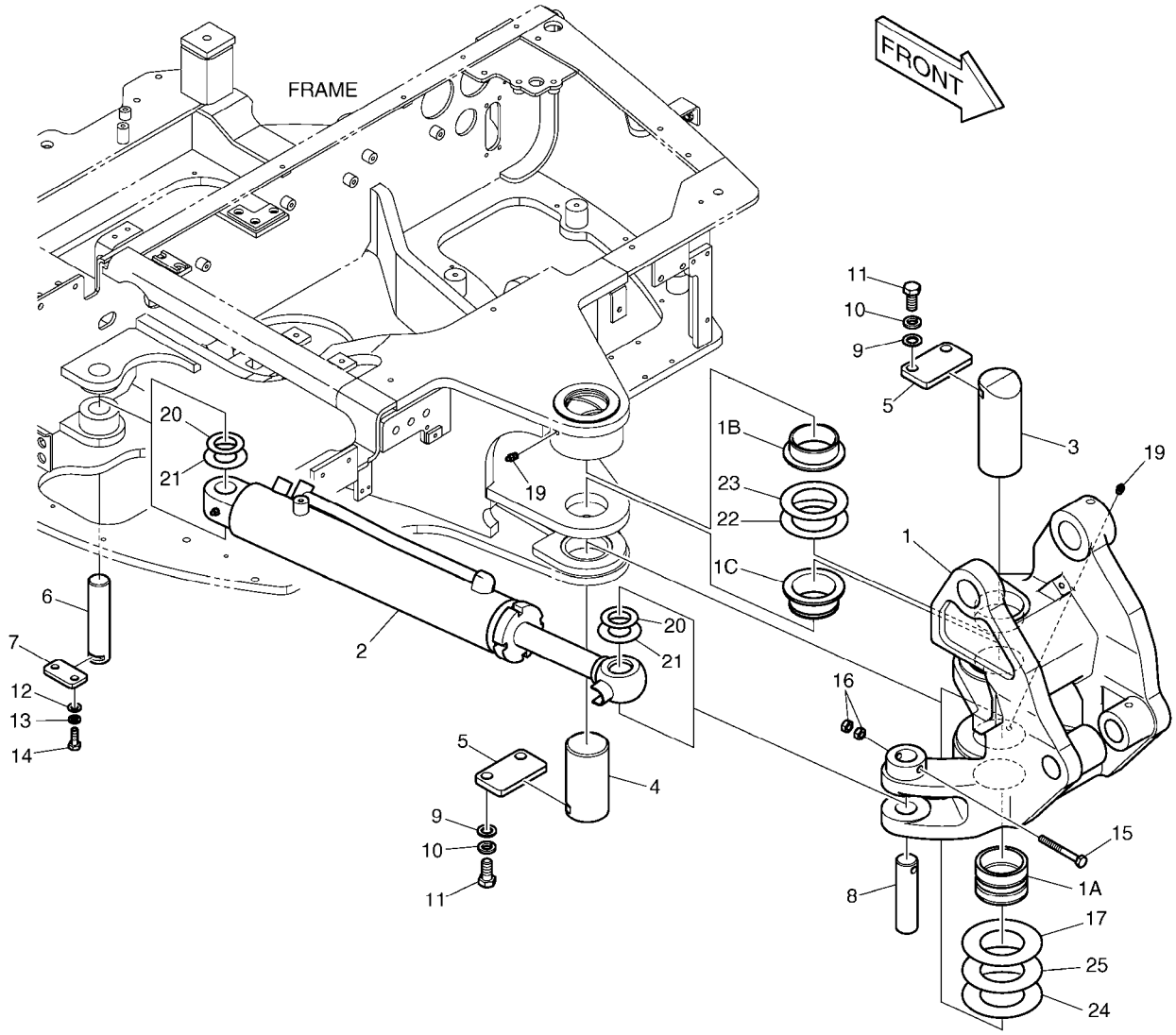

(THIS PARTS BOOK IS FOR REFERENCE ONLY.
PART NUMBERS AND SERAIL NUMBERS MAY BE
OUTDATED. ALWAYS USE THE ONLINE PARTS SYSTEM)

DATE	JAN. 04, 2013
3rd EDITION	

Fig. 1320 BOOM SWING
VIRAGE DE FRONTALE

Serial No. ;

Key No.	Part No.	Description	Description	Q'ty	S.C	Serial No.	ICA	Replaceable part	
								Part No.	Q'ty
1320 --	K1027081B	BOOM SWING ASS'Y	OSCILLATION ASS'Y DE FLI	-	D	5001-5289			
	110404-00027	BRACKET ASSY,BOOM SWING	OSCILLATION ASS'Y DE FLI	-	D	5290-			
1	K1036193	BRACKET;SWING	PARENTHESE	1					
1A	K1012364A	. BUSHING	. DOUILLE	1					
1B	K1026347	. BUSHING	. DOUILLE	1					
1C	K1026348	. BUSHING	. DOUILLE	1					
2	K1026782B	CYLINDER;BOOM SWING	OSCILLATION DE CYLINDE	1					
3	K1011680A	PIN	GOUPILLE	1		5001-5289	Y	120501-02684	1
	120501-02684	PIN;BOOM SWING BRACKET	GOUPILLE	1		5290-			
4	K1030864	PIN	GOUPILLE	1		5001-5289	Y	120501-02685	1
	120501-02685	PIN	GOUPILLE	1		5290-			
5	2116-1536B	PLATE;LOCK	PLAQUE	2					
6	K1015219	PIN	GOUPILLE	1		5001-5289	Y	120501-02681	1
	120501-02681	PIN	GOUPILLE	1		5290-			
7	K1011685	PLATE;LOCK	PLAQUE	1					
8	K1027083	PIN	GOUPILLE	1		5001-5289	Y	120501-02686	1
	120501-02686	PIN	GOUPILLE	1		5290-			
9	S5010913	WASHER,PLAIN	RONDELLE	4					
10	S5102903	WASHER,SPRING	RONDELLE	4					
11	S0521366	BOLT	BOULON	4					
12	S5010613	WASHER;PLAIN	RONDELLE	2					
13	S5102603	WASHER,SPRING	RONDELLE	2					
14	S0512266	BOLT M10X1.5X30	BOULON	2					
15	S0559366	BOLT	BOULON A 6 PANS	1					
16	S4012633	NUT	ECROU	2					
17	K1012317	SPACER	DOUILLE D'ECARTEMENT	1					
19	S6710042	NIPPLE;GREASE	GRAISSEUR	2					
20	2114-1059D228	SHIM	CALE	2					
21	2114-1059D212	SHIM	CALE	2					
22	DS7701440	SHIM	CALE	1					
23	DS7701441	SHIM	CALE	1					
24	DS7701446	SHIM	CALE	1					
25	DS7701447	SHIM	CALE	1					

(THIS PARTS BOOK IS FOR REFERENCE ONLY.
PART NUMBERS AND SERAIL NUMBERS MAY BE
OUTDATED. ALWAYS USE THE ONLINE PARTS SYSTEM)

DATE	JAN. 04, 2013
3rd EDITION	

Fig. 1330 PEDAL ASS'Y
ENSEMBLE DE PEDALE

Serial No. ;

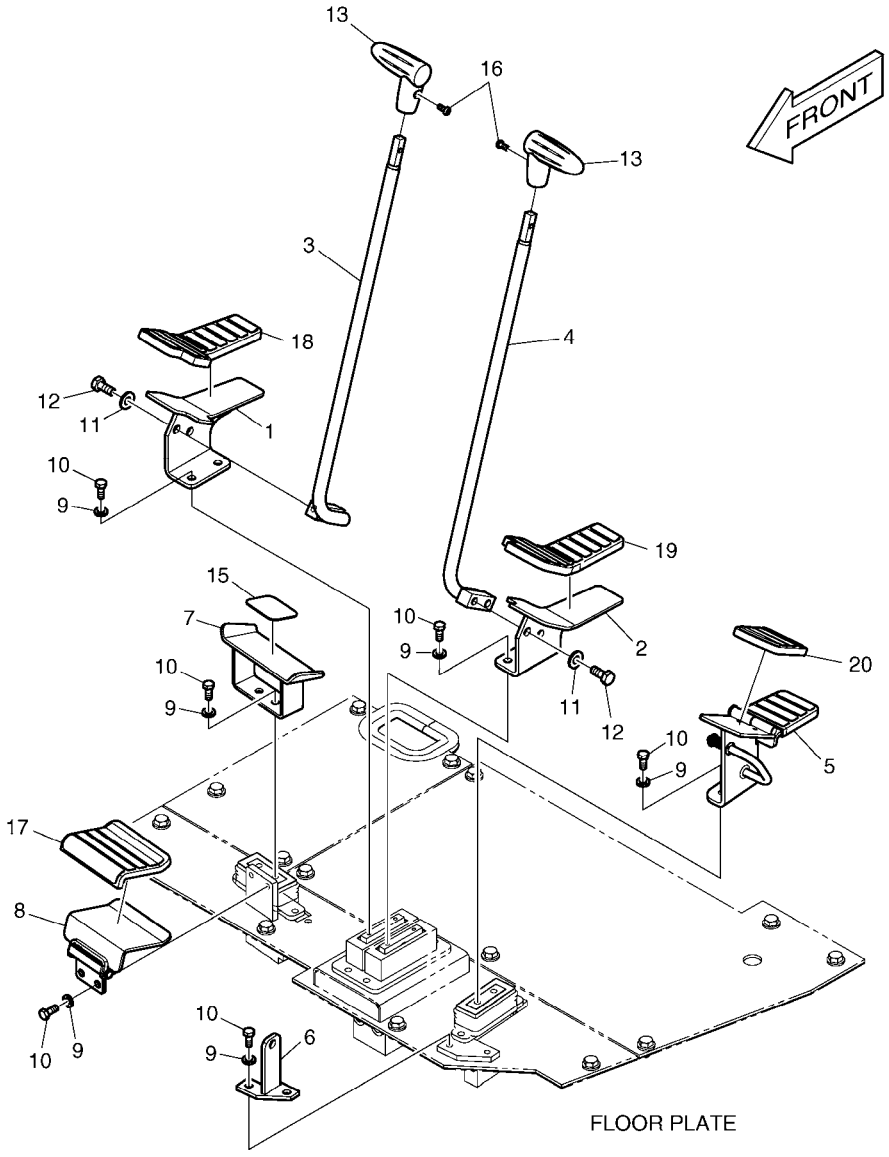

(THIS PARTS BOOK IS FOR REFERENCE ONLY.
PART NUMBERS AND SERAIL NUMBERS MAY BE
OUTDATED. ALWAYS USE THE ONLINE PARTS SYSTEM)

DATE	JAN. 04, 2013
3rd EDITION	

Fig. 1330 PEDAL ASS'Y
ENSEMBLE DE PEDALE

Serial No. ;

Key No.	Part No.	Description	Description	Q'ty	S.C	Serial No.	ICA	Replaceable part	
								Part No.	Q'ty
1330 --	K1013952C	PEDAL ASS'Y	PANNEAU	-	D	5001-5287			
	220105-00106	PEDAL ASS'Y	PANNEAU	-	D	5288-			
1	K1013853C	PEDAL;TRAVEL(R.H)	PEDALE	1					
2	K1013854C	PEDAL;TRAVEL(L.H)	PEDALE	1					
3	K1013855B	LEVER(R.H)	LEVIER	1					
4	K1013856B	LEVER(L.H)	LEVIER	1					
5	K1013866C	PEDAL	PEDALE	1		5001-5287	Y	220105-00107	1
	220105-00107	PEDAL	PEDALE	1		5288-			
6	K1013675A	PLATE	PLAQUE	1					
7	K1013943A	PEDAL	PEDALE	1					
8	K1013948C	COVER	COUVERCLE	1					
9	2114-1898D2	WASHER	RONDELLE	12					
10	2120-2166D5	BOLT	BOULON	12					
11	2114-1898D1	WASHER	RONDELLE	4					
12	2120-2166D2	BOLT	BOULON	4					
13	K1013961A	GRIP	POIGNEE	2					
15	K1013963	TAPE;ANTI-SKID	PLAQUE ANTI-DERAPANTE	1					
16	2120-2166D7	SCREW	VIS	2					
17	K1027170	RUBBER;PEDAL	CAOUTCHOUC	1		5001-5287	Y	180308-00467	1
	180308-00467	RUBBER	CAOUTCHOUC	1		5288-			
18	K1027169	RUBBER;PEDAL	CAOUTCHOUC	1		5001-5287	Y	180308-00468	1
	180308-00468	RUBBER	CAOUTCHOUC	1		5288-			
19	K1027168	RUBBER;PEDAL	CAOUTCHOUC	1		5001-5287	Y	180308-00469	1
	180308-00469	RUBBER	CAOUTCHOUC	1		5288-			
20	K1027166A	RUBBER;PEDAL	CAOUTCHOUC	1		5001-5287	Y	180308-00470	1
	180308-00470	RUBBER	CAOUTCHOUC	1		5288-			

(THIS PARTS BOOK IS FOR REFERENCE ONLY.
PART NUMBERS AND SERAIL NUMBERS MAY BE
OUTDATED. ALWAYS USE THE ONLINE PARTS SYSTEM)

DATE	JAN. 04, 2013
3rd EDITION	

Fig. 1340 FLOOR PLATE
TOLE DE PLANCHER

Serial No. ;

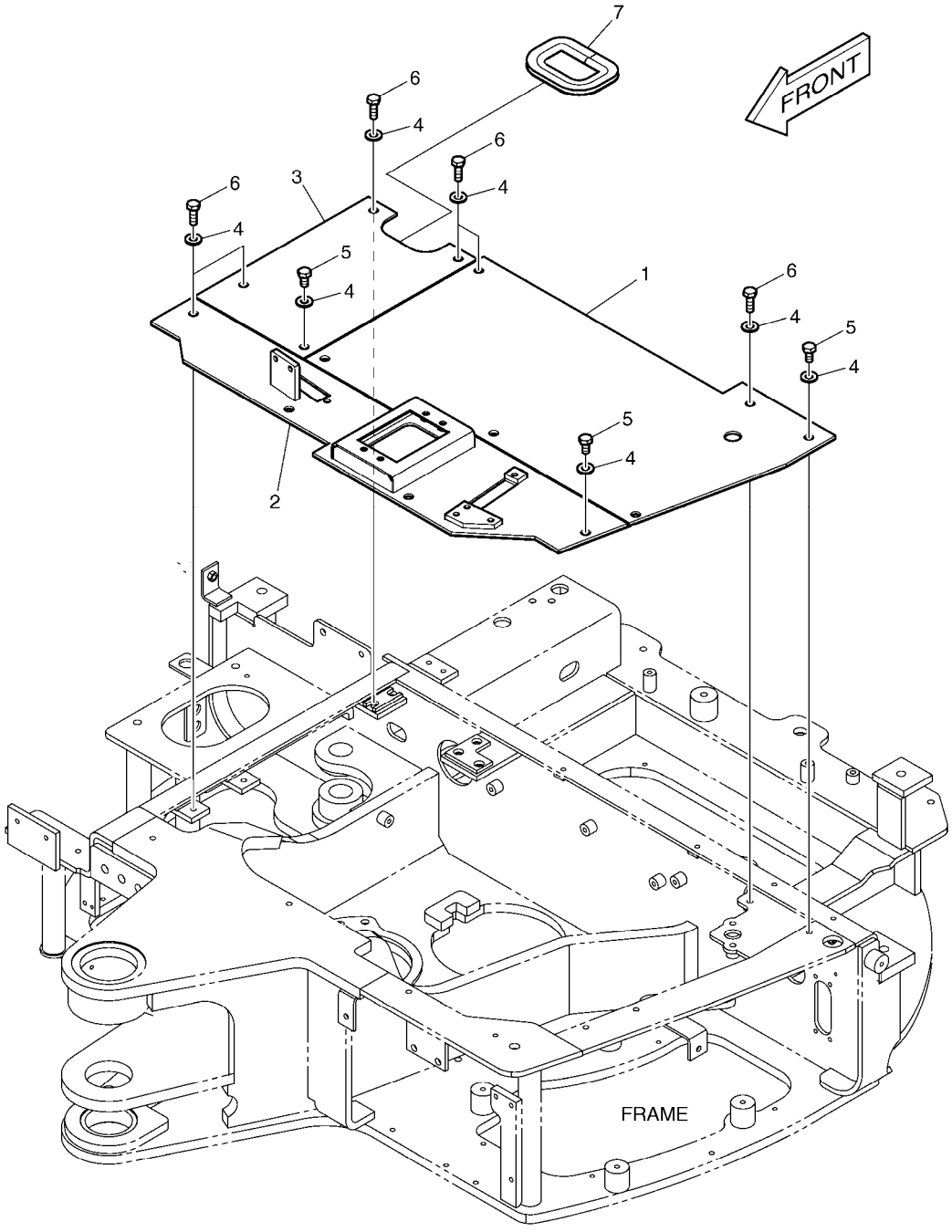

(THIS PARTS BOOK IS FOR REFERENCE ONLY.
PART NUMBERS AND SERAIL NUMBERS MAY BE
OUTDATED. ALWAYS USE THE ONLINE PARTS SYSTEM)

DATE	JAN. 04, 2013
3rd EDITION	

Fig. 1340 FLOOR PLATE
TOLE DE PLANCHER

Serial No. ;

Key No.	Part No.	Description	Description	Q'ty	S.C	Serial No.	ICA	Replaceable part	
								Part No.	Q'ty
1340 --	K1011797B	PLATE;FLOOR ASS'Y	PLAQUE	-	D				
1	K1011802A	PLATE;FLOOR(L.H)	PLAQUE	1					
2	K1011808A	PLATE;FLOOR(FRONT)	PLAQUE	1					
3	K1011809A	PLATE;FLOOR(R.H)	PLAQUE	1					
4	2114-1898D1	WASHER	RONDELLE	14					
5	2120-2166D4	BOLT M10X1.5X20	BOULON	8					
6	2120-2166D1	BOLT	BOULON	6					
7	K1011885	TRIM;RUBBER	EQUILIBRE EN CAOUTCHC	1					

(THIS PARTS BOOK IS FOR REFERENCE ONLY.
PART NUMBERS AND SERAIL NUMBERS MAY BE
OUTDATED. ALWAYS USE THE ONLINE PARTS SYSTEM)

DATE	JAN. 04, 2013
3rd EDITION	

Fig. 1350 SEAT BASE ASS'Y
ENSEMBLE DE POSEZ LA BASE

Serial No. ;

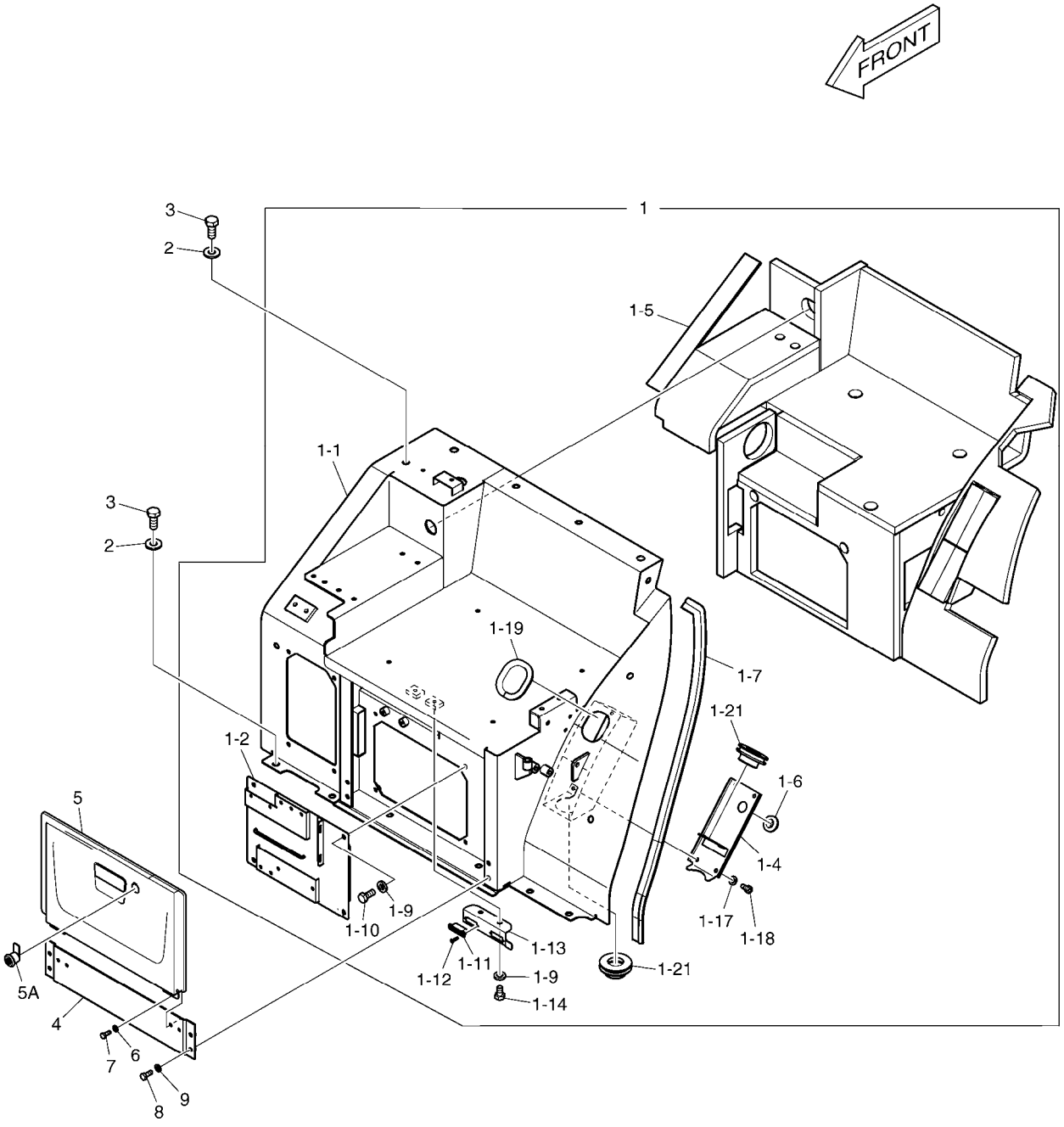

(THIS PARTS BOOK IS FOR REFERENCE ONLY.
PART NUMBERS AND SERAIL NUMBERS MAY BE
OUTDATED. ALWAYS USE THE ONLINE PARTS SYSTEM)

DATE	JAN. 04, 2013
3rd EDITION	

Fig. 1350 SEAT BASE ASS'Y
ENSEMBLE DE POSEZ LA BASE

Serial No. ;

Key No.	Part No.	Description	Description	Q'ty	S.C	Serial No.	ICA	Replaceable part	
								Part No.	Q'ty
1350 --	K1024299G	SEAT BASE ASS'Y	SIEGE	-	D	5001-5287			
	250110-00079A	PLATE ASSY,SEAT;BASE ASSY	SIEGE	-	D	5288-			
1	K1024300G	SEAT BASE ASS'Y	SIEGE	1		5001-5287	I	250110-00080A	1
	250110-00080A	PLATE ASSY,SEAT;BASE ASSY	SIEGE	1		5288-			
1-1	K1024301B	. SEAT;BASE	. SIEGE	1					
1-2	K1027474B	. COVER	. COUVERCLE	1					
1-4	K1012879A	. COVER	. COUVERCLE	1					
1-5	K1024371G	. FOAM ASS'Y	. EPONGE	1		5001-5287	I	180309-00182A	1
	180309-00182A	. SPONGE ASSY;SEAT BASE	. EPONGE	1		5288-			
1-6	160-00059	. BUSHING;RUBBER	. DOUILLE EN CAOUTCHOU	1					
1-7	K1024374A	. TRIM	. ATTACHE	1					
1-9	2114-1898D2	. WASHER	. RONDELLE	6					
1-10	2120-2166D5	. BOLT	. BOULON	4					
1-11	2125-1095A	. CATCH;MAGNETIC	. CROCHET	2					
1-12	S3452353	. SCREW M3X0.5X12	. VIS	4					
1-13	K1014332	. PLATE	. PLAQUE	1					
1-14	2120-2166D12	. BOLT;HEX	. BOULON	2					
1-17	2114-1898D3	. WASHER;PLAIN	. RONDELLE	4					
1-18	2120-2166D6	. BOLT	. BOULON	4					
1-19	2161-1744	. RUBBER	. CAOUTCHOUC	1					
1-21	2160-1227D1	. BUSHING;RUBBER	. DOUILLE EN CAOUTCHOU	2					
2	2114-1898D1	WASHER	RONDELLE	12					
3	2120-2166D2	BOLT	BOULON	12					
4	K1027477	PLATE	PLAQUE	1					
5	K1027478	COVER	COUVERCLE	1		5001-5287	Y	110508-15887	1
	110508-15887	COVER ASSY	COUVERCLE	1		5288-			
5A	K1006160	. CYLINDER;KEY	. CYLINDRE	1					
6	2114-1898D3	WASHER;PLAIN	RONDELLE	4					
7	2120-2166D6	BOLT	BOULON	4					
8	2120-2166D5	BOLT	BOULON	4					
9	2114-1898D2	WASHER	RONDELLE	4					

(THIS PARTS BOOK IS FOR REFERENCE ONLY.
PART NUMBERS AND SERAIL NUMBERS MAY BE
OUTDATED. ALWAYS USE THE ONLINE PARTS SYSTEM)

DATE	JAN. 04, 2013
3rd EDITION	

Fig. 1360 SEAT ASS'Y
SIEGE

Serial No. ;

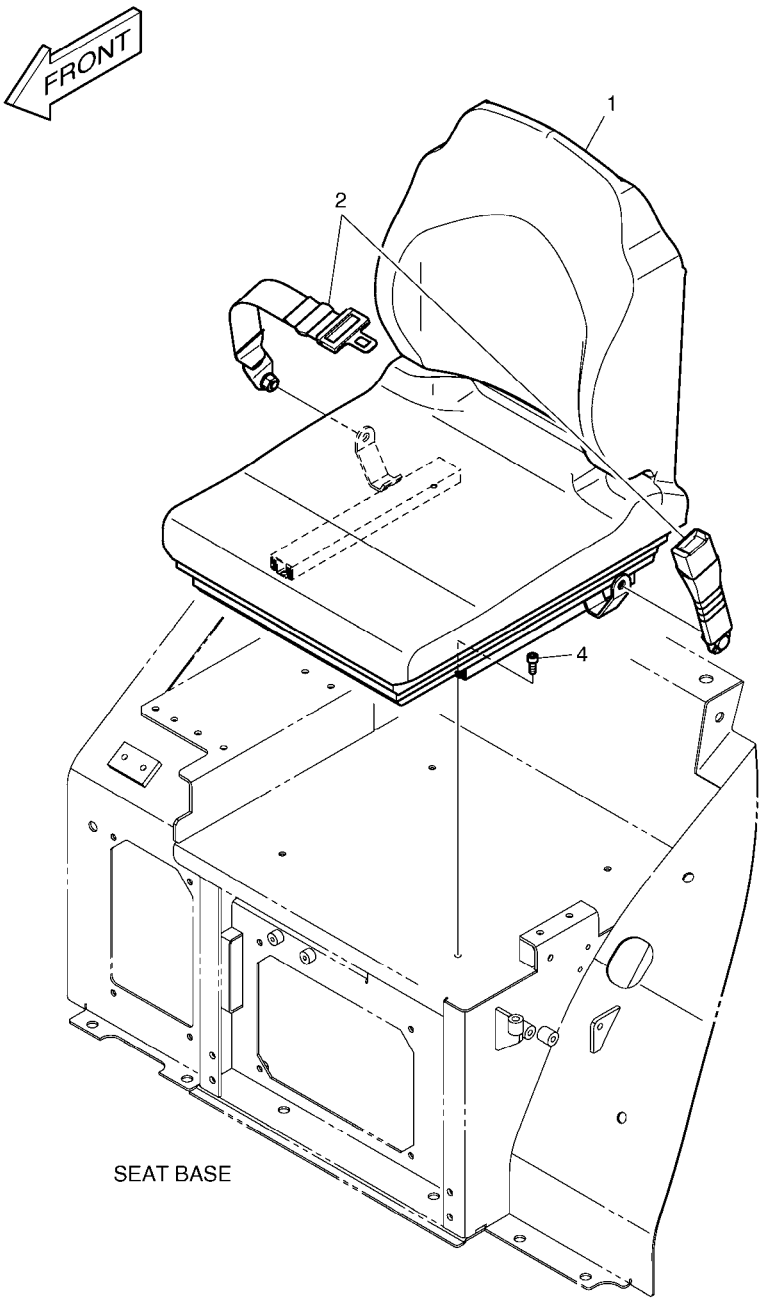

(THIS PARTS BOOK IS FOR REFERENCE ONLY.
PART NUMBERS AND SERAIL NUMBERS MAY BE
OUTDATED. ALWAYS USE THE ONLINE PARTS SYSTEM)

DATE	JAN. 04, 2013
3rd EDITION	

Fig. 1360 SEAT ASS'Y SIEGE

Serial No. ;

Key No.	Part No.	Description	Description	Q'ty	S.C	Serial No.	ICA	Replaceable part	
								Part No.	Q'ty
1360 --	K1011886A	SEAT ASS'Y	SIEGE	-	D				
1	901-00042	SEAT	SIEGE	1					
2	901-00050	BELT;SEAT	COURROIE	1					
4	S2208866	BOLT;SOCKET	BOULON	4					

(THIS PARTS BOOK IS FOR REFERENCE ONLY.
PART NUMBERS AND SERAIL NUMBERS MAY BE
OUTDATED. ALWAYS USE THE ONLINE PARTS SYSTEM)

DATE	JAN. 04, 2013
3rd EDITION	

Fig. 1370 SEAT
SIEGE

Serial No. ;

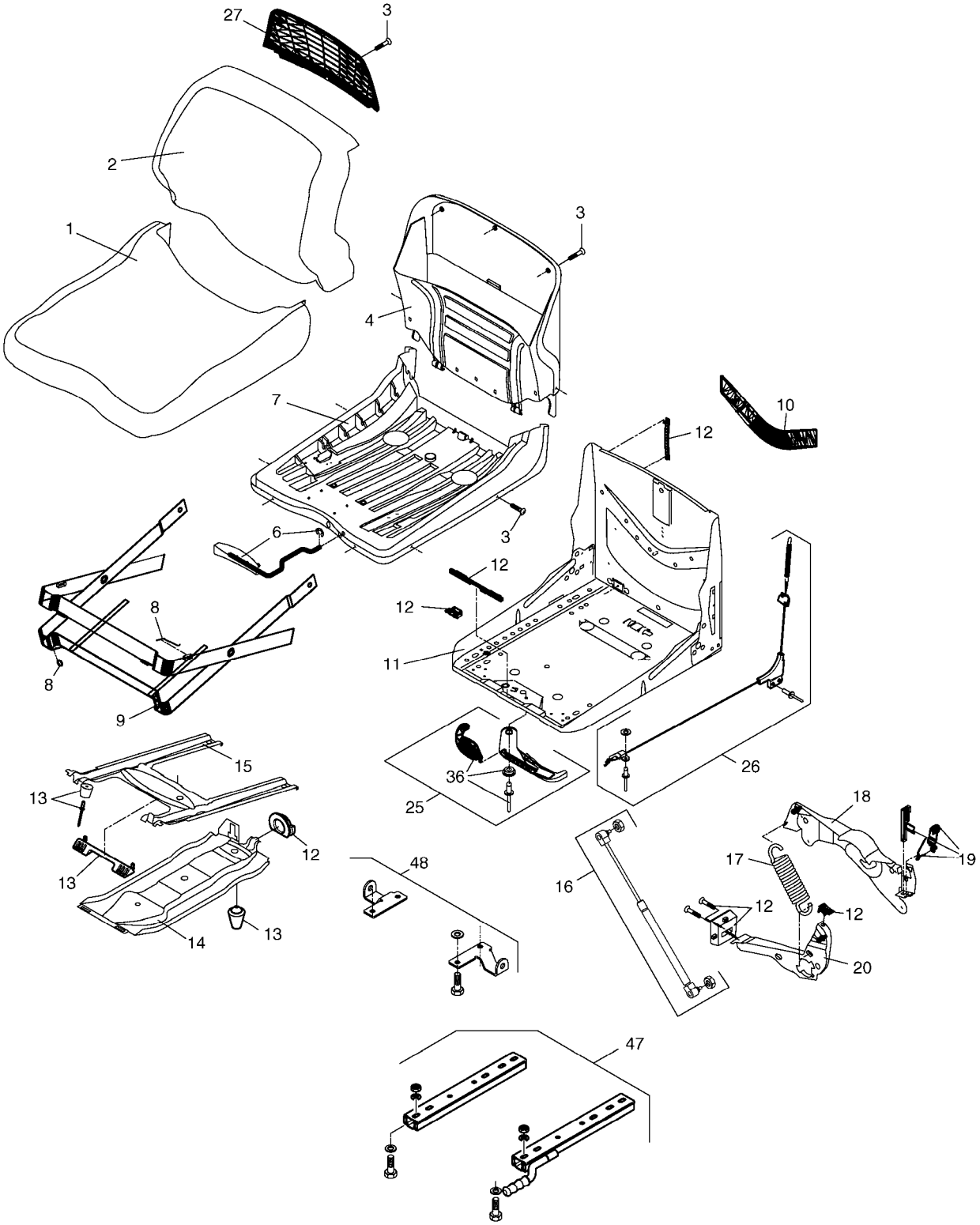

(THIS PARTS BOOK IS FOR REFERENCE ONLY.
PART NUMBERS AND SERAIL NUMBERS MAY BE
OUTDATED. ALWAYS USE THE ONLINE PARTS SYSTEM)

DATE	JAN. 04, 2013
3rd EDITION	

Fig. 1370 SEAT SIEGE

Serial No. ;

Key No.	Part No.	Description	Description	Q'ty	S.C	Serial No.	ICA	Replaceable part	
								Part No.	Q'ty
1370 --	901-00042	SEAT	SIEGE	1					
1	K9000356	PAD	CAOUTCHOUC	1					
2	K9000357	PAD	CAOUTCHOUC	1					
3	K9000358	ATTACHMENT	ATTACHMENT	1					
4	K9000359	PLATE;BACK	PLAQUE	1					
6	K9000360	LEVER;ADJUST	LEVIER	1					
7	K9000361	PLATE;SEAT	PLAQUE	1					
8	K9000362	SET;REPAIR	SET	1					
9	K9000363	SUSPENSION;COVER	COUVERCLE	1					
10	K9000364	COVER	COUVERCLE	1					
11	K9000365	RACK;SEAT	SUPPORT	1					
12	K9000366	PARTS;WEARING	PIECES DE RECHANGE	1					
13	K9000367	KIT;BUMPER	KIT	1					
14	K9000368	ROCKER;INTERIOR	ROCKER;INTERIOR	1					
15	K9000369	ROCKER;EXTERNAL	ROCKER;EXTERNAL	1					
16	K9000370	SPRING;GAS	RESSORT	1					
17	K9000371	SPRING;TENSION	RESSORT	1					
18	K9000372	LIFT;WEIGHT ADJUST	LIFT;WEIGHT ADJUST	1					
19	K9000373	GRID	GRID	1					
20	K9000374	LEVER	LEVIER	1					
25	K9000375	LEVER;ADJUSTING	LEVIER	1					
26	K9000376	CABLE;PUSH PULL	CABLE	1					
27	K9000377	COVER	COUVERCLE	1					
36	K9000378	GAUGE;WEIGHT	INDICATEUR	1					
47	K9000379	SET;ADJUSTMENT RAIL	SET	1					
48	K9000380	LATCHES;BELT	LOQUET	1					

(THIS PARTS BOOK IS FOR REFERENCE ONLY.
PART NUMBERS AND SERAIL NUMBERS MAY BE
OUTDATED. ALWAYS USE THE ONLINE PARTS SYSTEM)

DATE	JAN. 04, 2013
3rd EDITION	

Fig. 1380 CONTROL STAND MOUNTING
CONSOLE DE COMMANDE

Serial No. ;

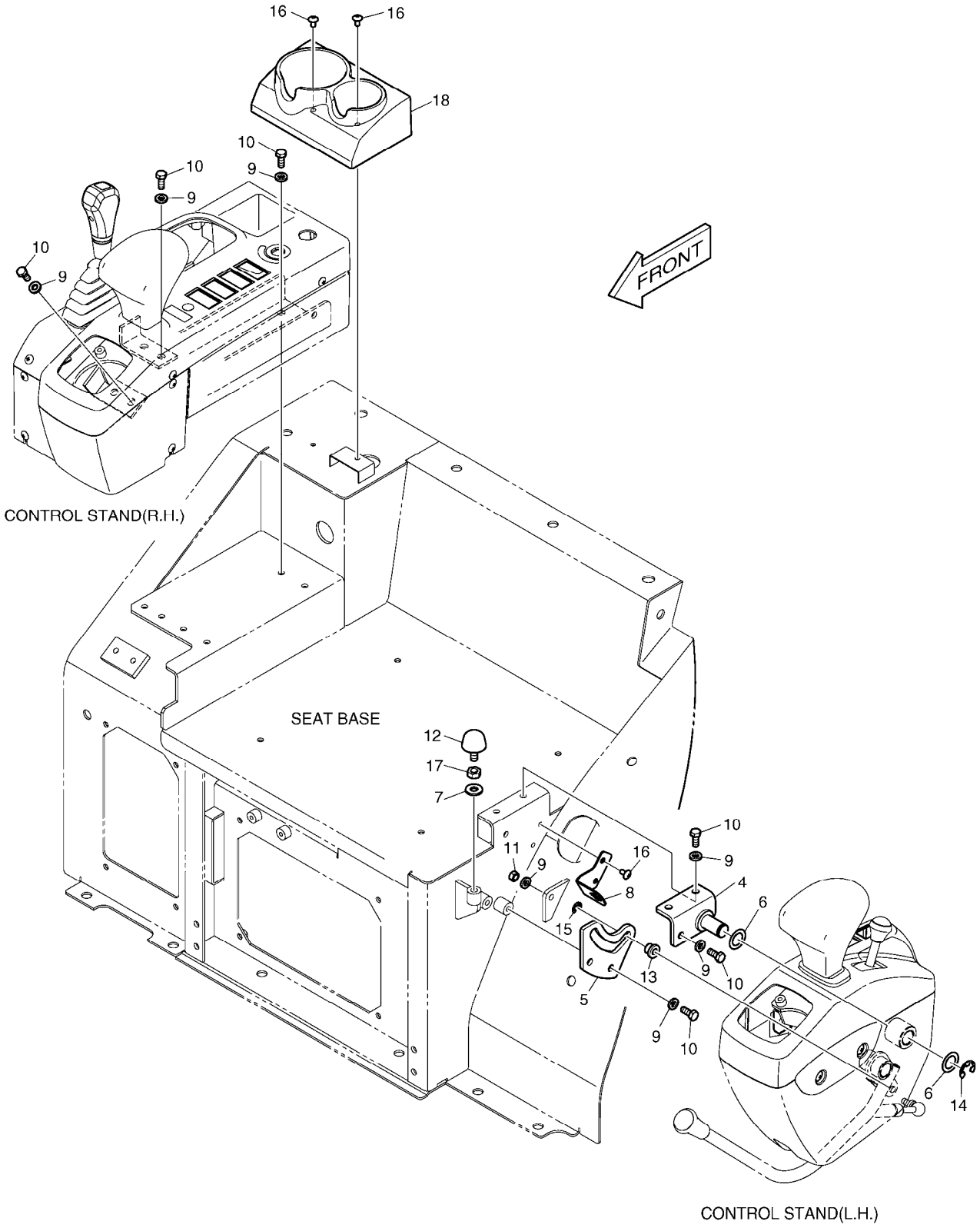

(THIS PARTS BOOK IS FOR REFERENCE ONLY.
PART NUMBERS AND SERAIL NUMBERS MAY BE
OUTDATED. ALWAYS USE THE ONLINE PARTS SYSTEM)

DATE	JAN. 04, 2013
3rd EDITION	

Fig. 1380 CONTROL STAND MOUNTING
CONSOLE DE COMMANDE

Serial No. ;

Key No.	Part No.	Description	Description	Q'ty	S.C	Serial No.	ICA	Replaceable part	
								Part No.	Q'ty
1380 --	K1012531C	CONTROL STAND	LEVIER	-	D	5001-5287			
	110953-00106	STAND ASS'Y;CONTROL	LEVIER	-	D	5288-			
4	K1012785A	PLATE	PLAQUE	1					
5	K1012786A	PLATE	PLAQUE	1					
6	K1012816	SHIM	CALE	2					
7	2114-1898D1	WASHER	RONDELLE	1					
8	K1012829A	PLATE	PLAQUE	1					
9	2114-1898D2	WASHER	RONDELLE	14					
10	2120-2166D5	BOLT	BOULON	13					
11	2121-1311D2	NUT	ECROU	1					
12	161-00195	STOPPER	TAQUET	1					
13	K1012877	ROLLER	GALET	1					
14	K1012878	RING	BAGUE	1					
15	K1012883	RING	BAGUE	1					
16	2120-2166D10	SCREW	VIS	4					
17	2121-1311D4	NUT	ECROU	1					
18	K1014323A	COVER	COUVERCLE	1		5001-5287	Y	110508-15889	1
	110508-15889	COVER	COUVERCLE	1		5288-			

(THIS PARTS BOOK IS FOR REFERENCE ONLY.
PART NUMBERS AND SERAIL NUMBERS MAY BE
OUTDATED. ALWAYS USE THE ONLINE PARTS SYSTEM)

DATE	JAN. 04, 2013
3rd EDITION	

Fig. 1390 CONTROL STAND - L.H
COMMANDEZ STAND - L.H

Serial No. ;

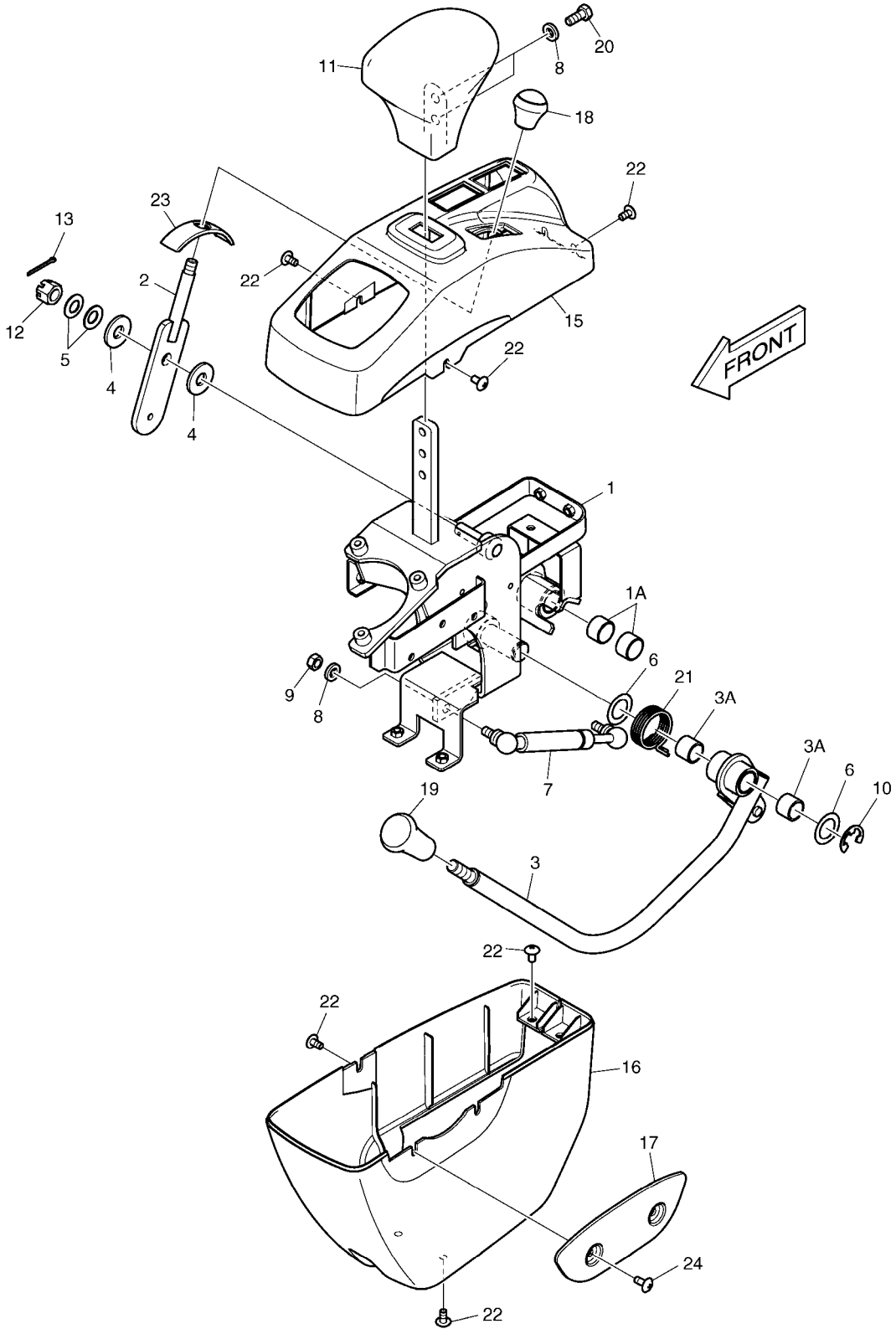

(THIS PARTS BOOK IS FOR REFERENCE ONLY.
PART NUMBERS AND SERAIL NUMBERS MAY BE
OUTDATED. ALWAYS USE THE ONLINE PARTS SYSTEM)

DATE	JAN. 04, 2013
3rd EDITION	

Fig. 1390 CONTROL STAND - L.H
COMMANDEZ STAND - L.H

Serial No. ;

Key No.	Part No.	Description	Description	Q'ty	S.C	Serial No.	ICA	Replaceable part	
								Part No.	Q'ty
1390 --	K1012834B	CONTROL STAND(L.H)	CONSOLE DE COMMANDE	-	D	5001-5287			
	110953-00107	STAND ASSY(L.H)	CONSOLE DE COMMANDE	-	D	5288-			
1	K1012723B	BRACKET	SUPPORT	1					
1A	2110-1184D37	. BUSH;DU	. DOUILLE	2					
2	K1012830	LEVER	LEVIER	1					
3	K1012787B	LEVER;SAFETY	LEVIER DE SURETE	1					
3A	2110-1184D37	. BUSH;DU	. DOUILLE	2					
4	2114-1058D72	WASHER;PLAIN	RONDELLE	2					
5	S5130703	WASHER;SPRING	RONDELLE ELASTIQUE	2					
6	K1012816	SHIM	CALE	2					
7	DS1001069	GAS SPRING	AMORTISSEUR	1					
8	2114-1898D2	WASHER	RONDELLE	3					
9	2121-1311D2	NUT	ECROU	1					
10	K1012878	RING	BAGUE	1					
11	K1012887	REST;ARM	REPOS DE BRAS	1					
12	S4210733	NUT;CASTLE	ECROU	1					
13	S5735481	PIN;SPLIT	GOUPILLE FENDUE	1					
15	K1014496B	CASE;UPPER	CARTER	1		5001-5287	Y	110913-00278	1
	110913-00278	CASE,STAND(UPPER)	CARTER	1		5288-			
16	K1014497B	CASE;LOWER	CARTER	1		5001-5287	Y	110913-00279	1
	110913-00279	CASE,STAND(LOWER)	CARTER	1		5288-			
17	K1014551B	COVER	COUVERCLE	1		5001-5287	Y	110508-15885	1
	110508-15885	COVER	COUVERCLE	1		5288-			
18	K1014552A	GRIP	POIGNEE	1					
19	K1014553B	GRIP	POIGNEE	1					
20	2120-2166D5	BOLT	BOULON	2					
21	K1012884B	SPRING	RESSORT	1					
22	2120-2166D52	BOLT M6X1.0X12	BOULON	9					
23	K1023706A	COVER	COUVERCLE	1		5001-5287	Y	110508-15886	1
	110508-15886	COVER	COUVERCLE	1		5288-			
24	2120-2166D10	SCREW	VIS	2					

(THIS PARTS BOOK IS FOR REFERENCE ONLY.
PART NUMBERS AND SERAIL NUMBERS MAY BE
OUTDATED. ALWAYS USE THE ONLINE PARTS SYSTEM)

DATE	JAN. 04, 2013
3rd EDITION	

Fig. 1400 CONTROL STAND - R.H
COMMANDEZ STAND - R.H

Serial No. ;

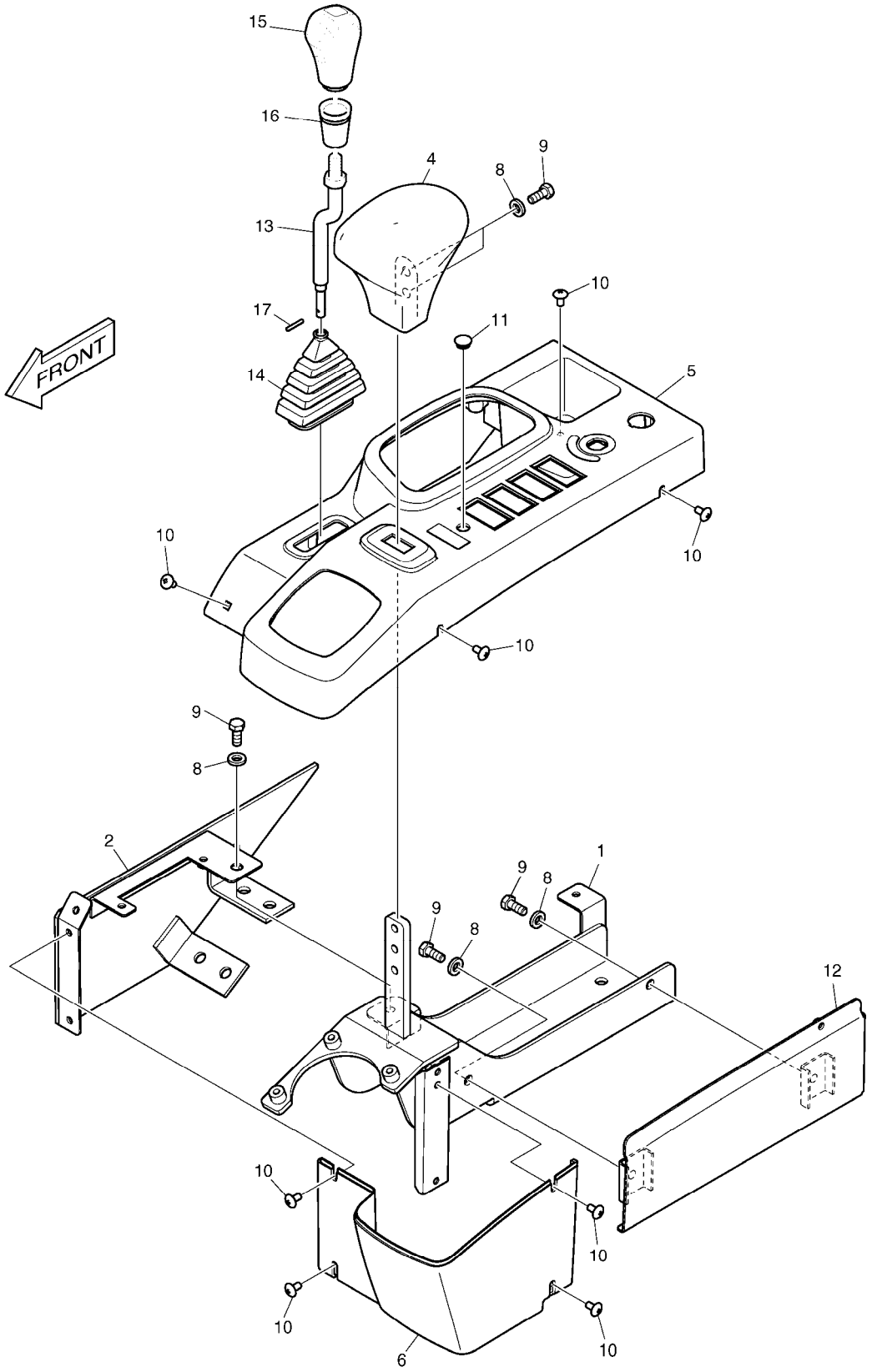

(THIS PARTS BOOK IS FOR REFERENCE ONLY.
PART NUMBERS AND SERAIL NUMBERS MAY BE
OUTDATED. ALWAYS USE THE ONLINE PARTS SYSTEM)

DATE	JAN. 04, 2013
3rd EDITION	

Fig. 1400 CONTROL STAND - R.H
COMMANDEZ STAND - R.H

Serial No. ;

Key No.	Part No.	Description	Description	Q'ty	S.C	Serial No.	ICA	Replaceable part	
								Part No.	Q'ty
1400 --	K1012835C	CONTROL STAND(R.H)	CONSOLE DE COMMANDE	-	D	5001-5287			
	110953-00108	STAND ASSY(R.H)	CONSOLE DE COMMANDE	-	D	5288-			
1	K1012724B	BRACKET	SUPPORT	1					
2	K1012978A	PLATE	PLAQUE	1					
4	K1012887	REST;ARM	REPOS DE BRAS	1					
5	K1014316B	CASE;UPPER	CARTER	1		5001-5287	Y	110913-00280	1
	110913-00280	CASE,STAND(UPPER)	CARTER	1		5288-			
6	K1014317B	COVER	COUVERCLE	1		5001-5287	Y	110913-00281	1
	110913-00281	CASE,STAND;RH LOWER	COUVERCLE	1		5288-			
8	2114-1898D2	WASHER	RONDELLE	5					
9	2120-2166D5	BOLT	BOULON	5					
10	2120-2166D52	BOLT M6X1.0X12	BOULON	8					
11	K1006995	CAP	CHAPEAU	1					
12	K1019026	COVER	COUVERCLE	1					
13	K1028344	LEVER	LEVIER	1					
14	K1023199	BOOT	INITIALISATION	1					
15	132-00010	GRIP	POIGNEE	1					
16	160-00055	BOOT	INITIALISATION	1					
17	S5740530	PIN;SPRING	GOUPILLE	1					

(THIS PARTS BOOK IS FOR REFERENCE ONLY.
PART NUMBERS AND SERAIL NUMBERS MAY BE
OUTDATED. ALWAYS USE THE ONLINE PARTS SYSTEM)

DATE	JAN. 04, 2013
3rd EDITION	

Fig. 1410 CANOPY VERRIERE

Serial No. ;

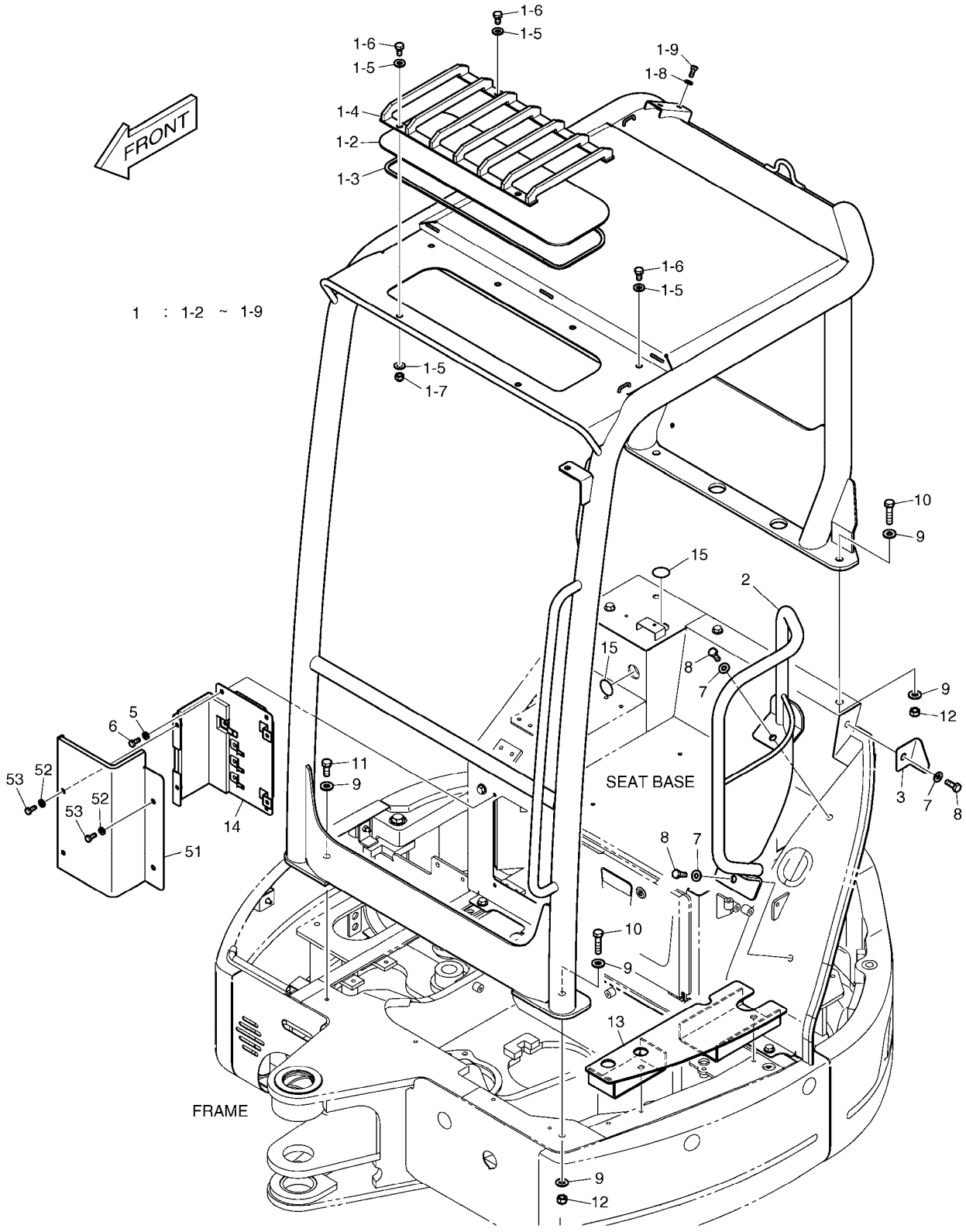

(THIS PARTS BOOK IS FOR REFERENCE ONLY.
PART NUMBERS AND SERAIL NUMBERS MAY BE
OUTDATED. ALWAYS USE THE ONLINE PARTS SYSTEM)

DATE	JAN. 04, 2013
3rd EDITION	

Fig. 1410 CANOPY VERRIERE

Serial No. ;

Key No.	Part No.	Description	Description	Q'ty	S.C	Serial No.	ICA	Replaceable part	
								Part No.	Q'ty
1410 --	K1023916C	CANOPY	VERRIERE	-	D				
1	K1015912B	CANOPY ASS'Y;ROPS	VERRI?RE	1					
1-2	K1017042	. GLASS	. VERRE	1					
1-3	K1017044	. DAMPER	. AMORTISSEUR	1					
1-4	K1017046A	. GUARD;ROOF	. GARDE	1					
1-5	2114-1898D1	. WASHER	. RONDELLE	8					
1-6	2120-2166D4	. BOLT M10X1.5X20	. BOULON	6					
1-7	2121-1311D5	. NUT;CAP	. ECROU	2					
1-8	2114-1898D2	. WASHER	. RONDELLE	2					
1-9	2120-2166D5	. BOLT	. BOULON	2					
2	K1017132A	STAY	SEJOUR	1					
3	K1017141	PLATE	PLAQUE	1					
5	2114-1898D2	WASHER	RONDELLE	4					
6	2120-2166D5	BOLT	BOULON	4					
7	2114-1898D1	WASHER	RONDELLE	3					
8	2120-2166D1	BOLT	BOULON	3					
9	2114-1898D17	WASHER M12	RONDELLE	7					
10	2120-2166D11	BOLT	BOULON	3					
11	2120-2166D32	BOLT	BOULON	1					
12	2121-9019	NUT;LOCK	ECROU	3					
13	K1026991	PLATE	PLAQUE	1					
14	K1012836B	COVER	COUVERCLE	1		5001-5287	Y	110508-15884	1
	110508-15884	COVER	COUVERCLE	1		5288-			
15	190-00727	LABEL	PLAQUE D'IDENTIFICATION	2					
51	K1030043	COVER	COUVERCLE	1					
52	2114-1898D2	WASHER	RONDELLE	4					
53	2120-2166D5	BOLT	BOULON	4					

(THIS PARTS BOOK IS FOR REFERENCE ONLY.
PART NUMBERS AND SERAIL NUMBERS MAY BE
OUTDATED. ALWAYS USE THE ONLINE PARTS SYSTEM)

DATE	JAN. 04, 2013
3rd EDITION	

Fig. 1420 FLOOR MAT PLANCHER

Serial No. ;

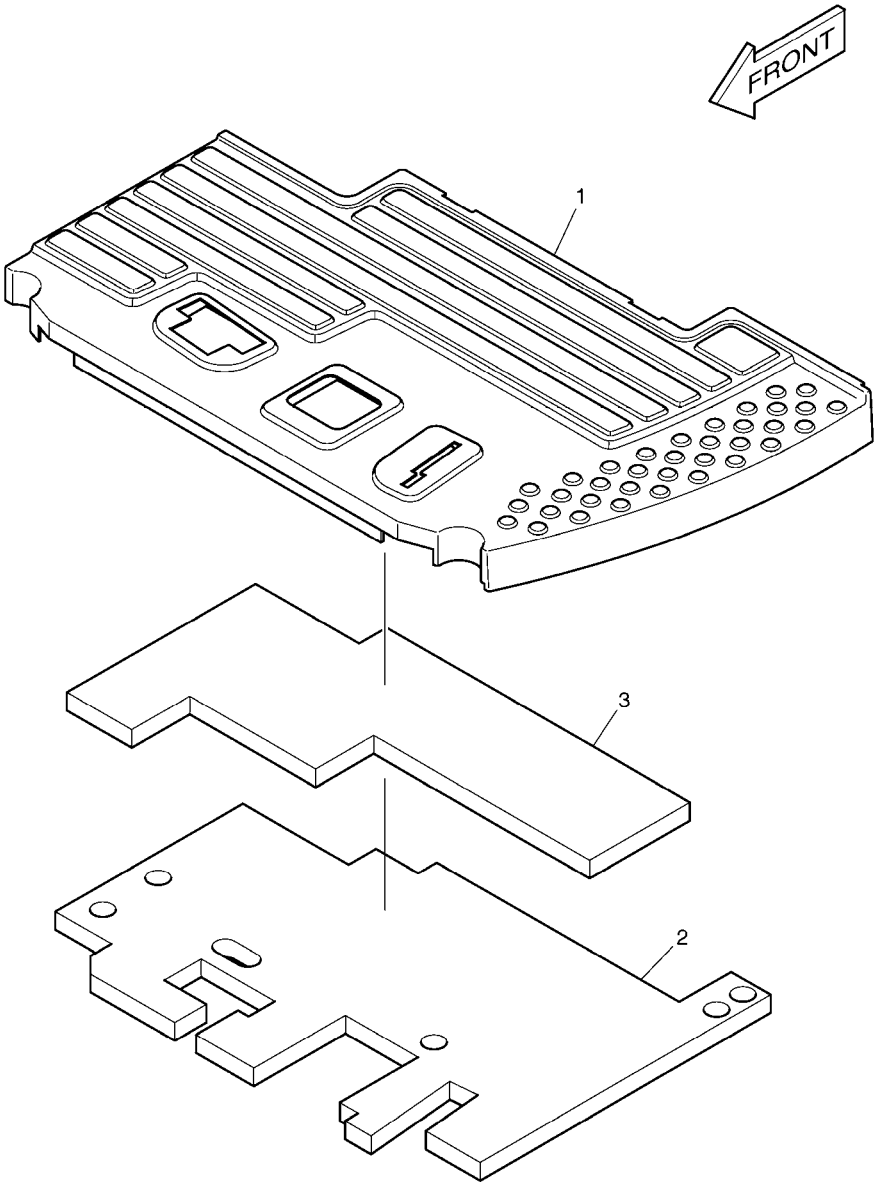

(THIS PARTS BOOK IS FOR REFERENCE ONLY.
PART NUMBERS AND SERAIL NUMBERS MAY BE
OUTDATED. ALWAYS USE THE ONLINE PARTS SYSTEM)

DATE	JAN. 04, 2013
3rd EDITION	

Fig. 1420 FLOOR MAT PLANCHER

Serial No. ;

Key No.	Part No.	Description	Description	Q'ty	S.C	Serial No.	ICA	Replaceable part	
								Part No.	Q'ty
1420 --	K1023914B	FLOOR MAT ASS'Y	PLANCHER	-	D	5001-5287			
	110935-00266	MAT,FLOOR	PLANCHER	-	D	5288-			
1	K1023959A	MAT;FLOOR	TAPIS DE SOL	1		5001-5287	Y	110935-00267	1
	110935-00267	MAT,FLOOR	TAPIS DE SOL	1		5288-			
2	K1026998	FOAM	EPONGE	1		5001-5287	Y	180102-00897	1
	180102-00897	FOAM	EPONGE	1		5288-			
3	K1026999	FOAM	EPONGE	1		5001-5287	Y	180102-00898	1
	180102-00898	FOAM	EPONGE	1		5288-			

(THIS PARTS BOOK IS FOR REFERENCE ONLY.
PART NUMBERS AND SERAIL NUMBERS MAY BE
OUTDATED. ALWAYS USE THE ONLINE PARTS SYSTEM)

DATE	JAN. 04, 2013
3rd EDITION	

Fig. 1430 ELECTRIC BOX
EQUIPMENT ELECTRIQUE

Serial No. ;

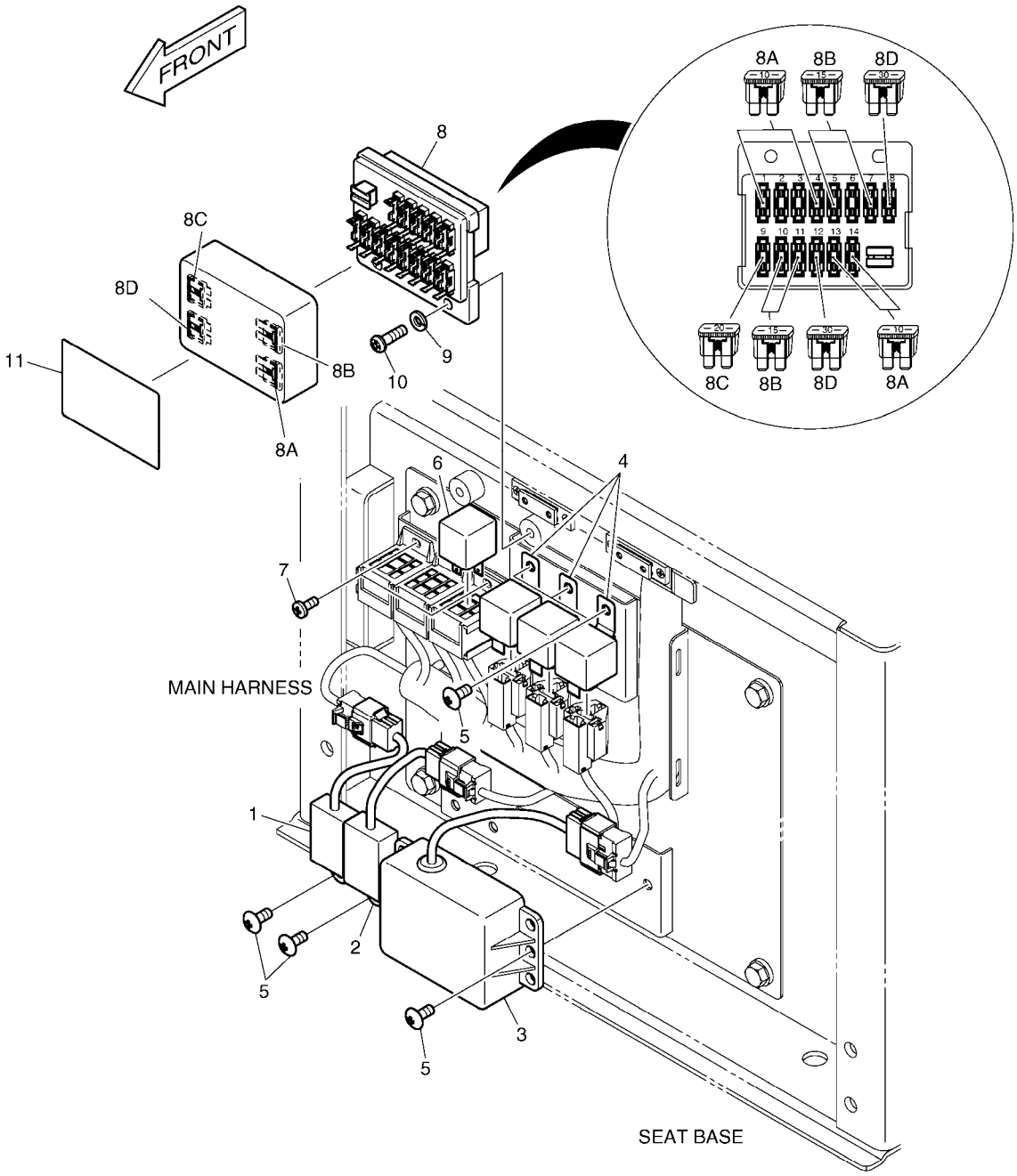

(THIS PARTS BOOK IS FOR REFERENCE ONLY.
PART NUMBERS AND SERAIL NUMBERS MAY BE
OUTDATED. ALWAYS USE THE ONLINE PARTS SYSTEM)

DATE	JAN. 04, 2013
3rd EDITION	

Fig. 1430 ELECTRIC BOX
EQUIPMENT ELECTRIQUE

Serial No. ;

Key No.	Part No.	Description	Description	Q'ty	S.C	Serial No.	ICA	Replaceable part	
								Part No.	Q'ty
1430 --	K1033610	ELECTRIC BOX ASS'Y	BOITIER ELECTRIQUE	-	D	5001-5108			
	300619-00168	ELECTRIC ASSY;ELECTRIC BOX	BOITIER ELECTRIQUE	-	D	5109-			
1	537-00010	TIMER;PREHEAT	TEMPORISATEUR	1					
2	537-00071	TIMER;ENGINE STOP	TEMPORISATEUR	1					
3	2523-9005	CONTROLLER;STARTER	CONTROLEUR	1					
4	K1023526	RELAY 70A	RELAIS	3		5001-5108	Y	K1053575	3
	K1053575	RELAY 70A	RELAIS	3		5109-			
5	2120-2166D10	SCREW	VIS	7					
6	2544-9032	RELAY	RELAIS	1		5001-5108			
	K1053324	RELAY	RELAIS	1		5109-			
7	2120-2166D18	SCREW	VIS	2					
8	K1029323	BOX;FUSE 12V	BOITE DE FUSIBLE	1					
8A	2527-1016	. FUSE;BLADE 10A	. FUSIBLE	7					
8B	2527-1017	. FUSE;BLADE 15A	. FUSIBLE	6					
8C	2527-1018	. FUSE;BLADE 20A	. FUSIBLE	2					
8D	2527-1025	. FUSE;BLADE 30A	. FUSIBLE	3					
9	S5102303	WASHER;SPRING	RONDELLE	2					
10	S3450983	SCREW M16X20	VIS	2					
11	K1030452	NAME PLATE;FUSE BOX	PLAQUE	1					

(THIS PARTS BOOK IS FOR REFERENCE ONLY.
PART NUMBERS AND SERAIL NUMBERS MAY BE
OUTDATED. ALWAYS USE THE ONLINE PARTS SYSTEM)

DATE	JAN. 04, 2013
3rd EDITION	

Fig. 1440 ELECTRIC PARTS - CONTROL STAND
PIECES ELECTRIQUES

Serial No. ;

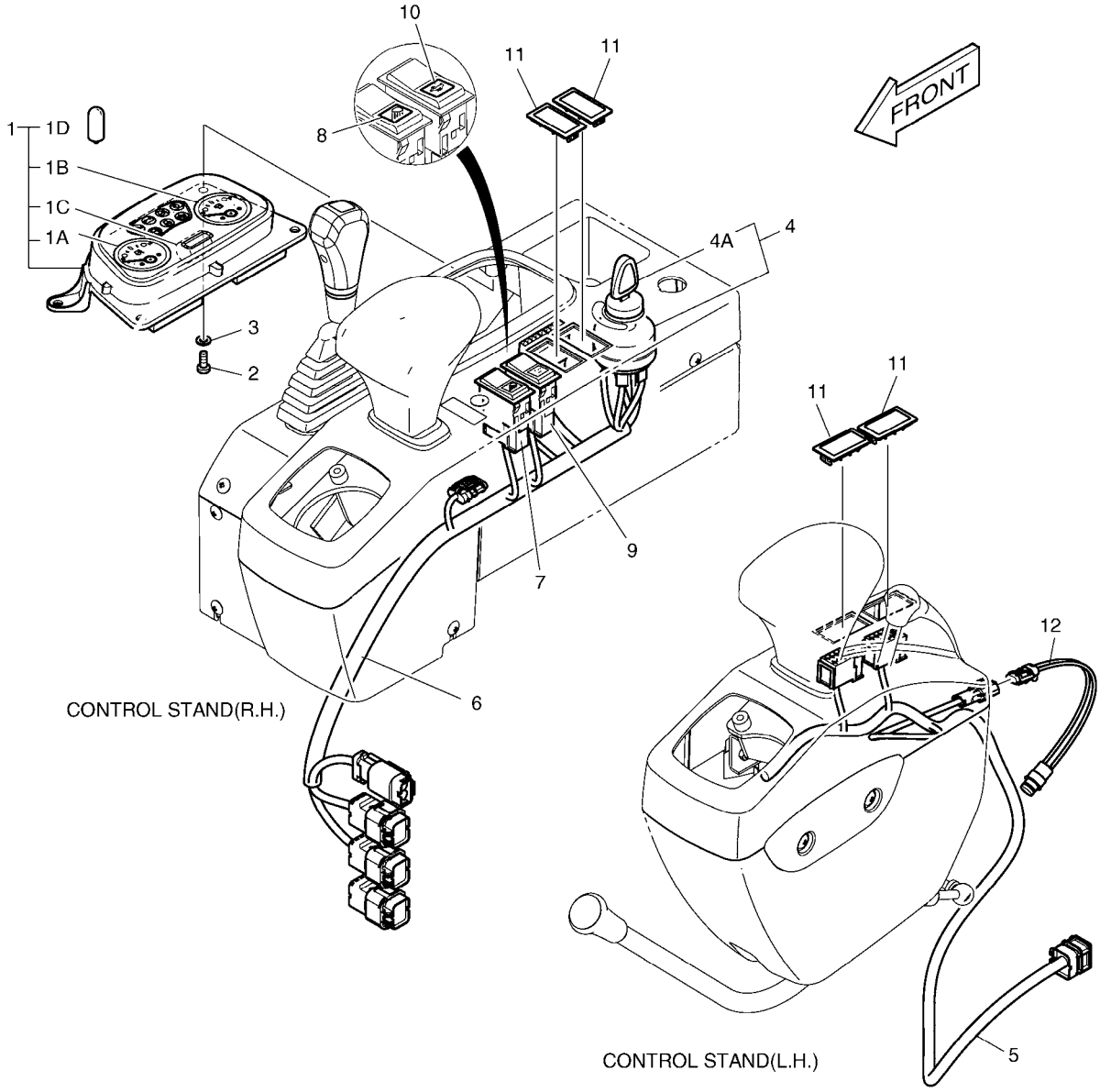

(THIS PARTS BOOK IS FOR REFERENCE ONLY.
PART NUMBERS AND SERAIL NUMBERS MAY BE
OUTDATED. ALWAYS USE THE ONLINE PARTS SYSTEM)

DATE	JAN. 04, 2013
3rd EDITION	

Fig. 1440 ELECTRIC PARTS - CONTROL STAND
PIECES ELECTRIQUES

Serial No. ;

Key No.	Part No.	Description	Description	Q'ty	S.C	Serial No.	ICA	Replaceable part	
								Part No.	Q'ty
1440 --	K1033612	ELECTRIC PARTS-STAND	EQUIPMENT ELECTRIQUE	-	D	5001-5287			
	300619-02104	ELECTRIC ASSY	EQUIPMENT ELECTRIQUE	-	D	5288-			
1	K1014175	PANEL;GAUGE	PANNEAU	1					
1A	K1014201	. GAUGE;TEMP	. MESURE	1					
1B	K1014202	. GAUGE;FUEL	. MESURE	1					
1C	2528-9040	. METER;HOUR	. METRE	1					
1D	515-00001A	. BULB	. AMPOULE	9					
2	S3450973	SCREW M6X1.0X16	VIS	4					
3	S5010313	WASHER	RONDELLE	4					
4	K1001858A	SWITCH;STARTER	COMMUTATEUR	1					
4A	K1009605B	. KEY;STARTER	. CLAVETTE	2					
5	K1013762	HARNESS;CONTROL STAND(L.H	HARNAIS	1					
6	K1013763	HARNESS;CONTROL STAND(R.H	HARNAIS	1		5001-5287	I	310207-02481	1
	310207-02481	HARNESS,CONTROL STAND;R.H	HARNAIS	1		5288-			
7	549-00040	SWITCH;ROCKER	COMMUTATEUR	1					
8	2190-2036D5	INSERT;WORKING LAMP	INSERTION	1					
9	2549-9115	SWITCH;ROCKER(12V)	INTERRUPTEUR	1					
10	2190-2036D13	INSERT;HIGH SPEED	INSERTION	1					
11	2621-9002	COVER	COUVERCLE	4					
12	K1014544	SWITCH;PILOT CUTOFF	COMMUTATEUR	1					

(THIS PARTS BOOK IS FOR REFERENCE ONLY.
PART NUMBERS AND SERAIL NUMBERS MAY BE
OUTDATED. ALWAYS USE THE ONLINE PARTS SYSTEM)

DATE	JAN. 04, 2013
3rd EDITION	

Fig. 1450 ELECTRIC PARTS - BATTERY EQUIPMENT ELECTRIQUE

Serial No. ;

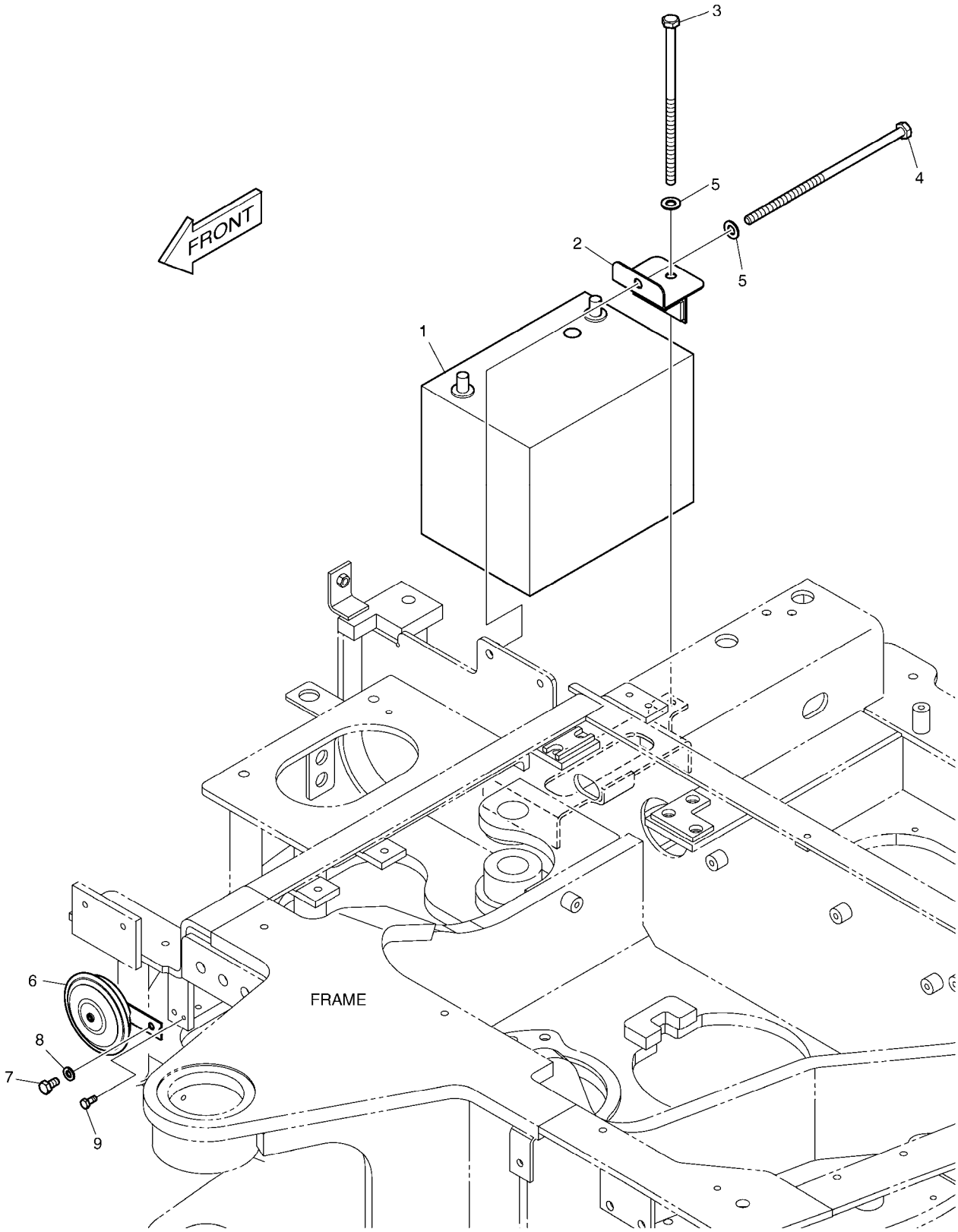

(THIS PARTS BOOK IS FOR REFERENCE ONLY.
PART NUMBERS AND SERAIL NUMBERS MAY BE
OUTDATED. ALWAYS USE THE ONLINE PARTS SYSTEM)

DATE	JAN. 04, 2013
3rd EDITION	

Fig. 1450 ELECTRIC PARTS - BATTERY
EQUIPMENT ELECTRIQUE

Serial No. ;

Key No.	Part No.	Description	Description	Q'ty	S.C	Serial No.	ICA	Replaceable part	
								Part No.	Q'ty
1450 --	K1033613A	ELECTRIC PARTS-CHASSIS	EQUIPMENT ELECTRIQUE	-	D	5001-5114			
	300619-00607	ELECTRIC ASSY;CHASSIS	EQUIPMENT ELECTRIQUE	-	D	5115-			
1	2506-9009	BATTERY	BATTERIE	1					
2	K1023533A	BRACKET	SUPPORT	1					
3	DS0001089	BOLT M10X1.5X220	BOULON A 6 PANS	1					
4	DS0001075	BOLT	BOULON A 6 PANS	1					
5	S5010613	WASHER;PLAIN	RONDELLE	2					
6	516-00009	HORN	AVERTISSEUR	1		5001-5114	I	300726-00004	1
	300726-00004	HORN;HIGH	AVERTISSEUR	1		5115-			
7	S0508666	BOLT	BOULON	1					
8	S5102503	WASHER,SPRING	RONDELLE	1					
9	S0504566	BOLT M6X1.0X14	BOULON A 6 PANS	1					

(THIS PARTS BOOK IS FOR REFERENCE ONLY.
PART NUMBERS AND SERAIL NUMBERS MAY BE
OUTDATED. ALWAYS USE THE ONLINE PARTS SYSTEM)

DATE	JAN. 04, 2013
3rd EDITION	

Fig. 1460 ELECTRIC WIRING - Tier 2
CABLAGE ELECTRIQUE

Serial No. ;

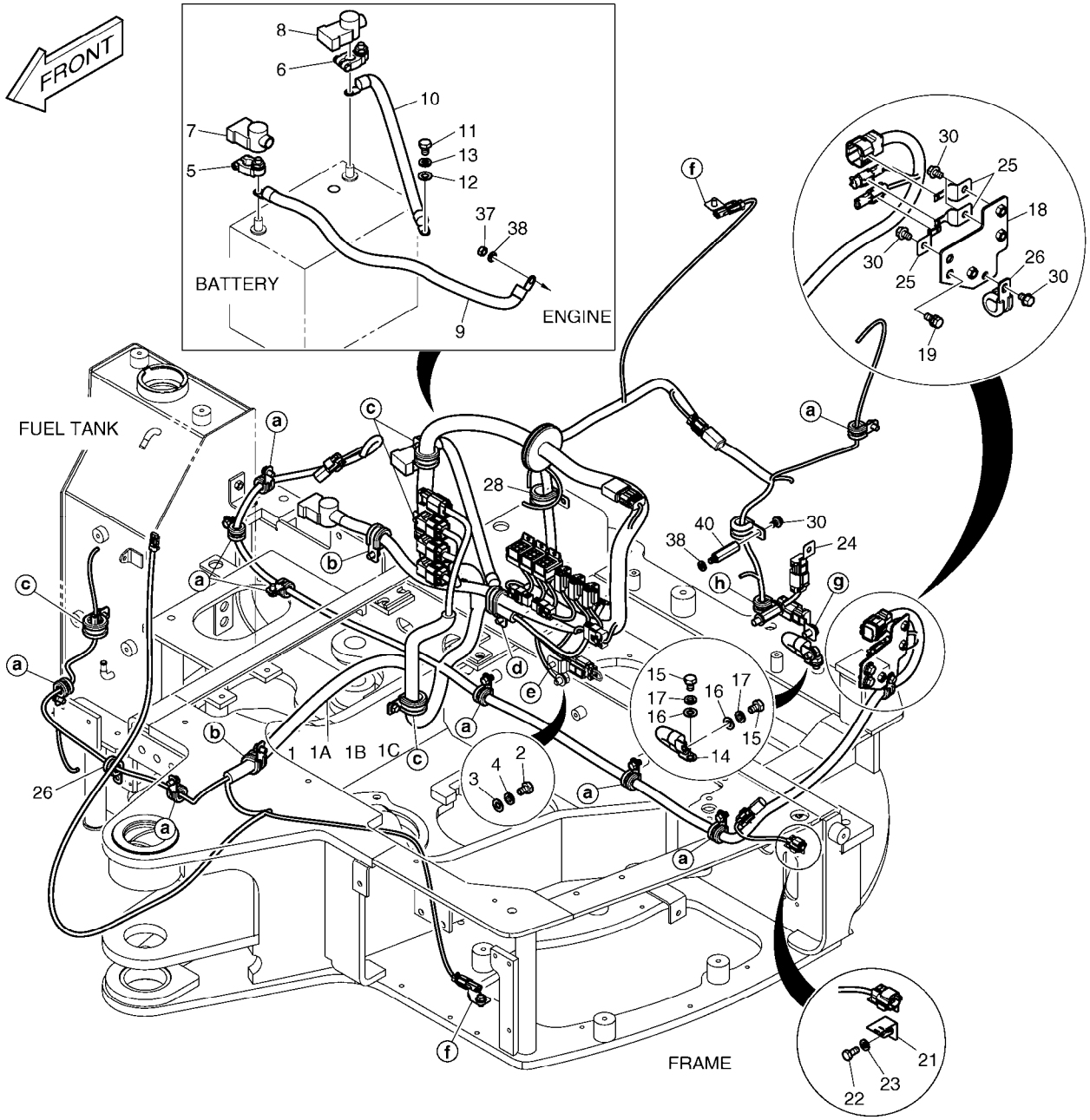

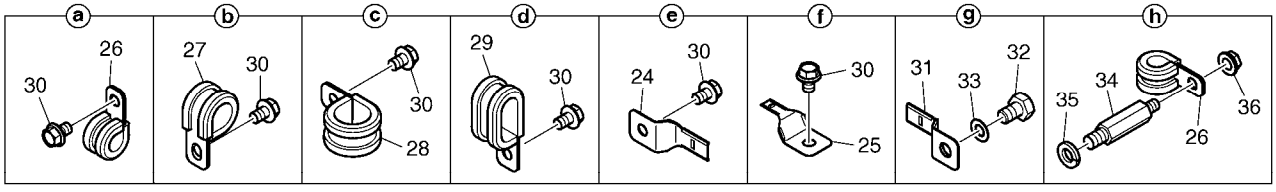

(THIS PARTS BOOK IS FOR REFERENCE ONLY.
PART NUMBERS AND SERAIL NUMBERS MAY BE
OUTDATED. ALWAYS USE THE ONLINE PARTS SYSTEM)

DATE	JAN. 04, 2013
3rd EDITION	

Fig. 1460 ELECTRIC WIRING - Tier 2
CABLAGE ELECTRIQUE

Serial No. ;

Key No.	Part No.	Description	Description	Q'ty	S.C	Serial No.	ICA	Replaceable part	
								Part No.	Q'ty
1460 --	K1033615A	ELECTRIC WIRING HARNESS	CABLAGE ELECTRIQUE	-	D	5001-5108			
	300619-00171	ELECTRIC ASSY;WIRING HARNE	CABLAGE ELECTRIQUE	-	D	5109-			
1	K1024504B	HARNESS;MAIN	HARNAIS	1		5001-5108			
	310207-00148	HARNESS,MAIN	HARNAIS	1		5109-5287	I	310207-00148A	1
	310207-00148A	HARNESS,MAIN	HARNAIS	1		5288-			
1A	2548-1027	. DIODE	. DIODE	2					
1B	K1000814	. DIODE;4 PIN	. DIODE	1					
1C	K1000815	. DIODE;8 PIN	. DIODE	1					
2	S0511653	BOLT	BOULON	1					
3	S5010613	WASHER;PLAIN	RONDELLE	1					
4	S5102603	WASHER,SPRING	RONDELLE	1					
5	2550-1014D1	TERMINAL;BATTERY(+)	BORNE	1					
6	2550-1014D2	TERMINAL;BATTERY(-)	BORNE	1					
7	2160-1212	CAP;BATT. TML (+)	CHAPEAU	1					
8	2160-1213	CAP;BATT. TML (-)	CHAPEAU	1					
9	2553-1275D96	CABLE;STARTER	CABLE	1					
10	2553-1275D97	CABLE;EARTH(BATTERY)	CABLE	1					
11	S0511653	BOLT	BOULON	1					
12	S5010613	WASHER;PLAIN	RONDELLE	1					
13	S5102603	WASHER,SPRING	RONDELLE	1					
14	553-00001D1	CABLE;E/G EARTH	CABLE	1					
15	S0511653	BOLT	BOULON	2					
16	S5010613	WASHER;PLAIN	RONDELLE	2					
17	S5102603	WASHER,SPRING	RONDELLE	2					
18	K1014279A	BRACKET;CONNECTOR	SUPPORT	1					
19	DS0025033	BOLT;SET	BOULON	2					
21	2195-3500	BRACKET	SUPPORT	1					
22	S0504566	BOLT M6X1.0X14	BOULON A 6 PANS	1					
23	S5102303	WASHER;SPRING	RONDELLE	1					
24	2197-1660	BRACKET	SUPPORT	2					
25	2197-1661	BRACKET	SUPPORT	5					
26	124-00208D2	CLIP	AGRAFE	12					
27	124-00208D3	CLIP	AGRAFE	3					
28	124-00208D4	CLIP	ATTACHE	6					
29	124-00209D2	CLIP	AGRAFE	1					
30	K1001029	BOLT	BOULON	24					
31	K1026565	BRACKET	SUPPORT	1					
32	S0511666	BOLT	BOULON	1					

(THIS PARTS BOOK IS FOR REFERENCE ONLY. PART NUMBERS AND SERIAL NUMBERS MAY BE OUTDATED. ALWAYS USE THE ONLINE PARTS SYSTEM)

DATE	JAN. 04, 2013
3rd EDITION	

Fig. 1460 ELECTRIC WIRING - Tier 2
CABLAGE ELECTRIQUE

Serial No. ;

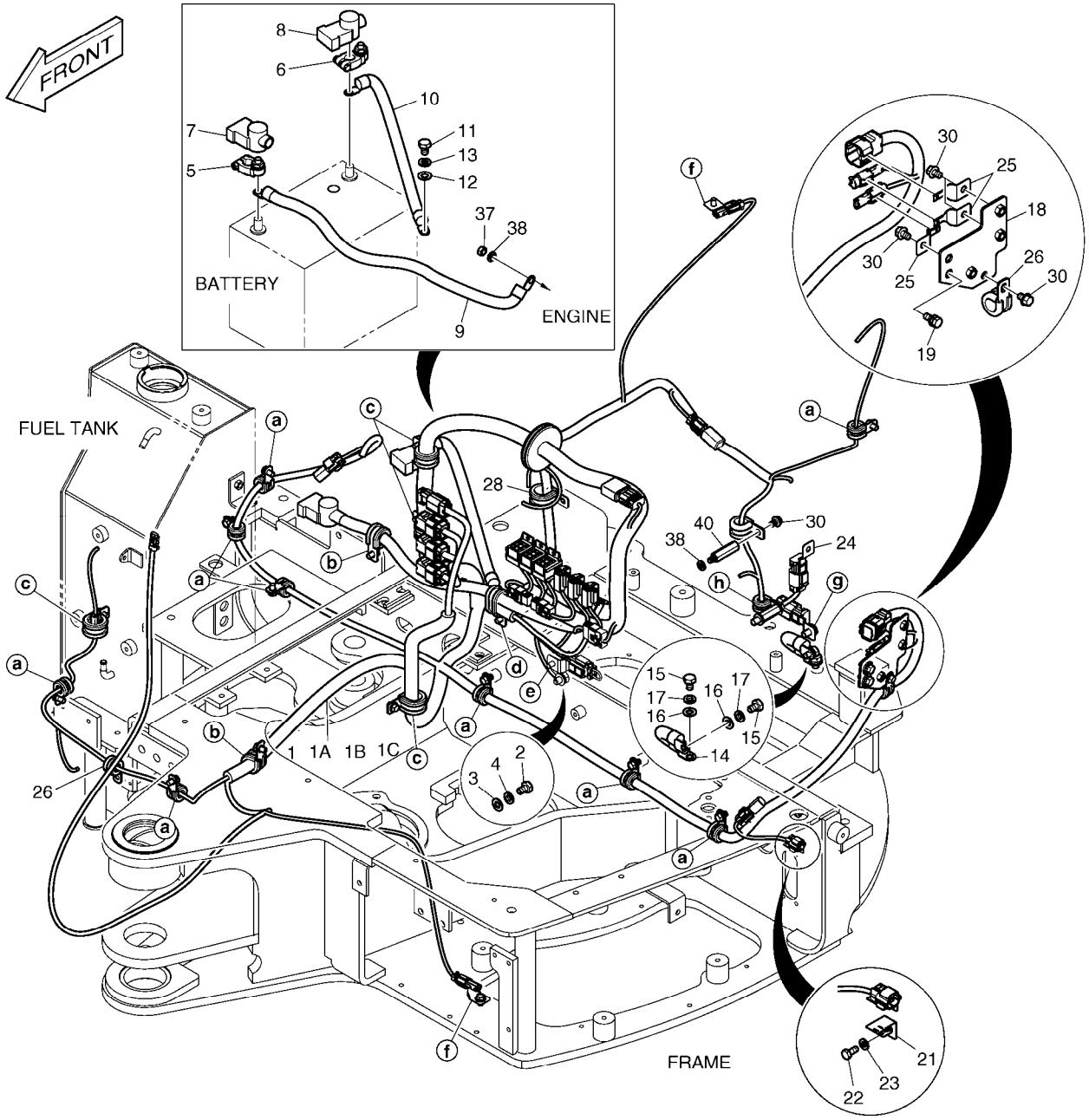

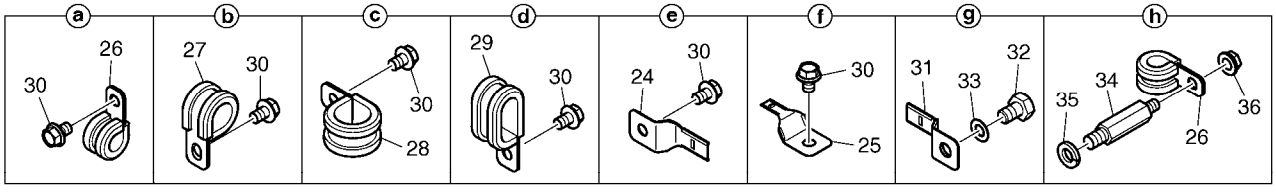

(THIS PARTS BOOK IS FOR REFERENCE ONLY.
PART NUMBERS AND SERAIL NUMBERS MAY BE
OUTDATED. ALWAYS USE THE ONLINE PARTS SYSTEM)

Fig. 1460 ELECTRIC WIRING - Tier 2
CABLAGE ELECTRIQUE

Serial No. ;

Key No.	Part No.	Description	Description	Q'ty	S.C	Serial No.	ICA	Replaceable part	
								Part No.	Q'ty
1460 -33	S5010613	WASHER;PLAIN	RONDELLE	1					
34	120-00114D7	BOLT;STUD	BOULON A 6 PANS	1					
35	S5102603	WASHER,SPRING	RONDELLE	1					
36	2121-1305	NUT	ECROU	1					
37	S4012533	NUT	ECROU	1					
38	S5102503	WASHER,SPRING	RONDELLE	2					
40	2120-2187	BOLT;STUD	BOULON	1					

(THIS PARTS BOOK IS FOR REFERENCE ONLY.
PART NUMBERS AND SERAIL NUMBERS MAY BE
OUTDATED. ALWAYS USE THE ONLINE PARTS SYSTEM)

DATE	JAN. 04, 2013
3rd EDITION	

Fig. 1470 WORKING LAMP
LAMPE FONCTIONNANTE

Serial No. ;

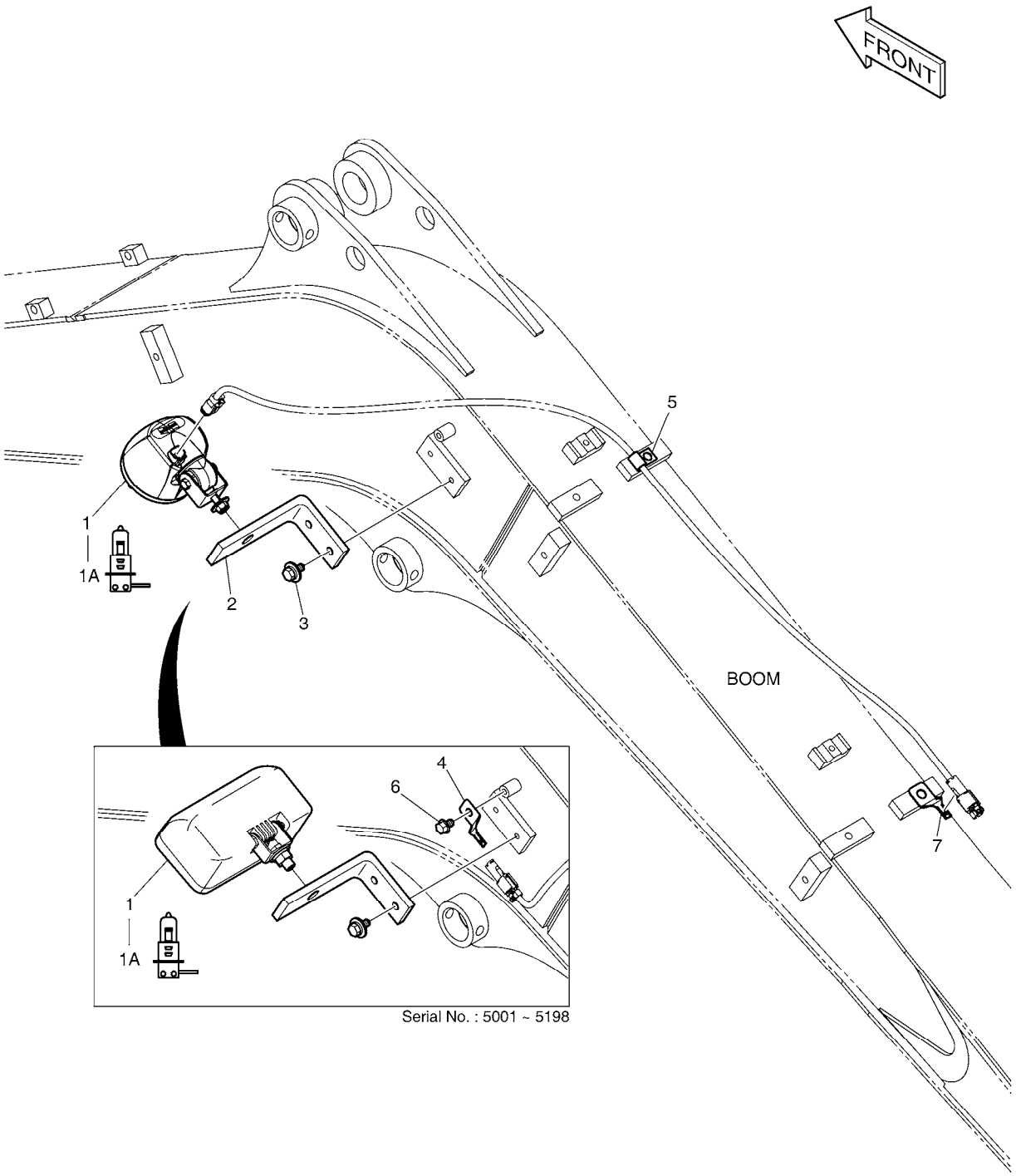

(THIS PARTS BOOK IS FOR REFERENCE ONLY.
PART NUMBERS AND SERAIL NUMBERS MAY BE
OUTDATED. ALWAYS USE THE ONLINE PARTS SYSTEM)

DATE	JAN. 04, 2013
3rd EDITION	

Fig. 1470 WORKING LAMP
LAMPE FONCTIONNANTE

Serial No. ;

Key No.	Part No.	Description	Description	Q'ty	S.C	Serial No.	ICA	Replaceable part	
								Part No.	Q'ty
1470 --	K1033663	WORKING LAMP ASS'Y	LAMPE FONCTIONNANTE	-	D	5001-5198			
	300619-01064	ELECTRIC ASSY;WORKING LAMP	LAMPE FONCTIONNANTE	-	D	5199-			
1	534-00029	LAMP;WORKING	LAMPE	1		5001-5198			
	301005-00181	LAMP ASSY,WORKING;(12V)	LAMPE	1		5199-			
1A	2515-1016D2	. BULB 12V 55W	. AMPOULE	1					
2	195-03420	BRACKET;LAMP	SUPPORT	1					
3	DS0025033	BOLT;SET	BOULON	2					
4	2197-1661	BRACKET	SUPPORT	1		5001-5198			
5	2124-1353D1	CLIP	AGRAFE	1					
6	K1001029	BOLT	BOULON	1		5001-5198			
7	K1026566	BRACKET;CONNECTOR	SUPPORT	1					

(THIS PARTS BOOK IS FOR REFERENCE ONLY.
PART NUMBERS AND SERAIL NUMBERS MAY BE
OUTDATED. ALWAYS USE THE ONLINE PARTS SYSTEM)

DATE	JAN. 04, 2013
3rd EDITION	

Fig. 1480 WORKING LAMP HARNESS
LAMPE FONCTIONNANTE

Serial No. ;

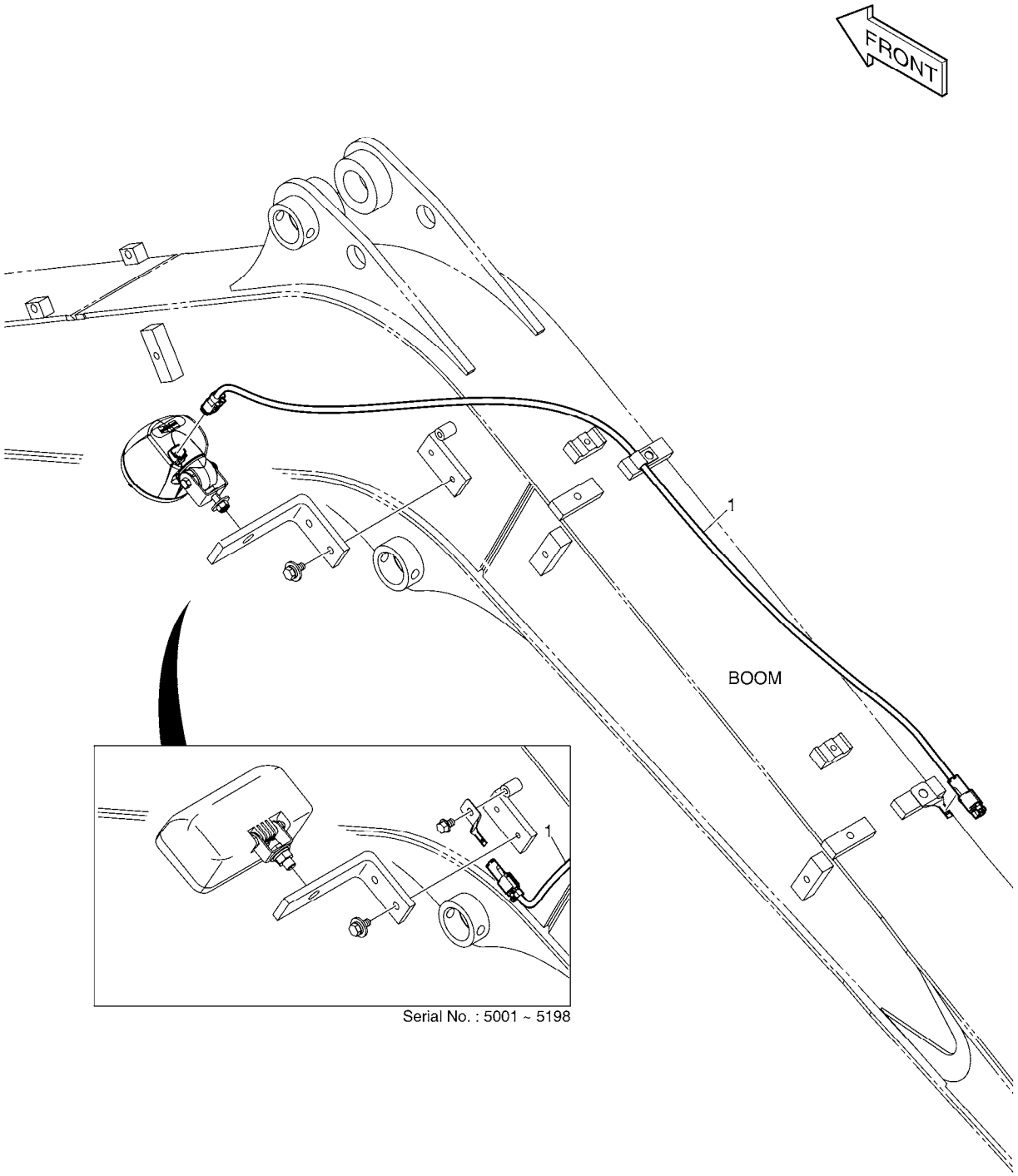

(THIS PARTS BOOK IS FOR REFERENCE ONLY.
PART NUMBERS AND SERAIL NUMBERS MAY BE
OUTDATED. ALWAYS USE THE ONLINE PARTS SYSTEM)

DATE	JAN. 04, 2013
3rd EDITION	

Fig. 1480 WORKING LAMP HARNESS
LAMPE FONCTIONNANTE

Serial No. ;

Key No.	Part No.	Description	Description	Q'ty	S.C	Serial No.	ICA	Replaceable part	
								Part No.	Q'ty
1480 --	K1033664	WORKING LAMP	LAMPE FONCTIONNANTE	-	D	5001-5198			
	300619-01065	ELECTRIC ASSY;WORKING LAMP	LAMPE FONCTIONNANTE	-	D	5199-			
1	K1014462A	HARNESS;WORKING LAMP	HARNAIS	1		5001-5198			
	310207-01093	HARNESS,LAMP;WORK	HARNAIS	1		5199-			

(THIS PARTS BOOK IS FOR REFERENCE ONLY.
PART NUMBERS AND SERAIL NUMBERS MAY BE
OUTDATED. ALWAYS USE THE ONLINE PARTS SYSTEM)

DATE	JAN. 04, 2013
3rd EDITION	

Fig. 1490 ELECTRIC PARTS - CANOPY
EQUIPMENT ELECTRIQUE

Serial No. ;

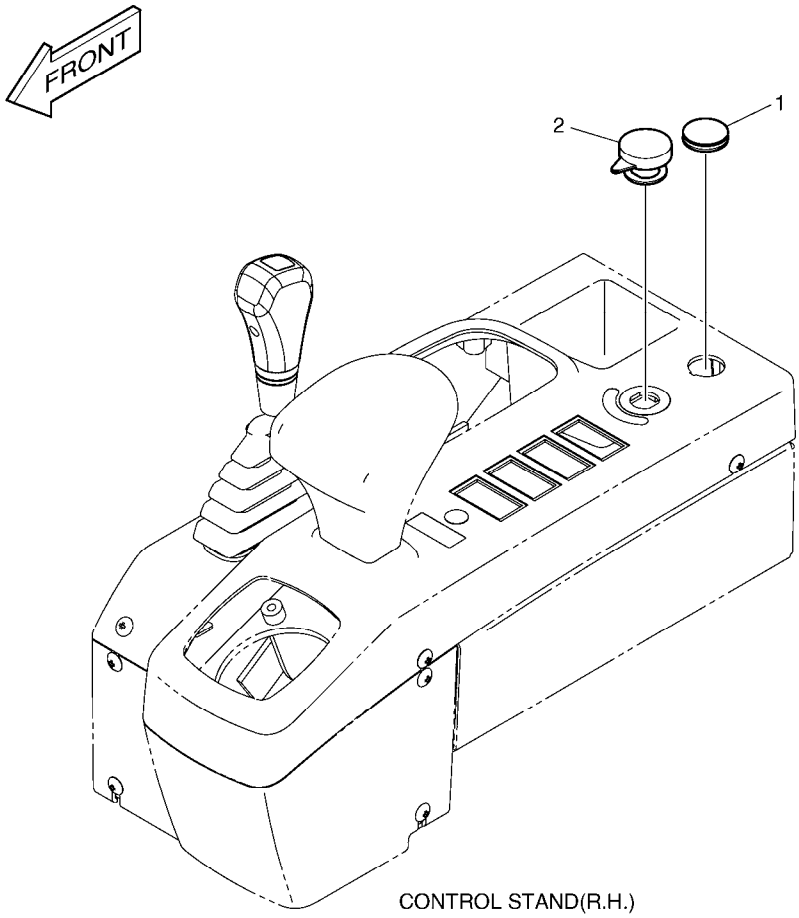

CONTROL STAND(R.H.)

(THIS PARTS BOOK IS FOR REFERENCE ONLY.
PART NUMBERS AND SERAIL NUMBERS MAY BE
OUTDATED. ALWAYS USE THE ONLINE PARTS SYSTEM)

Fig. 1490 ELECTRIC PARTS - CANOPY
EQUIPMENT ELECTRIQUE

Serial No. ;

Key No.	Part No.	Description	Description	Q'ty	S.C	Serial No.	ICA	Replaceable part	
								Part No.	Q'ty
1490 --	K1026793	ELECTRIC PARTS	EQUIPMENT ELECTRIQUE	-	D				
1	K1026510	CAP;RUBBER	CHAPEAU	1					
2	2160-1218	CAP	BOUCHON	1					

(THIS PARTS BOOK IS FOR REFERENCE ONLY.
PART NUMBERS AND SERAIL NUMBERS MAY BE
OUTDATED. ALWAYS USE THE ONLINE PARTS SYSTEM)

DATE	JAN. 04, 2013
3rd EDITION	

Fig. 1500 LICENSE PLATE
PLAT DE PERMIS

Serial No. ;

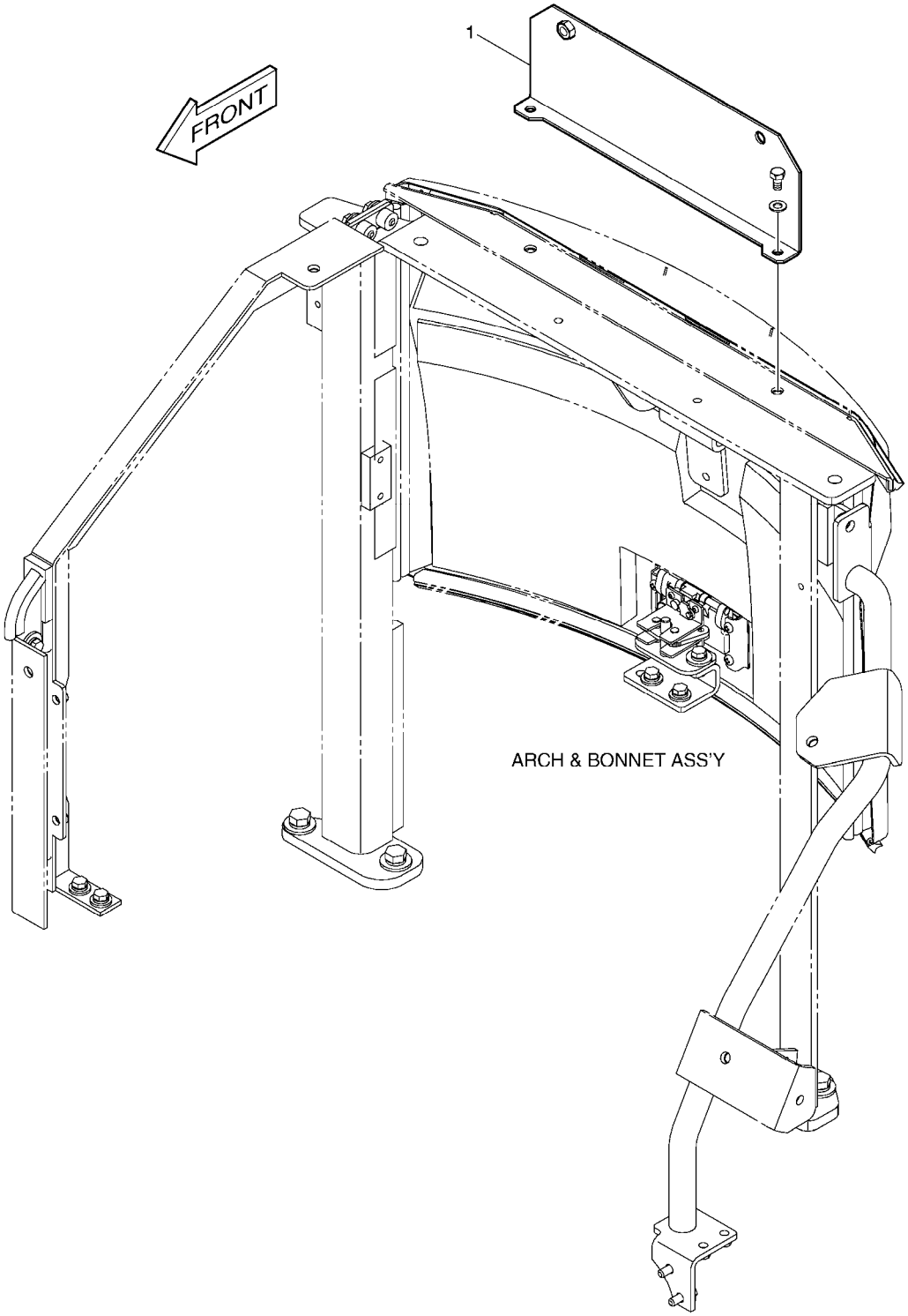

(THIS PARTS BOOK IS FOR REFERENCE ONLY.
PART NUMBERS AND SERAIL NUMBERS MAY BE
OUTDATED. ALWAYS USE THE ONLINE PARTS SYSTEM)

Fig. 1500 LICENSE PLATE
PLAT DE PERMIS

Serial No. ;

Key No.	Part No.	Description	Description	Q'ty	S.C	Serial No.	ICA	Replaceable part	
								Part No.	Q'ty
1500 --	K1041443	PLATE ASS'Y	PLAT ASS'Y	-	D				
1	K1041344	PLATE;LICENSE	PLAQUE	1					

(THIS PARTS BOOK IS FOR REFERENCE ONLY.
PART NUMBERS AND SERAIL NUMBERS MAY BE
OUTDATED. ALWAYS USE THE ONLINE PARTS SYSTEM)

DATE	JAN. 04, 2013
3rd EDITION	

Fig. 1510 ELECTRIC WIRING - Tier 3
CABLAGE ELECTRIQUE

Serial No. ;

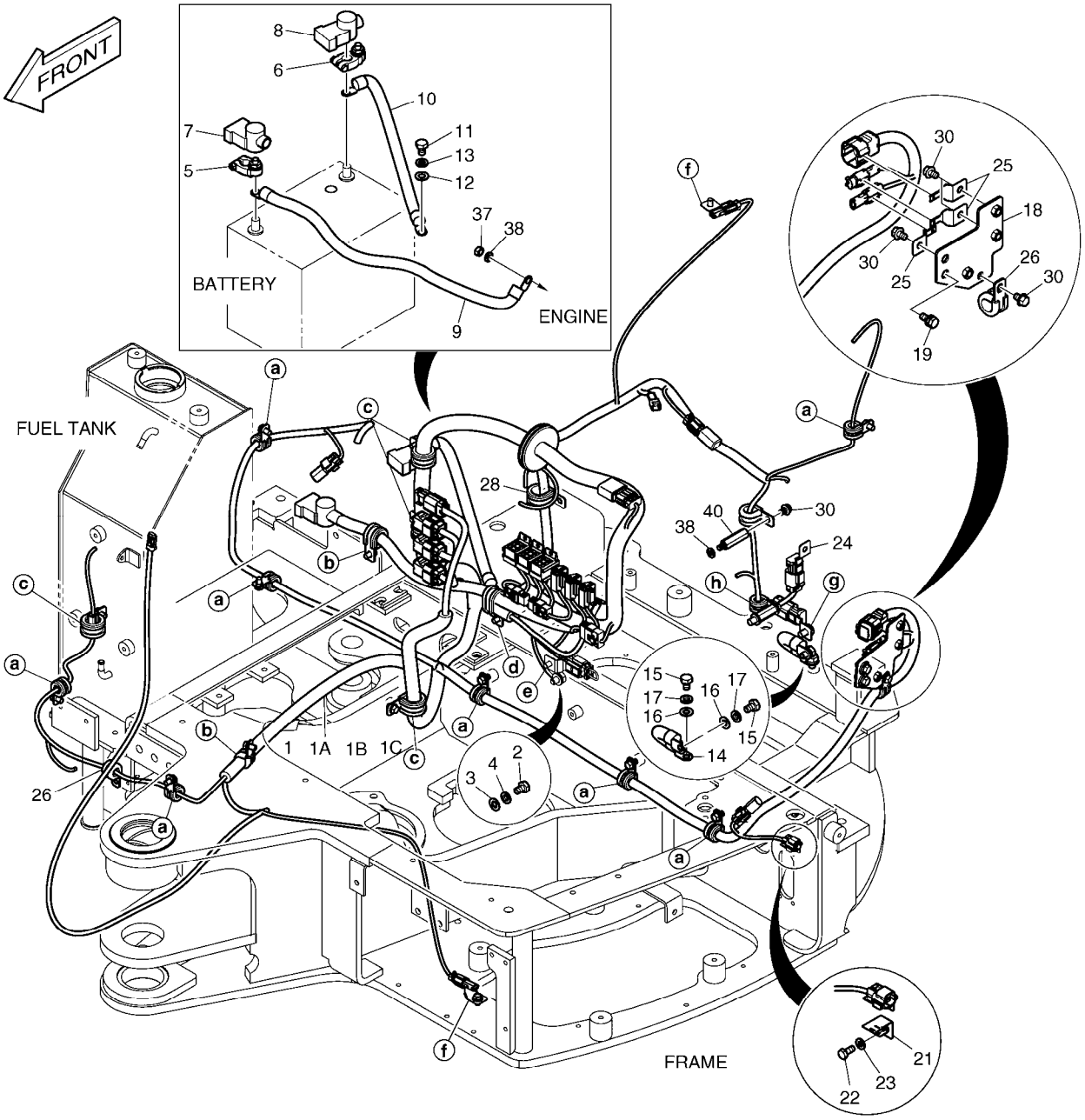

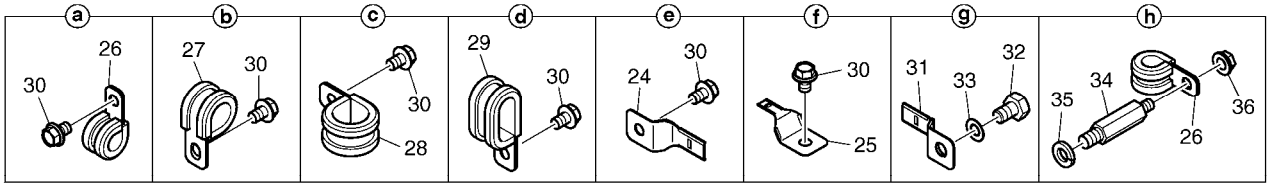

(THIS PARTS BOOK IS FOR REFERENCE ONLY.
PART NUMBERS AND SERAIL NUMBERS MAY BE
OUTDATED. ALWAYS USE THE ONLINE PARTS SYSTEM)

DATE	JAN. 04, 2013
3rd EDITION	

Fig. 1510 ELECTRIC WIRING - Tier 3
CABLAGE ELECTRIQUE

Serial No. ;

Key No.	Part No.	Description	Description	Q'ty	S.C	Serial No.	ICA	Replaceable part	
								Part No.	Q'ty
1510 --	K1042175	ELECTRIC WIRING HARNESS	CABLAGE ELECTRIQUE	-	D	5001-5108			
	300619-00172	ELECTRIC ASSY;WIRING HARNE	CABLAGE ELECTRIQUE	-	D	5109-			
1	K1041784	HARNESS;MAIN	HARNAIS	1		5001-5108			
	310207-00149	HARNESS,MAIN	HARNAIS	1		5109-5287	I	310207-00149A	1
	310207-00149A	HARNESS,MAIN	HARNAIS	1		5288-			
1A	2548-1027	. DIODE	. DIODE	2					
1B	K1000814	. DIODE;4 PIN	. DIODE	1					
1C	K1000815	. DIODE;8 PIN	. DIODE	1					
2	S0511653	BOLT	BOULON	1					
3	S5010613	WASHER;PLAIN	RONDELLE	1					
4	S5102603	WASHER,SPRING	RONDELLE	1					
5	2550-1014D1	TERMINAL;BATTERY(+)	BORNE	1					
6	2550-1014D2	TERMINAL;BATTERY(-)	BORNE	1					
7	2160-1212	CAP;BATT. TML (+)	CHAPEAU	1					
8	2160-1213	CAP;BATT. TML (-)	CHAPEAU	1					
9	2553-1275D96	CABLE;STARTER	CABLE	1					
10	2553-1275D97	CABLE;EARTH(BATTERY)	CABLE	1					
11	S0511653	BOLT	BOULON	1					
12	S5010613	WASHER;PLAIN	RONDELLE	1					
13	S5102603	WASHER,SPRING	RONDELLE	1					
14	553-00001D1	CABLE;E/G EARTH	CABLE	1					
15	S0511653	BOLT	BOULON	2					
16	S5010613	WASHER;PLAIN	RONDELLE	2					
17	S5102603	WASHER,SPRING	RONDELLE	2					
18	K1014279A	BRACKET;CONNECTOR	SUPPORT	1					
19	DS0025033	BOLT;SET	BOULON	2					
21	2195-3500	BRACKET	SUPPORT	1					
22	S0504566	BOLT M6X1.0X14	BOULON A 6 PANS	1					
23	S5102303	WASHER;SPRING	RONDELLE	1					
24	2197-1660	BRACKET	SUPPORT	2					
25	2197-1661	BRACKET	SUPPORT	5					
26	124-00208D2	CLIP	AGRAFE	12					
27	124-00208D3	CLIP	AGRAFE	3					
28	124-00208D4	CLIP	ATTACHE	6					
29	124-00209D2	CLIP	AGRAFE	1					
30	K1001029	BOLT	BOULON	24					
31	K1026565	BRACKET	SUPPORT	1					
32	S0511666	BOLT	BOULON	1					

(THIS PARTS BOOK IS FOR REFERENCE ONLY.
PART NUMBERS AND SERIAL NUMBERS MAY BE
OUTDATED. ALWAYS USE THE ONLINE PARTS SYSTEM)

Fig. 1510 ELECTRIC WIRING - Tier 3
CABLAGE ELECTRIQUE

Serial No. ;

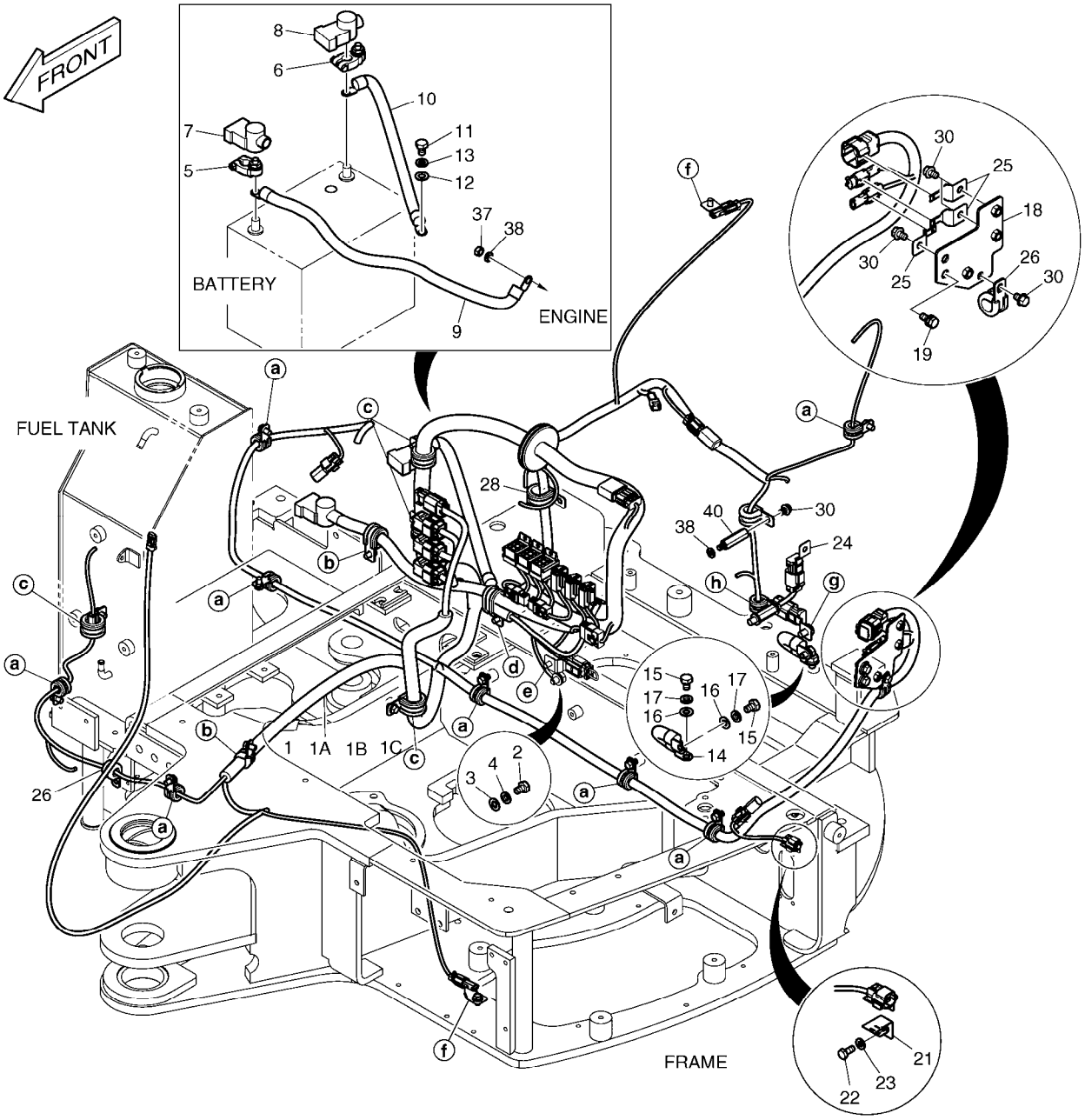

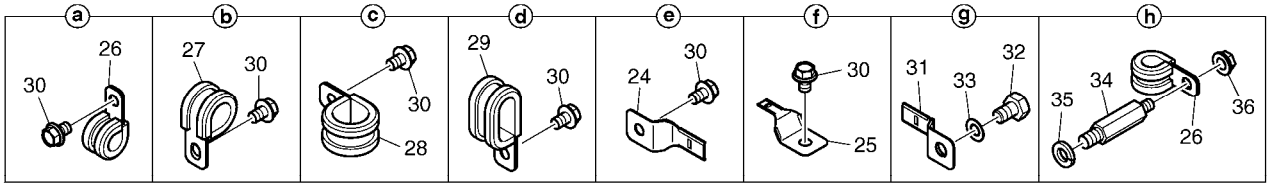

(THIS PARTS BOOK IS FOR REFERENCE ONLY.
PART NUMBERS AND SERAIL NUMBERS MAY BE
OUTDATED. ALWAYS USE THE ONLINE PARTS SYSTEM)

Fig. 1510 ELECTRIC WIRING - Tier 3
CABLAGE ELECTRIQUE

Serial No. ;

Key No.	Part No.	Description	Description	Q'ty	S.C	Serial No.	ICA	Replaceable part	
								Part No.	Q'ty
1510 -33	S5010613	WASHER;PLAIN	RONDELLE	1					
34	120-00114D7	BOLT;STUD	BOULON A 6 PANS	1					
35	S5102703	WASHER;SPRING	RONDELLE	1					
36	2121-1305	NUT	ECROU	1					
37	S4012533	NUT	ECROU	1					
38	S5102503	WASHER,SPRING	RONDELLE	2					
40	2120-2187	BOLT;STUD	BOULON	1					

(THIS PARTS BOOK IS FOR REFERENCE ONLY.
PART NUMBERS AND SERAIL NUMBERS MAY BE
OUTDATED. ALWAYS USE THE ONLINE PARTS SYSTEM)

DATE	JAN. 04, 2013
3rd EDITION	

Fig. 2100 TRACK FRAME
TRAIN DE ROULEMENT

Serial No. ;

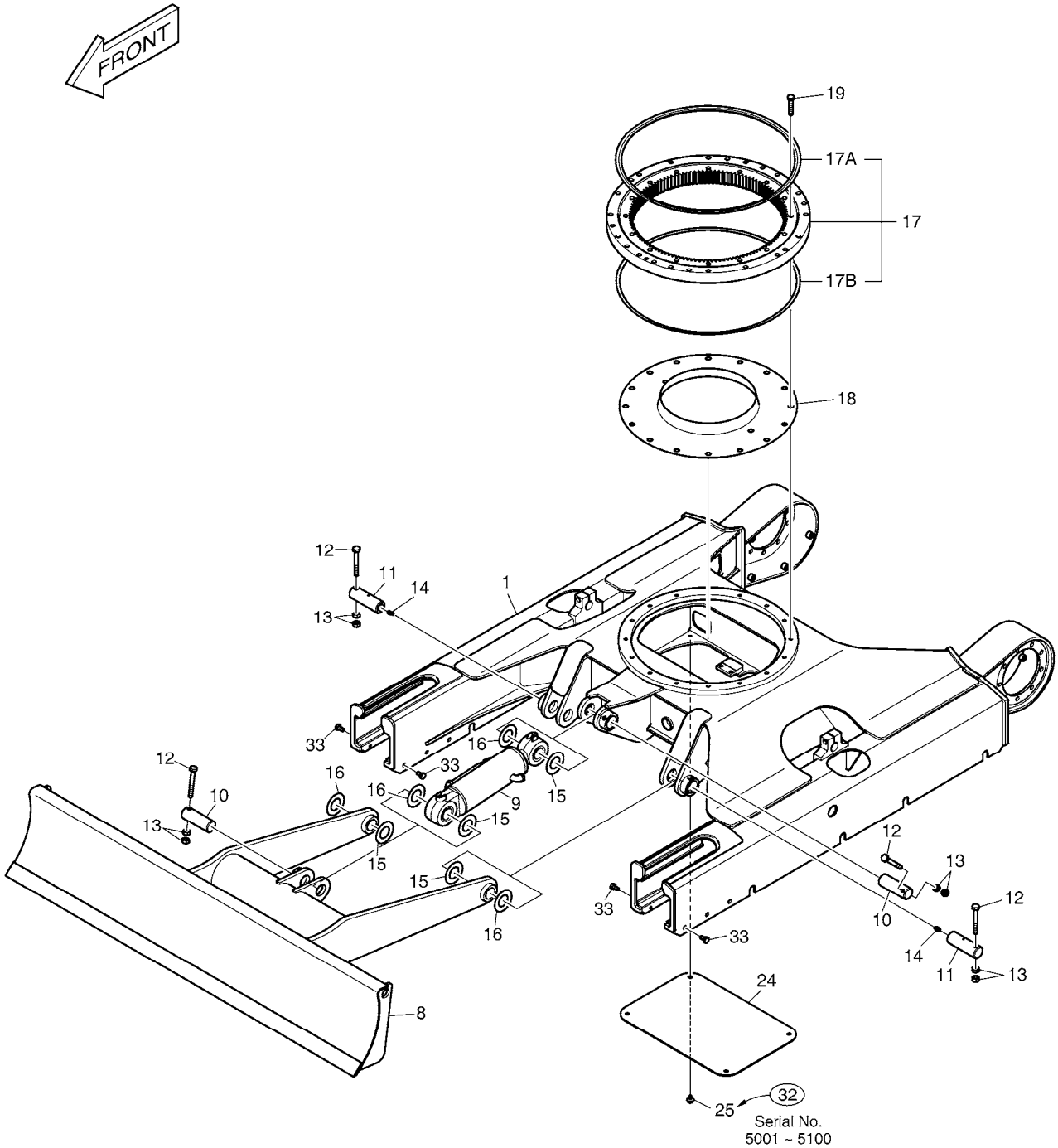

(THIS PARTS BOOK IS FOR REFERENCE ONLY.
PART NUMBERS AND SERAIL NUMBERS MAY BE
OUTDATED. ALWAYS USE THE ONLINE PARTS SYSTEM)

DATE	JAN. 04, 2013
3rd EDITION	

Fig. 2100 TRACK FRAME
TRAIN DE ROULEMENT

Serial No. ;

Key No.	Part No.	Description	Description	Q'ty	S.C	Serial No.	ICA	Replaceable part	
								Part No.	Q'ty
2100 --	K1028074C	TRACK ASS'Y	TRAIN DE ROULEMENT	-	D	5001-5100			
	650105-00025	UNDERCARRIAGE ASSY	SOUS LE CHARIOT	-	D	5101-			
1	K1028076B	FRAME;TRACK	ARMATURE	1					
8	K1025526A	BLADE;DOZER	LAME DE DOZER	1					
9	K1028460	CYLINDER;DOZER	CYLINDER;DOZER	1					
10	K1008237A	PIN	GOUPILLE	2		5001-5289	Y	120501-02687	2
	120501-02687	PIN	GOUPILLE	2		5290-			
11	K1008242A	PIN	GOUPILLE	2		5001-5289	Y	120501-02688	2
	120501-02688	PIN	GOUPILLE	2		5290-			
12	S0559166	BOLT M10X1.5X80	BOULON A 6 PANS	4					
13	S4012633	NUT	ECROU	8					
14	S6710042	NIPPLE;GREASE	GRAISSEUR	2					
15	2114-1059D183	SHIM	CALE	4					
16	2114-1059D46	SHIM 1.0T	CALE	4					
17	K1033358	BEARING;SWING	ROULEMENT	1		5001-5207	I	140109-00024	1
	140109-00024	BEARING,SWING	ROULEMENT	1		5208-			
17A	401107-00749	. SEAL,SWING BEARING	. JOINT	1		5208-			
17B	401107-00750	. SEAL	. JOINT	1		5208-			
18	K1014362A	BATH;GREASE	BATH DE GRAISSE	1		5001-5108	Y	110964-00001	1
	110964-00001	BATH;GREASE	BATH DE GRAISSE	1		5109-			
19	S0560966	BOLT M12X1.75X60	BOULON	16					
24	K1008072A	COVER;UNDER	COUVERCLE	1					
25	K1049808	BOLT,FLANGE	BOULON	4		5101-			
32	DS0025033	BOLT;SET	BOULON	4		5001-5100			
33	S0511866	BOLT	BOULON	12					

(THIS PARTS BOOK IS FOR REFERENCE ONLY.
PART NUMBERS AND SERAIL NUMBERS MAY BE
OUTDATED. ALWAYS USE THE ONLINE PARTS SYSTEM)

DATE	JAN. 04, 2013
3rd EDITION	

Fig. 2110 TRACK COMPONENTS COMPOSANTS DE VOIE

Serial No. ;

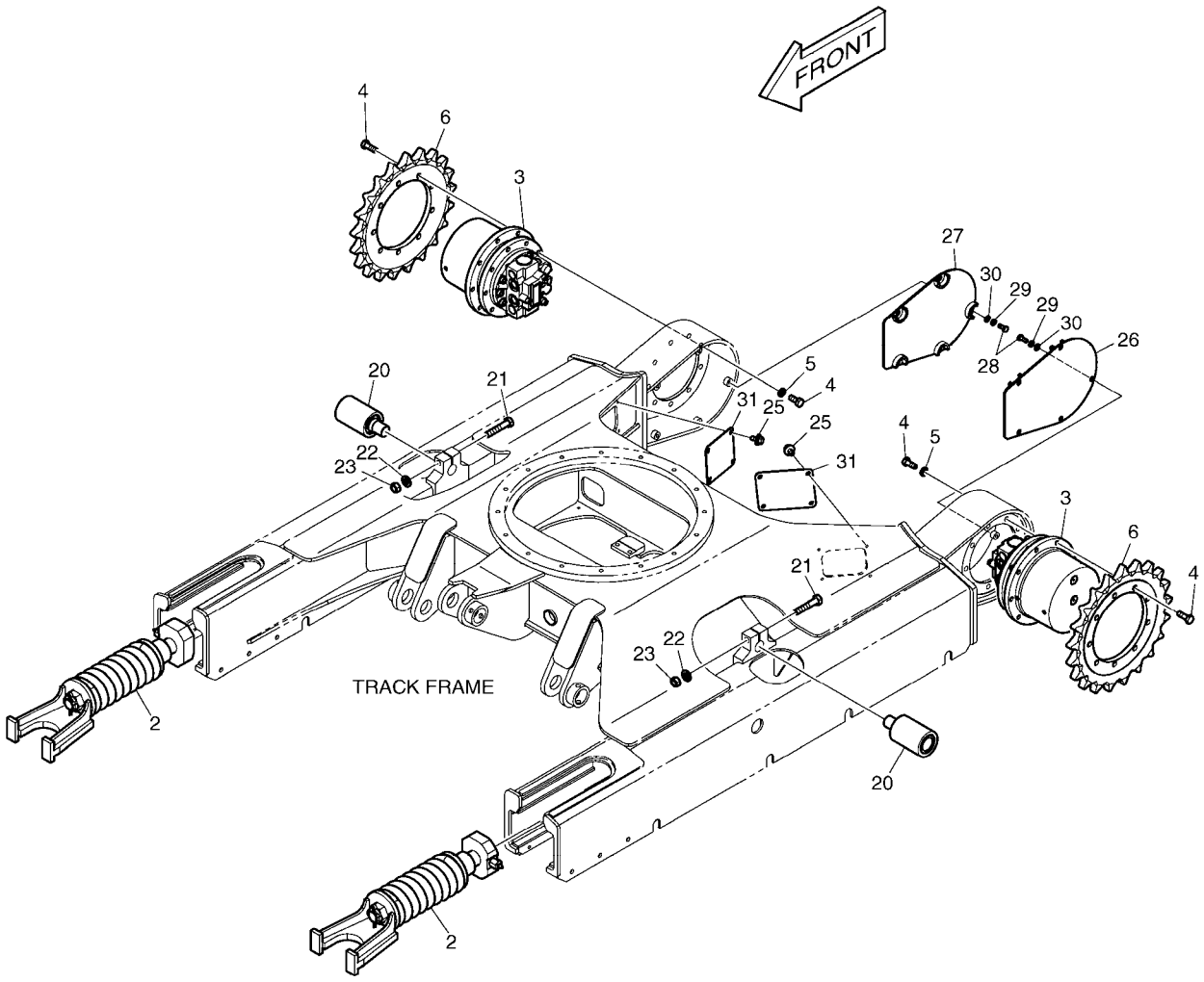

(THIS PARTS BOOK IS FOR REFERENCE ONLY.
PART NUMBERS AND SERAIL NUMBERS MAY BE
OUTDATED. ALWAYS USE THE ONLINE PARTS SYSTEM)

DATE	JAN. 04, 2013
3rd EDITION	

Fig. 2110 TRACK COMPONENTS COMPOSANTS DE VOIE

Serial No. ;

Key No.	Part No.	Description	Description	Q'ty	S.C	Serial No.	ICA	Replaceable part	
								Part No.	Q'ty
2110 --	K1028074E	TRACK ASS'Y	TRAIN DE ROULEMENT	-	D	5001-5100			
	650105-00025	UNDERCARRIAGE ASSY	SOUS LE CHARIOT	-	D	5101-			
2	K1028787A	ADJUSTER;TRACK	ADJUSTER;TRACK	2		5001-5016	I	K1028787B	2
	K1028787B	ADJUSTER;TRACK	ADJUSTER;TRACK	2		5017-5100	Y	200101-00012	2
	200101-00012	ADJUSTER,TRACK	ADJUSTER;TRACK	2		5101-			
3	K1028103B	MOTOR;TRAVEL	MOTEUR	2					
4	S0515266	BOLT	BOULON	36					
5	S5102703	WASHER;SPRING	RONDELLE	18					
6	K1014434	SPROCKET	COURONNE DENTEE	2					
20	K1014356	ROLLER;UPPER	ENSEMBLE GALET INFERIE	2					
21	S0563466	BOLT	BOULON	2					
22	K1015638	WASHER;HARDENED	RONDELLE	2					
23	S4012833	NUT	ECROU	2					
25	DS0025033	BOLT;SET	BOULON	8		5001-5100			
	K1049808	BOLT,FLANGE	BOULON	8		5101-			
26	K1008074B	COVER (L.H)	COUVERCLE	1					
27	K1026707	COVER (R.H)	COUVERCLE	1					
28	S0508866	BOLT	BOULON	10					
29	S5102503	WASHER,SPRING	RONDELLE	10					
30	S5010513	WASHER,PLAIN	RONDELLE	10					
31	K1015362	COVER	COUVERCLE	2					

(THIS PARTS BOOK IS FOR REFERENCE ONLY.
PART NUMBERS AND SERAIL NUMBERS MAY BE
OUTDATED. ALWAYS USE THE ONLINE PARTS SYSTEM)

DATE	JAN. 04, 2013
3rd EDITION	

Fig. 2120 TRACK ADJUSTER
REGLEUR DE VOIE

Serial No. ;

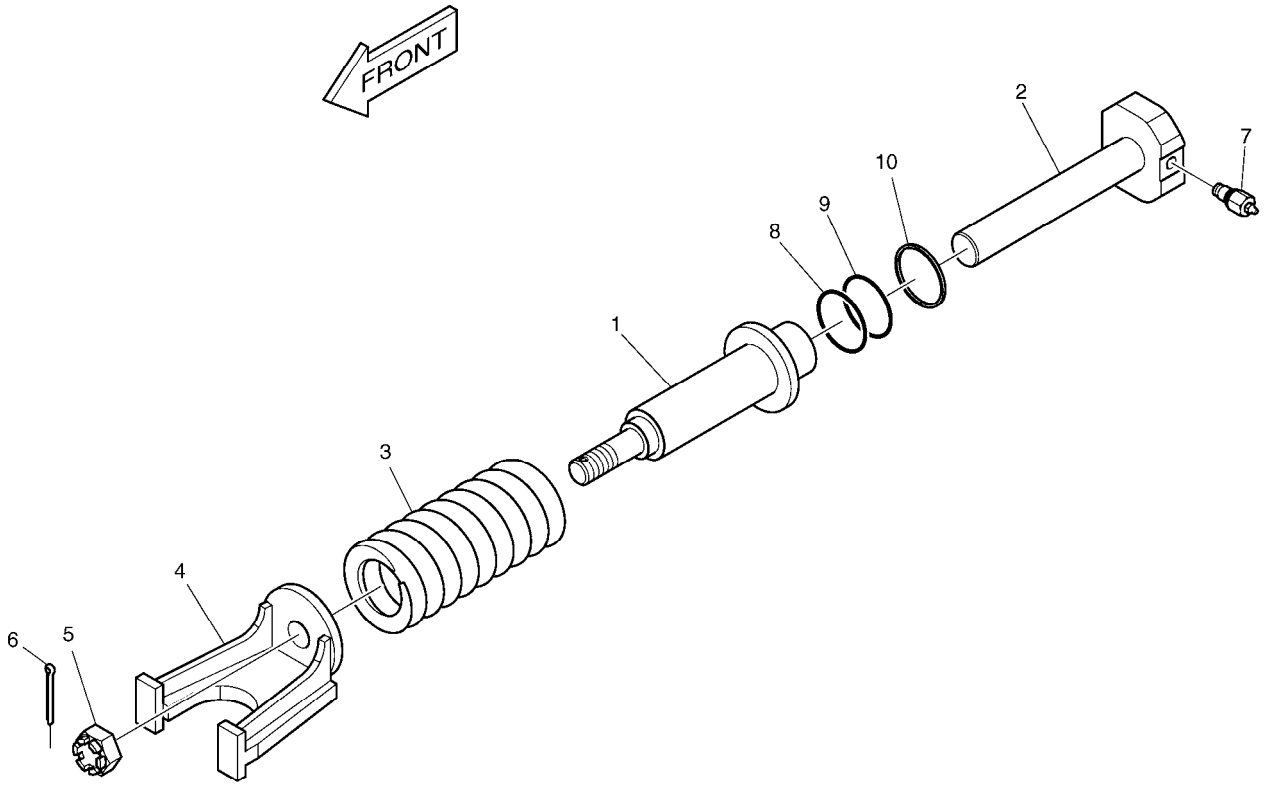

(THIS PARTS BOOK IS FOR REFERENCE ONLY.
PART NUMBERS AND SERAIL NUMBERS MAY BE
OUTDATED. ALWAYS USE THE ONLINE PARTS SYSTEM)

DATE	JAN. 04, 2013
3rd EDITION	

Fig. 2120 TRACK ADJUSTER
REGLEUR DE VOIE

Serial No. ;

Key No.	Part No.	Description	Description	Q'ty	S.C	Serial No.	ICA	Replaceable part	
								Part No.	Q'ty
2120 --	K1028787A	ADJUSTER;TRACK	ADJUSTER;TRACK	2		5001-5016	I	K1028787B	2
	K1028787B	ADJUSTER;TRACK	ADJUSTER;TRACK	2		5017-5100	Y	200101-00012	2
	200101-00012	ADJUSTER,TRACK	ADJUSTER;TRACK	2		5101-			
1	K1029266	BODY	CARTER	1					
2	K1029267A	ROD	TIGE	1		5001-5016	I	K1029267B	1
	K1029267B	ROD	TIGE	1		5017-			
3	K1029268	SPRING	RESSORT	1					
4	K1029025	BRACKET	SUPPORT	1					
5	S4277943	NUT	ECROU	1					
6	S5735911	PIN;SPLIT	GOUPILLE	1					
7	K1028959	NIPPLE;GREASE	MAMELON	1					
8	S8000401	O-RING	JOINT TORIQUE	1	K				
9	S8060400	RING;BACK UP	BAGUE	1	K				
10	-	PACKING	EMBALLAGE	1	K				
*	2440-9316AKT	SEAL KIT;TRACK SPRING	KIT D'ETANCHEITE	1					

(THIS PARTS BOOK IS FOR REFERENCE ONLY.
PART NUMBERS AND SERAIL NUMBERS MAY BE
OUTDATED. ALWAYS USE THE ONLINE PARTS SYSTEM)

DATE	JAN. 04, 2013
3rd EDITION	

Fig. 2130 RUBBER TRACK - 300mm
VOIE EN CAOUTCHOUC

Serial No. ;

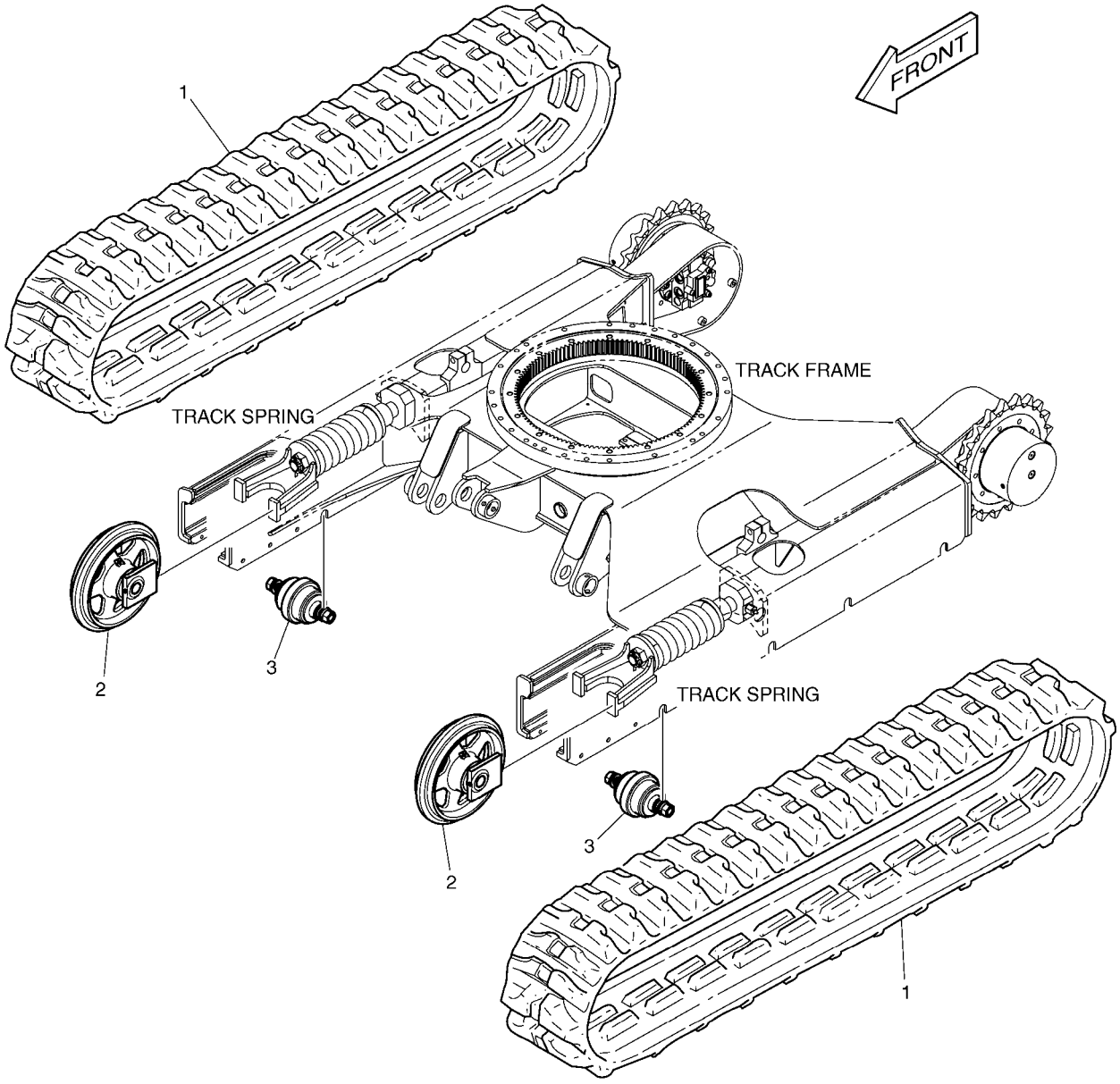

(THIS PARTS BOOK IS FOR REFERENCE ONLY.
PART NUMBERS AND SERAIL NUMBERS MAY BE
OUTDATED. ALWAYS USE THE ONLINE PARTS SYSTEM)

DATE	JAN. 04, 2013
3rd EDITION	

Fig. 2130 RUBBER TRACK - 300mm VOIE EN CAOUTCHOUC

Serial No. ;

Key No.	Part No.	Description	Description	Q'ty	S.C	Serial No.	ICA	Replaceable part	
								Part No.	Q'ty
2130 --	K1028139B	TRACK SHOE	CHAUSSURE DE VOIE	-	D	5001-5108			
	200106-00119	SHOE,TRACK;300MM	CHAUSSURE DE VOIE	-	D	5109-			
1	K1028140	SHOE;RUBBER(300mm)	CHAUSSURE EN CAOUTCI	2		5001-5108	I	200106-00116	2
	200106-00116	SHOE,RUBBER(300mm)	CHAUSSURE EN CAOUTCI	2		5109-			
2	K1014352A	IDLER;TRACK	OISIF	2					
3	K1014351C	ROLLER;LOWER	GALET	8					

(THIS PARTS BOOK IS FOR REFERENCE ONLY.
PART NUMBERS AND SERAIL NUMBERS MAY BE
OUTDATED. ALWAYS USE THE ONLINE PARTS SYSTEM)

DATE	JAN. 04, 2013
3rd EDITION	

Fig. 2140 TRAVELING PIPING
CONDUITES DE TRANSLATION

Serial No. ;

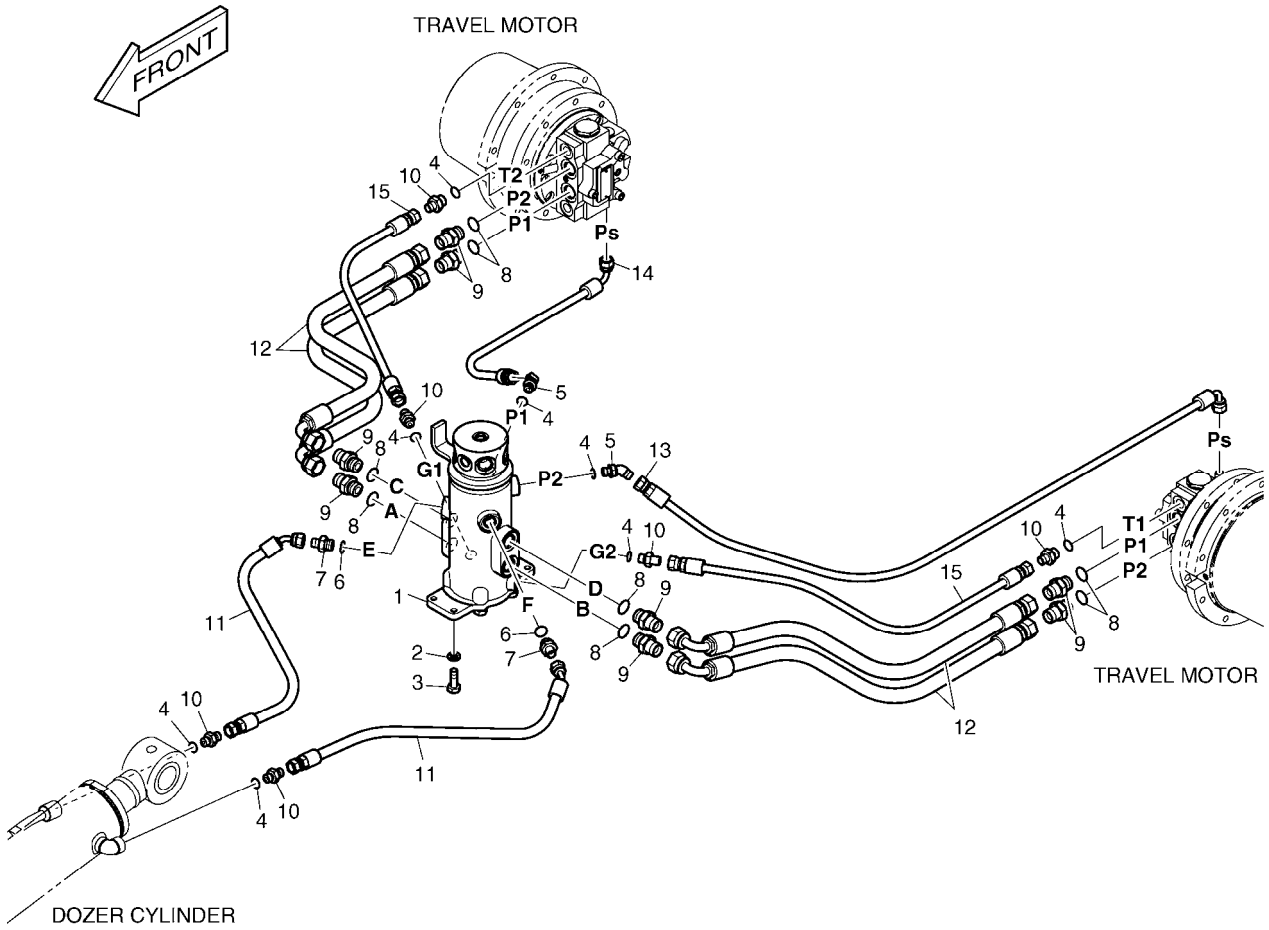

(THIS PARTS BOOK IS FOR REFERENCE ONLY.
PART NUMBERS AND SERAIL NUMBERS MAY BE
OUTDATED. ALWAYS USE THE ONLINE PARTS SYSTEM)

DATE	JAN. 04, 2013
3rd EDITION	

Fig. 2140 TRAVELING PIPING
CONDUITES DE TRANSLATION

Serial No. ;

Key No.	Part No.	Description	Description	Q'ty	S.C	Serial No.	ICA	Replaceable part	
								Part No.	Q'ty
2140 --	K1018113C	TRAVEL PIPING	CONDUITES	-	D				
1	K1008451	CENTER JOINT	JOINT CENTRAL	1		5001-5066	I	K1008451A	1
	K1008451A	CENTER JOINT	JOINT CENTRAL	1		5067-			
2	S5102603	WASHER,SPRING	RONDELLE	4					
3	S0512166	BOLT	BOULON	4					
4	S8000111	O-RING	JOINT CIRCULAIRE	8					
5	2181-2419D1	ELBOW	COUDE	2					
6	S8000141	O-RING	JOINT TORIQUE	2					
7	2181-1126D36	ADAPTER	ADAPTEUR	2					
8	S8000181	O-RING	JOINT CIRCULAIRE	8					
9	2181-1126D6	ADAPTER	ADAPTEUR	8					
10	2181-1126D14	ADAPTER	ADAPTEUR	6					
11	DS2092202	HOSE	TUYAU FLEXIBLE	2					
12	DS2093474	HOSE	TUYAU FLEXIBLE	4					
13	DS2093475	HOSE	TUYAU FLEXIBLE	1					
14	DS2093476	HOSE	TUYAU FLEXIBLE	1					
15	DS2094262	HOSE	TUYAU FLEXIBLE	2					

(THIS PARTS BOOK IS FOR REFERENCE ONLY.
PART NUMBERS AND SERAIL NUMBERS MAY BE
OUTDATED. ALWAYS USE THE ONLINE PARTS SYSTEM)

DATE	JAN. 04, 2013
3rd EDITION	

Fig. 3100 BOOM - 2.28m FLECHE

Serial No. ;

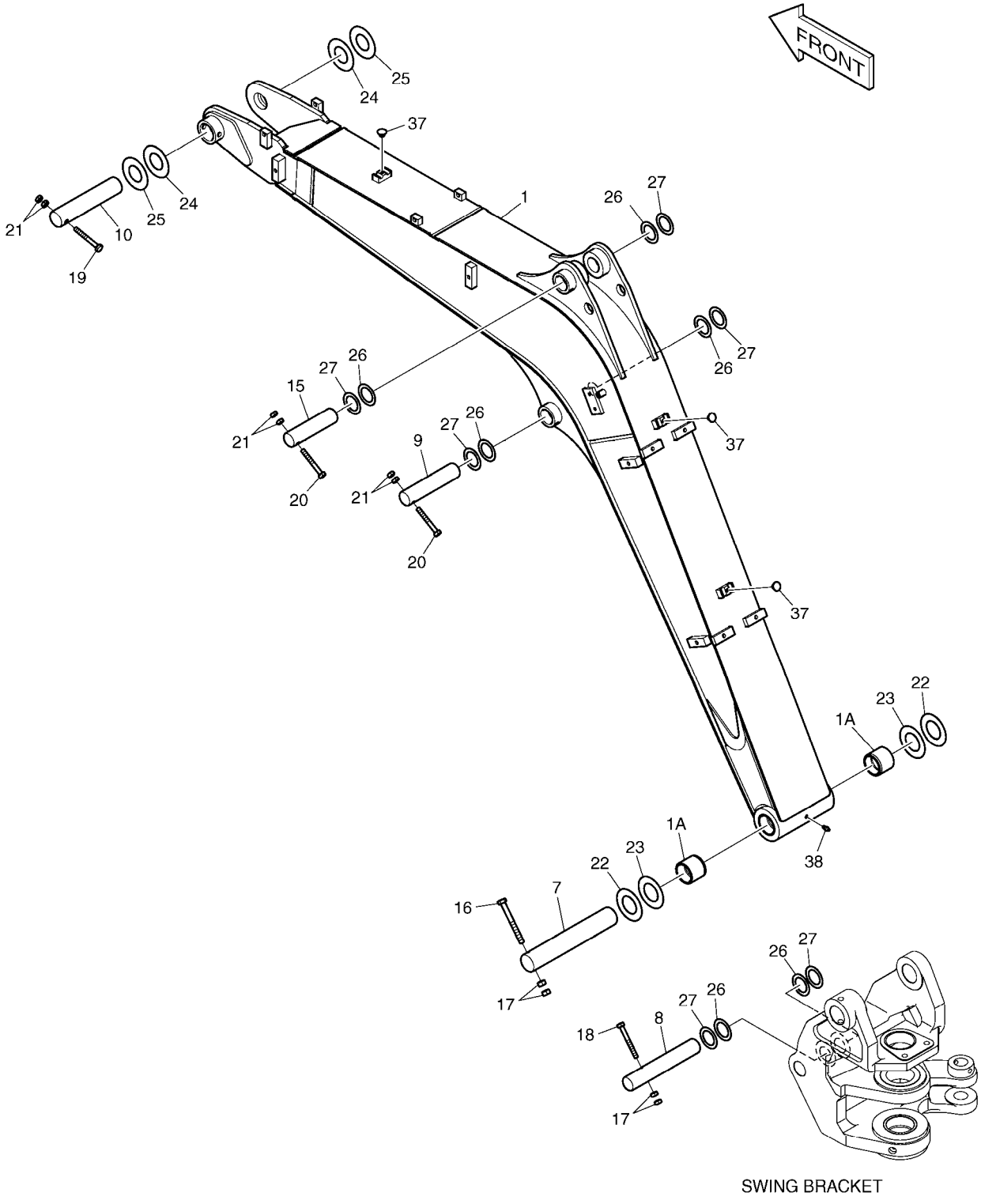

(THIS PARTS BOOK IS FOR REFERENCE ONLY.
PART NUMBERS AND SERAIL NUMBERS MAY BE
OUTDATED. ALWAYS USE THE ONLINE PARTS SYSTEM)

DATE	JAN. 04, 2013
3rd EDITION	

Fig. 3100 BOOM - 2.28m FLECHE

Serial No. ;

Key No.	Part No.	Description	Description	Q'ty	S.C	Serial No.	ICA	Replaceable part	
								Part No.	Q'ty
3100 --	K1027991C	FRONT ASS'Y	ENSEMBLE DE AVANT	-	D	5001-5237			
	650102-00240	FRONT ASS'Y	ENSEMBLE DE AVANT	-	D	5238-			
1	K1027952B	BOOM ASS'Y	ENSEMBLE FLECHE	1		5001-5237	Y	230207-00197	1
	230207-00197	BOOM ASSY 2.28m	ENSEMBLE FLECHE	1		5238-5257	Y	230207-00197A	1
	230207-00197A	BOOM ASSY 2.28m	ENSEMBLE FLECHE	1		5258-			
1A	K1014484	. BUSHING	. DOUILLE	2		5001-5257	Y	131008-00136	1
	131008-00136	. BUSHING	. DOUILLE	1		5258-			
7	K1012115A	PIN	GOUPILLE	1					
8	K1012116B	PIN	GOUPILLE	1					
9	K1012117A	PIN	GOUPILLE	1					
10	K1012118A	PIN	GOUPILLE	1					
15	K1018611	PIN	GOUPILLE	1					
16	S0562066	BOLT M12X1.75X115	BOULON	1					
17	S4012733	NUT	ECROU	4					
18	S0561666	BOLT	BOULON A 6 PANS	1					
19	S0559266	BOLT	BOULON	1					
20	S0559166	BOLT M10X1.5X80	BOULON A 6 PANS	2					
21	S4012633	NUT	ECROU	6					
22	DS7701460	SHIM	CALE	2					
23	DS7701459	SHIM	CALE	2					
24	DS7701461	SHIM	CALE	2					
25	DS7701462	SHIM	CALE	2					
26	DS7701465	SHIM	CALE	6					
27	DS7701466	SHIM	CALE	6					
37	K1027224	CAP	CHAPEAU	3					
38	S6710152	NIPPLE;GREASE	GRAISSEUR	1					

(THIS PARTS BOOK IS FOR REFERENCE ONLY.
PART NUMBERS AND SERAIL NUMBERS MAY BE
OUTDATED. ALWAYS USE THE ONLINE PARTS SYSTEM)

DATE	JAN. 04, 2013
3rd EDITION	

Fig. 3110 ARM - 1.19m BALANCIER

Serial No. ;

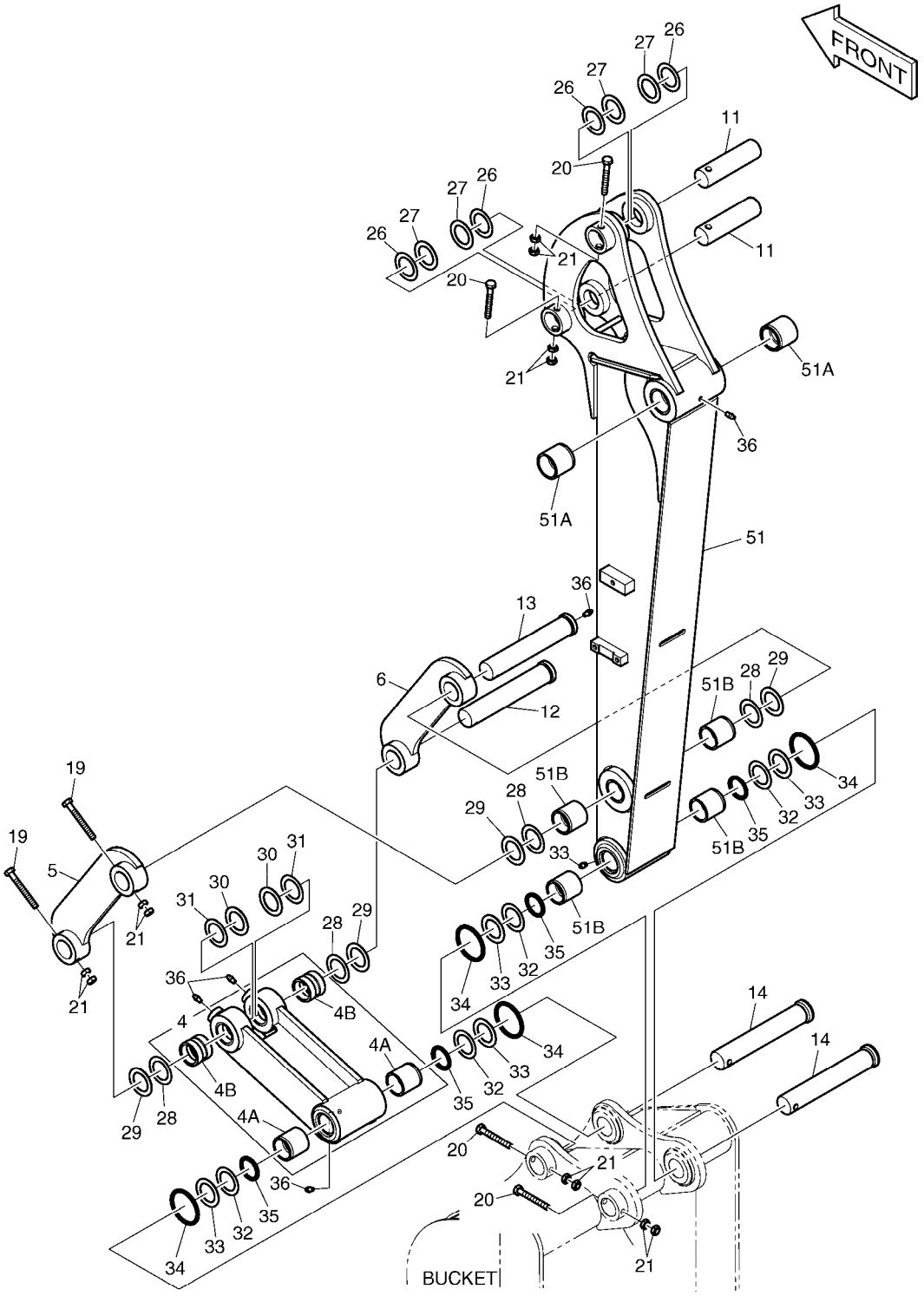

(THIS PARTS BOOK IS FOR REFERENCE ONLY.
PART NUMBERS AND SERAIL NUMBERS MAY BE
OUTDATED. ALWAYS USE THE ONLINE PARTS SYSTEM)

DATE	JAN. 04, 2013
3rd EDITION	

Fig. 3110 ARM - 1.19m BALANCIER

Serial No. ;

Key No.	Part No.	Description	Description	Q'ty	S.C	Serial No.	ICA	Replaceable part	
								Part No.	Q'ty
3110 --	K1027991C	FRONT ASS'Y	ENSEMBLE DE AVANT	-	D				
4	K1012101C	PUSH LINK ASS'Y	ARTICULATION	1		5001-5257	Y	101541-00088	1
	101541-00088	PUSH LINK ASS'Y	ARTICULATION	1		5258-			
4A	K1014482	. BUSHING	. DOUILLE	2		5001-5257	Y	131008-00131	2
	131008-00131	. BUSHING	. DOUILLE	2		5258-			
4B	K1014481	. BUSHING	. DOUILLE	2		5001-5257	Y	131008-00134	2
	131008-00134	. BUSHING	. DOUILLE	2		5258-			
5	K1012102A	LINK;GUIDE(L.H)	ARTICULATION	1					
6	K1012103A	LINK;GUIDE(R.H)	ARTICULATION	1					
11	K1012119A	PIN	GOUPILLE	2					
12	K1012120B	PIN	GOUPILLE	1					
13	K1012121B	PIN	GOUPILLE	1					
14	K1030260	PIN	GOUPILLE	2					
19	S0559266	BOLT	BOULON	2					
20	S0559166	BOLT M10X1.5X80	BOULON A 6 PANS	4					
21	S4012633	NUT	ECROU	12					
26	DS7701465	SHIM	CALE	4					
27	DS7701466	SHIM	CALE	4					
28	DS7701463	SHIM	CALE	4					
29	DS7701464	SHIM	CALE	4					
30	DS7701467	SHIM	CALE	2					
31	DS7701468	SHIM	CALE	2					
32	DS7701469	SHIM	CALE	4					
33	DS7701470	SHIM	CALE	4					
34	S8000651	O-RING	JOINT TORIQUE	4					
35	DS5501036	SEAL;DUST	JOINT	4					
36	S6710041	NIPPLE;GREASE	GRAISSEUR	6					
51	K1027911A	ARM;1.19M	ENSEMBLE DE BRAS	1		5001-5257	Y	230201-00576	1
	230201-00576	ARM;1.19M	ENSEMBLE DE BRAS	1		5258-			
51A	K1014483	. BUSHING	. DOUILLE	2		5001-5257	Y	131008-00113	2
	131008-00113	. BUSHING	. MANCHON	2		5258-			
51B	K1014482	. BUSHING	. DOUILLE	4		5001-5257	Y	131008-00131	4
	131008-00131	. BUSHING	. DOUILLE	4		5258-			

(THIS PARTS BOOK IS FOR REFERENCE ONLY.
PART NUMBERS AND SERAIL NUMBERS MAY BE
OUTDATED. ALWAYS USE THE ONLINE PARTS SYSTEM)

DATE	JAN. 04, 2013
3rd EDITION	

Fig. 3120 BUCKET - 0.079m³ GODET

Serial No. ;

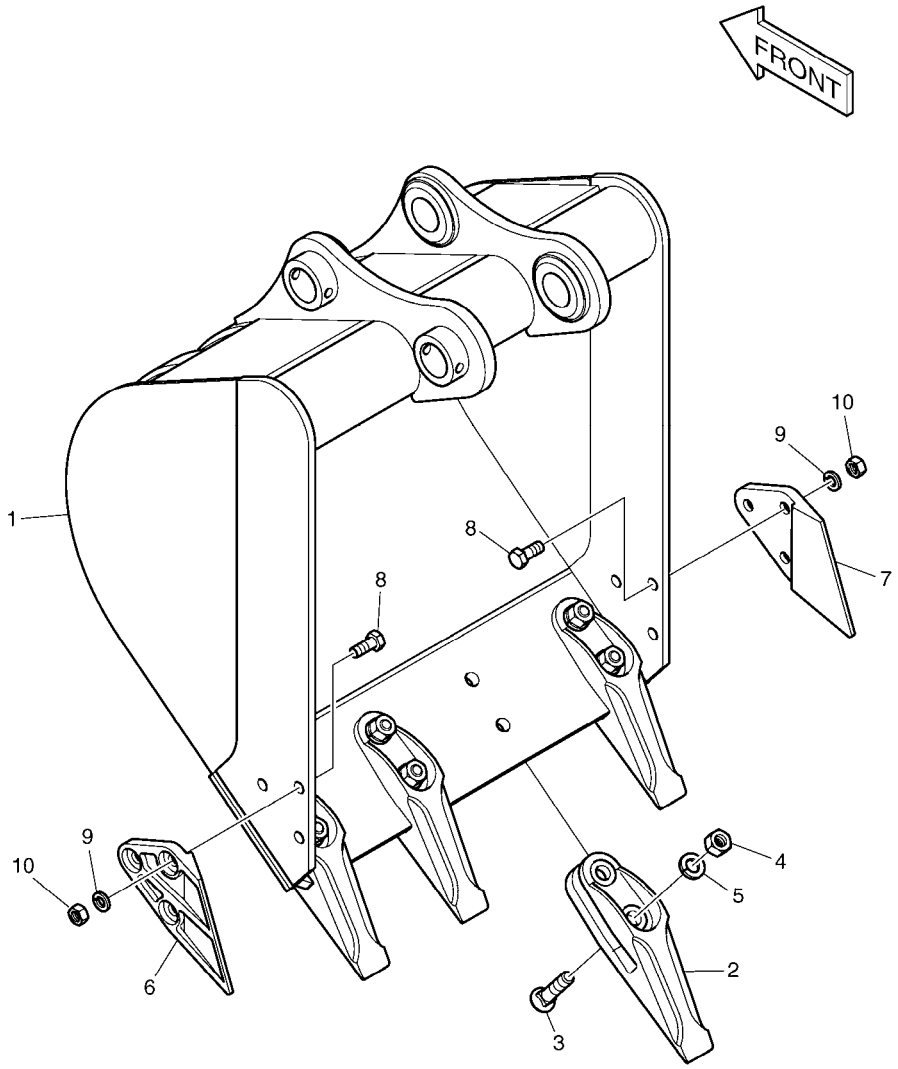

(THIS PARTS BOOK IS FOR REFERENCE ONLY.
PART NUMBERS AND SERAIL NUMBERS MAY BE
OUTDATED. ALWAYS USE THE ONLINE PARTS SYSTEM)

DATE	JAN. 04, 2013
3rd EDITION	

Fig. 3120 BUCKET - 0.079m³ GODET

Serial No. ;

Key No.	Part No.	Description	Description	Q'ty	S.C	Serial No.	ICA	Replaceable part	
								Part No.	Q'ty
3120 --	K1027990	BUCKET ASS'Y	ENSEMBLE GODET	1					
1	K1027912	BUCKET	GODET	1					
2	2713-1208B	TOOTH	CHEVILLE DE DENT	4					
3	2120-2138A	BOLT	BOULON A 6 PANS	8					
4	2121-1301	NUT	ECROU	8					
5	S5102901	WASHER;SPRING	RONDELLE ELASTIQUE	8					
6	2713-1206B	CUTTER;SIDE(L.H)	COIN DE GODET DROIT	1					
7	2713-1207B	CUTTER;SIDE(R.H)	COIN DE GODET DROIT	1					
8	S0515253	BOLT M12X1.75X30	BOULON	6					
9	S5102703	WASHER;SPRING	RONDELLE	6					
10	S4012733	NUT	ECROU	6					

(THIS PARTS BOOK IS FOR REFERENCE ONLY.
PART NUMBERS AND SERAIL NUMBERS MAY BE
OUTDATED. ALWAYS USE THE ONLINE PARTS SYSTEM)

DATE	JAN. 04, 2013
3rd EDITION	

Fig. 3130 FRONT PIPING
CONDUITES DE FRONTALES

Serial No. ;

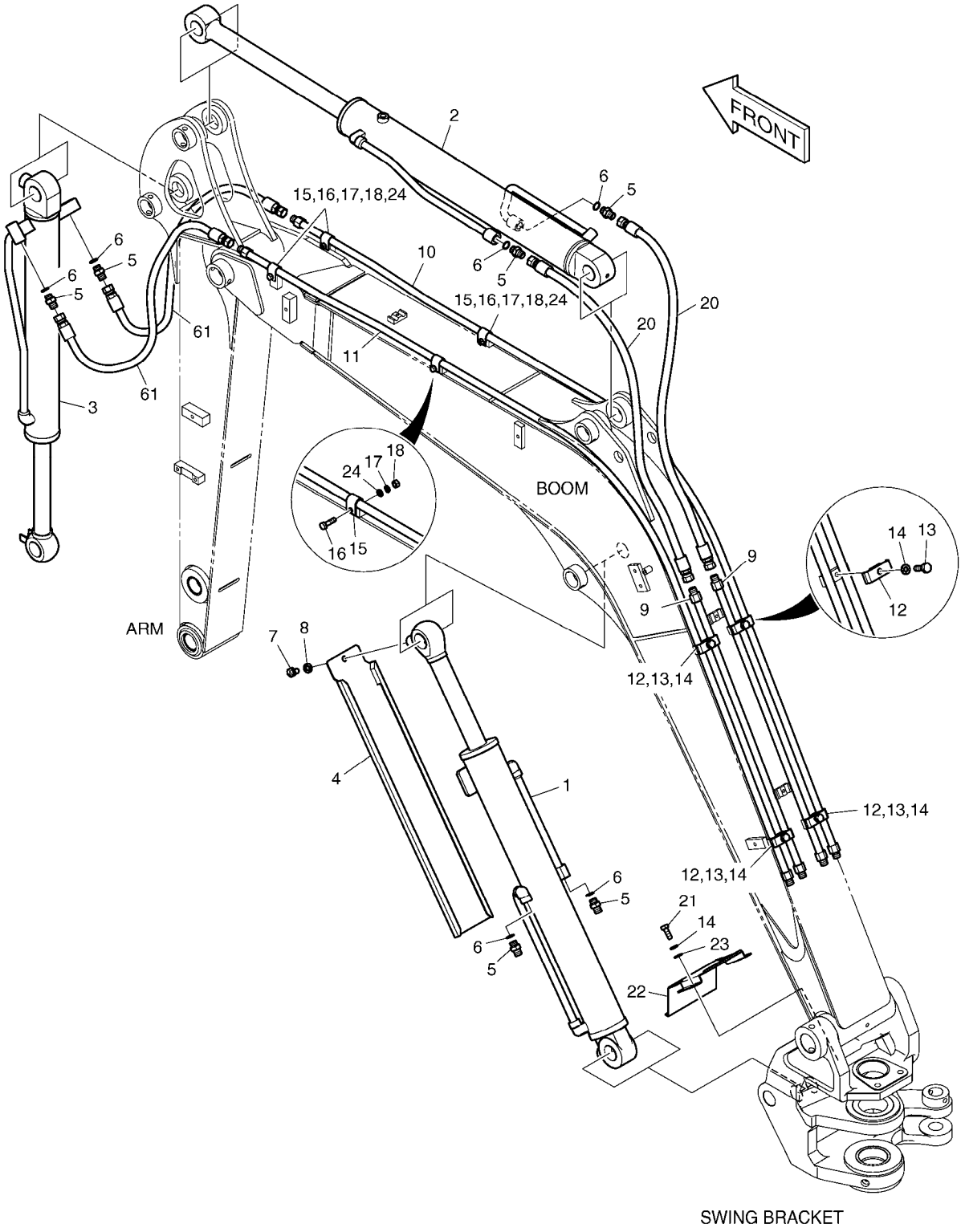

(THIS PARTS BOOK IS FOR REFERENCE ONLY.
PART NUMBERS AND SERAIL NUMBERS MAY BE
OUTDATED. ALWAYS USE THE ONLINE PARTS SYSTEM)

DATE	JAN. 04, 2013
3rd EDITION	

Fig. 3130 FRONT PIPING
CONDUITES DE FRONTALES

Serial No. ;

Key No.	Part No.	Description	Description	Q'ty	S.C	Serial No.	ICA	Replaceable part	
								Part No.	Q'ty
3130 --	K1028019E	FRONT PIPING	TUYAUTERIE AVANT	-	D	5001-5094			
	420212-00615	PIPING,FRONT	TUYAUTERIE AVANT	-	D	5095-			
1	K1027108B	CYLINDER;BOOM	CYLINDRE	1		5001-5257	Y	400309-00344	1
	400309-00344	CYLINDER,BOOM	CYLINDRE	1		5258-			
2	K1027105A	CYLINDER;ARM	VERIN DE BALANCIER	1		5001-5257	Y	400305-00224	1
	400305-00224	CYLINDER,ARM	VERIN DE BALANCIER	1		5258-			
3	K1027099A	CYLINDER;BUCKET	VERIN DE GODET	1		5001-5257	Y	400310-00220	1
	400310-00220	CYLINDER,BUCKET	VERIN DE GODET	1		5258-			
4	K1018636	COVER	COUVERCLE	1					
5	2181-1126D7	ADAPTER	ADAPTEUR	6					
6	S8000141	O-RING	JOINT TORIQUE	6					
7	S0514866	BOLT	BOULON	1					
8	S5102703	WASHER;SPRING	RONDELLE	1					
9	K1033315	PIPE	TUYAU	2					
10	K1027823A	PIPE	TUYAU	1					
11	K1027822A	PIPE	TUYAU	1					
12	K1018731	CLAMP	BRIDE	4		5001-5094	Y	K1054481	4
	K1054481	CLAMP,PIPE	COLLIER	4		5095-			
13	S0512366	BOLT	BOULON	4					
14	S5102603	WASHER,SPRING	RONDELLE	6					
15	K1023620	CLAMP	BRIDE	4					
16	S0556066	BOLT	BOULON A 6 PANS	4					
17	S5102503	WASHER,SPRING	RONDELLE	4					
18	S4012533	NUT	ECROU	4					
20	DS2094268	HOSE	TUYAU FLEXIBLE	2		5001-5091	I	DS2094376	2
	DS2094376	HOSE	TUYAU FLEXIBLE	2		5092-			
21	S2212266	BOLT;SOCKET M10X1.5X30	BOULON A 6 PANS CREUX	2					
22	K1027828A	COVER	COUVERCLE	1					
23	S5010603	WASHER;PLAIN M10	RONDELLE	2					
24	S5010513	WASHER,PLAIN	RONDELLE	4					
61	DS2094228	HOSE	TUYAU FLEXIBLE	2					

(THIS PARTS BOOK IS FOR REFERENCE ONLY.
PART NUMBERS AND SERAIL NUMBERS MAY BE
OUTDATED. ALWAYS USE THE ONLINE PARTS SYSTEM)

DATE	JAN. 04, 2013
3rd EDITION	

Fig. 3140 FRONT PIPING - BREAKER
CONDUITES FRONTALES

Serial No. ;

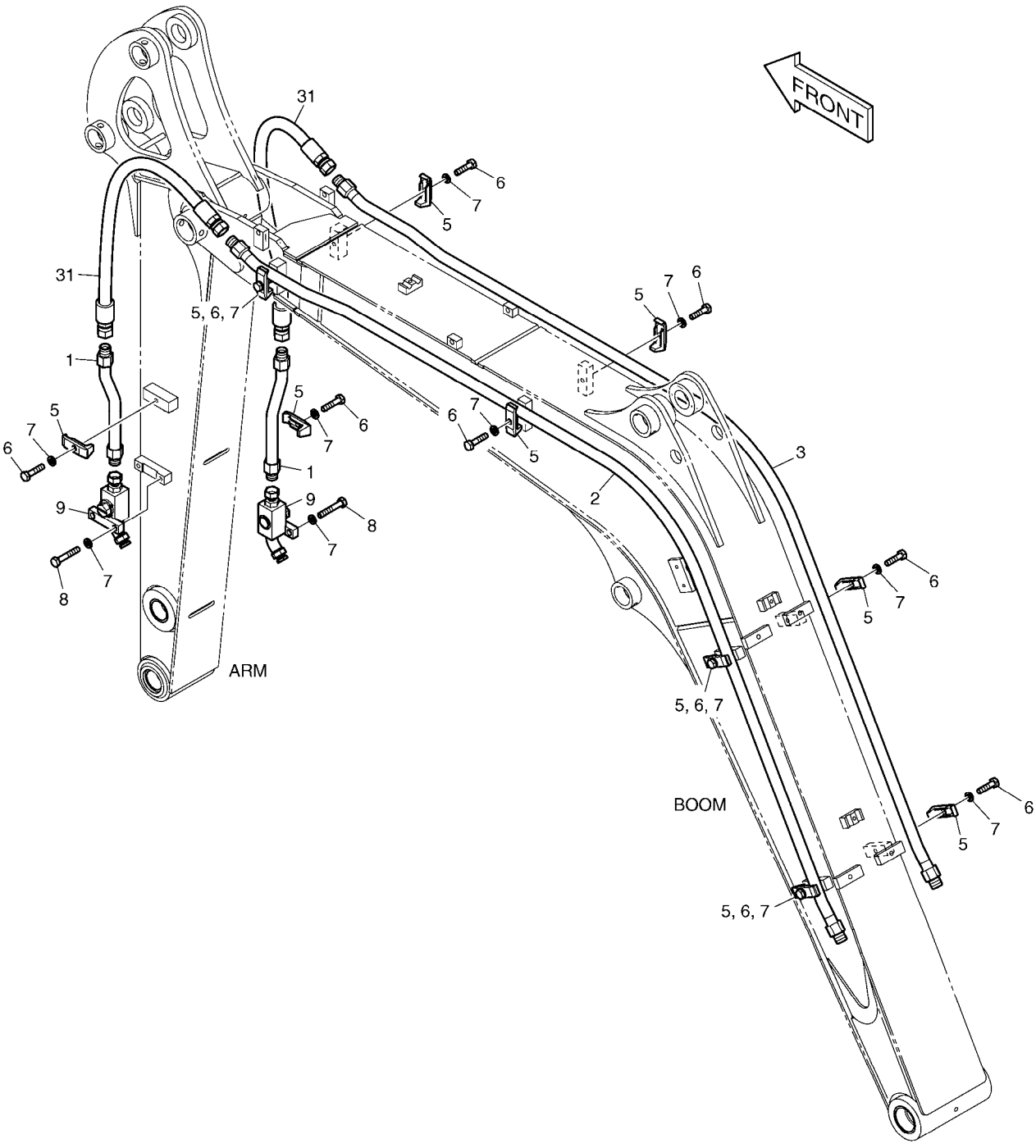

(THIS PARTS BOOK IS FOR REFERENCE ONLY.
PART NUMBERS AND SERAIL NUMBERS MAY BE
OUTDATED. ALWAYS USE THE ONLINE PARTS SYSTEM)

Fig. 3140 FRONT PIPING - BREAKER
CONDUITES FRONTALES

Serial No. ;

Key No.	Part No.	Description	Description	Q'ty	S.C	Serial No.	ICA	Replaceable part	
								Part No.	Q'ty
3140 --	K1028002A	BREAKER PIPING	TUYAUTERIE A SENS UNIQ	-	D				
1	K1012345A	PIPE	TUYAU	2					
2	K1027824A	PIPE	TUYAU	1					
3	K1027825A	PIPE	TUYAU	1					
5	2124-1026D1	CLAMP;PIPE	BRIDE	10					
6	S0558466	BOLT	BOULON	10					
7	S5102603	WASHER,SPRING	RONDELLE	14					
8	S0558766	BOLT	BOULON	4					
9	2420-9612B	STOP VALVE ASS'Y	VANNE	2					
31	DS2094275	HOSE	TUYAU FLEXIBLE	2					

(THIS PARTS BOOK IS FOR REFERENCE ONLY.
PART NUMBERS AND SERAIL NUMBERS MAY BE
OUTDATED. ALWAYS USE THE ONLINE PARTS SYSTEM)

DATE	JAN. 04, 2013
3rd EDITION	

Fig. 4100 MAIN PUMP POMPE

Serial No. ;

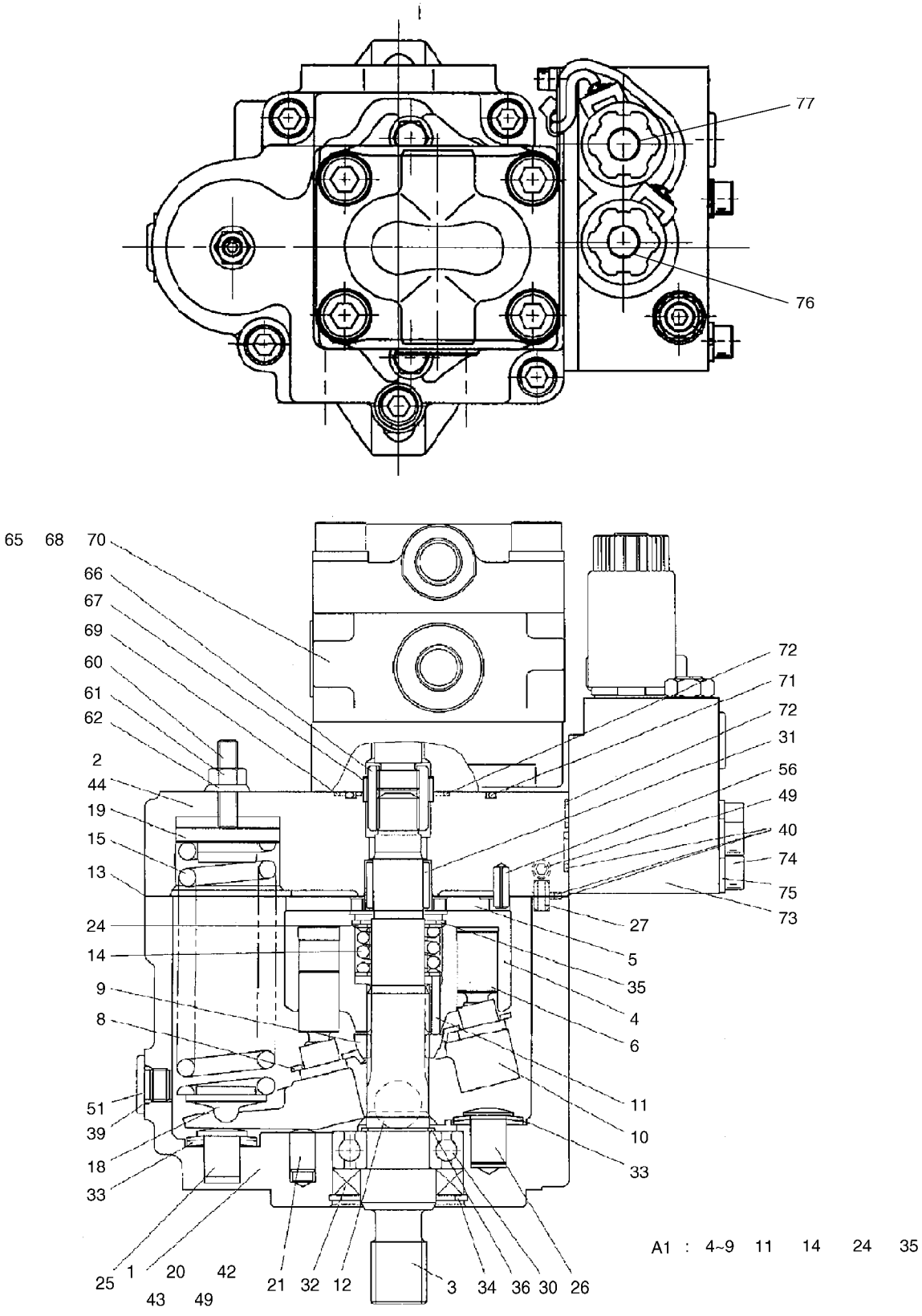

(THIS PARTS BOOK IS FOR REFERENCE ONLY.
PART NUMBERS AND SERAIL NUMBERS MAY BE
OUTDATED. ALWAYS USE THE ONLINE PARTS SYSTEM)

DATE	JAN. 04, 2013
3rd EDITION	

Fig. 4100 MAIN PUMP POMPE

Serial No. ;

Key No.	Part No.	Description	Description	Q'ty	S.C	Serial No.	ICA	Replaceable part	
								Part No.	Q'ty
4100 --	K1028324A	MAIN PUMP	POMPE	1					
1	-	BODY S	CARTER	1	D				
2	-	BODY H	CARTER	1	D				
3	-	SHAFT	REMARQUES	1	D				
4	-	CYLINDER BARREL	BARIL DE CYLINDRE	1	D				
5	-	VALVE PLATE	PLAUE	1	D				
6	K9005909	PISTON ASS'Y	ENSEMBLE PISTON	1					
8	-	SHOE HOLDER	SUPPORT DE CHAUSSURE	1	D				
9	-	BARREL HOLDER	SUPPORT DE BARIL	1	D				
10	-	SWASH PLATE	PLAQUE	1	D				
11	-	NEEDLE	AIGUILLE	3	D				
12	-	BALL	BILLE	2	D				
13	2.180-00617	PACKING	EMBALLAGE	1	K				
14	-	SPRING C	RESSORT	1	D				
15	-	SPRING TI	RESSORT	1	D				
18	-	SPRING HOLDER	SUPPORT DE RESSORT	1	D				
19	-	SPRING GUIDE	RESSORT	1	D				
20	-	PIN	REMARQUES	1	D				
21	-	ROD G	TIGE	1	D				
24	-	RETAINER	ARRETOIR	2	D				
25	-	STOPPER PIN A	ARRET	1	D				
26	-	STOPPER PIN B	ARRET	1	D				
27	-	PIN	REMARQUES	1	D				
30	-	BEARING,BALL	BILLE	1	D				
31	-	BEARING,NEEDLE	PLAIER	1	D				
32	2.180-00829	OIL SEAL	JOINT	1	K				
33	-	SPRING;DISH	SPRING;DISH	4	D				
34	-	RING;SNAP	ANNEAU	1	D				
35	S6510350	RING;RETAINER	BAGUE DE RETENUE	1					
36	-	RING;SNAP	ANNEAU	1	D				
39	S8000111	O-RING	JOINT CIRCULAIRE	1	K				
40	S8000121	O-RING	JOINT CIRCULAIRE	3	K				
42	-	PLUG	PRISE	1	D				
43	S8000111	O-RING	JOINT CIRCULAIRE	1	K				
44	-	SCREW	VIS	5	D				
49	-	PLUG	PRISE	5	D				
51	-	PLUG	PRISE	1	D				
56	-	PIN;SPRING	GOUPILLE	1	D				

(THIS PARTS BOOK IS FOR REFERENCE ONLY.
PART NUMBERS AND DETAIL NUMBERS MAY BE
OUTDATED. ALWAYS USE THE ONLINE PARTS SYSTEM)

DATE	JAN. 04, 2013
3rd EDITION	

Fig. 4100 MAIN PUMP POMPE

Serial No. ;

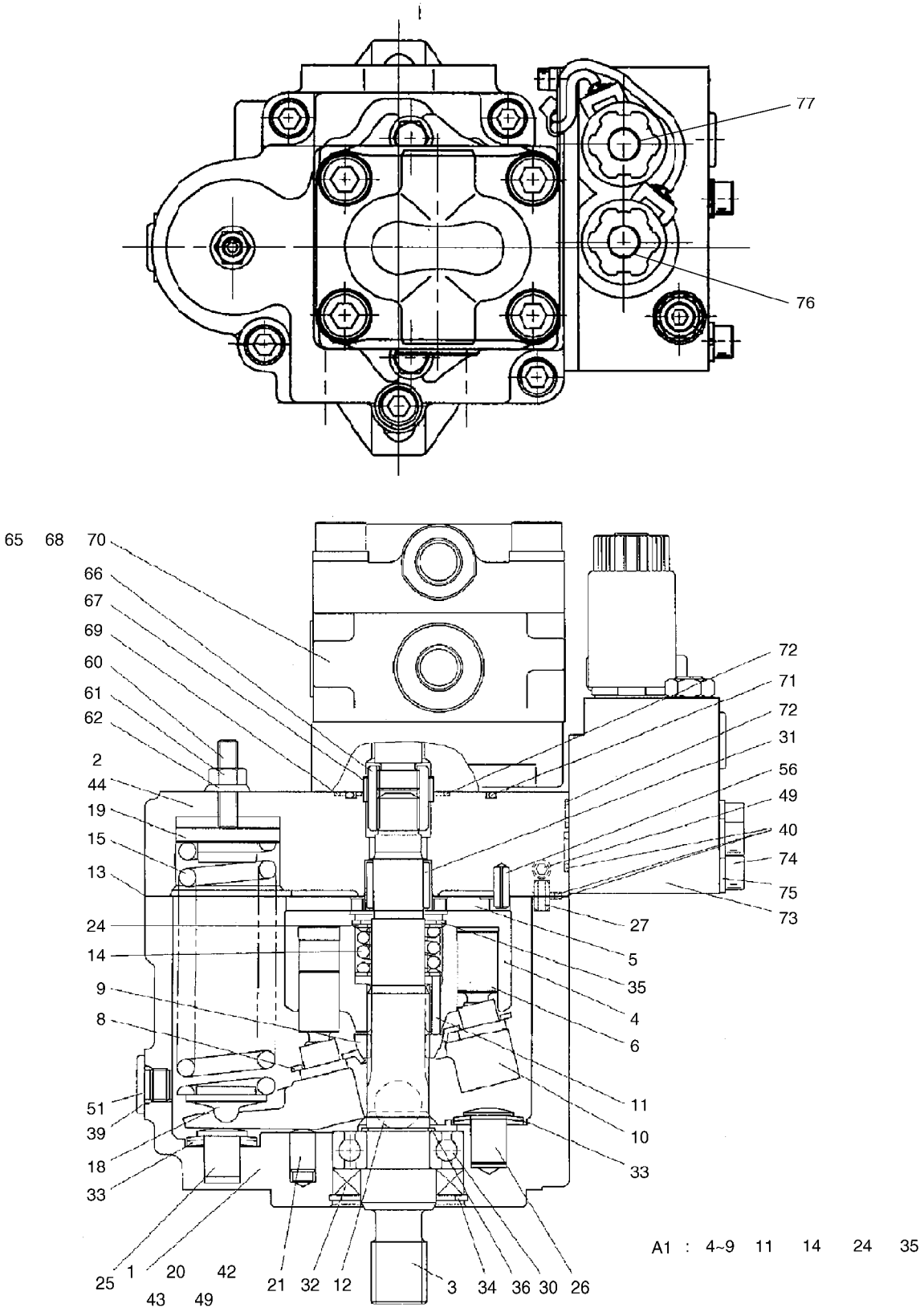

(THIS PARTS BOOK IS FOR REFERENCE ONLY.
PART NUMBERS AND SERAIL NUMBERS MAY BE
OUTDATED. ALWAYS USE THE ONLINE PARTS SYSTEM)

Fig. 4100 MAIN PUMP POMPE

Serial No. ;

Key No.	Part No.	Description	Description	Q'ty	S.C	Serial No.	ICA	Replaceable part	
								Part No.	Q'ty
4100 -60	-	SCREW	VIS	1	D				
61	-	NUT	ECROU	1	D				
62	2.114-01092	SEAL WASHER	VIS	1	K				
65	K9005903	GEAR PUMP	POMPE DE PIGNON	1					
66	-	COUPING	COUPING	1	D				
67	-	COLLAR	COLLIER	1	D				
68	-	SCREW	VIS	2	D				
69	S8000071	O-RING	JOINT TORIQUE	1	K				
70	-	WASHER	RONDELLE	2	D				
71	S8010551	O-RING	JOINT TORIQUE	1	K				
72	S8000081	O-RING	JOINT CIRCULAIRE	2	K				
73	K9005913	VALVE BLOCK ASS'Y	BLOC ASS'Y DE VALVE	1					
74	-	SCREW	VIS	3	D				
75	-	WASHER	RONDELLE	3	D				
76	K9005972	SOLENOID A	SOLENOID	1					
77	K9005973	SOLENOID B	SOLENOID	1					
A1	K9005912	CYLINDER BARREL KIT	BARIL DE CYLINDRE	1					
A3	K9005911	SEAL KIT;MAIN PUMP	KIT D'ETANCHEITE	1					

(THIS PARTS BOOK IS FOR REFERENCE ONLY.
PART NUMBERS AND SERAIL NUMBERS MAY BE
OUTDATED. ALWAYS USE THE ONLINE PARTS SYSTEM)

DATE	JAN. 04, 2013
3rd EDITION	

Fig. 4110 SWING MOTOR
MOTEUR D'ORIENTATION

Serial No. ;

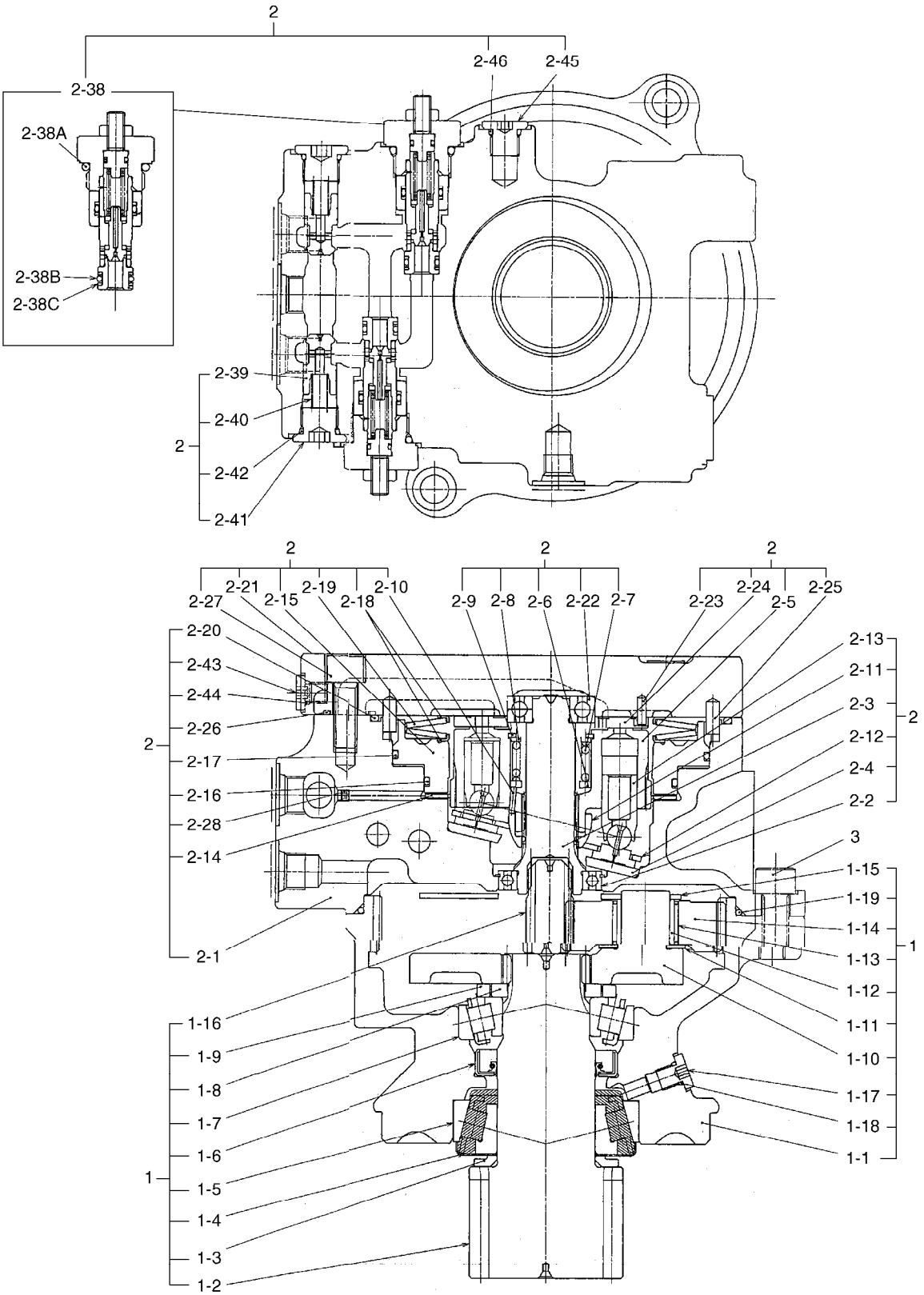

(THIS PARTS BOOK IS FOR REFERENCE ONLY.
PART NUMBERS AND SERAIL NUMBERS MAY BE
OUTDATED. ALWAYS USE THE ONLINE PARTS SYSTEM)

DATE	JAN. 04, 2013
3rd EDITION	

Fig. 4110 SWING MOTOR
MOTEUR D'ORIENTATION

Serial No. ;

Key No.	Part No.	Description	Description	Q'ty	S.C	Serial No.	ICA	Replaceable part	
								Part No.	Q'ty
4110 --	K1026973A	MOTOR;SWING	MOTEUR	1					
1	-	REDUCTION GEAR	REDEUTEUR D`ORIENTAT	1	D				
1-1	-	. HOUSING	. CARTER	1	D				
1-2	-	. SHAFT;PINION	. ARBRE	1	D				
1-3	-	. COLLAR	. COLLIER	1	D				
1-4	-	. PLATE	. PLAQUE	1	D				
1-5	-	. BEARING;TAPER ROLLER	. ROULEMENT A ROULEAU	1	D				
1-6	-	. SEAL;OIL	. JOINT D'HUILE	1	D				
1-7	-	. BEARING;TAPER ROLLER	. ROULEMENT A ROULEAU	1	D				
1-8	-	. PLATE	. PLAQUE	2	D				
1-9	-	. COLLAR	. COLLIER	1	D				
1-10	K9005917	. HOLDER	. SUPPORT	1					
1-11	K9003768	. WASHER;THRUST	. RONDELLE DE BUTEE	1					
1-12	K9003769	. RACE;INNER	. RACE INTERIEUR	3					
1-13	K9003770	. BEARING;NEEDLE	. ROULEMENT	3					
1-14	K9005919	. GEAR;PLANETARY	. PIGNON	3					
1-15	K9005920	. PLATE;THRUST	. PLAQUE	1					
1-16	K9005918	. GEAR;DRIVE	. PIGNON	1					
1-17	K9003757	. PLUG	. BOUCHON	1					
1-18	S8000081	. O-RING	. JOINT CIRCULAIRE	1					
1-19	2180-1216D150	. O-RING	. JOINT TORIQUE	1					
2	-	MOTOR;PISTON	MOTEUR	1	D				
2-1	K9005916	. CASE	. CARTER	1					
2-2	K9005914	. BEARING;BALL	. ROULEMENT	1					
2-3	K9005915	. SHAFT	. ARBRE	1					
2-4	K9003785	. PLATE;THRUST	. PLAQUE	1					
2-5	-	. BLOCK;CYLINDER	. BLOC-CYLINDRES	1	D				
2-6	K9003786	. COLLAR	. COLLIER	1					
2-7	K9003787	. SPRING	. RESSORT	1					
2-8	K9003788	. WASHER	. RONDELLE	1					
2-9	S6510370	. RING;RETAINER	. BAGUE	1					
2-10	K9003789	. PIN	. GOUPILLE	3					
2-11	K9003790	. HOLDER;RETAINER	. HOLDER;RETAINER	1					
2-12	K9003791	. PLATE;RETAINER	. PLAQUE	1					
2-13	-	. PISTON ASS`Y	. ENSEMBLE DE PISTON	9	D				
2-14	K9003792	. DISK	. DISK	1					
2-15	K9003793	. PISTON;BRAKE	. PISTON	1					
2-16	S8011101	. O-RING	. JOINT CIRCULAIRE	1					

(THIS PARTS BOOK IS FOR REFERENCE ONLY.
PART NUMBERS AND SERIAL NUMBERS MAY BE
OUTDATED. ALWAYS USE THE ONLINE PARTS SYSTEM)

DATE	JAN. 04, 2013
3rd EDITION	

Fig. 4110 SWING MOTOR
MOTEUR D'ORIENTATION

Serial No. ;

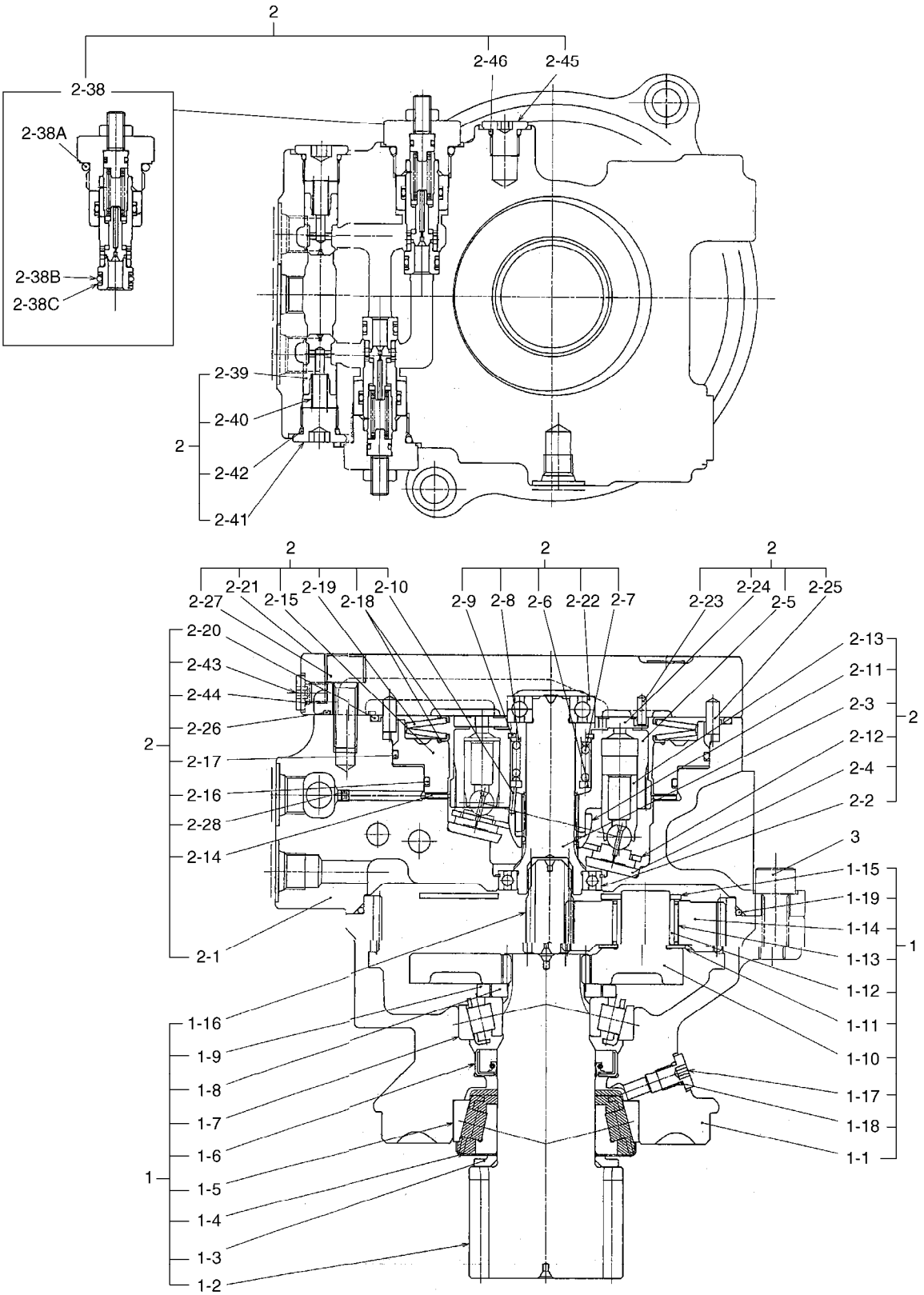

(THIS PARTS BOOK IS FOR REFERENCE ONLY.
PART NUMBERS AND SERAIL NUMBERS MAY BE
OUTDATED. ALWAYS USE THE ONLINE PARTS SYSTEM)

DATE	JAN. 04, 2013
3rd EDITION	

Fig. 4110 SWING MOTOR
MOTEUR D'ORIENTATION

Serial No. ;

Key No.	Part No.	Description	Description	Q'ty	S.C	Serial No.	ICA	Replaceable part	
								Part No.	Q'ty
4110 -2-17	S8011351	. O-RING	. JOINT CIRCULAIRE	1					
2-18	K9003794	. SEAT;SPRING	. SIEGE	2					
2-19	K9003795	. SPRING ASS`Y;DISK	. RESSORT ASS`Y;DISK	1					
2-20	K9003796	. O-RING	. JOINT TORIQUE	1					
2-21	K9003797	. COVER	. COUVERCLE	1					
2-22	K9003748	. BEARING;BALL	. ROULEMENT	1					
2-23	K9003747	. PIN	. GOUPILLE	1					
2-24	K9003746	. PLATE;VALVE	. PLAQUE	1					
2-25	K9003798	. PIN	. GOUPILLE	2					
2-26	S8000211	. O-RING	. JOINT TORIQUE	2					
2-27	S2215271	. BOLT;SOCKET	. BOULON A 6 PANS CREUX	5					
2-28	K9003799	. ORIFICE	. ORIFICE	1					
2-38	K9003800	. VALVE;RELIEF	. VANNE	2					
2-38A	S8000241	.. O-RING	.. JOINT CIRCULAIRE	1					
2-38B	S8000121	.. O-RING	.. JOINT CIRCULAIRE	1					
2-38C	S8060121	.. RING;BACK UP	.. ANNEAU	1					
2-39	K9003801	. VALVE;CHECK	. CAPTEUR	2					
2-40	K9003802	. SPRING	. RESSORT	2					
2-41	2.181-00286	. PLUG	. BOUCHON	2					
2-42	S8000141	. O-RING	. JOINT TORIQUE	2					
2-43	K9003757	. PLUG	. BOUCHON	2					
2-44	S8000081	. O-RING	. JOINT CIRCULAIRE	2					
2-45	K9003803	. PLUG	. PRISE	1					
2-46	S8000111	. O-RING	. JOINT CIRCULAIRE	1					
3	S2215271	BOLT;SOCKET	BOULON A 6 PANS CREUX	2					
A	K9003804	SEAL KIT;SWING MOTOR	JOINT	1					
B1	K9003805	CYLINDER BLOCK KIT	KIT DE BLOC CYLINDRE	1					
B6	K9005921	HOUSING ASS'Y	ENSEMBLE CARTER	1					

(THIS PARTS BOOK IS FOR REFERENCE ONLY.
PART NUMBERS AND SERAIL NUMBERS MAY BE
OUTDATED. ALWAYS USE THE ONLINE PARTS SYSTEM)

DATE	JAN. 04, 2013
3rd EDITION	

Fig. 4120 TRAVEL REDUCTION GEAR
BOITE REDUCTEUR

Serial No. ;

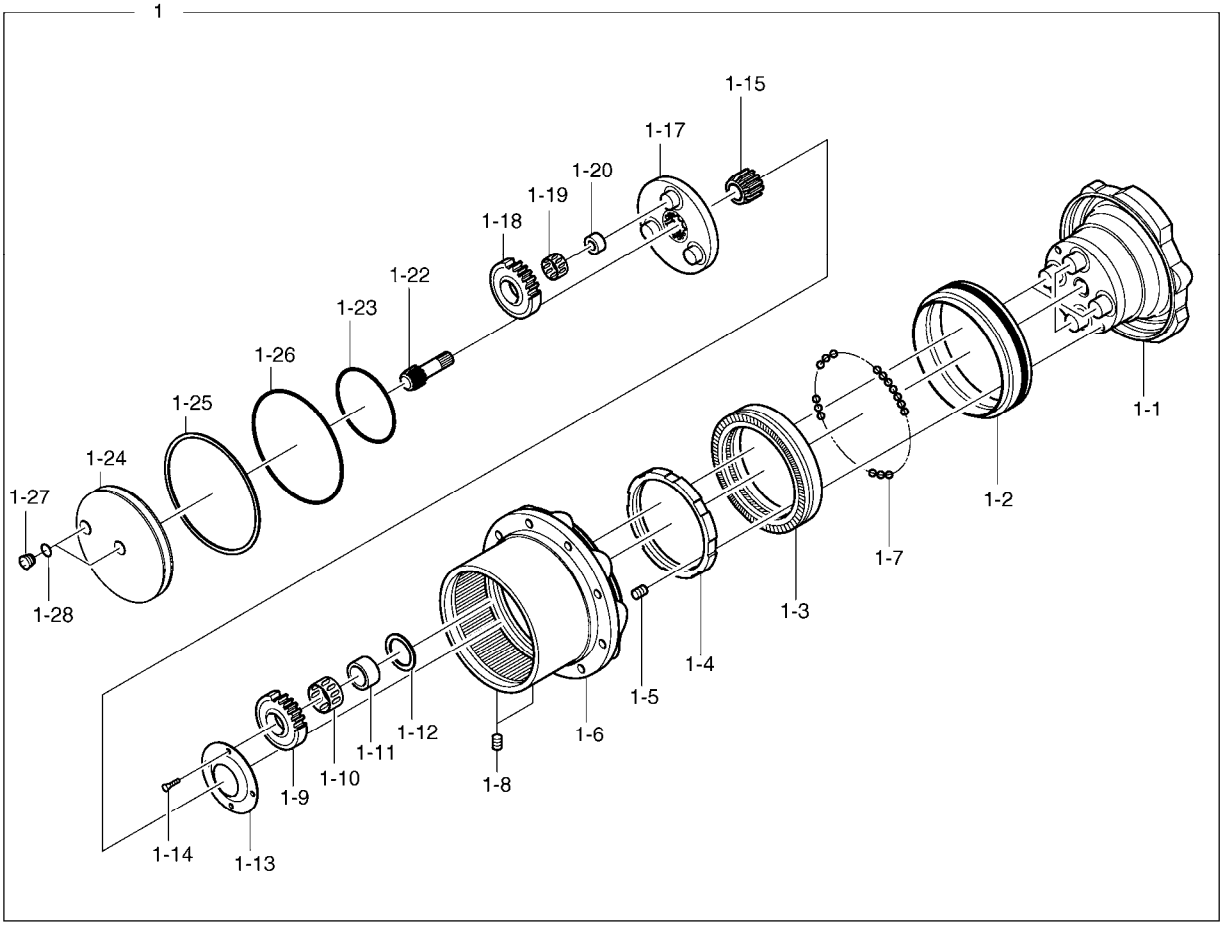

(THIS PARTS BOOK IS FOR REFERENCE ONLY.
PART NUMBERS AND SERAIL NUMBERS MAY BE
OUTDATED. ALWAYS USE THE ONLINE PARTS SYSTEM)

DATE	JAN. 04, 2013
3rd EDITION	

Fig. 4120 TRAVEL REDUCTION GEAR
BOITE REDUCTEUR

Serial No. ;

Key No.	Part No.	Description	Description	Q'ty	S.C	Serial No.	ICA	Replaceable part	
								Part No.	Q'ty
4120 --	K1028103B	MOTOR;TRAVEL	MOTEUR	2					
1	K9005923	REDUCTION GEAR	PIGNON	1					
1-1	-	. HOLDER;FLANGE	. SUPPORT	1	D				
1-2	K9003721	. SEAL;FLOATING	. JOINT	2					
1-3	K9005287	. BEARING;ANGULAR	. ROULEMENT	1					
1-4	K9003723	. NUT;RING	. ECROU	1					
1-5	K9005285	. PLUG	. BOUCHON	2					
1-6	-	. HOUSING	. CARTER	1	D				
1-7	S6250110	. BALL;STEEL	. BILLE	132					
1-8	2181-1116D1	. PLUG	. BOUCHON	2					
1-9	K9005308	. GEAR;PLANETARY	. PIGNON	4					
1-10	K9005294	. BEARING;NEEDLE	. ROULEMENT	4					
1-11	K9005296	. RACE;INNER	. RACE INTERIEUR	4					
1-12	K9005310	. PLATE;THRUST	. PLAQUE	4					
1-13	K9005286	. WASHER;THRUST	. RONDELLE DE BUTEE	1					
1-14	K9003730	. SCREW	. VIS	4					
1-15	K9005307	. GEAR;SUN	. PIGNON	1					
1-17	K9005924	. HOLDER	. SUPPORT	1					
1-18	K9005926	. GEAR;PLANETARY	. PIGNON	3					
1-19	K9005295	. BEARING;NEEDLE	. ROULEMENT	3					
1-20	K9005297	. RACE;INNER	. RACE INTERIEUR	3					
1-22	K9005925	. GEAR;DRIVE	. PIGNON	1					
1-23	-	. THRUST PLATE	. PRESSOSTAT	1	D				
1-24	K9005927	. COVER	. COUVERCLE	1					
1-25	S8011551	. O-RING	. JOINT TORIQUE	1					
1-26	K9003739	. WIRE	. FIL	1					
1-27	2.181-00286	. PLUG	. BOUCHON	2					
1-28	S8000141	. O-RING	. JOINT TORIQUE	2					

(THIS PARTS BOOK IS FOR REFERENCE ONLY.
PART NUMBERS AND SERAIL NUMBERS MAY BE
OUTDATED. ALWAYS USE THE ONLINE PARTS SYSTEM)

DATE	JAN. 04, 2013
3rd EDITION	

Fig. 4130 TRAVEL MOTOR
MOTEUR DE TRANSLATION

Serial No. ;

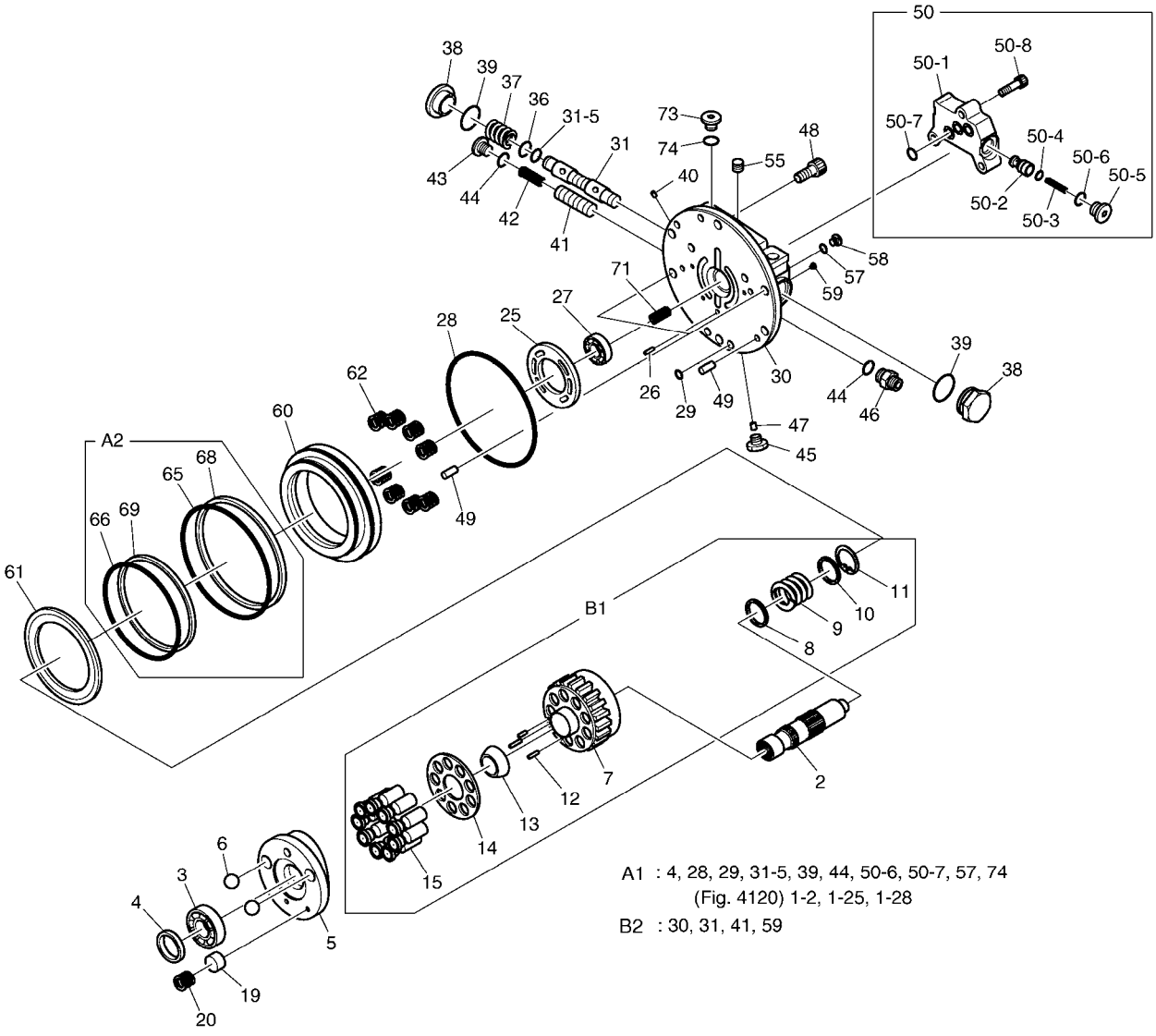

A1 : 4, 28, 29, 31-5, 39, 44, 50-6, 50-7, 57, 74
(Fig. 4120) 1-2, 1-25, 1-28

B2 : 30, 31, 41, 59

(THIS PARTS BOOK IS FOR REFERENCE ONLY.
PART NUMBERS AND SERAIL NUMBERS MAY BE
OUTDATED. ALWAYS USE THE ONLINE PARTS SYSTEM)

DATE	JAN. 04, 2013
3rd EDITION	

Fig. 4130 TRAVEL MOTOR
MOTEUR DE TRANSLATION

Serial No. ;

Key No.	Part No.	Description	Description	Q'ty	S.C	Serial No.	ICA	Replaceable part	
								Part No.	Q'ty
4130 -2	K9005278	SHAFT	ARBRE	1					
3	K9005283	BEARING;BALL	ROULEMENT	1					
4	K9005280	SEAL;OIL	JOINT	1					
5	K9005292	PLATE;SWASH	PLAQUE	1					
6	K9005293	BALL;STEEL	BOULE	2					
7	-	CYLINDER;BLOCK	BLOC DE CYLINDRE	1	D				
8	-	SEAT;SPRING	SIEGE	1	D				
9	-	SPRING	RESSORT	1	D				
10	-	WASHER	RONDELLE	1	D				
11	-	RING;SNAP	ANNEAU	1	D				
12	-	PIN	REMARQUES	3	D				
13	-	HOLDER;RETAINER	HOLDER;RETAINER	1	D				
14	-	PLATE;RETAINER	PLAQUE	1	D				
15	-	PISTON ASS`Y	ENSEMBLE DE PISTON	9	D				
19	K9005290	PISTON ASS'Y(2 SPEED)	ENSEMBLE PISTON	2					
20	K9005291	SPRING	RESSORT	2					
25	K9005281	PLATE;VALVE	PLAQUE	1					
26	K9003747	PIN	GOUPILLE	1					
27	K9005284	BEARING;BALL	ROULEMENT	1					
28	S8011200	O-RING	JOINT CIRCULAIRE	1					
29	S8000071	O-RING	JOINT TORIQUE	4					
30	-	PLATE;BASE	PLAQUE	1	D				
31	-	SPOOL ASS'Y	SPOOL	1	D				
31-5	S8000101	. O-RING	. JOINT TORIQUE	2					
36	K9003749	SEAT;SPRING	SIEGE	2					
37	K9005288	SPRING	RESSORT	2					
38	K9003751	CAP	CHAPEAU	2					
39	S8000291	O-RING	JOINT CIRCULAIRE	2					
40	2.415-00040	ORIFICE	ORIFICE	2					
41	-	SPOOL	PLUNGEUR	1	D				
42	K9003753	SPRING	RESSORT	1					
43	2.181-00286	PLUG	BOUCHON	1					
44	S8000141	O-RING	JOINT TORIQUE	2					
45	2.181-00280	PLUG	BOUCHON	3					
46	K9003754	PLUG	BOUCHON	1					
47	2.415-00040	ORIFICE	ORIFICE	4					
48	S2211861	BOLT;SOCKET M10X1.5X20	BOULON	6					
49	S5701041	PIN;PARALLEL	GOUPILLE	4					

(THIS PARTS BOOK IS FOR REFERENCE ONLY.
PART NUMBERS AND SERIAL NUMBERS MAY BE
OUTDATED. ALWAYS USE THE ONLINE PARTS SYSTEM)

DATE	JAN. 04, 2013
3rd EDITION	

Fig. 4130 TRAVEL MOTOR
MOTEUR DE TRANSLATION

Serial No. ;

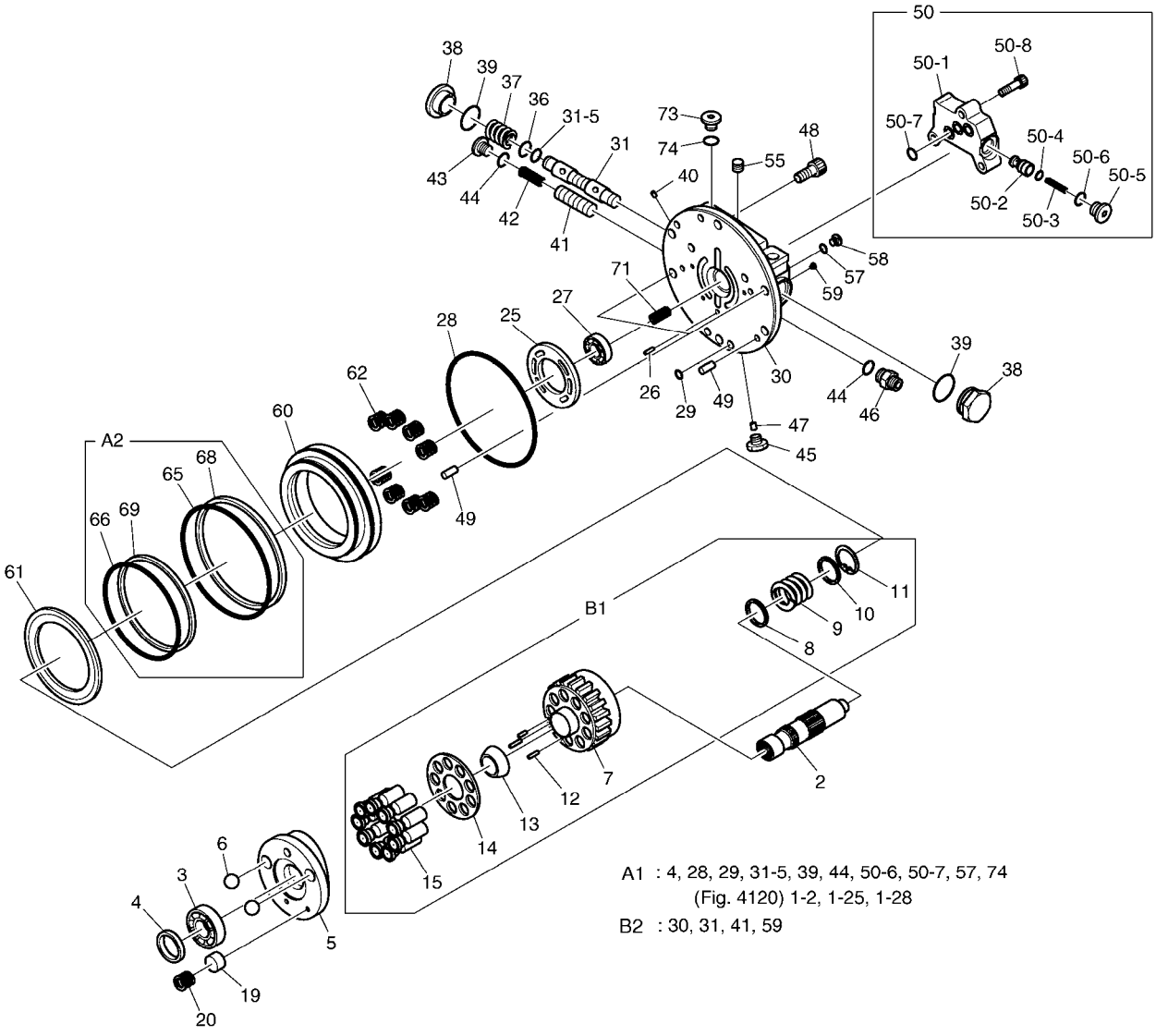

A1 : 4, 28, 29, 31-5, 39, 44, 50-6, 50-7, 57, 74
(Fig. 4120) 1-2, 1-25, 1-28

B2 : 30, 31, 41, 59

(THIS PARTS BOOK IS FOR REFERENCE ONLY.
PART NUMBERS AND SERAIL NUMBERS MAY BE
OUTDATED. ALWAYS USE THE ONLINE PARTS SYSTEM)

DATE	JAN. 04, 2013
3rd EDITION	

Fig. 4130 TRAVEL MOTOR
MOTEUR DE TRANSLATION

Serial No. ;

Key No.	Part No.	Description	Description	Q'ty	S.C	Serial No.	ICA	Replaceable part	
								Part No.	Q'ty
4130 -50	K9003756	VALVE;COUNTER BALANCE	VANNE	1					
50-1	-	. BODY	. CORPS	1	D				
50-2	-	. VALVE;CHECK	. VALVE	1	D				
50-3	-	. SPRING	. RESSORT	2	D				
50-4	-	. SEAT;SPRING	. SIEGE	2	D				
50-5	-	. PLUG	. PRISE	2	D				
50-6	S8000141	. O-RING	. JOINT TORIQUE	2					
50-7	S8000121	. O-RING	. JOINT CIRCULAIRE	3					
50-8	S2209261	. BOLT;WRENCH M8X30	. BOULON A 6 PANS CREUX	3					
55	2181-1116D1	PLUG	BOUCHON	1					
57	S8000081	O-RING	JOINT CIRCULAIRE	2					
58	K9003757	PLUG	BOUCHON	2					
59	K9005289	PLUG	BOUCHON	2					
60	K9005299	PISTON;BRAKE	PISTON	1					
61	K9005282	DISC	DISQUE	1					
62	K9005279	SPRING	RESSORT	8					
65	S8011101	O-RING	JOINT CIRCULAIRE	1					
66	S8010951	O-RING	JOINT TORIQUE	1					
68	K9005298	RING;BACK UP	BAGUE	1					
69	S8070950	RING;BACK UP	BAGUE	1					
71	2.415-00040	ORIFICE	ORIFICE	2					
73	K9003803	PLUG	PRISE	2					
74	S8000111	O-RING	JOINT CIRCULAIRE	2					
A1	K9005300	SEAL KIT;TRAVEL MOTOR	KIT DE JOINT	1					
A2	K9005301	SEAL KIT;PARKING BRAKE	FREIN DE STATIONNEMEN	1					
B1	K9005302	CYLINDER BLOCK KIT	KIT DE BLOC CYLINDRE	1					
B2	K9005303	BASE PLATE KIT	KIT D'EMBASE	1					

(THIS PARTS BOOK IS FOR REFERENCE ONLY.
PART NUMBERS AND SERAIL NUMBERS MAY BE
OUTDATED. ALWAYS USE THE ONLINE PARTS SYSTEM)

DATE	JAN. 04, 2013
3rd EDITION	

Fig. 4140 CONTROL VALVE DISTRIBUTEUR

Serial No. ;

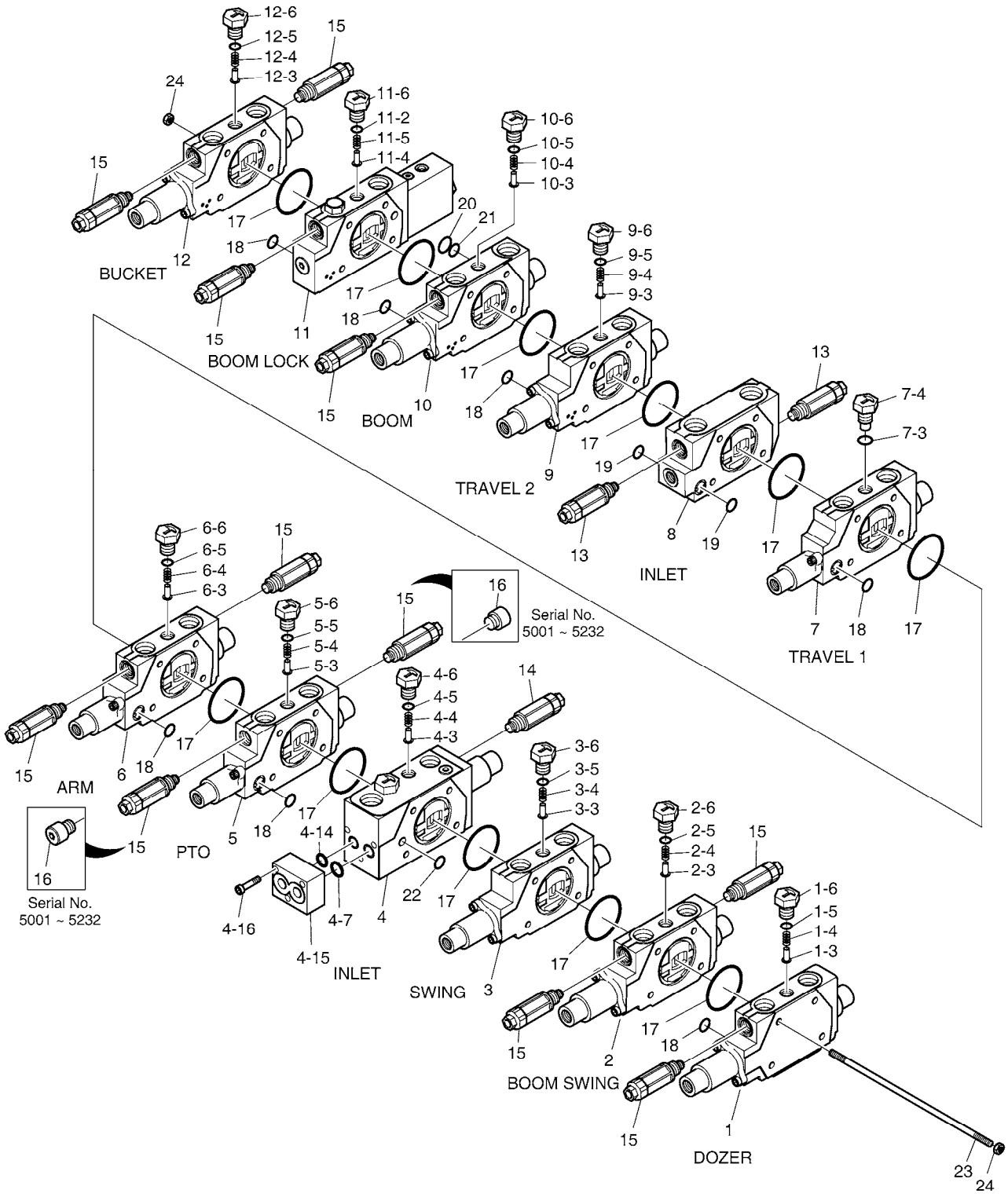

(THIS PARTS BOOK IS FOR REFERENCE ONLY.
PART NUMBERS AND SERAIL NUMBERS MAY BE
OUTDATED. ALWAYS USE THE ONLINE PARTS SYSTEM)

DATE	JAN. 04, 2013
3rd EDITION	

Fig. 4140 CONTROL VALVE DISTRIBUTEUR

Serial No. ;

Key No.	Part No.	Description	Description	Q'ty	S.C	Serial No.	ICA	Replaceable part	
								Part No.	Q'ty
4140 --	K1028369A	CONTROL VALVE	SOUPAPE DE COMMANDE	1		5001-5232	I	410105-00145	1
	410105-00145	VALVE,CONTROL	SOUPAPE DE COMMANDE	1		5233-			
1	K9004991	BLOCK ASS'Y-DOZER	BLOC ASS'Y	1					
1-3	K9004977	. POPPET;CHECK	. POUPEE	1					
1-4	K9004988	. SPRING;CHECK	. RESSORT	1					
1-5	S8000111	. O-RING	. JOINT CIRCULAIRE	1					
1-6	K9004981	. PLUG;CHECK	. BOUCHON	1					
2	K9004966	BLOCK ASS'Y-BOOM SWING	BLOC ASS'Y	1					
2-3	K9004977	. POPPET;CHECK	. POUPEE	1					
2-4	K9004988	. SPRING;CHECK	. RESSORT	1					
2-5	S8000111	. O-RING	. JOINT CIRCULAIRE	1					
2-6	K9004981	. PLUG;CHECK	. BOUCHON	1					
3	K9004967	BLOCK ASS'Y-SWING	BLOC ASS'Y	1					
3-3	K9004977	. POPPET;CHECK	. POUPEE	1					
3-4	K9004988	. SPRING;CHECK	. RESSORT	1					
3-5	S8000111	. O-RING	. JOINT CIRCULAIRE	1					
3-6	K9004981	. PLUG;CHECK	. BOUCHON	1					
4	K9004968	BLOCK	BLOC	1					
4-3	K9004976	. POPPET;CHECK	. POUPEE	2					
4-4	K9004989	. SPRING;CHECK	. RESSORT	2					
4-5	S8000111	. O-RING	. JOINT CIRCULAIRE	2					
4-6	K9004982	. PLUG;CHECK	. BOUCHON	2					
4-7	K9004987	. O-RING	. JOINT TORIQUE	2					
4-14	S8000101	. O-RING	. JOINT TORIQUE	1					
4-15	K9004965	. BODY;PILOT	. CORPS PILOTE	1					
4-16	S2203763	. BOLT;SOCKET	. BOULON A 6 PANS CREUX	3					
5	K9004969	BLOCK ASS'Y-PTO	ENSEMBLE DE BLOC	1					
5-3	K9004983	. POPPET;CHECK	. POUPEE	1					
5-4	K9004990	. SPRING;CHECK	. RESSORT	1					
5-5	S8000111	. O-RING	. JOINT CIRCULAIRE	1					
5-6	K9004984	. PLUG;CHECK	. BOUCHON	1					
6	K9004970	BLOCK ASS'Y-ARM	ENSEMBLE DE BLOC	1					
6-3	K9004977	. POPPET;CHECK	. POUPEE	1					
6-4	K9004988	. SPRING;CHECK	. RESSORT	1					
6-5	S8000111	. O-RING	. JOINT CIRCULAIRE	1					
6-6	K9004981	. PLUG;CHECK	. BOUCHON	1					
7	K9004971	BLOCK ASS'Y-TRAVEL	ENSEMBLE DE BLOC	1					
7-3	S8000111	. O-RING	. JOINT CIRCULAIRE	1					

(THIS PARTS BOOK IS FOR REFERENCE ONLY.
PART NUMBERS AND SERIAL NUMBERS MAY BE
OUTDATED. ALWAYS USE THE ONLINE PARTS SYSTEM)

DATE	JAN. 04, 2013
3rd EDITION	

Fig. 4140 CONTROL VALVE DISTRIBUTEUR

Serial No. ;

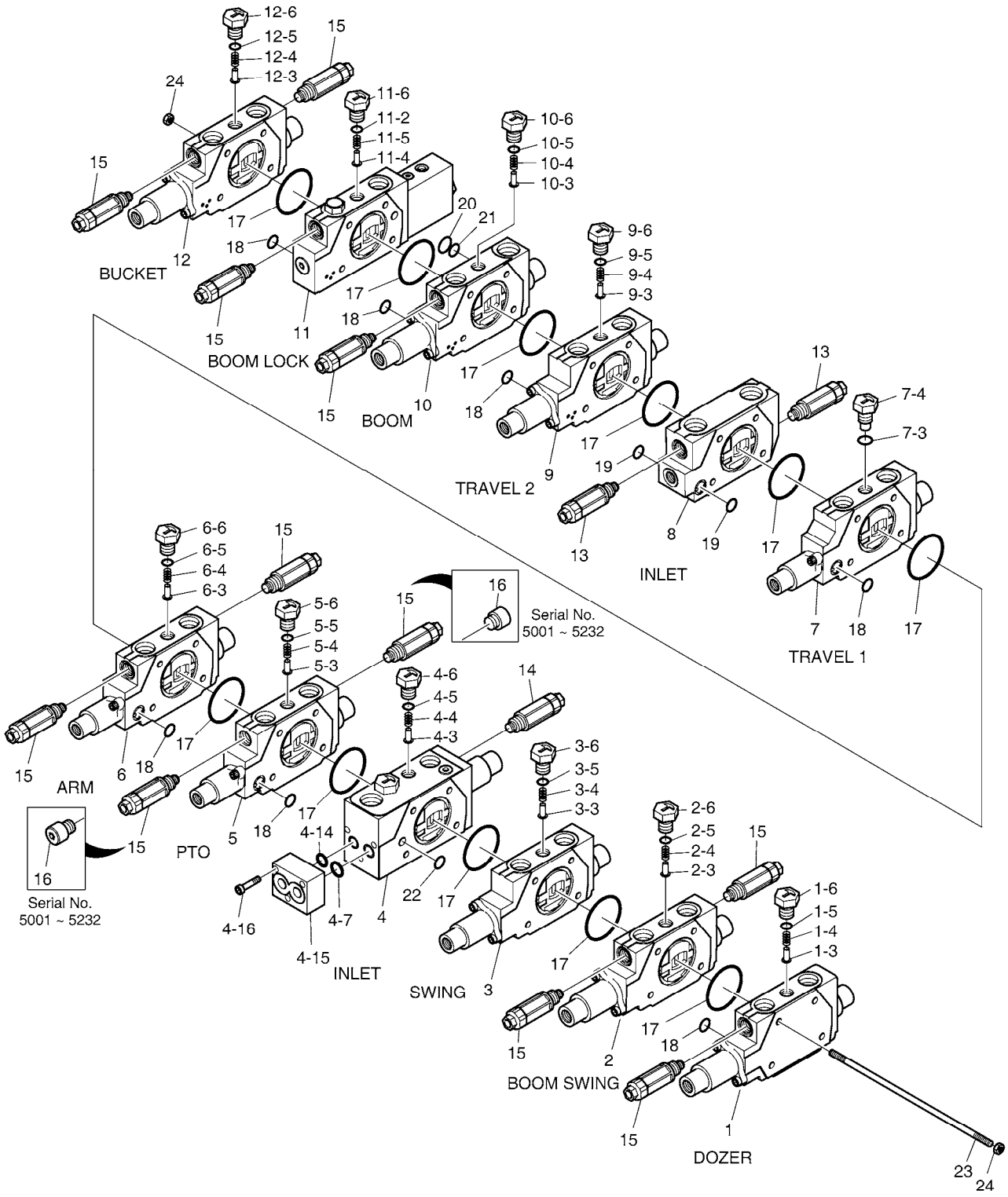

(THIS PARTS BOOK IS FOR REFERENCE ONLY.
PART NUMBERS AND SERAIL NUMBERS MAY BE
OUTDATED. ALWAYS USE THE ONLINE PARTS SYSTEM)

Fig. 4140 CONTROL VALVE DISTRIBUTEUR

Serial No. ;

Key No.	Part No.	Description	Description	Q'ty	S.C	Serial No.	ICA	Replaceable part	
								Part No.	Q'ty
4140 -7-4	K9004982	. PLUG;CHECK	. BOUCHON	1					
8	K9004964	BLOCK ASS'Y-INLET	ENSEMBLE DE BLOC	1					
9	K9004972	BLOCK ASS'Y-TRAVEL	ENSEMBLE DE BLOC	1					
9-3	K9004976	. POPPET;CHECK	. POUPEE	1					
9-4	K9004989	. SPRING;CHECK	. RESSORT	1					
9-5	S8000111	. O-RING	. JOINT CIRCULAIRE	1					
9-6	K9004982	. PLUG;CHECK	. BOUCHON	1					
10	K9004973	BLOCK ASS'Y-BOOM	ENSEMBLE DE BLOC	1					
10-3	K9004977	. POPPET;CHECK	. POUPEE	1					
10-4	K9004988	. SPRING;CHECK	. RESSORT	1					
10-5	S8000111	. O-RING	. JOINT CIRCULAIRE	1					
10-6	K9004981	. PLUG;CHECK	. BOUCHON	1					
11	K9004974	BLOCK ASS'Y-BOOM LOCK VALV	ENSEMBLE DE BLOC	1					
11-2	S8000111	. O-RING	. JOINT CIRCULAIRE	2					
11-4	K9004976	. POPPET;CHECK	. POUPEE	1					
11-5	K9004989	. SPRING;CHECK	. RESSORT	1					
11-6	K9004982	. PLUG;CHECK	. BOUCHON	1					
12	K9004975	BLOCK ASS'Y-BUCKET	BLOC ASS'Y	1					
12-3	K9004977	. POPPET;CHECK	. POUPEE	1					
12-4	K9004988	. SPRING;CHECK	. RESSORT	1					
12-5	S8000111	. O-RING	. JOINT CIRCULAIRE	1					
12-6	K9004981	. PLUG;CHECK	. BOUCHON	1					
13	K9005694	VALVE;MAIN RELIEF	VANNE	2					
14	K9005695	VALVE;MAIN RELIEF	VANNE	1					
15	K9005696	VALVE;OVERLOAD RELIEF	CLAPET DE DECHARGE	9		5001-5232			
	K9005696	VALVE;OVERLOAD RELIEF	CLAPET DE DECHARGE	11		5233-			
16	K9004980	PLUG;RELIEF	BOUCHON	2		5001-5232			
17	2180-1217D116	O-RING	JOINT TORIQUE	11					
18	S8000180	O-RING	JOINT TORIQUE	7					
19	S8000201	O-RING	JOINT TORIQUE	2					
20	S8000101	O-RING	JOINT TORIQUE	1					
21	S8000091	O-RING	JOINT CIRCULAIRE	1					
22	S8000060	O-RING	JOINT TORIQUE	1					
23	K9004986	BOLT;TIE	BOULON	4					
24	S4010503	NUT	ECROU	4					

(THIS PARTS BOOK IS FOR REFERENCE ONLY.
PART NUMBERS AND SERAIL NUMBERS MAY BE
OUTDATED. ALWAYS USE THE ONLINE PARTS SYSTEM)

DATE	JAN. 04, 2013
3rd EDITION	

Fig. 4150 CENTER JOINT
JOINT CENTRAL

Serial No. ;

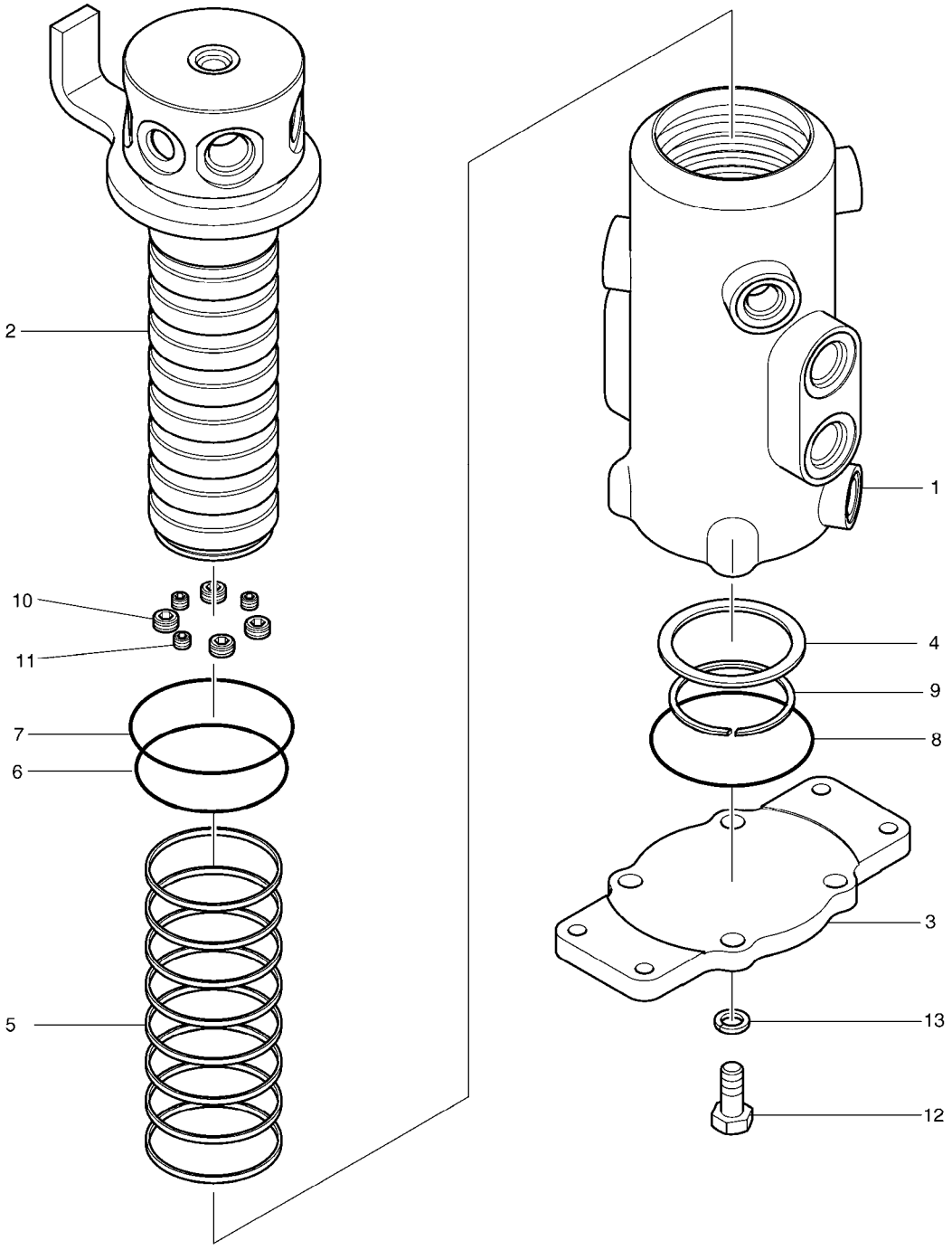

(THIS PARTS BOOK IS FOR REFERENCE ONLY.
PART NUMBERS AND SERAIL NUMBERS MAY BE
OUTDATED. ALWAYS USE THE ONLINE PARTS SYSTEM)

DATE	JAN. 04, 2013
3rd EDITION	

Fig. 4150 CENTER JOINT
JOINT CENTRAL

Serial No. ;

Key No.	Part No.	Description	Description	Q'ty	S.C	Serial No.	ICA	Replaceable part	
								Part No.	Q'ty
4150 --	K1008451	CENTER JOINT	JOINT CENTRAL	1		5001-5066	I	K1008451A	1
	K1008451A	CENTER JOINT	JOINT CENTRAL	1		5067-			
1	K1025477	HUB	MOYEU	1					
2	K1025478	SHAFT	ARBRE	1					
3	K1025479	COVER	COUVERCLE	1					
4	K1025480	SPACER	DOUILLE D'ECARTEMENT	1					
5	K1025481	SEAL;SLIPPER	JOINT	8	K	5001-5066	I	K1048682	8
	K1048682	SEAL;SLIPPER	JOINT	8	K	5067-			
6	S8000601	O-RING	JOINT TORIQUE	1	K				
7	S8000750	O-RING	JOINT TORIQUE	1	K				
8	S8010751	O-RING	JOINT TORIQUE	1	K				
9	S6500550	RING;RETAINER	ANNEAU	1					
10	2181-1116D2	PLUG	BOUCHON	4					
11	2181-1116D1	PLUG	BOUCHON	3					
12	S0512053	BOLT	BOULON	4					
13	S5102603	WASHER,SPRING	RONDELLE	4					
*	K9004888	SEAL KIT;CENTER JOINT	JOINT CENTRAL	1		5001-5066	I	K9004888A	1
	K9004888A	SEAL KIT;CENTER JOINT	JOINT CENTRAL	1		5067-			

(THIS PARTS BOOK IS FOR REFERENCE ONLY.
PART NUMBERS AND SERAIL NUMBERS MAY BE
OUTDATED. ALWAYS USE THE ONLINE PARTS SYSTEM)

DATE	JAN. 04, 2013
3rd EDITION	

Fig. 4160 REMOCON VALVE
VANNE DE PILOTE

Serial No. ;

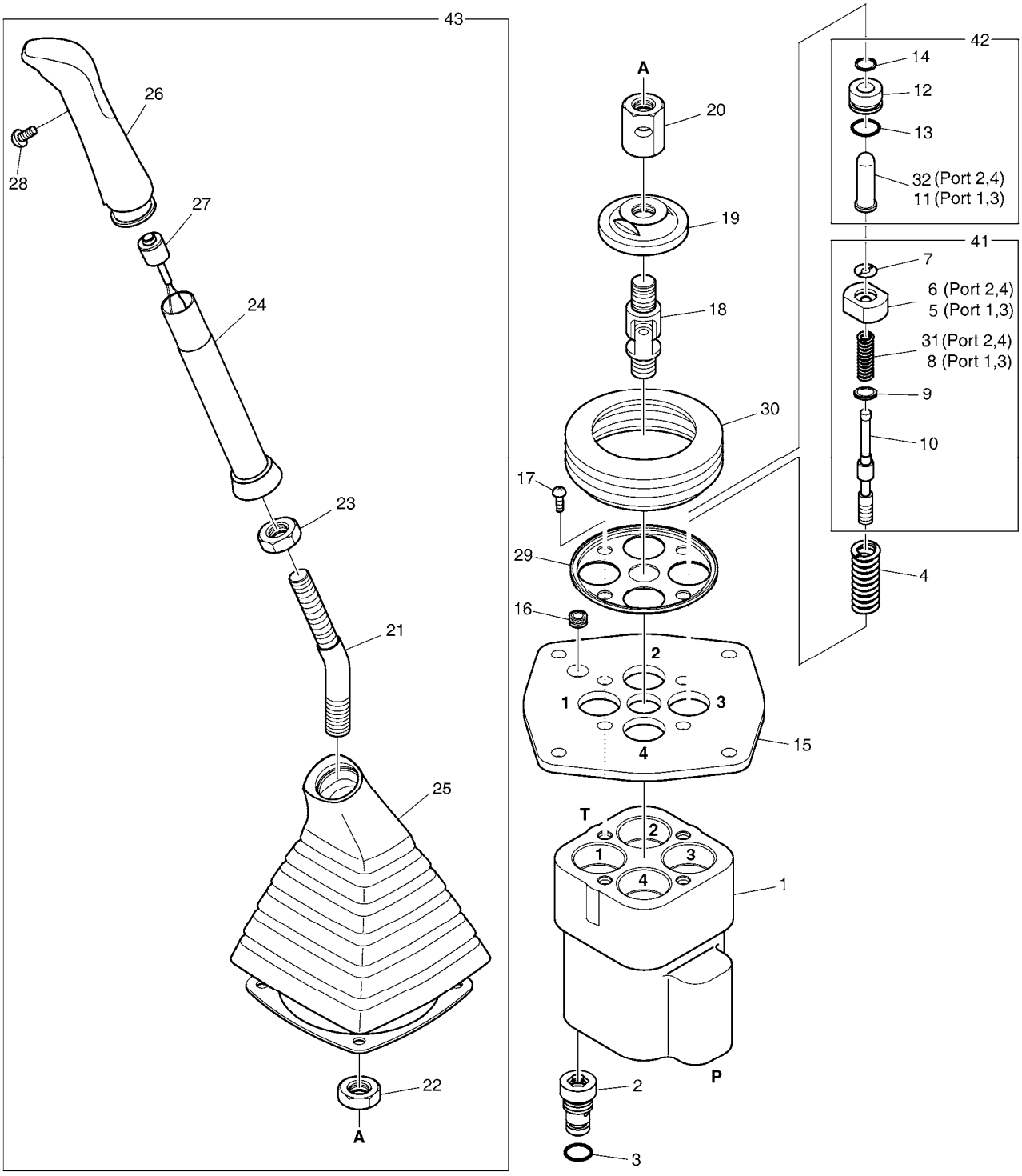

(THIS PARTS BOOK IS FOR REFERENCE ONLY.
PART NUMBERS AND SERAIL NUMBERS MAY BE
OUTDATED. ALWAYS USE THE ONLINE PARTS SYSTEM)

DATE	JAN. 04, 2013
3rd EDITION	

Fig. 4160 REMOCON VALVE VANNE DE PILOTE

Serial No. ;

Key No.	Part No.	Description	Description	Q'ty	S.C	Serial No.	ICA	Replaceable part	
								Part No.	Q'ty
4160 --	K1014372A	VALVE;JOY STICK(L.H)	VANNE	1		5001-5266	I	410113-00130	1
	410113-00130	VALVE,JOYSTICK;LH	VANNE	1		5267-			
	K1014373A	VALVE;JOY STICK(R.H)	VANNE	1		5001-5266	I	410113-00131	1
	410113-00131	VALVE,JOYSTICK;RH	VANNE	1		5267-			
1	1.451-00125	BODY	CARTER	1					
2	181-00471	PLUG	BOUCHON	4					
3	S8000081	O-RING	JOINT CIRCULAIRE	4					
4	K9003918	SPRING	RESSORT	4					
5	1.427-00009	SEAT;SPRING(PORT 1,3)	SIEGE	2					
6	K9004285	SEAT;SPRING(PORT 2,4)	SIEGE	2					
7	1.416-00002	STOPPER	ARRET	4					
8	K9003919	SPRING	RESSORT	2					
9	429-00017	SEAT;SPRING	SIEGE	4					
10	429-00016	SPOOL	BOBINE	4					
11	K9003920	ROD;PUSH	TIGE DE POUSSOIR	2					
12	K9003921	PLUG	BOUCHON	4					
13	S8000205	O-RING	JOINT CIRCULAIRE	4					
14	K9001127	SEAL;ROD	CACHET	4					
15	1.412-00013	PLATE	PLAQUE	1					
16	1.110-00167	BUSHING	DOUILLE	1					
17	S3450983	SCREW M16X20	VIS	4					
18	1.138-00004	JOINT ASS`Y	ENSEMBLE DE JOINT	1					
19	1.412-00131	PLATE;SWASH	PLAQUE	1		5001-5266	Y	K9001129A	1
	K9001129A	PLATE;SWASH	PLAQUE	1		5267-			
20	1.121-00028	NUT	ECROU	1					
21	K9003922	CONNECTOR	CONNECTEUR	1					
22	S4032833	NUT	ECROU	1					
23	S4032733	NUT	ECROU	1					
24	K9003923	INSERT	INSERTION	1					
25	K9003924	BOOT	INITIALISATION	1					
26	110925-00363	HANDLE(L.H)	POIGNEE	1					
	K9003925	HANDLE(R.H)	POIGNEE	1					
27	1.549-00002	SWITCH ASS'Y	COMMUTATEUR	1					
28	S3450333	SCREW M3X0.8X8	VIS	1					
29	1.412-00014	PLATE	PLAQUE	1					
30	1.160-00004	BOOT	BOTTE	1		5001-5266	Y	K9001128	1
	K9001128	BOOT	BOTTE	1		5267-			
31	K9003926	SPRING	RESSORT	2					

(THIS PARTS BOOK IS FOR REFERENCE ONLY. PART NUMBERS AND DETAIL NUMBERS MAY BE OUTDATED. ALWAYS USE THE ONLINE PARTS SYSTEM)

DATE	JAN. 04, 2013
3rd EDITION	

Fig. 4160 REMOCON VALVE
VANNE DE PILOTE

Serial No. ;

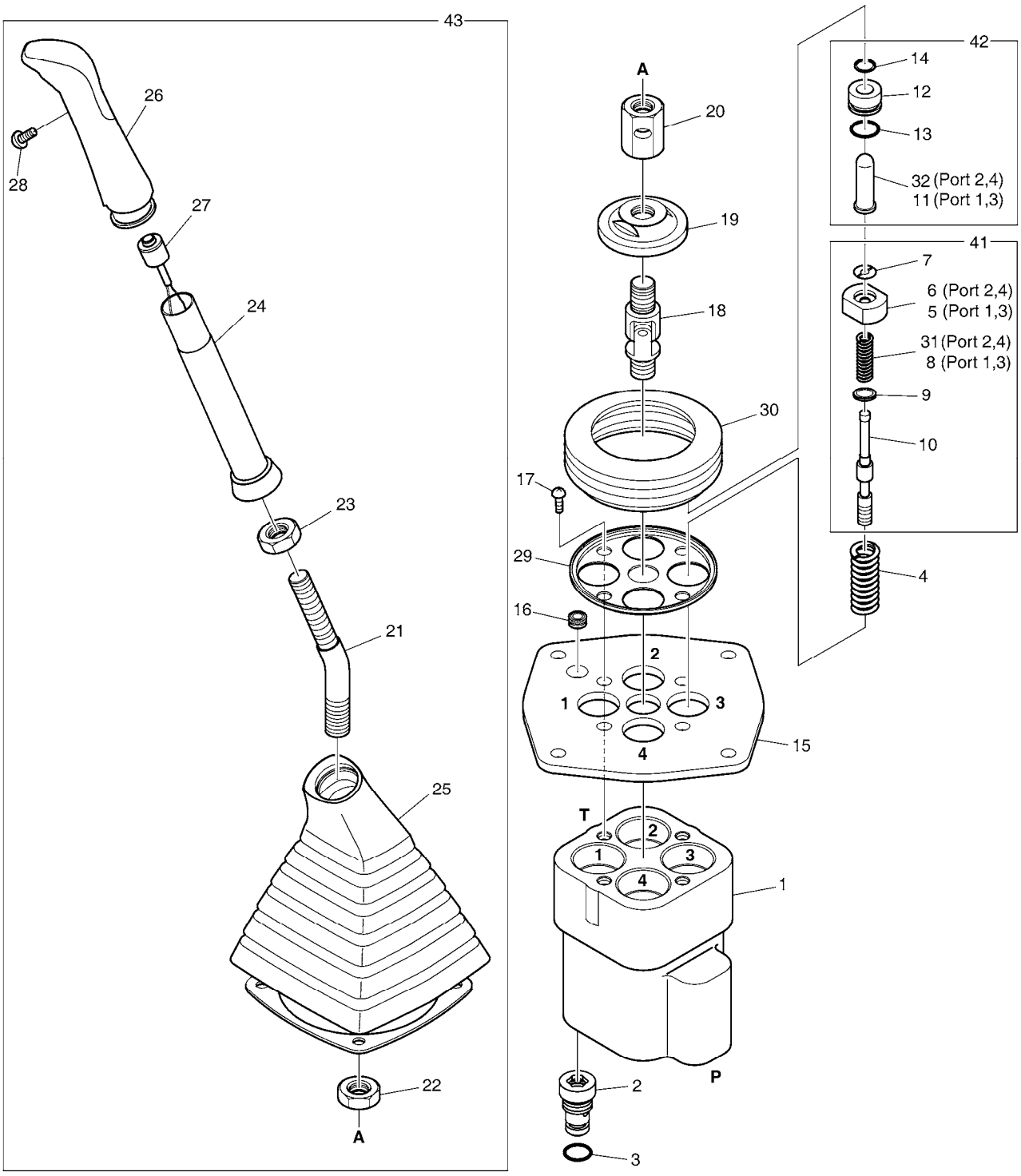

(THIS PARTS BOOK IS FOR REFERENCE ONLY.
PART NUMBERS AND SERAIL NUMBERS MAY BE
OUTDATED. ALWAYS USE THE ONLINE PARTS SYSTEM)

DATE	JAN. 04, 2013
3rd EDITION	

Fig. 4160 REMOCON VALVE VANNE DE PILOTE

Serial No. ;

Key No.	Part No.	Description	Description	Q'ty	S.C	Serial No.	ICA	Replaceable part	
								Part No.	Q'ty
4160 -32	K9003927	ROD;PUSH	TIGE DE POUSSOIR	2					
41	K9003928	KIT;SPOOL(PORT 1,3)	KIT DE BOBINE	2		5001-5266	Y	410207-00525	2
	410207-00525	SPOOL KIT;1,3	KIT DE BOBINE	2		5267-			
	K9003929	KIT;SPOOL(PORT 2,4)	KIT DE BOBINE	2		5001-5266	Y	410207-00526	2
	410207-00526	SPOOL KIT;2,4	KIT DE BOBINE	2		5267-			
42	K9003930	KIT;PLUG(PORT 1,3)	KIT DE PRISE	2		5001-5266	Y	430221-00918	2
	430221-00918	PLUG KIT;1,3	KIT DE PRISE	2		5267-			
	K9003931	KIT;PLUG(PORT 2,4)	KIT DE PRISE	2		5001-5266	Y	430221-00919	2
	430221-00919	PLUG KIT;2,4	KIT DE PRISE	2		5267-			
43	K9003932	HANDLE KIT;R.H	KIT DE POIGNEE	1		5001-5266	Y	110925-00378	1
	110925-00378	HANDLE KIT;R.H	KIT DE POIGNEE	1		5267-			
	K9003933	HANDLE KIT;L.H	KIT DE POIGNEE	1		5001-5266	Y	110925-00364	1
	110925-00364	HANDLE KIT;L.H	KIT DE POIGNEE	1		5267-			

(THIS PARTS BOOK IS FOR REFERENCE ONLY.
PART NUMBERS AND SERAIL NUMBERS MAY BE
OUTDATED. ALWAYS USE THE ONLINE PARTS SYSTEM)

DATE	JAN. 04, 2013
3rd EDITION	

Fig. 4170 PEDAL VALVE VANNE

Serial No. ; 5001 ~ 5109

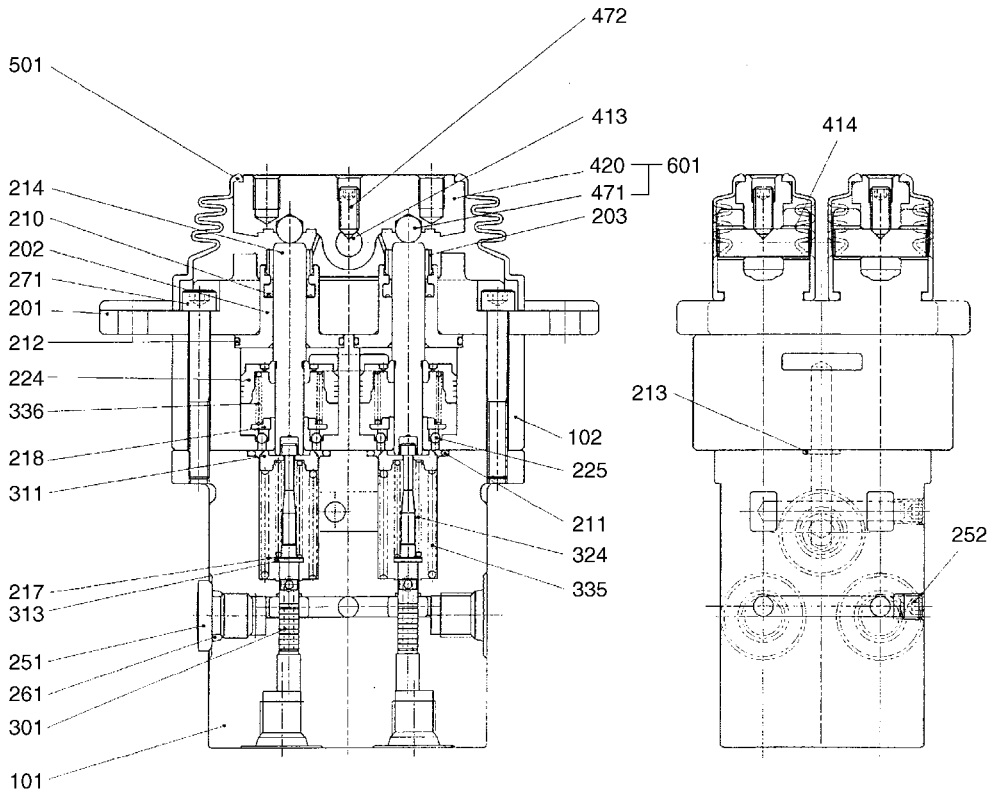

(THIS PARTS BOOK IS FOR REFERENCE ONLY.
PART NUMBERS AND SERAIL NUMBERS MAY BE
OUTDATED. ALWAYS USE THE ONLINE PARTS SYSTEM)

DATE	JAN. 04, 2013
3rd EDITION	

Fig. 4170 PEDAL VALVE VANNE

Serial No. ; 5001 ~ 5109

Key No.	Part No.	Description	Description	Q'ty	S.C	Serial No.	ICA	Replaceable part	
								Part No.	Q'ty
4170 --	K1011188	VALVE;PEDAL	VANNE	1					
101	-	CASING	CARTER	1	D				
102	-	CASING	CARTER	1	D				
201	K9003856	COVER	COUVERCLE	2					
202	K9003857	PLUG	BOUCHON	4					
203	K9003858	CAP;GREASE	CHAPEAU	4					
210	K9003859	PACKING	EMBALLAGE	4					
211	2180-1216D20	O-RING	JOINT TORIQUE	4					
212	2180-1216D25	O-RING	JOINT TORIQUE	4					
213	S8000081	O-RING	JOINT CIRCULAIRE	2					
214	K9003860	ROD;PUSH	TIGE DE POUSSOIR	4					
217	K9003861	SHIM	CALE	4					
218	K9003862	SEAT;SPRING	SIEGE	4					
224	K9003863	PISTON	PISTON	4	D				
225	S6250092	BALL;STEEL	BOULE	12					
251	2181-1890D2	PLUG	BOUCHON	3					
252	2.181-00214	PLUG	PRISE	2					
261	S8000111	O-RING	JOINT CIRCULAIRE	3					
271	K9003864	BOLT;SOCKET	BOULON A 6 PANS CREUX	4					
301	K9003865	SPOOL	BOBINE	4	D				
311	K9003866	SEAT;SPRING	SIEGE	4					
313	K9003867	WASHER	RONDELLE	4					
324	K9003868	SPRING	RESSORT	4					
335	K9003869	SPRING	RESSORT	4					
336	K9003870	SPRING	RESSORT	4					
413	K9003871	CAM;SHAFT	CAME	2					
414	K9003872	BUSH	DOUILLE	4					
420	K9003873	CAM	CAME	2					
471	S6250161	BALL;STEEL	BOULE	4					
472	K9003874	SET SCREW	VIS	2					
501	K9003875	BELLOWS	SOUFFLET	2					
601	K9003876	CAM ASS'Y	CAME	1					

(THIS PARTS BOOK IS FOR REFERENCE ONLY.
PART NUMBERS AND SERAIL NUMBERS MAY BE
OUTDATED. ALWAYS USE THE ONLINE PARTS SYSTEM)

DATE	JAN. 04, 2013
3rd EDITION	

Fig. 4171 PEDAL VALVE VANNE

Serial No. ; 5110 ~

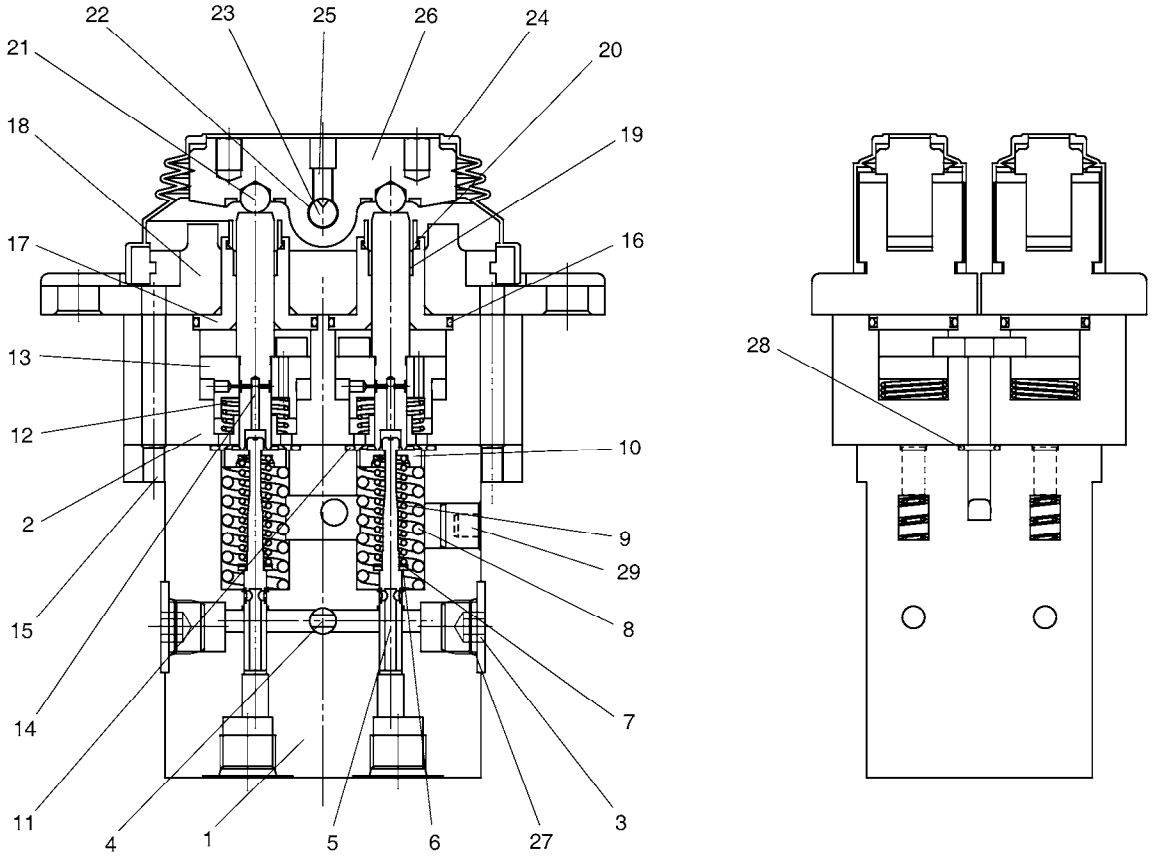

(THIS PARTS BOOK IS FOR REFERENCE ONLY.
PART NUMBERS AND SERAIL NUMBERS MAY BE
OUTDATED. ALWAYS USE THE ONLINE PARTS SYSTEM)

DATE	JAN. 04, 2013
3rd EDITION	

Fig. 4171 PEDAL VALVE VANNE

Serial No. ; 5110 ~

Key No.	Part No.	Description	Description	Q'ty	S.C	Serial No.	ICA	Replaceable part	
								Part No.	Q'ty
4171 --	K1027918B	PEDAL VALVE	VANNE	1		5110-5227	Y	410119-00008	1
	410119-00008	PEDAL VALVE	VANNE	1		5228-			
1	-	CASING(1)	ENVELOPPE	1	D				
2	-	CASING(2)	ENVELOPPE	1	D				
3	2181-1890D2	PLUG	BOUCHON	3					
4	181-00519	PLUG	BOUCHON	2					
5	K9005883	SPOOL	BOBINE	4					
6	K9005884	WASHER	RONDELLE	4					
7	K9005885	WASHER	RONDELLE	4					
8	K9005886	SPRING	RESSORT	4					
9	K9005887	SPRING	RESSORT	4					
10	K9005888	SPRING SEAT	RESSORT	4					
11	S8000201	O-RING	JOINT TORIQUE	4					
12	K9005889	SPRING	RESSORT	4					
13	K9005890	PISTON	PISTON	4					
14	K9005891	ROD;PUSH	TIGE DE POUSSOIR	4					
15	S2205661	BOLT;SOCKET	BOULON A 6 PANS CREUX	4					
16	2180-1217D25	O-RING	JOINT TORIQUE	4					
17	K9005892	PLUG	BOUCHON	4					
18	K9005893A	COVER	COUVERCLE	2					
19	K9005894	PACKING	EMBALLAGE	4					
20	K9005895	CAP;GREASE	CHAPEAU	4					
21	S6250161	BALL;STEEL	BOULE	4					
22	2110-1184D2	BUSH	DOUILLE	4					
23	K9005896	SHAFT;CAM	ARBRE A CAMES	2					
24	K9005897	BELLOWS	SOUFFLET	2					
25	S3522706	SCREW	VIS	2					
26	K9005898	CAM	CAME	2					
27	S8000111	O-RING	JOINT CIRCULAIRE	3					
28	S8000081	O-RING	JOINT CIRCULAIRE	2					
29	2181-1116D2	PLUG	BOUCHON	2					

(THIS PARTS BOOK IS FOR REFERENCE ONLY.
PART NUMBERS AND SERAIL NUMBERS MAY BE
OUTDATED. ALWAYS USE THE ONLINE PARTS SYSTEM)

DATE	JAN. 04, 2013
3rd EDITION	

Fig. 4180 PEDAL VALVE
VANNE

Serial No. ;

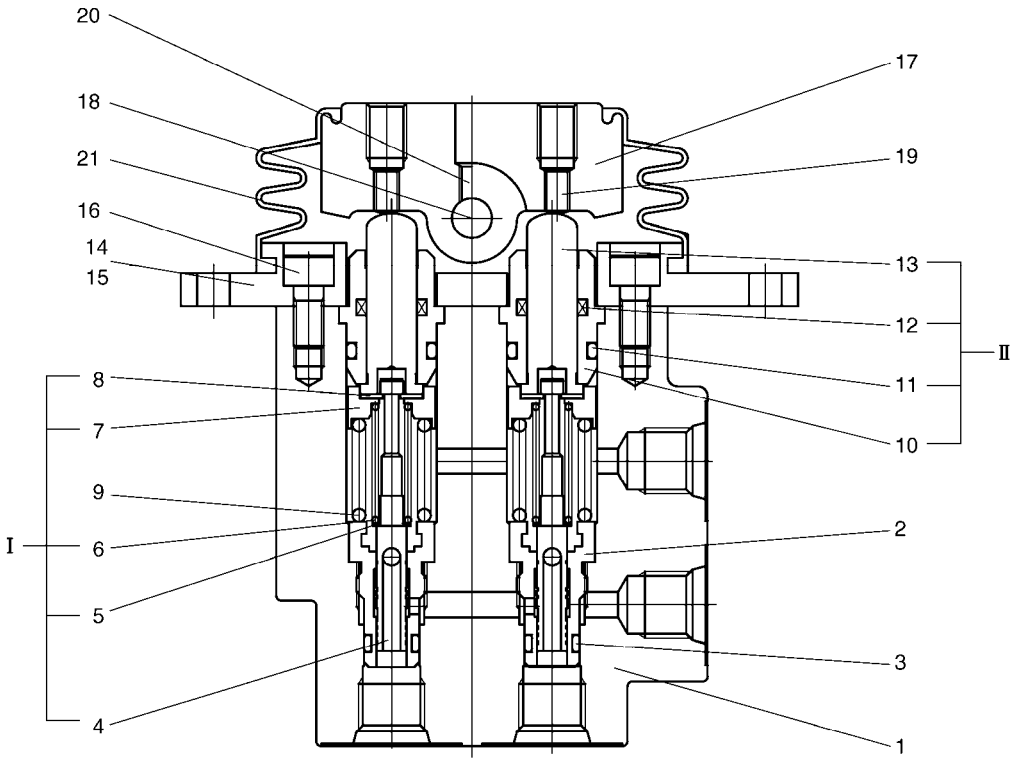

(THIS PARTS BOOK IS FOR REFERENCE ONLY.
PART NUMBERS AND SERAIL NUMBERS MAY BE
OUTDATED. ALWAYS USE THE ONLINE PARTS SYSTEM)

DATE	JAN. 04, 2013
3rd EDITION	

Fig. 4180 PEDAL VALVE VANNE

Serial No. ;

Key No.	Part No.	Description	Description	Q'ty	S.C	Serial No.	ICA	Replaceable part	
								Part No.	Q'ty
4180 --	K1013569B	VALVE;PEDAL	VANNE	1					
1	-	BODY	CORPS	1	D				
2	1.181-00055	PLUG	BOUCHON	2					
3	S8000081	O-RING	JOINT CIRCULAIRE	2					
I	K9003938A	KIT;SPOOL	KIT DE BOBINE	2					
4	429-00016	SPOOL	BOBINE	2					
5	429-00017	SEAT;SPRING	SIEGE	2					
6	K9003939	SPRING	RESSORT	2					
7	K9003940	SEAT;SPRING	SIEGE	2					
8	416-00008	STOPPER	ARRET	2					
9	K9003941	SPRING	RESSORT	2					
II	K9003942	KIT;PLUG	KIT DE PRISE	2					
10	1.181-00056	PLUG	BOUCHON	2					
11	S8000141	O-RING	JOINT TORIQUE	2					
12	1.180-00528	SEAL;ROD	CACHET	2					
13	K9003943	ROD;PUSH	TIGE DE POUSSOIR	2					
14	K9003944	COVER	COUVERCLE	1					
15	2110-1184D3	BUSH;DU	DOUILLE	2					
16	S2204671	BOLT;SOCKET	BOULON A 6 PANS CREUX	2					
17	K9003945	CAM	CAME	1					
18	K9003946	PIN	GOUPILLE	1					
19	K9003947	SCREW;ADJUST	VIS	2					
20	S3521901	SCREW;SET	VIS	3					
21	K9003948	BELLOWS	SOUFFLET	1					

(THIS PARTS BOOK IS FOR REFERENCE ONLY.
PART NUMBERS AND SERAIL NUMBERS MAY BE
OUTDATED. ALWAYS USE THE ONLINE PARTS SYSTEM)

DATE	JAN. 04, 2013
3rd EDITION	

Fig. 4190 REMOCON VALVE - DOZER
VANNE DE PILOTE

Serial No. ;

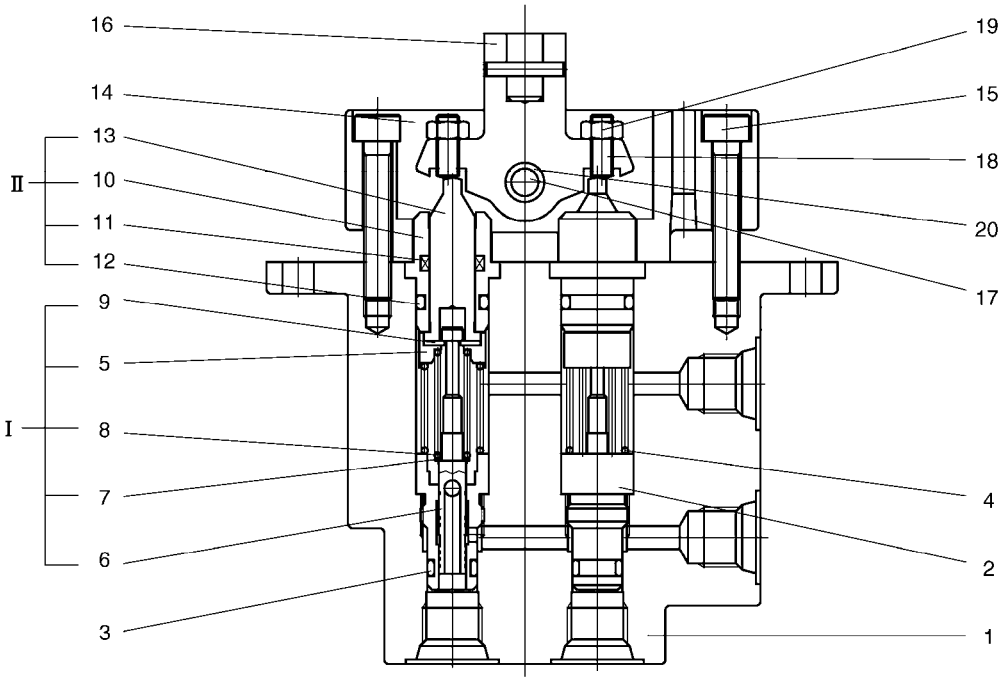

(THIS PARTS BOOK IS FOR REFERENCE ONLY.
PART NUMBERS AND SERAIL NUMBERS MAY BE
OUTDATED. ALWAYS USE THE ONLINE PARTS SYSTEM)

DATE	JAN. 04, 2013
3rd EDITION	

Fig. 4190 REMOCON VALVE - DOZER VANNE DE PILOTE

Serial No. ;

Key No.	Part No.	Description	Description	Q'ty	S.C	Serial No.	ICA	Replaceable part	
								Part No.	Q'ty
4190 --	K1027491	VALVE;REMOCON (DOZER)	VANNE	1					
1	-	BODY	CORPS	1	D				
2	1.181-00055	PLUG	BOUCHON	2					
3	S8000081	O-RING	JOINT CIRCULAIRE	2					
4	K9004286	SPRING	RESSORT	2					
I	K9004287	KIT;SPOOL	KIT DE BOBINE	2					
5	1.427-00015	SEAT;SPRING	SIEGE	2					
6	429-00016	SPOOL	BOBINE	2					
7	429-00017	SEAT;SPRING	SIEGE	2					
8	K9000458	SPRING	RESSORT	2					
9	416-00008	STOPPER	ARRET	2					
II	K9004288	KIT;PLUG	KIT DE PRISE	2					
10	1.181-00056	PLUG	BOUCHON	2					
11	1.180-00528	SEAL;ROD	CACHET	2					
12	S8000141	O-RING	JOINT TORIQUE	2					
13	1.428-00240	ROD;PUSH	TIGE DE POUSSOIR	2					
14	K9004289	COVER	COUVERCLE	1					
15	S2205361	BOLT	BOULON	2					
16	1.429-00003	GUIDE	GUIDE	1					
17	K9004290	PIN	GOUPILLE	1					
18	1.120-00010	BOLT	BOULON	2					
19	S4014233	NUT	ECROU	2					
20	K9004291	RING;SNAP	BAGUE D'ARRET	2					

(THIS PARTS BOOK IS FOR REFERENCE ONLY.
PART NUMBERS AND SERAIL NUMBERS MAY BE
OUTDATED. ALWAYS USE THE ONLINE PARTS SYSTEM)

DATE	JAN. 04, 2013
3rd EDITION	

Fig. 4200 BOOM CYLINDER VERIN DE FLECHE

Serial No. ;

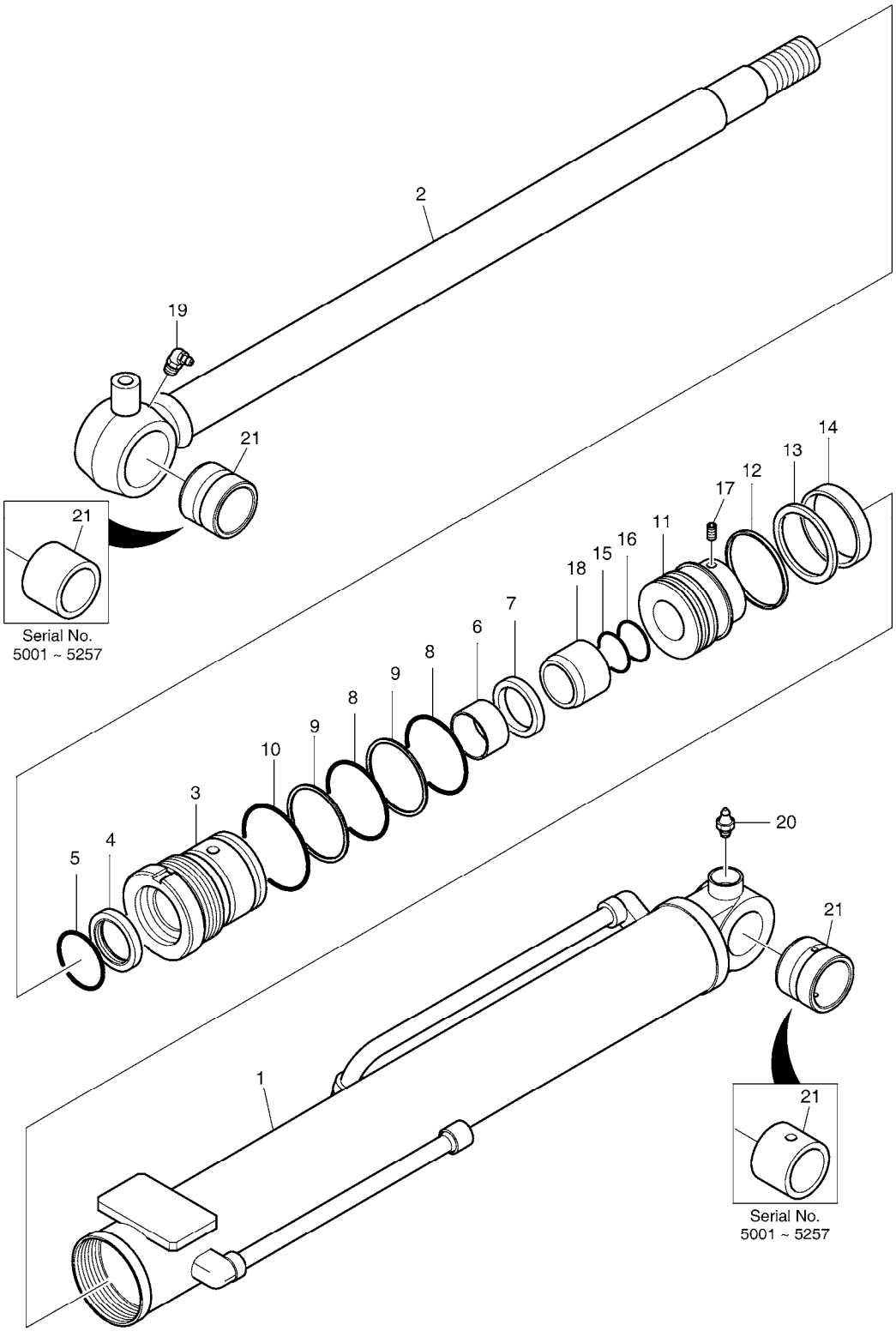

(THIS PARTS BOOK IS FOR REFERENCE ONLY.
PART NUMBERS AND SERAIL NUMBERS MAY BE
OUTDATED. ALWAYS USE THE ONLINE PARTS SYSTEM)

DATE	JAN. 04, 2013
3rd EDITION	

Fig. 4200 BOOM CYLINDER VERIN DE FLECHE

Serial No. ;

Key No.	Part No.	Description	Description	Q'ty	S.C	Serial No.	ICA	Replaceable part	
								Part No.	Q'ty
4200 --	K1027108B	CYLINDER;BOOM	CYLINDRE	1		5001-5257	Y	400309-00344	1
	400309-00344	CYLINDER,BOOM	CYLINDRE	1		5258-			
1	K9006229	TUBE ASS'Y	TUYAU FLEXIBLE	1					
2	K9006233	ROD ASS'Y	ENSEMBLE TIGE	1					
3	K9006245	COVER;ROD	COUVERCLE	1					
4	K9004939	WIPER;DUST	RACCORD ADAPTATEUR	1	K				
5	K9004940	STOPPER	ARRET	1					
6	2110-1184D82	DU-BUSH	DOUILLE DU	1					
7	K9004941	U-PACKING	JOINT EN U	1	K				
8	S8010751	O-RING	JOINT TORIQUE	2	K				
9	S8090750	RING;BACKUP	BAGUE	2	K				
10	S8010801	O-RING	JOINT CIRCULAIRE	1	K				
11	K9006240	PISTON	PISTON	1					
12	K9004943	RING;DUST	BAGUE	1	K				
13	K9004944	RING;GLYD	BAGUE	1	K				
14	K9006251	RING;WEAR	BAGUE D'USURE	1	K				
15	S8010401	O-RING	JOINT TORIQUE	1	K				
16	K9006247	RING;BACKUP	BAGUE	1	K				
17	S3523403	SCREW;SET	VIS	1					
18	K9006241	RING;CUSHION	BAGUE	1					
19	S6710153	NIPPLE;GREASE	GRAISSEUR	1					
20	S6710041	NIPPLE;GREASE	GRAISSEUR	1					
21	K1024123	BUSH	DOUILLE	2		5001-5257	Y	131008-00138	2
	131008-00138	BUSH	DOUILLE	2		5258-			
*	K9006257	SEAL KIT;BOOM	KIT D'ETANCHEITE	1					

(THIS PARTS BOOK IS FOR REFERENCE ONLY.
PART NUMBERS AND SERAIL NUMBERS MAY BE
OUTDATED. ALWAYS USE THE ONLINE PARTS SYSTEM)

DATE	JAN. 04, 2013
3rd EDITION	

Fig. 4210 ARM CYLINDER
VERIN DE BALANCIER

Serial No. ;

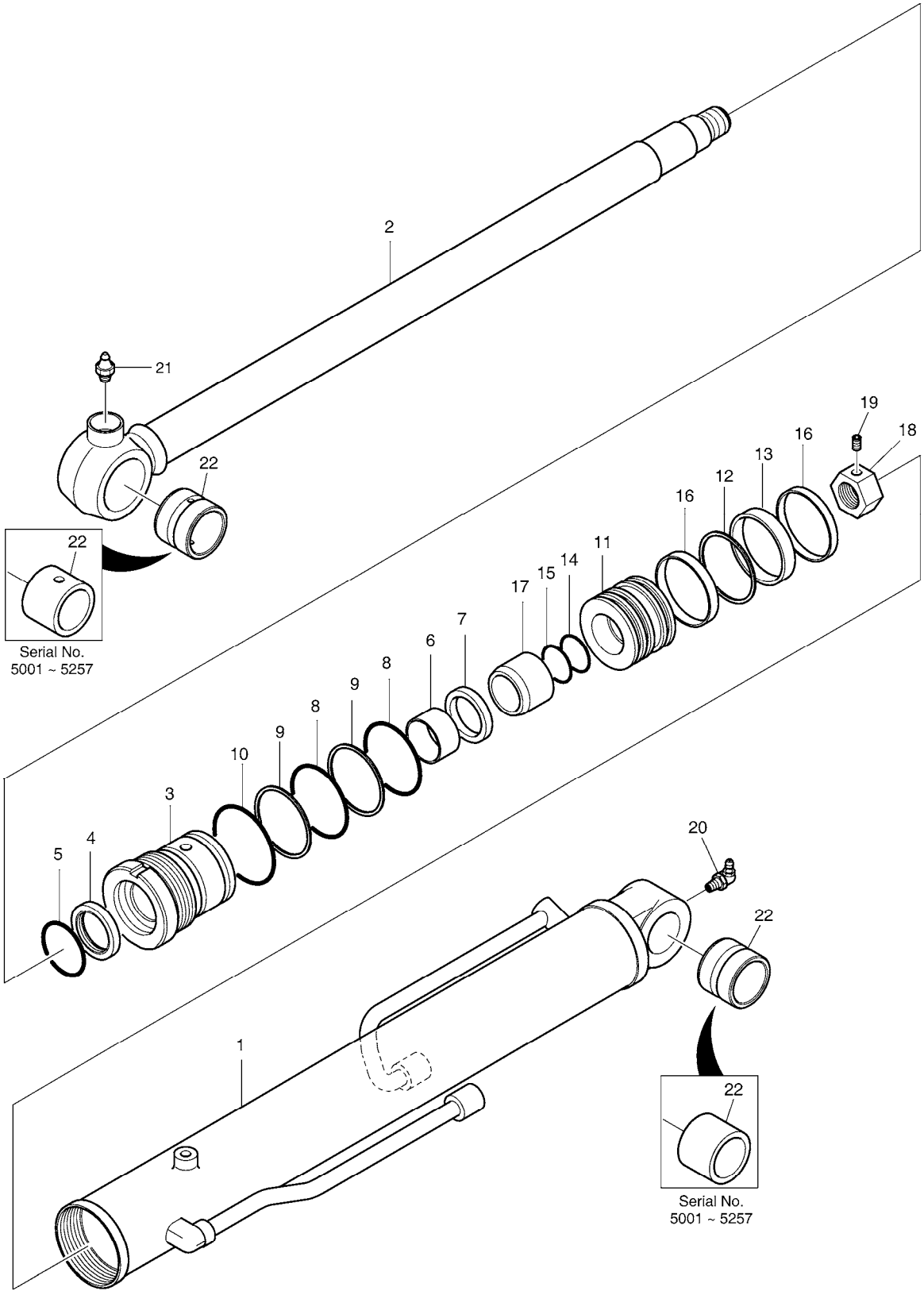

(THIS PARTS BOOK IS FOR REFERENCE ONLY.
PART NUMBERS AND SERAIL NUMBERS MAY BE
OUTDATED. ALWAYS USE THE ONLINE PARTS SYSTEM)

DATE	JAN. 04, 2013
3rd EDITION	

Fig. 4210 ARM CYLINDER VERIN DE BALANCIER

Serial No. ;

Key No.	Part No.	Description	Description	Q'ty	S.C	Serial No.	ICA	Replaceable part	
								Part No.	Q'ty
4210 --	K1027105A	CYLINDER;ARM	VERIN DE BALANCIER	1		5001-5257	Y	400305-00224	1
	400305-00224	CYLINDER,ARM	VERIN DE BALANCIER	1		5258-			
1	K9006228	TUBE ASS'Y	TUYAU FLEXIBLE	1					
2	K9006232	ROD ASS'Y	ENSEMBLE TIGE	1					
3	K9006243	COVER;ROD	COUVERCLE	1					
4	K9004939	WIPER;DUST	RACCORD ADAPTATEUR	1	K				
5	K9004940	STOPPER	ARRET	1					
6	2110-1184D82	DU-BUSH	DOUILLE DU	1					
7	K9004941	U-PACKING	JOINT EN U	1	K				
8	S8010701	O-RING	JOINT CIRCULAIRE	2	K				
9	1.180-00259	RING;BACK UP	BAGUE	2	K				
10	S8010751	O-RING	JOINT TORIQUE	1	K				
11	K9006238	PISTON	PISTON	1					
12	K9006255	SEAL;SUPPER	JOINT	1	K				
13	K9006253	RING;WEAR	BAGUE D'USURE	1	K				
14	S8000321	O-RING	JOINT CIRCULAIRE	1	K				
15	S8060320	RING;BACKUP	BAGUE	1	K				
16	K9006249	RING;DUST	BAGUE	2	K				
17	K9004950A	RING;CUSHION	BAGUE	1					
18	K9004934	NUT	ECROU	1					
19	S3523403	SCREW;SET	VIS	1					
20	S6710153	NIPPLE;GREASE	GRAISSEUR	1					
21	S6710041	NIPPLE;GREASE	GRAISSEUR	1					
22	K1024123	BUSH	DOUILLE	2		5001-5257	Y	131008-00138	2
	131008-00138	BUSH	DOUILLE	2		5258-			
*	K9006258	SEAL KIT;ARM	KIT D'ETANCHEITE	1					

(THIS PARTS BOOK IS FOR REFERENCE ONLY.
PART NUMBERS AND SERAIL NUMBERS MAY BE
OUTDATED. ALWAYS USE THE ONLINE PARTS SYSTEM)

DATE	JAN. 04, 2013
3rd EDITION	

Fig. 4220 BUCKET CYLINDER
VERIN DE GODET

Serial No. ;

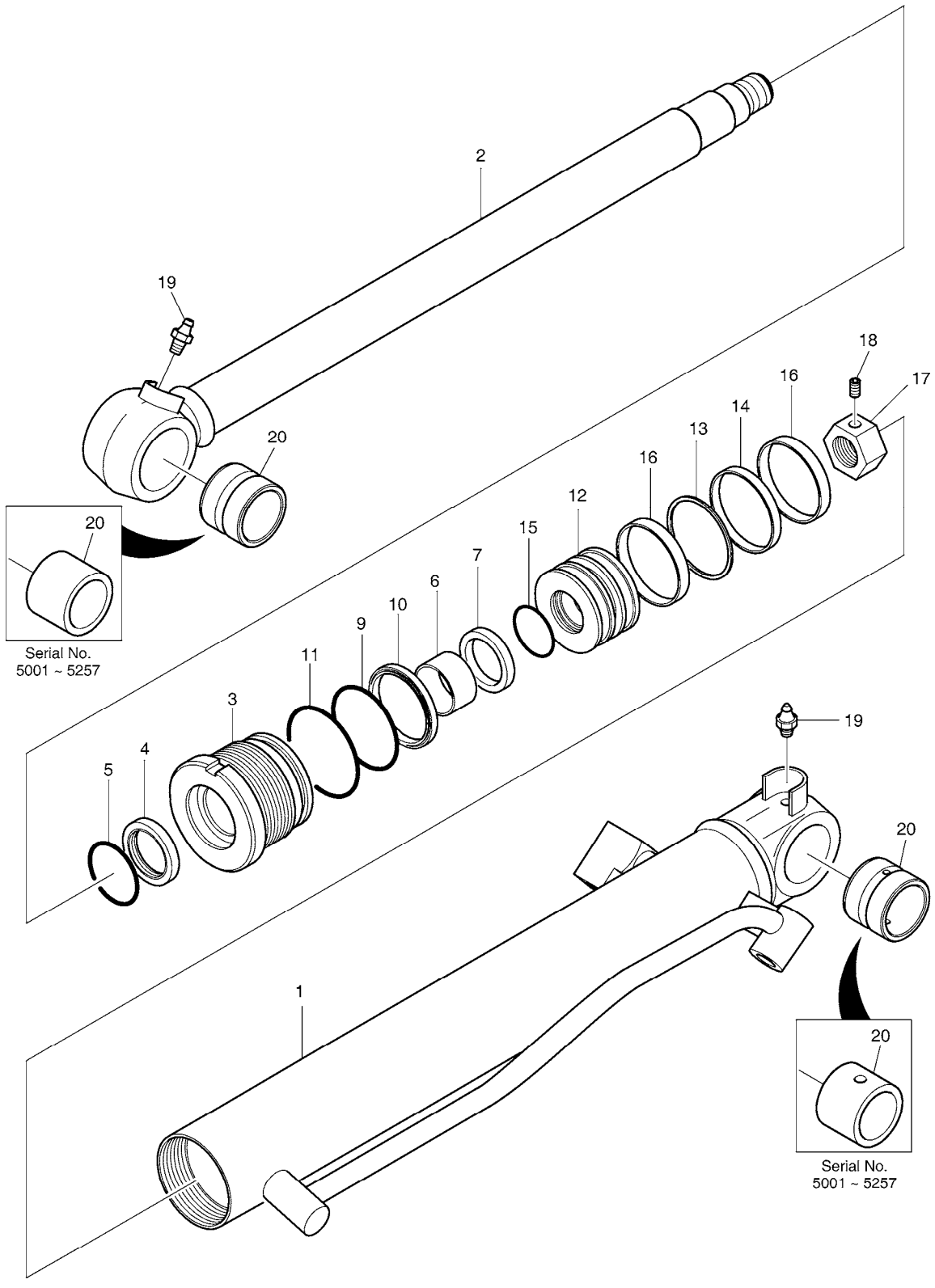

(THIS PARTS BOOK IS FOR REFERENCE ONLY.
PART NUMBERS AND SERAIL NUMBERS MAY BE
OUTDATED. ALWAYS USE THE ONLINE PARTS SYSTEM)

DATE	JAN. 04, 2013
3rd EDITION	

Fig. 4220 BUCKET CYLINDER VERIN DE GODET

Serial No. ;

Key No.	Part No.	Description	Description	Q'ty	S.C	Serial No.	ICA	Replaceable part	
								Part No.	Q'ty
4220 --	K1027099A	CYLINDER;BUCKET	VERIN DE GODET	1		5001-5257	Y	400310-00220	1
	400310-00220	CYLINDER,BUCKET	VERIN DE GODET	1		5258-			
1	K9004951	TUBE ASS'Y	TUYAU FLEXIBLE	1					
2	K9006234	ROD ASS'Y	ENSEMBLE TIGE	1					
3	K9006242	COVER;ROD	COUVERCLE	1					
4	K9004939	WIPER;DUST	RACCORD ADAPTATEUR	1	K				
5	K9004940	STOPPER	ARRET	1					
6	2110-1184D82	DU-BUSH	DOUILLE DU	1					
7	K9006246	U-PACKING	JOINT EN U	1	K				
9	S8010651	O-RING	JOINT TORIQUE	1	K				
10	S8090650	RING;BACK-UP	BAGUE DE SOUTIEN	1	K				
11	S8010701	O-RING	JOINT CIRCULAIRE	1	K				
12	K9006237	PISTON	PISTON	1					
13	K9006254	SEAL;SLIPPER	JOINT	1	K				
14	1.180-00406	RING;WEAR	BAGUE D'USURE	1	K				
15	S8000321	O-RING	JOINT CIRCULAIRE	1	K				
16	1.180-00329	RING;DUST	BAGUE	2	K				
17	K9004934	NUT	ECROU	1					
18	S3523403	SCREW;SET	VIS	1					
19	S6710041	NIPPLE;GREASE	GRAISSEUR	2					
20	K1024123	BUSH	DOUILLE	2		5001-5257	Y	131008-00138	2
	131008-00138	BUSH	DOUILLE	2		5258-			
*	K9006259	SEAL KIT;BUCKET	KIT D'ETANCHEITE	1					

(THIS PARTS BOOK IS FOR REFERENCE ONLY.
PART NUMBERS AND SERAIL NUMBERS MAY BE
OUTDATED. ALWAYS USE THE ONLINE PARTS SYSTEM)

DATE	JAN. 04, 2013
3rd EDITION	

Fig. 4230 BOOM SWING CYLINDER VERIN DE FLECHE

Serial No. ;

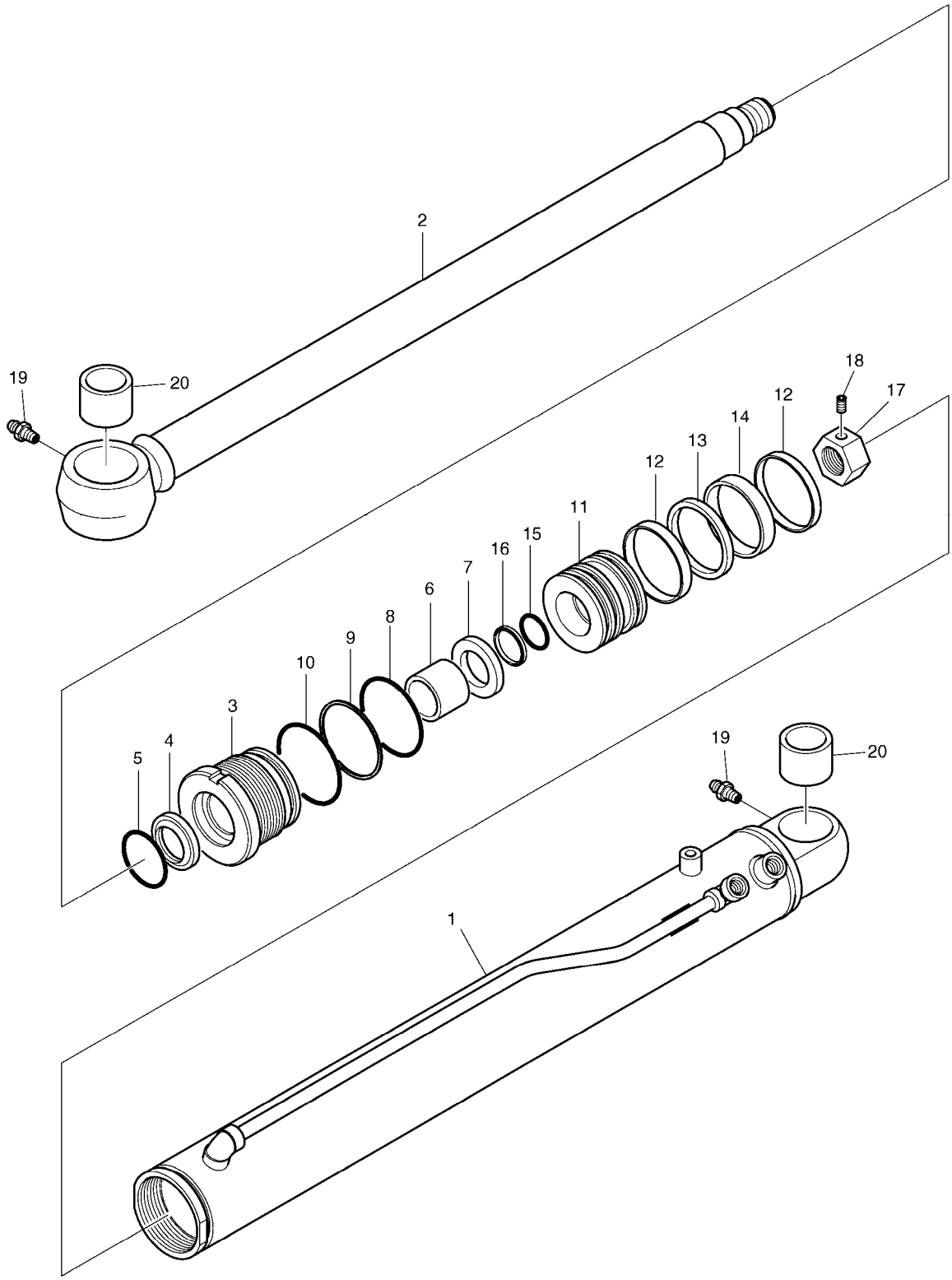

(THIS PARTS BOOK IS FOR REFERENCE ONLY.
PART NUMBERS AND SERAIL NUMBERS MAY BE
OUTDATED. ALWAYS USE THE ONLINE PARTS SYSTEM)

DATE	JAN. 04, 2013
3rd EDITION	

Fig. 4230 BOOM SWING CYLINDER VERIN DE FLECHE

Serial No. ;

Key No.	Part No.	Description	Description	Q'ty	S.C	Serial No.	ICA	Replaceable part	
								Part No.	Q'ty
4230 --	K1026782B	CYLINDER;BOOM SWING	OSCILLATION DE CYLINDE	1					
1	K9006230	TUBE ASS'Y	TUYAU FLEXIBLE	1					
2	K9006235	ROD ASS'Y	ENSEMBLE TIGE	1					
3	K9004962	COVER;ROD	COUVERCLE	1					
4	K9004939	WIPER;DUST	RACCORD ADAPTATEUR	1	K				
5	K9004940	STOPPER	ARRET	1					
6	2110-1184D82	DU-BUSH	DOUILLE DU	1					
7	K9004941	U-PACKING	JOINT EN U	1	K				
8	S8010751	O-RING	JOINT TORIQUE	1	K				
9	S8090750	RING;BACKUP	BAGUE	1	K				
10	S8010801	O-RING	JOINT CIRCULAIRE	1	K				
11	K9004942	PISTON	PISTON	1					
12	K9004943	RING;DUST	BAGUE	2	K				
13	K9004944	RING;GLYD	BAGUE	1	K				
14	K9004945	RING;WEAR	BAGUE D'USURE	1	K				
15	S8000321	O-RING	JOINT CIRCULAIRE	1	K				
16	S8060320	RING;BACKUP	BAGUE	1	K				
17	K9004934	NUT	ECROU	1					
18	S3523403	SCREW;SET	VIS	1					
19	S6710041	NIPPLE;GREASE	GRAISSEUR	2					
20	K9004963	BUSH	DOUILLE	2					
*	K9004947	SEAL KIT;BOOM SWING/BOOM	KIT D'ETANCHEITE	1					

(THIS PARTS BOOK IS FOR REFERENCE ONLY.
PART NUMBERS AND SERAIL NUMBERS MAY BE
OUTDATED. ALWAYS USE THE ONLINE PARTS SYSTEM)

DATE	JAN. 04, 2013
3rd EDITION	

Fig. 4240 DOZER CYLINDER
CYLINDRE DE DOZER

Serial No. ;

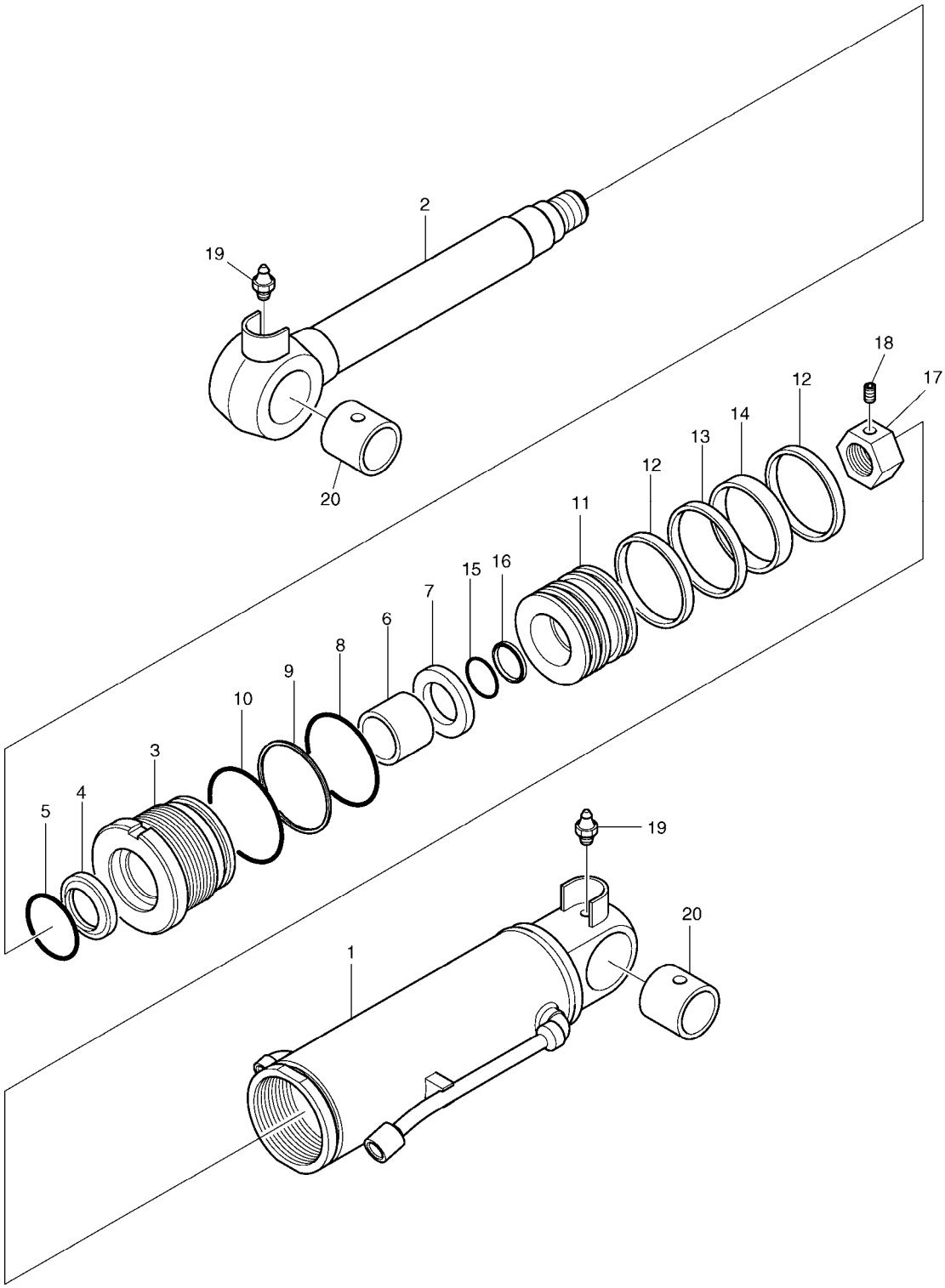

(THIS PARTS BOOK IS FOR REFERENCE ONLY.
PART NUMBERS AND SERAIL NUMBERS MAY BE
OUTDATED. ALWAYS USE THE ONLINE PARTS SYSTEM)

DATE	JAN. 04, 2013
3rd EDITION	

Fig. 4240 DOZER CYLINDER
CYLINDRE DE DOZER

Serial No. ;

Key No.	Part No.	Description	Description	Q'ty	S.C	Serial No.	ICA	Replaceable part	
								Part No.	Q'ty
4240 --	K1028460	CYLINDER;DOZER	CYLINDER;DOZER	1					
1	K9006231	TUBE ASS'Y	TUYAU FLEXIBLE	1					
2	K9006236	ROD ASS'Y	ENSEMBLE TIGE	1					
3	K9006244	COVER;ROD	COUVERCLE	1					
4	K9004939	WIPER;DUST	RACCORD ADAPTATEUR	1	K				
5	K9004940	STOPPER	ARRET	1					
6	2110-1184D82	DU-BUSH	DOUILLE DU	1					
7	K9004941	U-PACKING	JOINT EN U	1	K				
8	S8010801	O-RING	JOINT CIRCULAIRE	1	K				
9	K9006248	RING;BACKUP	BAGUE	1	K				
10	S8010851	O-RING	JOINT TORIQUE	1	K				
11	K9006239	PISTON	PISTON	1					
12	K9006250	RING;DUST	BAGUE	2	K				
13	K9006256	SEAL;SLIPPER	JOINT	1	K				
14	K9006252	RING;WEAR	BAGUE D'USURE	1	K				
15	S8000321	O-RING	JOINT CIRCULAIRE	1	K				
16	S8060320	RING;BACKUP	BAGUE	1	K				
17	K9004934	NUT	ECROU	1					
18	S3523403	SCREW;SET	VIS	1					
19	S6710041	NIPPLE;GREASE	GRAISSEUR	1					
20	K9004935	BUSH	DOUILLE	2					
*	K9006260	SEAL KIT;DOZER	KIT D'ETANCHEITE	1					

(THIS PARTS BOOK IS FOR REFERENCE ONLY.
PART NUMBERS AND SERAIL NUMBERS MAY BE
OUTDATED. ALWAYS USE THE ONLINE PARTS SYSTEM)

DATE	JAN. 04, 2013
3rd EDITION	

Fig. 4250 BOOM CYLINDER - LOCK VALVE
VERIN DE FLECHE

Serial No. ;

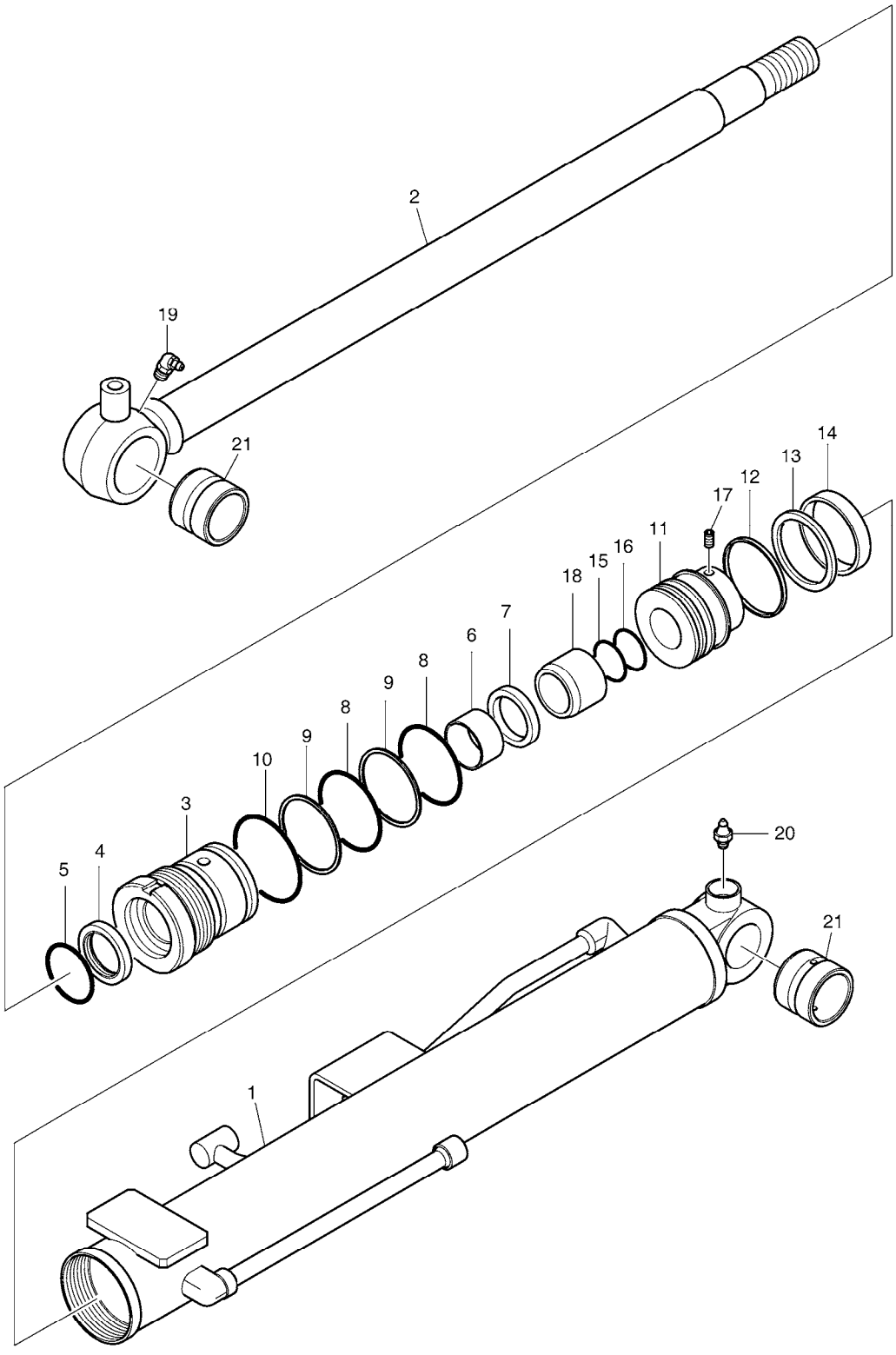

(THIS PARTS BOOK IS FOR REFERENCE ONLY.
PART NUMBERS AND SERAIL NUMBERS MAY BE
OUTDATED. ALWAYS USE THE ONLINE PARTS SYSTEM)

DATE	JAN. 04, 2013
3rd EDITION	

Fig. 4250 BOOM CYLINDER - LOCK VALVE VERIN DE FLECHE

Serial No. ;

Key No.	Part No.	Description	Description	Q'ty	S.C	Serial No.	ICA	Replaceable part	
								Part No.	Q'ty
4250 --	400309-00462	CYLINDER,BOOM;LOCK VALVE	VERIN DE FLECHE	1					
1	420406-01244	TUBE ASSY	TUYAU FLEXIBLE	1					
2	K9006233	ROD ASS'Y	ENSEMBLE TIGE	1					
3	K9006245	COVER;ROD	COUVERCLE	1					
4	K9004939	WIPER;DUST	RACCORD ADAPTATEUR	1	K				
5	K9004940	STOPPER	ARRET	1					
6	2110-1184D82	DU-BUSH	DOUILLE DU	1					
7	K9004941	U-PACKING	JOINT EN U	1	K				
8	S8010751	O-RING	JOINT TORIQUE	2	K				
9	S8090750	RING;BACKUP	BAGUE	2	K				
10	S8010801	O-RING	JOINT CIRCULAIRE	1	K				
11	K9006240	PISTON	PISTON	1					
12	K9004943	RING;DUST	BAGUE	1	K				
13	K9004944	RING;GLYD	BAGUE	1	K				
14	K9006251	RING;WEAR	BAGUE D'USURE	1	K				
15	S8010401	O-RING	JOINT TORIQUE	1	K				
16	K9006247	RING;BACKUP	BAGUE	1	K				
17	S3523403	SCREW;SET	VIS	1					
18	K9006241	RING;CUSHION	BAGUE	1					
19	S6710153	NIPPLE;GREASE	GRAISSEUR	1					
20	S6710041	NIPPLE;GREASE	GRAISSEUR	1					
21	131008-00138	BUSH	DOUILLE	2					
*	K9006257	SEAL KIT;BOOM	KIT D'ETANCHEITE	1					

(THIS PARTS BOOK IS FOR REFERENCE ONLY.
PART NUMBERS AND SERAIL NUMBERS MAY BE
OUTDATED. ALWAYS USE THE ONLINE PARTS SYSTEM)

DATE	JAN. 04, 2013
3rd EDITION	

Fig. 4260 ARM CYLINDER - LOCK VALVE
VERIN DE BALANCIER

Serial No. ;

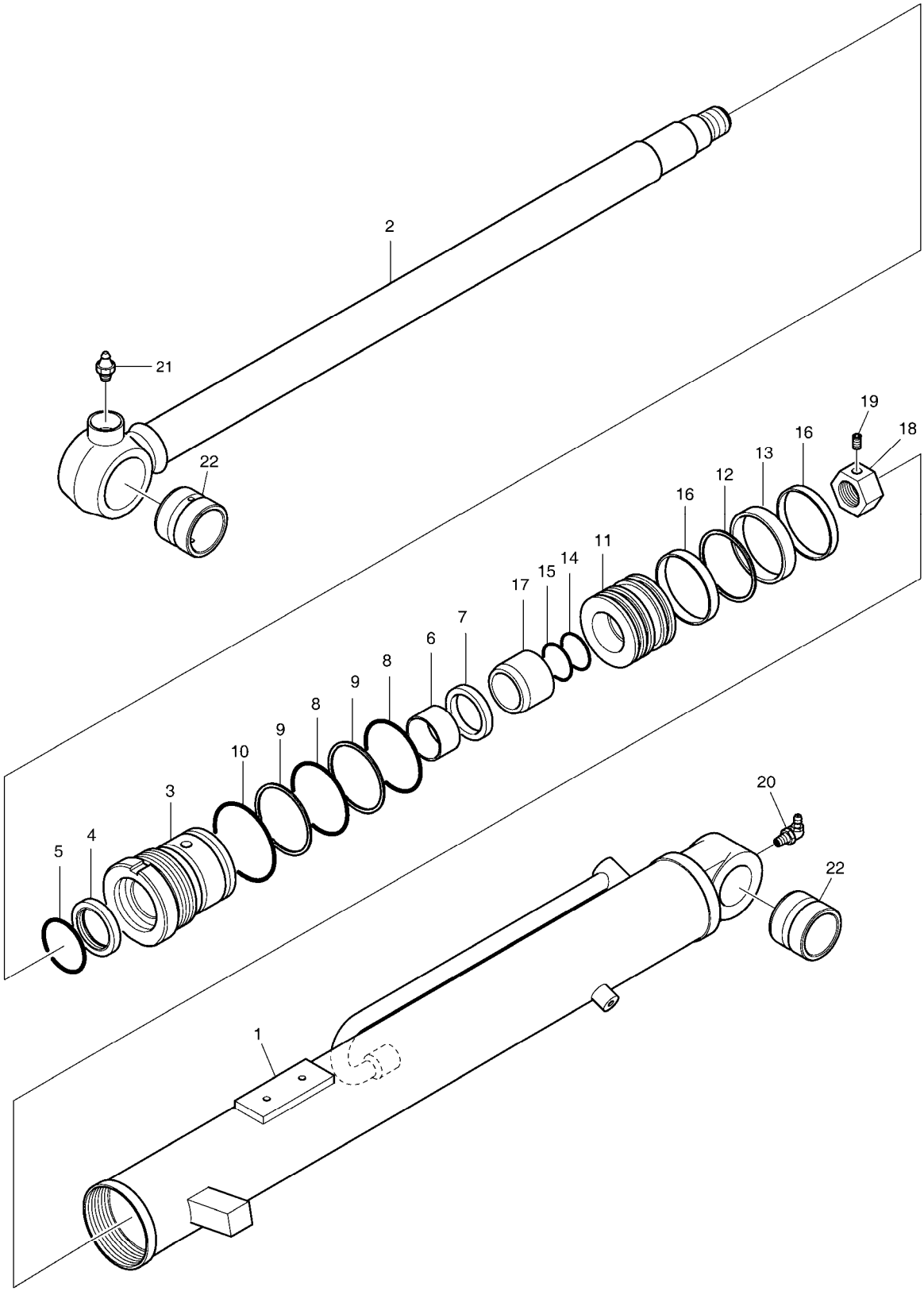

(THIS PARTS BOOK IS FOR REFERENCE ONLY.
PART NUMBERS AND SERAIL NUMBERS MAY BE
OUTDATED. ALWAYS USE THE ONLINE PARTS SYSTEM)

DATE	JAN. 04, 2013
3rd EDITION	

Fig. 4260 ARM CYLINDER - LOCK VALVE VERIN DE BALANCIER

Serial No. ;

Key No.	Part No.	Description	Description	Q'ty	S.C	Serial No.	ICA	Replaceable part	
								Part No.	Q'ty
4260 --	400305-00299	CYLINDER,ARM;LOCK VALVE	VERIN DE BALANCIER	1					
1	420406-01245	TUBE ASSY	TUYAU FLEXIBLE	1					
2	K9006232	ROD ASS'Y	ENSEMBLE TIGE	1					
3	K9006243	COVER;ROD	COUVERCLE	1					
4	K9004939	WIPER;DUST	RACCORD ADAPTATEUR	1	K				
5	K9004940	STOPPER	ARRET	1					
6	2110-1184D82	DU-BUSH	DOUILLE DU	1					
7	K9004941	U-PACKING	JOINT EN U	1	K				
8	S8010701	O-RING	JOINT CIRCULAIRE	2	K				
9	1.180-00259	RING;BACK UP	BAGUE	2	K				
10	S8010751	O-RING	JOINT TORIQUE	1	K				
11	K9006238	PISTON	PISTON	1					
12	K9006255	SEAL;SUPPER	JOINT	1	K				
13	K9006253	RING;WEAR	BAGUE D'USURE	1	K				
14	S8000321	O-RING	JOINT CIRCULAIRE	1	K				
15	S8060320	RING;BACKUP	BAGUE	1	K				
16	K9006249	RING;DUST	BAGUE	2	K				
17	K9004950A	RING;CUSHION	BAGUE	1					
18	K9004934	NUT	ECROU	1					
19	S3523403	SCREW;SET	VIS	1					
20	S6710153	NIPPLE;GREASE	GRAISSEUR	1					
21	S6710041	NIPPLE;GREASE	GRAISSEUR	1					
22	131008-00138	BUSH	DOUILLE	2					
*	K9006258	SEAL KIT;ARM	KIT D'ETANCHEITE	1					

(THIS PARTS BOOK IS FOR REFERENCE ONLY.
PART NUMBERS AND SERAIL NUMBERS MAY BE
OUTDATED. ALWAYS USE THE ONLINE PARTS SYSTEM)

DATE	JAN. 04, 2013
3rd EDITION	

Fig. 5100 TOOLS OUTILLAGE

Serial No. ;

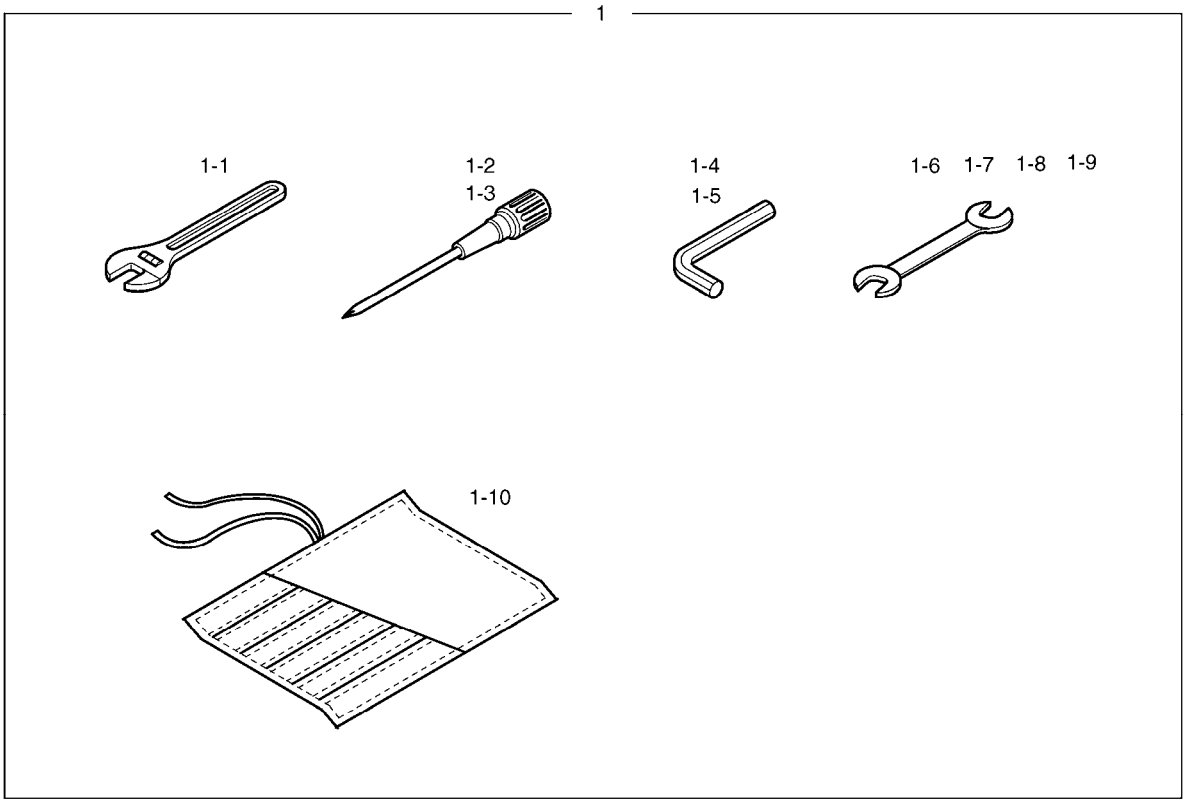

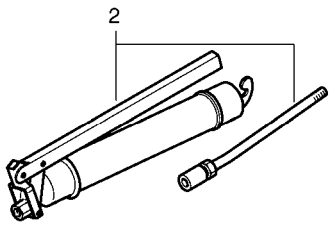

(THIS PARTS BOOK IS FOR REFERENCE ONLY.
PART NUMBERS AND SERAIL NUMBERS MAY BE
OUTDATED. ALWAYS USE THE ONLINE PARTS SYSTEM)

Fig. 5100 TOOLS OUTILLAGE

Serial No. ;

Key No.	Part No.	Description	Description	Q'ty	S.C	Serial No.	ICA	Replaceable part	
								Part No.	Q'ty
5100 --	K1030863	TOOLS	OUTILLAGE	-	D				
1	2199-1063F41	TOOL ASS'Y	ENSEMBLE OUTILLAGE	1					
1-1	T6580016	. WRENCH;ADJUST	. CLE A MOLETTE	1					
1-2	T7050003	. DRIVER(-)	. CONDUCTEUR	1					
1-3	T7050021	. DRIVER	. CONDUCTEUR	1					
1-4	T6550005	. L-WRENCH	. CLE MALE	1					
1-5	T6550009	. L-WRENCH	. CLE MALE	1					
1-6	T6510062	. SPANNER	. CLE PLATE	1					
1-7	T6500066	. SPANNER 10X13	. CLE PLATE	1					
1-8	T6510072	. SPANNER	. CLE PLATE	1					
1-9	T6510079	. SPANNER 22x24	. CLE PLATE	1					
1-10	K1033244	. SACK;TOOL	. ENSEMBLE OUTILLAGE	1					
2	2199-9008	GREASE GUN	PISTOLET DE GRAISSAGE	1					

(THIS PARTS BOOK IS FOR REFERENCE ONLY.
PART NUMBERS AND SERAIL NUMBERS MAY BE
OUTDATED. ALWAYS USE THE ONLINE PARTS SYSTEM)

DATE	JAN. 04, 2013
3rd EDITION	

Fig. 5110 SPARE PARTS PIECES DE RECHANGE

Serial No. ;

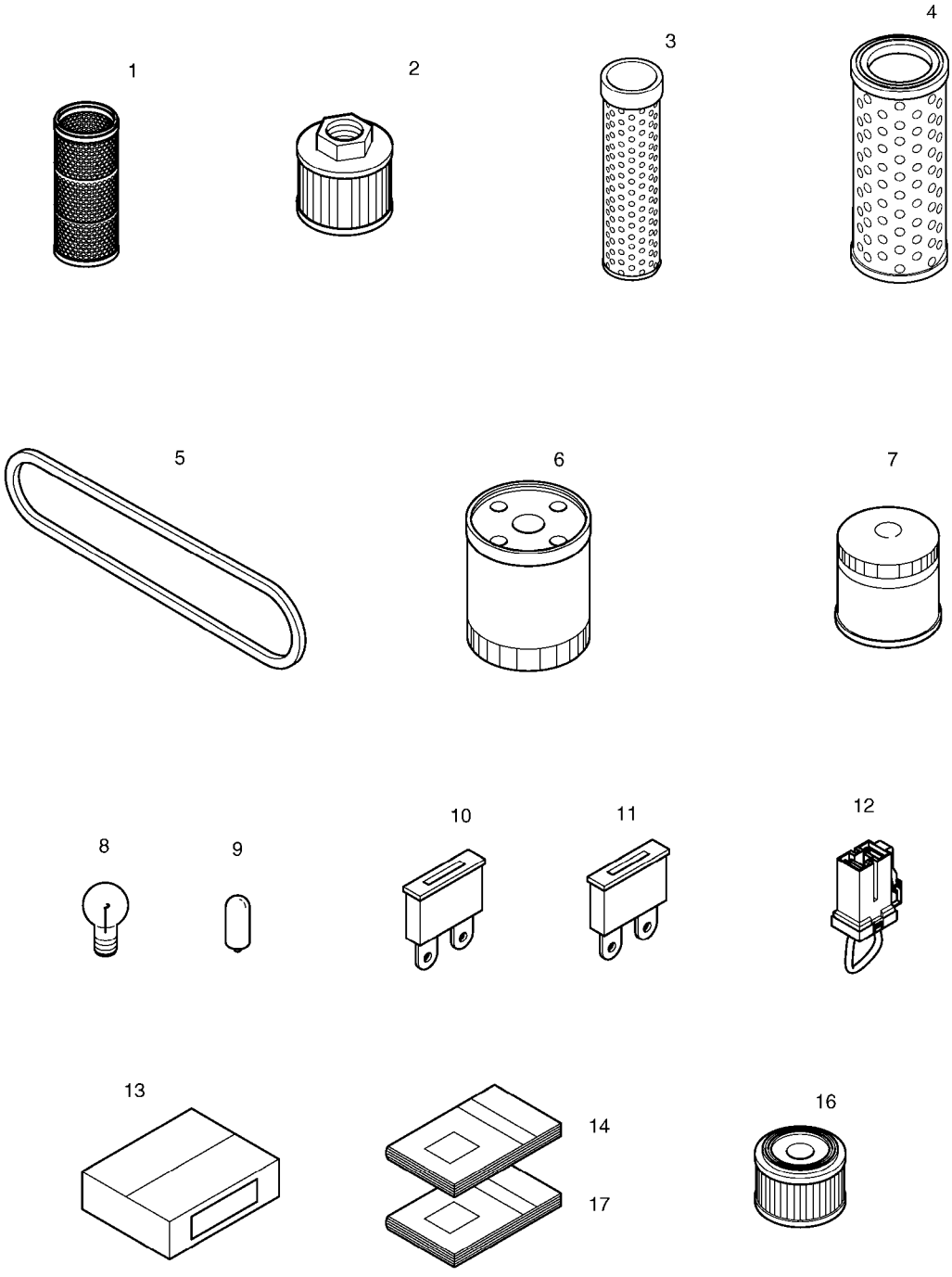

(THIS PARTS BOOK IS FOR REFERENCE ONLY.
PART NUMBERS AND SERAIL NUMBERS MAY BE
OUTDATED. ALWAYS USE THE ONLINE PARTS SYSTEM)

DATE	JAN. 04, 2013
3rd EDITION	

Fig. 5110 SPARE PARTS PIECES DE RECHANGE

Serial No. ;

Key No.	Part No.	Description	Description	Q'ty	S.C	Serial No.	ICA	Replaceable part	
								Part No.	Q'ty
5110 --	K1036949A	SPARE PARTS	PIECES DE RECHANGE	-	D				
1	K1011327	ELEMENT;RETURN FILTER	ELEMENT	1					
2	K1011555	FILTER;SUCTION	FILTRE	1					
3	K1025337	ELEMENT;AIR(INNER)	ELEMENT	1					
4	K1025338	ELEMENT;AIR(OUTER)	ELEMENT	1					
5	DS3202026	BELT;FAN	COURROIE	1					
6	K1045098	FILTER;E/G FUEL	FILTRE	1					
7	K1025334	FILTER;OIL	FILTRE	1					
8	2515-1016D2	BULB 12V 55W	AMPOULE	1					
9	515-00001A	BULB	AMPOULE	2					
10	2527-1017	FUSE;BLADE 15A	FUSIBLE	2					
11	2527-1016	FUSE;BLADE 10A	FUSIBLE	2					
12	527-00004	FUSIBLE LINK	FUSIBLE	1					
13	2512-9007	BOX;SPARE	BOITE	1					
14	K1036953EF	PARTS BOOK	CATALOGUE DES PIECES D	1					
16	K1029257	ELEMENT;AIR BREATHER	ELEMENT	1					
17	K1036319E	OPERATION MANUAL	MANUEL D'OPERATION	1					

(THIS PARTS BOOK IS FOR REFERENCE ONLY.
PART NUMBERS AND SERAIL NUMBERS MAY BE
OUTDATED. ALWAYS USE THE ONLINE PARTS SYSTEM)

DATE	JAN. 04, 2013
3rd EDITION	

Fig. 5120 NAME PLATE - EXPORT
PLAQUE D'IDENTIFICATION

Serial No. ;

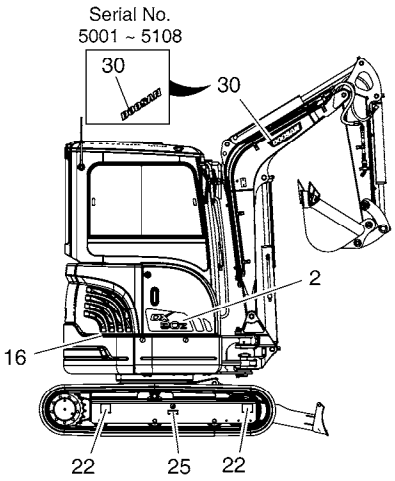

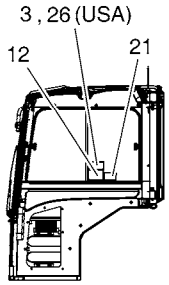

RIGHT SIDE VIEW
OF CABIN INSIDE

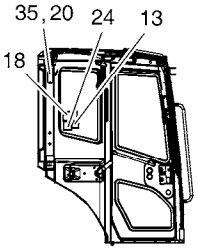

LEFT SIDE VIEW
OF CABIN INSIDE

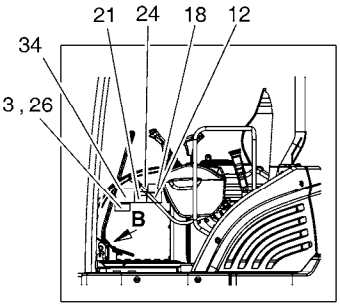

CANOPY TYPE

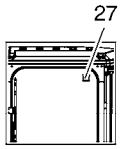

CABIN TYPE

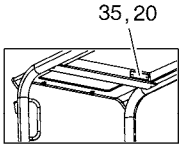

CANOPY TYPE

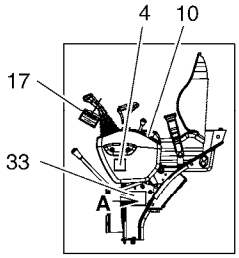

LEFT SIDE VIEW
OF CONTROL STAND

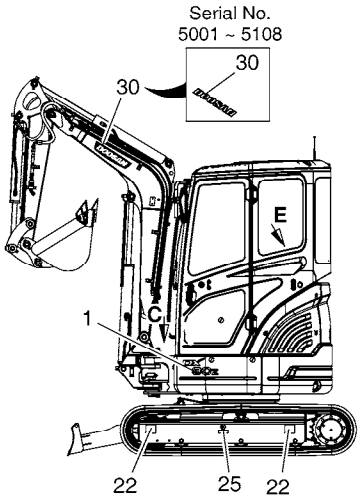

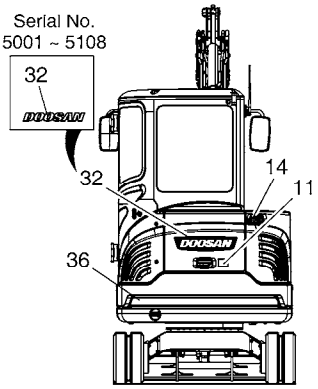

(CABIN TYPE)
(CANOPY TYPE : RIGHT TANK TOP)

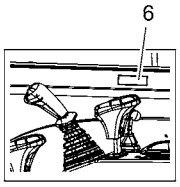

RIGHT SIDE VIEW
OF CONTROL STAND



VIEW **A**

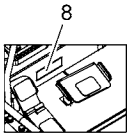

VIEW **B**

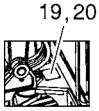

VIEW **C**

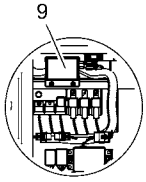

VIEW **E**

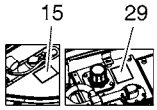

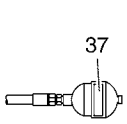

ACCUMULATOR

(THIS PARTS BOOK IS FOR REFERENCE ONLY.
PART NUMBERS AND SERAIL NUMBERS MAY BE
OUTDATED. ALWAYS USE THE ONLINE PARTS SYSTEM)

DATE	JAN. 04, 2013
3rd EDITION	

Fig. 5120 NAME PLATE - EXPORT PLAQUE D'IDENTIFICATION

Serial No. ;

Key No.	Part No.	Description	Description	Q'ty	S.C	Serial No.	ICA	Replaceable part	
								Part No.	Q'ty
5120 --	K1039496B	NAME PLATE ASS'Y-EXPORT	PLAQUE D'IDENTIFICATION	-	D	5001-5108			
	950205-00684	DECAL ASSY;EXPORT	DECALQUE D'IDENTIFICAT	-	D	5109-			
1	K1039479	PLATE;NAME	PLAQUE	1					
2	K1039481	PLATE;NAME	PLAQUE	1					
3	2190-3297	PLATE;NAME	PLAQUE	1					
4	2190-3309	PLATE;NAME(LEVER LOCK)	PLAQUE D`IDENTIFICATIOI	1					
5	K1039488A	PLATE;NAME	PLAQUE	1					
6	2190-2878	PLATE;NAME	PLAQUE D`IDENTIFICATIOI	1					
8	K1028331	PLATE;NAME	PLAQUE	1					
9	K1030452	NAME PLATE;FUSE BOX	PLAQUE	1					
10	2190-2633	PLATE;NAME	PLAQUE D'IDENTIFICATION	1					
11	190-00694	PLATE;NAME	PLAQUE D'IDENTIFICATION	1					
12	190-00688	PLATE;NAME	PLAQUE D'IDENTIFICATION	1					
13	2190-3388	PLATE;NAME	PLAQUE D'IDENTIFICATION	1					
14	K1033082	DECAL(DANGER)	DECALQUE	1					
15	190-00692	PLATE;NAME	PLAQUE D'IDENTIFICATION	1					
16	2190-2533A	PLATE;NAME	PLAQUE D'IDENTIFICATION	1					
17	190-00695A	PLATE;NAME	PLAQUE D'IDENTIFICATION	1					
18	2190-3386A	PLATE;NAME	PLAQUE D'IDENTIFICATION	1					
19	K1011647B	PLATE;NAME	PLAQUE D'IDENTIFICATION	1		5001-5016	I	K1011647C	1
	K1011647C	DECAL	DECALQUE	1		5017-			
20	2122-1002D2	RIVET	RIVET	6					
21	190-00689	PLATE;NAME	PLAQUE D'IDENTIFICATION	1					
22	K1042074	PLATE;NAME	PLAQUE D'IDENTIFICATION	4		5001-5105	I	K1042074A	4
	K1042074A	PLATE;NAME	PLAQUE D'IDENTIFICATION	4		5106-			
24	190-00693	PLATE;NAME	PLAQUE D'IDENTIFICATION	1					
25	190-00122	PLATE;NAME	PLAQUE	2					
26	K1028095	PLATE;NAME	PLAQUE	1					
27	2190-2480	PLATE;NAME	PLAQUE D'IDENTIFICATION	1					
29	190-00691A	PLATE;NAME	PLAQUE D'IDENTIFICATION	1					
30	K1011645D10	PLATE;NAME	PLAQUE D'IDENTIFICATION	2		5001-5108	I	950205-00657	2
	950205-00657	DECAL(DOOSAN)	DECALQUE	2		5109-			
32	K1011645D15	PLATE;NAME	PLAQUE	1		5001-5108	I	950205-00658	1
	950205-00658	DECAL(DOOSAN)	DECALQUE	1		5109-			
33	2190-2556D163	PLATE;NAME	PLAQUE	1		5001-5016	Y	2190-2556D165	1
	2190-2556D165	PLATE;NAME	PLAQUE	1		5017-5265	Y	2190-2556D163	1
	2190-2556D163	PLATE;NAME	PLAQUE	1		5266-			
34	2190-2556D164	PLATE;NAME	PLAQUE	1		5001-5016	Y	2190-2556D166	1

(THIS PARTS BOOK IS FOR REFERENCE ONLY. PART NUMBERS AND DETAIL NUMBERS MAY BE OUTDATED. ALWAYS USE THE ONLINE PARTS SYSTEM)

DATE	JAN. 04, 2013
3rd EDITION	

Fig. 5120 NAME PLATE - EXPORT
PLAQUE D'IDENTIFICATION

Serial No. ;

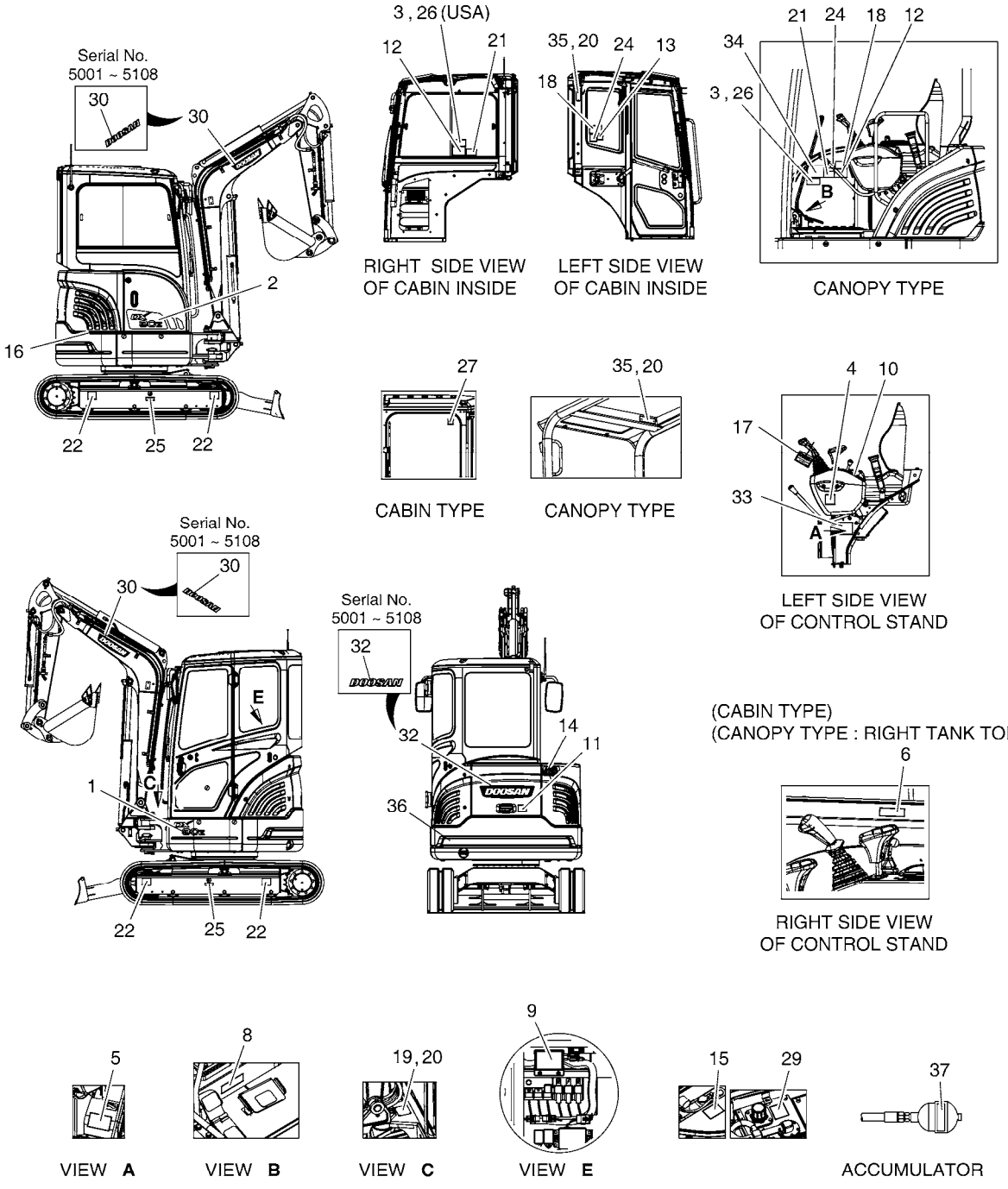

(THIS PARTS BOOK IS FOR REFERENCE ONLY.
PART NUMBERS AND SERAIL NUMBERS MAY BE
OUTDATED. ALWAYS USE THE ONLINE PARTS SYSTEM)

Fig. 5120 NAME PLATE - EXPORT
PLAQUE D'IDENTIFICATION

Serial No. ;

Key No.	Part No.	Description	Description	Q'ty	S.C	Serial No.	ICA	Replaceable part	
								Part No.	Q'ty
5120 -	2190-2556D166	PLATE;NAME	PLAQUE	1		5017-5265	Y	2190-2556D164	1
	2190-2556D164	PLATE;NAME	PLAQUE	1		5266-			
35	K1028065	DECAL	DECALQUE	1		5001-5121			
	950209-01145	PLATE,NAME	PLAQUE	1		5122-5919	I	950209-01145B	1
	950209-01145B	PLATE,NAME	PLAQUE D'IDENTIFICATION	1		5920-			
36	K1029125	DECAL	DECALQUE	1					
37	190-00703	PLATE;NAME	PLAQUE D'IDENTIFICATION	1					

(THIS PARTS BOOK IS FOR REFERENCE ONLY.
PART NUMBERS AND SERAIL NUMBERS MAY BE
OUTDATED. ALWAYS USE THE ONLINE PARTS SYSTEM)

DATE	JAN. 04, 2013
3rd EDITION	

Fig. 5130 NAME PLATE - EUROPE
PLAQUE D'IDENTIFICATION

Serial No. ;

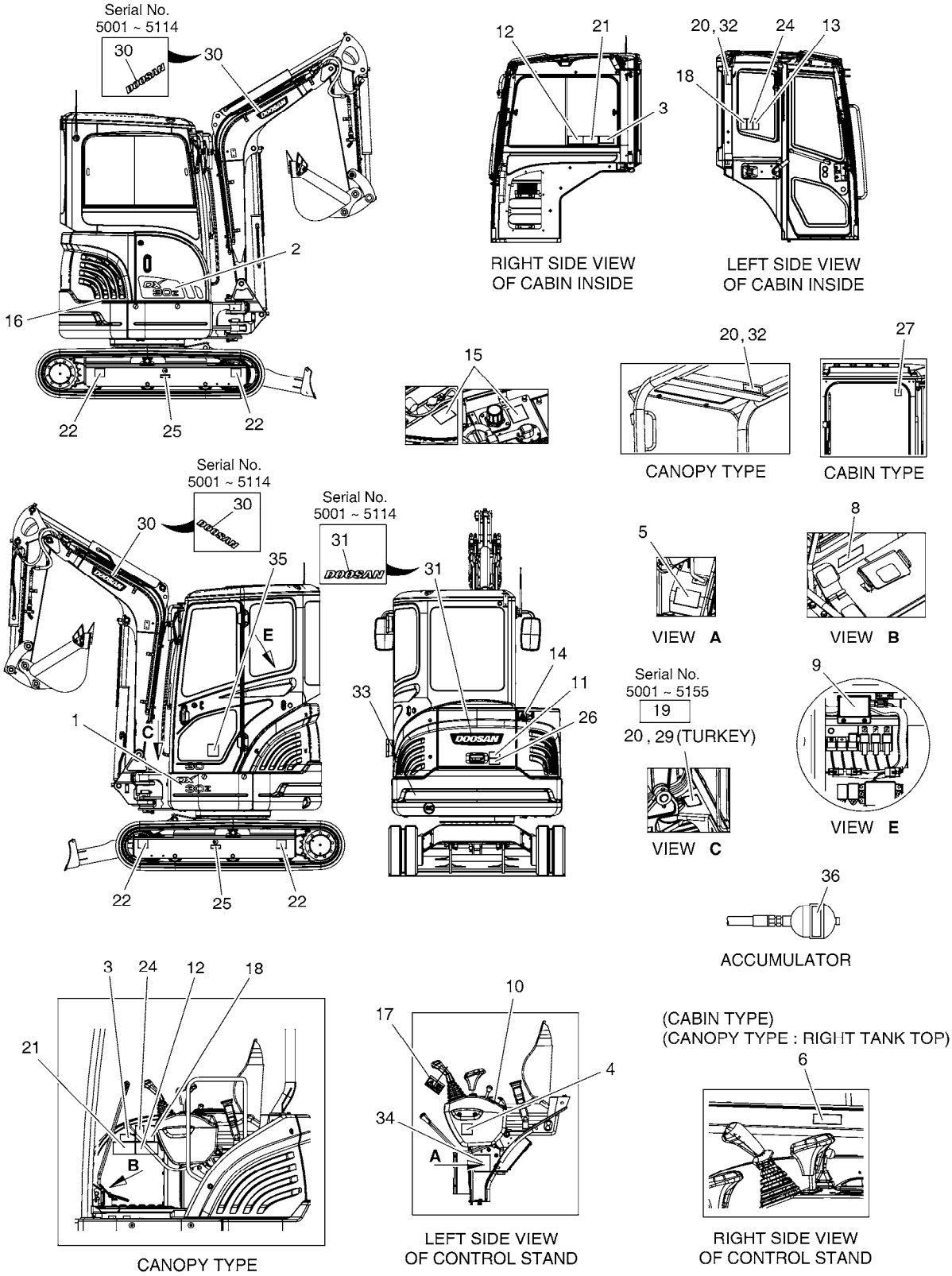

(THIS PARTS BOOK IS FOR REFERENCE ONLY.
PART NUMBERS AND SERAIL NUMBERS MAY BE
OUTDATED. ALWAYS USE THE ONLINE PARTS SYSTEM)

DATE	JAN. 04, 2013
3rd EDITION	

Fig. 5130 NAME PLATE - EUROPE
PLAQUE D'IDENTIFICATION

Serial No. ;

Key No.	Part No.	Description	Description	Q'ty	S.C	Serial No.	ICA	Replaceable part	
								Part No.	Q'ty
5130 --	K1039499A	NAME PLATE ASS'Y-EUROPE	PLAQUE D'IDENTIFICATION	-	D	5001-5114			
	950205-00685	DECAL ASSY;EUROPE	DECALQUE D'IDENTIFICAT	-	D	5115-			
1	K1039479	PLATE;NAME	PLAQUE	1					
2	K1039481	PLATE;NAME	PLAQUE	1					
3	2190-3297	PLATE;NAME	PLAQUE	1					
4	2190-3309	PLATE;NAME(LEVER LOCK)	PLAQUE D`IDENTIFICATIO	1					
5	K1026650A	PLATE;NAME	PLAQUE	1					
6	2190-2878	PLATE;NAME	PLAQUE D`IDENTIFICATIO	1					
8	K1028331	PLATE;NAME	PLAQUE	1					
9	K1030452	NAME PLATE;FUSE BOX	PLAQUE	1					
10	2190-2633	PLATE;NAME	PLAQUE D'IDENTIFICATION	1					
11	190-00095	PLATE;NAME	PLAQUE D'IDENTIFICATION	1					
12	190-00092	PLATE;NAME	PLAQUE D'IDENTIFICATION	1					
13	190-00093	PLATE;NAME(SLIDE WINDOW)	PLAQUE	1					
14	K1029440	PLATE;NAME	PLAQUE	1					
15	190-00097	NAME PLATE	PLAQUE D'IDENTIFICATION	2					
16	190-00100	PLATE;NAME(BATTERY)	PLAQUE	1					
17	190-00098A	PLATE;NAME	PLAQUE	1					
18	190-00521	PLATE;NAME	PLAQUE	1					
19	K1012204A	PLATE;NAME	PLAQUE D'IDENTIFICATION	1		5001-5016	I	K1012204B	1
	K1012204B	PLATE;NAME	PLAQUE D'IDENTIFICATION	1		5017-5105	I	K1012204C	1
	K1012204C	PLATE;NAME	PLAQUE D'IDENTIFICATION	1		5106-5155			
20	2122-1002D2	RIVET	RIVET	6					
21	190-00096	PLATE;NAME(ELEC. LINE)	PLAQUE D'IDENTIFICATION	1					
22	K1042074	PLATE;NAME	PLAQUE D'IDENTIFICATION	4		5001-5105	I	K1042074A	4
	K1042074A	PLATE;NAME	PLAQUE D'IDENTIFICATION	4		5106-			
24	190-00094	PLATE;NAME(CAUTION)	PLAQUE D'IDENTIFICATION	1					
25	190-00122	PLATE;NAME	PLAQUE	2					
26	190-00557	PLATE;NAME	PLAQUE	1					
27	190-00101	PLATE;NAME(HAMMER)	PLAQUE	1					
29	K1012205A	PLATE;NAME	PLAQUE D'IDENTIFICATION	1		5001-5016	I	K1012205B	1
	K1012205B	PLATE;NAME	PLAQUE D'IDENTIFICATION	1		5017-5105	I	K1012205C	1
	K1012205C	PLATE;NAME	PLAQUE D'IDENTIFICATION	1		5106-			
30	K1011645D10	PLATE;NAME	PLAQUE D'IDENTIFICATION	2		5001-5114	I	950205-00657	2
	950205-00657	DECAL(DOOSAN)	DECALQUE	2		5115-			
31	K1011645D15	PLATE;NAME	PLAQUE	1		5001-5114	I	950205-00658	1
	950205-00658	DECAL(DOOSAN)	DECALQUE	1		5115-			
32	K1028065	DECAL	DECALQUE	1		5001-5121			

(THIS PARTS BOOK IS FOR REFERENCE ONLY.
PART NUMBERS AND SERIAL NUMBERS MAY BE
OUTDATED. ALWAYS USE THE ONLINE PARTS SYSTEM)

DATE	JAN. 04, 2013
3rd EDITION	

Fig. 5130 NAME PLATE - EUROPE
PLAQUE D'IDENTIFICATION

Serial No. ;

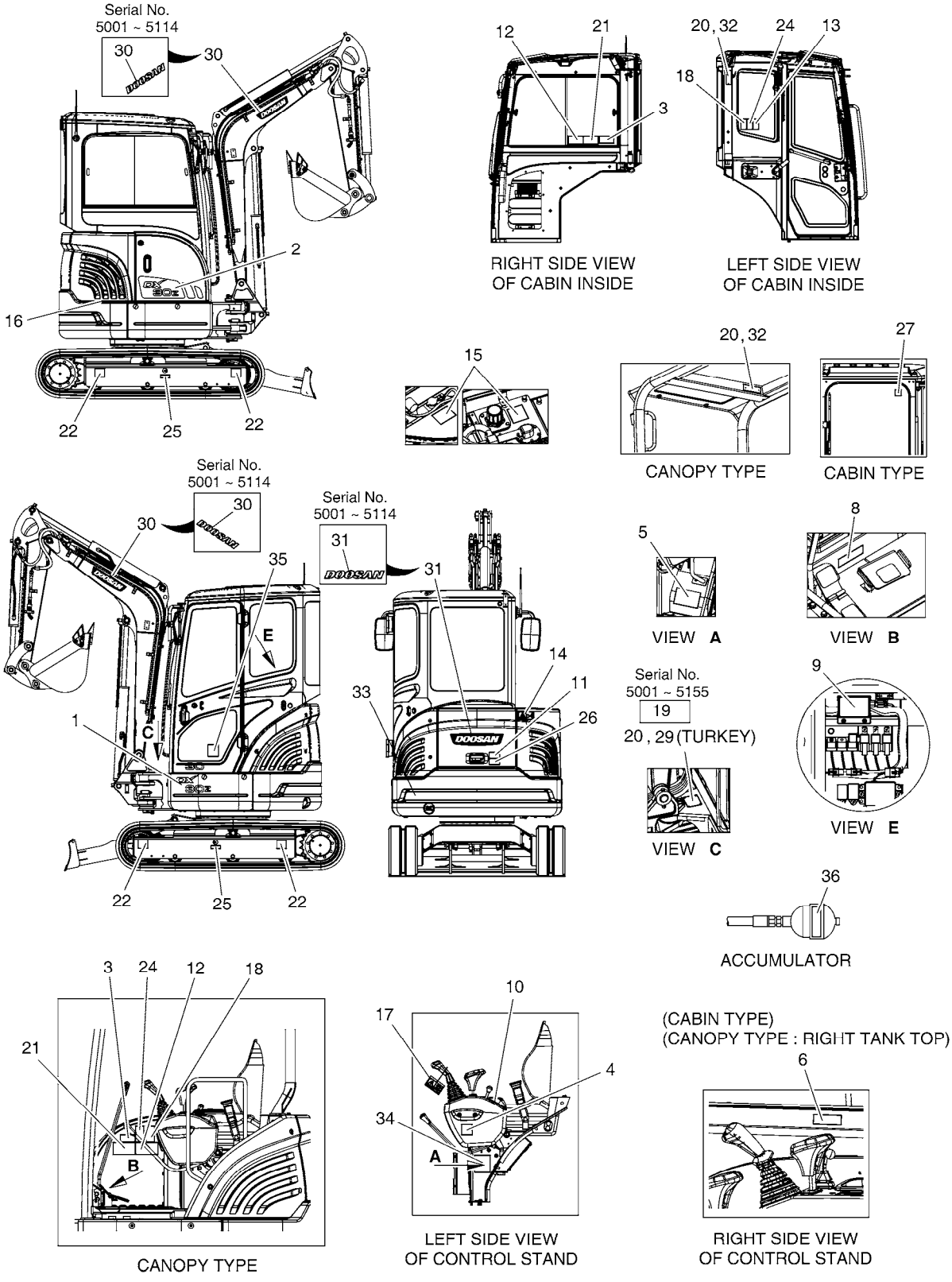

(THIS PARTS BOOK IS FOR REFERENCE ONLY.
PART NUMBERS AND SERAIL NUMBERS MAY BE
OUTDATED. ALWAYS USE THE ONLINE PARTS SYSTEM)

DATE	JAN. 04, 2013
3rd EDITION	

Fig. 5130 NAME PLATE - EUROPE
PLAQUE D'IDENTIFICATION

Serial No. ;

Key No.	Part No.	Description	Description	Q'ty	S.C	Serial No.	ICA	Replaceable part	
								Part No.	Q'ty
5130 -	950209-01145	PLATE,NAME	PLAQUE	1		5122-5919	I	950209-01145B	1
	950209-01145B	PLATE,NAME	PLAQUE D'IDENTIFICATION	1		5920-			
33	K1029125	DECAL	DECALQUE	1					
34	190-00730D5	DECAL	PLAQUE D'IDENTIFICATION	1					
35	190-01059D5	DECAL	DECALQUE	1					
36	190-00099	PLATE;NAME	PLAQUE	1					

(THIS PARTS BOOK IS FOR REFERENCE ONLY.
PART NUMBERS AND SERAIL NUMBERS MAY BE
OUTDATED. ALWAYS USE THE ONLINE PARTS SYSTEM)

DATE	JAN. 04, 2013
3rd EDITION	

Fig. 5140 DECAL - LIFTING CAPA DECALQUE

Serial No. ;

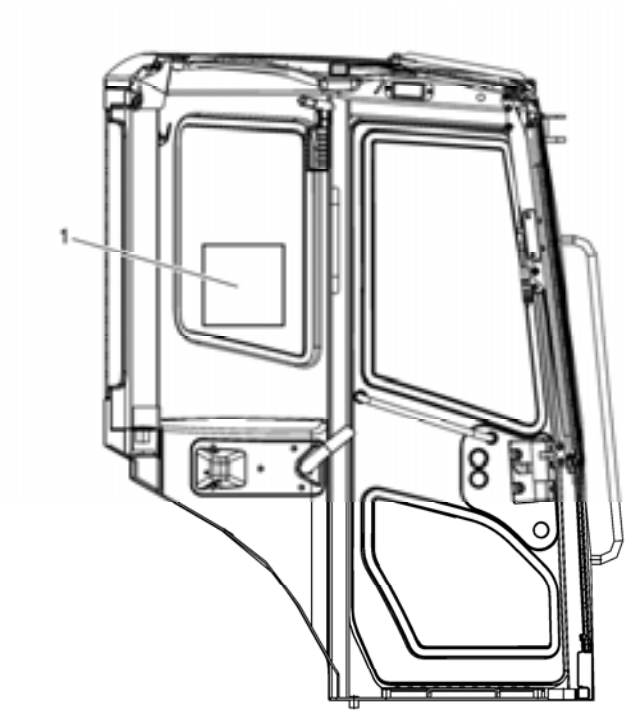

CABIN TYPE(INSIDE L.H)



CABIN TYPE(ROOF INNER)

(THIS PARTS BOOK IS FOR REFERENCE ONLY.
PART NUMBERS AND SERAIL NUMBERS MAY BE
OUTDATED. ALWAYS USE THE ONLINE PARTS SYSTEM)

DATE	JAN. 04, 2013
3rd EDITION	

Fig. 5140 DECAL - LIFTING CAPA DECALQUE

Serial No. ;

Key No.	Part No.	Description	Description	Q'ty	S.C	Serial No.	ICA	Replaceable part	
								Part No.	Q'ty
5140 --	K1052011	NAME PLATE ASS'Y	PLAQUE D'IDENTIFICATION	-	D				
1	K1051897	PLATE;NAME	PLAQUE	1					

(THIS PARTS BOOK IS FOR REFERENCE ONLY.
PART NUMBERS AND SERAIL NUMBERS MAY BE
OUTDATED. ALWAYS USE THE ONLINE PARTS SYSTEM)

DATE	JAN. 04, 2013
3rd EDITION	

Fig. 5150 DECAL - SERIAL(EUROPE) DECAL

Serial No. ;

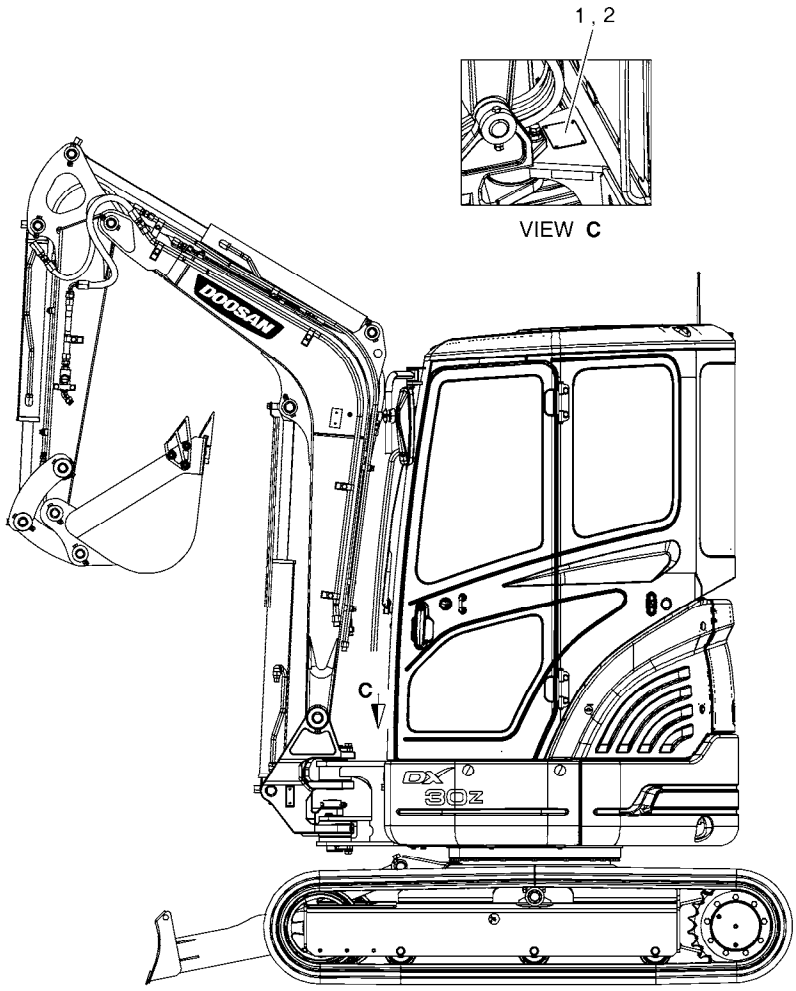

(THIS PARTS BOOK IS FOR REFERENCE ONLY.
PART NUMBERS AND SERAIL NUMBERS MAY BE
OUTDATED. ALWAYS USE THE ONLINE PARTS SYSTEM)

Fig. 5150 DECAL - SERIAL(EUROPE)
DECAL

Serial No. ;

Key No.	Part No.	Description	Description	Q'ty	S.C	Serial No.	ICA	Replaceable part	
								Part No.	Q'ty
5150 --	950209-02414	DECAL & NAME PLATE ASSY	PLAQUE D'IDENTIFICATION	-	D				
1	950205-01325	DECAL	PLAQUE D'IDENTIFICATION	1		5001-5257	I	950205-01325A	1
	950205-01325A	DECAL	PLAQUE D'IDENTIFICATION	1		5258-			
2	2122-1002D2	RIVET	RIVET	4					

(THIS PARTS BOOK IS FOR REFERENCE ONLY.
PART NUMBERS AND SERAIL NUMBERS MAY BE
OUTDATED. ALWAYS USE THE ONLINE PARTS SYSTEM)

DATE	JAN. 04, 2013
3rd EDITION	

Fig. 5160 DECAL - ROPS(EUROPE) - CANOPY DECALQUE

Serial No. ;

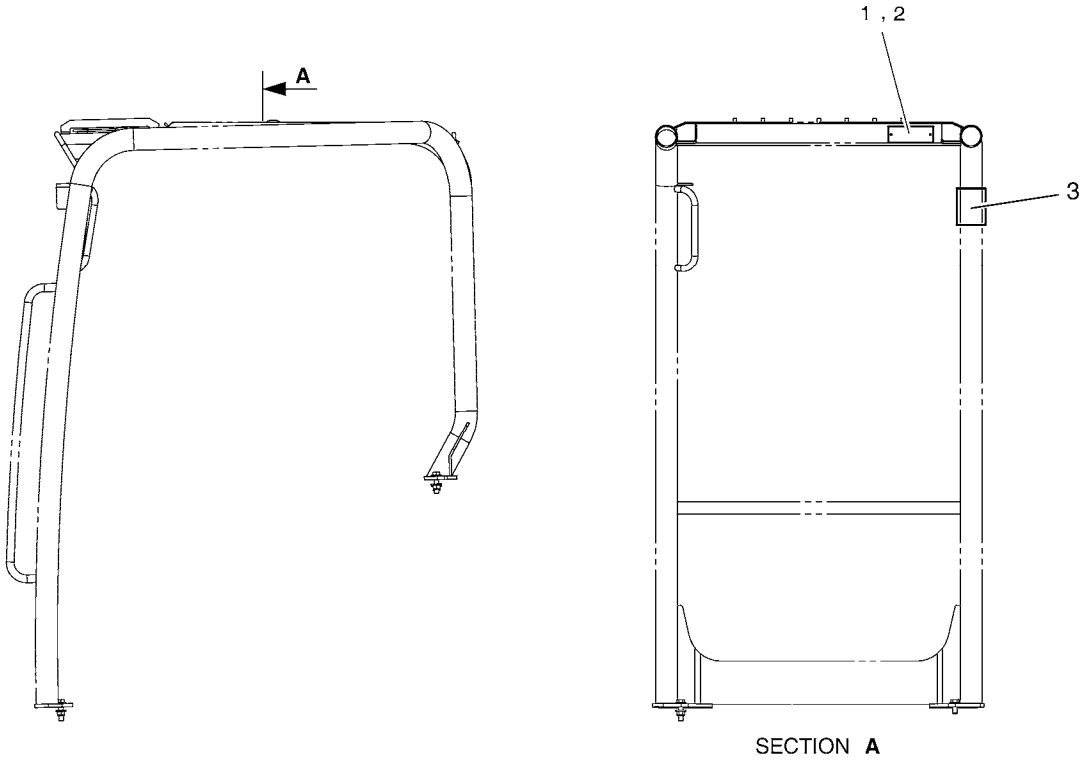

(THIS PARTS BOOK IS FOR REFERENCE ONLY.
PART NUMBERS AND SERAIL NUMBERS MAY BE
OUTDATED. ALWAYS USE THE ONLINE PARTS SYSTEM)

DATE	JAN. 04, 2013
3rd EDITION	

Fig. 5160 DECAL - ROPS(EUROPE) - CANOPY DECALQUE

Serial No. ;

Key No.	Part No.	Description	Description	Q'ty	S.C	Serial No.	ICA	Replaceable part	
								Part No.	Q'ty
5160 --	950209-04106	NAME PLATE ASSY;ROPS EURO	PLAQUE D'IDENTIFICATION	-	D				
1	950209-01145B	PLATE,NAME	PLAQUE D'IDENTIFICATION	1					
2	2122-1002D2	RIVET	RIVET	2					
3	950205-01169	DECAL	DECALQUE	1					

(THIS PARTS BOOK IS FOR REFERENCE ONLY.
PART NUMBERS AND SERAIL NUMBERS MAY BE
OUTDATED. ALWAYS USE THE ONLINE PARTS SYSTEM)

DATE	JAN. 04, 2013
3rd EDITION	

Fig. 6100 COUNTER WEIGHT
MASSE D'EQUILIBRAGE

Serial No. ;

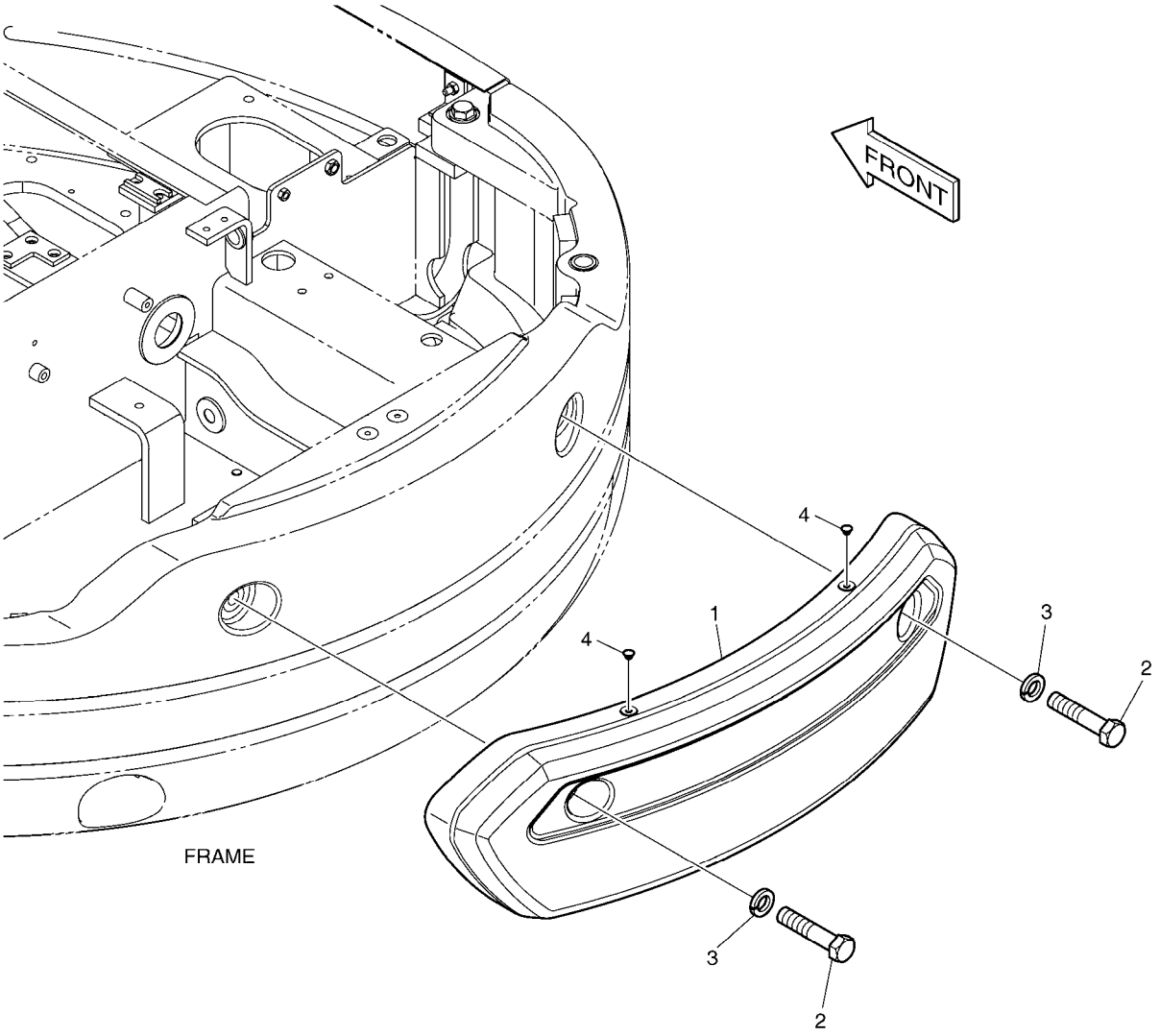

(THIS PARTS BOOK IS FOR REFERENCE ONLY.
PART NUMBERS AND SERAIL NUMBERS MAY BE
OUTDATED. ALWAYS USE THE ONLINE PARTS SYSTEM)

DATE	JAN. 04, 2013
3rd EDITION	

Fig. 6100 COUNTER WEIGHT
MASSE D'EQUILIBRAGE

Serial No. ;

Key No.	Part No.	Description	Description	Q'ty	S.C	Serial No.	ICA	Replaceable part	
								Part No.	Q'ty
6100 --	K1033980	COUNTER WEIGHT;OPT.	MASSE D'EQUILIBRAGE	-	D				
1	K1025348	COUNTER WEIGHT	CONTRE- POIDS	1					
2	S0570766	BOLT M20X2.5X95	BOULON	2					
3	S5103103	WASHER;SPRING	RONDELLE	2					
4	K1027224	CAP	CHAPEAU	2					

(THIS PARTS BOOK IS FOR REFERENCE ONLY.
PART NUMBERS AND SERAIL NUMBERS MAY BE
OUTDATED. ALWAYS USE THE ONLINE PARTS SYSTEM)

DATE	JAN. 04, 2013
3rd EDITION	

Fig. 6110 ACCUMULATOR ACCUMULATEUR

Serial No. ;

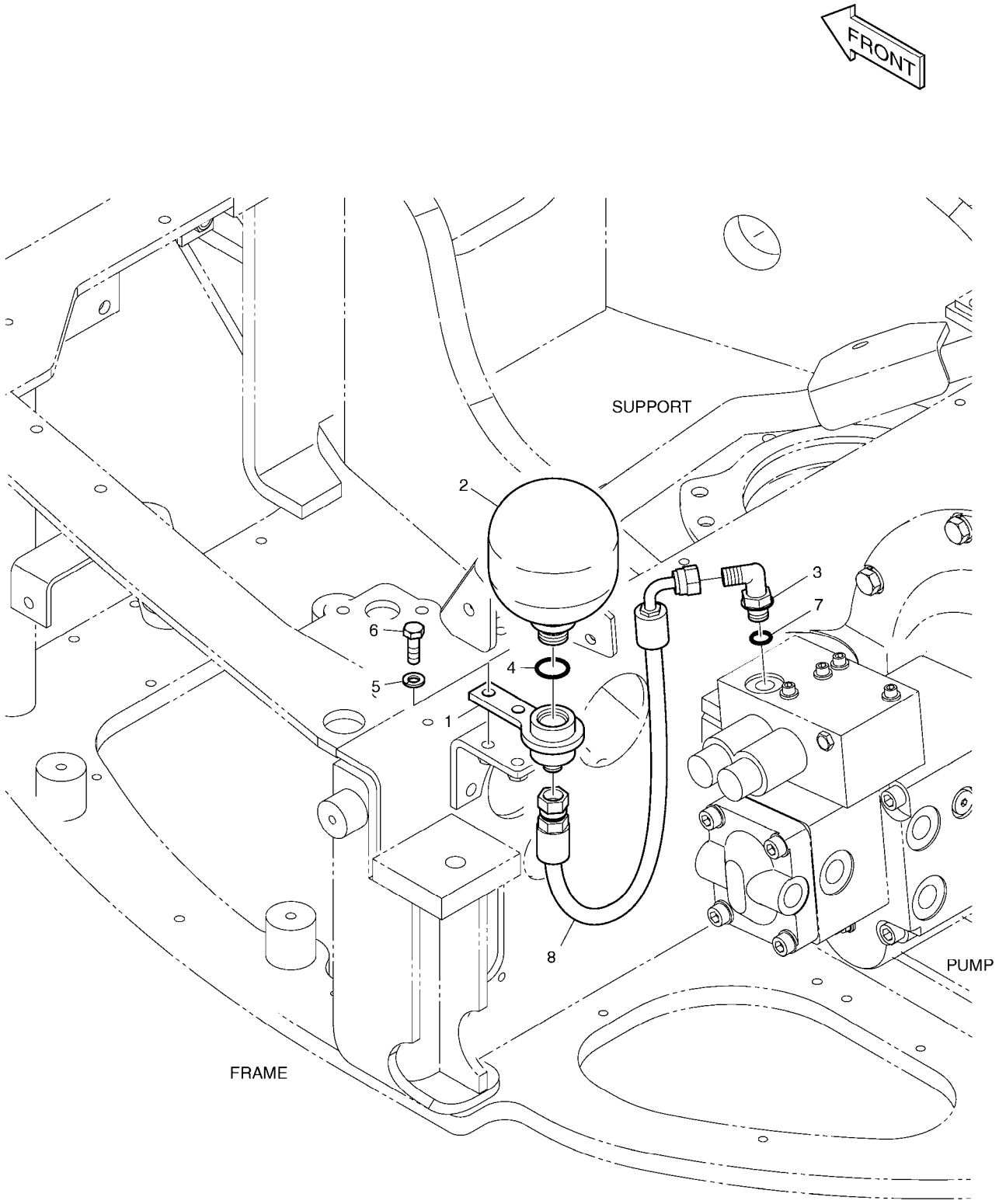

(THIS PARTS BOOK IS FOR REFERENCE ONLY.
PART NUMBERS AND SERAIL NUMBERS MAY BE
OUTDATED. ALWAYS USE THE ONLINE PARTS SYSTEM)

DATE	JAN. 04, 2013
3rd EDITION	

Fig. 6110 ACCUMULATOR ACCUMULATEUR

Serial No. ;

Key No.	Part No.	Description	Description	Q'ty	S.C	Serial No.	ICA	Replaceable part	
								Part No.	Q'ty
6110 --	K1030757A	ACCUMULATOR ASS'Y	ACCUMULATEUR ASS'Y	-	D				
1	K1013795	BLOCK	BLOC	1					
2	2460-9057A	ACCUMULATOR	ACCUMULATEUR	1					
3	2181-1702D10	ELBOW	COUDE	1					
4	S8000181	O-RING	JOINT CIRCULAIRE	1					
5	S5102503	WASHER,SPRING	RONDELLE	2					
6	S0509066	BOLT	BOULON	2					
7	S8000111	O-RING	JOINT CIRCULAIRE	1					
8	DS2093430	HOSE	TUYAU FLEXIBLE	1					

(THIS PARTS BOOK IS FOR REFERENCE ONLY.
PART NUMBERS AND SERAIL NUMBERS MAY BE
OUTDATED. ALWAYS USE THE ONLINE PARTS SYSTEM)

DATE	JAN. 04, 2013
3rd EDITION	

Fig. 6120 ARM PIPING - ARM 1.3m
CONDUITES DE BALANCIER

Serial No. ;

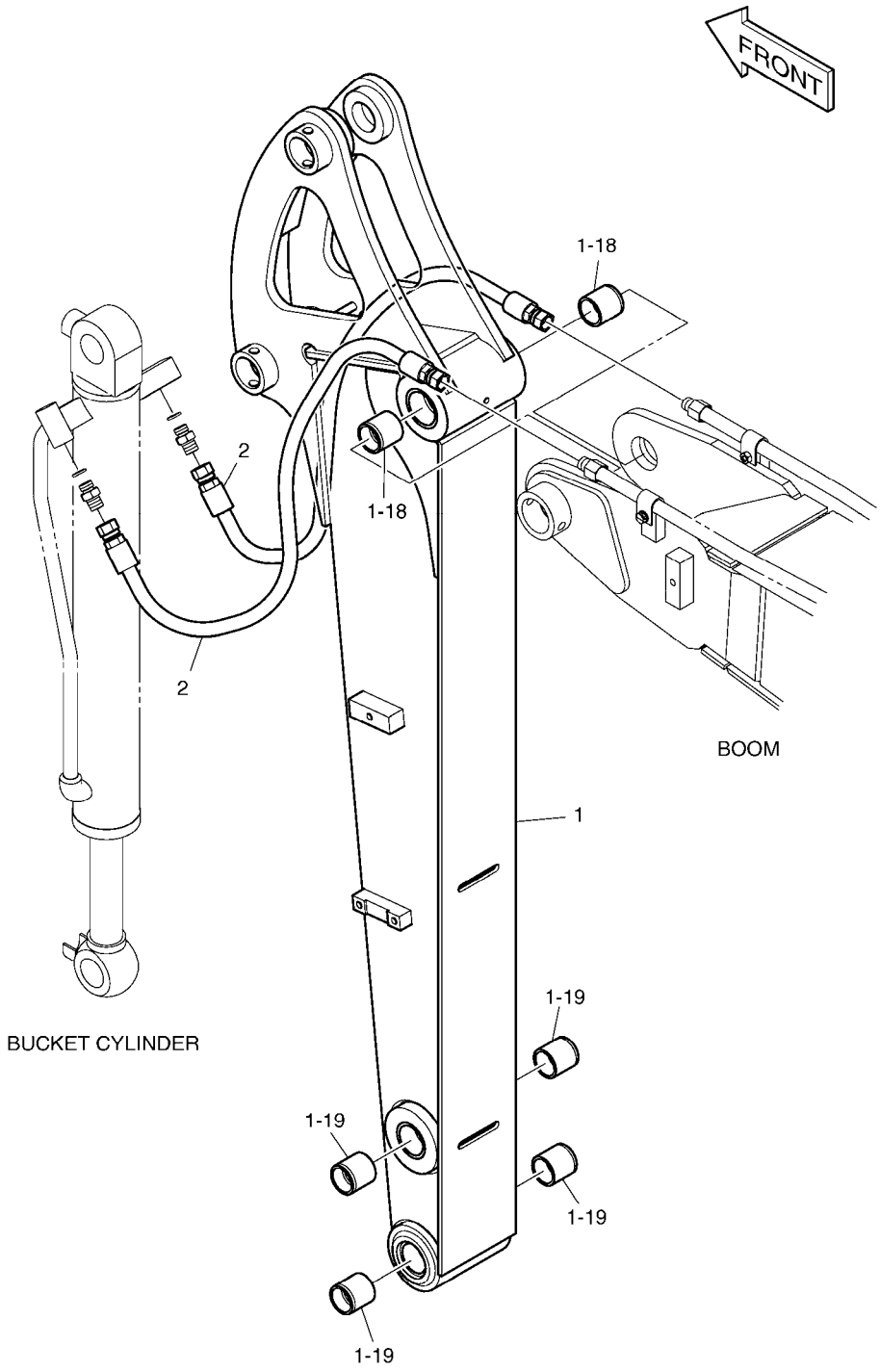

(THIS PARTS BOOK IS FOR REFERENCE ONLY.
PART NUMBERS AND SERAIL NUMBERS MAY BE
OUTDATED. ALWAYS USE THE ONLINE PARTS SYSTEM)

DATE	JAN. 04, 2013
3rd EDITION	

Fig. 6120 ARM PIPING - ARM 1.3m
CONDUITES DE BALANCIER

Serial No. ;

Key No.	Part No.	Description	Description	Q'ty	S.C	Serial No.	ICA	Replaceable part	
								Part No.	Q'ty
6120 --	K1034050	FRONT PIPING	TUYAUTERIE AVANT	-	D				
1	K1028001	ARM 1.3m	BALANCIER	1		5001-5066	Y	K1028001A	1
	K1028001A	ARM 1.3m	BALANCIER	1		5067-5257	Y	230201-00578	1
	230201-00578	ARM 1.3m	BALANCIER	1		5258-			
1-18	K1014483	. BUSHING	. DOUILLE	2		5001-5257	Y	131008-00113	2
	131008-00113	. BUSHING	. MANCHON	2		5258-			
1-19	K1014482	. BUSHING	. DOUILLE	4		5001-5257	Y	131008-00131	4
	131008-00131	. BUSHING	. DOUILLE	4		5258-			
2	DS2094254	HOSE	TUYAU FLEXIBLE	2					

(THIS PARTS BOOK IS FOR REFERENCE ONLY.
PART NUMBERS AND SERAIL NUMBERS MAY BE
OUTDATED. ALWAYS USE THE ONLINE PARTS SYSTEM)

DATE	JAN. 04, 2013
3rd EDITION	

Fig. 6130 FRONT PIPING - BREAKER(ARM 1.3m)
CONDUITES FRONTALES

Serial No. ;

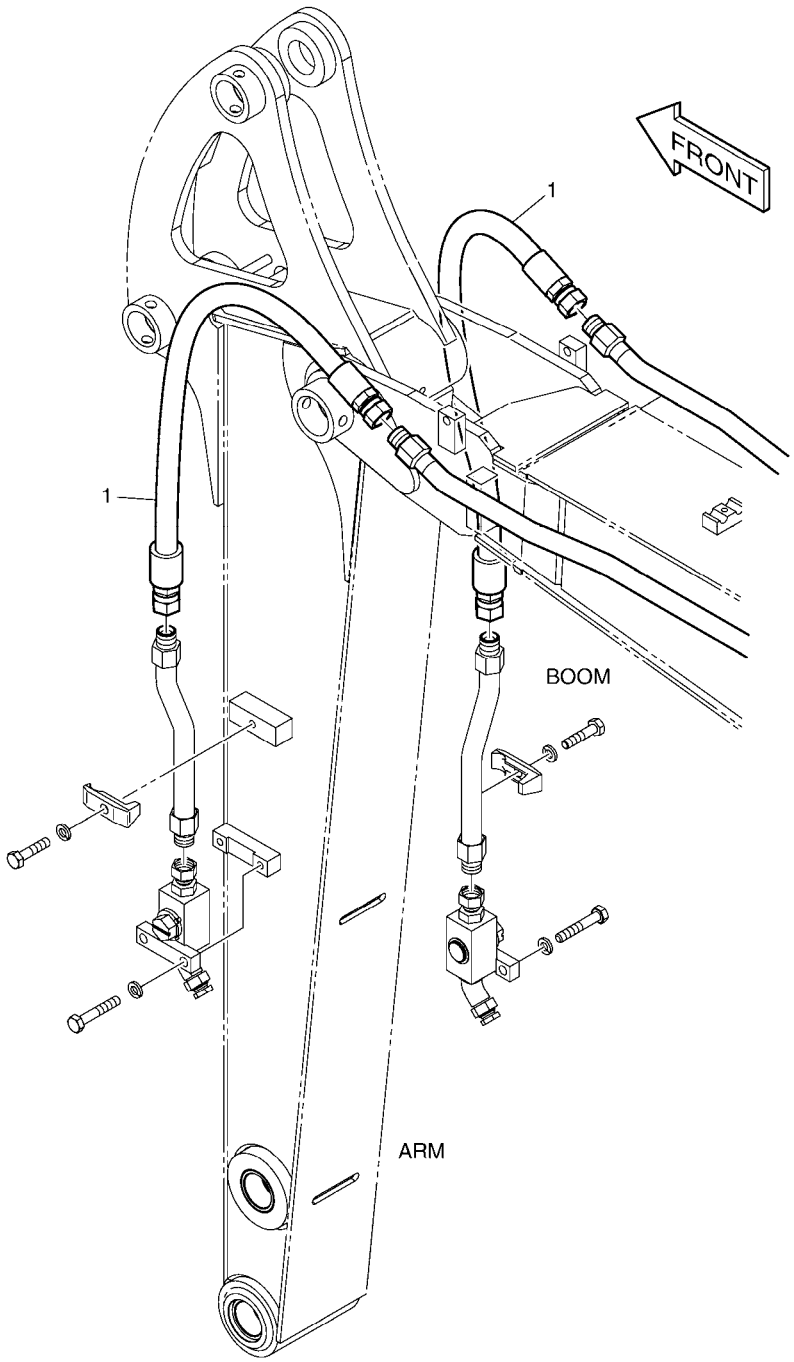

(THIS PARTS BOOK IS FOR REFERENCE ONLY.
PART NUMBERS AND SERAIL NUMBERS MAY BE
OUTDATED. ALWAYS USE THE ONLINE PARTS SYSTEM)

Fig. 6130 FRONT PIPING - BREAKER(ARM 1.3m) CONDUITES FRONTALES

Serial No. ;

Key No.	Part No.	Description	Description	Q'ty	S.C	Serial No.	ICA	Replaceable part	
								Part No.	Q'ty
6130 --	K1034052	BREAKER PIPING	TUYAUTERIE A SENS UNIQ	-	D				
1	DS2094253	HOSE	TUYAU FLEXIBLE	2					

(THIS PARTS BOOK IS FOR REFERENCE ONLY.
PART NUMBERS AND SERAIL NUMBERS MAY BE
OUTDATED. ALWAYS USE THE ONLINE PARTS SYSTEM)

DATE	JAN. 04, 2013
3rd EDITION	

Fig. 6140 PILOT PIPING - QUICK CLAMP
CONDUITES DE PILOTE

Serial No. ;

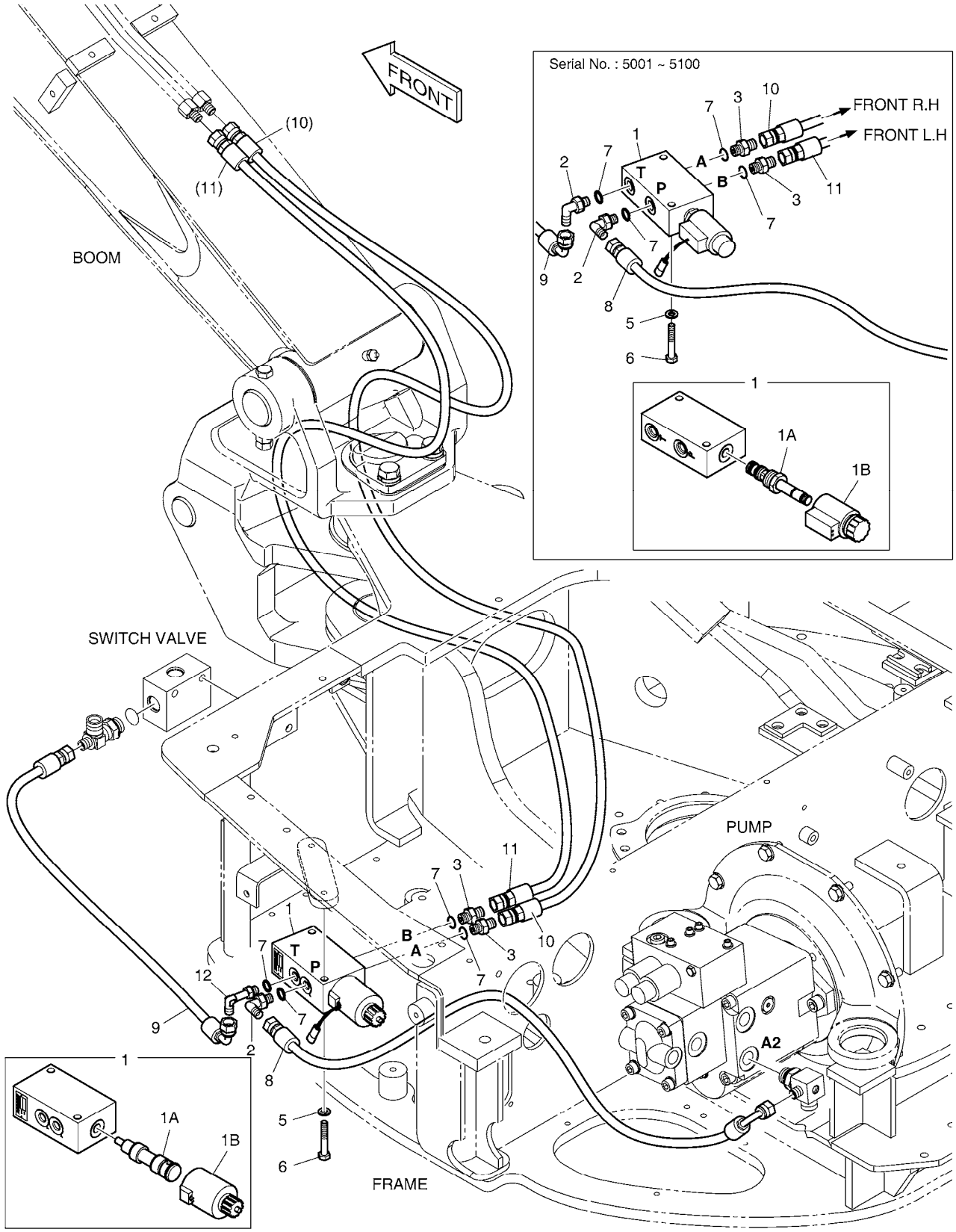

(THIS PARTS BOOK IS FOR REFERENCE ONLY.
PART NUMBERS AND SERAIL NUMBERS MAY BE
OUTDATED. ALWAYS USE THE ONLINE PARTS SYSTEM)

DATE	JAN. 04, 2013
3rd EDITION	

Fig. 6140 PILOT PIPING - QUICK CLAMP
CONDUITES DE PILOTE

Serial No. ;

Key No.	Part No.	Description	Description	Q'ty	S.C	Serial No.	ICA	Replaceable part	
								Part No.	Q'ty
6140 --	K1026001A	PILOT PIPING;QUICK CLAMP	TUYAUTERIE PILOTE	-	D	5001-5100			
	420212-01352	PIPING,QUICK CLAMP	TUYAUTERIE PILOTE	-	D	5101-			
1	426-00236	VALVE;SOLENOID	SOUPAPE A SOLENOIDE	1		5001-5100			
	410135-00031	VALVE,SOLENOID	SOUPAPE A SOLENOIDE	1		5101-			
1A	K9006321	. SPOOL;SOLENOID	. BOBINE	1		5001-5100			
	410207-00060	. SPOOL,SOLENOID	. BOBINE	1		5101-			
1B	K9006322	. COIL	. ENROULEMENT	1		5001-5100			
	300715-00009	. COIL	. ENROULEMENT	1		5101-			
2	2181-1702D4	ELBOW	COUDE	1					
3	2181-1126D14	ADAPTER	ADAPTEUR	2					
5	S5102503	WASHER,SPRING	RONDELLE	2					
6	S0556353	BOLT M8X1.25X50	BOULON A 6 PANS	2		5001-5100			
	S0556566	BOLT M8X1.25X60	BOULON	2		5101-			
7	S8000111	O-RING	JOINT CIRCULAIRE	4					
8	DS2093408	HOSE	TUYAU FLEXIBLE	1					
9	DS2093410	HOSE PF1/4-410L	TUYAU FLEXIBLE	1					
10	DS2094206	HOSE	TUYAU FLEXIBLE	1					
11	DS2094206	HOSE	TUYAU FLEXIBLE	1					
12	DS2281082	ELBOW	COUDE	1					

(THIS PARTS BOOK IS FOR REFERENCE ONLY.
PART NUMBERS AND SERAIL NUMBERS MAY BE
OUTDATED. ALWAYS USE THE ONLINE PARTS SYSTEM)

DATE	JAN. 04, 2013
3rd EDITION	

Fig. 6150 ELECTRIC PARTS - QUICK CLAMP BRIDE RAPIDE

Serial No. ;

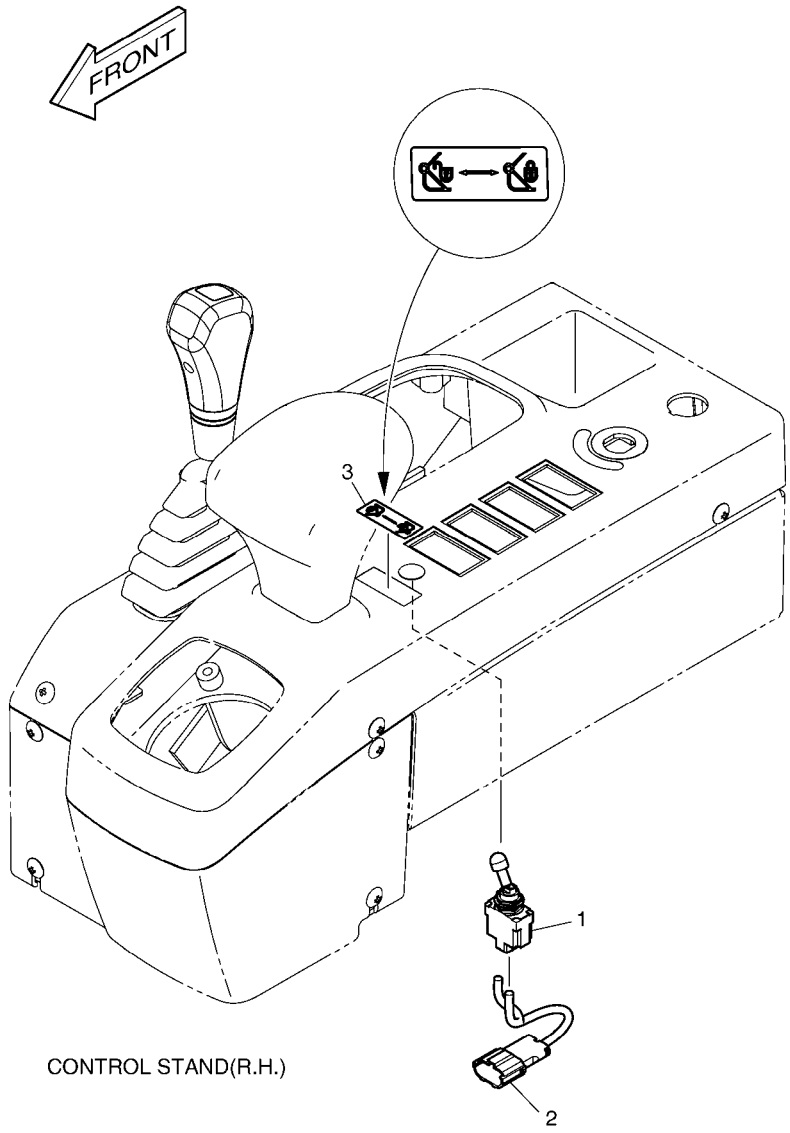

(THIS PARTS BOOK IS FOR REFERENCE ONLY.
PART NUMBERS AND SERAIL NUMBERS MAY BE
OUTDATED. ALWAYS USE THE ONLINE PARTS SYSTEM)

DATE	JAN. 04, 2013
3rd EDITION	

Fig. 6150 ELECTRIC PARTS - QUICK CLAMP
BRIDE RAPIDE

Serial No. ;

Key No.	Part No.	Description	Description	Q'ty	S.C	Serial No.	ICA	Replaceable part	
								Part No.	Q'ty
6150 --	K1026800	ELECTRIC PARTS	EQUIPMENT ELECTRIQUE	-	D				
1	549-00092	SWITCH;LOCKOUT TOGGLE	COMMUTATEUR	1					
2	530-00432A	HARNESS;JOINT	HARNAIS	1					
3	K1023854	NAME PLATE;QUICK CLAMP	PLAQUE D'IDENTIFICATION	1					

(THIS PARTS BOOK IS FOR REFERENCE ONLY.
PART NUMBERS AND SERAIL NUMBERS MAY BE
OUTDATED. ALWAYS USE THE ONLINE PARTS SYSTEM)

DATE	JAN. 04, 2013
3rd EDITION	

Fig. 6160 FRONT PIPING - QUICK CLAMP
CONDUITES DE FRONTALES

Serial No. ;

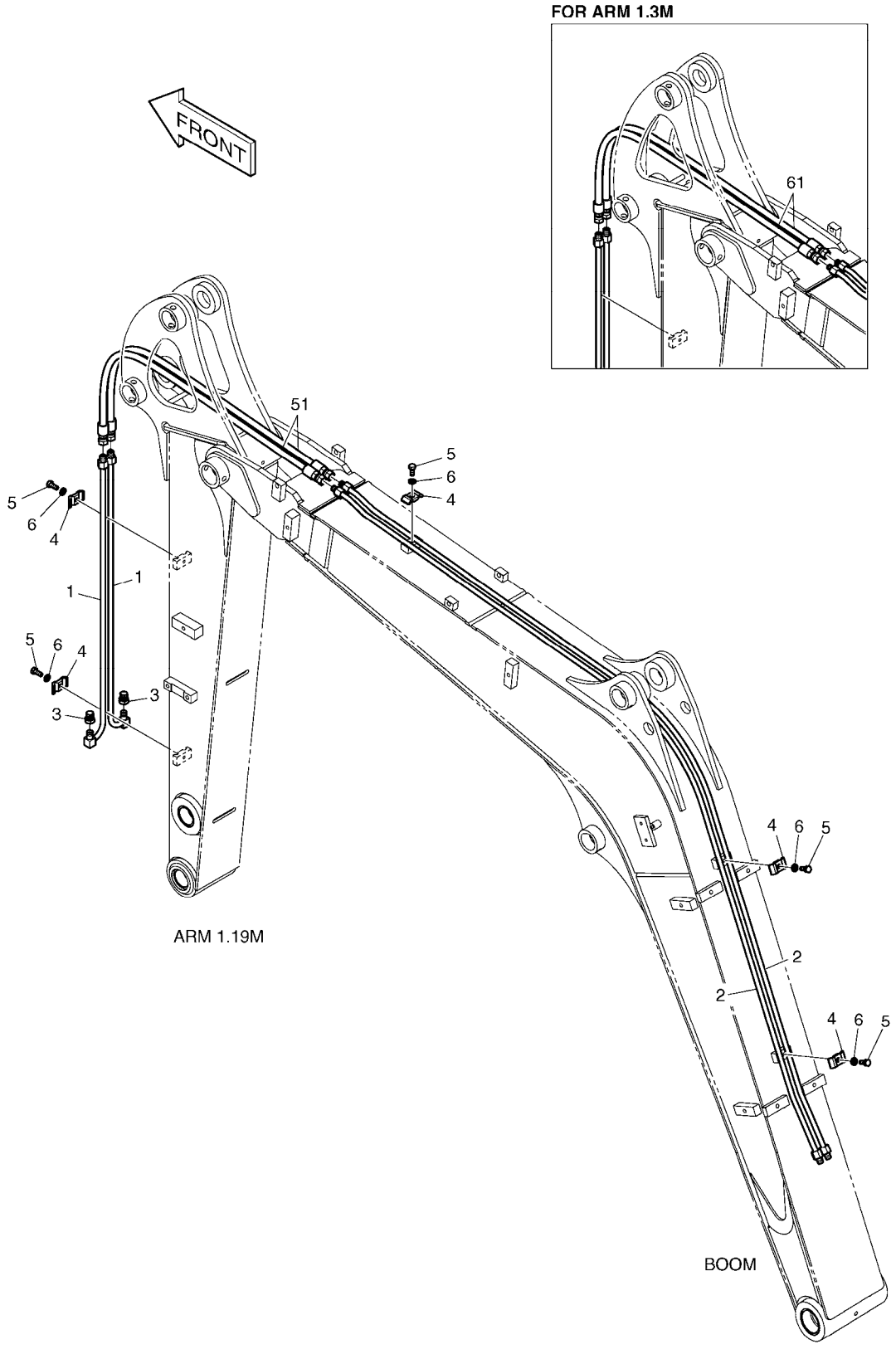

(THIS PARTS BOOK IS FOR REFERENCE ONLY.
PART NUMBERS AND SERAIL NUMBERS MAY BE
OUTDATED. ALWAYS USE THE ONLINE PARTS SYSTEM)

DATE	JAN. 04, 2013
3rd EDITION	

Fig. 6160 FRONT PIPING - QUICK CLAMP
CONDUITES DE FRONTALES

Serial No. ;

Key No.	Part No.	Description	Description	Q'ty	S.C	Serial No.	ICA	Replaceable part	
								Part No.	Q'ty
6160 --	K1028012B	QUICK CLAMP PIPING	BRIDE RAPIDE	-	D				
1	K1012377B	PIPE	TUYAU	2					
2	K1027827	PIPE	TUYAU	2					
3	2181-2820D1	PLUG	BOUCHON	2					
4	K1004011	CLAMP;PIPE	COLLIER	5					
5	S0508866	BOLT	BOULON	5					
6	S5102503	WASHER,SPRING	RONDELLE	5					
51	DS2094267	HOSE	TUYAU FLEXIBLE	2					
61	DS2094100	HOSE	TUYAU FLEXIBLE	2					

(THIS PARTS BOOK IS FOR REFERENCE ONLY.
PART NUMBERS AND SERAIL NUMBERS MAY BE
OUTDATED. ALWAYS USE THE ONLINE PARTS SYSTEM)

DATE	JAN. 04, 2013
3rd EDITION	

Fig. 6170 PILOT PIPING - TRAVEL ALARM
CONDUITES DE PILOTE

Serial No. ;

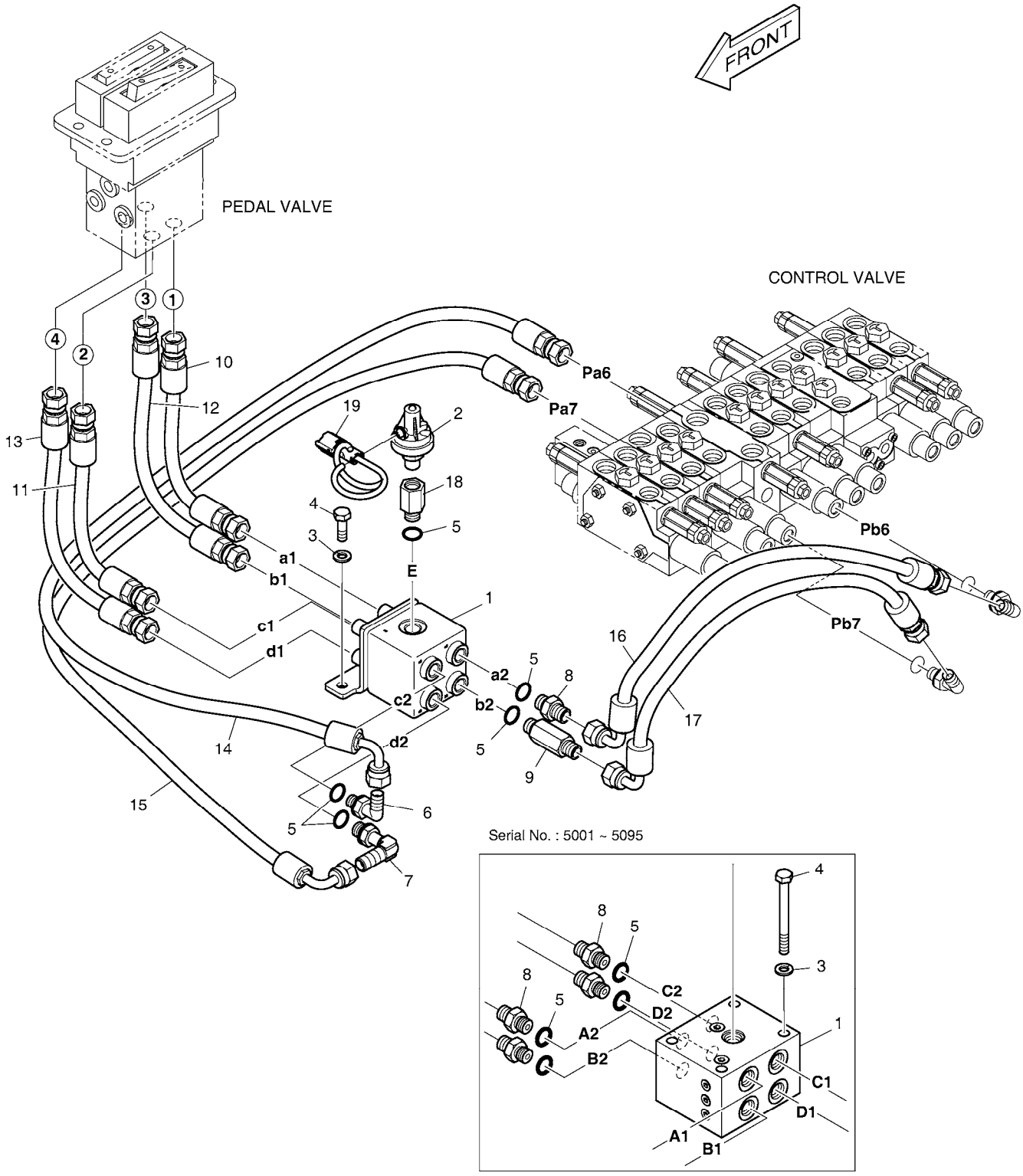

(THIS PARTS BOOK IS FOR REFERENCE ONLY.
PART NUMBERS AND SERAIL NUMBERS MAY BE
OUTDATED. ALWAYS USE THE ONLINE PARTS SYSTEM)

DATE	JAN. 04, 2013
3rd EDITION	

Fig. 6170 PILOT PIPING - TRAVEL ALARM
CONDUITES DE PILOTE

Serial No. ;

Key No.	Part No.	Description	Description	Q'ty	S.C	Serial No.	ICA	Replaceable part	
								Part No.	Q'ty
6170 --	K1033827A	PILOT PIPING-TRAVEL ALARM	CONDUITES DE PILOTE	-	D				
1	2420-9351B	VALVE;SHUTTLE	VANNE	1		5001-5095			
	K1050271	VALVE;SHUTTLE	VANNE	1		5096-			
2	549-00010	SWITCH;PRESSURE	COMMUTATEUR	1					
3	S5102503	WASHER,SPRING	RONDELLE	4		5001-5095			
	S5102503	WASHER,SPRING	RONDELLE	2		5096-			
4	S0556966	BOLT	BOULON	4		5001-5095			
	S0508853	BOLT	BOULON	2		5096-			
5	S8000111	O-RING	JOINT CIRCULAIRE	9		5001-5095			
	S8000111	O-RING	JOINT CIRCULAIRE	5		5096-			
6	2181-1702D4	ELBOW	COUDE	1					
7	2181-1702D82	ELBOW	COUDE	1					
8	2181-1126D14	ADAPTER	ADAPTEUR	5		5001-5095			
	2181-1126D14	ADAPTER	ADAPTEUR	1		5096-			
9	2181-1126D34	ADAPTER	ADAPTEUR	1					
10	DS2094138	HOSE	TUYAU FLEXIBLE	1					
11	DS2094138	HOSE	TUYAU FLEXIBLE	1					
12	DS2094139	HOSE	TUYAU FLEXIBLE	1					
13	DS2094139	HOSE	TUYAU FLEXIBLE	1					
14	DS2093233	HOSE	TUYAU FLEXIBLE	1					
15	DS2093157	HOSE	TUYAU	1					
16	DS2093127	HOSE	TUYAU FLEXIBLE	1					
17	DS2093024	HOSE	TUYAU FLEXIBLE	1					
18	DS2242017	REDUCER	REDUCTEUR	1					
19	530-00067	HARNESS	HARNAIS	1					

(THIS PARTS BOOK IS FOR REFERENCE ONLY.
PART NUMBERS AND SERAIL NUMBERS MAY BE
OUTDATED. ALWAYS USE THE ONLINE PARTS SYSTEM)

DATE	JAN. 04, 2013
3rd EDITION	

Fig. 6180 TRAVEL ALARM - ELECTRIC PARTS ALARME DE VOYAGE

Serial No. ;

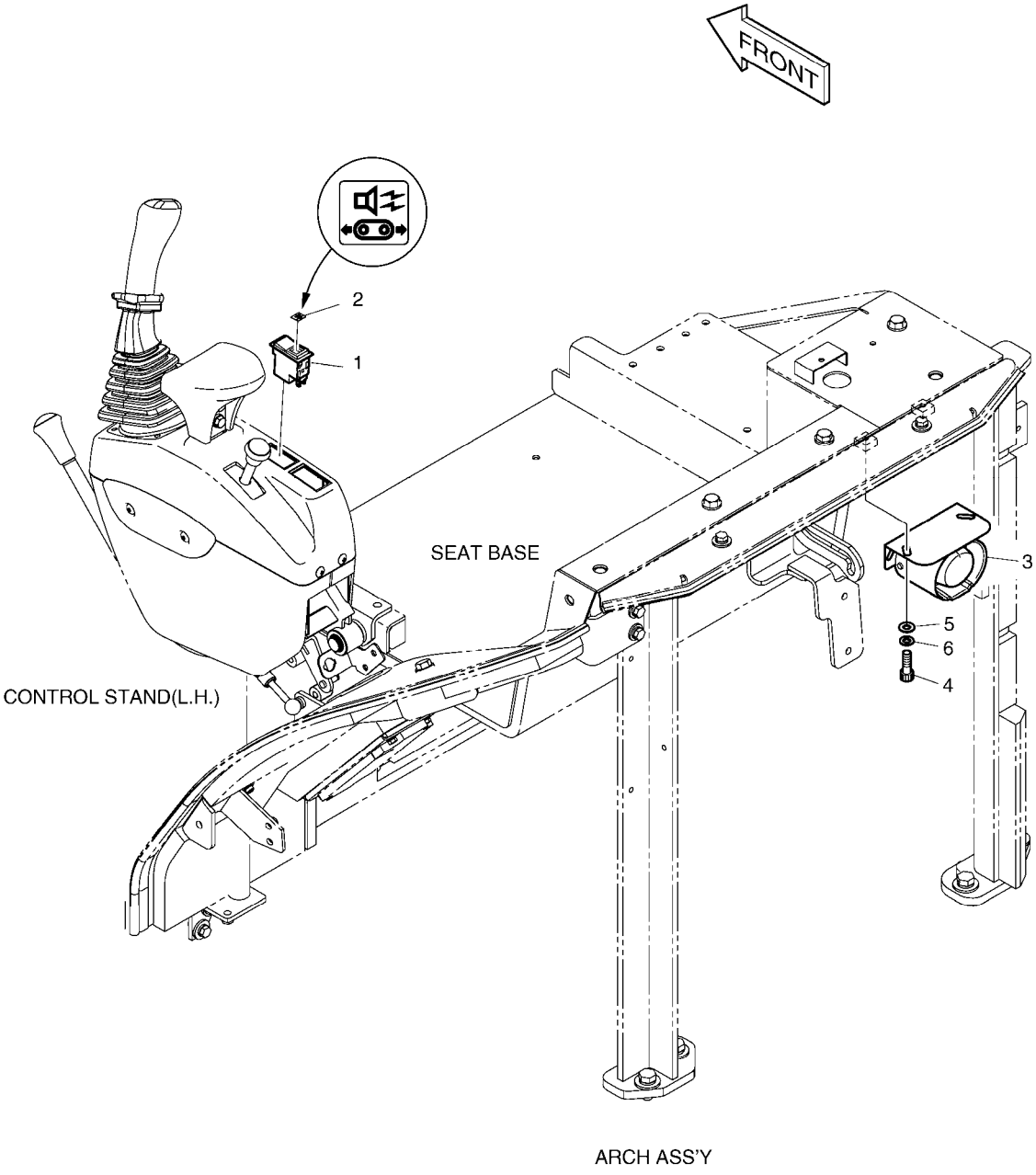

(THIS PARTS BOOK IS FOR REFERENCE ONLY.
PART NUMBERS AND SERAIL NUMBERS MAY BE
OUTDATED. ALWAYS USE THE ONLINE PARTS SYSTEM)

DATE	JAN. 04, 2013
3rd EDITION	

Fig. 6180 TRAVEL ALARM - ELECTRIC PARTS
ALARME DE VOYAGE

Serial No. ;

Key No.	Part No.	Description	Description	Q'ty	S.C	Serial No.	ICA	Replaceable part	
								Part No.	Q'ty
6180 --	K1033659A	TRAVEL ALARM ASS'Y	ALARME DE VOYAGE	-	D				
1	2549-9115	SWITCH;ROCKER(12V)	INTERRUPTEUR	1					
2	2190-2584D2	INSERT;ALARM	INSERTION	1					
3	516-00011	BUZZER;ALARM	VIBREUR	1					
4	S2208466	BOLT;SOCKET	BOULON	2					
5	S5010513	WASHER,PLAIN	RONDELLE	2					
6	S5102503	WASHER,SPRING	RONDELLE	2					

(THIS PARTS BOOK IS FOR REFERENCE ONLY.
PART NUMBERS AND SERAIL NUMBERS MAY BE
OUTDATED. ALWAYS USE THE ONLINE PARTS SYSTEM)

DATE	JAN. 04, 2013
3rd EDITION	

Fig. 6190 ELECTRIC PARTS - CABIN
PIECES ELECTRIQUES

Serial No. ;

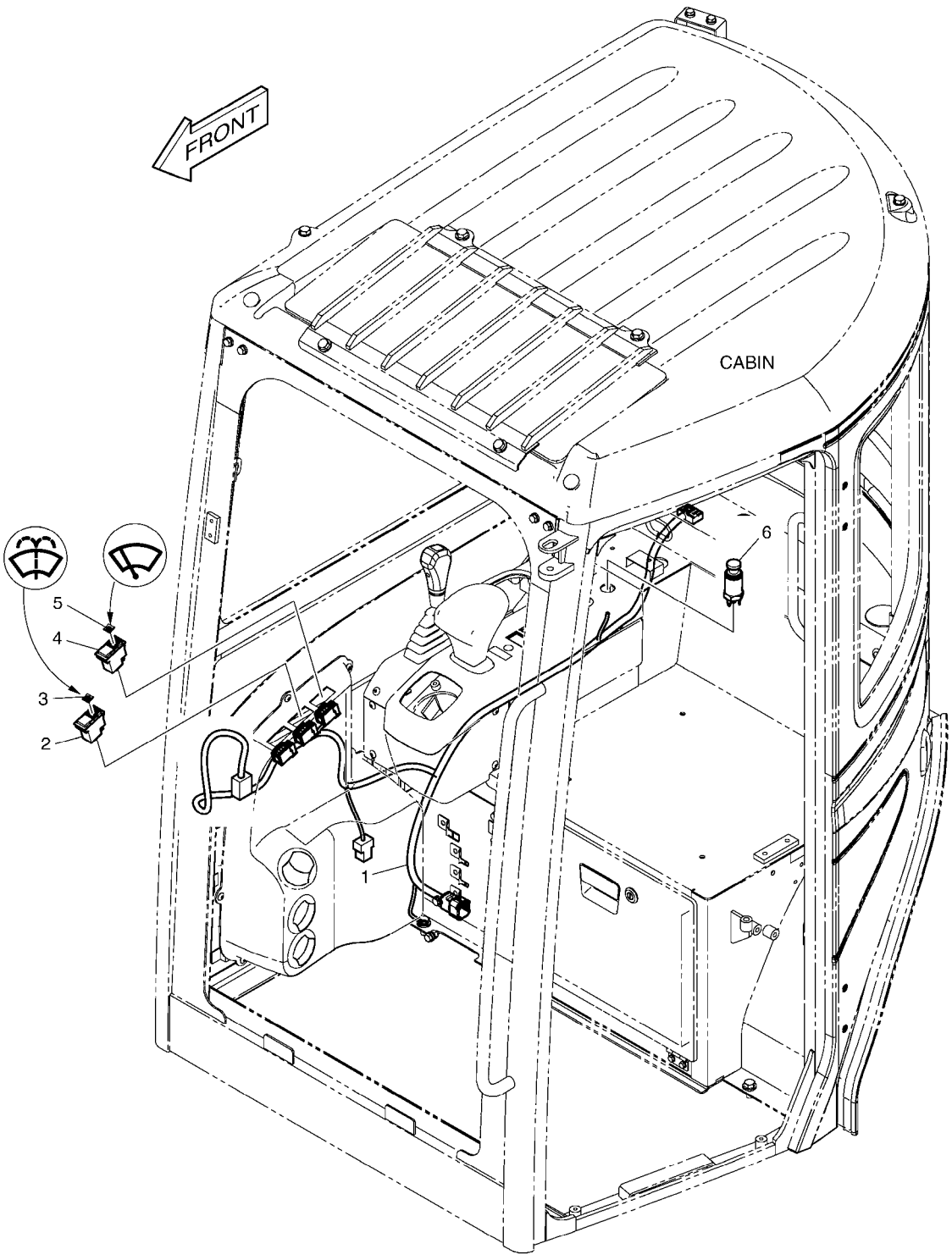

(THIS PARTS BOOK IS FOR REFERENCE ONLY.
PART NUMBERS AND SERAIL NUMBERS MAY BE
OUTDATED. ALWAYS USE THE ONLINE PARTS SYSTEM)

DATE	JAN. 04, 2013
3rd EDITION	

Fig. 6190 ELECTRIC PARTS - CABIN
PIECES ELECTRIQUES

Serial No. ;

Key No.	Part No.	Description	Description	Q'ty	S.C	Serial No.	ICA	Replaceable part	
								Part No.	Q'ty
6190 --	K1026794	ELECTRIC PARTS	EQUIPMENT ELECTRIQUE	-	D	5001-5287			
	300619-02110	ELECTRIC ASSY	EQUIPMENT ELECTRIQUE	-	D	5288-			
1	K1013764	HARNESS;CABIN	HARNAIS	1		5001-5287	I	310207-02477	1
	310207-02477	HARNESS;CABIN	HARNAIS	1		5288-			
2	549-00073	SWITCH;WIPER	COMMUTATEUR	1					
3	2190-2036D11	INSERT;WIPER	INSERTION	1					
4	549-00041	SWITCH;ROCKER	COMMUTATEUR	1					
5	2190-2036D12	INSERT;WASHER	INSERTION	1					
6	545-00002	LIGHTER;CIGAR	ALLUMEUR DE CIGARE	1		5001-5198	I	300730-00005	1
	300730-00005	LIGHTER,CIGAR	ALLUMEUR DE CIGARE	1		5199-			

(THIS PARTS BOOK IS FOR REFERENCE ONLY.
PART NUMBERS AND SERAIL NUMBERS MAY BE
OUTDATED. ALWAYS USE THE ONLINE PARTS SYSTEM)

DATE	JAN. 04, 2013
3rd EDITION	

Fig. 6200 WINDOW WASHER
RONDELLE DE FENETRE

Serial No. ;

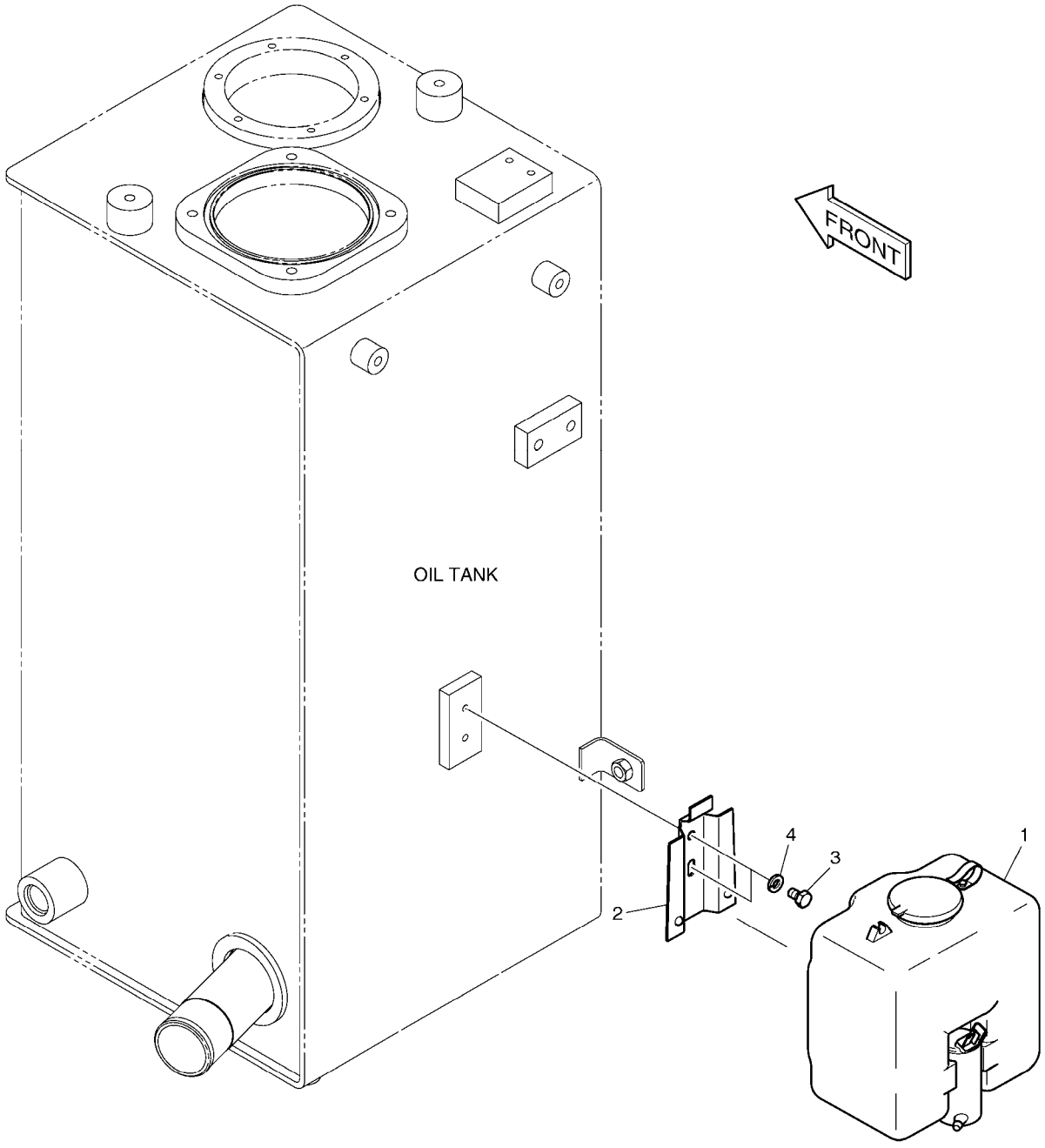

(THIS PARTS BOOK IS FOR REFERENCE ONLY.
PART NUMBERS AND SERAIL NUMBERS MAY BE
OUTDATED. ALWAYS USE THE ONLINE PARTS SYSTEM)

DATE	JAN. 04, 2013
3rd EDITION	

Fig. 6200 WINDOW WASHER
RONDELLE DE FENETRE

Serial No. ;

Key No.	Part No.	Description	Description	Q'ty	S.C	Serial No.	ICA	Replaceable part	
								Part No.	Q'ty
6200 --	K1026795	WINDOW WASHER	RONDELLE DE FENETRE	-	D				
1	2916-9002A	TANK;WASHER	LAVE-GLACE	1					
2	2195-1534	BRACKET	SUPPORT	1					
3	S0504366	BOLT	BOULON	2					
4	S5102303	WASHER;SPRING	RONDELLE	2					

(THIS PARTS BOOK IS FOR REFERENCE ONLY.
PART NUMBERS AND SERAIL NUMBERS MAY BE
OUTDATED. ALWAYS USE THE ONLINE PARTS SYSTEM)

DATE	JAN. 04, 2013
3rd EDITION	

Fig. 6210 ROTATING BEACON
FEU DE CIRCULATION

Serial No. ;

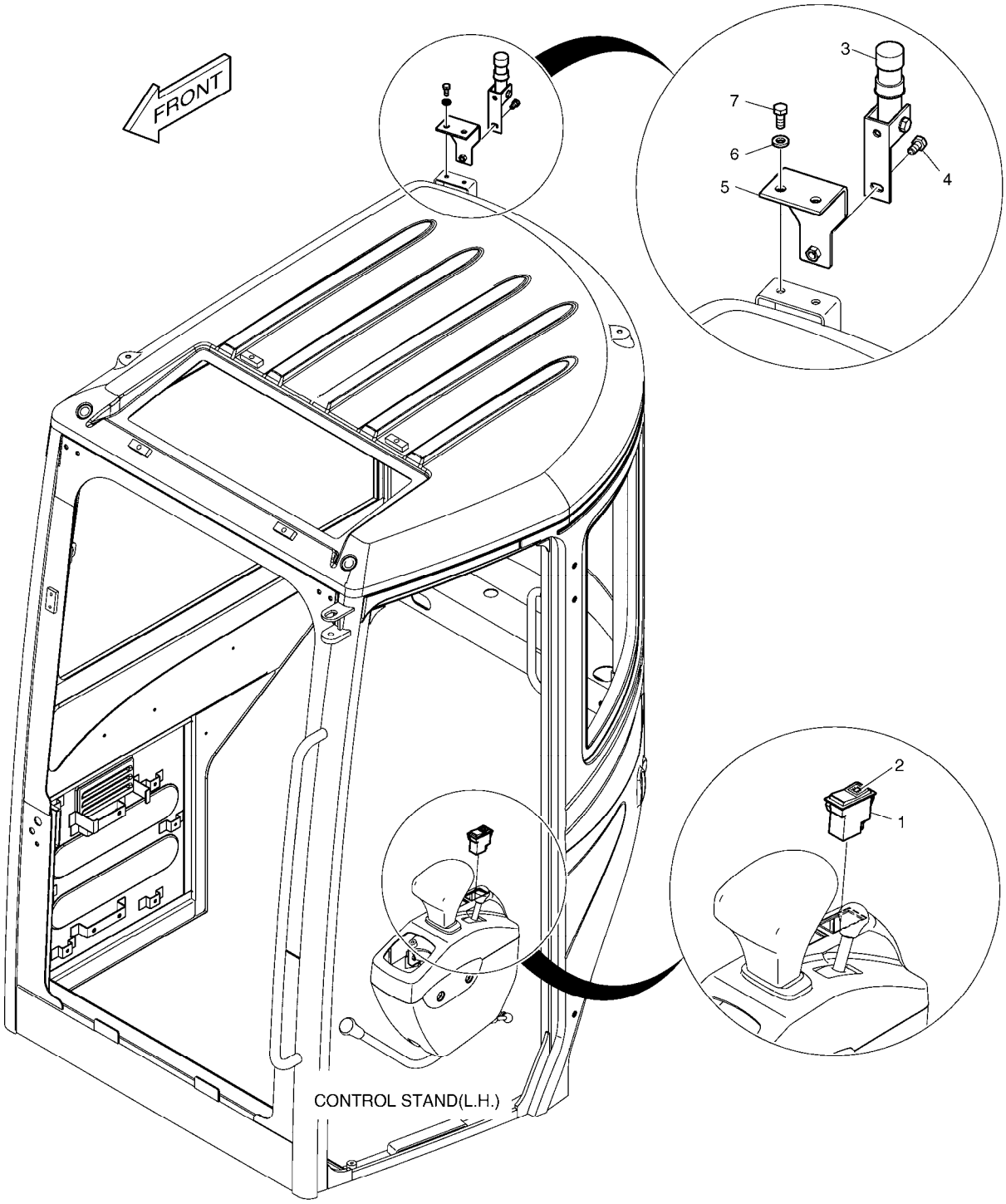

(THIS PARTS BOOK IS FOR REFERENCE ONLY.
PART NUMBERS AND SERAIL NUMBERS MAY BE
OUTDATED. ALWAYS USE THE ONLINE PARTS SYSTEM)

DATE	JAN. 04, 2013
3rd EDITION	

Fig. 6210 ROTATING BEACON FEU DE CIRCULATION

Serial No. ;

Key No.	Part No.	Description	Description	Q'ty	S.C	Serial No.	ICA	Replaceable part	
								Part No.	Q'ty
6210 --	K1026807	ROTATING BEACON ASS'Y	FEU DE CIRCULATION	-	D				
1	2549-9115	SWITCH;ROCKER(12V)	INTERRUPTEUR	1					
2	2190-2036D10	INSERT;ROTATING BEACON	INSERTION	1					
3	160-00061	BUSH;MOUNTING	DOUILLE	1					
4	2120-2166D25	BOLT M8X1.25X16	BOULON A 6 PANS	2					
5	K1017965	PLATE	PLAQUE	1					
6	2114-1898D2	WASHER	RONDELLE	2					
7	2120-2166D5	BOLT	BOULON	2					

(THIS PARTS BOOK IS FOR REFERENCE ONLY.
PART NUMBERS AND SERAIL NUMBERS MAY BE
OUTDATED. ALWAYS USE THE ONLINE PARTS SYSTEM)

DATE	JAN. 04, 2013
3rd EDITION	

Fig. 6220 CAR STEREO
STEREO

Serial No. ;

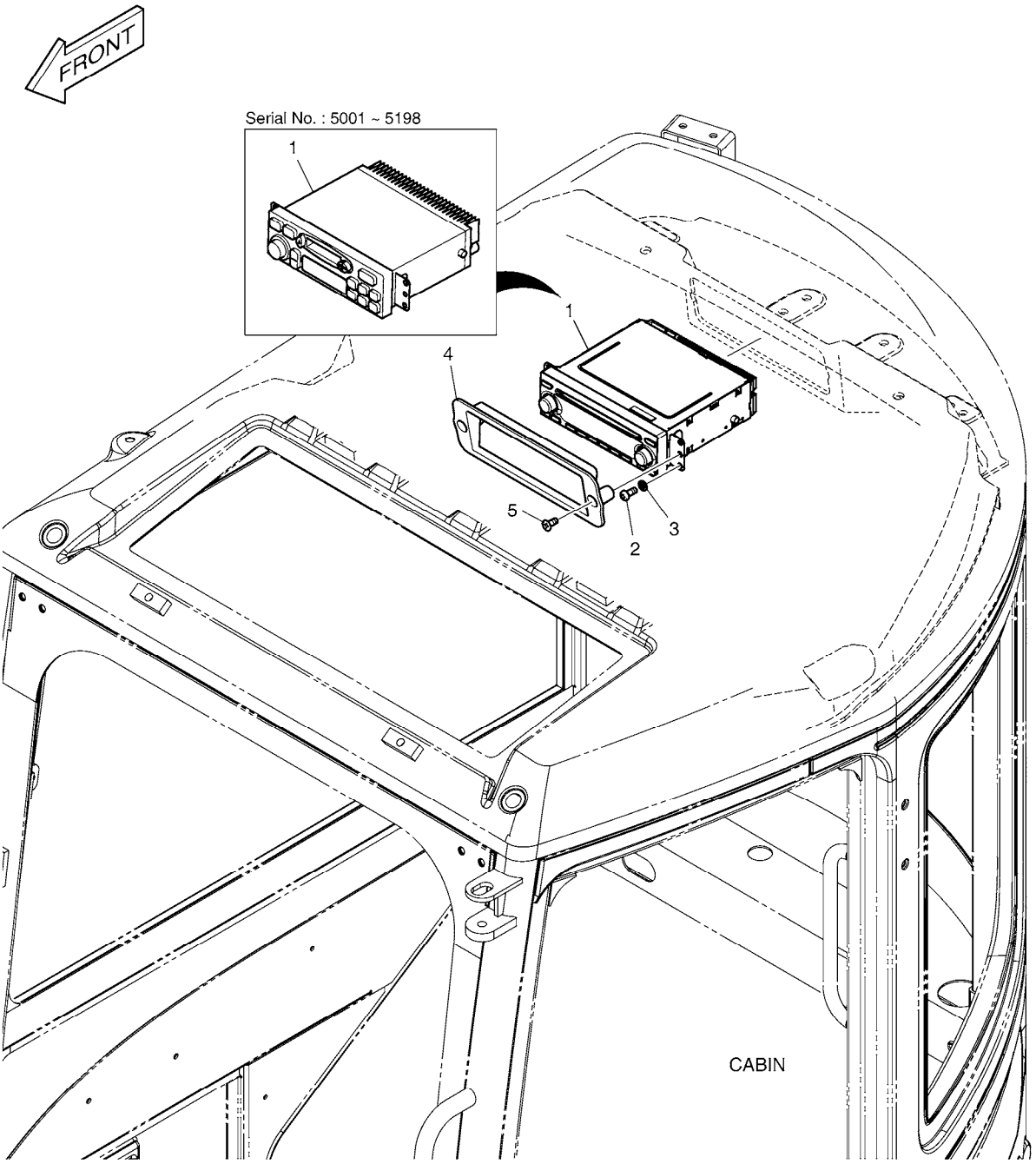

(THIS PARTS BOOK IS FOR REFERENCE ONLY.
PART NUMBERS AND SERAIL NUMBERS MAY BE
OUTDATED. ALWAYS USE THE ONLINE PARTS SYSTEM)

Fig. 6220 CAR STEREO STEREO

Serial No. ;

Key No.	Part No.	Description	Description	Q'ty	S.C	Serial No.	ICA	Replaceable part	
								Part No.	Q'ty
6220 --	K1026809	STEREO;CAR	STEREO VOITURE	-	D	5001-5198			
	300619-01098	ELECTRIC ASSY;CASSETTE PLA	STEREO VOITURE	-	D	5199-			
1	K1013232	STEREO;CAR	STEREO	1		5001-5198	I	300637-00003	1
	300637-00003	PLAYER,CD;12V	PLAQUEUR DE CD	1		5199-			
2	S3450833	SCREW	VIS	4					
3	S5100203	WASHER;SPRING	RONDELLE	4					
4	K1014622B	COVER	COUVERCLE	1					
5	2120-2166D44	SCREW M5X0.8X12	VIS	2					

(THIS PARTS BOOK IS FOR REFERENCE ONLY.
PART NUMBERS AND SERAIL NUMBERS MAY BE
OUTDATED. ALWAYS USE THE ONLINE PARTS SYSTEM)

DATE	JAN. 04, 2013
3rd EDITION	

Fig. 6230 CABIN LAMP
LAMPE

Serial No. ;

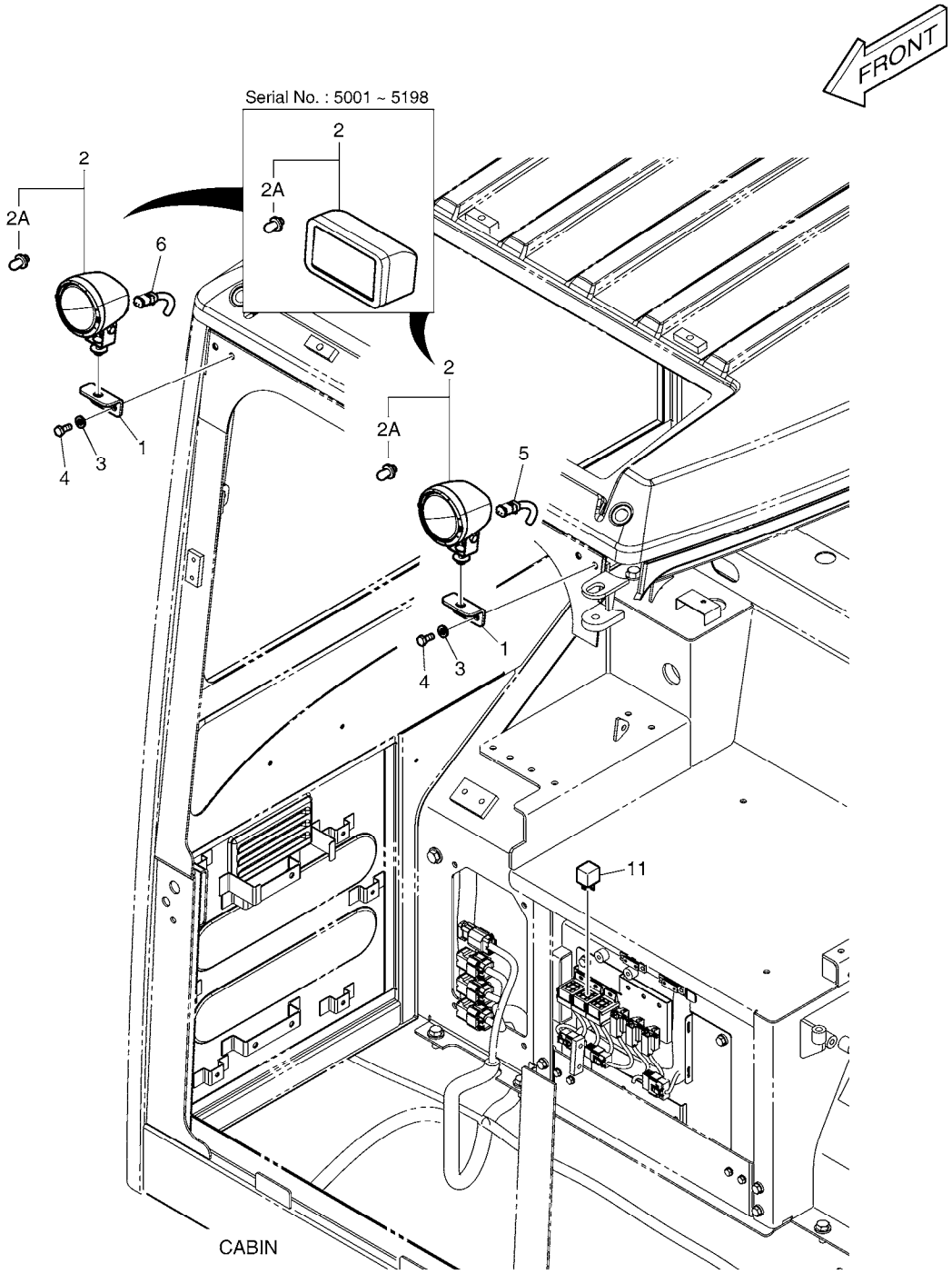

(THIS PARTS BOOK IS FOR REFERENCE ONLY.
PART NUMBERS AND SERAIL NUMBERS MAY BE
OUTDATED. ALWAYS USE THE ONLINE PARTS SYSTEM)

DATE	JAN. 04, 2013
3rd EDITION	

Fig. 6230 CABIN LAMP
LAMPE

Serial No. ;

Key No.	Part No.	Description	Description	Q'ty	S.C	Serial No.	ICA	Replaceable part	
								Part No.	Q'ty
6230 --	K1033666	WORKING LAMP ASS'Y	LAMPE FONCTIONNANTE	-	D	5001-5198			
	300619-01054	ELECTRIC ASSY;WORKING LAMP	LAMPE FONCTIONNANTE	-	D	5199-			
1	K1013067	BRACKET;CABIN LAMP	SUPPORT	2					
2	2534-9048	LAMP;WORKING	LAMPE 24V 55W	2		5001-5198			
	301005-00181	LAMP ASSY,WORKING;(12V)	LAMPE	2		5199-			
2A	2515-1016D2	. BULB 12V 55W	. AMPOULE	1					
3	2114-1898D2	WASHER	RONDELLE	4					
4	2120-2166D5	BOLT	BOULON	4					
5	310207-01094	HARNESS,JOINT;CABIN LAMP	HARNAIS	1		5199-			
6	310207-01094	HARNESS,JOINT;CABIN LAMP	HARNAIS	1		5199-			
11	2544-9032	RELAY	RELAIS	1		5001-5108			
	K1053324	RELAY	RELAIS	1		5109-			

(THIS PARTS BOOK IS FOR REFERENCE ONLY.
PART NUMBERS AND SERAIL NUMBERS MAY BE
OUTDATED. ALWAYS USE THE ONLINE PARTS SYSTEM)

DATE	JAN. 04, 2013
3rd EDITION	

Fig. 6240 WORKING LAMP
LAMPE FONCTIONNANTE

Serial No. ;

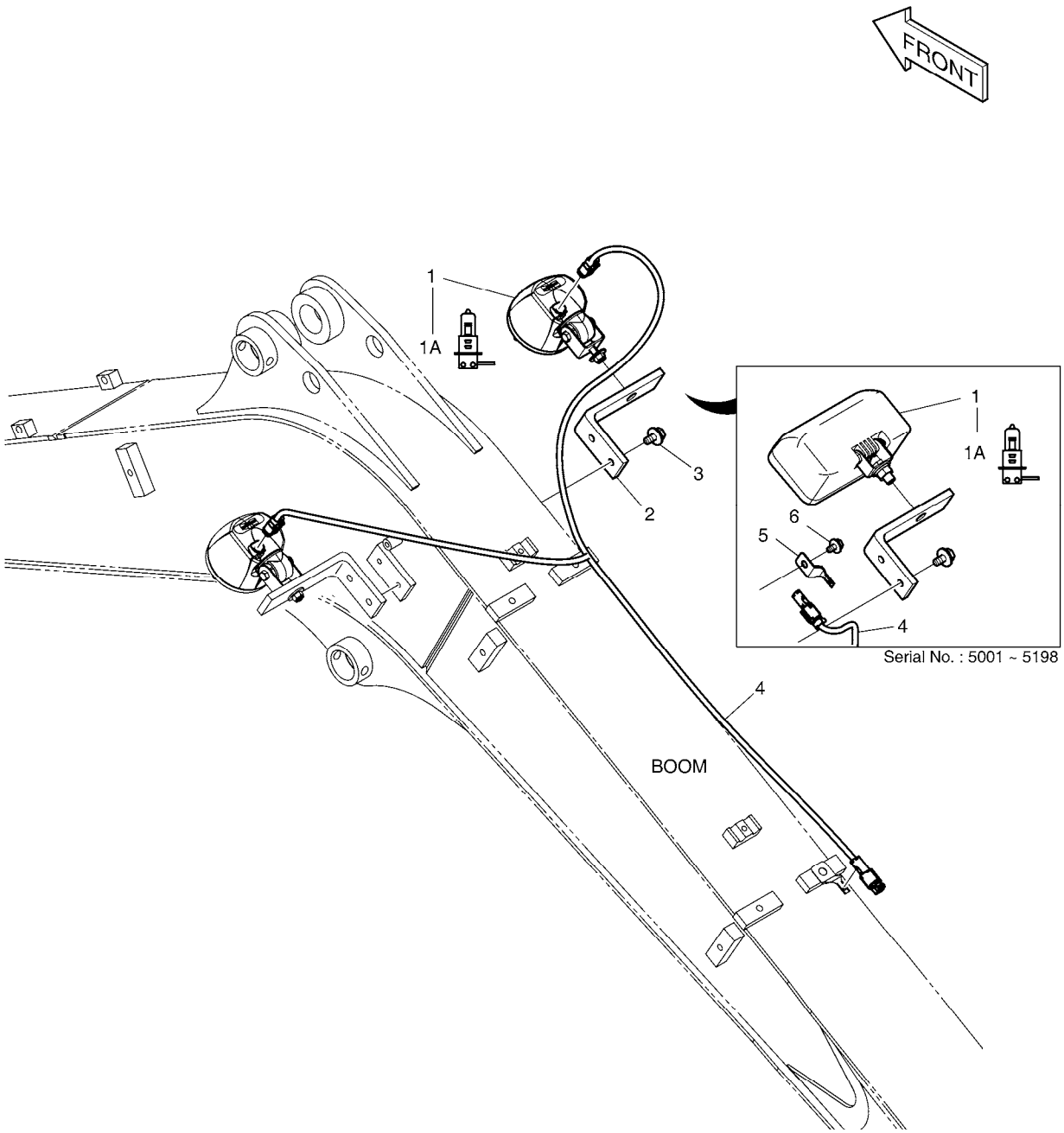

(THIS PARTS BOOK IS FOR REFERENCE ONLY.
PART NUMBERS AND SERAIL NUMBERS MAY BE
OUTDATED. ALWAYS USE THE ONLINE PARTS SYSTEM)

DATE	JAN. 04, 2013
3rd EDITION	

Fig. 6240 WORKING LAMP
LAMPE FONCTIONNANTE

Serial No. ;

Key No.	Part No.	Description	Description	Q'ty	S.C	Serial No.	ICA	Replaceable part	
								Part No.	Q'ty
6240 --	K1033665	WORKING LAMP ASS'Y	LAMPE FONCTIONNANTE	-	D	5001-5198			
	300619-01066	LAMP ASSY,ADDITIONAL WORKI	LAMPE FONCTIONNANTE	-	D	5199-			
1	534-00029	LAMP;WORKING	LAMPE	1		5001-5198			
	301005-00181	LAMP ASSY,WORKING;(12V)	LAMPE	1		5199-			
1A	2515-1016D2	. BULB 12V 55W	. AMPOULE	1					
2	195-03420	BRACKET;LAMP	SUPPORT	1					
3	DS0025033	BOLT;SET	BOULON	2					
4	K1023845A	HARNESS;WORK LAMP	HARNAIS	1		5001-5198			
	310207-01092	HARNESS,LAMP;WORK	HARNAIS	1		5199-			
5	2197-1661	BRACKET	SUPPORT	1		5001-5198			
6	K1001029	BOLT	BOULON	1		5001-5198			

(THIS PARTS BOOK IS FOR REFERENCE ONLY.
PART NUMBERS AND SERAIL NUMBERS MAY BE
OUTDATED. ALWAYS USE THE ONLINE PARTS SYSTEM)

DATE	JAN. 04, 2013
3rd EDITION	

Fig. 6250 HEATER - CABIN CHAUFFAGE

Serial No. ;

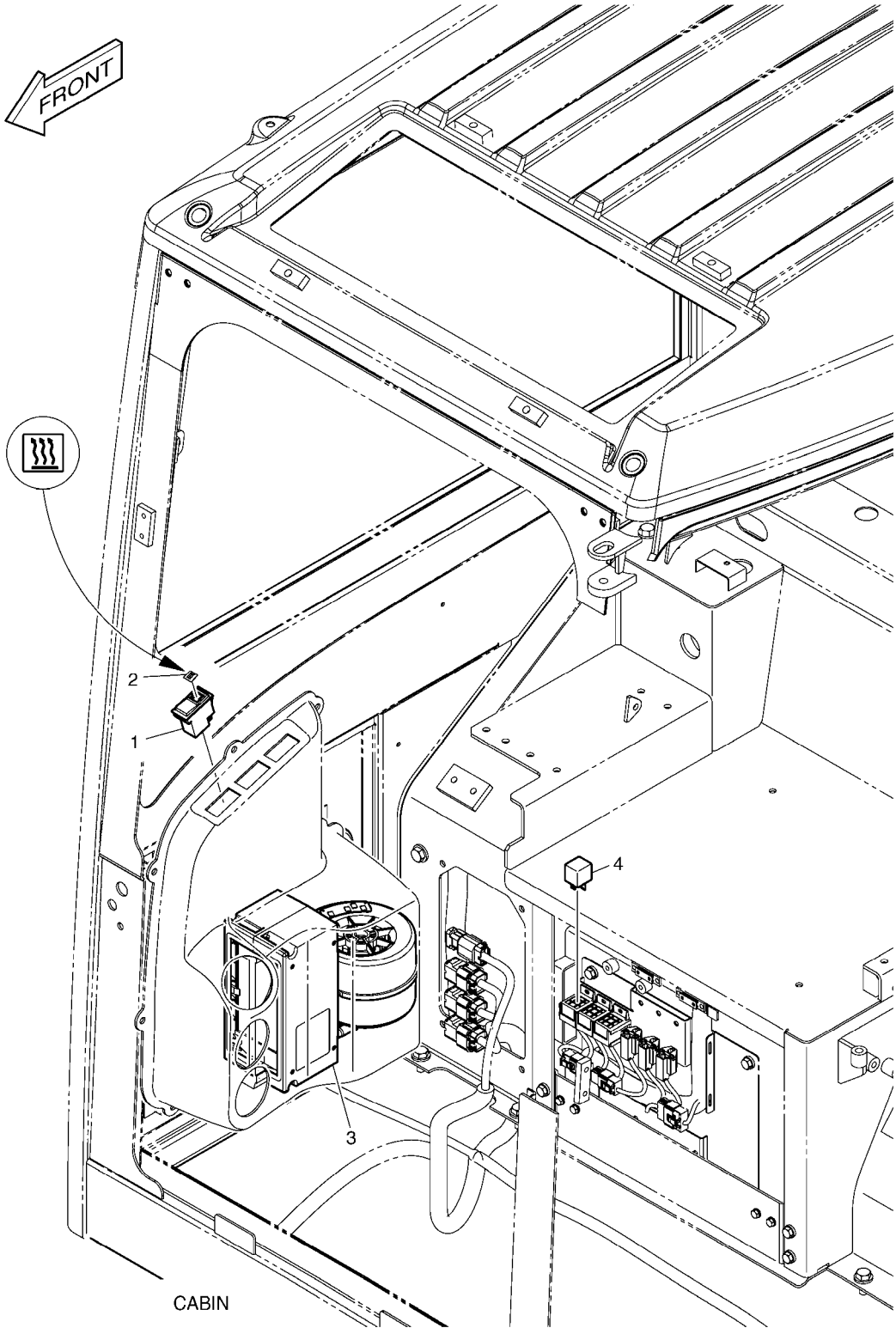

(THIS PARTS BOOK IS FOR REFERENCE ONLY.
PART NUMBERS AND SERAIL NUMBERS MAY BE
OUTDATED. ALWAYS USE THE ONLINE PARTS SYSTEM)

DATE	JAN. 04, 2013
3rd EDITION	

Fig. 6250 HEATER - CABIN CHAUFFAGE

Serial No. ;

Key No.	Part No.	Description	Description	Q'ty	S.C	Serial No.	ICA	Replaceable part	
								Part No.	Q'ty
6250 --	K1026796	HEATER ASS'Y	RECHAUFFEUR	-	D				
1	549-00040	SWITCH;ROCKER	COMMUTATEUR	1					
2	2190-2584D5	INSERT;HEATER	INSERTION	1					
3	K1013609	HEATER ASS'Y	RECHAUFFEUR	1					
4	2544-9032	RELAY	RELAIS	1		5001-5108			
	K1053324	RELAY	RELAIS	1		5109-			

(THIS PARTS BOOK IS FOR REFERENCE ONLY.
PART NUMBERS AND SERAIL NUMBERS MAY BE
OUTDATED. ALWAYS USE THE ONLINE PARTS SYSTEM)

DATE	JAN. 04, 2013
3rd EDITION	

Fig. 6260 HEATER CHAUFFAGE

Serial No. ;

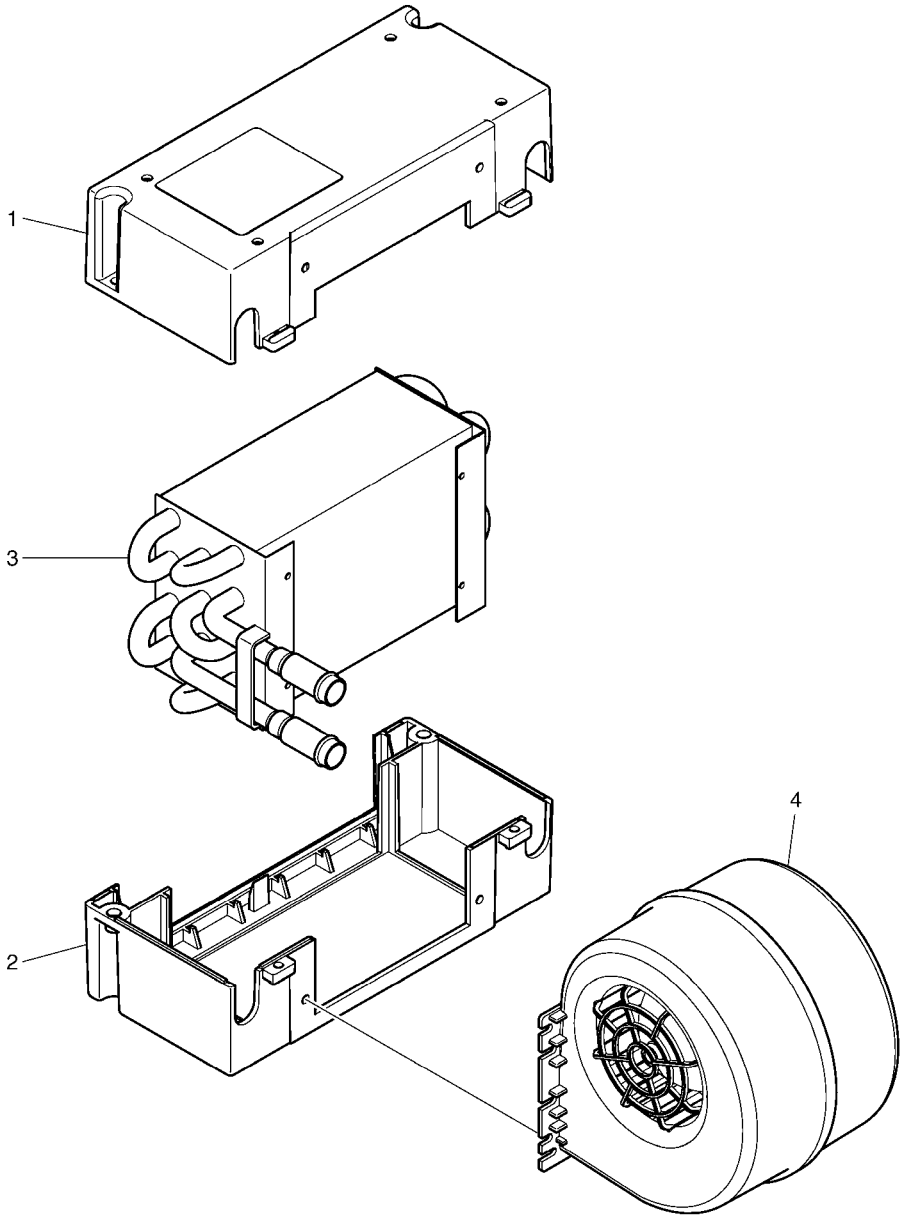

(THIS PARTS BOOK IS FOR REFERENCE ONLY.
PART NUMBERS AND SERAIL NUMBERS MAY BE
OUTDATED. ALWAYS USE THE ONLINE PARTS SYSTEM)

DATE	JAN. 04, 2013
3rd EDITION	

Fig. 6260 HEATER CHAUFFAGE

Serial No. ;

Key No.	Part No.	Description	Description	Q'ty	S.C	Serial No.	ICA	Replaceable part	
								Part No.	Q'ty
6260 --	K1013609	HEATER ASS'Y	RECHAUFFEUR	1					
1	K9005244	CASE	CARTER	1					
2	K9005245	CASE	CARTER	1					
3	K9005246	EVAPORATOR	CHAUFFAGE	1					
4	K9005247	MOTOR;BLOWER	MOTEUR	1					

(THIS PARTS BOOK IS FOR REFERENCE ONLY.
PART NUMBERS AND SERAIL NUMBERS MAY BE
OUTDATED. ALWAYS USE THE ONLINE PARTS SYSTEM)

DATE	JAN. 04, 2013
3rd EDITION	

Fig. 6270 HEATER COVER
BOITIES DE CHAUFFAGE

Serial No. ;

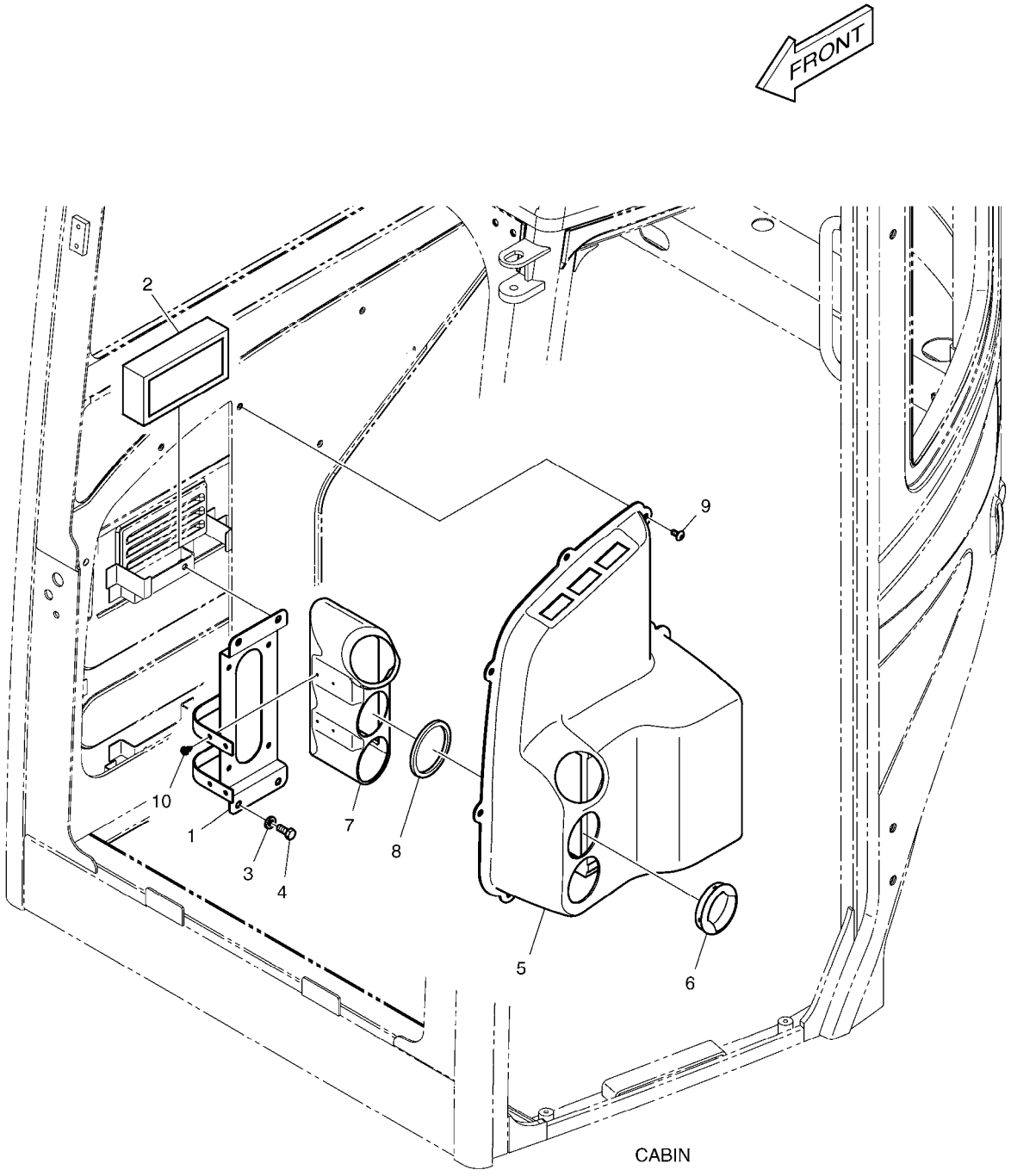

(THIS PARTS BOOK IS FOR REFERENCE ONLY.
PART NUMBERS AND SERAIL NUMBERS MAY BE
OUTDATED. ALWAYS USE THE ONLINE PARTS SYSTEM)

DATE	JAN. 04, 2013
3rd EDITION	

Fig. 6270 HEATER COVER
BOITIES DE CHAUFFAGE

Serial No. ;

Key No.	Part No.	Description	Description	Q'ty	S.C	Serial No.	ICA	Replaceable part	
								Part No.	Q'ty
6270 --	K1015073B	HEATER COVER	RECHAUFFEUR	-	D	5001-5287			
	110508-15882	COVER,HEATER	RECHAUFFEUR	-	D	5288-			
1	K1013225	PLATE;HEATER MOUNTING	PLAQUE	1					
2	2471-9040	FILTER;AIR	FILTRE	1					
3	2114-1898D2	WASHER	RONDELLE	4					
4	2120-2166D5	BOLT	BOULON	4					
5	K1014582B	COVER;HEATER	COUVERCLE	1		5001-5287	Y	110508-15883	1
	110508-15883	COVER,HEATER	COUVERCLE	1		5288-			
6	K1006041	NOZZLE;VENT SMALL	INJECTEUR	3					
7	K1014597	DUCT;HEATER	CONDUIT DE RECHAUFFE	1		5001-5287	Y	460103-00818	1
	460103-00818	DUCT,HEATER	CONDUIT DE RECHAUFFE	1		5288-			
8	K1015076	FOAM	EPONGE	3		5001-5287	Y	180102-00893	3
	180102-00893	FOAM	EPONGE	3		5288-			
9	2120-2166D10	SCREW	VIS	7					
10	S3640523	SCREW;TAPPING M5X10	VIS TARAUDEUSE	4					

(THIS PARTS BOOK IS FOR REFERENCE ONLY.
PART NUMBERS AND SERAIL NUMBERS MAY BE
OUTDATED. ALWAYS USE THE ONLINE PARTS SYSTEM)

DATE	JAN. 04, 2013
3rd EDITION	

Fig. 6280 HEATER PIPING
CONDUITES DE CHAUFFAGE

Serial No. ;

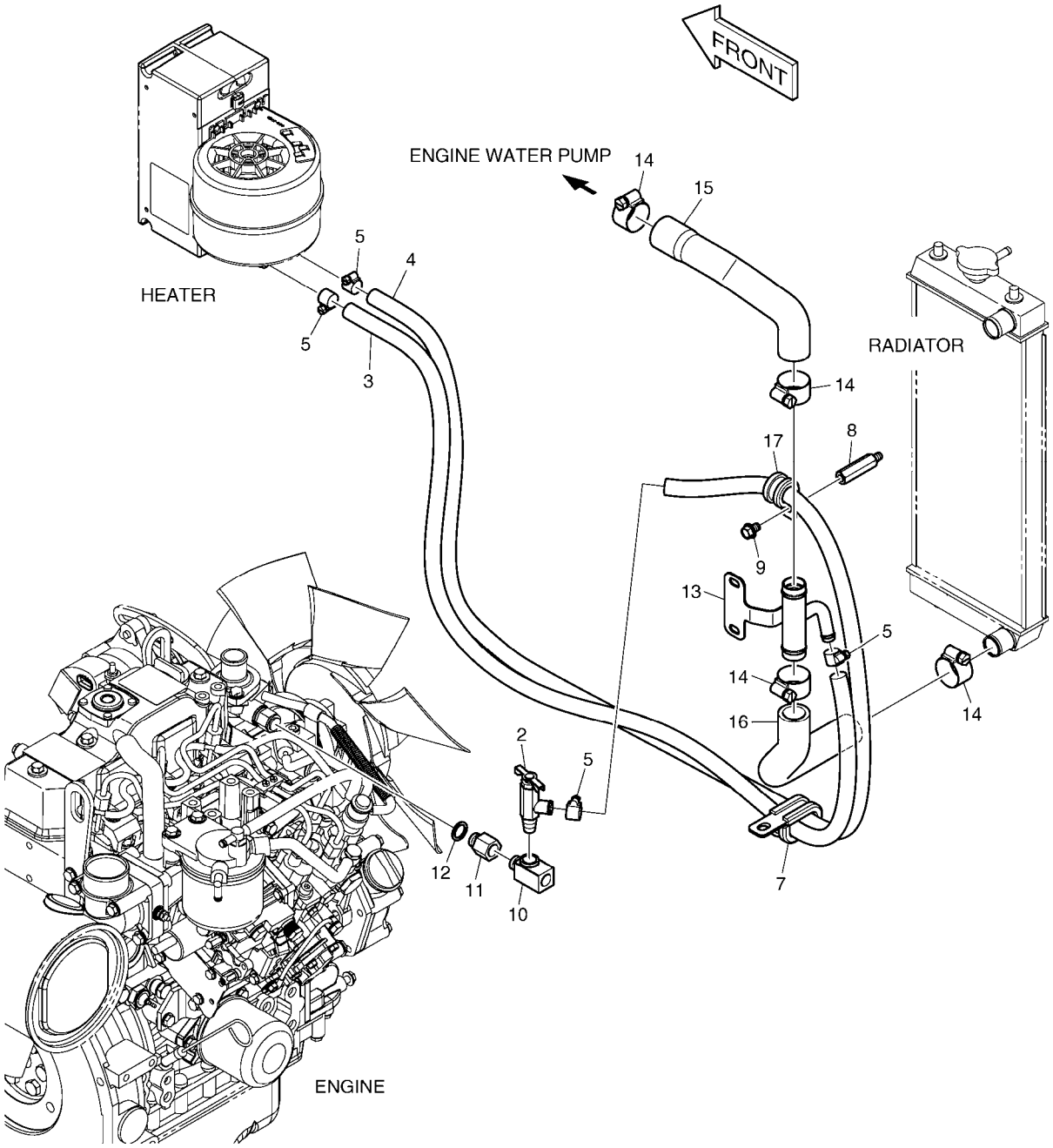

(THIS PARTS BOOK IS FOR REFERENCE ONLY.
PART NUMBERS AND SERAIL NUMBERS MAY BE
OUTDATED. ALWAYS USE THE ONLINE PARTS SYSTEM)

DATE	JAN. 04, 2013
3rd EDITION	

Fig. 6280 HEATER PIPING
CONDUITES DE CHAUFFAGE

Serial No. ;

Key No.	Part No.	Description	Description	Q'ty	S.C	Serial No.	ICA	Replaceable part	
								Part No.	Q'ty
6280 --	K1026797A	HEATER PIPING	TUYAUTERIE DE RECHAUI	-	D				
2	2186-9003	VALVE	VANNE	1					
3	2185-1308D13	HOSE	TUYAU FLEXIBLE	1					
4	2185-1308D13	HOSE	TUYAU FLEXIBLE	1					
5	S8450016	CLAMP	COLLIER	4					
7	124-00209D1	CLIP	AGRAFE	1					
8	2120-2187	BOLT;STUD	BOULON	1					
9	K1001029	BOLT	BOULON	1					
10	K1029709A	ADAPTER PT3/8-PT3/8	ADAPTEUR	1					
11	2181-1913D2	REDUCER	REDUCTEUR	1					
12	S8180251	PACKING	RONDELLE D'ETANCHEITE	1					
13	K1029710	PIPE;WATER	TUYAU	1					
14	S8450023	CLAMP	COLLIER	4					
15	K1030282	HOSE;WATER	TUYAU FLEXIBLE	1					
16	K1030283	HOSE;WATER	TUYAU FLEXIBLE	1					
17	124-00208D3	CLIP	AGRAFE	1					

(THIS PARTS BOOK IS FOR REFERENCE ONLY.
PART NUMBERS AND SERAIL NUMBERS MAY BE
OUTDATED. ALWAYS USE THE ONLINE PARTS SYSTEM)

DATE	JAN. 04, 2013
3rd EDITION	

Fig. 6290 CABIN MOUNTING SUPPORT DE CABINE

Serial No. ;

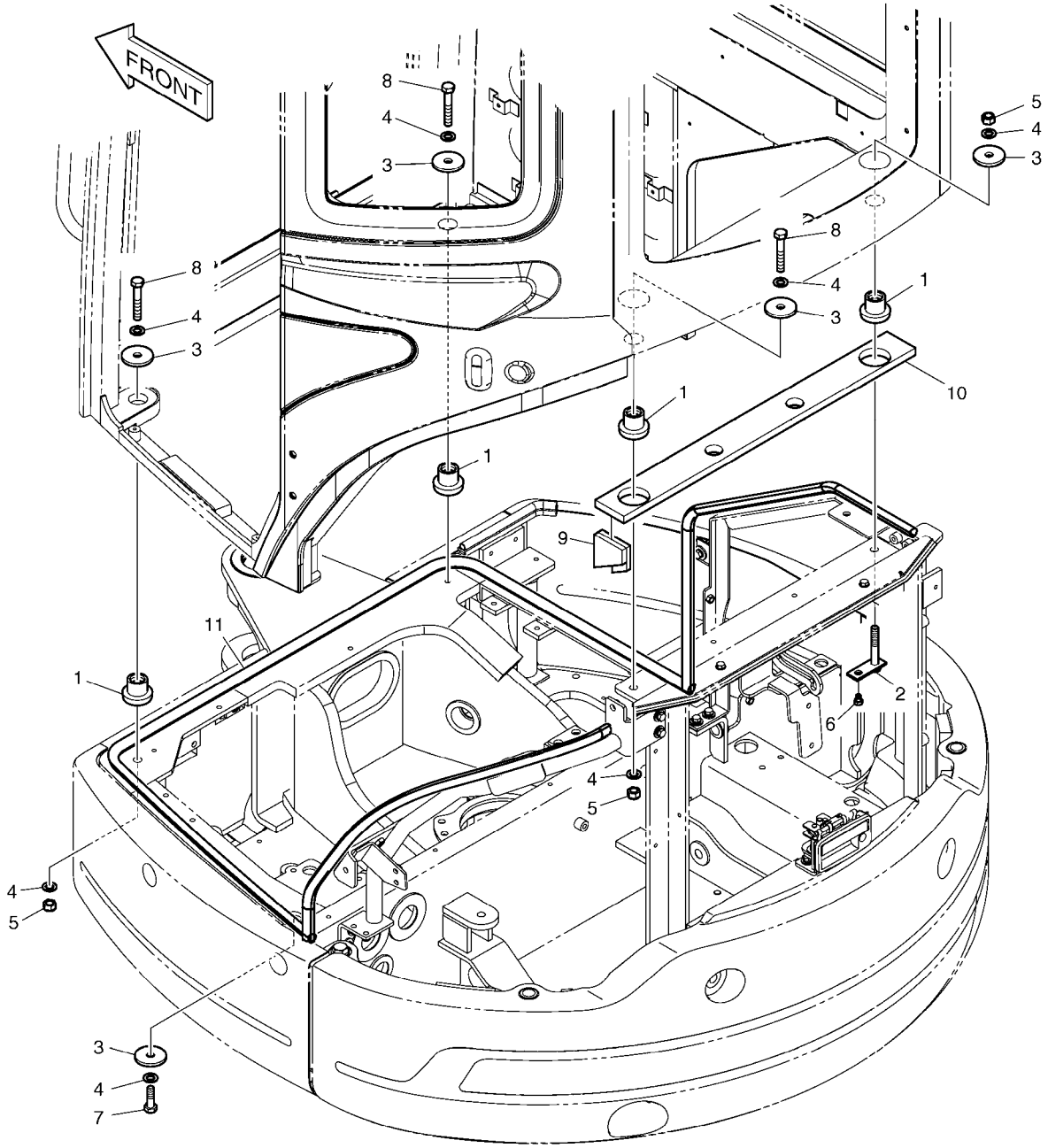

FRAME

(THIS PARTS BOOK IS FOR REFERENCE ONLY.
PART NUMBERS AND SERAIL NUMBERS MAY BE
OUTDATED. ALWAYS USE THE ONLINE PARTS SYSTEM)

DATE	JAN. 04, 2013
3rd EDITION	

Fig. 6290 CABIN MOUNTING SUPPORT DE CABINE

Serial No. ;

Key No.	Part No.	Description	Description	Q'ty	S.C	Serial No.	ICA	Replaceable part	
								Part No.	Q'ty
6290 --	K1011305G	CABIN MOUNTING	MONTAGE DE CABINE	-	D	5001-5176			
	220101-00684	CABIN ASSY,MOUNT	MONTAGE DE CABINE	-	D	5177-			
1	161-00284	RUBBER;CABIN MOUNTING	CAOUTCHOUC	4					
2	120-00255	BOLT	BOULON	1					
3	2114-1058D73	WASHER	RONDELLE PLATE	5					
4	2114-1058D54	WASHER	RONDELLE	7		5001-5176			
	120810-00122	WASHER,PLAIN	RONDELLE	7		5177-			
5	2121-9019	NUT;LOCK	ECROU	3					
6	S0508453	BOLT M8X1.25X12	BOULON A 6 PANS	1					
7	2120-2166D50	BOLT	BOULON A 6 PANS	1					
8	S0561253	BOLT M12X1.75X75	BOLT M12X1.75X75	3					
9	K1015632B	FOAM	EPONGE	1		5001-5034	I	K1015632C	1
	K1015632C	FOAM	EPONGE	1		5035-			
10	K1015633A	FOAM	EPONGE	1					
11	K1023901A	TRIM	ATTACHE	1					

(THIS PARTS BOOK IS FOR REFERENCE ONLY.
PART NUMBERS AND SERAIL NUMBERS MAY BE
OUTDATED. ALWAYS USE THE ONLINE PARTS SYSTEM)

DATE	JAN. 04, 2013
3rd EDITION	

Fig. 6300 COVER - CABIN
CABINE DE COUVERCLE

Serial No. ;

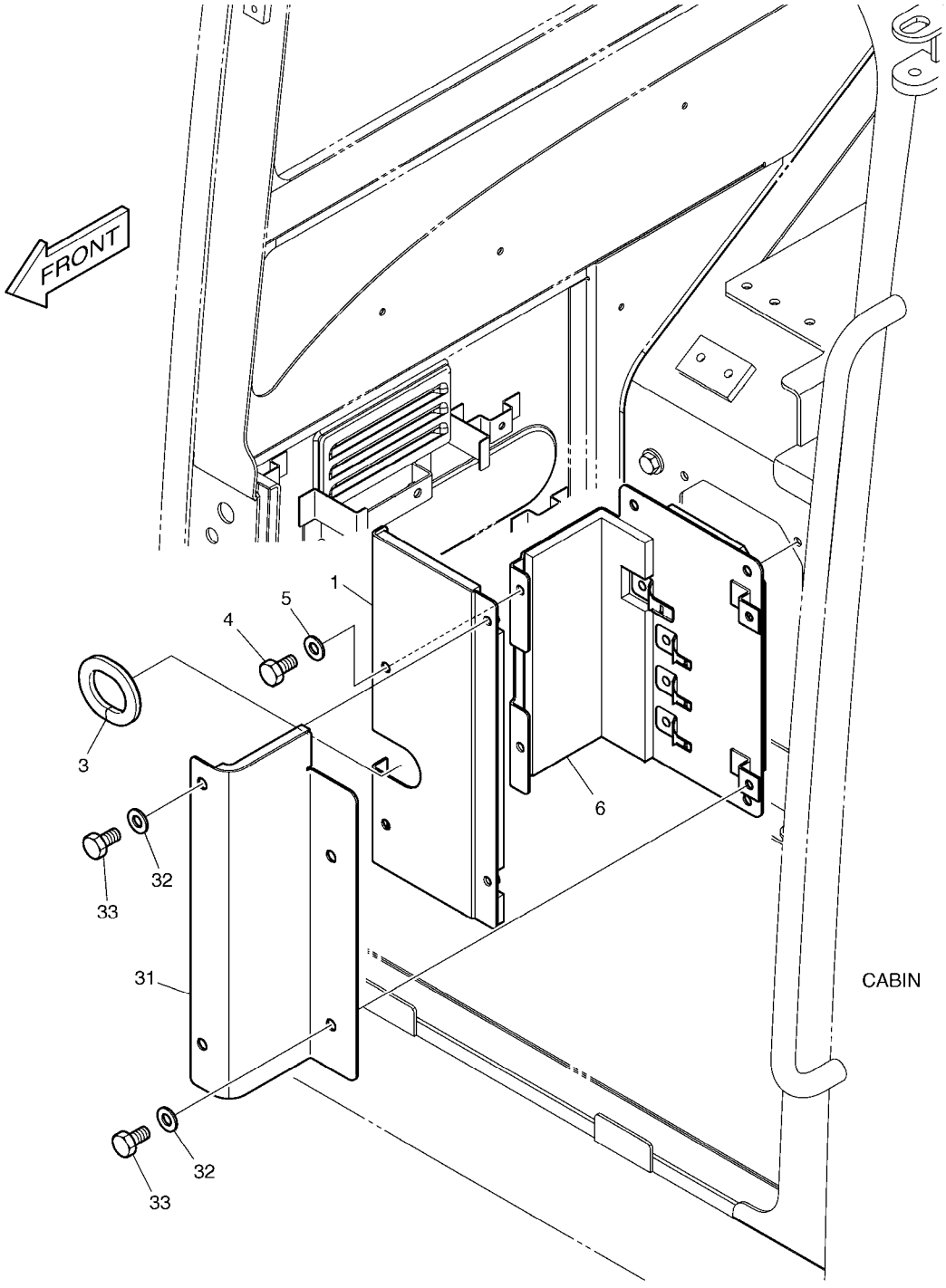

(THIS PARTS BOOK IS FOR REFERENCE ONLY.
PART NUMBERS AND SERAIL NUMBERS MAY BE
OUTDATED. ALWAYS USE THE ONLINE PARTS SYSTEM)

DATE	JAN. 04, 2013
3rd EDITION	

Fig. 6300 COVER - CABIN
CABINE DE COUVERCLE

Serial No. ;

Key No.	Part No.	Description	Description	Q'ty	S.C	Serial No.	ICA	Replaceable part	
								Part No.	Q'ty
6300 --	K1023912C	COVER ASS'Y	COUVERCLE	-	D	5001-5287			
	220204-00278	COVER,CABIN	COUVERCLE	-	D	5288-			
1	K1014172C	COVER	COUVERCLE	1					
3	2161-1744	RUBBER	CAOUTCHOUC	1					
4	2120-2166D5	BOLT	BOULON	6					
5	2114-1898D2	WASHER	RONDELLE	6					
6	K1012836B	COVER	COUVERCLE	1		5001-5287	Y	110508-15884	1
	110508-15884	COVER	COUVERCLE	1		5288-			
31	K1030060	COVER	COUVERCLE	1					
32	2114-1898D2	WASHER	RONDELLE	4					
33	2120-2166D5	BOLT	BOULON	4					

(THIS PARTS BOOK IS FOR REFERENCE ONLY.
PART NUMBERS AND SERAIL NUMBERS MAY BE
OUTDATED. ALWAYS USE THE ONLINE PARTS SYSTEM)

DATE	JAN. 04, 2013
3rd EDITION	

Fig. 6310 MIRROR MIROIR

Serial No. ;

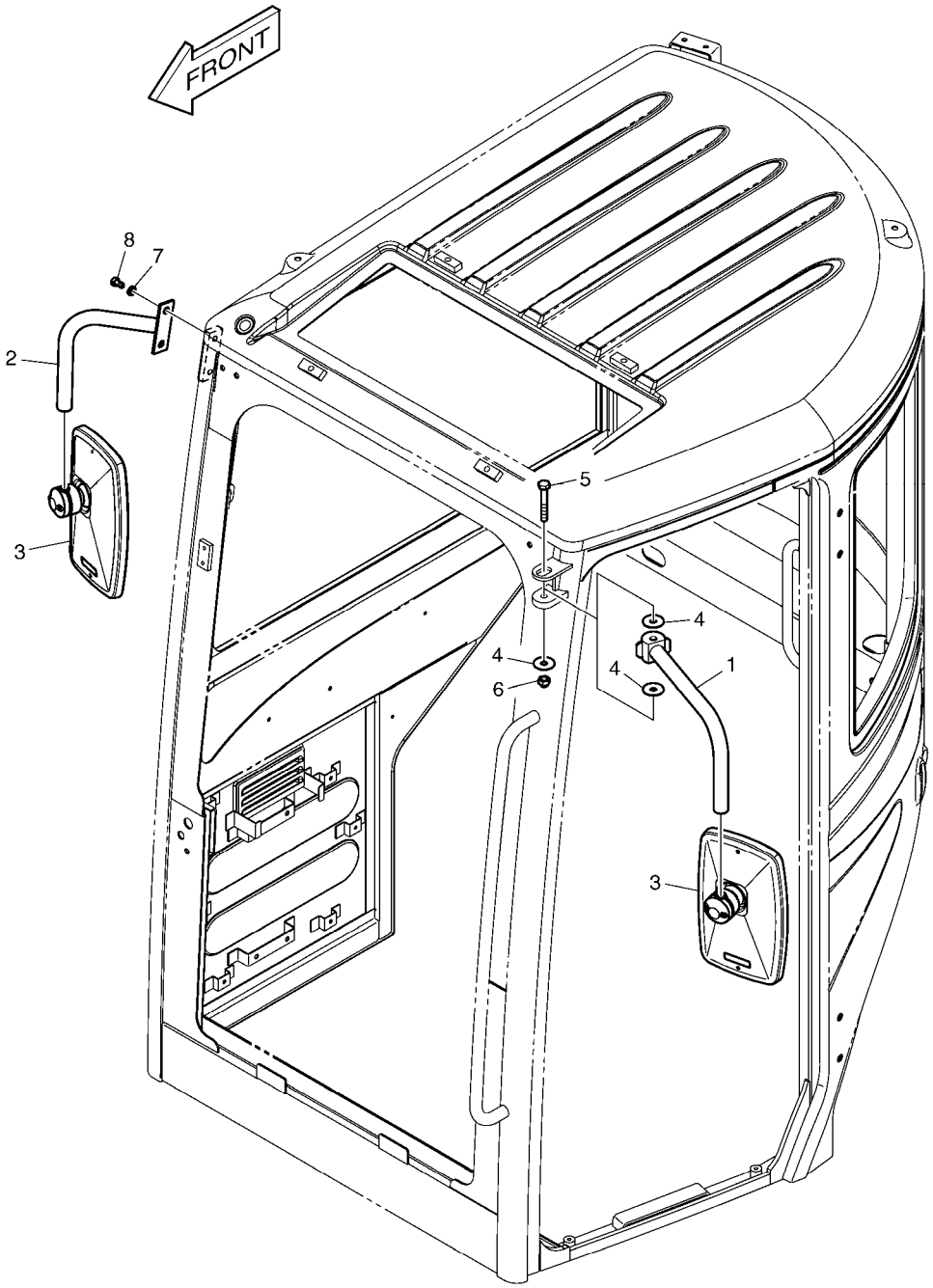

(THIS PARTS BOOK IS FOR REFERENCE ONLY.
PART NUMBERS AND SERAIL NUMBERS MAY BE
OUTDATED. ALWAYS USE THE ONLINE PARTS SYSTEM)

DATE	JAN. 04, 2013
3rd EDITION	

Fig. 6310 MIRROR MIROIR

Serial No. ;

Key No.	Part No.	Description	Description	Q'ty	S.C	Serial No.	ICA	Replaceable part	
								Part No.	Q'ty
6310 --	K1013176C	MIRROR ASS'Y	MIROIR	-	D	5001-5092			
	110969-00003	MIRROR ASS'Y	MIROIR	-	D	5093-			
1	K1013070A	STAY;MIRROR (L.H)	ENTRETOISE	1					
2	K1013177A	STAY;MIRROR (R.H)	SEJOUR DE MIROIR	1					
3	903-00068	MIRROR;SIDE	RETROVISEUR	2		5001-5092	I	K1040606	2
	K1040606	MIRROR;SIDE	MAIN COURANTE	2		5093-			
4	2114-1898D16	WASHER	RONDELLE	3					
5	2120-2166D60	BOLT	BOULON	1					
6	2121-1311D5	NUT;CAP	ECROU	1					
7	2114-1898D1	WASHER	RONDELLE	2					
8	2120-2166D56	BOLT M10X1.5X16	BOULON	2					

(THIS PARTS BOOK IS FOR REFERENCE ONLY.
PART NUMBERS AND SERAIL NUMBERS MAY BE
OUTDATED. ALWAYS USE THE ONLINE PARTS SYSTEM)

DATE	JAN. 04, 2013
3rd EDITION	

Fig. 6320 FLOOR MAT - CABIN
CABINE DE PLANCHER

Serial No. ;

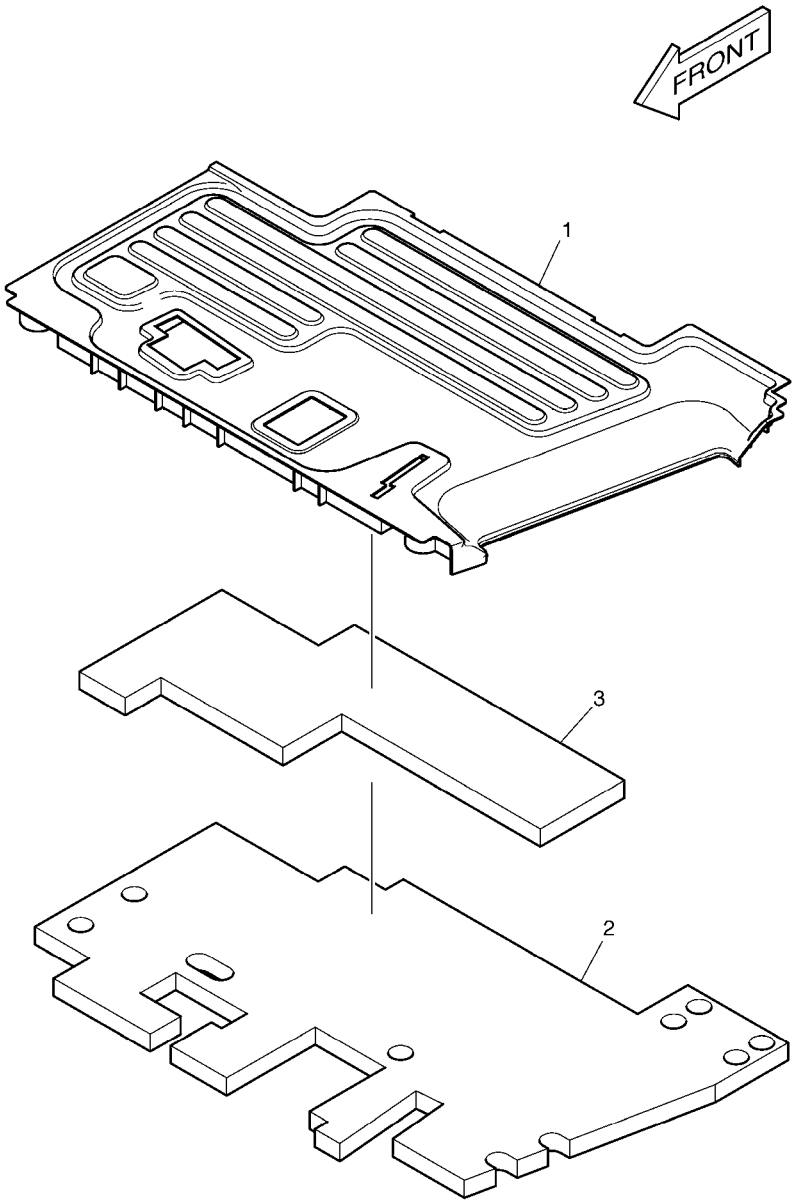

(THIS PARTS BOOK IS FOR REFERENCE ONLY.
PART NUMBERS AND SERAIL NUMBERS MAY BE
OUTDATED. ALWAYS USE THE ONLINE PARTS SYSTEM)

DATE	JAN. 04, 2013
3rd EDITION	

Fig. 6320 FLOOR MAT - CABIN
CABINE DE PLANCHER

Serial No. ;

Key No.	Part No.	Description	Description	Q'ty	S.C	Serial No.	ICA	Replaceable part	
								Part No.	Q'ty
6320 --	K1027805	MAT FLOOR ASS'Y	PLANCHER	-	D	5001-5287			
	110935-00264	MAT,FLOOR	PLANCHER	-	D	5288-			
1	K1029122	MAT;CABIN	TAPIS DE SOL	1		5001-5287	Y	110935-00265	1
	110935-00265	MAT,FLOOR	PLANCHER	1		5288-			
2	K1023873	FOAM;MAT FLOOR	EPONGE	1		5001-5287	Y	180102-00895	1
	180102-00895	FOAM	EPONGE	1		5288-			
3	K1023874B	FOAM;MAT FLOOR	EPONGE	1		5001-5287	Y	180102-00896	1
	180102-00896	FOAM	EPONGE	1		5288-			

(THIS PARTS BOOK IS FOR REFERENCE ONLY.
PART NUMBERS AND SERAIL NUMBERS MAY BE
OUTDATED. ALWAYS USE THE ONLINE PARTS SYSTEM)

DATE	JAN. 04, 2013
3rd EDITION	

Fig. 6330 CABIN (1)
CABINE

Serial No. ;

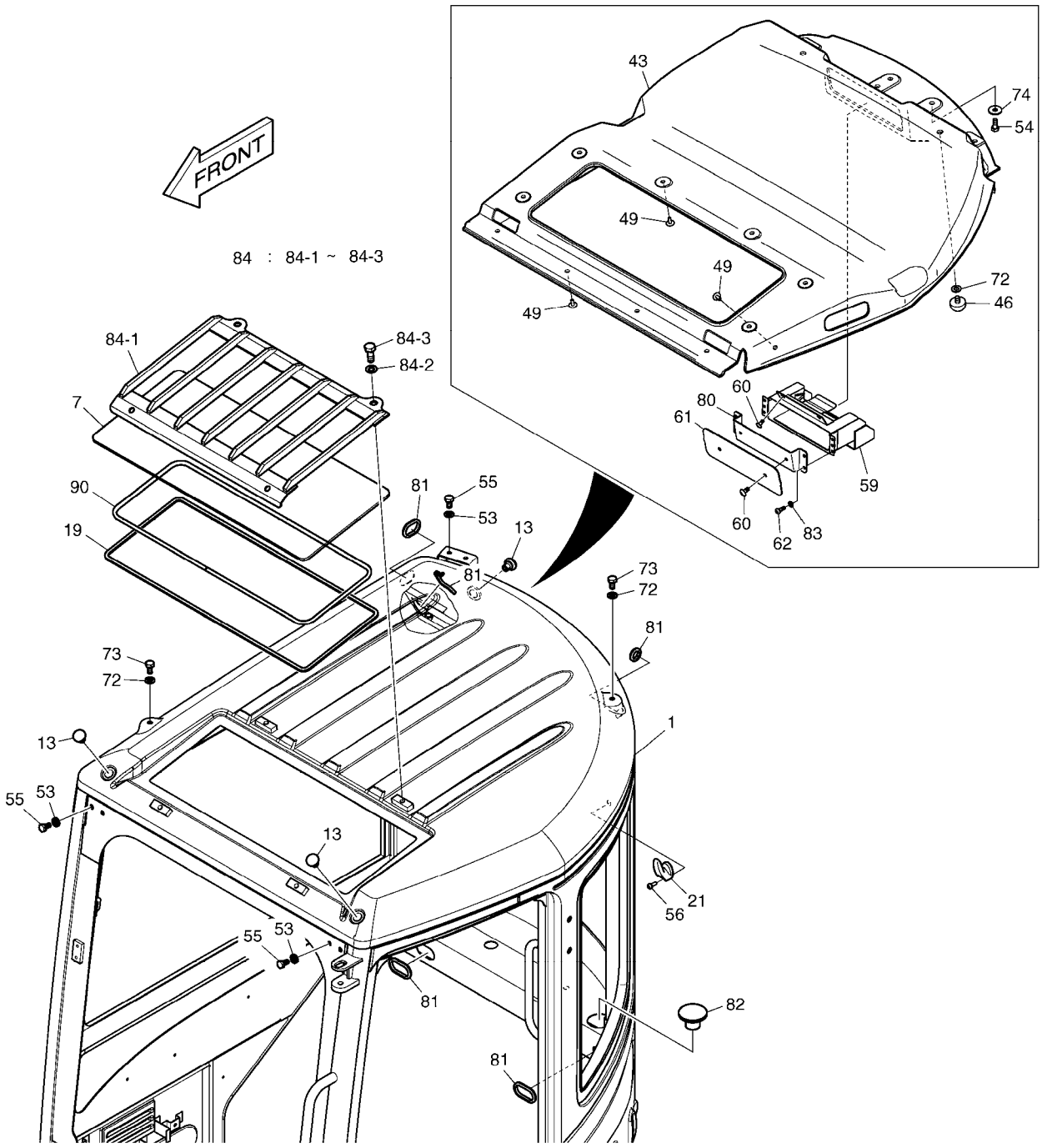

(THIS PARTS BOOK IS FOR REFERENCE ONLY.
PART NUMBERS AND SERAIL NUMBERS MAY BE
OUTDATED. ALWAYS USE THE ONLINE PARTS SYSTEM)

DATE	JAN. 04, 2013
3rd EDITION	

Fig. 6330 CABIN (1) CABINE

Serial No. ;

Key No.	Part No.	Description	Description	Q'ty	S.C	Serial No.	ICA	Replaceable part	
								Part No.	Q'ty
6330 --	K1011306G	CABIN ASS'Y	ENSEMBLE CABINE	1		5001-5105	I	K1011306H	1
	K1011306H	CABIN ASS'Y	ENSEMBLE CABINE	1		5106-5207	I	220101-00724	1
	220101-00724	CABIN ASSY	ENSEMBLE CABINE	1		5208-5265	I	220101-00724A	1
	220101-00724A	CABIN ASSY	ENSEMBLE CABINE	1		5266-5287	Y	220101-00724B	1
	220101-00724B	CABIN ASSY	ENSEMBLE CABINE	1		5288-			
1	-	BODY;CABIN	CORPS	1	D				
7	K1013088A	GLASS;ROOF	VERRE	1					
13	2160-1310	BUSHING;RUBBER	MANCHON CAOUTCHOUC	3					
19	K1013534	DAMPER	AMORTISSEUR	1					
21	K1014609B	HOOK;COAT	CROCHET	1					
43	K1014590C	PANEL;ROOF	PANNEAU DE TOIT	1					
46	4161-2507	STOPPER;RUBBER	TAQUET	2					
49	K1006936	SCRIVET	SCRIVET	14					
53	2114-1898D2	WASHER	RONDELLE	6					
54	2120-2166D5	BOLT	BOULON	4					
55	2120-2166D25	BOLT M8X1.25X16	BOULON A 6 PANS	6					
56	2120-2166D7	SCREW	VIS	1					
59	K1015107A	BRACKET;CASSETTE	SUPPORT	1					
60	2120-2166D10	SCREW	VIS	4					
61	K1015113B	COVER;CASSETTE	COUVERCLE	1					
62	2120-2166D8	SCREW M5X0.8X14	VIS	4					
72	2114-1898D15	WASHER;PLAIN	RONDELLE	4					
73	2120-2166D4	BOLT M10X1.5X20	BOULON	2					
74	2114-1898D8	WASHER	RONDELLE	4					
80	K1018881	PLATE;CASSETTE	PLAQUE	1					
81	K1018827A	TRIM;RUBBER	ATTACHE	1					
82	K1018810	GROMMET	CANON ISOLANT	2					
83	2114-1898D4	WASHER	RONDELLE	4					
84	K1024126	ROOF GUARD ASS'Y	GARDE DE TOIT	1	D				
84-1	K1017222	. GUARD;ROOF	. GARDE	1					
84-2	2114-1898D1	. WASHER	. RONDELLE	4					
84-3	2120-2166D56	. BOLT M10X1.5X16	. BOULON	4					
90	K1029458	RUBBER;TRIM	CAOUTCHOUC	1					

(THIS PARTS BOOK IS FOR REFERENCE ONLY.
PART NUMBERS AND SERAIL NUMBERS MAY BE
OUTDATED. ALWAYS USE THE ONLINE PARTS SYSTEM)

DATE	JAN. 04, 2013
3rd EDITION	

Fig. 6340 CABIN (2)
CABINE

Serial No. ;

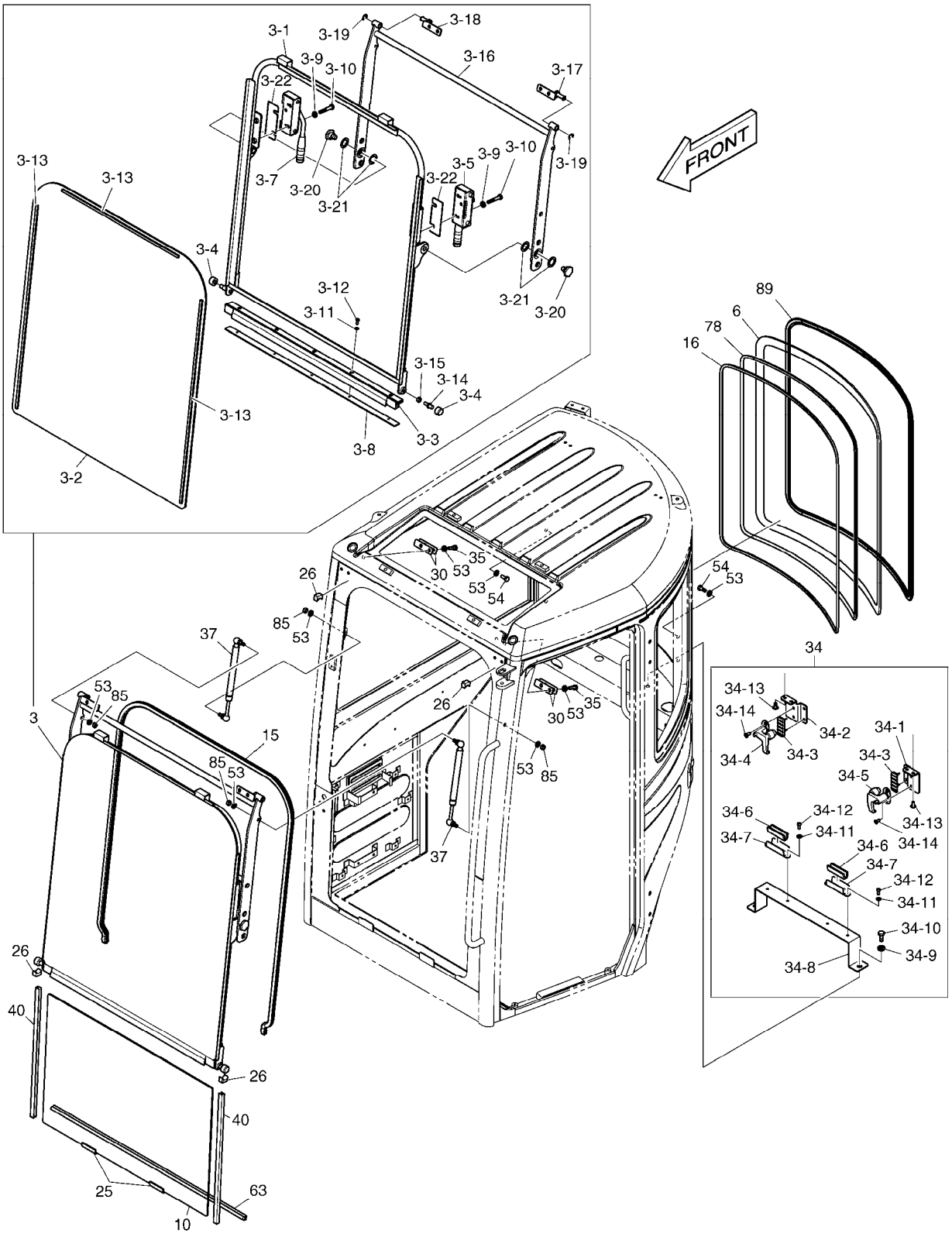

(THIS PARTS BOOK IS FOR REFERENCE ONLY.
PART NUMBERS AND SERAIL NUMBERS MAY BE
OUTDATED. ALWAYS USE THE ONLINE PARTS SYSTEM)

DATE	JAN. 04, 2013
3rd EDITION	

Fig. 6340 CABIN (2) CABINE

Serial No. ;

Key No.	Part No.	Description	Description	Q'ty	S.C	Serial No.	ICA	Replaceable part	
								Part No.	Q'ty
6340 --	K1011306G	CABIN ASS'Y	ENSEMBLE CABINE	1		5001-5105	I	K1011306H	1
	K1011306H	CABIN ASS'Y	ENSEMBLE CABINE	1		5106-5207	I	220101-00724	1
	220101-00724	CABIN ASSY	ENSEMBLE CABINE	1		5208-5265	I	220101-00724A	1
	220101-00724A	CABIN ASSY	ENSEMBLE CABINE	1		5266-5287	Y	220101-00724B	1
	220101-00724B	CABIN ASSY	ENSEMBLE CABINE	1		5288-			
3	K1011310G	FRONT DOOR ASS'Y	PORTE AVANT	1					
3-1	-	. BODY;DOOR	. PORTE	1	D				
3-2	K1013178B	. GLASS;SLIDE DOOR	. VERRE	1					
3-3	K1014709E	. SEAL;SLIDE DOOR	. GLISSEZ LE JOINT DE POR	1					
3-4	270-00028	. ROLLER	. GALET	2					
3-5	K1014748C	. LATCH;SLIDE DOOR(L.H)	. VERROU	1					
3-7	K1014747C	. LATCH;SLIDE DOOR(R.H)	. VERROU	1					
3-8	K1014988B	. PLATE	. PLAQUE	1					
3-9	2114-1898D2	. WASHER	. RONDELLE	4					
3-10	2120-2166D59	. BOLT	. BOULON	4					
3-11	2114-1898D13	. WASHER;PLAIN	. RONDELLE	5					
3-12	2120-2166D33	. SCREW M4X0.7X10	. VIS	5					
3-13	K1014990A	. DAMPER	. AMORTISSEUR	1					
3-14	K1024117A	. PIN;SLIDE DOOR	. GOUPILLE	1					
3-15	2121-1311D2	. NUT	. ECROU	1					
3-16	K1024128C	. BAR	. BARRE	1					
3-17	K1013051B	. BRACKET;L.H	. SUPPORT	1					
3-18	K1013050B	. BRACKET;R.H	. SUPPORT	1					
3-19	S6540700	. RING;RETAINING	. BAGUE	2					
3-20	K1014736A	. PIN	. GOUPILLE	2					
3-21	K1012816	. SHIM	. CALE	4					
3-22	K1030174	. SHIM	. CALE	2					
6	K1013087A	GLASS;REAR	VERRE	1					
10	K1013174B	GLASS;LOWER	VERRE	1					
15	K1013270A	TRIM;FRONT	EQUILIBRE AVANT	1					
16	K1013531A	DAMPER;REAR	AMORTISSEUR	1					
25	2161-2178	STOPPER	ARRET	2					
26	161-00208A	STOPPER;RUBBER	ARRET	4					
30	K1026395	PLATE	PLAQUE	4					
34	K1014737A	BRACKET ASS'Y	SUPPORT	1	D				
34-1	621-03113B	. PLATE;STOPPER (R.H)	. PLAQUE	1					
34-2	621-03114B	. PLATE;STOPPER(L.H)	. PLAQUE	1					
34-3	K1000794	. STOPPER;RUBBER	. TAQUET	2					

(THIS PARTS BOOK IS FOR REFERENCE ONLY.
PART NUMBERS AND SERIAL NUMBERS MAY BE
OUTDATED. ALWAYS USE THE ONLINE PARTS SYSTEM)

DATE	JAN. 04, 2013
3rd EDITION	

Fig. 6340 CABIN (2) CABINE

Serial No. ;

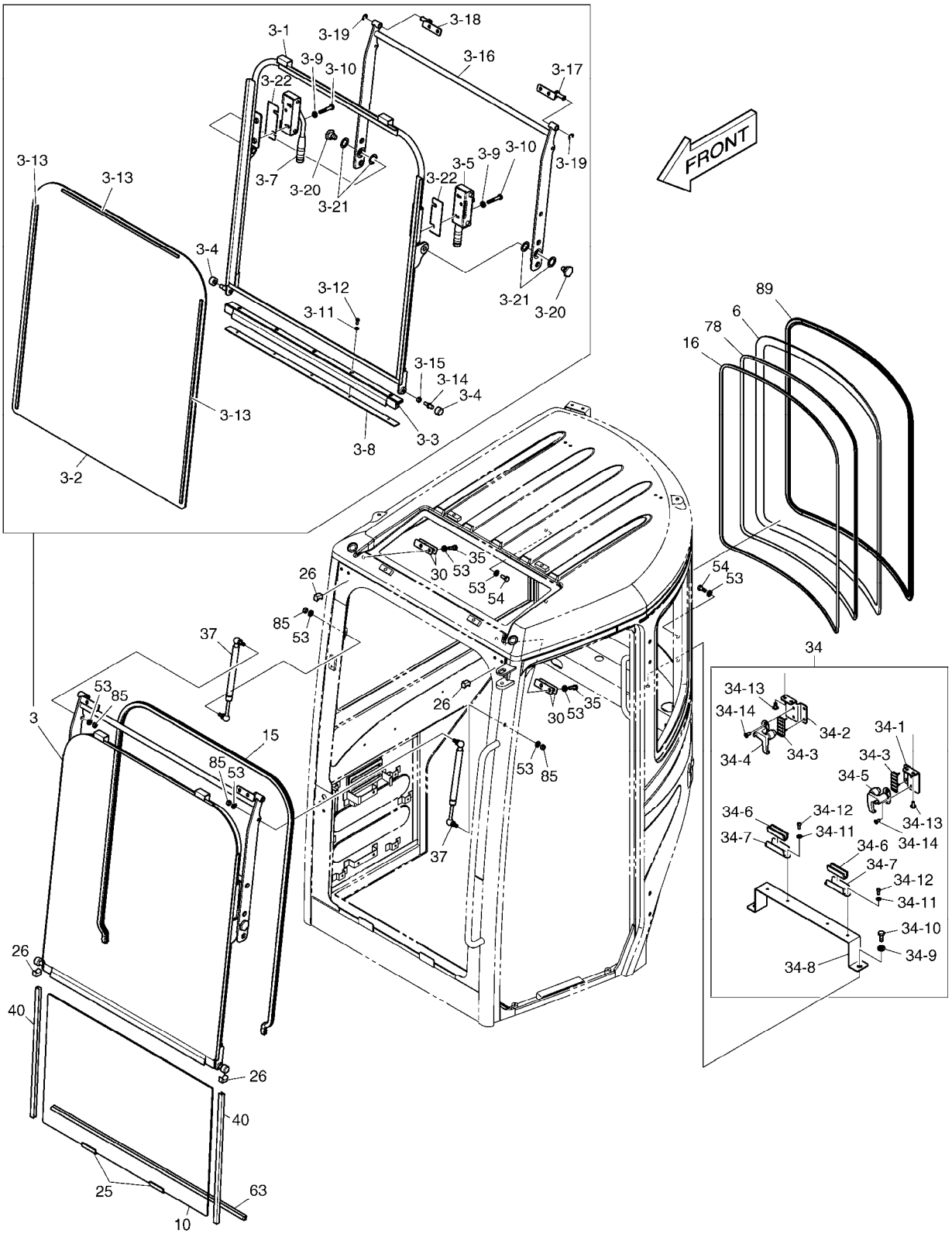

(THIS PARTS BOOK IS FOR REFERENCE ONLY.
PART NUMBERS AND SERAIL NUMBERS MAY BE
OUTDATED. ALWAYS USE THE ONLINE PARTS SYSTEM)

Fig. 6340 CABIN (2) CABINE

Serial No. ;

Key No.	Part No.	Description	Description	Q'ty	S.C	Serial No.	ICA	Replaceable part	
								Part No.	Q'ty
6340 -34-4	125-00077	. LOCK;REAR GLASS (L.H)	. SERRURE	1					
34-5	125-00078	. LOCK;REAR GLASS (R.H)	. SERRURE	1					
34-6	2161-2178	. STOPPER	. ARRET	2					
34-7	2891-1232B	. PLATE	. PLAQUE	2					
34-8	K1014735A	. BRACKET	. SUPPORT	1					
34-9	2114-1898D2	. WASHER	. RONDELLE	2					
34-10	2120-2166D5	. BOLT	. BOULON	2					
34-11	2114-1898D13	. WASHER;PLAIN	. RONDELLE	4					
34-12	2120-2166D33	. SCREW M4X0.7X10	. VIS	4					
34-13	2120-2166D10	. SCREW	. VIS	4					
34-14	2120-2166D44	. SCREW M5X0.8X12	. VIS	4					
35	2120-2166D16	BOLT M8X1.25X25	BOULON A 6 PANS	4					
37	K1014743A	GAS SPRING	AMORTISSEUR	2					
40	2160-1026	TRIM	CANAL	2					
53	2114-1898D2	WASHER	RONDELLE	12					
54	2120-2166D5	BOLT	BOULON	4					
63	2198-1061	RUBBER;TRIM	CAOUTCHOUC	1					
78	K1018782	TRIM;RUBBER	EQUILIBRE EN CAOUTCHC	1					
85	2121-1311D2	NUT	ECROU	3					
89	K1029450	RUBBER;TRIM	CAOUTCHOUC	1					

(THIS PARTS BOOK IS FOR REFERENCE ONLY.
PART NUMBERS AND SERAIL NUMBERS MAY BE
OUTDATED. ALWAYS USE THE ONLINE PARTS SYSTEM)

DATE	JAN. 04, 2013
3rd EDITION	

Fig. 6350 CABIN (3)
CABINE

Serial No. ;

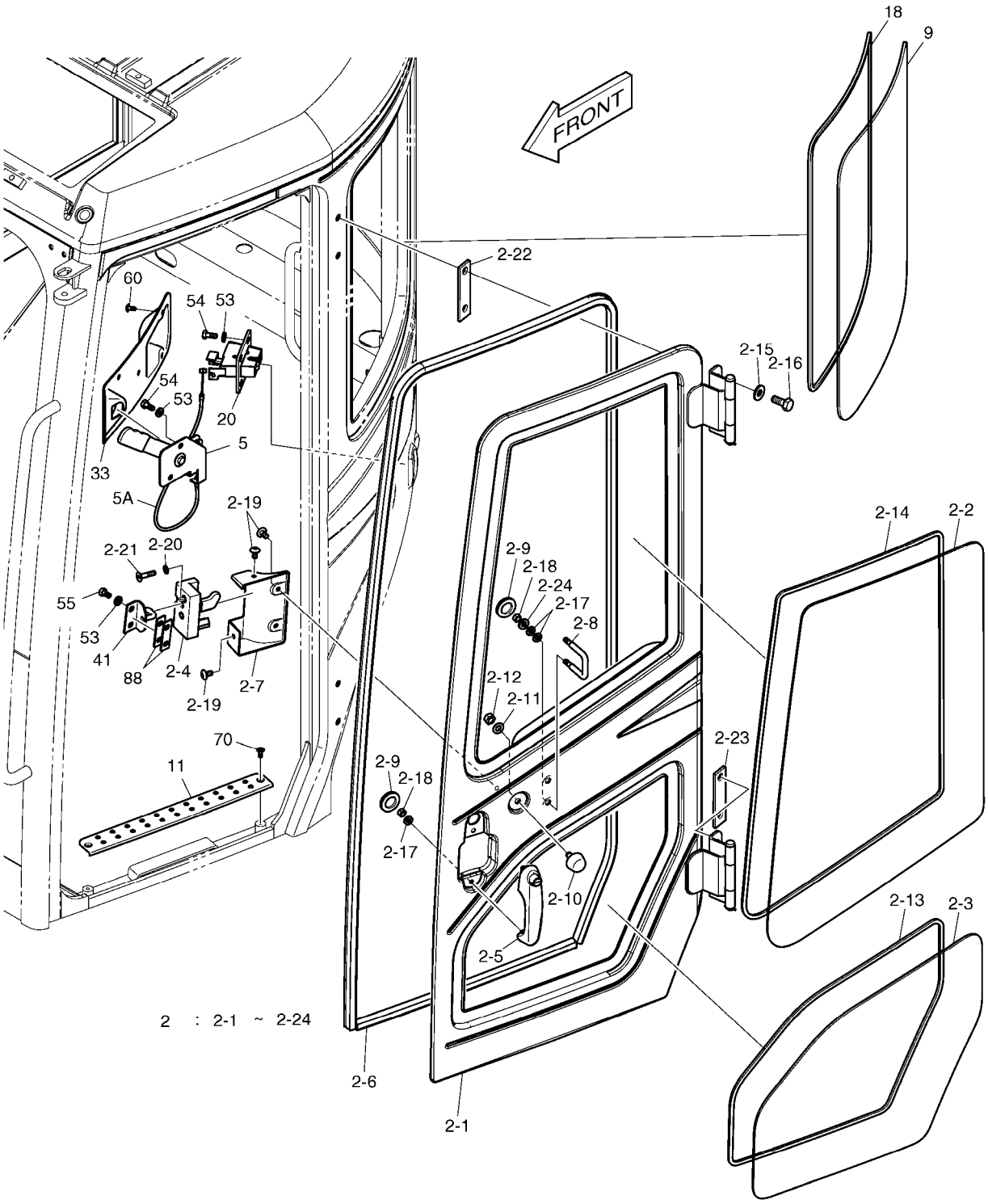

(THIS PARTS BOOK IS FOR REFERENCE ONLY.
PART NUMBERS AND SERAIL NUMBERS MAY BE
OUTDATED. ALWAYS USE THE ONLINE PARTS SYSTEM)

DATE	JAN. 04, 2013
3rd EDITION	

Fig. 6350 CABIN (3) CABINE

Serial No. ;

Key No.	Part No.	Description	Description	Q'ty	S.C	Serial No.	ICA	Replaceable part	
								Part No.	Q'ty
6350 --	K1011306G	CABIN ASS'Y	ENSEMBLE CABINE	1		5001-5105	I	K1011306H	1
	K1011306H	CABIN ASS'Y	ENSEMBLE CABINE	1		5106-5207	I	220101-00724	1
	220101-00724	CABIN ASSY	ENSEMBLE CABINE	1		5208-5265	I	220101-00724A	1
	220101-00724A	CABIN ASSY	ENSEMBLE CABINE	1		5266-5287	Y	220101-00724B	1
	220101-00724B	CABIN ASSY	ENSEMBLE CABINE	1		5288-			
2	K1011308G	SIDE DOOR ASS'Y(L.H)	ENSEMBLE LATERALE DE P	1		5001-5105	I	K1011308H	1
	K1011308H	SIDE DOOR ASS'Y(L.H)	ENSEMBLE LATERALE DE P	1		5106-5265	I	220205-00317	1
	220205-00317	SIDE DOOR ASS'Y(L.H)	ENSEMBLE LATERALE DE P	1		5266-5287	Y	220205-00317A	1
	220205-00317A	DOOR ASSY	ENSEMBLE LATERALE DE P	1		5288-			
2-1	-	. BODY;DOOR	. PORTE	1	D				
2-2	K1013075	. GLASS;DOOR UPPER	. VERRE	1					
2-3	K1013076A	. GLASS;DOOR LOWER	. VERRE	1					
2-4	K1013077	. CATCH;DOOR INNER	. CATCH;DOOR INTERIEUR	1					
2-5	K1037200	. HANDLE;DOOR	. HANDLE;DOOR	1		5001-5265	I	110925-00223	1
	110925-00223	. HANDLE;DOOR	. HANDLE;DOOR	1		5266-			
2-6	K1013079A	. TRIM RUBBER;DOOR INNER	. LE CAOUTCHOUC D'EQUI	1					
2-7	K1013567	. COVER;DOOR INNER	. COUVERCLE	1		5001-5287	Y	110508-16051	1
	110508-16051	. COVER;DOOR INNER	. COUVERCLE	1		5288-			
2-8	K1013081C	. U-BOLT	. BOULON U	1					
2-9	2160-1219	. GROMMET	. MANCHON CAOUTCHOU	3					
2-10	161-00195	. STOPPER	. TAQUET	1					
2-11	2114-1898D15	. WASHER;PLAIN	. RONDELLE	1					
2-12	2121-1311D4	. NUT	. ECROU	1					
2-13	K1013498	. DAMPER	. AMORTISSEUR	1					
2-14	K1013499	. DAMPER	. AMORTISSEUR	1					
2-15	2114-1898D1	. WASHER	. RONDELLE	4					
2-16	2120-2166D2	. BOLT	. BOULON	4					
2-17	2114-1898D2	. WASHER	. RONDELLE	6					
2-18	2121-1311D2	. NUT	. ECROU	4					
2-19	2120-2166D52	. BOLT M6X1.0X12	. BOULON	4					
2-20	S5210503	. WASHER M8	. RONDELLE ELASTIQUE	2					
2-21	2120-2150D4	. BOLT M8X1.25X35	. BOULON	2					
2-22	K1029442A	. SHIM	. CALE	1					
2-23	K1029443A	. SHIM	. CALE	1					
2-24	K1029447	. RUBBER	. CAOUTCHOUC	2					
5	K1013564A	LEVER ASS'Y;BACK LOCK	VARECH ARRIERE DE SER	1					
5A	127-00009	. WIRE ASS'Y	. FIL	1					
9	K1013090	GLASS;L.H	VERRE	1					

(THIS PARTS BOOK IS FOR REFERENCE ONLY.
PART NUMBERS AND SERAIL NUMBERS MAY BE
OUTDATED. ALWAYS USE THE ONLINE PARTS SYSTEM)

DATE	JAN. 04, 2013
3rd EDITION	

Fig. 6350 CABIN (3)
CABINE

Serial No. ;

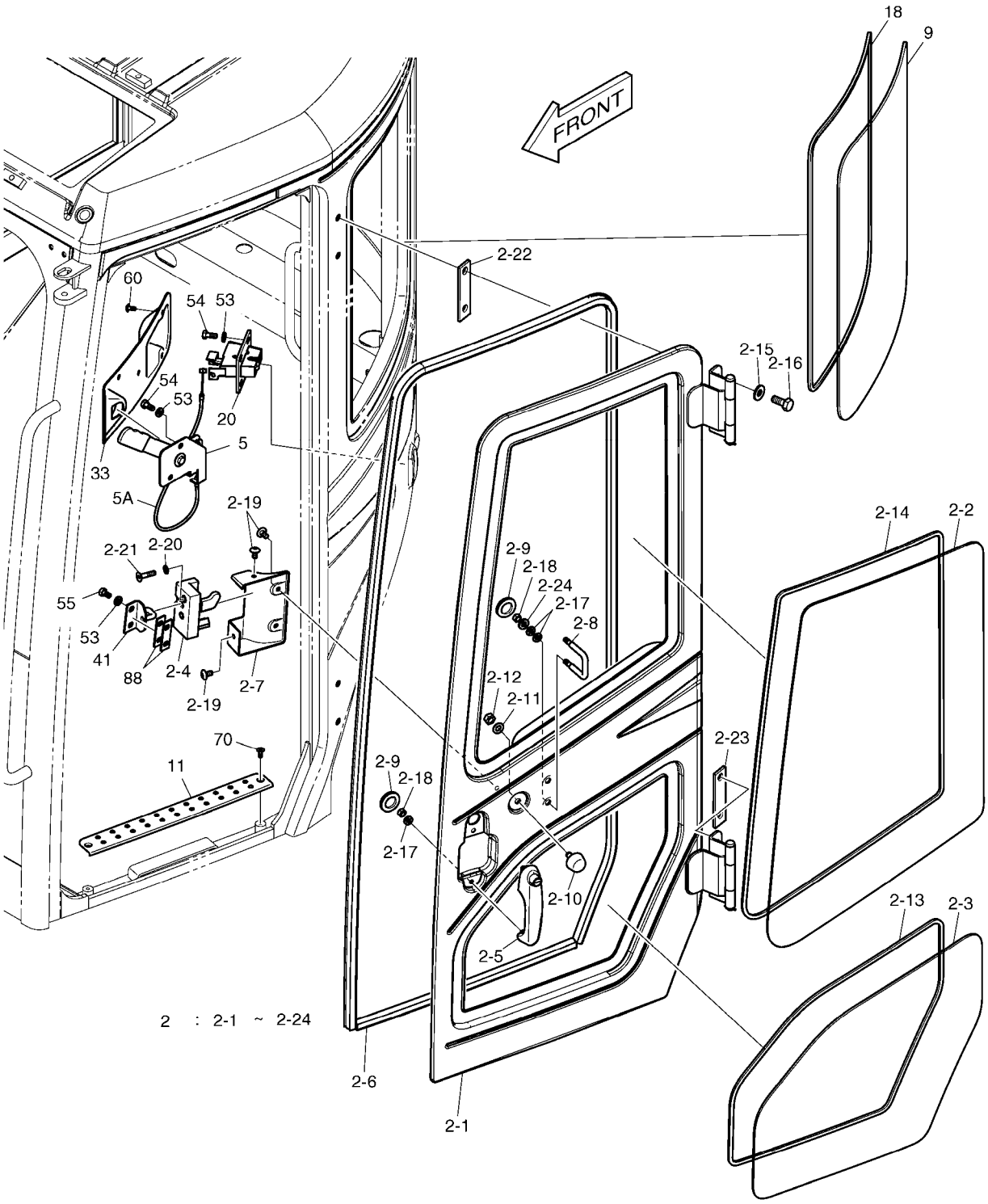

(THIS PARTS BOOK IS FOR REFERENCE ONLY.
PART NUMBERS AND SERAIL NUMBERS MAY BE
OUTDATED. ALWAYS USE THE ONLINE PARTS SYSTEM)

Fig. 6350 CABIN (3) CABINE

Serial No. ;

Key No.	Part No.	Description	Description	Q'ty	S.C	Serial No.	ICA	Replaceable part	
								Part No.	Q'ty
6350 -11	K1013073	STEP;CABIN DOOR	MARCHER	1					
18	K1013533	DAMPER	AMORTISSEUR	1					
20	2125-9055	LOCK;BACK	SERRURE	1					
33	K1014293A	COVER;BACK LOCK INNER	COUVERCLE	1		5001-5287	Y	110508-16052	1
	110508-16052	COVER;BACK LOCK INNER	COUVERCLE	1		5288-			
41	K1014785B	STRIKER;DOOR INNER	BUTEE	1					
53	2114-1898D2	WASHER	RONDELLE	8					
54	2120-2166D5	BOLT	BOULON	6					
55	2120-2166D25	BOLT M8X1.25X16	BOULON A 6 PANS	2					
60	2120-2166D10	SCREW	VIS	5					
70	2120-2150D3	SCREW	VIS	2					
88	K1029156A	PLATE	PLAQUE	2					

(THIS PARTS BOOK IS FOR REFERENCE ONLY.
PART NUMBERS AND SERAIL NUMBERS MAY BE
OUTDATED. ALWAYS USE THE ONLINE PARTS SYSTEM)

DATE	JAN. 04, 2013
3rd EDITION	

Fig. 6360 CABIN (4)
CABINE

Serial No. ;

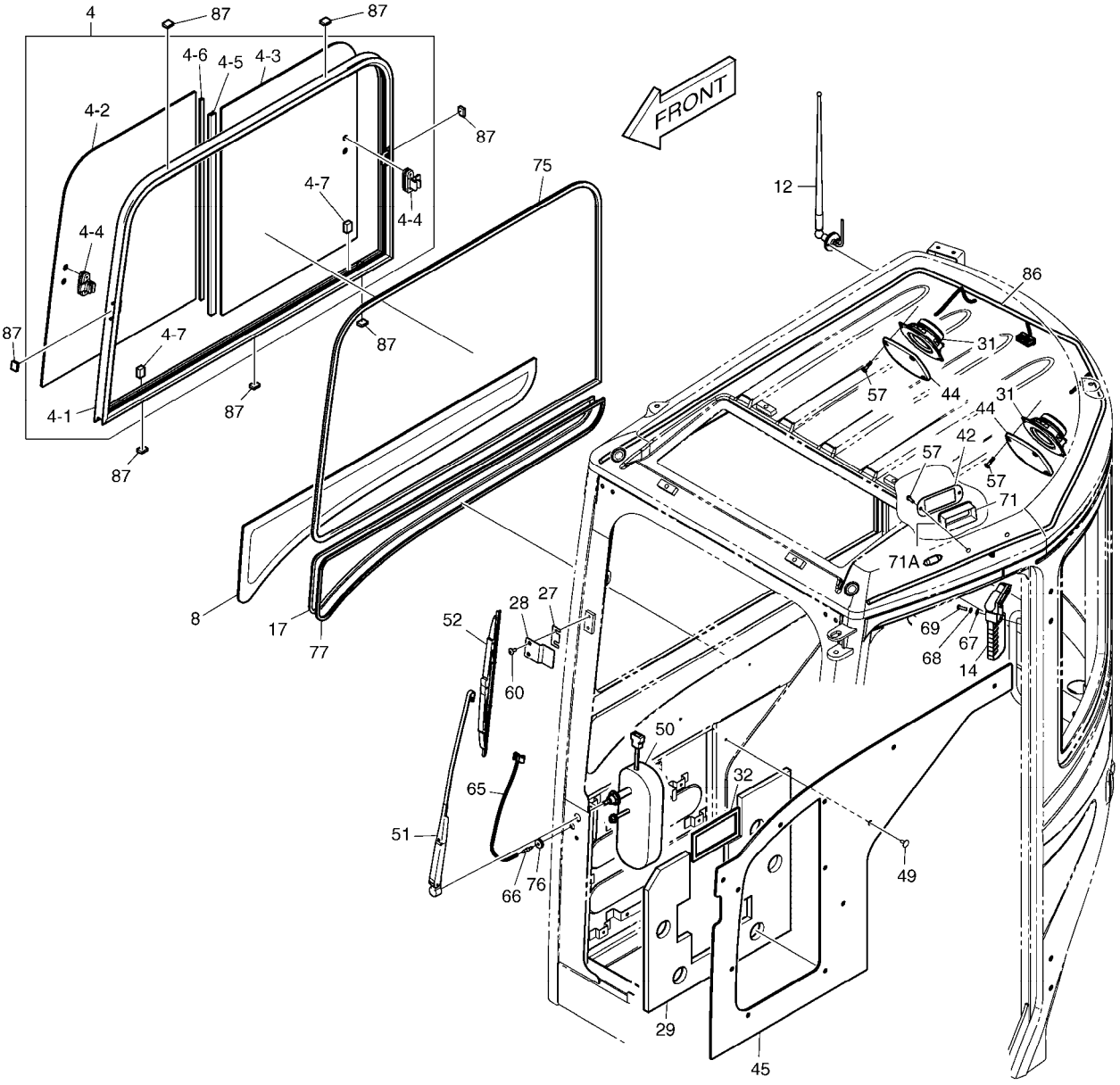

(THIS PARTS BOOK IS FOR REFERENCE ONLY.
PART NUMBERS AND SERAIL NUMBERS MAY BE
OUTDATED. ALWAYS USE THE ONLINE PARTS SYSTEM)

DATE	JAN. 04, 2013
3rd EDITION	

Fig. 6360 CABIN (4)
CABINE

Serial No. ;

Key No.	Part No.	Description	Description	Q'ty	S.C	Serial No.	ICA	Replaceable part	
								Part No.	Q'ty
6360 --	K1011306G	CABIN ASS'Y	ENSEMBLE CABINE	1		5001-5105	I	K1011306H	1
	K1011306H	CABIN ASS'Y	ENSEMBLE CABINE	1		5106-5207	I	220101-00724	1
	220101-00724	CABIN ASSY	ENSEMBLE CABINE	1		5208-5265	I	220101-00724A	1
	220101-00724A	CABIN ASSY	ENSEMBLE CABINE	1		5266-5287	Y	220101-00724B	1
	220101-00724B	CABIN ASSY	ENSEMBLE CABINE	1		5288-			
4	K1011312A	SIDE DOOR ASS'Y(R.H)	ENSEMBLE LATERALE DE F	1					
4-1	K1013082A	. FRAME;SASH	. ARMATURE DE SASH	1					
4-2	K1013084A	. GLASS (FRONT)	. VERRE	1					
4-3	K1013086A	. GLASS (REAR)	. VERRE	1					
4-4	2123-6119	. LOCK;SASH	. SERRURE	2					
4-5	2622-1265	. BAR	. BARRE	1					
4-6	2161-1041	. STRIP	. BANDE	1					
4-7	2161-6065	. STOPPER;GLASS	. ARRET	2					
8	K1013089A	GLASS;R.H	VERRE	1					
12	541-00013	ANTENNA	ANTENNE	1					
14	2199-9058	HAMMER	MARTEAU	1					
17	K1013532A	DAMPER	AMORTISSEUR	1					
27	621-01889A	PLATE;WIPER	PLAQUE	1					
28	K1018804	PLATE	PLAQUE	1					
29	K1026392	FOAM	EPONGE	1		5001-5287	Y	180102-00927	1
	180102-00927	FOAM	EPONGE	1		5288-			
31	2541-9020	SPEAKER	ORATEUR	2					
32	K1013265	SPONGE;FRESH AIR	EPONGE	1					
42	K1014787A	PLATE;LAMP	PLAQUE	1					
44	K1014591B	COVER;SPEAKER	COUVERCLE	2		5001-5287	Y	110508-15848	2
	110508-15848	COVER;SPEAKER	COUVERCLE	2		5288-			
45	K1014901B	PAD;SIDE (R.H)	GARNITURE LATERALE	1		5001-5287	Y	101555-00252	1
	101555-00252	PAD;SIDE(R.H)	GARNITURE LATERALE	1		5288-			
49	K1006936	SCRIVET	SCRIVET	5					
50	K1024109	MOTOR;WIPER	MOTEUR	1					
51	541-00011A	ARM;WIPER MOTOR	BALANCIER	1		5001-5207	I	300704-00016	1
	300704-00016	ARM ASSY,WIPER	BALANCIER	1		5208-			
52	2507-6006	BLADE;WIPER	BALAI D'ESSUIE-GLACE	1					
57	2120-2166D23	SCREW	VIS	10					
60	2120-2166D10	SCREW	VIS	2					
65	415-00040	NOZZLE;WIPER MOTOR	MOTEUR DE NOZZLE;WIPE	1					
66	2415-1018	ADAPTER;HOSE	ADAPTEUR	1					
67	2114-1898D13	WASHER;PLAIN	RONDELLE	3					

(THIS PARTS BOOK IS FOR REFERENCE ONLY.
PART NUMBERS AND SERIAL NUMBERS MAY BE
OUTDATED. ALWAYS USE THE ONLINE PARTS SYSTEM)

DATE	JAN. 04, 2013
3rd EDITION	

Fig. 6360 CABIN (4)
CABINE

Serial No. ;

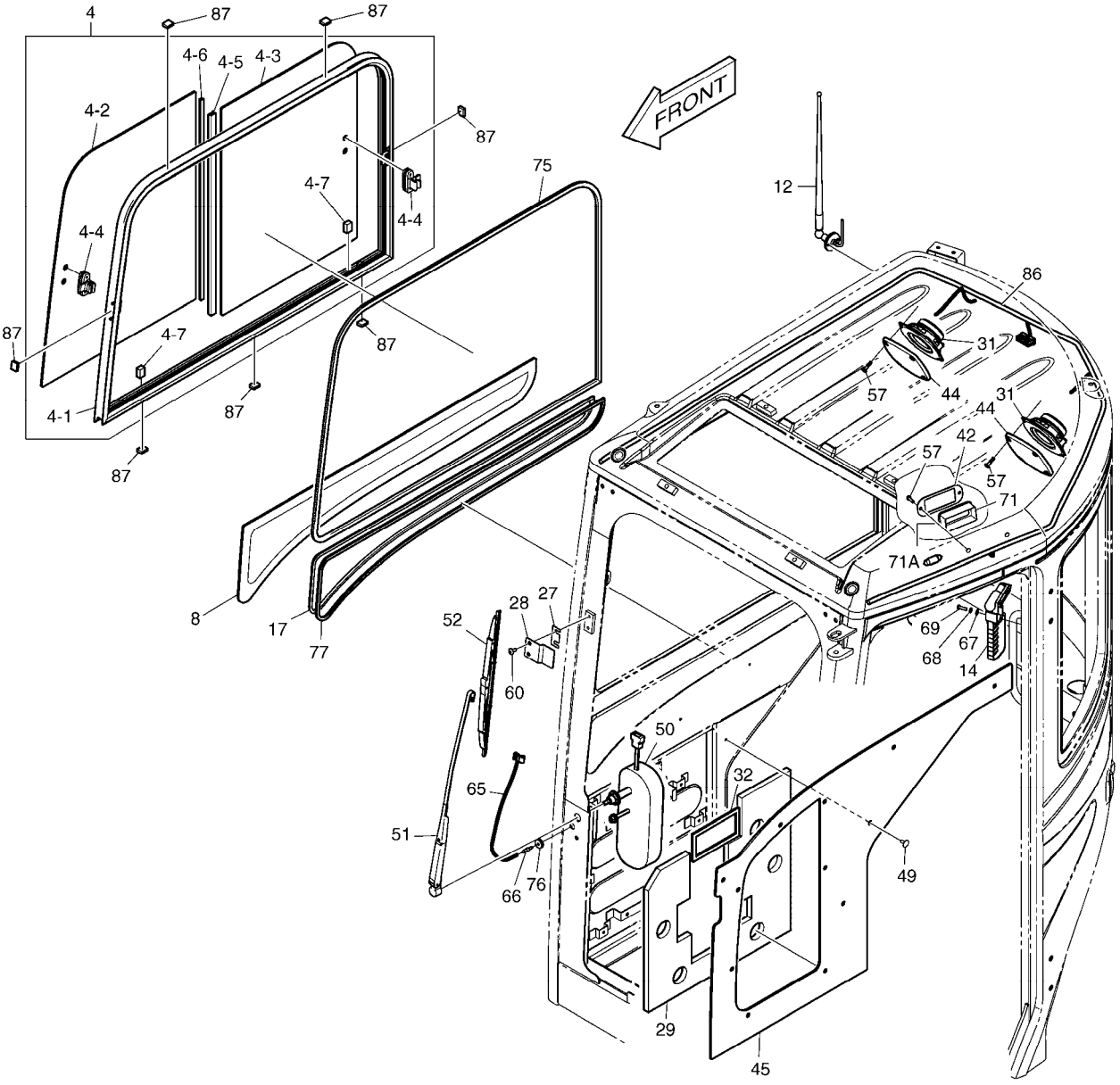

(THIS PARTS BOOK IS FOR REFERENCE ONLY.
PART NUMBERS AND SERAIL NUMBERS MAY BE
OUTDATED. ALWAYS USE THE ONLINE PARTS SYSTEM)

Fig. 6360 CABIN (4) CABINE

Serial No. ;

Key No.	Part No.	Description	Description	Q'ty	S.C	Serial No.	ICA	Replaceable part	
								Part No.	Q'ty
6360 -68	2114-2031D1	WASHER;SPRING	RONDELLE	3					
69	2120-2166D26	SCREW	VIS	3					
71	2534-9068	LAMP;ROOM	LAMPE	1					
71A	2515-1021D6	. BULB	. AMPOULE	1					
75	2161-1744	RUBBER	CAOUTCHOUC	1					
76	K1018803	GROMMET	CANON ISOLANT	1					
77	K1018777	TRIM;RUBBER	EQUILIBRE EN CAOUTCHC	1					
86	K1013765	HARNESS;CABIN SUB	HARNAIS	1					
87	2114-1838	SPACER	BAGUE D'ECARTEMENT	7					

(THIS PARTS BOOK IS FOR REFERENCE ONLY.
PART NUMBERS AND SERAIL NUMBERS MAY BE
OUTDATED. ALWAYS USE THE ONLINE PARTS SYSTEM)

DATE	JAN. 04, 2013
3rd EDITION	

Fig. 6370 PILOT PIPING - PATTERN CHANGE(1)
CONDUITES DE PILOTE

Serial No. ;

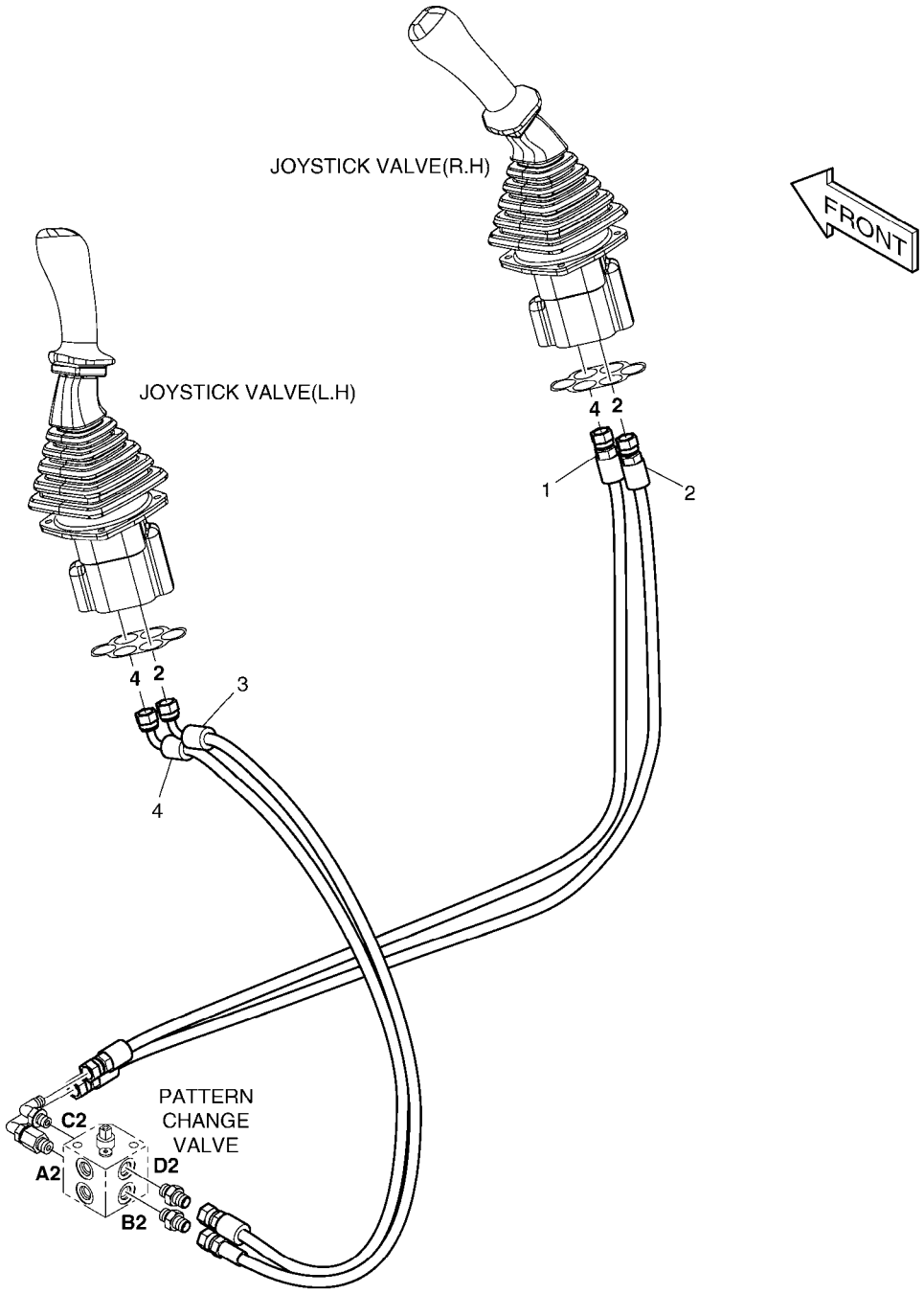

(THIS PARTS BOOK IS FOR REFERENCE ONLY.
PART NUMBERS AND SERAIL NUMBERS MAY BE
OUTDATED. ALWAYS USE THE ONLINE PARTS SYSTEM)

DATE	JAN. 04, 2013
3rd EDITION	

Fig. 6370 PILOT PIPING - PATTERN CHANGE(1)
CONDUITES DE PILOTE

Serial No. ;

Key No.	Part No.	Description	Description	Q'ty	S.C	Serial No.	ICA	Replaceable part	
								Part No.	Q'ty
6370 --	K1029138	PILOT PIPING	TUYAUTERIE PILOTE	-	D				
1	DS2094097	HOSE PF1/4-1190L	TUYAU FLEXIBLE	1					
2	DS2094003	HOSE PF1/4-1220L	TUYAU FLEXIBLE	1					
3	DS2093053	HOSE	TUYAU FLEXIBLE	1					
4	DS2093253	HOSE	TUYAU FLEXIBLE	1					

(THIS PARTS BOOK IS FOR REFERENCE ONLY.
PART NUMBERS AND SERAIL NUMBERS MAY BE
OUTDATED. ALWAYS USE THE ONLINE PARTS SYSTEM)

DATE	JAN. 04, 2013
3rd EDITION	

Fig. 6380 PILOT PIPING - PATTERN CHANGE(2)
CONDUITES DE PILOTE

Serial No. ;

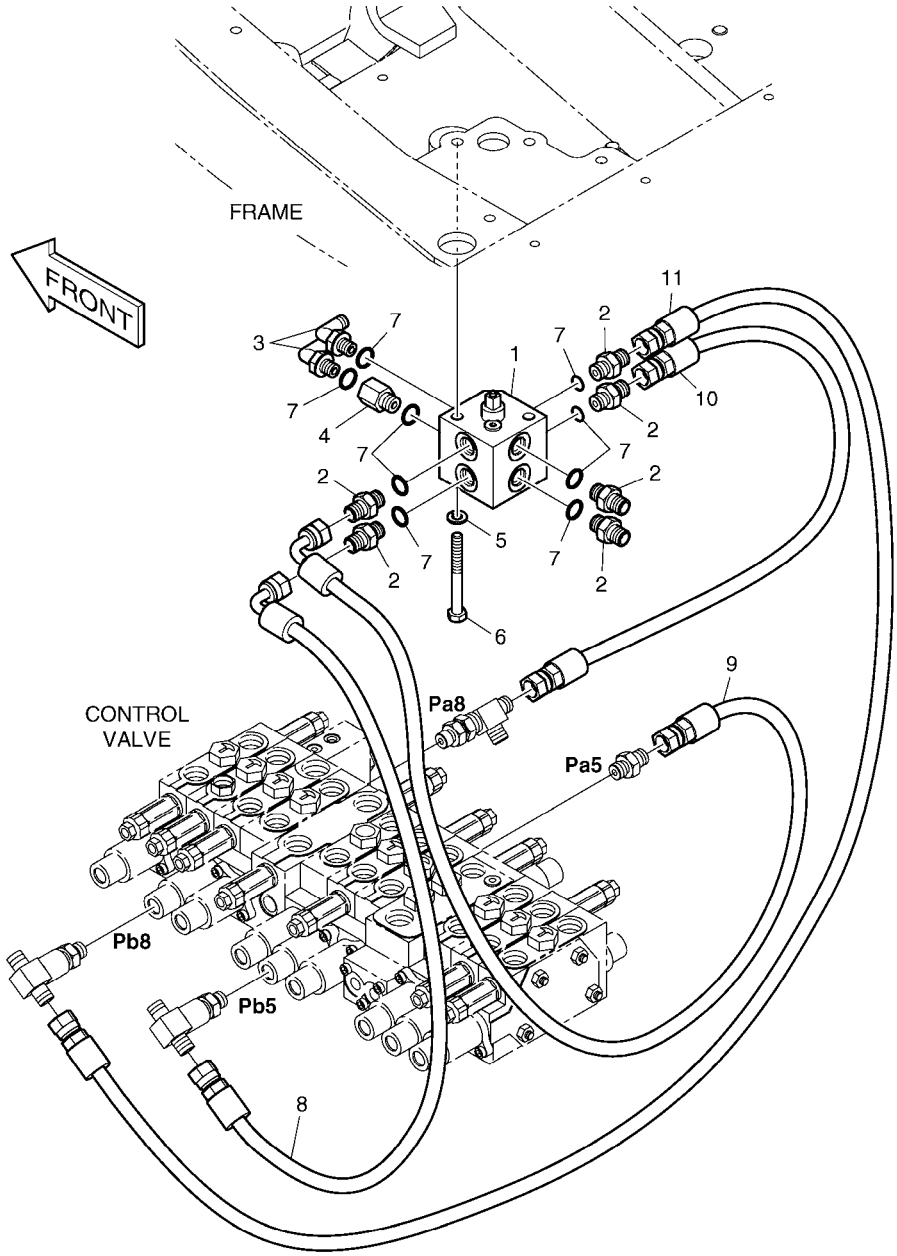

(THIS PARTS BOOK IS FOR REFERENCE ONLY.
PART NUMBERS AND SERAIL NUMBERS MAY BE
OUTDATED. ALWAYS USE THE ONLINE PARTS SYSTEM)

DATE	JAN. 04, 2013
3rd EDITION	

Fig. 6380 PILOT PIPING - PATTERN CHANGE(2)
CONDUITES DE PILOTE

Serial No. ;

Key No.	Part No.	Description	Description	Q'ty	S.C	Serial No.	ICA	Replaceable part	
								Part No.	Q'ty
6380 --	K1029139A	PILOT PIPING;PATTERN CHANG	TUYAUTERIE PILOTE	-	D				
1	K1014318	VALVE;PATTERN CHANGE	VANNE	1					
2	2181-1126D14	ADAPTER	ADAPTEUR	6					
3	2181-1702D4	ELBOW	COUDE	2					
4	2181-2337D1	REDUCER	REDUCTEUR	1					
5	S5102503	WASHER,SPRING	RONDELLE	2					
6	S0556853	BOLT M8X1.25X75	BOULON A 6 PANS	2					
7	S8000111	O-RING	JOINT CIRCULAIRE	9					
8	DS2093200	HOSE	TUYAU	1					
9	DS2093053	HOSE	TUYAU FLEXIBLE	1					
10	DS2094226	HOSE	TUYAU FLEXIBLE	1					
11	DS2094242	HOSE	TUYAU FLEXIBLE	1					

(THIS PARTS BOOK IS FOR REFERENCE ONLY.
PART NUMBERS AND SERAIL NUMBERS MAY BE
OUTDATED. ALWAYS USE THE ONLINE PARTS SYSTEM)

DATE	JAN. 04, 2013
3rd EDITION	

Fig. 6390 MAIN PIPING - QUICK CLAMP
CONDUITES DE BATI PRINCIPAL

Serial No. ;

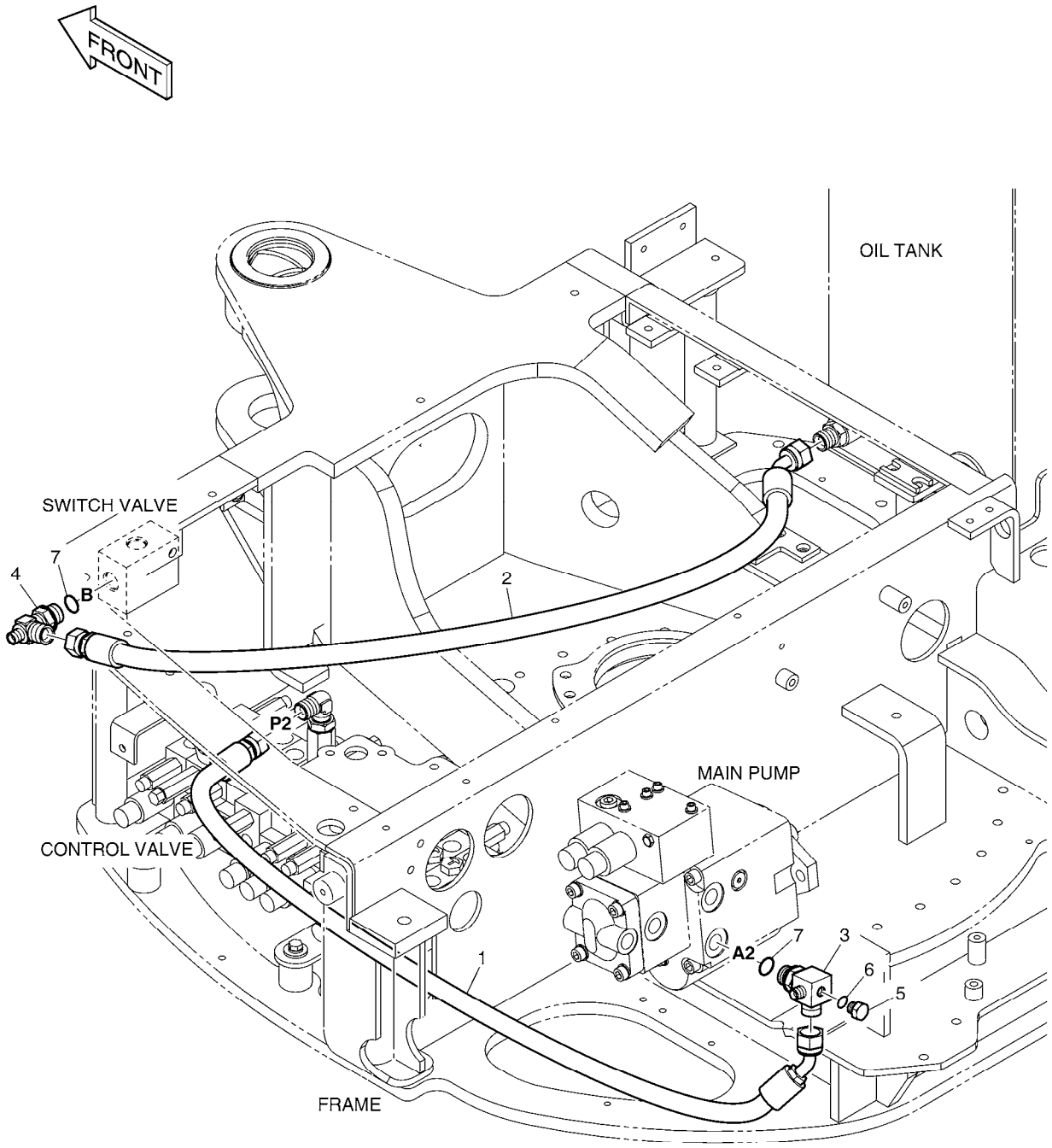

(THIS PARTS BOOK IS FOR REFERENCE ONLY.
PART NUMBERS AND SERAIL NUMBERS MAY BE
OUTDATED. ALWAYS USE THE ONLINE PARTS SYSTEM)

DATE	JAN. 04, 2013
3rd EDITION	

Fig. 6390 MAIN PIPING - QUICK CLAMP
CONDUITES DE BATI PRINCIPAL

Serial No. ;

Key No.	Part No.	Description	Description	Q'ty	S.C	Serial No.	ICA	Replaceable part	
								Part No.	Q'ty
6390 --	420212-09330	PIPING,MAIN;QUICK CLAMP	CONDUITES DE BATI PRIN(	-	D				
1	DS2092235	HOSE	TUYAU FLEXIBLE	1					
2	DS2092239	HOSE	TUYAU FLEXIBLE	1					
3	K1043645	TEE	TE	1					
4	2181-1951D8	TEE	TE	1					
5	2181-1950D1	PLUG	BOUCHON	1					
6	S8000111	O-RING	JOINT CIRCULAIRE	1					
7	S8000181	O-RING	JOINT CIRCULAIRE	2					

(THIS PARTS BOOK IS FOR REFERENCE ONLY.
PART NUMBERS AND SERAIL NUMBERS MAY BE
OUTDATED. ALWAYS USE THE ONLINE PARTS SYSTEM)

DATE	JAN. 04, 2013
3rd EDITION	

Fig. 6400 PILOT PIPING - BOOM LOCK VALVE
CONDUITES DE PILOTE

Serial No. ;

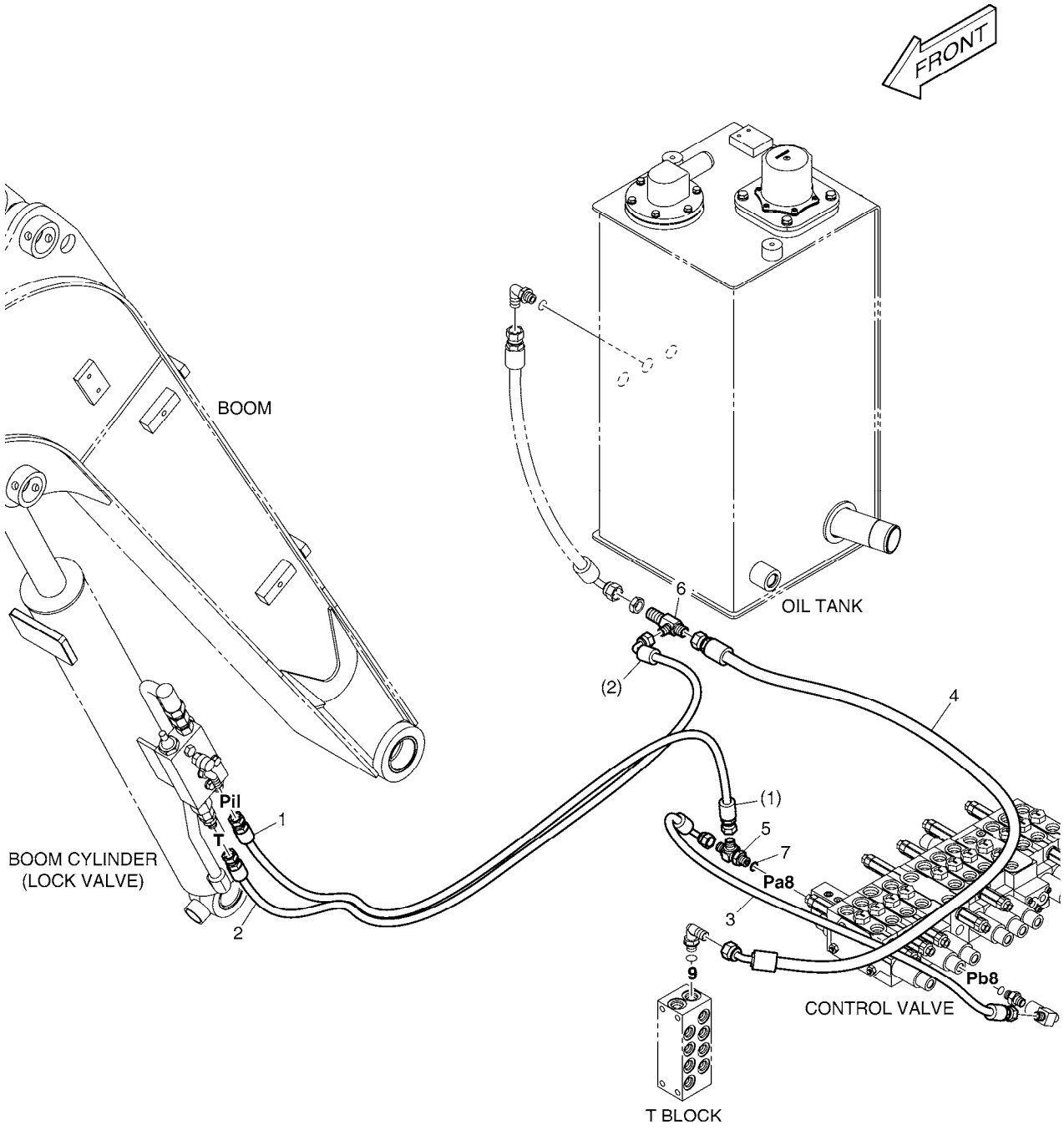

(THIS PARTS BOOK IS FOR REFERENCE ONLY.
PART NUMBERS AND SERAIL NUMBERS MAY BE
OUTDATED. ALWAYS USE THE ONLINE PARTS SYSTEM)

DATE	JAN. 04, 2013
3rd EDITION	

Fig. 6400 PILOT PIPING - BOOM LOCK VALVE
CONDUITES DE PILOTE

Serial No. ;

Key No.	Part No.	Description	Description	Q'ty	S.C	Serial No.	ICA	Replaceable part	
								Part No.	Q'ty
6400 --	420212-08654	PIPING,PILOT;BOOM LOCK VALV	CONDUITES DE PILOTE	-	D				
1	DS2094040	HOSE	TUYAU FLEXIBLE	1					
2	DS2093220	HOSE	TUYAU FLEXIBLE	1					
3	DS2093115	HOSE	TUYAU FLEXIBLE	1					
4	DS2092008	HOSE	TUYAU FLEXIBLE	1					
5	2181-1951D1	TEE	TE	1					
6	DS2411001	TEE	TE	1					
7	S8000111	O-RING	JOINT CIRCULAIRE	1					

(THIS PARTS BOOK IS FOR REFERENCE ONLY.
PART NUMBERS AND SERAIL NUMBERS MAY BE
OUTDATED. ALWAYS USE THE ONLINE PARTS SYSTEM)

DATE	JAN. 04, 2013
3rd EDITION	

Fig. 6410 PILOT PIPING - ARM LOCK VALVE
CONDUITES DE PILOTE

Serial No. ;

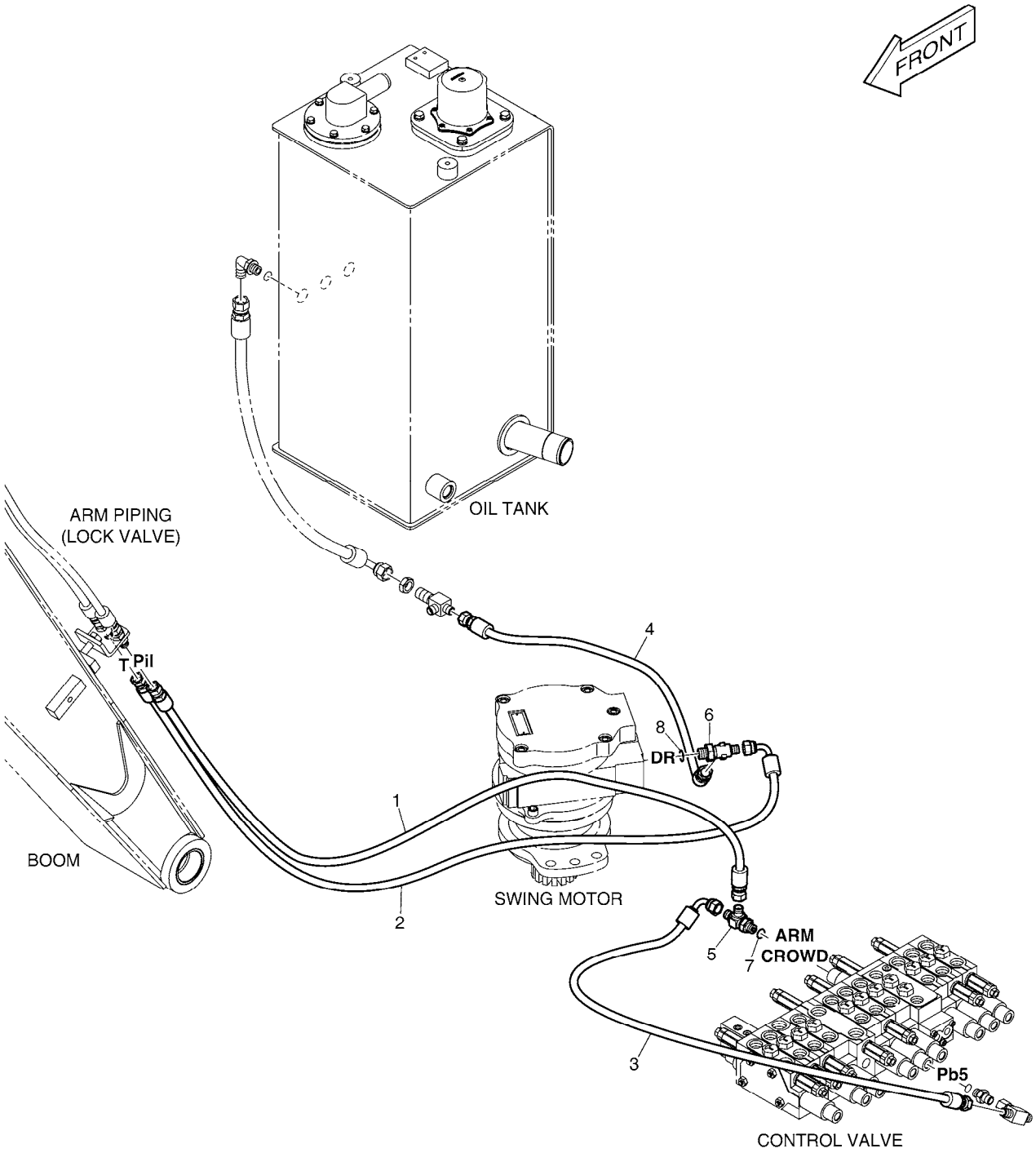

(THIS PARTS BOOK IS FOR REFERENCE ONLY.
PART NUMBERS AND SERAIL NUMBERS MAY BE
OUTDATED. ALWAYS USE THE ONLINE PARTS SYSTEM)

Fig. 6410 PILOT PIPING - ARM LOCK VALVE
CONDUITES DE PILOTE

Serial No. ;

Key No.	Part No.	Description	Description	Q'ty	S.C	Serial No.	ICA	Replaceable part	
								Part No.	Q'ty
6410 --	420212-08656	PIPING,PILOT;ARM LOCK VALVE	CONDUITES DE PILOTE	-	D				
1	DS2094419	HOSE(ST-ST)	TUYAU FLEXIBLE	1					
2	DS2093219	HOSE	TUYAU FLEXIBLE	1					
3	DS2093249	HOSE	TUYAU FLEXIBLE	1					
4	DS2094060	HOSE	TUYAU FLEXIBLE	1					
5	2181-1951D1	TEE	TE	1					
6	2181-1951D7	TEE	TE	1					
7	S8000111	O-RING	JOINT CIRCULAIRE	1					
8	S8000141	O-RING	JOINT TORIQUE	1					

(THIS PARTS BOOK IS FOR REFERENCE ONLY.
PART NUMBERS AND SERAIL NUMBERS MAY BE
OUTDATED. ALWAYS USE THE ONLINE PARTS SYSTEM)

DATE	JAN. 04, 2013
3rd EDITION	

Fig. 6420 BOOM PIPING - LOCK VALVE
DONDUITER DE FLECHE

Serial No. ;

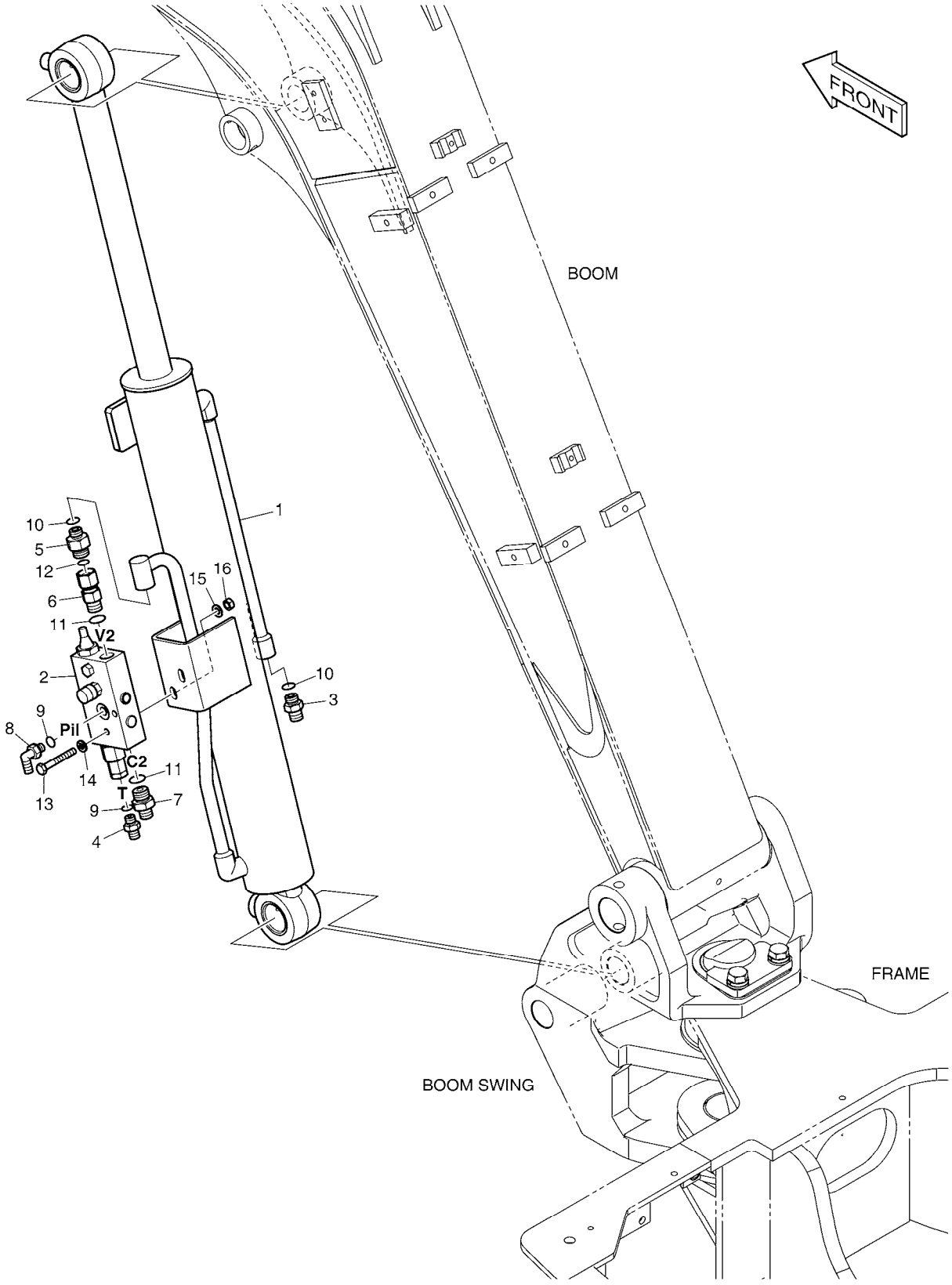

(THIS PARTS BOOK IS FOR REFERENCE ONLY.
PART NUMBERS AND SERAIL NUMBERS MAY BE
OUTDATED. ALWAYS USE THE ONLINE PARTS SYSTEM)

DATE	JAN. 04, 2013
3rd EDITION	

Fig. 6420 BOOM PIPING - LOCK VALVE
DONDUITER DE FLECHE

Serial No. ;

Key No.	Part No.	Description	Description	Q'ty	S.C	Serial No.	ICA	Replaceable part	
								Part No.	Q'ty
6420 --	420212-08006	PIPING,BOOM LOCK VALVE	CONDUITES DE FLECHE	-	D				
1	400309-00462	CYLINDER,BOOM;LOCK VALVE	VERIN DE FLECHE	1					
2	410114-00173	VALVE,LOCK	FERMEZ À CLEF LA VALVE	1					
3	2181-1126D7	ADAPTER	ADAPTEUR	1					
4	2181-1126D14	ADAPTER	ADAPTEUR	1					
5	2181-4133D38	ADAPTER	ADAPTEUR	1					
6	DS2235002	ADAPTER	ADAPTEUR	1					
7	2181-1126D23	ADAPTER	ADAPTEUR	1					
8	2181-1702D4	ELBOW	COUDE	1					
9	S8000111	O-RING	JOINT CIRCULAIRE	2					
10	S8000141	O-RING	JOINT TORIQUE	2					
11	S8000181	O-RING	JOINT CIRCULAIRE	2					
12	S8030081	O-RING	JOINT CIRCULAIRE	1					
13	S0556566	BOLT M8X1.25X60	BOULON	2					
14	S5102503	WASHER,SPRING	RONDELLE	2					
15	S5010513	WASHER,PLAIN	RONDELLE	2					
16	S4012533	NUT	ECROU	2					

(THIS PARTS BOOK IS FOR REFERENCE ONLY.
PART NUMBERS AND SERAIL NUMBERS MAY BE
OUTDATED. ALWAYS USE THE ONLINE PARTS SYSTEM)

DATE	JAN. 04, 2013
3rd EDITION	

Fig. 6430 BOOM PIPING - ARM LOCK VALVE
TUYAUTERIE DE PERCHE

Serial No. ;

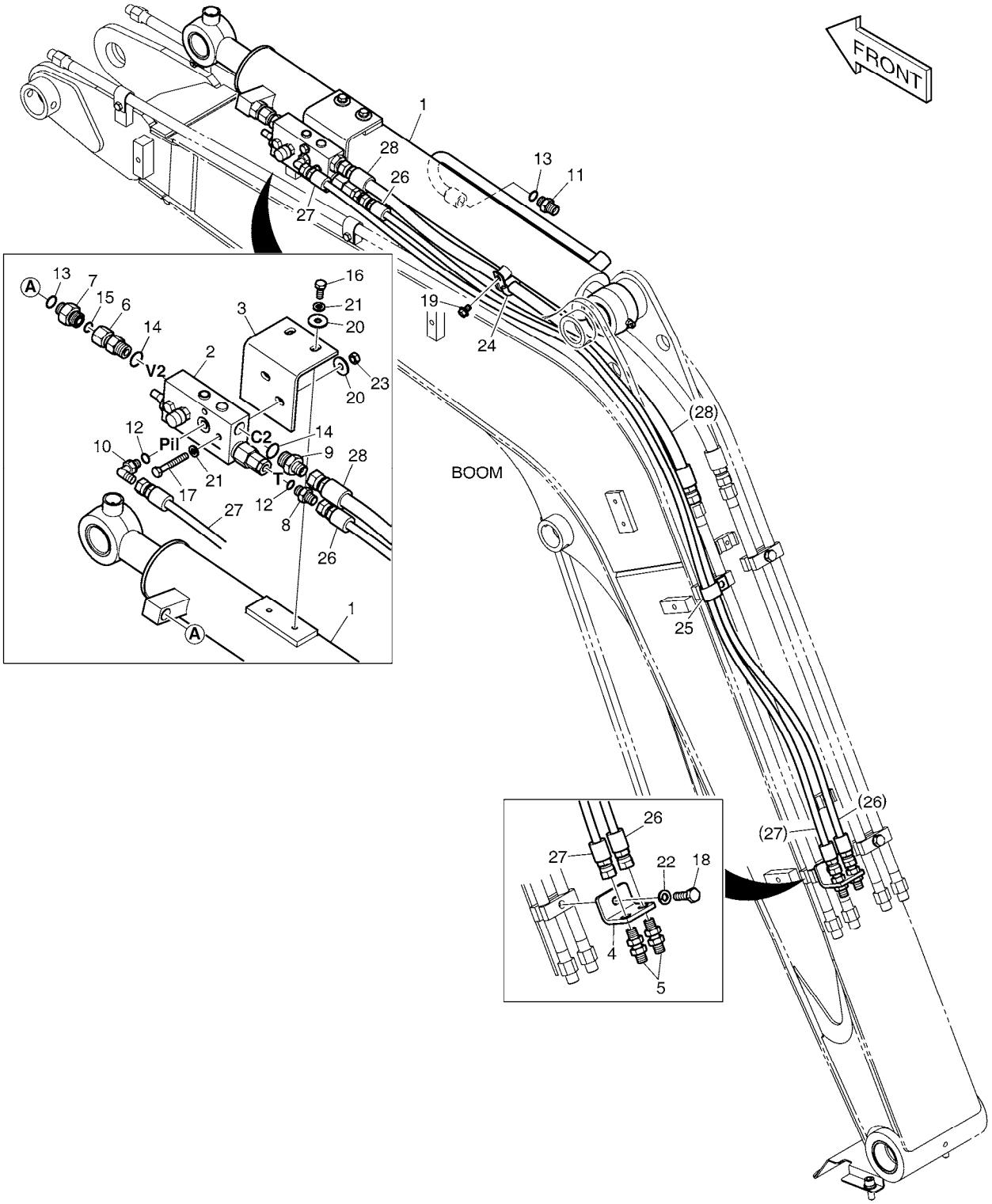

(THIS PARTS BOOK IS FOR REFERENCE ONLY.
PART NUMBERS AND SERAIL NUMBERS MAY BE
OUTDATED. ALWAYS USE THE ONLINE PARTS SYSTEM)

DATE	JAN. 04, 2013
3rd EDITION	

Fig. 6430 BOOM PIPING - ARM LOCK VALVE
TUYAUTERIE DE PERCHE

Serial No. ;

Key No.	Part No.	Description	Description	Q'ty	S.C	Serial No.	ICA	Replaceable part	
								Part No.	Q'ty
6430 --	420212-08007	PIPING,ARM LOCK VALVE	CONDUITES DE BALANCIE	-	D				
1	400305-00299	CYLINDER,ARM;LOCK VALVE	VERIN DE BALANCIER	1					
2	410114-00197	VALVE,LOCK	FERMEZ À CLEF LA VALVE	1					
3	110406-02375	BRACKET	SUPPORT	1					
4	K1033141	BRACKET	SUPPORT	1					
5	181-00020	ADAPTER	ADAPTEUR	2					
6	DS2235002	ADAPTER	ADAPTEUR	1					
7	2181-4133D38	ADAPTER	ADAPTEUR	1					
8	2181-1126D14	ADAPTER	ADAPTEUR	1					
9	2181-1126D23	ADAPTER	ADAPTEUR	1					
10	2181-1702D4	ELBOW	COUDE	1					
11	2181-1126D7	ADAPTER	ADAPTEUR	1					
12	S8000111	O-RING	JOINT CIRCULAIRE	2					
13	S8000141	O-RING	JOINT TORIQUE	2					
14	S8000181	O-RING	JOINT CIRCULAIRE	2					
15	S8030081	O-RING	JOINT CIRCULAIRE	1					
16	S0508866	BOLT	BOULON	2					
17	S0556466	BOLT	BOULON	2					
18	S0558266	BOLT	BOULON	1					
19	K1001029	BOLT	BOULON	1					
20	2114-1058D29	WASHER	RONDELLE	4					
21	S5102503	WASHER,SPRING	RONDELLE	4					
22	S5102603	WASHER,SPRING	RONDELLE	1					
23	S4012533	NUT	ECROU	2					
24	124-00208D3	CLIP	AGRAFE	1					
25	DS2805009	CLIP	AGRAFE	1					
26	DS2094515	HOSE ASSY,HYDRAULIC	TUYAU FLEXIBLE	1					
27	DS2094516	HOSE ASSY,HYDRAULIC	TUYAU FLEXIBLE	1					
28	DS2094505	HOSE ASSY,HYDRAULIC	TUYAU FLEXIBLE	1					

(THIS PARTS BOOK IS FOR REFERENCE ONLY.
PART NUMBERS AND SERAIL NUMBERS MAY BE
OUTDATED. ALWAYS USE THE ONLINE PARTS SYSTEM)

DATE	JAN. 04, 2013
3rd EDITION	

Fig. 6440 OVERLOAD WARNING
AVERTISSEMENT DE SURCHARGE

Serial No. ;

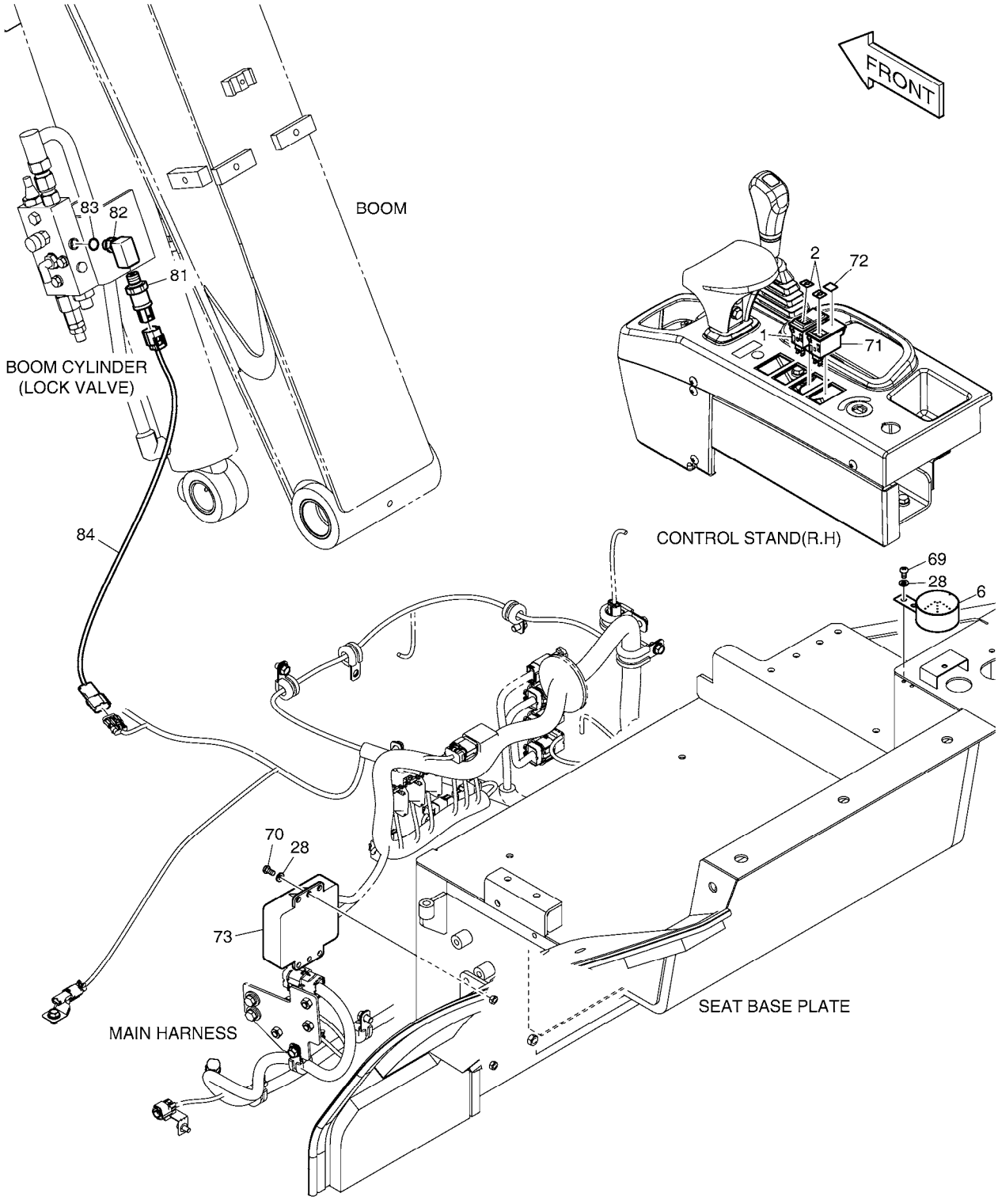

(THIS PARTS BOOK IS FOR REFERENCE ONLY.
PART NUMBERS AND SERAIL NUMBERS MAY BE
OUTDATED. ALWAYS USE THE ONLINE PARTS SYSTEM)

Fig. 6440 OVERLOAD WARNING
AVERTISSEMENT DE SURCHARGE

Serial No. ;

Key No.	Part No.	Description	Description	Q'ty	S.C	Serial No.	ICA	Replaceable part	
								Part No.	Q'ty
6440 --	300619-02108	ELECTRIC ASSY;OVERLOAD WA	AVERTISSEMENT DE SURC	-	D				
1	2549-9115	SWITCH;ROCKER(12V)	INTERRUPTEUR	1					
2	2190-2036D25	INSERT;OVERLOAD WARNING	INSERTION	2					
6	2516-1104	BUZZER;PILOT	VIBREUR PILOTE	1					
28	S5102303	WASHER;SPRING	RONDELLE	4					
69	S3450943	SCREW	VIS	2					
70	S3450953	SCREW M6X12	VIS	2					
71	301423-00045	SWITCH,ROCKER	COMMUTATEUR	1					
72	2190-2036D32	INSERT,SWITCH;BLACK	INSERTION	1					
73	300611-00513	CONTROLLER UNIT	MODULE DE COMMANDE	1					
81	2547-9045	SENSOR;PRESSURE	SONDE	1					
82	DS2308018	ELBOW	COUDE	1					
83	S8000111	O-RING	JOINT CIRCULAIRE	1					
84	310207-02493	HARNESS;OWD PRESSURE SEN	FAISCEAU	1					

(THIS PARTS BOOK IS FOR REFERENCE ONLY.
PART NUMBERS AND SERAIL NUMBERS MAY BE
OUTDATED. ALWAYS USE THE ONLINE PARTS SYSTEM)

(THIS PARTS BOOK IS FOR REFERENCE ONLY.
PART NUMBERS AND SERAIL NUMBERS MAY BE
OUTDATED. ALWAYS USE THE ONLINE PARTS SYSTEM)

Part No.	Fig No.	Key No.
1.110-00167	4160	16
1.120-00010	4190	18
1.121-00028	4160	20
1.138-00004	4160	18
1.160-00004	4160	30
1.180-00259	4210	9
	4260	9
1.180-00329	4220	16
1.180-00406	4220	14
1.180-00528	4180	12
	4190	11
1.181-00055	4180	2
	4190	2
1.181-00056	4180	10
	4190	10
1.412-00013	4160	15
1.412-00014	4160	29
1.412-00131	4160	19
1.416-00002	4160	7
1.427-00009	4160	5
1.427-00015	4190	5
1.428-00240	4190	13
1.429-00003	4190	16
1.451-00125	4160	1
1.549-00002	4160	27
101541-00088	3110	4
101555-00252	6360	45
110404-00027	1320	-
110406-02375	6430	3
110501-00018	1280	-
110508-00050	1290	-
110508-15848	6360	44
110508-15882	6270	-
110508-15883	6270	5
110508-15884	1410	14
	6300	6
110508-15885	1390	17
110508-15886	1390	23
110508-15887	1350	5
110508-15889	1380	18
110508-16051	6350	2-7
110508-16052	6350	33
110513-00012	1300	-
110513-00045	1300	2
110902-00010	1130	65
	1135	65
110913-00278	1390	15
110913-00279	1390	16
110913-00280	1400	5
110913-00281	1400	6
110921-00006	1120	20
110925-00223	6350	2-5
110925-00363	4160	26
110925-00364	4160	43
110925-00378	4160	43
110935-00264	6320	-
110935-00265	6320	1
110935-00266	1420	-
110935-00267	1420	1
110948-00001	1120	19
110953-00106	1380	-
110953-00107	1390	-
110953-00108	1400	-
110958-00055	1280	2
110958-00068	1280	3
110958-00070	1280	4
110964-00001	2100	18
110969-00003	6310	-
119-00027A	1170	5
120-00114D7	1460	34
	1510	34
120-00255	6290	2
120501-02681	1320	6
120501-02684	1320	3
120501-02685	1320	4
120501-02686	1320	8
120501-02687	2100	10
120501-02688	2100	11
120810-00122	6290	4
121-00010D1	1240	20
121-00010D3	1180	46
121-00010D7	1310	7
124-00208D2	1310	4
	1460	26
	1510	26
124-00208D3	1460	27
	1510	27
	6280	17
	6430	24
124-00208D4	1460	28
	1510	28
124-00209D1	6280	7
124-00209D2	1460	29
	1510	29
125-00077	6340	34-4
125-00078	6340	34-5
127-00009	6350	5A
131008-00113	3110	51A
	6120	1-18
131008-00131	3110	4A
131008-00131	3110	51B
	6120	1-19
131008-00134	3110	4B
131008-00136	3100	1A
131008-00138	4200	21
	4210	22
	4220	20
	4250	21
	4260	22
132-00010	1400	15
140109-00024	2100	17
150109-00024	1120	-
160-00055	1400	16
160-00059	1350	1-6
160-00061	6210	3
161-00195	1380	12
	6350	2-10
161-00208A	6340	26
161-00284	6290	1
180-00222	010	42
	017	28
	040	23
	047	18
180102-00006	1280	28
180102-00007	1290	27
180102-00893	6270	8
180102-00895	6320	2
180102-00896	6320	3
180102-00897	1420	2
180102-00898	1420	3
180102-00927	6360	29
180308-00467	1330	17
180308-00468	1330	18
180308-00469	1330	19
180308-00470	1330	20
180309-00182A	1350	1-5
181-00020	6430	5
181-00078D1	1240	16
181-00103	1310	6
181-00471	4160	2
181-00519	4171	4
181-00837D1	1250	14
185-00376	1150	2
190-00078	1100	54
190-00092	5130	12
190-00093	5130	13
190-00094	5130	24
190-00095	5130	11
190-00096	5130	21
190-00097	5130	15

(THIS PARTS BOOK IS FOR REFERENCE ONLY
PART NUMBERS AND SERIAL NUMBERS MAY BE
OUTDATED. ALWAYS USE THE ONLINE PARTS SYSTEM)

Part No.	Fig No.	Key No.	Part No.	Fig No.	Key No.	Part No.	Fig No.	Key No.
190-00098A	5130	17	2.120-00039	012	67	2.120-00147	006	5
190-00099	5130	36		041	118		036	5
190-00100	5130	16		042	66	2.120-00148	002	26
190-00101	5130	27	2.120-00041	007	9		010	17
190-00122	5120	25		037	8		032	16
	5130	25	2.120-00044	003	13		040	17
190-00521	5130	18		004	37	2.120-00150	010	15
190-00557	5130	26		016	32		010	40
190-00688	5120	12		033	13		012	85
190-00689	5120	21		034	39		040	15
190-00691A	5120	29		046	32		040	42
190-00692	5120	15	2.120-00050	013	29		042	84
190-00693	5120	24		013	33	2.120-00225	008	12
190-00694	5120	11		043	44		038	12
190-00695A	5120	17		043	48	2.120-00258	009	13
190-00703	5120	37	2.120-00052	015	1		039	3
190-00727	1410	15		045	1	2.120-00259	011	114
190-00730D5	5130	34	2.120-00136	002	24	2.120-00331	015	24
190-01059D5	5130	35		002	25		045	24
195-03420	1470	2		003	12	2.120-00496	004	50
	6240	2		004	2		004	51
2.113-00005	007	8		011	131		034	51
	008	6		032	14		034	52
	037	7		032	15	2.120-00694	004	11
	038	6		033	12		034	12
2.114-00889	009	14		034	3	2.120-00855	006	4
	009	15		041	130		036	4
	017	17	2.120-00137	005	10	2.120-00856	006	3
	032	21		009	24		036	3
	039	4		011	132	2.120-00858	008	11
	039	5		039	13		038	11
	047	17		041	131	2.120-00861	010	25
2.114-01090	011	101	2.120-00138	014	3		040	25
	011	108		032	22	2.120-00862	006	9
	011	109		044	3		036	9
	041	101	2.120-00139	005	5	2.121-00084	004	13
	041	108		007	15		034	14
	041	127		037	14	2.121-00085	013	5
2.114-01092	4100	62	2.120-00143	010	29		043	5
2.115-00008	013	26		040	29	2.121-00092	009	17
	043	41	2.120-00144	006	15		039	7
2.115-00054	012	59		036	15	2.121-00176	012	68
	042	58	2.120-00145	003	7		042	67
2.115-00546	014	13		009	8	2.121-00267	002	31
2.120-00029	002	29		010	16		006	10
	032	19		033	19		006	6
2.120-00037	003	4		039	34		032	20
	033	4		040	16		036	10
2.120-00039	011	120	2.120-00146	005	11		036	6
	012	53		005	6	2.121-00268	016	31

(THIS PARTS BOOK IS FOR REFERENCE ONLY.
PART NUMBERS AND SERIAL NUMBERS MAY BE
OUTDATED. ALWAYS USE THE ONLINE PARTS SYSTEM)

Part No.	Fig No.	Key No.	Part No.	Fig No.	Key No.	Part No.	Fig No.	Key No.
2.121-00268	046	31	2.180-01240	034	27	2.549-00027	010	24
2.123-00088	013	13		047	11		040	24
	043	13	2.180-01241	004	29	2.549-00029	010	41
2.124-00020	014	5		017	4		040	22
	014	8	2.181-00163	001	6	200101-00012	2110	2
	044	10		031	6		2120	-
	044	6	2.181-00214	4170	252	200106-00116	2130	1
2.124-00086	010	34	2.181-00280	4130	45	200106-00119	2130	-
	010	38	2.181-00286	4110	2-41	2110-1184D2	4171	22
	013	49		4120	1-27	2110-1184D3	4180	15
	013	52		4130	43	2110-1184D37	1390	1A
	040	35	2.181-00306	001	5		1390	3A
	040	39		031	5	2110-1184D82	4200	6
	043	56	2.181-00308	004	23		4210	6
	043	58		034	22		4220	6
2.131-00258	013	10	2.181-00314	001	9		4230	6
	043	10		031	9		4240	6
2.132-00005	004	52	2.181-00353	009	23		4250	6
	034	53		040	40		4260	6
2.140-00105	013	51	2.181-00355	003	9	2114-1058D29	1280	30
	043	57		033	9		6430	20
2.158-00004	004	55	2.197-00046	004	1	2114-1058D54	6290	4
	017	5		034	2	2114-1058D63	1280	21
	034	33	2.217-00072	004	30	2114-1058D72	1390	4
	047	5		034	29	2114-1058D73	6290	3
2.177-00050	007	4	2.304-00001	002	15	2114-1059D183	2100	15
	037	4		032	8	2114-1059D212	1320	21
2.180-00054	010	23	2.313-00001	009	12	2114-1059D228	1320	20
	017	18		039	2	2114-1059D46	2100	16
	040	30	2.412-00266	013	12	2114-1300	1150	15
	047	28		043	12		1170	19
2.180-00100	010	28	2.415-00040	4130	40	2114-1300A	1150	15
	017	27		4130	47		1170	19
	040	28		4130	71	2114-1816A	1100	7
	047	16	2.427-00018	004	32	2114-1838	6360	87
2.180-00355	002	28		017	6	2114-1898D1	1330	11
	017	21		034	34		1340	4
	032	18		047	6		1350	2
	047	21	2.427-00019	013	11		1380	7
2.180-00359	012	5		043	11		1410	1-5
	042	5	2.429-00043	009	2		1410	7
2.180-00611	013	14		039	31		6310	7
2.180-00617	4100	13	2.429-00133	007	1		6330	84-2
2.180-00829	4100	32		037	1		6350	2-15
2.180-00910	003	11	2.430-00083	003	3	2114-1898D13	6340	3-11
	017	25		033	3		6340	34-11
	033	11	2.471-00037	014	11		6360	67
	047	25		1160	7	2114-1898D15	6330	72
2.180-01240	004	28	2.474-00028	014	12		6350	2-11
	017	11	2.549-00005	009	9	2114-1898D16	6310	4

(THIS PARTS BOOK IS FOR REFERENCE ONLY.
PART NUMBERS AND SERIAL NUMBERS MAY BE
OUTDATED. ALWAYS USE THE ONLINE PARTS SYSTEM)

Part No.	Fig No.	Key No.
2114-1898D17	1410	9
2114-1898D2	1330	9
	1350	1-9
	1350	9
	1380	9
	1390	8
	1400	8
	1410	1-8
	1410	5
	1410	52
	6210	6
	6230	3
	6270	3
	6300	32
	6300	5
	6330	53
	6340	3-9
	6340	34-9
	6340	53
	6350	2-17
	6350	53
2114-1898D3	1350	1-17
	1350	6
2114-1898D4	6330	83
2114-1898D8	6330	74
2114-2031D1	6360	68
2116-1536B	1320	5
2120-1413D3	1180	13
2120-2138A	3120	3
2120-2150D3	6350	70
2120-2150D4	6350	2-21
2120-2166D1	1340	6
	1410	8
2120-2166D10	1380	16
	1390	24
	1430	5
	6270	9
	6330	60
	6340	34-13
	6350	60
	6360	60
2120-2166D11	1410	10
2120-2166D12	1350	1-14
2120-2166D16	6340	35
2120-2166D18	1430	7
2120-2166D2	1330	12
	1350	3
	6350	2-16
2120-2166D23	6360	57
2120-2166D25	6210	4
2120-2166D25	6330	55
	6350	55
2120-2166D26	6360	69
2120-2166D32	1410	11
2120-2166D33	6340	3-12
	6340	34-12
2120-2166D4	1340	5
	1410	1-6
	6330	73
2120-2166D44	6220	5
	6340	34-14
2120-2166D5	1330	10
	1350	1-10
	1350	8
	1380	10
	1390	20
	1400	9
	1410	1-9
	1410	53
	1410	6
	6210	7
	6230	4
	6270	4
	6300	33
	6300	4
	6330	54
	6340	34-10
	6340	54
	6350	54
2120-2166D50	6290	7
2120-2166D52	1390	22
	1400	10
	6350	2-19
2120-2166D56	6310	8
	6330	84-3
2120-2166D59	6340	3-10
2120-2166D6	1350	1-18
	1350	7
2120-2166D60	6310	5
2120-2166D7	1330	16
	6330	56
2120-2166D8	6330	62
2120-2187	1120	62
	1460	40
	1510	40
	6280	8
2120-2196D1	1150	9
2120-2196D2	1170	18
2121-1301	3120	4
2121-1305	1460	36
2121-1305	1510	36
2121-1311D2	1380	11
	1390	9
	6340	3-15
	6340	85
	6350	2-18
2121-1311D4	1380	17
	6350	2-12
2121-1311D5	1410	1-7
	6310	6
2121-9019	1410	12
	6290	5
2121-9019A	1110	9
2122-1002D2	5120	20
	5130	20
	5150	2
	5160	2
2123-2132	1100	15
2123-6119	6360	4-4
2124-1026D1	1180	23
	3140	5
2124-1353D1	1470	5
2124-1353D3	1150	4
	1160	14
2125-1095A	1350	1-11
2125-9055	6350	20
2138-9006B	1270	2
2160-1004D48	1100	20
2160-1004D9	1120	41
2160-1026	6340	40
2160-1212	1460	7
	1510	7
2160-1213	1460	8
	1510	8
2160-1218	1490	2
2160-1219	6350	2-9
2160-1227D1	1350	1-21
2160-1310	6330	13
2161-1041	6360	4-6
2161-1744	1350	1-19
	6300	3
	6360	75
2161-2178	6340	25
	6340	34-6
2161-6065	6360	4-7
2180-1026D23	1180	41
2180-1216D150	4110	1-19
2180-1216D20	4170	211
2180-1216D25	4170	212
2180-1217D116	4140	17

(THIS PARTS BOOK IS FOR REFERENCE ONLY
PART NUMBERS AND SERIAL NUMBERS MAY BE
OUTDATED. ALWAYS USE THE ONLINE PARTS SYSTEM)

Part No.	Fig No.	Key No.
2180-1217D25	4171	16
2181-1110D30	1310	1
2181-1110D42	1310	3
2181-1116D1	4120	1-8
	4130	55
	4150	11
2181-1116D2	4150	10
	4171	29
2181-1116D3	002	4
	010	13
	040	13
2181-1126D115	1190	13
	1200	13
2181-1126D14	1210	9
	1220	8
	1240	2
	1250	2
	2140	10
	6140	3
	6170	8
	6380	2
	6420	4
	6430	8
2181-1126D23	6420	7
	6430	9
2181-1126D27	1190	11
2181-1126D28	1190	12
2181-1126D34	1240	3
	1250	3
	6170	9
2181-1126D36	1240	4
	2140	7
2181-1126D51	1250	9
2181-1126D6	1180	7
	1200	7
	1210	7
	2140	9
2181-1126D7	1190	8
	1200	8
	1210	8
	3130	5
	6420	3
	6430	11
2181-1126D75	1220	9
2181-1702D10	1210	18
	6110	3
2181-1702D2	1190	16
	1200	104
	1200	16
2181-1702D35	1210	20
2181-1702D36	1200	21
2181-1702D4	1220	10
	1240	6
	1250	6
	6140	2
	6170	6
	6380	3
	6420	8
	6430	10
2181-1702D41	1210	22
2181-1702D5	1200	17
	1210	17
	1240	7
2181-1702D50	1200	24
2181-1702D55	1200	26
	1210	26
2181-1702D56	1220	11
	1240	8
2181-1702D82	6170	7
2181-1890D2	4170	251
	4171	3
2181-1913D2	6280	11
2181-1950D1	1150	5
	1170	7
	1180	101
	1200	105
	1200	31
	6390	5
2181-1950D2	1240	10
2181-1950D9	1170	8
2181-1951D1	6400	5
	6410	5
2181-1951D7	6410	6
2181-1951D8	1200	104
	6390	4
2181-2337D1	1240	11
	6380	4
2181-2337D10	1200	29
2181-2337D12	1190	30
	1200	30
	1210	30
2181-2337D2	1200	28
	1210	28
2181-2419D1	1240	12
	1250	12
	2140	5
2181-2820D1	1200	91
	6160	3
2181-4125	1250	13
2181-4133D38	6420	5
2181-4133D38	6430	7
2185-1308D13	6280	3
	6280	4
2186-9003	1150	6
	6280	2
2190-2036D10	6210	2
2190-2036D11	6190	3
2190-2036D12	6190	5
2190-2036D13	1440	10
2190-2036D25	6440	2
2190-2036D32	6440	72
2190-2036D5	1440	8
2190-2480	5120	27
2190-2533A	5120	16
2190-2556D163	5120	33
2190-2556D164	5120	34
2190-2556D165	5120	33
2190-2556D166	5120	34
2190-2584D2	6180	2
2190-2584D5	6250	2
2190-2633	5120	10
	5130	10
2190-2878	5120	6
	5130	6
2190-3297	5120	3
	5130	3
2190-3309	5120	4
	5130	4
2190-3386A	5120	18
2190-3388	5120	13
2195-1534	6200	2
2195-3500	1460	21
	1510	21
2197-1660	1460	24
	1510	24
2197-1661	1460	25
	1470	4
	1510	25
	6240	5
2198-1061	6340	63
2199-1063F41	5100	1
2199-9008	5100	2
2199-9058	6360	14
220101-00684	6290	-
220101-00724	6330	-
	6340	-
	6350	-
	6360	-
220101-00724A	6330	-
	6340	-

(THIS PARTS BOOK IS FOR REFERENCE ONLY. PART NUMBERS AND SERIAL NUMBERS MAY BE OUTDATED. ALWAYS USE THE ONLINE PARTS SYSTEM)

Part No.	Fig No.	Key No.
220101-00724A	6350	-
	6360	-
220101-00724B	6330	-
	6340	-
	6350	-
	6360	-
220105-00106	1330	-
220105-00107	1330	5
220204-00278	6300	-
220205-00317	6350	2
220205-00317A	6350	2
220214-00051	1190	6
230201-00576	3110	51
230201-00578	6120	1
230207-00197	3100	1
230207-00197A	3100	1
2415-1018	6360	66
2420-9351B	6170	1
2420-9612B	3140	9
2440-9316AKT	2120	*
2460-9057A	6110	2
2471-9010A	1150	16
2471-9040	6270	2
250110-00079A	1350	-
250110-00080A	1350	1
2506-9009	1450	1
2507-6006	6360	52
2512-9007	5110	13
2515-1016D2	1470	1A
	5110	8
	6230	2A
	6240	1A
2515-1021D6	6360	71A
2516-1104	6440	6
2523-9005	1430	3
2527-1016	1430	8A
	5110	11
2527-1017	1430	8B
	5110	10
2527-1018	1430	8C
2527-1025	1430	8D
2528-9040	1440	1C
2534-9048	6230	2
2534-9068	6360	71
2541-9020	6360	31
2544-9032	1430	6
	6230	11
	6250	4
2547-9045	6440	81
2548-1027	1460	1A
2548-1027	1510	1A
2549-9115	1440	9
	6180	1
	6210	1
	6440	1
2550-1014D1	1460	5
	1510	5
2550-1014D2	1460	6
	1510	6
2553-1275D96	1460	9
	1510	9
2553-1275D97	1460	10
	1510	10
2621-2752	1220	6
2621-9002	1440	11
2622-1265	6360	4-5
270-00028	6340	3-4
2705-9002	1280	16
2713-1206B	3120	6
2713-1207B	3120	7
2713-1208B	3120	2
2891-1232B	6340	34-7
2916-9002A	6200	1
300611-00513	6440	73
300619-00168	1430	-
300619-00171	1460	-
300619-00172	1510	-
300619-00607	1450	-
300619-01054	6230	-
300619-01064	1470	-
300619-01065	1480	-
300619-01066	6240	-
300619-01098	6220	-
300619-02104	1440	-
300619-02108	6440	-
300619-02110	6190	-
300637-00003	6220	1
300704-00016	6360	51
300715-00009	6140	1B
300726-00004	1450	6
300730-00005	6190	6
301005-00181	1470	1
	6230	2
	6240	1
301316-00019	1150	17
301423-00045	6440	71
310207-00148	1460	1
310207-00148A	1460	1
310207-00149	1510	1
310207-00149A	1510	1
310207-01092	6240	4
310207-01093	1480	1
310207-01094	6230	5
	6230	6
310207-02477	6190	1
310207-02481	1440	6
310207-02493	6440	84
400305-00224	3130	2
	4210	-
400305-00299	4260	-
	6430	1
400309-00344	3130	1
	4200	-
400309-00462	4250	-
	6420	1
400310-00220	3130	3
	4220	-
401107-00749	2100	17A
401107-00750	2100	17B
410105-00145	1190	1
	4140	-
410113-00130	1220	1
	4160	-
410113-00131	1220	2
	4160	-
410114-00173	6420	2
410114-00197	6430	2
410119-00008	1220	5
	4171	-
410135-00031	6140	1
410207-00060	6140	1A
410207-00525	4160	41
410207-00526	4160	41
415-00040	6360	65
416-00008	4180	8
	4190	9
4161-2507	6330	46
420-00291	1200	4
420203-00019	1130	49
	1135	49
420212-00615	3130	-
420212-00625	1190	-
	1200	-
	1210	-
420212-00628	1180	-
420212-01341	1220	-
420212-01341A	1220	-
420212-01341B	1220	-
420212-01352	6140	-
420212-08006	6420	-

(THIS PARTS BOOK IS FOR REFERENCE ONLY
PART NUMBERS AND SERIAL NUMBERS MAY BE
OUTDATED. ALWAYS USE THE ONLINE PARTS SYSTEM)

Part No.	Fig No.	Key No.
420212-08007	6430	-
420212-08654	6400	-
420212-08656	6410	-
420212-09330	6390	-
420406-01244	4250	1
420406-01245	4260	1
426-00236	6140	1
429-00016	4160	10
	4180	4
	4190	6
429-00017	4160	9
	4180	5
	4190	7
430221-00918	4160	42
430221-00919	4160	42
450103-00042	1150	-
450103-00045	1150	1
450105-00032	1170	-
450105-00041	1170	1
460103-00818	6270	7
515-00001A	1440	1D
	5110	9
516-00009	1450	6
516-00011	6180	3
527-00004	5110	12
530-00067	6170	19
530-00432A	6150	2
534-00029	1470	1
	6240	1
537-00010	1430	1
537-00071	016	35
	046	35
	1430	2
541-00011A	6360	51
541-00013	6360	12
545-00002	6190	6
549-00010	6170	2
549-00040	1440	7
	6250	1
549-00041	6190	4
549-00073	6190	2
549-00092	6150	1
553-00001D1	1460	14
	1510	14
621-01889A	6360	27
621-03113B	6340	34-1
621-03114B	6340	34-2
650102-00240	3100	-
650105-00025	2100	-
	2110	-
901-00042	1360	1
	1370	-
901-00050	1360	2
903-00068	6310	3
950205-00657	5120	30
	5130	30
950205-00658	5120	32
	5130	31
950205-00684	5120	-
950205-00685	5130	-
950205-01169	5160	3
950205-01325	5150	1
950205-01325A	5150	1
950209-01145	5120	35
	5130	32
950209-01145B	5120	35
	5130	32
	5160	1
950209-02414	5150	-
950209-04106	5160	-
A408117	039	1
A408253	044	15
A408254	044	16
A408255	044	17
A408256	044	18
A408257	044	19
A408258	044	20
A408260	044	22
A408289	034	28
	047	4
D460483	002	14
	004	39
	032	7
	034	1
D460678	003	17
	033	17
D465096	010	21
	017	14
	040	21
	047	14
DS0001075	1450	4
DS0001089	1450	3
DS0025017	1190	58
	1200	58
DS0025018	1280	19
DS0025032	1180	43
	1190	23
	1280	14
	1290	18
DS0025033	1100	5
DS0025033	1120	33
	1130	33
	1135	33
	1180	16
	1280	13
	1290	19
	1290	2-15
	1300	5
	1460	19
	1470	3
	1510	19
	2100	32
	2110	25
	6240	3
DS0025039	1100	22
	1160	16
	1280	27
DS0025044	1120	63
DS1001069	1390	7
DS20551026	1180	6
DS2076159	1120	29
DS2076160	1120	39
DS2087066	1180	35
DS2092008	6400	4
DS2092091	1260	1
DS2092092	1260	3
DS2092117	1240	24
DS2092118	1250	34
DS2092119	1250	35
DS2092125	1200	101
	1200	35
DS2092126	1200	37
DS2092142	1180	28
DS2092144	1210	43
DS2092178	1200	102
DS2092179	1210	48
DS2092180	1210	49
DS2092202	2140	11
DS2092235	1200	101
	1200	35
	6390	1
DS2092236	1200	37
DS2092239	1200	102
	6390	2
DS2093006	1240	26
DS2093017	1250	32
DS2093024	1250	43
	6170	17
DS2093025	1220	22
DS2093027	1250	45

(THIS PARTS BOOK IS FOR REFERENCE ONLY
PART NUMBERS AND SERIAL NUMBERS MAY BE
OUTDATED. ALWAYS USE THE ONLINE PARTS SYSTEM)

Part No.	Fig No.	Key No.
DS2093028	1310	10
DS2093032	1250	40
DS2093034	1220	23
DS2093036	1250	41
DS2093040	1310	8
DS2093043	1240	28
DS2093053	6370	3
	6380	9
DS2093069	1240	25
DS2093098	1250	33
DS2093115	1250	40
	1310	9
	6400	3
DS2093119	1220	15
DS2093127	6170	16
DS2093157	6170	15
DS2093197	1250	30
DS2093200	6380	8
DS2093219	6410	2
DS2093220	6400	2
DS2093233	6170	14
DS2093234	1230	3
DS2093249	1250	44
	6410	3
DS2093253	6370	4
DS2093261	1250	38
DS2093276	1190	55
DS2093288	1220	20
DS2093299	1240	22
DS2093300	1240	23
DS2093301	1210	41
DS2093302	1210	39
DS2093304	1200	46
DS2093318	1250	44
DS2093330	1220	14
DS2093366	1250	39
DS2093375	1250	37
DS2093397	1250	36
DS2093408	6140	8
DS2093410	6140	9
DS2093413	1210	38
DS2093416	1190	51
DS2093417	1190	50
DS2093418	1190	54
DS2093420	1220	12
	1220	13
DS2093421	1230	4
DS2093427	1250	31
DS2093430	6110	8
DS2093431	1210	40

Part No.	Fig No.	Key No.
DS2093474	2140	12
DS2093475	2140	13
DS2093476	2140	14
DS2093485	1180	9
DS2093495	1190	53
DS2093496	1190	57
DS2093498	1210	42
DS2093500	1190	52
DS2093765	1190	52
DS2093766	1190	53
DS2094003	6370	2
DS2094006	1260	4
DS2094017	1230	1
DS2094024	1240	29
DS2094040	6400	1
DS2094060	6410	4
DS2094097	6370	1
DS2094100	6160	61
DS2094113	1220	21
DS2094115	1200	44
DS2094137	1260	2
DS2094138	6170	10
	6170	11
DS2094139	6170	12
	6170	13
DS2094166	1200	45
DS2094184	1240	27
DS2094206	6140	10
	6140	11
DS2094214	1220	17
DS2094215	1220	18
DS2094220	1220	16
DS2094221	1220	19
DS2094222	1230	2
DS2094223	1250	42
DS2094226	6380	10
DS2094228	3130	61
DS2094242	6380	11
DS2094253	6130	1
DS2094254	6120	2
DS2094262	2140	15
DS2094265	1180	38
DS2094267	6160	51
DS2094268	3130	20
DS2094271	1190	56
DS2094275	3140	31
DS2094376	3130	20
DS2094408	1180	38
DS2094419	6410	1
DS2094505	6430	28

Part No.	Fig No.	Key No.
DS2094515	6430	26
DS2094516	6430	27
DS2105014	1160	2
DS2105056	1160	1
DS2105061	1160	4
DS2105064	1160	5
DS2105067	1160	3
DS2235002	6420	6
	6430	6
DS2239012	1180	29
DS2242017	6170	18
DS2242022	1250	5
DS2281082	6140	12
DS2308018	6440	82
DS2365002	1200	103
DS2411001	6400	6
DS2411008	1240	15
DS2805009	1160	13
	6430	25
DS3202026	010	18
	040	18
	5110	5
DS5201079	1100	21
DS5231015	1130	93
DS5501036	3110	35
DS7601043	1100	12
DS7601049	1100	11
DS7701440	1320	22
DS7701441	1320	23
DS7701446	1320	24
DS7701447	1320	25
DS7701459	3100	23
DS7701460	3100	22
DS7701461	3100	24
DS7701462	3100	25
DS7701463	3110	28
DS7701464	3110	29
DS7701465	3100	26
	3110	26
DS7701466	3100	27
	3110	27
DS7701467	3110	30
DS7701468	3110	31
DS7701469	3110	32
DS7701470	3110	33
DS7718012	1150	20
	1170	21
K1000794	6340	34-3
K1000814	1460	1B
	1510	1B

(THIS PARTS BOOK IS FOR REFERENCE ONLY
PART NUMBERS AND SERIAL NUMBERS MAY BE
OUTDATED. ALWAYS USE THE ONLINE PARTS SYSTEM)

Part No.	Fig No.	Key No.
K1000815	1460	1C
	1510	1C
K1001029	1120	44
	1150	8
	1160	8
	1290	26
	1310	5
	1460	30
	1470	6
	1510	30
	6240	6
	6280	9
	6430	19
K1001858A	1440	4
K1003945	1220	7
K1004011	6160	4
K1004134	1140	8
K1006041	6270	6
K1006160	1350	5A
K1006936	6330	49
	6360	49
K1006995	1400	11
K1007598	1170	2
K1007920A	1170	3
K1008072A	2100	24
K1008074B	2110	26
K1008237A	2100	10
K1008242A	2100	11
K1008307	1100	6
K1008451	2140	1
	4150	-
K1008451A	2140	1
	4150	-
K1008938A	1290	7
K1009418	1300	3
K1009435A	1180	20
K1009605B	1440	4A
K1010292A	1180	32
K1010603A	1180	4
K1010875	1180	11
K1010888	1110	10
K1010890A	1120	20
K1010890B	1120	20
K1010914A	1100	17
K1010914B	1100	17
K1011188	1220	5
	4170	-
K1011305G	6290	-
K1011306G	6330	-
	6340	-
K1011306G	6350	-
	6360	-
K1011306H	6330	-
	6340	-
	6350	-
	6360	-
K1011308G	6350	2
K1011308H	6350	2
K1011310G	6340	3
K1011312A	6360	4
K1011327	1170	2A
	5110	1
K1011328	1170	4
K1011350A	1280	7
K1011377	1190	2
K1011378	1190	3
K1011379A	1190	6
K1011555	1170	17
	5110	2
K1011563A	1100	1A
K1011645D10	5120	30
	5130	30
K1011645D15	5120	32
	5130	31
K1011647B	5120	19
K1011647C	5120	19
K1011680A	1320	3
K1011685	1320	7
K1011783	1150	14
	1170	20
K1011783A	1150	14
	1170	20
K1011797B	1340	-
K1011802A	1340	1
K1011808A	1340	2
K1011809A	1340	3
K1011885	1340	7
K1011886A	1360	-
K1012040A	1200	33
K1012041B	1200	34
K1012050A	1270	1
K1012079A	1280	22
K1012101C	3110	4
K1012102A	3110	5
K1012103A	3110	6
K1012115A	3100	7
K1012116B	3100	8
K1012117A	3100	9
K1012118A	3100	10
K1012119A	3110	11
K1012120B	3110	12
K1012121B	3110	13
K1012204A	5130	19
K1012204B	5130	19
K1012204C	5130	19
K1012205A	5130	29
K1012205B	5130	29
K1012205C	5130	29
K1012317	1320	17
K1012345A	3140	1
K1012364A	1320	1A
K1012377B	6160	1
K1012531C	1380	-
K1012673	1290	10
K1012685A	1170	6
K1012723B	1390	1
K1012724B	1400	1
K1012785A	1380	4
K1012786A	1380	5
K1012787B	1390	3
K1012816	1380	6
	1390	6
	6340	3-21
K1012829A	1380	8
K1012830	1390	2
K1012834B	1390	-
K1012835C	1400	-
K1012836B	1410	14
	6300	6
K1012877	1380	13
K1012878	1380	14
	1390	10
K1012879A	1350	1-4
K1012883	1380	15
K1012884B	1390	21
K1012887	1390	11
	1400	4
K1012978A	1400	2
K1013050B	6340	3-18
K1013051B	6340	3-17
K1013067	6230	1
K1013070A	6310	1
K1013073	6350	11
K1013075	6350	2-2
K1013076A	6350	2-3
K1013077	6350	2-4
K1013079A	6350	2-6
K1013081C	6350	2-8
K1013082A	6360	4-1
K1013084A	6360	4-2

(THIS PARTS BOOK IS FOR REFERENCE ONLY
PART NUMBERS AND SERIAL NUMBERS MAY BE
OUTDATED. ALWAYS USE THE ONLINE PARTS SYSTEM)

Part No.	Fig No.	Key No.
K1013086A	6360	4-3
K1013087A	6340	6
K1013088A	6330	7
K1013089A	6360	8
K1013090	6350	9
K1013174B	6340	10
K1013176C	6310	-
K1013177A	6310	2
K1013178B	6340	3-2
K1013225	6270	1
K1013232	6220	1
K1013265	6360	32
K1013270A	6340	15
K1013498	6350	2-13
K1013499	6350	2-14
K1013531A	6340	16
K1013532A	6360	17
K1013533	6350	18
K1013534	6330	19
K1013564A	6350	5
K1013567	6350	2-7
K1013569B	1220	3
	4180	-
K1013609	6250	3
	6260	-
K1013675A	1330	6
K1013762	1440	5
K1013763	1440	6
K1013764	6190	1
K1013765	6360	86
K1013795	6110	1
K1013853C	1330	1
K1013854C	1330	2
K1013855B	1330	3
K1013856B	1330	4
K1013866C	1330	5
K1013943A	1330	7
K1013948C	1330	8
K1013952C	1330	-
K1013961A	1330	13
K1013963	1330	15
K1014172C	6300	1
K1014175	1440	1
K1014201	1440	1A
K1014202	1440	1B
K1014279A	1460	18
	1510	18
K1014293A	6350	33
K1014316B	1400	5
K1014317B	1400	6
K1014318	6380	1
K1014323A	1380	18
K1014332	1350	1-13
K1014351C	2130	3
K1014352A	2130	2
K1014356	2110	20
K1014362A	2100	18
K1014372A	1220	1
	4160	-
K1014373A	1220	2
	4160	-
K1014434	2110	6
K1014462A	1480	1
K1014481	3110	4B
K1014482	3110	4A
	3110	51B
	6120	1-19
K1014483	3110	51A
	6120	1-18
K1014484	3100	1A
K1014496B	1390	15
K1014497B	1390	16
K1014544	1440	12
K1014551B	1390	17
K1014552A	1390	18
K1014553B	1390	19
K1014582B	6270	5
K1014590C	6330	43
K1014591B	6360	44
K1014597	6270	7
K1014609B	6330	21
K1014622B	6220	4
K1014709E	6340	3-3
K1014735A	6340	34-8
K1014736A	6340	3-20
K1014737A	6340	34
K1014743A	6340	37
K1014747C	6340	3-7
K1014748C	6340	3-5
K1014785B	6350	41
K1014787A	6360	42
K1014901B	6360	45
K1014988B	6340	3-8
K1014990A	6340	3-13
K1015073B	6270	-
K1015076	6270	8
K1015107A	6330	59
K1015113B	6330	61
K1015219	1320	6
K1015362	2110	31
K1015533	1180	37
K1015536A	1180	22
K1015538	1180	12
K1015632B	6290	9
K1015632C	6290	9
K1015633A	6290	10
K1015638	2110	22
K1015912B	1410	1
K1016482A	1100	3
K1016483B	1100	4
K1016533E	1280	1
K1016535B	1280	3
K1016537C	1280	5
K1016538B	1280	6
K1016540	1280	10
K1016541	1280	11
K1016546	1280	1A
K1016547A	1280	1B
K1016548	1280	1C
K1016564A	1280	12
K1016577	1280	23
K1016578	1280	24
K1016579	1280	25
K1016927C	1290	1
K1016929B	1290	3
K1016930B	1290	4
K1016931B	1290	5
K1016933A	1290	8
K1016934A	1290	12
K1016937A	1290	15
K1016948	1290	2-8
K1016949	1290	2-9
K1016956	1290	3-6
K1017042	1410	1-2
K1017044	1410	1-3
K1017046A	1410	1-4
K1017132A	1410	2
K1017141	1410	3
K1017222	6330	84-1
K1017514	1120	3
K1017516A	1130	4
	1135	4
K1017521	1120	16
K1017522A	1120	91
K1017535	1120	21
K1017562A	1120	27
K1017631C	1290	11
K1017653A	1300	1
K1017654	1300	2
K1017655A	1300	4

(THIS PARTS BOOK IS FOR REFERENCE ONLY
PART NUMBERS AND SERIAL NUMBERS MAY BE
OUTDATED. ALWAYS USE THE ONLINE PARTS SYSTEM)

Part No.	Fig No.	Key No.
K1017736	1290	3-7
K1017749B	1290	24
K1017757B	1100	16
K1017965	6210	5
K1017996B	1270	-
K1017997A	1270	3
K1018113C	2140	-
K1018178B	1130	92
K1018209B	1180	26
K1018322	1100	9
K1018323	1100	10
K1018384A	1180	42
K1018423A	1120	30
K1018496A	1110	7
K1018611	3100	15
K1018636	3130	4
K1018731	3130	12
K1018777	6360	77
K1018782	6340	78
K1018803	6360	76
K1018804	6360	28
K1018810	6330	82
K1018827A	6330	81
K1018881	6330	80
K1019026	1400	12
K1023199	1400	14
K1023526	1430	4
K1023533A	1450	2
K1023620	3130	15
K1023706A	1390	23
K1023845A	6240	4
K1023854	6150	3
K1023873	6320	2
K1023874B	6320	3
K1023901A	6290	11
K1023912C	6300	-
K1023914B	1420	-
K1023916C	1410	-
K1023959A	1420	1
K1024109	6360	50
K1024117A	6340	3-14
K1024123	4200	21
	4210	22
	4220	20
K1024126	6330	84
K1024128C	6340	3-16
K1024299G	1350	-
K1024300G	1350	1
K1024301B	1350	1-1
K1024371G	1350	1-5
K1024374A	1350	1-7
K1024504B	1460	1
K1024911	1130	4
	1135	4
K1024913	1130	4C
	1130	66
	1135	4C
	1135	66
K1025334	009	22
	039	15
	5110	7
K1025335	014	2
K1025337	1130	4A
	1135	4A
	5110	3
K1025338	1130	4B
	1135	4B
	5110	4
K1025339A	1150	1
K1025348	6100	1
K1025369	1150	3
K1025373B	1150	-
K1025394	1100	53
K1025413B	1170	1
K1025431C	1170	-
K1025477	4150	1
K1025478	4150	2
K1025479	4150	3
K1025480	4150	4
K1025481	4150	5
K1025526A	2100	8
K1025585	1240	1
K1026001A	6140	-
K1026012	1290	16
K1026033B	1100	2
K1026044A	1280	8
K1026046	1280	26
K1026167	1150	17
K1026196A	1140	2
K1026270	1120	48
K1026271A	1120	46
K1026272A	1120	47
K1026277A	1110	5
K1026278A	1110	6
K1026347	1320	1B
K1026348	1320	1C
K1026392	6360	29
K1026395	6340	30
K1026510	1490	1
K1026565	1460	31
K1026565	1510	31
K1026566	1470	7
K1026650A	5130	5
K1026691	1100	18
K1026707	2110	27
K1026782B	1320	2
	4230	-
K1026793	1490	-
K1026794	6190	-
K1026795	6200	-
K1026796	6250	-
K1026797A	6280	-
K1026800	6150	-
K1026807	6210	-
K1026809	6220	-
K1026963B	1290	17
K1026964B	1290	14
K1026965A	1290	6
K1026968G	1290	-
K1026973A	1180	1
	4110	-
K1026989G	1280	-
K1026990A	1280	9
K1026991	1410	13
K1026998	1420	2
K1026999	1420	3
K1027027A	1290	2-13
K1027081B	1320	-
K1027083	1320	8
K1027099A	3130	3
	4220	-
K1027105A	3130	2
	4210	-
K1027108B	3130	1
	4200	-
K1027122C	1120	24
K1027155	1290	9
K1027158E	1110	-
	1120	-
K1027158G	1130	-
	1135	-
K1027165C	1140	-
K1027166A	1330	20
K1027168	1330	19
K1027169	1330	18
K1027170	1330	17
K1027181E	1120	25
K1027224	3100	37
	6100	4
K1027262C	1100	1

(THIS PARTS BOOK IS FOR REFERENCE ONLY.
PART NUMBERS AND SERIAL NUMBERS MAY BE
OUTDATED. ALWAYS USE THE ONLINE PARTS SYSTEM)

Part No.	Fig No.	Key No.
K1027262E	1100	1
K1027376H	1100	-
K1027474B	1350	1-2
K1027477	1350	4
K1027478	1350	5
K1027491	1220	4
	4190	-
K1027515	1180	36
K1027526	1180	31
K1027547B	1180	-
K1027600A	1180	17
K1027657	1130	52
	1135	52
K1027657A	1130	52
	1135	52
K1027658A	1130	53
	1135	53
K1027673	1180	27
K1027708A	1180	19
K1027805	6320	-
K1027822A	3130	11
K1027823A	3130	10
K1027824A	3140	2
K1027825A	3140	3
K1027827	6160	2
K1027828A	3130	22
K1027867B	1160	-
K1027911A	3110	51
K1027912	3120	1
K1027918B	1220	5
	4171	-
K1027952B	3100	1
K1027978	1310	-
K1027990	3120	-
K1027991C	3100	-
	3110	-
K1028001	6120	1
K1028001A	6120	1
K1028002A	3140	-
K1028012B	6160	-
K1028019E	3130	-
K1028025E	1190	-
	1200	-
	1210	-
K1028065	5120	35
	5130	32
K1028074C	2100	-
K1028074E	2110	-
K1028076B	2100	1
K1028095	5120	26
K1028103B	2110	3
	4120	-
K1028121B	1300	-
K1028139B	2130	-
K1028140	2130	1
K1028320A	1130	91
K1028324A	1140	1
	4100	-
K1028331	5120	8
	5130	8
K1028344	1400	13
K1028369A	1190	1
	4140	-
K1028460	2100	9
	4240	-
K1028629	1100	19
K1028787A	2110	2
	2120	-
K1028787B	2110	2
	2120	-
K1028853C	1120	19
K1028853E	1120	19
K1028959	2120	7
K1029025	2120	4
K1029122	6320	1
K1029125	5120	36
	5130	33
K1029136B	1220	-
K1029138	6370	-
K1029139A	6380	-
K1029140	1230	-
K1029141C	1240	-
	1250	-
K1029143	1260	-
K1029156A	6350	88
K1029222	1130	55
	1135	55
K1029226B	1280	4
K1029257	1170	6B
	5110	16
K1029266	2120	1
K1029267A	2120	2
K1029267B	2120	2
K1029268	2120	3
K1029323	1430	8
K1029440	5130	14
K1029442A	6350	2-22
K1029443A	6350	2-23
K1029447	6350	2-24
K1029450	6340	89
K1029457	1110	57
K1029458	6330	90
K1029709A	6280	10
K1029710	6280	13
K1030043	1410	51
K1030060	6300	31
K1030174	6340	3-22
K1030177	1290	3-9
K1030260	3110	14
K1030282	6280	15
K1030283	6280	16
K1030389	1100	24
K1030452	1430	11
	5120	9
	5130	9
K1030757A	6110	-
K1030863	5100	-
K1030864	1320	4
K1033082	5120	14
K1033141	6430	4
K1033244	5100	1-10
K1033315	3130	9
K1033358	2100	17
K1033430A	1130	49
	1135	49
K1033594A	1160	15
K1033610	1430	-
K1033612	1440	-
K1033613A	1450	-
K1033615A	1460	-
K1033659A	6180	-
K1033663	1470	-
K1033664	1480	-
K1033665	6240	-
K1033666	6230	-
K1033827A	6170	-
K1033980	6100	-
K1034050	6120	-
K1034052	6130	-
K1036193	1320	1
K1036319E	5110	17
K1036575	1100	1B
K1036836A	1120	2
K1036949A	5110	-
K1036953EF	5110	14
K1037200	6350	2-5
K1037267	1290	13
K1037272	1120	22
K1037756	1280	2
K1037756A	1280	2

(THIS PARTS BOOK IS FOR REFERENCE ONLY
PART NUMBERS AND SERIAL NUMBERS MAY BE
OUTDATED. ALWAYS USE THE ONLINE PARTS SYSTEM)

Part No.	Fig No.	Key No.
K1038224	1135	91
K1038653	1120	45
K1038674	1120	58
K1038674A	1120	58
K1038706	1120	23
K1038706A	1120	23
K1038706B	1120	23
K1038726	1110	59
K1038804A	1290	2
K1038892A	1100	25
K1038892B	1100	25
K1039479	5120	1
	5130	1
K1039481	5120	2
	5130	2
K1039488A	5120	5
K1039496B	5120	-
K1039499A	5130	-
K1039682	1135	92
K1040063	1200	14
K1040606	6310	3
K1040818	1200	61
K1041335	1280	17
K1041336	1280	28
K1041337	1280	18
K1041344	1500	1
K1041443	1500	-
K1041489	1130	55
	1135	55
K1041490	1120	26
K1041784	1510	1
K1041791	1120	38
K1042074	5120	22
	5130	22
K1042074A	5120	22
	5130	22
K1042175	1510	-
K1043645	1200	103
	6390	3
K1045098	044	2
	5110	6
K1048682	4150	5
K1049665	1290	3-1
K1049808	1120	64
	1300	5
	2100	25
	2110	25
K1050271	6170	1
K1051897	5140	1
K1052011	5140	-
K1053324	1430	6
	6230	11
	6250	4
K1053575	1430	4
K1054481	3130	12
K9000356	1370	1
K9000357	1370	2
K9000358	1370	3
K9000359	1370	4
K9000360	1370	6
K9000361	1370	7
K9000362	1370	8
K9000363	1370	9
K9000364	1370	10
K9000365	1370	11
K9000366	1370	12
K9000367	1370	13
K9000368	1370	14
K9000369	1370	15
K9000370	1370	16
K9000371	1370	17
K9000372	1370	18
K9000373	1370	19
K9000374	1370	20
K9000375	1370	25
K9000376	1370	26
K9000377	1370	27
K9000378	1370	36
K9000379	1370	47
K9000380	1370	48
K9000458	4190	8
K9001127	4160	14
K9001128	4160	30
K9001129A	4160	19
K9002134	012	21
	042	21
K9002135	012	22
	042	22
K9002138	012	24
	042	24
K9002144	010	14
	012	83
	012	84
	040	14
	042	82
	042	83
K9003717	1120	2A
K9003721	4120	1-2
K9003723	4120	1-4
K9003730	4120	1-14
K9003739	4120	1-26
K9003746	4110	2-24
K9003747	4110	2-23
	4130	26
K9003748	4110	2-22
K9003749	4130	36
K9003751	4130	38
K9003753	4130	42
K9003754	4130	46
K9003756	4130	50
K9003757	4110	1-17
	4110	2-43
	4130	58
K9003768	4110	1-11
K9003769	4110	1-12
K9003770	4110	1-13
K9003785	4110	2-4
K9003786	4110	2-6
K9003787	4110	2-7
K9003788	4110	2-8
K9003789	4110	2-10
K9003790	4110	2-11
K9003791	4110	2-12
K9003792	4110	2-14
K9003793	4110	2-15
K9003794	4110	2-18
K9003795	4110	2-19
K9003796	4110	2-20
K9003797	4110	2-21
K9003798	4110	2-25
K9003799	4110	2-28
K9003800	4110	2-38
K9003801	4110	2-39
K9003802	4110	2-40
K9003803	4110	2-45
	4130	73
K9003804	4110	A
K9003805	4110	B1
K9003856	4170	201
K9003857	4170	202
K9003858	4170	203
K9003859	4170	210
K9003860	4170	214
K9003861	4170	217
K9003862	4170	218
K9003863	4170	224
K9003864	4170	271
K9003865	4170	301
K9003866	4170	311
K9003867	4170	313

(THIS PARTS BOOK IS FOR REFERENCE ONLY
PART NUMBERS AND SERIAL NUMBERS MAY BE
OUTDATED. ALWAYS USE THE ONLINE PARTS SYSTEM)

Part No.	Fig No.	Key No.
K9003868	4170	324
K9003869	4170	335
K9003870	4170	336
K9003871	4170	413
K9003872	4170	414
K9003873	4170	420
K9003874	4170	472
K9003875	4170	501
K9003876	4170	601
K9003918	4160	4
K9003919	4160	8
K9003920	4160	11
K9003921	4160	12
K9003922	4160	21
K9003923	4160	24
K9003924	4160	25
K9003925	4160	26
K9003926	4160	31
K9003927	4160	32
K9003928	4160	41
K9003929	4160	41
K9003930	4160	42
K9003931	4160	42
K9003932	4160	43
K9003933	4160	43
K9003938A	4180	I
K9003939	4180	6
K9003940	4180	7
K9003941	4180	9
K9003942	4180	II
K9003943	4180	13
K9003944	4180	14
K9003945	4180	17
K9003946	4180	18
K9003947	4180	19
K9003948	4180	21
K9004285	4160	6
K9004286	4190	4
K9004287	4190	I
K9004288	4190	II
K9004289	4190	14
K9004290	4190	17
K9004291	4190	20
K9004600	014	6
K9004602	015	12
	045	12
K9004603	012	96
	042	95
K9004605	013	54
	043	60
K9004606	002	17
	017	26
	032	10
	047	26
K9004607	016	4
	046	4
K9004608	016	8
	046	8
K9004609	016	13
	046	13
K9004610	016	15
	046	15
K9004611	016	16
	046	16
K9004612	016	20
	046	20
K9004613	016	29
	046	29
K9004614	016	9
	046	9
K9004615	016	10
	046	10
K9004616	016	11
	046	11
K9004617	016	12
	046	12
K9004618	016	5
	046	5
K9004619	016	6
	046	6
K9004620	016	18
	046	18
K9004621	016	19
	046	19
K9004622	016	21
	046	21
K9004623	016	22
	046	22
K9004624	016	23
	046	23
K9004625	016	24
	046	24
K9004626	016	25
	046	25
K9004627	016	26
	046	26
K9004628	016	27
	046	27
K9004629	016	28
	046	28
K9004630	016	7
	046	7
K9004631	002	12
K9004632	002	13
	032	6
K9004633	004	43
	034	44
K9004634	004	44
	034	45
K9004635	004	45
	034	46
K9004636	004	46
	034	47
K9004637	004	6
	034	7
K9004638	004	7
	034	8
K9004639	004	8
	034	9
K9004640	008	5
K9004641	007	10
K9004642	007	14
	037	13
K9004643	007	11
	037	10
K9004644	007	17
	037	16
K9004645	002	8
K9004646	002	7
K9004647	002	18
K9004648	002	19
K9004649	002	20
K9004650	009	18
	039	8
K9004651	009	11
	039	11
K9004653	010	33
	040	34
K9004654	011	78
	041	78
K9004655	011	130
	041	129
K9004656	011	50
	041	50
K9004657	011	56
	041	56
K9004659	011	61
	041	61
K9004660	011	62
	041	62

(THIS PARTS BOOK IS FOR REFERENCE ONLY
PART NUMBERS AND SERIAL NUMBERS MAY BE
OUTDATED. ALWAYS USE THE ONLINE PARTS SYSTEM)

Part No.	Fig No.	Key No.
K9004661	013	6
	043	6
K9004662	013	48
	043	54
K9004663	013	50
	043	55
K9004665	016	1
	046	1
K9004666	008	15
	038	15
K9004667	002	6
	032	4
K9004668	016	33
	046	33
K9004670	004	34
	034	36
K9004671	002	27
	032	17
K9004672	006	11
	036	11
	1130	12
	1135	12
K9004673	010	49
	040	49
	1120	42
K9004676	002	21
	017	3
	032	11
	047	3
K9004677	013	55
	043	61
K9004678	001	14
	001	4
	031	14
	031	4
K9004679	009	10
	039	12
K9004681	010	43
	040	43
	1120	28
K9004682	010	45
	040	45
K9004683	010	48
	040	48
	1120	43
K9004684	010	46
	040	46
K9004685	001	7
	031	7
K9004689	002	11
K9004690	002	22
	032	12
K9004704	006	7
	017	10
	036	7
	047	10
K9004714	014	1
	044	1
K9004723	003	15
	033	15
K9004727	009	20
	039	10
K9004732	005	2
	017	16
K9004741	004	42
	034	43
K9004742	004	9
	034	10
K9004744	007	7
	037	6
K9004748	007	16
	037	15
K9004749	009	3
	017	12
	039	32
	047	12
K9004750	009	21
	017	24
	039	14
	047	24
K9004751	010	27
	017	15
	040	27
	047	15
K9004752	013	30
	043	45
K9004753	005	3
	017	8
	035	7
	047	8
K9004754	010	26
	040	26
K9004756	014	4
K9004757	014	7
K9004758	015	2
	045	2
K9004759	015	5
	045	5
K9004760	015	6
	045	6
K9004761	015	7
	045	7
K9004762	015	8
	045	8
K9004763	015	9
	045	9
K9004764	015	10
	045	10
K9004765	015	11
	045	11
K9004766	015	13
	045	13
K9004767	015	16
	045	16
K9004768	015	20
	045	20
K9004769	015	22
	045	22
K9004770	015	23
	045	23
K9004771	036	8
K9004773	010	20
	040	20
K9004776	005	13
	035	2
K9004777	002	10
K9004778	016	2
	046	2
K9004779	016	14
	046	14
K9004780	016	17
	046	17
K9004781	003	18
	033	18
K9004784	014	9
K9004785	003	2
	033	2
K9004786	014	10
	044	4
	1160	6
K9004788	015	3
	045	3
K9004789	015	14
	045	14
K9004790	015	15
	045	15
K9004791	015	17
	045	17
K9004792	015	18
	045	18

(THIS PARTS BOOK IS FOR REFERENCE ONLY. PART NUMBERS AND SERIAL NUMBERS MAY BE OUTDATED. ALWAYS USE THE ONLINE PARTS SYSTEM)

Part No.	Fig No.	Key No.
K9004793	015	19
	045	19
K9004795	016	30
K9004796	002	16
	032	9
K9004797	001	13
	031	13
K9004799	008	10
	038	10
K9004801	002	9
K9004803	016	34
	046	34
K9004804	007	18
	037	17
K9004805	011	51
	011	52
	041	51
	041	52
K9004806	011	55
	041	55
K9004807	011	65
	041	65
K9004808	011	4
	041	4
K9004809	011	99
K9004810	011	105
	041	105
K9004811	011	107
	041	107
K9004812	011	117
	041	115
K9004813	011	106
	041	106
K9004815	012	23
	042	23
K9004816	012	82
	042	81
K9004817	011	48
	041	48
K9004818	011	66
	041	66
K9004819	011	68
	041	68
K9004820	011	70
	041	70
K9004821	011	60
	041	60
K9004822	011	71
	041	71
K9004823	011	121

Part No.	Fig No.	Key No.
K9004823	041	119
K9004824	012	2
	042	2
K9004825	012	3
	042	3
K9004826	011	53
	041	53
K9004827	011	36
K9004828	011	34
	011	35
	041	34
	041	35
K9004829	011	44
	041	44
K9004830	011	33
	041	33
K9004831	011	98
	041	98
K9004832	011	45
K9004833	011	49
	041	49
K9004834	011	69
	041	69
K9004835	011	100
	041	100
K9004836	005	4
	035	8
K9004837	006	13
	036	13
K9004838	009	16
	017	22
	039	6
	047	22
K9004840	012	63
	042	62
K9004841	011	102
	011	110
	041	102
	041	109
K9004842	006	14
	036	14
K9004843	007	19
	011	111
	037	18
	041	110
K9004845	011	112
	041	111
K9004846	011	113
	041	112
K9004847	010	47

Part No.	Fig No.	Key No.
K9004847	040	47
K9004849	002	5
K9004850	011	103
	012	65
	041	103
	042	64
K9004851	011	118
	041	116
K9004852	011	119
	011	63
	041	117
	041	63
K9004853	011	64
	041	64
K9004854	004	36
	034	38
	035	6
	035	9
K9004855	004	38
	034	40
K9004856	003	5
	033	5
K9004857	011	125
	041	123
K9004858	006	16
	036	16
K9004859	007	20
	011	126
	037	19
	041	124
K9004860	001	8
	031	8
K9004864	002	1
K9004868	002	30
	003	19
	004	56
	017	30
	047	30
K9004870	015	21
	045	21
K9004871	016	3
	046	3
K9004883	011	54
	041	54
K9004884	015	4
	045	4
K9004888	4150	*
K9004888A	4150	*
K9004934	4210	18
	4220	17

(THIS PARTS BOOK IS FOR REFERENCE ONLY. PART NUMBERS AND SERIAL NUMBERS MAY BE OUTDATED. ALWAYS USE THE ONLINE PARTS SYSTEM)

Part No.	Fig No.	Key No.	Part No.	Fig No.	Key No.	Part No.	Fig No.	Key No.
K9004934	4230	17	K9004976	4140	11-4	K9005154	004	3
	4240	17		4140	4-3		034	4
	4260	18		4140	9-3	K9005155	004	4
K9004935	4240	20	K9004977	4140	1-3		034	5
K9004939	4200	4		4140	10-3	K9005156	004	49
	4210	4		4140	12-3		017	7
	4220	4		4140	2-3		034	50
	4230	4		4140	3-3		047	7
	4240	4		4140	6-3	K9005158	004	40
	4250	4	K9004980	4140	16		034	41
	4260	4	K9004981	4140	1-6	K9005159	004	10
K9004940	4200	5		4140	10-6		034	11
	4210	5		4140	12-6	K9005160	004	15
	4220	5		4140	2-6	K9005161	004	21
	4230	5		4140	3-6		034	32
	4240	5		4140	6-6	K9005162	004	33
	4250	5	K9004982	4140	11-6		034	35
	4260	5		4140	4-6	K9005163	005	7
K9004941	4200	7		4140	7-4	K9005164	006	2
	4210	7		4140	9-6		036	2
	4230	7	K9004983	4140	5-3	K9005165	007	3
	4240	7	K9004984	4140	5-6		037	3
	4250	7	K9004986	4140	23	K9005166	008	1
	4260	7	K9004987	4140	4-7	K9005167	008	9
K9004942	4230	11	K9004988	4140	1-4		038	9
K9004943	4200	12		4140	10-4	K9005168	008	16
	4230	12		4140	12-4	K9005169	008	18
	4250	12		4140	2-4		038	18
K9004944	4200	13		4140	3-4	K9005170	009	1
	4230	13		4140	6-4		039	35
	4250	13	K9004989	4140	11-5	K9005171	009	19
K9004945	4230	14		4140	4-4		039	9
K9004947	4230	*		4140	9-4	K9005172	010	1
K9004950A	4210	17	K9004990	4140	5-4	K9005173	010	31
	4260	17	K9004991	4140	1		040	32
K9004951	4220	1	K9005146	004	27	K9005174	010	36
K9004962	4230	3		034	26		040	37
K9004963	4230	20	K9005147	004	14	K9005175	010	32
K9004964	4140	8		034	15		040	33
K9004965	4140	4-15	K9005148	001	12	K9005176	010	37
K9004966	4140	2		031	12		040	38
K9004967	4140	3	K9005149	001	38	K9005178	010	35
K9004968	4140	4		031	38		040	36
K9004969	4140	5	K9005150	004	41	K9005179	013	35
K9004970	4140	6		034	42	K9005180	013	39
K9004971	4140	7	K9005151	005	12	K9005181	013	43
K9004972	4140	9	K9005152	004	24	K9005182	001	30
K9004973	4140	10		034	23		031	30
K9004974	4140	11	K9005153	004	25	K9005183	003	6
K9004975	4140	12		034	24		033	6

(THIS PARTS BOOK IS FOR REFERENCE ONLY
PART NUMBERS AND SERIAL NUMBERS MAY BE
OUTDATED. ALWAYS USE THE ONLINE PARTS SYSTEM)

Part No.	Fig No.	Key No.	Part No.	Fig No.	Key No.	Part No.	Fig No.	Key No.
K9005184	033	8	K9005215	017	13	K9005303	4130	B2
K9005185	001	32		040	31	K9005307	4120	1-15
	031	32		047	13	K9005308	4120	1-9
K9005186	001	27	K9005217	008	13	K9005310	4120	1-12
	031	27		038	13	K9005662	1170	6A
K9005187	001	35	K9005219	012	97	K9005694	4140	13
	031	35		042	96	K9005695	4140	14
K9005188	004	26	K9005220	013	2	K9005696	4140	15
	034	25	K9005221	008	23	K9005883	4171	5
K9005189	006	1		038	23	K9005884	4171	6
	017	9	K9005222	011	128	K9005885	4171	7
	036	1	K9005223	001	1	K9005886	4171	8
	047	9		031	1	K9005887	4171	9
K9005191	007	2	K9005224	008	34	K9005888	4171	10
	037	2	K9005225	008	36	K9005889	4171	12
K9005192	008	29		038	36	K9005890	4171	13
	038	28	K9005226	001	24	K9005891	4171	14
K9005193	008	30		031	24	K9005892	4171	17
	038	29	K9005227	008	24	K9005893A	4171	18
K9005194	008	32		038	24	K9005894	4171	19
	038	32	K9005228	017	1	K9005895	4171	20
K9005195	008	28	K9005244	6260	1	K9005896	4171	23
	038	31	K9005245	6260	2	K9005897	4171	24
K9005196	009	4	K9005246	6260	3	K9005898	4171	26
	039	33	K9005247	6260	4	K9005903	4100	65
K9005197	010	3	K9005278	4130	2	K9005909	4100	6
	040	3	K9005279	4130	62	K9005911	4100	A3
K9005198	010	4	K9005280	4130	4	K9005912	4100	A1
	040	4	K9005281	4130	25	K9005913	4100	73
K9005199	010	8	K9005282	4130	61	K9005914	4110	2-2
	040	8	K9005283	4130	3	K9005915	4110	2-3
K9005200	010	9	K9005284	4130	27	K9005916	4110	2-1
	040	9	K9005285	4120	1-5	K9005917	4110	1-10
K9005201	001	31	K9005286	4120	1-13	K9005918	4110	1-16
	017	2	K9005287	4120	1-3	K9005919	4110	1-14
	031	31	K9005288	4130	37	K9005920	4110	1-15
	047	2	K9005289	4130	59	K9005921	4110	B6
K9005203	005	9	K9005290	4130	19	K9005923	4120	1
	017	23	K9005291	4130	20	K9005924	4120	1-17
K9005205	008	22	K9005292	4130	5	K9005925	4120	1-22
	038	22	K9005293	4130	6	K9005926	4120	1-18
K9005208	004	19	K9005294	4120	1-10	K9005927	4120	1-24
	034	31	K9005295	4120	1-19	K9005937	044	14
K9005210	010	11	K9005296	4120	1-11	K9005967	010	19
	040	11	K9005297	4120	1-20		040	19
K9005211	005	1	K9005298	4130	68	K9005968	010	39
K9005213	006	8	K9005299	4130	60		040	41
K9005214	017	29	K9005300	4130	A1	K9005969	011	1
	047	29	K9005301	4130	A2	K9005970	013	1
K9005215	010	22	K9005302	4130	B1	K9005971	1120	60

(THIS PARTS BOOK IS FOR REFERENCE ONLY
PART NUMBERS AND SERIAL NUMBERS MAY BE
OUTDATED. ALWAYS USE THE ONLINE PARTS SYSTEM)

Part No.	Fig No.	Key No.
K9005972	4100	76
K9005973	4100	77
K9006070	041	126
K9006145	041	99
K9006228	4210	1
K9006229	4200	1
K9006230	4230	1
K9006231	4240	1
K9006232	4210	2
	4260	2
K9006233	4200	2
	4250	2
K9006234	4220	2
K9006235	4230	2
K9006236	4240	2
K9006237	4220	12
K9006238	4210	11
	4260	11
K9006239	4240	11
K9006240	4200	11
	4250	11
K9006241	4200	18
	4250	18
K9006242	4220	3
K9006243	4210	3
	4260	3
K9006244	4240	3
K9006245	4200	3
	4250	3
K9006246	4220	7
K9006247	4200	16
	4250	16
K9006248	4240	9
K9006249	4210	16
	4260	16
K9006250	4240	12
K9006251	4200	14
	4250	14
K9006252	4240	14
K9006253	4210	13
	4260	13
K9006254	4220	13
K9006255	4210	12
	4260	12
K9006256	4240	13
K9006257	4200	*
	4250	*
K9006258	4210	*
	4260	*
K9006259	4220	*

Part No.	Fig No.	Key No.
K9006260	4240	*
K9006308	003	8
K9006321	6140	1A
K9006322	6140	1B
K9006429	044	12
K9006430	046	30
K9006431	035	1
K9006432	035	4
K9006433	040	1
K9006434	032	5
K9006435	034	16
K9006436	038	1
K9006437	038	5
K9006438	038	16
K9006439	037	9
K9006440	043	14
K9006441	043	50
K9006442	043	51
K9006443	043	52
K9006444	034	56
K9006445	034	57
K9006446	035	3
	047	23
K9006447	039	16
K9006448	041	36
K9006449	041	45
K9006450	034	55
K9006451	044	5
K9006452	044	8
K9006453	039	29
	047	27
K9006454	043	2
K9006455	044	9
K9006456	035	10
K9006457	039	30
K9006458	038	34
K9006459	047	1
K9006460	041	1
K9006461	043	1
K9006462	032	1
S0504366	6200	3
S0504453	1120	35
S0504566	1450	9
	1460	22
	1510	22
S0504666	1180	34
	1220	24
S0504866	1160	9
	1290	21
S0504953	1170	12

Part No.	Fig No.	Key No.
S0508453	6290	6
S0508666	1280	29
	1450	7
S0508766	1170	15
S0508853	1270	6
	6170	4
S0508866	1220	25
	2110	28
	6160	5
	6430	16
S0509066	6110	6
S0509366	1200	15
S0511653	1460	11
	1460	15
	1460	2
	1510	11
	1510	15
	1510	2
S0511666	1460	32
	1510	32
S0511866	2100	33
S0512053	4150	12
S0512066	1140	5
S0512166	2140	3
S0512266	1110	31
	1320	14
S0512366	3130	13
S0512666	1150	12
S0514866	3130	7
S0515253	3120	8
S0515266	2110	4
S0521366	1320	11
S0556066	3130	16
S0556353	6140	6
S0556466	6430	17
S0556566	6140	6
	6420	13
S0556753	1240	19
S0556853	6380	6
S0556866	1160	20
S0556966	6170	4
S0558266	6430	18
S0558466	1180	25
	3140	6
S0558766	3140	8
S0559166	2100	12
	3100	20
	3110	20
S0559266	3100	19
	3110	19

(THIS PARTS BOOK IS FOR REFERENCE ONLY. PART NUMBERS AND SERIAL NUMBERS MAY BE OUTDATED. ALWAYS USE THE ONLINE PARTS SYSTEM)

Part No.	Fig No.	Key No.	Part No.	Fig No.	Key No.	Part No.	Fig No.	Key No.
S0559366	1320	15	S4012533	1290	20	S5102203	1100	52
S0560966	2100	19		1460	37		1270	5
S0561166	1100	13		1510	37	S5102303	1120	37
S0561253	6290	8		3130	18		1160	10
S0561666	3100	18		6420	16		1170	13
S0561766	1110	8		6430	23		1220	26
S0562066	3100	16	S4012633	1130	61		1430	9
S0563466	2110	21		1135	61		1460	23
S0565666	1100	8		1180	15		1510	23
S0565966	1100	23		1320	16		6200	4
S0570766	6100	2		2100	13		6440	28
S2202766	1170	14		3100	21	S5102503	1160	18
S2203763	4140	4-16		3110	21		1170	16
S2204671	4180	16	S4012733	3100	17		1220	27
S2205361	4190	15		3120	10		1240	21
S2205661	4171	15	S4012833	2110	23		1450	8
S2208466	6180	4	S4014233	4190	19		1460	38
S2208866	1360	4	S4032733	4160	23		1510	38
S2209261	4130	50-8	S4032833	4160	22		2110	29
S2211861	4130	48	S4210733	1390	12		3130	17
S2212266	3130	21	S4277943	2120	5		6110	5
S2212366	1180	18	S5010313	1120	36		6140	5
S2214866	1140	7		1160	11		6160	6
S2215271	4110	2-27		1440	3		6170	3
	4110	3	S5010513	1200	32		6180	6
S2215466	1180	2		1270	7		6380	5
S2265266	1140	3		1290	25		6420	14
S3450333	4160	28		2110	30		6430	21
S3450833	1150	18		3130	24	S5102603	1140	6
	6220	2		6180	5		1150	10
S3450853	1100	51		6420	15		1180	24
S3450943	6440	69	S5010603	3130	23		1320	13
S3450953	6440	70	S5010613	1150	11		1460	13
S3450973	1440	2		1180	14		1460	17
S3450983	1430	10		1320	12		1460	35
	4160	17		1450	5		1460	4
S3452353	1350	1-12		1460	12		1510	13
S3521901	4180	20		1460	16		1510	17
S3522706	4171	25		1460	3		1510	4
S3523403	4200	17		1460	33		2140	2
	4210	19		1510	12		3130	14
	4220	18		1510	16		3140	7
	4230	18		1510	3		4150	13
	4240	18		1510	33		6430	22
	4250	17	S5010913	1320	9	S5102703	1100	14
	4260	19	S5011113	1180	45		1110	32
S3640523	6270	10	S5020603	1280	20		1180	3
S4010503	4140	24	S5100203	1150	19		1510	35
S4012233	1270	4		6220	3		2110	5
S4012333	1290	23	S5100303	1180	33		3120	9

(THIS PARTS BOOK IS FOR REFERENCE ONLY.
PART NUMBERS AND SERIAL NUMBERS MAY BE
OUTDATED. ALWAYS USE THE ONLINE PARTS SYSTEM)

Part No.	Fig No.	Key No.
S5102703	3130	8
S5102901	3120	5
S5102903	1320	10
S5103103	6100	3
S5110703	1140	4
S5130703	1390	5
S5210503	6350	2-20
S5701041	003	1
	003	14
	008	2
	033	1
	033	14
	038	2
	4130	49
S5735481	1390	13
S5735911	2120	6
S5740490	008	8
	038	8
S5740530	1400	17
S5740860	004	35
	034	37
S6250092	4170	225
S6250110	4120	1-7
S6250161	4170	471
	4171	21
S6500550	4150	9
S6510350	4100	35
S6510370	4110	2-9
S6540700	6340	3-19
S6710041	3110	36
	4200	20
	4210	21
	4220	19
	4230	19
	4240	19
	4250	20
	4260	21
S6710042	1310	2
	1320	19
	2100	14
S6710152	3100	38
S6710153	4200	19
	4210	20
	4250	19
	4260	20
S8000060	4140	22
S8000070	011	116
	041	114
S8000071	4100	69
	4130	29
S8000081	4100	72
	4110	1-18
	4110	2-44
	4130	57
	4160	3
	4170	213
	4171	28
	4180	3
	4190	3
S8000091	4140	21
S8000101	4130	31-5
	4140	20
	4140	4-14
S8000111	1150	7
	1170	9
	1180	102
	1200	10
	1200	106
	1210	10
	1220	28
	1240	17
	1250	17
	2140	4
	4100	39
	4100	43
	4110	2-46
	4130	74
	4140	1-5
	4140	10-5
	4140	11-2
	4140	12-5
	4140	2-5
	4140	3-5
	4140	4-5
	4140	5-5
	4140	6-5
	4140	7-3
	4140	9-5
	4170	261
	4171	27
	6110	7
	6140	7
	6170	5
	6380	7
	6390	6
	6400	7
	6410	7
	6420	9
	6430	12
	6440	83
S8000120	004	53
	017	19
	034	54
	047	19
S8000121	4100	40
	4110	2-38B
	4130	50-7
S8000141	1180	5
	1190	25
	1200	25
	1210	25
	1240	18
	2140	6
	3130	6
	4110	2-42
	4120	1-28
	4130	44
	4130	50-6
	4180	11
	4190	12
	6410	8
	6420	10
	6430	13
S8000161	014	15
	044	21
S8000180	4140	18
S8000181	1180	40
	1190	19
	1200	107
	1200	19
	1210	19
	2140	8
	6110	4
	6390	7
	6420	11
	6430	14
S8000201	4140	19
	4171	11
S8000205	4160	13
S8000211	4110	2-26
S8000231	1180	30
S8000241	4110	2-38A
S8000291	1170	11
	4130	39
S8000320	002	23
	004	54
	017	20
	032	13
	034	58
	047	20

(THIS PARTS BOOK IS FOR REFERENCE ONLY.
PART NUMBERS AND SERIAL NUMBERS MAY BE
OUTDATED. ALWAYS USE THE ONLINE PARTS SYSTEM)

Part No.	Fig No.	Key No.
S8000321	4210	14
	4220	15
	4230	15
	4240	15
	4260	14
S8000401	2120	8
S8000601	4150	6
S8000651	3110	34
S8000750	4150	7
S8010401	4200	15
	4250	15
S8010551	4100	71
S8010651	014	14
	4220	9
S8010701	4210	8
	4220	11
	4260	8
S8010751	4150	8
	4200	8
	4210	10
	4230	8
	4250	8
	4260	10
S8010801	4200	10
	4230	10
	4240	8
	4250	10
S8010851	4240	10
S8010951	4130	66
S8011101	1170	10
	4110	2-16
	4130	65
S8011200	4130	28
S8011351	4110	2-17
S8011551	4120	1-25
S8030081	6420	12
	6430	15
S8060121	4110	2-38C
S8060320	4210	15
	4230	16
	4240	16
	4260	15
S8060400	2120	9
S8070950	4130	69
S8090650	4220	10
S8090750	4200	9
	4230	9
	4250	9
S8180251	6280	12
S8450006	1150	13
S8450006	1160	12
S8450016	6280	5
S8450018	1180	44
S8450023	1120	18
	1120	92
	1180	8
	6280	14
S8450044	1180	21
S8450053	1120	15
	1130	15
	1135	15
S8450140	1130	54
	1135	54
T6500066	5100	1-7
T6510062	5100	1-6
T6510072	5100	1-8
T6510079	5100	1-9
T6550005	5100	1-4
T6550009	5100	1-5
T6580016	5100	1-1
T7050003	5100	1-2
T7050021	5100	1-3
Part No.	Fig No.	Key No.

(THIS PARTS BOOK IS FOR REFERENCE ONLY.
PART NUMBERS AND SERAIL NUMBERS MAY BE
OUTDATED. ALWAYS USE THE ONLINE PARTS SYSTEM)