RUTHZIL TRATOR COMERCIAL DE PEÇAS LTDA 11 97083-6812 ROLANDO

DOOSAN

OUTUBRO 2005

# DX340LC

# PARTS LIST
# LISTE DE PIECES DETACHEES

N°DE REFERENCE : K1009681FEF
HECC - 2807

# DOOSAN Excavator DX340LC



| Filter | | Interval(hr) |
|---|---|---|
| E/g oil filter | 65.05510-5026B | 500 |
| E/g fuel filter | 65.12503-5027 | 500 |
| Pre fuel filter | K1006529 | 500 |
| Element-inner(air cleaner) | 474-00037 | 2000 |
| Element-outer(air cleaner) | 474-00038 | 2000 |
| Suction filter-oil tank | 2471-9401A | 2000 |
| Return filter-oil tank | 474-00055 | 1000 |
| Element-pilot filter | 2471-1154 | 1000 |
| Aircon filter | K1002210 | 1000 |
| Element-Air Breather | K1029257 | 1000 |

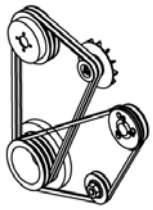

| Belt | | |
|---|---|---|
| Aircon Belt | 2106-1019D25 | 1210L |
| Fan Belt | 65.96801-0144A | 1400L |

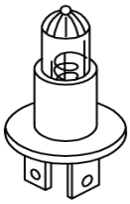

| Bulb | |
|---|---|
| Bulb 24V 3W | S862203H |
| Bulb-halogen 24V 75/70W | 2515-1016D4 |
| Bulb 24V 75/70W | 2515-1022D1 |

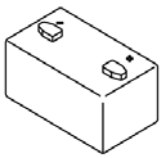



| Battery / fuse / relay | |
|---|---|
| Battery | 2506-6008 |
| Fuse 10A | 2527-1016 |
| Fuse 15A | 2527-1017 |
| Fuse 20A | 2527-1018 |
| Fuse 30A | 2527-1025 |
| Fusible link 27A | 2527-1023A |
| Relay | 2544-9033 |
| Battery relay | 2544-9024 |



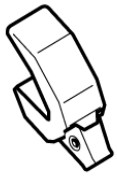

| Teeth / adapter / side cutter | |
|---|---|
| Teeth | K1005018A |
| Adpater | 713-00033 |
| Side cutter(RH) | 2713-6034A |
| Side cutter(LH) | 2713-6035A |

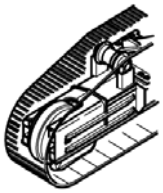

| Under carriage | | |
|---|---|---|
| Idler | 270-00049B | |
| Track spring | K1006183B | |
| Upper roller | 270-00047A | |
| Lower roller | K1008896 | |
| Sprocket | 108-00022B | |
| Track link-without shoe | 272-00062A | |
| Track shoe-link+shoe | K1007012A | 600G |
| Shoe (only) | K1007014 | 600G |
| Shoe (only) | 273-00110 | 700G |
| Shoe (only) | 273-00111 | 800G |
| Shoe (only) | K1007015 | 850G |
| Shoe (only) | 273-00112 | 900G |



| Seal kit | |
|---|---|
| Seal kit-boom cyl | K9002289 |
| Seal kit-arm cyl | K9002290 |
| Seal kit-bucket cyl | K9002289 |
| Seal kit-track spring | 274-00009KT |
| Seal kit-center joint | 480-00018KT |
| Control valve | 420-00295KT |
| Seal kit-swing motor | K9002069 |
| Seal kit-travel motor | 2401-9264KT |
| Seal kit-pedal valve | 420-00453KT |

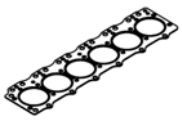

| Engine Gasket kit | |
|---|---|
| Top overhaul gasket kit | 65.99605-8035 |
| All overhaul gasket kit | 65.99601-8054 |

# *FOREWORD*

● This parts list is shown the equipment components parts of「DOOSAN EXCAVATOR DX340LC」.

## 1. HOW TO ORDER PARTS.

When ordering parts, please specify the follwing items as shown in the following example.

| | | | | |
|---|---|---|---|---|
| Ex. | 1) Model of Machine | : | DX340LC | (Shown on name plate on the side cover) |
| | 2) Machine Serial No | : | HECC0-○○○○ | (Shown on nameplate on the bed frame) |
| | 3) Engine Serial No | : | DL08○○○○○○EC | (Shown on Engine cylinder block) |
| | 4) Part No. | : | K1004522B | |
| | 5) Description | : | MAIN PUMP | |
| | 6) Q'ty | : | 1 | |

## 2. HOW TO USE THIS PARTS LIST.

**Key No.** : It shows the reference no. on the illustration.

**Part No.** : It shows the part number of the parts which are included in an illustration.

**Description** : It shows the name of part. Components of an assembly part are shown with [•] marks and are shown on the line, or lines, below the assembly part. Also if the components with [•] mark is consists of further components part. These further components are shown with the marks [••].

**Q'ty** : It shows the quantity use for one machine. quantity of components show the quantity for one assembly part.

**Service code** : Abbreviations in this column have their own meaning as show below.

- B : The parts with this abbreviation shows that the part requires some work on it before installing in the machine.
- D : These parts are not serviceable, In case of the part with this abbreviation is a component of an assembly and is not available independently. The assembly part containing this part should be ordered.
- K : This means that the part is contained in the service part kit.
- M : This means that the part is available only with its mating parts altogether.
- R : The part with this abbreviation shows that the quantity of the part is changed depending on the machine, such as an adjusting shim etc.
- S : This part is specially provided as a service part, which was not provided in the machine before shipping from the factory.

G : This part need grade control and should be requested as the same grade of counter part.

OP : Optional parts.

EX : Specific design parts.

OS : Over-sized parts.

US : Under-sized parts.
(Part with abbreviation "OS" or "US" is described on the line below the standard sized part.)

# : The part with this mark is newly added on that page of the equipment.

Serial no. : Serial No. shows the machine serial number which the parts were applied.
As to the engine Serial No. shows only engine serial number which the parts were applied.
Parts without any applicable serial number are used in every machine.

ICA : ICA shows the interchangeability between the original and the improved parts.
Abbreviations used in this column are as follows;

I : Part No. in the column of "Replaceable part" can be used instead of this part but not vice versa.

P : This must not be used for machine. The part No. in the column "Replaceable part" should be used instead.

T : Parts No. those in the column of "Replaceable part" can be used as an assembly instead of this part.

Y : This part and the part in the column of "Replaceable part" are interchangeable with each other.

Blank : This part has no "Repleaceable part"

Replaceable part : Interchangeable parts nos. and their required quantity are shown in this column.
If interchangeable improved parts are provided for the parts which you may order, the improved parts classified as "I", "P" "T" or "Y" may be supplied.

● When repairing, it is recommended to use our standard part.

● Researching the assembling parts from Part No., see the 「Parts Index」 of this parts list.

Oct. 2005

# *AVANT-PROPOS*

● Cette liste de pieces apparait dans le 「DOOSAN EXCAVATEUR DX340LC」.

## 1. COMMENT COMMANDER LES PICES.

Lorsque vous commanderez les pieces, veuillez specifier les articles suivants comme indiques dans l'exemple ci-dessous:

| | | | |
|---|---|---|---|
| Ex. | 1) Modele de machine | : | DX340LC |
| | 2) Serie de la machine | : | HECC0-○○○○ |
| | 3) Numero de serie du moteur | : | DL08○○○○○○EC |
| | 4) Numero de la piece | : | K1004522B |
| | 5) Description | : | POMPE |
| | 6) Quantite | : | 1 |

## 2. COMMENT UTILISER CE RECUEIL DE PIECES DETACHEES.

Numero de la cle : Indique le numero de reference de l'illustration.

Numero de la piece : Indique le numero de piece sur l'illustration.

Description : Nom de la piece. Les pieces composantes des pieces d'assemblage sont indiquees avec une marque [•] en dessous des pieces d'assemblage. Aussi, si les pieces composantes sont marques d'un [•]. Cela indique qu'ily a plusieurs pieces composantes, ces autres pieces composantes sont indiquees par un [••].

Quantite : Quantite, montre la quantite utilisee pour une machine, cependant Q'te des composants de pieces montre la quantite utilisee pour un assemblage de pieces.

Code de Service : L'Abveration est un composant d'un code de service qui a sa propre signification comme indique ci-dessous.

- B : La piece avec cette abreviation indique que la piece exige d'etre travaillee avant d'etre installee dans la machine.
- D : La piece avec cette abreviation est uun composant d'un assemblage et n'est pas diponible toute seule, la d'assemblage contenant cette peece dcvrait ctrc commandee
- K : Cette veut dire que la piece est inclue dans la trousse de pieces de service. "ensemble kit"
- M : Cela signifie que la piece est disponible uniquement avec as peice piece d'accouplement.
- R : La piece avec cette abreviation montre que la quantite de la piece est changee en fonction de la machine.

S : Cette piece est specialement approvisionnee en tant que piece de service, qui n'a pas ete livree dans la machine lors du depart de l'usine.

G : Cette piece a besoin d'on degerde controle et doit etre commande avec un niveau de degre equivalent.

OP : Prieces facultatives

EX : Pieces specifiquement dessinees

OS : Pieces demesurees

US : Pieces uop petites
La piece avec abreviation OS-US est decrite sur la ligne en dessous de la piece standard

# : La piece avec cette marque vient d'ent d'etre rajoutee sur la page de l'equipement.

Numero de serie : Numero de serie indique le numero de serie de la machine avcc lesquels les pieces etaient appliquees.
En ce qui conceme le numero de serie du moteur. Celui-ci indique seulement le numero de serie du moteur sur lesquels les pieces etaient appliquess.
Les pieces qui n'ont aucun numero de serie applicable sont utilisees dans toutes les machines.

ICA : Indique l'interchangeabilite entre la piece originale et les piece ameliorees.
Les abreviations utilisees dans cette colonne sont les suivantes:

I : Piece numero dans la colonne de piece de piece de remplacement peut etre utilisee au lieu de cette piece mais pas l'inverse.

P : Ceci ne peut etrc utilise pour la machine. Le numero de piece dans colonne pieces remplacable devrait etre utilise a la place.

T : Numcros de pieces, ceux dans la colonne piece de remplacement' peuvent etre utilisees en tant qu'assemblage au lieu de cette piece.

Y : Cette piece et la piece dans la colonne piece de remplacement'sont.

Piece de rechange : Numeros de pieces interchangeables et leurs quantites requises sont indiques sur cette colonne. Si les pieces ameliorees interchangeables sont fournies, les pieces que vous pouvez commander sont classees de la facon suivante "I", "P", "T" ou "Y" peuvent etre fournies.

- Lors de reparation. il est recommande d'utiliser notre piece standard.
- Recherche de pieces d'assemblage a partir des numeros de pieces
  Regarder l'index des pieces qui se trouvent a la fin du livre.

Oct. 2005

# CONTENT
# TABLES DES MATIERES

## • ENGINE PARTS


| | | | | |
|---|---|---|---|---|
| Fig. | 001 | CYLINDER BLOCK | BLOC CYLINDRES | 2 |
| | 002 | TIMING GEAR CASE | CARTER | 4 |
| | 003 | FLYWHEEL HOUSING | CARTER DE VOLANT | 6 |
| | 004 | OIL SEAL | JOINT CENTRAL | 8 |
| | 005 | BREATHER PIPE | CONDUIT DE VENTILATION | 10 |
| | 005A | BREATHER PIPE | CONDUIT DE VENTILATION | 11-1 |
| | 006 | DRIVING SYSTEM | SYSTEME D'ENTRAINEMENT | 12 |
| | 007 | CYLINDER HEAD | CULLASSE | 16 |
| | 008 | CYLINDER HEAD COVER | COUVRE-CULASSE | 18 |
| | 009 | TIMING SYSTEM | SYSTEME DE SYNCHRONISATION | 20 |
| | 010 | OIL PUMP | POMPE | 24 |
| | 011 | OIL FILTER & OIL COOLER | FILTRE D'HUILE | 26 |
| | 012 | OIL PAN | CARTER D'HUILE | 30 |
| | 013 | COOLING WATER PIPE & THERMOSTAT | CONDUITE D'EAU DE REFROIDISSEMENT | 32 |
| | 014 | WATER PUMP | SYSTEME DE REFROIDSSEMENT | 34 |
| | 015 | COOLING FAN | VENTILATEUR | 36 |
| | 016 | EXHAUST MANIFOLD | TUBULURE ET COLLECTEUR | 38 |
| | 017 | INTAKE MANIFOLD | TUBULURE DE PRISE | 40 |
| | 018 | TURBO CHARGER | TURBO CHARGER | 42 |
| | 019 | INTAKE STAKE | PIEU DE PRISE | 44 |
| | 020 | INJECTOR | INDICATEUR | 46 |
| | 021 | FUEL INJECTION PIPE | PIPE D'INJECTION DE CARBURANT | 48 |
| | 022 | INJECTION PUMP | POMPE D'INJECTION | 50 |
| | 023 | INJECTION PUMP DRIVE | POMPE D'INJECTION DE CARBURANT | 52 |
| | 024 | ENGINE CONTROL | COMMANDE REGIME MOTEUR | 54 |
| | 025 | FUEL SYSTEM | INSTALLATION CARBURANT | 56 |
| | 026 | ALTERNATOR & ALTERNATOR MOUNTING | ALTERNATEUR ET SUPPORT D'ALTERNATEU | 58 |
| | 027 | LIFTING HOOK | CROCHET DE LEVAGE | 60 |
| | 028 | STARTER | COMMANDE DEMARREUR | 62 |
| | 029 | AIR HEATER | RECHAUFFEUR D'AIR | 64 |
| | 030 | SENSOR | CAPTEUR | 66 |
| | 031 | WIRE HARNESS | JAGUE DE NIVEAU | 68 |
| | 032 | ENGINE MOUNTING | SUPPORT | 70 |
| | 033 | POWER STEERING PUMP | POMPE DE DIRECTION DE PUISSANCE | 72 |
| | 034 | AIR COMPRESSOR | COMPRESSEUR D'AIR | 74 |
| | 035 | OVER HAUL GASKET KIT - ALL | PIECES DE RECHANGE | 76 |
| | 036 | OVER HAUL GASKET KIT - TOP | PIECES DE RECHANGE | 78 |


## • BODY PARTS


| | | | | |
|---|---|---|---|---|
| Fig. | 1100 | MAIN FRAME | ENSEMBLE BATI PRINCIPAL | 80 |

| | | |
|---|---|---|
| 1110 COUNTER WEIGHT | MASSE D'EQUILIBRAGE | 82 |
| 1120 ENGINE MOUNTING | MOTAGE POUR MOTEUR | 84 |
| 1130 RADIATOR MOUNTING | SUPPORT DE RADIATEUR | 86 |
| 1140 RADIATOR | RADIATEUR | 88 |
| 1150 MUFFLER | SILENCIEUX | 90 |
| 1160 CAC PIPING | CHARGEE DE REFROIDISSEUR D'CAIR | 92 |
| 1170 AIR CLEANER | ENSEMBLE FILTRE A AIR | 94 |
| 1180 PUMP MOUNTING | ENSEMBLE POMPE | 96 |
| 1190 SWING DEVICE | SYSTEME D'ORIENTATION | 98 |
| 1200 FUEL TANK | ENSEMBLE RESERVOIR DE GAZOLE | 100 |
| 1210 FUEL PIPING | CONDUITES DE GAZOLE | 102 |
| 1220 OIL TANK | RESERVOIR DE HUILE | 104 |
| 1230 OIL COOLER PIPING(1) | CONDUITES DE HUILE | 106 |
| 1240 OIL COOLER PIPING(2) | CONDUITES DE HUILE | 108 |
| 1250 MAIN PIPING(1) - PUMP | CIRCUIT HYDRAULIQUE PRINCIPAL | 110 |
| 1260 MAIN PIPING(2) - BOOM | CIRCUIT HYDRAULIQUE PRINCIPAL | 112 |
| 1270 MAIN PIPING(3) - ARM, BUCKET | CIRCUIT HYDRAULIQUE PRINCIPAL | 114 |
| 1280 MAIN PIPING(4) - SWING | CIRCUIT HYDRAULIQUE PRINCIPAL | 116 |
| 1290 MAIN PIPING(5) - TRAVEL | CIRCUIT HYDRAULIQUE PRINCIPAL | 118 |
| 1300 PILOT PIPING(1) | CONDUITES DE PILOTE | 120 |
| 1310 PILOT PIPING(2) | CONDUITES DE PILOTE | 124 |
| 1311 PILOT PIPING(2) | CONDUITES DE PILOTE | 126 |
| 1320 PILOT PIPING(3) | CONDUITES DE PILOTE | 128 |
| 1330 PILOT PIPING(4) | CONDUITES DE PILOTE | 130 |
| 1340 PILOT PIPING(5) | CONDUITES DE PILOTE | 132 |
| 1350 PILOT PIPING(6) | CONDUITES DE PILOTE | 134 |
| 1360 PILOT PIPING(7) | CONDUITES DE PILOTE | 136 |
| 1370 PILOT PIPING(8) | CONDUITES DE PILOTE | 138 |
| 1380 CONTROL STAND - L.H. | CONSOLE DE COMMANDE | 140 |
| 1390 CONTROL STAND - R.H. | CONSOLE DE COMMANDE | 142 |
| 1400 SEAT SLIDING PLATE | POSEZ GLISSER LE PLAT | 144 |
| 1410 SEAT PLATE | POSEZ LE PLAT | 146 |
| 1420 SEAT MOUNTING | SIEGE LE SUPPORT | 148 |
| 1425 SEAT | SIEGE | 150 |
| 1430 DUCT COVER | CONDUITES COUVERCLE | 152 |
| 1440 HEATER COVER | BOITIES DE CHAUFFAGE | 154 |
| 1450 CABIN MOUNTING | SUPPORT DE CABINE | 156 |
| 1460 CABIN(1) | CABINE | 158 |
| 1470 CABIN(2) | CABINE | 162 |
| 1480 CABIN(3) | CABINE | 166 |
| 1490 CABIN(4) | CABINE | 170 |
| 1495 HANDLE - CABIN | HANDLE | 173-3 |
| 1500 FLOOR MAT | PLANCHER | 174 |
| 1510 FLOOR PLATE | TOLE DE PLANCHER | 176 |
| 1520 HANDLE ASS'Y | HANDLE | 178 |
| 1530 ROOF COVER | COUVERCLE | 180 |

| | | | |
|---|---|---|---|
| | 1540 FOOT REST - L.H. | REPOS DE PIED | 182 |
| | 1550 FOOT REST - R.H. | REPOS DE PIED | 184 |
| | 1560 SUPPORT | APPUI | 186 |
| | 1570 BAFFLE | COUVERCLE | 188 |
| | 1580 SIDE DOOR - L.H | ENSEMBLE DE PORTE | 190 |
| | 1590 SIDE DOOR - R.H | ENSEMBLE DE PORTE | 192 |
| | 1600 BATTERY COVER | COUVERCLE | 194 |
| | 1610 COVER | COUVERCLE | 196 |
| | 1620 ENGINE COVER | COUVERTURE DE MOTEUR | 198 |
| | 1630 ACOUSTIC FOAM | ENSEMBLE DE EPONGE | 200 |
| | 1640 UNDER COVER | COUVERCLE | 202 |
| | 1650 LUBRICATION PIPING | LUBRIFICATION | 204 |
| | 1660 ELECTRIC BOX ASS'Y | EQUIPMENT ELECTRIQUE | 206 |
| | 1670 ELECTRIC PARTS - CABIN | EQUIPMENT ELECTRIQUE | 208 |
| | 1680 ELECTRIC PARTS - CONTROL STAND | EQUIPMENT ELECTRIQUE | 212 |
| | 1690 ELECTRIC PARTS - RELATED | EQUIPMENT ELECTRIQUE | 214 |
| | 1700 ELECTRIC PARTS - ENGINE | EQUIPMENT ELECTRIQUE | 218 |
| | 1710 ALTERNATOR MOUNTING | SUPPORT D'ALTERNATEUR | 220 |
| | 1720 ALTERNATOR | ALTERNATEUR | 222 |
| | 1730 ELECTRIC PARTS - WORKING LAMP | EQUIPMENT ELECTRIQUE | 224 |
| | 1740 ELECTRIC WIRING | POSE DE FILES ELECTRIQUES | 226 |
| | 1750 AIRCONDITIONER(1) | REFRIGERATION | 228 |
| | 1760 AIRCON UNIT | CLE A MOLETTE | 230 |
| | 1770 AIRCONDITIONER(2) | REFRIGERATION | 232 |


## • TRACK PARTS


| | | | |
|---|---|---|---|
| Fig. | 2100 TRACK FRAME | ENSEMBLE TRAIN DE ROULEMENT | 236 |
| | 2110 TRACK GUARD | GARDE D'TRAIN | 238 |
| | 2120 TRACK GUARD-TRACK WIDTH 3m | GARDE D'TRAIN | 240 |
| | 2130 TRAVEL DEVICE | ENSEMBLE TRAIN DE ROULEMENT | 242 |
| | 2140 IDLER | BARBOTIN | 244 |
| | 2150 TRACK SPRING | TENDEUR DE CHENILLE | 246 |
| | 2160 UPPER ROLLER | GALET SUPERIEUR | 248 |
| | 2170 LOWER ROLLER | GALET INFERIEUR | 250 |
| | 2180 CENTER JOINT | JOINT CENTRAL | 252 |
| | 2190 TRACK SHOE ASS'Y - 600G | MAILLON DE CHAINE | 254 |
| | 2200 TRAVEL PIPING - STD | CONDUITES DE TRANSLATION | 256 |
| | 2210 TRAVEL PIPING - TRACK WIDTH 3m | CONDUITES DE TRANSLATION | 258 |


## • FRONT PARTS


| | | | |
|---|---|---|---|
| Fig. | 3100 BOOM - 6.5m | FLECHE | 260 |
| | 3110 ARM - 3.2m | BALANCIER | 262 |
| | 3120 BUCKET-1.3m³ | GODET | 264 |
| | 3130 BOOM PIPING | CONDUITES DE FLECHE | 266 |
| | 3140 LUBRICATION PIPING - BOOM | LUBRIFICATION | 268 |
| | 3141 LUBRICATION PIPING - BOOM | LUBRIFICATION | 269-1 |

| | | | |
|---|---|---|---|
| | 3150 ARM PIPING - ARM 3.2m | CONDUITES DE BALANCIER | 270 |
| | 3160 LUBRICATION PIPING -ARM 3.2m | LUBRIFICATION | 272 |


## • HYDRAULIC COMPONENTS


| | | | |
|---|---|---|---|
| Fig. | 4100 MAIN PUMP | POMPE PRINCIPALE | 274 |
| | 4110 MAIN PUMP - ROTARY GROUP | GROUPE ROTATIF | 276 |
| | 4120 MAIN PUMP - CONTROL | COMMANDE DE POMPE | 280 |
| | 4130 MAIN PUMP - E.P.P.R VALVE | POMPE - E.P.P.R | 284 |
| | 4140 SWING MOTOR | MOTEUR D'ORIENTATION | 286 |
| | 4150 SWING REDUCTION GEAR | REDEUTEUR D'ORIENTATION | 290 |
| | 4160 TRAVEL MOTOR | MOTEUR DE TRANSLATION | 292 |
| | 4170 TRAVEL REDUCTION GEAR | REDEUTEUR DE TRANSLATION | 296 |
| | 4180 CONTROL VALVE(1) | VANNE DE COMMANDE | 300 |
| | 4190 CONTROL VALVE(2) | VANNE DE COMMANDE | 302 |
| | 4200 CONTROL VALVE(3) | VANNE DE COMMANDE | 304 |
| | 4210 REMOTE CONTROL VALVE | VANNE DE COMMAND A DISTANCE | 308 |
| | 4220 PEDAL VALVE | VANNE DE PEDALE | 312 |
| | 4221 PEDAL VALVE | VANNE DE PEDALE | 315-1 |
| | 4230 SOLENOID VALVE | VANNE DE SOLENOIDE | 316 |
| | 4231 SOLENOID VALVE | VANNE DE SOLENOIDE | 318 |
| | 4240 BOOM CYLINDER-R.H | VERIN DE FLECHE DROIT | 320 |
| | 4250 BOOM CYLINDER-L.H | VERIN DE FLECHE GAUCHE | 324 |
| | 4260 ARM CYLINDER | VERIN DE BALANCIER | 328 |
| | 4270 BUCKET CYLINDER | VERIN DE GODET | 332 |
| | 4280 PEDAL VALVE - TWO WAY & ROTATING | VANNE DE PEDALE | 336 |
| | 4281 PEDAL VALVE - TWO WAY & ROTATING | VANNE DE PEDALE | 337-1 |
| | 4290 GEAR PUMP - ROTATING | POMPE A ENGRENAG | 338 |
| | 4300 BOOM CYLINDER(L.H)-LOCK VALVE | VERIN DE FLECHE GAUCHE | 340 |
| | 4310 BOOM CYLINDER(R.H)-LOCK VALVE | VERIN DE FLECHE DROIT | 344 |
| | 4320 ARM CYLINDER-LOCK VALVE | VERIN DE BALANCIER | 348 |


## • OTHER PARTS


| | | | |
|---|---|---|---|
| Fig. | 5100 TOOLS | OUTILLAGE | 352 |
| | 5110 SPARE PARTS | PIECES DE RECHANGE | 356 |
| | 5120 NAME PLATE - CABIN(EXPORT) | PLAQUE D'IDENTIFICATION | 358 |
| | 5130 NAME PLATE - EXPORT | PLAQUE D'IDENTIFICATION | 360 |
| | 5140 NAME PLATE - CABIN(EUROPE) | PLAQUE D'IDENTIFICATION | 362 |
| | 5150 NAME PLATE - EUROPE | PLAQUE D'IDENTIFICATION | 364 |
| | 5160 NAME PLATE-HEAVY DUTY | PLAQUE D'IDENTIFICATION | 365-1 |


## • OPTION PARTS


| | | | |
|---|---|---|---|
| Fig. | 6100 FUEL FILLER PUMP | POMPE | 366 |
| | 6110 SUN ROOF COVER | COUVERTURE DE TOIT DU SOLEIL | 368 |
| | 6120 MAIN PIPING - ONE WAY | CONDUITES DE BATI PRINCIPAL | 370 |
| | 6130 ONE WAY PIPING - WITH FILTER | TUYAUTERIE A SENS UNIQUE | 372 |
| | 6140 PILOT PIPING - ONE & TWO WAY | CONDUITES DE PILOTE | 374 |

| | | |
|---|---|---|
| 6141 PILOT PIPING - ONE & TWO WAY | CONDUITES DE PILOTE | 376 |
| 6150 MAIN PIPING - TWO WAY | CONDUITES DE BATI PRINCIPAL | 378 |
| 6160 TWO WAY PIPING - WITH FILTER | TUYAUTERIE DE DEUX MANIERES | 380 |
| 6170 PILOT PIPING - TWO WAY(1) | CIRCUIT DE PILOTE | 382 |
| 6180 PILOT PIPING - TWO WAY(2) | CIRCUIT DE PILOTE | 384 |
| 6190 BOOM PIPING - ONE & TWO WAY | CONDUITES DE FLECHE | 386 |
| 6200 ARM PIPING - ONE & TWO WAY(ARM 3.2m) | CONDUITES DE BALANCIER | 388 |
| 6210 MAIN PIPING - QUICK FIT | CONDUITES DE BATI PRINCIPAL | 390 |
| 6220 BOOM PIPING - QUICK CLAMP | CONDUITES DE FLECHE | 392 |
| 6230 ARM PIPING - QUICK FIT(ARM 3.2m) | CONDUITES DE BALANCIER | 394 |
| 6240 ELECTRIC PARTS - QUICK CLAMP | BRIDE RAPIDE | 396 |
| 6250 TRACK FRAME - FULL GUARD | ENSEMBLE TRAIN DE ROULEMENT | 398 |
| 6260 TRACK FRAME(3m) - FULL GUARD | ENSEMBLE TRAIN DE ROULEMENT | 400 |
| 6270 TRACK SHOE ASS'Y - 700G | MAILLON DE CHAINE | 402 |
| 6280 TRACK SHOE ASS'Y - 800G | MAILLON DE CHAINE | 404 |
| 6290 TRACK SHOE ASS'Y - 850G | MAILLON DE CHAINE | 406 |
| 6300 TRACK SHOE ASS'Y - 900G | MAILLON DE CHAINE | 408 |
| 6310 MAIN PIPING - ROTATING | CONDUITES DE BATI PRINCIPAL | 410 |
| 6320 PILOT PIPING(1) - ROTATING | CONDUITES DE PILOTE | 412 |
| 6330 PILOT PIPING(2) - ROTATING | CONDUITES DE PILOTE | 414 |
| 6340 PILOT PIPING - ROTATING & QUICK FIT | CONDUITES DE PILOTE | 416 |
| 6350 BOOM PIPING - ROTATION | CONDUITES DE FLECHE | 418 |
| 6360 ARM PIPING - ROTATION(ARM 3.2m) | CONDUITES DE BALANCIER | 420 |
| 6370 PILOT PIPING - BOOM LOCK VALVE | CONDUITES DE PILOTE | 422 |
| 6380 BOOM PIPING - LOCK VALVE | DONDUITER DE FLECHE | 424 |
| 6390 PILOT PIPING - ARM LOCK VALVE | CONDUITES DE PILOTE | 426 |
| 6400 ARM PIPING - LOCK VALVE | CONDUITES DE BALANCIER | 428 |
| 6410 SWING ALARM | AVERTISSEUR | 430 |
| 6420 RAIN SHIELD | BOUCLIER DE PLUIE | 432 |
| 6430 RAIN SHIELD & LAMP MOUNTING | BOUCLIER ET DE LAMPE DE PLUIE | 434 |
| 6440 CABIN LOWER GUARD | LA CARLINGUE ABAISSENT LA GARDE | 436 |
| 6450 WINDOW GUARD | GARDE DE FENETRE | 438 |
| 6460 FOGS GUARD ASS'Y | EMBRUME LA GARDE ASS'Y | 440 |
| 6470 FLOOR MAT - TWO WAY | PLANCHER | 442 |
| 6480 FLOOR MAT - ROTATING | PLANCHER | 444 |
| 6490 FLOOR MAT - TWO WAY & ROTATING | PLANCHER | 446 |
| 6500 FLOOR MAT - TWO WAY & ROTATING & ARTI | PLANCHER | 448 |
| 6510 ALTERNATOR - 80A | ALTERNATEUR | 450 |
| 6520 FUEL HEATER | RECHAUFFEUR DE CARBUR | 452 |
| 6530 TRAVEL ALARM | ALARME DE VOYAGE | 454 |
| 6540 WORKING LAMP(2-LAMP) | LAMPE FONCTIONNANTE | 456 |
| 6550 WORKING LAMP(4-LAMP) | LAMPE FONCTIONNANTE | 458 |
| 6560 WORKING LAMP - REAR | AVERTISSEUR RELAIS | 460 |
| 6570 WORKING LAMP(2-LAMP) | LAMPE FONCTIONNANTE | 462 |
| 6580 WORKING LAMP(4-LAMP) | LAMPE FONCTIONNANTE | 464 |
| 6590 ROTATING BEACON | FEU DE CIRCULATION | 466 |

| | | | |
|---|---|---|---|
| 6600 | ROTATING BEACON MOUNTING | SUPPORT TOURNANT DE BALISE | 468 |
| 6610 | ROTATING BEACON(TELESCOPIC) | FEU DE CIRCULATION | 470 |
| 6620 | ROTATING BEACON(TELESCOPIC) | FEU DE CIRCULATION | 472 |
| 6630 | ROTATING BEACON - WITH FOGS | FEU DE CIRCULATION | 474 |
| 6640 | OVERLOAD WARNING | AVERTISSEMENT DE SURCHARGE | 476 |
| 6650 | LOWER WIPER | ABAISSEZ L'ESSUIE-GLACE | 478 |
| 6660 | CD PLAYER | PLAQUEUR DE CD | 480 |
| 6670 | ACOUSTIC FOAM - LOW NOISE | ENSEMBLE DE EPONGE | 482 |
| 6680 | ARM - 2.6m | ENSEMBLE BALANCIER | 484 |
| 6690 | ARM PIPING - ARM 2.6m | CONDUITES DE BALANCIER | 486 |
| 6700 | LUBRICATION PIPING - ARM 2.6m | LUBRIFICATION | 488 |
| 6710 | ARM PIPING - ONE & TWO WAY(ARM 2.6m) | CONDUITES DE BALANCIER | 490 |
| 6720 | BUCKET - 1.1 m³ | ENSEMBLE GODET | 492 |
| 6730 | BUCKET - 1.4 m³ | ENSEMBLE GODET | 494 |
| 6740 | BUCKET - 1.6 m³ | ENSEMBLE GODET | 496 |
| 6750 | PATTERN CHANGE PIPING(1) | TUYAUTERIE DE CHANGEMENT DE MODELE | 498 |
| 6760 | PATTERN CHANGE PIPING(2) | TUYAUTERIE DE CHANGEMENT DE MODELE | 500 |
| 6770 | BUCKET ASS'Y - 1.09m³(42") - SIDE PIN | ENSEMBLE DE GODET | 502 |
| 6780 | BUCKET ASS'Y - 1.29m³(48") - SIDE PIN | ENSEMBLE DE GODET | 504 |
| 6790 | BUCKET ASS'Y - 1.48m³(54") - SIDE PIN | ENSEMBLE DE GODET | 506 |
| 6800 | BUCKET ASS'Y - 1.60m³(57") - SIDE PIN | ENSEMBLE DE GODET | 508 |
| 6810 | BUCKET ASS'Y - 1.80m³(63") - SIDE PIN | ENSEMBLE DE GODET | 510 |
| 6820 | ARM PIPING - QUICK FIT(ARM 2.6m) | CONDUITES DE BALANCIER | 512 |
| 6830 | ARM PIPING - ROTATION(ARM 2.6m) | CONDUITES DE BALANCIER | 514 |
| 6840 | ARM - 3.95m | BALANCIER | 516 |
| 6850 | ARM PIPING - ARM 3.95m | CONDUITES DE BALANCIER | 518 |
| 6860 | LUBRICATION PIPING -ARM 3.95m | LUBRIFICATION | 520 |
| 6870 | ARM PIPING - ONE & TWO WAY(ARM 3.95m) | CONDUITES DE BALANCIER | 522 |
| 6880 | ARM PIPING - QUICK FIT(ARM 3.95m) | CONDUITES DE BALANCIER | 524 |
| 6890 | ARM PIPING - ROTATION(ARM 3.95m) | CONDUITES DE BALANCIER | 526 |
| 6900 | TROPICAL PARTS | PIECES TROPICALES | 528 |
| 6910 | ENGINE COVER - EUROPE | COUVERTURE DE MOTEUR | 530 |
| 6920 | TOP GUARD ASS'Y | ENSEMBLE DE GARDE SUPERIEURE | 532 |
| 6930 | RADIO | RADIO | 534 |
| 6940 | ROCK BUCKET - 1.12m³(HEAVY DUTY) | GODET | 536 |


- **WORLDWIDE NETWORK**

| DATE | JUN. 30, 2007 |
|---|---|
| REV.NO. | EXB07-06 |

# Fig. 001 CYLINDER BLOCK
# BLOC CYLINDRES

**Serial No. ;**

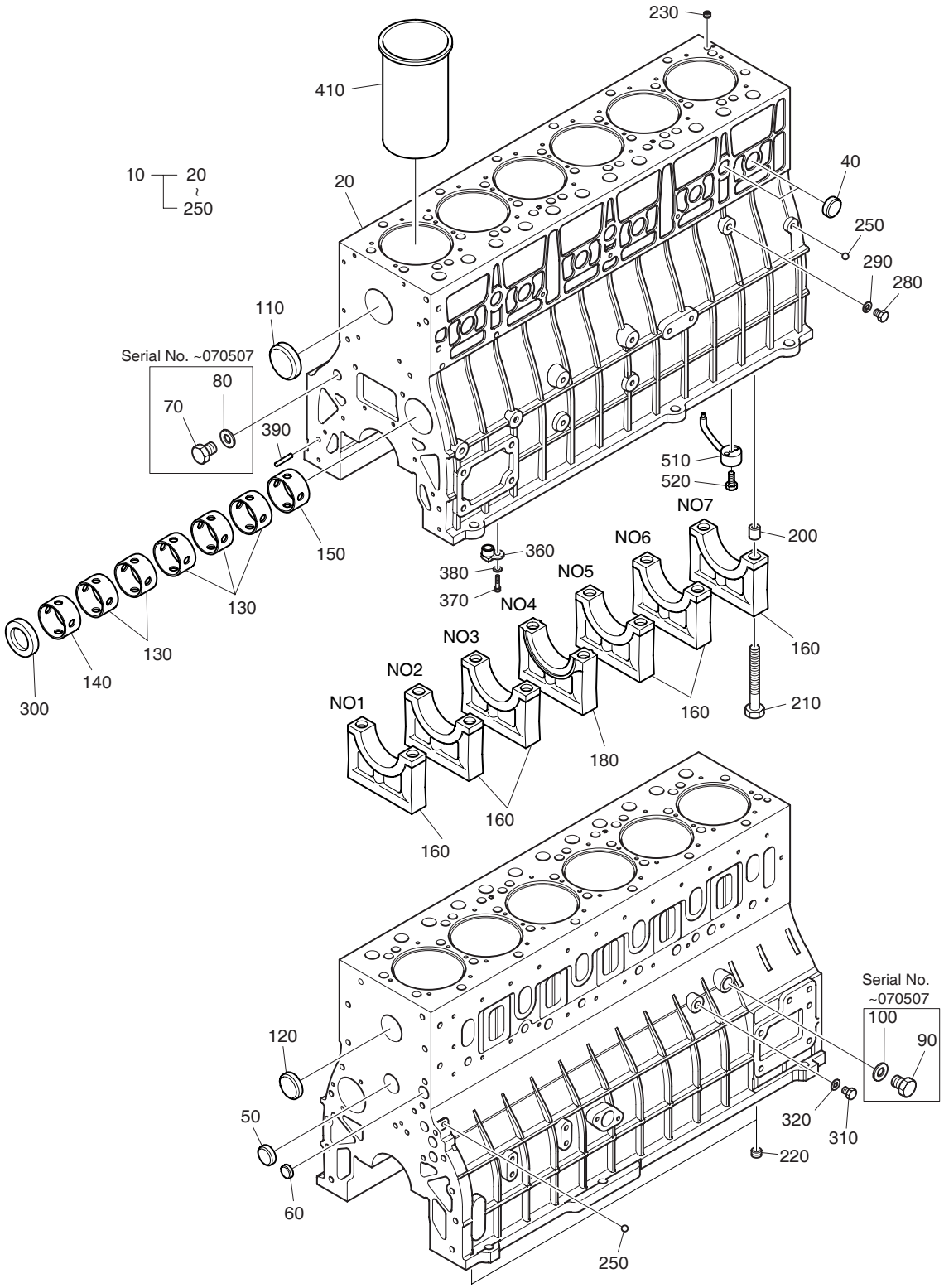

| DATE | JUN. 30, 2007 |
|---|---|
| REV. NO. | EXB07-06 |

# Fig. 001 CYLINDER BLOCK BLOC CYLINDRES

Serial No. ;

| Key No. | Part No. | Description | Description | Q'ty | S.C | Serial No. | ICA | Replaceable part | |
|---|---|---|---|---|---|---|---|---|---|
| | | | | | | | | Part No. | Q'ty |
| 001-10 | 65.01101-6108A | BLOCK;CYLINDER | BLOC | 1 | | ~060824 | Y | 65.01101-6108B | 1 |
| | 65.01101-6108B | BLOCK;CYLINDER | BLOC | 1 | | ~070507 | Y | 65.01101-6108C | 1 |
| | **65.01101-6108C** | **BLOCK;CYLINDER** | BLOC | 1 | | 070508~ | | | |
| 20 | 65.01101-0108A | . BLOCK;CYLINDER | . BLOC | 1 | D | ~060824 | | | |
| | 65.01101-0108B | . BLOCK;CYLINDER | . BLOC | 1 | D | ~070507 | | | |
| | **65.01101-0108C** | **. BLOCK;CYLINDER** | . BLOC | 1 | D | 070508~ | | | |
| 40 | 65.90302-0042 | . PLUG;CORE | . BOUCHON DE | 9 | | | | | |
| 50 | 65.90302-0042 | . PLUG;CORE | . BOUCHON DE | 1 | | | | | |
| 60 | 65.91606-0041 | . PLUG;CORE HOLE | . BOUCHON | 1 | | | | | |
| 70 | **65.90310-0132** | **. SCREW;PLUG** | . BOUCHON A VIS | 1 | | ~070507 | | | |
| 80 | **06.56190-0718** | **. RING;SEAL** | . BAGUE | 1 | | ~070507 | | | |
| 90 | **65.90310-0132** | **. SCREW;PLUG** | . BOUCHON A VIS | 1 | | ~070507 | | | |
| 100 | **06.56190-0718** | **. RING;SEAL** | . BAGUE | 1 | | ~070507 | | | |
| 110 | 65.90302-0059 | . PLUG;CORE | . BOUCHON | 1 | | | | | |
| 120 | 65.90302-0026 | . PLUG;CORE | . RACCORD | 1 | | | | | |
| 130 | 65.04410-0017 | . BUSH;CAM SHAFT | . COUSSINET D'ARBRE A | 5 | | | | | |
| 140 | 65.04410-0019 | . BUSH;CAM SHAFT | . DOUILLE | 1 | | | | | |
| 150 | 65.04410-0020 | . BUSH;CAM SHAFT | . DOUILLE | 1 | | | | | |
| 160 | 65.01105-1049 | . CAP;BEARING | . PALIER D'ARBRE | 6 | D | | | | |
| 180 | 65.01105-1050 | . CAP;BEARING | . PALIER D'ARBRE | 1 | D | | | | |
| 200 | 65.91710-0035B | . RING;LOCATING | . BAGUE DE CENTRAGE | 14 | | | | | |
| 210 | 65.90020-0096 | . BOLT;COLLARED HEX. | . BOULON A 6 PANS | 14 | | | | | |
| 220 | 65.90310-0148 | . SCREW;PLUG | . VIS | 2 | | | | | |
| 230 | 65.91001-0002 | . PLUG | . BOUCHON | 3 | | ~060824 | I | 65.91001-0013 | 3 |
| | 65.91001-0013 | . AVSEAL | . AVSEAL | 3 | | 060825~ | | | |
| 250 | 06.31641-0618 | . BALL;STEEL | . BILLE | 2 | | | | | |
| 280 | 65.90310-0091 | SCREW;PLUG M12X1.5X20 | BOUCHON FILETE AM16x1.5 | 1 | | | | | |
| 290 | 06.56190-0704 | RING;SEAL A12X18 | BAGUE D'ETANCHEITE | 1 | | | | | |
| 300 | 65.91605-0002 | COVER;CORE HOLE | COUVERCLE | 1 | | | | | |
| 310 | 65.90310-0135 | PLUG;SCREW | BOUCHON A VIS | 1 | | | | | |
| 320 | 06.56190-0706 | RING;SEAL A14X20 | BAGUE D'ETANCHEITE | 1 | | | | | |
| 360 | 65.05710-0001 | FLANGE;CONNECTION | BRIDE | 1 | | | | | |
| 370 | 06.02090-0307 | BOLT;SOCKET HEAD M6X14L | BOULON A 6 PANS CREUX | 1 | | | | | |
| 380 | 06.16731-2106 | WASHER;SPRING A6 | RONDELLE ELASTIQUE M6 | 1 | | | | | |
| 390 | 06.22022-1063 | PIN;DOWEL 8M6X24 | GOUJON D'ASSEMBLAGE | 2 | | | | | |
| 410 | 65.01201-0074 | LINER;CYLINDER | RECOUVREMENT | 6 | | | | | |
| 510 | 65.01601-5018A | NOZZLE;OIL SPRAY | INJECTEUR | 6 | | ~071101 | Y | 65.01601-5018B | 1 |
| | **65.01601-5018B** | **NOZZLE;OIL SPRAY** | INJECTEUR | 6 | | 071102~ | | | |

| DATE | JUN. 30, 2007 |
|---|---|
| REV.NO. | EXB07-06 |

# Fig. 001 CYLINDER BLOCK
# BLOC CYLINDRES

**Serial No. ;**

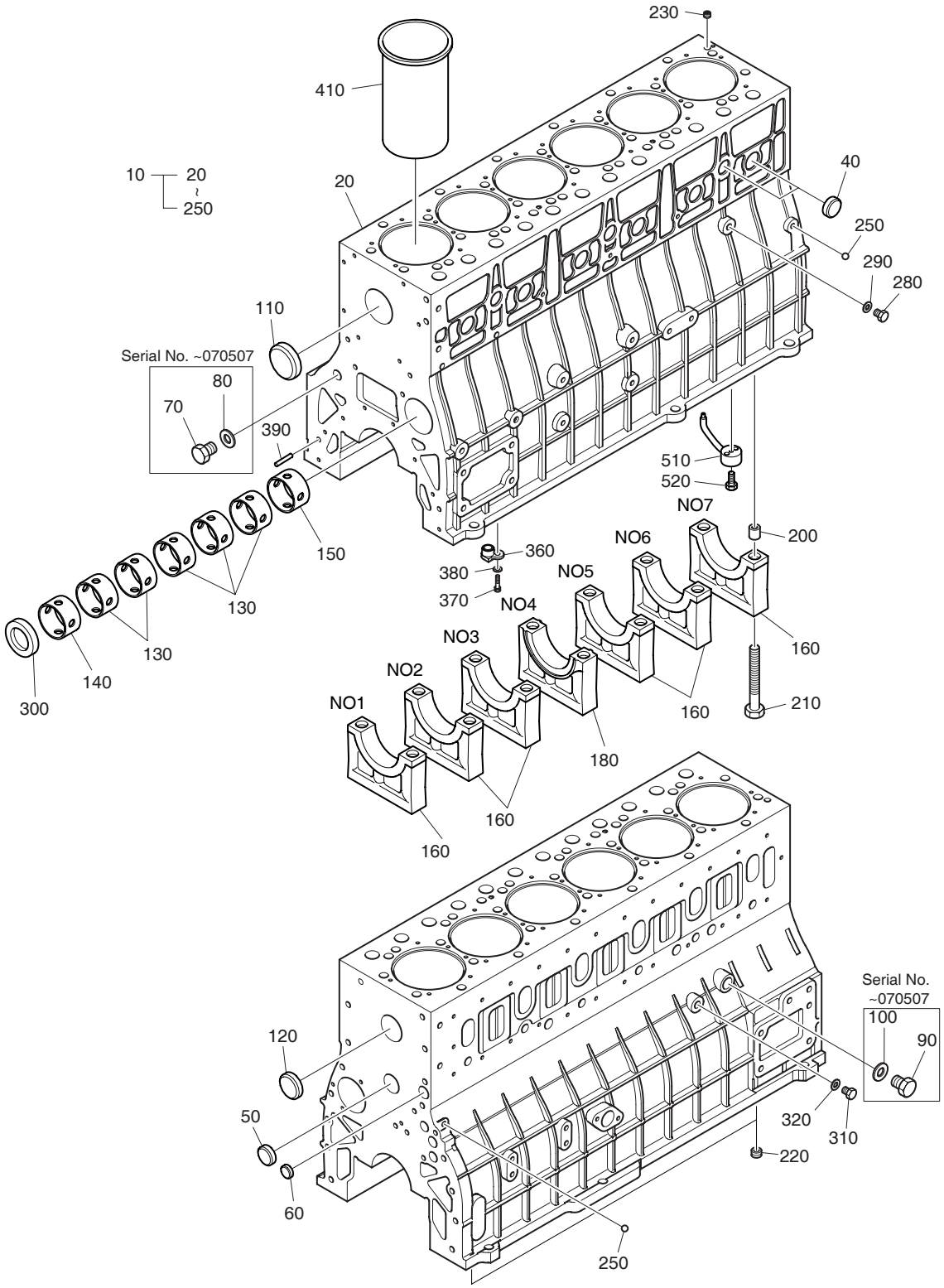

| DATE | JUN. 30, 2007 |
|---|---|
| REV. NO. | EXB07-06 |

# Fig. 001 CYLINDER BLOCK BLOC CYLINDRES

**Serial No. ;**

| Key No. | Part No. | Description | Description | Q'ty | S.C | Serial No. | ICA | Replaceable part | |
|---|---|---|---|---|---|---|---|---|---|
| | | | | | | | | Part No. | Q'ty |
| 001-520 | 65.05405-6001 | RELIEF VALVE ASS'Y | CLAPET DE DECHARGE | 6 | | ~071101 | | | |
| | **65.98150-0089** | **RELIEF VALVE ASS'Y** | CLAPET DE DECHARGE | 6 | | 071102~ | | | |

| DATE | JUN. 30, 2007 |
|---|---|
| REV.NO. | EXB07-06 |

# Fig. 002 TIMING GEAR CASE CARTER

**Serial No. ;**

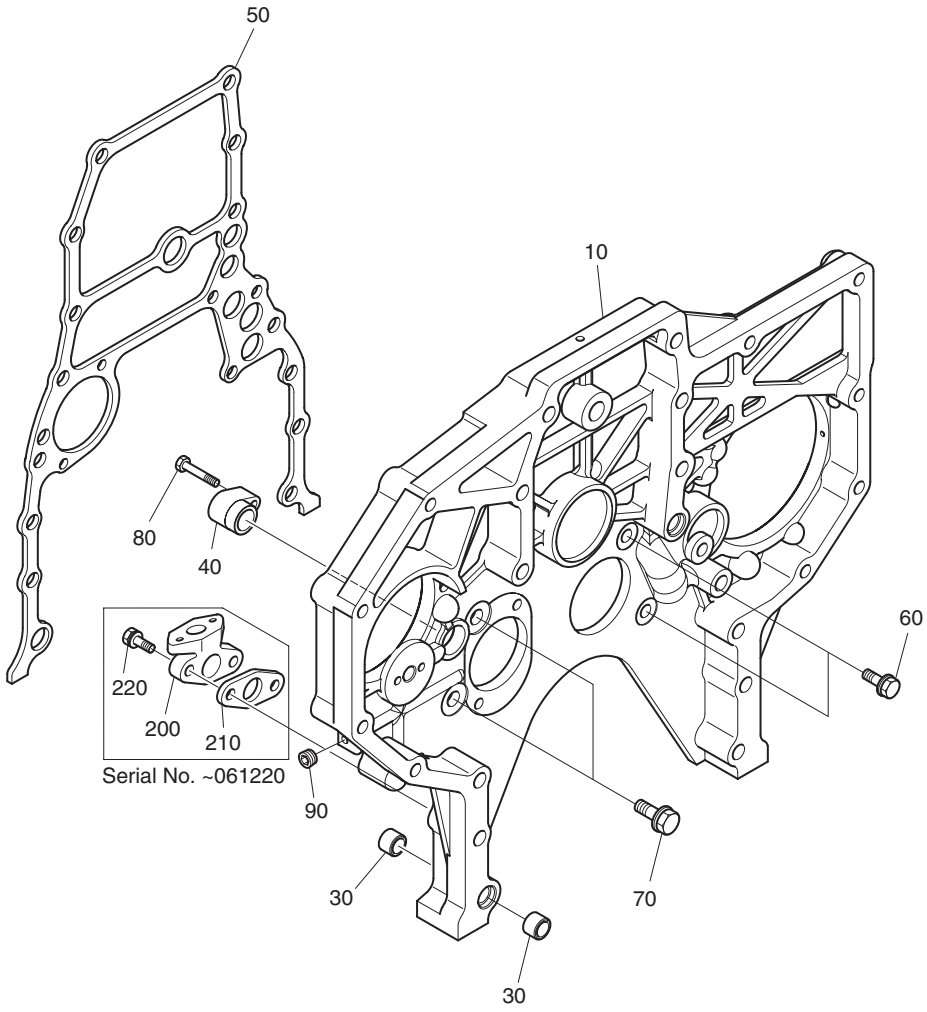

| DATE | JUN. 30, 2007 |
|---|---|
| REV. NO. | EXB07-06 |

# Fig. 002 TIMING GEAR CASE CARTER

Serial No. ;

| Key No. | Part No. | Description | Description | Q'ty | S.C | Serial No. | ICA | Replaceable part | |
|---|---|---|---|---|---|---|---|---|---|
| | | | | | | | | Part No. | Q'ty |
| 002-10 | 65.01304-0028A | CASE;TIMING GEAR | CARTER | 1 | | ~060825 | I | 65.01304-0032 | 1 |
| | 65.01304-0032 | CASE;TIMING GEAR | CARTER | 1 | | ~061220 | | | |
| | 65.01304-0035 | CASE;TIMING GEAR | CARTER | 1 | | ~070627 | I | 65.01304-0037 | 1 |
| | **65.01304-0037** | **CASE;TIMING GEAR** | CARTER | 1 | | 070628~ | | | |
| 30 | 65.91710-0016 | RING;STOPPER | ANNEAU DE BLOCAGE | 2 | | | | | |
| 40 | 65.98130-0145 | ADAPTER | ADAPTEUR | 1 | | | | | |
| 50 | 65.01903-0012 | GASKET | JOINT | 1 | | | | | |
| 60 | 65.90020-0087 | BOLT;COLLARED HEX. | BOULON A 6 PANS | 2 | | | | | |
| 70 | 65.90020-0084 | BOLT;COLLARED HEX. | BOULON A 6 PANS | 2 | | | | | |
| 80 | 06.01923-2918 | BOLT ASS'Y M6X35 | BOULON A 6 PANS | 1 | | | | | |
| 90 | 65.90320-0022 | SCREW;PLUG PT1/8 | VIS DE REGLAGE | 1 | | | | | |
| 200 | 65.98130-0224 | ADAPTER | ADAPTEUR | 1 | | ~061220 | | | |
| 210 | 65.96601-0045A | GASKET | JOINT | 1 | | ~061220 | | | |
| 220 | 06.01913-3115 | HEX. BOLT ASS'Y M8X25 | BOULON A 6 PANS | 2 | | ~061220 | | | |

| DATE | DEC. 29, 2005 |
|---|---|
| REV.NO. | EXB05-20 |

# Fig. 003 FLYWHEEL HOUSING
# CARTER DE VOLANT

**Serial No. ;**

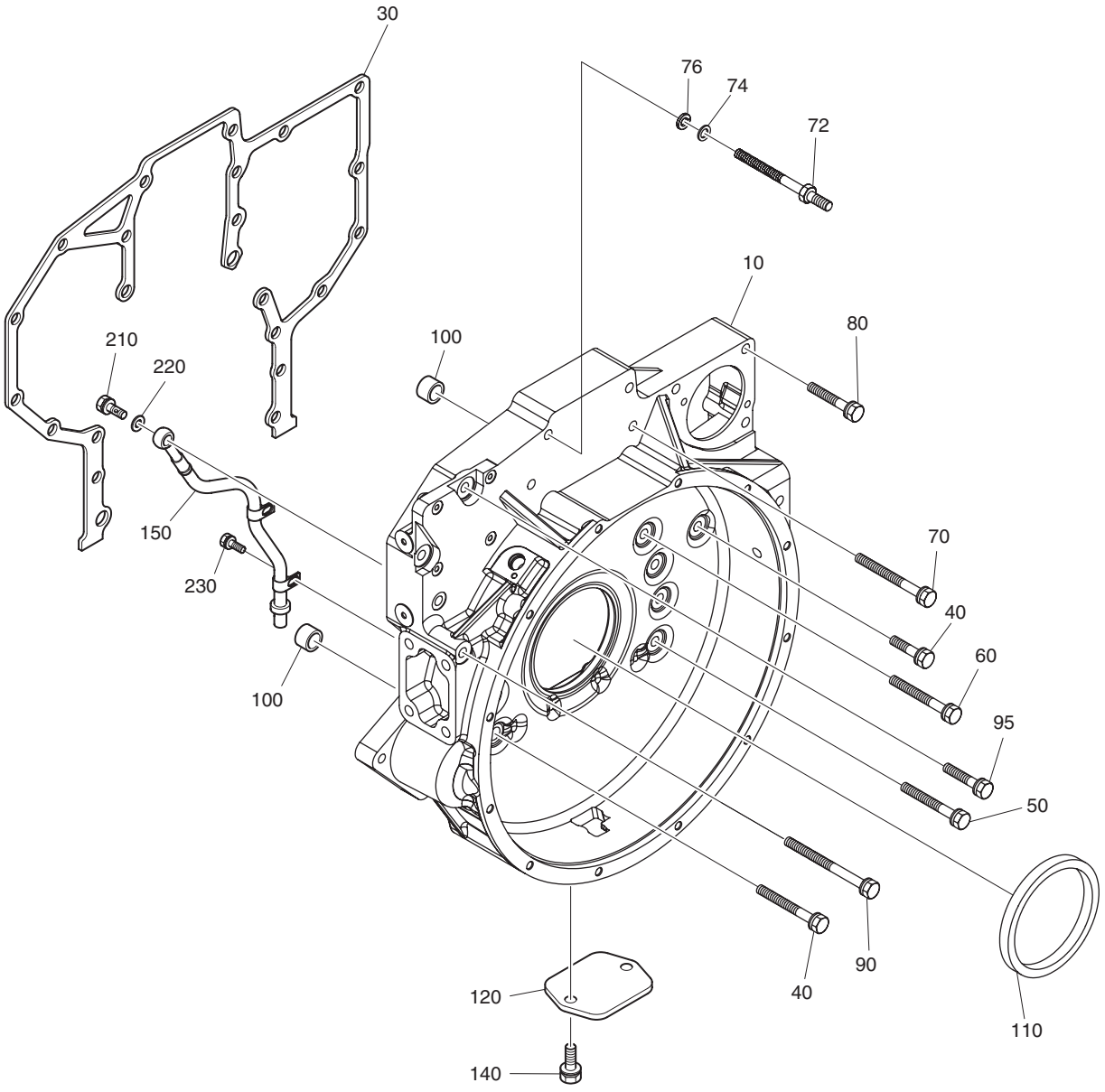

| DATE | DEC. 29, 2005 |
|---|---|
| REV. NO. | EXB05-20 |

# Fig. 003 FLYWHEEL HOUSING CARTER DE VOLANT

Serial No. ;

| Key No. | Part No. | Description | Description | Q'ty | S.C | Serial No. | ICA | Replaceable part | |
|---|---|---|---|---|---|---|---|---|---|
| | | | | | | | | Part No. | Q'ty |
| 003-10 | 65.01401-0241A | HOUSING;FLYWHEEL | CARTER DE VOLANT | 1 | | ~051230 | | | |
| | **65.01401-0256** | **HOUSING;FLYWHEEL** | CARTER DE VOLANT | 1 | | 051231~ | | | |
| 30 | 65.01904-0027A | GASKET | JOINT | 1 | | | | | |
| 40 | 65.90020-0099 | BOLT;COLLARED HEX. | BOULON A 6 PANS | 2 | | | | | |
| 50 | 65.90020-0100 | BOLT;COLLARED HEX. | BOULON A 6 PANS | 8 | | | | | |
| 60 | 65.90020-0101 | BOLT;COLLARED HEX. | BOULON A 6 PANS | 2 | | | | | |
| 70 | 65.90020-0102 | BOLT;COLLARED HEX. | BOULON A 6 PANS | 2 | | | | | |
| 72 | 65.90201-0123 | BOLT;STUD | BOULON A 6 PANS | 2 | | | | | |
| 74 | 06.15010-2313 | WASHER;PLAIN 12 | RONDELLE 13 | 2 | | | | | |
| 76 | 06.16731-2109 | WASHER;SPRING A12 | RONDELLE ELASTIQUE | 2 | | | | | |
| 80 | 65.90020-0103 | BOLT;COLLARED HEX. | BOULON A 6 PANS | 5 | | | | | |
| 90 | 65.90020-0104 | BOLT;COLLARED HEX. | BOULON A 6 PANS | 2 | | | | | |
| 95 | 65.90020-0105 | BOLT;COLLARED HEX. | BOULON A 6 PANS | 2 | | | | | |
| 100 | 65.91710-0009 | RING;STOPPER | ANNEAU DE BLOCAGE | 2 | | | | | |
| 110 | 65.01510-0141 | SEAL;OIL(REAR) | JOINT | 1 | | | | | |
| 120 | 65.01414-0004A | COVER;TIMING POINT HOLE | COUVERCLE | 1 | | | | | |
| 140 | 06.01913-3110 | BOLT ASS'Y M8X12 | BOULON A 6 PANS | 2 | | | | | |
| 150 | 65.01802-6001 | PIPE;BREATHER | CONDUITE | 1 | | | | | |
| 210 | 06.78144-2204 | SCREW;HOLLOW NW10 | VIS CREUSE | 1 | | | | | |
| 220 | 06.56190-0706 | RING;SEAL A14X20 | BAGUE D'ETANCHEITE | 2 | | | | | |
| 230 | 06.01913-3110 | BOLT ASS'Y M8X12 | BOULON A 6 PANS | 2 | | | | | |

| DATE | JUN. 30, 2007 |
|---|---|
| REV.NO. | EXB07-06 |

# Fig. 004 OIL SEAL JOINT CENTRAL

**Serial No. ;**

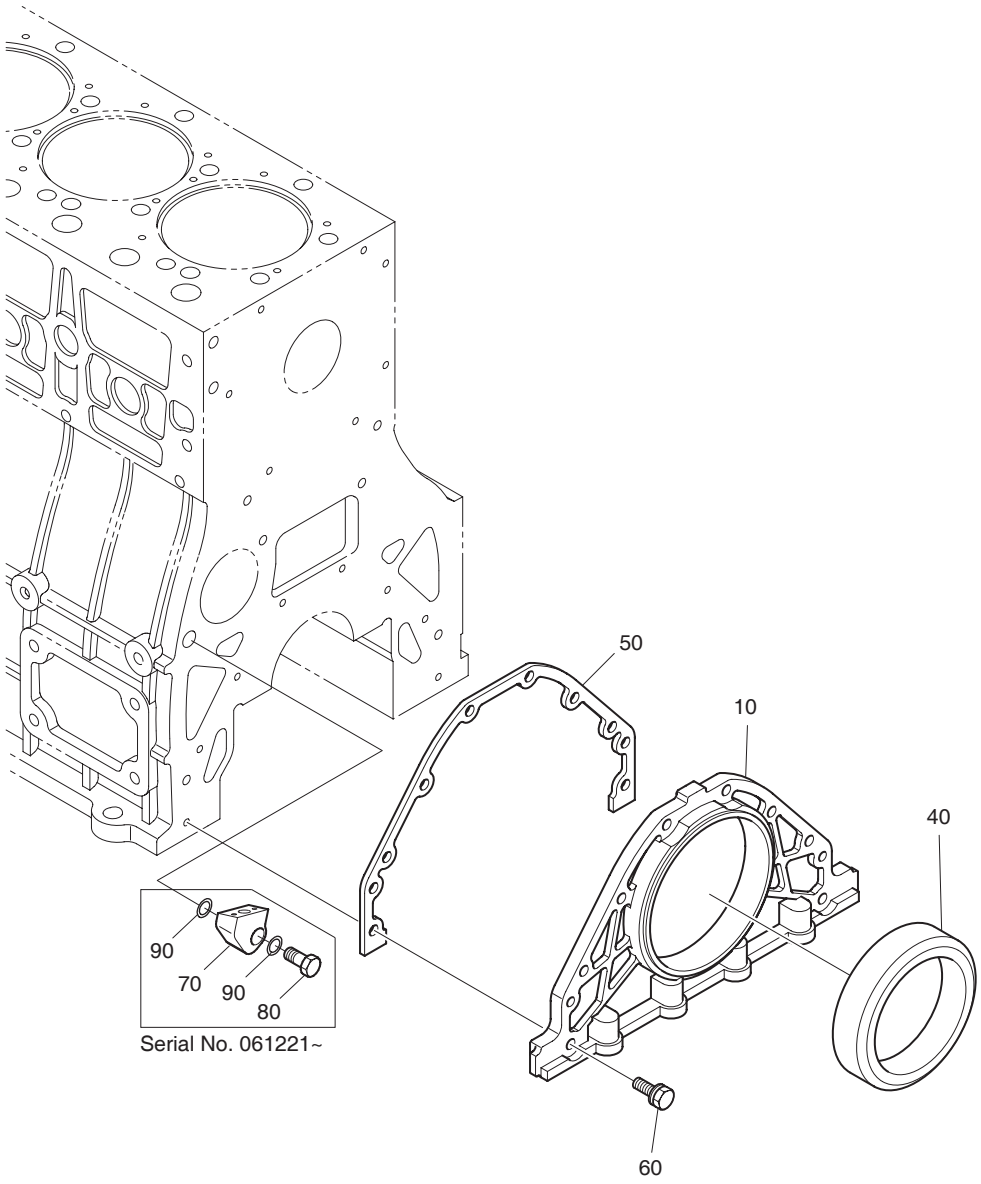

| DATE | JUN. 30, 2007 |
|---|---|
| REV. NO. | EXB07-06 |

# Fig. 004 OIL SEAL JOINT CENTRAL

**Serial No. ;**

| Key No. | Part No. | Description | Description | Q'ty | S.C | Serial No. | ICA | Replaceable part | |
|---|---|---|---|---|---|---|---|---|---|
| | | | | | | | | Part No. | Q'ty |
| 004-10 | 65.01501-5002 | COVER;SEALING | COUVERCLE | 1 | | ~060511 | Y | 65.01501-5002A | 1 |
| | 65.01501-5002A | COVER;SEALING | COUVERCLE | 1 | | ~070817 | Y | 65.01501-5002B | 1 |
| | **65.01501-5002B** | **COVER;SEALING** | COUVERCLE | 1 | | 070818~ | | | |
| 40 | 65.01510-0153A | SEAL;OIL | JOINT | 1 | | | | | |
| 50 | 65.01905-0008 | GASKET | JOINT | 1 | | | | | |
| 60 | 06.01923-3116 | BOLT ASS'Y M8X28 | BOULON A 6 PANS | 8 | | | | | |
| 70 | **65.98130-0242** | **ADAPTER** | ADAPTEUR | 1 | | 061221~ | | | |
| 80 | **65.98150-0086** | **SCREW;HOLLOW** | VIS | 1 | | 061221~ | | | |
| 90 | **06.56190-0718** | **RING;SEAL** | BAGUE | 2 | | 061221~ | | | |

| DATE | JUN. 30, 2006 |
|---|---|
| REV.NO. | EXB06-08 |

# Fig. 005 BREATHER PIPE
# CONDUIT DE VENTILATION

**Serial No. ; ~051230**

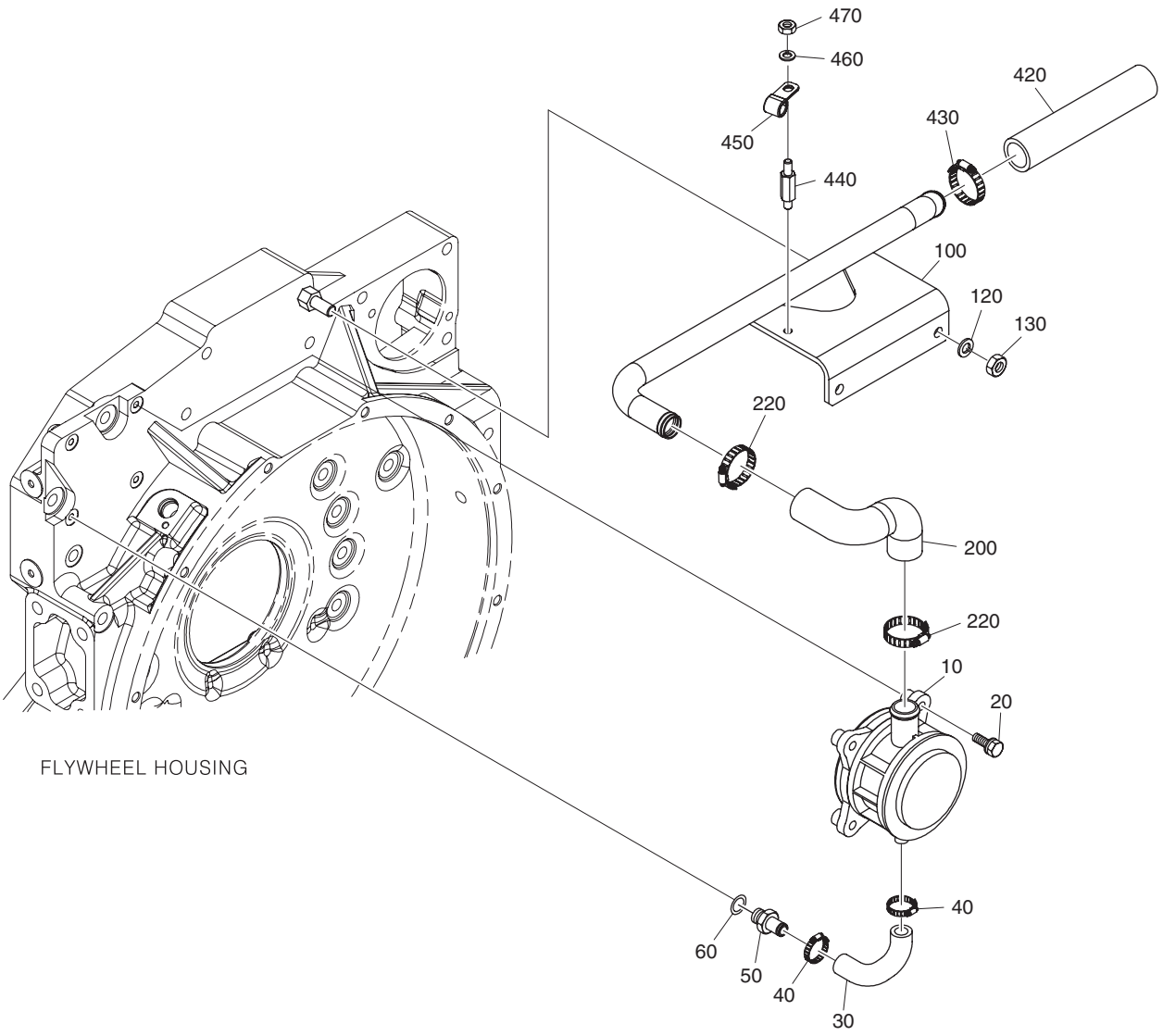

| DATE | JUN. 30, 2006 |
|---|---|
| REV. NO. | EXB06-08 |

# Fig. 005 BREATHER PIPE
# CONDUIT DE VENTILATION

**Serial No. ; ~051230**

| Key No. | Part No. | Description | Description | Q'ty | S.C | Serial No. | ICA | Replaceable part | |
|---|---|---|---|---|---|---|---|---|---|
| | | | | | | | | Part No. | Q'ty |
| 005-10 | 65.01801-5039 | HOUSING;BREATHER | CARTER | 1 | | ~051230 | | | |
| 20 | 06.01923-3118 | BOLT ASS'Y M8X35 | BOULON 6 PANS | 4 | | | | | |
| 30 | 65.96301-0399 | HOSE;RUBBER | TUYAU FLEXIBLE | 1 | | | | | |
| 40 | 06.67020-0101 | CLAMP;HOSE | ATTACHE | 2 | | | | | |
| 50 | 65.98131-0097 | NIPPLE | MAMELON | 1 | | | | | |
| 60 | 06.56190-0706 | RING;SEAL A14X20 | BAGUE D'ETANCHEITE | 1 | | | | | |
| 100 | 65.01802-5034 | PIPE;BREATHER | PIPE;BREATHER | 1 | | | | | |
| 120 | 06.16731-2108 | WASHER;SPRING A10 | RONDELLE | 2 | | | | | |
| 130 | 06.11063-8215 | NUT;HEX. M10 | ECROU 6 PANS M10 | 2 | | | | | |
| 200 | 65.96301-0420 | HOSE;RUBBER | TUYAU FLEXIBLE | 1 | | | | | |
| 220 | 06.67020-0105 | CLAMP NWS16 | COLLIER | 2 | | | | | |
| 420 | 65.96301-0438 | HOSE;RUBBER | TUYAU FLEXIBLE | 1 | | | | | |
| 430 | 06.67020-0105 | CLAMP NWS16 | COLLIER | 1 | | | | | |
| 440 | 65.90201-0122 | BOLT;STUD | BOULON A 6 PANS | 1 | | | | | |
| 450 | 65.97401-0188 | CLIP;PIPE | ATTACHE | 1 | | | | | |
| 460 | 06.16731-2107 | WASHER;SPRING A8 | RONDELLE ELASTIQUE | 1 | | | | | |
| 470 | 06.11063-8214 | NUT;HEX. M8 | ECROU 6 PANS M8 | 1 | | | | | |

| DATE | JUN. 30, 2007 |
|---|---|
| REV.NO. | EXB07-06 |

# Fig. 005A BREATHER PIPE
# CONDUIT DE VENTILATION

**Serial No. ; 051231 ~**

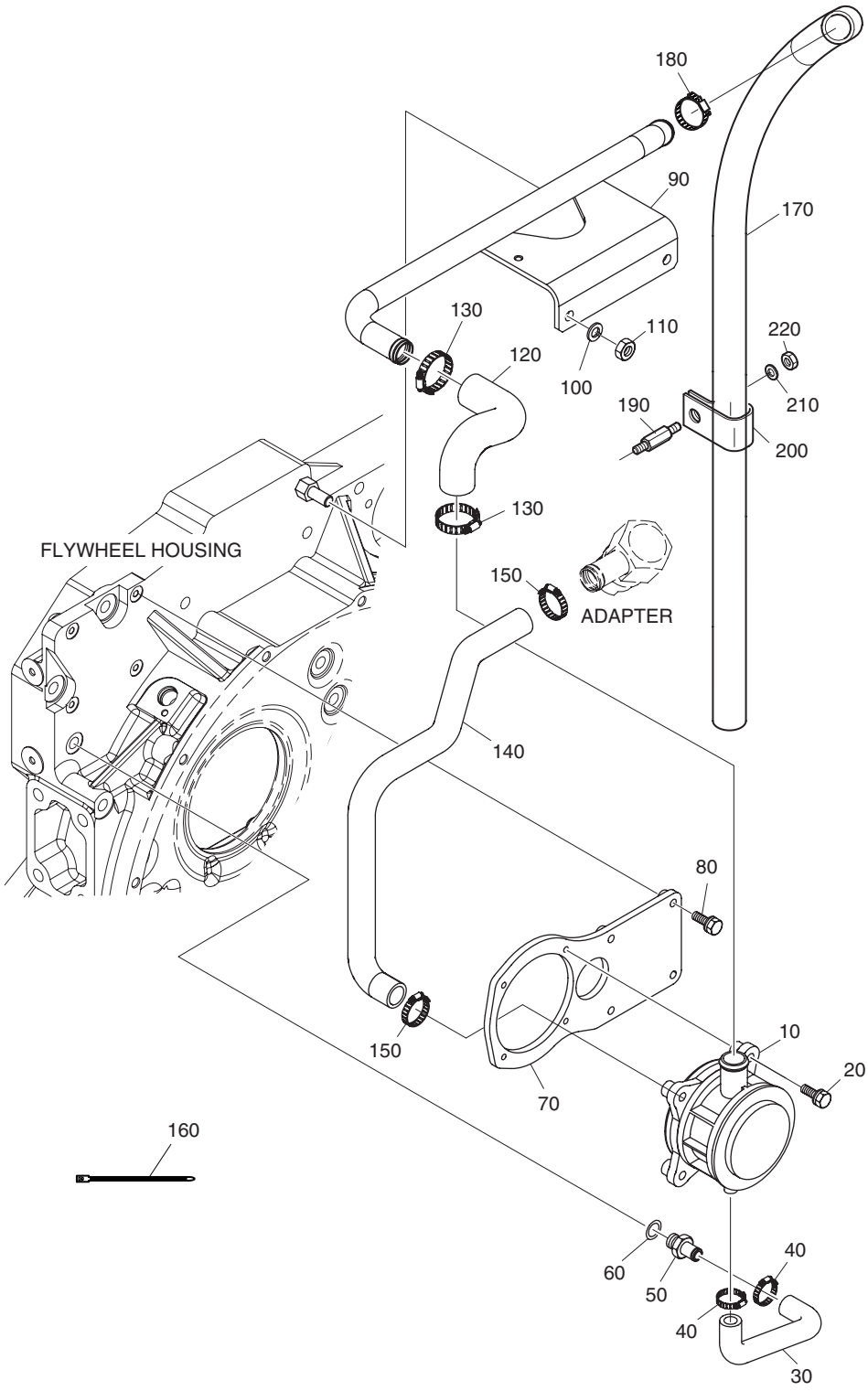

| DATE | JUN. 30, 2007 |
|---|---|
| REV. NO. | EXB07-06 |

# Fig.005A BREATHER PIPE CONDUIT DE VENTILATION

**Serial No. ; 051231~**

| Key No. | Part No. | Description | Description | Q'ty | S.C | Serial No. | ICA | Replaceable part | |
|---|---|---|---|---|---|---|---|---|---|
| | | | | | | | | Part No. | Q'ty |
| 005A-10 | 65.01801-5100 | BREATHER | CARTER | 1 | | | | | |
| 20 | 06.01923-3114 | BOLT ASS'Y M8X35 | BOULON A 6 PANS | 4 | | | | | |
| 30 | 65.96301-0459 | HOSE;RUBBER | TUYAU FLEXIBLE | 1 | | | | | |
| 40 | 06.67020-0101 | CLAMP;HOSE | COLLIER | 2 | | | | | |
| 50 | 65.98131-0097 | ADAPTER | ADAPTEUR | 1 | | | | | |
| 60 | 06.56190-0706 | RING;SEAL | BAGUE | 1 | | | | | |
| 70 | 65.01840-5003 | BRACKET;BREATHER PIPE | SUPPORT | 1 | | ~060518 | Y | 65.01840-5003A | 1 |
| | 65.01840-5003A | BRACKET;BREATHER PIPE | SUPPORT | 1 | | 060519~ | | | |
| 80 | 06.01913-3117 | BOLT ASS'Y | BOULON A 6 PANS | 4 | | | | | |
| 90 | 65.01802-5034 | PIPE;BREATHER | CONDUITE | 1 | | ~070901 | Y | 65.01802-5034A | 1 |
| | **65.01802-5034A** | **PIPE;BREATHER** | CONDUITE | 1 | | 070902~ | | | |
| 100 | 06.16731-2108 | WASHER;SPRING | RONDELLE ELASTIQUE | 2 | | | | | |
| 110 | 06.11063-8215 | NUT;HEX | ECROU | 2 | | | | | |
| 120 | 65.96301-0460 | HOSE;RUBBER | TUYAU FLEXIBLE | 1 | | | | | |
| 130 | 06.67020-0105 | CLAMP | COLLIER | 2 | | | | | |
| 140 | 65.96301-0461 | HOSE;RUBBER | TUYAU FLEXIBLE | 1 | | | | | |
| 150 | 06.67020-0105 | CLAMP | COLLIER | 1 | | | | | |
| 160 | 65.97460-0002 | CABLE;TIA | CABLE | 1 | | | | | |
| 170 | 65.96301-0438 | HOSE;RUBBER | TUYAU FLEXIBLE | 1 | | ~070901 | Y | 65.96301-0438A | 1 |
| | **65.96301-0438A** | **HOSE;RUBBER** | TUYAU FLEXIBLE | 1 | | 070902~ | | | |
| 180 | 06.67020-0105 | CLAMP | COLLIER | 1 | | | | | |
| 190 | 65.90201-0122 | BOLT;STUD | BOULON A 6 PANS | 1 | | | | | |
| 200 | 65.97401-5019 | CLIP;PIPE | ATTACHE | 1 | | | | | |
| 210 | 06.16731-2107 | WASHER;SPRING | RONDELLE ELASTIQUE | 1 | | | | | |
| 220 | 06.11063-8214 | NUT;HEX | ECROU | 1 | | | | | |

| DATE | JUN. 30, 2007 |
|---|---|
| REV.NO. | EXB07-06 |

# Fig. 006 DRIVING SYSTEM SYSTEME D'ENTRAINEMENT

**Serial No. ;**

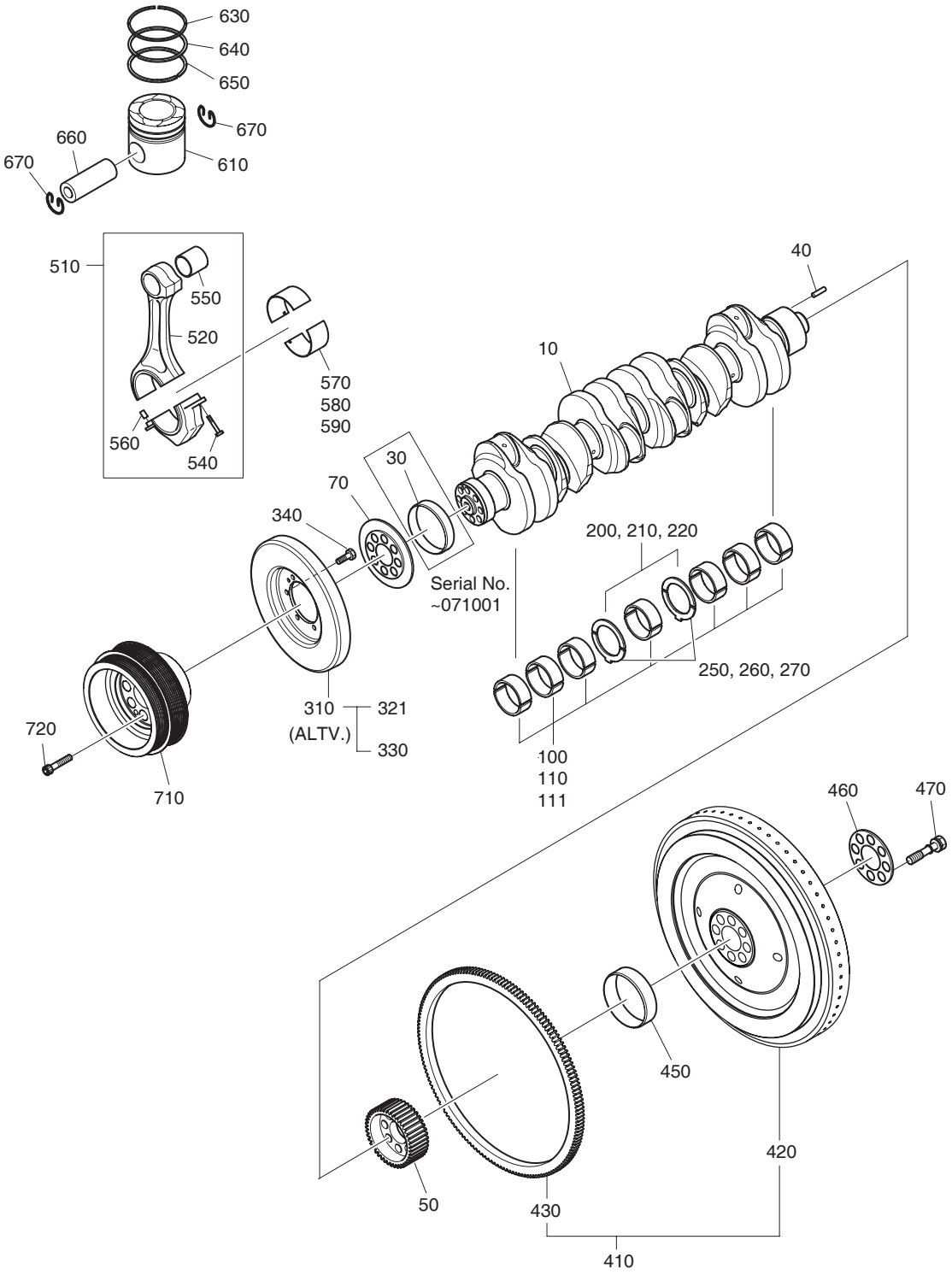

| DATE | JUN. 30, 2007 |
|---|---|
| REV. NO. | EXB07-06 |

# Fig. 006 DRIVING SYSTEM SYSTEME D'ENTRAINEMENT

Serial No. ;

| Key No. | Part No. | Description | Description | Q'ty | S.C | Serial No. | ICA | Replaceable part | |
|---|---|---|---|---|---|---|---|---|---|
| | | | | | | | | Part No. | Q'ty |
| 006-10 | 65.02101-0064 | SHAFT;CRANK | ARBRE | 1 | | ~071001 | Y | 65.02101-0064B | 1 |
| | **65.02101-0064B** | **SHAFT;CRANK** | ARBRE | 1 | | 071002~ | | | |
| 30 | 65.02130-0001 | RING;WEAR(FRONT) | SEGMENT D'USURE | 1 | | ~071001 | | | |
| 40 | 06.22022-1018 | PIN;DOWEL 8M6X45 | GOUJON | 1 | | | | | |
| 50 | 65.02115-0014B | GEAR;CRANK SHAFT | PIGNON | 1 | | | | | |
| 70 | 65.01505-0007 | RING;OIL THROWER. | BAGUE | 1 | | | | | |
| 100 | 65.01110-6120 | BEARING;MAIN | PALIER | 7 | | | | | |
| 110 | 65.01110-6121 | BEARING;MAIN (0.25) | PALIER | 7 | US | | | | |
| 111 | 65.01110-6122 | BEARING;MAIN (0.50) | PALIER | 7 | US | | | | |
| 200 | 65.01150-0015 | WASHER;THRUST(UPPER) | RONDELLE DE | 2 | | | | | |
| 210 | 65.01150-0019 | . WASHER;THRUST(0.25) | . RONDELLE DE | 1 | OS | | | | |
| 220 | 65.01150-0020 | . WASHER;THRUST(0.50) | . RONDELLE DE | 1 | OS | | | | |
| 250 | 65.01150-0016A | WASHER;THRUST(LOWER) | RONDELLE DE BUTEE | 2 | | | | | |
| 260 | 65.01150-0023A | . WASHER;THRUST(0.25) | . RONDELLE DE BUTEE | 1 | OS | | | | |
| 270 | 65.01150-0024A | . WASHER;THRUST(0.50) | . RONDELLE DE BUTEE | 1 | OS | | | | |
| 310 | 65.02201-7032 | DAMPER;VISCOUS(ALT) | AMORTISSEUR DE | 1 | D | | | | |
| 321 | 65.02201-7033 | . DAMPER;VISCOUS | . DAMPER;VISCOUS | 1 | | | | | |
| 330 | 65.02201-7034 | . DAMPER;VISCOUS | . DAMPER;VISCOUS | 1 | | | | | |
| 340 | 65.90020-0062B | BOLT;HEX. M10X20 | BOULON A 6 PANS | 6 | | | | | |
| 410 | 65.02301-5135 | FLYWHEEL | VOLANT | 1 | | | | | |
| 420 | 65.02301-0280 | . FLYWHEEL | . VOLANT | 1 | | | | | |
| 430 | 65.02310-0073D | . GEAR;STARTER RING | . PIGNON | 1 | | | | | |
| 450 | 65.02130-0003 | BUSH;DRIVING | BUSH;DRIVING | 1 | | | | | |
| 460 | 65.90701-0096 | WASHER | RONDELLE | 1 | | ~070605 | Y | 65.90701-0096A | 1 |
| | **65.90701-0096A** | **WASHER** | RONDELLE | 1 | | 070606~ | | | |
| 470 | 65.90020-0108 | BOLT;COLLARED HEX. | BOULON A 6 PANS | 8 | | | | | |
| 510 | 65.02401-6025 | ROD;CONNECTING | TIGE | 6 | | ~060602 | Y | 65.02401-6025A | 6 |
| | 65.02401-6025A | ROD;CONNECTING | TIGE | 6 | | 060603~ | | | |
| 520 | 65.02401-0013 | . ROD;CONNECTING | . TIGE | 1 | D | ~060602 | | | |
| | 65.02401-0013A | . ROD;CONNECTING | . TIGE | 1 | D | 060603~ | | | |
| 540 | 65.90020-0009D | . BOLT;CONNECTING ROD | . VIS DE BIELLE | 2 | | | | | |
| 550 | 65.02405-0007 | . BUSH;CONNECTING ROD | . DOUILLE DE BIELLE | 1 | B | ~060602 | I | 65.02405-0010 | 1 |
| | 65.02405-0010 | . BUSH;CONNECTING ROD | . DOUILLE DE BIELLE | 1 | B | 060603~ | | | |
| 560 | 65.91301-0010 | . PIN;DOWEL | . GOUPILLE D'AJUSTAGE | 2 | | | | | |
| 570 | 65.02410-6130 | BEARING;CONNECTING ROD | BEARING;CONNECTING | 6 | | | | | |
| 580 | 65.02410-6131 | . BEARING;CON. ROD(0.25) | . PALIER | 1 | US | | | | |
| 590 | 65.02410-6132 | . BEARING;CON. ROD(0.50) | . PALIER | 1 | US | | | | |
| 610 | 65.02501-0501 | PISTON | PISTON | 6 | | ~071030 | I | 65.02501-0505 | 6 |

| DATE | JUN. 30, 2007 |
|---|---|
| REV.NO. | EXB07-06 |

# Fig. 006 DRIVING SYSTEM
# SYSTEME D'ENTRAINEMENT

**Serial No. ;**

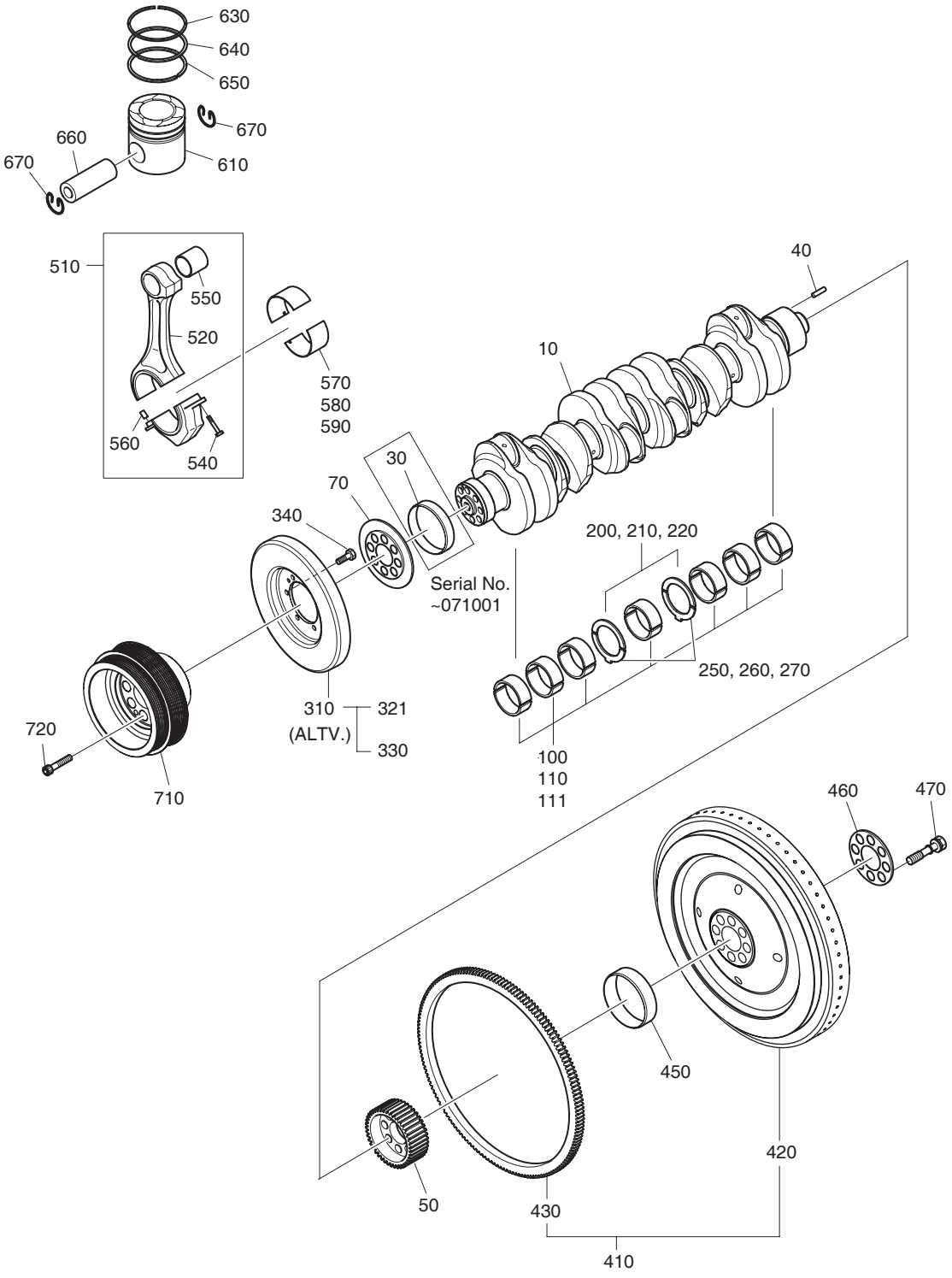

| DATE | JUN. 30, 2007 |
|---|---|
| REV. NO. | EXB07-06 |

# Fig. 006 DRIVING SYSTEM SYSTEME D'ENTRAINEMENT

**Serial No. ;**

| Key No. | Part No. | Description | Description | Q'ty | S.C | Serial No. | ICA | Replaceable part | |
|---|---|---|---|---|---|---|---|---|---|
| | | | | | | | | Part No. | Q'ty |
| 006-610 | **65.02501-0505** | **PISTON** | PISTON | 6 | | 071031~ | | | |
| 630 | 65.02503-0127 | RING;PISTON | BAGUE | 6 | | | | | |
| 640 | 65.02503-0128 | RING;PISTON | BAGUE | 6 | | | | | |
| 650 | 65.02503-0129 | RING;PISTON | BAGUE | 6 | | | | | |
| 660 | 65.02502-0015 | PIN;PISTON | GOUJON | 6 | | | | | |
| 670 | 65.90815-0024A | RING;LOCK | BAGUE | 12 | | | | | |
| 710 | 65.02601-0219 | PULLEY;V-BELT | POULIE | 1 | | | | | |
| 720 | 06.02106-0824 | BOLT | BOULON A 6 PANS | 8 | | | | | |

| DATE | JUN. 30, 2007 |
|---|---|
| REV.NO. | EXB07-06 |

# Fig. 007 CYLINDER HEAD CULLASSE

**Serial No. ;**

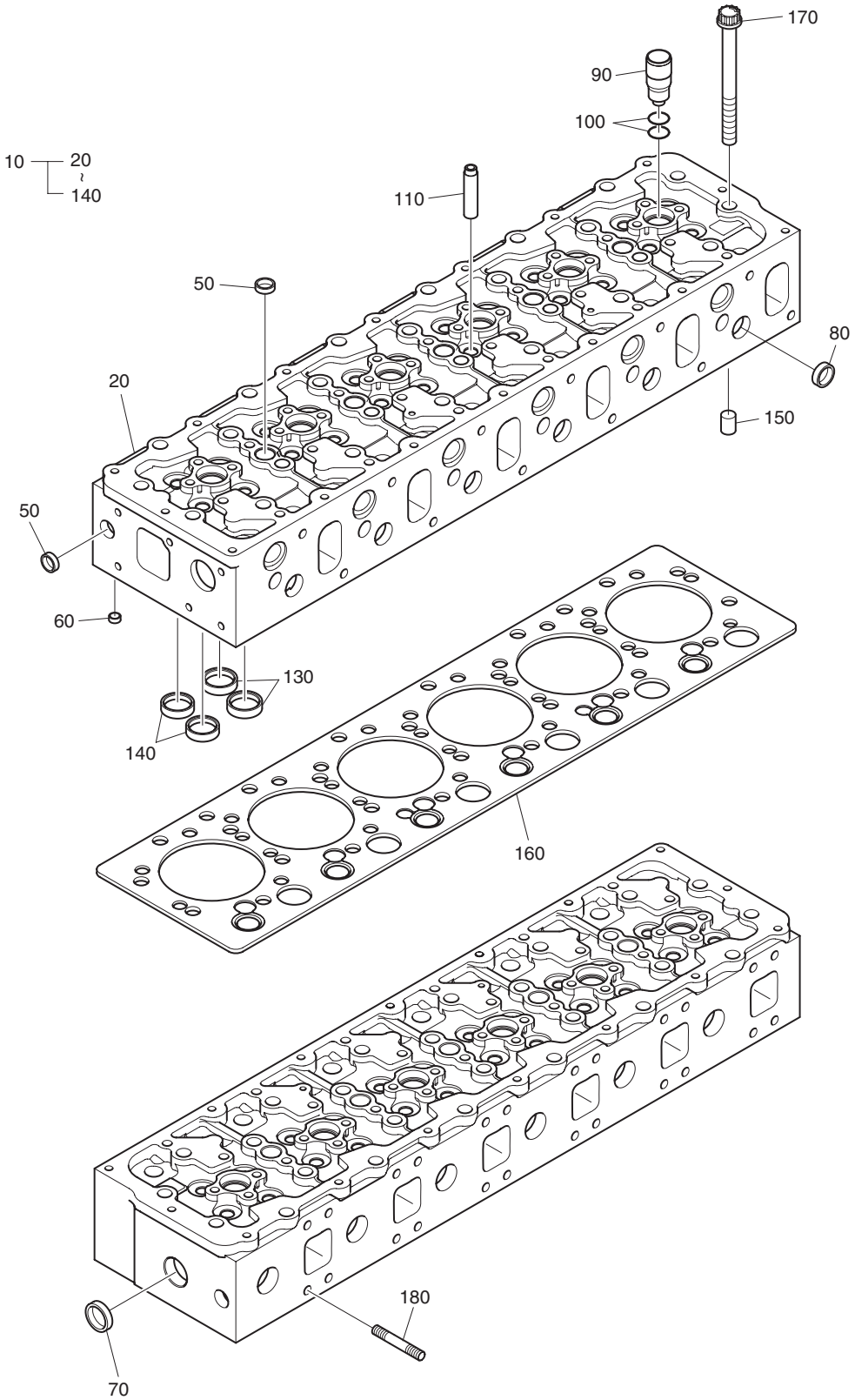

| DATE | JUN. 30, 2007 |
|---|---|
| REV. NO. | EXB07-06 |

# Fig. 007 CYLINDER HEAD CULLASSE

Serial No. ;

| Key No. | Part No. | Description | Description | Q'ty | S.C | Serial No. | ICA | Replaceable part | |
|---|---|---|---|---|---|---|---|---|---|
| | | | | | | | | Part No. | Q'ty |
| 007-10 | 65.03101-6075B | HEAD;CYLINDER | CULLASSE | 1 | | ~050921 | Y | 65.03101-6075C | 1 |
| | 65.03101-6075C | HEAD;CYLINDER | CULLASSE | 1 | | ~061129 | Y | 65.03101-6075E | 1 |
| | 65.03101-6075E | HEAD;CYLINDER | CULLASSE | 1 | | ~070902 | Y | 65.03101-6075G | 1 |
| | **65.03101-6075G** | **HEAD;CYLINDER** | CULLASSE | 1 | | 070903~ | | | |
| 20 | 65.03101-1056A | . HEAD;CYLINDER | . CULASSE | 1 | D | ~070902 | | | |
| | **65.03101-1056B** | **. HEAD;CYLINDER** | . CULASSE | 1 | D | 070903~ | | | |
| 50 | 65.90302-0045 | . PLUG;CORE | . TASSE | 17 | | | | | |
| 60 | 65.90302-0027 | . PLUG;CORE | . RACCORD | 1 | | | | | |
| 70 | 65.90302-0042 | . PLUG;CORE | . BOUCHON DE | 6 | | | | | |
| 80 | 65.90302-0048 | . PLUG;CORE | . BOUCHON DE | 6 | | | | | |
| 90 | 65.03205-0006A | . BUSH;INJECTION NOZZLE | . COUSSINET | 6 | | ~050921 | Y | 65.03205-0006B | 6 |
| | 65.03205-0006B | . BUSH;INJECTION NOZZLE | . COUSSINET | 6 | | 050922~ | | | |
| 100 | 65.96501-0088 | . O-RING | . JOINT TORIQUE | 12 | | | | | |
| 110 | 65.03201-1012A | . VALVE;GUIDE | . VANNE | 24 | B | ~061129 | I | 65.03201-1052A | 24 |
| | 65.03201-1052A | . VALVE;GUIDE | . VANNE | 24 | B | ~070902 | I | 65.03201-1052B | 24 |
| | **65.03201-1052B** | **. VALVE;GUIDE** | . VANNE | 24 | B | 070903~ | | | |
| 130 | 65.03203-1055B | . SEAT;INTAKE VALVE | . SIEGE | 12 | B | | | | |
| 140 | 65.03203-1056B | . SEAT;EXHAUST VALVE | . SIEGE | 12 | B | | | | |
| 150 | 65.91030-0005 | PIN;FIX | GOUJON | 2 | | | | | |
| 160 | 65.03901-0068 | GASKET;CYLINDER HEAD | JOINT | 1 | | ~070808 | I | 65.03901-0074 | 1 |
| | **65.03901-0074** | **GASKET;CYLINDER HEAD** | JOINT | 1 | | 070809~ | | | |
| 170 | 65.90021-0005 | BOLT;COLLARED DUO | BOULON 6 PANS | 26 | | | | | |
| 180 | 65.90201-0113 | BOLT;STUD | BOULON A 6 PANS | 24 | | | | | |

| DATE | JUN. 30, 2007 |
|---|---|
| REV.NO. | EXB07-06 |

# Fig. 008 CYLINDER HEAD COVER COUVRE-CULASSE

**Serial No. ;**

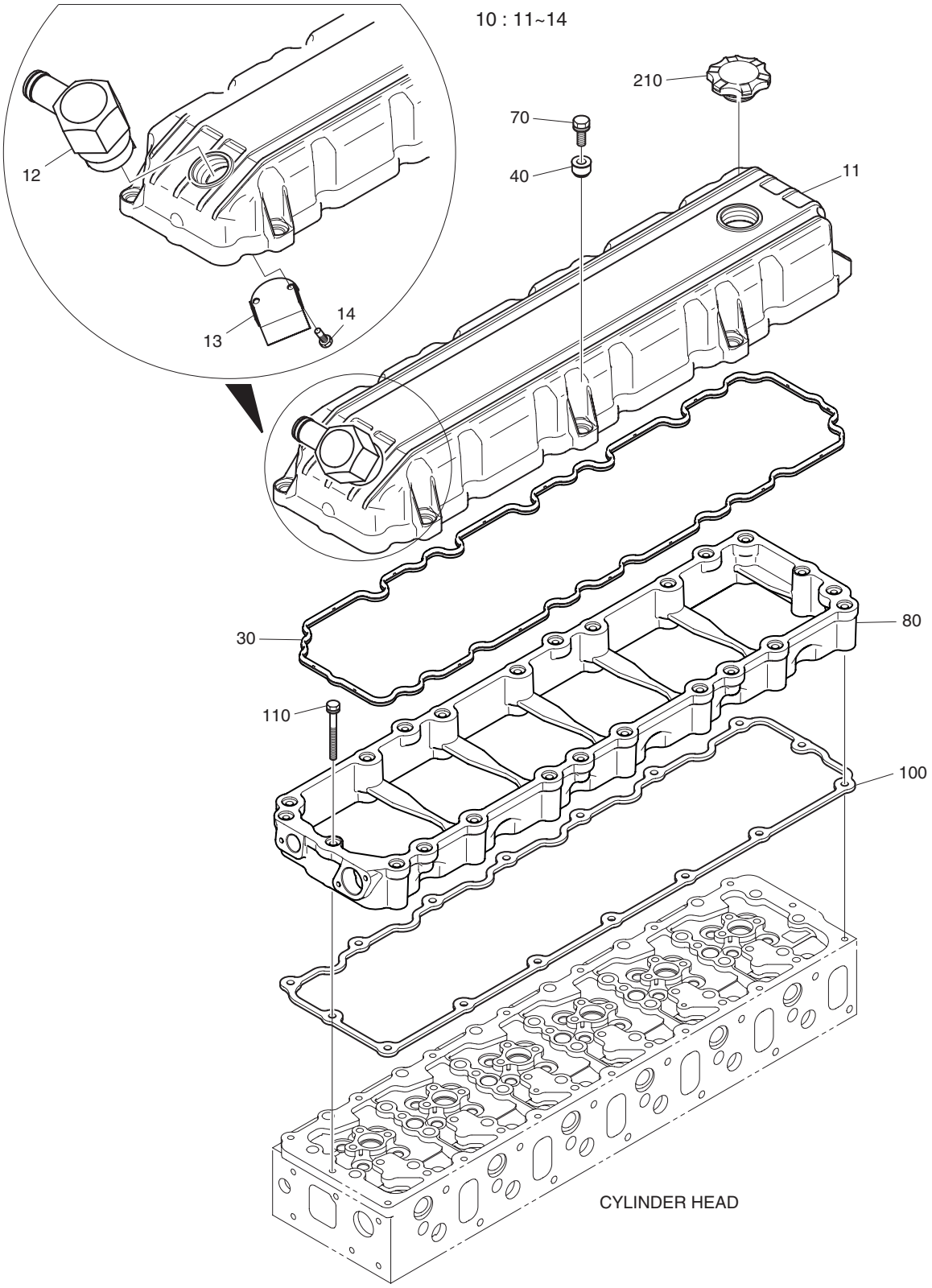

| DATE | JUN. 30, 2007 |
|---|---|
| REV. NO. | EXB07-06 |

# Fig. 008 CYLINDER HEAD COVER COUVRE-CULASSE

Serial No. ;

| Key No. | Part No. | Description | Description | Q'ty | S.C | Serial No. | ICA | Replaceable part | |
|---|---|---|---|---|---|---|---|---|---|
| | | | | | | | | Part No. | Q'ty |
| 008-10 | 65.03401-0068 | COVER;CYLINDER HEAD | COUVERCLE | 1 | | ~051230 | | | |
| | 65.03401-5008 | CYLINDER HEAD COVER ASS'Y | CULASSE | 1 | | ~061030 | Y | 65.03401-5008A | 1 |
| | 65.03401-5008A | CYLINDER HEAD COVER ASS'Y | CULASSE | 1 | | ~070705 | | | |
| | **65.03401-5008B** | **CYLINDER HEAD COVER** | CULASSE | 1 | | 070706~ | | | |
| 11 | 65.03401-0085 | . COVER;CYLINDER HEAD | . COUVERCLE | 1 | | ~061030 | Y | 65.03401-0085A | 1 |
| | 65.03401-0085A | . COVER;CYLINDER HEAD | . COUVERCLE | 1 | | ~070705 | | | |
| | **65.03401-0085B** | **. COVER;CYLINDER HEAD** | . COUVERCLE | 1 | | 070706~ | | | |
| 12 | 65.01810-5009 | . ADAPTER | . ADAPTEUR | 1 | | 051231~ | | | |
| 13 | 65.03440-0015 | . PLATE;BAFFLE | . PLAQUE | 1 | | 051231~ | | | |
| 14 | 06.01280-6807 | . BOLT.HEX | . BOULON A 6 PANS | 2 | | 051231~ | | | |
| 30 | 65.03905-0032 | GASKET;CYLINDER HEAD COVER | JOINT | 1 | | | | | |
| 40 | 65.03905-5002 | GASKET;CYLINDER HEAD COVER | JOINT | 8 | | | | | |
| 70 | 65.90020-0109 | BOLT;COLLARED HEX. | BOULON A 6 PANS | 8 | | | | | |
| 80 | 65.03402-0007A | COVER;INTERMEDIATE | COUVERCLE | 1 | | ~070326 | Y | 65.03402-0007B | 1 |
| | **65.03402-0007B** | **COVER;INTERMEDIATE** | COUVERCLE | 1 | | 070327~ | | | |
| 100 | 65.03905-0028 | GASKET;CYLINDER HEAD COVER | JOINT | 1 | | ~070530 | I | 65.03905-0045 | 1 |
| | 65.03905-0045 | GASKET;CYLINDER HEAD COVER | JOINT | 1 | | 070530~ | | | |
| 110 | 65.90020-0110 | BOLT;COLLARED HEX. | BOULON A 6 PANS | 16 | | ~060512 | Y | 65.90020-0110A | 16 |
| | 65.90020-0110A | BOLT;COLLARED HEX. | BOULON A 6 PANS | 16 | | 060513~ | | | |
| 210 | 65.01810-5007 | OIL FILLER CAP ASS'Y | VIBREUR | 1 | | ~051230 | I | 65.01810-5011 | 1 |
| | 65.01810-5011 | OIL FILLER CAP ASS'Y | VIBREUR | 1 | | 051231~ | | | |

| DATE | JUN. 30, 2007 |
|---|---|
| REV.NO. | EXB07-06 |

# Fig. 009 TIMING SYSTEM
# SYSTEME DE SYNCHRONISATION

**Serial No. ;**

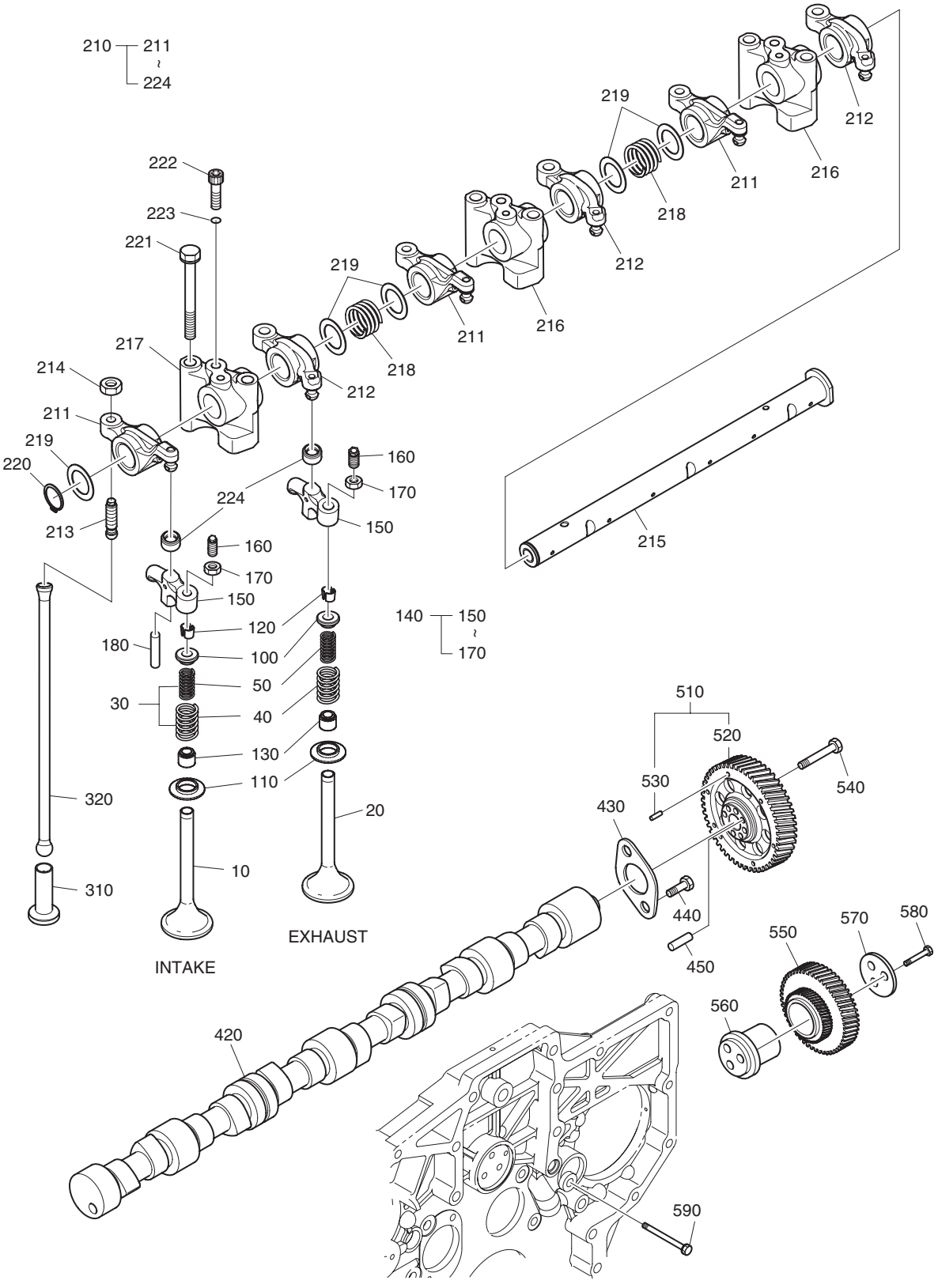

| DATE | JUN. 30, 2007 |
|---|---|
| REV. NO. | EXB07-06 |

# Fig. 009 TIMING SYSTEM SYSTEME DE SYNCHRONISATION

Serial No. ;

| Key No. | Part No. | Description | Description | Q'ty | S.C | Serial No. | ICA | Replaceable part | |
|---|---|---|---|---|---|---|---|---|---|
| | | | | | | | | Part No. | Q'ty |
| 009-10 | 65.04101-0059B | VALVE | VANNE | 12 | | ~050822 | Y | 65.04101-0059C | 12 |
| | 65.04101-0059C | VALVE | VANNE | 12 | | 052823~ | | | |
| 20 | 65.04101-0060B | VALVE | VANNE | 12 | | | | | |
| 30 | 65.04102-6011B | SPRING;VALVE | RESSORT | 24 | | | | | |
| 40 | 65.04102-0020B | . SPRING;VALVE | . JOINT TORIQUE | 1 | D | | | | |
| 50 | 65.04102-0021A | . SPRING;VALVE | . JOINT TORIQUE | 1 | D | | | | |
| 100 | 65.04103-0016 | PLATE;VALVE SPRING | PLAQUE | 24 | | | | | |
| 110 | 65.90701-0097B | WASHER | RONDELLE | 24 | | | | | |
| 120 | 65.04104-0008 | COTTER;VALVE | COTTER;VALVE | 48 | | | | | |
| 130 | 65.04902-0014 | SEAL;VALVE STEAM | JOINT | 24 | | ~070902 | I | 65.04902-0020 | 24 |
| | **65.04902-0020** | **SEAL;VALVE STEAM** | JOINT | 24 | | 070903~ | | | |
| 140 | 65.04130-6001A | CALIPER | ETRIER | 12 | | ~050822 | Y | 65.04130-6001B | 12 |
| | 65.04130-6001B | CALIPER | ETRIER | 12 | | 050823~ | | | |
| 150 | 65.04130-0001B | . CALIPER | . ETRIER | 1 | | ~050822 | Y | 65.04130-0001C | 1 |
| | 65.04130-0001C | . CALIPER | . ETRIER | 1 | | 050823~ | | | |
| 160 | 65.04205-0007A | . SCREW;ADJUST | . VIS | 1 | | | | | |
| 170 | 65.90501-0031 | . NUT;HEX. | . ECROU | 1 | | | | | |
| 180 | 65.04135-0003 | PIN;CALIPER GUIDE | GOUPILLE | 12 | | | | | |
| 210 | 65.04200-6030D | ROCKER ARM SHAFT ASS'Y | GODET | 2 | | ~060310 | Y | 65.04200-6030E | 2 |
| | 65.04200-6030E | ROCKER ARM SHAFT ASS'Y | GODET | 2 | | 060311~ | | | |
| 211 | 65.04201-5025 | . ARM;ROCKER | . RAMPE DE CULBUTEURS | 3 | | | | | |
| 212 | 65.04201-5026 | . ARM;ROCKER | . RAMPE DE CULBUTEURS | 3 | | | | | |
| 213 | 65.04205-0012 | . SCREW;ADJUST | . VIS | 6 | | | | | |
| 214 | 65.90501-0031 | . NUT;HEX. | . ECROU | 6 | | | | | |
| 215 | 65.04203-5017 | . SHAFT;ROCKER ARM | . ARBRE | 1 | | ~060310 | Y | 65.04203-5017A | 1 |
| | 65.04203-5017A | . SHAFT;ROCKER ARM | . ARBRE | 1 | | 060311~ | | | |
| 216 | 65.04202-0026 | . BRACKET;ROCKER ARM | . SUPPORT | 2 | | | | | |
| 217 | 65.04202-0027 | . BRACKET;ROCKER ARM | . SUPPORT | 1 | | | | | |
| 218 | 65.97601-0118 | . SPRING;COMPRESSION | . RESSORT DE | 2 | | | | | |
| 219 | 65.90701-0136B | . WASHER | . RONDELLE | 5 | | | | | |
| 220 | 06.29010-0120 | . RING;SNAP 24X1.2 | . CIRCLIP | 1 | | | | | |
| 221 | 65.90020-0093 | . BOLT;COLLARED HEX. | . BOULON A 6 PANS | 6 | | | | | |
| 222 | 65.90030-0020 | . BOLT;SOCKET HEAD | . BOULON A 6 PANS CREUX | 1 | | | | | |
| 223 | 06.16110-0106 | . WASHER;SPRING A8 | . RONDELLE ELASTIQUE A8 | 1 | | | | | |
| 224 | 65.04209-0002 | . CAP;ADJUST SCREW | . CHAPEAU | 6 | | ~060310 | Y | 65.04209-0002A | 6 |
| | 65.04209-0002A | . CAP;ADJUST SCREW | . CHAPEAU | 6 | | 060311~ | | | |
| 310 | 65.04301-5002B | TAPPET;VALVE | TRINGLERIE | 12 | | | | | |
| 320 | 65.04302-0001 | ROD;PUSH | TIGE DE POUSSOIR | 12 | | ~060215 | Y | 65.04302-0001A | 12 |

| DATE | JUN. 30, 2007 |
|---|---|
| REV.NO. | EXB07-06 |

# Fig. 009 TIMING SYSTEM
# SYSTEME DE SYNCHRONISATION

**Serial No. ;**

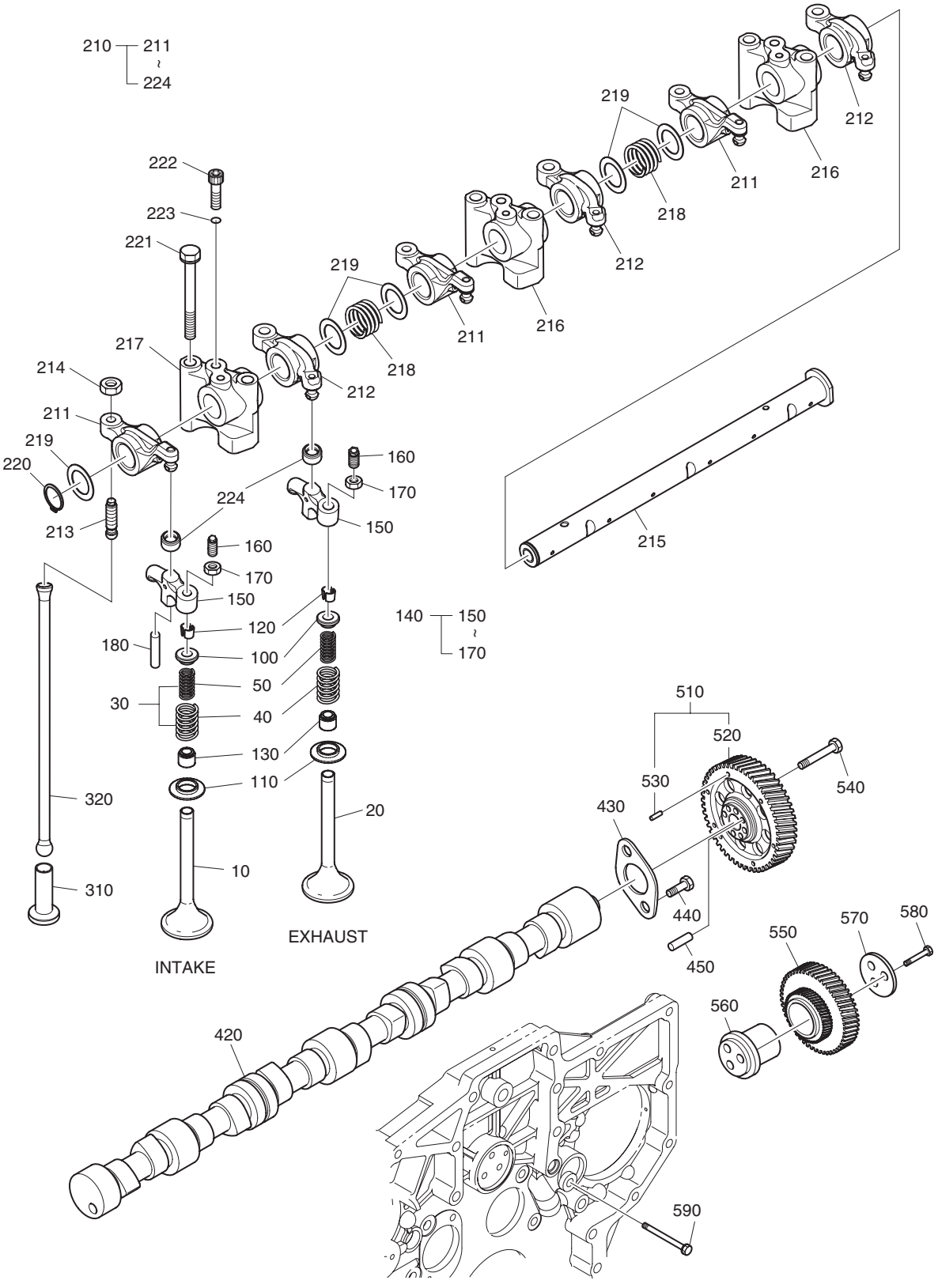

| DATE | JUN. 30, 2007 |
|---|---|
| REV. NO. | EXB07-06 |

# Fig. 009 TIMING SYSTEM SYSTEME DE SYNCHRONISATION

Serial No. ;

| Key No. | Part No. | Description | Description | Q'ty | S.C | Serial No. | ICA | Replaceable part | |
|---|---|---|---|---|---|---|---|---|---|
| | | | | | | | | Part No. | Q'ty |
| 009-320 | 65.04302-0001A | ROD;PUSH | TIGE DE POUSSOIR | 12 | | 060216~ | | | |
| 420 | 65.04401-0029B | SHAFT;CAM | ARBRE | 1 | | ~061127 | Y | 65.04401-0029C | 1 |
| | 65.04401-0029C | SHAFT;CAM | ARBRE | 1 | | ~071026 | I | 65.04401-0047 | 1 |
| | **65.04401-0047** | **SHAFT;CAM** | ARBRE | 1 | | 071027~ | | | |
| 430 | 65.90720-0027A | WASHER;THRUST | RONDELLE DE BUTEE | 1 | | | | | |
| 440 | 65.90020-0092 | BOLT;COLLARED HEX. | BOULON A 6 PANS | 2 | | | | | |
| 450 | 06.22022-1016 | PIN;DOWEL 8M6X36 | GOUPILLE D'AJUSTAGE | 1 | | | | | |
| 510 | 65.04501-6002A | GEAR;CAM SHAFT | PIGNON | 1 | | | | | |
| 520 | 65.04501-0014A | . GEAR;CAM SHAFT | . JOINT | 1 | | | | | |
| 530 | 65.91010-0005A | . PIN;STRAIGHT | . GOUPILLE | 7 | D | | | | |
| 540 | 65.90020-0086 | BOLT;COLLARED HEX. | BOULON A 6 PANS | 4 | | | | | |
| 550 | 65.04505-5003B | GEAR;IDLE | PIGNON | 1 | | | | | |
| 560 | 65.04506-0012A | PIN;IDEL GEAR | GOUJON | 1 | | | | | |
| 570 | 65.90720-0028B | WASHER;THRUST | RONDELLE DE BUTEE | 1 | | | | | |
| 580 | 65.90020-0085 | BOLT;COLLARED HEX. | BOULON A 6 PANS | 3 | | | | | |
| 590 | 06.01914-3221 | BOLT ASS'Y M10X50 | BOULON A 6 PANS | 1 | | | | | |

| DATE | JUN. 30, 2007 |
|---|---|
| REV.NO. | EXB07-06 |

# Fig. 010 OIL PUMP
# POMPE

**Serial No. ;**

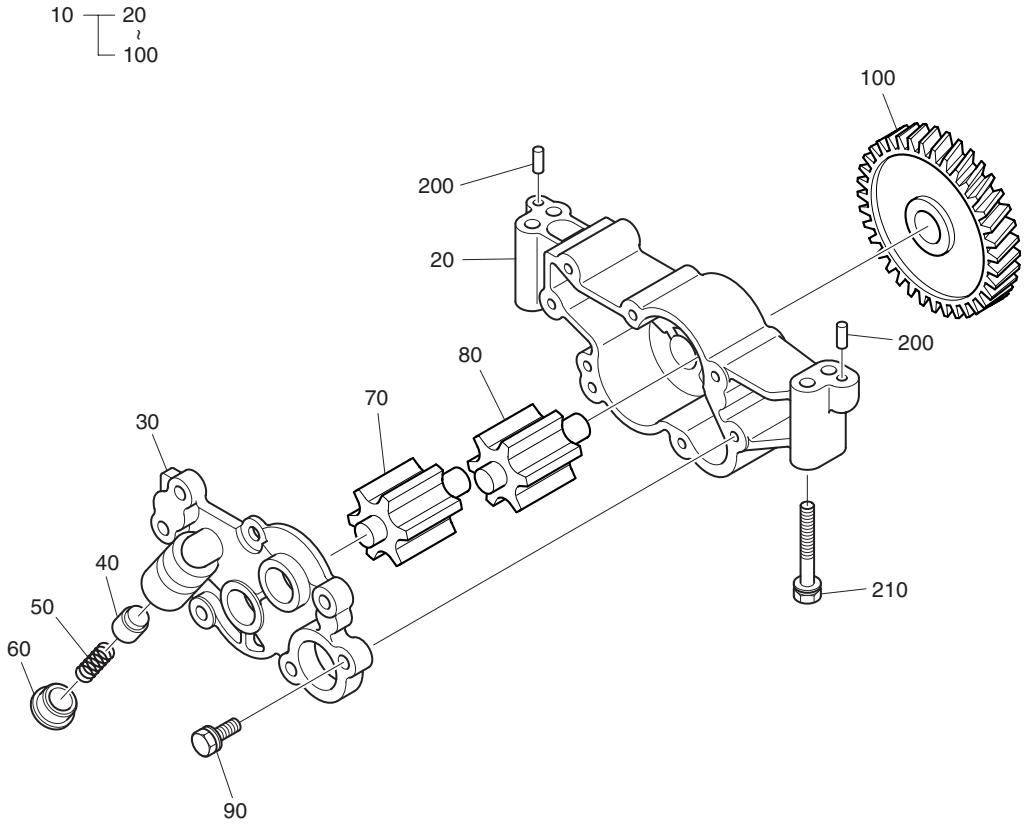

| DATE | JUN. 30, 2007 |
|---|---|
| REV. NO. | EXB07-06 |

# Fig. 010 OIL PUMP POMPE

**Serial No. ;**

| Key No. | Part No. | Description | Description | Q'ty | S.C | Serial No. | ICA | Replaceable part | |
|---|---|---|---|---|---|---|---|---|---|
| | | | | | | | | Part No. | Q'ty |
| 010-10 | 65.05100-6052B | OIL PUMP ASS'Y | POMPE | 1 | | ~060703 | | | |
| 20 | 65.05102-0027A | . HOUSING;OIL PUMP | . CARTER | 1 | D | | | | |
| 30 | 65.05103-0032A | . COVER;OIL PUMP | . COUVERCLE | 1 | D | | | | |
| 40 | 65.05410-0007 | . PLUNGER;VALVE | . PLUNGEUR | 1 | | | | | |
| 50 | 65.97601-0105 | . SPRING;COMPRESSION | . RESSORT | 1 | | | | | |
| 60 | 65.90310-0104 | . SCREW;PLUG | . BOUCHON FILETE | 1 | | | | | |
| 70 | 65.05104-0006 | . GEAR;OIL PUMP | . POMPE A HUILE | 1 | | | | | |
| 80 | 65.05104-0005 | . GEAR;OIL PUMP | . POMPE A HUILE | 1 | | | | | |
| 90 | 06.01923-3116 | . BOLT ASS'Y M8X28 | . BOULON A 6 PANS | 5 | | | | | |
| 100 | 65.05201-0014B | . GEAR;OIL PUMP DRIVE | . JOINT | 1 | | | | | |
| 200 | 06.22022-0907 | PIN;DOWEL 6M6X10 | GOUPILLE D'AJUSTAGE | 2 | | | | | |
| 210 | 06.01923-3125 | BOLT ASS'Y M8X70 | BOULON A 6 PANS | 4 | | | | | |

| DATE | DEC. 15, 2006 |
|---|---|
| REV.NO. | EXB06-13 |

# Fig. 011 OIL FILTER & OIL COOLER
# FILTRE D'HUILE

**Serial No. ;**

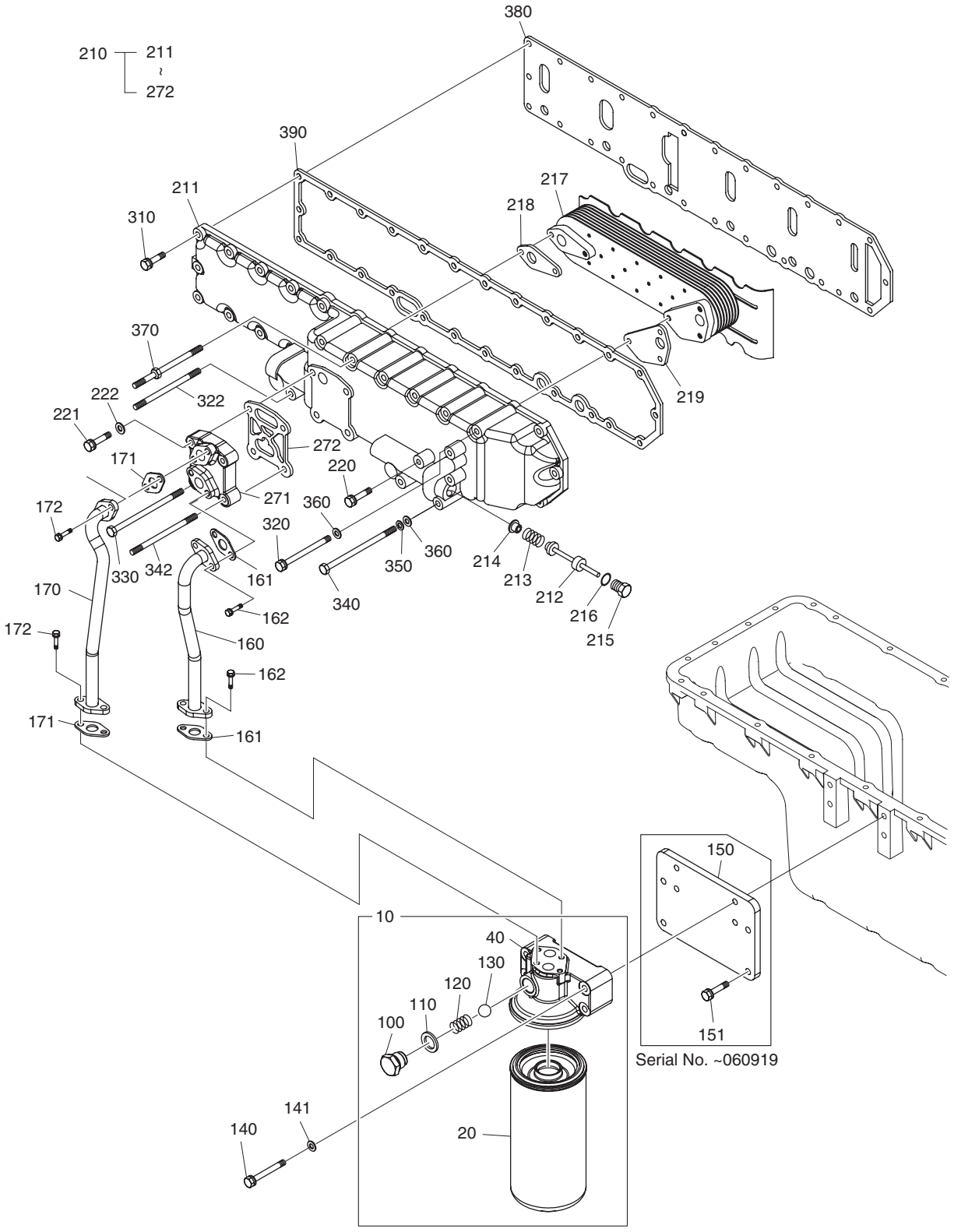

| DATE | DEC. 15, 2006 |
|---|---|
| REV. NO. | EXB06-13 |

# Fig. 011 OIL FILTER & OIL COOLER FILTRE D'HUILE

Serial No. ;

| Key No. | Part No. | Description | Description | Q'ty | S.C | Serial No. | ICA | Replaceable part | |
|---|---|---|---|---|---|---|---|---|---|
| | | | | | | | | Part No. | Q'ty |
| 011-10 | 65.05501-7086 | FILTER;OIL | FILTRE | 1 | | ~051216 | Y | 65.05501-7086A | 1 |
| | 65.05501-7086A | FILTER;OIL | FILTRE | 1 | | ~061019 | Y | 65.05501-7086B | 1 |
| | **65.05501-7086B** | **FILTER;OIL** | FILTRE | 1 | | 061020~ | | | |
| 20 | 65.05510-5026 | . CARTRIDGE;OIL FILTER | . INDICATEUR | 1 | | ~051216 | Y | 65.05510-5026A | 1 |
| | 65.05510-5026A | . CARTRIDGE;OIL FILTER | . INDICATEUR | 1 | | ~061019 | Y | 65.05510-5026B | 1 |
| | **65.05510-5026B** | **. CARTRIDGE;OIL FILTER** | . INDICATEUR | 1 | | 061020~ | | | |
| 40 | 65.05503-5054 | . HEAD;OIL FILTER | . CULASSE | 1 | | | | | |
| 100 | 65.90310-0115 | . PLUG | . BOUCHON | 1 | | | | | |
| 110 | 06.56190-0726 | . RING;SEAL 26X31 | . BAGUE D'ETANCHEITE | 1 | | | | | |
| 120 | 65.97601-0075 | . SPRING | . RESSORT | 1 | | | | | |
| 130 | 06.31641-0433 | . BALL;STEEL | . BALLIER | 1 | | | | | |
| 140 | 06.01913-3224 | BOLT;HEX. M10X1.5X65 | BOULON A 6 PANS | 4 | | | | | |
| 141 | 06.15010-2312 | WASHER;PLAIN 10.5 | RONDELLE | 4 | | | | | |
| 150 | **65.05540-0020** | **BRACKET;OIL FILTER** | SUPPORT | 1 | | ~061019 | | | |
| 151 | **06.01913-3217** | **BOLT ASS'Y M10X30** | BOULON A 6 PANS | 4 | | ~061019 | | | |
| 160 | 65.05701-5537 | PIPE;OIL | PIPE;OIL | 1 | | ~061019 | | | |
| | **65.05701-5697** | **PIPE;OIL** | PIPE;OIL | 1 | | 061020~ | | | |
| 161 | 65.05903A0001 | GASKET | JOINT | 2 | | | | | |
| 162 | 06.01913-3114 | BOLT ASS'Y M8X22 | BOULON A 6 PANS | 4 | | | | | |
| 170 | 65.05701-5538 | PIPE;OIL | PIPE;OIL | 1 | | | | | |
| 171 | 65.05903A0001 | GASKET | JOINT | 2 | | | | | |
| 172 | 06.01913-3114 | BOLT ASS'Y M8X22 | BOULON A 6 PANS | 4 | | | | | |
| 210 | 65.05601-7076 | OIL COOLER ASS'Y | REFROIDISSEMENT DE | 1 | | ~061012 | Y | 65.05601-7076A | 1 |
| | **65.05601-7076A** | **OIL COOLER ASS'Y** | REFROIDISSEMENT DE | 1 | | 061013~ | | | |
| 211 | 65.05604-0026A | . HOUSING;OIL COOLER | . CARTER | 1 | | ~061012 | Y | 65.05604-0026B | 1 |
| | **65.05604-0026B** | **. HOUSING;OIL COOLER** | . CARTER | 1 | | 061013~ | | | |
| 212 | 65.05410-0008A | . PLUNGER;REGULATING VALVE | . PLUNGEUR | 1 | | | | | |
| 213 | 65.97601-0120 | . SPRING;COMPRESSION | . RESSORT DE | 1 | | | | | |
| 214 | 65.90701-0095 | . WASHER | . RONDELLE | 1 | | | | | |
| 215 | 65.54109-0005A | . SCREW;PLUG M22X1.5 | . VIS | 2 | | | | | |
| 216 | 06.56190-0718 | . RING;SEAL | . BAGUE | 1 | | | | | |
| 217 | 65.05606-5030A | . ELEMENT;OIL COOLER | . ELEMENT DE | 1 | | | | | |
| 218 | 65.05902-0017 | . GASKET;OIL COOLER | . JOINT | 1 | | | | | |
| 219 | 65.05902-0018 | . GASKET;OIL COOLER | . JOINT | 1 | | | | | |
| 220 | 06.01923-3120 | . BOLT ASS'Y M8X45 | . BOULON A 6 PANS | 3 | | | | | |
| 221 | 06.01913-3121 | . BOLT ASS'Y M8X50 | . BOULON A 6 PANS | 2 | | | | | |
| 222 | 06.15010-2311 | . WASHER 8.4 | . RONDELLE | 2 | | | | | |
| 271 | 65.05607-5001 | . FLANGE;OIL COOLER | . BRIDE | 1 | | | | | |

| DATE | DEC. 15, 2006 |
|---|---|
| REV.NO. | EXB06-13 |

# Fig. 011 OIL FILTER & OIL COOLER FILTRE D'HUILE

**Serial No. ;**

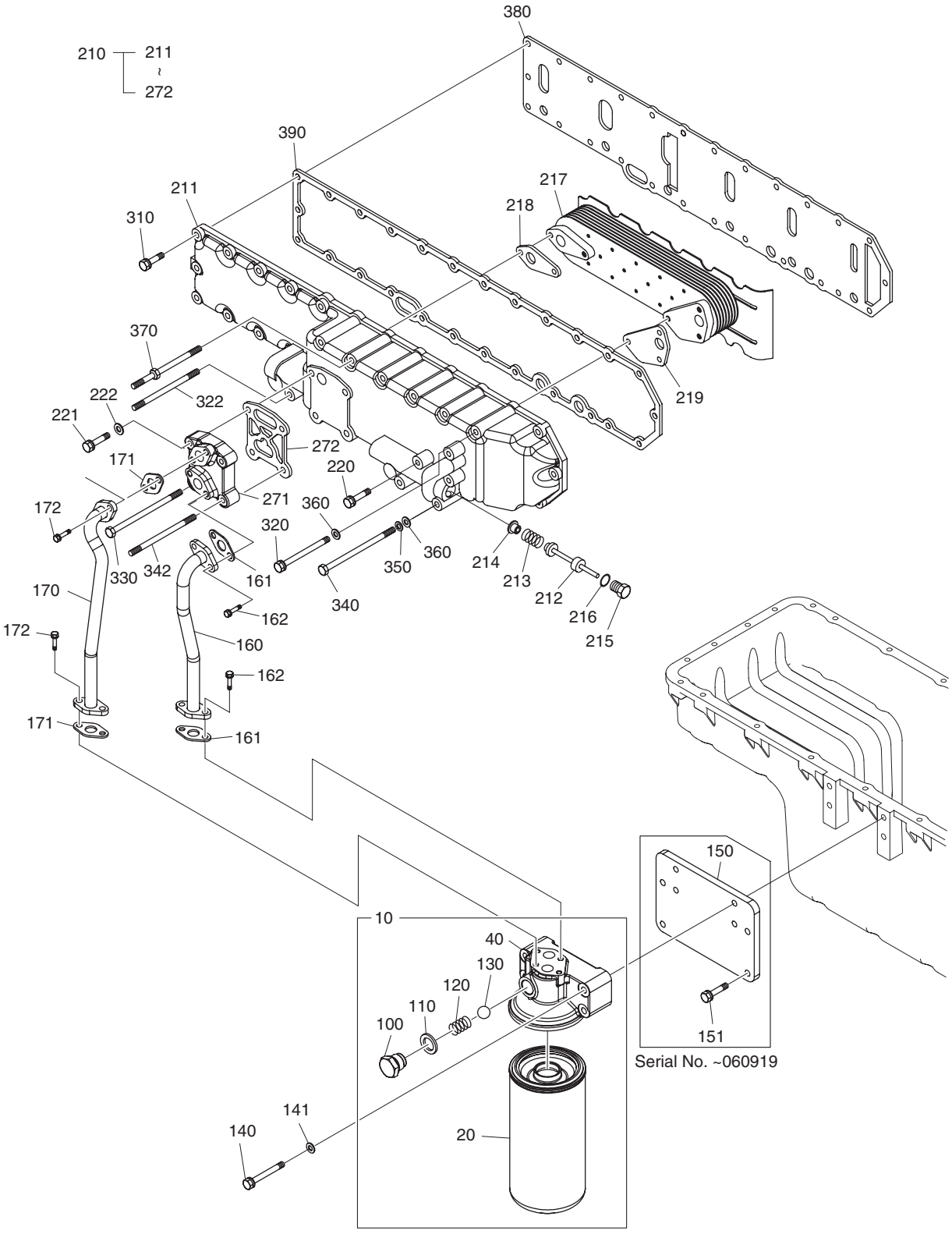

| DATE | DEC. 15, 2006 |
|---|---|
| REV. NO. | EXB06-13 |

# Fig. 011 OIL FILTER & OIL COOLER FILTRE D'HUILE

Serial No. ;

| Key No. | Part No. | Description | Description | Q'ty | S.C | Serial No. | ICA | Replaceable part | |
|---|---|---|---|---|---|---|---|---|---|
| | | | | | | | | Part No. | Q'ty |
| 011-272 | 65.05901-0026 | . GASKET;OIL FILTER | . JOINT | 1 | | | | | |
| 310 | 06.01923-3118 | BOLT ASS'Y M8X35 | BOULON 6 PANS | 14 | | | | | |
| 320 | 06.01913-3131 | BOLT ASS'Y M8X100 | BOULON 6 PANS | 6 | | | | | |
| 322 | 65.90201-0124 | BOLT;STUD M8X100 | BOULON A 6 PANS | 1 | | | | | |
| 330 | 65.90001-0139 | BOLT;HEX. M8X150 | BOULON A 6 PANS | 1 | | | | | |
| 340 | 06.01013-9142 | BOLT;HEX. M8X135 | BOULON A 6 PANS | 2 | | | | | |
| 342 | 65.90201-0125 | BOLT ASS'Y M8X145 | BOULON A 6 PANS | 1 | | | | | |
| 350 | 06.16731-2107 | WASHER;SPRING A8 | RONDELLE ELASTIQUE | 3 | | | | | |
| 360 | 06.15010-2311 | WASHER 8.4 | RONDELLE | 11 | | | | | |
| 370 | 65.90441-0016 | BOLT;SPACER M8X97 | BOULON A 6 PANS | 1 | | | | | |
| 380 | 65.05610-0006 | PLATE;BAFFLE | PLAQUE | 1 | | | | | |
| 390 | 65.05902-0019 | GASKET;OIL COOLER | JOINT | 2 | | | | | |

| DATE | JUN. 30, 2007 |
|---|---|
| REV.NO. | EXB07-06 |

# Fig. 012 OIL PAN
# CARTER D'HUILE

**Serial No. ;**

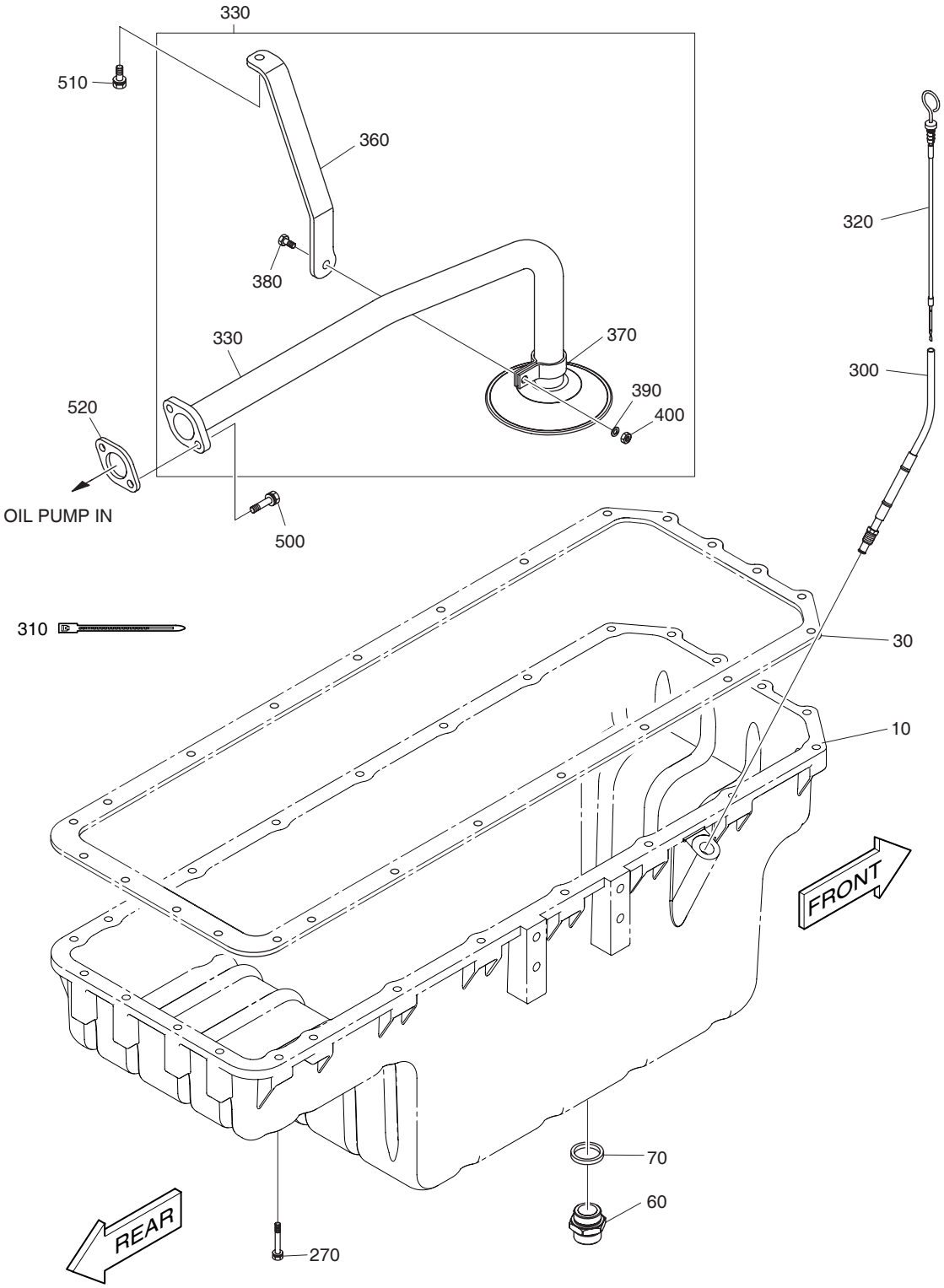

| DATE | JUN. 30, 2007 |
|---|---|
| REV. NO. | EXB07-06 |

# Fig. 012 OIL PAN
# CARTER D'HUILE

**Serial No. ;**

| Key No. | Part No. | Description | Description | Q'ty | S.C | Serial No. | ICA | Replaceable part | |
|---|---|---|---|---|---|---|---|---|---|
| | | | | | | | | Part No. | Q'ty |
| 012-10 | 65.05801-5233 | PAN;OIL | CAOUTCHOUC | 1 | | ~060919 | | | |
| | 65.05801-5251 | PAN;OIL | CAOUTCHOUC | 1 | | ~071126 | | | |
| | **65.05801-5266** | **PAN;OIL** | CAOUTCHOUC | 1 | | 071127~ | | | |
| 30 | 65.05904-0031 | GASKET;OIL PAN | JOINT | 1 | | ~071226 | I | 65.05904-0038 | 1 |
| | **65.05904-0038** | **GASKET;OIL PAN** | JOINT | 1 | | 071227~ | | | |
| 60 | 65.98125-5022 | JOINT;DRAIN | JOINT | 1 | | ~060707 | Y | 65.98125-5022A | 1 |
| | 65.98125-5022A | JOINT;DRAIN | JOINT | 1 | | 060708~ | | | |
| 70 | 06.56190-0732 | RING;SEAL A30X36 | CONTACT DE NIVEAU | 1 | | | | | |
| 270 | 06.01923-3120 | BOLT ASS'Y M8X45 | BOULON A 6 PANS | 24 | | ~071226 | | | |
| | **65.90020-0143** | **BOLT ASS'Y M8X40** | BOULON A 6 PANS | 36 | | 071127~ | | | |
| 300 | 65.05806-5116 | GUIDE TUBE;OIL LEVEL GAUGE | GARDE | 1 | | ~070213 | I | 65.05806-5116A | 1 |
| | **65.05806-5116A** | **GUIDE TUBE;OIL LEVEL** | GARDE | 1 | | 070214~ | | | |
| 310 | 65.97460-0002 | CABLE;TIA | CABLE | 1 | | | | | |
| 320 | 65.05805-5225 | GAUGE;OIL LEVEL | PIGNON | 1 | | ~060401 | Y | 65.05805-5225A | 1 |
| | 65.05805-5225A | GAUGE;OIL LEVEL | PIGNON | 1 | | 060402~ | | | |
| 330 | 65.05701-6106 | PIPE;OIL | PIPE;OIL | 1 | | | | | |
| 360 | 65.05740-0037 | . BRACKET;OIL PIPE | . SUPPORT | 1 | | | | | |
| 370 | 65.97401-0080 | . CLIP;PIPE | . ATTACHE | 1 | | | | | |
| 380 | 06.01283-7115 | . BOLT;HEX. M8X25 | . BOULON A 6 PANS | 1 | | | | | |
| 390 | 06.15010-2311 | . WASHER 8.4 | . RONDELLE | 1 | | | | | |
| 400 | 65.90510-0012 | . NUT;CLEVELOC | . ECROU DE BLOCAGE | 1 | | | | | |
| 500 | 06.01913-3119 | BOLT ASS'Y M8X40 | BOULON A 6 PANS | 2 | | | | | |
| 510 | 06.01913-3113 | BOLT ASS'Y M8X20 | BOULON A 6 PANS | 1 | | | | | |
| 520 | 65.05901-0027 | GASKET;OIL FILTER | JOINT | 1 | | | | | |

| DATE | JUN. 30, 2006 |
|---|---|
| REV.NO. | EXB06-08 |

# Fig. 013 COOLING WATER PIPE & THERMOSTAT
# CONDUITE D'EAU DE REFROIDISSEMENT

**Serial No. ;**

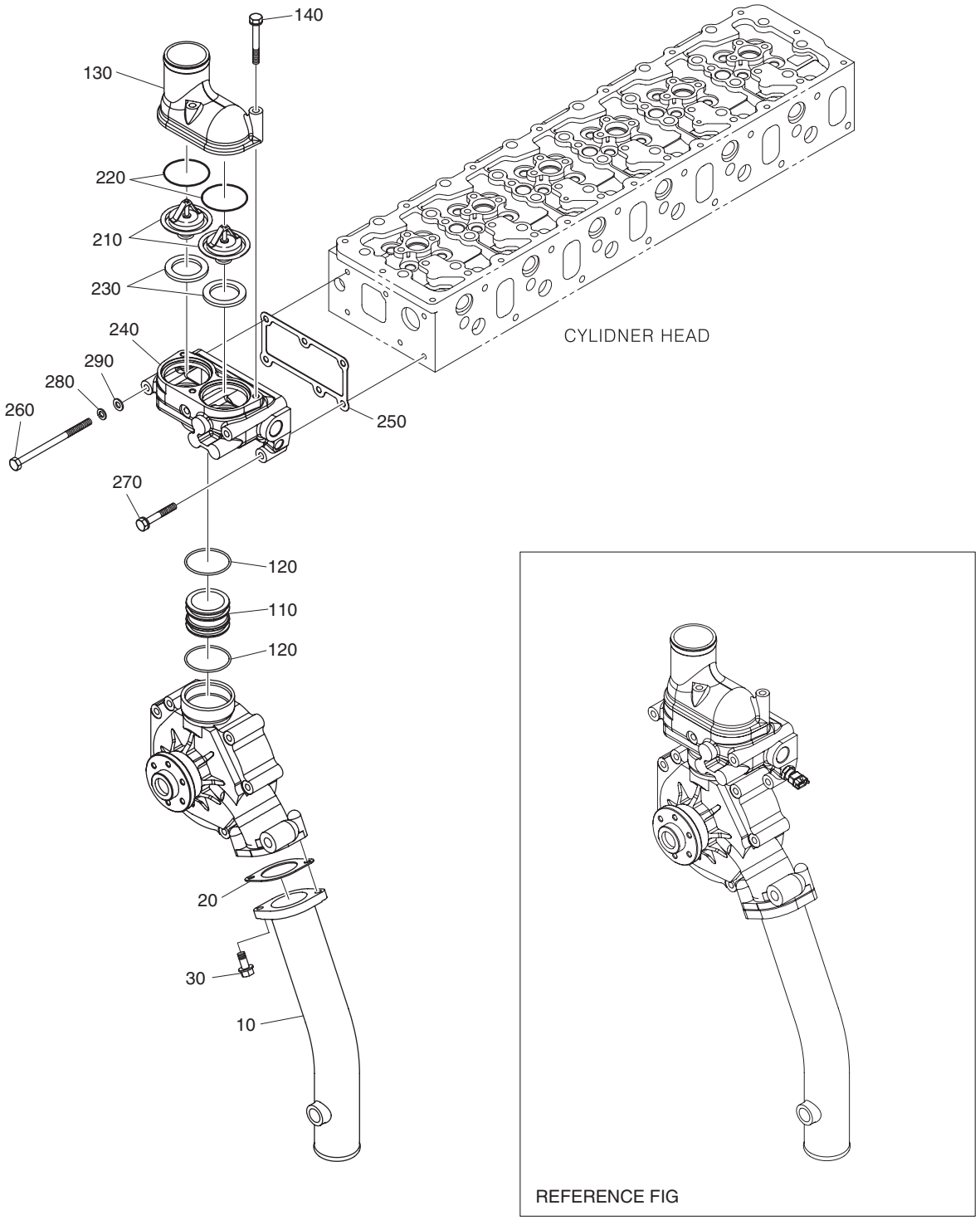

| DATE | JUN. 30, 2006 |
|---|---|
| REV. NO. | EXB06-08 |

# Fig. 013 COOLING WATER PIPE & THERMOSTAT
# CONDUITE D'EAU DE REFROIDISSEMENT

Serial No. ;

| Key No. | Part No. | Description | Description | Q'ty | S.C | Serial No. | ICA | Replaceable part | |
|---|---|---|---|---|---|---|---|---|---|
| | | | | | | | | Part No. | Q'ty |
| 013-10 | 65.06301-0252 | PIPE;COOLING WATER | CONDUITE D'EAU DE | 1 | | | | | |
| 20 | 65.06901-0037 | GASKET;WATER PUMP | JOINT | 1 | | | | | |
| 30 | 06.01923-3117 | BOLT ASS'Y M8X30 | BOULON 6 PANS | 2 | | | | | |
| 110 | 65.06301-0219A | PIPE;COOLING WATER | CONDUITE | 1 | | | | | |
| 120 | 65.96501-0089 | O-RING | JOINT TORIQUE | 2 | | ~051128 | Y | 65.96501-0089A | 1 |
| | 65.96501-0089A | O-RING | JOINT TORIQUE | 2 | | 051129~ | | | |
| 130 | 65.06405-0018A | PIPE;WATER OUTLET | COUVERCLE | 1 | | | | | |
| 140 | 06.01923-3124 | BOLT ASS'Y M8X65 | BOULON A 6 PANS | 3 | | | | | |
| 210 | 51.06402-0062 | THERMOSTAT | THERMOSTAT | 2 | | | | | |
| 220 | 06.56342-1208 | O-RING 60X4 | JOINT TORIQUE | 2 | | | | | |
| 230 | 65.06901A0069 | GASKET | JOINT | 2 | | | | | |
| 240 | 65.06404-5028 | HOUSING;THERMOSTAT | CARTER | 1 | | | | | |
| 250 | 65.06901-0040 | GASKET;WATER PUMP | JOINT | 1 | | | | | |
| 260 | 06.01013-9127 | BOLT;HEX. M8X120 | BOULON A 6 PANS | 3 | | | | | |
| 270 | 06.01923-3122 | BOLT ASS'Y M8X55 | BOULON A 6 PANS | 3 | | | | | |
| 280 | 06.16731-2107 | WASHER;SPRING A8 | RONDELLE ELASTIQUE | 3 | | | | | |
| 290 | 06.15010-2311 | WASHER 8.4 | RONDELLE | 3 | | | | | |

| DATE | JUN. 30, 2007 |
|---|---|
| REV.NO. | EXB07-06 |

# Fig. 014 WATER PUMP
# SYSTEME DE REFROIDSSEMENT

**Serial No. ;**

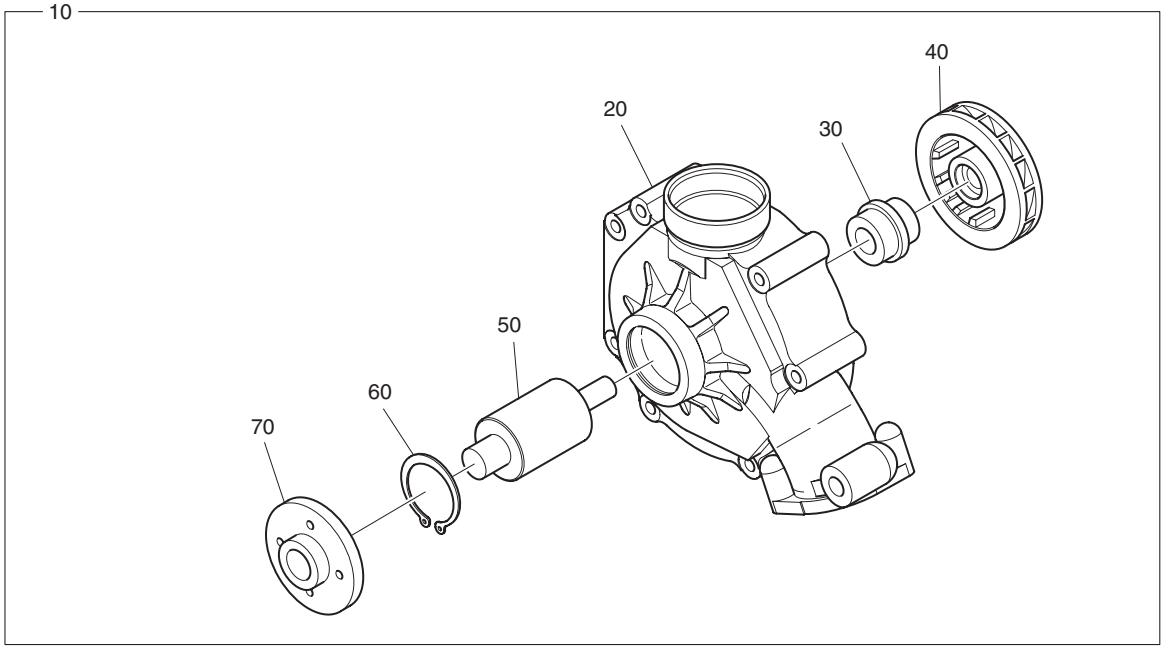


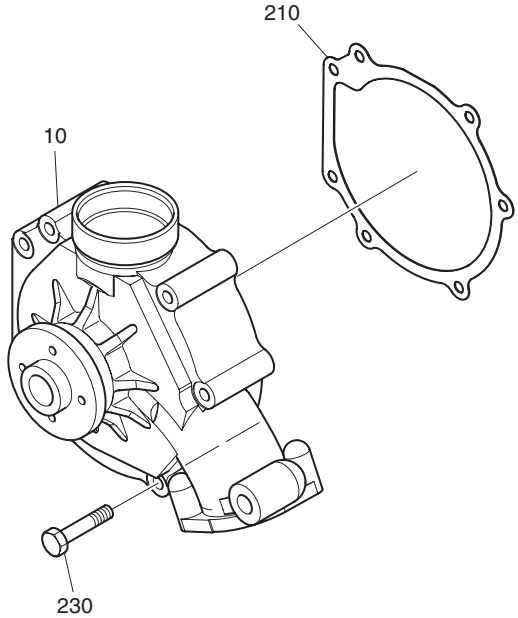

| DATE | JUN. 30, 2007 |
|---|---|
| REV. NO. | EXB07-06 |

# Fig. 014 WATER PUMP
# SYSTEME DE REFROIDSSEMENT

**Serial No. ;**

| Key No. | Part No. | Description | Description | Q'ty | S.C | Serial No. | ICA | Replaceable part | |
|---|---|---|---|---|---|---|---|---|---|
| | | | | | | | | Part No. | Q'ty |
| 014-10 | 65.06500-6174 | WATER PUMP ASS'Y | RONDELLE DE BUTEE | 1 | | ~061207 | Y | 65.06500-6174A | 1 |
| | 65.06500-6174A | WATER PUMP ASS'Y | RONDELLE DE BUTEE | 1 | | ~071008 | Y | 65.06500-6174C | 1 |
| | **65.06500-6174C** | **WATER PUMP ASS'Y** | RONDELLE DE BUTEE | 1 | | 071009~ | | | |
| 20 | 65.06501-0091 | . HOUSING;WATER PUMP | . CARTER | 1 | D | ~061207 | | | |
| | 65.06501-0091A | . HOUSING;WATER PUMP | . CARTER | 1 | D | ~071008 | | | |
| | **65.06501-0091C** | **. HOUSING;WATER PUMP** | . CARTER | 1 | D | 071009~ | | | |
| 30 | 65.06520-6007 | . SEAL;MECHANICAL | . JOINT | 1 | | | | | |
| 40 | 65.06506-0028 | . IMPELLER;WATER PUMP | . TURBINE | 1 | | | | | |
| 50 | 65.93410-0027 | . BEARING;WATER PUMP | . PALIER | 1 | | | | | |
| 60 | 06.29020-0132 | . RING;SNAP 55X2 | . BAGUE ELASTIQUE | 1 | | | | | |
| 70 | 65.06504-0030A | . HUB | . MOYEU | 1 | | | | | |
| 210 | 65.06901-0039 | GASKET;WATER PUMP | JOINT | 1 | | | | | |
| 230 | 06.01913-3125 | BOLT ASS'Y M8X70 | BOULON A 6 PANS | 7 | | | | | |

| DATE | DEC. 15, 2006 |
|---|---|
| REV.NO. | EXB06-13 |

# Fig. 015 COOLING FAN VENTILATEUR

**Serial No. ;**

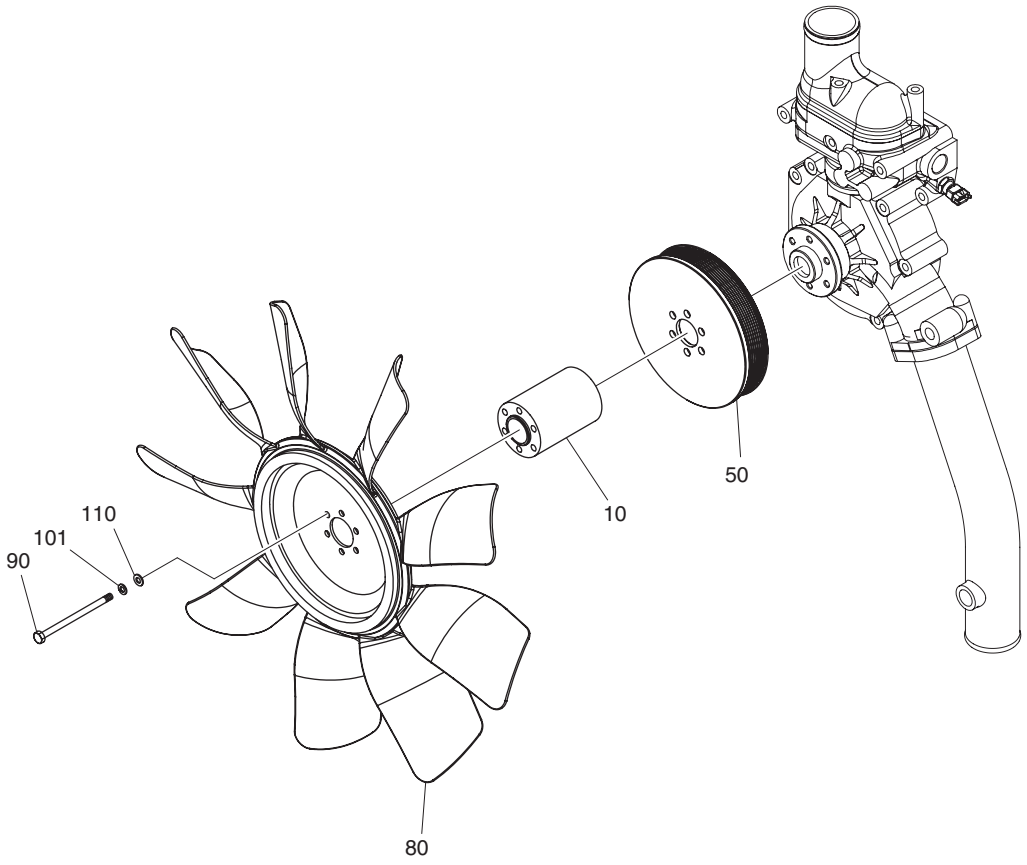

| DATE | DEC. 15, 2006 |
|---|---|
| REV. NO. | EXB06-13 |

# Fig. 015 COOLING FAN VENTILATEUR

Serial No. ;

| Key No. | Part No. | Description | Description | Q'ty | S.C | Serial No. | ICA | Replaceable part | |
|---|---|---|---|---|---|---|---|---|---|
| | | | | | | | | Part No. | Q'ty |
| 015-10 | 65.06611-0118A | FLANGE;FAN | BRIDE | 1 | | ~060529 | | | |
| | **65.06611-0135** | **FLANGE;FAN** | BRIDE | 1 | | 060530~ | | | |
| 50 | 65.06606-0069 | PULLEY;FAN(TIER-III) | POULIE | 1 | | ~060529 | | | |
| | 65.06606-0074 | PULLEY;FAN(TIER-III) | POULIE | 1 | | ~061019 | I | 65.06606-0066 | 1 |
| | **65.06606-0066** | **PULLEY;FAN(TIER-III)** | POULIE | 1 | | 061020~ | | | |
| 80 | 65.06601-5064 | FAN;COOLING | VENTILATEUR | 1 | | ~060529 | | | |
| | **65.06601-5073** | **FAN;COOLING** | VENTILATEUR | 1 | | 060530~ | | | |
| 90 | 06.01013-9129 | BOLT;HEX. M8X140 | BOULON A 6 PANS | 6 | | ~060529 | | | |
| | **06.01013-9130** | **BOLT;HEX. M8X140** | BOULON A 6 PANS | 6 | | 060530~ | | | |
| 101 | 06.16731-2107 | WASHER;SPRING A8 | RONDELLE ELASTIQUE | 6 | | | | | |
| 110 | 06.15010-2311 | WASHER 8.4 | RONDELLE | 6 | | | | | |

| DATE | JUN. 30, 2007 |
|---|---|
| REV.NO. | EXB07-06 |

# Fig. 016 EXHAUST MANIFOLD TUBULURE ET COLLECTEUR

**Serial No. ;**

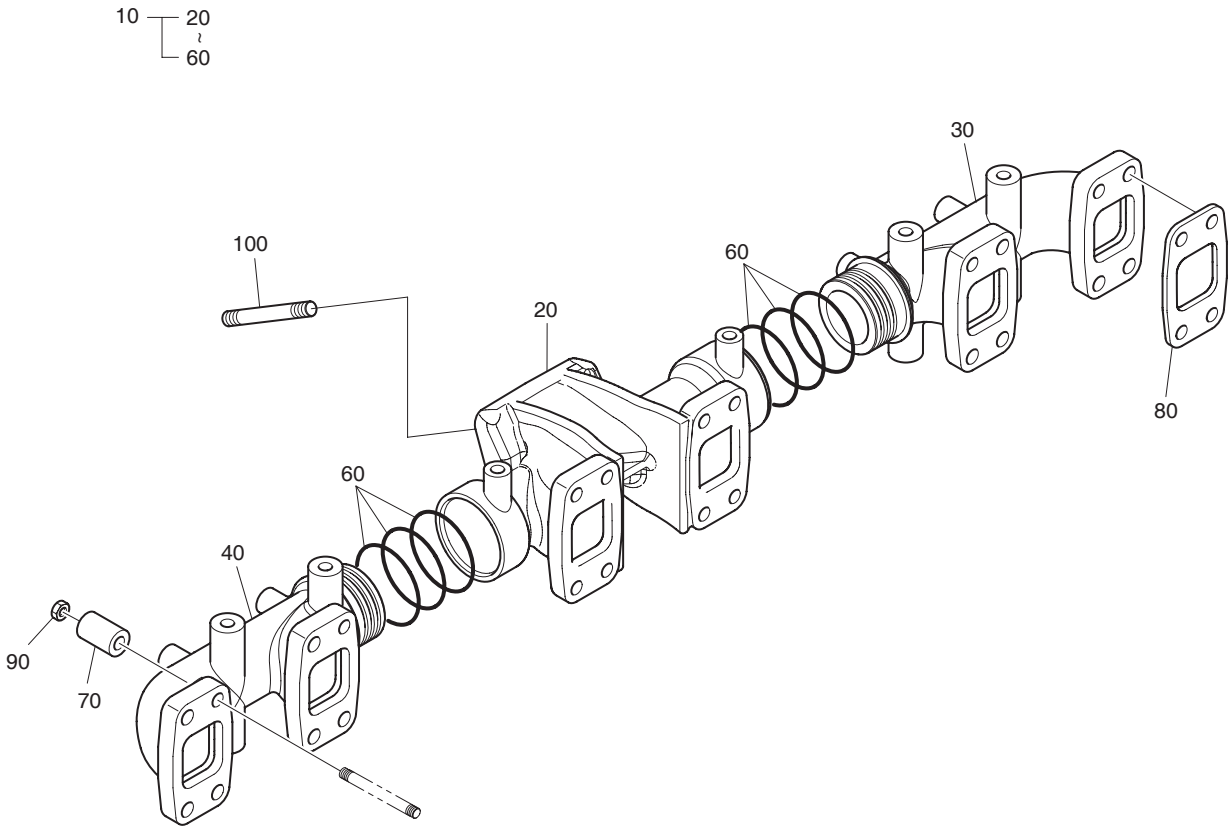

| DATE | JUN. 30, 2007 |
|---|---|
| REV. NO. | EXB07-06 |

# Fig. 016 EXHAUST MANIFOLD TUBULURE ET COLLECTEUR

**Serial No. ;**

| Key No. | Part No. | Description | Description | Q'ty | S.C | Serial No. | ICA | Replaceable part | |
|---|---|---|---|---|---|---|---|---|---|
| | | | | | | | | Part No. | Q'ty |
| 016-10 | 65.08100-6076 | EXHAUST MANIFOLD ASS'Y | TUBULURE ET | 1 | | ~061206 | Y | 65.08100-6076A | 1 |
| | 65.08100-6076A | EXHAUST MANIFOLD ASS'Y | TUBULURE ET | 1 | | ~070323 | I | 65.08100-6098 | 1 |
| | **65.08100-6098** | **EXHAUST MANIFOLD ASS'Y** | TUBULURE ET | 1 | | 070324~ | | | |
| 20 | 65.08101-0244 | . MANIFOLD;EXHAUST | . COLLECTEUR | 1 | | | | | |
| 30 | 65.08101-0245 | . MANIFOLD;EXHAUST | . COLLECTEUR | 1 | | ~070323 | | | |
| | **65.08101-0282** | **. MANIFOLD;EXHAUST** | . COLLECTEUR | 1 | | 070324~ | | | |
| 40 | 65.08101-0246 | . MANIFOLD;EXHAUST | . COLLECTEUR | 1 | | | | | |
| 60 | 65.96507-0013 | . RING;SEAL | . BAGUE D'ETANCHEITE | 6 | | ~061206 | I | 65.96507-0059 | 6 |
| | **65.96507-0059** | **. RING;SEAL** | . BAGUE D'ETANCHEITE | 6 | | ~070323 | | | |
| | **65.96507-0059** | **. RING;SEAL** | . BAGUE D'ETANCHEITE | 8 | | 070324~ | | | |
| 70 | 65.91701-0241 | SPACER | BAGUE D'ECARTEMENT | 24 | | | | | |
| 80 | 65.08901-0032A | GASKET;EXHAUST MANIFOLD | JOINT | 6 | | | | | |
| 90 | 65.90535-0001 | FLANGE | ECROU 6 PANS | 24 | | | | | |
| 100 | 65.90201-0076 | BOLT;STUD M10X1.25X30 | BOULON DE GOUJON | 4 | | ~061025 | I | 65.90201-0073 | 4 |
| | 65.90201-0073 | BOLT;STUD M10X1.25X25 | BOULON DE GOUJON | 4 | | 061026~ | | | |

| DATE | JUN. 30, 2007 |
|---|---|
| REV.NO. | EXB07-06 |

# Fig. 017 INTAKE MANIFOLD TUBULURE DE PRISE

**Serial No. ;**

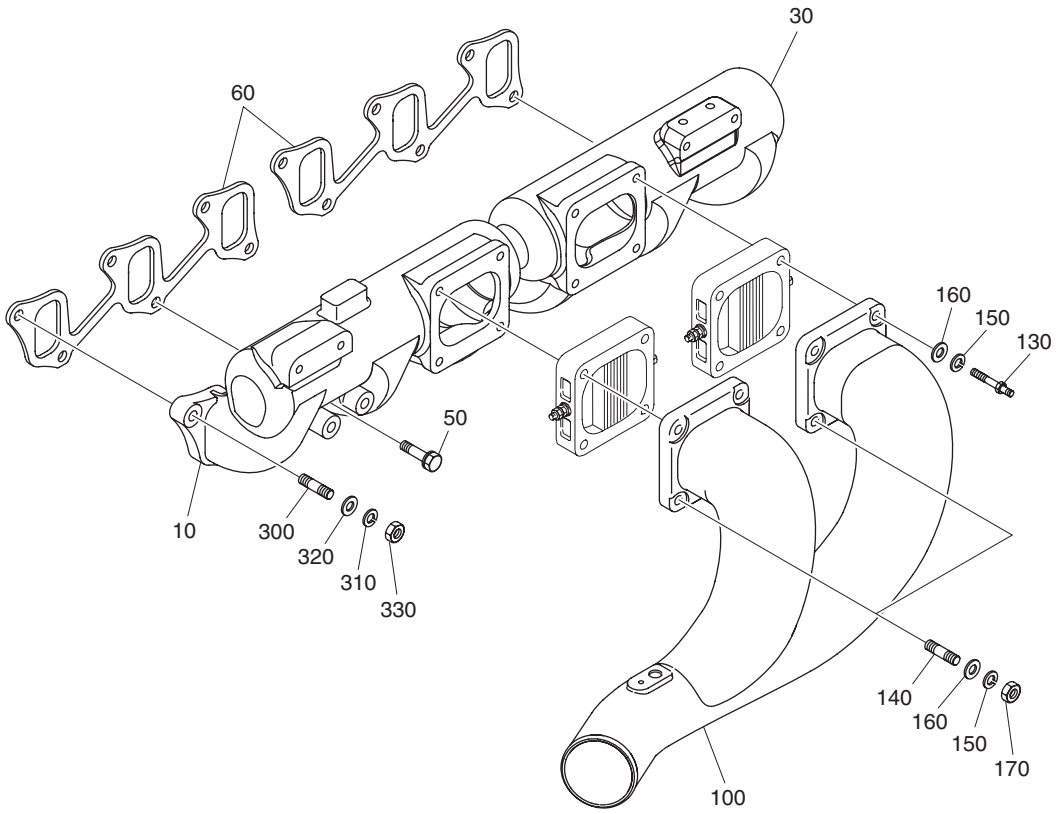

| DATE | JUN. 30, 2007 |
|---|---|
| REV. NO. | EXB07-06 |

# Fig. 017 INTAKE MANIFOLD TUBULURE DE PRISE

**Serial No. ;**

| Key No. | Part No. | Description | Description | Q'ty | S.C | Serial No. | ICA | Replaceable part | |
|---|---|---|---|---|---|---|---|---|---|
| | | | | | | | | Part No. | Q'ty |
| 017-10 | 65.08201-0066 | MANIFOLD;INTAKE | COLLECTEUR | 1 | | | | | |
| 30 | 65.08201-5069 | MANIFOLD;INTAKE | COLLECTEUR | 1 | | | | | |
| 50 | 06.01923-3219 | BOLT ASS'Y M10X40 | BOULON A 6 PANS | 8 | | | | | |
| 60 | 65.08902-0027 | GASKET;INTAKE MANIFOLD | JOINT | 2 | | ~071109 | I | 65.08902-0035 | 2 |
| | **65.08902-0035** | **GASKET;INTAKE MANIFOLD** | JOINT | 2 | | 071110~ | | | |
| 100 | 65.08202-0179 | STAKE;INTAKE | TUBULURE D'ADIMISSION | 1 | | | | | |
| 130 | 65.90201-0126 | BOLT;STUD | BOULON A 6 PANS | 1 | | | | | |
| 140 | 06.06225-0713 | BOLT;STUD | BOULON A 6 PANS | 7 | | | | | |
| 150 | 06.16731-2107 | WASHER;SPRING A8 | RONDELLE ELASTIQUE | 8 | | | | | |
| 160 | 06.15010-2311 | WASHER 8.4 | RONDELLE | 8 | | | | | |
| 170 | 06.11063-8214 | NUT;HEX. M8 | ECROU 6 PANS M8 | 7 | | | | | |
| 300 | 06.06225-0810 | BOLT;STUD M10X40 | BOULON A 6 PANS | 4 | | | | | |
| 310 | 06.16731-2108 | WASHER;SPRING A10 | RONDELLE | 4 | | | | | |
| 320 | 06.15010-2312 | WASHER;PLAIN 10.5 | RONDELLE | 4 | | | | | |
| 330 | 06.11063-8215 | NUT;HEX. M10 | ECROU 6 PANS M10 | 4 | | | | | |

| DATE | DEC. 15, 2006 |
|---|---|
| REV.NO. | EXB06-13 |

# Fig. 018 TURBO CHARGER
# TURBO CHARGER

**Serial No. ;**

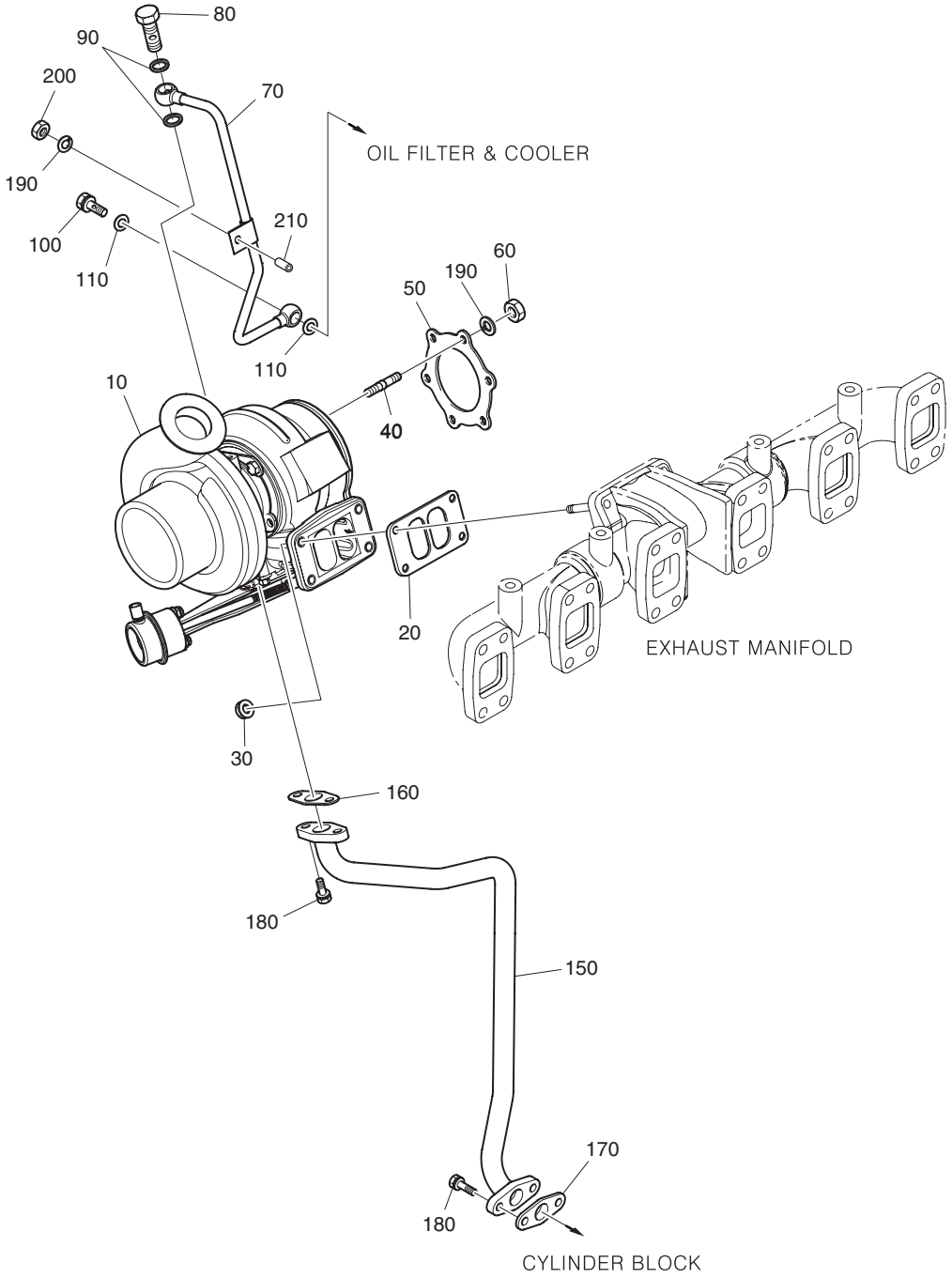

| DATE | DEC. 15, 2006 |
|---|---|
| REV. NO. | EXB06-13 |

# Fig. 018 TURBO CHARGER
# TURBO CHARGER

**Serial No. ;**

| Key No. | Part No. | Description | Description | Q'ty | S.C | Serial No. | ICA | Replaceable part | |
|---|---|---|---|---|---|---|---|---|---|
| | | | | | | | | Part No. | Q'ty |
| 018-10 | 65.09100-7098 | TURBO CHARGER ASS'Y | TURBO CHARGER | 1 | | ~061030 | I | 65.09100-7140 | 1 |
| | **65.09100-7140** | **TURBO CHARGER ASS'Y** | TURBO CHARGER | 1 | | 061031~ | | | |
| 20 | 65.09901-0018A | GASKET | JOINT | 1 | | | | | |
| 30 | 65.90535-0001 | FLANGE | ECROU 6 PANS | 4 | | | | | |
| 40 | 65.90201-0127 | BOLT;STUD | BOULON A 6 PANS | 6 | | | | | |
| 50 | 65.09901-0030 | GASKET;TURBO CHARGER | JOINT | 1 | | | | | |
| 60 | 06.11063-8214 | NUT;HEX. M8 | ECROU 6 PANS M8 | 6 | | | | | |
| 70 | 65.05701-5501 | PIPE;OIL | PIPE;OIL | 1 | | | | | |
| 80 | 06.78144-2403 | SCREW;HOLLOW M12X1.5 | VIS CREUSE | 1 | | | | | |
| 90 | 06.56190-0704 | RING;SEAL A12X18 | BAGUE D'ETANCHEITE | 2 | | | | | |
| 100 | 06.78144-2204 | SCREW;HOLLOW NW10 | VIS CREUSE | 1 | | | | | |
| 110 | 06.56190-0705 | RING;SEAL A14X18 | ENSEMBLE BAGUE | 2 | | | | | |
| 150 | 65.05701-5523 | PIPE;OIL | PIPE;OIL | 1 | | | | | |
| 160 | 65.96601-0045A | GASKET | JOINT | 1 | | ~060529 | Y | 65.96601-0067 | 1 |
| | **65.96601-0067** | **GASKET** | JOINT | 1 | | 060530~ | | | |
| 170 | 65.96601-0052 | GASKET | JOINT | 1 | | | | | |
| 180 | 06.01913-3114 | BOLT ASS'Y M8X22 | BOULON A 6 PANS | 4 | | | | | |
| 190 | 06.16731-2107 | WASHER;SPRING A8 | RONDELLE ELASTIQUE | 7 | | | | | |
| 200 | 06.11063-8214 | NUT;HEX. M8 | ECROU 6 PANS M8 | 1 | | | | | |
| 210 | 65.91701-0213 | SPACER | BAGUE D'ECARTEMENT | 1 | | | | | |

| DATE | OCT. 17, 2005 |
|---|---|
| 1st EDITION | |

# Fig. 019 INTAKE STAKE
# PIEU DE PRISE

**Serial No. ;**

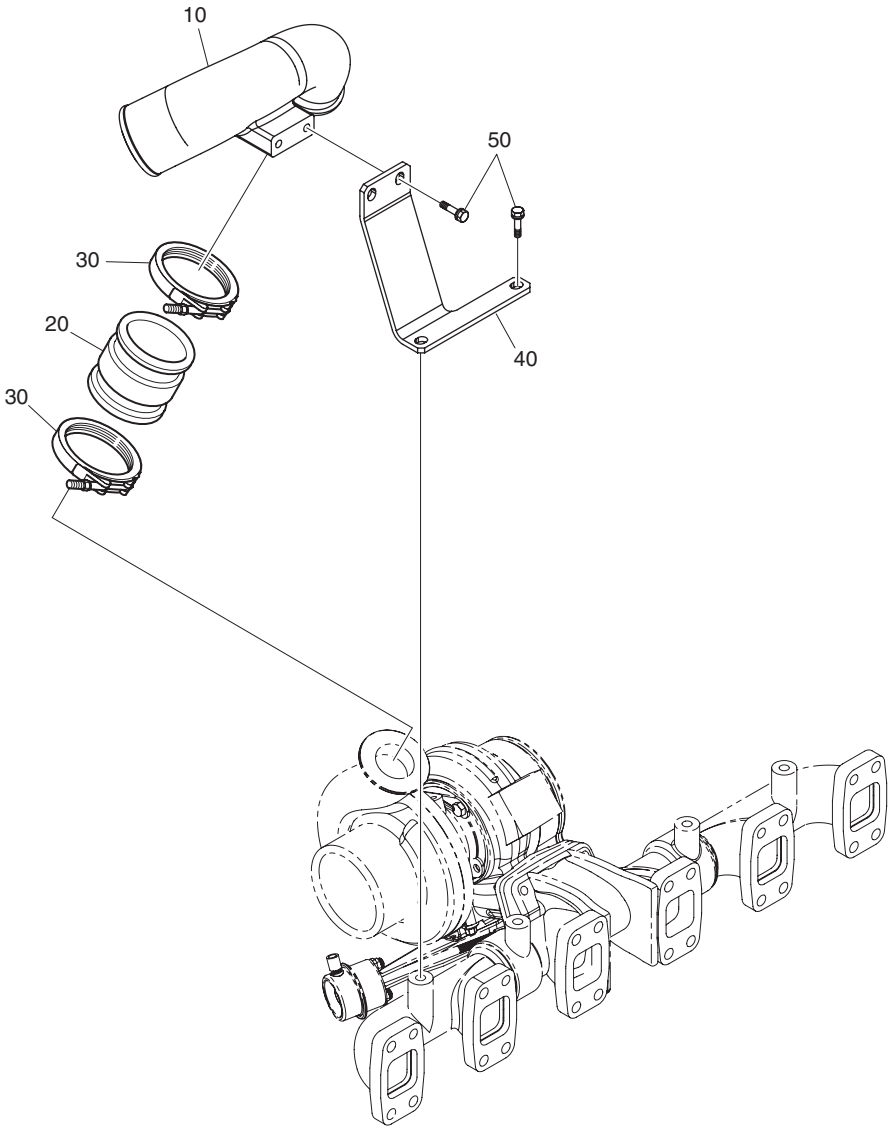

| DATE | OCT. 17, 2005 |
|---|---|
| 1st EDITION | |

# Fig. 019 INTAKE STAKE
# PIEU DE PRISE

Serial No. ;

| Key No. | Part No. | Description | Description | Q'ty | S.C | Serial No. | ICA | Replaceable part | |
|---|---|---|---|---|---|---|---|---|---|
| | | | | | | | | Part No. | Q'ty |
| 019-10 | 65.09411-5084 | INLET | PRISE | 1 | | | | | |
| 20 | 65.96301-6003 | HOSE;RUBBER | TUYAU FLEXIBLE | 1 | | | | | |
| 30 | 65.97450-5003 | CLAMP;V-TYPE | COLLIER | 2 | | | | | |
| 40 | 65.09440-0044 | BRACKET | SUPPORT | 1 | | | | | |
| 50 | 06.01923-3215 | BOLT ASS'Y M10X25 | BOULON A 6 PANS | 4 | | | | | |

# Fig. 020 INJECTOR INDICATEUR

**Serial No. ;**

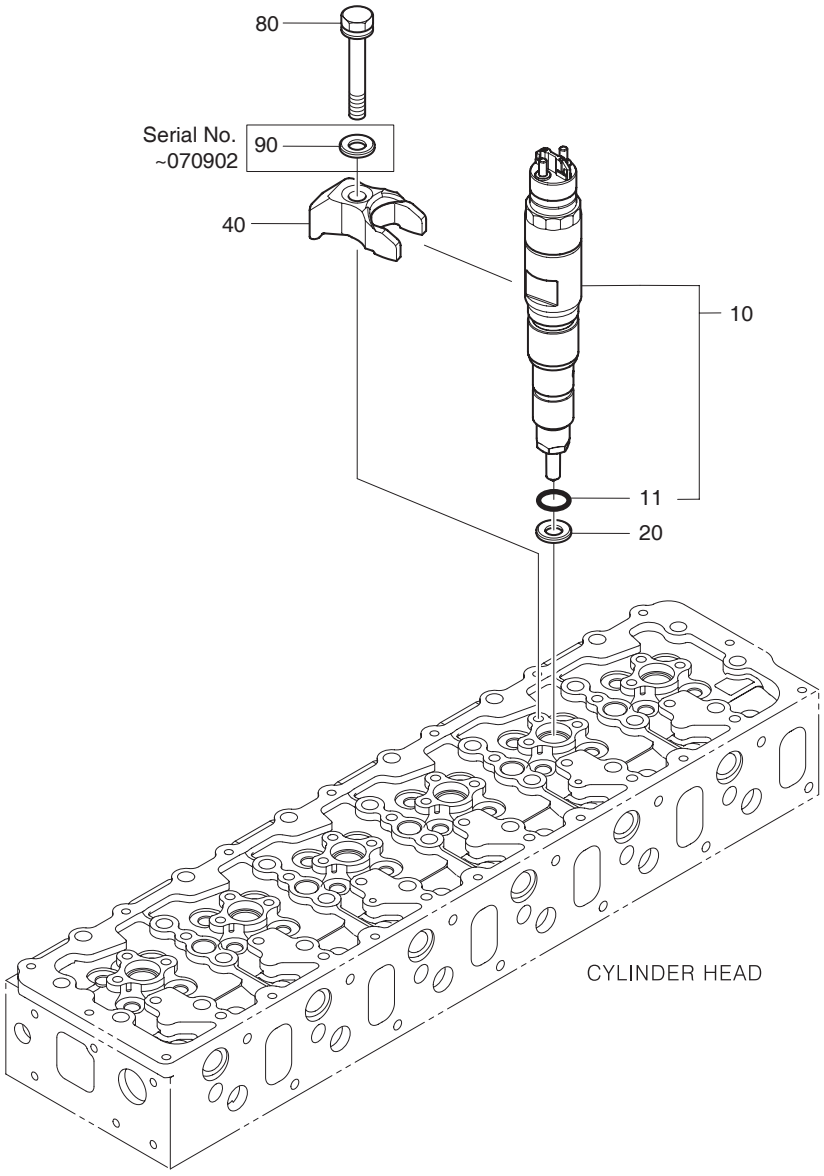

| DATE | JUN. 30, 2007 |
|---|---|
| REV. NO. | EXB07-06 |

# Fig. 020 INJECTOR INDICATEUR

**Serial No. ;**

| Key No. | Part No. | Description | Description | Q'ty | S.C | Serial No. | ICA | Replaceable part | |
|---|---|---|---|---|---|---|---|---|---|
| | | | | | | | | Part No. | Q'ty |
| 020-10 | 65.10401-7001A | INJECTOR ASS'Y | INDICATEUR | 6 | | ~061116 | I | 65.10401-7001B | 6 |
| | 65.10401-7001B | INJECTOR ASS'Y | INDICATEUR | 6 | | ~070710 | I | 65.10401-7001C | 6 |
| | **65.10401-7001C** | **INJECTOR ASS'Y** | INDICATEUR | 6 | | 070711~ | | | |
| 11 | 65.96501-0430 | . O-RING | . JOINT TORIQUE | 1 | | ~061116 | I | 65.96501-0437 | 1 |
| | 65.96501-0437 | . O-RING | . JOINT TORIQUE | 1 | | 061117~ | | | |
| 20 | 65.96507-0053 | RING;SEAL | BAGUE | 6 | | | | | |
| 40 | 65.10205-5001 | FIXTURE;E.U.I | FIXTURE;E.U.I | 6 | | ~051115 | Y | 65.10205-0003 | 6 |
| | 65.10205-0003 | FIXTURE;E.U.I | FIXTURE;E.U.I | 6 | | ~070902 | | | |
| | **65.10205-0007** | **FIXTURE;E.U.I** | FIXTURE;E.U.I | 6 | | 070903~ | | | |
| 80 | 65.90020-0106 | BOLT;COLLARED HEX. | BOULON A 6 PANS | 6 | | ~070902 | | | |
| | **65.90020-0141** | **BOLT;COLLARED HEX.** | BOULON A 6 PANS | 6 | | 070903~ | | | |
| 90 | **06.15061-0102** | **WASHER;BALL C8.5** | RONDELLE 8 | 6 | | ~070902 | | | |

| DATE | DEC. 15, 2006 |
|---|---|
| REV.NO. | EXB06-13 |

# Fig. 021 FUEL INJECTION PIPE
# PIPE D'INJECTION DE CARBURANT

**Serial No. ;**

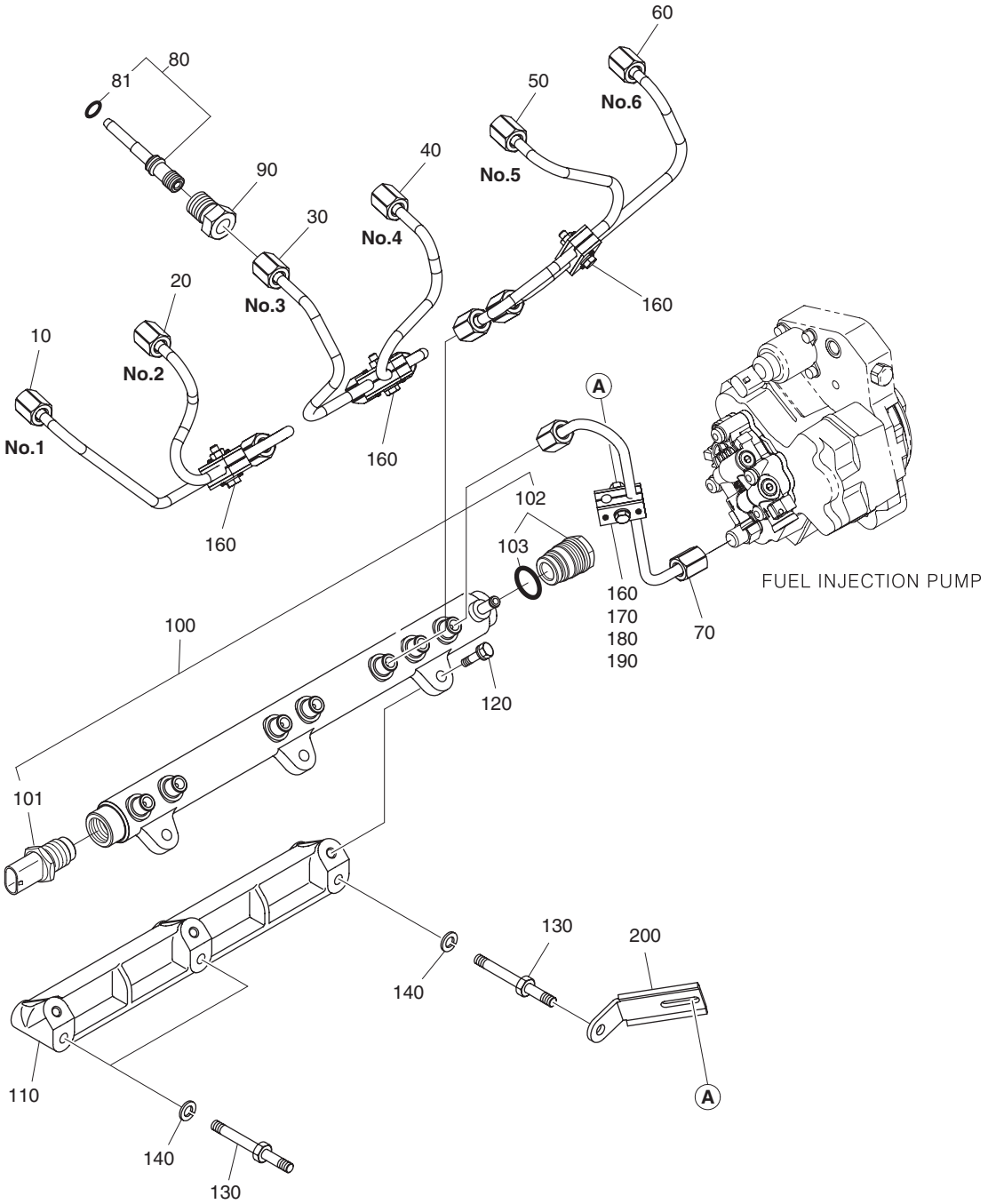

| DATE | DEC. 15, 2006 |
|---|---|
| REV. NO. | EXB06-13 |

# Fig. 021 FUEL INJECTION PIPE
# PIPE D'INJECTION DE CARBURANT

Serial No. ;

| Key No. | Part No. | Description | Description | Q'ty | S.C | Serial No. | ICA | Replaceable part | |
|---|---|---|---|---|---|---|---|---|---|
| | | | | | | | | Part No. | Q'ty |
| 021-10 | 65.10301-6094 | PIPE;INJECTION | CONDUITE | 1 | | ~051102 | Y | 65.10301-6094A | 1 |
| | 65.10301-6094A | PIPE;INJECTION | CONDUITE | 1 | | 051103~ | | | |
| 20 | 65.10301-6095 | PIPE;INJECTION | CONDUITE | 1 | | ~051102 | Y | 65.10301-6095A | 1 |
| | 65.10301-6095A | PIPE;INJECTION | CONDUITE | 1 | | ~060911 | Y | 65.10301-6095B | 1 |
| | **65.10301-6095B** | **PIPE;INJECTION** | CONDUITE | 1 | | 060912~ | | | |
| 30 | 65.10301-6096A | PIPE;INJECTION | CONDUITE | 1 | | ~051102 | Y | 65.10301-6096B | 1 |
| | 65.10301-6096B | PIPE;INJECTION | CONDUITE | 1 | | 051103~ | | | |
| 40 | 65.10301-6097 | PIPE;INJECTION | CONDUITE | 1 | | ~051102 | Y | 65.10301-6097A | 1 |
| | 65.10301-6097A | PIPE;INJECTION | CONDUITE | 1 | | 051103~ | | | |
| 50 | 65.10301-6098 | PIPE;INJECTION | CONDUITE | 1 | | ~051102 | Y | 65.10301-6098A | 1 |
| | 65.10301-6098A | PIPE;INJECTION | CONDUITE | 1 | | 051103~ | | | |
| 60 | 65.10301-6099 | PIPE;INJECTION | CONDUITE | 1 | | ~051102 | Y | 65.10301-6099A | 1 |
| | 65.10301-6099A | PIPE;INJECTION | CONDUITE | 1 | | 051103~ | | | |
| 70 | 65.10301-6104 | PIPE;INJECTION | CONDUITE | 1 | | ~051102 | Y | 65.10301-6104A | 1 |
| | 65.10301-6104A | PIPE;INJECTION | CONDUITE | 1 | | 051103~ | | | |
| 80 | 65.10410-6001 | CONNECTOR | CONNECTOR | 6 | | ~050917 | Y | 65.10410-6004 | 6 |
| | 65.10410-6004 | CONNECTOR | CONNECTOR | 6 | | 050918~ | | | |
| 81 | 65.96501-0429 | . O-RING | . JOINT TORIQUE | 1 | | ~050917 | Y | 65.96501-0433 | 1 |
| | **65.96501-0433** | **. O-RING** | . JOINT TORIQUE | 1 | | 050918~ | | | |
| 90 | 65.10415-0001 | NUT | ECROU | 6 | | | | | |
| 100 | 65.10601-6001 | RAIL | CHEMIN DE FER | 1 | | ~051102 | Y | 65.10601-6001A | 1 |
| | 65.10601-6001A | RAIL | CHEMIN DE FER | 1 | | 051103~ | | | |
| 101 | 65.27114-5001 | . SENSER;RAIL PRESS | . SENSER;RAIL | 1 | | | | | |
| 102 | 65.52122-6001 | . VALVE;LIMIT PRESS | . VANNE | 1 | | | | | |
| 103 | 65.96501-0431 | .. O-RING | . JOINT TORIQUE | 1 | | | | | |
| 110 | 65.10610-0002 | BRACKET;RAIL MOUNTING | SUPPORT | 1 | | | | | |
| 120 | 06.01913-3117 | BOLT ASS'Y M8X30 | BOULON A 6 PANS | 3 | | | | | |
| 130 | 65.90201-0093 | BOLT;STUD | BOULON A 6 PANS | 3 | | | | | |
| 140 | 06.16731-2107 | WASHER;SPRING A8 | RONDELLE ELASTIQUE | 3 | | | | | |
| 160 | 65.97401-6036 | CLIP;PIPE | ATTACHE | 4 | | | | | |
| 170 | 65.97401-5022 | . CLIP;PIPE | . ATTACHE | 1 | | | | | |
| 180 | 65.97401-5023 | . CLIP;PIPE | . ATTACHE | 1 | | | | | |
| 190 | 06.01913-2917 | . BOLT ASS'Y M6X30 | . BOULON A 6 PANS | 1 | | | | | |
| 200 | 65.97480-0206A | HOLDER | POSSESSEUR | 1 | | | | | |

| DATE | JUN. 30, 2006 |
|---|---|
| REV.NO. | EXB06-08 |

# Fig. 022 INJECTION PUMP
# POMPE D'INJECTION

**Serial No. ;**

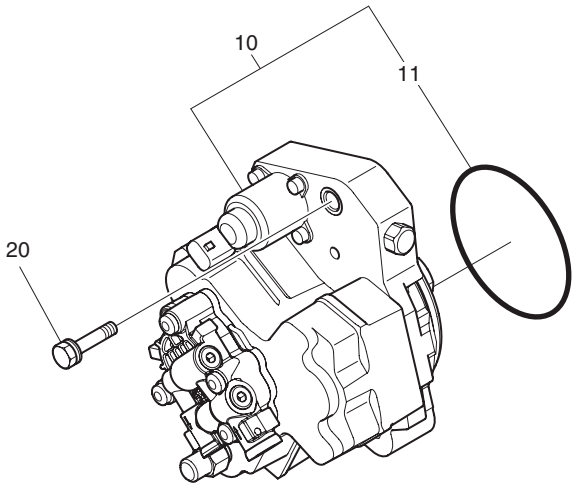

| DATE | JUN. 30, 2006 |
|---|---|
| REV. NO. | EXB06-08 |

# Fig. 022 INJECTION PUMP POMPE D'INJECTION

Serial No. ;

| Key No. | Part No. | Description | Description | Q'ty | S.C | Serial No. | ICA | Replaceable part | |
|---|---|---|---|---|---|---|---|---|---|
| | | | | | | | | Part No. | Q'ty |
| 022-10 | **65.10501-7001A** | **PUMP;HIGH PRESSURE** | POMPE | 1 | | | | | |
| 11 | 65.96501-0428 | . O-RING | . JOINT TORIQUE | 1 | | | | | |
| 20 | 06.01913-3220 | BOLT ASS'Y M10X45 | BOULON A 6 PANS | 3 | | ~060117 | I | 06.01913-3221 | 3 |
| | **06.01913-3221** | **BOLT ASS'Y M10X50** | BOULON A 6 PANS | 3 | | 060118~ | | | |

| DATE | DEC. 15, 2006 |
|---|---|
| REV.NO. | EXB06-13 |

# Fig. 023 INJECTION PUMP DRIVE
# POMPE D'INJECTION DE CARBURANT

**Serial No. ;**

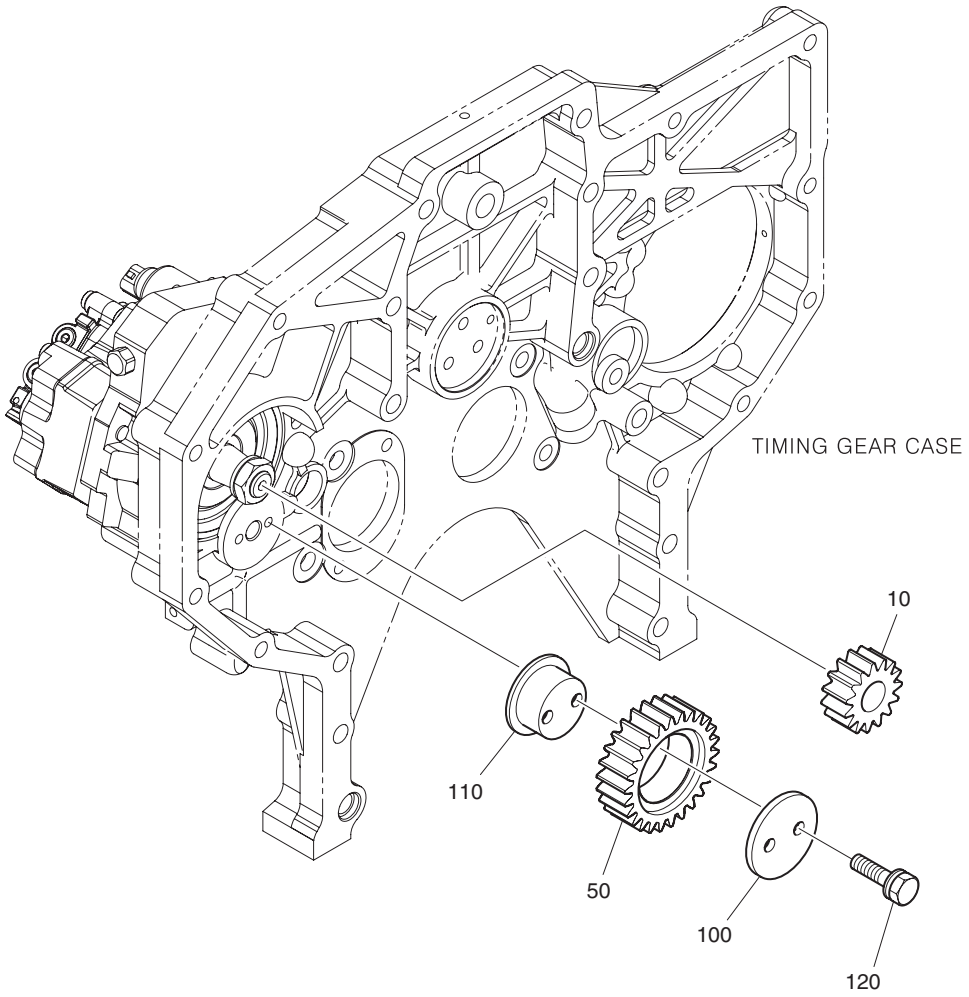

| DATE | DEC. 15, 2006 |
|---|---|
| REV. NO. | EXB06-13 |

# Fig. 023 INJECTION PUMP DRIVE
# POMPE D'INJECTION DE CARBURANT

**Serial No. ;**

| Key No. | Part No. | Description | Description | Q'ty | S.C | Serial No. | ICA | Replaceable part | |
|---|---|---|---|---|---|---|---|---|---|
| | | | | | | | | Part No. | Q'ty |
| 023-10 | 65.11301-0030 | GEAR;INJECTION PUMP DRIVE | PIGNON | 1 | | | | | |
| 50 | 65.11306-5001B | GEAR;IDLE | PIGNON | 1 | | | | | |
| 100 | 65.90720-0030B | WASHER;THRUST | RONDELLE DE BUTEE | 1 | | ~060905 | Y | 65.90720-0030C | 1 |
| | **65.90720-0030C** | **WASHER;THRUST** | RONDELLE DE BUTEE | 1 | | 060906~ | | | |
| 110 | 65.04506-0013A | PIN;IDEL GEAR | GOUJON | 1 | | | | | |
| 120 | 65.90020-0088A | BOLT;COLLARED HEX. | BOULON A 6 PANS | 2 | | | | | |

| DATE | JUN. 30, 2007 |
|---|---|
| REV.NO. | EXB07-06 |

# Fig. 024 ENGINE CONTROL
# COMMANDE REGIME MOTEUR

**Serial No. ;**

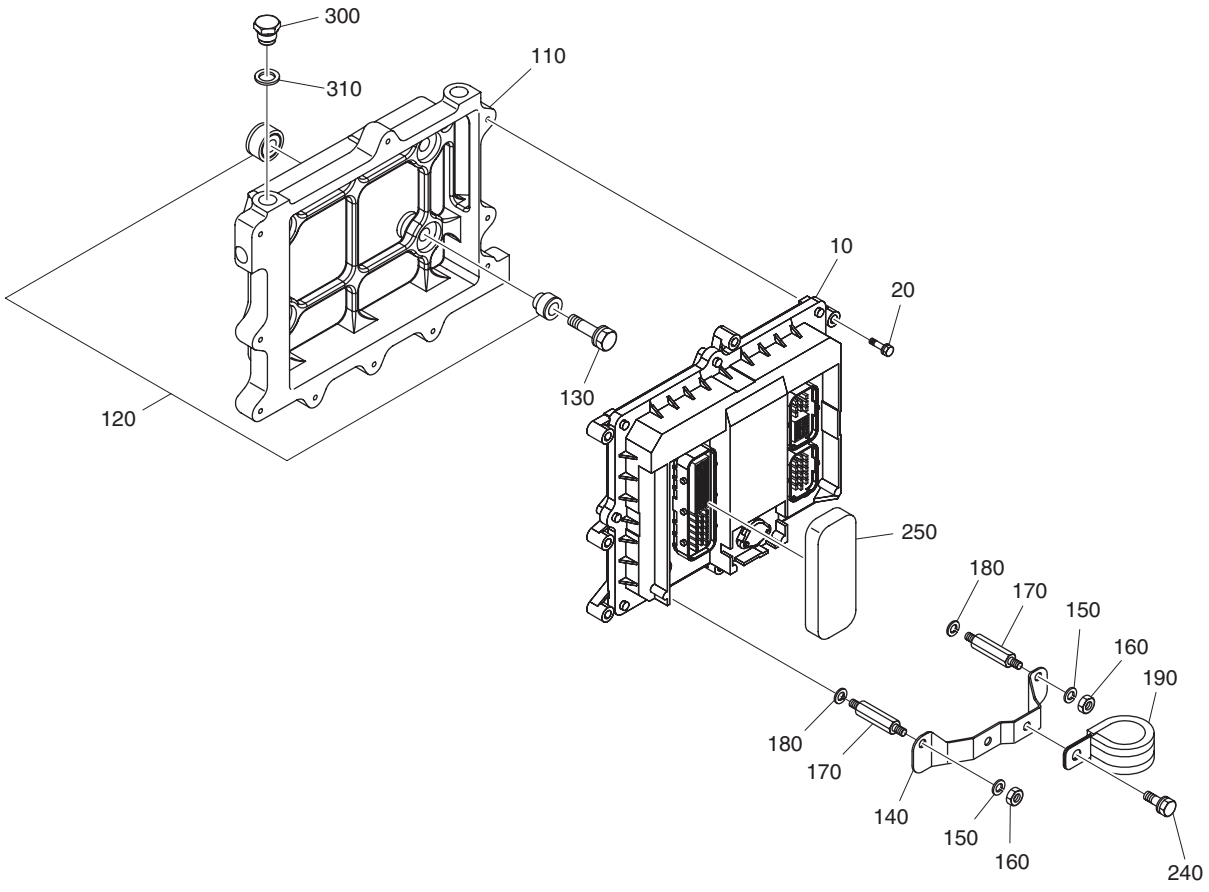

| DATE | JUN. 30, 2007 |
|---|---|
| REV. NO. | EXB07-06 |

# Fig. 024 ENGINE CONTROL
# COMMANDE REGIME MOTEUR

**Serial No. ;**

| Key No. | Part No. | Description | Description | Q'ty | S.C | Serial No. | ICA | Replaceable part | |
|---|---|---|---|---|---|---|---|---|---|
| | | | | | | | | Part No. | Q'ty |
| 024-10 | 65.99497-8597 | ENGINE CONTROL UNIT | COMMANDE REGIME | 1 | | | | | |
| 20 | 06.01923-2917 | BOLT ASS'Y M6X30 | BOULON A 6 PANS | 8 | | | | | |
| 110 | 65.11210-0001A | PLATE;ENGINE CONTROL UNIT | PLAQUE | 1 | | ~071114 | Y | 65.11210-0001B | 1 |
| | **65.11210-0001B** | **PLATE;ENGINE CONTROL** | PLAQUE | 1 | | 071115~ | | | |
| 120 | 65.96210-6001A | CUSHION;RUBBER | CUSHION;RUBBER | 4 | | | | | |
| 130 | 65.90020-0095 | BOLT;COLLARED HEX. | BOULON A 6 PANS | 4 | | | | | |
| 140 | 65.29150-5001 | BRACKET;HARNESS | SUPPORT | 1 | | | | | |
| 150 | 06.16731-2106 | WASHER;SPRING A6 | RONDELLE ELASTIQUE M6 | 2 | | | | | |
| 160 | 06.11063-8212 | NUT;HEX. M6 | ECROU 6 PANS M6 | 2 | | | | | |
| 170 | 65.90441-0050 | BOLT;SPACER | BOULON A 6 PANS | 2 | | | | | |
| 180 | 06.16731-2106 | WASHER;SPRING | RONDELLE ELASTIQUE | 2 | | | | | |
| 190 | 65.97401-5019 | CLIP;PIPE | ATTACHE | 1 | | ~051121 | I | 65.97401-0188 | 1 |
| | 65.97401-0188 | CLIP;PIPE | ATTACHE | 1 | | 051122~ | | | |
| 240 | 06.01923-2911 | BOLT ASS'Y M6X16 | ENSEMBLE BOULON | 1 | | | | | |
| 250 | 65.96001-0012 | CAP;RUBBER | CHAPEAU | 1 | | | | | |
| 300 | 06.08092-0204 | SCREW;PLUG M14X1.5 | BOUCHON A VIS | 2 | | | | | |
| 310 | 06.56190-0706 | RING;SEAL A14X20 | BAGUE D'ETANCHEITE | 2 | | ~071114 | I | 65.96507-0043 | 2 |
| | **65.96507-0043** | **RING;SEAL A14X20** | BAGUE D'ETANCHEITE | 2 | | 071115~ | | | |

| DATE | JUN. 30, 2008 |
|---|---|
| REV.NO. | EXB08-06 |

# Fig. 025 FUEL SYSTEM INSTALLATION CARBURANT

**Serial No. ;**

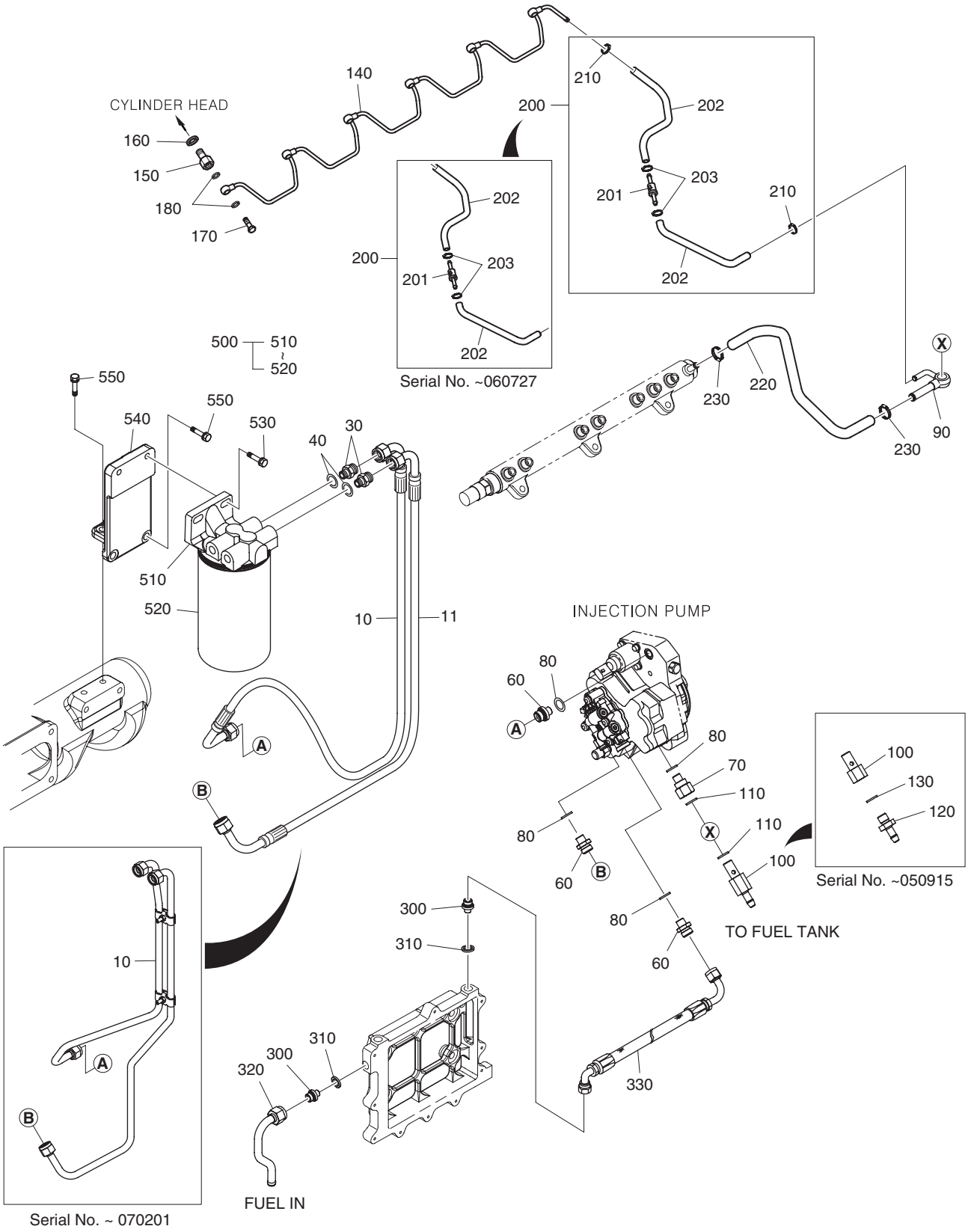

| DATE | JUN. 30, 2008 |
|---|---|
| REV. NO. | EXB08-06 |

# Fig. 025 FUEL SYSTEM INSTALLATION CARBURANT

Serial No. ;

| Key No. | Part No. | Description | Description | Q'ty | S.C | Serial No. | ICA | Replaceable part | |
|---|---|---|---|---|---|---|---|---|---|
| | | | | | | | | Part No. | Q'ty |
| 025-10 | 65.12301-6011 | PIPE;FUEL | CONDUITE | 1 | | ~070201 | T | 65.96340-5082 | 1 |
| | | | | | | | | 65.96340-5083 | 1 |
| | 65.96340-5082 | HOSE;FUEL | TUYAU FLEXIBLE | 1 | | 070202~ | | | |
| 11 | 65.96340-5083 | HOSE;FUEL | TUYAU FLEXIBLE | 1 | | 070202~ | | | |
| 30 | 06.78190-0206 | SCREW;CONNECTION | VIS | 2 | | ~060127 | I | 65.98130-0229 | 2 |
| | 65.98130-0229 | ADAPTER | ADAPTEUR | 2 | | 060128~ | | | |
| 40 | 06.56190-0706 | RING;SEAL A14X20 | BAGUE D'ETANCHEITE | 2 | | | | | |
| 60 | 65.98130-0211 | ADAPTER | ADAPTEUR | 3 | | ~050915 | I | 65.98130-0235 | 3 |
| | 65.98130-0235 | ADAPTER | ADAPTEUR | 3 | | 050716~ | | | |
| 70 | 65.98130-0159A | ADAPTER | ADAPTEUR | 1 | | | | | |
| 80 | 06.56190-0704 | RING;SEAL A12X18 | BAGUE D'ETANCHEITE | 4 | | | | | |
| 90 | 65.12301-5244B | PIPE;FUEL | CONDUITE | 1 | | | | | |
| 100 | 65.98130-0218 | ADAPTER | ADAPTEUR | 1 | | ~050915 | I | 65.98130-0236 | 1 |
| | 65.98130-0236 | ADAPTER | ADAPTEUR | 1 | | 050916~ | | | |
| 110 | 06.56190-0706 | RING;SEAL A14X20 | BAGUE D'ETANCHEITE | 2 | | | | | |
| 120 | 65.98131-0018 | NIPPLE;UNION | MAMELON | 1 | | ~050915 | | | |
| 130 | 06.56190-0706 | RING;SEAL A14X20 | BAGUE D'ETANCHEITE | 1 | | ~050915 | | | |
| 140 | 65.12301-5261A | PIPE;FUEL | CONDUITE | 1 | | | | | |
| 150 | 65.98130-0154 | ADAPTER | ADAPTEUR | 6 | | | | | |
| 160 | 06.56180-0712 | RING;SEAL A8X14 | BAGUE D'ETANCHEITE | 6 | | | | | |
| 170 | 65.98150-0042A | SCREW;HOLLOW M8X1 | VIS CREUSE M8x1 | 6 | | | | | |
| 180 | 65.96507-0055 | RING;SEAL | BAGUE | 6 | | | | | |
| 200 | 65.96301-7001A | HOSE;RUBBER | TUYAU FLEXIBLE | 1 | | ~071018 | Y | 65.96301-7001B | 1 |
| | 65.96301-7001B | HOSE;RUBBER | TUYAU FLEXIBLE | 1 | | 071019~ | | | |
| 201 | 65.52101-0004 | . REGULATOR;PRESSURE | . REGULATEUR | 1 | | | | | |
| 202 | 65.96301-0410A | . HOSE;RUBBER | . TUYAU FLEXIBLE | 2 | | | | | |
| 203 | 65.97402-0003 | . CLAMP;HOSE | . COLLIER | 2 | | | | | |
| 210 | 65.97402-0003 | CLAMP;HOSE | COLLIER | 2 | | | | | |
| 220 | 65.96301-0243 | HOSE;RUBBER | TUYAU FLEXIBLE | 1 | | | | | |
| 230 | 65.97440-0045 | CLAMP;HOSE | COLLIER | 2 | | | | | |
| 300 | 06.78190-0206 | SCREW;CONNECTION | VIS | 2 | | ~060127 | I | 65.98130-0229 | 2 |
| | 65.98130-0229 | SCREW;CONNECTION | VIS | 2 | | 060128~ | | | |
| 310 | 06.56190-0706 | RING;SEAL A14X20 | BAGUE D'ETANCHEITE | 2 | | ~061213 | I | 65.96507-0043 | 2 |
| | **65.96507-0043** | **RING;SEAL A14X20** | BAGUE D'ETANCHEITE | 2 | | 061214~ | | | |
| 320 | 65.12301-5268 | PIPE;FUEL | CONDUITE | 1 | | | | | |
| 330 | 65.96340-5069 | HOSE;RUBBER | TUYAU FLEXIBLE | 1 | | ~050603 | I | 65.12301-5287 | 1 |
| | 65.12301-5287 | HOSE;RUBBER | TUYAU FLEXIBLE | 1 | | 050604~ | | | |
| 500 | 65.12501-7085A | FUEL FILTER ASS'Y | POMPE | 1 | | ~060513 | Y | 65.12501-7093 | 1 |

| DATE | JUN. 30, 2008 |
|---|---|
| REV.NO. | EXB08-06 |

# Fig. 025 FUEL SYSTEM INSTALLATION CARBURANT

**Serial No. ;**

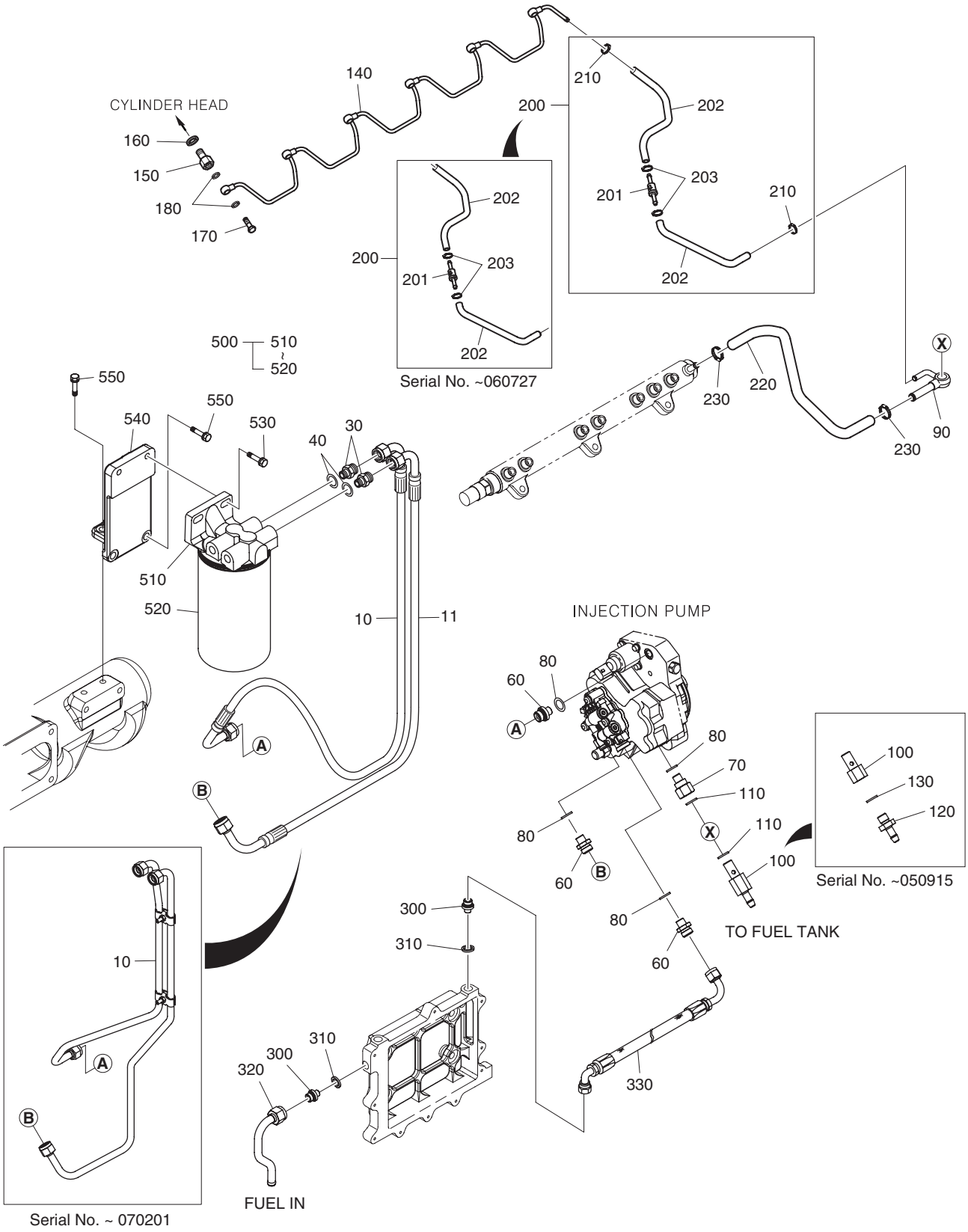

| DATE | JUN. 30, 2008 |
|---|---|
| REV. NO. | EXB08-06 |

# Fig. 025 FUEL SYSTEM INSTALLATION CARBURANT

Serial No. ;

| Key No. | Part No. | Description | Description | Q'ty | S.C | Serial No. | ICA | Replaceable part | |
|---|---|---|---|---|---|---|---|---|---|
| | | | | | | | | Part No. | Q'ty |
| 025-500 | 65.12501-7093 | FUEL FILTER ASS'Y | POMPE | 1 | | ~070824 | I | 65.12501-7043 | 1 |
| | 65.12501-7043 | FUEL FILTER ASS'Y | POMPE | 1 | | 070825~ | | | |
| 510 | 65.12504-5019 | . HEAD;FUEL FILTER | . TETE DE FILTRE | 1 | | ~060513 | | | |
| | 65.12504-5023 | . HEAD;FUEL FILTER | . TETE DE FILTRE | 1 | | ~070824 | I | 65.12504-5023A | 1 |
| | 65.12504-5023A | . HEAD;FUEL FILTER | . TETE DE FILTRE | 1 | | 070825~ | | | |
| 520 | 65.12503-5020A | . ELEMENT;FUEL FILTER | . ELEMENT FILTRANT | 1 | | ~060513 | Y | 65.12503-5027 | 1 |
| | 65.12503-5027 | . ELEMENT;FUEL FILTER | . ELEMENT FILTRANT | 1 | | ~070824 | I | 65.12503-5033 | 1 |
| | 65.12503-5033 | . ELEMENT;FUEL FILTER | . ELEMENT FILTRANT | 1 | | 070825~ | | | |
| 530 | 06.01923-3218 | BOLT ASS'Y M10X35 | BOULON A 6 PANS | 2 | | | | | |
| 540 | 65.12540-0050 | BRACKET;FUEL FILTER | SUPPORT | 1 | | | | | |
| 550 | 06.01913-3216 | BOLT;HEX. M10X28 | BOULON A 6 PANS | 4 | | | | | |

# Fig. 026 ALTERNATOR & ALTERNATOR MOUNTING
# ALTERNATEUR ET SUPPORT D'ALTERNATEU

**Serial No. ;**

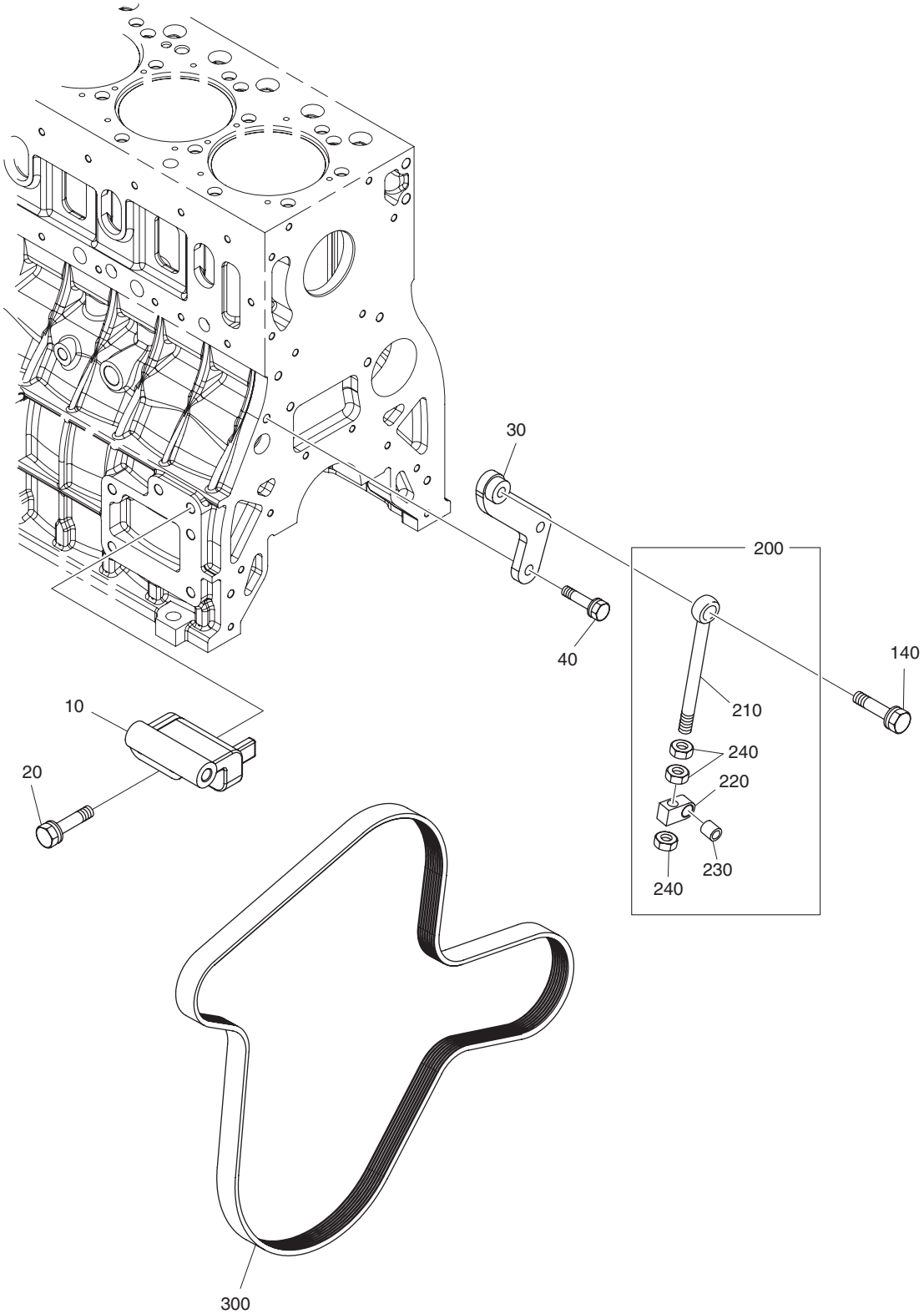

| DATE | DEC. 15, 2006 |
|---|---|
| REV. NO. | EXB06-13 |

# Fig. 026 ALTERNATOR & ALTERNATOR MOUNTING
# ALTERNATEUR ET SUPPORT D'ALTERNATEU

Serial No. ;

| Key No. | Part No. | Description | Description | Q'ty | S.C | Serial No. | ICA | Replaceable part | |
|---|---|---|---|---|---|---|---|---|---|
| | | | | | | | | Part No. | Q'ty |
| 026-10 | 65.19102-0093 | BRACKET;ALTERNATOR | SUPPORT | 1 | | | | | |
| 20 | 06.01943-3326 | BOLT ASS'Y M12X1.5X75 | BOULON A 6 PANS | 2 | | | | | |
| 30 | 65.19103-5048 | SUPPORT;ALTERNATOR | SUPPORT | 1 | | ~061207 | Y | 65.19103-5048A | 1 |
| | **65.19103-5048A** | **SUPPORT;ALTERNATOR** | SUPPORT | 1 | | 061208~ | | | |
| 40 | 06.01913-3215 | BOLT ASS'Y M10X25 | BOULON A 6 PANS | 2 | | | | | |
| 140 | 06.01943-3319 | BOLT ASS'Y M12X1.5X40 | BOULON 6 A PANS | 1 | | | | | |
| 200 | 65.19103-6012 | EYE BOLT ASS'Y(TIER-II) | BOULON A 6PANS | 1 | | ~060720 | Y | 65.19103-6012A | 1 |
| | **65.19103-6012A** | **EYE BOLT ASS'Y(TIER-II)** | BOULON A 6PANS | 1 | | 060721~ | | | |
| 210 | 65.90441-0009A | . EYE BOLT ASS'Y | . BOUCHON A VIS | 1 | D | | | | |
| 220 | 65.19107-0001 | . PIECE;GUIDE | . GUIDE | 1 | D | ~060720 | | | |
| | **65.19107-0001A** | **. PIECE;GUIDE** | . GUIDE | 1 | D | 060721~ | | | |
| 230 | 65.93020-0055 | . BUSH | . AMPOULE | 1 | D | | | | |
| 240 | 06.11063-9217 | . NUT;HEX. | . ECROU 6 PANS | 3 | | | | | |
| 300 | 65.96801-0144A | BELT;V-TYPE | CEINTURE | 1 | | | | | |

| DATE | JUN. 30, 2007 |
|---|---|
| REV.NO. | EXB07-06 |

# Fig. 027 LIFTING HOOK
# CROCHET DE LEVAGE

**Serial No. ;**

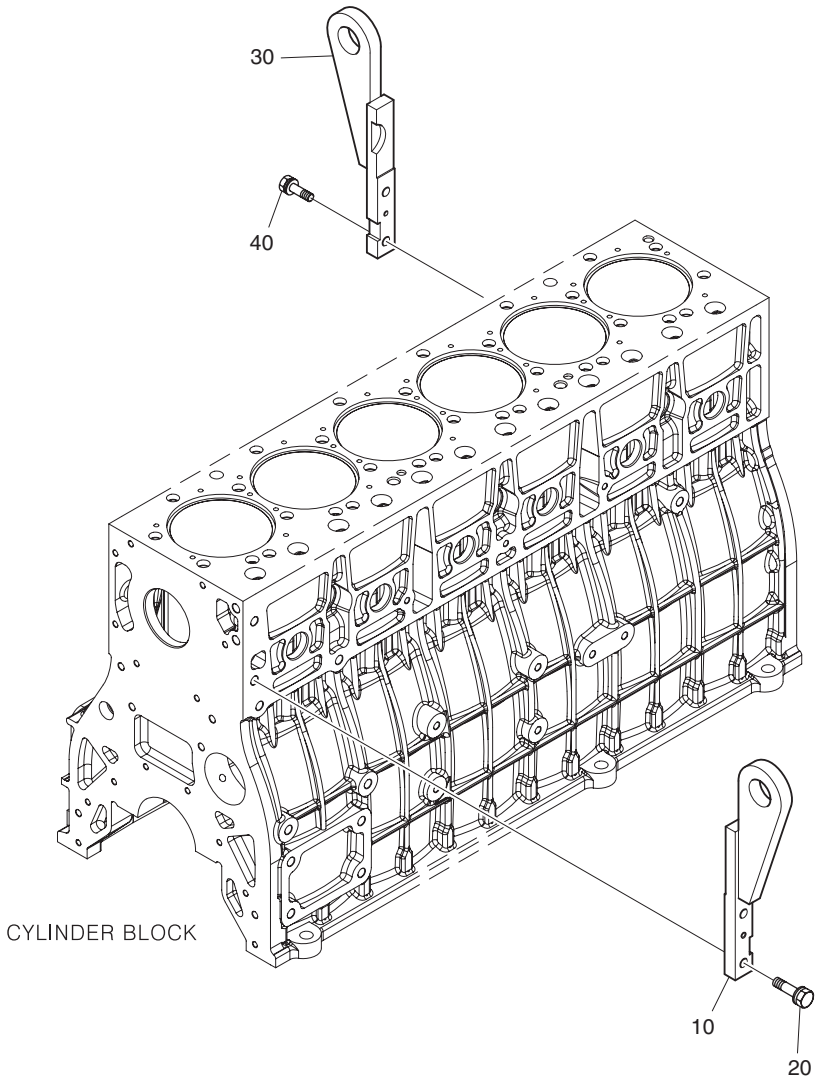

| DATE | JUN. 30, 2007 |
|---|---|
| REV. NO. | EXB07-06 |

# Fig. 027 LIFTING HOOK CROCHET DE LEVAGE

**Serial No. ;**

| Key No. | Part No. | Description | Description | Q'ty | S.C | Serial No. | ICA | Replaceable part | |
|---|---|---|---|---|---|---|---|---|---|
| | | | | | | | | Part No. | Q'ty |
| 027-10 | 65.19202-5017A | HOOK;LIFTING | CROCHET | 1 | | ~061207 | Y | 65.19202-5017B | 1 |
| | 65.19202-5017B | HOOK;LIFTING | CROCHET | 1 | | 061208~ | | | |
| 20 | 06.01943-3320 | BOLT ASS'Y M12X1.5X45 | BOULON 6 PANS | 2 | | ~050727 | | | |
| | 06.01943-3317 | BOLT ASS'Y M12X1.5X30 | BOULON 6 PANS | 2 | | 050728~ | | | |
| 30 | 65.19202-5017A | HOOK;LIFTING | CROCHET | 1 | | ~050727 | | | |
| | 65.19202-5013 | HOOK;LIFTING | CROCHET | 1 | | 050728~ | | | |
| 40 | 06.01943-3320 | BOLT ASS'Y M12X1.5X45 | BOULON 6 PANS | 2 | | | | | |

| DATE | JUN. 30, 2007 |
|---|---|
| REV.NO. | EXB07-06 |

# Fig. 028 STARTER
# COMMANDE DEMARREUR

**Serial No. ;**

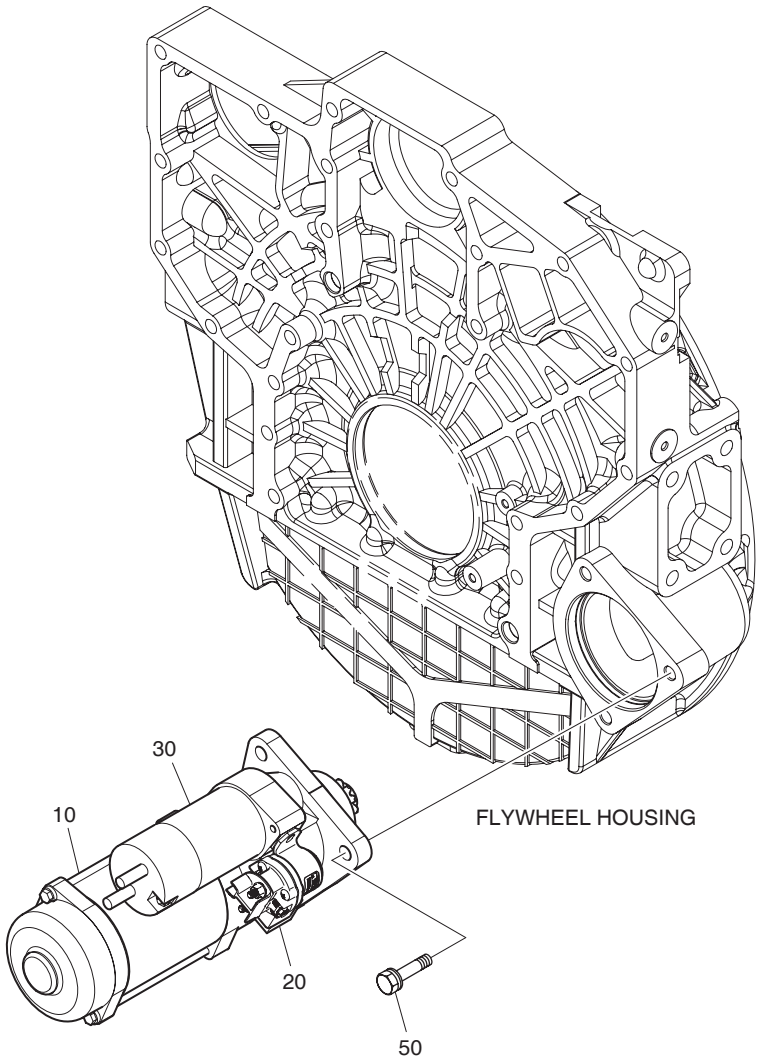

| DATE | JUN. 30, 2007 |
|---|---|
| REV. NO. | EXB07-06 |

# Fig. 028 STARTER COMMANDE DEMARREUR

**Serial No. ;**

| Key No. | Part No. | Description | Description | Q'ty | S.C | Serial No. | ICA | Replaceable part | |
|---|---|---|---|---|---|---|---|---|---|
| | | | | | | | | Part No. | Q'ty |
| 028-10 | 65.26201-7073 | STARTER | COMMANDE DEMARREUR | 1 | | ~051013 | Y | 65.26201-7073A | 1 |
| | 65.26201-7073A | STARTER | COMMANDE DEMARREUR | 1 | | ~061117 | Y | 65.26201-7073B | 1 |
| | 65.26201-7073B | STARTER | COMMANDE DEMARREUR | 1 | | ~070820 | Y | 65.26201-7073C | 1 |
| | **65.26201-7073C** | **STARTER** | COMMANDE DEMARREUR | 1 | | 070821~ | | | |
| 20 | **65.26212-0006** | **RELAY;MAYNETIC** | RELAIS | 1 | | 070821~ | | | |
| 30 | **65.26214-0006** | **SWITCH;MAYNETIC** | COMMUTATEUR | 1 | | 070821~ | | | |
| 50 | 06.01953-3318 | BOLT ASS'Y M12X1.5X35 | BOULON A 6 PANS | 3 | | | | | |

| DATE | JUN. 30, 2007 |
|---|---|
| REV.NO. | EXB07-06 |

# Fig. 029 AIR HEATER
# RECHAUFFEUR D'AIR

**Serial No. ;**

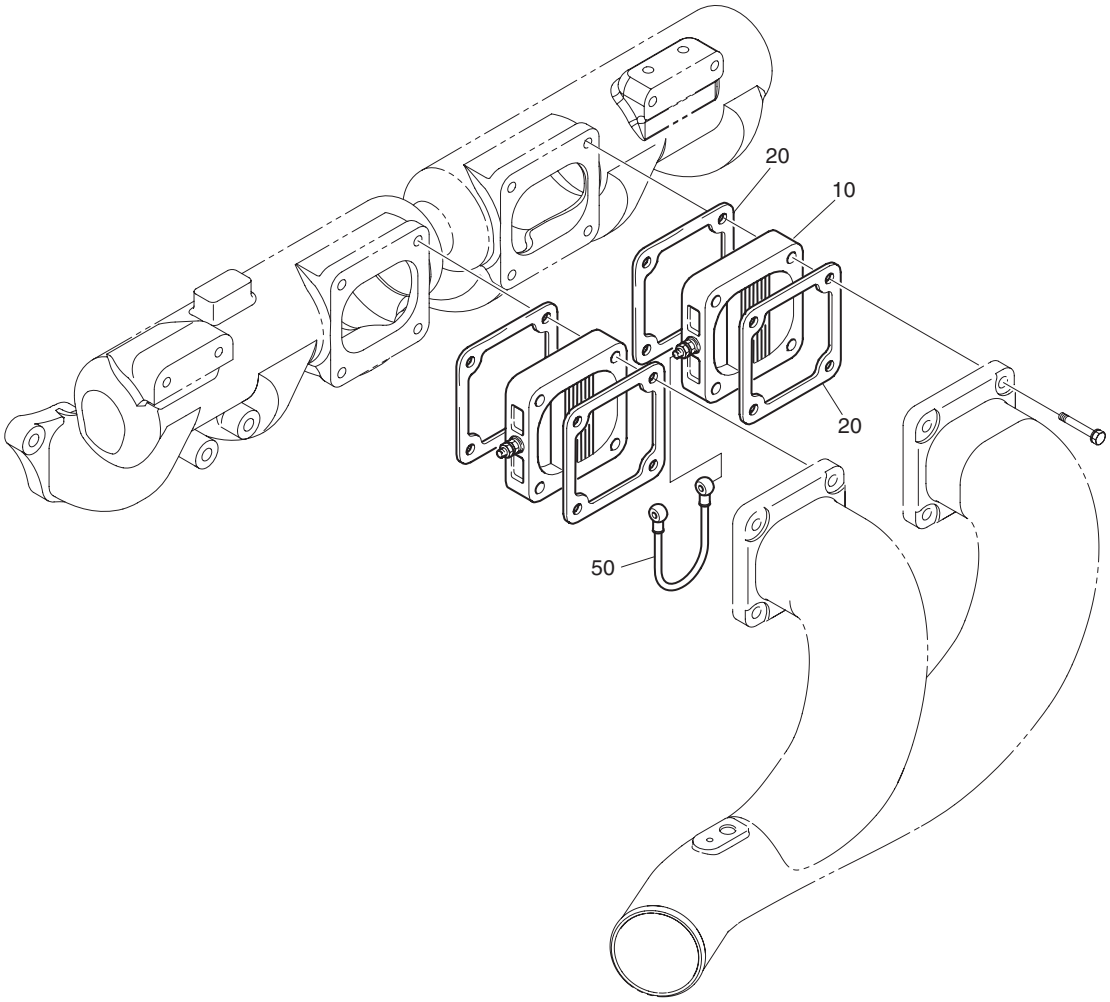

| DATE | JUN. 30, 2007 |
|---|---|
| REV. NO. | EXB07-06 |

# Fig. 029 AIR HEATER RECHAUFFEUR D'AIR

**Serial No. ;**

| Key No. | Part No. | Description | Description | Q'ty | S.C | Serial No. | ICA | Replaceable part | |
|---|---|---|---|---|---|---|---|---|---|
| | | | | | | | | Part No. | Q'ty |
| 029-10 | 65.26803-7024B | PLUG;PREHEATER | BOUCHON | 2 | | | | | |
| 20 | 65.08904-0002 | GASKET;AIR HEATER | JOINT | 4 | | | | | |
| 50 | 65.26805-0006 | CABLE | CABLE | 1 | | | | | |

| DATE | JUN. 30, 2007 |
|---|---|
| REV.NO. | EXB07-06 |

# Fig. 030 SENSOR CAPTEUR

**Serial No. ;**

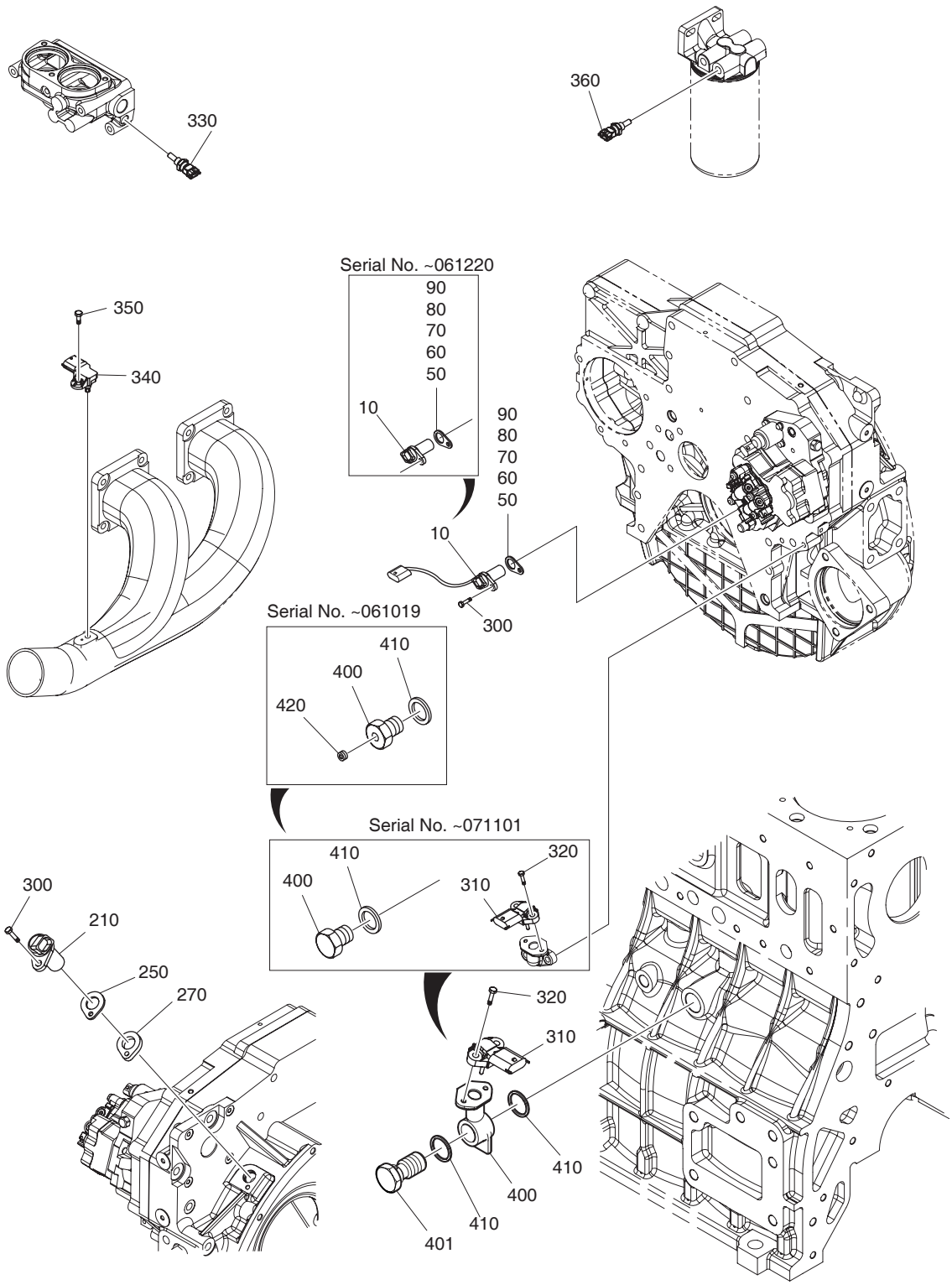

| DATE | JUN. 30, 2007 |
|---|---|
| REV. NO. | EXB07-06 |

# Fig. 030 SENSOR CAPTEUR

Serial No. ;

| Key No. | Part No. | Description | Description | Q'ty | S.C | Serial No. | ICA | Replaceable part | |
|---|---|---|---|---|---|---|---|---|---|
| | | | | | | | | Part No. | Q'ty |
| 030-10 | 65.27103-7008 | SENSOR | CAPTEUR | 1 | | ~061220 | | | |
| | 65.27103-7014 | SENSOR | CAPTEUR | 1 | | 061221~ | | | |
| 50 | 65.11308-8003 | SPACER;INJECTION PUMP | BAGUE D'ECARTEMENT | 1 | | | | | |
| 60 | 65.11308-0005 | . SPACER;INJECTION PUMP | . ENTERTOISE | 1 | R | | | | |
| 70 | 65.11308-0006 | . SPACER;INJECTION PUMP | . ENTERTOISE | 1 | R | | | | |
| 80 | 65.11308-0007 | . SPACER;INJECTION PUMP | . ENTERTOISE | 1 | R | | | | |
| 90 | 65.11308-0008 | . SPACER;INJECTION PUMP | . ENTERTOISE | 1 | R | | | | |
| 210 | 65.27103-7008 | SENSOR | CAPTEUR | 1 | | | | | |
| 250 | 65.11308-8003 | SPACER;INJECTION PUMP | BAGUE D'ECARTEMENT | 1 | | | | | |
| 270 | 65.91701-0229A | SPACER | BAGUE D'ECARTEMENT | 1 | | | | | |
| 300 | 06.01923-2915 | BOLT ASS'Y M6X25 | BOULON A 6 PANS | 2 | | | | | |
| 310 | 65.27427-7001 | SENSOR;OIL PRESSURE & TEMP | CAPTEUR | 1 | | | | | |
| 320 | 06.01923-2913 | BOLT ASS'Y M6X20 | BOULON A 6 PANS | 2 | | | | | |
| 330 | 65.27423-7003 | SENSOR;WATERTEMPERATURE | CAPTEUR | 1 | | | | | |
| 340 | 65.27444-7001 | SENSOR | CAPTEUR | 1 | | | | | |
| 350 | 06.01923-2912 | BOLT ASS'Y M6X18 | BOULON A 6 PANS | 1 | | | | | |
| 360 | 65.27423-7003 | SENSOR;WATER TEMPERATURE | CAPTEUR | 1 | | | | | |
| 400 | 65.98130-0170 | ADAPTER | ADAPTEUR | 1 | | ~061019 | | | |
| | 65.98130-0132 | ADAPTER | ADAPTEUR | 1 | | ~071101 | | | |
| | 65.98130-0247 | ADAPTER | ADAPTEUR | 1 | | 071102~ | | | |
| 401 | 65.98150-0088 | SCREW;HOLLOW | VIS CREUSE | 1 | | 071102~ | | | |
| 410 | 06.56190-0718 | RING;SEAL | BAGUE | 1 | | ~071101 | | | |
| | **06.56190-0718** | **RING;SEAL** | BAGUE | 2 | | 071102~ | | | |
| 420 | 65.90320-0022 | PLUG;SCREW PT1/8 | VIS DE REGLAGE | 1 | | ~061019 | | | |

| DATE | JUN. 30, 2007 |
|---|---|
| REV.NO. | EXB07-06 |

# Fig. 031 WIRE HARNESS
# JAGUE DE NIVEAU

**Serial No. ;**

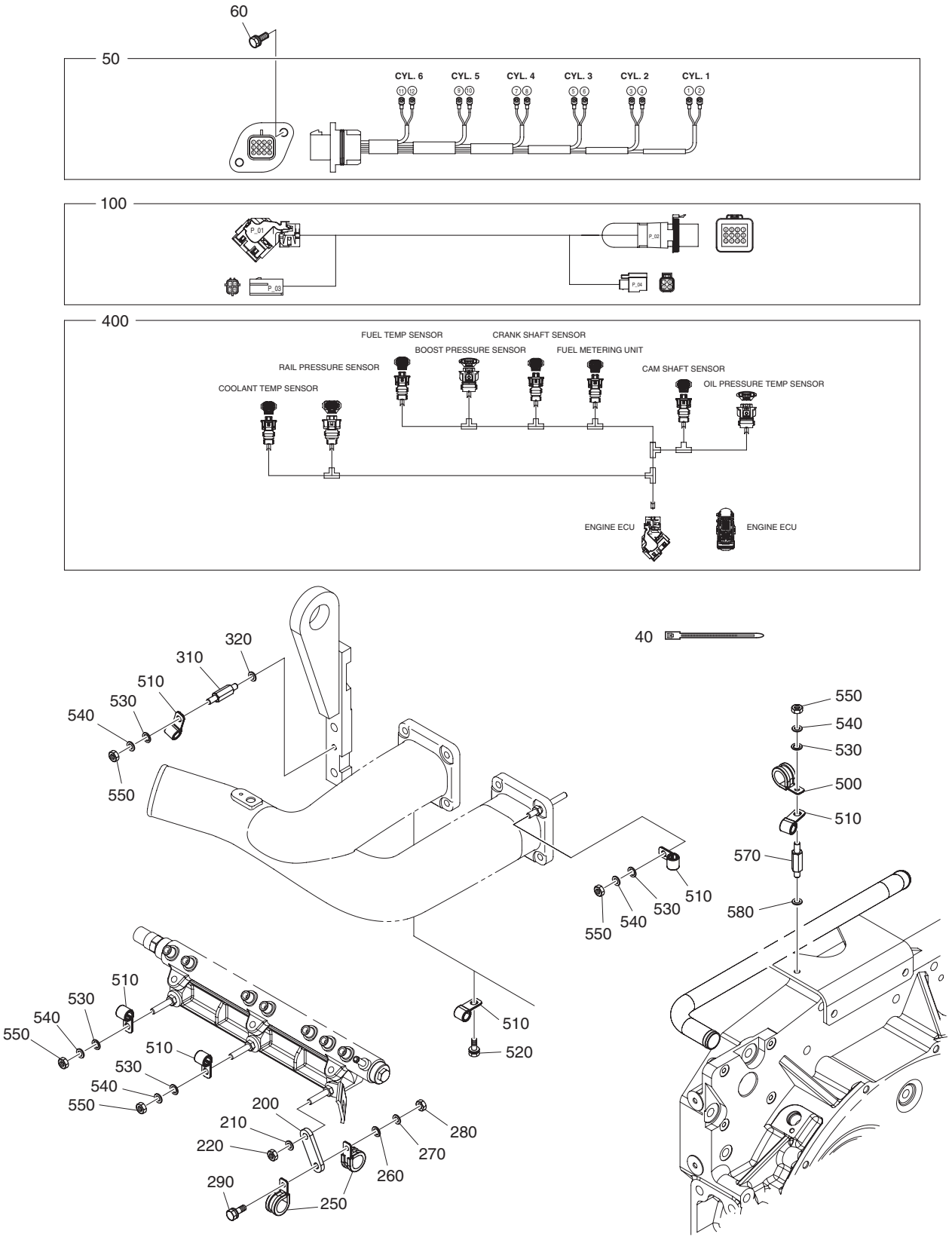

| DATE | JUN. 30, 2007 |
|---|---|
| REV. NO. | EXB07-06 |

# Fig. 031 WIRE HARNESS JAGUE DE NIVEAU

**Serial No. ;**

| Key No. | Part No. | Description | Description | Q'ty | S.C | Serial No. | ICA | Replaceable part | |
|---|---|---|---|---|---|---|---|---|---|
| | | | | | | | | Part No. | Q'ty |
| 031-40 | 65.97460-0008 | BAND;TENSION | JAGUE DE NIVEAU | 9 | | | | | |
| 50 | 65.29101-6137C | WIRE;ELECTIRC | CABLE | 1 | | ~070326 | Y | 65.29101-6137E | 1 |
| | **65.29101-6137E** | **WIRE;ELECTIRC** | CABLE | 1 | | 070327~ | | | |
| 60 | 06.01923-2911 | BOLT ASS'Y M6X16 | ENSEMBLE BOULON | 2 | | | | | |
| 100 | 65.29101-6155 | WIRE;ELECTIRC | CABLE | 1 | | ~061220 | Y | 65.29101-6155A | 1 |
| | 65.29101-6155A | WIRE;ELECTIRC | CABLE | 1 | | 061221~ | | | |
| 200 | 65.29150-0005 | BRACKET;HARNESS | SUPPORT | 1 | | | | | |
| 210 | 06.16731-2107 | WASHER;SPRING A8 | RONDELLE ELASTIQUE | 1 | | | | | |
| 220 | 06.11063-8214 | NUT;HEX. M8 | ECROU 6 PANS M8 | 1 | | | | | |
| 250 | 65.97401-5024 | CLIP;PIPE | ATTACHE | 2 | | | | | |
| 260 | 06.15010-2311 | WASHER 8.4 | RONDELLE | 1 | | | | | |
| 270 | 06.16731-2107 | WASHER;SPRING A8 | RONDELLE ELASTIQUE | 1 | | | | | |
| 280 | 06.11063-8214 | NUT;HEX. M8 | ECROU 6 PANS M8 | 1 | | | | | |
| 290 | 06.01923-3115 | HEX. BOLT ASS'Y 2.M8X25 | BOULON A 6 PANS | 1 | | | | | |
| 310 | 65.90201-0128 | BOLT;STUD | BOULON A 6 PANS | 1 | | | | | |
| 320 | 06.16731-2107 | WASHER;SPRING A8 | RONDELLE ELASTIQUE | 1 | | | | | |
| 400 | 65.29101-6156 | WIRE;ELECTIRC | CABLE | 1 | | ~051013 | I | 65.29101-6197 | 1 |
| | 65.29101-6197 | WIRE;ELECTIRC | CABLE | 1 | | ~061220 | | | |
| | 65.29101-6211 | WIRE;ELECTIRC | CABLE | 1 | | ~070326 | Y | 65.29101-6211A | 1 |
| | **65.29101-6211A** | **WIRE;ELECTIRC** | CABLE | 1 | | 070327~ | | | |
| 500 | 65.97401-5024 | CLIP;PIPE | ATTACHE | 1 | | | | | |
| 510 | 65.97401-0196 | CLIP;PIPE | ATTACHE | 7 | | | | | |
| 520 | 06.01923-3110 | BOLT ASS'Y M8X12 | BOULON A 6 PANS | 2 | | | | | |
| 530 | 06.15010-2311 | WASHER 8.4 | RONDELLE | 4 | | | | | |
| 540 | 06.16731-2107 | WASHER;SPRING A8 | RONDELLE ELASTIQUE | 4 | | | | | |
| 550 | 06.11063-8214 | NUT;HEX. M8 | ECROU 6 PANS M8 | 4 | | | | | |
| 570 | 65.90201-0128 | BOLT;STUD | BOULON A 6 PANS | 1 | | | | | |
| 580 | 06.16731-2107 | WASHER;SPRING A8 | RONDELLE ELASTIQUE | 1 | | | | | |

| DATE | JUN. 30, 2006 |
|---|---|
| REV.NO. | EXB06-08 |

# Fig. 032 ENGINE MOUNTING SUPPORT

**Serial No. ;**

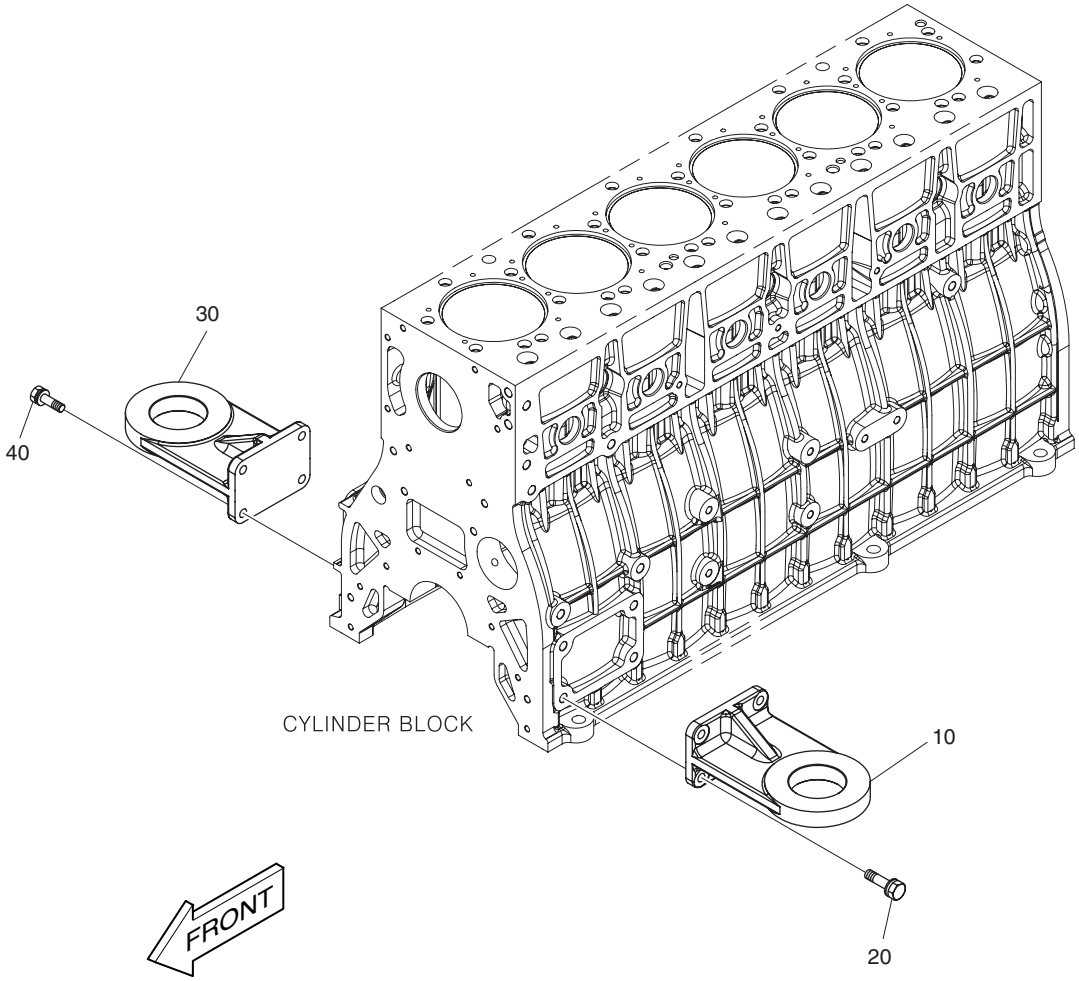

| DATE | JUN. 30, 2006 |
|---|---|
| REV. NO. | EXB06-08 |

# Fig. 032 ENGINE MOUNTING SUPPORT

Serial No. ;

| Key No. | Part No. | Description | Description | Q'ty | S.C | Serial No. | ICA | Replaceable part | |
|---|---|---|---|---|---|---|---|---|---|
| | | | | | | | | Part No. | Q'ty |
| 032-10 | 65.41530-0181 | BRACKET;FRONT MOUNTING | SUPPORT | 1 | | | | | |
| 20 | 06.01944-3318 | BOLT;HEX. | BOULON A 6 PANS | 4 | | | | | |
| 30 | 65.41530-0181 | BRACKET;FRONT MOUNTING | SUPPORT | 1 | | | | | |
| 40 | 06.01944-3318 | BOLT;HEX. | BOULON A 6 PANS | 4 | | | | | |

| DATE | JUN. 30, 2006 |
|---|---|
| REV.NO. | EXB06-08 |

# Fig. 033 POWER STEERING PUMP
# POMPE DE DIRECTION DE PUISSANCE

**Serial No. ;**

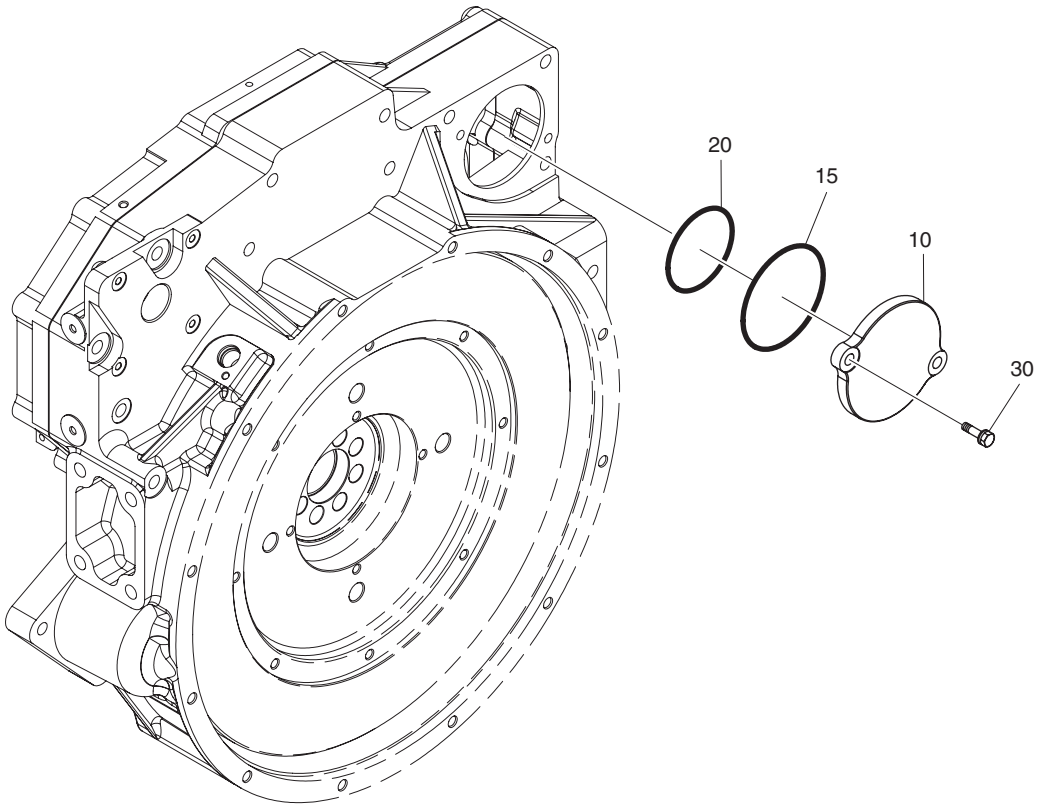

| DATE | JUN. 30, 2006 |
|---|---|
| REV. NO. | EXB06-08 |

# Fig. 033 POWER STEERING PUMP
# POMPE DE DIRECTION DE PUISSANCE

**Serial No. ;**

| Key No. | Part No. | Description | Description | Q'ty | S.C | Serial No. | ICA | Replaceable part | |
|---|---|---|---|---|---|---|---|---|---|
| | | | | | | | | Part No. | Q'ty |
| 033-10 | 65.01402-0015 | COVER;FLYWHEEL HOUSING | COUVERCLE | 1 | | | | | |
| 15 | 06.56020-0116 | O-RING(G100) | JOINT TORIQUE | 1 | | | | | |
| 20 | 06.56020-0115 | O-RING | JOINT TORIQUE | 1 | | | | | |
| 30 | 06.01923-3217 | BOLT ASS'Y M10X30 | BOULON A 6 PANS | 2 | | | | | |

| DATE | JUN. 30, 2007 |
|---|---|
| REV.NO. | EXB07-06 |

# Fig. 034 AIR COMPRESSOR
# COMPRESSEUR D'AIR

**Serial No. ;**

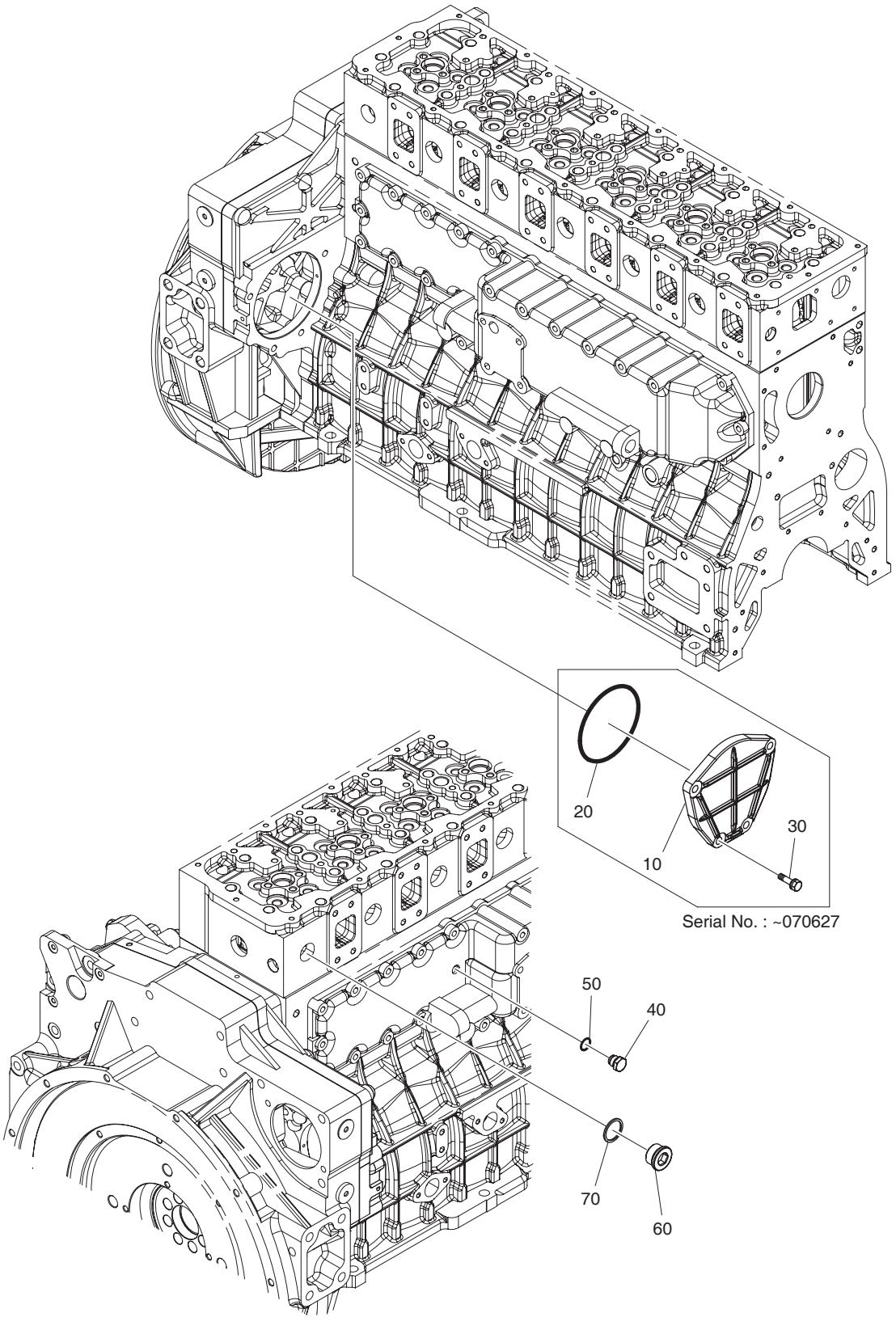

| DATE | JUN. 30, 2007 |
|---|---|
| REV. NO. | EXB07-06 |

# Fig. 034 AIR COMPRESSOR COMPRESSEUR D'AIR

**Serial No. ;**

| Key No. | Part No. | Description | Description | Q'ty | S.C | Serial No. | ICA | Replaceable part | |
|---|---|---|---|---|---|---|---|---|---|
| | | | | | | | | Part No. | Q'ty |
| 034-10 | **65.01307-0013** | **COVER** | COUVERCLE | 1 | | ~070627 | | | |
| 20 | **65.96501-0090A** | **O-RING** | JOINT TORIQUE | 1 | | ~070627 | | | |
| 30 | **06.01923-3218** | **BOLT ASS'Y M10X35** | BOULON A 6 PANS | 4 | | ~070627 | | | |
| 40 | 65.90310-0140 | SCREW;PLUG M16X1.5 | BOUCHON | 1 | | | | | |
| 50 | 06.56190-0708 | RING;SEAL A16X22 | BAGUE D'ETANCHEITE | 1 | | | | | |
| 60 | 65.90310-0134 | SCREW;PLUG | VIS | 1 | | | | | |
| 70 | 06.56190-0732 | RING;SEAL A30X36 | CONTACT DE NIVEAU | 1 | | | | | |

| DATE | JUN. 30, 2007 |
|---|---|
| REV.NO. | EXB07-06 |

# Fig. 035 OVER HAUL GASKET KIT - ALL PIECES DE RECHANGE

**Serial No. ;**

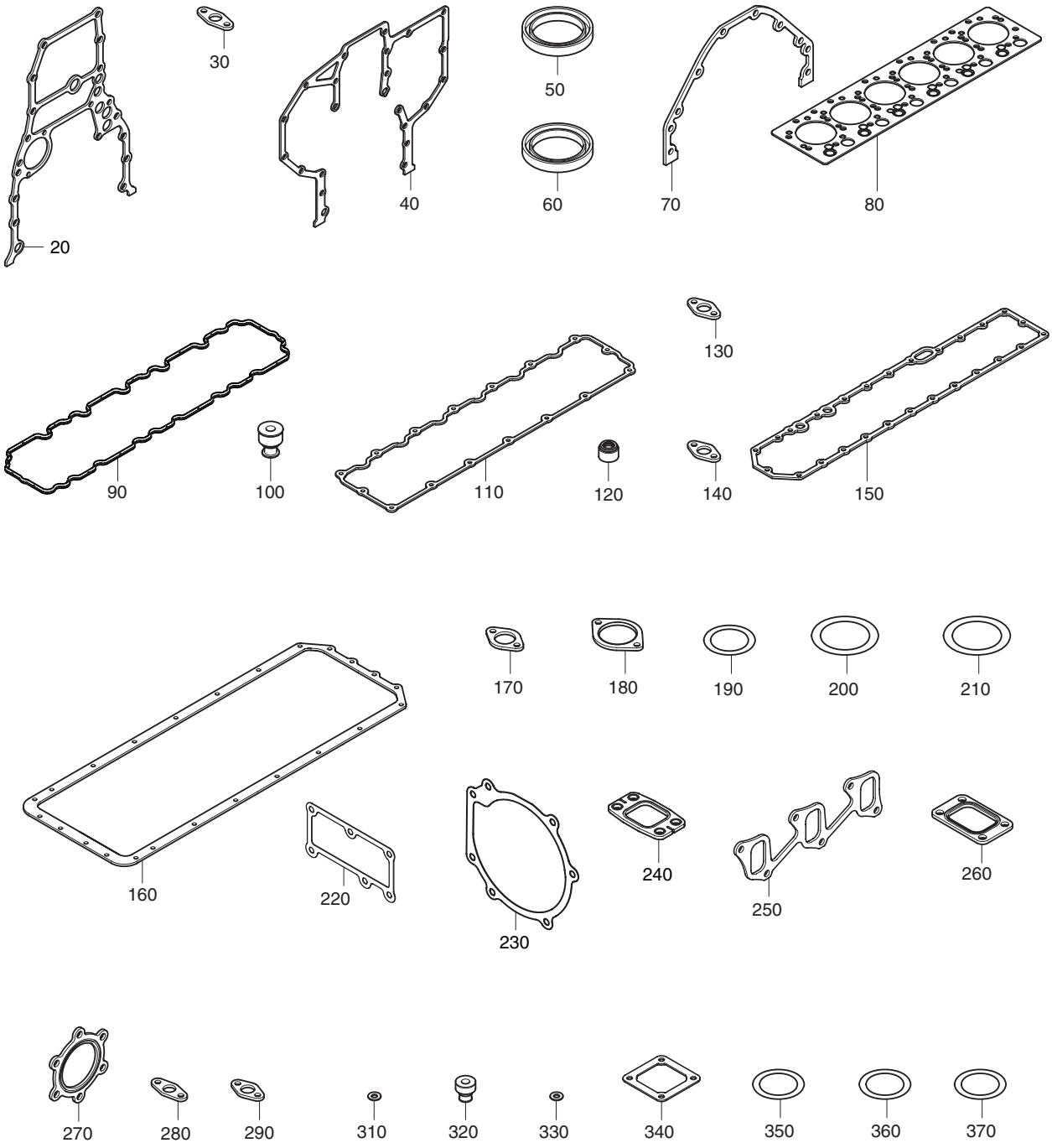

| DATE | JUN. 30, 2007 |
|---|---|
| REV. NO. | EXB07-06 |

# Fig. 035 OVER HAUL GASKET KIT - ALL PIECES DE RECHANGE

**Serial No. ;**

| Key No. | Part No. | Description | Description | Q'ty | S.C | Serial No. | ICA | Replaceable part | |
|---|---|---|---|---|---|---|---|---|---|
| | | | | | | | | Part No. | Q'ty |
| 035-- | 65.99601-8054 | ALL OVERHAUL GASKET KIT | TOUS REVISENT LE KIT DE | 1 | | | | | |
| 20 | 65.01903-0012 | . GASKET | . JOINT | 1 | | | | | |
| 30 | 65.96601-0045A | . GASKET | . JOINT | 1 | | ~060529 | Y | 65.96601-00467 | 1 |
| | **65.96601-00467** | **. GASKET** | . JOINT | 1 | | 060530~ | | | |
| 40 | 65.01904-0027A | . GASKET | . JOINT | 1 | | | | | |
| 50 | 65.01510-0141 | . SEAL;OIL | . JOINT | 1 | | | | | |
| 60 | 65.01510-0153A | . SEAL;OIL | . JOINT | 1 | | ~070817 | | | |
| | **65.01510-0041** | **. SEAL;OIL** | . JOINT | 1 | | 070818~ | | | |
| 70 | 65.01905-0008 | . GASKET | . JOINT | 1 | | | | | |
| 80 | 65.03901-0068 | . GASKET;CYLINDER HEAD | . JOINT | 1 | | ~070808 | I | 65.03901-0074 | 1 |
| | **65.03901-0074** | **. GASKET;CYLINDER HEAD** | . JOINT | 1 | | 070809~ | | | |
| 90 | 65.03905-0032 | . GASKET;CYLINDER HEAD | . JOINT | 1 | | | | | |
| 100 | 65.03905-5002 | . GASKET;CYLINDER HEAD | . JOINT | 8 | | | | | |
| 110 | 65.03905-0028A | . GASKET;CYLINDER HEAD | . JOINT | 1 | | ~070530 | I | 65.03905-0028A | 1 |
| | **65.03905-0045** | **. GASKET;CYLINDER HEAD** | . JOINT | 1 | | 070531~ | | | |
| 120 | 65.04902-0014 | . SEAL;VALVE STEAM | . JOINT | 24 | | | | | |
| 130 | 65.05903A0001 | . GASKET | . JOINT | 2 | | | | | |
| 140 | 65.05903A0001 | . GASKET | . JOINT | 2 | | | | | |
| 150 | 65.05902-0019 | . GASKET;OIL COOLER | . JOINT | 2 | | | | | |
| 160 | 65.05904-0031 | . GASKET;OIL PAN | . JOINT | 1 | | ~051126 | I | 65.05904-0038 | 1 |
| | 65.05904-0038 | . GASKET;OIL PAN | . JOINT | 1 | | 051127~ | | | |
| 170 | 65.05901-0027 | . GASKET;OIL FILTER | . JOINT | 1 | | | | | |
| 180 | 65.06901-0037 | . GASKET;WATER PUMP | . JOINT | 1 | | | | | |
| 190 | 65.96501-0089 | . O-RING | . JOINT TORIQUE | 2 | | ~051128 | Y | 65.96501-0089A | 2 |
| | **65.96501-0089A** | **. O-RING** | . JOINT TORIQUE | 2 | | 051129~ | | | |
| 200 | 06.56342-1208 | . O-RING 60X4 | . JOINT TORIQUE | 2 | | | | | |
| 210 | 65.06901A0069 | . GASKET | . JOINT | 2 | | | | | |
| 220 | 65.06901-0040 | . GASKET;WATER PUMP | . JOINT | 1 | | | | | |
| 230 | 65.06901-0039 | . GASKET;WATER PUMP | . JOINT | 1 | | | | | |
| 240 | 65.08901-0032 | . GASKET;EXHAUST MANIFOLD | . JOINT | 6 | | | | | |
| 250 | 65.08902-0027 | . GASKET;INTAKE MANIFOLD | . JOINT | 2 | | ~071109 | I | 65.08902-0035 | 2 |
| | **65.08902-0035** | **. GASKET;INTAKE MANIFOLD** | . JOINT | 2 | | 071110~ | | | |
| 260 | 65.09901-0018A | . GASKET | . JOINT | 1 | | | | | |
| 270 | 65.09901-0030 | . GASKET;TURBO CHARGER | . JOINT | 1 | | | | | |
| 280 | 65.96601-0045A | . GASKET | . JOINT | 1 | | ~060529 | | | |
| | 65.96601-0067 | . GASKET | . JOINT | 1 | | 060530~ | | | |
| 290 | 65.96601-0052 | . GASKET | . JOINT | 1 | | | | | |
| 310 | 65.96507-0053 | . RING;SEAL | . BAGUE | 6 | | | | | |

| DATE | JUN. 30, 2007 |
|---|---|
| REV.NO. | EXB07-06 |

# Fig. 035 OVER HAUL GASKET KIT - ALL PIECES DE RECHANGE

**Serial No. ;**

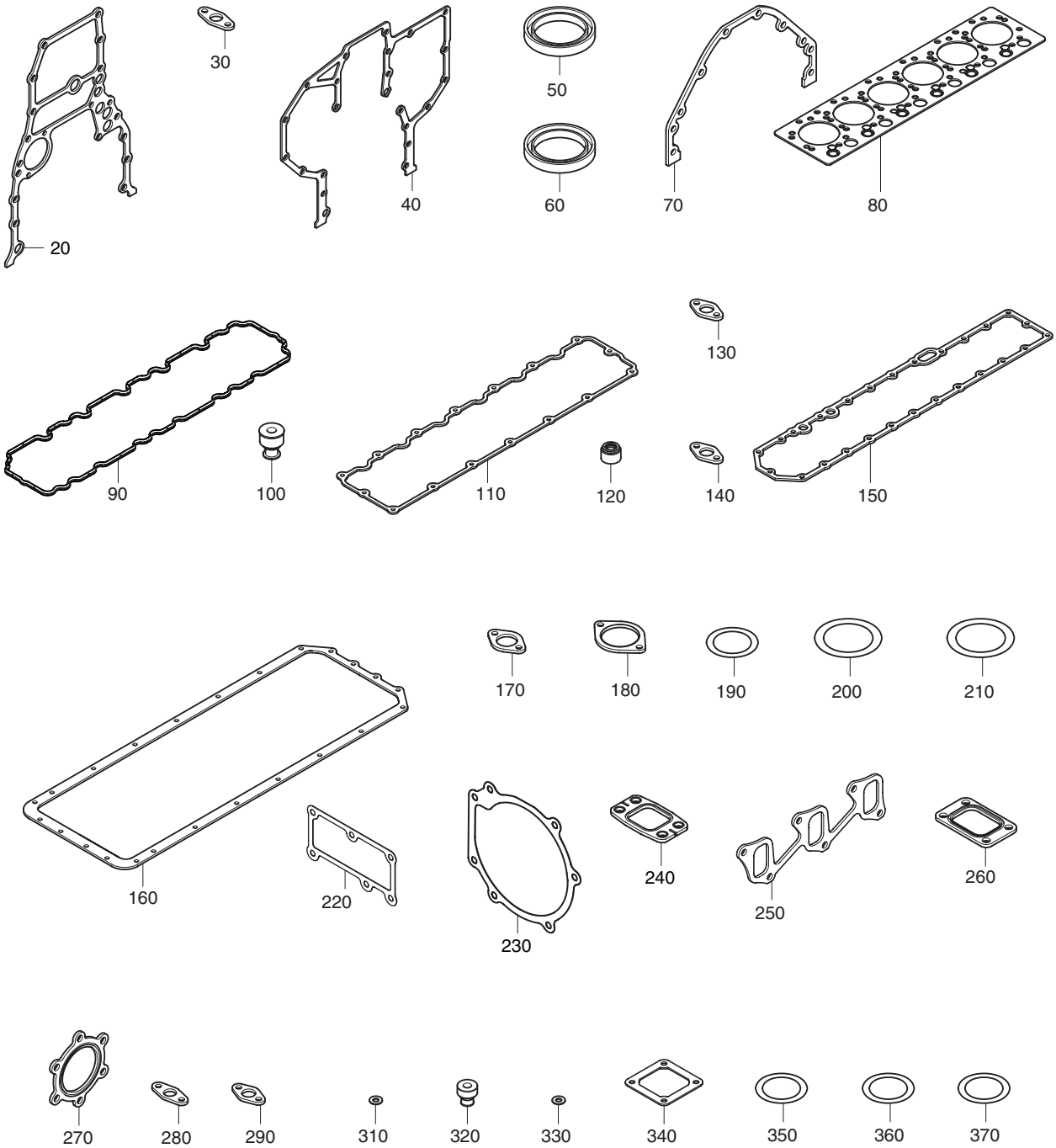

| DATE | JUN. 30, 2007 |
|---|---|
| REV. NO. | EXB07-06 |

# Fig. 035 OVER HAUL GASKET KIT - ALL PIECES DE RECHANGE

**Serial No. ;**

| Key No. | Part No. | Description | Description | Q'ty | S.C | Serial No. | ICA | Replaceable part | |
|---|---|---|---|---|---|---|---|---|---|
| | | | | | | | | Part No. | Q'ty |
| 035-320 | 65.96210-6001A | . CUSHION;RUBBER | . CUSHION;RUBBER | 4 | | | | | |
| 330 | 06.56180-0712 | . RING;SEAL A8X14 | . BAGUE D'ETANCHEITE | 18 | | | | | |
| 340 | 65.08904-0002 | . GASKET;AIR HEATER | . JOINT | 4 | | | | | |
| 350 | 06.56020-0116 | . O-RING(G100) | . JOINT TORIQUE | 1 | | | | | |
| 360 | 06.56020-0115 | . O-RING | . JOINT TORIQUE | 1 | | | | | |
| 370 | 65.96501-0090A | . O-RING | . JOINT TORIQUE | 1 | | | | | |

| DATE | JUN. 30, 2007 |
|---|---|
| REV.NO. | EXB07-06 |

# Fig. 036 OVER HAUL GASKET KIT - TOP
# PIECES DE RECHANGE

**Serial No. ;**

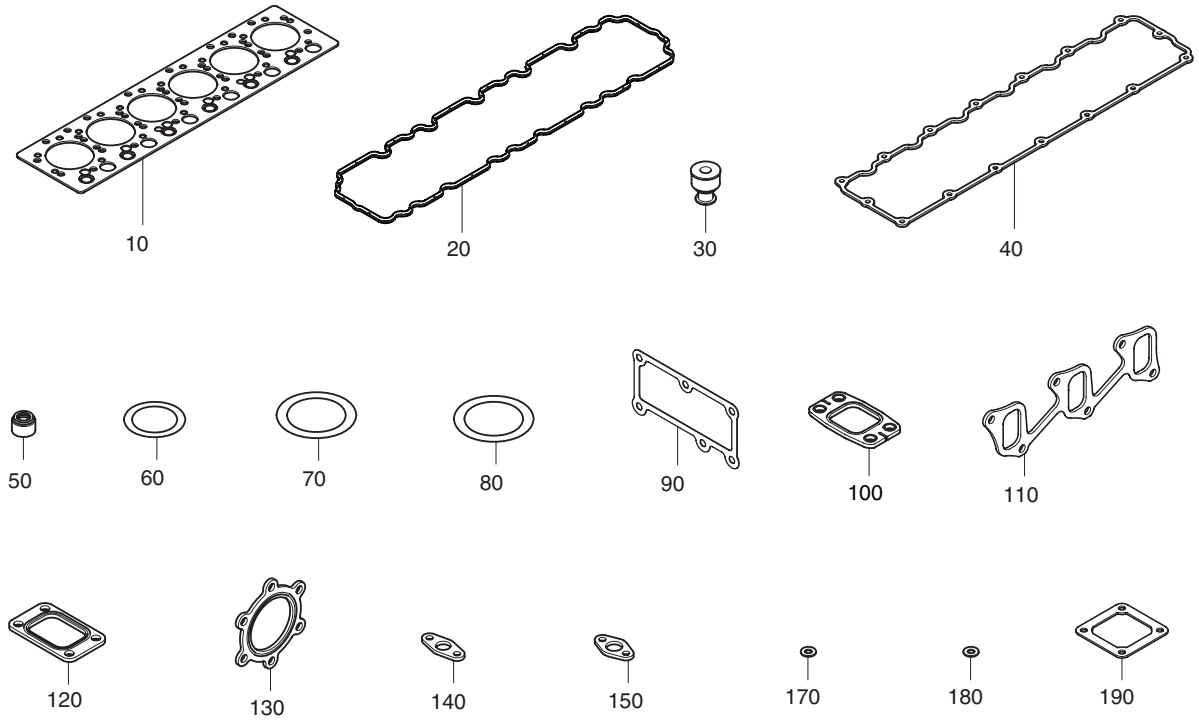

| DATE | JUN. 30, 2007 |
|---|---|
| REV. NO. | EXB07-06 |

# Fig. 036 OVER HAUL GASKET KIT - TOP PIECES DE RECHANGE

**Serial No. ;**

| Key No. | Part No. | Description | Description | Q'ty | S.C | Serial No. | ICA | Replaceable part | |
|---|---|---|---|---|---|---|---|---|---|
| | | | | | | | | Part No. | Q'ty |
| 036-- | 65.99605-8035 | KIT;TOP OVERHAUL GASKET | KIT | 1 | | | | | |
| 10 | 65.03901-0068 | . GASKET;CYLINDER HEAD | . JOINT | 1 | | ~070808 | I | 65.03901-0074 | 1 |
| | **65.03901-0074** | **. GASKET;CYLINDER HEAD** | . JOINT | 1 | | 070809~ | | | |
| 20 | 65.03905-0032 | . GASKET;CYLINDER HEAD | . JOINT | 1 | | | | | |
| 30 | 65.03905-5002 | . GASKET;CYLINDER HEAD | . JOINT | 8 | | | | | |
| 40 | 65.03905-0028A | . GASKET;CYLINDER HEAD | . JOINT | 1 | | ~070530 | I | 65.03905-0045 | 1 |
| | **65.03905-0045** | **. GASKET;CYLINDER HEAD** | . JOINT | 1 | | 070531~ | | | |
| 50 | 65.04902-0014 | . SEAL;VALVE STEAM | . JOINT | 24 | | | | | |
| 60 | 65.96501-0089 | . O-RING | . JOINT TORIQUE | 2 | | | | | |
| 70 | 06.56342-1208 | . O-RING 60X4 | . JOINT TORIQUE | 2 | | | | | |
| 80 | 65.06901A0069 | . GASKET | . JOINT | 2 | | | | | |
| 90 | 65.06901-0040 | . GASKET;WATER PUMP | . JOINT | 1 | | | | | |
| 100 | **65.08901-0032A** | **. GASKET;EXHAUST** | . JOINT | 6 | | | | | |
| 110 | 65.08902-0027 | . GASKET;INTAKE MANIFOLD | . JOINT | 2 | | ~071109 | I | 65.08902-0035 | 2 |
| | **65.08902-0035** | **. GASKET;INTAKE MANIFOLD** | . JOINT | 2 | | 071110~ | | | |
| 120 | 65.09901-0018A | . GASKET | . JOINT | 1 | | | | | |
| 130 | 65.09901-0030 | . GASKET;TURBO CHARGER | . JOINT | 1 | | | | | |
| 140 | 65.96601-0045A | . GASKET | . JOINT | 1 | | ~060529 | Y | 65.96601-0067 | 1 |
| | 65.96601-0067 | . GASKET | . JOINT | 1 | | 060530~ | | | |
| 150 | 65.96601-0052 | . GASKET | . JOINT | 1 | | | | | |
| 170 | 65.96507-0053 | . RING;SEAL | . BAGUE | 6 | | | | | |
| 180 | 06.56180-0712 | . RING;SEAL A8X14 | . BAGUE D'ETANCHEITE | 18 | | | | | |
| 190 | 65.08904-0002 | . GASKET;AIR HEATER | . JOINT | 4 | | | | | |

| DATE | JUN. 30, 2008 |
|---|---|
| REV.NO. | EXB08-06 |

# Fig. 1100 MAIN FRAME
# ENSEMBLE BATI PRINCIPAL

**Serial No. ;**

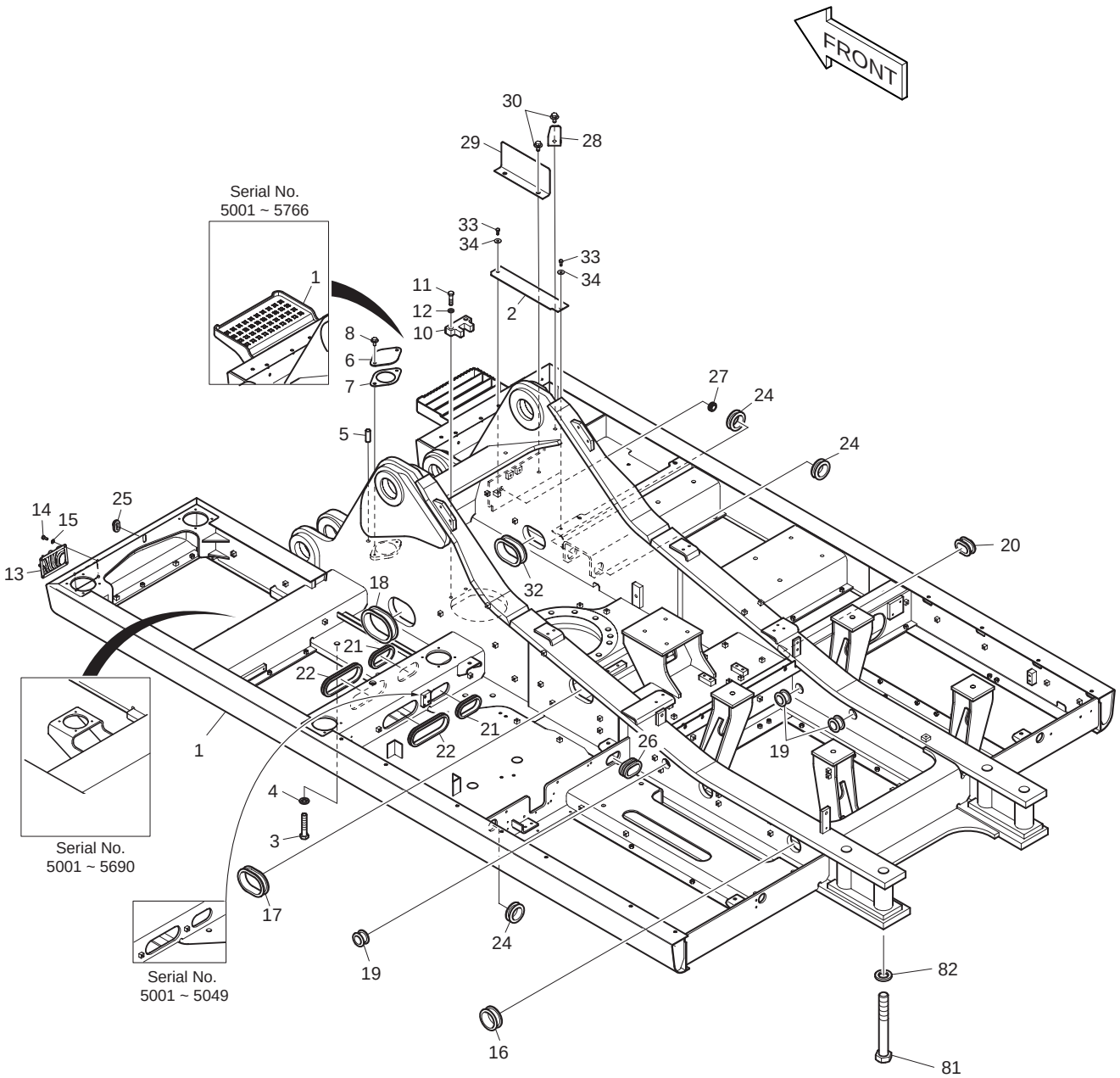

| DATE | JUN. 30, 2008 |
|---|---|
| REV. NO. | EXB08-06 |

# Fig. 1100 MAIN FRAME
# ENSEMBLE BATI PRINCIPAL

Serial No. ;

| Key No. | Part No. | Description | Description | Q'ty | S.C | Serial No. | ICA | Replaceable part | |
|---|---|---|---|---|---|---|---|---|---|
| | | | | | | | | Part No. | Q'ty |
| 1100-- | K1002971S | MAIN FRAME | ENSEMBLE BATI PRINCIPAL | - | D | 5001–5031 | | | |
| | **K1002971Q** | **MAIN FRAME** | ENSEMBLE BATI PRINCIPAL | - | D | **5032**– | | | |
| 1 | K1002972E | FRAME;MAIN | CHASSIS PRINCIPAL | 1 | | 5001–5031 | I | K1002972G | 1 |
| | K1002972G | FRAME;MAIN | CHASSIS PRINCIPAL | 1 | | 5032–5049 | I | K1002972H | 1 |
| | K1002972H | FRAME;MAIN | CHASSIS PRINCIPAL | 1 | | 5050–5066 | I | K1002972J | 1 |
| | K1002972J | FRAME;MAIN | CHASSIS PRINCIPAL | 1 | | 5067–5099 | I | K1002972K | 1 |
| | K1002972K | FRAME;MAIN | CHASSIS PRINCIPAL | 1 | | 5100–5449 | I | K1002972L | 1 |
| | K1002972L | FRAME;MAIN | CHASSIS PRINCIPAL | 1 | | 5450–5690 | | | |
| | K1002972M | FRAME;MAIN | CHASSIS PRINCIPAL | 1 | | 5691–5766 | I | K1002972P | 1 |
| | K1002972P | FRAME;MAIN | CHASSIS PRINCIPAL | 1 | | 5767–5902 | I | K1002972R | 1 |
| | **K1002972R** | **FRAME;MAIN** | CHASSIS PRINCIPAL | 1 | | **5903**– | | | |
| 2 | K1004976A | PLATE | PLAQUE | 1 | | | | | |
| 3 | S0775866 | BOLT | BOULON A 6 PANS | 35 | | | | | |
| 4 | 2114-1831A | WASHER;HARD | RONDELLE ELASTIQUE | 35 | | | | | |
| 5 | 2123-1107D6 | PIN;KNOCK | GOUPILLE | 2 | | 5001–5954 | | | |
| | **2123-1107D7** | **PIN;KNOCK** | GOUPILLE | 2 | | **5955**– | | | |
| 6 | 621-02938B | COVER | COUVERCLE | 1 | | | | | |
| 7 | 180-00463 | PACKING | RONDELLE D'ETANCHEITE | 1 | | | | | |
| 8 | DS0025023 | BOLT;SET | BOULON A 6 PANS | 2 | | | | | |
| 10 | K1002107A | PLATE | PLAQUE | 1 | | | | | |
| 11 | S0565466 | BOLT | BOULON A 6 PANS | 2 | | | | | |
| 12 | S5102903 | WASHER;SPRING | RONDELLE ELASTIQUE | 2 | | | | | |
| 13 | 621-02800 | GUARD;LAMP | GARDE | 1 | | | | | |
| 14 | 2120-2166D5 | BOLT | BOULON A 6 PANS | 4 | | | | | |
| 15 | 2114-1898D14 | WASHER | RONDELLE PAQUE | 4 | | | | | |
| 16 | 2160-1004D42 | BUSHING | MANCHON CAOUTCHOUC | 1 | | | | | |
| 17 | DS7601024 | BUSHING;RUBBER | DOUILLE | 1 | | 5001–5902 | | | |
| | **DS7601063** | **BUSHING;RUBBER** | DOUILLE | 1 | | **5903**– | | | |
| 18 | 2160-1201D9 | BUSHING;RUBBER | MANCHON CAOUTCHOUC | 1 | | | | | |
| 19 | DS7603058 | BUSHING;RUBBER | DOUILLE | 3 | | | | | |
| 20 | DS7601029 | BUSHING;RUBBER | MANCHON CAOUTCHOUC | 1 | | 5001–5902 | | | |
| | **DS7601064** | **BUSHING;RUBBER** | MANCHON CAOUTCHOUC | 1 | | **5903**– | | | |
| 21 | DS7601027 | BUSHING;RUBBER | MANCHON CAOUTCHOUC | 2 | | | | | |
| 22 | DS7601028 | BUSHING;RUBBER | MANCHON CAOUTCHOUC | 2 | | | | | |
| 24 | 2160-1004D55 | BUSHING;RUBBER | MANCHON CAOUTCHOUC | 3 | | | | | |
| 25 | 160-00081 | CAP;BUSHING | CHAPEAU | 1 | | | | | |
| 26 | 2160-1201D14 | BUSHING;RUBBER | MANCHON CAOUTCHOUC | 1 | | | | | |
| 27 | 2160-1004D45 | BUSHING;RUBBER | GARNISSAGE | 1 | | | | | |

| DATE | JUN. 30, 2008 |
|---|---|
| REV.NO. | EXB08-06 |

# Fig. 1100 MAIN FRAME
# ENSEMBLE BATI PRINCIPAL

**Serial No. ;**

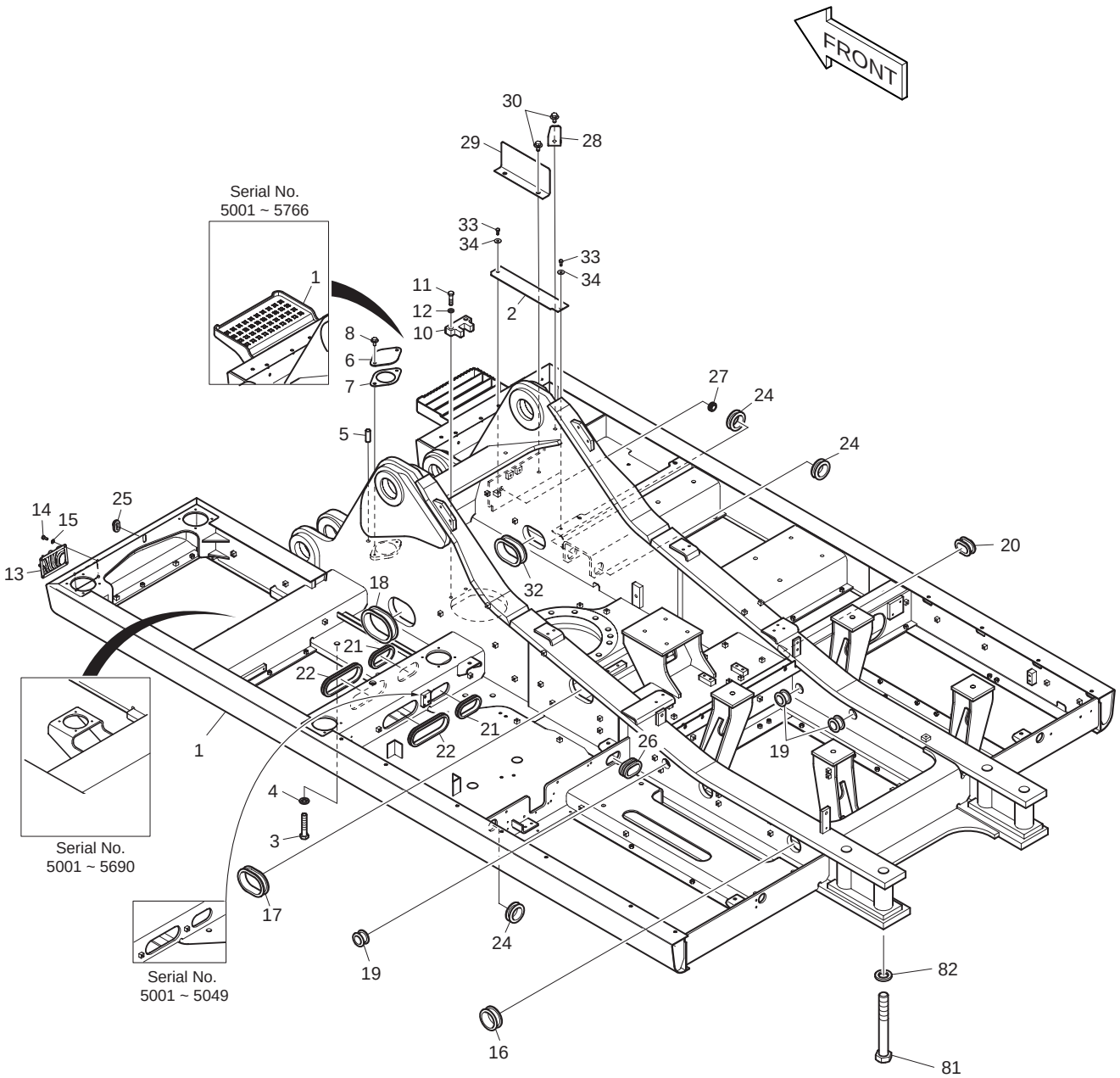

| DATE | JUN. 30, 2008 |
|---|---|
| REV. NO. | EXB08-06 |

# Fig. 1100 MAIN FRAME
# ENSEMBLE BATI PRINCIPAL

Serial No. ;

| Key No. | Part No. | Description | Description | Q'ty | S.C | Serial No. | ICA | Replaceable part | |
|---|---|---|---|---|---|---|---|---|---|
| | | | | | | | | Part No. | Q'ty |
| 1100-28 | 195-02623A | BRACKET | SUPPORT | 1 | | | | | |
| 29 | 191-02987A | PLATE | PLAQUE | 1 | | | | | |
| 30 | DS0025018 | BOLT;SET | BOULON A 6 PANS | 3 | | | | | |
| 32 | DS7601032 | BUSHING;RUBBER | MANCHON CAOUTCHOUC | 1 | | | | | |
| 33 | S0508866 | BOLT | BOULON A 6 PANS | 2 | | | | | |
| 34 | 2114-1058D29 | WASHER;PLAIN | RONDELLE | 2 | | | | | |
| 81 | 120-00272A | BOLT | BOULON A 6 PANS | 4 | | | | | |
| 82 | 114-00055 | WASHER;HARDEN | RONDELLE | 4 | | | | | |

| DATE | JUN. 30, 2008 |
|---|---|
| REV.NO. | EXB08-06 |

# Fig. 1110 COUNTER WEIGHT
# MASSE D'EQUILIBRAGE

**Serial No. ;**

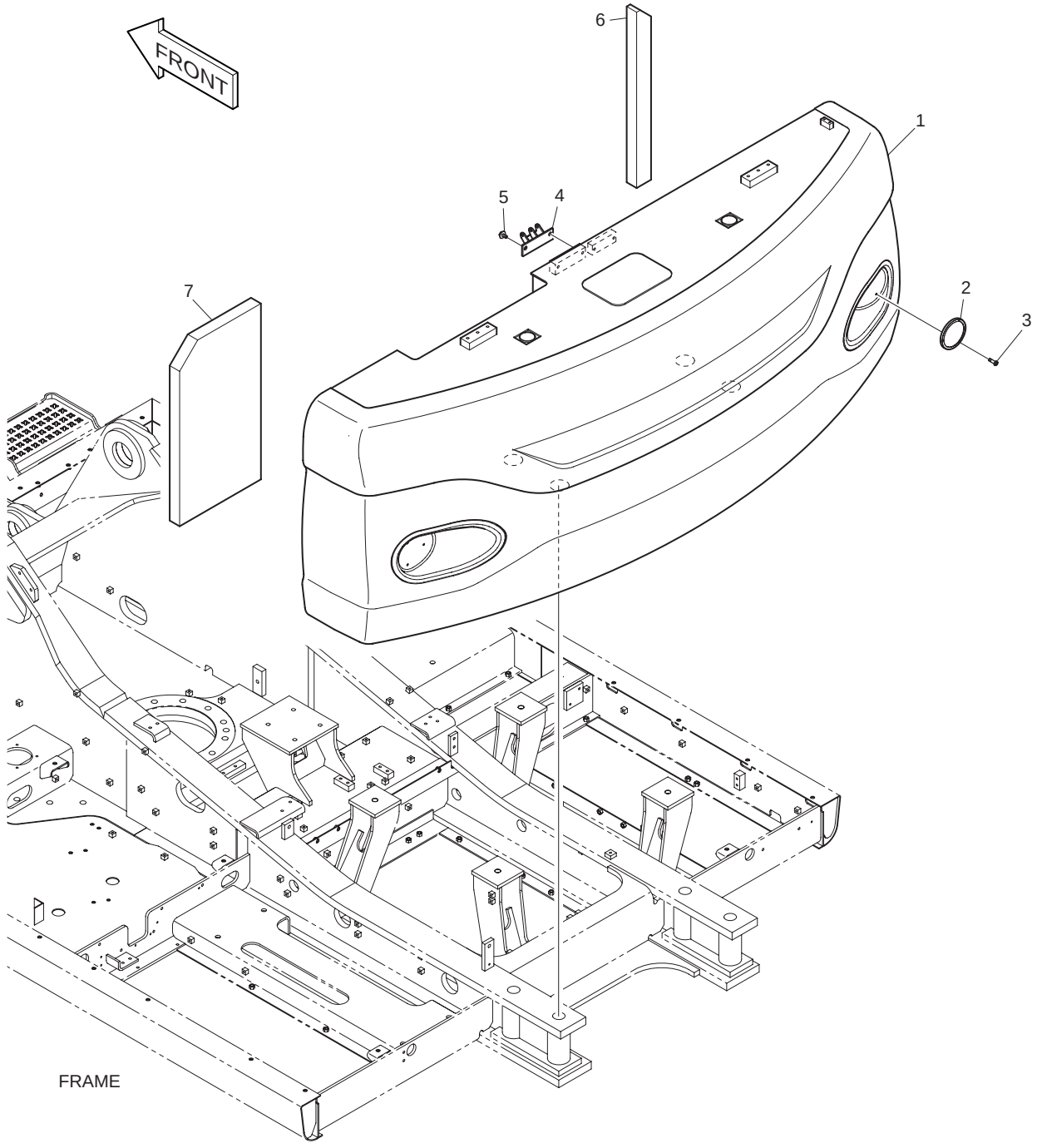

| DATE | JUN. 30, 2008 |
|---|---|
| REV. NO. | EXB08-06 |

# Fig. 1110 COUNTER WEIGHT MASSE D'EQUILIBRAGE

Serial No. ;

| Key No. | Part No. | Description | Description | Q'ty | S.C | Serial No. | ICA | Replaceable part | |
|---|---|---|---|---|---|---|---|---|---|
| | | | | | | | | Part No. | Q'ty |
| 1110-- | **K1045595** | **COUNTER WEIGHT ASS'Y** | MASSE D'EQUILIBRAGE | 1 | | | | | |
| 1 | K1005172A | WEIGHT;COUNTER 6.8ton | MASSE D'EQUILIBRAGE | 1 | | 5001–5049 | I | K1005172B | 1 |
| | K1005172B | WEIGHT;COUNTER 6.8ton | MASSE D'EQUILIBRAGE | 1 | | 5050–5081 | I | K1005172C | 1 |
| | K1005172C | WEIGHT;COUNTER 6.8ton | MASSE D'EQUILIBRAGE | 1 | | 5082–5902 | I | K1043719 | 1 |
| | **K1043719** | **WEIGHT;COUNTER 7.1ton** | MASSE D'EQUILIBRAGE | 1 | | **5903**– | | | |
| 2 | 190-01107B | REFLECTOR | REDUCTEUR | 2 | | | | | |
| 3 | S3450343 | SCREW | VIS | 6 | | | | | |
| 4 | **K1002078** | **BRACKET** | SUPPORT | 1 | | | | | |
| 5 | **DS0025015** | **BOLT;SET** | BOULON | 2 | | | | | |
| 6 | **K1002730A** | **FORM** | EPONGE | 1 | | | | | |
| 7 | **K1005834A** | **FORM** | EPONGE | 1 | | | | | |

| DATE | DEC. 15, 2006 |
|---|---|
| REV.NO. | EXB06-13 |

# Fig. 1120 ENGINE MOUNTING
# MOTAGE POUR MOTEUR

**Serial No. ;**

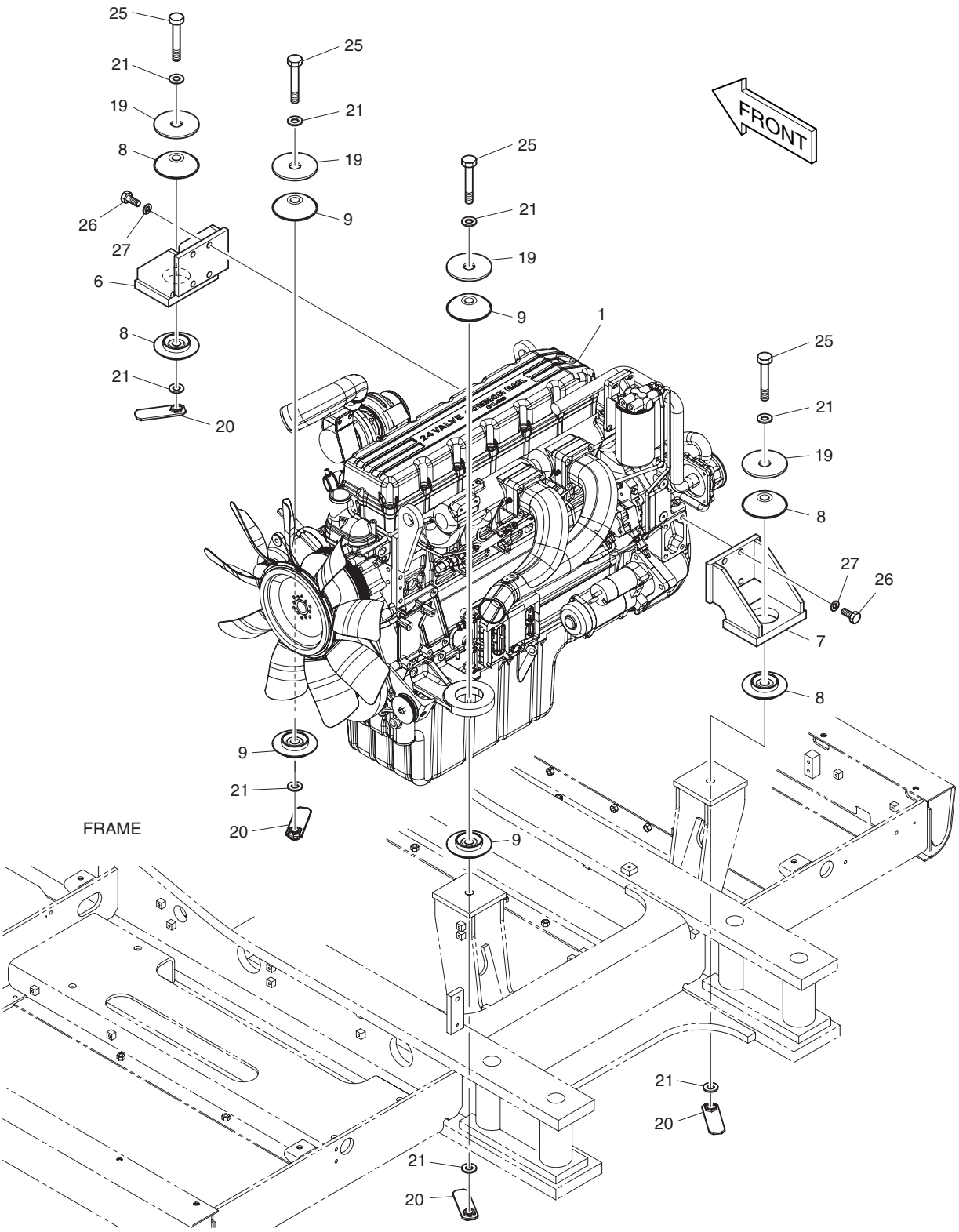

| DATE | DEC. 15, 2006 |
|---|---|
| REV. NO. | EXB06-13 |

# Fig. 1120 ENGINE MOUNTING
# MOTAGE POUR MOTEUR

**Serial No. ;**

| Key No. | Part No. | Description | Description | Q'ty | S.C | Serial No. | ICA | Replaceable part | |
|---|---|---|---|---|---|---|---|---|---|
| | | | | | | | | Part No. | Q'ty |
| 1120-- | K1004971E | ENGINE ASS'Y | ENSEMBLE MOTEUR | - | D | 5001–5031 | | | |
| | **K1004971K** | **ENGINE ASS'Y** | ENSEMBLE MOTEUR | - | D | **5032–** | | | |
| 1 | K1004972 | ENGINE ASS'Y-TIER-III | MOTEUR | 1 | | 5001–5274 | | | |
| | **K1004972A** | **ENGINE ASS'Y-TIER-III** | MOTEUR | 1 | | **5275–** | | | |
| 6 | 195-02626B | BRACKET;ENGINE MOUNT | SUPPORT | 1 | | | | | |
| 7 | 195-02625B | BRACKET;ENGINE MOUNT | SUPPORT | 1 | | 5001–5031 | I | 195-02625C | 1 |
| | 195-02625C | BRACKET;ENGINE MOUNT | SUPPORT | 1 | | 5032– | | | |
| 8 | 161-00551 | RUBBER;MOUNT ENGINE | CAOUTCHOUC | 4 | | | | | |
| 9 | 161-00553 | RUBBER;MOUNT ENGINE | CAOUTCHOUC | 4 | | | | | |
| 19 | 2114-1929 | WASHER | RONDELLE PLATE | 4 | | | | | |
| 20 | 195-02643C | SUPPORT;NUT | SUPPORT | 4 | | | | | |
| 21 | 2114-9012A | WASHER;HARDEN | RONDELLE | 8 | | | | | |
| 25 | S0771466 | BOLT M20X1.5X130 | BOULON A 6 PANS | 4 | | | | | |
| 26 | S0521466 | BOLT M16X2.0X40 | BOULON A 6 PANS | 8 | | | | | |
| 27 | S5102903 | WASHER;SPRING M16 | RONDELLE ELASTIQUE | 8 | | | | | |

| DATE | DEC. 15, 2006 |
|---|---|
| REV.NO. | EXB06-13 |

# Fig. 1130 RADIATOR MOUNTING
# SUPPORT DE RADIATEUR

**Serial No. ;**

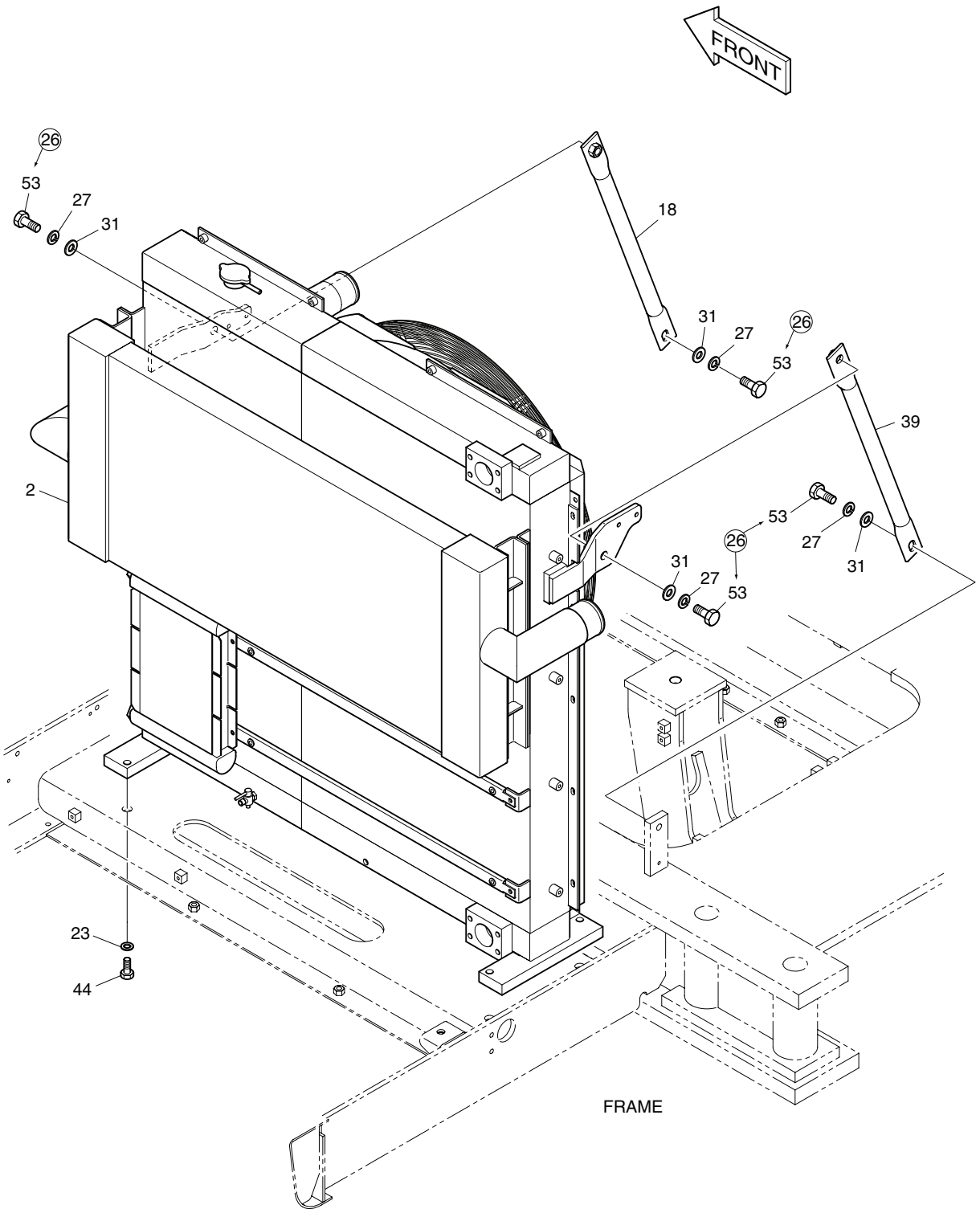

| DATE | DEC. 15, 2006 |
|---|---|
| REV. NO. | EXB06-13 |

# Fig. 1130 RADIATOR MOUNTING SUPPORT DE RADIATEUR

Serial No. ;

| Key No. | Part No. | Description | Description | Q'ty | S.C | Serial No. | ICA | Replaceable part | |
|---|---|---|---|---|---|---|---|---|---|
| | | | | | | | | Part No. | Q'ty |
| 1130-- | **K1004971K** | **ENGINE ASS'Y** | MOTEUR | - | D | | | | |
| 2 | K1004867A | RADIATOR ASS'Y | RADIATEUR | 1 | | 5001–5049 | I | K1004867B | 1 |
| | K1004867B | RADIATOR ASS'Y | RADIATEUR | 1 | | 5050–5274 | I | K1023212 | 1 |
| | **K1023212** | **RADIATOR ASS'Y** | RADIATEUR | 1 | | **5275–** | | | |
| 18 | K1005859 | STAY | ENTRETOISE | 1 | | 5001–5049 | I | K1005859A | 1 |
| | K1005859A | STAY | ENTRETOISE | 1 | | 5050– | | | |
| 23 | 2114-1816A | WASHER;HARDEN | RONDELLE | 4 | | | | | |
| 26 | S0521466 | BOLT M16X2.0X40 | BOULON A 6 PANS | 4 | | 5001–5049 | | | |
| 27 | S5102903 | WASHER;SPRING M16 | RONDELLE ELASTIQUE | 4 | | | | | |
| 31 | S5010913 | WASHER;PLAIN M16 | RONDELLE PLATE | 4 | | | | | |
| 39 | K1005860 | STAY | ENTRETOISE | 1 | | 5001–5049 | I | K1005860A | 1 |
| | K1005860A | STAY | ENTRETOISE | 1 | | 5050– | | | |
| 44 | S0565066 | BOLT M16X2.0X40 | BOULON A 6 PANS | 4 | | | | | |
| 53 | S0521566 | BOLT | BOULON A 6 PANS | 4 | | 5050– | | | |

| DATE | DEC. 15, 2006 |
|---|---|
| REV.NO. | EXB06-13 |

# Fig. 1140 RADIATOR RADIATEUR

**Serial No. ;**

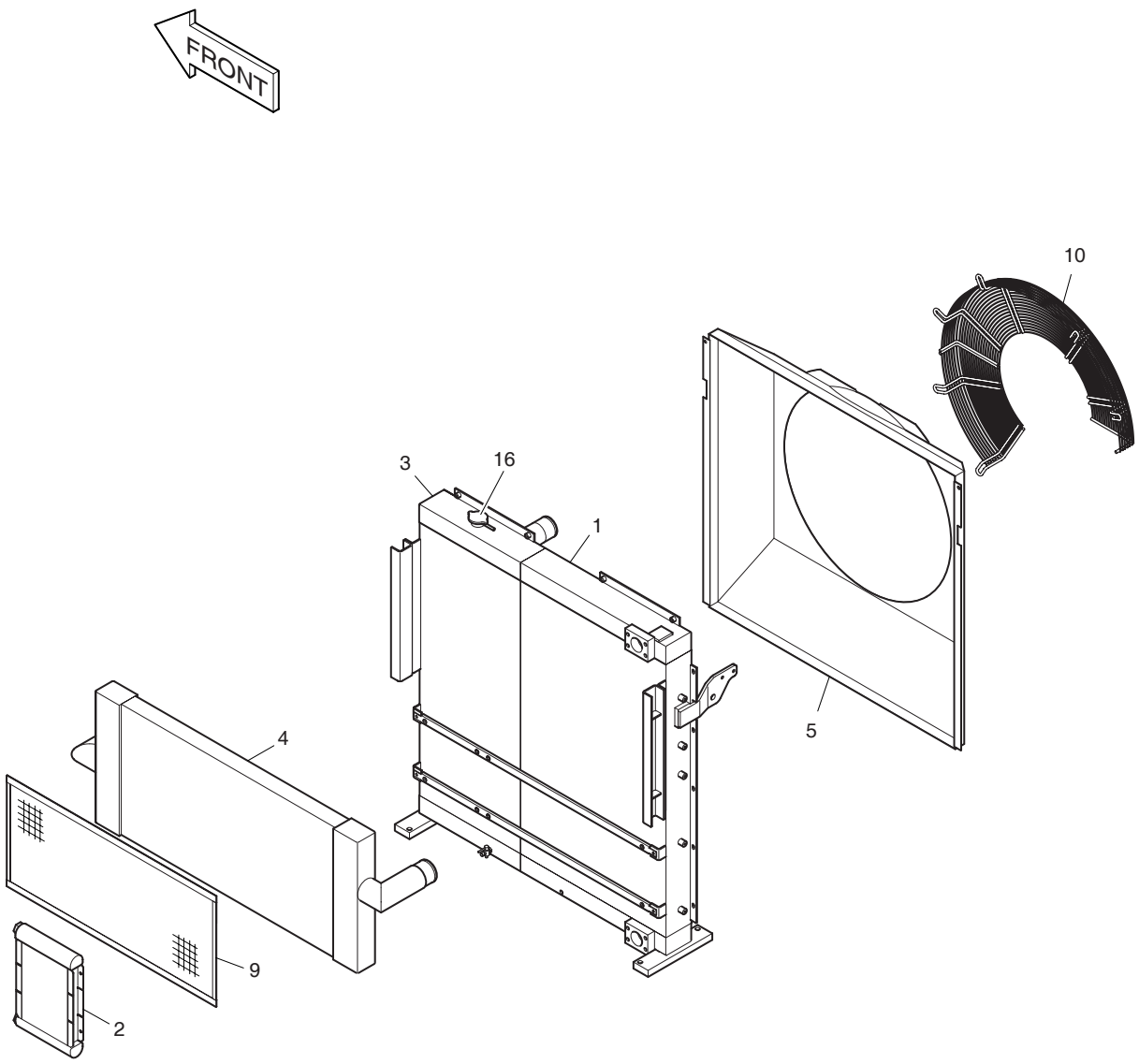

| DATE | DEC. 15, 2006 |
|---|---|
| REV. NO. | EXB06-13 |

# Fig. 1140 RADIATOR RADIATEUR

Serial No. ;

| Key No. | Part No. | Description | Description | Q'ty | S.C | Serial No. | ICA | Replaceable part | |
|---|---|---|---|---|---|---|---|---|---|
| | | | | | | | | Part No. | Q'ty |
| 1140-- | K1004867A | RADIATOR ASS'Y | ENSEMBLE RADIATEUR | 1 | | 5001–5049 | I | K1004867B | 1 |
| | K1004867B | RADIATOR ASS'Y | ENSEMBLE RADIATEUR | 1 | | 5050–5274 | I | K1023212 | 1 |
| | **K1023212** | **RADIATOR ASS'Y** | ENSEMBLE RADIATEUR | 1 | | **5275–** | | | |
| 1 | K9002111 | OIL COOLER | REFROIDISSEUR D'HUILE | 1 | | | | | |
| 2 | K9002112 | FUEL COOLER | REFROIDISSEUR DE | 1 | | | | | |
| 3 | K9002113 | RADIATOR | RADIATEUR | 1 | | | | | |
| 4 | K9002114 | CAC ASS'Y | CHARGEE | 1 | | | | | |
| 5 | K9002115 | SHROUD | RACCORD ADAPTATEUR | 1 | | 5001–5274 | | | |
| | **K9002959** | **SHROUD** | RACCORD ADAPTATEUR | 1 | | **5275–** | | | |
| 9 | K9002116 | WIRE NET;CAC | CABLE | 1 | | | | | |
| 10 | K9002117 | GUARD;FAN | BARRE DE PROTECTION | 1 | | 5001–5274 | | | |
| | **K9002960** | **GUARD;FAN** | BARRE DE PROTECTION | 1 | | **5275–** | | | |
| 16 | K9003611 | CAP;RADIATOR | CHAPEAU | 1 | | | | | |

| DATE | DEC. 15, 2006 |
|---|---|
| REV.NO. | EXB06-13 |

# Fig. 1150 MUFFLER SILENCIEUX

**Serial No. ;**

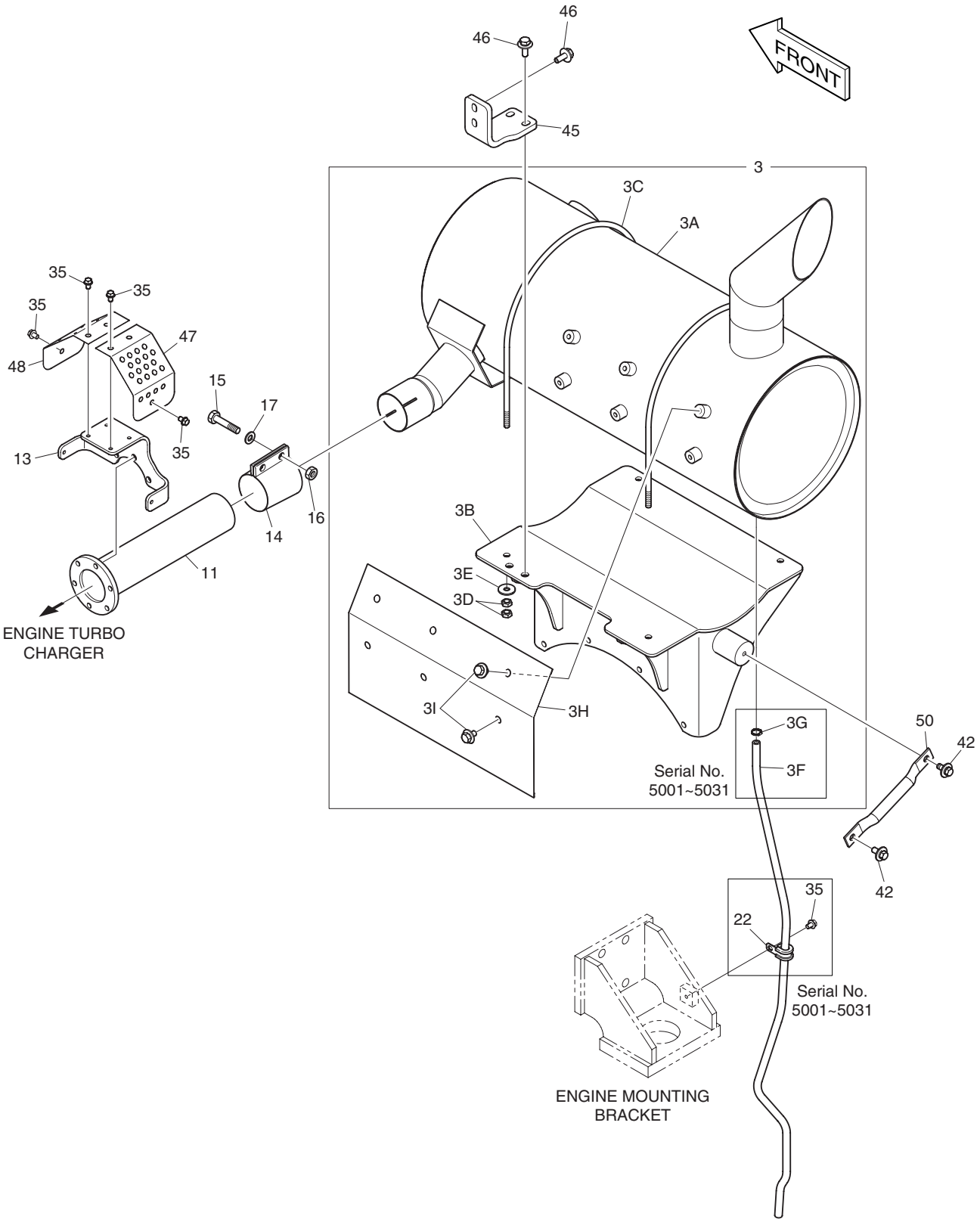

| DATE | DEC. 15, 2006 |
|---|---|
| REV. NO. | EXB06-13 |

# Fig. 1150 MUFFLER SILENCIEUX

Serial No. ;

| Key No. | Part No. | Description | Description | Q'ty | S.C | Serial No. | ICA | Replaceable part | |
|---|---|---|---|---|---|---|---|---|---|
| | | | | | | | | Part No. | Q'ty |
| 1150-- | K1004971E | ENGINE ASS'Y | ENSEMBLE MOTEUR | - | D | 5001–5031 | | | |
| | K1004971G | ENGINE ASS'Y | ENSEMBLE MOTEUR | - | D | 5032– | | | |
| 3 | 203-00095H | MUFFLER SUB ASS'Y | SILENCIEUX | 1 | | 5001–5031 | I | 203-00095J | 1 |
| | 203-00095J | MUFFLER SUB ASS'Y | SILENCIEUX | 1 | | 5032–5099 | I | 203-00095K | 1 |
| | 203-00095K | MUFFLER SUB ASS'Y | SILENCIEUX | 1 | | 5100–5362 | I | K1029158 | 1 |
| | **K1029158** | **MUFFLER SUB ASS'Y** | SILENCIEUX | 1 | | **5363–** | | | |
| 3A | K1002593B | . MUFFLER | . SILENCIEUX | 1 | | 5001–5031 | I | K1002593C | 1 |
| | K1002593C | . MUFFLER | . SILENCIEUX | 1 | | 5032–5362 | I | K1029147 | 1 |
| | **K1029147** | **. MUFFLER** | . SILENCIEUX | 1 | | **5363–** | | | |
| 3B | K1002920C | . BRACKET | . SUPPORT | 1 | | | | | |
| 3C | K1002446 | . BOLT;U | . BOULON A 6 PANS | 2 | | 5001–5099 | I | K1023547 | 2 |
| | K1023547 | . BOLT;U | . BOULON A 6 PANS | 2 | | 5100– | | | |
| 3D | S4012633 | . NUT | . ECROU M10X1.5 | 8 | | | | | |
| 3E | 2114-1058D63 | . WASHER;PLAIN | . RONDELLE | 4 | | | | | |
| 3F | 2185-1247D88 | . HOSE 1100L | . TUYAU FLEXIBLE | 1 | | 5001–5031 | | | |
| 3G | S8450012 | . CLAMP;HOSE | . COLLIER | 1 | | 5001–5031 | | | |
| 3H | K1004466 | . PLATE;INSULATION | . PLAQUE | 1 | | | | | |
| 3I | DS0025013 | . BOLT;SET | . BOULON A 6 PANS | 6 | | | | | |
| 11 | 182-00123 | PIPE;EXHAUST | CONDUITE | 1 | | | | | |
| 13 | K1004280B | BRACKET | SUPPORT | 1 | | | | | |
| 14 | 124-00310A | CLAMP | COLLIER | 1 | | | | | |
| 15 | S0515866 | BOLT M12X1.75X60 | BOULON A 6 PANS | 2 | | | | | |
| 16 | S4012733 | NUT M12 | ECROU | 2 | | | | | |
| 17 | S5010713 | WASHER;PLAIN M12 | RONDELLE | 2 | | | | | |
| 22 | 124-00208D2 | CLIP | CLIP | 1 | | | | | |
| 35 | K1001029 | BOLT | BOULON A 6 PANS | 7 | | | | | |
| 42 | DS0025017 | BOLT;SET | BOULON A 6 PANS | 2 | | | | | |
| 45 | K1000349A | BRACKET | SUPPORT | 1 | | | | | |
| 46 | DS0025034 | BOLT;SET | BOULON A 6 PANS | 4 | | | | | |
| 47 | K1006244A | COVER | COUVERCLE | 1 | | | | | |
| 48 | K1006245 | COVER | COUVERCLE | 1 | | | | | |
| 50 | K1004507 | STAY | ENTRETOISE | 1 | | | | | |

| DATE | JUN. 30, 2007 |
|---|---|
| REV.NO. | EXB07-06 |

# Fig. 1160 CAC PIPING
# CHARGEE DE REFROIDISSEUR D'CAIR

**Serial No. ;**

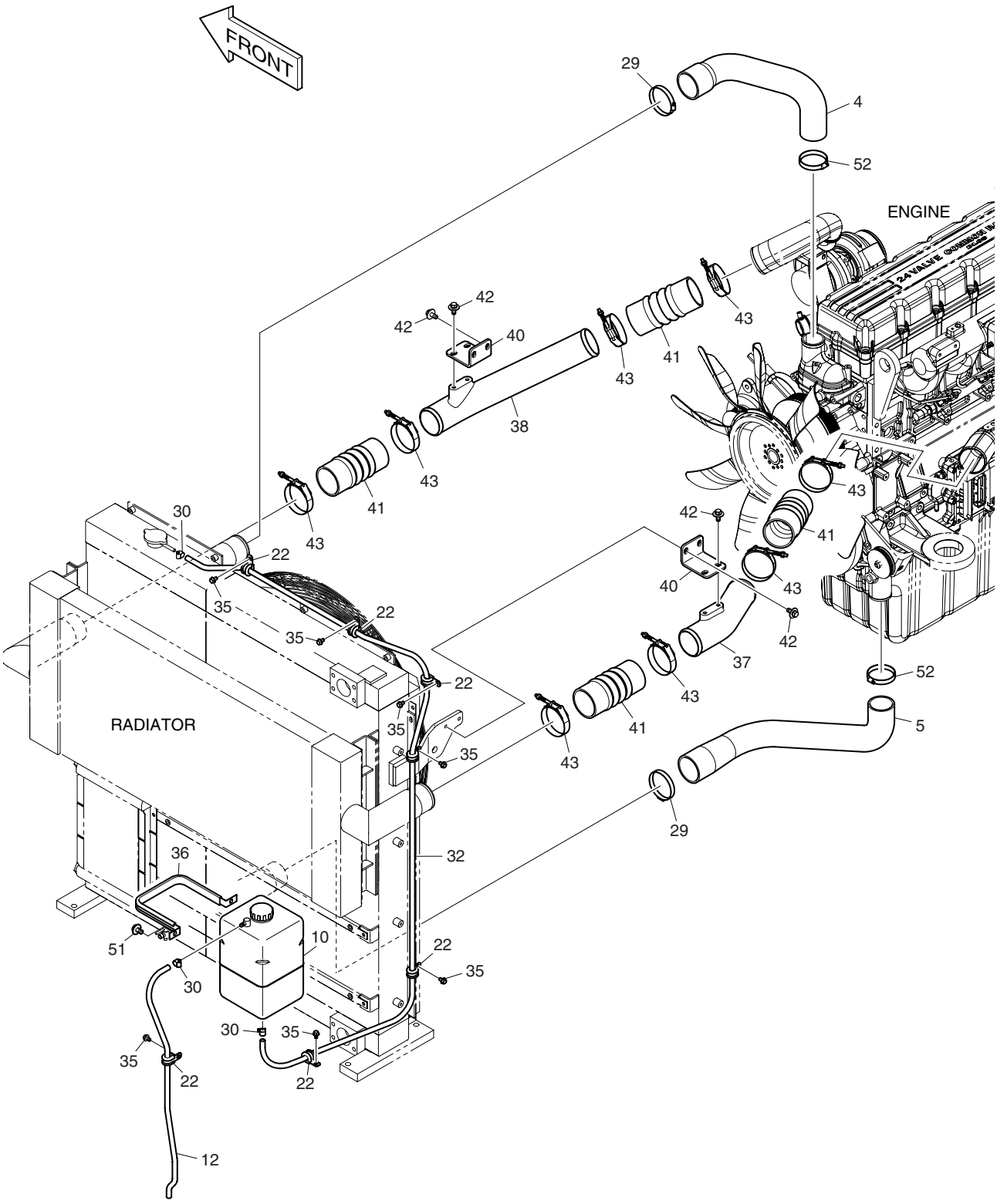

| DATE | JUN. 30, 2007 |
|---|---|
| REV. NO. | EXB07-06 |

# Fig. 1160 CAC PIPING
# CHARGEE DE REFROIDISSEUR D'CAIR

**Serial No. ;**

| Key No. | Part No. | Description | Description | Q'ty | S.C | Serial No. | ICA | Replaceable part | |
|---|---|---|---|---|---|---|---|---|---|
| | | | | | | | | Part No. | Q'ty |
| 1160-- | K1004971K | ENGINE ASS'Y | ENSEMBLE MOTEUR | - | D | | | | |
| 4 | K1005188B | HOSE;WATER | TUYAU D'EAU | 1 | | 5001–5274 | I | K1024918 | 1 |
| | K1024918 | HOSE;WATER | TUYAU D'EAU | 1 | | 5275– | | | |
| 5 | K1005189B | HOSE;WATER | TUYAU D'EAU | 1 | | | | | |
| 10 | K1003354A | TANK;RESERVE | RESERVOIR A GAZOLE | 1 | | | | | |
| 12 | K1004515 | HOSE | TUYAU FLEXIBLE | 1 | | | | | |
| 22 | 124-00208D2 | CLIP | CLIP | 7 | | | | | |
| 29 | S8470085 | CLAMP;HOSE | COLLIER | 2 | | | | | |
| 30 | S8450006 | CLAMP;HOSE | COLLIER | 3 | | | | | |
| 32 | K1006252 | HOSE;WATER | TUYAU D'EAU | 1 | | | | | |
| 35 | K1001029 | BOLT | BOULON A 6 PANS | 7 | | | | | |
| 36 | K1002851 | CLAMP | COLLIER | 1 | | | | | |
| 37 | K1005099 | PIPE;AIR | CONDUITE | 1 | | | | | |
| 38 | K1005098 | PIPE;AIR | CONDUITE | 1 | | | | | |
| 40 | K1006253A | BRACKET | SUPPORT | 2 | | | | | |
| 41 | K1012214 | HOSE;CAC | TUYAU FLEXIBLE | 4 | | 5001–5814 | I | K1038559 | 4 |
| | **K1038559** | **HOSE;CAC** | TUYAU FLEXIBLE | 4 | | **5815**– | | | |
| 42 | DS0025017 | BOLT;SET | BOULON A 6 PANS | 8 | | | | | |
| 43 | 124-00194 | CLAMP;HOSE | COLLIER | 8 | | | | | |
| 51 | DS0025014 | BOLT;SET | BOULON A 6 PANS | 2 | | | | | |
| 52 | S8470075 | CLAMP;HOSE | COLLIER | 2 | | | | | |

| DATE | JUN. 30, 2008 |
|---|---|
| REV.NO. | EXB08-06 |

# Fig. 1170 AIR CLEANER
# ENSEMBLE FILTRE A AIR

**Serial No. ;**

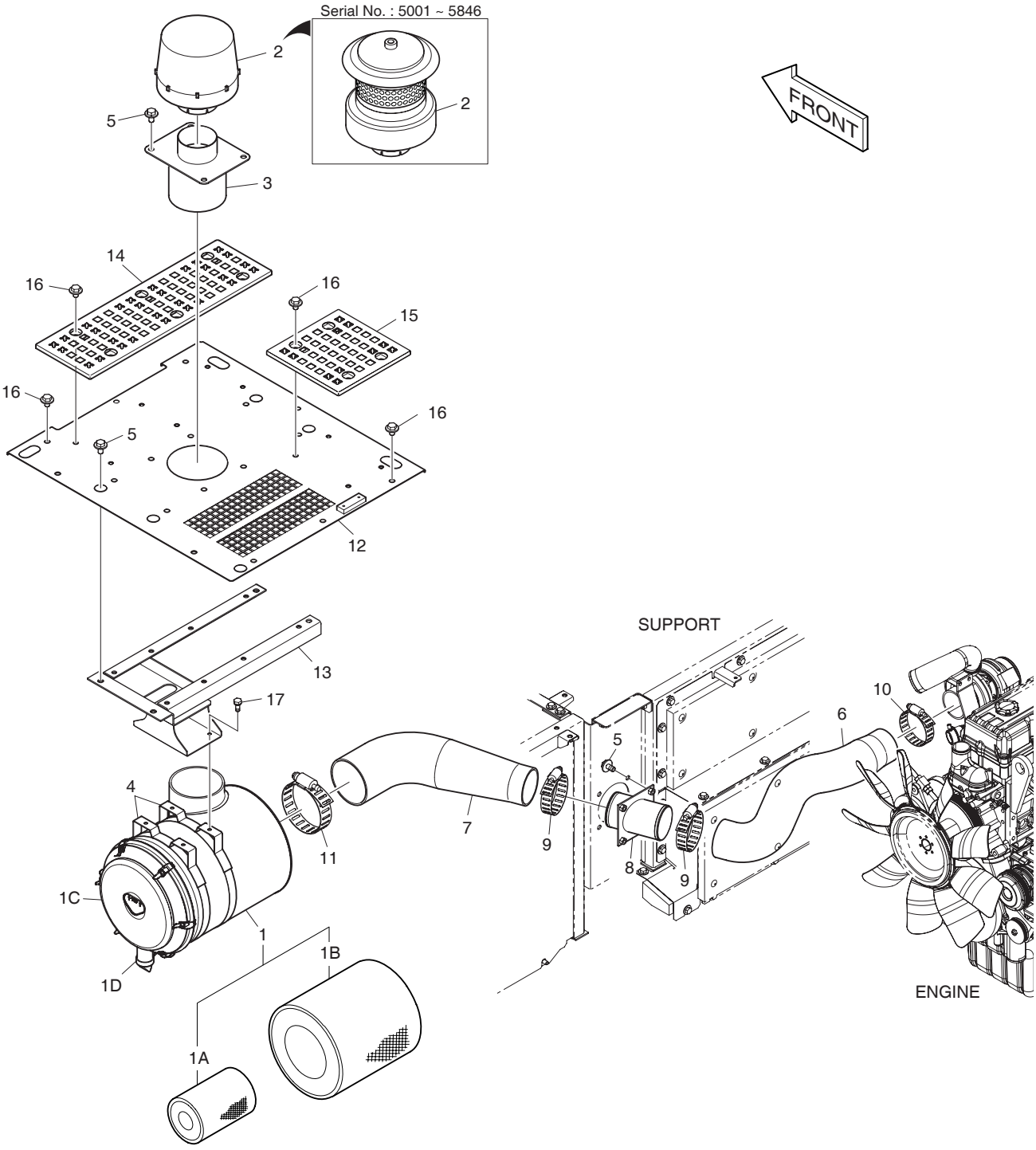

| DATE | JUN. 30, 2008 |
|---|---|
| REV. NO. | EXB08-06 |

# Fig. 1170 AIR CLEANER ENSEMBLE FILTRE A AIR

Serial No. ;

| Key No. | Part No. | Description | Description | Q'ty | S.C | Serial No. | ICA | Replaceable part | |
|---|---|---|---|---|---|---|---|---|---|
| | | | | | | | | Part No. | Q'ty |
| 1170-- | K1005074B | AIR CLEANER ASS'Y | ENSEMBLE FILTRE A AIR | - | D | | | | |
| 1 | 204-00066 | AIR CLEANER | ENSEMBLE FILTRE A AIR | 1 | | | | | |
| 1A | 474-00037 | . ELEMENT;INNER | . ELEMENT | 1 | | | | | |
| 1B | 474-00038 | . ELEMENT;OUTER | . ELEMENT | 1 | | | | | |
| 1C | 204-00069 | . COVER | . COUVERCLE | 1 | | | | | |
| 1D | 204-00070 | . VALVE | . VANNE | 1 | | | | | |
| 2 | 2204-9032 | PRE-CLEANER | PRE-FILTRE A AIR TURBO | 1 | | 5001–5055 | I | K1017883 | 1 |
| | K1017883 | PRE-CLEANER | PRE-FILTRE A AIR TURBO | 1 | | 5056–5846 | | | |
| | **K1043471** | **PRE-CLEANER** | PRE-FILTRE A AIR TURBO | 1 | | **5847–** | | | |
| 3 | K1006040 | PIPE | CONDUITE | 1 | | 5001–5846 | | | |
| | **K1006040A** | **PIPE** | CONDUITE | 1 | | **5847–** | | | |
| 4 | 124-00297A | BAND;AIR CLEANER | ATTACHE DE TUYAU | 2 | | | | | |
| 5 | DS0025015 | BOLT;SET | BOULON A 6 PANS | 12 | | | | | |
| 6 | K1005120 | HOSE;AIR | TUYAU FLEXIBLE | 1 | | | | | |
| 7 | K1005119 | HOSE;AIR | TUYAU FLEXIBLE | 1 | | | | | |
| 8 | K1005359 | PIPE;AIR | CONDUITE | 1 | | | | | |
| 9 | S8510143 | CLAMP;HOSE | COLLIER | 2 | | | | | |
| 10 | S8510118 | CLAMP;HOSE | COLLIER | 1 | | | | | |
| 11 | S8510168 | CLAMP;HOSE | COLLIER | 1 | | | | | |
| 12 | K1006047 | COVER | COUVERCLE | 1 | | | | | |
| 13 | K1000640 | SUPPORT | SUPPORT | 1 | | | | | |
| 14 | K1002915 | PLATE;ANTI-SKID | PLAQUE | 1 | | | | | |
| 15 | K1002478 | PLATE;ANTI-SKID | PLAQUE | 1 | | | | | |
| 16 | DS0025022 | BOLT;SET | BOULON A 6 PANS | 23 | | | | | |
| 17 | DS0025024 | BOLT;SET | BOULON A 6 PANS | 4 | | | | | |

| DATE | JUN. 30, 2006 |
|---|---|
| REV.NO. | EXB06-08 |

# Fig. 1180 PUMP MOUNTING ENSEMBLE POMPE

**Serial No. ;**

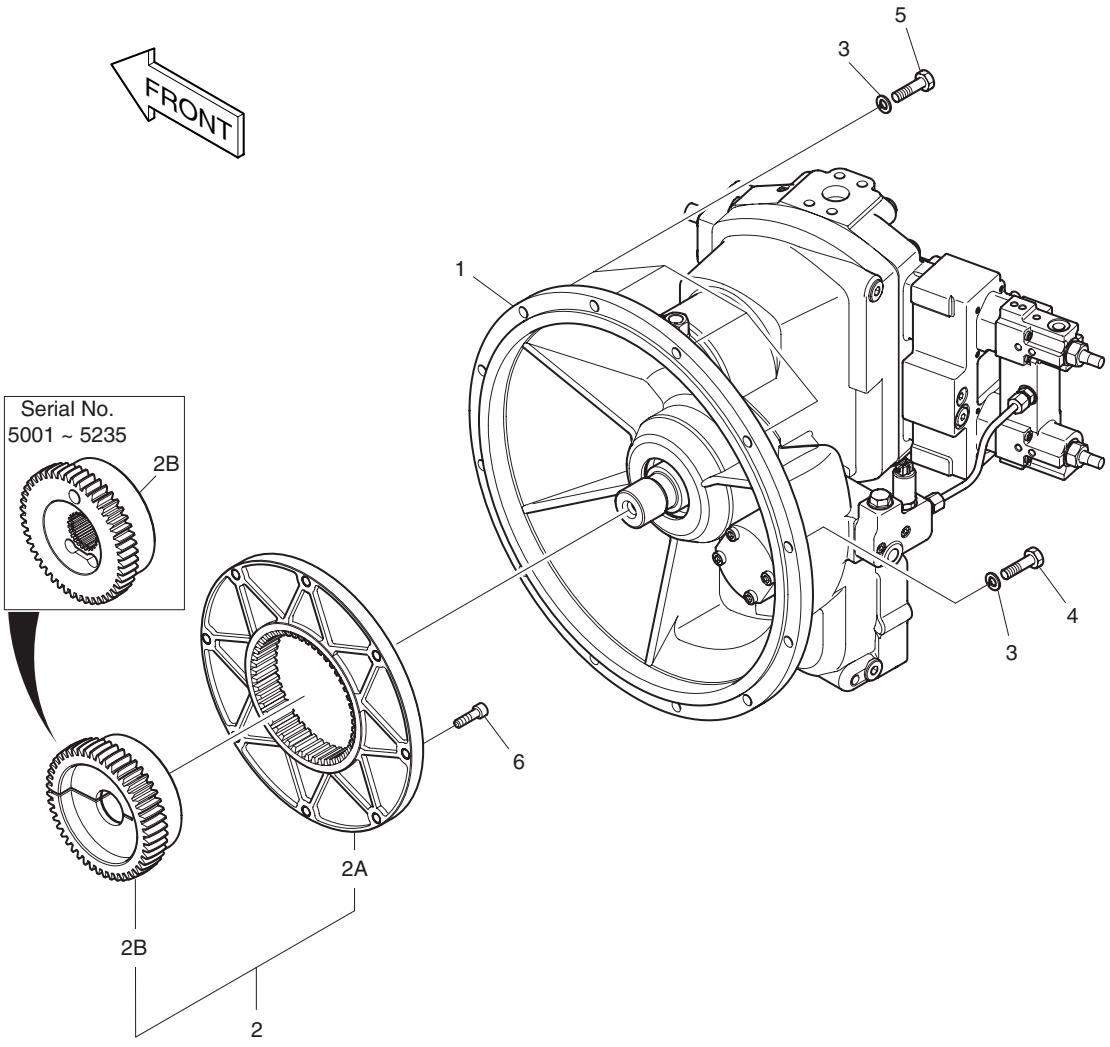

| DATE | JUN. 30, 2006 |
|---|---|
| REV. NO. | EXB06-08 |

# Fig. 1180 PUMP MOUNTING ENSEMBLE POMPE

Serial No. ;

| Key No. | Part No. | Description | Description | Q'ty | S.C | Serial No. | ICA | Replaceable part | |
|---|---|---|---|---|---|---|---|---|---|
| | | | | | | | | Part No. | Q'ty |
| 1180-- | K1005197C | PUMP ASS'Y | ENSEMBLE POMPE | - | D | | | | |
| 1 | K1004522B | PUMP;MAIN | POMPE PRINCIPALE | 1 | | | | | |
| 2 | 414-00061 | COUPLING;PUMP | FIXATION DE POMPE | 1 | | 5001–5235 | I | K1018984 | 1 |
| | **K1018984** | **COUPLING;PUMP** | FIXATION DE POMPE | 1 | | **5236–** | | | |
| 2A | 414-00063 | . FLANGE;COUPLING | . BRIDE | 1 | | | | | |
| 2B | 414-00064 | . HUB;COUPLING | . MOYEU | 1 | | 5001–5235 | I | K1018999 | 1 |
| | **K1018999** | **. HUB;COUPLING** | . MOYEU | 1 | | **5236–** | | | |
| 3 | S5102603 | WASHER;SPRING | RONDELLE ELASTIQUE M10 | 12 | | | | | |
| 4 | S0558366 | BOLT | BOULON A 6 PANS | 8 | | | | | |
| 5 | S0558566 | BOLT | BOULON A 6 PANS | 4 | | | | | |
| 6 | S2212366 | BOLT;SOCKET | BOULON DE PLOT | 8 | | | | | |

| DATE | JUN. 30, 2008 |
|---|---|
| REV.NO. | EXB08-06 |

# Fig. 1190 SWING DEVICE
# SYSTEME D'ORIENTATION

**Serial No. ;**

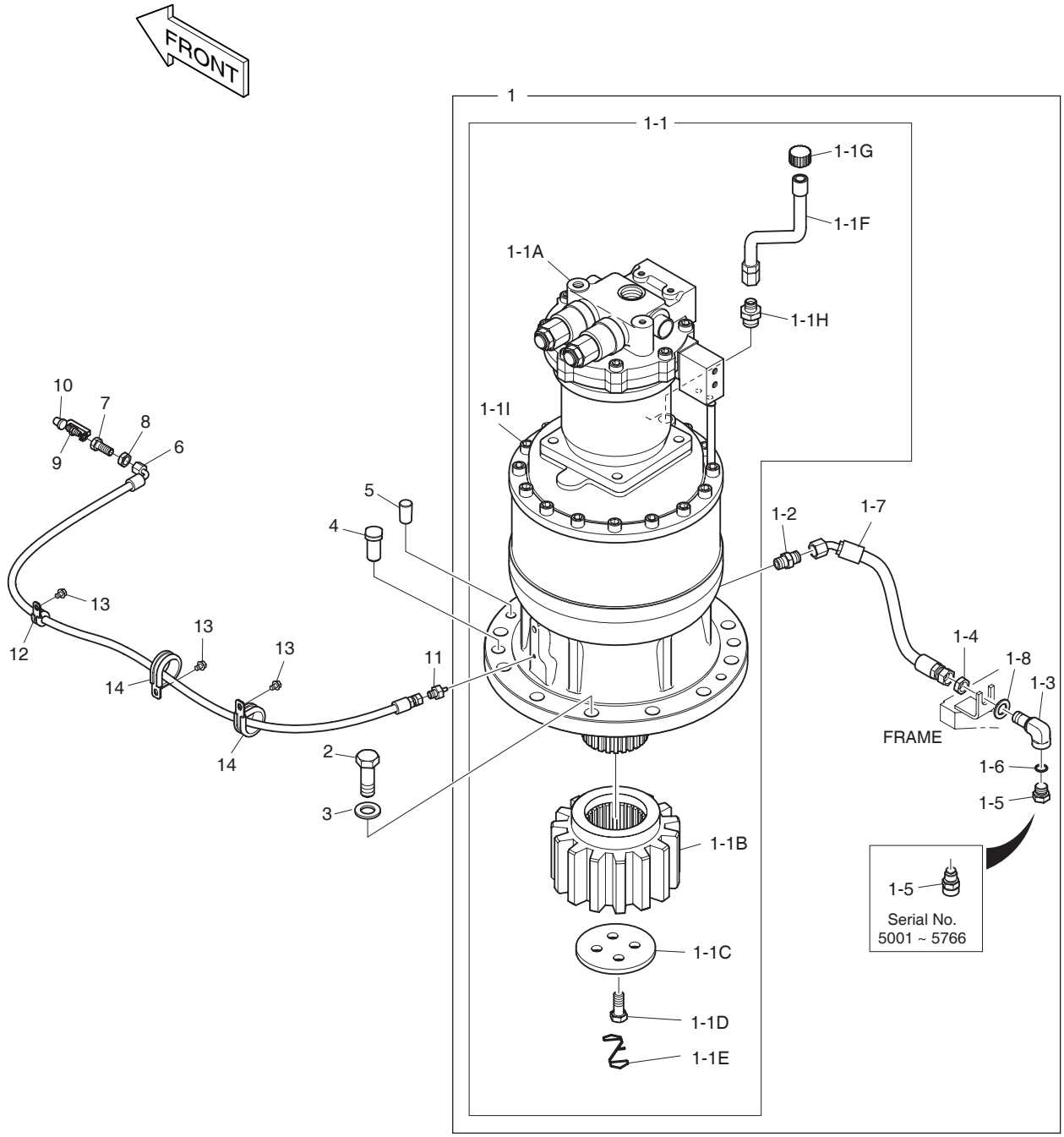

| DATE | JUN. 30, 2008 |
|---|---|
| REV. NO. | EXB08-06 |

# Fig. 1190 SWING DEVICE SYSTEME D'ORIENTATION

Serial No. ;

| Key No. | Part No. | Description | Description | Q'ty | S.C | Serial No. | ICA | Replaceable part | |
|---|---|---|---|---|---|---|---|---|---|
| | | | | | | | | Part No. | Q'ty |
| 1190-- | K1004822E | SWING DEVICE INSTALL | SYSTEME D'ORIENTATION | - | D | | | | |
| 1 | K1004824B | SWING DEVICE SUB ASS'Y | SYSTEME D'ORIENTATION | 1 | | 5001–5766 | I | K1004824C | 1 |
| | K1004824C | SWING DEVICE SUB ASS'Y | SYSTEME D'ORIENTATION | 1 | | 5767–5861 | I | K1004824E | 1 |
| | **K1004824E** | **SWING DEVICE SUB ASS'Y** | SYSTEME D'ORIENTATION | 1 | | **5862–** | | | |
| 1-1 | K1004825B | . SWING DEVICE ASS'Y | . MOTEUR D'ORIENTATION | 1 | D | | | | |
| 1-1A | K1007543A | .. MOTOR;SWING | .. MOTEUR D'ORIENTATION | 1 | | | | | |
| 1-1B | 2404-1065 | .. GEAR;PINION | .. PIGNON | 1 | | | | | |
| 1-1C | 2403-1046A | .. COVER | .. COUVERCLE | 1 | | | | | |
| 1-1D | 2120-1363 | .. BOLT M16X2.0X40 | .. BOULON A 6 PANS | 4 | | | | | |
| 1-1E | 2126-9001 | .. WIRE | .. CABLE | 2 | | | | | |
| 1-1F | 2182-1706A | .. PIPE | .. TUYAU | 1 | | | | | |
| 1-1G | 2119-1063A | .. CAP | .. CHAPEAU | 1 | | | | | |
| 1-1H | 2181-1110D10 | .. ADAPTER | .. RACCORD ADAPTATEUR | 1 | | | | | |
| 1-1I | 404-00094A | .. GEAR;REDUCTION | .. PIGNON | 1 | | 5001–5861 | I | 404-00094B | 1 |
| | **404-00094B** | **.. GEAR;REDUCTION** | .. PIGNON | 1 | | **5862–** | | | |
| 1-2 | 2181-1110D22 | . ADAPTER | . RACCORD | 1 | | | | | |
| 1-3 | 181-00717 | . ELBOW | . COUDE | 1 | | | | | |
| 1-4 | 121-00010D3 | . NUT | . ECROU | 1 | | | | | |
| 1-5 | 426-00278 | . VALVE;DRAIN | . VANNE | 1 | | 5001–5766 | | | |
| | 2181-1950D7 | . PLUG | . BOUCHON | 1 | | 5767– | | | |
| 1-6 | S8000181 | . O-RING | . JOINT TORIQUE | 1 | | | | | |
| 1-7 | 2184-1060D172 | . HOSE | . TUYAU FLEXIBLE | 1 | | | | | |
| 1-8 | S5011113 | . WASHER M20 | . RONDELLE | 1 | | | | | |
| 2 | S0774766 | BOLT M24X2.0X70 | BOULON A 6 PANS | 12 | | | | | |
| 3 | 2114-1831A | WASHER;HARDEN | RONDELLE ELASTIQUE | 12 | | | | | |
| 4 | 2123-1717B | PIN;KNOCK | GOUJON | 2 | | | | | |
| 5 | 198-00028 | CORK | CHAPEAU | 2 | | | | | |
| 6 | 2184-1046D105 | HOSE | TUYAU FLEXIBLE | 1 | | | | | |
| 7 | 181-00103 | REDUCER PT1/8-PF1/4 | REDUCTEUR | 1 | | | | | |
| 8 | 121-00006 | NUT PF1/4 | ECROU | 1 | | | | | |
| 9 | S6710041 | NIPPLE;GREASE | GRAISSEUR | 1 | | | | | |
| 10 | 160-00020 | CAP;GREASE NIPPLE | CHAPEAU | 1 | | | | | |
| 11 | 2181-1110D30 | ADAPTER | RACCORD ADAPTATEUR | 1 | | | | | |
| 12 | 124-00208D2 | CLIP | CLIP | 1 | | | | | |
| 13 | K1001029 | BOLT | BOULON A 6 PANS | 3 | | | | | |
| 14 | 124-00208D7 | CLIP | ATTACHE | 2 | | | | | |

| DATE | JUN. 30, 2007 |
|---|---|
| REV.NO. | EXB07-06 |

# Fig. 1200 FUEL TANK
# ENSEMBLE RESERVOIR DE GAZOLE

**Serial No. ;**

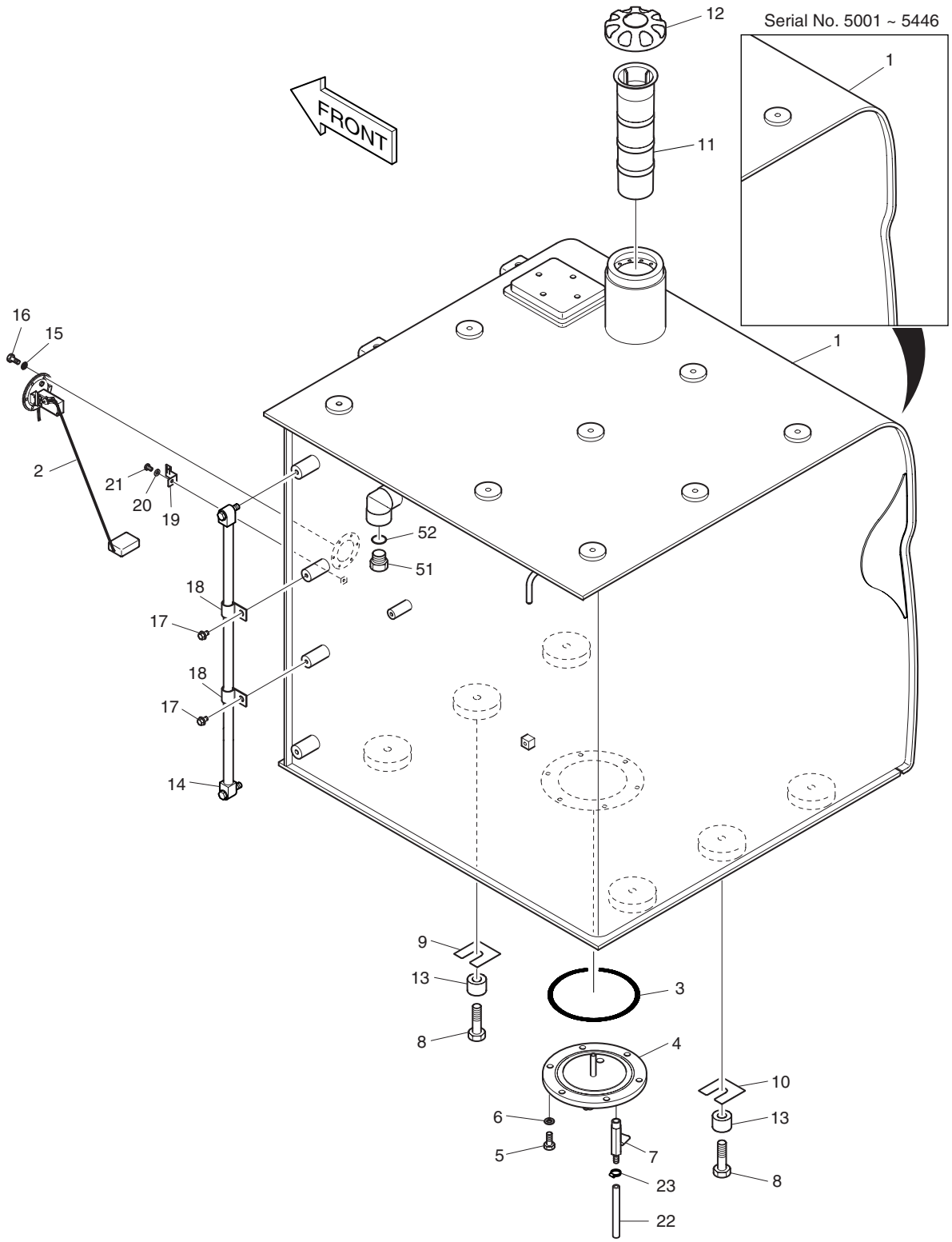

| DATE | JUN. 30, 2007 |
|---|---|
| REV. NO. | EXB07-06 |

# Fig. 1200 FUEL TANK
# ENSEMBLE RESERVOIR DE GAZOLE

**Serial No. ;**

| Key No. | Part No. | Description | Description | Q'ty | S.C | Serial No. | ICA | Replaceable part | |
|---|---|---|---|---|---|---|---|---|---|
| | | | | | | | | Part No. | Q'ty |
| 1200-- | **K1004150K** | **FUEL TANK ASS'Y** | ENSEMBLE RESERVOIR DE | - | D | | | | |
| 1 | K1005208B | TANK;FUEL | RESERVOIR A GAZOLE | 1 | | 5001–5066 | I | K1005208C | 1 |
| | K1005208C | TANK;FUEL | RESERVOIR A GAZOLE | 1 | | 5067–5446 | I | K1005208G | 1 |
| | **K1005208G** | **TANK;FUEL** | RESERVOIR A GAZOLE | 1 | | **5447–5766** | I | K1005208H | 1 |
| | **K1005208H** | **TANK;FUEL** | RESERVOIR A GAZOLE | 1 | | **5767–** | | | |
| 2 | 547-00026 | SENSOR;FUEL | SIEGE | 1 | | | | | |
| 3 | S8011450 | O-RING | JOINT TORIQUE | 1 | | | | | |
| 4 | 473-00033 | COVER | COUVERCLE | 1 | | | | | |
| 5 | S0512066 | BOLT | BOULON A 6 PANS | 6 | | | | | |
| 6 | S5102603 | WASHER;SPRING | RONDELLE ELASTIQUE M10 | 6 | | | | | |
| 7 | 186-00017A | COCK ASS'Y;DRAIN | ROBINET | 1 | | | | | |
| 8 | S0565466 | BOLT | BOULON A 6 PANS | 6 | | | | | |
| 9 | 114-00522 | SHIM | CALE | 3 | | | | | |
| 10 | 114-00523 | SHIM | CALE | 3 | | | | | |
| 11 | 471-00105 | FILTER;FUEL STRAINER | FILTRE | 1 | | 5001–5379 | I | 471-00105A | 1 |
| | 471-00105A | FILTER;FUEL STRAINER | FILTRE | 1 | | 5380– | | | |
| 12 | K1004166 | CAP;FUEL | CHAPEAU | 1 | | | | | |
| 13 | 114-00425 | SPACER;HARDEN | BAGUE D'ECARTEMENT | 6 | | | | | |
| 14 | 119-00014AD1 | GAUGE;LEVEL | PIGNON | 1 | | | | | |
| 15 | S5100203 | WASHER;SPRING | RONDELLE ELASTIQUE M5 | 6 | | | | | |
| 16 | S3450833 | SCREW | VIS | 6 | | | | | |
| 17 | K1001029 | BOLT | BOULON A 6 PANS | 2 | | | | | |
| 18 | DS2802021 | CLIP | ATTACHE | 2 | | | | | |
| 19 | 2195-3500 | BRACKET;HOUSING | SUPPORT | 1 | | | | | |
| 20 | S5102303 | WASHER;SPRING | RONDELLE ELASTIQUE M6 | 1 | | | | | |
| 21 | S3450943 | SCREW | VIS M6X1.0X10 | 1 | | | | | |
| 22 | DS2105053 | HOSE | TUYAU FLEXIBLE | 1 | | | | | |
| 23 | S8450012 | CLAMP;HOSE | COLLIER | 1 | | | | | |
| 51 | 2181-1950D9 | PLUG | BOUCHON | 1 | | | | | |
| 52 | S8000291 | O-RING | JOINT TORIQUE | 1 | | | | | |

| DATE | OCT. 17, 2005 |
|---|---|
| 1st EDITION | |

# Fig. 1210 FUEL PIPING
# CONDUITES DE GAZOLE

**Serial No. ;**

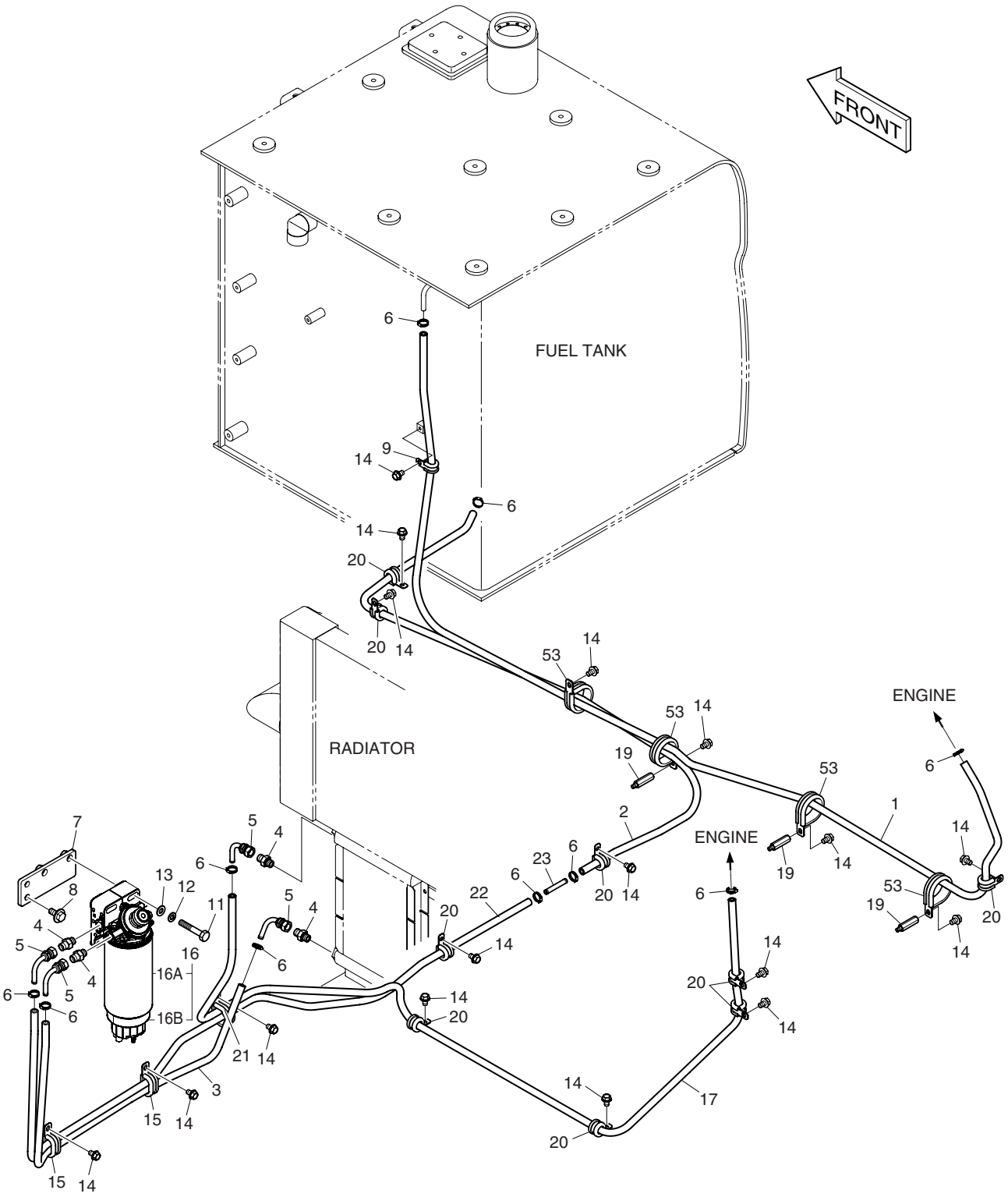

| DATE | OCT. 17, 2005 |
|---|---|
| 1st EDITION | |

# Fig. 1210 FUEL PIPING
# CONDUITES DE GAZOLE

Serial No. ;

| Key No. | Part No. | Description | Description | Q'ty | S.C | Serial No. | ICA | Replaceable part | |
|---|---|---|---|---|---|---|---|---|---|
| | | | | | | | | Part No. | Q'ty |
| 1210-- | K1005075E | FUEL PIPING | CONDUITES DE GAZOLE | - | D | | | | |
| 1 | 2185-1247D116 | HOSE;FUEL | TUYAU FLEXIBLE | 1 | | | | | |
| 2 | 2185-1247D78 | HOSE;FUEL | TUYAU FLEXIBLE | 1 | | | | | |
| 3 | 2185-1247D134 | HOSE;FUEL | TUYAU A GAZOLE | 1 | | | | | |
| 4 | DS2479004 | ADAPTER | RACCORD ADAPTATEUR | 4 | | | | | |
| 5 | K1002864 | ELBOW | COUDE | 4 | | | | | |
| 6 | S8450012 | CLAMP;HOSE | COLLIER | 10 | | | | | |
| 7 | K1002719A | BRACKET | SUPPORT | 1 | | | | | |
| 8 | DS0025025 | BOLT;SET | BOULON A 6 PANS | 2 | | | | | |
| 9 | 124-00208D2 | CLIP | CLIP | 1 | | | | | |
| 11 | S0561266 | BOLT | BOULON A 6 PANS | 2 | | | | | |
| 12 | S5102703 | WASHER;SPRING | RONDELLE ELASTIQUE | 2 | | | | | |
| 13 | S5010713 | WASHER;PLAIN | RONDELLE | 2 | | | | | |
| 14 | K1001029 | BOLT | BOULON A 6 PANS | 17 | | | | | |
| 15 | 124-00209D1 | CLIP | ATTACHE | 2 | | | | | |
| 16 | K1006519 | PRE FUEL FILTER | POMPE | 1 | | | | | |
| 16A | K1006529 | . FILTER;PRE FUEL | . FILTRE | 1 | | | | | |
| 16B | K1006973 | . BOWL;WATER | . CUVETTE | 1 | | | | | |
| 17 | 2185-1247D77 | HOSE | TUYAU FLEXIBLE | 1 | | | | | |
| 19 | 2120-2187 | BOLT;STUD | BOULON A 6 PANS | 3 | | | | | |
| 20 | 124-00208D3 | CLIP | ATTACHE | 9 | | | | | |
| 21 | 124-00208D6 | CLIP | ATTACHE | 1 | | | | | |
| 22 | 2185-1247D24 | HOSE | TUYAU FLEXIBLE | 1 | | | | | |
| 23 | K1013543 | PIPE | CONDUITES | 1 | | | | | |
| 53 | 124-00209D1 | CLIP | BAGUE D'ARRET | 4 | | | | | |

| DATE | JUN. 30, 2007 |
|---|---|
| REV.NO. | EXB07-06 |

# Fig. 1220 OIL TANK
# RESERVOIR DE HUILE

**Serial No. ;**

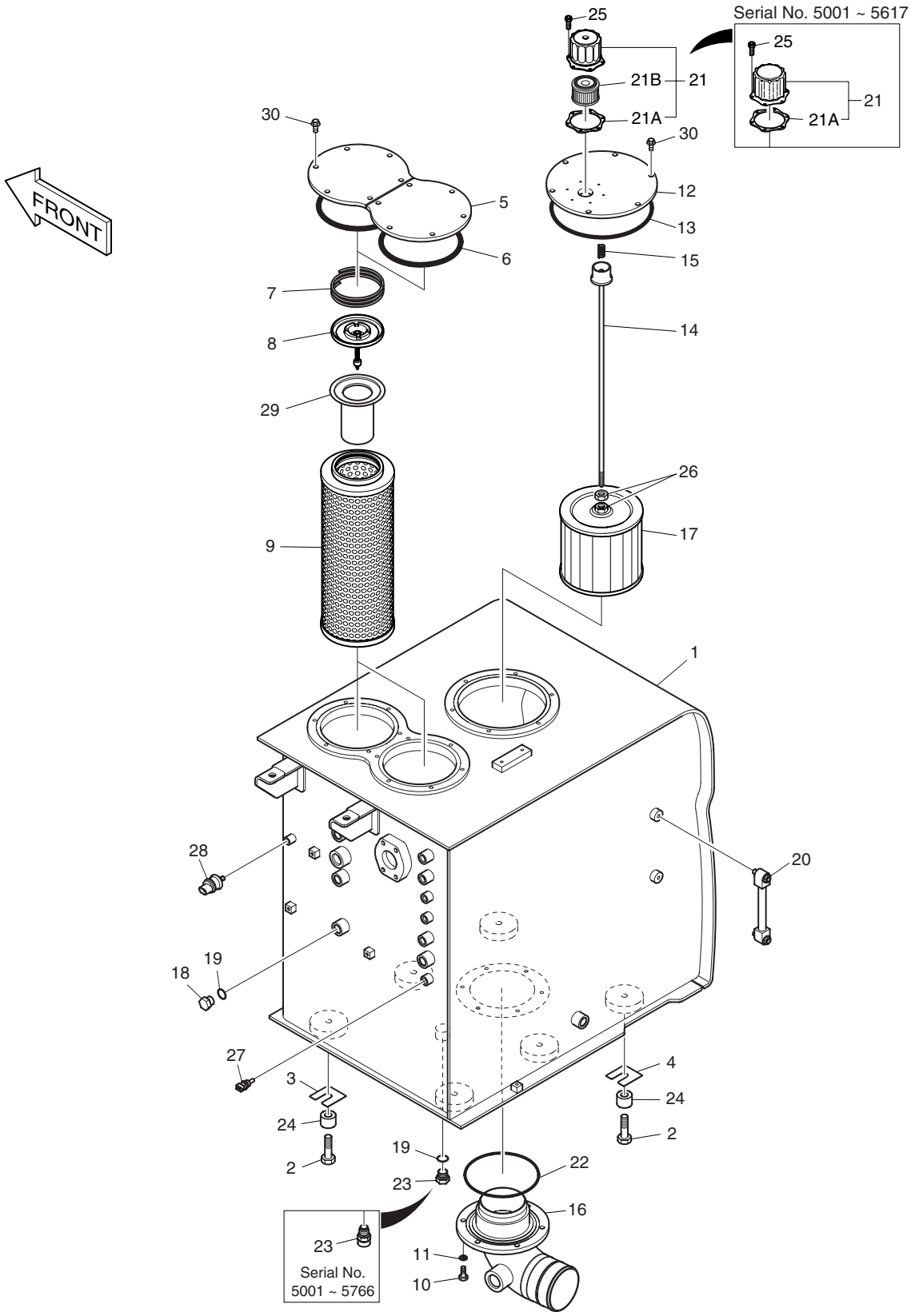

| DATE | JUN. 30, 2007 |
|---|---|
| REV. NO. | EXB07-06 |

# Fig. 1220 OIL TANK RESERVOIR DE HUILE

Serial No. ;

| Key No. | Part No. | Description | Description | Q'ty | S.C | Serial No. | ICA | Replaceable part | |
|---|---|---|---|---|---|---|---|---|---|
| | | | | | | | | Part No. | Q'ty |
| 1220-- | **K1003093J** | **OIL TANK ASS'Y** | ENSEMBLE RESERVOIR | - | D | | | | |
| 1 | K1003085B | TANK;OIL | RESERVOIR D'HUILE | 1 | | 5001–5066 | I | K1003085C | 1 |
| | K1003085C | TANK;OIL | RESERVOIR D'HUILE | 1 | | 5067–5483 | I | K1003085E | 1 |
| | **K1003085E** | **TANK;OIL** | RESERVOIR D'HUILE | 1 | | **5484–5789** | I | K1003085J | 1 |
| | **K1003085J** | **TANK;OIL** | RESERVOIR D'HUILE | 1 | | **5790–** | | | |
| 2 | S0565466 | BOLT | BOULON A 6 PANS | 6 | | | | | |
| 3 | 114-00522 | SHIM | CALE | 3 | | | | | |
| 4 | 114-00523 | SHIM | CALE | 3 | | | | | |
| 5 | K1003992B | COVER | COUVERCLE | 2 | | 5001–5766 | I | K1003992C | 2 |
| | **K1003992C** | **COVER** | COUVERCLE | 2 | | **5767–** | | | |
| 6 | S8011850 | O-RING | JOINT TORIQUE | 2 | | | | | |
| 7 | 2129-1393 | SPRING | RESSORT | 2 | | | | | |
| 8 | 2426-1175 | VALVE;BY-PASS | VANNE | 2 | | | | | |
| 9 | 474-00055 | ELELMENT;FILTER | ELEMENT FILTRANT | 2 | | | | | |
| 10 | S0512066 | BOLT | BOULON A 6 PANS | 6 | | | | | |
| 11 | S5102603 | WASHER;SPRING | RONDELLE ELASTIQUE M10 | 6 | | | | | |
| 12 | K1004313A | COVER | COUVERCLE | 1 | | | | | |
| 13 | S8012200 | O-RING | JOINT TORIQUE | 1 | | | | | |
| 14 | 2136-1433 | ROD | TIGE | 1 | | | | | |
| 15 | 2129-1008 | SPRING | RESSORT | 1 | | | | | |
| 16 | K1009434 | PIPE | CONDUITE | 1 | | | | | |
| 17 | 2471-9401A | FILTER;SUCTION | FILTRE A ASPIRATION | 1 | | | | | |
| 18 | 2181-1950D7 | PLUG | BOUCHON | 1 | | | | | |
| 19 | S8000181 | O-RING | JOINT TORIQUE | 2 | | | | | |
| 20 | 119-00025B | GAUGE;LEVEL | PIGNON | 1 | | | | | |
| 21 | **422-00027A** | **BREATHER;AIR** | RENIFLARD D'AIR | 1 | | **5001–5617** | I | K1012685A | 1 |
| 21A | **180-00200** | **. PACKING** | . EMBALLAGE | 1 | | **5001–5617** | I | K9005662 | 1 |
| 21 | **K1012685A** | **BREATHER;AIR** | RENIFLARD D'AIR | 1 | | **5618–** | | | |
| 21A | **K9005662** | **. GASKET** | . JOINT | 1 | | **5618–** | | | |
| 21B | **K1029257** | **. ELEMENT;AIR BREATHER** | . ELEMENT | 1 | | **5618–** | | | |
| 22 | S8011651 | O-RING | JOINT TORIQUE | 1 | | | | | |
| 23 | 426-00278 | VALVE;DRAIN | VANNE | 1 | | 5001–5766 | | | |
| | **2181-1950D7** | **PLUG** | BOUCHON | 1 | | **5767–** | | | |
| 24 | 114-00425 | SPACER;HARDEN | BAGUE D'ECARTEMENT | 6 | | | | | |
| 25 | 2120-2166D41 | BOLT | VIS | 6 | | | | | |
| 26 | S4012633 | NUT | ECROU M10X1.5 | 2 | | | | | |
| 27 | K1003296 | SENSOR;OIL TEMP | CAPTEUR | 1 | | | | | |
| 28 | 549-00095 | SWITCH | INTERRUPTEUR | 1 | | | | | |

| DATE | JUN. 30, 2007 |
|---|---|
| REV.NO. | EXB07-06 |

# Fig. 1220 OIL TANK
# RESERVOIR DE HUILE

**Serial No. ;**

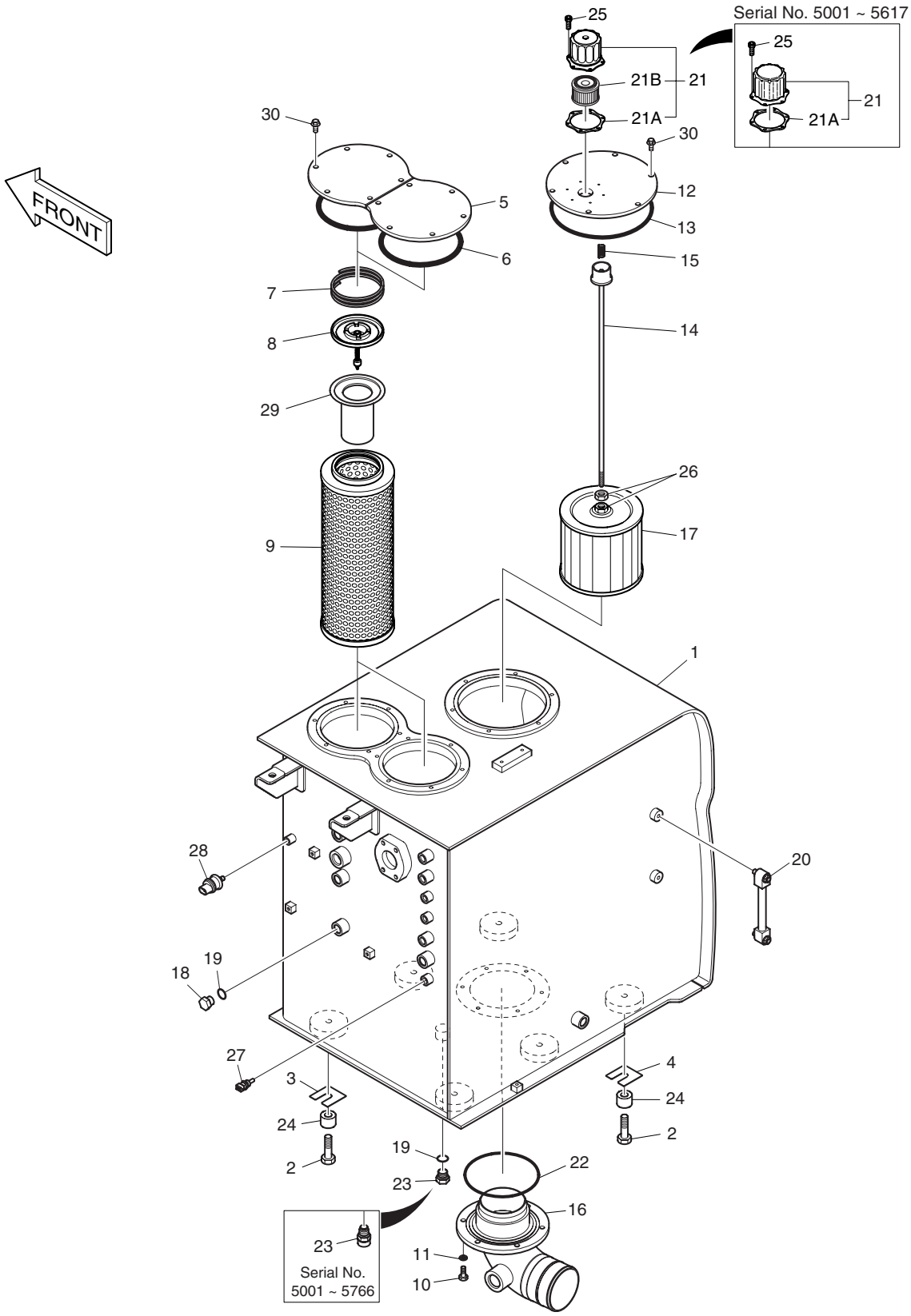

| DATE | JUN. 30, 2007 |
|---|---|
| REV. NO. | EXB07-06 |

# Fig. 1220 OIL TANK RESERVOIR DE HUILE

Serial No. ;

| Key No. | Part No. | Description | Description | Q'ty | S.C | Serial No. | ICA | Replaceable part | |
|---|---|---|---|---|---|---|---|---|---|
| | | | | | | | | Part No. | Q'ty |
| 1220-29 | 471-00127 | FILTER;BY-PASS | FILTRE | 2 | | | | | |
| 30 | K1007957 | BOLT | BOULON A 6 PANS | 18 | | | | | |

| DATE | JUN. 30, 2007 |
|---|---|
| REV.NO. | EXB07-06 |

# Fig. 1230 OIL COOLER PIPING(1)
# CONDUITES DE HUILE

**Serial No. ;**

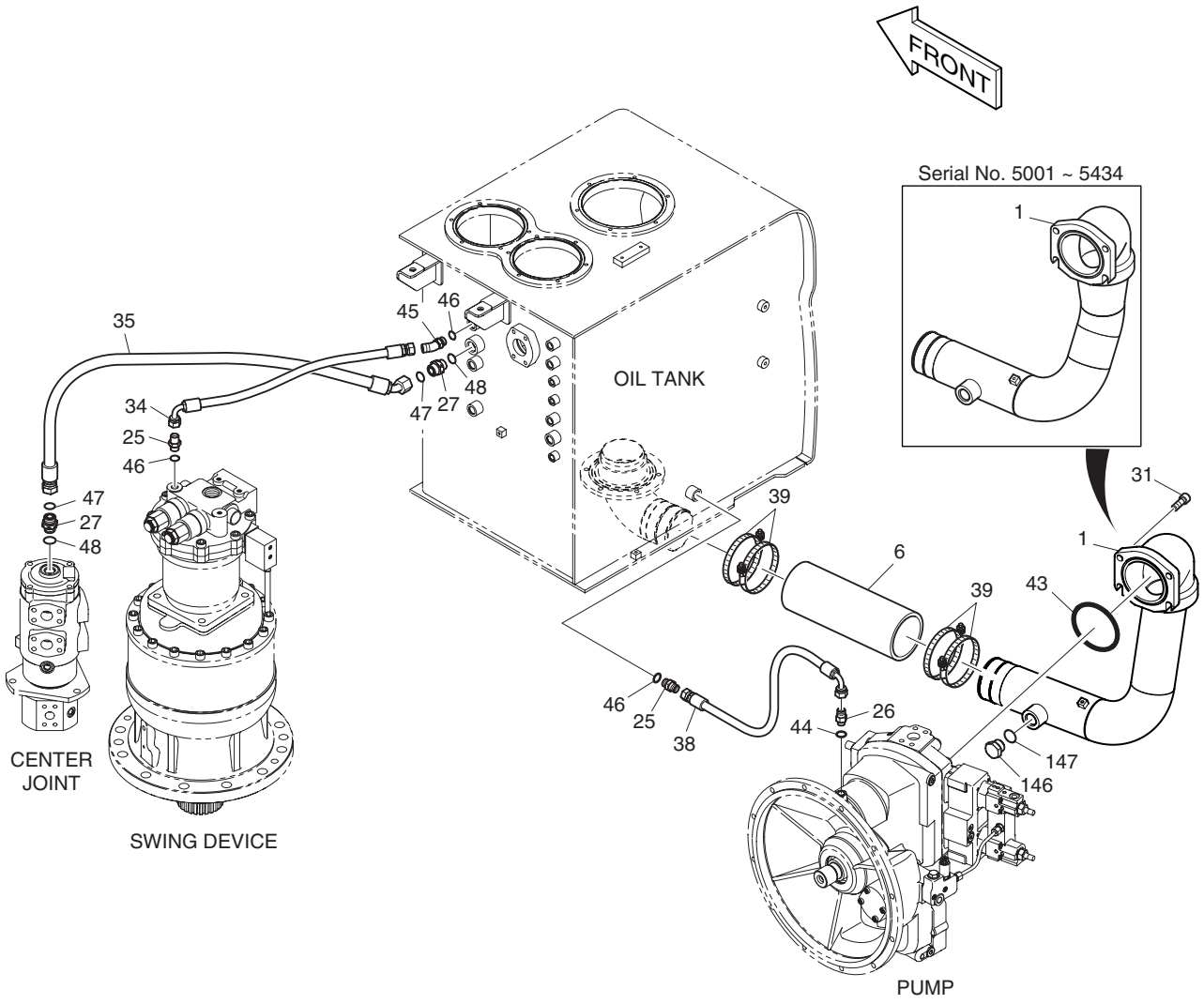

| DATE | JUN. 30, 2007 |
|---|---|
| REV. NO. | EXB07-06 |

# Fig. 1230 OIL COOLER PIPING(1) CONDUITES DE HUILE

**Serial No. ;**

| Key No. | Part No. | Description | Description | Q'ty | S.C | Serial No. | ICA | Replaceable part | |
|---|---|---|---|---|---|---|---|---|---|
| | | | | | | | | Part No. | Q'ty |
| 1230-- | **K1002987C** | **OIL COOLER PIPING** | CONDUITES | - | D | | | | |
| 1 | K1004777B | PIPE;SUCTION | TUBE D'ASPIRATION | 1 | | 5001–5434 | I | K1004777C | 1 |
| | **K1004777C** | **PIPE;SUCTION** | TUBE D'ASPIRATION | 1 | | **5435–** | | | |
| 6 | 2185-1737D3 | HOSE | TUYAU FLEXIBLE | 1 | | | | | |
| 25 | 2181-1126D6 | ADAPTER | RACCORD ADAPTATEUR | 2 | | | | | |
| 26 | DS2380004 | ADAPTER;FILTER | ADAPTEUR | 1 | | | | | |
| 27 | 2181-2627D1 | ADAPTER | RACCORD ADAPTATEUR | 2 | | | | | |
| 31 | S2221566 | BOLT;SOCKET | BOULON A 6 PANS CREUX | 4 | | | | | |
| 34 | DS2055854 | HOSE | TUYAU FLEXIBLE | 1 | | | | | |
| 35 | DS2012245 | HOSE | TUYAU FLEXIBLE | 1 | | | | | |
| 38 | DS2055853 | HOSE | TUYAU FLEXIBLE | 1 | | | | | |
| 39 | S8500143 | CLAMP;HOSE | COLLIER | 4 | | | | | |
| 43 | 2180-1026D35 | O-RING | JOINT TORIQUE | 1 | | | | | |
| 44 | S8040081 | O-RING | JOINT TORIQUE | 1 | | | | | |
| 45 | 2181-2419D3 | ELBOW | COUDE | 1 | | | | | |
| 46 | S8000181 | O-RING | JOINT TORIQUE | 3 | | | | | |
| 47 | S8030121 | O-RING | JOINT TORIQUE | 2 | | | | | |
| 48 | S8000231 | O-RING | JOINT TORIQUE | 2 | | | | | |
| 146 | 2181-1950D9 | PLUG | BOUCHON | 1 | | | | | |
| 147 | S8000291 | O-RING | JOINT TORIQUE | 1 | | | | | |

| DATE | JUN. 30, 2007 |
|---|---|
| REV.NO. | EXB07-06 |

# Fig. 1240 OIL COOLER PIPING(2)
# CONDUITES DE HUILE

**Serial No. ;**

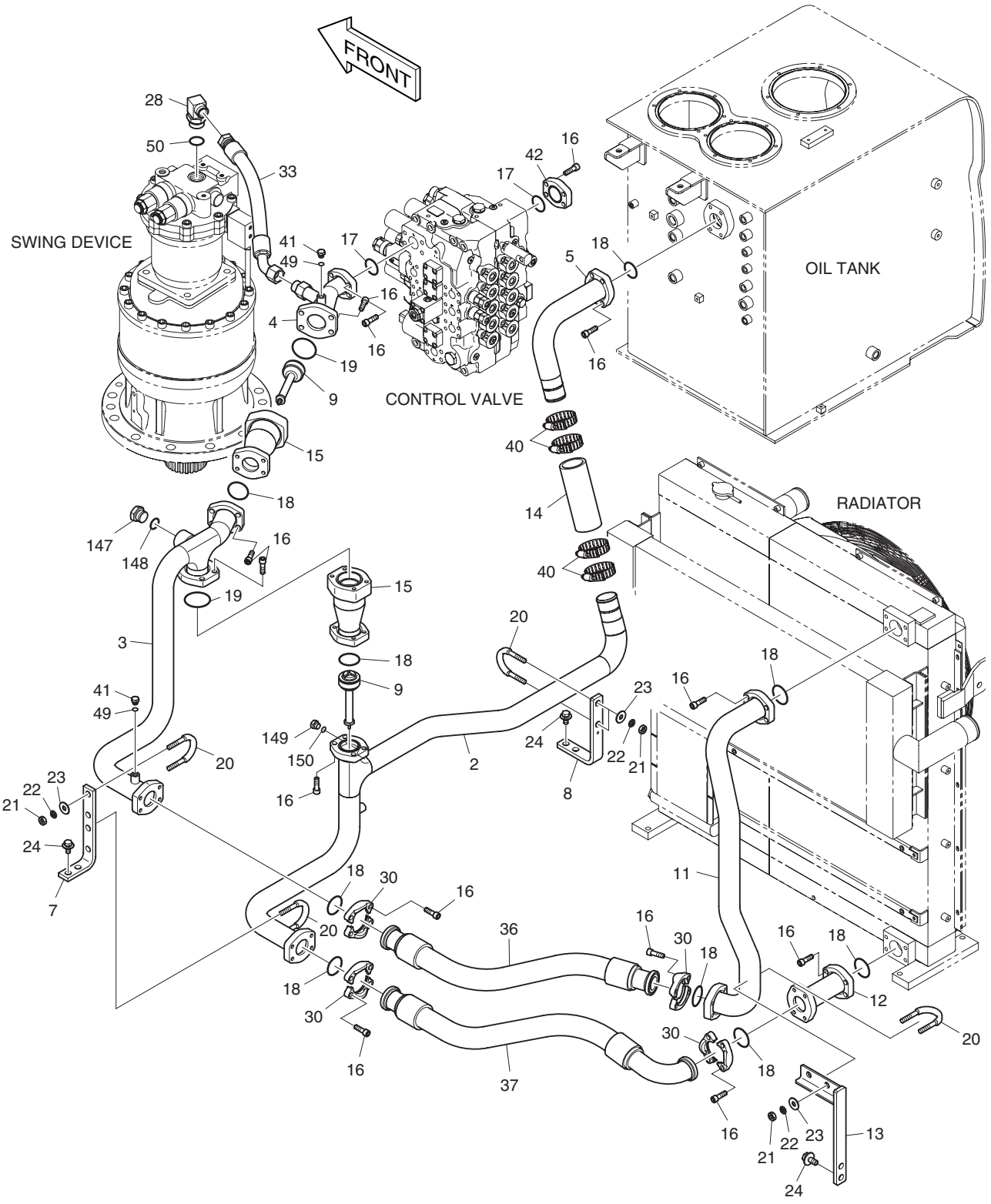

| DATE | JUN. 30, 2007 |
|---|---|
| REV. NO. | EXB07-06 |

# Fig. 1240 OIL COOLER PIPING(2) CONDUITES DE HUILE

**Serial No. ;**

| Key No. | Part No. | Description | Description | Q'ty | S.C | Serial No. | ICA | Replaceable part | |
|---|---|---|---|---|---|---|---|---|---|
| | | | | | | | | Part No. | Q'ty |
| 1240-- | **K1002987E** | **OIL COOLER PIPING** | CONDUITES | - | D | | | | |
| 2 | K1003022B | PIPE | CONDUITE | 1 | | | | | |
| 3 | K1003021A | PIPE | CONDUITE | 1 | | | | | |
| 4 | K1003020A | PIPE | CONDUITE | 1 | | 5001–5659 | I | K1003020B | 1 |
| | **K1003020B** | **PIPE** | CONDUITE | 1 | | **5660–** | | | |
| 5 | K1003026A | PIPE | CONDUITE | 1 | | | | | |
| 7 | 195-02735B | PLATE | SUPPORT | 1 | | | | | |
| 8 | K1004989A | PLATE | PLAQUE | 1 | | | | | |
| 9 | K1000643 | VALVE;BYPASS | VANNE | 2 | | | | | |
| 11 | K1007449A | PIPE | CONDUITE | 1 | | | | | |
| 12 | K1004290A | PIPE | CONDUITE | 1 | | | | | |
| 13 | K1004811A | BRACKET | SUPPORT | 1 | | | | | |
| 14 | 2185-1776D1 | HOSE | TUYAU FLEXIBLE | 1 | | | | | |
| 15 | K1000644C | PIPE | CONDUITE | 2 | | | | | |
| 16 | S2215466 | BOLT;SOCKET | BOULON DE PLOT | 52 | | | | | |
| 17 | 2180-1026D24 | O-RING | JOINT TORIQUE | 2 | | | | | |
| 18 | 2180-1026D27 | O-RING | JOINT TORIQUE | 9 | | | | | |
| 19 | 2180-1026D31 | O-RING | JOINT TORIQUE | 2 | | | | | |
| 20 | 120-00258A | U-BOLT | BOULON A 6 PANS | 4 | | | | | |
| 21 | S4012733 | NUT | ECROU | 8 | | | | | |
| 22 | S5102703 | WASHER;SPRING | RONDELLE ELASTIQUE M12 | 8 | | | | | |
| 23 | 2114-1058D30 | WASHER | RONDELLE | 8 | | | | | |
| 24 | DS0025018 | BOLT;SET | BOULON A 6 PANS | 6 | | | | | |
| 28 | DS2281100 | ELBOW | COUDE | 1 | | | | | |
| 30 | 4215-1003D6 | FLANGE;SPLIT | FLASQUE | 8 | | | | | |
| 33 | DS2054318 | HOSE | TUYAU FLEXIBLE | 1 | | | | | |
| 36 | DS2038158 | HOSE | TUYAU FLEXIBLE | 1 | | | | | |
| 37 | DS2040396 | HOSE | TUYAU FLEXIBLE | 1 | | | | | |
| 40 | S8500092 | CLAMP;HOSE | COLLIER | 4 | | | | | |
| 41 | 2181-1950D1 | PLUG | BOUCHON | 2 | | | | | |
| 42 | 2181-2157D6 | FLANGE;COVER | BRIDE | 1 | | | | | |
| 49 | S8000111 | O-RING | JOINT TORIQUE | 2 | | | | | |
| 50 | S8000381 | O-RING | JOINT TORIQUE | 1 | | | | | |
| 147 | 2181-1950D9 | PLUG | BOUCHON | 1 | | | | | |
| 148 | S8000291 | O-RING | JOINT TORIQUE | 1 | | | | | |
| 149 | 2181-1950D2 | PLUG | BOUCHON | 1 | | | | | |
| 150 | S8000141 | O-RING | JOINT TORIQUE | 1 | | | | | |

| DATE | JUN. 30, 2007 |
|---|---|
| REV.NO. | EXB07-06 |

# Fig. 1250 MAIN PIPING(1) - PUMP
# CIRCUIT HYDRAULIQUE PRINCIPAL

**Serial No. ;**

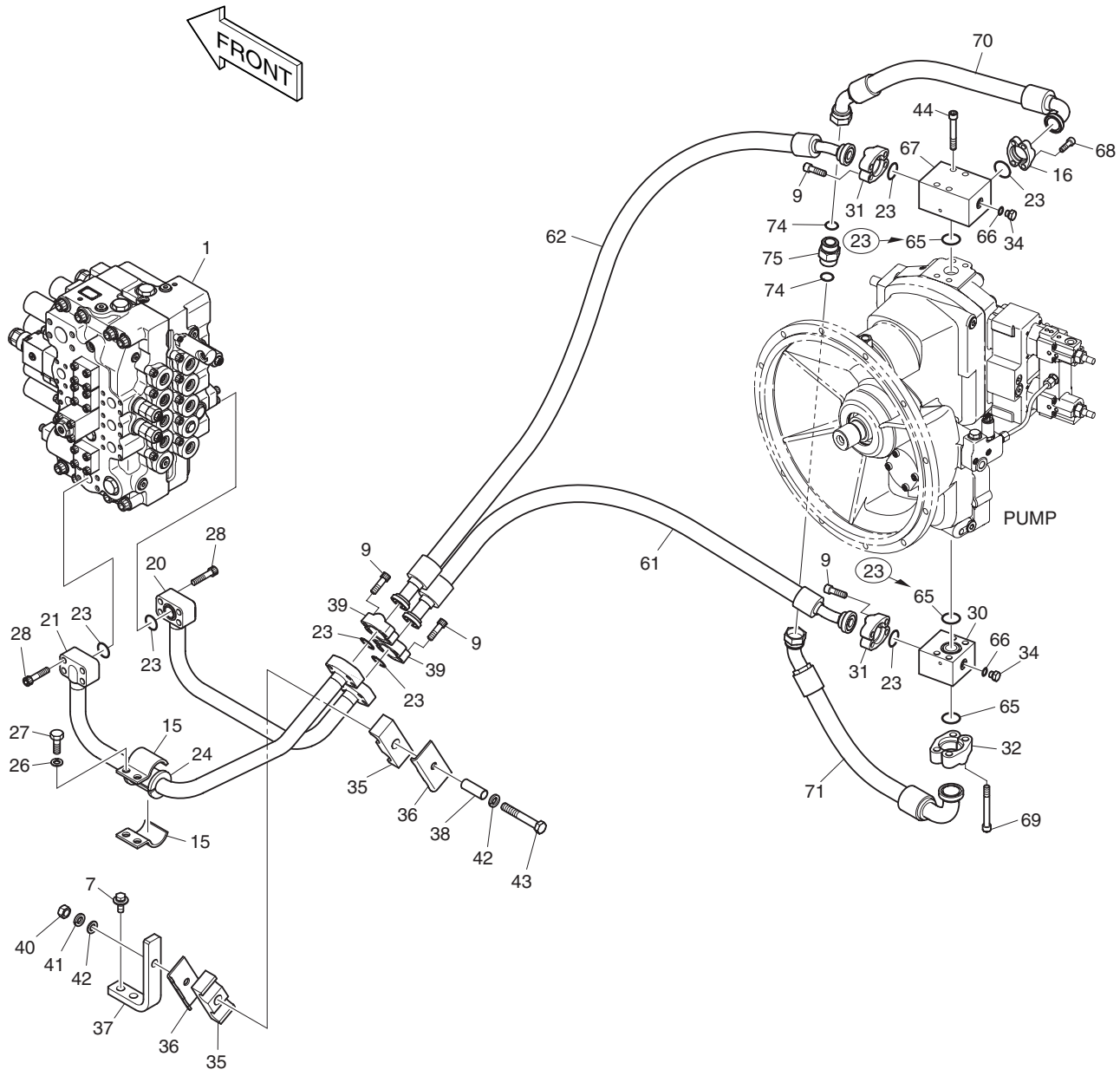

| DATE | JUN. 30, 2007 |
|---|---|
| REV. NO. | EXB07-06 |

# Fig. 1250 MAIN PIPING(1) - PUMP
# CIRCUIT HYDRAULIQUE PRINCIPAL

**Serial No. ;**

| Key No. | Part No. | Description | Description | Q'ty | S.C | Serial No. | ICA | Replaceable part | |
|---|---|---|---|---|---|---|---|---|---|
| | | | | | | | | Part No. | Q'ty |
| 1250-- | **K1002988H** | **MAIN PIPING** | CIRCUIT HYDRAULIQUE | - | D | | | | |
| 1 | K1002989A | CONTROL VALVE | VANNE DE COMMANDE | 1 | | | | | |
| 7 | DS0025020 | BOLT;SET | BOULON A 6 PANS | 2 | | | | | |
| 9 | S2215466 | BOLT;SOCKET | BOULON DE PLOT | 16 | | | | | |
| 15 | 124-00218 | CLAMP | COLLIER | 2 | | | | | |
| 16 | 2181-9083 | FLANGE;SPLIT | FLASQUE | 2 | | | | | |
| 20 | K1003103A | PIPE | CONDUITE | 1 | | | | | |
| 21 | K1003104A | PIPE | CONDUITE | 1 | | | | | |
| 23 | 2180-1026D19 | O-RING | JOINT TORIQUE | 9 | | 5001–5619 | | | |
| | **2180-1026D19** | **O-RING** | JOINT TORIQUE | 7 | | **5620**– | | | |
| 24 | 161-00281 | RUBBER | CAOUTCHOUC | 1 | | | | | |
| 26 | S5102803 | WASHER;SPRING | RONDELLE ELASTIQUE M14 | 2 | | | | | |
| 27 | S0562766 | BOLT | BOULON A 6 PANS | 2 | | | | | |
| 28 | S2215766 | BOLT;SOCKET | BOULON DE PLOT | 8 | | | | | |
| 30 | K1001971B | BLOCK | BLOC | 1 | | | | | |
| 31 | 2181-9084A | FLANGE;SPLIT | FLASQUE EN DEUX | 4 | | | | | |
| 32 | 2181-9086 | FLANGE;SPLIT | FLASQUE EN DEUX | 2 | | | | | |
| 34 | 2181-1950D1 | PLUG | BOUCHON | 2 | | | | | |
| 35 | 124-00210A | RUBBER | ATTACHE DE TUBE | 2 | | | | | |
| 36 | 2191-3705C | PLATE | PLAQUE | 2 | | | | | |
| 37 | K1005180A | BRACKET | SUPPORT | 1 | | | | | |
| 38 | 114-00456 | SPACER | DOUILLE D'ECARTEMENT | 1 | | | | | |
| 39 | 2181-9081 | FLANGE;SPLIT | BRIDE | 4 | | | | | |
| 40 | S4012933 | NUT | ECROU | 1 | | | | | |
| 41 | S5102903 | WASHER;SPRING | RONDELLE ELASTIQUE | 1 | | | | | |
| 42 | S5010813 | WASHER;PLAIN | RONDELLE | 2 | | | | | |
| 43 | S0566466 | BOLT | BOULON | 1 | | | | | |
| 44 | S2216366 | BOLT;SOCKET | BOULON A 6 PANS CREUX | 4 | | | | | |
| 61 | DS2097001 | HOSE | TUYAU FLEXIBLE | 1 | | 5001–5630 | I | DS2097017 | 1 |
| | **DS2097017** | **HOSE** | TUYAU FLEXIBLE | 1 | | **5631**– | | | |
| 62 | DS2097006 | HOSE | TUYAU FLEXIBLE | 1 | | 5001–5630 | I | DS2097015 | 1 |
| | **DS2097015** | **HOSE** | TUYAU FLEXIBLE | 1 | | **5631**– | | | |
| 65 | 2180-1026D23 | O-RING | JOINT TORIQUE | 1 | | 5001–5619 | | | |
| | **2180-1026D23** | **O-RING** | JOINT TORIQUE | 3 | | **5620**– | | | |
| 66 | S8000111 | O-RING | JOINT TORIQUE | 2 | | | | | |
| 67 | K1007921A | BLOCK | BLOC | 1 | | | | | |
| 68 | S2212366 | BOLT;SOCKET | BOULON DE PLOT | 4 | | | | | |
| 69 | S2216866 | BOLT;SOCKET | BOULON A 6 PANS CREUX | 4 | | | | | |

| DATE | JUN. 30, 2007 |
|---|---|
| REV.NO. | EXB07-06 |

# Fig. 1250 MAIN PIPING(1) - PUMP
# CIRCUIT HYDRAULIQUE PRINCIPAL

**Serial No. ;**

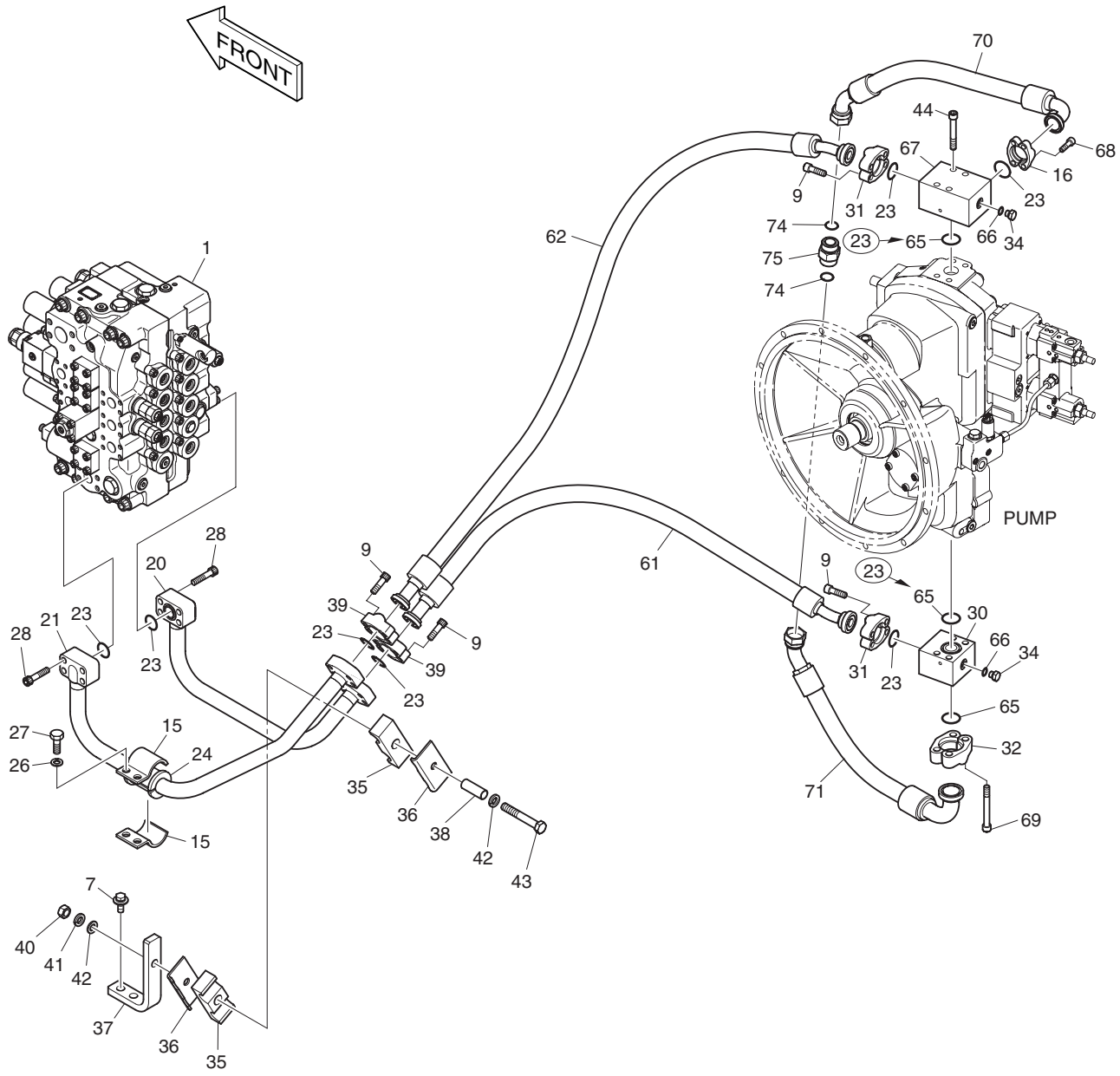

| DATE | JUN. 30, 2007 |
|---|---|
| REV. NO. | EXB07-06 |

# Fig. 1250 MAIN PIPING(1) - PUMP
# CIRCUIT HYDRAULIQUE PRINCIPAL

**Serial No. ;**

| Key No. | Part No. | Description | Description | Q'ty | S.C | Serial No. | ICA | Replaceable part | |
|---|---|---|---|---|---|---|---|---|---|
| | | | | | | | | Part No. | Q'ty |
| 1250-70 | DS2065030 | HOSE | TUYAU FLEXIBLE | 1 | | | | | |
| 71 | DS2065031 | HOSE | TUYAU FLEXIBLE | 1 | | | | | |
| 74 | S8030161 | O-RING | JOINT TORIQUE | 2 | | | | | |
| 75 | K1012046A | ADAPTER | RACCORD ADAPTATEUR | 1 | | | | | |

| DATE | JUN. 30, 2006 |
|---|---|
| REV.NO. | EXB06-08 |

# Fig. 1260 MAIN PIPING(2) - BOOM
# CIRCUIT HYDRAULIQUE PRINCIPAL

**Serial No. ;**

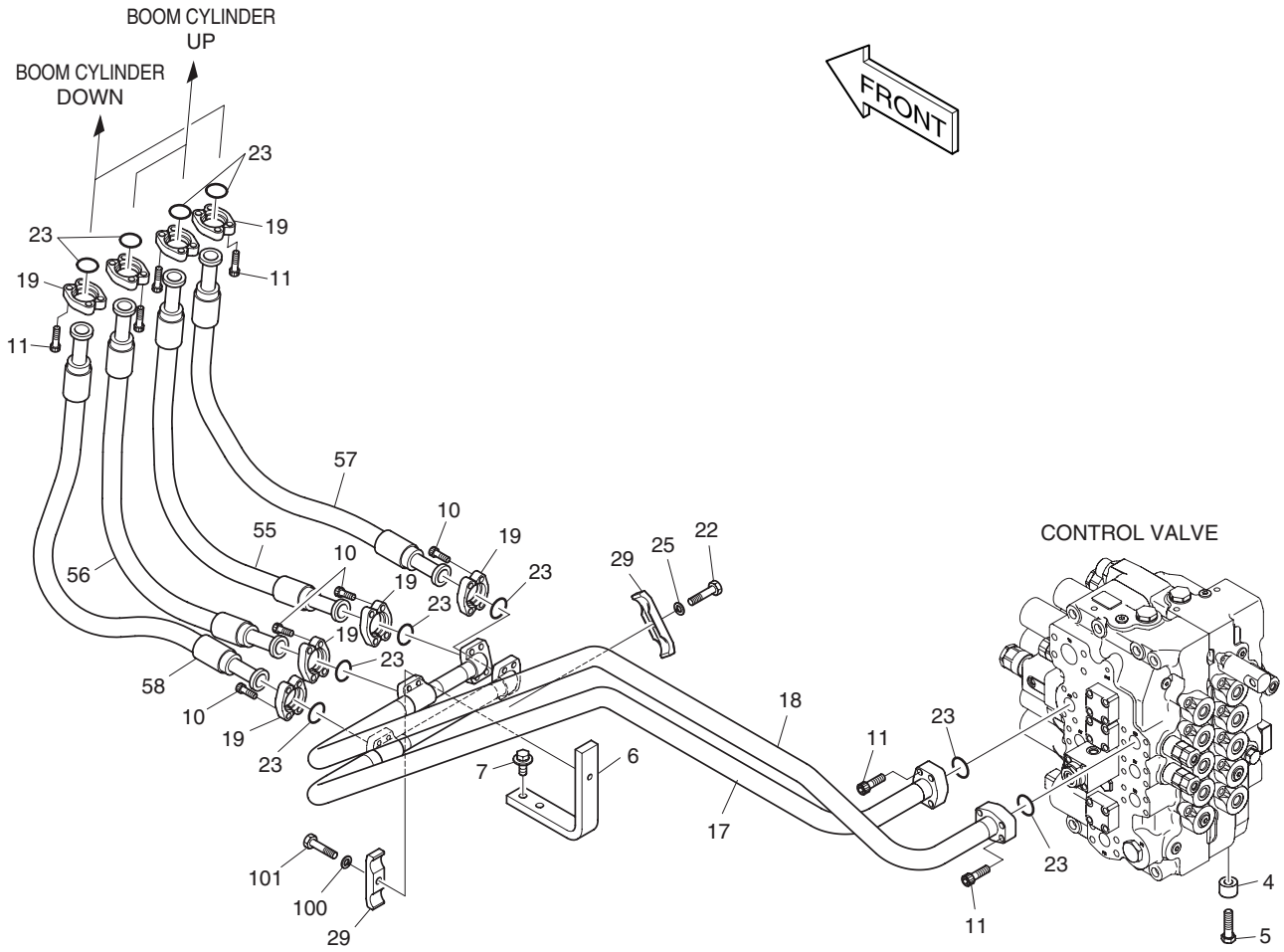

| DATE | JUN. 30, 2006 |
|---|---|
| REV. NO. | EXB06-08 |

# Fig. 1260 MAIN PIPING(2) - BOOM
# CIRCUIT HYDRAULIQUE PRINCIPAL

**Serial No. ;**

| Key No. | Part No. | Description | Description | Q'ty | S.C | Serial No. | ICA | Replaceable part | |
|---|---|---|---|---|---|---|---|---|---|
| | | | | | | | | Part No. | Q'ty |
| 1260-- | **K1002988E** | **MAIN PIPING** | CIRCUIT HYDRAULIQUE | - | D | | | | |
| 4 | 114-00425 | SPACER | BAGUE D'ECARTEMENT | 4 | | | | | |
| 5 | S0565466 | BOLT | BOULON A 6 PANS | 4 | | | | | |
| 6 | 195-02572B | PLATE | SUPPORT | 1 | | 5001–5099 | | | |
| | **K1023531** | **PLATE** | SUPPORT | 1 | | **5100–** | | | |
| 7 | DS0025020 | BOLT;SET | BOULON A 6 PANS | 2 | | | | | |
| 10 | S2212266 | BOLT;SOCKET | BOULON DE PLOT | 16 | | | | | |
| 11 | S2212466 | BOLT;SOCKET | BOULON DE PLOT | 24 | | | | | |
| 17 | K1003083A | PIPE | CONDUITE | 1 | | 5001–5099 | I | K1003083B | 1 |
| | **K1003083B** | **PIPE** | CONDUITE | 1 | | **5100–** | | | |
| 18 | K1003084A | PIPE | CONDUITE | 1 | | 5001–5099 | I | K1003084B | 1 |
| | **K1003084B** | **PIPE** | CONDUITE | 1 | | **5100–** | | | |
| 19 | 2181-9078 | FLANGE;SPLIT | FLASQUE EN DEUX | 16 | | | | | |
| 22 | S0561066 | BOLT | BOULON A 6 PANS | 1 | | | | | |
| 23 | 2180-1026D19 | O-RING | JOINT TORIQUE | 10 | | | | | |
| 25 | S5102703 | WASHER;SPRING | RONDELLE ELASTIQUE M12 | 1 | | | | | |
| 29 | 2124-1025D5 | CLAMP | ATTACHE DE TUBE | 2 | | | | | |
| 55 | DS2038187 | HOSE | TUYAU FLEXIBLE | 1 | | 5001–5099 | I | DS2038224 | 1 |
| | **DS2038224** | **HOSE** | TUYAU FLEXIBLE | 1 | | **5100–** | | | |
| 56 | DS2038187 | HOSE | TUYAU FLEXIBLE | 1 | | 5001–5099 | I | DS2038224 | 1 |
| | **DS2038224** | **HOSE** | TUYAU FLEXIBLE | 1 | | **5100–** | | | |
| 57 | DS2038187 | HOSE | TUYAU FLEXIBLE | 1 | | 5001–5099 | I | DS2038224 | 1 |
| | **DS2038224** | **HOSE** | TUYAU FLEXIBLE | 1 | | **5100–** | | | |
| 58 | DS2038187 | HOSE | TUYAU FLEXIBLE | 1 | | 5001–5099 | I | DS2038224 | 1 |
| | **DS2038224** | **HOSE** | TUYAU FLEXIBLE | 1 | | **5100–** | | | |
| 100 | S5102703 | WASHER;SPRING | RONDELLE ELASTIQUE M12 | 1 | | | | | |
| 101 | S0561066 | BOLT | BOULON A 6 PANS | 1 | | | | | |

| DATE | OCT. 17, 2005 |
|---|---|
| 1st EDITION | |

# Fig. 1270 MAIN PIPING(3) - ARM, BUCKET
# CIRCUIT HYDRAULIQUE PRINCIPAL

**Serial No. ;**

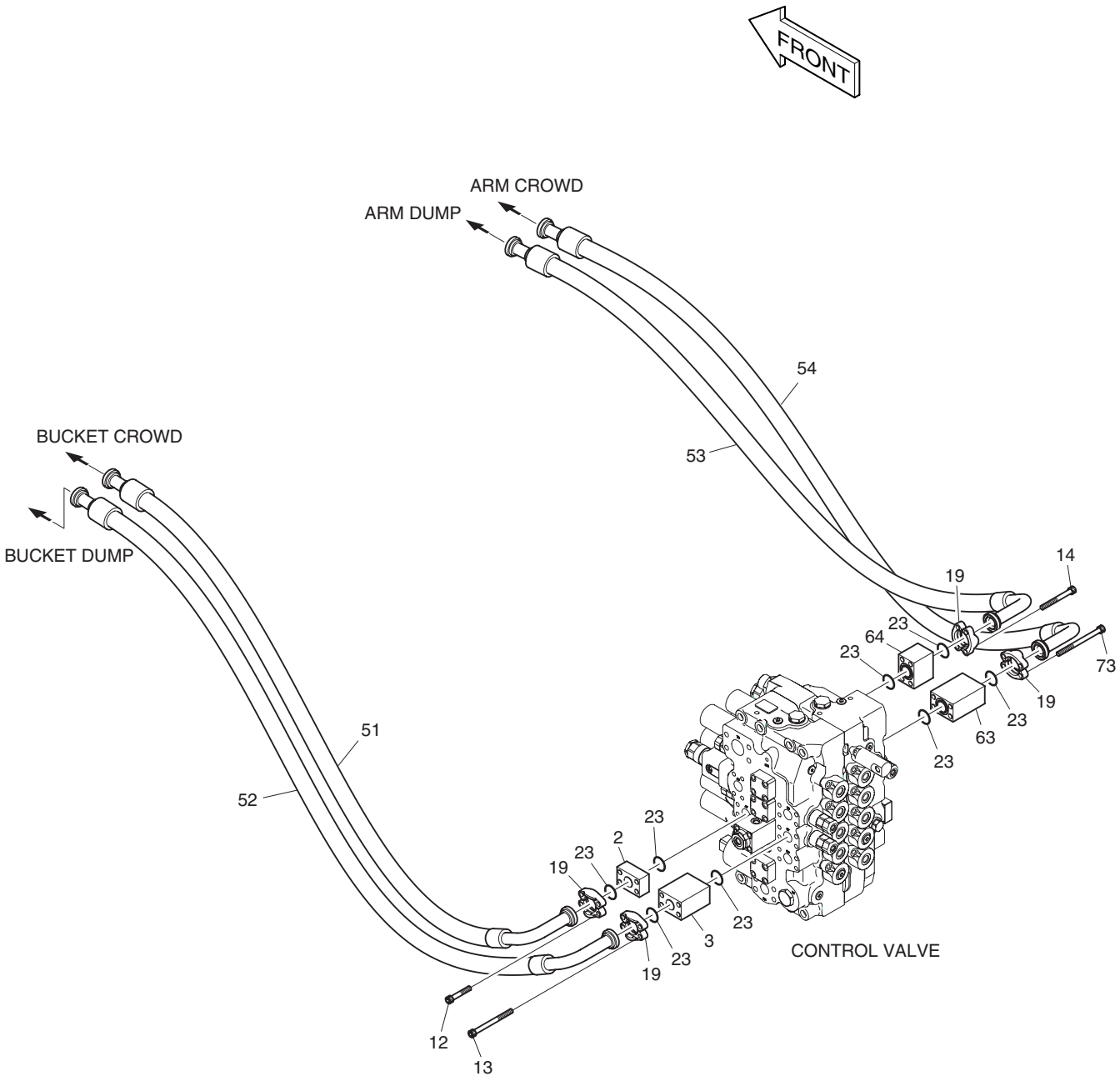

| DATE | OCT. 17, 2005 |
|---|---|
| 1st EDITION | |

# Fig. 1270 MAIN PIPING(3) - ARM, BUCKET
# CIRCUIT HYDRAULIQUE PRINCIPAL

Serial No. ;

| Key No. | Part No. | Description | Description | Q'ty | S.C | Serial No. | ICA | Replaceable part | |
|---|---|---|---|---|---|---|---|---|---|
| | | | | | | | | Part No. | Q'ty |
| 1270-- | K1002988C | MAIN PIPING | CIRCUIT HYDRAULIQUE | - | D | | | | |
| 2 | 2423-1407 | BLOCK;SPACER | BLOC | 1 | | | | | |
| 3 | 423-00171 | BLOCK;SPACER | BLOC | 1 | | | | | |
| 12 | S2212866 | BOLT;SOCKET | BOULON A 6 PANS CREUX | 4 | | | | | |
| 13 | S2214066 | BOLT;SOCKET | BOULON A 6 PANS CREUX | 4 | | | | | |
| 14 | S2213466 | BOLT;SOCKET | BOULON A 6 PANS CREUX | 4 | | | | | |
| 19 | 2181-9078 | FLANGE;SPLIT | FLASQUE EN DEUX | 8 | | | | | |
| 23 | 2180-1026D19 | O-RING | JOINT TORIQUE | 8 | | | | | |
| 51 | DS2040474 | HOSE | TUYAU FLEXIBLE | 1 | | | | | |
| 52 | DS2040473 | HOSE | TUYAU FLEXIBLE | 1 | | | | | |
| 53 | DS2040474 | HOSE | TUYAU FLEXIBLE | 1 | | | | | |
| 54 | DS2040473 | HOSE | TUYAU FLEXIBLE | 1 | | | | | |
| 63 | K1005357 | BLOCK;SPACER | BLOC | 1 | | | | | |
| 64 | 2181-2170 | BLOCK;SPACER | BLOC | 1 | | | | | |
| 73 | S2214266 | BOLT;SOCKET | BOULON DE PLOT | 4 | | | | | |

| DATE | OCT. 17, 2005 |
|---|---|
| 1st EDITION | |

# Fig. 1280 MAIN PIPING(4) - SWING CIRCUIT HYDRAULIQUE PRINCIPAL

**Serial No. ;**

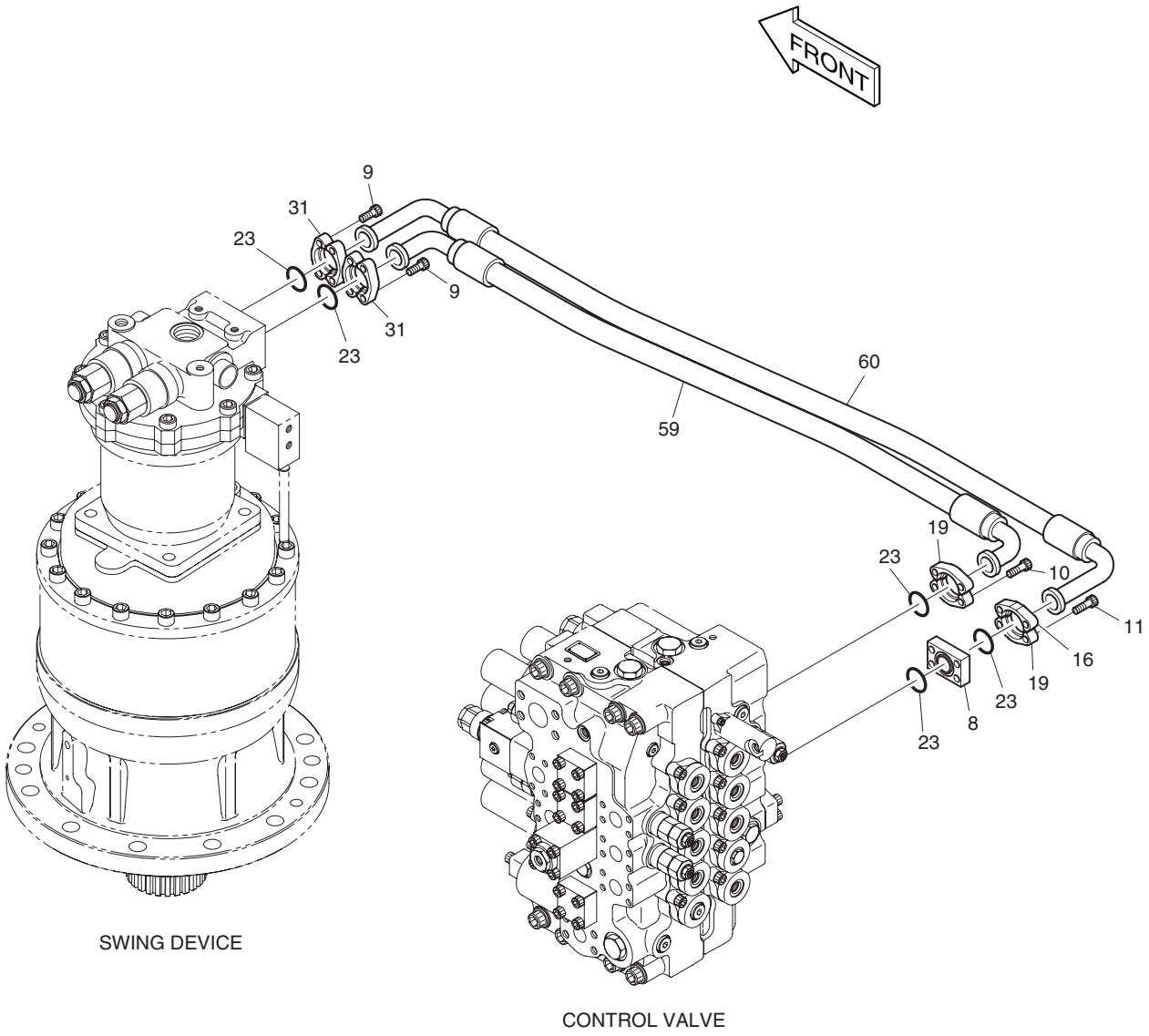

| DATE | OCT. 17, 2005 |
|---|---|
| 1st EDITION | |

# Fig. 1280 MAIN PIPING(4) - SWING
# CIRCUIT HYDRAULIQUE PRINCIPAL

Serial No. ;

| Key No. | Part No. | Description | Description | Q'ty | S.C | Serial No. | ICA | Replaceable part | |
|---|---|---|---|---|---|---|---|---|---|
| | | | | | | | | Part No. | Q'ty |
| 1280-- | K1002988C | MAIN PIPING | CIRCUIT HYDRAULIQUE | - | D | | | | |
| 8 | 423-00199 | BLOCK;SPACER | BLOC | 1 | | | | | |
| 9 | S2215466 | BOLT;SOCKET | BOULON DE PLOT | 8 | | | | | |
| 10 | S2212266 | BOLT;SOCKET | BOULON DE PLOT | 4 | | | | | |
| 11 | S2212466 | BOLT;SOCKET | BOULON DE PLOT | 4 | | | | | |
| 16 | 2181-9083 | FLANGE;SPLIT | FLASQUE | 1 | | | | | |
| 19 | 2181-9078 | FLANGE;SPLIT | FLASQUE EN DEUX | 3 | | | | | |
| 23 | 2180-1026D19 | O-RING | JOINT TORIQUE | 5 | | | | | |
| 31 | 2181-9084A | FLANGE;SPLIT | FLASQUE EN DEUX | 4 | | | | | |
| 59 | DS2045274 | HOSE | TUYAU FLEXIBLE | 1 | | | | | |
| 60 | DS2045240 | HOSE | TUYAU FLEXIBLE | 1 | | | | | |

| DATE | OCT. 17, 2005 |
|---|---|
| 1st EDITION | |

# Fig. 1290 MAIN PIPING(5) - TRAVEL CIRCUIT HYDRAULIQUE PRINCIPAL

**Serial No. ;**

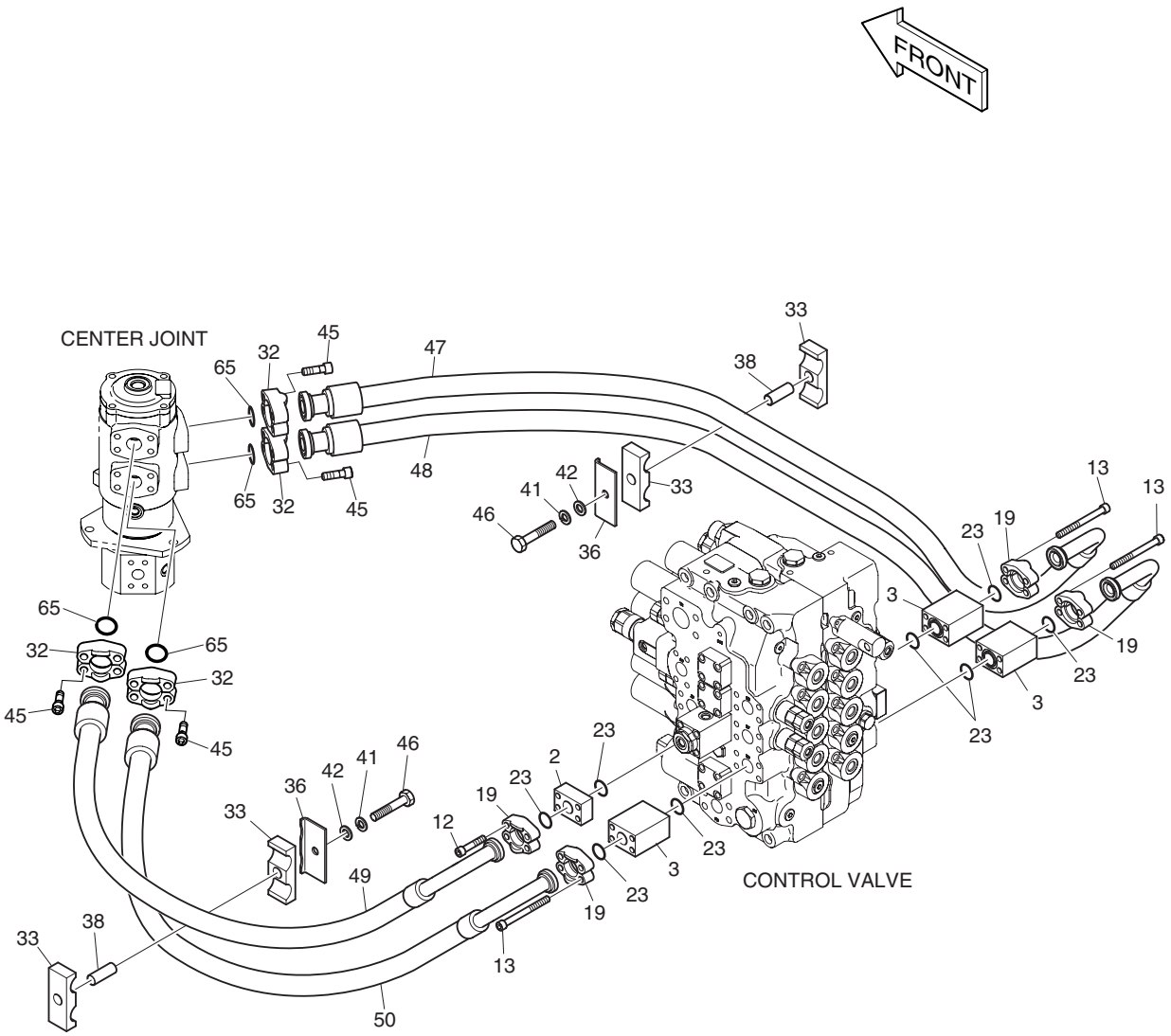

| DATE | OCT. 17, 2005 |
|---|---|
| 1st EDITION | |

# Fig. 1290 MAIN PIPING(5) - TRAVEL
# CIRCUIT HYDRAULIQUE PRINCIPAL

Serial No. ;

| Key No. | Part No. | Description | Description | Q'ty | S.C | Serial No. | ICA | Replaceable part | |
|---|---|---|---|---|---|---|---|---|---|
| | | | | | | | | Part No. | Q'ty |
| 1290-- | K1002988C | MAIN PIPING | CIRCUIT HYDRAULIQUE | - | D | | | | |
| 2 | 2423-1407 | BLOCK;SPACER | BLOC | 1 | | | | | |
| 3 | 423-00171 | BLOCK;SPACER | BLOC | 3 | | | | | |
| 12 | S2212866 | BOLT;SOCKET | BOULON A 6 PANS CREUX | 4 | | | | | |
| 13 | S2214066 | BOLT;SOCKET | BOULON A 6 PANS CREUX | 12 | | | | | |
| 19 | 2181-9078 | FLANGE;SPLIT | FLASQUE EN DEUX | 8 | | | | | |
| 23 | 2180-1026D19 | O-RING | JOINT TORIQUE | 8 | | | | | |
| 32 | 2181-9086 | FLANGE;SPLIT | FLASQUE EN DEUX | 8 | | | | | |
| 33 | 124-00247 | CLAMP;HOSE | COLLIER | 4 | | | | | |
| 36 | 2191-3705C | PLATE | PLAQUE | 2 | | | | | |
| 38 | 114-00456 | SPACER | DOUILLE D'ECARTEMENT | 2 | | | | | |
| 41 | S5102903 | WASHER;SPRING | RONDELLE ELASTIQUE | 2 | | | | | |
| 42 | S5010813 | WASHER;PLAIN | RONDELLE | 2 | | | | | |
| 45 | S2218566 | BOLT;SOCKET | BOULON A 6 PANS CREUX | 16 | | | | | |
| 46 | S0566066 | BOLT | BOULON A 6 PANS | 2 | | | | | |
| 47 | DS2040426 | HOSE | TUYAU FLEXIBLE | 1 | | | | | |
| 48 | DS2040427 | HOSE | TUYAU FLEXIBLE | 1 | | | | | |
| 49 | DS2040428 | HOSE | TUYAU FLEXIBLE | 1 | | | | | |
| 50 | DS2040429 | HOSE | TUYAU FLEXIBLE | 1 | | | | | |
| 65 | 2180-1026D23 | O-RING | JOINT TORIQUE | 4 | | | | | |

| DATE | JUN. 30, 2006 |
|---|---|
| REV.NO. | EXB06-08 |

# Fig. 1300 PILOT PIPING(1)
# CONDUITES DE PILOTE

**Serial No. ;**

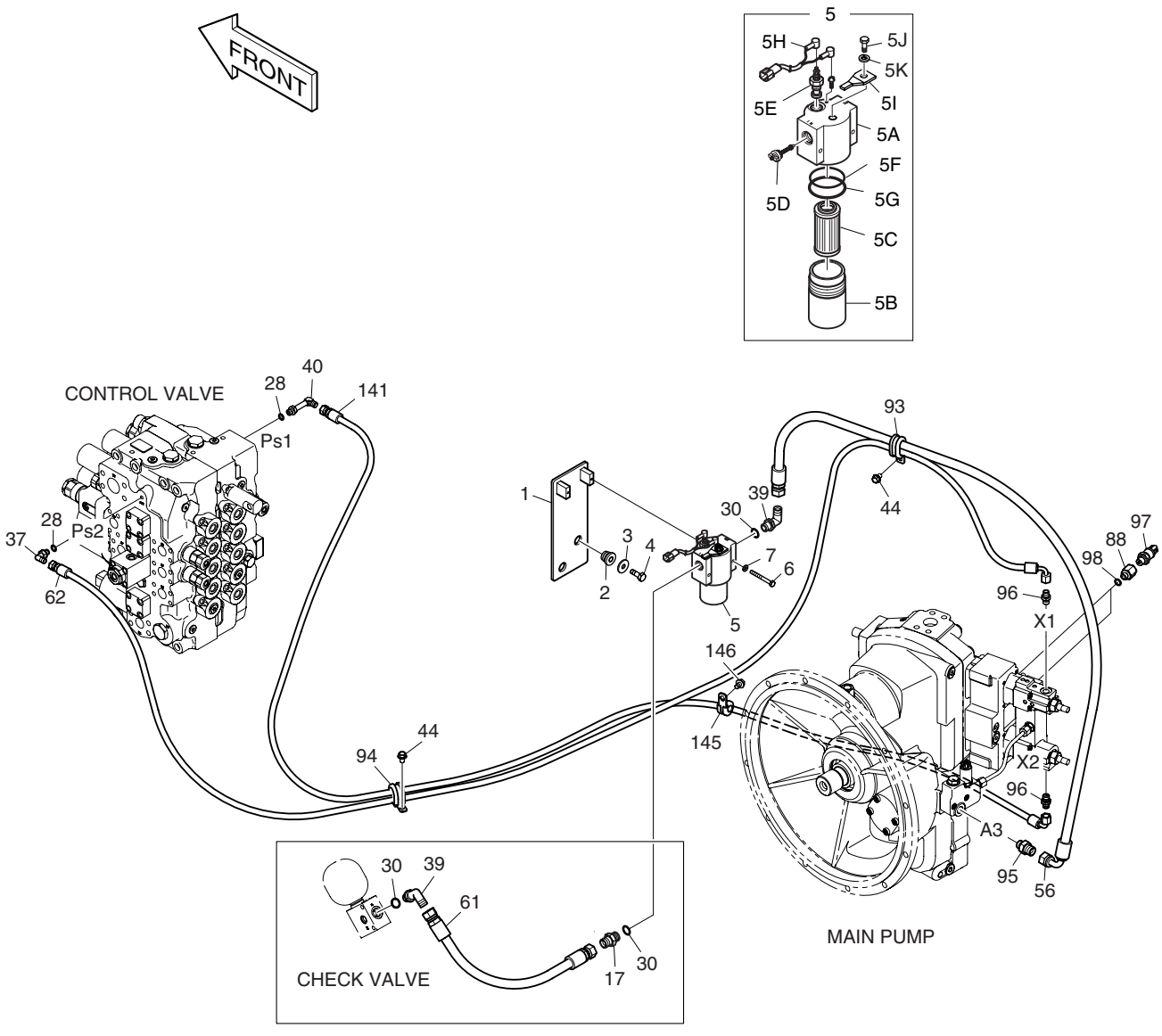


Serial No. : 5001 ~ 5031

| DATE | JUN. 30, 2006 |
|---|---|
| REV. NO. | EXB06-08 |

# Fig. 1300 PILOT PIPING(1) CONDUITES DE PILOTE

Serial No. ;

| Key No. | Part No. | Description | Description | Q'ty | S.C | Serial No. | ICA | Replaceable part | |
|---|---|---|---|---|---|---|---|---|---|
| | | | | | | | | Part No. | Q'ty |
| 1300-- | K1004428B | PILOT PIPING | CONDUITES DE PILOTE | - | D | 5001–5031 | | | |
| | K1004428C | PILOT PIPING | CONDUITES DE PILOTE | - | D | 5032– | | | |
| 1 | 195-01601 | BRACKET;FILTER | SUPPORT | 1 | | | | | |
| 2 | 198-00016 | RUBBER | CAOUTCHOUC | 2 | | | | | |
| 3 | 2114-1058D10 | WASHER | RONDELLE PLATE | 2 | | | | | |
| 4 | S0512266 | BOLT | BOULON A 6 PANS | 2 | | | | | |
| 5 | 471-00075A | FILTER;PILOT | FILTRE | 1 | | | | | |
| 5A | - | . HEAD | . COUVERCLE | 1 | D | | | | |
| 5B | 2472-7003 | . CASE | . CARTER | 1 | | | | | |
| 5C | 2471-1154 | . ELEMENT;PILOT FILTER | . ELEMENT FILTRANT | 1 | | | | | |
| 5D | 2426-1237 | . VALVE;BY-PASS | . VANNE | 1 | | | | | |
| 5E | 2471-1155A | . INDICATOR | . FILTRE DE GAZOLE | 1 | | | | | |
| 5F | Y-3738-04 | . O-RING | . JOINT TORIQUE | 1 | | | | | |
| 5G | Y-3738-05 | . RING;BACK-UP | . BAGUE D'ETANCHEITE | 1 | | | | | |
| 5H | 530-00236 | . HARNESS;PILOT FILTER | . FAISCEAU | 1 | | | | | |
| 5I | **2197-1661** | **. BRACKET** | . SUPPORT | 1 | | | | | |
| 5J | S0508653 | . BOLT M8X1.25X16 | . BOULON A 6 PANS | 1 | | | | | |
| 5K | S5102503 | . WASHER;SPRING | . RONDELLE ELASTIQUE | 1 | | | | | |
| 6 | S0553766 | BOLT | BOULON A 6 PANS | 2 | | | | | |
| 7 | S5102303 | WASHER;SPRING | RONDELLE ELASTIQUE M6 | 2 | | | | | |
| 17 | 2181-1126D6 | ADAPTER | RACCORD ADAPTATEUR | 1 | | 5001–5031 | | | |
| 28 | S8000111 | O-RING | JOINT TORIQUE | 2 | | | | | |
| 30 | S8000181 | O-RING | JOINT TORIQUE | 3 | | 5001–5031 | | | |
| | S8000181 | O-RING | JOINT TORIQUE | 1 | | 5032– | | | |
| 37 | 2181-1702D4 | ELBOW | COUDE | 1 | | | | | |
| 39 | 2181-1702D2 | ELBOW | COUDE | 2 | | 5001–5031 | | | |
| | 2181-1702D2 | ELBOW | COUDE | 1 | | 5032– | | | |
| 40 | 2181-1702D56 | ELBOW | COUDE | 1 | | | | | |
| 44 | K1001029 | BOLT | BOULON A 6 PANS | 2 | | | | | |
| 56 | DS2055886 | HOSE | TUYAU FLEXIBLE | 1 | | | | | |
| 61 | 2184-1026D136 | HOSE | TUYAU FLEXIBLE | 1 | | 5001–5031 | | | |
| 62 | DS2093159 | HOSE | TUYAU FLEXIBLE | 1 | | | | | |
| 88 | 181-00716 | ADAPTER | RACCORD ADAPTATEUR | 2 | | | | | |
| 93 | 124-00209D1 | CLIP | ATTACHE | 1 | | | | | |
| 94 | 124-00208D5 | CLIP | ATTACHE | 1 | | | | | |
| 95 | DS2479001 | ADAPTER | RACCORD ADAPTATEUR | 1 | | | | | |
| 96 | DS2479002 | ADAPTER | RACCORD ADAPTATEUR | 2 | | | | | |
| 97 | 2547-9045 | SENSOR;PRESSURE | CAPTEUR | 2 | | | | | |

| DATE | JUN. 30, 2006 |
|---|---|
| REV.NO. | EXB06-08 |

# Fig. 1300 PILOT PIPING(1)
# CONDUITES DE PILOTE

**Serial No. ;**

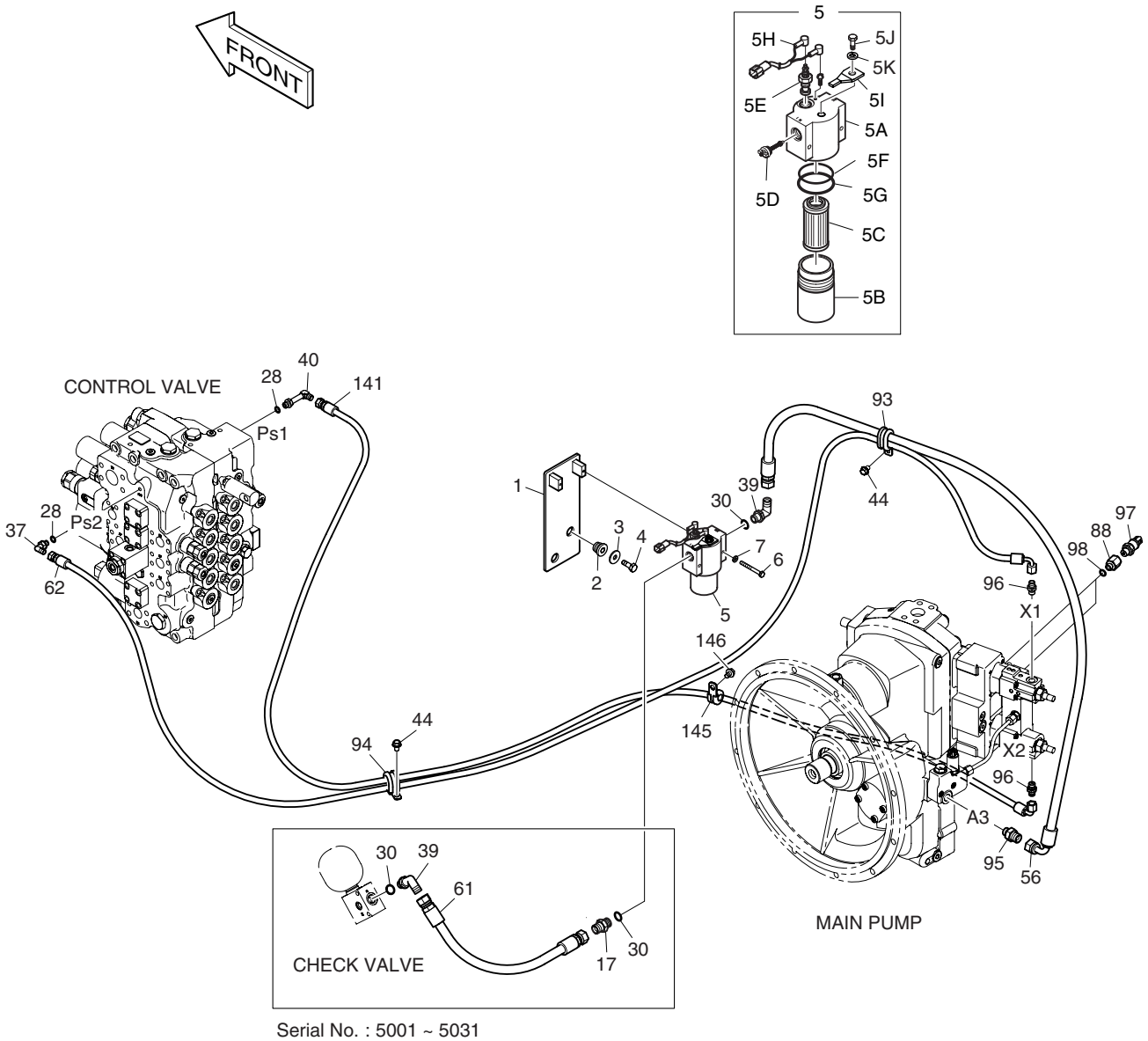


Serial No. : 5001 ~ 5031

| DATE | JUN. 30, 2006 |
|---|---|
| REV. NO. | EXB06-08 |

# Fig. 1300 PILOT PIPING(1) CONDUITES DE PILOTE

Serial No. ;

| Key No. | Part No. | Description | Description | Q'ty | S.C | Serial No. | ICA | Replaceable part | |
|---|---|---|---|---|---|---|---|---|---|
| | | | | | | | | Part No. | Q'ty |
| 1300-98 | S8040061 | O-RING | JOINT TORIQUE | 2 | | | | | |
| 141 | DS2093160 | HOSE | TUYAU FLEXIBLE | 1 | | | | | |
| 145 | 124-00208D2 | CLIP | CLIP | 1 | | | | | |
| 146 | K1001029 | BOLT | BOULON A 6 PANS | 1 | | | | | |

| DATE | OCT. 17, 2005 |
|---|---|
| 1st EDITION | |

# Fig. 1310 PILOT PIPING(2)
# CONDUITES DE PILOTE

**Serial No. ; 5001 ~ 5031**

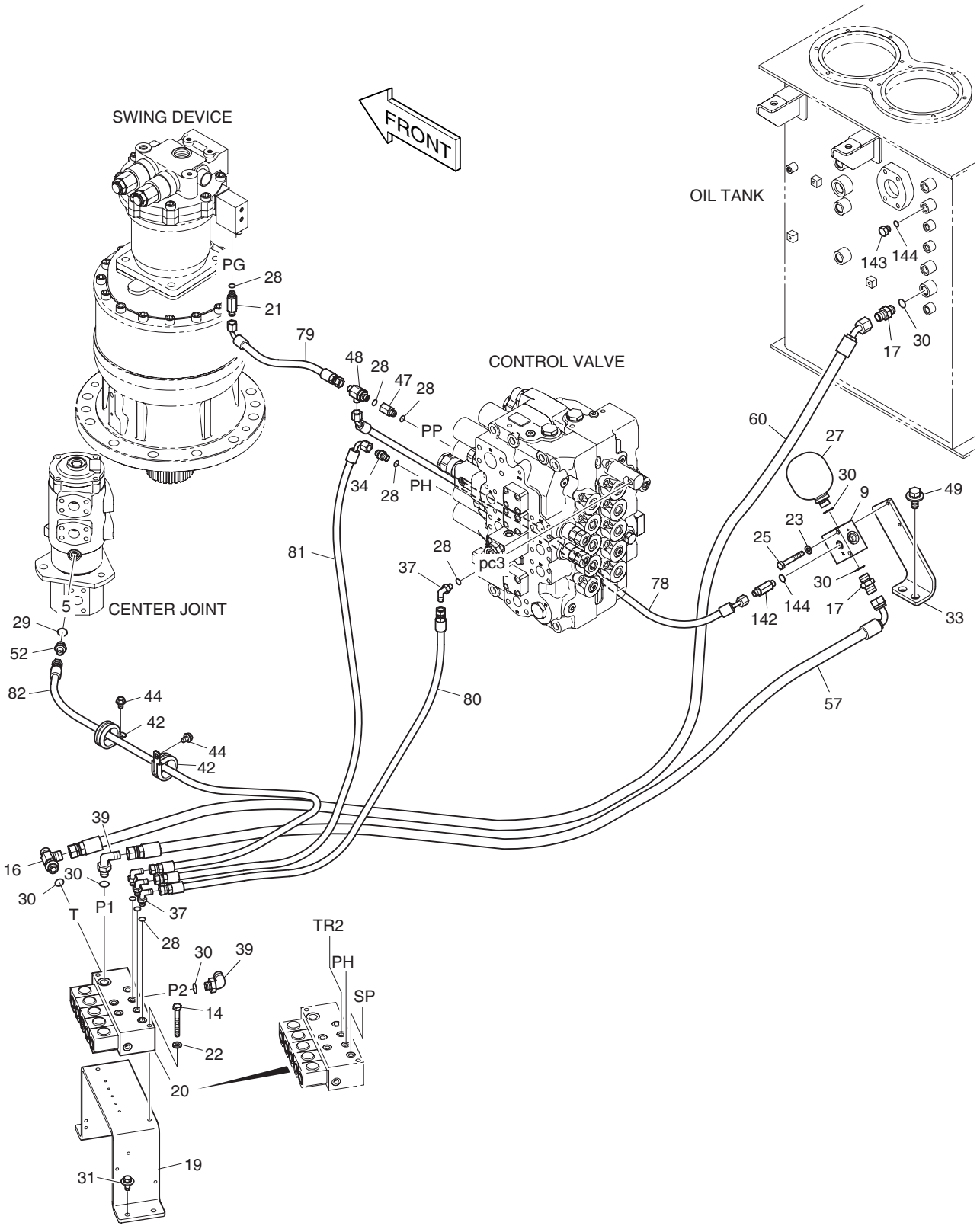

| DATE | OCT. 17, 2005 |
|---|---|
| 1st EDITION | |

# Fig. 1310 PILOT PIPING(2)
# CONDUITES DE PILOTE

**Serial No. ; 5001 ~ 5031**

| Key No. | Part No. | Description | Description | Q'ty | S.C | Serial No. | ICA | Replaceable part | |
|---|---|---|---|---|---|---|---|---|---|
| | | | | | | | | Part No. | Q'ty |
| 1310-- | K1004428B | PILOT PIPING(1) | CIRCUIT DE PILOTE | - | D | 5001-5031 | | | |
| 9 | 426-00265 | VALVE;CHECK | VANNE DE CONTROLE | 1 | | | | | |
| 14 | S0559066 | BOLT | BOULON A 6 PANS | 2 | | | | | |
| 16 | 2181-1951D5 | TEE | TE | 1 | | | | | |
| 17 | 2181-1126D6 | ADAPTER | RACCORD ADAPTATEUR | 2 | | | | | |
| 19 | 195-03323C | BRACKET | SUPPORT | 1 | | | | | |
| 20 | 426-00245A | VALVE;SOLENOID | VANNE SOLENOIDE | 1 | | | | | |
| 21 | 2181-1126D34 | ADAPTER | RACCORD ADAPTATEUR | 1 | | | | | |
| 22 | S5102603 | WASHER;SPRING | RONDELLE ELASTIQUE | 2 | | | | | |
| 23 | S5102503 | WASHER;SPRING | RONDELLE ELASTIQUE M8 | 2 | | | | | |
| 25 | S0556466 | BOLT | BOULON A 6 PANS | 2 | | | | | |
| 27 | 2460-9057A | ACCUMULATOR | RESERVOIR | 1 | | | | | |
| 28 | S8000111 | O-RING | JOINT TORIQUE | 9 | | | | | |
| 29 | S8000141 | O-RING | JOINT TORIQUE | 1 | | | | | |
| 30 | S8000181 | O-RING | JOINT TORIQUE | 6 | | | | | |
| 31 | DS0025016 | BOLT;SET | BOULON A 6 PANS | 4 | | | | | |
| 33 | K1005317B | BRACKET | SUPPORT | 1 | | | | | |
| 34 | 2181-1126D14 | ADAPTER | RACCORD ADAPTATEUR | 1 | | | | | |
| 37 | 2181-1702D4 | ELBOW | COUDE | 4 | | | | | |
| 39 | 2181-1702D2 | ELBOW | COUDE | 2 | | | | | |
| 42 | 124-00208D7 | CLIP | ATTACHE | 2 | | | | | |
| 44 | K1001029 | BOLT | BOULON A 6 PANS | 2 | | | | | |
| 47 | 471-00118 | REDUCER;FILTER | REDUCTEUR | 1 | | | | | |
| 48 | 2181-1951D1 | TEE | TE | 1 | | | | | |
| 49 | DS0025019 | BOLT;SET | BOULON A 6 PANS | 2 | | | | | |
| 52 | 2181-1126D36 | ADAPTER | RACCORD | 1 | | | | | |
| 57 | DS2055884 | HOSE | TUYAU FLEXIBLE | 1 | | | | | |
| 60 | DS2054336 | HOSE | TUYAU FLEXIBLE | 1 | | | | | |
| 78 | DS2093157 | HOSE | TUYAU FLEXIBLE | 1 | | | | | |
| 79 | DS2093024 | HOSE(ST-90) | TUYAU FLEXIBLE | 1 | | | | | |
| 80 | DS2094049 | HOSE | TUYAU FLEXIBLE | 1 | | | | | |
| 81 | DS2093158 | HOSE(ST-90) | TUYAU FLEXIBLE | 1 | | | | | |
| 82 | DS2094051 | HOSE | TUYAU FLEXIBLE | 1 | | | | | |
| 142 | 2181-1126D34 | ADAPTER | RACCORD ADAPTATEUR | 1 | | | | | |
| 143 | 2181-1950D1 | PLUG | BOUCHON | 1 | | | | | |
| 144 | S8000111 | O-RING | JOINT TORIQUE | 2 | | | | | |

| DATE | JUN. 30, 2007 |
|---|---|
| REV.NO. | EXB07-06 |

# Fig. 1311 PILOT PIPING(2)
# CONDUITES DE PILOTE

**Serial No. ; 5032 ~**

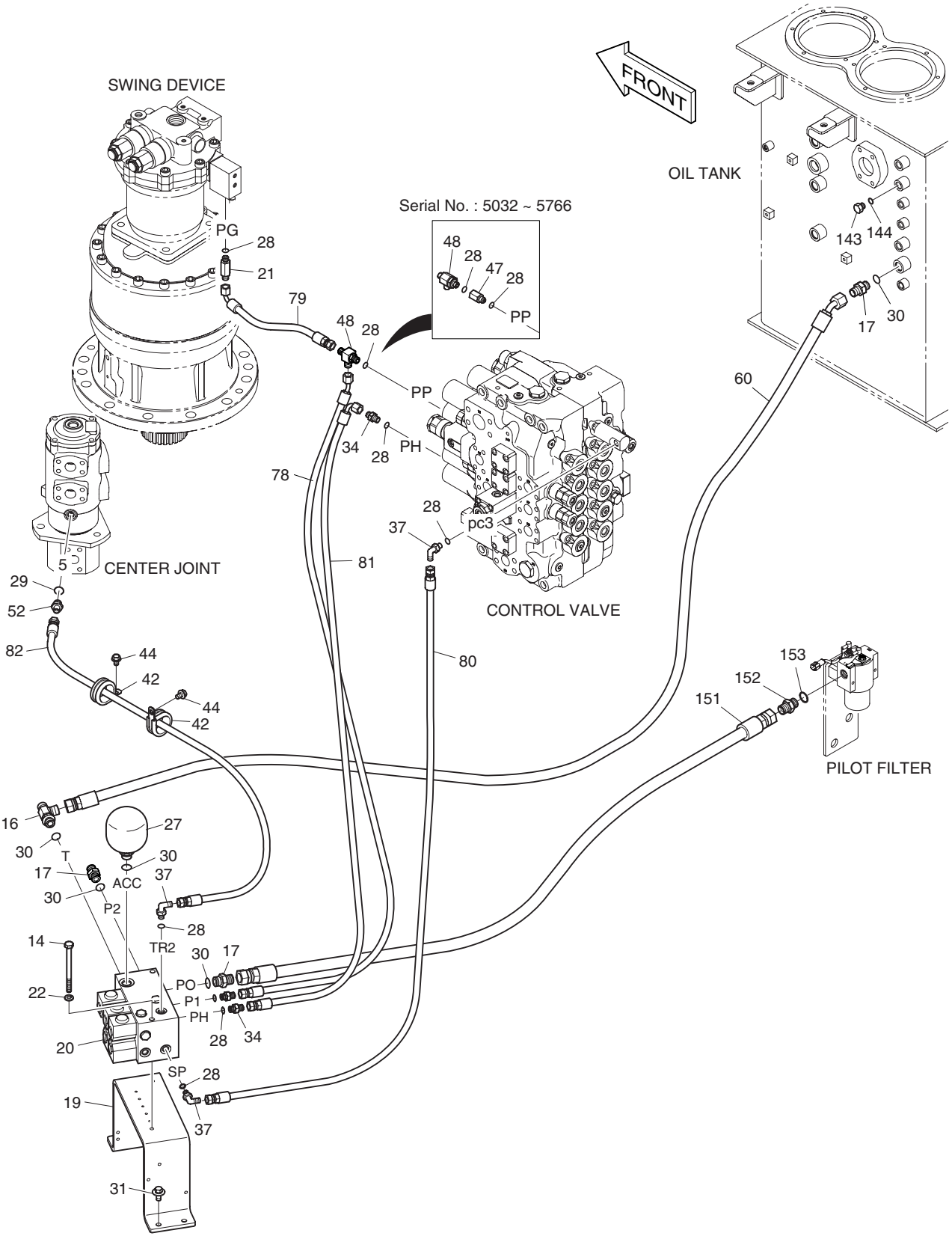

| DATE | JUN. 30, 2007 |
|---|---|
| REV. NO. | EXB07-06 |

# Fig. 1311 PILOT PIPING(2) CONDUITES DE PILOTE

**Serial No. ; 5032 ~**

| Key No. | Part No. | Description | Description | Q'ty | S.C | Serial No. | ICA | Replaceable part | |
|---|---|---|---|---|---|---|---|---|---|
| | | | | | | | | Part No. | Q'ty |
| 1311-- | K1004428H | PILOT PIPING(1) | CIRCUIT DE PILOTE | - | D | 5032– | | | |
| 14 | S0560066 | BOLT | BOULON A 6 PANS | 2 | | | | | |
| 16 | 2181-1951D5 | TEE | TE | 1 | | | | | |
| 17 | 2181-1126D6 | ADAPTER | RACCORD ADAPTATEUR | 3 | | | | | |
| 19 | K1013608 | BRACKET | SUPPORT | 1 | | | | | |
| 20 | K1012576 | VALVE;SOLENOID | VANNE SOLENOIDE | 1 | | | | | |
| 21 | 2181-1126D34 | ADAPTER | RACCORD ADAPTATEUR | 1 | | | | | |
| 22 | S5102603 | WASHER;SPRING | RONDELLE ELASTIQUE M10 | 2 | | | | | |
| 27 | 2460-9057A | ACCUMULATOR | RESERVOIR | 1 | | | | | |
| 28 | S8000111 | O-RING | JOINT TORIQUE | 11 | | 5032–5766 | | | |
| | **S8000111** | **O-RING** | JOINT TORIQUE | 10 | | **5767–** | | | |
| 29 | S8000141 | O-RING | JOINT TORIQUE | 1 | | | | | |
| 30 | S8000181 | O-RING | JOINT TORIQUE | 7 | | | | | |
| 31 | DS0025016 | BOLT;SET | BOULON A 6 PANS | 4 | | | | | |
| 34 | 2181-1126D14 | ADAPTER | RACCORD ADAPTATEUR | 3 | | | | | |
| 37 | 2181-1702D4 | ELBOW | COUDE | 3 | | | | | |
| 42 | 124-00208D7 | CLIP | ATTACHE | 2 | | | | | |
| 44 | K1001029 | BOLT | BOULON A 6 PANS | 2 | | | | | |
| 47 | **471-00118** | **REDUCER;FILTER** | REDUCTEUR | 1 | | **5032–5766** | | | |
| 48 | 2181-1951D1 | TEE | TE | 1 | | 5032–5766 | | | |
| | **K1038032** | **TEE** | TE | 1 | | **5767–** | | | |
| 52 | 2181-1126D36 | ADAPTER | RACCORD | 1 | | | | | |
| 60 | DS2054208 | HOSE | TUYAU FLEXIBLE | 1 | | | | | |
| 78 | DS2092007 | HOSE | TUYAU FLEXIBLE | 1 | | | | | |
| 79 | DS2093024 | HOSE(ST-90) | TUYAU FLEXIBLE | 1 | | 5032–5766 | | | |
| | **DS2093035** | **HOSE(ST-90)** | TUYAU FLEXIBLE | 1 | | **5767–** | | | |
| 80 | DS2094049 | HOSE | TUYAU FLEXIBLE | 1 | | 5032–5066 | | | |
| | DS2094017 | HOSE | TUYAU FLEXIBLE | 1 | | 5067– | | | |
| 81 | DS2093158 | HOSE(ST-90) | TUYAU FLEXIBLE | 1 | | | | | |
| 82 | DS2094051 | HOSE | TUYAU FLEXIBLE | 1 | | 5032–5059 | | | |
| | DS2094170 | HOSE | TUYAU FLEXIBLE | 1 | | 5060– | | | |
| 143 | 2181-1950D1 | PLUG | BOUCHON | 1 | | | | | |
| 144 | S8000111 | O-RING | JOINT TORIQUE | 1 | | | | | |
| 151 | 2184-1026D380 | HOSE | TUYAU FLEXIBLE | 1 | | | | | |
| 152 | 2181-1126D6 | ADAPTER | RACCORD ADAPTATEUR | 1 | | | | | |
| 153 | S8000181 | O-RING | JOINT TORIQUE | 1 | | | | | |

| DATE | JUN. 30, 2007 |
|---|---|
| REV.NO. | EXB07-06 |

# Fig. 1320 PILOT PIPING(3)
# CONDUITES DE PILOTE

**Serial No. ;**

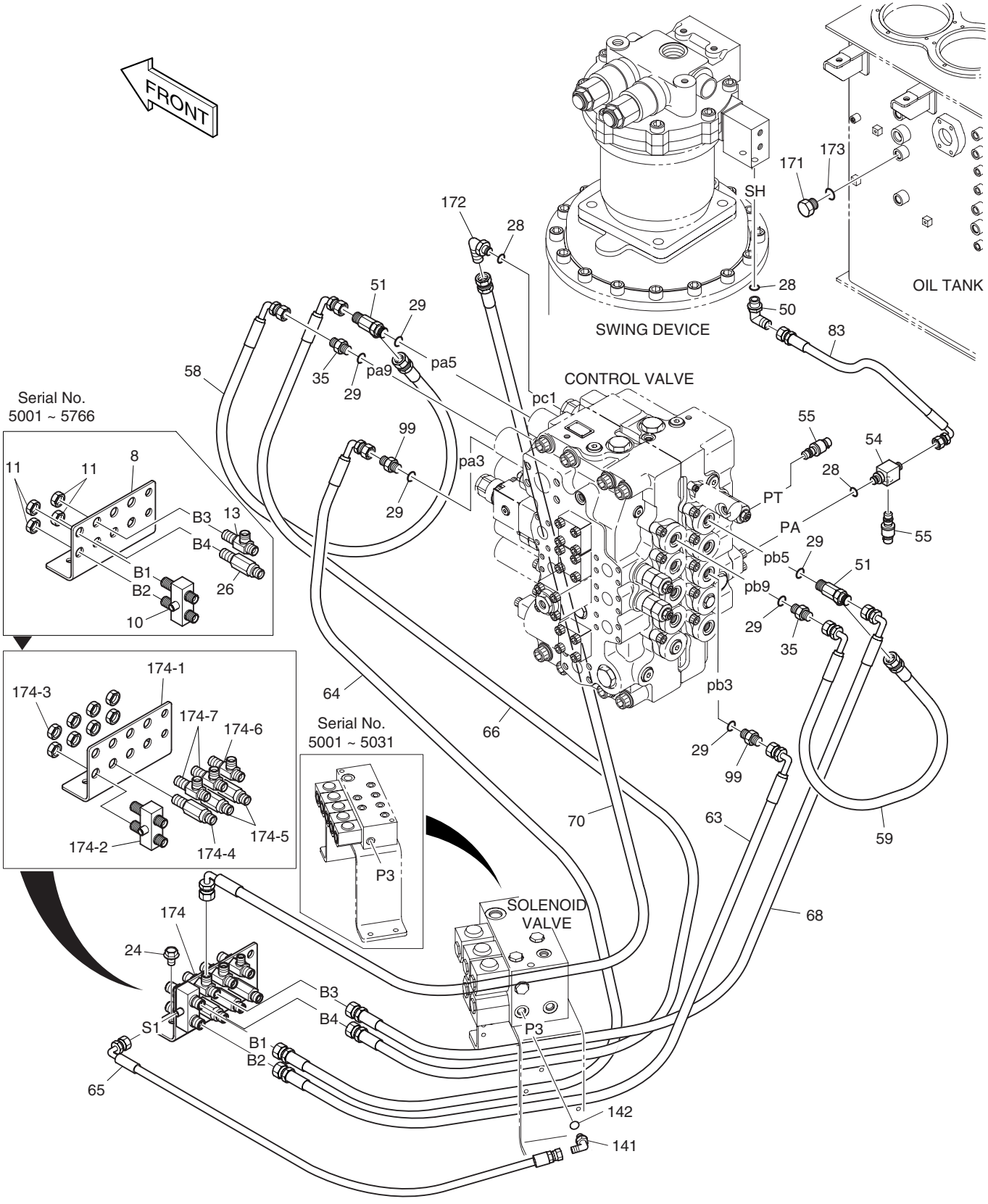

| DATE | JUN. 30, 2007 |
|---|---|
| REV. NO. | EXB07-06 |

# Fig. 1320 PILOT PIPING(3) CONDUITES DE PILOTE

Serial No. ;

| Key No. | Part No. | Description | Description | Q'ty | S.C | Serial No. | ICA | Replaceable part | |
|---|---|---|---|---|---|---|---|---|---|
| | | | | | | | | Part No. | Q'ty |
| 1320-- | K1004428B | PILOT PIPING(1) | CIRCUIT DE PILOTE | - | D | 5001–5031 | | | |
| | **K1004428H** | **PILOT PIPING(1)** | CIRCUIT DE PILOTE | - | D | **5032–** | | | |
| 8 | **K1000354** | **BRACKET;JOINT** | SUPPORT | 1 | | **5001–5766** | | | |
| 10 | **420-00307** | **VALVE;SHUTTLE** | VANNE | 1 | | **5001–5766** | | | |
| 11 | **121-00010D1** | **NUT** | ECROU | 4 | | **5001–5766** | | | |
| 13 | **181-00086D2** | **TEE** | TE | 1 | | **5001–5766** | | | |
| 24 | DS0025017 | BOLT;SET | BOULON A 6 PANS | 2 | | | | | |
| 26 | **420-00352D1** | **VALVE;SHOCKLESS** | VANNE | 1 | | **5001–5766** | | | |
| 28 | S8000111 | O-RING | JOINT TORIQUE | 3 | | | | | |
| 29 | S8000141 | O-RING | JOINT TORIQUE | 6 | | | | | |
| 35 | 2181-1126D7 | ADAPTER | RACCORD | 2 | | | | | |
| 50 | 2181-1702D57 | ELBOW | COUDE | 1 | | | | | |
| 51 | 2181-1951D16 | TEE | TE | 2 | | | | | |
| 54 | 2181-2635 | ADAPTER | RACCORD ADAPTATEUR | 1 | | | | | |
| 55 | 2549-9112 | SWITCH;PRESSURE | INTERRUPTEUR | 2 | | | | | |
| 58 | DS2093033 | HOSE | TUYAU FLEXIBLE | 1 | | | | | |
| 59 | DS2093029 | HOSE | TUYAU FLEXIBLE | 1 | | | | | |
| 63 | DS2093064 | HOSE(ST-90) | TUYAU FLEXIBLE | 1 | | | | | |
| 64 | DS2093150 | HOSE(ST-90) | TUYAU FLEXIBLE | 1 | | | | | |
| 65 | DS2093017 | HOSE | TUYAU FLEXIBLE | 1 | | | | | |
| 66 | DS2093151 | HOSE | TUYAU FLEXIBLE | 1 | | | | | |
| 68 | DS2093151 | HOSE | TUYAU FLEXIBLE | 1 | | | | | |
| 70 | DS2093018 | HOSE | TUYAU FLEXIBLE | 1 | | | | | |
| 83 | DS2093013 | HOSE | TUYAU FLEXIBLE | 1 | | | | | |
| 99 | 181-00144D6 | ADAPTER | ADAPTEUR | 2 | | | | | |
| 141 | 2181-1702D4 | ELBOW | COUDE | 1 | | | | | |
| 142 | S8000111 | O-RING | JOINT TORIQUE | 1 | | | | | |
| 171 | 2181-1950D3 | PLUG | BOUCHON | 1 | | | | | |
| 172 | 2181-1702D3 | ELBOW | RACCORD | 1 | | | | | |
| 173 | S8000181 | O-RING | JOINT TORIQUE | 1 | | | | | |
| 174 | **K1038028** | **JOINT PLATE SUB ASS'Y** | SUPPORT | 1 | | **5767–** | | | |
| 174-1 | K1000354 | . BRACKET;JOINT | . SUPPORT | 1 | | | | | |
| 174-2 | 420-00307 | . VALVE;SHUTTLE | . VANNE | 1 | | | | | |
| 174-3 | 121-00010D1 | . NUT | . ECROU | 8 | | | | | |
| 174-4 | 420-00352D1 | . VALVE;SHOCKLESS | . VANNE | 1 | | | | | |
| 174-5 | DS2410009 | . ADAPTER | . ADAPTEUR | 2 | | | | | |
| 174-6 | 181-00086D1 | . TEE | . TE | 1 | | | | | |
| 174-7 | 181-00086D2 | . TEE | . TE | 2 | | | | | |

| DATE | JUN. 30, 2007 |
|---|---|
| REV.NO. | EXB07-06 |

# Fig. 1330 PILOT PIPING(4)
# CONDUITES DE PILOTE

**Serial No. ;**

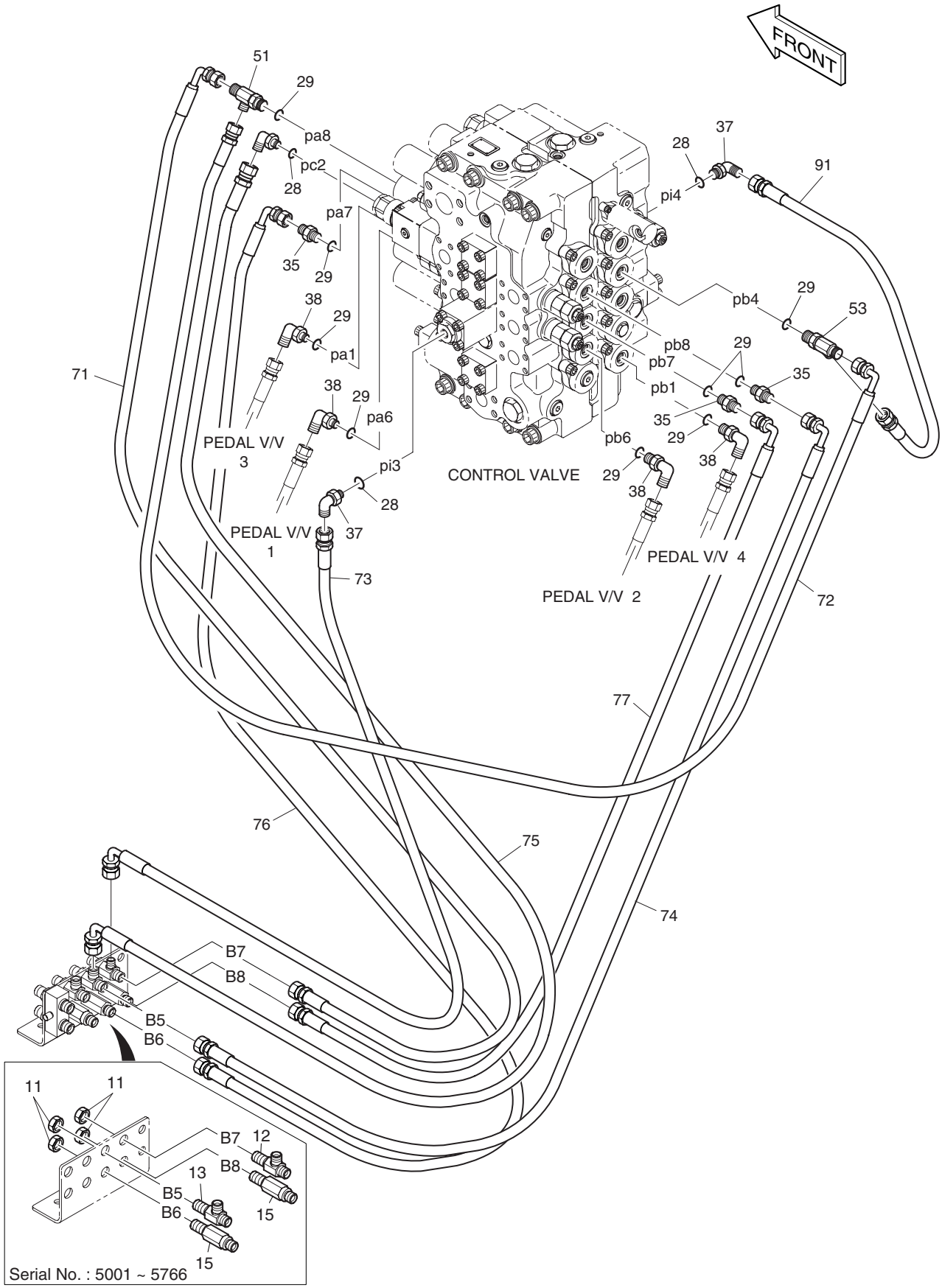

| DATE | JUN. 30, 2007 |
|---|---|
| REV. NO. | EXB07-06 |

# Fig. 1330 PILOT PIPING(4) CONDUITES DE PILOTE

**Serial No. ;**

| Key No. | Part No. | Description | Description | Q'ty | S.C | Serial No. | ICA | Replaceable part | |
|---|---|---|---|---|---|---|---|---|---|
| | | | | | | | | Part No. | Q'ty |
| 1330-- | K1004428B | PILOT PIPING(1) | CIRCUIT DE PILOTE | - | D | 5001–5031 | | | |
| | K1004428H | PILOT PIPING(1) | CIRCUIT DE PILOTE | - | D | 5032– | | | |
| 11 | **121-00010D1** | **NUT** | ECROU | 4 | | **5001–5766** | | | |
| 12 | **181-00086D1** | **TEE** | TE | 1 | | **5001–5766** | | | |
| 13 | **181-00086D2** | **TEE** | TE | 1 | | **5001–5766** | | | |
| 15 | **DS2410009** | **ADAPTER** | ADAPTEUR | 2 | | **5001–5766** | | | |
| 28 | S8000111 | O-RING | JOINT TORIQUE | 3 | | | | | |
| 29 | S8000141 | O-RING | JOINT TORIQUE | 9 | | | | | |
| 35 | 2181-1126D7 | ADAPTER | RACCORD | 3 | | | | | |
| 37 | 2181-1702D4 | ELBOW | COUDE | 2 | | | | | |
| 38 | 2181-1702D10 | ELBOW | COUDE | 4 | | | | | |
| 51 | 2181-1951D16 | TEE | TE | 1 | | | | | |
| 53 | 2181-1951D6 | TEE | TE | 1 | | | | | |
| 71 | DS2093154 | HOSE | TUYAU FLEXIBLE | 1 | | | | | |
| 72 | DS2093020 | HOSE | TUYAU FLEXIBLE | 1 | | | | | |
| 73 | DS2093156 | HOSE | TUYAU FLEXIBLE | 1 | | | | | |
| 74 | DS2093152 | HOSE | TUYAU FLEXIBLE | 1 | | | | | |
| 75 | DS2093063 | HOSE | TUYAU FLEXIBLE | 1 | | | | | |
| 76 | DS2093153 | HOSE | TUYAU FLEXIBLE | 1 | | | | | |
| 77 | DS2093022 | HOSE | TUYAU FLEXIBLE | 1 | | | | | |
| 91 | DS2094010 | HOSE | TUYAU FLEXIBLE | 1 | | | | | |

| DATE | OCT. 17, 2005 |
|---|---|
| 1st EDITION | |

# Fig. 1340 PILOT PIPING(5)
# CONDUITES DE PILOTE

**Serial No. ;**

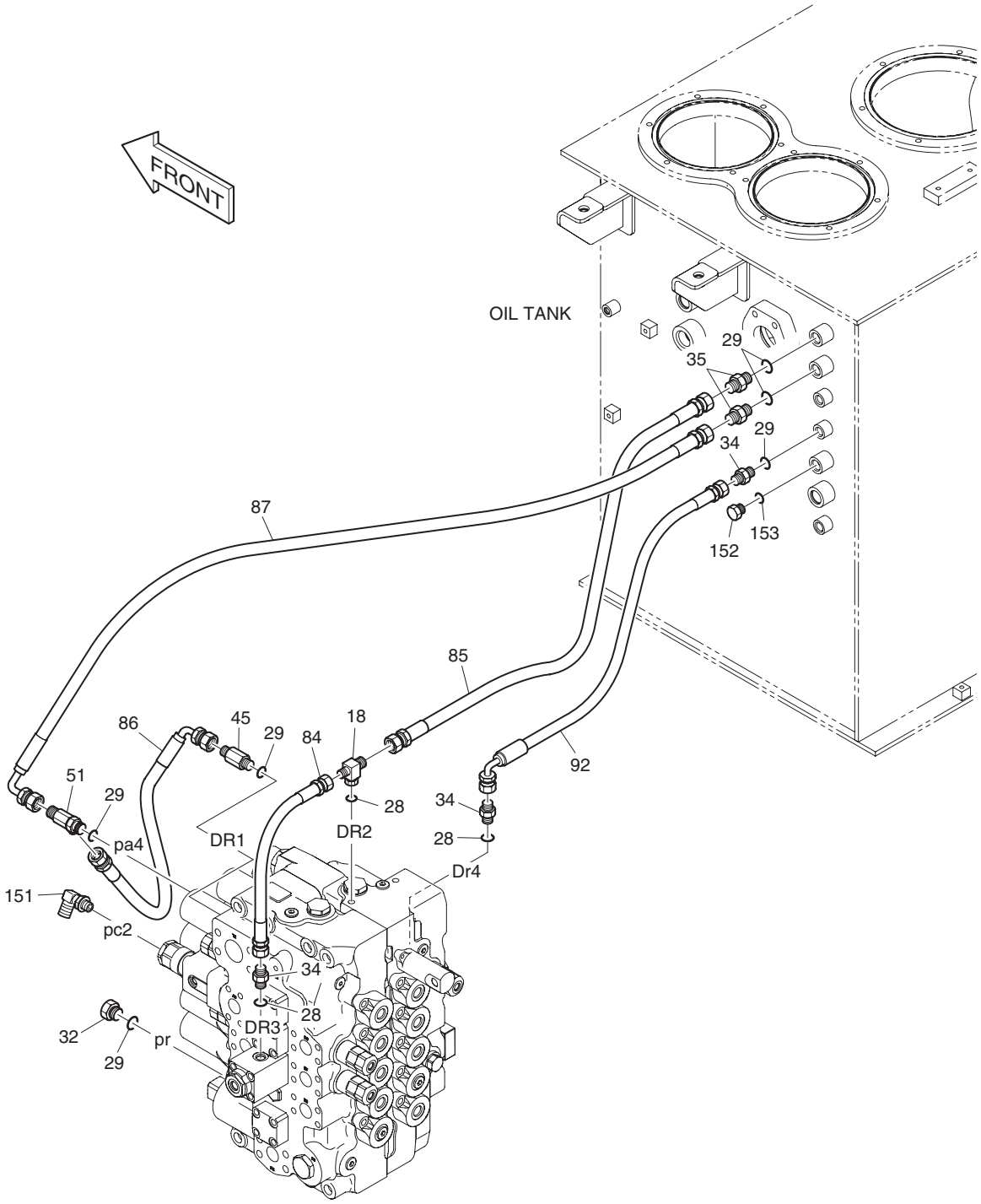


CONTROL VALVE

| DATE | OCT. 17, 2005 |
|---|---|
| 1st EDITION | |

# Fig. 1340 PILOT PIPING(5)
# CONDUITES DE PILOTE

Serial No. ;

| Key No. | Part No. | Description | Description | Q'ty | S.C | Serial No. | ICA | Replaceable part | |
|---|---|---|---|---|---|---|---|---|---|
| | | | | | | | | Part No. | Q'ty |
| 1340-- | K1004428B | PILOT PIPING(1) | CIRCUIT DE PILOTE | - | D | 5001-5031 | | | |
| | K1004428C | PILOT PIPING(1) | CIRCUIT DE PILOTE | - | D | 5032- | | | |
| 18 | DS2347033 | TEE | TE | 1 | | | | | |
| 28 | S8000111 | O-RING | JOINT TORIQUE | 4 | | | | | |
| 29 | S8000141 | O-RING | JOINT TORIQUE | 6 | | | | | |
| 32 | 2181-1950D2 | PLUG | BOUCHON | 1 | | | | | |
| 34 | 2181-1126D14 | ADAPTER | RACCORD ADAPTATEUR | 3 | | | | | |
| 35 | 2181-1126D7 | ADAPTER | RACCORD | 2 | | | | | |
| 45 | 2181-1126D27 | ADAPTER | RACCORD ADAPTATEUR | 1 | | | | | |
| 51 | 2181-1951D16 | TEE | TE | 1 | | | | | |
| 84 | DS2094048 | HOSE | TUYAU FLEXIBLE | 1 | | | | | |
| 85 | DS2094050 | HOSE(ST-ST) | TUYAU FLEXIBLE | 1 | | | | | |
| 86 | DS2093029 | HOSE | TUYAU FLEXIBLE | 1 | | | | | |
| 87 | DS2093155 | HOSE | TUYAU FLEXIBLE | 1 | | | | | |
| 92 | DS2093027 | HOSE | TUYAU FLEXIBLE | 1 | | | | | |
| 151 | 2181-1702D2 | ELBOW | COUDE | 1 | | | | | |
| 152 | 2181-1950D3 | PLUG | BOUCHON | 1 | | | | | |
| 153 | S8000141 | O-RING | JOINT TORIQUE | 1 | | | | | |

| DATE | JUN. 30, 2008 |
|---|---|
| REV.NO. | EXB08-06 |

# Fig. 1350 PILOT PIPING(6)
# CONDUITES DE PILOTE

**Serial No. ;**

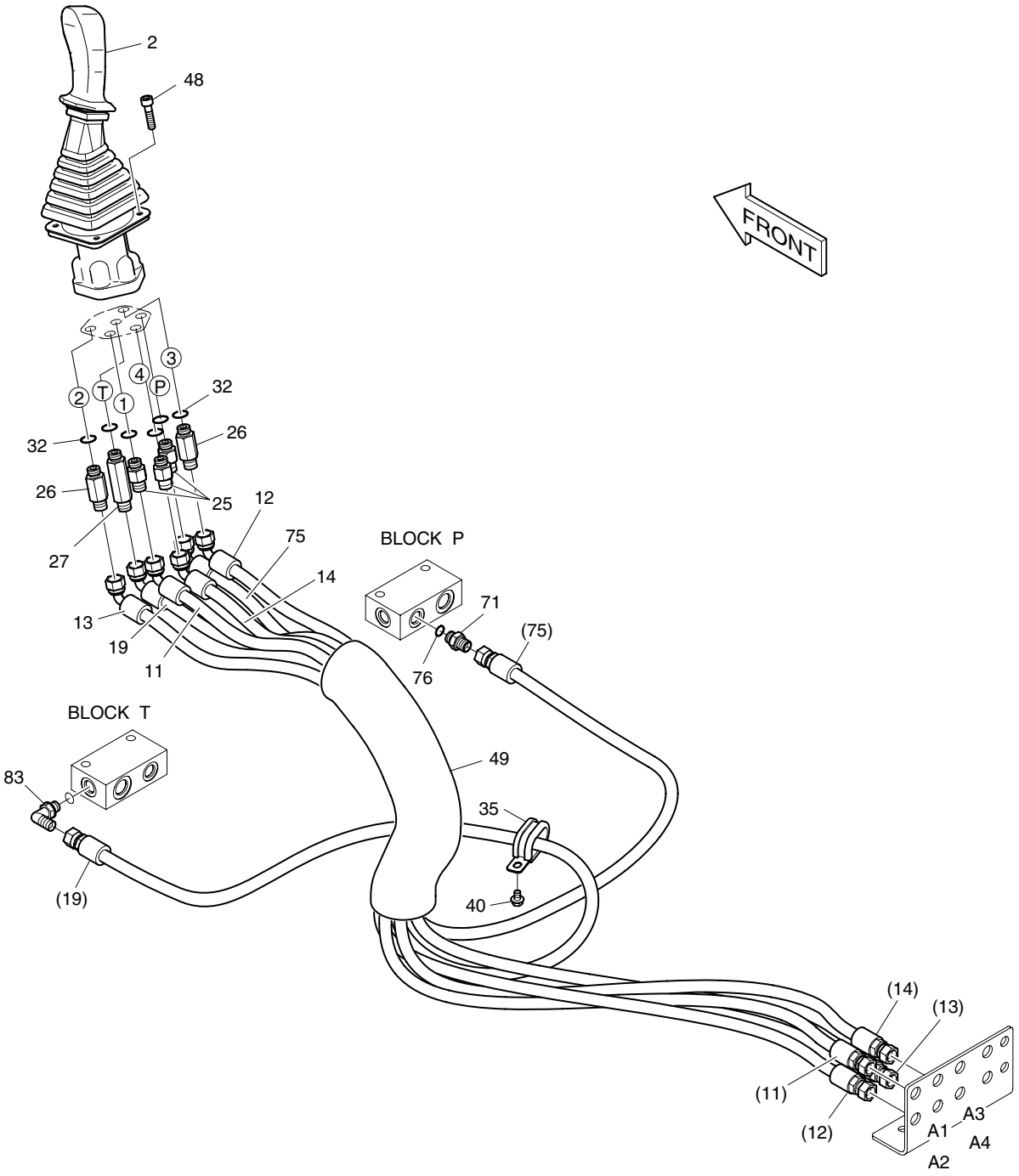

| DATE | JUN. 30, 2008 |
|---|---|
| REV. NO. | EXB08-06 |

# Fig. 1350 PILOT PIPING(6) CONDUITES DE PILOTE

Serial No. ;

| Key No. | Part No. | Description | Description | Q'ty | S.C | Serial No. | ICA | Replaceable part | |
|---|---|---|---|---|---|---|---|---|---|
| | | | | | | | | Part No. | Q'ty |
| 1350-- | K1004429C | PILOT PIPING(2) | CIRCUIT DE PILOTE | - | D | 5001–5031 | | | |
| | K1004429E | PILOT PIPING(2) | CIRCUIT DE PILOTE | - | D | 5032– | | | |
| 2 | K1000556E | VALVE;REMOCON(L.H) | VANNE | 1 | | 5001–5478 | I | K1000556G | 1 |
| | K1000556G | VALVE;REMOCON(L.H) | VANNE | 1 | | 5479–5944 | I | K1000556H | 1 |
| | **K1000556H** | **VALVE;REMOCON(L.H)** | VANNE | 1 | | **5945**– | | | |
| 11 | DS2095001 | HOSE | TUYAU FLEXIBLE | 1 | | | | | |
| 12 | DS2095001 | HOSE | TUYAU FLEXIBLE | 1 | | | | | |
| 13 | DS2095001 | HOSE | TUYAU FLEXIBLE | 1 | | | | | |
| 14 | DS2095001 | HOSE | TUYAU FLEXIBLE | 1 | | | | | |
| 19 | DS2095004 | HOSE | TUYAU FLEXIBLE | 1 | | | | | |
| 25 | DS2213165 | ADAPTER | ADAPTEUR | 3 | | | | | |
| 26 | 2181-1126D27 | ADAPTER | RACCORD ADAPTATEUR | 2 | | | | | |
| 27 | 2181-1126D28 | ADAPTER | RACCORD ADAPTATEUR | 1 | | | | | |
| 32 | S8000141 | O-RING | JOINT TORIQUE | 6 | | | | | |
| 35 | 124-00209D2 | CLIP | ATTACHE | 1 | | | | | |
| 40 | K1001029 | BOLT | BOULON A 6 PANS | 1 | | | | | |
| 48 | S2204866 | BOLT;SOCKET | BOULON A 6 PANS CREUX | 4 | | | | | |
| 49 | K1003945 | PROTECTOR | PROTECTEUR | 1 | | | | | |
| 71 | 2181-1126D7 | ADAPTER | RACCORD | 1 | | | | | |
| 75 | DS2095003 | HOSE | TUYAU FLEXIBLE | 1 | | | | | |
| 76 | S8000141 | O-RING | JOINT TORIQUE | 1 | | | | | |
| 83 | 2181-1702D5 | ELBOW | COUDE EN S | 1 | | | | | |

| DATE | JUN. 30, 2008 |
|---|---|
| REV.NO. | EXB08-06 |

# Fig. 1360 PILOT PIPING(7)
# CONDUITES DE PILOTE

**Serial No. ;**

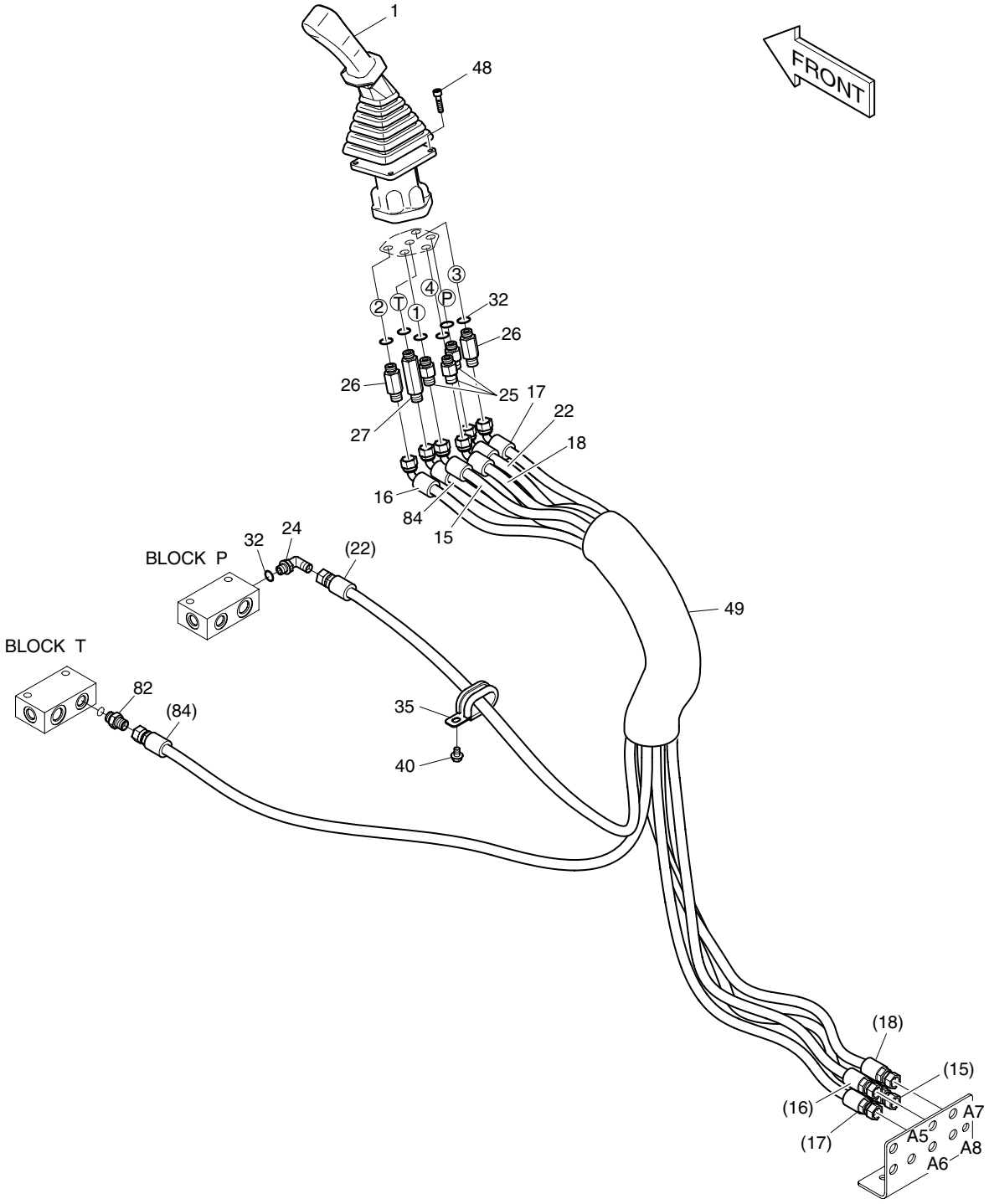

| DATE | JUN. 30, 2008 |
|---|---|
| REV. NO. | EXB08-06 |

# Fig. 1360 PILOT PIPING(7) CONDUITES DE PILOTE

Serial No. ;

| Key No. | Part No. | Description | Description | Q'ty | S.C | Serial No. | ICA | Replaceable part | |
|---|---|---|---|---|---|---|---|---|---|
| | | | | | | | | Part No. | Q'ty |
| 1360-- | K1004429C | PILOT PIPING(2) | CIRCUIT DE PILOTE | - | D | 5001–5031 | | | |
| | K1004429E | PILOT PIPING(2) | CIRCUIT DE PILOTE | - | D | 5032– | | | |
| 1 | K1000555E | VALVE;REMOCON(R.H) | VANNE | 1 | | 5001–5478 | I | K1000555G | 1 |
| | K1000555G | VALVE;REMOCON(R.H) | VANNE | 1 | | 5479–5944 | I | K1000555H | 1 |
| | **K1000555H** | **VALVE;REMOCON(R.H)** | VANNE | 1 | | **5945**– | | | |
| 15 | DS2095001 | HOSE | TUYAU FLEXIBLE | 1 | | | | | |
| 16 | DS2095001 | HOSE | TUYAU FLEXIBLE | 1 | | | | | |
| 17 | DS2095001 | HOSE | TUYAU FLEXIBLE | 1 | | | | | |
| 18 | DS2095001 | HOSE | TUYAU FLEXIBLE | 1 | | | | | |
| 22 | DS2095002 | HOSE | TUYAU FLEXIBLE | 1 | | | | | |
| 24 | 2181-1702D5 | ELBOW | COUDE EN S | 1 | | | | | |
| 25 | DS2213165 | ADAPTER | ADAPTEUR | 3 | | | | | |
| 26 | 2181-1126D27 | ADAPTER | RACCORD ADAPTATEUR | 2 | | | | | |
| 27 | 2181-1126D28 | ADAPTER | RACCORD ADAPTATEUR | 1 | | | | | |
| 32 | S8000141 | O-RING | JOINT TORIQUE | 7 | | | | | |
| 35 | 124-00209D2 | CLIP | ATTACHE | 1 | | | | | |
| 40 | K1001029 | BOLT | BOULON A 6 PANS | 1 | | | | | |
| 48 | S2204866 | BOLT;SOCKET | BOULON A 6 PANS | 4 | | | | | |
| 49 | K1003945 | PROTECTOR | PROTECTEUR | 1 | | | | | |
| 82 | 2181-1126D7 | ADAPTER | RACCORD | 1 | | | | | |
| 84 | DS2095003 | HOSE | TUYAU FLEXIBLE | 1 | | | | | |

| DATE | JUN. 30, 2008 |
|---|---|
| REV.NO. | EXB08-06 |

# Fig. 1370 PILOT PIPING(8)
# CONDUITES DE PILOTE

**Serial No. ;**

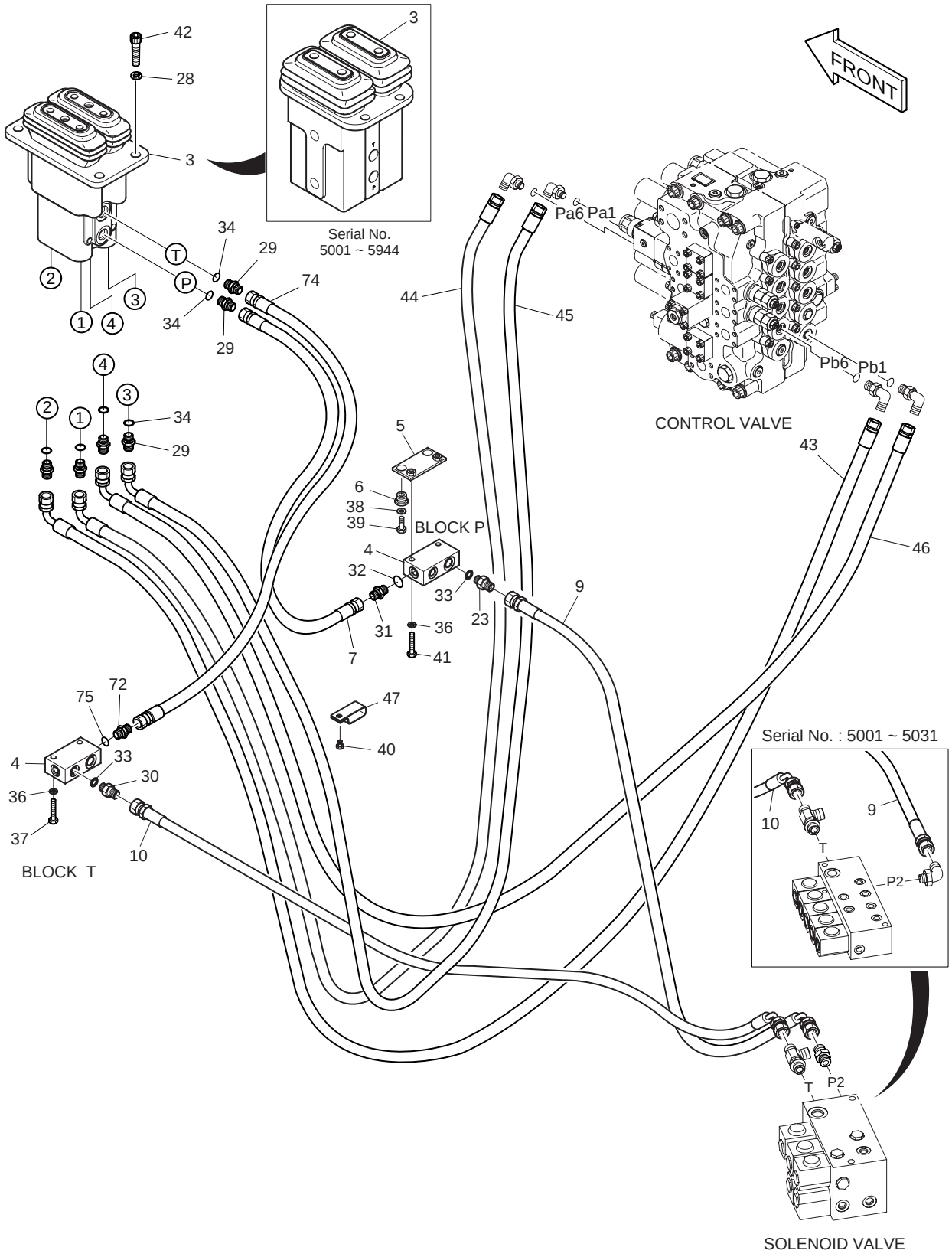

| DATE | JUN. 30, 2008 |
|---|---|
| REV. NO. | EXB08-06 |

# Fig. 1370 PILOT PIPING(8) CONDUITES DE PILOTE

Serial No. ;

| Key No. | Part No. | Description | Description | Q'ty | S.C | Serial No. | ICA | Replaceable part | |
|---|---|---|---|---|---|---|---|---|---|
| | | | | | | | | Part No. | Q'ty |
| 1370-- | K1004429C | PILOT PIPING(2) | CIRCUIT DE PILOTE | - | D | 5001–5031 | | | |
| | K1004429E | PILOT PIPING(2) | CIRCUIT DE PILOTE | - | D | 5032– | | | |
| 3 | 420-00467 | VALVE;PEDAL | VANNE | 1 | | 5001–5944 | | | |
| | **420-00467A** | **VALVE;PEDAL** | VANNE | 1 | | **5945**– | | | |
| 4 | 2423-1470 | BLOCK | BLOC | 2 | | | | | |
| 5 | 621-02151 | PLATE | PLAQUE | 1 | | | | | |
| 6 | 198-00016 | RUBBER | CAOUTCHOUC | 2 | | | | | |
| 7 | DS2094006 | HOSE | TUYAU FLEXIBLE | 1 | | | | | |
| 9 | 2184-1026D251 | HOSE | TUYAU FLEXIBLE | 1 | | 5001–5031 | | | |
| | DS2054208 | HOSE | TUYAU FLEXIBLE | 1 | | 5032– | | | |
| 10 | DS2054304 | HOSE | TUYAU FLEXIBLE | 1 | | | | | |
| 23 | 2471-1135 | ADAPTER;FILTER | FILTRE | 1 | | | | | |
| 28 | S5110603 | WASHER;SPRING | RONDELLE ELASTIQUE | 4 | | | | | |
| 29 | 2181-1126D14 | ADAPTER | RACCORD ADAPTATEUR | 6 | | | | | |
| 30 | 2181-1126D6 | ADAPTER | RACCORD ADAPTATEUR | 1 | | | | | |
| 31 | 2181-1126D36 | ADAPTER | RACCORD | 1 | | | | | |
| 32 | S8000141 | O-RING | JOINT TORIQUE | 1 | | | | | |
| 33 | S8000181 | O-RING | JOINT TORIQUE | 2 | | | | | |
| 34 | S8000111 | O-RING | JOINT TORIQUE | 6 | | | | | |
| 36 | S5102603 | WASHER;SPRING | RONDELLE ELASTIQUE M10 | 4 | | | | | |
| 37 | S0558666 | BOLT | BOULON A 6 PANS | 2 | | | | | |
| 38 | 2114-1058D10 | WASHER | RONDELLE PLATE | 2 | | | | | |
| 39 | S0512266 | BOLT | BOULON A 6 PANS | 2 | | | | | |
| 40 | K1001029 | BOLT | BOULON A 6 PANS | 1 | | | | | |
| 41 | S0558766 | BOLT | BOULON A 6 PANS | 2 | | | | | |
| 42 | S2212266 | BOLT;SOCKET | BOULON DE PLOT | 4 | | | | | |
| 43 | DS2093170 | HOSE | TUYAU FLEXIBLE | 1 | | | | | |
| 44 | DS2093188 | HOSE | TUYAU FLEXIBLE | 1 | | | | | |
| 45 | DS2093169 | HOSE | TUYAU FLEXIBLE | 1 | | | | | |
| 46 | DS2093170 | HOSE | TUYAU FLEXIBLE | 1 | | | | | |
| 47 | 124-00209D3 | CLIP | ATTACHE | 1 | | | | | |
| 72 | 2181-1126D36 | ADAPTER | RACCORD | 1 | | | | | |
| 74 | DS2094006 | HOSE | TUYAU FLEXIBLE | 1 | | | | | |
| 75 | S8000141 | O-RING | JOINT TORIQUE | 1 | | | | | |

| DATE | JUN. 30, 2007 |
|---|---|
| REV.NO. | EXB07-06 |

# Fig. 1380 CONTROL STAND - L.H.
# CONSOLE DE COMMANDE

**Serial No. ;**

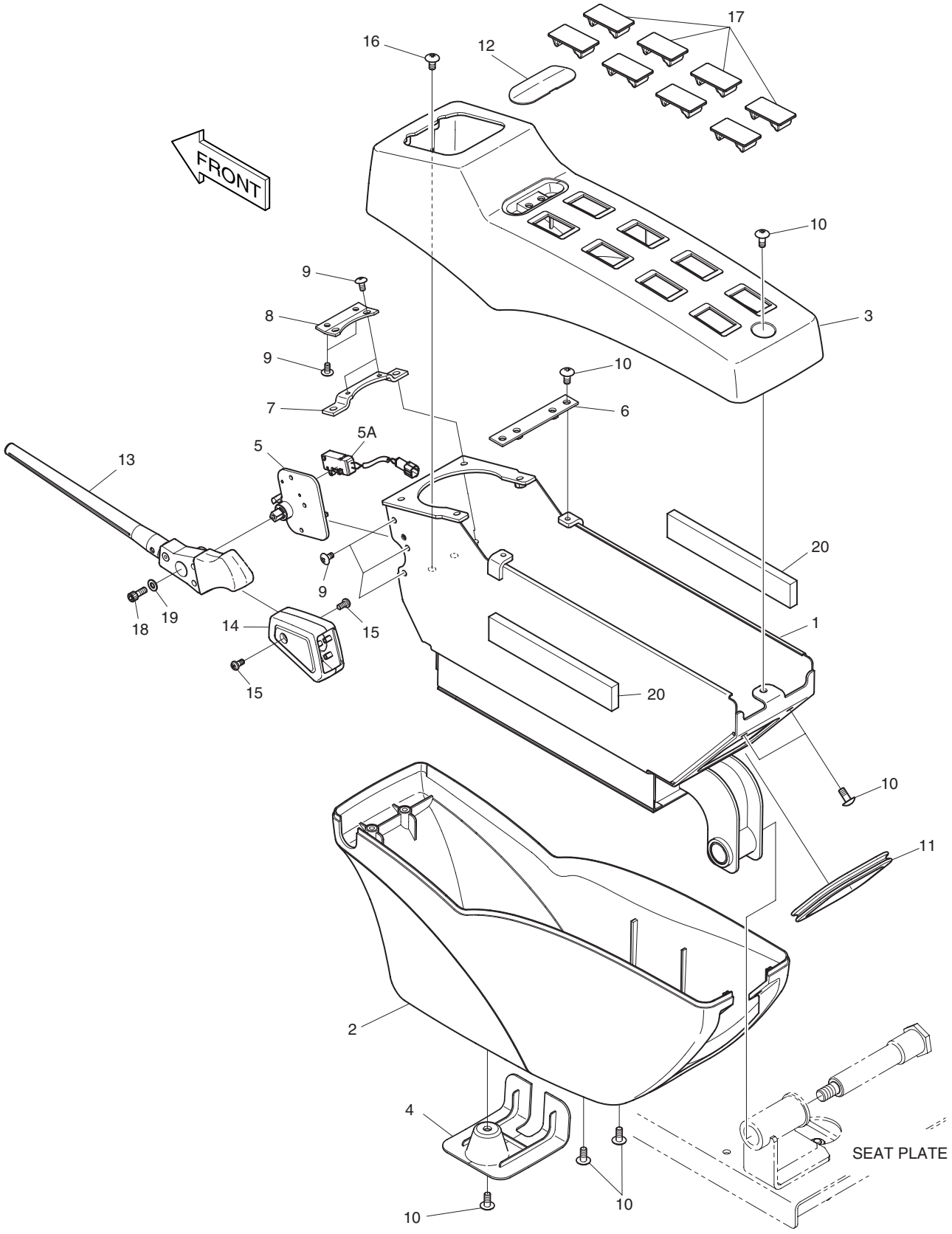

| DATE | JUN. 30, 2007 |
|---|---|
| REV. NO. | EXB07-06 |

# Fig. 1380 CONTROL STAND - L.H.
# CONSOLE DE COMMANDE

**Serial No. ;**

| Key No. | Part No. | Description | Description | Q'ty | S.C | Serial No. | ICA | Replaceable part | |
|---|---|---|---|---|---|---|---|---|---|
| | | | | | | | | Part No. | Q'ty |
| 1380-- | **K1002202G** | **CONTROL STAND L.H.** | PANNEAU | - | D | | | | |
| 1 | 195-02753C | BRACKET;STAND LH | SUPPORT | 1 | | | | | |
| 2 | 621-02901B | COVER;STAND LH LOWER | COUVERCLE | 1 | | | | | |
| 3 | 621-03012C | COVER;STAND LH UPPER | COUVERCLE | 1 | | 5001–5410 | I | 621-03012E | 1 |
| | **621-03012E** | **COVER;STAND LH UPPER** | COUVERCLE | 1 | | **5411–5690** | | | |
| | **621-03012G** | **COVER;STAND LH UPPER** | COUVERCLE | 1 | | **5691–** | | | |
| 4 | 621-03014B | COVER;STAND LOW | COUVERCLE | 1 | | | | | |
| 5 | 195-02868C | BRACKET;SAFETY ASM | SUPPORT | 1 | | | | | |
| 5A | 549-00089 | . SWITCH;MICRO | . INTERRUPTEUR | 1 | | | | | |
| 6 | 621-02957A | PLATE;STAND MOUNT | PLAQUE | 1 | | | | | |
| 7 | 159-00290A | PLATE | PLAQUE | 1 | | | | | |
| 8 | 159-00287A | PLATE;COVER MOUNT | PLAQUE | 1 | | | | | |
| 9 | 2120-2166D53 | SCREW | VIS | 7 | | | | | |
| 10 | 2120-2166D10 | SCREW | VIS | 10 | | | | | |
| 11 | K1001023 | STRIP;WEATHER | TAMPON | 1 | | | | | |
| 12 | 621-03733A | COVER | COUVERCLE | 1 | | 5001–5410 | I | 621-03733B | 1 |
| | **621-03733B** | **COVER** | COUVERCLE | 1 | | **5411–5690** | | | |
| | **621-03733C** | **COVER** | COUVERCLE | 1 | | **5691–** | | | |
| 13 | K1000840 | LEVER | LEVIER | 1 | | | | | |
| 14 | K1000842A | COVER | COUVERCLE | 1 | | | | | |
| 15 | S3450823 | SCREW M5X0.8X10 | VIS | 2 | | | | | |
| 16 | 2120-2166D52 | BOLT | BOULON A 6 PANS | 2 | | | | | |
| 17 | 621-02801 | COVER;SWITCH | COUVERCLE | 8 | | | | | |
| 18 | S2202966 | BOLT;SOCKET | BOULON A 6 PANS CREUX | 1 | | | | | |
| 19 | 2114-1898D4 | WASHER | RONDELLE | 1 | | | | | |
| 20 | K1010466 | FORM | EPONGE | 2 | | | | | |

| DATE | JUN. 30, 2007 |
|---|---|
| REV.NO. | EXB07-06 |

# Fig. 1390 CONTROL STAND - R.H.
# CONSOLE DE COMMANDE

**Serial No. ;**

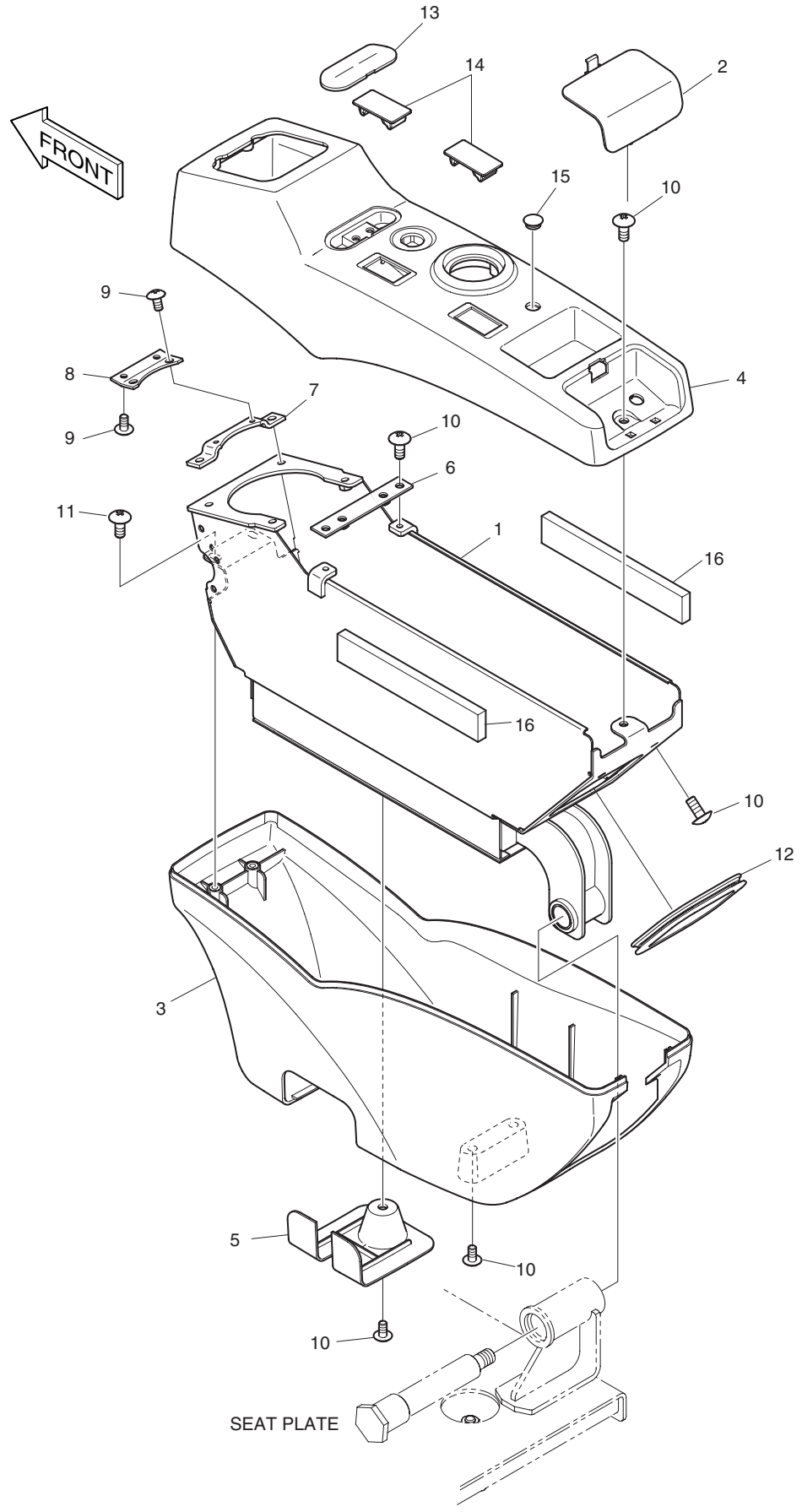

| DATE | JUN. 30, 2007 |
|---|---|
| REV. NO. | EXB07-06 |

# Fig. 1390 CONTROL STAND - R.H.
# CONSOLE DE COMMANDE

**Serial No. ;**

| Key No. | Part No. | Description | Description | Q'ty | S.C | Serial No. | ICA | Replaceable part | |
|---|---|---|---|---|---|---|---|---|---|
| | | | | | | | | Part No. | Q'ty |
| 1390-- | **K1005468C** | **STAND ASS'Y R.H.** | CONSOLE DE COMMANDE | - | D | | | | |
| 1 | 195-02755C | BRACKET;STAND RH | SUPPORT | 1 | | | | | |
| 2 | 621-02926B | COVER;SWITCH | COUVERCLE | 1 | | 5001–5410 | I | 621-02926C | 1 |
| | **621-02926C** | **COVER;SWITCH** | COUVERCLE | 1 | | **5411–5690** | | | |
| | **621-02926E** | **COVER;SWITCH** | COUVERCLE | 1 | | **5691–** | | | |
| 3 | 621-02900B | COVER;STAND RH LOWER | COUVERCLE | 1 | | | | | |
| 4 | K1005343A | COVER;STAND RH UPPER | COUVERCLE | 1 | | 5001–5410 | I | K1005343B | 1 |
| | **K1005343B** | **COVER;STAND RH UPPER** | COUVERCLE | 1 | | **5411–5690** | | | |
| | **K1005343C** | **COVER;STAND RH UPPER** | COUVERCLE | 1 | | **5691–** | | | |
| 5 | 621-03014B | COVER;STAND LOW | COUVERCLE | 1 | | | | | |
| 6 | 621-02957A | PLATE;STAND MOUNT | PLAQUE | 1 | | | | | |
| 7 | 159-00290A | PLATE | PLAQUE | 1 | | | | | |
| 8 | 159-00287A | PLATE;COVER MOUNT | PLAQUE | 1 | | | | | |
| 9 | 2120-2166D53 | BOLT | VIS | 4 | | | | | |
| 10 | 2120-2166D10 | SCREW | VIS | 10 | | | | | |
| 11 | 2120-2166D52 | BOLT | BOULON A 6 PANS | 2 | | | | | |
| 12 | K1001023 | STRIP;WEATHER | TAMPON | 1 | | | | | |
| 13 | 621-03733A | COVER | COUVERCLE | 1 | | 5001–5410 | I | 621-03733B | 1 |
| | **621-03733B** | **COVER** | COUVERCLE | 1 | | **5411–5690** | | | |
| | **621-03733C** | **COVER** | COUVERCLE | 1 | | **5691–** | | | |
| 14 | 621-02801 | COVER;SWITCH | COUVERCLE | 2 | | | | | |
| 15 | K1006995 | CAP | CHAPEAU | 1 | | | | | |
| 16 | K1010466 | FORM | EPONGE | 2 | | | | | |

| DATE | JUN. 30, 2006 |
|---|---|
| REV.NO. | EXB06-08 |

# Fig. 1400 SEAT SLIDING PLATE
# POSEZ GLISSER LE PLAT

**Serial No. ;**

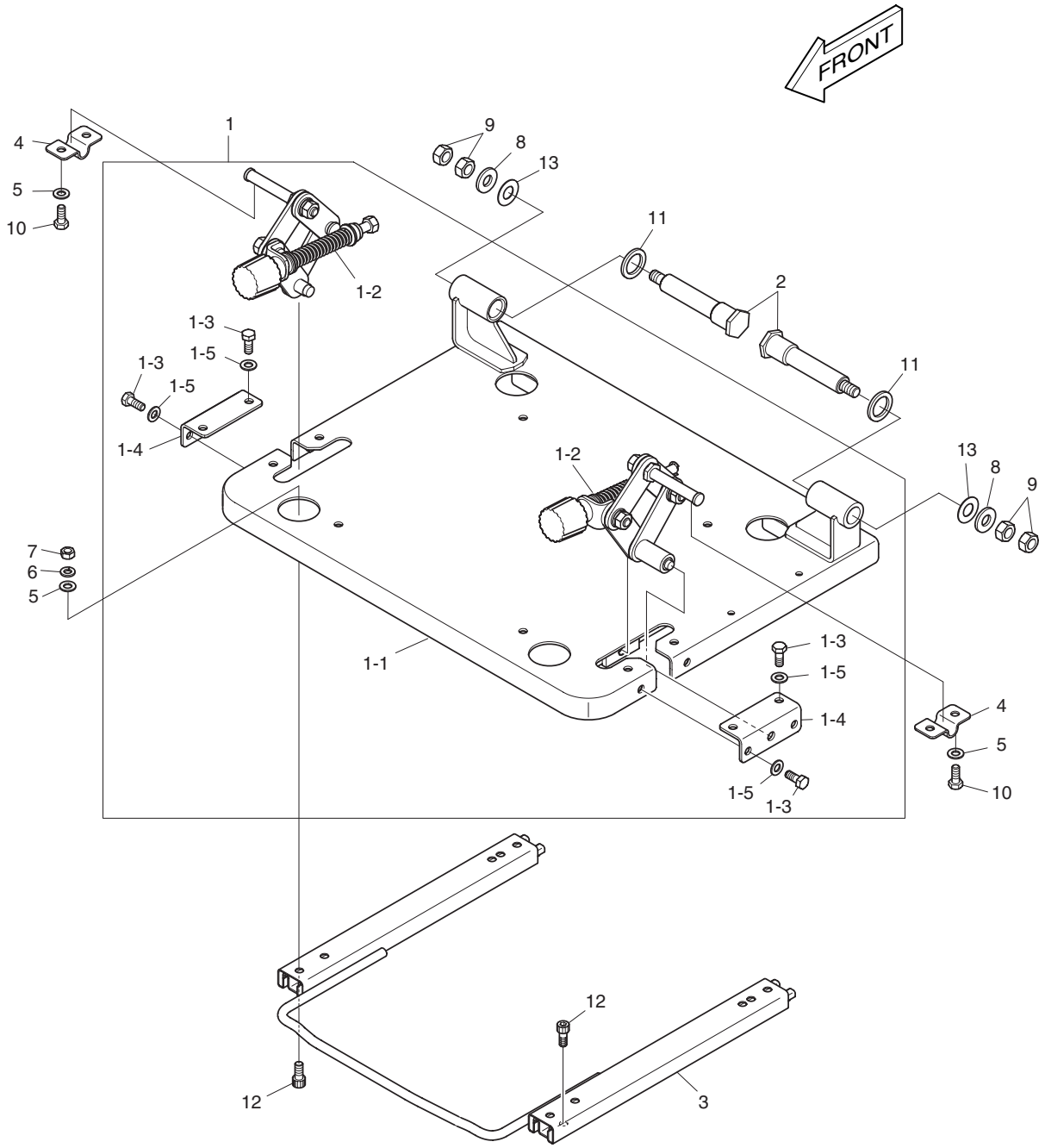

| DATE | JUN. 30, 2006 |
|---|---|
| REV. NO. | EXB06-08 |

# Fig. 1400 SEAT SLIDING PLATE
# POSEZ GLISSER LE PLAT

Serial No. ;

| Key No. | Part No. | Description | Description | Q'ty | S.C | Serial No. | ICA | Replaceable part | |
|---|---|---|---|---|---|---|---|---|---|
| | | | | | | | | Part No. | Q'ty |
| 1400-- | **K1002204C** | **SEAT PLATE ASS'Y** | SIEGE | - | D | | | | |
| 1 | 621-03011E | SEAT PLATE ASS'Y | SIEGE | 1 | | | | | |
| 1-1 | 621-02895C | . PLATE;SEAT MOUNT | . PLAQUE | 1 | | | | | |
| 1-2 | **195-02904C** | **. BRACKET ASS'Y;STAND** | . ENSEMBLE SUPPORT | 1 | | | | | |
| 1-3 | 2120-2166D5 | . BOLT | . BOULON A 6 PANS | 8 | | | | | |
| 1-4 | 621-02925A | . PLATE | . PLAQUE | 2 | | | | | |
| 1-5 | 2114-1898D14 | . WASHER;PLAIN | . RONDELLE PAQUE | 8 | | | | | |
| 2 | 123-00524B | PIN;TILT STAND | GOUJON | 2 | | | | | |
| 3 | K1003381 | RAIL | CHEMIN DE FER | 1 | | | | | |
| 4 | 621-03005A | PLATE | PLAQUE | 2 | | | | | |
| 5 | 2114-1898D14 | WASHER | RONDELLE PAQUE | 8 | | | | | |
| 6 | 2114-2031D4 | WASHER;SPRING | RONDELLE ELASTIQUE | 4 | | | | | |
| 7 | 2121-1311D2 | NUT | ECROU | 4 | | | | | |
| 8 | 2114-1898D17 | WASHER | RONDELLE | 2 | | | | | |
| 9 | 2121-1311D1 | NUT | ECROU | 4 | | | | | |
| 10 | 2120-2166D5 | BOLT | BOULON A 6 PANS | 4 | | | | | |
| 11 | 2114-1898D18 | WASHER | RONDELLE | 2 | | | | | |
| 12 | S2208866 | BOLT;SOCKET | BOULON DE PLOT | 8 | | | | | |
| 13 | 114-00590 | WASHER | RONDELLE | 2 | | | | | |

| DATE | OCT. 17, 2005 |
|---|---|
| 1st EDITION | |

# Fig. 1410 SEAT PLATE
# POSEZ LE PLAT

**Serial No. ;**

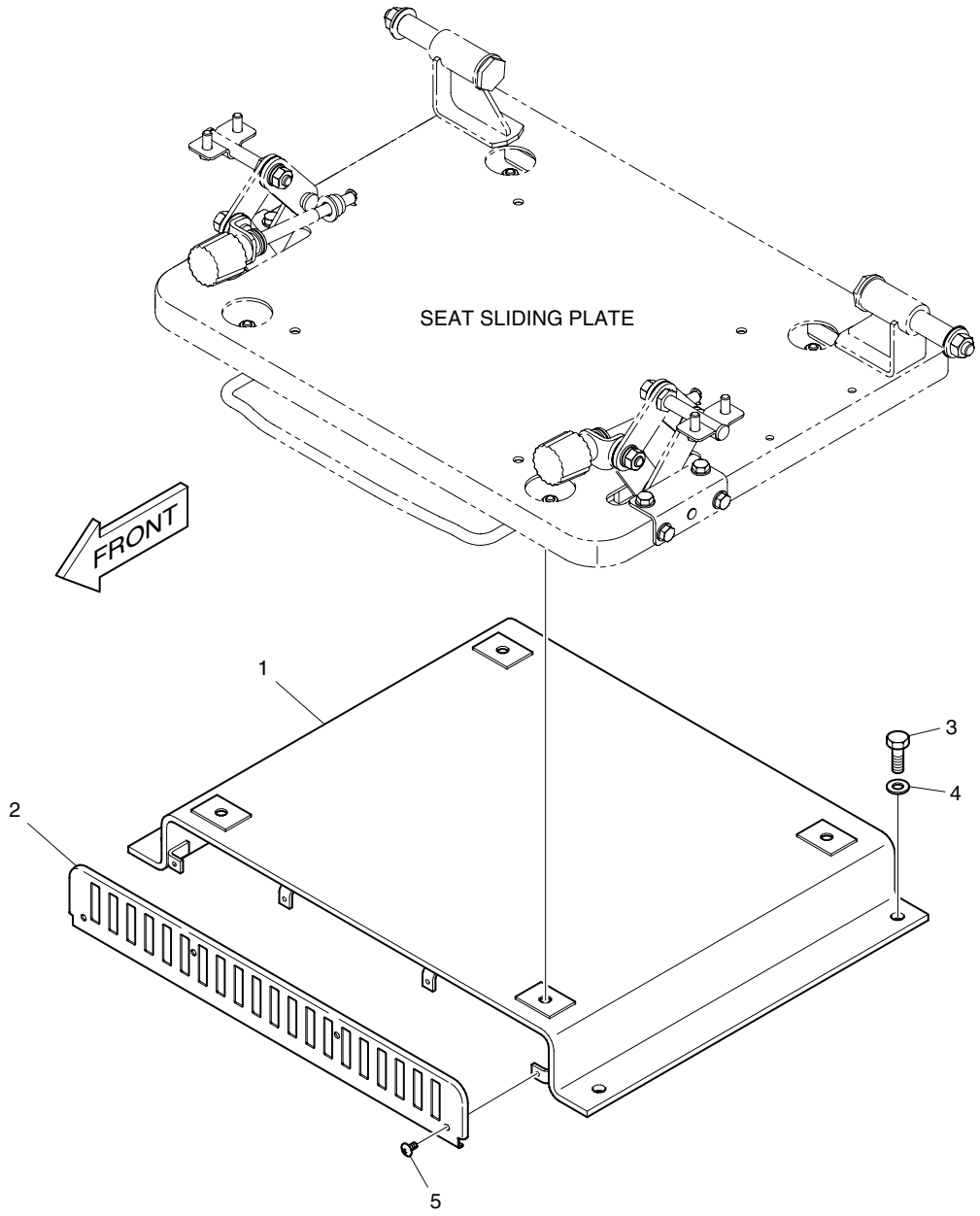

| DATE | OCT. 17, 2005 |
|---|---|
| 1st EDITION | |

# Fig. 1410 SEAT PLATE POSEZ LE PLAT

Serial No. ;

| Key No. | Part No. | Description | Description | Q'ty | S.C | Serial No. | ICA | Replaceable part | |
|---|---|---|---|---|---|---|---|---|---|
| | | | | | | | | Part No. | Q'ty |
| 1410-- | K1002229A | SEAT PLATE | SIEGE | - | D | | | | |
| 1 | K1002230A | BRACKET;SEAT LOWER | SUPPORT | 1 | | | | | |
| 2 | K1002231A | PLATE;COVER | PLAQUE | 1 | | | | | |
| 3 | 2120-2166D1 | BOLT | BOULON A 6 PANS | 4 | | | | | |
| 4 | 2114-1898D15 | WASHER | RONDELLE | 4 | | | | | |
| 5 | 2120-2166D53 | BOLT | VIS | 4 | | | | | |

| DATE | JUN. 30, 2006 |
|---|---|
| REV.NO. | EXB06-08 |

# Fig. 1420 SEAT MOUNTING
# SIEGE LE SUPPORT

**Serial No. ;**

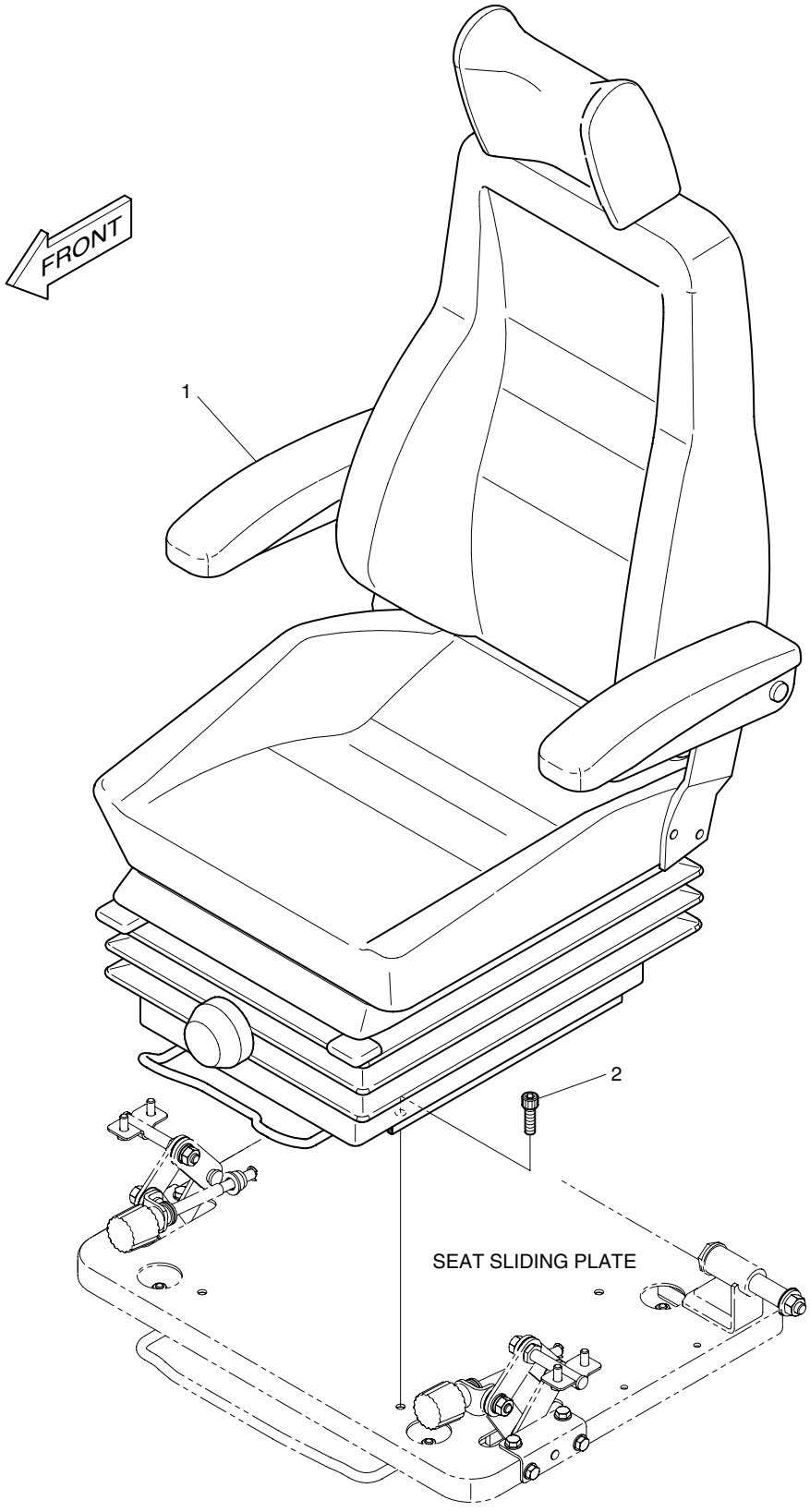

| DATE | JUN. 30, 2006 |
|---|---|
| REV. NO. | EXB06-08 |

# Fig. 1420 SEAT MOUNTING SIEGE LE SUPPORT

Serial No. ;

| Key No. | Part No. | Description | Description | Q'ty | S.C | Serial No. | ICA | Replaceable part | |
|---|---|---|---|---|---|---|---|---|---|
| | | | | | | | | Part No. | Q'ty |
| 1420-- | K1002084A | SEAT MOUNTING | SIEGE | - | D | | | | |
| 1 | 901-00045 | SEAT | SIEGE | 1 | | | | | |
| 2 | S2208866 | BOLT;SOCKET | BOULON DE PLOT | 4 | | | | | |

| DATE | OCT. 17, 2005 |
|---|---|
| 1st EDITION | |

# Fig. 1425 SEAT SIEGE

Serial No. ;

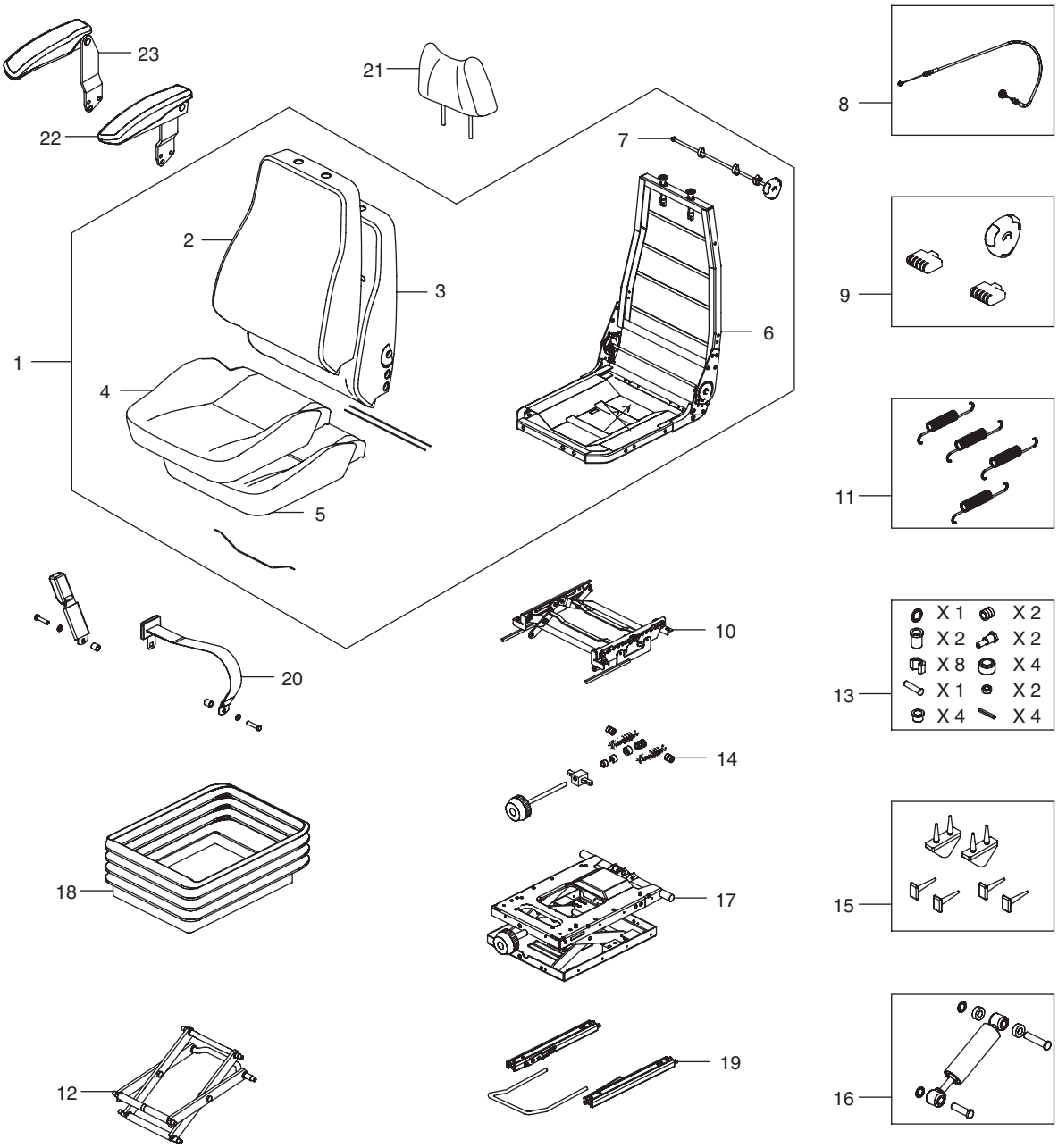

| DATE | OCT. 17, 2005 |
|---|---|
| 1st EDITION | |

# Fig. 1425 SEAT SIEGE

Serial No. ;

| Key No. | Part No. | Description | Description | Q'ty | S.C | Serial No. | ICA | Replaceable part | |
|---|---|---|---|---|---|---|---|---|---|
| | | | | | | | | Part No. | Q'ty |
| 1425-- | 901-00045 | SEAT ASS'Y | SIEGE | 1 | | | | | |
| 1 | K9001695 | UPPER ASS'Y | SUPERIEUR | 1 | | | | | |
| 2 | K9001201 | BACK COVER | COUVERTURE ARRIERE | 1 | | | | | |
| 3 | K9001202 | BACK FOAM | MOUSSE ARRIERE | 1 | | | | | |
| 4 | K9001203 | SEAT COVER | COUVERCLE | 1 | | | | | |
| 5 | K9001204 | SEAT FOAM | EPONGE | 1 | | | | | |
| 6 | K9001205 | FRAME | PRINCIPAL | 1 | | | | | |
| 7 | K9001206 | LUMBAR KIT | KIT LOMBAIRE | 1 | | | | | |
| 8 | K9001207 | CABLE;ADJUST | CABLE | 1 | | | | | |
| 9 | 2.172-00003 | HANDLE | HANDLE | 1 | | | | | |
| 10 | K9001208 | HEIGHT RISER | RECHAUFFEUR | 1 | | | | | |
| 11 | K9001209 | HEIGHT RISER SPRING KIT | RECHAUFFEUR | 1 | | | | | |
| 12 | K9001210 | LEVER/CENTRE PIVOT KIT | LEVIER | 1 | | | | | |
| 13 | K9001211 | BEARING KIT | PALIER | 1 | | | | | |
| 14 | K9001212 | WEIGHT ADJUST KIT | LE POIDS AJUSTENT LE | 1 | | | | | |
| 15 | K9001213 | UPSTOP/BUMPSTOP KIT | KIT | 1 | | | | | |
| 16 | K9001214 | DAMPER KIT | REGISTRE | 1 | | | | | |
| 17 | K9001215 | SUSPENSION ASS'Y | SUSPENSION | 1 | | | | | |
| 18 | K9001216 | SUSPENSION COVER | SUSPENSION | 1 | | | | | |
| 19 | K9001217 | SLIDING RAIL ASS'Y | GLISSEMENT DU RAIL | 1 | | | | | |
| 20 | K9001218 | BELT;SEAT | COURROIE | 1 | | | | | |
| 21 | K9001219 | HEAD REST | SIEGE | 1 | | | | | |
| 22 | K9001220 | ARM REST-L.H | REPOSER | 1 | | | | | |
| 23 | K9001221 | ARM REST-R.H | REPOSER | 1 | | | | | |

| DATE | JUN. 30, 2007 |
|---|---|
| REV.NO. | EXB07-06 |

# Fig. 1430 DUCT COVER
# CONDUITES COUVERCLE

**Serial No. ;**

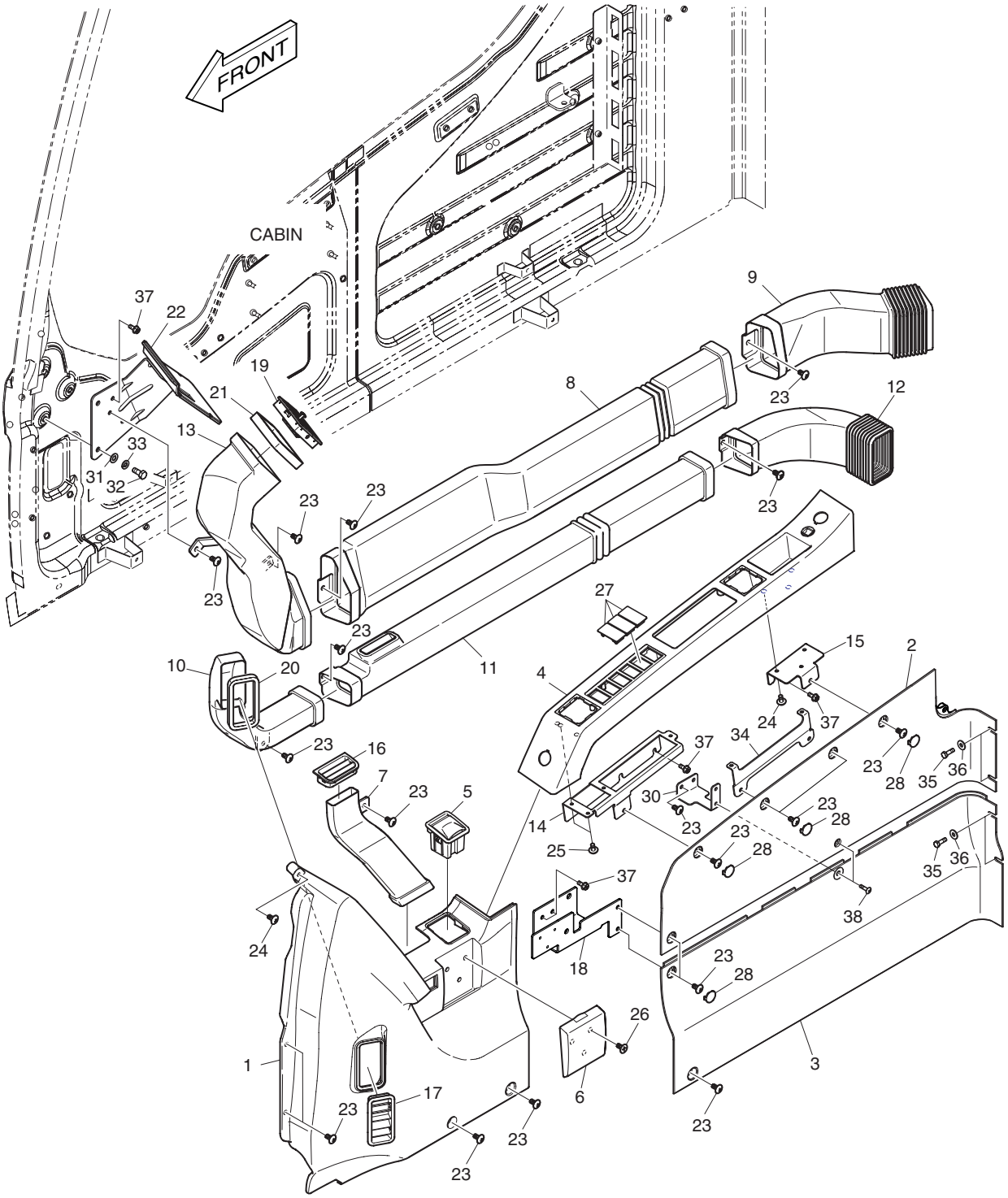

| DATE | JUN. 30, 2007 |
|---|---|
| REV. NO. | EXB07-06 |

# Fig. 1430 DUCT COVER CONDUITES COUVERCLE

Serial No. ;

| Key No. | Part No. | Description | Description | Q'ty | S.C | Serial No. | ICA | Replaceable part | |
|---|---|---|---|---|---|---|---|---|---|
| | | | | | | | | Part No. | Q'ty |
| 1430-- | **621-02902H** | **SIDE COVER ASS'Y** | COUVERCLE | - | D | | | | |
| 1 | 621-02903C | COVER;SIDE FRONT | COUVERCLE | 1 | | | | | |
| 2 | 621-02905C | COVER;SIDE UPPER | COUVERCLE | 1 | | | | | |
| 3 | 621-02904C | COVER;SIDE LOWER | COUVERCLE | 1 | | | | | |
| 4 | 621-02909C | COVER;SWITCH | COUVERCLE | 1 | | 5001–5088 | I | 621-02909E | 1 |
| | 621-02909E | COVER;SWITCH | COUVERCLE | 1 | | 5089–5690 | | | |
| | **621-02909G** | **COVER;SWITCH** | COUVERCLE | 1 | | **5691**– | | | |
| 5 | 906-00002A | ASHTRAY | CENDRIER | 1 | | | | | |
| 6 | 621-02908B | CUP HOLDER | POSSESSEUR | 1 | | | | | |
| 7 | 213-00035B | DUCT;DEFROSTER SIDE | COUVERCLE | 1 | | | | | |
| 8 | 213-00030B | DUCT;FACE MID | COUVERCLE | 1 | | | | | |
| 9 | 213-00031E | DUCT;FACE REAR | COUVERCLE | 1 | | | | | |
| 10 | 213-00032B | DUCT;DEFROSTER FRONT | COUVERCLE | 1 | | | | | |
| 11 | 213-00033B | DUCT;DEFROSTER MID | COUVERCLE | 1 | | | | | |
| 12 | 213-00034E | DUCT;DEFROSTER REAR | COUVERCLE | 1 | | | | | |
| 13 | 213-00029C | DUCT;FACE FRONT | COUVERCLE | 1 | | | | | |
| 14 | 195-02768C | BRACKET;SWITCH COVER | SUPPORT | 1 | | | | | |
| 15 | 195-02769B | BRACKET;SWITCH COVER REAR | SUPPORT | 1 | | 5001–5088 | I | 195-02769C | 1 |
| | 195-02769C | BRACKET;SWITCH COVER REAR | SUPPORT | 1 | | 5089– | | | |
| 16 | 415-00046B | LOUVER;SIDE | COUVERCLE | 1 | | | | | |
| 17 | 415-00045B | LOUVER;FRONT | COUVERCLE | 1 | | | | | |
| 18 | 195-02770C | BRACKET;CUP HOLDER | SUPPORT | 1 | | | | | |
| 19 | 415-00044B | LOUVER;FACE | COUVERCLE | 1 | | | | | |
| 20 | K1001068 | FOAM | EPONGE | 1 | | | | | |
| 21 | K1001069A | FOAM | EPONGE | 1 | | | | | |
| 22 | 195-02858C | BRACKET;MONITOR | SUPPORT | 1 | | | | | |
| 23 | 2120-2166D52 | BOLT | BOULON A 6 PANS | 22 | | | | | |
| 24 | 2120-2166D53 | BOLT | VIS | 4 | | | | | |
| 25 | S3654523 | SCREW | VIS | 4 | | | | | |
| 26 | 2120-2166D23 | SCREW | VIS | 3 | | | | | |
| 27 | 621-02801 | COVER;SWITCH | COUVERCLE | 3 | | | | | |
| 28 | 621-03734A | COVER | COUVERCLE | 6 | | | | | |
| 30 | K1005007A | PLATE | PLAQUE | 1 | | | | | |
| 31 | 2114-1898D14 | WASHER | RONDELLE PAQUE | 3 | | | | | |
| 32 | 2120-2166D5 | BOLT | BOULON A 6 PANS | 3 | | | | | |
| 33 | 2114-2031D4 | WASHER;SPRING | RONDELLE ELASTIQUE | 3 | | | | | |
| 34 | K1009627 | PLATE | PLAQUE | 1 | | | | | |
| 35 | 2120-2166D36 | BOLT | BOULON A 6 PANS | 4 | | | | | |

| DATE | JUN. 30, 2007 |
|---|---|
| REV.NO. | EXB07-06 |

# Fig. 1430 DUCT COVER
# CONDUITES COUVERCLE

**Serial No. ;**

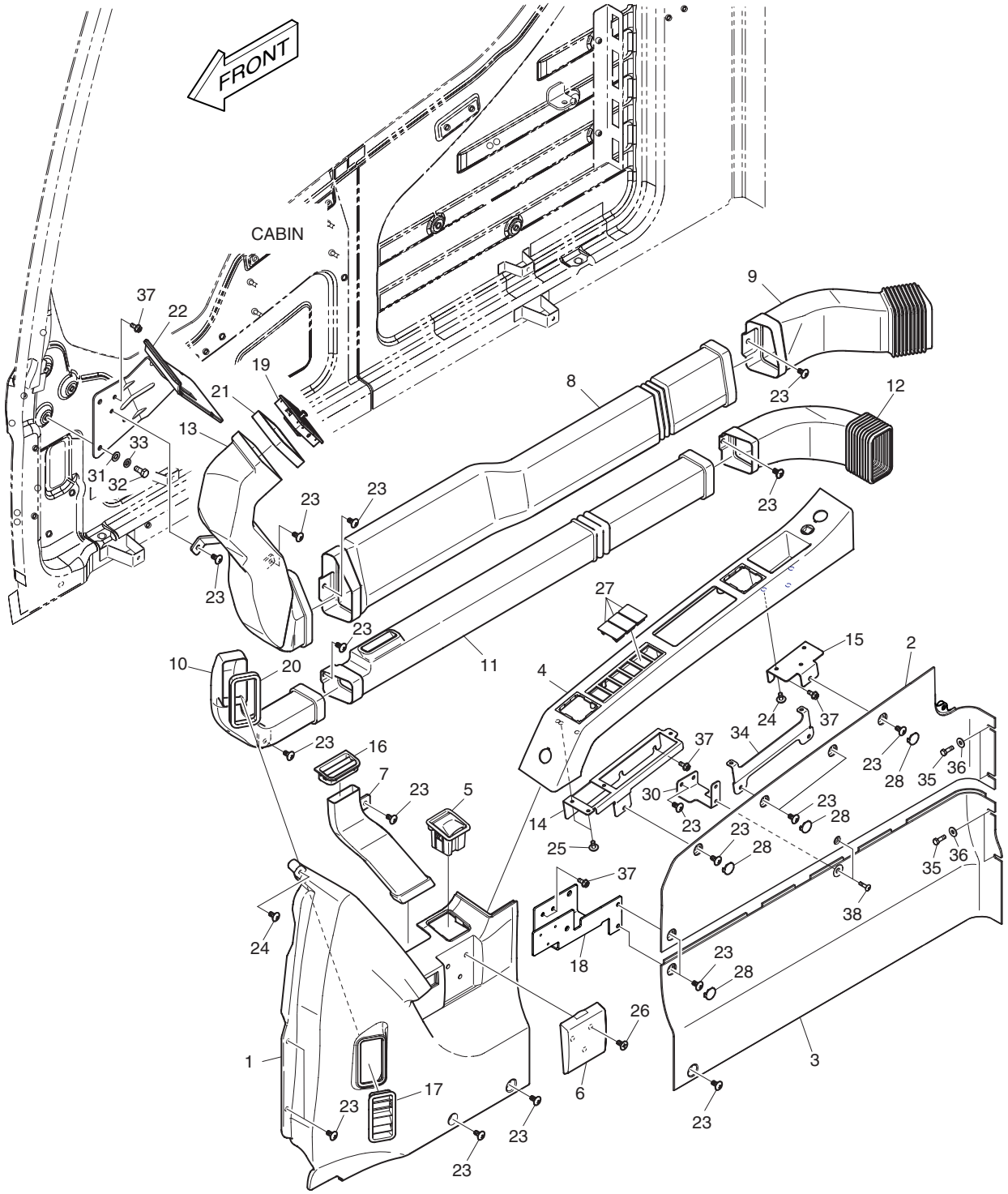

| DATE | JUN. 30, 2007 |
|---|---|
| REV. NO. | EXB07-06 |

# Fig. 1430 DUCT COVER
# CONDUITES COUVERCLE

**Serial No. ;**

| Key No. | Part No. | Description | Description | Q'ty | S.C | Serial No. | ICA | Replaceable part | |
|---|---|---|---|---|---|---|---|---|---|
| | | | | | | | | Part No. | Q'ty |
| 1430-36 | 2114-1898D5 | WASHER | RONDELE | 4 | | | | | |
| 37 | K1010304 | BOLT;FLANGE | BOULON A 6 PANS | 8 | | | | | |
| 38 | 2120-2166D57 | BOLT | BOULON A 6 PANS | 2 | | | | | |

| DATE | JUN. 30, 2008 |
|---|---|
| REV.NO. | EXB08-06 |

# Fig. 1440 HEATER COVER
# BOITIES DE CHAUFFAGE

**Serial No. ;**

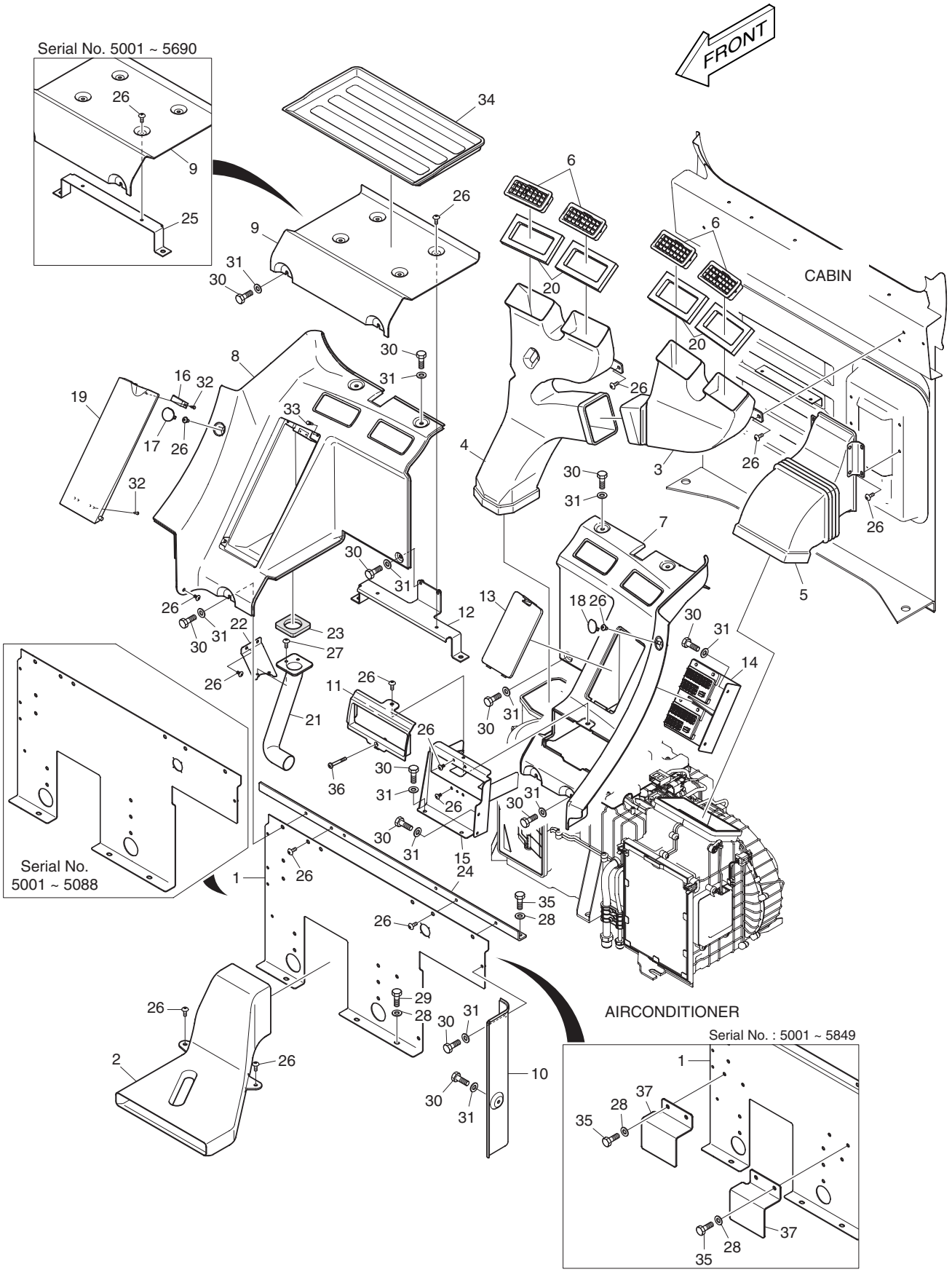

| DATE | JUN. 30, 2008 |
|---|---|
| REV. NO. | EXB08-06 |

# Fig. 1440 HEATER COVER BOITIES DE CHAUFFAGE

Serial No. ;

| Key No. | Part No. | Description | Description | Q'ty | S.C | Serial No. | ICA | Replaceable part | |
|---|---|---|---|---|---|---|---|---|---|
| | | | | | | | | Part No. | Q'ty |
| 1440-- | 621-02896J | HEATER COVER | COUVERCLE | - | D | | | | |
| 1 | 621-02894C | COVER;REAR LOWER | COUVERCLE | 1 | | 5001–5088 | I | 621-02894E | 1 |
| | 621-02894E | COVER;REAR LOWER | COUVERCLE | 1 | | 5089–5849 | | | |
| | **621-02894G** | **COVER;REAR LOWER** | COUVERCLE | 1 | | **5850**– | | | |
| 2 | 213-00036B | DUCT;FOOT | COUVERCLE | 1 | | | | | |
| 3 | 213-00037B | DUCT;REAR (L.H.) | COUVERCLE | 1 | | | | | |
| 4 | 213-00038B | DUCT;REAR (R.H.) | COUVERCLE | 1 | | | | | |
| 5 | 213-00039B | DUCT;AIR INLET | COUVERCLE | 1 | | | | | |
| 6 | 415-00043B | NOZZLE;REAR | INJECTEUR | 4 | | | | | |
| 7 | 621-02913C | COVER;REAR (L.H.) | COUVERCLE | 1 | | | | | |
| 8 | 621-02914C | COVER;REAR (R.H.) | COUVERCLE | 1 | | | | | |
| 9 | 621-02915B | COVER;REAR CENTER | COUVERCLE | 1 | | | | | |
| 10 | 621-02907B | COVER;SIDE REAR (L.H.) | COUVERCLE | 1 | | | | | |
| 11 | 621-02917C | COVER;STEREO UP | COUVERCLE | 1 | | | | | |
| 12 | K1001295A | PLATE | PLAQUE | 1 | | | | | |
| 13 | 621-02919B | COVER;FUSE | COUVERCLE | 1 | | | | | |
| 14 | 195-02771B | BRACKET;FUSE BOX | SUPPORT | 1 | | | | | |
| 15 | 195-02772E | BRACKET;STEREO | SUPPORT | 1 | | | | | |
| 16 | 2125-1095A | CATCH;MAGNETIC | LOQUET | 1 | | | | | |
| 17 | K1005344A | COVER | COUVERCLE | 1 | | | | | |
| 18 | K1005345A | COVER;HOLE | COUVERCLE | 1 | | | | | |
| 19 | 621-02920C | COVER;BOX | COUVERCLE | 1 | | | | | |
| 20 | K1001310 | FOAM | EPONGE | 4 | | | | | |
| 21 | 213-00040A | DUCT;AIR BOX | COUVERCLE | 1 | | | | | |
| 22 | 195-02774 | BRACKET;AIR DUCT MOUNT | SUPPORT | 1 | | | | | |
| 23 | 161-00622 | FOAM;AIR SEAL | EPONGE | 1 | | | | | |
| 24 | 195-02785C | BRACKET;CROSS BAR | SUPPORT | 1 | | | | | |
| 25 | 195-02790B | BRACKET | SUPPORT | 1 | | 5001–5690 | | | |
| 26 | 2120-2166D10 | SCREW | VIS | 25 | | 5001–5088 | | | |
| | 2120-2166D10 | SCREW | VIS | 21 | | 5089–5690 | | | |
| | 2120-2166D10 | SCREW | VIS | 19 | | 5691– | | | |
| 27 | 2120-2166D53 | BOLT | VIS | 2 | | | | | |
| 28 | 2114-1898D14 | WASHER | RONDELLE PAQUE | 5 | | 5001–5088 | | | |
| | 2114-1898D14 | WASHER | RONDELLE PAQUE | 9 | | 5089–5849 | | | |
| | **2114-1898D14** | **WASHER** | RONDELLE PAQUE | 5 | | **5850**– | | | |
| 29 | 2120-2166D12 | BOLT | BOULON A 6 PANS | 3 | | | | | |
| 30 | 2120-2166D36 | BOLT | BOULON A 6 PANS | 19 | | | | | |
| 31 | 2114-1898D5 | WASHER | RONDELE | 19 | | | | | |

| DATE | JUN. 30, 2008 |
|---|---|
| REV.NO. | EXB08-06 |

# Fig. 1440 HEATER COVER
# BOITIES DE CHAUFFAGE

**Serial No. ;**

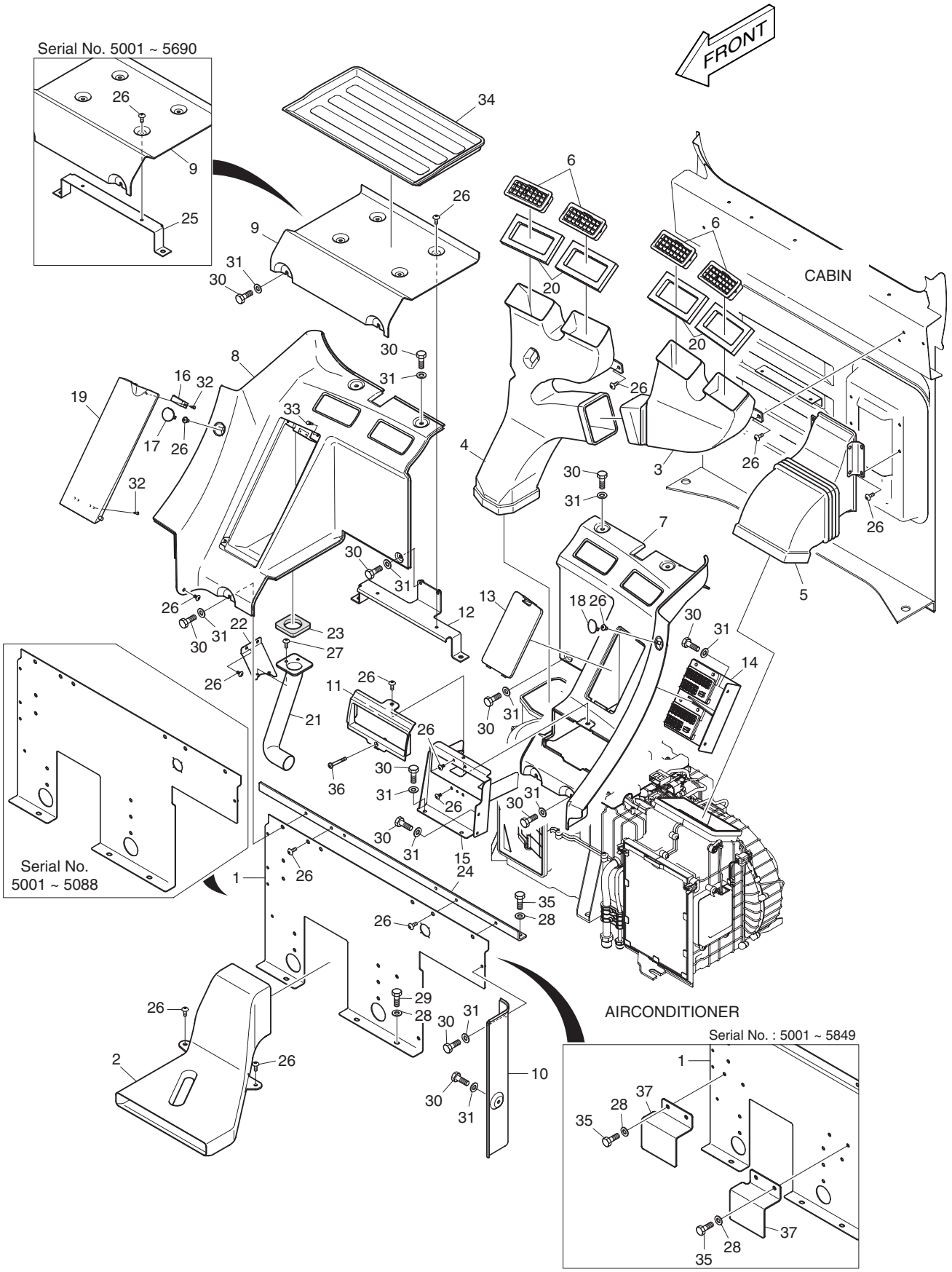

| DATE | JUN. 30, 2008 |
|---|---|
| REV. NO. | EXB08-06 |

# Fig. 1440 HEATER COVER BOITIES DE CHAUFFAGE

Serial No. ;

| Key No. | Part No. | Description | Description | Q'ty | S.C | Serial No. | ICA | Replaceable part | |
|---|---|---|---|---|---|---|---|---|---|
| | | | | | | | | Part No. | Q'ty |
| 1440-32 | S3644163 | SCREW | VIS | 8 | | | | | |
| 33 | K1002385 | STOPPER | TAQUET D'ARRET | 2 | | | | | |
| 34 | 161-00624 | PAD;FOAM | CAOUTCHOUC | 1 | | | | | |
| 35 | 2120-2166D5 | BOLT | BOULON A 6 PANS | 2 | | 5001–5088 | | | |
| | 2120-2166D5 | BOLT | BOULON A 6 PANS | 6 | | 5089–5849 | | | |
| | **2120-2166D5** | **BOLT** | BOULON A 6 PANS | 2 | | **5850–** | | | |
| 36 | 2120-2166D58 | BOLT | BOULON A 6 PANS | 1 | | | | | |
| 37 | **K1017271** | **PLATE** | PLAQUE | 2 | | **5089–5849** | | | |

| DATE | JUN. 30, 2007 |
|---|---|
| REV.NO. | EXB07-06 |

# Fig. 1450 CABIN MOUNTING
# SUPPORT DE CABINE

**Serial No. ;**

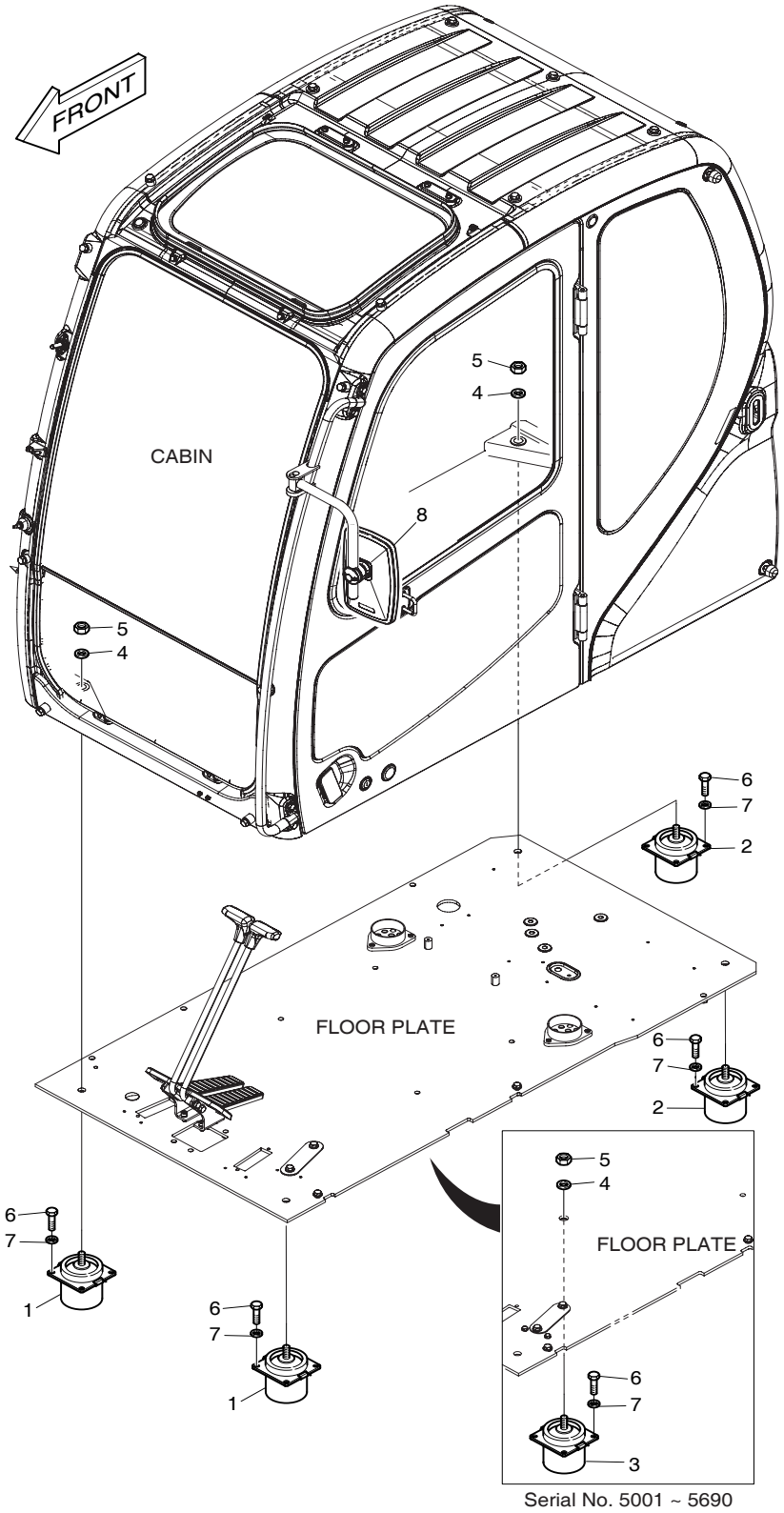


Serial No. 5001 ~ 5690

| DATE | JUN. 30, 2007 |
|---|---|
| REV. NO. | EXB07-06 |

# Fig. 1450 CABIN MOUNTING SUPPORT DE CABINE

**Serial No. ;**

| Key No. | Part No. | Description | Description | Q'ty | S.C | Serial No. | ICA | Replaceable part | |
|---|---|---|---|---|---|---|---|---|---|
| | | | | | | | | Part No. | Q'ty |
| 1450-- | 621-03223 | CABIN MOUNT | SUPPORT DE CABINE | - | D | | | | |
| 1 | 2161-9057 | RUBBER;MOUNT(FRONT) | SUPPORT | 2 | | | | | |
| 2 | 2161-9058 | RUBBER;MOUNT(REAR) | SUPPORT | 2 | | | | | |
| 3 | **K1000043** | **RUBBER;CABIN MOUNT** | CAOUTCHOUC | 1 | | **5001–5690** | | | |
| 4 | 2114-1058D2 | WASHER | RONDELLE | 5 | | 5001–5690 | | | |
| | **2114-1058D2** | **WASHER** | RONDELLE | 4 | | **5691–** | | | |
| 5 | 2121-9007 | NUT | ECROU | 5 | | 5001–5690 | | | |
| | **2121-9007** | **NUT** | ECROU | 4 | | **5691–** | | | |
| 6 | 2120-2166D2 | BOLT | BOULON | 20 | | 5001–5690 | | | |
| | **2120-2166D2** | **BOLT** | BOULON | 16 | | **5691–** | | | |
| 7 | 2114-1898D1 | WASHER | RONDELLE | 20 | | 5001–5690 | | | |
| | **2114-1898D1** | **WASHER** | RONDELLE | 16 | | **5691–** | | | |
| 8 | 903-00068 | MIRROR;SIDE | RETROVISEUR | 1 | | 5001–5815 | I | K1040606 | 1 |
| | **K1040606** | **MIRROR;SIDE** | RETROVISEUR | 1 | | **5816–** | | | |

| DATE | JUN. 30, 2007 |
|---|---|
| REV.NO. | EXB07-06 |

# Fig. 1460 CABIN(1)
# CABINE

**Serial No. ;**

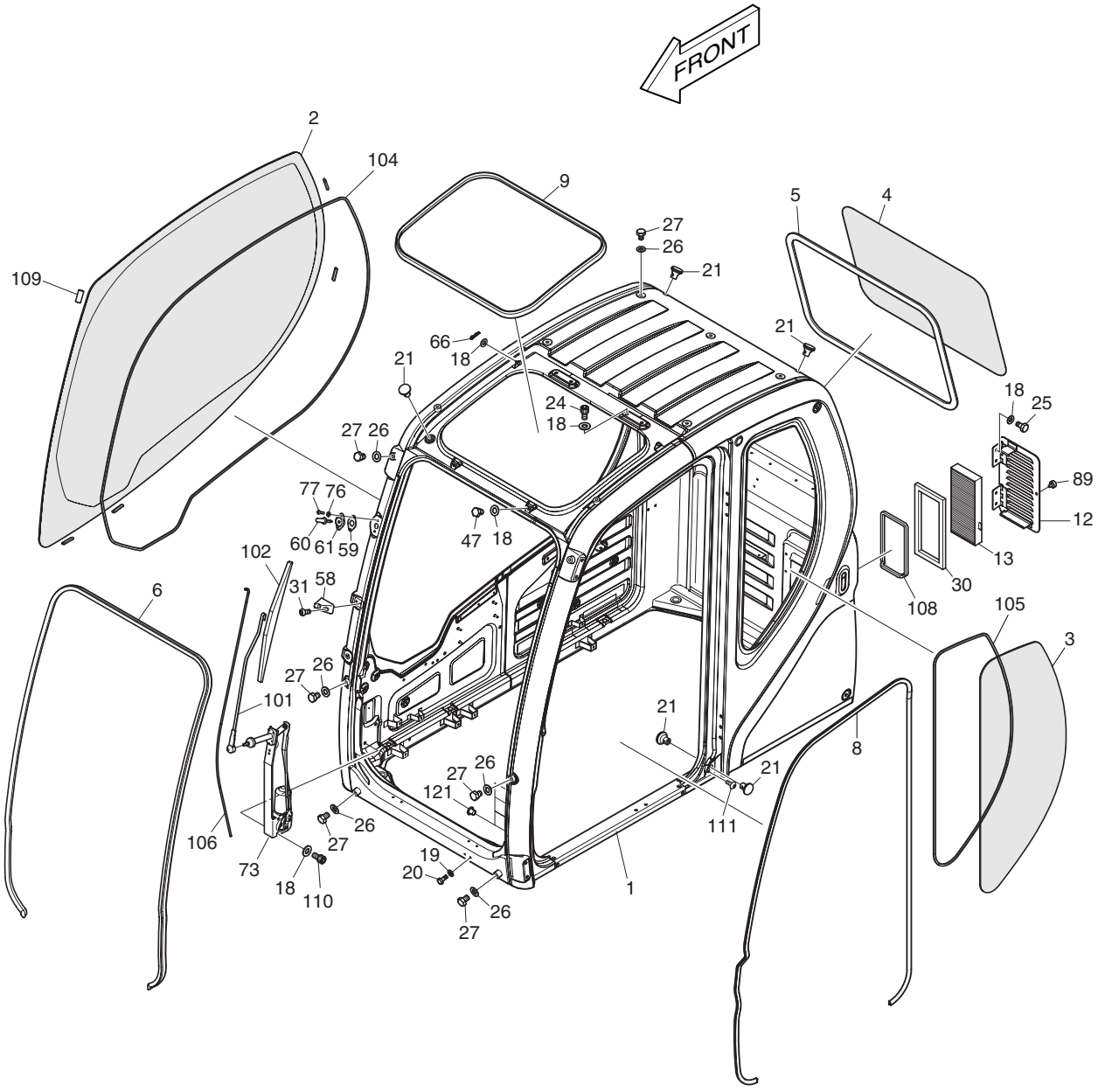

| DATE | JUN. 30, 2007 |
|---|---|
| REV. NO. | EXB07-06 |

# Fig. 1460 CABIN(1) CABINE

**Serial No. ;**

| Key No. | Part No. | Description | Description | Q'ty | S.C | Serial No. | ICA | Replaceable part | |
|---|---|---|---|---|---|---|---|---|---|
| | | | | | | | | Part No. | Q'ty |
| 1460-- | 622-00351E | CABIN ASS'Y | CABINE | 1 | | 5001–5088 | I | 622-00351G | 1 |
| | 622-00351G | CABIN ASS'Y | CABINE | 1 | | 5089–5410 | I | 622-00351H | 1 |
| | **622-00351H** | **CABIN ASS'Y** | CABINE | 1 | | **5411–5501** | I | 622-00351J | 1 |
| | **622-00351J** | **CABIN ASS'Y** | CABINE | 1 | | **5502–5756** | I | 622-00351K | 1 |
| | **622-00351K** | **CABIN ASS'Y** | CABINE | 1 | | **5757–** | | | |
| 1 | - | BODY;CABIN | CARTER | 1 | D | | | | |
| 2 | 903-00072A | GLASS;RH | VITRE | 1 | | | | | |
| 3 | 903-00073A | GLASS;LH REAR | VITRE | 1 | | | | | |
| 4 | 903-00075 | GLASS;REAR | VITRE | 1 | | | | | |
| 5 | 198-00054A | TRIM;REAR GLASS | CANAL | 1 | | | | | |
| 6 | 162-00035A | STRIP;WEATHER | TAMPON | 1 | | | | | |
| 8 | 162-00039A | STRIP;BODY | TAMPON | 1 | | | | | |
| 9 | 162-00038 | TRIM;ROOF | CANAL | 1 | | | | | |
| 12 | 621-02864 | COVER;FRESH AIR ASM | COUVERCLE | 1 | | | | | |
| 13 | 471-00119 | FILTER;FRESH AIR | FILTRE | 1 | | | | | |
| 18 | 2114-1898D14 | WASHER;PLAIN | RONDELLE PAQUE | 15 | | | | | |
| 19 | 2114-1898D3 | WASHER;PLAIN | RONDELLE | 2 | | | | | |
| 20 | 2120-2166D28 | BOLT | BOULON A 6 PANS | 2 | | | | | |
| 21 | 2160-1310 | RUBBER;BUSHING | GARNISSAGE | 5 | | | | | |
| 24 | S2208561 | BOLT | BOULON A 6 PANS | 4 | | | | | |
| 25 | 2120-2166D12 | BOLT | BOULON A 6 PANS | 4 | | | | | |
| 26 | 2114-1898D6 | WASHER;PLAIN | RONDELLE | 13 | | | | | |
| 27 | 2120-2166D37 | BOLT | BOULON A 6 PANS | 13 | | | | | |
| 30 | 161-00640 | SPONGE | EPONGE | 1 | | 5001–5410 | I | 161-00640A | 1 |
| | **161-00640A** | **SPONGE** | EPONGE | 1 | | **5411–** | | | |
| 31 | 2120-2166D7 | SCREW | BOULON A 6 PANS | 2 | | | | | |
| 47 | 2120-2166D5 | BOLT | BOULON A 6 PANS | 2 | | | | | |
| 58 | 195-02729 | BRACKET;BLADE | SUPPORT | 1 | | | | | |
| 59 | 161-00598A | RUBBER;WASHER NOZZLE | RUBBER;WASHER NOZZLE | 1 | | | | | |
| 60 | 554-00005 | NOZZLE;WASHER | INJECTEUR | 1 | | | | | |
| 61 | 621-02837A | COVER;WASHER NOZZLE | COUVERCLE | 1 | | | | | |
| 66 | 123-00523 | PIN;GAS-SPRING | GOUJON | 2 | | | | | |
| 73 | 538-00011 | MOTOR;WIPER | MOTEUR | 1 | | | | | |
| 76 | 2114-1898D13 | WASHER;PLAIN | RONDELLE PLATE | 2 | | | | | |
| 77 | 2120-2166D26 | SCREW | BOULON A 6 PANS | 2 | | | | | |
| 89 | K1003427 | BOLT;KNOB | BOULON A 6 PANS | 1 | | | | | |
| 101 | 541-00015 | ARM;WIPER | BALANCIER | 1 | | | | | |
| 102 | 507-00006 | BLADE;WIPER | LAME | 1 | | | | | |

| DATE | JUN. 30, 2007 |
|---|---|
| REV.NO. | EXB07-06 |

# Fig. 1460 CABIN(1)
# CABINE

**Serial No. ;**

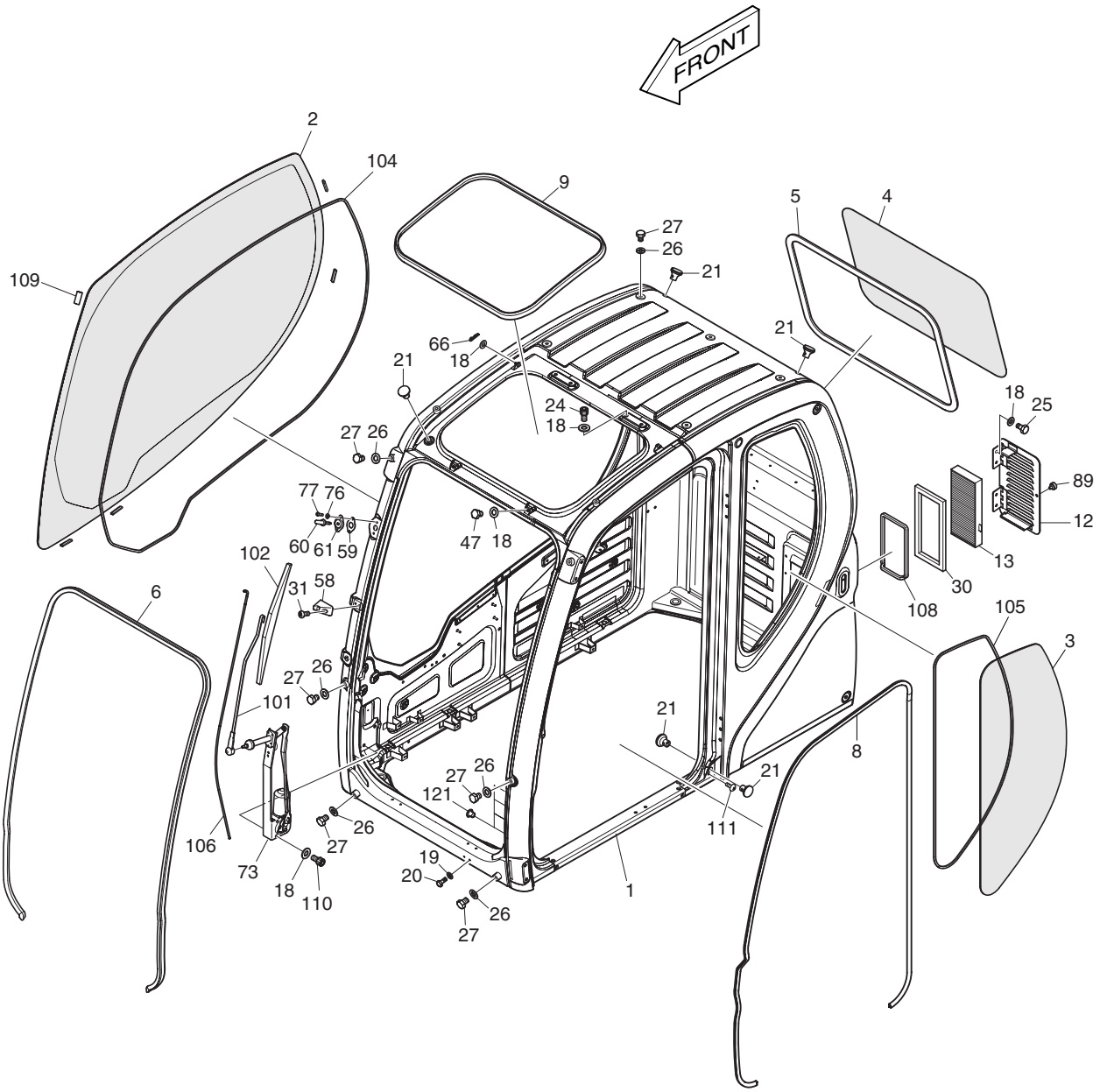

| DATE | JUN. 30, 2007 |
|---|---|
| REV. NO. | EXB07-06 |

# Fig. 1460 CABIN(1) CABINE

**Serial No. ;**

| Key No. | Part No. | Description | Description | Q'ty | S.C | Serial No. | ICA | Replaceable part | |
|---|---|---|---|---|---|---|---|---|---|
| | | | | | | | | Part No. | Q'ty |
| 1460-104 | K1002635 | DAMPER | REGISTRE | 1 | | | | | |
| 105 | K1002636 | DAMPER | REGISTRE | 1 | | | | | |
| 106 | 2185-1660 | HOSE | TUYAU FLEXIBLE | 1 | | | | | |
| 108 | K1004061 | FOAM | EPONGE | 1 | | | | | |
| 109 | K1003522 | STOPPER | TAQUET D'ARRET | 5 | | | | | |
| 110 | S2208466 | BOLT;SOCKET | BOULON A 6 PANS CREUX | 3 | | | | | |
| 111 | 2120-2166D53 | BOLT | VIS | 1 | | | | | |
| 121 | **160-00074A** | **CAP** | CHAPEAU | 4 | | **5411–5501** | | | |
| | **160-00074A** | **CAP** | CHAPEAU | 2 | | **5502–** | | | |

| DATE | JUN. 30, 2007 |
|---|---|
| REV.NO. | EXB07-06 |

# Fig. 1470 CABIN(2)
# CABINE

**Serial No. ;**

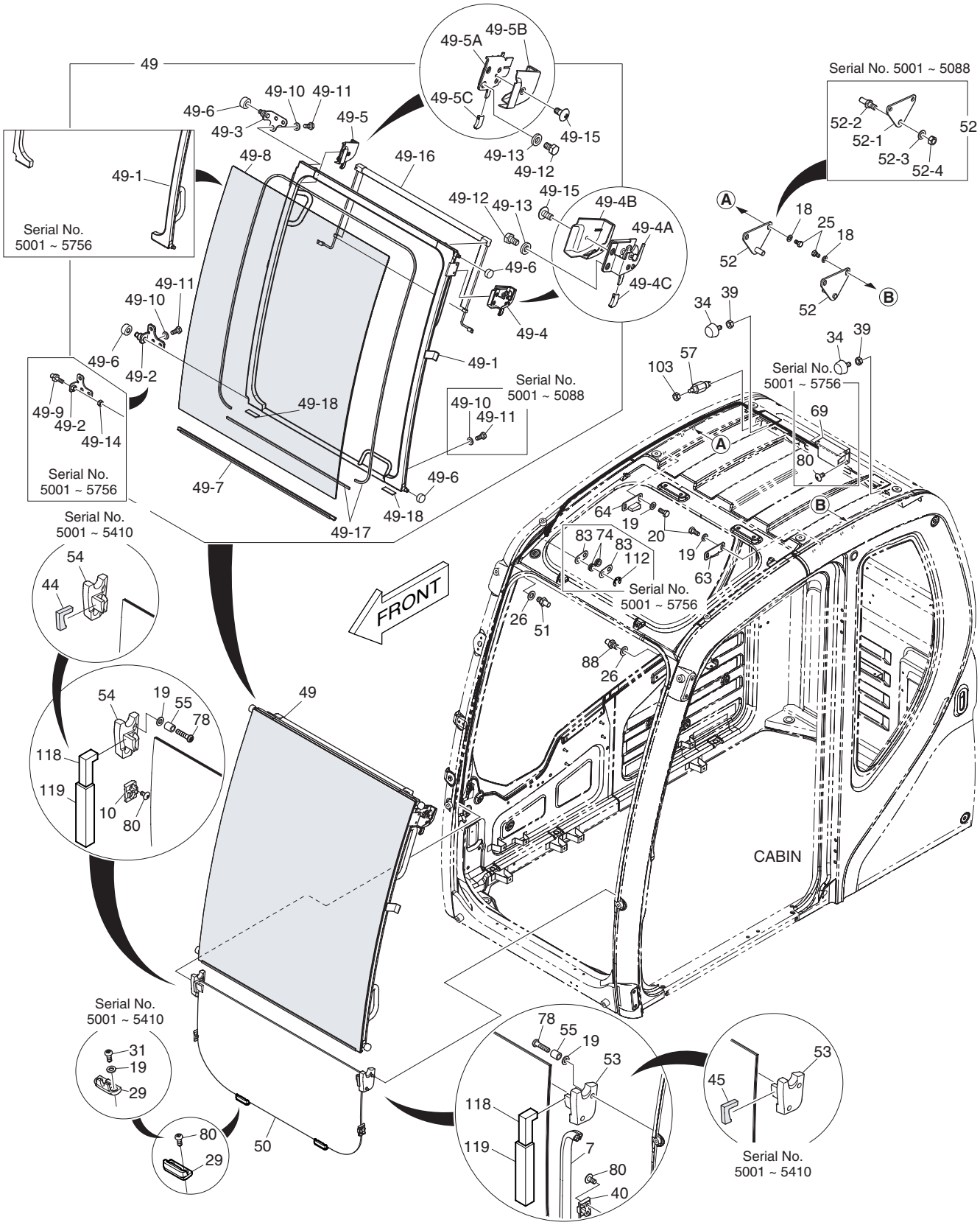

| DATE | JUN. 30, 2007 |
|---|---|
| REV. NO. | EXB07-06 |

# Fig. 1470 CABIN(2) CABINE

Serial No. ;

| Key No. | Part No. | Description | Description | Q'ty | S.C | Serial No. | ICA | Replaceable part | |
|---|---|---|---|---|---|---|---|---|---|
| | | | | | | | | Part No. | Q'ty |
| 1470-- | 622-00351E | CABIN ASS'Y | CABINE | 1 | | 5001–5088 | I | 622-00351G | 1 |
| | 622-00351G | CABIN ASS'Y | CABINE | 1 | | 5089–5410 | I | 622-00351H | 1 |
| | **622-00351H** | **CABIN ASS'Y** | CABINE | 1 | | **5411–5501** | I | 622-00351J | 1 |
| | **622-00351J** | **CABIN ASS'Y** | CABINE | 1 | | **5502–5756** | I | 622-00351K | 1 |
| | **622-00351K** | **CABIN ASS'Y** | CABINE | 1 | | **5757–** | | | |
| 7 | 162-00034B | STRIP;WEATHER | TAMPON | 1 | | | | | |
| 10 | 416-00018A | STOPPER;GLASS LOWER RH | TAQUET D'ARRET | 1 | | | | | |
| 18 | 2114-1898D14 | WASHER;PLAIN | RONDELLE PAQUE | 4 | | | | | |
| 19 | 2114-1898D3 | WASHER;PLAIN | RONDELLE | 12 | | 5001–5410 | | | |
| | **2114-1898D3** | **WASHER;PLAIN** | RONDELLE | 8 | | **5411–** | | | |
| 20 | 2120-2166D28 | BOLT;HEX | BOULON A 6 PANS | 4 | | | | | |
| 25 | 2120-2166D12 | BOLT;HEX | BOULON A 6 PANS | 4 | | | | | |
| 26 | 2114-1898D6 | WASHER;PLAIN | RONDELLE | 2 | | | | | |
| 29 | 416-00019A | STOPPER;LOWER | TAQUET D'ARRET | 2 | | 5001–5410 | I | 416-00019B | 2 |
| | **416-00019B** | **STOPPER;LOWER** | TAQUET D'ARRET | 2 | | **5411–** | | | |
| 31 | **2120-2166D7** | **SCREW** | BOULON A 6 PANS | 4 | | **5001–5410** | | | |
| 34 | 161-00195 | STOPPER;SLIDE DOOR BACK | ARRET | 2 | | | | | |
| 39 | 2121-1311D4 | NUT | ECROU | 2 | | | | | |
| 40 | 416-00020 | STOPPER;GLASS LOWER LH | TAQUET D'ARRET | 1 | | | | | |
| 44 | **116-00110** | **FOAM;SIDE RH** | EPONGE | 1 | | **5001–5410** | | | |
| 45 | **116-00111** | **FOAM;SIDE LH** | EPONGE | 1 | | **5001–5410** | | | |
| 49 | 622-00359E | DOOR;SLIDE | VERROU | 1 | | 5001–5088 | I | 622-00359G | 1 |
| | 622-00359G | DOOR;SLIDE | VERROU | 1 | | 5089–5410 | I | 622-00359H | 1 |
| | **622-00359H** | **DOOR;SLIDE** | VERROU | 1 | | **5411–5501** | I | 622-00359J | 1 |
| | **622-00359J** | **DOOR;SLIDE** | VERROU | 1 | | **5502–5756** | I | 622-00359K | 1 |
| | **622-00359K** | **DOOR;SLIDE** | VERROU | 1 | | **5757–** | | | |
| 49-1 | 622-00360C | . PANEL ASS'Y | . PANNEAU | 1 | | 5001–5088 | I | 622-00360E | 1 |
| | 622-00360E | . PANEL ASS'Y | . PANNEAU | 1 | | 5089–5410 | I | 622-00360G | 1 |
| | **622-00360G** | **. PANEL ASS'Y** | . PANNEAU | 1 | | **5411–5501** | I | 622-00360H | 1 |
| | **622-00360H** | **. PANEL ASS'Y** | . PANNEAU | 1 | | **5502–5756** | | | |
| | **K1033991** | **. PANEL ASS'Y** | . PANNEAU | 1 | | **5757–** | | | |
| 49-2 | 195-02739A | . BRACKET;RH LOWER ROLLER | . SUPPORT | 1 | | 5001–5088 | I | 195-02739B | 1 |
| | 195-02739B | . BRACKET;RH LOWER ROLLER | . SUPPORT | 1 | | 5089–5756 | I | 195-02739C | 1 |
| | **195-02739C** | **. BRACKET;RH LOWER** | . SUPPORT | 1 | | **5757–** | | | |
| 49-3 | 195-02740B | . BRACKET;RH ROLLER UPPER | . SUPPORT | 1 | | 5001–5088 | I | 195-02740C | 1 |
| | 195-02740C | . BRACKET;RH ROLLER UPPER | . SUPPORT | 1 | | 5089–5756 | I | 195-02740E | 1 |
| | **195-02740E** | **. BRACKET;RH ROLLER** | . SUPPORT | 1 | | **5757–** | | | |
| 49-4 | 125-00096A | . CATCH ASS'Y;SLIDE DOOR LH | . LOQUET | 1 | | | | | |

| DATE | JUN. 30, 2007 |
|---|---|
| REV.NO. | EXB07-06 |

# Fig. 1470 CABIN(2)
# CABINE

**Serial No. ;**

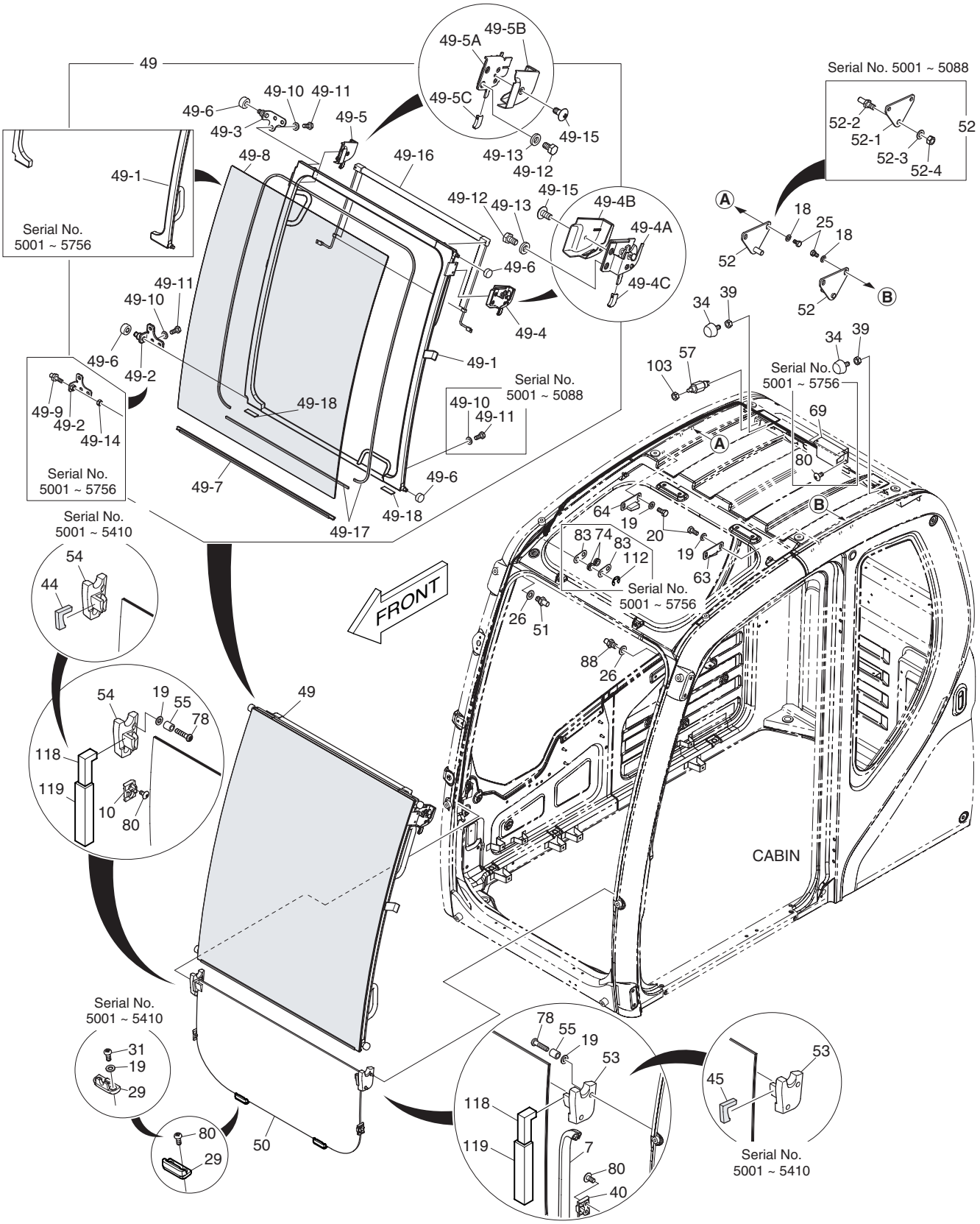

| DATE | JUN. 30, 2007 |
|---|---|
| REV. NO. | EXB07-06 |

# Fig. 1470 CABIN(2) CABINE

Serial No. ;

| Key No. | Part No. | Description | Description | Q'ty | S.C | Serial No. | ICA | Replaceable part | |
|---|---|---|---|---|---|---|---|---|---|
| | | | | | | | | Part No. | Q'ty |
| 1470-49-4A | 125-00073B | .. CATCH;LH | .. LOQUET | 1 | | | | | |
| 49-4B | 621-03724 | .. COVER;CATCH LH | .. COUVERCLE | 1 | | | | | |
| 49-4C | 133-00248 | .. KNOB;SLIDE DOOR CATCH | .. BOUTON | 1 | | | | | |
| 49-5 | 125-00097A | . CATCH ASM;SLIDE DOOR RH | . LOQUET | 1 | | | | | |
| 49-5A | 125-00074B | .. CATCH;RH | .. LOQUET | 1 | | | | | |
| 49-5B | 621-03725 | .. COVER;CATCH RH | .. COUVERCLE | 1 | | | | | |
| 49-5C | 133-00248 | .. KNOB;SLIDE DOOR CATCH | .. BOUTON | 1 | | | | | |
| 49-6 | 270-00054B | . ROLLER | . PLAIER | 4 | | | | | |
| 49-7 | 505-00016B | . BAR | . CAOUTCHOUC | 1 | | 5001–5756 | | | |
| | **K1036331** | **. BAR** | . CAOUTCHOUC | 1 | | **5757–** | | | |
| 49-8 | 903-00076A | . GLASS;FRONT UPPER | . VITRE | 1 | | 5001–5088 | I | 903-00076B | 1 |
| | 903-00076B | . GLASS;FRONT UPPER | . VITRE | 1 | | 5089–5756 | I | K1033880 | 1 |
| | **K1033880** | **. GLASS;FRONT UPPER** | . VITRE | 1 | | **5757–** | | | |
| 49-9 | **123-00522B** | **. PIN;SLIDE ROLLER RH** | . GOUPILLE | 1 | | **5001–5756** | | | |
| 49-10 | 2114-1898D3 | . WASHER;PLAIN | . RONDELLE | 9 | | 5001–5088 | | | |
| | 2114-1898D3 | . WASHER;PLAIN | . RONDELLE | 6 | | 5089– | | | |
| 49-11 | 2120-2166D28 | . BOLT | . BOULON A 6 PANS | 9 | | 5001–5088 | | | |
| | 2120-2166D28 | . BOLT | . BOULON A 6 PANS | 6 | | 5089– | | | |
| 49-12 | 2120-2166D12 | . BOLT | . BOULON A 6 PANS | 4 | | | | | |
| 49-13 | 2114-1898D2 | . WASHER | . RONDELLE | 4 | | | | | |
| 49-14 | **2121-1311D2** | **. NUT** | . ECROU | 1 | | **5001–5756** | | | |
| 49-15 | 2120-2166D52 | . SCREW | . BOULON A 6 PANS | 2 | | | | | |
| 49-16 | 474-00044A | . SUN SCREEN;FRONT | . LE SOLEIL | 1 | | | | | |
| 49-17 | K1002638 | . DAMPER | . REGISTRE | 1 | | 5001–5088 | I | K1002638A | 1 |
| | K1002638A | . DAMPER | . REGISTRE | 1 | | 5089–5756 | I | K1036967 | 1 |
| | **K1036967** | **. DAMPER** | . REGISTRE | 1 | | **5757–** | | | |
| 49-18 | K1006368 | . RUBBER | . CAOUTCHOUC | 2 | | | | | |
| 50 | 903-00074 | GLASS;FRONT LOWER | VITRE | 1 | | | | | |
| 51 | 142-00128B | STRIKER;RH | FRAPPER | 1 | | | | | |
| 52 | 142-00127B | STRIKER;SLIDE DOOR REAR | FRAPPER | 2 | | 5001–5088 | I | 142-00127C | 2 |
| | 142-00127C | STRIKER;SLIDE DOOR REAR | FRAPPER | 2 | | 5089– | | | |
| 52-1 | 191-03183B | . PLATE | . PLAQUE | 1 | | 5001–5088 | | | |
| 52-2 | 123-00515A | . BAR | . CAOUTCHOUC | 1 | | 5001–5088 | | | |
| 52-3 | 2114-1898D6 | . WASHER;PLAIN | . RONDELLE | 1 | | 5001–5088 | | | |
| 52-4 | 2121-1311D1 | . NUT | . ECROU | 1 | | 5001–5088 | | | |
| 53 | 116-00089A | STOPPER;RUBBER LH | TAQUET D'ARRET | 1 | | 5001–5410 | I | 116-00089B | 1 |
| | **116-00089B** | **STOPPER;RUBBER LH** | TAQUET D'ARRET | 1 | | **5411–** | | | |
| 54 | 116-00090A | STOPPER;RUBBER RH | TAQUET D'ARRET | 1 | | 5001–5410 | I | 116-00090B | 1 |

| DATE | JUN. 30, 2007 |
|---|---|
| REV.NO. | EXB07-06 |

# Fig. 1470 CABIN(2) CABINE

**Serial No. ;**

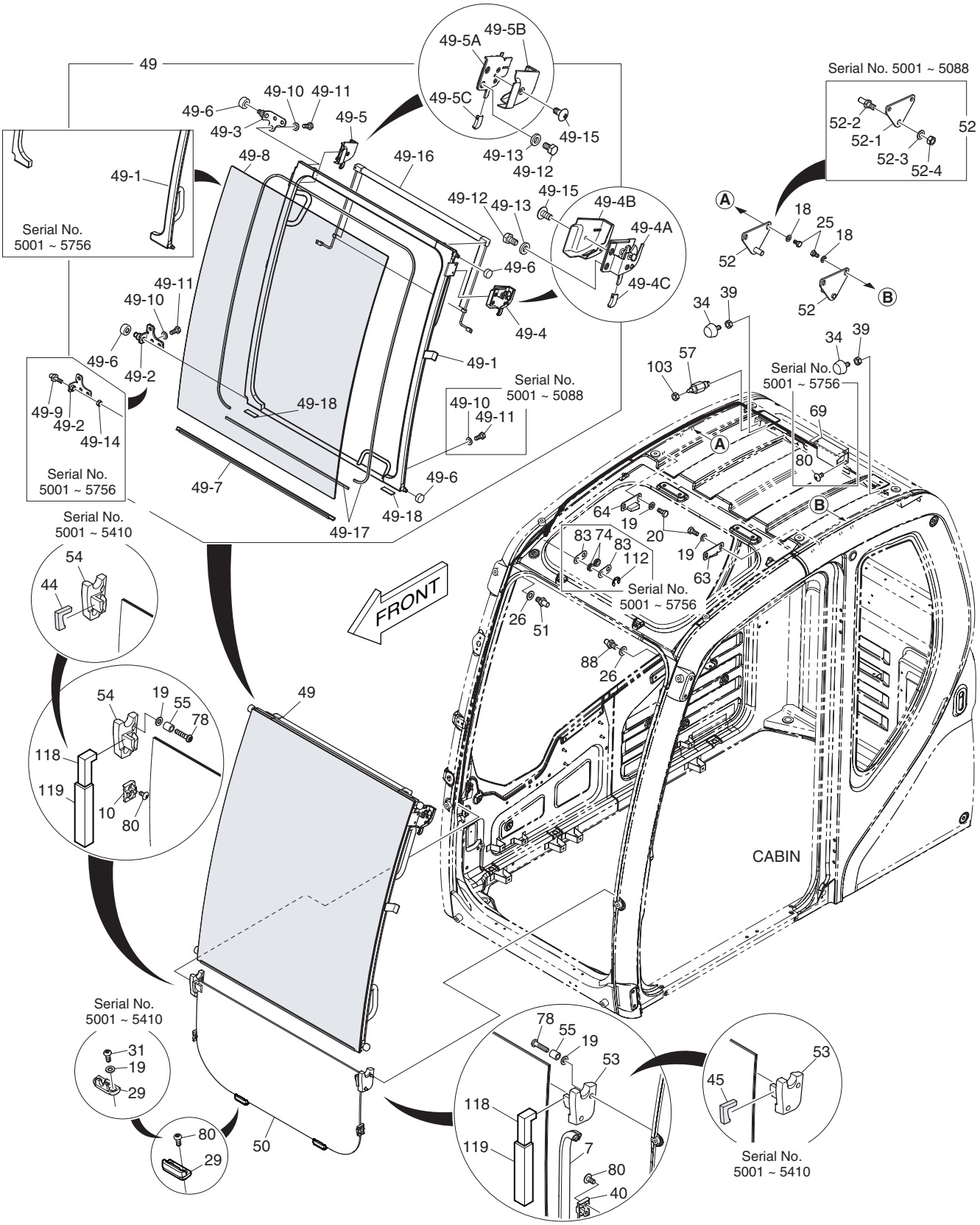

| DATE | JUN. 30, 2007 |
|---|---|
| REV. NO. | EXB07-06 |

# Fig. 1470 CABIN(2) CABINE

**Serial No. ;**

| Key No. | Part No. | Description | Description | Q'ty | S.C | Serial No. | ICA | Replaceable part | |
|---|---|---|---|---|---|---|---|---|---|
| | | | | | | | | Part No. | Q'ty |
| 1470-54 | **116-00090B** | **STOPPER;RUBBER RH** | TAQUET D'ARRET | 1 | | **5411–** | | | |
| 55 | 2140-1338 | PIPE;SPACER | TUYAU | 4 | | | | | |
| 57 | 549-00086 | SWITCH;SLIDE | INTERRUPTEUR | 1 | | | | | |
| 63 | 161-00618B | STOPPER;SLIDE DOOR OPEN | TAQUET D'ARRET | 1 | | | | | |
| 64 | 161-00619B | STOPPER;SLIDE DOOR OPEN | TAQUET D'ARRET | 1 | | | | | |
| 69 | **129-00155** | **SPRING;ASSIST** | RESSORT | 1 | | **5001–5756** | | | |
| 74 | **270-00062A** | **ROLLER;ASSIST CABLE** | GALET | 2 | | **5001–5756** | | | |
| 78 | S3450993 | SCREW | VIS | 4 | | | | | |
| 80 | 2120-2166D52 | SCREW | BOULON A 6 PANS | 6 | | 5001–5410 | | | |
| | **2120-2166D52** | **SCREW** | BOULON A 6 PANS | 10 | | **5411–5756** | | | |
| | **2120-2166D52** | **SCREW** | BOULON A 6 PANS | 8 | | **5757–** | | | |
| 83 | **191-03734A** | **PLATE;WASHER** | PLAQUE | 2 | | **5001–5756** | | | |
| 88 | K1003284 | STRIKER;LH | FRAPPER | 1 | | | | | |
| 103 | S4034833 | NUT | ECROU | 1 | | | | | |
| 112 | **S6540600** | **RING;RETAINER** | BAGUE CIRCLIPS | 2 | | **5001–5756** | | | |
| 118 | **K1027768** | **FOAM** | EPONGE | 2 | | **5411–** | | | |
| 119 | **K1027769** | **FOAM** | EPONGE | 2 | | **5411–** | | | |

| DATE | JUN. 30, 2007 |
|---|---|
| REV.NO. | EXB07-06 |

# Fig. 1480 CABIN(3) CABINE

**Serial No. ;**

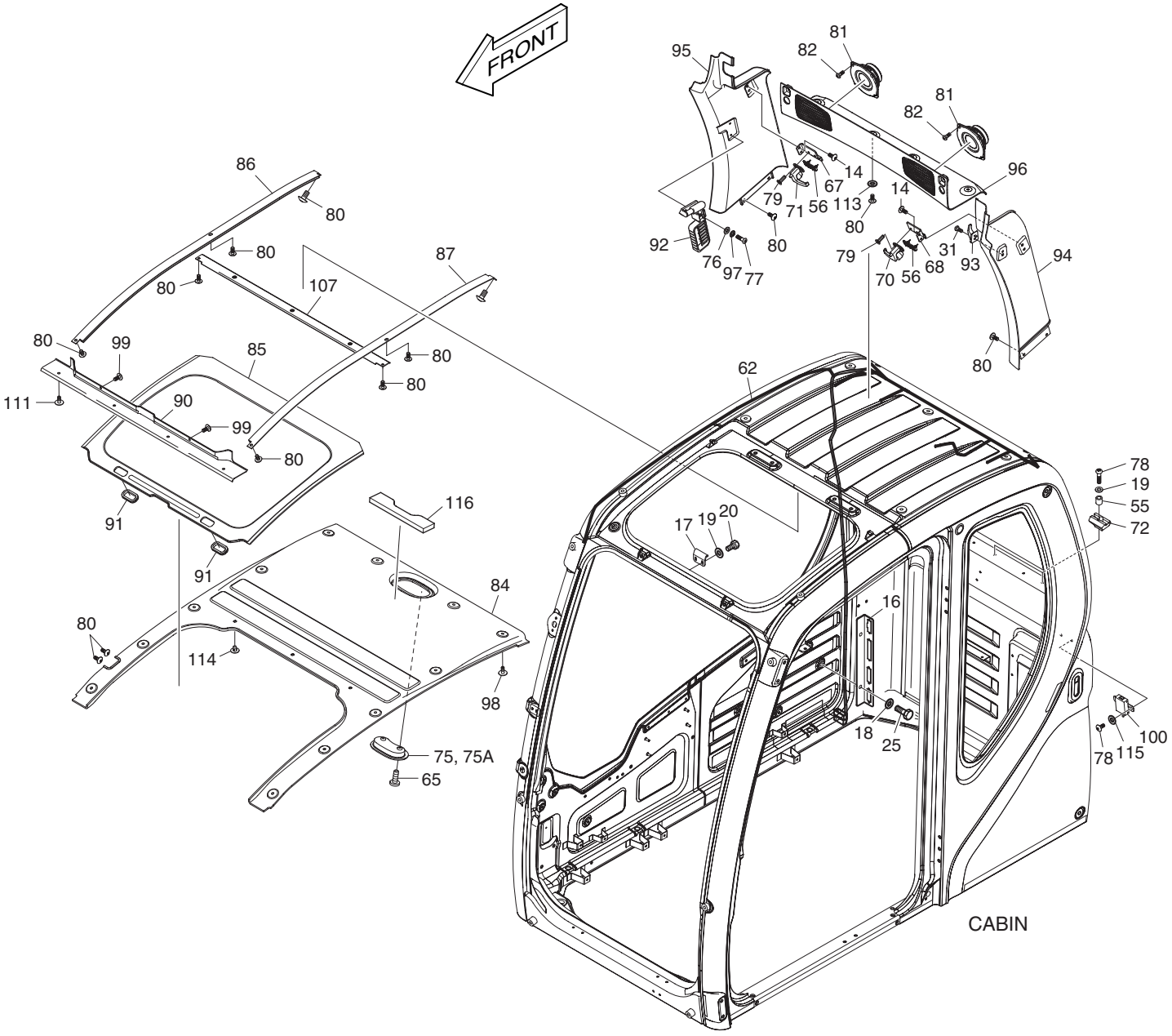

| DATE | JUN. 30, 2007 |
|---|---|
| REV. NO. | EXB07-06 |

# Fig. 1480 CABIN(3) CABINE

**Serial No. ;**

| Key No. | Part No. | Description | Description | Q'ty | S.C | Serial No. | ICA | Replaceable part | |
|---|---|---|---|---|---|---|---|---|---|
| | | | | | | | | Part No. | Q'ty |
| 1480-- | 622-00351E | CABIN ASS'Y | CABINE | 1 | | 5001–5088 | I | 622-00351G | 1 |
| | 622-00351G | CABIN ASS'Y | CABINE | 1 | | 5089–5410 | I | 622-00351H | 1 |
| | **622-00351H** | **CABIN ASS'Y** | CABINE | 1 | | **5411–5501** | I | 622-00351J | 1 |
| | **622-00351J** | **CABIN ASS'Y** | CABINE | 1 | | **5502–5756** | | | |
| | **622-00351K** | **CABIN ASS'Y** | CABINE | 1 | | **5757–** | | | |
| 14 | 2120-2166D10 | SCREW | VIS | 4 | | | | | |
| 16 | 191-03179 | PLATE;CONNECTOR | PLAQUE | 1 | | 5001–5088 | I | 191-03179A | 1 |
| | 191-03179A | PLATE;CONNECTOR | PLAQUE | 1 | | 5089– | | | |
| 17 | 191-03166C | STRIKER PLATE ROOF | TOIT DE PLAT DE BUTEE | 1 | | | | | |
| 18 | 2114-1898D14 | WASHER;PLAIN | RONDELLE PAQUE | 2 | | | | | |
| 19 | 2114-1898D3 | WASHER;PLAIN | RONDELLE | 4 | | | | | |
| 20 | 2120-2166D28 | BOLT | BOULON A 6 PANS | 2 | | | | | |
| 25 | 2120-2166D12 | BOLT | BOULON A 6 PANS | 2 | | | | | |
| 31 | 2120-2166D7 | SCREW | BOULON A 6 PANS | 1 | | | | | |
| 55 | 2140-1338 | PIPE;SPACER | TUYAU | 2 | | | | | |
| 56 | K1000794 | STOPPER;RUBBER | TAQUET D'ARRET | 2 | | | | | |
| 62 | 530-00417B | HARNESS;CABIN | FAISCEAU | 1 | | | | | |
| 65 | S3458843 | SCREW | VIS | 2 | | | | | |
| 67 | 621-03113B | PLATE;STOPPER (R.H) | TAQUET D'ARRET | 1 | | | | | |
| 68 | 621-03114B | PLATE;STOPPER (L.H) | TAQUET D'ARRET | 1 | | | | | |
| 70 | 125-00077 | LOCK;REAR GLASS (L.H) | SERRURE | 1 | | | | | |
| 71 | 125-00078 | LOCK;REAR GLASS (R.H) | SERRURE | 1 | | | | | |
| 72 | 2161-2212 | STOPPER;RUBBER | ARRET | 2 | | | | | |
| 75 | 534-00079 | ROOM LAMP | LAMPE | 1 | | | | | |
| 75A | 2515-1021D1 | . BULB | . LAMPE | 1 | | | | | |
| 76 | 2114-1898D13 | WASHER;PLAIN | RONDELLE PLATE | 2 | | | | | |
| 77 | 2120-2166D26 | SCREW | BOULON A 6 PANS | 2 | | | | | |
| 78 | S3450993 | SCREW | VIS | 4 | | | | | |
| 79 | S3452853 | SCREW | VIS | 4 | | | | | |
| 80 | 2120-2166D52 | SCREW | BOULON A 6 PANS | 20 | | | | | |
| 81 | 2541-9020 | SPEAKER | HAUT-PARLEUR | 2 | | | | | |
| 82 | S3450833 | SCREW | VIS | 8 | | | | | |
| 84 | 161-00609C | PAD;ROOF REAR | CAOUTCHOUC | 1 | | 5001–5756 | | | |
| | **161-00609E** | **PAD;ROOF REAR** | CAOUTCHOUC | 1 | | **5757–** | | | |
| 85 | 161-00610C | PAD;ROOF CENTER | CAOUTCHOUC | 1 | | 5001–5501 | I | 161-00610E | 1 |
| | **161-00610E** | **PAD;ROOF CENTER** | CAOUTCHOUC | 1 | | **5502–** | | | |
| 86 | 359-00022A | RAIL;ROOF PANEL RH | CHEMIN DE FER | 1 | | | | | |
| 87 | 359-00021A | RAIL;ROOF PANEL LH | CHEMIN DE FER | 1 | | | | | |

| DATE | JUN. 30, 2007 |
|---|---|
| REV.NO. | EXB07-06 |

# Fig. 1480 CABIN(3)
# CABINE

**Serial No. ;**

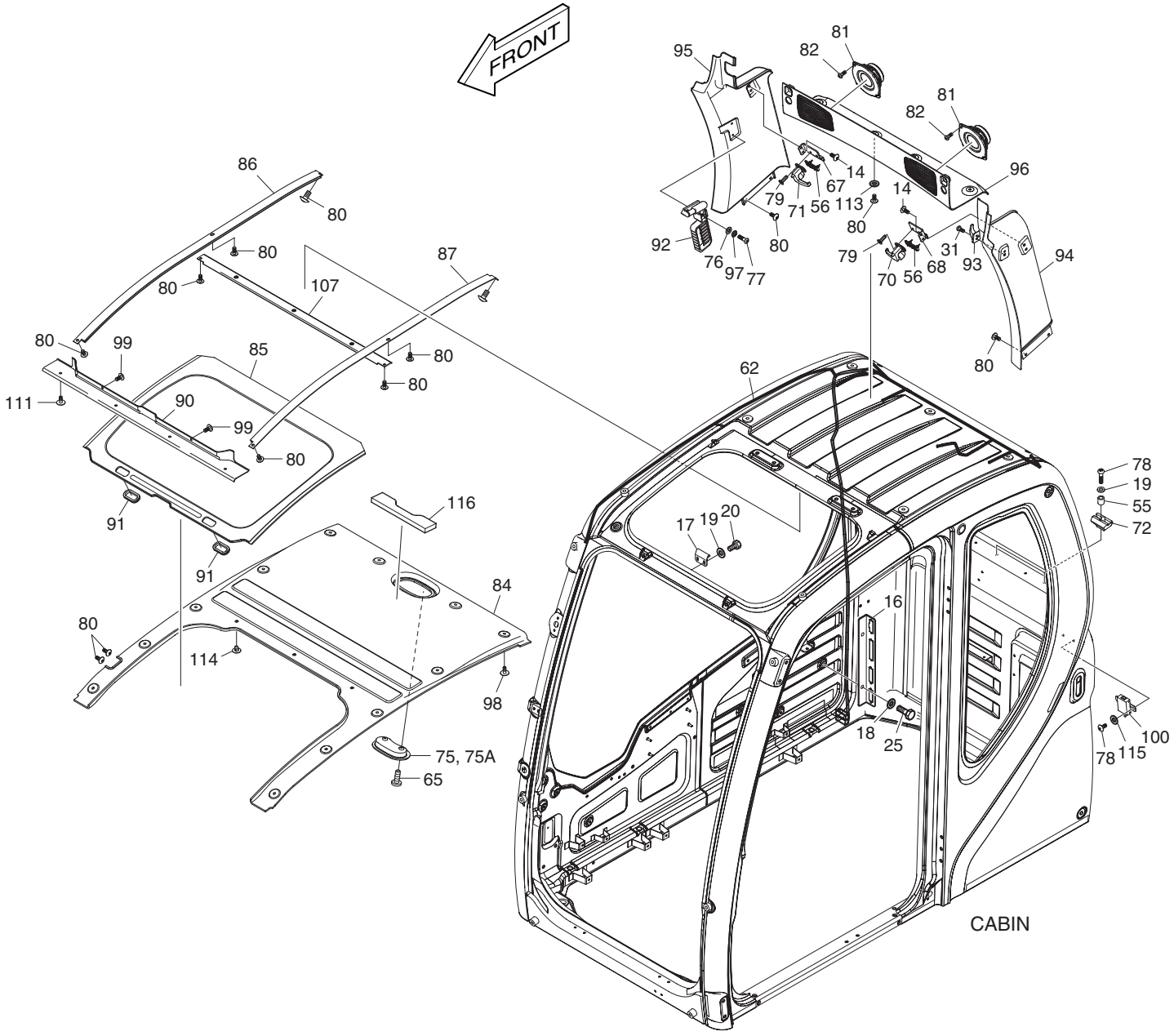

| DATE | JUN. 30, 2007 |
|---|---|
| REV. NO. | EXB07-06 |

# Fig. 1480 CABIN(3) CABINE

Serial No. ;

| Key No. | Part No. | Description | Description | Q'ty | S.C | Serial No. | ICA | Replaceable part | |
|---|---|---|---|---|---|---|---|---|---|
| | | | | | | | | Part No. | Q'ty |
| 1480-90 | 161-00613B | PAD;ROOF FRONT | CAOUTCHOUC | 1 | | | | | |
| 91 | 172-00055A | HANDLE;ROOF | POIGNEE | 2 | | | | | |
| 92 | 2199-9058 | HAMMER | MARTEAU | 1 | | | | | |
| 93 | 2150-1133 | HOOK;COAT | CROCHET | 1 | | | | | |
| 94 | 621-02910C | COVER;PILLAR LH | COUVERCLE | 1 | | | | | |
| 95 | 621-02911C | COVER;PILLAR RH | COUVERCLE | 1 | | | | | |
| 96 | 621-02912B | COVER;REAR UPPER | COUVERCLE | 1 | | | | | |
| 97 | 2114-2031D1 | WASHER;SPRING | RONDELLE ELASTIQUE | 2 | | | | | |
| 98 | K1006936 | SCRIVET | RIVET | 12 | | | | | |
| 99 | 2120-2166D18 | SCREW | VIS | 2 | | | | | |
| 100 | K1002641 | MODULE ASS'Y | MODULE | 1 | | | | | |
| 107 | K1003676B | PLATE | PLAQUE | 1 | | | | | |
| 111 | 2120-2166D53 | SCREW | VIS | 4 | | | | | |
| 113 | 2114-1898D5 | WASHER | RONDELE | 4 | | | | | |
| 114 | K1006933 | SCRIVET | RIVET | 3 | | | | | |
| 115 | S5010313 | WASHER | RONDELLE | 2 | | | | | |
| 116 | K1010839 | FORM | EPONGE | 1 | | | | | |

| DATE | JUN. 30, 2007 |
|---|---|
| REV.NO. | EXB07-06 |

# Fig. 1490 CABIN(4)
# CABINE

**Serial No. ;**

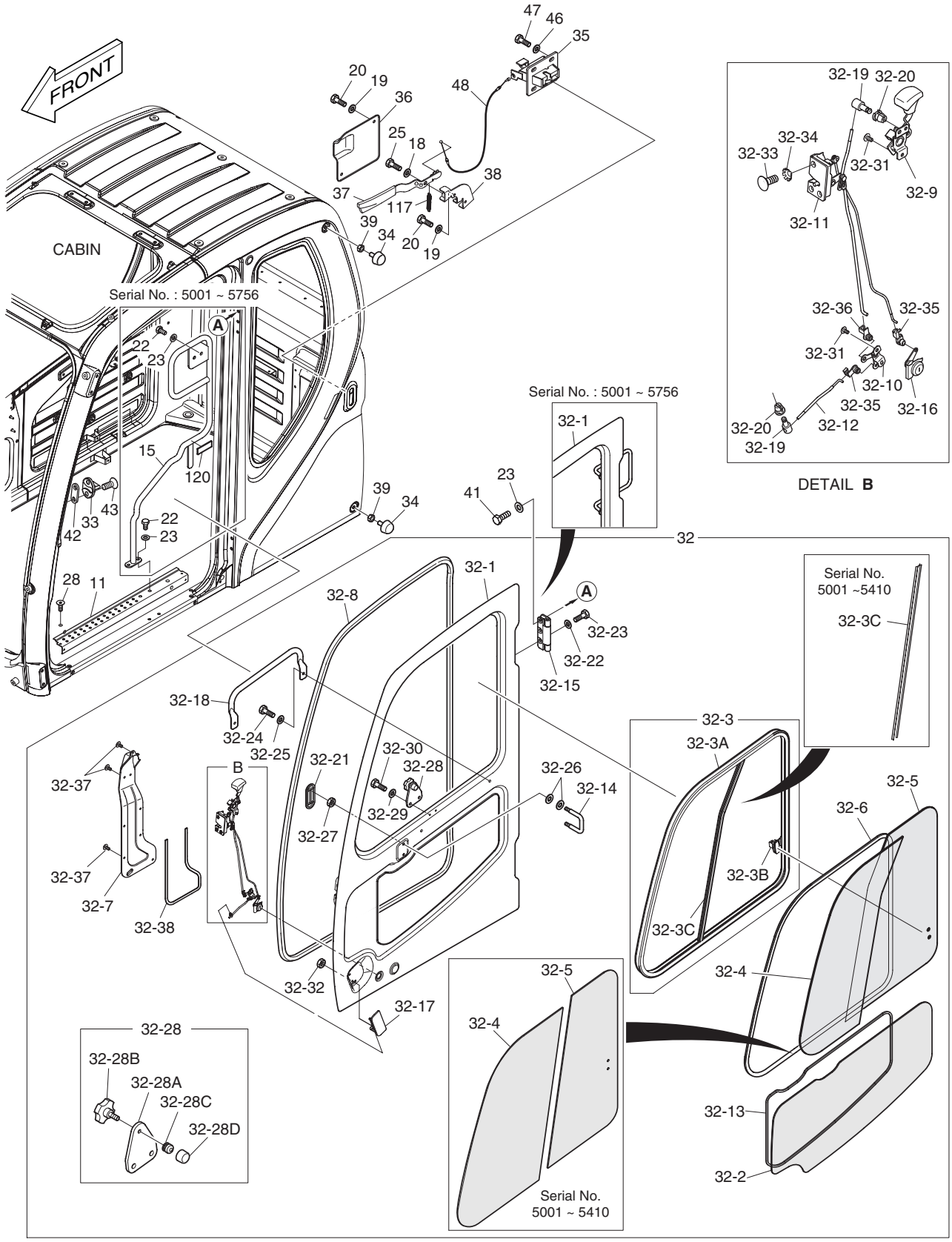

| DATE | JUN. 30, 2007 |
|---|---|
| REV. NO. | EXB07-06 |

# Fig. 1490 CABIN(4) CABINE

Serial No. ;

| Key No. | Part No. | Description | Description | Q'ty | S.C | Serial No. | ICA | Replaceable part | |
|---|---|---|---|---|---|---|---|---|---|
| | | | | | | | | Part No. | Q'ty |
| 1490-- | 622-00351E | CABIN ASS'Y | CABINE | 1 | | 5001–5088 | I | 622-00351G | 1 |
| | 622-00351G | CABIN ASS'Y | CABINE | 1 | | 5089–5410 | I | 622-00351H | 1 |
| | **622-00351H** | **CABIN ASS'Y** | CABINE | 1 | | **5411–5501** | I | 622-00351J | 1 |
| | **622-00351J** | **CABIN ASS'Y** | CABINE | 1 | | **5502–5756** | I | 622-00351K | 1 |
| | **622-00351K** | **CABIN ASS'Y** | CABINE | 1 | | **5757–** | | | |
| 11 | 625-00159B | STEP;CABIN DOOR | MARCHER | 1 | | | | | |
| 15 | 172-00052C | HANDLE;INNER | POIGNEE | 1 | | 5001–5410 | I | 172-00052E | 1 |
| | **172-00052E** | **HANDLE;INNER** | POIGNEE | 1 | | **5411–5756** | | | |
| 18 | 2114-1898D14 | WASHER;PLAIN | RONDELLE PAQUE | 1 | | | | | |
| 19 | 2114-1898D3 | WASHER;PLAIN | RONDELLE | 4 | | | | | |
| 20 | 2120-2166D28 | BOLT | BOULON A 6 PANS | 4 | | | | | |
| 22 | **2120-2166D4** | **BOLT** | BOULON A 6 PANS | 4 | | **5001–5756** | | | |
| 23 | 2114-1898D15 | WASHER;PLAIN | RONDELLE | 10 | | 5001–5756 | | | |
| | **2114-1898D15** | **WASHER;PLAIN** | RONDELLE | 6 | | **5757–** | | | |
| 25 | 2120-2166D12 | BOLT | BOULON A 6 PANS | 1 | | | | | |
| 28 | 2120-2150D3 | SCREW | BOULON A 6 PANS | 4 | | | | | |
| 32 | 622-00353E | DOOR ASS'Y | VERROU | 1 | | 5001–5410 | I | 622-00353G | 1 |
| | **622-00353G** | **DOOR ASS'Y** | VERROU | 1 | | **5411–5756** | I | 622-00353H | 1 |
| | **622-00353H** | **DOOR ASS'Y** | VERROU | 1 | | **5757–** | | | |
| 32-1 | - | . DOOR;BODY | . PORTE | 1 | D | | | | |
| 32-2 | 903-00069A | . GLASS;DOOR LOWER | . VITRE | 1 | | | | | |
| 32-3 | 622-00355 | . SASH ASS'Y | . CHASSIS | 1 | | 5001–5410 | | | |
| | **622-00355A** | **. SASH ASS'Y** | . CHASSIS | 1 | | **5411–** | | | |
| 32-3A | 622-00356 | .. FRAME ASS'Y;SASH | .. BATI | 1 | | | | | |
| 32-3B | 2123-6119 | .. LOCK;SASH | .. VERROU | 1 | | | | | |
| 32-3C | 162-00033 | .. BAR;CENTER | .. CAOUTCHOUC | 1 | | 5001–5410 | | | |
| | **162-00033A** | **.. BAR;CENTER** | .. CAOUTCHOUC | 1 | | **5411–** | | | |
| 32-4 | 903-00070A | . GLASS;SASH FRONT | . VITRE | 1 | | 5001–5410 | | | |
| | **903-00070B** | **. GLASS;SASH FRONT** | . VITRE | 1 | | **5411–** | | | |
| 32-5 | 903-00071A | . GLASS;SASH REAR | . VITRE | 1 | | 5001–5410 | | | |
| | **903-00071B** | **. GLASS;SASH REAR** | . VITRE | 1 | | **5411–** | | | |
| 32-6 | 161-00623 | . TRIM | . ATTACHE | 1 | | | | | |
| 32-7 | 621-02869B | . COVER;LOCK | . COUVERCLE | 1 | | | | | |
| 32-8 | 198-00053A | . RUBBER TRIM;DOOR INNER | . CAOUTCHOUC | 1 | | | | | |
| 32-9 | 133-00221 | . LEVER ASS'Y;INNER HANDLE | . LEVIER | 1 | | | | | |
| 32-10 | 137-00092 | . LINK;DOOR INNER | . PIECE DE JONCTION | 1 | | | | | |
| 32-11 | 125-00072 | . CATCH ASS'Y;DOOR INNER | . LOQUET | 1 | | | | | |
| 32-12 | 136-00055A | . ROD;OUTER HANDLE TO LINK | . TIGE | 1 | | | | | |

| DATE | JUN. 30, 2007 |
|---|---|
| REV.NO. | EXB07-06 |

# Fig. 1490 CABIN(4)
# CABINE

**Serial No. ;**

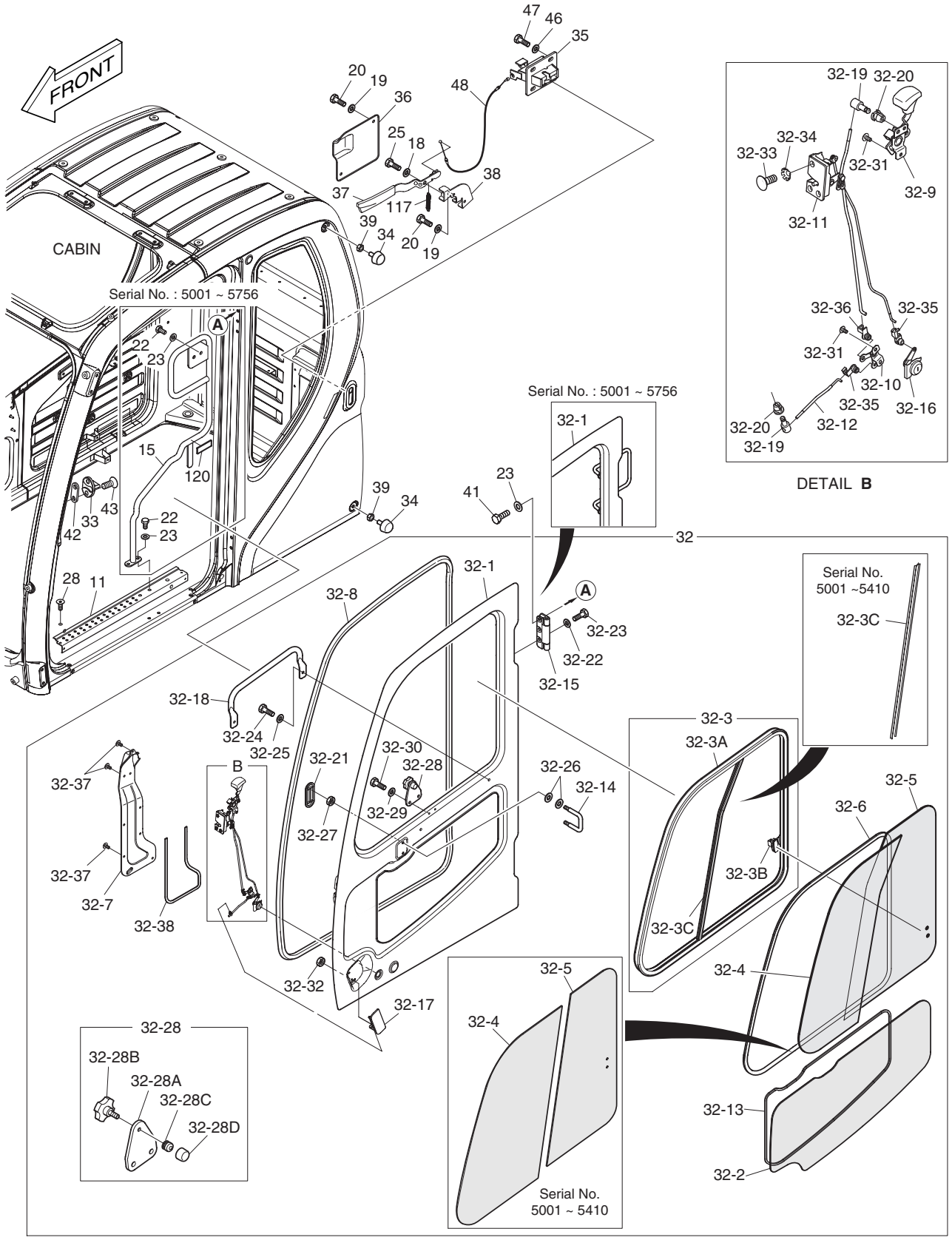

| DATE | JUN. 30, 2007 |
|---|---|
| REV. NO. | EXB07-06 |

# Fig. 1490 CABIN(4) CABINE

**Serial No. ;**

| Key No. | Part No. | Description | Description | Q'ty | S.C | Serial No. | ICA | Replaceable part | |
|---|---|---|---|---|---|---|---|---|---|
| | | | | | | | | Part No. | Q'ty |
| 1490-32-13 | K1002637 | . DAMPER | . REGISTRE | 1 | | | | | |
| 32-14 | 2150-1132A | . HOOK;CATCH DOOR | . FRAPPER | 1 | | | | | |
| 32-15 | 2171-1078 | . HINGE ASS'Y;DOOR | . CHARNIERE | 2 | | 5001–5410 | I | K1027765 | 2 |
| | **K1027765** | **. HINGE ASS'Y;DOOR** | . CHARNIERE | 2 | | **5411–** | | | |
| 32-16 | K1003900 | . KEY ASS'Y;DOOR | . CLE | 1 | | | | | |
| 32-17 | 2172-9021 | . HANDLE;OUTER | . POIGNEE | 1 | | | | | |
| 32-18 | 145-00124A | . STAY | . ENTRETOISE | 1 | | | | | |
| 32-19 | 2123-2247 | . PIN | . GOUJON | 2 | | | | | |
| 32-20 | 2124-1689A | . SNAP | . RUPTURE | 2 | | | | | |
| 32-21 | 621-02867A | . COVER;DOOR INNER | . COUVERCLE | 1 | | | | | |
| 32-22 | 2114-1898D15 | . WASHER;PLAIN | . RONDELLE | 6 | | | | | |
| 32-23 | 2120-2166D1 | . BOLT | . BOULON A 6 PANS | 6 | | | | | |
| 32-24 | 2120-2166D5 | . BOLT | . BOULON A 6 PANS | 2 | | | | | |
| 32-25 | 2114-1898D2 | . WASHER | . RONDELLE | 2 | | | | | |
| 32-26 | 2891-1311 | . PLATE | . PLAQUE | 4 | | | | | |
| 32-27 | S4012533 | . NUT;HEXAGON | . ECROU | 2 | | | | | |
| 32-28 | 161-00621B | . STOPPER;RUBBER | . TAQUET D'ARRET | 1 | | | | | |
| 32-28 | 191-03283 | .. PLATE;STOPPER | .. TAQUET D'ARRET | 1 | | | | | |
| 32-28 | 4132-1138 | .. KNOB | .. BOSSE | 1 | | | | | |
| 32-28 | 161-00620 | .. RUBBER;STOPPER | .. CAOUTCHOUC | 1 | | | | | |
| 32-28 | 116-00092A | .. STOPPER | .. TAQUET D'ARRET | 1 | | | | | |
| 32-29 | 2114-1898D3 | . WASHER;PLAIN | . RONDELLE | 2 | | | | | |
| 32-30 | 2120-2166D28 | . BOLT | . BOULON A 6 PANS | 2 | | | | | |
| 32-31 | 2120-2166D52 | . SCREW | . BOULON A 6 PANS | 5 | | | | | |
| 32-32 | S4012333 | . NUT | . ECROU M6X1.0 | 2 | | | | | |
| 32-33 | 2120-2150D3 | . SCREW | . BOULON A 6 PANS | 3 | | | | | |
| 32-34 | S5210303 | . WASHER;TOOTHED | . RONDELLE ELASTIQUE | 3 | | | | | |
| 32-35 | 124-00010 | . CLIP;ROD | . ATTACHE | 2 | | | | | |
| 32-36 | 124-00344 | . CLIP;ROD | . ATTACHE | 1 | | | | | |
| 32-37 | 2120-2166D53 | . SCREW | . VIS | 8 | | | | | |
| 32-38 | K1006370 | . FOAM | . EPONGE | 1 | | | | | |
| 33 | 2142-9005 | STRIKER;DOOR | FRAPPER | 1 | | | | | |
| 34 | 161-00195 | STOPPER;SLIDE DOOR BACK | ARRET | 2 | | | | | |
| 35 | 2125-9055 | LOCK;BACK | LOQUET | 1 | | | | | |
| 36 | 621-02849A | COVER;BACK LOCK INNER | COUVERCLE | 1 | | | | | |
| 37 | 133-00220E | LEVER;BACK LOCK | LEVIER | 1 | | | | | |
| 38 | 195-02719B | BRACKET;BACK LOCK | SUPPORT | 1 | | | | | |
| 39 | 2121-1311D4 | NUT | ECROU | 2 | | | | | |

| DATE | JUN. 30, 2007 |
|---|---|
| REV.NO. | EXB07-06 |

# Fig. 1490 CABIN(4)
# CABINE

**Serial No. ;**

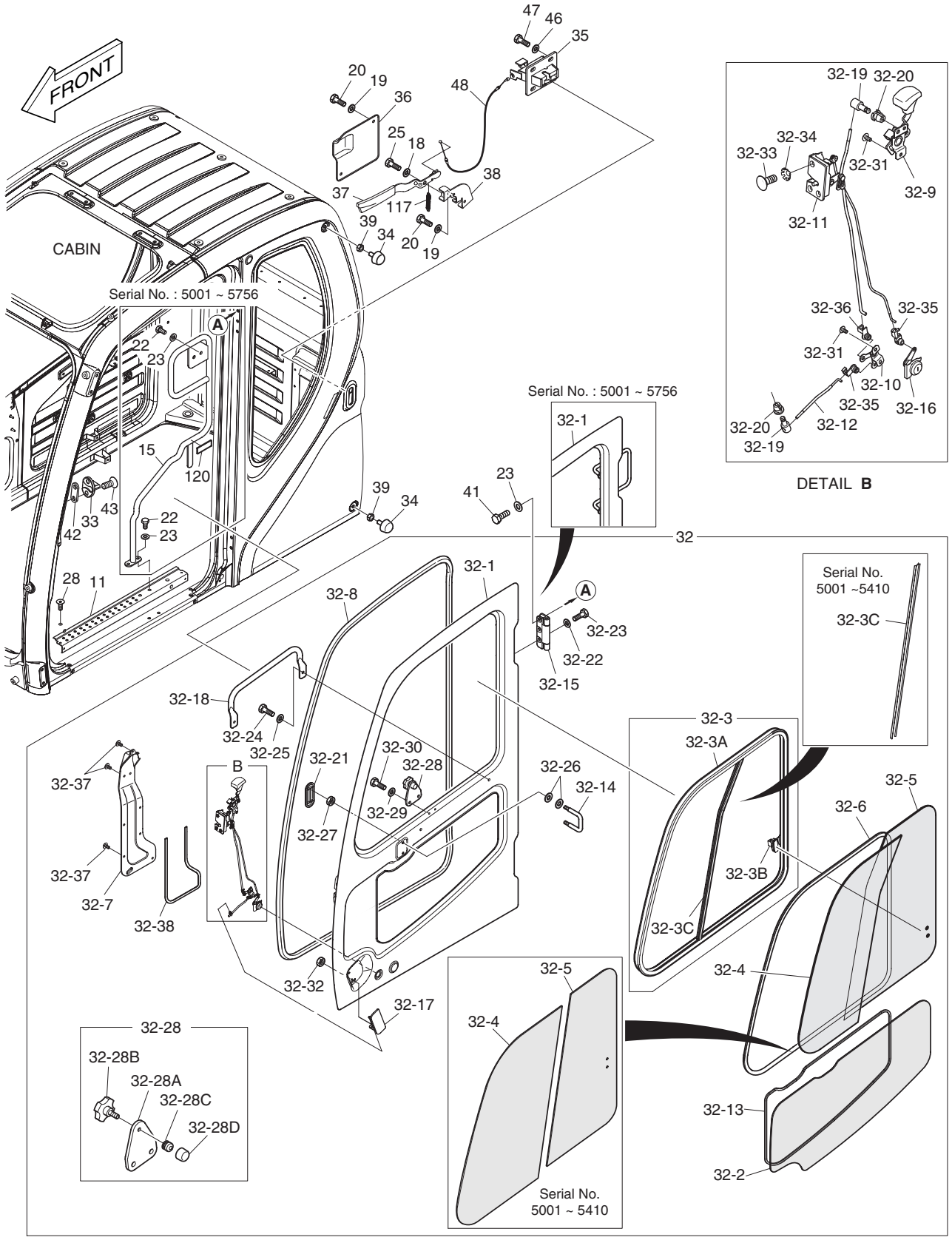

| DATE | JUN. 30, 2007 |
|---|---|
| REV. NO. | EXB07-06 |

# Fig. 1490 CABIN(4) CABINE

**Serial No. ;**

| Key No. | Part No. | Description | Description | Q'ty | S.C | Serial No. | ICA | Replaceable part | |
|---|---|---|---|---|---|---|---|---|---|
| | | | | | | | | Part No. | Q'ty |
| 1490-41 | 2120-2166D1 | BOLT | BOULON A 6 PANS | 6 | | | | | |
| 42 | 2114-1856 | SHIM;STRIKER | CALE | 1 | | | | | |
| 43 | 2120-2150D1 | BOLT | BOULON A 6 PANS | 2 | | | | | |
| 46 | 2114-1898D2 | WASHER | RONDELLE | 4 | | | | | |
| 47 | 2120-2166D5 | BOLT | BOULON A 6 PANS | 4 | | | | | |
| 48 | 2127-1002A | CABLE;BACK LOCK | CABLE | 1 | | | | | |
| 117 | **2129-1446** | **SPRING** | RESSORT | 1 | | **5411–** | | | |
| 120 | **K1006368** | **RUBBER** | CAOUTCHOUC | 1 | | **5411–5756** | | | |

| DATE | JUN. 30, 2007 |
|---|---|
| REV.NO. | EXB07-06 |

# Fig. 1495 HANDLE - CABIN HANDLE

**Serial No. ; 5757 ~**

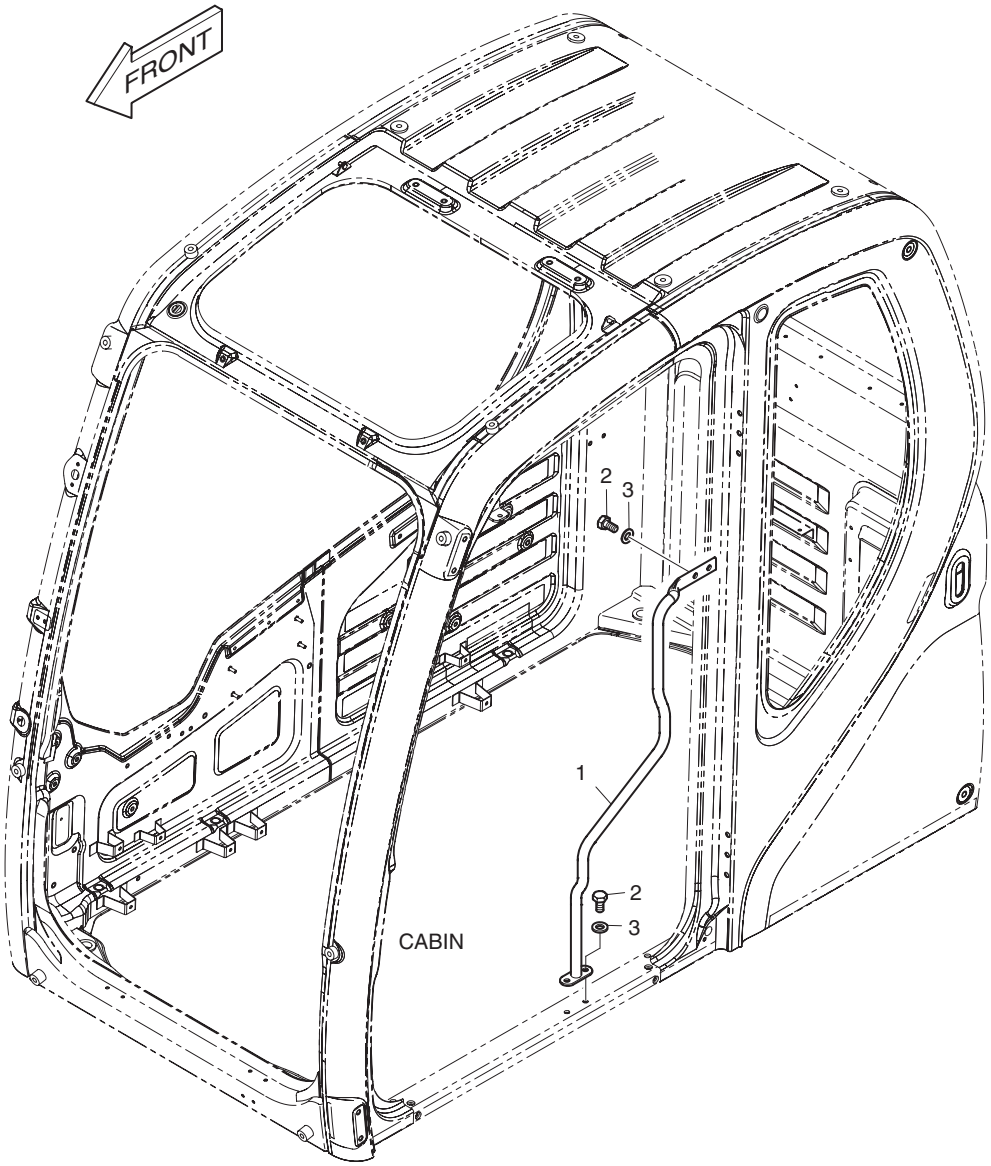

| DATE | JUN. 30, 2007 |
|---|---|
| REV. NO. | EXB07-06 |

# Fig. 1495 HANDLE - CABIN HANDLE

**Serial No. ; 5757 ~**

| Key No. | Part No. | Description | Description | Q'ty | S.C | Serial No. | ICA | Replaceable part | |
|---|---|---|---|---|---|---|---|---|---|
| | | | | | | | | Part No. | Q'ty |
| 1495-- | **K1038240** | **HANDLE ASS'Y** | HANDLE | - | D | **5757–** | | | |
| 1 | K1038247 | HANDLE | HANDLE | 1 | | | | | |
| 2 | 2120-2166D4 | BOLT | BOULON A 6 PANS | 4 | | | | | |
| 3 | 2114-1898D15 | WASHER | CALE | 4 | | | | | |

| DATE | JUN. 30, 2007 |
|---|---|
| REV.NO. | EXB07-06 |

# Fig. 1500 FLOOR MAT PLANCHER

**Serial No. ;**

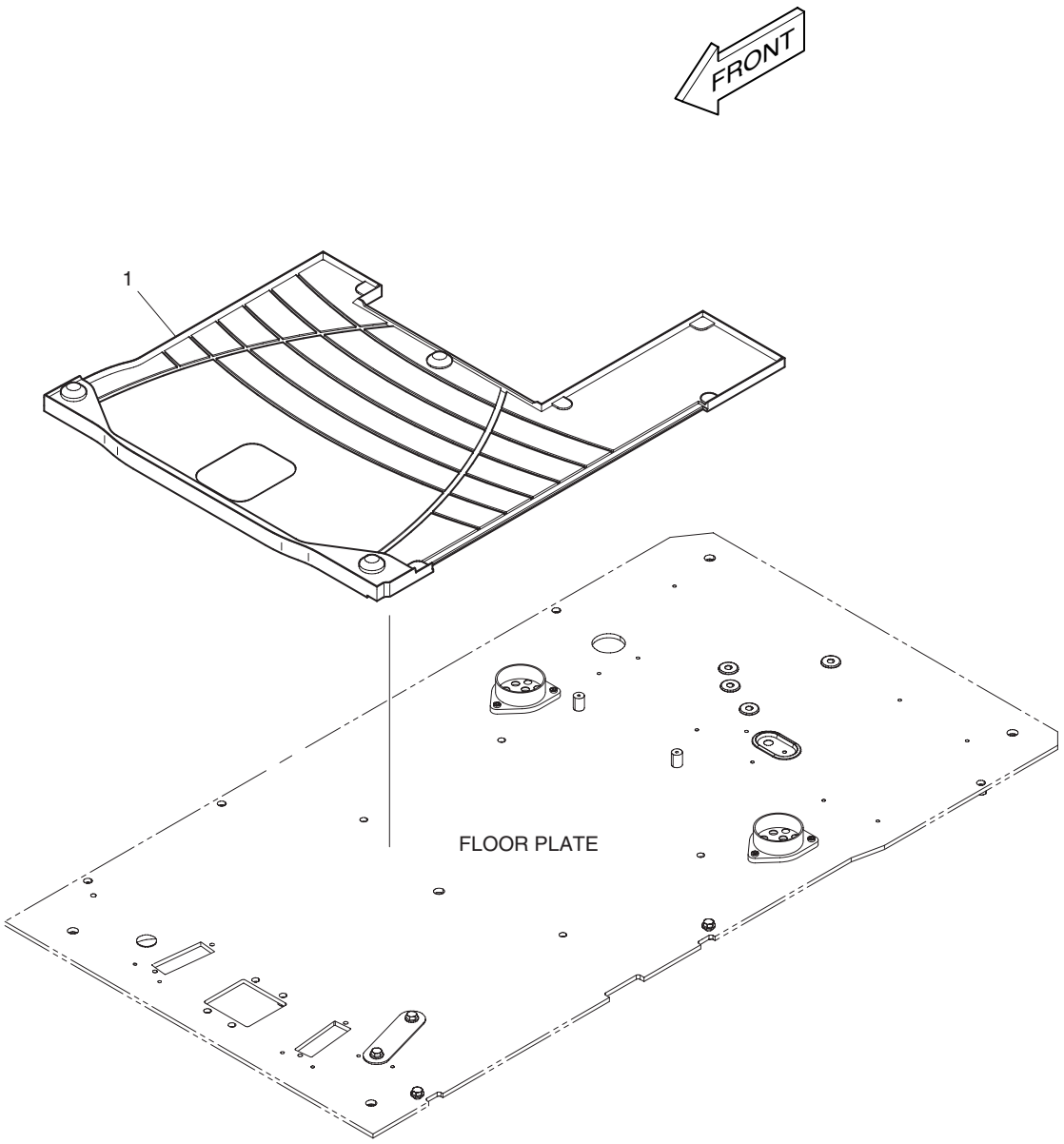

| DATE | JUN. 30, 2007 |
|---|---|
| REV. NO. | EXB07-06 |

# Fig. 1500 FLOOR MAT PLANCHER

**Serial No. ;**

| Key No. | Part No. | Description | Description | Q'ty | S.C | Serial No. | ICA | Replaceable part | |
|---|---|---|---|---|---|---|---|---|---|
| | | | | | | | | Part No. | Q'ty |
| 1500-1 | K1002081 | MAT;FLOOR | PLAQUE | 1 | | 5001–5494 | I | K1002081A | 1 |
| | **K1002081A** | **MAT;FLOOR** | PLAQUE | 1 | | **5495–** | | | |

| DATE | JUN. 30, 2007 |
|---|---|
| REV.NO. | EXB07-06 |

# Fig. 1510 FLOOR PLATE
# TOLE DE PLANCHER

**Serial No. ;**

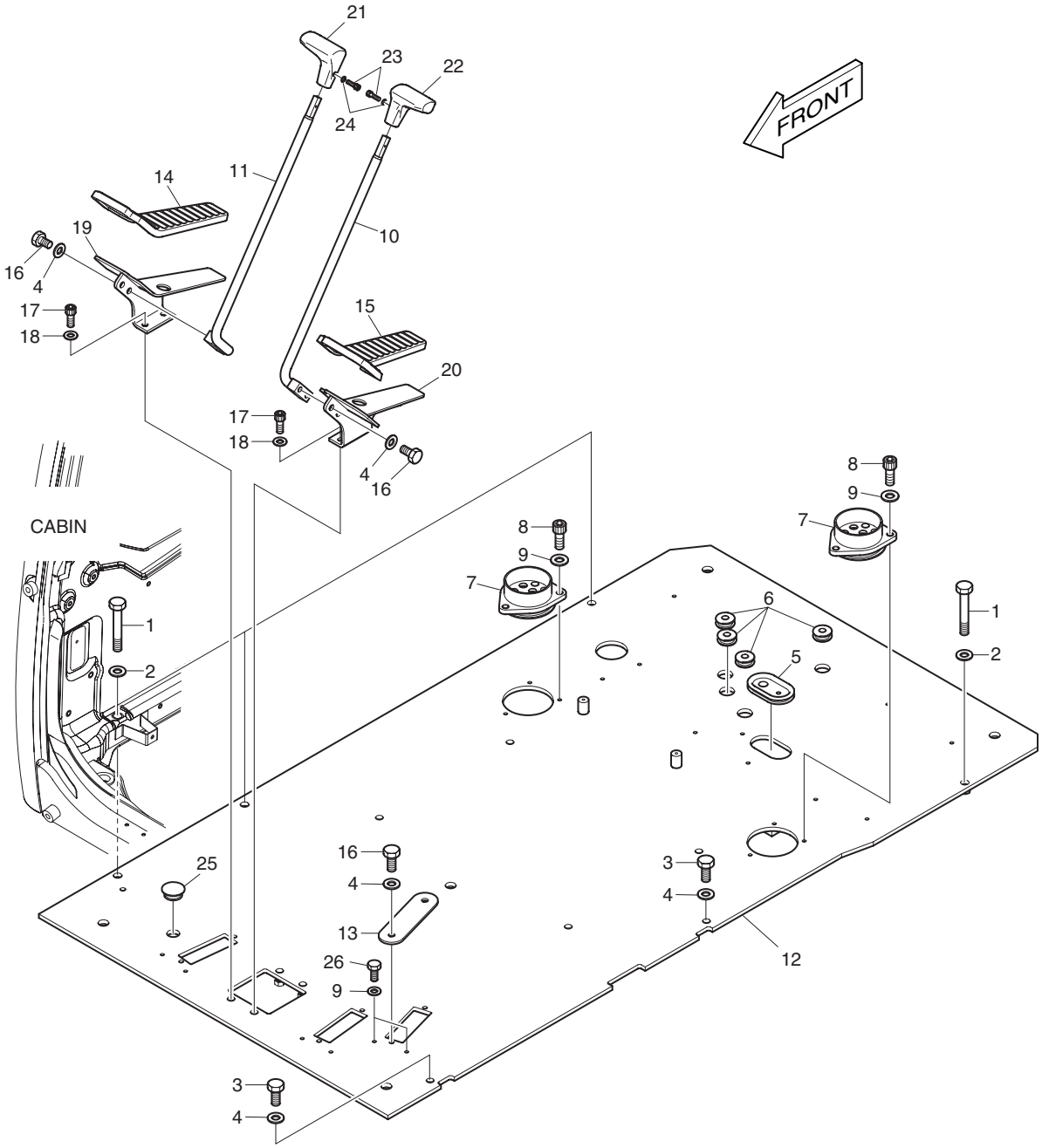

| DATE | JUN. 30, 2007 |
|---|---|
| REV. NO. | EXB07-06 |

# Fig. 1510 FLOOR PLATE TOLE DE PLANCHER

**Serial No. ;**

| Key No. | Part No. | Description | Description | Q'ty | S.C | Serial No. | ICA | Replaceable part | |
|---|---|---|---|---|---|---|---|---|---|
| | | | | | | | | Part No. | Q'ty |
| 1510-- | **622-00426C** | **FLOOR PLATE ASS'Y** | TOLE DE PLANCHER | - | D | | | | |
| 1 | 2120-2166D55 | BOLT | BOULON A 6 PANS | 4 | | | | | |
| 2 | 2114-1898D17 | WASHER | RONDELLE | 4 | | | | | |
| 3 | 2120-2166D1 | BOLT | BOULON A 6 PANS | 2 | | | | | |
| 4 | 2114-1898D1 | WASHER | RONDELLE | 8 | | | | | |
| 5 | 160-00071 | BUSHING;RUBBER | DOUILLE | 1 | | | | | |
| 6 | 160-00072 | BUSHING;RUBBER | DOUILLE | 4 | | | | | |
| 7 | 160-00080A | BUSHING;RUBBER | DOUILLE | 2 | | | | | |
| 8 | S2208866 | BOLT | BOULON DE PLOT | 6 | | | | | |
| 9 | 2114-1898D14 | WASHER | RONDELLE PAQUE | 8 | | | | | |
| 10 | 133-00229A | LEVER;TRAVEL (L.H) | LEVIER | 1 | | | | | |
| 11 | 133-00230A | LEVER;TRAVEL (R.H) | LEVIER | 1 | | | | | |
| 12 | 621-02892E | PLATE;FLOOR | PLAQUE | 1 | | 5001–5690 | | | |
| | **621-02892G** | **PLATE;FLOOR** | PLAQUE | 1 | | **5691–** | | | |
| 13 | 621-01507 | PLATE | PLAQUE | 1 | | | | | |
| 14 | 161-00381 | RUBBER;PEDAL(R.H) | CAOUTCHOUC | 1 | | | | | |
| 15 | 161-00382 | RUBBER;PEDAL(L.H) | CAOUTCHOUC | 1 | | | | | |
| 16 | 2120-2166D4 | BOLT | BOULON A 6 PANS | 6 | | | | | |
| 17 | S2211866 | BOLT;SOCKET | BOULON A 6 PANS CREUX | 4 | | | | | |
| 18 | S5110603 | WASHER | RONDELLE ELASTIQUE | 4 | | | | | |
| 19 | 195-01683A | BRACKET;PEDAL(R.H) | SUPPORT | 1 | | | | | |
| 20 | 195-01684A | BRACKET;PEDAL(L.H) | SUPPORT | 1 | | | | | |
| 21 | 2132-1134B | GRIP;LEVER(R.H) | POIGNEE | 1 | | | | | |
| 22 | 2132-1133B | GRIP;LEVER(L.H) | POIGNEE | 1 | | | | | |
| 23 | S2201766 | BOLT | BOULON A 6 PANS | 2 | | | | | |
| 24 | S5000113 | WASHER;PLAIN | RONDELLE PLATE | 2 | | | | | |
| 25 | 2161-2487 | CAP;RUBBER | ARRET | 1 | | | | | |
| 26 | 2120-2166D12 | BOLT | BOULON A 6 PANS | 2 | | | | | |

| DATE | OCT. 17, 2005 |
|---|---|
| 1st EDITION | |

# Fig. 1520 HANDLE ASS'Y HANDLE

**Serial No. ;**

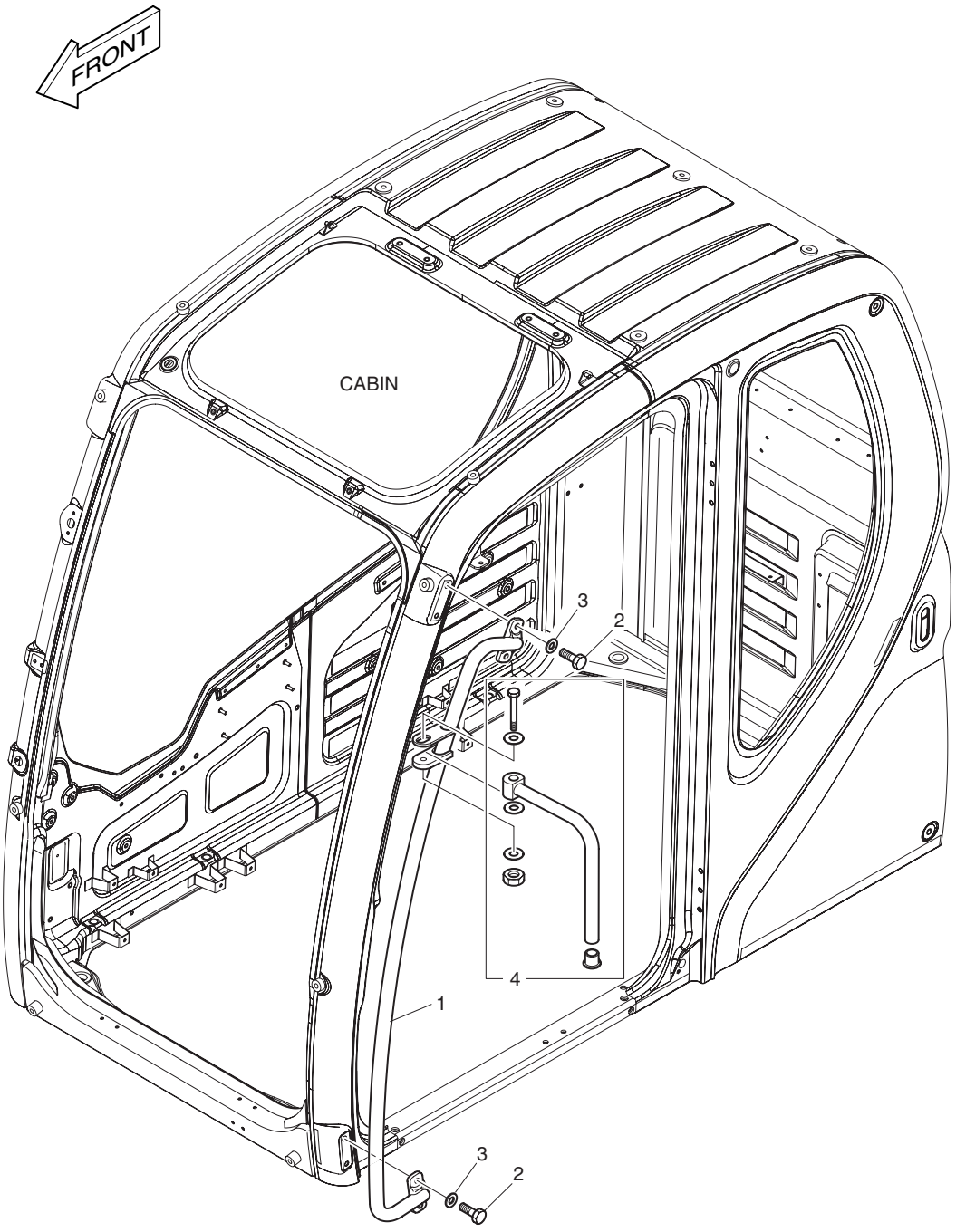

| DATE | OCT. 17, 2005 |
|---|---|
| 1st EDITION | |

# Fig. 1520 HANDLE ASS'Y HANDLE

Serial No. ;

| Key No. | Part No. | Description | Description | Q'ty | S.C | Serial No. | ICA | Replaceable part | |
|---|---|---|---|---|---|---|---|---|---|
| | | | | | | | | Part No. | Q'ty |
| 1520-- | 172-00372A | HANDLE ASS'Y | HANDLE | - | D | | | | |
| 1 | 172-00053B | HANDLE;OUTER | POIGNEE | 1 | | | | | |
| 2 | 2120-2166D2 | BOLT | BOULON A 6 PANS | 4 | | | | | |
| 3 | 2114-1898D15 | WASHER | RONDELLE | 4 | | | | | |
| 4 | K1004272 | STAY;MIRROR | ENTRETOISE | 1 | | | | | |

| DATE | OCT. 17, 2005 |
|---|---|
| 1st EDITION | |

# Fig. 1530 ROOF COVER
# COUVERCLE

**Serial No. ;**

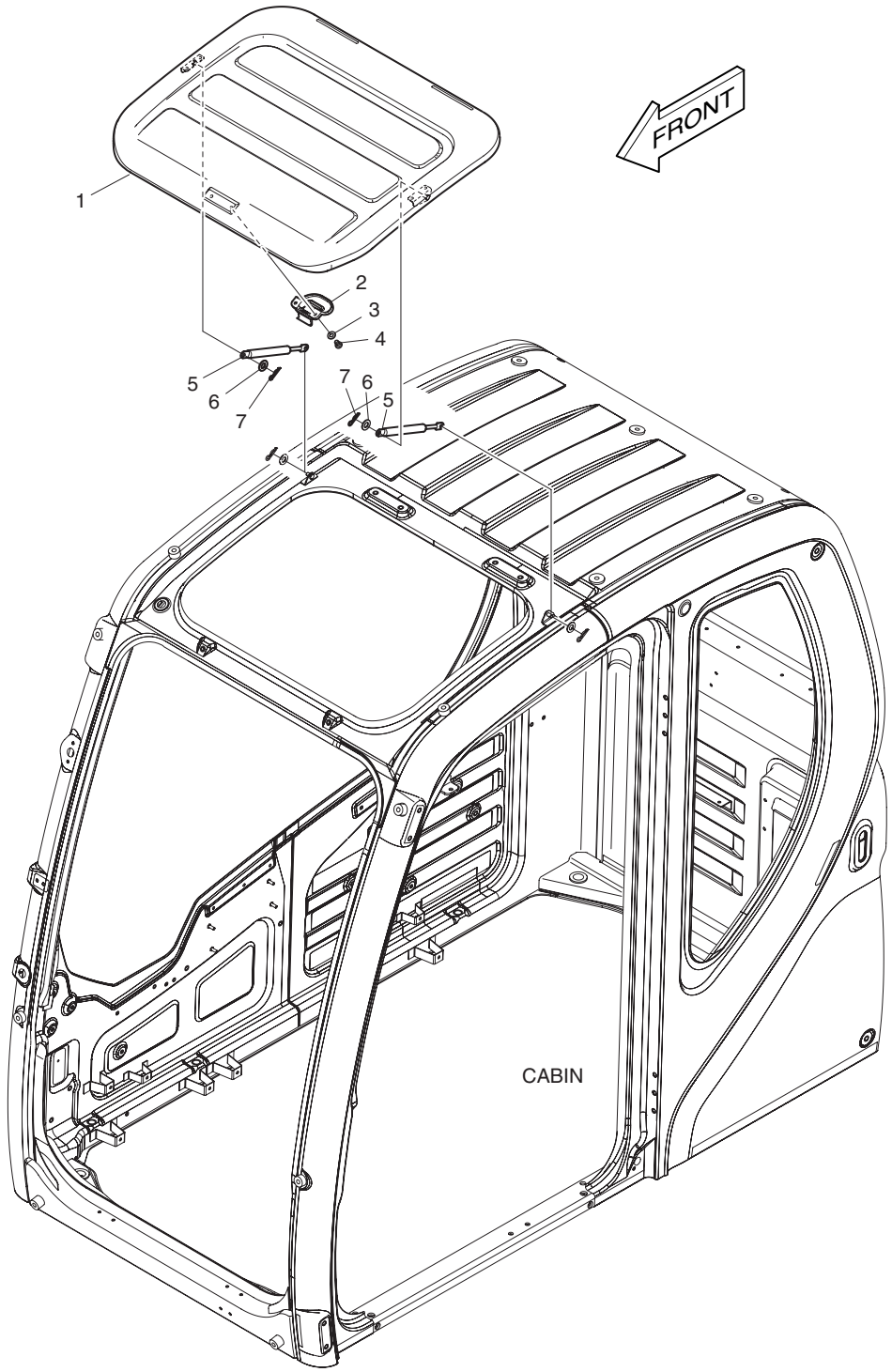

| DATE | OCT. 17, 2005 |
|---|---|
| 1st EDITION | |

# Fig. 1530 ROOF COVER COUVERCLE

Serial No. ;

| Key No. | Part No. | Description | Description | Q'ty | S.C | Serial No. | ICA | Replaceable part | |
|---|---|---|---|---|---|---|---|---|---|
| | | | | | | | | Part No. | Q'ty |
| 1530-- | 621-03732C | ROOF COVER ASS'Y | COUVERCLE | - | D | | | | |
| 1 | 621-03727B | COVER;ROOF | COUVERCLE | 1 | | | | | |
| 2 | 123-00516B | LOCK ASS'Y;ROOF COVER | SERRURE | 1 | | | | | |
| 3 | 2114-1898D3 | WASHER | RONDELLE | 2 | | | | | |
| 4 | 2120-2166D9 | SCREW | BOULON A 6 PANS | 2 | | | | | |
| 5 | DS1003009 | GAS-SPRING | RESSORT | 2 | | | | | |
| 6 | 2114-1898D14 | WASHER | RONDELLE PAQUE | 2 | | | | | |
| 7 | 123-00523 | PIN;GAS-SPRING | GOUJON | 2 | | | | | |

| DATE | JUN. 30, 2006 |
|---|---|
| REV.NO. | EXB06-08 |

# Fig. 1540 FOOT REST - L.H.
# REPOS DE PIED

**Serial No. ;**

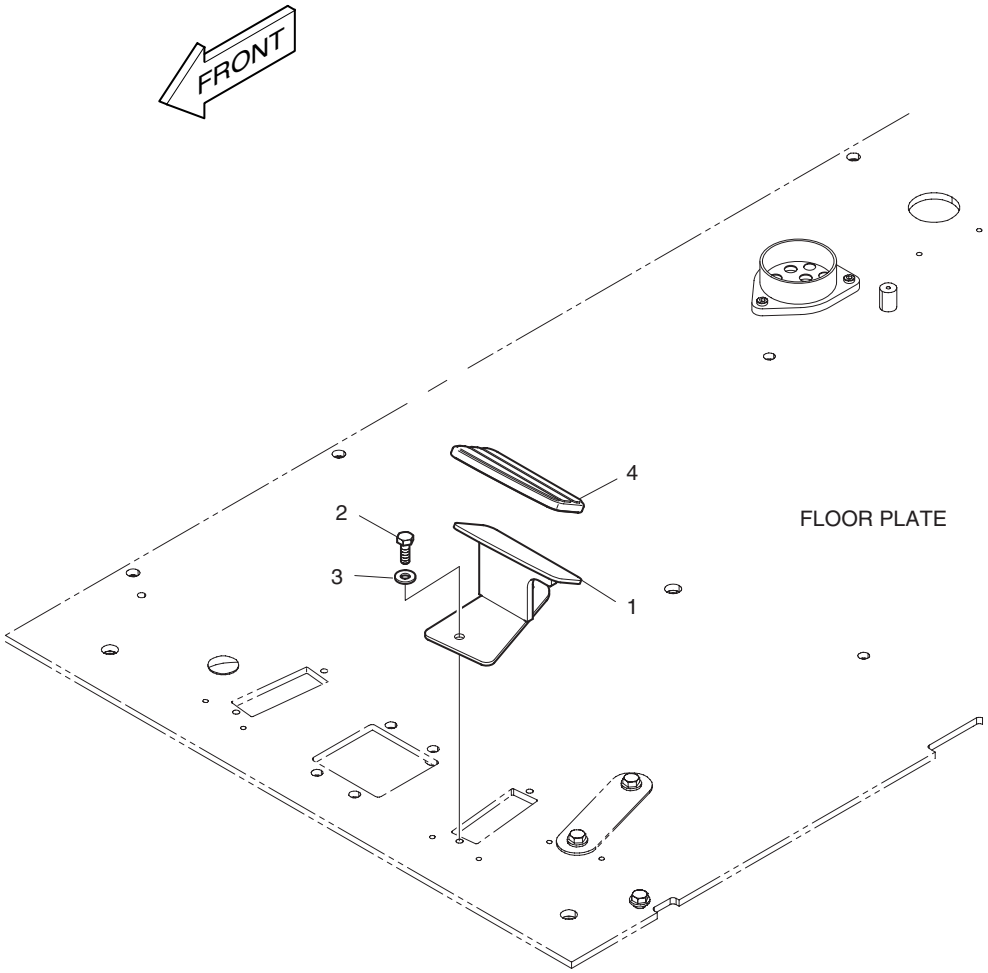

| DATE | JUN. 30, 2006 |
|---|---|
| REV. NO. | EXB06-08 |

# Fig. 1540 FOOT REST - L.H. REPOS DE PIED

Serial No. ;

| Key No. | Part No. | Description | Description | Q'ty | S.C | Serial No. | ICA | Replaceable part | |
|---|---|---|---|---|---|---|---|---|---|
| | | | | | | | | Part No. | Q'ty |
| 1540-- | K1002082 | FOOT REST(L.H) | REPOS DE PIED | - | D | | | | |
| 1 | 195-02949A | BRACKET;FOOT REST(L.H) | SUPPORT | 1 | | | | | |
| 2 | 2120-2166D1 | BOLT | BOULON A 6 PANS | 2 | | | | | |
| 3 | 2114-1898D1 | WASHER | RONDELLE | 2 | | | | | |
| 4 | 2160-1345 | COVER;FOOT REST | COUVERCLE | 1 | | | | | |

| DATE | JUN. 30, 2006 |
|---|---|
| REV.NO. | EXB06-08 |

# Fig. 1550 FOOT REST - R.H.
# REPOS DE PIED

**Serial No. ;**

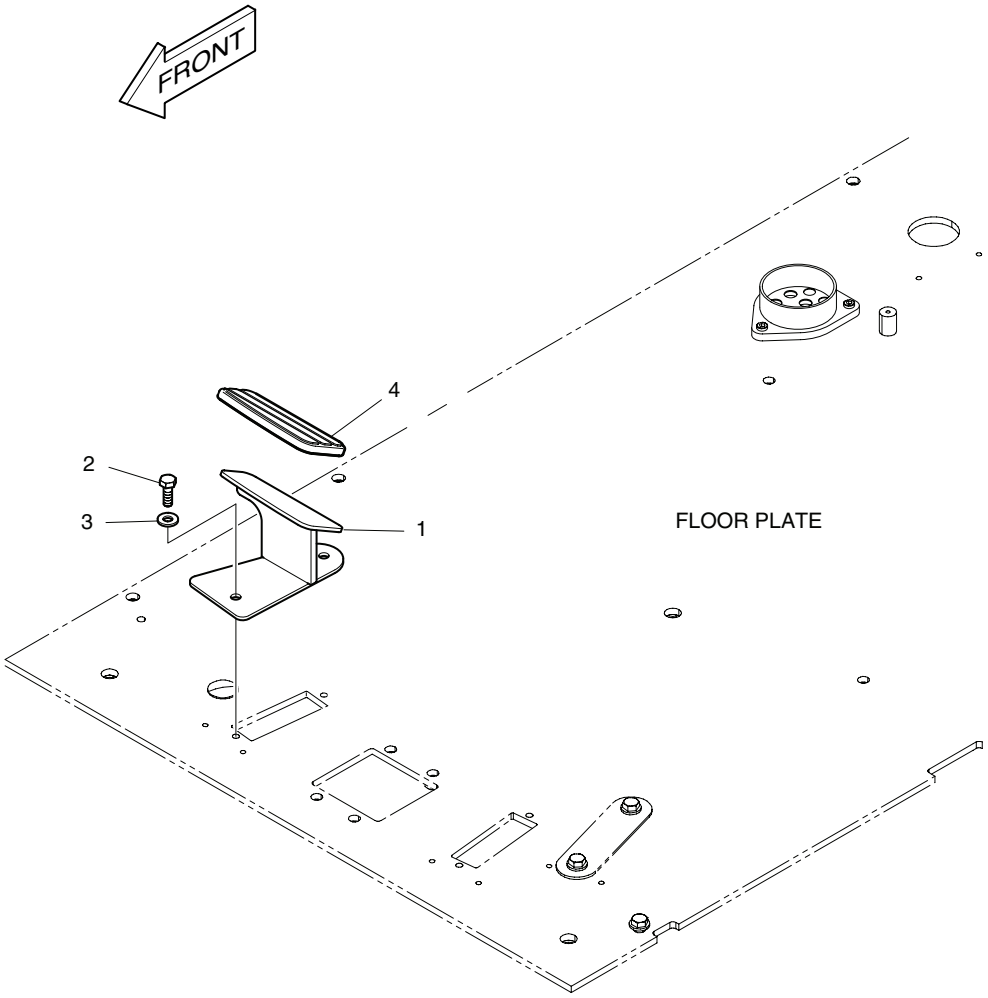

| DATE | JUN. 30, 2006 |
|---|---|
| REV. NO. | EXB06-08 |

# Fig. 1550 FOOT REST - R.H.
# REPOS DE PIED

Serial No. ;

| Key No. | Part No. | Description | Description | Q'ty | S.C | Serial No. | ICA | Replaceable part | |
|---|---|---|---|---|---|---|---|---|---|
| | | | | | | | | Part No. | Q'ty |
| 1550-- | K1002083 | FOOT REST(R.H) | REPOS DE PIED | - | D | | | | |
| 1 | 195-02948A | BRACKET;FOOT REST(R.H) | SUPPORT | 1 | | | | | |
| 2 | 2120-2166D1 | BOLT | BOULON A 6 PANS | 2 | | | | | |
| 3 | 2114-1898D1 | WASHER | RONDELLE | 2 | | | | | |
| 4 | 2160-1346 | COVER;FOOT REST | COUVERCLE | 1 | | | | | |

| DATE | DEC. 15, 2006 |
|---|---|
| REV.NO. | EXB06-13 |

# Fig. 1560 SUPPORT APPUI

**Serial No. ;**

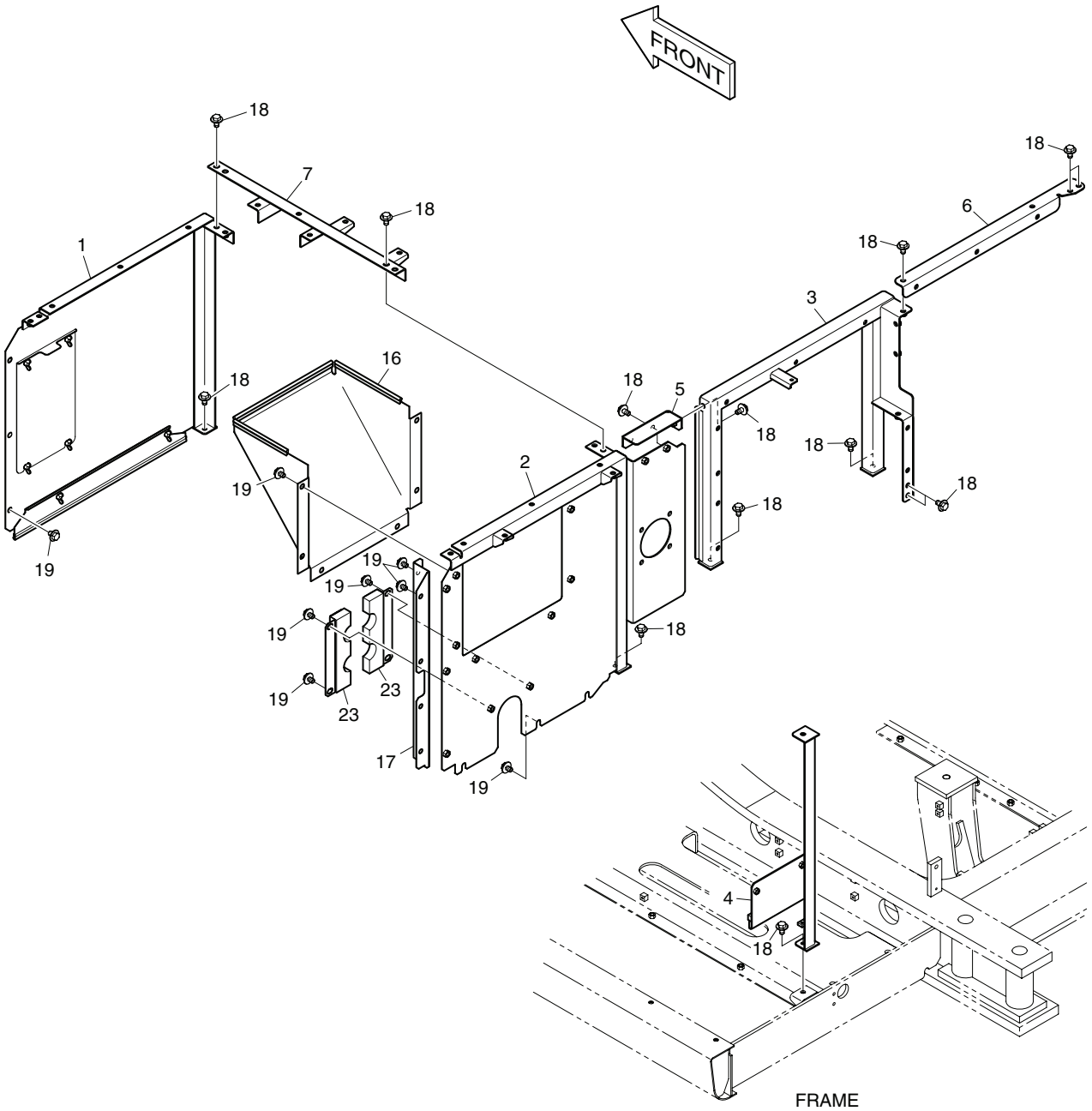

| DATE | DEC. 15, 2006 |
|---|---|
| REV. NO. | EXB06-13 |

# Fig. 1560 SUPPORT APPUI

Serial No. ;

| Key No. | Part No. | Description | Description | Q'ty | S.C | Serial No. | ICA | Replaceable part | |
|---|---|---|---|---|---|---|---|---|---|
| | | | | | | | | Part No. | Q'ty |
| 1560-- | K1005076C | SUPPOT ASS'Y | SUPPORT | - | D | 5001–5049 | | | |
| | **K1005076G** | **SUPPOT ASS'Y** | SUPPORT | - | D | **5050–** | | | |
| 1 | 195-02742E | SUPPORT | SUPPORT | 1 | | 5001–5049 | I | 195-02742G | 1 |
| | 195-02742G | SUPPORT | SUPPORT | 1 | | 5050–5274 | I | 195-02742H | 1 |
| | **195-02742H** | **SUPPORT** | SUPPORT | 1 | | **5275–** | | | |
| 2 | K1005150B | SUPPORT | SUPPORT | 1 | | 5001–5049 | I | K1005150C | 1 |
| | K1005150C | SUPPORT | SUPPORT | 1 | | 5050– | | | |
| 3 | K1005151A | SUPPORT | SUPPORT | 1 | | 5001–5049 | I | K1005151B | 1 |
| | K1005151B | SUPPORT | SUPPORT | 1 | | 5050– | | | |
| 4 | K1000641A | SUPPORT | SUPPORT | 1 | | 5001–5049 | I | K1000641B | 1 |
| | K1000641B | SUPPORT | SUPPORT | 1 | | 5050– | | | |
| 5 | K1005360A | SUPPORT | SUPPORT | 1 | | 5001–5049 | I | K1005360B | 1 |
| | K1005360B | SUPPORT | SUPPORT | 1 | | 5050– | | | |
| 6 | K1005161 | SUPPORT | SUPPORT | 1 | | 5001–5049 | I | K1005161A | 1 |
| | K1005161A | SUPPORT | SUPPORT | 1 | | 5050– | | | |
| 7 | K1005361 | SUPPORT | SUPPORT | 1 | | 5001–5049 | I | K1005361A | 1 |
| | K1005361A | SUPPORT | SUPPORT | 1 | | 5050– | | | |
| 16 | 621-02670 | COVER;BAFFLE | COUVERCLE | 1 | | | | | |
| 17 | K1005563 | COVER;BAFFLE | COUVERCLE | 1 | | | | | |
| 18 | DS0025015 | BOLT;SET | BOULON A 6 PANS | 17 | | | | | |
| 19 | DS0025022 | BOLT;SET | BOULON A 6 PANS | 23 | | | | | |
| 23 | K1011137 | COVER | COUVERCLE | 2 | | | | | |

| DATE | DEC. 29, 2005 |
|---|---|
| REV.NO. | EXB05-20 |

# Fig. 1570 BAFFLE COUVERCLE

**Serial No. ;**

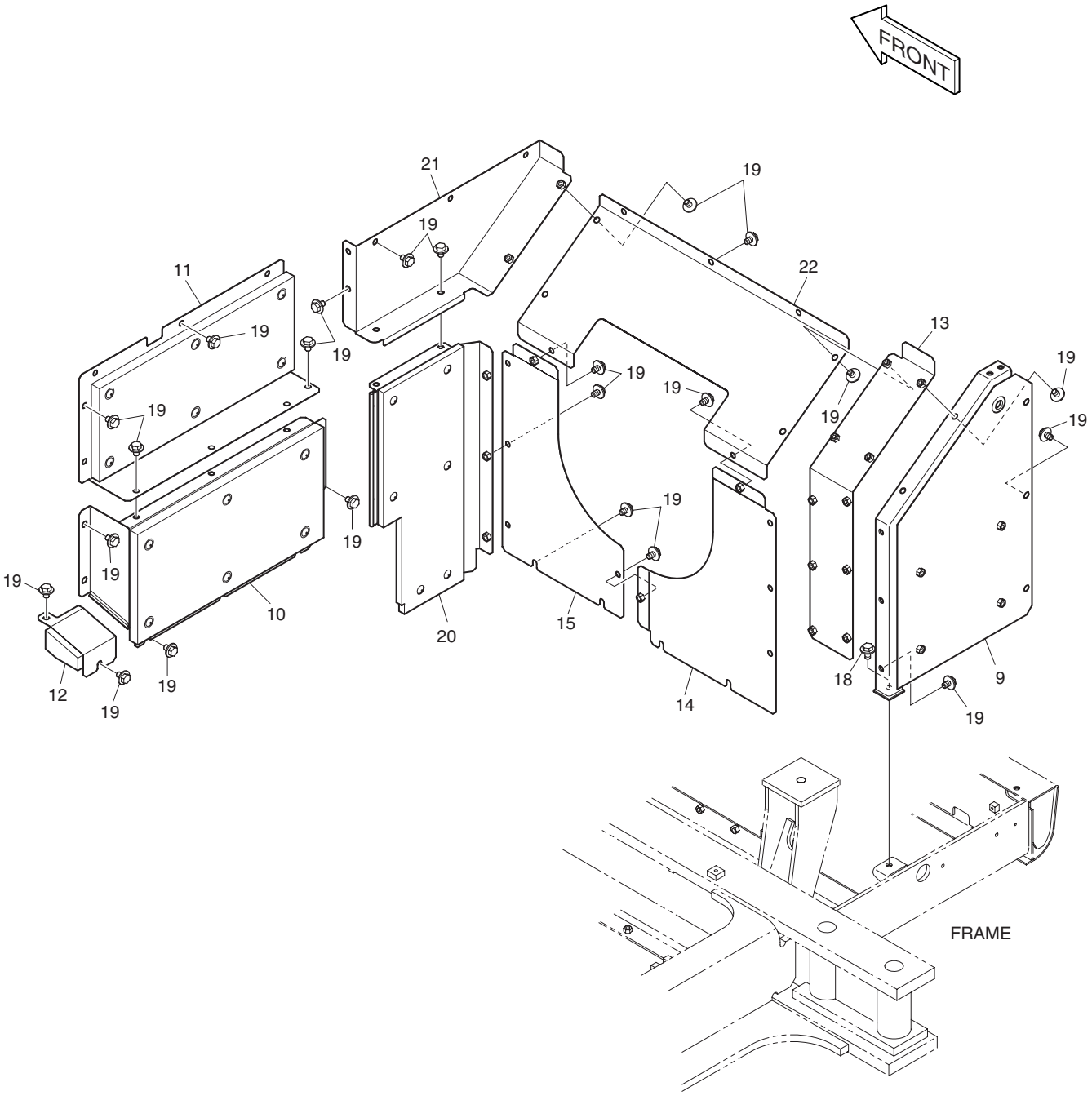

| DATE | DEC. 29, 2005 |
|---|---|
| REV. NO. | EXB05-20 |

# Fig. 1570 BAFFLE COUVERCLE

Serial No. ;

| Key No. | Part No. | Description | Description | Q'ty | S.C | Serial No. | ICA | Replaceable part | |
|---|---|---|---|---|---|---|---|---|---|
| | | | | | | | | Part No. | Q'ty |
| 1570-- | K1005076C | SUPPOT ASS'Y | SUPPORT | - | D | 5001–5049 | | | |
| | **K1005076E** | **SUPPOT ASS'Y** | SUPPORT | - | D | **5050–** | | | |
| 9 | K1005211C | SUPPORT | SUPPORT | 1 | | 5001–5049 | I | K1005211E | 1 |
| | **K1005211E** | **SUPPORT** | SUPPORT | 1 | | **5050–** | | | |
| 10 | K1005239A | COVER;BAFFLE | COUVERCLE | 1 | | | | | |
| 11 | K1005240A | COVER;BAFFLE | COUVERCLE | 1 | | | | | |
| 12 | K1005297A | COVER;BAFFLE | COUVERCLE | 1 | | | | | |
| 13 | K1005215A | COVER;BAFFLE | COUVERCLE | 1 | | | | | |
| 14 | K1005212A | COVER;BAFFLE | COUVERCLE | 1 | | | | | |
| 15 | K1005213A | COVER;BAFFLE | COUVERCLE | 1 | | | | | |
| 18 | DS0025015 | BOLT;SET | BOULON A 6 PANS | 1 | | | | | |
| 19 | DS0025022 | BOLT;SET | BOULON A 6 PANS | 53 | | | | | |
| 20 | K1005216A | COVER;BAFFLE | COUVERCLE | 1 | | | | | |
| 21 | K1005217A | COVER;BAFFLE | COUVERCLE | 1 | | | | | |
| 22 | K1005214A | COVER;BAFFLE | COUVERCLE | 1 | | | | | |

| DATE | JUN. 30, 2008 |
|---|---|
| REV.NO. | EXB08-06 |

# Fig. 1580 SIDE DOOR - L.H
# ENSEMBLE DE PORTE

**Serial No. ;**

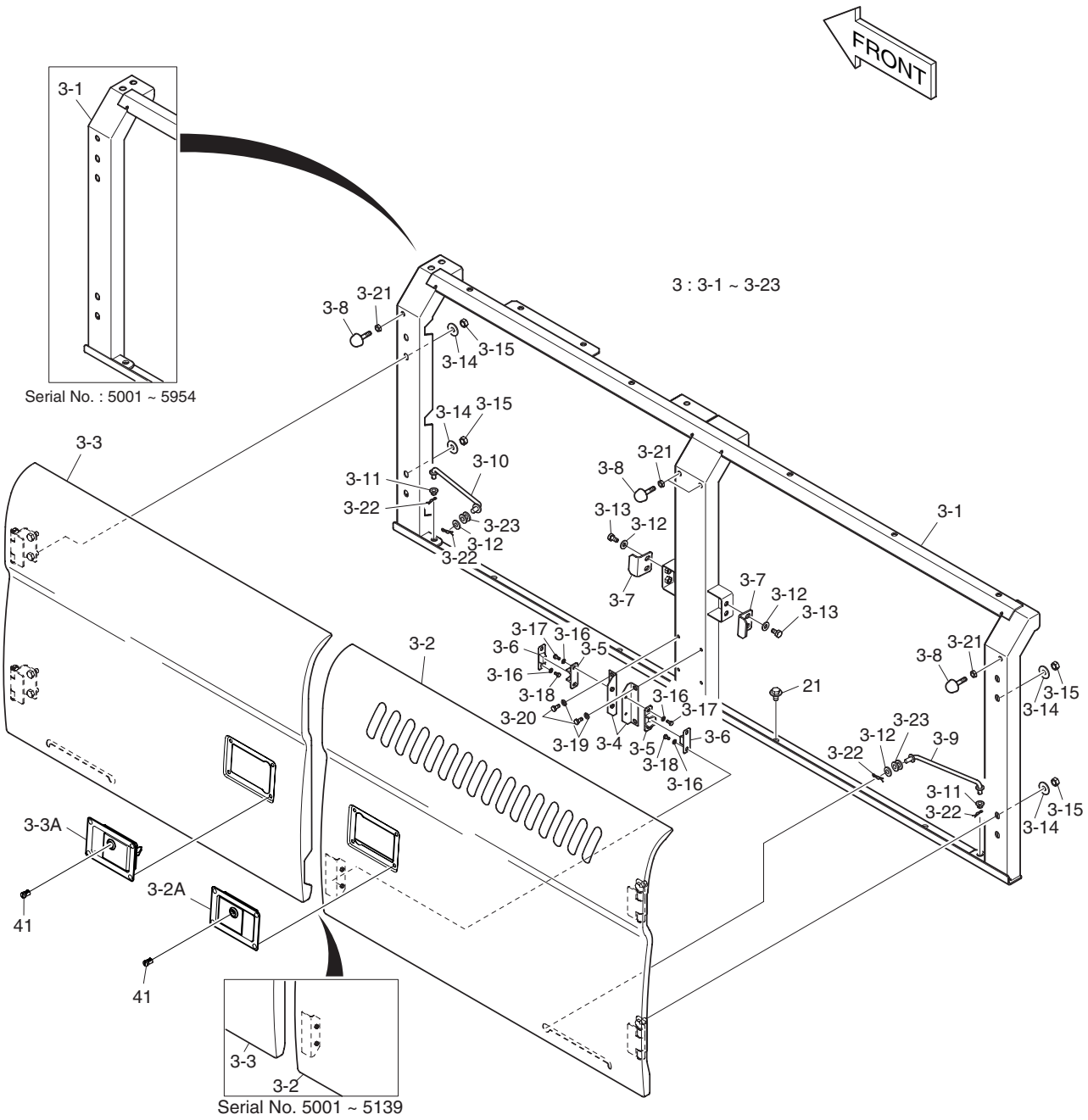

| DATE | JUN. 30, 2008 |
|---|---|
| REV. NO. | EXB08-06 |

# Fig. 1580 SIDE DOOR - L.H<br>ENSEMBLE DE PORTE

**Serial No. ;**

| Key No. | Part No. | Description | Description | Q'ty | S.C | Serial No. | ICA | Replaceable part | |
|---|---|---|---|---|---|---|---|---|---|
| | | | | | | | | Part No. | Q'ty |
| 1580-- | K1005229S | COVER ASS'Y | ENSEMBLE CAPOT | - | D | | | | |
| 3 | K1005250B | SIDE DOOR ASS'Y(L.H) | PORTE | 1 | | 5001–5139 | I | K1005250C | 1 |
| | K1005250C | SIDE DOOR ASS'Y(L.H) | PORTE | 1 | | 5140–5954 | I | K1005250E | 1 |
| | **K1005250E** | **SIDE DOOR ASS'Y(L.H)** | PORTE | 1 | | **5955–** | | | |
| 3-1 | K1005265B | . SUPPORT | . SUPPORT | 1 | | 5001–5954 | I | K1005265C | 1 |
| | **K1005265C** | **. SUPPORT** | . SUPPORT | 1 | | **5955–** | | | |
| 3-2 | K1002410E | . DOOR;SIDE | . PORTE | 1 | | 5001–5139 | I | K1002410H | 1 |
| | K1002410H | . DOOR;SIDE | . PORTE | 1 | | 5140– | | | |
| 3-2A | 125-00034A | .. LOCK | .. VERROU | 1 | | | | | |
| 3-3 | K1005271B | . DOOR;SIDE | . PORTE | 1 | | 5001–5139 | I | K1005271C | 1 |
| | K1005271C | . DOOR;SIDE | . PORTE | 1 | | 5140– | | | |
| 3-3A | 125-00035A | .. LOCK | .. VERROU | 1 | | | | | |
| 3-4 | 2116-1522 | . PLATE | . PLAQUE | 2 | | | | | |
| 3-5 | 2161-9052 | . STOPPER;PLATE | . ARRET | 2 | | | | | |
| 3-6 | 2161-9053 | . STOPPER;RUBBER | . ARRET | 2 | | | | | |
| 3-7 | 621-02726A | . PLATE;LOCK | . PLAQUE | 2 | | | | | |
| 3-8 | K1001260A | . RUBBER;STOPPER | . CAOUTCHOUC | 4 | | | | | |
| 3-9 | 623-00074B | . STAY | . ENTRETOISE | 1 | | | | | |
| 3-10 | 623-00075B | . STAY | . ENTRETOISE | 1 | | | | | |
| 3-11 | K1000602 | . BUSHING | . DOUILLE | 2 | | | | | |
| 3-12 | 2114-1058D45 | . WASHER | . RONDELLE | 6 | | | | | |
| 3-13 | S0511866 | . BOLT | . BOULON A 6 PANS | 4 | | | | | |
| 3-14 | 2114-1058D30 | . WASHER | . RONDELLE | 8 | | | | | |
| 3-15 | S4012733 | . NUT | . ECROU | 8 | | | | | |
| 3-16 | S5010513 | . WASHER;PLAIN | . RONDELLE M8 | 8 | | | | | |
| 3-17 | S0504553 | . BOLT | . BOULON A 6 PANS | 4 | | | | | |
| 3-18 | S0504453 | . BOLT | . BOULON A 6 PANS | 4 | | | | | |
| 3-19 | S5010513 | . WASHER;PLAIN | . RONDELLE M8 | 4 | | | | | |
| 3-20 | S0508753 | . BOLT | . BOULON A 6 PANS | 4 | | | | | |
| 3-21 | S4012633 | . NUT | . ECROU M10X1.5 | 4 | | | | | |
| 3-22 | 2705-9002 | . PIN;LOCK | . GOUPILLE DE BLOCAGE | 4 | | | | | |
| 3-23 | K1008335 | . BUSHING | . DOUILLE | 2 | | | | | |
| 21 | DS0025015 | BOLT;SET | BOULON A 6 PANS | 7 | | | | | |
| 41 | K1004529 | CYLINDER;KEY | CLE | 2 | | | | | |

| DATE | JUN. 30, 2008 |
|---|---|
| REV.NO. | EXB08-06 |

# Fig. 1590 SIDE DOOR - R.H
# ENSEMBLE DE PORTE

**Serial No. ;**

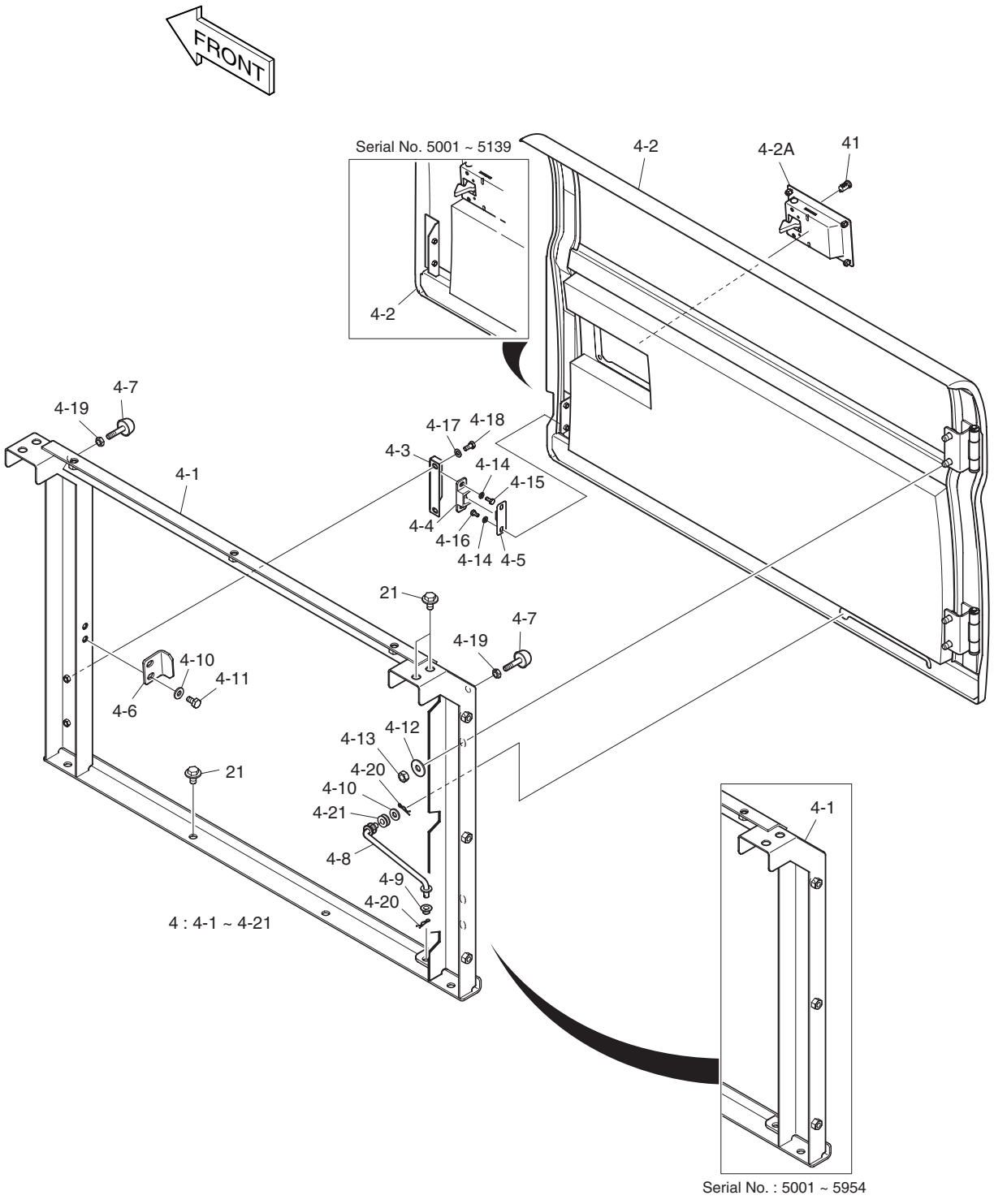

| DATE | JUN. 30, 2008 |
|---|---|
| REV. NO. | EXB08-06 |

# Fig. 1590 SIDE DOOR - R.H<br>ENSEMBLE DE PORTE

Serial No. ;

| Key No. | Part No. | Description | Description | Q'ty | S.C | Serial No. | ICA | Replaceable part | |
|---|---|---|---|---|---|---|---|---|---|
| | | | | | | | | Part No. | Q'ty |
| 1590-- | K1005229C | COVER ASS'Y | ENSEMBLE CAPOT | - | D | | | | |
| 4 | K1005251B | SIDE DOOR ASS'Y(R.H) | PORTE | 1 | | 5001–5139 | I | K1005251C | 1 |
| | K1005251C | SIDE DOOR ASS'Y(R.H) | PORTE | 1 | | 5140–5954 | I | K1005251E | 1 |
| | **K1005251E** | **SIDE DOOR ASS'Y(R.H)** | PORTE | 1 | | **5955–** | | | |
| 4-1 | K1005280B | . SUPPORT | . SUPPORT | 1 | | 5001–5954 | I | K1005280C | 1 |
| | **K1005280C** | **. SUPPORT** | . SUPPORT | 1 | | **5955–** | | | |
| 4-2 | K1005282B | . SIDE DOOR | . PORTE | 1 | | 5001–5139 | I | K1005282C | 1 |
| | K1005282C | . SIDE DOOR | . PORTE | 1 | | 5140– | | | |
| 4-2A | 125-00035A | .. LOCK | .. VERROU | 1 | | | | | |
| 4-3 | 2116-1522 | . PLATE | . PLAQUE | 1 | | | | | |
| 4-4 | 2161-9052 | . STOPPER;PLATE | . ARRET | 1 | | | | | |
| 4-5 | 2161-9053 | . STOPPER;RUBBER | . ARRET | 1 | | | | | |
| 4-6 | 621-02726A | . PLATE;LOCK | . PLAQUE | 1 | | | | | |
| 4-7 | K1001260A | . RUBBER;STOPPER | . CAOUTCHOUC | 2 | | | | | |
| 4-8 | 623-00075B | . STAY | . ENTRETOISE | 1 | | | | | |
| 4-9 | K1000602 | . BUSHING | . DOUILLE | 1 | | | | | |
| 4-10 | 2114-1058D45 | . WASHER | . RONDELLE | 3 | | | | | |
| 4-11 | S0511866 | . BOLT | . BOULON A 6 PANS | 2 | | | | | |
| 4-12 | 2114-1058D30 | . WASHER | . RONDELLE | 4 | | | | | |
| 4-13 | S4012733 | . NUT | . ECROU | 4 | | | | | |
| 4-14 | S5010513 | . WASHER;PLAIN | . RONDELLE M8 | 4 | | | | | |
| 4-15 | S0504553 | . BOLT | . BOULON A 6 PANS | 2 | | | | | |
| 4-16 | S0504453 | . BOLT | . BOULON A 6 PANS | 2 | | | | | |
| 4-17 | S5010513 | . WASHER;PLAIN | . RONDELLE M8 | 2 | | | | | |
| 4-18 | S0508753 | . BOLT | . BOULON A 6 PANS | 2 | | | | | |
| 4-19 | S4012633 | . NUT | . ECROU M10X1.5 | 2 | | | | | |
| 4-20 | 2705-9002 | . PIN;LOCK | . GOUPILLE DE BLOCAGE | 2 | | | | | |
| 4-21 | K1008335 | . BUSHING | . DOUILLE | 1 | | | | | |
| 21 | DS0025015 | BOLT;SET | BOULON A 6 PANS | 6 | | | | | |
| 41 | K1004529 | CYLINDER;KEY | CLE | 1 | | | | | |

| DATE | JUN. 30, 2007 |
|---|---|
| REV.NO. | EXB07-06 |

# Fig. 1600 BATTERY COVER COUVERCLE

**Serial No. ;**

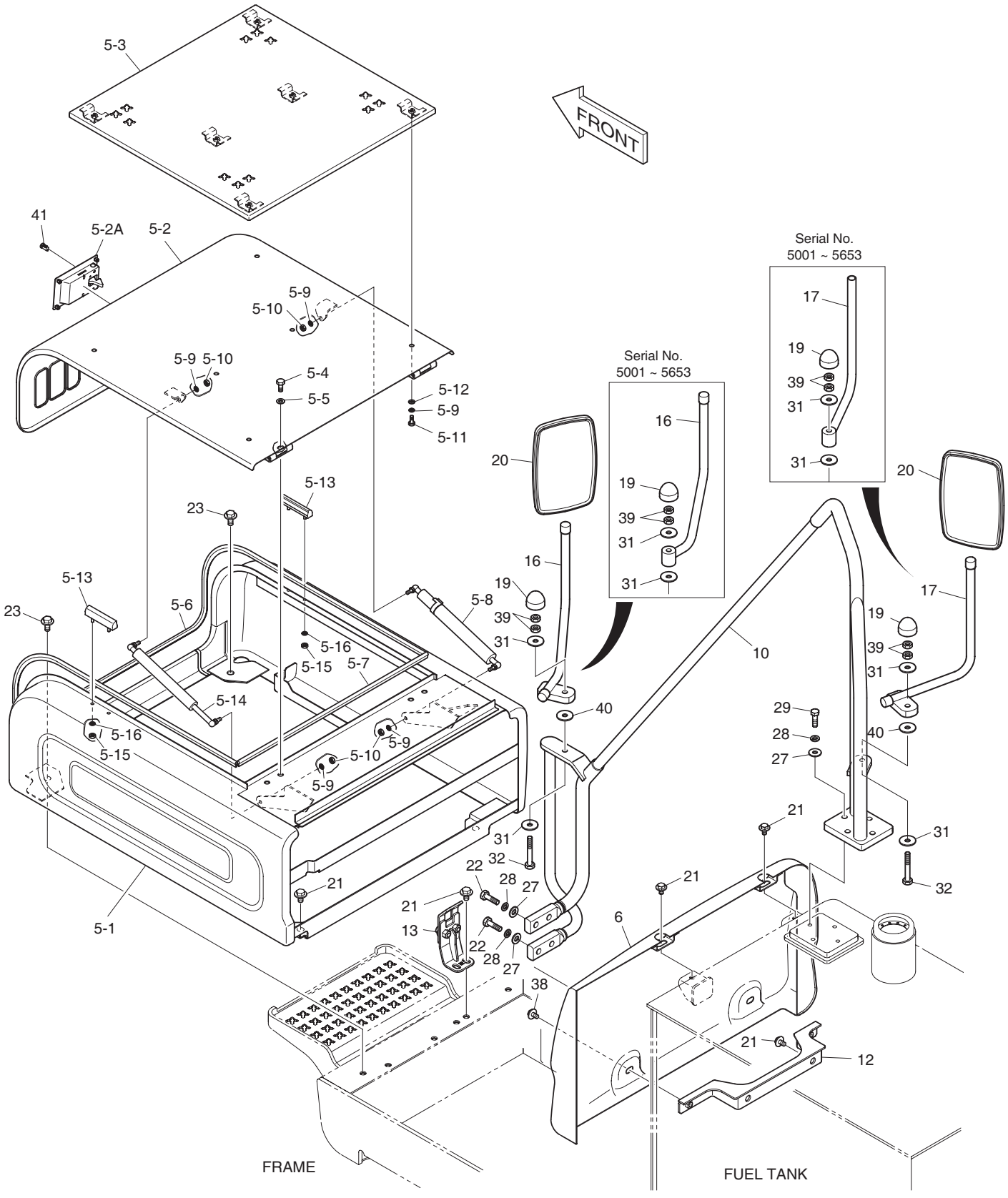

| DATE | JUN. 30, 2007 |
|---|---|
| REV. NO. | EXB07-06 |

# Fig. 1600 BATTERY COVER COUVERCLE

Serial No. ;

| Key No. | Part No. | Description | Description | Q'ty | S.C | Serial No. | ICA | Replaceable part | |
|---|---|---|---|---|---|---|---|---|---|
| | | | | | | | | Part No. | Q'ty |
| 1600-- | **K1005229Q** | **COVER ASS'Y** | ENSEMBLE CAPOT | - | D | | | | |
| 5 | 621-02716E | BATTERY COVER ASS'Y | COMPARTIMENT | 1 | | | | | |
| 5-1 | - | . COVER;BATTERY | . COUVERCLE | 1 | D | | | | |
| 5-2 | 621-02646E | . COVER | . COUVERCLE | 1 | | | | | |
| 5-2A | 125-00071B | .. LATCH;FRONT | .. LATCH;FRONT | 1 | | | | | |
| 5-3 | K1000494 | . COVER | . COUVERCLE | 1 | | | | | |
| 5-4 | S0512066 | . BOLT | . BOULON A 6 PANS | 4 | | | | | |
| 5-5 | S5010613 | . WASHER | . RONDELLE | 4 | | | | | |
| 5-6 | - | . RUBBER | . CAOUTCHOUC | 1 | | | | | |
| 5-7 | - | . RUBBER | . CAOUTCHOUC | 1 | | | | | |
| 5-8 | K1001968 | . CYLINDER;GAS | . CYLINDRE | 1 | | | | | |
| 5-9 | S5102503 | . WASHER;SPRING | . RONDELLE ELASTIQUE M8 | 10 | | | | | |
| 5-10 | S4012533 | . NUT | . ECROU | 4 | | | | | |
| 5-11 | S0508866 | . BOLT | . BOULON A 6 PANS | 6 | | | | | |
| 5-12 | 2114-1058D29 | . WASHER_PLAIN | . RONDELLE | 6 | | | | | |
| 5-13 | K1005305A | . STOPPER;;RUBBER | . ARRET | 2 | | | | | |
| 5-14 | DS1001060 | . SPRING;GAS | . CYLINDRE | 1 | | | | | |
| 5-15 | S4012333 | . NUT | . ECROU M6X1.0 | 4 | | | | | |
| 5-16 | S5102303 | . WASHER;SPRING | . RONDELLE ELASTIQUE M6 | 4 | | | | | |
| 6 | 621-02681B | COVER;TANK | COUVERCLE | 1 | | | | | |
| 10 | K1013266 | HANDRAIL | ENTRETOISE | 1 | | 5001–5560 | I | K1013266A | 1 |
| | **K1013266A** | **HANDRAIL** | ENTRETOISE | 1 | | **5561–5719** | I | K1013266B | 1 |
| | **K1013266B** | **HANDRAIL** | ENTRETOISE | 1 | | **5720–** | | | |
| 12 | K1002613A | BRACKET | SUPPORT | 1 | | | | | |
| 13 | 195-02624C | BRACKET | SUPPORT | 1 | | | | | |
| 16 | K1013269 | STAY;MIRROR | ENTRETOISE | 1 | | 5001–5653 | I | K1038110A | 1 |
| | **K1038110A** | **STAY;MIRROR** | ENTRETOISE | 1 | | **5654–** | | | |
| 17 | K1013290 | STAY;MIRROR | ENTRETOISE | 1 | | 5001–5653 | I | K1038107A | 1 |
| | **K1038107A** | **STAY;MIRROR** | ENTRETOISE | 1 | | **5654–** | | | |
| 19 | 161-00580 | CAP;RUBBER | CHAPEAU | 2 | | | | | |
| 20 | 903-00068 | MIRROR | RETROVISEUR | 2 | | 5001–5815 | I | K1040606 | 2 |
| | **K1040606** | **MIRROR** | RETROVISEUR | 2 | | **5816–** | | | |
| 21 | DS0025015 | BOLT;SET | BOULON A 6 PANS | 8 | | | | | |
| 22 | S0560666 | BOLT | BOULON A 6 PANS | 4 | | | | | |
| 23 | DS0025027 | BOLT;SET | BOULON A 6 PANS | 2 | | | | | |
| 27 | 2114-1154 | WASHER;PLAIN | RONDELLE M12 | 8 | | | | | |
| 28 | S5102703 | WASHER;SPRING | RONDELLE ELASTIQUE M12 | 8 | | | | | |
| 29 | S0560566 | BOLT | BOULON A 6 PANS | 4 | | | | | |

| DATE | JUN. 30, 2007 |
|---|---|
| REV.NO. | EXB07-06 |

# Fig. 1600 BATTERY COVER COUVERCLE

**Serial No. ;**

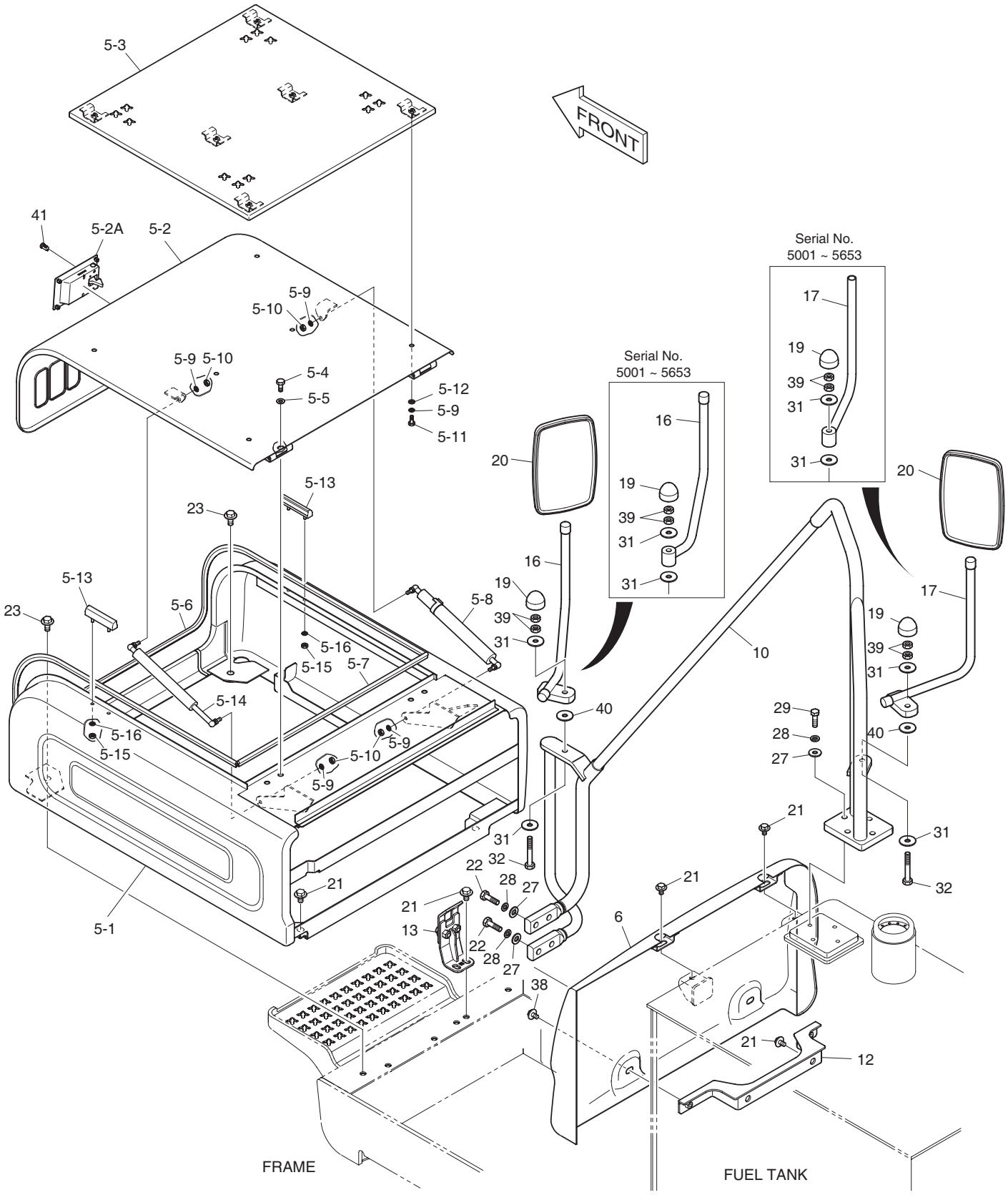

| DATE | JUN. 30, 2007 |
|---|---|
| REV. NO. | EXB07-06 |

# Fig. 1600 BATTERY COVER COUVERCLE

**Serial No. ;**

| Key No. | Part No. | Description | Description | Q'ty | S.C | Serial No. | ICA | Replaceable part | |
|---|---|---|---|---|---|---|---|---|---|
| | | | | | | | | Part No. | Q'ty |
| 1600-31 | 2114-1058D68 | WASHER | RONDELLE PLATE | 6 | | 5001–5653 | | | |
| | **2114-1058D68** | **WASHER** | RONDELLE PLATE | 4 | | **5654–** | | | |
| 32 | S0561466 | BOLT | BOULON A 6 PANS | 2 | | 5001–5653 | | | |
| | **S0561066** | **BOLT** | BOULON A 6 PANS | 2 | | **5654–** | | | |
| 38 | DS0025014 | BOLT;SET | BOULON A 6 PANS | 2 | | | | | |
| 39 | S4012733 | NUT | ECROU | 4 | | | | | |
| 40 | **2114-1058D54** | **WASHER** | RONDELLE PLATE | 2 | | **5654–** | | | |
| 41 | K1004529 | CYLINDER;KEY | CLE | 1 | | | | | |

| DATE | JUN. 30, 2007 |
|---|---|
| REV.NO. | EXB07-06 |

# Fig. 1610 COVER COUVERCLE

**Serial No. ;**

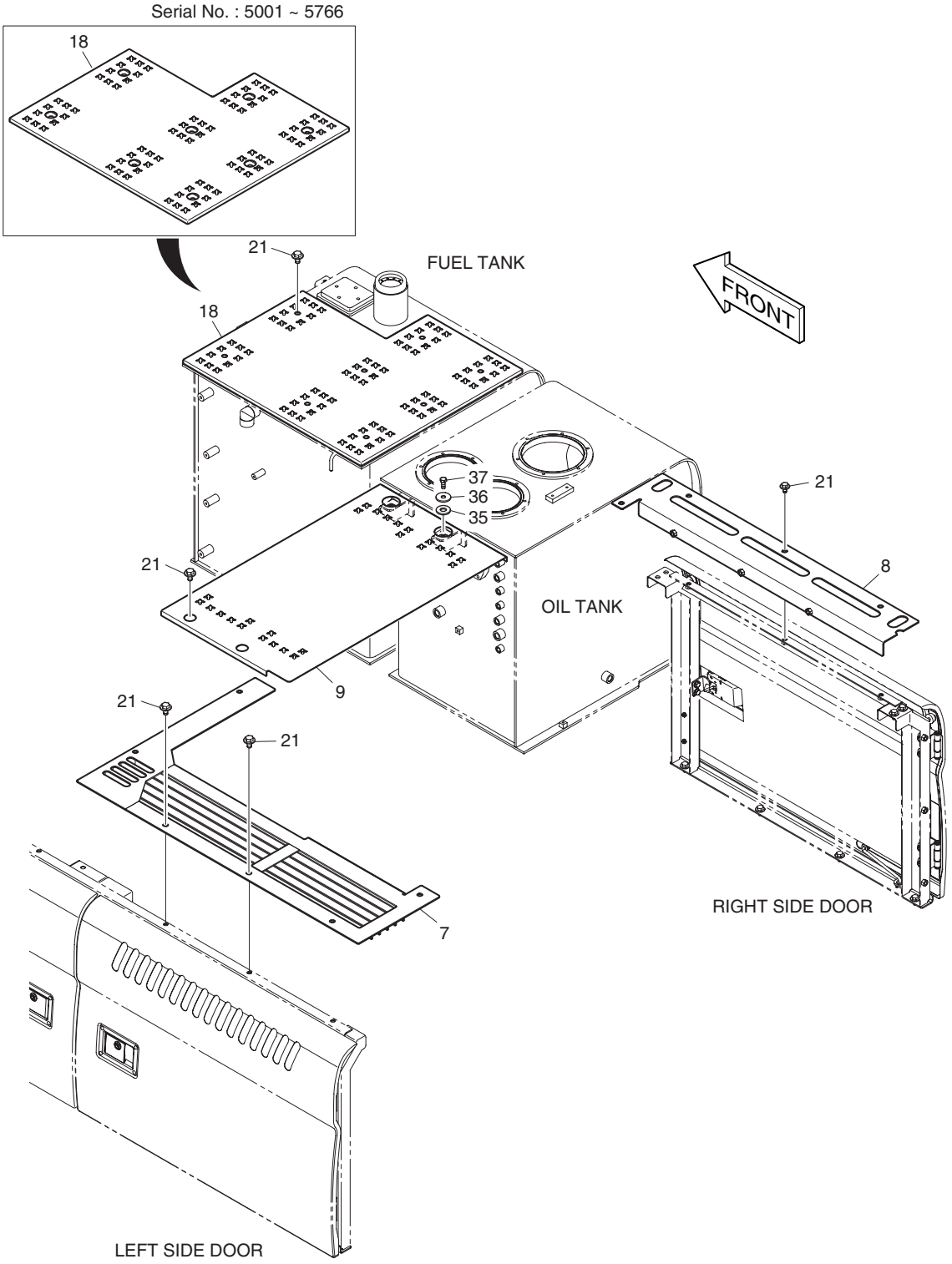

| DATE | JUN. 30, 2007 |
|---|---|
| REV. NO. | EXB07-06 |

# Fig. 1610 COVER COUVERCLE

**Serial No. ;**

| Key No. | Part No. | Description | Description | Q'ty | S.C | Serial No. | ICA | Replaceable part | |
|---|---|---|---|---|---|---|---|---|---|
| | | | | | | | | Part No. | Q'ty |
| 1610-- | **K1005229R** | **COVER ASS'Y** | ENSEMBLE CAPOT | - | D | | | | |
| 7 | K1005778A | COVER | COUVERCLE | 1 | | 5001–5049 | I | K1005778B | 1 |
| | K1005778B | COVER | COUVERCLE | 1 | | 5050– | | | |
| 8 | K1005779 | COVER | COUVERCLE | 1 | | | | | |
| 9 | K1005788 | COVER | COUVERCLE | 1 | | | | | |
| 18 | K1005888 | COVER | COUVERCLE | 1 | | 5001–5766 | I | K1005888A | 1 |
| | **K1005888A** | **COVER** | COUVERCLE | 1 | | **5767–** | | | |
| 21 | DS0025015 | BOLT;SET | BOULON A 6 PANS | 20 | | | | | |
| 35 | 160-00050 | RUBBER | CAOUTCHOUC | 2 | | | | | |
| 36 | 114-00529 | SPACER | BAGUE D'ECARTEMENT | 2 | | | | | |
| 37 | S0515266 | BOLT | BOULON A 6 PANS | 2 | | | | | |

| DATE | JUN. 30, 2006 |
|---|---|
| REV.NO. | EXB06-08 |

# Fig. 1620 ENGINE COVER
# COUVERTURE DE MOTEUR

**Serial No. ;**

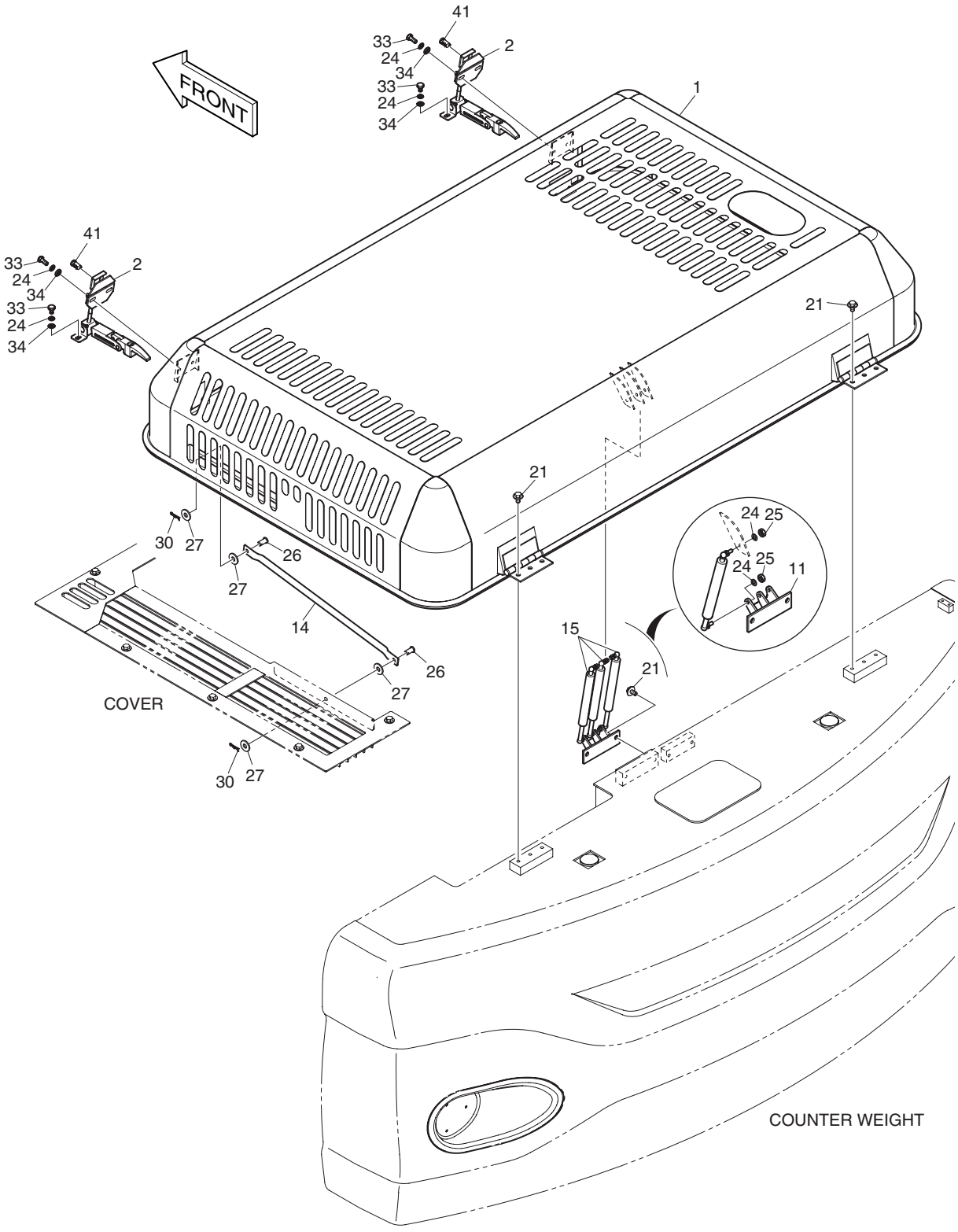

| DATE | JUN. 30, 2006 |
|---|---|
| REV. NO. | EXB06-08 |

# Fig. 1620 ENGINE COVER
# COUVERTURE DE MOTEUR

**Serial No. ;**

| Key No. | Part No. | Description | Description | Q'ty | S.C | Serial No. | ICA | Replaceable part | |
|---|---|---|---|---|---|---|---|---|---|
| | | | | | | | | Part No. | Q'ty |
| 1620-- | **K1005229J** | **COVER ASS'Y** | ENSEMBLE CAPOT | - | D | | | | |
| 1 | K1005353B | BONNET | CAPOT | 1 | | | | | |
| 2 | 125-00075A | CATCH | LOQUET | 2 | | | | | |
| 11 | K1002078 | BRACKET | SUPPORT | 1 | | | | | |
| 14 | 145-00069 | STAY | ENTRETOISE | 1 | | | | | |
| 15 | DS1001059 | SPRING;GAS | VERIN PNEUMATIQUE | 3 | | 5001–5099 | I | DS1001072 | 3 |
| | **DS1001072** | **SPRING;GAS** | VERIN PNEUMATIQUE | 3 | | **5100–** | | | |
| 21 | DS0025015 | BOLT;SET | BOULON A 6 PANS | 8 | | | | | |
| 24 | S5102503 | WASHER;SPRING | RONDELLE ELASTIQUE M8 | 14 | | | | | |
| 25 | S4012533 | NUT | ECROU | 6 | | | | | |
| 26 | 2123-1057D47 | PIN | GOUPILLE | 2 | | | | | |
| 27 | 2114-1154 | WASHER;PLAIN | RONDELLE M12 | 4 | | | | | |
| 30 | 2705-9002 | PIN;LOCK | GOUPILLE DE BLOCAGE | 2 | | | | | |
| 33 | S0508866 | BOLT | BOULON A 6 PANS | 8 | | | | | |
| 34 | S5010513 | WASHER;PLAIN | RONDELLE M8 | 8 | | | | | |
| 41 | K1004529 | CYLINDER;KEY | CLE | 2 | | | | | |

| DATE | JUN. 30, 2008 |
|---|---|
| REV.NO. | EXB08-06 |

# Fig. 1630 ACOUSTIC FOAM
# ENSEMBLE DE EPONGE

**Serial No. ;**

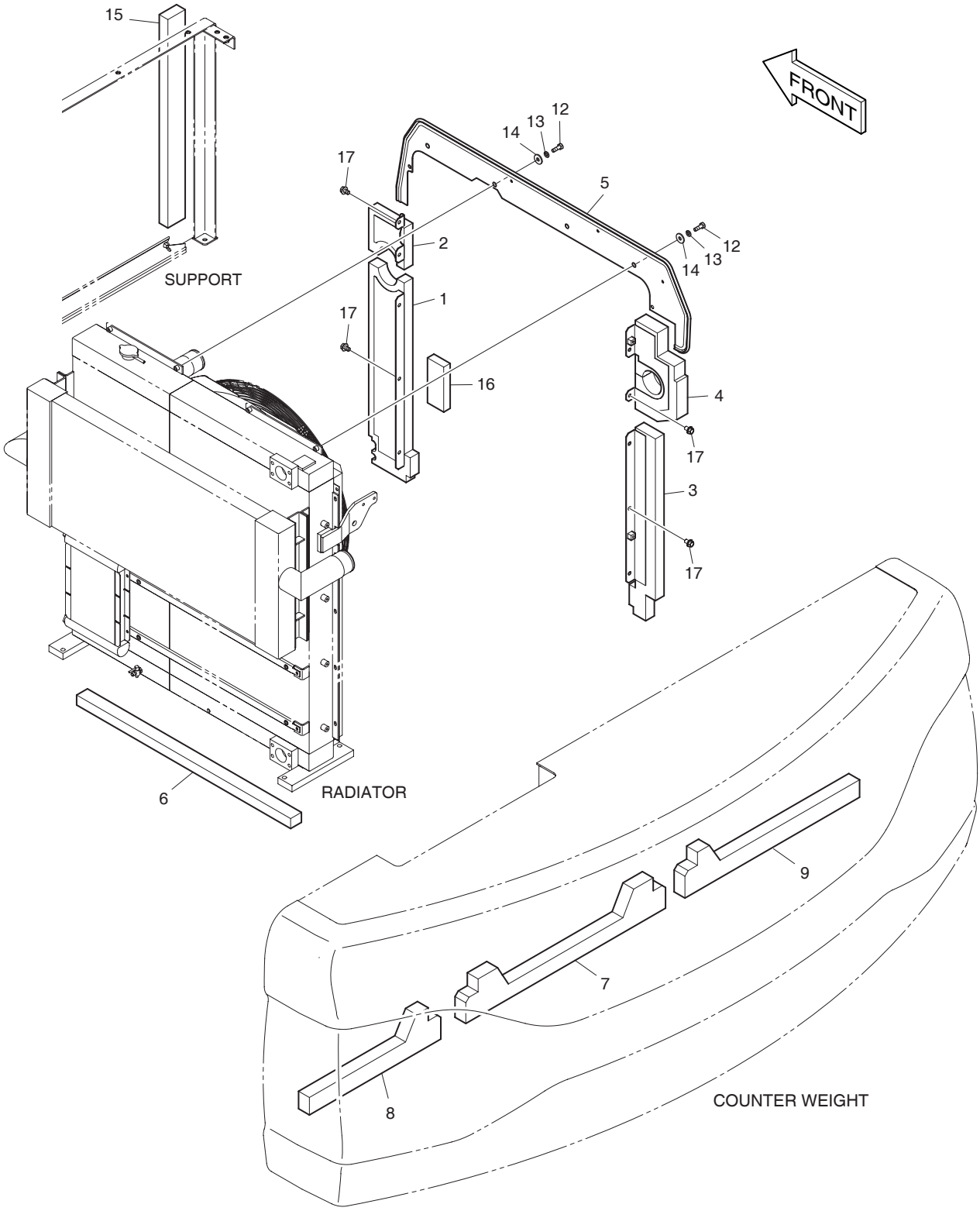

| DATE | JUN. 30, 2008 |
|---|---|
| REV. NO. | EXB08-06 |

# Fig. 1630 ACOUSTIC FOAM ENSEMBLE DE EPONGE

Serial No. ;

| Key No. | Part No. | Description | Description | Q'ty | S.C | Serial No. | ICA | Replaceable part | |
|---|---|---|---|---|---|---|---|---|---|
| | | | | | | | | Part No. | Q'ty |
| 1630-- | K1005073A | ACOUSTIC FOAM | ENSEMBLE DE EPONGE | - | D | | | | |
| 1 | K1005783A | COVER | COUVERCLE | 1 | | | | | |
| 2 | K1005784 | COVER | COUVERCLE | 1 | | | | | |
| 3 | K1005785 | COVER | COUVERCLE | 1 | | | | | |
| 4 | K1005786A | COVER | COUVERCLE | 1 | | | | | |
| 5 | K1005782A | COVER | COUVERCLE | 1 | | | | | |
| 6 | K1004636 | FOAM | EPONGE | 1 | | | | | |
| 7 | K1005837 | FOAM;POLYURETHANE | EPONGE | 1 | | | | | |
| 8 | K1005835A | FOAM;POLYURETHANE | EPONGE | 1 | | | | | |
| 9 | K1005836 | FOAM;POLYURETHANE | EPONGE | 1 | | | | | |
| 12 | S0509066 | BOLT | BOULON A 6 PANS | 6 | | | | | |
| 13 | S5102503 | WASHER;SPRING | RONDELLE ELASTIQUE M8 | 6 | | | | | |
| 14 | 2114-1058D29 | WASHER;PLAIN | RONDELLE | 6 | | | | | |
| 15 | 161-00614 | FOAM | EPONGE | 1 | | | | | |
| 16 | K1009110 | FORM;POLYURETHANE | EPONGE | 1 | | | | | |
| 17 | K1001029 | BOLT | BOULON A 6 PANS | 10 | | | | | |

| DATE | DEC. 29, 2005 |
|---|---|
| REV.NO. | EXB05-20 |

# Fig. 1640 UNDER COVER COUVERCLE

**Serial No. ;**

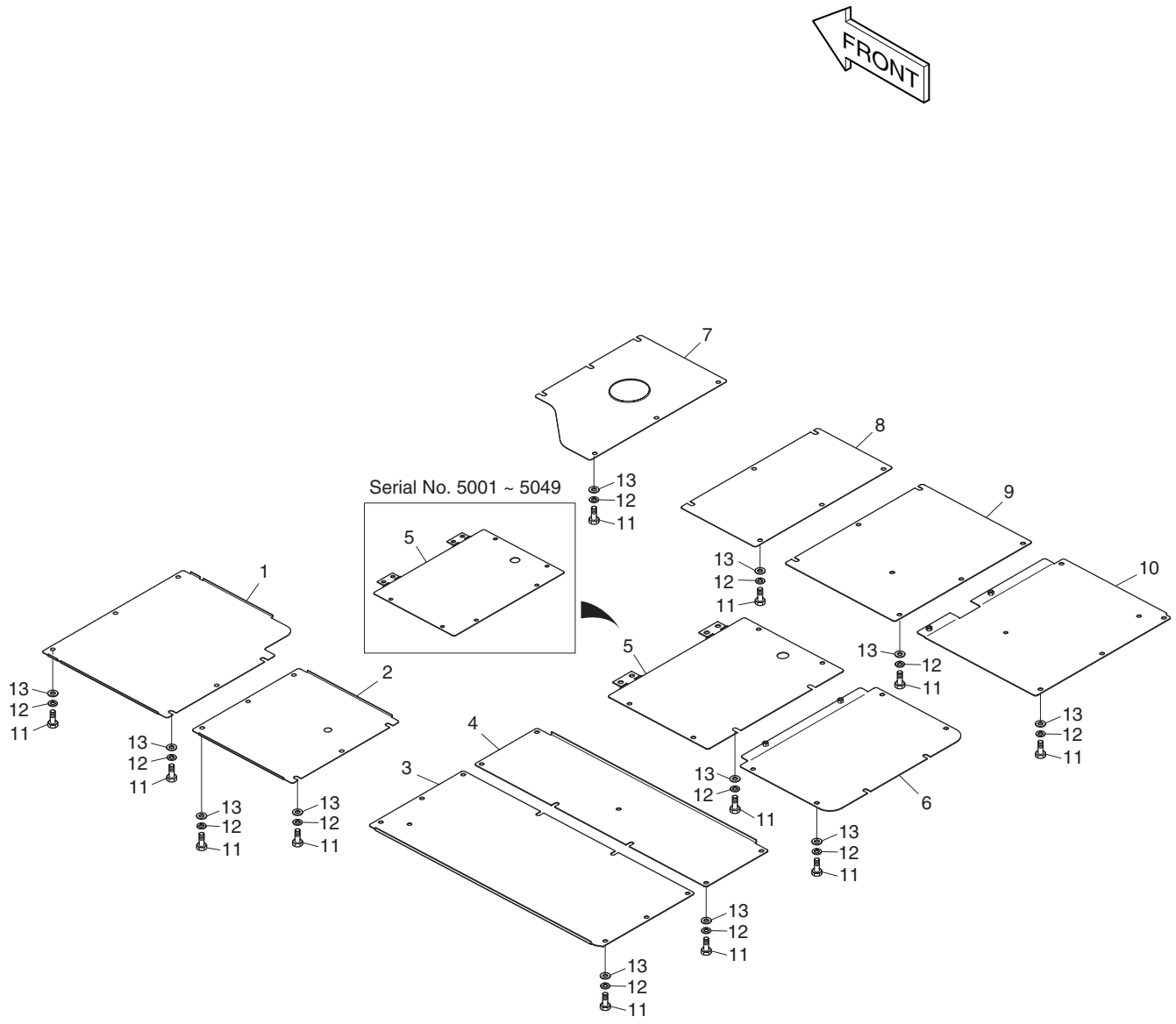

| DATE | DEC. 29, 2005 |
|---|---|
| REV. NO. | EXB05-20 |

# Fig. 1640 UNDER COVER COUVERCLE

Serial No. ;

| Key No. | Part No. | Description | Description | Q'ty | S.C | Serial No. | ICA | Replaceable part | |
|---|---|---|---|---|---|---|---|---|---|
| | | | | | | | | Part No. | Q'ty |
| 1640-- | K1005369C | UNDER COVER ASS'Y | COUVERCLE | - | D | 5001–5031 | | | |
| | K1005369G | UNDER COVER ASS'Y | COUVERCLE | - | D | 5032– | | | |
| 1 | K1005370A | COVER;UNDER | COUVERCLE | 1 | | | | | |
| 2 | K1005371A | COVER;UNDER | COUVERCLE | 1 | | | | | |
| 3 | K1005372A | COVER;UNDER | COUVERCLE | 1 | | | | | |
| 4 | K1005373A | COVER;UNDER | COUVERCLE | 1 | | | | | |
| 5 | K1005374B | COVER;UNDER | COUVERCLE | 1 | | 5001–5049 | | K1005374C | 1 |
| | **K1005374C** | **COVER;UNDER** | COUVERCLE | 1 | | **5050–** | | | |
| 6 | K1005375B | COVER;UNDER | COUVERCLE | 1 | | | | | |
| 7 | K1005376B | COVER;UNDER | COUVERCLE | 1 | | | | | |
| 8 | K1005377B | COVER;UNDER | COUVERCLE | 1 | | | | | |
| 9 | K1005378B | COVER;UNDER | COUVERCLE | 1 | | | | | |
| 10 | K1005379B | COVER;UNDER | COUVERCLE | 1 | | 5001–5031 | I | K1005379C | 1 |
| | K1005379C | COVER;UNDER | COUVERCLE | 1 | | 5032– | | | |
| 11 | S0560466 | BOLT | BOULON A 6 PANS | 67 | | | | | |
| 12 | S5102703 | WASHER;SPRING | RONDELLE ELASTIQUE M12 | 67 | | | | | |
| 13 | DS0401188 | WASHER;PLAIN | RONDELLE PLATE | 67 | | | | | |

| DATE | JUN. 30, 2007 |
|---|---|
| REV.NO. | EXB07-06 |

# Fig. 1650 LUBRICATION PIPING LUBRIFICATION

**Serial No. ;**

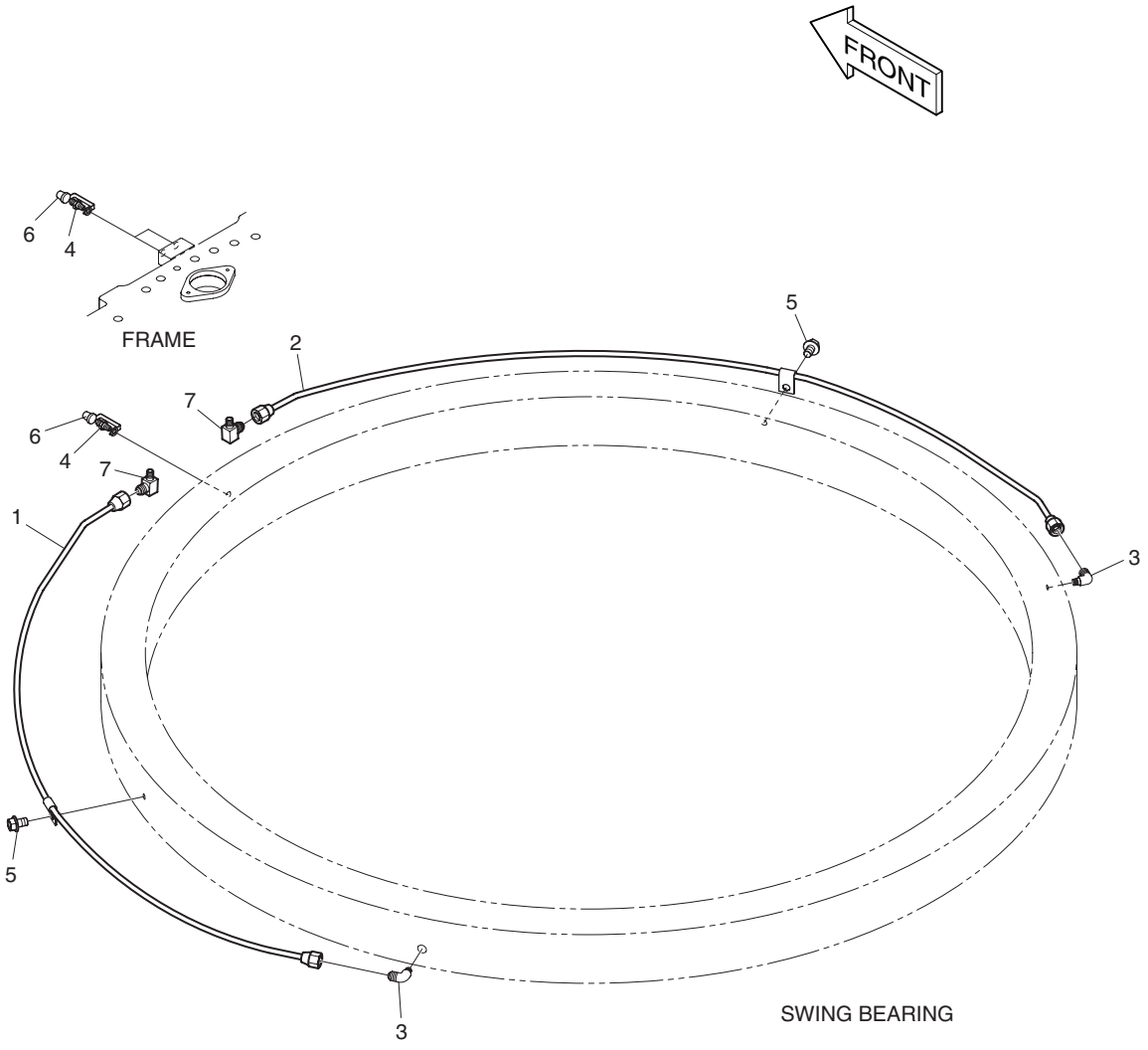

| DATE | JUN. 30, 2007 |
|---|---|
| REV. NO. | EXB07-06 |

# Fig. 1650 LUBRICATION PIPING LUBRIFICATION

Serial No. ;

| Key No. | Part No. | Description | Description | Q'ty | S.C | Serial No. | ICA | Replaceable part | |
|---|---|---|---|---|---|---|---|---|---|
| | | | | | | | | Part No. | Q'ty |
| 1650-- | K1006681 | LUBRICATION PIPING | LUBRIFICATION | - | D | | | | |
| 1 | K1006682 | PIPE;GREASE | CONDUITE | 1 | | | | | |
| 2 | K1006683 | PIPE;GREASE | CONDUITE | 1 | | | | | |
| 3 | 2181-1925 | ELBOW | COUDE | 2 | | | | | |
| 4 | S6710041 | NIPPLE;GREASE | GRAISSEUR | 3 | | | | | |
| 5 | K1001029 | BOLT | BOULON A 6 PANS | 2 | | | | | |
| 6 | 160-00020 | CAP;GREASE NIPPLE | CHAPEAU | 3 | | | | | |
| 7 | 2181-1918D6 | ELBOW | RACCORD ADAPTATEUR | 2 | | | | | |

| DATE | JUN. 30, 2008 |
|---|---|
| REV.NO. | EXB08-06 |

# Fig. 1660 ELECTRIC BOX ASS'Y EQUIPMENT ELECTRIQUE

**Serial No. ;**

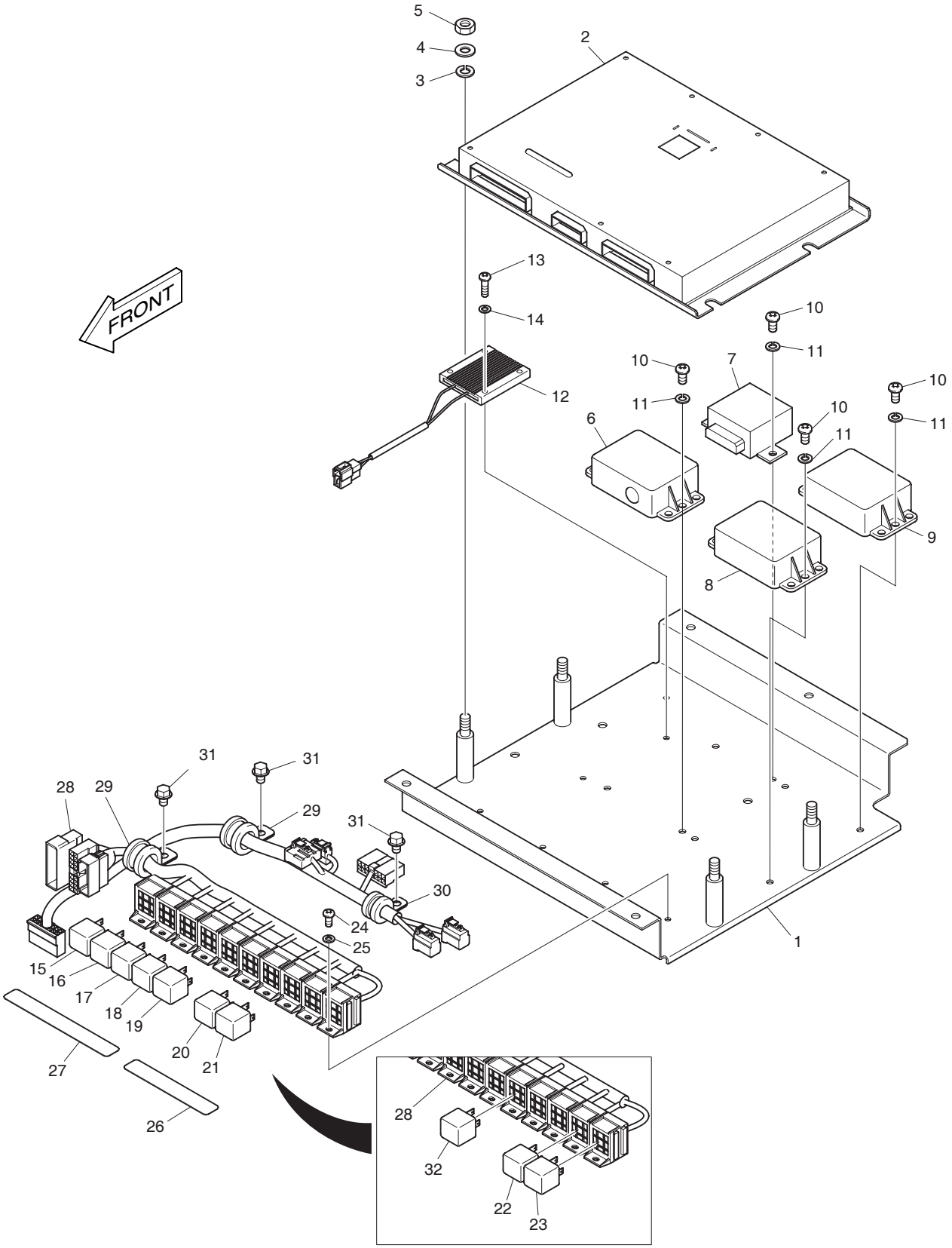


Serial No. 5001 ~ 5690

| DATE | JUN. 30, 2008 |
|---|---|
| REV. NO. | EXB08-06 |

# Fig. 1660 ELECTRIC BOX ASS'Y EQUIPMENT ELECTRIQUE

Serial No. ;

| Key No. | Part No. | Description | Description | Q'ty | S.C | Serial No. | ICA | Replaceable part | |
|---|---|---|---|---|---|---|---|---|---|
| | | | | | | | | Part No. | Q'ty |
| 1660-- | K1009355 | ELECTRIC BOX ASS'Y | SUPPORT | 1 | | 5001–5074 | I | K1009355A | 1 |
| | K1009355A | ELECTRIC BOX ASS'Y | SUPPORT | 1 | | 5075–5690 | | | |
| | K1009355B | ELECTRIC BOX ASS'Y | SUPPORT | 1 | | 5691–5944 | I | K1009355C | 1 |
| | **K1009355C** | **ELECTRIC BOX ASS'Y** | SUPPORT | 1 | | **5945–** | | | |
| 1 | 621-02955B | PLATE;ELECTRIC BOX | PLAQUE | 1 | | 5001–5690 | I | 621-02955C | 1 |
| | 621-02955C | PLATE;ELECTRIC BOX | PLAQUE | 1 | | 5691– | | | |
| 2 | K1007727 | CONTROLLER;E-EPOS | COMMANDE | 1 | | 5001–5074 | I | K1007727A | 1 |
| | K1007727A | CONTROLLER;E-EPOS | COMMANDE | 1 | | 5075–5944 | I | K1007727B | 1 |
| | **K1007727B** | **CONTROLLER;E-EPOS** | COMMANDE | 1 | | **5945–** | | | |
| 3 | S5010613 | WASHER;PLAIN M10 | RONDELLE | 4 | | | | | |
| 4 | S5102603 | WASHER;SPRING M10 | RONDELLE ELASTIQUE M10 | 4 | | | | | |
| 5 | S4012633 | NUT M10x1.5 | ECROU M10X1.5 | 4 | | | | | |
| 6 | 2543-9015 | CONTROLLER;STARTER | MOTEUR | 1 | | | | | |
| 7 | 543-00106 | CONTROLLER;WIPER | COMMANDE | 1 | | | | | |
| 8 | 2531-1003 | CONVERTER;DC-DC | CONVERTEUR | 1 | | | | | |
| 9 | 2531-1003 | CONVERTER;DC-DC | CONVERTEUR | 1 | | | | | |
| 10 | S3450953 | SCREW M6X1.0X12 | VIS | 8 | | | | | |
| 11 | S5102303 | WASHER;SPRING M6 | RONDELLE ELASTIQUE M6 | 8 | | | | | |
| 12 | 545-00011 | RESISTOR;AUXILIARY | RESISTOR;AUXILIARY | 1 | | | | | |
| 13 | S3450863 | SCREW M5X0.8X22 | VIS | 2 | | | | | |
| 14 | S5100203 | WASHER;SPRING M5 | RONDELLE ELASTIQUE M5 | 2 | | | | | |
| 15 | 2544-9033 | RELAY | RELAIS AVERTISSEUR | 1 | | | | | |
| 16 | 2544-9033 | RELAY | RELAIS AVERTISSEUR | 1 | | | | | |
| 17 | 2544-9033 | RELAY | RELAIS AVERTISSEUR | 1 | | | | | |
| 18 | 2544-9033 | RELAY | RELAIS AVERTISSEUR | 1 | | | | | |
| 19 | 2544-9033 | RELAY | RELAIS AVERTISSEUR | 1 | | | | | |
| 20 | 2544-9033 | RELAY | RELAIS AVERTISSEUR | 1 | | | | | |
| 21 | 2544-9033 | RELAY | RELAIS AVERTISSEUR | 1 | | | | | |
| 22 | 2544-9033 | RELAY | RELAIS AVERTISSEUR | 1 | | 5001–5690 | | | |
| 23 | 2544-9033 | RELAY | RELAIS AVERTISSEUR | 1 | | 5001–5690 | | | |
| 24 | S3450833 | BOLT M5X0.8X12 | VIS | 4 | | | | | |
| 25 | S5100203 | WASHER;SPRING M5 | RONDELLE ELASTIQUE M5 | 4 | | | | | |
| 26 | 190-01192D9 | PLATE;NAME(RELAY) | PLAQUE D'IDENTIFICATION | 1 | | | | | |
| 27 | 190-01192D2 | PLATE;NAME(RELAY) | PLAQUE D'IDENTIFICATION | 1 | | | | | |
| 28 | 530-00412G | HARNESS;ELECTRIC BOX | FAISCEAU | 1 | | | | | |
| 29 | 124-00208D3 | CLIP | ATTACHE | 2 | | | | | |
| 30 | 124-00208D2 | CLIP | CLIP | 1 | | | | | |
| 31 | K1001029 | BOLT | BOULON A 6 PANS | 3 | | | | | |

| DATE | JUN. 30, 2008 |
|---|---|
| REV.NO. | EXB08-06 |

# Fig. 1660 ELECTRIC BOX ASS'Y
# EQUIPMENT ELECTRIQUE

**Serial No. ;**

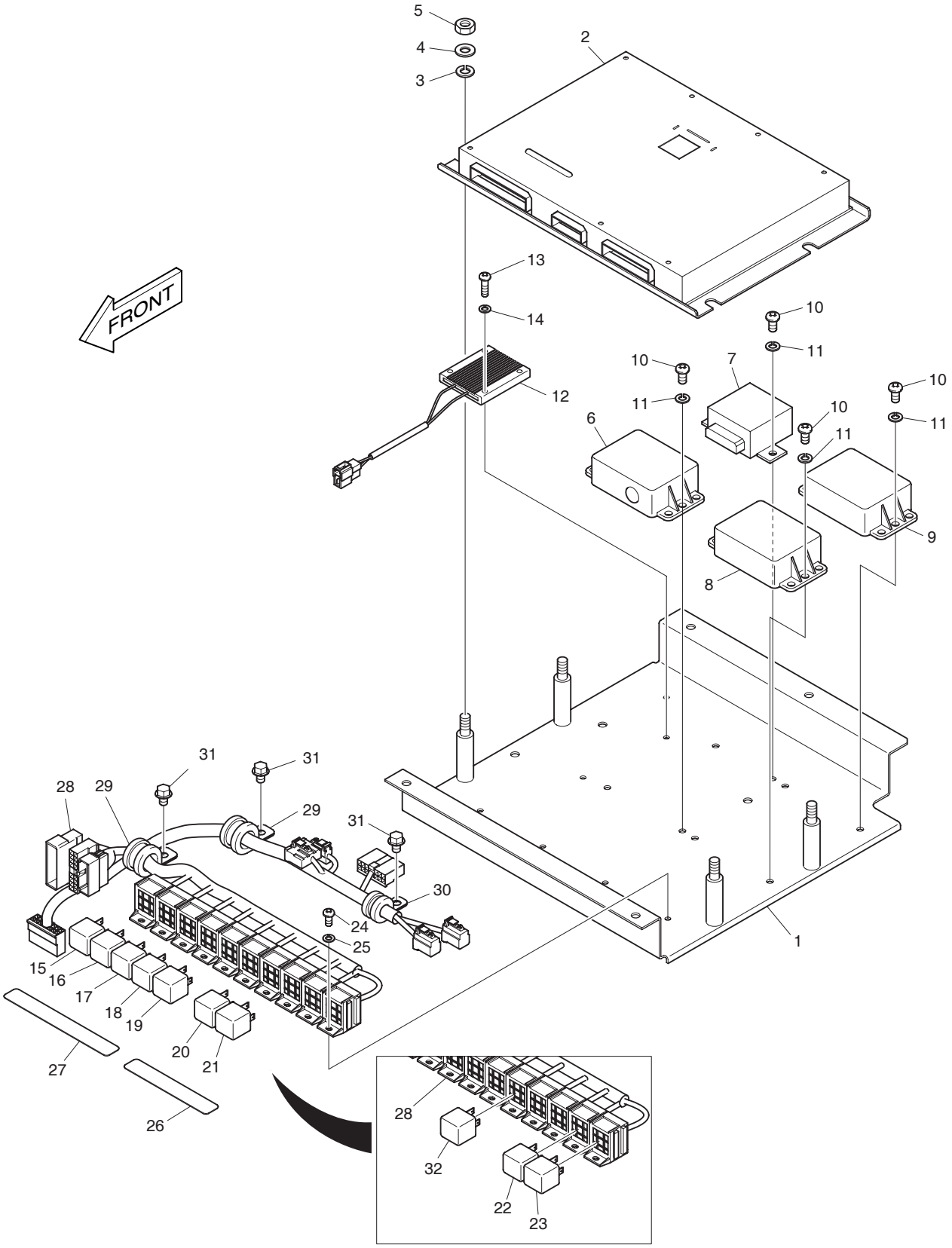


Serial No. 5001 ~ 5690

| DATE | JUN. 30, 2008 |
|---|---|
| REV. NO. | EXB08-06 |

# Fig. 1660 ELECTRIC BOX ASS'Y
# EQUIPMENT ELECTRIQUE

**Serial No. ;**

| Key No. | Part No. | Description | Description | Q'ty | S.C | Serial No. | ICA | Replaceable part | |
|---|---|---|---|---|---|---|---|---|---|
| | | | | | | | | Part No. | Q'ty |
| 1660-32 | 2544-9033 | RELAY | RELAIS AVERTISSEUR | 1 | | 5001–5690 | | | |

| DATE | JUN. 30, 2008 |
|---|---|
| REV.NO. | EXB08-06 |

# Fig. 1670 ELECTRIC PARTS - CABIN EQUIPMENT ELECTRIQUE

**Serial No. ;**

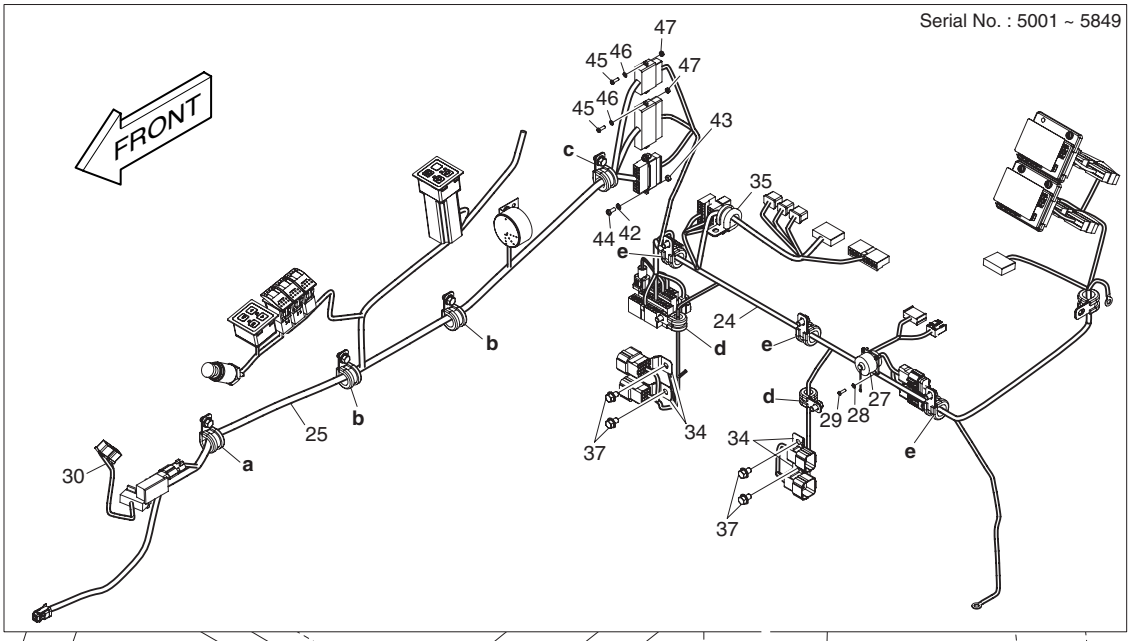


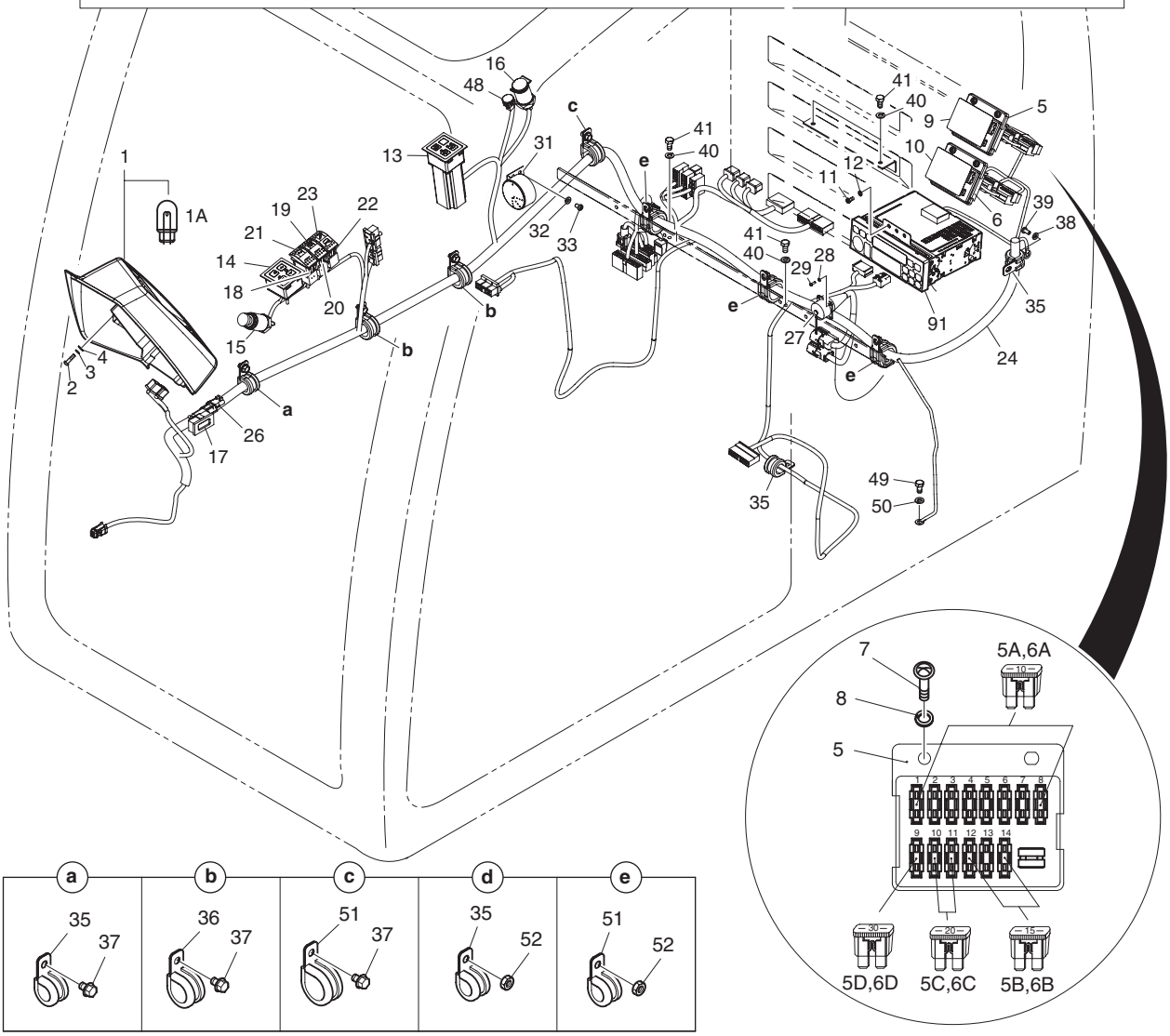

| DATE | JUN. 30, 2008 |
|---|---|
| REV. NO. | EXB08-06 |

# Fig. 1670 ELECTRIC PARTS - CABIN EQUIPMENT ELECTRIQUE

Serial No. ;

| Key No. | Part No. | Description | Description | Q'ty | S.C | Serial No. | ICA | Replaceable part | |
|---|---|---|---|---|---|---|---|---|---|
| | | | | | | | | Part No. | Q'ty |
| 1670-- | K1009356I | ELECTRIC PARTS-CABIN | EQUIPMENT ELECTRIQUE | - | D | | | | |
| 1 | 539-00076B | PANEL;GAUGE | PANNEAU | 1 | | 5001–5088 | | | |
| | 539-00076C | PANEL;GAUGE | PANNEAU | 1 | | 5089–5690 | I | 539-00076E | 1 |
| | 539-00076E | PANEL;GAUGE | PANNEAU | 1 | | 5691– | | | |
| 1A | 515-00012A | . BULB 24V 2W | . AMPOULE | 6 | | | | | |
| 2 | S3450863 | SCREW M5X0.8X22 | VIS | 4 | | | | | |
| 3 | S5100203 | WASHER;SPRING M5 | RONDELLE ELASTIQUE M5 | 4 | | | | | |
| 4 | S5000213 | WASHER;PLAIN M5 | RONDELLE | 4 | | | | | |
| 5 | K1001263A | FUSE;BOX | FUSIBLE | 1 | | | | | |
| 5A | 2527-1016 | . FUSE;BLADE 10A | . LAME DE FUSIBLE | 8 | | | | | |
| 5B | 2527-1017 | . FUSE;BLADE 15A | . LAME DE FUSIBLE | 3 | | | | | |
| 5C | 2527-1018 | . FUSE;BLADE 20A | . FUSIBLE | 2 | | | | | |
| 5D | 2527-1025 | . FUSE;BLADE 30A | . FUSIBLE | 1 | | | | | |
| 6 | K1001263A | FUSE;BOX | FUSIBLE | 1 | | | | | |
| 6A | 2527-1016 | . FUSE;BLADE 10A | . LAME DE FUSIBLE | 8 | | | | | |
| 6B | 2527-1017 | . FUSE;BLADE 15A | . LAME DE FUSIBLE | 3 | | | | | |
| 6C | 2527-1018 | . FUSE;BLADE 20A | . FUSIBLE | 2 | | | | | |
| 6D | 2527-1025 | . FUSE;BLADE 30A | . FUSIBLE | 1 | | | | | |
| 7 | S3450983 | SCREW M6x1.0x20 | VIS | 4 | | | | | |
| 8 | S5102303 | WASHER;SPRING M6 | RONDELLE ELASTIQUE M6 | 4 | | | | | |
| 9 | K1008019D3 | PLATE;NAME(FUSE BOX) | PLAQUE D'IDENTIFICATION | 1 | | | | | |
| 10 | K1008019D4 | PLATE;NAME(FUSE BOX) | PLAQUE D'IDENTIFICATION | 1 | | | | | |
| 11 | S3450833 | BOLT M5X0.8X12 | VIS | 4 | | | | | |
| 12 | S5100203 | WASHER;SPRING M5 | RONDELLE ELASTIQUE M5 | 4 | | | | | |
| 13 | 543-00095 | PANEL ASS'Y;WIPER CON. | PANNEAU | 1 | | | | | |
| 14 | 543-00096 | PANEL ASS'Y;RADIO CON. | PANNEAU | 1 | | | | | |
| 15 | 545-00001 | LIGHTER;CIGAR | ALLUME-CIGARE | 1 | | | | | |
| 16 | 527-00006 | SOCKET;12V POWER M100 | CLE A DOUILLE | 1 | | | | | |
| 17 | 2528-9040 | METER;HOUR | TOTALISATEUR HORAIRE | 1 | | | | | |
| 18 | 549-00103 | SWITCH;ROCKER(2STEP) | INTERRUPTEUR | 1 | | | | | |
| 19 | K1002406D11 | ACTUATOR;SWITCH | ACTUATOR;SWITCH | 1 | | | | | |
| 20 | 549-00103 | SWITCH;ROCKER(2STEP) | INTERRUPTEUR | 1 | | | | | |
| 21 | K1002406D12 | ACTUATOR;SWITCH | ACTUATOR;SWITCH | 1 | | | | | |
| 22 | K1006572 | SWITCH;BREAKER | AVERTISSEUR | 1 | | | | | |
| 23 | K1002406D21 | ACTUATOR;SWITCH | ACTUATOR;SWITCH | 1 | | | | | |
| 24 | 530-00411G | HARNESS;CABIN | FAISCEAU | 1 | | 5001–5849 | | | |
| | **K1030336** | **HARNESS;CABIN** | FAISCEAU | 1 | | **5850–** | | | |
| 25 | **530-00413C** | **HARNESS;SWITCH BOX** | FAISCEAU | 1 | | **5001–5849** | | | |

# Fig. 1670 ELECTRIC PARTS - CABIN
# EQUIPMENT ELECTRIQUE

**Serial No. ;**

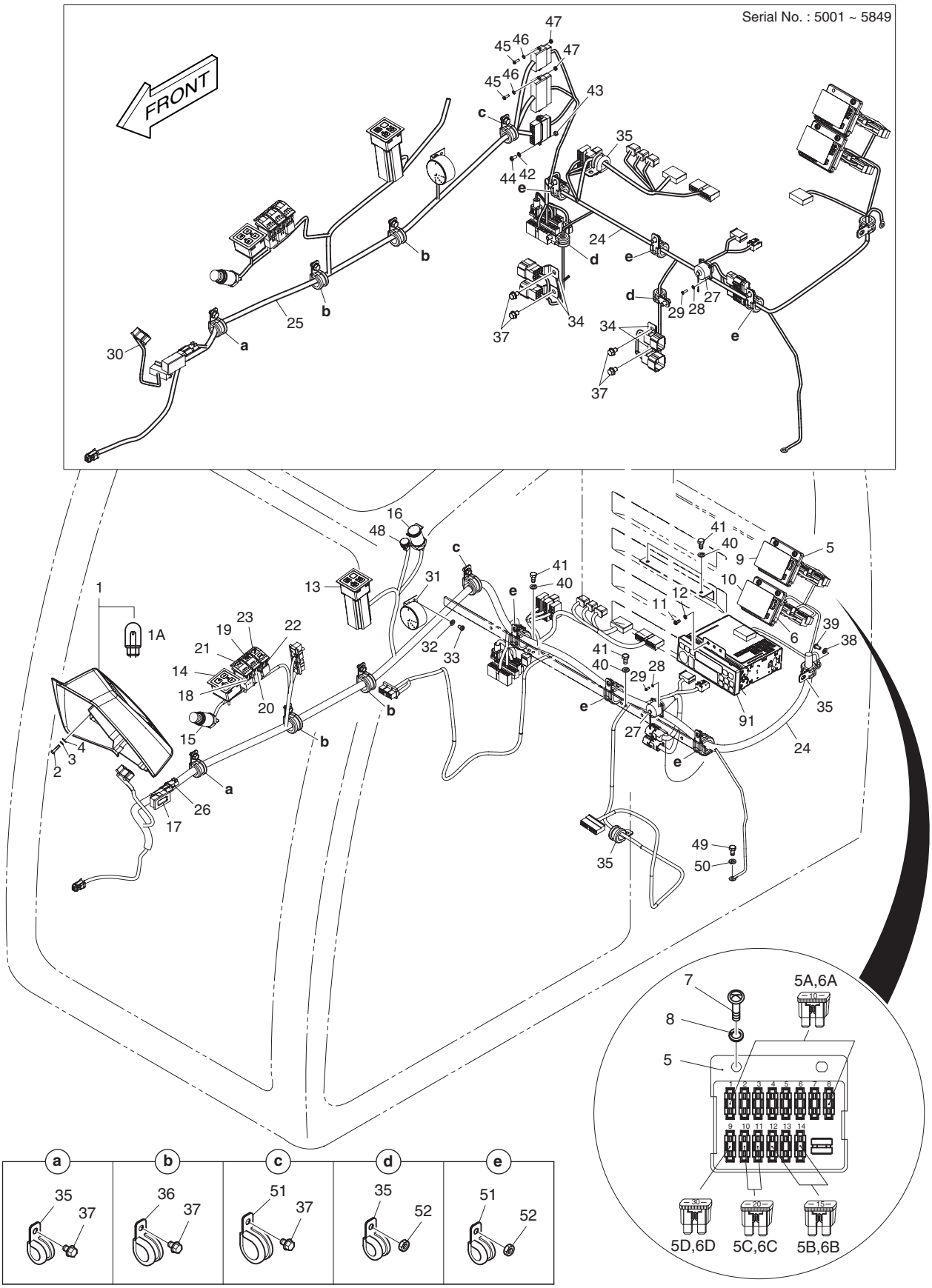

| DATE | JUN. 30, 2008 |
|---|---|
| REV. NO. | EXB08-06 |

# Fig. 1670 ELECTRIC PARTS - CABIN EQUIPMENT ELECTRIQUE

Serial No. ;

| Key No. | Part No. | Description | Description | Q'ty | S.C | Serial No. | ICA | Replaceable part | |
|---|---|---|---|---|---|---|---|---|---|
| | | | | | | | | Part No. | Q'ty |
| 1670-26 | 530-00434B | HARNESS;HOUR METER JOINT | FAISCEAU | 1 | | | | | |
| 27 | 530-00435A | HARNESS;CHECK CONN. JOINT | FAISCEAU | 1 | | 5001–5690 | I | 530-00435B | 1 |
| | 530-00435B | HARNESS;CHECK CONN. JOINT | FAISCEAU | 1 | | 5691– | | | |
| 28 | S5100003 | WASHER;SPRING M3 | RONDELLE ELASTIQUE | 4 | | | | | |
| 29 | S3450343 | SCREW M3X0.5X10 | VIS | 4 | | | | | |
| 30 | **530-00416B** | **HARNESS;GAUGE PANEL** | FAISCEAU | 1 | | **5001–5849** | | | |
| 31 | 2516-1116 | BUZZER;PILOT | VIBREUR ARRIERE | 1 | | | | | |
| 32 | S5102303 | WASHER;SPRING M6 | RONDELLE ELASTIQUE M6 | 2 | | | | | |
| 33 | S3450943 | SCREW M6X1.0X10 | VIS M6X1.0X10 | 2 | | | | | |
| 34 | **2197-1661** | **BRACKET;HOUSING** | SUPPORT | 4 | | **5001–5849** | | | |
| 35 | 124-00208D3 | CLIP | ATTACHE | 4 | | 5001–5849 | | | |
| | **124-00208D3** | **CLIP** | ATTACHE | 2 | | **5850–** | | | |
| 36 | 124-00208D2 | CLIP | CLIP | 2 | | | | | |
| 37 | K1001029 | BOLT | BOULON A 6 PANS | 8 | | 5001–5849 | | | |
| | **K1001029** | **BOLT** | BOULON A 6 PANS | 4 | | **5850–** | | | |
| 38 | S5102303 | WASHER;SPRING M6 | RONDELLE ELASTIQUE M6 | 1 | | | | | |
| 39 | S3450953 | SCREW M6X1.0X12 | VIS | 1 | | | | | |
| 40 | S5102503 | WASHER;SPRING M8 | RONDELLE ELASTIQUE M8 | 4 | | | | | |
| 41 | S0508653 | BOLT M8X1.25X16 | BOULON A 6 PANS | 4 | | | | | |
| 42 | **S5100203** | **WASHER;SPRING M5** | RONDELLE ELASTIQUE M5 | 2 | | **5001–5849** | | | |
| 43 | **S4012203** | **NUT M5X.8** | ECROU | 2 | | **5001–5849** | | | |
| 44 | **S3450833** | **BOLT M5X0.8X12** | VIS | 2 | | **5001–5849** | | | |
| 45 | **S3450343** | **SCREW M3X0.5X10** | VIS | 4 | | **5001–5849** | | | |
| 46 | **S5100003** | **WASHER;SPRING M3** | RONDELLE ELASTIQUE | 4 | | **5001–5849** | | | |
| 47 | **S4012003** | **NUT** | ECROU | 4 | | **5001–5849** | | | |
| 48 | 547-00023 | SENSOR | CAPTEUR | 1 | | | | | |
| 49 | S0508653 | BOLT M8X1.25X16 | BOULON A 6 PANS | 1 | | | | | |
| 50 | S5102503 | WASHER;SPRING M8 | RONDELLE ELASTIQUE M8 | 1 | | | | | |
| 51 | 124-00208D5 | CLIP | ATTACHE | 4 | | | | | |
| 52 | 2121-1305 | NUT | ECROU | 5 | | 5001–5849 | | | |
| | **2121-1305** | **NUT** | ECROU | 3 | | **5850–** | | | |
| 91 | 541-00010 | STEREO;CAR | RELAIS AVERTISSEUR | 1 | | 5001–5393 | I | K1026654 | 1 |
| | K1026654 | STEREO;CAR | RELAIS AVERTISSEUR | 1 | | 5394– | | | |

# Fig. 1680 ELECTRIC PARTS - CONTROL STAND EQUIPMENT ELECTRIQUE

**Serial No. ;**

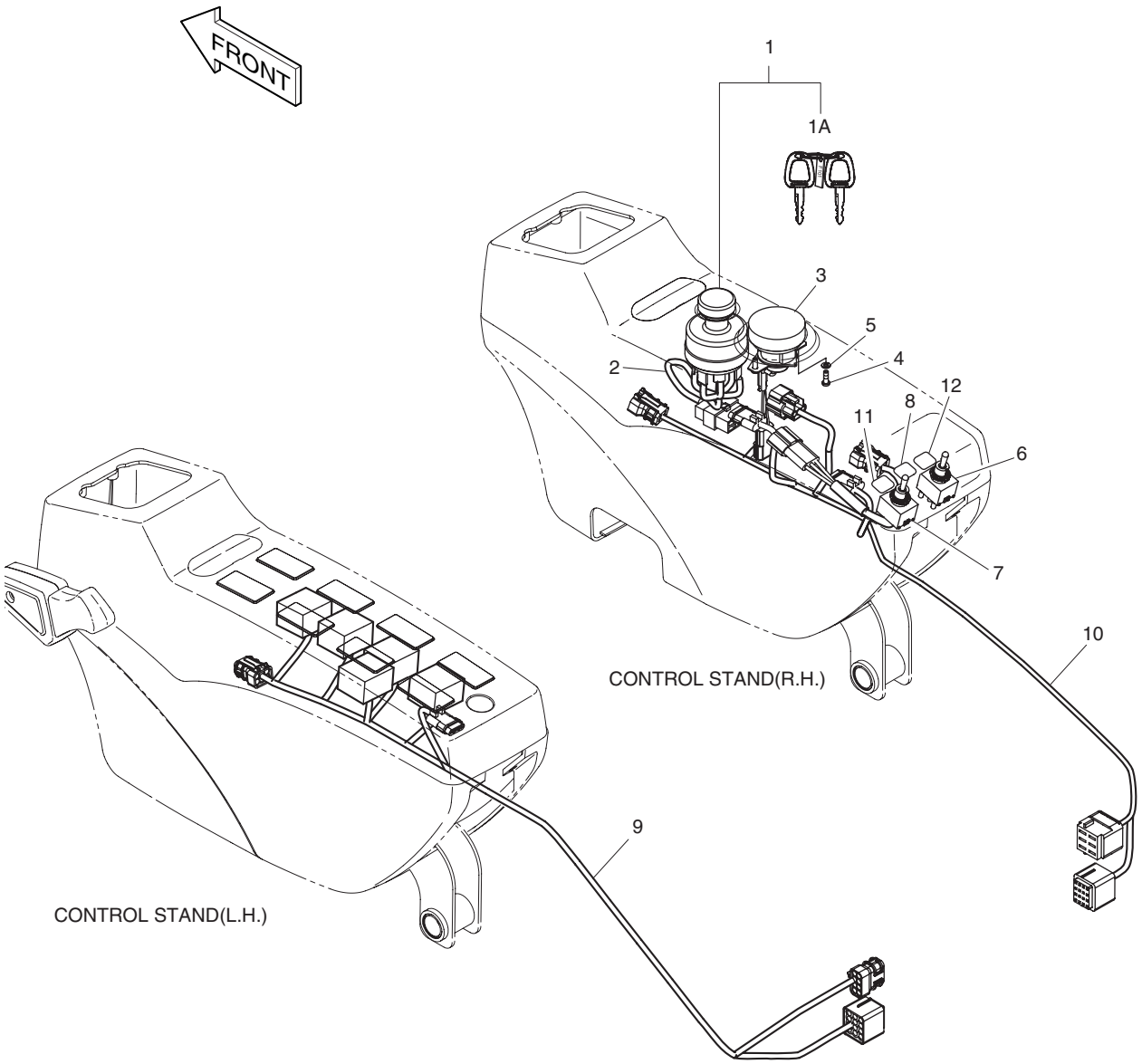

| DATE | JUN. 30, 2008 |
|---|---|
| REV. NO. | EXB08-06 |

# Fig. 1680 ELECTRIC PARTS - CONTROL STAND
# EQUIPMENT ELECTRIQUE

**Serial No. ;**

| Key No. | Part No. | Description | Description | Q'ty | S.C | Serial No. | ICA | Replaceable part | |
|---|---|---|---|---|---|---|---|---|---|
| | | | | | | | | Part No. | Q'ty |
| 1680-- | K1009357B | ELECTRIC PARTS-CONTROL | EQUIPMENT ELECTRIQUE | - | D | | | | |
| 1 | K1001858A | SWITCH;STARTER | CONTACT DE DEMARREUR | 1 | | | | | |
| 1A | K1009605A | . KEY;STARTER | . CLE | 2 | | | | | |
| 2 | **530-00150** | **HARNESS;STARTER SWITCH** | FAISCEAU | 1 | | **5001–5849** | | | |
| 3 | 2552-1004 | DIAL;ENGINE CONTROL | CADRAN | 1 | | 5001–5088 | I | K1013846 | 1 |
| | K1013846 | DIAL;ENGINE CONTROL | CADRAN | 1 | | 5089– | | | |
| 4 | S3450583 | SCREW M4X0.7X12 | VIS | 2 | | | | | |
| 5 | S5100103 | WASHER;SPRING M4 | RONDELLE ELASTIQUE | 2 | | | | | |
| 6 | 549-00090 | SWITCH;TOGGLE | INTERRUPTEUR | 1 | | 5001–5690 | I | 549-00090A | 1 |
| | 549-00090A | SWITCH;TOGGLE | INTERRUPTEUR | 1 | | 5691– | | | |
| 7 | K1001702 | SWITCH;TOGGLE | INTERRUPTEUR | 1 | | 5001–5690 | I | K1001702A | 1 |
| | K1001702A | SWITCH;TOGGLE | INTERRUPTEUR | 1 | | 5691– | | | |
| 8 | K1004427 | PLATE;NAME | PLAQUE D'IDENTIFICATION | 1 | | | | | |
| 9 | 530-00415C | HARNESS;STAND(LH) | FAISCEAU | 1 | | 5001–5849 | | | |
| | **K1030275** | **HARNESS;STAND(LH)** | FAISCEAU | 1 | | **5850–** | | | |
| 10 | 530-00414C | HARNESS;STAND(RH) | FAISCEAU | 1 | | 5001–5849 | | | |
| | **K1030574** | **HARNESS;STAND(RH)** | FAISCEAU | 1 | | **5850–** | | | |
| 11 | K1004425 | PLATE;NAME | PLAQUE D'IDENTIFICATION | 1 | | | | | |
| 12 | K1004426 | PLATE;NAME | PLAQUE D'IDENTIFICATION | 1 | | | | | |

| DATE | JUN. 30, 2006 |
|---|---|
| REV.NO. | EXB06-08 |

# Fig. 1690 ELECTRIC PARTS - RELATED EQUIPMENT ELECTRIQUE

**Serial No. ;**

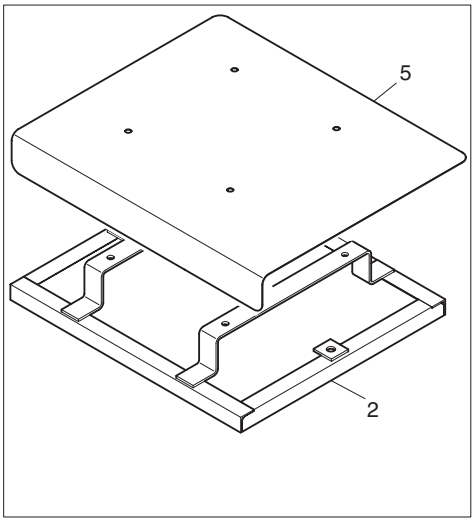


Serial No. 5001 ~ 5069

| DATE | JUN. 30, 2006 |
|---|---|
| REV. NO. | EXB06-08 |

# Fig. 1690 ELECTRIC PARTS - RELATED EQUIPMENT ELECTRIQUE

Serial No. ;

| Key No. | Part No. | Description | Description | Q'ty | S.C | Serial No. | ICA | Replaceable part | |
|---|---|---|---|---|---|---|---|---|---|
| | | | | | | | | Part No. | Q'ty |
| 1690-- | **K1009362A** | **ELECTRIC PARTS-RELATED** | EQUIPMENT ELECTRIQUE | - | D | | | | |
| 1 | 2506-6008 | BATTERY | BATTERIE | 2 | | | | | |
| 2 | K1002860A | BRACKET | SUPPORT | 1 | | 5001–5069 | I | K1002860B | 1 |
| | **K1002860B** | **BRACKET** | SUPPORT | 1 | | **5070–** | | | |
| 3 | S5102603 | WASHER;SPRING M10 | RONDELLE ELASTIQUE M10 | 2 | | | | | |
| 4 | 2120-1036D12 | BOLT M10X1.5X240 | BOULON A 6 PANS | 2 | | | | | |
| 5 | 621-03068B | COVER | COUVERCLE | 1 | | 5001–5069 | I | 621-03068C | 1 |
| | **621-03068C** | **COVER** | COUVERCLE | 1 | | **5070–** | | | |
| 6 | S3050883 | BOLT;WING M8X1.25X20 | VIS | 4 | | | | | |
| 7 | S5102503 | WASHER;SPRING M8 | RONDELLE ELASTIQUE M8 | 4 | | | | | |
| 8 | S5010513 | WASHER;PLAIN M8 | RONDELLE M8 | 4 | | | | | |
| 9 | 2544-9024 | RELAY;BATTERY | RELAIS BATTERIE | 1 | | | | | |
| 10 | S0509053 | BOLT M8X1.25X25 | BOULON A 6 PANS | 2 | | | | | |
| 11 | S5102503 | WASHER;SPRING M8 | RONDELLE ELASTIQUE M8 | 2 | | | | | |
| 12 | S5010513 | WASHER;PLAIN M8 | RONDELLE M8 | 2 | | | | | |
| 13 | 2527-9004 | BREAKER;CIRCUIT | COUPE-CIRCUIT | 1 | | | | | |
| 14 | 2120-1354 | SCREW | VIS | 2 | | | | | |
| 15 | 2527-1023A | FUSIBLE LINK | FUSIBLE | 1 | | | | | |
| 16 | 2544-1022 | RELAY | RELAIS DEMARREUR | 1 | | | | | |
| 17 | S0504453 | BOLT M6X1.0X12 | BOULON A 6 PANS | 2 | | | | | |
| 18 | S5102303 | WASHER;SPRING M6 | RONDELLE ELASTIQUE M6 | 2 | | | | | |
| 19 | K1000789 | RESERVE TANK | RESEVOIR | 1 | | | | | |
| 20 | 2195-1534 | BRACKET | SUPPORT | 1 | | | | | |
| 21 | S0504453 | BOLT M6X1.0X12 | BOULON A 6 PANS | 2 | | | | | |
| 22 | S5102303 | WASHER;SPRING M6 | RONDELLE ELASTIQUE M6 | 2 | | | | | |
| 23 | 534-00085 | LAMP;HEAD | LAMPE | 2 | | | | | |
| 23A | 2515-1016D4 | . BULB 24V 70W | . LAMPE | 1 | | | | | |
| 24 | 516-00014 | HORN;HIGH | AVERTISSEUR | 1 | | | | | |
| 25 | 516-00015 | HORN;LOW | AVERTISSEUR | 1 | | | | | |
| 26 | S0508666 | BOLT | BOULON A 6 PANS | 2 | | | | | |
| 27 | S5102503 | WASHER;SPRING M8 | RONDELLE ELASTIQUE M8 | 2 | | | | | |
| 28 | 195-02622C | BRACKET | SUPPORT | 1 | | | | | |
| 29 | DS0025022 | BOLT;SET | BOULON A 6 PANS | 2 | | | | | |
| 30 | 621-02643B | PLATE | PLAQUE | 1 | | | | | |
| 31 | DS0025013 | BOLT;SET | BOULON A 6 PANS | 2 | | | | | |
| 32 | 191-02986C | PLATE | PLAQUE | 1 | | | | | |
| 33 | DS0025013 | BOLT;SET | BOULON A 6 PANS | 2 | | | | | |
| 34 | K1007668 | BRACKET | SUPPORT | 1 | | | | | |

| DATE | JUN. 30, 2006 |
|---|---|
| REV.NO. | EXB06-08 |

# Fig. 1690 ELECTRIC PARTS - RELATED EQUIPMENT ELECTRIQUE

**Serial No. ;**

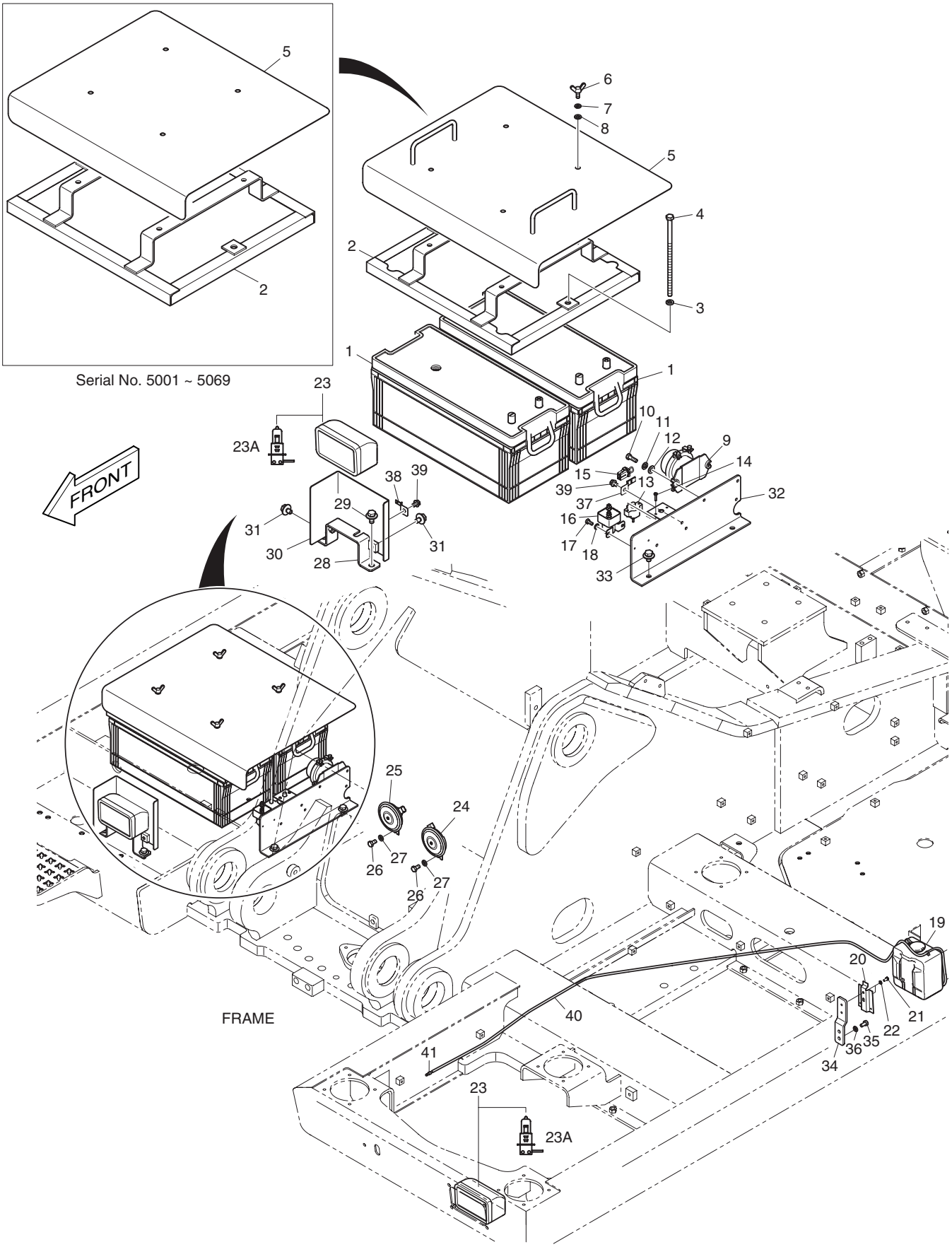

| DATE | JUN. 30, 2006 |
|---|---|
| REV. NO. | EXB06-08 |

# Fig. 1690 ELECTRIC PARTS - RELATED EQUIPMENT ELECTRIQUE

Serial No. ;

| Key No. | Part No. | Description | Description | Q'ty | S.C | Serial No. | ICA | Replaceable part | |
|---|---|---|---|---|---|---|---|---|---|
| | | | | | | | | Part No. | Q'ty |
| 1690-35 | S0508666 | BOLT | BOULON A 6 PANS | 2 | | | | | |
| 36 | S5102503 | WASHER;SPRING | RONDELLE ELASTIQUE M8 | 2 | | | | | |
| 37 | 2197-1660 | BRACKET;HOUSING | SUPPORT | 1 | | | | | |
| 38 | 2197-1661 | BRACKET;HOUSING | SUPPORT | 1 | | | | | |
| 39 | K1001029 | BOLT | BOULON A 6 PANS | 2 | | | | | |
| 40 | 4185-1777 | HOSE;WATER | TUYAU FLEXIBLE | 1 | | | | | |
| 41 | 2415-1018 | ADAPTER;HOSE | RACCORD ADAPTEUR | 1 | | | | | |

| DATE | JUN. 30, 2008 |
|---|---|
| REV.NO. | EXB08-06 |

# Fig. 1700 ELECTRIC PARTS - ENGINE
# EQUIPMENT ELECTRIQUE

**Serial No. ;**

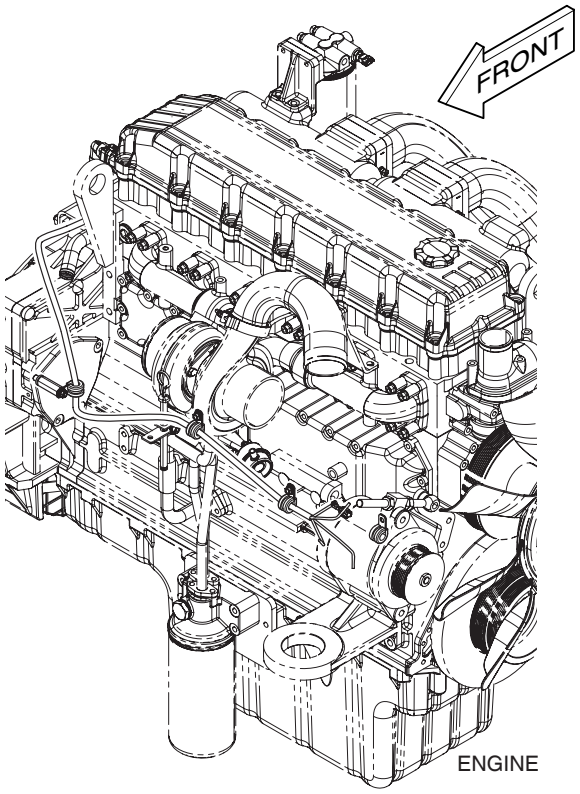


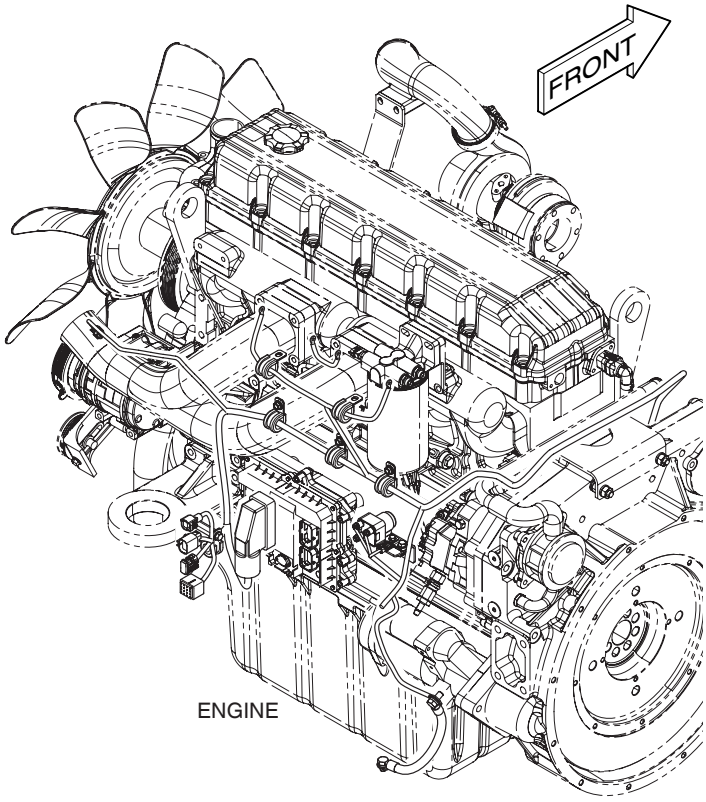


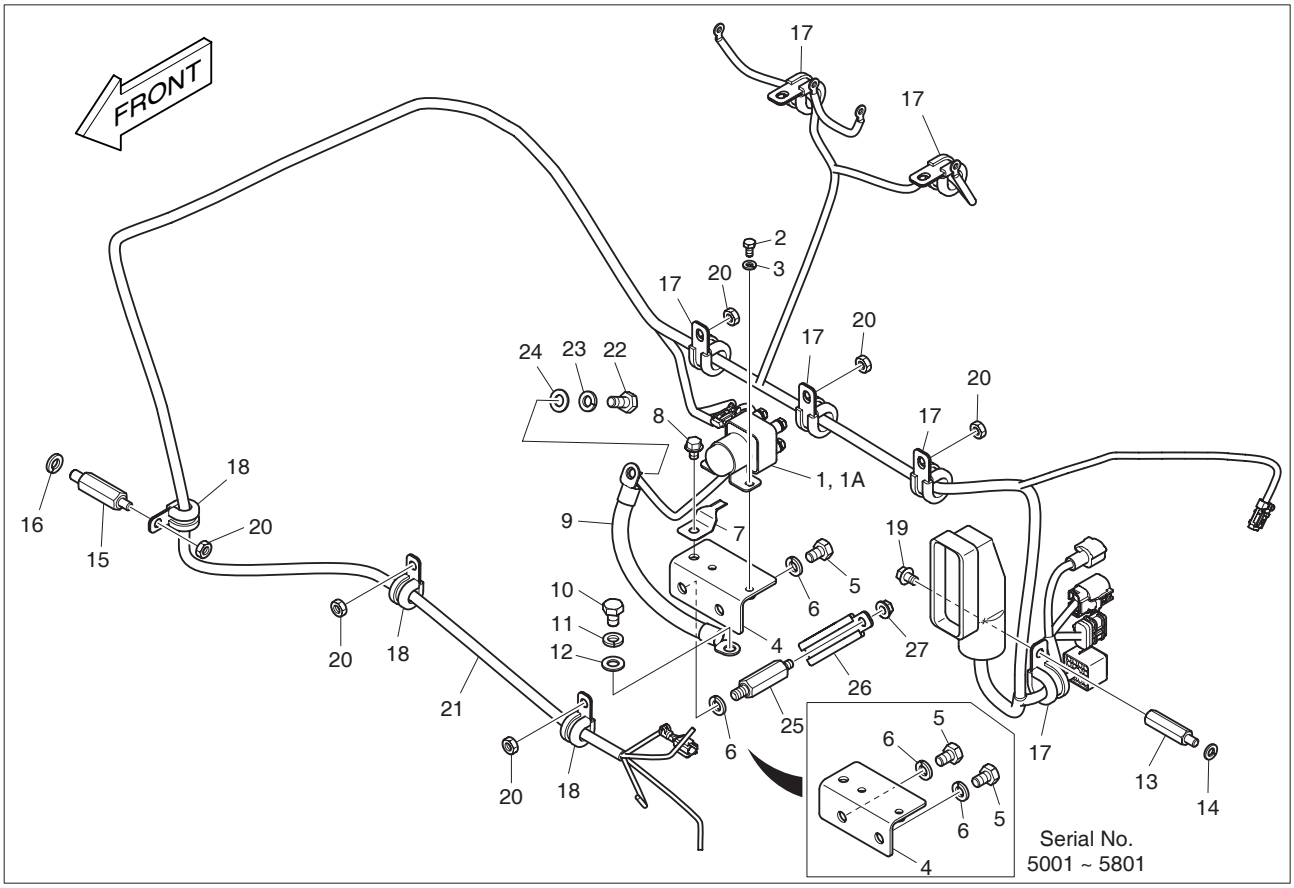

| DATE | JUN. 30, 2008 |
|---|---|
| REV. NO. | EXB08-06 |

# Fig. 1700 ELECTRIC PARTS - ENGINE EQUIPMENT ELECTRIQUE

Serial No. ;

| Key No. | Part No. | Description | Description | Q'ty | S.C | Serial No. | ICA | Replaceable part | |
|---|---|---|---|---|---|---|---|---|---|
| | | | | | | | | Part No. | Q'ty |
| 1700-- | K1009364A | ELECTRIC PARTS-ENGINE | EQUIPMENT ELECTRIQUE | - | D | | | | |
| 1 | 544-00007 | RELAY;PREHEAT | RELAIS DE | 1 | | | | | |
| 1A | 527-00005 | . FUSE;PREHEAT RELAY | . FUSIBLE | 1 | | | | | |
| 2 | S0504453 | BOLT M6X1.0X12 | BOULON A 6 PANS | 2 | | | | | |
| 3 | S5102303 | WASHER;SPRING M6 | RONDELLE ELASTIQUE M6 | 2 | | | | | |
| 4 | 195-02676B | BRACKET;RELAY | SUPPORT | 1 | | 5001–5801 | I | 195-02676C | 1 |
| | **195-02676C** | **BRACKET;RELAY** | SUPPORT | 1 | | **5802–** | | | |
| 5 | S0511653 | BOLT M10X1.5X16 | BOULON A 6 PANS | 2 | | 5001–5801 | | | |
| | **S0511653** | **BOLT M10X1.5X16** | BOULON A 6 PANS | 1 | | **5802–** | | | |
| 6 | S5102603 | WASHER;SPRING M10 | RONDELLE ELASTIQUE M10 | 2 | | | | | |
| 7 | 2197-1661 | BRACKET;HOUSING | SUPPORT | 1 | | | | | |
| 8 | K1001029 | BOLT | BOULON A 6 PANS | 1 | | | | | |
| 9 | 553-00001D2 | CABLE;ENGINE EARTH | CABLE | 1 | | | | | |
| 10 | S0511853 | BOLT M10x1.5x20 | BOULON A 6 PANS | 1 | | | | | |
| 11 | S5102603 | WASHER;SPRING M10 | RONDELLE ELASTIQUE M10 | 1 | | | | | |
| 12 | S5010613 | WASHER;PLAIN M10 | RONDELLE | 1 | | | | | |
| 13 | 2120-2187 | BOLT;STUD M8X1.25X20 | BOULON A 6 PANS | 1 | | | | | |
| 14 | S5102503 | WASHER;SPRING M8 | RONDELLE ELASTIQUE M8 | 1 | | | | | |
| 15 | 2120-2159 | BOLT;STUD | BOULON A 6 PANS | 1 | | | | | |
| 16 | S5102603 | WASHER;SPRING M10 | RONDELLE ELASTIQUE M10 | 1 | | | | | |
| 17 | 124-00208D3 | CLIP | ATTACHE | 6 | | | | | |
| 18 | 124-00208D2 | CLIP | CLIP | 3 | | | | | |
| 19 | K1001029 | BOLT | BOULON A 6 PANS | 1 | | | | | |
| 20 | 2121-1305 | NUT M8x1.25 | ECROU | 6 | | | | | |
| 21 | K1007928A | HARNESS;ENGINE | FAISCEAU | 1 | | | | | |
| 22 | S0511953 | BOLT M10X1.5X22 | BOULON A 6 PANS | 1 | | | | | |
| 23 | S5102603 | WASHER;SPRING M10 | RONDELLE ELASTIQUE M10 | 1 | | | | | |
| 24 | S5010613 | WASHER;PLAIN M10 | RONDELLE | 1 | | | | | |
| 25 | **2120-2159** | **BOLT;STUD** | BOLT;STUD | 1 | | **5802–** | | | |
| 26 | **124-00208D6** | **CLIP** | CLIP | 1 | | **5802–** | | | |
| 27 | **2121-1305** | **NUT** | NUT | 1 | | **5802–** | | | |

| DATE | OCT. 17, 2005 |
|---|---|
| 1st EDITION | |

# Fig. 1710 ALTERNATOR MOUNTING
# SUPPORT D'ALTERNATEUR

**Serial No. ;**

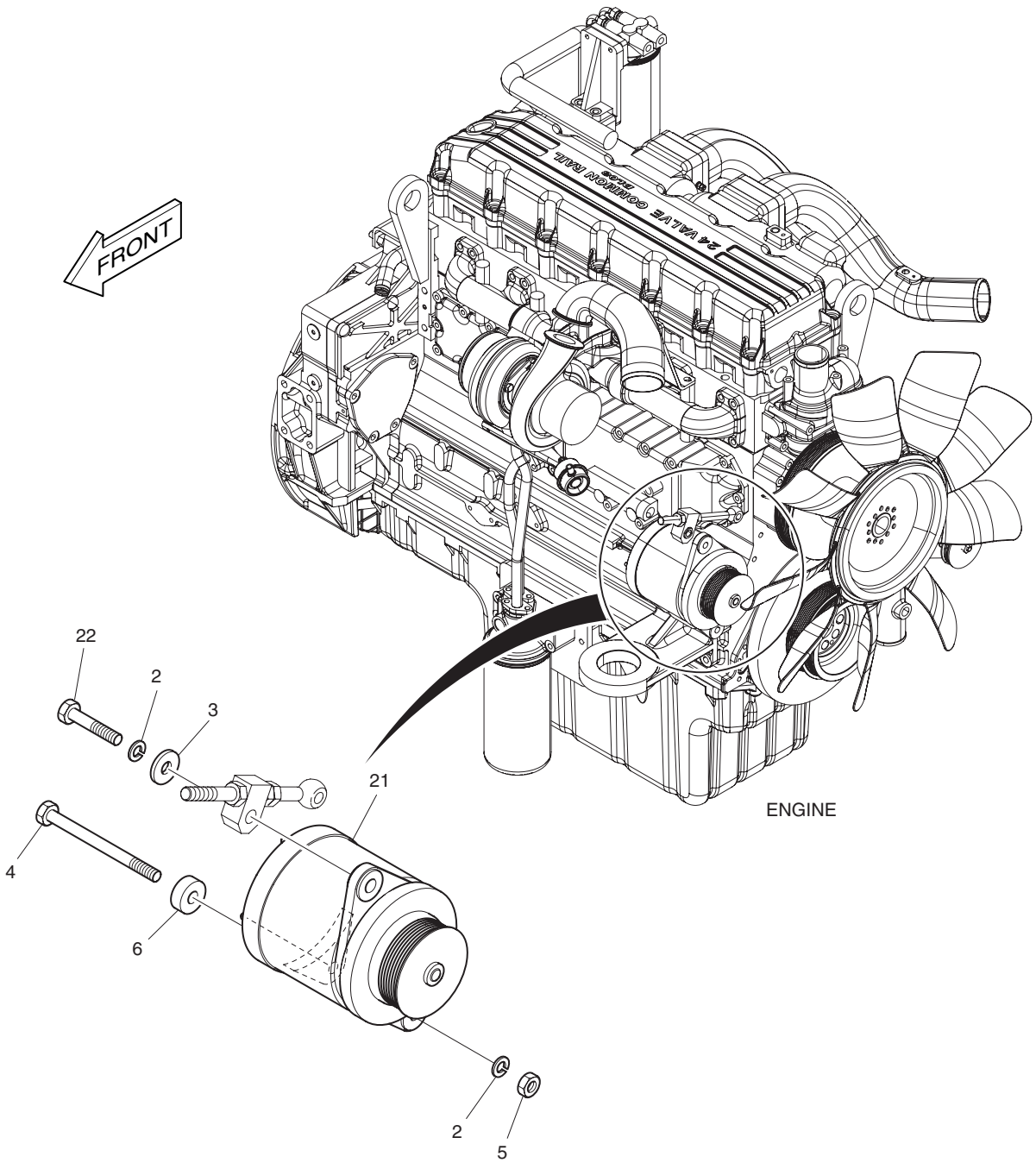

| DATE | OCT. 17, 2005 |
|---|---|
| 1st EDITION | |

# Fig. 1710 ALTERNATOR MOUNTING SUPPORT D'ALTERNATEUR

Serial No. ;

| Key No. | Part No. | Description | Description | Q'ty | S.C | Serial No. | ICA | Replaceable part | |
|---|---|---|---|---|---|---|---|---|---|
| | | | | | | | | Part No. | Q'ty |
| 1710-- | K1009387A | ALTERNATOR MOUNTING | SUPPORT D'ALTERNATEUR | - | D | | | | |
| 2 | S5102703 | WASHER;SPRING M12 | RONDELLE ELASTIQUE | 2 | | | | | |
| 3 | 2114-1058D54 | WASHER M12 | RONDELLE PLATE | 1 | | | | | |
| 4 | S0562653 | BOLT M12X1.75X160 | BOULON A 6 PANS | 1 | | | | | |
| 5 | S4012733 | NUT M12 | ECROU | 1 | | | | | |
| 6 | 2114-1058D70 | WASHER | RONDELLE PLATE | 1 | | | | | |
| 21 | 2502-9009 | ALTERNATOR 24V 50A | ALTERNATEUR | 1 | | | | | |
| 22 | S0786653 | BOLT | BOULON A 6 PANS | 1 | | | | | |

# Fig. 1720 ALTERNATOR
# ALTERNATEUR

Serial No. ;

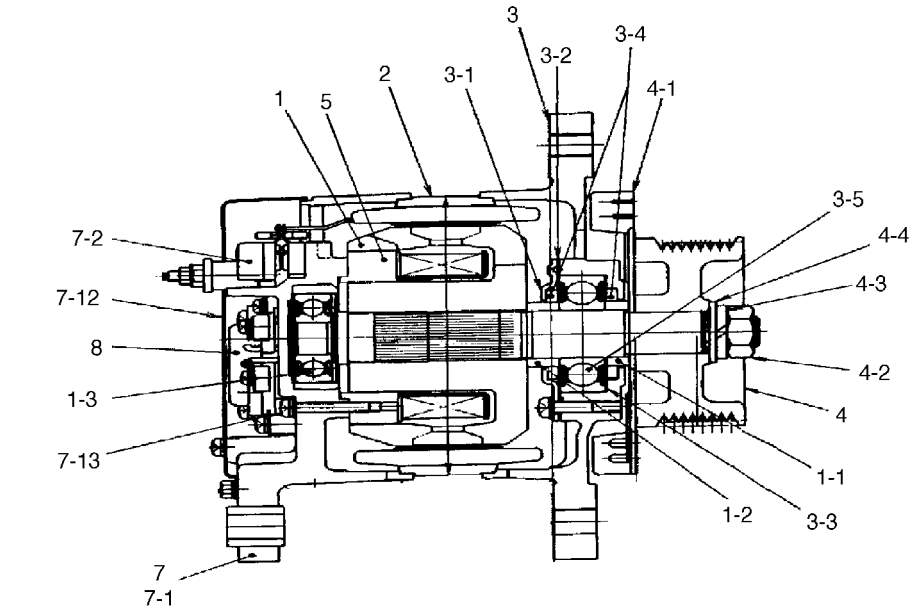


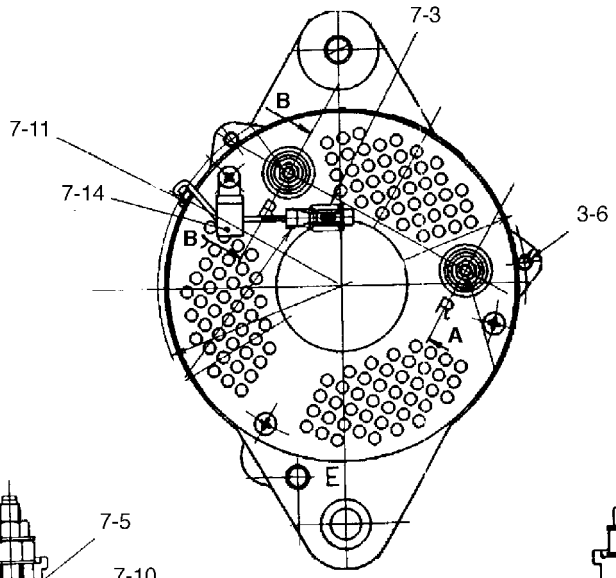


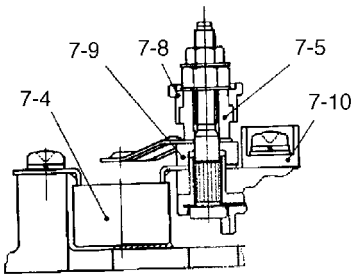


SECTION **A - A**

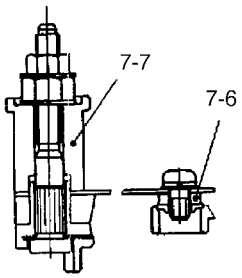


SECTION **B - B**

| DATE | OCT. 17, 2005 |
|---|---|
| 1st EDITION | |

# Fig. 1720 ALTERNATOR ALTERNATEUR

Serial No. ;

| Key No. | Part No. | Description | Description | Q'ty | S.C | Serial No. | ICA | Replaceable part | |
|---|---|---|---|---|---|---|---|---|---|
| | | | | | | | | Part No. | Q'ty |
| 1720-- | 2502-9009 | ALTERNATOR | ALTERNATEUR | 1 | | | | | |
| 1 | 0-35100-0300 | ROTOR ASS'Y | ROTOR | 1 | | | | | |
| 1-1 | 1-33923-0790 | . COLLAR | . BRIDE | 1 | | | | | |
| 1-2 | 0-35923-0160 | . COLLAR | . BAGUE | 1 | | | | | |
| 1-3 | 0-09201-0980 | . BEARING;BALL | . PALIER | 1 | | | | | |
| 2 | 0-35200-0440 | STATOR ASS'Y | STATOR | 1 | | | | | |
| 3 | 0-35300-0310 | BRACKET ASS'Y | SUPPORT | 1 | | | | | |
| 3-1 | 0-35926-0070 | . RETAINER | . BAGUE DE SOUTIEN | 1 | | | | | |
| 3-2 | 0-35926-0090 | . RETAINER | . BAGUE DE SOUTIEN | 1 | | | | | |
| 3-3 | 1-33926-0730 | . RETAINER | . BAGUE | 1 | | | | | |
| 3-4 | 0-35951-0060 | . PACKING | . JOINT | 2 | | | | | |
| 3-5 | 0-09201-1140 | . BEARING;BALL | . PALIER | 1 | | | | | |
| 3-6 | 0-0275-06802 | . BOLT | . BOULON A 6 PANS | 3 | | | | | |
| 4 | 0-35411-0870 | PULLEY | POULIE | 1 | | | | | |
| 4-1 | 0-35421-0170 | . FAN | . VENTILATEUR | 1 | | | | | |
| 4-2 | 0-0280-16022 | . NUT | . ECROU | 1 | | | | | |
| 4-3 | 1-0335-16002 | . WASHER;SPRING | . RONDELLE | 1 | | | | | |
| 4-4 | 1-0330-16012 | . WASHER;PLAIN | . RONDELLE | 1 | | | | | |
| 5 | 0-35120-0230 | COIL;FIELD | COIL | 1 | | | | | |
| 7 | 0-35700-0890 | BRACKET ASS'Y | SUPPORT | 1 | | | | | |
| 7-1 | 0-35710-1090 | . BRACKET;REAR | . SUPPORT | 1 | | | | | |
| 7-2 | 0-35730-0510 | . RECTIFIER ASS'Y | . RECTIFIER | 1 | | | | | |
| 7-3 | 0-35780-0750 | . TERMINAL ASS'Y | . COSSE | 1 | | | | | |
| 7-4 | 0-09170-2501 | . CONDENSER | . CONDENSEUR | 1 | | | | | |
| 7-5 | 0-35923-0130 | . COLLAR | . BAGUE | 1 | | | | | |
| 7-6 | 0-35923-0200 | . COLLAR | . BAGUE | 1 | | | | | |
| 7-7 | 0-35943-0140 | . BUSH;INSULATE | . DOUILLE | 1 | | | | | |
| 7-8 | 0-35943-0150 | . BUSH;INSULATE | . DOUILLE | 1 | | | | | |
| 7-9 | 0-35943-0160 | . BUSH;INSULATE | . DOUILLE | 1 | | | | | |
| 7-10 | 0-35943-0170 | . BUSH;INSULATE | . DOUILLE | 1 | | | | | |
| 7-11 | 1-33953-0150 | . BUSH;GUM | . DOUILLE | 1 | | | | | |
| 7-12 | 0-35761-0250 | . COVER | . COUVERCLE | 1 | | | | | |
| 7-13 | 0-0056-05302 | . SCREW | . VIS | 3 | | | | | |
| 7-14 | 1-33931-0021 | . CLIP | . ATTACHE | 1 | | | | | |
| 8 | 0-35719-0200 | REGULATOR ASS'Y | REGULATEUR | 1 | | | | | |

| DATE | OCT. 17, 2005 |
|---|---|
| 1st EDITION | |

# Fig. 1730 ELECTRIC PARTS - WORKING LAMP
# EQUIPMENT ELECTRIQUE

**Serial No. ;**

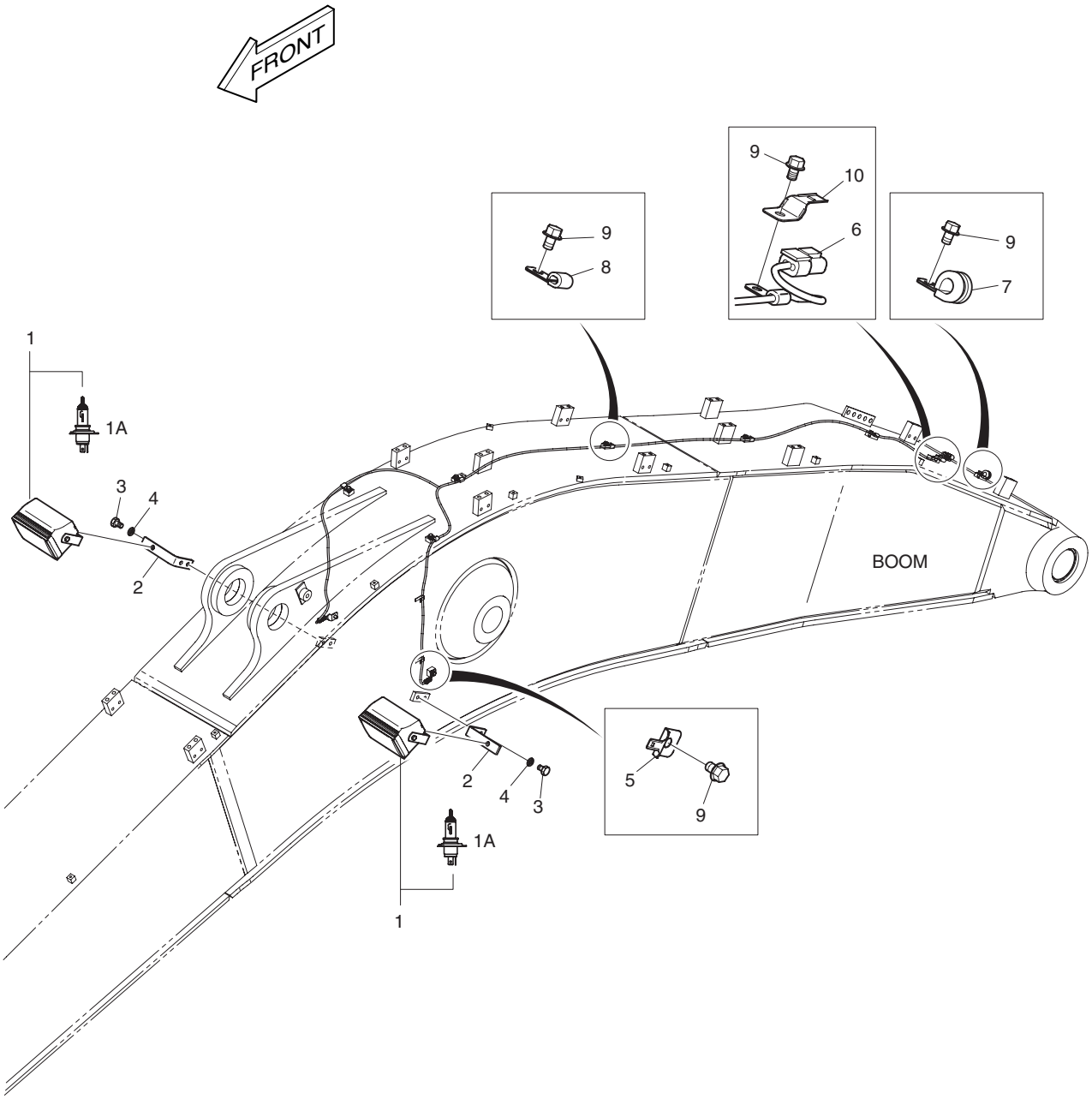

| DATE | OCT. 17, 2005 |
|---|---|
| 1st EDITION | |

# Fig. 1730 ELECTRIC PARTS - WORKING LAMP
# EQUIPMENT ELECTRIQUE

Serial No. ;

| Key No. | Part No. | Description | Description | Q'ty | S.C | Serial No. | ICA | Replaceable part | |
|---|---|---|---|---|---|---|---|---|---|
| | | | | | | | | Part No. | Q'ty |
| 1730-- | K1009366A | ELECTRIC PARTS-WORKING | EQUIPMENT ELECTRIQUE | - | D | | | | |
| 1 | 534-00064 | LAMP ASS'Y;WORKING | LAMPE | 2 | | | | | |
| 1A | 2515-1022D1 | . BULB;HALOGEN(24V 75/70W) | . AMPOULE | 1 | | | | | |
| 2 | 2195-2394B | BRACKET | SUPPORT | 2 | | | | | |
| 3 | S0515066 | BOLT | BOULON A 6 PANS | 4 | | | | | |
| 4 | S5102703 | WASHER;SPRING M12 | RONDELLE ELASTIQUE | 4 | | | | | |
| 5 | 2197-1661 | BRACKET;HOUSING | SUPPORT | 2 | | | | | |
| 6 | 530-00418D4 | HARNESS;WORKING LAMP | FAISCEAU | 1 | | | | | |
| 7 | 124-00208D2 | CLIP | CLIP | 1 | | | | | |
| 8 | 2124-1509D1 | CLIP | ATTACHE | 7 | | | | | |
| 9 | K1001029 | BOLT | BOULON A 6 PANS | 10 | | | | | |
| 10 | 2197-1660 | BRACKET;HOUSING | SUPPORT | 1 | | | | | |

| DATE | JUN. 30, 2007 |
|---|---|
| REV.NO. | EXB07-06 |

# Fig. 1740 ELECTRIC WIRING
# POSE DE FILES ELECTRIQUES

**Serial No. ;**

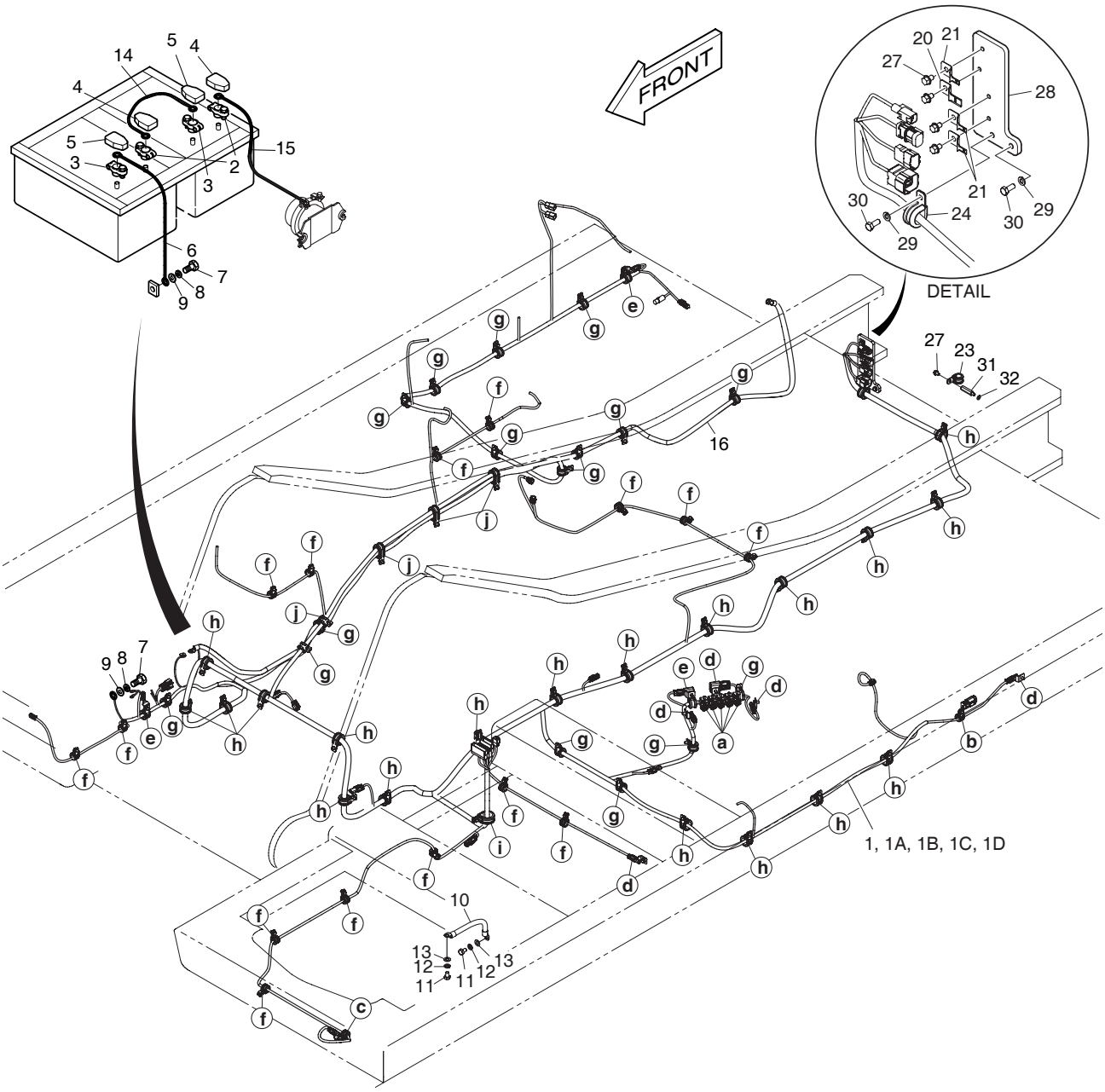


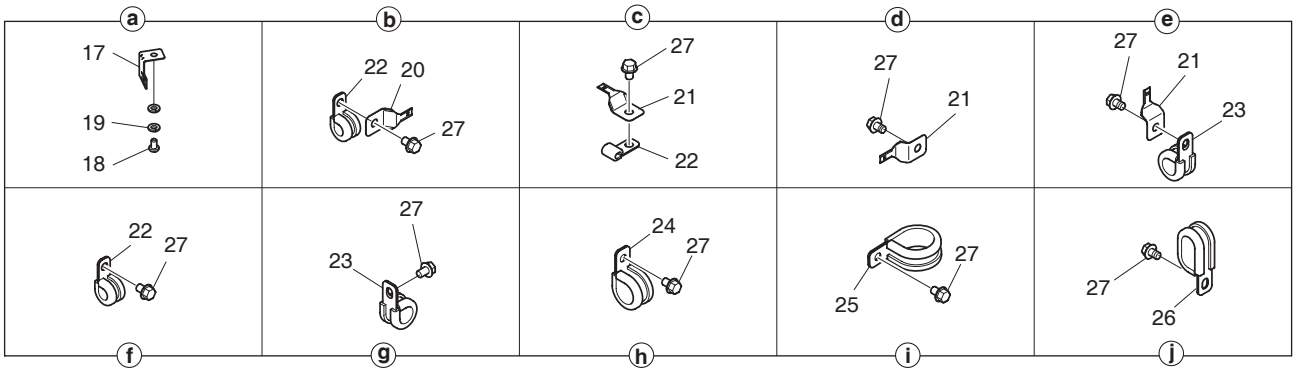

| DATE | JUN. 30, 2007 |
|---|---|
| REV. NO. | EXB07-06 |

# Fig. 1740 ELECTRIC WIRING
# POSE DE FILES ELECTRIQUES

**Serial No. ;**

| Key No. | Part No. | Description | Description | Q'ty | S.C | Serial No. | ICA | Replaceable part | |
|---|---|---|---|---|---|---|---|---|---|
| | | | | | | | | Part No. | Q'ty |
| 1740-- | K1009385A | ELECTRIC WIRING | CIRCUIT OUVERT | - | D | | | | |
| 1 | K1006451B | HARNESS;MAIN | FAISCEAU | 1 | | | | | |
| 1A | 2548-1027 | . DIODE | . DIODE | 4 | | | | | |
| 1B | 548-00003A | . DIODE | . DIODE | 1 | | | | | |
| 1C | K1000814 | . DIODE | . DIODE | 1 | | | | | |
| 1D | K1000815 | . DIODE | . DIODE | 1 | | | | | |
| 2 | 2550-1014D1 | TERMINAL;BATTERY(+) | COSSE DE BATTERIE(+) | 2 | | | | | |
| 3 | 2550-1014D2 | TERMINAL;BATTERY(-) | COSSE DE BATTERIE | 2 | | | | | |
| 4 | 2160-1212 | CAP;BATT. TML (+) | CHAPEAU DE | 2 | | | | | |
| 5 | 2160-1213 | CAP;BATT. TML (-) | BOUCHON | 2 | | | | | |
| 6 | 2553-1275D5 | CABLE;EARTH | CABLE | 1 | | | | | |
| 7 | S0511653 | BOLT M10X1.5X16 | BOULON A 6 PANS | 2 | | | | | |
| 8 | S5102603 | WASHER;SPRING M10 | RONDELLE ELASTIQUE M10 | 2 | | | | | |
| 9 | S5010613 | WASHER;PLAIN M10 | RONDELLE | 2 | | | | | |
| 10 | 2553-1275D5 | CABLE;EARTH | CABLE | 1 | | 5001–5690 | | | |
| | **2553-1275D39** | **CABLE;EARTH** | CABLE | 1 | | **5691–** | | | |
| 11 | S0511653 | BOLT M10X1.5X16 | BOULON A 6 PANS | 2 | | | | | |
| 12 | S5102603 | WASHER;SPRING M10 | RONDELLE ELASTIQUE M10 | 2 | | | | | |
| 13 | S5010613 | WASHER;PLAIN M10 | RONDELLE | 2 | | | | | |
| 14 | 2553-1275D6 | CABLE;BATT-BATT | CABLE BATTERIE A | 1 | | | | | |
| 15 | 2553-1275D54 | CABLE:BATT-BATT. RELAY | CABLE | 1 | | | | | |
| 16 | 2553-1275D10 | CABLE;BATT RY-STARTER | CABLE | 1 | | | | | |
| 17 | 2195-3500 | BRACKET;HOUSING | SUPPORT | 5 | | | | | |
| 18 | S0504453 | BOLT M6X1.0X12 | BOULON A 6 PANS | 5 | | | | | |
| 19 | S5102303 | WASHER;SPRING M6 | RONDELLE ELASTIQUE M6 | 5 | | | | | |
| 20 | 2197-1660 | BRACKET;HOUSING | SUPPORT | 2 | | | | | |
| 21 | 2197-1661 | BRACKET;HOUSING | SUPPORT | 12 | | | | | |
| 22 | 124-00208D2 | CLIP | CLIP | 17 | | | | | |
| 23 | 124-00208D3 | CLIP | ATTACHE | 20 | | | | | |
| 24 | 124-00208D4 | CLIP | ATTACHE | 20 | | | | | |
| 25 | 124-00208D6 | CLIP | ATTACHE | 1 | | | | | |
| 26 | 124-00209D1 | CLIP | ATTACHE | 4 | | | | | |
| 27 | K1001029 | BOLT | BOULON A 6 PANS | 70 | | | | | |
| 28 | K1001786A | BRACKET;CONNECTOR | SUPPORT | 1 | | | | | |
| 29 | S5102503 | WASHER;SPRING M8 | RONDELLE ELASTIQUE M8 | 2 | | | | | |
| 30 | S0508853 | BOLT M8X1.25X20 | BOULON A 6 PANS | 2 | | | | | |
| 31 | 2120-2187 | BOLT;STUD | BOULON A 6 PANS | 1 | | | | | |
| 32 | S5102503 | WASHER;SPRING | RONDELLE ELASTIQUE M8 | 1 | | | | | |

| DATE | OCT. 17, 2005 |
|---|---|
| 1st EDITION | |

# Fig. 1750 AIRCONDITIONER(1) REFRIGERATION

**Serial No. ;**

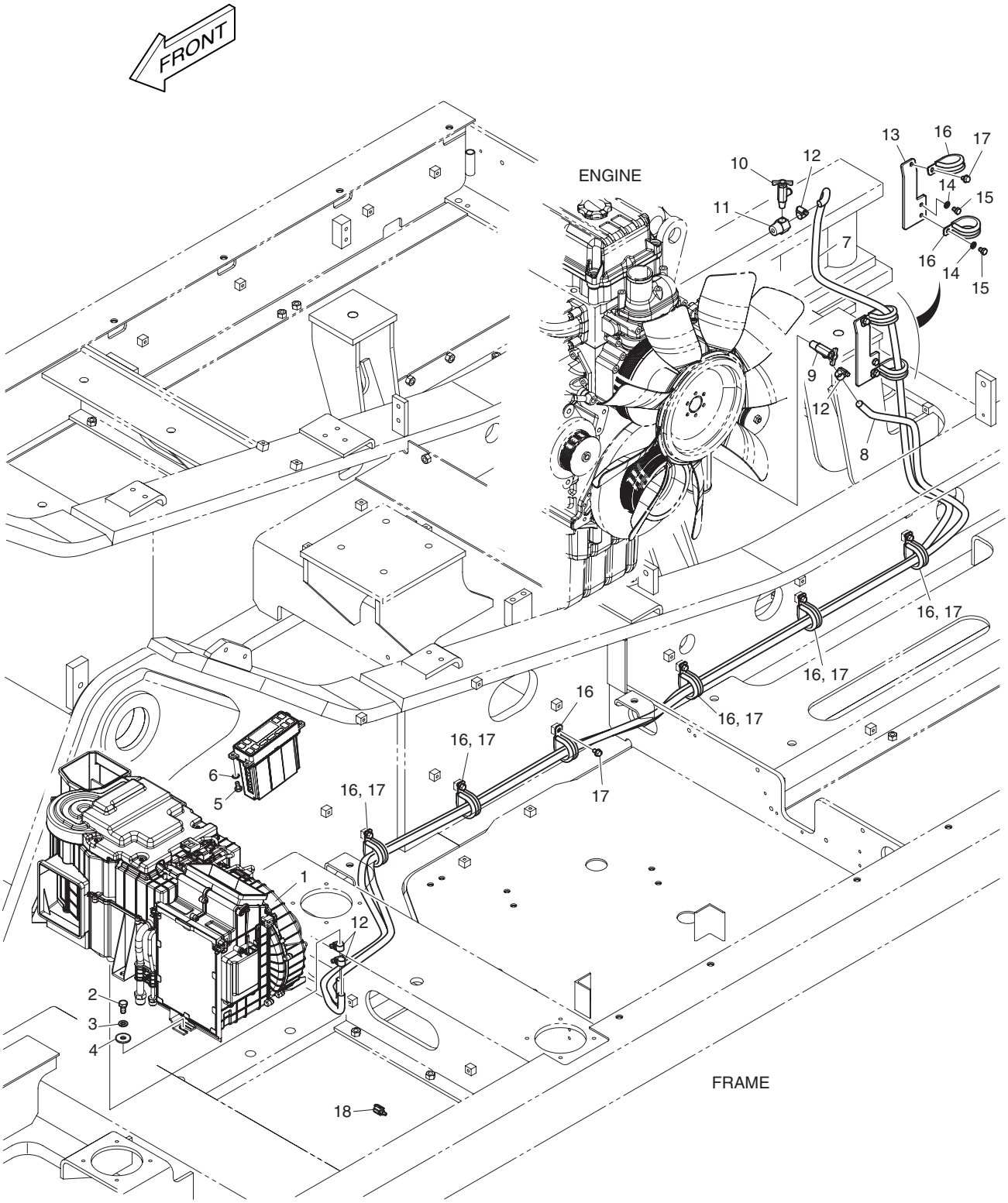

| DATE | OCT. 17, 2005 |
|---|---|
| 1st EDITION | |

# Fig. 1750 AIRCONDITIONER(1) REFRIGERATION

Serial No. ;

| Key No. | Part No. | Description | Description | Q'ty | S.C | Serial No. | ICA | Replaceable part | |
|---|---|---|---|---|---|---|---|---|---|
| | | | | | | | | Part No. | Q'ty |
| 1750-- | K1009391A | AIR CONDITIONER(1) | REFRIGERATION | - | D | | | | |
| 1 | 920-00127A | UNIT;AIRCON & HEATING | CLE A MOLETTE | 1 | | | | | |
| 2 | S0508653 | BOLT M8X1.25X16 | BOULON A 6 PANS | 6 | | | | | |
| 3 | S5102503 | WASHER;SPRING M8 | RONDELLE ELASTIQUE M8 | 6 | | | | | |
| 4 | 2114-1058D29 | WASHER | RONDELLE | 6 | | | | | |
| 5 | S3450833 | BOLT M5X0.8X12 | VIS | 4 | | | | | |
| 6 | S5000213 | WASHER;PLAIN M5 | RONDELLE | 4 | | | | | |
| 7 | 2185-1308D9 | HOSE;RUBBER @20/13X4900 | TUYAU FLEXIBLE | 1 | | | | | |
| 8 | 2185-1308D6 | HOSE;RUBBER @20/13X3500 | TUYAU | 1 | | | | | |
| 9 | 2186-9005 | COCK | ROBINET | 1 | | | | | |
| 10 | 2186-9003 | VALVE | VANNE | 1 | | | | | |
| 11 | 2181-1159 | ADAPTER(PT3/4XPT3/8) | RACCORD ADAPTATEUR | 1 | | | | | |
| 12 | S8450016 | CLAMP;HOSE | COLLIER | 4 | | | | | |
| 13 | K1006960A | BRACKET;HOSE GUIDE | SUPPORT | 1 | | | | | |
| 14 | S5102503 | WASHER;SPRING M8 | RONDELLE ELASTIQUE M8 | 2 | | | | | |
| 15 | S0508866 | BOLT | BOULON A 6 PANS | 2 | | | | | |
| 16 | 124-00208D7 | CLIP | ATTACHE | 8 | | | | | |
| 17 | K1001029 | BOLT | BOULON A 6 PANS | 7 | | | | | |
| 18 | 547-00024A | SENSOR;AMBENT | CAPTEUR | 1 | | | | | |

| DATE | OCT. 17, 2005 |
|---|---|
| 1st EDITION | |

# Fig. 1760 AIRCON UNIT
# CLE A MOLETTE

Serial No. ;

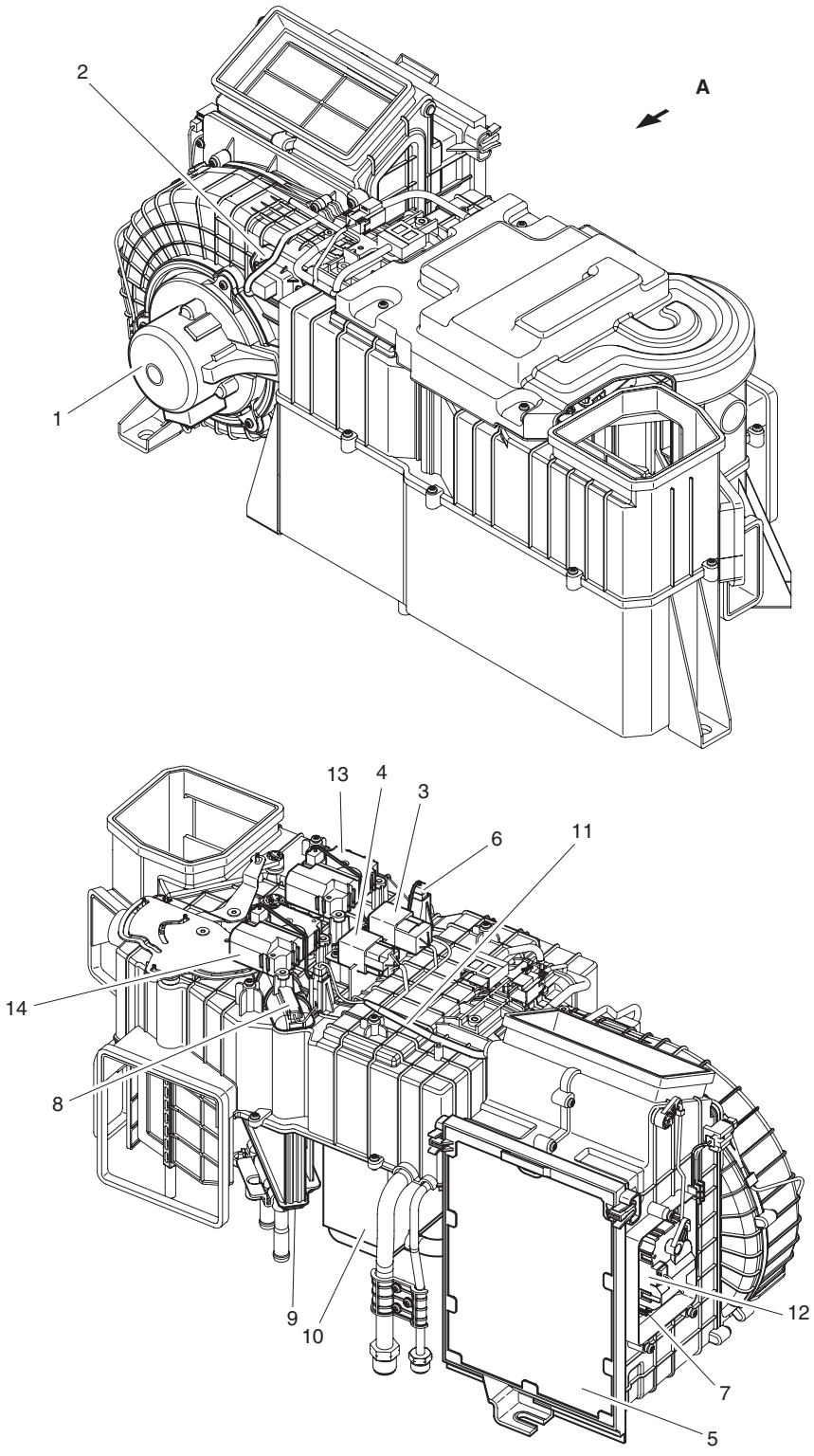


VIEW **A**

| DATE | OCT. 17, 2005 |
|---|---|
| 1st EDITION | |

# Fig. 1760 AIRCON UNIT CLE A MOLETTE

Serial No. ;

| Key No. | Part No. | Description | Description | Q'ty | S.C | Serial No. | ICA | Replaceable part | |
|---|---|---|---|---|---|---|---|---|---|
| | | | | | | | | Part No. | Q'ty |
| 1760-- | 920-00127A | AIRCON UNIT | CLE A MOLETTE | 1 | | | | | |
| 1 | K1002206 | MOTOR;BLOWER;24V | MOTEUR | 1 | | | | | |
| 2 | K1002207 | POWER FET | FET DE PUISSANCE | 1 | | | | | |
| 3 | K1002208 | RELAY;BLOWER 24V | RELAIS | 1 | | | | | |
| 4 | K1002209 | RELAY;AIRCON 24V | RELAIS | 1 | | | | | |
| 5 | K1002210 | FILTER;AIR CON. | FILTRE | 1 | | | | | |
| 6 | K1002211 | SENSOR;TEMP EVAPORATOR | CAPTEUR | 1 | | | | | |
| 7 | K1002212 | SENSOR;TEMPERATURE | CAPTEUR | 1 | | | | | |
| 8 | K1002213 | SENSOR;WATER TEMPERATURE | CAPTEUR | 1 | | | | | |
| 9 | K1002214 | CORE;HEATER | CORE;HEATER | 1 | | | | | |
| 10 | K1002215 | EVAPORATOR | CHAUFFAGE | 1 | | | | | |
| 11 | K1002216 | HARNESS;AIR CONDITIONER | FAISCEAU | 1 | | | | | |
| 12 | K1002217 | ACTUATOR;INTAKE | DECLENCHEURE | 1 | | | | | |
| 13 | K1002218 | ACTUATOR;AIR MIX | DECLENCHEURE | 1 | | | | | |
| 14 | K1002219 | ACTUATOR;MODE | DECLENCHEURE | 1 | | | | | |

| DATE | JUN. 30, 2006 |
|---|---|
| REV.NO. | EXB06-08 |

# Fig. 1770 AIRCONDITIONER(2) REFRIGERATION

**Serial No. ;**

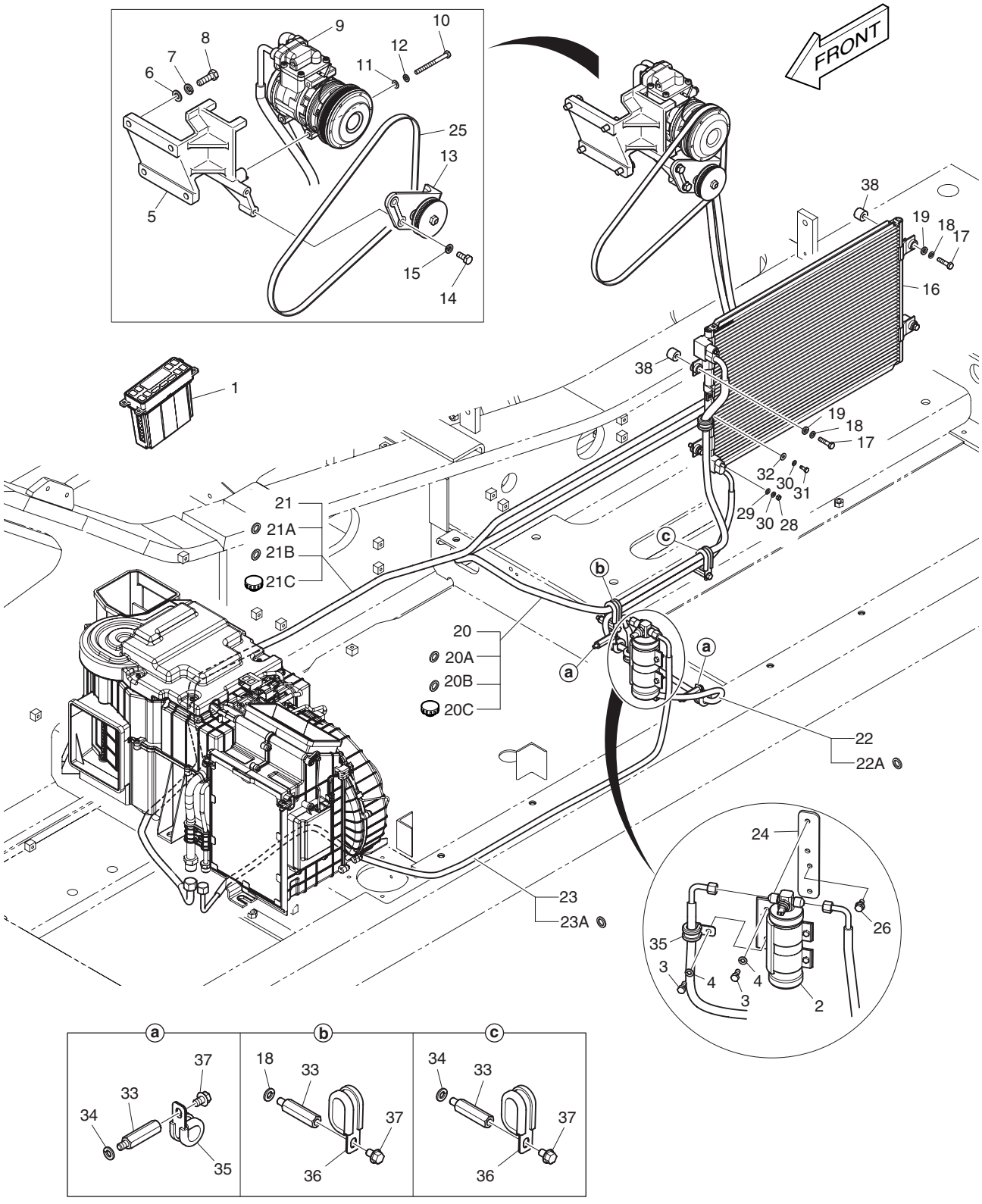

| DATE | JUN. 30, 2006 |
|---|---|
| REV. NO. | EXB06-08 |

# Fig. 1770 AIRCONDITIONER(2) REFRIGERATION

Serial No. ;

| Key No. | Part No. | Description | Description | Q'ty | S.C | Serial No. | ICA | Replaceable part | |
|---|---|---|---|---|---|---|---|---|---|
| | | | | | | | | Part No. | Q'ty |
| 1770-- | **K1009392B** | **AIR CONDITIONER(2)** | CLIMATISEUR | - | D | | | | |
| 1 | 543-00107 | CONTROL PANEL;AIR CON | PANNEAU | 1 | | | | | |
| 2 | 2204-6039A | RECEIVER DRIER | RESERVOIR DESSICATEUR | 1 | | | | | |
| 3 | S0508866 | BOLT M8X1.25X20 | BOULON A 6 PANS | 2 | | | | | |
| 4 | S5102503 | WASHER;SPRING M8 | RONDELLE ELASTIQUE M8 | 2 | | | | | |
| 5 | 195-02803A | BRACKET;COMPRESSOR | SUPPORT | 1 | | 5001–5069 | I | 195-02803B | 1 |
| | **195-02803B** | **BRACKET;COMPRESSOR** | SUPPORT | 1 | | **5070–** | | | |
| 6 | S5010713 | WASHER;PLAIN M12 | RONDELLE | 4 | | | | | |
| 7 | S5102703 | WASHER;SPRING M12 | RONDELLE ELASTIQUE M12 | 4 | | | | | |
| 8 | S0786453 | BOLT;HEX. | BOULON A 6 PANS | 4 | | | | | |
| 9 | 2208-6013B | COMPRESSOR | COMPRESSEUR | 1 | | | | | |
| 10 | S0557153 | BOLT | BOULON A 6 PANS | 4 | | | | | |
| 11 | S5010513 | WASHER M8 | RONDELLE M8 | 4 | | | | | |
| 12 | S5102503 | WASHER;SPRING M8 | RONDELLE ELASTIQUE M8 | 4 | | | | | |
| 13 | 2107-6006 | PULLEY ASS'Y;IDLE | ENSEMBLE POULIE FOU | 1 | | | | | |
| 14 | S0512053 | BOLT M10X1.5X25 | BOULON A 6 PANS | 2 | | | | | |
| 15 | S5102603 | WASHER;SPRING M10 | RONDELLE ELASTIQUE M10 | 2 | | | | | |
| 16 | 520-00004 | CONDENSER;AIR CON | CONDENSER;AIRCON | 1 | | | | | |
| 17 | S0509353 | BOLT M8X1.25X35 | BOULON A 6 PANS | 4 | | | | | |
| 18 | S5102503 | WASHER;SPRING M8 | RONDELLE ELASTIQUE M8 | 4 | | | | | |
| 19 | 2114-1058D29 | WASHER | RONDELLE | 4 | | | | | |
| 20 | K1010014B | HOSE;DISCHARGE | TUYAU FLEXIBLE | 1 | | | | | |
| 20A | 2180-6088 | . O-RING(COMP) | . JOINT TORIQUE | 1 | | | | | |
| 20B | K1011384 | . O-RING(CONDENSER) | . JOINT TORIQUE | 1 | | | | | |
| 20C | 1.161-00018 | . CAP;CHECK PORT | . CHAPEAU | 1 | | | | | |
| 21 | 185-00385B | HOSE;SUCTION | TUYAU FLEXIBLE | 1 | | | | | |
| 21A | 2180-6086 | . O-RING(COMP) | . JOINT TORIQUE | 1 | | | | | |
| 21B | K1011385 | . O-RING(EVA) | . JOINT TORIQUE | 1 | | | | | |
| 21C | 1.161-00019 | . CAP;CHECK PORT | . CHAPEAU | 1 | | | | | |
| 22 | K1010013B | HOSE;LIQUID(1) | TUYAU FLEXIBLE | 1 | | | | | |
| 22A | K1011388 | . O-RING | . JOINT TORIQUE | 2 | | | | | |
| 23 | 185-00387A | HOSE;LIQUID(2) | TUYAU FLEXIBLE | 1 | | | | | |
| 23A | K1011388 | . O-RING | . JOINT TORIQUE | 2 | | | | | |
| 24 | K1009936 | BRACKET | SUPPORT | 1 | | | | | |
| 25 | 2106-1019D25 | BELT;AIRCON(4PK-1425L) | COURROIE | 1 | | | | | |
| 26 | DS0025013 | BOLT;SET | BOULON A 6 PANS | 2 | | | | | |
| 28 | S4012303 | NUT M6X1.0 | ECROU | 2 | | | | | |
| 29 | S5000313 | WASHER;PLAIN | RONDELLE PLATE | 2 | | | | | |

| DATE | JUN. 30, 2006 |
|---|---|
| REV.NO. | EXB06-08 |

# Fig. 1770 AIRCONDITIONER(2) REFRIGERATION

**Serial No. ;**

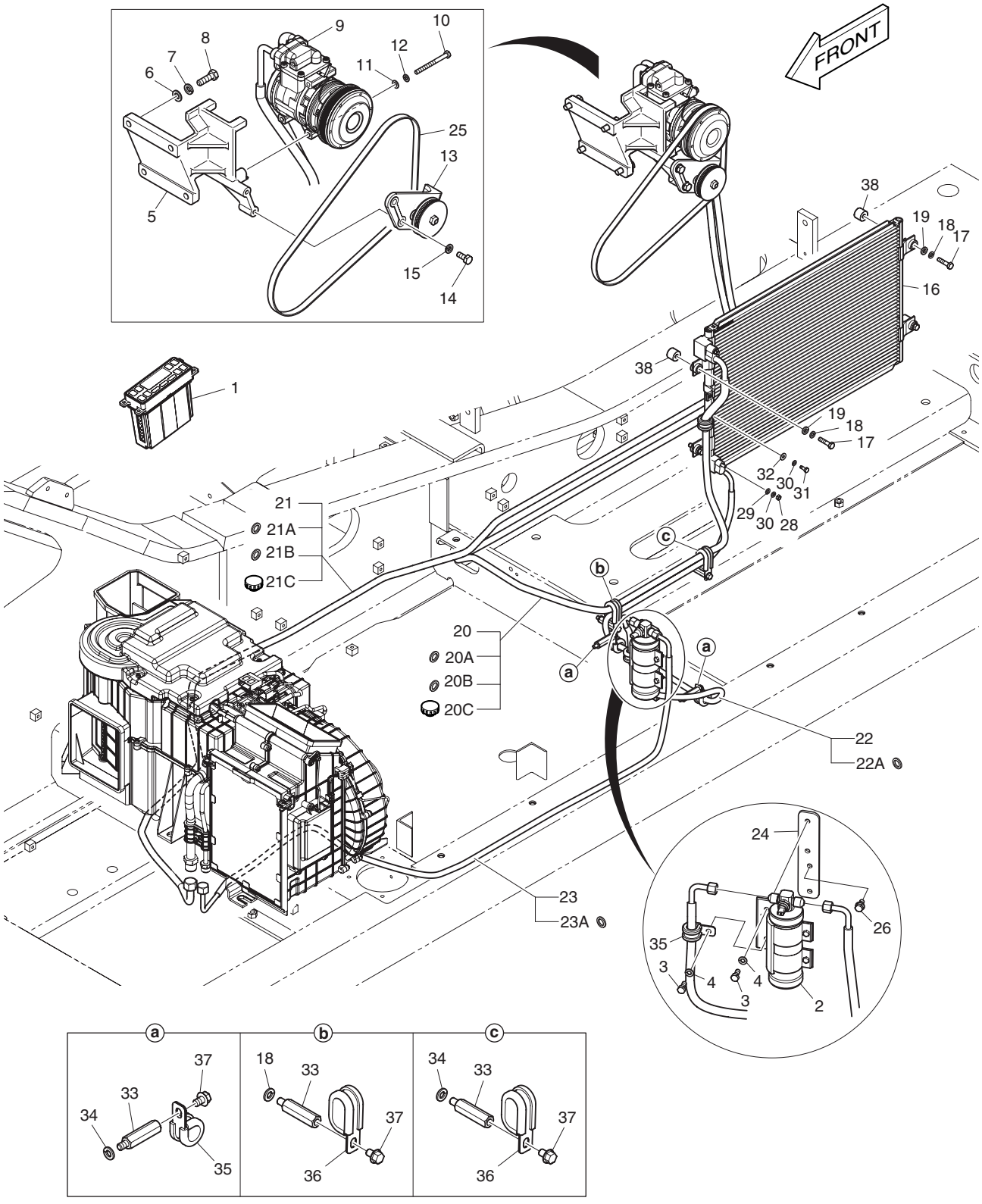

| DATE | JUN. 30, 2006 |
|---|---|
| REV. NO. | EXB06-08 |

# Fig. 1770 AIRCONDITIONER(2) REFRIGERATION

Serial No. ;

| Key No. | Part No. | Description | Description | Q'ty | S.C | Serial No. | ICA | Replaceable part | |
|---|---|---|---|---|---|---|---|---|---|
| | | | | | | | | Part No. | Q'ty |
| 1770-30 | S5102303 | WASHER;SPRING M6 | RONDELLE ELASTIQUE M6 | 3 | | | | | |
| 31 | S0504653 | BOLT M6X1.0X16 | BOULON A 6 PANS | 1 | | | | | |
| 32 | 2114-1058D52 | WASHER | RONDELLE | 2 | | | | | |
| 33 | 2120-2187 | BOLT;STUD | BOULON A 6 PANS | 4 | | | | | |
| 34 | S5102503 | WASHER;SPRING | RONDELLE ELASTIQUE M8 | 3 | | | | | |
| 35 | 124-00208D3 | CLIP | ATTACHE | 3 | | | | | |
| 36 | 124-00209D1 | CLIP | ATTACHE | 2 | | | | | |
| 37 | K1001029 | BOLT | BOULON A 6 PANS | 4 | | | | | |
| 38 | K1005017 | SPACER | DOUILLE D'ECARTEMENT | 4 | | | | | |

# Fig. 2100 TRACK FRAME
# ENSEMBLE TRAIN DE ROULEMENT

**Serial No. ;**

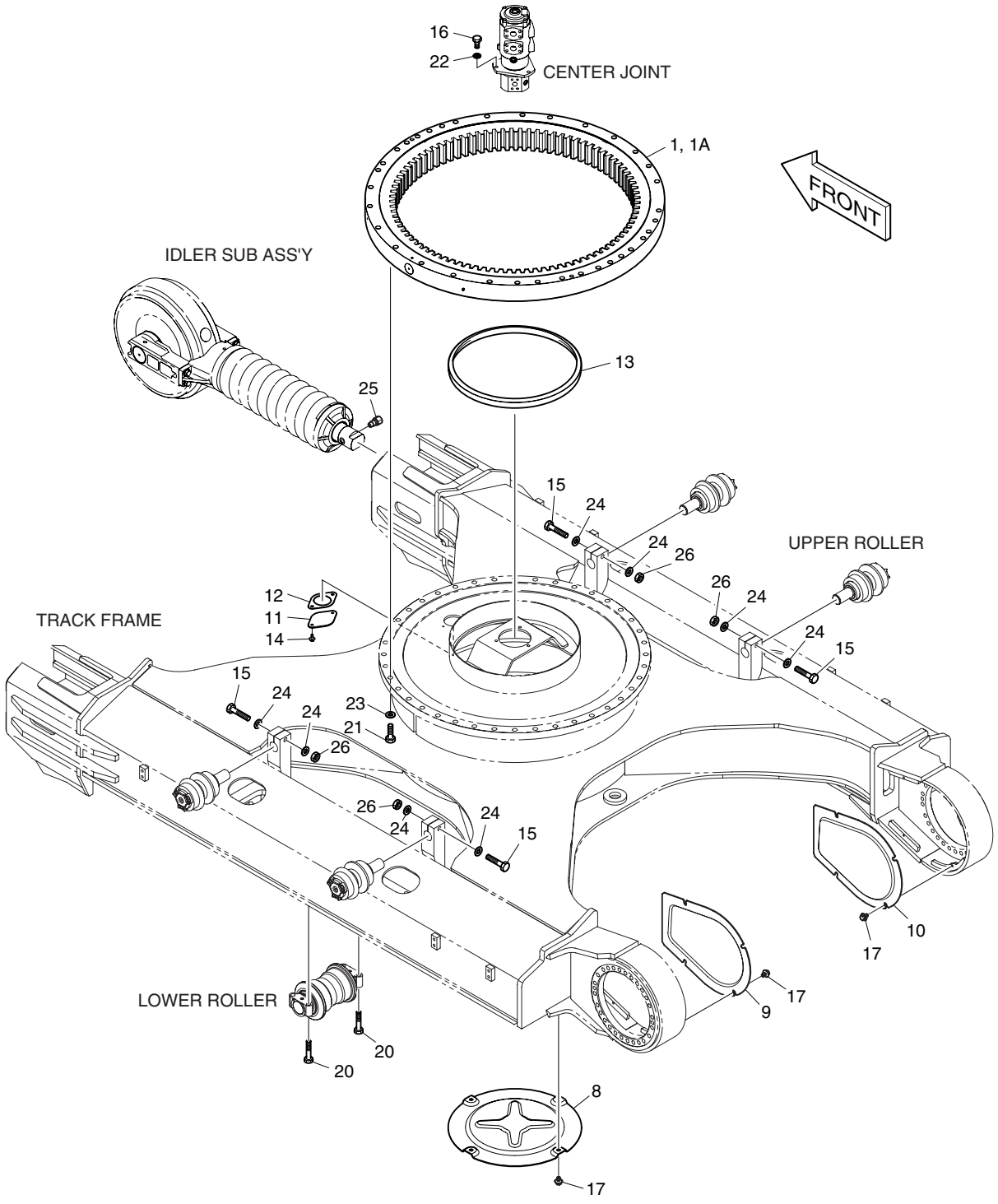

| DATE | OCT. 17, 2005 |
|---|---|
| 1st EDITION | |

# Fig. 2100 TRACK FRAME
# ENSEMBLE TRAIN DE ROULEMENT

Serial No. ;

| Key No. | Part No. | Description | Description | Q'ty | S.C | Serial No. | ICA | Replaceable part | |
|---|---|---|---|---|---|---|---|---|---|
| | | | | | | | | Part No. | Q'ty |
| 2100-- | K1003013C | TRACK FRAME | ENSEMBLE TRAIN DE | - | D | | | | |
| 1 | K1006604 | BEARING;SWING | PALIER D'ORIENTATION | 1 | | | | | |
| 1A | 180-00297D2 | . SEAL | . JOINT | 2 | | | | | |
| 8 | K1004271 | COVER;UNDER | COUVERCLE | 1 | | | | | |
| 9 | 621-02715A | COVER;MOTOR(L.H) | COUVERCLE | 1 | | | | | |
| 10 | 621-02714A | COVER;MOTOR(R.H) | COUVERCLE | 1 | | | | | |
| 11 | 621-02938A | COVER | COUVERCLE | 1 | | | | | |
| 12 | 180-00463 | PACKING | RONDELLE D'ETANCHEITE | 1 | | | | | |
| 13 | K1004695 | SEAL | JOINT | 1 | | | | | |
| 14 | DS0025016 | BOLT;SET | BOULON A 6 PANS | 2 | | | | | |
| 15 | S0571166 | BOLT | BOULON A 6 PANS | 4 | | | | | |
| 16 | S0521266 | BOLT | BOULON A 6 PANS | 3 | | | | | |
| 17 | DS0025019 | BOLT;SET | BOULON A 6 PANS | 12 | | | | | |
| 20 | S0570766 | BOLT | BOULON A 6 PANS | 72 | | | | | |
| 21 | S0574966 | BOLT | BOULON A 6 PANS | 40 | | | | | |
| 22 | S5102903 | WASHER;SPRING | RONDELLE ELASTIQUE | 3 | | | | | |
| 23 | 2114-1831A | WASHER;HARD | RONDELLE ELASTIQUE | 40 | | | | | |
| 24 | 2114-9012A | WASHER;HARD | RONDELLE | 8 | | | | | |
| 25 | 422-00055 | VALVE;GREASE | VANNE | 2 | | | | | |
| 26 | S4013133 | NUT | ECROU | 4 | | | | | |

| DATE | JUN. 30, 2007 |
|---|---|
| REV.NO. | EXB07-06 |

# Fig. 2110 TRACK GUARD
# GARDE D'TRAIN

**Serial No. ;**

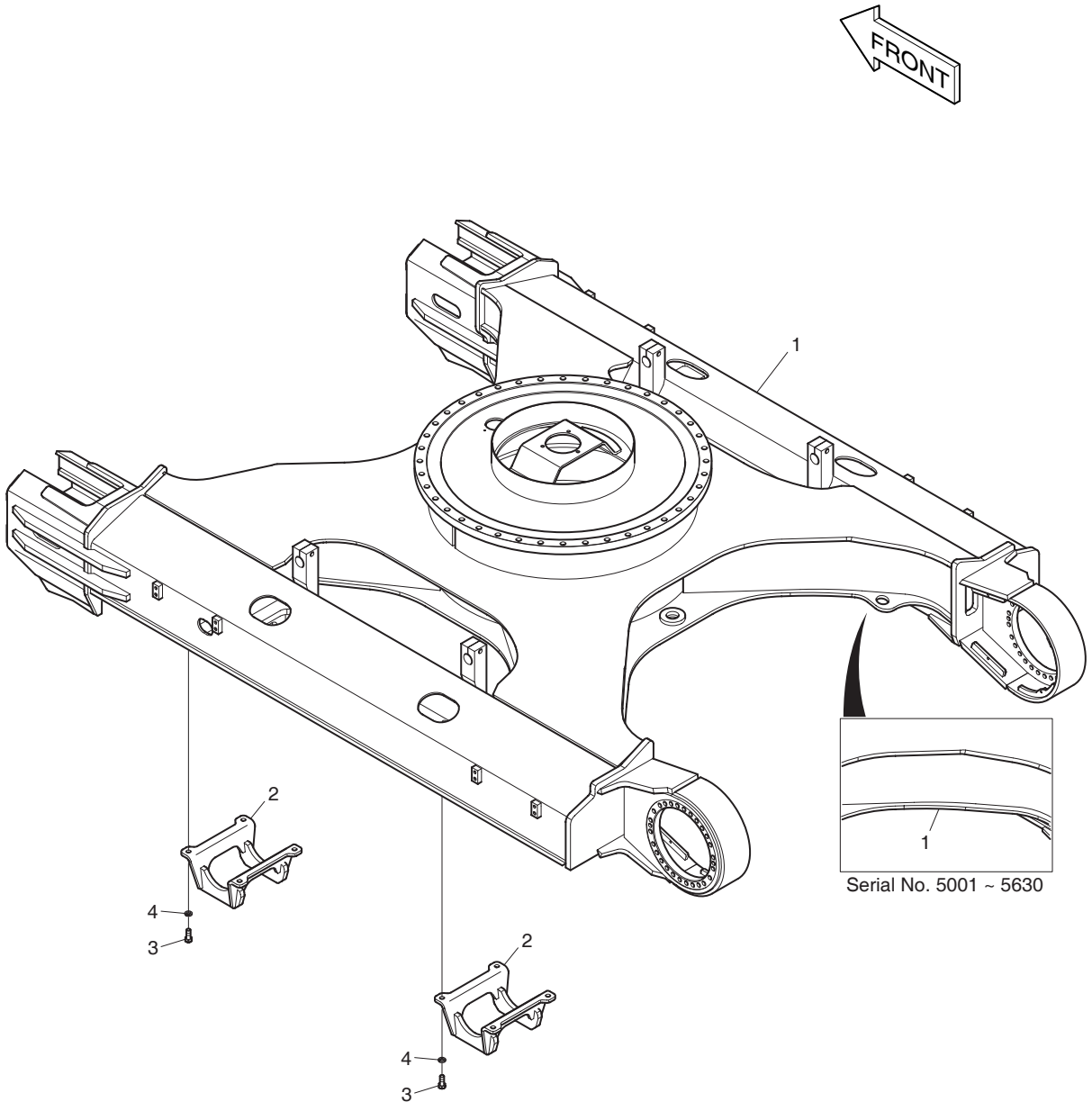

| DATE | JUN. 30, 2007 |
|---|---|
| REV. NO. | EXB07-06 |

# Fig. 2110 TRACK GUARD GARDE D'TRAIN

**Serial No. ;**

| Key No. | Part No. | Description | Description | Q'ty | S.C | Serial No. | ICA | Replaceable part | |
|---|---|---|---|---|---|---|---|---|---|
| | | | | | | | | Part No. | Q'ty |
| 2110-- | **K1009977H** | **TRACK GUARD** | GARDE D'TRAIN | - | D | | | | |
| 1 | K1003014E | FRAME;TRACK | CHASSIS A CHAINES | 1 | | 5001–5478 | I | K1003014G | 1 |
| | K1003014G | FRAME;TRACK | CHASSIS A CHAINES | 1 | | 5479–5630 | I | K1003014H | 1 |
| | **K1003014H** | **FRAME;TRACK** | CHASSIS A CHAINES | 1 | | **5631–5766** | I | K1003014J | 1 |
| | **K1003014J** | **FRAME;TRACK** | CHASSIS A CHAINES | 1 | | **5767–** | | | |
| 2 | K1009970 | GUARD;TRACK | GARDE | 4 | | | | | |
| 3 | S0527666 | BOLT | BOULON A 6 PANS | 16 | | | | | |
| 4 | S5103103 | WASHER;SPRING | RONDELLE ELASTIQUE M20 | 16 | | | | | |

| DATE | JUN. 30, 2007 |
|---|---|
| REV.NO. | EXB07-06 |

# Fig. 2120 TRACK GUARD-TRACK WIDTH 3m
# GARDE D'TRAIN

**Serial No. ;**

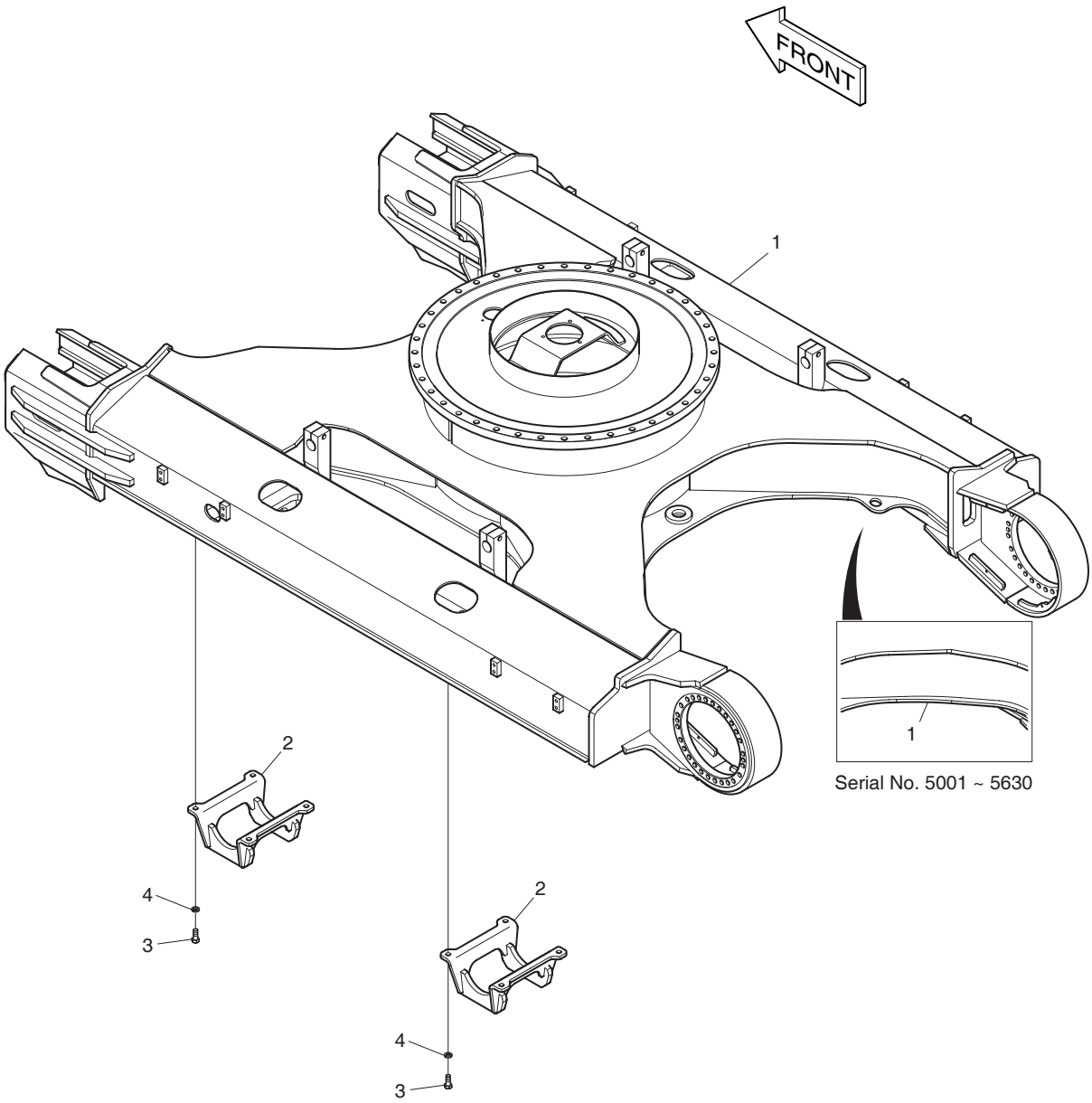

| DATE | JUN. 30, 2007 |
|---|---|
| REV. NO. | EXB07-06 |

# Fig. 2120 TRACK GUARD-TRACK WIDTH 3m GARDE D'TRAIN

**Serial No. ;**

| Key No. | Part No. | Description | Description | Q'ty | S.C | Serial No. | ICA | Replaceable part | |
|---|---|---|---|---|---|---|---|---|---|
| | | | | | | | | Part No. | Q'ty |
| 2120-- | **K1009978H** | **TRACK GUARD** | GARDE D'TRAIN | - | D | | | | |
| 1 | K1006157E | FRAME;TRACK-3M | CHASSIS A CHAINES | 1 | | 5001–5478 | I | K1006157G | 1 |
| | K1006157G | FRAME;TRACK-3M | CHASSIS A CHAINES | 1 | | 5479–5630 | I | K1006157H | 1 |
| | **K1006157H** | **FRAME;TRACK-3M** | CHASSIS A CHAINES | 1 | | **5631–5766** | I | K1006157J | 1 |
| | **K1006157J** | **FRAME;TRACK-3M** | CHASSIS A CHAINES | 1 | | **5767–** | | | |
| 2 | K1009970 | GUARD;TRACK | GARDE | 4 | | | | | |
| 3 | S0527666 | BOLT | BOULON A 6 PANS | 16 | | | | | |
| 4 | S5103103 | WASHER;SPRING | RONDELLE ELASTIQUE M20 | 16 | | | | | |

| DATE | OCT. 17, 2005 |
|---|---|
| 1st EDITION | |

# Fig. 2130 TRAVEL DEVICE
# ENSEMBLE TRAIN DE ROULEMENT

**Serial No. ;**

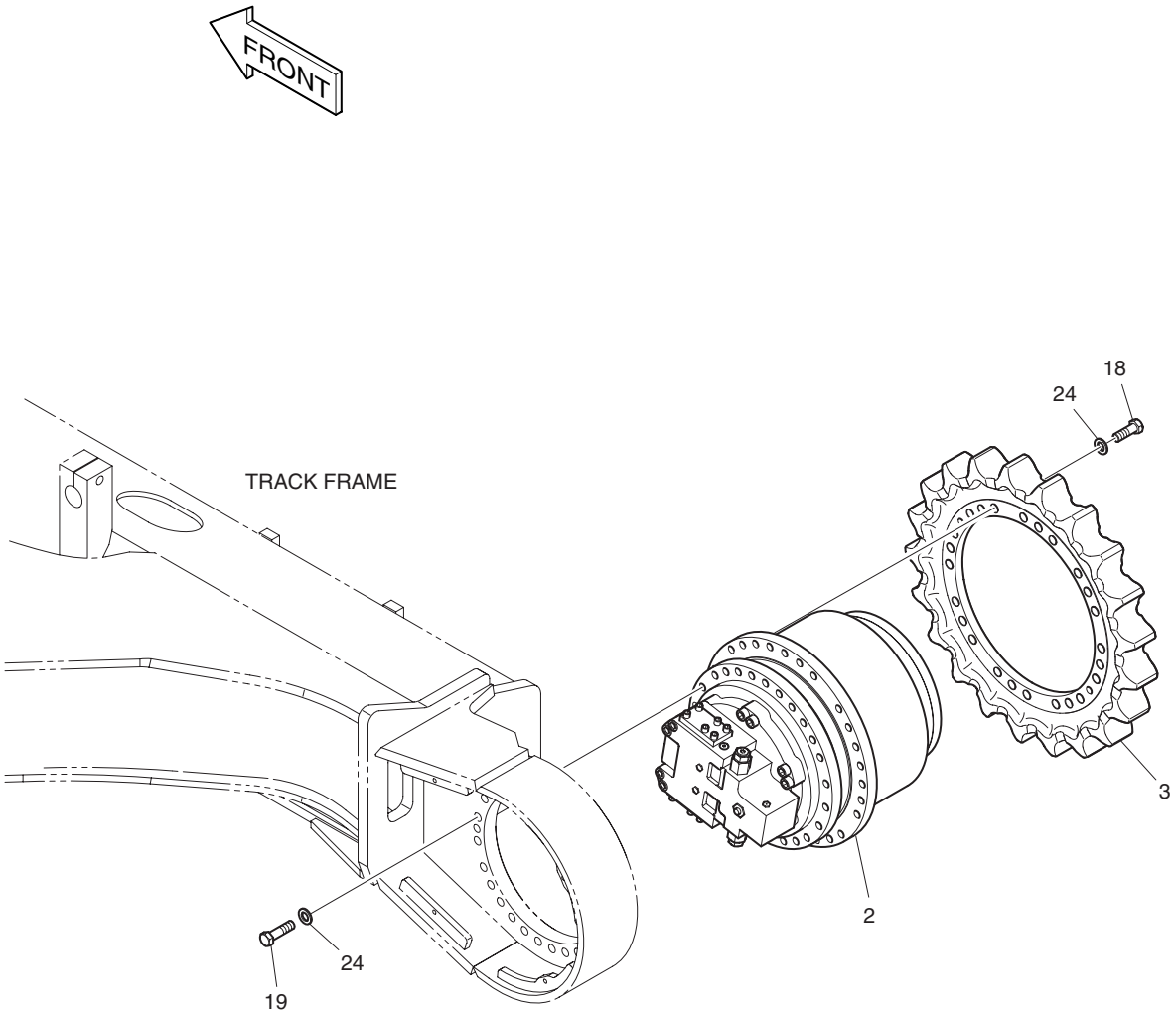

| DATE | OCT. 17, 2005 |
|---|---|
| 1st EDITION | |

# Fig. 2130 TRAVEL DEVICE
# ENSEMBLE TRAIN DE ROULEMENT

Serial No. ;

| Key No. | Part No. | Description | Description | Q'ty | S.C | Serial No. | ICA | Replaceable part | |
|---|---|---|---|---|---|---|---|---|---|
| | | | | | | | | Part No. | Q'ty |
| 2130-- | K1003013C | TRACK FRAME | ENSEMBLE TRAIN DE | - | D | | | | |
| 2 | K1003131 | TRAVEL DEVICE | MOTEUR D'ORIENTATION | 2 | | | | | |
| 3 | 108-00022B | SPROCKET | COURONNE DENTEE | 2 | | | | | |
| 18 | S0570066 | BOLT | BOULON A 6 PANS | 48 | | | | | |
| 19 | S0570366 | BOLT | BOULON A 6 PANS | 52 | | | | | |
| 24 | 2114-9012A | WASHER;HARD | RONDELLE | 100 | | | | | |

| DATE | JUN. 30, 2008 |
|---|---|
| REV.NO. | EXB08-06 |

# Fig. 2140 IDLER BARBOTIN

**Serial No. ;**

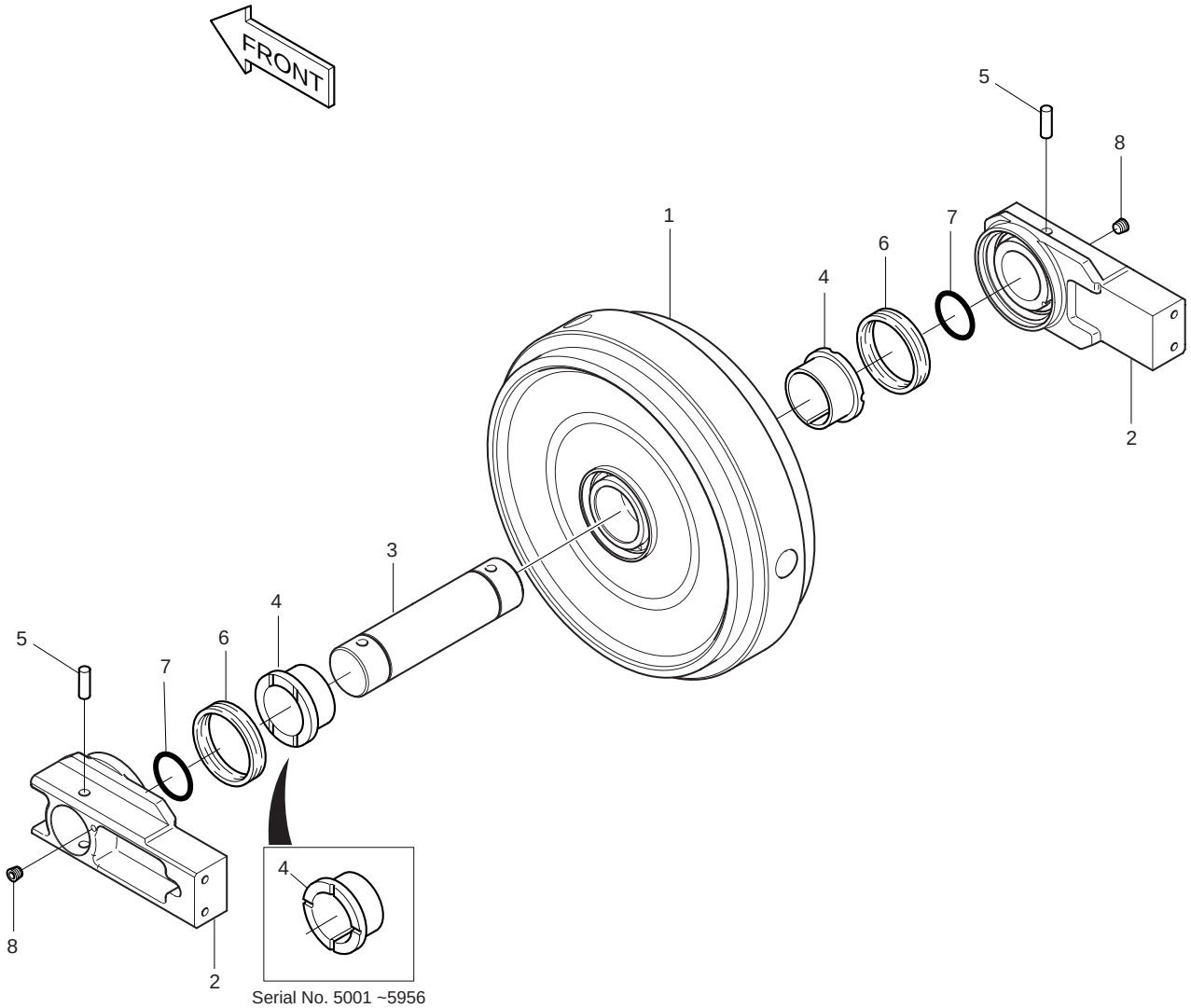

| DATE | JUN. 30, 2008 |
|---|---|
| REV. NO. | EXB08-06 |

# Fig. 2140 IDLER BARBOTIN

Serial No. ;

| Key No. | Part No. | Description | Description | Q'ty | S.C | Serial No. | ICA | Replaceable part | |
|---|---|---|---|---|---|---|---|---|---|
| | | | | | | | | Part No. | Q'ty |
| 2140-- | 270-00049B | IDLER ASS'Y | ENSEMBLE BARBOTIN | 2 | | 5001–5956 | I | 270-00049C | 2 |
| | **270-00049C** | **IDLER ASS'Y** | ENSEMBLE BARBOTIN | 2 | | **5957–** | | | |
| 1 | - | BODY;IDLER | CARTER | 1 | D | | | | |
| 2 | 271-00024 | SUPPORT | SUPPORT | 2 | | | | | |
| 3 | 2220-1014 | SHAFT | AXE | 1 | | | | | |
| 4 | 2110-1071A | BUSHING | DOUILLE | 2 | | 5001–5956 | | | |
| | **K1029146** | **BUSHING** | DOUILLE | 2 | | **5957–** | | | |
| 5 | 2123-1218 | PIN | GOUPILLE | 2 | | | | | |
| 6 | 2180-9057 | SEAL;FLOATING | JOINT | 2 | | | | | |
| 7 | S8010851 | O-RING | JOINT TORIQUE | 2 | | | | | |
| 8 | 2181-1116D2 | PLUG | BOUCHON | 2 | | | | | |

| DATE | JUN. 30, 2008 |
|---|---|
| REV.NO. | EXB08-06 |

# Fig. 2150 TRACK SPRING
# TENDEUR DE CHENILLE

**Serial No. ;**

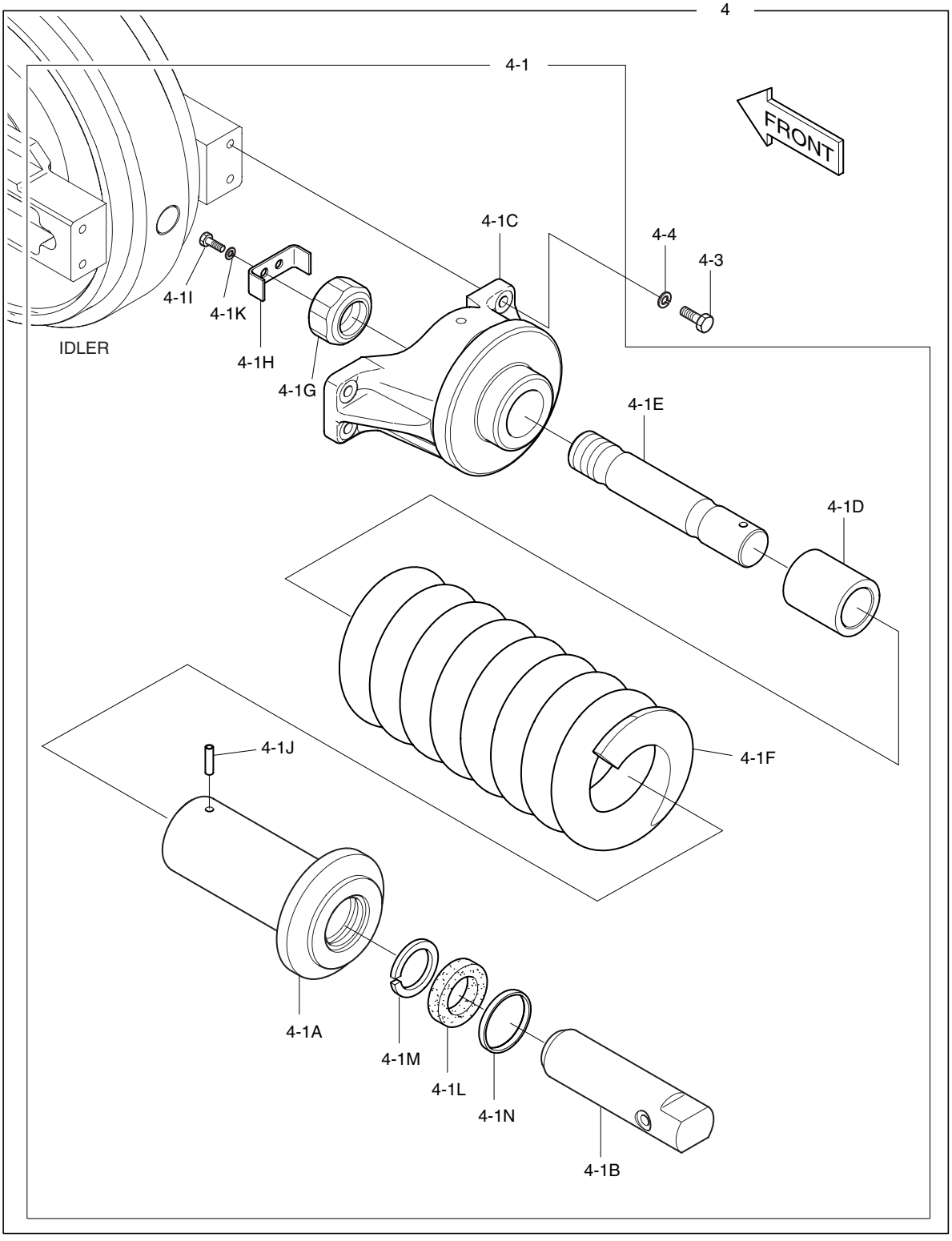

| DATE | JUN. 30, 2008 |
|---|---|
| REV. NO. | EXB08-06 |

# Fig. 2150 TRACK SPRING
# TENDEUR DE CHENILLE

Serial No. ;

| Key No. | Part No. | Description | Description | Q'ty | S.C | Serial No. | ICA | Replaceable part | |
|---|---|---|---|---|---|---|---|---|---|
| | | | | | | | | Part No. | Q'ty |
| 2150-4 | K1006203B | ADJUSTER ASS'Y;TRACK | ADJUSTER | 2 | | 5001–5049 | | | |
| | K1006203C | ADJUSTER ASS'Y;TRACK | ADJUSTER | 2 | | 5050–5766 | I | K1006203E | 2 |
| | K1006203E | ADJUSTER ASS'Y;TRACK | ADJUSTER | 2 | | 5767–5956 | I | K1006203G | 2 |
| | **K1006203G** | **ADJUSTER ASS'Y;TRACK** | ADJUSTER | 2 | | **5957**– | | | |
| 4-1 | K1006183A | . TRACK SPRING ASS'Y | . ENSEMBLE MAILLON DE | 1 | | 5001–5031 | I | K1006183B | 1 |
| | K1006183B | . TRACK SPRING ASS'Y | . ENSEMBLE MAILLON DE | 1 | | 5032–5049 | I | K1006183C | 1 |
| | K1006183C | . TRACK SPRING ASS'Y | . ENSEMBLE MAILLON DE | 1 | | 5050–5766 | I | K1006183E | 1 |
| | K1006183E | . TRACK SPRING ASS'Y | . ENSEMBLE MAILLON DE | 1 | | 5767– | | | |
| 4-1A | K1006184 | .. CYLINDER BODY | .. CYLINDRE | 1 | | 5001–5031 | I | K1006184A | 1 |
| | K1006184A | .. CYLINDER BODY | .. CYLINDRE | 1 | | 5032–5049 | | | |
| | K1006184B | .. CYLINDER BODY | .. CYLINDRE | 1 | | 5050– | | | |
| 4-1B | K1006185A | .. PISTON ROD | .. PISTON | 1 | | | | | |
| 4-1C | 195-02644 | .. BRACKET | .. SUPPORT | 1 | | 5001–5049 | | | |
| | K1017315 | .. BRACKET | .. SUPPORT | 1 | | 5050– | | | |
| 4-1D | K1006186 | .. SPACER | .. DOUILLE D'ESPACEMENT | 1 | | 5001–5049 | | | |
| | K1006186A | .. SPACER | .. DOUILLE D'ESPACEMENT | 1 | | 5050– | | | |
| 4-1E | K1006187 | .. SHAFT | .. ARBRE | 1 | | 5001–5049 | | | |
| | K1006187A | .. SHAFT | .. ARBRE | 1 | | 5050– | | | |
| 4-1F | K1006188 | .. SPRING | .. RESSORT | 1 | | | | | |
| 4-1G | 121-00083 | .. NUT;LOCK | .. ERROU | 1 | | 5001–5049 | | | |
| | K1017316 | .. NUT;LOCK | .. ERROU | 1 | | 5050– | | | |
| 4-1H | 621-02717 | .. PLATE;LOCK | .. PLAQUE | 1 | | 5001–5049 | | | |
| | K1017317 | .. PLATE;LOCK | .. PLAQUE | 1 | | 5050– | | | |
| 4-1I | S0515363 | .. BOLT | .. BOULON A 6 PANS | 2 | | | | | |
| 4-1J | S5741270 | .. PIN;SPRING | .. GOUJON | 1 | | | | | |
| 4-1K | S5102703 | .. WASHER;SPRING | .. RONDELLE ELASTIQUE | 2 | | | | | |
| 4-1L | 180-00459 | .. PACKING | .. RONDELLE ETANCHE | 1 | K | | | | |
| 4-1M | 180-00460 | .. RING;BACK UP | .. BAGUE D'ETANCHEITE | 1 | K | | | | |
| 4-1N | 180-00461 | .. SEAL;DUST | .. JOINT | 1 | K | | | | |
| 4-3 | S0565466 | . BOLT | . BOULON A 6 PANS | 4 | | | | | |
| 4-4 | S5102903 | . WASHER;SPRING | . RONDELLE ELASTIQUE | 4 | | | | | |
| * | 274-00009KT | SEAL KIT;TRACK SPRING | KIT DE JOINT | 1 | | | | | |

| DATE | JUN. 30, 2008 |
|---|---|
| REV.NO. | EXB08-06 |

# Fig. 2160 UPPER ROLLER GALET SUPERIEUR

**Serial No. ;**

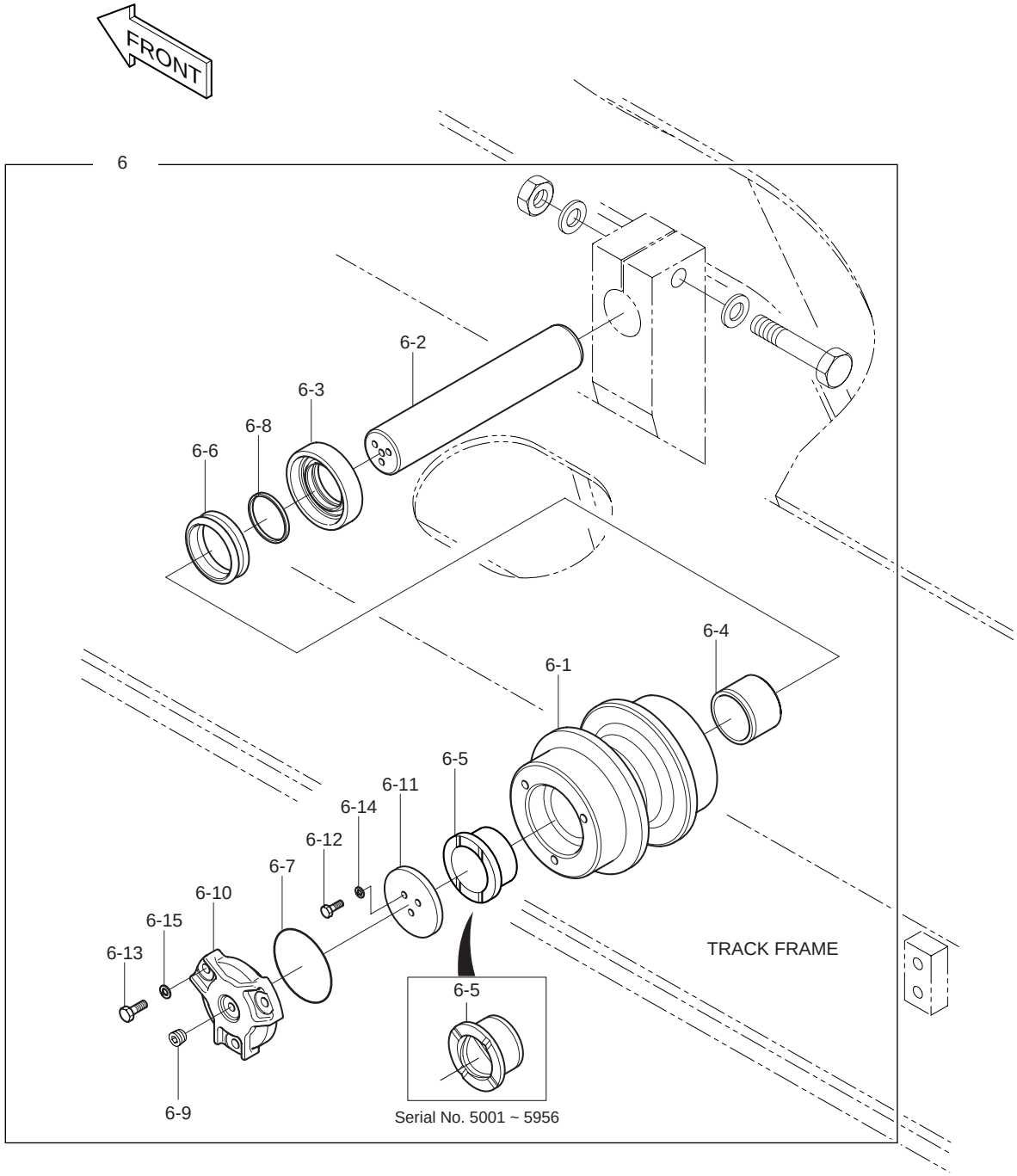

| DATE | JUN. 30, 2008 |
|---|---|
| REV. NO. | EXB08-06 |

# Fig. 2160 UPPER ROLLER GALET SUPERIEUR

Serial No. ;

| Key No. | Part No. | Description | Description | Q'ty | S.C | Serial No. | ICA | Replaceable part | |
|---|---|---|---|---|---|---|---|---|---|
| | | | | | | | | Part No. | Q'ty |
| 2160-- | **K1003013K** | **TRACK ASS'Y** | TRAIN | - | D | | | | |
| 6 | 270-00047A | ROLLER;UPPER | GALET | 4 | | 5001–5956 | I | 270-00047B | 4 |
| | **270-00047B** | **ROLLER;UPPER** | GALET | 4 | | **5957–** | | | |
| 6-1 | - | . BODY ASS'Y | . ENSEMBLE DE CARTER | 1 | D | | | | |
| 6-2 | 112-00077 | . SHAFT | . ARBRE | 1 | | 5001–5956 | I | 112-00077A | 1 |
| | **112-00077A** | **. SHAFT** | . ARBRE | 1 | | **5957–** | | | |
| 6-3 | 115-00135 | . RING;THRUST | . BAGUE | 1 | | | | | |
| 6-4 | 2110-1072A | . BUSHING | . DOUILLE | 1 | | 5001–5956 | | | |
| | **K1029148A** | **. BUSHING** | . DOUILLE | 1 | | **5957–** | | | |
| 6-5 | 2110-1073A | . BUSHING | . DOUILLE | 1 | | 5001–5956 | | | |
| | **K1029149A** | **. BUSHING** | . DOUILLE | 1 | | **5957–** | | | |
| 6-6 | 2180-9005A | . SEAL;FLOATING | . ETANCHEITE | 1 | | 5001–5956 | I | 2180-9005B | 1 |
| | **2180-9005B** | **. SEAL;FLOATING** | . ETANCHEITE | 1 | | **5957–** | | | |
| 6-7 | 2180-6005 | . O-RING | . JOINT TORIQUE G80 | 1 | | | | | |
| 6-8 | S8010550 | . O-RING | . JOINT TORIQUE | 1 | | | | | |
| 6-9 | 2181-6005 | . PLUG | . BOUCHON | 1 | | | | | |
| 6-10 | 2229-1006B | . COVER | . COUVERCLE | 1 | | | | | |
| 6-11 | 2114-1158A | . WASHER | . RONDELLE | 1 | | | | | |
| 6-12 | S0508861 | . BOLT | . BOULON M8x1.25x20 | 3 | | | | | |
| 6-13 | S0758253 | . BOLT | . BOULON A 6 PANS | 3 | | | | | |
| 6-14 | S5102503 | . WASHER:SPRING | . RONDELLE ELASTIQUE M8 | 3 | | | | | |
| 6-15 | S5102603 | . WASHER:SPRING | . RONDELLE ELASTIQUE | 3 | | | | | |

| DATE | OCT. 17, 2005 |
|---|---|
| 1st EDITION | |

# Fig. 2170 LOWER ROLLER
# GALET INFERIEUR

**Serial No. ;**

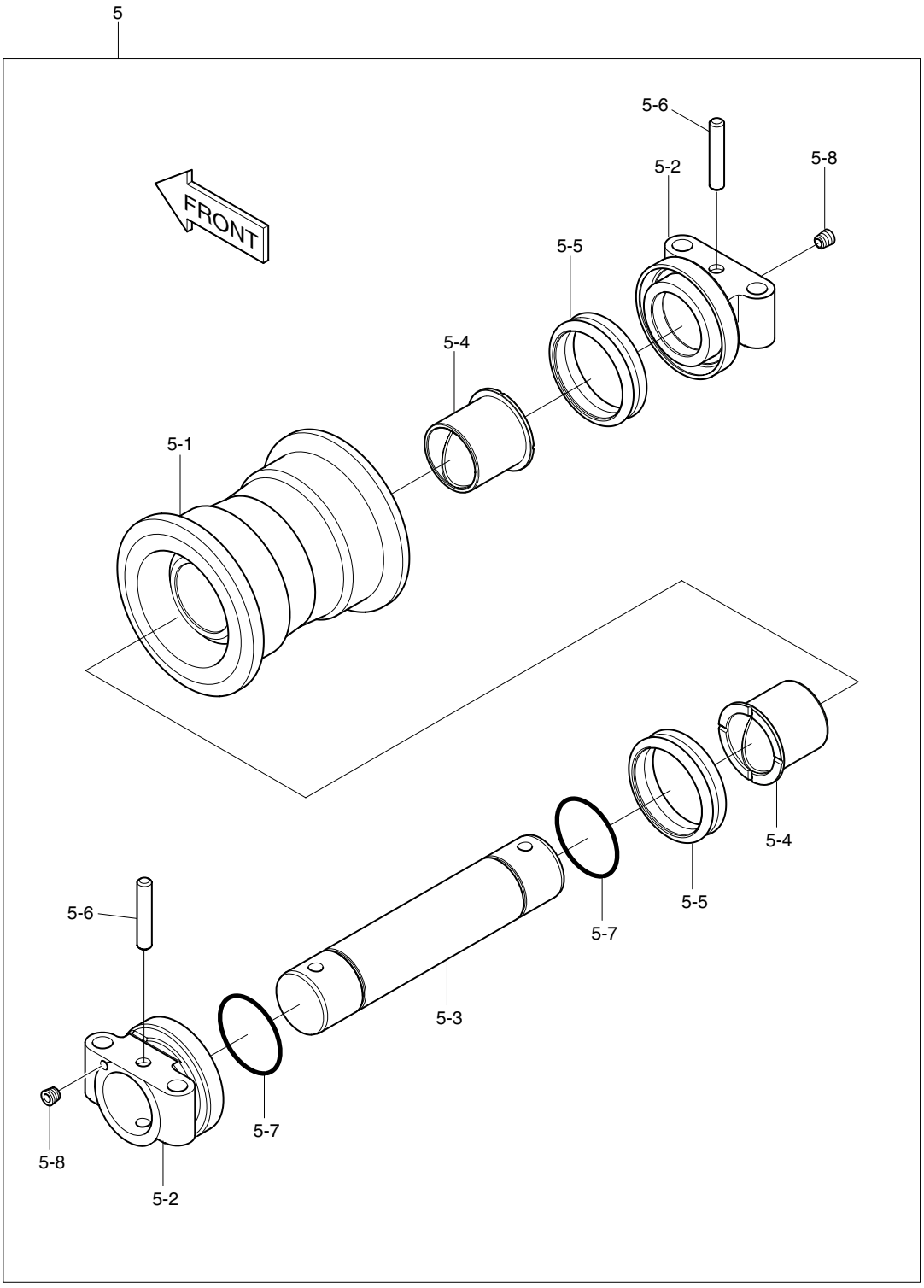

| DATE | OCT. 17, 2005 |
|---|---|
| 1st EDITION | |

# Fig. 2170 LOWER ROLLER
# GALET INFERIEUR

Serial No. ;

| Key No. | Part No. | Description | Description | Q'ty | S.C | Serial No. | ICA | Replaceable part | |
|---|---|---|---|---|---|---|---|---|---|
| | | | | | | | | Part No. | Q'ty |
| 2170-- | K1003013C | TRACK ASS'Y | ENSEMBLE TRAIN DE | - | D | | | | |
| 5 | K1008896 | ROLLER;LOWER | GALET INFERIEUR | 18 | | | | | |
| 5-1 | - | . BODY ASS'Y | . ENSEMBLE DE CARTER | 1 | D | | | | |
| 5-2 | K1011500 | . COLLAR | . BRIDE | 2 | | | | | |
| 5-3 | 2112-6005 | . SHAFT | . ARBRE | 1 | | | | | |
| 5-4 | K1011141 | . BUSHING | . MANCHON | 2 | | | | | |
| 5-5 | K1011502 | . SEAL;FLOATING | . JOINT | 2 | | | | | |
| 5-6 | 2123-6118 | . PIN | . GOUPILLE | 2 | | | | | |
| 5-7 | S8010700 | . O-RING | . JOINT TORIQUE | 2 | | | | | |
| 5-8 | 2181-1116D2 | . PLUG | . BOUCHON | 2 | | | | | |

| DATE | JUN. 30, 2006 |
|---|---|
| REV.NO. | EXB06-08 |

# Fig. 2180 CENTER JOINT
# JOINT CENTRAL

**Serial No. ;**

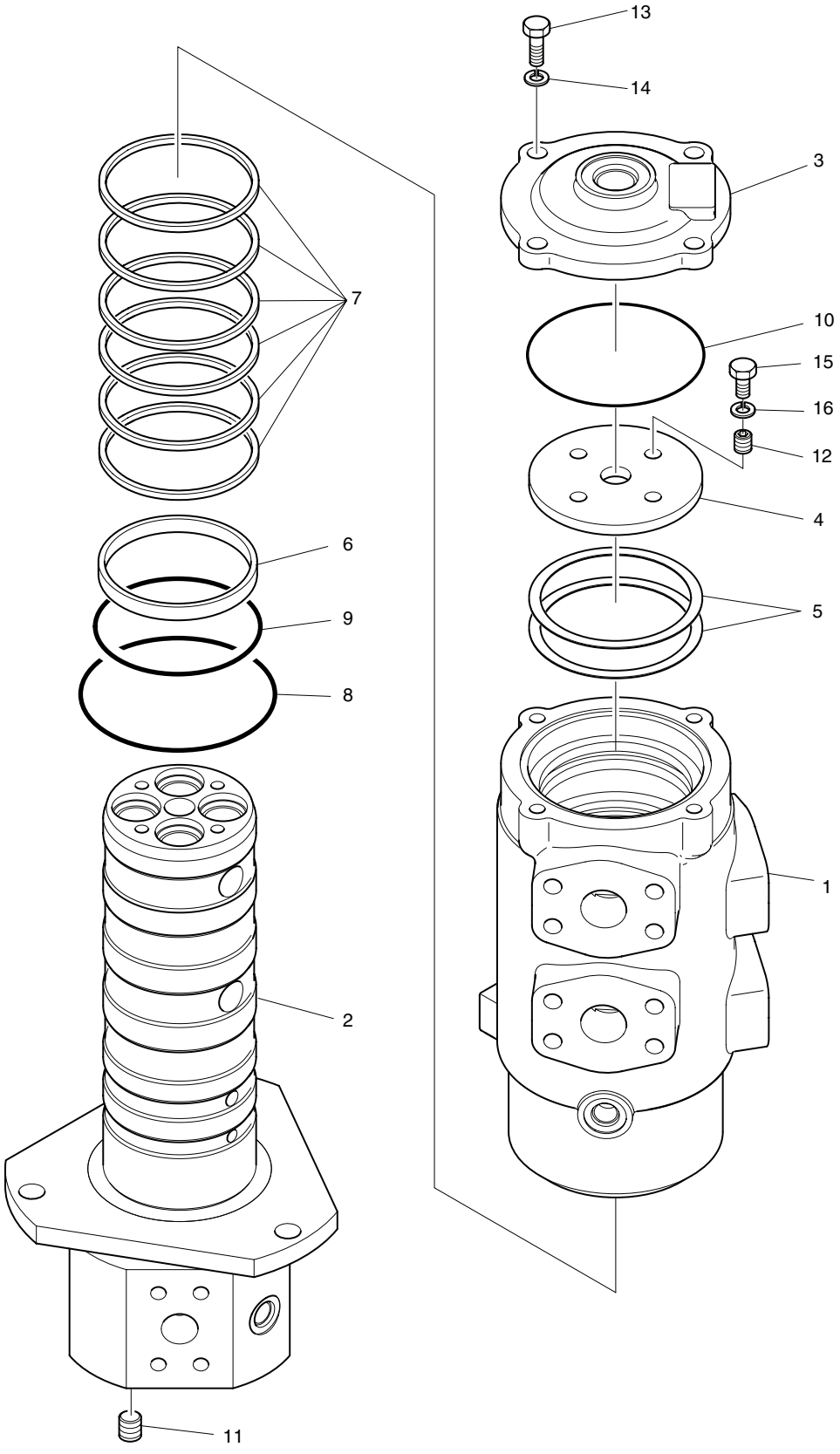

| DATE | JUN. 30, 2006 |
|---|---|
| REV. NO. | EXB06-08 |

# Fig. 2180 CENTER JOINT / JOINT CENTRAL

Serial No. ;

| Key No. | Part No. | Description | Description | Q'ty | S.C | Serial No. | ICA | Replaceable part | |
|---|---|---|---|---|---|---|---|---|---|
| | | | | | | | | Part No. | Q'ty |
| 2180-- | K1001557B | CENTER JOINT | JOINT CENTRAL | 1 | | | | | |
| 1 | - | BODY | CARROSSERIE | 1 | D | | | | |
| 2 | K1001565A | SPINDLE ASS'Y | ENSEMBLE TOUPIE | 1 | | | | | |
| 3 | K1001566 | COVER | COUVERCLE | 1 | | | | | |
| 4 | K1001567 | SPACER | DOUILLE D'ECARTEMENT | 1 | | | | | |
| 5 | K1001568 | SHIM | CALE | 2 | | | | | |
| 6 | - | RING;WEAR | SEGMENT D'USURE | 1 | K | | | | |
| 7 | - | SEAL | JOINT | 6 | K | | | | |
| 8 | - | O-RING | JOINT TORIQUE | 1 | K | | | | |
| 9 | - | O-RING | JOINT TORIQUE | 1 | K | | | | |
| 10 | - | O-RING | JOINT TORIQUE | 1 | K | | | | |
| 11 | 2181-1116D2 | PLUG | BOUCHON | 1 | | | | | |
| 12 | - | PLUG | BOUCHON | 4 | | | | | |
| 13 | S0515253 | BOLT | BOULON A 6 PANS | 4 | | | | | |
| 14 | S5102703 | WASHER;SPRING | RONDELLE ELASTIQUE M12 | 4 | | | | | |
| 15 | S0512053 | BOLT | BOULON A 6 PANS | 4 | | | | | |
| 16 | S5102603 | WASHER;SPRING | RONDELLE ELASTIQUE M10 | 4 | | | | | |
| * | 480-00018KT | SEAL KIT;CENTER JOINT | KIT DE JOINT | 1 | | | | | |

# Fig. 2190 TRACK SHOE ASS'Y - 600G
# MAILLON DE CHAINE

Serial No. ;

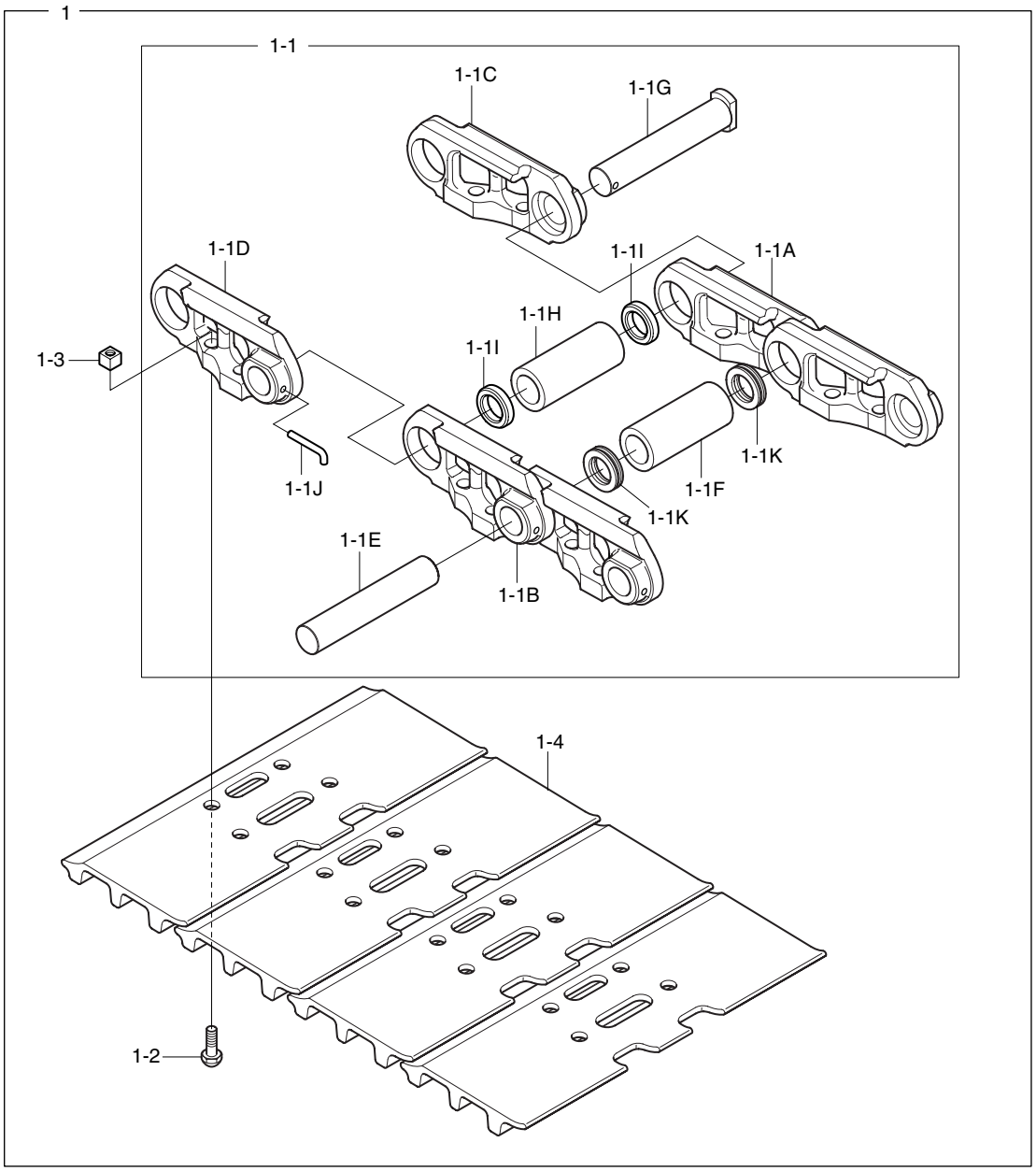


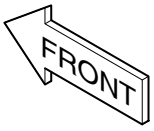


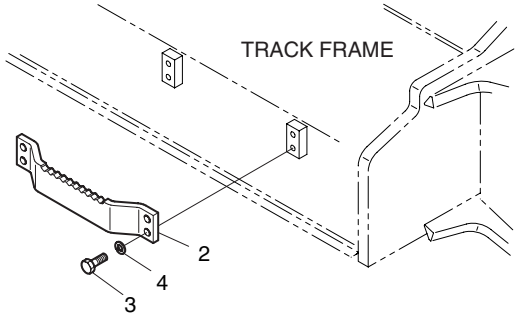

| DATE | OCT. 17, 2005 |
|---|---|
| 1st EDITION | |

# Fig. 2190 TRACK SHOE ASS'Y - 600G
# MAILLON DE CHAINE

Serial No. ;

| Key No. | Part No. | Description | Description | Q'ty | S.C | Serial No. | ICA | Replaceable part | |
|---|---|---|---|---|---|---|---|---|---|
| | | | | | | | | Part No. | Q'ty |
| 2190-- | K1008704A | TRACK SHOE ASS'Y(600MM) | MAILLON DE CHAINE | - | D | | | | |
| 1 | K1007012A | TRACK SHOE ASS'Y | ENSEMBLE MAILLON DE | 2 | | | | | |
| 1-1 | 272-00062A | . TRACK LINK ASS'Y | . ENSEMBLE MAILLON DE | 1 | | | | | |
| 1-1A | 272-00056 | .. LINK;TRACK(R.H.) | .. PIECE DE JONCTION | 47 | | | | | |
| 1-1B | 272-00057 | .. LINK;TRACK(L.H.) | .. PIECE DE JONCTION | 47 | | | | | |
| 1-1C | 272-00058 | .. LINK;MASTER(R.H.) | .. PIECE DE JONCTION | 1 | | | | | |
| 1-1D | 272-00059 | .. LINK;MASTER(L.H.) | .. PIECE DE JONCTION | 1 | | | | | |
| 1-1E | 123-00510 | .. PIN;TRACK(REGULAR) | .. BROCHE | 47 | | | | | |
| 1-1F | 110-00238 | .. BUSH;TRACK(REGULAR) | .. BAGUE | 47 | | | | | |
| 1-1G | 123-00511 | .. PIN;TRACK(MASTER) | .. BROCHE | 1 | | | | | |
| 1-1H | 110-00239 | .. BUSH;TRACK(MASTER) | .. BAGUE | 1 | | | | | |
| 1-1I | 114-00566 | .. SPACER | .. ENTERTOISE | 2 | | | | | |
| 1-1J | 2123-1629 | .. PIN;CLAMPING | .. BROCHE | 1 | | | | | |
| 1-1K | 180-00454 | .. SEAL;DUST | .. JOINT | 94 | | | | | |
| 1-2 | 120-00314 | . BOLT;TRACK | . BOULON A 6 PANS | 192 | | | | | |
| 1-3 | 121-00084 | . NUT;TRACK | . ECROU | 192 | | | | | |
| 1-4 | K1007014 | . SHOE;TRACK(600MM) | . SABOT | 48 | | | | | |
| 2 | K1000809 | STEP | MARCHER | 4 | | | | | |
| 3 | S0565066 | BOLT | BOULON A 6 PANS | 16 | | | | | |
| 4 | S5102903 | WASHER;SPRING | RONDELLE ELASTIQUE | 16 | | | | | |

| DATE | OCT. 17, 2005 |
|---|---|
| 1st EDITION | |

# Fig. 2200 TRAVEL PIPING - STD
# CONDUITES DE TRANSLATION

**Serial No. ;**

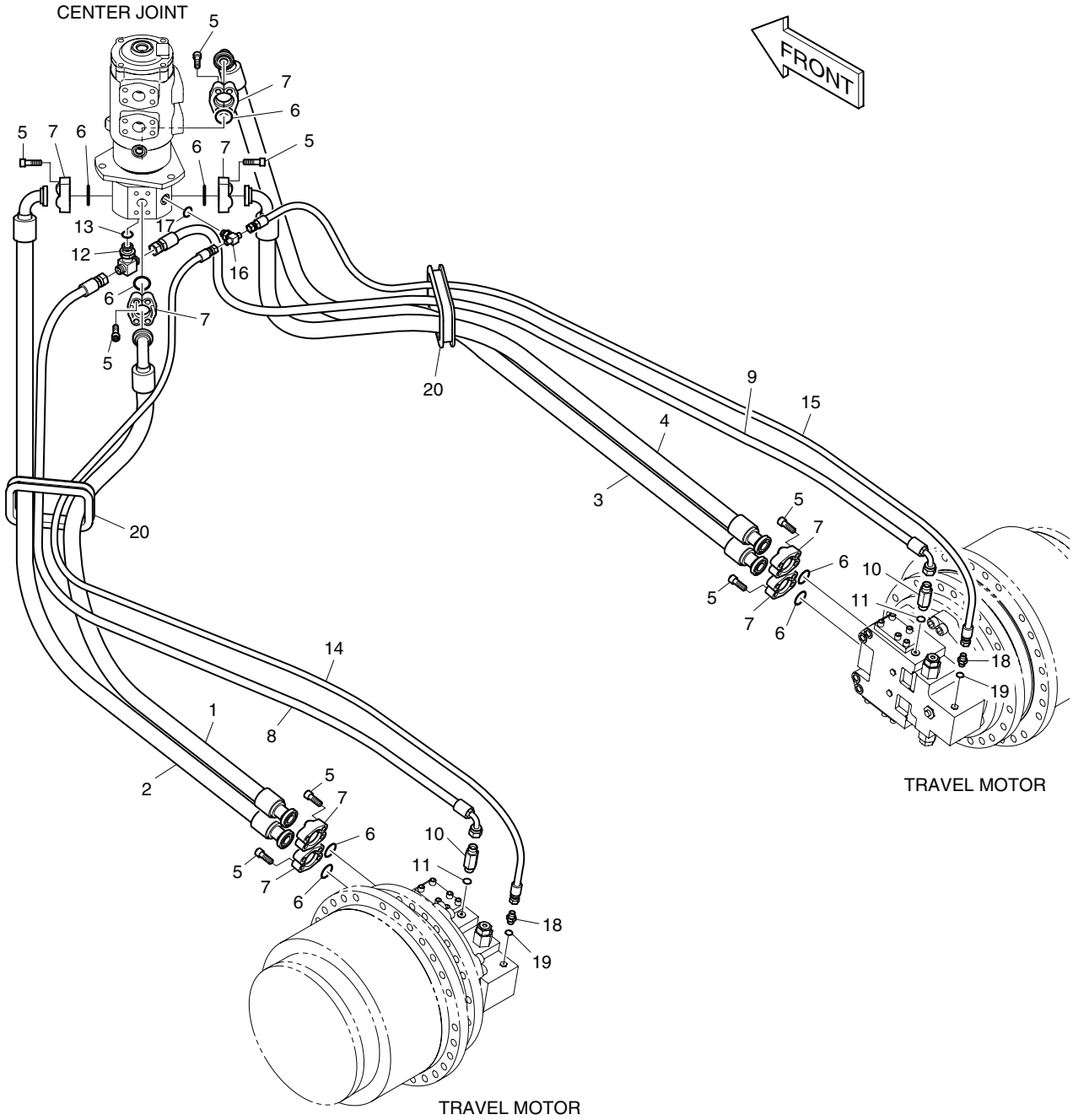

| DATE | OCT. 17, 2005 |
|---|---|
| 1st EDITION | |

# Fig. 2200 TRAVEL PIPING - STD
# CONDUITES DE TRANSLATION

Serial No. ;

| Key No. | Part No. | Description | Description | Q'ty | S.C | Serial No. | ICA | Replaceable part | |
|---|---|---|---|---|---|---|---|---|---|
| | | | | | | | | Part No. | Q'ty |
| 2200-- | K1006766A | TRAVEL PIPING | CONDUITES | - | D | | | | |
| 1 | DS2040434 | HOSE | TUYAU FLEXIBLE | 1 | | | | | |
| 2 | DS2040435 | HOSE | TUYAU FLEXIBLE | 1 | | | | | |
| 3 | DS2040435 | HOSE | TUYAU FLEXIBLE | 1 | | | | | |
| 4 | DS2040434 | HOSE | TUYAU FLEXIBLE | 1 | | | | | |
| 5 | S2215466 | BOLT;SOCKET | BOULON DE PLOT | 32 | | | | | |
| 6 | 2180-1026D19 | O-RING | JOINT TORIQUE | 8 | | | | | |
| 7 | 2181-9081 | FLANGE;SPLIT | BRIDE | 16 | | | | | |
| 8 | DS2055858 | HOSE | TUYAU FLEXIBLE | 1 | | | | | |
| 9 | DS2055858 | HOSE | TUYAU FLEXIBLE | 1 | | | | | |
| 10 | 2181-1126D83 | ADAPTER | RACCORD ADAPTATEUR | 2 | | | | | |
| 11 | S8000181 | O-RING | JOINT TORIQUE | 2 | | | | | |
| 12 | DS2347032 | TEE | TE | 1 | | | | | |
| 13 | S8000231 | O-RING | JOINT TORIQUE | 1 | | | | | |
| 14 | DS2094085 | HOSE | TUYAU FLEXIBLE | 1 | | | | | |
| 15 | DS2094085 | HOSE | TUYAU FLEXIBLE | 1 | | | | | |
| 16 | DS2347025 | TEE | TE | 1 | | | | | |
| 17 | S8000141 | O-RING | JOINT TORIQUE | 1 | | | | | |
| 18 | 2181-1126D14 | ADAPTER | RACCORD ADAPTATEUR | 2 | | | | | |
| 19 | S8000111 | O-RING | JOINT TORIQUE | 2 | | | | | |
| 20 | 2160-4003 | BUSHING;RUBBER | GARNISSAGE | 2 | | | | | |

| DATE | OCT. 17, 2005 |
|---|---|
| 1st EDITION | |

# Fig. 2210 TRAVEL PIPING - TRACK WIDTH 3m
# CONDUITES DE TRANSLATION

**Serial No. ;**

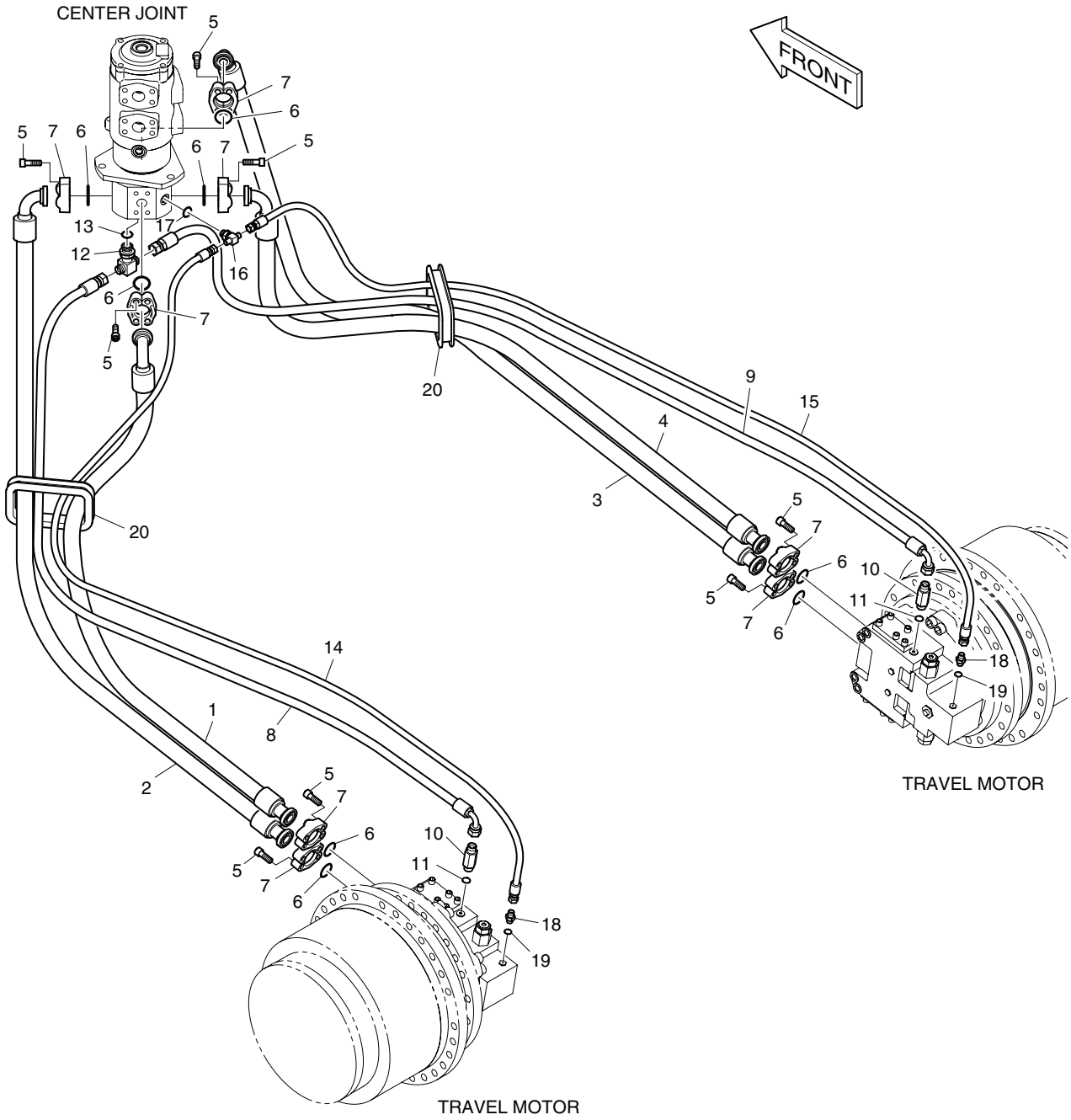

| DATE | OCT. 17, 2005 |
|---|---|
| 1st EDITION | |

# Fig. 2210 TRAVEL PIPING - TRACK WIDTH 3m
# CONDUITES DE TRANSLATION

Serial No. ;

| Key No. | Part No. | Description | Description | Q'ty | S.C | Serial No. | ICA | Replaceable part | |
|---|---|---|---|---|---|---|---|---|---|
| | | | | | | | | Part No. | Q'ty |
| 2210-- | K1006794B | TRAVEL PIPING | CONDUITES | - | D | | | | |
| 1 | DS2040436 | HOSE | TUYAU FLEXIBLE | 1 | | | | | |
| 2 | DS2040437 | HOSE | TUYAU FLEXIBLE | 1 | | | | | |
| 3 | DS2040437 | HOSE | TUYAU FLEXIBLE | 1 | | | | | |
| 4 | DS2040436 | HOSE | TUYAU FLEXIBLE | 1 | | | | | |
| 5 | S2215466 | BOLT;SOCKET | BOULON DE PLOT | 32 | | | | | |
| 6 | 2180-1026D19 | O-RING | JOINT TORIQUE | 8 | | | | | |
| 7 | 2181-9081 | FLANGE;SPLIT | BRIDE | 16 | | | | | |
| 8 | DS2055858 | HOSE | TUYAU FLEXIBLE | 1 | | | | | |
| 9 | DS2055858 | HOSE | TUYAU FLEXIBLE | 1 | | | | | |
| 10 | 2181-1126D83 | ADAPTER | RACCORD ADAPTATEUR | 2 | | | | | |
| 11 | S8000181 | O-RING | JOINT TORIQUE | 2 | | | | | |
| 12 | DS2347032 | TEE | TE | 1 | | | | | |
| 13 | S8000231 | O-RING | JOINT TORIQUE | 1 | | | | | |
| 14 | DS2094069 | HOSE | TUYAU FLEXIBLE | 1 | | | | | |
| 15 | DS2094069 | HOSE | TUYAU FLEXIBLE | 1 | | | | | |
| 16 | DS2347025 | TEE | TE | 1 | | | | | |
| 17 | S8000141 | O-RING | JOINT TORIQUE | 1 | | | | | |
| 18 | 2181-1126D14 | ADAPTER | RACCORD ADAPTATEUR | 2 | | | | | |
| 19 | S8000111 | O-RING | JOINT TORIQUE | 2 | | | | | |
| 20 | 2160-4003 | BUSHING;RUBBER | GARNISSAGE | 2 | | | | | |

| DATE | JUN. 30, 2008 |
|---|---|
| REV.NO. | EXB08-06 |

# Fig. 3100 BOOM - 6.5m FLECHE

**Serial No. ;**

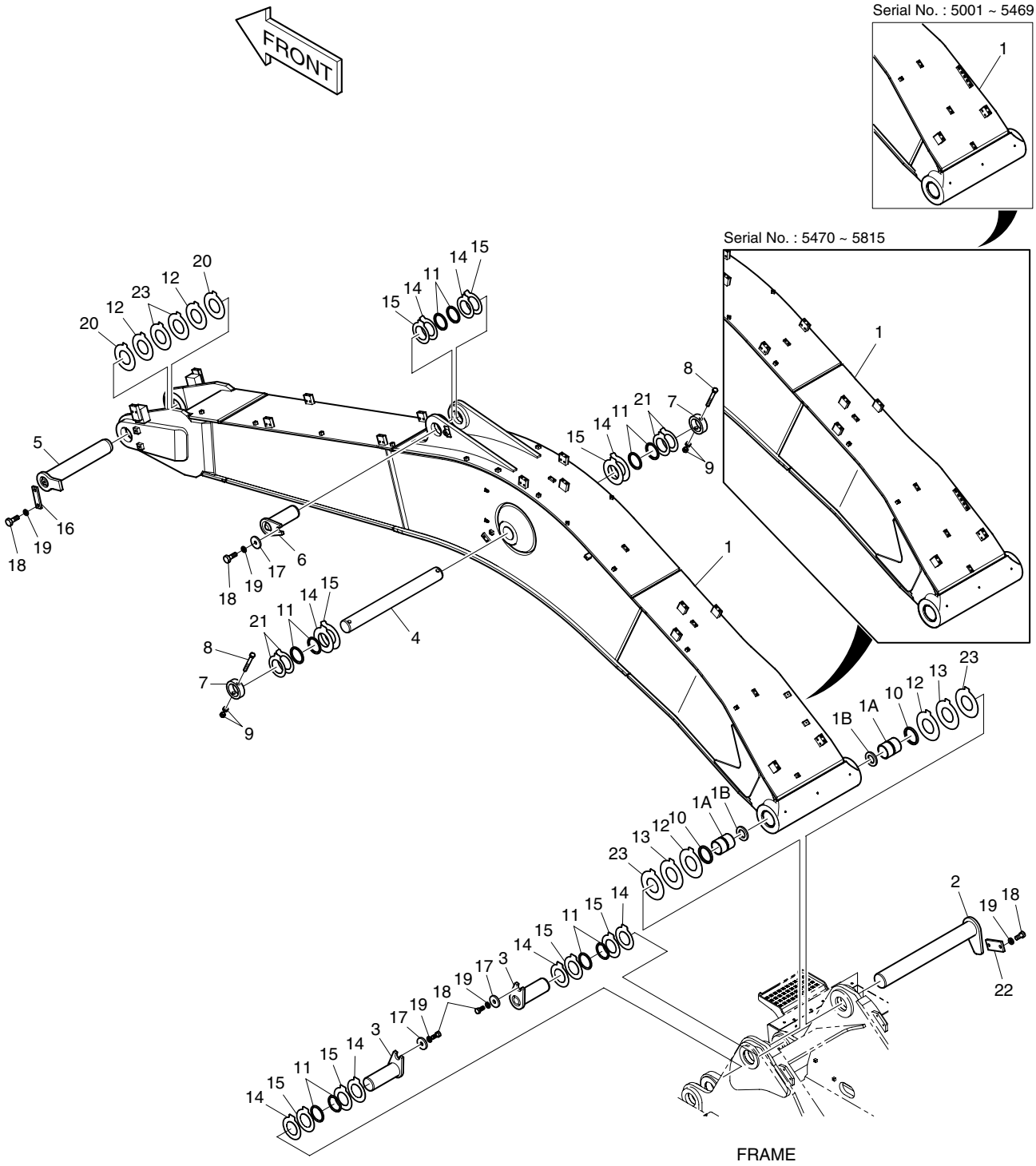

| DATE | JUN. 30, 2008 |
|---|---|
| REV. NO. | EXB08-06 |

# Fig. 3100 BOOM - 6.5m FLECHE

Serial No. ;

| Key No. | Part No. | Description | Description | Q'ty | S.C | Serial No. | ICA | Replaceable part | |
|---|---|---|---|---|---|---|---|---|---|
| | | | | | | | | Part No. | Q'ty |
| 3100-- | **K1004464K** | **BOOM ASS'Y** | ENSEMBLE FLECHE | - | D | | | | |
| 1 | K1004465 | BOOM SUB ASS'Y-6.5M | ENSEMBLE FLECHE | 1 | | 5001–5129 | I | K1004465A | 1 |
| | K1004465A | BOOM SUB ASS'Y-6.5M | ENSEMBLE FLECHE | 1 | | 5130–5469 | I | K1004465B | 1 |
| | K1004465B | BOOM SUB ASS'Y-6.5M | ENSEMBLE FLECHE | 1 | | 5470–5501 | I | K1004465C | 1 |
| | K1004465C | BOOM SUB ASS'Y-6.5M | ENSEMBLE FLECHE | 1 | | 5502–5815 | | | |
| | K1004465E | BOOM SUB ASS'Y-6.5M | ENSEMBLE FLECHE | 1 | | 5816–5859 | I | K1004465G | 1 |
| | **K1004465G** | **BOOM SUB ASS'Y-6.5M** | ENSEMBLE FLECHE | 1 | | **5860**– | | | |
| 1A | K1003909 | . BUSHING | . MANCHON | 2 | | | | | |
| 1B | 2180-1106BD15 | . SEAL;DUST | . PARE-POUSSIERES | 2 | | | | | |
| 2 | K1005722A | PIN | GOUJON | 1 | | 5001–5679 | I | K1005722B | 1 |
| | K1005722B | PIN | GOUJON | 1 | | 5680– | | | |
| 3 | 2123-2356A | PIN | GOUPILLE | 2 | | 5001–5815 | I | K1039627 | 2 |
| | K1039627 | PIN | GOUPILLE | 2 | | 5816–5999 | I | K1039627A | 2 |
| | **K1039627A** | **PIN** | GOUPILLE | 2 | | **6000**– | | | |
| 4 | K1005726 | PIN | GOUJON | 1 | | 5001–5679 | I | K1005726A | 1 |
| | K1005726A | PIN | GOUJON | 1 | | 5680–5881 | I | K1005726B | 1 |
| | **K1005726B** | **PIN** | GOUJON | 1 | | **5882**– | | | |
| 5 | 2123-2349B | PIN | GOUJON | 1 | | 5001–5815 | I | K1039626 | 1 |
| | K1039626 | PIN | GOUJON | 1 | | 5816– | | | |
| 6 | 2123-2031C | PIN | GOUJON | 1 | | 5001–5815 | I | K1039625 | 1 |
| | K1039625 | PIN | GOUJON | 1 | | 5816– | | | |
| 7 | 2116-1539 | STOPPER | TAQUET D'ARRET | 2 | | | | | |
| 8 | S0571966 | BOLT | BOULON A 6 PANS | 2 | | | | | |
| 9 | S4013133 | NUT | ECROU | 4 | | | | | |
| 10 | 2180-1106BD15 | SEAL;DUST | PARE-POUSSIERES | 2 | | | | | |
| 11 | 2180-1106BD14 | SEAL;DUST | PARE-POUSSIERES | 10 | | | | | |
| 12 | DS7752050 | SHIM | CALE | 4 | | | | | |
| 13 | DS7752051 | SHIM | CALE | 2 | | | | | |
| 14 | DS7752045 | SHIM | CALE | 8 | | | | | |
| 15 | DS7752046 | SHIM | CALE | 8 | | | | | |
| 16 | 2191-2205D8 | PLATE;STOPPER | PLAQUE | 1 | | | | | |
| 17 | 2116-1060D5 | STOPPER | TAQUET D'ARRET | 3 | | | | | |
| 18 | S0521366 | BOLT | BOULON A 6 PANS | 7 | | | | | |
| 19 | S5102903 | WASHER;SPRING | RONDELLE ELASTIQUE | 7 | | | | | |
| 20 | DS7752049 | SHIM | CALE | 2 | | | | | |
| 21 | DS7752044 | SHIM | CALE | 4 | | | | | |
| 22 | K1002345A | PLATE | PLAQUE | 1 | | | | | |
| 23 | DS7752106 | SHIM | CALE | 4 | | 5502– | | | |

| DATE | JUN. 30, 2008 |
|---|---|
| REV.NO. | EXB08-06 |

# Fig. 3110 ARM - 3.2m BALANCIER

**Serial No. ;**

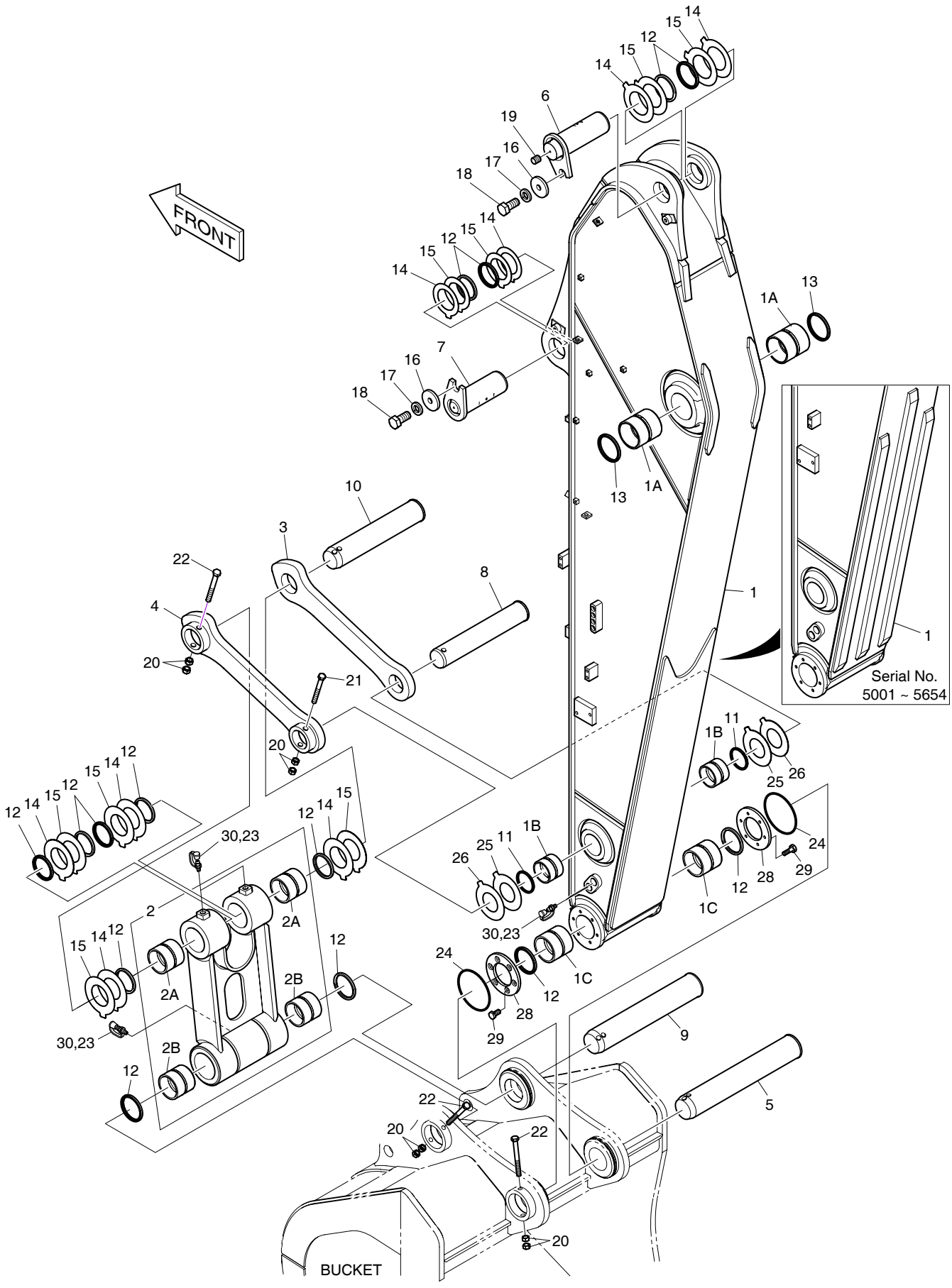

| DATE | JUN. 30, 2008 |
|---|---|
| REV. NO. | EXB08-06 |

# Fig. 3110 ARM - 3.2m BALANCIER

Serial No. ;

| Key No. | Part No. | Description | Description | Q'ty | S.C | Serial No. | ICA | Replaceable part | |
|---|---|---|---|---|---|---|---|---|---|
| | | | | | | | | Part No. | Q'ty |
| 3110-- | K1004474E | ARM ASS'Y | ENSEMBLE BALANCIER | - | D | | | | |
| 1 | K1004475 | ARM SUB ASS'Y-3.2M | ENSEMBLE BALANCIER | 1 | | 5001–5462 | I | K1004475A | 1 |
| | K1004475A | ARM SUB ASS'Y-3.2M | ENSEMBLE BALANCIER | 1 | | 5463–5654 | I | K1004475B | 1 |
| | K1004475B | ARM SUB ASS'Y-3.2M | ENSEMBLE BALANCIER | 1 | | 5655–5814 | I | K1004475C | 1 |
| | K1004475C | ARM SUB ASS'Y-3.2M | ENSEMBLE BALANCIER | 1 | | 5815–5838 | I | K1004475E | 1 |
| | **K1004475E** | **ARM SUB ASS'Y-3.2M** | ENSEMBLE BALANCIER | 1 | | **5839–** | | | |
| 1A | K1003910 | . BUSHING | . MANCHON | 2 | | | | | |
| 1B | 110-00248 | . BUSHING | . COUSSINET | 2 | | | | | |
| 1C | K1003911 | . BUSHING | . MANCHON | 2 | | | | | |
| 2 | K1005832A | PUSH LINK ASS'Y | ENSEMBLE DE | 1 | | | | | |
| 2A | K1003912 | . BUSHING | . MANCHON | 2 | | | | | |
| 2B | K1003913 | . BUSHING | . MANCHON | 2 | | | | | |
| 3 | 2155-1349A | LINK;GUIDE(R.H) | ARTICULATED | 1 | | | | | |
| 4 | 2155-1350A | LINK;GUIDE(L.H) | ARTICULATED | 1 | | | | | |
| 5 | 123-00578 | PIN | GOUJON | 1 | | 5001–5838 | I | 123-00578A | 1 |
| | **123-00578A** | **PIN** | GOUJON | 1 | | **5839–** | | | |
| 6 | 123-00668 | PIN | GOUJON | 1 | | 5001–5469 | | | |
| | 123-00668A | PIN | GOUJON | 1 | | 5470–5838 | I | 123-00668B | 1 |
| | **123-00668B** | **PIN** | GOUJON | 1 | | **5839–** | | | |
| 7 | K1000543 | PIN | GOUJON | 1 | | 5001–5838 | I | K1000543A | 1 |
| | **K1000543A** | **PIN** | GOUJON | 1 | | **5839–** | | | |
| 8 | 2123-2351A | PIN | GOUPILLE | 1 | | 5001–5838 | I | K1039630 | 1 |
| | **K1039630** | **PIN** | GOUPILLE | 1 | | **5839–** | | | |
| 9 | 2123-2352A | PIN | GOUPILLE | 1 | | 5001–5838 | I | K1039629 | 1 |
| | **K1039629** | **PIN** | GOUPILLE | 1 | | **5839–** | | | |
| 10 | 2123-2353A | PIN | GOUPILLE | 1 | | 5001–5838 | I | K1039631 | 1 |
| | **K1039631** | **PIN** | GOUPILLE | 1 | | **5839–** | | | |
| 11 | 2180-1106BD6 | SEAL;DUST | PARE-POUSSIERES | 2 | | | | | |
| 12 | 2180-1106BD14 | SEAL;DUST | PARE-POUSSIERES | 14 | | | | | |
| 13 | 2180-1106BD15 | SEAL;DUST | PARE-POUSSIERES | 2 | | | | | |
| 14 | DS7752045 | SHIM | CALE | 8 | | | | | |
| 15 | DS7752046 | SHIM | CALE | 8 | | | | | |
| 16 | 2116-1060D5 | STOPPER | TAQUET D'ARRET | 2 | | | | | |
| 17 | S5102903 | WASHER;SPRING | RONDELLE ELASTIQUE | 2 | | | | | |
| 18 | S0521366 | BOLT | BOULON A 6 PANS | 2 | | | | | |
| 19 | 2181-1116D1 | PLUG | BOUCHON | 1 | | 5001–5469 | | | |
| 20 | S4013133 | NUT | ECROU | 8 | | | | | |
| 21 | S0571861 | BOLT | BOULON A 6 PANS | 1 | | 5001–5129 | I | DS0001085 | 1 |

| DATE | JUN. 30, 2008 |
|---|---|
| REV.NO. | EXB08-06 |

# Fig. 3110 ARM - 3.2m BALANCIER

**Serial No. ;**

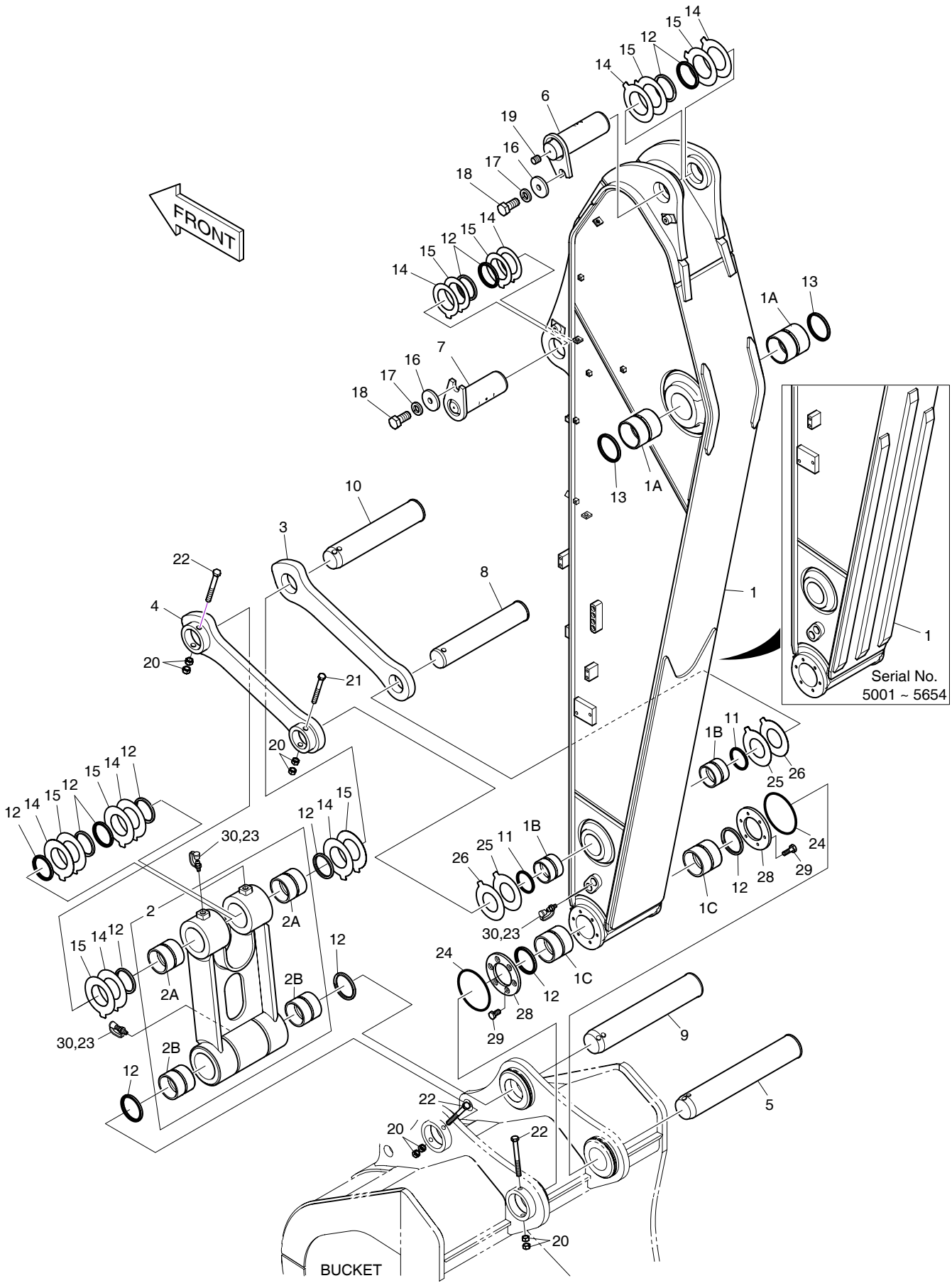

| DATE | JUN. 30, 2008 |
|---|---|
| REV. NO. | EXB08-06 |

# Fig. 3110 ARM - 3.2m BALANCIER

Serial No. ;

| Key No. | Part No. | Description | Description | Q'ty | S.C | Serial No. | ICA | Replaceable part | |
|---|---|---|---|---|---|---|---|---|---|
| | | | | | | | | Part No. | Q'ty |
| 3110-21 | DS0001085 | BOLT | BOULON A 6 PANS | 1 | | 5130– | | | |
| 22 | S0571966 | BOLT | BOULON A 6 PANS | 3 | | 5001–5129 | I | DS0001086 | 3 |
| | DS0001086 | BOLT | BOULON A 6 PANS | 3 | | 5130– | | | |
| 23 | S6710041 | NIPPLE;GREASE | GRAISSEUR | 5 | | | | | |
| 24 | 180-00077D7 | O-RING | JOINT TORIQUE | 2 | | | | | |
| 25 | DS7752015 | SHIM | CALE | 2 | | | | | |
| 26 | DS7752016 | SHIM | CALE | 2 | | | | | |
| 28 | K1005780 | SPACER | DOUILLE D'ECARTEMENT | 2 | | | | | |
| 29 | 120-00223 | BOLT | BOULON A 6 PANS | 12 | | | | | |
| 30 | 160-00020 | CAP;GREASE NIPPLE | CHAPEAU | 5 | | | | | |

| DATE | JUN. 30, 2008 |
|---|---|
| REV.NO. | EXB08-06 |

# Fig. 3120 BUCKET-1.3 m³ GODET

**Serial No. ;**

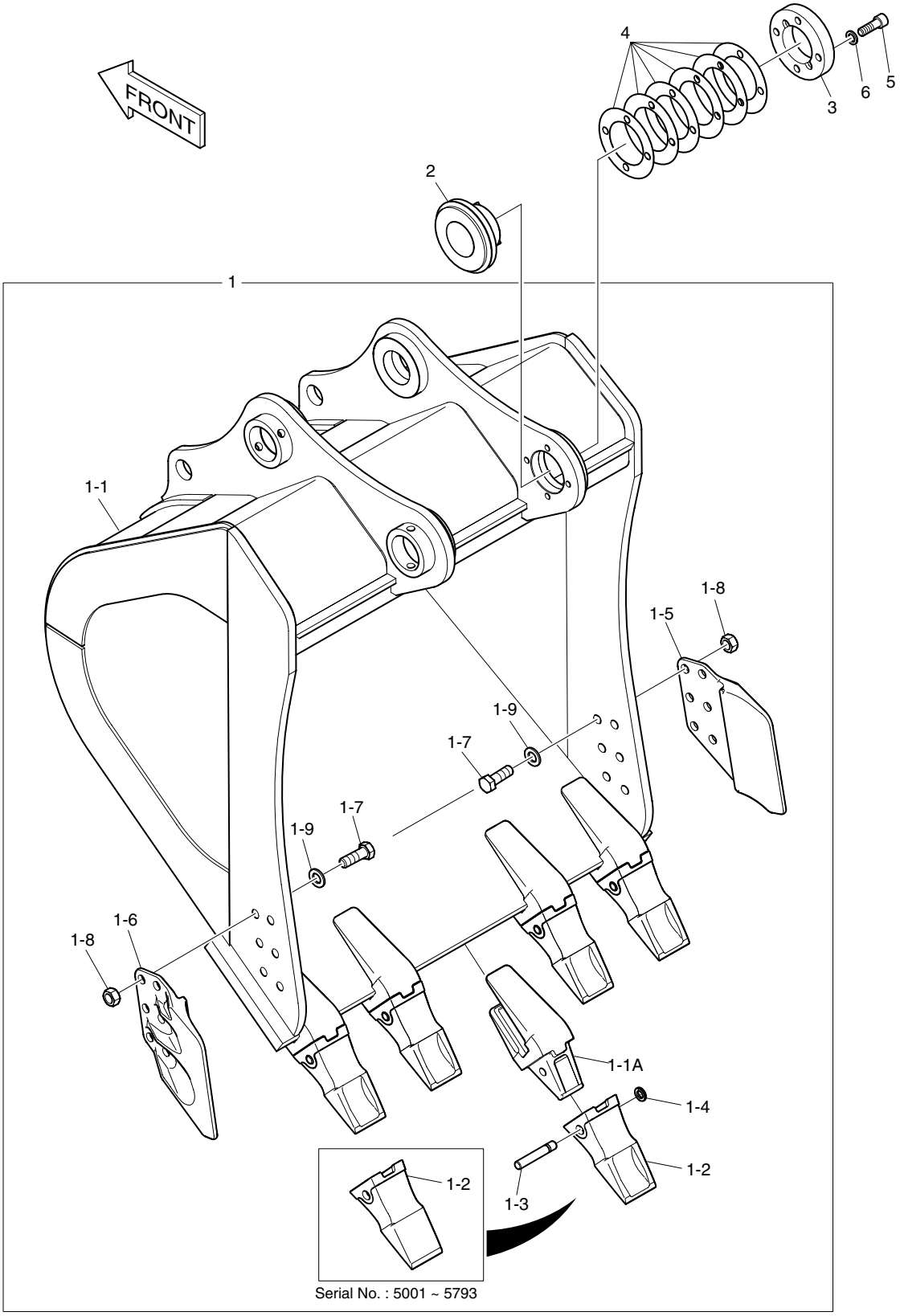

| DATE | JUN. 30, 2008 |
|---|---|
| REV. NO. | EXB08-06 |

# Fig. 3120 BUCKET-1.3m³ GODET

Serial No. ;

| Key No. | Part No. | Description | Description | Q'ty | S.C | Serial No. | ICA | Replaceable part | |
|---|---|---|---|---|---|---|---|---|---|
| | | | | | | | | Part No. | Q'ty |
| 3120-- | K1004478C | BUCKET ASS'Y | ENSEMBLE GODET | - | D | | | | |
| 1 | K1004479A | BUCKET SUB ASS'Y-1.3㎥ | GODET | 1 | | 5001–5756 | I | K1004479B | 1 |
| | K1004479B | BUCKET SUB ASS'Y-1.3㎥ | GODET | 1 | | 5757–5793 | I | K1004479C | 1 |
| | K1004479C | BUCKET SUB ASS'Y-1.3㎥ | GODET | 1 | | 5794– | | | |
| 1-1 | K1004480A | . BUCKET;WELD-1.3㎥ | . GODET | 1 | | 5001–5756 | I | K1004480B | 1 |
| | K1004480B | . BUCKET;WELD-1.3㎥ | . GODET | 1 | | 5757– | | | |
| 1-1A | 713-00033 | .. ADAPTER;TOOTH | .. DENT DE ADAPTEUR | 5 | | | | | |
| 1-2 | K1005018 | . TOOTH;POINT | . DENT | 5 | | 5001–5793 | I | K1005018A | 5 |
| | K1005018A | . TOOTH;POINT | . DENT | 5 | | 5794– | | | |
| 1-3 | 705-00006 | . PIN;LOCKING | . GOUPILLE DE BLOCAGE | 5 | | | | | |
| 1-4 | 114-00246 | . WASHER;LOCKING | . RONDELLE | 5 | | | | | |
| 1-5 | 2713-6034A | . CUTTER;SIDE(R.H) | . COIN DE GODET DROIT | 1 | | | | | |
| 1-6 | 2713-6035A | . CUTTER;SIDE(L.H) | . COIN DE GODET DROIT | 1 | | | | | |
| 1-7 | S0574761 | . BOLT | . BOULON A 6 PANS | 12 | | | | | |
| 1-8 | S4013333 | . NUT | . ECROU | 12 | | | | | |
| 1-9 | 2114-1831A | . WASHER;HARD | . RONDELLE ELASTIQUE | 12 | | | | | |
| 2 | K1005253 | BUSH;FLANGE | DOUILLE | 1 | | | | | |
| 3 | K1005254A | STOPPER:COVER | TAQUET D'ARRET | 1 | | 5001–5922 | I | K1005254B | 1 |
| | **K1005254B** | **STOPPER:COVER** | TAQUET D'ARRET | 1 | | **5923**– | | | |
| 4 | K1013571 | SHIM | CALE | 6 | | | | | |
| 5 | S2221666 | BOLT;SOCKET | BOULON A 6 PANS CREUX | 4 | | | | | |
| 6 | K1014251 | WASHER;HARDEN | RONDELLE | 4 | | | | | |

| DATE | JUN. 30, 2007 |
|---|---|
| REV.NO. | EXB07-06 |

# Fig. 3130 BOOM PIPING
# CONDUITES DE FLECHE

**Serial No. ;**

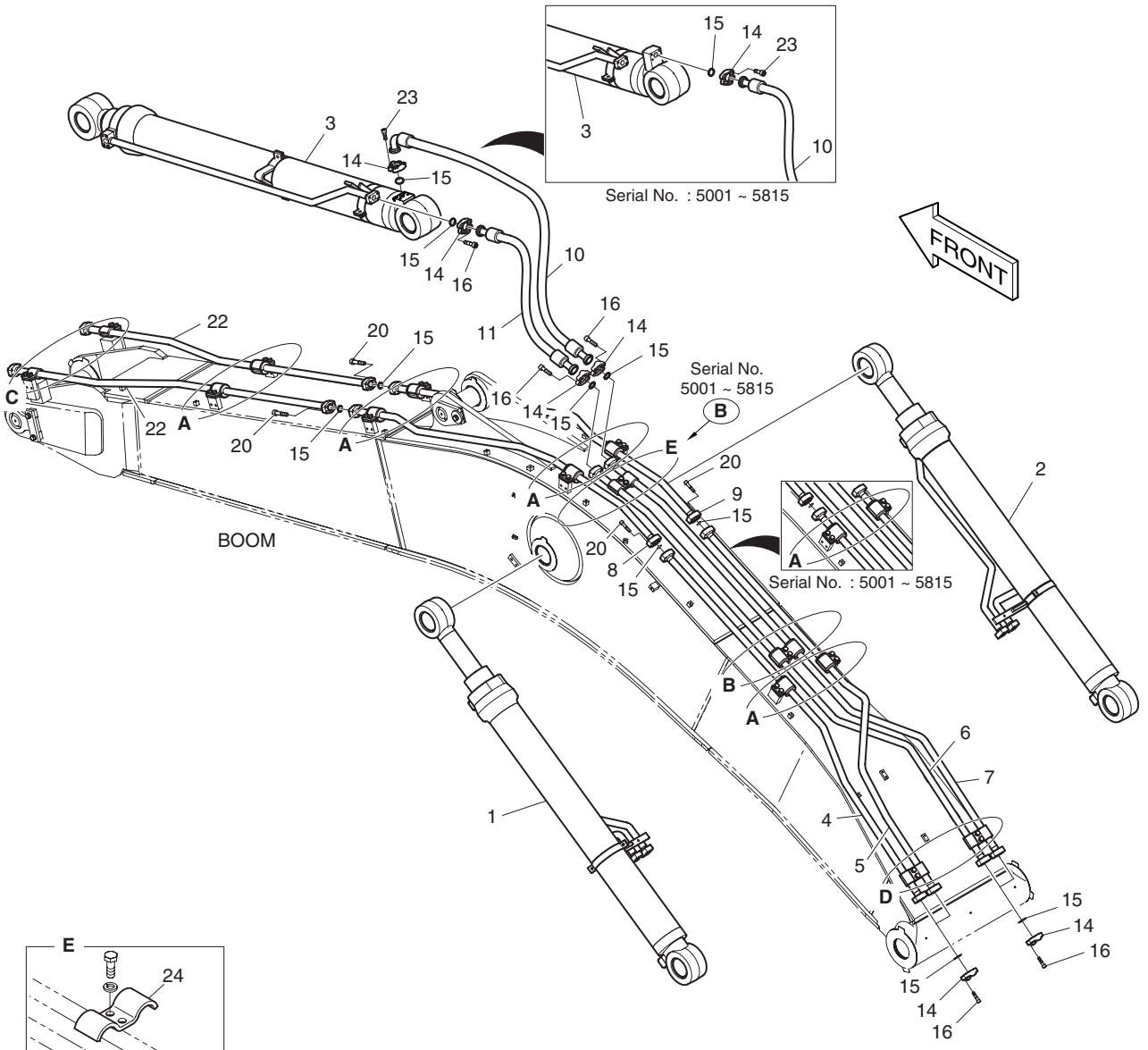




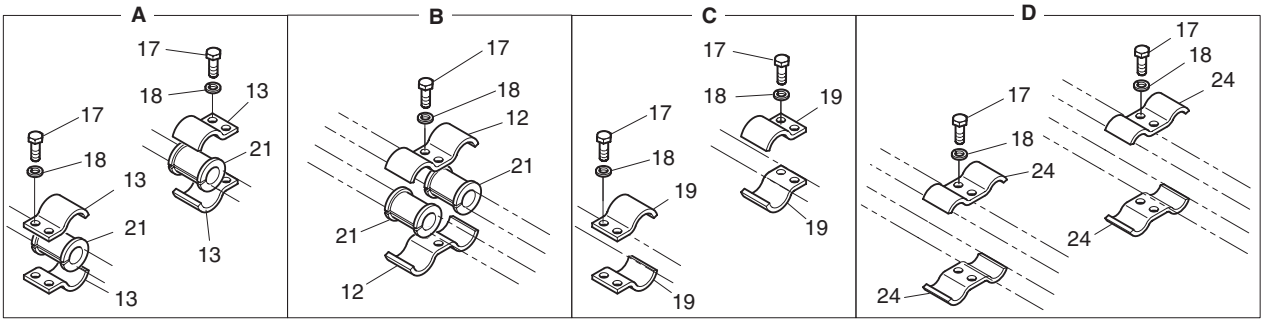

| DATE | JUN. 30, 2007 |
|---|---|
| REV. NO. | EXB07-06 |

# Fig. 3130 BOOM PIPING
# CONDUITES DE FLECHE

Serial No. ;

| Key No. | Part No. | Description | Description | Q'ty | S.C | Serial No. | ICA | Replaceable part | |
|---|---|---|---|---|---|---|---|---|---|
| | | | | | | | | Part No. | Q'ty |
| 3130-- | **K1006200B** | **BOOM PIPING** | CONDUITES DE FLECHE | - | D | | | | |
| 1 | K1006190 | CYLINDER;BOOM(LH) | VERIN DE FLECHE GAUCHE | 1 | | | | | |
| 2 | K1006191 | CYLINDER;BOOM(RH) | VERIN DE FLECHE DROIT | 1 | | | | | |
| 3 | K1006192 | CYLINDER;ARM | VERIN DE BALANCIER | 1 | | 5001–5330 | I | K1006192A | 1 |
| | K1006192A | CYLINDER;ARM | VERIN DE BALANCIER | 1 | | 5331–5469 | I | K1006192B | 1 |
| | **K1006192B** | **CYLINDER;ARM** | VERIN DE BALANCIER | 1 | | **5470–5815** | | | |
| | **K1006192C** | **CYLINDER;ARM** | VERIN DE BALANCIER | 1 | | **5816–** | | | |
| 4 | K1006193 | PIPE | CONDUITE | 1 | | | | | |
| 5 | K1006194 | PIPE | CONDUITE | 1 | | | | | |
| 6 | K1006195 | PIPE | CONDUITE | 1 | | 5001–5815 | I | K1006195A | 1 |
| | **K1006195A** | **PIPE** | CONDUITE | 1 | | **5816–** | | | |
| 7 | K1006196 | PIPE | CONDUITE | 1 | | 5001–5815 | I | K1006196A | 1 |
| | **K1006196A** | **PIPE** | CONDUITE | 1 | | **5816–** | | | |
| 8 | K1006197A | PIPE | CONDUITE | 1 | | | | | |
| 9 | K1006198A | PIPE | CONDUITE | 1 | | | | | |
| 10 | 2184-1081D146 | HOSE | TUYAU FLEXIBLE | 1 | | 5001–5034 | | | |
| | DS2038169 | HOSE | TUYAU FLEXIBLE | 1 | | 5035–5815 | | | |
| | **2184-1100D129** | **HOSE** | TUYAU FLEXIBLE | 1 | | **5816–** | | | |
| 11 | 2184-1081D111 | HOSE | TUYAU FLEXIBLE | 1 | | 5001–5034 | | | |
| | DS2038208 | HOSE | TUYAU FLEXIBLE | 1 | | 5035– | | | |
| 12 | K1004055 | CLAMP;PIPE | FIXATION DE TUYAU | 4 | | 5001–5815 | | | |
| | **K1004055** | **CLAMP;PIPE** | FIXATION DE TUYAU | 2 | | **5816–** | | | |
| 13 | K1004056 | CLAMP;PIPE | FIXATION DE TUYAU | 20 | | | | | |
| 14 | 2181-9078 | FLANGE;SPLIT | FLASQUE EN DEUX | 16 | | | | | |
| 15 | 2180-1026D19 | O-RING | JOINT TORIQUE | 12 | | | | | |
| 16 | S2212466 | BOLT;SOCKET | BOULON DE PLOT | 28 | | | | | |
| 17 | S0562766 | BOLT | BOULON A 6 PANS | 32 | | 5001–5815 | | | |
| | **S0562766** | **BOLT** | BOULON A 6 PANS | 28 | | **5816–** | | | |
| 18 | S5102803 | WASHER;SPRING | RONDELLE ELASTIQUE M14 | 32 | | 5001–5815 | | | |
| | **S5102803** | **WASHER;SPRING** | RONDELLE ELASTIQUE M14 | 28 | | **5816–** | | | |
| 19 | K1004057 | CLAMP;PIPE | FIXATION DE TUYAU | 4 | | | | | |
| 20 | **S2212666** | **BOLT;SOCKET** | BOULON A 6 PANS CREUX | 16 | | **5001–5815** | | | |
| 21 | 161-00281 | RUBBER | CAOUTCHOUC | 14 | | 5001–5815 | | | |
| | **161-00281** | **RUBBER** | CAOUTCHOUC | 10 | | **5816–** | | | |
| 22 | K1006199 | PIPE | CONDUITE | 2 | | | | | |
| 23 | S2212266 | BOLT;SOCKET | BOULON DE PLOT | 4 | | | | | |
| 24 | K1004058 | CLAMP;PIPE | FIXATION DE TUYAU | 4 | | 5001–5815 | | | |
| | **K1004058** | **CLAMP;PIPE** | FIXATION DE TUYAU | 6 | | **5816–** | | | |

| DATE | JUN. 30, 2007 |
|---|---|
| REV.NO. | EXB07-06 |

# Fig. 3140 LUBRICATION PIPING - BOOM LUBRIFICATION

**Serial No. ; 5001 ~ 5815**

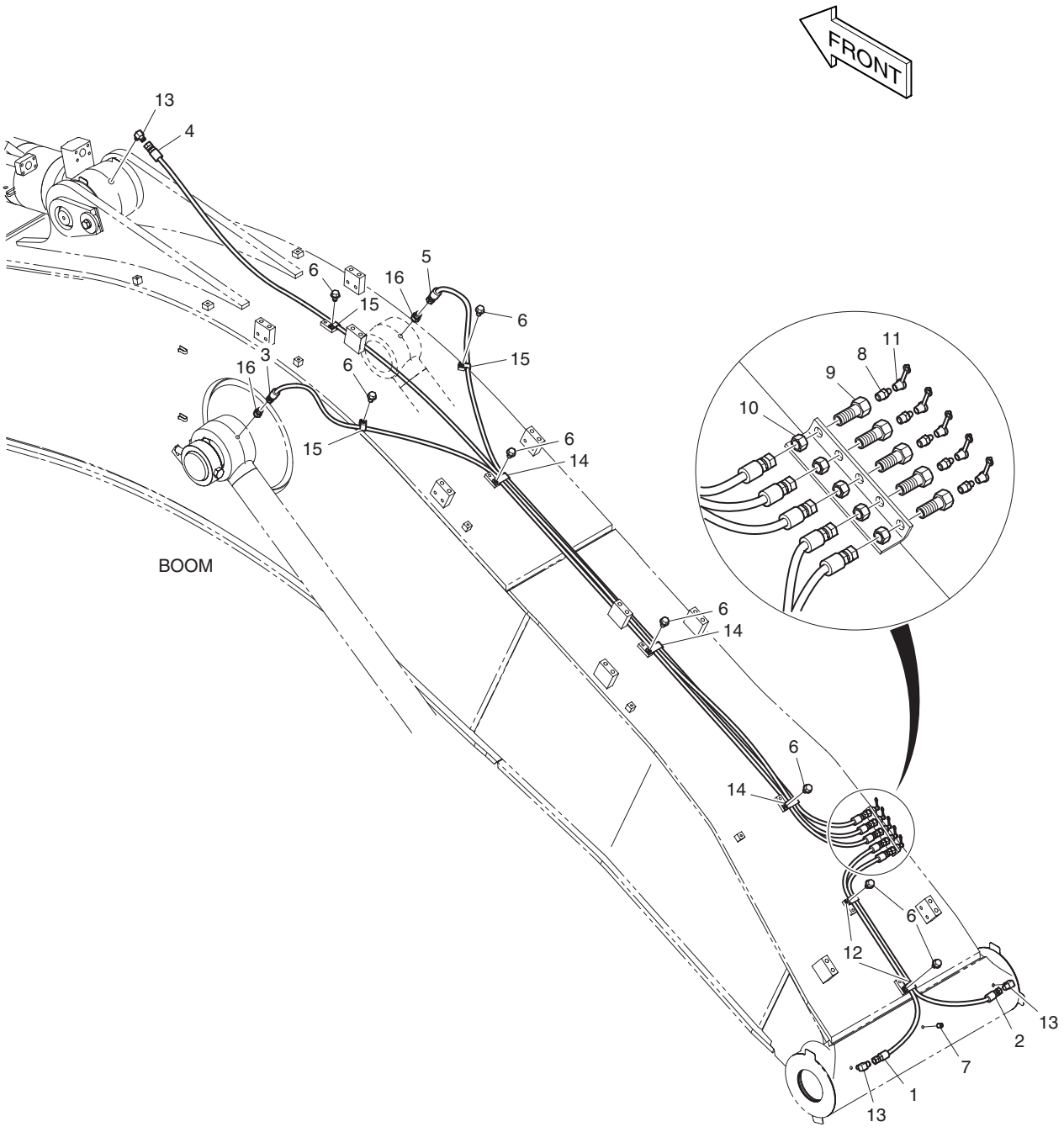

| DATE | JUN. 30, 2007 |
|---|---|
| REV. NO. | EXB07-06 |

# Fig. 3140 LUBRICATION PIPING - BOOM LUBRIFICATION

**Serial No. ; 5001 ~ 5815**

| Key No. | Part No. | Description | Description | Q'ty | S.C | Serial No. | ICA | Replaceable part | |
|---|---|---|---|---|---|---|---|---|---|
| | | | | | | | | Part No. | Q'ty |
| 3140-- | **K1006204** | **LUBRICATION PIPING** | LUBRIFICATION | - | D | **5001–5815** | | | |
| 1 | 2184-1045D210 | HOSE | TUYAU FLEXIBLE | 1 | | | | | |
| 2 | DS2053834 | HOSE | TUYAU FLEXIBLE | 1 | | | | | |
| 3 | 2184-1045D96 | HOSE | TUYAU FLEXIBLE | 1 | | | | | |
| 4 | DS2053735 | HOSE | TUYAU FLEXIBLE | 1 | | | | | |
| 5 | 2184-1045D131 | HOSE | TUYAU FLEXIBLE | 1 | | | | | |
| 6 | K1001029 | BOLT | BOULON A 6 PANS | 8 | | | | | |
| 7 | S3524403 | PLUG;DRAIN | BOUCHON | 1 | | | | | |
| 8 | S6710041 | NIPPLE;GREASE | GRAISSEUR | 5 | | | | | |
| 9 | 181-00103 | REDUCER | REDUCTEUR | 5 | | | | | |
| 10 | 121-00006 | NUT | ECROU | 5 | | | | | |
| 11 | 160-00020 | CAP;GREASE NIPPLE | CHAPEAU | 5 | | | | | |
| 12 | 124-00199D5 | CLIP | ATTACHE | 2 | | | | | |
| 13 | 2181-1186D12 | ELBOW | RACCORD ADAPTATEUR | 3 | | | | | |
| 14 | 124-00199D4 | CLIP | ATTACHE | 3 | | | | | |
| 15 | 2124-1353D2 | CLIP | CLIP | 3 | | | | | |
| 16 | 2181-4112 | ADAPTER | RACCORD ADAPTEUR | 2 | | | | | |

| DATE | JUN. 30, 2007 |
|---|---|
| REV.NO. | EXB07-06 |

# Fig. 3141 LUBRICATION PIPING - BOOM LUBRIFICATION

**Serial No. ; 5816 ~**

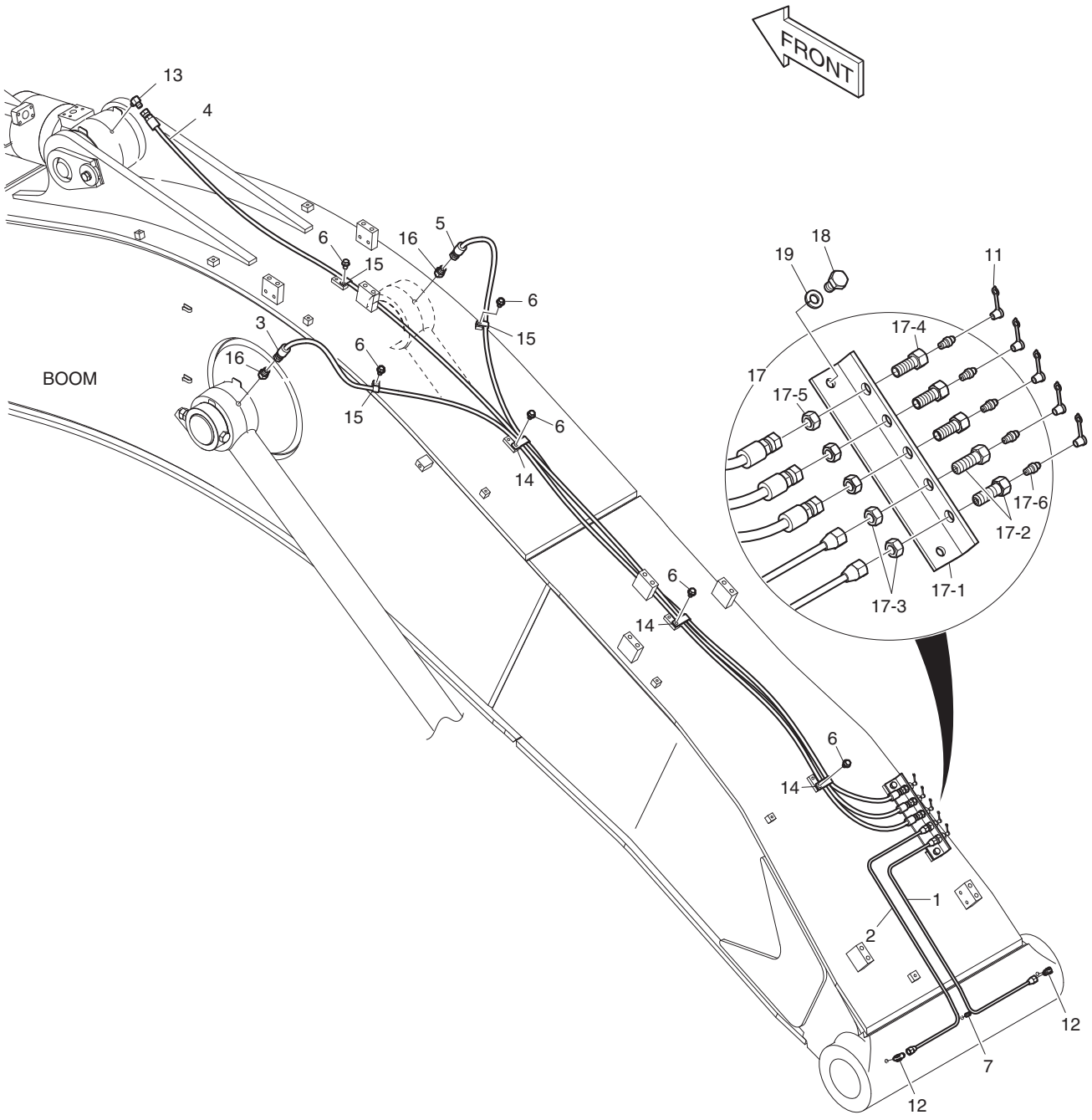

| DATE | JUN. 30, 2007 |
|---|---|
| REV. NO. | EXB07-06 |

# Fig. 3141 LUBRICATION PIPING - BOOM LUBRIFICATION

**Serial No. ; 5816 ~**

| Key No. | Part No. | Description | Description | Q'ty | S.C | Serial No. | ICA | Replaceable part | |
|---|---|---|---|---|---|---|---|---|---|
| | | | | | | | | Part No. | Q'ty |
| 3141-- | **K1006204A** | **LUBRICATION PIPING** | LUBRIFICATION | - | D | **5816–** | | | |
| 1 | K1039643 | PIPE | CONDUITE | 1 | | | | | |
| 2 | K1039644 | PIPE | CONDUITE | 1 | | | | | |
| 3 | 2184-1045D96 | HOSE | TUYAU FLEXIBLE | 1 | | | | | |
| 4 | DS2053735 | HOSE | TUYAU FLEXIBLE | 1 | | | | | |
| 5 | 2184-1045D131 | HOSE | TUYAU FLEXIBLE | 1 | | | | | |
| 6 | K1001029 | BOLT | BOULON A 6 PANS | 6 | | | | | |
| 7 | S3524403 | PLUG;DRAIN | BOUCHON | 1 | | | | | |
| 11 | 160-00020 | CAP;GREASE NIPPLE | CHAPEAU | 5 | | | | | |
| 12 | 2181-1925 | ELBOW | RACCORD ADAPTATEUR | 2 | | | | | |
| 13 | 2181-1186D12 | ELBOW | RACCORD ADAPTATEUR | 1 | | | | | |
| 14 | 124-00199D4 | CLIP | ATTACHE | 3 | | | | | |
| 15 | 2124-1353D2 | CLIP | ATTACHE | 3 | | | | | |
| 16 | 2181-4112 | ADAPTER | RACCORD ADAPTEUR | 2 | | | | | |
| 17 | K1038003 | GREASE PLATE SUB ASSY | ASSY DE SOUS-MARIN DE | 1 | | | | | |
| 17-1 | K1037887 | . PLATE | . PLAQUE | 1 | | | | | |
| 17-2 | 181-00525 | . REDUCER | . REDUCTEUR | 2 | | | | | |
| 17-3 | S4032833 | . NUT | . ECROU | 2 | | | | | |
| 17-4 | 181-00103 | . REDUCER | . REDUCTEUR | 3 | | | | | |
| 17-5 | 121-00006 | . NUT | . ECROU | 3 | | | | | |
| 17-6 | S6710041 | . NIPPLE;GREASE | . GRAISSEUR | 5 | | | | | |
| 18 | S0511866 | BOLT | BOULON A 6 PANS | 2 | | | | | |
| 19 | S5102603 | WASHER;SPRING | RONDELLE ELASTIQUE | 2 | | | | | |

| DATE | JUN. 30, 2007 |
|---|---|
| REV.NO. | EXB07-06 |

# Fig. 3150 ARM PIPING - ARM 3.2m
# CONDUITES DE BALANCIER

**Serial No. ;**

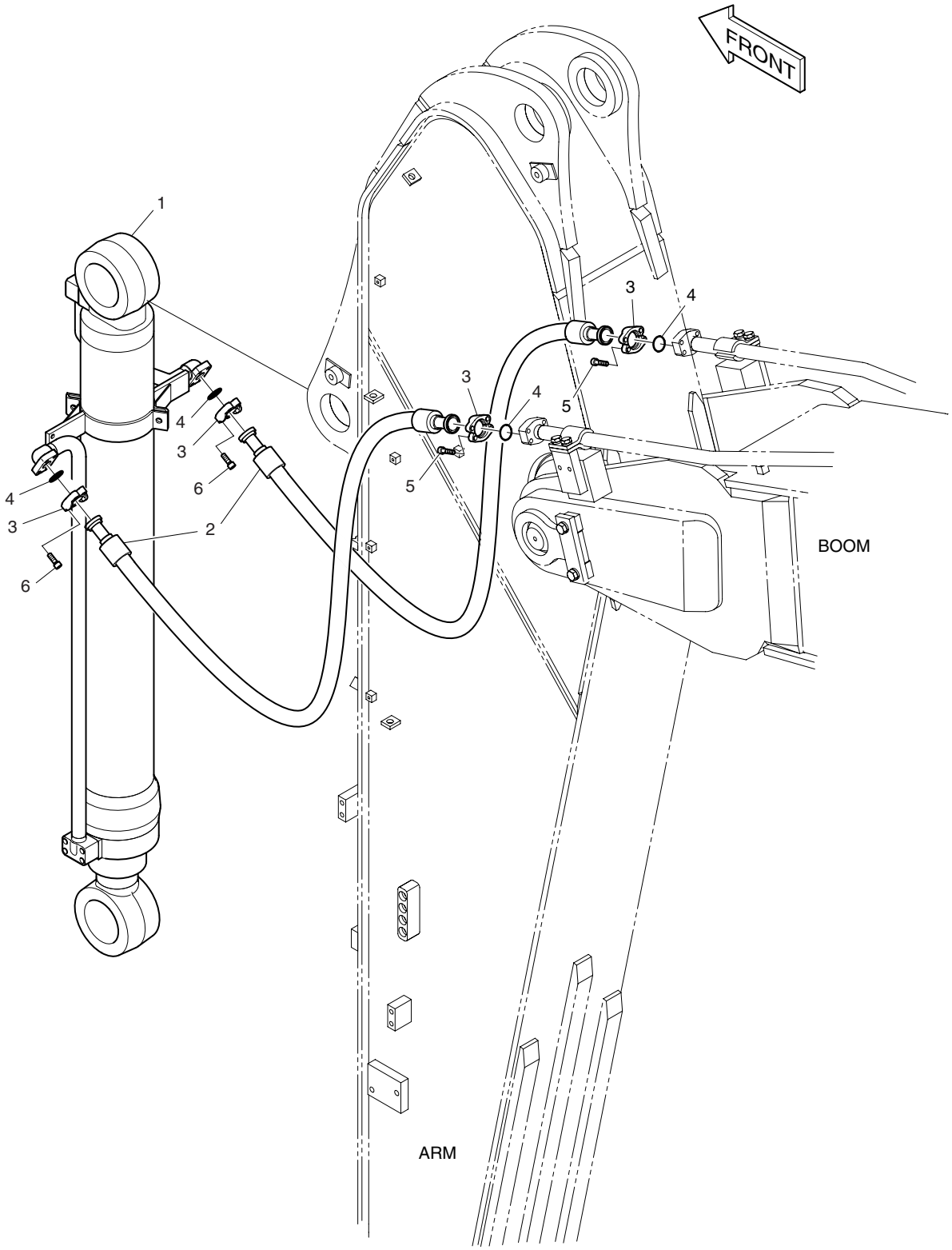

| DATE | JUN. 30, 2007 |
|---|---|
| REV. NO. | EXB07-06 |

# Fig. 3150 ARM PIPING - ARM 3.2m CONDUITES DE BALANCIER

**Serial No. ;**

| Key No. | Part No. | Description | Description | Q'ty | S.C | Serial No. | ICA | Replaceable part | |
|---|---|---|---|---|---|---|---|---|---|
| | | | | | | | | Part No. | Q'ty |
| 3150-- | K1006201A | ARM PIPING | CONDUITES DE BALANCIER | - | D | | | | |
| 1 | K1006202 | CYLINDER;BUCKET | VERIN DE GODET | 1 | | 5001–5668 | I | K1006202A | 1 |
| | **K1006202A** | **CYLINDER;BUCKET** | VERIN DE GODET | 1 | | **5669–** | | | |
| 2 | 2184-1081D154 | HOSE | TUYAU FLEXIBLE | 2 | | | | | |
| 3 | 2181-9078 | FLANGE;SPLIT | FLASQUE EN DEUX | 8 | | | | | |
| 4 | 2180-1026D19 | O-RING | JOINT TORIQUE | 4 | | | | | |
| 5 | S2212466 | BOLT;SOCKET | BOULON DE PLOT | 8 | | | | | |
| 6 | S2212266 | BOLT;SOCKET | BOULON DE PLOT | 8 | | | | | |

# Fig. 3160 LUBRICATION PIPING -ARM 3.2m LUBRIFICATION

**Serial No. ;**

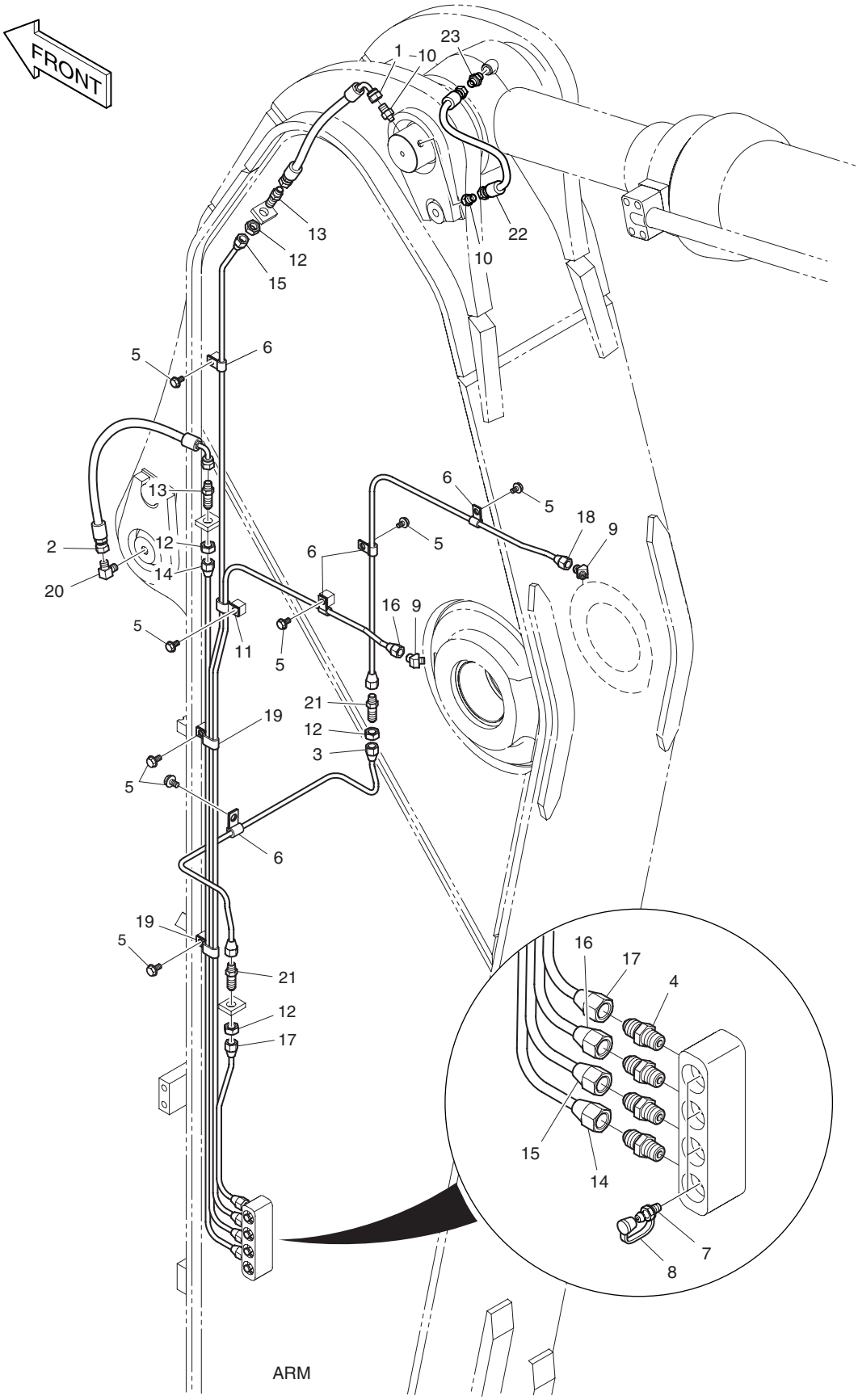

| DATE | JUN. 30, 2007 |
|---|---|
| REV. NO. | EXB07-06 |

# Fig. 3160 LUBRICATION PIPING -ARM 3.2m LUBRIFICATION

**Serial No. ;**

| Key No. | Part No. | Description | Description | Q'ty | S.C | Serial No. | ICA | Replaceable part | |
|---|---|---|---|---|---|---|---|---|---|
| | | | | | | | | Part No. | Q'ty |
| 3160-- | **K1006205B** | **LUBRICATION PIPING** | LUBRIFICATION | - | D | | | | |
| 1 | 2184-1036D64 | HOSE | TUYAU FLEXIBLE | 1 | | | | | |
| 2 | DS2055699 | HOSE | TUYAU FLEXIBLE | 1 | | | | | |
| 3 | K1006240 | PIPE | CONDUITE | 1 | | | | | |
| 4 | 2181-1184 | ADAPTER | RACCORD | 4 | | | | | |
| 5 | K1001029 | BOLT | BOULON A 6 PANS | 8 | | | | | |
| 6 | DS2802023 | CLIP | ATTACHE | 5 | | | | | |
| 7 | S6710041 | NIPPLE;GREASE | GRAISSEUR | 4 | | | | | |
| 8 | 160-00020 | CAP;GREASE NIPPLE | CHAPEAU | 4 | | | | | |
| 9 | K1000057 | ELBOW | COUDE | 2 | | | | | |
| 10 | 2181-4112 | ADAPTER | RACCORD ADAPTEUR | 1 | | 5001–5469 | | | |
| | **2181-4112** | **ADAPTER** | RACCORD ADAPTEUR | 2 | | **5470–** | | | |
| 11 | DS2805007 | CLIP | ATTACHE | 1 | | | | | |
| 12 | S4032833 | NUT | ECROU | 4 | | | | | |
| 13 | 2181-1923D12 | ADAPTER | RACCORD ADAPTATEUR | 2 | | | | | |
| 14 | K1006206 | PIPE | CONDUITE | 1 | | | | | |
| 15 | K1006207 | PIPE | CONDUITE | 1 | | | | | |
| 16 | K1006208 | PIPE | CONDUITE | 1 | | | | | |
| 17 | K1006209 | PIPE | CONDUITE | 1 | | | | | |
| 18 | K1006210 | PIPE | CONDUITE | 1 | | | | | |
| 19 | DS2805008 | CLIP | ATTACHE | 2 | | | | | |
| 20 | 2181-1111D11 | ELBOW | COUDE | 1 | | | | | |
| 21 | DS2225009 | ADAPTER | ADAPTEUR | 2 | | | | | |
| 22 | **DS2094250** | **HOSE** | TUYAU FLEXIBLE | 1 | | **5470–5659** | | | |
| | **DS2094173** | **HOSE** | TUYAU FLEXIBLE | 1 | | **5660–** | | | |
| 23 | **2181-1110D1** | **ADAPTER** | ADAPTEUR | 1 | | **5470–** | | | |

| DATE | JUN. 30, 2006 |
|---|---|
| REV.NO. | EXB06-08 |

# Fig. 4100 MAIN PUMP
# POMPE

**Serial No. ;**

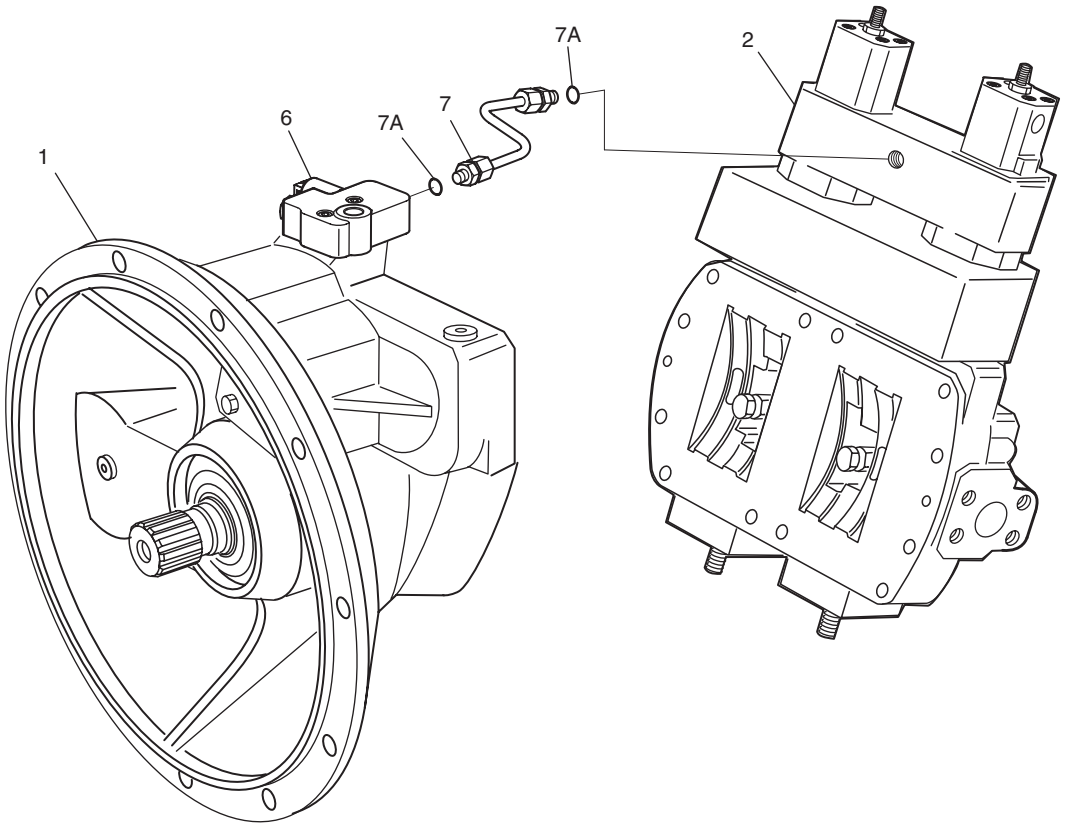

| DATE | JUN. 30, 2006 |
|---|---|
| REV. NO. | EXB06-08 |

# Fig. 4100 MAIN PUMP POMPE

Serial No. ;

| Key No. | Part No. | Description | Description | Q'ty | S.C | Serial No. | ICA | Replaceable part | |
|---|---|---|---|---|---|---|---|---|---|
| | | | | | | | | Part No. | Q'ty |
| 4100-- | K1004522B | PUMP;MAIN | POMPE PRINCIPALE | 1 | | | | | |
| 1 | - | **PUMP** | POMPE | 1 | D | | | | |
| 2 | K9002830 | CONTROL | ENSEMBLE COMMANDE | 1 | | | | | |
| 6 | K9001906 | PORT PLATE WITH VALVES | PLAT GAUCHE AVEC DES | 1 | | | | | |
| 7 | K9001907 | PIPE ASS'Y | ENSEMBLE CONDUITES | 1 | | | | | |
| 7A | 2.180-00472 | . O-RING | . JOINT TORIQUE | 2 | | | | | |

| DATE | JUN. 30, 2007 |
|---|---|
| REV.NO. | EXB07-06 |

# Fig. 4110 MAIN PUMP - ROTARY GROUP GROUPE ROTATIF

**Serial No. ;**

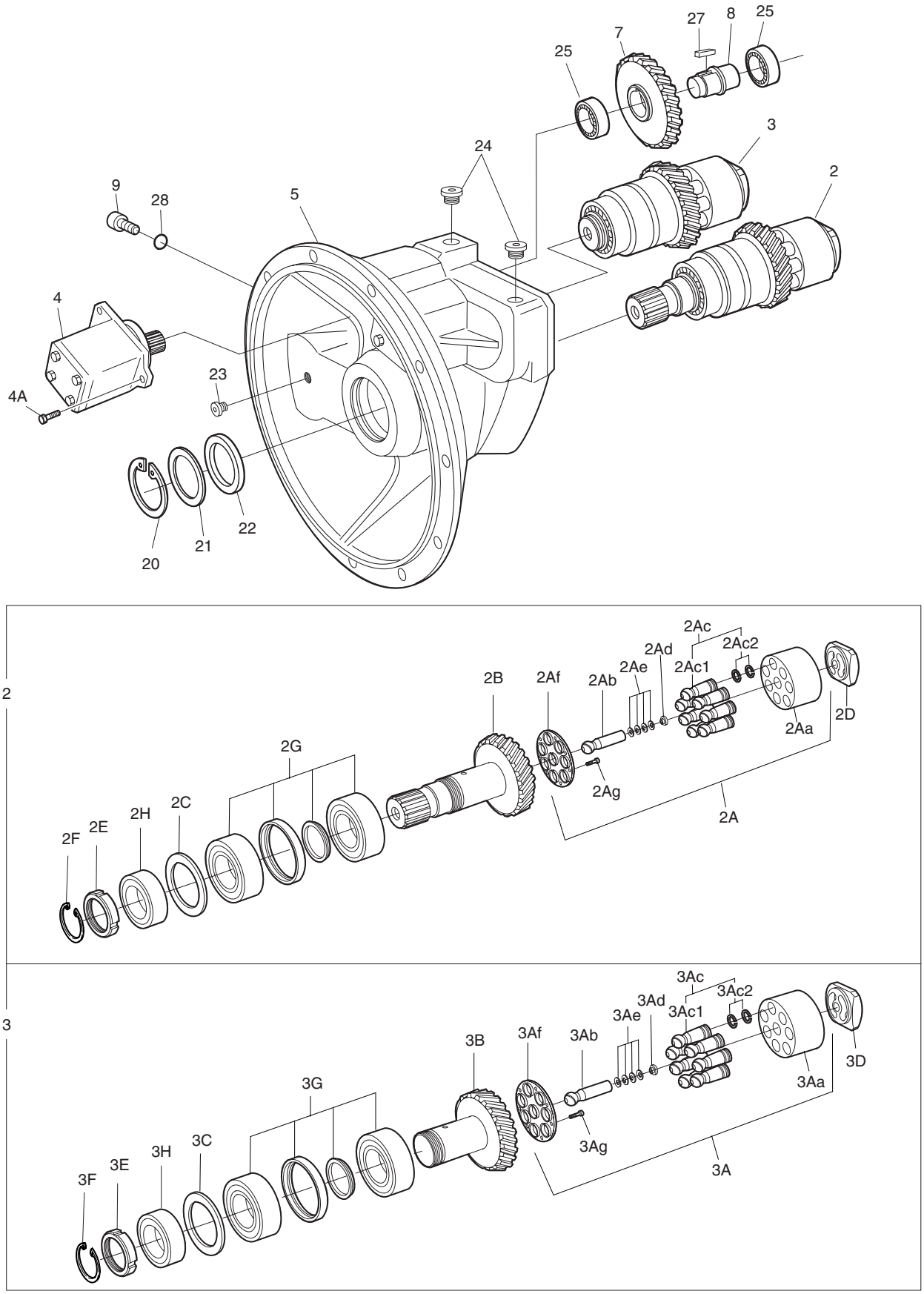

| DATE | JUN. 30, 2007 |
|---|---|
| REV. NO. | EXB07-06 |

# Fig. 4110 MAIN PUMP - ROTARY GROUP GROUPE ROTATIF

**Serial No. ;**

| Key No. | Part No. | Description | Description | Q'ty | S.C | Serial No. | ICA | Replaceable part | |
|---|---|---|---|---|---|---|---|---|---|
| | | | | | | | | Part No. | Q'ty |
| 4110-2 | K9001908 | ROTARY GROUP | GROUPE ROTATIF | 1 | | | | | |
| 2A | K9001909 | . ROTARY GROUP;SECTION | . GROUPE ROTATOIRE | 1 | | | | | |
| 2Aa | 2.410-00138 | .. CYLINDER | .. CYLINDRE | 1 | | | | | |
| 2Ab | K9001910 | .. PIN;CENTER | .. BROCHE CENTRALE | 1 | | | | | |
| 2Ac | K9001911 | .. PISTON & PISTON RINGS | .. PISTON & BAGUE | 7 | | | | | |
| 2Ac1 | - | ... PISTON | ... PISTON | 1 | D | | | | |
| 2Ac2 | - | ... RING;STEEL SEALING | ... ANNEAU | 2 | D | | | | |
| 2Ad | K9001912 | .. COLLAR;SPRING | .. CALE | 1 | | | | | |
| 2Ae | 2.453-00025 | .. CUP SPRING | .. RESSORT | 4 | | | | | |
| 2Af | 2.412-00224 | .. PLATE;RETAINING | .. PLAQUE | 1 | | | | | |
| 2Ag | K9001916 | .. SCREW;PAN HEAD | .. VIS | 14 | | | | | |
| 2B | K9001913 | . SHAFT;DRIVE | . AXE | 1 | | | | | |
| 2C | 2.114-00167 | . SHIM | . PLAQUE | 1 | | | | | |
| | 2.114-00168 | . SHIM | . PLAQUE | 1 | | | | | |
| | 2.114-00169 | . SHIM | . PLAQUE | 1 | | | | | |
| 2D | 2.412-00131 | . CONTROL LENS;RIGHT-HAND | . PLAQUE | 1 | | | | | |
| 2E | 2.180-01026 | . PLATE;BACK-UP | . PLAQUE | 1 | R | | | | |
| | 2.180-01027 | . PLATE;BACK-UP | . PLAQUE | 1 | R | | | | |
| | 2.180-01028 | . PLATE;BACK-UP | . PLAQUE | 1 | R | | | | |
| | 2.180-01029 | . PLATE;BACK-UP | . PLAQUE | 1 | R | | | | |
| | 2.180-01030 | . PLATE;BACK-UP | . PLAQUE | 1 | R | | | | |
| | 2.180-01031 | . PLATE;BACK-UP | . PLAQUE | 1 | R | | | | |
| | 2.180-01032 | . PLATE;BACK-UP | . PLAQUE | 1 | R | | | | |
| 2F | K9001914 | . RING;RETAINING | . RONDELLE DE RETENUE | 1 | | | | | |
| 2G | 2.109-00264 | . BEARING;UNIT | . ROULEMENT | 1 | | | | | |
| 2H | 2.109-00248 | . BEARING;TAPERED-ROLLER | . PALIER | 1 | | | | | |
| 3 | K9001915 | ROTARY GROUP | GROUPE ROTATIF | 1 | | | | | |
| 3A | K9001909 | . ROTARY GROUP;SECTION | . GROUPE ROTATOIRE | 1 | | | | | |
| 3Aa | 2.410-00138 | .. CYLINDER | .. CYLINDRE | 1 | | | | | |
| 3Ab | K9001910 | .. PIN;CENTER | .. BROCHE CENTRALE | 1 | | | | | |
| 3Ac | K9001911 | .. PISTON & PISTON RINGS | .. PISTON & BAGUE | 7 | | | | | |
| 3Ac1 | - | ... PISTON | ... PISTON | 1 | D | | | | |
| 3Ac2 | - | ... RING;STEEL SEALING | ... ANNEAU | 2 | D | | | | |
| 3Ad | K9001912 | .. COLLAR;SPRING | .. CALE | 1 | | | | | |
| 3Ae | 2.453-00025 | .. CUP SPRING | .. RESSORT | 4 | | | | | |
| 3Af | 2.412-00224 | .. PLATE;RETAINING | .. PLAQUE | 1 | | | | | |
| 3Ag | K9001916 | .. SCREW;PAN HEAD | .. VIS | 14 | | | | | |
| 3B | K9001917 | . SHAFT;DRIVE | . AXE | 1 | | | | | |

| DATE | JUN. 30, 2007 |
|---|---|
| REV.NO. | EXB07-06 |

# Fig. 4110 MAIN PUMP - ROTARY GROUP GROUPE ROTATIF

**Serial No. ;**

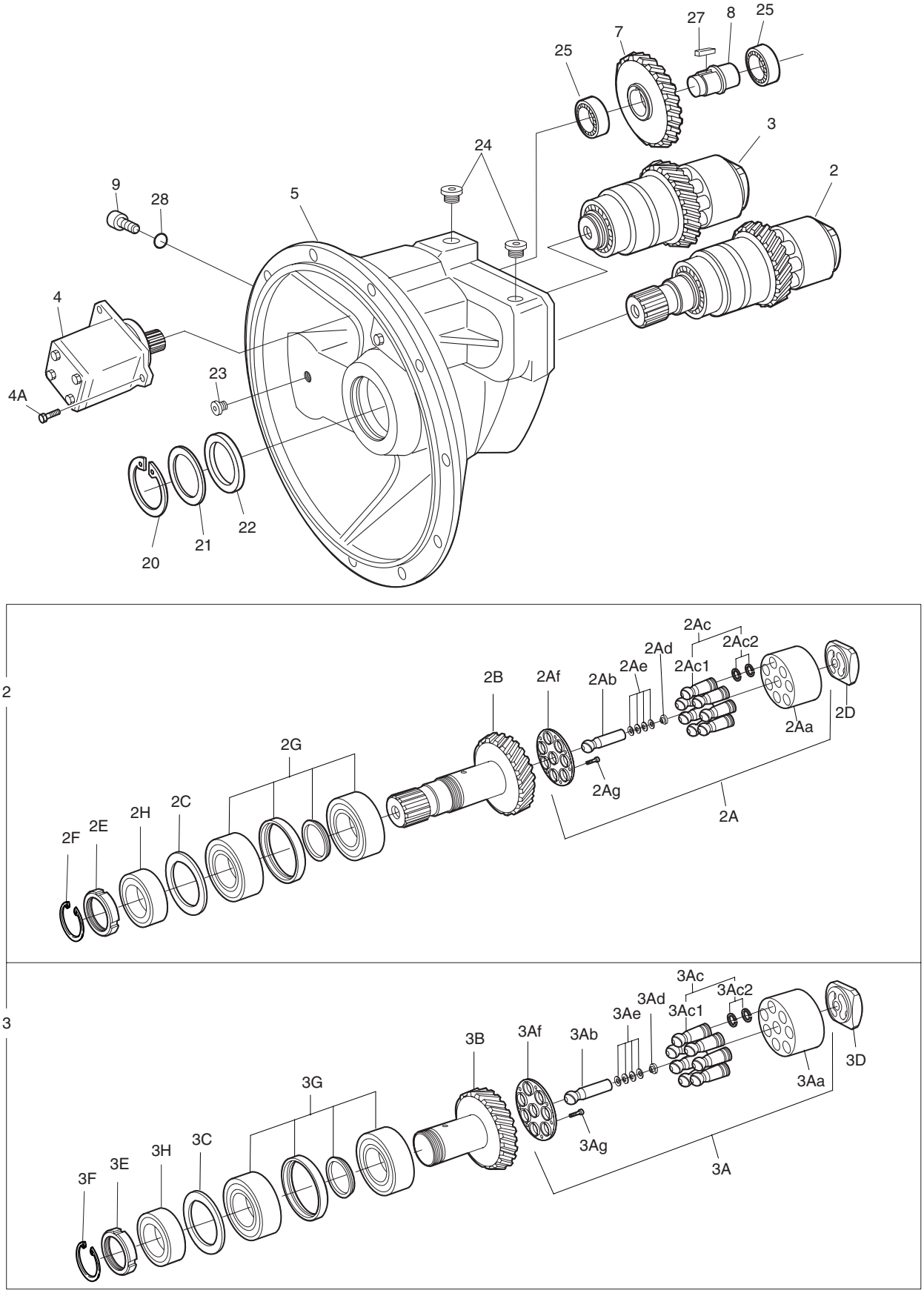

| DATE | JUN. 30, 2007 |
|---|---|
| REV. NO. | EXB07-06 |

# Fig. 4110 MAIN PUMP - ROTARY GROUP GROUPE ROTATIF

**Serial No. ;**

| Key No. | Part No. | Description | Description | Q'ty | S.C | Serial No. | ICA | Replaceable part | |
|---|---|---|---|---|---|---|---|---|---|
| | | | | | | | | Part No. | Q'ty |
| 4110-3C | 2.114-00170 | . SHIM | . PLAQUE | 1 | R | | | | |
| | 2.114-00171 | . SHIM | . PLAQUE | 1 | R | | | | |
| | 2.114-00172 | . SHIM | . PLAQUE | 1 | R | | | | |
| | 2.114-00173 | . SHIM | . PLAQUE | 1 | R | | | | |
| | 2.114-00174 | . SHIM | . PLAQUE | 1 | R | | | | |
| 3D | 2.412-00128 | . CONTROL LENS;LEFT-HAND | . PLAQUE | 1 | | | | | |
| 3E | 2.180-01026 | . PLATE;BACK-UP | . PLAQUE | 1 | R | | | | |
| | 2.180-01033 | . PLATE;BACK-UP | . PLAQUE | 1 | R | | | | |
| | 2.180-01027 | . PLATE;BACK-UP | . PLAQUE | 1 | R | | | | |
| | 2.180-01028 | . PLATE;BACK-UP | . PLAQUE | 1 | R | | | | |
| | 2.180-01029 | . PLATE;BACK-UP | . PLAQUE | 1 | R | | | | |
| | 2.180-01030 | . PLATE;BACK-UP | . PLAQUE | 1 | R | | | | |
| | 2.180-01031 | . PLATE;BACK-UP | . PLAQUE | 1 | R | | | | |
| | 2.180-01032 | . PLATE;BACK-UP | . PLAQUE | 1 | R | | | | |
| 3F | K9001914 | . RING;RETAINING | . RONDELLE DE RETENUE | 1 | | | | | |
| 3G | 2.109-00265 | . BEARING;UNIT | . ROULEMENT | 1 | | | | | |
| 3H | 2.109-00248 | . BEARING;TAPERED-ROLLER | . PALIER | 1 | | | | | |
| 4 | K9001918 | PUMP;GEAR | POMPE A ENGRENAGE | 1 | | | | | |
| 4A | 2.120-00829 | BOLT;SOCKET M10X20 | VIS | 2 | | | | | |
| 5 | - | HOUSING;PUMP | RONDELLE DE RETENUE | 1 | D | | | | |
| 7 | K9001919 | GEAR | ENGRENAGE | 1 | | | | | |
| 8 | K9001920 | SHAFT;STUB | ARBRE | 1 | | | | | |
| 9 | 2.317-00047 | STUD;CONNECT | GOUJON | 1 | | | | | |
| 20 | 2.115-00311 | RING;RETAINING | RONDELLE DE RETENUE | 1 | | | | | |
| 21 | 2.115-00327 | RING;SHAFT SEAL | BAGUE | 1 | | | | | |
| 22 | 2.114-00175 | SHIM | CALE | 1 | | | | | |
| 23 | 2.120-00611 | SCREW;LOCKING | VIS | 1 | | | | | |
| 24 | 2.120-00624 | SCREW;LOCKING | VIS | 3 | | | | | |
| 25 | 2.109-00192 | BEARING;PLAIN ROLLER | PALIER | 2 | | | | | |
| 27 | 2.405-00154 | SHAFT;KEY | ARBRE | 1 | | | | | |
| 28 | 2.180-01203 | O-RING | JOINT TORIQUE | 1 | | | | | |

| DATE | JUN. 30, 2007 |
|---|---|
| REV.NO. | EXB07-06 |

# Fig. 4120 MAIN PUMP - CONTROL
# POMPE COMMANDE

**Serial No. ;**

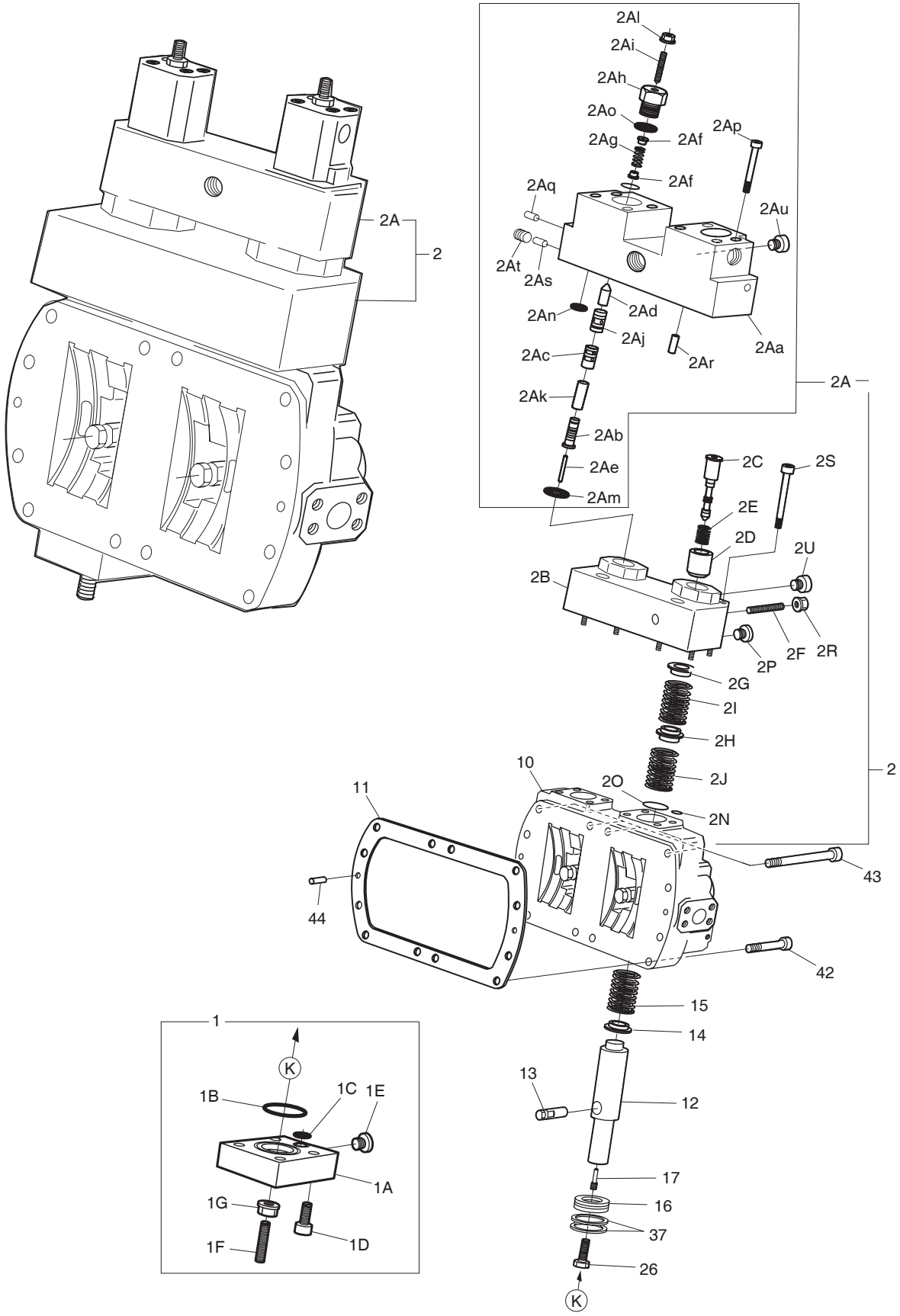

| DATE | JUN. 30, 2007 |
|---|---|
| REV. NO. | EXB07-06 |

# Fig. 4120 MAIN PUMP - CONTROL COMMANDE DE POMPE

Serial No. ;

| Key No. | Part No. | Description | Description | Q'ty | S.C | Serial No. | ICA | Replaceable part | |
|---|---|---|---|---|---|---|---|---|---|
| | | | | | | | | Part No. | Q'ty |
| 4120-1 | K9002256 | COVER | COUVERCLE | 2 | | | | | |
| 1A | 2.430-00229 | . COVER | . COUVERCLE | 1 | | | | | |
| 1B | 2.180-01196 | . O-RING | . JOINT TORIQUE | 1 | | | | | |
| 1C | 2.180-01189 | . O-RING | . JOINT TORIQUE | 1 | | | | | |
| 1D | 2.120-00836 | . SCREW;SOCKET-HEAD | . VIS | 4 | | | | | |
| 1E | 2.120-00615 | . SCREW;LOCKING | . VIS | 1 | | | | | |
| 1F | 2.123-00289 | . PIN;THREADED | . BROCHE | 1 | | | | | |
| 1G | 2.121-00263 | . NUT;SEAL LOCK | . ECROU | 1 | | | | | |
| 2 | K9002828 | CONTROL MODULE | ENSEMBLE COMMANDE | 1 | | | | | |
| 2A | K9001922 | . CONTROL MODULE | . MODULE DE COMMANDE | 1 | | | | | |
| 2Aa | - | .. HOUSING;CONTROL | .. LOGEMENT | 1 | D | | | | |
| 2Ab | 2.409-00177 | .. PISTON;CONTROL | .. PISTON | 2 | | | | | |
| 2Ac | 2.408-00063 | .. BUSH;CONTROL | .. DOUILLE | 2 | | | | | |
| 2Ad | 2.409-00200 | .. PISTON;POSITIONING | .. PISTON | 2 | | | | | |
| 2Ae | 2.123-00065 | .. PIN | .. BROCHE | 2 | | | | | |
| 2Af | 2.114-00039 | .. COLLAR;SPRING | .. CALE | 4 | | | | | |
| 2Ag | 2.131-00415 | .. SPRING;PRESSURE | .. RESSORT | 2 | | | | | |
| 2Ah | 2.120-00613 | .. SCREW;LOCKING | .. CHAPEAU | 2 | | | | | |
| 2Ai | 2.123-00235 | .. PIN;THREADED | .. BROCHE | 2 | | | | | |
| 2Aj | K9001923 | .. PISTON;CONTROL | .. PISTON | 2 | | | | | |
| 2Ak | K9001924 | .. BUSH;CONTROL | .. DOUILLE | 2 | | | | | |
| 2Al | 2.121-00202 | .. NUT;SEAL LOCK | .. ECROU | 2 | | | | | |
| 2Am | 2.180-01191 | .. O-RING | .. JOINT TORIQUE | 2 | | | | | |
| 2An | 2.180-00471 | .. O-RING | .. JOINT TORIQUE | 2 | | | | | |
| 2Ao | 2.180-01181 | .. O-RING | .. JOINT TORIQUE | 2 | | | | | |
| 2Ap | 2.120-00826 | .. SCREW;SOCKET-HEAD | .. VIS | 6 | | | | | |
| 2Aq | 2.123-00288 | .. PIN;DOUBLE BREAK-OFF | .. BROCHE | 5 | | | | | |
| 2Ar | 2.123-00131 | .. PIN;CYLINDER | .. BROCHE | 2 | | | | | |
| 2As | 2.123-00300 | .. PIN;DOUBLE BREAK-OFF | .. BROCHE | 1 | | | | | |
| 2At | 2.181-00262 | .. PLUG | .. BOUCHON | 1 | | | | | |
| 2Au | 2.120-00612 | .. PLUG | .. BOUCHON | 1 | | | | | |
| 2B | - | . HOUSING;CONTROL | . BOITIER | 1 | D | | | | |
| 2C | 2.409-00180 | . PISTON;CONTROL | . PISTON | 2 | | | | | |
| 2D | 2.408-00083 | . BUSH;SPRING | . DOUILLE | 2 | | | | | |
| 2E | 2.131-00418 | . SPRING;PRESSURE | . RESSORT | 2 | | | | | |
| 2F | 2.123-00249 | . PIN;THREADED | . BROCHE | 2 | | | | | |
| 2G | 2.114-00067 | . COLLAR;SPRING | . CALE | 2 | | | | | |
| 2H | 2.114-00068 | . COLLAR;SPRING | . CALE | 2 | | | | | |

| DATE | JUN. 30, 2007 |
|---|---|
| REV.NO. | EXB07-06 |

# Fig. 4120 MAIN PUMP - CONTROL
# POMPE COMMANDE

**Serial No. ;**

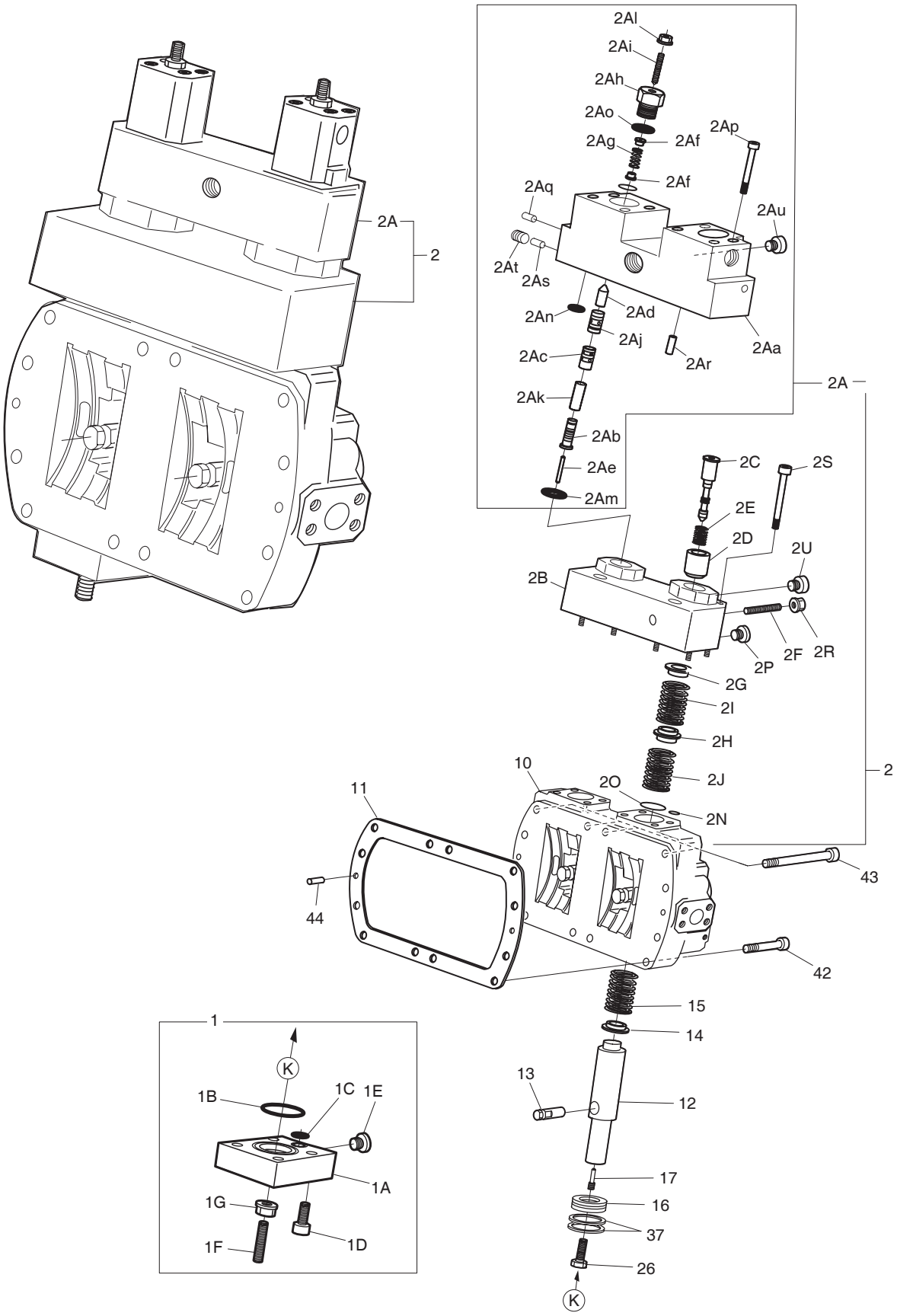

| DATE | JUN. 30, 2007 |
|---|---|
| REV. NO. | EXB07-06 |

# Fig. 4120 MAIN PUMP - CONTROL COMMANDE DE POMPE

Serial No. ;

| Key No. | Part No. | Description | Description | Q'ty | S.C | Serial No. | ICA | Replaceable part | |
|---|---|---|---|---|---|---|---|---|---|
| | | | | | | | | Part No. | Q'ty |
| 4120-2I | 2.131-00428 | . SPRING;PRESSURE | . RESSORT | 2 | | | | | |
| 2J | 2.131-00429 | . SPRING;PRESSURE | . RESSORT | 2 | | | | | |
| 2N | 2.180-00471 | . O-RING | . JOINT TORIQUE | 4 | | | | | |
| 2O | 2.180-01197 | . O-RING | . JOINT TORIQUE | 2 | | | | | |
| 2P | 2.120-00611 | . SCREW;LOCKING | . VIS | 2 | | | | | |
| 2R | 2.121-00202 | . NUT;SEAL LOCK | . ECROU | 2 | | | | | |
| 2S | 2.120-00828 | . SCREW;SOCKET-HEAD | . VIS | 6 | | | | | |
| 2U | 2.120-00616 | . SCREW;LOCKING | . VIS | 1 | | | | | |
| 10 | - | HOUSING;CONTROL | BOITIER DE COMMANDE | 1 | D | | | | |
| 11 | 2.180-00086 | GASKET | JOINT | 1 | | | | | |
| 12 | 2.409-00205 | PISTON;POSITIONING | PISTON | 2 | | | | | |
| 13 | 2.428-00065 | TRUNNION;POSITIONING | ANNEAU DE SOUTIEN | 2 | | | | | |
| 14 | K9002827 | COLLAR;SPRING | COLLIER | 2 | | | | | |
| 15 | 2.131-00430 | SPRING;PRESSURE | RESSORT DE | 2 | | | | | |
| 16 | K9001926 | PISTON | PISTON | 2 | | | | | |
| 17 | 2.123-00248 | PIN;THREADED | GOUPILLE FILETEE | 2 | | | | | |
| 26 | 2.120-00801 | SCREW;HEX | VIS | 2 | | | | | |
| 37 | K9001927 | RING;SQUARE | ANNEAU DE BLOCAGE | 4 | | | | | |
| 42 | 2.120-00837 | SCREW;SOCKET M16X60 | VIS | 8 | | | | | |
| 43 | S2222461 | SCREW;SOCKET M16X90 | BOULON A 6 PANS CREUX | 4 | | | | | |
| 44 | 2.123-00134 | PIN;CYLINDER | GOUPILLE CYLINDRIQUE | 2 | | | | | |

| DATE | JUN. 30, 2006 |
|---|---|
| REV.NO. | EXB06-08 |

# Fig. 4130 MAIN PUMP - E.P.P.R VALVE
# POMPE - E.P.P.R

**Serial No. ;**

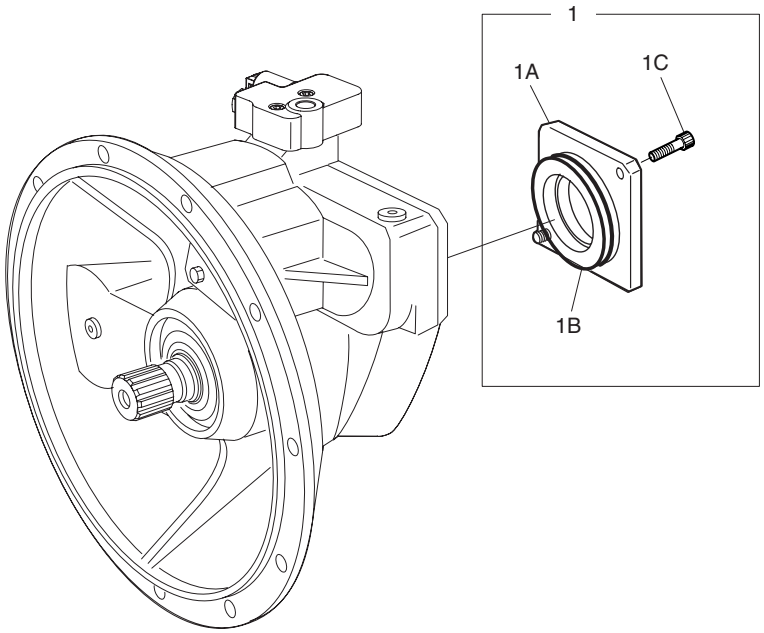


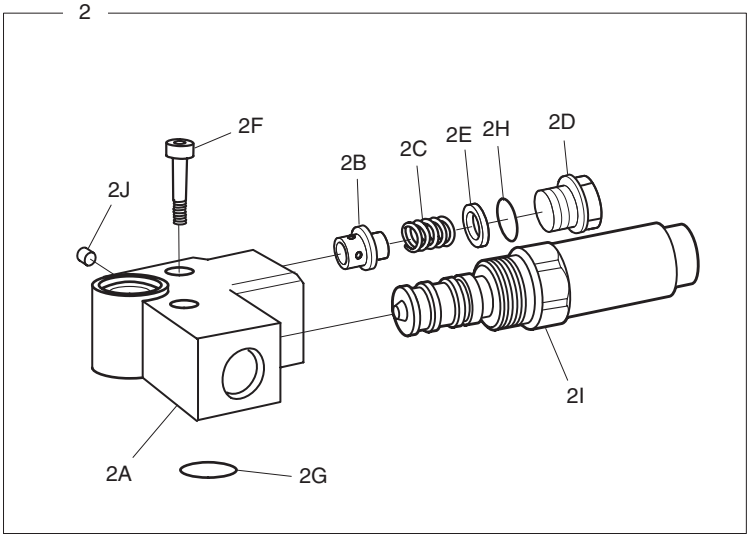

| DATE | JUN. 30, 2006 |
|---|---|
| REV. NO. | EXB06-08 |

# Fig. 4130 MAIN PUMP - E.P.P.R VALVE
# POMPE - E.P.P.R

Serial No. ;

| Key No. | Part No. | Description | Description | Q'ty | S.C | Serial No. | ICA | Replaceable part | |
|---|---|---|---|---|---|---|---|---|---|
| | | | | | | | | Part No. | Q'ty |
| 4130-1 | 2.430-00227 | COVER ASS'Y | ENSEMBLE CAPOT | 1 | | | | | |
| 1A | 2.430-00230 | . COVER | . COUVERCLE | 1 | | | | | |
| 1B | 2.180-01192 | . O-RING | . JOINT TORIQUE | 1 | | | | | |
| 1C | 2.120-00831 | . SCREW;SOCKET | . VIS | 2 | | | | | |
| 2 | K9001906 | PORT PLATE WITH VALVES | PLAT GAUCHE AVEC DES | 1 | | | | | |
| 2A | - | . PLATE;PORT | . PLAQUE | 1 | D | | | | |
| 2B | 2.409-00216 | . PISTON;VALVE | . PISTON | 1 | | | | | |
| 2C | 2.131-00417 | . SPRING;PRESSURE | . RESSORT | 1 | | | | | |
| 2D | 2.120-00617 | . SCREW;LOCKING | . VIS | 1 | | | | | |
| 2E | 2.114-00877 | . WASHER | . RONDELLE | 1 | | | | | |
| 2F | S2209361 | . SCREW;SOCKET | . BOULON A 6 PANS | 2 | | | | | |
| 2G | 2.180-01180 | . O-RING | . JOINT TORIQUE | 2 | | | | | |
| 2H | 2.180-01182 | . O-RING | . JOINT TORIQUE | 1 | | | | | |
| 2I | K9001933 | . VALVE | . SOUPAPE | 1 | | | | | |
| 2J | 2.123-00138 | . PIN;DOUBLE BREAK-OFF | . BROCHE | 1 | | | | | |

| DATE | OCT. 17, 2005 |
|---|---|
| 1st EDITION | |

# Fig. 4140 SWING MOTOR MOTEUR D'ORIENTATION

Serial No. ;

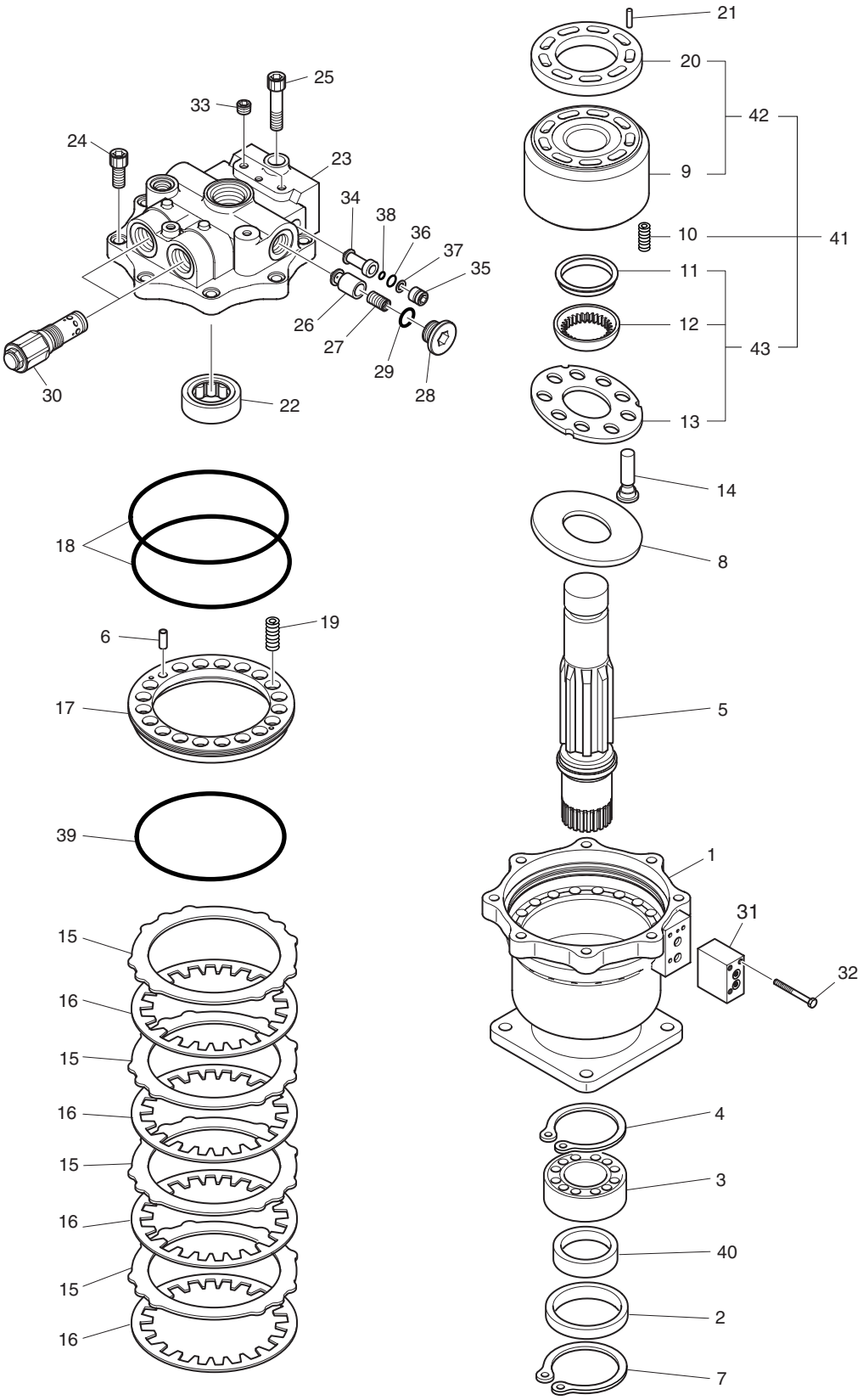

| DATE | OCT. 17, 2005 |
|---|---|
| 1st EDITION | |

# Fig. 4140 SWING MOTOR MOTEUR D'ORIENTATION

Serial No. ;

| Key No. | Part No. | Description | Description | Q'ty | S.C | Serial No. | ICA | Replaceable part | |
|---|---|---|---|---|---|---|---|---|---|
| | | | | | | | | Part No. | Q'ty |
| 4140-- | K1007543A | MOTOR;SWING | MOTEUR D'ORIENTATION | 1 | | | | | |
| 1 | 1.451-00145 | BODY | CARROSSERIE | 1 | D | | | | |
| 2 | 1.180-00523 | SEAL;OIL | JOINT D'HUILE | 1 | K | | | | |
| 3 | 1.109-00066 | BEARING;ROLLER | ROULEMENT A BILLES | 1 | | | | | |
| 4 | 1.115-00100 | RING;SNAP | BAGUE ELASTIQUE | 1 | | | | | |
| 5 | 1.405-00025 | SHAFT | ARBRE | 1 | | | | | |
| 6 | 1.123-00041 | PIN | GOUJON | 1 | | | | | |
| 7 | 1.115-00371 | RING;STOP | ANNEAU DE BLOCAGE | 1 | | | | | |
| 8 | 1.412-00113 | PLATE;SHOE | PLAQUE-SABOT | 1 | | | | | |
| 9 | - | CYLINDER;BLOCK | BLOC CYLINDRE | 1 | D | | | | |
| 10 | 1.131-00070 | SPRING | RESSORT | 9 | | | | | |
| 11 | 1.427-00007 | SEAT;BALL GUIDE | SIEGE | 1 | | | | | |
| 12 | 1.429-00008 | GUIDE;BALL | GUIDE | 1 | | | | | |
| 13 | - | PLATE;SET | PLAQUE | 1 | D | | | | |
| 14 | 1.409-00175 | PISTON ASS'Y | ENSEMBLE PISTON | 9 | | | | | |
| 15 | 1.412-00063 | PLATE;FRICTION | PLAQUE | 4 | | | | | |
| 16 | 1.412-00025 | PLATE | PLAQUE | 4 | | | | | |
| 17 | 1.409-00187 | PISTON;BRAKE | PISTON DE FREIN | 1 | | | | | |
| 18 | 2180-1217D160 | O-RING | JOINT TORIQUE | 2 | K | | | | |
| 19 | 1.131-00071 | SPRING | RESSORT | 19 | | | | | |
| 20 | - | PLATE;VALVE | PLAQUE | 1 | D | | | | |
| 21 | 1.123-00042 | PIN | GOUJON | 2 | | | | | |
| 22 | 1.109-00058 | BEARING;NEEDLE | ROULEMENT A AIGUILLES | 1 | | | | | |
| 23 | K9002105 | COVER;REAR | COUVERCLE ARRIERE | 1 | | | | | |
| 24 | S2218661 | BOLT;SOCKET | BOULON A 6 PANS CREUX | 7 | | | | | |
| 25 | S2219571 | BOLT;SOCKET | BOULON A 6 PANS CREUX | 1 | | | | | |
| 26 | 1.426-00010 | POPPET | POUPEE | 2 | | | | | |
| 27 | 1.131-00072 | SPRING | RESSORT | 2 | | | | | |
| 28 | 1.181-00103 | PLUG;DRAIN | BOUCHON | 2 | | | | | |
| 29 | S8000291 | O-RING | JOINT TORIQUE | 2 | K | | | | |
| 30 | 1.420-00122 | RELIEF VALVE ASS'Y | COUVERCLE ETANCHE | 2 | | | | | |
| 31 | K9002106 | VALVE;TIME DELAY | VANNE | 1 | | | | | |
| 32 | S2206161 | BOLT;SOCKET | BOULON A 6 PANS CREUX | 3 | | | | | |
| 33 | 2181-1116D2 | PLUG(PT1/4) | BOUCHON | 3 | | | | | |
| 34 | K9000942 | VALVE;SWING REACTIONLESS | REDUCTEUR | 2 | | | | | |
| 35 | K9000943 | PLUG | BOUCHON | 2 | | | | | |
| 36 | S8000181 | O-RING | JOINT TORIQUE | 2 | K | | | | |
| 37 | K9000944 | RING;BACK UP | BAGUE D'ETANCHEITE | 2 | K | | | | |
| 38 | S8000121 | O-RING | JOINT TORIQUE | 2 | K | | | | |

| DATE | OCT. 17, 2005 |
|---|---|
| 1st EDITION | |

# Fig. 4140 SWING MOTOR
# MOTEUR D'ORIENTATION

Serial No. ;

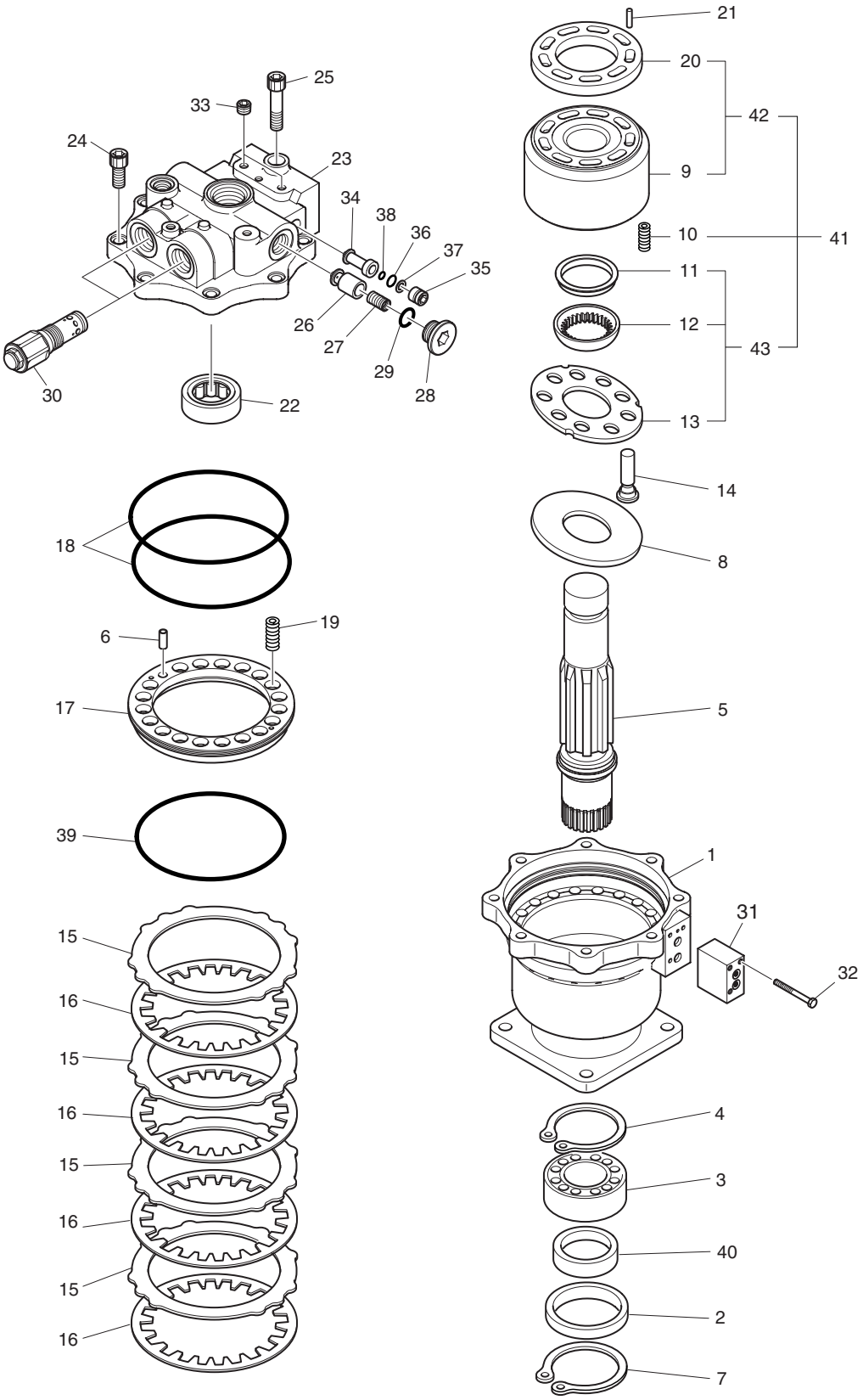

| DATE | OCT. 17, 2005 |
|---|---|
| 1st EDITION | |

# Fig. 4140 SWING MOTOR
# MOTEUR D'ORIENTATION

Serial No. ;

| Key No. | Part No. | Description | Description | Q'ty | S.C | Serial No. | ICA | Replaceable part | |
|---|---|---|---|---|---|---|---|---|---|
| | | | | | | | | Part No. | Q'ty |
| 4140-39 | 2180-1217D159 | O-RING | JOINT TORIQUE | 1 | K | | | | |
| 40 | 1.110-00172 | BUSHING | DOUILLE | 1 | | | | | |
| 41 | K9002107 | ROTARY KIT | KIT DE ROTATOIRE | 1 | | | | | |
| 42 | K9002108 | CYLINDER BLOCK KIT | KIT DE CYLINDRE | 1 | | | | | |
| 43 | K9002109 | RETAINER KIT | KIT DE BAGUE | 1 | | | | | |
| * | K9002069 | SEAL KIT;SWING MOTOR | KIT D'ETANCHEITE | 1 | | | | | |

| DATE | JUN. 30, 2008 |
|---|---|
| REV.NO. | EXB08-06 |

# Fig. 4150 SWING REDUCTION GEAR REDEUTEUR D'ORIENTATION

**Serial No. ;**

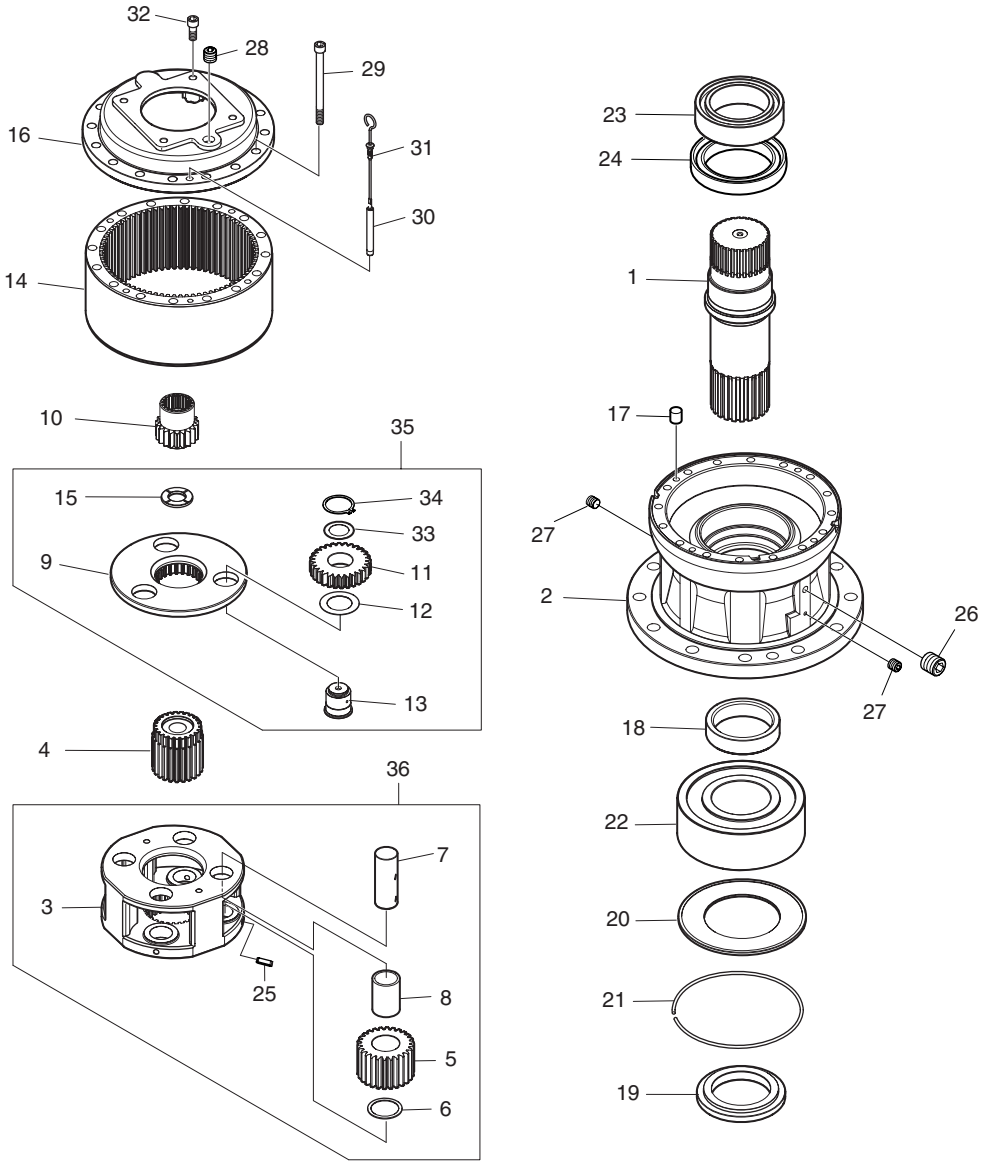

| DATE | JUN. 30, 2008 |
|---|---|
| REV. NO. | EXB08-06 |

# Fig. 4150 SWING REDUCTION GEAR REDEUTEUR D'ORIENTATION

Serial No. ;

| Key No. | Part No. | Description | Description | Q'ty | S.C | Serial No. | ICA | Replaceable part | |
|---|---|---|---|---|---|---|---|---|---|
| | | | | | | | | Part No. | Q'ty |
| 4150-- | 404-00094A | SWING REDUCTION GEAR | REDUCTEUR | 1 | | 5001–5861 | I | 404-00094B | 1 |
| | **404-00094B** | **SWING REDUCTION GEAR** | REDUCTEUR | 1 | | **5862–** | | | |
| 1 | 105-00011 | SHAFT | ARBRE | 1 | | 5001–5861 | I | 105-00011A | 1 |
| | **105-00011A** | **SHAFT** | ARBRE | 1 | | **5862–** | | | |
| 2 | 423-00172 | CASE;GEAR | BOITIER A PIGNONS | 1 | | | | | |
| 3 | 230-00056 | CARRIER NO.2 | PORTE-SATELLITES N2 | 1 | | 5001–5861 | I | 230-00056A | 1 |
| | **230-00056A** | **CARRIER NO.2** | PORTE-SATELLITES N2 | 1 | | **5862–** | | | |
| 4 | 104-00039 | GEAR;SUN NO.2 | PIGNON PRINCIPAL | 1 | | | | | |
| 5 | 104-00037 | GEAR;PLANETARY NO.2 | PIGNON | 4 | | | | | |
| 6 | 223-00043 | PLATE;SIDE NO.2 | PLAQUE | 4 | | | | | |
| 7 | 123-00459 | SHAFT FOR PIN NO.2 | ARBRE | 4 | | | | | |
| 8 | 110-00228 | BUSH NO.2 | DOUILLE | 4 | | | | | |
| 9 | 230-00057 | CARRIER NO.1 | PORTE-SATELLITES N1 | 1 | | | | | |
| 10 | 104-00038 | GEAR;SUN NO.1 | PIGNON PRINCIPAL | 1 | | | | | |
| 11 | 104-00042 | GEAR;PLANETARY NO.1 | PIGNON | 3 | | | | | |
| 12 | 223-00044 | PLATE;SIDE NO.1 | PLAQUE | 3 | | | | | |
| 13 | 123-00457 | PIN ASS'Y | GOUPILLE | 3 | | | | | |
| 14 | 104-00040 | GEAR;RING | COURONNE DENTEE | 1 | | | | | |
| 15 | 223-00045 | PLATE;THRUST | PLAQUE | 1 | | | | | |
| 16 | 621-02348 | COVER | COUVERCLE | 1 | | | | | |
| 17 | 705-00008 | PIN;LOCK | GOUJON | 4 | | | | | |
| 18 | 114-00543 | SPACER | BAGUE D'ECARTEMENT | 1 | | | | | |
| 19 | 114-00544 | COLLAR | BAGUE | 1 | | | | | |
| 20 | 159-00233 | PLATE | PLAQUE | 1 | | | | | |
| 21 | 278-00090 | RING;LOCK | BAGUE | 1 | | | | | |
| 22 | 109-00168 | BEARING;SPHERICAL ROLLER | PALIER | 1 | | | | | |
| 23 | 109-00169 | BEARING;SPHERICAL ROLLER | PALIER | 1 | | | | | |
| 24 | 180-00472 | SEAL;OIL | JOINT D'HUILE | 1 | | | | | |
| 25 | S5741361 | PIN;SPRING | GOUJON | 4 | | | | | |
| 26 | S5810030 | PLUG | BOUCHON | 1 | | | | | |
| 27 | S5810010 | PLUG | BOUCHON | 2 | | | | | |
| 28 | S5810050 | PLUG | BOUCHON | 1 | | | | | |
| 29 | 120-00294 | BOLT;SOCKET M16X180 | BOULON A 6 PANS CREUX | 16 | | | | | |
| 30 | 140-01343A | PIPE | CONDUITE | 1 | | | | | |
| 31 | 119-00020 | BAR;LEVEL | JAGUE DE NIVEAU | 1 | | | | | |
| 32 | 120-00293 | BOLT;SOCKET M16X40 | BOULON A 6 PANS CREUX | 4 | | | | | |
| 33 | 223-00046 | PLATE;SIDE NO.3 | PLAQUE | 3 | | | | | |
| 34 | S6500400 | RING;SNAP | BAGUE | 3 | | | | | |

| DATE | JUN. 30, 2008 |
|---|---|
| REV.NO. | EXB08-06 |

# Fig. 4150 SWING REDUCTION GEAR REDEUTEUR D'ORIENTATION

**Serial No. ;**

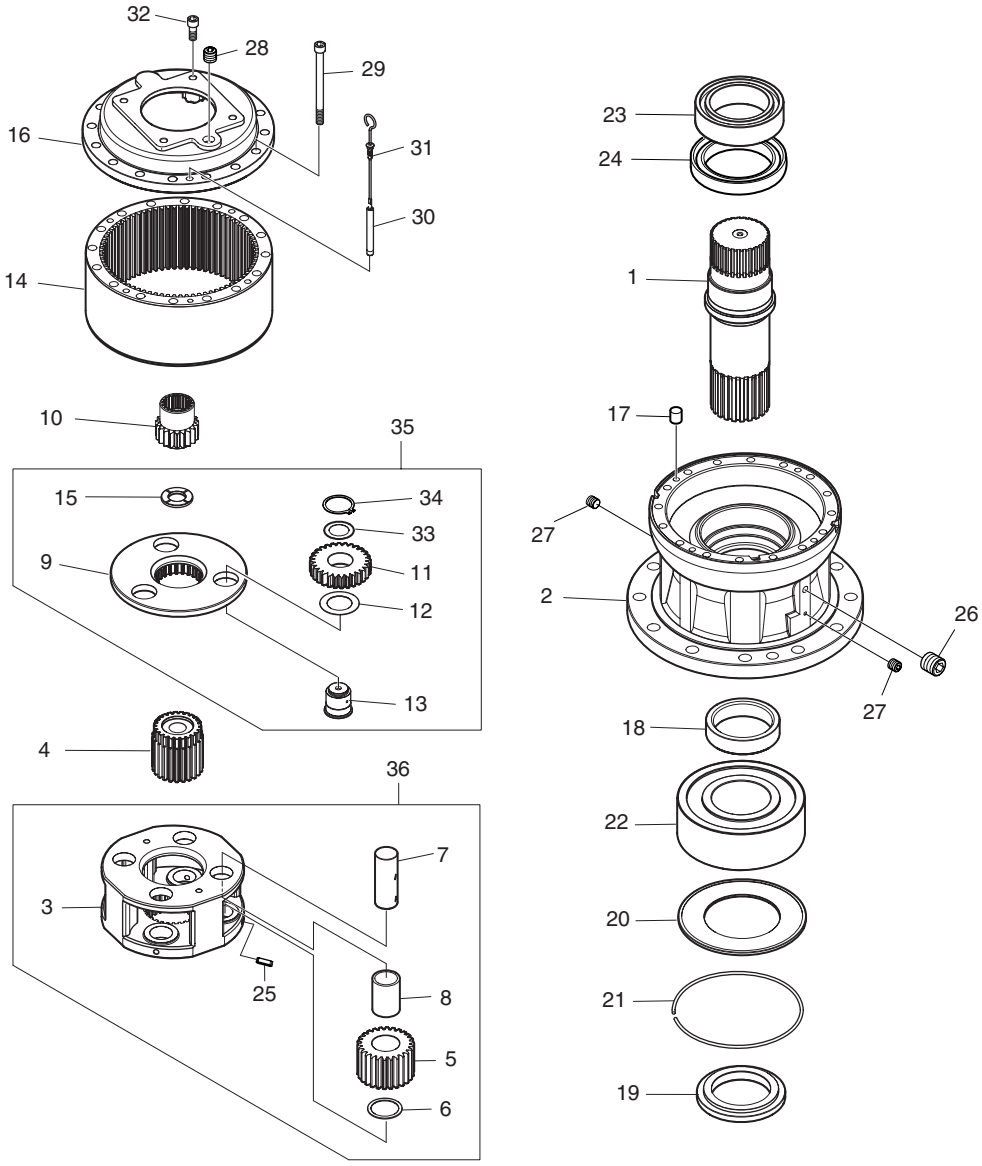

| DATE | JUN. 30, 2008 |
|---|---|
| REV. NO. | EXB08-06 |

# Fig. 4150 SWING REDUCTION GEAR REDEUTEUR D'ORIENTATION

Serial No. ;

| Key No. | Part No. | Description | Description | Q'ty | S.C | Serial No. | ICA | Replaceable part | |
|---|---|---|---|---|---|---|---|---|---|
| | | | | | | | | Part No. | Q'ty |
| 4150-35 | 230-00064 | CARRIER NO.1 ASS'Y | PORTEUR | 1 | | | | | |
| 36 | 230-00065 | CARRIER NO.2 ASS'Y | PORTEUR | 1 | | | | | |

| DATE | DEC. 15, 2006 |
|---|---|
| REV.NO. | EXB06-13 |

# Fig. 4160 TRAVEL MOTOR
# MOTEUR DE TRANSLATION

**Serial No. ;**

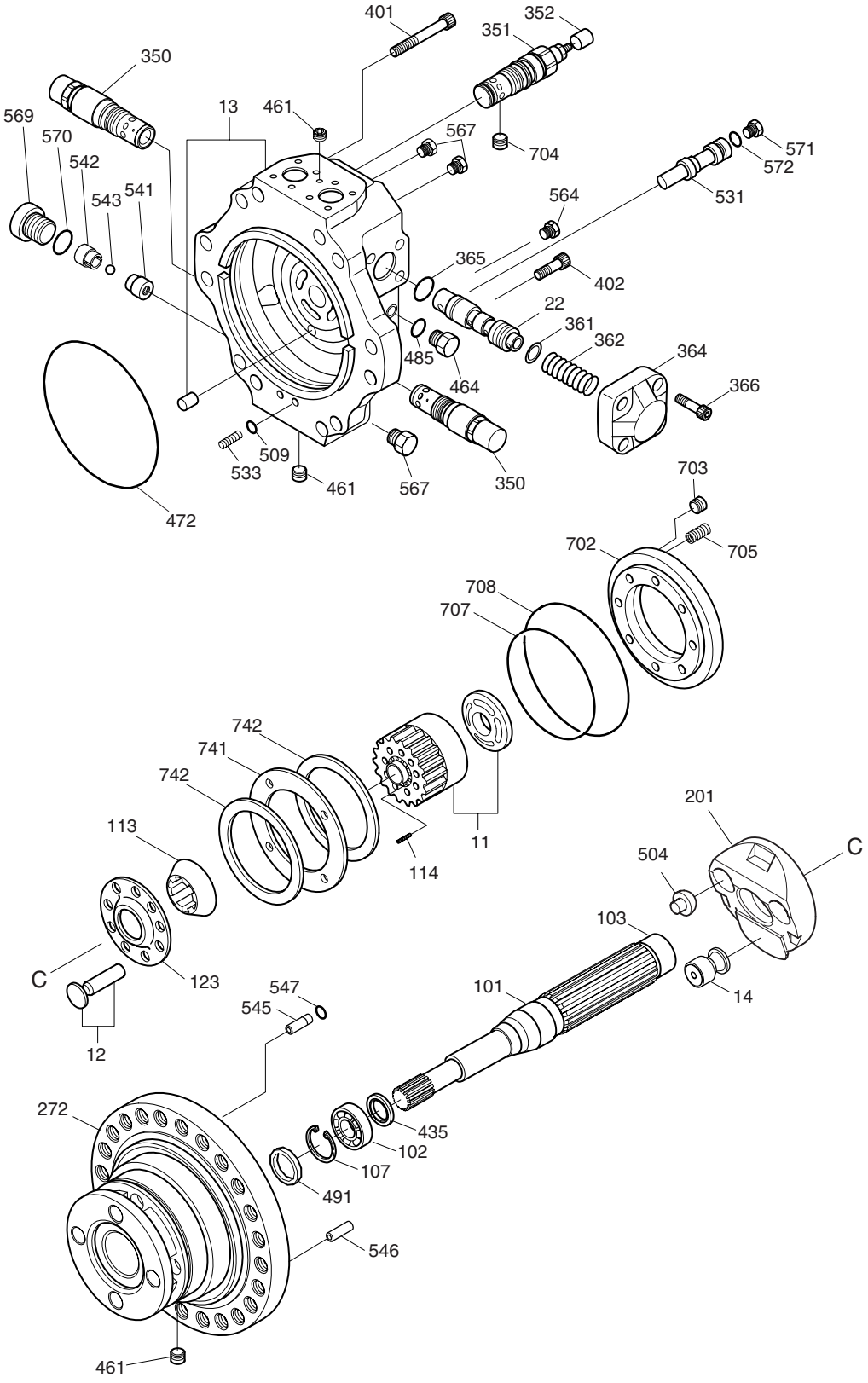

| DATE | DEC. 15, 2006 |
|---|---|
| REV. NO. | EXB06-13 |

# Fig. 4160 TRAVEL MOTOR MOTEUR DE TRANSLATION

Serial No. ;

| Key No. | Part No. | Description | Description | Q'ty | S.C | Serial No. | ICA | Replaceable part | |
|---|---|---|---|---|---|---|---|---|---|
| | | | | | | | | Part No. | Q'ty |
| 4160-- | K1003132 | TRAVEL MOTOR | MOTEUR DE TRANSLATION | 2 | | | | | |
| 11 | 410-00011 | CYLINDER ASS'Y | CYLINDRE | 1 | | | | | |
| 12 | **409-00033** | **PISTON ASS'Y** | ENSEMBLE PISTON | 9 | | | | | |
| 13 | 423-00081 | VALVE CASING ASS'Y | VANNE | 1 | | | | | |
| 14 | 409-00034 | TILTING PISTON ASS'Y | ENSEMBLE DE PISTON | 1 | | | | | |
| 22 | 424-00085 | SPOOL;COUNTER BALANCE | BARBOTINE | 1 | | | | | |
| 101 | K9002261 | SHAFT;DRIVE | ARBRE MOTEUR | 1 | | | | | |
| 102 | 109-00143 | BEARING;ROLLER | ROULEMENT A BILLES | 1 | | | | | |
| 103 | 109-00144 | BEARING;NEEDLE | ROULEMENT A AIGUILLES | 1 | | | | | |
| 107 | S6500500 | RING;SNAP | BAGUE | 1 | | | | | |
| 113 | 408-00021 | BUSH | COUSSINET | 1 | | | | | |
| 114 | 129-00096 | SPRING;CYLINDER | RESSORT CYLINDRIQUE | 9 | | | | | |
| 123 | 412-00034 | PLATE;SET | PLAQUE | 1 | | | | | |
| 201 | K9002262 | PLATE;SWASH | PLATEUR OSCILLANT | 1 | | | | | |
| 272 | K9002263 | CASING;SHAFT | CARTER | 1 | D | | | | |
| 350 | 420-00195 | VALVE;RELIEF | CLAPET DE DECHARGE | 2 | | | | | |
| 351 | 420-00196 | VALVE;REDUCING | DETENDEUR | 1 | | | | | |
| 352 | 430-00025 | COVER | COUVERCLE | 1 | | | | | |
| 361 | 114-00345 | WASHER | RONDELLE | 2 | | | | | |
| 362 | 129-00097 | SPRING;COUNTER BALANCE | RESSORT | 2 | | | | | |
| 364 | 403-00005 | COVER;COUNTER BALANCE | COUVERCLE | 2 | | | | | |
| 365 | S8010451 | O-RING | JOINT TORIQUE | 2 | K | | | | |
| 366 | S2215561 | BOLT;SOCKET | BOULON A 6 PANS | 8 | | | | | |
| 401 | S2228671 | BOLT;SOCKET | BOULON A 6 PANS CREUX | 2 | | | | | |
| 402 | S2227661 | BOLT;SOCKET | BOULON A 6 PANS CREUX | 4 | | | | | |
| 435 | S6510900 | RING;SNAP | BAGUE DE RETENUE | 1 | | | | | |
| 461 | 181-00519 | PLUG | BOUCHON | 14 | | | | | |
| 464 | 2181-1950D3 | PLUG;VP | BOUCHON | 2 | | | | | |
| 472 | 1.180-00159 | O-RING | JOINT TORIQUE | 1 | K | | | | |
| 485 | S8000181 | O-RING | JOINT TORIQUE | 2 | K | | | | |
| 491 | 2180-8002A | SEAL;OIL | JOINT TORIQUE | 1 | K | | | | |
| 504 | 148-00019 | BALL;PIVOT | BILLE | 2 | | | | | |
| 509 | S8000181 | O-RING | JOINT TORIQUE | 1 | K | | | | |
| 531 | 424-00086 | SPOOL;TILTING | BARBOTINE | 1 | | | | | |
| 533 | 129-00098 | SPRING;TILTING | RESSORT | 1 | | | | | |
| 541 | 429-00021 | SEAT | SIEGE | 1 | | | | | |
| 542 | 416-00012 | STOPPER | ARRET | 1 | | | | | |
| 543 | S6250132 | BALL;STEEL | BILLE | 1 | | | | | |

| DATE | DEC. 15, 2006 |
|---|---|
| REV.NO. | EXB06-13 |

# Fig. 4160 TRAVEL MOTOR
# MOTEUR DE TRANSLATION

**Serial No. ;**

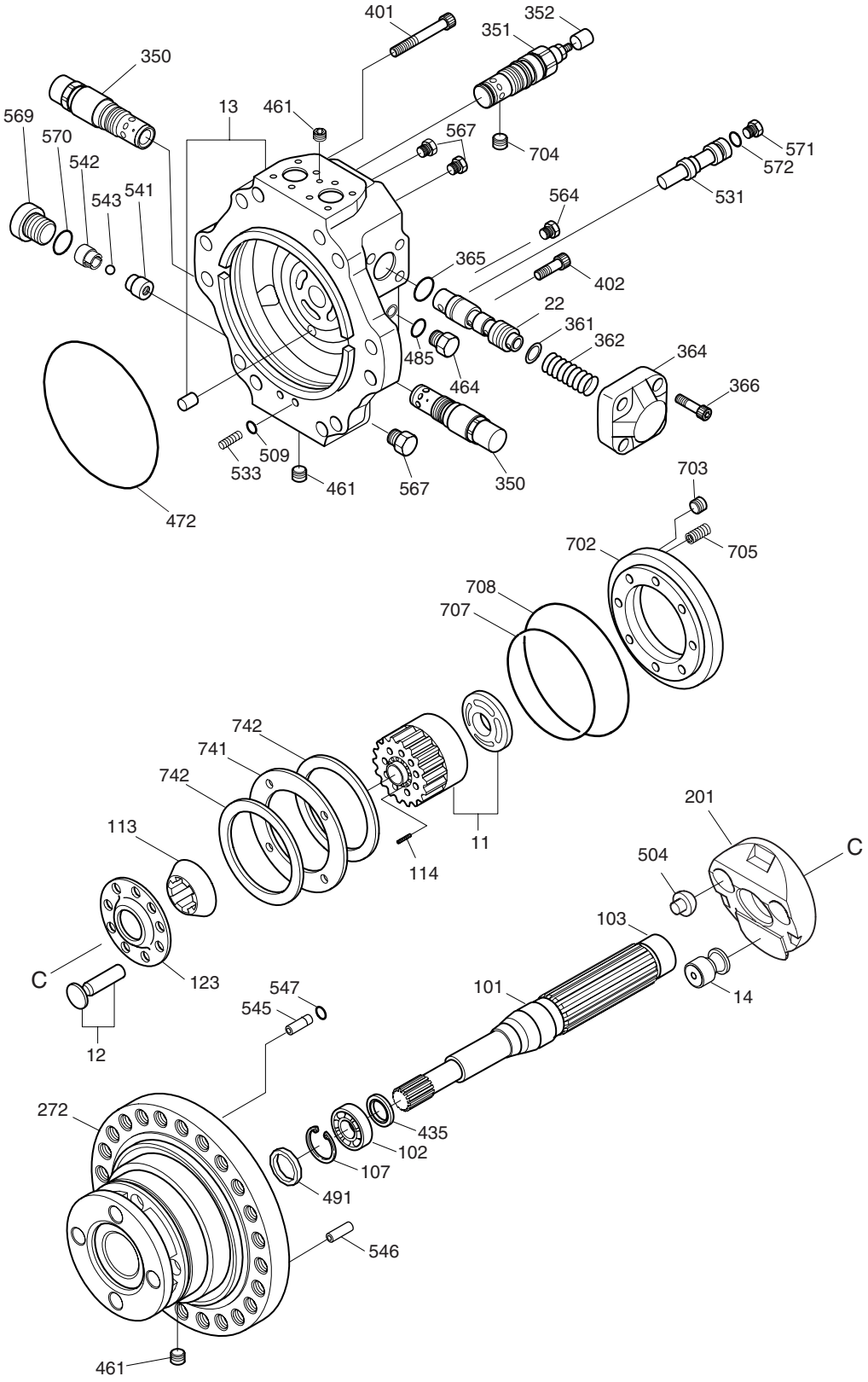

| DATE | DEC. 15, 2006 |
|---|---|
| REV. NO. | EXB06-13 |

# Fig. 4160 TRAVEL MOTOR MOTEUR DE TRANSLATION

Serial No. ;

| Key No. | Part No. | Description | Description | Q'ty | S.C | Serial No. | ICA | Replaceable part | |
|---|---|---|---|---|---|---|---|---|---|
| | | | | | | | | Part No. | Q'ty |
| 4160-545 | 415-00032 | ORIFICE | ORIFICE | 1 | | | | | |
| 546 | 415-00033 | ORIFICE | ORIFICE | 1 | | | | | |
| 547 | S8000111 | O-RING | JOINT TORIQUE | 2 | K | | | | |
| 564 | 2181-1116D2 | PLUG | BOUCHON | 2 | | | | | |
| 567 | 2181-1950D1 | PLUG;VP | BOUCHON | 4 | | | | | |
| 569 | 2181-1890D2 | PLUG;RO | BOUCHON | 2 | | | | | |
| 570 | S8000111 | O-RING | JOINT TORIQUE | 6 | K | | | | |
| 571 | 2181-1890D3 | PLUG;RO | BOUCHON | 1 | | | | | |
| 572 | S8000141 | O-RING | JOINT TORIQUE | 1 | K | | | | |
| 702 | 452-00023 | PISTON;BRAKE | PISTON DE FREIN | 1 | | | | | |
| 703 | 415-00034 | ORIFICE | ORIFICE | 1 | | | | | |
| 704 | 415-00035 | ORIFICE | ORIFICE | 1 | | | | | |
| 705 | 129-00062 | SPRING;BRAKE | RESSORT DE FREIN | 14 | | | | | |
| 707 | 2180-1217D156 | O-RING | JOINT TORIQUE | 1 | K | | | | |
| 708 | 1.180-00161 | O-RING | JOINT TORIQUE | 1 | K | | | | |
| 741 | 412-00036 | PLATE;SEPARATOR | PLAQUE | 3 | | | | | |
| 742 | 412-00037 | PLATE;FRICTION | PLAQUE | 2 | | | | | |
| * | 2401-9264KT | SEAL KIT;MOTOR | KIT DE JOINT | 1 | | | | | |

| DATE | JUN. 30, 2006 |
|---|---|
| REV.NO. | EXB06-08 |

# Fig. 4170 TRAVEL REDUCTION GEAR REDEUTEUR DE TRANSLATION

**Serial No. ;**

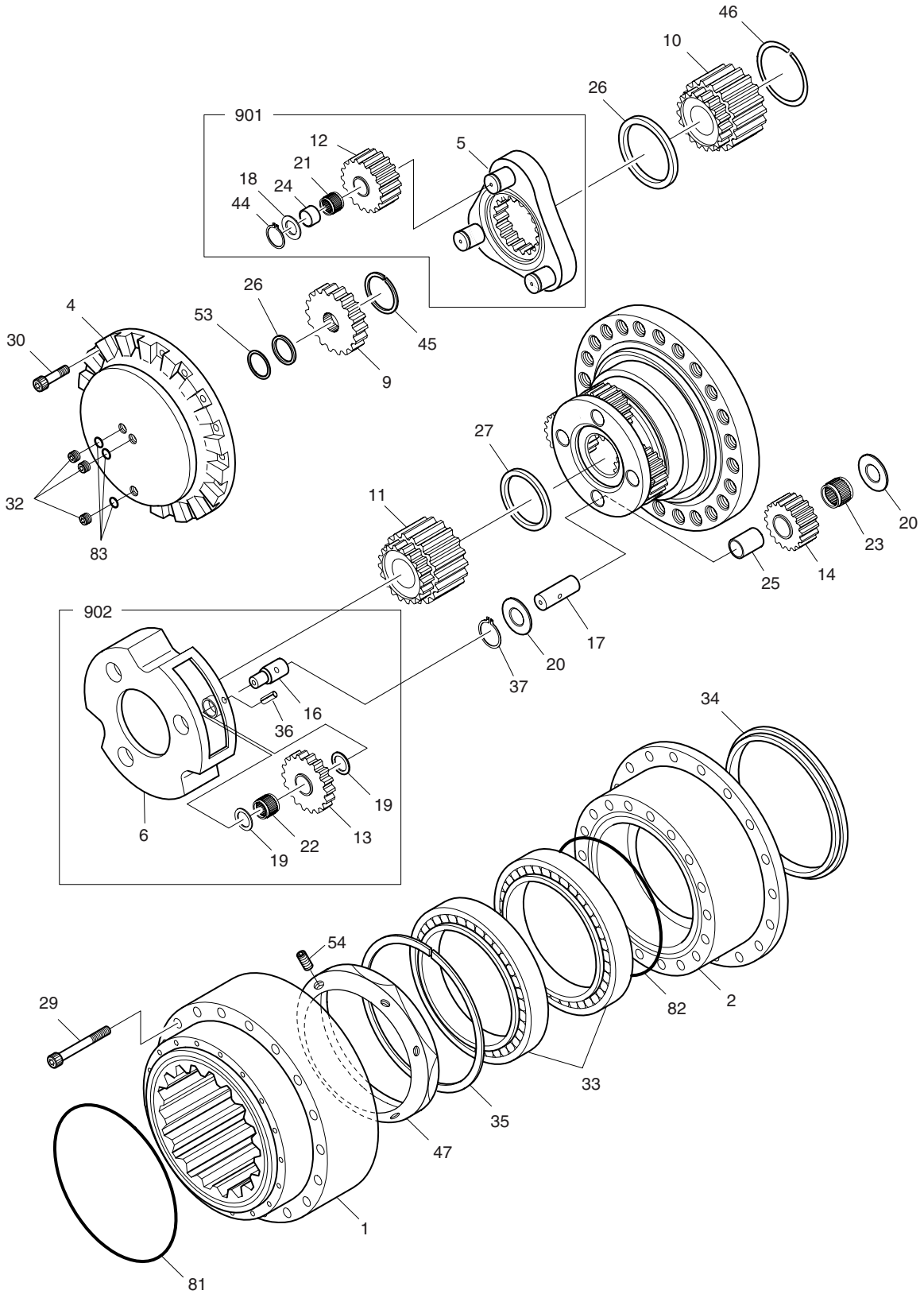

| DATE | JUN. 30, 2006 |
|---|---|
| REV. NO. | EXB06-08 |

# Fig. 4170 TRAVEL REDUCTION GEAR REDEUTEUR DE TRANSLATION

Serial No. ;

| Key No. | Part No. | Description | Description | Q'ty | S.C | Serial No. | ICA | Replaceable part | |
|---|---|---|---|---|---|---|---|---|---|
| | | | | | | | | Part No. | Q'ty |
| 4170-- | K1003134 | TRAVEL REDUCTION GEAR | BOITE REDUCTEUR | 2 | | | | | |
| 1 | 104-00035 | GEAR;RING | COURONNE DENTEE | 1 | | | | | |
| 2 | 1.402-00129 | HOUSING | BOITIER | 1 | | | | | |
| 4 | 1.430-00216 | COVER;SIDE | COUVERCLE | 1 | | | | | |
| 5 | 1.230-00009 | CARRIER NO.1 | PORTE-SATELLITES N1 | 1 | | | | | |
| 6 | 1.230-00015 | CARRIER NO.2 | PORTE-SATELLITES N2 | 1 | | | | | |
| 9 | 404-00080 | GEAR;SUN NO.1 | PIGNON PRINCIPAL | 1 | | | | | |
| 10 | 404-00081 | GEAR;SUN NO.2 | PIGNON PRINCIPAL | 1 | | | | | |
| 11 | 404-00082 | GEAR;SUN NO.3 | PIGNON | 1 | | | | | |
| 12 | 1.403-00061 | GEAR;PLANETARY NO.1 | PIGNON | 3 | | | | | |
| 13 | 1.403-00065 | GEAR;PLANETARY NO.2 | PIGNON | 3 | | | | | |
| 14 | 104-00036 | GEAR;PLANETARY NO.3 | PIGNON | 4 | | | | | |
| 16 | K9002264 | PIN NO.2 | GOUPILLE | 3 | | | | | |
| 17 | 123-00285 | PIN NO.3 | BROUCHE | 4 | | | | | |
| 18 | 1.412-00121 | PLATE;SIDE E | PLAQUE | 3 | | | | | |
| 19 | 1.412-00117 | PLATE;SIDE A | PLAQUE | 6 | | | | | |
| 20 | 412-00038 | PLATE;SIDE F | PLAQUE | 8 | | | | | |
| 21 | 1.216-00017 | CAGE;NEEDLE | ROULEMENT A AIGUILLES | 3 | | | | | |
| 22 | 1.216-00015 | CAGE;NEEDLE | ROULEMENT A AIGUILLES | 3 | | | | | |
| 23 | 1.216-00018 | CAGE;NEEDLE | ROULEMENT A AIGUILLES | 4 | | | | | |
| 24 | 1.115-00232 | RING;INNER | BAGUE D'ARRET | 3 | | | | | |
| 25 | 110-00126 | BUSH;FLOATING | BAGUE | 4 | | | | | |
| 26 | 114-00347 | RING;THRUST 60 | ANNEAU DE BLOCAGE | 2 | | | | | |
| 27 | 114-00348 | RING;THRUST 90 | ANNEAU DE BLOCAGE | 1 | | | | | |
| 29 | S2222671 | BOLT;SOCKET M16X100 | BOULON A 6 PANS CREUX | 28 | | | | | |
| 30 | S2208871 | BOLT;SOCKET M8X20 | BOULON A 6 PANS | 12 | | | | | |
| 32 | 2181-1890D4 | PLUG | BOUCHON | 3 | | | | | |
| 33 | 109-00145 | BEARING;ANGULAR | PALIER | 2 | | | | | |
| 34 | 180-00345 | SEAL;FLOATING | JOINT A FACE FROTTANTE | 1 | | | | | |
| 35 | 1.114-00054 | SHIM 1.0 | CALE 1.0 | 1 | | | | | |
| 36 | 1.123-00081 | PIN;SPRING | GOUPILLE ELASTIQUE | 3 | | | | | |
| 37 | S6510420 | RING;SNAP | ROND-TYPE C | 4 | | | | | |
| 44 | S6500450 | RING;SNAP | BAGUE D'ARRET | 3 | | | | | |
| 45 | 124-00150 | CLIP | BAGUE D'ARRET | 1 | | | | | |
| 46 | 124-00151 | CLIP | BAGUE D'ARRET | 1 | | | | | |
| 47 | 1.115-00248 | NUT;RING | BAGUE-ECROU | 1 | | | | | |
| 53 | 1.114-00306 | WASHER 1.0t | RONDELLE | 1 | | | | | |
| | K9002676 | WASHER 1.5t | RONDELLE | 1 | | | | | |

| DATE | JUN. 30, 2006 |
|---|---|
| REV.NO. | EXB06-08 |

# Fig. 4170 TRAVEL REDUCTION GEAR REDEUTEUR DE TRANSLATION

**Serial No. ;**

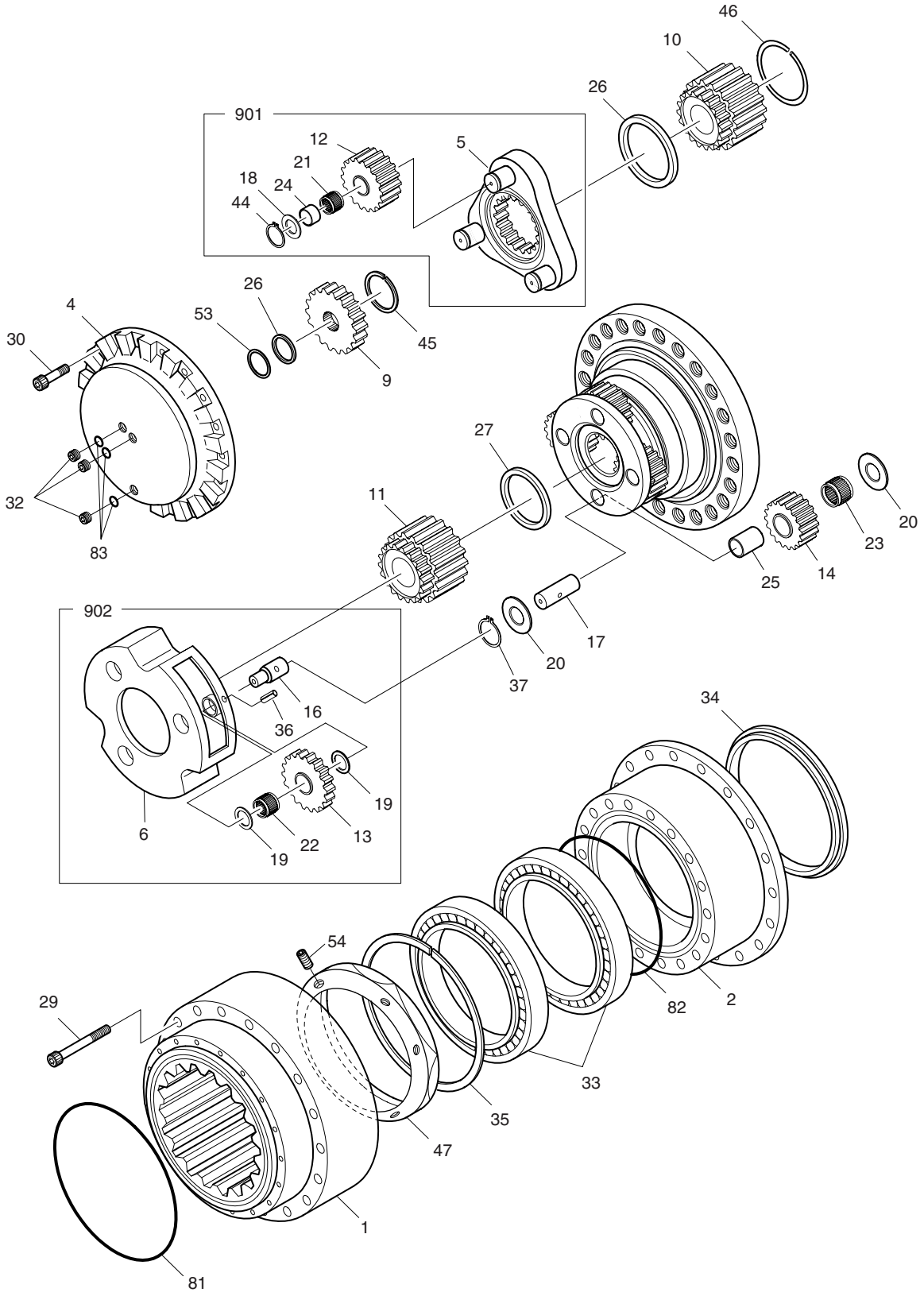

| DATE | JUN. 30, 2006 |
|---|---|
| REV. NO. | EXB06-08 |

# Fig. 4170 TRAVEL REDUCTION GEAR REDEUTEUR DE TRANSLATION

Serial No. ;

| Key No. | Part No. | Description | Description | Q'ty | S.C | Serial No. | ICA | Replaceable part | |
|---|---|---|---|---|---|---|---|---|---|
| | | | | | | | | Part No. | Q'ty |
| 4170-54 | 2.121-00226 | SCREW;SET | VIS DE REGLAGE | 6 | | | | | |
| 81 | 1.180-00162 | O-RING | JOINT TORIQUE | 1 | | | | | |
| 82 | 1.180-00163 | O-RING | JOINT TORIQUE | 1 | | | | | |
| 83 | S8000181 | O-RING | JOINT TORIQUE | 3 | | | | | |
| 901 | 1.230-00012 | CARRIER NO.1 SUB ASS'Y | PORTE-SATELLITES N1 | 1 | | | | | |
| 902 | 1.230-00018 | CARRIER NO.2 SUB ASS'Y | PORTE-SATELLITES N2 | 1 | | | | | |

| DATE | OCT. 17, 2005 |
|---|---|
| 1st EDITION | |

# Fig. 4180 CONTROL VALVE(1)
# VANNE DE COMMANDE

**Serial No. ;**

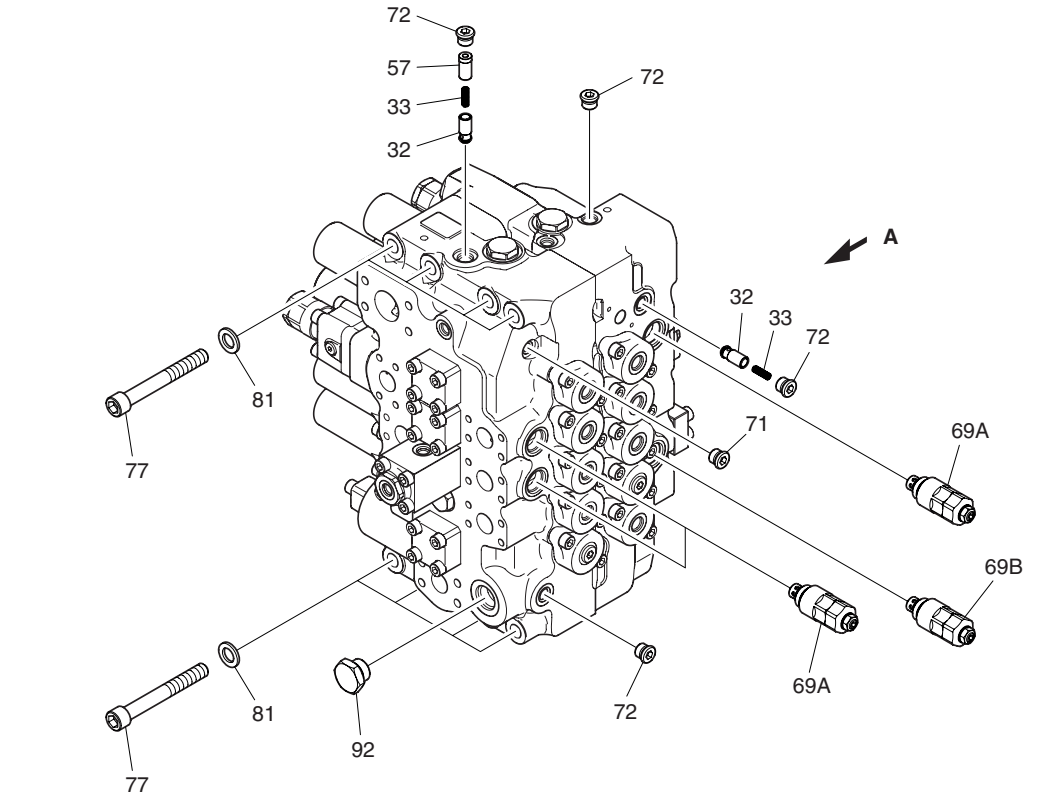


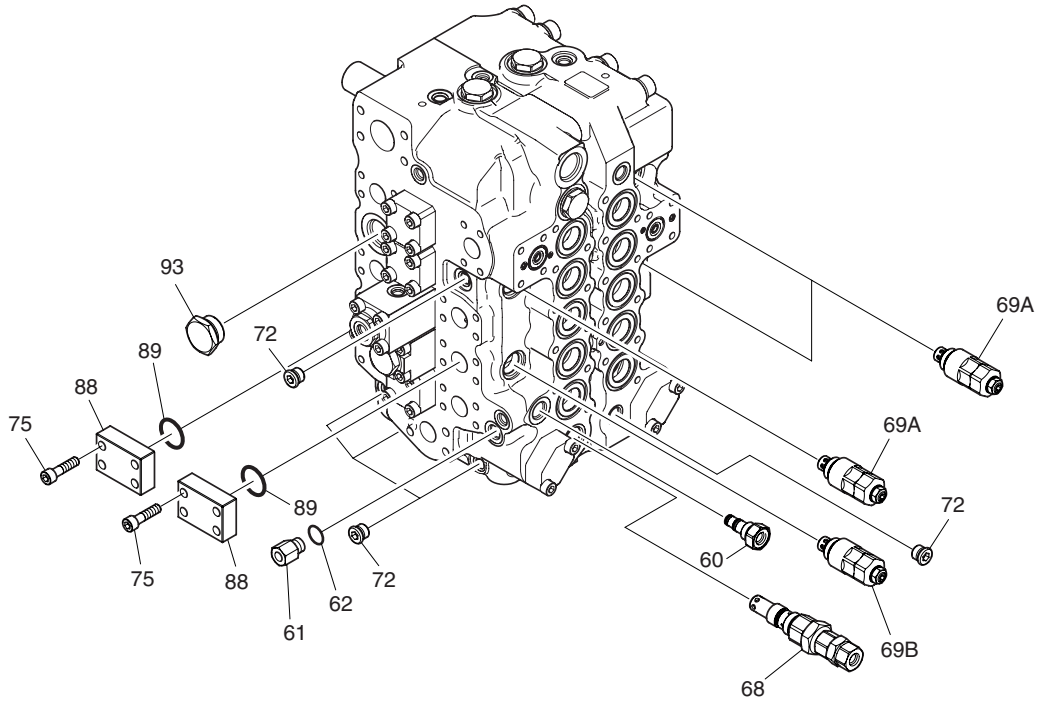


VIEW **A**

| DATE | OCT. 17, 2005 |
|---|---|
| 1st EDITION | |

# Fig. 4180 CONTROL VALVE(1) VANNE DE COMMANDE

Serial No. ;

| Key No. | Part No. | Description | Description | Q'ty | S.C | Serial No. | ICA | Replaceable part | |
|---|---|---|---|---|---|---|---|---|---|
| | | | | | | | | Part No. | Q'ty |
| 4180-- | K1002989A | VALVE;CONTROL | VANNE DE COMMANDE | 1 | | | | | |
| 32 | 426-00168 | POPET | POPET | 2 | | | | | |
| 33 | 129-00126 | SPRING | RESSORT | 2 | | | | | |
| 57 | 114-00414 | SPACER | BAGUE D'ECARTEMENT | 1 | | | | | |
| 60 | 181-00633 | PLUG ASS'Y | BOUCHON | 1 | | | | | |
| 61 | 2.181-00268 | PLUG | BOUCHON | 1 | | | | | |
| 62 | S8000141 | O-RING | JOINT TORIQUE | 1 | K | | | | |
| 68 | K9001804 | VALVE;MAIN RELIEF | CLEPET DE CHARGE | 1 | | | | | |
| 69A | 420-00258 | VALVE;OVERLOAD RELIEF | VANNE | 6 | | | | | |
| 69B | K9002672 | VALVE;OVERLOAD RELIEF | VANNE | 2 | | | | | |
| 71 | 181-00562 | PLUG ASS'Y | BOUCHON | 1 | | | | | |
| 72 | 181-00561 | PLUG ASS'Y | BOUCHON | 9 | | | | | |
| 75 | S2212466 | BOLT;SOCKET M10X40L | BOULON DE PLOT | 8 | | | | | |
| 77 | S2223266 | BOLT;SOCKET M16X130L | BOULON A 6 PANS CREUX | 8 | | | | | |
| 81 | S5010913 | WASHER | RONDELLE PLATE | 8 | | | | | |
| 88 | 2181-2434 | CAP | BRIDE | 2 | | | | | |
| 89 | 2180-1216D109 | O-RING | JOINT TORIQUE | 2 | K | | | | |
| 92 | 181-00647 | PLUG ASS'Y | BOUCHON | 1 | | | | | |
| 93 | 181-00649 | PLUG ASS'Y | BOUCHON | 1 | | | | | |
| * | 420-00295KT | SEAL KIT;CONTROL VALVE | KIT DE JOINT | 1 | | | | | |

| DATE | OCT. 17, 2005 |
|---|---|
| 1st EDITION | |

# Fig. 4190 CONTROL VALVE(2)
# VANNE DE COMMANDE

**Serial No. ;**

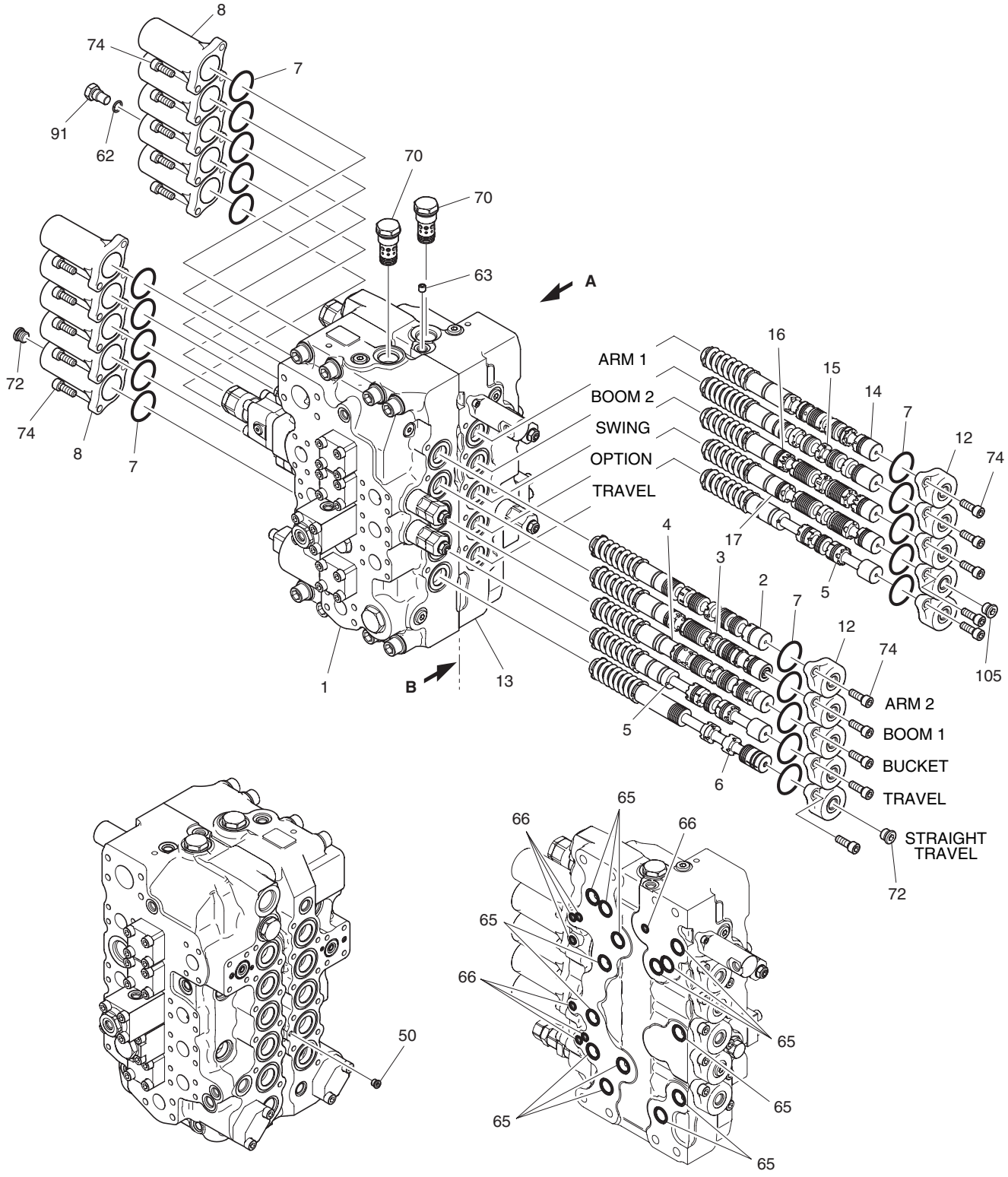


VIEW **A**

SECTION **B**

| DATE | OCT. 17, 2005 |
|---|---|
| 1st EDITION | |

# Fig. 4190 CONTROL VALVE(2) VANNE DE COMMANDE

Serial No. ;

| Key No. | Part No. | Description | Description | Q'ty | S.C | Serial No. | ICA | Replaceable part | |
|---|---|---|---|---|---|---|---|---|---|
| | | | | | | | | Part No. | Q'ty |
| 4190-- | K1002989A | VALVE;CONTROL | VANNE DE COMMANDE | 1 | | | | | |
| 1 | 423-00096 | HOUSING;VALVE | CARTER | 1 | D | | | | |
| 2 | 424-00156 | SPOOL ASS'Y-ARM2 | PLUNGEUR | 1 | | | | | |
| 3 | 424-00148 | SPOOL ASS'Y-BOOM1 | PLUNGEUR | 1 | | | | | |
| 4 | K9001197 | SPOOL ASS'Y-BUCKET | PLUNGEUR | 1 | | | | | |
| 5 | 2.424-00283 | SPOOL ASS'Y-TRAVEL | PLUNGEUR | 2 | | | | | |
| 6 | 424-00115 | SPOOL ASS'Y-T/S | PLUNGEUR | 1 | | | | | |
| 7 | S8010451 | O-RING | JOINT TORIQUE | 20 | K | | | | |
| 8 | 430-00033 | CAP | CHAPEAU | 10 | | | | | |
| 12 | 430-00035 | CAP | CHAPEAU | 10 | | | | | |
| 13 | 423-00097 | HOUSING;VALVE | CARTER | 1 | D | | | | |
| 14 | K9002673 | SPOOL ASS'Y-ARM1 | PLUNGEUR | 1 | | | | | |
| 15 | 424-00151 | SPOOL ASS'Y-BOOM2 | PLUNGEUR | 1 | | | | | |
| 16 | 424-00203 | SPOOL ASS'Y-SWING | PLUNGEUR | 1 | | | | | |
| 17 | 424-00123 | SPOOL ASS'Y-OPTION | PLUNGEUR | 1 | | | | | |
| 50 | K9001199 | PLUG | BOUCHON | 1 | D | | | | |
| 62 | S8000141 | O-RING | JOINT TORIQUE | 1 | K | | | | |
| 63 | 415-00037 | PLUG;ORIFICE | BOUCHON | 1 | | | | | |
| 65 | K9002675 | O-RING | JOINT TORIQUE | 14 | K | | | | |
| 66 | 180-00402 | O-RING | JOINT TORIQUE | 7 | K | | | | |
| 70 | 420-00259 | FOOT RELIFE VALVE | PIED RELIFE VALVE | 2 | | | | | |
| 72 | 181-00561 | PLUG ASS'Y | BOUCHON | 2 | | | | | |
| 74 | S2212266 | BOLT;SOCKET M10X28L | BOULON DE PLOT | 40 | | | | | |
| 91 | 2.181-00269 | PLUG | BOUCHON | 1 | | | | | |
| 105 | 2.181-00323 | PLUG ASS'Y | BOUCHON | 1 | | | | | |

| DATE | OCT. 17, 2005 |
|---|---|
| 1st EDITION | |

# Fig. 4200 CONTROL VALVE(3)
# VANNE DE COMMANDE

**Serial No. ;**

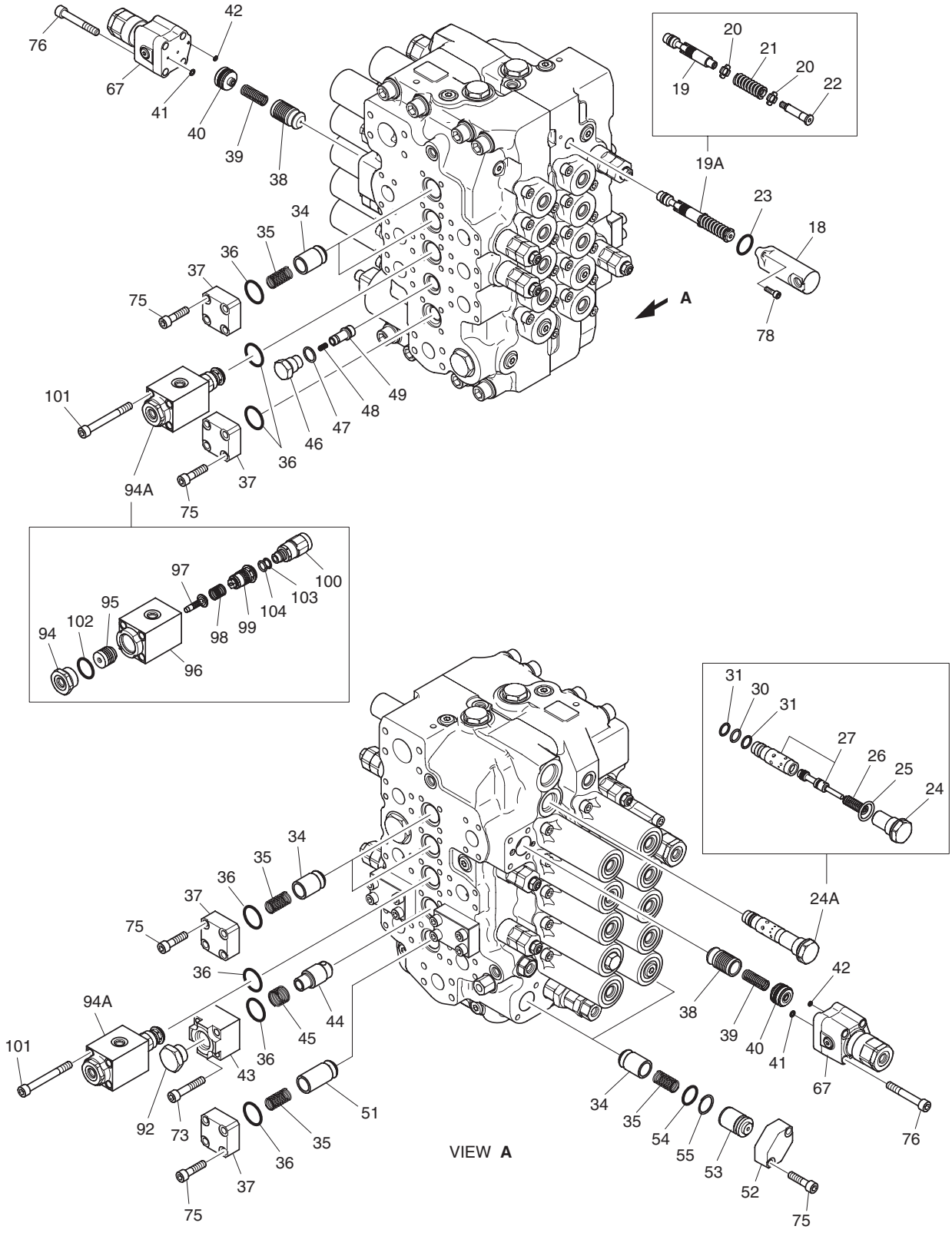

| DATE | OCT. 17, 2005 |
|---|---|
| 1st EDITION | |

# Fig. 4200 CONTROL VALVE(3) VANNE DE COMMANDE

Serial No. ;

| Key No. | Part No. | Description | Description | Q'ty | S.C | Serial No. | ICA | Replaceable part | |
|---|---|---|---|---|---|---|---|---|---|
| | | | | | | | | Part No. | Q'ty |
| 4200-- | K1002989A | VALVE;CONTROL | VANNE DE COMMANDE | 1 | | | | | |
| 18 | 430-00038 | CAP | CHAPEAU | 1 | | | | | |
| 19A | 420-00382 | SP VALVE ASS'Y | SP VALVE ASS'Y | 1 | | | | | |
| 19 | 424-00166 | . SPOOL | . PLUNGEUR | 1 | D | | | | |
| 20 | 429-00024 | . SPRING SEAT | . RESSORT | 2 | | | | | |
| 21 | 129-00124 | . SPRING | . RESSORT | 1 | | | | | |
| 22 | 430-00040 | . SPOOL END | . PLUNGEUR | 1 | | | | | |
| 23 | S8000261 | O-RING | JOINT TORIQUE P29 | 1 | K | | | | |
| 24A | 420-00388 | ARM REGEN ASS'Y | ENSEMBLE CLAPET | 1 | | | | | |
| 24 | 430-00041 | . PLUG | . BOUCHON | 1 | | | | | |
| 25 | S8000241 | . O-RING | . JOINT TORIQUE | 1 | K | | | | |
| 26 | 129-00125 | . SPRING | . RESSORT | 1 | | | | | |
| 27 | - | . SPOOL | . BOBINE | 1 | D | | | | |
| 30 | S8000161 | . O-RING | . JOINT TORIQUE | 1 | K | | | | |
| 31 | S8060161 | . RING;BACK-UP | . ANNEAU DE SOUTIEN | 2 | K | | | | |
| 34 | 426-00169 | POPET | POPET | 6 | | | | | |
| 35 | 129-00127 | SPRING | RESSORT | 7 | | | | | |
| 36 | S8000321 | O-RING | JOINT TORIQUE | 9 | K | | | | |
| 37 | 181-00628 | FLANGE | BRIDE | 6 | | | | | |
| 38 | 426-00170 | POPET | POPET | 2 | | | | | |
| 39 | 129-00128 | SPRING | RESSORT | 2 | | | | | |
| 40 | 114-00411 | SPACER ASS'Y | BAGUE D'ECARTEMENT | 2 | | | | | |
| 41 | S8000061 | O-RING | JOINT TORIQUE | 2 | K | | | | |
| 42 | S8000041 | O-RING | JOINT TORIQUE | 2 | K | | | | |
| 43 | 181-00630 | FLANGE | BRIDE | 1 | | | | | |
| 44 | 426-00171 | POPET | POPET | 1 | | | | | |
| 45 | 129-00130 | SPRING | RESSORT | 1 | | | | | |
| 46 | 430-00042 | PLUG | BOUCHON | 1 | | | | | |
| 47 | 180-00398 | O-RING | JOINT TORIQUE | 1 | K | | | | |
| 48 | 129-00129 | SPRING | RESSORT | 1 | | | | | |
| 49 | 426-00172 | POPET | POPET | 1 | | | | | |
| 51 | 426-00173 | POPET | POPET | 1 | | | | | |
| 52 | 181-00631 | FLANGE | BRIDE | 2 | | | | | |
| 53 | 114-00413 | SPACER | BAGUE D'ECARTEMENT | 2 | | | | | |
| 54 | S8010250 | O-RING | JOINT TORIQUE | 2 | K | | | | |
| 55 | 180-00445 | RING;BACK-UP | BAGUE D'ETANCHEITE | 2 | K | | | | |
| 67 | 420-00246 | ANTI-DRIFT VALVE ASS'Y | VANNE | 2 | | | | | |
| 73 | S2212766 | BOLT;SOCKET M10X55L | BOULON DE PLOT | 4 | | | | | |
| 75 | S2212466 | BOLT;SOCKET M10X40L | BOULON DE PLOT | 28 | | | | | |

| DATE | OCT. 17, 2005 |
|---|---|
| 1st EDITION | |

# Fig. 4200 CONTROL VALVE(3)
# VANNE DE COMMANDE

Serial No. ;

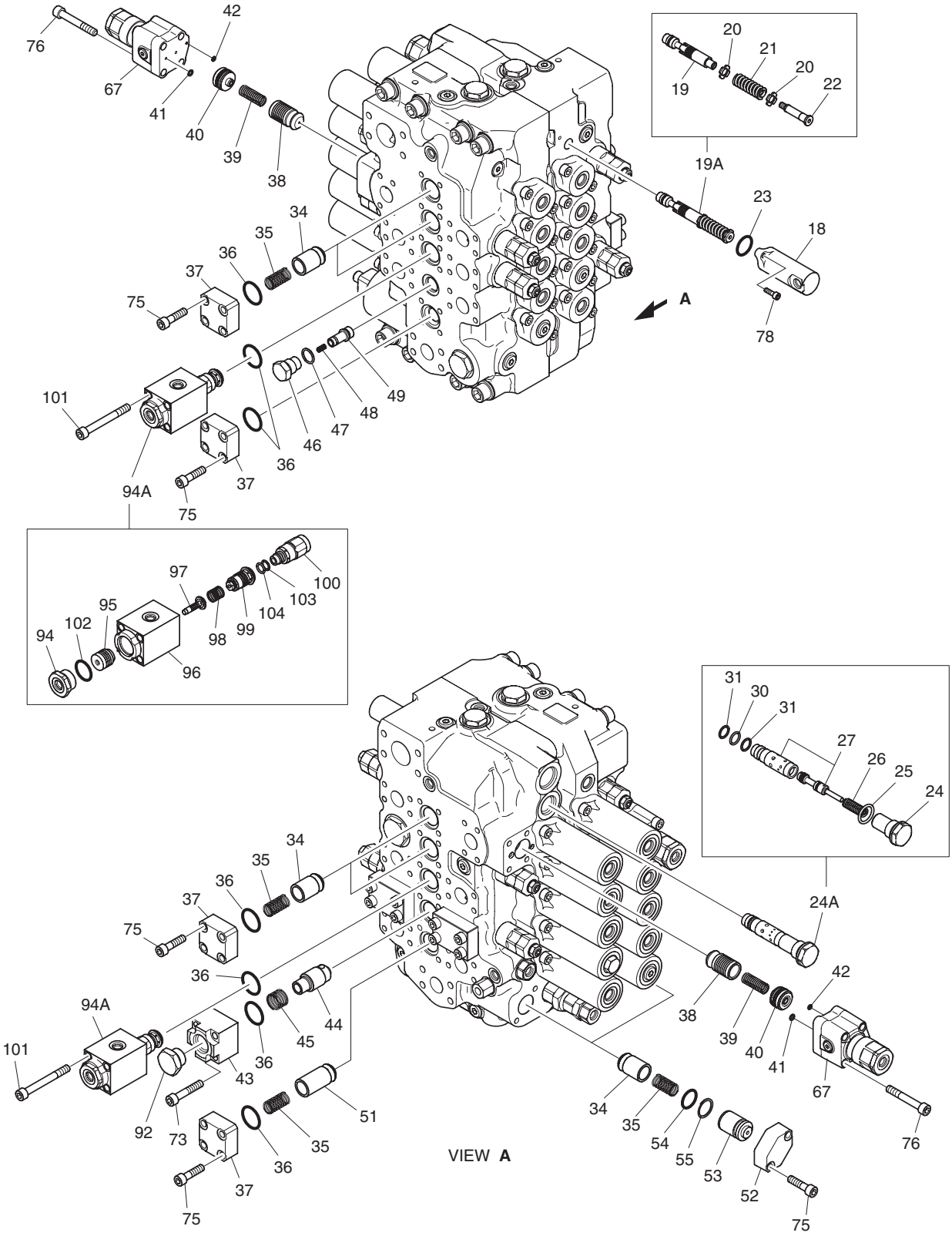

| DATE | OCT. 17, 2005 |
|---|---|
| 1st EDITION | |

# Fig. 4200 CONTROL VALVE(3) VANNE DE COMMANDE

Serial No. ;

| Key No. | Part No. | Description | Description | Q'ty | S.C | Serial No. | ICA | Replaceable part | |
|---|---|---|---|---|---|---|---|---|---|
| | | | | | | | | Part No. | Q'ty |
| 4200-76 | S2213066 | BOLT;SOCKET M10X70L | BOULON A 6 PANS CREUX | 8 | | | | | |
| 78 | S2204866 | BOLT;SOCKET M6X20L | BOULON A 6 PANS | 2 | | | | | |
| 92 | 181-00647 | PLUG ASS'Y | BOUCHON | 1 | | | | | |
| 94A | 420-00309 | BOOM PRIORITY VALVE | VANNE | 2 | | | | | |
| 94 | 430-00045 | . PLUG | . BOUCHON | 1 | | | | | |
| 95 | 409-00049 | . PISTON | . PISTON | 1 | D | | | | |
| 96 | - | . BODY | . CARROSSERIE | 1 | D | | | | |
| 97 | 409-00050 | . PISTON | . PISTON | 1 | D | | | | |
| 98 | 129-00139 | . SPRING | . RESSORT | 1 | | | | | |
| 99 | - | . SLEEVE | . BROUCHE | 1 | D | | | | |
| 100 | 426-00182 | . POPET ASS'Y | . POPET | 1 | | | | | |
| 102 | 180-00400 | . O-RING | . JOINT TORIQUE | 1 | K | | | | |
| 103 | S8060121 | . RING;BACK-UP | . BAGUE | 1 | K | | | | |
| 104 | S8000121 | . O-RING P12 HS90 | . JOINT TORIQUE | 1 | K | | | | |
| 101 | S2213466 | BOLT;SOCKET M10X90 | BOULON A 6 PANS CREUX | 8 | | | | | |

| DATE | JUN. 30, 2008 |
|---|---|
| REV.NO. | EXB08-06 |

# Fig. 4210 REMOTE CONTROL VALVE
# VANNE DE COMMAND A DISTANCE

**Serial No. ;**

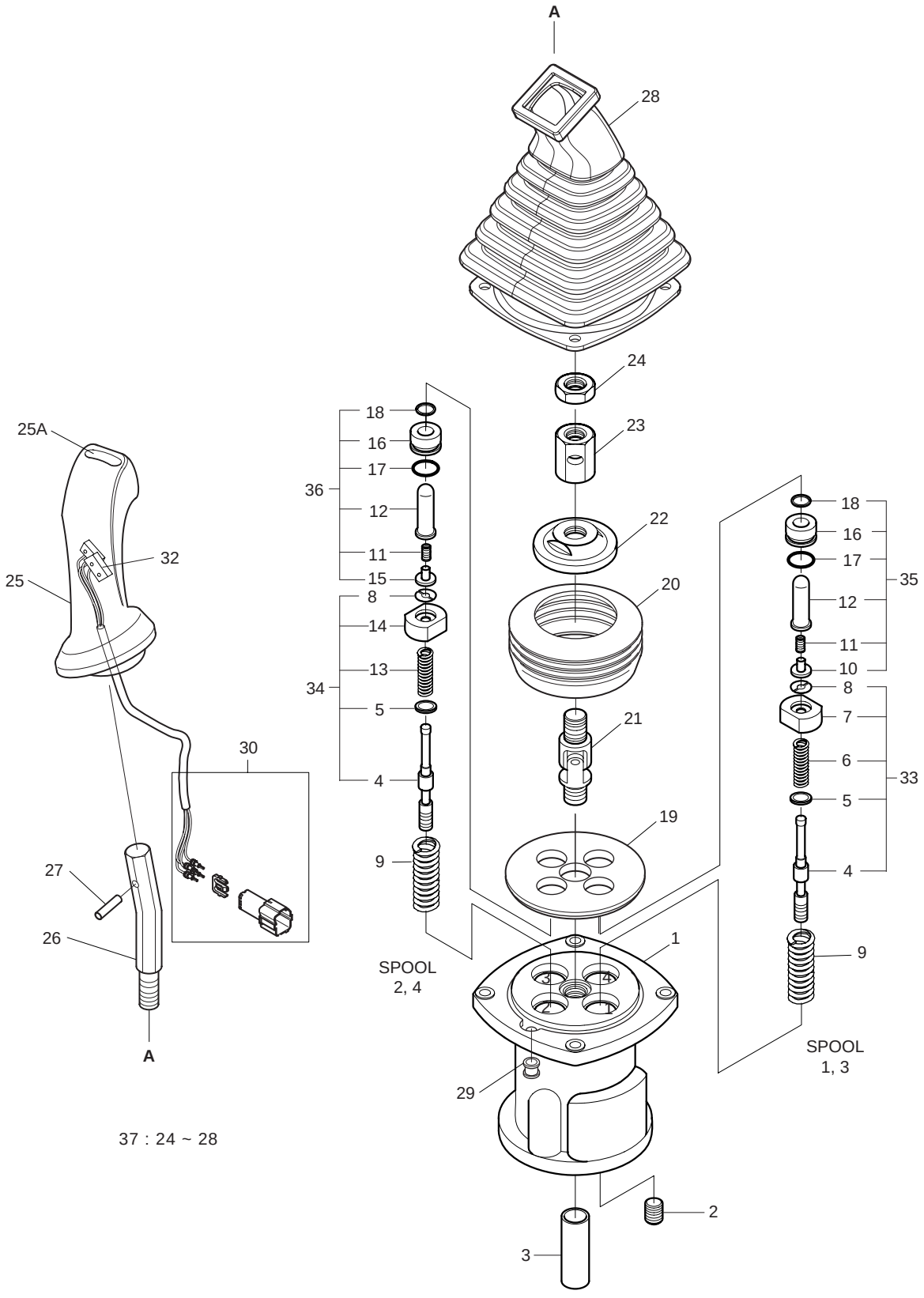

| DATE | JUN. 30, 2008 |
|---|---|
| REV. NO. | EXB08-06 |

# Fig. 4210 REMOTE CONTROL VALVE VANNE DE COMMAND A DISTANCE

Serial No. ;

| Key No. | Part No. | Description | Description | Q'ty | S.C | Serial No. | ICA | Replaceable part | |
|---|---|---|---|---|---|---|---|---|---|
| | | | | | | | | Part No. | Q'ty |
| 4210-- | K1000556E | REMOTE CONTROL VALVE(L.H) | MANETTE DE CONTROLE | 1 | | 5001–5478 | I | K1000556G | 1 |
| | K1000556G | REMOTE CONTROL VALVE(L.H) | MANETTE DE CONTROLE | 1 | | 5479–5944 | I | K1000556H | 1 |
| | **K1000556H** | **REMOTE CONTROL** | MANETTE DE CONTROLE | 1 | | **5945–** | | | |
| | K1000555E | REMOTE CONTROL VALVE(R.H) | MANETTE DE CONTROLE | 1 | | 5001–5478 | I | K1000555G | 1 |
| | K1000555G | REMOTE CONTROL VALVE(R.H) | MANETTE DE CONTROLE | 1 | | 5479–5944 | I | K1000555H | 1 |
| | **K1000555H** | **REMOTE CONTROL** | MANETTE DE CONTROLE | 1 | | **5945–** | | | |
| 1 | K9001114 | CASE | CARTER | 1 | D | | | | |
| 2 | 2181-1116D2 | PLUG | BOUCHON | 4 | | | | | |
| 3 | K9001115 | BUSHING | DOUILLE | 1 | | | | | |
| 4 | - | SPOOL | BOBINE | 4 | D | | | | |
| 5 | - | SHIM | CALE | 1 | D | | | | |
| 6 | K9001117 | SPRING | RESSORT | 2 | D | | | | |
| 7 | K9001762 | SEAT;SPRING | CUVETTE DE RESSORT | 2 | D | | | | |
| 8 | K9001763 | STOPPER | ARRET | 4 | D | | | | |
| 9 | K9001119 | SPRING | RESSORT | 4 | | | | | |
| 10 | 1.416-00017 | STOPPER | ARRET | 2 | D | | | | |
| 11 | K9001121 | SPRING | RESSORT | 4 | D | | | | |
| 12 | K9001766 | ROD;PUSH | POUSSOIR | 4 | D | | | | |
| 13 | K9001123 | SPRING | RESSORT | 2 | D | | | | |
| 14 | K9001767 | SEAT;SPRING | CUVETTE DE RESSORT | 2 | D | | | | |
| 15 | 1.416-00018 | STOPPER | ARRET | 2 | D | | | | |
| 16 | K9001768 | PLUG | BOUCHON | 4 | D | | | | |
| 17 | S8000205 | O-RING | JOINT TORIQUE | 4 | | | | | |
| 18 | 180-00198 | SEAL;ROD | TIGE D'ETANCHEITE | 4 | | 5001–5478 | | | |
| | K9001127 | SEAL;ROD | TIGE D'ETANCHEITE | 4 | | 5479– | | | |
| 19 | 1.412-00017 | PLATE | PLAQUE | 1 | | | | | |
| 20 | K9001128 | BOOT | BOOT | 1 | | | | | |
| 21 | 1.138-00004 | JOINT ASS'Y | ENSEMBLE DE JOINT | 1 | | | | | |
| 22 | K9001129 | PLATE;SWASH | PLAQUE | 1 | | | | | |
| 23 | 1.121-00028 | NUT | ECROU | 1 | | | | | |
| 24 | S4012833 | NUT | ECROU | 1 | | | | | |
| 25 | K9001130 | HANDLE ASS'Y(L.H) | HANDLE | 1 | | | | | |
| | K9001131 | HANDLE ASS'Y(R.H) | HANDLE | 1 | | | | | |
| 25A | 1.161-00021 | . CAP;PEANUT | . CHAPEAU | 1 | | | | | |
| 26 | 1.178-00004 | BAR;HANDLE | JAGUE DE NIVEAU | 1 | | | | | |
| 27 | S5740800 | PIN;SPRING | GOUJON | 1 | | | | | |
| 28 | K9001132 | BELLOWS | SOUFFLET | 1 | | | | | |
| 29 | 1.110-00169 | BUSHING | DOUILLE | 1 | | | | | |

| DATE | JUN. 30, 2008 |
|---|---|
| REV.NO. | EXB08-06 |

# Fig. 4210 REMOTE CONTROL VALVE
# VANNE DE COMMAND A DISTANCE

**Serial No. ;**

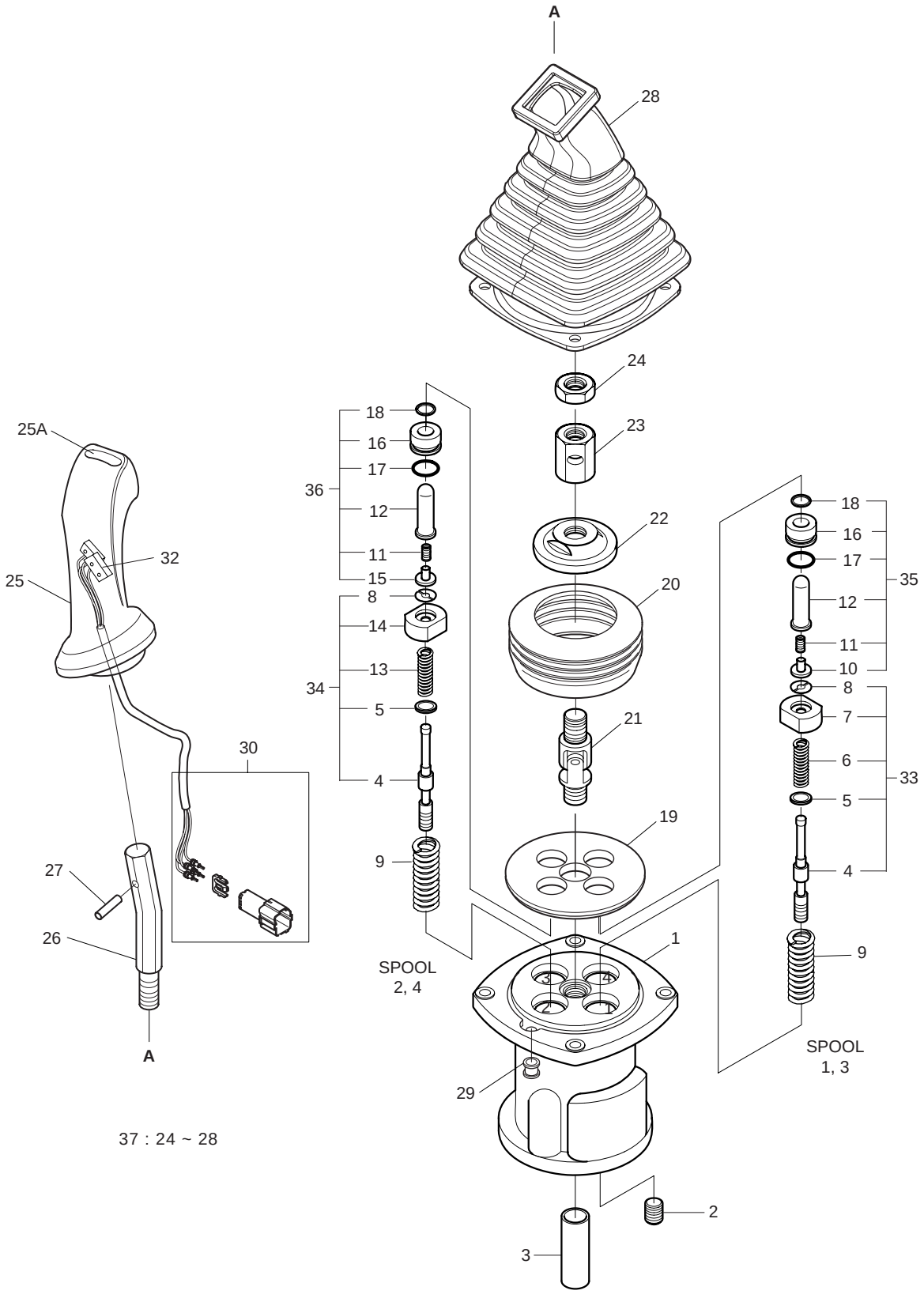

| DATE | JUN. 30, 2008 |
|---|---|
| REV. NO. | EXB08-06 |

# Fig. 4210 REMOTE CONTROL VALVE
# VANNE DE COMMAND A DISTANCE

Serial No. ;

| Key No. | Part No. | Description | Description | Q'ty | S.C | Serial No. | ICA | Replaceable part | |
|---|---|---|---|---|---|---|---|---|---|
| | | | | | | | | Part No. | Q'ty |
| 4210-30 | K9001133 | CONNECTOR ASS'Y | CONNECTOR | 1 | | | | | |
| 32 | K9001001 | SWITCH ASS'Y | INTERRUPTEUR | 1 | | | | | |
| 33 | K9001135 | KIT;SPOOL(1,3) | KIT DE BOBINE | 1 | | 5001–5478 | | | |
| | K9003998 | KIT;SPOOL(1,3) | KIT DE BOBINE | 1 | | 5479– | | | |
| 34 | K9001136 | KIT;SPOOL(2,4) | KIT DE BOBINE | 1 | | 5001–5478 | | | |
| | K9003999 | KIT;SPOOL(2,4) | KIT DE BOBINE | 1 | | 5479– | | | |
| 35 | K9001137 | KIT;PLUG(1,3) | KIT DE PRISE | 1 | | 5001–5478 | | | |
| | K9004000 | KIT;PLUG(1,3) | KIT DE PRISE | 1 | | 5479–5944 | | | |
| | **K9006480** | **KIT;PLUG(1,3)** | KIT DE PRISE | 1 | | **5945**– | | | |
| 36 | K9001138 | KIT;PLUG(2,4) | KIT DE PRISE | 1 | | 5001–5478 | | | |
| | K9004001 | KIT;PLUG(2,4) | KIT DE PRISE | 1 | | 5479–5944 | | | |
| | **K9006481** | **KIT;PLUG(2,4)** | KIT DE PRISE | 1 | | **5945**– | | | |
| 37 | K9001139 | KIT;HANDLE(R.H) | KIT DE POIGN?E | 1 | | | | | |
| | K9001140 | KIT;HANDLE(L.H) | KIT DE POIGN?E | 1 | | | | | |

| DATE | JUN. 30, 2008 |
|---|---|
| REV.NO. | EXB08-06 |

# Fig. 4220 PEDAL VALVE
# VANNE DE PEDALE

**Serial No. ; 5001 ~ 5944**

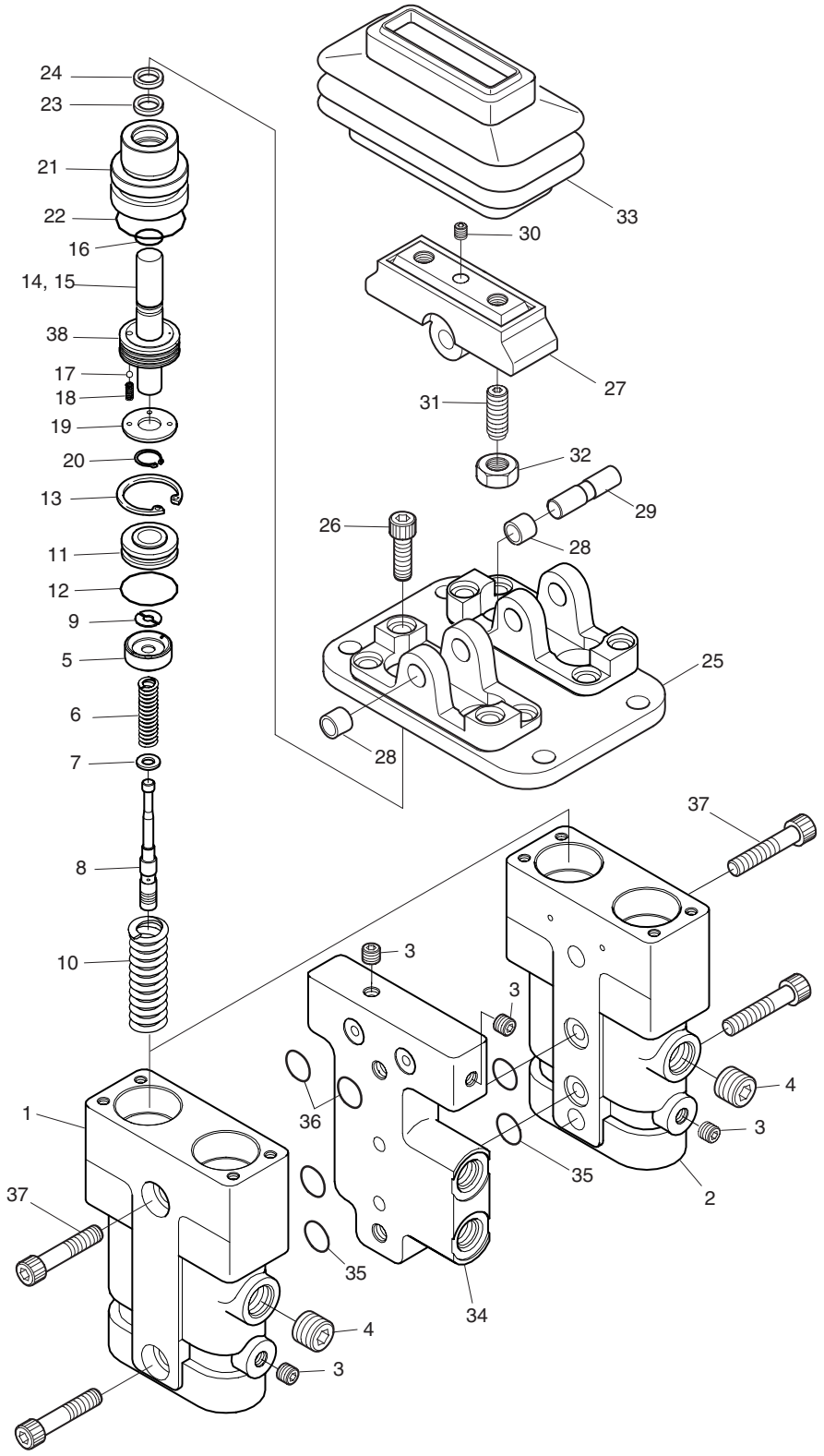

| DATE | JUN. 30, 2008 |
|---|---|
| REV. NO. | EXB08-06 |

# Fig. 4220 PEDAL VALVE VANNE DE PEDALE

**Serial No. ; 5001 ~ 5944**

| Key No. | Part No. | Description | Description | Q'ty | S.C | Serial No. | ICA | Replaceable part | |
|---|---|---|---|---|---|---|---|---|---|
| | | | | | | | | Part No. | Q'ty |
| 4220-- | **420-00467** | **PEDAL VALVE** | VANNE | 1 | | **5001–5944** | | | |
| 1 | 423-00046 | BODY(1) | CARTER | 1 | D | | | | |
| 2 | 423-00047 | BODY(2) | CARTER | 1 | D | | | | |
| 3 | 2181-1116D1 | PLUG PT1/8 | BOUCHON | 4 | | | | | |
| 4 | 2181-1116D3 | PLUG PT3/8 | BOUCHON | 2 | | | | | |
| 5 | 429-00004 | SEAT;SPRING | SIEGE | 4 | | | | | |
| 6 | K9001141 | SPRING | RESSORT | 4 | | | | | |
| 7 | 429-00005 | SEAT;SPRING | SIEGE | 4 | | | | | |
| 8 | 424-00042 | SPOOL | PLUNGEUR | 4 | | | | | |
| 9 | 161-00080 | STOPPER | TAQUET D'ARRET | 4 | | | | | |
| 10 | 129-00042 | SPRING | RESSORT | 4 | | | | | |
| 11 | 429-00006 | GUIDE;ROD | GARDE | 4 | | | | | |
| 12 | S8000221 | O-RING | JOINT TORIQUE | 4 | K | | | | |
| 13 | 1.229-00036 | RING;SNAP | BAGUE | 4 | | | | | |
| 14 | 1.454-00001 | ROD;PUSH | TIGE DE POUSSOIR | 4 | | | | | |
| 15 | S5740480 | PIN;SPRING | GOUJON | 4 | | | | | |
| 16 | 180-00197 | SEAL | JOINT | 4 | K | | | | |
| 17 | S6250110 | BALL;STEEL | BILLE | 4 | | | | | |
| 18 | 129-00043 | SPRING | RESSORT | 4 | | | | | |
| 19 | 159-00017 | PLATE | PLAQUE | 4 | | | | | |
| 20 | 115-00042 | RING;SNAP | BAGUE | 4 | | | | | |
| 21 | 181-00319 | PLUG | BOUCHON | 4 | | | | | |
| 22 | S8010251 | O-RING | JOINT TORIQUE | 4 | K | | | | |
| 23 | 180-00198 | SEAL;ROD | TIGE D'ETANCHEITE | 4 | K | | | | |
| 24 | 180-00199 | SEAL;DUST | BAGUE D'ETANCHEITE | 4 | K | | | | |
| 25 | K9001142 | COVER | COUVERCLE | 1 | | | | | |
| 26 | S2205261 | BOLT;WRENCH M6X1.0X30 | BOULON A 6 PANS CREUX | 4 | | | | | |
| 27 | 354-00002 | CAM | CAME | 2 | | | | | |
| 28 | 2110-1184D7 | BUSHING | DOUILLE | 4 | | | | | |
| 29 | 354-00003 | SHAFT;CAM | ARBRE | 2 | | | | | |
| 30 | S3523608 | SCREW;SET | VIS | 2 | | | | | |
| 31 | 120-00127 | SCREW;SET | VIS | 4 | | | | | |
| 32 | S4014633 | NUT M10 | ECROU | 4 | | | | | |
| 33 | 160-00008 | BELLOWS | SOUFFLET | 2 | | | | | |
| 34 | 114-00225 | SPACER | BAGUE D'ECARTEMENT | 1 | | | | | |
| 35 | S8000121 | O-RING | JOINT TORIQUE | 4 | K | | | | |
| 36 | S8000101 | O-RING | JOINT TORIQUE | 2 | K | | | | |
| 37 | S2212461 | BOLT;WRENCH M10X1.5X42 | BOULON A 6 PANS CREUX | 4 | | | | | |

| DATE | JUN. 30, 2008 |
|---|---|
| REV.NO. | EXB08-06 |

# Fig. 4220 PEDAL VALVE VANNE DE PEDALE

**Serial No. ; 5001 ~ 5944**

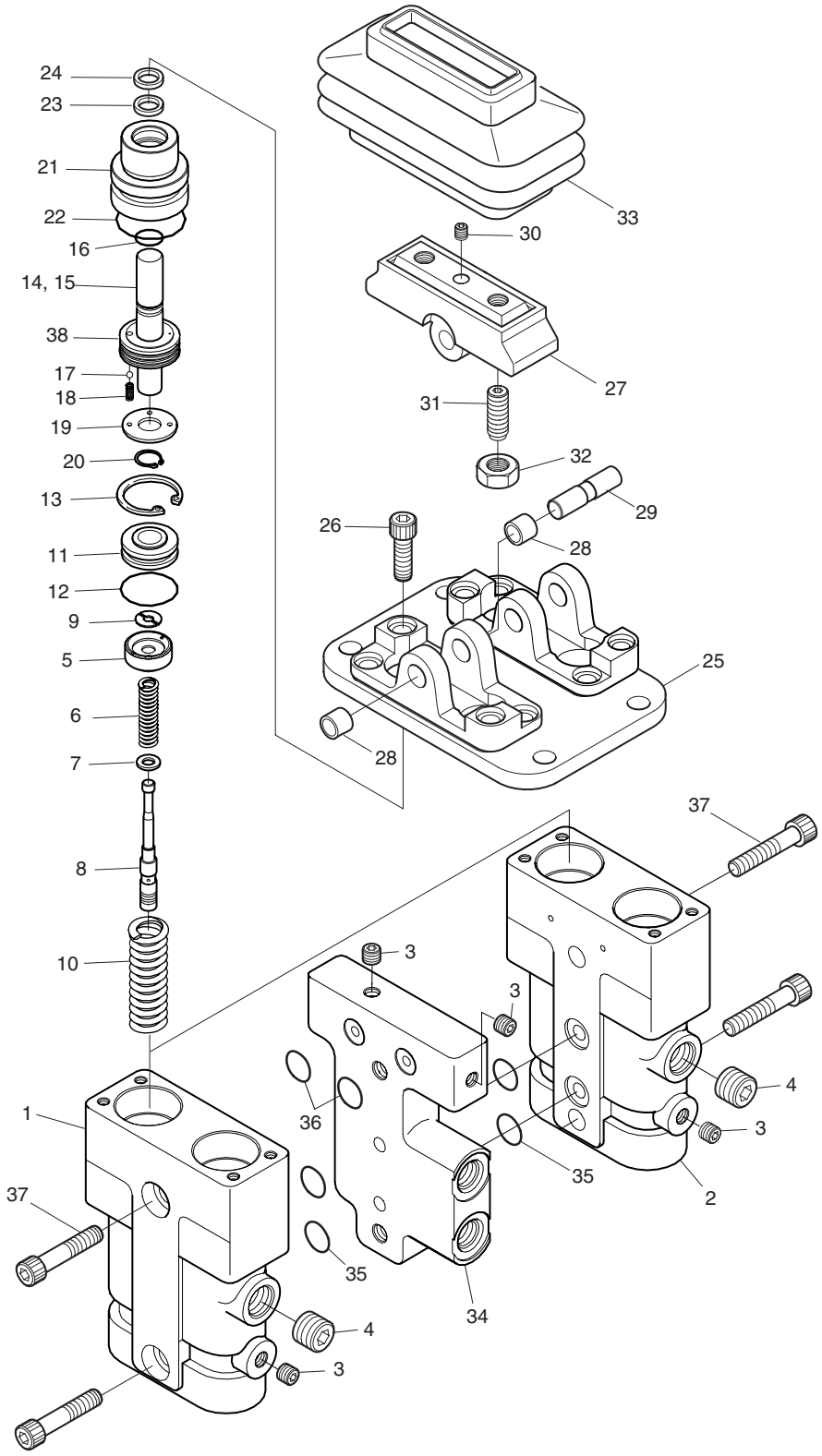

| DATE | JUN. 30, 2008 |
|---|---|
| REV. NO. | EXB08-06 |

# Fig. 4220 PEDAL VALVE VANNE DE PEDALE

**Serial No. ; 5001 ~ 5944**

| Key No. | Part No. | Description | Description | Q'ty | S.C | Serial No. | ICA | Replaceable part | |
|---|---|---|---|---|---|---|---|---|---|
| | | | | | | | | Part No. | Q'ty |
| 4220-38 | 1.409-00225 | PISTON | PISTON | 4 | | | | | |
| * | 420-00453KT | SEAL KIT;PEDAL VALVE | KIT DE JOINT | 1 | | | | | |

| DATE | JUN. 30, 2008 |
|---|---|
| REV.NO. | EXB08-06 |

# Fig. 4221 PEDAL VALVE
# VANNE DE PEDALE

**Serial No. ; 5945 ~**

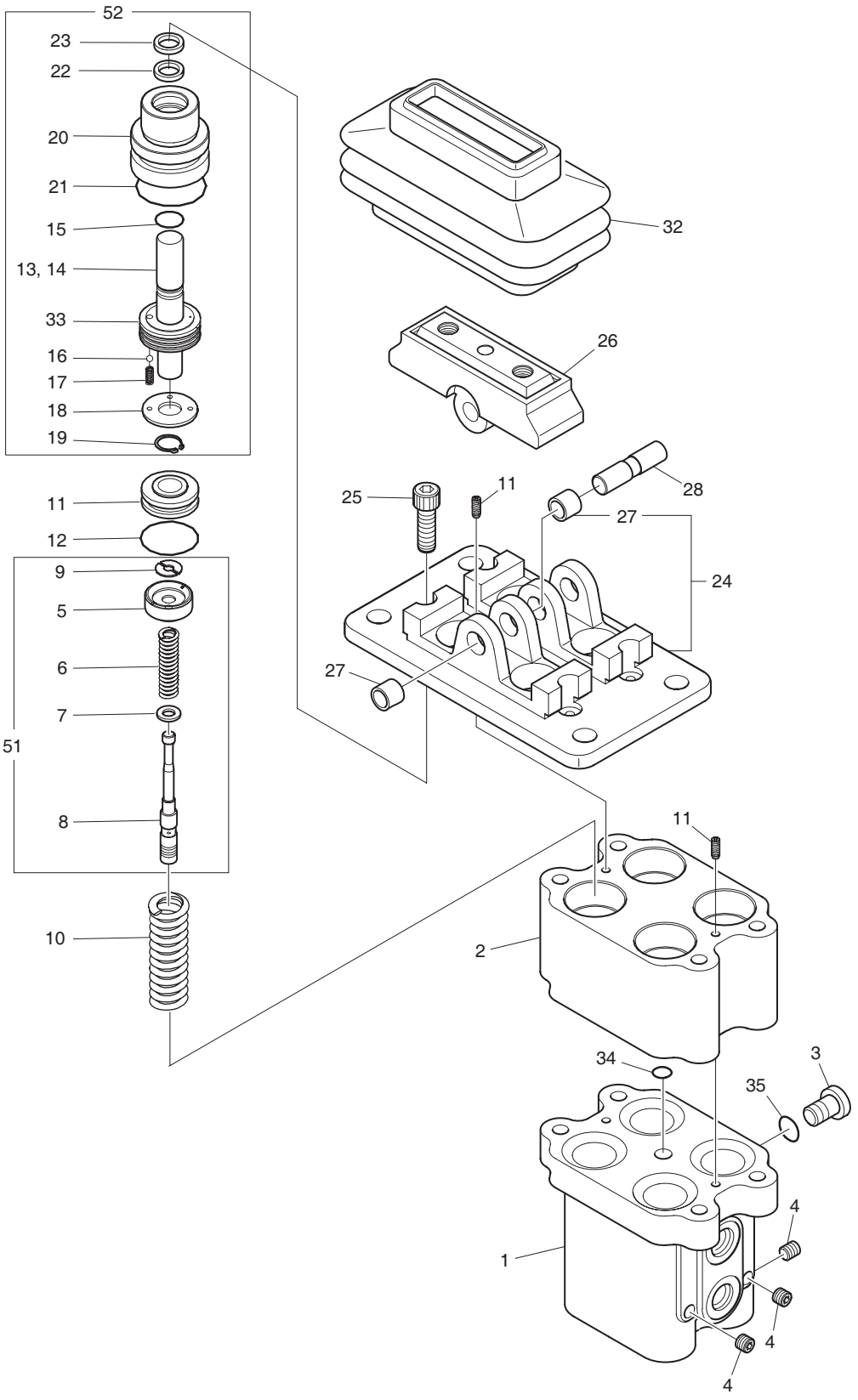

| DATE | JUN. 30, 2008 |
|---|---|
| REV. NO. | EXB08-06 |

# Fig. 4221 PEDAL VALVE VANNE DE PEDALE

**Serial No. ; 5945 ~**

| Key No. | Part No. | Description | Description | Q'ty | S.C | Serial No. | ICA | Replaceable part | |
|---|---|---|---|---|---|---|---|---|---|
| | | | | | | | | Part No. | Q'ty |
| 4221-- | **420-00467A** | **VALVE;PEDAL** | VANNE DE PEDALE | 1 | | **5945–** | | | |
| 1 | - | BODY | CARTER | 1 | D | | | | |
| 2 | - | BODY | CARTER | 1 | D | | | | |
| 3 | 420-00112 | PLUG | BOUCHON | 1 | | | | | |
| 4 | 2181-1116D1 | PLUG | BOUCHON | 3 | | | | | |
| 51 | K9006863 | KIT;SPOOL | PLUNGEUR | 4 | | | | | |
| 5 | 429-00004 | . SEAT;SPRING | . SIEGE | 4 | | | | | |
| 6 | K9001141 | . SPRING | . RESSORT | 4 | | | | | |
| 7 | 429-00005 | . SEAT;SPRING | . SIEGE | 4 | | | | | |
| 8 | 424-00042 | . SPOOL | . PLUNGEUR | 4 | | | | | |
| 9 | 161-00080 | . STOPPER | . CHAPEAU | 4 | | | | | |
| 10 | K9006860 | SPRING | RESSORT | 4 | | | | | |
| 11 | S5740600 | PIN;SPRING | GOUJON | 4 | | | | | |
| 12 | S8000261 | O-RING | JOINT TORIQUE | 4 | | | | | |
| 52 | K9006864 | KIT;PLUG | KIT | 4 | | | | | |
| 13 | - | . ROD;PUSH | . TIGE DE POUSSOIR | 4 | D | | | | |
| 14 | S5740480 | . PIN;SPRING | . GOUJON | 4 | | | | | |
| 15 | - | . SEAL | . JOINT | 4 | D | | | | |
| 16 | 148-00012 | . BALL;SPEEL | . BILLE | 4 | | | | | |
| 17 | 129-00043 | . SPRING | . RESSORT | 4 | | | | | |
| 18 | 159-00017 | . PLATE | . PLAQUE | 4 | | | | | |
| 19 | 115-00042 | . RING;SNAP | . BAGUE | 4 | | | | | |
| 20 | - | . PLUG | . BOUCHON | 4 | D | | | | |
| 21 | S8010251 | . O-RING | . JOINT TORIQUE | 4 | | | | | |
| 22 | 180-00198 | . RING;ROD | . TIGE D'ETANCHEITE | 4 | | | | | |
| 23 | 180-00199 | . SEAL;DUST | . BAGUE D'ETANCHEITE | 4 | | | | | |
| 33 | 1.409-00225 | . PISTON | PISTON | 4 | | | | | |
| 24 | K9006865 | KIT;COVER | COUVERCLE | 1 | | | | | |
| 27 | 2110-1184D7 | . BUSH | . BAGUE | 4 | | | | | |
| 25 | S2210071 | BOLT;SOCKET | BOULON DE PLOT | 4 | | | | | |
| 26 | K9006866 | KIT;CAM | CAME | 2 | | | | | |
| 28 | K9006861 | SHAFT;CAM | ARBRE A CAMES | 2 | | | | | |
| 32 | K9006862 | BELLOWS | SOUFFLET | 2 | | | | | |
| 34 | S8000081 | O-RING | JOINT TORIQUE | 1 | | | | | |
| 35 | S8000111 | O-RING | JOINT TORIQUE | 1 | | | | | |

| DATE | OCT. 17, 2005 |
|---|---|
| 1st EDITION | |

# Fig. 4230 SOLENOID VALVE
# VANNE DE SOLENOIDE

Serial No. ; 5001 ~ 5031

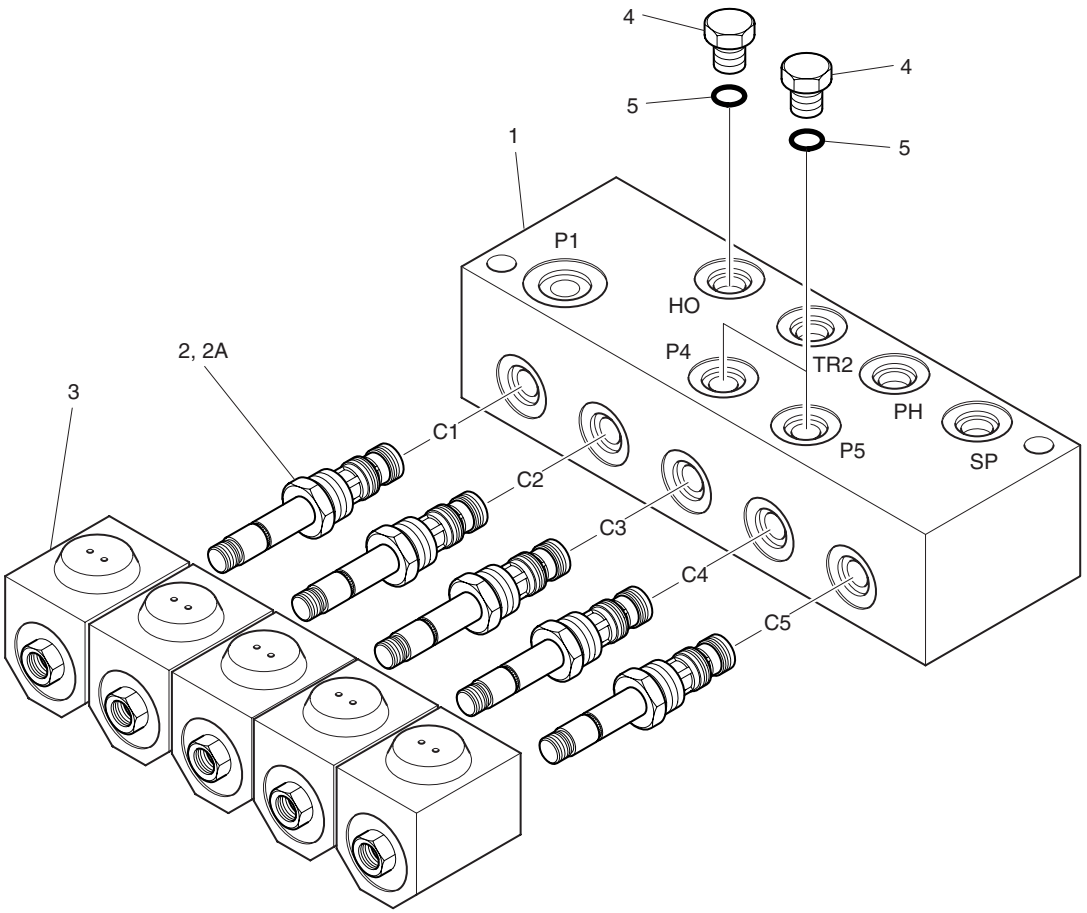

| DATE | OCT. 17, 2005 |
|---|---|
| 1st EDITION | |

# Fig. 4230 SOLENOID VALVE VANNE DE SOLENOIDE

**Serial No. ; 5001 ~ 5031**

| Key No. | Part No. | Description | Description | Q'ty | S.C | Serial No. | ICA | Replaceable part | |
|---|---|---|---|---|---|---|---|---|---|
| | | | | | | | | Part No. | Q'ty |
| 4230-- | 426-00245A | SOLENOID VALVE | VANNE SOLENOIDE | 1 | | 5001-5031 | | | |
| 1 | - | BLOCK | BLOC | 1 | D | | | | |
| 2 | K9001354 | SOLENOID VALVE | SOUPAPE A SOLENOIDE | 5 | | | | | |
| 2A | K9001943 | . SEAL KIT | . KIT DE REPARATION | 1 | | | | | |
| 3 | 519-00003 | COIL | BOBINE | 5 | | | | | |
| 4 | 2181-1950D1 | PLUG PF1/4 | BOUCHON | 3 | | | | | |
| 5 | S8000111 | O-RING P11 | JOINT TORIQUE | 3 | | | | | |

# Fig. 4231 SOLENOID VALVE
# VANNE DE SOLENOIDE

**Serial No. ; 5032 ~**

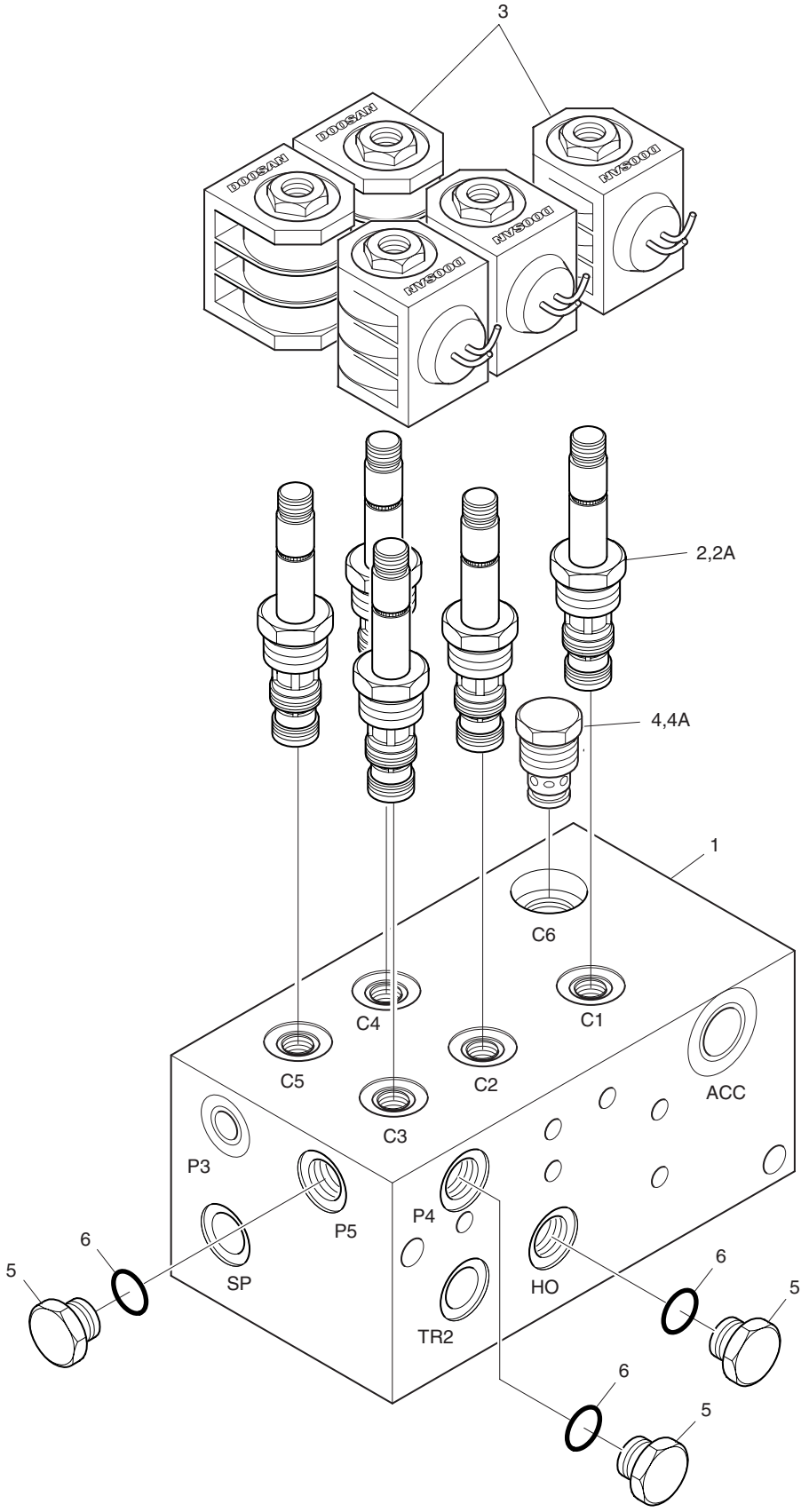

| DATE | JUN. 30, 2006 |
|---|---|
| REV. NO. | EXB06-08 |

# Fig. 4231 SOLENOID VALVE VANNE DE SOLENOIDE

Serial No. ; 5032 ~

| Key No. | Part No. | Description | Description | Q'ty | S.C | Serial No. | ICA | Replaceable part | |
|---|---|---|---|---|---|---|---|---|---|
| | | | | | | | | Part No. | Q'ty |
| 4231-- | K1012576 | SOLENOID VALVE | VANNE SOLENOIDE | 1 | | 5032– | | | |
| 1 | - | BLOCK | BLOC | 1 | D | | | | |
| 2 | K9001354 | SOLENOID VALVE | VANNE SOLENOIDE | 5 | | | | | |
| 2A | K9001943 | . SEAL KIT | . KIT DE REPARATION | 1 | | | | | |
| 3 | 519-00003 | COIL | BOBINE | 5 | | | | | |
| 4 | K9002065 | VALVE;CHECK | VANNE DE CONTROLE | 1 | | | | | |
| 4A | 1.180-00447 | . SEAL KIT | . KIT DE REPARATION | 1 | | | | | |
| 5 | 2181-1950D1 | PLUG PF1/4 | BOUCHON | 3 | | | | | |
| 6 | S8000111 | O-RING P11 | JOINT TORIQUE | 3 | | | | | |

| DATE | OCT. 17, 2005 |
|---|---|
| 1st EDITION | |

# Fig. 4240 BOOM CYLINDER-R.H
# VERIN DE FLECHE DROIT

**Serial No. ;**

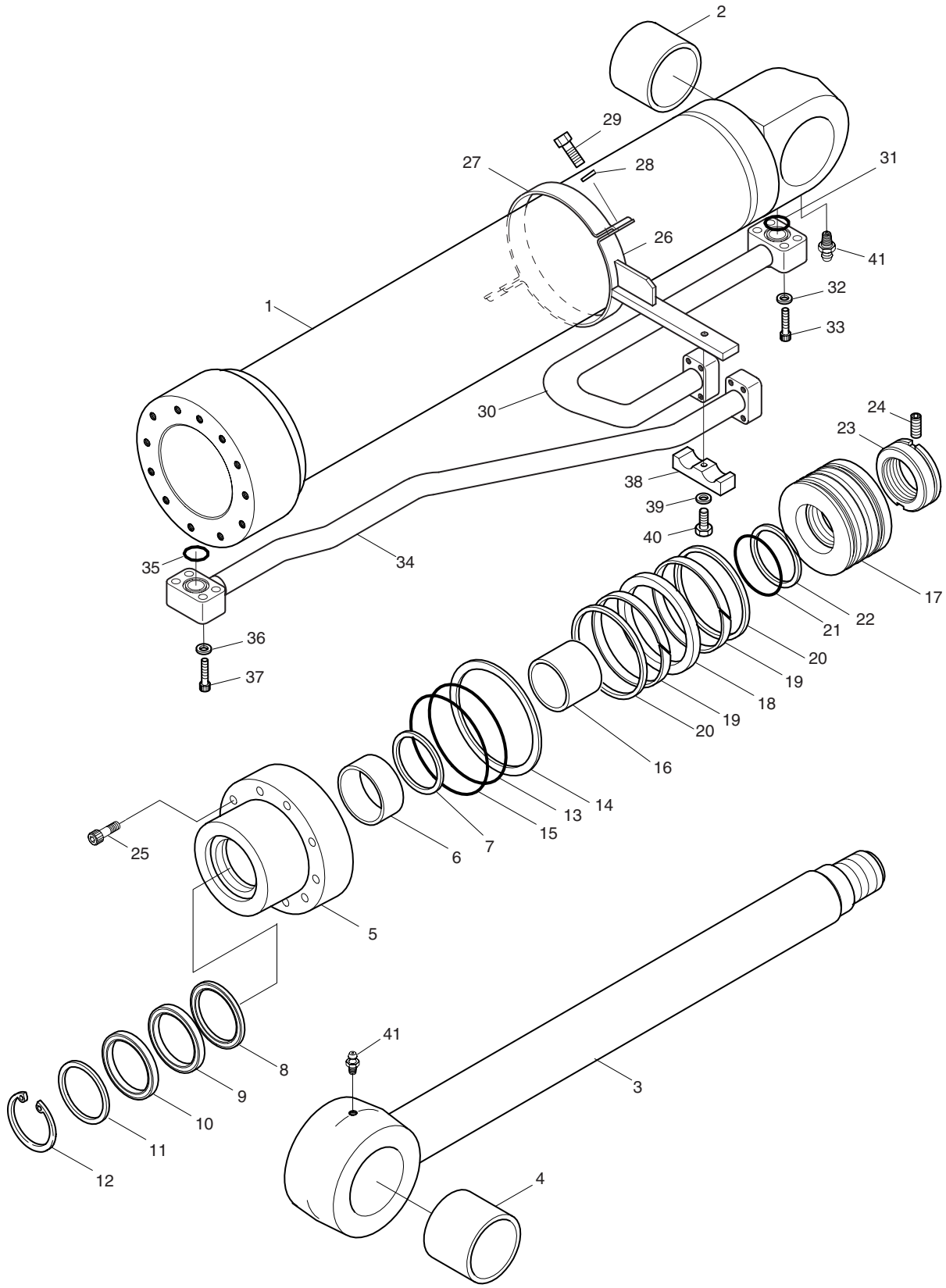

| DATE | OCT. 17, 2005 |
|---|---|
| 1st EDITION | |

# Fig. 4240 BOOM CYLINDER-R.H VERIN DE FLECHE DROIT

Serial No. ;

| Key No. | Part No. | Description | Description | Q'ty | S.C | Serial No. | ICA | Replaceable part | |
|---|---|---|---|---|---|---|---|---|---|
| | | | | | | | | Part No. | Q'ty |
| 4240-- | K1006191 | CYLINDER;BOOM(R.H) | VERIN DE FLECHE DROIT | 1 | | | | | |
| 1 | K9002265 | TUBE ASS'Y | ENSEMBLE TUBE | 1 | | | | | |
| 2 | K1003914 | BUSH | COUSSINET | 1 | | | | | |
| 3 | K9002266 | ROD ASS'Y | ENSEMBLE TIGE | 1 | | | | | |
| 4 | K1003914 | BUSH | COUSSINET | 1 | | | | | |
| 5 | K9002267 | COVER;ROD | COUVERCLE | 1 | | | | | |
| 6 | 110-00081 | BUSH;DD | COUSSINET | 1 | | | | | |
| 7 | 115-00073 | RING;RETAINING | BAGUE | 1 | | | | | |
| 8 | K9001882 | SEAL;BUFFER | JOINT | 1 | K | | | | |
| 9 | K9001883 | U-PACKING | JOINT EN U | 1 | K | | | | |
| 10 | K9001884 | RING;BACK UP | ANNEAU DE SOUTIEN | 1 | K | | | | |
| 11 | 115-00077 | WIPER;DUST | PARE-POUSSIERE | 1 | K | | | | |
| 12 | 115-00078 | RING;RETAINING | RONDELLE DE RETENUE | 1 | | | | | |
| 13 | S8011451 | O-RING | JOINT TORIQUE | 1 | K | | | | |
| 14 | K9001164 | RING;BACK UP | BAGUE D'ETANCHEITE | 1 | K | | | | |
| 15 | 180-00363 | O-RING | JOINT TORIQUE | 1 | K | | | | |
| 16 | K9002268 | RING;CUSHION | BAGUE D'AMORTISSEMENT | 1 | | | | | |
| 17 | K9002269 | PISTON | PISTON | 1 | | | | | |
| 18 | K9001166 | SEAL;SLIPPER | PATIN D'ETANCHEITE | 1 | K | | | | |
| 19 | 115-00121 | RING;WEAR | SEGMENT D'USURE | 2 | K | | | | |
| 20 | 115-00122 | RING;SLYD | SEGMENT SLYD | 2 | K | | | | |
| 21 | S8010801 | O-RING | JOINT TORIQUE | 1 | K | | | | |
| 22 | K9001895 | RING;BACK UP | ANNEAU DE SOUTIEN | 2 | K | | | | |
| 23 | 121-00044 | NUT;PISTON | ECROU DE PISTON | 1 | | | | | |
| 24 | S3523836 | SCREW;SET | VIS DE REGLAGE | 1 | | | | | |
| 25 | S2225271 | BOLT;HEX SOCKET | BOULON A 6 PANS CREUX | 12 | | | | | |
| 26 | 1.124-00082 | PIPE BAND ASS'Y | ENSEMBLE COLLIER DE | 1 | | | | | |
| 27 | 124-00157 | BAND;PIPE | ATTACHE | 1 | | | | | |
| 28 | S5100603 | WASHER;SPRING | RONDELLE ELASTIQUE | 2 | | | | | |
| 29 | S0558261 | BOLT;HEX | BOULON M10x1.5x35 | 2 | | | | | |
| 30 | 1.140-00114 | PIPE ASS'Y-H(R.H) | ENSEMBLE CONDUITES | 1 | | | | | |
| 31 | S8000341 | O-RING | JOINT TORIQUE | 1 | | | | | |
| 32 | S5100703 | WASHER;SPRING | RONDELLE ELASTIQUE | 4 | | | | | |
| 33 | S2215961 | BOLT;HEX SOCKET | BOULON A 6 PANS CREUX | 4 | | | | | |
| 34 | K9002270 | PIPE ASS'Y-R(R.H) | ENSEMBLE CONDUITES | 1 | | | | | |
| 35 | S8000341 | O-RING | JOINT TORIQUE | 1 | | | | | |
| 36 | S5100703 | WASHER;SPRING | RONDELLE ELASTIQUE | 4 | | | | | |
| 37 | S2215961 | BOLT;HEX SOCKET | BOULON A 6 PANS CREUX | 4 | | | | | |
| 38 | 124-00158 | CLAMP;PIPE | FIXATION DE TUYAU | 1 | | | | | |

| DATE | OCT. 17, 2005 |
|---|---|
| 1st EDITION | |

# Fig. 4240 BOOM CYLINDER-R.H
# VERIN DE FLECHE DROIT

**Serial No. ;**

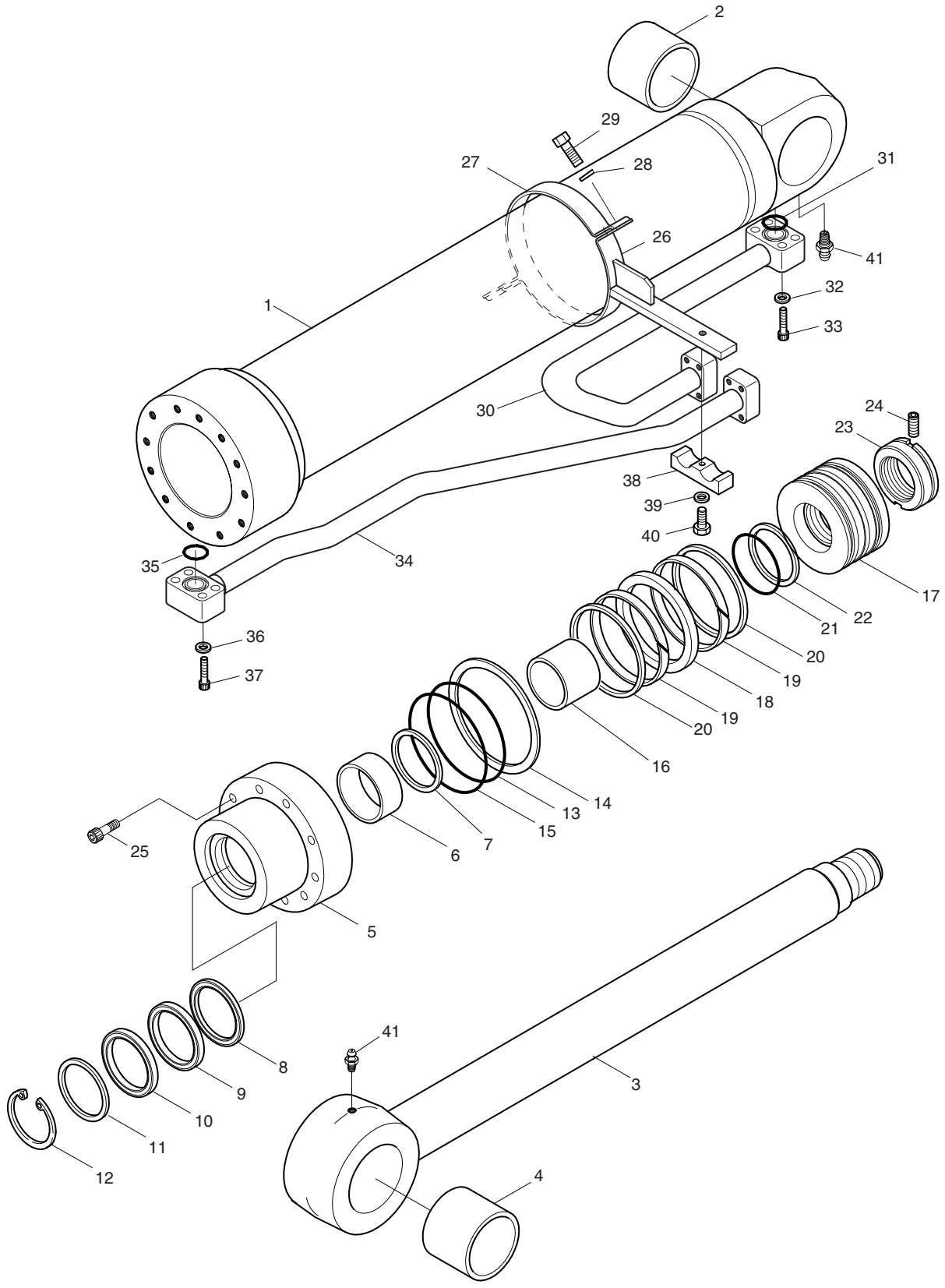

| DATE | OCT. 17, 2005 |
|---|---|
| 1st EDITION | |

# Fig. 4240 BOOM CYLINDER-R.H
# VERIN DE FLECHE DROIT

Serial No. ;

| Key No. | Part No. | Description | Description | Q'ty | S.C | Serial No. | ICA | Replaceable part | |
|---|---|---|---|---|---|---|---|---|---|
| | | | | | | | | Part No. | Q'ty |
| 4240-39 | S5100703 | WASHER;SPRING | RONDELLE ELASTIQUE | 1 | | | | | |
| 40 | S0561053 | BOLT;HEX | BOULON A 6 PANS | 1 | | | | | |
| 41 | S6710032 | NIPPLE;GREASE | GRAISSEUR | 2 | | | | | |
| * | K9002289 | SEAL KIT;BOOM CYL. | KIT D'ETANCHEITE | 1 | | | | | |

| DATE | OCT. 17, 2005 |
|---|---|
| 1st EDITION | |

# Fig. 4250 BOOM CYLINDER-L.H
# VERIN DE FLECHE GAUCHE

Serial No. ;

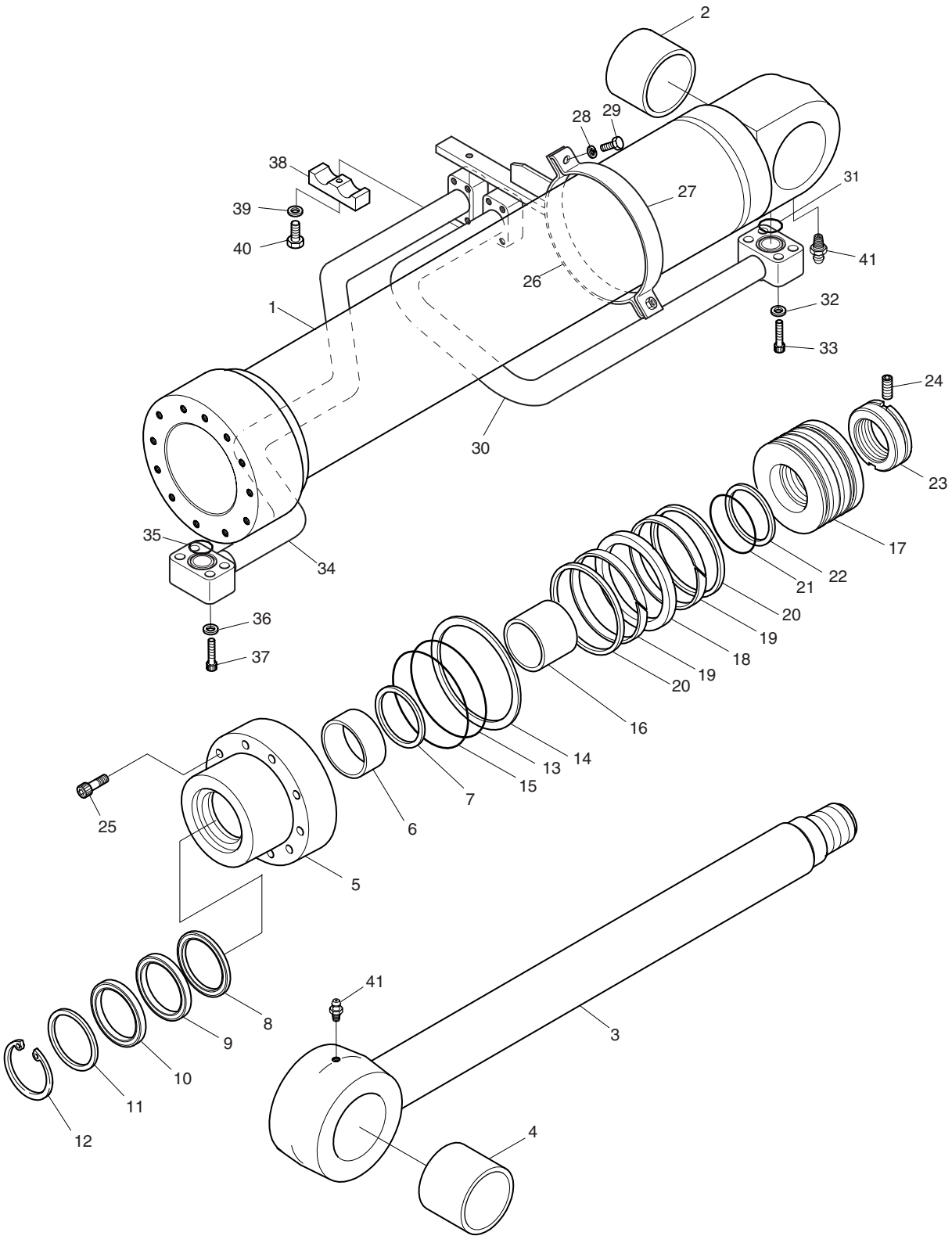

| DATE | OCT. 17, 2005 |
|---|---|
| 1st EDITION | |

# Fig. 4250 BOOM CYLINDER-L.H VERIN DE FLECHE GAUCHE

Serial No. ;

| Key No. | Part No. | Description | Description | Q'ty | S.C | Serial No. | ICA | Replaceable part | |
|---|---|---|---|---|---|---|---|---|---|
| | | | | | | | | Part No. | Q'ty |
| 4250-- | K1006190 | CYLINDER;BOOM(L.H) | VERIN DE FLECHE | 1 | | | | | |
| 1 | K9002265 | TUBE ASS'Y | ENSEMBLE TUBE | 1 | | | | | |
| 2 | K1003914 | BUSH | COUSSINET | 1 | | | | | |
| 3 | K9002266 | ROD ASS'Y | ENSEMBLE TIGE | 1 | | | | | |
| 4 | K1003914 | BUSH | COUSSINET | 1 | | | | | |
| 5 | K9002267 | COVER;ROD | COUVERCLE | 1 | | | | | |
| 6 | 110-00081 | BUSH;DD | COUSSINET | 1 | | | | | |
| 7 | 115-00073 | RING;RETAINING | BAGUE | 1 | | | | | |
| 8 | K9001882 | SEAL;BUFFER | JOINT | 1 | K | | | | |
| 9 | K9001883 | U-PACKING | JOINT EN U | 1 | K | | | | |
| 10 | K9001884 | RING;BACK UP | ANNEAU DE SOUTIEN | 1 | K | | | | |
| 11 | 115-00077 | WIPER;DUST | PARE-POUSSIERE | 1 | K | | | | |
| 12 | 115-00078 | RING;RETAINING | RONDELLE DE RETENUE | 1 | | | | | |
| 13 | S8011451 | O-RING | JOINT TORIQUE | 1 | K | | | | |
| 14 | K9001164 | RING;BACK UP | BAGUE D'ETANCHEITE | 1 | K | | | | |
| 15 | 180-00363 | O-RING | JOINT TORIQUE | 1 | K | | | | |
| 16 | K9002268 | RING;CUSHION | BAGUE D'AMORTISSEMENT | 1 | | | | | |
| 17 | K9002269 | PISTON | PISTON | 1 | | | | | |
| 18 | K9001166 | SEAL;SLIPPER | PATIN D'ETANCHEITE | 1 | K | | | | |
| 19 | 115-00121 | RING;WEAR | SEGMENT D'USURE | 2 | K | | | | |
| 20 | 115-00122 | RING;SLYD | SEGMENT SLYD | 2 | K | | | | |
| 21 | S8010801 | O-RING | JOINT TORIQUE | 1 | K | | | | |
| 22 | K9001895 | RING;BACK UP | ANNEAU DE SOUTIEN | 2 | K | | | | |
| 23 | 121-00044 | NUT;PISTON | ECROU DE PISTON | 1 | | | | | |
| 24 | S3523836 | SCREW;SET | VIS DE REGLAGE | 1 | | | | | |
| 25 | S2225271 | BOLT;HEX SOCKET | BOULON A 6 PANS CREUX | 12 | | | | | |
| 26 | 1.124-00082 | PIPE BAND ASS'Y | ENSEMBLE COLLIER DE | 1 | | | | | |
| 27 | 124-00157 | BAND;PIPE | ATTACHE | 1 | | | | | |
| 28 | S5100603 | WASHER;SPRING | RONDELLE ELASTIQUE | 2 | | | | | |
| 29 | S0558261 | BOLT;HEX | BOULON M10x1.5x35 | 2 | | | | | |
| 30 | 1.140-00090 | PIPE ASS'Y-H(L.H) | CONDUITES | 1 | | | | | |
| 31 | S8000341 | O-RING | JOINT TORIQUE | 1 | | | | | |
| 32 | S5100703 | WASHER;SPRING | RONDELLE ELASTIQUE | 4 | | | | | |
| 33 | S2215961 | BOLT;HEX SOCKET | BOULON A 6 PANS CREUX | 4 | | | | | |
| 34 | K9002271 | PIPE ASS'Y-R(L.H) | ENSEMBLE CONDUITES | 1 | | | | | |
| 35 | S8000341 | O-RING | JOINT TORIQUE | 1 | | | | | |
| 36 | S5100703 | WASHER;SPRING | RONDELLE ELASTIQUE | 4 | | | | | |
| 37 | S2215961 | BOLT;HEX SOCKET | BOULON A 6 PANS CREUX | 4 | | | | | |
| 38 | 124-00158 | CLAMP;PIPE | FIXATION DE TUYAU | 1 | | | | | |

| DATE | OCT. 17, 2005 |
|---|---|
| 1st EDITION | |

# Fig. 4250 BOOM CYLINDER-L.H
# VERIN DE FLECHE GAUCHE

**Serial No. ;**

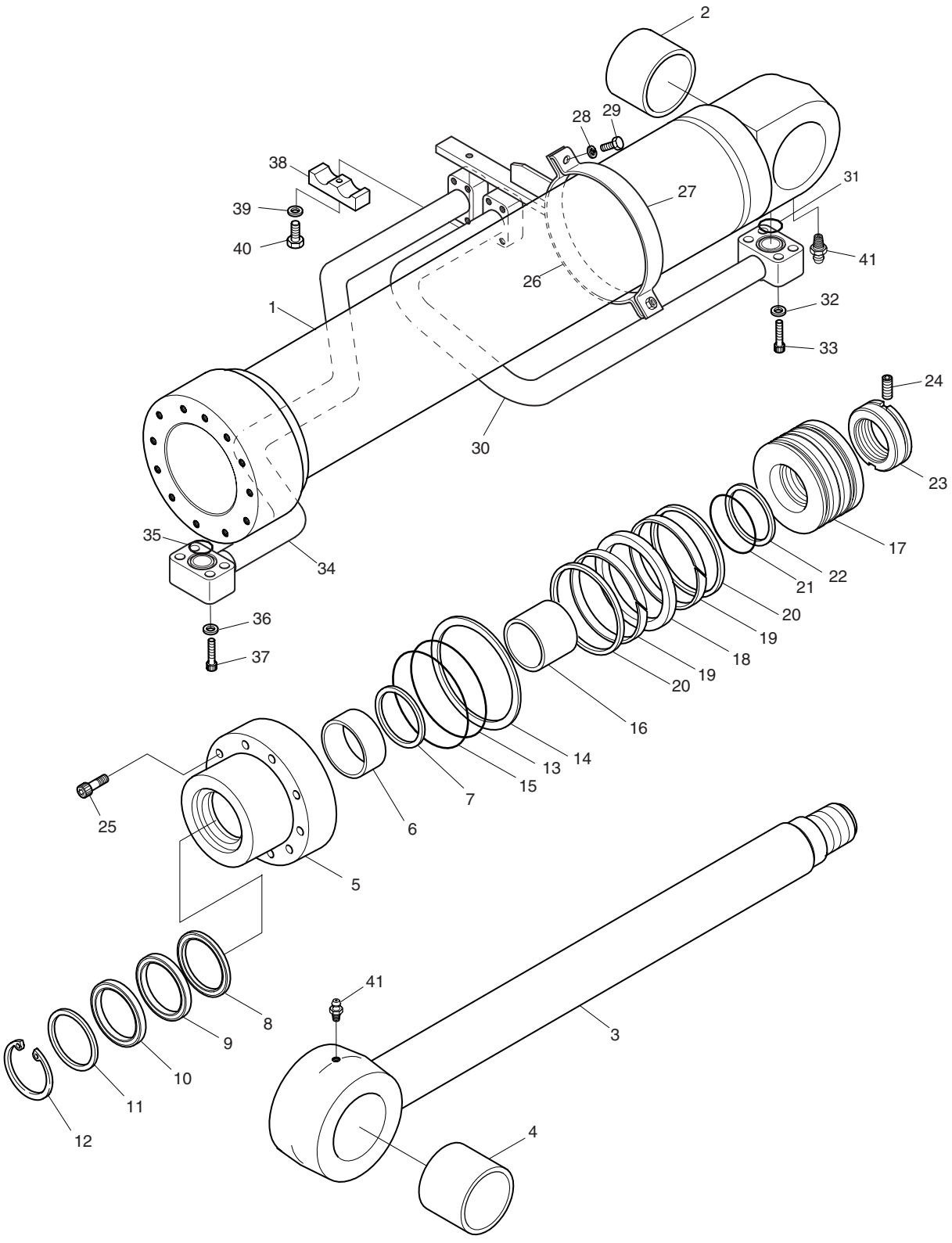

| DATE | OCT. 17, 2005 |
|---|---|
| 1st EDITION | |

# Fig. 4250 BOOM CYLINDER-L.H
# VERIN DE FLECHE GAUCHE

Serial No. ;

| Key No. | Part No. | Description | Description | Q'ty | S.C | Serial No. | ICA | Replaceable part | |
|---|---|---|---|---|---|---|---|---|---|
| | | | | | | | | Part No. | Q'ty |
| 4250-39 | S5100703 | WASHER;SPRING | RONDELLE ELASTIQUE | 1 | | | | | |
| 40 | S0561053 | BOLT;HEX | BOULON A 6 PANS | 1 | | | | | |
| 41 | S6710032 | NIPPLE;GREASE | GRAISSEUR | 2 | | | | | |
| * | K9002289 | SEAL KIT;BOOM CYL. | KIT D'ETANCHEITE | 1 | | | | | |

| DATE | JUN. 30, 2007 |
|---|---|
| REV.NO. | EXB07-06 |

# Fig. 4260 ARM CYLINDER
# VERIN DE BALANCIER

**Serial No. ;**

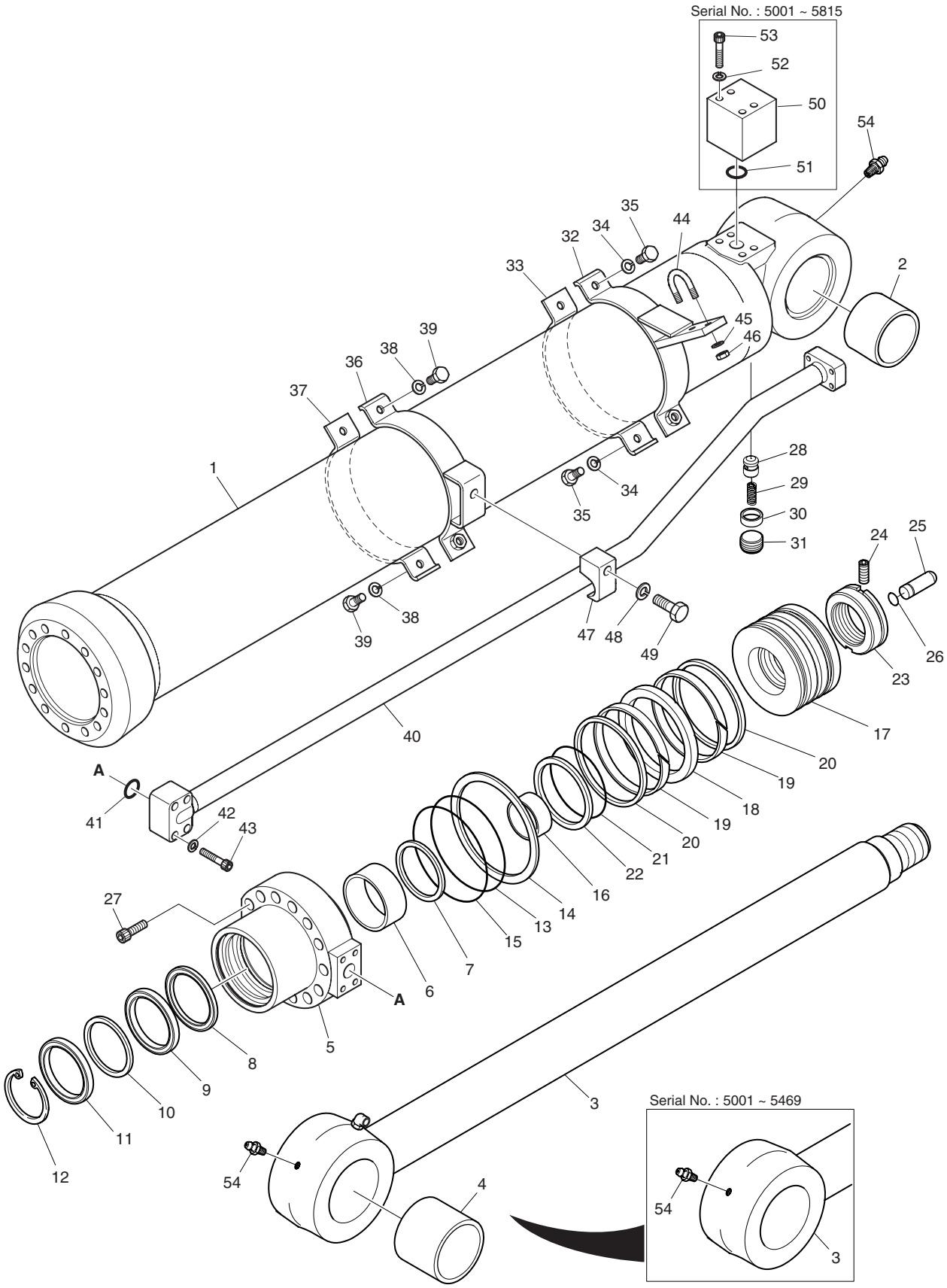

| DATE | JUN. 30, 2007 |
|---|---|
| REV. NO. | EXB07-06 |

# Fig. 4260 ARM CYLINDER VERIN DE BALANCIER

Serial No. ;

| Key No. | Part No. | Description | Description | Q'ty | S.C | Serial No. | ICA | Replaceable part | |
|---|---|---|---|---|---|---|---|---|---|
| | | | | | | | | Part No. | Q'ty |
| 4260-- | K1006192 | CYLINDER;ARM | VERIN DE BALANCIER | 1 | | 5001–5330 | I | K1006192A | 1 |
| | K1006192A | CYLINDER;ARM | VERIN DE BALANCIER | 1 | | 5331–5469 | I | K1006192B | 1 |
| | **K1006192B** | **CYLINDER;ARM** | VERIN DE BALANCIER | 1 | | **5470–5815** | | | |
| | **K1006192C** | **CYLINDER;ARM** | VERIN DE BALANCIER | 1 | | **5816–** | | | |
| 1 | K9002272 | TUBE ASS'Y | ENSEMBLE TUBE | 1 | | | | | |
| 2 | K1003915 | BUSH | COUSSINET | 1 | | | | | |
| 3 | K9002273 | ROD ASS'Y | ENSEMBLE TIGE | 1 | | 5001–5330 | | | |
| | K9002273A | ROD ASS'Y | ENSEMBLE TIGE | 1 | | 5331–5469 | I | K9002273B | 1 |
| | **K9002273B** | **ROD ASS'Y** | ENSEMBLE TIGE | 1 | | **5470–** | | | |
| 4 | K1003915 | BUSH | COUSSINET | 1 | | | | | |
| 5 | K9002274 | COVER;ROD | COUVERCLE | 1 | | | | | |
| 6 | 110-01002 | BUSH;DD | COUSSINET | 1 | | | | | |
| 7 | 115-00090 | RING;RETAINING | BAGUE | 1 | | | | | |
| 8 | K9001950 | SEAL;BUFFER | JOINT | 1 | K | | | | |
| 9 | K9001951 | PARKING;U | JOINT EN U | 1 | K | | | | |
| 10 | K9001952 | RING;BACK UP | ANNEAU DE SOUTIEN | 1 | K | | | | |
| 11 | 115-00098 | WIPER;DUST | PARE-POUSSIERE | 1 | K | | | | |
| 12 | 115-00091 | RING;RETAINING | RONDELLE DE RETENUE | 1 | | | | | |
| 13 | S8011601 | O-RING | JOINT TORIQUE | 1 | K | | | | |
| 14 | K9001953 | RING;BACK UP | ANNEAU DE SOUTIEN | 1 | K | | | | |
| 15 | 2180-1216D150 | O-RING | JOINT TORIQUE | 1 | K | | | | |
| 16 | K9002275 | RING;CUSHION | BAGUE D'AMORTISSEMENT | 1 | | | | | |
| 17 | K9002276 | PISTON | PISTON | 1 | | | | | |
| 18 | K9002277 | SEAL;SLIPPER | PATIN D'ETANCHEITE | 1 | K | | | | |
| 19 | 115-00112 | RING;WEAR | SEGMENT D'USURE | 2 | K | | | | |
| 20 | 115-00110 | RING;SLYD | SEGMENT SLYD | 2 | K | | | | |
| 21 | S8010901 | O-RING | JOINT TORIQUE | 1 | K | | | | |
| 22 | K9001955 | RING;BACK UP | ANNEAU DE SOUTIEN | 2 | K | | | | |
| 23 | K9001956 | NUT;PISTON | ECROU DE PISTON | 1 | | 5001–5330 | | | |
| | K9003705 | NUT;PISTON | ECROU DE PISTON | 1 | | 5331– | | | |
| 24 | S3523836 | SCREW;SET | VIS DE REGLAGE | 1 | | | | | |
| 25 | K9002278 | PLUNGER;CUSHION | PLONGEUR AMORTISSEUR | 1 | | | | | |
| 26 | K9002279 | RING;STOP | ANNEAU DE BLOCAGE | 1 | | | | | |
| 27 | S2228261 | BOLT;HEX SOCKET | BOULON A 6 PANS CREUX | 14 | | | | | |
| 28 | 1.420-00052 | VALVE;CHECK | VANNE DE CONTROLE | 1 | | | | | |
| 29 | 129-00071 | SPRING | RESSORT | 1 | | | | | |
| 30 | 1.195-00022 | SUPPORT;SPRING | SUPPORT | 1 | | | | | |
| 31 | 2181-1116D3 | PLUG;HEX SOCKET | BOUCHON | 1 | | | | | |

| DATE | JUN. 30, 2007 |
|---|---|
| REV.NO. | EXB07-06 |

# Fig. 4260 ARM CYLINDER
# VERIN DE BALANCIER

**Serial No. ;**

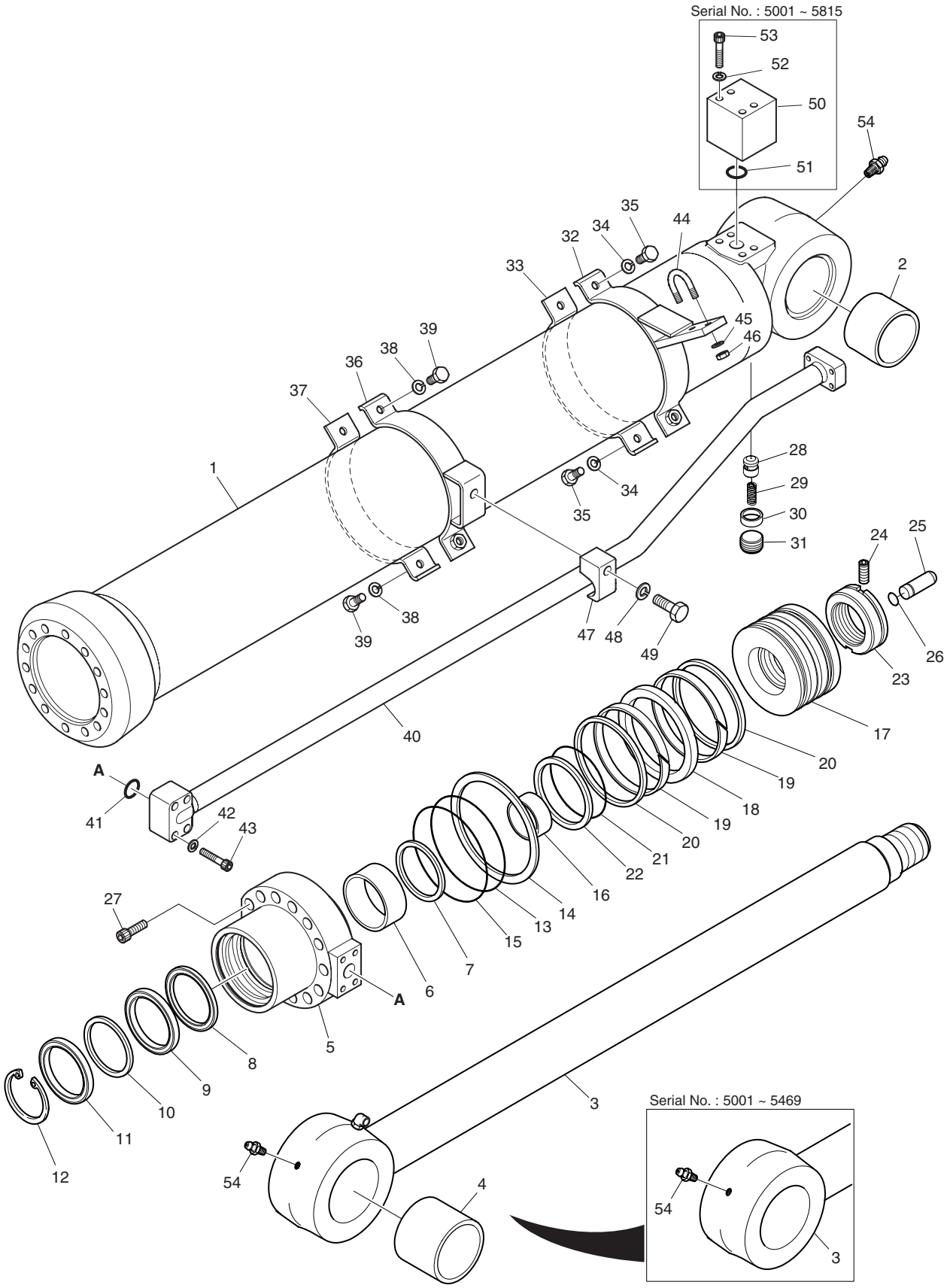

| DATE | JUN. 30, 2007 |
|---|---|
| REV. NO. | EXB07-06 |

# Fig. 4260 ARM CYLINDER VERIN DE BALANCIER

**Serial No. ;**

| Key No. | Part No. | Description | Description | Q'ty | S.C | Serial No. | ICA | Replaceable part | |
|---|---|---|---|---|---|---|---|---|---|
| | | | | | | | | Part No. | Q'ty |
| 4260-32 | K9002280 | PIPE BAND ASS'Y-H | ATTACHE DE CONDUITES | 1 | | | | | |
| 33 | 124-00129 | BAND;PIPE | ATTACHE | 1 | | | | | |
| 34 | S5100703 | WASHER;SPRING | RONDELLE ELASTIQUE M12 | 2 | | | | | |
| 35 | S0560563 | BOLT;HEX | BOULON | 2 | | | | | |
| 36 | K9002281 | PIPE BAND ASS'Y-R | ATTACHE DE CONDUITES | 1 | | | | | |
| 37 | 124-00129 | BAND;PIPE | ATTACHE | 1 | | | | | |
| 38 | S5100703 | WASHER;SPRING | RONDELLE ELASTIQUE M12 | 2 | | | | | |
| 39 | S0560563 | BOLT;HEX | BOULON | 2 | | | | | |
| 40 | K9002282 | PIPE ASS'Y-R | CONDUITE | 1 | | | | | |
| 41 | S8000341 | O-RING | JOINT TORIQUE | 1 | | | | | |
| 42 | S5100703 | WASHER;SPRING | RONDELLE ELASTIQUE M12 | 4 | | | | | |
| 43 | S2215961 | BOLT;HEX SOCKET | BOULON A 6 PANS CREUX | 4 | | | | | |
| 44 | K9001158 | BOLT;U | BOULON A 6 PANS | 1 | | | | | |
| 45 | S5100603 | WASHER;SPRING | RONDELLE ELASTIQUE | 2 | | | | | |
| 46 | S4012633 | NUT;HEX | ECROU M10X1.5 | 2 | | | | | |
| 47 | K9001159 | CLAMP;PIPE | FIXATION DE TUYAU | 1 | | | | | |
| 48 | S5102903 | WASHER;SPRING | RONDELLE ELASTIQUE | 1 | | | | | |
| 49 | S0521853 | BOLT;HEX | BOULON A 6 PANS | 1 | | | | | |
| 50 | **K9001173** | **PORT;FLANGE** | PORT;FLANGE | 1 | | **5001–5815** | | | |
| 51 | **S8000341** | **O-RING** | JOINT TORIQUE | 1 | | **5001–5815** | | | |
| 52 | **S5100603** | **WASHER;SPRING** | RONDELLE ELASTIQUE | 4 | | **5001–5815** | | | |
| 53 | **S2213363** | **BOLT;SOCKET** | BOULON A 6 PANS CREUX | 4 | | **5001–5815** | | | |
| 54 | S6710032 | NIPPLE;GREASE | GRAISSEUR | 2 | | | | | |
| * | K9002290 | SEAL KIT;ARM CYL | KIT D'ETANCHEITE | 1 | | | | | |

| DATE | JUN. 30, 2007 |
|---|---|
| REV.NO. | EXB07-06 |

# Fig. 4270 BUCKET CYLINDER VERIN DE GODET

**Serial No. ;**

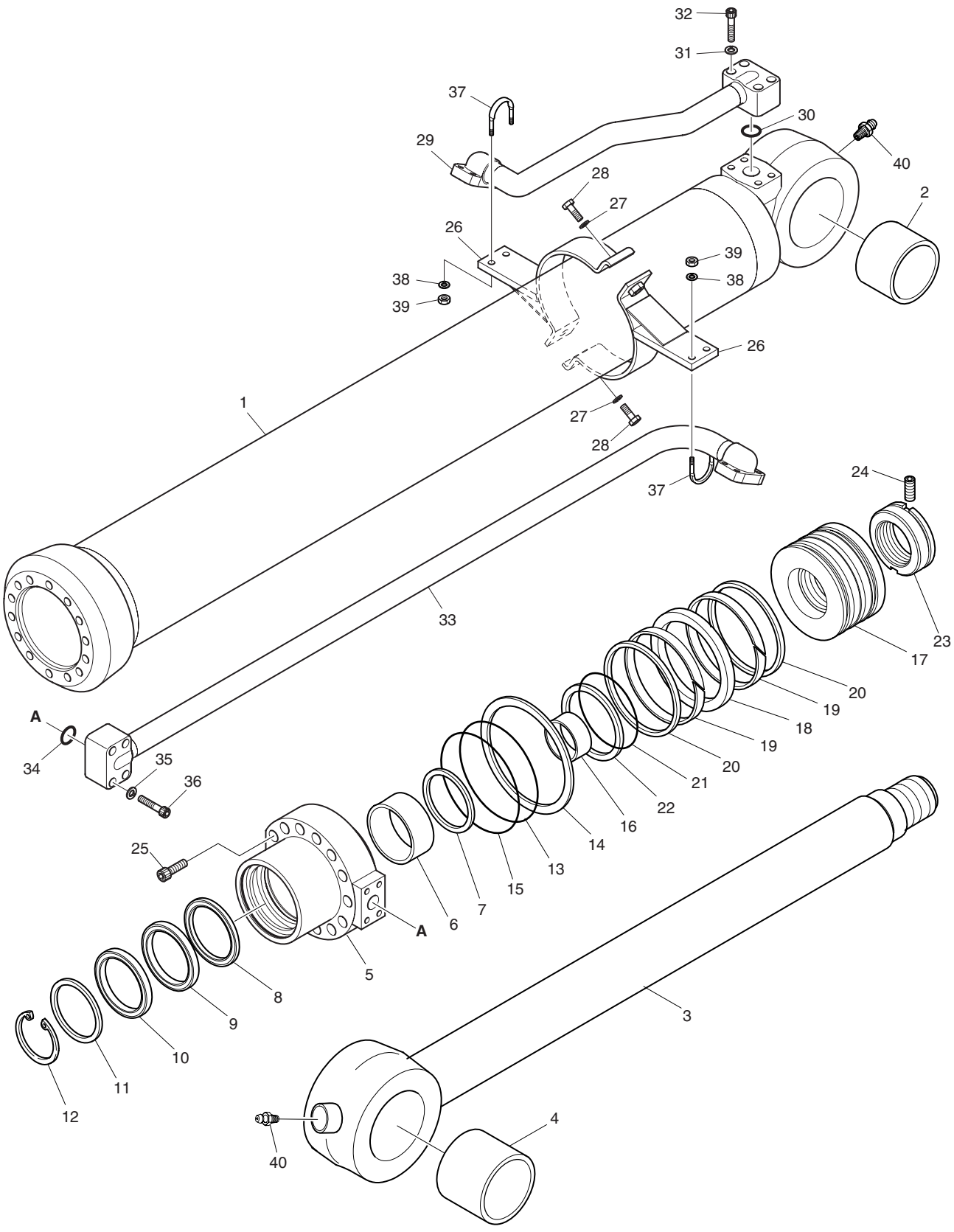

| DATE | JUN. 30, 2007 |
|---|---|
| REV. NO. | EXB07-06 |

# Fig. 4270 BUCKET CYLINDER VERIN DE GODET

Serial No. ;

| Key No. | Part No. | Description | Description | Q'ty | S.C | Serial No. | ICA | Replaceable part | |
|---|---|---|---|---|---|---|---|---|---|
| | | | | | | | | Part No. | Q'ty |
| 4270-- | K1006202 | CYLINDER;BUCKET | VERIN DE GODET | 1 | | 5001–5668 | I | K1006202A | 1 |
| | **K1006202A** | **CYLINDER;BUCKET** | VERIN DE GODET | 1 | | **5669–** | | | |
| 1 | K9002283 | TUBE ASS'Y | ENSEMBLE TUBE | 1 | | | | | |
| 2 | K1003914 | BUSH | COUSSINET | 1 | | | | | |
| 3 | K9002284 | ROD ASS'Y | ENSEMBLE TIGE | 1 | | 5001–5668 | I | K9002284A | 1 |
| | **K9002284A** | **ROD ASS'Y** | ENSEMBLE TIGE | 1 | | **5669–** | | | |
| 4 | K1003916 | BUSH;ROLLED | DOUILLE | 1 | | 5001–5668 | I | K1003914 | 1 |
| | **K1003914** | **BUSH;ROLLED** | DOUILLE | 1 | | **5669–** | | | |
| 5 | K9002267 | COVER;ROD | COUVERCLE | 1 | | | | | |
| 6 | 110-00081 | BUSH;DD | COUSSINET | 1 | | | | | |
| 7 | 115-00073 | RING;RETAINING | BAGUE | 1 | | | | | |
| 8 | K9001882 | SEAL;BUFFER | JOINT | 1 | K | | | | |
| 9 | K9001883 | U-PACKING | JOINT EN U | 1 | K | | | | |
| 10 | K9001884 | RING;BACK UP | ANNEAU DE SOUTIEN | 1 | K | | | | |
| 11 | 115-00077 | WIPER;DUST | PARE-POUSSIERE | 1 | K | | | | |
| 12 | 115-00078 | RING;RETAINING | RONDELLE DE RETENUE | 1 | | | | | |
| 13 | S8011451 | O-RING | JOINT TORIQUE | 1 | K | | | | |
| 14 | K9001164 | RING;BACK UP | BAGUE D'ETANCHEITE | 1 | K | | | | |
| 15 | 180-00363 | O-RING | JOINT TORIQUE | 1 | K | | | | |
| 16 | K9002285 | RING;CUSHION | BAGUE D'AMORTISSEMENT | 1 | | | | | |
| 17 | K9002269 | PISTON | PISTON | 1 | | | | | |
| 18 | K9001166 | SEAL;SLIPPER | PATIN D'ETANCHEITE | 1 | K | | | | |
| 19 | 115-00121 | RING;WEAR | SEGMENT D'USURE | 2 | K | | | | |
| 20 | 115-00122 | RING;SLYD | SEGMENT SLYD | 2 | K | | | | |
| 21 | S8010801 | O-RING | JOINT TORIQUE | 1 | K | | | | |
| 22 | K9001895 | RING;BACK UP | ANNEAU DE SOUTIEN | 2 | K | | | | |
| 23 | 121-00044 | NUT;PISTON | ECROU DE PISTON | 1 | | | | | |
| 24 | S3523836 | SCREW;SET | VIS DE REGLAGE | 1 | | | | | |
| 25 | S2225271 | BOLT;HEX SOCKET | BOULON A 6 PANS CREUX | 12 | | | | | |
| 26 | K9002286 | PIPE BAND ASS'Y | ENSEMBLE COLLIER DE | 2 | | | | | |
| 27 | S5100703 | WASHER;SPRING | RONDELLE ELASTIQUE M12 | 2 | | | | | |
| 28 | S0560563 | BOLT;HEX | BOULON | 2 | | | | | |
| 29 | K9002287 | PIPE ASS'Y-H | CONDUITE | 1 | | | | | |
| 30 | S8000341 | O-RING | JOINT TORIQUE | 1 | | | | | |
| 31 | S5100703 | WASHER;SPRING | RONDELLE ELASTIQUE M12 | 4 | | | | | |
| 32 | S2215961 | BOLT;HEX SOCKET | BOULON A 6 PANS CREUX | 4 | | | | | |
| 33 | K9002288 | PIPE ASS'Y-R | CONDUITE | 1 | | | | | |
| 34 | S8000341 | O-RING | JOINT TORIQUE | 1 | | | | | |

| DATE | JUN. 30, 2007 |
|---|---|
| REV.NO. | EXB07-06 |

# Fig. 4270 BUCKET CYLINDER VERIN DE GODET

**Serial No. ;**

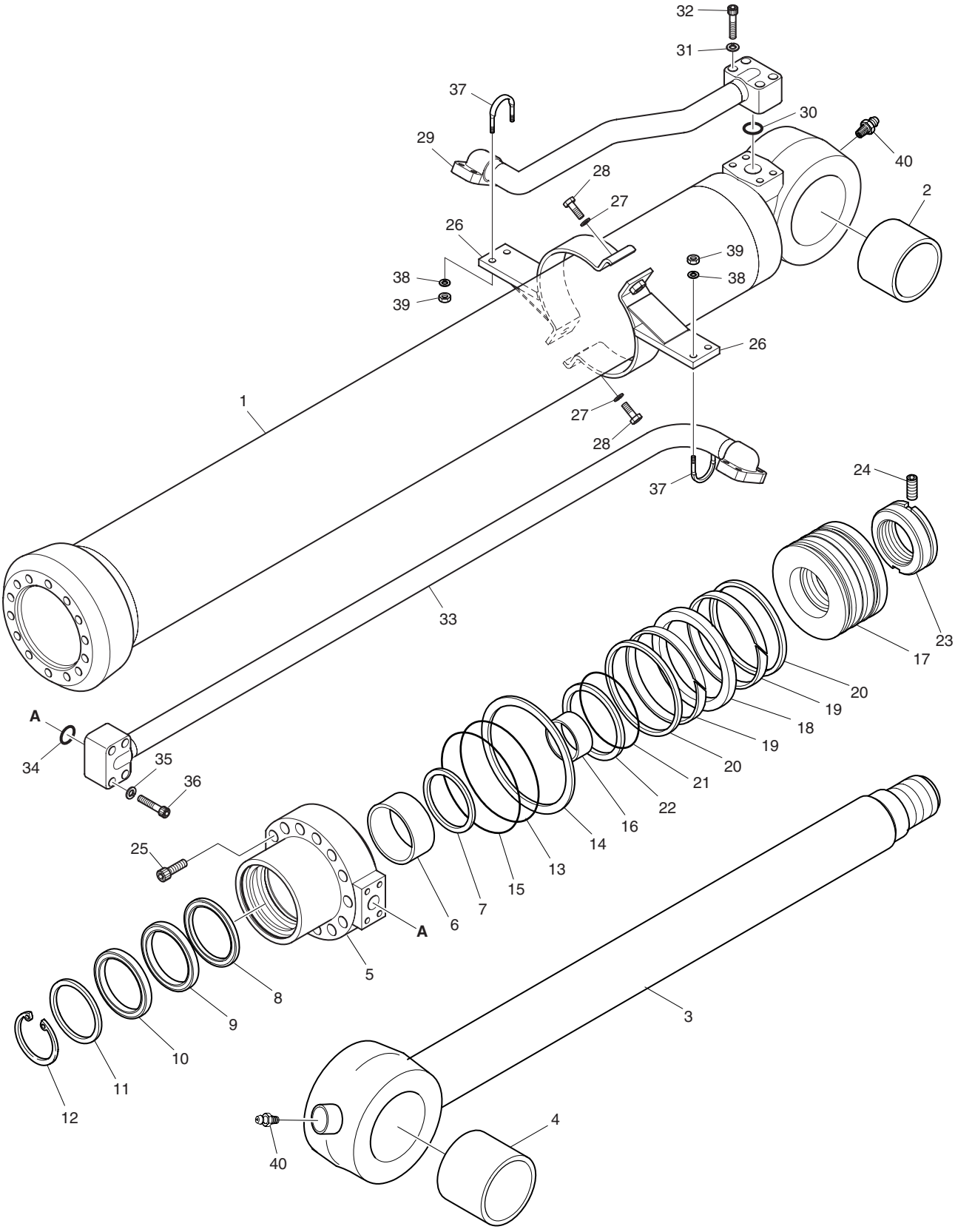

| DATE | JUN. 30, 2007 |
|---|---|
| REV. NO. | EXB07-06 |

# Fig. 4270 BUCKET CYLINDER VERIN DE GODET

Serial No. ;

| Key No. | Part No. | Description | Description | Q'ty | S.C | Serial No. | ICA | Replaceable part | |
|---|---|---|---|---|---|---|---|---|---|
| | | | | | | | | Part No. | Q'ty |
| 4270-35 | S5100703 | WASHER;SPRING | RONDELLE ELASTIQUE M12 | 4 | | | | | |
| 36 | S2215961 | BOLT;HEX SOCKET | BOULON A 6 PANS CREUX | 4 | | | | | |
| 37 | K9001158 | BOLT;U | BOULON A 6 PANS | 2 | | | | | |
| 38 | S5100603 | WASHER;SPRING | RONDELLE ELASTIQUE | 4 | | | | | |
| 39 | S4012633 | NUT;HEX | ECROU M10X1.5 | 4 | | | | | |
| 40 | S6710032 | NIPPLE;GREASE | GRAISSEUR | 2 | | | | | |
| * | K9002289 | SEAL KIT | KIT D'ETANCHEITE | 1 | | | | | |

| DATE | JUN. 30, 2008 |
|---|---|
| REV.NO. | EXB08-06 |

# Fig. 4280 PEDAL VALVE - TWO WAY & ROTATING
# VANNE DE PEDALE

**Serial No. ; 5001 ~ 5859**

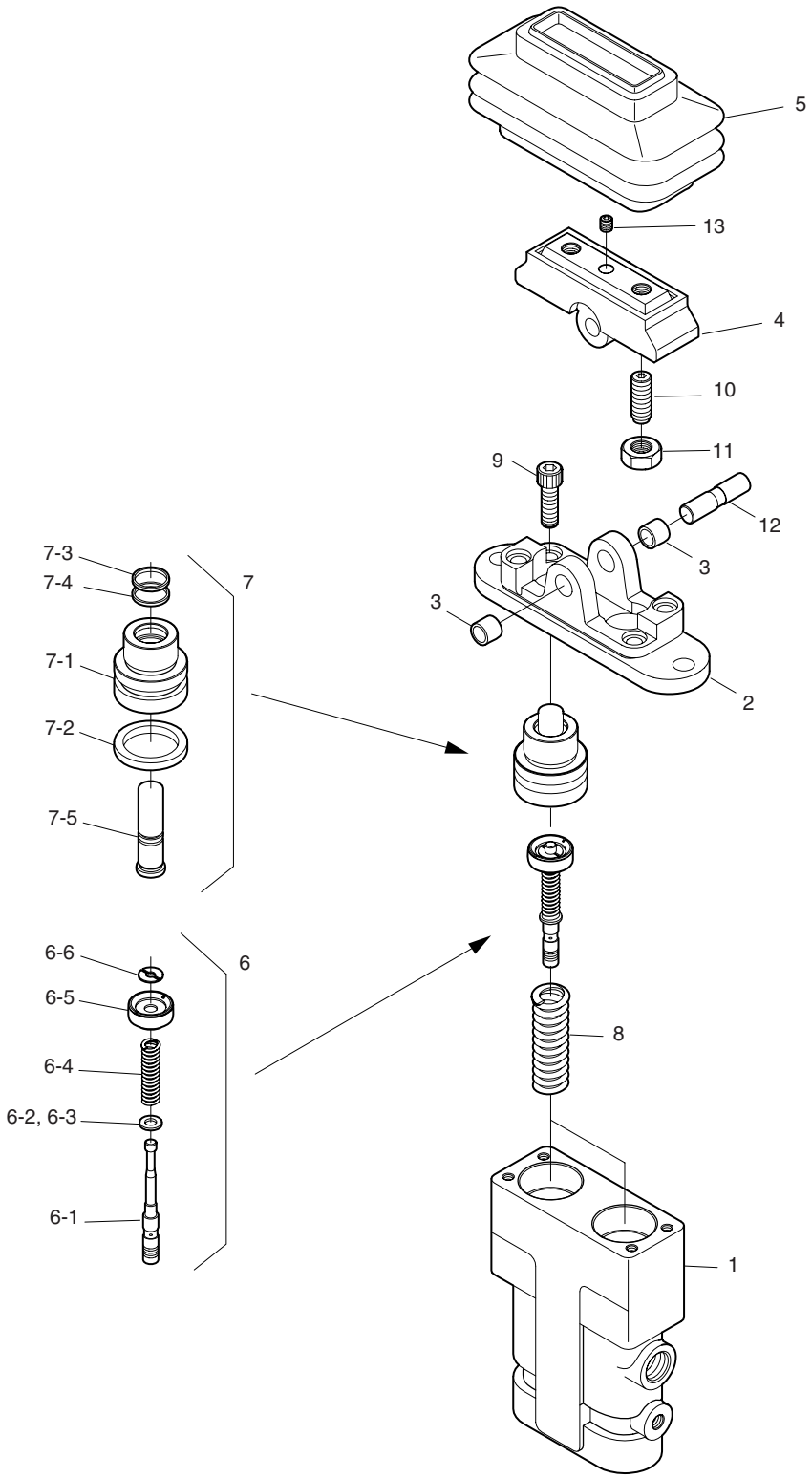

| DATE | JUN. 30, 2008 |
|---|---|
| REV. NO. | EXB08-06 |

# Fig. 4280 PEDAL VALVE - TWO WAY & ROTATING VANNE DE PEDALE

**Serial No. ; 5001 ~ 5859**

| Key No. | Part No. | Description | Description | Q'ty | S.C | Serial No. | ICA | Replaceable part | |
|---|---|---|---|---|---|---|---|---|---|
| | | | | | | | | Part No. | Q'ty |
| 4280-- | **420-00347** | **PEDAL VALVE** | VANNE DE PEDALE | 1 | | **5001–5859** | | | |
| 1 | - | CASING | BOITIER | 1 | D | | | | |
| 2 | - | COVER | COUVERCLE | 1 | D | | | | |
| 3 | 2110-1184D7 | BUSH;DU 10X10 | DOUILLE | 2 | | | | | |
| 4 | 354-00002 | CAM | CAME | 1 | D | | | | |
| 5 | 160-00008 | BELLOW | SOUFFLET | 1 | | | | | |
| 6 | 402-00036 | SPOOL ASS'Y | TIROIR | 2 | | | | | |
| 6-1 | - | . SPOOL | . BOBINE | 1 | D | | | | |
| 6-2 | - | . SHIM | . PLAQUE | 1 | R | | | | |
| 6-3 | - | . SEAT;SPRING | . SIEGE | 1 | D | | | | |
| 6-4 | - | . SPRING | . RESSORT | 1 | D | | | | |
| 6-5 | - | . SEAT;SPRING | . SIEGE | 1 | D | | | | |
| 6-6 | - | . STOPPER | . ARRET | 1 | D | | | | |
| 7 | 1.428-00241 | PLUG ASS'Y | BOUCHON | 2 | | | | | |
| 7-1 | - | . PLUG | . BOUCHON | 1 | D | | | | |
| 7-2 | - | . O-RING | . JOINT TORIQUE | 1 | D | | | | |
| 7-3 | - | . SEAL;DUST | . BAGUE D'ETANCHEITE | 1 | D | | | | |
| 7-4 | - | . SEAL;ROD | . JOINT | 1 | D | | | | |
| 7-5 | - | . ROD;PUSH | . TIGE | 1 | D | | | | |
| 8 | 1.131-00037 | SPRING | RESSORT | 2 | | | | | |
| 9 | S2209261 | BOLT;WRENCH M8X30 | BOULON A 6 PANS CREUX | 2 | | | | | |
| 10 | 120-00127 | SCREW;SET | VIS | 2 | | | | | |
| 11 | S4014633 | NUT M10 | ECROU | 2 | | | | | |
| 12 | 354-00003 | SHAFT;CAM | ARBRE | 1 | | | | | |
| 13 | S3523601 | SCREW;SET M8X12 | VIS | 1 | | | | | |

| DATE | JUN. 30, 2008 |
|---|---|
| REV.NO. | EXB08-06 |

# Fig. 4281 PEDAL VALVE - TWO WAY & ROTATING VANNE DE PEDALE

**Serial No. ; 5860 ~**

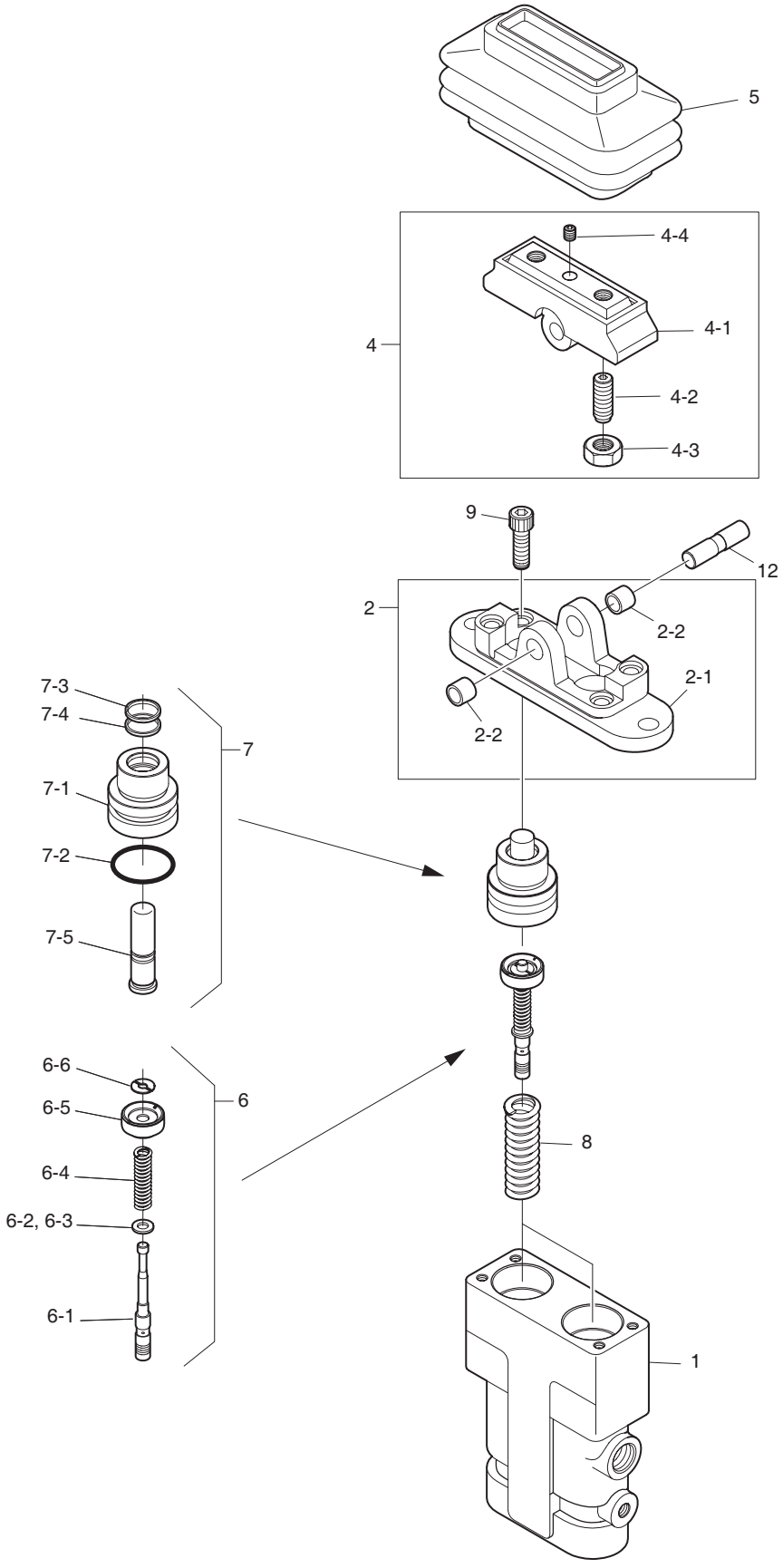

| DATE | JUN. 30, 2008 |
|---|---|
| REV. NO. | EXB08-06 |

# Fig. 4281 PEDAL VALVE-TWO WAY & ROTATING VANNE DE PEDALE

**Serial No. ; 5860 ~**

| Key No. | Part No. | Description | Description | Q'ty | S.C | Serial No. | ICA | Replaceable part | |
|---|---|---|---|---|---|---|---|---|---|
| | | | | | | | | Part No. | Q'ty |
| 4281-- | **K1017382A** | **PEDAL VALVE** | VANNE DE PEDALE | 1 | | **5860–** | | | |
| 1 | - | CASING | CARTER | 1 | D | | | | |
| 2 | K9002934 | COVER KIT | COUVERCLE | 1 | | | | | |
| 2-1 | - | . COVER | COUVERCLE | 1 | D | | | | |
| 2-2 | 2100-1184D7 | . BUSH;DU 10X10 | BAGUE | 2 | | | | | |
| 4 | K9003465 | CAM KIT | CAME | 1 | | | | | |
| 4-1 | - | . CAM | CAME | 1 | D | | | | |
| 4-2 | - | . SCREW;SET | . VIS | 2 | D | | | | |
| 4-3 | S4014633 | . NUT M10 | . ECROU | 2 | | | | | |
| 4-4 | S3523601 | . SCREW;SET M8X12 | . VIS | 1 | | | | | |
| 5 | 160-00008 | BELLOW | SOUFFLET | 1 | | | | | |
| 6 | 402-00036 | SPOOL ASS'Y | PLUNGEUR | 2 | | | | | |
| 6-1 | - | . SPOOL | . PLUNGEUR | 1 | D | | | | |
| 6-2 | - | . SHIM | . CALE | 1 | R | | | | |
| 6-3 | - | . SEAT;SPRING | . SIEGE DE RESSORT | 1 | D | | | | |
| 6-4 | - | . SPRING | . RESSORT | 1 | D | | | | |
| 6-5 | - | . SEAT;SPRING | . SIEGE DE RESSORT | 1 | D | | | | |
| 6-6 | - | . STOPPER | . ARRET | 1 | D | | | | |
| 7 | 1.428-00241A | PLUG ASS'Y | BOUCHON | 2 | | | | | |
| 7-1 | - | . PLUG | . BOUCHON | 1 | D | | | | |
| 7-2 | - | . O-RING | . JOINT TORIQUE | 1 | D | | | | |
| 7-3 | - | . SEAL;DUST | . BAGUE D'ETANCHEITE | 1 | D | | | | |
| 7-4 | - | . SEAL;ROD | . BAGUE D'ETANCHEITE | 1 | D | | | | |
| 7-5 | - | . ROD;PUSH | . TIGE | 1 | D | | | | |
| 8 | K9002935 | SPRING | RESSORT | 2 | | | | | |
| 9 | S2209261 | BOLT;WRENCH M8X30 | BOULON A 6 PANS | 2 | | | | | |
| 12 | 354-00003 | SHAFT;CAM | ARBRE | 1 | | | | | |

| DATE | OCT. 17, 2005 |
|---|---|
| 1st EDITION | |

# Fig. 4290 GEAR PUMP - ROTATING
# POMPE A ENGRENAG

**Serial No. ;**

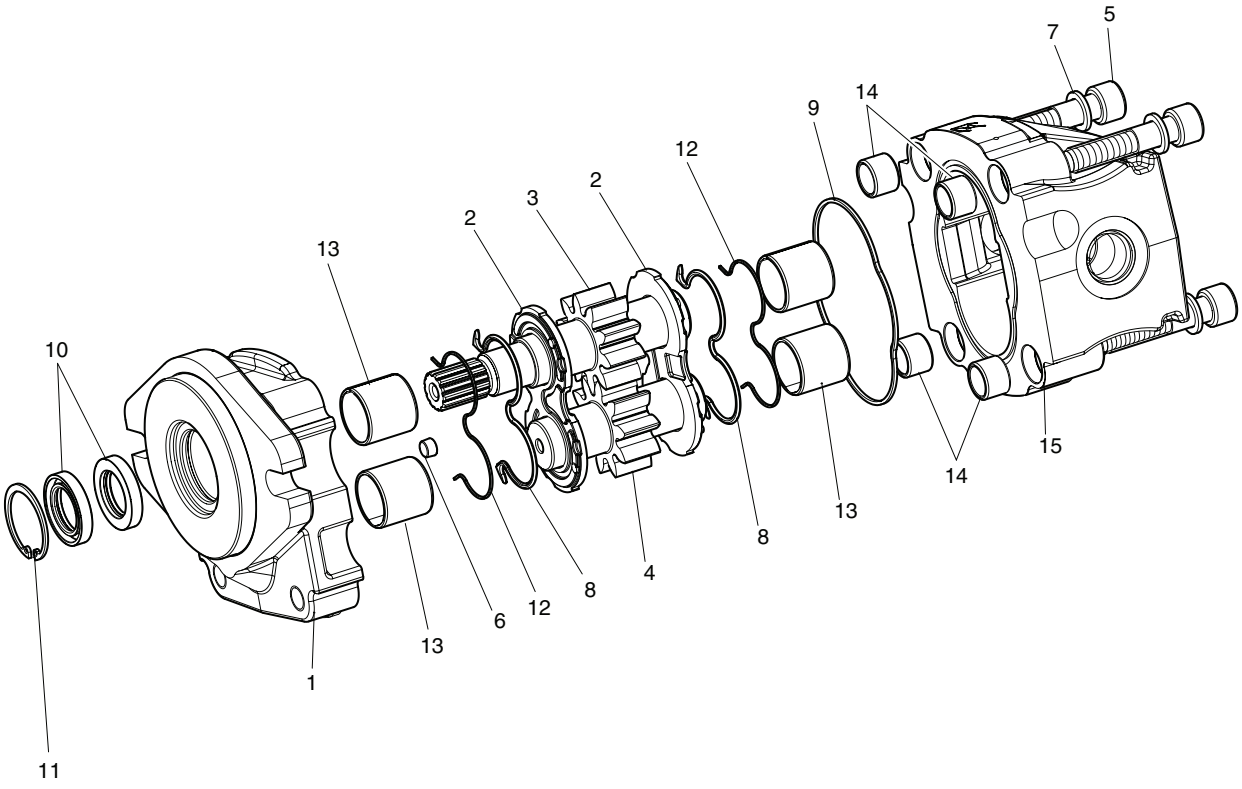

| DATE | OCT. 17, 2005 |
|---|---|
| 1st EDITION | |

# Fig. 4290 GEAR PUMP - ROTATING
# POMPE A ENGRENAG

Serial No. ;

| Key No. | Part No. | Description | Description | Q'ty | S.C | Serial No. | ICA | Replaceable part | |
|---|---|---|---|---|---|---|---|---|---|
| | | | | | | | | Part No. | Q'ty |
| 4290-- | K1007973 | GEAR PUMP | POMPE A ENGRENAG | 1 | | | | | |
| 1 | - | COVER;FRONT | COUVERCLE | 1 | D | | | | |
| 2 | - | PLATE;THRUST | PLAQUE LATERALE | 2 | D | | | | |
| 3 | - | SHAFT;DRIVE | ARBRE MOTEUR | 1 | D | | | | |
| 4 | - | GEAR;DRIVEN | PIGNON ENTRAINE | 1 | D | | | | |
| 5 | S2218861 | BOLT;SOCKET | BOULON | 4 | | | | | |
| 6 | - | PLUG | BOUCHON | 1 | D | | | | |
| 7 | S5110803 | WASHER | RONDELLE ELASTIQUE | 4 | | | | | |
| 8 | - | SEAL | JOINT | 2 | K | | | | |
| 9 | - | SEAL | JOINT | 1 | K | | | | |
| 10 | - | SEAL;SHAFT | BAGUE D'ETANCHEITE | 2 | K | | | | |
| 11 | - | RING;SNAP | BAGUE ELASTIQUE | 1 | D | | | | |
| 12 | - | RING | BAGUE | 2 | K | | | | |
| 13 | - | BUSH | COUSSINET | 4 | D | | | | |
| 14 | - | BUSH | COUSSINET | 4 | D | | | | |
| 15 | - | BODY | CARROSSERIE | 1 | D | | | | |
| * | K9001988 | SEAL KIT;GEAR PUMP | KIT DE JOINT | 1 | | | | | |

| DATE | OCT. 17, 2005 |
|---|---|
| 1st EDITION | |

# Fig. 4300 BOOM CYLINDER(L.H)-LOCK VALVE
# VERIN DE FLECHE GAUCHE

**Serial No. ;**

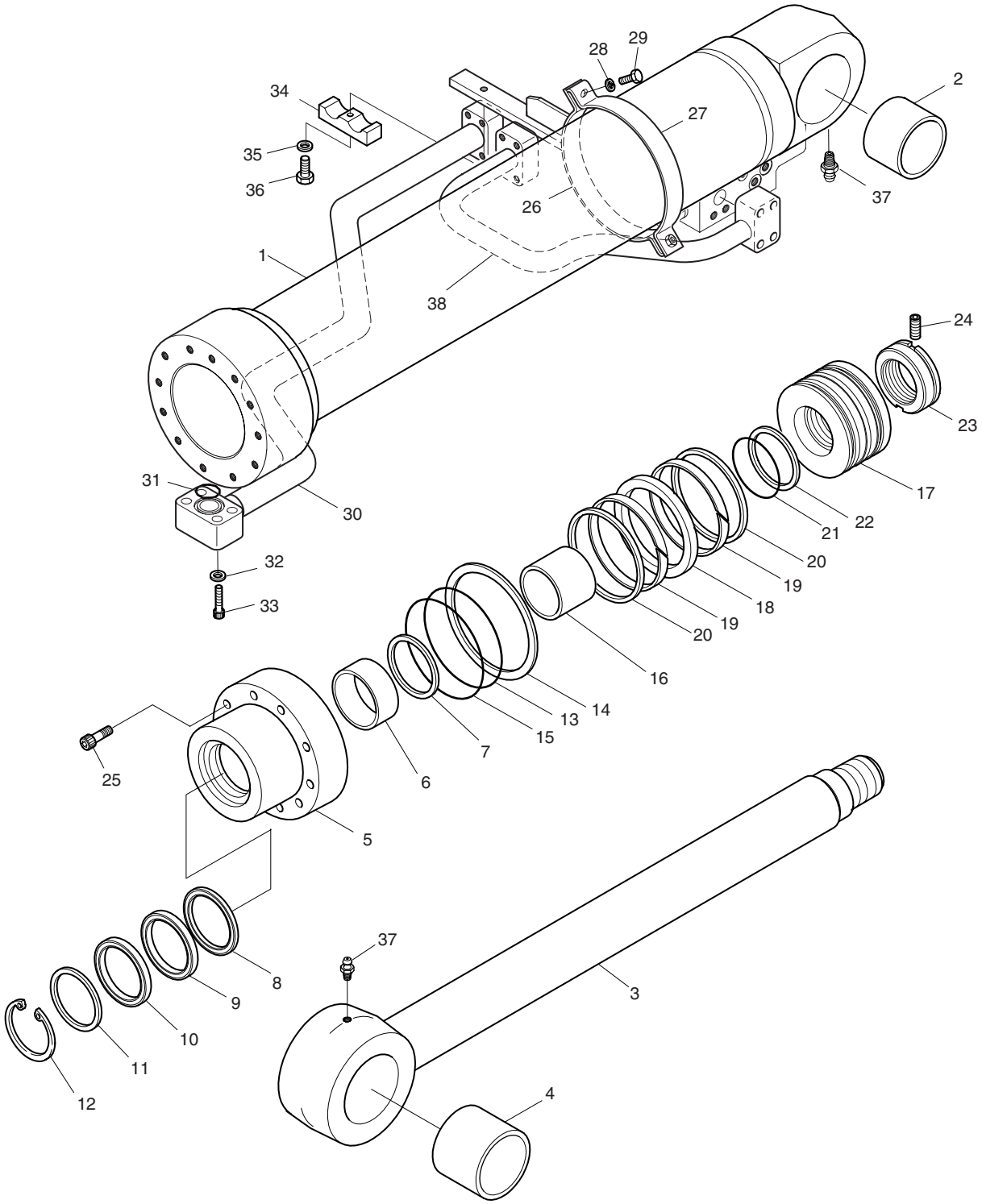

| DATE | OCT. 17, 2005 |
|---|---|
| 1st EDITION | |

# Fig. 4300 BOOM CYLINDER(L.H)-LOCK VALVE VERIN DE FLECHE GAUCHE

Serial No. ;

| Key No. | Part No. | Description | Description | Q'ty | S.C | Serial No. | ICA | Replaceable part | |
|---|---|---|---|---|---|---|---|---|---|
| | | | | | | | | Part No. | Q'ty |
| 4300-- | K1006234 | CYLINDER;BOOM(L.H) | VERIN DE FLECHE | 1 | | | | | |
| 1 | K9002265 | TUBE ASS'Y | ENSEMBLE TUBE | 1 | | | | | |
| 2 | K1003914 | BUSH | COUSSINET | 1 | | | | | |
| 3 | K9002266 | ROD ASS'Y | ENSEMBLE TIGE | 1 | | | | | |
| 4 | K1003914 | BUSH | COUSSINET | 1 | | | | | |
| 5 | K9002267 | COVER;ROD | COUVERCLE | 1 | | | | | |
| 6 | 110-00081 | BUSH;DD | COUSSINET | 1 | | | | | |
| 7 | 115-00073 | RING;RETAINING | BAGUE | 1 | | | | | |
| 8 | K9001882 | SEAL;BUFFER | JOINT | 1 | K | | | | |
| 9 | K9001883 | U-PACKING | JOINT EN U | 1 | K | | | | |
| 10 | K9001884 | RING;BACK UP | ANNEAU DE SOUTIEN | 1 | K | | | | |
| 11 | 115-00077 | WIPER;DUST | PARE-POUSSIERE | 1 | K | | | | |
| 12 | 115-00078 | RING;RETAINING | RONDELLE DE RETENUE | 1 | | | | | |
| 13 | S8011451 | O-RING | JOINT TORIQUE | 1 | K | | | | |
| 14 | K9001164 | RING;BACK UP | BAGUE D'ETANCHEITE | 1 | K | | | | |
| 15 | 180-00363 | O-RING | JOINT TORIQUE | 1 | K | | | | |
| 16 | K9002268 | RING;CUSHION | BAGUE D'AMORTISSEMENT | 1 | | | | | |
| 17 | K9002269 | PISTON | PISTON | 1 | | | | | |
| 18 | K9001166 | SEAL;SLIPPER | PATIN D'ETANCHEITE | 1 | K | | | | |
| 19 | 115-00121 | RING;WEAR | SEGMENT D'USURE | 2 | K | | | | |
| 20 | 115-00122 | RING;SLYD | SEGMENT SLYD | 2 | K | | | | |
| 21 | S8010801 | O-RING | JOINT TORIQUE | 1 | K | | | | |
| 22 | K9001895 | RING;BACK UP | ANNEAU DE SOUTIEN | 2 | K | | | | |
| 23 | 121-00044 | NUT;PISTON | ECROU DE PISTON | 1 | | | | | |
| 24 | S3523836 | SCREW;SET | VIS DE REGLAGE | 1 | | | | | |
| 25 | S2225271 | BOLT;HEX SOCKET | BOULON A 6 PANS CREUX | 12 | | | | | |
| 26 | 1.124-00082 | PIPE BAND ASS'Y | ENSEMBLE COLLIER DE | 1 | | | | | |
| 27 | 124-00157 | BAND;PIPE | ATTACHE | 1 | | | | | |
| 28 | S5100603 | WASHER;SPRING | RONDELLE ELASTIQUE | 2 | | | | | |
| 29 | S0558261 | BOLT;HEX | BOULON M10x1.5x35 | 2 | | | | | |
| 30 | K9002271 | PIPE ASS'Y-R(L.H) | ENSEMBLE CONDUITES | 1 | | | | | |
| 31 | S8000341 | O-RING | JOINT TORIQUE | 1 | | | | | |
| 32 | S5100703 | WASHER;SPRING | RONDELLE ELASTIQUE | 4 | | | | | |
| 33 | S2215961 | BOLT;HEX SOCKET | BOULON A 6 PANS CREUX | 4 | | | | | |
| 34 | 124-00158 | CLAMP;PIPE | FIXATION DE TUYAU | 1 | | | | | |
| 35 | S5100703 | WASHER;SPRING | RONDELLE ELASTIQUE | 1 | | | | | |
| 36 | S0561053 | BOLT;HEX | BOULON A 6 PANS | 1 | | | | | |
| 37 | S6710032 | NIPPLE;GREASE | GRAISSEUR | 2 | | | | | |
| 38 | 140-00053 | PIPE ASS'Y-H(L.H) | CONDUITES | 1 | | | | | |

| DATE | OCT. 17, 2005 |
|---|---|
| 1st EDITION | |

# Fig. 4300 BOOM CYLINDER(L.H)-LOCK VALVE
# VERIN DE FLECHE GAUCHE

**Serial No. ;**

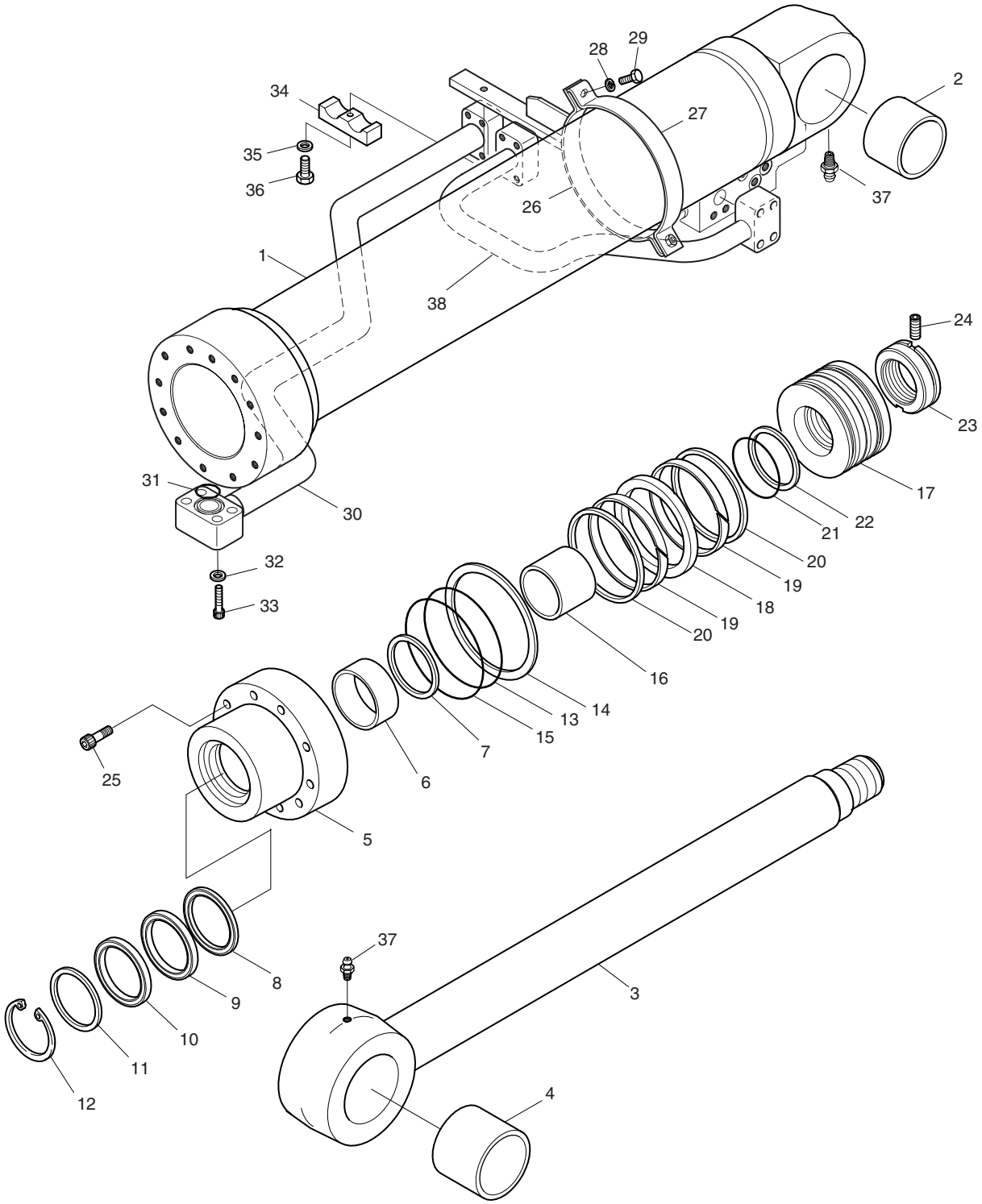

| DATE | OCT. 17, 2005 |
|---|---|
| 1st EDITION | |

# Fig. 4300 BOOM CYLINDER(L.H)-LOCK VALVE VERIN DE FLECHE GAUCHE

Serial No. ;

| Key No. | Part No. | Description | Description | Q'ty | S.C | Serial No. | ICA | Replaceable part | |
|---|---|---|---|---|---|---|---|---|---|
| | | | | | | | | Part No. | Q'ty |
| 4300-* | K9002289 | SEAL KIT;BOOM CYL. | KIT D'ETANCHEITE | 1 | | | | | |

| DATE | OCT. 17, 2005 |
|---|---|
| 1st EDITION | |

# Fig. 4310 BOOM CYLINDER(R.H)-LOCK VALVE
# VERIN DE FLECHE DROIT

**Serial No. ;**

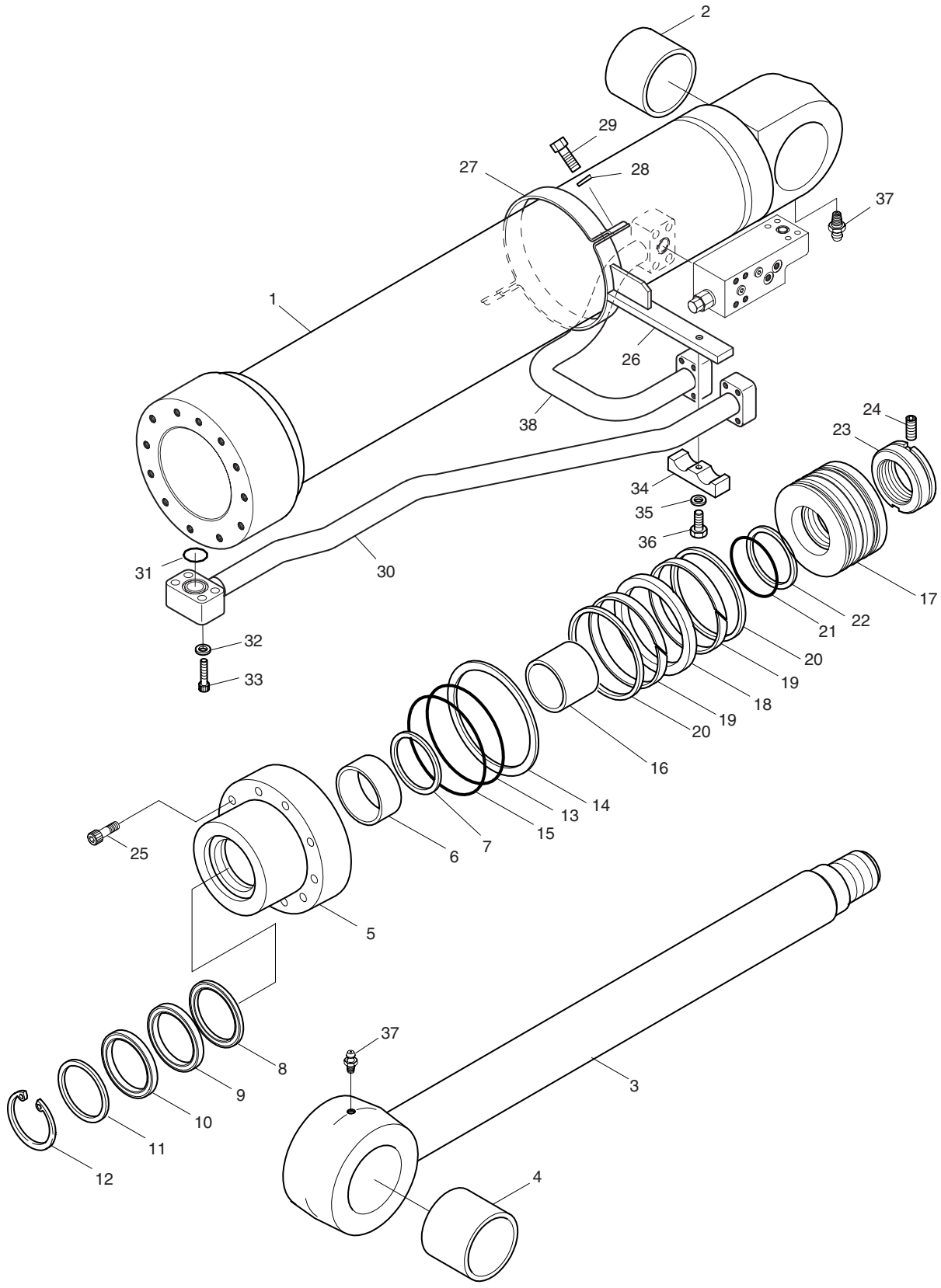

| DATE | OCT. 17, 2005 |
|---|---|
| 1st EDITION | |

# Fig. 4310 BOOM CYLINDER(R.H)-LOCK VALVE VERIN DE FLECHE DROIT

Serial No. ;

| Key No. | Part No. | Description | Description | Q'ty | S.C | Serial No. | ICA | Replaceable part | |
|---|---|---|---|---|---|---|---|---|---|
| | | | | | | | | Part No. | Q'ty |
| 4310-- | K1006235 | CYLINDER;BOOM(R.H) | VERIN DE FLECHE DROIT | 1 | | | | | |
| 1 | K9002265 | TUBE ASS'Y | ENSEMBLE TUBE | 1 | | | | | |
| 2 | K1003914 | BUSH | COUSSINET | 1 | | | | | |
| 3 | K9002266 | ROD ASS'Y | ENSEMBLE TIGE | 1 | | | | | |
| 4 | K1003914 | BUSH | COUSSINET | 1 | | | | | |
| 5 | K9002267 | COVER;ROD | COUVERCLE | 1 | | | | | |
| 6 | 110-00081 | BUSH;DD | COUSSINET | 1 | | | | | |
| 7 | 115-00073 | RING;RETAINING | BAGUE | 1 | | | | | |
| 8 | K9001882 | SEAL;BUFFER | JOINT | 1 | K | | | | |
| 9 | K9001883 | U-PACKING | JOINT EN U | 1 | K | | | | |
| 10 | K9001884 | RING;BACK UP | ANNEAU DE SOUTIEN | 1 | K | | | | |
| 11 | 115-00077 | WIPER;DUST | PARE-POUSSIERE | 1 | K | | | | |
| 12 | 115-00078 | RING;RETAINING | RONDELLE DE RETENUE | 1 | | | | | |
| 13 | S8011451 | O-RING | JOINT TORIQUE | 1 | K | | | | |
| 14 | K9001164 | RING;BACK UP | BAGUE D'ETANCHEITE | 1 | K | | | | |
| 15 | 180-00363 | O-RING | JOINT TORIQUE | 1 | K | | | | |
| 16 | K9002268 | RING;CUSHION | BAGUE D'AMORTISSEMENT | 1 | | | | | |
| 17 | K9002269 | PISTON | PISTON | 1 | | | | | |
| 18 | K9001166 | SEAL;SLIPPER | PATIN D'ETANCHEITE | 1 | K | | | | |
| 19 | 115-00121 | RING;WEAR | SEGMENT D'USURE | 2 | K | | | | |
| 20 | 115-00122 | RING;SLYD | SEGMENT SLYD | 2 | K | | | | |
| 21 | S8010801 | O-RING | JOINT TORIQUE | 1 | K | | | | |
| 22 | K9001895 | RING;BACK UP | ANNEAU DE SOUTIEN | 2 | K | | | | |
| 23 | 121-00044 | NUT;PISTON | ECROU DE PISTON | 1 | | | | | |
| 24 | S3523836 | SCREW;SET | VIS DE REGLAGE | 1 | | | | | |
| 25 | S2225271 | BOLT;HEX SOCKET | BOULON A 6 PANS CREUX | 12 | | | | | |
| 26 | 1.124-00082 | PIPE BAND ASS'Y | ENSEMBLE COLLIER DE | 1 | | | | | |
| 27 | 124-00157 | BAND;PIPE | ATTACHE | 1 | | | | | |
| 28 | S5100603 | WASHER;SPRING | RONDELLE ELASTIQUE | 2 | | | | | |
| 29 | S0558261 | BOLT;HEX | BOULON M10x1.5x35 | 2 | | | | | |
| 30 | K9002270 | PIPE ASS'Y-R(R.H) | ENSEMBLE CONDUITES | 1 | | | | | |
| 31 | S8000341 | O-RING | JOINT TORIQUE | 1 | | | | | |
| 32 | S5100703 | WASHER;SPRING | RONDELLE ELASTIQUE | 4 | | | | | |
| 33 | S2215961 | BOLT;HEX SOCKET | BOULON A 6 PANS CREUX | 4 | | | | | |
| 34 | 124-00158 | CLAMP;PIPE | FIXATION DE TUYAU | 1 | | | | | |
| 35 | S5100703 | WASHER;SPRING | RONDELLE ELASTIQUE | 1 | | | | | |
| 36 | S0561053 | BOLT;HEX | BOULON A 6 PANS | 1 | | | | | |
| 37 | S6710032 | NIPPLE;GREASE | GRAISSEUR | 2 | | | | | |
| 38 | 140-00052 | PIPE ASS'Y-H(R.H) | ENSEMBLE CONDUITES | 1 | | | | | |

| DATE | OCT. 17, 2005 |
|---|---|
| 1st EDITION | |

# Fig. 4310 BOOM CYLINDER(R.H)-LOCK VALVE
# VERIN DE FLECHE DROIT

**Serial No. ;**

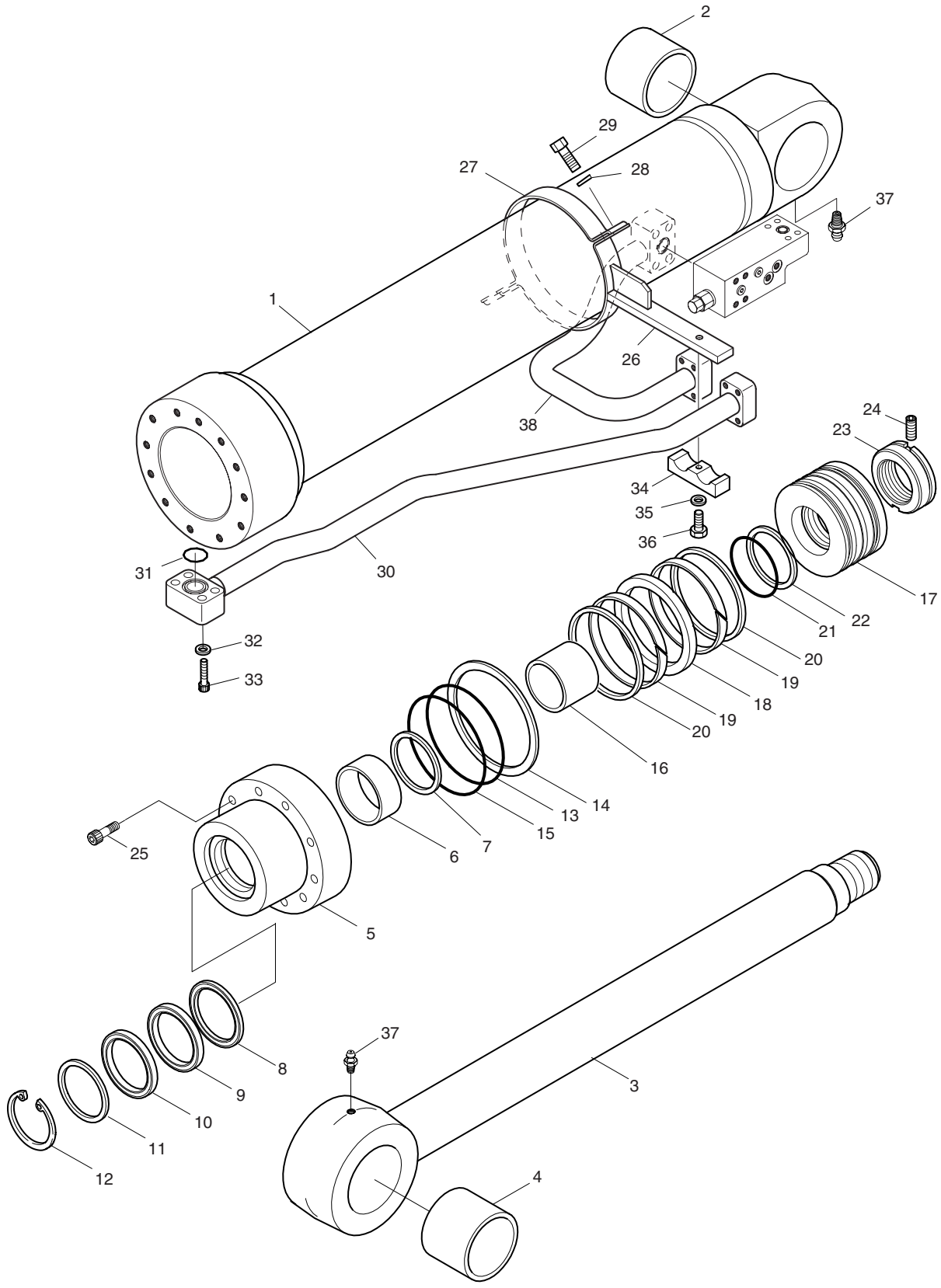

| DATE | OCT. 17, 2005 |
|---|---|
| 1st EDITION | |

# Fig. 4310 BOOM CYLINDER(R.H)-LOCK VALVE VERIN DE FLECHE DROIT

Serial No. ;

| Key No. | Part No. | Description | Description | Q'ty | S.C | Serial No. | ICA | Replaceable part | |
|---|---|---|---|---|---|---|---|---|---|
| | | | | | | | | Part No. | Q'ty |
| 4310-* | K9002289 | SEAL KIT;BOOM CYL. | KIT D'ETANCHEITE | 1 | | | | | |

| DATE | JUN. 30, 2007 |
|---|---|
| REV.NO. | EXB07-06 |

# Fig. 4320 ARM CYLINDER-LOCK VALVE VERIN DE BALANCIER

**Serial No. ;**

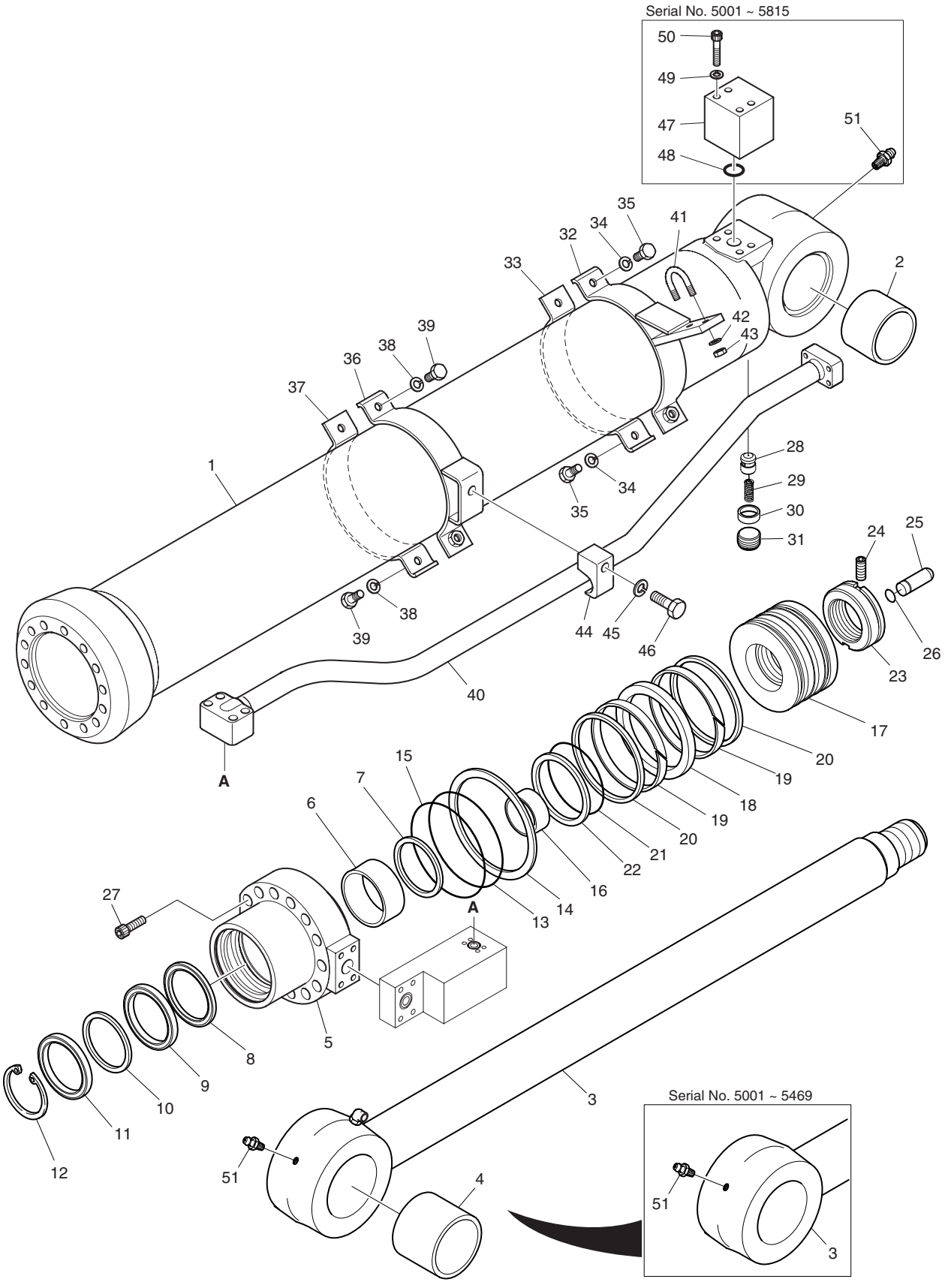

| DATE | JUN. 30, 2007 |
|---|---|
| REV. NO. | EXB07-06 |

# Fig. 4320 ARM CYLINDER-LOCK VALVE VERIN DE BALANCIER

Serial No. ;

| Key No. | Part No. | Description | Description | Q'ty | S.C | Serial No. | ICA | Replaceable part | |
|---|---|---|---|---|---|---|---|---|---|
| | | | | | | | | Part No. | Q'ty |
| 4320-- | K1006237 | CYLINDER;ARM | VERIN DE BALANCIER | 1 | | 5001–5330 | I | K1006237A | 1 |
| | K1006237A | CYLINDER;ARM | VERIN DE BALANCIER | 1 | | 5331–5469 | I | K1006237B | 1 |
| | **K1006237B** | **CYLINDER;ARM** | VERIN DE BALANCIER | 1 | | **5470–5815** | | | |
| | **K1006237C** | **CYLINDER;ARM** | VERIN DE BALANCIER | 1 | | **5816–** | | | |
| 1 | K9002272 | TUBE ASS'Y | ENSEMBLE TUBE | 1 | | | | | |
| 2 | K1003915 | BUSH | COUSSINET | 1 | | | | | |
| 3 | K9002273 | ROD ASS'Y | ENSEMBLE TIGE | 1 | | 5001–5330 | | | |
| | K9002273A | ROD ASS'Y | ENSEMBLE TIGE | 1 | | 5331–5469 | I | K9002273B | 1 |
| | **K9002273B** | **ROD ASS'Y** | ENSEMBLE TIGE | 1 | | **5470–** | | | |
| 4 | K1003915 | BUSH | COUSSINET | 1 | | | | | |
| 5 | K9002274 | COVER;ROD | COUVERCLE | 1 | | | | | |
| 6 | 110-01002 | BUSH;DD | COUSSINET | 1 | | | | | |
| 7 | 115-00090 | RING;RETAINING | BAGUE | 1 | | | | | |
| 8 | K9001950 | SEAL;BUFFER | JOINT | 1 | K | | | | |
| 9 | K9001951 | PARKING;U | JOINT EN U | 1 | K | | | | |
| 10 | K9001952 | RING;BACK UP | ANNEAU DE SOUTIEN | 1 | K | | | | |
| 11 | 115-00098 | WIPER;DUST | PARE-POUSSIERE | 1 | K | | | | |
| 12 | 115-00091 | RING;RETAINING | RONDELLE DE RETENUE | 1 | | | | | |
| 13 | S8011601 | O-RING | JOINT TORIQUE | 1 | K | | | | |
| 14 | K9001953 | RING;BACK UP | ANNEAU DE SOUTIEN | 1 | K | | | | |
| 15 | 2180-1216D150 | O-RING | JOINT TORIQUE | 1 | K | | | | |
| 16 | K9002275 | RING;CUSHION | BAGUE D'AMORTISSEMENT | 1 | | | | | |
| 17 | K9002276 | PISTON | PISTON | 1 | | | | | |
| 18 | K9002277 | SEAL;SLIPPER | PATIN D'ETANCHEITE | 1 | K | | | | |
| 19 | 115-00112 | RING;WEAR | SEGMENT D'USURE | 2 | K | | | | |
| 20 | 115-00110 | RING;SLYD | SEGMENT SLYD | 2 | K | | | | |
| 21 | S8010901 | O-RING | JOINT TORIQUE | 1 | K | | | | |
| 22 | K9001955 | RING;BACK UP | ANNEAU DE SOUTIEN | 2 | K | | | | |
| 23 | K9001956 | NUT;PISTON | ECROU DE PISTON | 1 | | 5001–5330 | | | |
| | K9003705 | NUT;PISTON | ECROU DE PISTON | 1 | | 5331– | | | |
| 24 | S3523836 | SCREW;SET | VIS DE REGLAGE | 1 | | | | | |
| 25 | K9002278 | PLUNGER;CUSHION | PLONGEUR AMORTISSEUR | 1 | | | | | |
| 26 | K9002279 | RING;STOP | ANNEAU DE BLOCAGE | 1 | | | | | |
| 27 | S2228261 | BOLT;HEX SOCKET | BOULON A 6 PANS CREUX | 14 | | | | | |
| 28 | 1.420-00052 | VALVE;CHECK | VANNE DE CONTROLE | 1 | | | | | |
| 29 | 129-00071 | SPRING | RESSORT | 1 | | | | | |
| 30 | 1.195-00022 | SUPPORT;SPRING | SUPPORT | 1 | | | | | |
| 31 | 2181-1116D3 | PLUG;HEX SOCKET | BOUCHON | 1 | | | | | |

| DATE | JUN. 30, 2007 |
|---|---|
| REV.NO. | EXB07-06 |

# Fig. 4320 ARM CYLINDER-LOCK VALVE
# VERIN DE BALANCIER

**Serial No. ;**

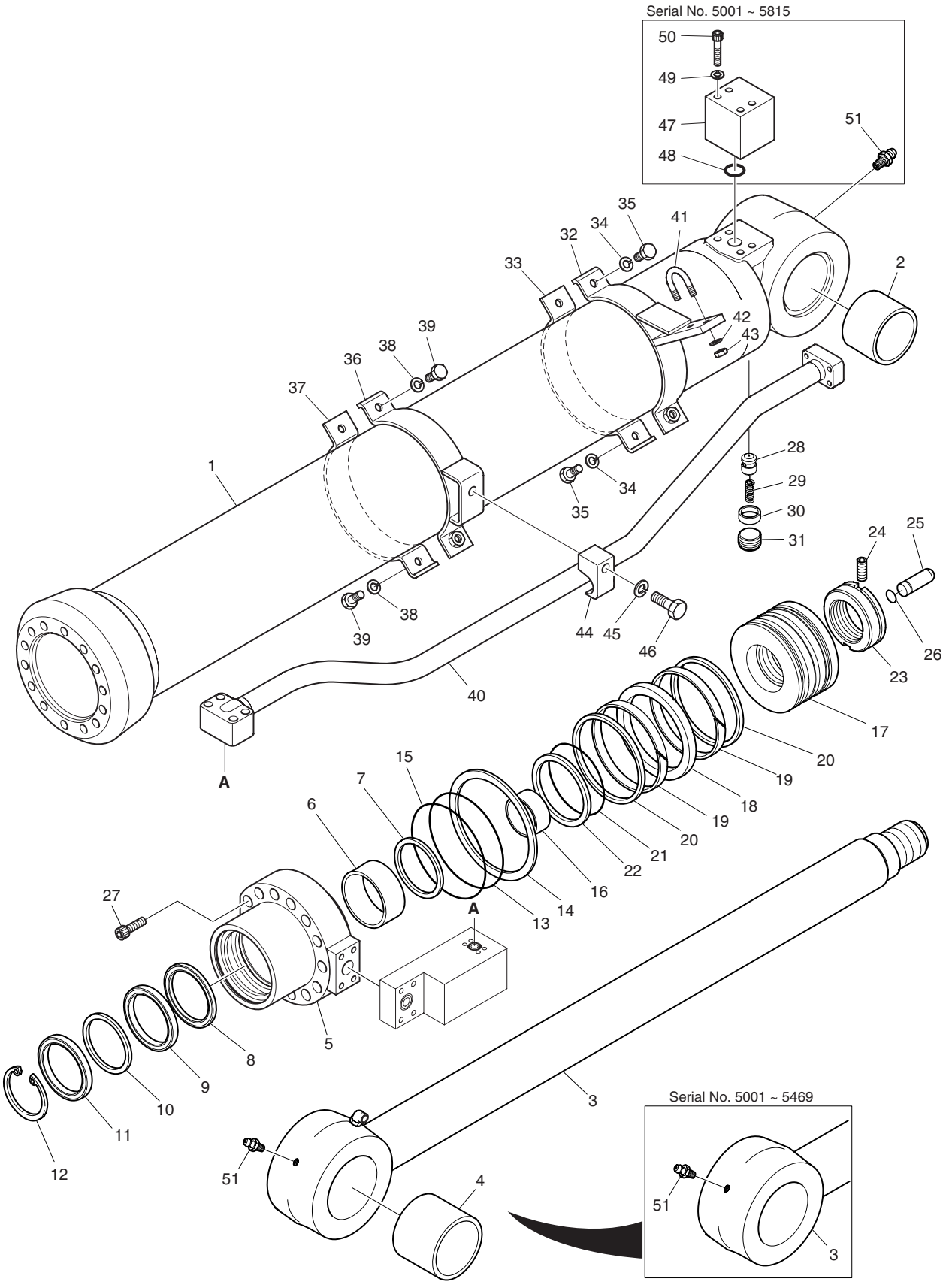

| DATE | JUN. 30, 2007 |
|---|---|
| REV. NO. | EXB07-06 |

# Fig. 4320 ARM CYLINDER-LOCK VALVE VERIN DE BALANCIER

**Serial No. ;**

| Key No. | Part No. | Description | Description | Q'ty | S.C | Serial No. | ICA | Replaceable part | |
|---|---|---|---|---|---|---|---|---|---|
| | | | | | | | | Part No. | Q'ty |
| 4320-32 | K9002280 | PIPE BAND ASS'Y-H | ATTACHE DE CONDUITES | 1 | | | | | |
| 33 | 124-00129 | BAND;PIPE | ATTACHE | 1 | | | | | |
| 34 | S5100703 | WASHER;SPRING | RONDELLE ELASTIQUE M12 | 2 | | | | | |
| 35 | S0560563 | BOLT;HEX | BOULON | 2 | | | | | |
| 36 | K9002281 | PIPE BAND ASS'Y-R | ATTACHE DE CONDUITES | 1 | | | | | |
| 37 | 124-00129 | BAND;PIPE | ATTACHE | 1 | | | | | |
| 38 | S5100703 | WASHER;SPRING | RONDELLE ELASTIQUE M12 | 2 | | | | | |
| 39 | S0560563 | BOLT;HEX | BOULON | 2 | | | | | |
| 40 | K9002678 | PIPE ASS'Y-R | CONDUITE | 1 | | | | | |
| 41 | K9001158 | BOLT;U | BOULON A 6 PANS | 1 | | | | | |
| 42 | S5100603 | WASHER;SPRING | RONDELLE ELASTIQUE | 2 | | | | | |
| 43 | S4012633 | NUT;HEX | ECROU M10X1.5 | 2 | | | | | |
| 44 | K9001159 | CLAMP;PIPE | FIXATION DE TUYAU | 1 | | | | | |
| 45 | S5102903 | WASHER;SPRING | RONDELLE ELASTIQUE | 1 | | | | | |
| 46 | S0521853 | BOLT;HEX | BOULON A 6 PANS | 1 | | | | | |
| 47 | **K9001173** | **PORT;FLANGE** | PORT;FLANGE | 1 | | **5001−5815** | | | |
| 48 | **S8000341** | **O-RING** | JOINT TORIQUE | 1 | | **5001−5815** | | | |
| 49 | **S5100603** | **WASHER;SPRING** | RONDELLE ELASTIQUE | 4 | | **5001−5815** | | | |
| 50 | **S2213363** | **BOLT;SOCKET** | BOULON A 6 PANS CREUX | 4 | | **5001−5815** | | | |
| 51 | **S6710032** | **NIPPLE;GREASE** | GRAISSEUR | 2 | | **5001−5815** | | | |
| * | K9002290 | SEAL KIT;ARM CYL | KIT D'ETANCHEITE | 1 | | | | | |

| DATE | JUN. 30, 2006 |
|---|---|
| REV.NO. | EXB06-08 |

# Fig. 5100 TOOLS OUTILLAGE

**Serial No. ;**

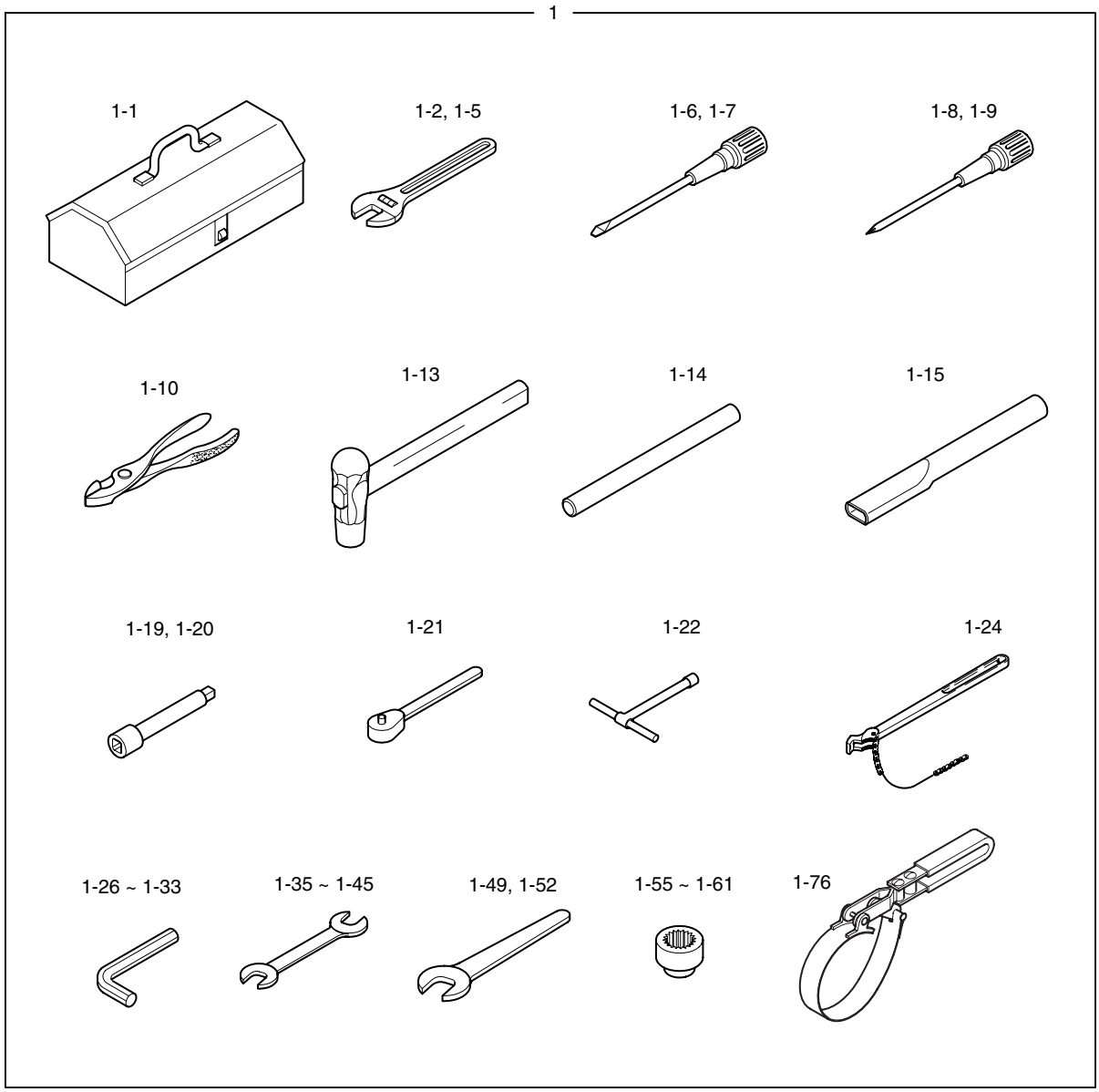


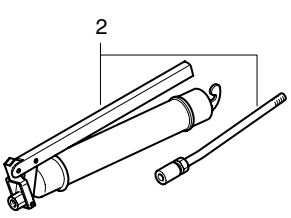


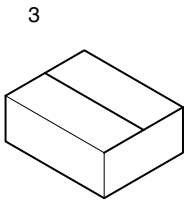





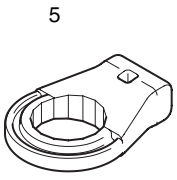

| DATE | JUN. 30, 2006 |
|---|---|
| REV. NO. | EXB06-08 |

# Fig. 5100 TOOLS OUTILLAGE

Serial No. ;

| Key No. | Part No. | Description | Description | Q'ty | S.C | Serial No. | ICA | Replaceable part | |
|---|---|---|---|---|---|---|---|---|---|
| | | | | | | | | Part No. | Q'ty |
| 5100-- | K1009689 | TOOLS | OUTILLAGE | - | D | | | | |
| 1 | 2199-1063F30 | TOOL ASS'Y | OUTILLAGE | 1 | | 5001–5112 | I | 2199-1063F38 | 1 |
| | **2199-1063F38** | **TOOL ASS'Y** | OUTILLAGE | 1 | | **5113–** | | | |
| 1-1 | 2199-9043 | . BOX;TOOL | . BOITE | 1 | | | | | |
| 1-2 | T6580008 | . WRENCH;ADJUST(6") | . CLE A MOLETTE | 1 | D | | | | |
| 1-5 | T6580020 | . WRENCH;ADJUST(12") | . CLE A MOLETTE | 1 | D | | | | |
| 1-6 | T7050003 | . DRIVER (-) 6X100 | . TOURNEVIS(-) | 1 | D | | | | |
| 1-7 | T7050013 | . DRIVER (-) 8X150 | . TOURNEVIS(-) | 1 | D | | | | |
| 1-8 | T7050021 | . DRIVER (+) 6X100 | . TOURNEVIS(-) | 1 | D | | | | |
| 1-9 | T7050022 | . DRIVER (+) 8X150 | . TOURNEVIS(+) | 1 | D | | | | |
| 1-10 | T7500004 | . PLIERS;COMBI 8" | . PINCE | 1 | D | | | | |
| 1-13 | T7260057 | . HAMMER 2.0lb | . MARTEAU | 1 | D | | | | |
| 1-14 | 2199-1004 | . BAR D28X400L | . BARRE | 1 | | | | | |
| 1-15 | 2199-1005 | . PIPE D34X400L | . CONDUITE | 1 | | | | | |
| 1-19 | T6690012 | . BAR;EXTENSION 5" | . RALLONGE | 1 | D | | | | |
| 1-20 | T6690013 | . BAR;EXTENSION 10" | . RALLONGE | 1 | D | | | | |
| 1-21 | T6750003 | . HANDLE;RATCHET 1/2 | . POIGNEE A CLIQUET | 1 | D | | | | |
| 1-22 | 2199-9009 | . CLIP;DRIVER 13 | . TOURNEVIS | 1 | | | | | |
| 1-24 | 2199-9057 | . WRENCH;FILTER | . CLE A MOLETTE | 1 | | | | | |
| 1-26 | T6550005 | . L-WRENCH 4 | . CLE MALE | 1 | D | | | | |
| 1-27 | T6550006 | . L-WRENCH 5 | . CLE MALE | 1 | D | | | | |
| 1-28 | T6550007 | . L-WRENCH 6 | . CLE MALE | 1 | D | | | | |
| 1-29 | T6550009 | . L-WRENCH 8 | . CLE MALE | 1 | D | | | | |
| 1-30 | T6550011 | . L-WRENCH 10 | . CLE 6 PANS MALE | 1 | D | | | | |
| 1-32 | T6550015 | . L-WRENCH 14 | . CLE MALE | 1 | D | | | | |
| 1-33 | T6550018 | . L-WRENCH 17 | . CLE MALE | 1 | D | | | | |
| 1-35 | T6510062 | . SPANNER 8X10 | . CLE PLATE | 1 | D | | | | |
| 1-36 | T6510066 | . SPANNER 10X13 | . CLE PLATE | 1 | D | | | | |
| 1-37 | T6510070 | . SPANNER 13X17 | . CLE PLATE | 1 | D | | | | |
| 1-38 | T6510072 | . SPANNER 17X19 | . CLE PLATE | 1 | D | | | | |
| 1-39 | T6510075 | . SPANNER 19X22 | . CLE PLATE | 1 | D | | | | |
| 1-41 | T6510081 | . SPANNER 24X27 | . CLE PLATE | 1 | D | | | | |
| 1-42 | T6510085 | . SPANNER 27X30 | . CLE PLATE | 1 | D | | | | |
| 1-44 | T6510089 | . SPANNER 32X36 | . CLE PLATE | 1 | D | | | | |
| 1-45 | T6510091 | . SPANNER 36X41 | . CLE PLATE | 1 | D | | | | |
| 1-49 | T6510018 | . SPANNER 24 | . CLE PLATE | 1 | D | | | | |
| 1-52 | T6510027 | . SPANNER 41 | . CLE PLATE | 1 | D | | | | |
| 1-55 | T6600183 | . SOCKET M6 | . CLE A DOUILLE | 1 | D | | | | |

| DATE | JUN. 30, 2006 |
|---|---|
| REV.NO. | EXB06-08 |

# Fig. 5100 TOOLS OUTILLAGE

**Serial No. ;**

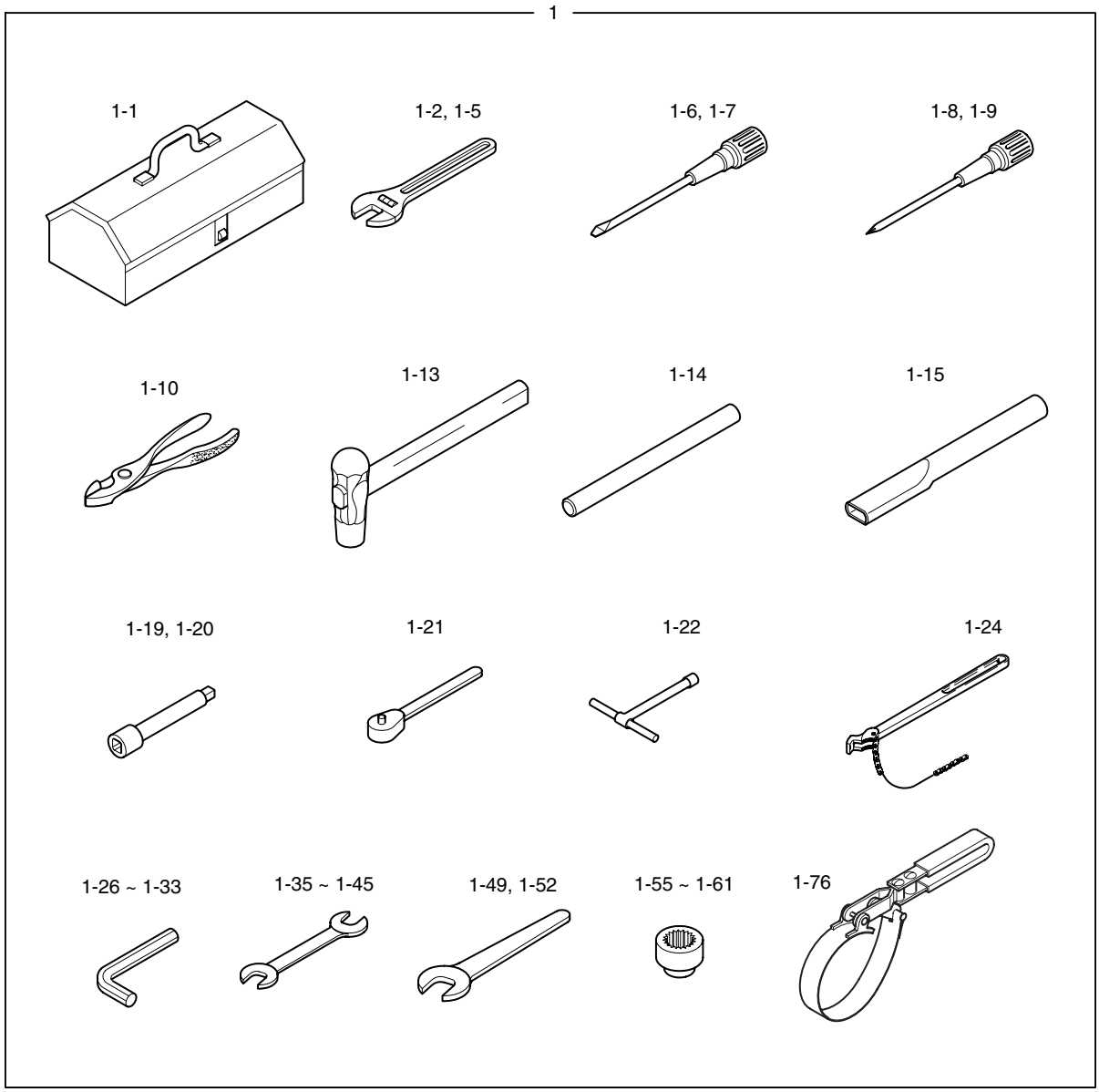


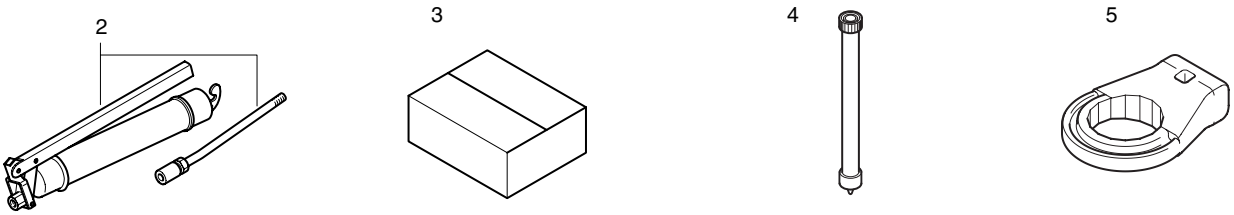

| DATE | JUN. 30, 2006 |
|---|---|
| REV. NO. | EXB06-08 |

# Fig. 5100 TOOLS OUTILLAGE

Serial No. ;

| Key No. | Part No. | Description | Description | Q'ty | S.C | Serial No. | ICA | Replaceable part | |
|---|---|---|---|---|---|---|---|---|---|
| | | | | | | | | Part No. | Q'ty |
| 5100-1-56 | T6600189 | . SOCKET M8 | . CLE A DOUILLE | 1 | D | | | | |
| 1-57 | T6600197 | . SOCKET M10 | . CLE A DOUILLE | 1 | D | | | | |
| 1-58 | T6600201 | . SOCKET M12 | . CLE A DOUILLE | 1 | D | | | | |
| 1-59 | T6600211 | . SOCKET M16 | . CLE A DOUILLE | 1 | D | | | | |
| 1-60 | T6600223 | . SOCKET M20 | . CLE A DOUILLE | 1 | D | | | | |
| 1-61 | **T6600217** | **. SOCKET M27** | . CLE A DOUILLE | 1 | D | **5113–** | | | |
| 1-76 | 199-00126 | . FILTER;WRENCH | . FILTRE | 1 | | | | | |
| 2 | 2199-9008 | GREASE GUN | PISTOLET DE GRAISSAGE | 1 | | | | | |
| 3 | 2199-9007 | BOX | BOITE | 1 | | | | | |
| 4 | 184-00120 | HOSE;OIL CHANGE | TUYAU FLEXIBLE | 1 | | | | | |
| 5 | K1006586 | WRENCH;PRE FUEL FILTER | FILTRE D'ESSENCE DE | 1 | | | | | |

# Fig. 5110 SPARE PARTS PIECES DE RECHANGE

**Serial No. ;**

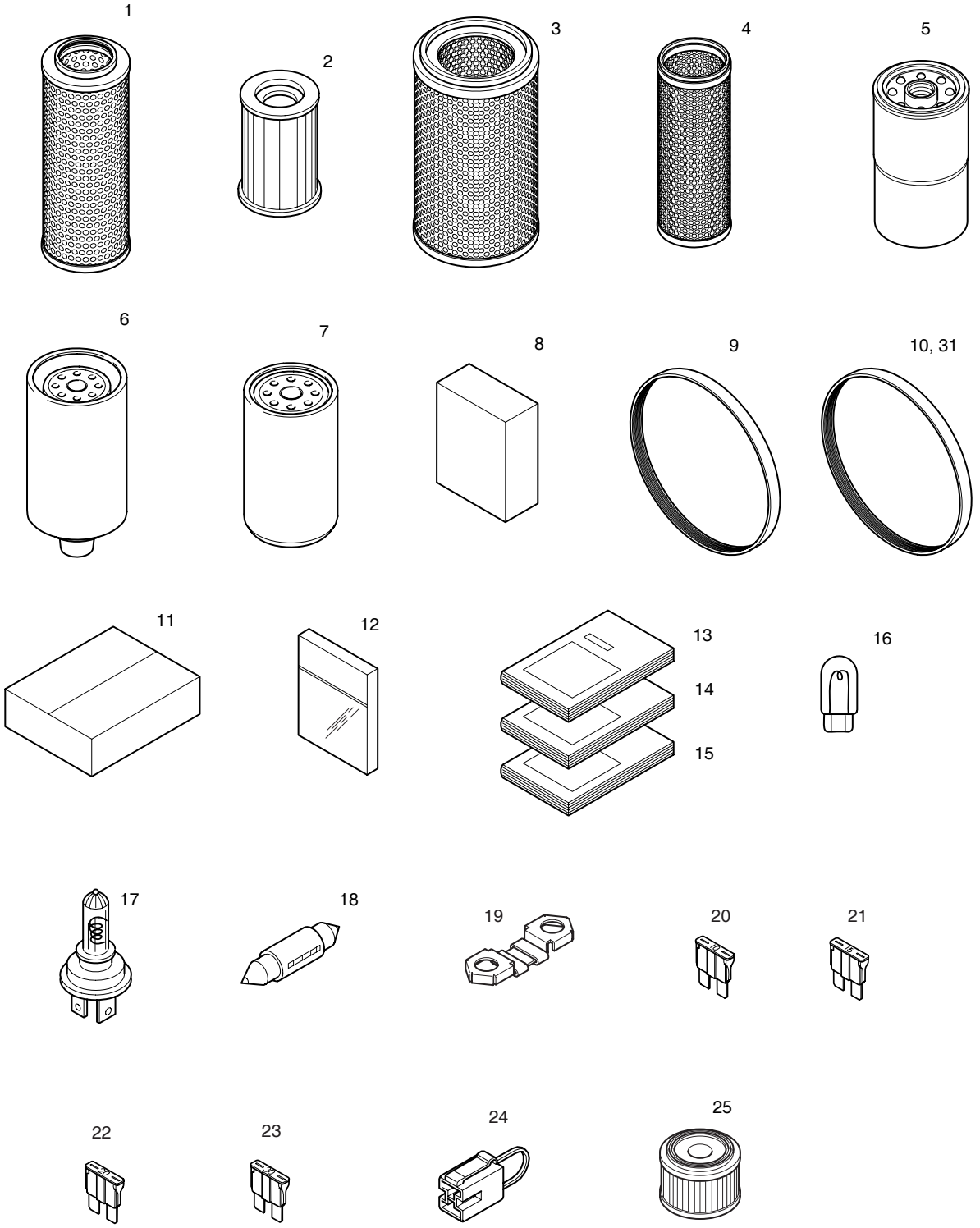

| DATE | JUN. 30, 2008 |
|---|---|
| REV. NO. | EXB08-06 |

# Fig. 5110 SPARE PARTS PIECES DE RECHANGE

Serial No. ;

| Key No. | Part No. | Description | Description | Q'ty | S.C | Serial No. | ICA | Replaceable part | |
|---|---|---|---|---|---|---|---|---|---|
| | | | | | | | | Part No. | Q'ty |
| 5110-- | K1009678 | SPARE PARTS | PIECES DE RECHANGE | - | D | | | | |
| 1 | 474-00055 | ELEMENT;FILTER | ELEMENT FILTRANT | 1 | | | | | |
| 2 | 2471-1154 | ELEMENT;FILTER(PILOT) | ELEMENT FILTRANT | 1 | | | | | |
| 3 | 474-00038 | ELEMENT;AIR(OUTER) | ELEMENT | 1 | | | | | |
| 4 | 474-00037 | ELEMENT;AIR(INNER) | ELEMENT | 1 | | | | | |
| 5 | 65.05510-5026B | FILTER;E/G OIL | FILTRE | 1 | | | | | |
| 6 | 65.12503-5027 | FILTER;FUEL | FILTRE | 1 | | 5001–5922 | I | 65.12503-5033 | 1 |
| | **65.12503-5033** | **FILTER;FUEL** | FILTRE | 1 | | **5923–** | | | |
| 7 | K1006529 | CARTRIDGE;PRE FUEL FILTER | FILTRE | 1 | | | | | |
| 8 | K1006854 | OIL;ENGINE(TIER-II) | RESERVOIR D'HUILE | 10 | | | | | |
| 9 | 2106-1019D25 | BELT;AIRCON(4PK-1210L) | COURROIE | 1 | | | | | |
| 10 | 2106-1019D22 | BELT;FAN(8PK-1400L) | COURROIE | 1 | | | | | |
| 11 | 2512-1095D1 | BOX;SPARE PARTS | BOITE DE PIECES DE | 1 | | | | | |
| 12 | 2180-9153 | O-RING KIT | KIT DE REPARATION | 1 | | | | | |
| 13 | K1009681EF | PARTS BOOK | MANUEL DE PIECES DE | 1 | | | | | |
| 14 | K1009683E | OPERATION MANUAL | MANUEL D'UTILISATION | 1 | | | | | |
| 15 | K1009684E | SHOP MANUAL | MANUEL DE MAGASIN | 1 | | | | | |
| 16 | S862203H | BULB 24V 3W/T-10 | LAMPE | 2 | | 5001–5055 | | | |
| | 515-00012A | BULB | LAMPE | 2 | | 5056– | | | |
| 17 | 2515-1022D1 | BULB;HALOGEN 24V 75/70W | AMPOULE | 1 | | | | | |
| 18 | 2515-1016D4 | BULB 24V 70W | LAMPE | 1 | | | | | |
| 19 | 527-00005 | FUSE;PREHEAT RELAY | FUSIBLE | 2 | | | | | |
| 20 | 2527-1016 | FUSE;BLADE 10A | LAME DE FUSIBLE | 2 | | | | | |
| 21 | 2527-1017 | FUSE;BLADE 15A | LAME DE FUSIBLE | 2 | | | | | |
| 22 | 2527-1018 | FUSE;BLADE 20A | FUSIBLE | 1 | | | | | |
| 23 | 2527-1025 | FUSE;BLADE 30A | FUSIBLE | 1 | | | | | |
| 24 | 2527-1023A | FUSIBLE LINK 27A | FUSIBLE | 1 | | | | | |
| 25 | K1029257 | ELEMENT;AIR BREATHER | ELEMENT | 1 | | 5618– | | | |
| 31 | 2106-1019D26 | BELT(8PK-1350L);TROPICAL | COURROIE | 1 | | | | | |

| DATE | JUN. 30, 2007 |
|---|---|
| REV.NO. | EXB07-06 |

# Fig. 5120 NAME PLATE - CABIN(EXPORT) PLAQUE D'IDENTIFICATION

**Serial No. ;**

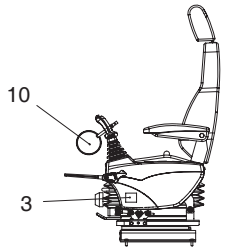


LEFT SIDE VIEW OF
LEFT CONTROL STAND

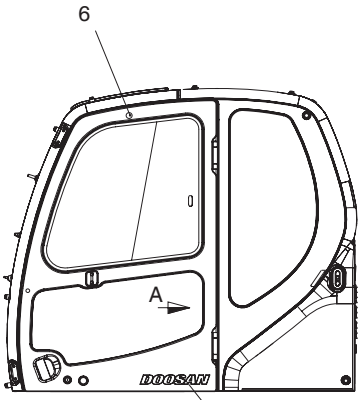


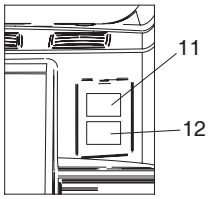


VIEW A
FUSE BOX

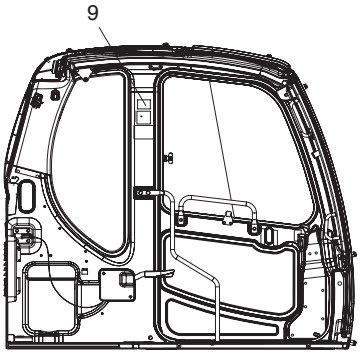


LEFT SIDE VIEW
OF CABIN INSIDE

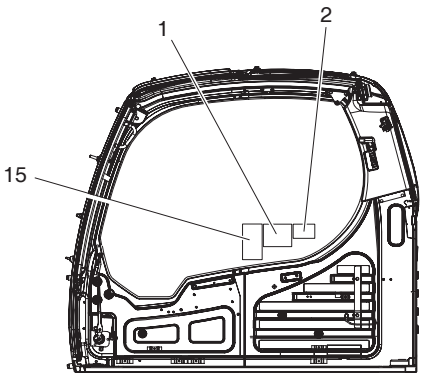


RIGHT SIDE VIEW
OF CABIN INSIDE

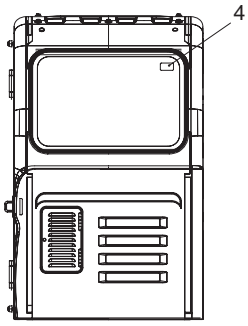


Serial No. 5001 ~ 5610

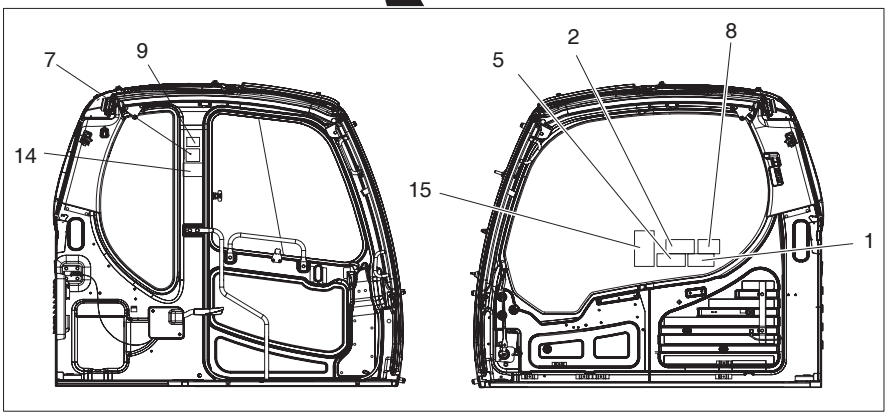

| DATE | JUN. 30, 2007 |
|---|---|
| REV. NO. | EXB07-06 |

# Fig. 5120 NAME PLATE - CABIN(EXPORT) PLAQUE D'IDENTIFICATION

**Serial No. ;**

| Key No. | Part No. | Description | Description | Q'ty | S.C | Serial No. | ICA | Replaceable part | |
|---|---|---|---|---|---|---|---|---|---|
| | | | | | | | | Part No. | Q'ty |
| 5120-- | **K1007342H** | **NAME** | PLAQUE D'IDENTIFICATION | - | D | | | | |
| 1 | 190-00688 | PLATE;NAME | PLAQUE D'IDENTIFICATION | 1 | | 5001–5610 | I | K1034000 | 1 |
| | **K1034000** | **PLATE;NAME** | PLAQUE D'IDENTIFICATION | 1 | | **5611–** | | | |
| 2 | 2190-3297 | PLATE;NAME | PLAQUE D'IDENTIFICATION | 1 | | | | | |
| 3 | K1005909 | PLATE;NAME | PLAQUE D'IDENTIFICATION | 1 | | | | | |
| 4 | 2190-2480 | PLATE;NAME | PLAQUE D'IDENTIFICATION | 1 | | | | | |
| 5 | **2190-3386A** | **PLATE;NAME** | PLAQUE D'IDENTIFICATION | 1 | | **5001–5610** | | | |
| 6 | **2116-9003** | **PLATE** | PLAQUE | 1 | | **5001–5610** | | | |
| 7 | **190-00693** | **PLATE;NAME** | PLAQUE D'IDENTIFICATION | 1 | | **5001–5610** | | | |
| 8 | **190-00689** | **PLATE;NAME** | PLAQUE D'IDENTIFICATION | 1 | | **5001–5610** | | | |
| 9 | 2190-3388 | PLATE;NAME | PLAQUE D'IDENTIFICATION | 1 | | | | | |
| 10 | 190-00695 | PLATE;NAME | PLAQUE D'IDENTIFICATION | 1 | | 5001–5610 | I | 190-00695A | 1 |
| | **190-00695A** | **PLATE;NAME** | PLAQUE D'IDENTIFICATION | 1 | | **5611–** | | | |
| 11 | K1008019D3 | PLATE;NAME | PLAQUE D'IDENTIFICATION | 1 | | | | | |
| 12 | K1008019D4 | PLATE;NAME | PLAQUE D'IDENTIFICATION | 1 | | | | | |
| 13 | K1011743D6 | PLATE;NAME | PLAQUE D'IDENTIFICATION | 1 | | | | | |
| 14 | **K1012583** | **PLATE;NAME** | PLAQUE D'IDENTIFICATION | 1 | | **5001–5610** | | | |
| 15 | K1016614 | PLATE;NAME | PLAQUE D'IDENTIFICATION | 1 | | 5064– | | | |

| DATE | JUN. 30, 2007 |
|---|---|
| REV.NO. | EXB07-06 |

# Fig. 5130 NAME PLATE - EXPORT
# PLAQUE D'IDENTIFICATION

**Serial No. ;**

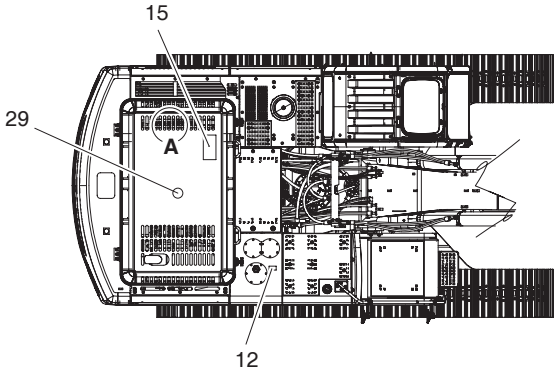


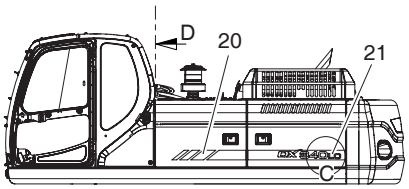





DATAIL C

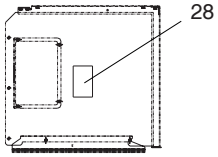


SECTION D

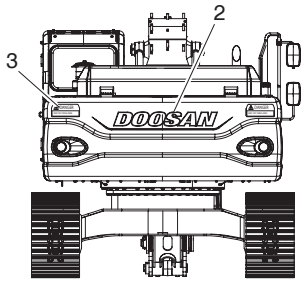


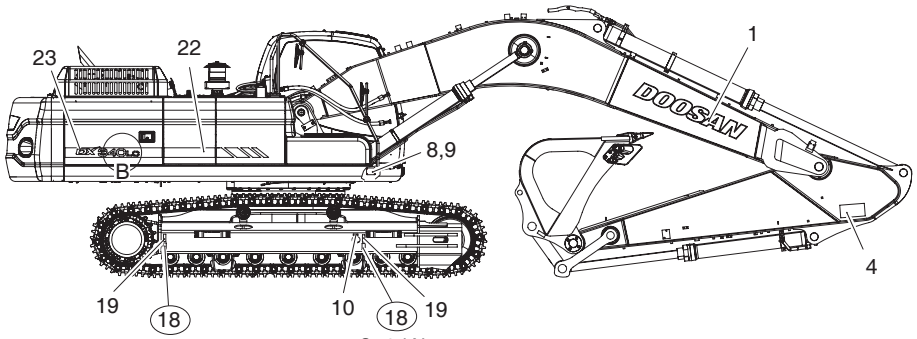


Serial No.
5001 ~ 5769

Serial No.
5001 ~ 5769




DATAIL B

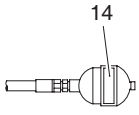


ACCUMULATOR

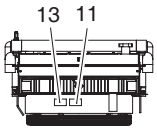


DETAIL **A**

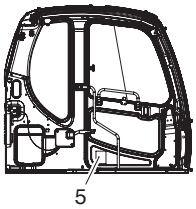


LEFT SIDE VIEW
OF CABIN INSIDE

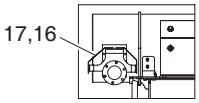


TOP VIEW OF
TURBO CHARGER COVER

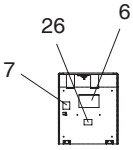


BATTERY DOOR

| DATE | JUN. 30, 2007 |
|---|---|
| REV. NO. | EXB07-06 |

# Fig. 5130 NAME PLATE - EXPORT PLAQUE D'IDENTIFICATION

**Serial No. ;**

| Key No. | Part No. | Description | Description | Q'ty | S.C | Serial No. | ICA | Replaceable part | |
|---|---|---|---|---|---|---|---|---|---|
| | | | | | | | | Part No. | Q'ty |
| 5130-- | **K1015164J** | **NAME PLATE-EXPORT** | PLAQUE D'IDENTIFICATION | - | D | | | | |
| 1 | K1011645D3 | PLATE;NAME | PLAQUE D'IDENTIFICATION | 2 | | | | | |
| 2 | K1011645D2 | PLATE;NAME | PLAQUE D'IDENTIFICATION | 1 | | | | | |
| 3 | 2190-3379A | PLATE;NAME | PLAQUE D'IDENTIFICATION | 2 | | | | | |
| 4 | 190-00652 | PLATE;NAME | PLAQUE D'IDENTIFICATION | 2 | | | | | |
| 5 | 2190-2556D138 | PLATE;NAME | PLAQUE D'IDENTIFICATION | 1 | | | | | |
| 6 | K1015167 | PLATE;NAME | PLAQUE D'IDENTIFICATION | 1 | | 5001–5031 | I | K1015167A | 1 |
| | K1015167A | PLATE;NAME | PLAQUE D'IDENTIFICATION | 1 | | 5032–5769 | I | K1015167B | 1 |
| | **K1015167B** | **PLATE;NAME** | PLAQUE D'IDENTIFICATION | 1 | | **5770–** | | | |
| 7 | 2190-2533A | PLATE;NAME | PLAQUE D'IDENTIFICATION | 1 | | | | | |
| 8 | K1011647B | PLATE;NAME | PLAQUE D'IDENTIFICATION | 1 | | | | | |
| 9 | 2122-1002D2 | RIVET | RIVET | 4 | | | | | |
| 10 | 190-00122 | PLATE;NAME | PLAQUE D'IDENTIFICATION | 2 | | | | | |
| 11 | 190-00694 | PLATE;NAME | PLAQUE D'IDENTIFICATION | 1 | | | | | |
| 12 | 190-00691 | PLATE;NAME | PLAQUE D'IDENTIFICATION | 1 | | 5001–5769 | | | |
| | **190-00691A** | **PLATE;NAME** | PLAQUE D'IDENTIFICATION | 1 | | **5770–** | | | |
| 13 | 190-00692 | PLATE;NAME | PLAQUE D'IDENTIFICATION | 1 | | | | | |
| 14 | 190-00703 | PLATE;NAME | PLAQUE D'IDENTIFICATION | 1 | | | | | |
| 15 | 190-00522 | PLATE;NAME | PLAQUE D'IDENTIFICATION | 1 | | 5001–5610 | I | 190-00522A | 1 |
| | **190-00522A** | **PLATE;NAME** | PLAQUE D'IDENTIFICATION | 1 | | **5611–** | | | |
| 16 | 190-00648A | PLATE;NAME | PLAQUE D'IDENTIFICATION | 1 | | | | | |
| 17 | 2122-1002D4 | RIVET | RIVET | 4 | | | | | |
| 18 | **2190-2476** | **PLATE;NAME** | PLAQUE D'IDENTIFICATION | 4 | | **5001–5769** | | | |
| 19 | 2190-2477 | PLATE;NAME | PLAQUE D'IDENTIFICATION | 4 | | 5001–5769 | I | K1042074 | 4 |
| | **K1042074** | **PLATE;NAME** | PLAQUE D'IDENTIFICATION | 4 | | **5770–** | | | |
| 20 | K1012258 | PLATE;NAME | PLAQUE D'IDENTIFICATION | 1 | | | | | |
| 21 | K1013440A | PLATE;NAME | PLAQUE D'IDENTIFICATION | 1 | | | | | |
| 22 | K1012260 | PLATE;NAME | PLAQUE D'IDENTIFICATION | 1 | | | | | |
| 23 | K1013441A | PLATE;NAME | PLAQUE D'IDENTIFICATION | 1 | | | | | |
| 26 | K1015739 | PLATE;NAME | PLAQUE D'IDENTIFICATION | 1 | | 5040– | | | |
| 27 | K1016066 | PLATE;NAME | PLAQUE D'IDENTIFICATION | 2 | | 5032– | | | |
| 28 | K1016614 | PLATE;NAME | PLAQUE D'IDENTIFICATION | 2 | | 5064– | | | |
| 29 | **K1018746AD2** | **PLATE;NAME** | PLAQUE D'IDENTIFICATION | 1 | | **5089–5610** | | | |

| DATE | JUN. 30, 2007 |
|---|---|
| REV.NO. | EXB07-06 |

# Fig. 5140 NAME PLATE - CABIN(EUROPE) PLAQUE D'IDENTIFICATION

**Serial No. ;**

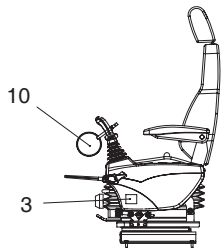


LEFT SIDE VIEW OF
LEFT CONTROL STAND

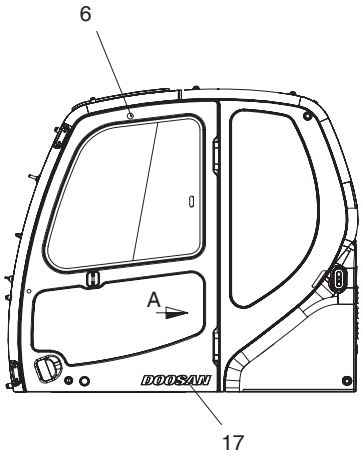


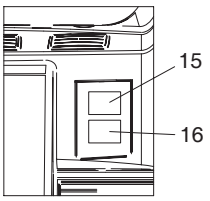


VIEW A
FUSE BOX

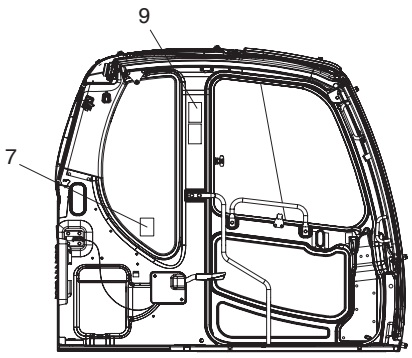


LEFT SIDE VIEW
OF CABIN INSIDE

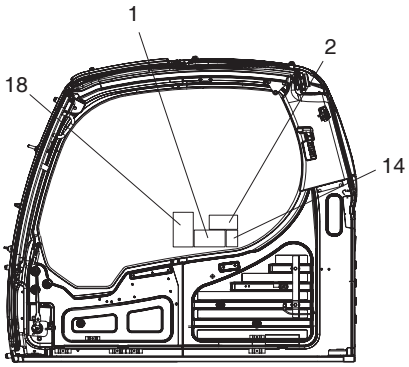


RIGHT SIDE VIEW
OF CABIN INSIDE

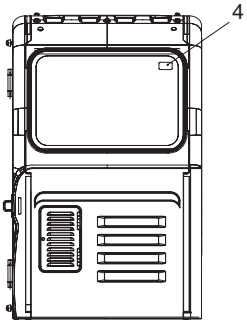


Serial No. 5001 ~ 5610

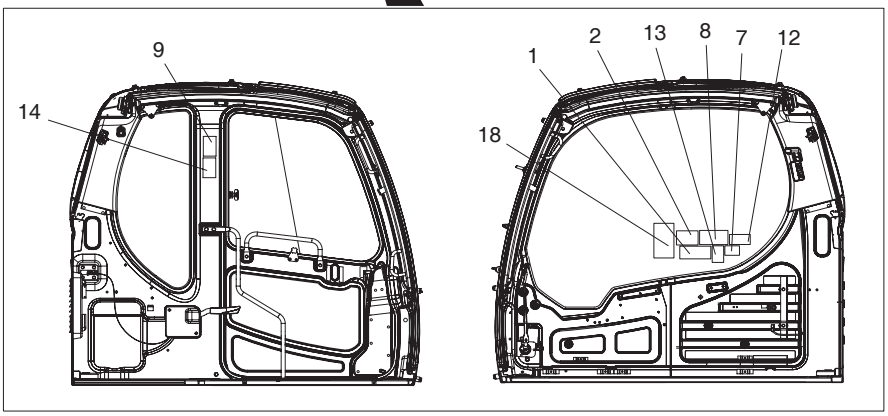

| DATE | JUN. 30, 2007 |
|---|---|
| REV. NO. | EXB07-06 |

# Fig. 5140 NAME PLATE - CABIN(EUROPE) PLAQUE D'IDENTIFICATION

**Serial No. ;**

| Key No. | Part No. | Description | Description | Q'ty | S.C | Serial No. | ICA | Replaceable part | |
|---|---|---|---|---|---|---|---|---|---|
| | | | | | | | | Part No. | Q'ty |
| 5140-- | **K1008464E** | **NAME** | PLAQUE D'IDENTIFICATION | - | D | | | | |
| 1 | 190-00092 | PLATE;NAME | PLAQUE D'IDENTIFICATION | 1 | | 5001–5610 | I | K1034001 | 1 |
| | **K1034001** | **PLATE;NAME** | PLAQUE D'IDENTIFICATION | 1 | | **5611–** | | | |
| 2 | 2190-3297 | PLATE;NAME | PLAQUE D'IDENTIFICATION | 1 | | | | | |
| 3 | K1005909 | PLATE;NAME | PLAQUE D'IDENTIFICATION | 1 | | | | | |
| 4 | 190-00101 | PLATE;NAME | PLAQUE D'IDENTIFICATION | 1 | | | | | |
| 6 | **2116-9003** | **PLATE** | PLAQUE | 1 | | **5001–5610** | | | |
| 7 | 2190-2524 | PLATE;NAME | PLAQUE D'IDENTIFICATION | 1 | | | | | |
| 8 | **190-00096** | **PLATE;NAME** | PLAQUE D'IDENTIFICATION | 1 | | **5001–5610** | | | |
| 9 | 190-00093 | PLATE;NAME | PLAQUE D'IDENTIFICATION | 1 | | | | | |
| 10 | 190-00098 | PLATE;NAME | PLAQUE D'IDENTIFICATION | 1 | | 5001–5610 | I | 190-00098A | 1 |
| | **190-00098A** | **PLATE;NAME** | PLAQUE D'IDENTIFICATION | 1 | | **5611–** | | | |
| 12 | **190-00102** | **PLATE;NAME** | PLAQUE D'IDENTIFICATION | 1 | | **5001–5610** | | | |
| 13 | **190-00094** | **PLATE;NAME** | PLAQUE D'IDENTIFICATION | 1 | | **5001–5610** | | | |
| 14 | 190-00521 | PLATE;NAME | PLAQUE D'IDENTIFICATION | 1 | | | | | |
| 15 | K1008019D3 | PLATE;NAME | PLAQUE D'IDENTIFICATION | 1 | | | | | |
| 16 | K1008019D4 | PLATE;NAME | PLAQUE D'IDENTIFICATION | 1 | | | | | |
| 17 | K1011743D6 | PLATE;NAME | PLAQUE D'IDENTIFICATION | 1 | | | | | |
| 18 | K1016614 | PLATE;NAME | PLAQUE D'IDENTIFICATION | 1 | | 5064– | | | |

| DATE | JUN. 30, 2007 |
|---|---|
| REV.NO. | EXB07-06 |

# Fig. 5150 NAME PLATE - EUROPE
# PLAQUE D'IDENTIFICATION

**Serial No. ;**

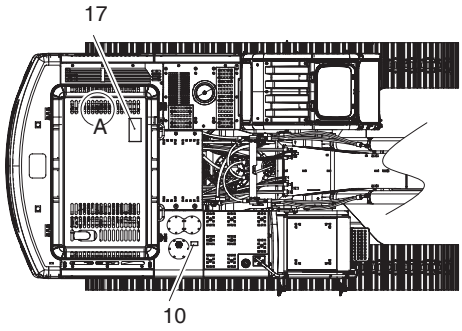


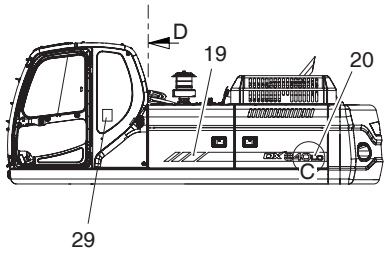


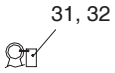


E/G EMISSION




DATAIL C

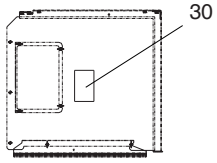


SECTION D

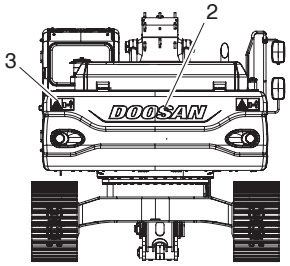


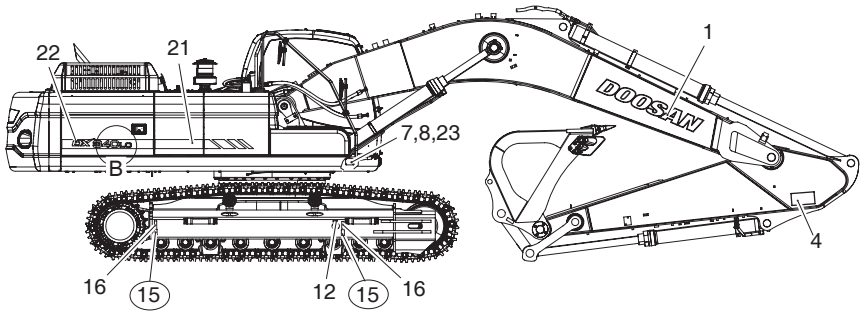


Serial No.
5001 ~ 5769

Serial No.
5001 ~ 5769

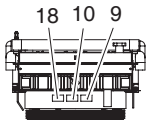


DETAIL **A**




DATAIL B

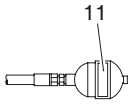


ACCUMULATOR

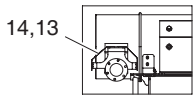


TOP VIEW OF
TURBO CHARGER COVER

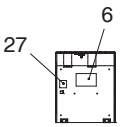


BATTERY DOOR

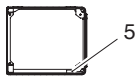


DETAIL **B**

| DATE | JUN. 30, 2007 |
|---|---|
| REV. NO. | EXB07-06 |

# Fig. 5150 NAME PLATE - EUROPE PLAQUE D'IDENTIFICATION

**Serial No. ;**

| Key No. | Part No. | Description | Description | Q'ty | S.C | Serial No. | ICA | Replaceable part | |
|---|---|---|---|---|---|---|---|---|---|
| | | | | | | | | Part No. | Q'ty |
| 5150-- | **K1015171G** | **NAME PLATE-EUROPE** | PLAQUE D'IDENTIFICATION | - | D | | | | |
| 1 | K1011645D3 | PLATE;NAME | PLAQUE D'IDENTIFICATION | 2 | | | | | |
| 2 | K1011645D2 | PLATE;NAME | PLAQUE D'IDENTIFICATION | 1 | | | | | |
| 3 | K1008571 | PLATE;NAME | PLAQUE D'IDENTIFICATION | 2 | | | | | |
| 4 | 190-00652 | PLATE;NAME | PLAQUE D'IDENTIFICATION | 2 | | | | | |
| 5 | 190-00100 | PLATE;NAME | PLAQUE D'IDENTIFICATION | 1 | | | | | |
| 6 | K1015170 | PLATE;NAME | PLAQUE D'IDENTIFICATION | 1 | | 5001–5069 | I | K1015170A | 1 |
| | K1015170A | PLATE;NAME | PLAQUE D'IDENTIFICATION | 1 | | 5070–5769 | I | K1015170B | 1 |
| | **K1015170B** | **PLATE;NAME** | PLAQUE D'IDENTIFICATION | 1 | | **5770**– | | | |
| 7 | K1012204A | PLATE;NAME | PLAQUE D'IDENTIFICATION | 1 | | | | | |
| 8 | 2122-1002D2 | RIVET | RIVET | 4 | | | | | |
| 9 | 190-00095 | PLATE;NAME | PLAQUE D'IDENTIFICATION | 1 | | | | | |
| 10 | 190-00097 | PLATE;NAME | PLAQUE D'IDENTIFICATION | 2 | | | | | |
| 11 | 190-00099 | PLATE;NAME | PLAQUE D'IDENTIFICATION | 1 | | | | | |
| 12 | 190-00122 | PLATE;NAME | PLAQUE D'IDENTIFICATION | 2 | | | | | |
| 13 | 190-00648A | PLATE;NAME | PLAQUE D'IDENTIFICATION | 1 | | | | | |
| 14 | 2122-1002D4 | RIVET | RIVET | 4 | | | | | |
| 15 | **2190-2476** | **PLATE;NAME** | PLAQUE D'IDENTIFICATION | 4 | | **5001–5769** | | | |
| 16 | 2190-2477 | PLATE;NAME | PLAQUE D'IDENTIFICATION | 4 | | 5001–5769 | I | K1042074 | 4 |
| | **K1042074** | **PLATE;NAME** | PLAQUE D'IDENTIFICATION | 4 | | **5770**– | | | |
| 17 | 190-00522 | PLATE;NAME | PLAQUE D'IDENTIFICATION | 1 | | 5001–5610 | I | 190-00522A | 1 |
| | **190-00522A** | **PLATE;NAME** | PLAQUE D'IDENTIFICATION | 1 | | **5611**– | | | |
| 18 | 190-00557 | PLATE;NAME | PLAQUE D'IDENTIFICATION | 1 | | | | | |
| 19 | K1012258 | PLATE;NAME | PLAQUE D'IDENTIFICATION | 1 | | | | | |
| 20 | K1013440A | PLATE;NAME | PLAQUE D'IDENTIFICATION | 1 | | | | | |
| 21 | K1012260 | PLATE;NAME | PLAQUE D'IDENTIFICATION | 1 | | | | | |
| 22 | K1013441A | PLATE;NAME | PLAQUE D'IDENTIFICATION | 1 | | | | | |
| 23 | K1012205A | PLATE;NAME | PLAQUE D'IDENTIFICATION | 1 | | | | | |
| 27 | K1016102 | PLATE;NAME | PLAQUE D'IDENTIFICATION | 1 | | 5070– | | | |
| 28 | K1016066 | PLATE;NAME | PLAQUE D'IDENTIFICATION | 2 | | 5032– | | | |
| 29 | 190-01059D16 | PLATE;NAME | PLAQUE D'IDENTIFICATION | 1 | | 5032– | | | |
| 30 | K1016614 | PLATE;NAME | PLAQUE D'IDENTIFICATION | 1 | | 5064– | | | |
| 31 | 190-00509BD23 | PLATE;NAME | PLAQUE D'IDENTIFICATION | 1 | | 5064– | | | |
| 32 | 2124-1622D1 | CLIP;BAND | ATTACHE | 1 | | 5064– | | | |

| DATE | DEC. 15, 2006 |
|---|---|
| REV.NO. | EXB06-13 |

# Fig. 5160 NAME PLATE-HEAVY DUTY
# PLAQUE D'IDENTIFICATION

**Serial No. ;**

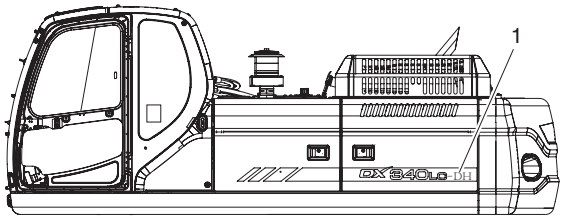


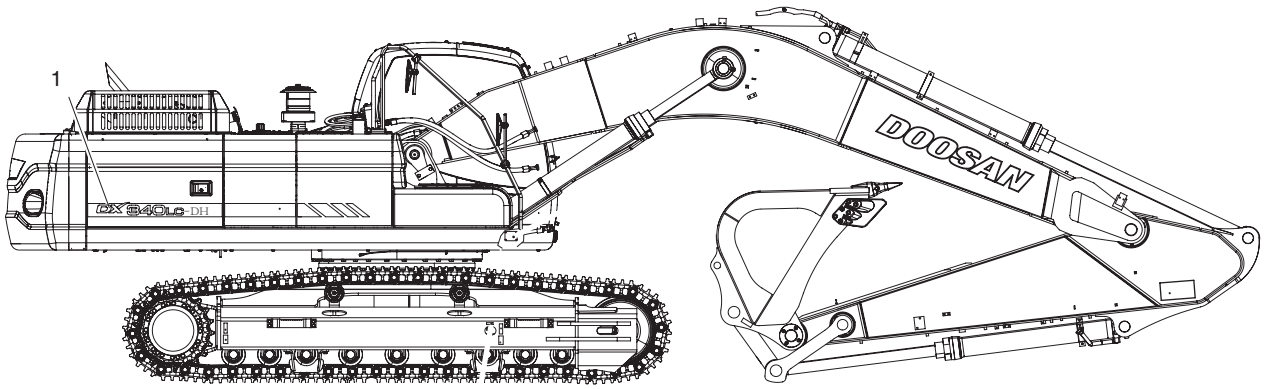

| DATE | DEC. 15, 2006 |
|---|---|
| REV. NO. | EXB06-13 |

# Fig. 5160 NAME PLATE-HEAVY DUTY PLAQUE D'IDENTIFICATION

**Serial No. ;**

| Key No. | Part No. | Description | Description | Q'ty | S.C | Serial No. | ICA | Replaceable part | |
|---|---|---|---|---|---|---|---|---|---|
| | | | | | | | | Part No. | Q'ty |
| 5160-- | **K1018689A** | **NAME PLATE-HEAVY DUTY** | PLAQUE D'IDENTIFICATION | - | D | | | | |
| 1 | K1018682 | PLATE;NAME | PLAQUE D'IDENTIFICATION | 2 | | 5001–5421 | I | K1018682A | 2 |
| | **K1018682A** | **PLATE;NAME** | PLAQUE D'IDENTIFICATION | 2 | | **5422–** | | | |

| DATE | JUN. 30, 2007 |
|---|---|
| REV.NO. | EXB07-06 |

# Fig. 6100 FUEL FILLER PUMP
# POMPE

**Serial No. ;**

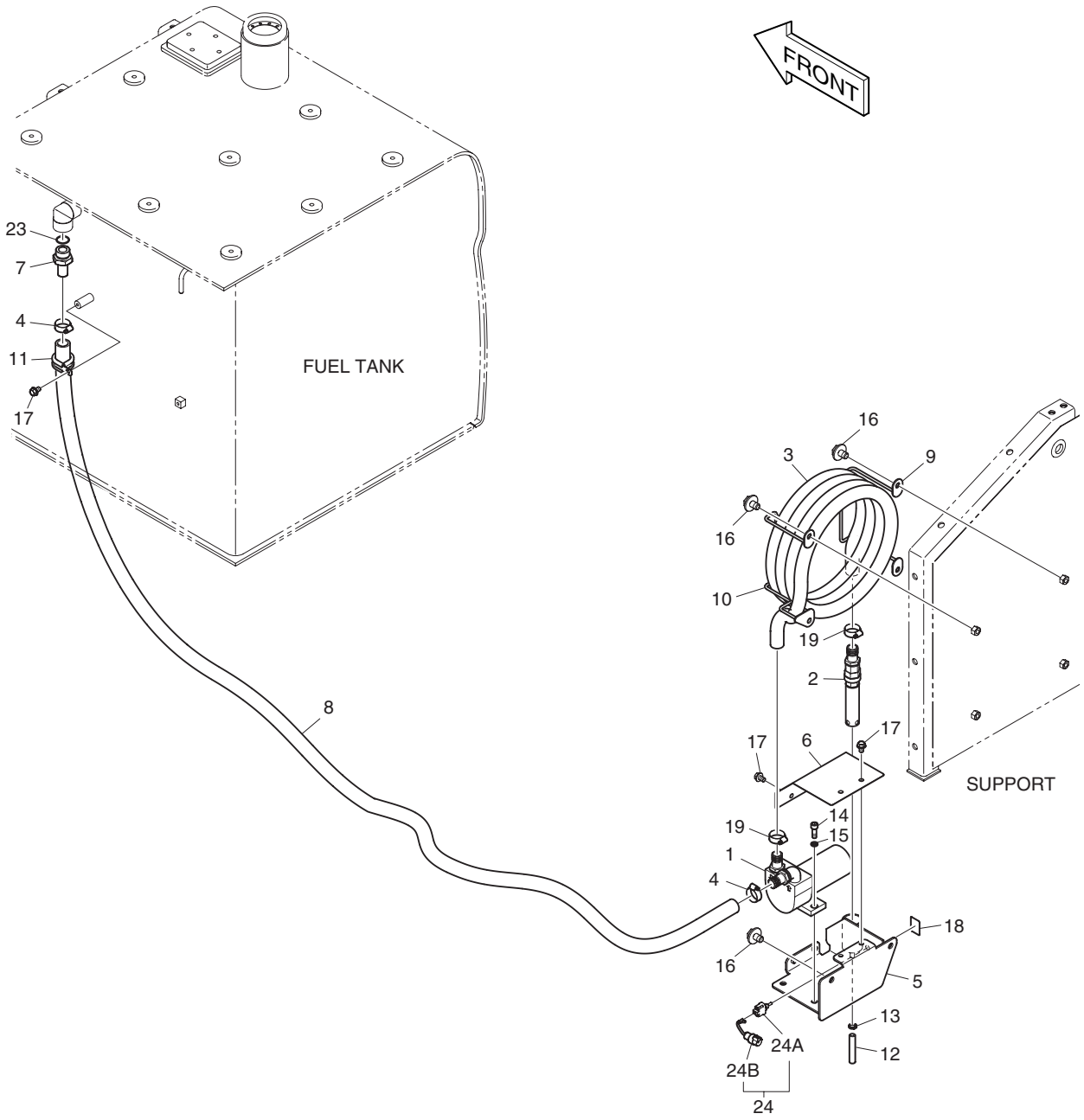

| DATE | JUN. 30, 2007 |
|---|---|
| REV. NO. | EXB07-06 |

# Fig. 6100 FUEL FILLER PUMP POMPE

**Serial No. ;**

| Key No. | Part No. | Description | Description | Q'ty | S.C | Serial No. | ICA | Replaceable part | |
|---|---|---|---|---|---|---|---|---|---|
| | | | | | | | | Part No. | Q'ty |
| 6100-- | K1006365C | FUEL FILLER PUMP | POMPE | - | D | | | | |
| 1 | 401-00527 | PUMP;FUEL TRANSFER | POMPE | 1 | | | | | |
| 2 | 421-00023 | CHECK VALVE ASS'Y | VANNE | 1 | | | | | |
| 3 | 185-00412D1 | HOSE;FUEL | TUYAU A GAZOLE | 1 | | | | | |
| 4 | S8470044 | CLAMP;HOSE | COLLIER | 2 | | | | | |
| 5 | K1001300A | BRACKET;FUEL PUMP | SUPPORT | 1 | | | | | |
| 6 | K1001301A | COVER | COUVERCLE | 1 | | | | | |
| 7 | 2181-2104D8 | ADAPTER | RACCORD ADAPTATEUR | 1 | | | | | |
| 8 | DS2079164 | HOSE | TUYAU FLEXIBLE | 1 | | | | | |
| 9 | K1001270 | BRACKET | SUPPORT | 1 | | | | | |
| 10 | K1001271 | BRACKET | SUPPORT | 1 | | | | | |
| 11 | 124-00208D6 | CLIP | ATTACHE | 1 | | | | | |
| 12 | DS2079153 | HOSE | TUYAU FLEXIBLE | 1 | | | | | |
| 13 | S8450012 | CLAMP;HOSE | COLLIER | 1 | | | | | |
| 14 | S2212266 | BOLT;SOCKET | BOULON DE PLOT | 2 | | | | | |
| 15 | S5110603 | WASHER;SPRING | RONDELLE ELASTIQUE | 2 | | | | | |
| 16 | DS0025019 | BOLT;SET | BOULON A 6 PANS | 6 | | | | | |
| 17 | K1001029 | BOLT | BOULON A 6 PANS | 5 | | | | | |
| 18 | 190-01172 | PLATE;NAME | PLAQUE D'IDENTIFICATION | 1 | | | | | |
| 19 | S8450023 | CLAMP;HOSE | COLLIER | 2 | | | | | |
| 23 | S8000291 | O-RING | JOINT TORIQUE | 1 | | | | | |
| 24 | **K1024144** | **TOGGLE SWITCH ASS'Y** | INTERRUPTEUR A LEVIER | 1 | | | | | |
| 24A | 549-00093 | . SWITCH;TOGGLE | . INTERRUPTEUR | 1 | | | | | |
| 24B | 530-00214A | . HARNESS | . FAISCEAU | 1 | | | | | |

| DATE | OCT. 17, 2005 |
|---|---|
| 1st EDITION | |

# Fig. 6110 SUN ROOF COVER
# COUVERTURE DE TOIT DU SOLEIL

**Serial No. ;**

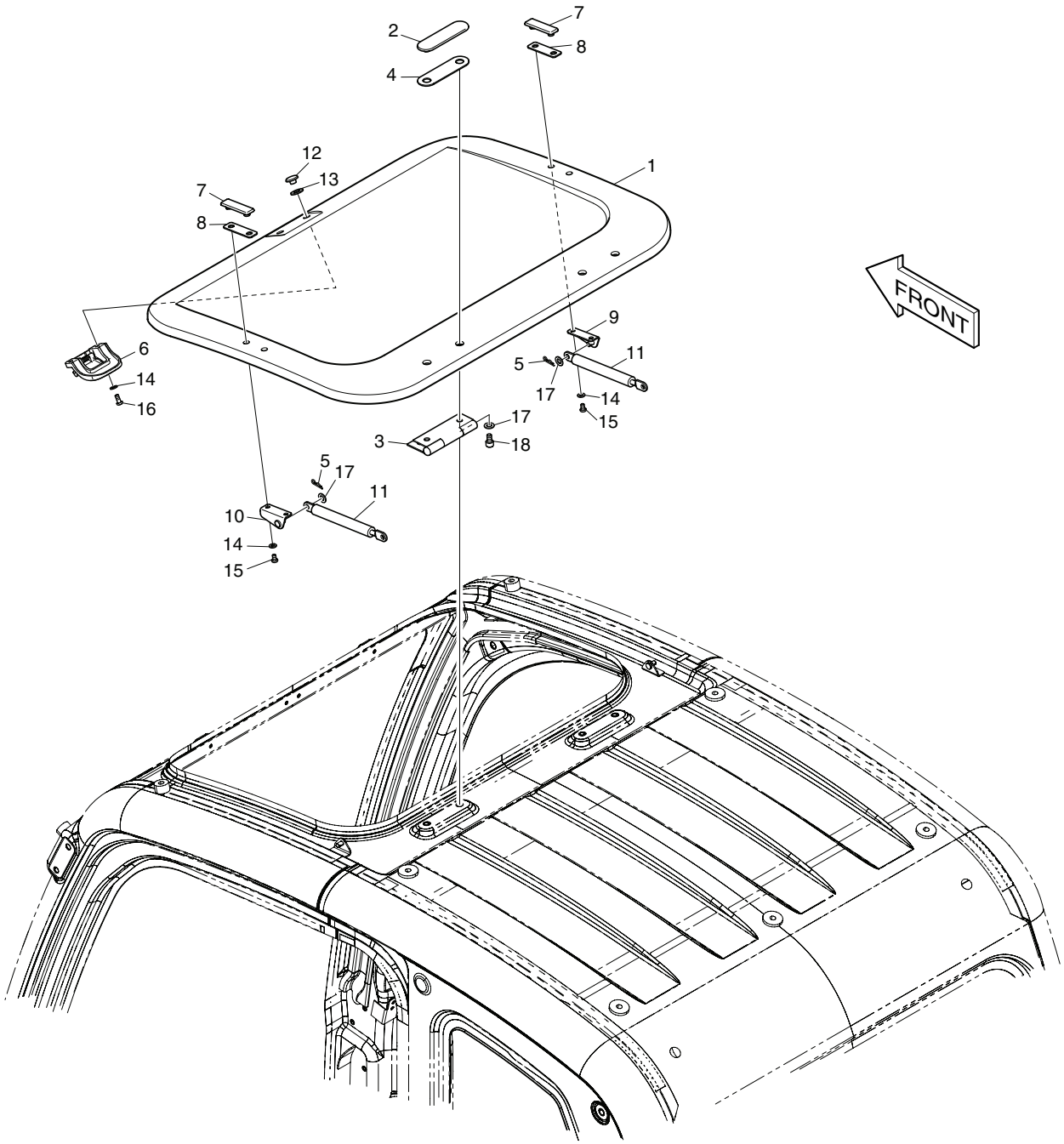

| DATE | OCT. 17, 2005 |
|---|---|
| 1st EDITION | |

# Fig. 6110 SUN ROOF COVER
# COUVERTURE DE TOIT DU SOLEIL

Serial No. ;

| Key No. | Part No. | Description | Description | Q'ty | S.C | Serial No. | ICA | Replaceable part | |
|---|---|---|---|---|---|---|---|---|---|
| | | | | | | | | Part No. | Q'ty |
| 6110-- | 621-02870C | SUN ROOF COVER | LE SOLEIL | - | D | | | | |
| 1 | 621-02871B | COVER;SUN ROOF | COUVERCLE | 1 | | | | | |
| 2 | 621-02872 | COVER;ROOF HINGE | COUVERCLE | 2 | | | | | |
| 3 | 171-00060A | HINGE;ROOF COVER | CHARNIERE | 2 | | | | | |
| 4 | 161-00599 | PAD;RUBBER | CAOUTCHOUC | 2 | | | | | |
| 5 | 123-00523 | PIN;GAS-SPRING | GOUJON | 2 | | | | | |
| 6 | 123-00516B | LOCK ASS'Y;ROOF COVER | SERRURE | 1 | | | | | |
| 7 | 621-02873 | COVER;ROOF GAS-CYLINDER | COUVERCLE | 2 | | | | | |
| 8 | 161-00600 | PAD;RUBBER | CAOUTCHOUC | 2 | | | | | |
| 9 | 191-03279A | PLATE;ROOF GAS-SPRING RH | PLAQUE | 1 | | | | | |
| 10 | 191-03280A | PLATE;ROOF GAS-SPRING LH | PLAQUE | 1 | | | | | |
| 11 | DS1003008 | GAS-SPRING | RESSORT | 2 | | | | | |
| 12 | 621-03103 | COVER;ROOF HANDLE | COUVERCLE | 2 | | | | | |
| 13 | 161-00639 | RUBBER;ROOF HANDLE | CAOUTCHOUC | 2 | | | | | |
| 14 | 2114-1898D3 | WASHER M6 | RONDELLE | 6 | | | | | |
| 15 | S3450943 | SCREW M6X1.0X10 | VIS M6X1.0X10 | 4 | | | | | |
| 16 | 2120-2166D7 | SCREW M6X1.0X14 | BOULON A 6 PANS | 2 | | | | | |
| 17 | 2114-1898D14 | WASHER | RONDELLE PAQUE | 6 | | | | | |
| 18 | S2208561 | BOLT;SOCKET M8x1.25x15 | BOULON A 6 PANS | 4 | | | | | |

| DATE | OCT. 17, 2005 |
|---|---|
| 1st EDITION | |

# Fig. 6120 MAIN PIPING - ONE WAY
# CONDUITES DE BATI PRINCIPAL

**Serial No. ;**

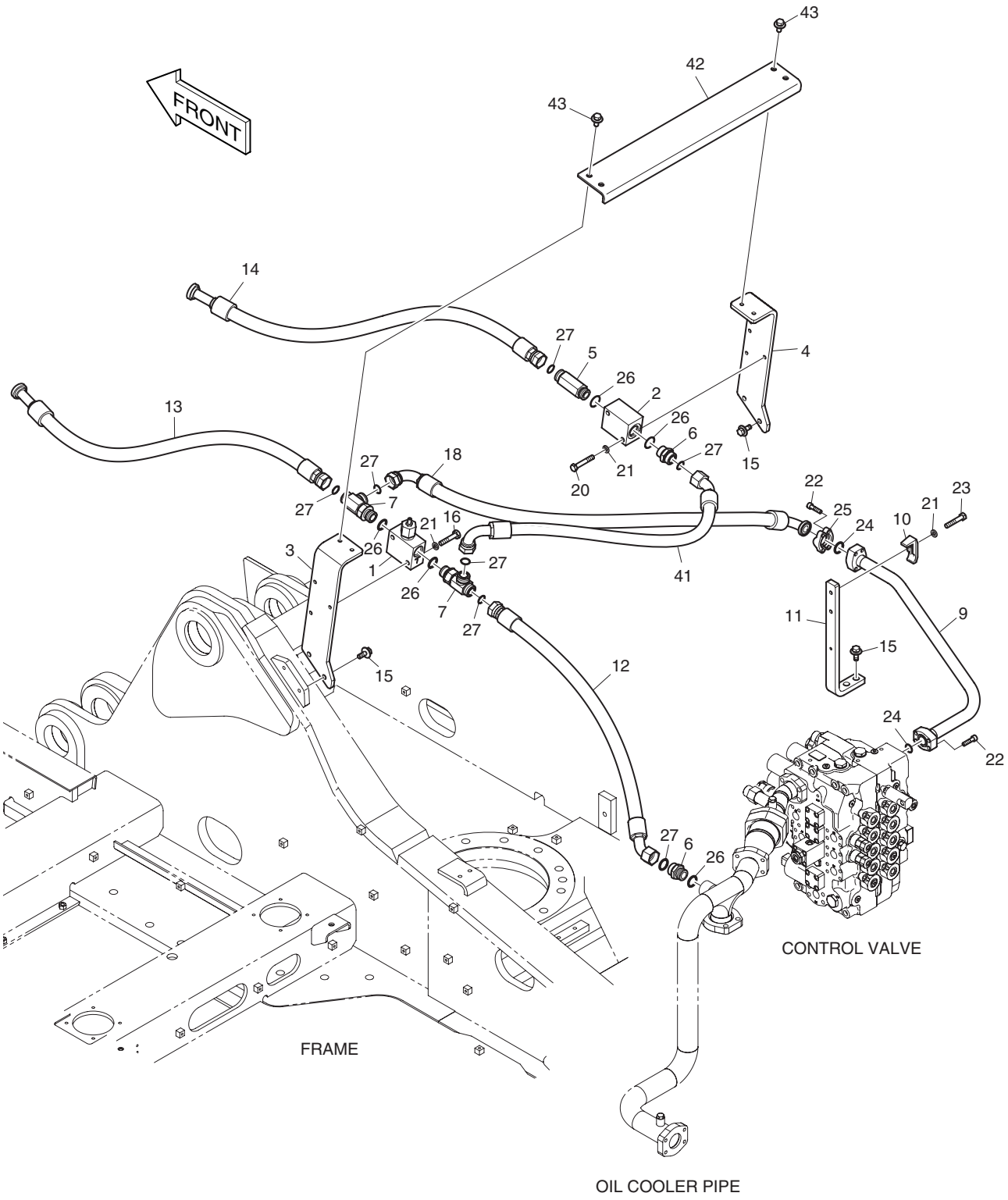

| DATE | OCT. 17, 2005 |
|---|---|
| 1st EDITION | |

# Fig. 6120 MAIN PIPING - ONE WAY
# CONDUITES DE BATI PRINCIPAL

Serial No. ;

| Key No. | Part No. | Description | Description | Q'ty | S.C | Serial No. | ICA | Replaceable part | |
|---|---|---|---|---|---|---|---|---|---|
| | | | | | | | | Part No. | Q'ty |
| 6120-- | K1005113C | MAIN PIPING-ONE WAY | CONDUITES DE BATI | - | D | | | | |
| 1 | 426-00267A | VALVE;RELIEF | VANNE | 1 | | | | | |
| 2 | 423-00193B | BLOCK | BLOC | 1 | | | | | |
| 3 | 195-03435B | BRACKET | SUPPORT | 1 | | | | | |
| 4 | 195-03436B | BRACKET | SUPPORT | 1 | | | | | |
| 5 | DS2232107 | ADAPTER | ADAPTEUR | 1 | | | | | |
| 6 | 2181-4133D6 | Adapter | RACCORD ADAPTATEUR | 2 | | | | | |
| 7 | 181-00121D8 | TEE | TE | 2 | | | | | |
| 9 | K1004828A | PIPE | CONDUITE | 1 | | | | | |
| 10 | 2124-1026D3 | CLAMP;PIPE | ATTACHE DE TUBE | 1 | | | | | |
| 11 | K1004829A | BRACKET | SUPPORT | 1 | | | | | |
| 12 | DS2012253 | HOSE | TUYAU FLEXIBLE | 1 | | | | | |
| 13 | DS2016056 | HOSE | TUYAU FLEXIBLE | 1 | | | | | |
| 14 | DS2016056 | HOSE | TUYAU FLEXIBLE | 1 | | | | | |
| 15 | DS0025020 | BOLT;SET | BOULON A 6 PANS | 6 | | | | | |
| 16 | S0561066 | BOLT | BOULON A 6 PANS | 3 | | | | | |
| 18 | DS2026123 | HOSE | TUYAU FLEXIBLE | 1 | | | | | |
| 20 | S0561266 | BOLT | BOULON A 6 PANS | 2 | | | | | |
| 21 | S5102703 | WASHER;SPRING | RONDELLE ELASTIQUE | 5 | | | | | |
| 22 | S2212466 | BOLT;SOCKET | BOULON DE PLOT | 8 | | | | | |
| 23 | S0561066 | BOLT | BOULON A 6 PANS | 1 | | | | | |
| 24 | 2180-1026D19 | O-RING | JOINT TORIQUE | 2 | | | | | |
| 25 | 2181-9078 | FLANGE;SPLIT | FLASQUE EN DEUX | 2 | | | | | |
| 26 | S8000291 | O-RING | JOINT TORIQUE | 5 | | | | | |
| 27 | S8030161 | O-RING | JOINT TORIQUE | 7 | | | | | |
| 41 | DS2021102 | HOSE | TUYAU FLEXIBLE | 1 | | | | | |
| 42 | K1006393A | BRACKET | SUPPORT | 1 | | | | | |
| 43 | DS0025018 | BOLT;SET | BOULON A 6 PANS | 4 | | | | | |

| DATE | OCT. 17, 2005 |
|---|---|
| 1st EDITION | |

# Fig. 6130 ONE WAY PIPING - WITH FILTER
# TUYAUTERIE A SENS UNIQUE

**Serial No. ;**

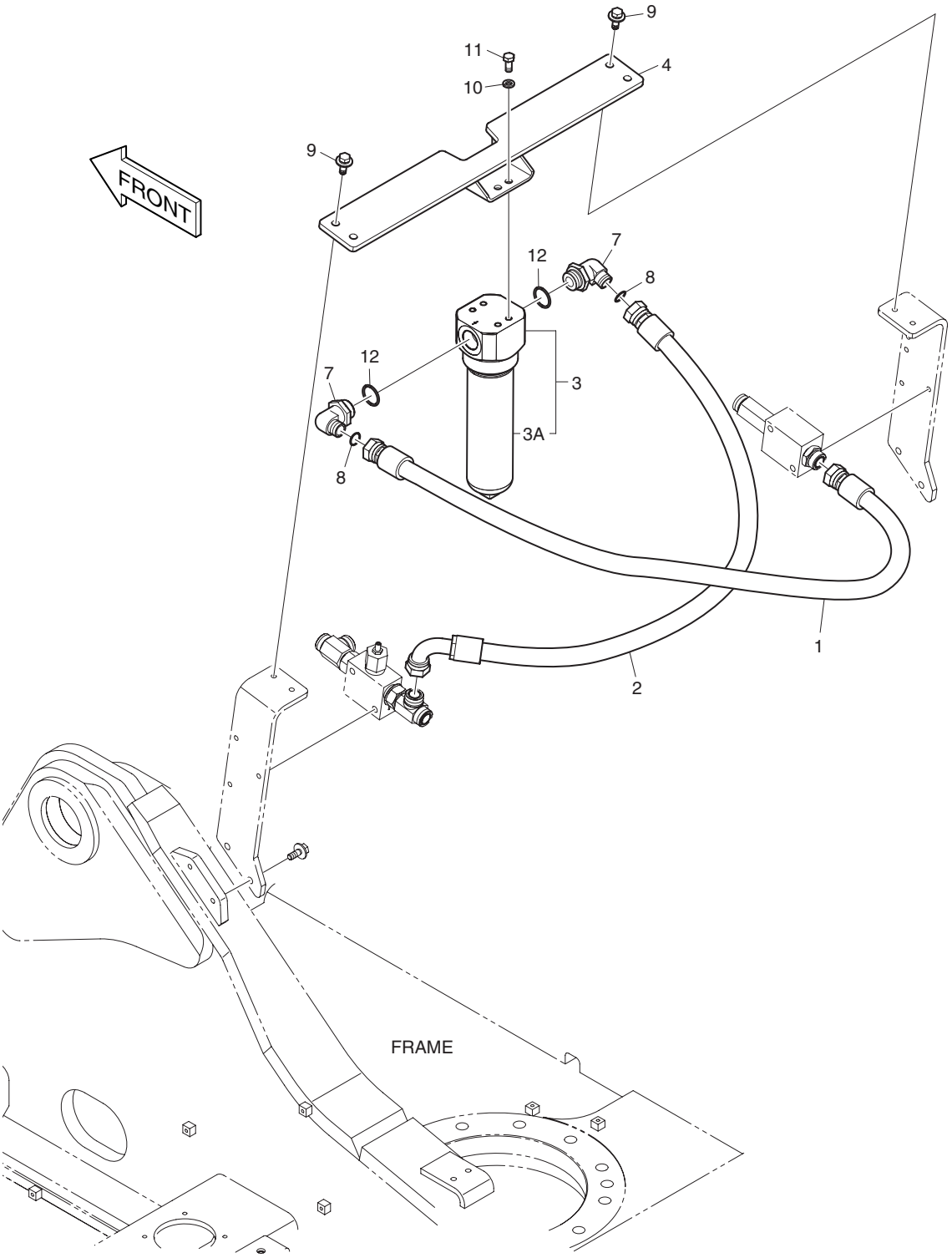

| DATE | OCT. 17, 2005 |
|---|---|
| 1st EDITION | |

# Fig. 6130 ONE WAY PIPING - WITH FILTER
# TUYAUTERIE A SENS UNIQUE

Serial No. ;

| Key No. | Part No. | Description | Description | Q'ty | S.C | Serial No. | ICA | Replaceable part | |
|---|---|---|---|---|---|---|---|---|---|
| | | | | | | | | Part No. | Q'ty |
| 6130-- | K1006587B | ONE WAY PIPING-WITH FILTER | TUYAUTERIE A SENS | - | D | | | | |
| 1 | DS2011330 | HOSE | TUYAU FLEXIBLE | 1 | | | | | |
| 2 | DS2013698 | HOSE | TUYAU FLEXIBLE | 1 | | | | | |
| 3 | 471-00109 | FILTER;BREAKER | FILTRE | 1 | | | | | |
| 3A | 474-00041 | . ELEMENT;BREAKER FILTER | . ELEMENT | 1 | | | | | |
| 4 | K1006392A | BRACKET | SUPPORT | 1 | | | | | |
| 7 | DS2304080 | ELBOW | COUDE | 2 | | | | | |
| 8 | S8030161 | O-RING | JOINT TORIQUE | 2 | | | | | |
| 9 | DS0025020 | BOLT;SET | BOULON A 6 PANS | 4 | | | | | |
| 10 | S5102703 | WASHER;SPRING | RONDELLE ELASTIQUE | 4 | | | | | |
| 11 | S0515166 | BOLT | BOULON A 6 PANS | 4 | | | | | |
| 12 | S8000381 | O-RING | JOINT TORIQUE | 2 | | | | | |

| DATE | OCT. 17, 2005 |
|---|---|
| 1st EDITION | |

# Fig. 6140 PILOT PIPING - ONE & TWO WAY
# CONDUITES DE PILOTE

**Serial No. ; 5001 ~ 5031**

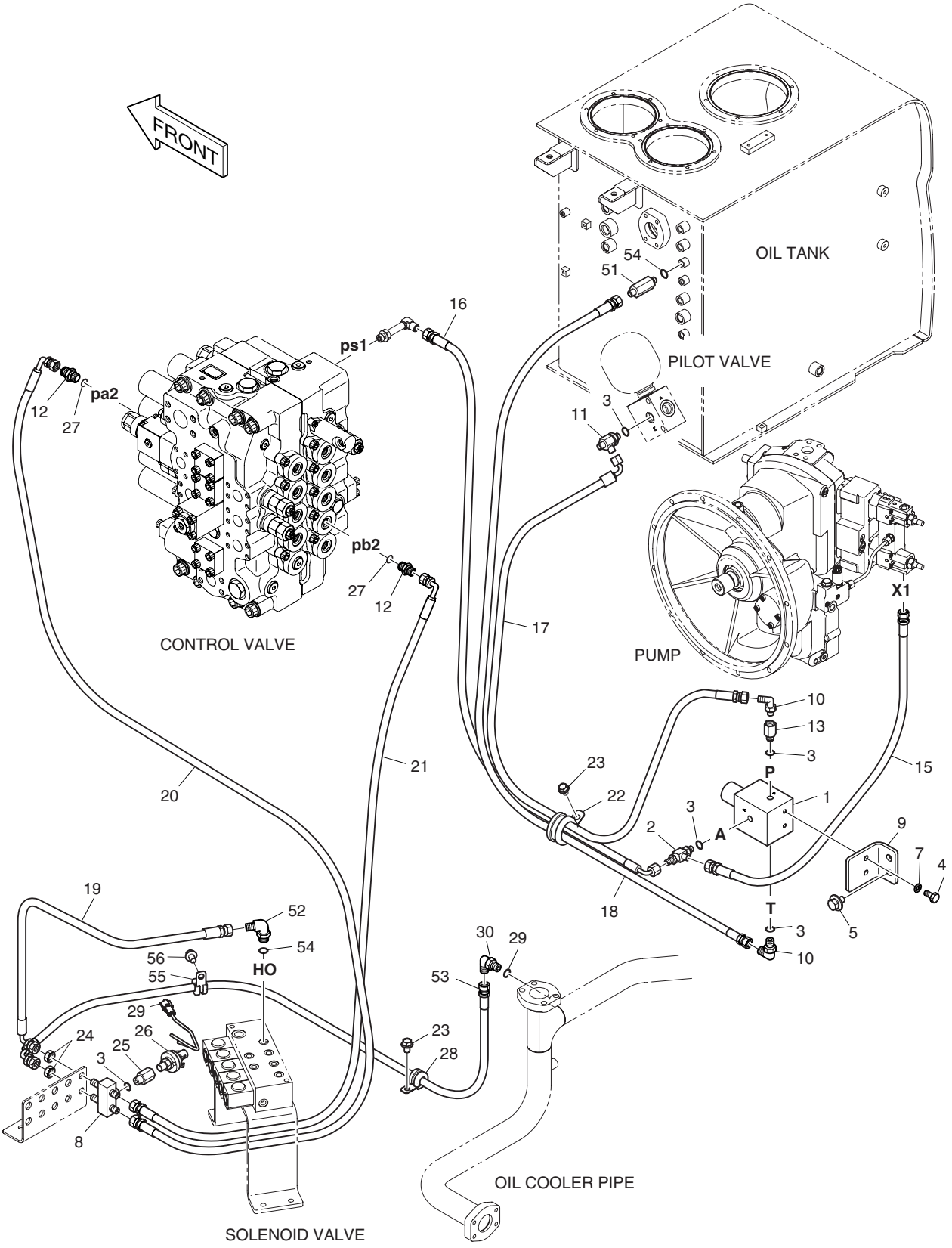

| DATE | OCT. 17, 2005 |
|---|---|
| 1st EDITION | |

# Fig. 6140 PILOT PIPING - ONE & TWO WAY CONDUITES DE PILOTE

**Serial No. ; 5001 ~ 5031**

| Key No. | Part No. | Description | Description | Q'ty | S.C | Serial No. | ICA | Replaceable part | |
|---|---|---|---|---|---|---|---|---|---|
| | | | | | | | | Part No. | Q'ty |
| 6140-- | K1006224B | PILOT PIPING-ONE & TWO WAY | CONDUITES DE PILOTE | - | D | 5001-5031 | | | |
| 1 | 426-00266 | VALVE;EPPR | VANNE | 1 | | | | | |
| 2 | 181-00779 | TEE;SHUTTLE | TE | 1 | | | | | |
| 3 | S8000111 | O-RING | JOINT TORIQUE | 5 | | | | | |
| 4 | S0508766 | BOLT | BOULON A 6 PANS | 2 | | | | | |
| 5 | DS0025013 | BOLT;SET | BOULON A 6 PANS | 2 | | | | | |
| 7 | S5102503 | WASHER;SPRING | RONDELLE ELASTIQUE M8 | 2 | | | | | |
| 8 | 420-00476 | VALVE;SHUTTLE | VANNE | 1 | | | | | |
| 9 | 195-02711B | BRACKET | SUPPORT | 1 | | | | | |
| 10 | 2181-1702D4 | ELBOW | COUDE | 2 | | | | | |
| 11 | 2181-1951D1 | TEE | TE | 1 | | | | | |
| 12 | 2181-1126D36 | ADAPTER | RACCORD | 2 | | | | | |
| 13 | 471-00118 | FILTER;REDUCER | REDUCTEUR | 1 | | | | | |
| 15 | DS2094006 | HOSE | TUYAU FLEXIBLE | 1 | | | | | |
| 16 | DS2093118 | HOSE | TUYAU FLEXIBLE | 1 | | | | | |
| 17 | DS2093093 | HOSE | TUYAU FLEXIBLE | 1 | | | | | |
| 18 | DS2094113 | HOSE | TUYAU FLEXIBLE | 1 | | | | | |
| 19 | DS2093040 | HOSE | TUYAU FLEXIBLE | 1 | | | | | |
| 20 | DS2093163 | HOSE | TUYAU FLEXIBLE | 1 | | | | | |
| 21 | DS2093101 | HOSE | TUYAU FLEXIBLE | 1 | | | | | |
| 22 | 124-00208D5 | CLIP | ATTACHE | 1 | | | | | |
| 23 | K1001029 | BOLT | BOULON A 6 PANS | 2 | | | | | |
| 24 | 121-00010D7 | NUT | ECROU | 2 | | | | | |
| 25 | DS2242017 | REDUCER | REDUCTEUR | 1 | | | | | |
| 26 | 549-00010 | SWITCH;PRESSURE | INTERRUPTEUR | 1 | | | | | |
| 27 | S8000141 | O-RING | JOINT TORIQUE | 3 | | | | | |
| 28 | 124-00208D2 | CLIP | CLIP | 1 | | | | | |
| 29 | 530-00067 | HARNESS | FAISCEAU | 1 | | | | | |
| 30 | 2181-1702D10 | ELBOW | COUDE | 1 | | | | | |
| 51 | 2181-1126D34 | ADAPTER | RACCORD ADAPTATEUR | 1 | | | | | |
| 52 | 2181-1702D4 | ELBOW | COUDE | 1 | | | | | |
| 53 | DS2093014 | HOSE | TUYAU FLEXIBLE | 1 | | | | | |
| 54 | S8000111 | O-RING | JOINT TORIQUE | 2 | | | | | |
| 55 | 124-00208D2 | CLIP | CLIP | 1 | | | | | |
| 56 | K1001029 | BOLT | BOULON A 6 PANS | 1 | | | | | |

| DATE | JUN. 30, 2007 |
|---|---|
| REV.NO. | EXB07-06 |

# Fig. 6141 PILOT PIPING - ONE & TWO WAY
# CONDUITES DE PILOTE

**Serial No. ; 5032 ~**

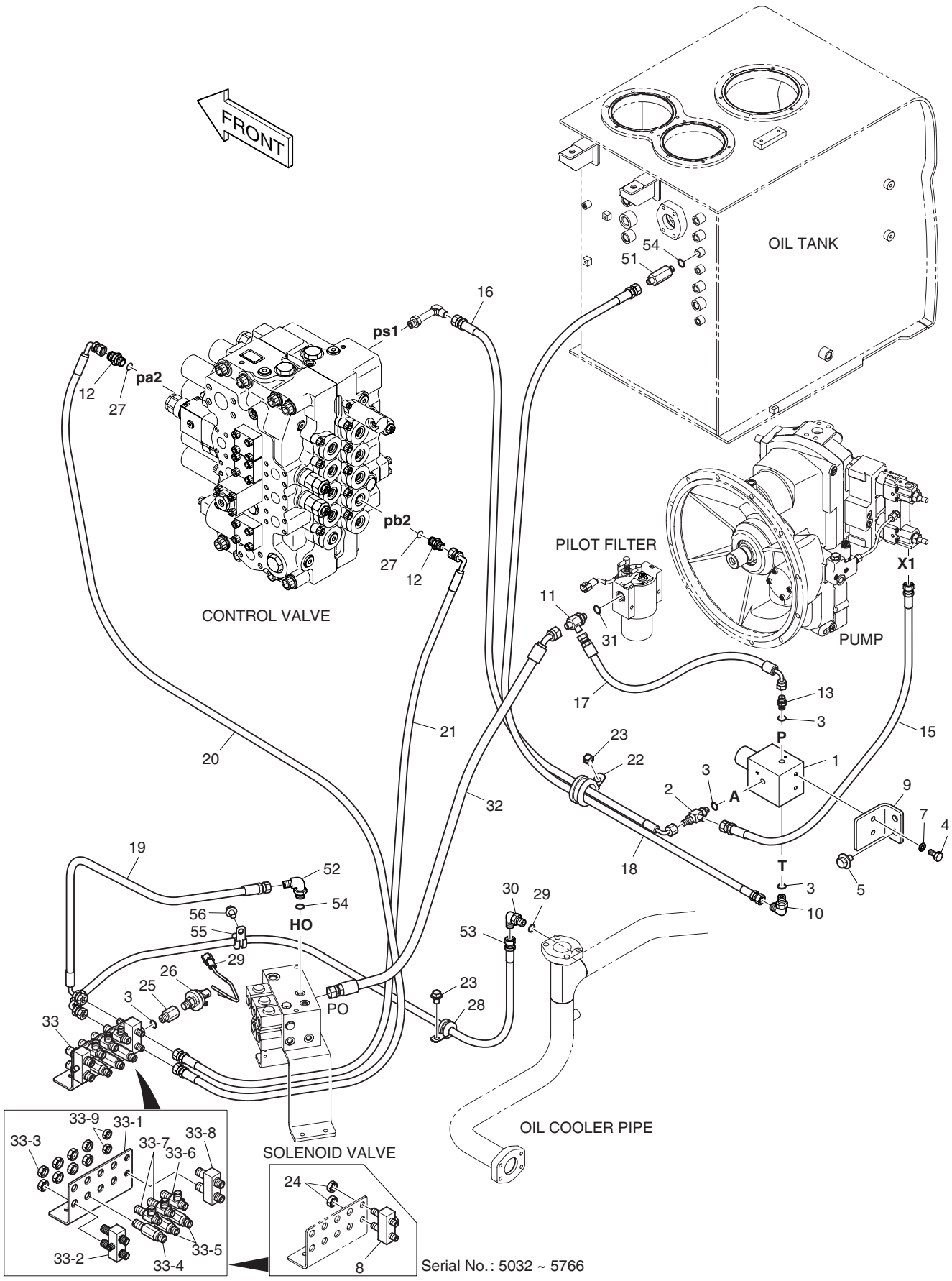

| DATE | JUN. 30, 2007 |
|---|---|
| REV. NO. | EXB07-06 |

# Fig. 6141 PILOT PIPING - ONE & TWO WAY CONDUITES DE PILOTE

**Serial No. ; 5032 ~**

| Key No. | Part No. | Description | Description | Q'ty | S.C | Serial No. | ICA | Replaceable part | |
|---|---|---|---|---|---|---|---|---|---|
| | | | | | | | | Part No. | Q'ty |
| 6141-- | K1006224G | PILOT PIPING-ONE & TWO WAY | CONDUITES DE PILOTE | - | D | 5032– | | | |
| 1 | 426-00266 | VALVE;EPPR | VANNE | 1 | | | | | |
| 2 | 181-00779 | TEE;SHUTTLE | TE | 1 | | | | | |
| 3 | S8000111 | O-RING | JOINT TORIQUE | 5 | | | | | |
| 4 | S0508766 | BOLT | BOULON A 6 PANS | 2 | | | | | |
| 5 | DS0025013 | BOLT;SET | BOULON A 6 PANS | 2 | | | | | |
| 7 | S5102503 | WASHER;SPRING | RONDELLE ELASTIQUE M8 | 2 | | | | | |
| 8 | **420-00476** | **VALVE;SHUTTLE** | VANNE | 1 | | **5032–5766** | | | |
| 9 | 195-02711B | BRACKET | SUPPORT | 1 | | | | | |
| 10 | 2181-1702D4 | ELBOW | COUDE | 1 | | | | | |
| 11 | 2181-1951D19 | TEE | TE | 1 | | | | | |
| 12 | 2181-1126D36 | ADAPTER | RACCORD | 2 | | | | | |
| 13 | 2471-1133 | ADAPTER;FILTER | REDUCTEUR | 1 | | | | | |
| 15 | DS2094006 | HOSE | TUYAU FLEXIBLE | 1 | | | | | |
| 16 | DS2093118 | HOSE | TUYAU FLEXIBLE | 1 | | | | | |
| 17 | DS2093036 | HOSE | TUYAU FLEXIBLE | 1 | | 5032–5066 | | | |
| | DS2093032 | HOSE | TUYAU FLEXIBLE | 1 | | 5067– | | | |
| 18 | DS2094113 | HOSE | TUYAU FLEXIBLE | 1 | | | | | |
| 19 | DS2093005 | HOSE | TUYAU FLEXIBLE | 1 | | | | | |
| 20 | DS2093163 | HOSE | TUYAU FLEXIBLE | 1 | | | | | |
| 21 | DS2093101 | HOSE | TUYAU FLEXIBLE | 1 | | | | | |
| 22 | 124-00208D5 | CLIP | ATTACHE | 1 | | | | | |
| 23 | K1001029 | BOLT | BOULON A 6 PANS | 2 | | | | | |
| 24 | **121-00010D7** | **NUT** | ECROU | 2 | | **5032–5766** | | | |
| 25 | DS2242017 | REDUCER | REDUCTEUR | 1 | | | | | |
| 26 | 549-00010 | SWITCH;PRESSURE | INTERRUPTEUR | 1 | | | | | |
| 27 | S8000141 | O-RING | JOINT TORIQUE | 3 | | | | | |
| 28 | 124-00208D2 | CLIP | CLIP | 1 | | | | | |
| 29 | 530-00067 | HARNESS | FAISCEAU | 1 | | | | | |
| 30 | 2181-1702D10 | ELBOW | COUDE | 1 | | | | | |
| 31 | S8000181 | O-RING | JOINT TORIQUE | 1 | | | | | |
| 32 | 2184-1026D380 | HOSE | TUYAU FLEXIBLE | 1 | | | | | |
| 33 | **K1038029** | **JOINT PLATE SUB ASS'Y** | SUPPORT | 1 | | **5766–** | | | |
| 33-1 | K1000354 | . BRACKET;JOINT | . SUPPORT | 1 | | | | | |
| 33-2 | 420-00307 | . VALVE;SHUTTLE | . VANNE | 1 | | | | | |
| 33-3 | 121-00010D1 | . NUT | . ECROU | 8 | | | | | |
| 33-4 | 420-00352D1 | . VALVE;SHOCKLESS | . VANNE | 1 | | | | | |
| 33-5 | DS2410009 | . ADAPTER | . ADAPTEUR | 2 | | | | | |

| DATE | JUN. 30, 2007 |
|---|---|
| REV.NO. | EXB07-06 |

# Fig. 6141 PILOT PIPING - ONE & TWO WAY
# CONDUITES DE PILOTE

**Serial No. ; 5032 ~**

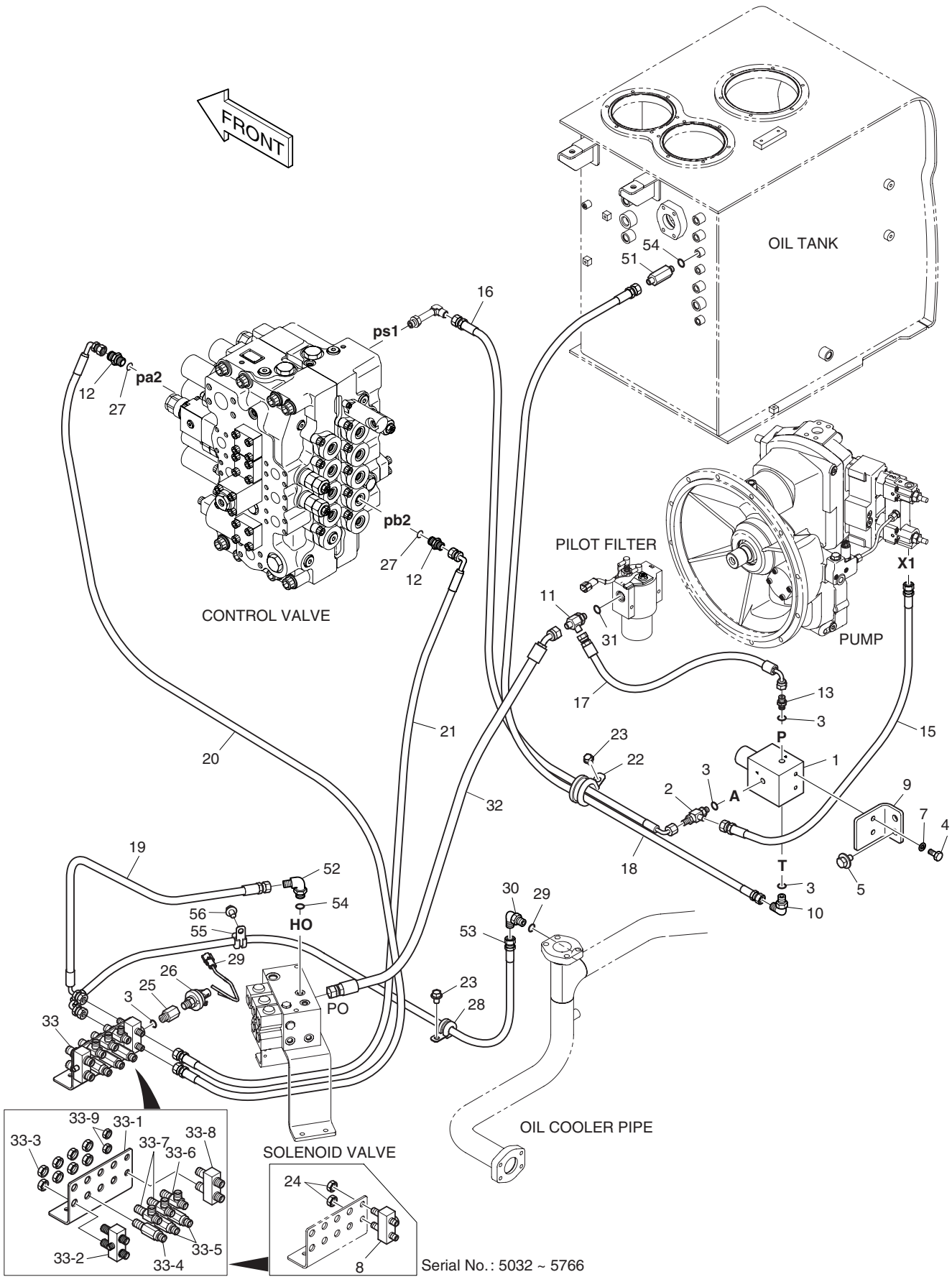

| DATE | JUN. 30, 2007 |
|---|---|
| REV. NO. | EXB07-06 |

# Fig. 6141 PILOT PIPING - ONE & TWO WAY CONDUITES DE PILOTE

**Serial No. ; 5032 ~**

| Key No. | Part No. | Description | Description | Q'ty | S.C | Serial No. | ICA | Replaceable part | |
|---|---|---|---|---|---|---|---|---|---|
| | | | | | | | | Part No. | Q'ty |
| 6141-33-6 | 181-00086D1 | . TEE | . TE | 1 | | | | | |
| 33-7 | 181-00086D2 | . TEE | . TE | 2 | | | | | |
| 33-8 | 420-00476 | . VALVE;SHUTTLE | . VANNE | 1 | | | | | |
| 33-9 | 121-00010D7 | . NUT | . ECROU | 2 | | | | | |
| 51 | 2181-1126D34 | ADAPTER | RACCORD ADAPTATEUR | 1 | | | | | |
| 52 | 2181-1702D4 | ELBOW | COUDE | 1 | | | | | |
| 53 | DS2093014 | HOSE | TUYAU FLEXIBLE | 1 | | | | | |
| 54 | S8000111 | O-RING | JOINT TORIQUE | 2 | | | | | |
| 55 | 124-00208D2 | CLIP | CLIP | 1 | | | | | |
| 56 | K1001029 | BOLT | BOULON A 6 PANS | 1 | | | | | |

| DATE | OCT. 17, 2005 |
|---|---|
| 1st EDITION | |

# Fig. 6150 MAIN PIPING - TWO WAY
# CONDUITES DE BATI PRINCIPAL

**Serial No. ;**

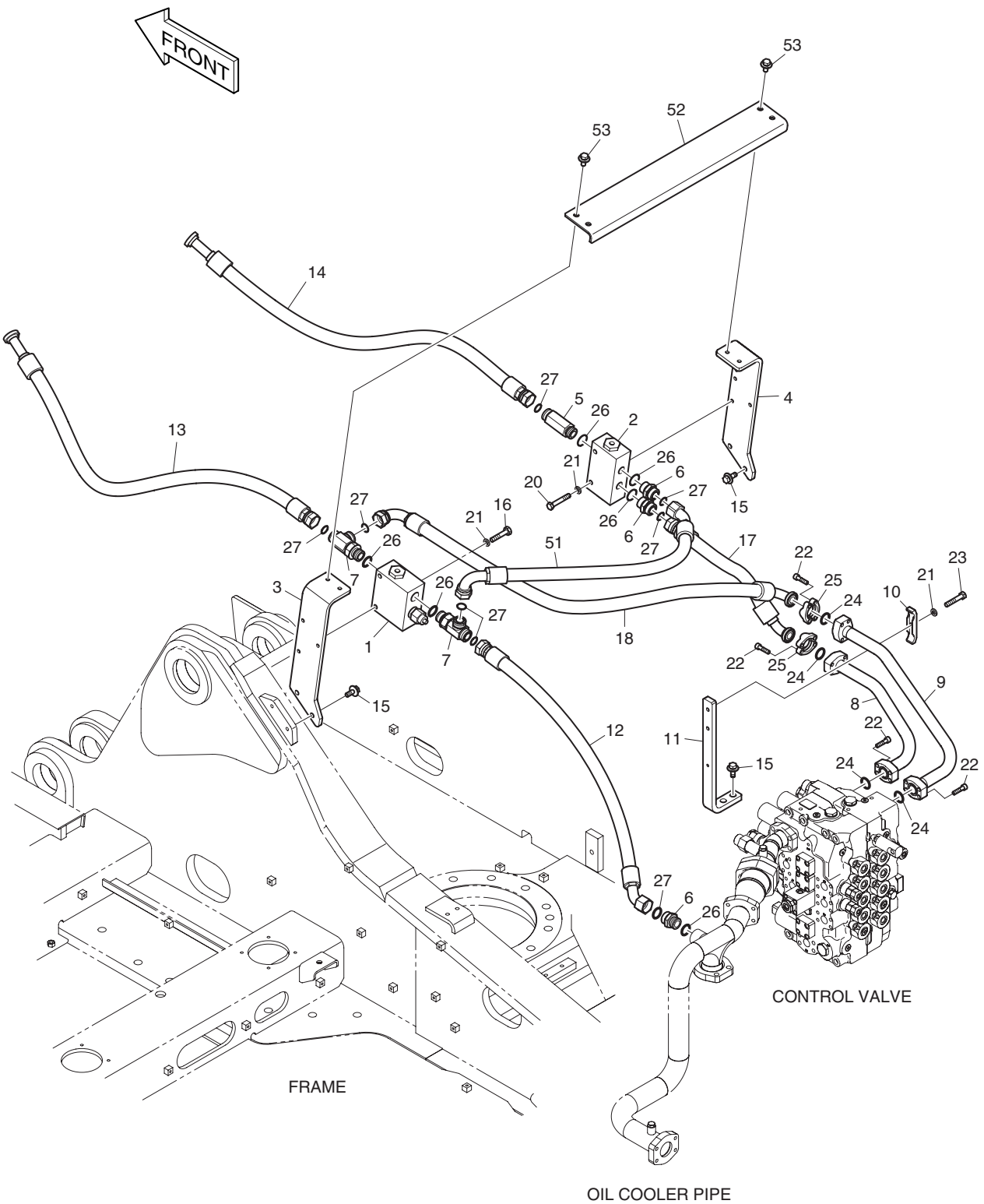

| DATE | OCT. 17, 2005 |
|---|---|
| 1st EDITION | |

# Fig. 6150 MAIN PIPING - TWO WAY
# CONDUITES DE BATI PRINCIPAL

Serial No. ;

| Key No. | Part No. | Description | Description | Q'ty | S.C | Serial No. | ICA | Replaceable part | |
|---|---|---|---|---|---|---|---|---|---|
| | | | | | | | | Part No. | Q'ty |
| 6150-- | K1005114C | MAIN PIPING-TWO WAY | CONDUITES DE BATI | - | D | | | | |
| 1 | 426-00248A | VALVE;SELECT | VANNE | 1 | | | | | |
| 2 | 426-00249A | VALVE;SELECT | VANNE | 1 | | | | | |
| 3 | 195-03435B | BRACKET | SUPPORT | 1 | | | | | |
| 4 | 195-03436B | BRACKET | SUPPORT | 1 | | | | | |
| 5 | DS2232107 | ADAPTER | ADAPTEUR | 1 | | | | | |
| 6 | 2181-4133D6 | ADAPTER | RACCORD ADAPTATEUR | 3 | | | | | |
| 7 | 181-00121D8 | TEE | TE | 2 | | | | | |
| 8 | K1004827A | PIPE | CONDUITE | 1 | | | | | |
| 9 | K1004828A | PIPE | CONDUITE | 1 | | | | | |
| 10 | 2124-1025D5 | CLAMP | ATTACHE DE TUBE | 1 | | | | | |
| 11 | K1004829A | BRACKET | SUPPORT | 1 | | | | | |
| 12 | DS2012249 | HOSE | TUYAU FLEXIBLE | 1 | | | | | |
| 13 | DS2016056 | HOSE | TUYAU FLEXIBLE | 1 | | | | | |
| 14 | DS2016056 | HOSE | TUYAU FLEXIBLE | 1 | | | | | |
| 15 | DS0025020 | BOLT;SET | BOULON A 6 PANS | 6 | | | | | |
| 16 | S0561466 | BOLT | BOULON A 6 PANS | 2 | | | | | |
| 17 | DS2017042 | HOSE | TUYAU FLEXIBLE | 1 | | | | | |
| 18 | DS2026123 | HOSE | TUYAU FLEXIBLE | 1 | | | | | |
| 20 | S0561266 | BOLT | BOULON A 6 PANS | 2 | | | | | |
| 21 | S5102703 | WASHER;SPRING | RONDELLE ELASTIQUE | 5 | | | | | |
| 22 | S2212466 | BOLT;SOCKET | BOULON DE PLOT | 16 | | | | | |
| 23 | S0561066 | BOLT | BOULON A 6 PANS | 1 | | | | | |
| 24 | 2180-1026D19 | O-RING | JOINT TORIQUE | 4 | | | | | |
| 25 | 2181-9078 | FLANGE;SPLIT | FLASQUE EN DEUX | 4 | | | | | |
| 26 | S8000291 | O-RING | JOINT TORIQUE | 6 | | | | | |
| 27 | S8030161 | O-RING | JOINT TORIQUE | 8 | | | | | |
| 51 | DS2021102 | HOSE | TUYAU FLEXIBLE | 1 | | | | | |
| 52 | K1006393A | BRACKET | SUPPORT | 1 | | | | | |
| 53 | DS0025018 | BOLT;SET | BOULON A 6 PANS | 4 | | | | | |

| DATE | OCT. 17, 2005 |
|---|---|
| 1st EDITION | |

# Fig. 6160 TWO WAY PIPING - WITH FILTER
# TUYAUTERIE DE DEUX MANIERES

Serial No. ;

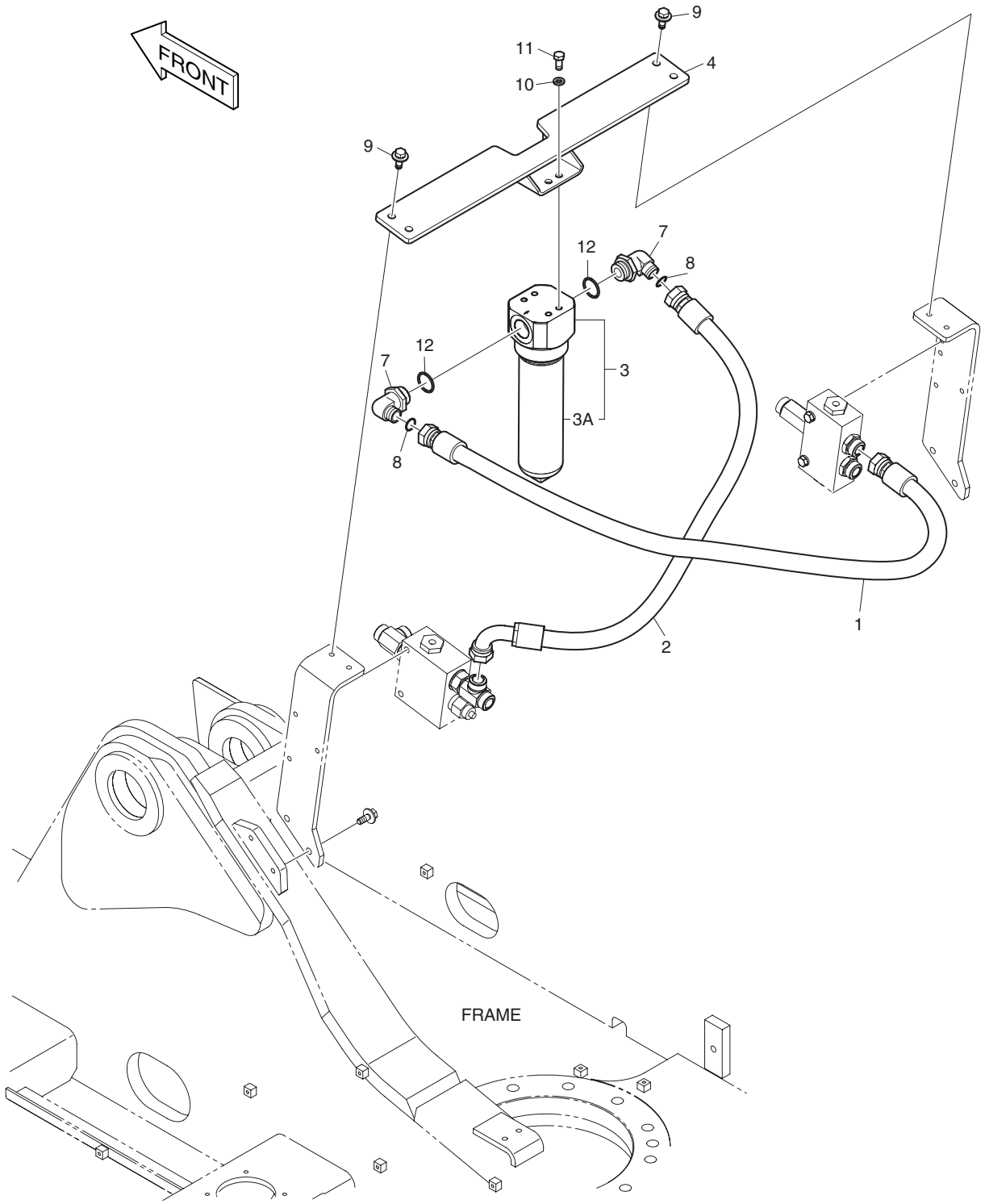

| DATE | OCT. 17, 2005 |
|---|---|
| 1st EDITION | |

# Fig. 6160 TWO WAY PIPING - WITH FILTER
# TUYAUTERIE DE DEUX MANIERES

Serial No. ;

| Key No. | Part No. | Description | Description | Q'ty | S.C | Serial No. | ICA | Replaceable part | |
|---|---|---|---|---|---|---|---|---|---|
| | | | | | | | | Part No. | Q'ty |
| 6160-- | K1006390B | TWO WAY PIPING-WITH FILTER | TUYAUTERIE DE DEUX | - | D | | | | |
| 1 | DS2011330 | HOSE | TUYAU FLEXIBLE | 1 | | | | | |
| 2 | DS2013698 | HOSE | TUYAU FLEXIBLE | 1 | | | | | |
| 3 | 471-00109 | FILTER;BREAKER | FILTRE | 1 | | | | | |
| 3A | 474-00041 | . ELEMENT;BREAKER FILTER | . ELEMENT | 1 | | | | | |
| 4 | K1006392A | BRACKET | SUPPORT | 1 | | | | | |
| 7 | DS2304080 | ELBOW | COUDE | 2 | | | | | |
| 8 | S8030161 | O-RING | JOINT TORIQUE | 2 | | | | | |
| 9 | DS0025020 | BOLT;SET | BOULON A 6 PANS | 4 | | | | | |
| 10 | S5102703 | WASHER;SPRING | RONDELLE ELASTIQUE | 4 | | | | | |
| 11 | S0515166 | BOLT | BOULON A 6 PANS | 4 | | | | | |
| 12 | S8000381 | O-RING | JOINT TORIQUE | 2 | | | | | |

| DATE | JUN. 30, 2007 |
|---|---|
| REV.NO. | EXB07-06 |

# Fig. 6170 PILOT PIPING - TWO WAY(1)
# CIRCUIT DE PILOTE

**Serial No. ;**

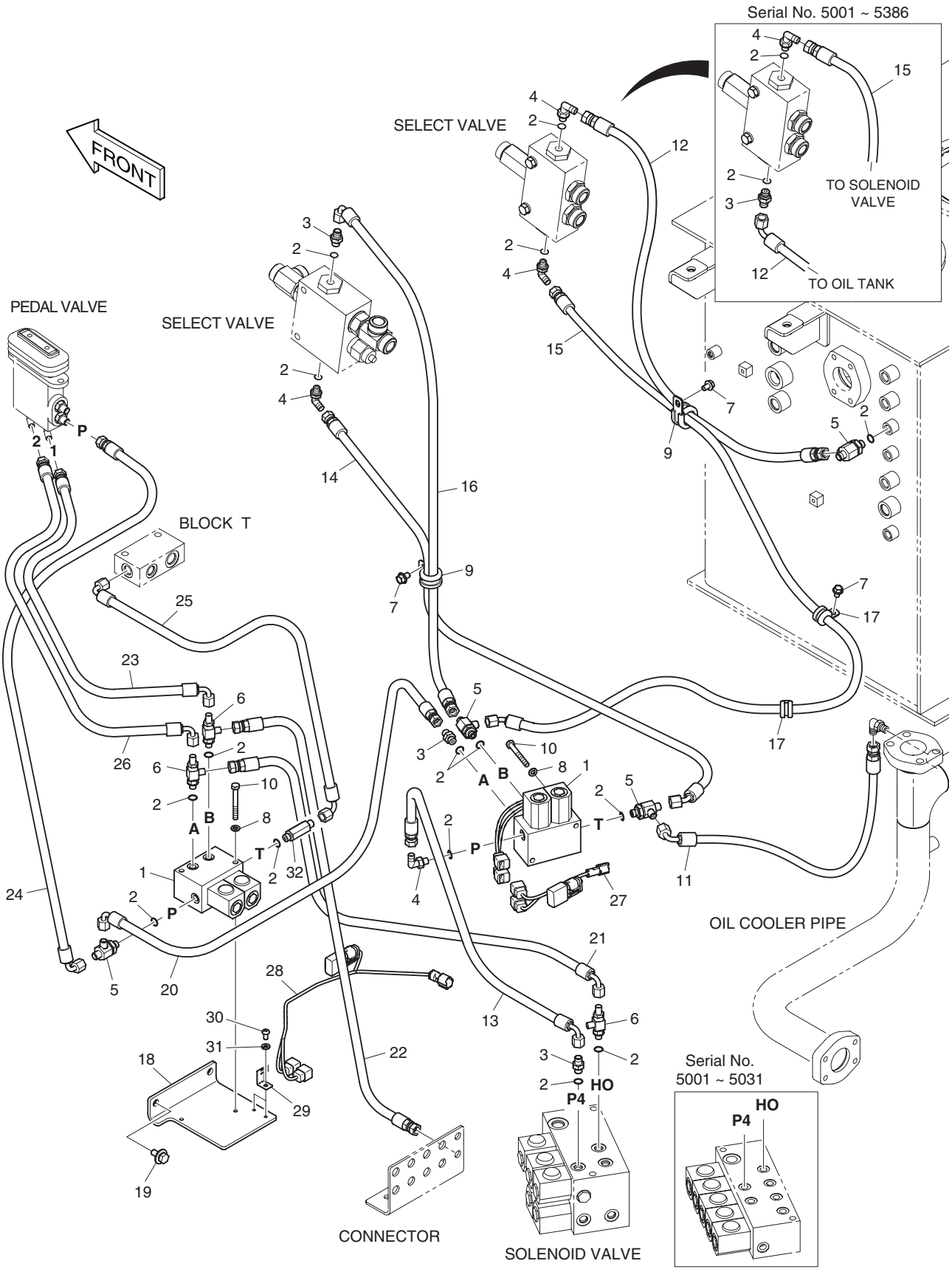

| DATE | JUN. 30, 2007 |
|---|---|
| REV. NO. | EXB07-06 |

# Fig. 6170 PILOT PIPING - TWO WAY(1) CIRCUIT DE PILOTE

Serial No. ;

| Key No. | Part No. | Description | Description | Q'ty | S.C | Serial No. | ICA | Replaceable part | |
|---|---|---|---|---|---|---|---|---|---|
| | | | | | | | | Part No. | Q'ty |
| 6170-- | K1006246B | PILOT PIPING-TWO WAY | CIRCUIT DE PILOTE | - | D | 5001–5031 | | | |
| | K1006246C | PILOT PIPING-TWO WAY | CIRCUIT DE PILOTE | - | D | 5032–5386 | | | |
| | K1006246E | PILOT PIPING-TWO WAY | CIRCUIT DE PILOTE | - | D | 5387– | | | |
| 1 | 426-00247A | VALVE;SOLENOID | VANNE SOLENOIDE | 2 | | | | | |
| 2 | S8000111 | O-RING | JOINT TORIQUE | 15 | | | | | |
| 3 | 2181-1126D14 | ADAPTER | RACCORD ADAPTATEUR | 4 | | 5001–5386 | | | |
| | 2181-1126D14 | ADAPTER | RACCORD ADAPTATEUR | 3 | | 5387– | | | |
| 4 | 2181-1702D4 | ELBOW | COUDE | 3 | | 5001–5386 | | | |
| | 2181-1702D4 | ELBOW | COUDE | 4 | | 5387– | | | |
| 5 | 2181-1951D1 | TEE | TE | 4 | | | | | |
| 6 | 181-00779 | TEE;SHUTTLE | TE | 3 | | | | | |
| 7 | K1001029 | BOLT | BOULON A 6 PANS | 3 | | | | | |
| 8 | S5102503 | WASHER;SPRING | RONDELLE ELASTIQUE M8 | 4 | | | | | |
| 9 | 124-00208D4 | CLIP | ATTACHE | 2 | | | | | |
| 10 | S0556766 | BOLT | BOULON A 6 PANS | 4 | | | | | |
| 11 | DS2093039 | HOSE | TUYAU FLEXIBLE | 1 | | 5001–5032 | | | |
| | **DS2093036** | **HOSE** | TUYAU FLEXIBLE | 1 | | **5033**– | | | |
| 12 | DS2093021 | HOSE | TUYAU FLEXIBLE | 1 | | 5001–5386 | | | |
| | DS2094087 | HOSE | TUYAU FLEXIBLE | 1 | | 5387– | | | |
| 13 | DS2093035 | HOSE | TUYAU FLEXIBLE | 1 | | 5001–5031 | | | |
| | DS2093127 | HOSE | TUYAU FLEXIBLE | 1 | | 5032– | | | |
| 14 | DS2092039 | HOSE | TUYAU FLEXIBLE | 1 | | | | | |
| 15 | DS2092040 | HOSE | TUYAU FLEXIBLE | 1 | | 5001–5386 | | | |
| | DS2092135 | HOSE | TUYAU FLEXIBLE | 1 | | 5387– | | | |
| 16 | DS2093034 | HOSE | TUYAU FLEXIBLE | 1 | | | | | |
| 17 | 124-00208D2 | CLIP | CLIP | 2 | | | | | |
| 18 | K1003422A | BRACKET | SUPPORT | 1 | | | | | |
| 19 | DS0025017 | BOLT;SET | BOULON A 6 PANS | 2 | | | | | |
| 20 | DS2093119 | HOSE | TUYAU FLEXIBLE | 1 | | | | | |
| 21 | DS2093149 | HOSE | TUYAU FLEXIBLE | 1 | | 5001–5031 | | | |
| | DS2093179 | HOSE | TUYAU FLEXIBLE | 1 | | 5032– | | | |
| 22 | DS2094032 | HOSE | TUYAU FLEXIBLE | 1 | | | | | |
| 23 | DS2093120 | HOSE | TUYAU FLEXIBLE | 1 | | | | | |
| 24 | DS2093121 | HOSE | TUYAU FLEXIBLE | 1 | | | | | |
| 25 | DS2091008 | HOSE | TUYAU FLEXIBLE | 1 | | | | | |
| 26 | DS2093119 | HOSE | TUYAU FLEXIBLE | 1 | | | | | |
| 27 | K1000816 | HARNESS | FAISCEAU | 1 | | | | | |
| 28 | K1003638B | HARNESS;JOINT | FAISCEAU | 1 | | | | | |

| DATE | JUN. 30, 2007 |
|---|---|
| REV.NO. | EXB07-06 |

# Fig. 6170 PILOT PIPING - TWO WAY(1)
# CIRCUIT DE PILOTE

**Serial No. ;**

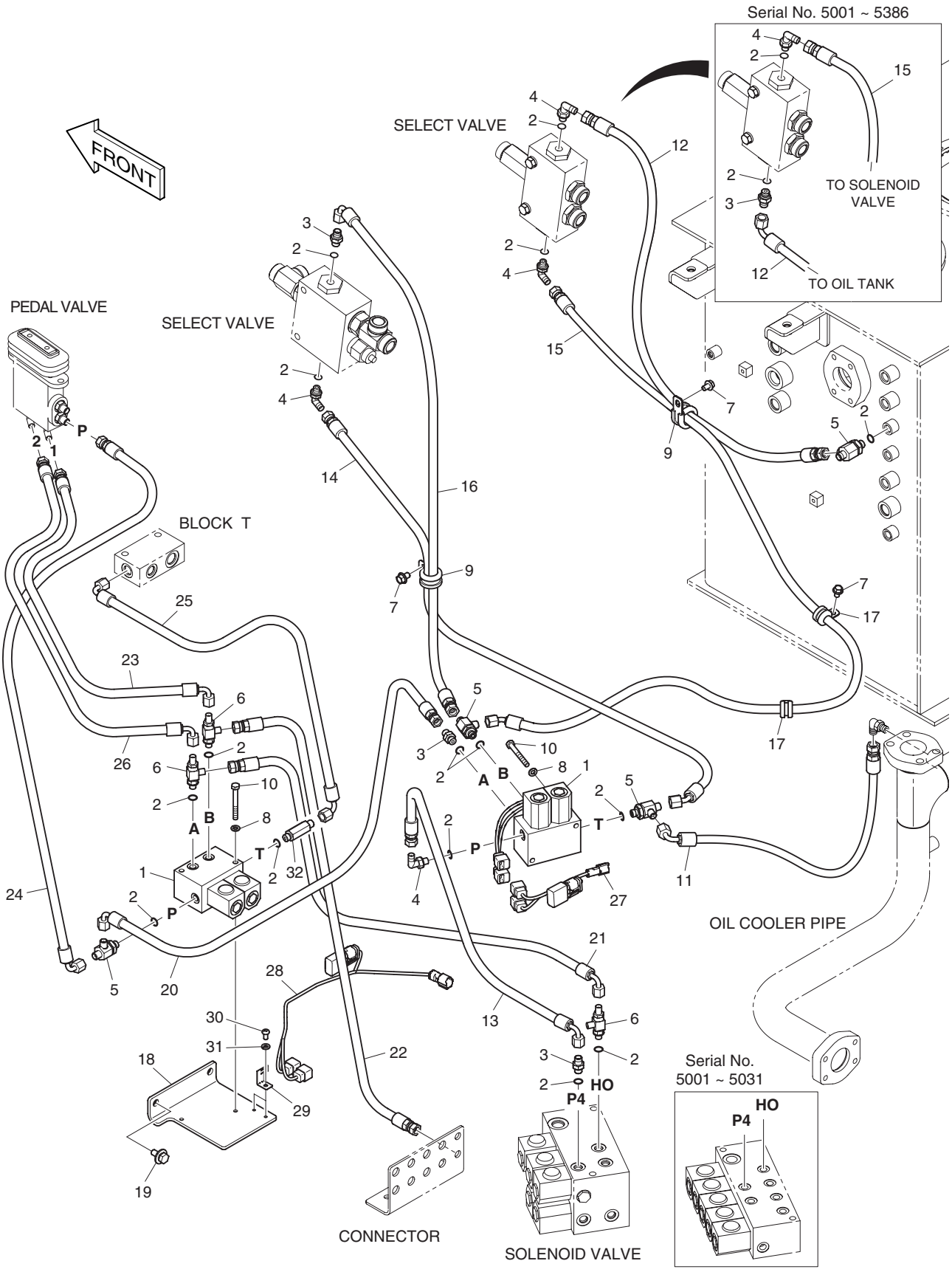

| DATE | JUN. 30, 2007 |
|---|---|
| REV. NO. | EXB07-06 |

# Fig. 6170 PILOT PIPING - TWO WAY(1) CIRCUIT DE PILOTE

**Serial No. ;**

| Key No. | Part No. | Description | Description | Q'ty | S.C | Serial No. | ICA | Replaceable part | |
|---|---|---|---|---|---|---|---|---|---|
| | | | | | | | | Part No. | Q'ty |
| 6170-29 | 2195-3500 | BRACKET;HOUSING | SUPPORT | 2 | | | | | |
| 30 | S3450953 | SCREW | VIS | 2 | | | | | |
| 31 | S5102303 | WASHER;SPRING | RONDELLE ELASTIQUE M6 | 2 | | | | | |
| 32 | 2181-1126D103 | ADAPTER | ADAPTEUR | 1 | | | | | |

| DATE | JUN. 30, 2008 |
|---|---|
| REV.NO. | EXB08-06 |

# Fig. 6180 PILOT PIPING - TWO WAY(2)
# CIRCUIT DE PILOTE

**Serial No. ;**

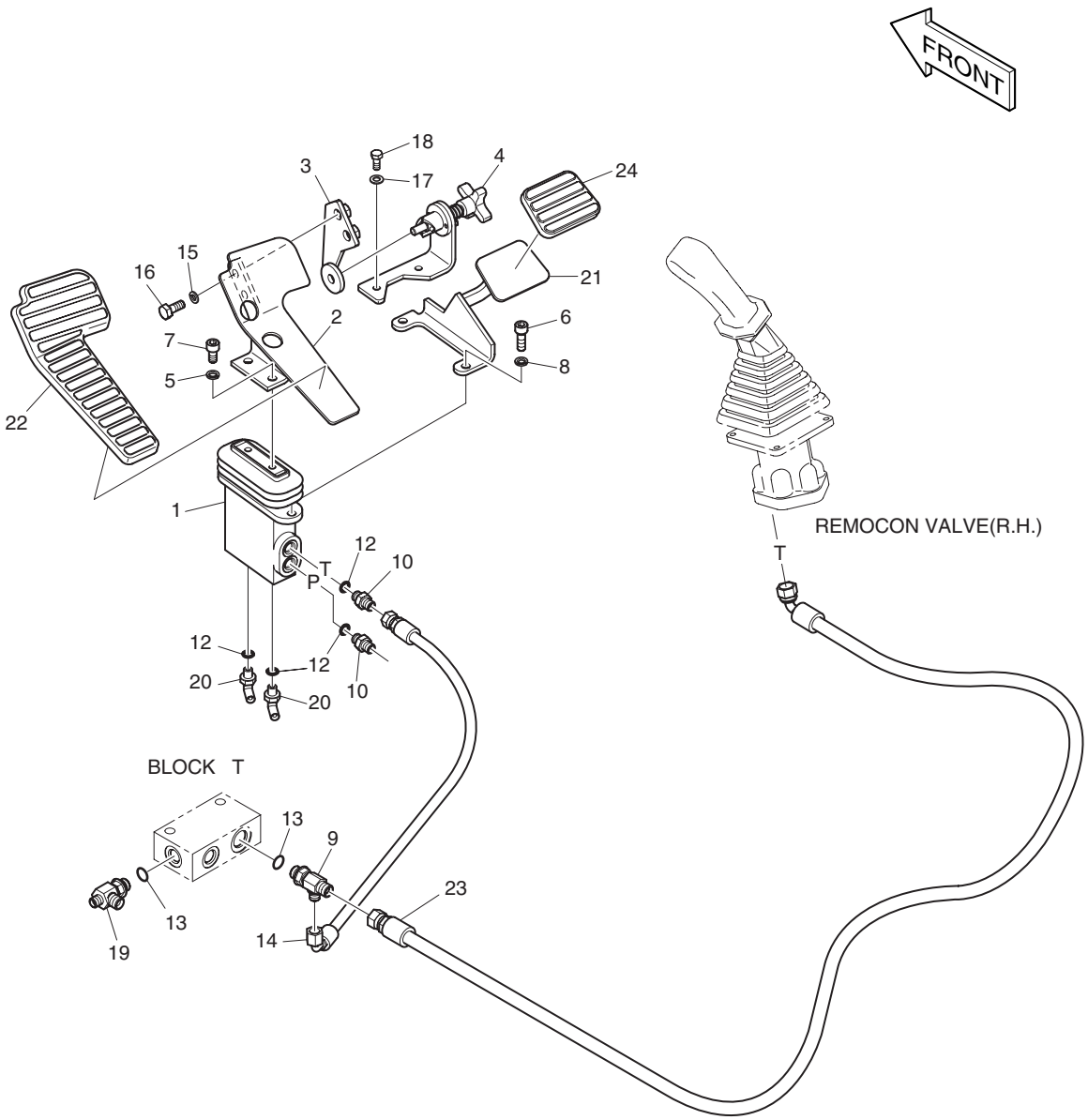

| DATE | JUN. 30, 2008 |
|---|---|
| REV. NO. | EXB08-06 |

# Fig. 6180 PILOT PIPING - TWO WAY(2) CIRCUIT DE PILOTE

Serial No. ;

| Key No. | Part No. | Description | Description | Q'ty | S.C | Serial No. | ICA | Replaceable part | |
|---|---|---|---|---|---|---|---|---|---|
| | | | | | | | | Part No. | Q'ty |
| 6180-- | K1006460B | PILOT PIPING-TWO WAY(2) | CIRCUIT DE PILOTE | - | D | | | | |
| 1 | 420-00347 | VALVE;PEDAL | VANNE DE PEDALE | 1 | | 5001–5859 | I | K1017382A | 1 |
| | **K1017382A** | **VALVE;PEDAL** | VANNE DE PEDALE | 1 | | **5860–** | | | |
| 2 | 195-01683A | BRACKET;PEDAL | SUPPORT | 1 | | | | | |
| 3 | K1000695A | PLATE | PLAQUE | 1 | | | | | |
| 4 | K1000696C | LOCK | SERRURE | 1 | | | | | |
| 5 | S5110603 | WASHER M10 | RONDELLE ELASTIQUE | 2 | | | | | |
| 6 | S2212266 | BOLT;SOCKET M10X1.5X30 | BOULON DE PLOT | 2 | | | | | |
| 7 | S2211866 | BOLT;SOCKET M10X1.5X20 | BOULON A 6 PANS CREUX | 2 | | | | | |
| 8 | S5110603 | WASHER | RONDELLE ELASTIQUE | 2 | | | | | |
| 9 | 2181-1951D6 | TEE | TE | 1 | | | | | |
| 10 | 2181-1126D14 | ADAPTER | RACCORD ADAPTATEUR | 2 | | | | | |
| 12 | S8000111 | O-RING | JOINT TORIQUE | 4 | | | | | |
| 13 | S8000141 | O-RING | JOINT TORIQUE | 2 | | | | | |
| 14 | DS2093040 | HOSE | TUYAU FLEXIBLE | 1 | | | | | |
| 15 | S5102603 | WASHER;SPRING M8 | RONDELLE ELASTIQUE M10 | 2 | | | | | |
| 16 | 2120-2166D2 | BOLT M10X1.5X25 | BOULON A 6 PANS | 2 | | | | | |
| 17 | S5102503 | WASHER M8 | RONDELLE ELASTIQUE M8 | 2 | | | | | |
| 18 | 2120-2166D5 | BOLT M8X1.25X20 | BOULON A 6 PANS | 2 | | | | | |
| 19 | 2181-1951D11 | TEE | TE | 1 | | | | | |
| 20 | 2181-1702D4 | ELBOW | COUDE | 2 | | | | | |
| 21 | K1003947A | FOOTREST | REPOS DE PIED | 1 | | | | | |
| 22 | 161-00381 | RUBBER;PEDAL | CAOUTCHOUC | 1 | | | | | |
| 23 | DS2095003 | HOSE | TUYAU FLEXIBLE | 1 | | | | | |
| 24 | K1006656 | RUBBER;PEDAL | CAOUTCHOUC | 1 | | | | | |

| DATE | JUN. 30, 2007 |
|---|---|
| REV.NO. | EXB07-06 |

# Fig. 6190 BOOM PIPING - ONE & TWO WAY
# CONDUITES DE FLECHE

**Serial No. ;**

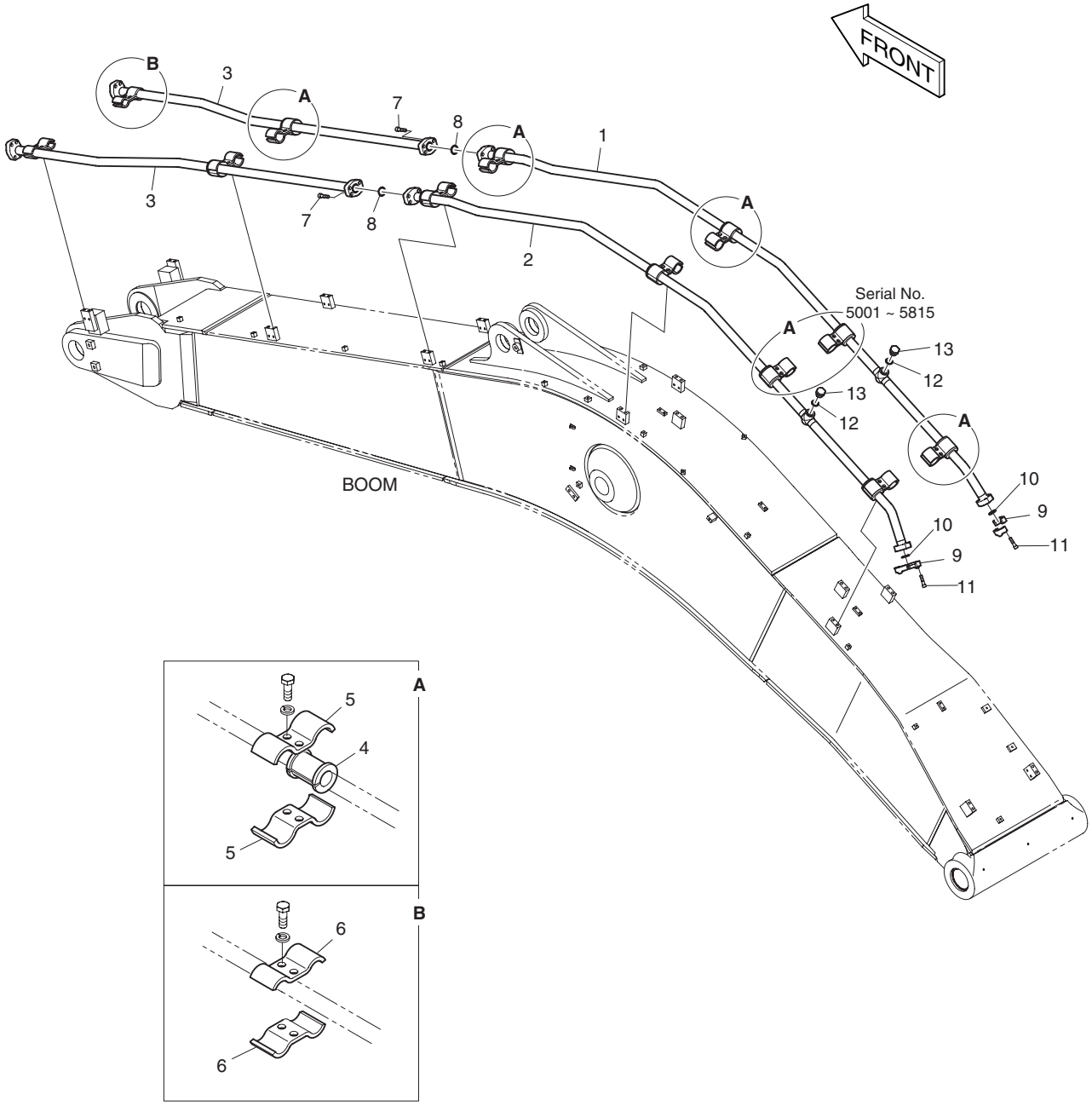

| DATE | JUN. 30, 2007 |
|---|---|
| REV. NO. | EXB07-06 |

# Fig. 6190 BOOM PIPING - ONE & TWO WAY
# CONDUITES DE FLECHE

**Serial No. ;**

| Key No. | Part No. | Description | Description | Q'ty | S.C | Serial No. | ICA | Replaceable part | |
|---|---|---|---|---|---|---|---|---|---|
| | | | | | | | | Part No. | Q'ty |
| 6190-- | **K1006212B** | **BOOM PIPING (ONE&TWO** | CONDUITES DE FLECHE | - | D | | | | |
| 1 | K1006213A | PIPE | CONDUITE | 1 | | | | | |
| 2 | K1006214A | PIPE | CONDUITE | 1 | | | | | |
| 3 | K1006215 | PIPE | CONDUITE | 2 | | | | | |
| 4 | 161-00280 | RUBBER | CAOUTCHOUC | 10 | | 5001–5815 | | | |
| | **161-00280** | **RUBBER** | CAOUTCHOUC | 8 | | **5816–** | | | |
| 5 | K1004059 | CLAMP | FIXATION DE TUYAU | 20 | | 5001–5815 | | | |
| | **K1004059** | **CLAMP** | FIXATION DE TUYAU | 16 | | **5816–** | | | |
| 6 | K1004060 | CLAMP | FIXATION DE TUYAU | 4 | | | | | |
| 7 | S2218766 | BOLT;SOCKET | BOULON A 6 PANS CREUX | 8 | | | | | |
| 8 | 2180-1026D23 | O-RING | JOINT TORIQUE | 2 | | | | | |
| 9 | 2181-9081 | FLANGE;SPLIT | BRIDE | 4 | | | | | |
| 10 | 2180-1026D19 | O-RING | JOINT TORIQUE | 2 | | | | | |
| 11 | S2215666 | BOLT;SOCKET | BOULON DE PLOT | 8 | | | | | |
| 12 | S8000291 | O-RING | JOINT TORIQUE | 2 | | | | | |
| 13 | 2181-1950D9 | PLUG | BOUCHON | 2 | | | | | |

| DATE | JUN. 30, 2008 |
|---|---|
| REV.NO. | EXB08-06 |

# Fig. 6200 ARM PIPING - ONE & TWO WAY(ARM 3.2m)
# CONDUITES DE BALANCIER

**Serial No. ;**

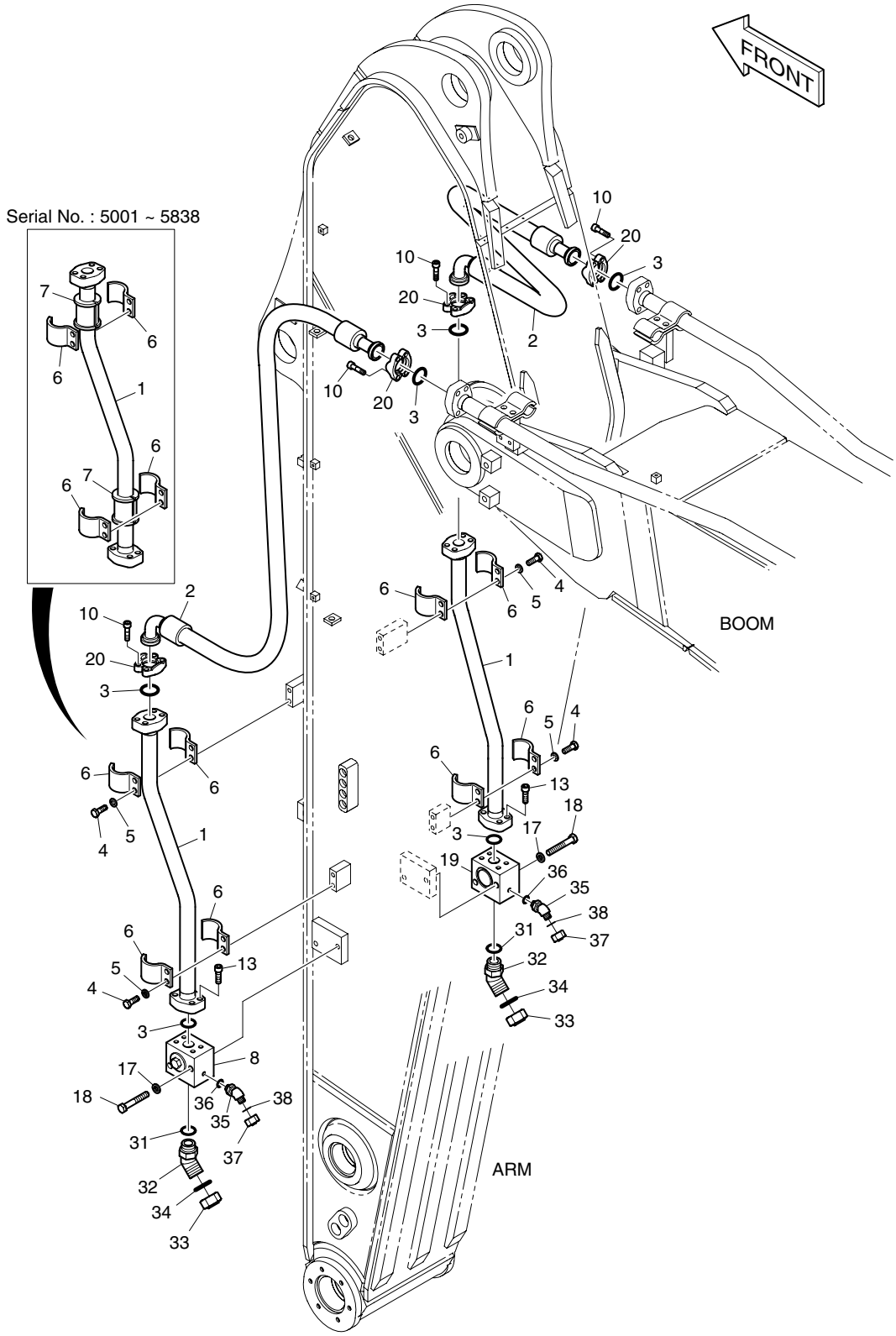

| DATE | JUN. 30, 2008 |
|---|---|
| REV. NO. | EXB08-06 |

# Fig. 6200 ARM PIPING - ONE & TWO WAY(ARM 3.2m) CONDUITES DE BALANCIER

Serial No. ;

| Key No. | Part No. | Description | Description | Q'ty | S.C | Serial No. | ICA | Replaceable part | |
|---|---|---|---|---|---|---|---|---|---|
| | | | | | | | | Part No. | Q'ty |
| 6200-- | K1006217B | ARM PIPING-ONE & TWO WAY | CONDUITES DE BALANCIER | - | D | | | | |
| 1 | K1006218 | PIPE | CONDUITE | 2 | | | | | |
| 2 | DS2040383 | HOSE | TUYAU FLEXIBLE | 2 | | | | | |
| 3 | 2180-1026D23 | O-RING | JOINT TORIQUE | 6 | | | | | |
| 4 | S0562766 | BOLT | BOULON A 6 PANS | 8 | | | | | |
| 5 | S5102803 | WASHER;SPRING | RONDELLE ELASTIQUE M14 | 8 | | | | | |
| 6 | K1004001 | CLAMP;PIPE | COLLIER | 8 | | 5001–5838 | | | |
| | **K1004000** | **CLAMP;PIPE** | COLLIER | 8 | | **5839–** | | | |
| 7 | **161-00280** | **RUBBER** | CAOUTCHOUC | 4 | | **5001–5838** | | | |
| 8 | 420-00508B | VALVE;STOP(L.H) | VANNE | 1 | | | | | |
| 10 | S2218766 | BOLT;SOCKET | BOULON A 6 PANS CREUX | 16 | | | | | |
| 13 | S2218566 | BOLT;SOCKET | BOULON A 6 PANS CREUX | 8 | | | | | |
| 17 | S5102903 | WASHER;SPRING | RONDELLE ELASTIQUE | 4 | | | | | |
| 18 | S0566266 | BOLT | BOULON A 6 PANS | 4 | | | | | |
| 19 | 420-00515B | VALVE;STOP(R.H) | VANNE | 1 | | | | | |
| 20 | 2181-9086 | FLANGE;SPLIT | FLASQUE EN DEUX | 8 | | | | | |
| 31 | S8000381 | O-RING | JOINT TORIQUE | 2 | | | | | |
| 32 | 2181-2816D3 | ELBOW | COUDE | 2 | | | | | |
| 33 | 2181-2817D3 | CAP | CHAPEAU | 2 | | | | | |
| 34 | 2180-1026D37 | O-RING | JOINT TORIQUE | 2 | | | | | |
| 35 | 2181-2816D4 | ELBOW | COUDE | 2 | | | | | |
| 36 | S8000181 | O-RING | JOINT TORIQUE | 2 | | | | | |
| 37 | 2181-2817D4 | CAP | BOUCHON | 2 | | | | | |
| 38 | S8030081 | O-RING | JOINT TORIQUE | 2 | | | | | |

| DATE | OCT. 17, 2005 |
|---|---|
| 1st EDITION | |

# Fig. 6210 MAIN PIPING - QUICK FIT
# CONDUITES DE BATI PRINCIPAL

**Serial No. ;**

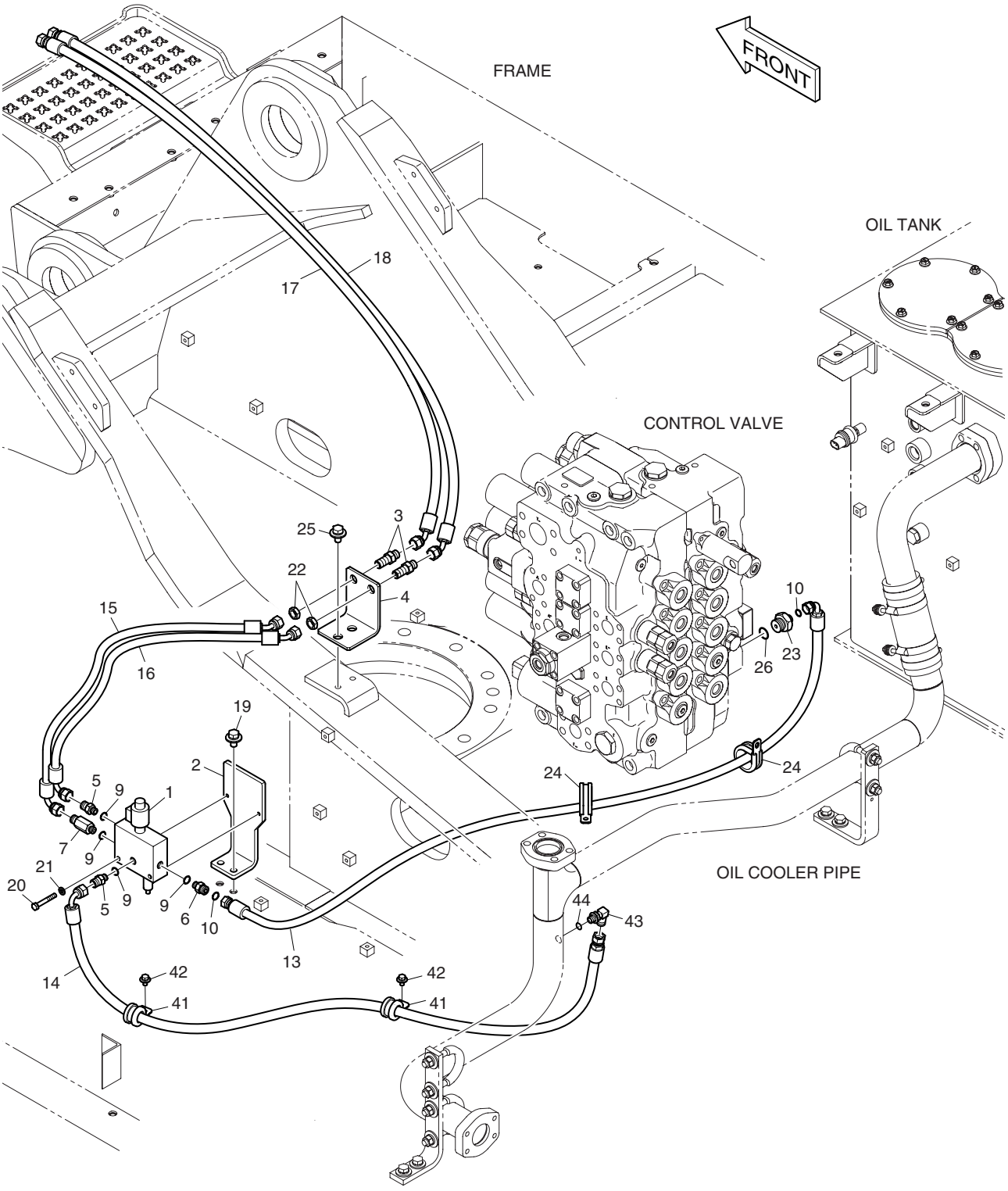

| DATE | OCT. 17, 2005 |
|---|---|
| 1st EDITION | |

# Fig. 6210 MAIN PIPING - QUICK FIT
# CONDUITES DE BATI PRINCIPAL

Serial No. ;

| Key No. | Part No. | Description | Description | Q'ty | S.C | Serial No. | ICA | Replaceable part | |
|---|---|---|---|---|---|---|---|---|---|
| | | | | | | | | Part No. | Q'ty |
| 6210-- | K1005116B | MAIN PIPING-QUICK FIT | CONDUITES DE BATI | - | D | | | | |
| 1 | 426-00287 | VALVE;QUICK-FIT | VANNE | 1 | | | | | |
| 2 | 195-03123E | BRACKET | SUPPORT | 1 | | | | | |
| 3 | 181-00078D1 | ADAPTER | ADAPTEUR | 2 | | | | | |
| 4 | K1002573B | PLATE | PLAQUE | 1 | | | | | |
| 5 | 2181-1126D85 | ADAPTER | RACCORD | 2 | | | | | |
| 6 | 2181-4133D40 | ADAPTER | ADAPTEUR | 1 | | | | | |
| 7 | 2181-1126D31 | ADAPTER | RACCORD ADAPTATEUR | 1 | | | | | |
| 9 | S8000111 | O-RING | JOINT TORIQUE | 4 | | | | | |
| 10 | S8030061 | O-RING | JOINT TORIQUE | 1 | | | | | |
| 13 | DS2013607 | HOSE | TUYAU FLEXIBLE | 1 | | | | | |
| 14 | DS2093097 | HOSE | TUYAU FLEXIBLE | 1 | | | | | |
| 15 | DS2058268 | HOSE | TUYAU FLEXIBLE | 1 | | | | | |
| 16 | DS2058269 | HOSE | TUYAU FLEXIBLE | 1 | | | | | |
| 17 | DS2054350 | HOSE | TUYAU FLEXIBLE | 1 | | | | | |
| 18 | DS2054351 | HOSE | TUYAU FLEXIBLE | 1 | | | | | |
| 19 | DS0025017 | BOLT;SET | BOULON A 6 PANS | 2 | | | | | |
| 20 | S0556466 | BOLT | BOULON A 6 PANS | 2 | | | | | |
| 21 | S5102503 | WASHER;SPRING | RONDELLE ELASTIQUE M8 | 2 | | | | | |
| 22 | 121-00010D1 | NUT | ECROU | 2 | | | | | |
| 23 | DS2404024 | ADAPTER | ADAPTEUR | 1 | | | | | |
| 24 | 124-00208D7 | CLIP | ATTACHE | 2 | | | | | |
| 25 | DS0025019 | BOLT;SET | BOULON A 6 PANS | 2 | | | | | |
| 26 | S8000231 | O-RING | JOINT TORIQUE | 1 | | | | | |
| 41 | 124-00208D3 | CLIP | ATTACHE | 2 | | | | | |
| 42 | K1001029 | BOLT | BOULON A 6 PANS | 2 | | | | | |
| 43 | 2181-1702D3 | ELBOW | RACCORD | 1 | | | | | |
| 44 | S8000111 | O-RING | JOINT TORIQUE | 1 | | | | | |

| DATE | JUN. 30, 2007 |
|---|---|
| REV.NO. | EXB07-06 |

# Fig. 6220 BOOM PIPING - QUICK CLAMP
# CONDUITES DE FLECHE

**Serial No. ;**

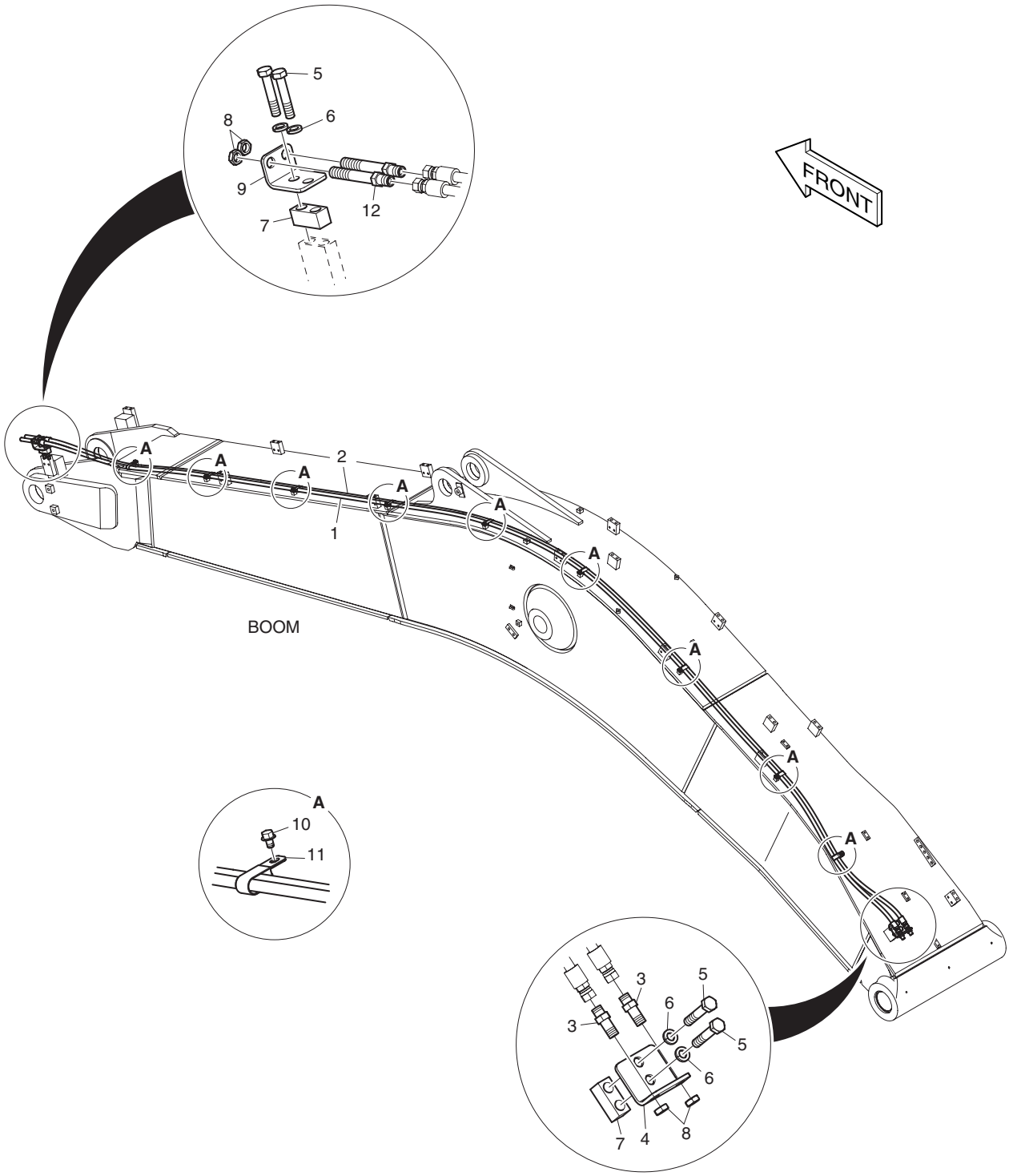

| DATE | JUN. 30, 2007 |
|---|---|
| REV. NO. | EXB07-06 |

# Fig. 6220 BOOM PIPING - QUICK CLAMP CONDUITES DE FLECHE

**Serial No. ;**

| Key No. | Part No. | Description | Description | Q'ty | S.C | Serial No. | ICA | Replaceable part | |
|---|---|---|---|---|---|---|---|---|---|
| | | | | | | | | Part No. | Q'ty |
| 6220-- | **K1006229A** | **BOOM PIPING(QUICK CLAMP)** | CONDUITES DE FLECHE | - | D | | | | |
| 1 | DS2053835 | HOSE | TUYAU FLEXIBLE | 1 | | 5001–5301 | | | |
| | **DS2053937** | **HOSE** | TUYAU FLEXIBLE | 1 | | **5302–** | | | |
| 2 | DS2053835 | HOSE | TUYAU FLEXIBLE | 1 | | | | | |
| 3 | 181-00078D1 | ADAPTER | ADAPTEUR | 2 | | | | | |
| 4 | 195-00163 | BRACKET | SUPPORT | 1 | | | | | |
| 5 | S0563466 | BOLT | BOULON A 6 PANS | 4 | | | | | |
| 6 | S5102803 | WASHER;SPRING | RONDELLE ELASTIQUE M14 | 4 | | | | | |
| 7 | K1004006 | PLATE | PLAQUE | 2 | | | | | |
| 8 | 121-00010D1 | NUT | ECROU | 4 | | | | | |
| 9 | 195-02705 | BRACKET | SUPPORT | 1 | | | | | |
| 10 | K1001029 | BOLT | BOULON A 6 PANS | 9 | | | | | |
| 11 | 124-00199D1 | CLIP | ATTACHE | 9 | | | | | |
| 12 | K1000112 | ADATER | ADAPTEUR | 2 | | | | | |

| DATE | OCT. 17, 2005 |
|---|---|
| 1st EDITION | |

# Fig. 6230 ARM PIPING - QUICK FIT(ARM 3.2m)
# CONDUITES DE BALANCIER

**Serial No. ;**

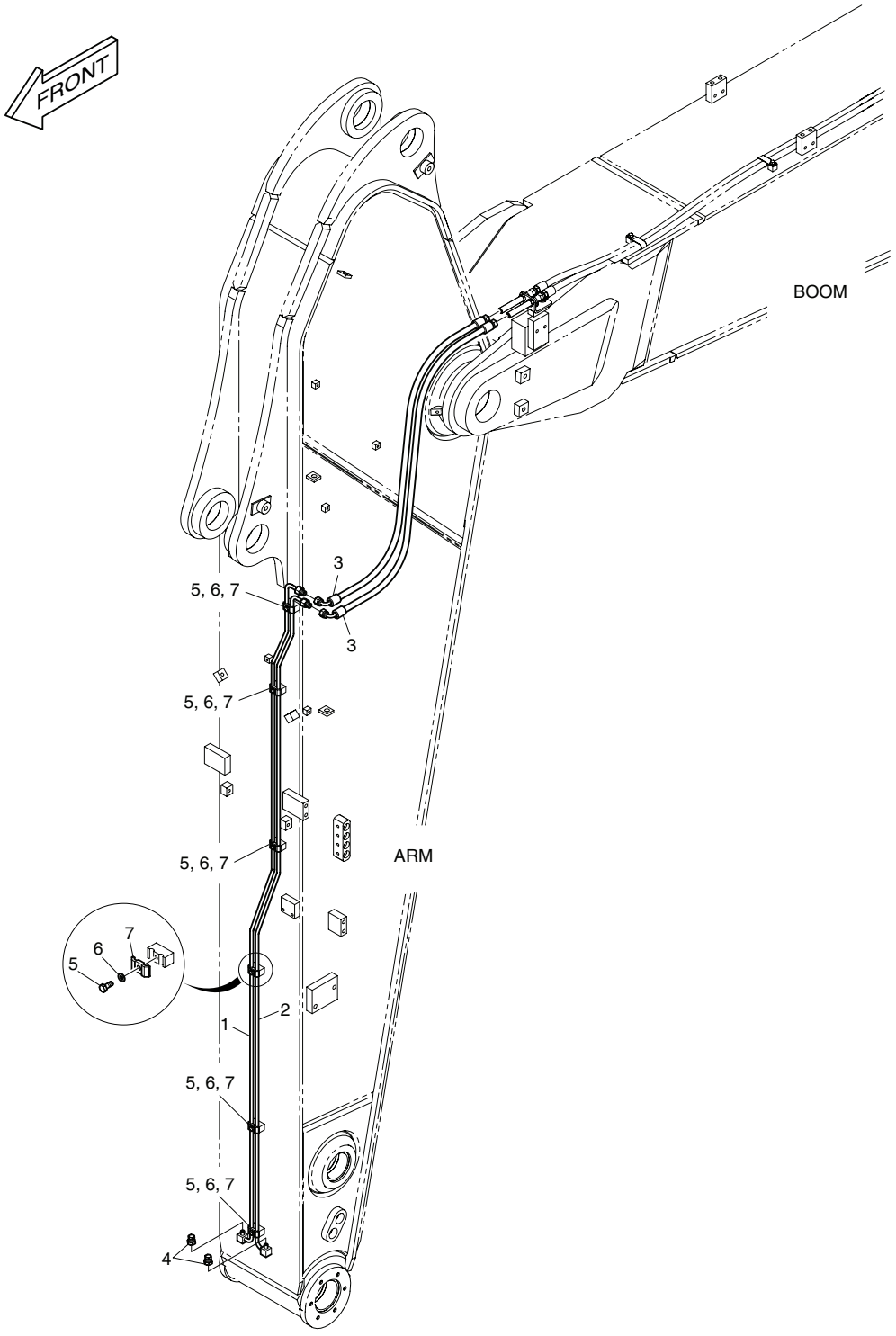

| DATE | OCT. 17, 2005 |
|---|---|
| 1st EDITION | |

# Fig. 6230 ARM PIPING - QUICK FIT(ARM 3.2m) CONDUITES DE BALANCIER

Serial No. ;

| Key No. | Part No. | Description | Description | Q'ty | S.C | Serial No. | ICA | Replaceable part | |
|---|---|---|---|---|---|---|---|---|---|
| | | | | | | | | Part No. | Q'ty |
| 6230-- | K1006230 | ARM PIPING(QUICK CLAMP) | CONDUITES DE | - | D | | | | |
| 1 | K1006231 | PIPE | CONDUITE | 1 | | | | | |
| 2 | K1006232 | PIPE | CONDUITE | 1 | | | | | |
| 3 | DS2055865 | HOSE | TUYAU FLEXIBLE | 2 | | | | | |
| 4 | 2181-2820D1 | PLUG | BOUCHON | 2 | | | | | |
| 5 | S0508866 | BOLT | BOULON A 6 PANS | 6 | | | | | |
| 6 | S5102503 | WASHER;SPRING | RONDELLE ELASTIQUE M8 | 6 | | | | | |
| 7 | K1004011 | CLAMP;PIPE | FIXATION DE TUYAU | 6 | | | | | |

# Fig. 6240 ELECTRIC PARTS - QUICK CLAMP BRIDE RAPIDE

**Serial No. ;**

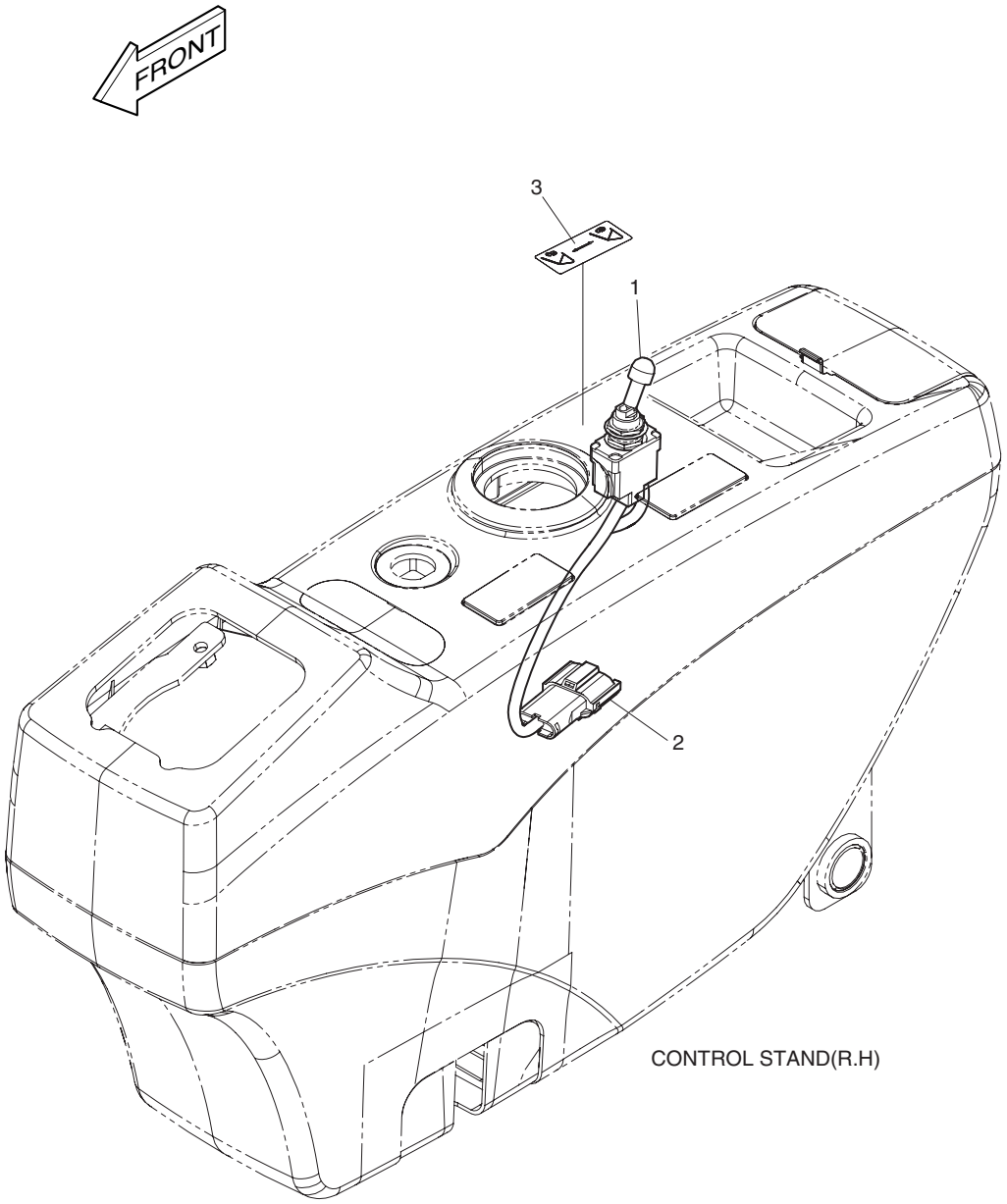

| DATE | OCT. 17, 2005 |
|---|---|
| 1st EDITION | |

# Fig. 6240 ELECTRIC PARTS - QUICK CLAMP BRIDE RAPIDE

Serial No. ;

| Key No. | Part No. | Description | Description | Q'ty | S.C | Serial No. | ICA | Replaceable part | |
|---|---|---|---|---|---|---|---|---|---|
| | | | | | | | | Part No. | Q'ty |
| 6240-- | K1009450 | QUICK CLAMP | BRIDE RAPIDE | - | D | | | | |
| 1 | 549-00092 | SWITCH;TOGGLE | INTERRUPTEUR | 1 | | | | | |
| 2 | 530-00432A | HARNESS;JOINT | FAISCEAU | 1 | | | | | |
| 3 | K1005776 | PLATE;NAME | PLAQUE D'IDENTIFICATION | 1 | | | | | |

| DATE | JUN. 30, 2007 |
|---|---|
| REV.NO. | EXB07-06 |

# Fig. 6250 TRACK FRAME - FULL GUARD
# ENSEMBLE TRAIN DE ROULEMENT

**Serial No. ;**

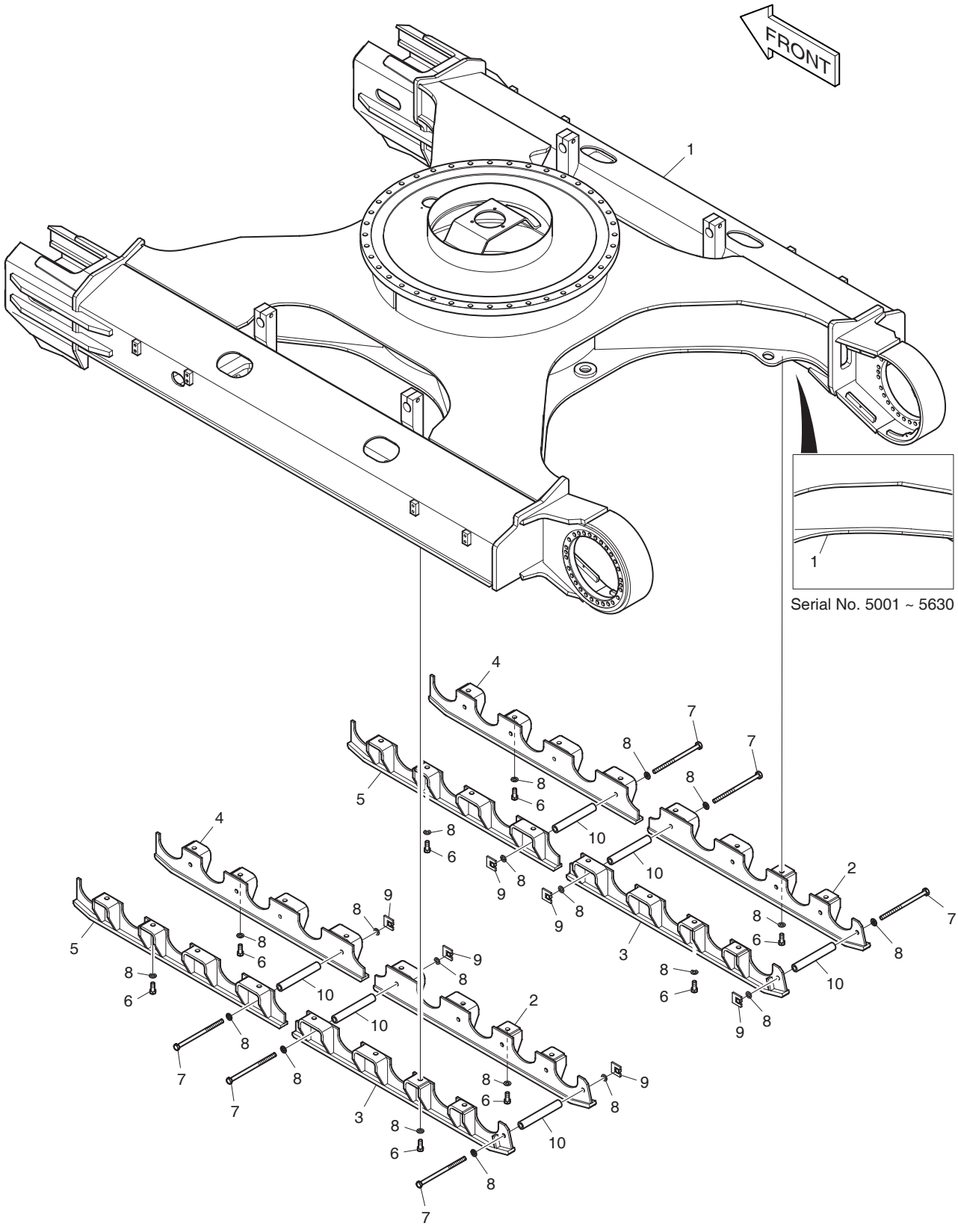

| DATE | JUN. 30, 2007 |
|---|---|
| REV. NO. | EXB07-06 |

# Fig. 6250 TRACK FRAME - FULL GUARD ENSEMBLE TRAIN DE ROULEMENT

**Serial No. ;**

| Key No. | Part No. | Description | Description | Q'ty | S.C | Serial No. | ICA | Replaceable part | |
|---|---|---|---|---|---|---|---|---|---|
| | | | | | | | | Part No. | Q'ty |
| 6250-- | **K1009979G** | **TRACK FRAME** | ENSEMBLE TRAIN DE | - | D | | | | |
| 1 | K1009651C | FRAME;TRACK(FULL GUARD) | CHASSIS A CHAINES | 1 | | 5001–5630 | I | K1009651G | 1 |
| | **K1009651G** | **FRAME;TRACK(FULL GUARD)** | CHASSIS A CHAINES | 1 | | **5631–** | | | |
| 2 | K1008761 | GUARD;TRACK(R.H)-REAR | GARDE | 2 | | | | | |
| 3 | K1008762 | GUARD;TRACK(L.H)-REAR | GARDE | 2 | | | | | |
| 4 | K1008763 | GUARD;TRACK(R.H)-FRONT | GARDE | 2 | | | | | |
| 5 | K1008764 | GUARD;TRACK(L.H)-FRONT | GARDE | 2 | | | | | |
| 6 | S0527666 | BOLT | BOULON A 6 PANS | 32 | | | | | |
| 7 | K1009981 | BOLT | BOULON A 6 PANS | 18 | | | | | |
| 8 | 2114-9012A | WASHER;HARD | RONDELLE | 68 | | | | | |
| 9 | K1008926 | PLATE;LOCK | PLAQUE | 18 | | | | | |
| 10 | K1009982 | SPACER | DOUILLE D'ECARTEMENT | 18 | | | | | |

| DATE | JUN. 30, 2007 |
|---|---|
| REV.NO. | EXB07-06 |

# Fig. 6260 TRACK FRAME(3m) - FULL GUARD
# ENSEMBLE TRAIN DE ROULEMENT

**Serial No. ;**

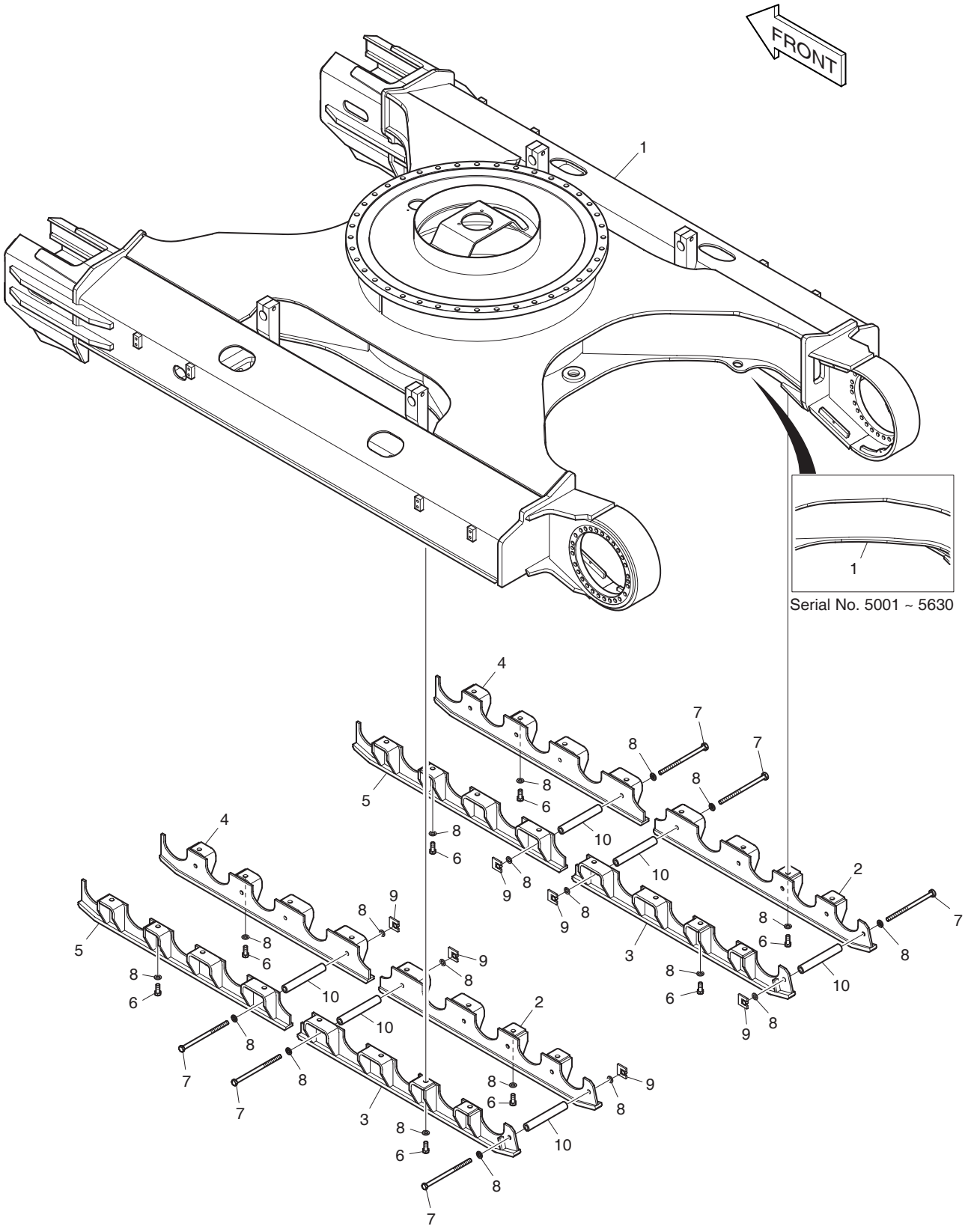

| DATE | JUN. 30, 2007 |
|---|---|
| REV. NO. | EXB07-06 |

# Fig. 6260 TRACK FRAME(3m) - FULL GUARD ENSEMBLE TRAIN DE ROULEMENT

**Serial No. ;**

| Key No. | Part No. | Description | Description | Q'ty | S.C | Serial No. | ICA | Replaceable part | |
|---|---|---|---|---|---|---|---|---|---|
| | | | | | | | | Part No. | Q'ty |
| 6260-- | **K1009980E** | **TRACK FRAME** | ENSEMBLE TRAIN DE | - | D | | | | |
| 1 | K1009878C | FRAME;TRACK-3M (FULL GUARD) | CHASSIS A CHAINES | 1 | | 5001–5630 | I | K1009878E | 1 |
| | **K1009878E** | **FRAME;TRACK-3M (FULL** | CHASSIS A CHAINES | 1 | | **5631–** | | | |
| 2 | K1008761 | GUARD;TRACK(R.H)-REAR | GARDE | 2 | | | | | |
| 3 | K1008762 | GUARD;TRACK(L.H)-REAR | GARDE | 2 | | | | | |
| 4 | K1008763 | GUARD;TRACK(R.H)-FRONT | GARDE | 2 | | | | | |
| 5 | K1008764 | GUARD;TRACK(L.H)-FRONT | GARDE | 2 | | | | | |
| 6 | S0527666 | BOLT | BOULON A 6 PANS | 32 | | | | | |
| 7 | K1009981 | BOLT | BOULON A 6 PANS | 18 | | | | | |
| 8 | 2114-9012A | WASHER;HARD | RONDELLE | 68 | | | | | |
| 9 | K1008926 | PLATE;LOCK | PLAQUE | 18 | | | | | |
| 10 | K1009982 | SPACER | DOUILLE D'ECARTEMENT | 18 | | | | | |

| DATE | OCT. 17, 2005 |
|---|---|
| 1st EDITION | |

# Fig. 6270 TRACK SHOE ASS'Y - 700G
# MAILLON DE CHAINE

**Serial No. ;**

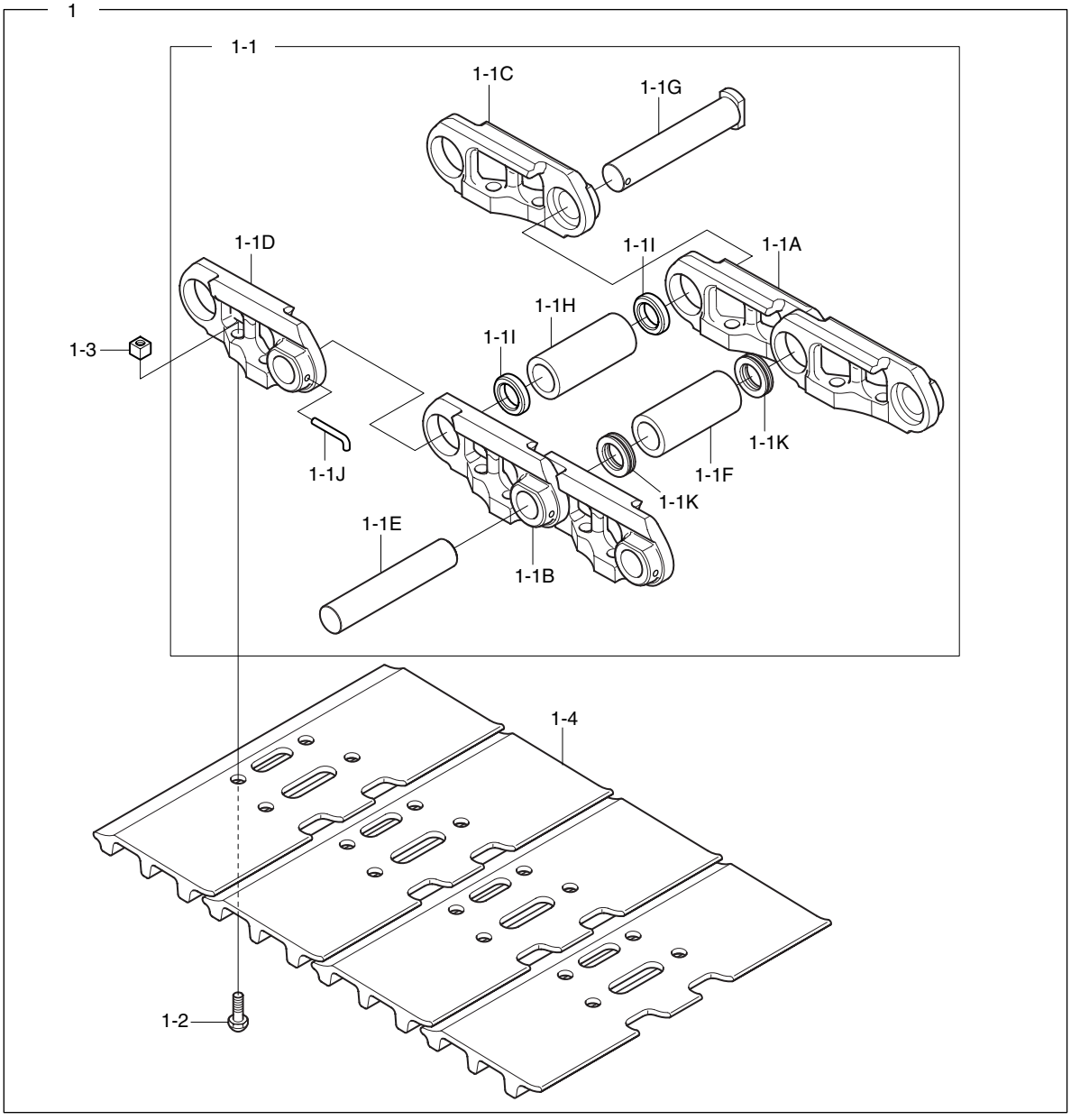


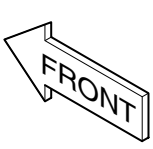


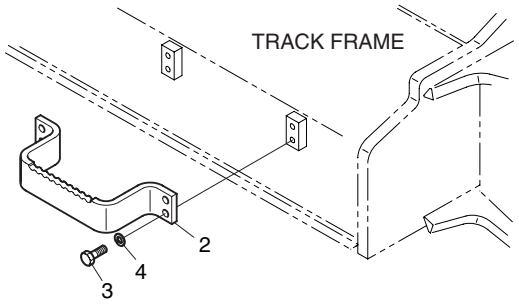

| DATE | OCT. 17, 2005 |
|---|---|
| 1st EDITION | |

# Fig. 6270 TRACK SHOE ASS'Y - 700G
# MAILLON DE CHAINE

Serial No. ;

| Key No. | Part No. | Description | Description | Q'ty | S.C | Serial No. | ICA | Replaceable part | |
|---|---|---|---|---|---|---|---|---|---|
| | | | | | | | | Part No. | Q'ty |
| 6270-- | K1009228A | TRACK SHOE ASS'Y(700MM) | MAILLON DE CHAINE | - | D | | | | |
| 1 | 273-00107A | TRACK SHOE ASS'Y | ENSEMBLE MAILLON DE | 2 | | | | | |
| 1-1 | 272-00062A | . TRACK LINK ASS'Y | . ENSEMBLE MAILLON DE | 1 | | | | | |
| 1-1A | 272-00056 | .. LINK;TRACK(R.H.) | .. PIECE DE JONCTION | 47 | | | | | |
| 1-1B | 272-00057 | .. LINK;TRACK(L.H.) | .. PIECE DE JONCTION | 47 | | | | | |
| 1-1C | 272-00058 | .. LINK;MASTER(R.H.) | .. PIECE DE JONCTION | 1 | | | | | |
| 1-1D | 272-00059 | .. LINK;MASTER(L.H.) | .. PIECE DE JONCTION | 1 | | | | | |
| 1-1E | 123-00510 | .. PIN;TRACK(REGULAR) | .. BROCHE | 47 | | | | | |
| 1-1F | 110-00238 | .. BUSH;TRACK(REGULAR) | .. BAGUE | 47 | | | | | |
| 1-1G | 123-00511 | .. PIN;TRACK(MASTER) | .. BROCHE | 1 | | | | | |
| 1-1H | 110-00239 | .. BUSH;TRACK(MASTER) | .. BAGUE | 1 | | | | | |
| 1-1I | 114-00566 | .. SPACER | .. ENTERTOISE | 2 | | | | | |
| 1-1J | 2123-1629 | .. PIN;CLAMPING | .. BROCHE | 1 | | | | | |
| 1-1K | 180-00454 | .. SEAL;DUST | .. JOINT | 94 | | | | | |
| 1-2 | 120-00314 | . BOLT;TRACK | . BOULON A 6 PANS | 192 | | | | | |
| 1-3 | 121-00084 | . NUT;TRACK | . ECROU | 192 | | | | | |
| 1-4 | 273-00110 | . SHOE;TRACK(700MM) | . SABOT | 48 | | | | | |
| 2 | K1004859D1 | STEP | MARCHER | 4 | | | | | |
| 3 | S0565066 | BOLT | BOULON A 6 PANS | 16 | | | | | |
| 4 | S5102903 | WASHER;SPRING | RONDELLE ELASTIQUE | 16 | | | | | |

| DATE | OCT. 17, 2005 |
|---|---|
| 1st EDITION | |

# Fig. 6280 TRACK SHOE ASS'Y - 800G
# MAILLON DE CHAINE

**Serial No. ;**

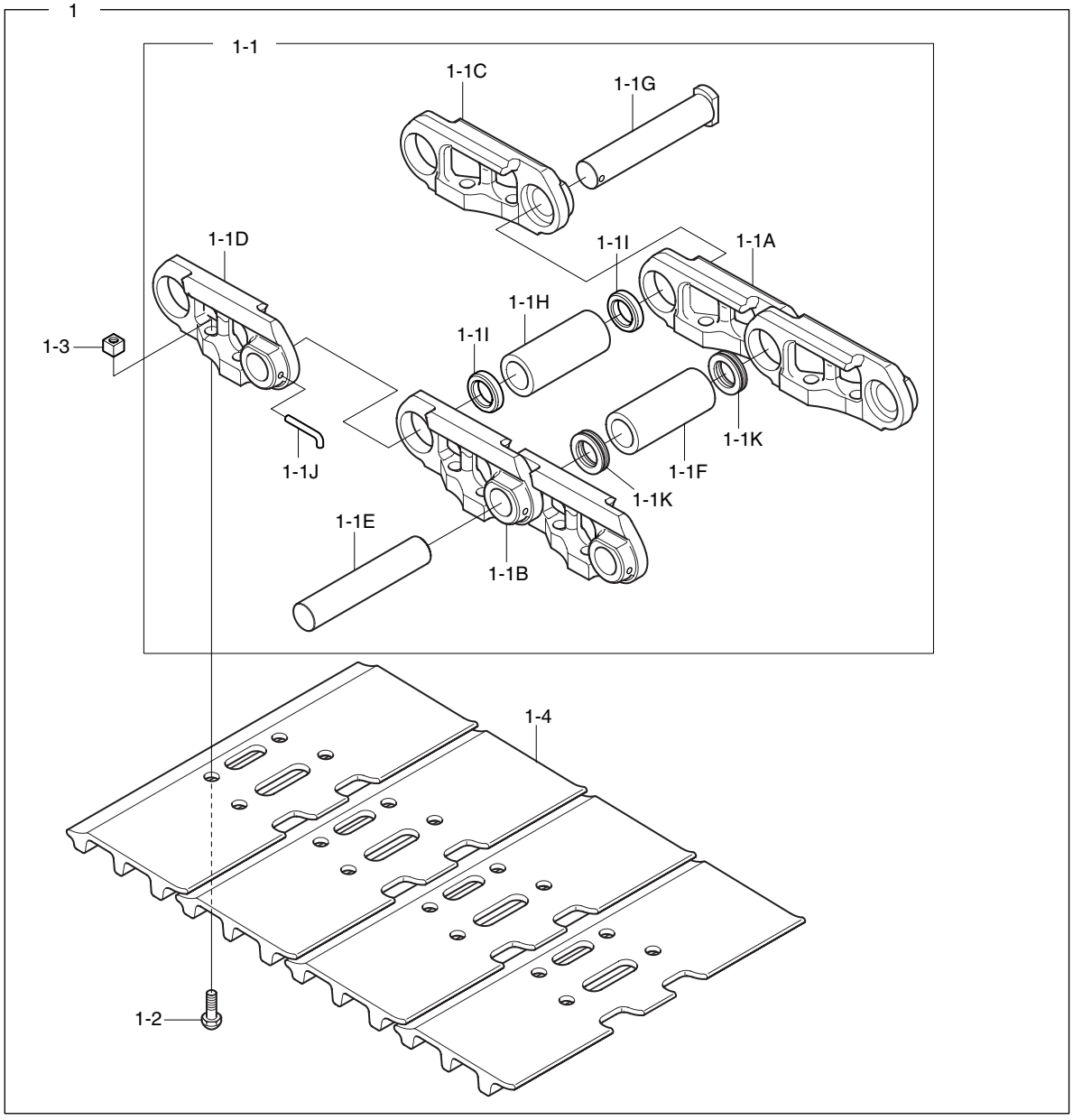


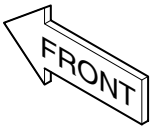


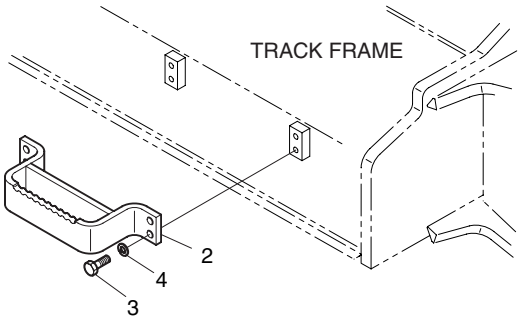

| DATE | OCT. 17, 2005 |
|---|---|
| 1st EDITION | |

# Fig. 6280 TRACK SHOE ASS'Y - 800G
# MAILLON DE CHAINE

Serial No. ;

| Key No. | Part No. | Description | Description | Q'ty | S.C | Serial No. | ICA | Replaceable part | |
|---|---|---|---|---|---|---|---|---|---|
| | | | | | | | | Part No. | Q'ty |
| 6280-- | K1009229A | TRACK SHOE ASS'Y(800MM) | MAILLON DE CHAINE | - | D | | | | |
| 1 | 273-00108A | TRACK SHOE ASS'Y | ENSEMBLE MAILLON DE | 2 | | | | | |
| 1-1 | 272-00062A | . TRACK LINK ASS'Y | . ENSEMBLE MAILLON DE | 1 | | | | | |
| 1-1A | 272-00056 | .. LINK;TRACK(R.H.) | .. PIECE DE JONCTION | 47 | | | | | |
| 1-1B | 272-00057 | .. LINK;TRACK(L.H.) | .. PIECE DE JONCTION | 47 | | | | | |
| 1-1C | 272-00058 | .. LINK;MASTER(R.H.) | .. PIECE DE JONCTION | 1 | | | | | |
| 1-1D | 272-00059 | .. LINK;MASTER(L.H.) | .. PIECE DE JONCTION | 1 | | | | | |
| 1-1E | 123-00510 | .. PIN;TRACK(REGULAR) | .. BROCHE | 47 | | | | | |
| 1-1F | 110-00238 | .. BUSH;TRACK(REGULAR) | .. BAGUE | 47 | | | | | |
| 1-1G | 123-00511 | .. PIN;TRACK(MASTER) | .. BROCHE | 1 | | | | | |
| 1-1H | 110-00239 | .. BUSH;TRACK(MASTER) | .. BAGUE | 1 | | | | | |
| 1-1I | 114-00566 | .. SPACER | .. ENTERTOISE | 2 | | | | | |
| 1-1J | 2123-1629 | .. PIN;CLAMPING | .. BROCHE | 1 | | | | | |
| 1-1K | 180-00454 | .. SEAL;DUST | .. JOINT | 94 | | | | | |
| 1-2 | 120-00314 | . BOLT;TRACK | . BOULON A 6 PANS | 192 | | | | | |
| 1-3 | 121-00084 | . NUT;TRACK | . ECROU | 192 | | | | | |
| 1-4 | 273-00111 | . SHOE;TRACK(800MM) | . SABOT | 48 | | | | | |
| 2 | K1004859D2 | STEP | MARCHER | 4 | | | | | |
| 3 | S0565066 | BOLT | BOULON A 6 PANS | 16 | | | | | |
| 4 | S5102903 | WASHER;SPRING | RONDELLE ELASTIQUE | 16 | | | | | |

| DATE | OCT. 17, 2005 |
|---|---|
| 1st EDITION | |

# Fig. 6290 TRACK SHOE ASS'Y - 850G
# MAILLON DE CHAINE

**Serial No. ;**

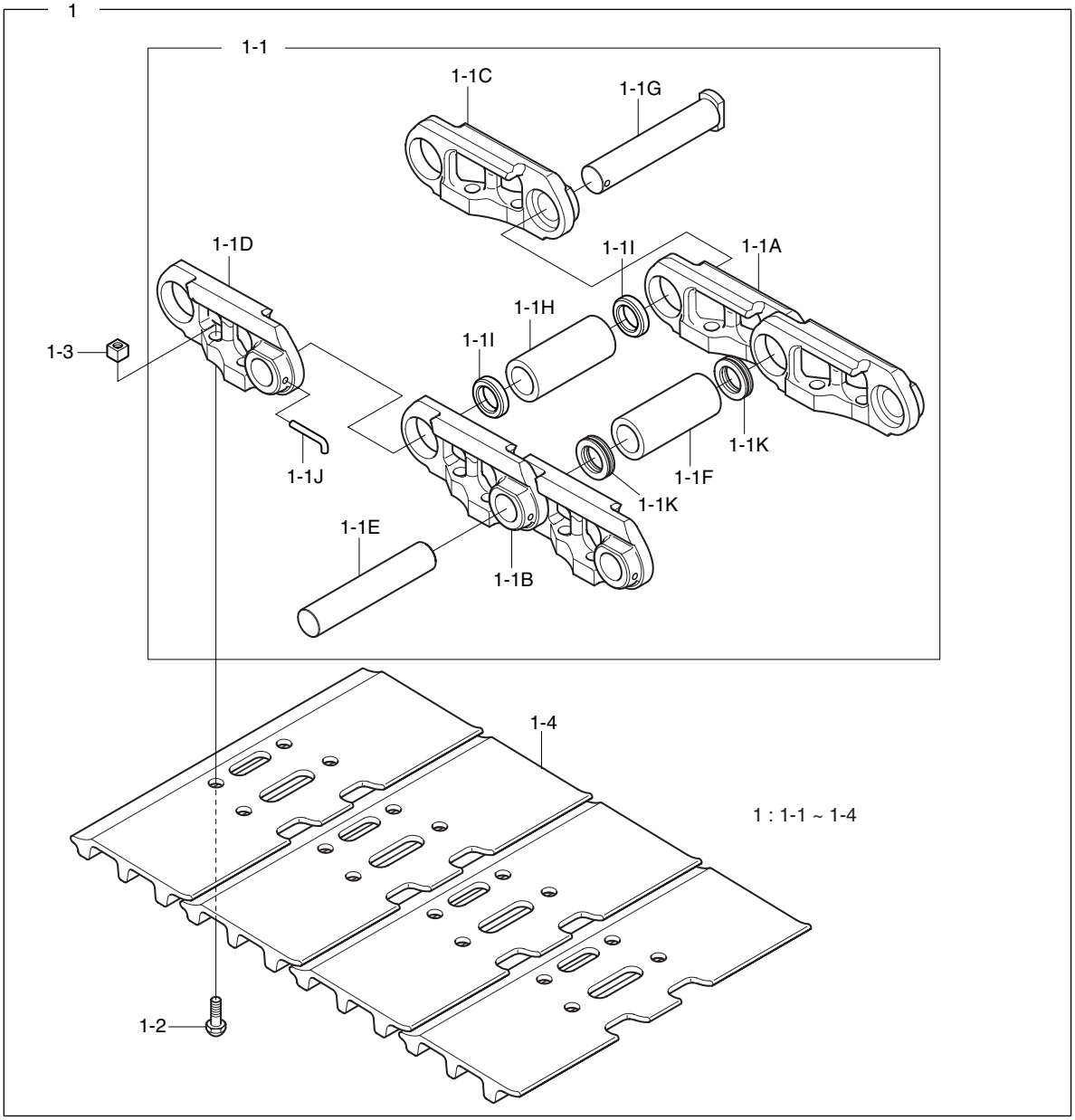


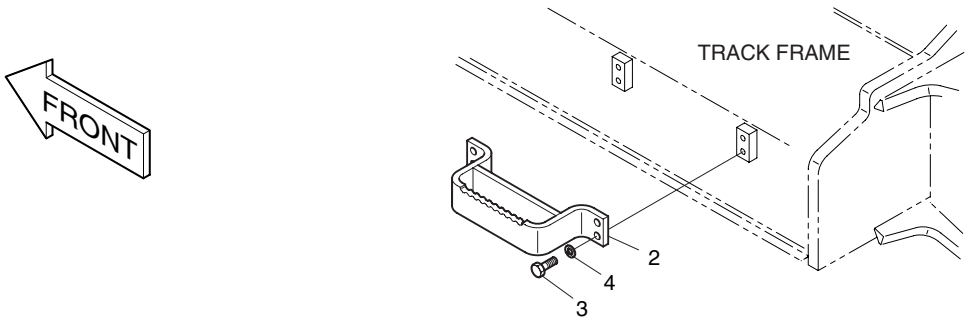

| DATE | OCT. 17, 2005 |
|---|---|
| 1st EDITION | |

# Fig. 6290 TRACK SHOE ASS'Y - 850G
# MAILLON DE CHAINE

Serial No. ;

| Key No. | Part No. | Description | Description | Q'ty | S.C | Serial No. | ICA | Replaceable part | |
|---|---|---|---|---|---|---|---|---|---|
| | | | | | | | | Part No. | Q'ty |
| 6290-- | K1009230A | TRACK SHOE ASS'Y(850MM) | MAILLON DE CHAINE | - | D | | | | |
| 1 | K1007013A | TRACK SHOE ASS'Y | ENSEMBLE MAILLON DE | 2 | | | | | |
| 1-1 | 272-00062A | . TRACK LINK ASS'Y | . ENSEMBLE MAILLON DE | 1 | | | | | |
| 1-1A | 272-00056 | .. LINK;TRACK(R.H.) | .. PIECE DE JONCTION | 47 | | | | | |
| 1-1B | 272-00057 | .. LINK;TRACK(L.H.) | .. PIECE DE JONCTION | 47 | | | | | |
| 1-1C | 272-00058 | .. LINK;MASTER(R.H.) | .. PIECE DE JONCTION | 1 | | | | | |
| 1-1D | 272-00059 | .. LINK;MASTER(L.H.) | .. PIECE DE JONCTION | 1 | | | | | |
| 1-1E | 123-00510 | .. PIN;TRACK(REGULAR) | .. BROCHE | 47 | | | | | |
| 1-1F | 110-00238 | .. BUSH;TRACK(REGULAR) | .. BAGUE | 47 | | | | | |
| 1-1G | 123-00511 | .. PIN;TRACK(MASTER) | .. BROCHE | 1 | | | | | |
| 1-1H | 110-00239 | .. BUSH;TRACK(MASTER) | .. BAGUE | 1 | | | | | |
| 1-1I | 114-00566 | .. SPACER | .. ENTERTOISE | 2 | | | | | |
| 1-1J | 2123-1629 | .. PIN;CLAMPING | .. BROCHE | 1 | | | | | |
| 1-1K | 180-00454 | .. SEAL;DUST | .. JOINT | 94 | | | | | |
| 1-2 | 120-00314 | . BOLT;TRACK | . BOULON A 6 PANS | 192 | | | | | |
| 1-3 | 121-00084 | . NUT;TRACK | . ECROU | 192 | | | | | |
| 1-4 | K1007015 | . SHOE;TRACK(850MM) | . SABOT | 48 | | | | | |
| 2 | K1004859D4 | STEP | MARCHER | 4 | | | | | |
| 3 | S0565066 | BOLT | BOULON A 6 PANS | 16 | | | | | |
| 4 | S5102903 | WASHER;SPRING | RONDELLE ELASTIQUE | 16 | | | | | |

| DATE | OCT. 17, 2005 |
|---|---|
| 1st EDITION | |

# Fig. 6300 TRACK SHOE ASS'Y - 900G
# MAILLON DE CHAINE

**Serial No. ;**

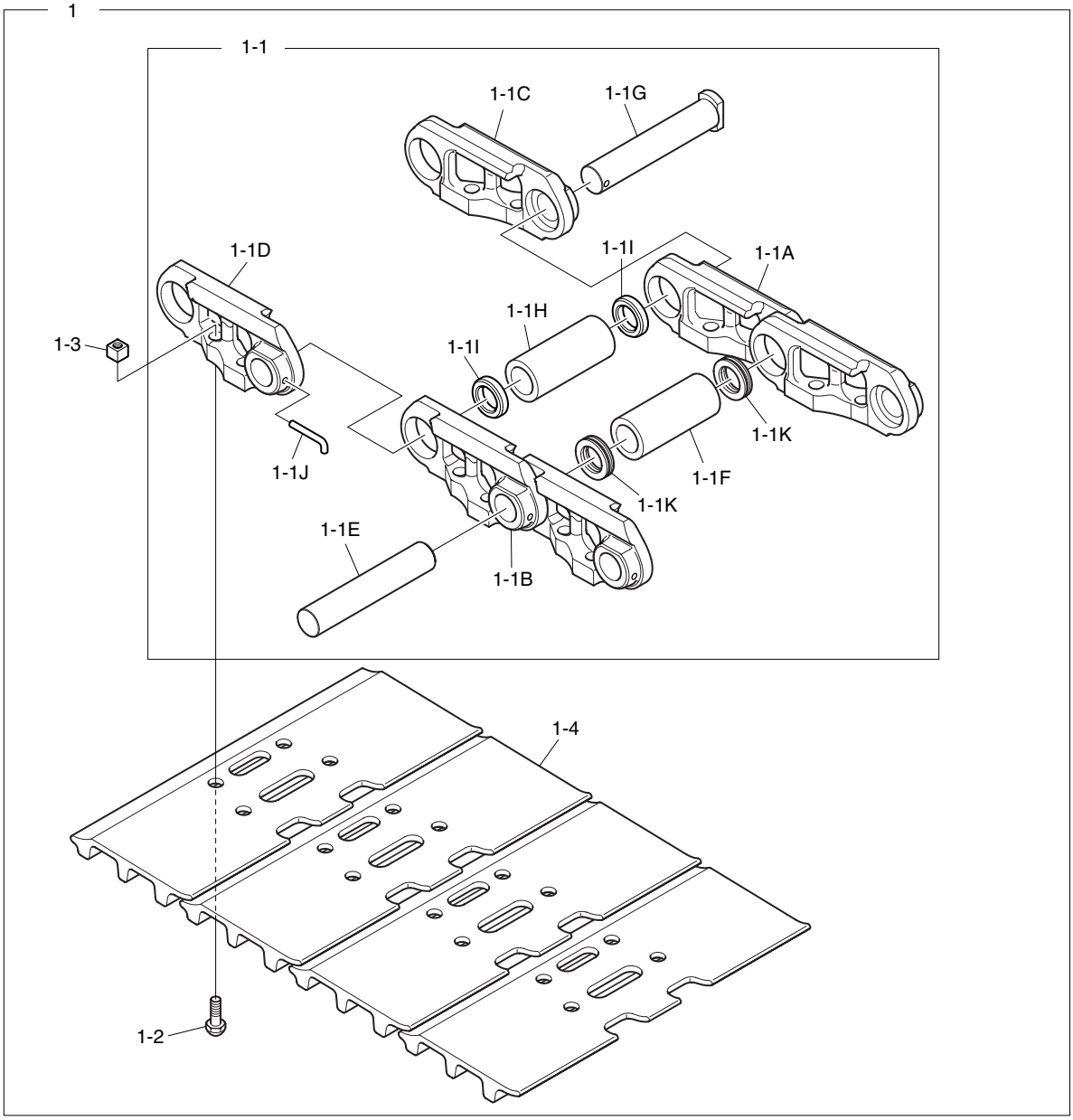


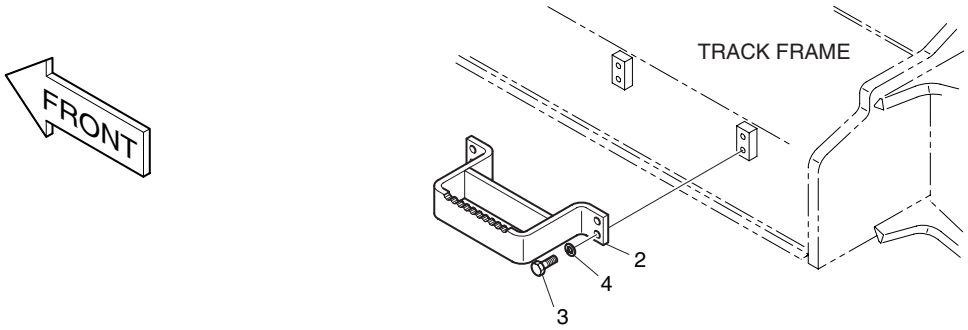

| DATE | OCT. 17, 2005 |
|---|---|
| 1st EDITION | |

# Fig. 6300 TRACK SHOE ASS'Y - 900G
# MAILLON DE CHAINE

Serial No. ;

| Key No. | Part No. | Description | Description | Q'ty | S.C | Serial No. | ICA | Replaceable part | |
|---|---|---|---|---|---|---|---|---|---|
| | | | | | | | | Part No. | Q'ty |
| 6300-- | K1009231A | TRACK SHOE ASS'Y | ENSEMBLE MAILLON DE | - | D | | | | |
| 1 | 273-00109A | TRACK SHOE ASS'Y(900MM) | MAILLON DE CHAINE | 2 | | | | | |
| 1-1 | 272-00062A | . TRACK LINK ASS'Y | . ENSEMBLE MAILLON DE | 1 | | | | | |
| 1-1A | 272-00056 | .. LINK;TRACK(R.H.) | .. PIECE DE JONCTION | 47 | | | | | |
| 1-1B | 272-00057 | .. LINK;TRACK(L.H.) | .. PIECE DE JONCTION | 47 | | | | | |
| 1-1C | 272-00058 | .. LINK;MASTER(R.H.) | .. PIECE DE JONCTION | 1 | | | | | |
| 1-1D | 272-00059 | .. LINK;MASTER(L.H.) | .. PIECE DE JONCTION | 1 | | | | | |
| 1-1E | 123-00510 | .. PIN;TRACK(REGULAR) | .. BROCHE | 47 | | | | | |
| 1-1F | 110-00238 | .. BUSH;TRACK(REGULAR) | .. BAGUE | 47 | | | | | |
| 1-1G | 123-00511 | .. PIN;TRACK(MASTER) | .. BROCHE | 1 | | | | | |
| 1-1H | 110-00239 | .. BUSH;TRACK(MASTER) | .. BAGUE | 1 | | | | | |
| 1-1I | 114-00566 | .. SPACER | .. ENTERTOISE | 2 | | | | | |
| 1-1J | 2123-1629 | .. PIN;CLAMPING | .. BROCHE | 1 | | | | | |
| 1-1K | 180-00454 | .. SEAL;DUST | .. JOINT | 94 | | | | | |
| 1-2 | 120-00314 | . BOLT;TRACK | . BOULON A 6 PANS | 192 | | | | | |
| 1-3 | 121-00084 | . NUT;TRACK | . ECROU | 192 | | | | | |
| 1-4 | 273-00112 | . SHOE;TRACK (900MM) | . SABOT | 48 | | | | | |
| 2 | K1004859D3 | STEP | MARCHER | 4 | | | | | |
| 3 | S0565066 | BOLT | BOULON A 6 PANS | 16 | | | | | |
| 4 | S5102903 | WASHER;SPRING | RONDELLE ELASTIQUE | 16 | | | | | |

| DATE | JUN. 30, 2006 |
|---|---|
| REV.NO. | EXB06-08 |

# Fig. 6310 MAIN PIPING - ROTATING
# CONDUITES DE BATI PRINCIPAL

**Serial No. ;**

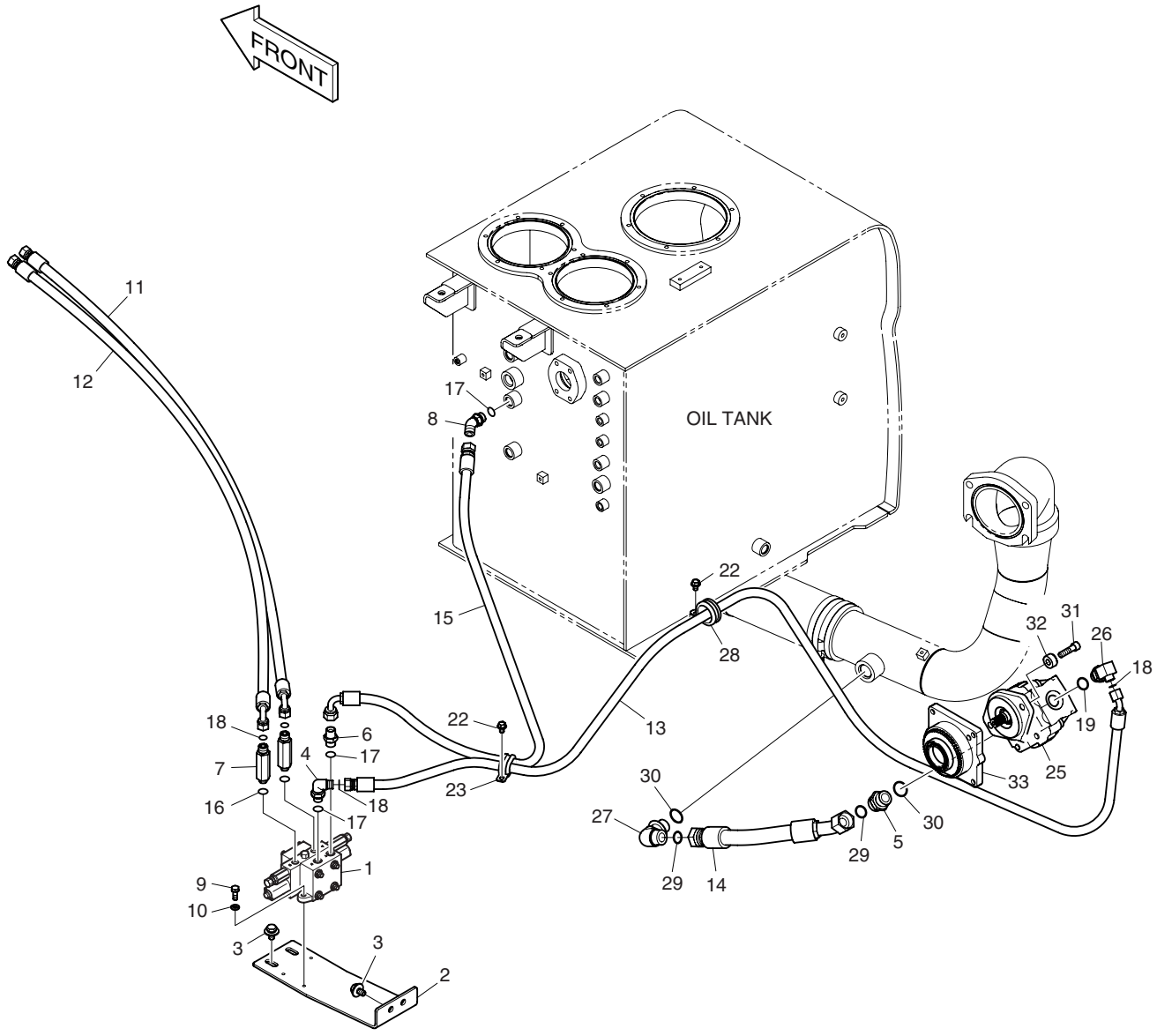

| DATE | JUN. 30, 2006 |
|---|---|
| REV. NO. | EXB06-08 |

# Fig. 6310 MAIN PIPING - ROTATING
# CONDUITES DE BATI PRINCIPAL

**Serial No. ;**

| Key No. | Part No. | Description | Description | Q'ty | S.C | Serial No. | ICA | Replaceable part | |
|---|---|---|---|---|---|---|---|---|---|
| | | | | | | | | Part No. | Q'ty |
| 6310-- | K1005115C | MAIN PIPING-ROTATING | CONDUITES DE BATI | - | D | | | | |
| 1 | 426-00284A | VALVE;ONE SPOOL | VANNE | 1 | | 5001–5134 | I | 426-00284B | 1 |
| | **426-00284B** | **VALVE;ONE SPOOL** | VANNE | 1 | | **5135–** | | | |
| 2 | K1006400B | BRACKET | SUPPORT | 1 | | | | | |
| 3 | DS0025019 | BOLT;SET | BOULON A 6 PANS | 4 | | | | | |
| 4 | 2181-2815D3 | ELBOW | COUDE | 1 | | | | | |
| 5 | 2181-4133D6 | ADAPTER | RACCORD ADAPTATEUR | 1 | | | | | |
| 6 | 2181-1126D6 | ADAPTER | RACCORD ADAPTATEUR | 1 | | | | | |
| 7 | DS2232108 | ADAPTER | RACCORD ADAPTATEUR | 2 | | | | | |
| 8 | 2181-2419D3 | ELBOW | COUDE | 1 | | | | | |
| 9 | S0508966 | BOLT | BOULON A 6 PANS | 3 | | | | | |
| 10 | S5102503 | WASHER;SPRING | RONDELLE ELASTIQUE M8 | 3 | | | | | |
| 11 | DS2013674 | HOSE | TUYAU FLEXIBLE | 1 | | | | | |
| 12 | DS2013675 | HOSE | TUYAU FLEXIBLE | 1 | | | | | |
| 13 | DS2012281 | HOSE | TUYAU FLEXIBLE | 1 | | | | | |
| 14 | DS2012282 | HOSE | TUYAU FLEXIBLE | 1 | | | | | |
| 15 | DS2055887 | HOSE | TUYAU FLEXIBLE | 1 | | | | | |
| 16 | S8000141 | O-RING | JOINT TORIQUE | 2 | | | | | |
| 17 | S8000181 | O-RING | JOINT TORIQUE | 3 | | | | | |
| 18 | S8030081 | O-RING | JOINT TORIQUE | 4 | | | | | |
| 19 | S8000231 | O-RING | JOINT TORIQUE | 1 | | | | | |
| 22 | K1001029 | BOLT | BOULON A 6 PANS | 2 | | | | | |
| 23 | 124-00209D1 | CLIP | ATTACHE | 1 | | | | | |
| 25 | K1007973 | PUMP;GEAR | POMPE A ENGRENAGE | 1 | | | | | |
| 26 | DS2304014 | ELBOW | COUDE | 1 | | | | | |
| 27 | 2181-2815D1 | ELBOW | COUDE | 1 | | | | | |
| 28 | 124-00208D7 | CLIP | ATTACHE | 1 | | | | | |
| 29 | S8030161 | O-RING | JOINT TORIQUE | 2 | | | | | |
| 30 | S8000291 | O-RING | JOINT TORIQUE | 2 | | | | | |
| 31 | S2215566 | BOLT;SOCKET | BOULON A 6 PANS CREUX | 2 | | | | | |
| 32 | K1007011 | SPACER | DOUILLE D'ECARTEMENT | 2 | | | | | |
| 33 | K1007517 | POWER TAKE OFF | DENSEMBLE DE FLASQUE | 1 | | | | | |

| DATE | DEC. 15, 2006 |
|---|---|
| REV.NO. | EXB06-13 |

# Fig. 6320 PILOT PIPING(1) - ROTATING
# CONDUITES DE PILOTE

**Serial No. ;**

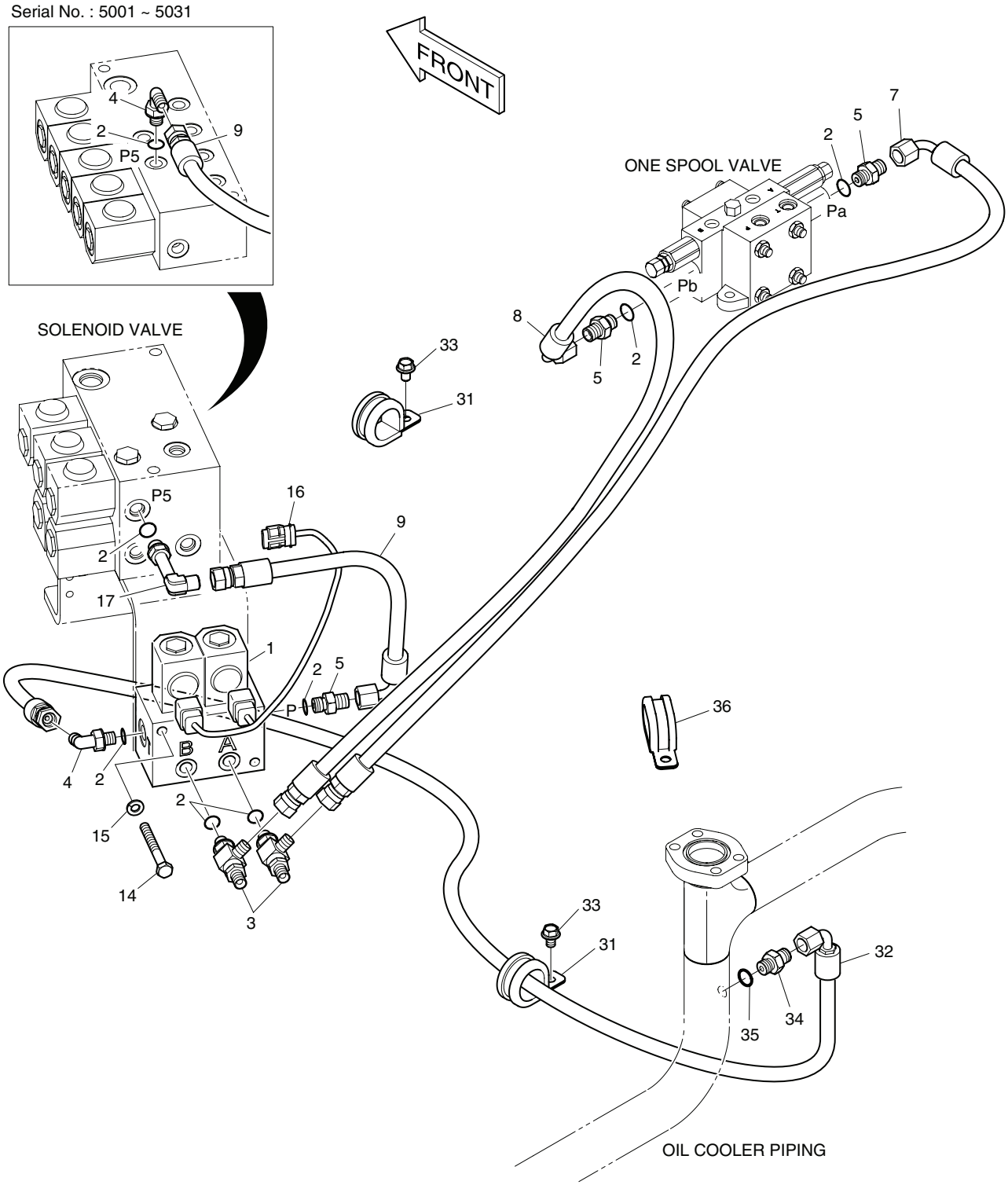

| DATE | DEC. 15, 2006 |
|---|---|
| REV. NO. | EXB06-13 |

# Fig. 6320 PILOT PIPING(1) - ROTATING
# CONDUITES DE PILOTE

Serial No. ;

| Key No. | Part No. | Description | Description | Q'ty | S.C | Serial No. | ICA | Replaceable part | |
|---|---|---|---|---|---|---|---|---|---|
| | | | | | | | | Part No. | Q'ty |
| 6320-- | K1005787A | PILOT PIPING-ROTATING | CONDUITES DE PILOTE | - | D | 5001–5031 | | | |
| | K1005787B | PILOT PIPING-ROTATING | CONDUITES DE PILOTE | - | D | 5032– | | | |
| 1 | 426-00247A | VALVE;SOLENOID | VANNE SOLENOIDE | 1 | | | | | |
| 2 | S8000111 | O-RING | JOINT TORIQUE | 7 | | | | | |
| 3 | 181-00779 | TEE;SHUTTLE | TE | 2 | | | | | |
| 4 | 2181-1702D4 | ELBOW | COUDE | 2 | | 5001–5031 | | | |
| | 2181-1702D4 | ELBOW | COUDE | 1 | | 5032– | | | |
| 5 | 2181-1126D14 | ADAPTER | RACCORD ADAPTATEUR | 3 | | | | | |
| 7 | DS2093121 | HOSE | TUYAU FLEXIBLE | 1 | | | | | |
| 8 | DS2093014 | HOSE | TUYAU FLEXIBLE | 1 | | | | | |
| 9 | DS2093024 | HOSE | TUYAU FLEXIBLE | 1 | | 5001–5031 | | | |
| | DS2093208 | HOSE | TUYAU FLEXIBLE | 1 | | 5032– | | | |
| 14 | S0556766 | BOLT | BOULON A 6 PANS | 2 | | | | | |
| 15 | S5102503 | WASHER;SPRING | RONDELLE ELASTIQUE M8 | 2 | | | | | |
| 16 | K1000817 | HARNESS | FAISCEAU | 1 | | | | | |
| 17 | 2181-1702D56 | ELBOW | COUDE | 1 | | 5032– | | | |
| 31 | 124-00208D5 | CLIP | ATTACHE | 2 | | | | | |
| 32 | DS2093043 | HOSE | TUYAU FLEXIBLE | 1 | | | | | |
| 33 | K1001029 | BOLT | BOULON A 6 PANS | 2 | | | | | |
| 34 | 2181-1126D14 | ADAPTER | RACCORD ADAPTATEUR | 1 | | | | | |
| 35 | S8000111 | O-RING | JOINT TORIQUE | 1 | | | | | |
| 36 | 124-00209D4 | CLIP | ATTACHE | 1 | | | | | |

| DATE | JUN. 30, 2008 |
|---|---|
| REV.NO. | EXB08-06 |

# Fig. 6330 PILOT PIPING(2) - ROTATING
# CONDUITES DE PILOTE

**Serial No. ;**

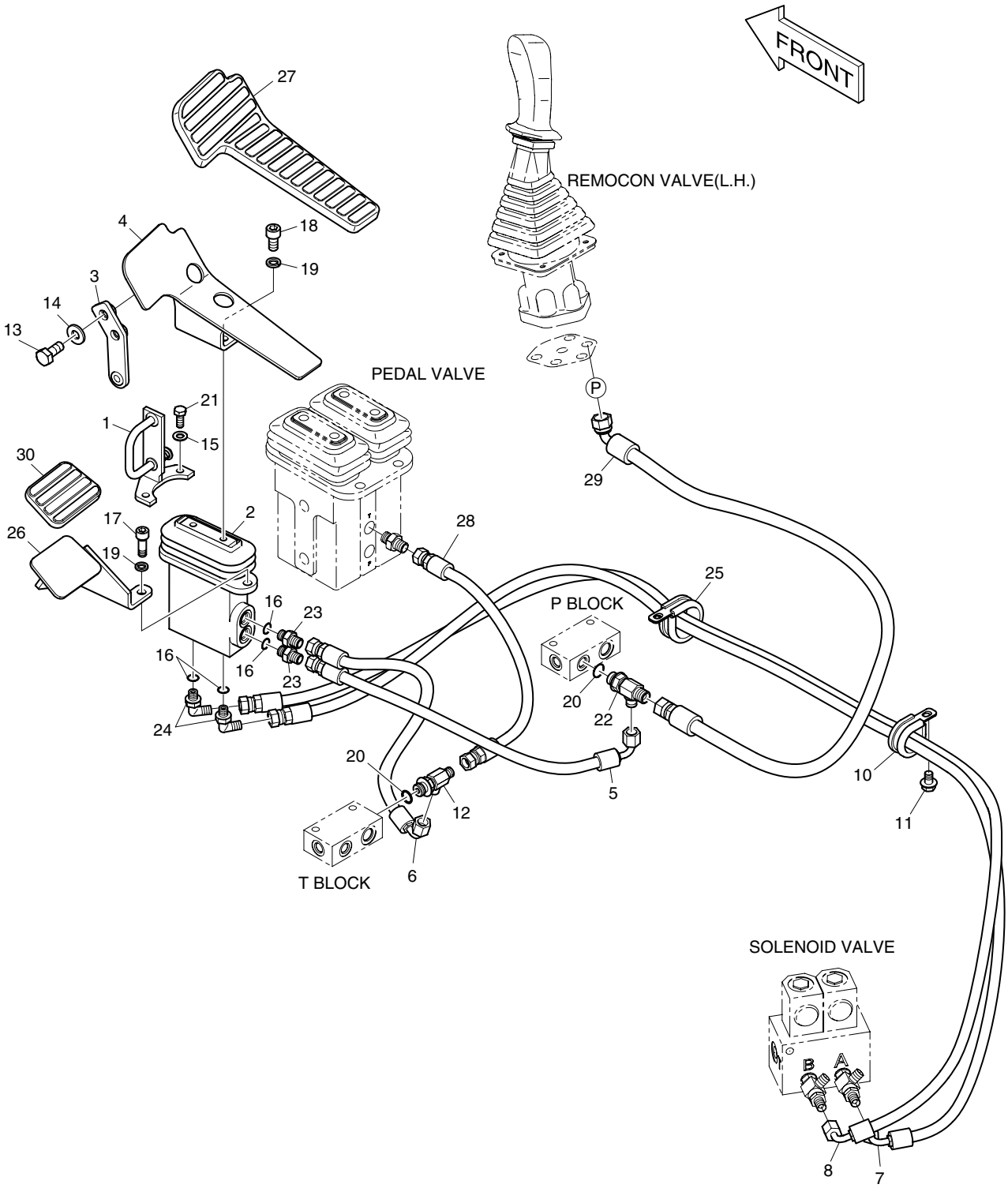

| DATE | JUN. 30, 2008 |
|---|---|
| REV. NO. | EXB08-06 |

# Fig. 6330 PILOT PIPING(2) - ROTATING CONDUITES DE PILOTE

Serial No. ;

| Key No. | Part No. | Description | Description | Q'ty | S.C | Serial No. | ICA | Replaceable part | |
|---|---|---|---|---|---|---|---|---|---|
| | | | | | | | | Part No. | Q'ty |
| 6330-- | K1006461B | PILOT PIPING-ROTATING | CONDUITES DE PILOTE | - | D | | | | |
| 1 | K1001873A | LOCK;PEDAL(L.H) | LOCK;PEDAL | 1 | | | | | |
| 2 | 420-00347 | VALVE;PEDAL | VANNE DE PEDALE | 1 | | 5001–5859 | I | K1017382A | 1 |
| | **K1017382A** | **VALVE;PEDAL** | VANNE DE PEDALE | 1 | | **5860**– | | | |
| 3 | K1001871B | PLATE | PLAQUE | 1 | | | | | |
| 4 | 195-01684A | BRACKET;PEDAL | SUPPORT | 1 | | | | | |
| 5 | DS2093123 | HOSE | TUYAU FLEXIBLE | 1 | | | | | |
| 6 | DS2093130 | HOSE | TUYAU FLEXIBLE | 1 | | | | | |
| 7 | DS2093171 | HOSE | TUYAU FLEXIBLE | 1 | | | | | |
| 8 | DS2093172 | HOSE | TUYAU FLEXIBLE | 1 | | | | | |
| 10 | 124-00208D5 | CLIP | ATTACHE | 1 | | | | | |
| 11 | K1001029 | BOLT | BOULON A 6 PANS | 1 | | | | | |
| 12 | 2181-1951D7 | TEE | TE | 1 | | | | | |
| 13 | 2120-2166D2 | BOLT | BOULON A 6 PANS | 2 | | | | | |
| 14 | S5102603 | WASHER | RONDELLE ELASTIQUE M10 | 2 | | | | | |
| 15 | S5102503 | WASHER | RONDELLE ELASTIQUE M8 | 2 | | | | | |
| 16 | S8000111 | O-RING | JOINT TORIQUE | 4 | | | | | |
| 17 | S2212266 | BOLT | BOULON DE PLOT | 2 | | | | | |
| 18 | S2211866 | BOLT | BOULON A 6 PANS CREUX | 2 | | | | | |
| 19 | S5110603 | WASHER;SPRING | RONDELLE ELASTIQUE | 4 | | | | | |
| 20 | S8000141 | O-RING | JOINT TORIQUE | 2 | | | | | |
| 21 | 2120-2166D5 | BOLT | BOULON A 6 PANS | 2 | | | | | |
| 22 | 2181-1951D6 | TEE | TE | 1 | | | | | |
| 23 | 2181-1126D14 | ADAPTER | RACCORD ADAPTATEUR | 2 | | | | | |
| 24 | 2181-1702D4 | ELBOW | COUDE | 2 | | | | | |
| 25 | 124-00208D7 | CLIP | ATTACHE | 1 | | | | | |
| 26 | K1003948A | FOOT REST | REPOS DE PIED | 1 | | | | | |
| 27 | 161-00382 | RUBBER;PEDAL | CAOUTCHOUC | 1 | | | | | |
| 28 | DS2094006 | HOSE | TUYAU FLEXIBLE | 1 | | | | | |
| 29 | DS2095003 | HOSE | TUYAU FLEXIBLE | 1 | | | | | |
| 30 | K1006656 | RUBBER;PEDAL | CAOUTCHOUC | 1 | | | | | |

| DATE | OCT. 17, 2005 |
|---|---|
| 1st EDITION | |

# Fig. 6340 PILOT PIPING - ROTATING & QUICK FIT
# CONDUITES DE PILOTE

**Serial No. ;**

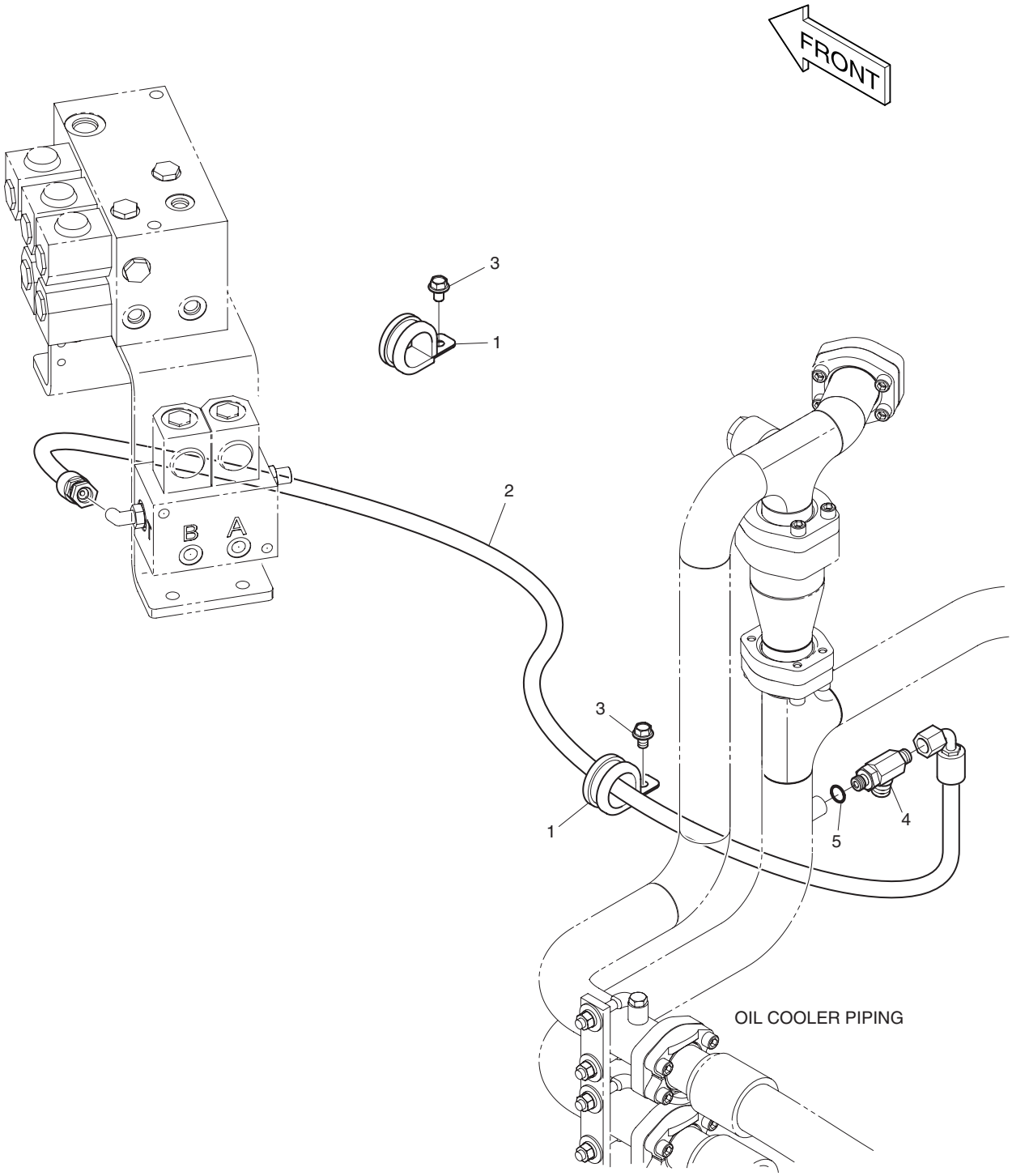

| DATE | OCT. 17, 2005 |
|---|---|
| 1st EDITION | |

# Fig. 6340 PILOT PIPING - ROTATING & QUICK FIT
# CONDUITES DE PILOTE

**Serial No. ;**

| Key No. | Part No. | Description | Description | Q'ty | S.C | Serial No. | ICA | Replaceable part | |
|---|---|---|---|---|---|---|---|---|---|
| | | | | | | | | Part No. | Q'ty |
| 6340-- | K1006564A | PILOT PIPING | CONDUITES DE PILOTE | - | D | | | | |
| 1 | 124-00208D6 | CLIP | ATTACHE | 2 | | | | | |
| 2 | DS2093043 | HOSE | TUYAU FLEXIBLE | 1 | | | | | |
| 3 | K1001029 | BOLT | BOULON A 6 PANS | 2 | | | | | |
| 4 | 2181-1951D14 | TEE | TE | 1 | | | | | |
| 5 | S8000111 | O-RING | JOINT TORIQUE | 1 | | | | | |

| DATE | JUN. 30, 2007 |
|---|---|
| REV.NO. | EXB07-06 |

# Fig. 6350 BOOM PIPING - ROTATION
# CONDUITES DE FLECHE

**Serial No. ;**

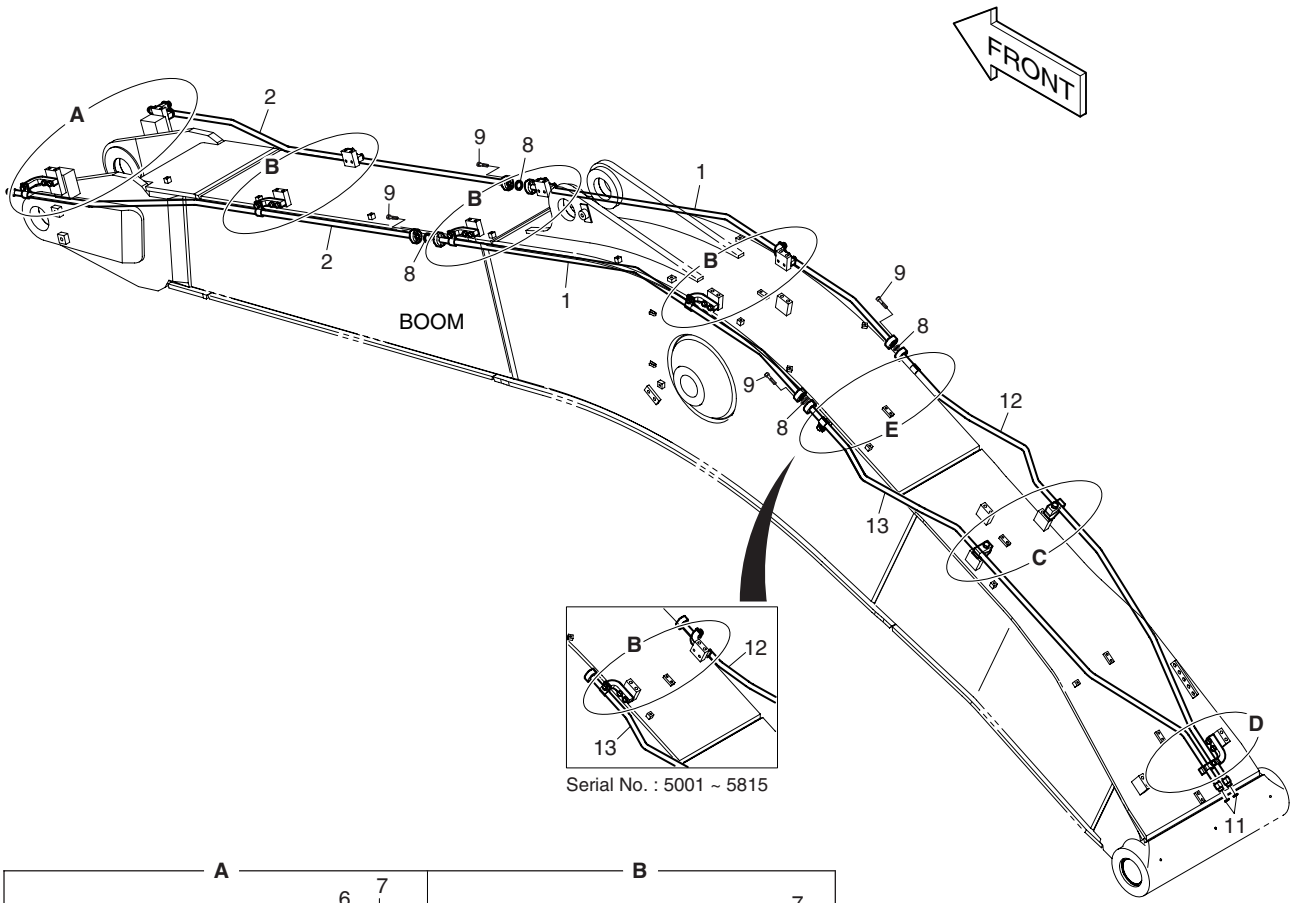


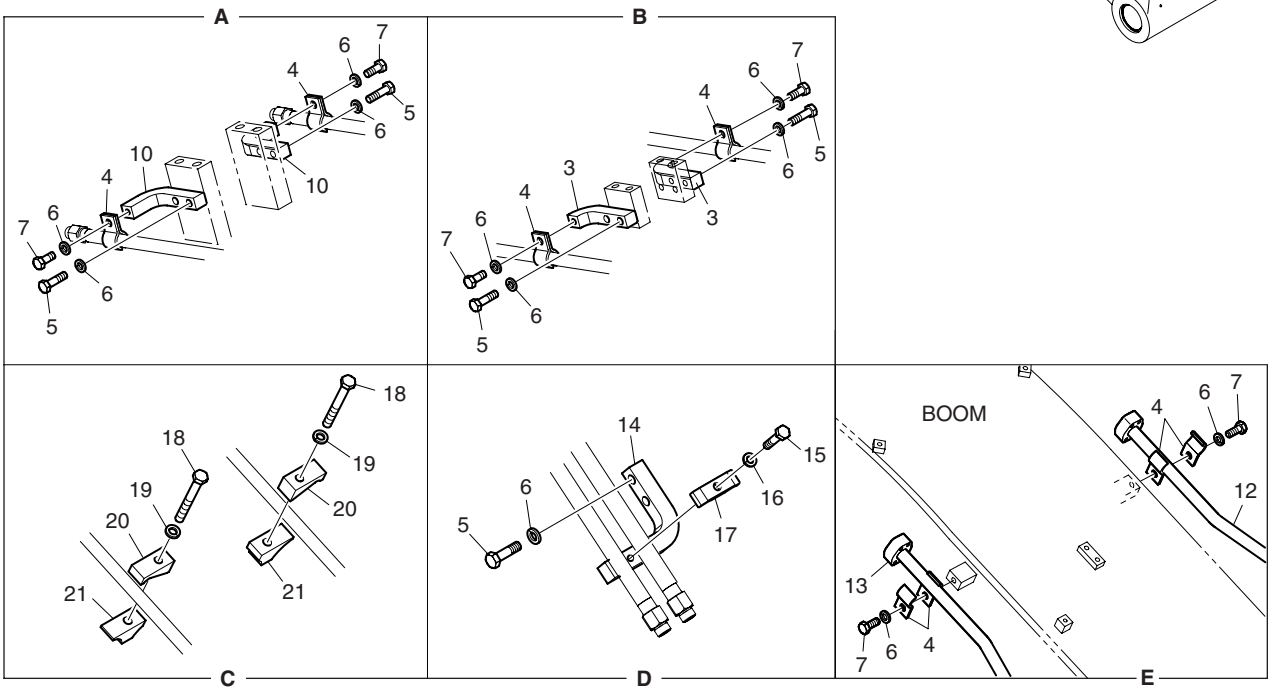

| DATE | JUN. 30, 2007 |
|---|---|
| REV. NO. | EXB07-06 |

# Fig. 6350 BOOM PIPING - ROTATION CONDUITES DE FLECHE

**Serial No. ;**

| Key No. | Part No. | Description | Description | Q'ty | S.C | Serial No. | ICA | Replaceable part | |
|---|---|---|---|---|---|---|---|---|---|
| | | | | | | | | Part No. | Q'ty |
| 6350-- | **K1006219A** | **BOOM PIPING-ROTATION** | CONDUITES DE FLECHE | - | D | | | | |
| 1 | K1006220 | PIPE | CONDUITE | 2 | | 5001–5815 | I | K1006220A | 2 |
| | **K1006220A** | **PIPE** | CONDUITE | 2 | | **5816–** | | | |
| 2 | K1006221A | PIPE | CONDUITE | 2 | | | | | |
| 3 | 621-02700A | PLATE | PLAQUE | 8 | | 5001–5815 | | | |
| | **621-02700A** | **PLATE** | PLAQUE | 6 | | **5816–** | | | |
| 4 | 124-00299A | CLAMP;PIPE | FIXATION DE TUYAU | 20 | | | | | |
| 5 | S0560666 | BOLT | BOULON A 6 PANS | 22 | | 5001–5815 | | | |
| | **S0560666** | **BOLT** | BOULON A 6 PANS | 18 | | **5816–** | | | |
| 6 | S5102703 | WASHER;SPRING | RONDELLE ELASTIQUE M12 | 32 | | 5001–5815 | | | |
| | **S5102703** | **WASHER;SPRING** | RONDELLE ELASTIQUE M12 | 28 | | **5816–** | | | |
| 7 | S0515266 | BOLT | BOULON A 6 PANS | 10 | | | | | |
| 8 | 2180-1026D30 | O-RING | JOINT TORIQUE | 4 | | | | | |
| 9 | S2209466 | BOLT;SOCKET | BOULON A 6 PANS CREUX | 16 | | | | | |
| 10 | K1004027 | PLATE | PLAQUE | 2 | | | | | |
| 11 | S8030081 | O-RING | JOINT TORIQUE | 2 | | | | | |
| 12 | K1006222 | PIPE | CONDUITE | 1 | | 5001–5815 | | | |
| | **K1006222A** | **PIPE** | CONDUITE | 1 | | **5816–** | | | |
| 13 | K1006223 | PIPE | CONDUITE | 1 | | 5001–5815 | | | |
| | **K1006223A** | **PIPE** | CONDUITE | 1 | | **5816–** | | | |
| 14 | 621-02798 | PLATE | PLAQUE | 1 | | | | | |
| 15 | S0558466 | BOLT | BOULON A 6 PANS | 1 | | | | | |
| 16 | S5102603 | WASHER;SPRING | RONDELLE ELASTIQUE M10 | 1 | | | | | |
| 17 | K1004028 | CLAMP;PIPE | FIXATION DE TUYAU | 1 | | | | | |
| 18 | S0564366 | BOLT | BOULON A 6PANS | 2 | | | | | |
| 19 | S5102803 | WASHER;SPRING | RONDELLE ELASTIQUE M14 | 2 | | | | | |
| 20 | K1006931 | CLAMP;PIPE | FIXATION DE TUYAU | 2 | | | | | |
| 21 | K1006930 | CLAMP;PIPE | FIXATION DE TUYAU | 2 | | | | | |

| DATE | OCT. 17, 2005 |
|---|---|
| 1st EDITION | |

# Fig. 6360 ARM PIPING - ROTATION(ARM 3.2m)
# CONDUITES DE BALANCIER

**Serial No. ;**

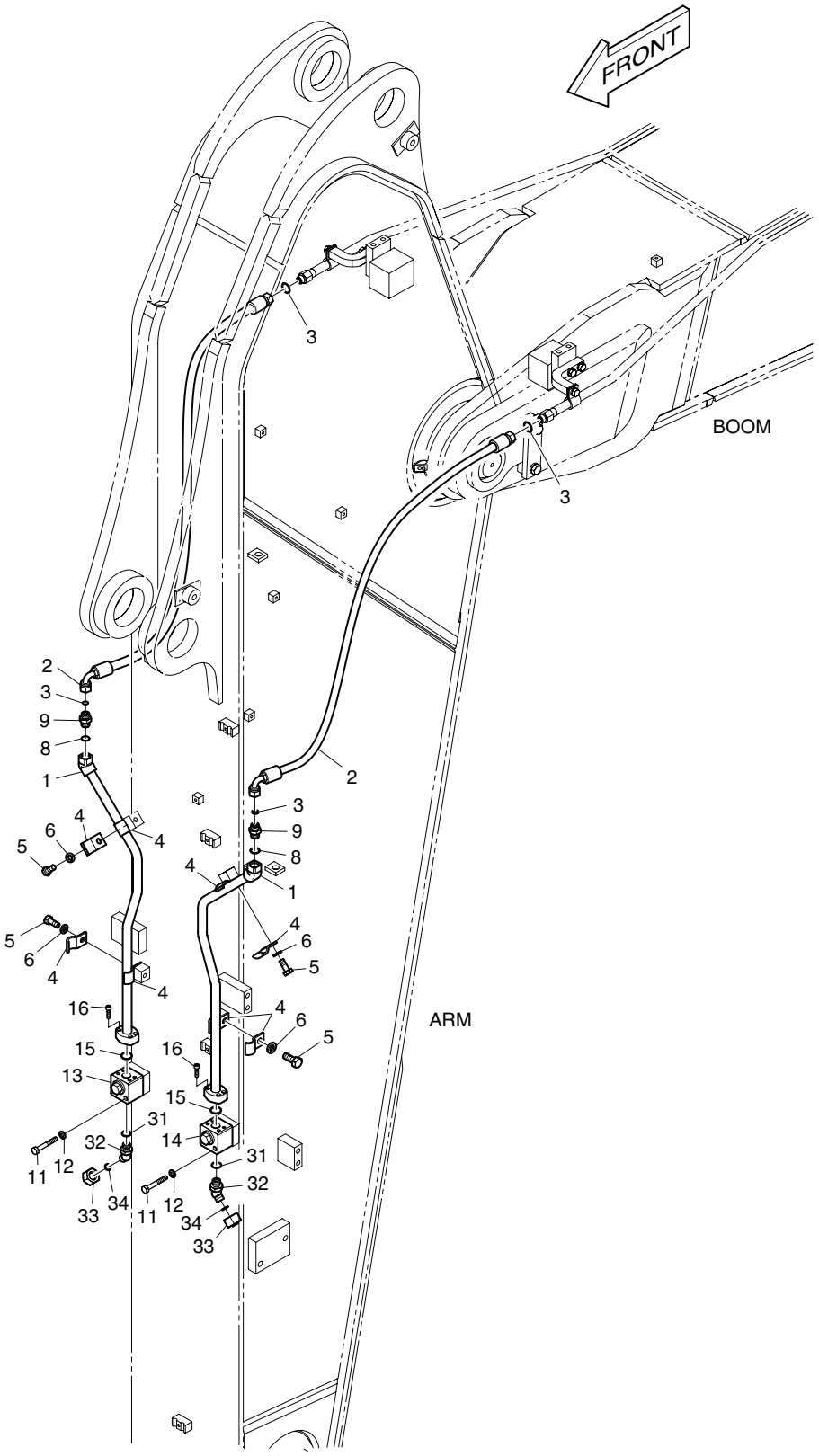

| DATE | OCT. 17, 2005 |
|---|---|
| 1st EDITION | |

# Fig. 6360 ARM PIPING - ROTATION(ARM 3.2m) CONDUITES DE BALANCIER

Serial No. ;

| Key No. | Part No. | Description | Description | Q'ty | S.C | Serial No. | ICA | Replaceable part | |
|---|---|---|---|---|---|---|---|---|---|
| | | | | | | | | Part No. | Q'ty |
| 6360-- | K1006225A | ARM PIPING-ROTATION | CONDUITES DE | - | D | | | | |
| 1 | K1006226 | PIPE | CONDUITE | 2 | | | | | |
| 2 | DS2013596 | HOSE | TUYAU FLEXIBLE | 2 | | | | | |
| 3 | S8030081 | O-RING | JOINT TORIQUE | 4 | | | | | |
| 4 | 124-00299A | CLAMP;PIPE | FIXATION DE TUYAU | 8 | | | | | |
| 5 | S0515266 | BOLT | BOULON A 6 PANS | 4 | | | | | |
| 6 | S5102703 | WASHER;SPRING | RONDELLE ELASTIQUE | 4 | | | | | |
| 8 | S8000181 | O-RING | JOINT TORIQUE | 2 | | | | | |
| 9 | 2181-4133D3 | ADAPTER | RACCORD | 2 | | | | | |
| 11 | S0558966 | BOLT | BOULON A 6PANS | 4 | | | | | |
| 12 | S5102603 | WASHER;SPRING | RONDELLE ELASTIQUE | 4 | | | | | |
| 13 | K1006227 | VALVE;SWITCH(R.H) | VANNE | 1 | | | | | |
| 14 | K1006228 | VALVE;SWITCH(L.H) | VANNE | 1 | | | | | |
| 15 | 2180-1026D30 | O-RING | JOINT TORIQUE | 2 | | | | | |
| 16 | S2209266 | BOLT;SOCKET | BOULON A 6 PANS CREUX | 8 | | | | | |
| 31 | S8000181 | O-RING | JOINT TORIQUE | 2 | | | | | |
| 32 | 2181-2816D4 | ELBOW | COUDE | 2 | | | | | |
| 33 | 2181-2817D4 | CAP | BOUCHON | 2 | | | | | |
| 34 | S8030081 | O-RING | JOINT TORIQUE | 2 | | | | | |

| DATE | JUN. 30, 2006 |
|---|---|
| REV.NO. | EXB06-08 |

# Fig. 6370 PILOT PIPING - BOOM LOCK VALVE
# CONDUITES DE PILOTE

**Serial No. ;**

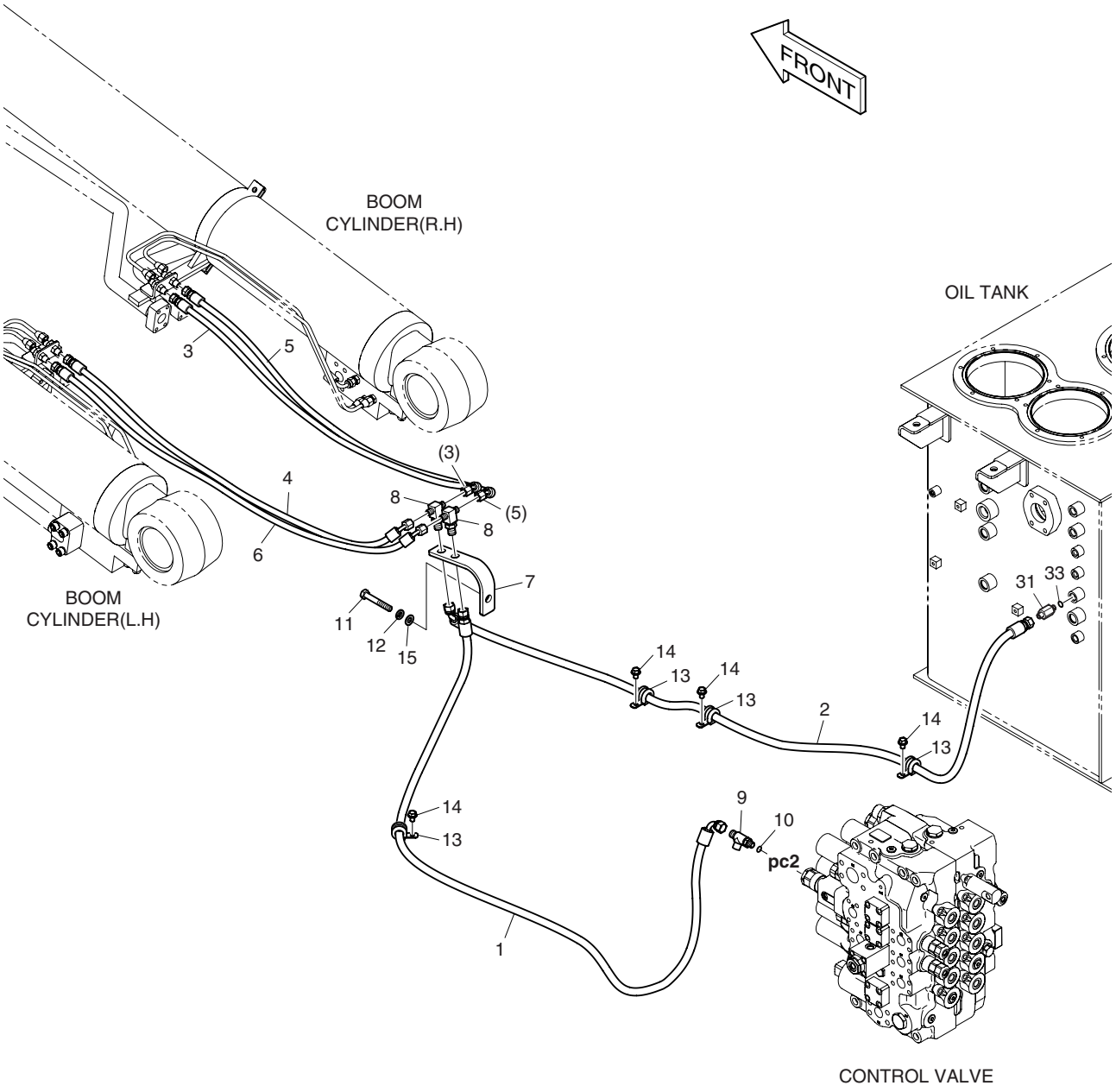

| DATE | JUN. 30, 2006 |
|---|---|
| REV. NO. | EXB06-08 |

# Fig. 6370 PILOT PIPING - BOOM LOCK VALVE
# CONDUITES DE PILOTE

**Serial No. ;**

| Key No. | Part No. | Description | Description | Q'ty | S.C | Serial No. | ICA | Replaceable part | |
|---|---|---|---|---|---|---|---|---|---|
| | | | | | | | | Part No. | Q'ty |
| 6370-- | **K1005975B** | **PILOT PIPING-BOOM LOCK** | CONDUITES DE PILOTE | - | D | | | | |
| 1 | DS2093215 | HOSE | TUYAU FLEXIBLE | 1 | | 5001–5099 | I | DS2093223 | 1 |
| | **DS2093223** | **HOSE** | TUYAU FLEXIBLE | 1 | | **5100–** | | | |
| 2 | DS2092061 | HOSE | TUYAU FLEXIBLE | 1 | | | | | |
| 3 | DS2092007 | HOSE | TUYAU FLEXIBLE | 1 | | | | | |
| 4 | DS2092007 | HOSE | TUYAU FLEXIBLE | 1 | | | | | |
| 5 | DS2092062 | HOSE | TUYAU FLEXIBLE | 1 | | | | | |
| 6 | DS2092062 | HOSE | TUYAU FLEXIBLE | 1 | | | | | |
| 7 | K1003633A | BRACKET | SUPPORT | 1 | | | | | |
| 8 | 181-00008 | TEE | TE | 2 | | | | | |
| 9 | 2181-2375D7 | TEE | TE | 1 | | | | | |
| 10 | S8000111 | O-RING | JOINT TORIQUE | 1 | | | | | |
| 11 | S0561366 | BOLT | BOULON A 6 PANS | 1 | | | | | |
| 12 | S5102703 | WASHER;SPRING | RONDELLE ELASTIQUE M12 | 1 | | | | | |
| 13 | 124-00208D3 | CLIP | ATTACHE | 4 | | | | | |
| 14 | K1001029 | BOLT | BOULON A 6 PANS | 4 | | | | | |
| 15 | S5010713 | WASHER;PLAIN | RONDELLE | 1 | | | | | |
| 31 | 2181-1126D27 | ADAPTER | RACCORD ADAPTATEUR | 1 | | | | | |
| 33 | S8000141 | O-RING | JOINT TORIQUE | 1 | | | | | |

| DATE | OCT. 17, 2005 |
|---|---|
| 1st EDITION | |

# Fig. 6380 BOOM PIPING - LOCK VALVE
# DONDUITER DE FLECHE

**Serial No. ;**

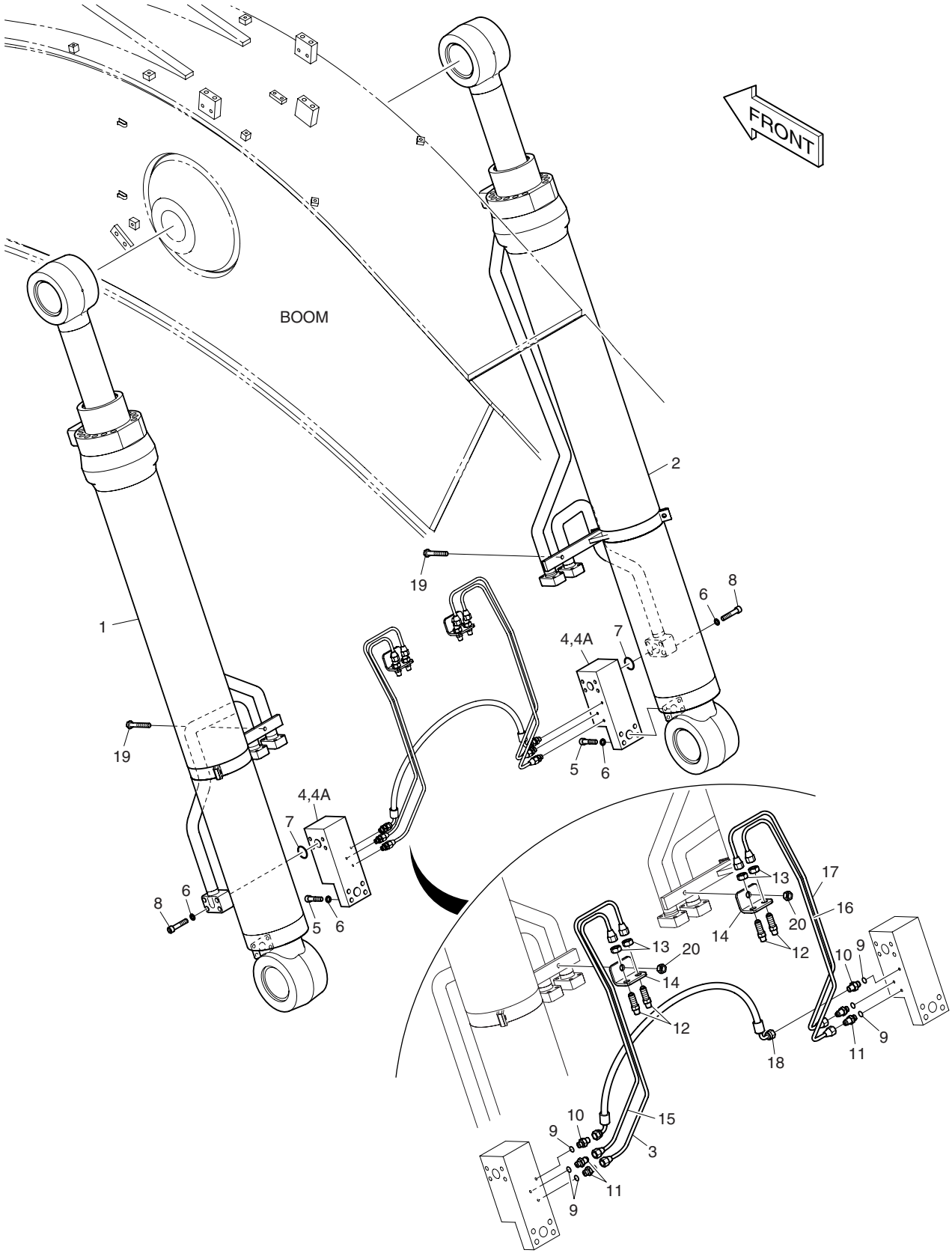

| DATE | OCT. 17, 2005 |
|---|---|
| 1st EDITION | |

# Fig. 6380 BOOM PIPING - LOCK VALVE DONDUITER DE FLECHE

Serial No. ;

| Key No. | Part No. | Description | Description | Q'ty | S.C | Serial No. | ICA | Replaceable part | |
|---|---|---|---|---|---|---|---|---|---|
| | | | | | | | | Part No. | Q'ty |
| 6380-- | K1006233 | BOOM PIPING-LOCK VALVE | DONDUITER DE FLECHE | - | D | | | | |
| 1 | K1006234 | CYLINDER;BOOM(L.H) | VERIN DE FLECHE | 1 | | | | | |
| 2 | K1006235 | CYLINDER;BOOM(R.H) | VERIN DE FLECHE DROIT | 1 | | | | | |
| 3 | 140-01092A | PIPE | CONDUITE | 1 | | | | | |
| 4 | 420-00004A | LOCK VALVE | VANNE | 2 | | | | | |
| 4A | K9000999 | . SEAL KIT;LOCK VALVE | . KIT DE JOINT | 1 | | | | | |
| 5 | S2215766 | BOLT;SOCKET | BOULON DE PLOT | 8 | | | | | |
| 6 | S5110703 | WASHER;SPRING | RONDELLE ELASTIQUE | 16 | | | | | |
| 7 | S8000341 | O-RING | JOINT TORIQUE | 2 | | | | | |
| 8 | S2215866 | BOLT;SOCKET | BOULON A 6 PANS CREUX | 8 | | | | | |
| 9 | S8000111 | O-RING | JOINT TORIQUE | 6 | | | | | |
| 10 | 2181-1126D14 | ADAPTER | RACCORD ADAPTATEUR | 2 | | | | | |
| 11 | 2181-1916D5 | ADAPTER | RACCORD ADAPTATEUR | 4 | | | | | |
| 12 | 2181-1923D12 | ADAPTER | RACCORD ADAPTATEUR | 4 | | | | | |
| 13 | S4032833 | NUT | ECROU | 4 | | | | | |
| 14 | 195-01535A | BRACKET | SUPPORT | 2 | | | | | |
| 15 | 140-01093A | PIPE | CONDUITE | 1 | | | | | |
| 16 | 140-01094A | PIPE | CONDUITE | 1 | | | | | |
| 17 | 140-01095A | PIPE | CONDUITE | 1 | | | | | |
| 18 | DS2059383 | HOSE | TUYAU FLEXIBLE | 1 | | | | | |
| 19 | S0561466 | BOLT | BOULON A 6 PANS | 2 | | | | | |
| 20 | S4012733 | NUT | ECROU | 2 | | | | | |

| DATE | JUN. 30, 2006 |
|---|---|
| REV.NO. | EXB06-08 |

# Fig. 6390 PILOT PIPING - ARM LOCK VALVE
# CONDUITES DE PILOTE

**Serial No. ;**

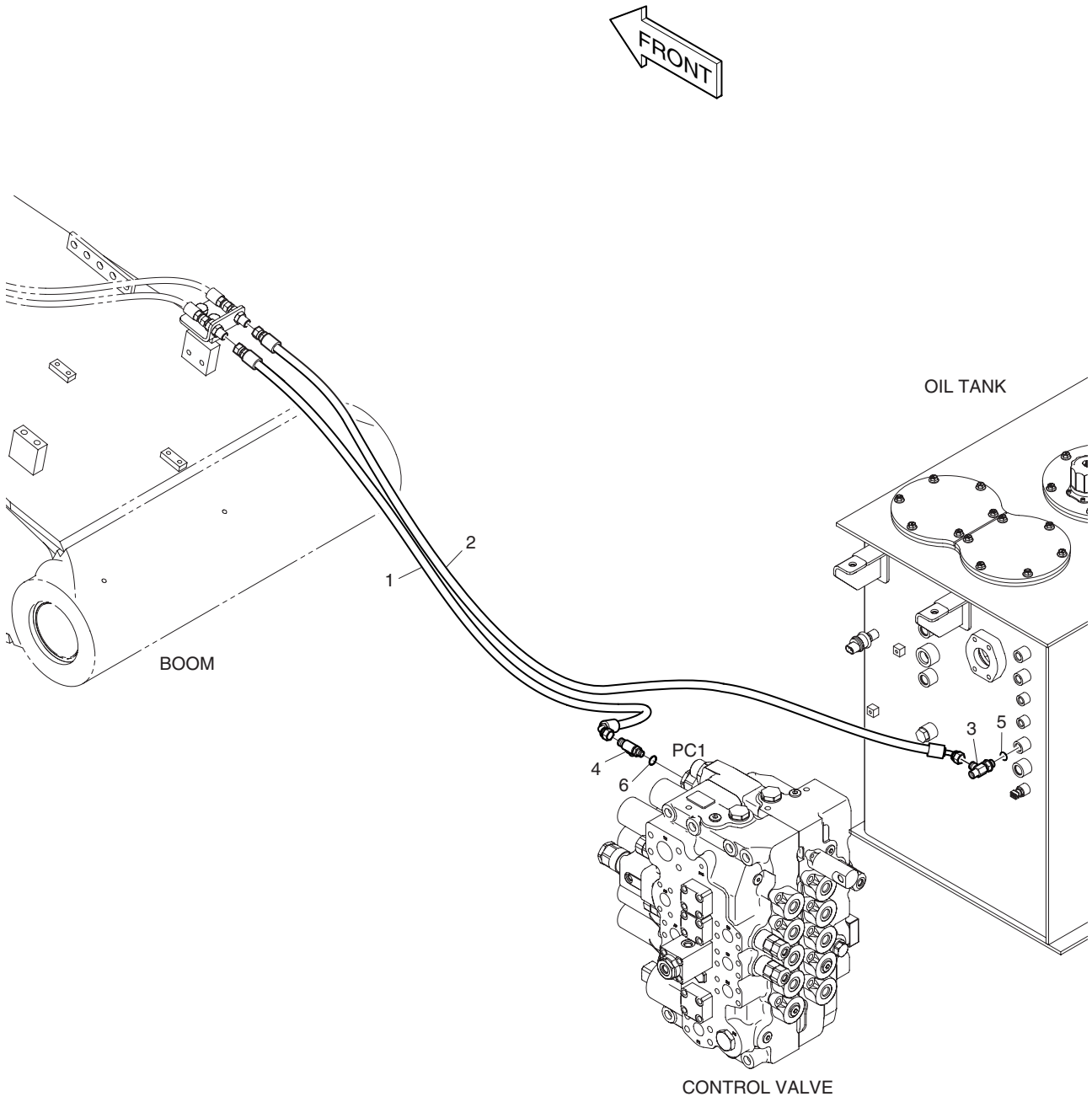

| DATE | JUN. 30, 2006 |
|---|---|
| REV. NO. | EXB06-08 |

# Fig. 6390 PILOT PIPING - ARM LOCK VALVE CONDUITES DE PILOTE

**Serial No. ;**

| Key No. | Part No. | Description | Description | Q'ty | S.C | Serial No. | ICA | Replaceable part | |
|---|---|---|---|---|---|---|---|---|---|
| | | | | | | | | Part No. | Q'ty |
| 6390-- | K1009235 | PILOT PIPING-ARM LOCK V/V | CONDUITES DE PILOTE | - | D | | | | |
| 1 | DS2093222 | HOSE | TUYAU FLEXIBLE | 1 | | | | | |
| 2 | DS2092010 | HOSE | TUYAU FLEXIBLE | 1 | | | | | |
| 3 | 2181-1951D16 | TEE | TE | 1 | | | | | |
| 4 | 2181-2375D7 | TEE | TE | 1 | | | | | |
| 5 | S8000141 | O-RING | JOINT TORIQUE | 1 | | | | | |
| 6 | S8000111 | O-RING | JOINT TORIQUE | 1 | | | | | |

| DATE | JUN. 30, 2007 |
|---|---|
| REV.NO. | EXB07-06 |

# Fig. 6400 ARM PIPING - LOCK VALVE
# CONDUITES DE BALANCIER

**Serial No. ;**

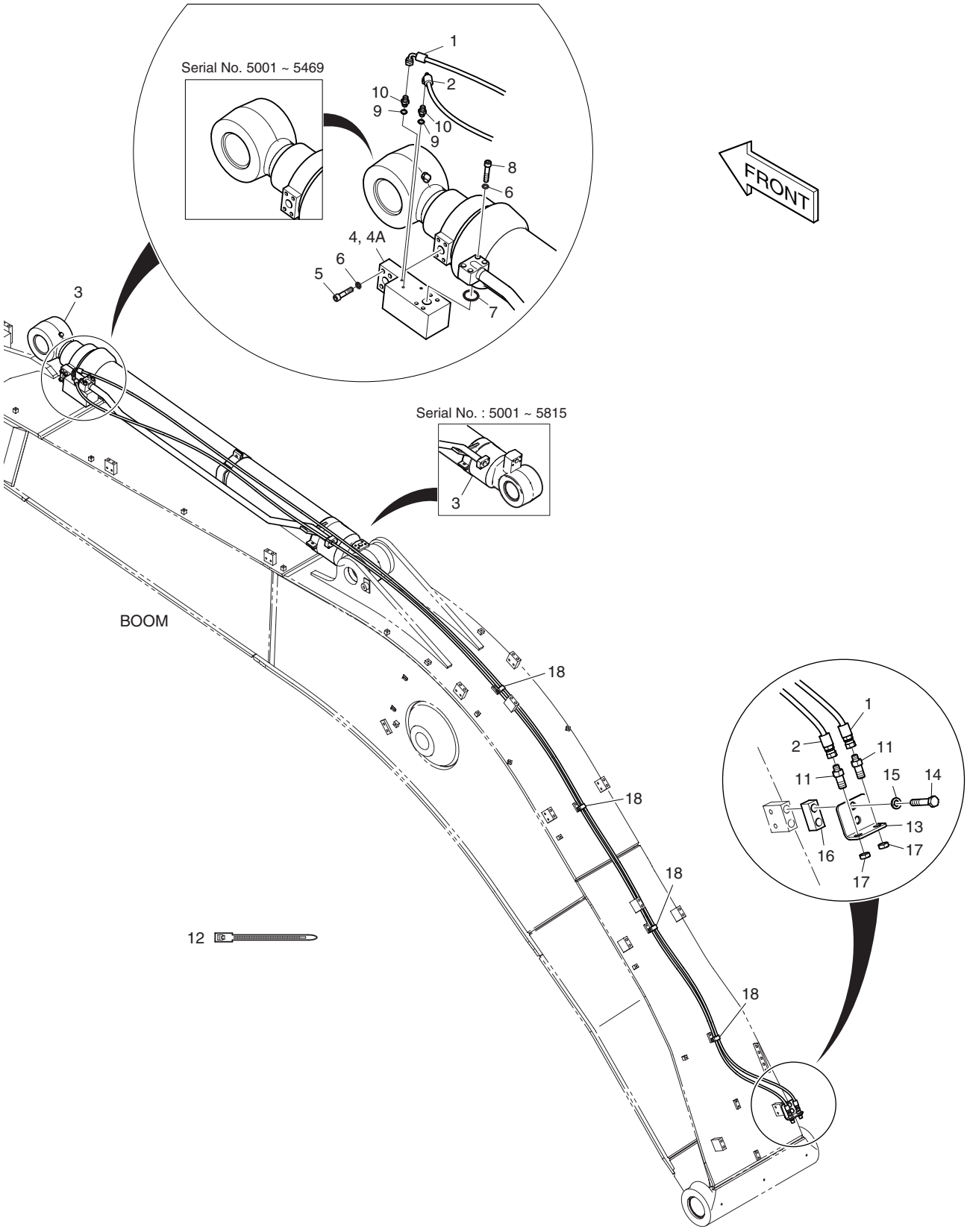

| DATE | JUN. 30, 2007 |
|---|---|
| REV. NO. | EXB07-06 |

# Fig. 6400 ARM PIPING - LOCK VALVE CONDUITES DE BALANCIER

**Serial No. ;**

| Key No. | Part No. | Description | Description | Q'ty | S.C | Serial No. | ICA | Replaceable part | |
|---|---|---|---|---|---|---|---|---|---|
| | | | | | | | | Part No. | Q'ty |
| 6400-- | **K1006236C** | **ARM PIPING-LOCK VALVE** | CONDUITES DE BALANCIER | - | D | | | | |
| 1 | 2184-1046D269 | HOSE | TUYAU FLEXIBLE | 1 | | | | | |
| 2 | 2184-1046D269 | HOSE | TUYAU FLEXIBLE | 1 | | | | | |
| 3 | K1006237 | CYLINDER;ARM | VERIN DE BALANCIER | 1 | | 5001–5330 | I | K1006237A | 1 |
| | K1006237A | CYLINDER;ARM | VERIN DE BALANCIER | 1 | | 5331–5469 | I | K1006237B | 1 |
| | **K1006237B** | **CYLINDER;ARM** | VERIN DE BALANCIER | 1 | | **5470–5815** | | | |
| | **K1006237C** | **CYLINDER;ARM** | VERIN DE BALANCIER | 1 | | **5816–** | | | |
| 4 | 420-00004A | LOCK VALVE | VANNE | 1 | | | | | |
| 4A | K9000999 | . SEAL KIT;LOCK VALVE | . KIT DE JOINT | 1 | | | | | |
| 5 | S2215766 | BOLT;SOCKET | BOULON DE PLOT | 4 | | | | | |
| 6 | S5110703 | WASHER;SPRING | RONDELLE ELASTIQUE | 8 | | | | | |
| 7 | S8000341 | O-RING | JOINT TORIQUE | 1 | | | | | |
| 8 | S2215866 | BOLT;SOCKET | BOULON A 6 PANS CREUX | 4 | | | | | |
| 9 | S8000111 | O-RING | JOINT TORIQUE | 2 | | | | | |
| 10 | 2181-1126D14 | ADAPTER | RACCORD ADAPTATEUR | 2 | | | | | |
| 11 | 181-00078D5 | ADAPTER | ADAPTEUR | 2 | | | | | |
| 12 | 2124-1084D2 | CLIP;BAND | ATTACHE | 30 | | | | | |
| 13 | 195-00163 | BRACKET | SUPPORT | 1 | | | | | |
| 14 | S0563466 | BOLT | BOULON A 6 PANS | 2 | | | | | |
| 15 | S5102803 | WASHER;SPRING | RONDELLE ELASTIQUE M14 | 2 | | | | | |
| 16 | K1004006 | PLATE | PLAQUE | 1 | | | | | |
| 17 | 121-00010D1 | NUT | ECROU | 2 | | | | | |
| 18 | 124-00199D5 | CLIP | ATTACHE | 4 | | | | | |

| DATE | OCT. 17, 2005 |
|---|---|
| 1st EDITION | |

# Fig. 6410 SWING ALARM
# AVERTISSEUR

**Serial No. ;**

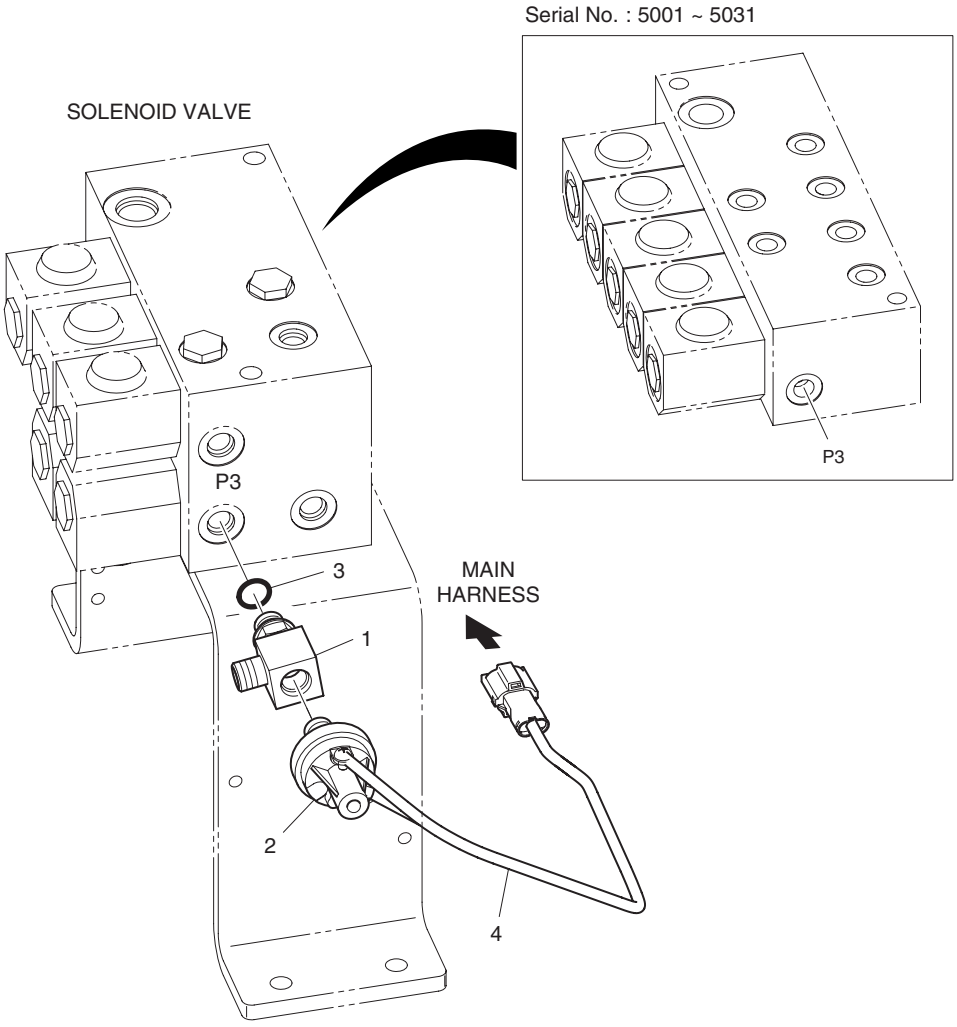

| DATE | OCT. 17, 2005 |
|---|---|
| 1st EDITION | |

# Fig. 6410 SWING ALARM AVERTISSEUR

Serial No. ;

| Key No. | Part No. | Description | Description | Q'ty | S.C | Serial No. | ICA | Replaceable part | |
|---|---|---|---|---|---|---|---|---|---|
| | | | | | | | | Part No. | Q'ty |
| 6410-- | K1006616A | SWING ALARM | AVERTISSEUR | - | D | | | | |
| 1 | K1002158 | TEE | TE | 1 | | | | | |
| 2 | 549-00010 | SWITCH;PRESSURE | INTERRUPTEUR | 1 | | | | | |
| 3 | S8000111 | O-RING | JOINT TORIQUE | 1 | | | | | |
| 4 | 530-00067 | HARNESS;JOINT(PRESS SW) | FAISCEAU | 1 | | | | | |

| DATE | JUN. 30, 2006 |
|---|---|
| REV.NO. | EXB06-08 |

# Fig. 6420 RAIN SHIELD
# BOUCLIER DE PLUIE

**Serial No. ;**

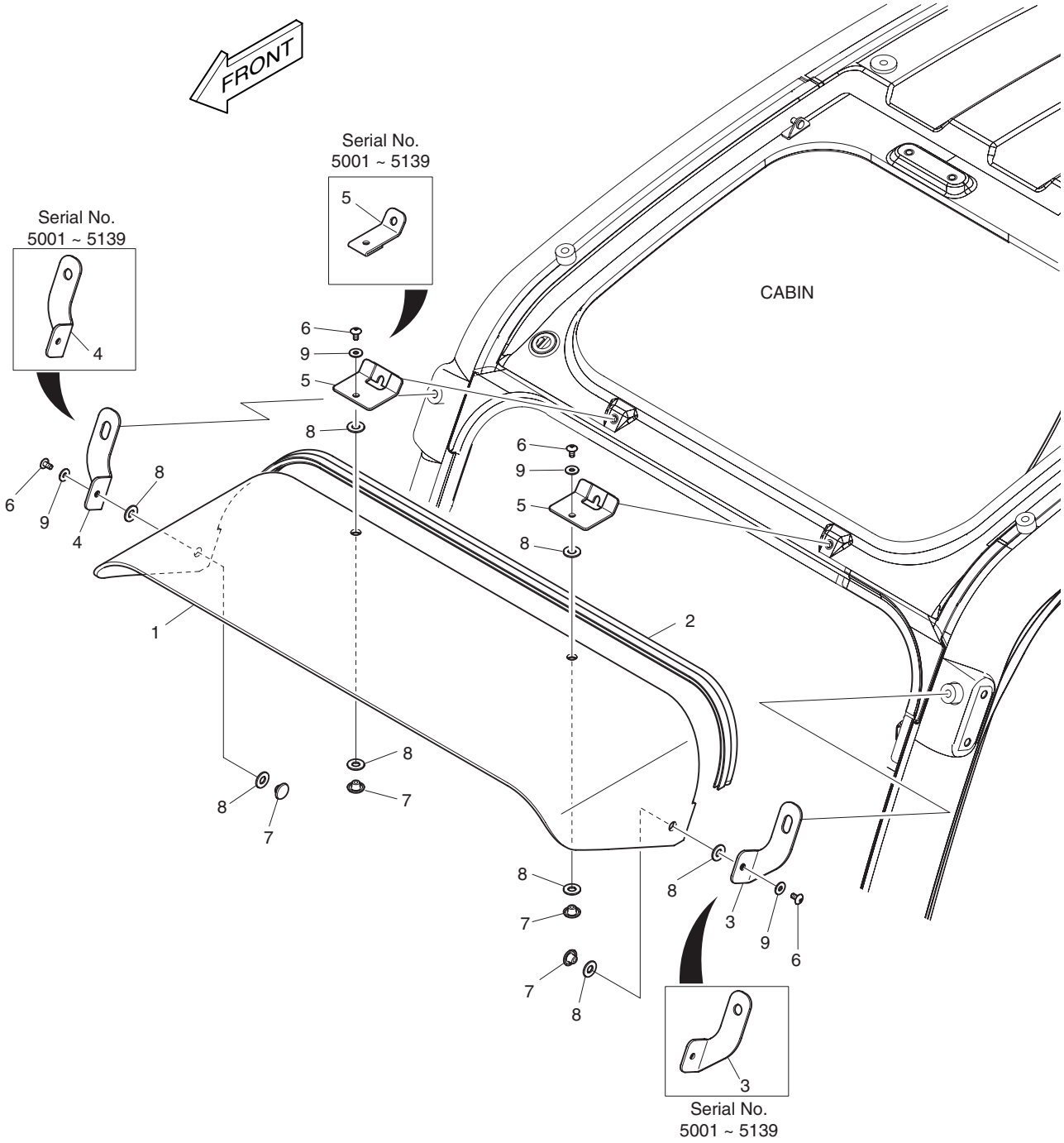

| DATE | JUN. 30, 2006 |
|---|---|
| REV. NO. | EXB06-08 |

# Fig. 6420 RAIN SHIELD BOUCLIER DE PLUIE

Serial No. ;

| Key No. | Part No. | Description | Description | Q'ty | S.C | Serial No. | ICA | Replaceable part | |
|---|---|---|---|---|---|---|---|---|---|
| | | | | | | | | Part No. | Q'ty |
| 6420-- | **K1002561A** | **RAIN SHIELD** | BOUCLIER DE PLUIE | - | D | | | | |
| 1 | 159-00294A | COVER;RAIN SHIELD | COUVERCLE | 1 | | 5001–5139 | I | 159-00294B | 1 |
| | **159-00294B** | **COVER;RAIN SHIELD** | COUVERCLE | 1 | | **5140–** | | | |
| 2 | 162-00040A | STRIP;WEATHER | TAMPON | 1 | | | | | |
| 3 | K1002574 | BRACKET(L.H) | SUPPORT | 1 | | 5001–5139 | I | K1002574A | 1 |
| | **K1002574A** | **BRACKET(L.H)** | SUPPORT | 1 | | **5140–** | | | |
| 4 | K1002575 | BRACKET(R.H) | SUPPORT | 1 | | 5001–5139 | I | K1002575A | 1 |
| | **K1002575A** | **BRACKET(R.H)** | SUPPORT | 1 | | **5140–** | | | |
| 5 | 195-03374A | BRACKET;RAIN SHIELD | SUPPORT | 2 | | 5001–5139 | | | |
| | **195-03374B** | **BRACKET;RAIN SHIELD** | SUPPORT | 2 | | **5140–** | | | |
| 6 | 2120-2166D52 | BOLT M6x1.0x12 | BOULON A 6 PANS | 4 | | | | | |
| 7 | 621-03103 | COVER;ROOF HANDLE | COUVERCLE | 4 | | | | | |
| 8 | 161-00639 | RUBBER;ROOF HANDLE | CAOUTCHOUC | 8 | | | | | |
| 9 | 2114-1898D5 | WASHER M6 | RONDELE | 4 | | | | | |

| DATE | JUN. 30, 2006 |
|---|---|
| REV.NO. | EXB06-08 |

# Fig. 6430 RAIN SHIELD & LAMP MOUNTING
# BOUCLIER ET DE LAMPE DE PLUIE

**Serial No. ;**

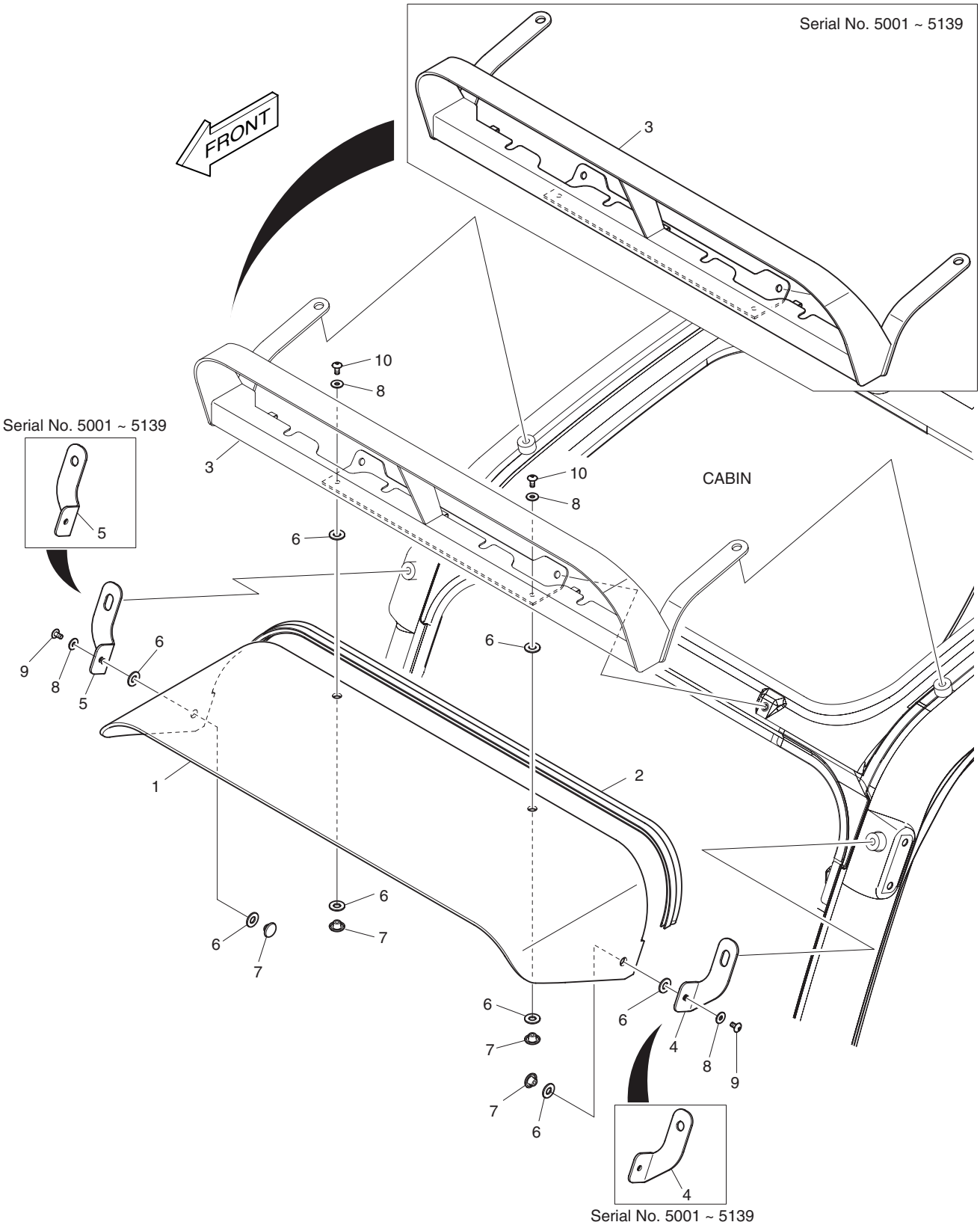

| DATE | JUN. 30, 2006 |
|---|---|
| REV. NO. | EXB06-08 |

# Fig. 6430 RAIN SHIELD & LAMP MOUNTING
# BOUCLIER ET DE LAMPE DE PLUIE

**Serial No. ;**

| Key No. | Part No. | Description | Description | Q'ty | S.C | Serial No. | ICA | Replaceable part | |
|---|---|---|---|---|---|---|---|---|---|
| | | | | | | | | Part No. | Q'ty |
| 6430-- | **534-00117A** | **RAIN SHIELD & LAMP ASS'Y** | BOUCLIER DE PLUIE | - | D | | | | |
| 1 | 159-00294A | COVER;RAIN SHIELD | COUVERCLE | 1 | | 5001–5139 | I | 159-00294B | 1 |
| | **159-00294B** | **COVER;RAIN SHIELD** | COUVERCLE | 1 | | **5140–** | | | |
| 2 | 162-00040A | STRIP;WEATHER | TAMPON | 1 | | | | | |
| 3 | **195-02908B** | **BRACKET;FRONT LAMP** | SUPPORT | 1 | | **5001–5139** | | | |
| 4 | K1002574 | BRACKET(L.H) | SUPPORT | 1 | | 5001–5139 | I | K1002574A | 1 |
| | **K1002574A** | **BRACKET(L.H)** | SUPPORT | 1 | | **5140–** | | | |
| 5 | K1002575 | BRACKET(R.H) | SUPPORT | 1 | | 5001–5139 | I | K1002575A | 1 |
| | **K1002575A** | **BRACKET(R.H)** | SUPPORT | 1 | | **5140–** | | | |
| 6 | 161-00639 | RUBBER;ROOF HANDLE | CAOUTCHOUC | 8 | | | | | |
| 7 | 621-03103 | COVER;ROOF HANDLE | COUVERCLE | 4 | | | | | |
| 8 | 2114-1898D5 | WASHER M6 | RONDELE | 4 | | | | | |
| 9 | 2120-2166D52 | SCREW | BOULON A 6 PANS | 2 | | | | | |
| 10 | 2120-2166D10 | SCREW | VIS | 2 | | | | | |

| DATE | OCT. 17, 2005 |
|---|---|
| 1st EDITION | |

# Fig. 6440 CABIN LOWER GUARD
# LA CARLINGUE ABAISSENT LA GARDE Serial No. ;

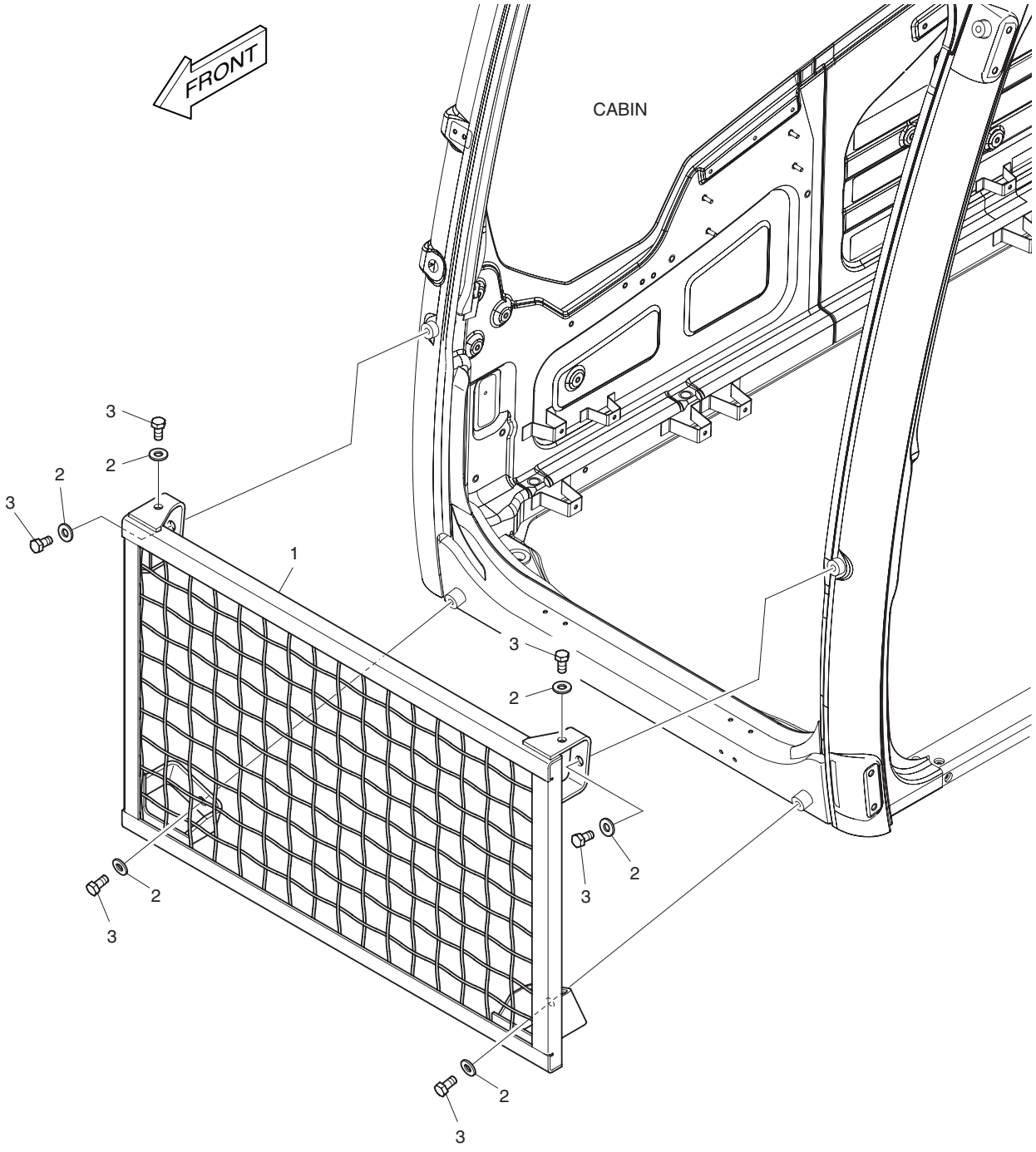

| DATE | OCT. 17, 2005 |
|---|---|
| 1st EDITION | |

# Fig. 6440 CABIN LOWER GUARD
# LA CARLINGUE ABAISSENT LA GARDE

Serial No. ;

| Key No. | Part No. | Description | Description | Q'ty | S.C | Serial No. | ICA | Replaceable part | |
|---|---|---|---|---|---|---|---|---|---|
| | | | | | | | | Part No. | Q'ty |
| 6440-- | 623-00086 | GUARD;FRONT LOWER | GARDE | - | D | | | | |
| 1 | 623-00085A | GUARD;FRONT | GARDE | 1 | | | | | |
| 2 | 2114-1898D17 | WASHER | RONDELLE | 6 | | | | | |
| 3 | 2120-2166D27 | BOLT | BOULON A 6 PANS | 6 | | | | | |

| DATE | OCT. 17, 2005 |
|---|---|
| 1st EDITION | |

# Fig. 6450 WINDOW GUARD
# GARDE DE FENETRE

**Serial No. ;**

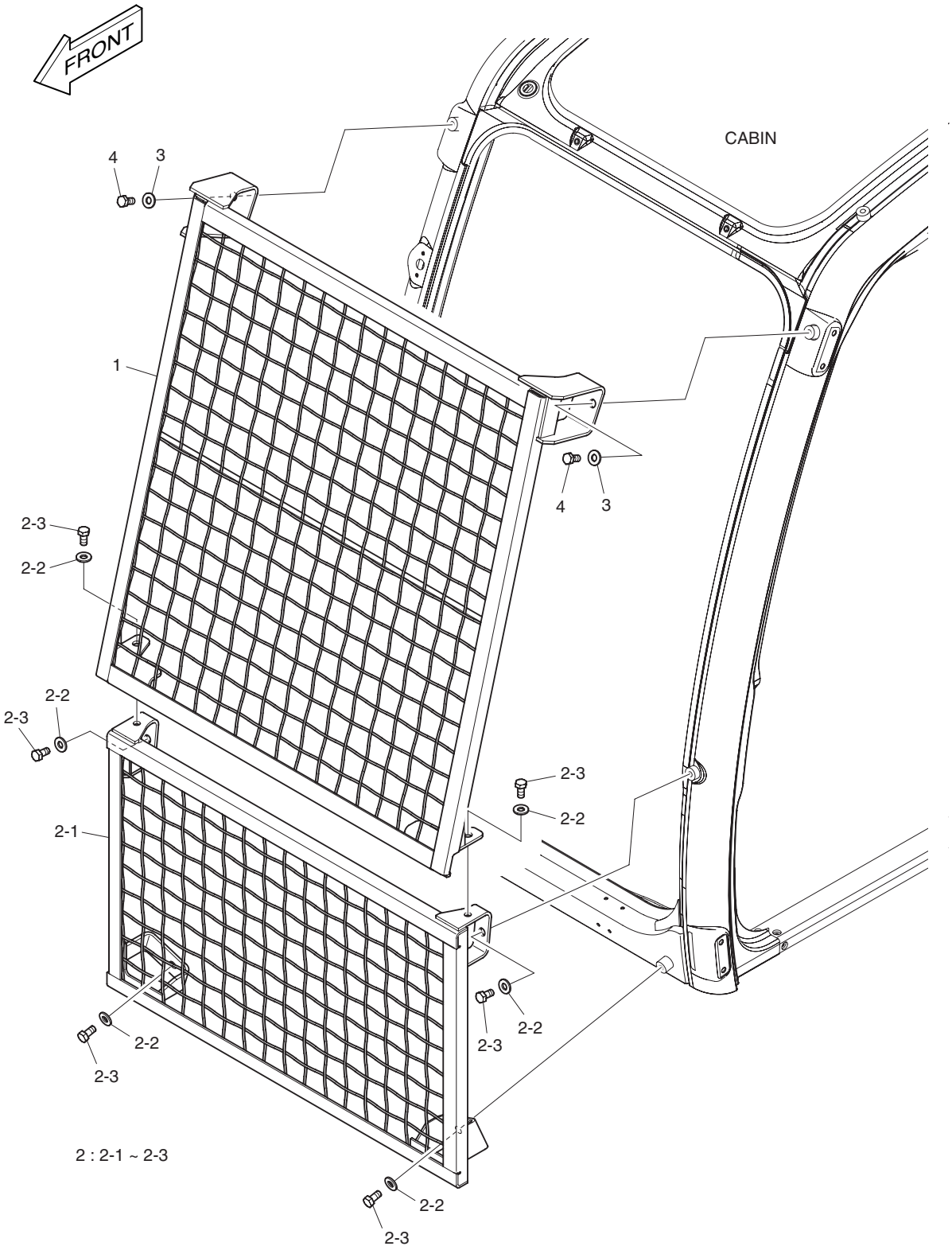

| DATE | OCT. 17, 2005 |
|---|---|
| 1st EDITION | |

# Fig. 6450 WINDOW GUARD GARDE DE FENETRE

Serial No. ;

| Key No. | Part No. | Description | Description | Q'ty | S.C | Serial No. | ICA | Replaceable part | |
|---|---|---|---|---|---|---|---|---|---|
| | | | | | | | | Part No. | Q'ty |
| 6450-- | K1002771 | WINDOW GUARD | GARDE | - | D | | | | |
| 1 | K1002759A | GUARD;FRONT UPPER | GARDE | 1 | | | | | |
| 2 | 623-00086 | GUARD;FRONT LOWER | GARDE | 1 | D | | | | |
| 2-1 | 623-00085A | . GUARD;FRONT LOWER | . GARDE | 1 | | | | | |
| 2-2 | 2114-1898D17 | . WASHER | . RONDELLE | 6 | | | | | |
| 2-3 | 2120-2166D27 | . BOLT | . BOULON A 6 PANS | 6 | | | | | |
| 3 | 2114-1898D17 | WASHER M12 | RONDELLE | 2 | | | | | |
| 4 | 2120-2166D27 | BOLT | BOULON A 6 PANS | 2 | | | | | |

| DATE | OCT. 17, 2005 |
|---|---|
| 1st EDITION | |

# Fig. 6460 FOGS GUARD ASS'Y
# EMBRUME LA GARDE ASS'Y

**Serial No. ;**

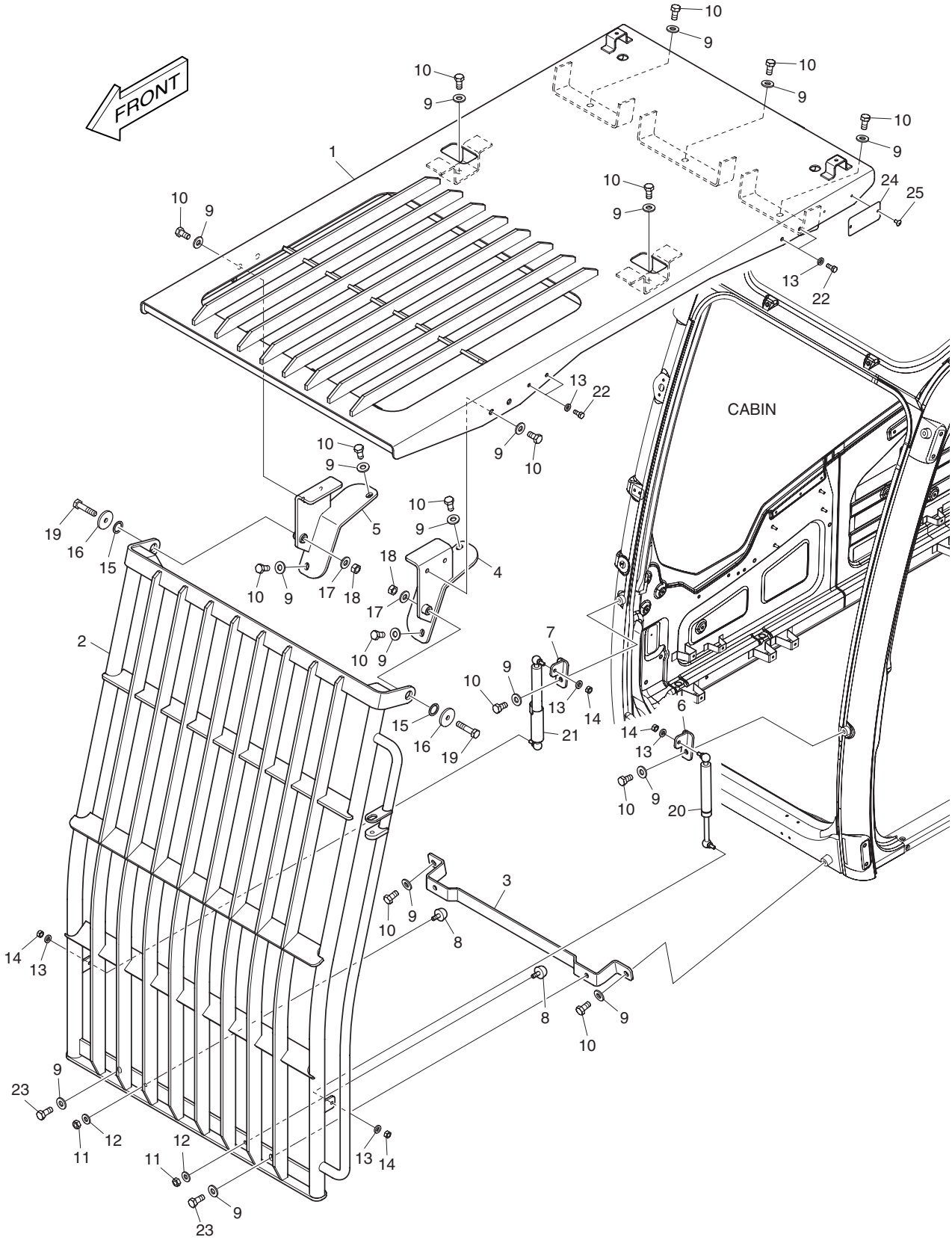

| DATE | OCT. 17, 2005 |
|---|---|
| 1st EDITION | |

# Fig. 6460 FOGS GUARD ASS'Y
# EMBRUME LA GARDE ASS'Y

Serial No. ;

| Key No. | Part No. | Description | Description | Q'ty | S.C | Serial No. | ICA | Replaceable part | |
|---|---|---|---|---|---|---|---|---|---|
| | | | | | | | | Part No. | Q'ty |
| 6460-- | K1002883 | FOGS GUARD ASS'Y | EMBRUME LA GARDE | - | D | | | | |
| 1 | K1002811A | GUARD;ROOF | GARDE | 1 | | | | | |
| 2 | K1002846 | GUARD;FRONT | GARDE | 1 | | | | | |
| 3 | K1002842A | BRACKET | SUPPORT | 1 | | | | | |
| 4 | K1002838 | BRACKET(L.H) | SUPPORT | 1 | | | | | |
| 5 | K1002839A | BRACKET(R.H) | SUPPORT | 1 | | | | | |
| 6 | K1002840 | BRACKET(L.H) | SUPPORT | 1 | | | | | |
| 7 | K1002841 | BRACKET(R.H) | SUPPORT | 1 | | | | | |
| 8 | 161-00195 | STOPPER;RUBBER | ARRET | 2 | | | | | |
| 9 | 2114-1898D17 | WASHER M12 | RONDELLE | 19 | | | | | |
| 10 | 2120-2166D27 | BOLT | BOULON A 6 PANS | 17 | | | | | |
| 11 | 2121-1311D4 | NUT M10X1.5 | ECROU | 2 | | | | | |
| 12 | 2114-1898D1 | WASHER | RONDELLE | 2 | | | | | |
| 13 | 2114-1898D2 | WASHER | RONDELLE | 8 | | | | | |
| 14 | 2121-1311D2 | NUT M8X1.25 | ECROU | 4 | | | | | |
| 15 | 2114-1058D31 | WASHER | RONDELLE | 2 | | | | | |
| 16 | 2114-1898D10 | WASHER M12 | RONDELLE PLATE | 2 | | | | | |
| 17 | 2114-1898D6 | WASHER M12 | RONDELLE | 2 | | | | | |
| 18 | 2121-1311D1 | NUT M12X1.75 | ECROU | 2 | | | | | |
| 19 | S0515766 | BOLT M12X1.75X55 | BOULON A 6 PANS | 2 | | | | | |
| 20 | K1005823 | CYLINDER;GAS | CYLINDRE | 1 | | | | | |
| 21 | K1005822 | CYLINDER;GAS | CYLINDRE | 1 | | | | | |
| 22 | 2120-2166D5 | BOLT M8X1.25X20 | BOULON A 6 PANS | 4 | | | | | |
| 23 | 2120-2166D32 | BOLT M12x1.75x30 | BOULON A 6 PANS | 2 | | | | | |
| 24 | K1007231 | NAME;PLATE | PLAQUE D'IDENTIFICATION | 1 | | | | | |
| 25 | 2120-2166D52 | BOLT | BOULON A 6 PANS | 2 | | | | | |

| DATE | JUN. 30, 2007 |
|---|---|
| REV.NO. | EXB07-06 |

# Fig. 6470 FLOOR MAT - TWO WAY PLANCHER

**Serial No. ;**

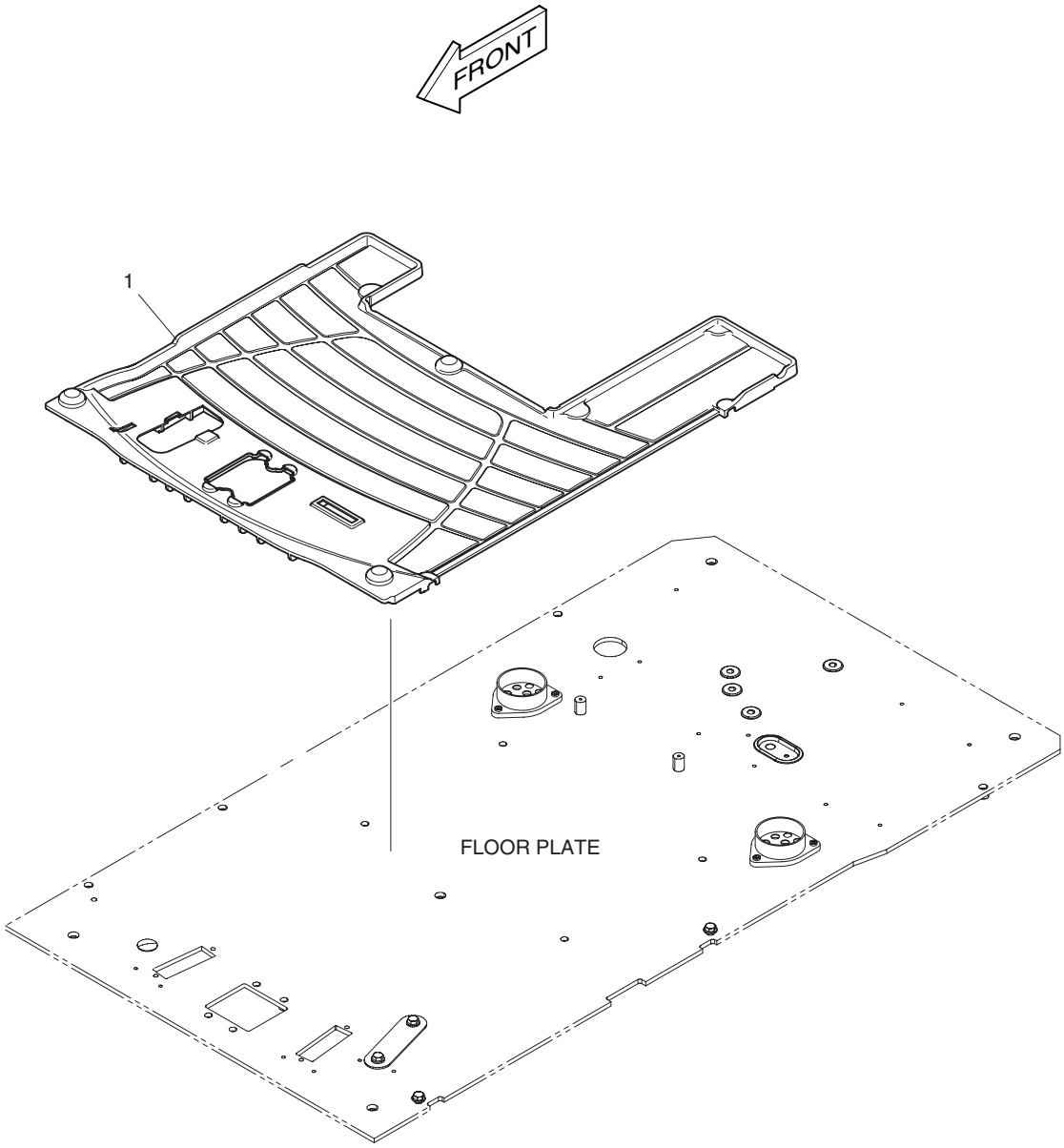

| DATE | JUN. 30, 2007 |
|---|---|
| REV. NO. | EXB07-06 |

# Fig. 6470 FLOOR MAT - TWO WAY PLANCHER

**Serial No. ;**

| Key No. | Part No. | Description | Description | Q'ty | S.C | Serial No. | ICA | Replaceable part | |
|---|---|---|---|---|---|---|---|---|---|
| | | | | | | | | Part No. | Q'ty |
| 6470-1 | K1007092 | MAT;FLOOR | PLAQUE | 1 | | 5001–5494 | I | K1007092A | 1 |
| | **K1007092A** | **MAT;FLOOR** | PLAQUE | 1 | | **5495–** | | | |

| DATE | JUN. 30, 2007 |
|---|---|
| REV.NO. | EXB07-06 |

# Fig. 6480 FLOOR MAT - ROTATING PLANCHER

**Serial No. ;**

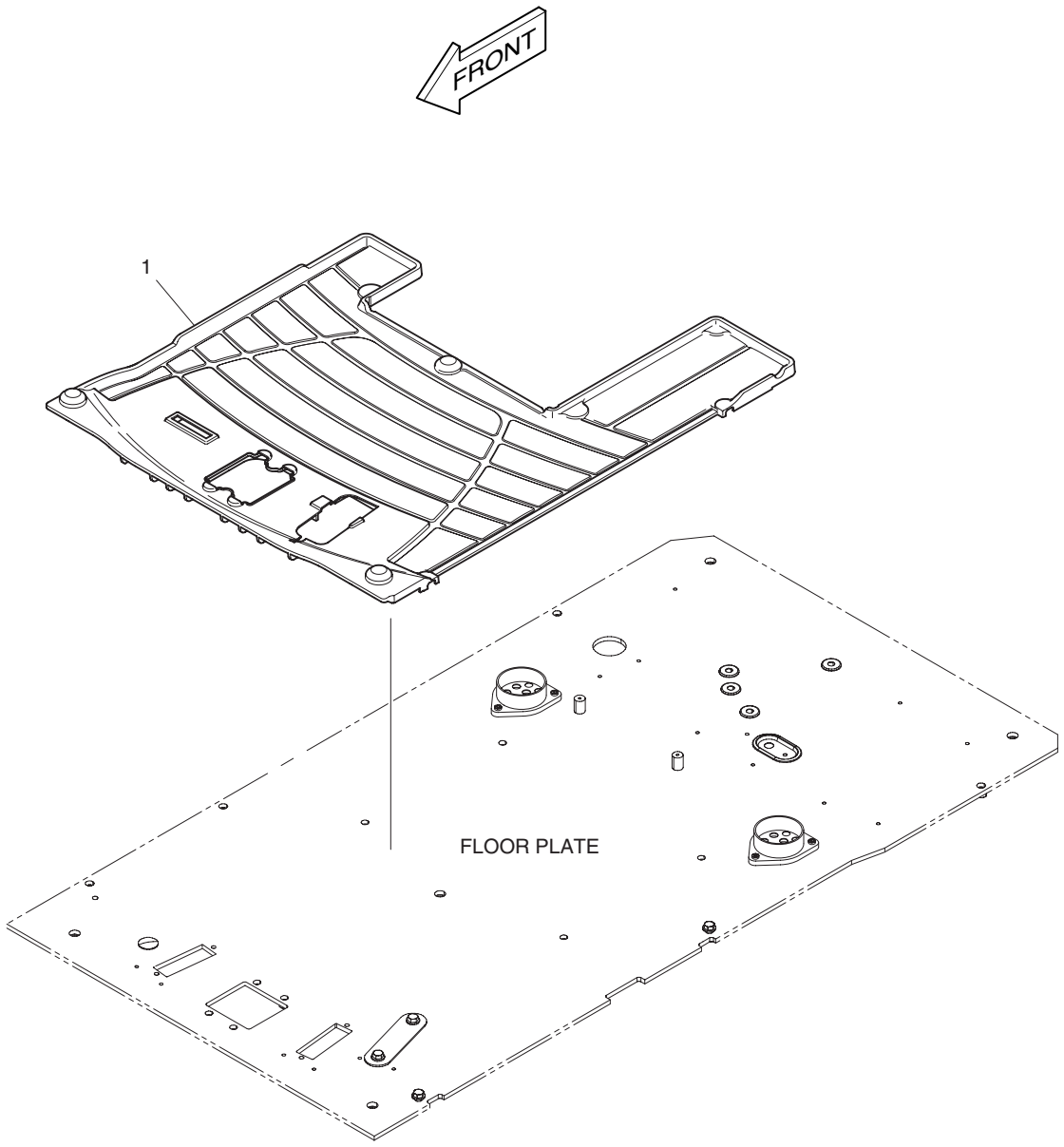

| DATE | JUN. 30, 2007 |
|---|---|
| REV. NO. | EXB07-06 |

# Fig. 6480 FLOOR MAT - ROTATING PLANCHER

**Serial No. ;**

| Key No. | Part No. | Description | Description | Q'ty | S.C | Serial No. | ICA | Replaceable part | |
|---|---|---|---|---|---|---|---|---|---|
| | | | | | | | | Part No. | Q'ty |
| 6480-1 | K1007093 | MAT;FLOOR | PLAQUE | 1 | | 5001–5494 | I | K1007093A | 1 |
| | **K1007093A** | **MAT;FLOOR** | PLAQUE | 1 | | **5495–** | | | |

| DATE | JUN. 30, 2007 |
|---|---|
| REV.NO. | EXB07-06 |

# Fig. 6490 FLOOR MAT - TWO WAY & ROTATING PLANCHER

**Serial No. ;**

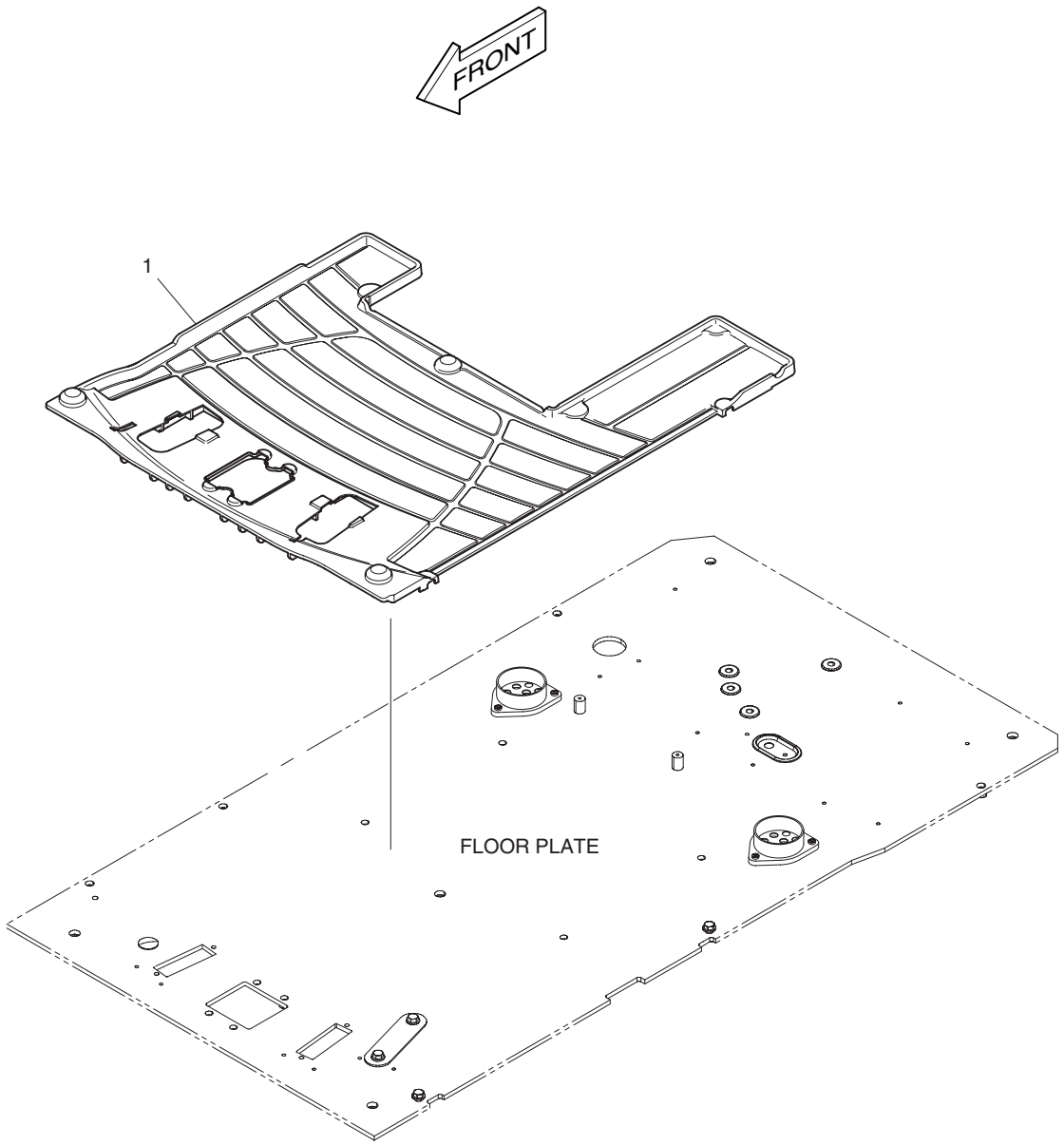

| DATE | JUN. 30, 2007 |
|---|---|
| REV. NO. | EXB07-06 |

# Fig. 6490 FLOOR MAT - TWO WAY & ROTATING PLANCHER

**Serial No. ;**

| Key No. | Part No. | Description | Description | Q'ty | S.C | Serial No. | ICA | Replaceable part | |
|---|---|---|---|---|---|---|---|---|---|
| | | | | | | | | Part No. | Q'ty |
| 6490-1 | K1007094 | MAT;FLOOR | PLAQUE | 1 | | 5001–5494 | I | K1007094A | 1 |
| | **K1007094A** | **MAT;FLOOR** | PLAQUE | 1 | | **5495–** | | | |

| DATE | JUN. 30, 2006 |
|---|---|
| REV.NO. | EXB06-08 |

# Fig. 6500 FLOOR MAT - TWO WAY & ROTATING & ARTI PLANCHER

**Serial No. ;**

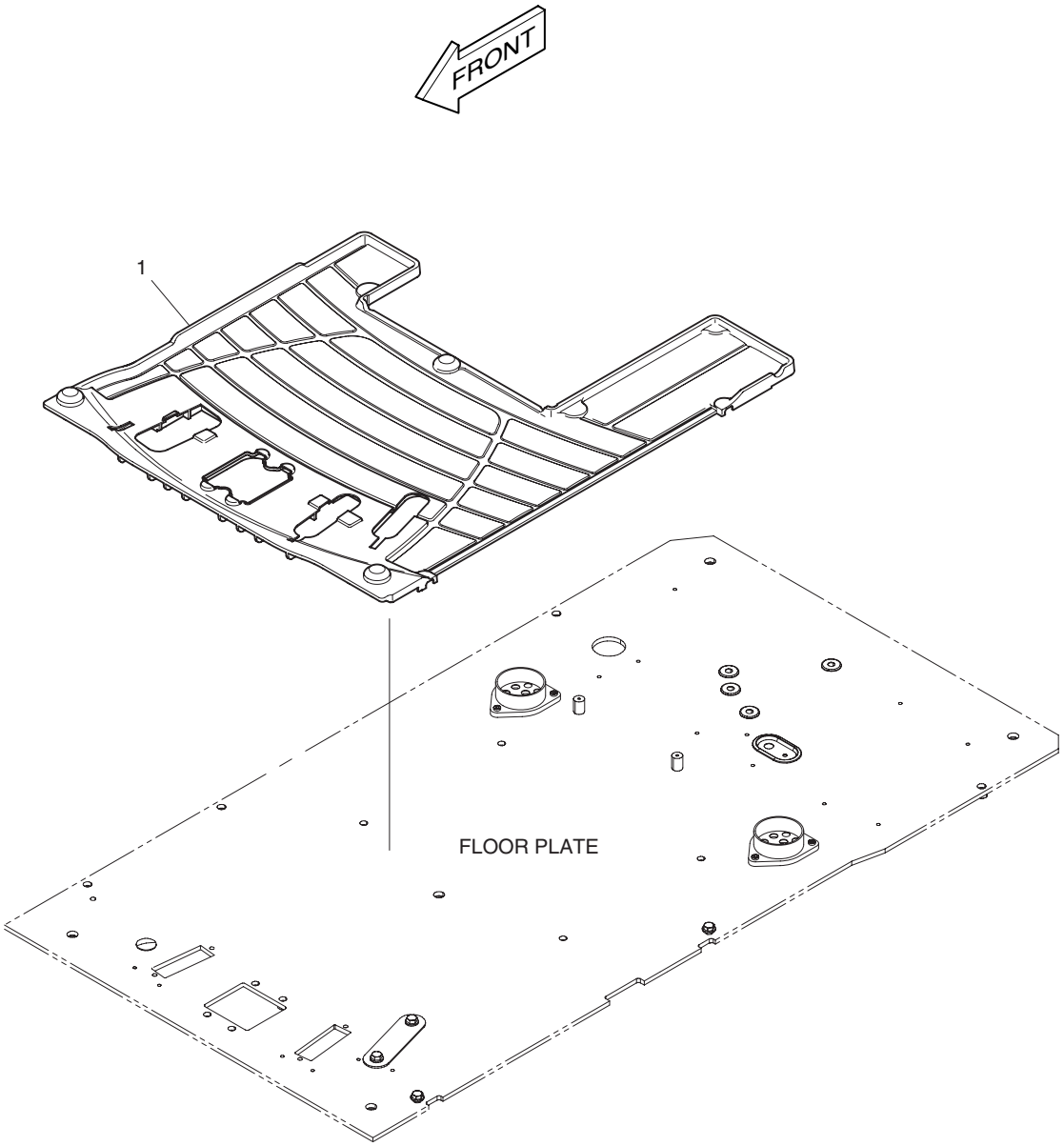

| DATE | JUN. 30, 2006 |
|---|---|
| REV. NO. | EXB06-08 |

# Fig. 6500 FLOOR MAT - TWO WAY & ROTATING & ARTI PLANCHER

Serial No. ;

| Key No. | Part No. | Description | Description | Q'ty | S.C | Serial No. | ICA | Replaceable part | |
|---|---|---|---|---|---|---|---|---|---|
| | | | | | | | | Part No. | Q'ty |
| 6500-1 | K1007095 | MAT;FLOOR | PLAQUE | 1 | | | | | |

| DATE | OCT. 17, 2005 |
|---|---|
| 1st EDITION | |

# Fig. 6510 ALTERNATOR - 80A
# ALTERNATEUR

**Serial No. ;**

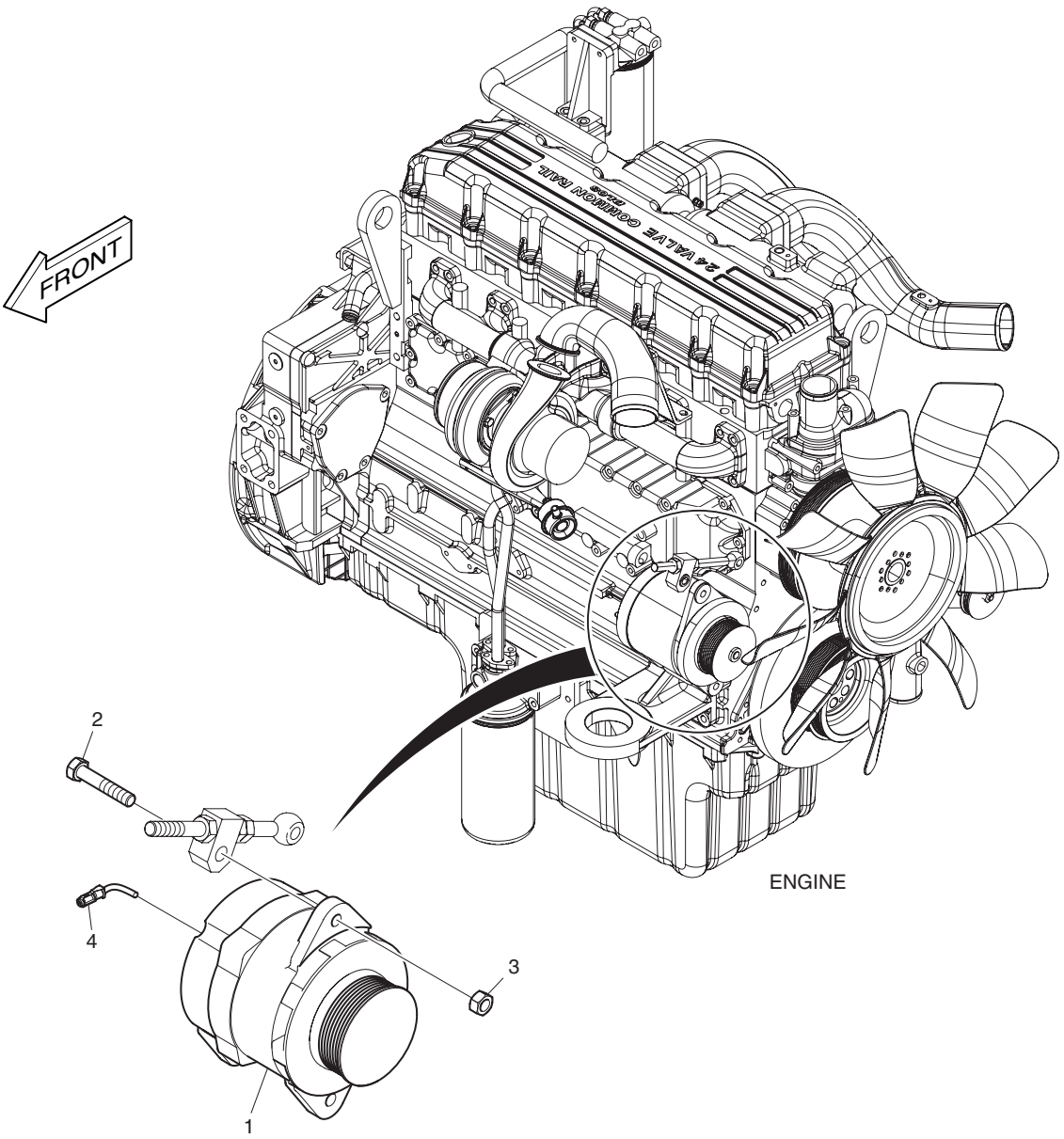

| DATE | OCT. 17, 2005 |
|---|---|
| 1st EDITION | |

# Fig. 6510 ALTERNATOR - 80A
# ALTERNATEUR

Serial No. ;

| Key No. | Part No. | Description | Description | Q'ty | S.C | Serial No. | ICA | Replaceable part | |
|---|---|---|---|---|---|---|---|---|---|
| | | | | | | | | Part No. | Q'ty |
| 6510-- | K1009390A | ALTERNATOR MOUNTING | SUPPORT D'ALTERNATEUR | - | D | | | | |
| 1 | K1010703 | ALTERNATOR 24V 80A | ALTERNATEUR | 1 | | | | | |
| 2 | S0761053 | BOLT | BOULON A 6 PANS | 1 | | | | | |
| 3 | S4032733 | NUT M12 | ECROU | 1 | | | | | |
| 4 | 530-00123 | HARNESS | FAISCEAU | 1 | | | | | |

| DATE | JUN. 30, 2007 |
|---|---|
| REV.NO. | EXB07-06 |

# Fig. 6520 FUEL HEATER
# RECHAUFFEUR DE CARBUR

**Serial No. ;**

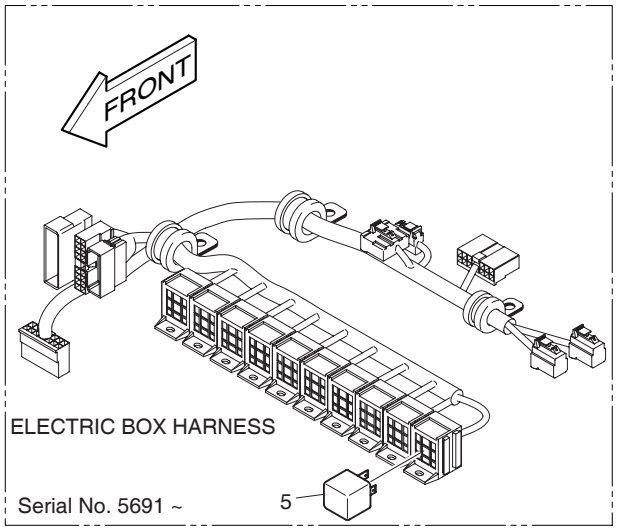


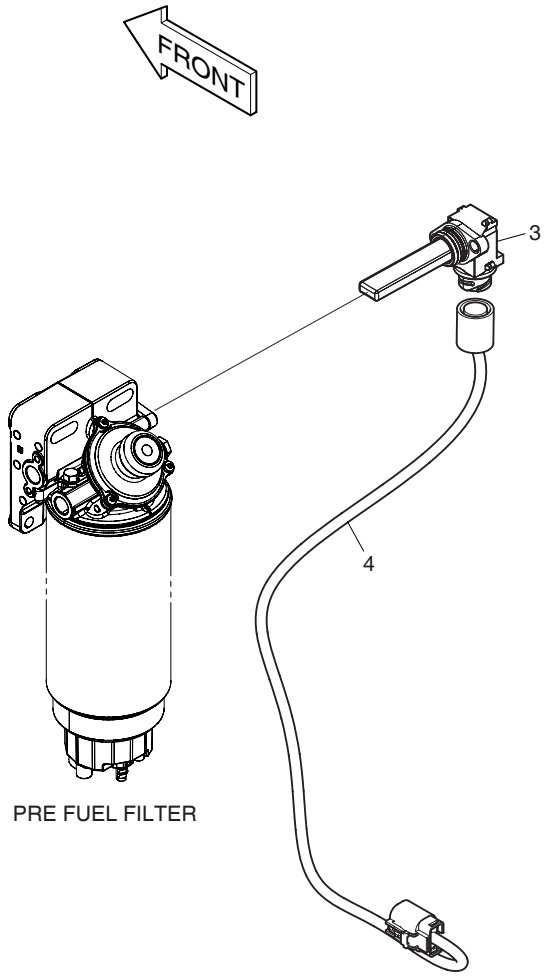


PRE FUEL FILTER

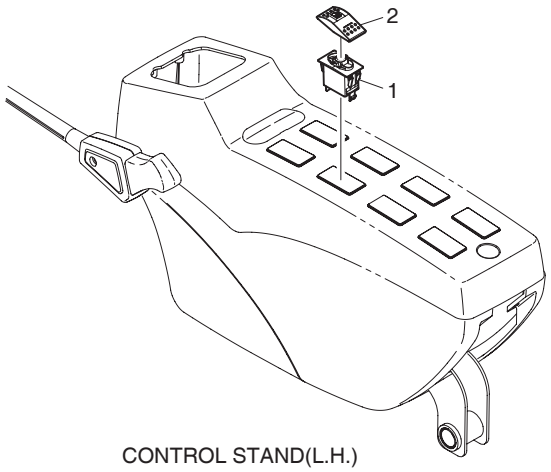


CONTROL STAND(L.H.)

| DATE | JUN. 30, 2007 |
|---|---|
| REV. NO. | EXB07-06 |

# Fig. 6520 FUEL HEATER RECHAUFFEUR DE CARBUR

**Serial No. ;**

| Key No. | Part No. | Description | Description | Q'ty | S.C | Serial No. | ICA | Replaceable part | |
|---|---|---|---|---|---|---|---|---|---|
| | | | | | | | | Part No. | Q'ty |
| 6520-- | **K1009395A** | **FUEL HEATER** | RECHAUFFEUR DE | - | D | | | | |
| 1 | 549-00101 | SWITCH;ROCKER | INTERRUPTEUR | 1 | | | | | |
| 2 | K1002406D2 | ACTUATOR;SWITCH | ACTUATOR;SWITCH | 1 | | | | | |
| 3 | K1004716 | HEATER;FUEL | RECHAUFFEUR | 1 | | | | | |
| 4 | K1006668 | HARNESS;JOINT | FAISCEAU | 1 | | | | | |
| 5 | **2544-9033** | **RELAY** | RELAIS | 1 | | **5691–** | | | |

| DATE | JUN. 30, 2007 |
|---|---|
| REV.NO. | EXB07-06 |

# Fig. 6530 TRAVEL ALRAM
# ALARME DE VOYAGE

**Serial No. ;**

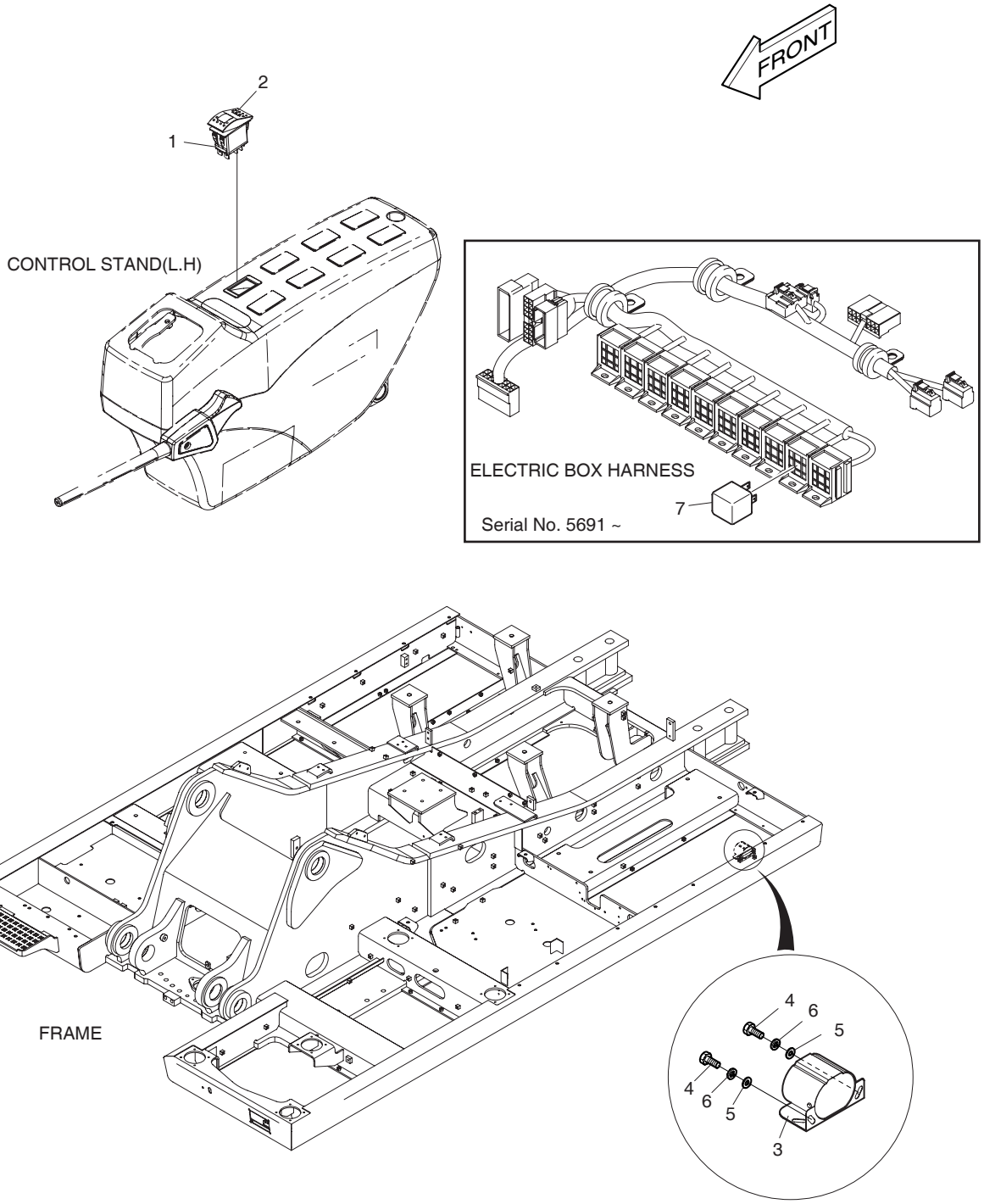

| DATE | JUN. 30, 2007 |
|---|---|
| REV. NO. | EXB07-06 |

# Fig. 6530 TRAVEL ALARM ALARME DE VOYAGE

**Serial No. ;**

| Key No. | Part No. | Description | Description | Q'ty | S.C | Serial No. | ICA | Replaceable part | |
|---|---|---|---|---|---|---|---|---|---|
| | | | | | | | | Part No. | Q'ty |
| 6530-- | **K1009397A** | **TRAVEL ALARM** | SIGNALISATEUR | - | D | | | | |
| 1 | 549-00103 | SWITCH;ROCKER | INTERRUPTEUR | 1 | | | | | |
| 2 | K1002406D14 | ACTUATOR;SWITCH | ACTUATOR;SWITCH | 1 | | | | | |
| 3 | 516-00011 | BUZZER;BACK-UP | BUZZER;BACK-UP | 1 | | | | | |
| 4 | S0508653 | BOLT | BOULON A 6 PANS | 2 | | | | | |
| 5 | S5010513 | WASHER;PLAIN | RONDELLE M8 | 2 | | | | | |
| 6 | S5102503 | WASHER;SPRING | RONDELLE ELASTIQUE M8 | 2 | | | | | |
| 7 | **2544-9033** | **RELAY** | RELAIS | 1 | | **5691–** | | | |

| DATE | JUN. 30, 2006 |
|---|---|
| REV.NO. | EXB06-08 |

# Fig. 6540 WORKING LAMP(2-LAMP) LAMPE FONCTIONNANTE

**Serial No. ;**

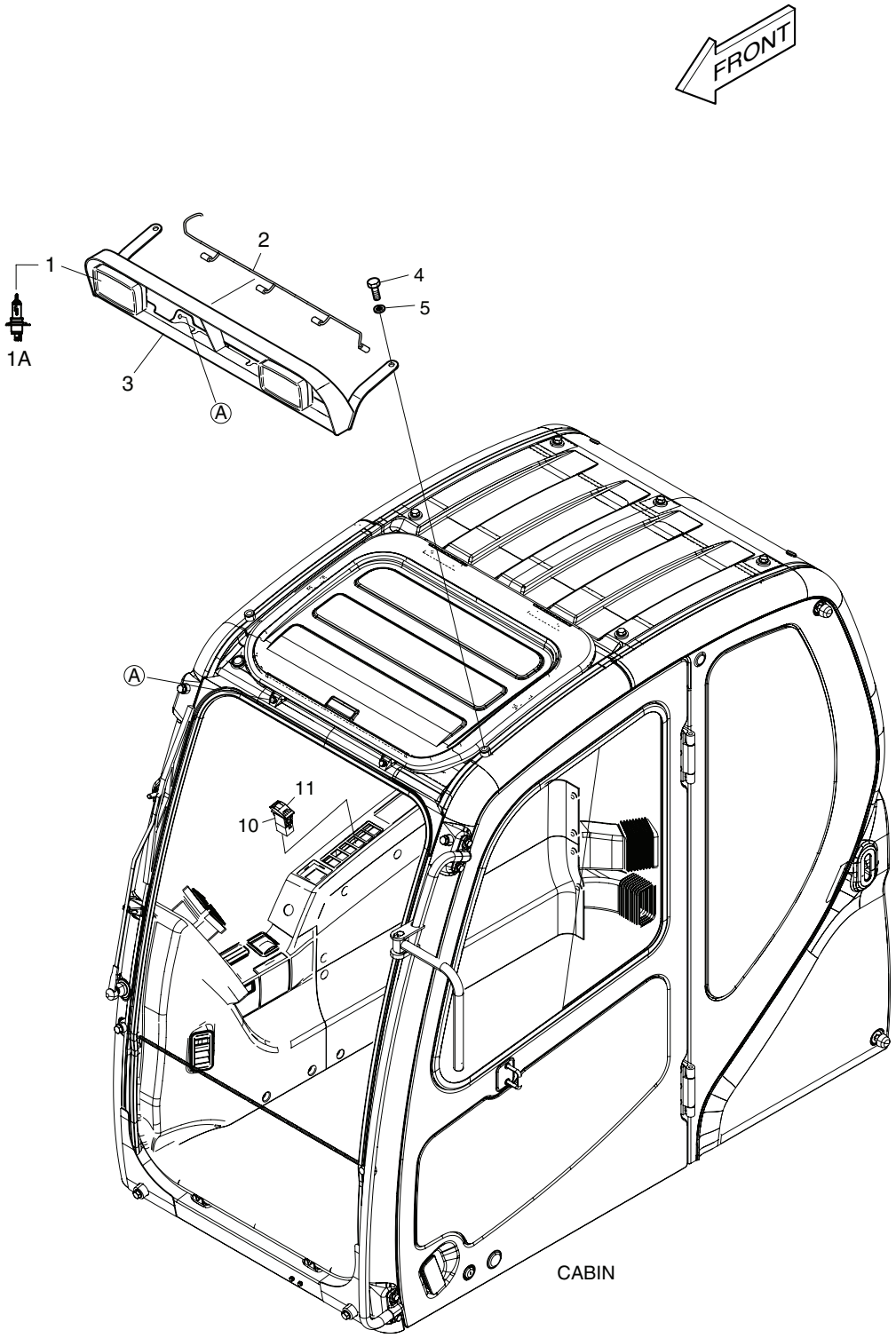

| DATE | JUN. 30, 2006 |
|---|---|
| REV. NO. | EXB06-08 |

# Fig. 6540 WORKING LAMP(2-LAMP) LAMPE FONCTIONNANTE

**Serial No. ;**

| Key No. | Part No. | Description | Description | Q'ty | S.C | Serial No. | ICA | Replaceable part | |
|---|---|---|---|---|---|---|---|---|---|
| | | | | | | | | Part No. | Q'ty |
| 6540-- | K1009400 | WORKING LAMP-2 LAMP | LAMPE FONCTIONNANTE | - | D | | | | |
| 1 | 534-00085 | LAMP;CABIN | LAMPE | 2 | | | | | |
| 1A | 2515-1016D4 | . BULB 24V 70W | . LAMPE | 1 | | | | | |
| 2 | 530-00430A | HARNESS;FRONT LAMP | FAISCEAU | 1 | | | | | |
| 3 | 195-02908B | BRACKET;FRONT LAMP | SUPPORT | 1 | | 5001–5139 | I | 195-02908C | 1 |
| | **195-02908C** | **BRACKET;FRONT LAMP** | SUPPORT | 1 | | **5140–** | | | |
| 4 | 2120-2166D54 | BOLT | BOULON A 6PANS | 2 | | | | | |
| 5 | 2114-1898D6 | WASHER;PLAIN | RONDELLE | 2 | | | | | |
| 10 | 549-00103 | SWITCH | INTERRUPTEUR | 1 | | | | | |
| 11 | K1002406D13 | ACTUATOR | DECLENCHEURE | 1 | | | | | |

| DATE | JUN. 30, 2007 |
|---|---|
| REV.NO. | EXB07-06 |

# Fig. 6550 WORKING LAMP(4-LAMP)
# LAMPE FONCTIONNANTE

**Serial No. ;**

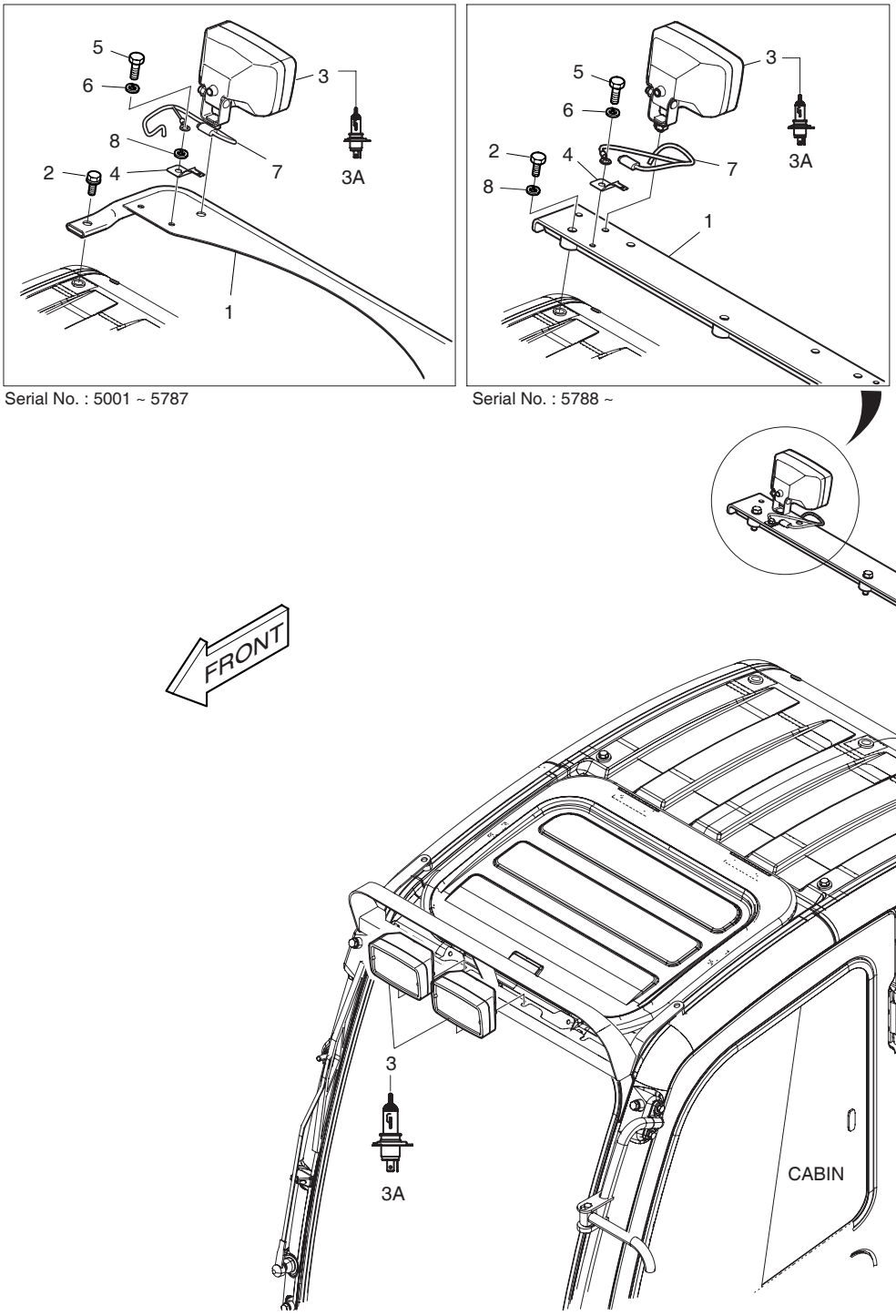

| DATE | JUN. 30, 2007 |
|---|---|
| REV. NO. | EXB07-06 |

# Fig. 6550 WORKING LAMP(4-LAMP) LAMPE FONCTIONNANTE

**Serial No. ;**

| Key No. | Part No. | Description | Description | Q'ty | S.C | Serial No. | ICA | Replaceable part | |
|---|---|---|---|---|---|---|---|---|---|
| | | | | | | | | Part No. | Q'ty |
| 6550-- | K1009403 | WORKING LAMP | LAMPE FONCTIONNANTE | - | D | | | | |
| 1 | 195-02910A | BRACKET | SUPPORT | 1 | | 5001–5787 | | | |
| | **195-02910C** | **BRACKET** | SUPPORT | 1 | | **5788–** | | | |
| 2 | 2120-2166D54 | BOLT | BOULON A 6PANS | 2 | | 5001–5787 | | | |
| | **S0515653** | **BOLT M12X1.75X50** | BOULON A 6PANS | 3 | | **5788–** | | | |
| 3 | 534-00085 | LAMP;CABIN | LAMPE | 4 | | | | | |
| 3A | 2515-1016D4 | . BULB 24V 70W | . LAMPE | 1 | | | | | |
| 4 | 2197-1661 | BRACKET;HOUSING | SUPPORT | 2 | | | | | |
| 5 | S0508853 | BOLT | BOULON A 6 PANS | 2 | | | | | |
| 6 | S5102503 | WASHER;SPRING | RONDELLE ELASTIQUE M8 | 2 | | | | | |
| 7 | 530-00463A | HARNESS;REAR LAMP | FAISCEAU | 2 | | | | | |
| 8 | 2114-1898D6 | WASHER | RONDELLE | 2 | | 5001–5787 | | | |
| | **S5010713** | **WASHER** | RONDELLE | 3 | | **5788–** | | | |

| DATE | OCT. 17, 2005 |
|---|---|
| 1st EDITION | |

# Fig. 6560 WORKING LAMP - REAR
# AVERTISSEUR RELAIS

**Serial No. ;**

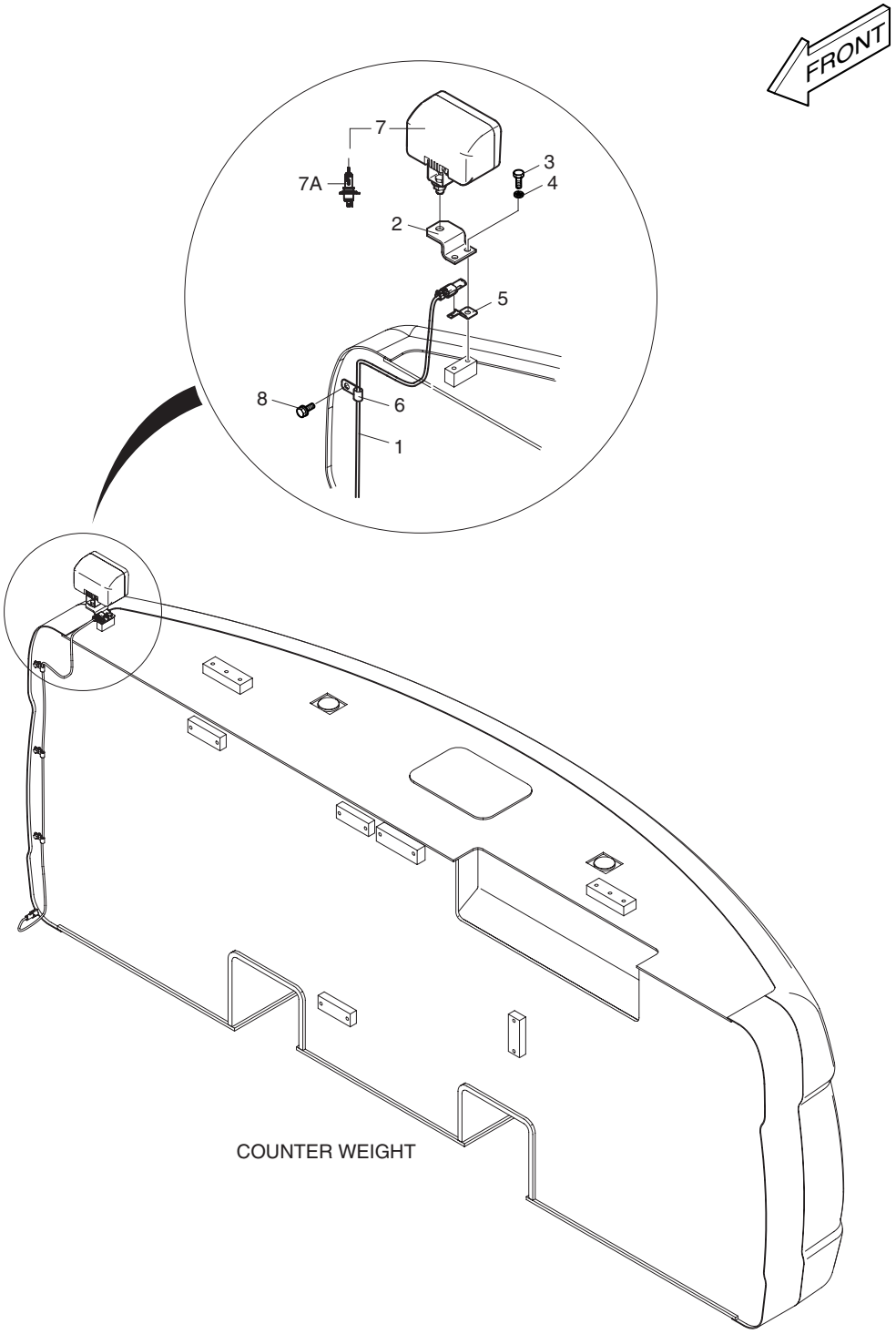

| DATE | OCT. 17, 2005 |
|---|---|
| 1st EDITION | |

# Fig. 6560 WORKING LAMP - REAR AVERTISSEUR RELAIS

Serial No. ;

| Key No. | Part No. | Description | Description | Q'ty | S.C | Serial No. | ICA | Replaceable part | |
|---|---|---|---|---|---|---|---|---|---|
| | | | | | | | | Part No. | Q'ty |
| 6560-- | K1009404 | WORKING LAMP-REAR LAMP | AVERTISSEUR RELAIS | - | D | | | | |
| 1 | 530-00431 | HARNESS;REAR LAMP | FAISCEAU | 1 | | | | | |
| 2 | 195-02775A | PLATE | PLAQUE | 1 | | | | | |
| 3 | S0508853 | BOLT | BOULON A 6 PANS | 2 | | | | | |
| 4 | S5102503 | WASHER;SPRING | RONDELLE ELASTIQUE M8 | 2 | | | | | |
| 5 | 2197-1661 | BRACKET;HOUSING | SUPPORT | 1 | | | | | |
| 6 | 2124-1509D1 | CLIP;BAND | ATTACHE | 3 | | | | | |
| 7 | 534-00085 | LAMP | LAMPE | 1 | | | | | |
| 7A | 2515-1016D4 | . BULB 24V 70W | . LAMPE | 1 | | | | | |
| 8 | K1001029 | BOLT | BOULON A 6 PANS | 3 | | | | | |

| DATE | OCT. 17, 2005 |
|---|---|
| 1st EDITION | |

# Fig. 6570 WORKING LAMP(2-LAMP) LAMPE FONCTIONNANTE

**Serial No. ;**

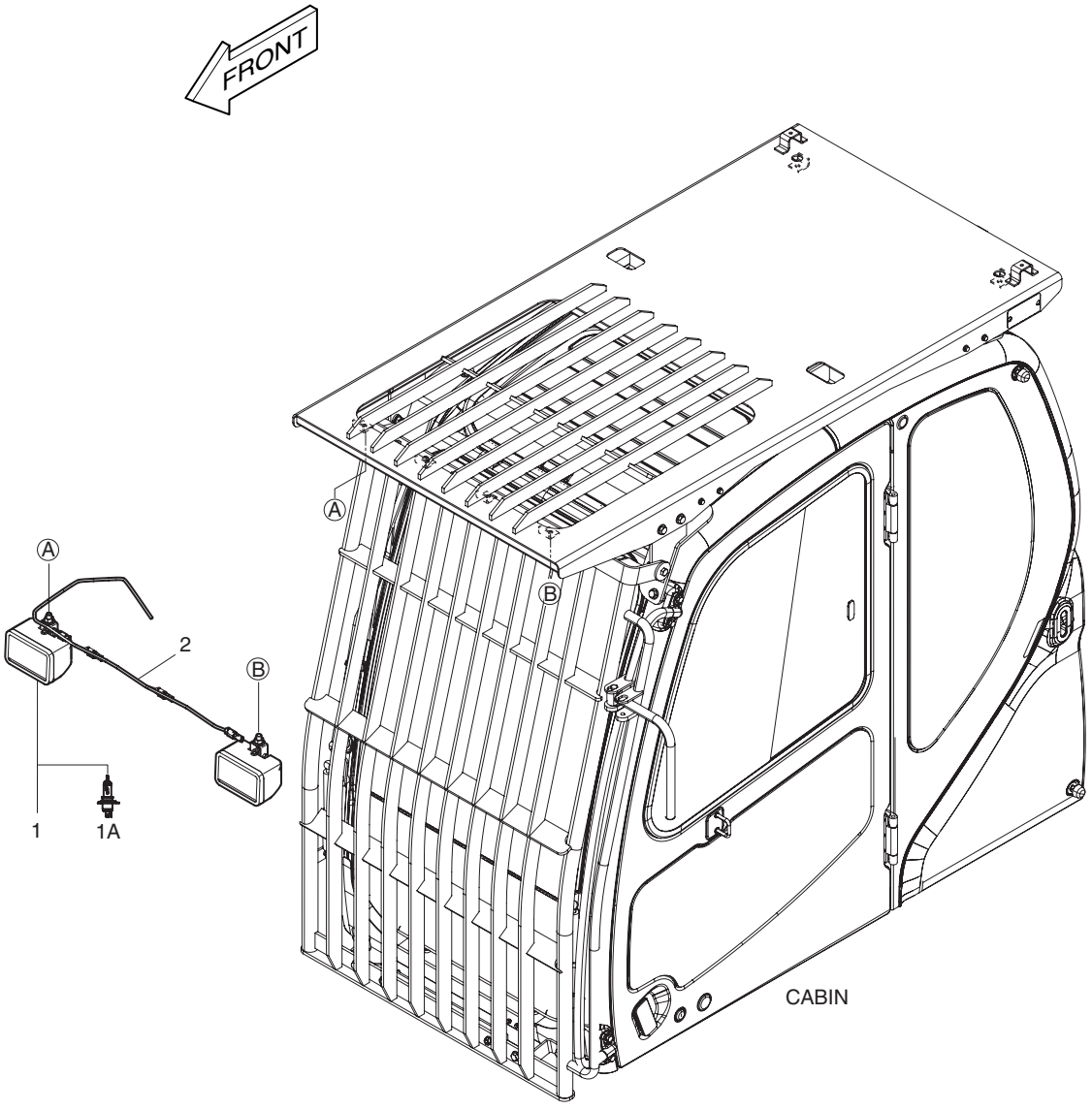

| DATE | OCT. 17, 2005 |
|---|---|
| 1st EDITION | |

# Fig. 6570 WORKING LAMP(2-LAMP)
# LAMPE FONCTIONNANTE

Serial No. ;

| Key No. | Part No. | Description | Description | Q'ty | S.C | Serial No. | ICA | Replaceable part | |
|---|---|---|---|---|---|---|---|---|---|
| | | | | | | | | Part No. | Q'ty |
| 6570-- | K1009406 | WORKING LAMP ASS'Y | LAMPE FONCTIONNANTE | - | D | | | | |
| 1 | 534-00085 | LAMP;WORKING | LAMPE | 2 | | | | | |
| 1A | 2515-1016D4 | . BULB 24V 70W | . LAMPE | 1 | | | | | |
| 2 | K1006663 | HARNESS;JOINT | FAISCEAU | 1 | | | | | |

| DATE | OCT. 17, 2005 |
|---|---|
| 1st EDITION | |

# Fig. 6580 WORKING LAMP(4-LAMP) LAMPE FONCTIONNANTE

**Serial No. ;**

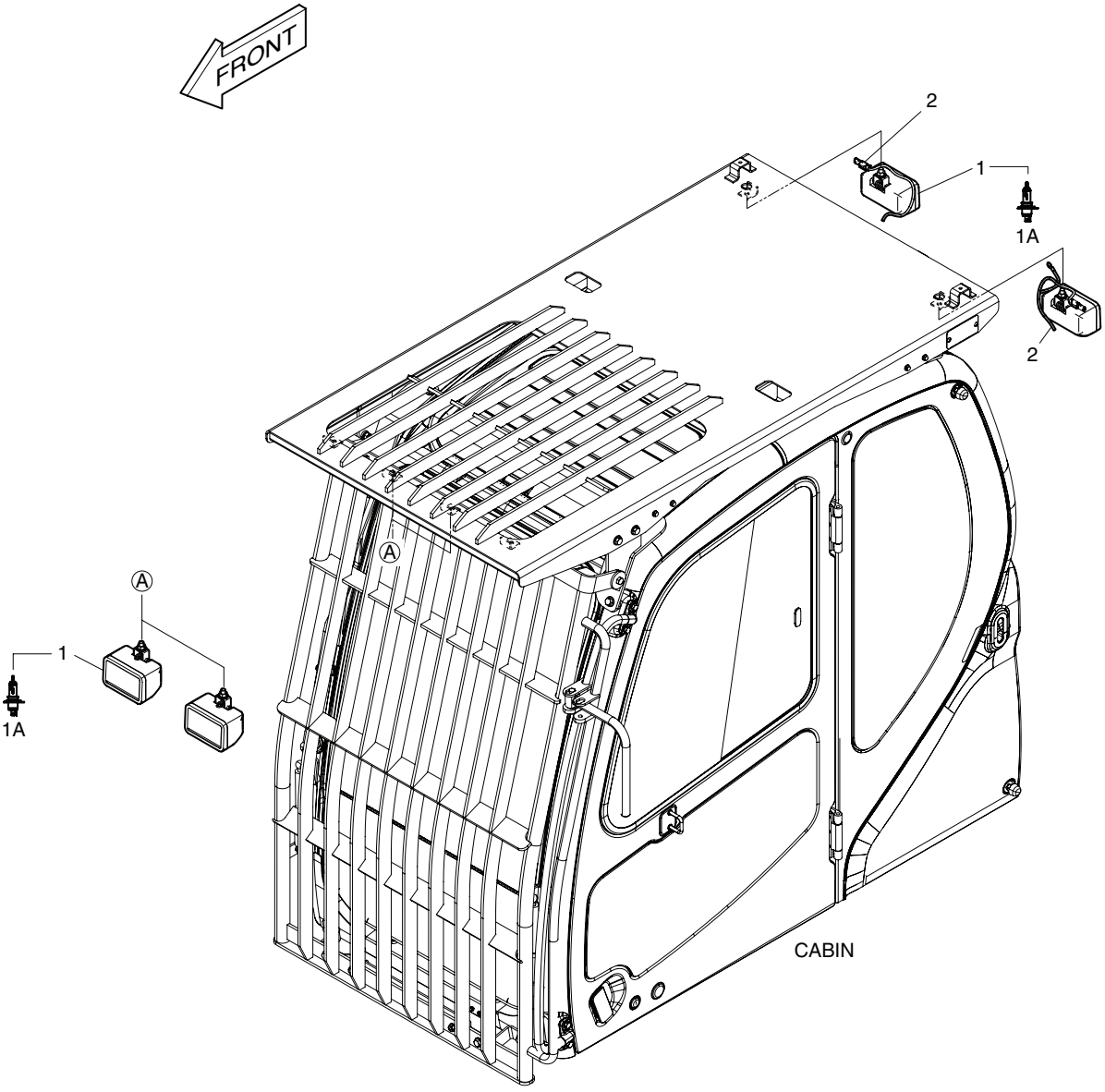

| DATE | OCT. 17, 2005 |
|---|---|
| 1st EDITION | |

# Fig. 6580 WORKING LAMP(4-LAMP) LAMPE FONCTIONNANTE

Serial No. ;

| Key No. | Part No. | Description | Description | Q'ty | S.C | Serial No. | ICA | Replaceable part | |
|---|---|---|---|---|---|---|---|---|---|
| | | | | | | | | Part No. | Q'ty |
| 6580-- | K1009408 | WORKING LAMP ASS'Y | LAMPE FONCTIONNANTE | - | D | | | | |
| 1 | 534-00085 | LAMP;WORKING | LAMPE | 4 | | | | | |
| 1A | 2515-1016D4 | . BULB 24V 70W | . LAMPE | 1 | | | | | |
| 2 | 530-00463A | HARNESS;JOINT | FAISCEAU | 2 | | | | | |

| DATE | OCT. 17, 2005 |
|---|---|
| 1st EDITION | |

# Fig. 6590 ROTATING BEACON
# FEU DE CIRCULATION

**Serial No. ;**

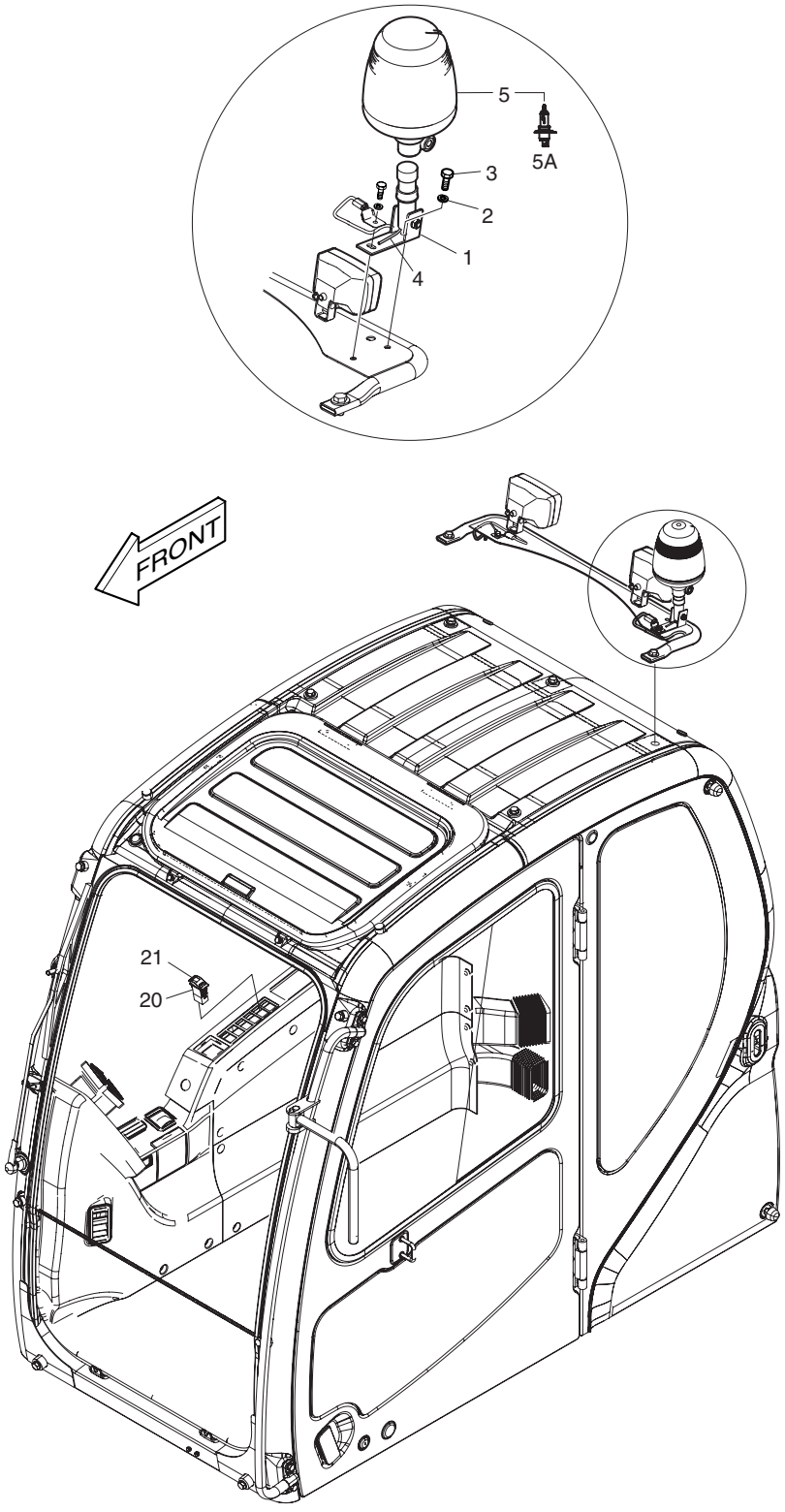

| DATE | OCT. 17, 2005 |
|---|---|
| 1st EDITION | |

# Fig. 6590 ROTATING BEACON FEU DE CIRCULATION

Serial No. ;

| Key No. | Part No. | Description | Description | Q'ty | S.C | Serial No. | ICA | Replaceable part | |
|---|---|---|---|---|---|---|---|---|---|
| | | | | | | | | Part No. | Q'ty |
| 6590-- | K1009413 | ROTATING BEACON | FEU DE CIRCULATION | - | D | | | | |
| 1 | 160-00061 | BUSH;MOUNTING | MANCHON | 1 | | | | | |
| 2 | S5102503 | WASHER;SPRING | RONDELLE ELASTIQUE M8 | 1 | | | | | |
| 3 | S0508853 | BOLT | BOULON A 6 PANS | 1 | | | | | |
| 4 | 530-00464 | HARNESS;ROTATING BEACON | FAISCEAU | 1 | | | | | |
| 5 | 534-00062 | ROTATING BEACON | FEU DE CIRCULATION | 1 | | | | | |
| 5A | 515-00013 | . BULB;HALOGEN 24V 70W | . AMPOULE | 1 | | | | | |
| 20 | 549-00101 | SWITCH | INTERRUPTEUR | 1 | | | | | |
| 21 | K1002406D3 | ACTUATOR | DECLENCHEURE | 1 | | | | | |

| DATE | JUN. 30, 2006 |
|---|---|
| REV.NO. | EXB06-08 |

# Fig. 6600 ROTATING BEACON MOUNTING SUPPORT TOURNANT DE BALISE

**Serial No. ;**

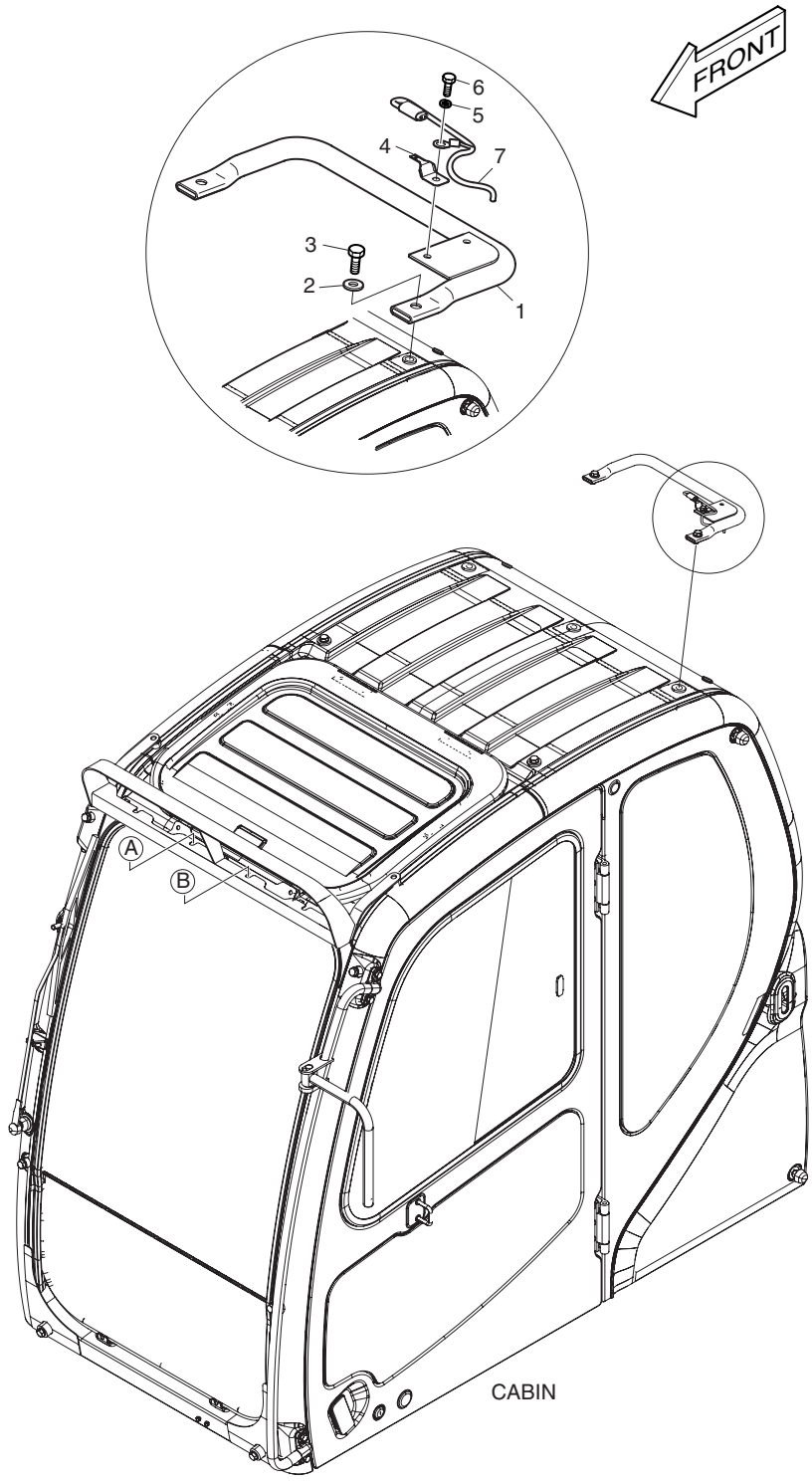

| DATE | JUN. 30, 2006 |
|---|---|
| REV. NO. | EXB06-08 |

# Fig. 6600 ROTATING BEACON MOUNTING SUPPORT TOURNANT DE BALISE

**Serial No. ;**

| Key No. | Part No. | Description | Description | Q'ty | S.C | Serial No. | ICA | Replaceable part | |
|---|---|---|---|---|---|---|---|---|---|
| | | | | | | | | Part No. | Q'ty |
| 6600-- | K1009419 | ROTATING BEACON MOUNTING | SUPPORT TOURNANT DE B | - | D | | | | |
| 1 | **195-02909A** | **BRACKET;BEACON** | SUPPORT | 1 | | | | | |
| 2 | 2114-1898D1 | WASHER | RONDELLE | 2 | | | | | |
| 3 | S0512053 | BOLT | BOULON A 6 PANS | 2 | | | | | |
| 4 | 2197-1661 | BRACKET;HOUSING | SUPPORT | 1 | | | | | |
| 5 | S5102503 | WASHER;SPRING | RONDELLE ELASTIQUE M8 | 1 | | | | | |
| 6 | S0508853 | BOLT | BOULON A 6 PANS | 1 | | | | | |
| 7 | 530-00463A | HARNESS | FAISCEAU | 1 | | | | | |

| DATE | JUN. 30, 2007 |
|---|---|
| REV.NO. | EXB07-06 |

# Fig. 6610 ROTATING BEACON(TELESCOPIC) FEU DE CIRCULATION

**Serial No. ;**

Serial No. : 5001 ~ 5787

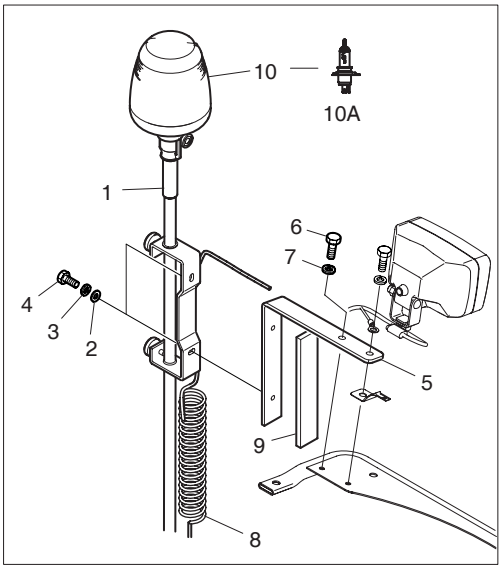


Serial No. : 5788 ~

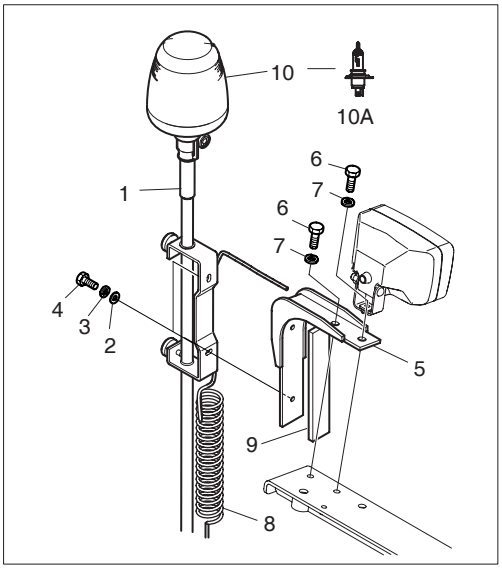


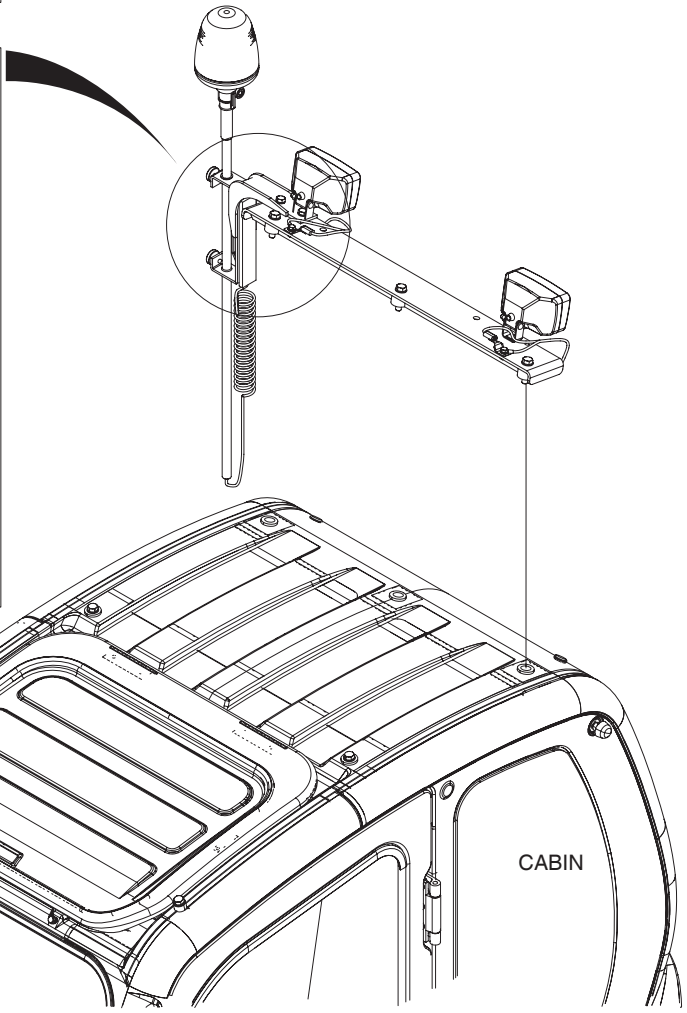

| DATE | JUN. 30, 2007 |
|---|---|
| REV. NO. | EXB07-06 |

# Fig. 6610 ROTATING BEACON(TELESCOPIC) FEU DE CIRCULATION

**Serial No. ;**

| Key No. | Part No. | Description | Description | Q'ty | S.C | Serial No. | ICA | Replaceable part | |
|---|---|---|---|---|---|---|---|---|---|
| | | | | | | | | Part No. | Q'ty |
| 6610-- | K1009421 | ROTATING BEACON | FEU DE CIRCULATION | - | D | | | | |
| 1 | 195-01805 | SUPPORT;BEACON | SUPPORT | 1 | | | | | |
| 2 | S5010513 | WASHER;PLAIN | RONDELLE M8 | 2 | | | | | |
| 3 | S5102503 | WASHER;SPRING | RONDELLE ELASTIQUE M8 | 2 | | | | | |
| 4 | S0508653 | BOLT | BOULON A 6 PANS | 2 | | | | | |
| 5 | 195-02925 | BRACKET | SUPPORT | 1 | | 5001–5787 | | | |
| | **195-02925A** | **BRACKET** | SUPPORT | 1 | | **5788–** | | | |
| 6 | S0508853 | BOLT | BOULON A 6 PANS | 1 | | 5001–5787 | | | |
| | **S0512053** | **BOLT** | BOULON A 6 PANS | 2 | | **5788–** | | | |
| 7 | S5102503 | WASHER;SPRING | RONDELLE ELASTIQUE M8 | 1 | | 5001–5787 | | | |
| | **S5100603** | **WASHER;SPRING** | RONDELLE ELASTIQUE M8 | 2 | | **5788–** | | | |
| 8 | K1010065 | HARNESS;JOINT | FAISCEAU | 1 | | | | | |
| 9 | 161-00404 | RUBBER | CAOUTCHOUC | 1 | | | | | |
| 10 | 534-00062 | LAMP;ROTATING BEACON | FEU DE CIRCULATION | 1 | | | | | |
| 10A | 515-00013 | . BULB;HALOGEN 24V 70W | . AMPOULE | 1 | | | | | |

| DATE | JUN. 30, 2007 |
|---|---|
| REV.NO. | EXB07-06 |

# Fig. 6620 ROTATING BEACON(TELESCOPIC) FEU DE CIRCULATION

**Serial No. ;**

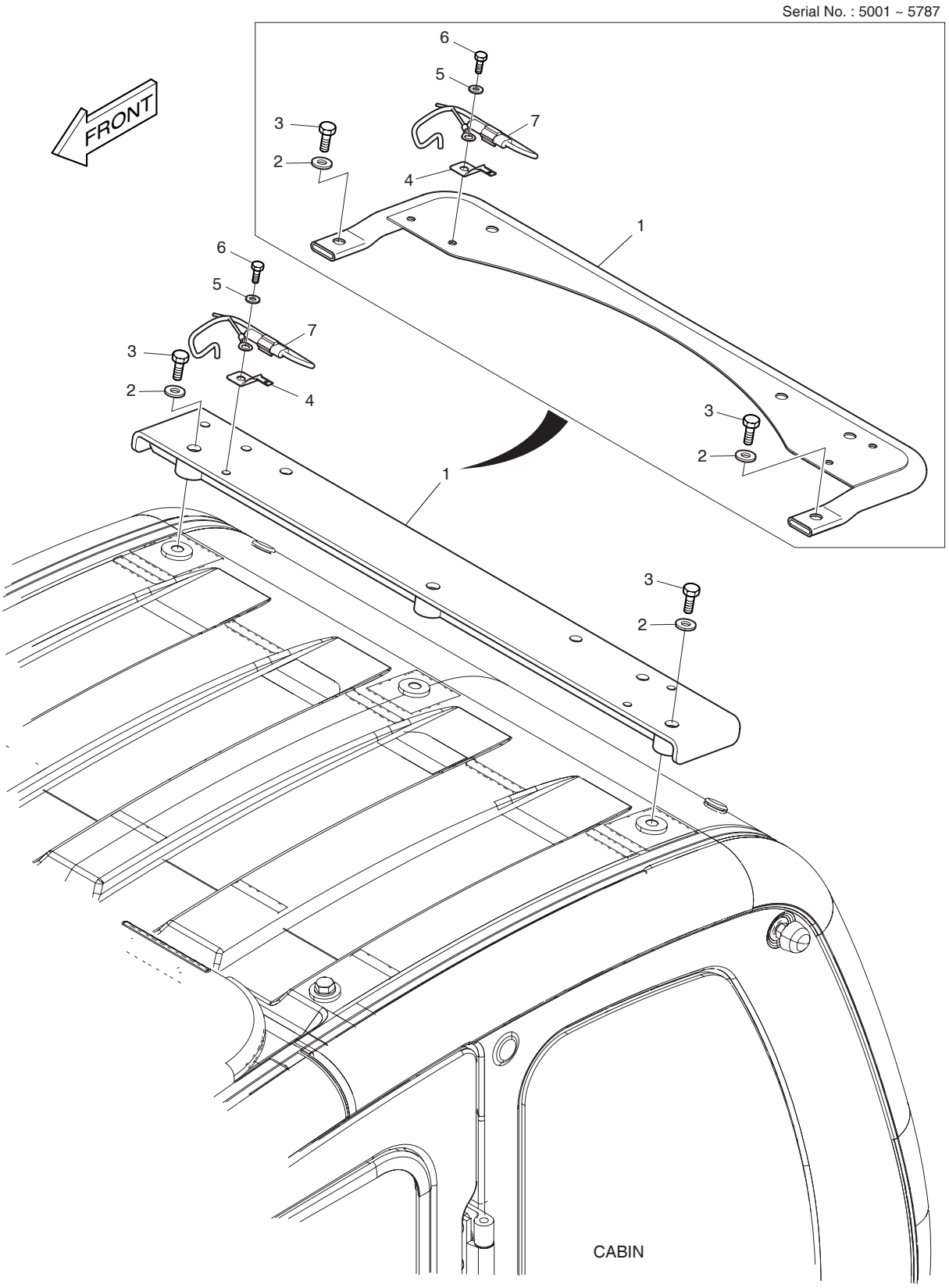

| DATE | JUN. 30, 2007 |
|---|---|
| REV. NO. | EXB07-06 |

# Fig. 6620 ROTATING BEACON(TELESCOPIC) FEU DE CIRCULATION

**Serial No. ;**

| Key No. | Part No. | Description | Description | Q'ty | S.C | Serial No. | ICA | Replaceable part | |
|---|---|---|---|---|---|---|---|---|---|
| | | | | | | | | Part No. | Q'ty |
| 6620-- | K1009422 | ROTATING BEACON-TELESCOPIC | FEU DE CIRCULATION | - | D | | | | |
| 1 | 195-02910A | BRACKET | SUPPORT | 1 | | 5001–5787 | | | |
| | **195-02910C** | **BRACKET** | SUPPORT | 1 | | **5788–** | | | |
| 2 | 2114-1898D6 | WASHER | RONDELLE | 2 | | 5001–5787 | | | |
| | **S5010713** | **WASHER** | RONDELLE | 3 | | **5788–** | | | |
| 3 | 2120-2166D54 | BOLT | BOULON A 6PANS | 2 | | 5001–5787 | | | |
| | **S0515653** | **BOLT M12X1.75X50** | BOULON A 6PANS | 3 | | **5788–** | | | |
| 4 | 2197-1661 | BRACKET;HOUSING | SUPPORT | 1 | | | | | |
| 5 | S5102503 | WASHER;SPRING | RONDELLE ELASTIQUE M8 | 1 | | | | | |
| 6 | S0508853 | BOLT | BOULON A 6 PANS | 1 | | | | | |
| 7 | 530-00463A | HARNESS | FAISCEAU | 1 | | | | | |

| DATE | OCT. 17, 2005 |
|---|---|
| 1st EDITION | |

# Fig. 6630 ROTATING BEACON - WITH FOGS
# FEU DE CIRCULATION

**Serial No. ;**

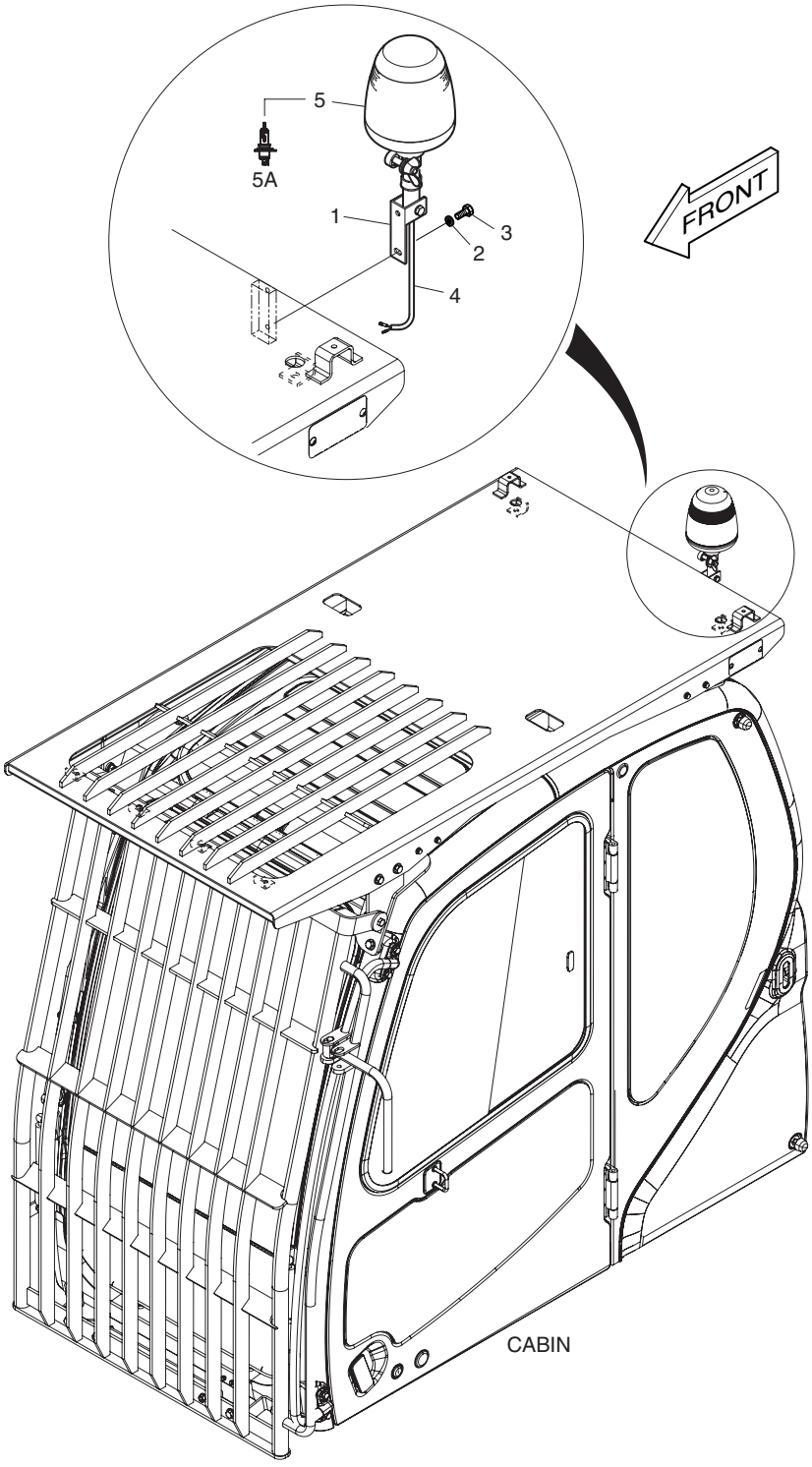

| DATE | OCT. 17, 2005 |
|---|---|
| 1st EDITION | |

# Fig. 6630 ROTATING BEACON - WITH FOGS FEU DE CIRCULATION

Serial No. ;

| Key No. | Part No. | Description | Description | Q'ty | S.C | Serial No. | ICA | Replaceable part | |
|---|---|---|---|---|---|---|---|---|---|
| | | | | | | | | Part No. | Q'ty |
| 6630-- | K1009424 | ROTATING BEACON | FEU DE CIRCULATION | - | D | | | | |
| 1 | 160-00061 | BUSH;MOUNTING | MANCHON | 1 | | | | | |
| 2 | S5102503 | WASHER;SPRING | RONDELLE ELASTIQUE M8 | 2 | | | | | |
| 3 | S0508853 | BOLT | BOULON A 6 PANS | 2 | | | | | |
| 4 | 530-00464 | HARNESS;JOINT | FAISCEAU | 1 | | | | | |
| 5 | 534-00062 | LAMP;ROTATING BEACON | FEU DE CIRCULATION | 1 | | | | | |
| 5A | 515-00013 | . BULB;HALOGEN 24V 70W | . AMPOULE | 1 | | | | | |

# Fig. 6640 OVERLOAD WARNING AVERTISSEMENT DE SURCHARGE

Serial No. ;

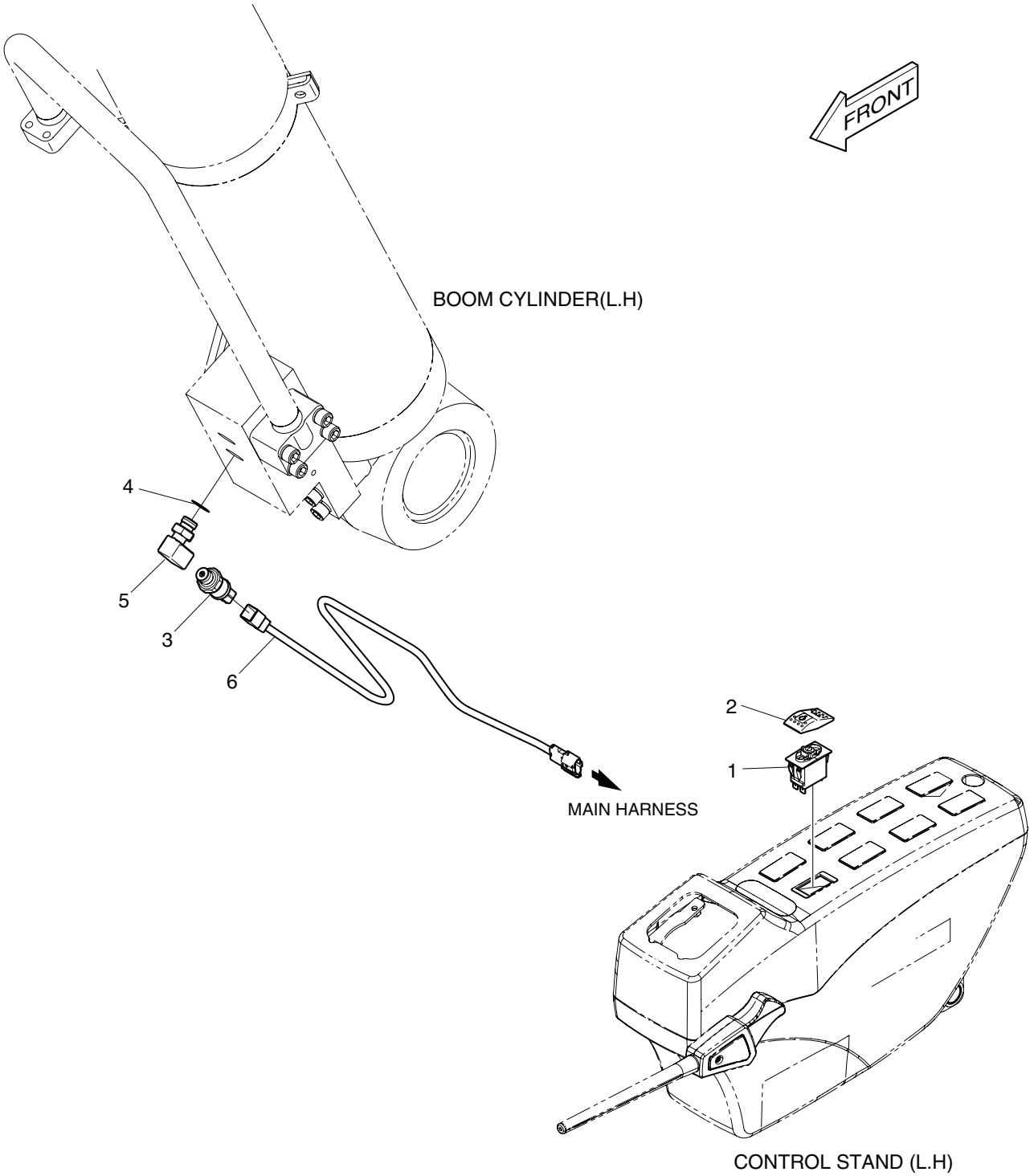

| DATE | OCT. 17, 2005 |
|---|---|
| 1st EDITION | |

# Fig. 6640 OVERLOAD WARNING AVERTISSEMENT DE SURCHARGE

Serial No. ;

| Key No. | Part No. | Description | Description | Q'ty | S.C | Serial No. | ICA | Replaceable part | |
|---|---|---|---|---|---|---|---|---|---|
| | | | | | | | | Part No. | Q'ty |
| 6640-- | K1009445 | OVER LOAD WARNING | AVERTISSEMENT DE SURC | - | D | | | | |
| 1 | 549-00102 | SWITCH | INTERRUPTEUR | 1 | | | | | |
| 2 | K1002406D4 | ACTUATOR | DECLENCHEURE | 1 | | | | | |
| 3 | 2547-9045 | SENSOR;PRESSURE | CAPTEUR | 1 | | | | | |
| 4 | S8000161 | O-RING | JOINT TORIQUE | 1 | | | | | |
| 5 | DS2308021 | ELBOW | COUDE | 1 | | | | | |
| 6 | K1002153 | HARNESS;JOINT | FAISCEAU | 1 | | | | | |

| DATE | JUN. 30, 2007 |
|---|---|
| REV.NO. | EXB07-06 |

# Fig. 6650 LOWER WIPER
# ABAISSEZ L'ESSUIE-GLACE

**Serial No. ;**

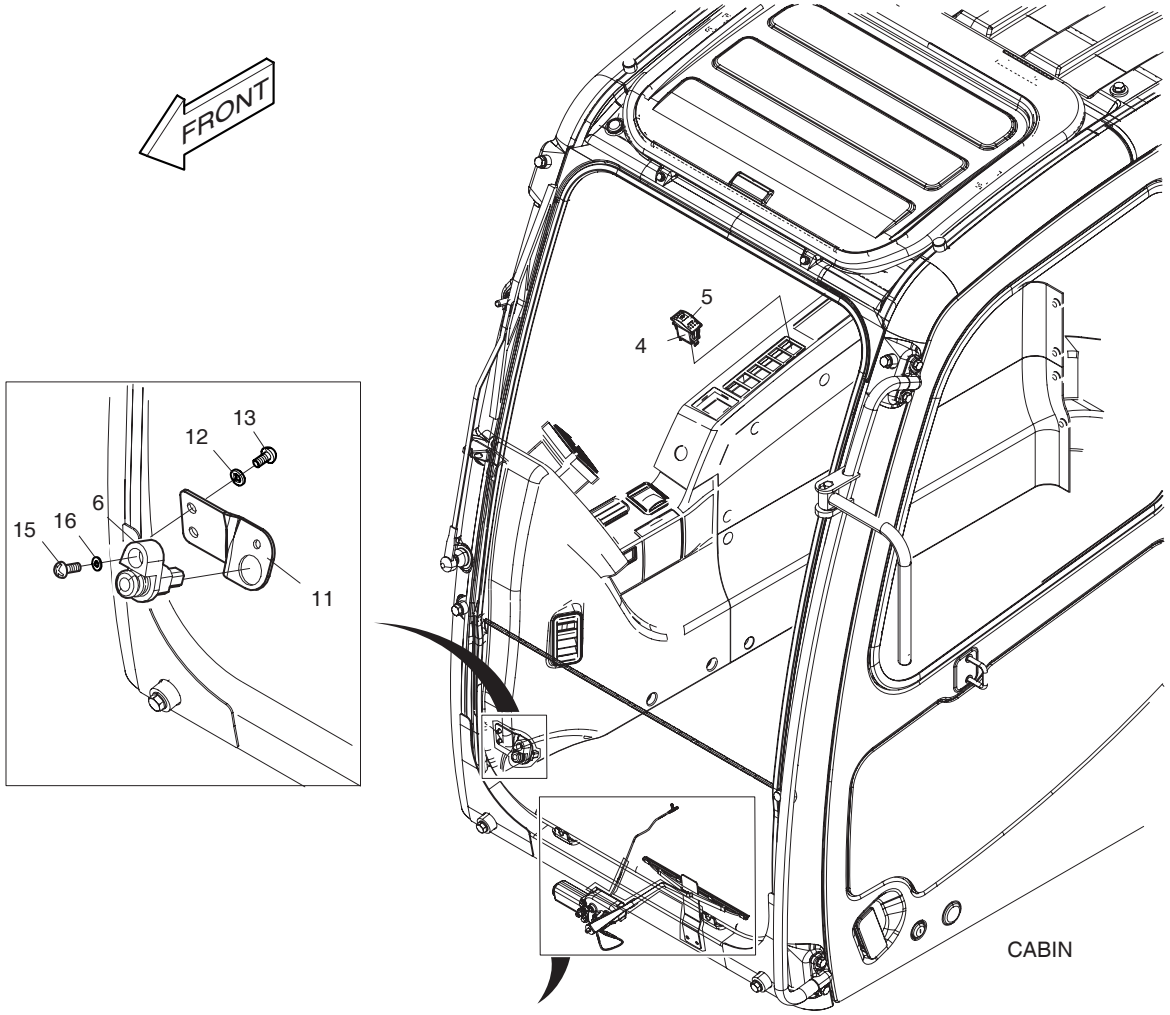


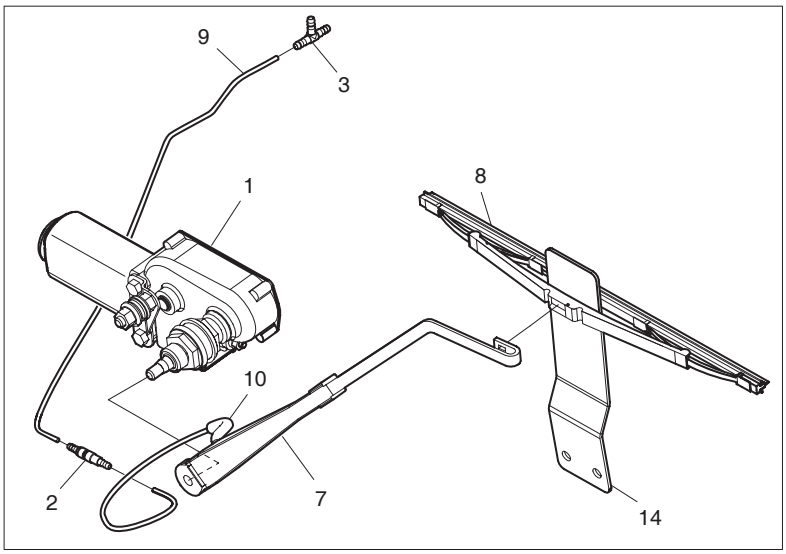


Serial No. 5691 ~

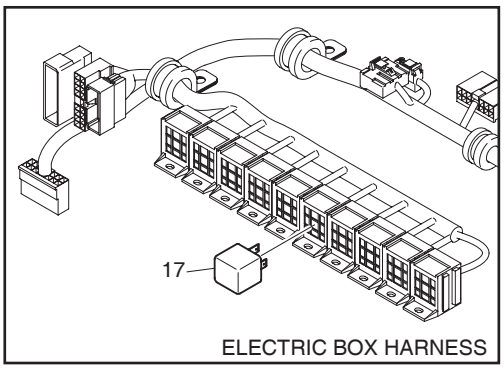

| DATE | JUN. 30, 2007 |
|---|---|
| REV. NO. | EXB07-06 |

# Fig. 6650 LOWER WIPER ABAISSEZ L'ESSUIE-GLACE

**Serial No. ;**

| Key No. | Part No. | Description | Description | Q'ty | S.C | Serial No. | ICA | Replaceable part | |
|---|---|---|---|---|---|---|---|---|---|
| | | | | | | | | Part No. | Q'ty |
| 6650-- | K1009446A | LOWER WIPER ASS'Y | ABAISSEZ L'ESSUIE-GLA | - | D | | | | |
| 1 | 538-00012 | MOTOR;WIPER | MOTEUR | 1 | | | | | |
| 2 | 426-00282 | VALVE;LOWER WIPER CHECK | VANNE | 1 | | | | | |
| 3 | 181-00804 | TEE | TE | 1 | | | | | |
| 4 | 549-00101 | SWITCH | INTERRUPTEUR | 1 | | | | | |
| 5 | K1002406D5 | ACTUATOR | DECLENCHEURE | 1 | | | | | |
| 6 | 549-00077 | SWITCH | AVERTISSEUR | 1 | | | | | |
| 7 | 541-00016 | ARM;WIPER | BALANCIER | 1 | | | | | |
| 8 | 507-00007 | BLADE;WIPER | LAME | 1 | | | | | |
| 9 | K1002866 | HOSE | TUYAU FLEXIBLE | 1 | | | | | |
| 10 | K1002867D1 | TUBE | DOUILLE ACIER | 1 | | | | | |
| 11 | 195-03444 | BRACKET;SWITCH | SUPPORT | 1 | | | | | |
| 12 | 2114-1898D3 | WASHER;PLAIN | RONDELLE | 2 | | | | | |
| 13 | 2120-2166D9 | SCREW | BOULON A 6 PANS | 2 | | | | | |
| 14 | 191-03736E | PLATE;STOPPER | TAQUET D'ARRET | 1 | | | | | |
| 15 | S3450833 | SCREW | VIS | 1 | | | | | |
| 16 | S5100203 | WASHER SPRING | RONDELLE ELASTIQUE M5 | 1 | | | | | |
| 17 | **2544-9033** | **RELAY** | RELAIS | 1 | | **5691–** | | | |

| DATE | JUN. 30, 2006 |
|---|---|
| REV.NO. | EXB06-08 |

# Fig. 6660 CD PLAYER PLAQUEUR DE CD

**Serial No. ;**

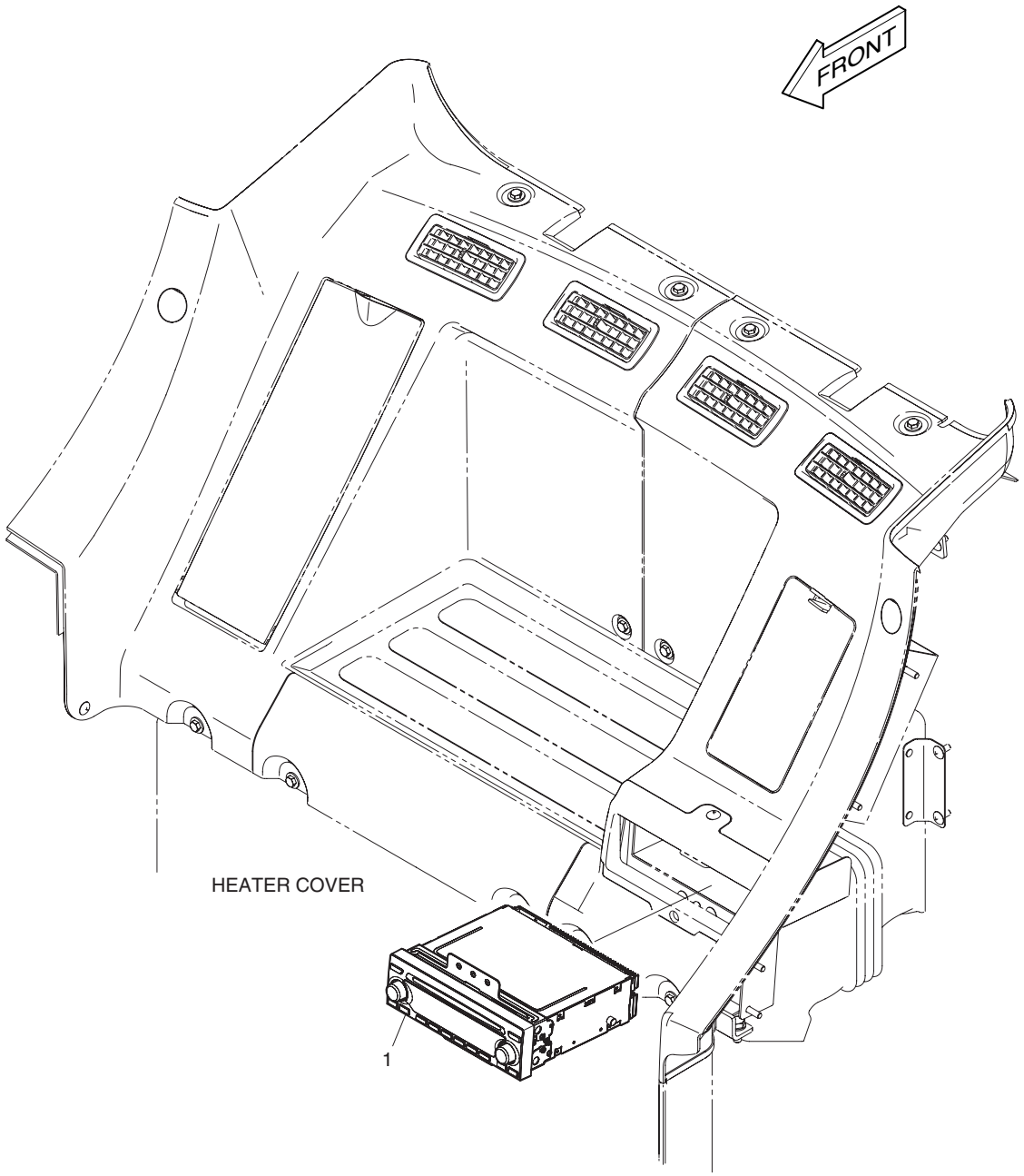

| DATE | JUN. 30, 2006 |
|---|---|
| REV. NO. | EXB06-08 |

# Fig. 6660 CD PLAYER PLAQUEUR DE CD

Serial No. ;

| Key No. | Part No. | Description | Description | Q'ty | S.C | Serial No. | ICA | Replaceable part | |
|---|---|---|---|---|---|---|---|---|---|
| | | | | | | | | Part No. | Q'ty |
| 6660-- | K1009452 | CD PLAYER | PLAQUEUR DE CD | - | D | | | | |
| 1 | K1000982 | CD PLAYER | PLAQUEUR DE CD | 1 | | | | | |

| DATE | JUN. 30, 2008 |
|---|---|
| REV.NO. | EXB08-06 |

# Fig. 6670 ACOUSTIC FOAM - LOW NOISE
# ENSEMBLE DE EPONGE

**Serial No. ;**

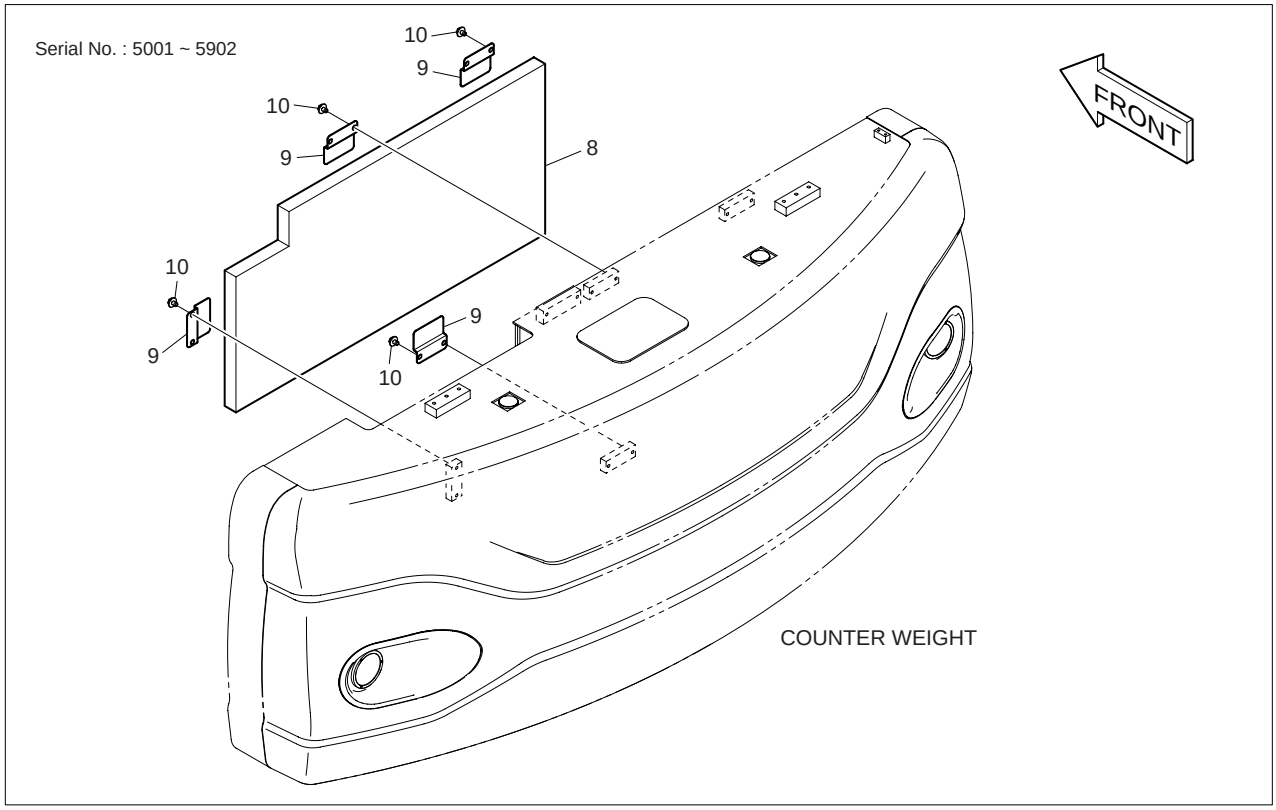


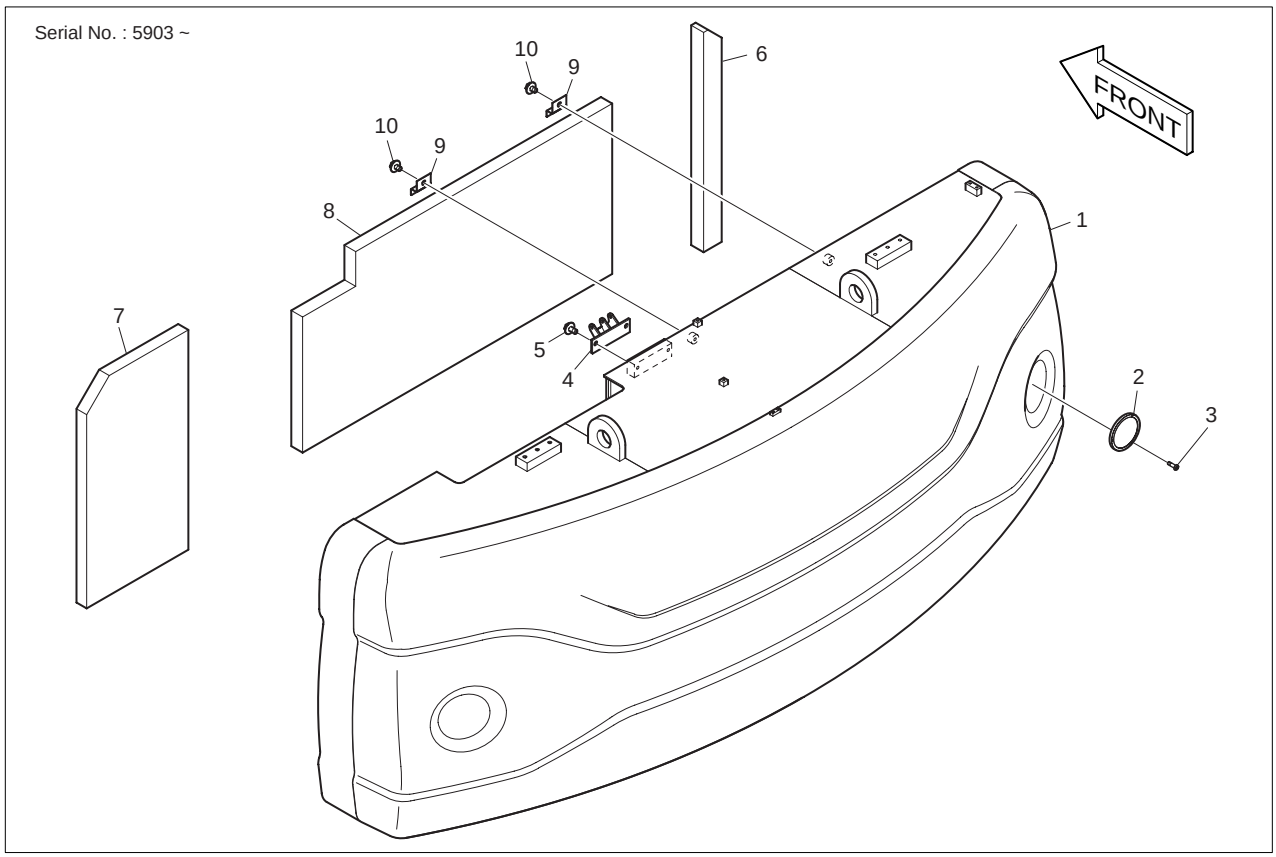

| DATE | JUN. 30, 2008 |
|---|---|
| REV. NO. | EXB08-06 |

# Fig. 6670 ACOUSTIC FOAM - LOW NOISE ENSEMBLE DE EPONGE

Serial No. ;

| Key No. | Part No. | Description | Description | Q'ty | S.C | Serial No. | ICA | Replaceable part | |
|---|---|---|---|---|---|---|---|---|---|
| | | | | | | | | Part No. | Q'ty |
| 6670-- | **K1009705** | **ACOUSTIC FOAM** | ENSEMBLE DE EPONGE | - | D | **5001–5902** | | | |
| | **K1045597** | **ACOUSTIC FOAM** | ENSEMBLE DE EPONGE | 1 | | **5903–** | | | |
| 1 | **K1043719** | **WEIGHT;COUNTER 7.1ton** | MASSE D'EQUILIBRAGE | 1 | | | | | |
| 2 | **190-01107B** | **REFLECTOR** | REDUCTEUR | 2 | | | | | |
| 3 | **S3450343** | **SCREW** | VIS | 6 | | | | | |
| 4 | **K1002078** | **BRACKET** | SUPPORT | 1 | | | | | |
| 5 | **DS0025015** | **BOLT;SET** | BOULON A 6 PANS | 2 | | | | | |
| 6 | **K1002730A** | **FOAM** | EPONGE | 1 | | | | | |
| 7 | **K1005834A** | **FOAM** | EPONGE | 1 | | | | | |
| 8 | **K1009706** | **FOAM** | EPONGE | 1 | | | | | |
| 9 | **K1004119** | **BRACKET** | SUPPORT | 4 | | **5001–5902** | | | |
| | **621-01572** | **PLATE; STOPPER** | PLAQUE | 2 | | **5903–** | | | |
| 10 | **DS0025022** | **BOLT;SET** | BOULON A 6 PANS | 8 | | **5001–5902** | | | |
| | **DS0025022** | **BOLT;SET** | BOULON A 6 PANS | 2 | | **5903–** | | | |

| DATE | JUN. 30, 2008 |
|---|---|
| REV.NO. | EXB08-06 |

# Fig. 6680 ARM - 2.6m
# ENSEMBLE BALANCIER

**Serial No. ;**

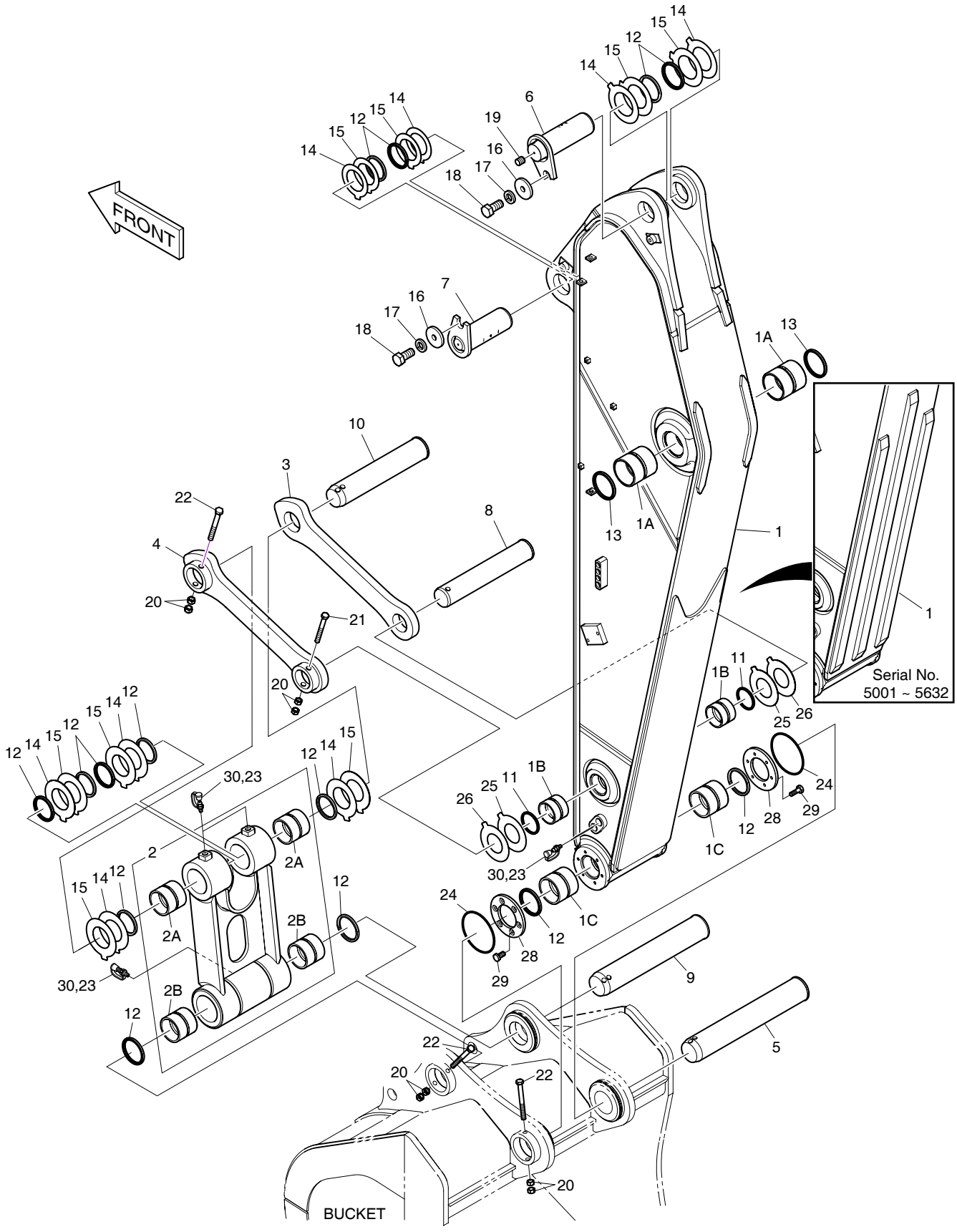

| DATE | JUN. 30, 2008 |
|---|---|
| REV. NO. | EXB08-06 |

# Fig. 6680 ARM - 2.6m ENSEMBLE BALANCIER

Serial No. ;

| Key No. | Part No. | Description | Description | Q'ty | S.C | Serial No. | ICA | Replaceable part | |
|---|---|---|---|---|---|---|---|---|---|
| | | | | | | | | Part No. | Q'ty |
| 6680-- | K1014005H | ARM ASS'Y | ENSEMBLE BALANCIER | - | D | | | | |
| 1 | K1014008 | ARM SUB ASS'Y-2.6M | ENSEMBLE BALANCIER | 1 | | 5001–5083 | I | K1014008A | 1 |
| | K1014008A | ARM SUB ASS'Y-2.6M | ENSEMBLE BALANCIER | 1 | | 5084–5461 | I | K1014008B | 1 |
| | K1014008B | ARM SUB ASS'Y-2.6M | ENSEMBLE BALANCIER | 1 | | 5462–5632 | I | K1014008C | 1 |
| | K1014008C | ARM SUB ASS'Y-2.6M | ENSEMBLE BALANCIER | 1 | | 5633–5814 | I | K1014008E | 1 |
| | K1014008E | ARM SUB ASS'Y-2.6M | ENSEMBLE BALANCIER | 1 | | 5815–5838 | I | K1014008G | 1 |
| | **K1014008G** | **ARM SUB ASS'Y-2.6M** | ENSEMBLE BALANCIER | 1 | | **5839–** | | | |
| 1A | K1003910 | . BUSHING | . MANCHON | 2 | | | | | |
| 1B | 110-00248 | . BUSHING | . COUSSINET | 2 | | | | | |
| 1C | K1003911 | . BUSHING | . MANCHON | 2 | | | | | |
| 2 | K1005832A | PUSH LINK ASS'Y | ENSEMBLE DE | 1 | | | | | |
| 2A | K1003912 | . BUSHING | . MANCHON | 2 | | | | | |
| 2B | K1003913 | . BUSHING | . MANCHON | 2 | | | | | |
| 3 | 2155-1349A | LINK;GUIDE(R.H) | ARTICULATED | 1 | | | | | |
| 4 | 2155-1350A | LINK;GUIDE(L.H) | ARTICULATED | 1 | | | | | |
| 5 | 123-00578 | PIN | GOUJON | 1 | | 5001–5838 | I | 123-00578A | 1 |
| | **123-00578A** | **PIN** | GOUJON | 1 | | **5839–** | | | |
| 6 | 123-00668 | PIN | GOUJON | 1 | | 5001–5469 | | | |
| | 123-00668A | PIN | GOUJON | 1 | | 5470–5838 | I | 123-00668B | 1 |
| | **123-00668B** | **PIN** | GOUJON | 1 | | **5839–** | | | |
| 7 | K1000543 | PIN | GOUJON | 1 | | 5001–5838 | I | K1000543A | 1 |
| | **K1000543A** | **PIN** | GOUJON | 1 | | **5839–** | | | |
| 8 | 2123-2351A | PIN | GOUPILLE | 1 | | 5001–5838 | I | K1039630 | 1 |
| | **K1039630** | **PIN** | GOUPILLE | 1 | | **5839–** | | | |
| 9 | 2123-2352A | PIN | GOUPILLE | 1 | | 5001–5838 | I | K1039629 | 1 |
| | **K1039629** | **PIN** | GOUPILLE | 1 | | **5839–** | | | |
| 10 | 2123-2353A | PIN | GOUPILLE | 1 | | 5001–5838 | I | K1039631 | 1 |
| | **K1039631** | **PIN** | GOUPILLE | 1 | | **5839–** | | | |
| 11 | 2180-1106BD6 | SEAL;DUST | PARE-POUSSIERES | 2 | | | | | |
| 12 | 2180-1106BD14 | SEAL;DUST | PARE-POUSSIERES | 14 | | | | | |
| 13 | 2180-1106BD15 | SEAL;DUST | PARE-POUSSIERES | 2 | | | | | |
| 14 | DS7752045 | SHIM | CALE | 8 | | | | | |
| 15 | DS7752046 | SHIM | CALE | 8 | | | | | |
| 16 | 2116-1060D5 | STOPPER | TAQUET D'ARRET | 2 | | | | | |
| 17 | S5102903 | WASHER;SPRING | RONDELLE ELASTIQUE | 2 | | | | | |
| 18 | S0521366 | BOLT | BOULON A 6 PANS | 2 | | | | | |
| 19 | 2181-1116D1 | PLUG | BOUCHON | 1 | | 5001–5469 | | | |
| 20 | S4013133 | NUT | ECROU | 8 | | | | | |

| DATE | JUN. 30, 2008 |
|---|---|
| REV.NO. | EXB08-06 |

# Fig. 6680 ARM - 2.6m
# ENSEMBLE BALANCIER

**Serial No. ;**

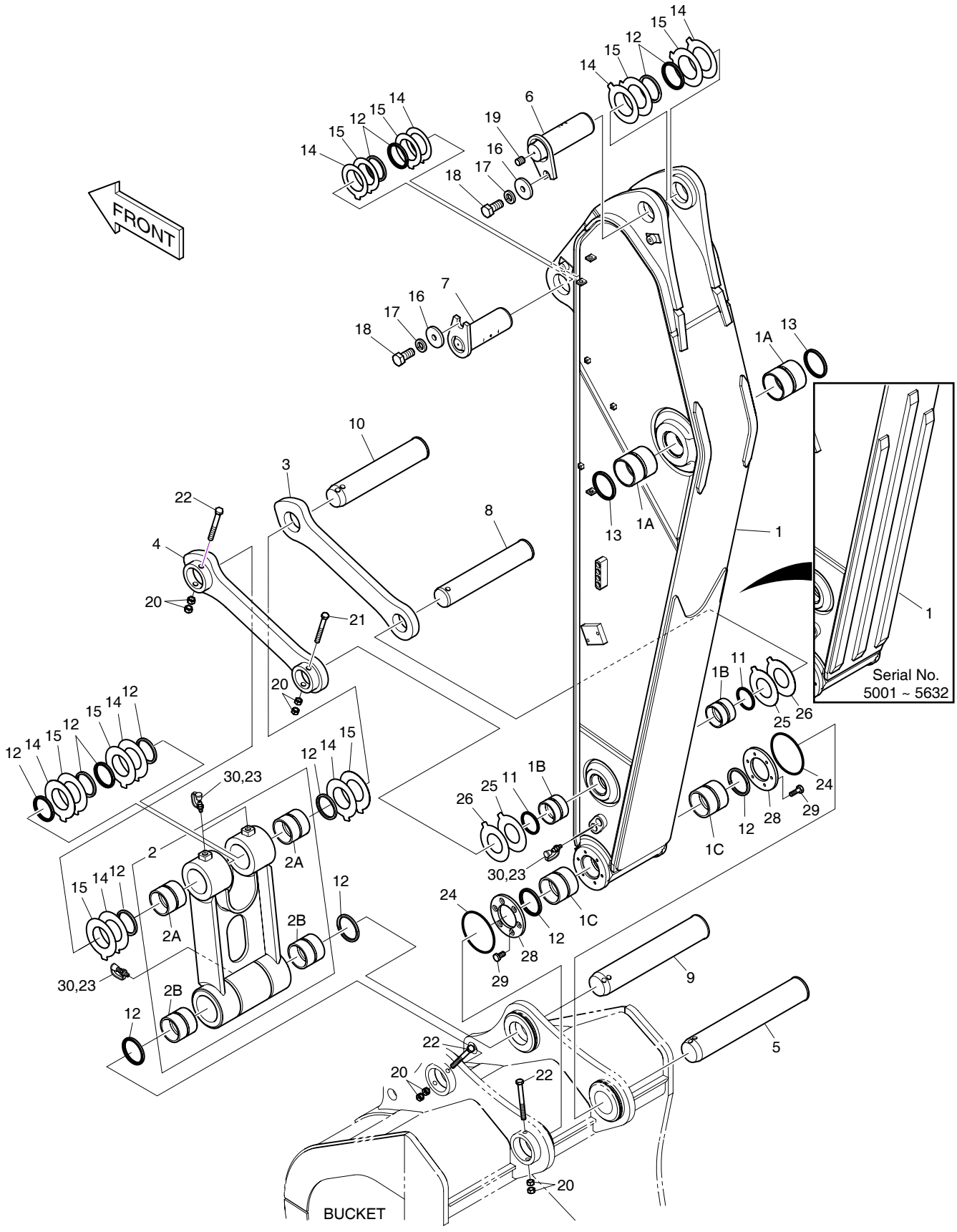

| DATE | JUN. 30, 2008 |
|---|---|
| REV. NO. | EXB08-06 |

# Fig. 6680 ARM - 2.6m
# ENSEMBLE BALANCIER

Serial No. ;

| Key No. | Part No. | Description | Description | Q'ty | S.C | Serial No. | ICA | Replaceable part | |
|---|---|---|---|---|---|---|---|---|---|
| | | | | | | | | Part No. | Q'ty |
| 6680-21 | S0571861 | BOLT | BOULON A 6 PANS | 1 | | 5001–5129 | I | DS0001085 | 1 |
| | DS0001085 | BOLT | BOULON A 6 PANS | 1 | | 5130– | | | |
| 22 | S0571966 | BOLT | BOULON A 6 PANS | 3 | | 5001–5129 | I | DS0001086 | 3 |
| | DS0001086 | BOLT | BOULON A 6 PANS | 3 | | 5130– | | | |
| 23 | S6710041 | NIPPLE;GREASE | GRAISSEUR | 5 | | | | | |
| 24 | 180-00077D7 | O-RING | JOINT TORIQUE | 2 | | | | | |
| 25 | DS7752015 | SHIM | CALE | 2 | | | | | |
| 26 | DS7752016 | SHIM | CALE | 2 | | | | | |
| 28 | K1005780 | SPACER | DOUILLE D'ECARTEMENT | 2 | | | | | |
| 29 | 120-00223 | BOLT | BOULON A 6 PANS | 12 | | | | | |
| 30 | 160-00020 | CAP;GREASE NIPPLE | CHAPEAU | 5 | | | | | |

| DATE | JUN. 30, 2007 |
|---|---|
| REV.NO. | EXB07-06 |

# Fig. 6690 ARM PIPING - ARM 2.6m
# CONDUITES DE BALANCIER

**Serial No. ;**

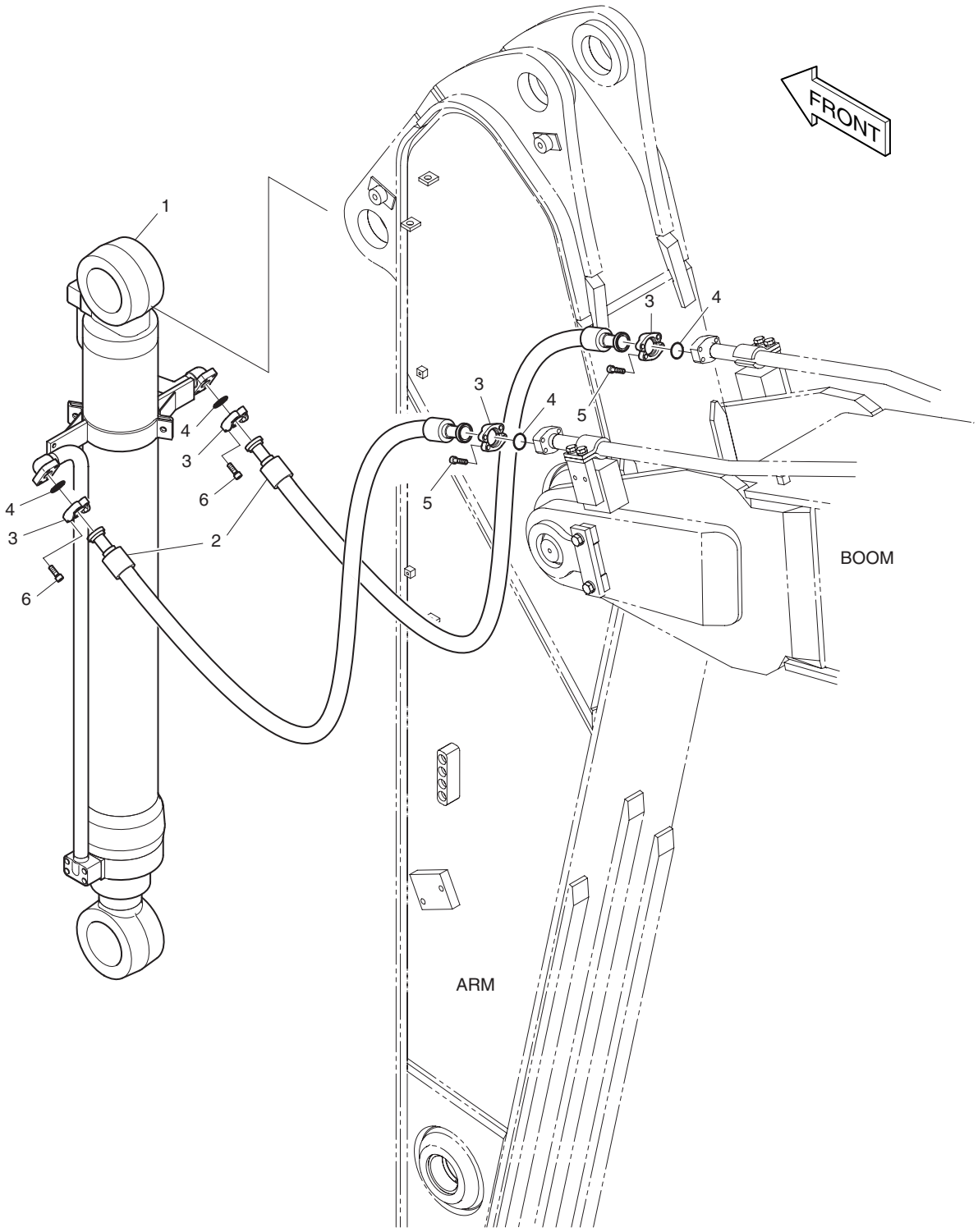

| DATE | JUN. 30, 2007 |
|---|---|
| REV. NO. | EXB07-06 |

# Fig. 6690 ARM PIPING - ARM 2.6m CONDUITES DE BALANCIER

**Serial No. ;**

| Key No. | Part No. | Description | Description | Q'ty | S.C | Serial No. | ICA | Replaceable part | |
|---|---|---|---|---|---|---|---|---|---|
| | | | | | | | | Part No. | Q'ty |
| 6690-- | K1014408A | ARM PIPING | CONDUITES DE BALANCIER | - | D | | | | |
| 1 | K1006202 | CYLINDER;BUCKET | VERIN DE GODET | 1 | | 5001–5668 | I | K1006202A | 1 |
| | **K1006202A** | **CYLINDER;BUCKET** | VERIN DE GODET | 1 | | **5669–** | | | |
| 2 | DS2039106 | HOSE | TUYAU FLEXIBLE | 2 | | | | | |
| 3 | 2181-9078 | FLANGE;SPLIT | FLASQUE EN DEUX | 8 | | | | | |
| 4 | 2180-1026D19 | O-RING | JOINT TORIQUE | 4 | | | | | |
| 5 | S2212466 | BOLT;SOCKET | BOULON DE PLOT | 8 | | | | | |
| 6 | S2212266 | BOLT;SOCKET | BOULON DE PLOT | 8 | | | | | |

# Fig. 6700 LUBRICATION PIPING - ARM 2.6m
# LUBRIFICATION

**Serial No. ;**

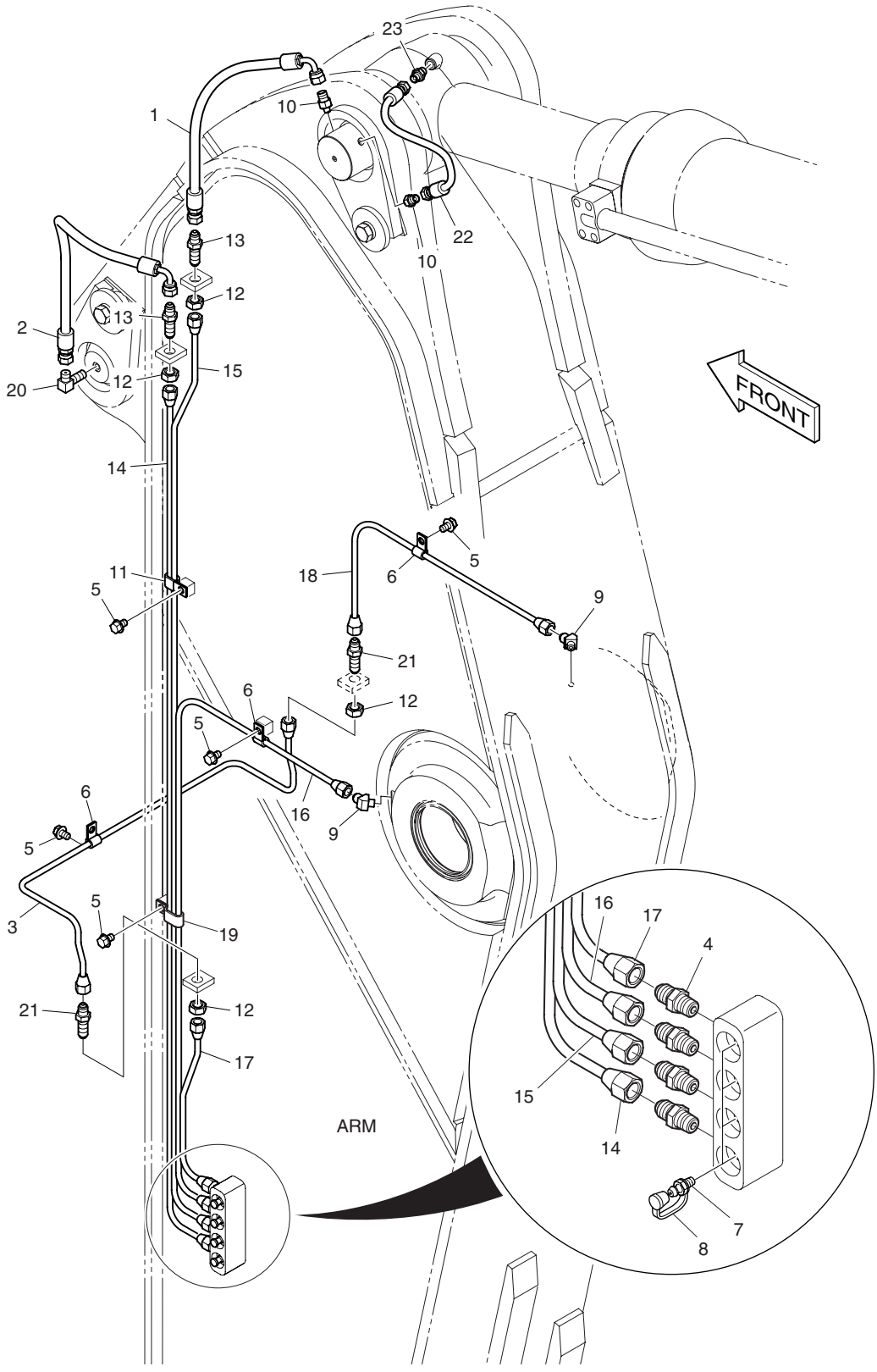

| DATE | JUN. 30, 2007 |
|---|---|
| REV. NO. | EXB07-06 |

# Fig. 6700 LUBRICATION PIPING - ARM 2.6m LUBRIFICATION

**Serial No. ;**

| Key No. | Part No. | Description | Description | Q'ty | S.C | Serial No. | ICA | Replaceable part | |
|---|---|---|---|---|---|---|---|---|---|
| | | | | | | | | Part No. | Q'ty |
| 6700-- | **K1014417B** | **LUBRICATION PIPING** | LUBRIFICATION | - | D | | | | |
| 1 | DS2055815 | HOSE | TUYAU FLEXIBLE | 1 | | | | | |
| 2 | DS2055891 | HOSE | TUYAU FLEXIBLE | 1 | | | | | |
| 3 | K1006240 | PIPE | CONDUITE | 1 | | | | | |
| 4 | 2181-1184 | ADAPTER | RACCORD | 4 | | | | | |
| 5 | K1001029 | BOLT | BOULON A 6 PANS | 5 | | | | | |
| 6 | DS2802023 | CLIP | ATTACHE | 3 | | | | | |
| 7 | S6710041 | NIPPLE;GREASE | GRAISSEUR | 4 | | | | | |
| 8 | 160-00020 | CAP;GREASE NIPPLE | CHAPEAU | 4 | | | | | |
| 9 | K1000057 | ELBOW | COUDE | 2 | | | | | |
| 10 | 2181-4112 | ADAPTER | RACCORD ADAPTEUR | 1 | | 5001–5469 | | | |
| | **2181-4112** | **ADAPTER** | RACCORD ADAPTEUR | 2 | | **5470–** | | | |
| 11 | DS2805007 | CLIP | ATTACHE | 1 | | | | | |
| 12 | S4032833 | NUT | ECROU | 4 | | | | | |
| 13 | 2181-1923D12 | ADAPTER | RACCORD ADAPTATEUR | 2 | | | | | |
| 14 | K1014418 | PIPE | CONDUITE | 1 | | | | | |
| 15 | K1014419 | PIPE | CONDUITE | 1 | | | | | |
| 16 | K1014420 | PIPE | CONDUITE | 1 | | | | | |
| 17 | K1014421 | PIPE | CONDUITE | 1 | | | | | |
| 18 | K1014422 | PIPE | CONDUITE | 1 | | | | | |
| 19 | DS2805008 | CLIP | ATTACHE | 1 | | | | | |
| 20 | 2181-1111D11 | ELBOW | COUDE | 1 | | | | | |
| 21 | DS2225009 | ADAPTER | ADAPTEUR | 2 | | | | | |
| 22 | **DS2094250** | **HOSE** | TUYAU FLEXIBLE | 1 | | **5470–5659** | | | |
| | **DS2094173** | **HOSE** | TUYAU FLEXIBLE | 1 | | **5660–** | | | |
| 23 | **2181-1110D1** | **ADAPTER** | ADAPTEUR | 1 | | **5470–** | | | |

| DATE | OCT. 17, 2005 |
|---|---|
| 1st EDITION | |

# Fig. 6710 ARM PIPING - ONE & TWO WAY(ARM 2.6m)
# CONDUITES DE BALANCIER

**Serial No. ;**

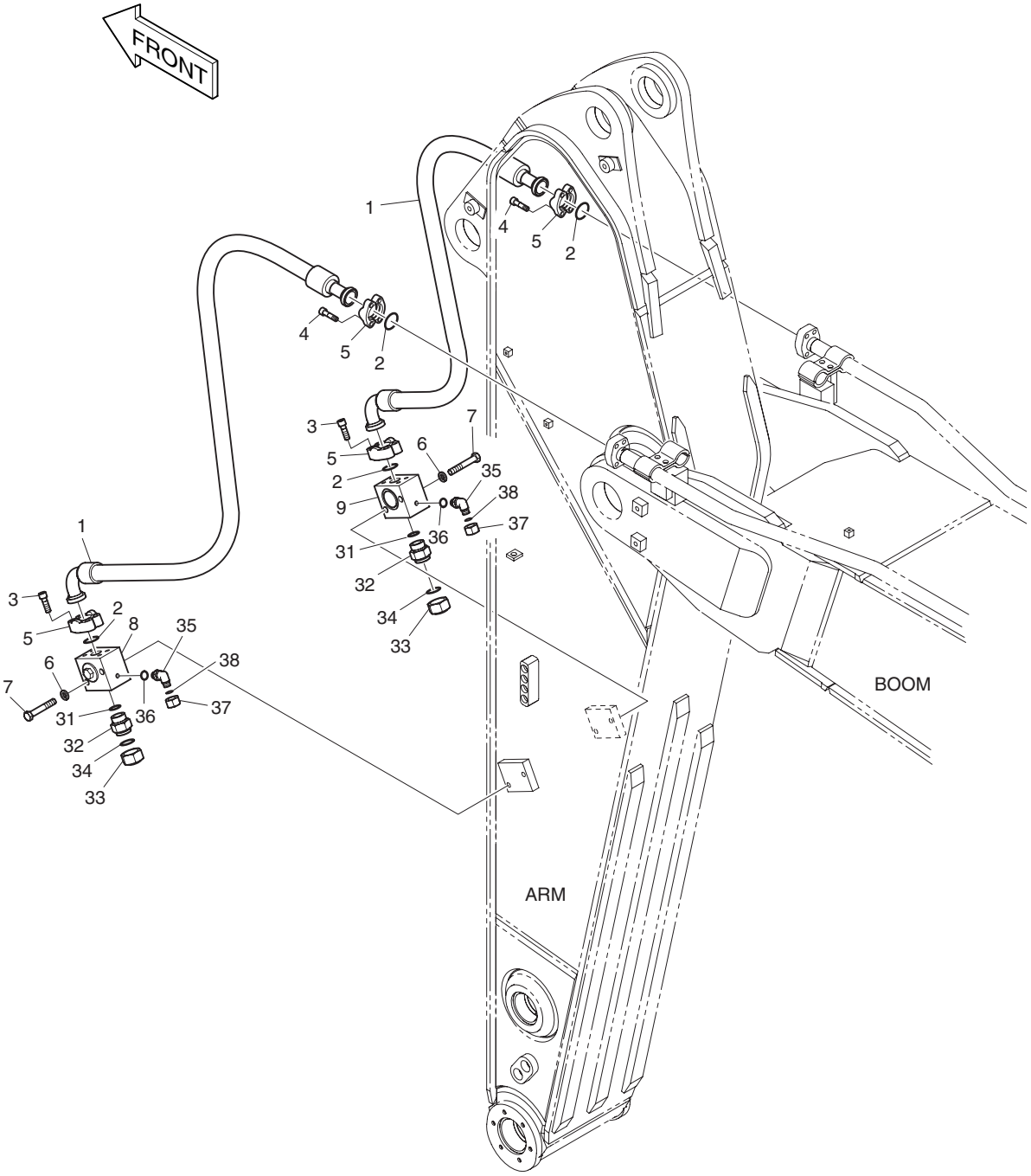

| DATE | OCT. 17, 2005 |
|---|---|
| 1st EDITION | |

# Fig. 6710 ARM PIPING - ONE & TWO WAY(ARM 2.6m) CONDUITES DE BALANCIER

Serial No. ;

| Key No. | Part No. | Description | Description | Q'ty | S.C | Serial No. | ICA | Replaceable part | |
|---|---|---|---|---|---|---|---|---|---|
| | | | | | | | | Part No. | Q'ty |
| 6710-- | K1014409 | ARM PIPING-ONE & TWO WAY | CONDUITES DE | - | D | | | | |
| 1 | DS2040495 | HOSE | TUYAU FLEXIBLE | 2 | | | | | |
| 2 | 2180-1026D23 | O-RING | JOINT TORIQUE | 4 | | | | | |
| 3 | S2218566 | BOLT;SOCKET | BOULON A 6 PANS CREUX | 8 | | | | | |
| 4 | S2218766 | BOLT;SOCKET | BOULON A 6 PANS CREUX | 8 | | | | | |
| 5 | 2181-9086 | FLANGE;SPLIT | FLASQUE EN DEUX | 8 | | | | | |
| 6 | S5102903 | WASHER;SPRING | RONDELLE ELASTIQUE | 4 | | | | | |
| 7 | S0566266 | BOLT | BOULON A 6 PANS | 4 | | | | | |
| 8 | 420-00508B | VALVE;STOP(L.H) | VANNE | 1 | | | | | |
| 9 | 420-00515B | VALVE;STOP(R.H) | VANNE | 1 | | | | | |
| 31 | S8000381 | O-RING | JOINT TORIQUE | 2 | | | | | |
| 32 | 2181-4133D35 | ADAPTER | RACCORD ADAPTEUR | 2 | | | | | |
| 33 | 2181-2817D3 | CAP | CHAPEAU | 2 | | | | | |
| 34 | 2180-1026D37 | O-RING | JOINT TORIQUE | 2 | | | | | |
| 35 | 2181-2815D3 | ELBOW | COUDE | 2 | | | | | |
| 36 | S8000181 | O-RING | JOINT TORIQUE | 2 | | | | | |
| 37 | 2181-2817D4 | CAP | BOUCHON | 2 | | | | | |
| 38 | S8030081 | O-RING | JOINT TORIQUE | 2 | | | | | |

| DATE | JUN. 30, 2008 |
|---|---|
| REV.NO. | EXB08-06 |

# Fig. 6720 BUCKET - 1.1 m³ ENSEMBLE GODET

**Serial No. ;**

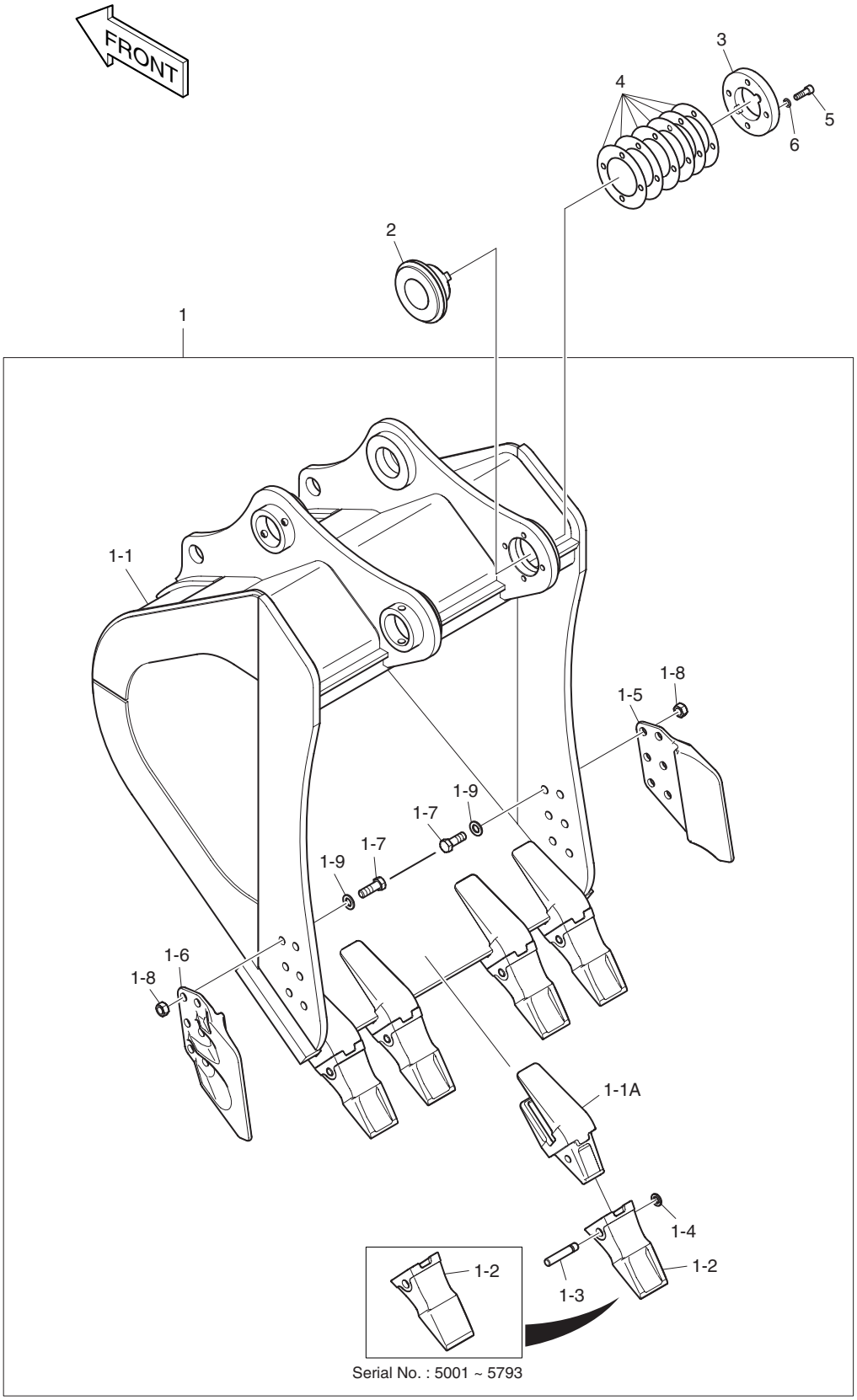

| DATE | JUN. 30, 2008 |
|---|---|
| REV. NO. | EXB08-06 |

# Fig. 6720 BUCKET - 1.1 m³ ENSEMBLE GODET

Serial No. ;

| Key No. | Part No. | Description | Description | Q'ty | S.C | Serial No. | ICA | Replaceable part | |
|---|---|---|---|---|---|---|---|---|---|
| | | | | | | | | Part No. | Q'ty |
| 6720-- | K1014016B | BUCKET ASS'Y | ENSEMBLE GODET | - | D | | | | |
| 1 | K1014017 | BUCKET SUB ASS'Y-1.1㎥ | GODET | 1 | | 5001–5756 | I | K1014017A | 1 |
| | K1014017A | BUCKET SUB ASS'Y-1.1㎥ | GODET | 1 | | 5757–5793 | I | K1014017B | 1 |
| | K1014017B | BUCKET SUB ASS'Y-1.1㎥ | GODET | 1 | | 5794– | | | |
| 1-1 | K1014018 | . BUCKET;WELD-1.1㎥ | . GODET | 1 | | 5001–5756 | I | K1014018A | 1 |
| | K1014018A | . BUCKET;WELD-1.1㎥ | . GODET | 1 | | 5757– | | | |
| 1-1A | 713-00033 | .. ADAPTER;TOOTH | .. DENT DE ADAPTEUR | 5 | | | | | |
| 1-2 | K1005018 | . TOOTH;POINT | . DENT | 5 | | 5001–5793 | I | K1005018A | 5 |
| | K1005018A | . TOOTH;POINT | . DENT | 5 | | 5794– | | | |
| 1-3 | 705-00006 | . PIN;LOCKING | . GOUPILLE DE BLOCAGE | 5 | | | | | |
| 1-4 | 114-00246 | . WASHER;LOCKING | . RONDELLE | 5 | | | | | |
| 1-5 | 2713-6034A | . CUTTER;SIDE(R.H) | . COIN DE GODET DROIT | 1 | | | | | |
| 1-6 | 2713-6035A | . CUTTER;SIDE(L.H) | . COIN DE GODET DROIT | 1 | | | | | |
| 1-7 | S0574761 | . BOLT | . BOULON A 6 PANS | 12 | | | | | |
| 1-8 | S4013333 | . NUT | . ECROU | 12 | | | | | |
| 1-9 | 2114-1831A | . WASHER;HARD | . RONDELLE ELASTIQUE | 12 | | | | | |
| 2 | K1005253 | BUSH;FLANGE | DOUILLE | 1 | | | | | |
| 3 | K1005254A | STOPPER:COVER | TAQUET D'ARRET | 1 | | 5001–5922 | I | K1005254B | 1 |
| | **K1005254B** | **STOPPER:COVER** | TAQUET D'ARRET | 1 | | **5923**– | | | |
| 4 | K1013571 | SHIM | CALE | 6 | | | | | |
| 5 | S2221666 | BOLT;SOCKET | BOULON A 6 PANS CREUX | 4 | | | | | |
| 6 | K1014251 | WASHER;HARDEN | RONDELLE | 4 | | | | | |

| DATE | JUN. 30, 2008 |
|---|---|
| REV.NO. | EXB08-06 |

# Fig. 6730 BUCKET - 1.4 m³ ENSEMBLE GODET

**Serial No. ;**

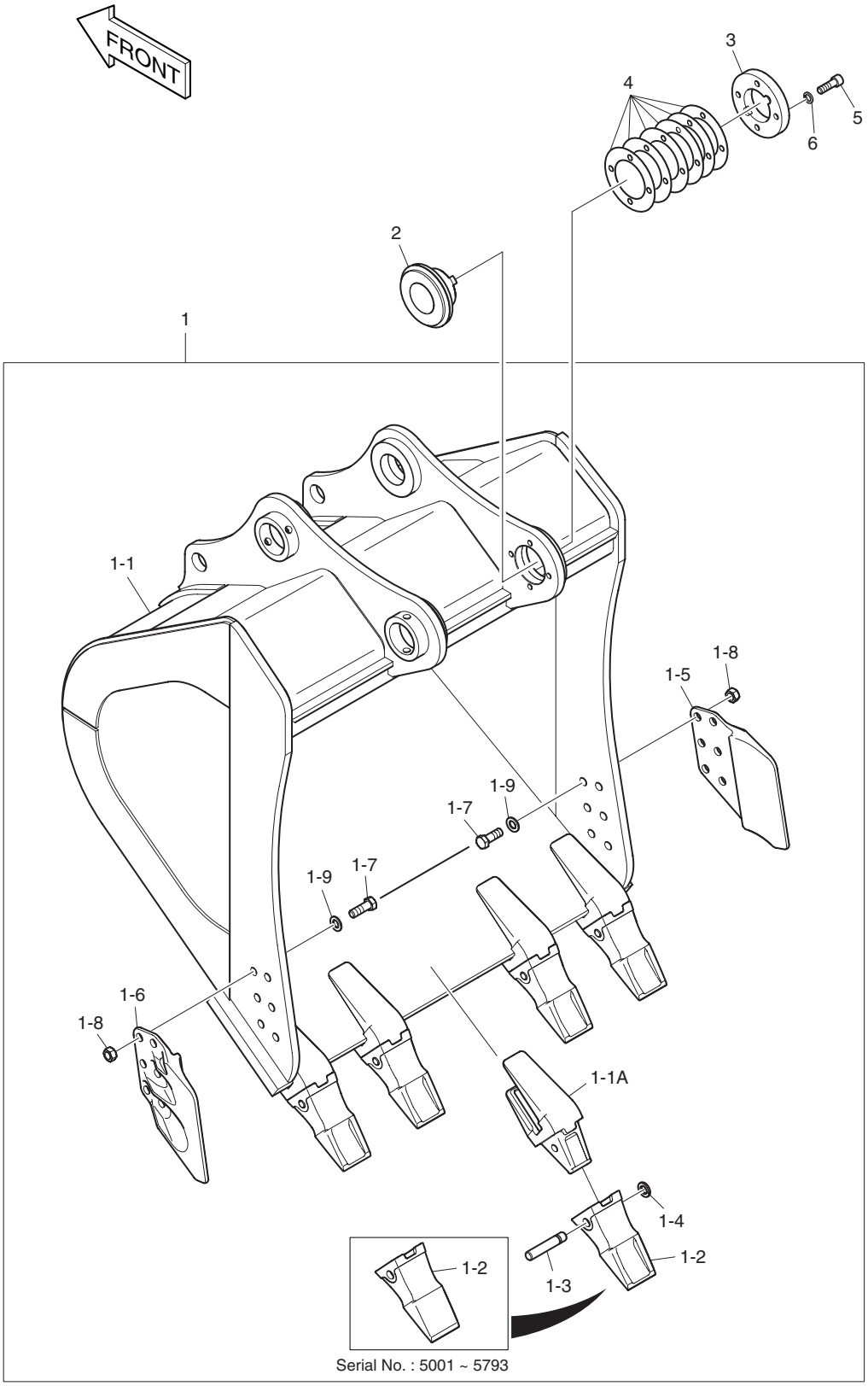

| DATE | JUN. 30, 2008 |
|---|---|
| REV. NO. | EXB08-06 |

# Fig. 6730 BUCKET - 1.4 m³ ENSEMBLE GODET

Serial No. ;

| Key No. | Part No. | Description | Description | Q'ty | S.C | Serial No. | ICA | Replaceable part | |
|---|---|---|---|---|---|---|---|---|---|
| | | | | | | | | Part No. | Q'ty |
| 6730-- | K1014019B | BUCKET ASS'Y | ENSEMBLE GODET | - | D | | | | |
| 1 | K1014020 | BUCKET SUB ASS'Y-1.4㎥ | GODET | 1 | | 5001–5756 | I | K1014020A | 1 |
| | K1014020A | BUCKET SUB ASS'Y-1.4㎥ | GODET | 1 | | 5757–5793 | I | K1014020B | 1 |
| | K1014020B | BUCKET SUB ASS'Y-1.4㎥ | GODET | 1 | | 5794– | | | |
| 1-1 | K1014021 | . BUCKET;WELD-1.4㎥ | . GODET | 1 | | 5001–5756 | I | K1014021A | 1 |
| | K1014021A | . BUCKET;WELD-1.4㎥ | . GODET | 1 | | 5757– | | | |
| 1-1A | 713-00033 | .. ADAPTER;TOOTH | .. DENT DE ADAPTEUR | 5 | | | | | |
| 1-2 | K1005018 | . TOOTH;POINT | . DENT | 5 | | 5001–5793 | I | K1005018A | 5 |
| | K1005018A | . TOOTH;POINT | . DENT | 5 | | 5794– | | | |
| 1-3 | 705-00006 | . PIN;LOCKING | . GOUPILLE DE BLOCAGE | 5 | | | | | |
| 1-4 | 114-00246 | . WASHER;LOCKING | . RONDELLE | 5 | | | | | |
| 1-5 | 2713-6034A | . CUTTER;SIDE(R.H) | . COIN DE GODET DROIT | 1 | | | | | |
| 1-6 | 2713-6035A | . CUTTER;SIDE(L.H) | . COIN DE GODET DROIT | 1 | | | | | |
| 1-7 | S0574761 | . BOLT | . BOULON A 6 PANS | 12 | | | | | |
| 1-8 | S4013333 | . NUT | . ECROU | 12 | | | | | |
| 1-9 | 2114-1831A | . WASHER;HARD | . RONDELLE ELASTIQUE | 12 | | | | | |
| 2 | K1005253 | BUSH;FLANGE | DOUILLE | 1 | | | | | |
| 3 | K1005254A | STOPPER:COVER | TAQUET D'ARRET | 1 | | 5001–5922 | I | K1005254B | 1 |
| | **K1005254B** | **STOPPER:COVER** | TAQUET D'ARRET | 1 | | **5923**– | | | |
| 4 | K1013571 | SHIM | CALE | 6 | | | | | |
| 5 | S2221666 | BOLT;SOCKET | BOULON A 6 PANS CREUX | 4 | | | | | |
| 6 | K1014251 | WASHER;HARDEN | RONDELLE | 4 | | | | | |

| DATE | JUN. 30, 2008 |
|---|---|
| REV.NO. | EXB08-06 |

# Fig. 6740 BUCKET - 1.6 m³ ENSEMBLE GODET

**Serial No. ;**

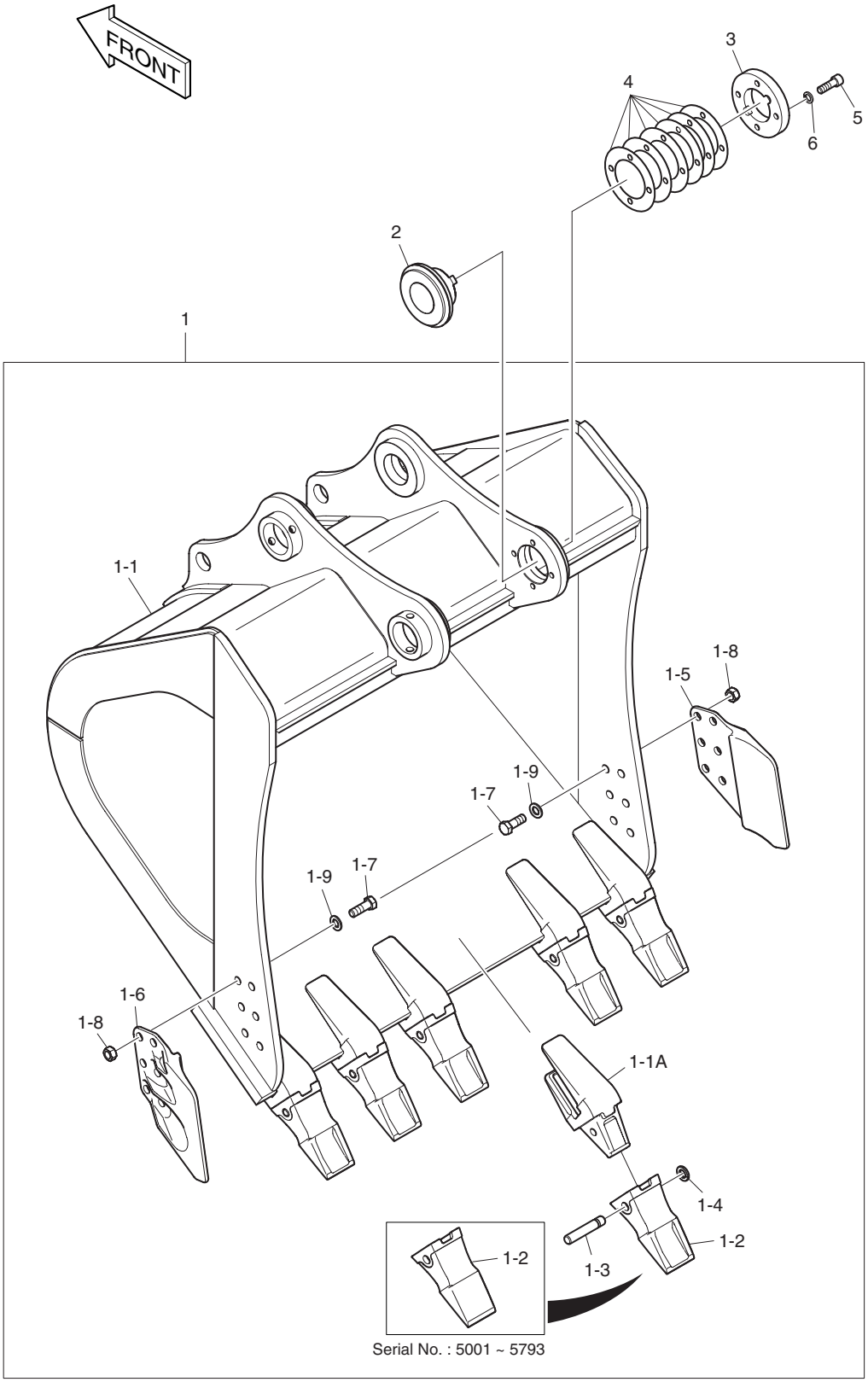

| DATE | JUN. 30, 2008 |
|---|---|
| REV. NO. | EXB08-06 |

# Fig. 6740 BUCKET - 1.6 m³ ENSEMBLE GODET

Serial No. ;

| Key No. | Part No. | Description | Description | Q'ty | S.C | Serial No. | ICA | Replaceable part | |
|---|---|---|---|---|---|---|---|---|---|
| | | | | | | | | Part No. | Q'ty |
| 6740-- | K1014030B | BUCKET ASS'Y | ENSEMBLE GODET | - | D | | | | |
| 1 | K1014031 | BUCKET SUB ASS'Y-1.6㎥ | GODET | 1 | | 5001–5756 | I | K1014031A | 1 |
| | K1014031A | BUCKET SUB ASS'Y-1.6㎥ | GODET | 1 | | 5757–5793 | I | K1014031B | 1 |
| | K1014031B | BUCKET SUB ASS'Y-1.6㎥ | GODET | 1 | | 5794– | | | |
| 1-1 | K1014032 | . BUCKET;WELD-1.6㎥ | . GODET | 1 | | 5001–5756 | I | K1014032A | 1 |
| | K1014032A | . BUCKET;WELD-1.6㎥ | . GODET | 1 | | 5757– | | | |
| 1-1A | 713-00033 | .. ADAPTER;TOOTH | .. DENT DE ADAPTEUR | 6 | | | | | |
| 1-2 | K1005018 | . TOOTH;POINT | . DENT | 6 | | 5001–5793 | I | K1005018A | 6 |
| | K1005018A | . TOOTH;POINT | . DENT | 6 | | 5794– | | | |
| 1-3 | 705-00006 | . PIN;LOCKING | . GOUPILLE DE BLOCAGE | 6 | | | | | |
| 1-4 | 114-00246 | . WASHER;LOCKING | . RONDELLE | 6 | | | | | |
| 1-5 | 2713-6034A | . CUTTER;SIDE(R.H) | . COIN DE GODET DROIT | 1 | | | | | |
| 1-6 | 2713-6035A | . CUTTER;SIDE(L.H) | . COIN DE GODET DROIT | 1 | | | | | |
| 1-7 | S0574761 | . BOLT | . BOULON A 6 PANS | 12 | | | | | |
| 1-8 | S4013333 | . NUT | . ECROU | 12 | | | | | |
| 1-9 | 2114-1831A | . WASHER;HARD | . RONDELLE ELASTIQUE | 12 | | | | | |
| 2 | K1005253 | BUSH;FLANGE | DOUILLE | 1 | | | | | |
| 3 | K1005254A | STOPPER:COVER | TAQUET D'ARRET | 1 | | 5001–5922 | I | K1005254B | 1 |
| | **K1005254B** | **STOPPER:COVER** | TAQUET D'ARRET | 1 | | **5923**– | | | |
| 4 | K1013571 | SHIM | CALE | 6 | | | | | |
| 5 | S2221666 | BOLT;SOCKET | BOULON A 6 PANS CREUX | 4 | | | | | |
| 6 | K1014251 | WASHER;HARDEN | RONDELLE | 4 | | | | | |

| DATE | DEC. 29, 2005 |
|---|---|
| REV.NO. | EXB05-20 |

# Fig. 6750 PATTERN CHANGE PIPING(1)
# TUYAUTERIE DE CHANGEMENT DE MODELE

**Serial No. ;**

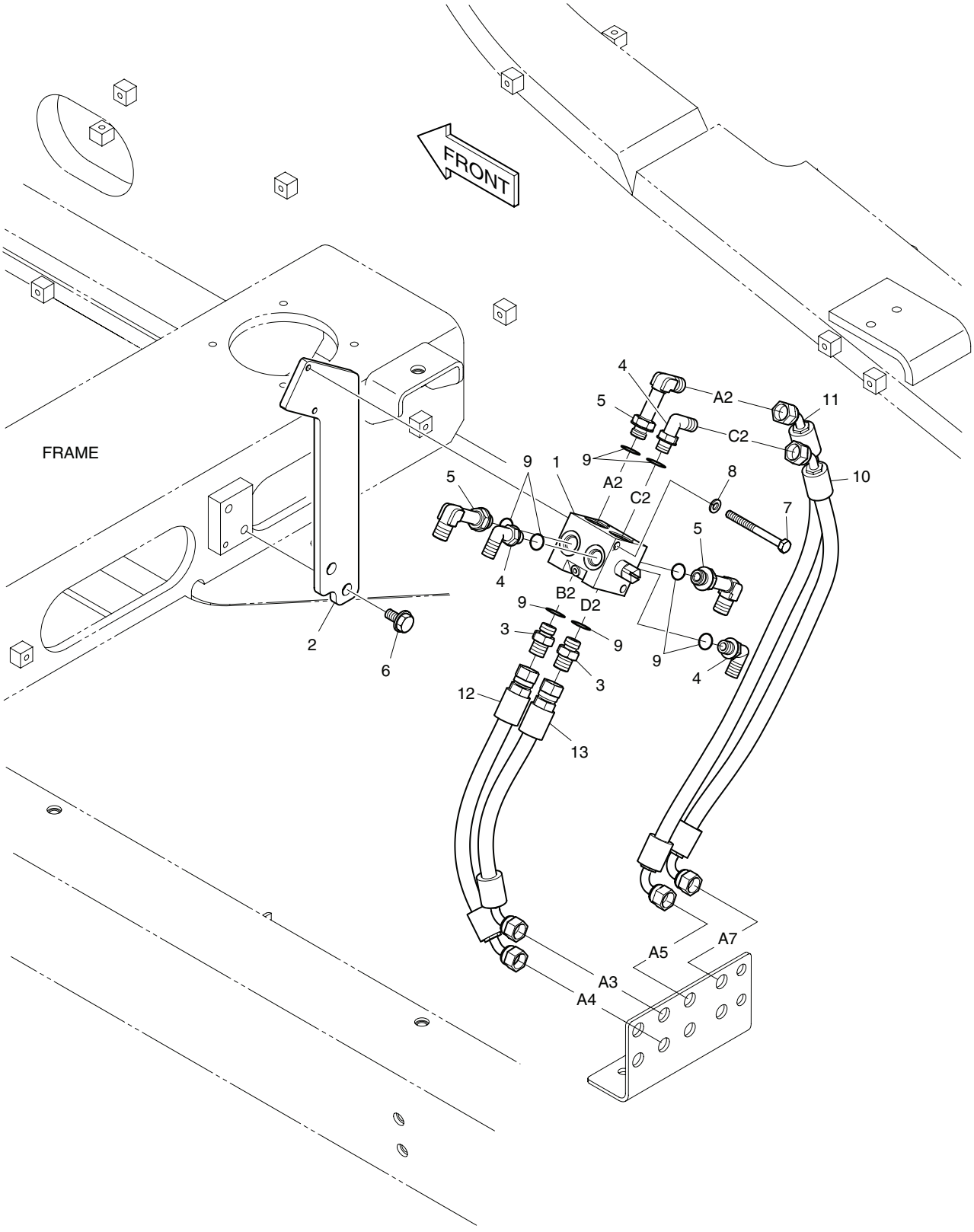

| DATE | DEC. 29, 2005 |
|---|---|
| REV. NO. | EXB05-20 |

# Fig. 6750 PATTERN CHANGE PIPING(1)
# TUYAUTERIE DE CHANGEMENT DE MODELE

Serial No. ;

| Key No. | Part No. | Description | Description | Q'ty | S.C | Serial No. | ICA | Replaceable part | |
|---|---|---|---|---|---|---|---|---|---|
| | | | | | | | | Part No. | Q'ty |
| 6750-- | K1016900 | PATTERN CHANGE PIPING | TUYAUTERIE DE | - | D | | | | |
| 1 | K1014874 | VALVE;SELECTOR | CLAPET SELECTEUR | 1 | | | | | |
| 2 | K1015780 | BRACKET | SUPPORT | 1 | | | | | |
| 3 | 2181-1126D7 | ADAPTER | RACCORD ADAPTATEUR | 2 | | | | | |
| 4 | 2181-1702D5 | ELBOW | COUDE | 3 | | | | | |
| 5 | 2181-1702D51 | ELBOW | COUDE | 3 | | | | | |
| 6 | DS0025018 | BOLT;SET | BOULON A 6 PANS | 2 | | | | | |
| 7 | S0557066 | BOLT | BOULON A 6 PANS | 2 | | | | | |
| 8 | S5102503 | WASHER;SPRING | RONDELLE ELASTIQUE | 2 | | | | | |
| 9 | S8000141 | O-RING | JOINT TORIQUE | 8 | | | | | |
| 10 | DS2090020 | HOSE | TUYAU FLEXIBLE | 1 | | | | | |
| 11 | DS2090021 | HOSE | TUYAU FLEXIBLE | 1 | | | | | |
| 12 | DS2092080 | HOSE | TUYAU FLEXIBLE | 1 | | | | | |
| 13 | DS2095031 | HOSE | TUYAU FLEXIBLE | 1 | | | | | |

| DATE | DEC. 29, 2005 |
|---|---|
| REV.NO. | EXB05-20 |

# Fig. 6760 PATTERN CHANGE PIPING(2)
# TUYAUTERIE DE CHANGEMENT DE MODELE

**Serial No. ;**

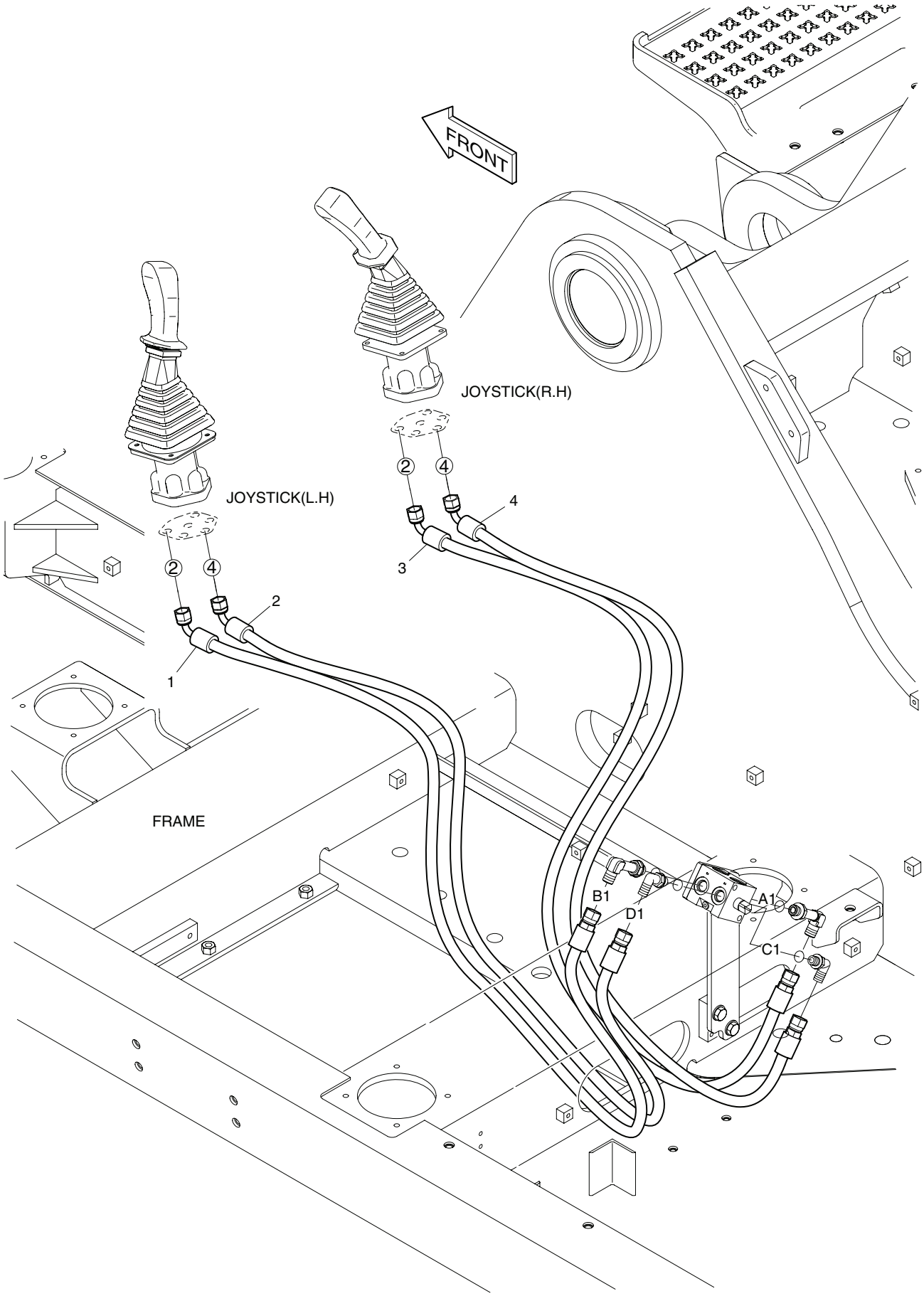

| DATE | DEC. 29, 2005 |
|---|---|
| REV. NO. | EXB05-20 |

# Fig. 6760 PATTERN CHANGE PIPING(2)
# TUYAUTERIE DE CHANGEMENT DE MODELE

Serial No. ;

| Key No. | Part No. | Description | Description | Q'ty | S.C | Serial No. | ICA | Replaceable part | |
|---|---|---|---|---|---|---|---|---|---|
| | | | | | | | | Part No. | Q'ty |
| 6760-- | K1016899 | PATTERN CHANGE PIPING | TUYAUTERIE DE | - | D | | | | |
| 1 | DS2095030 | HOSE | TUYAU FLEXIBLE | 1 | | | | | |
| 2 | DS2095030 | HOSE | TUYAU FLEXIBLE | 1 | | | | | |
| 3 | DS2095029 | HOSE | TUYAU FLEXIBLE | 1 | | | | | |
| 4 | DS2095029 | HOSE | TUYAU FLEXIBLE | 1 | | | | | |

| DATE | JUN. 30, 2008 |
|---|---|
| REV.NO. | EXB08-06 |

# Fig. 6770 BUCKET ASS'Y - 1.09m³(42") - SIDE PIN ENSEMBLE DE GODET

**Serial No. ;**

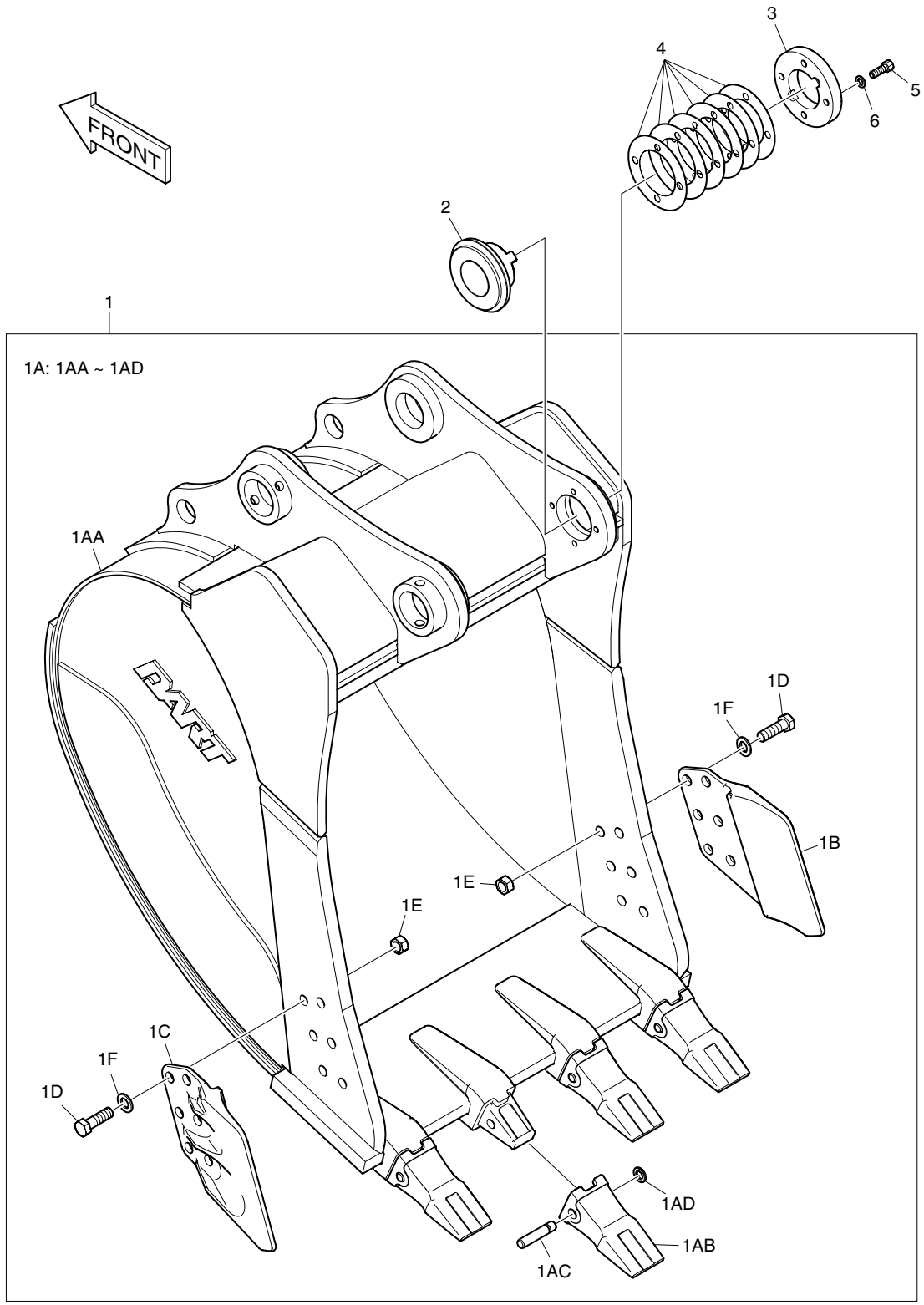

| DATE | JUN. 30, 2008 |
|---|---|
| REV. NO. | EXB08-06 |

# Fig. 6770 BUCKET ASS'Y - 1.09m³(42") - SIDE PIN ENSEMBLE DE GODET

**Serial No. ;**

| Key No. | Part No. | Description | Description | Q'ty | S.C | Serial No. | ICA | Replaceable part | |
|---|---|---|---|---|---|---|---|---|---|
| | | | | | | | | Part No. | Q'ty |
| 6770-- | K1012985 | BUCKET ASS'Y | ENSEMBLE DE GODET | - | D | | | | |
| 1 | K1012986 | BUCKET SUB ASS'Y-1.09㎥ | ENSEMBLE DE GODET | 1 | | | | | |
| 1A | K1012987 | . BUCKET;WITH TOOTH-1.09㎥ | . GODET | 1 | | | | | |
| 1AA | K1012988 | .. BUCKET-1.09㎥ | .. GODET | 1 | D | | | | |
| 1AB | 713-00034 | .. POINT;TOOTH | .. DENT | 4 | | | | | |
| 1AC | 705-00006 | .. PIN;LOCKING | .. GOUPILLE | 4 | | | | | |
| 1AD | 114-00246 | .. WASHER;LOCKING | .. RONDELLE | 4 | | | | | |
| 1B | 2713-6034A | . CUTTER;SIDE(R.H) | . COIN DE GODET DROIT | 1 | | | | | |
| 1C | 2713-6035A | . CUTTER;SIDE(L.H) | . COIN DE GODET DROIT | 1 | | | | | |
| 1D | S0574961 | . BOLT | . BOULON A 6 PANS | 12 | | | | | |
| 1E | S4013333 | . NUT | . ECROU | 12 | | | | | |
| 1F | 2114-1831A | . WASHER;HARDEN | . RONDELLE | 12 | | | | | |
| 2 | K1005253 | BUSH;FLANGE | BRIDE | 1 | | | | | |
| 3 | K1005254A | STOPPER | TAQUET D'ARRET | 1 | | 5001–5922 | I | K1005254B | 1 |
| | **K1005254B** | **STOPPER** | TAQUET D'ARRET | 1 | | **5923**– | | | |
| 4 | K1013571 | SHIM | CALE | 6 | | | | | |
| 5 | S2221566 | BOLT;SOCKET | BOULON A 6 PANS CREUX | 4 | | | | | |
| 6 | K1014251 | WASHER;HARDEN | RONDELLE | 4 | | | | | |

| DATE | JUN. 30, 2008 |
|---|---|
| REV.NO. | EXB08-06 |

# Fig. 6780 BUCKET ASS'Y - 1.29m³(48") - SIDE PIN ENSEMBLE DE GODET

**Serial No. ;**

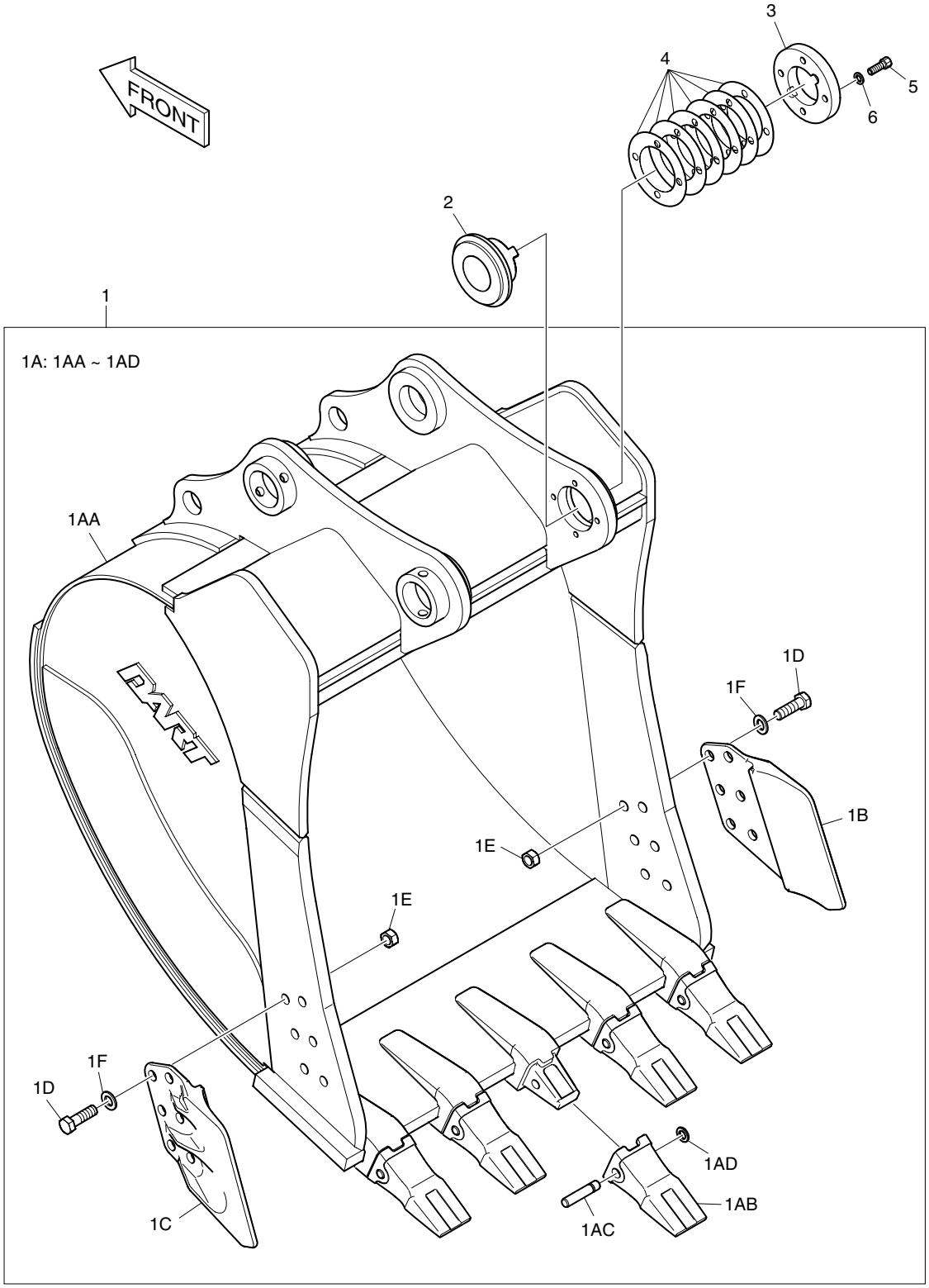

| DATE | JUN. 30, 2008 |
|---|---|
| REV. NO. | EXB08-06 |

# Fig. 6780 BUCKET ASS'Y - 1.29m³(48") - SIDE PIN ENSEMBLE DE GODET

**Serial No. ;**

| Key No. | Part No. | Description | Description | Q'ty | S.C | Serial No. | ICA | Replaceable part | |
|---|---|---|---|---|---|---|---|---|---|
| | | | | | | | | Part No. | Q'ty |
| 6780-- | K1012989 | BUCKET ASS'Y | ENSEMBLE DE GODET | - | D | | | | |
| 1 | K1012990 | BUCKET SUB ASS'Y-1.29㎥ | ENSEMBLE DE GODET | 1 | | | | | |
| 1A | K1012991 | . BUCKET;WITH TOOTH-1.29㎥ | . GODET | 1 | | | | | |
| 1AA | K1012992 | .. BUCKET-1.29㎥ | .. GODET | 1 | D | | | | |
| 1AB | 713-00034 | .. POINT;TOOTH | .. DENT | 5 | | | | | |
| 1AC | 705-00006 | .. PIN;LOCKING | .. GOUPILLE | 5 | | | | | |
| 1AD | 114-00246 | .. WASHER;LOCKING | .. RONDELLE | 5 | | | | | |
| 1B | 2713-6034A | . CUTTER;SIDE(R.H) | . COIN DE GODET DROIT | 1 | | | | | |
| 1C | 2713-6035A | . CUTTER;SIDE(L.H) | . COIN DE GODET DROIT | 1 | | | | | |
| 1D | S0574961 | . BOLT | . BOULON A 6 PANS | 12 | | | | | |
| 1E | S4013333 | . NUT | . ECROU | 12 | | | | | |
| 1F | 2114-1831A | . WASHER;HARDEN | . RONDELLE | 12 | | | | | |
| 2 | K1005253 | BUSH;FLANGE | BRIDE | 1 | | | | | |
| 3 | K1005254A | STOPPER | TAQUET D'ARRET | 1 | | 5001–5922 | I | K1005254B | 1 |
| | **K1005254B** | **STOPPER** | TAQUET D'ARRET | 1 | | **5923**– | | | |
| 4 | K1013571 | SHIM | CALE | 6 | | | | | |
| 5 | S2221566 | BOLT;SOCKET | BOULON A 6 PANS CREUX | 4 | | | | | |
| 6 | K1014251 | WASHER;HARDEN | RONDELLE | 4 | | | | | |

| DATE | JUN. 30, 2008 |
|---|---|
| REV.NO. | EXB08-06 |

# Fig. 6790 BUCKET ASS'Y - 1.48m³(54") - SIDE PIN ENSEMBLE DE GODET

**Serial No. ;**

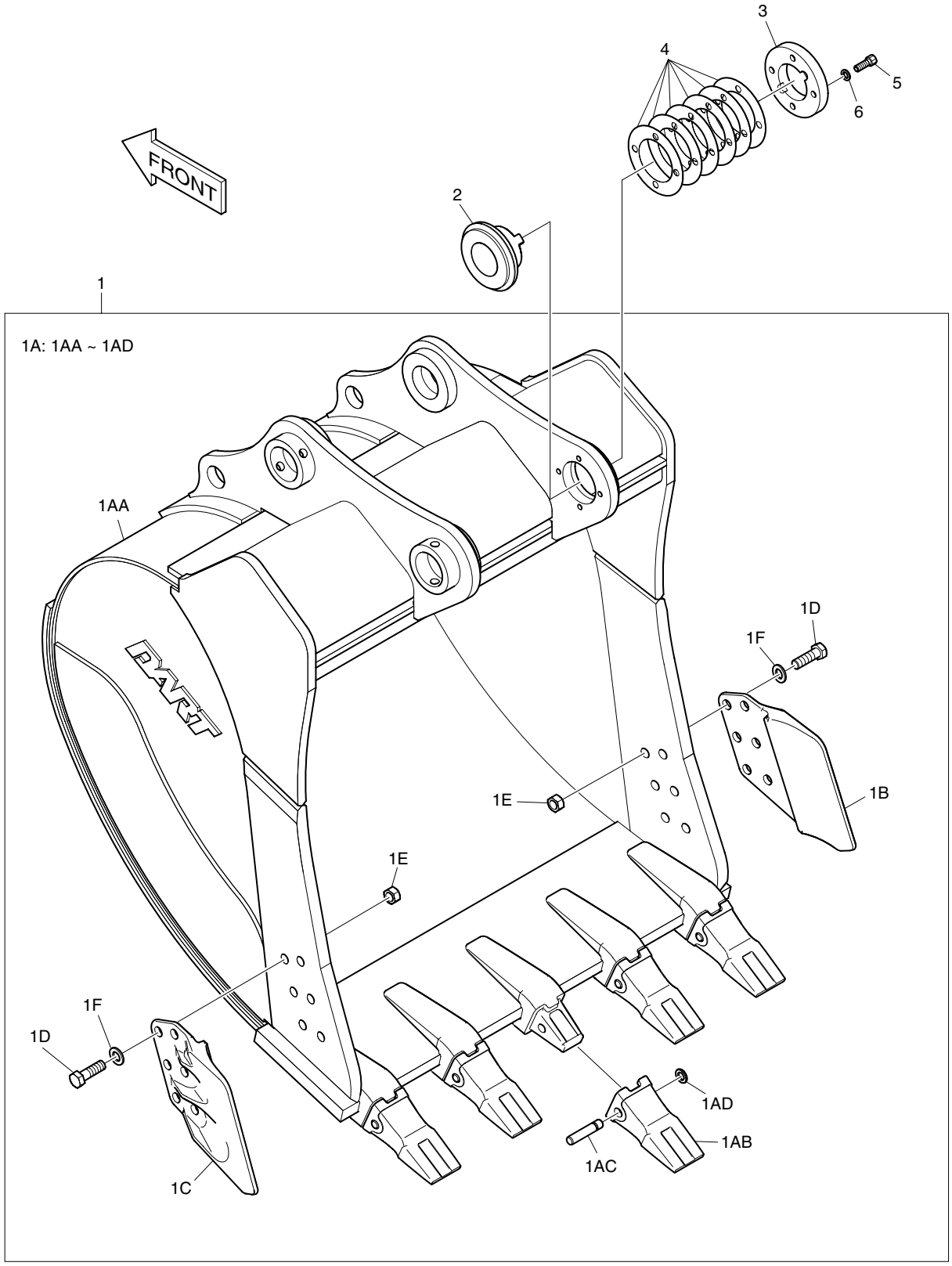

| DATE | JUN. 30, 2008 |
|---|---|
| REV. NO. | EXB08-06 |

# Fig. 6790 BUCKET ASS'Y - 1.48m³(54") - SIDE PIN ENSEMBLE DE GODET

**Serial No. ;**

| Key No. | Part No. | Description | Description | Q'ty | S.C | Serial No. | ICA | Replaceable part | |
|---|---|---|---|---|---|---|---|---|---|
| | | | | | | | | Part No. | Q'ty |
| 6790-- | K1012993 | BUCKET ASS'Y | ENSEMBLE DE GODET | - | D | | | | |
| 1 | K1012994 | BUCKET SUB ASS'Y-1.48㎥ | ENSEMBLE DE GODET | 1 | | | | | |
| 1A | K1012995 | . BUCKET;WITH TOOTH-1.48㎥ | . GODET | 1 | | | | | |
| 1AA | K1012996 | .. BUCKET-1.48㎥ | .. GODET | 1 | D | | | | |
| 1AB | 713-00034 | .. POINT;TOOTH | .. DENT | 5 | | | | | |
| 1AC | 705-00006 | .. PIN;LOCKING | .. GOUPILLE | 5 | | | | | |
| 1AD | 114-00246 | .. WASHER;LOCKING | .. RONDELLE | 5 | | | | | |
| 1B | 2713-6034A | . CUTTER;SIDE(R.H) | . COIN DE GODET DROIT | 1 | | | | | |
| 1C | 2713-6035A | . CUTTER;SIDE(L.H) | . COIN DE GODET DROIT | 1 | | | | | |
| 1D | S0574961 | . BOLT | . BOULON A 6 PANS | 12 | | | | | |
| 1E | S4013333 | . NUT | . ECROU | 12 | | | | | |
| 1F | 2114-1831A | . WASHER;HARDEN | . RONDELLE | 12 | | | | | |
| 2 | K1005253 | BUSH;FLANGE | BRIDE | 1 | | | | | |
| 3 | K1005254A | STOPPER | TAQUET D'ARRET | 1 | | 5001–5922 | I | K1005254B | 1 |
| | **K1005254B** | **STOPPER** | TAQUET D'ARRET | 1 | | **5923**– | | | |
| 4 | K1013571 | SHIM | CALE | 6 | | | | | |
| 5 | S2221566 | BOLT;SOCKET | BOULON A 6 PANS CREUX | 4 | | | | | |
| 6 | K1014251 | WASHER;HARDEN | RONDELLE | 4 | | | | | |

| DATE | JUN. 30, 2008 |
|---|---|
| REV.NO. | EXB08-06 |

# Fig. 6800 BUCKET ASS'Y - 1.60m³(57") - SIDE PIN ENSEMBLE DE GODET

**Serial No. ;**

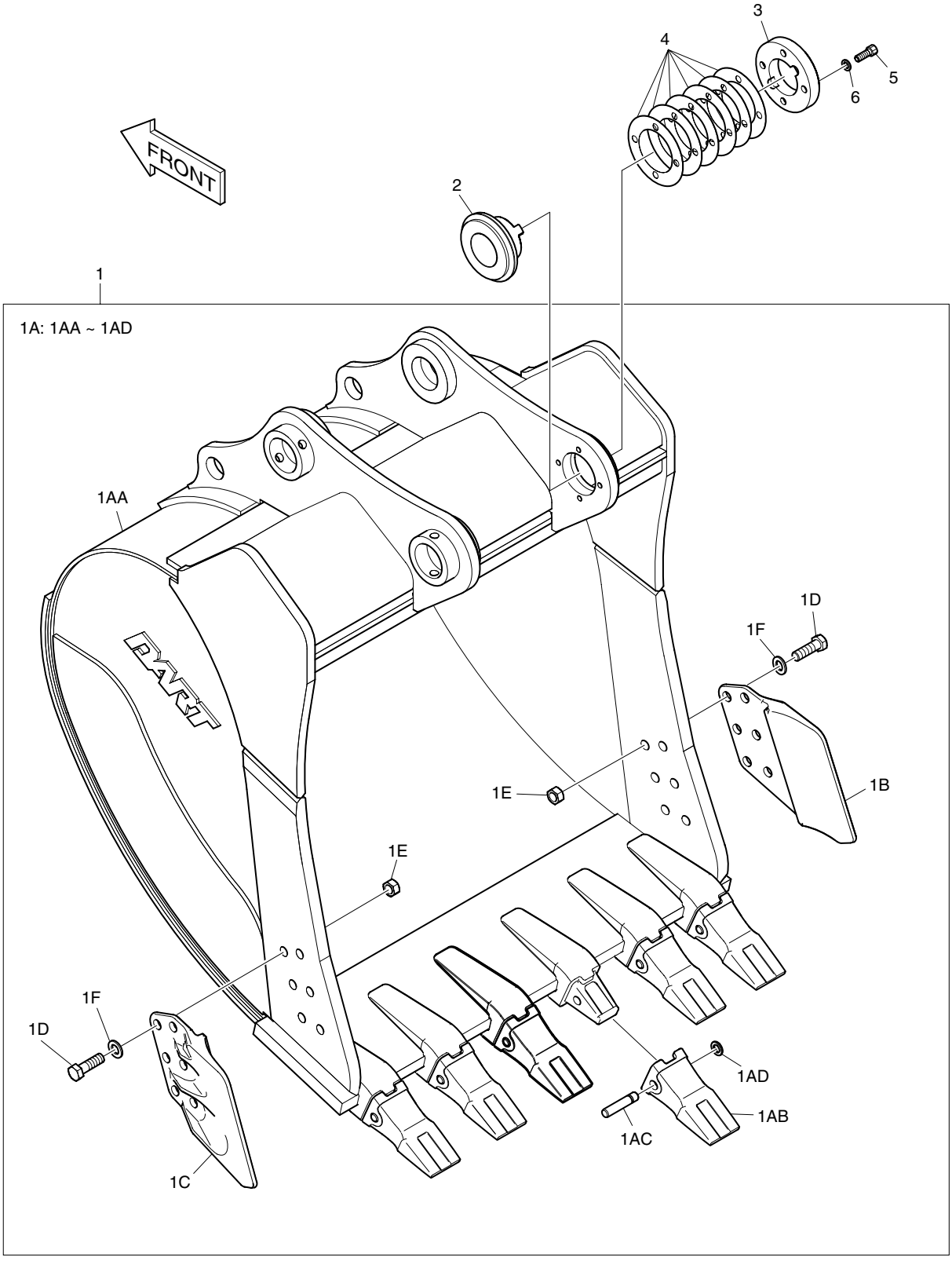

| DATE | JUN. 30, 2008 |
|---|---|
| REV. NO. | EXB08-06 |

# Fig. 6800 BUCKET ASS'Y - 1.60m³(57") - SIDE PIN ENSEMBLE DE GODET

**Serial No. ;**

| Key No. | Part No. | Description | Description | Q'ty | S.C | Serial No. | ICA | Replaceable part | |
|---|---|---|---|---|---|---|---|---|---|
| | | | | | | | | Part No. | Q'ty |
| 6800-- | K1012997 | BUCKET ASS'Y | ENSEMBLE DE GODET | - | D | | | | |
| 1 | K1012998 | BUCKET SUB ASS'Y-1.60㎥ | ENSEMBLE DE GODET | 1 | | | | | |
| 1A | K1012999 | . BUCKET;WITH TOOTH-1.60㎥ | . GODET | 1 | | | | | |
| 1AA | K1013000 | .. BUCKET-1.60㎥ | .. GODET | 1 | D | | | | |
| 1AB | 713-00034 | .. POINT;TOOTH | .. DENT | 6 | | | | | |
| 1AC | 705-00006 | .. PIN;LOCKING | .. GOUPILLE | 6 | | | | | |
| 1AD | 114-00246 | .. WASHER;LOCKING | .. RONDELLE | 6 | | | | | |
| 1B | 2713-6034A | . CUTTER;SIDE(R.H) | . COIN DE GODET DROIT | 1 | | | | | |
| 1C | 2713-6035A | . CUTTER;SIDE(L.H) | . COIN DE GODET DROIT | 1 | | | | | |
| 1D | S0574961 | . BOLT | . BOULON A 6 PANS | 12 | | | | | |
| 1E | S4013333 | . NUT | . ECROU | 12 | | | | | |
| 1F | 2114-1831A | . WASHER;HARDEN | . RONDELLE | 12 | | | | | |
| 2 | K1005253 | BUSH;FLANGE | BRIDE | 1 | | | | | |
| 3 | K1005254A | STOPPER | TAQUET D'ARRET | 1 | | 5001–5922 | I | K1005254B | 1 |
| | **K1005254B** | **STOPPER** | TAQUET D'ARRET | 1 | | **5923**– | | | |
| 4 | K1013571 | SHIM | CALE | 6 | | | | | |
| 5 | S2221566 | BOLT;SOCKET | BOULON A 6 PANS CREUX | 4 | | | | | |
| 6 | K1014251 | WASHER;HARDEN | RONDELLE | 4 | | | | | |

| DATE | JUN. 30, 2008 |
|---|---|
| REV.NO. | EXB08-06 |

# Fig. 6810 BUCKET ASS'Y - 1.80m³(63") - SIDE PIN ENSEMBLE DE GODET

**Serial No. ;**

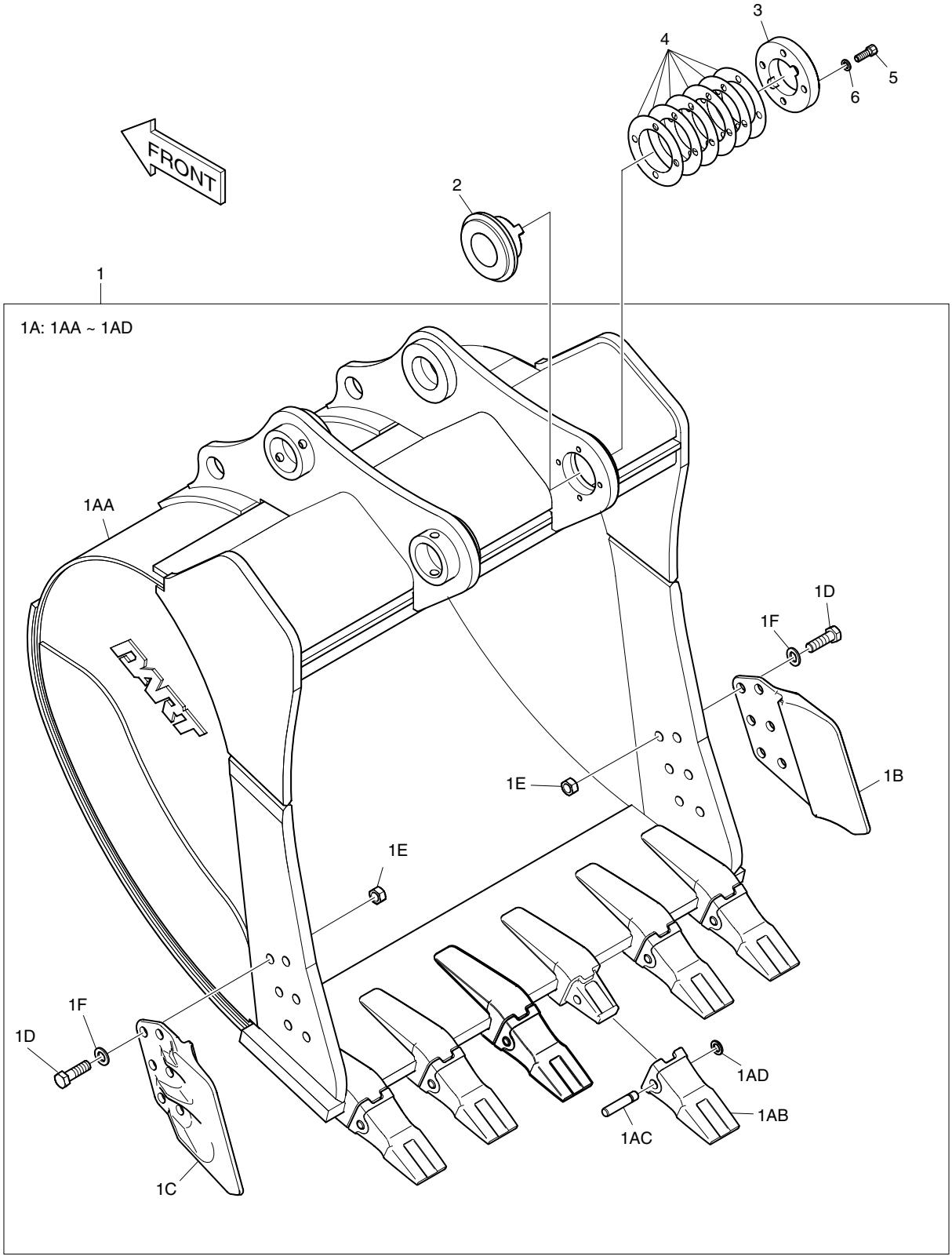

| DATE | JUN. 30, 2008 |
|---|---|
| REV. NO. | EXB08-06 |

# Fig. 6810 BUCKET ASS'Y - 1.80m³(63") - SIDE PIN ENSEMBLE DE GODET

**Serial No. ;**

| Key No. | Part No. | Description | Description | Q'ty | S.C | Serial No. | ICA | Replaceable part | |
|---|---|---|---|---|---|---|---|---|---|
| | | | | | | | | Part No. | Q'ty |
| 6810-- | K1013001 | BUCKET ASS'Y | ENSEMBLE DE GODET | - | D | | | | |
| 1 | K1013002 | BUCKET SUB ASS'Y-1.80㎥ | ENSEMBLE DE GODET | 1 | | | | | |
| 1A | K1013003 | . BUCKET;WITH TOOTH-1.80㎥ | . GODET | 1 | | | | | |
| 1AA | K1013004 | .. BUCKET-1.80㎥ | .. GODET | 1 | D | | | | |
| 1AB | 713-00034 | .. POINT;TOOTH | .. DENT | 6 | | | | | |
| 1AC | 705-00006 | .. PIN;LOCKING | .. GOUPILLE | 6 | | | | | |
| 1AD | 114-00246 | .. WASHER;LOCKING | .. RONDELLE | 6 | | | | | |
| 1B | 2713-6034A | . CUTTER;SIDE(R.H) | . COIN DE GODET DROIT | 1 | | | | | |
| 1C | 2713-6035A | . CUTTER;SIDE(L.H) | . COIN DE GODET DROIT | 1 | | | | | |
| 1D | S0574961 | . BOLT | . BOULON A 6 PANS | 12 | | | | | |
| 1E | S4013333 | . NUT | . ECROU | 12 | | | | | |
| 1F | 2114-1831A | . WASHER;HARDEN | . RONDELLE | 12 | | | | | |
| 2 | K1005253 | BUSH;FLANGE | BRIDE | 1 | | | | | |
| 3 | K1005254A | STOPPER | TAQUET D'ARRET | 1 | | 5001–5922 | I | K1005254B | 1 |
| | **K1005254B** | **STOPPER** | TAQUET D'ARRET | 1 | | **5923**– | | | |
| 4 | K1013571 | SHIM | CALE | 6 | | | | | |
| 5 | S2221566 | BOLT;SOCKET | BOULON A 6 PANS CREUX | 4 | | | | | |
| 6 | K1014251 | WASHER;HARDEN | RONDELLE | 4 | | | | | |

| DATE | JUN. 30, 2006 |
|---|---|
| REV.NO. | EXB06-08 |

# Fig. 6820 ARM PIPING - QUICK FIT(ARM 2.6m) CONDUITES DE BALANCIER

**Serial No. ;**

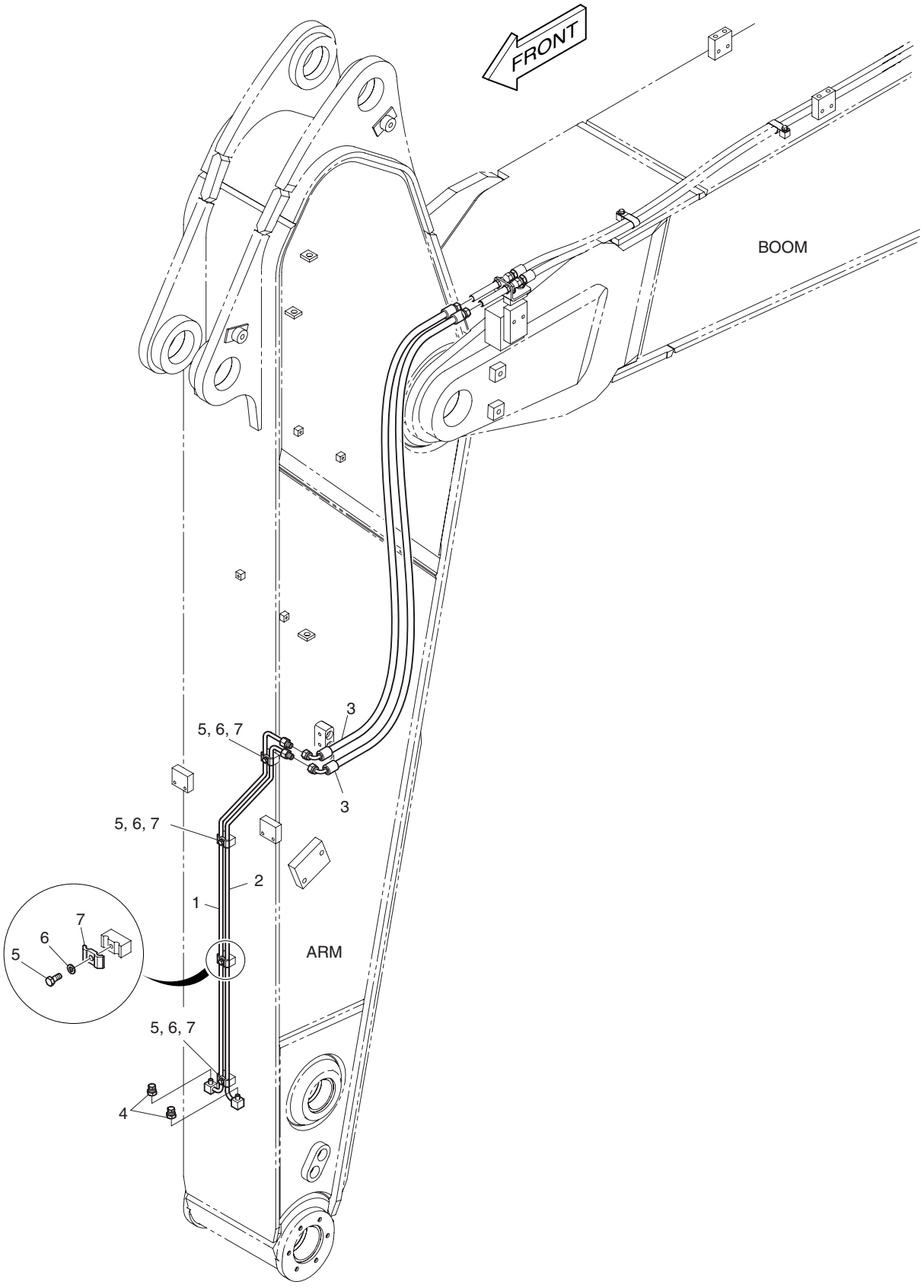

| DATE | JUN. 30, 2006 |
|---|---|
| REV. NO. | EXB06-08 |

# Fig. 6820 ARM PIPING - QUICK FIT(ARM 2.6m) CONDUITES DE BALANCIER

Serial No. ;

| Key No. | Part No. | Description | Description | Q'ty | S.C | Serial No. | ICA | Replaceable part | |
|---|---|---|---|---|---|---|---|---|---|
| | | | | | | | | Part No. | Q'ty |
| 6820-- | K1018697 | ARM PIPING(QUICK CLAMP) | CONDUITES DE BALANCIER | - | D | | | | |
| 1 | K1018733 | PIPE | CONDUITE | 1 | | | | | |
| 2 | K1018734 | PIPE | CONDUITE | 1 | | | | | |
| 3 | DS2055953 | HOSE | TUYAU FLEXIBLE | 2 | | | | | |
| 4 | 2181-2820D1 | PLUG | BOUCHON | 2 | | | | | |
| 5 | S0508866 | BOLT | BOULON A 6 PANS | 4 | | | | | |
| 6 | S5102503 | WASHER;SPRING | RONDELLE ELASTIQUE M8 | 4 | | | | | |
| 7 | K1004011 | CLAMP;PIPE | FIXATION DE TUYAU | 4 | | | | | |

| DATE | JUN. 30, 2006 |
|---|---|
| REV.NO. | EXB06-08 |

# Fig. 6830 ARM PIPING - ROTATION(ARM 2.6m) CONDUITES DE BALANCIER

**Serial No. ;**

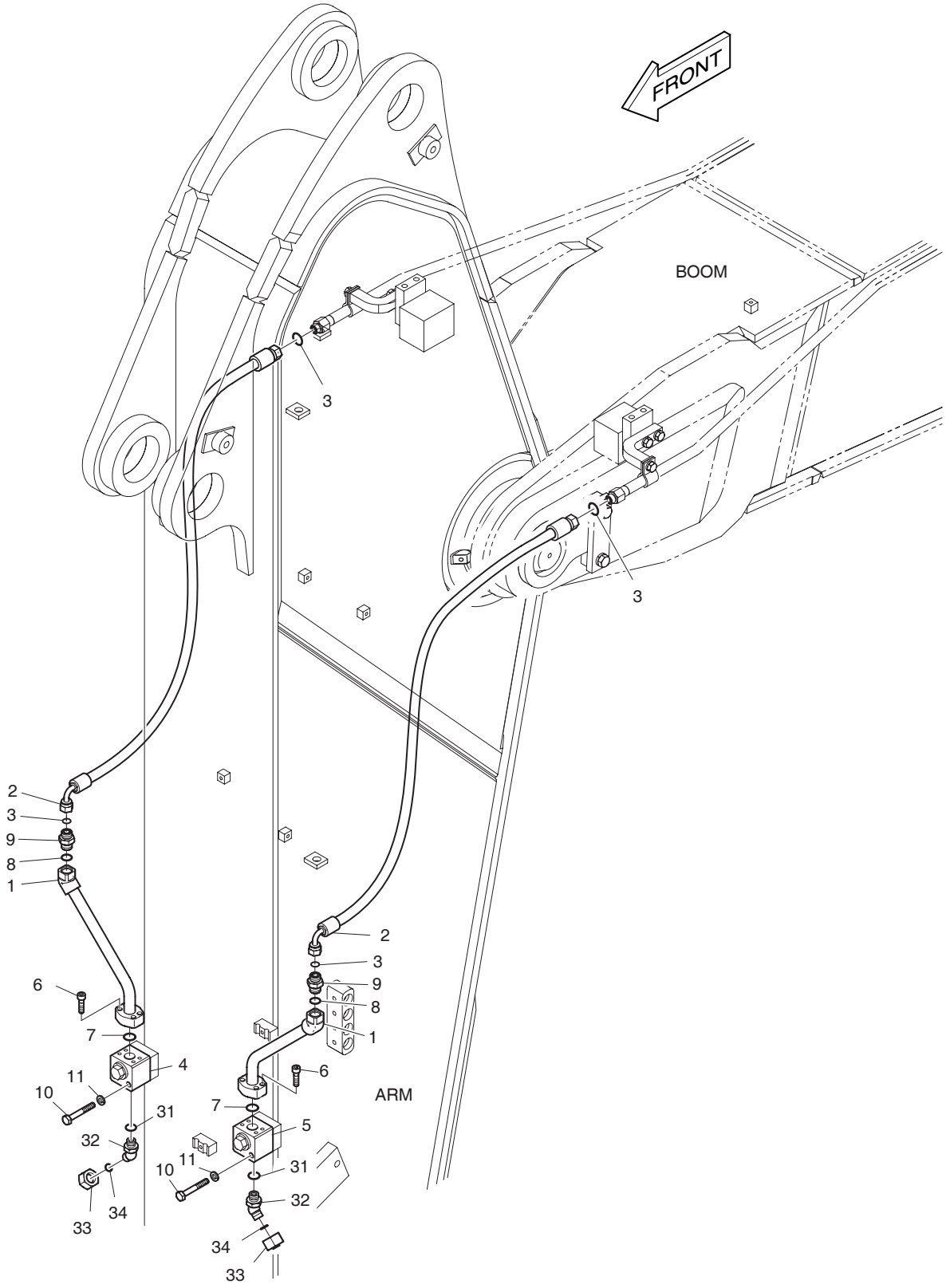

| DATE | JUN. 30, 2006 |
|---|---|
| REV. NO. | EXB06-08 |

# Fig. 6830 ARM PIPING - ROTATION(ARM 2.6m) CONDUITES DE BALANCIER

Serial No. ;

| Key No. | Part No. | Description | Description | Q'ty | S.C | Serial No. | ICA | Replaceable part | |
|---|---|---|---|---|---|---|---|---|---|
| | | | | | | | | Part No. | Q'ty |
| 6830-- | K1018695 | ARM PIPING-ROTATION | CONDUITES DE BALANCIER | - | D | | | | |
| 1 | K1018732 | PIPE | CONDUITE | 2 | | | | | |
| 2 | DS2013621 | HOSE | TUYAU FLEXIBLE | 2 | | | | | |
| 3 | S8030081 | O-RING | JOINT TORIQUE | 4 | | | | | |
| 4 | K1006227 | VALVE;SWITCH(R.H) | VANNE | 1 | | | | | |
| 5 | K1006228 | VALVE;SWITCH(L.H) | VANNE | 1 | | | | | |
| 6 | S2209266 | BOLT;SOCKET | BOULON A 6 PANS CREUX | 8 | | | | | |
| 7 | 2180-1026D30 | O-RING | JOINT TORIQUE | 2 | | | | | |
| 8 | S8000181 | O-RING | JOINT TORIQUE | 2 | | | | | |
| 9 | 2181-4133D3 | ADAPTER | RACCORD | 2 | | | | | |
| 10 | S0558966 | BOLT | BOULON A 6PANS | 4 | | | | | |
| 11 | S5102603 | WASHER;SPRING | RONDELLE ELASTIQUE M10 | 4 | | | | | |
| 31 | S8000181 | O-RING | JOINT TORIQUE | 2 | | | | | |
| 32 | 2181-2816D4 | ELBOW | COUDE | 2 | | | | | |
| 33 | 2181-2817D4 | CAP | BOUCHON | 2 | | | | | |
| 34 | S8030081 | O-RING | JOINT TORIQUE | 2 | | | | | |

| DATE | JUN. 30, 2008 |
|---|---|
| REV.NO. | EXB08-06 |

# Fig. 6840 ARM - 3.95m BALANCIER

**Serial No. ;**

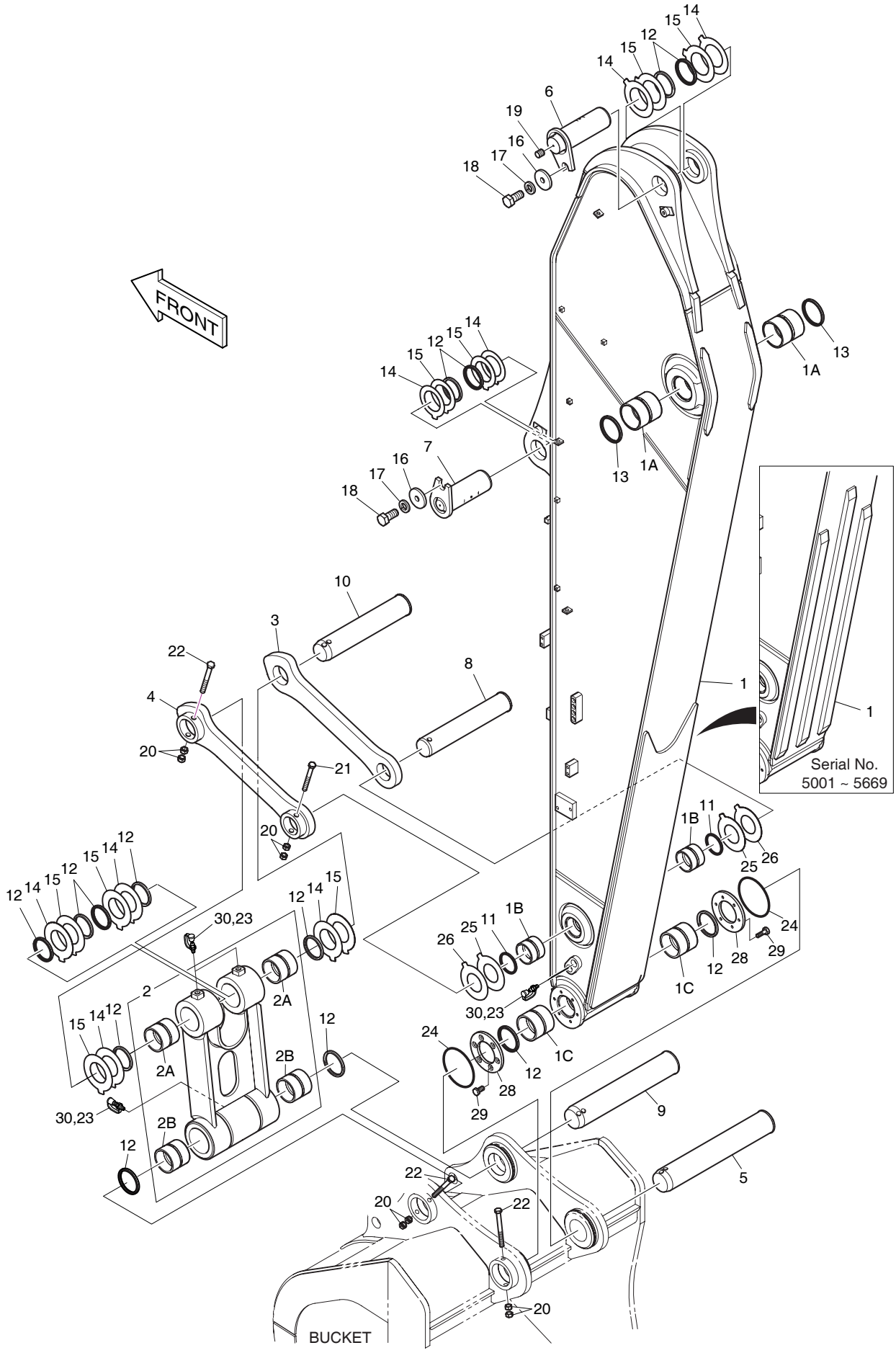

| DATE | JUN. 30, 2008 |
|---|---|
| REV. NO. | EXB08-06 |

# Fig. 6840 ARM - 3.95m BALANCIER

Serial No. ;

| Key No. | Part No. | Description | Description | Q'ty | S.C | Serial No. | ICA | Replaceable part | |
|---|---|---|---|---|---|---|---|---|---|
| | | | | | | | | Part No. | Q'ty |
| 6840-- | K1014022E | ARM ASS'Y | ENSEMBLE BALANCIER | - | D | | | | |
| 1 | K1014023 | ARM SUB ASS'Y-3.95M | ENSEMBLE BALANCIER | 1 | | 5001–5439 | I | K1014023A | 1 |
| | K1014023A | ARM SUB ASS'Y-3.95M | ENSEMBLE BALANCIER | 1 | | 5440–5669 | I | K1014023B | 1 |
| | K1014023B | ARM SUB ASS'Y-3.95M | ENSEMBLE BALANCIER | 1 | | 5670–5814 | I | K1014023C | 1 |
| | K1014023C | ARM SUB ASS'Y-3.95M | ENSEMBLE BALANCIER | 1 | | 5815–5838 | I | K1014023E | 1 |
| | **K1014023E** | **ARM SUB ASS'Y-3.95M** | ENSEMBLE BALANCIER | 1 | | **5839–** | | | |
| 1A | K1003910 | . BUSHING | . MANCHON | 2 | | | | | |
| 1B | 110-00248 | . BUSHING | . COUSSINET | 2 | | | | | |
| 1C | K1003911 | . BUSHING | . MANCHON | 2 | | | | | |
| 2 | K1005832A | PUSH LINK ASS'Y | ENSEMBLE DE | 1 | | | | | |
| 2A | K1003912 | . BUSHING | . MANCHON | 2 | | | | | |
| 2B | K1003913 | . BUSHING | . MANCHON | 2 | | | | | |
| 3 | 2155-1349A | LINK;GUIDE(R.H) | ARTICULATED | 1 | | | | | |
| 4 | 2155-1350A | LINK;GUIDE(L.H) | ARTICULATED | 1 | | | | | |
| 5 | 123-00578 | PIN | GOUJON | 1 | | 5001–5838 | I | 123-00578A | 1 |
| | **123-00578A** | **PIN** | GOUJON | 1 | | **5839–** | | | |
| 6 | 123-00668 | PIN | GOUJON | 1 | | 5001–5469 | | | |
| | 123-00668A | PIN | GOUJON | 1 | | 5470–5838 | I | 123-00668B | 1 |
| | **123-00668B** | **PIN** | GOUJON | 1 | | **5839–** | | | |
| 7 | K1000543 | PIN | GOUJON | 1 | | 5001–5838 | I | K1000543A | 1 |
| | **K1000543A** | **PIN** | GOUJON | 1 | | **5839–** | | | |
| 8 | 2123-2351A | PIN | GOUPILLE | 1 | | 5001–5838 | I | K1039630 | 1 |
| | **K1039630** | **PIN** | GOUPILLE | 1 | | **5839–** | | | |
| 9 | 2123-2352A | PIN | GOUPILLE | 1 | | 5001–5838 | I | K1039629 | 1 |
| | **K1039629** | **PIN** | GOUPILLE | 1 | | **5839–** | | | |
| 10 | 2123-2353A | PIN | GOUPILLE | 1 | | 5001–5838 | I | K1039631 | 1 |
| | **K1039631** | **PIN** | GOUPILLE | 1 | | **5839–** | | | |
| 11 | 2180-1106BD6 | SEAL;DUST | PARE-POUSSIERES | 2 | | | | | |
| 12 | 2180-1106BD14 | SEAL;DUST | PARE-POUSSIERES | 14 | | | | | |
| 13 | 2180-1106BD15 | SEAL;DUST | PARE-POUSSIERES | 2 | | | | | |
| 14 | DS7752045 | SHIM | CALE | 8 | | | | | |
| 15 | DS7752046 | SHIM | CALE | 8 | | | | | |
| 16 | 2116-1060D5 | STOPPER | TAQUET D'ARRET | 2 | | | | | |
| 17 | S5102903 | WASHER;SPRING | RONDELLE ELASTIQUE | 2 | | | | | |
| 18 | S0521366 | BOLT | BOULON A 6 PANS | 2 | | | | | |
| 19 | 2181-1116D1 | PLUG | BOUCHON | 1 | | 5001–5469 | | | |
| 20 | S4013133 | NUT | ECROU | 8 | | | | | |
| 21 | S0571861 | BOLT | BOULON A 6 PANS | 1 | | | | | |

| DATE | JUN. 30, 2008 |
|---|---|
| REV.NO. | EXB08-06 |

# Fig. 6840 ARM - 3.95m BALANCIER

**Serial No. ;**

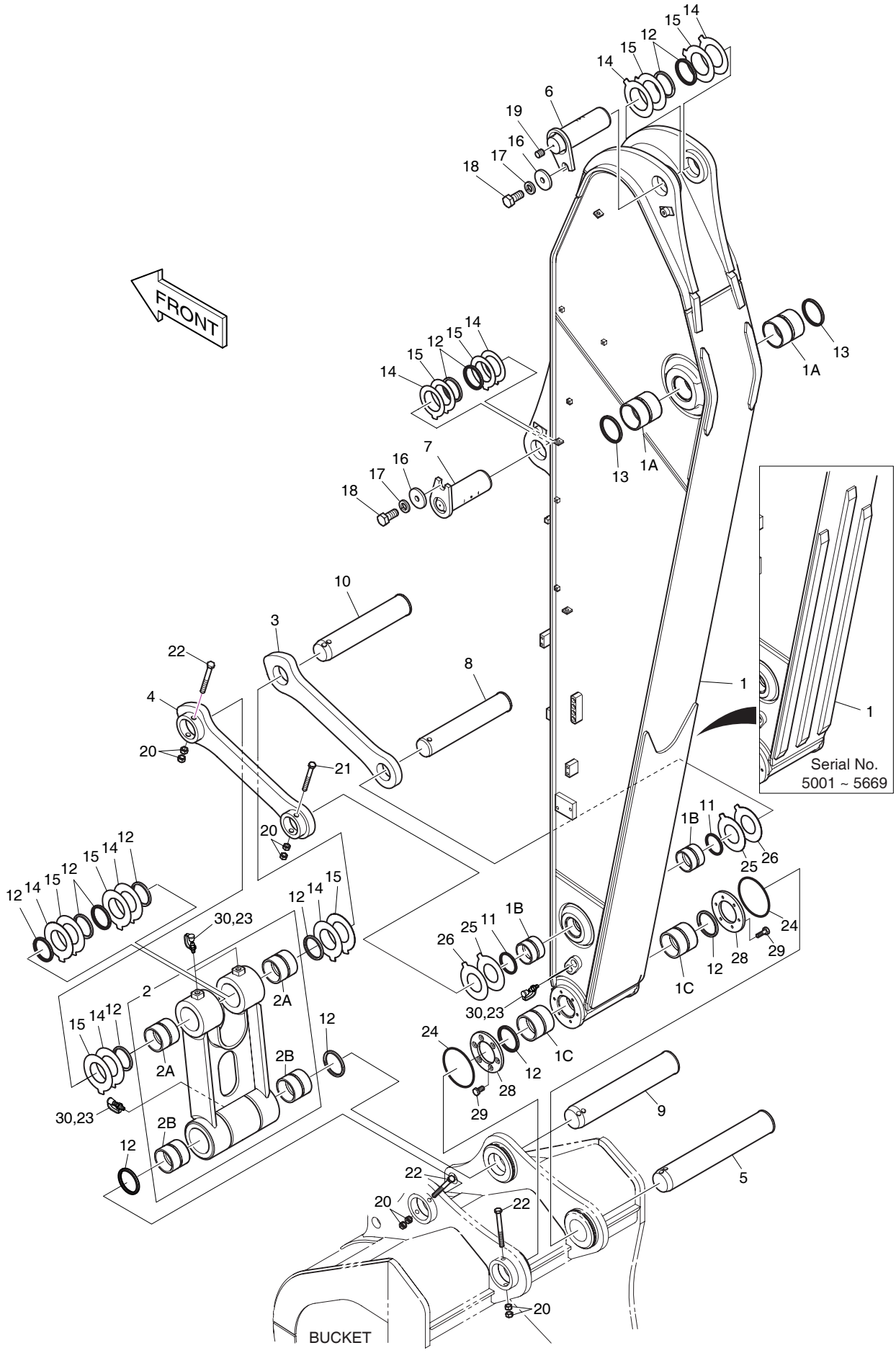

| DATE | JUN. 30, 2008 |
|---|---|
| REV. NO. | EXB08-06 |

# Fig. 6840 ARM - 3.95m BALANCIER

Serial No. ;

| Key No. | Part No. | Description | Description | Q'ty | S.C | Serial No. | ICA | Replaceable part | |
|---|---|---|---|---|---|---|---|---|---|
| | | | | | | | | Part No. | Q'ty |
| 6840-22 | S0571966 | BOLT | BOULON A 6 PANS | 3 | | | | | |
| 23 | S6710041 | NIPPLE;GREASE | GRAISSEUR | 5 | | | | | |
| 24 | 180-00077D7 | O-RING | JOINT TORIQUE | 2 | | | | | |
| 25 | DS7752015 | SHIM | CALE | 2 | | | | | |
| 26 | DS7752016 | SHIM | CALE | 2 | | | | | |
| 28 | K1005780 | SPACER | DOUILLE D'ECARTEMENT | 2 | | | | | |
| 29 | 120-00223 | BOLT | BOULON A 6 PANS | 12 | | | | | |
| 30 | 160-00020 | CAP;GREASE NIPPLE | CHAPEAU | 5 | | | | | |

| DATE | JUN. 30, 2007 |
|---|---|
| REV.NO. | EXB07-06 |

# Fig. 6850 ARM PIPING - ARM 3.95m
# CONDUITES DE BALANCIER

**Serial No. ;**

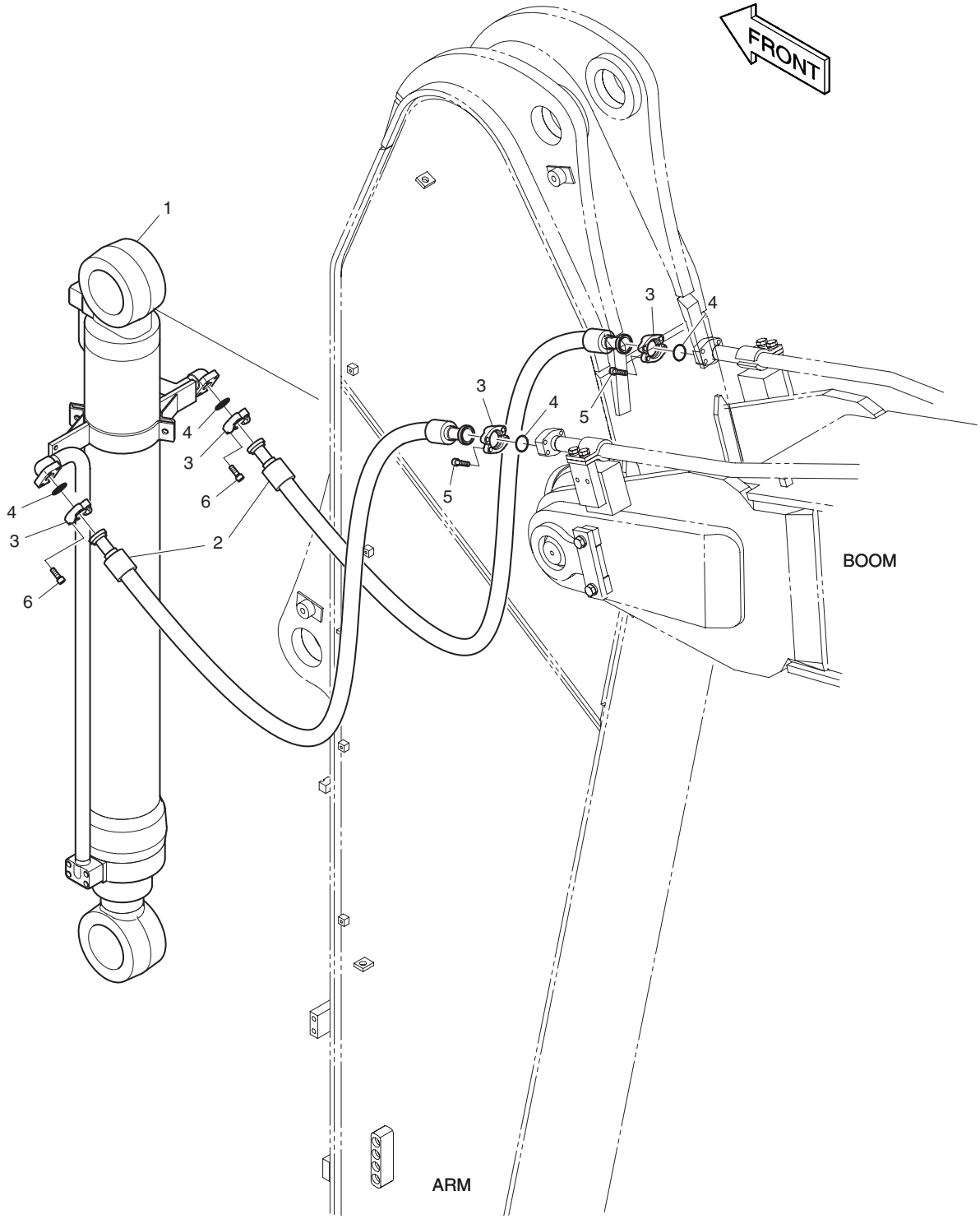

| DATE | JUN. 30, 2007 |
|---|---|
| REV. NO. | EXB07-06 |

# Fig. 6850 ARM PIPING - ARM 3.95m CONDUITES DE BALANCIER

**Serial No. ;**

| Key No. | Part No. | Description | Description | Q'ty | S.C | Serial No. | ICA | Replaceable part | |
|---|---|---|---|---|---|---|---|---|---|
| | | | | | | | | Part No. | Q'ty |
| 6850-- | K1018551A | ARM PIPING | CONDUITES DE BALANCIER | - | D | | | | |
| 1 | K1006202 | CYLINDER;BUCKET | VERIN DE GODET | 1 | | 5001–5668 | I | K1006202A | 1 |
| | **K1006202A** | **CYLINDER;BUCKET** | VERIN DE GODET | 1 | | **5669–** | | | |
| 2 | DS2039113 | HOSE | TUYAU FLEXIBLE | 2 | | | | | |
| 3 | 2181-9078 | FLANGE;SPLIT | FLASQUE EN DEUX | 8 | | | | | |
| 4 | 2180-1026D19 | O-RING | JOINT TORIQUE | 4 | | | | | |
| 5 | S2212466 | BOLT;SOCKET | BOULON DE PLOT | 8 | | | | | |
| 6 | S2212266 | BOLT;SOCKET | BOULON DE PLOT | 8 | | | | | |

# Fig. 6860 LUBRICATION PIPING -ARM 3.95m
# LUBRIFICATION

**Serial No. ;**

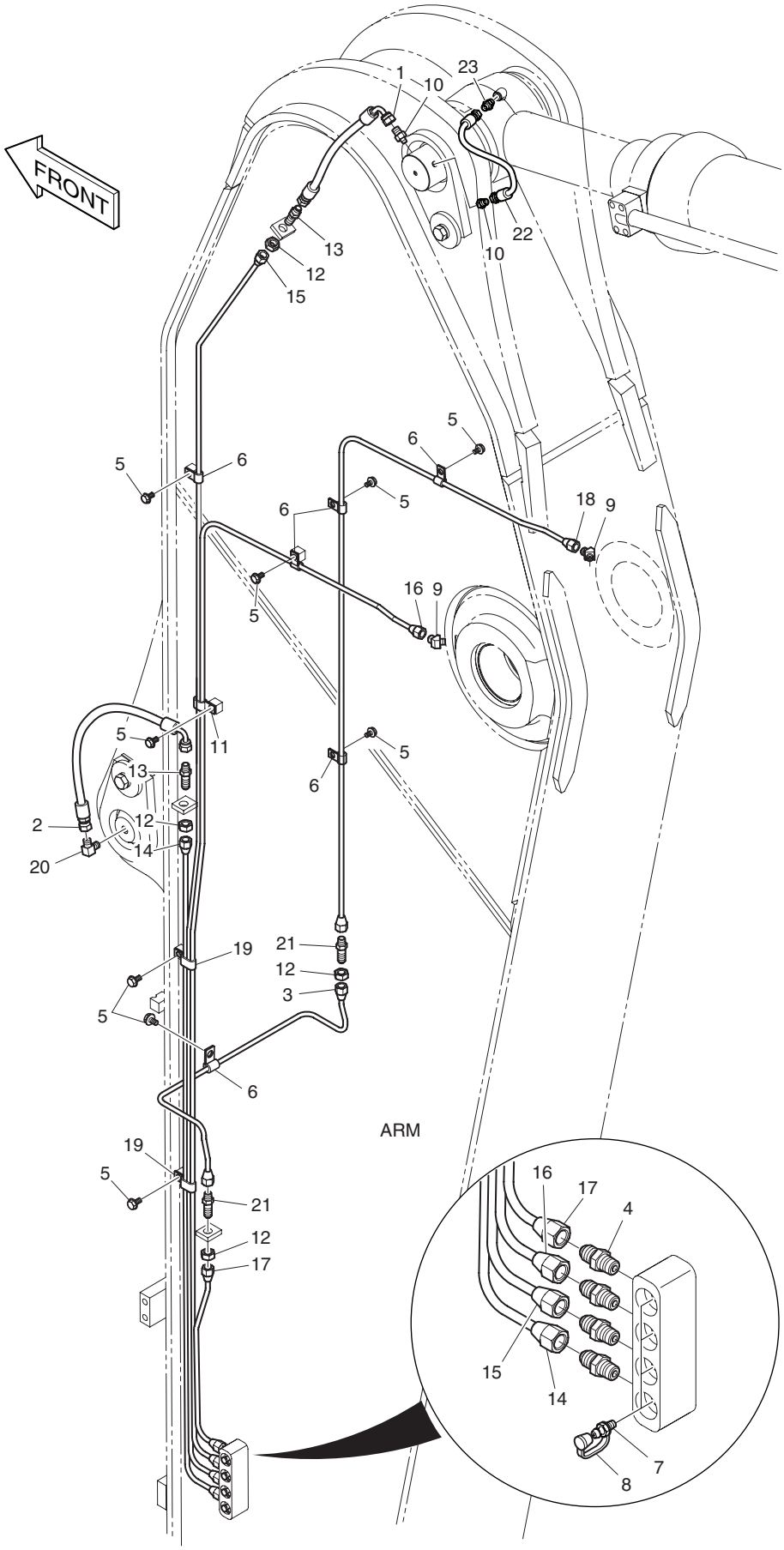

| DATE | JUN. 30, 2007 |
|---|---|
| REV. NO. | EXB07-06 |

# Fig. 6860 LUBRICATION PIPING -ARM 3.95m LUBRIFICATION

**Serial No. ;**

| Key No. | Part No. | Description | Description | Q'ty | S.C | Serial No. | ICA | Replaceable part | |
|---|---|---|---|---|---|---|---|---|---|
| | | | | | | | | Part No. | Q'ty |
| 6860-- | **K1018552B** | **LUBRICATION PIPING** | LUBRIFICATION | - | D | | | | |
| 1 | 2184-1036D64 | HOSE | TUYAU FLEXIBLE | 1 | | | | | |
| 2 | DS2055699 | HOSE | TUYAU FLEXIBLE | 1 | | | | | |
| 3 | K1006240 | PIPE | CONDUITE | 1 | | | | | |
| 4 | 2181-1184 | ADAPTER | RACCORD | 4 | | | | | |
| 5 | K1001029 | BOLT | BOULON A 6 PANS | 9 | | | | | |
| 6 | DS2802023 | CLIP | ATTACHE | 6 | | | | | |
| 7 | S6710041 | NIPPLE;GREASE | GRAISSEUR | 4 | | | | | |
| 8 | 160-00020 | CAP;GREASE NIPPLE | CHAPEAU | 4 | | | | | |
| 9 | K1000057 | ELBOW | COUDE | 2 | | | | | |
| 10 | 2181-4112 | ADAPTER | RACCORD ADAPTEUR | 1 | | 5001–5469 | | | |
| | **2181-4112** | **ADAPTER** | RACCORD ADAPTEUR | 2 | | **5470–** | | | |
| 11 | DS2805007 | CLIP | ATTACHE | 1 | | | | | |
| 12 | S4032833 | NUT | ECROU | 4 | | | | | |
| 13 | 2181-1923D12 | ADAPTER | RACCORD ADAPTATEUR | 2 | | | | | |
| 14 | K1006206 | PIPE | CONDUITE | 1 | | | | | |
| 15 | K1018553 | PIPE | CONDUITE | 1 | | | | | |
| 16 | K1018554 | PIPE | CONDUITE | 1 | | | | | |
| 17 | K1006209 | PIPE | CONDUITE | 1 | | | | | |
| 18 | K1018555 | PIPE | CONDUITE | 1 | | | | | |
| 19 | DS2805008 | CLIP | ATTACHE | 2 | | | | | |
| 20 | 2181-1111D11 | ELBOW | COUDE | 1 | | | | | |
| 21 | DS2225009 | ADAPTER | ADAPTEUR | 2 | | | | | |
| 22 | **DS2094250** | **HOSE** | TUYAU FLEXIBLE | 1 | | **5470–5659** | | | |
| | **DS2094173** | **HOSE** | TUYAU FLEXIBLE | 1 | | **5660–** | | | |
| 23 | **2181-1110D1** | **ADAPTER** | ADAPTEUR | 1 | | **5470–** | | | |

| DATE | JUN. 30, 2008 |
|---|---|
| REV.NO. | EXB08-06 |

# Fig. 6870 ARM PIPING - ONE & TWO WAY(ARM 3.95m) CONDUITES DE BALANCIER

**Serial No. ;**

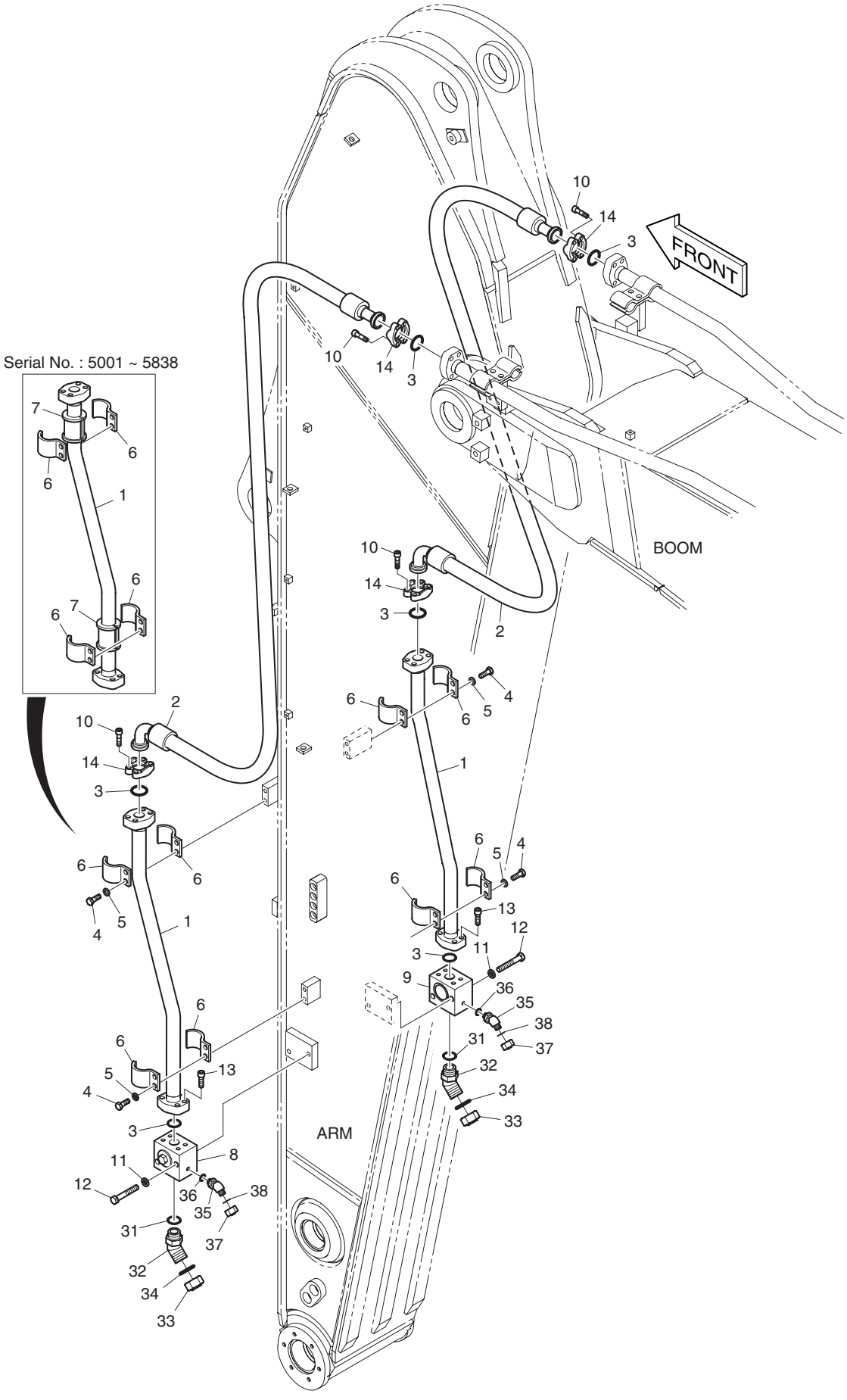

| DATE | JUN. 30, 2008 |
|---|---|
| REV. NO. | EXB08-06 |

# Fig. 6870 ARM PIPING - ONE & TWO WAY(ARM 3.95m) CONDUITES DE BALANCIER

Serial No. ;

| Key No. | Part No. | Description | Description | Q'ty | S.C | Serial No. | ICA | Replaceable part | |
|---|---|---|---|---|---|---|---|---|---|
| | | | | | | | | Part No. | Q'ty |
| 6870-- | K1018556A | ARM PIPING-ONE & TWO WAY | CONDUITES DE BALANCIER | - | D | | | | |
| 1 | K1015333 | PIPE | CONDUITE | 2 | | | | | |
| 2 | DS2040502 | HOSE | TUYAU FLEXIBLE | 2 | | | | | |
| 3 | 2180-1026D23 | O-RING | JOINT TORIQUE | 6 | | | | | |
| 4 | S0562766 | BOLT | BOULON A 6 PANS | 8 | | | | | |
| 5 | S5102803 | WASHER;SPRING | RONDELLE ELASTIQUE M14 | 8 | | | | | |
| 6 | K1004001 | CLAMP;PIPE | COLLIER | 8 | | 5001–5838 | | | |
| | **K1004000** | **CLAMP;PIPE** | COLLIER | 8 | | **5839–** | | | |
| 7 | **161-00280** | **RUBBER** | CAOUTCHOUC | 4 | | **5001–5838** | | | |
| 8 | 420-00508B | VALVE;STOP(L.H) | VANNE | 1 | | | | | |
| 9 | 420-00515B | VALVE;STOP(R.H) | VANNE | 1 | | | | | |
| 10 | S2218766 | BOLT;SOCKET | BOULON A 6 PANS CREUX | 16 | | | | | |
| 11 | S5102903 | WASHER;SPRING | RONDELLE ELASTIQUE | 4 | | | | | |
| 12 | S0566266 | BOLT | BOULON A 6 PANS | 4 | | | | | |
| 13 | S2218566 | BOLT;SOCKET | BOULON A 6 PANS CREUX | 8 | | | | | |
| 14 | 2181-9086 | FLANGE;SPLIT | FLASQUE EN DEUX | 8 | | | | | |
| 31 | S8000381 | O-RING | JOINT TORIQUE | 2 | | | | | |
| 32 | 2181-2816D3 | ELBOW | COUDE | 2 | | | | | |
| 33 | 2181-2817D3 | CAP | CHAPEAU | 2 | | | | | |
| 34 | 2180-1026D37 | O-RING | JOINT TORIQUE | 2 | | | | | |
| 35 | 2181-2816D4 | ELBOW | COUDE | 2 | | | | | |
| 36 | S8000181 | O-RING | JOINT TORIQUE | 2 | | | | | |
| 37 | 2181-2817D4 | CAP | BOUCHON | 2 | | | | | |
| 38 | S8030081 | O-RING | JOINT TORIQUE | 2 | | | | | |

| DATE | JUN. 30, 2006 |
|---|---|
| REV.NO. | EXB06-08 |

# Fig. 6880 ARM PIPING - QUICK FIT(ARM 3.95m) CONDUITES DE BALANCIER

**Serial No. ;**

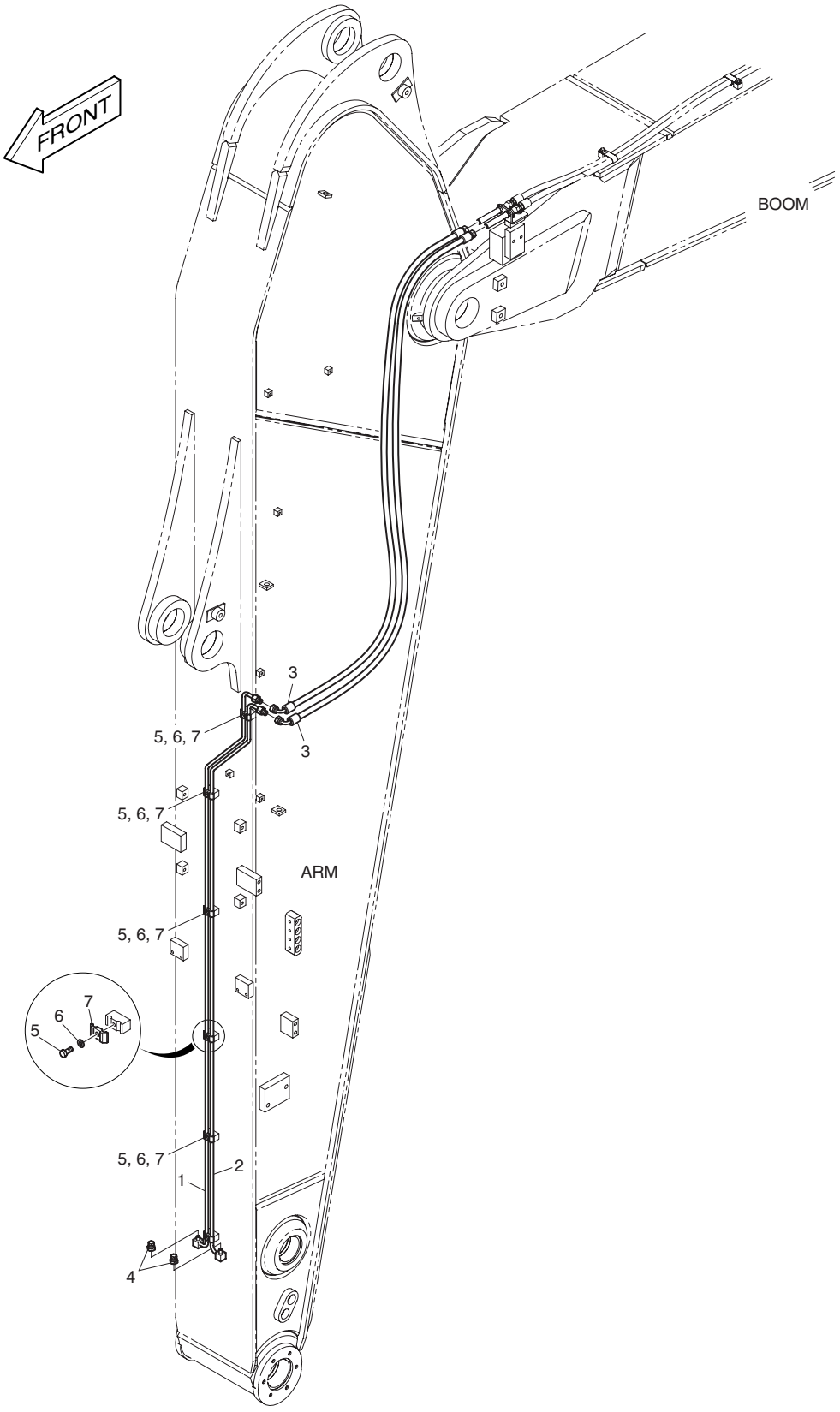

| DATE | JUN. 30, 2006 |
|---|---|
| REV. NO. | EXB06-08 |

# Fig. 6880 ARM PIPING - QUICK FIT(ARM 3.95m) CONDUITES DE BALANCIER

Serial No. ;

| Key No. | Part No. | Description | Description | Q'ty | S.C | Serial No. | ICA | Replaceable part | |
|---|---|---|---|---|---|---|---|---|---|
| | | | | | | | | Part No. | Q'ty |
| 6880-- | K1018561 | ARM PIPING(QUICK CLAMP) | CONDUITES DE BALANCIER | - | D | | | | |
| 1 | K1018562 | PIPE | CONDUITE | 1 | | | | | |
| 2 | K1018563 | PIPE | CONDUITE | 1 | | | | | |
| 3 | DS2055925 | HOSE | TUYAU FLEXIBLE | 2 | | | | | |
| 4 | 2181-2820D1 | PLUG | BOUCHON | 2 | | | | | |
| 5 | S0508866 | BOLT | BOULON A 6 PANS | 6 | | | | | |
| 6 | S5102503 | WASHER;SPRING | RONDELLE ELASTIQUE M8 | 6 | | | | | |
| 7 | K1004011 | CLAMP;PIPE | FIXATION DE TUYAU | 6 | | | | | |

| DATE | JUN. 30, 2006 |
|---|---|
| REV.NO. | EXB06-08 |

# Fig. 6890 ARM PIPING - ROTATION(ARM 3.95m) CONDUITES DE BALANCIER

**Serial No. ;**

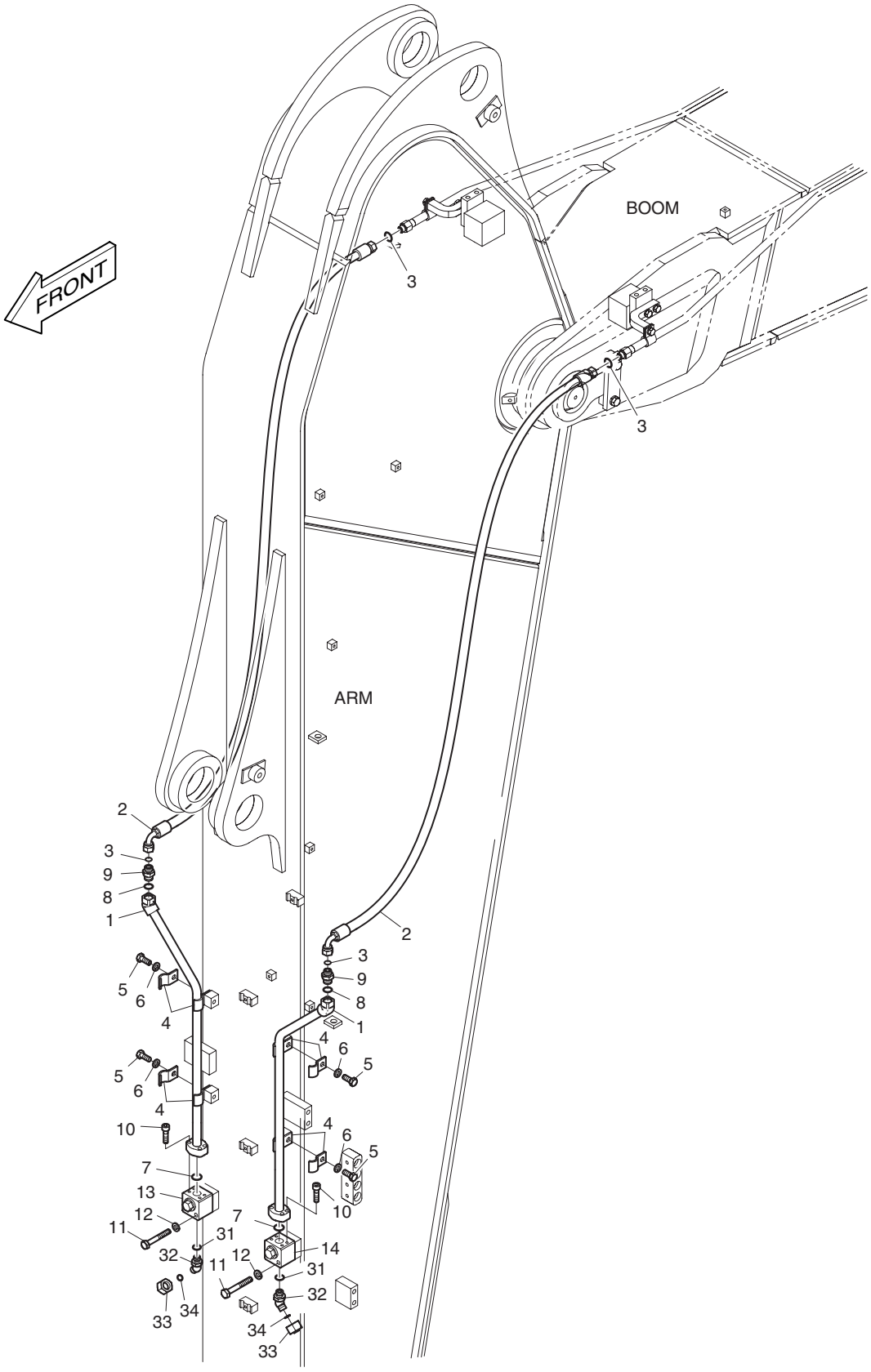

| DATE | JUN. 30, 2006 |
|---|---|
| REV. NO. | EXB06-08 |

# Fig. 6890 ARM PIPING - ROTATION(ARM 3.95m) CONDUITES DE BALANCIER

Serial No. ;

| Key No. | Part No. | Description | Description | Q'ty | S.C | Serial No. | ICA | Replaceable part | |
|---|---|---|---|---|---|---|---|---|---|
| | | | | | | | | Part No. | Q'ty |
| 6890-- | K1018558 | ARM PIPING-ROTATION | CONDUITES DE BALANCIER | - | D | | | | |
| 1 | K1018559 | PIPE | CONDUITE | 2 | | | | | |
| 2 | DS2013744 | HOSE | TUYAU FLEXIBLE | 2 | | | | | |
| 3 | S8030081 | O-RING | JOINT TORIQUE | 4 | | | | | |
| 4 | 124-00299A | CLAMP;PIPE | FIXATION DE TUYAU | 8 | | | | | |
| 5 | S0515266 | BOLT | BOULON A 6 PANS | 4 | | | | | |
| 6 | S5102703 | WASHER;SPRING | RONDELLE ELASTIQUE M12 | 4 | | | | | |
| 7 | 2180-1026D30 | O-RING | JOINT TORIQUE | 2 | | | | | |
| 8 | S8000181 | O-RING | JOINT TORIQUE | 2 | | | | | |
| 9 | 2181-4133D3 | ADAPTER | RACCORD | 2 | | | | | |
| 10 | S2209266 | BOLT;SOCKET | BOULON A 6 PANS CREUX | 8 | | | | | |
| 11 | S0558966 | BOLT | BOULON A 6PANS | 4 | | | | | |
| 12 | S5102603 | WASHER;SPRING | RONDELLE ELASTIQUE M10 | 4 | | | | | |
| 13 | K1006227 | VALVE;SWITCH(R.H) | VANNE | 1 | | | | | |
| 14 | K1006228 | VALVE;SWITCH(L.H) | VANNE | 1 | | | | | |
| 31 | S8000181 | O-RING | JOINT TORIQUE | 2 | | | | | |
| 32 | 2181-2816D4 | ELBOW | COUDE | 2 | | | | | |
| 33 | 2181-2817D4 | CAP | BOUCHON | 2 | | | | | |
| 34 | S8030081 | O-RING | JOINT TORIQUE | 2 | | | | | |

| DATE | DEC. 15, 2006 |
|---|---|
| REV.NO. | EXB06-13 |

# Fig. 6900 TROPICAL PARTS
# PIECES TROPICALES

**Serial No. ;**

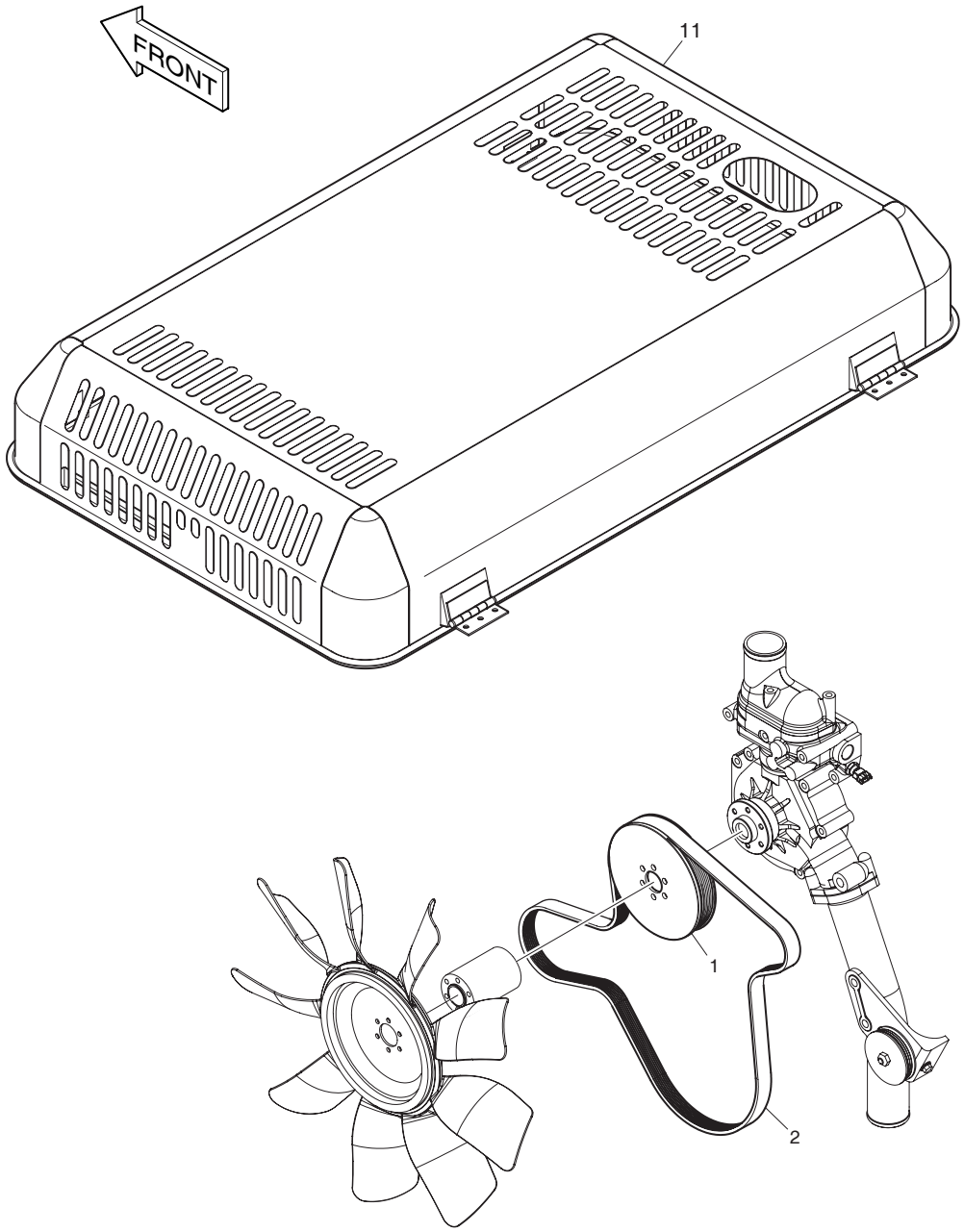

| DATE | DEC. 15, 2006 |
|---|---|
| REV. NO. | EXB06-13 |

# Fig. 6900 TROPICAL PARTS PIECES TROPICALES

Serial No. ;

| Key No. | Part No. | Description | Description | Q'ty | S.C | Serial No. | ICA | Replaceable part | |
|---|---|---|---|---|---|---|---|---|---|
| | | | | | | | | Part No. | Q'ty |
| 6900-- | K1026171 | TROPICAL PARTS | PIECES TROPICALES | - | D | | | | |
| 1 | K1017629 | PULLEY;FAN | PULLEY;FAN | 1 | | | | | |
| 2 | 2106-1019D26 | V-BELT(8PK-1350L) | V-BELT | 1 | | | | | |
| 11 | K1025177 | ENGINE COVER;TROPICAL | COUVERTURE DE MOTEUR | 1 | | | | | |

| DATE | DEC. 15, 2006 |
|---|---|
| REV.NO. | EXB06-13 |

# Fig. 6910 ENGINE COVER - EUROPE COUVERTURE DE MOTEUR

**Serial No. ;**

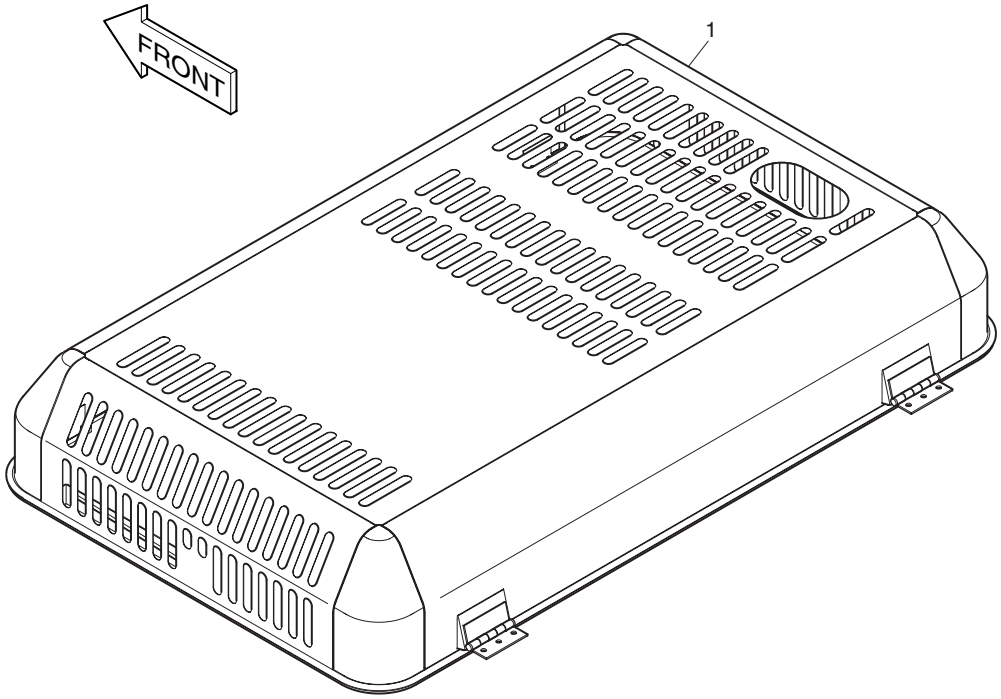

| DATE | DEC. 15, 2006 |
|---|---|
| REV. NO. | EXB06-13 |

# Fig. 6910 ENGINE COVER - EUROPE COUVERTURE DE MOTEUR

**Serial No. ;**

| Key No. | Part No. | Description | Description | Q'ty | S.C | Serial No. | ICA | Replaceable part | |
|---|---|---|---|---|---|---|---|---|---|
| | | | | | | | | Part No. | Q'ty |
| 6910-1 | K1029144 | ENGINE COVER-EUROPE | COUVERTURE DE MOTEUR | 1 | | | | | |

| DATE | JUN. 30, 2007 |
|---|---|
| REV.NO. | EXB07-06 |

# Fig. 6920 TOP GUARD ASS'Y
# ENSEMBLE DE GARDE SUPERIEURE

**Serial No. ;**

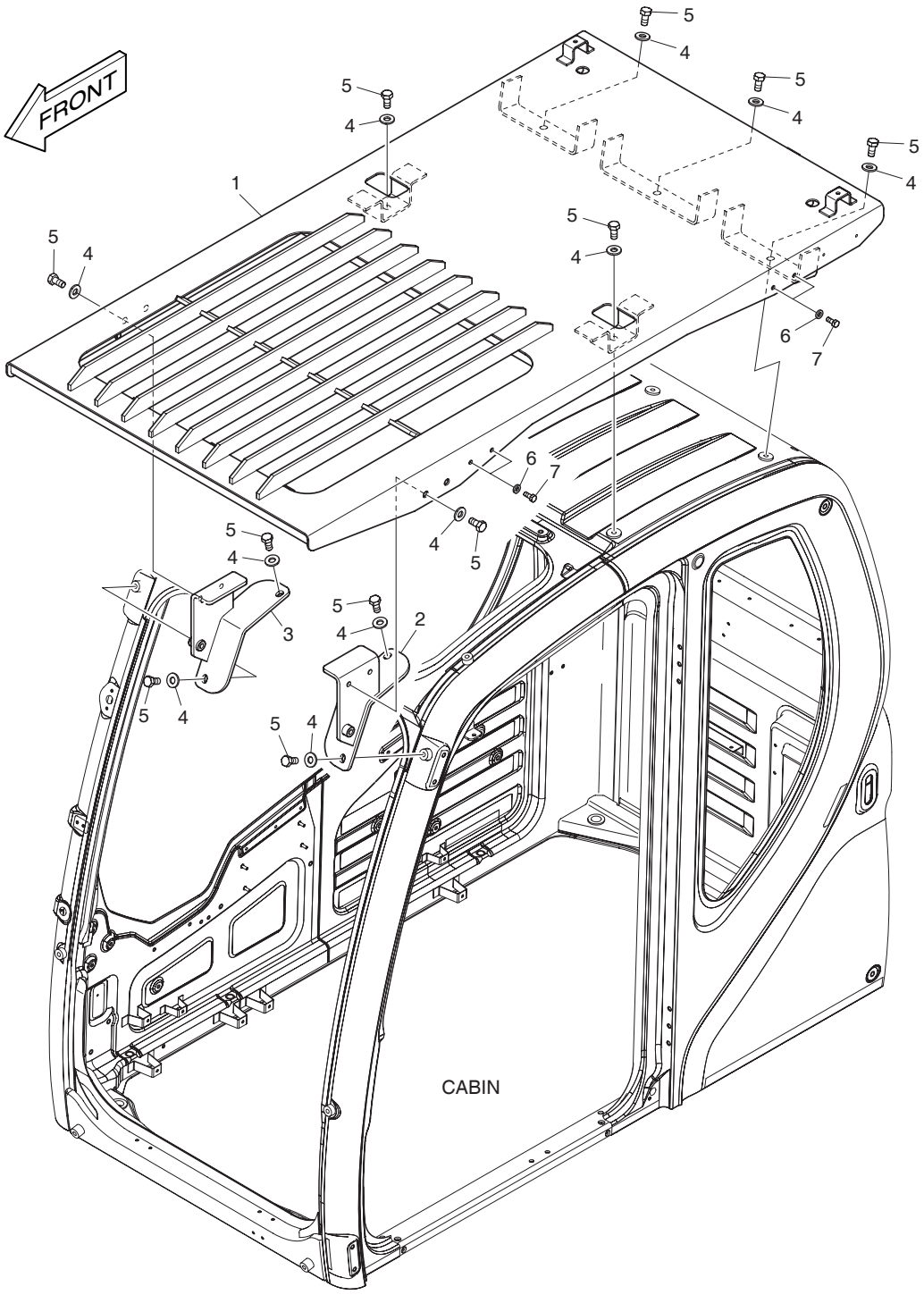

| DATE | JUN. 30, 2007 |
|---|---|
| REV. NO. | EXB07-06 |

# Fig. 6920 TOP GUARD ASS'Y
# ENSEMBLE DE GARDE SUPERIEURE

**Serial No. ;**

| Key No. | Part No. | Description | Description | Q'ty | S.C | Serial No. | ICA | Replaceable part | |
|---|---|---|---|---|---|---|---|---|---|
| | | | | | | | | Part No. | Q'ty |
| 6920-- | K1033498 | TOP GUARD ASS'Y | GARDE SUPERIEURE | - | D | | | | |
| 1 | K1002811A | GUARD;ROOF | GARDE | 1 | | | | | |
| 2 | K1002838 | BRACKET(L.H) | SUPPORT | 1 | | | | | |
| 3 | K1002839A | BRACKET(R.H) | SUPPORT | 1 | | | | | |
| 4 | 2114-1898D17 | WASHER M12 | RONDELLE PLATE | 13 | | | | | |
| 5 | 2120-2166D27 | BOLT | BOULON A 6 PANS | 13 | | | | | |
| 6 | 2114-1898D2 | WASHER | RONDELLE | 4 | | | | | |
| 7 | 2120-2166D5 | BOLT M8X1.25X20 | BOULON A 6 PANS | 4 | | | | | |

# Fig. 6930 RADIO
# RADIO

**Serial No. ;**

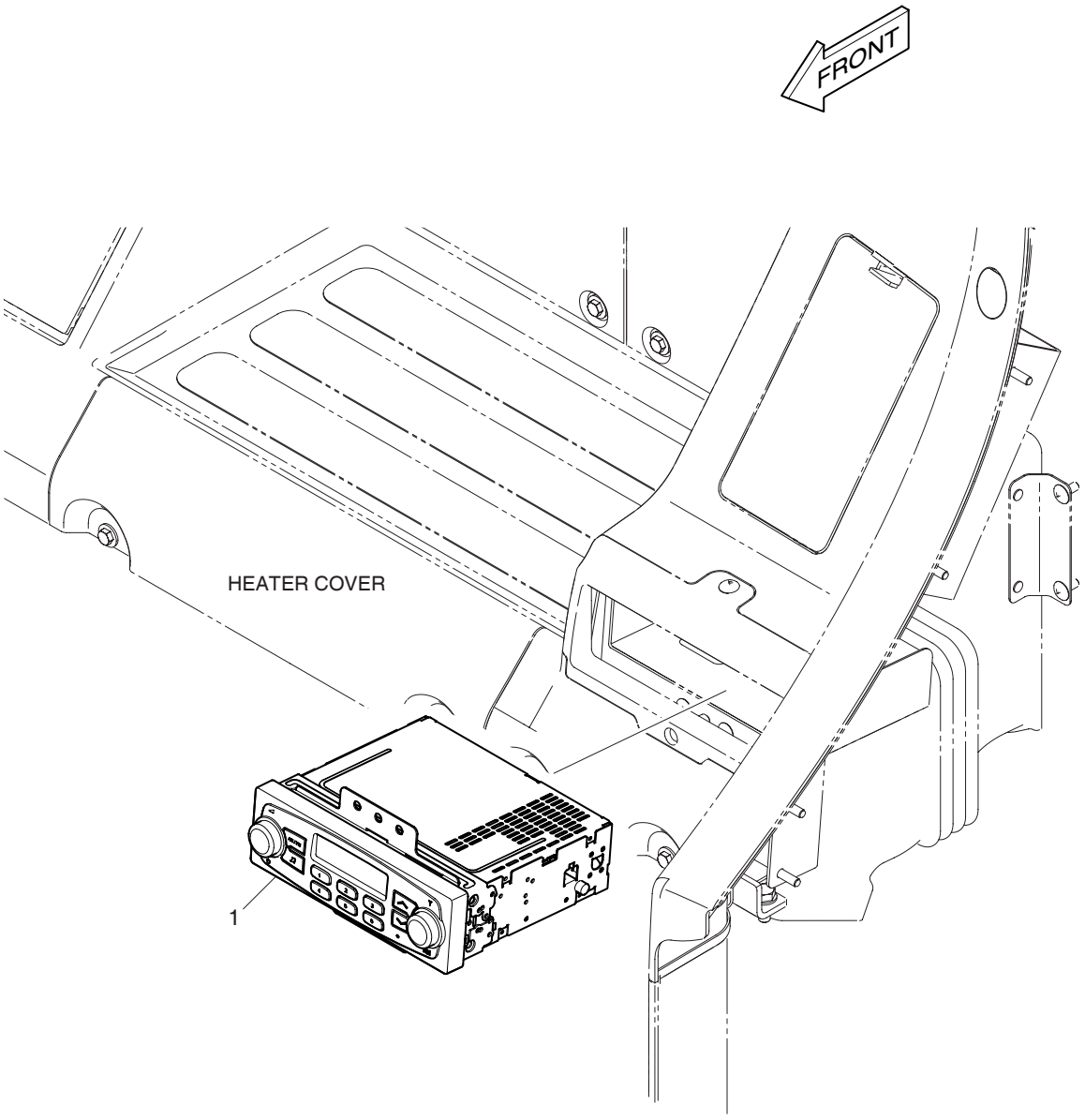

| DATE | JUN. 30, 2007 |
|---|---|
| REV. NO. | EXB07-06 |

# Fig. 6930 RADIO
# RADIO

**Serial No. ;**

| Key No. | Part No. | Description | Description | Q'ty | S.C | Serial No. | ICA | Replaceable part | |
|---|---|---|---|---|---|---|---|---|---|
| | | | | | | | | Part No. | Q'ty |
| 6930-- | K1033652 | RADIO;STEREO | RADIO STEREO | - | D | | | | |
| 1 | K1033644 | RADIO;STEREO(12V) | RADIO STEREO | 1 | | | | | |

| DATE | JUN. 30, 2008 |
|---|---|
| REV.NO. | EXB08-06 |

# Fig. 6940 ROCK BUCKET - 1.12m³(HEAVY DUTY) GODET

**Serial No. ;**

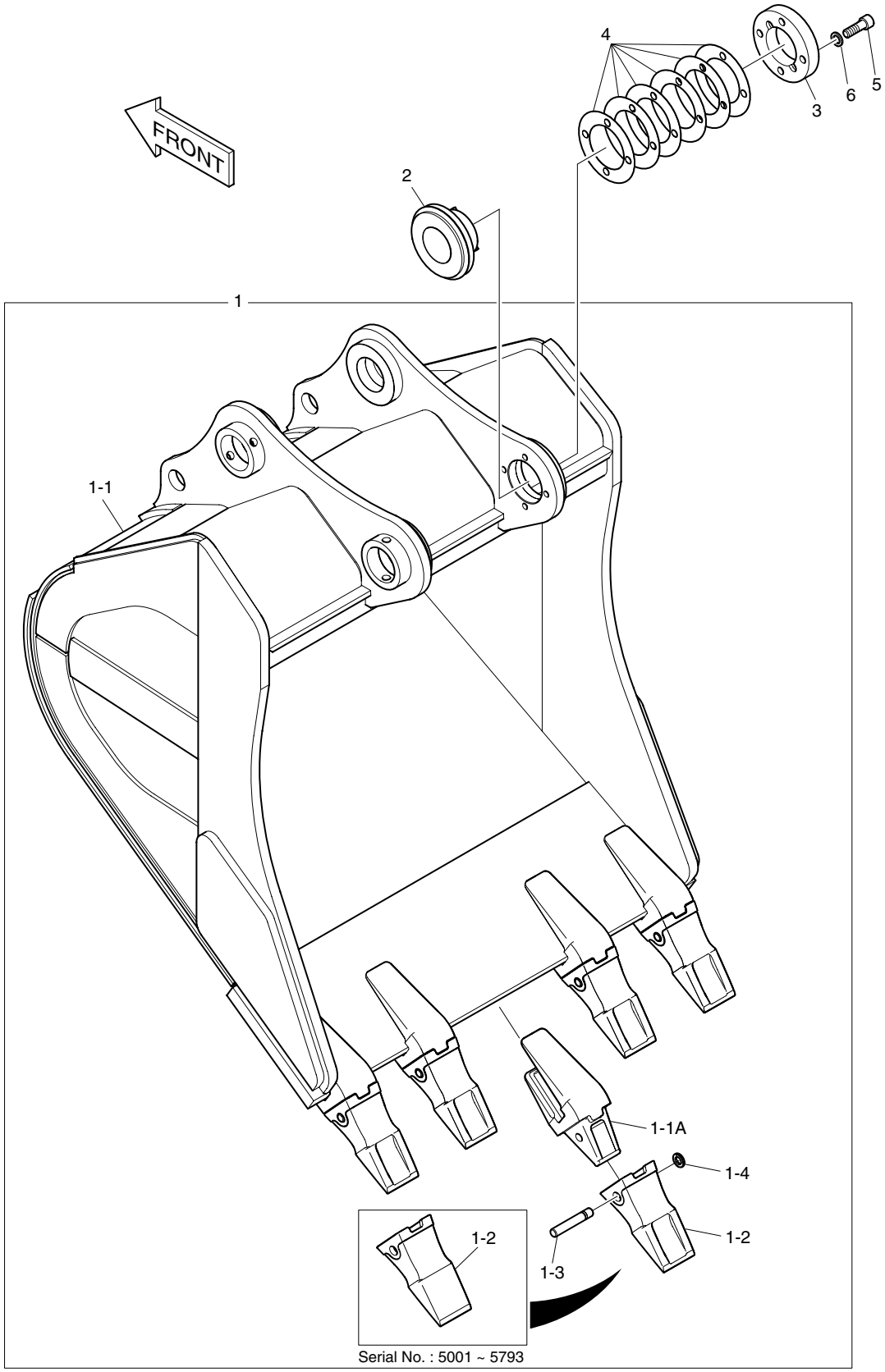

| DATE | JUN. 30, 2008 |
|---|---|
| REV. NO. | EXB08-06 |

# Fig. 6940 ROCK BUCKET - 1.12m³(HEAVY DUTY) GODET

**Serial No. ;**

| Key No. | Part No. | Description | Description | Q'ty | S.C | Serial No. | ICA | Replaceable part | |
|---|---|---|---|---|---|---|---|---|---|
| | | | | | | | | Part No. | Q'ty |
| 6940-- | K1038176 | BUCKET ASS'Y | ENSEMBLE GODET | - | D | | | | |
| 1 | K1038177 | BUCKET SUB ASS'Y-1.12㎥ | GODET | 1 | | 5001–5793 | I | K1038177A | 1 |
| | K1038177A | BUCKET SUB ASS'Y-1.12㎥ | GODET | 1 | | 5794– | | | |
| 1-1 | K1038178 | . BUCKET;WELD-1.12㎥ | GODET | 1 | | | | | |
| 1-1A | 713-00033 | .. ADAPTER;TOOTH | .. DENT DE ADAPTEUR | 5 | | | | | |
| 1-2 | K1005018 | . TOOTH;POINT | . DENT | 5 | | 5001–5793 | I | K1005018A | 5 |
| | K1005018A | . TOOTH;POINT | . DENT | 5 | | 5794– | | | |
| 1-3 | 705-00006 | . PIN;LOCKING | . GOUPILLE | 5 | | | | | |
| 1-4 | 114-00246 | . WASHER;LOCKING | . RONDELLE | 5 | | | | | |
| 2 | K1005253 | BUSH;FLANGE | BRIDE | 1 | | | | | |
| 3 | K1005254A | STOPPER;COVER | TAQUET D'ARRET | 1 | | 5001–5922 | I | K1005254B | 1 |
| | **K1005254B** | **STOPPER;COVER** | TAQUET D'ARRET | 1 | | **5923**– | | | |
| 4 | K1013571 | SHIM | CALE | 6 | | | | | |
| 5 | S2221666 | BOLT;SOCKET | BOULON A 6 PANS CREUX | 4 | | | | | |
| 6 | K1014251 | WASHER;HARDEN | RONDELLE | 4 | | | | | |

# INDEX

| PART NO. | FIG NO. | KEY NO. |
|---|---|---|
| 0-0056-05302 | 1720 | 7-13 |
| 0-0275-06802 | 1720 | 3-6 |
| 0-0280-16022 | 1720 | 4-2 |
| 0-09170-2501 | 1720 | 7-4 |
| 0-09201-0980 | 1720 | 1-3 |
| 0-09201-1140 | 1720 | 3-5 |
| 0-35100-0300 | 1720 | 1 |
| 0-35120-0230 | 1720 | 5 |
| 0-35200-0440 | 1720 | 2 |
| 0-35300-0310 | 1720 | 3 |
| 0-35411-0870 | 1720 | 4 |
| 0-35421-0170 | 1720 | 4-1 |
| 0-35700-0890 | 1720 | 7 |
| 0-35710-1090 | 1720 | 7-1 |
| 0-35719-0200 | 1720 | 8 |
| 0-35730-0510 | 1720 | 7-2 |
| 0-35761-0250 | 1720 | 7-12 |
| 0-35780-0750 | 1720 | 7-3 |
| 0-35923-0130 | 1720 | 7-5 |
| 0-35923-0160 | 1720 | 1-2 |
| 0-35923-0200 | 1720 | 7-6 |
| 0-35926-0070 | 1720 | 3-1 |
| 0-35926-0090 | 1720 | 3-2 |
| 0-35943-0140 | 1720 | 7-7 |
| 0-35943-0150 | 1720 | 7-8 |
| 0-35943-0160 | 1720 | 7-9 |
| 0-35943-0170 | 1720 | 7-10 |
| 0-35951-0060 | 1720 | 3-4 |
| 06.01013-9127 | 013 | 260 |
| 06.01013-9129 | 015 | 90 |
| 06.01013-9130 | 015 | 90 |
| 06.01013-9142 | 011 | 340 |
| 06.01280-6807 | 008 | 14 |
| 06.01283-7115 | 012 | 380 |
| 06.01913-2917 | 021 | 190 |
| 06.01913-3110 | 003 | 140 |
| | 003 | 230 |
| 06.01913-3113 | 012 | 510 |
| 06.01913-3114 | 011 | 162 |
| | 011 | 172 |
| | 018 | 180 |
| 06.01913-3115 | 002 | 220 |
| 06.01913-3117 | 005A | 80 |
| | 021 | 120 |
| 06.01913-3119 | 012 | 500 |
| 06.01913-3121 | 011 | 221 |
| 06.01913-3125 | 014 | 230 |
| 06.01913-3131 | 011 | 320 |
| 06.01913-3215 | 026 | 40 |
| 06.01913-3216 | 025 | 550 |
| 06.01913-3217 | 011 | 151 |
| 06.01913-3220 | 022 | 20 |
| 06.01913-3221 | 022 | 20 |
| 06.01913-3224 | 011 | 140 |
| 06.01914-3221 | 009 | 590 |
| 06.01923-2911 | 024 | 240 |
| | 031 | 60 |
| 06.01923-2912 | 030 | 350 |
| 06.01923-2913 | 030 | 320 |
| 06.01923-2915 | 030 | 300 |
| 06.01923-2917 | 024 | 20 |
| 06.01923-2918 | 002 | 80 |
| 06.01923-3110 | 031 | 520 |
| 06.01923-3114 | 005A | 20 |
| 06.01923-3115 | 031 | 290 |
| 06.01923-3116 | 004 | 60 |
| | 010 | 90 |
| 06.01923-3117 | 013 | 30 |
| 06.01923-3118 | 005 | 20 |
| | 011 | 310 |
| 06.01923-3120 | 011 | 220 |
| | 012 | 270 |
| 06.01923-3122 | 013 | 270 |
| 06.01923-3124 | 013 | 140 |
| 06.01923-3125 | 010 | 210 |
| 06.01923-3215 | 019 | 50 |
| 06.01923-3217 | 033 | 30 |
| 06.01923-3218 | 025 | 530 |
| | 034 | 30 |
| 06.01923-3219 | 017 | 50 |
| 06.01943-3317 | 027 | 20 |
| 06.01943-3319 | 026 | 140 |
| 06.01943-3320 | 027 | 20 |
| | 027 | 40 |
| 06.01943-3326 | 026 | 20 |
| 06.01944-3318 | 032 | 20 |
| | 032 | 40 |
| 06.01953-3318 | 028 | 50 |
| 06.02090-0307 | 001 | 370 |
| 06.02106-0824 | 006 | 720 |
| 06.06225-0713 | 017 | 140 |
| 06.06225-0810 | 017 | 300 |
| 06.08092-0204 | 024 | 300 |
| 06.11063-8212 | 024 | 160 |
| 06.11063-8214 | 005 | 470 |
| | 005A | 220 |
| | 017 | 170 |
| | 018 | 60 |
| | 018 | 200 |
| | 031 | 220 |
| 06.11063-8214 | 031 | 280 |
| | 031 | 550 |
| 06.11063-8215 | 005 | 130 |
| | 005A | 110 |
| | 017 | 330 |
| 06.11063-9217 | 026 | 240 |
| 06.15010-2311 | 011 | 222 |
| | 011 | 360 |
| | 012 | 390 |
| | 013 | 290 |
| | 015 | 110 |
| | 017 | 160 |
| | 031 | 260 |
| | 031 | 530 |
| 06.15010-2312 | 011 | 141 |
| | 017 | 320 |
| 06.15010-2313 | 003 | 74 |
| 06.15061-0102 | 020 | 90 |
| 06.16110-0106 | 009 | 223 |
| 06.16731-2106 | 001 | 380 |
| | 024 | 150 |
| | 024 | 180 |
| 06.16731-2107 | 005 | 460 |
| | 005A | 210 |
| | 011 | 350 |
| | 013 | 280 |
| | 015 | 101 |
| | 017 | 150 |
| | 018 | 190 |
| | 021 | 140 |
| | 031 | 210 |
| | 031 | 270 |
| | 031 | 320 |
| | 031 | 540 |
| | 031 | 580 |
| 06.16731-2108 | 005 | 120 |
| | 005A | 100 |
| | 017 | 310 |
| 06.16731-2109 | 003 | 76 |
| 06.22022-0907 | 010 | 200 |
| 06.22022-1016 | 009 | 450 |
| 06.22022-1018 | 006 | 40 |
| 06.22022-1063 | 001 | 390 |
| 06.29010-0120 | 009 | 220 |
| 06.29020-0132 | 014 | 60 |
| 06.31641-0433 | 011 | 130 |
| 06.31641-0618 | 001 | 250 |
| 06.56020-0115 | 033 | 20 |
| | 035 | 360 |
| 06.56020-0116 | 033 | 15 |

| PART NO. | FIG NO. | KEY NO. | PART NO. | FIG NO. | KEY NO. | PART NO. | FIG NO. | KEY NO. |
|---|---|---|---|---|---|---|---|---|
| 06.56020-0116 | 035 | 350 | 1.115-00248 | 4170 | 47 | 1.412-00117 | 4170 | 19 |
| 06.56180-0712 | 025 | 160 | 1.115-00371 | 4140 | 7 | 1.412-00121 | 4170 | 18 |
| | 035 | 330 | 1.121-00028 | 4210 | 23 | 1.416-00017 | 4210 | 10 |
| | 036 | 180 | 1.123-00041 | 4140 | 6 | 1.416-00018 | 4210 | 15 |
| 06.56190-0704 | 001 | 290 | 1.123-00042 | 4140 | 21 | 1.420-00052 | 4260 | 28 |
| | 018 | 90 | 1.123-00081 | 4170 | 36 | | 4320 | 28 |
| | 025 | 80 | 1.124-00082 | 4240 | 26 | 1.420-00122 | 4140 | 30 |
| 06.56190-0705 | 018 | 110 | | 4250 | 26 | 1.426-00010 | 4140 | 26 |
| 06.56190-0706 | 001 | 320 | | 4300 | 26 | 1.427-00007 | 4140 | 11 |
| | 003 | 220 | | 4310 | 26 | 1.428-00241 | 4280 | 7 |
| | 005 | 60 | 1.131-00037 | 4280 | 8 | 1.428-00241A | 4281 | 7 |
| | 005A | 60 | 1.131-00070 | 4140 | 10 | 1.429-00008 | 4140 | 12 |
| | 024 | 310 | 1.131-00071 | 4140 | 19 | 1.430-00216 | 4170 | 4 |
| | 025 | 40 | 1.131-00072 | 4140 | 27 | 1.451-00145 | 4140 | 1 |
| | 025 | 110 | 1.138-00004 | 4210 | 21 | 1.454-00001 | 4220 | 14 |
| | 025 | 130 | 1.140-00090 | 4250 | 30 | 1-0330-16012 | 1720 | 4-4 |
| | 025 | 310 | 1.140-00114 | 4240 | 30 | 1-0335-16002 | 1720 | 4-3 |
| 06.56190-0708 | 034 | 50 | 1.161-00018 | 1770 | 20C | 104-00035 | 4170 | 1 |
| 06.56190-0718 | 001 | 80 | 1.161-00019 | 1770 | 21C | 104-00036 | 4170 | 14 |
| | 001 | 100 | 1.161-00021 | 4210 | 25A | 104-00037 | 4150 | 5 |
| | 004 | 90 | 1.178-00004 | 4210 | 26 | 104-00038 | 4150 | 10 |
| | 011 | 216 | 1.180-00159 | 4160 | 472 | 104-00039 | 4150 | 4 |
| | 030 | 410 | 1.180-00161 | 4160 | 708 | 104-00040 | 4150 | 14 |
| | 030 | 410 | 1.180-00162 | 4170 | 81 | 104-00042 | 4150 | 11 |
| 06.56190-0726 | 011 | 110 | 1.180-00163 | 4170 | 82 | 105-00011 | 4150 | 1 |
| 06.56190-0732 | 012 | 70 | 1.180-00447 | 4231 | 4A | 105-00011A | 4150 | 1 |
| | 034 | 70 | 1.180-00523 | 4140 | 2 | 108-00022B | 2130 | 3 |
| 06.56342-1208 | 013 | 220 | 1.181-00103 | 4140 | 28 | 109-00143 | 4160 | 102 |
| | 035 | 200 | 1.195-00022 | 4260 | 30 | 109-00144 | 4160 | 103 |
| | 036 | 70 | | 4320 | 30 | 109-00145 | 4170 | 33 |
| 06.67020-0101 | 005 | 40 | 1.216-00015 | 4170 | 22 | 109-00168 | 4150 | 22 |
| | 005A | 40 | 1.216-00017 | 4170 | 21 | 109-00169 | 4150 | 23 |
| 06.67020-0105 | 005 | 220 | 1.216-00018 | 4170 | 23 | 110-00081 | 4240 | 6 |
| | 005 | 430 | 1.229-00036 | 4220 | 13 | | 4250 | 6 |
| | 005A | 130 | 1.230-00009 | 4170 | 5 | | 4270 | 6 |
| | 005A | 150 | 1.230-00012 | 4170 | 901 | | 4300 | 6 |
| | 005A | 180 | 1.230-00015 | 4170 | 6 | | 4310 | 6 |
| 06.78144-2204 | 003 | 210 | 1.230-00018 | 4170 | 902 | 110-00126 | 4170 | 25 |
| | 018 | 100 | 1.402-00129 | 4170 | 2 | 110-00228 | 4150 | 8 |
| 06.78144-2403 | 018 | 80 | 1.403-00061 | 4170 | 12 | 110-00238 | 2190 | 1-1F |
| 06.78190-0206 | 025 | 30 | 1.403-00065 | 4170 | 13 | | 6270 | 1-1F |
| | 025 | 300 | 1.405-00025 | 4140 | 5 | | 6280 | 1-1F |
| 1.109-00058 | 4140 | 22 | 1.409-00175 | 4140 | 14 | | 6290 | 1-1F |
| 1.109-00066 | 4140 | 3 | 1.409-00187 | 4140 | 17 | | 6300 | 1-1F |
| 1.110-00169 | 4210 | 29 | 1.409-00225 | 4220 | 38 | 110-00239 | 2190 | 1-1H |
| 1.110-00172 | 4140 | 40 | | 4221 | 33 | | 6270 | 1-1H |
| 1.114-00054 | 4170 | 35 | 1.412-00017 | 4210 | 19 | | 6280 | 1-1H |
| 1.114-00306 | 4170 | 53 | 1.412-00025 | 4140 | 16 | | 6290 | 1-1H |
| 1.115-00100 | 4140 | 4 | 1.412-00063 | 4140 | 15 | | 6300 | 1-1H |
| 1.115-00232 | 4170 | 24 | 1.412-00113 | 4140 | 8 | 110-00248 | 3110 | 1B |

| PART NO. | FIG NO. | KEY NO. |
|---|---|---|
| 110-00248 | 6680 | 1B |
| | 6840 | 1B |
| 110-01002 | 4260 | 6 |
| | 4320 | 6 |
| 112-00077 | 2160 | 6-2 |
| 112-00077A | 2160 | 6-2 |
| 114-00055 | 1100 | 82 |
| 114-00225 | 4220 | 34 |
| 114-00246 | 3120 | 1-4 |
| | 6720 | 1-4 |
| | 6730 | 1-4 |
| | 6740 | 1-4 |
| | 6770 | 1AD |
| | 6780 | 1AD |
| | 6790 | 1AD |
| | 6800 | 1AD |
| | 6810 | 1AD |
| | 6940 | 1-4 |
| 114-00345 | 4160 | 361 |
| 114-00347 | 4170 | 26 |
| 114-00348 | 4170 | 27 |
| 114-00411 | 4200 | 40 |
| 114-00413 | 4200 | 53 |
| 114-00414 | 4180 | 57 |
| 114-00425 | 1200 | 13 |
| | 1220 | 24 |
| | 1260 | 4 |
| 114-00456 | 1250 | 38 |
| | 1290 | 38 |
| 114-00522 | 1200 | 9 |
| | 1220 | 3 |
| 114-00523 | 1200 | 10 |
| | 1220 | 4 |
| 114-00529 | 1610 | 36 |
| 114-00543 | 4150 | 18 |
| 114-00544 | 4150 | 19 |
| 114-00566 | 2190 | 1-1I |
| | 6270 | 1-1I |
| | 6280 | 1-1I |
| | 6290 | 1-1I |
| | 6300 | 1-1I |
| 114-00590 | 1400 | 13 |
| 115-00042 | 4220 | 20 |
| | 4221 | 19 |
| 115-00073 | 4240 | 7 |
| | 4250 | 7 |
| | 4270 | 7 |
| | 4300 | 7 |
| | 4310 | 7 |
| 115-00077 | 4240 | 11 |
| 115-00077 | 4250 | 11 |
| | 4270 | 11 |
| | 4300 | 11 |
| | 4310 | 11 |
| 115-00078 | 4240 | 12 |
| | 4250 | 12 |
| | 4270 | 12 |
| | 4300 | 12 |
| | 4310 | 12 |
| 115-00090 | 4260 | 7 |
| | 4320 | 7 |
| 115-00091 | 4260 | 12 |
| | 4320 | 12 |
| 115-00098 | 4260 | 11 |
| | 4320 | 11 |
| 115-00110 | 4260 | 20 |
| | 4320 | 20 |
| 115-00112 | 4260 | 19 |
| | 4320 | 19 |
| 115-00121 | 4240 | 19 |
| | 4250 | 19 |
| | 4270 | 19 |
| | 4300 | 19 |
| | 4310 | 19 |
| 115-00122 | 4240 | 20 |
| | 4250 | 20 |
| | 4270 | 20 |
| | 4300 | 20 |
| | 4310 | 20 |
| 115-00135 | 2160 | 6-3 |
| 116-00089A | 1470 | 53 |
| 116-00089B | 1470 | 53 |
| 116-00090A | 1470 | 54 |
| 116-00090B | 1470 | 54 |
| 116-00092A | 1490 | 32-28D |
| 116-00110 | 1470 | 44 |
| 116-00111 | 1470 | 45 |
| 119-00014AD1 | 1200 | 14 |
| 119-00020 | 4150 | 31 |
| 119-00025B | 1220 | 20 |
| 120-00127 | 4220 | 31 |
| | 4280 | 10 |
| 120-00223 | 3110 | 29 |
| | 6680 | 29 |
| | 6840 | 29 |
| 120-00258A | 1240 | 20 |
| 120-00272A | 1100 | 81 |
| 120-00293 | 4150 | 32 |
| 120-00294 | 4150 | 29 |
| 120-00314 | 2190 | 1-2 |
| 120-00314 | 6270 | 1-2 |
| | 6280 | 1-2 |
| | 6290 | 1-2 |
| | 6300 | 1-2 |
| 121-00006 | 1190 | 8 |
| | 3140 | 10 |
| | 3141 | 17-5 |
| 121-00010D1 | 1320 | 11 |
| | 1320 | 174-3 |
| | 1330 | 11 |
| | 6141 | 33-3 |
| | 6210 | 22 |
| | 6220 | 8 |
| | 6400 | 17 |
| 121-00010D3 | 1190 | 1-4 |
| 121-00010D7 | 6140 | 24 |
| | 6141 | 24 |
| | 6141 | 33-9 |
| 121-00044 | 4240 | 23 |
| | 4250 | 23 |
| | 4270 | 23 |
| | 4300 | 23 |
| | 4310 | 23 |
| 121-00083 | 2150 | 4-1G |
| 121-00084 | 2190 | 1-3 |
| | 6270 | 1-3 |
| | 6280 | 1-3 |
| | 6290 | 1-3 |
| | 6300 | 1-3 |
| 123-00285 | 4170 | 17 |
| 123-00457 | 4150 | 13 |
| 123-00459 | 4150 | 7 |
| 123-00510 | 2190 | 1-1E |
| | 6270 | 1-1E |
| | 6280 | 1-1E |
| | 6290 | 1-1E |
| | 6300 | 1-1E |
| 123-00511 | 2190 | 1-1G |
| | 6270 | 1-1G |
| | 6280 | 1-1G |
| | 6290 | 1-1G |
| | 6300 | 1-1G |
| 123-00515A | 1470 | 52-2 |
| 123-00516B | 1530 | 2 |
| | 6110 | 6 |
| 123-00522B | 1470 | 49-9 |
| 123-00523 | 1460 | 66 |
| | 1530 | 7 |
| | 6110 | 5 |
| 123-00524B | 1400 | 2 |

| PART NO. | FIG NO. | KEY NO. |
|---|---|---|
| 123-00578 | 3110 | 5 |
| | 6680 | 5 |
| | 6840 | 5 |
| 123-00578A | 3110 | 5 |
| | 6680 | 5 |
| | 6840 | 5 |
| 123-00668 | 3110 | 6 |
| | 6680 | 6 |
| | 6840 | 6 |
| 123-00668A | 3110 | 6 |
| | 6680 | 6 |
| | 6840 | 6 |
| 123-00668B | 3110 | 6 |
| | 6680 | 6 |
| | 6840 | 6 |
| 124-00010 | 1490 | 32-35 |
| 124-00129 | 4260 | 33 |
| | 4260 | 37 |
| | 4320 | 33 |
| | 4320 | 37 |
| 124-00150 | 4170 | 45 |
| 124-00151 | 4170 | 46 |
| 124-00157 | 4240 | 27 |
| | 4250 | 27 |
| | 4300 | 27 |
| | 4310 | 27 |
| 124-00158 | 4240 | 38 |
| | 4250 | 38 |
| | 4300 | 34 |
| | 4310 | 34 |
| 124-00194 | 1160 | 43 |
| 124-00199D1 | 6220 | 11 |
| 124-00199D4 | 3140 | 14 |
| | 3141 | 14 |
| 124-00199D5 | 3140 | 12 |
| | 6400 | 18 |
| 124-00208D2 | 1150 | 22 |
| | 1160 | 22 |
| | 1190 | 12 |
| | 1210 | 9 |
| | 1300 | 145 |
| | 1660 | 30 |
| | 1670 | 36 |
| | 1700 | 18 |
| | 1730 | 7 |
| | 1740 | 22 |
| | 6140 | 28 |
| | 6140 | 55 |
| | 6141 | 28 |
| | 6141 | 55 |
| 124-00208D2 | 6170 | 17 |
| 124-00208D3 | 1210 | 20 |
| | 1660 | 29 |
| | 1670 | 35 |
| | 1670 | 35 |
| | 1700 | 17 |
| | 1740 | 23 |
| | 1770 | 35 |
| | 6210 | 41 |
| | 6370 | 13 |
| 124-00208D4 | 1740 | 24 |
| | 6170 | 9 |
| 124-00208D5 | 1300 | 94 |
| | 1670 | 51 |
| | 6140 | 22 |
| | 6141 | 22 |
| | 6320 | 31 |
| | 6330 | 10 |
| 124-00208D6 | 1210 | 21 |
| | 1700 | 26 |
| | 1740 | 25 |
| | 6100 | 11 |
| | 6340 | 1 |
| 124-00208D7 | 1190 | 14 |
| | 1310 | 42 |
| | 1311 | 42 |
| | 1750 | 16 |
| | 6210 | 24 |
| | 6310 | 28 |
| | 6330 | 25 |
| 124-00209D1 | 1210 | 15 |
| | 1210 | 53 |
| | 1300 | 93 |
| | 1740 | 26 |
| | 1770 | 36 |
| | 6310 | 23 |
| 124-00209D2 | 1350 | 35 |
| | 1360 | 35 |
| 124-00209D3 | 1370 | 47 |
| 124-00209D4 | 6320 | 36 |
| 124-00210A | 1250 | 35 |
| 124-00218 | 1250 | 15 |
| 124-00247 | 1290 | 33 |
| 124-00297A | 1170 | 4 |
| 124-00299A | 6350 | 4 |
| | 6360 | 4 |
| | 6890 | 4 |
| 124-00310A | 1150 | 14 |
| 124-00344 | 1490 | 32-36 |
| 125-00034A | 1580 | 3-2A |
| 125-00035A | 1580 | 3-3A |
| | 1590 | 4-2A |
| 125-00071B | 1600 | 5-2A |
| 125-00072 | 1490 | 32-11 |
| 125-00073B | 1470 | 49-4A |
| 125-00074B | 1470 | 49-5A |
| 125-00075A | 1620 | 2 |
| 125-00077 | 1480 | 70 |
| 125-00078 | 1480 | 71 |
| 125-00096A | 1470 | 49-4 |
| 125-00097A | 1470 | 49-5 |
| 129-00042 | 4220 | 10 |
| 129-00043 | 4220 | 18 |
| | 4221 | 17 |
| 129-00062 | 4160 | 705 |
| 129-00071 | 4260 | 29 |
| | 4320 | 29 |
| 129-00096 | 4160 | 114 |
| 129-00097 | 4160 | 362 |
| 129-00098 | 4160 | 533 |
| 129-00124 | 4200 | 21 |
| 129-00125 | 4200 | 26 |
| 129-00126 | 4180 | 33 |
| 129-00127 | 4200 | 35 |
| 129-00128 | 4200 | 39 |
| 129-00129 | 4200 | 48 |
| 129-00130 | 4200 | 45 |
| 129-00139 | 4200 | 98 |
| 129-00155 | 1470 | 69 |
| 133-00220E | 1490 | 37 |
| 133-00221 | 1490 | 32-9 |
| 133-00229A | 1510 | 10 |
| 133-00230A | 1510 | 11 |
| 133-00248 | 1470 | 49-4C |
| | 1470 | 49-5C |
| 1-33923-0790 | 1720 | 1-1 |
| 1-33926-0730 | 1720 | 3-3 |
| 1-33931-0021 | 1720 | 7-14 |
| 1-33953-0150 | 1720 | 7-11 |
| 136-00055A | 1490 | 32-12 |
| 137-00092 | 1490 | 32-10 |
| 140-00052 | 4310 | 38 |
| 140-00053 | 4300 | 38 |
| 140-01092A | 6380 | 3 |
| 140-01093A | 6380 | 15 |
| 140-01094A | 6380 | 16 |
| 140-01095A | 6380 | 17 |
| 140-01343A | 4150 | 30 |
| 142-00127B | 1470 | 52 |
| 142-00127C | 1470 | 52 |

| PART NO. | FIG NO. | KEY NO. |
|---|---|---|
| 142-00128B | 1470 | 51 |
| 145-00069 | 1620 | 14 |
| 145-00124A | 1490 | 32-18 |
| 148-00012 | 4221 | 16 |
| 148-00019 | 4160 | 504 |
| 159-00017 | 4220 | 19 |
| | 4221 | 18 |
| 159-00233 | 4150 | 20 |
| 159-00287A | 1380 | 8 |
| | 1390 | 8 |
| 159-00290A | 1380 | 7 |
| | 1390 | 7 |
| 159-00294A | 6420 | 1 |
| | 6430 | 1 |
| 159-00294B | 6420 | 1 |
| | 6430 | 1 |
| 160-00008 | 4220 | 33 |
| | 4280 | 5 |
| | 4281 | 5 |
| 160-00020 | 1190 | 10 |
| | 1650 | 6 |
| | 3110 | 30 |
| | 3140 | 11 |
| | 3141 | 11 |
| | 3160 | 8 |
| | 6680 | 30 |
| | 6700 | 8 |
| | 6840 | 30 |
| | 6860 | 8 |
| 160-00050 | 1610 | 35 |
| 160-00061 | 6590 | 1 |
| | 6630 | 1 |
| 160-00071 | 1510 | 5 |
| 160-00072 | 1510 | 6 |
| 160-00074A | 1460 | 121 |
| | 1460 | 121 |
| 160-00080A | 1510 | 7 |
| 160-00081 | 1100 | 25 |
| 161-00080 | 4220 | 9 |
| | 4221 | 9 |
| 161-00195 | 1470 | 34 |
| | 1490 | 34 |
| | 6460 | 8 |
| 161-00280 | 6190 | 4 |
| | 6190 | 4 |
| | 6200 | 7 |
| | 6870 | 7 |
| 161-00281 | 1250 | 24 |
| | 3130 | 21 |
| | 3130 | 21 |
| 161-00381 | 1510 | 14 |
| | 6180 | 22 |
| 161-00382 | 1510 | 15 |
| | 6330 | 27 |
| 161-00404 | 6610 | 9 |
| 161-00551 | 1120 | 8 |
| 161-00553 | 1120 | 9 |
| 161-00580 | 1600 | 19 |
| 161-00598A | 1460 | 59 |
| 161-00599 | 6110 | 4 |
| 161-00600 | 6110 | 8 |
| 161-00609C | 1480 | 84 |
| 161-00609E | 1480 | 84 |
| 161-00610C | 1480 | 85 |
| 161-00610E | 1480 | 85 |
| 161-00613B | 1480 | 90 |
| 161-00614 | 1630 | 15 |
| 161-00618B | 1470 | 63 |
| 161-00619B | 1470 | 64 |
| 161-00620 | 1490 | 32-28C |
| 161-00621B | 1490 | 32-28 |
| 161-00622 | 1440 | 23 |
| 161-00623 | 1490 | 32-6 |
| 161-00624 | 1440 | 34 |
| 161-00639 | 6110 | 13 |
| | 6420 | 8 |
| | 6430 | 6 |
| 161-00640 | 1460 | 30 |
| 161-00640A | 1460 | 30 |
| 162-00033 | 1490 | 32-3C |
| 162-00033A | 1490 | 32-3C |
| 162-00034B | 1470 | 7 |
| 162-00035A | 1460 | 6 |
| 162-00038 | 1460 | 9 |
| 162-00039A | 1460 | 8 |
| 162-00040A | 6420 | 2 |
| | 6430 | 2 |
| 171-00060A | 6110 | 3 |
| 172-00052C | 1490 | 15 |
| 172-00052E | 1490 | 15 |
| 172-00053B | 1520 | 1 |
| 172-00055A | 1480 | 91 |
| 172-00372A | 1520 | - |
| 180-00077D7 | 3110 | 24 |
| | 6680 | 24 |
| | 6840 | 24 |
| 180-00197 | 4220 | 16 |
| 180-00198 | 4210 | 18 |
| | 4220 | 23 |
| | 4221 | 22 |
| 180-00199 | 4220 | 24 |
| | 4221 | 23 |
| 180-00200 | 1220 | 21A |
| 180-00297D2 | 2100 | 1A |
| 180-00345 | 4170 | 34 |
| 180-00363 | 4240 | 15 |
| | 4250 | 15 |
| | 4270 | 15 |
| | 4300 | 15 |
| | 4310 | 15 |
| 180-00398 | 4200 | 47 |
| 180-00400 | 4200 | 102 |
| 180-00402 | 4190 | 66 |
| 180-00445 | 4200 | 55 |
| 180-00454 | 2190 | 1-1K |
| | 6270 | 1-1K |
| | 6280 | 1-1K |
| | 6290 | 1-1K |
| | 6300 | 1-1K |
| 180-00459 | 2150 | 4-1L |
| 180-00460 | 2150 | 4-1M |
| 180-00461 | 2150 | 4-1N |
| 180-00463 | 1100 | 7 |
| | 2100 | 12 |
| 180-00472 | 4150 | 24 |
| 181-00008 | 6370 | 8 |
| 181-00078D1 | 6210 | 3 |
| | 6220 | 3 |
| 181-00078D5 | 6400 | 11 |
| 181-00086D1 | 1320 | 174-6 |
| | 1330 | 12 |
| | 6141 | 33-6 |
| 181-00086D2 | 1320 | 13 |
| | 1320 | 174-7 |
| | 1330 | 13 |
| | 6141 | 33-7 |
| 181-00103 | 1190 | 7 |
| | 3140 | 9 |
| | 3141 | 17-4 |
| 181-00121D8 | 6120 | 7 |
| | 6150 | 7 |
| 181-00144D6 | 1320 | 99 |
| 181-00319 | 4220 | 21 |
| 181-00519 | 4160 | 461 |
| 181-00525 | 3141 | 17-2 |
| 181-00561 | 4180 | 72 |
| | 4190 | 72 |
| 181-00562 | 4180 | 71 |
| 181-00628 | 4200 | 37 |
| 181-00630 | 4200 | 43 |

| PART NO. | FIG NO. | KEY NO. |
|---|---|---|
| 181-00631 | 4200 | 52 |
| 181-00633 | 4180 | 60 |
| 181-00647 | 4180 | 92 |
| | 4200 | 92 |
| 181-00649 | 4180 | 93 |
| 181-00716 | 1300 | 88 |
| 181-00717 | 1190 | 1-3 |
| 181-00779 | 6140 | 2 |
| | 6141 | 2 |
| | 6170 | 6 |
| | 6320 | 3 |
| 181-00804 | 6650 | 3 |
| 182-00123 | 1150 | 11 |
| 184-00120 | 5100 | 4 |
| 185-00385B | 1770 | 21 |
| 185-00387A | 1770 | 23 |
| 185-00412D1 | 6100 | 3 |
| 186-00017A | 1200 | 7 |
| 190-00092 | 5140 | 1 |
| 190-00093 | 5140 | 9 |
| 190-00094 | 5140 | 13 |
| 190-00095 | 5150 | 9 |
| 190-00096 | 5140 | 8 |
| 190-00097 | 5150 | 10 |
| 190-00098 | 5140 | 10 |
| 190-00098A | 5140 | 10 |
| 190-00099 | 5150 | 11 |
| 190-00100 | 5150 | 5 |
| 190-00101 | 5140 | 4 |
| 190-00102 | 5140 | 12 |
| 190-00122 | 5130 | 10 |
| | 5150 | 12 |
| 190-00509BD23 | 5150 | 31 |
| 190-00521 | 5140 | 14 |
| 190-00522 | 5130 | 15 |
| | 5150 | 17 |
| 190-00522A | 5130 | 15 |
| | 5150 | 17 |
| 190-00557 | 5150 | 18 |
| 190-00648A | 5130 | 16 |
| | 5150 | 13 |
| 190-00652 | 5130 | 4 |
| | 5150 | 4 |
| 190-00688 | 5120 | 1 |
| 190-00689 | 5120 | 8 |
| 190-00691 | 5130 | 12 |
| 190-00691A | 5130 | 12 |
| 190-00692 | 5130 | 13 |
| 190-00693 | 5120 | 7 |
| 190-00694 | 5130 | 11 |
| 190-00695 | 5120 | 10 |
| 190-00695A | 5120 | 10 |
| 190-00703 | 5130 | 14 |
| 190-01059D16 | 5150 | 29 |
| 190-01107B | 1110 | 2 |
| | 6670 | 2 |
| 190-01172 | 6100 | 18 |
| 190-01192D2 | 1660 | 27 |
| 190-01192D9 | 1660 | 26 |
| 191-02986C | 1690 | 32 |
| 191-02987A | 1100 | 29 |
| 191-03166C | 1480 | 17 |
| 191-03179 | 1480 | 16 |
| 191-03179A | 1480 | 16 |
| 191-03183B | 1470 | 52-1 |
| 191-03279A | 6110 | 9 |
| 191-03280A | 6110 | 10 |
| 191-03283 | 1490 | 32-28A |
| 191-03734A | 1470 | 83 |
| 191-03736E | 6650 | 14 |
| 195-00163 | 6220 | 4 |
| | 6400 | 13 |
| 195-01535A | 6380 | 14 |
| 195-01601 | 1300 | 1 |
| 195-01683A | 1510 | 19 |
| | 6180 | 2 |
| 195-01684A | 1510 | 20 |
| | 6330 | 4 |
| 195-01805 | 6610 | 1 |
| 195-02572B | 1260 | 6 |
| 195-02622C | 1690 | 28 |
| 195-02623A | 1100 | 28 |
| 195-02624C | 1600 | 13 |
| 195-02625B | 1120 | 7 |
| 195-02625C | 1120 | 7 |
| 195-02626B | 1120 | 6 |
| 195-02643C | 1120 | 20 |
| 195-02644 | 2150 | 4-1C |
| 195-02676B | 1700 | 4 |
| 195-02676C | 1700 | 4 |
| 195-02705 | 6220 | 9 |
| 195-02711B | 6140 | 9 |
| | 6141 | 9 |
| 195-02719B | 1490 | 38 |
| 195-02729 | 1460 | 58 |
| 195-02735B | 1240 | 7 |
| 195-02739A | 1470 | 49-2 |
| 195-02739B | 1470 | 49-2 |
| 195-02739C | 1470 | 49-2 |
| 195-02740B | 1470 | 49-3 |
| 195-02740C | 1470 | 49-3 |
| 195-02740E | 1470 | 49-3 |
| 195-02742E | 1560 | 1 |
| 195-02742G | 1560 | 1 |
| 195-02742H | 1560 | 1 |
| 195-02753C | 1380 | 1 |
| 195-02755C | 1390 | 1 |
| 195-02768C | 1430 | 14 |
| 195-02769B | 1430 | 15 |
| 195-02769C | 1430 | 15 |
| 195-02770C | 1430 | 18 |
| 195-02771B | 1440 | 14 |
| 195-02772E | 1440 | 15 |
| 195-02774 | 1440 | 22 |
| 195-02775A | 6560 | 2 |
| 195-02785C | 1440 | 24 |
| 195-02790B | 1440 | 25 |
| 195-02803A | 1770 | 5 |
| 195-02803B | 1770 | 5 |
| 195-02858C | 1430 | 22 |
| 195-02868C | 1380 | 5 |
| 195-02904C | 1400 | 1-2 |
| 195-02908B | 6430 | 3 |
| | 6540 | 3 |
| 195-02908C | 6540 | 3 |
| 195-02909A | 6600 | 1 |
| 195-02910A | 6550 | 1 |
| | 6620 | 1 |
| 195-02910C | 6550 | 1 |
| | 6620 | 1 |
| 195-02925 | 6610 | 5 |
| 195-02925A | 6610 | 5 |
| 195-02948A | 1550 | 1 |
| 195-02949A | 1540 | 1 |
| 195-03123E | 6210 | 2 |
| 195-03323C | 1310 | 19 |
| 195-03374A | 6420 | 5 |
| 195-03374B | 6420 | 5 |
| 195-03435B | 6120 | 3 |
| | 6150 | 3 |
| 195-03436B | 6120 | 4 |
| | 6150 | 4 |
| 195-03444 | 6650 | 11 |
| 198-00016 | 1300 | 2 |
| | 1370 | 6 |
| 198-00028 | 1190 | 5 |
| 198-00053A | 1490 | 32-8 |
| 198-00054A | 1460 | 5 |
| 199-00126 | 5100 | 1-76 |
| 2.109-00192 | 4110 | 25 |

| PART NO. | FIG NO. | KEY NO. | PART NO. | FIG NO. | KEY NO. | PART NO. | FIG NO. | KEY NO. |
|---|---|---|---|---|---|---|---|---|
| 2.109-00248 | 4110 | 2H | 2.131-00418 | 4120 | 2E | 2.412-00224 | 4110 | 2Af |
| | 4110 | 3H | 2.131-00428 | 4120 | 2I | | 4110 | 3Af |
| 2.109-00264 | 4110 | 2G | 2.131-00429 | 4120 | 2J | 2.424-00283 | 4190 | 5 |
| 2.109-00265 | 4110 | 3G | 2.131-00430 | 4120 | 15 | 2.428-00065 | 4120 | 13 |
| 2.114-00039 | 4120 | 2Af | 2.172-00003 | 1425 | 9 | 2.430-00227 | 4130 | 1 |
| 2.114-00067 | 4120 | 2G | 2.180-00086 | 4120 | 11 | 2.430-00229 | 4120 | 1A |
| 2.114-00068 | 4120 | 2H | 2.180-00471 | 4120 | 2An | 2.430-00230 | 4130 | 1A |
| 2.114-00167 | 4110 | 2C | | 4120 | 2N | 2.453-00025 | 4110 | 2Ae |
| 2.114-00168 | 4110 | 2C | 2.180-00472 | 4100 | 7A | | 4110 | 3Ae |
| 2.114-00169 | 4110 | 2C | 2.180-01026 | 4110 | 2E | 203-00095H | 1150 | 3 |
| 2.114-00170 | 4110 | 3C | | 4110 | 3E | 203-00095J | 1150 | 3 |
| 2.114-00171 | 4110 | 3C | 2.180-01027 | 4110 | 2E | 203-00095K | 1150 | 3 |
| 2.114-00172 | 4110 | 3C | | 4110 | 3E | 204-00066 | 1170 | 1 |
| 2.114-00173 | 4110 | 3C | 2.180-01028 | 4110 | 2E | 204-00069 | 1170 | 1C |
| 2.114-00174 | 4110 | 3C | | 4110 | 3E | 204-00070 | 1170 | 1D |
| 2.114-00175 | 4110 | 22 | 2.180-01029 | 4110 | 2E | 2100-1184D7 | 4281 | 2-2 |
| 2.114-00877 | 4130 | 2E | | 4110 | 3E | 2106-1019D22 | 5110 | 10 |
| 2.115-00311 | 4110 | 20 | 2.180-01030 | 4110 | 2E | 2106-1019D25 | 1770 | 25 |
| 2.115-00327 | 4110 | 21 | | 4110 | 3E | | 5110 | 9 |
| 2.120-00611 | 4110 | 23 | 2.180-01031 | 4110 | 2E | 2106-1019D26 | 5110 | 31 |
| | 4120 | 2P | | 4110 | 3E | | 6900 | 2 |
| 2.120-00612 | 4120 | 2Au | 2.180-01032 | 4110 | 2E | 2107-6006 | 1770 | 13 |
| 2.120-00613 | 4120 | 2Ah | | 4110 | 3E | 2110-1071A | 2140 | 4 |
| 2.120-00615 | 4120 | 1E | 2.180-01033 | 4110 | 3E | 2110-1072A | 2160 | 6-4 |
| 2.120-00616 | 4120 | 2U | 2.180-01180 | 4130 | 2G | 2110-1073A | 2160 | 6-5 |
| 2.120-00617 | 4130 | 2D | 2.180-01181 | 4120 | 2Ao | 2110-1184D7 | 4220 | 28 |
| 2.120-00624 | 4110 | 24 | 2.180-01182 | 4130 | 2H | | 4221 | 27 |
| 2.120-00801 | 4120 | 26 | 2.180-01189 | 4120 | 1C | | 4280 | 3 |
| 2.120-00826 | 4120 | 2Ap | 2.180-01191 | 4120 | 2Am | 2112-6005 | 2170 | 5-3 |
| 2.120-00828 | 4120 | 2S | 2.180-01192 | 4130 | 1B | 2114-1058D10 | 1300 | 3 |
| 2.120-00829 | 4110 | 4A | 2.180-01196 | 4120 | 1B | | 1370 | 38 |
| 2.120-00831 | 4130 | 1C | 2.180-01197 | 4120 | 2O | 2114-1058D2 | 1450 | 4 |
| 2.120-00836 | 4120 | 1D | 2.180-01203 | 4110 | 28 | | 1450 | 4 |
| 2.120-00837 | 4120 | 42 | 2.181-00262 | 4120 | 2At | 2114-1058D29 | 1100 | 34 |
| 2.121-00202 | 4120 | 2Al | 2.181-00268 | 4180 | 61 | | 1600 | 5-12 |
| | 4120 | 2R | 2.181-00269 | 4190 | 91 | | 1630 | 14 |
| 2.121-00226 | 4170 | 54 | 2.181-00323 | 4190 | 105 | | 1750 | 4 |
| 2.121-00263 | 4120 | 1G | 2.317-00047 | 4110 | 9 | | 1770 | 19 |
| 2.123-00065 | 4120 | 2Ae | 2.405-00154 | 4110 | 27 | 2114-1058D30 | 1240 | 23 |
| 2.123-00131 | 4120 | 2Ar | 2.408-00063 | 4120 | 2Ac | | 1580 | 3-14 |
| 2.123-00134 | 4120 | 44 | 2.408-00083 | 4120 | 2D | | 1590 | 4-12 |
| 2.123-00138 | 4130 | 2J | 2.409-00177 | 4120 | 2Ab | 2114-1058D31 | 6460 | 15 |
| 2.123-00235 | 4120 | 2Ai | 2.409-00180 | 4120 | 2C | 2114-1058D45 | 1580 | 3-12 |
| 2.123-00248 | 4120 | 17 | 2.409-00200 | 4120 | 2Ad | | 1590 | 4-10 |
| 2.123-00249 | 4120 | 2F | 2.409-00205 | 4120 | 12 | 2114-1058D52 | 1770 | 32 |
| 2.123-00288 | 4120 | 2Aq | 2.409-00216 | 4130 | 2B | 2114-1058D54 | 1600 | 40 |
| 2.123-00289 | 4120 | 1F | 2.410-00138 | 4110 | 2Aa | | 1710 | 3 |
| 2.123-00300 | 4120 | 2As | | 4110 | 3Aa | 2114-1058D63 | 1150 | 3E |
| 2.131-00415 | 4120 | 2Ag | 2.412-00128 | 4110 | 3D | 2114-1058D68 | 1600 | 31 |
| 2.131-00417 | 4130 | 2C | 2.412-00131 | 4110 | 2D | | 1600 | 31 |

| PART NO. | FIG NO. | KEY NO. |
|---|---|---|
| 2114-1058D70 | 1710 | 6 |
| 2114-1154 | 1600 | 27 |
| | 1620 | 27 |
| 2114-1158A | 2160 | 6-11 |
| 2114-1816A | 1130 | 23 |
| 2114-1831A | 1100 | 4 |
| | 1190 | 3 |
| | 2100 | 23 |
| | 3120 | 1-9 |
| | 6720 | 1-9 |
| | 6730 | 1-9 |
| | 6740 | 1-9 |
| | 6770 | 1F |
| | 6780 | 1F |
| | 6790 | 1F |
| | 6800 | 1F |
| | 6810 | 1F |
| 2114-1856 | 1490 | 42 |
| 2114-1898D1 | 1450 | 7 |
| | 1450 | 7 |
| | 1510 | 4 |
| | 1540 | 3 |
| | 1550 | 3 |
| | 6460 | 12 |
| | 6600 | 2 |
| 2114-1898D10 | 6460 | 16 |
| 2114-1898D13 | 1460 | 76 |
| | 1480 | 76 |
| 2114-1898D14 | 1100 | 15 |
| | 1400 | 1-5 |
| | 1400 | 5 |
| | 1430 | 31 |
| | 1440 | 28 |
| | 1440 | 28 |
| | 1440 | 28 |
| | 1460 | 18 |
| | 1470 | 18 |
| | 1480 | 18 |
| | 1490 | 18 |
| | 1510 | 9 |
| | 1530 | 6 |
| | 6110 | 17 |
| 2114-1898D15 | 1410 | 4 |
| | 1490 | 23 |
| | 1490 | 23 |
| | 1490 | 32-22 |
| | 1495 | 3 |
| | 1520 | 3 |
| 2114-1898D17 | 1400 | 8 |
| | 1510 | 2 |
| 2114-1898D17 | 6440 | 2 |
| | 6450 | 2-2 |
| | 6450 | 3 |
| | 6460 | 9 |
| | 6920 | 4 |
| 2114-1898D18 | 1400 | 11 |
| 2114-1898D2 | 1470 | 49-13 |
| | 1490 | 32-25 |
| | 1490 | 46 |
| | 6460 | 13 |
| | 6920 | 6 |
| 2114-1898D3 | 1460 | 19 |
| | 1470 | 19 |
| | 1470 | 19 |
| | 1470 | 49-10 |
| | 1470 | 49-10 |
| | 1480 | 19 |
| | 1490 | 19 |
| | 1490 | 32-29 |
| | 1530 | 3 |
| | 6110 | 14 |
| | 6650 | 12 |
| 2114-1898D4 | 1380 | 19 |
| 2114-1898D5 | 1430 | 36 |
| | 1440 | 31 |
| | 1480 | 113 |
| | 6420 | 9 |
| | 6430 | 8 |
| 2114-1898D6 | 1460 | 26 |
| | 1470 | 26 |
| | 1470 | 52-3 |
| | 6460 | 17 |
| | 6540 | 5 |
| | 6550 | 8 |
| | 6620 | 2 |
| 2114-1929 | 1120 | 19 |
| 2114-2031D1 | 1480 | 97 |
| 2114-2031D4 | 1400 | 6 |
| | 1430 | 33 |
| 2114-9012A | 1120 | 21 |
| | 2100 | 24 |
| | 2130 | 24 |
| | 6250 | 8 |
| | 6260 | 8 |
| 2116-1060D5 | 3100 | 17 |
| | 3110 | 16 |
| | 6680 | 16 |
| | 6840 | 16 |
| 2116-1522 | 1580 | 3-4 |
| | 1590 | 4-3 |
| 2116-1539 | 3100 | 7 |
| 2116-9003 | 5120 | 6 |
| | 5140 | 6 |
| 2119-1063A | 1190 | 1-1G |
| 2120-1036D12 | 1690 | 4 |
| 2120-1354 | 1690 | 14 |
| 2120-1363 | 1190 | 1-1D |
| 2120-2150D1 | 1490 | 43 |
| 2120-2150D3 | 1490 | 28 |
| | 1490 | 32-33 |
| 2120-2159 | 1700 | 15 |
| | 1700 | 25 |
| 2120-2166D1 | 1410 | 3 |
| | 1490 | 32-23 |
| | 1490 | 41 |
| | 1510 | 3 |
| | 1540 | 2 |
| | 1550 | 2 |
| 2120-2166D10 | 1380 | 10 |
| | 1390 | 10 |
| | 1440 | 26 |
| | 1440 | 26 |
| | 1440 | 26 |
| | 1480 | 14 |
| | 6430 | 10 |
| 2120-2166D12 | 1440 | 29 |
| | 1460 | 25 |
| | 1470 | 25 |
| | 1470 | 49-12 |
| | 1480 | 25 |
| | 1490 | 25 |
| | 1510 | 26 |
| 2120-2166D18 | 1480 | 99 |
| 2120-2166D2 | 1450 | 6 |
| | 1450 | 6 |
| | 1520 | 2 |
| | 6180 | 16 |
| | 6330 | 13 |
| 2120-2166D23 | 1430 | 26 |
| 2120-2166D26 | 1460 | 77 |
| | 1480 | 77 |
| 2120-2166D27 | 6440 | 3 |
| | 6450 | 2-3 |
| | 6450 | 4 |
| | 6460 | 10 |
| | 6920 | 5 |
| 2120-2166D28 | 1460 | 20 |
| | 1470 | 20 |
| | 1470 | 49-11 |
| | 1470 | 49-11 |

| PART NO. | FIG NO. | KEY NO. |
|---|---|---|
| 2120-2166D28 | 1480 | 20 |
| | 1490 | 20 |
| | 1490 | 32-30 |
| 2120-2166D32 | 6460 | 23 |
| 2120-2166D36 | 1430 | 35 |
| | 1440 | 30 |
| 2120-2166D37 | 1460 | 27 |
| 2120-2166D4 | 1490 | 22 |
| | 1495 | 2 |
| | 1510 | 16 |
| 2120-2166D41 | 1220 | 25 |
| 2120-2166D5 | 1100 | 14 |
| | 1400 | 1-3 |
| | 1400 | 10 |
| | 1430 | 32 |
| | 1440 | 35 |
| | 1440 | 35 |
| | 1440 | 35 |
| | 1460 | 47 |
| | 1490 | 32-24 |
| | 1490 | 47 |
| | 6180 | 18 |
| | 6330 | 21 |
| | 6460 | 22 |
| | 6920 | 7 |
| 2120-2166D52 | 1380 | 16 |
| | 1390 | 11 |
| | 1430 | 23 |
| | 1470 | 49-15 |
| | 1470 | 80 |
| | 1470 | 80 |
| | 1470 | 80 |
| | 1480 | 80 |
| | 1490 | 32-31 |
| | 6420 | 6 |
| | 6430 | 9 |
| | 6460 | 25 |
| 2120-2166D53 | 1380 | 9 |
| | 1390 | 9 |
| | 1410 | 5 |
| | 1430 | 24 |
| | 1440 | 27 |
| | 1460 | 111 |
| | 1480 | 111 |
| | 1490 | 32-37 |
| 2120-2166D54 | 6540 | 4 |
| | 6550 | 2 |
| | 6620 | 3 |
| 2120-2166D55 | 1510 | 1 |
| 2120-2166D57 | 1430 | 38 |
| 2120-2166D58 | 1440 | 36 |
| 2120-2166D7 | 1460 | 31 |
| | 1470 | 31 |
| | 1480 | 31 |
| | 6110 | 16 |
| 2120-2166D9 | 1530 | 4 |
| | 6650 | 13 |
| 2120-2187 | 1210 | 19 |
| | 1700 | 13 |
| | 1740 | 31 |
| | 1770 | 33 |
| 2121-1305 | 1670 | 52 |
| | 1670 | 52 |
| | 1700 | 20 |
| | 1700 | 27 |
| 2121-1311D1 | 1400 | 9 |
| | 1470 | 52-4 |
| | 6460 | 18 |
| 2121-1311D2 | 1400 | 7 |
| | 1470 | 49-14 |
| | 6460 | 14 |
| 2121-1311D4 | 1470 | 39 |
| | 1490 | 39 |
| | 6460 | 11 |
| 2121-9007 | 1450 | 5 |
| | 1450 | 5 |
| 2122-1002D2 | 5130 | 9 |
| | 5150 | 8 |
| 2122-1002D4 | 5130 | 17 |
| | 5150 | 14 |
| 2123-1057D47 | 1620 | 26 |
| 2123-1107D6 | 1100 | 5 |
| 2123-1107D7 | 1100 | 5 |
| 2123-1218 | 2140 | 5 |
| 2123-1629 | 2190 | 1-1J |
| | 6270 | 1-1J |
| | 6280 | 1-1J |
| | 6290 | 1-1J |
| | 6300 | 1-1J |
| 2123-1717B | 1190 | 4 |
| 2123-2031C | 3100 | 6 |
| 2123-2247 | 1490 | 32-19 |
| 2123-2349B | 3100 | 5 |
| 2123-2351A | 3110 | 8 |
| | 6680 | 8 |
| | 6840 | 8 |
| 2123-2352A | 3110 | 9 |
| | 6680 | 9 |
| | 6840 | 9 |
| 2123-2353A | 3110 | 10 |
| 2123-2353A | 6680 | 10 |
| | 6840 | 10 |
| 2123-2356A | 3100 | 3 |
| 2123-6118 | 2170 | 5-6 |
| 2123-6119 | 1490 | 32-3B |
| 2124-1025D5 | 1260 | 29 |
| | 6150 | 10 |
| 2124-1026D3 | 6120 | 10 |
| 2124-1084D2 | 6400 | 12 |
| 2124-1353D2 | 3140 | 15 |
| | 3141 | 15 |
| 2124-1509D1 | 1730 | 8 |
| | 6560 | 6 |
| 2124-1622D1 | 5150 | 32 |
| 2124-1689A | 1490 | 32-20 |
| 2125-1095A | 1440 | 16 |
| 2125-9055 | 1490 | 35 |
| 2126-9001 | 1190 | 1-1E |
| 2127-1002A | 1490 | 48 |
| 2129-1008 | 1220 | 15 |
| 2129-1393 | 1220 | 7 |
| 2129-1446 | 1490 | 117 |
| 213-00029C | 1430 | 13 |
| 213-00030B | 1430 | 8 |
| 213-00031E | 1430 | 9 |
| 213-00032B | 1430 | 10 |
| 213-00033B | 1430 | 11 |
| 213-00034E | 1430 | 12 |
| 213-00035B | 1430 | 7 |
| 213-00036B | 1440 | 2 |
| 213-00037B | 1440 | 3 |
| 213-00038B | 1440 | 4 |
| 213-00039B | 1440 | 5 |
| 213-00040A | 1440 | 21 |
| 2132-1133B | 1510 | 22 |
| 2132-1134B | 1510 | 21 |
| 2136-1433 | 1220 | 14 |
| 2140-1338 | 1470 | 55 |
| | 1480 | 55 |
| 2142-9005 | 1490 | 33 |
| 2150-1132A | 1490 | 32-14 |
| 2150-1133 | 1480 | 93 |
| 2155-1349A | 3110 | 3 |
| | 6680 | 3 |
| | 6840 | 3 |
| 2155-1350A | 3110 | 4 |
| | 6680 | 4 |
| | 6840 | 4 |
| 2160-1004D42 | 1100 | 16 |
| 2160-1004D45 | 1100 | 27 |

| PART NO. | FIG NO. | KEY NO. | PART NO. | FIG NO. | KEY NO. | PART NO. | FIG NO. | KEY NO. |
|---|---|---|---|---|---|---|---|---|
| 2160-1004D55 | 1100 | 24 | 2180-1026D37 | 6200 | 34 | 2181-1116D3 | 4260 | 31 |
| 2160-1201D14 | 1100 | 26 | | 6710 | 34 | | 4320 | 31 |
| 2160-1201D9 | 1100 | 18 | | 6870 | 34 | 2181-1126D103 | 6170 | 32 |
| 2160-1212 | 1740 | 4 | 2180-1106BD14 | 3100 | 11 | 2181-1126D14 | 1310 | 34 |
| 2160-1213 | 1740 | 5 | | 3110 | 12 | | 1311 | 34 |
| 2160-1310 | 1460 | 21 | | 6680 | 12 | | 1340 | 34 |
| 2160-1345 | 1540 | 4 | | 6840 | 12 | | 1370 | 29 |
| 2160-1346 | 1550 | 4 | 2180-1106BD15 | 3100 | 1B | | 2200 | 18 |
| 2160-4003 | 2200 | 20 | | 3100 | 10 | | 2210 | 18 |
| | 2210 | 20 | | 3110 | 13 | | 6170 | 3 |
| 2161-2212 | 1480 | 72 | | 6680 | 13 | | 6170 | 3 |
| 2161-2487 | 1510 | 25 | | 6840 | 13 | | 6180 | 10 |
| 2161-9052 | 1580 | 3-5 | 2180-1106BD6 | 3110 | 11 | | 6320 | 5 |
| | 1590 | 4-4 | | 6680 | 11 | | 6320 | 34 |
| 2161-9053 | 1580 | 3-6 | | 6840 | 11 | | 6330 | 23 |
| | 1590 | 4-5 | 2180-1216D109 | 4180 | 89 | | 6380 | 10 |
| 2161-9057 | 1450 | 1 | 2180-1216D150 | 4260 | 15 | | 6400 | 10 |
| 2161-9058 | 1450 | 2 | | 4320 | 15 | 2181-1126D27 | 1340 | 45 |
| 2171-1078 | 1490 | 32-15 | 2180-1217D156 | 4160 | 707 | | 1350 | 26 |
| 2172-9021 | 1490 | 32-17 | 2180-1217D159 | 4140 | 39 | | 1360 | 26 |
| 2180-1026D19 | 1250 | 23 | 2180-1217D160 | 4140 | 18 | | 6370 | 31 |
| | 1250 | 23 | 2180-6005 | 2160 | 6-7 | 2181-1126D28 | 1350 | 27 |
| | 1260 | 23 | 2180-6086 | 1770 | 21A | | 1360 | 27 |
| | 1270 | 23 | 2180-6088 | 1770 | 20A | 2181-1126D31 | 6210 | 7 |
| | 1280 | 23 | 2180-8002A | 4160 | 491 | 2181-1126D34 | 1310 | 21 |
| | 1290 | 23 | 2180-9005A | 2160 | 6-6 | | 1310 | 142 |
| | 2200 | 6 | 2180-9005B | 2160 | 6-6 | | 1311 | 21 |
| | 2210 | 6 | 2180-9057 | 2140 | 6 | | 6140 | 51 |
| | 3130 | 15 | 2180-9153 | 5110 | 12 | | 6141 | 51 |
| | 3150 | 4 | 2181-1110D1 | 3160 | 23 | 2181-1126D36 | 1310 | 52 |
| | 6120 | 24 | | 6700 | 23 | | 1311 | 52 |
| | 6150 | 24 | | 6860 | 23 | | 1370 | 31 |
| | 6190 | 10 | 2181-1110D10 | 1190 | 1-1H | | 1370 | 72 |
| | 6690 | 4 | 2181-1110D22 | 1190 | 1-2 | | 6140 | 12 |
| | 6850 | 4 | 2181-1110D30 | 1190 | 11 | | 6141 | 12 |
| 2180-1026D23 | 1250 | 65 | 2181-1111D11 | 3160 | 20 | 2181-1126D6 | 1230 | 25 |
| | 1250 | 65 | | 6700 | 20 | | 1300 | 17 |
| | 1290 | 65 | | 6860 | 20 | | 1310 | 17 |
| | 6190 | 8 | 2181-1116D1 | 3110 | 19 | | 1311 | 17 |
| | 6200 | 3 | | 4220 | 3 | | 1311 | 152 |
| | 6710 | 2 | | 4221 | 4 | | 1370 | 30 |
| | 6870 | 3 | | 6680 | 19 | | 6310 | 6 |
| 2180-1026D24 | 1240 | 17 | | 6840 | 19 | 2181-1126D7 | 1320 | 35 |
| 2180-1026D27 | 1240 | 18 | 2181-1116D2 | 2140 | 8 | | 1330 | 35 |
| 2180-1026D30 | 6350 | 8 | | 2170 | 5-8 | | 1340 | 35 |
| | 6360 | 15 | | 2180 | 11 | | 1350 | 71 |
| | 6830 | 7 | | 4140 | 33 | | 1360 | 82 |
| | 6890 | 7 | | 4160 | 564 | | 6750 | 3 |
| 2180-1026D31 | 1240 | 19 | | 4210 | 2 | 2181-1126D83 | 2200 | 10 |
| 2180-1026D35 | 1230 | 43 | 2181-1116D3 | 4220 | 4 | | 2210 | 10 |

| PART NO. | FIG NO. | KEY NO. |
|---|---|---|
| 2181-1126D85 | 6210 | 5 |
| 2181-1159 | 1750 | 11 |
| 2181-1184 | 3160 | 4 |
| | 6700 | 4 |
| | 6860 | 4 |
| 2181-1186D12 | 3140 | 13 |
| | 3141 | 13 |
| 2181-1702D10 | 1330 | 38 |
| | 6140 | 30 |
| | 6141 | 30 |
| 2181-1702D2 | 1300 | 39 |
| | 1300 | 39 |
| | 1310 | 39 |
| | 1340 | 151 |
| 2181-1702D3 | 1320 | 172 |
| | 6210 | 43 |
| 2181-1702D4 | 1300 | 37 |
| | 1310 | 37 |
| | 1311 | 37 |
| | 1320 | 141 |
| | 1330 | 37 |
| | 6140 | 10 |
| | 6140 | 52 |
| | 6141 | 10 |
| | 6141 | 52 |
| | 6170 | 4 |
| | 6170 | 4 |
| | 6180 | 20 |
| | 6320 | 4 |
| | 6320 | 4 |
| | 6330 | 24 |
| 2181-1702D5 | 1350 | 83 |
| | 1360 | 24 |
| | 6750 | 4 |
| 2181-1702D51 | 6750 | 5 |
| 2181-1702D56 | 1300 | 40 |
| | 6320 | 17 |
| 2181-1702D57 | 1320 | 50 |
| 2181-1890D2 | 4160 | 569 |
| 2181-1890D3 | 4160 | 571 |
| 2181-1890D4 | 4170 | 32 |
| 2181-1916D5 | 6380 | 11 |
| 2181-1918D6 | 1650 | 7 |
| 2181-1923D12 | 3160 | 13 |
| | 6380 | 12 |
| | 6700 | 13 |
| | 6860 | 13 |
| 2181-1925 | 1650 | 3 |
| | 3141 | 12 |
| 2181-1950D1 | 1240 | 41 |
| 2181-1950D1 | 1250 | 34 |
| | 1310 | 143 |
| | 1311 | 143 |
| | 4160 | 567 |
| | 4230 | 4 |
| | 4231 | 5 |
| 2181-1950D2 | 1240 | 149 |
| | 1340 | 32 |
| 2181-1950D3 | 1320 | 171 |
| | 1340 | 152 |
| | 4160 | 464 |
| 2181-1950D7 | 1190 | 1-5 |
| | 1220 | 18 |
| | 1220 | 23 |
| 2181-1950D9 | 1200 | 51 |
| | 1230 | 146 |
| | 1240 | 147 |
| | 6190 | 13 |
| 2181-1951D1 | 1310 | 48 |
| | 1311 | 48 |
| | 6140 | 11 |
| | 6170 | 5 |
| 2181-1951D11 | 6180 | 19 |
| 2181-1951D14 | 6340 | 4 |
| 2181-1951D16 | 1320 | 51 |
| | 1330 | 51 |
| | 1340 | 51 |
| | 6390 | 3 |
| 2181-1951D19 | 6141 | 11 |
| 2181-1951D5 | 1310 | 16 |
| | 1311 | 16 |
| 2181-1951D6 | 1330 | 53 |
| | 6180 | 9 |
| | 6330 | 22 |
| 2181-1951D7 | 6330 | 12 |
| 2181-2104D8 | 6100 | 7 |
| 2181-2157D6 | 1240 | 42 |
| 2181-2170 | 1270 | 64 |
| 2181-2375D7 | 6370 | 9 |
| | 6390 | 4 |
| 2181-2419D3 | 1230 | 45 |
| | 6310 | 8 |
| 2181-2434 | 4180 | 88 |
| 2181-2627D1 | 1230 | 27 |
| 2181-2635 | 1320 | 54 |
| 2181-2815D1 | 6310 | 27 |
| 2181-2815D3 | 6310 | 4 |
| | 6710 | 35 |
| 2181-2816D3 | 6200 | 32 |
| | 6870 | 32 |
| 2181-2816D4 | 6200 | 35 |
| | 6360 | 32 |
| | 6830 | 32 |
| | 6870 | 35 |
| | 6890 | 32 |
| 2181-2817D3 | 6200 | 33 |
| | 6710 | 33 |
| | 6870 | 33 |
| 2181-2817D4 | 6200 | 37 |
| | 6360 | 33 |
| | 6710 | 37 |
| | 6830 | 33 |
| | 6870 | 37 |
| | 6890 | 33 |
| 2181-2820D1 | 6230 | 4 |
| | 6820 | 4 |
| | 6880 | 4 |
| 2181-4112 | 3140 | 16 |
| | 3141 | 16 |
| | 3160 | 10 |
| | 3160 | 10 |
| | 6700 | 10 |
| | 6700 | 10 |
| | 6860 | 10 |
| | 6860 | 10 |
| 2181-4133D3 | 6360 | 9 |
| | 6830 | 9 |
| | 6890 | 9 |
| 2181-4133D35 | 6710 | 32 |
| 2181-4133D40 | 6210 | 6 |
| 2181-4133D6 | 6120 | 6 |
| | 6150 | 6 |
| | 6310 | 5 |
| 2181-6005 | 2160 | 6-9 |
| 2181-9078 | 1260 | 19 |
| | 1270 | 19 |
| | 1280 | 19 |
| | 1290 | 19 |
| | 3130 | 14 |
| | 3150 | 3 |
| | 6120 | 25 |
| | 6150 | 25 |
| | 6690 | 3 |
| | 6850 | 3 |
| 2181-9081 | 1250 | 39 |
| | 2200 | 7 |
| | 2210 | 7 |
| | 6190 | 9 |
| 2181-9083 | 1250 | 16 |
| | 1280 | 16 |

| PART NO. | FIG NO. | KEY NO. |
|---|---|---|
| 2181-9084A | 1250 | 31 |
| | 1280 | 31 |
| 2181-9086 | 1250 | 32 |
| | 1290 | 32 |
| | 6200 | 20 |
| | 6710 | 5 |
| | 6870 | 14 |
| 2182-1706A | 1190 | 1-1F |
| 2184-1026D136 | 1300 | 61 |
| 2184-1026D251 | 1370 | 9 |
| 2184-1026D380 | 1311 | 151 |
| | 6141 | 32 |
| 2184-1036D64 | 3160 | 1 |
| | 6860 | 1 |
| 2184-1045D131 | 3140 | 5 |
| | 3141 | 5 |
| 2184-1045D210 | 3140 | 1 |
| 2184-1045D96 | 3140 | 3 |
| | 3141 | 3 |
| 2184-1046D105 | 1190 | 6 |
| 2184-1046D269 | 6400 | 1 |
| | 6400 | 2 |
| 2184-1060D172 | 1190 | 1-7 |
| 2184-1081D111 | 3130 | 11 |
| 2184-1081D146 | 3130 | 10 |
| 2184-1081D154 | 3150 | 2 |
| 2184-1100D129 | 3130 | 10 |
| 2185-1247D116 | 1210 | 1 |
| 2185-1247D134 | 1210 | 3 |
| 2185-1247D24 | 1210 | 22 |
| 2185-1247D77 | 1210 | 17 |
| 2185-1247D78 | 1210 | 2 |
| 2185-1247D88 | 1150 | 3F |
| 2185-1308D6 | 1750 | 8 |
| 2185-1308D9 | 1750 | 7 |
| 2185-1660 | 1460 | 106 |
| 2185-1737D3 | 1230 | 6 |
| 2185-1776D1 | 1240 | 14 |
| 2186-9003 | 1750 | 10 |
| 2186-9005 | 1750 | 9 |
| 2190-2476 | 5130 | 18 |
| | 5150 | 15 |
| 2190-2477 | 5130 | 19 |
| | 5150 | 16 |
| 2190-2480 | 5120 | 4 |
| 2190-2524 | 5140 | 7 |
| 2190-2533A | 5130 | 7 |
| 2190-2556D138 | 5130 | 5 |
| 2190-3297 | 5120 | 2 |
| | 5140 | 2 |
| 2190-3379A | 5130 | 3 |
| 2190-3386A | 5120 | 5 |
| 2190-3388 | 5120 | 9 |
| 2191-2205D8 | 3100 | 16 |
| 2191-3705C | 1250 | 36 |
| | 1290 | 36 |
| 2195-1534 | 1690 | 20 |
| 2195-2394B | 1730 | 2 |
| 2195-3500 | 1200 | 19 |
| | 1740 | 17 |
| | 6170 | 29 |
| 2197-1660 | 1690 | 37 |
| | 1730 | 10 |
| | 1740 | 20 |
| 2197-1661 | 1300 | 5I |
| | 1670 | 34 |
| | 1690 | 38 |
| | 1700 | 7 |
| | 1730 | 5 |
| | 1740 | 21 |
| | 6550 | 4 |
| | 6560 | 5 |
| | 6600 | 4 |
| | 6620 | 4 |
| 2199-1004 | 5100 | 1-14 |
| 2199-1005 | 5100 | 1-15 |
| 2199-1063F30 | 5100 | 1 |
| 2199-1063F38 | 5100 | 1 |
| 2199-9007 | 5100 | 3 |
| 2199-9008 | 5100 | 2 |
| 2199-9009 | 5100 | 1-22 |
| 2199-9043 | 5100 | 1-1 |
| 2199-9057 | 5100 | 1-24 |
| 2199-9058 | 1480 | 92 |
| 2204-6039A | 1770 | 2 |
| 2204-9032 | 1170 | 2 |
| 2208-6013B | 1770 | 9 |
| 2220-1014 | 2140 | 3 |
| 2229-1006B | 2160 | 6-10 |
| 223-00043 | 4150 | 6 |
| 223-00044 | 4150 | 12 |
| 223-00045 | 4150 | 15 |
| 223-00046 | 4150 | 33 |
| 230-00056 | 4150 | 3 |
| 230-00056A | 4150 | 3 |
| 230-00057 | 4150 | 9 |
| 230-00064 | 4150 | 35 |
| 230-00065 | 4150 | 36 |
| 2401-9264KT | 4160 | * |
| 2403-1046A | 1190 | 1-1C |
| 2404-1065 | 1190 | 1-1B |
| 2415-1018 | 1690 | 41 |
| 2423-1407 | 1270 | 2 |
| | 1290 | 2 |
| 2423-1470 | 1370 | 4 |
| 2426-1175 | 1220 | 8 |
| 2426-1237 | 1300 | 5D |
| 2460-9057A | 1310 | 27 |
| | 1311 | 27 |
| 2471-1133 | 6141 | 13 |
| 2471-1135 | 1370 | 23 |
| 2471-1154 | 1300 | 5C |
| | 5110 | 2 |
| 2471-1155A | 1300 | 5E |
| 2471-9401A | 1220 | 17 |
| 2472-7003 | 1300 | 5B |
| 2502-9009 | 1710 | 21 |
| | 1720 | - |
| 2506-6008 | 1690 | 1 |
| 2512-1095D1 | 5110 | 11 |
| 2515-1016D4 | 1690 | 23A |
| | 5110 | 18 |
| | 6540 | 1A |
| | 6550 | 3A |
| | 6560 | 7A |
| | 6570 | 1A |
| | 6580 | 1A |
| 2515-1021D1 | 1480 | 75A |
| 2515-1022D1 | 1730 | 1A |
| | 5110 | 17 |
| 2516-1116 | 1670 | 31 |
| 2527-1016 | 1670 | 5A |
| | 1670 | 6A |
| | 5110 | 20 |
| 2527-1017 | 1670 | 5B |
| | 1670 | 6B |
| | 5110 | 21 |
| 2527-1018 | 1670 | 5C |
| | 1670 | 6C |
| | 5110 | 22 |
| 2527-1023A | 1690 | 15 |
| | 5110 | 24 |
| 2527-1025 | 1670 | 5D |
| | 1670 | 6D |
| | 5110 | 23 |
| 2527-9004 | 1690 | 13 |
| 2528-9040 | 1670 | 17 |
| 2531-1003 | 1660 | 8 |
| | 1660 | 9 |
| 2541-9020 | 1480 | 81 |

| PART NO. | FIG NO. | KEY NO. |
|---|---|---|
| 2543-9015 | 1660 | 6 |
| 2544-1022 | 1690 | 16 |
| 2544-9024 | 1690 | 9 |
| 2544-9033 | 1660 | 15 |
| | 1660 | 16 |
| | 1660 | 17 |
| | 1660 | 18 |
| | 1660 | 19 |
| | 1660 | 20 |
| | 1660 | 21 |
| | 1660 | 22 |
| | 1660 | 23 |
| | 1660 | 32 |
| | 6520 | 5 |
| | 6530 | 7 |
| | 6650 | 17 |
| 2547-9045 | 1300 | 97 |
| | 6640 | 3 |
| 2548-1027 | 1740 | 1A |
| 2549-9112 | 1320 | 55 |
| 2550-1014D1 | 1740 | 2 |
| 2550-1014D2 | 1740 | 3 |
| 2552-1004 | 1680 | 3 |
| 2553-1275D10 | 1740 | 16 |
| 2553-1275D39 | 1740 | 10 |
| 2553-1275D5 | 1740 | 6 |
| | 1740 | 10 |
| 2553-1275D54 | 1740 | 15 |
| 2553-1275D6 | 1740 | 14 |
| 270-00047A | 2160 | 6 |
| 270-00047B | 2160 | 6 |
| 270-00049B | 2140 | - |
| 270-00049C | 2140 | - |
| 270-00054B | 1470 | 49-6 |
| 270-00062A | 1470 | 74 |
| 2705-9002 | 1580 | 3-22 |
| | 1590 | 4-20 |
| | 1620 | 30 |
| 271-00024 | 2140 | 2 |
| 2713-6034A | 3120 | 1-5 |
| | 6720 | 1-5 |
| | 6730 | 1-5 |
| | 6740 | 1-5 |
| | 6770 | 1B |
| | 6780 | 1B |
| | 6790 | 1B |
| | 6800 | 1B |
| | 6810 | 1B |
| 2713-6035A | 3120 | 1-6 |
| | 6720 | 1-6 |
| 2713-6035A | 6730 | 1-6 |
| | 6740 | 1-6 |
| | 6770 | 1C |
| | 6780 | 1C |
| | 6790 | 1C |
| | 6800 | 1C |
| | 6810 | 1C |
| 272-00056 | 2190 | 1-1A |
| | 6270 | 1-1A |
| | 6280 | 1-1A |
| | 6290 | 1-1A |
| | 6300 | 1-1A |
| 272-00057 | 2190 | 1-1B |
| | 6270 | 1-1B |
| | 6280 | 1-1B |
| | 6290 | 1-1B |
| | 6300 | 1-1B |
| 272-00058 | 2190 | 1-1C |
| | 6270 | 1-1C |
| | 6280 | 1-1C |
| | 6290 | 1-1C |
| | 6300 | 1-1C |
| 272-00059 | 2190 | 1-1D |
| | 6270 | 1-1D |
| | 6280 | 1-1D |
| | 6290 | 1-1D |
| | 6300 | 1-1D |
| 272-00062A | 2190 | 1-1 |
| | 6270 | 1-1 |
| | 6280 | 1-1 |
| | 6290 | 1-1 |
| | 6300 | 1-1 |
| 273-00107A | 6270 | 1 |
| 273-00108A | 6280 | 1 |
| 273-00109A | 6300 | 1 |
| 273-00110 | 6270 | 1-4 |
| 273-00111 | 6280 | 1-4 |
| 273-00112 | 6300 | 1-4 |
| 274-00009KT | 2150 | * |
| 278-00090 | 4150 | 21 |
| 2891-1311 | 1490 | 32-26 |
| 354-00002 | 4220 | 27 |
| | 4280 | 4 |
| 354-00003 | 4220 | 29 |
| | 4280 | 12 |
| | 4281 | 12 |
| 359-00021A | 1480 | 87 |
| 359-00022A | 1480 | 86 |
| 401-00527 | 6100 | 1 |
| 402-00036 | 4280 | 6 |
| 402-00036 | 4281 | 6 |
| 403-00005 | 4160 | 364 |
| 404-00080 | 4170 | 9 |
| 404-00081 | 4170 | 10 |
| 404-00082 | 4170 | 11 |
| 404-00094A | 1190 | 1-1I |
| | 4150 | - |
| 404-00094B | 1190 | 1-1I |
| | 4150 | - |
| 408-00021 | 4160 | 113 |
| 409-00033 | 4160 | 12 |
| 409-00034 | 4160 | 14 |
| 409-00049 | 4200 | 95 |
| 409-00050 | 4200 | 97 |
| 410-00011 | 4160 | 11 |
| 412-00034 | 4160 | 123 |
| 412-00036 | 4160 | 741 |
| 412-00037 | 4160 | 742 |
| 412-00038 | 4170 | 20 |
| 4132-1138 | 1490 | 32-28B |
| 414-00061 | 1180 | 2 |
| 414-00063 | 1180 | 2A |
| 414-00064 | 1180 | 2B |
| 415-00032 | 4160 | 545 |
| 415-00033 | 4160 | 546 |
| 415-00034 | 4160 | 703 |
| 415-00035 | 4160 | 704 |
| 415-00037 | 4190 | 63 |
| 415-00043B | 1440 | 6 |
| 415-00044B | 1430 | 19 |
| 415-00045B | 1430 | 17 |
| 415-00046B | 1430 | 16 |
| 416-00012 | 4160 | 542 |
| 416-00018A | 1470 | 10 |
| 416-00019A | 1470 | 29 |
| 416-00019B | 1470 | 29 |
| 416-00020 | 1470 | 40 |
| 4185-1777 | 1690 | 40 |
| 420-00004A | 6380 | 4 |
| | 6400 | 4 |
| 420-00112 | 4221 | 3 |
| 420-00195 | 4160 | 350 |
| 420-00196 | 4160 | 351 |
| 420-00246 | 4200 | 67 |
| 420-00258 | 4180 | 69A |
| 420-00259 | 4190 | 70 |
| 420-00295KT | 4180 | * |
| 420-00307 | 1320 | 10 |
| | 1320 | 174-2 |
| | 6141 | 33-2 |

| PART NO. | FIG NO. | KEY NO. |
|---|---|---|
| 420-00309 | 4200 | 94A |
| 420-00347 | 4280 | - |
| | 6180 | 1 |
| | 6330 | 2 |
| 420-00352D1 | 1320 | 26 |
| | 1320 | 174-4 |
| | 6141 | 33-4 |
| 420-00382 | 4200 | 19A |
| 420-00388 | 4200 | 24A |
| 420-00453KT | 4220 | * |
| 420-00467 | 1370 | 3 |
| | 4220 | - |
| 420-00467A | 1370 | 3 |
| | 4221 | - |
| 420-00476 | 6140 | 8 |
| | 6141 | 8 |
| | 6141 | 33-8 |
| 420-00508B | 6200 | 8 |
| | 6710 | 8 |
| | 6870 | 8 |
| 420-00515B | 6200 | 19 |
| | 6710 | 9 |
| | 6870 | 9 |
| 421-00023 | 6100 | 2 |
| 4215-1003D6 | 1240 | 30 |
| 422-00027A | 1220 | 21 |
| 422-00055 | 2100 | 25 |
| 423-00046 | 4220 | 1 |
| 423-00047 | 4220 | 2 |
| 423-00081 | 4160 | 13 |
| 423-00096 | 4190 | 1 |
| 423-00097 | 4190 | 13 |
| 423-00171 | 1270 | 3 |
| | 1290 | 3 |
| 423-00172 | 4150 | 2 |
| 423-00193B | 6120 | 2 |
| 423-00199 | 1280 | 8 |
| 424-00042 | 4220 | 8 |
| | 4221 | 8 |
| 424-00085 | 4160 | 22 |
| 424-00086 | 4160 | 531 |
| 424-00115 | 4190 | 6 |
| 424-00123 | 4190 | 17 |
| 424-00148 | 4190 | 3 |
| 424-00151 | 4190 | 15 |
| 424-00156 | 4190 | 2 |
| 424-00166 | 4200 | 19 |
| 424-00203 | 4190 | 16 |
| 426-00168 | 4180 | 32 |
| 426-00169 | 4200 | 34 |
| 426-00170 | 4200 | 38 |
| 426-00171 | 4200 | 44 |
| 426-00172 | 4200 | 49 |
| 426-00173 | 4200 | 51 |
| 426-00182 | 4200 | 100 |
| 426-00245A | 1310 | 20 |
| | 4230 | - |
| 426-00247A | 6170 | 1 |
| | 6320 | 1 |
| 426-00248A | 6150 | 1 |
| 426-00249A | 6150 | 2 |
| 426-00265 | 1310 | 9 |
| 426-00266 | 6140 | 1 |
| | 6141 | 1 |
| 426-00267A | 6120 | 1 |
| 426-00278 | 1190 | 1-5 |
| | 1220 | 23 |
| 426-00282 | 6650 | 2 |
| 426-00284A | 6310 | 1 |
| 426-00284B | 6310 | 1 |
| 426-00287 | 6210 | 1 |
| 429-00004 | 4220 | 5 |
| | 4221 | 5 |
| 429-00005 | 4220 | 7 |
| | 4221 | 7 |
| 429-00006 | 4220 | 11 |
| 429-00021 | 4160 | 541 |
| 429-00024 | 4200 | 20 |
| 430-00025 | 4160 | 352 |
| 430-00033 | 4190 | 8 |
| 430-00035 | 4190 | 12 |
| 430-00038 | 4200 | 18 |
| 430-00040 | 4200 | 22 |
| 430-00041 | 4200 | 24 |
| 430-00042 | 4200 | 46 |
| 430-00045 | 4200 | 94 |
| 452-00023 | 4160 | 702 |
| 471-00075A | 1300 | 5 |
| 471-00105 | 1200 | 11 |
| 471-00105A | 1200 | 11 |
| 471-00109 | 6130 | 3 |
| | 6160 | 3 |
| 471-00118 | 1310 | 47 |
| | 1311 | 47 |
| | 6140 | 13 |
| 471-00119 | 1460 | 13 |
| 471-00127 | 1220 | 29 |
| 473-00033 | 1200 | 4 |
| 474-00037 | 1170 | 1A |
| | 5110 | 4 |
| 474-00038 | 1170 | 1B |
| | 5110 | 3 |
| 474-00041 | 6130 | 3A |
| | 6160 | 3A |
| 474-00044A | 1470 | 49-16 |
| 474-00055 | 1220 | 9 |
| | 5110 | 1 |
| 480-00018KT | 2180 | * |
| 505-00016B | 1470 | 49-7 |
| 507-00006 | 1460 | 102 |
| 507-00007 | 6650 | 8 |
| 51.06402-0062 | 013 | 210 |
| 515-00012A | 1670 | 1A |
| | 5110 | 16 |
| 515-00013 | 6590 | 5A |
| | 6610 | 10A |
| | 6630 | 5A |
| 516-00011 | 6530 | 3 |
| 516-00014 | 1690 | 24 |
| 516-00015 | 1690 | 25 |
| 519-00003 | 4230 | 3 |
| | 4231 | 3 |
| 520-00004 | 1770 | 16 |
| 527-00005 | 1700 | 1A |
| | 5110 | 19 |
| 527-00006 | 1670 | 16 |
| 530-00067 | 6140 | 29 |
| | 6141 | 29 |
| | 6410 | 4 |
| 530-00123 | 6510 | 4 |
| 530-00150 | 1680 | 2 |
| 530-00214A | 6100 | 24B |
| 530-00236 | 1300 | 5H |
| 530-00411G | 1670 | 24 |
| 530-00412G | 1660 | 28 |
| 530-00413C | 1670 | 25 |
| 530-00414C | 1680 | 10 |
| 530-00415C | 1680 | 9 |
| 530-00416B | 1670 | 30 |
| 530-00417B | 1480 | 62 |
| 530-00418D4 | 1730 | 6 |
| 530-00430A | 6540 | 2 |
| 530-00431 | 6560 | 1 |
| 530-00432A | 6240 | 2 |
| 530-00434B | 1670 | 26 |
| 530-00435A | 1670 | 27 |
| 530-00435B | 1670 | 27 |
| 530-00463A | 6550 | 7 |
| | 6580 | 2 |
| | 6600 | 7 |

| PART NO. | FIG NO. | KEY NO. | PART NO. | FIG NO. | KEY NO. | PART NO. | FIG NO. | KEY NO. |
|---|---|---|---|---|---|---|---|---|
| 530-00463A | 6620 | 7 | 549-00103 | 1670 | 20 | 621-02909C | 1430 | 4 |
| 530-00464 | 6590 | 4 | | 6530 | 1 | 621-02909E | 1430 | 4 |
| | 6630 | 4 | | 6540 | 10 | 621-02909G | 1430 | 4 |
| 534-00062 | 6590 | 5 | 553-00001D2 | 1700 | 9 | 621-02910C | 1480 | 94 |
| | 6610 | 10 | 554-00005 | 1460 | 60 | 621-02911C | 1480 | 95 |
| | 6630 | 5 | 621-01507 | 1510 | 13 | 621-02912B | 1480 | 96 |
| 534-00064 | 1730 | 1 | 621-01572 | 6670 | 9 | 621-02913C | 1440 | 7 |
| 534-00079 | 1480 | 75 | 621-02151 | 1370 | 5 | 621-02914C | 1440 | 8 |
| 534-00085 | 1690 | 23 | 621-02348 | 4150 | 16 | 621-02915B | 1440 | 9 |
| | 6540 | 1 | 621-02643B | 1690 | 30 | 621-02917C | 1440 | 11 |
| | 6550 | 3 | 621-02646E | 1600 | 5-2 | 621-02919B | 1440 | 13 |
| | 6560 | 7 | 621-02670 | 1560 | 16 | 621-02920C | 1440 | 19 |
| | 6570 | 1 | 621-02681B | 1600 | 6 | 621-02925A | 1400 | 1-4 |
| | 6580 | 1 | 621-02700A | 6350 | 3 | 621-02926B | 1390 | 2 |
| 534-00117A | 6430 | - | | 6350 | 3 | 621-02926C | 1390 | 2 |
| 538-00011 | 1460 | 73 | 621-02714A | 2100 | 10 | 621-02926E | 1390 | 2 |
| 538-00012 | 6650 | 1 | 621-02715A | 2100 | 9 | 621-02938A | 2100 | 11 |
| 539-00076B | 1670 | 1 | 621-02716E | 1600 | 5 | 621-02938B | 1100 | 6 |
| 539-00076C | 1670 | 1 | 621-02717 | 2150 | 4-1H | 621-02955B | 1660 | 1 |
| 539-00076E | 1670 | 1 | 621-02726A | 1580 | 3-7 | 621-02955C | 1660 | 1 |
| 541-00010 | 1670 | 91 | | 1590 | 4-6 | 621-02957A | 1380 | 6 |
| 541-00015 | 1460 | 101 | 621-02798 | 6350 | 14 | | 1390 | 6 |
| 541-00016 | 6650 | 7 | 621-02800 | 1100 | 13 | 621-03005A | 1400 | 4 |
| 543-00095 | 1670 | 13 | 621-02801 | 1380 | 17 | 621-03011E | 1400 | 1 |
| 543-00096 | 1670 | 14 | | 1390 | 14 | 621-03012C | 1380 | 3 |
| 543-00106 | 1660 | 7 | | 1430 | 27 | 621-03012E | 1380 | 3 |
| 543-00107 | 1770 | 1 | 621-02837A | 1460 | 61 | 621-03012G | 1380 | 3 |
| 544-00007 | 1700 | 1 | 621-02849A | 1490 | 36 | 621-03014B | 1380 | 4 |
| 545-00001 | 1670 | 15 | 621-02864 | 1460 | 12 | | 1390 | 5 |
| 545-00011 | 1660 | 12 | 621-02867A | 1490 | 32-21 | 621-03068B | 1690 | 5 |
| 547-00023 | 1670 | 48 | 621-02869B | 1490 | 32-7 | 621-03068C | 1690 | 5 |
| 547-00024A | 1750 | 18 | 621-02870C | 6110 | - | 621-03103 | 6110 | 12 |
| 547-00026 | 1200 | 2 | 621-02871B | 6110 | 1 | | 6420 | 7 |
| 548-00003A | 1740 | 1B | 621-02872 | 6110 | 2 | | 6430 | 7 |
| 549-00010 | 6140 | 26 | 621-02873 | 6110 | 7 | 621-03113B | 1480 | 67 |
| | 6141 | 26 | 621-02892E | 1510 | 12 | 621-03114B | 1480 | 68 |
| | 6410 | 2 | 621-02892G | 1510 | 12 | 621-03223 | 1450 | - |
| 549-00077 | 6650 | 6 | 621-02894C | 1440 | 1 | 621-03724 | 1470 | 49-4B |
| 549-00086 | 1470 | 57 | 621-02894E | 1440 | 1 | 621-03725 | 1470 | 49-5B |
| 549-00089 | 1380 | 5A | 621-02894G | 1440 | 1 | 621-03727B | 1530 | 1 |
| 549-00090 | 1680 | 6 | 621-02895C | 1400 | 1-1 | 621-03732C | 1530 | - |
| 549-00090A | 1680 | 6 | 621-02896J | 1440 | - | 621-03733A | 1380 | 12 |
| 549-00092 | 6240 | 1 | 621-02900B | 1390 | 3 | | 1390 | 13 |
| 549-00093 | 6100 | 24A | 621-02901B | 1380 | 2 | 621-03733B | 1380 | 12 |
| 549-00095 | 1220 | 28 | 621-02902H | 1430 | - | | 1390 | 13 |
| 549-00101 | 6520 | 1 | 621-02903C | 1430 | 1 | 621-03733C | 1380 | 12 |
| | 6590 | 20 | 621-02904C | 1430 | 3 | | 1390 | 13 |
| | 6650 | 4 | 621-02905C | 1430 | 2 | 621-03734A | 1430 | 28 |
| 549-00102 | 6640 | 1 | 621-02907B | 1440 | 10 | 622-00351E | 1460 | - |
| 549-00103 | 1670 | 18 | 621-02908B | 1430 | 6 | | 1470 | - |

| PART NO. | FIG NO. | KEY NO. |
|---|---|---|
| 622-00351E | 1480 | - |
| | 1490 | - |
| 622-00351G | 1460 | - |
| | 1470 | - |
| | 1480 | - |
| | 1490 | - |
| 622-00351H | 1460 | - |
| | 1470 | - |
| | 1480 | - |
| | 1490 | - |
| 622-00351J | 1460 | - |
| | 1470 | - |
| | 1480 | - |
| | 1490 | - |
| 622-00351K | 1460 | - |
| | 1470 | - |
| | 1480 | - |
| | 1490 | - |
| 622-00353E | 1490 | 32 |
| 622-00353G | 1490 | 32 |
| 622-00353H | 1490 | 32 |
| 622-00355 | 1490 | 32-3 |
| 622-00355A | 1490 | 32-3 |
| 622-00356 | 1490 | 32-3A |
| 622-00359E | 1470 | 49 |
| 622-00359G | 1470 | 49 |
| 622-00359H | 1470 | 49 |
| 622-00359J | 1470 | 49 |
| 622-00359K | 1470 | 49 |
| 622-00360C | 1470 | 49-1 |
| 622-00360E | 1470 | 49-1 |
| 622-00360G | 1470 | 49-1 |
| 622-00360H | 1470 | 49-1 |
| 622-00426C | 1510 | - |
| 623-00074B | 1580 | 3-9 |
| 623-00075B | 1580 | 3-10 |
| | 1590 | 4-8 |
| 623-00085A | 6440 | 1 |
| | 6450 | 2-1 |
| 623-00086 | 6440 | - |
| | 6450 | 2 |
| 625-00159B | 1490 | 11 |
| 65.01101-0108A | 001 | 20 |
| 65.01101-0108B | 001 | 20 |
| 65.01101-0108C | 001 | 20 |
| 65.01101-6108A | 001 | 10 |
| 65.01101-6108B | 001 | 10 |
| 65.01101-6108C | 001 | 10 |
| 65.01105-1049 | 001 | 160 |
| 65.01105-1050 | 001 | 180 |
| 65.01110-6120 | 006 | 100 |
| 65.01110-6121 | 006 | 110 |
| 65.01110-6122 | 006 | 111 |
| 65.01150-0015 | 006 | 200 |
| 65.01150-0016A | 006 | 250 |
| 65.01150-0019 | 006 | 210 |
| 65.01150-0020 | 006 | 220 |
| 65.01150-0023A | 006 | 260 |
| 65.01150-0024A | 006 | 270 |
| 65.01201-0074 | 001 | 410 |
| 65.01304-0028A | 002 | 10 |
| 65.01304-0032 | 002 | 10 |
| 65.01304-0035 | 002 | 10 |
| 65.01304-0037 | 002 | 10 |
| 65.01307-0013 | 034 | 10 |
| 65.01401-0241A | 003 | 10 |
| 65.01401-0256 | 003 | 10 |
| 65.01402-0015 | 033 | 10 |
| 65.01414-0004A | 003 | 120 |
| 65.01501-5002 | 004 | 10 |
| 65.01501-5002A | 004 | 10 |
| 65.01501-5002B | 004 | 10 |
| 65.01505-0007 | 006 | 70 |
| 65.01510-00040 | 004 | 40 |
| 65.01510-0041 | 035 | 60 |
| 65.01510-0141 | 003 | 110 |
| | 035 | 50 |
| 65.01510-0153A | 004 | 40 |
| | 035 | 60 |
| 65.01601-5018A | 001 | 510 |
| 65.01601-5018B | 001 | 510 |
| 65.01801-5039 | 005 | 10 |
| 65.01801-5100 | 005A | 10 |
| 65.01802-5034 | 005 | 100 |
| | 005A | 90 |
| 65.01802-5034A | 005A | 90 |
| 65.01802-6001 | 003 | 150 |
| 65.01810-5007 | 008 | 210 |
| 65.01810-5009 | 008 | 12 |
| 65.01810-5011 | 008 | 210 |
| 65.01840-5003 | 005A | 70 |
| 65.01840-5003A | 005A | 70 |
| 65.01903-0012 | 002 | 50 |
| | 035 | 20 |
| 65.01904-0027A | 003 | 30 |
| | 035 | 40 |
| 65.01905-0008 | 004 | 50 |
| | 035 | 70 |
| 65.02101-0064 | 006 | 10 |
| 65.02101-0064B | 006 | 10 |
| 65.02115-0014B | 006 | 50 |
| 65.02130-0001 | 006 | 30 |
| 65.02130-0003 | 006 | 450 |
| 65.02201-7032 | 006 | 310 |
| 65.02201-7033 | 006 | 321 |
| 65.02201-7034 | 006 | 330 |
| 65.02301-0280 | 006 | 420 |
| 65.02301-5135 | 006 | 410 |
| 65.02310-0073D | 006 | 430 |
| 65.02401-0013 | 006 | 520 |
| 65.02401-0013A | 006 | 520 |
| 65.02401-6025 | 006 | 510 |
| 65.02401-6025A | 006 | 510 |
| 65.02405-0007 | 006 | 550 |
| 65.02405-0010 | 006 | 550 |
| 65.02410-6130 | 006 | 570 |
| 65.02410-6131 | 006 | 580 |
| 65.02410-6132 | 006 | 590 |
| 65.02501-0501 | 006 | 610 |
| 65.02501-0505 | 006 | 610 |
| 65.02502-0015 | 006 | 660 |
| 65.02503-0127 | 006 | 630 |
| 65.02503-0128 | 006 | 640 |
| 65.02503-0129 | 006 | 650 |
| 65.02601-0219 | 006 | 710 |
| 65.03101-1056A | 007 | 20 |
| 65.03101-1056B | 007 | 20 |
| 65.03101-6075B | 007 | 10 |
| 65.03101-6075C | 007 | 10 |
| 65.03101-6075E | 007 | 10 |
| 65.03101-6075G | 007 | 10 |
| 65.03201-1012A | 007 | 110 |
| 65.03201-1052A | 007 | 110 |
| 65.03201-1052B | 007 | 110 |
| 65.03203-1055B | 007 | 130 |
| 65.03203-1056B | 007 | 140 |
| 65.03205-0006A | 007 | 90 |
| 65.03205-0006B | 007 | 90 |
| 65.03401-0068 | 008 | 10 |
| 65.03401-0085 | 008 | 11 |
| 65.03401-0085A | 008 | 11 |
| 65.03401-0085B | 008 | 11 |
| 65.03401-5008 | 008 | 10 |
| 65.03401-5008A | 008 | 10 |
| 65.03401-5008B | 008 | 10 |
| 65.03402-0007A | 008 | 80 |
| 65.03402-0007B | 008 | 80 |
| 65.03440-0015 | 008 | 13 |
| 65.03901-0068 | 007 | 160 |
| | 035 | 80 |

| PART NO. | FIG NO. | KEY NO. | PART NO. | FIG NO. | KEY NO. | PART NO. | FIG NO. | KEY NO. |
|---|---|---|---|---|---|---|---|---|
| 65.03901-0068 | 036 | 10 | 65.04501-0014A | 009 | 520 | 65.05901-0027 | 012 | 520 |
| 65.03901-0074 | 007 | 160 | 65.04501-6002A | 009 | 510 | | 035 | 170 |
| | 035 | 80 | 65.04505-5003B | 009 | 550 | 65.05902-0017 | 011 | 218 |
| | 036 | 10 | 65.04506-0012A | 009 | 560 | 65.05902-0018 | 011 | 219 |
| 65.03905-0028 | 008 | 100 | 65.04506-0013A | 023 | 110 | 65.05902-0019 | 011 | 390 |
| 65.03905-0028A | 035 | 110 | 65.04902-0014 | 009 | 130 | | 035 | 150 |
| | 036 | 40 | | 035 | 120 | 65.05903A0001 | 011 | 161 |
| 65.03905-0032 | 008 | 30 | | 036 | 50 | | 011 | 171 |
| | 035 | 90 | 65.04902-0020 | 009 | 130 | | 035 | 130 |
| | 036 | 20 | 65.05100-6052B | 010 | 10 | | 035 | 140 |
| 65.03905-0045 | 008 | 100 | 65.05102-0027A | 010 | 20 | 65.05904-0031 | 012 | 30 |
| | 035 | 110 | 65.05103-0032A | 010 | 30 | | 035 | 160 |
| | 036 | 40 | 65.05104-0005 | 010 | 80 | 65.05904-0038 | 012 | 30 |
| 65.03905-5002 | 008 | 40 | 65.05104-0006 | 010 | 70 | | 035 | 160 |
| | 035 | 100 | 65.05201-0014B | 010 | 100 | 65.06301-0219A | 013 | 110 |
| | 036 | 30 | 65.05405-6001 | 001 | 520 | 65.06301-0252 | 013 | 10 |
| 65.04101-0059B | 009 | 10 | 65.05410-0007 | 010 | 40 | 65.06404-5028 | 013 | 240 |
| 65.04101-0059C | 009 | 10 | 65.05410-0008A | 011 | 212 | 65.06405-0018A | 013 | 130 |
| 65.04101-0060B | 009 | 20 | 65.05501-7086 | 011 | 10 | 65.06500-6174 | 014 | 10 |
| 65.04102-0020B | 009 | 40 | 65.05501-7086A | 011 | 10 | 65.06500-6174A | 014 | 10 |
| 65.04102-0021A | 009 | 50 | 65.05501-7086B | 011 | 10 | 65.06500-6174C | 014 | 10 |
| 65.04102-6011B | 009 | 30 | 65.05503-5054 | 011 | 40 | 65.06501-0091 | 014 | 20 |
| 65.04103-0016 | 009 | 100 | 65.05510-5026 | 011 | 20 | 65.06501-0091A | 014 | 20 |
| 65.04104-0008 | 009 | 120 | 65.05510-5026A | 011 | 20 | 65.06501-0091C | 014 | 20 |
| 65.04130-0001B | 009 | 150 | 65.05510-5026B | 011 | 20 | 65.06504-0030A | 014 | 70 |
| 65.04130-0001C | 009 | 150 | | 5110 | 5 | 65.06506-0028 | 014 | 40 |
| 65.04130-6001A | 009 | 140 | 65.05540-0020 | 011 | 150 | 65.06520-6007 | 014 | 30 |
| 65.04130-6001B | 009 | 140 | 65.05601-7076 | 011 | 210 | 65.06601-5064 | 015 | 80 |
| 65.04135-0003 | 009 | 180 | 65.05601-7076A | 011 | 210 | 65.06601-5073 | 015 | 80 |
| 65.04200-6030D | 009 | 210 | 65.05604-0026A | 011 | 211 | 65.06606-0066 | 015 | 50 |
| 65.04200-6030E | 009 | 210 | 65.05604-0026B | 011 | 211 | 65.06606-0069 | 015 | 50 |
| 65.04201-5025 | 009 | 211 | 65.05606-5030A | 011 | 217 | 65.06606-0074 | 015 | 50 |
| 65.04201-5026 | 009 | 212 | 65.05607-5001 | 011 | 271 | 65.06611-0118A | 015 | 10 |
| 65.04202-0026 | 009 | 216 | 65.05610-0006 | 011 | 380 | 65.06611-0135 | 015 | 10 |
| 65.04202-0027 | 009 | 217 | 65.05701-5501 | 018 | 70 | 65.06901-0037 | 013 | 20 |
| 65.04203-5017 | 009 | 215 | 65.05701-5523 | 018 | 150 | | 035 | 180 |
| 65.04203-5017A | 009 | 215 | 65.05701-5537 | 011 | 160 | 65.06901-0039 | 014 | 210 |
| 65.04205-0007A | 009 | 160 | 65.05701-5538 | 011 | 170 | | 035 | 230 |
| 65.04205-0012 | 009 | 213 | 65.05701-5697 | 011 | 160 | 65.06901-0040 | 013 | 250 |
| 65.04209-0002 | 009 | 224 | 65.05701-6106 | 012 | 330 | | 035 | 220 |
| 65.04209-0002A | 009 | 224 | 65.05710-0001 | 001 | 360 | | 036 | 90 |
| 65.04301-5002B | 009 | 310 | 65.05740-0037 | 012 | 360 | 65.06901A0069 | 013 | 230 |
| 65.04302-0001 | 009 | 320 | 65.05801-5233 | 012 | 10 | | 035 | 210 |
| 65.04302-0001A | 009 | 320 | 65.05801-5251 | 012 | 10 | | 036 | 80 |
| 65.04401-0029B | 009 | 420 | 65.05801-5266 | 012 | 10 | 65.08100-6076 | 016 | 10 |
| 65.04401-0029C | 009 | 420 | 65.05805-5225 | 012 | 320 | 65.08100-6076A | 016 | 10 |
| 65.04401-0047 | 009 | 420 | 65.05805-5225A | 012 | 320 | 65.08100-6098 | 016 | 10 |
| 65.04410-0017 | 001 | 130 | 65.05806-5116 | 012 | 300 | 65.08101-0244 | 016 | 20 |
| 65.04410-0019 | 001 | 140 | 65.05806-5116A | 012 | 300 | 65.08101-0245 | 016 | 30 |
| 65.04410-0020 | 001 | 150 | 65.05901-0026 | 011 | 272 | 65.08101-0246 | 016 | 40 |

| PART NO. | FIG NO. | KEY NO. |
|---|---|---|
| 65.08101-0282 | 016 | 30 |
| 65.08201-0066 | 017 | 10 |
| 65.08201-5069 | 017 | 30 |
| 65.08202-0179 | 017 | 100 |
| 65.08901-0032 | 035 | 240 |
| 65.08901-0032A | 016 | 80 |
| | 036 | 100 |
| 65.08902-0027 | 017 | 60 |
| | 035 | 250 |
| | 036 | 110 |
| 65.08902-0035 | 017 | 60 |
| | 035 | 250 |
| | 036 | 110 |
| 65.08904-0002 | 029 | 20 |
| | 035 | 340 |
| | 036 | 190 |
| 65.09100-7098 | 018 | 10 |
| 65.09100-7140 | 018 | 10 |
| 65.09411-5084 | 019 | 10 |
| 65.09440-0044 | 019 | 40 |
| 65.09901-0018A | 018 | 20 |
| | 035 | 260 |
| | 036 | 120 |
| 65.09901-0030 | 018 | 50 |
| | 035 | 270 |
| | 036 | 130 |
| 65.10205-0003 | 020 | 40 |
| 65.10205-0007 | 020 | 40 |
| 65.10205-5001 | 020 | 40 |
| 65.10301-6094 | 021 | 10 |
| 65.10301-6094A | 021 | 10 |
| 65.10301-6095 | 021 | 20 |
| 65.10301-6095A | 021 | 20 |
| 65.10301-6095B | 021 | 20 |
| 65.10301-6096A | 021 | 30 |
| 65.10301-6096B | 021 | 30 |
| 65.10301-6097 | 021 | 40 |
| 65.10301-6097A | 021 | 40 |
| 65.10301-6098 | 021 | 50 |
| 65.10301-6098A | 021 | 50 |
| 65.10301-6099 | 021 | 60 |
| 65.10301-6099A | 021 | 60 |
| 65.10301-6104 | 021 | 70 |
| 65.10301-6104A | 021 | 70 |
| 65.10401-7001A | 020 | 10 |
| 65.10401-7001B | 020 | 10 |
| 65.10401-7001C | 020 | 10 |
| 65.10410-6001 | 021 | 80 |
| 65.10410-6004 | 021 | 80 |
| 65.10415-0001 | 021 | 90 |
| 65.10501-7001A | 022 | 10 |
| 65.10601-6001 | 021 | 100 |
| 65.10601-6001A | 021 | 100 |
| 65.10610-0002 | 021 | 110 |
| 65.11210-0001A | 024 | 110 |
| 65.11210-0001B | 024 | 110 |
| 65.11301-0030 | 023 | 10 |
| 65.11306-5001B | 023 | 50 |
| 65.11308-0005 | 030 | 60 |
| 65.11308-0006 | 030 | 70 |
| 65.11308-0007 | 030 | 80 |
| 65.11308-0008 | 030 | 90 |
| 65.11308-8003 | 030 | 50 |
| | 030 | 250 |
| 65.12301-5244B | 025 | 90 |
| 65.12301-5261A | 025 | 140 |
| 65.12301-5268 | 025 | 320 |
| 65.12301-5287 | 025 | 330 |
| 65.12301-6011 | 025 | 10 |
| 65.12501-7043 | 025 | 500 |
| 65.12501-7085A | 025 | 500 |
| 65.12501-7093 | 025 | 500 |
| 65.12503-5020A | 025 | 520 |
| 65.12503-5027 | 025 | 520 |
| | 5110 | 6 |
| 65.12503-5033 | 025 | 520 |
| | 5110 | 6 |
| 65.12504-5019 | 025 | 510 |
| 65.12504-5023 | 025 | 510 |
| 65.12504-5023A | 025 | 510 |
| 65.12540-0050 | 025 | 540 |
| 65.19102-0093 | 026 | 10 |
| 65.19103-5048 | 026 | 30 |
| 65.19103-5048A | 026 | 30 |
| 65.19103-6012 | 026 | 200 |
| 65.19103-6012A | 026 | 200 |
| 65.19107-0001 | 026 | 220 |
| 65.19107-0001A | 026 | 220 |
| 65.19202-5013 | 027 | 30 |
| 65.19202-5017A | 027 | 10 |
| | 027 | 30 |
| 65.19202-5017B | 027 | 10 |
| 65.26201-7073 | 028 | 10 |
| 65.26201-7073A | 028 | 10 |
| 65.26201-7073B | 028 | 10 |
| 65.26201-7073C | 028 | 10 |
| 65.26212-0006 | 028 | 20 |
| 65.26214-0006 | 028 | 30 |
| 65.26803-7024B | 029 | 10 |
| 65.26805-0006 | 029 | 50 |
| 65.27103-7008 | 030 | 10 |
| | 030 | 210 |
| 65.27103-7014 | 030 | 10 |
| 65.27114-5001 | 021 | 101 |
| 65.27423-7003 | 030 | 330 |
| | 030 | 360 |
| 65.27427-7001 | 030 | 310 |
| 65.27444-7001 | 030 | 340 |
| 65.29101-6137C | 031 | 50 |
| 65.29101-6137E | 031 | 50 |
| 65.29101-6155 | 031 | 100 |
| 65.29101-6155A | 031 | 100 |
| 65.29101-6156 | 031 | 400 |
| 65.29101-6197 | 031 | 400 |
| 65.29101-6211 | 031 | 400 |
| 65.29101-6211A | 031 | 400 |
| 65.29150-0005 | 031 | 200 |
| 65.29150-5001 | 024 | 140 |
| 65.41530-0181 | 032 | 10 |
| | 032 | 30 |
| 65.52101-0004 | 025 | 201 |
| 65.52122-6001 | 021 | 102 |
| 65.54109-0005A | 011 | 215 |
| 65.90001-0139 | 011 | 330 |
| 65.90020-0009D | 006 | 540 |
| 65.90020-0062B | 006 | 340 |
| 65.90020-0084 | 002 | 70 |
| 65.90020-0085 | 009 | 580 |
| 65.90020-0086 | 009 | 540 |
| 65.90020-0087 | 002 | 60 |
| 65.90020-0088A | 023 | 120 |
| 65.90020-0092 | 009 | 440 |
| 65.90020-0093 | 009 | 221 |
| 65.90020-0095 | 024 | 130 |
| 65.90020-0096 | 001 | 210 |
| 65.90020-0099 | 003 | 40 |
| 65.90020-0100 | 003 | 50 |
| 65.90020-0101 | 003 | 60 |
| 65.90020-0102 | 003 | 70 |
| 65.90020-0103 | 003 | 80 |
| 65.90020-0104 | 003 | 90 |
| 65.90020-0105 | 003 | 95 |
| 65.90020-0106 | 020 | 80 |
| 65.90020-0108 | 006 | 470 |
| 65.90020-0109 | 008 | 70 |
| 65.90020-0110 | 008 | 110 |
| 65.90020-0110A | 008 | 110 |
| 65.90020-0141 | 020 | 80 |
| 65.90020-0143 | 012 | 270 |
| 65.90021-0005 | 007 | 170 |

| PART NO. | FIG NO. | KEY NO. |
|---|---|---|
| 65.90030-0020 | 009 | 222 |
| 65.90201-0073 | 016 | 100 |
| 65.90201-0076 | 016 | 100 |
| 65.90201-0093 | 021 | 130 |
| 65.90201-0113 | 007 | 180 |
| 65.90201-0122 | 005 | 440 |
| | 005A | 190 |
| 65.90201-0123 | 003 | 72 |
| 65.90201-0124 | 011 | 322 |
| 65.90201-0125 | 011 | 342 |
| 65.90201-0126 | 017 | 130 |
| 65.90201-0127 | 018 | 40 |
| 65.90201-0128 | 031 | 310 |
| | 031 | 570 |
| 65.90302-0026 | 001 | 120 |
| 65.90302-0027 | 007 | 60 |
| 65.90302-0042 | 001 | 40 |
| | 001 | 50 |
| | 007 | 70 |
| 65.90302-0045 | 007 | 50 |
| 65.90302-0048 | 007 | 80 |
| 65.90302-0059 | 001 | 110 |
| 65.90310-0091 | 001 | 280 |
| 65.90310-0104 | 010 | 60 |
| 65.90310-0115 | 011 | 100 |
| 65.90310-0132 | 001 | 70 |
| | 001 | 90 |
| 65.90310-0134 | 034 | 60 |
| 65.90310-0135 | 001 | 310 |
| 65.90310-0140 | 034 | 40 |
| 65.90310-0148 | 001 | 220 |
| 65.90320-0022 | 002 | 90 |
| | 030 | 420 |
| 65.90441-0009A | 026 | 210 |
| 65.90441-0016 | 011 | 370 |
| 65.90441-0050 | 024 | 170 |
| 65.90501-0031 | 009 | 170 |
| | 009 | 214 |
| 65.90510-0012 | 012 | 400 |
| 65.90535-0001 | 016 | 90 |
| | 018 | 30 |
| 65.90701-0095 | 011 | 214 |
| 65.90701-0096 | 006 | 460 |
| 65.90701-0096A | 006 | 460 |
| 65.90701-0097B | 009 | 110 |
| 65.90701-0136B | 009 | 219 |
| 65.90720-0027A | 009 | 430 |
| 65.90720-0028B | 009 | 570 |
| 65.90720-0030B | 023 | 100 |
| 65.90720-0030C | 023 | 100 |
| 65.90815-0024A | 006 | 670 |
| 65.91001-0002 | 001 | 230 |
| 65.91001-0013 | 001 | 230 |
| 65.91010-0005A | 009 | 530 |
| 65.91030-0005 | 007 | 150 |
| 65.91301-0010 | 006 | 560 |
| 65.91605-0002 | 001 | 300 |
| 65.91606-0041 | 001 | 60 |
| 65.91701-0213 | 018 | 210 |
| 65.91701-0229A | 030 | 270 |
| 65.91701-0241 | 016 | 70 |
| 65.91710-0009 | 003 | 100 |
| 65.91710-0016 | 002 | 30 |
| 65.91710-0035B | 001 | 200 |
| 65.93020-0055 | 026 | 230 |
| 65.93410-0027 | 014 | 50 |
| 65.96001-0012 | 024 | 250 |
| 65.96210-6001A | 024 | 120 |
| | 035 | 320 |
| 65.96301-0243 | 025 | 220 |
| 65.96301-0399 | 005 | 30 |
| 65.96301-0410A | 025 | 202 |
| 65.96301-0420 | 005 | 200 |
| 65.96301-0438 | 005 | 420 |
| | 005A | 170 |
| 65.96301-0438A | 005A | 170 |
| 65.96301-0459 | 005A | 30 |
| 65.96301-0460 | 005A | 120 |
| 65.96301-0461 | 005A | 140 |
| 65.96301-6003 | 019 | 20 |
| 65.96301-7001A | 025 | 200 |
| 65.96301-7001B | 025 | 200 |
| 65.96340-5069 | 025 | 330 |
| 65.96340-5082 | 025 | 10 |
| 65.96340-5083 | 025 | 11 |
| 65.96501-0088 | 007 | 100 |
| 65.96501-0089 | 013 | 120 |
| | 035 | 190 |
| | 036 | 60 |
| 65.96501-0089A | 013 | 120 |
| | 035 | 190 |
| 65.96501-0090A | 034 | 20 |
| | 035 | 370 |
| 65.96501-0428 | 022 | 11 |
| 65.96501-0429 | 021 | 81 |
| 65.96501-0430 | 020 | 11 |
| 65.96501-0431 | 021 | 103 |
| 65.96501-0433 | 021 | 81 |
| 65.96501-0437 | 020 | 11 |
| 65.96507-0013 | 016 | 60 |
| 65.96507-0043 | 024 | 310 |
| | 025 | 310 |
| 65.96507-0053 | 020 | 20 |
| | 035 | 310 |
| | 036 | 170 |
| 65.96507-0055 | 025 | 180 |
| 65.96507-0059 | 016 | 60 |
| | 016 | 60 |
| 65.96601-0045A | 002 | 210 |
| | 018 | 160 |
| | 035 | 30 |
| | 035 | 280 |
| | 036 | 140 |
| 65.96601-00467 | 035 | 30 |
| 65.96601-0052 | 018 | 170 |
| | 035 | 290 |
| | 036 | 150 |
| 65.96601-0067 | 018 | 160 |
| | 035 | 280 |
| | 036 | 140 |
| 65.96801-0144A | 026 | 300 |
| 65.97401-0080 | 012 | 370 |
| 65.97401-0188 | 005 | 450 |
| | 024 | 190 |
| 65.97401-0196 | 031 | 510 |
| 65.97401-5019 | 005A | 200 |
| | 024 | 190 |
| 65.97401-5022 | 021 | 170 |
| 65.97401-5023 | 021 | 180 |
| 65.97401-5024 | 031 | 250 |
| | 031 | 500 |
| 65.97401-6036 | 021 | 160 |
| 65.97402-0003 | 025 | 203 |
| | 025 | 210 |
| 65.97440-0045 | 025 | 230 |
| 65.97450-5003 | 019 | 30 |
| 65.97460-0002 | 005A | 160 |
| | 012 | 310 |
| 65.97460-0008 | 031 | 40 |
| 65.97480-0206A | 021 | 200 |
| 65.97601-0075 | 011 | 120 |
| 65.97601-0105 | 010 | 50 |
| 65.97601-0118 | 009 | 218 |
| 65.97601-0120 | 011 | 213 |
| 65.98125-5022 | 012 | 60 |
| 65.98125-5022A | 012 | 60 |
| 65.98130-0132 | 030 | 400 |
| 65.98130-0145 | 002 | 40 |
| 65.98130-0154 | 025 | 150 |
| 65.98130-0159A | 025 | 70 |

| PART NO. | FIG NO. | KEY NO. | PART NO. | FIG NO. | KEY NO. | PART NO. | FIG NO. | KEY NO. |
|---|---|---|---|---|---|---|---|---|
| 65.98130-0170 | 030 | 400 | 903-00072A | 1460 | 2 | DS0025020 | 1260 | 7 |
| 65.98130-0211 | 025 | 60 | 903-00073A | 1460 | 3 | | 6120 | 15 |
| 65.98130-0218 | 025 | 100 | 903-00074 | 1470 | 50 | | 6130 | 9 |
| 65.98130-0224 | 002 | 200 | 903-00075 | 1460 | 4 | | 6150 | 15 |
| 65.98130-0229 | 025 | 30 | 903-00076A | 1470 | 49-8 | | 6160 | 9 |
| | 025 | 300 | 903-00076B | 1470 | 49-8 | DS0025022 | 1170 | 16 |
| 65.98130-0235 | 025 | 60 | 906-00002A | 1430 | 5 | | 1560 | 19 |
| 65.98130-0236 | 025 | 100 | 920-00127A | 1750 | 1 | | 1570 | 19 |
| 65.98130-0242 | 004 | 70 | | 1760 | - | | 1690 | 29 |
| 65.98130-0247 | 030 | 400 | DS0001085 | 3110 | 21 | | 6670 | 10 |
| 65.98131-0018 | 025 | 120 | | 6680 | 21 | | 6670 | 10 |
| 65.98131-0097 | 005 | 50 | DS0001086 | 3110 | 22 | DS0025023 | 1100 | 8 |
| | 005A | 50 | | 6680 | 22 | DS0025024 | 1170 | 17 |
| 65.98150-0042A | 025 | 170 | DS0025013 | 1150 | 3I | DS0025025 | 1210 | 8 |
| 65.98150-0086 | 004 | 80 | | 1690 | 31 | DS0025027 | 1600 | 23 |
| 65.98150-0088 | 030 | 401 | | 1690 | 33 | DS0025034 | 1150 | 46 |
| 65.98150-0089 | 001 | 520 | | 1770 | 26 | DS0401188 | 1640 | 13 |
| 65.99497-8597 | 024 | 10 | | 6140 | 5 | DS1001059 | 1620 | 15 |
| 65.99601-8054 | 035 | - | | 6141 | 5 | DS1001060 | 1600 | 5-14 |
| 65.99605-8035 | 036 | - | DS0025014 | 1160 | 51 | DS1001072 | 1620 | 15 |
| 705-00006 | 3120 | 1-3 | | 1600 | 38 | DS1003008 | 6110 | 11 |
| | 6720 | 1-3 | DS0025015 | 1110 | 5 | DS1003009 | 1530 | 5 |
| | 6730 | 1-3 | | 1170 | 5 | DS2011330 | 6130 | 1 |
| | 6740 | 1-3 | | 1560 | 18 | | 6160 | 1 |
| | 6770 | 1AC | | 1570 | 18 | DS2012245 | 1230 | 35 |
| | 6780 | 1AC | | 1580 | 21 | DS2012249 | 6150 | 12 |
| | 6790 | 1AC | | 1590 | 21 | DS2012253 | 6120 | 12 |
| | 6800 | 1AC | | 1600 | 21 | DS2012281 | 6310 | 13 |
| | 6810 | 1AC | | 1610 | 21 | DS2012282 | 6310 | 14 |
| | 6940 | 1-3 | | 1620 | 21 | DS2013596 | 6360 | 2 |
| 705-00008 | 4150 | 17 | | 6670 | 5 | DS2013607 | 6210 | 13 |
| 713-00033 | 3120 | 1-1A | DS0025016 | 1310 | 31 | DS2013621 | 6830 | 2 |
| | 6720 | 1-1A | | 1311 | 31 | DS2013674 | 6310 | 11 |
| | 6730 | 1-1A | | 2100 | 14 | DS2013675 | 6310 | 12 |
| | 6740 | 1-1A | DS0025017 | 1150 | 42 | DS2013698 | 6130 | 2 |
| | 6940 | 1-1A | | 1160 | 42 | | 6160 | 2 |
| 713-00034 | 6770 | 1AB | | 1320 | 24 | DS2013744 | 6890 | 2 |
| | 6780 | 1AB | | 6170 | 19 | DS2016056 | 6120 | 13 |
| | 6790 | 1AB | | 6210 | 19 | | 6120 | 14 |
| | 6800 | 1AB | DS0025018 | 1100 | 30 | | 6150 | 13 |
| | 6810 | 1AB | | 1240 | 24 | | 6150 | 14 |
| 901-00045 | 1420 | 1 | | 6120 | 43 | DS2017042 | 6150 | 17 |
| | 1425 | - | | 6150 | 53 | DS2021102 | 6120 | 41 |
| 903-00068 | 1450 | 8 | | 6750 | 6 | | 6150 | 51 |
| | 1600 | 20 | DS0025019 | 1310 | 49 | DS2026123 | 6120 | 18 |
| 903-00069A | 1490 | 32-2 | | 2100 | 17 | | 6150 | 18 |
| 903-00070A | 1490 | 32-4 | | 6100 | 16 | DS2038158 | 1240 | 36 |
| 903-00070B | 1490 | 32-4 | | 6210 | 25 | DS2038169 | 3130 | 10 |
| 903-00071A | 1490 | 32-5 | | 6310 | 3 | DS2038187 | 1260 | 55 |
| 903-00071B | 1490 | 32-5 | DS0025020 | 1250 | 7 | | 1260 | 56 |

| PART NO. | FIG NO. | KEY NO. |
|---|---|---|
| DS2038187 | 1260 | 57 |
| | 1260 | 58 |
| DS2038208 | 3130 | 11 |
| DS2038224 | 1260 | 55 |
| | 1260 | 56 |
| | 1260 | 57 |
| | 1260 | 58 |
| DS2039106 | 6690 | 2 |
| DS2039113 | 6850 | 2 |
| DS2040383 | 6200 | 2 |
| DS2040396 | 1240 | 37 |
| DS2040426 | 1290 | 47 |
| DS2040427 | 1290 | 48 |
| DS2040428 | 1290 | 49 |
| DS2040429 | 1290 | 50 |
| DS2040434 | 2200 | 1 |
| | 2200 | 4 |
| DS2040435 | 2200 | 2 |
| | 2200 | 3 |
| DS2040436 | 2210 | 1 |
| | 2210 | 4 |
| DS2040437 | 2210 | 2 |
| | 2210 | 3 |
| DS2040473 | 1270 | 52 |
| | 1270 | 54 |
| DS2040474 | 1270 | 51 |
| | 1270 | 53 |
| DS2040495 | 6710 | 1 |
| DS2040502 | 6870 | 2 |
| DS2045240 | 1280 | 60 |
| DS2045274 | 1280 | 59 |
| DS2053735 | 3140 | 4 |
| | 3141 | 4 |
| DS2053834 | 3140 | 2 |
| DS2053835 | 6220 | 1 |
| | 6220 | 2 |
| DS2053937 | 6220 | 1 |
| DS2054208 | 1311 | 60 |
| | 1370 | 9 |
| DS2054304 | 1370 | 10 |
| DS2054318 | 1240 | 33 |
| DS2054336 | 1310 | 60 |
| DS2054350 | 6210 | 17 |
| DS2054351 | 6210 | 18 |
| DS2055699 | 3160 | 2 |
| | 6860 | 2 |
| DS2055815 | 6700 | 1 |
| DS2055853 | 1230 | 38 |
| DS2055854 | 1230 | 34 |
| DS2055858 | 2200 | 8 |
| DS2055858 | 2200 | 9 |
| | 2210 | 8 |
| | 2210 | 9 |
| DS2055865 | 6230 | 3 |
| DS2055884 | 1310 | 57 |
| DS2055886 | 1300 | 56 |
| DS2055887 | 6310 | 15 |
| DS2055891 | 6700 | 2 |
| DS2055925 | 6880 | 3 |
| DS2055953 | 6820 | 3 |
| DS2058268 | 6210 | 15 |
| DS2058269 | 6210 | 16 |
| DS2059383 | 6380 | 18 |
| DS2065030 | 1250 | 70 |
| DS2065031 | 1250 | 71 |
| DS2079153 | 6100 | 12 |
| DS2079164 | 6100 | 8 |
| DS2090020 | 6750 | 10 |
| DS2090021 | 6750 | 11 |
| DS2091008 | 6170 | 25 |
| DS2092007 | 1311 | 78 |
| | 6370 | 3 |
| | 6370 | 4 |
| DS2092010 | 6390 | 2 |
| DS2092039 | 6170 | 14 |
| DS2092040 | 6170 | 15 |
| DS2092061 | 6370 | 2 |
| DS2092062 | 6370 | 5 |
| | 6370 | 6 |
| DS2092080 | 6750 | 12 |
| DS2092135 | 6170 | 15 |
| DS2093005 | 6141 | 19 |
| DS2093013 | 1320 | 83 |
| DS2093014 | 6140 | 53 |
| | 6141 | 53 |
| | 6320 | 8 |
| DS2093017 | 1320 | 65 |
| DS2093018 | 1320 | 70 |
| DS2093020 | 1330 | 72 |
| DS2093021 | 6170 | 12 |
| DS2093022 | 1330 | 77 |
| DS2093024 | 1310 | 79 |
| | 1311 | 79 |
| | 6320 | 9 |
| DS2093027 | 1340 | 92 |
| DS2093029 | 1320 | 59 |
| | 1340 | 86 |
| DS2093032 | 6141 | 17 |
| DS2093033 | 1320 | 58 |
| DS2093034 | 6170 | 16 |
| DS2093035 | 1311 | 79 |
| | 6170 | 13 |
| DS2093036 | 6141 | 17 |
| | 6170 | 11 |
| DS2093039 | 6170 | 11 |
| DS2093040 | 6140 | 19 |
| | 6180 | 14 |
| DS2093043 | 6320 | 32 |
| | 6340 | 2 |
| DS2093063 | 1330 | 75 |
| DS2093064 | 1320 | 63 |
| DS2093093 | 6140 | 17 |
| DS2093097 | 6210 | 14 |
| DS2093101 | 6140 | 21 |
| | 6141 | 21 |
| DS2093118 | 6140 | 16 |
| | 6141 | 16 |
| DS2093119 | 6170 | 20 |
| | 6170 | 26 |
| DS2093120 | 6170 | 23 |
| DS2093121 | 6170 | 24 |
| | 6320 | 7 |
| DS2093123 | 6330 | 5 |
| DS2093127 | 6170 | 13 |
| DS2093130 | 6330 | 6 |
| DS2093149 | 6170 | 21 |
| DS2093150 | 1320 | 64 |
| DS2093151 | 1320 | 66 |
| | 1320 | 68 |
| DS2093152 | 1330 | 74 |
| DS2093153 | 1330 | 76 |
| DS2093154 | 1330 | 71 |
| DS2093155 | 1340 | 87 |
| DS2093156 | 1330 | 73 |
| DS2093157 | 1310 | 78 |
| DS2093158 | 1310 | 81 |
| | 1311 | 81 |
| DS2093159 | 1300 | 62 |
| DS2093160 | 1300 | 141 |
| DS2093163 | 6140 | 20 |
| | 6141 | 20 |
| DS2093169 | 1370 | 45 |
| DS2093170 | 1370 | 43 |
| | 1370 | 46 |
| DS2093171 | 6330 | 7 |
| DS2093172 | 6330 | 8 |
| DS2093179 | 6170 | 21 |
| DS2093188 | 1370 | 44 |
| DS2093208 | 6320 | 9 |
| DS2093215 | 6370 | 1 |

| PART NO. | FIG NO. | KEY NO. |
|---|---|---|
| DS2093222 | 6390 | 1 |
| DS2093223 | 6370 | 1 |
| DS2094006 | 1370 | 7 |
| | 1370 | 74 |
| | 6140 | 15 |
| | 6141 | 15 |
| | 6330 | 28 |
| DS2094010 | 1330 | 91 |
| DS2094017 | 1311 | 80 |
| DS2094032 | 6170 | 22 |
| DS2094048 | 1340 | 84 |
| DS2094049 | 1310 | 80 |
| | 1311 | 80 |
| DS2094050 | 1340 | 85 |
| DS2094051 | 1310 | 82 |
| | 1311 | 82 |
| DS2094069 | 2210 | 14 |
| | 2210 | 15 |
| DS2094085 | 2200 | 14 |
| | 2200 | 15 |
| DS2094087 | 6170 | 12 |
| DS2094113 | 6140 | 18 |
| | 6141 | 18 |
| DS2094170 | 1311 | 82 |
| DS2094173 | 3160 | 22 |
| | 6700 | 22 |
| | 6860 | 22 |
| DS2094250 | 3160 | 22 |
| | 6700 | 22 |
| | 6860 | 22 |
| DS2095001 | 1350 | 11 |
| | 1350 | 12 |
| | 1350 | 13 |
| | 1350 | 14 |
| | 1360 | 15 |
| | 1360 | 16 |
| | 1360 | 17 |
| | 1360 | 18 |
| DS2095002 | 1360 | 22 |
| DS2095003 | 1350 | 75 |
| | 1360 | 84 |
| | 6180 | 23 |
| | 6330 | 29 |
| DS2095004 | 1350 | 19 |
| DS2095029 | 6760 | 3 |
| | 6760 | 4 |
| DS2095030 | 6760 | 1 |
| | 6760 | 2 |
| DS2095031 | 6750 | 13 |
| DS2097001 | 1250 | 61 |
| DS2097006 | 1250 | 62 |
| DS2097015 | 1250 | 62 |
| DS2097017 | 1250 | 61 |
| DS2105053 | 1200 | 22 |
| DS2213165 | 1350 | 25 |
| | 1360 | 25 |
| DS2225009 | 3160 | 21 |
| | 6700 | 21 |
| | 6860 | 21 |
| DS2232107 | 6120 | 5 |
| | 6150 | 5 |
| DS2232108 | 6310 | 7 |
| DS2242017 | 6140 | 25 |
| | 6141 | 25 |
| DS2281100 | 1240 | 28 |
| DS2304014 | 6310 | 26 |
| DS2304080 | 6130 | 7 |
| | 6160 | 7 |
| DS2308021 | 6640 | 5 |
| DS2347025 | 2200 | 16 |
| | 2210 | 16 |
| DS2347032 | 2200 | 12 |
| | 2210 | 12 |
| DS2347033 | 1340 | 18 |
| DS2380004 | 1230 | 26 |
| DS2404024 | 6210 | 23 |
| DS2410009 | 1320 | 174-5 |
| | 1330 | 15 |
| | 6141 | 33-5 |
| DS2479001 | 1300 | 95 |
| DS2479002 | 1300 | 96 |
| DS2479004 | 1210 | 4 |
| DS2802021 | 1200 | 18 |
| DS2802023 | 3160 | 6 |
| | 6700 | 6 |
| | 6860 | 6 |
| DS2805007 | 3160 | 11 |
| | 6700 | 11 |
| | 6860 | 11 |
| DS2805008 | 3160 | 19 |
| | 6700 | 19 |
| | 6860 | 19 |
| DS7601024 | 1100 | 17 |
| DS7601027 | 1100 | 21 |
| DS7601028 | 1100 | 22 |
| DS7601029 | 1100 | 20 |
| DS7601032 | 1100 | 32 |
| DS7601063 | 1100 | 17 |
| DS7601064 | 1100 | 20 |
| DS7603058 | 1100 | 19 |
| DS7752015 | 3110 | 25 |
| | 6680 | 25 |
| | 6840 | 25 |
| DS7752016 | 3110 | 26 |
| | 6680 | 26 |
| | 6840 | 26 |
| DS7752044 | 3100 | 21 |
| DS7752045 | 3100 | 14 |
| | 3110 | 14 |
| | 6680 | 14 |
| | 6840 | 14 |
| DS7752046 | 3100 | 15 |
| | 3110 | 15 |
| | 6680 | 15 |
| | 6840 | 15 |
| DS7752049 | 3100 | 20 |
| DS7752050 | 3100 | 12 |
| DS7752051 | 3100 | 13 |
| DS7752106 | 3100 | 23 |
| K1000043 | 1450 | 3 |
| K1000057 | 3160 | 9 |
| | 6700 | 9 |
| | 6860 | 9 |
| K1000112 | 6220 | 12 |
| K1000349A | 1150 | 45 |
| K1000354 | 1320 | 8 |
| | 1320 | 174-1 |
| | 6141 | 33-1 |
| K1000494 | 1600 | 5-3 |
| K1000543 | 3110 | 7 |
| | 6680 | 7 |
| | 6840 | 7 |
| K1000543A | 3110 | 7 |
| | 6680 | 7 |
| | 6840 | 7 |
| K1000555E | 1360 | 1 |
| | 4210 | - |
| K1000555G | 1360 | 1 |
| | 4210 | - |
| K1000555H | 1360 | 1 |
| | 4210 | - |
| K1000556E | 1350 | 2 |
| | 4210 | - |
| K1000556G | 1350 | 2 |
| | 4210 | - |
| K1000556H | 1350 | 2 |
| | 4210 | - |
| K1000602 | 1580 | 3-11 |
| | 1590 | 4-9 |
| K1000640 | 1170 | 13 |

| PART NO. | FIG NO. | KEY NO. |
|---|---|---|
| K1000641A | 1560 | 4 |
| K1000641B | 1560 | 4 |
| K1000643 | 1240 | 9 |
| K1000644C | 1240 | 15 |
| K1000695A | 6180 | 3 |
| K1000696C | 6180 | 4 |
| K1000789 | 1690 | 19 |
| K1000794 | 1480 | 56 |
| K1000809 | 2190 | 2 |
| K1000814 | 1740 | 1C |
| K1000815 | 1740 | 1D |
| K1000816 | 6170 | 27 |
| K1000817 | 6320 | 16 |
| K1000840 | 1380 | 13 |
| K1000842A | 1380 | 14 |
| K1000982 | 6660 | 1 |
| K1001023 | 1380 | 11 |
| | 1390 | 12 |
| K1001029 | 1150 | 35 |
| | 1160 | 35 |
| | 1190 | 13 |
| | 1200 | 17 |
| | 1210 | 14 |
| | 1300 | 44 |
| | 1300 | 146 |
| | 1310 | 44 |
| | 1311 | 44 |
| | 1350 | 40 |
| | 1360 | 40 |
| | 1370 | 40 |
| | 1630 | 17 |
| | 1650 | 5 |
| | 1660 | 31 |
| | 1670 | 37 |
| | 1670 | 37 |
| | 1690 | 39 |
| | 1700 | 8 |
| | 1700 | 19 |
| | 1730 | 9 |
| | 1740 | 27 |
| | 1750 | 17 |
| | 1770 | 37 |
| | 3140 | 6 |
| | 3141 | 6 |
| | 3160 | 5 |
| | 6100 | 17 |
| | 6140 | 23 |
| | 6140 | 56 |
| | 6141 | 23 |
| | 6141 | 56 |
| K1001029 | 6170 | 7 |
| | 6210 | 42 |
| | 6220 | 10 |
| | 6310 | 22 |
| | 6320 | 33 |
| | 6330 | 11 |
| | 6340 | 3 |
| | 6370 | 14 |
| | 6560 | 8 |
| | 6700 | 5 |
| | 6860 | 5 |
| K1001068 | 1430 | 20 |
| K1001069A | 1430 | 21 |
| K1001260A | 1580 | 3-8 |
| | 1590 | 4-7 |
| K1001263A | 1670 | 5 |
| | 1670 | 6 |
| K1001270 | 6100 | 9 |
| K1001271 | 6100 | 10 |
| K1001295A | 1440 | 12 |
| K1001300A | 6100 | 5 |
| K1001301A | 6100 | 6 |
| K1001310 | 1440 | 20 |
| K1001557B | 2180 | - |
| K1001565A | 2180 | 2 |
| K1001566 | 2180 | 3 |
| K1001567 | 2180 | 4 |
| K1001568 | 2180 | 5 |
| K1001702 | 1680 | 7 |
| K1001702A | 1680 | 7 |
| K1001786A | 1740 | 28 |
| K1001858A | 1680 | 1 |
| K1001871B | 6330 | 3 |
| K1001873A | 6330 | 1 |
| K1001968 | 1600 | 5-8 |
| K1001971B | 1250 | 30 |
| K1002078 | 1110 | 4 |
| | 1620 | 11 |
| | 6670 | 4 |
| K1002081 | 1500 | 1 |
| K1002081A | 1500 | 1 |
| K1002082 | 1540 | - |
| K1002083 | 1550 | - |
| K1002084A | 1420 | - |
| K1002107A | 1100 | 10 |
| K1002153 | 6640 | 6 |
| K1002158 | 6410 | 1 |
| K1002202G | 1380 | - |
| K1002204C | 1400 | - |
| K1002206 | 1760 | 1 |
| K1002207 | 1760 | 2 |
| K1002208 | 1760 | 3 |
| K1002209 | 1760 | 4 |
| K1002210 | 1760 | 5 |
| K1002211 | 1760 | 6 |
| K1002212 | 1760 | 7 |
| K1002213 | 1760 | 8 |
| K1002214 | 1760 | 9 |
| K1002215 | 1760 | 10 |
| K1002216 | 1760 | 11 |
| K1002217 | 1760 | 12 |
| K1002218 | 1760 | 13 |
| K1002219 | 1760 | 14 |
| K1002229A | 1410 | - |
| K1002230A | 1410 | 1 |
| K1002231A | 1410 | 2 |
| K1002345A | 3100 | 22 |
| K1002385 | 1440 | 33 |
| K1002406D11 | 1670 | 19 |
| K1002406D12 | 1670 | 21 |
| K1002406D13 | 6540 | 11 |
| K1002406D14 | 6530 | 2 |
| K1002406D2 | 6520 | 2 |
| K1002406D21 | 1670 | 23 |
| K1002406D3 | 6590 | 21 |
| K1002406D4 | 6640 | 2 |
| K1002406D5 | 6650 | 5 |
| K1002410E | 1580 | 3-2 |
| K1002410H | 1580 | 3-2 |
| K1002446 | 1150 | 3C |
| K1002478 | 1170 | 15 |
| K1002561A | 6420 | - |
| K1002573B | 6210 | 4 |
| K1002574 | 6420 | 3 |
| | 6430 | 4 |
| K1002574A | 6420 | 3 |
| | 6430 | 4 |
| K1002575 | 6420 | 4 |
| | 6430 | 5 |
| K1002575A | 6420 | 4 |
| | 6430 | 5 |
| K1002593B | 1150 | 3A |
| K1002593C | 1150 | 3A |
| K1002613A | 1600 | 12 |
| K1002635 | 1460 | 104 |
| K1002636 | 1460 | 105 |
| K1002637 | 1490 | 32-13 |
| K1002638 | 1470 | 49-17 |
| K1002638A | 1470 | 49-17 |
| K1002641 | 1480 | 100 |

| PART NO. | FIG NO. | KEY NO. |
|---|---|---|
| K1002719A | 1210 | 7 |
| K1002730A | 1110 | 6 |
| | 6670 | 6 |
| K1002759A | 6450 | 1 |
| K1002771 | 6450 | - |
| K1002811A | 6460 | 1 |
| | 6920 | 1 |
| K1002838 | 6460 | 4 |
| | 6920 | 2 |
| K1002839A | 6460 | 5 |
| | 6920 | 3 |
| K1002840 | 6460 | 6 |
| K1002841 | 6460 | 7 |
| K1002842A | 6460 | 3 |
| K1002846 | 6460 | 2 |
| K1002851 | 1160 | 36 |
| K1002860A | 1690 | 2 |
| K1002860B | 1690 | 2 |
| K1002864 | 1210 | 5 |
| K1002866 | 6650 | 9 |
| K1002867D1 | 6650 | 10 |
| K1002883A | 6460 | - |
| K1002915 | 1170 | 14 |
| K1002920C | 1150 | 3B |
| K1002971Q | 1100 | - |
| K1002971S | 1100 | - |
| K1002972E | 1100 | 1 |
| K1002972G | 1100 | 1 |
| K1002972H | 1100 | 1 |
| K1002972J | 1100 | 1 |
| K1002972K | 1100 | 1 |
| K1002972L | 1100 | 1 |
| K1002972M | 1100 | 1 |
| K1002972P | 1100 | 1 |
| K1002972R | 1100 | 1 |
| K1002987C | 1230 | - |
| K1002987E | 1240 | - |
| K1002988C | 1270 | - |
| | 1280 | - |
| | 1290 | - |
| K1002988E | 1260 | - |
| K1002988H | 1250 | - |
| K1002989A | 1250 | 1 |
| | 4180 | - |
| | 4190 | - |
| | 4200 | - |
| K1003013C | 2100 | - |
| | 2130 | - |
| | 2170 | - |
| K1003013K | 2160 | - |
| K1003014E | 2110 | 1 |
| K1003014G | 2110 | 1 |
| K1003014H | 2110 | 1 |
| K1003014J | 2110 | 1 |
| K1003020A | 1240 | 4 |
| K1003020B | 1240 | 4 |
| K1003021A | 1240 | 3 |
| K1003022B | 1240 | 2 |
| K1003026A | 1240 | 5 |
| K1003083A | 1260 | 17 |
| K1003083B | 1260 | 17 |
| K1003084A | 1260 | 18 |
| K1003084B | 1260 | 18 |
| K1003085B | 1220 | 1 |
| K1003085C | 1220 | 1 |
| K1003085E | 1220 | 1 |
| K1003085J | 1220 | 1 |
| K1003093J | 1220 | - |
| K1003103A | 1250 | 20 |
| K1003104A | 1250 | 21 |
| K1003131 | 2130 | 2 |
| K1003132 | 4160 | - |
| K1003134 | 4170 | - |
| K1003284 | 1470 | 88 |
| K1003296 | 1220 | 27 |
| K1003354A | 1160 | 10 |
| K1003381 | 1400 | 3 |
| K1003422A | 6170 | 18 |
| K1003427 | 1460 | 89 |
| K1003522 | 1460 | 109 |
| K1003633A | 6370 | 7 |
| K1003638B | 6170 | 28 |
| K1003676B | 1480 | 107 |
| K1003900 | 1490 | 32-16 |
| K1003909 | 3100 | 1A |
| K1003910 | 3110 | 1A |
| | 6680 | 1A |
| | 6840 | 1A |
| K1003911 | 3110 | 1C |
| | 6680 | 1C |
| | 6840 | 1C |
| K1003912 | 3110 | 2A |
| | 6680 | 2A |
| | 6840 | 2A |
| K1003913 | 3110 | 2B |
| | 6680 | 2B |
| | 6840 | 2B |
| K1003914 | 4240 | 2 |
| | 4240 | 4 |
| | 4250 | 2 |
| K1003914 | 4250 | 4 |
| | 4270 | 2 |
| | 4270 | 4 |
| | 4300 | 2 |
| | 4300 | 4 |
| | 4310 | 2 |
| | 4310 | 4 |
| K1003915 | 4260 | 2 |
| | 4260 | 4 |
| | 4320 | 2 |
| | 4320 | 4 |
| K1003916 | 4270 | 4 |
| K1003945 | 1350 | 49 |
| | 1360 | 49 |
| K1003947A | 6180 | 21 |
| K1003948A | 6330 | 26 |
| K1003992B | 1220 | 5 |
| K1003992C | 1220 | 5 |
| K1004000 | 6200 | 6 |
| | 6870 | 6 |
| K1004001 | 6200 | 6 |
| | 6870 | 6 |
| K1004006 | 6220 | 7 |
| | 6400 | 16 |
| K1004011 | 6230 | 7 |
| | 6820 | 7 |
| | 6880 | 7 |
| K1004027 | 6350 | 10 |
| K1004028 | 6350 | 17 |
| K1004055 | 3130 | 12 |
| | 3130 | 12 |
| K1004056 | 3130 | 13 |
| K1004057 | 3130 | 19 |
| K1004058 | 3130 | 24 |
| | 3130 | 24 |
| K1004059 | 6190 | 5 |
| | 6190 | 5 |
| K1004060 | 6190 | 6 |
| K1004061 | 1460 | 108 |
| K1004119 | 6670 | 9 |
| K1004150K | 1200 | - |
| K1004166 | 1200 | 12 |
| K1004271 | 2100 | 8 |
| K1004272 | 1520 | 4 |
| K1004280B | 1150 | 13 |
| K1004290A | 1240 | 12 |
| K1004313A | 1220 | 12 |
| K1004425 | 1680 | 11 |
| K1004426 | 1680 | 12 |
| K1004427 | 1680 | 8 |

| PART NO. | FIG NO. | KEY NO. |
|---|---|---|
| K1004428B | 1300 | - |
| | 1310 | - |
| | 1320 | - |
| | 1330 | - |
| | 1340 | - |
| K1004428C | 1300 | - |
| | 1340 | - |
| K1004428H | 1311 | - |
| | 1320 | - |
| | 1330 | - |
| K1004429C | 1350 | - |
| | 1360 | - |
| | 1370 | - |
| K1004429E | 1350 | - |
| | 1360 | - |
| | 1370 | - |
| K1004464K | 3100 | - |
| K1004465 | 3100 | 1 |
| K1004465A | 3100 | 1 |
| K1004465B | 3100 | 1 |
| K1004465C | 3100 | 1 |
| K1004465E | 3100 | 1 |
| K1004465G | 3100 | 1 |
| K1004466 | 1150 | 3H |
| K1004474E | 3110 | - |
| K1004475 | 3110 | 1 |
| K1004475A | 3110 | 1 |
| K1004475B | 3110 | 1 |
| K1004475C | 3110 | 1 |
| K1004475E | 3110 | 1 |
| K1004478C | 3120 | - |
| K1004479A | 3120 | 1 |
| K1004479B | 3120 | 1 |
| K1004479C | 3120 | 1 |
| K1004480A | 3120 | 1-1 |
| K1004480B | 3120 | 1-1 |
| K1004507 | 1150 | 50 |
| K1004515 | 1160 | 12 |
| K1004522B | 1180 | 1 |
| | 4100 | - |
| K1004529 | 1580 | 41 |
| | 1590 | 41 |
| | 1600 | 41 |
| | 1620 | 41 |
| K1004636 | 1630 | 6 |
| K1004695 | 2100 | 13 |
| K1004716 | 6520 | 3 |
| K1004777B | 1230 | 1 |
| K1004777C | 1230 | 1 |
| K1004811A | 1240 | 13 |
| K1004822E | 1190 | - |
| K1004824B | 1190 | 1 |
| K1004824C | 1190 | 1 |
| K1004824E | 1190 | 1 |
| K1004825B | 1190 | 1-1 |
| K1004827A | 6150 | 8 |
| K1004828A | 6120 | 9 |
| | 6150 | 9 |
| K1004829A | 6120 | 11 |
| | 6150 | 11 |
| K1004859D1 | 6270 | 2 |
| K1004859D2 | 6280 | 2 |
| K1004859D3 | 6300 | 2 |
| K1004859D4 | 6290 | 2 |
| K1004867A | 1130 | 2 |
| | 1140 | - |
| K1004867B | 1130 | 2 |
| | 1140 | - |
| K1004971E | 1120 | - |
| | 1150 | - |
| K1004971G | 1150 | - |
| K1004971K | 1120 | - |
| | 1130 | - |
| | 1160 | - |
| K1004972 | 1120 | 1 |
| K1004972A | 1120 | 1 |
| K1004976A | 1100 | 2 |
| K1004989A | 1240 | 8 |
| K1005007A | 1430 | 30 |
| K1005017 | 1770 | 38 |
| K1005018 | 3120 | 1-2 |
| | 6720 | 1-2 |
| | 6730 | 1-2 |
| | 6740 | 1-2 |
| | 6940 | 1-2 |
| K1005018A | 3120 | 1-2 |
| | 6720 | 1-2 |
| | 6730 | 1-2 |
| | 6740 | 1-2 |
| | 6940 | 1-2 |
| K1005073A | 1630 | - |
| K1005074B | 1170 | - |
| K1005075E | 1210 | - |
| K1005076C | 1560 | - |
| | 1570 | - |
| K1005076E | 1570 | - |
| K1005076G | 1560 | - |
| K1005098 | 1160 | 38 |
| K1005099 | 1160 | 37 |
| K1005113C | 6120 | - |
| K1005114C | 6150 | - |
| K1005115C | 6310 | - |
| K1005116B | 6210 | - |
| K1005119 | 1170 | 7 |
| K1005120 | 1170 | 6 |
| K1005150B | 1560 | 2 |
| K1005150C | 1560 | 2 |
| K1005151A | 1560 | 3 |
| K1005151B | 1560 | 3 |
| K1005161 | 1560 | 6 |
| K1005161A | 1560 | 6 |
| K1005172A | 1110 | 1 |
| K1005172B | 1110 | 1 |
| K1005172C | 1110 | 1 |
| K1005180A | 1250 | 37 |
| K1005188B | 1160 | 4 |
| K1005189B | 1160 | 5 |
| K1005197C | 1180 | - |
| K1005208B | 1200 | 1 |
| K1005208C | 1200 | 1 |
| K1005208G | 1200 | 1 |
| K1005208H | 1200 | 1 |
| K1005211C | 1570 | 9 |
| K1005211E | 1570 | 9 |
| K1005212A | 1570 | 14 |
| K1005213A | 1570 | 15 |
| K1005214A | 1570 | 22 |
| K1005215A | 1570 | 13 |
| K1005216A | 1570 | 20 |
| K1005217A | 1570 | 21 |
| K1005229C | 1590 | - |
| K1005229J | 1620 | - |
| K1005229Q | 1600 | - |
| K1005229R | 1610 | - |
| K1005229S | 1580 | - |
| K1005239A | 1570 | 10 |
| K1005240A | 1570 | 11 |
| K1005250B | 1580 | 3 |
| K1005250C | 1580 | 3 |
| K1005250E | 1580 | 3 |
| K1005251B | 1590 | 4 |
| K1005251C | 1590 | 4 |
| K1005251E | 1590 | 4 |
| K1005253 | 3120 | 2 |
| | 6720 | 2 |
| | 6730 | 2 |
| | 6740 | 2 |
| | 6770 | 2 |
| | 6780 | 2 |
| | 6790 | 2 |

| PART NO. | FIG NO. | KEY NO. |
|---|---|---|
| K1005253 | 6800 | 2 |
| | 6810 | 2 |
| | 6940 | 2 |
| K1005254A | 3120 | 3 |
| | 6720 | 3 |
| | 6730 | 3 |
| | 6740 | 3 |
| | 6770 | 3 |
| | 6780 | 3 |
| | 6790 | 3 |
| | 6800 | 3 |
| | 6810 | 3 |
| | 6940 | 3 |
| K1005254B | 3120 | 3 |
| | 6720 | 3 |
| | 6730 | 3 |
| | 6740 | 3 |
| | 6770 | 3 |
| | 6780 | 3 |
| | 6790 | 3 |
| | 6800 | 3 |
| | 6810 | 3 |
| | 6940 | 3 |
| K1005265B | 1580 | 3-1 |
| K1005265C | 1580 | 3-1 |
| K1005271B | 1580 | 3-3 |
| K1005271C | 1580 | 3-3 |
| K1005280B | 1590 | 4-1 |
| K1005280C | 1590 | 4-1 |
| K1005282B | 1590 | 4-2 |
| K1005282C | 1590 | 4-2 |
| K1005297A | 1570 | 12 |
| K1005305A | 1600 | 5-13 |
| K1005317B | 1310 | 33 |
| K1005343A | 1390 | 4 |
| K1005343B | 1390 | 4 |
| K1005343C | 1390 | 4 |
| K1005344A | 1440 | 17 |
| K1005345A | 1440 | 18 |
| K1005353B | 1620 | 1 |
| K1005357 | 1270 | 63 |
| K1005359 | 1170 | 8 |
| K1005360A | 1560 | 5 |
| K1005360B | 1560 | 5 |
| K1005361 | 1560 | 7 |
| K1005361A | 1560 | 7 |
| K1005369C | 1640 | - |
| K1005369G | 1640 | - |
| K1005370A | 1640 | 1 |
| K1005371A | 1640 | 2 |
| K1005372A | 1640 | 3 |
| K1005373A | 1640 | 4 |
| K1005374B | 1640 | 5 |
| K1005374C | 1640 | 5 |
| K1005375B | 1640 | 6 |
| K1005376B | 1640 | 7 |
| K1005377B | 1640 | 8 |
| K1005378B | 1640 | 9 |
| K1005379B | 1640 | 10 |
| K1005379C | 1640 | 10 |
| K1005468C | 1390 | - |
| K1005563 | 1560 | 17 |
| K1005722A | 3100 | 2 |
| K1005722B | 3100 | 2 |
| K1005726 | 3100 | 4 |
| K1005726A | 3100 | 4 |
| K1005726B | 3100 | 4 |
| K1005776 | 6240 | 3 |
| K1005778A | 1610 | 7 |
| K1005778B | 1610 | 7 |
| K1005779 | 1610 | 8 |
| K1005780 | 3110 | 28 |
| | 6680 | 28 |
| | 6840 | 28 |
| K1005782A | 1630 | 5 |
| K1005783A | 1630 | 1 |
| K1005784 | 1630 | 2 |
| K1005785 | 1630 | 3 |
| K1005786A | 1630 | 4 |
| K1005787A | 6320 | - |
| K1005787B | 6320 | - |
| K1005788 | 1610 | 9 |
| K1005822 | 6460 | 21 |
| K1005823 | 6460 | 20 |
| K1005832A | 3110 | 2 |
| | 6680 | 2 |
| | 6840 | 2 |
| K1005834A | 1110 | 7 |
| | 6670 | 7 |
| K1005835A | 1630 | 8 |
| K1005836 | 1630 | 9 |
| K1005837 | 1630 | 7 |
| K1005859 | 1130 | 18 |
| K1005859A | 1130 | 18 |
| K1005860 | 1130 | 39 |
| K1005860A | 1130 | 39 |
| K1005888 | 1610 | 18 |
| K1005888A | 1610 | 18 |
| K1005909 | 5120 | 3 |
| | 5140 | 3 |
| K1005975B | 6370 | - |
| K1006040 | 1170 | 3 |
| K1006040A | 1170 | 3 |
| K1006047 | 1170 | 12 |
| K1006157E | 2120 | 1 |
| K1006157G | 2120 | 1 |
| K1006157H | 2120 | 1 |
| K1006157J | 2120 | 1 |
| K1006183A | 2150 | 4-1 |
| K1006183B | 2150 | 4-1 |
| K1006183C | 2150 | 4-1 |
| K1006183E | 2150 | 4-1 |
| K1006184 | 2150 | 4-1A |
| K1006184A | 2150 | 4-1A |
| K1006184B | 2150 | 4-1A |
| K1006185A | 2150 | 4-1B |
| K1006186 | 2150 | 4-1D |
| K1006186A | 2150 | 4-1D |
| K1006187 | 2150 | 4-1E |
| K1006187A | 2150 | 4-1E |
| K1006188 | 2150 | 4-1F |
| K1006190 | 3130 | 1 |
| | 4250 | - |
| K1006191 | 3130 | 2 |
| | 4240 | - |
| K1006192 | 3130 | 3 |
| | 4260 | - |
| K1006192A | 3130 | 3 |
| | 4260 | - |
| K1006192B | 3130 | 3 |
| | 4260 | - |
| K1006192C | 3130 | 3 |
| | 4260 | - |
| K1006193 | 3130 | 4 |
| K1006194 | 3130 | 5 |
| K1006195 | 3130 | 6 |
| K1006195A | 3130 | 6 |
| K1006196 | 3130 | 7 |
| K1006196A | 3130 | 7 |
| K1006197A | 3130 | 8 |
| K1006198A | 3130 | 9 |
| K1006199 | 3130 | 22 |
| K1006200B | 3130 | - |
| K1006201A | 3150 | - |
| K1006202 | 3150 | 1 |
| | 4270 | - |
| | 6690 | 1 |
| | 6850 | 1 |
| K1006202A | 3150 | 1 |
| | 4270 | - |

| PART NO. | FIG NO. | KEY NO. |
|---|---|---|
| K1006202A | 6690 | 1 |
| | 6850 | 1 |
| K1006203B | 2150 | 4 |
| K1006203C | 2150 | 4 |
| K1006203E | 2150 | 4 |
| K1006203G | 2150 | 4 |
| K1006204 | 3140 | - |
| K1006204A | 3141 | - |
| K1006205B | 3160 | - |
| K1006206 | 3160 | 14 |
| | 6860 | 14 |
| K1006207 | 3160 | 15 |
| K1006208 | 3160 | 16 |
| K1006209 | 3160 | 17 |
| | 6860 | 17 |
| K1006210 | 3160 | 18 |
| K1006212B | 6190 | - |
| K1006213A | 6190 | 1 |
| K1006214A | 6190 | 2 |
| K1006215 | 6190 | 3 |
| K1006217B | 6200 | - |
| K1006218 | 6200 | 1 |
| K1006219A | 6350 | - |
| K1006220 | 6350 | 1 |
| K1006220A | 6350 | 1 |
| K1006221A | 6350 | 2 |
| K1006222 | 6350 | 12 |
| K1006222A | 6350 | 12 |
| K1006223 | 6350 | 13 |
| K1006223A | 6350 | 13 |
| K1006224B | 6140 | - |
| K1006224G | 6141 | - |
| K1006225A | 6360 | - |
| K1006226 | 6360 | 1 |
| K1006227 | 6360 | 13 |
| | 6830 | 4 |
| | 6890 | 13 |
| K1006228 | 6360 | 14 |
| | 6830 | 5 |
| | 6890 | 14 |
| K1006229A | 6220 | - |
| K1006230 | 6230 | - |
| K1006231 | 6230 | 1 |
| K1006232 | 6230 | 2 |
| K1006233 | 6380 | - |
| K1006234 | 4300 | - |
| | 6380 | 1 |
| K1006235 | 4310 | - |
| | 6380 | 2 |
| K1006236C | 6400 | - |
| K1006237 | 4320 | - |
| | 6400 | 3 |
| K1006237A | 4320 | - |
| | 6400 | 3 |
| K1006237B | 4320 | - |
| | 6400 | 3 |
| K1006237C | 4320 | - |
| | 6400 | 3 |
| K1006240 | 3160 | 3 |
| | 6700 | 3 |
| | 6860 | 3 |
| K1006244A | 1150 | 47 |
| K1006245 | 1150 | 48 |
| K1006246B | 6170 | - |
| K1006246C | 6170 | - |
| K1006246E | 6170 | - |
| K1006252 | 1160 | 32 |
| K1006253A | 1160 | 40 |
| K1006365C | 6100 | - |
| K1006368 | 1470 | 49-18 |
| | 1490 | 120 |
| K1006370 | 1490 | 32-38 |
| K1006390B | 6160 | - |
| K1006392A | 6130 | 4 |
| | 6160 | 4 |
| K1006393A | 6120 | 42 |
| | 6150 | 52 |
| K1006400B | 6310 | 2 |
| K1006451B | 1740 | 1 |
| K1006460B | 6180 | - |
| K1006461B | 6330 | - |
| K1006519 | 1210 | 16 |
| K1006529 | 1210 | 16A |
| | 5110 | 7 |
| K1006564A | 6340 | - |
| K1006572 | 1670 | 22 |
| K1006586 | 5100 | 5 |
| K1006587B | 6130 | - |
| K1006604 | 2100 | 1 |
| K1006616A | 6410 | - |
| K1006656 | 6180 | 24 |
| | 6330 | 30 |
| K1006663 | 6570 | 2 |
| K1006668 | 6520 | 4 |
| K1006681 | 1650 | - |
| K1006682 | 1650 | 1 |
| K1006683 | 1650 | 2 |
| K1006766A | 2200 | - |
| K1006794B | 2210 | - |
| K1006854 | 5110 | 8 |
| K1006930 | 6350 | 21 |
| K1006931 | 6350 | 20 |
| K1006933 | 1480 | 114 |
| K1006936 | 1480 | 98 |
| K1006960A | 1750 | 13 |
| K1006973 | 1210 | 16B |
| K1006995 | 1390 | 15 |
| K1007011 | 6310 | 32 |
| K1007012A | 2190 | 1 |
| K1007013A | 6290 | 1 |
| K1007014 | 2190 | 1-4 |
| K1007015 | 6290 | 1-4 |
| K1007092 | 6470 | 1 |
| K1007092A | 6470 | 1 |
| K1007093 | 6480 | 1 |
| K1007093A | 6480 | 1 |
| K1007094 | 6490 | 1 |
| K1007094A | 6490 | 1 |
| K1007095 | 6500 | 1 |
| K1007231 | 6460 | 24 |
| K1007231A | 6460 | 24 |
| K1007342H | 5120 | - |
| K1007449A | 1240 | 11 |
| K1007517 | 6310 | 33 |
| K1007543A | 1190 | 1-1A |
| | 4140 | - |
| K1007668 | 1690 | 34 |
| K1007727 | 1660 | 2 |
| K1007727A | 1660 | 2 |
| K1007727B | 1660 | 2 |
| K1007921A | 1250 | 67 |
| K1007928A | 1700 | 21 |
| K1007957 | 1220 | 30 |
| K1007973 | 4290 | - |
| | 6310 | 25 |
| K1008019D3 | 1670 | 9 |
| | 5120 | 11 |
| | 5140 | 15 |
| K1008019D4 | 1670 | 10 |
| | 5120 | 12 |
| | 5140 | 16 |
| K1008335 | 1580 | 3-23 |
| | 1590 | 4-21 |
| K1008464E | 5140 | - |
| K1008571 | 5150 | 3 |
| K1008704A | 2190 | - |
| K1008761 | 6250 | 2 |
| | 6260 | 2 |
| K1008762 | 6250 | 3 |
| | 6260 | 3 |

| PART NO. | FIG NO. | KEY NO. |
|---|---|---|
| K1008763 | 6250 | 4 |
| | 6260 | 4 |
| K1008764 | 6250 | 5 |
| | 6260 | 5 |
| K1008896 | 2170 | 5 |
| K1008926 | 6250 | 9 |
| | 6260 | 9 |
| K1009110 | 1630 | 16 |
| K1009228A | 6270 | - |
| K1009229A | 6280 | - |
| K1009230A | 6290 | - |
| K1009231A | 6300 | - |
| K1009235 | 6390 | - |
| K1009355 | 1660 | - |
| K1009355A | 1660 | - |
| K1009355B | 1660 | - |
| K1009355C | 1660 | - |
| K1009356I | 1670 | - |
| K1009357B | 1680 | - |
| K1009362A | 1690 | - |
| K1009364A | 1700 | - |
| K1009366A | 1730 | - |
| K1009385A | 1740 | - |
| K1009387A | 1710 | - |
| K1009390A | 6510 | - |
| K1009391A | 1750 | - |
| K1009392B | 1770 | - |
| K1009395A | 6520 | - |
| K1009397A | 6530 | - |
| K1009400 | 6540 | - |
| K1009403 | 6550 | - |
| K1009404 | 6560 | - |
| K1009406 | 6570 | - |
| K1009408 | 6580 | - |
| K1009413 | 6590 | - |
| K1009419 | 6600 | - |
| K1009421 | 6610 | - |
| K1009422 | 6620 | - |
| K1009424 | 6630 | - |
| K1009434 | 1220 | 16 |
| K1009445 | 6640 | - |
| K1009446A | 6650 | - |
| K1009450 | 6240 | - |
| K1009452 | 6660 | - |
| K1009605A | 1680 | 1A |
| K1009627 | 1430 | 34 |
| K1009651C | 6250 | 1 |
| K1009651G | 6250 | 1 |
| K1009678 | 5110 | - |
| K1009681EF | 5110 | 13 |
| K1009683E | 5110 | 14 |
| K1009684E | 5110 | 15 |
| K1009689 | 5100 | - |
| K1009705 | 6670 | - |
| K1009706 | 6670 | 8 |
| K1009878C | 6260 | 1 |
| K1009878E | 6260 | 1 |
| K1009936 | 1770 | 24 |
| K1009970 | 2110 | 2 |
| | 2120 | 2 |
| K1009977H | 2110 | - |
| K1009978H | 2120 | - |
| K1009979G | 6250 | - |
| K1009980E | 6260 | - |
| K1009981 | 6250 | 7 |
| | 6260 | 7 |
| K1009982 | 6250 | 10 |
| | 6260 | 10 |
| K1010013B | 1770 | 22 |
| K1010014B | 1770 | 20 |
| K1010065 | 6610 | 8 |
| K1010304 | 1430 | 37 |
| K1010466 | 1380 | 20 |
| | 1390 | 16 |
| K1010703 | 6510 | 1 |
| K1010839 | 1480 | 116 |
| K1011137 | 1560 | 23 |
| K1011141 | 2170 | 5-4 |
| K1011384 | 1770 | 20B |
| K1011385 | 1770 | 21B |
| K1011388 | 1770 | 22A |
| | 1770 | 23A |
| K1011500 | 2170 | 5-2 |
| K1011502 | 2170 | 5-5 |
| K1011645D2 | 5130 | 2 |
| | 5150 | 2 |
| K1011645D3 | 5130 | 1 |
| | 5150 | 1 |
| K1011647B | 5130 | 8 |
| K1011743D6 | 5120 | 13 |
| | 5140 | 17 |
| K1012046A | 1250 | 75 |
| K1012204A | 5150 | 7 |
| K1012205A | 5150 | 23 |
| K1012214 | 1160 | 41 |
| K1012258 | 5130 | 20 |
| | 5150 | 19 |
| K1012260 | 5130 | 22 |
| | 5150 | 21 |
| K1012576 | 1311 | 20 |
| K1012576 | 4231 | - |
| K1012583 | 5120 | 14 |
| K1012685A | 1220 | 21 |
| K1012985 | 6770 | - |
| K1012986 | 6770 | 1 |
| K1012987 | 6770 | 1A |
| K1012988 | 6770 | 1AA |
| K1012989 | 6780 | - |
| K1012990 | 6780 | 1 |
| K1012991 | 6780 | 1A |
| K1012992 | 6780 | 1AA |
| K1012993 | 6790 | - |
| K1012994 | 6790 | 1 |
| K1012995 | 6790 | 1A |
| K1012996 | 6790 | 1AA |
| K1012997 | 6800 | - |
| K1012998 | 6800 | 1 |
| K1012999 | 6800 | 1A |
| K1013000 | 6800 | 1AA |
| K1013001 | 6810 | - |
| K1013002 | 6810 | 1 |
| K1013003 | 6810 | 1A |
| K1013004 | 6810 | 1AA |
| K1013266 | 1600 | 10 |
| K1013266A | 1600 | 10 |
| K1013266B | 1600 | 10 |
| K1013269 | 1600 | 16 |
| K1013290 | 1600 | 17 |
| K1013440A | 5130 | 21 |
| | 5150 | 20 |
| K1013441A | 5130 | 23 |
| | 5150 | 22 |
| K1013543 | 1210 | 23 |
| K1013571 | 3120 | 4 |
| | 6720 | 4 |
| | 6730 | 4 |
| | 6740 | 4 |
| | 6770 | 4 |
| | 6780 | 4 |
| | 6790 | 4 |
| | 6800 | 4 |
| | 6810 | 4 |
| | 6940 | 4 |
| K1013608 | 1311 | 19 |
| K1013846 | 1680 | 3 |
| K1014005H | 6680 | - |
| K1014008 | 6680 | 1 |
| K1014008A | 6680 | 1 |
| K1014008B | 6680 | 1 |
| K1014008C | 6680 | 1 |

| PART NO. | FIG NO. | KEY NO. | PART NO. | FIG NO. | KEY NO. | PART NO. | FIG NO. | KEY NO. |
|---|---|---|---|---|---|---|---|---|
| K1014008E | 6680 | 1 | K1015170A | 5150 | 6 | K1024144 | 6100 | 24 |
| K1014008G | 6680 | 1 | K1015170B | 5150 | 6 | K1024918 | 1160 | 4 |
| K1014016B | 6720 | - | K1015171G | 5150 | - | K1025177 | 6900 | 11 |
| K1014017 | 6720 | 1 | K1015333 | 6870 | 1 | K1026171 | 6900 | - |
| K1014017A | 6720 | 1 | K1015739 | 5130 | 26 | K1026654 | 1670 | 91 |
| K1014017B | 6720 | 1 | K1015780 | 6750 | 2 | K1027765 | 1490 | 32-15 |
| K1014018 | 6720 | 1-1 | K1016066 | 5130 | 27 | K1027768 | 1470 | 118 |
| K1014018A | 6720 | 1-1 | | 5150 | 28 | K1027769 | 1470 | 119 |
| K1014019B | 6730 | - | K1016102 | 5150 | 27 | K1029144 | 6910 | 1 |
| K1014020 | 6730 | 1 | K1016614 | 5120 | 15 | K1029146 | 2140 | 4 |
| K1014020A | 6730 | 1 | | 5130 | 28 | K1029147 | 1150 | 3A |
| K1014020B | 6730 | 1 | | 5140 | 18 | K1029148A | 2160 | 6-4 |
| K1014021 | 6730 | 1-1 | | 5150 | 30 | K1029149A | 2160 | 6-5 |
| K1014021A | 6730 | 1-1 | K1016899 | 6760 | - | K1029158 | 1150 | 3 |
| K1014022E | 6840 | - | K1016900 | 6750 | - | K1029257 | 1220 | 21B |
| K1014023 | 6840 | 1 | K1017271 | 1440 | 37 | | 5110 | 25 |
| K1014023A | 6840 | 1 | K1017315 | 2150 | 4-1C | K1030275 | 1680 | 9 |
| K1014023B | 6840 | 1 | K1017316 | 2150 | 4-1G | K1030336 | 1670 | 24 |
| K1014023C | 6840 | 1 | K1017317 | 2150 | 4-1H | K1030574 | 1680 | 10 |
| K1014023E | 6840 | 1 | K1017382A | 4281 | - | K1033498 | 6920 | - |
| K1014030B | 6740 | - | | 6180 | 1 | K1033644 | 6930 | 1 |
| K1014031 | 6740 | 1 | | 6330 | 2 | K1033652 | 6930 | - |
| K1014031A | 6740 | 1 | K1017629 | 6900 | 1 | K1033880 | 1470 | 49-8 |
| K1014031B | 6740 | 1 | K1017883 | 1170 | 2 | K1033991 | 1470 | 49-1 |
| K1014032 | 6740 | 1-1 | K1018551A | 6850 | - | K1034000 | 5120 | 1 |
| K1014032A | 6740 | 1-1 | K1018552B | 6860 | - | K1034001 | 5140 | 1 |
| K1014251 | 3120 | 6 | K1018553 | 6860 | 15 | K1036331 | 1470 | 49-7 |
| | 6720 | 6 | K1018554 | 6860 | 16 | K1036967 | 1470 | 49-17 |
| | 6730 | 6 | K1018555 | 6860 | 18 | K1037887 | 3141 | 17-1 |
| | 6740 | 6 | K1018556A | 6870 | - | K1038003 | 3141 | 17 |
| | 6770 | 6 | K1018558 | 6890 | - | K1038028 | 1320 | 174 |
| | 6780 | 6 | K1018559 | 6890 | 1 | K1038029 | 6141 | 33 |
| | 6790 | 6 | K1018561 | 6880 | - | K1038032 | 1311 | 48 |
| | 6800 | 6 | K1018562 | 6880 | 1 | K1038107A | 1600 | 17 |
| | 6810 | 6 | K1018563 | 6880 | 2 | K1038110A | 1600 | 16 |
| | 6940 | 6 | K1018682 | 5160 | 1 | K1038176 | 6940 | - |
| K1014408A | 6690 | - | K1018682A | 5160 | 1 | K1038177 | 6940 | 1 |
| K1014409 | 6710 | - | K1018689A | 5160 | - | K1038177A | 6940 | 1 |
| K1014417B | 6700 | - | K1018695 | 6830 | - | K1038178 | 6940 | 1-1 |
| K1014418 | 6700 | 14 | K1018697 | 6820 | - | K1038240 | 1495 | - |
| K1014419 | 6700 | 15 | K1018732 | 6830 | 1 | K1038247 | 1495 | 1 |
| K1014420 | 6700 | 16 | K1018733 | 6820 | 1 | K1038559 | 1160 | 41 |
| K1014421 | 6700 | 17 | K1018734 | 6820 | 2 | K1039625 | 3100 | 6 |
| K1014422 | 6700 | 18 | K1018746AD2 | 5130 | 29 | K1039626 | 3100 | 5 |
| K1014874 | 6750 | 1 | K1018984 | 1180 | 2 | K1039627 | 3100 | 3 |
| K1015164J | 5130 | - | K1018999 | 1180 | 2B | K1039627A | 3100 | 3 |
| K1015167 | 5130 | 6 | K1023212 | 1130 | 2 | K1039629 | 3110 | 9 |
| K1015167A | 5130 | 6 | | 1140 | - | | 6680 | 9 |
| K1015167B | 5130 | 6 | K1023531 | 1260 | 6 | | 6840 | 9 |
| K1015170 | 5150 | 6 | K1023547 | 1150 | 3C | K1039630 | 3110 | 8 |

| PART NO. | FIG NO. | KEY NO. |
|---|---|---|
| K1039630 | 6680 | 8 |
| | 6840 | 8 |
| K1039631 | 3110 | 10 |
| | 6680 | 10 |
| | 6840 | 10 |
| K1039643 | 3141 | 1 |
| K1039644 | 3141 | 2 |
| K1040606 | 1450 | 8 |
| | 1600 | 20 |
| K1042074 | 5130 | 19 |
| | 5150 | 16 |
| K1043471 | 1170 | 2 |
| K1043719 | 1110 | 1 |
| | 6670 | 1 |
| K1045595 | 1110 | - |
| K1045597 | 6670 | - |
| K9000942 | 4140 | 34 |
| K9000943 | 4140 | 35 |
| K9000944 | 4140 | 37 |
| K9000999 | 6380 | 4A |
| | 6400 | 4A |
| K9001001 | 4210 | 32 |
| K9001114 | 4210 | 1 |
| K9001115 | 4210 | 3 |
| K9001117 | 4210 | 6 |
| K9001119 | 4210 | 9 |
| K9001121 | 4210 | 11 |
| K9001123 | 4210 | 13 |
| K9001127 | 4210 | 18 |
| K9001128 | 4210 | 20 |
| K9001129 | 4210 | 22 |
| K9001130 | 4210 | 25 |
| K9001131 | 4210 | 25 |
| K9001132 | 4210 | 28 |
| K9001133 | 4210 | 30 |
| K9001135 | 4210 | 33 |
| K9001136 | 4210 | 34 |
| K9001137 | 4210 | 35 |
| K9001138 | 4210 | 36 |
| K9001139 | 4210 | 37 |
| K9001140 | 4210 | 37 |
| K9001141 | 4220 | 6 |
| | 4221 | 6 |
| K9001142 | 4220 | 25 |
| K9001158 | 4260 | 44 |
| | 4270 | 37 |
| | 4320 | 41 |
| K9001159 | 4260 | 47 |
| | 4320 | 44 |
| K9001164 | 4240 | 14 |
| K9001164 | 4250 | 14 |
| | 4270 | 14 |
| | 4300 | 14 |
| | 4310 | 14 |
| K9001166 | 4240 | 18 |
| | 4250 | 18 |
| | 4270 | 18 |
| | 4300 | 18 |
| | 4310 | 18 |
| K9001173 | 4260 | 50 |
| | 4320 | 47 |
| K9001197 | 4190 | 4 |
| K9001199 | 4190 | 50 |
| K9001201 | 1425 | 2 |
| K9001202 | 1425 | 3 |
| K9001203 | 1425 | 4 |
| K9001204 | 1425 | 5 |
| K9001205 | 1425 | 6 |
| K9001206 | 1425 | 7 |
| K9001207 | 1425 | 8 |
| K9001208 | 1425 | 10 |
| K9001209 | 1425 | 11 |
| K9001210 | 1425 | 12 |
| K9001211 | 1425 | 13 |
| K9001212 | 1425 | 14 |
| K9001213 | 1425 | 15 |
| K9001214 | 1425 | 16 |
| K9001215 | 1425 | 17 |
| K9001216 | 1425 | 18 |
| K9001217 | 1425 | 19 |
| K9001218 | 1425 | 20 |
| K9001219 | 1425 | 21 |
| K9001220 | 1425 | 22 |
| K9001221 | 1425 | 23 |
| K9001354 | 4230 | 2 |
| | 4231 | 2 |
| K9001695 | 1425 | 1 |
| K9001762 | 4210 | 7 |
| K9001763 | 4210 | 8 |
| K9001766 | 4210 | 12 |
| K9001767 | 4210 | 14 |
| K9001768 | 4210 | 16 |
| K9001804 | 4180 | 68 |
| K9001882 | 4240 | 8 |
| | 4250 | 8 |
| | 4270 | 8 |
| | 4300 | 8 |
| | 4310 | 8 |
| K9001883 | 4240 | 9 |
| | 4250 | 9 |
| K9001883 | 4270 | 9 |
| | 4300 | 9 |
| | 4310 | 9 |
| K9001884 | 4240 | 10 |
| | 4250 | 10 |
| | 4270 | 10 |
| | 4300 | 10 |
| | 4310 | 10 |
| K9001895 | 4240 | 22 |
| | 4250 | 22 |
| | 4270 | 22 |
| | 4300 | 22 |
| | 4310 | 22 |
| K9001906 | 4100 | 6 |
| | 4130 | 2 |
| K9001907 | 4100 | 7 |
| K9001908 | 4110 | 2 |
| K9001909 | 4110 | 2A |
| | 4110 | 3A |
| K9001910 | 4110 | 2Ab |
| | 4110 | 3Ab |
| K9001911 | 4110 | 2Ac |
| | 4110 | 3Ac |
| K9001912 | 4110 | 2Ad |
| | 4110 | 3Ad |
| K9001913 | 4110 | 2B |
| K9001914 | 4110 | 2F |
| | 4110 | 3F |
| K9001915 | 4110 | 3 |
| K9001916 | 4110 | 2Ag |
| | 4110 | 3Ag |
| K9001917 | 4110 | 3B |
| K9001918 | 4110 | 4 |
| K9001919 | 4110 | 7 |
| K9001920 | 4110 | 8 |
| K9001922 | 4120 | 2A |
| K9001923 | 4120 | 2Aj |
| K9001924 | 4120 | 2Ak |
| K9001926 | 4120 | 16 |
| K9001927 | 4120 | 37 |
| K9001933 | 4130 | 2I |
| K9001943 | 4230 | 2A |
| | 4231 | 2A |
| K9001950 | 4260 | 8 |
| | 4320 | 8 |
| K9001951 | 4260 | 9 |
| | 4320 | 9 |
| K9001952 | 4260 | 10 |
| | 4320 | 10 |
| K9001953 | 4260 | 14 |

| PART NO. | FIG NO. | KEY NO. |
|---|---|---|
| K9001953 | 4320 | 14 |
| K9001955 | 4260 | 22 |
| | 4320 | 22 |
| K9001956 | 4260 | 23 |
| | 4320 | 23 |
| K9001988 | 4290 | * |
| K9002065 | 4231 | 4 |
| K9002069 | 4140 | * |
| K9002105 | 4140 | 23 |
| K9002106 | 4140 | 31 |
| K9002107 | 4140 | 41 |
| K9002108 | 4140 | 42 |
| K9002109 | 4140 | 43 |
| K9002111 | 1140 | 1 |
| K9002112 | 1140 | 2 |
| K9002113 | 1140 | 3 |
| K9002114 | 1140 | 4 |
| K9002115 | 1140 | 5 |
| K9002116 | 1140 | 9 |
| K9002117 | 1140 | 10 |
| K9002256 | 4120 | 1 |
| K9002261 | 4160 | 101 |
| K9002262 | 4160 | 201 |
| K9002263 | 4160 | 272 |
| K9002264 | 4170 | 16 |
| K9002265 | 4240 | 1 |
| | 4250 | 1 |
| | 4300 | 1 |
| | 4310 | 1 |
| K9002266 | 4240 | 3 |
| | 4250 | 3 |
| | 4300 | 3 |
| | 4310 | 3 |
| K9002267 | 4240 | 5 |
| | 4250 | 5 |
| | 4270 | 5 |
| | 4300 | 5 |
| | 4310 | 5 |
| K9002268 | 4240 | 16 |
| | 4250 | 16 |
| | 4300 | 16 |
| | 4310 | 16 |
| K9002269 | 4240 | 17 |
| | 4250 | 17 |
| | 4270 | 17 |
| | 4300 | 17 |
| | 4310 | 17 |
| K9002270 | 4240 | 34 |
| | 4310 | 30 |
| K9002271 | 4250 | 34 |
| K9002271 | 4300 | 30 |
| K9002272 | 4260 | 1 |
| | 4320 | 1 |
| K9002273 | 4260 | 3 |
| | 4320 | 3 |
| K9002273A | 4260 | 3 |
| | 4320 | 3 |
| K9002273B | 4260 | 3 |
| | 4320 | 3 |
| K9002274 | 4260 | 5 |
| | 4320 | 5 |
| K9002275 | 4260 | 16 |
| | 4320 | 16 |
| K9002276 | 4260 | 17 |
| | 4320 | 17 |
| K9002277 | 4260 | 18 |
| | 4320 | 18 |
| K9002278 | 4260 | 25 |
| | 4320 | 25 |
| K9002279 | 4260 | 26 |
| | 4320 | 26 |
| K9002280 | 4260 | 32 |
| | 4320 | 32 |
| K9002281 | 4260 | 36 |
| | 4320 | 36 |
| K9002282 | 4260 | 40 |
| K9002283 | 4270 | 1 |
| K9002284 | 4270 | 3 |
| K9002284A | 4270 | 3 |
| K9002285 | 4270 | 16 |
| K9002286 | 4270 | 26 |
| K9002287 | 4270 | 29 |
| K9002288 | 4270 | 33 |
| K9002289 | 4240 | * |
| | 4250 | * |
| | 4270 | * |
| | 4300 | * |
| | 4310 | * |
| K9002290 | 4260 | * |
| | 4320 | * |
| K9002672 | 4180 | 69B |
| K9002673 | 4190 | 14 |
| K9002675 | 4190 | 65 |
| K9002676 | 4170 | 53 |
| K9002678 | 4320 | 40 |
| K9002827 | 4120 | 14 |
| K9002828 | 4120 | 2 |
| K9002830 | 4100 | 2 |
| K9002934 | 4281 | 2 |
| K9002935 | 4281 | 8 |
| K9002959 | 1140 | 5 |
| K9002960 | 1140 | 10 |
| K9003465 | 4281 | 4 |
| K9003611 | 1140 | 16 |
| K9003705 | 4260 | 23 |
| | 4320 | 23 |
| K9003998 | 4210 | 33 |
| K9003999 | 4210 | 34 |
| K9004000 | 4210 | 35 |
| K9004001 | 4210 | 36 |
| K9005662 | 1220 | 21A |
| K9006480 | 4210 | 35 |
| K9006481 | 4210 | 36 |
| K9006860 | 4221 | 10 |
| K9006861 | 4221 | 28 |
| K9006862 | 4221 | 32 |
| K9006863 | 4221 | 51 |
| K9006864 | 4221 | 52 |
| K9006865 | 4221 | 24 |
| K9006866 | 4221 | 26 |
| S0504453 | 1580 | 3-18 |
| | 1590 | 4-16 |
| | 1690 | 17 |
| | 1690 | 21 |
| | 1700 | 2 |
| | 1740 | 18 |
| S0504553 | 1580 | 3-17 |
| | 1590 | 4-15 |
| S0504653 | 1770 | 31 |
| S0508653 | 1300 | 5J |
| | 1670 | 41 |
| | 1670 | 49 |
| | 1750 | 2 |
| | 6530 | 4 |
| | 6610 | 4 |
| S0508666 | 1690 | 26 |
| | 1690 | 35 |
| S0508753 | 1580 | 3-20 |
| | 1590 | 4-18 |
| S0508766 | 6140 | 4 |
| | 6141 | 4 |
| S0508853 | 1740 | 30 |
| | 6550 | 5 |
| | 6560 | 3 |
| | 6590 | 3 |
| | 6600 | 6 |
| | 6610 | 6 |
| | 6620 | 6 |
| | 6630 | 3 |
| S0508861 | 2160 | 6-12 |

| PART NO. | FIG NO. | KEY NO. |
|---|---|---|
| S0508866 | 1100 | 33 |
| | 1600 | 5-11 |
| | 1620 | 33 |
| | 1750 | 15 |
| | 1770 | 3 |
| | 6230 | 5 |
| | 6820 | 5 |
| | 6880 | 5 |
| S0508966 | 6310 | 9 |
| S0509053 | 1690 | 10 |
| S0509066 | 1630 | 12 |
| S0509353 | 1770 | 17 |
| S0511653 | 1700 | 5 |
| | 1700 | 5 |
| | 1740 | 7 |
| | 1740 | 11 |
| S0511853 | 1700 | 10 |
| S0511866 | 1580 | 3-13 |
| | 1590 | 4-11 |
| | 3141 | 18 |
| S0511953 | 1700 | 22 |
| S0512053 | 1770 | 14 |
| | 2180 | 15 |
| | 6600 | 3 |
| | 6610 | 6 |
| S0512066 | 1200 | 5 |
| | 1220 | 10 |
| | 1600 | 5-4 |
| S0512266 | 1300 | 4 |
| | 1370 | 39 |
| S0515066 | 1730 | 3 |
| S0515166 | 6130 | 11 |
| | 6160 | 11 |
| S0515253 | 2180 | 13 |
| S0515266 | 1610 | 37 |
| | 6350 | 7 |
| | 6360 | 5 |
| | 6890 | 5 |
| S0515363 | 2150 | 4-1I |
| S0515653 | 6550 | 2 |
| | 6620 | 3 |
| S0515766 | 6460 | 19 |
| S0515866 | 1150 | 15 |
| S0521266 | 2100 | 16 |
| S0521366 | 3100 | 18 |
| | 3110 | 18 |
| | 6680 | 18 |
| | 6840 | 18 |
| S0521466 | 1120 | 26 |
| | 1130 | 26 |
| S0521566 | 1130 | 53 |
| S0521853 | 4260 | 49 |
| | 4320 | 46 |
| S0527666 | 2110 | 3 |
| | 2120 | 3 |
| | 6250 | 6 |
| | 6260 | 6 |
| S0553766 | 1300 | 6 |
| S0556466 | 1310 | 25 |
| | 6210 | 20 |
| S0556766 | 6170 | 10 |
| | 6320 | 14 |
| S0557066 | 6750 | 7 |
| S0557153 | 1770 | 10 |
| S0558261 | 4240 | 29 |
| | 4250 | 29 |
| | 4300 | 29 |
| | 4310 | 29 |
| S0558366 | 1180 | 4 |
| S0558466 | 6350 | 15 |
| S0558566 | 1180 | 5 |
| S0558666 | 1370 | 37 |
| S0558766 | 1370 | 41 |
| S0558966 | 6360 | 11 |
| | 6830 | 10 |
| | 6890 | 11 |
| S0559066 | 1310 | 14 |
| S0560066 | 1311 | 14 |
| S0560466 | 1640 | 11 |
| S0560563 | 4260 | 35 |
| | 4260 | 39 |
| | 4270 | 28 |
| | 4320 | 35 |
| | 4320 | 39 |
| S0560566 | 1600 | 29 |
| S0560666 | 1600 | 22 |
| | 6350 | 5 |
| | 6350 | 5 |
| S0561053 | 4240 | 40 |
| | 4250 | 40 |
| | 4300 | 36 |
| | 4310 | 36 |
| S0561066 | 1260 | 22 |
| | 1260 | 101 |
| | 1600 | 32 |
| | 6120 | 16 |
| | 6120 | 23 |
| | 6150 | 23 |
| S0561266 | 1210 | 11 |
| | 6120 | 20 |
| S0561266 | 6150 | 20 |
| S0561366 | 6370 | 11 |
| S0561466 | 1600 | 32 |
| | 6150 | 16 |
| | 6380 | 19 |
| S0562653 | 1710 | 4 |
| S0562766 | 1250 | 27 |
| | 3130 | 17 |
| | 3130 | 17 |
| | 6200 | 4 |
| | 6870 | 4 |
| S0563466 | 6220 | 5 |
| | 6400 | 14 |
| S0564366 | 6350 | 18 |
| S0565066 | 1130 | 44 |
| | 2190 | 3 |
| | 6270 | 3 |
| | 6280 | 3 |
| | 6290 | 3 |
| | 6300 | 3 |
| S0565466 | 1100 | 11 |
| | 1200 | 8 |
| | 1220 | 2 |
| | 1260 | 5 |
| | 2150 | 4-3 |
| S0566066 | 1290 | 46 |
| S0566266 | 6200 | 18 |
| | 6710 | 7 |
| | 6870 | 12 |
| S0566466 | 1250 | 43 |
| S0570066 | 2130 | 18 |
| S0570366 | 2130 | 19 |
| S0570766 | 2100 | 20 |
| S0571166 | 2100 | 15 |
| S0571861 | 3110 | 21 |
| | 6680 | 21 |
| | 6840 | 21 |
| S0571966 | 3100 | 8 |
| | 3110 | 22 |
| | 6680 | 22 |
| | 6840 | 22 |
| S0574761 | 3120 | 1-7 |
| | 6720 | 1-7 |
| | 6730 | 1-7 |
| | 6740 | 1-7 |
| S0574961 | 6770 | 1D |
| | 6780 | 1D |
| | 6790 | 1D |
| | 6800 | 1D |
| | 6810 | 1D |

| PART NO. | FIG NO. | KEY NO. |
|---|---|---|
| S0574966 | 2100 | 21 |
| S0758253 | 2160 | 6-13 |
| S0761053 | 6510 | 2 |
| S0771466 | 1120 | 25 |
| S0774766 | 1190 | 2 |
| S0775866 | 1100 | 3 |
| S0786453 | 1770 | 8 |
| S0786653 | 1710 | 22 |
| S2201766 | 1510 | 23 |
| S2202966 | 1380 | 18 |
| S2204866 | 1350 | 48 |
| | 1360 | 48 |
| | 4200 | 78 |
| S2205261 | 4220 | 26 |
| S2206161 | 4140 | 32 |
| S2208466 | 1460 | 110 |
| S2208561 | 1460 | 24 |
| | 6110 | 18 |
| S2208866 | 1400 | 12 |
| | 1420 | 2 |
| | 1510 | 8 |
| S2208871 | 4170 | 30 |
| S2209261 | 4280 | 9 |
| | 4281 | 9 |
| S2209266 | 6360 | 16 |
| | 6830 | 6 |
| | 6890 | 10 |
| S2209361 | 4130 | 2F |
| S2209466 | 6350 | 9 |
| S2210071 | 4221 | 25 |
| S2211866 | 1510 | 17 |
| | 6180 | 7 |
| | 6330 | 18 |
| S2212266 | 1260 | 10 |
| | 1280 | 10 |
| | 1370 | 42 |
| | 3130 | 23 |
| | 3150 | 6 |
| | 4190 | 74 |
| | 6100 | 14 |
| | 6180 | 6 |
| | 6330 | 17 |
| | 6690 | 6 |
| | 6850 | 6 |
| S2212366 | 1180 | 6 |
| | 1250 | 68 |
| S2212461 | 4220 | 37 |
| S2212466 | 1260 | 11 |
| | 1280 | 11 |
| | 3130 | 16 |
| S2212466 | 3150 | 5 |
| | 4180 | 75 |
| | 4200 | 75 |
| | 6120 | 22 |
| | 6150 | 22 |
| | 6690 | 5 |
| | 6850 | 5 |
| S2212666 | 3130 | 20 |
| S2212766 | 4200 | 73 |
| S2212866 | 1270 | 12 |
| | 1290 | 12 |
| S2213066 | 4200 | 76 |
| S2213363 | 4260 | 53 |
| | 4320 | 50 |
| S2213466 | 1270 | 14 |
| | 4200 | 101 |
| S2214066 | 1270 | 13 |
| | 1290 | 13 |
| S2214266 | 1270 | 73 |
| S2215466 | 1240 | 16 |
| | 1250 | 9 |
| | 1280 | 9 |
| | 2200 | 5 |
| | 2210 | 5 |
| S2215561 | 4160 | 366 |
| S2215566 | 6310 | 31 |
| S2215666 | 6190 | 11 |
| S2215766 | 1250 | 28 |
| | 6380 | 5 |
| | 6400 | 5 |
| S2215866 | 6380 | 8 |
| | 6400 | 8 |
| S2215961 | 4240 | 33 |
| | 4240 | 37 |
| | 4250 | 33 |
| | 4250 | 37 |
| | 4260 | 43 |
| | 4270 | 32 |
| | 4270 | 36 |
| | 4300 | 33 |
| | 4310 | 33 |
| S2216366 | 1250 | 44 |
| S2216866 | 1250 | 69 |
| S2218566 | 1290 | 45 |
| | 6200 | 13 |
| | 6710 | 3 |
| | 6870 | 13 |
| S2218661 | 4140 | 24 |
| S2218766 | 6190 | 7 |
| | 6200 | 10 |
| S2218766 | 6710 | 4 |
| | 6870 | 10 |
| S2218861 | 4290 | 5 |
| S2219571 | 4140 | 25 |
| S2221566 | 1230 | 31 |
| | 6770 | 5 |
| | 6780 | 5 |
| | 6790 | 5 |
| | 6800 | 5 |
| | 6810 | 5 |
| S2221666 | 3120 | 5 |
| | 6720 | 5 |
| | 6730 | 5 |
| | 6740 | 5 |
| | 6940 | 5 |
| S2222461 | 4120 | 43 |
| S2222671 | 4170 | 29 |
| S2223266 | 4180 | 77 |
| S2225271 | 4240 | 25 |
| | 4250 | 25 |
| | 4270 | 25 |
| | 4300 | 25 |
| | 4310 | 25 |
| S2227661 | 4160 | 402 |
| S2228261 | 4260 | 27 |
| | 4320 | 27 |
| S2228671 | 4160 | 401 |
| S3050883 | 1690 | 6 |
| S3450343 | 1110 | 3 |
| | 1670 | 29 |
| | 1670 | 45 |
| | 6670 | 3 |
| S3450583 | 1680 | 4 |
| S3450823 | 1380 | 15 |
| S3450833 | 1200 | 16 |
| | 1480 | 82 |
| | 1660 | 24 |
| | 1670 | 11 |
| | 1670 | 44 |
| | 1750 | 5 |
| | 6650 | 15 |
| S3450863 | 1660 | 13 |
| | 1670 | 2 |
| S3450943 | 1200 | 21 |
| | 1670 | 33 |
| | 6110 | 15 |
| S3450953 | 1660 | 10 |
| | 1670 | 39 |
| | 6170 | 30 |
| S3450983 | 1670 | 7 |

| PART NO. | FIG NO. | KEY NO. |
|---|---|---|
| S3450993 | 1470 | 78 |
| | 1480 | 78 |
| S3452853 | 1480 | 79 |
| S3458843 | 1480 | 65 |
| S3523601 | 4280 | 13 |
| | 4281 | 4-4 |
| S3523608 | 4220 | 30 |
| S3523836 | 4240 | 24 |
| | 4250 | 24 |
| | 4260 | 24 |
| | 4270 | 24 |
| | 4300 | 24 |
| | 4310 | 24 |
| | 4320 | 24 |
| S3524403 | 3140 | 7 |
| | 3141 | 7 |
| S3644163 | 1440 | 32 |
| S3654523 | 1430 | 25 |
| S4012003 | 1670 | 47 |
| S4012203 | 1670 | 43 |
| S4012303 | 1770 | 28 |
| S4012333 | 1490 | 32-32 |
| | 1600 | 5-15 |
| S4012533 | 1490 | 32-27 |
| | 1600 | 5-10 |
| | 1620 | 25 |
| S4012633 | 1150 | 3D |
| | 1220 | 26 |
| | 1580 | 3-21 |
| | 1590 | 4-19 |
| | 1660 | 5 |
| | 4260 | 46 |
| | 4270 | 39 |
| | 4320 | 43 |
| S4012733 | 1150 | 16 |
| | 1240 | 21 |
| | 1580 | 3-15 |
| | 1590 | 4-13 |
| | 1600 | 39 |
| | 1710 | 5 |
| | 6380 | 20 |
| S4012833 | 4210 | 24 |
| S4012933 | 1250 | 40 |
| S4013133 | 2100 | 26 |
| | 3100 | 9 |
| | 3110 | 20 |
| | 6680 | 20 |
| | 6840 | 20 |
| S4013333 | 3120 | 1-8 |
| | 6720 | 1-8 |
| S4013333 | 6730 | 1-8 |
| | 6740 | 1-8 |
| | 6770 | 1E |
| | 6780 | 1E |
| | 6790 | 1E |
| | 6800 | 1E |
| | 6810 | 1E |
| S4014633 | 4220 | 32 |
| | 4280 | 11 |
| | 4281 | 4-3 |
| S4032733 | 6510 | 3 |
| S4032833 | 3141 | 17-3 |
| | 3160 | 12 |
| | 6380 | 13 |
| | 6700 | 12 |
| | 6860 | 12 |
| S4034833 | 1470 | 103 |
| S5000113 | 1510 | 24 |
| S5000213 | 1670 | 4 |
| | 1750 | 6 |
| S5000313 | 1770 | 29 |
| S5010313 | 1480 | 115 |
| S5010513 | 1580 | 3-16 |
| | 1580 | 3-19 |
| | 1590 | 4-14 |
| | 1590 | 4-17 |
| | 1620 | 34 |
| | 1690 | 8 |
| | 1690 | 12 |
| | 1770 | 11 |
| | 6530 | 5 |
| | 6610 | 2 |
| S5010613 | 1600 | 5-5 |
| | 1660 | 3 |
| | 1700 | 12 |
| | 1700 | 24 |
| | 1740 | 9 |
| | 1740 | 13 |
| S5010713 | 1150 | 17 |
| | 1210 | 13 |
| | 1770 | 6 |
| | 6370 | 15 |
| | 6550 | 8 |
| | 6620 | 2 |
| S5010813 | 1250 | 42 |
| | 1290 | 42 |
| S5010913 | 1130 | 31 |
| | 4180 | 81 |
| S5011113 | 1190 | 1-8 |
| S5100003 | 1670 | 28 |
| S5100003 | 1670 | 46 |
| S5100103 | 1680 | 5 |
| S5100203 | 1200 | 15 |
| | 1660 | 14 |
| | 1660 | 25 |
| | 1670 | 3 |
| | 1670 | 12 |
| | 1670 | 42 |
| | 6650 | 16 |
| S5100603 | 4240 | 28 |
| | 4250 | 28 |
| | 4260 | 45 |
| | 4260 | 52 |
| | 4270 | 38 |
| | 4300 | 28 |
| | 4310 | 28 |
| | 4320 | 42 |
| | 4320 | 49 |
| | 6610 | 7 |
| S5100703 | 4240 | 32 |
| | 4240 | 36 |
| | 4240 | 39 |
| | 4250 | 32 |
| | 4250 | 36 |
| | 4250 | 39 |
| | 4260 | 34 |
| | 4260 | 38 |
| | 4260 | 42 |
| | 4270 | 27 |
| | 4270 | 31 |
| | 4270 | 35 |
| | 4300 | 32 |
| | 4300 | 35 |
| | 4310 | 32 |
| | 4310 | 35 |
| | 4320 | 34 |
| | 4320 | 38 |
| S5102303 | 1200 | 20 |
| | 1300 | 7 |
| | 1600 | 5-16 |
| | 1660 | 11 |
| | 1670 | 8 |
| | 1670 | 32 |
| | 1670 | 38 |
| | 1690 | 18 |
| | 1690 | 22 |
| | 1700 | 3 |
| | 1740 | 19 |
| | 1770 | 30 |
| | 6170 | 31 |

| PART NO. | FIG NO. | KEY NO. |
|---|---|---|
| S5102503 | 1300 | 5K |
| | 1310 | 23 |
| | 1600 | 5-9 |
| | 1620 | 24 |
| | 1630 | 13 |
| | 1670 | 40 |
| | 1670 | 50 |
| | 1690 | 7 |
| | 1690 | 11 |
| | 1690 | 27 |
| | 1690 | 36 |
| | 1700 | 14 |
| | 1740 | 29 |
| | 1740 | 32 |
| | 1750 | 3 |
| | 1750 | 14 |
| | 1770 | 4 |
| | 1770 | 12 |
| | 1770 | 18 |
| | 1770 | 34 |
| | 2160 | 6-14 |
| | 6140 | 7 |
| | 6141 | 7 |
| | 6170 | 8 |
| | 6180 | 17 |
| | 6210 | 21 |
| | 6230 | 6 |
| | 6310 | 10 |
| | 6320 | 15 |
| | 6330 | 15 |
| | 6530 | 6 |
| | 6550 | 6 |
| | 6560 | 4 |
| | 6590 | 2 |
| | 6600 | 5 |
| | 6610 | 3 |
| | 6610 | 7 |
| | 6620 | 5 |
| | 6630 | 2 |
| | 6750 | 8 |
| | 6820 | 6 |
| | 6880 | 6 |
| S5102603 | 1180 | 3 |
| | 1200 | 6 |
| | 1220 | 11 |
| | 1310 | 22 |
| | 1311 | 22 |
| | 1370 | 36 |
| | 1660 | 4 |
| | 1690 | 3 |

| PART NO. | FIG NO. | KEY NO. |
|---|---|---|
| S5102603 | 1700 | 6 |
| | 1700 | 11 |
| | 1700 | 16 |
| | 1700 | 23 |
| | 1740 | 8 |
| | 1740 | 12 |
| | 1770 | 15 |
| | 2160 | 6-15 |
| | 2180 | 16 |
| | 3141 | 19 |
| | 6180 | 15 |
| | 6330 | 14 |
| | 6350 | 16 |
| | 6360 | 12 |
| | 6830 | 11 |
| | 6890 | 12 |
| S5102703 | 1210 | 12 |
| | 1240 | 22 |
| | 1260 | 25 |
| | 1260 | 100 |
| | 1600 | 28 |
| | 1640 | 12 |
| | 1710 | 2 |
| | 1730 | 4 |
| | 1770 | 7 |
| | 2150 | 4-1K |
| | 2180 | 14 |
| | 6120 | 21 |
| | 6130 | 10 |
| | 6150 | 21 |
| | 6160 | 10 |
| | 6350 | 6 |
| | 6350 | 6 |
| | 6360 | 6 |
| | 6370 | 12 |
| | 6890 | 6 |
| S5102803 | 1250 | 26 |
| | 3130 | 18 |
| | 3130 | 18 |
| | 6200 | 5 |
| | 6220 | 6 |
| | 6350 | 19 |
| | 6400 | 15 |
| | 6870 | 5 |
| S5102903 | 1100 | 12 |
| | 1120 | 27 |
| | 1130 | 27 |
| | 1250 | 41 |
| | 1290 | 41 |
| | 2100 | 22 |

| PART NO. | FIG NO. | KEY NO. |
|---|---|---|
| S5102903 | 2150 | 4-4 |
| | 2190 | 4 |
| | 3100 | 19 |
| | 3110 | 17 |
| | 4260 | 48 |
| | 4320 | 45 |
| | 6200 | 17 |
| | 6270 | 4 |
| | 6280 | 4 |
| | 6290 | 4 |
| | 6300 | 4 |
| | 6680 | 17 |
| | 6710 | 6 |
| | 6840 | 17 |
| | 6870 | 11 |
| S5103103 | 2110 | 4 |
| | 2120 | 4 |
| S5110603 | 1370 | 28 |
| | 1510 | 18 |
| | 6100 | 15 |
| | 6180 | 5 |
| | 6180 | 8 |
| | 6330 | 19 |
| S5110703 | 6380 | 6 |
| | 6400 | 6 |
| S5110803 | 4290 | 7 |
| S5210303 | 1490 | 32-34 |
| S5740480 | 4220 | 15 |
| | 4221 | 14 |
| S5740600 | 4221 | 11 |
| S5740800 | 4210 | 27 |
| S5741270 | 2150 | 4-1J |
| S5741361 | 4150 | 25 |
| S5810010 | 4150 | 27 |
| S5810030 | 4150 | 26 |
| S5810050 | 4150 | 28 |
| S6250110 | 4220 | 17 |
| S6250132 | 4160 | 543 |
| S6500400 | 4150 | 34 |
| S6500450 | 4170 | 44 |
| S6500500 | 4160 | 107 |
| S6510420 | 4170 | 37 |
| S6510900 | 4160 | 435 |
| S6540600 | 1470 | 112 |
| S6710032 | 4240 | 41 |
| | 4250 | 41 |
| | 4260 | 54 |
| | 4270 | 40 |
| | 4300 | 37 |
| | 4310 | 37 |

| PART NO. | FIG NO. | KEY NO. |
|---|---|---|
| S6710032 | 4320 | 51 |
| S6710041 | 1190 | 9 |
| | 1650 | 4 |
| | 3110 | 23 |
| | 3140 | 8 |
| | 3141 | 17-6 |
| | 3160 | 7 |
| | 6680 | 23 |
| | 6700 | 7 |
| | 6840 | 23 |
| | 6860 | 7 |
| S8000041 | 4200 | 42 |
| S8000061 | 4200 | 41 |
| S8000081 | 4221 | 34 |
| S8000101 | 4220 | 36 |
| S8000111 | 1240 | 49 |
| | 1250 | 66 |
| | 1300 | 28 |
| | 1310 | 28 |
| | 1310 | 144 |
| | 1311 | 28 |
| | 1311 | 28 |
| | 1311 | 144 |
| | 1320 | 28 |
| | 1320 | 142 |
| | 1330 | 28 |
| | 1340 | 28 |
| | 1370 | 34 |
| | 2200 | 19 |
| | 2210 | 19 |
| | 4160 | 547 |
| | 4160 | 570 |
| | 4221 | 35 |
| | 4230 | 5 |
| | 4231 | 6 |
| | 6140 | 3 |
| | 6140 | 54 |
| | 6141 | 3 |
| | 6141 | 54 |
| | 6170 | 2 |
| | 6180 | 12 |
| | 6210 | 9 |
| | 6210 | 44 |
| | 6320 | 2 |
| | 6320 | 35 |
| | 6330 | 16 |
| | 6340 | 5 |
| | 6370 | 10 |
| | 6380 | 9 |
| | 6390 | 6 |

| PART NO. | FIG NO. | KEY NO. |
|---|---|---|
| S8000111 | 6400 | 9 |
| | 6410 | 3 |
| S8000121 | 4140 | 38 |
| | 4200 | 104 |
| | 4220 | 35 |
| S8000141 | 1240 | 150 |
| | 1310 | 29 |
| | 1311 | 29 |
| | 1320 | 29 |
| | 1330 | 29 |
| | 1340 | 29 |
| | 1340 | 153 |
| | 1350 | 32 |
| | 1350 | 76 |
| | 1360 | 32 |
| | 1370 | 32 |
| | 1370 | 75 |
| | 2200 | 17 |
| | 2210 | 17 |
| | 4160 | 572 |
| | 4180 | 62 |
| | 4190 | 62 |
| | 6140 | 27 |
| | 6141 | 27 |
| | 6180 | 13 |
| | 6310 | 16 |
| | 6330 | 20 |
| | 6370 | 33 |
| | 6390 | 5 |
| | 6750 | 9 |
| S8000161 | 4200 | 30 |
| | 6640 | 4 |
| S8000181 | 1190 | 1-6 |
| | 1220 | 19 |
| | 1230 | 46 |
| | 1300 | 30 |
| | 1300 | 30 |
| | 1310 | 30 |
| | 1311 | 30 |
| | 1311 | 153 |
| | 1320 | 173 |
| | 1370 | 33 |
| | 2200 | 11 |
| | 2210 | 11 |
| | 4140 | 36 |
| | 4160 | 485 |
| | 4160 | 509 |
| | 4170 | 83 |
| | 6141 | 31 |
| | 6200 | 36 |

| PART NO. | FIG NO. | KEY NO. |
|---|---|---|
| S8000181 | 6310 | 17 |
| | 6360 | 8 |
| | 6360 | 31 |
| | 6710 | 36 |
| | 6830 | 8 |
| | 6830 | 31 |
| | 6870 | 36 |
| | 6890 | 8 |
| | 6890 | 31 |
| S8000205 | 4210 | 17 |
| S8000221 | 4220 | 12 |
| S8000231 | 1230 | 48 |
| | 2200 | 13 |
| | 2210 | 13 |
| | 6210 | 26 |
| | 6310 | 19 |
| S8000241 | 4200 | 25 |
| S8000261 | 4200 | 23 |
| | 4221 | 12 |
| S8000291 | 1200 | 52 |
| | 1230 | 147 |
| | 1240 | 148 |
| | 4140 | 29 |
| | 6100 | 23 |
| | 6120 | 26 |
| | 6150 | 26 |
| | 6190 | 12 |
| | 6310 | 30 |
| S8000321 | 4200 | 36 |
| S8000341 | 4240 | 31 |
| | 4240 | 35 |
| | 4250 | 31 |
| | 4250 | 35 |
| | 4260 | 41 |
| | 4260 | 51 |
| | 4270 | 30 |
| | 4270 | 34 |
| | 4300 | 31 |
| | 4310 | 31 |
| | 4320 | 48 |
| | 6380 | 7 |
| | 6400 | 7 |
| S8000381 | 1240 | 50 |
| | 6130 | 12 |
| | 6160 | 12 |
| | 6200 | 31 |
| | 6710 | 31 |
| | 6870 | 31 |
| S8010250 | 4200 | 54 |
| S8010251 | 4220 | 22 |

| PART NO. | FIG NO. | KEY NO. |
|---|---|---|
| S8010251 | 4221 | 21 |
| S8010451 | 4160 | 365 |
| | 4190 | 7 |
| S8010550 | 2160 | 6-8 |
| S8010700 | 2170 | 5-7 |
| S8010801 | 4240 | 21 |
| | 4250 | 21 |
| | 4270 | 21 |
| | 4300 | 21 |
| | 4310 | 21 |
| S8010851 | 2140 | 7 |
| S8010901 | 4260 | 21 |
| | 4320 | 21 |
| S8011450 | 1200 | 3 |
| S8011451 | 4240 | 13 |
| | 4250 | 13 |
| | 4270 | 13 |
| | 4300 | 13 |
| | 4310 | 13 |
| S8011601 | 4260 | 13 |
| | 4320 | 13 |
| S8011651 | 1220 | 22 |
| S8011850 | 1220 | 6 |
| S8012200 | 1220 | 13 |
| S8030061 | 6210 | 10 |
| S8030081 | 6200 | 38 |
| | 6310 | 18 |
| | 6350 | 11 |
| | 6360 | 3 |
| | 6360 | 34 |
| | 6710 | 38 |
| | 6830 | 3 |
| | 6830 | 34 |
| | 6870 | 38 |
| | 6890 | 3 |
| | 6890 | 34 |
| S8030121 | 1230 | 47 |
| S8030161 | 1250 | 74 |
| | 6120 | 27 |
| | 6130 | 8 |
| | 6150 | 27 |
| | 6160 | 8 |
| | 6310 | 29 |
| S8040061 | 1300 | 98 |
| S8040081 | 1230 | 44 |
| S8060121 | 4200 | 103 |
| S8060161 | 4200 | 31 |
| S8450006 | 1160 | 30 |
| S8450012 | 1150 | 3G |
| | 1200 | 23 |
| S8450012 | 1210 | 6 |
| | 6100 | 13 |
| S8450016 | 1750 | 12 |
| S8450023 | 6100 | 19 |
| S8470044 | 6100 | 4 |
| S8470075 | 1160 | 52 |
| S8470085 | 1160 | 29 |
| S8500092 | 1240 | 40 |
| S8500143 | 1230 | 39 |
| S8510118 | 1170 | 10 |
| S8510143 | 1170 | 9 |
| S8510168 | 1170 | 11 |
| S862203H | 5110 | 16 |
| T6510018 | 5100 | 1-49 |
| T6510027 | 5100 | 1-52 |
| T6510062 | 5100 | 1-35 |
| T6510066 | 5100 | 1-36 |
| T6510070 | 5100 | 1-37 |
| T6510072 | 5100 | 1-38 |
| T6510075 | 5100 | 1-39 |
| T6510081 | 5100 | 1-41 |
| T6510085 | 5100 | 1-42 |
| T6510089 | 5100 | 1-44 |
| T6510091 | 5100 | 1-45 |
| T6550005 | 5100 | 1-26 |
| T6550006 | 5100 | 1-27 |
| T6550007 | 5100 | 1-28 |
| T6550009 | 5100 | 1-29 |
| T6550011 | 5100 | 1-30 |
| T6550015 | 5100 | 1-32 |
| T6550018 | 5100 | 1-33 |
| T6580008 | 5100 | 1-2 |
| T6580020 | 5100 | 1-5 |
| T6600183 | 5100 | 1-55 |
| T6600189 | 5100 | 1-56 |
| T6600197 | 5100 | 1-57 |
| T6600201 | 5100 | 1-58 |
| T6600211 | 5100 | 1-59 |
| T6600217 | 5100 | 1-61 |
| T6600223 | 5100 | 1-60 |
| T6690012 | 5100 | 1-19 |
| T6690013 | 5100 | 1-20 |
| T6750003 | 5100 | 1-21 |
| T7050003 | 5100 | 1-6 |
| T7050013 | 5100 | 1-7 |
| T7050021 | 5100 | 1-8 |
| T7050022 | 5100 | 1-9 |
| T7260057 | 5100 | 1-13 |
| T7500004 | 5100 | 1-10 |
| Y-3738-04 | 1300 | 5F |
| Y-3738-05 | 1300 | 5G |

# DOOSAN INFRACORE CO., LTD.
# AROUND THE WORLD

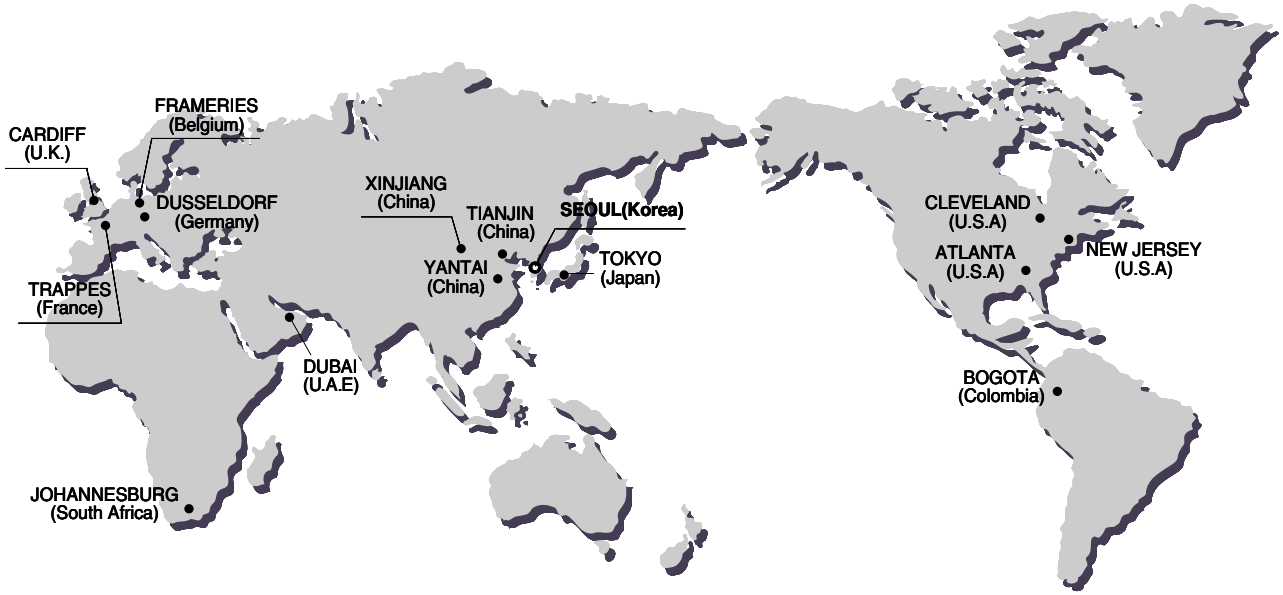


**Head Office**
Hwasu-Dong 7-11, Dong-Gu, Incheon, Korea.
Tel : +82-32-211-1114 Fax : +82-32-211-1231

**Seoul Office**
Doosan Tower 26TH FL. 18-12, Euljiro-6Ga,
Jung-Gu, Seoul, korea 100-730
Tel : +82-2-3389-8114 Fax : +82-2-3389-8117

## ASIA & OCEANIA

**Doosan Infracore Machine Tools Yantai Co.,Ltd.**
1, Dayu Road 1, ETDZ, Yantai, Shandong, China
Tel : +86-0535-693-5060 , Fax : +86-0535-693-5619

**Doosan Infracore Liaoning Machinery Co.,Ltd.**
No.32 DongLing Road, DongLing District, ShenYang,
Liaoning, China
Tel : +86-24-8841-1407, Fax : +86-24-8841-1404

**Doosan Infracore Xinjiang Machinery Co.,Ltd.**
No. 178, Hetanbei Road, Wurumuqi, Xinjiang, China
Tel : +86-991-469-7217 , Fax : +86-991-469-8641

**Dajian(Tianjin) Mechanical Construction Co., Ltd**
No.87 Gongxing Road, Tanggu, Tianjin, china
Tel : +86-22-2521-0540 Fax : +86-22-2521-0714

**Doosan Infracore (China) Co., Ltd.**
#28, Wuzhishan Road, Eco. & Tech, Development Zone,
Yantai, Shandong, China
Tel : +86-535-638-2000 Fax : +86-535-638-2004

**Doosan Infracore Japan Corporation**
3rd Floor, k-1 Bld.,19-4, Nishi-shinbashi 2-Chome,
Minato-Ku, Tokyo, Japan
Phone : +81-3-3434-2547 Fax : +81-3-3434-2548

**Doosan Infracore Middle East Center(Dubai)**
183127, Al-Serkal Building, Air Port Road, Dubai, U.A.E
Phone : +971-4-295-2781, 2782 Fax : +971-4-295-2783

## NORTH AMERICA

**Doosan Infracore America Corporation**
2905 Shawnee Industrial Way, Suwanee,
Georgia 30024, U. S. A
Tel : +1-770-831-2200 Fax : +1-770-831-0480

**Doosan Infracore America Corporation Cleveland Office**
4530 Renaissance Parkway, Warrensville Heights, OH 44128, U.S.A
Tel : +1-216-595-1212 Fax : +1-216-595-1214

**Doosan Infracore America Corporation N.J. Office**
8 York Avenue, West Caldwell, N.J. 07006, U.S.A
Tel : +1-973-618-2500 Fax : +1-973-618-2501

## EUROPE

**Doosan Infracore U.K., Ltd.**
Doosan House, Unit 6.3, Nantgarw Park, Cardiff
CF47QU, U.K.
Tel : +44-1443-84-2273 Fax : +44-1443-84-1933

**Doosan Infracore Germany GmbH**
Hans-Boeckler strasse 27-29, D-40764, Langenfeld-Fuhrkamp,
Germany / Tel : +49-2173-8509-20 Fax : +49-2173-8509-60

**Doosan Infracore Europe S.A. (Europe Head Office)**
1A, Rue Achille Degrace, 7080 Frameries, Belgium
Tel : +32-65-61-3231 Fax : +32-65-61-3238

**Doosan Infracore France SARL**
**(Doosan Infracore Europe S.A. France Office)**
2Eme Etage, 1/3 Avenue Pavlov, Z.A.I. Des Bruyeres, 78190 Trappes France
Tel : +33-1-3016-2140 Fax : +33-1-3016-2144

**Doosan Infracore Europe S.A. Italy Office**
Via Monfalcone 41, 20090 Cinisello B.mo (MI)
Tel : +39-2-612-0565 Fax : +39-2-612-6322

## SOUTH AMERICA

**Colombia Liaison Office**
Diagonal127 A No. 17-34 Oficina 302
Bogota, Colombia
Tel : +57-1-625-3470 Fax : 57-1 -625-3883

## AFRICA

**Doosan Infracore South Africa (PTY)Ltd.**
60C Electron Road, Isando 1600, Johannesburg, South Africa
Tel : +27-11-974-2095 Fax : +27-11 -974-2778