Fig. 1100 MAIN FRAME

DOOSAN

DX350LC

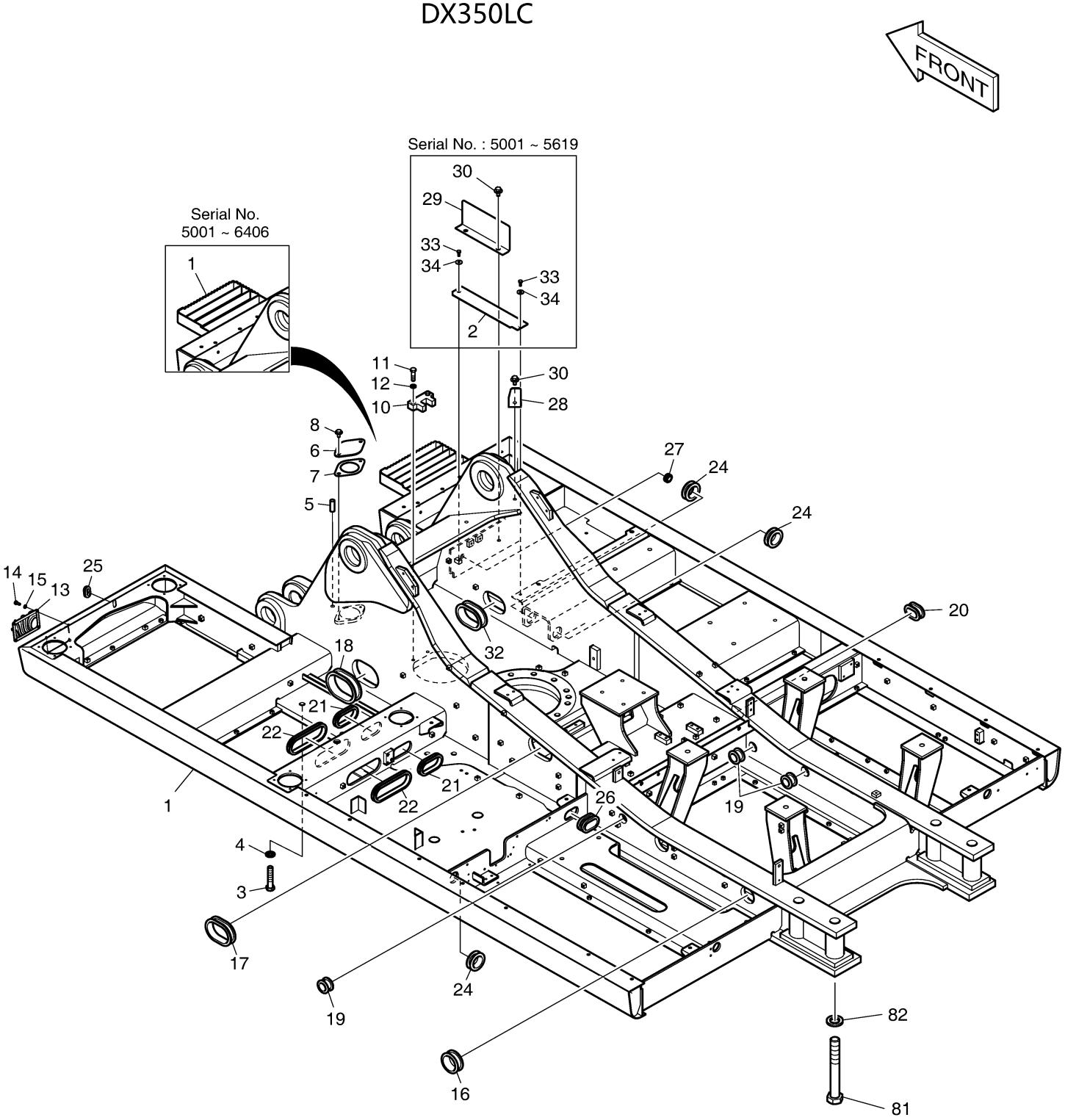

DOOSAN Doosan Infracore

Fig. 1100 MAIN FRAME

Key No	Part No	Description	Qty	S.C	Serial No	ICA	Replacable	Qty
-	K1002971T	MAIN FRAME	-	D	5001~5996			
-	160620-00069	MAIN FRAME	-	D	5997~			
1	K1002972S	FRAME;MAIN	1		5001~5996	I	160620-00070	1
1	160620-00070	FRAME;MAIN	1		5997~5998	Y	160620-00070A	1
1	160620-00070A	FRAME,MAIN	1		5999~6057	I	160620-00070B	1
1	160620-00070B	FRAME,MAIN	1		6058~6156	I	160620-00070E	1
1	160620-00070E	FRAME,MAIN	1		6157~6298	I	160620-00070G	1
1	160620-00070G	FRAME,MAIN	1		6299~6383	I	160620-00070H	1
1	160620-00070H	FRAME,MAIN	1		6384~6406			
1	160620-00070L	FRAME,MAIN	1		6407~6496			
1	160620-00070M	FRAME,MAIN	1		6497~6499			
1	160620-00070N	FRAME,MAIN	1		6500~			
2	K1004976A	PLATE	1		5001~5619			
3	S0775866	BOLT	35					
4	2114-1831A	WASHER;HARDEN	35					
5	2123-1107D7	PIN;KNOCK	2					
6	621-02938B	COVER	1					
7	180-00463	PACKING	1					
8	DS0025023	BOLT;SET	2					
10	K1002107A	PLATE	1					
11	S0565466	BOLT	2					
12	S5102903	WASHER,SPRING	2					
13	621-02800	GUARD;LAMP	1					
14	2120-2166D5	BOLT	4					
15	2114-1898D14	WASHER;PLAIN	4					
16	2160-1004D42	BUSHING;RUBBER	1					
17	DS7601063	BUSHING;RUBBER	1					
18	2160-1201D9	BUSHING;RUBBER	1					
19	DS7603058	BUSHING;RUBBER	3					
20	DS7601064	BUSHING;RUBBER	1					
21	DS7601027	BUSHING;RUBBER	2					
22	DS7601028	BUSHING;RUBBER	2					
24	2160-1004D55	BUSHING;RUBBER	3					
25	160-00081	CAP	1					
26	2160-1201D14	BUSHING;RUBBER	1					
27	2160-1004D45	BUSHING;RUBBER	1					

Key No	Part No	Description	Qty	S.C	Serial No	ICA	Replacable	Qty
28	195-02623A	BRACKET	1					
29	191-02987A	PLATE	1		5001~5619			
30	DS0025018	BOLT;SET	3		5001~5619			
30	DS0025018	BOLT;SET	1		5620~			
32	DS7601032	BUSHING;RUBBER	1					
33	S0508866	BOLT	2		5001~5619			
34	2114-1058D29	WASHER	2		5001~5619			
81	120-00272A	BOLT	4					
82	114-00055	WASHER;HARDEN	4					

Fig. 1110 COUNTER WEIGHT

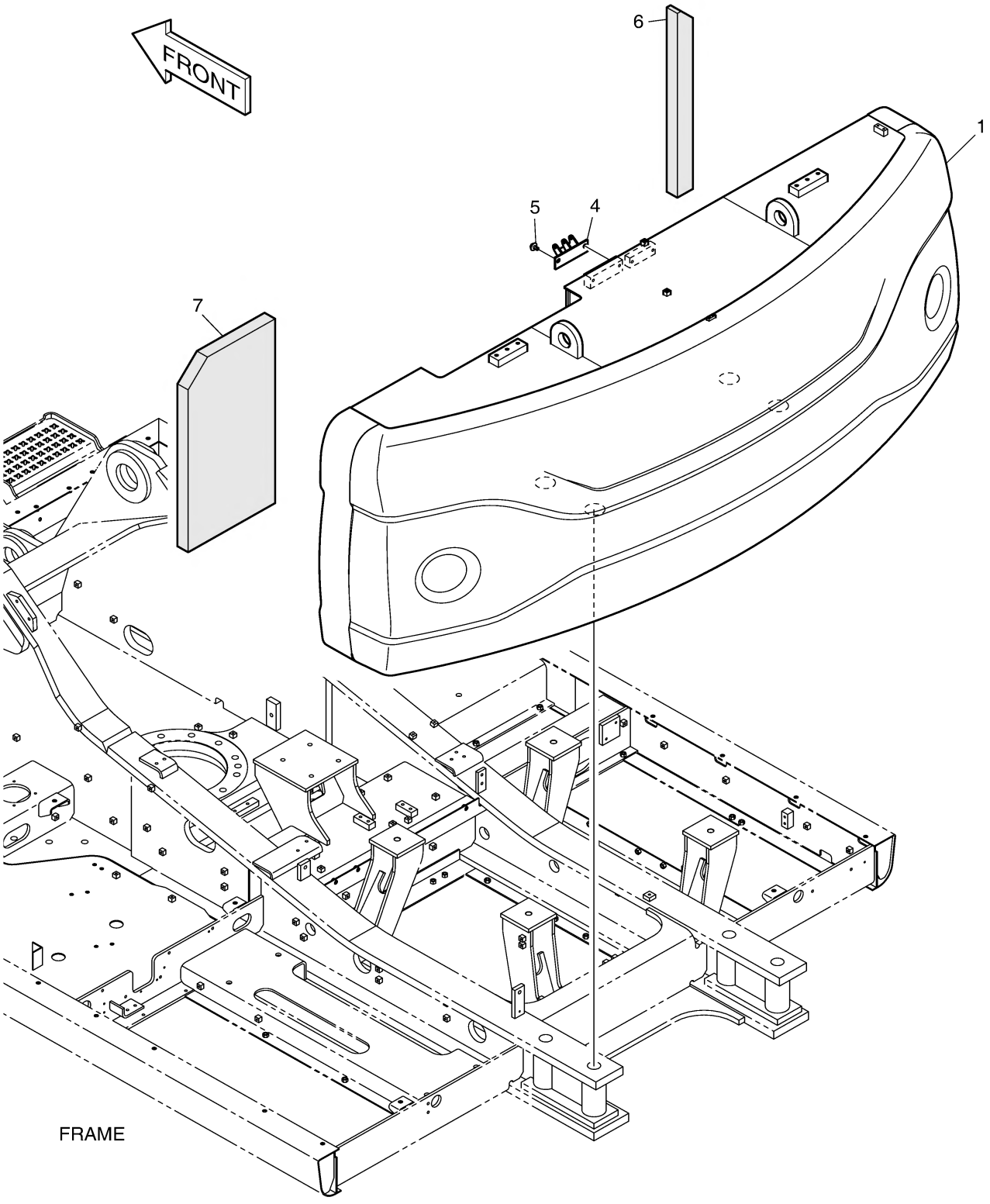

Fig. 1110 COUNTER WEIGHT

Key No	Part No	Description	Qty	S.C	Serial No	ICA	Replacable	Qty
-	K1045595A	COUNTER WEIGHT ASS'Y	1					
1	K1043719A	WEIGHT;COUNTER 7.1ton	1					
4	K1002078	BRACKET	1					
5	DS0025015	BOLT;SET	2					
6	K1002730A	FOAM	1					
7	K1005834A	FORM	1					

Fig. 1120 ENGINE MOUNTING

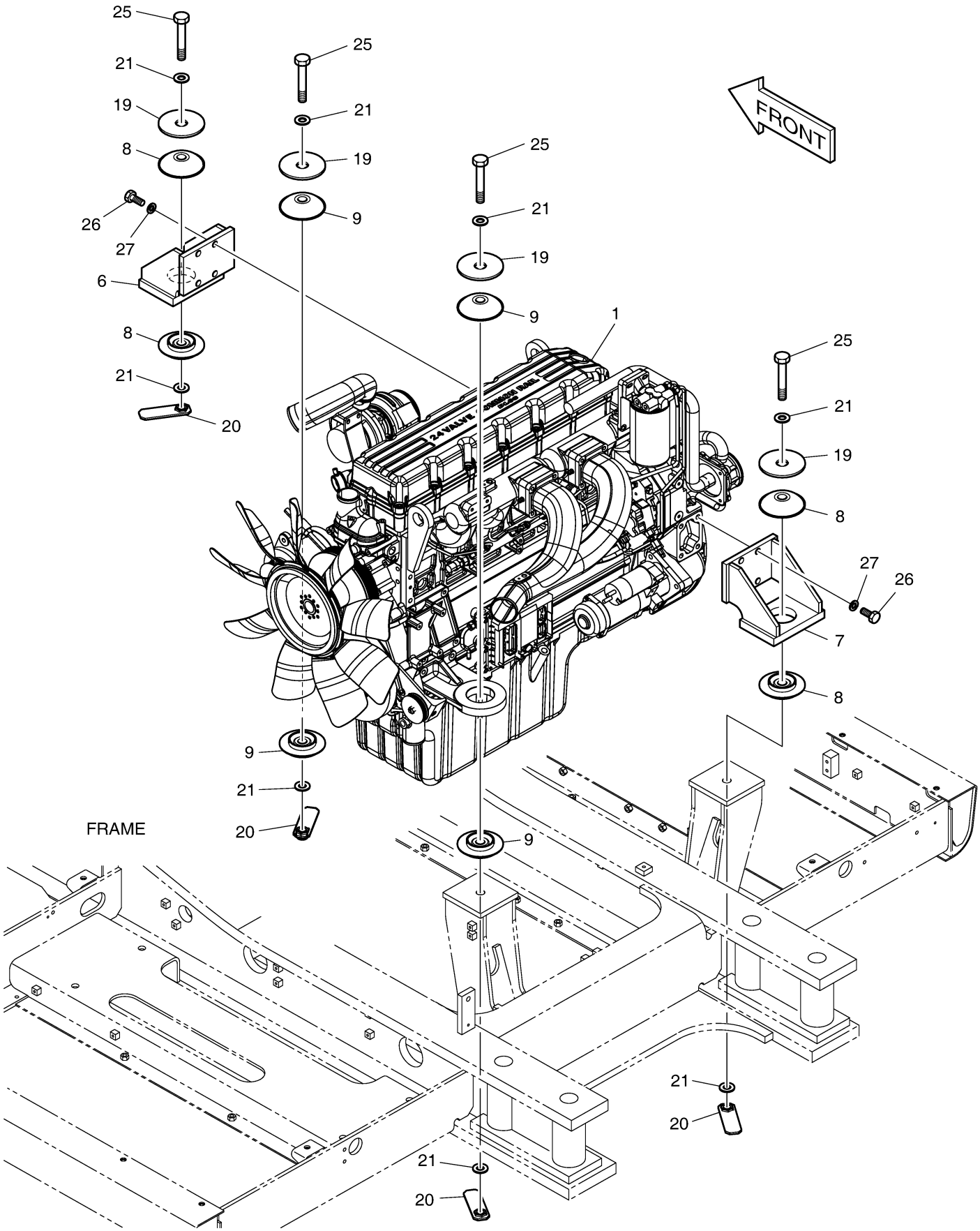

DOOSAN Doosan Infracore

Fig. 1120 ENGINE MOUNTING

Key No	Part No	Description	Qty	S.C	Serial No	ICA	Replacable	Qty
-	K1004971K	ENGINE ASS'Y	-	D	5001~6383			
-	150109-00586	ENGINE ASSY	-	D	6384~			
1	K1043601	ENGINE ASS'Y-TIER-III	1					
6	195-02626B	BRACKET;ENGINE MOUNT	1					
7	195-02625C	BRACKET;ENGINE MOUNT	1					
8	161-00551	RUBBER;E/G MOUNTING	4					
9	161-00553	RUBBER;E/G MOUNTING	4					
19	2114-1929	WASHER	4					
20	195-02643C	SUPPORT;NUT	4					
21	2114-9012A	WASHER	8					
25	S0771466	BOLT	4					
26	S0521466	BOLT M16X2.0X40	8					
27	S5102903	WASHER,SPRING	8					

Fig. 1130 RADIATOR MOUNTING

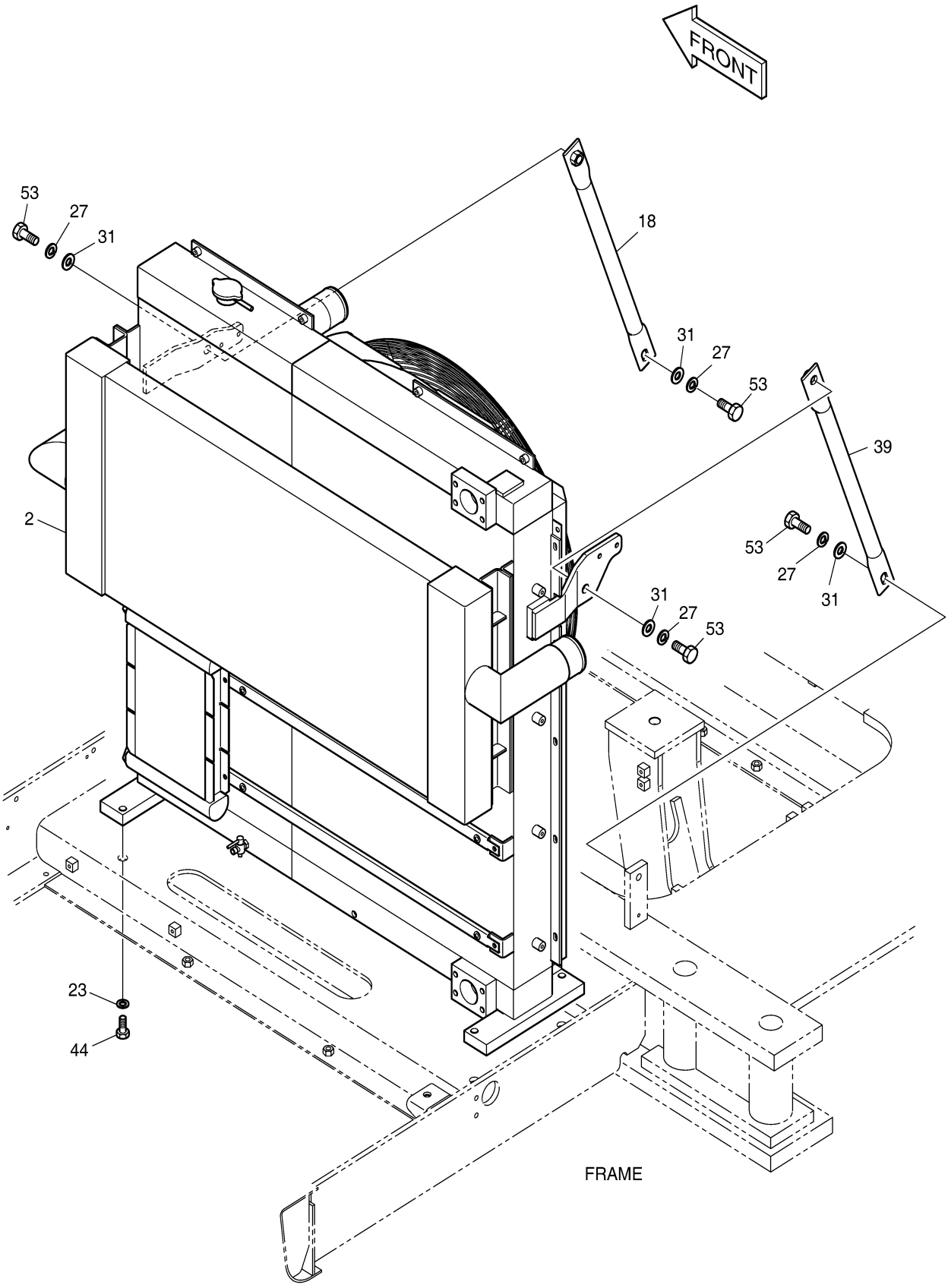

Fig. 1130 RADIATOR MOUNTING

Key No	Part No	Description	Qty	S.C	Serial No	ICA	Replacable	Qty
-	K1004971K	ENGINE ASS'Y	-	D	5001~6383			
-	150109-00586	ENGINE ASSY	-	D	6384~			
2	K1023212	RADIATOR ASS'Y	1		5001~6383	I	440211-00255	1
2	440211-00255	RADIATOR ASS'Y	1		6384~			
18	K1005859A	STAY	1					
23	2114-1816A	WASHER	4					
27	S5102903	WASHER,SPRING	4					
31	S5010913	WASHER,PLAIN:M16	4					
39	K1005860A	STAY	1					
44	S0565066	BOLT M16X2.0X40	4					
53	S0521566	BOLT M16X2.0X45	4					

Fig. 1140 RADIATOR

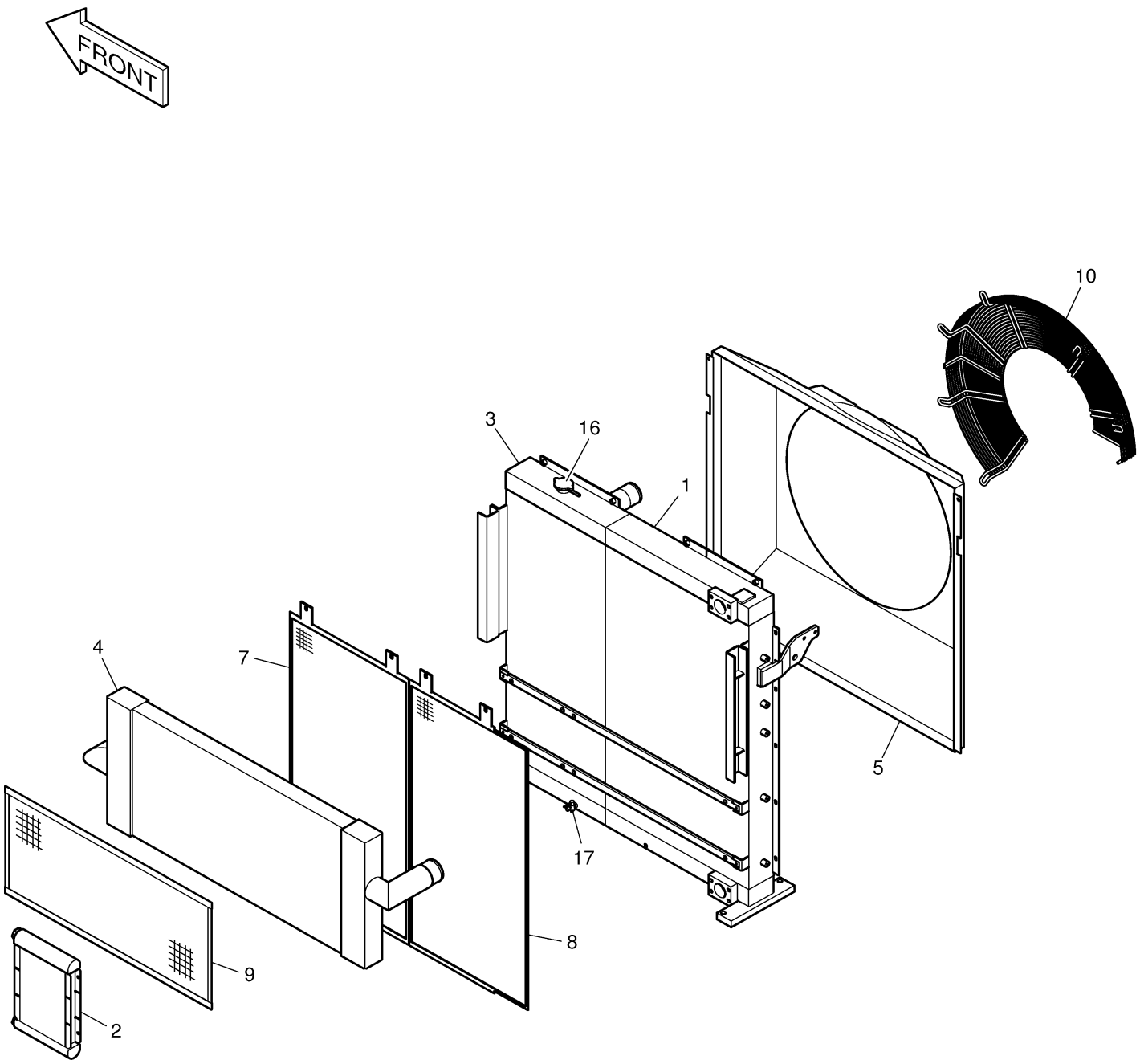

Fig. 1140 RADIATOR

Key No	Part No	Description	Qty	S.C	Serial No	ICA	Replacable	Qty
-	K1023212	RADIATOR ASS'Y	1		5001~6383	I	440211-00255	1
-	440211-00255	RADIATOR ASS'Y	1		6384~			
1	K9002111	OIL COOLER	1		5001~6383			
1	K9002111A	COOLER,OIL	1		6384~			
2	K9002112	FUEL COOLER	1					
3	K9002113	RADIATOR	1		5001~6383			
3	K9002113A	RADIATOR	1		6384~			
4	K9002114	CAC ASS'Y	1		5001~6383			
4	440301-00011	CHARGE,AIR COOLER	1		6384~			
5	K9002959	SHROUD	1					
7	101551-00026	NET,WIRE	1					
8	101551-00027	NET,WIRE	1					
9	K9002116	WIRE NET;CAC	1					
10	K9002960	GUARD;FAN	1					
16	K9003611	CAP;RADIATOR	1					
17	410202-00018	COCK,DRAIN	1					

Fig. 1150 MUFFLER

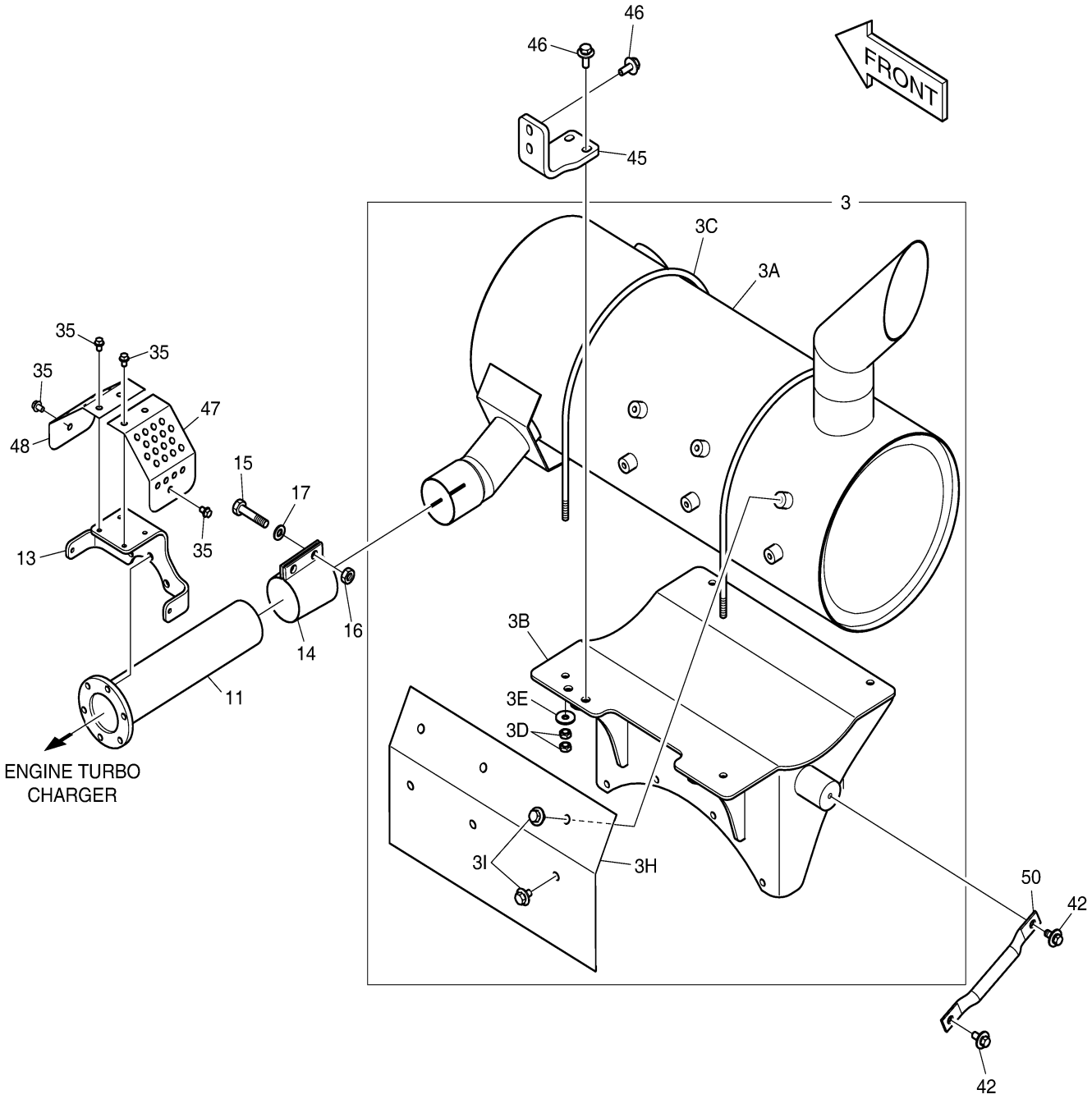

DOOSAN Doosan Infracore

Fig. 1150 MUFFLER

Key No	Part No	Description	Qty	S.C	Serial No	ICA	Replacable	Qty
-	K1004971G	ENGINE ASS'Y	-	D	5001~6383			
-	150109-00586	ENGINE ASSY	-	D	6384~			
3	K1029158	MUFFLER SUB ASS'Y	1		5001~6511	Y	240103-00553	1
3	240103-00553	MUFFLER ASSY	1		6512~			
3A	K1029147	MUFFLER	1		5001~6511	Y	240103-00528	1
3A	240103-00528	MUFFLER	1		6512~			
3B	K1002920C	BRACKET	1					
3C	K1023547	BOLT;U	2					
3D	S4012633	NUT	8					
3E	2114-1058D63	WASHER	4					
3H	K1004466	PLATE;INSULATION	1					
3I	DS0025013	BOLT;SET	6					
11	182-00123	PIPE;EXHAUST	1					
13	K1004280B	BRACKET	1					
14	124-00310A	CLAMP	1					
15	S0515866	BOLT	2					
16	S4012733	NUT	2					
17	S5010713	WASHER;PLAIN M12	2					
35	K1001029	BOLT	6					
42	DS0025017	BOLT	2					
45	K1000349A	BRACKET	1					
46	DS0025034	BOLT	4					
47	K1006244A	COVER	1					
48	K1006245	COVER	1					
50	K1004507	STAY	1					

Fig. 1160 CAC PIPING

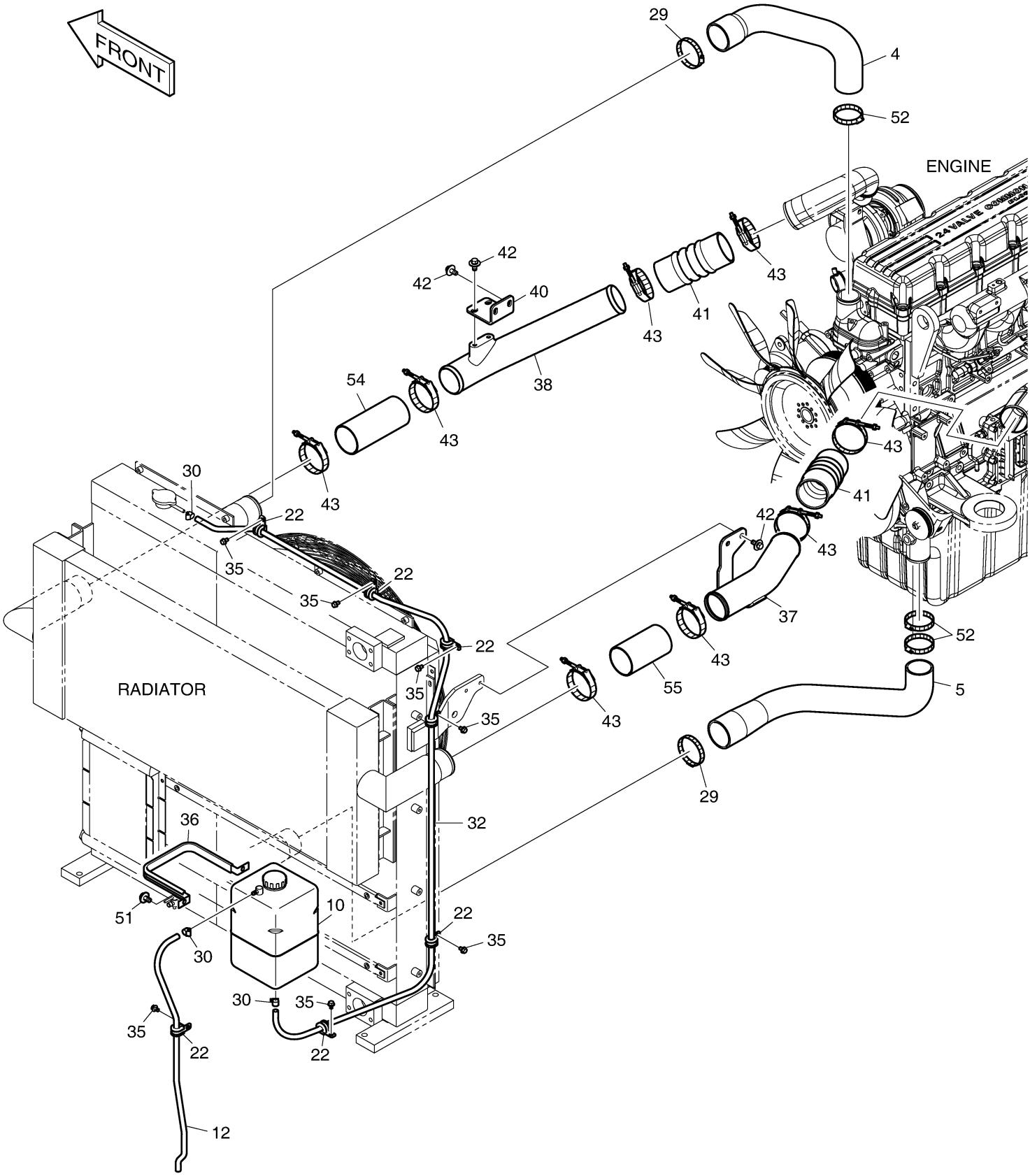

Fig. 1160 CAC PIPING

Key No	Part No	Description	Qty	S.C	Serial No	ICA	Replacable	Qty
-	K1004971K	ENGINE ASS'Y	-	D	5001~6383			
-	150109-00586	ENGINE ASSY	-	D	6384~			
4	K1024918	HOSE;WATER	1					
5	K1005189B	HOSE;WATER	1					
10	K1003354A	TANK;RESERVE	1					
12	K1004515	HOSE	1					
22	124-00208D2	CLIP	7					
29	S8470085	CLAMP	2		5001~6383			
29	S8500092	CLAMP;HOSE	2		6384~			
30	S8450006	CLAMP;HOSE	3					
32	K1006252	HOSE;WATER	1					
35	K1001029	BOLT	7					
36	K1002851	CLAMP	1					
37	K1046120	PIPE;AIR	1					
38	K1005098	PIPE;AIR	1					
40	K1006253A	BRACKET	1					
41	K1038559	HOSE;AIR	2					
42	DS0025017	BOLT	6					
43	124-00194	CLAMP	8		5001~6501	Y	S8500092	8
43	S8500092	CLAMP;HOSE	8		6502~			
51	DS0025014	BOLT;SET	2					
52	S8470075	CLAMP;HOSE	2		5001~6383			
52	S8500079	CLAMP;HOSE	3		6384~			
54	K1046005	HOSE;AIR	1					
55	K1046023	HOSE;AIR	1					

Fig. 1170 AIR CLEANER

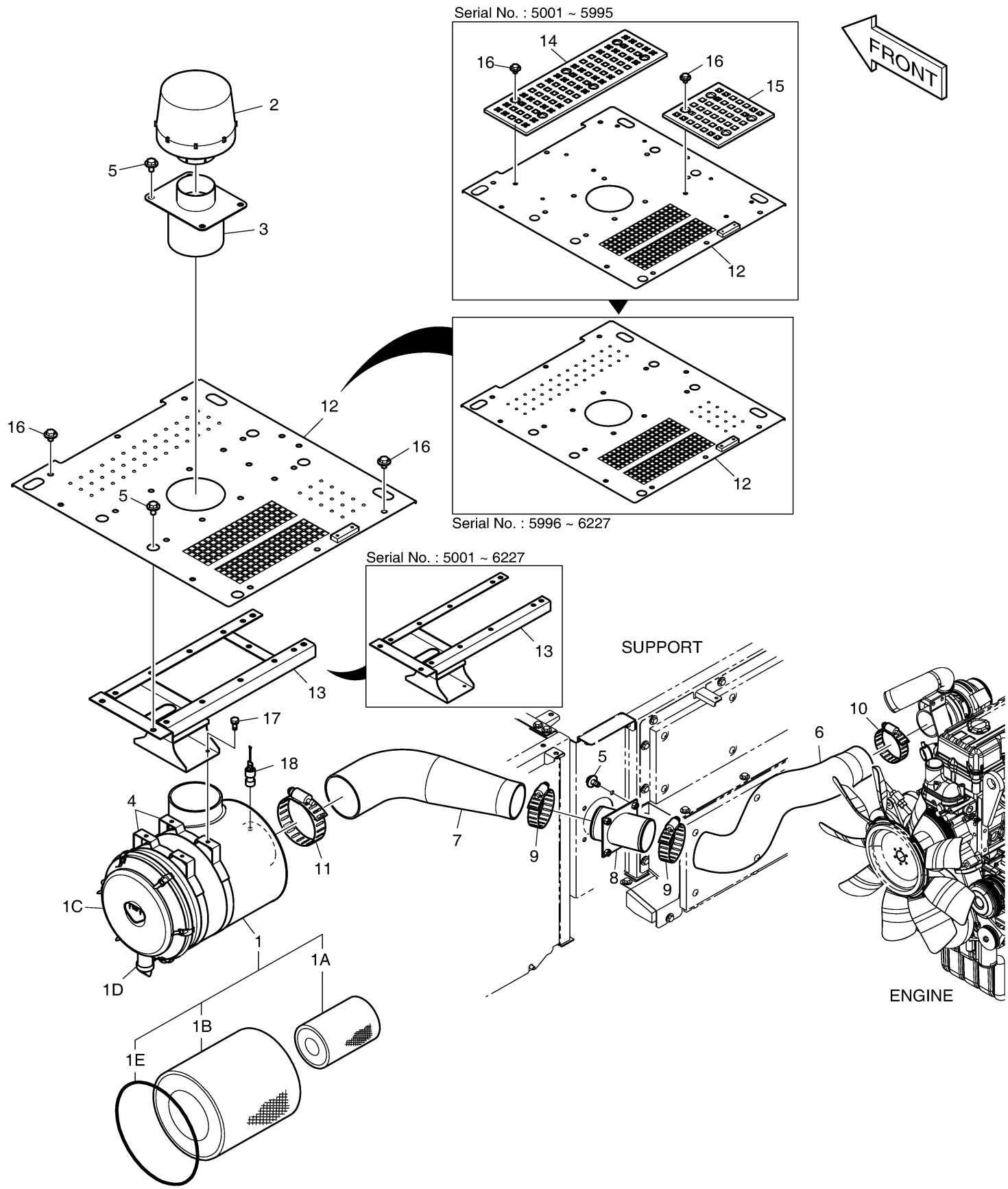

DOOSAN Doosan Infracore

Fig. 1170 AIR CLEANER

Key No	Part No	Description	Qty	S.C	Serial No	ICA	Replacable	Qty
-	K1005074E	AIR CLEANER ASS'Y	-	D	5001~5995			
-	400414-00021	AIR CLEANER ASS'Y	-	D	5996~			
1	204-00066	AIR CLEANER	1					
1A	474-00037	ELEMENT;INNER	1					
1B	474-00038	ELEMENT;OUTER	1					
1C	204-00069	COVER	1					
1D	204-00070	VALVE;VACUATOR	1					
1E	204-00071	RING,O	1					
2	K1043471	PRE CLEANER	1					
3	K1006040A	PIPE	1					
4	124-00297A	BAND	2					
5	DS0025015	BOLT;SET	12					
6	K1005120	HOSE;AIR	1					
7	K1005119	HOSE;AIR	1					
8	K1005359	PIPE;AIR	1					
9	S8510143	CLAMP;HOSE	2					
10	S8510118	CLAMP;HOSE	1					
11	S8510168	CLAMP;HOSE	1					
12	K1006047	COVER	1		5001~5995	I	110508-00153	1
12	110508-00153	COVER	1		5996~6227			
12	110508-00219	COVER	1		6228~6425	Y	110508-00219A	1
12	110508-00219A	COVER	1		6426~			
13	K1000640	SUPPORT	1		5001~6227			
13	110958-00780	SUPPORT	1		6228~			
14	K1002915	PLATE;ANTI-SKID	1		5001~5995			
15	K1002478	PLATE;ANTI-SKID	1		5001~5995			
16	DS0025022	BOLT;SET	23		5001~5995			
16	DS0025022	BOLT;SET	11		5996~6227			
16	DS0025022	BOLT;SET	10		6228~			
17	DS0025024	BOLT;SET	4					
18	170-00004	INDICATOR;DUST	1					

Fig. 1180 PUMP MOUNTING

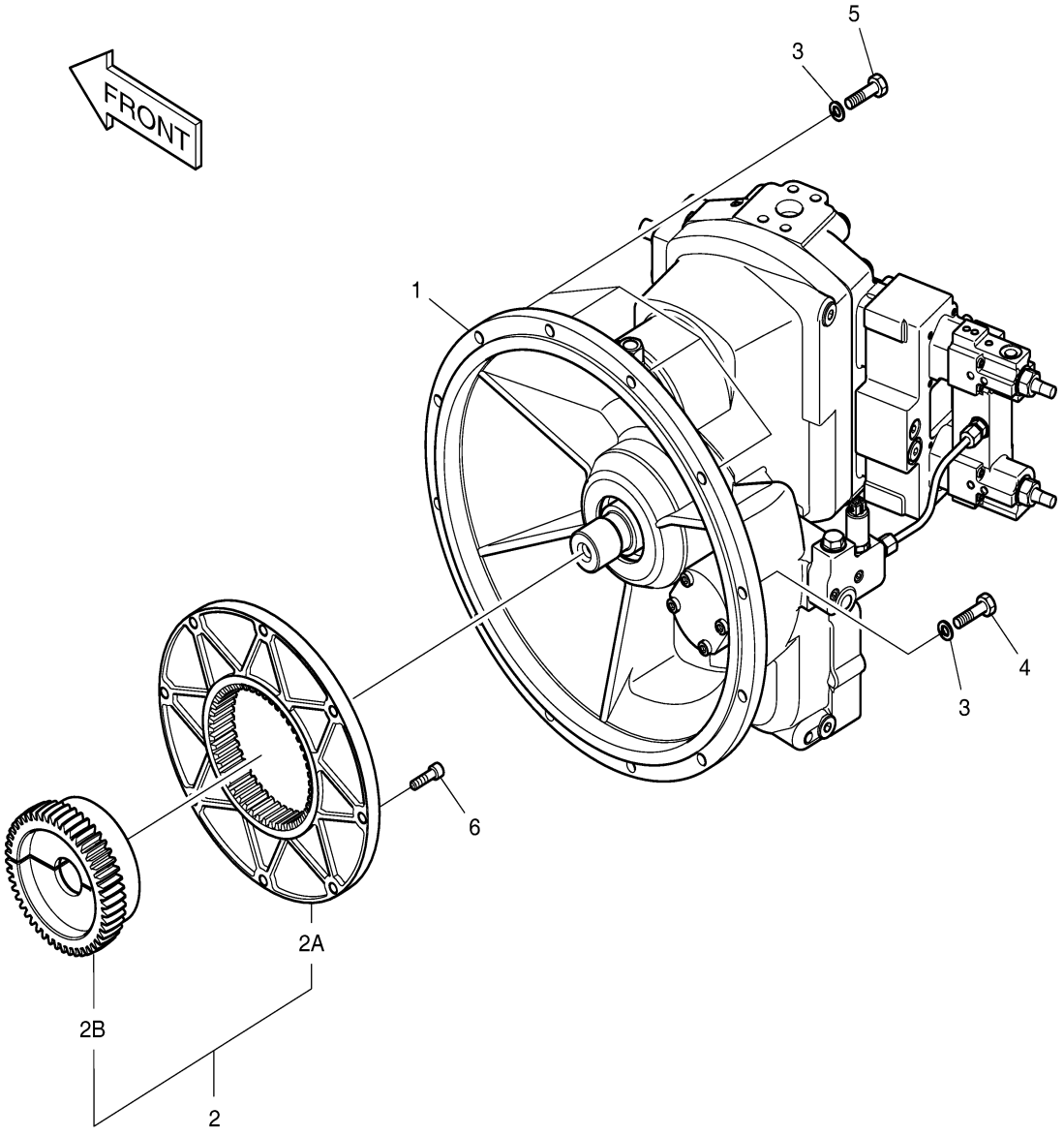

Fig. 1180 PUMP MOUNTING

Key No	Part No	Description	Qty	S.C	Serial No	ICA	Replacable	Qty
-	K1005197E	PUMP ASS'Y	-	D	5001~6383			
-	400914-00256	PUMP ASS'Y	-	D	6384~			
1	K1004522C	PUMP;MAIN	1		5001~6383	Y	400914-00249	1
1	400914-00249	PUMP,MAIN	1		6384~			
2	K1018984	COUPLING	1					
2A	414-00063	FLANGE;COUPLING	1					
2B	K1018999	HUB;COUPLING	1					
3	S5102603	WASHER,SPRING;M10	12					
4	S0558366	BOLT M10X1.5X40	8					
5	S0558566	BOLT	4					
6	S2212366	BOLT;SOCKET M10X1.5X35	8					

Fig. 1190 SWING DEVICE

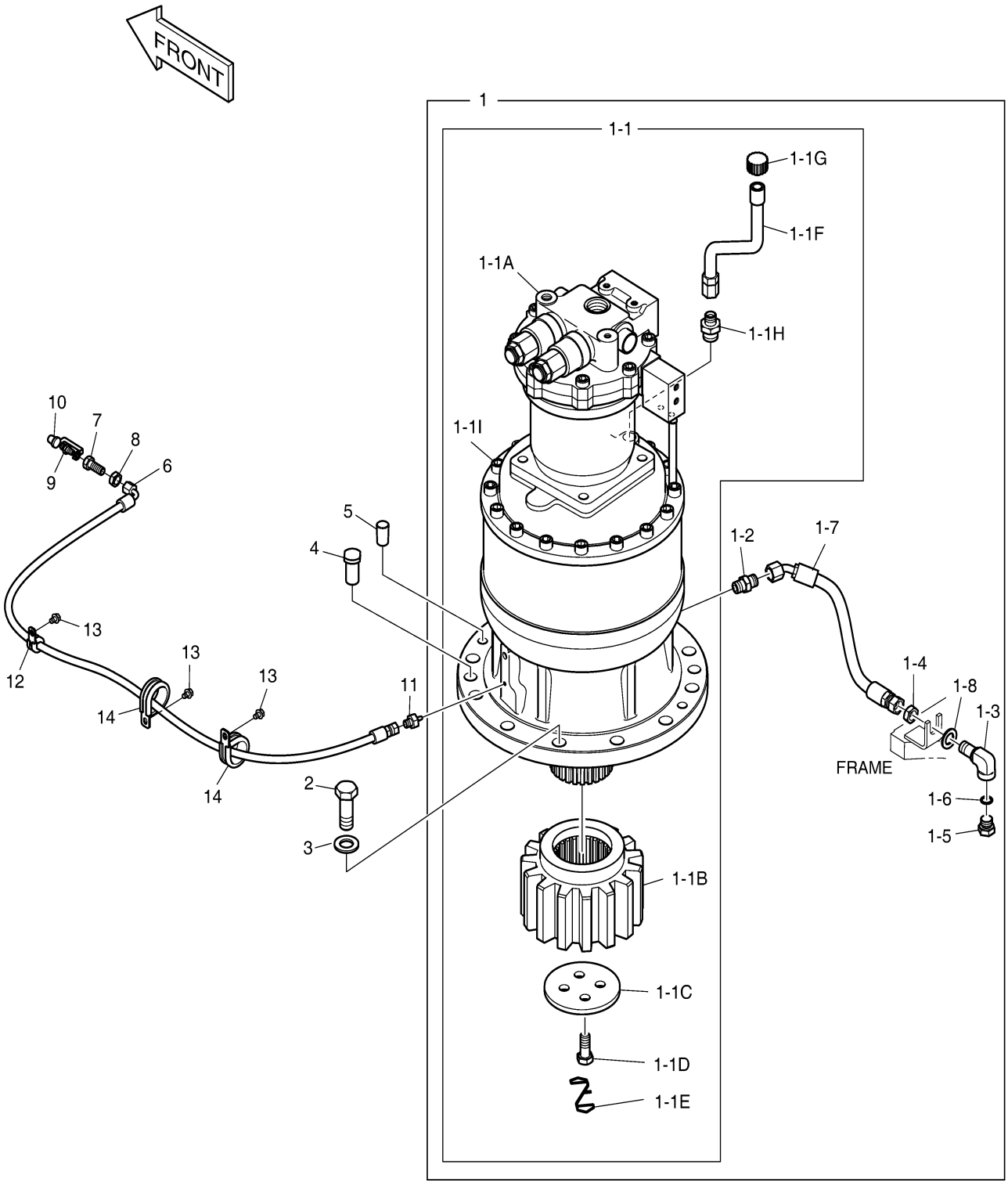

DOOSAN Doosan Infracore

Fig. 1190 SWING DEVICE

Key No	Part No	Description	Qty	S.C	Serial No	ICA	Replacable	Qty
-	K1004822E	SWING DEVICE INSTALL	-	D	5001~6105			
-	170301-00061	DEVICE ASSY,SWING	-	D	6106~			
1	K1004824E	SWING DEVICE SUB ASS'Y	1		5001~6105	I	170301-00062	1
1	170301-00062	DEVICE,SWING	1		6106~6156	I	170301-00062A	1
1	170301-00062A	DEVICE,SWING	1		6157~6518	I	170301-00062B	1
1	170301-00062B	DEVICE,SWING	1		6519~			
1-1	K1004825B	SWING DEVICE ASS'Y	1	D				
1-1A	K1007543A	MOTOR;SWING	1					
1-1B	2404-1065	GEAR;PINION	1					
1-1C	2403-1046A	COVER	1					
1-1D	2120-1363	BOLT	4					
1-1E	2126-9001	WIRE	2					
1-1F	2182-1706A	PIPE	1					
1-1G	2119-1063A	CAP	1		5001~6105	I	2119-1063B	1
1-1G	2119-1063B	CAP	1		6106~			
1-1H	2181-1110D10	ADAPTER	1					
1-1I	404-00094B	GEAR;REDUCTION	1		5001~6156	I	130426-00014	1
1-1I	130426-00014	GEAR,SWING REDUCTION	1		6157~6518	I	130426-00014A	1
1-1I	130426-00014A	GEAR,SWING REDUCTION	1		6519~			
1-2	2181-1110D22	ADAPTER	1					
1-3	181-00717	ELBOW	1					
1-4	121-00010D3	NUT	1					
1-5	2181-1950D7	PLUG	1					
1-6	S8000181	O-RING	1					
1-7	2184-1060D172	HOSE	1					
1-8	S5011113	WASHER;PLAIN	1					
2	S0774766	BOLT M24X2.0X70	12					
3	2114-1831A	WASHER;HARDEN	12					
4	2123-1717B	PIN;KNOCK	2					
5	198-00028	CAP	2					
6	2184-1046D105	HOSE	1					
7	181-00103	REDUCER	1					
8	121-00006	NUT	1					
9	S6710041	NIPPLE;GREASE	1					
10	160-00020	CAP;GREASE NIPPLE	1					
11	2181-1110D30	ADAPTER	1					

Key No	Part No	Description	Qty	S.C	Serial No	ICA	Replacable	Qty
12	124-00208D2	CLIP	1					
13	K1001029	BOLT	3					
14	124-00208D7	CLIP	2					

Fig. 1200 FUEL TANK

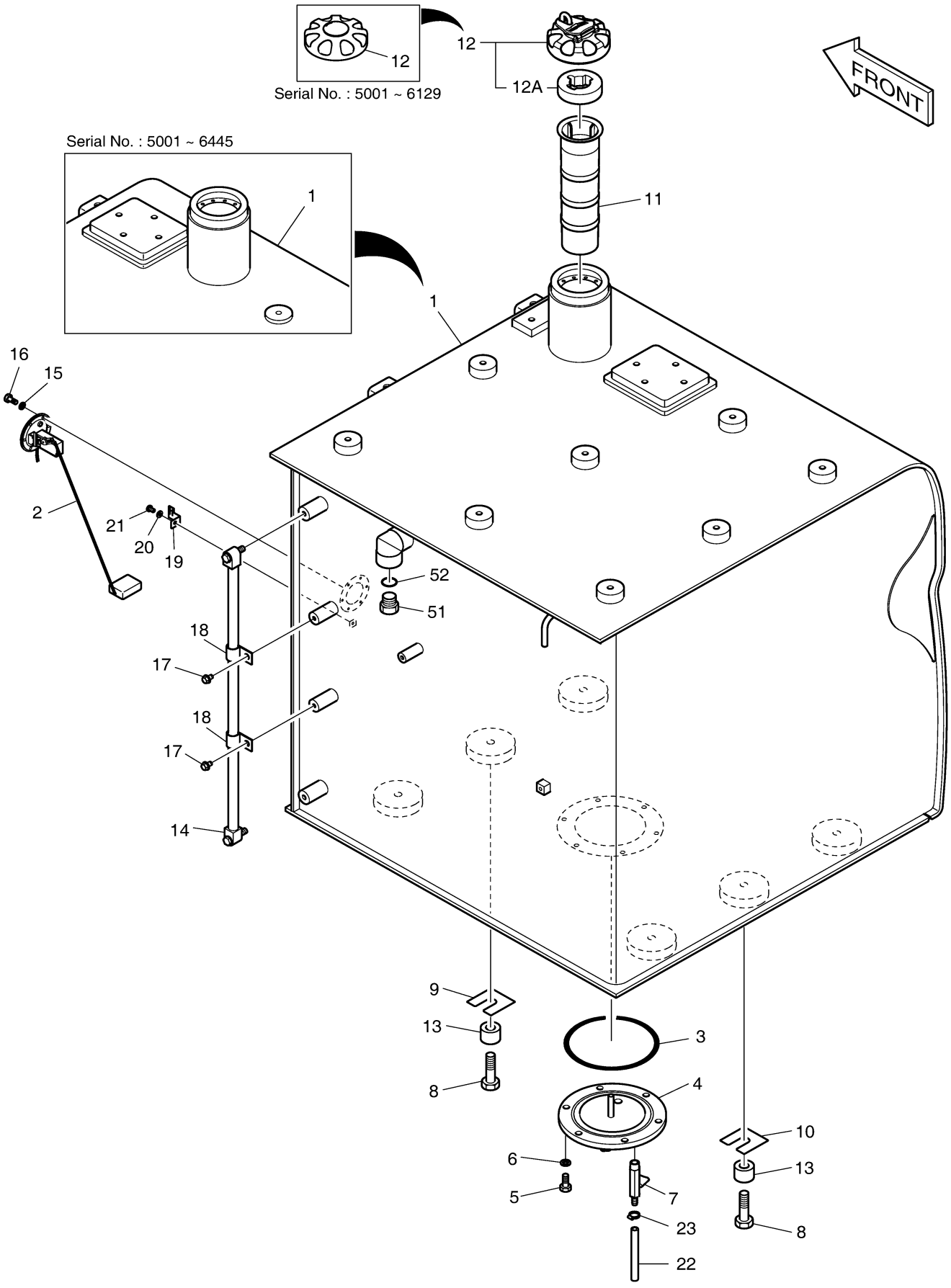

DOOSAN Doosan Infracore

Fig. 1200 FUEL TANK

Key No	Part No	Description	Qty	S.C	Serial No	ICA	Replacable	Qty
-	K1004150L	FUEL TANK ASS'Y	-	D	5001~6129			
-	450103-00135	TANK ASSY,FUEL	-	D	6130~6406			
-	450103-00334	TANK ASSY,FUEL	-	D	6407~			
1	K1005208J	TANK;FUEL	1		5001~5982	I	K1005208L	1
1	K1005208L	TANK;FUEL	1		5983~6167	I	450103-00157	1
1	450103-00157	TANK,FUEL	1		6168~6445			
1	450103-00335	TANK,FUEL	1		6446~6501	I	450103-00335A	1
1	450103-00335A	TANK,FUEL	1		6502~			
2	547-00026	SENDER;FUEL	1		5001~6142	Y	301316-00016	1
2	301316-00016	SENDER,FUEL	1		6143~			
3	S8011450	O-RING	1					
4	473-00033	COVER	1					
5	S0512066	BOLT M10X1.5X25	6					
6	S5102603	WASHER,SPRING;M10	6					
7	186-00017A	COCK;DRAIN	1					
8	S0565466	BOLT	6					
9	114-00522	SHIM	3					
10	114-00523	SHIM	3					
11	471-00105A	FILTER;FUEL STRAINER	1					
12	K1004266	CAP;FUEL	1		5001~6129	I	110911-00126	1
12	110911-00126	CAP,FUEL	1		6130~			
12A	400504-00045	ELEMENT(FUEL CAP)	1		6130~			
13	114-00425	SPACER	6					
14	119-00014AD1	GAUGE;LEVEL	1					
15	S5100203	WASHER;SPRING	6					
16	S3450833	SCREW	6					
17	K1001029	BOLT	2					
18	DS2802021	CLIP	2					
19	2195-3500	BRACKET	1					
20	S5102303	WASHER;SPRING	1					
21	S3450943	SCREW	1					
22	DS2105053	HOSE	1					
23	S8450012	CLAMP	1					
51	2181-1950D9	PLUG	1					
52	S8000291	O-RING	1					

Fig. 1210 FUEL PIPING

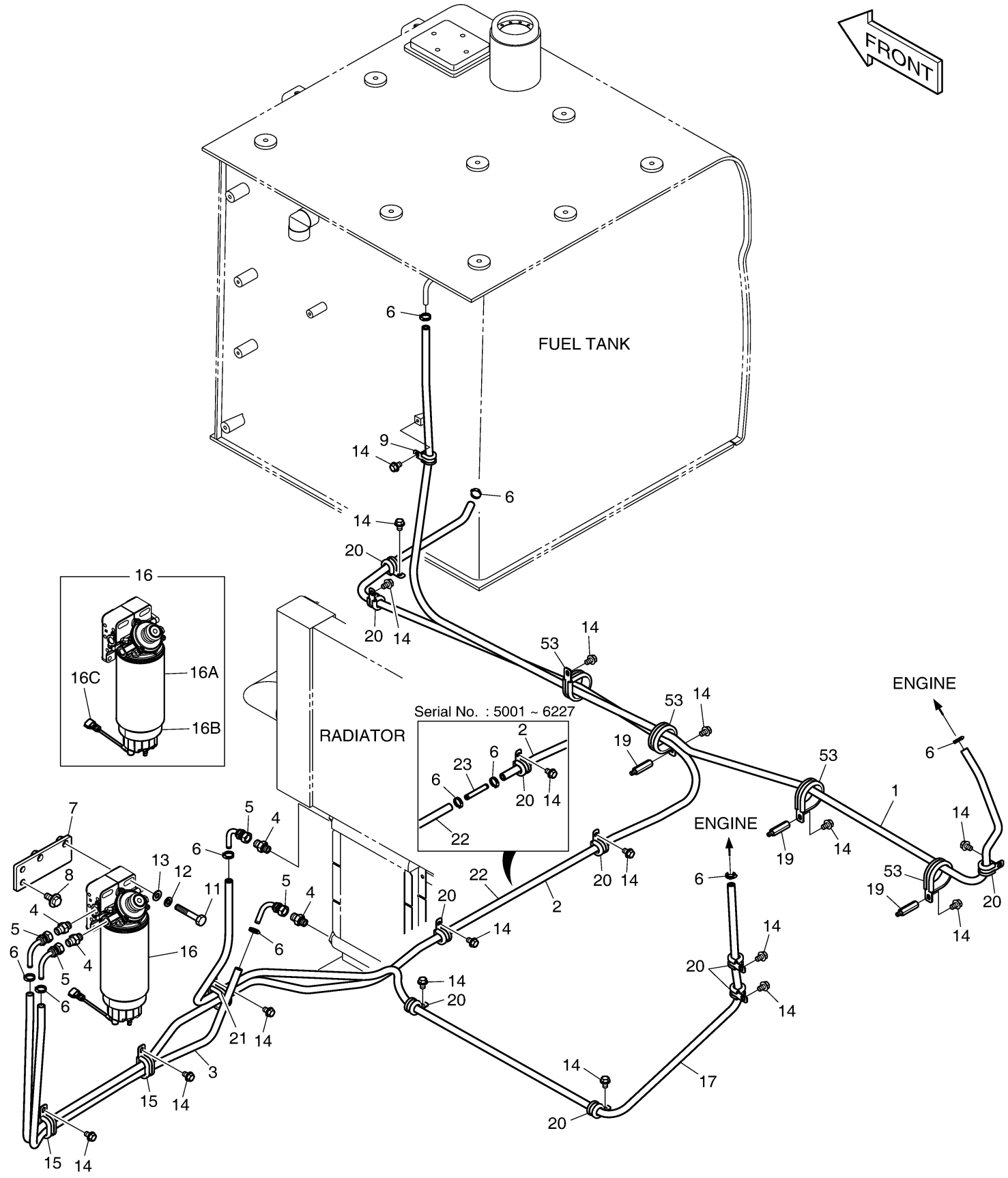

DOOSAN Doosan Infracore

Thank you very much for your reading.

Please Click Here Then Get More Information.