RUTHZIL TRATOR COMERCIAL DE PEÇAS LTDA 11 97083-6812 ROLANDO CITRANGULO

MARÇO 2010

SERVICE PARTS CATALOGUE

CATALOGO PARTI DI RICAMBIO

CATALOGUE DES PIECES DETACHEES

ERSATZTEILKATALOG

CATÁLOGO DE PIEZAS DE REPUESTO

CATÁLOGO DE PECAS SOBRESSALENTES

RESERVEDELSKATALOG

ONDERDELENLIJST

E215B ROPS Tier III
Crawler Excavator

Print No. 84267565

SERVICE PARTS CATALOGUE

CATALOGO PARTI DI RICAMBIO

CATALOGUE DES PIECES DETACHEES

ERSATZTEILKATALOG

CATÁLOGO DE PIEZAS DE REPUESTO

CATÁLOGO DE PECAS SOBRESSALENTES

RESERVEDELSKATALOG

ONDERDELENLIJST

E215B ROPS Tier III
Crawler Excavator

Print No. 84267565

Copyright © New Holland

PARTS CATALOG

Product Line

Model E215B

ROPS Tier III

CATALOGO PARTI DI RICAMBIO

CATALOGUE DES PIECES DETACHEES

ERSATZTEILKATALOG

CATÁLOGO DES PIEZAS DE REPUESTO

CATÁLOGO DE PEÇAS SOBRESSALENTES

ONDERDELENLIJST

RESERVEDELSKATALOG

CATALOGUE n. 84267565
1st Edition 3 - 2010

NEW HOLLAND

Copyright © New Holland

All rights reserved by **NEW HOLLAND KOBELCO.**
The information contained in this catalogue is intended to be of a general nature only. **NEW HOLLAND KOBELCO** may at any time and from time to time, for technical or other necessary reasons, modify any of the details or specifications of the product described in this catalogue. To be sure of getting accurate, detailed and up-to-date information, an intending buyer should consult his nearest **NEW HOLLAND KOBELCO** dealer or distributor.
Single item numeration method used in this catalogue may not be used without written consent from **NEW HOLLAND KOBELCO**.

Tutti i diritti sono riservati alla **NEW HOLLAND KOBELCO**.
I dati e le informazioni contenuti in questo catalogo sono di natura generale. Di volta in volta e in qualunque momento la **NEW HOLLAND KOBELCO** può per ragioni tecniche o comunque altrimenti necessarie variare qualsiasi dettaglio o dato tecnico della macchina descritta in questo catalogo. Per essere certi di ottenere informazioni dettagliate, precise e aggiornate l'eventuale acquirente deve consultare il distributore o concessionario **NEW HOLLAND KOBELCO** più vicino.
Il metodo di numerazione dei singoli pezzi utilizzato in questo catalogo non può essere utilizzato senza l'autorizzazione scritta della **NEW HOLLAND KOBELCO**.

Tous droits réservés par **NEW HOLLAND KOBELCO**.
L'information contenue dans ce catalogue est destiné à couvrir seulement une généralité. **NEW HOLLAND KOBELCO** peut à chaque instant ou périodiquement, pour des questions techniques ou autres motifs modifier quelques détails ou spécifications du produit décrit dans ce catalogue. S'assurer de la précision, des détails et de la mise à jour des information, étant entendu que l'acheteur devrait consulter le concessionnaire ou le distributeur **NEW HOLLAND KOBELCO** le plus proche.
La méthode de numérotation des ITEM simples dans ce catalogue ne peut pas être utilisé sans autorisation écrite de **NEW HOLLAND KOBELCO**.

NEW HOLLAND KOBELCO behält sich alle Rechte vor.
Die in diesem Katalog enthaltenen Informationen sind nur allgemeiner Art. **NEW HOLLAND KOBELCO** kann jederzeit und von Zeit zu Zeit aus technischen oder anderen unumgänglichen Gründen beliebige Einzelheiten oder technische Daten des in diesem Produkt beschriebenen Produkts modifizieren. Ein Kaufinteressent sollte seinen nächstgelegenen **NEW HOLLAND KOBELCO**-Händler oder -Vertreter konsultieren, um sicher zu sein, daß er genaue, ausführliche und aktuelle Informationen erhält.
Das in diesem Katalog zur Numerierung von Einzelteilen verwendete Verfahren darf ohne schriftliche Genehmigung von **NEW HOLLAND KOBELCO** nicht verwendet werden.

Todos los derechos reservados por **NEW HOLLAND KOBELCO**.
La información contenida en este catálogo sólo es de tipo general. **NEW HOLLAND KOBELCO** puede, en cualquier momento, y de vez en cuando, por motivos técnicos o por otras necesidades, modificar cualquiera de los detalles o especificaciones del producto descrito en este catálogo. Asegúrese de disponer de la información correcta, detallada y al día, ya que los compradores potenciales consultarán a su agente o distribuidor **NEW HOLLAND KOBELCO** más cercano.
El sistema de numeración simple que se usa en este catálogo no puede utilizarse sin consentimiento escrito de **NEW HOLLAND KOBELCO**.

Todos os direitos estão reservados pela **NEW HOLLAND KOBELCO**.
A informação contida neste catálogo destinase apenas a ser utilizada com caracter geral. A **NEW HOLLAND KOBELCO** pode, em qualquer momento e de tempos a tempos, por razões técnicas ou outras, modificar alguns dos seus detalhes ou especificações do produto descritos neste catálogo. Para assegurar que obtêm as informações correctas e actualizadas, deverá contactar o seu concessionário ou distribuidor **NEW HOLLAND KOBELCO** mais próximo.
Não deverá utilizar o método de numeração de items simples deste catálogo sem o consentimento escrito da **NEW HOLLAND KOBELCO**.

Alle rechten zijn voorbehouden door **NEW HOLLAND KOBELCO**.
De informatie, opgenomen in deze catalogus is enkel bedoeld als zijnde van algemene aard. **NEW HOLLAND KOBELCO** kan gelijk wanneer en van tijd tot tijd, voor technische of andere nodige redenen, gelijk welk detail of specificatie wijzigen van het produkt, beschreven in deze catalogus. Om zeker te zijn van accurate, gedetailleerde en up-to-date informatie moet een potentiële koper de dichtstbijzijnde **NEW HOLLAND KOBELCO** dealer of verdeler raadplegen.
De numerieke code voor het aanduiden van onderdelen, gebruikt in deze catalogus, mag niet gebruikt worden zonder schriftelijke toelating van **NEW HOLLAND KOBELCO**.

NEW HOLLAND KOBELCO forbeholder sig alle rettigheder.
Oplysningerne i dette katalog er kun af generel art. **NEW HOLLAND KOBELCO** kan når som helst og ind imellem ændre alle detaljer eller specifikationer i dette katalog, af tekniske eller andre nødvendige årsager. For at være sikker på at få præcis, detaljeret og tidssvarende information, bør en mulig køber rette henvendelse til sin nærmeste **NEW HOLLAND KOBELCO** forhandler.
Nummereringsmetoden for de enkelte dele, der bruges i dette katalog, må ikke bruges uden skriftlig tilladelse fra **NEW HOLLAND KOBELCO**.

Copyright © New Holland

GENERAL CONTENT **English**

INSTRUCTIONS FOR ORDERING SPARE PARTS ..... PAGE 3

ORDERING RULES ..... PAGE 4

NOTES FOR CONSULTING . ..... PAGE 6-7

ABBREVIATIONS ..... PAGE 22

CONVERSION CHART (INC-MM) ..... PAGE 23

IDENTIFICATION AND VERSION LIST ..... PAGE 25-27

MAINTENANCE PARTS ..... PAGE 29-31

NUMBER INDEX ..... PAGE 33

INDICE GENERALE **Italiano**

ISTRUZIONI PER ORDINARE I RICAMBI ..... PAG. 3

NORME PER L'ORDINAZIONE ..... PAG. 4

NOTE DI CONSULTAZIONE ..... PAG. 8-9

ABBREVIAZIONI ..... PAG. 22

TABELLA DI CONVERSIONE (POLLICI-MM) ..... PAG. 23

IDENTIFICAZIONE ED ELENCO DELLE VERSIONI ..... PAG. 25-27

PARTICOLARI PER LA MANUTENZIONE ... PAG. 29-31

INDICE NUMERICO ..... PAG. 33

CONTEXT GENERAL **Français**

INSTRUCTIONS POUR COMMANDE PIECES DETACHEES ..... PAGE 3

REGLES DE COMMANDES ..... PAGE 4

NOTES DE CONSULTATIONS ..... PAGE 10-11

ABREVIATIONS ..... PAGE 22

CHARTE DE CONVERSION (INCH-MM) ..... PAGE 23

IDENTIFICATION ET LISTE DES VERSIONS ..... PAGE 25-27

PIECES DE MAINTENANCE ..... PAGE 29-31

INDEX NUMERIQUE ..... PAGE 33

ALLGEMEINER INHALT **Deutsch**

ANLEITUNG ZUM BESTELLEN VON ERSATZTEILEN ..... SEITE 3

BESTELLREGELN ..... SEITE 4

HINWEISE FÜR NACHFRAGEN ..... SEITE 12-13

ABKÜRZUNGEN ..... SEITE 22

UMRECHNUNGSTABELLE (INCH-MM) ..... SEITE 23

KENNZEICHEN UND VERZEICHNIS DER VERSIONEN ..... SEITE 25-27

TEILE FÜR DIE INSTANDHALTUNG ..... SEITE 29-31

TEILNUMMER-VERZEICHNIS ..... SEITE 33

Copyright © New Holland

CONTEXTO GENERAL — Español

INSTRUCCIONES PARA LOS PEDIDOS DE RECAMBIOS ..... PÁGINA 3

NORMATIVA DE PEDIDOS ..... PÁGINA 5

NOTAS DE CONSULTA ..... PÁGINA 14-15

ABREVIACIONES ..... PÁGINA 22

TABLA DE CONVERSIÓN (PULG-MM) ..... PÁGINA 23

IDENTIFICACION Y LISTA DE VERSIONES ..... PÁGINA 25-27

PIEZAS DE MANTENIMIENTO ..... PÁGINA 29-31

ÍNDICE NUMÉRICO ..... PÁGINA 33

ÍNDICE GENERAL — Português

INSTRUÇÕES PARA A ENCOMENDA DE PEÇAS DE SERVIÇO .. PÁGINA 3

REGRAS PARA ENCOMENDA DE PEÇAS . PÁGINA 5

NOTAS PARA CONSULTA ..... PÁGINA 16-17

ABREVIATURAS ..... PÁGINA 22

TABELA DE CONVERSÃO (POL.-MM) ..... PÁGINA 23

IDENTIFICAÇÃO E ELENCO DAS VERSÕES ..... PÁGINA 25-27

PEÇAS DE MANUTENÇÃO ..... PÁGINA 29-31

ÍNDICE NÚMERICO ..... PÁGINA 33

ALGEMENE INHOUD — Nederlands

INSTRUCTIES VOOR HET BESTELLEN VAN ONDERDELEN ..... BLZ. 3

BESTELREGELS ..... BLZ. 5

NOTA'S VOOR CONSULTATIE ..... BLZ. 18-19

AFKORTINGEN ..... BLZ. 22

CONVERSIETABEL (INCH-MM) ..... BLZ. 23

IDENTIFICATIE EN LIJST VAN DE VERSIES ..... BLZ. 25-27

ONDERDELEN VOOR ONDERHOUD ..... BLZ. 29-31

NUMMER INDEX ..... BLZ. 33

GENERAL INDHOLD — Dansk

INSTRUKTIONER FOR BESTILLING AF RESERVEDELE ..... SIDE 3

BESTILLINGSREGLER ..... SIDE 5

BEMÆRKNINGER FOR HENVENDELSE ..... SIDE 20-21

FORKORTELSER ..... SIDE 22

KONVERTERINGSKORT (INC-MM) ..... SIDE 23

IDENTIFIKATION OG LISTE OVER VERSIONERNE ..... SIDE 25-27

VEDLIGEHOLDELSESDELE ..... SIDE 29-31

NUMMEROVERSIGT ..... SIDE 33

Copyright © New Holland

INSTRUCTIONS FOR ORDERING SPARE PARTS

The part numbers shown in this catalogue are correct up to the date of publication. **NEW HOLLAND KOBELCO** policy of continuously improving our products during the production lifetime of the Model may result in later changes to illustrations and to part numbers. When ordering replacement parts be sure to confirm your requirements against the current CD based PAL or microfiche parts catalogue at your dealership.

ISTRUZIONI PER ORDINARE I RICAMBI

I numeri ricambio riportati in questo catalogo si intendono corretti fino alla data della pubblicazione. La **NEW HOLLAND KOBELCO** persegue una politica di continuo miglioramento del prodotto durante tutto il periodo di produzione del modello per cui può accadere che ci siano modifiche successive alle illustrazioni e ai numeri ricambio. Al momento di ordinare un particolare di ricambio, verificare accuratamente i dati utilizzando il CD PAL o il catalogo ricambi su microfiche presente presso la Concessionaria.

INSTRUCTIONS POUR COMMANDE PIECES DETACHEES

Les références de pièces détachées notées dans ce catalogue sont correctes à la date de publication. La politique **NEW HOLLAND KOBELCO** pour l'amélioration constante des produits durant la durée de vie des modèles peut changer les illustrations et les références des pièces détachées. Quand l'ordre de remplacement de pièces est confirmé, il est nécessaire de mettre à jour l'actuel CD base PAL ou microfiches de pièces détachées chez votre concessionnaire.

ANLEITUNG ZUM BESTELLEN VON ERSATZTEILEN

Die in diesem Katalog aufgeführten Teilnummern sind am Tag der Veröffentlichung korrekt. Die Firmenpolitik von **NEW HOLLAND KOBELCO** sieht während der Produktionsdauer dieses Modells dessen kontinuierliche Verbesserung vor; dies kann zu späteren Änderungen an Abbildungen und Teilnummern führen. Stellen Sie vor der Bestellung von Ersatzteilen sicher, daß Sie bei Ihrem Händlerbetrieb die von Ihnen benötigten Teile mit dem aktuellen PAL auf der Grundlage von CDs oder dem aktuellen Microfiche-Ersatzteilkatalog abgeglichen haben.

INSTRUCCIONES PARA LOS PEDIDOS DE RECAMBIOS

Los números de pieza indicados en este catálogo son los correctos en la fecha de la publicación. La política de **NEW HOLLAND KOBELCO** es de constante mejora de sus productos durante todo el período de vida de la producción del Modelo, lo que puede hacer que se produzcan cambios en las ilustraciones y en los números de pieza. Al hacer pedidos de recambios debe asegurarse de que sean de acuerdo con sus necesidades comprobando el CD actualizado en sistema PAL o bien las microfichas de catálogos existentes en la agencia.

INSTRUÇÕES PARA A ENCOMENDA DE PEÇAS DE SERVIÇO

Os números de peça indicados neste catálogo estão correctos até à data da publicação. A política da **NEW HOLLAND KOBELCO** de contínuo melhoramento dos produtos durante toda a vida de produção do modelo pode dar origem às últimas alterações nas figuras e nos números de peça. Quando encomendar peças de substituição, assegurese de que confirma os seus requisitos com o CD actual do sistema PAL ou com a microficha do catálogo de peças no seu concessionário.

INSTRUCTIES VOOR HET BESTELLEN VAN ONDERDELEN

De onderdeelnummers, getoond in deze catalogus, zijn correct tot op de datum van publicatie. Het **NEW HOLLAND KOBELCO** beleid van het voortdurend verbeteren van onze produkten tijdens de produktieduurtijd van het Model kan resulteren in latere wijzigingen van illustraties en onderdeelnummers. Om onderdelen te bestellen, gelieve uw vereisten te confirmeren volgens de actuele CD PAL of microfiche onderdelencatalogus bij uw dealer.

INSTRUKTIONER FOR BESTILLING AF RESERVEDELE

De reservedelsnumre, der findes i dette katalog, er korrekte op til udgivelsesdatoen. **NEW HOLLAND KOBELCO** politik med konstant forbedring af produkterne under modellens produktlevetid kan medføre senere ændringer af illustrationer og reservedelsnumre. Sørg for at få bekræftet, at dine krav opfyldes, ved at kontrollere i det gældende CD-baserede PAL katalog eller mikrofilm hos forhandleren.

Copyright © New Holland

ORDERING RULES

This catalogue is divided into main sections corresponding to specific areas of the product.
Each section is represented by detailed figures (illustrations) to assist in locating and identifying parts.
Parts released for service are indicated alongside the figure.

NORME PER L'ORDINAZIONE

Questo catalogo è suddiviso in sezioni principali corrispondenti alle aree specifiche della macchina. Ogni sezione è composta da figure tecniche dettagliate che agevolano l'individuazione e l'identificazione dei particolari. I particolari disponibili per l'assistenza sono indicati unitamente alla figura.

REGLES DE COMMANDES

Ce catalogue est divisé en sections principales correspondant aux aires spécifiques de production.
Chaques sections est représentées par des figures détaillées (illustrations) pour aider à la localisation et à l'identification des pièces détachées.
Les pièces nécessaires pour le service sont indiquées sur le côté de la figure.

BESTELLREGELN

Dieser Katalog ist in Hauptabschnitte aufgeteilt, die speziellen Baugruppen des Produkts entsprechen.
Jeder Abschnitt wird durch detaillierte Abbildungen veranschaulicht, die das Auffinden und Identifizieren von Teilen erleichtern.
Für den Service freigegebene Teile sind neben der Abbildung aufgeführt.

Copyright © New Holland

NORMATIVA DE PEDIDOS

Este catálogo se divide en tres secciones principales correspondientes a áreas específicas del producto. Cada sección se representa con figuras detalladas (ilustraciones) para facilitar la localización e identificación de las piezas.
Las piezas disponibles para el servicio se encuentran indicadas al lado de la figura.

REGRAS PARA ENCOMENDA DE PEÇAS

Este catálogo está dividido em secções principais correspondendo a áreas específicas do produto.
Cada secção está representada através de figuras detalhadas (desenhos) para auxiliar na localização e identificação de peças.
As peças disponíveis para serviço estão indicadas ao lado da figura.

BESTELREGELS

Deze catalogus is ingedeeld in hoofdsecties, overeenstem mend met specifieke componenten van het produkt.
Iedere sectie wordt voorgesteld door gedetailleerde afbeeldingen (illustraties) om de onderdelen te helpen lokaliseren en identificeren.
Onderdelen, vrijgegeven voor service, worden aangeduid naast de afbeelding.

BESTILLINGSREGLER

Dette katalog er inddelt i hovedafsnit, svarende til specifikke områder for produktet.
Hvert afsnit er repræsenteret ved detaljerede figurer (illustrationer), der hjælper med til at finde og genkende dele.
Dele til service vises langs med figuren.

Copyright © New Holland

09.07	01	p1	07/99

POWER TAKE-OFF - D0200
PRESA DI FORZA - D0200
PRISE DE FORCE - D0200
ZAPFWELLE - D0200

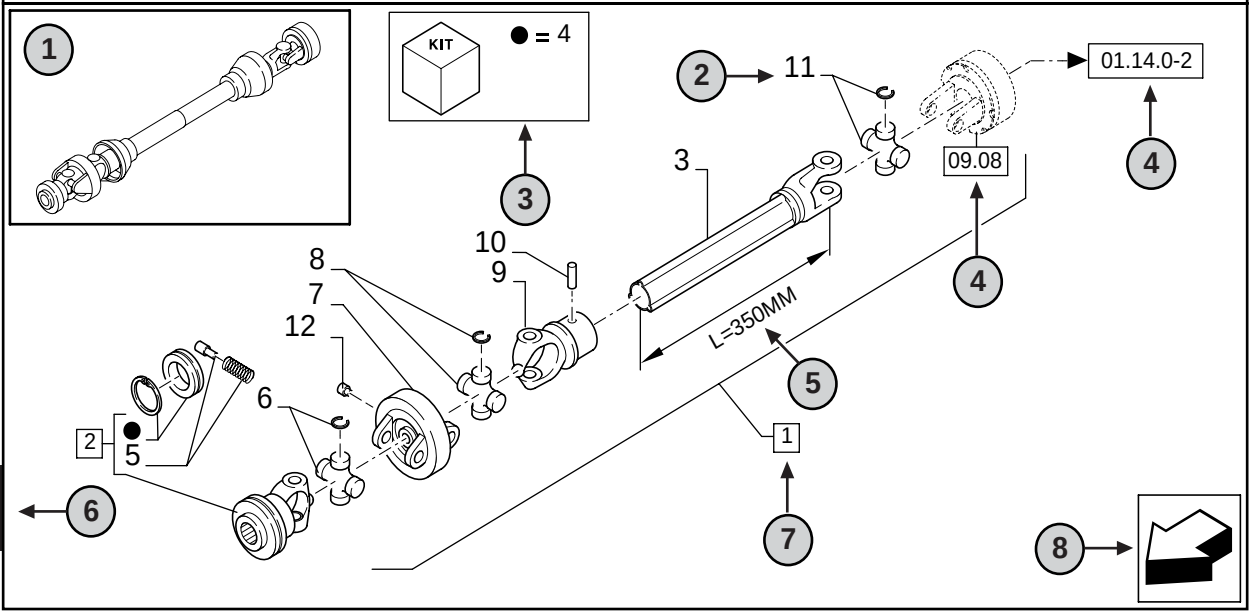

9

TOMA DE FUERZA - D0200
TOMADA DE FORÇA - D0200
KRAFTUDTAG - D0200
AFTAKAS - D0200

09.07	01	p1	07/99

R	N	P.N.	MOD	Q	Description Denominacion	Descrizione Denominação	Description Beskrivelse	Bezeichnungen Beschrijving	L.C.
1	1	**86529340**		1	SHAFT,PTO **(2 TO 11)**	PRESA DI FORZA	PRISE DE FORCE	ZAPFWELLE	207P
					TOMA DE FUERZA	TOMADA DE FORCA	PTO/KRAFTUDTAG	AFTAKAS	
2	15	**84014007**		1	YOKE **(4,5)**	FORCELLA	MACHOIRE	GABEL	085F
					HORQUILLA	GARFO	GAFFEL	VORK	
3	16	**NSS**		1	SHAFT,**L=350MM**	ALBERO	ARBRE	WELLE	016A
					EJE	VEIO	AKSEL	AS	
4		**84004292**	C0204	1	KIT	CORREDO	KIT	SATZ	305C
					EQUIPO	KIT	UDSTYR	KIT	
4		**[84058743]**	D0500	1	KIT	CORREDO	KIT	SATZ	305C
					EQUIDO	KIT	UDSTYR	KIT	

1 = FOR ITALY ONLY

9

STANDARD

MODELS

Copyright © New Holland

ENGLISH

1 **Position** of the “Figure” on the machine.

2 Reference - Figure call-out of the partnumber.

3 Parts supplied in repair kits per symbol reference.

4 01.14.0-2 Part illustrated on the **Page** or in the **Figure** indicated, or calls for **Variations** or **Details**.
Indicates components shown in detail elsewhere in the catalogue under the figure number shown.

5 Technical specifications relating to the Part indicated.

6 **Section** number.

7 2 Includes item(s) ..... (See English description).

8 Orientation. (Arrow indicates front of the machine). 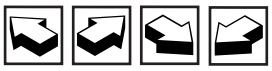

9 Figure description.

10 General information of the figure.

11 **Assembly** code.

12 **Sequence** code within the assembly.

13 Page number within the sequence code.

14 **Date** of printing or updating of page (month-year).

15 **Note** - Relating to the Part Number. There is a key to symbols and abbreviations at the bottom of the text page.

16 Non-serviced parts.

17 Further description of the part to help confirm identification.

18 Not available as service part.

19 Part Number.

20 Modification.

C 0201 = Part valid **UNTIL 0201** change.
D 0300 = Part valid **FROM 0300** change.
F 0202 = Part valid **FROM Serial N.... to Serial N....**

Implementation of change. Serial number from which the change starts.
The numbers are indicated on the identification plate of the model.
E.g.: **D0300 Serial n° 2503001** means that the part has been installed **“FROM”** serial number **2503001**.
Consequently, the parts marked by **C0201**, were installed **“UP TO”** serial number **2501999**.

21 Total **Quantity** of the Part referred to in the page.
The quantity can be replaced by the following indications:
M = supplied in metres. **AR** = quantity as requested.

22 Part **Description**.

23 **L.C. - Lexicon code** for the identification of Part names.

24 Footnote references.

25 Figure notes.

26 Model number.

Copyright © New Holland

POWER TAKE-OFF - D0200
PRESA DI FORZA - D0200
PRISE DE FORCE - D0200
ZAPFWELLE - D0200

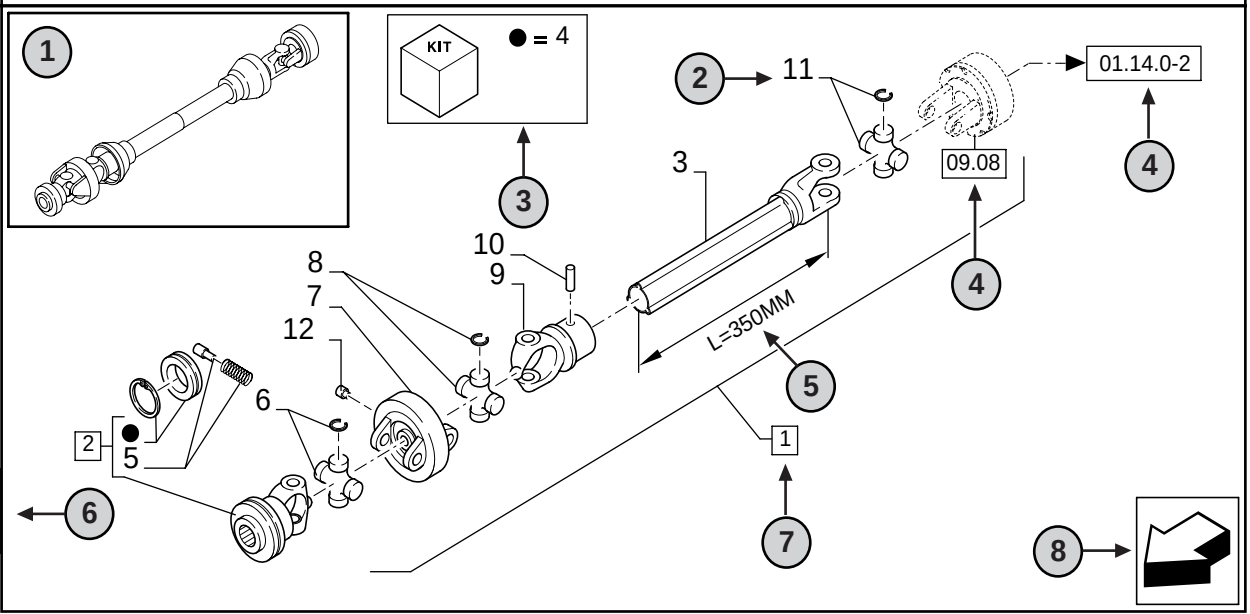

9

TOMA DE FUERZA - D0200
TOMADA DE FORÇA - D0200
KRAFTUDTAG - D0200
AFTAKAS - D0200

R	N	P.N.	MOD	Q	Description Denominacion	Descrizione Denominação	Description Beskrivelse	Bezeichnungen Beschrijving	L.C.
1	1	**86529340**		1	SHAFT,PTO **(2 TO 11)**	PRESA DI FORZA	PRISE DE FORCE	ZAPFWELLE	207P
					TOMA DE FUERZA	TOMADA DE FORCA	PTO/KRAFTUDTAG	AFTAKAS	
2	15	**84014007**		1	YOKE **(4,5)**	FORCELLA	MACHOIRE	GABEL	085F
					HORQUILLA	GARFO	GAFFEL	VORK	
3	16	**NSS**		1	SHAFT,**L=350MM**	ALBERO	ARBRE	WELLE	016A
					EJE	VEIO	AKSEL	AS	
4		**84004292**	C0204	1	KIT	CORREDO	KIT	SATZ	305C
					EQUIPO	KIT	UDSTYR	KIT	
4		**[84058743]**	D0500	1	KIT	CORREDO	KIT	SATZ	305C
					EQUIDO	KIT	UDSTYR	KIT	

1 = FOR ITALY ONLY

9

STANDARD **MODELS**

Copyright © New Holland

ITALIANO

1 **Posizione** della “Figura” sulla macchina.

2 Riferimento del Numero ricambio nella figura.

3 Particolari forniti nei corredi di riparazione per riferimento simbolico.

4 01.14.0-2 Particolare illustrato alla **Pagina** o nella **Figura** indicata, oppure richiamo per **Variazioni** o **Dettagli.** Indica i componenti illustrati in dettaglio in un’altra parte nel catalogo sotto il numero di figura riportato.

5 Dati tecnici relativi al particolare indicato.

6 Numero **Sezione**.

7 2 Comprende il/i pezzo/i ..... (Vedi descrizione Inglese).

8 Orientamento (la freccia indica la parte anteriore della macchina). 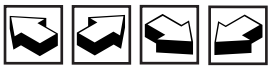

9 Descrizione figura.

10 Informazioni generali sulla figura.

11 Codice **complessivo**.

12 Codice **sequenza** nel complessivo.

13 Numero pagina nel codice sequenza.

14 **Data** di stampa o di aggiornamento della pagina (mese-anno).

15 **Nota** - Si riferisce al numero ricambio. In fondo alla pagina di testo è riportato la legenda dei simboli e delle abbreviazioni.

16 Particolari non soggetti a manutenzione.

17 Ulteriore descrizione del particolare per confermare definitivamente l’identificazione.

18 Non disponibile come particolare per l’assistenza.

19 Numero ricambio.

20 Modifica.

⟶| **C 0201** = Particolare valido **FINO alla modifica 0201**.
|⟶ **D 0300** = Particolare valido **A PARTIRE dalla modifica 0300**.
|—| **F 0202** = Particolare valido **A PARTIRE dal telaio n. .... fino al telaio n. ....**

Introduzione della modifica. Numero telaio a partire dal quale la modifica è stata adottata.
I numeri sono indicati sulla targhetta di identificazione del modello.
E.s.: **D0300 telaio n. 2503001** significa che il particolare è stato installato **“A PARTIRE DAL”** telaio n. **2503001**.
Per cui, i particolari marcati **C0201**, sono stati installati **“FINO AL”** telaio n. **2501999**.

21 **Quantità** totale del particolare indicato nella pagina.
La quantità può essere sostituita dalle indicazioni seguenti:
M = fornito a metri. **AR** = quantità come necessario (‘as required’).

22 **Descrizione** particolare.

23 **L.C. - Codice Lessico** per l’identificazione dei nomi dei particolari.

24 Riferimenti note a piè di pagina.

25 Note figura.

26 Numero modello.

Copyright © New Holland

POWER TAKE-OFF - D0200
PRESA DI FORZA - D0200
PRISE DE FORCE - D0200
ZAPFWELLE - D0200

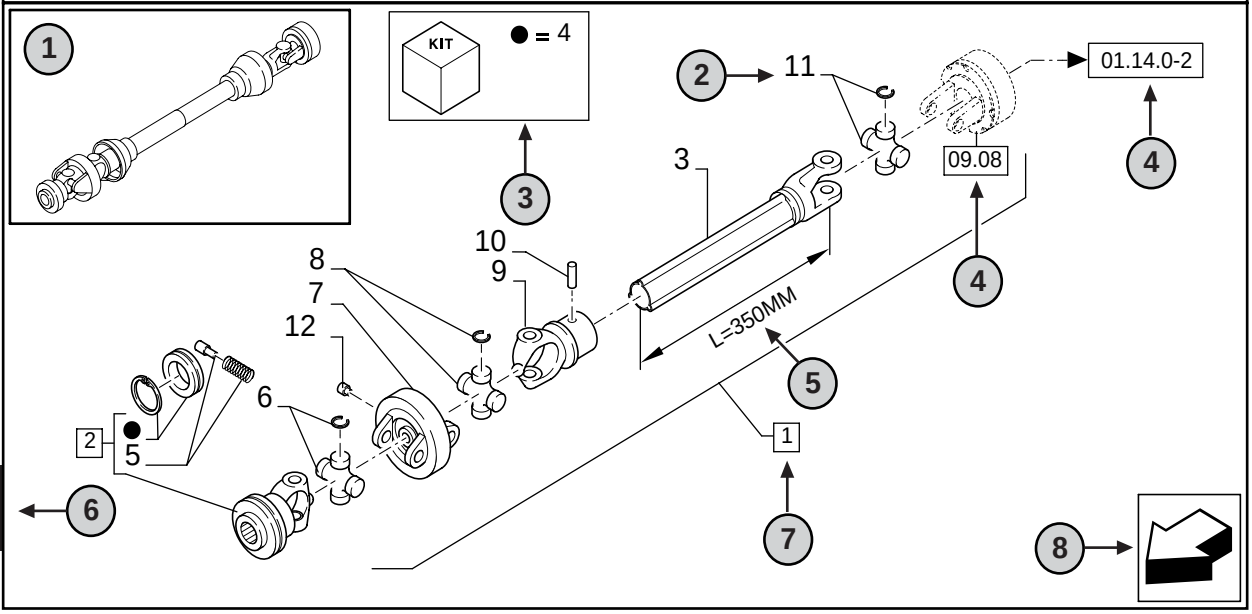

9

09.07	01	p1	07/99

TOMA DE FUERZA - D0200
TOMADA DE FORÇA - D0200
KRAFTUDTAG - D0200
AFTAKAS - D0200

R	N	P.N.	MOD	Q	Description Denominacion	Descrizione Denominação	Description Beskrivelse	Bezeichnungen Beschrijving	L.C.
1	1	**86529340**		1	SHAFT,PTO **(2 TO 11)**	PRESA DI FORZA	PRISE DE FORCE	ZAPFWELLE	207P
					TOMA DE FUERZA	TOMADA DE FORCA	PTO/KRAFTUDTAG	AFTAKAS	
2	15	**84014007**		1	YOKE **(4,5)**	FORCELLA	MACHOIRE	GABEL	085F
					HORQUILLA	GARFO	GAFFEL	VORK	
3	16	**NSS**		1	SHAFT,**L=350MM**	ALBERO	ARBRE	WELLE	016A
					EJE	VEIO	AKSEL	AS	
4		**84004292**	C0204	1	KIT	CORREDO	KIT	SATZ	305C
					EQUIPO	KIT	UDSTYR	KIT	
4		**[84058743]**	D0500	1	KIT	CORREDO	KIT	SATZ	305C
					EQUIDO	KIT	UDSTYR	KIT	

1 = FOR ITALY ONLY

9

STANDARD

MODELS

Copyright © New Holland

FRANÇAIS

1 **Position** du “Chiffre” sur la machine.

2 Référence-Chiffre de terminaison de la référence**.**

3 Pièces détachées approvisionnées en kit de réparation par symbole de référence.

4 01.14.0-2 Pièce illustrée dans la **page** ou sur la **figure** indiquée, pour des **variations** ou des **détails**. Montre les composants détaillés par ailleurs dans le catalogue sous le numéro de la figure.

5 Spécifications techniques relatif à la pièce indiquée.

6 Numérotation des **sections**.

7 2 ITEM inclus ..... (Voir description anglaise).

8 Orientation (la Flèche indique l’avant de la machine).

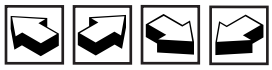

9 Description de la figure.

10 Information générale de la figure.

11 Code d’**assemblage**.

12 Code de **séquence** sans l’assemblage.

13 Numéro de page sans le code de séquence.

14 **Date** d’impression ou mise à jour de la page (mois-année).

15 **Note** - relatif à la référence. Ceci est la clé des symboles et abréviations en bas de la page suivante.

16 Pièces non servies.

17 Description supplémentaire de la pièces pour aider à la confirmation de l’identification.

18 Ne concerne pas le service pièces détachées.

19 Référence.

20 Modification.

C 0201 = Pièce valable **JUSQU’A 0201** Changement.
D 0300 = Pièce valable **A PARTIR DE 0300** Changement.
F 0202 = Pièce valable **A PARTIR DU** N° de série **.... Jusqu’au** N° de série**....**

Mise en oeuvre de changement. Les numéro de série qui démarrent.
Les numéros sont indiqués sur la plaque d’identification du modèles.
Ex.: **D0300** N° de série **2503001** indique que la pièce a été installée **à partir** du N° de série **2503001**.
En conséquence la pièce marquée **C0201** serait installée **après** le N° de série **2501999**.

21 **Total** du nombre de pièces référencées dans la page.
La quantité peut être remplacée par l’indications suivante:
M = Vendu au mètres. **AR** = Quantité à la demande.

22 **Description** de la pièce.

23 **L.C. - Code Lexique ou Glossaire** pour l’identification du nom des pièces.

24 Référence en bas de page.

25 Annotation des chiffres.

26 Numéro du modèle.

Copyright © New Holland

09.07	01	p1	07/99

POWER TAKE-OFF - D0200
PRESA DI FORZA - D0200
PRISE DE FORCE - D0200
ZAPFWELLE - D0200

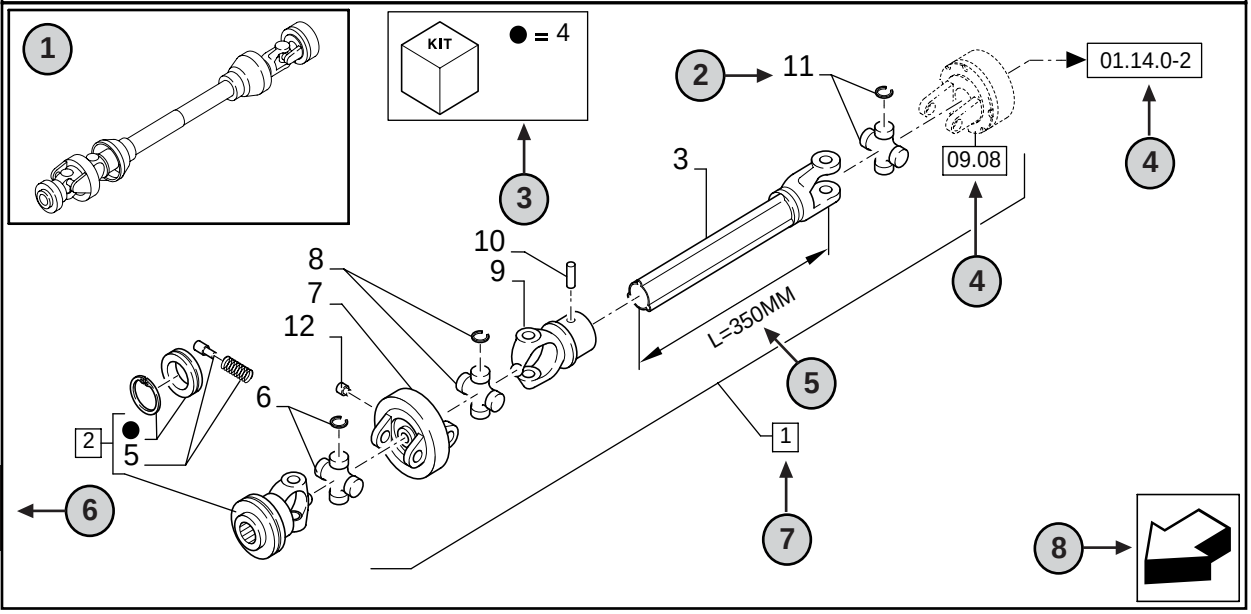

9

TOMA DE FUERZA - D0200
TOMADA DE FORÇA - D0200
KRAFTUDTAG - D0200
AFTAKAS - D0200

09.07	01	p1	07/99

R	N	P.N.	MOD	Q	Description Denominacion	Descrizione Denominação	Description Beskrivelse	Bezeichnungen Beschrijving	L.C.
1	1	**86529340**		1	SHAFT,PTO **(2 TO 11)** TOMA DE FUERZA	PRESA DI FORZA TOMADA DE FORCA	PRISE DE FORCE PTO/KRAFTUDTAG	ZAPFWELLE AFTAKAS	207P
2	15	**84014007**		1	YOKE **(4,5)** HORQUILLA	FORCELLA GARFO	MACHOIRE GAFFEL	GABEL VORK	085F
3	16	**NSS**		1	SHAFT,**L=350MM** EJE	ALBERO VEIO	ARBRE AKSEL	WELLE AS	016A
4		**84004292**	C0204	1	KIT EQUIPO	CORREDO KIT	KIT UDSTYR	SATZ KIT	305C
4		**[84058743]**	D0500	1	KIT EQUIDO	CORREDO KIT	KIT UDSTYR	SATZ KIT	305C

1 = FOR ITALY ONLY

9

STANDARD

MODELS

Copyright © New Holland

DEUTSCH

1 **Position** der “Abbildung” an der Maschine.

2 Bezug - Abbilding, auf der die Teilnummer aufgeführt ist.

3 Teile, die gemäß der Bezeichnung durch das Symbol in Reparatursätzen geliefert werden.

4 01.14.0-2 Teil, das auf der angegebenen **Seite** oder **Abbildung** veranschaulicht ist, oder Verweis auf **Änderungen** oder **dataillierte Angaben**. Angabe von Teilen, die an anderer Stelle innerhalb des Katalogs unter der dargestellten Abbildungsnummer detailliert dargestellt sind.

5 Technische Daten zum angegebenen Teil.

6 **Abschnittsnummer**.

7 2 I Umfaßt Teil(e) ..... (Siehe Beschreibung in englischer Sprache).

8 Orientierung (der Pfeil weist zur Vorderseite der Maschine). 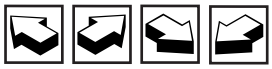

9 Beschreibung der Abbildung.

10 Allgemeine Information zur Abbildung.

11 **Montagecode**.

12 **Folgecode** innerhalb der Baugruppe.

13 Seitennummer innerhalb des Folgecodes.

14 **Datum** des Drucks oder der Aktualisierung der Seite (Monat-Jahr).

15 **Hinweis -** Bezieht sich auf die Teilnummer. Ein Schlüssel für die Symbole und Abkürzungen befindet sich unten auf der Textseite.

16 Kein gewartetes Teil.

17 Weitere Beschreibung des Teils; dient als Hilfe bei der Identifizierung des Teils.

18 Nicht als Service-Teil erhältlich.

19 Teilnummer.

20 Modifizierung.

C 0201 = Teil gültig **BIS** zur Änderung **0201**.
D 0300 = Teil gültig **AB** der Änderung **0300**.
F 0202 = Teil gültig **AB Serien-N.... bis Serien-N....**

Einführung der Änderung. Serienummer, von der an die Änderung erfolgte.
Die Nummern sind auf dem Typenschild des Modells aufgeführt.
Beispiel: **D0300 Serienummer 2503001** bedeutet, daß das Teil “**AB**” Serienummer **2503001** montiert wurde.
Folglich wurden Teile, die mit **C0201** markiert sind, **“BIS”** Serienummer **2501999** montiert.

21 **Gesamtzahl** des auf der Seite Aufgeführten Teils.
Diese Zahl kann durch die folgenden Angaben ersetzt sein:
M = Lieferung in Meter. **AR** = Anzahl nach Bedarf.

22 **Beschreibung** von Teilen.

23 **L.C. - Lexikon-Code** zur Identifizierung von Bezeichnungen für Teile.

24 Fußnotenverzeichnisse.

25 Hinweise zu Abbildungen.

26 Modellnummer.

Copyright © New Holland

POWER TAKE-OFF - D0200
PRESA DI FORZA - D0200
PRISE DE FORCE - D0200
ZAPFWELLE - D0200

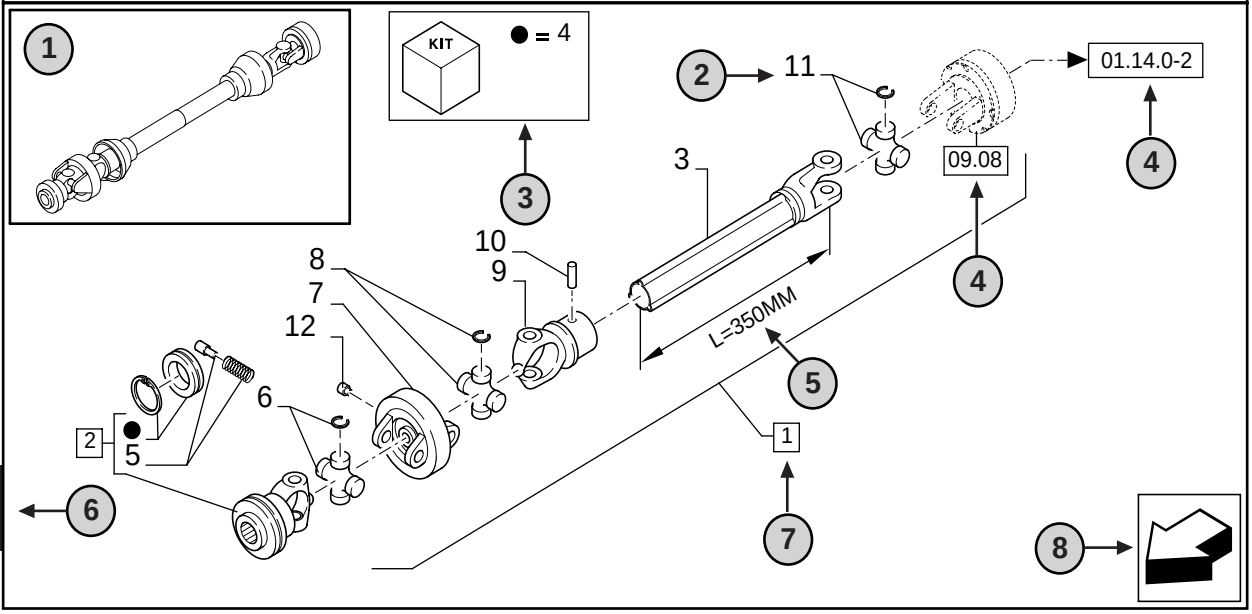

9

TOMA DE FUERZA - D0200
TOMADA DE FORÇA - D0200
KRAFTUDTAG - D0200
AFTAKAS - D0200

09.07	01	p1	07/99

R	N	P.N.	MOD	Q	Description Denominacion	Descrizione Denominação	Description Beskrivelse	Bezeichnungen Beschrijving	L.C.
1	1	**86529340**		1	SHAFT,PTO **(2 TO 11)** TOMA DE FUERZA	PRESA DI FORZA TOMADA DE FORCA	PRISE DE FORCE PTO/KRAFTUDTAG	ZAPFWELLE AFTAKAS	207P
2	15	**84014007**		1	YOKE **(4,5)** HORQUILLA	FORCELLA GARFO	MACHOIRE GAFFEL	GABEL VORK	085F
3	16	**NSS**		1	SHAFT,**L=350MM** EJE	ALBERO VEIO	ARBRE AKSEL	WELLE AS	016A
4		**84004292**	C0204	1	KIT EQUIPO	CORREDO KIT	KIT UDSTYR	SATZ KIT	305C
4		**[84058743]**	D0500	1	KIT EQUIDO	CORREDO KIT	KIT UDSTYR	SATZ KIT	305C

1 = FOR ITALY ONLY

9

STANDARD — **MODELS**

Copyright © New Holland

ESPAÑOL

1 **Posición** de la “Figura” en la máquina.

2 Referencia - Figura correspondiente del número de pieza.

3 Piezas suministradas en juegos de reparación por símbolo de referencia.

4 01.14.0-2 Pieza ilustrada en la **Página** o en la **Figura** indicado, o indicaciones por **Variaciones** o **Detalles.** Señala componentes mostrados en detalle en algún lugar del catálogo bajo este número de figura.

5 Especificaciones técnicas relacionadas con la pieza indicada.

6 Número de **Sección**.

7 2 Incluye punto(s) ..... (Ver descripción en inglés).

8 Orientación (La flecha indica la parte delantera de la máquina). 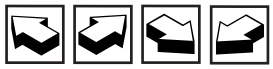

9 Descripción de la figura.

10 Información general de la figura.

11 Código de **Conjunto.**

12 Código de **Secuencia dentro del conjunto.**

13 Número de pieza dentro del código de secuencia.

14 **Fecha** de impresión o puesta al día de la página (mes-año).

15 **Nota -** Relacionada con el Número de Pieza.Hay una clave de símbolos y abreviaciones al final de la página de texto.

16 Piezas que no se suministran en servicio.

17 Descripción ulterior de la pieza para facilitar su identificación.

18 No disponible como pieza de servicio.

19 Número de pieza.

20 Modificación.

⟶| **C 0201** = Pieza válida **HASTA** el cambio **0201**.
|⟶ **D 0300** = Pieza válida **DESDE** el cambio **0300**.
|—| **F 0202** = Pieza válida **DESDE el N° de Serie.... al N° de Serie....**

Implementación del cambio. Número de serie a partir del cual comienza el cambio.
Los números se indican en la placa de identificación del modelo.
P.e.: **D0300 Serie n° 2503001** significa que las piezas se han instalado **“DESDE”** el número de serie **2503001**.
En consecuencia, las piezas marcadas con **C0201**, fueron montadas **“HASTA”** el número de serie **2501999**.

21 **Cantidad** total de las piezas referenciadas en la página.
La cantidad puede ser sustituida por cualquiera de las siguientes indicaciones:
M = suministrada por metros. **AR** = cantidad según sea necesario.

22 **Descripción.**

23 **L.C. - Código Léxico** para la identificación de los nombres de piezas.

24 Notas de pié de página.

25 Notas de figura.

26 Número de modelo.

Copyright © New Holland

09.07	01	p1	07/99

POWER TAKE-OFF - D0200
PRESA DI FORZA - D0200
PRISE DE FORCE - D0200
ZAPFWELLE - D0200

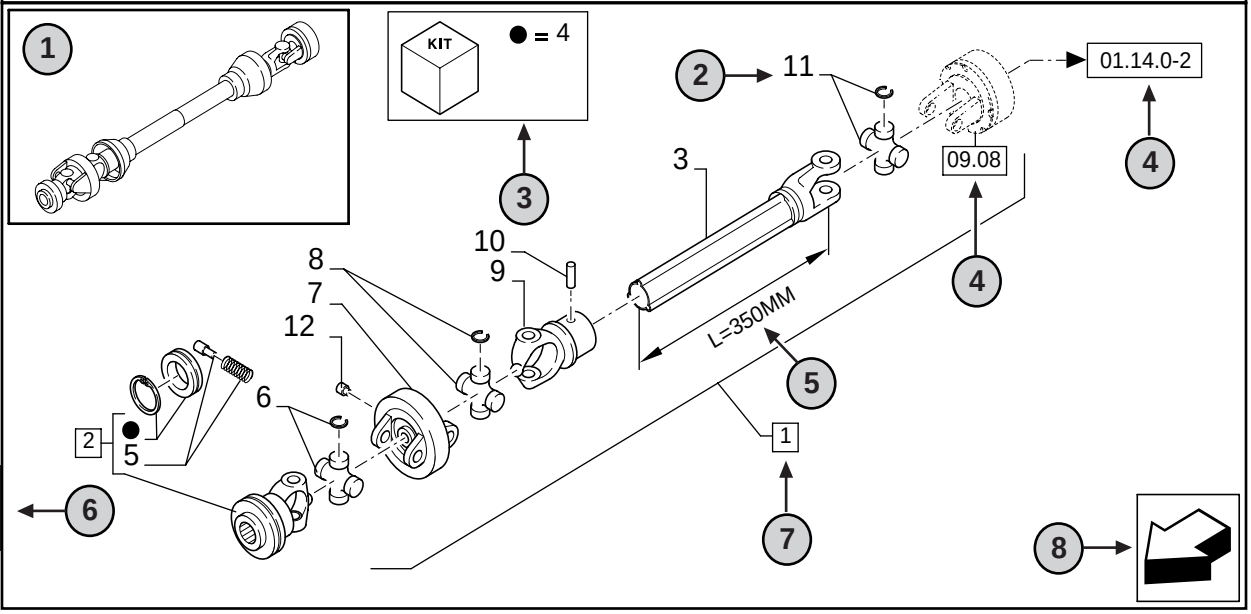

TOMA DE FUERZA - D0200
TOMADA DE FORÇA - D0200
KRAFTUDTAG - D0200
AFTAKAS - D0200

09.07	01	p1	07/99

R	N	P.N.	MOD	Q	Description Denominacion	Descrizione Denominação	Description Beskrivelse	Bezeichnungen Beschrijving	L.C.
1	1	**86529340**		1	SHAFT,PTO **(2 TO 11)** TOMA DE FUERZA	PRESA DI FORZA TOMADA DE FORCA	PRISE DE FORCE PTO/KRAFTUDTAG	ZAPFWELLE AFTAKAS	207P
2	15	**84014007**		1	YOKE **(4,5)** HORQUILLA	FORCELLA GARFO	MACHOIRE GAFFEL	GABEL VORK	085F
3	16	**NSS**		1	SHAFT,**L=350MM** EJE	ALBERO VEIO	ARBRE AKSEL	WELLE AS	016A
4		**84004292**	C0204	1	KIT EQUIPO	CORREDO KIT	KIT UDSTYR	SATZ KIT	305C
4		**[84058743]**	D0500	1	KIT EQUIDO	CORREDO KIT	KIT UDSTYR	SATZ KIT	305C

1 = FOR ITALY ONLY

STANDARD **MODELS**

Copyright © New Holland

PORTUGUÊS

1 **Posição** da “Figura” na máquina.

2 Referência - figura chamar pelo n° de peça.

3 Peças fornecidas nos kits de reparação por referência de símbolo.

4 01.14.0-2 Peça indicada na **Página** ou no **Figura**, ou chamadas para **Variações** ou **Detalhes**. Indicam componentes que se mostram em detalhe num outro local do catálogo com o número da figura indicado.

5 Especificações técnicas relacionadas com a peça indicada.

6 Número da **Secção**.

7 2 Inclui os item(s) ..... (Veja a descrição em Inglés).

8 Orientação (A seta indica a frente da máquina).

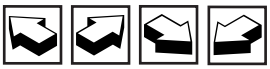

9 Descrição da figura.

10 Informação geral da figura.

11 Código do **Conjunto**.

12 Código de **Sequência** no conjunto.

13 Número da página no código de sequência.

14 **Data** da impressão ou da actualização da página (mês-ano).

15 **Nota** - Em relação ao n°. de peça. Existe uma chave para os símbolos e abreviaturas na parte inferior da página.

16 Peças que não são servidas.

17 Descrição adicional da peça para auxiliar a confirmar a identificação.

18 Não disponível como peça de serviço.

19 Número de Peça.

20 Modificação.

C 0201 = Pieza válida **HASTA** el cambio **0201**.
D 0300 = Pieza válida **DESDE** el cambio **0300**.
F 0202 = Pieza válida **DESDE el N° de Serie.... al N° de Serie....**

Implementação da mudança. N° de série a partir do qual a alteração tem início.
Os números são indicados na chapa de identificação do modelo
Ex.: **D0300 N° de Série 2503001** significa que a peça foi montada **“A PARTIR”** do n°. de série **2503001.**
Como consequência, as peças marcadas por **C0201**, foram montadas **“ATÉ”** ao n°. de série **2501999.**

21 **Quantidade** total de peças referenciadas na página.
A quantidade pode ser substituída pelas seguintes indicações:
M = fornecido em metros. **AR** = Quantidade consoante o pedido.

22 **Descrição** da peça.

23 **L.C. - Código Léxico** para a identificação dos nomes das peças.

24 Referências de rodapé.

25 Notas das figuras.

26 Número do modelo.

Copyright © New Holland

09.07	01	p1	07/99

POWER TAKE-OFF - D0200
PRESA DI FORZA - D0200
PRISE DE FORCE - D0200
ZAPFWELLE - D0200

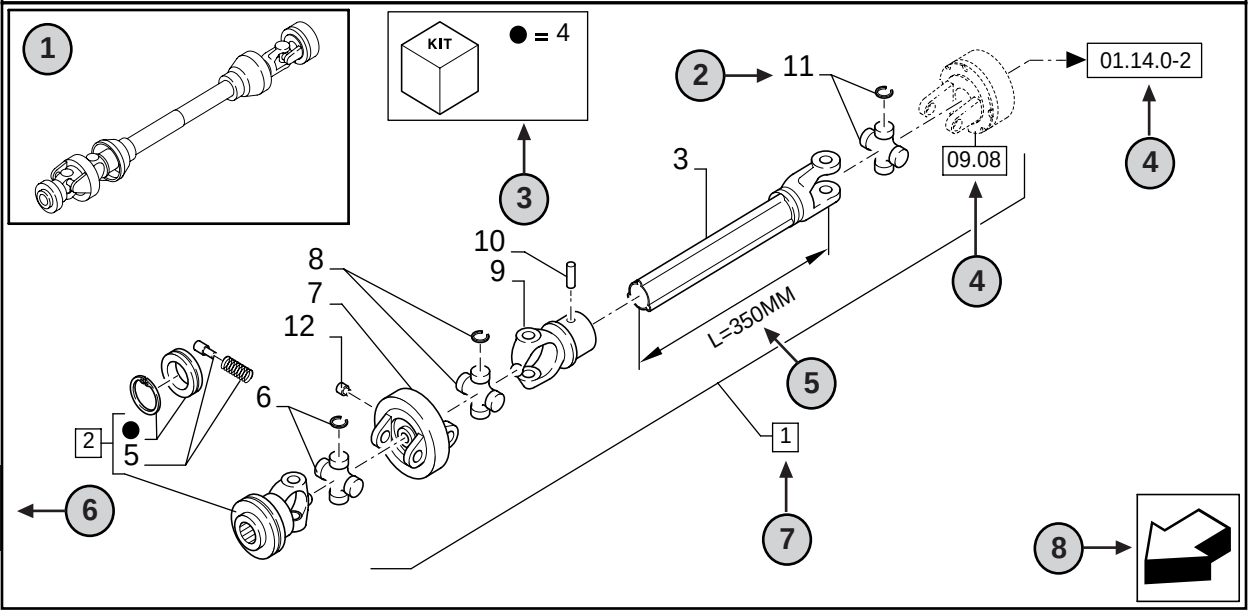

09.07	01	p1	07/99

TOMA DE FUERZA - D0200
TOMADA DE FORÇA - D0200
KRAFTUDTAG - D0200
AFTAKAS - D0200

R	N	P.N.	MOD	Q	Description Denominacion	Descrizione Denominação	Description Beskrivelse	Bezeichnungen Beschrijving	L.C.
1	1	**86529340**		1	SHAFT,PTO **(2 TO 11)**	PRESA DI FORZA	PRISE DE FORCE	ZAPFWELLE	207P
					TOMA DE FUERZA	TOMADA DE FORCA	PTO/KRAFTUDTAG	AFTAKAS	
2	15	**84014007**		1	YOKE **(4,5)**	FORCELLA	MACHOIRE	GABEL	085F
					HORQUILLA	GARFO	GAFFEL	VORK	
3	16	**NSS**		1	SHAFT,**L=350MM**	ALBERO	ARBRE	WELLE	016A
					EJE	VEIO	AKSEL	AS	
4		**84004292**	C0204	1	KIT	CORREDO	KIT	SATZ	305C
					EQUIPO	KIT	UDSTYR	KIT	
4		**[84058743]**	D0500	1	KIT	CORREDO	KIT	SATZ	305C
					EQUIDO	KIT	UDSTYR	KIT	

1 = FOR ITALY ONLY

STANDARD

MODELS

Copyright © New Holland

NEDERLANDS

1 **Positie** van de “Afbeelding” op de machine.

2 Referentie - Afbeeldingafroep van het onderdeelnummer.

3 Onderdelen, geleverd in herstelpakket volgens symboolreferentie.

4 01.14.0-2 Onderdeel, afgebeeld op de **Bladz.** of aangeduid op de **Afbeelding**, of vragen voor **Variaties** of **Details**. Verwijst naar componenten, in detail getoond elders in de catalogus, onder het getoonde afbeeldingsnummer

5 Technische specificaties betreffende het aangeduide Onderdeel.

6 **Sectienummer**.

7 2 Inclusief item(s) ..... (Zie Engelse beschrijving).

8 Orientatie (pijl wijst naar voorzijde van de machine). 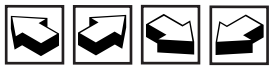

9 Beschrijving van afbeelding.

10 Algemene informatie van de afbeelding.

11 **Assemblagecode**.

12 **Sequentiecode** in de assemblage.

13 Bladzijdenummer in de sequentiecode.

14 **Datum** van drukken of bijwerken van bladzijde (maand-jaar).

15 **Nota** - Betreffende het Onderdeelnummer. Er is een sleutel voor symbolen en afkortingen, onderaan de tekstbladz.

16 Niet-beschikbare onderdelen.

17 Verdere beschrijving van het onderdeel om de identificatie te confirmeren.

18 Niet beschikbaar als service-onderdeel.

19 Onderdeelnummer.

20 Wijziging.

C 0201 = Onderdeel geldig **TOT 0201** wijziging.
D 0300 = Onderdeel geldig **VANAF 0300** wijziging.
F 0202 = Onderdeel geldig **VANAF Serienr.... tot Serienr....**

Implementatie van wijziging. Serienummer van waarop de wijziging begint.
De nummers staan vermeld op de identificatieplaat van het model.
D.w.z.: **D0300 Serienr. 2503001** betekent dat het onderdeel gemonteerd werd **“VANAF”** serienummer **2503001**.
Bijgevolg, de onderdelen, aangeduid met **C0201**,werden gemonteerd **“TOT OP”** serienummer **2501999.**

21 Totaal **Aantal** van het Onderdeel, vernoemd op de bladzijde.
Het aantal kan vervangen worden door volgende indicaties:
M = geleverd in meter. **AR** = aantal zoals vereist.

22 **Beschrijving** van Onderdeel.

23 **L.C. - Lexiconcode** voor de identificatie van benaming van Onderdelen.

24 Voetnota’s referenties.

25 Afbeeldingnota’s.

26 Modelnummer.

Copyright © New Holland

09.07	01	p1	07/99

POWER TAKE-OFF - D0200
PRESA DI FORZA - D0200
PRISE DE FORCE - D0200
ZAPFWELLE - D0200

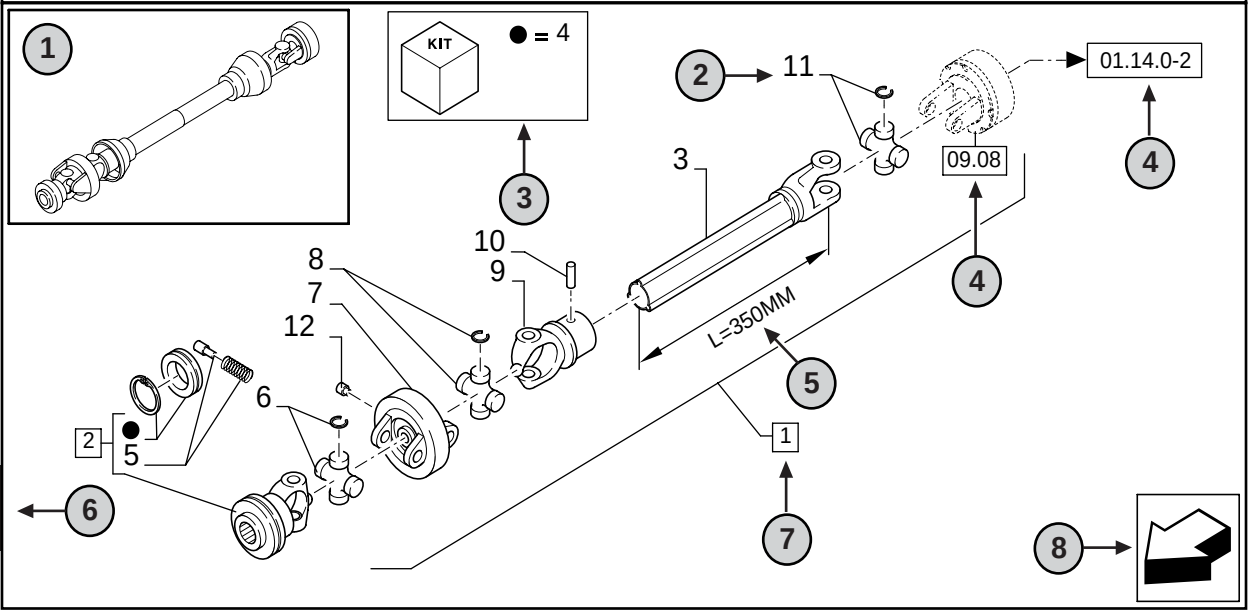

09.07	01	p1	07/99

TOMA DE FUERZA - D0200
TOMADA DE FORÇA - D0200
KRAFTUDTAG - D0200
AFTAKAS - D0200

R	N	P.N.	MOD	Q	Description Denominacion	Descrizione Denominação	Description Beskrivelse	Bezeichnungen Beschrijving	L.C.
1	1	**86529340**		1	SHAFT,PTO **(2 TO 11)** TOMA DE FUERZA	PRESA DI FORZA TOMADA DE FORCA	PRISE DE FORCE PTO/KRAFTUDTAG	ZAPFWELLE AFTAKAS	207P
2	15	**84014007**		1	YOKE **(4,5)** HORQUILLA	FORCELLA GARFO	MACHOIRE GAFFEL	GABEL VORK	085F
3	16	**NSS**		1	SHAFT,**L=350MM** EJE	ALBERO VEIO	ARBRE AKSEL	WELLE AS	016A
4		**84004292**	C0204	1	KIT EQUIPO	CORREDO KIT	KIT UDSTYR	SATZ KIT	305C
4		**[84058743]**	D0500	1	KIT EQUIDO	CORREDO KIT	KIT UDSTYR	SATZ KIT	305C

1 = FOR ITALY ONLY

STANDARD **MODELS**

Copyright © New Holland

DANSK

1 **Placering** af “Figuren” på maskinen.

2 Reference - Figur-præsentation af reservedelsnummeret.

3 Dele, der leveres i reparationskit pr. symbolreference.

4 01.14.0-2 Dele illustreret på **Siden** eller i den viste **Figur**, eller ønsker om **Variationer** eller **Detaljer**. Angiver komponenter vist i detaljer andetsteds i Kataloget under det viste figurnummer.

5 Teknisk specifikationer med relation til den viste del.

6 **Afsnit** nummer.

7 2 Inkluderer del(e) ..... (Se engelsk beskrivelse).

8 Placering (Pil viser maskinens front). 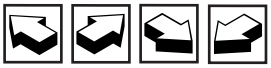

9 Beskrivelse af figur.

10 General information om figuren.

11 **Komponentkode**.

12 **Sekvenskode** for komponenten.

13 Sidenummer inden for sekvenskoden.

14 **Dato** for udskrift eller opdatering af siden (måned-år).

15 **Bemærk** - Ved relatering til reservedelsnummeret. Der er en nøgle til symboler og forkortelser i bunden af tekstsiden.

16 Ikke-servicerede dele.

17 Yderligere beskrivelse af delen for lettere at kunne få bekræftet identifikationen.

18 Ikke tilgængelig som servicedel.

19 Reservedelsnummer.

20 Ændring.

C 0201 = Del gældende **TIL 0201** ændring.
D 0300 = Del gældende **FRA 0300** ændring.
F 0202 = Del gældende **FRA Serienr.... til Serienr....**

Indførelse af ændring. Serienummeret fra hvilken ændringen starter.
Numrene er vist på identifikationspladen for modellen.
Fx.: **D0300 serienr 2503001** betyder, at delen er monteret **“FRA”** serienummer **2503001**.
Således er dele mærket **C0201**, monteret **“OP TIL”** serienummer **2501999**.

21 Total **Antal** af delen, der refereres til på siden.
Antallet kan udskiftes med følgende indikationer:
M = leveret i meter. **AR** = antal som ønsket.

22 **Beskrivelse** af delen.

23 **L.C. - Leksikonkode** til identifikation af reservedeles navn.

24 Fodnote-referencer.

25 Figur-bemærkninger.

26 Modelnummer.

Copyright © New Holland

ABBREVIATIONS ABBREVIAZIONI ABREVIATIONS ABKÜRZUNGEN		ABREVIACIONES ABREVIATURAS AFKORTINGEN FORKORTELSER		
	Description Denominacion	**Descrizione Denominação**	**Description Beschrijving**	**Bezeichnung Beskrivelse**
ASSY	ASSEMBLY MONTAJE	COMPLESSIVO GRUPO	ENSEMBLE MONTAGEGROEP	KOMPL. EINHEIT AGGREGAT
AR	AS REQUIRED SEGÚN NECESIDAD	A RICHIESTA SEGUNDO NECESSIDADE	SELON BESOIN NAAR BEHOEFTE	NACH BEDARF EFTER BEHOV
NS	NOT SERVICED NO DISPONIBLE	NON DISPONIBILE NÃO DISPONIVEL	PAS DISPONIBLE NIET BESCHIKBAAR	NICHT LIEFERBAR IKKE DISPONIBEL
NSS	NOT SERVICED SEPARATELY NO DISPON.PAR SEPARADO	NON DISPONIBILE SEPARATAM. NÃO DISPON.EM SEPARADO	PAS DISPON. SEPAR. NIET AFZOND. BESCHIKB.	NICHT SEPARAT LIEFERBAR IKKE DISPON. SEPARAT
INCL.	INCLUDES INCLUYE	COMPRENDE INCLUI	COMPREND BEVAT	ENTHÄLT INDKLUDERER
(2,3)	INCLUDES INCLUYE	COMPRENDE INCLUI	COMPREND BEVAT	ENTHÄLT INDKLUDERER
LH	LEFT HAND MANO IZQUIERDA	LATO SINISTRO MÃO ESQUERDA	COTE GAUCHE LINKS	LINKS VENSTRE
RH	RIGHT HAND MANO DERECHA	LATO DESTRO MÃO DIREITA	COTE DROIT RECHTS	RECHTS HØJRE
SEE FIGURE	SEE FIGURE VÈRSE FIGURA	VEDERE FIGURA VEJA FIGURA	VOIR FIGURE ZIE AFBEELDING	SIEHE ABBILDUNG SE FIGUR
THK	THICKNESS ESPESAR	SPESSORE ESPESSURA	EPAISSEUR DIKTE	STÄRKE TYKKELSE
Ø or DIA.	DIAMETER DIAMETRO	DIAMETRO DIÁMETRO	DIAMETRE DIAMETER	DURCHMESSER DIAMETER
I.D.	INSIDE DIAMETER DIAMETRO INTERIOR	DIAMETRO INTERNO DIÁMETRO INTERNO	DIAMETRE INTER. BINNENDIAMETER	INNENDURCHMESSER INDVENDIG DIAMETER
O.D.	OUTSIDE DIAMETER DIAMETRO EXTERIOR	DIAMETRO ESTERNO DIÁMETRO EXTRIOR	DIAMETRE EXTERIEUR BUITENDIAMETER	AUSSENDURCHMESSER UDVENDIG DIAMETER
ACC	ACCESSORY ACCESORIO	ACCESSORIO ACESSORIO	ACCESSOIRE TOEBEHOREN	ZUBEHÖR TILBEHØR
OPT	OPTION OPCIONES	ALTERNATIVA OPÇIONAL	FACULTATIF OPTIE	WAHLWEISE ALTERNATIV
P.T.O.	POWER TAKE-OFF TOMA DE FUERZA	PRESA DI FORZA TOMADA DE FORÇA	PRISE DE FORCE AFTAKAS	ZAPFWELLE KRAFTUDTAG
T or Z=	TEETH DIENTES	DENTI DENTES	DENTS TANDEN	ZAHMEN TÆNDER
L	LENGTH LARGO	LUNGHEZZA COMPRIMENTO	LONG LENGTE	LANG LÆNGDE
FRONT	FRONT DELANTERO	ANTERIORE DIANTEIRO	AVANT VOORAAN	VORN FORAN
REAR	REAR TRASERO	POSTERIORE TRASEIRO	ARRIERE ACHTERAAN	HINTERE BAG
LOWER	LOWER BAJAR	INFERIORE INFERIOR	INFERIEUR ONDER	SENKEN NEDRE
UPPER	UPPER DE ARRIBA	SUPERIORE SUPERIOR	SUPERIEUR BOVEN	OBER ØVRE
H.F.	HARD FACE TEMPRA	TEMPRATO TEMPERADO	TEMPRE VERHARD	GEHÄRT HÆRDED
WITH or W/	WITH CON	CON COM	AVEC MET	MIT MED
WITHOUT or L/	WITHOUT SIN	SENZA SEM	SANS ZONDER	OHNE UDEN
NA	NORTH AMERICA NORTE AMÉRICA	NORD AMERICA AMÉRICA DO NORTE	ETATS-UNIS DU NORD NOORD-AMERIKA	NORD-AMERICA NORDAMERIKA
NLS	NO LONGER SERVICED YA NO SE SUMINISTRA	NON PIU' DISPONIBILE A RICAMBIO NÃO MAIS DISPONÍVEL EM SERVIÇO	PLUS DISPO.EN SERVICE NIET LANGER GELEVERD	NICHT MEHR ERHÄLTLICH SERVICERES IKKE MERE
PL	PROCURE LOCALLY ADQUIRIR EN PLAZA	DA PROCURARE IN LOCO PROCURA LOCAL	PROCURER LOCALEMENT LOKAAL AANKOPEN	ÖRTLICH ZU BESCHAFFEN FREMSKAFFES LOKALT
OW	ORDER THROUGH WHOLEGOODS PEDIR COMO MERCANCÍA GENERAL	ORDINARE TRAMITE MAGAZZINO ENCOMENDA POR MERCADORIAS	COMMANDER EN FOURNITURE BESTELLEN ALS STUKGOED	BEIZUBEHÖR-LOG. ZU BESTELLEN BESTIL GENNEM MASKINSALG
OC	ORDER COMPONENTS PEDIR COMPONENTES	ORDINARE COMPONENTI ENCOMENDA DE COMPONENTES	COMMANDER COMPOSANTS COMPONENTEN BESTELLEN	BESTELLPOSTEN BESTIL KOMPONENTER

Copyright © New Holland

CONVERSION CHART (INC-MM)
TABELLA DI CONVERSIONE (POLLICI-MM)
CHARTE DE CONVERSION (INCH-MM)
UMRECHNUNGSTABELLE (INCH-MM)
TABLA DE CONVERSIÓN (PULG-MM)
TABELA DE CONVERSÃO (POL.-MM)
CONVERSIETABEL (INCH-MM)
KONVERTERINGSKORT (INC-MM)

Inch Fractions and Decimals to Millimeter Equivalents
Le frazioni e i decimali del pollice equvalgono al millimetri
Les tractions et les décimales du pouce équivalent aux millimètres
Die Zollbruchteile und Zolldezimalen den Millimetern entsprechen

Las fracciónes y los decimalesde la pulgadaequivalen a los milímetros
As fracções e os decimais de polegada equivalem a milímetros
Het equivalent tussen de breuken en de decimalen van een duim naar millimeters
Brøkerne og decimalerne for tommer svarer til millimeter

INCHES		MM	INCHES		MM	INCHES		MM	INCHES		MM
Fraction	Decimal		Fraction	Decimal		Fraction	Decimal		Fraction	Decimal	
-	.0004	.10	-	.3	7.620	-	.7874	20	-	1.969	50
-	.001	.025	5/16	.3125	7.938	51/64	.7969	20.241	2	2.000	50.8
-	.0039	.10	-	.3150	8	13/64	.8125	20.638	2-1/8	2.125	54
-	.005	.127	21/64	.3281	8.334	-	.8268	21	-	2.165	56
-	.0079	.2	-	.3346	8.5	53/64	.8281	21.034	2-1/4	2.250	57.2
-	.0098	.25	11/32	.3438	8.731	27/32	.8438	21.431	-	2.362	60
-	.01	.254	-	.3543	9	55/64	.8594	21.828	2-3/8	2.375	60.3
-	.0118	3	23/64	.3594	9.128	-	.8662	22	2-1/2	2.500	63.5
1/64	.0156	.397	-	.3740	9.5	7/8	.8750	22.225	-	2.559	66
-	.0157	.4	3/8	.375	9.526	57/64	.8906	22.622	2-5/8	2.625	66.7
-	.0197	.5	25/64	.3908	9.922	-	.9	22.860	2-3/4	2.750	69.9
-	.0236	.6	-	.3937	10	-	.9055	23	-	2.756	70
-	.025	.635	-	.4	10.160	29/32	.9063	23.019	2-7/8	2.850	73
-	.0276	.7	13/32	.4062	10.319	59/64	.9219	23.416	-	2.953	75
-	.0295	.75	-	.4134	10.5	15/16	.9375	23.813	3	3.000	76.2
1/32	.0313	.794	27/64	.4219	10.716	-	.9449	14	-	3.150	80
-	.0315	.8	-	.4331	11	61/64	.9531	24.209	3-1/4	3.250	82.6
-	.0354	.9	7/16	.4375	11.113	31/32	.9688	24.608	-	3.346	85
-	.0394	1	29/64	.4531	11.509	-	.9843	25	3-1/2	3.500	88.9
3/64	.0469	1.191	15/32	.4688	11.906	1	1.000	25.400	-	3.543	90
-	.0472	1.2	-	.4724	12	-	1.024	26	-	3.740	95
-	.05	1.270	31/64	.4844	12.303	1-1/16	1.062	26.988	3-3/4	3.750	95.3
-	.0551	1.4	-	.4921	12.5	-	1.063	27	-	3.937	100
-	.0591	1.5	1/2	.5	12.700	-	1.102	28	4	4.000	101.6
1/16	.0625	1.588	-	.5118	13	1-1/8	1.125	28.575	-	4.331	110
-	.0669	1.7	33/64	.5156	13.097	-	1.142	29	4-1/2	4.500	114.3
-	.075	1.905	17/32	.5326	13.494	-	1.181	30	-	4.724	120
5/64	.0781	1.984	-	.5315	13.5	1-3/16	1.188	30.16	5	5.000	127
-	.0787	2	35/64	.5469	13.891	-	1.221	31	-	5.118	130
-	.0906	2.3	-	.5512	14	1-1/4	1.250	31.75	5-1/2	5.500	139.7
3/32	.0938	2.381	9/16	.5625	14.288	-	1.260	32	-	5.512	140
-	.0984	2.5	-	.571	14.5	-	1.299	33	-	5.906	150
-	.1	2.540	37/64	.5781	14.684	1-5/16	1.312	33.34	6	6.000	152.4
-	.1024	2.6	-	.5906	15	-	1.339	34	-	6.299	160
7/64	.1093	2.776	19/32	.5938	15.081	1-3/8	1.375	34.93	6-1/2	6.500	165.1
-	.1181	3	-	.6	15.240	-	1.378	35	7	7.000	177.8
1/8	.125	3.175	39/64	.6094	15.478	-	1.417	36	-	7.087	180
-	.1378	3.5	-	.6103	15.5	1-7/16	1.438	36.51	7-1/2	7.500	190.5
9/64	.1406	3.572	5/8	.6250	15.875	-	1.457	37	-	7.874	200
5/32	.1563	3.969	-	.6299	16	-	1.496	38	8	8.000	203.2
-	.1575	4	41/64	.6406	16.272	1-1/2	1.500	38.10	8-1/2	8.500	215.8
11/64	.1719	4.366	-	.6496	16.5	-	1.535	39	-	8.661	220
-	.1772	4.5	21/32	.6563	16.669	1-9/16	1.562	39.69	9	9.000	228.6
3/16	.1875	4.763	-	.6693	17	-	1.575	40	-	9.449	240
-	.1969	5	43/64	.6719	17.066	-	1.614	41	9-1/2	9.500	241.3
-	.2	5.080	11/16	.6875	17.463	1-5/8	1.625	41.28	-	9.843	250
13/64	.2031	5.169	-	.6890	17.5	-	1.6544	42	10	10.000	254
-	.2165	5.5	-	.7	17.780	1-11/16	1.688	42.86	-	10.236	260
7/32	.2188	5.558	45/64	.7031	17.859	-	1.693	43	11	11.000	279.4
15/64	.2344	5.953	-	.7087	18	-	1.732	44	-	11.024	280
-	.2362	6	23/32	.7188	18.256	1-3/4	1.750	44.45	-	11.811	300
1/4	.25	6.360	-	.7283	18.5	-	1.772	45	12	12.000	304.8
-	.2559	6.5	47/64	.7344	18.653	-	1.811	46	13	13.000	330.2
17/64	.2656	6.747	-	.7480	19	1-13/46	1.813	46.04	-	13.780	350
-	.2756	7	3/4	.75	19.050	-	1.850	47	14	14.000	355.6
9/32	.2813	7.144	49/64	.7656	19.447	1-7/8	1.875	47.63	15	15.000	381
-	.2953	7.5	-	.7677	19.5	-	1.890	48	-	15.748	400
19/64	.2969	7.541	25/32	.7813	19.844	-	1.929	49	16	16.000	408.4

Copyright © New Holland

Copyright © New Holland

IDENTIFICATION AND VERSION LIST

IDENTIFICACION Y LISTA DE VERSIONES

IDENTIFICAZIONE ED ELENCO DELLE VERSIONI

IDENTIFICAÇÃO E ELENCO DAS VERSÕES

IDENTIFICATION ET LISTE DES VERSIONS

IDENTIFICATIE EN LIJST VAN DE VERSIES

KENNZEICHEN UND VERZEICHNIS DER VERSIONEN

IDENTIFIKATION OG LISTE OVER VERSIONERNE

Copyright © New Holland

Copyright © New Holland

IDENTIFICATION AND VERSION LIST
IDENTIFICAZIONE ED ELENCO DELLE VERSIONI
KENNZEICHEN UND VERZEICHNIS DER VERSIONEN
IDENTIFICATION ET LISTE DES VERSIONS

MODELS MODELLI MODELES MODELLE MODELOS MODELOS MODELLEN MODELLER	ENGINEERING CODE DENOMINAZIONE TECNICA DESIGNATION TECNIQUE TECHNISCHE BEZEICHNUNG DESIGNACION TECNICA DENOMINAÇÃO TÉCNICA TECNISCHE BENAMING TEKNISCH BENÆVNELSE	ENGINE MODEL MODELLO DEL MOTORE MODELE DU MOTEUR MOTORBAUMUSTER MODELO DEL MOTOR MODELO DO MOTOR MODEL VAN MOTOR MOTOR-MODEL	VERSION CODE CODICE VERSIONE CODE VERSION CODE VERSION CODIGO VERSION CÓDIGO VERSÃO CODE VERSIE VERSIONS-KODE
E215BEL	**540855613**		**01**
E215BL	**540855612**		**02**
E215BLC	**540855610**	**CNH U.K.**	**03**
E215BTEL	**540855633**	**667TA/MEB**	**04**
E215BTL	**540855632**		**05**
E215BTLC	**540855630**		**06**

MODELS MODELLI MODELES MODELLE MODELOS MODELOS MODELLEN MODELLER	MACHINE SERIAL NUMBER – NUMERO DI MATRICOLA DELLA MACCHINA NUMERO DE SERIE DE LA MACHINE – SERIENNUMMER DER MASCHINE NUMERO DE SERIE DE LA MAQUINA – MATRÍCULA DA MÁQUINA SERIENUMMER VAN DE MACHINE – MASKINENS MATRIKEL
E215BEL	**ZEF228ME** N0LA00000 ← (*)
E215BL	**ZEF228ML** N0LA00000 ← (*)
E215BLC	**ZEF228MC** N0LA00000 ← (*)
E215BTEL	**ZEF228TE** N0LA00000 ← (*)
E215BTL	**ZEF228TL** N0LA00000 ← (*)
E215BTLC	**ZEF228TC** N0LA00000 ← (*)

(*) Machine identification code, useful in case of Dealer assistance.
(*) Codice identificativo specifico della macchina, da riportare nelle comunicazioni con la Rete Assistenziale.
(*) Code d'identification spécifique du véhicule, à reporter dans les communications avec le Réseau d'Assistance.
(*) Spezifischer Kenn-Code der Maschine, der in den Mitteilungen an das Kundendienstnetz anzugeben ist.
(*) Código de identificación específico de la máquina, a incluir en las comunicaciones con la Red Asistencial.
(*) Código identificativo especifico da maquina, que deve ser indicado nas comunicações com a Rede de Assistência.
(*) Specifieke identificatiecode van de machine, te vermelden bij communicatie met het Servicenetwerk.
(*) Specifik identifikations-kode for maskinen som skal anføres i kommunikationerne med Service-nettet.

RECORD YOUR SERIAL NUMBERS BELOW – REGISTRATE I VOSTRI NUMERI DI MATRICOLA QUI SOTTO
ENREGISTREZ VOS NUMEROS DE SERIE CI-DESSOUS – UNTEN SERIENNUMMER VIERMERKEN
ANOTE AQUI LOS NUMEROS DE SERIE – REGISTRAR OS NÚMEROS DE MATRÍCULA ABAIXO
NOTEER HIERONDER DE SERIENUMMERS – REGISTRER DERES MATRIKEL-NUMRE FOR NEDEN

MACHINE SERIAL NUMBER - NUMERO DI MATRICOLA DELLA MACCHINA NUMERO DE SERIE DE LA MACHINE - SERIENNUMMER DER MASCHINE NUMERO DE SERIE DE LA MAQUINA - MATRÍCULA DA MÁQUINA SERIENUMMER VAN DE MACHINE - MASKINENS MATRIKEL	ENGINE SERIAL NUMBER - MATRICOLA DEL MOTORE NUMERO DE SERIE DU MOTEUR - SERIENNUMMER DES MOTORS NUMERO DE SERIE DEL MOTOR - MATRÍCULA DO MOTOR SERIENUMMER VAN DE MOTOR - MOTORENS MATRIKEL
_____	_____

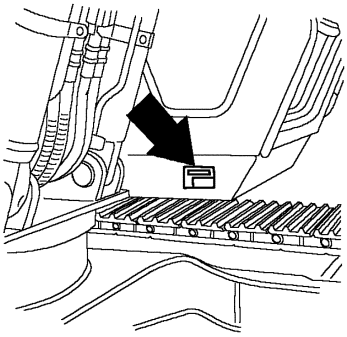

MACHINE SERIAL NUMBER LOCATION
POSIZIONE DEL NUMERO DI MATRICOLA DELLA MACCHINA
EMPLACEMENT DU NUMERO DE SERIE DE LA MACHINE
ORT DER SERIENNUMMER DER MASCHINE
UBICACION NUMERO DE SERIE DE LA MAQUINA
POSIÇÃO DO NÚMERO DE MATRÍCULA DA MÁQUINA
POSITIE VAN SERIENUMMER VAN DE MACHINE
POSITION PÅ MASKINENS MATRIKEL-NUMMER

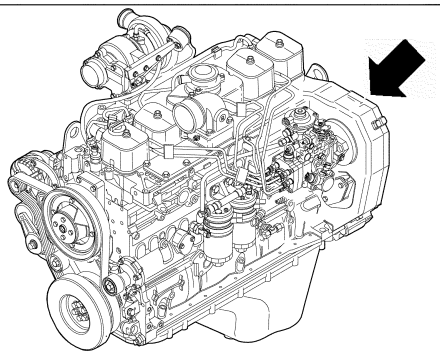

ENGINE SERIAL NUMBER LOCATION
POSIZIONE DEL NUMERO DI MATRICOLA DEL MOTORE
EMPLACEMENT DU NUMERO DE SERIE DU MOTEUR
ORT DER SERIENNUMMER DES MOTORS
UBICACION DEL NUMERO DE SERIE DEL MOTOR
POSIÇÃO DO NÚMERO DE MATRÍCULA DO MOTOR
POSITIE VAN SERIENUMMER VAN DE MOTOR
POSITION PÅ MOTORENS MATRIKEL-NUMMER

Copyright © New Holland

IDENTIFICACION Y LISTA DE VERSIONES
IDENTIFICATION AND VERSION LIST
IDENTIFICATION AND VERSION LIST
IDENTIFICATION AND VERSION LIST

R	N	P.N.	MOD	Q	Description Denominacion	Descrizione Beskrivelse	Bezeichnung Denominação	Description Beschrijving	L.C.

Copyright © New Holland

MAINTENANCE PARTS

PARTICOLARI PER LA MANUTENZIONE

PIECES DE MAINTENANCE

TEILE FÜR DIE INSTANDHALTUNG

PIEZAS DE MANTENIMIENTO

PEÇAS DE MANUTENÇÃO

ONDERDELEN VOOR ONDERHOUD

VEDLIGEHOLDELSESDELE

Copyright © New Holland

Copyright © New Holland

0 - FILTERS	00	p1	03/10

MAINTENANCE PARTS
PARTICOLARI PER LA MANUTENZIONE
ERSATZTEILEN FUER DER WARTUNG
PIECES POUR L'ENTRETIEN

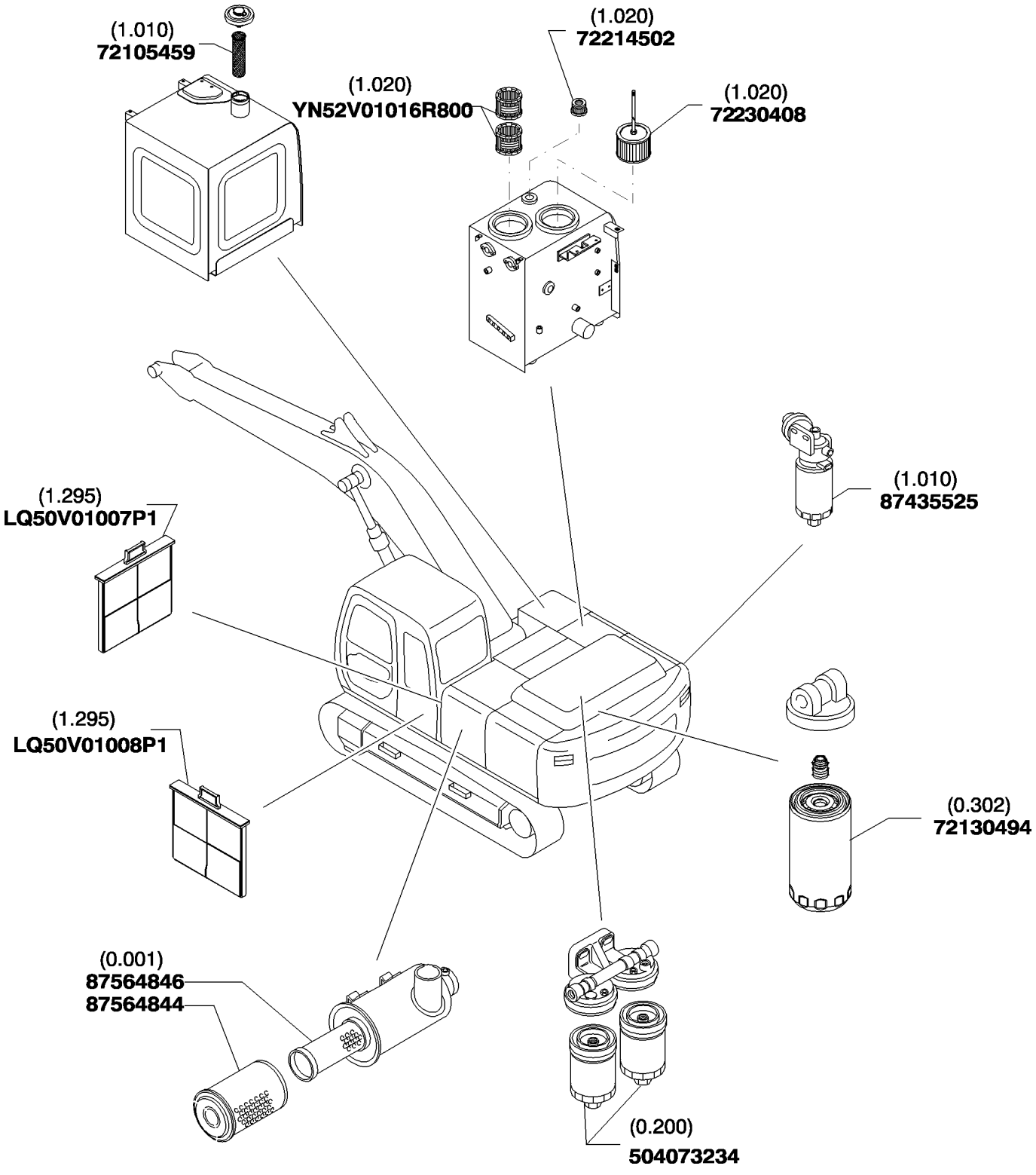

Copyright © New Holland

REPUESTOS POUR MANUTENCION
MAINTENANCE PARTS
MAINTENANCE PARTS
MAINTENANCE PARTS

R	N	P.N.	MOD	Q	Description Denominacion	Descrizione Beskrivelse	Bezeichnung Denominação	Description Beschrijving	L.C.

Copyright © New Holland

NUMBER INDEX

INDICE NUMERICO

INDEX NUMERIQUE

TEILNUMMER-VERZEICHNIS

ÍNDICE NUMÉRICO

ÍNDICE NÚMERICO

NUMMER INDEX

NUMMEROVERSIGT

Copyright © New Holland

Copyright © New Holland

INDEX - INDICE - INDEX - ZAHLENVERZEICHNIS - INDICE - INDICE - INDHOLD - INHOUD

Number	Figure	Sequence	Ref.	Number	Figure	Sequence	Ref.
{71420662}	2.031	04	4	10516874	5.0088	02	14
{87383050}	5.0076	13	1		5.0088	04	17
	5.0077	09	1		5.0089	02	13
	5.0078	09	1		5.0089	04	25
	5.0079	09	1	10517074	1.060	01	16
{HX23L06155CB}	1.090	01	12		1.060	03	22
{HX23L06160CG}	1.090	01	13		1.220	12	24
{HX23L06185CR}	1.090	02	6		1.220	13	24
{HX23L06190CB}	1.090	02	7		1.300	01	61
{HX23L06190CH}	1.090	02	9		1.300	09	14
{HX33L06082DX}	1.092	01	5		1.300	10	12
{LB13E01040P1}	1.220	08	13		2.001	01	4
{LB15E01006P1}	1.220	15	1		2.031	04	26
{LB21C01277P1}	1.300	08	1B		3.000	01	13
{LB64H01021P1}	1.080	02	20		3.001	01	13
{LB64H01022P1}	1.080	03	5		3.002	01	13
{LQ02C01310P1}	1.250	05	7		5.0013	03	6
{LS25M00005F1}	5.0159	01	1		5.0020	10	36
{LS25M00006F1}	5.0156	01	1		5.0020	11	11
{LS68H01016D7}	1.090	01	3		5.0021	10	36
{LS68H01016D9}	1.090	02	2		5.0021	11	11
{XLQ52F01761P1}	1.000	01	14		5.0022	03	6
{XLQ52F01762P1}	1.000	02	29		5.0023	10	36
{YN03M02148F1}	5.0076	10	1		5.0023	11	6
	5.0077	06	1		5.0024	10	36
	5.0078	06	1		5.0024	11	6
	5.0079	06	1		5.0038	03	6
{YN03M02149F1}	5.0076	10	2		5.0076	14	5
	5.0077	06	2		5.0077	10	5
	5.0078	06	2		5.0078	10	5
	5.0079	06	2		5.0079	10	5
{YN11P01153P1}	0.001	01	15		5.0087	03	3
{YN13E01634P1}	1.220	08	1		5.0088	03	19
{YN21C02777P2}	1.300	08	3C		5.0088	05	16
{YN21C04437P1}	1.300	08	2B		5.0089	04	11
{YN21C04438P1}	1.300	08	2C		5.0530	03	6
10100730	2.050	01	4	10517174	1.220	04	4
10101901	1.220	14	8		5.0020	04	12
10441690	2.040	01	9		5.0020	10	37
	2.041	01	8		5.0021	04	12
	2.041	02	6		5.0021	10	37
10516474	1.020	01	5		5.0023	04	12
	1.093	01	5		5.0023	10	37
	1.200	01	31		5.0024	04	12
	1.200	02	31		5.0024	10	37
	1.220	03	16		5.0086	03	19
	1.220	06	4		5.0088	04	19
	1.280	01	7	10517270	3.020	02	11
	1.295	02	14	10517274	1.300	04	48
10516671	0.004	01	12	10517374	3.000	02	8
10516674	1.070	01	12		5.0052	01	3
	1.080	03	7	10517474	3.000	03	3
	1.200	02	11	10520121	5.0013	02	43
	1.220	03	19		5.0022	02	43
	1.220	09	5		5.0038	02	43
	1.220	10	27		5.0530	02	43
	1.220	11	27	10523404	1.295	02	65
	1.220	12	27	10571874	1.020	01	13
	1.220	13	27	10572074	5.0101	01	8
	1.250	07	7		5.0102	01	8
	1.295	01	15		5.0103	01	8
	1.295	02	15		5.0104	01	8
	1.300	11	2C		5.0105	01	8
	1.300	11	9		5.0106	01	8
	5.0040	02	41	10721911	5.0208	02	7
10516874	0.000	02	52		5.0209	02	7
	1.000	01	35	10789721	0.004	01	10
	1.000	02	35	10902231	0.004	01	14
	1.070	01	10	10902234	1.220	07	4
	1.220	05	5		1.260	01	42
	1.220	12	32		1.260	02	42
	1.220	14	5		1.260	03	42
	1.295	02	11		5.0040	03	7
	1.300	06	5		5.0076	07	22
	1.300	07	5		5.0077	05	22
	2.030	05	12		5.0078	05	22
	3.000	02	11		5.0079	05	22
	5.0020	11	6	10902431	0.004	01	15
	5.0021	11	6	10902434	1.220	06	2
	5.0023	11	10		1.295	02	7
	5.0024	11	10		5.0089	05	30
	5.0076	05	18	10902634	1.280	01	5
	5.0077	04	18	10977634	5.0040	03	8
	5.0078	04	18	10977834	1.220	08	15
	5.0079	04	18	10979234	1.220	12	31
	5.0086	01	14	11055690	1.220	03	5E
	5.0086	03	17	11066371	1.030	03	858
	5.0087	01	13	11068370	1.040	03	19
	5.0087	03	15	11071370	1.040	03	20

Copyright © New Holland

Number	Figure	Sequence	Ref.	Number	Figure	Sequence	Ref.
11106034	0.002	01	13	11106434	5.0079	03	14
	0.003	03	31		5.0086	01	11
	1.070	01	7		5.0086	03	9
	1.080	01	17		5.0087	01	9
	1.080	02	17		5.0087	03	14
	1.081	01	25		5.0088	02	11
	1.200	02	9		5.0088	04	9
	1.220	10	28		5.0089	02	9
	1.250	04	3		5.0089	04	24
	1.270	02	3	11106634	0.002	01	9
	1.270	03	6		1.030	01	9
	1.300	02	46		1.080	01	16
	1.300	03	46		1.270	01	2
	5.0020	09	6		5.0020	04	10
	5.0020	15	7		5.0021	04	10
	5.0021	09	6		5.0023	04	10
	5.0021	15	7		5.0024	04	10
	5.0023	09	6		5.0076	05	16
	5.0023	15	7		5.0077	04	16
	5.0024	09	6		5.0078	04	16
	5.0024	15	7		5.0079	04	16
	5.0076	07	24	11106834	2.031	04	13
	5.0077	05	24	11107034	1.030	01	10
	5.0078	05	24		5.0087	01	11
	5.0079	05	24		5.0089	02	11
11106134	1.020	01	10	11107234	5.0148	01	19
11106234	0.000	02	19	11107334	1.295	02	17
	0.000	03	19		2.030	05	10
	0.001	01	7		2.031	05	18
	0.001	02	7	11107434	0.000	02	22
	1.000	01	8		0.003	03	16
	1.000	02	8		1.083	03	22
	1.081	01	26		1.083	04	17
	1.220	01	15		5.0076	03	8
	1.220	05	3		5.0076	04	17
	1.295	02	6		5.0077	02	8
	1.300	09	6		5.0077	03	17
	3.000	02	10		5.0078	02	8
	5.0020	11	5		5.0078	03	17
	5.0021	11	5		5.0079	02	8
	5.0076	03	13		5.0079	03	17
	5.0076	04	24	11107734	1.083	01	21
	5.0076	07	23	11108034	1.081	01	27
	5.0077	02	13	11112134	1.220	12	22
	5.0077	03	24		1.220	13	22
	5.0077	05	23	11112234	1.083	04	13
	5.0078	02	13		1.300	01	63
	5.0078	03	24		1.300	02	63
	5.0078	05	23		1.300	03	63
	5.0079	02	13		1.300	04	63
	5.0079	03	24		1.300	08	6
	5.0079	05	23		2.001	01	3
	5.0088	05	11		3.000	01	9
11106434	0.003	02	15		3.001	01	9
	0.003	03	15		3.002	01	9
	1.010	02	7		5.0076	03	7
	1.080	01	18		5.0077	02	7
	1.080	02	18		5.0078	02	7
	1.083	01	32		5.0079	02	7
	1.083	04	14		5.0208	01	2
	1.091	01	10		5.0208	03	2
	1.092	01	13		5.0209	01	2
	1.295	03	26		5.0209	03	2
	2.030	05	9		5.0585	01	10
	5.0020	04	9	11112434	1.010	02	5
	5.0020	06	10		1.061	01	14
	5.0020	08	6		1.083	01	33
	5.0020	13	12		1.300	01	42
	5.0020	14	9		1.300	02	42
	5.0021	04	9		1.300	03	42
	5.0021	06	10		1.300	09	12
	5.0021	08	6		1.300	10	9
	5.0021	13	12		1.300	12	3
	5.0021	14	9		5.0020	10	26
	5.0023	04	9		5.0020	11	10
	5.0023	06	10		5.0021	10	26
	5.0023	08	6		5.0021	11	10
	5.0023	11	9		5.0023	10	26
	5.0023	13	12		5.0023	11	20
	5.0023	14	9		5.0024	10	26
	5.0024	04	9		5.0024	11	20
	5.0024	06	10		5.0040	02	26
	5.0024	08	6		5.0208	02	11
	5.0024	11	9		5.0209	02	11
	5.0024	13	12		5.0580	01	12
	5.0024	14	9	11112634	0.000	01	9
	5.0076	04	14		0.003	01	11
	5.0077	03	14		1.061	01	15
	5.0078	03	14		1.083	01	20

Copyright © New Holland

Number	Figure	Sequence	Ref.	Number	Figure	Sequence	Ref.
11112634	1.250	03	1	11120734	5.0530	04	2
	1.250	05	2	11120931	5.0013	02	32
	2.030	01	18		5.0022	02	32
	2.031	01	12		5.0038	02	32
	2.031	02	9		5.0530	02	32
	5.0020	04	11	11120934	2.000	01	3
	5.0020	10	27		2.000	02	11
	5.0020	16	8		2.001	01	7
	5.0021	04	11		2.001	02	3
	5.0021	10	27		2.002	01	2
	5.0021	16	8	11123734	0.000	01	8
	5.0023	04	11	11124534	1.250	03	4
	5.0023	10	27	11124774	3.010	01	8
	5.0023	16	8	11124834	1.040	01	1
	5.0024	04	11	11125774	1.000	01	10
	5.0024	10	27	11127434	1.300	04	50
	5.0024	16	8		2.000	01	4
	5.0148	01	17		2.001	02	4
11112674	1.300	01	53	1113178	0.400	02	1
11112834	1.060	01	13	11195374	1.260	03	50
	1.300	01	43	11195474	1.010	01	7
	1.300	04	43		1.220	08	14
	1.300	10	10		1.280	01	15
	2.031	01	11	11701721	0.002	01	11
	3.060	01	2		1.083	04	18
	5.0020	10	30		1.300	02	44
	5.0021	10	30		1.300	06	4
	5.0023	10	30		1.300	07	4
	5.0024	10	30		1.300	09	8
11113034	0.000	01	12		5.0076	03	10
	5.0004	01	14		5.0076	04	18
	5.0005	01	14		5.0077	02	10
11113234	5.0076	14	4		5.0077	03	18
	5.0077	10	4		5.0078	02	10
	5.0078	10	4		5.0078	03	18
	5.0079	10	4		5.0079	02	10
11113334	1.061	01	16		5.0079	03	18
	5.0020	10	28		5.0208	02	2
	5.0021	10	28		5.0209	02	2
	5.0023	10	28	11702921	1.061	01	21
	5.0024	10	28		1.250	06	5
	5.0086	03	10		1.300	05	7
	5.0088	04	10		5.0004	01	16
11113434	1.220	13	9		5.0005	01	16
	2.031	04	23	11703221	0.000	01	10
	5.0087	03	2	12163224	1.070	02	3
	5.0089	04	2		5.0076	10	3
11113534	5.0023	11	5		5.0077	06	3
	5.0024	11	5		5.0078	06	3
	5.0086	01	12		5.0079	06	3
	5.0087	01	8	12163321	1.270	01	4
	5.0088	02	12		2.000	01	7
	5.0089	02	8		2.000	02	12
11114034	1.060	01	14		2.001	01	8
11115334	1.220	04	3		2.001	02	7
11116034	5.0020	04	7		2.002	01	3
	5.0021	04	7		5.0013	02	33
	5.0023	04	7		5.0013	02	9
	5.0024	04	7		5.0013	04	3
11116234	5.0020	04	8		5.0022	02	33
	5.0021	04	8		5.0022	02	9
	5.0023	04	8		5.0022	04	3
	5.0024	04	8		5.0038	02	33
11116834	5.0101	01	7		5.0038	02	9
	5.0102	01	7		5.0038	04	3
	5.0103	01	7		5.0144	01	3
	5.0104	01	7		5.0530	02	33
	5.0105	01	7		5.0530	02	9
	5.0106	01	7		5.0530	04	3
11118534	1.010	01	10	12163521	2.000	02	3
	1.020	01	14		2.001	02	18
11118734	1.050	01	4	12164521	1.000	01	28
	1.250	05	3	12164721	0.004	01	9
11118774	3.030	01	2		1.300	01	31
11119034	5.0042	01	4		1.300	02	31
11119174	3.010	01	5		1.300	03	31
11120531	5.0013	02	7		1.300	09	16
	5.0022	02	7	12626231	5.0148	01	21
	5.0038	02	7	12641031	1.091	01	11
	5.0530	02	7		5.0020	06	11
11120734	2.002	01	14		5.0020	08	7
	5.0013	02	8		5.0020	13	13
	5.0013	04	2		5.0020	14	12
	5.0022	02	8		5.0021	06	11
	5.0022	04	2		5.0021	08	7
	5.0038	02	8		5.0021	13	13
	5.0038	04	2		5.0021	14	12
	5.0144	01	2		5.0023	06	11
	5.0530	02	8		5.0023	08	7

Copyright © New Holland

Number	Figure	Sequence	Ref.
12641031	5.0023	13	13
	5.0023	14	12
	5.0024	06	11
	5.0024	08	7
	5.0024	13	13
	5.0024	14	12
12642021	1.220	11	26
	1.220	12	26
	1.220	13	26
12646721	0.004	01	16
12647004	1.295	02	64
12654401	5.0580	01	8
1306937	0.360	02	10
13270411	5.0040	03	9
13272014	1.260	03	40
13274024	1.010	01	6
13407211	2.030	02	15
	2.030	04	15
	2.031	03	15
	2.040	01	16
	2.041	01	16
	2.041	02	13
	5.0086	04	1B
	5.0087	04	1B
	5.0088	07	1B
	5.0089	07	1B
13408411	2.030	04	16
13683701	4.520	03	2
14304134	1.280	01	13
14304870	1.030	02	407
14305134	2.040	01	15
	2.041	01	15
	2.041	02	12
14305234	1.020	01	4
	1.220	03	14
14305334	1.030	03	438
	1.093	01	4
14305434	1.090	01	16
	1.090	02	16
14305470	1.030	03	439
14305670	1.050	10	211B
	1.050	11	211B
14306234	1.080	03	6
	1.200	02	10
14306334	1.200	02	13
	5.0156	01	2
	5.0159	01	2
14306370	1.030	02	406
	3.060	02	8
14306470	1.050	05	273
	1.050	14	273
	1.051	02	271
	1.060	02	271
14306570	3.060	02	9
14306670	1.050	14	278
14306970	1.030	03	412
14309070	1.030	03	413
14309270	1.050	10	279
14311070	1.050	14	274
	5.0076	02	701
14359570	5.0076	02	702
14420170	5.0020	02	9
	5.0021	02	9
	5.0023	02	9
	5.0024	02	9
14420234	5.0076	05	22
	5.0077	04	22
	5.0078	04	22
	5.0079	04	22
	5.0086	01	13
	5.0088	02	13
14420331	0.004	01	7
14420334	2.030	05	11
	5.0087	01	10
	5.0089	02	10
14420534	5.0076	05	17
	5.0077	04	17
	5.0078	04	17
	5.0079	04	17
14422034	1.060	03	21
14422170	1.050	14	275
14422234	2.031	04	14
	5.0013	03	4
	5.0022	03	4
	5.0038	03	4
	5.0086	02	5
	5.0086	03	18
	5.0087	02	3
	5.0087	03	16
14422234	5.0088	03	17
	5.0088	05	12
	5.0089	03	13
	5.0530	03	4
14422274	5.0086	03	11
	5.0088	04	11
14422334	5.0023	11	18
	5.0024	11	18
14422434	2.031	04	25
	5.0020	10	29
	5.0021	10	29
	5.0023	10	29
	5.0024	10	29
	5.0087	03	19
	5.0089	04	14
	5.0089	04	26
14422934	2.031	04	12
	5.0088	03	18
	5.0088	05	13
	5.0089	03	14
	5.0089	04	10
14423034	5.0020	01	4
	5.0021	01	4
	5.0023	01	4
	5.0024	01	4
14423070	5.0020	02	12
	5.0021	02	12
	5.0023	02	12
	5.0024	02	12
14423234	1.051	01	2
	1.060	01	18
14424534	5.0020	10	31
	5.0020	17	11
	5.0021	10	31
	5.0021	17	11
	5.0023	10	31
	5.0023	11	13
	5.0023	17	11
	5.0024	10	31
	5.0024	11	13
	5.0024	17	11
	5.0086	03	12
	5.0088	04	12
14426874	2.030	02	7
	2.030	04	7
14428774	2.030	03	12
14432774	2.031	03	7
14442034	1.250	07	5
14482780	1.020	01	9
14496101	5.0040	03	10
14496321	1.280	01	14
14496431	0.004	01	17
	1.090	01	17
	1.090	02	17
	1.200	01	32
	1.200	02	32
	1.220	03	15
	1.220	06	3
	1.220	07	5
	1.260	01	49
	1.260	02	49
	1.260	03	49
	1.280	01	6
	1.295	02	57
	5.0076	07	25
	5.0077	05	25
	5.0078	05	25
	5.0079	05	25
	5.0089	05	31
14496531	0.000	02	51
	0.001	02	17
	0.003	01	9
	0.003	03	20
	1.070	01	11
	1.081	02	36
	1.082	01	3
	1.082	02	3
	1.200	01	12
	1.200	02	12
	1.220	01	19
	1.220	03	18
	1.220	09	9
	1.250	06	7
	1.250	07	8
	1.260	02	48
	1.270	02	5
	1.270	03	8
	1.295	01	10
	1.295	02	10

Copyright © New Holland

Number	Figure	Sequence	Ref.	Number	Figure	Sequence	Ref.
14496531	1.300	01	62	14496731	1.010	02	6
	1.300	02	62		1.060	01	15
	1.300	05	19		1.061	01	17
	1.300	05	5		1.083	01	28
	1.300	11	8		1.083	01	37
	5.0020	09	8		1.083	04	25
	5.0020	15	8		1.220	12	23
	5.0021	09	8		1.220	13	23
	5.0021	15	8		1.250	05	8
	5.0023	09	8		1.300	08	7
	5.0023	15	8		1.300	09	13
	5.0024	09	8		1.300	10	11
	5.0024	15	8		1.300	12	4
	5.0040	02	32		2.030	01	19
	5.0148	01	20		2.031	01	16
14496631	0.000	02	53		2.031	02	10
	0.000	03	53		2.031	04	24
	0.001	01	16		3.000	01	14
	0.001	02	16		3.001	01	14
	0.002	01	12		3.002	01	14
	0.003	02	19		3.060	01	3
	0.003	03	19		5.0005	01	18
	1.000	01	36		5.0020	04	17
	1.000	02	36		5.0020	10	33
	1.010	02	8		5.0020	16	10
	1.030	01	11		5.0021	04	17
	1.070	01	9		5.0021	10	33
	1.080	01	19		5.0021	16	10
	1.080	02	19		5.0023	04	17
	1.081	01	28		5.0023	10	33
	1.083	01	23		5.0023	16	10
	1.083	01	36		5.0024	04	17
	1.083	03	23		5.0024	10	33
	1.083	04	19		5.0024	16	10
	1.092	01	14		5.0040	02	42
	1.200	02	30		5.0076	03	14
	1.220	01	20		5.0077	02	14
	1.220	05	4		5.0078	02	14
	1.220	10	29		5.0079	02	14
	1.220	12	33		5.0086	01	15
	1.220	14	6		5.0086	03	15
	1.250	04	4		5.0087	01	12
	1.270	02	6		5.0087	03	13
	1.270	03	9		5.0088	02	15
	1.295	02	19		5.0088	04	15
	1.295	03	62		5.0089	02	12
	1.300	02	64		5.0089	04	23
	1.300	03	64		5.0148	01	27
	1.300	09	7		5.0208	01	3
	2.030	05	13		5.0208	02	16
	2.031	04	19		5.0208	03	3
	2.031	05	19		5.0209	01	3
	5.0020	04	16		5.0209	02	16
	5.0020	09	10		5.0209	03	3
	5.0020	15	9		5.0580	01	10
	5.0021	04	16		5.0585	01	11
	5.0021	09	10	14496931	1.050	01	5
	5.0021	15	9		1.300	03	29
	5.0023	04	16		1.300	04	29
	5.0023	09	10		2.000	01	8
	5.0023	15	9		2.001	02	8
	5.0024	04	16	14497031	0.000	01	11
	5.0024	09	10	14497731	1.260	03	51
	5.0024	15	9		5.0208	02	8
	5.0076	03	9		5.0209	02	8
	5.0076	04	19	14522421	4.200	01	3
	5.0076	05	13	14525021	4.200	01	3
	5.0076	07	26	14534079	4.200	01	21
	5.0077	02	9	14534279	4.200	01	21
	5.0077	03	19	14534379	4.200	01	21
	5.0077	04	13	14534479	4.200	01	21
	5.0077	05	26	14534579	4.200	01	21
	5.0078	02	9	14549579	4.200	01	3
	5.0078	03	19	14549879	4.200	01	3
	5.0078	04	13	14550079	4.200	01	3
	5.0078	05	26	14582790	4.200	01	26
	5.0079	02	9	14601271	5.0076	10	1C
	5.0079	03	19		5.0076	10	2C
	5.0079	04	13		5.0077	06	1C
	5.0079	05	26		5.0077	06	2C
	5.0087	01	14		5.0078	06	1C
	5.0088	05	18		5.0078	06	2C
	5.0089	02	14		5.0079	06	1C
	5.0208	02	3		5.0079	06	2C
	5.0209	02	3	14626090	4.200	01	24
14496721	5.0004	01	15	14626290	4.200	01	25
	5.0005	01	15	14626671	4.200	01	27
14496731	0.000	01	50	15246234	1.000	01	27
	0.003	01	13	15896221	1.220	03	13

Copyright © New Holland

Number	Figure	Sequence	Ref.	Number	Figure	Sequence	Ref.
15896221	1.260	01	45	220208300	3.020	03	21
	1.295	02	63	24100U1176S5	1.295	05	3
15896421	5.0040	03	12	2420R349D170	5.0020	13	5
15903804	1.220	08	16		5.0021	13	5
15970734	3.030	02	12		5.0023	13	5
15984134	3.000	02	6		5.0024	13	5
	5.0052	01	2	2420R349D175	5.0020	13	6
15988474	3.000	03	2		5.0021	13	6
16043034	1.250	06	6		5.0023	13	6
	1.300	11	7		5.0024	13	6
	5.0580	01	7	2420R372D7	5.0580	01	13
16043234	1.220	09	10	2420R537D115	1.090	01	4
	5.0040	03	6	2436U1198S551	1.060	02	152
	5.0580	01	9		2.031	06	202
16043434	0.000	02	20		5.0088	06	202
	0.001	02	13		5.0089	06	202
	0.003	01	7	2436U1231S513	1.050	12	515
	1.082	01	2	2441U549S464	1.030	02	467
	1.082	02	2	2444R596D2	1.081	01	35
	1.200	01	23	2444Z3421	5.0020	05	5
	1.220	01	18		5.0021	05	5
	1.220	03	20		5.0023	05	5
	1.220	10	25		5.0024	05	5
	1.220	11	25	2445R152D1	3.060	02	13
	1.220	12	25	2830076	0.040	01	1
	1.220	13	25	2830156	0.201	01	2
	1.250	07	6	2830266	0.201	01	1
	1.260	02	37	2830559	0.310	01	10
	1.270	02	4	2830775	0.063	01	8
	1.270	03	5	2830784	0.063	01	7
	1.295	01	8	2830922	0.060	01	15
	1.295	02	8	2830923	0.060	01	15
	1.300	01	40	2831019	0.071	01	3
	1.300	02	40	2831297	0.081	01	3
	1.300	05	18	2831298	0.081	01	1
	1.300	05	6	2852308	0.042	01	4
	5.0020	09	5	2852659	0.042	01	13
	5.0020	15	6	2852661	0.042	01	9
	5.0021	09	5	2852662	0.042	01	10
	5.0021	15	6	2852663	0.042	01	11
	5.0023	09	5	2853208	0.340	01	4
	5.0023	15	6	2853894	0.042	01	5
	5.0024	09	5	2854127	0.042	01	7
	5.0024	15	6	2855287	0.043	01	4
16043631	0.004	01	5	2855612	0.120	01	5
16043634	0.001	02	12	2855718	0.140	01	1
	0.003	02	37	2855890	0.240	01	3
	1.070	01	8	2991636	0.400	02	2
	1.220	03	17	2991637	0.400	02	3
	1.295	01	23	2992147	0.080	01	4
	5.0040	02	21	2992148	0.080	01	4
16043834	1.081	02	24	2992149	0.080	01	4
	1.200	01	18	2992153	0.080	01	5
	1.200	02	16	2992154	0.080	01	5
	1.200	02	18	2992155	0.080	01	5
16044134	1.300	11	2D	422050500	1.295	01	5
	1.300	11	6		1.295	02	5
16044534	5.0148	01	18		1.295	03	5
16046134	1.295	02	9	422050700	0.001	02	10
16100821	0.002	01	10	422702800	1.230	01	1
	0.003	03	18	42531183	0.400	02	22
	0.004	01	13	42533805	0.400	02	7
	1.220	09	6	42533807	0.400	02	9
	1.220	10	30	42533816	0.400	02	18
	1.220	12	30	42533817	0.400	02	19
	1.300	05	4	42533819	0.400	02	20
	5.0040	02	31	42534008	0.360	02	5
16101521	1.070	01	4	42534012	0.360	02	9
16101721	5.0040	03	11	42535275	0.360	02	15
16102324	1.030	03	801	42535631	0.400	02	21
16249031	5.0013	02	42	42536304	0.400	02	17
	5.0022	02	42	42536305	0.400	02	16
	5.0038	02	42	42537051	0.400	02	10
	5.0530	02	42	42537054	0.400	02	13
16586324	0.345	01	1	42537055	0.400	02	15
16587224	0.360	01	2	42537056	0.400	02	4
16587924	0.270	01	8	42537057	0.400	02	5
	0.305	01	11	42537058	0.400	02	6
16592824	0.345	01	11	42537060	0.400	02	11
16593024	0.323	01	1	42537061	0.400	02	12
16597924	0.270	01	7	42537064	0.360	02	1
16690624	0.042	01	1	42537069	0.360	02	3
16784504	0.063	01	9	42537071	0.360	02	6
16979231	0.140	01	4	42537076	0.360	02	8
17094614	0.043	02	8	42537082	0.360	02	16
17278780	0.043	01	6	42537670	0.400	02	8
17285481	0.043	03	11	42537822	0.360	02	11
17290181	0.310	01	13	42537878	0.400	02	14
17916280	0.310	01	6	42546435	0.360	02	13

Copyright © New Holland

Number	Figure	Sequence	Ref.	Number	Figure	Sequence	Ref.
45482627	3.020	03	18	4896404	0.310	01	4
4858605	0.140	02	8	4896407	0.310	01	9
4890189	0.043	02	6	4896409	0.310	01	11
4890732	0.345	01	12	4896410	0.310	01	7
4890832	0.043	02	4	4896616	0.140	02	1
4890833	0.043	03	8	4896622	0.120	01	2
4890964	0.201	01	4	4896770	0.140	02	7
4891209	0.043	02	5	4896884	0.149	01	2
4891288	0.305	01	5	4896897	0.350	01	2
4891353	0.040	01	6	4897026	0.043	02	1
4892318	0.400	01	1	4897178	0.060	01	13
4892426	0.345	01	9	4897179	0.060	01	14
4892708	0.081	01	2	4897330	0.270	01	5
4892712	0.082	01	2	4897457	0.120	01	4
4892732	0.345	01	10	4897481	0.300	01	1
4892859	0.060	01	1	4897858	0.042	01	6
4892860	0.066	01	4	4897861	0.042	01	8
4892861	0.060	01	1	4898301	0.042	01	3
4892867	0.084	01	2	4898502	0.270	01	3
4892893	0.084	01	3	4899003	0.042	01	14
4892915	0.043	03	2		0.140	02	4
4893036	0.071	01	5	4899009	0.040	02	4
4893386	0.080	01	2		0.060	01	10
4893391	0.302	01	6	4899019	0.310	01	1
	0.310	01	8	4899020	0.043	03	7
4893518	0.140	02	6	4899026	0.040	01	2
4893840	0.400	01	3		0.043	01	1
4894095	0.203	01	4		0.043	03	1
4894218	0.040	02	1	4899031	0.201	01	3
4894641	0.083	01	3	4899032	0.040	03	1
4894721	0.201	01	5	4899037	0.350	01	3
4895037	0.270	01	10	4899039	0.071	01	2
4895038	0.040	01	4		0.149	01	3
4895039	0.040	01	3	4899046	0.080	01	3
4895040	0.040	01	7	4899058	0.305	01	7
4895045	0.310	01	5	4899063	0.043	02	3
4895049	0.040	02	8	4899068	0.042	01	15
4895078	0.060	01	16		0.043	03	9
4895085	0.060	01	2		0.120	01	3
4895089	0.305	01	9		0.200	01	3
4895107	0.305	01	2	4899072	0.040	02	5
4895132	0.240	01	2		0.060	01	11
4895155	0.043	03	3	4899073	0.043	01	3
4895166	0.200	01	5		0.450	01	2
	0.400	01	6	4899074	0.043	03	2
4895179	0.060	01	12	4899076	0.043	03	2
4895180	0.040	02	9	4899078	0.043	02	2
4895183	0.060	01	4	4899079	0.120	01	1
4895184	0.060	01	9		0.305	01	1
4895187	0.060	01	6		0.320	01	3
4895188	0.060	01	5	4899080	0.120	01	6
4895195	0.066	01	1	4899085	0.077	01	4
4895196	0.066	01	7	4899086	0.240	01	1
4895198	0.066	01	9	4899090	0.300	01	2
4895199	0.066	01	10	4899091	0.042	01	2
4895200	0.066	01	11		0.043	01	2
4895202	0.063	01	1		0.326	01	1
4895204	0.066	01	12	4899093	0.043	01	3
4895214	0.063	01	3		0.200	01	4
4895215	0.060	01	8		0.400	01	5
4895228	0.040	01	5	4899107	0.305	01	3
4895244	0.149	02	3	4899108	0.305	01	4
4895291	0.400	01	4	4899109	0.043	03	2
4895294	0.071	01	7		0.345	01	5
4895296	0.063	01	2	4899110	0.043	02	7
4895297	0.140	03	2		0.045	01	3
4895305	0.149	02	2	4899115	0.040	02	3
4895323	0.345	01	6	4899122	0.400	01	7
4895347	0.060	01	7	4899643	0.310	01	2
4895355	0.043	01	7	4899827	0.305	01	6
4895360	0.063	01	10	4899921	0.071	01	4
4895361	0.066	01	2	4952483	1.300	01	51
4895363	0.066	01	5	4976587	1.010	01	5
4895364	0.066	01	6	4982514	0.000	02	36
4895365	0.066	01	8		0.003	02	34
4895378	0.043	03	4		1.010	02	12
4895379	0.043	03	5		1.081	02	31
4895392	0.040	02	6		1.280	01	4
	0.323	01	6		1.295	01	25
4895393	0.040	02	7		1.295	02	25
	0.323	01	7		2.031	05	21
4895406	0.270	01	4		2.040	01	17
4895424	0.071	01	6		2.041	01	17
4895576	0.323	01	4		2.041	02	14
4895605	0.040	02	2		3.070	01	11
4895610	0.270	01	6		5.0020	01	7
4895623	0.323	01	9		5.0021	01	7
4895625	0.323	01	8		5.0023	01	7
4895765	0.060	01	3		5.0024	01	7

Copyright © New Holland

Number	Figure	Sequence	Ref.	Number	Figure	Sequence	Ref.
4982514	5.0076	11	7	70923841	5.0076	12	5
	5.0076	12	6		5.0076	13	3
	5.0076	13	4		5.0076	14	9
	5.0077	07	7		5.0077	07	6
	5.0077	08	6		5.0077	08	5
	5.0077	09	4		5.0077	09	3
	5.0078	07	7		5.0077	10	9
	5.0078	08	6		5.0078	07	6
	5.0078	09	4		5.0078	08	5
	5.0079	07	7		5.0078	09	3
	5.0079	08	6		5.0078	10	9
	5.0079	09	4		5.0079	07	6
	5.0088	01	6		5.0079	08	5
	5.0088	03	20		5.0079	09	3
	5.0088	05	17		5.0079	10	9
	5.0089	01	6	70923843	1.065	01	4
	5.0089	05	9		1.083	02	25
	5.0148	01	23		1.083	04	21
500315794	0.045	01	1		2.030	01	15
500315795	0.045	01	2		2.030	05	8
500387647	0.323	01	3		2.031	01	14
500388140	0.083	01	2		2.031	02	8
500389850	0.345	01	4		3.070	01	4
500389865	0.345	01	7		5.0086	03	21
500389866	0.083	01	1		5.0087	03	18
500389886	0.310	01	12		5.0088	05	15
500395697	0.345	01	8		5.0089	04	28
500396330	0.310	01	14	70924110	2.030	05	7
504002420	0.200	01	2		5.0086	01	9
504019911	0.305	01	10		5.0087	01	16
504025613	0.270	01	11		5.0088	02	9
504026078	0.450	01	1		5.0089	02	16
504030960	0.326	01	5	70924192	1.050	09	161
504032877	0.140	01	2		1.050	10	161
504035017	0.043	01	5		1.050	11	161
504035186	0.084	01	1		1.050	12	161
504036695	0.360	01	1		1.050	13	161
504038511	0.140	02	5		1.060	04	22A
504039282	0.302	01	5		5.0020	04	14
504042847	0.323	01	5		5.0020	10	24
504043984	0.326	01	7		5.0020	11	8
504045920	0.270	01	2		5.0020	17	13
504046336	0.270	01	9		5.0021	04	14
504047260	0.040	02	10		5.0021	10	24
504047522	0.042	01	12		5.0021	11	8
504049033	0.350	01	1		5.0021	17	13
504051712	0.270	01	1		5.0023	04	14
504051850	0.270	01	12		5.0023	10	24
504053522	0.063	01	6		5.0023	11	11
504054732	0.345	01	2		5.0023	17	13
504057571	0.080	01	1		5.0024	04	14
504060728	0.140	01	3		5.0024	10	24
504061554	0.149	01	1		5.0024	11	11
504061555	0.149	02	1		5.0024	17	13
504062710	0.323	01	2		5.0076	05	20
504062856	0.320	01	2		5.0077	04	20
504064867	0.071	01	1		5.0078	04	20
504065039	0.063	01	5		5.0079	04	20
504065040	0.063	01	4		5.0086	03	14
504065125	0.140	02	3		5.0088	04	14
504065285	0.203	01	3	70924200	2.031	04	27
504065874	0.340	01	2		5.0013	03	5
504065877	0.340	01	1		5.0020	04	13
504065878	0.340	01	3		5.0020	11	7
504065879	0.340	01	5		5.0021	04	13
504067220	0.077	01	1		5.0021	11	7
504067723	0.066	01	3		5.0022	03	5
504072176	0.203	01	1		5.0023	04	13
504072177	0.203	01	2		5.0023	11	16
504073234	0.200	01	6		5.0024	04	13
504076109	0.040	03	2		5.0024	11	16
504078557	0.320	01	1		5.0038	03	5
504078856	0.326	01	4		5.0086	02	3
504078966	0.326	01	6		5.0086	03	20
504079269	0.326	01	2		5.0087	02	4
504079373	0.200	01	1		5.0087	03	4
504079607	0.326	01	3		5.0089	03	17
504081248	0.077	01	2		5.0089	04	12
504083433	0.140	02	2		5.0530	03	5
504084095	0.305	01	8	70931640	1.083	01	26
504085705	0.077	01	3		2.030	01	16
504093651	0.082	01	3		2.031	01	15
504096409	0.310	01	3		2.031	02	7
504115364	0.043	03	6		5.0020	10	25
504125149	0.140	03	1		5.0020	16	9
504126942	0.021	01	1		5.0020	17	14
504128011	0.043	03	10		5.0021	10	25
504202791	0.345	01	3		5.0021	16	9
70923841	5.0076	11	6		5.0021	17	14

Copyright © New Holland

Number	Figure	Sequence	Ref.	Number	Figure	Sequence	Ref.
70931640	5.0023	10	25	71405770	5.0078	02	12
	5.0023	16	9		5.0078	03	23
	5.0023	17	14		5.0078	04	14
	5.0024	10	25		5.0079	02	12
	5.0024	16	9		5.0079	03	23
	5.0024	17	14		5.0079	04	14
	5.0086	02	4	71405814	2.031	04	22
	5.0087	02	5	71405815	2.031	04	6
	5.0088	03	14	71405944	1.085	01	10
	5.0089	03	16		1.220	12	21
71318802	3.020	02	10		5.0088	01	7
71400952	3.030	02	10		5.0089	01	7
71400954	3.030	02	3	71405981	4.200	01	2
	3.040	02	12	71405982	4.200	01	9
71400964	3.030	02	2	71405983	4.200	01	9
71400968	3.030	02	4	71405985	4.200	01	11
71401321	3.020	02	902	71405986	4.200	01	12
71401325	3.020	02	902A	71405987	4.200	01	13
71401327	3.020	02	5	71405988	4.200	01	13
71401352	3.020	02	8	71405989	4.200	01	13
71403661	0.001	02	11	71405990	4.200	01	13
	1.010	02	4	71405991	4.200	01	13
	1.295	02	60	71405992	4.200	01	13
71403889	1.220	03	2	71405993	4.200	01	19
71404161	3.070	01	1A	71405995	4.200	01	28
71404162	1.020	01	12A	71406009	4.520	04	32
71404163	2.031	04	10A	71406248	0.003	02	40
71404166	5.0076	02	162	71406250	0.003	03	23
	5.0076	03	11		1.060	03	12
	5.0076	04	20	71406271	1.020	01	12
	5.0077	02	11	71406374	4.200	01	29
	5.0077	03	20	71406454	5.0042	01	2
	5.0078	02	11	71407471	4.200	01	20
	5.0078	03	20	71412008	3.010	04	17
	5.0079	02	11	71415031	4.520	04	51
	5.0079	03	20	71415090	2.001	01	5
71404168	1.050	08	264		2.031	03	30
	1.050	09	264	71415094	2.050	01	3
	1.050	10	264	71415157	2.050	01	2
	1.050	11	264	71415158	2.030	04	30
	1.050	12	264		5.0013	01	22
	1.050	14	264		5.0013	02	10
71404311	1.083	02	18		5.0022	01	22
	1.083	03	18		5.0022	02	10
	5.0020	04	5		5.0038	01	22
	5.0021	04	5		5.0038	02	10
	5.0023	04	5		5.0530	01	22
	5.0024	04	5		5.0530	02	10
71404313	1.060	01	10	71415214	1.000	01	12
	2.031	04	7	71415385	1.295	02	24
	5.0013	03	3	71415426	1.000	03	8
	5.0020	10	6	71415855	5.0087	01	7
	5.0021	10	6		5.0089	02	7
	5.0022	03	3	71415899	1.220	12	16
	5.0023	10	6	71416090	5.0087	03	10
	5.0023	11	17		5.0089	04	20
	5.0024	10	6	71416130	1.081	01	29
	5.0024	11	17		1.220	12	15
	5.0038	03	3		1.220	13	15
	5.0088	05	10	71416864	0.003	02	39
	5.0089	04	5	71418183	1.220	14	9
	5.0530	03	3	71418385	3.010	02	3
71404365	3.070	01	1	71418432	2.030	03	9
71404460	2.030	01	17	71418434	2.030	03	8
	5.0087	03	12	71418452	2.030	03	23
	5.0089	04	22	71418453	2.030	03	25
71404615	1.060	04	22	71418454	2.030	03	24
71404856	2.000	02	22	71418476	2.030	02	4
	2.001	02	24	71418479	2.030	02	6
71404909	5.0076	05	12	71418480	2.030	02	8
	5.0077	04	12	71418481	2.030	02	9
	5.0078	04	12		2.030	04	9
	5.0079	04	12	71418483	2.030	02	10
71405003	1.010	01	11		2.030	04	10
	1.020	01	15	71418537	2.031	03	4
	1.250	05	4	71418539	2.031	03	5
	1.270	01	3	71418542	2.031	03	10
	3.010	01	6	71418545	2.031	03	9
	5.0042	01	3	71418683	3.010	02	4
71405228	1.010	01	8	71418801	5.0101	01	4
71405229	1.010	01	9		5.0102	01	4
71405770	1.083	04	23		5.0103	01	4
	1.220	12	18		5.0104	01	4
	5.0076	03	12		5.0105	01	4
	5.0076	04	23		5.0106	01	4
	5.0076	05	14	71418802	5.0101	01	5
	5.0077	02	12		5.0102	01	5
	5.0077	03	23		5.0103	01	5
	5.0077	04	14		5.0104	01	5

Copyright © New Holland

Number	Figure	Sequence	Ref.	Number	Figure	Sequence	Ref.
71418802	5.0105	01	5	71451946	1.220	06	1
	5.0106	01	5	71451954	0.000	03	31
71418803	5.0101	01	9	71452048	1.220	03	9
	5.0102	01	9	71456596	1.030	01	8
	5.0103	01	9	71461019	5.0001	01	6
	5.0104	01	9		5.0002	01	6
	5.0105	01	9		5.0003	01	6
	5.0106	01	9		5.0004	01	6
71420545	2.031	04	11		5.0005	01	6
71421784	1.000	03	11E	71464956	0.003	02	38
71425116	1.300	08	1C	71465030	2.030	03	11
	1.300	09	11	71465031	2.030	03	10
71425615	1.220	11	19	71465036	2.030	03	17
71431617	0.003	03	21	71465286	5.0144	01	1
71433079	4.520	04	20	71466017	5.0023	11	4
71433086	4.520	03	16		5.0024	11	4
71433088	4.520	01	13	71466172	5.0076	14	3
71433093	4.520	01	8		5.0077	10	3
71433096	4.520	02	17		5.0078	10	3
71433121	4.520	02	15		5.0079	10	3
71433122	4.520	01	18	71466905	3.020	03	17
71433123	4.520	04	19	71468153	4.520	02	9
71433287	5.0013	01	12	71468156	4.520	02	5
	5.0022	01	12	71468528	4.520	03	34
	5.0038	01	12	71468529	4.520	03	35
	5.0530	01	12	71469208	2.030	03	3
71437694	4.520	04	14	71469305	4.520	02	12
71442021	3.000	02	4	71470185	3.010	02	5
71442022	3.000	02	5	71471056	3.010	02	6
71442115	1.000	02	6	71472914	5.0004	01	13
71442116	1.000	02	7		5.0005	01	13
71444029	5.0020	04	6	71474984	2.031	03	12
	5.0020	10	7	71475456	1.295	02	61
	5.0020	17	10	71477094	4.520	04	3
	5.0021	04	6	71484462	1.083	01	24
	5.0021	10	7		1.083	04	22
	5.0021	17	10		5.0076	14	8
	5.0023	04	6		5.0077	10	8
	5.0023	10	7		5.0078	10	8
	5.0023	11	12		5.0079	10	8
	5.0023	17	10		5.0086	01	10
	5.0024	04	6		5.0087	01	15
	5.0024	10	7		5.0088	02	10
	5.0024	11	12		5.0089	02	15
	5.0024	17	10	71485944	5.0076	10	1A
	5.0086	03	6		5.0076	10	2A
	5.0088	04	6		5.0077	06	1A
71444332	2.031	06	161		5.0077	06	2A
	5.0088	06	161		5.0078	06	1A
	5.0089	06	161		5.0078	06	2A
71445617	2.030	03	4		5.0079	06	1A
71445618	2.030	03	5		5.0079	06	2A
71445626	2.030	02	12	71488736	0.000	03	41
	2.030	04	13	71491520	4.200	01	31
71445627	2.030	02	13	72104592	2.030	02	3
	2.030	04	14	72104596	2.030	02	30
71445656	2.031	03	11	72104628	2.030	04	4
71445657	2.030	03	20	72104630	2.030	02	14
	2.031	03	13		2.030	04	11
71445658	2.030	03	21	72104631	2.030	04	3
	2.031	03	14	72105459	1.010	01	1B
71445662	2.030	03	19	72107089	0.002	01	14
71445664	2.030	03	16	72108835	1.010	02	9
71445704	2.030	02	5	72109072	0.000	03	32
	2.030	04	5	72109073	0.000	03	32A
71445714	2.030	02	11	72111748	2.031	03	3
	2.030	04	12	72112166	5.0148	01	1
71447620	2.030	02	4A	72116240	4.520	03	31
71447621	2.030	03	3A	72130429	4.520	01	24
71447622	2.031	03	4A		4.520	02	24
71447625	2.030	04	4A	72130465	4.520	01	25
71449470	5.0585	01	8	72130467	4.520	01	27
	5.0585	02	8	72130493	0.302	01	4
71450201	0.000	03	43	72130494	0.302	01	7
71450316	1.220	10	4	72150175	1.020	01	6D
71450318	1.220	10	5	72150352	1.030	05	435
71450342	1.220	12	6	72150353	1.030	05	350
71450974	5.0208	04	5	72150613	5.0076	08	2
	5.0580	02	5	72150614	5.0076	08	4
71451259	5.0585	01	6	72150710	1.020	01	6B
	5.0585	02	6	72151580	2.030	01	14
71451371	1.220	14	2		2.031	01	9
71451372	1.220	14	2A		5.0020	17	8
	1.220	14	3		5.0021	17	8
71451489	1.220	03	4B		5.0023	17	8
71451490	1.220	03	4A		5.0024	17	8
71451677	1.220	03	3	72160573	5.0086	01	7
71451711	0.000	03	26		5.0086	03	7
71451914	1.220	03	4		5.0088	02	7

Copyright © New Holland

Number	Figure	Sequence	Ref.
72160573	5.0088	04	7
72185342	5.0101	01	1
	5.0102	01	1
	5.0104	01	1
	5.0105	01	1
	5.0106	01	1
72200426	2.002	01	8B
72201210	1.300	01	30
	1.300	02	30
	1.300	03	30
	1.300	09	15
72201224	1.300	06	6
	1.300	07	6
	1.300	09	9
72201225	1.250	03	2
	1.300	01	60
	1.300	02	60
	1.300	03	60
	1.300	04	60
	1.300	05	8
72201227	1.300	01	36
72201239	0.003	02	1
72201251	0.003	03	14
72201683	2.030	05	4
	5.0086	03	5
	5.0088	04	5
72202073	1.020	01	8
72202074	1.020	01	7
72202082	1.020	01	3
72202085	1.016	01	3
72202178	5.0013	01	3
	5.0022	01	3
	5.0038	01	3
	5.0530	01	3
72202183	5.0013	01	2
	5.0022	01	2
	5.0038	01	2
	5.0530	01	2
72202194	5.0013	02	13
	5.0022	02	13
	5.0038	02	13
	5.0530	02	13
72202195	5.0013	02	14
	5.0022	02	14
	5.0038	02	14
	5.0530	02	14
72202197	5.0013	02	15
	5.0022	02	15
	5.0038	02	15
	5.0530	02	15
72202198	2.002	01	16
	5.0013	02	16
	5.0013	04	5
	5.0022	02	16
	5.0022	04	5
	5.0038	02	16
	5.0038	04	5
	5.0530	02	16
	5.0530	04	5
72202199	2.002	01	17
	5.0013	02	17
	5.0013	04	6
	5.0022	02	17
	5.0022	04	6
	5.0038	02	17
	5.0038	04	6
	5.0530	02	17
	5.0530	04	6
72202200	2.002	01	18
	5.0013	02	18
	5.0013	04	7
	5.0022	02	18
	5.0022	04	7
	5.0038	02	18
	5.0038	04	7
	5.0530	02	18
	5.0530	04	7
72202203	2.002	01	15
	5.0013	02	19
	5.0013	04	4
	5.0022	02	19
	5.0022	04	4
	5.0038	02	19
	5.0038	04	4
	5.0530	02	19
	5.0530	04	4
72202204	5.0013	02	20
	5.0022	02	20
	5.0038	02	20
72202204	5.0530	02	20
72202212	5.0013	01	23
	5.0022	01	23
	5.0038	01	23
	5.0530	01	23
72202218	5.0013	02	34
	5.0022	02	34
	5.0038	02	34
	5.0530	02	34
72202344	5.0101	01	6
72202346	5.0102	01	6
72202348	5.0103	01	6
72202350	5.0104	01	6
72202352	5.0105	01	6
72202354	5.0106	01	6
72202385	3.070	01	5
72202453	1.090	01	18
	1.090	02	18
72202489	5.0002	01	12
72202943	1.000	03	3
72202944	1.000	03	4
72202945	1.000	03	5
72202946	1.000	03	6
72202973	1.010	01	12
	1.020	01	16
72203001	3.070	01	12
72203002	3.070	01	6
72203003	3.070	01	10
72203140	2.000	02	4
	2.001	01	11
	2.001	02	19
	2.002	01	11
	5.0013	02	53
	5.0022	02	53
	5.0038	02	53
	5.0530	02	53
72203141	2.000	02	5
	2.001	01	10
	2.001	02	20
	2.002	01	10
	5.0013	02	54
	5.0022	02	54
	5.0038	02	54
	5.0530	02	54
72203145	2.000	02	8
	2.001	01	9
	2.001	02	23
	2.002	01	9
	5.0013	02	52
	5.0022	02	52
	5.0038	02	52
	5.0530	02	52
72203147	2.000	01	13
	2.000	02	13
	2.001	02	13
	2.002	01	4
	5.0013	02	35
	5.0022	02	35
	5.0038	02	35
	5.0530	02	35
72203148	2.000	01	10
	2.001	02	10
72203149	2.000	01	11
	2.001	02	11
72203150	2.000	01	12
	2.001	02	12
72203151	2.000	01	9
	2.000	02	16
	2.001	02	9
	2.002	01	7
72203153	2.000	01	14
	2.000	02	14
	2.001	02	14
	2.002	01	5
	5.0013	02	36
	5.0022	02	36
	5.0038	02	36
	5.0530	02	36
72203154	2.000	01	15
	2.000	02	15
	2.001	02	15
	2.002	01	6
	5.0013	02	37
	5.0022	02	37
	5.0038	02	37
	5.0530	02	37
72203157	2.001	01	12
	2.002	01	12
72203521	5.0003	01	12

Copyright © New Holland

Number	Figure	Sequence	Ref.	Number	Figure	Sequence	Ref.
72203523	5.0004	01	12	72204754	5.0078	04	7
72203525	5.0005	01	12		5.0079	04	7
72203537	0.003	02	27	72205013	5.0013	03	1
72203539	1.220	01	6	72205175	5.0087	03	17
72203669	5.0087	03	5		5.0089	04	27
	5.0089	04	15	72205980	1.050	04	24
72203740	0.000	01	4	72206056	1.010	02	14
72203750	0.000	01	5	72206057	5.0148	01	16
72203757	0.000	01	6	72206112	5.0088	03	15
72203758	0.000	01	7		5.0148	01	22
72203760	0.000	02	34	72206258	1.300	01	35
72203761	0.000	02	33	72206731	5.0101	01	2A
72203762	0.000	02	24		5.0102	01	2A
72203763	0.000	02	23		5.0103	01	2A
72203856	1.070	01	3		5.0104	01	2A
72203912	1.295	04	4		5.0105	01	2A
72203915	1.295	04	3		5.0106	01	2A
72203934	1.295	02	32	72207066	1.000	01	25
72203961	1.280	01	3		1.300	09	5
72204155	1.091	01	1	72207108	4.520	02	10
	5.0020	06	1	72207171	5.0020	17	3
	5.0020	13	1		5.0021	17	3
	5.0021	06	1		5.0023	17	3
	5.0021	13	1		5.0024	17	3
	5.0023	06	1	72207182	5.0043	01	1
	5.0023	13	1	72209013	1.050	02	7
	5.0024	06	1		1.050	03	7
	5.0024	13	1	72209106	5.0580	01	5
72204201	5.0076	11	3A	72209121	1.220	16	3
	5.0076	11	4A		1.260	02	39
	5.0076	11	5A	72209157	3.020	01	2
	5.0076	12	3A	72209389	0.001	02	8
	5.0076	13	2A	72209399	0.004	01	4
	5.0077	07	3A	72209400	0.004	01	11
	5.0077	07	4A	72209583	4.520	02	7
	5.0077	07	5A	72209585	4.200	01	33
	5.0077	08	3A	72209632	1.295	01	70
	5.0077	09	2A	72209721	1.295	01	33
	5.0078	07	3A	72209801	1.030	02	953
	5.0078	07	4A	72209802	1.030	02	954
	5.0078	07	5A	72209803	1.030	02	300
	5.0078	08	3A	72209806	1.030	02	400
	5.0078	09	2A	72209807	1.030	02	500
	5.0079	07	3A	72209810	1.030	03	418
	5.0079	07	4A		1.060	02	272
	5.0079	07	5A		1.081	03	171
	5.0079	08	3A		5.0020	02	10
	5.0079	09	2A		5.0021	02	10
72204223	1.016	01	4		5.0023	02	10
72204291	5.0076	05	21		5.0024	02	10
	5.0077	04	21	72209813	1.030	02	466
	5.0078	04	21		1.030	03	466
	5.0079	04	21		1.030	05	466
72204293	5.0076	14	6	72209815	1.030	02	490
	5.0077	10	6		1.030	03	496
	5.0078	10	6		1.060	02	154
	5.0079	10	6		5.0076	02	153
72204294	5.0076	14	7	72209818	1.051	03	661
	5.0077	10	7	72209820	1.060	02	161
	5.0078	10	7		2.031	06	169
	5.0079	10	7		5.0088	06	169
72204335	1.061	01	13		5.0089	06	169
72204478	5.0103	01	12	72209821	1.030	05	728
	5.0104	01	12	72209822	1.051	02	561
	5.0105	01	12	72209823	1.030	05	732
	5.0106	01	12		5.0076	02	161
72204479	5.0103	01	10	72209824	1.030	04	861
	5.0104	01	10		1.050	08	562
	5.0105	01	10		1.090	03	8
	5.0106	01	10		5.0076	02	163
72204480	5.0103	01	11	72209827	1.030	05	725
	5.0104	01	11		1.060	02	263
	5.0105	01	11		1.091	02	28
	5.0106	01	11		2.031	06	164
72204481	5.0101	01	2		5.0020	05	3A
	5.0102	01	2		5.0020	07	28
	5.0103	01	2		5.0021	05	3A
	5.0104	01	2		5.0021	07	28
	5.0105	01	2		5.0023	05	3A
	5.0106	01	2		5.0023	07	28
72204482	5.0103	01	1		5.0024	05	3A
72204524	0.002	01	8		5.0024	07	28
72204526	0.002	01	4		5.0076	09	11
72204603	1.295	01	4		5.0088	06	164
72204607	1.083	03	16		5.0089	06	164
72204618	1.083	03	15	72209830	1.051	02	262
72204659	0.004	01	1		2.031	06	170
72204754	5.0076	05	7		5.0088	06	170
	5.0077	04	7		5.0089	06	170

Copyright © New Holland

Number	Figure	Sequence	Ref.	Number	Figure	Sequence	Ref.
72209832	1.030	03	924	72210072	1.050	06	154
72209833	1.030	04	361		1.050	07	154
72209834	1.030	04	362		1.050	09	154
72209835	1.030	04	363	72210074	2.031	06	207
72209836	1.030	05	710		5.0088	06	207
	1.030	06	710		5.0089	06	207
72209838	1.030	06	728	72210077	1.050	06	163
	1.050	06	164		1.050	07	163
	1.050	07	164		1.050	08	163
	1.050	08	164		1.050	09	163
	1.050	09	164		1.050	10	163
	1.050	10	164		1.050	13	163
	1.050	11	164		1.050	14	163
	1.050	12	164		5.0076	02	164
	1.050	13	164	72210080	1.051	02	202
	1.051	02	603A	72210087	1.051	02	261
	1.051	03	161	72210091	1.050	08	521
	5.0020	03	2		1.050	09	521
	5.0021	03	2		1.050	10	521
	5.0023	03	2		1.050	11	521
	5.0024	03	2		1.050	12	521
72209839	1.050	06	162		1.050	13	521
	1.050	07	162	72210093	1.050	10	523
	1.050	08	162	72210094	1.050	10	524
	1.050	10	162		1.050	11	524
	1.050	11	162	72210098	1.050	10	602
	1.050	12	162		1.050	11	602
	1.050	13	162		1.051	02	603
	1.051	02	161	72210099	1.050	10	603
72209841	1.050	10	556		1.050	11	603
	1.050	11	556		1.051	02	604
72209842	5.0076	02	151	72210100	1.050	11	605
72209843	1.060	02	153	72210124	1.050	08	323
	2.031	06	204		1.050	09	323
	5.0088	06	204		1.050	12	323
	5.0089	06	204	72210125	1.050	08	336
72209857	1.090	03	2		1.050	09	336
72209858	1.090	03	5		1.050	10	336
72209859	1.090	03	6		1.050	11	336
72209860	1.090	03	7		1.050	12	336
72209861	1.090	03	9		1.060	02	339
72209862	1.090	03	11	72210126	1.050	08	333
72209863	1.090	03	10		1.050	09	333
72209865	1.090	03	13		1.050	10	333
72209866	1.090	03	14		1.050	11	333
72209867	1.090	03	15		1.060	02	333
72209868	1.090	03	16	72210127	1.050	08	331
72209869	1.090	03	17		1.050	09	331
72209870	1.090	03	18		1.050	10	331
72209876	1.030	06	414		1.050	11	331
72209877	1.030	06	435		1.050	12	331
72209878	1.030	02	468		1.050	12	333
	1.030	06	468		1.060	02	331
72209879	1.030	06	711	72210164	3.020	02	2
72209976	1.040	02	101	72210165	3.020	02	4
72209977	1.040	02	111	72210170	3.020	02	9
72209978	1.040	02	114	72210181	3.020	03	20
72209979	1.040	02	123	72210182	3.020	02	900
72209980	1.040	02	124	72210186	5.0001	01	1
72209981	1.040	02	131		5.0002	01	1
72209982	1.040	02	351		5.0003	01	1
72209983	1.040	02	355		5.0004	01	1
72209984	1.040	02	401		5.0005	01	1
72209985	1.040	02	443	72210187	5.0001	01	2
72209986	1.040	02	444		5.0002	01	2
72209987	1.040	02	469		5.0003	01	2
72209989	1.040	02	488		5.0004	01	2
	1.060	02	262		5.0005	01	2
	2.031	06	162	72210188	5.0001	01	3
	5.0088	06	162		5.0002	01	3
	5.0089	06	162		5.0003	01	3
72209991	1.040	02	702		5.0004	01	3
72209992	1.040	02	706		5.0005	01	3
72209993	1.040	02	707	72210189	5.0001	01	4
72209994	1.040	02	712		5.0002	01	4
72209995	1.040	02	742		5.0003	01	4
72209996	1.040	02	743		5.0004	01	4
72210000	1.040	02	993		5.0005	01	4
	1.040	03	27	72210190	5.0001	01	5
72210001	1.040	02	994		5.0002	01	5
72210003	1.040	02	52		5.0003	01	5
72210004	1.040	02	100		5.0004	01	5
72210005	1.040	02	200		5.0005	01	5
72210012	1.040	03	11	72210191	5.0001	01	7
72210015	1.040	03	10		5.0002	01	7
72210023	1.040	03	22		5.0003	01	7
72210050	2.031	06	163		5.0004	01	7
	5.0088	06	163		5.0005	01	7
	5.0089	06	163	72210192	5.0001	01	8

Copyright © New Holland

Number	Figure	Sequence	Ref.	Number	Figure	Sequence	Ref.
72210192	5.0002	01	8	72210451	5.0076	09	13
	5.0003	01	8	72210460	3.010	04	21
	5.0004	01	8	72210461	3.010	04	22
	5.0005	01	8	72210462	3.010	04	23
72210193	5.0001	01	9	72210463	3.010	04	24
	5.0002	01	9	72210464	3.010	04	25
	5.0003	01	9	72210465	3.010	03	27
	5.0004	01	9	72210467	3.010	03	29
	5.0005	01	9	72210469	3.010	03	31
72210194	5.0001	01	11		3.010	04	31
72210195	5.0002	01	11	72210470	3.010	03	32
72210196	5.0003	01	11	72210483	1.091	02	5
72210197	5.0004	01	11		5.0020	07	5
72210198	5.0005	01	11		5.0021	07	5
72210200	5.0001	01	1-8		5.0023	07	5
	5.0002	01	1-8		5.0024	07	5
	5.0003	01	1-8	72210484	1.091	02	1
	5.0004	01	1-8		5.0020	07	1
	5.0005	01	1-8		5.0021	07	1
72210208	0.003	04	4		5.0023	07	1
72210209	0.003	04	28		5.0024	07	1
72210213	0.003	04	26	72210485	1.091	02	2
72210216	0.003	04	5		5.0020	07	2
72210219	1.091	02	3		5.0021	07	2
	5.0020	07	3		5.0023	07	2
	5.0021	07	3		5.0024	07	2
	5.0023	07	3	72210486	1.091	02	8
	5.0024	07	3		5.0020	07	8
72210223	1.091	02	9		5.0021	07	8
	5.0020	07	9		5.0023	07	8
	5.0021	07	9		5.0024	07	8
	5.0023	07	9	72210487	1.091	02	11
	5.0024	07	9		5.0020	07	11
72210225	1.091	02	14		5.0021	07	11
	5.0020	07	14		5.0023	07	11
	5.0021	07	14		5.0024	07	11
	5.0023	07	14	72210488	1.091	02	12
	5.0024	07	14		5.0020	07	12
72210226	1.091	02	15		5.0021	07	12
	5.0020	07	15		5.0023	07	12
	5.0021	07	15		5.0024	07	12
	5.0023	07	15	72210489	1.091	02	13
	5.0024	07	15		5.0020	07	13
72210230	1.091	02	18		5.0021	07	13
	5.0020	07	18		5.0023	07	13
	5.0021	07	18		5.0024	07	13
	5.0023	07	18	72210490	1.091	02	19
	5.0024	07	18		5.0020	07	19
72210232	1.091	02	20		5.0021	07	19
	5.0020	07	20		5.0023	07	19
	5.0021	07	20		5.0024	07	19
	5.0023	07	20	72210491	1.091	02	27
	5.0024	07	20		5.0020	07	27
72210233	1.091	02	21		5.0021	07	27
	5.0020	07	21		5.0023	07	27
	5.0021	07	21		5.0024	07	27
	5.0023	07	21		5.0076	08	10
	5.0024	07	21	72210492	1.091	02	24
72210234	1.091	02	22		5.0020	07	24
	5.0020	07	22		5.0021	07	24
	5.0021	07	22		5.0023	07	24
	5.0023	07	22		5.0024	07	24
	5.0024	07	22	72210493	1.091	02	29
72210237	1.091	02	26		5.0020	07	29
	5.0020	07	26		5.0021	07	29
	5.0021	07	26		5.0023	07	29
	5.0023	07	26		5.0024	07	29
	5.0024	07	26	72210494	1.091	02	30
72210243	3.060	02	3		5.0020	07	30
72210246	3.060	02	6		5.0021	07	30
72210247	3.060	02	7		5.0023	07	30
72210435	1.051	02	204		5.0024	07	30
72210436	1.051	02	323	72210495	5.0148	02	1
72210437	1.051	02	324	72210496	5.0148	02	2
72210438	1.051	02	333	72210497	5.0148	02	3
72210439	1.051	02	334	72210498	5.0148	02	4
72210440	1.051	02	337	72210527	3.020	03	16
72210441	1.051	02	512	72210559	1.300	07	2D
72210442	1.051	02	522	72211062	0.001	01	1A
72210443	1.051	02	551	72211160	1.050	08	552
72210444	5.0076	06	1	72211238	4.520	04	28
72210446	5.0076	06	10	72211282	1.030	02	824
72210447	5.0076	08	3		1.040	03	28
	5.0076	09	2	72211285	1.030	02	792
72210448	5.0076	09	7	72211525	2.001	01	13
72210449	5.0076	09	8	72211750	4.520	03	33
72210450	5.0076	08	11	72211775	5.0032	01	1
	5.0076	09	10	72212247	5.0076	14	2
72210451	5.0076	08	12		5.0077	10	2

Copyright © New Holland

Number	Figure	Sequence	Ref.	Number	Figure	Sequence	Ref.
72212247	5.0078	10	2	72214543	1.081	02	5
72213766	0.003	04	20		5.0020	08	1
72213767	0.003	04	19		5.0021	08	1
72213804	1.295	01	50		5.0023	08	1
72214500	1.020	01	3A		5.0024	08	1
72214501	1.020	01	3B	72214546	1.082	01	4
72214502	1.020	01	3C		1.082	02	4
72214503	1.020	01	3D		5.0020	05	7
72214504	1.020	01	3E		5.0021	05	7
72214521	1.050	04	23		5.0023	05	7
	1.081	02	16		5.0024	05	7
72214522	1.050	02	10		5.0076	07	33
	1.080	03	3		5.0077	05	33
	1.092	01	8		5.0078	05	33
	5.0020	08	4		5.0079	05	33
	5.0020	14	7	72214547	1.081	01	7
	5.0021	08	4	72214548	1.081	01	22
	5.0021	14	7		2.031	05	9
	5.0023	08	4		5.0088	03	10
	5.0023	14	7		5.0088	05	8
	5.0024	08	4		5.0089	03	10
	5.0024	14	7		5.0089	05	7
72214523	1.050	02	11	72214550	1.081	02	9
	1.050	04	11	72214555	5.0148	01	4
	1.081	02	15	72214556	1.081	01	32
	1.090	01	15	72214558	1.050	02	35
	1.090	02	15		1.083	01	31
	2.031	05	8	72214561	1.080	03	4
	5.0088	03	7		5.0020	08	5
	5.0088	05	6		5.0020	14	8
	5.0089	03	12		5.0021	08	5
72214524	1.050	02	12		5.0021	14	8
	1.050	04	12		5.0023	08	5
	1.081	01	17		5.0023	14	8
	1.091	01	7		5.0024	08	5
	3.070	01	3		5.0024	14	8
	5.0020	06	7	72214663	1.060	03	5
	5.0020	13	9		1.091	01	8
	5.0021	06	7		2.031	04	10
	5.0021	13	9		5.0020	06	8
	5.0023	06	7		5.0020	13	10
	5.0023	13	9		5.0021	06	8
	5.0024	06	7		5.0021	13	10
	5.0024	13	9		5.0023	06	8
	5.0076	07	14		5.0023	13	10
	5.0077	05	14		5.0024	06	8
	5.0078	05	14		5.0024	13	10
	5.0079	05	14		5.0076	05	10
	5.0148	01	14		5.0076	07	12
72214525	1.050	02	13		5.0077	04	10
	1.050	03	13		5.0077	05	12
	1.050	04	13		5.0078	04	10
	1.092	01	9		5.0078	05	12
	5.0076	07	15		5.0079	04	10
	5.0077	05	15		5.0079	05	12
	5.0078	05	15		5.0088	05	9
	5.0079	05	15		5.0089	04	8
	5.0148	01	15		5.0148	01	26
72214526	1.050	02	14	72214668	1.061	02	9
	1.050	04	14	72214669	1.065	01	5
	1.060	04	13	72214711	1.065	01	2
	5.0088	03	9	72214714	1.083	02	17
	5.0088	05	7		1.083	04	10
	5.0089	03	7	72214717	1.060	04	8
	5.0089	05	6		1.061	02	10
72214527	1.050	03	17	72214718	5.0148	01	11
	1.081	02	20	72214731	1.081	02	10
72214533	1.060	04	3	72214734	1.060	01	4
72214534	1.060	04	4		1.060	04	10
72214535	1.050	03	3	72214735	1.060	04	16
	1.081	02	4		5.0076	07	21
	5.0076	07	4		5.0077	05	21
	5.0077	05	4		5.0078	05	21
	5.0078	05	4		5.0079	05	21
	5.0079	05	4	72214739	5.0020	14	3
72214539	5.0076	07	5		5.0021	14	3
	5.0077	05	5		5.0023	14	3
	5.0078	05	5		5.0024	14	3
	5.0079	05	5	72214740	1.081	02	2
72214540	5.0088	03	11	72214743	5.0148	01	25
	5.0089	03	9	72214744	1.050	02	9
72214541	1.050	04	22		1.050	03	9
	1.081	02	19		1.060	04	9
72214542	1.060	04	14		1.081	01	14
	1.081	01	18		1.081	02	14
	5.0076	07	16		1.091	01	6
	5.0077	05	16		3.070	01	13
	5.0078	05	16		5.0020	06	6
	5.0079	05	16		5.0020	13	8

Copyright © New Holland

Number	Figure	Sequence	Ref.	Number	Figure	Sequence	Ref.
72214744	5.0021	06	6	72216769	5.0088	03	8
	5.0021	13	8		5.0089	03	11
	5.0023	06	6		5.0148	01	13
	5.0023	13	8	72217374	1.030	02	717
	5.0024	06	6	72217375	1.030	02	728
	5.0024	13	8	72217376	1.030	02	774
	5.0076	07	13	72217377	1.030	03	722
	5.0077	05	13	72217378	1.030	03	725
	5.0078	05	13	72217379	1.030	03	733
	5.0079	05	13	72217380	1.030	03	734
72214762	1.065	01	1	72217381	1.030	03	753
72214763	5.0076	05	9	72217382	1.030	03	756
	5.0077	04	9	72217392	0.001	01	1L
	5.0078	04	9	72217405	1.061	02	11
	5.0079	04	9		3.070	01	2
72214775	1.080	02	8	72217408	5.0076	07	18
72214782	1.050	02	5		5.0077	05	18
	1.080	03	1		5.0078	05	18
72214808	5.0076	03	5		5.0079	05	18
	5.0076	04	11	72217409	1.060	04	7
	5.0077	02	5	72217471	1.030	02	710
	5.0077	03	11	72217475	1.030	02	727
	5.0078	02	5	72217476	1.030	03	732
	5.0078	03	11	72219119	1.030	03	814
	5.0079	02	5	72219245	5.0023	11	14
	5.0079	03	11		5.0024	11	14
72215205	5.0020	11	4	72219249	5.0020	12	2
	5.0021	11	4		5.0021	12	2
	5.0023	11	7		5.0023	12	2
	5.0024	11	7		5.0024	12	2
72215206	5.0020	11	3	72219250	5.0020	12	3
	5.0021	11	3		5.0021	12	3
	5.0023	11	8		5.0023	12	3
	5.0024	11	8		5.0024	12	3
72215288	5.0020	05	3	72219251	5.0020	12	9
	5.0021	05	3		5.0021	12	9
	5.0023	05	3		5.0023	12	9
	5.0024	05	3		5.0024	12	9
72215300	5.0076	08	1	72219252	5.0020	12	4
72215301	5.0076	08	8		5.0021	12	4
72215357	1.030	03	730		5.0023	12	4
72215374	1.040	02	472		5.0024	12	4
72215377	1.040	02	400	72219253	5.0020	12	6
72215386	1.030	03	757		5.0021	12	6
72215387	1.030	02	725		5.0023	12	6
	1.030	03	755		5.0024	12	6
72215395	1.030	02	724	72219254	5.0020	12	8
	1.030	03	724		5.0021	12	8
72215396	1.030	03	708		5.0023	12	8
72215424	0.003	04	3		5.0024	12	8
72215443	1.060	01	17	72219255	5.0020	12	5
	1.060	02	265		5.0021	12	5
	1.083	01	27		5.0023	12	5
	1.083	01	35		5.0024	12	5
	1.083	02	27	72219256	5.0020	12	7
	1.083	03	27		5.0021	12	7
	5.0020	10	23		5.0023	12	7
	5.0021	10	23		5.0024	12	7
	5.0023	10	23	72219278	5.0020	12	14
	5.0024	10	23		5.0021	12	14
	5.0076	05	19		5.0023	12	14
	5.0077	04	19		5.0024	12	14
	5.0078	04	19	72219279	5.0020	12	1
	5.0079	04	19		5.0021	12	1
	5.0086	03	13		5.0023	12	1
	5.0088	03	13		5.0024	12	1
	5.0088	04	13	72219287	5.0020	12	10
	5.0088	05	14		5.0021	12	10
72215461	1.030	02	702		5.0023	12	10
	1.030	03	763		5.0024	12	10
72215463	1.030	02	732	72219288	5.0020	12	11
	1.030	03	728		5.0021	12	11
72215527	1.051	03	521		5.0023	12	11
72215528	1.051	03	561		5.0024	12	11
72215529	1.051	03	562	72219289	5.0020	12	12
72215596	1.050	10	211A		5.0021	12	12
	1.050	10	266		5.0023	12	12
	1.050	11	211A		5.0024	12	12
	1.050	14	266	72219290	5.0020	12	13
	1.060	02	264		5.0021	12	13
72216048	1.051	03	162		5.0023	12	13
72216049	1.051	03	522		5.0024	12	13
72216050	1.051	03	563	72219365	1.030	04	802
72216201	1.051	03	564	72219489	0.002	01	4A
72216202	1.051	03	612	72219899	2.040	01	10
72216204	1.051	03	651		2.041	01	10
72216207	1.051	03	621		2.041	02	8
72216209	1.051	03	671	72219901	2.041	01	9
72216453	2.031	02	4		2.041	02	7

Copyright © New Holland

Number	Figure	Sequence	Ref.	Number	Figure	Sequence	Ref.
72220290	2.040	01	8	72954209	5.0208	02	9
72220488	0.001	02	6		5.0209	02	9
72230151	3.000	01	2	72954322	5.0076	03	4
72230242	1.010	01	1		5.0076	04	16
72230256	1.020	01	1		5.0077	02	4
72230304	3.070	01	9		5.0077	03	16
72230314	3.010	01	7		5.0078	02	4
72230318	3.030	01	1		5.0078	03	16
72230325	3.000	02	3		5.0079	02	4
	5.0052	01	1		5.0079	03	16
72230333	3.002	01	2	72954857	0.003	04	24
72230408	1.020	01	2	72954868	1.260	01	38
72230470	1.000	01	37A		1.260	02	38
72275189	1.300	02	39		1.260	03	38
	1.300	03	39	72954954	5.0088	03	5
	5.0208	02	10		5.0089	03	4
	5.0209	02	10	72954985	1.085	01	7
72280246	5.0020	18	3		5.0088	01	5
	5.0021	18	3		5.0089	01	5
	5.0023	18	3	72954986	1.061	02	12
	5.0024	18	3	72954988	5.0020	05	6
72280271	1.090	03	12		5.0021	05	6
72282535	1.295	01	72		5.0023	05	6
72283072	1.040	03	30		5.0024	05	6
72283326	5.0020	02	3		5.0076	07	19
	5.0021	02	3		5.0076	07	32
	5.0023	02	3		5.0077	05	19
	5.0024	02	3		5.0077	05	32
72283478	5.0013	01	11		5.0078	05	19
	5.0022	01	11		5.0078	05	32
	5.0038	01	11		5.0079	05	19
	5.0086	01	8		5.0079	05	32
	5.0086	03	8	72955399	5.0086	01	6
	5.0088	02	8		5.0087	01	6
	5.0088	04	8		5.0088	02	6
	5.0530	01	11		5.0089	02	6
72283559	1.050	03	18	72955421	1.000	01	9
	1.050	04	18	72955434	5.0076	07	17
	5.0088	03	12		5.0077	05	17
	5.0089	03	8		5.0078	05	17
72283610	5.0148	01	8		5.0079	05	17
72283853	1.060	04	18	72955472	1.061	02	6
	5.0076	07	20	72955500	5.0088	05	4
	5.0077	05	20	72955526	5.0076	07	1
	5.0078	05	20		5.0077	05	1
	5.0079	05	20		5.0078	05	1
72284849	1.050	02	16		5.0079	05	1
72950241	1.300	11	3	72955844	1.250	03	5
72950285	1.050	08	261	72955862	3.040	01	2
	1.050	09	261	72955941	1.220	01	11
	1.050	10	261	72956186	1.220	01	16
	1.050	11	261	72957165	5.0148	01	24
	1.050	12	261	72957825	2.031	06	166
	1.060	02	261		5.0088	06	166
72950894	1.220	01	10		5.0089	06	166
72951026	3.060	02	12	72957828	1.020	01	6C
72951496	1.090	01	22	72958811	1.050	08	512
72951499	1.010	02	11	72958881	1.030	02	886
	1.090	01	21	72958882	1.030	02	901
	1.090	02	21	72960052	1.083	04	15
	1.092	01	15	72960147	3.060	02	5
	1.220	07	3	72960345	1.050	02	20
	1.220	08	2		1.085	01	8
	1.220	09	2	72960350	1.040	03	31
	1.220	10	13	72960479	1.030	05	312
	1.220	11	13	72960987	5.0020	02	2
	1.220	12	13		5.0021	02	2
	1.220	13	13		5.0023	02	2
	1.220	15	2		5.0024	02	2
	5.0040	01	18	72961479	1.060	02	151
	5.0040	02	18	72962036	2.000	01	5
	5.0076	15	2		2.001	02	5
	5.0077	11	2	72962148	1.030	02	153
	5.0078	11	2	72962149	1.030	02	157
	5.0079	11	2	72962150	1.030	02	535
	5.0089	03	15	72962151	1.030	03	100
	5.0585	01	5	72962208	1.030	02	211
	5.0585	02	5	72962215	1.030	02	127
72951749	1.250	06	8	72962216	1.030	02	885
72952742	1.220	16	4	72962321	1.020	01	6E
	1.260	01	44	72963318	5.0088	03	21
72952745	1.220	01	12	72963810	1.300	09	10
72952762	5.0148	01	12	72963962	1.030	02	156
72953349	1.260	03	20	72963968	1.030	05	355
72953884	2.050	01	1	72963969	1.030	05	433
72953989	2.000	01	6	72963970	1.030	05	434
	2.001	02	6	72963972	1.030	05	700
72953999	0.003	04	2	72963976	1.030	02	124
72954173	1.060	04	6	72963995	1.030	05	309

Copyright © New Holland

Number	Figure	Sequence	Ref.	Number	Figure	Sequence	Ref.
72963996	1.030	05	310	84175009	5.0585	01	3
72963997	1.030	05	311	84175610	5.0585	01	7
72964141	1.300	01	37	84176247	3.020	01	1
	1.300	02	37	84177031	5.0585	01	9
	1.300	08	4	84189984	1.040	01	5
72964142	1.300	01	38	84227438	5.0088	03	6
	1.300	02	38		5.0089	03	6
	1.300	08	5	84273175	1.000	01	37
72964210	1.050	10	321	87330694	2.001	01	2
	1.050	11	321	87332765	2.001	01	15
	1.050	12	321		2.031	01	17
72964211	1.050	10	322	87333054	5.0088	01	4
	1.050	11	322		5.0089	01	4
72964212	1.050	09	325	87333059	1.030	02	113
72964469	1.030	02	789	87333061	1.030	02	116
72964485	1.030	02	806	87333062	1.030	02	123
72964498	1.030	05	850	87333063	1.030	02	251
72964521	5.0020	02	11	87333064	1.030	02	261
	5.0021	02	11	87333069	1.030	02	401
	5.0023	02	11	87333070	1.030	02	532
	5.0024	02	11	87333071	1.030	02	534
73313187	1.280	01	2	87333132	1.050	08	324
76030024	5.0001	01	10		1.050	09	324
	5.0002	01	10		1.050	12	324
	5.0003	01	10	87334470	2.000	02	2
	5.0004	01	10		2.001	02	17
	5.0005	01	10	87338398	1.081	02	21
76046530	3.030	02	13	87338401	5.0076	07	31
76046537	3.030	02	11		5.0077	05	31
79028981	4.200	01	30		5.0078	05	31
79047640	1.220	14	7		5.0079	05	31
79069460	5.0208	04	2A	87338408	1.080	01	3
	5.0580	02	2A	87338415	1.091	01	2
79083943	3.020	03	15		5.0020	06	2
8093880	0.082	01	1		5.0020	13	2
8093881	0.082	01	4		5.0021	06	2
8093882	0.081	01	4		5.0021	13	2
8093949	0.082	01	4		5.0023	06	2
8093957	0.360	02	2		5.0023	13	2
8093958	0.360	02	4		5.0024	06	2
8093959	0.360	02	7		5.0024	13	2
8093960	0.360	02	12	87338432	1.065	01	3
8094556	0.082	01	1	87338497	1.060	04	1
8094960	0.081	01	4	87338500	1.060	04	21
8094961	0.081	01	4	87338533	1.081	01	1
8190143	0.360	02	14	87338536	1.081	02	23
84123792	1.295	01	68	87338540	1.080	01	15
84123793	1.295	01	69	87338542	1.080	01	12
84123944	4.520	03	44	87339899	2.031	03	1
84124313	1.295	01	73	87339903	2.031	03	2
84125579	2.001	01	14	87340506	0.003	01	5
84130880	1.220	16	1	87340507	0.003	01	6
84131847	0.021	01		87340508	0.003	01	8
84136413	1.200	04	2	87343090	2.030	01	11
84141769	1.000	03	11F		2.031	02	5
84142001	3.010	01	4		5.0020	10	22
84147125	5.0020	10	8		5.0021	10	22
	5.0021	10	8		5.0023	10	22
	5.0023	10	8		5.0024	10	22
	5.0024	10	8	87343093	2.030	01	12
84151536	5.0580	01	6		2.031	02	6
84152664	3.010	02	1		5.0020	10	38
84152673	3.010	02	2		5.0021	10	38
84152727	3.010	02	7		5.0023	10	38
84152738	3.010	02	8		5.0024	10	38
84152750	3.010	02	9	87343179	5.0076	13	2
84152752	3.010	02	10		5.0077	09	2
84152755	3.010	02	11		5.0078	09	2
84152756	3.010	02	12		5.0079	09	2
84152758	3.010	02	13	87343330	2.030	01	7
84152764	3.010	02	14		2.031	01	5
84152771	3.010	02	15		5.0020	10	11
84152774	3.010	02	16		5.0021	10	11
84152777	3.010	04	18		5.0023	10	11
84152939	3.010	04	19		5.0024	10	11
84152942	3.010	04	20	87343333	2.030	01	8
84152952	3.010	04	26		2.031	01	7
84152959	3.010	03	28	87343335	2.030	01	9
84152963	3.010	03	30		2.031	01	6
84152970	3.010	03	33		5.0020	10	12
	3.010	04	33		5.0021	10	12
84161860	1.295	01	74		5.0023	10	12
84163381	5.0208	02	6		5.0024	10	12
	5.0209	02	6	87343337	2.030	01	10
84164716	5.0585	01	4		2.031	01	8
84165067	1.020	01	6	87343348	2.031	04	3
84173832	2.000	01	16	87343521	2.030	01	13
84175003	5.0585	01	1		2.031	01	10
84175005	5.0585	01	2		5.0020	10	34

Copyright © New Holland

Number	Figure	Sequence	Ref.	Number	Figure	Sequence	Ref.
87343521	5.0020	17	9	87359469	5.0020	10	10
	5.0021	10	34		5.0021	10	10
	5.0021	17	9		5.0023	10	10
	5.0023	10	34		5.0024	10	10
	5.0023	17	9	87361706	1.300	03	28
	5.0024	10	34	87363966	1.030	06	12
	5.0024	17	9	87369423	1.000	01	5
87345200	5.0087	03	8	87369427	1.040	01	3
	5.0089	04	18	87369430	1.040	01	6
87346192	5.0086	01	2	87369444	2.030	04	8
	5.0087	01	2	87375394	5.0076	05	8
	5.0088	02	2		5.0077	04	8
	5.0089	02	2		5.0078	04	8
87346193	5.0086	01	3		5.0079	04	8
	5.0087	01	3	87377643	3.001	01	2
	5.0088	02	3	87381217	5.0076	14	1
	5.0089	02	3		5.0077	10	1
87346806	2.001	01	1	87381234	5.0020	11	9
87349048	5.0013	02	6		5.0021	11	9
	5.0022	02	6		5.0023	11	19
	5.0038	02	6		5.0024	11	19
	5.0530	02	6	87382950	5.0078	10	1
87349049	2.030	01	22		5.0079	10	1
87349050	5.0013	02	5	87382952	5.0023	11	1
	5.0022	02	5		5.0024	11	1
	5.0038	02	5	87382954	5.0023	11	2
	5.0530	02	5		5.0024	11	2
87349053	2.030	04	1	87382965	5.0079	10	2
87349054	2.030	04	2	87383027	2.031	02	3
87349642	5.0020	16	6	87386068	5.0076	01	1
	5.0020	17	7		5.0077	01	1
	5.0021	16	6		5.0078	01	1
	5.0021	17	7		5.0079	01	1
	5.0023	16	6	87395450	2.030	01	20
	5.0023	17	7	87395451	2.030	02	1
	5.0024	16	6	87395454	2.030	02	2
	5.0024	17	7	87396684	5.0076	12	3
87349648	5.0020	16	7		5.0077	08	3
	5.0021	16	7		5.0078	08	3
	5.0023	16	7		5.0079	08	3
	5.0024	16	7	87396711	5.0076	11	4
87349655	5.0020	16	3		5.0077	07	4
	5.0020	17	5		5.0078	07	4
	5.0021	16	3		5.0079	07	4
	5.0021	17	5	87396713	5.0076	11	5
	5.0023	16	3		5.0077	07	5
	5.0023	17	5		5.0078	07	5
	5.0024	16	3		5.0079	07	5
	5.0024	17	5	87396715	5.0076	11	3
87349673	5.0020	16	4		5.0077	07	3
	5.0021	16	4		5.0078	07	3
	5.0023	16	4		5.0079	07	3
	5.0024	16	4	87396720	5.0076	11	1
87349692	5.0020	10	15		5.0077	07	1
	5.0020	16	5		5.0078	07	1
	5.0021	10	15		5.0079	07	1
	5.0021	16	5	87396721	5.0076	11	2
	5.0023	10	15		5.0076	12	2
	5.0023	16	5		5.0077	07	2
	5.0024	10	15		5.0077	08	2
	5.0024	16	5		5.0078	07	2
87352425	5.0001	01	12		5.0078	08	2
87353061	5.0020	17	6		5.0079	07	2
	5.0021	17	6		5.0079	08	2
	5.0023	17	6	87396723	2.031	05	17
	5.0024	17	6	87396727	5.0076	12	1
87353360	2.031	04	5		5.0077	08	1
	5.0088	05	5		5.0078	08	1
	5.0089	04	4		5.0079	08	1
87353624	0.003	04	25	87396773	5.0087	01	1
87354132	5.0086	04	1		5.0089	02	1
	5.0087	04	1	87396775	5.0087	01	17
87354133	5.0088	07	1		5.0089	02	17
	5.0089	07	1	87396776	5.0087	02	1
87354943	5.0530	01	21	87397163	1.050	01	3
87356265	2.041	02	5	87397165	1.050	01	2
87356298	2.040	01	1	87397171	1.050	02	1
87356299	2.041	02	4	87397448	1.050	03	2
87356300	2.040	01	2		5.0076	07	2
87356301	2.040	01	3		5.0077	05	2
87356672	1.300	05	11		5.0078	05	2
87356682	1.300	05	14		5.0079	05	2
87356683	1.300	05	15	87397449	1.050	04	4
87356990	1.000	03	11	87397450	1.050	02	8
87357734	1.220	03	11	87397451	1.050	03	21
87359468	5.0020	10	9	87397561	1.060	03	23
	5.0021	10	9	87397565	1.083	01	29
	5.0023	10	9	87397568	1.050	03	6
	5.0024	10	9		1.080	02	7

Copyright © New Holland

Number	Figure	Sequence	Ref.	Number	Figure	Sequence	Ref.
87397569	1.061	01	18	87522432	1.092	01	7
	1.083	01	34		5.0020	05	2
	5.0020	04	15		5.0020	06	5
	5.0021	04	15		5.0020	13	7
	5.0023	04	15		5.0021	05	2
	5.0024	04	15		5.0021	06	5
87397570	1.083	01	30		5.0021	13	7
	5.0020	04	4		5.0023	05	2
	5.0021	04	4		5.0023	06	5
	5.0023	04	4		5.0023	13	7
	5.0024	04	4		5.0024	05	2
87435522	1.010	02	13		5.0024	06	5
87435525	1.010	02	13A		5.0024	13	7
87438159	1.010	02	13B	87523517	0.003	01	10
87472588	3.000	03	1	87523518	0.003	01	12
87475074	1.016	01	1	87523519	0.003	01	3
87475075	1.016	02	18	87523521	0.003	01	3A
87477496	2.030	01	4	87523522	0.003	01	4
87487428	1.016	02	12	87523524	0.003	01	4A
87487429	1.016	02	16	87523525	0.003	01	2
87489568	5.0032	01	2	87523527	0.003	01	2A
87490305	4.520	03	43	87524750	1.020	01	11
87491614	1.300	09	2	87524790	0.003	01	2B
87497378	1.016	02	1	87524810	1.260	01	41
87497379	1.016	02	2	87524864	1.070	01	1
87497380	1.016	02	3	87524865	1.070	01	2
87497381	1.016	02	4	87524873	1.070	01	5
87497382	1.016	02	5	87524874	1.070	01	6
87497383	1.016	02	6	87524894	1.081	01	3
87497384	1.016	02	7	87524900	1.060	01	1
87497385	1.016	02	8	87524901	1.060	01	2
87497386	1.016	02	9	87524902	1.060	03	3
87497387	1.016	02	10	87524903	5.0076	07	9
87497399	1.016	02	11		5.0077	05	9
87497400	1.016	02	13		5.0078	05	9
87497401	1.016	02	14		5.0079	05	9
87497402	1.016	02	15		5.0088	03	16
87497639	1.016	02	17		5.0089	03	18
87499036	3.040	01	1	87524904	1.060	01	7
87499037	3.040	02	2	87524905	1.060	01	8
87499039	3.040	02	2A	87524907	1.060	01	19
87499040	3.040	02	5	87525249	0.000	01	1
87499041	3.040	02	6	87525250	0.000	01	2
87499042	3.040	02	7	87525261	0.000	02	18
87499045	3.040	02	10	87525263	0.000	01	35
87499047	3.040	02	13	87525505	5.0013	01	21B
87499048	3.040	02	11		5.0022	01	21B
87517167	2.030	01	1		5.0038	01	21B
87517169	2.030	01	2		5.0530	01	21B
87517171	2.030	01	3	87526660	0.003	02	3
87517176	2.030	01	5	87526661	0.003	02	2
87517178	2.030	01	6	87526662	0.003	03	4
87518149	2.031	01	1	87526664	0.003	03	6
87518151	2.031	01	2	87526665	0.003	03	7
87518153	2.031	01	3	87526666	0.003	03	10
87518155	2.031	01	4	87526667	0.003	03	11
87518158	2.031	02	1	87526669	0.003	03	12
87518160	2.031	02	2	87526672	0.003	03	13
87519949	1.082	01	1	87526677	0.003	02	36
87519950	1.082	02	1	87526680	1.010	02	10
87520007	5.0020	01	1		1.081	02	30
	5.0021	01	1		1.092	01	16
	5.0023	01	1		1.220	07	2
	5.0024	01	1		1.220	08	3
87521245	2.000	01	16A		1.220	09	3
	2.001	01	14A		1.220	11	12
	2.002	01	8A		1.295	02	49
	2.031	03	1A		5.0020	01	8
87521521	1.081	01	6		5.0021	01	8
87521852	1.200	02	1		5.0023	01	8
87521882	5.0020	04	3		5.0024	01	8
	5.0021	04	3		5.0040	01	17
	5.0023	04	3		5.0040	02	17
	5.0024	04	3		5.0076	15	3
87521883	5.0020	04	1		5.0077	11	3
	5.0021	04	1		5.0078	11	3
	5.0023	04	1		5.0079	11	3
	5.0024	04	1	87527530	1.260	05	2
87521884	5.0020	04	2	87527531	5.0020	18	1
	5.0021	04	2		5.0021	18	1
	5.0023	04	2		5.0023	18	1
	5.0024	04	2		5.0024	18	1
87522431	5.0020	05	1	87527533	1.200	04	1
	5.0021	05	1		1.260	05	1
	5.0023	05	1	87527880	1.083	03	1
	5.0024	05	1	87528088	1.030	01	1-5
87522432	1.090	01	14	87528089	1.030	01	6
	1.090	02	14	87528090	1.030	01	7
	1.091	01	5	87528092	5.0076	05	5

Copyright © New Holland

Number	Figure	Sequence	Ref.
87528092	5.0077	04	5
	5.0078	04	5
	5.0079	04	5
87528129	1.083	02	10
87528664	1.083	01	11
87528665	1.083	01	12
87528672	1.093	01	3
87528679	1.093	01	2
87528778	5.0088	08	1
	5.0089	08	1
87529445	1.295	01	12
87529448	1.295	02	16
87529476	1.295	05	2
87529489	1.295	04	1
87529490	1.295	04	2
87529496	1.295	04	6
87529497	1.295	04	7
87529502	1.295	03	40
87529503	1.092	01	1
87529521	1.295	01	58
87529912	5.0020	17	1
	5.0021	17	1
	5.0023	17	1
	5.0024	17	1
87529928	2.002	01	8
87529935	1.081	02	8
87529936	1.081	01	11
87529937	1.081	01	12
87529938	1.081	02	13
87529939	1.081	01	34
87530581	5.0076	05	6
	5.0077	04	6
	5.0078	04	6
	5.0079	04	6
87530582	1.060	03	20
87530584	5.0076	05	11
	5.0077	04	11
	5.0078	04	11
	5.0079	04	11
87530862	1.010	02	15
87530988	0.001	01	1
87530989	0.001	02	2
87530994	0.001	02	3
87530995	0.001	02	4
87530996	0.001	02	9
87531043	1.300	10	7
87531044	1.300	10	8
87531048	1.080	01	5
87531049	1.080	01	6
87531050	1.080	01	2
87531051	1.080	02	9
87531052	1.080	02	10
87531053	1.080	02	14
87531056	1.060	04	2
87531061	1.080	01	13
87531068	1.080	01	1
87531069	1.080	01	4
87531507	2.000	01	17
	2.001	01	16
	2.002	01	20
	5.0013	01	24
	5.0022	01	24
	5.0038	01	24
	5.0530	01	24
87531523	5.0076	07	10
	5.0077	05	10
	5.0078	05	10
	5.0079	05	10
87531528	1.300	07	2C
87531530	1.300	08	3
87531536	1.300	08	3B
87531539	1.083	01	13
87531555	1.300	02	7
87531569	1.300	01	5
87531583	1.300	03	11
87531590	1.300	02	12
87531595	1.300	02	13
87531602	1.300	02	16
87531608	1.300	02	18
87531609	1.300	01	19
87531610	1.300	01	20
87531611	1.300	01	21
87531614	1.300	03	25
87531619	1.300	03	27
87531620	1.300	06	1
87532008	1.083	01	14
87532096	5.0076	03	1
	5.0077	02	1
	5.0078	02	1
87532096	5.0079	02	1
87532097	5.0076	03	2
	5.0077	02	2
	5.0078	02	2
	5.0079	02	2
87532102	5.0076	03	3
	5.0077	02	3
	5.0078	02	3
	5.0079	02	3
87532105	5.0076	03	6
	5.0076	04	12
	5.0077	02	6
	5.0077	03	12
	5.0078	02	6
	5.0078	03	12
	5.0079	02	6
	5.0079	03	12
87532117	3.060	01	1
87532229	5.0013	01	21
87532858	1.295	04	9
87532882	1.090	01	1
	1.090	02	1
87532888	1.060	04	5
87532891	1.060	04	15
87532892	1.060	04	17
87532893	1.060	04	19
87532906	5.0076	07	3
	5.0077	05	3
	5.0078	05	3
	5.0079	05	3
87532907	5.0076	07	8
	5.0077	05	8
	5.0078	05	8
	5.0079	05	8
87532944	2.000	02	1
	2.001	02	16
87532949	1.061	02	7
87533036	1.300	06	1A
87533037	1.300	06	1B
87533038	1.300	06	1C
87533039	1.300	07	2
87533042	1.300	07	2A
87533043	1.300	07	2B
87533048	1.300	06	3A
87533050	1.300	05	1
87533078	1.091	01	3
	1.092	01	4
	5.0020	06	3
	5.0021	06	3
	5.0023	06	3
	5.0024	06	3
87533102	1.092	01	11
87533336	5.0013	01	21D
	5.0022	01	21D
	5.0038	01	21D
	5.0530	01	21D
87533338	5.0013	01	21C
	5.0022	01	21C
	5.0038	01	21C
	5.0530	01	21C
87533342	5.0013	01	21A
	5.0022	01	21A
	5.0038	01	21A
	5.0530	01	21A
87533361	1.300	05	10
87533362	1.300	05	12
87533363	1.300	05	13
87533364	1.300	05	16
87533365	1.300	05	17
87533371	2.002	01	13
	5.0013	04	1
	5.0022	04	1
	5.0038	04	1
	5.0530	04	1
87533375	2.000	02	10
	2.002	01	1
	5.0013	02	31
	5.0022	02	31
	5.0038	02	31
	5.0530	02	31
87533378	2.000	01	1
	2.001	02	1
87533381	2.000	01	2
	2.001	02	2
87533389	5.0086	03	16
87533392	5.0013	03	2
	5.0022	03	2
	5.0530	03	2
87533580	1.061	01	2

Copyright © New Holland

Number	Figure	Sequence	Ref.	Number	Figure	Sequence	Ref.
87533586	1.061	01	3	87539206	5.0023	09	4
87533854	1.061	01	4		5.0023	15	5
87533907	1.061	01	5		5.0024	09	4
87534195	0.002	01	1		5.0024	15	5
87534197	0.002	01	2	87539962	5.0086	01	1
87534200	0.002	01	3		5.0088	02	1
87534202	0.002	01	5	87539963	5.0086	02	1
87534279	1.061	01	20	87539964	5.0086	02	2
87535533	2.030	01	21	87539965	5.0086	01	16
87535897	2.002	01	19		5.0088	02	16
87536204	0.060	01		87540076	1.010	02	1
87536305	1.083	04	1	87540077	1.010	02	2
87536531	1.083	04	4	87540078	1.010	02	3
87536532	1.083	04	5	87540129	5.0088	03	3
87536553	0.002	01	7		5.0089	03	5
87536667	1.083	04	3	87540130	1.040	01	7A
87536886	5.0013	02	41	87540132	1.040	01	4
	5.0022	02	41	87540133	5.0088	03	4
	5.0038	02	41		5.0089	03	3
	5.0530	02	41	87540358	5.0022	01	21
87536897	1.080	03	2	87540359	5.0038	01	21
	5.0020	08	2	87540814	5.0088	08	2
	5.0020	14	4		5.0089	08	2
	5.0021	08	2	87542038	2.030	05	1
	5.0021	14	4	87542040	2.030	05	2
	5.0023	08	2	87542042	2.030	05	3
	5.0023	14	4	87543175	2.030	04	1A
	5.0024	08	2		2.030	04	2A
	5.0024	14	4	87543176	2.030	02	1A
87536903	5.0013	02	51		2.030	02	2A
	5.0022	02	51	87543300	5.0086	04	1A
	5.0038	02	51		5.0087	04	1A
	5.0530	02	51		5.0088	07	1A
87536913	5.0013	02	4		5.0089	07	1A
	5.0022	02	4	87543992	5.0020	10	1
	5.0038	02	4		5.0021	10	1
	5.0530	02	4		5.0023	10	1
87537460	1.091	01	4		5.0024	10	1
	1.092	01	6	87543993	5.0020	10	2
	5.0020	06	4		5.0021	10	2
	5.0021	06	4		5.0023	10	2
	5.0023	06	4		5.0024	10	2
	5.0024	06	4	87543994	5.0020	10	3
87537856	1.300	02	22		5.0021	10	3
	1.300	03	22		5.0023	10	3
87537857	1.000	02	1		5.0024	10	3
87537858	1.000	02	2	87543995	5.0020	10	4
87537859	1.000	02	3		5.0021	10	4
87537861	1.000	02	24		5.0023	10	4
87537862	1.000	02	23		5.0024	10	4
87537863	1.000	01	26	87543996	1.300	02	15
87537888	5.0020	08	3	87544495	5.0086	03	3
	5.0021	08	3		5.0088	04	3
	5.0023	08	3	87544499	5.0086	03	2
	5.0024	08	3		5.0088	04	2
87539072	1.010	01	4	87544500	5.0086	03	4
87539080	1.000	02	22		5.0088	04	4
87539081	1.000	02	21	87544502	5.0086	03	1
87539082	1.000	01	20		5.0088	04	1
87539083	1.000	01	19	87545186	5.0088	02	4
87539088	5.0088	03	1	87545187	5.0086	01	5
87539089	5.0088	03	2		5.0088	02	5
87539195	1.270	03	2	87545734	1.300	02	14
	5.0020	09	2	87545735	1.300	03	17
	5.0020	15	2	87547555	5.0088	05	1
	5.0021	09	2	87547557	5.0088	05	2
	5.0021	15	2	87547558	5.0088	05	3
	5.0023	09	2	87547562	5.0022	03	1
	5.0023	15	2	87547564	5.0038	03	1
	5.0024	09	2	87547571	0.003	01	2C
	5.0024	15	2	87549839	1.000	02	13
87539200	5.0020	15	3	87549841	1.000	02	31
	5.0021	15	3	87549842	1.000	01	32
	5.0023	15	3	87549843	1.000	01	33
	5.0024	15	3	87549844	1.000	01	34
87539205	1.270	03	3	87550707	0.000	03	30
	5.0020	09	3	87550714	1.000	03	2
	5.0020	15	4	87550878	1.220	12	8
	5.0021	09	3	87551717	1.300	10	6
	5.0021	15	4	87552690	2.030	03	6
	5.0023	09	3	87552691	2.030	03	7
	5.0023	15	4	87552692	2.030	03	13
	5.0024	09	3	87552693	2.030	03	14
	5.0024	15	4	87552694	2.030	03	15
87539206	1.270	03	4	87552695	2.030	03	18
	5.0020	09	4	87552696	2.030	03	22
	5.0020	15	5	87552697	2.030	03	26
	5.0021	09	4	87552698	2.030	03	27
	5.0021	15	5	87555081	1.220	04	1

Copyright © New Holland

Number	Figure	Sequence	Ref.	Number	Figure	Sequence	Ref.
87555081	1.220	05	1	87560623	1.300	09	4
	5.0208	04	2	87561516	3.020	03	19
	5.0580	02	2	87562678	5.0042	01	1
87555669	5.0024	11	3	87564296	1.220	09	8
87555883	0.000	02	14	87564844	0.001	01	1C
87555884	0.000	02	15	87564846	0.001	01	1B
87556737	5.0020	11	2	87565331	1.220	03	5
	5.0021	11	2	87565332	1.220	03	5A
	5.0023	11	15	87565334	1.220	03	5B
87556738	5.0020	11	1	87565335	1.220	03	5C
	5.0021	11	1	87565336	1.220	03	5D
	5.0023	11	3	87565337	1.220	03	7
87556832	5.0076	12	4	87565339	1.220	03	5G
	5.0077	08	4	87565340	1.220	03	6
	5.0078	08	4	87565341	1.220	03	8
	5.0079	08	4	87565343	1.220	03	10
87557247	5.0087	02	2	87565344	1.220	03	12
87557250	5.0089	03	1	87568522	0.000	03	42
87557252	5.0089	03	2	87570965	1.250	07	3
87557379	3.070	01	7	87570967	1.250	07	4
87557380	3.070	01	8	87571058	1.220	10	2
87557543	1.220	01	31	87571059	1.220	10	3
87557635	5.0076	04	2	87571060	1.220	12	11
	5.0077	03	2	87571727	2.031	05	20
	5.0078	03	2	87572206	5.0020	17	2
	5.0079	03	2		5.0021	17	2
87557638	5.0076	04	7		5.0023	17	2
	5.0077	03	7		5.0024	17	2
	5.0078	03	7	87572208	5.0087	03	9
	5.0079	03	7		5.0089	04	19
87557640	5.0076	04	6	87572209	5.0087	03	6
	5.0077	03	6		5.0089	04	16
	5.0078	03	6	87572211	5.0089	04	1
	5.0079	03	6	87572213	5.0087	03	1
87557648	0.003	02	8	87572218	5.0020	17	4
87557649	0.003	02	35		5.0021	17	4
87557652	1.050	02	19		5.0023	17	4
87557658	1.061	02	8		5.0024	17	4
87557668	2.041	01	4	87572226	1.300	05	9
87557669	2.041	01	5	87573248	1.061	01	1
87557670	2.041	01	6	87575698	5.0087	03	7
87557671	2.040	01	7		5.0089	04	17
87557672	2.041	02	1	87575958	1.295	01	34
87557673	2.041	02	2	87576370	1.000	03	1
87557674	2.041	02	3	87576371	1.220	13	14
87557690	2.040	01	4	87576417	1.300	01	8
87557691	2.040	01	5	87576537	1.300	02	9
87557692	2.040	01	6	87576553	1.300	02	26
87557693	2.041	01	1	87576765	2.030	03	100
87557694	2.041	01	2	87576766	2.030	03	200
87557695	2.041	01	3	87576767	2.030	03	300
87557696	2.041	01	7	87576768	2.030	03	400
87557723	2.040	01	11	87576769	2.030	03	500
	2.041	01	11	87579050	5.0148	01	2
87557724	2.040	01	12	87579051	5.0148	01	3
	2.041	01	12	87579052	5.0148	01	5
	2.041	02	9	87579053	5.0148	01	6
87557773	2.040	01	14	87579054	5.0148	01	9
	2.041	01	14	87579055	1.050	02	15
	2.041	02	11		5.0148	01	10
87557774	2.040	01	13	87579056	1.300	05	3
	2.041	01	13	87579057	1.300	05	2
	2.041	02	10	87579445	0.003	03	5
87558145	5.0530	03	1	87579546	5.0020	14	6
87558547	5.0024	11	15		5.0021	14	6
87558716	1.300	02	4		5.0023	14	6
87558718	1.300	01	10		5.0024	14	6
87559156	1.220	01	33	87579586	1.300	04	6
	1.220	02	9	87579587	1.300	02	52
	5.0076	15	1	87579588	1.300	02	23
	5.0077	11	1	87579589	1.300	01	24
	5.0078	11	1	87579592	1.016	01	2
	5.0079	11	1	87579594	5.0020	01	2
	5.0208	04	4		5.0021	01	2
	5.0580	02	4		5.0023	01	2
87559198	5.0208	04	3		5.0024	01	2
	5.0580	02	3	87584110	1.220	01	5
87559395	1.220	03	1	87585125	0.001	01	1F
87559396	1.220	03	5F	87585128	0.001	01	1H
87559666	1.220	05	2	87586053	1.051	01	1
87559668	1.220	04	2	87587716	0.000	01	3
87559743	3.030	02	5	87588861	2.031	03	2A
87559745	3.030	02	8	87589997	1.300	04	1A
87559747	3.030	02	9	87594883	1.090	01	11
87559748	1.220	14	1	87597934	4.520	02	6
87559749	1.220	14	4	87597935	4.520	01	21
87559754	3.030	02	1	87597936	4.520	02	26
87559755	3.030	02	6	87597937	4.520	01	29
87560621	1.300	09	3	87597938	4.520	01	30

Copyright © New Holland

Number	Figure	Sequence	Ref.	Number	Figure	Sequence	Ref.
87597939	4.520	01	36	87628538	0.002	01	15
87597940	4.520	01	37	87632030	5.0020	16	2
87597943	1.300	04	1		5.0021	16	2
87599406	5.0020	01	6		5.0023	16	2
	5.0021	01	6		5.0024	16	2
	5.0023	01	6	87632032	5.0020	16	1
	5.0024	01	6		5.0021	16	1
87600091	4.520	03	4		5.0023	16	1
87600093	4.520	01	30		5.0024	16	1
87600095	4.520	01	30	87632058	5.0089	05	29
87600530	3.000	01	1	87633122	1.295	01	1
	3.001	01	1	87633128	1.295	01	71
	3.002	01	1	87636398	0.004	01	2
87603343	1.083	03	8	87636399	0.004	01	3
87603344	1.083	03	9	87636401	0.004	01	8
87603345	1.083	02	7	87636405	0.004	01	6
87603347	1.083	02	2	87638528	5.0005	01	17
87603348	1.083	03	3	87638740	1.000	01	4
87603349	1.083	03	5	87640939	0.000	02	16
87603350	1.083	03	6	87641272	1.300	12	1
87603351	1.083	02	4	87641273	1.300	12	2
87606746	5.0208	02	4	87643223	1.050	01	6
	5.0209	02	4		5.0020	01	3
87606856	5.0208	02	5		5.0021	01	3
	5.0209	02	5		5.0023	01	3
87606857	5.0208	02	12		5.0024	01	3
	5.0209	02	12	87643224	1.050	01	7
87606858	5.0208	02	13	87643225	1.040	01	2
	5.0209	02	13		1.050	01	8
87608371	1.080	01	11	87645092	1.092	01	3
	1.091	01	9		5.0076	07	6
	1.092	01	10		5.0077	05	6
	5.0020	05	4		5.0078	05	6
	5.0020	06	9		5.0079	05	6
	5.0020	13	11	87645816	5.0089	05	3
	5.0021	05	4	87652542	1.300	06	1D
	5.0021	06	9		1.300	07	2E
	5.0021	13	11		1.300	09	1A
	5.0023	05	4	87654116	1.090	02	5
	5.0023	06	9	87654320	3.020	02	903
	5.0023	13	11	87657411	5.0040	01	36
	5.0024	05	4	87657719	5.0040	03	1
	5.0024	06	9	87657720	5.0040	02	2
	5.0024	13	11	87657724	5.0040	02	7
87609321	5.0020	01	5	87657725	5.0040	02	8
	5.0021	01	5	87657726	5.0040	02	9
	5.0023	01	5	87657727	5.0040	02	10
	5.0024	01	5	87657728	5.0040	03	5
87609987	5.0086	01	4	87657729	5.0040	02	13
87610396	5.0088	09	1	87657732	5.0040	01	14
87610397	5.0088	09	1	87657736	5.0038	03	2
87610398	5.0088	09	1	87662791	5.0040	01	39
87610905	1.300	10	5	87662793	5.0040	03	2
87610969	5.0087	01	4	87662794	5.0040	01	20
	5.0089	02	4	87662922	5.0040	01	16
87610970	5.0087	01	5	87664173	0.003	02	41
	5.0089	02	5	87676786	5.0040	03	13
87611493	5.0089	09	1	87681693	1.260	02	23
87611494	5.0089	09	1	87687414	5.0076	07	11
87611495	5.0089	09	1		5.0077	05	11
87611990	1.220	02	14		5.0078	05	11
87612011	1.083	01	19		5.0079	05	11
	1.083	02	19	87687417	5.0076	07	7
	1.083	03	19		5.0077	05	7
87612013	0.000	02	17		5.0078	05	7
87612553	1.250	06	1		5.0079	05	7
	1.300	11	1	87691652	4.520	02	42
87616670	1.300	11	2	87692485	5.0040	01	15
87616671	1.300	11	2A	87700850	1.090	02	8
87616672	1.300	11	2B	87701340	4.520	01	40
	1.300	11	5	87702830	4.520	01	41
87616673	4.520	04	52	87703006	1.092	01	2
87619048	1.300	09	1	87707297	1.090	01	10
87620686	2.000	02	6	87718026	1.300	11	4
	2.001	02	21	87720558	1.295	02	66
87620687	2.000	02	7	87723741	0.003	01	1
	2.001	02	22	87736586	1.295	01	3
87621308	1.220	01	32	87743991	1.295	02	2
87622204	2.031	04	2	87746013	1.270	02	2
87622205	2.031	04	1		1.270	03	7
87622865	5.0088	01	1		5.0020	09	11
	5.0089	01	1		5.0021	09	11
87622866	5.0088	01	2		5.0023	09	11
	5.0089	01	2		5.0024	09	11
87622868	1.085	01	5	87748274	1.010	01	1A
87622869	1.085	01	3	99478110	0.140	01	5
	5.0088	01	3	99478153	0.140	01	6
	5.0089	01	3	EM30V00001S321	5.0076	02	322
87623250	1.260	03	22	HS23C14135G1	1.040	03	23

Copyright © New Holland

Number	Figure	Sequence	Ref.	Number	Figure	Sequence	Ref.
HS53C20105G1	1.000	01	11	YN03M01867P1	1.070	02	1E
LB03M01015P1	1.270	01	7A	YN03M02019P1	1.070	02	1B
LB13E01042P1	1.220	08	4		1.070	02	2B
LB22T00015P1	4.520	01	23	YN03M02085P2	1.200	02	15
LB22T00016P1	4.520	01	22	YN03M02108F1	1.280	01	11
LB22T01002P1	4.520	01	38	YN03M02109F1	1.200	01	3
LB22T01004P1	4.520	01	45	YN03M02110F1	1.200	01	4
LC10V00010S312	1.030	02	312	YN03M02111F1	1.200	01	5
LC21C01040P1	1.300	01	2A	YN03M02112P1	1.200	01	14
LC30V00036S973	1.050	07	973	YN03M02113P1	1.070	02	4
LC30V00036S974	1.050	07	974	YN03M02114P1	5.0076	10	4
LC55C01001P1	5.0580	01	14		5.0077	06	4
LC55C01004P1	5.0580	01	15		5.0078	06	4
LQ02C00021F1	1.250	01	1		5.0079	06	4
LQ02C00022F1	1.250	02	1	YN03M02125P1	1.270	01	1
LQ02C01193P1	1.250	03	7	YN03M02126P1	1.270	01	5
LQ02C01211P1	1.250	03	8	YN03M02128P1	1.270	01	6
LQ02C01213P1	1.250	05	1	YN03M02134P1	5.0076	10	1B
LQ02C01276P1	1.250	03	3		5.0076	10	2B
LQ02C01277P1	1.250	03	9		5.0077	06	1B
LQ02C01289P1	5.0208	03	1		5.0077	06	2B
	5.0209	03	1		5.0078	06	1B
LQ02C01299P1	5.0208	01	1		5.0078	06	2B
	5.0209	01	1		5.0079	06	1B
LQ02C01300P1	5.0208	02	1		5.0079	06	2B
	5.0209	02	1	YN03M02139F1	1.070	02	2
LQ13E01215P1	1.220	09	7	YN03M02139F2	1.070	02	1
LQ13E01233P1	1.220	09	12	YN03M02140P1	1.070	02	1A
LQ20M00059F1	1.295	05	1	YN03M02141P1	1.070	02	2A
LQ20M01169P1	1.295	05	6	YN05P00058S002	0.003	04	6
LQ20M01328P1	1.295	03	30	YN05P00058S003	0.003	04	9
LQ30V00028R220	1.050	08	220	YN05P00058S005	0.003	04	17
	1.050	09	220	YN05P00058S012	0.003	04	21
	1.050	10	220	YN05P00058S013	0.003	04	22
	1.050	11	220	YN05P00058S014	0.003	04	23
	1.050	12	220	YN05P00058S019	0.003	04	7
LQ30V00028S307	1.050	08	307	YN05P00058S022	0.003	04	10
LQ50V01007P1	1.295	05	4	YN05P00058S023	0.003	04	8
LQ50V01008P1	1.295	03	39	YN05P00058S032	0.003	04	30
LQ52C01021P1	1.250	06	4	YN05P00062S001	0.003	04	1
LQ52C01025P1	1.250	06	3	YN05P00062S012	0.003	04	12
LQ52C01026P1	1.250	06	2	YN05P00062S013	0.003	04	13
LQ52S00025P1	1.260	03	47	YN05P00062S014	0.003	04	14
LQ55C01002F1	5.0580	01	1	YN05P00062S015	0.003	04	15
LQ55C01013P1	5.0580	01	11	YN05P00062S016	0.003	04	16
LQ55C01027P1	5.0580	01	4	YN05P00062S018	0.003	04	18
LQ58S00002P1	1.260	01	26	YN05P00062S027	0.003	04	27
LQ68H01030D1	1.090	01	20	YN05P00062S029	0.003	04	29
	1.090	02	20	YN10V00019S056	5.0076	06	2
LQ68H01031P1	1.090	01	19	YN10V00033F2	1.030	01	4
	1.090	02	19	YN10V00043F1	1.030	01	1
LQ80E01019P1	5.0208	04	1	YN10V00043R100	1.030	02	100
	5.0580	02	1	YN10V00043R200	1.030	02	200
LS52S00015P1	1.060	03	6	YN10V00043S111	1.030	02	111
NS	0.001	01	1D	YN10V00043S271	1.030	02	271
	0.001	01	1E	YN10V00043S325	1.030	02	325
	0.001	01	1G	YN10V00043S546	1.030	02	546
NSS	1.000	03	11A	YN10V01009F1	1.030	01	2
	1.000	03	11B	YN12P01205F1	1.093	01	1
	1.000	03	11C	YN13E01606P1	1.220	10	1
	1.000	03	11D	YN14E01119P1	1.220	07	1
PU20M01002P1	1.260	01	27	YN15V00035S301	1.040	02	301
XLB03M01014F1	1.270	01	7	YN15V00035S491	1.040	02	491
YA30V00002S331	5.0076	02	331	YN15V00035S980	1.040	02	980
YA30V00002S332	5.0076	02	332	YN15V00035S984	1.040	02	984
YA30V00002S511	5.0076	02	511	YN15V00035S985	1.040	02	985
YA30V00002S521	5.0076	02	521	YN15V00036F3	1.040	01	7
YA30V00002S551	5.0076	02	551	YN17M01162D1	1.260	03	34
YB22T01004P1	4.520	01	39	YN17M01162D2	1.260	01	43
YB26V00001F1	1.081	01	33	YN17M01313P3	5.0020	18	2
YB46W00001F2	1.030	01	5		5.0021	18	2
YF30V00011R210	1.050	08	230		5.0023	18	2
	1.050	09	230		5.0024	18	2
	1.050	10	230	YN17M01417P1	5.0020	18	4
	1.050	11	230		5.0021	18	4
	1.050	12	230		5.0023	18	4
YF30V00011S202	1.050	08	202		5.0024	18	4
	1.050	09	202	YN17M01432F1	1.260	01	1
YF30V00011S212	1.050	14	212	YN17M01433F1	1.260	02	2
YF30V00011S213	1.050	14	213	YN17M01435F1	1.260	01	4
YF30V00011S304	1.050	11	304	YN17M01436F1	1.260	01	5
YF62H01001P1	1.092	01	12	YN17M01437P1	1.260	01	6
YM52F01151D1	1.000	02	30	YN17M01438F1	1.260	01	7
YN01E01021P1	1.260	03	21	YN17M01439F1	1.260	01	8
YN02P01032P1	0.000	03	25	YN17M01440F1	1.260	01	9
YN03M00304F1	1.200	03	1	YN17M01441F1	1.260	01	10
YN03M01863P1	1.070	02	2E	YN17M01442F1	1.260	01	11
YN03M01866P1	1.070	02	1D	YN17M01443F1	1.260	01	12
	1.070	02	2D	YN17M01444P1	1.260	02	29

Copyright © New Holland

Number	Figure	Sequence	Ref.	Number	Figure	Sequence	Ref.
YN17M01445P1	1.260	03	30	YN26C01012P1	1.000	04	11
YN17M01446P1	1.260	02	31	YN26C01013P1	1.000	04	12
YN17M01447P1	1.260	03	32	YN26C01014P1	1.000	04	13
YN17M01448P1	1.260	01	33	YN26C01015P1	1.000	04	14
YN17M01449P1	1.260	02	46	YN26C01016P1	1.000	04	15
YN17M01462P1	1.260	03	25	YN26C01018P1	1.000	04	17
YN17M01463P1	1.260	03	24	YN26C01023P1	1.000	04	2
YN17M01464P1	1.260	01	3	YN26C01024P1	1.000	04	16
YN17M01466P1	1.260	03	35	YN26C01025P1	1.000	05	1
YN17M01467P1	1.260	03	36	YN26C01026P1	1.000	05	2
YN17M01480P1	1.260	01	19	YN26C01027P1	1.000	05	3
YN20M00016S078	1.295	05	7	YN26C01029P1	1.000	05	4
YN20M01094DC	1.295	02	13	YN26M00072P1	1.200	01	2
YN20M01760F1	1.295	04	8	YN26M00074P1	5.0020	09	1
YN20M01771F1	1.260	01	14		5.0021	09	1
YN20M01772F1	1.260	01	15		5.0023	09	1
YN20M01773F1	1.260	01	13		5.0024	09	1
YN20M01774F1	1.260	01	16	YN26M00075P1	5.0020	15	1
YN20M01779P1	1.260	01	17		5.0021	15	1
YN20M01780P1	1.260	01	18		5.0023	15	1
YN20M01782F1	1.295	04	5		5.0024	15	1
YN20M01791P1	1.260	01	28	YN26M00076P1	1.270	02	1
YN20M01794P1	1.200	01	20		1.270	03	1
YN20M01795P1	1.200	01	21	YN26M00077P1	1.200	01	8
YN20M01796P1	1.200	01	22	YN28V00019S165	2.031	06	165
YN20M01797P1	1.200	01	19		5.0088	06	165
YN21C02462P1	1.300	06	3B		5.0089	06	165
YN21C02682P1	1.300	08	3A	YN28V00019S167	2.031	06	167
YN21C03195P1	1.300	08	2A		5.0088	06	167
YN21C03244P2	1.300	08	1A		5.0089	06	167
YN21C03282P1	1.300	03	11A	YN28V00019S201	2.031	06	201
YN21C03283P1	1.300	03	11B		5.0088	06	201
YN21C03284P1	1.300	03	11C		5.0089	06	201
YN21C03463P1	1.300	03	17A	YN28V00019S203	2.031	06	203
YN21C03610P1	1.300	03	17B		5.0088	06	203
YN21C04431F1	1.300	08	1		5.0089	06	203
YN21C04434F1	1.300	08	2	YN28V00019S206	2.031	06	206
YN21C04455P1	1.300	01	3		5.0088	06	206
YN21C04470P1	1.300	01	2		5.0089	06	206
YN21C04473P1	1.300	03	47	YN28V00019S271	2.031	06	271
YN21C04637F1	1.300	06	3		5.0088	06	271
YN22E00395F1	1.220	01	41		5.0089	06	271
YN22E01322P1	1.220	01	1	YN28V00019S311	2.031	06	311
YN22E01334P1	1.220	01	9		5.0088	06	311
YN22E01335P1	1.220	16	2		5.0089	06	311
YN22E01355P1	1.220	01	2	YN28V00019S321	2.031	06	321
YN22E01357P1	1.220	01	3		5.0088	06	321
YN22V00001F8	1.050	08	601		5.0089	06	321
YN22V00014FA	1.040	02	51	YN28V00019S322	2.031	06	322
YN22V00035S701	5.0020	03	21		5.0088	06	322
	5.0021	03	21		5.0089	06	322
	5.0023	03	21	YN28V00019S323	2.031	06	323
	5.0024	03	21		5.0088	06	323
YN22V00037F1	2.031	06	601		5.0089	06	323
	5.0088	06	601	YN28V00019S542	2.031	06	542
	5.0089	06	601		5.0088	06	542
YN22V00040F2	5.0076	02	601		5.0089	06	542
YN22V00041F2	5.0076	02	602	YN28V00019S631	2.031	06	631
YN24C01271P1	1.300	10	4		5.0088	06	631
YN24C01372P1	1.300	10	1		5.0089	06	631
YN24C01373P1	1.300	10	2	YN28V00019S632	2.031	06	632
YN24C01374P1	1.300	10	3		5.0088	06	632
YN24E00016S001	1.220	02	1		5.0089	06	632
YN24E00016S002	1.220	02	2	YN30H01215P1	1.060	01	9
YN24E00016S003	1.220	02	3	YN30V00001S205	1.050	08	205
YN24E00016S004	1.220	02	4		1.050	09	205
YN24E00016S005	1.220	02	5		1.050	10	205
YN24E00016S006	1.220	02	6		1.050	11	205
YN24E00016S007	1.220	02	7		1.050	12	205
YN24E00016S008	1.220	02	8	YN30V00001S339	1.050	09	339
YN24E00016S011	1.220	02	11	YN30V00001S551	1.050	08	551
YN24E00016S012	1.220	02	12		1.050	09	551
YN24E00016S013	1.220	02	13		1.050	10	551
YN25M00081F1	1.250	04	1		1.050	11	551
YN25M01234P1	1.250	07	2		1.050	12	551
YN25M01235P1	1.250	07	1		1.050	13	551
YN25M01238F1	1.200	02	7	YN30V00101R120	1.050	08	120
YN25M01239P1	1.200	02	17		1.050	09	120
YN25M01240P1	1.200	01	6		1.050	10	120
YN25M01242P1	1.250	04	2		1.050	11	120
YN26C01003P1	1.000	04	1		1.050	12	120
YN26C01004P1	1.000	04	3	YN30V00101R140	1.050	08	140
YN26C01005P1	1.000	04	4		1.050	09	140
YN26C01006P1	1.000	04	5		1.050	10	140
YN26C01007P1	1.000	04	6		1.050	11	140
YN26C01008P1	1.000	04	7		1.050	12	140
YN26C01009P1	1.000	04	8	YN30V00101R190	1.050	08	180
YN26C01010P1	1.000	04	9		1.050	09	180
YN26C01011P1	1.000	04	10		1.050	10	180

Copyright © New Holland

Number	Figure	Sequence	Ref.
YN30V00101R190	1.050	11	180
	1.050	12	180
YN30V00101R200	1.050	08	190
	1.050	09	190
	1.050	10	190
	1.050	11	190
	1.050	12	190
YN30V00101R210	1.050	08	200
	1.050	09	200
	1.050	10	200
	1.050	11	200
	1.050	12	200
YN30V00101R220	1.050	08	210
	1.050	09	210
	1.050	10	210
	1.050	11	210
	1.050	12	210
YN30V00101S010	1.050	10	301
YN30V00101S201	1.050	08	201
	1.050	09	201
	1.050	11	201
	1.050	12	201
YN30V00101S203	1.050	10	203
	1.060	02	201
YN30V00101S204	1.050	10	204
YN30V00101S206	1.050	10	206
YN30V00101S207	1.050	14	207
YN30V00101S209	1.050	11	209
YN30V00101S216	1.050	11	216
YN30V00101S303	1.050	10	303
YN30V00101S305	1.050	09	305
YN30V00101S306	1.050	09	306
YN30V00101S309	1.050	08	309
YN30V00101S310	1.050	09	310
YN30V00101S311	1.050	12	311
YN30V00101S326	1.050	09	326
YN30V00101S327	1.050	08	327
	1.050	09	327
	1.060	02	321
YN30V00101S328	1.050	12	328
YN30V00101S329	1.050	08	329
	1.050	09	329
	1.060	02	322
YN30V00101S340	1.050	12	340
YN30V00101S341	1.050	08	511
	1.050	09	511
	1.050	10	511
	1.050	11	511
	1.050	12	511
	1.050	13	511
YN30V00101S514	1.050	10	514
	1.050	11	514
YN30V00101S517	1.050	14	517
YN30V00101S518	1.050	14	518
YN30V00101S522	1.050	08	522
YN30V00101S527	1.050	14	527
YN30V00101S528	1.050	14	528
YN30V00104S201	5.0020	02	4
	5.0021	02	4
	5.0023	02	4
	5.0024	02	4
YN30V00104S301	5.0020	02	6
	5.0021	02	6
	5.0023	02	6
	5.0024	02	6
YN30V00104S321	5.0020	02	7
	5.0021	02	7
	5.0023	02	7
	5.0024	02	7
YN30V00105R100	1.092	02	100
YN30V00105R110	1.092	02	110
YN30V00105R120	1.092	02	120
YN30V00105R130	1.092	02	130
YN30V00105R140	1.092	02	140
YN30V00105R150	1.092	02	150
YN30V00105R160	1.092	02	160
YN30V00105R170	1.092	02	170
YN30V00105R180	1.092	02	180
YN30V00105S005	1.092	02	1
YN30V00105S010	1.092	02	11
YN30V00107S152	5.0076	02	152
YN30V00107S321	5.0076	02	321
YN30V00108S121	5.0076	02	121
YN30V00108S261	5.0076	02	261
YN30V00116F4	1.050	01	1
YN30V00116R110	1.050	08	110
	1.050	09	110
	1.050	10	110
	1.050	11	110
YN30V00116R110	1.050	12	110
YN30V00116R150	1.050	08	150
	1.050	09	150
	1.050	10	150
	1.050	11	150
	1.050	12	150
YN30V00116R170	1.050	08	170
	1.050	09	170
	1.050	10	170
	1.050	11	170
	1.050	12	170
YN30V00116S215	1.050	10	215
YN30V00116S302	1.050	11	302
YN30V00116S306	1.050	08	306
YN30V00116S308	1.050	12	308
YN30V00119F1	1.050	10	211
	1.050	11	211
YN30V00120F2	1.050	14	606
YN30V01062P1	1.050	12	604
YN32W00022F2	1.040	01	7B
YN32W01022P1	1.040	03	16
YN32W01026P1	1.040	03	14
YN32W01028P1	1.040	03	15
YN32W01051P1	1.040	03	1
YN32W01052P1	1.040	03	2
YN32W01054P1	1.040	03	4
YN32W01055P1	1.040	03	5
YN32W01056P1	1.040	03	6
YN32W01058P1	1.040	03	8
YN32W01060P1	1.040	03	12
YN32W01063P1	1.040	03	18
YN32W01067P1	1.040	03	9
YN32W01072P1	1.040	03	17
YN32W01080D1	1.040	03	25
YN32W01081P1	1.040	03	29
YN32W01082P1	1.040	03	21
YN32W01104P1	1.040	03	13
YN32W01117P1	1.040	03	3
YN32W01118F1	1.040	03	7
YN35V00017S171	5.0076	02	271
YN35V00048F1	1.060	02	350
	1.081	03	601
YN35V00049F1	1.081	03	602
YN35V00050F1	1.081	03	701
	5.0020	02	8
	5.0021	02	8
	5.0023	02	8
	5.0024	02	8
YN35V00051F1	1.081	03	702
YN35V00052F1	1.030	01	3
YN50E00017P1	1.070	02	1C
	1.070	02	2C
YN50S00043D5	5.0148	01	28
YN52V01008S002	1.020	01	6A
YN52V01016R800	1.020	01	6G
YN54D00014F2	3.020	03	901
YN54D01051P1	3.020	02	12
YN54D01062P1	3.020	03	13
YN54E01033P1	1.280	01	12
YN55E01088P1	5.0040	03	4
YN55E01092P1	5.0040	03	3
YN55V01062P1	3.060	02	4
YN55V01073P1	3.060	02	1
YN59S00021S001	1.260	04	1
YN59S00021S002	1.260	04	2
YN59S00021S003	1.260	04	3
YN59S00021S004	1.260	04	4
YN59S00021S005	1.260	04	5
YN59S00021S006	1.260	04	6
YN59S00021S007	1.260	04	7
YN59S00021S008	1.260	04	8
YN59S00021S009	1.260	04	9
YN59S00021S010	1.260	04	10
YN70V00010P1	3.020	03	14
YT02C01515D7	1.200	01	24
YT20M00009S005	1.295	05	5
ZC16X01200	0.002	01	6
	0.003	02	33
ZG31U08000	1.040	03	26
ZM73C10020	5.0076	05	15
	5.0077	04	15
	5.0078	04	15
	5.0079	04	15
ZN17C20012	1.250	03	6
ZN18C20012	1.030	02	808
ZY26X06056	1.060	01	11

Copyright © New Holland

Copyright © New Holland

TABLE OF CONTENTS

0 - FILTERS	00	MAINTENANCE PARTS
0 - VERSION	00	IDENTIFICATION AND VERSION LIST
0.000	01	ENGINE SUSPENSIONS
0.000	02	PIPING - ENGINE OIL
0.000	03	ENGINE - COMPONENTS
0.001	01	AIR CLEANER
0.001	02	AIR CLEANER
0.002	01	MUFFLER
0.003	01	RADIATOR
0.003	02	RADIATOR (WATER)
0.003	03	RADIATOR
0.003	04	RADIATOR - COMPONENTS
0.004	01	ACCELERATOR CONTROLS
0.021	01	ENGINE
0.040	01	CRANKCASE
0.040	02	CRANKCASE
0.040	03	CRANKCASE
0.042	01	ENGINE OIL SUMP
0.043	01	CRANKCASE COVERS
0.043	02	CRANKCASE COVERS
0.043	03	CRANKCASE COVERS
0.045	01	BREATHER - ENGINE
0.060	01	CYLINDER HEAD
0.063	01	CYLINDER HEAD COVERS
0.066	01	ROCKER SHAFT
0.071	01	INTAKE MANIFOLD
0.077	01	EXHAUST MANIFOLD
0.080	01	CRANKSHAFT
0.081	01	CONNECTING ROD
0.082	01	PISTON - ENGINE
0.083	01	FLYWHEEL - ENGINE
0.084	01	PULLEY - CRANKSHAFT
0.120	01	CAMSHAFT - TIMING CONTROL
0.140	01	INJECTION PUMP
0.140	02	INJECTION PUMP - CONTROL
0.140	03	INJECTION EQUIPMENT - INJECTOR
0.149	01	INJECTION EQUIPMENT - PIPING
0.149	02	INJECTION EQUIPMENT - PIPING
0.200	01	FUEL FILTER
0.201	01	FUEL PUMP
0.203	01	PIPING - FUEL
0.240	01	TURBOCHARGER
0.270	01	ENGINE OIL DIPSTICK
0.300	01	OIL PUMP - ENGINE
0.302	01	OIL FILTERS - ENGINE
0.305	01	PIPING - ENGINE OIL
0.310	01	HEAT EXCHANGER - ENGINE
0.320	01	WATER PUMP
0.323	01	PIPING - ENGINE COOLING SYSTEM
0.326	01	THERMOSTAT - ENGINE COOLING SYSTEM
0.340	01	WATER PUMP - CONTROL
0.345	01	FAN DRIVE
0.350	01	POWER TAKE OFF
0.360	01	STARTER MOTOR
0.360	02	STARTER MOTOR - COMPONENTS

Copyright © New Holland

TABLE OF CONTENTS

0.400	01	ALTERNATOR
0.400	02	ALTERNATOR - COMPONENTS
0.450	01	HOOKS - ENGINE
1.000	01	UPPER FRAME
1.000	02	UPPER FRAME
1.000	03	UPPER FRAME
1.000	04	UPPER FRAME
1.000	05	UPPER FRAME
1.010	01	FUEL TANK
1.010	02	PIPING FUEL
1.016	01	FUEL TRANSFER PUMP
1.016	02	FUEL TRANSFER PUMP - COMPONENTS
1.020	01	OIL TANK
1.030	01	HYDRAULIC PUMP
1.030	02	HYDRAULIC PUMP - COMPONENTS
1.030	03	HYDRAULIC PUMP - COMPONENTS
1.030	04	HYDRAULIC PUMP - COMPONENTS
1.030	05	HYDRAULIC PUMP - COMPONENTS
1.030	06	HYDRAULIC PUMP - COMPONENTS
1.040	01	SWING REDUCTION UNIT
1.040	02	SWING REDUCTION UNIT - COMPONENTS
1.040	03	SWING REDUCTION UNIT - COMPONENTS
1.050	01	HYDRAULIC CONTROL VALVE
1.050	02	PIPING PILOT - DISTRIBUTOR - VERSION (01-02-03)
1.050	03	PIPING PILOT - DISTRIBUTOR - VERSION (01-02-03)
1.050	04	PIPING PILOT - DISTRIBUTOR - VERSION (01-02-03)
1.050	05	HYDRAULIC CONTROL VALVE - COMPONENTS
1.050	06	HYDRAULIC CONTROL VALVE - COMPONENTS
1.050	07	HYDRAULIC CONTROL VALVE - COMPONENTS
1.050	08	HYDRAULIC CONTROL VALVE - COMPONENTS
1.050	09	HYDRAULIC CONTROL VALVE - COMPONENTS
1.050	10	HYDRAULIC CONTROL VALVE - COMPONENTS
1.050	11	HYDRAULIC CONTROL VALVE - COMPONENTS
1.050	12	HYDRAULIC CONTROL VALVE - COMPONENTS
1.050	13	HYDRAULIC CONTROL VALVE - COMPONENTS
1.050	14	HYDRAULIC CONTROL VALVE - COMPONENTS
1.051	01	HYDRAULIC CONTROL VALVE - VERSION (04-05-06)
1.051	02	HYDRAULIC CONTROL VALVE - COMPONENTS - VERSION (04-05-06)
1.051	03	HYDRAULIC CONTROL VALVE - COMPONENTS - VERSION (04-05-06)
1.060	01	HYDRAULIC PUMP PILOT SYSTEM PIPES
1.060	02	HYDRAULIC PUMP PILOT SYSTEM PIPES - COMPONENTS
1.060	03	HYDRAULIC PUMP PILOT SYSTEM PIPES
1.060	04	HYDRAULIC PUMP PILOT SYSTEM PIPES
1.061	01	OIL RETURN PIPES
1.061	02	OIL RETURN PIPES
1.065	01	HYDRAULIC LINES SWIVEL
1.070	01	CONTROLS
1.070	02	CONTROLS
1.080	01	PILOT PIPING (1)
1.080	02	PILOT PIPING (1)
1.080	03	PILOT PIPING (1) - VERSION (04-05-06)
1.081	01	PILOT PIPING (2)
1.081	02	PILOT PIPING (2)
1.081	03	PILOT PIPING (2) - COMPONENTS
1.082	01	BLOCK - OPT - VERSION (01-02-03)

Copyright © New Holland

TABLE OF CONTENTS

1.082	02	BLOCK - OPT - VERSION (04-05-06)
1.083	01	PILOT PIPING (3)
1.083	02	PILOT PIPING (3)
1.083	03	PILOT PIPING (3)
1.083	04	PILOT PIPING (3) - VERSION (04-05-06)
1.085	01	PILOT PIPING (5) - VERSION (04-05-06)
1.090	01	PILOT PIPING - MANIPULATOR
1.090	02	PILOT PIPING - MANIPULATOR
1.090	03	PILOT PIPING - MANIPULATOR - COMPONENTS
1.091	01	PILOT PIPING - PEDAL - VERSION (04-05-06)
1.091	02	PILOT PIPING - PEDAL - COMPONENTS - VERSION (04-05-06)
1.092	01	TRAVEL PILOT SYSTEM PIPES
1.092	02	TRAVEL PILOT SYSTEM PIPES - COMPONENTS
1.093	01	FIXINGS FOR SERVOCONTROL PIPES
1.200	01	DASHBOARD
1.200	02	DASHBOARD
1.200	03	DASHBOARD
1.200	04	DASHBOARD
1.220	01	ELECTRIC SYSTEM
1.220	02	ELECTRIC SYSTEM - COMPONENTS
1.220	03	ELECTRIC SYSTEM
1.220	04	ELECTRIC SYSTEM
1.220	05	ELECTRIC SYSTEM
1.220	06	ELECTRIC SYSTEM
1.220	07	ELECTRIC SYSTEM
1.220	08	ELECTRIC SYSTEM
1.220	09	ELECTRIC SYSTEM
1.220	10	ELECTRIC SYSTEM
1.220	11	ELECTRIC SYSTEM
1.220	12	ELECTRIC SYSTEM
1.220	13	ELECTRIC SYSTEM
1.220	14	ELECTRIC SYSTEM
1.220	15	ELECTRIC SYSTEM
1.220	16	ELECTRIC SYSTEM
1.230	01	WINDOW WASHER
1.250	01	CAB
1.250	02	CAB
1.250	03	CAB
1.250	04	SEAT BELT
1.250	05	CAB GUARD
1.250	06	CAB MIRROR
1.250	07	ARMREST
1.260	01	PANEL ASSY, INSTRUMENT
1.260	02	PANEL ASSY, INSTRUMENT
1.260	03	PANEL ASSY, INSTRUMENT
1.260	04	PANEL ASSY, INSTRUMENT - COMPONENTS
1.260	05	PANEL ASSY, INSTRUMENT
1.270	01	FLOOR-CAB
1.270	02	FLOOR-CAB - VERSION (01-02-03)
1.270	03	FLOOR-CAB - VERSION (04-05-06)
1.280	01	RADIO
1.295	01	AIR CONDITIONING
1.295	02	AIR CONDITIONING
1.295	03	AIR CONDITIONING
1.295	04	AIR CONDITIONING

Copyright © New Holland

TABLE OF CONTENTS

1.295	05	AIR CONDITIONING
1.300	01	HOODS - GUARDS
1.300	02	HOODS - GUARDS
1.300	03	HOODS - GUARDS
1.300	04	HOODS - GUARDS
1.300	05	HOODS - GUARDS
1.300	06	HOODS - GUARDS
1.300	07	HOODS - GUARDS
1.300	08	HOODS - GUARDS
1.300	09	HOODS - GUARDS
1.300	10	HOODS - GUARDS
1.300	11	HOODS - MIRROR, REAR-VIEW
1.300	12	HOODS - MIRROR, REAR-VIEW
2.000	01	MONOBLOC BOOM - VERSION (01-02-03)
2.000	02	MONOBLOC BOOM - VERSION (01-02-03)
2.001	01	LIFT BOOM - VERSION (04-05-06)
2.001	02	LIFT BOOM - VERSION (04-05-06)
2.002	01	POSITIONER ARM - VERSION (04-05-06)
2.030	01	BOOM PIPING - VERSION (01-02-03)
2.030	02	LIFT CYLINDER - COMPONENTS
2.030	03	DIPPER STICK CYLINDER - COMPONENTS
2.030	04	BUCKET CYLINDER - COMPONENTS
2.030	05	BUCKET CYLINDER
2.031	01	BOOM PIPING - VERSION (04-05-06)
2.031	02	BOOM PIPING - VERSION (04-05-06)
2.031	03	POSITIONER CYLINDER - COMPONENTS - VERSION (04-05-06)
2.031	04	POSITIONER SAFETY VALVE - VERSION (04-05-06)
2.031	05	POSITIONER SAFETY VALVE - VERSION (04-05-06)
2.031	06	POSITIONER SAFETY VALVE - COMPONENTS - VERSION (04-05-06)
2.040	01	LUBRIC. FITTING PIPING - VERSION (01-02-03)
2.041	01	LUBRIC. FITTING PIPING - VERSION (04-05-06)
2.041	02	LUBRIC. FITTING PIPING - VERSION (04-05-06)
2.050	01	BUCKET INSTALLATION
3.000	01	LOWER FRAME - VERSION (01-04)
3.000	02	LOWER FRAME
3.000	03	LOWER FRAME
3.001	01	LOWER FRAME - VERSION (02-05)
3.002	01	LOWER FRAME - VERSION (03-06)
3.010	01	TRAVEL REDUCTION UNITS
3.010	02	TRAVEL REDUCTION UNITS - COMPONENTS
3.010	03	TRAVEL REDUCTION UNITS - COMPONENTS
3.010	04	TRAVEL REDUCTION UNITS - COMPONENTS
3.020	01	TRACK IDLER
3.020	02	TRACK IDLER - COMPONENTS
3.020	03	TRACK IDLER - COMPONENTS
3.030	01	TRACK CARRIER ROLLER
3.030	02	TRACK CARRIER ROLLER - COMPONENTS
3.040	01	TRACK ROLLER
3.040	02	TRACK ROLLER - COMPONENTS
3.060	01	ROTARY DISTRIBUTOR
3.060	02	ROTARY DISTRIBUTOR - COMPONENTS
3.070	01	TRAVEL PIPING (LOWER)
4.200	01	TOOLS KIT
4.520	01	DECALS
4.520	02	DECALS

Copyright © New Holland

TABLE OF CONTENTS

4.520	03	DECALS
4.520	04	DECALS
5.0001	01	TRACK CHAIN (L=500MM) - VERSION (01-04) - OPTIONAL CODE 956000168
5.0002	01	TRACK CHAIN (L=600MM) - OPTIONAL CODE 956000248
5.0003	01	TRACK CHAIN (L=700MM) - OPTIONAL CODE 956000348
5.0004	01	TRACK CHAIN (L=800MM) - VERSION (02-03-05-06) - OPTIONAL CODE 956000528
5.0005	01	TRACK CHAIN (L=900MM) - VERSION (02-03-05-06) - OPTIONAL CODE 956000738
5.0013	01	DIPPER STICK (L=2.94M) - OPTIONAL CODE 781147078
5.0013	02	DIPPER STICK (L=2.94M) - OPTIONAL CODE 781147078
5.0013	03	DIPPER STICK (L=2.94M) - OPTIONAL CODE 781147078
5.0013	04	DIPPER STICK (L=2.94M) - OPTIONAL CODE 781147078
5.0020	01	HYDRAULIC HAMMER (L=2.08 MT) - OPTIONAL CODE 461226128 (01-02-03) - 461226138 (04-05-06)
5.0020	02	HYDRAULIC HAMMER (L=2.08 MT) - COMPONENTS - OPTIONAL CODE 461226128 (01-02-03) - 461226138 (04-05-06)
5.0020	03	HYDRAULIC HAMMER (L=2.08 MT) - COMPONENTS - OPTIONAL CODE 461226128 (01-02-03) - 461226138 (04-05-06)
5.0020	04	HYDRAULIC HAMMER (L=2.08 MT) - OPTIONAL CODE 461226128 (01-02-03) - 461226138 (04-05-06)
5.0020	05	HYDRAULIC HAMMER (L=2.08 MT) - OPTIONAL CODE 461226128 (01-02-03) - 461226138 (04-05-06)
5.0020	06	HYDRAULIC HAMMER (L=2.08 MT) - OPTIONAL CODE 461226128 (01-02-03)
5.0020	07	HYDRAULIC HAMMER (L=2.08 MT) - COMPONENTS - OPTIONAL CODE 461226128 (01-02-03) - 461226138 (04-05-06)
5.0020	08	HYDRAULIC HAMMER (L=2.08 MT) - OPTIONAL CODE 461226128 (01-02-03)
5.0020	09	HYDRAULIC HAMMER (L=2.08 MT) - OPTIONAL CODE 461226128 (01-02-03)
5.0020	10	HYDRAULIC HAMMER (L=2.08 MT) - OPTIONAL CODE 461226128 (01-02-03)
5.0020	11	HYDRAULIC HAMMER (L=2.08 MT) - OPTIONAL CODE 461226128 (01-02-03) - 461226138 (04-05-06)
5.0020	12	HYDRAULIC HAMMER (L=2.08 MT) - COMPONENTS - OPTIONAL CODE 461226128 (01-02-03) - 461226138 (04-05-06)
5.0020	13	HYDRAULIC HAMMER (L=2.08 MT) - OPTIONAL CODE 461226138 (04-05-06)
5.0020	14	HYDRAULIC HAMMER (L=2.08 MT) - OPTIONAL CODE 461226138 (04-05-06)
5.0020	15	HYDRAULIC HAMMER (L=2.08 MT) - OPTIONAL CODE 461226138 (04-05-06)
5.0020	16	HYDRAULIC HAMMER (L=2.08 MT) - OPTIONAL CODE 461226138 (04-05-06)
5.0020	17	HYDRAULIC HAMMER (L=2.08 MT) - OPTIONAL CODE 461226138 (04-05-06)
5.0020	18	HYDRAULIC HAMMER (L=2.08 MT) - OPTIONAL CODE 461226128 (01-02-03) - 461226138 (04-05-06)
5.0021	01	HYDRAULIC HAMMER (L=2.4 MT) - OPTIONAL CODE 461229068 (01-02-03) - 461229078 (04-05-06)
5.0021	02	HYDRAULIC HAMMER (L=2.4 MT) - COMPONENTS - OPTIONAL CODE 461229068 (01-02-03) - 461229078 (04-05-06)
5.0021	03	HYDRAULIC HAMMER (L=2.4 MT) - COMPONENTS - OPTIONAL CODE 461229068 (01-02-03) - 461229078 (04-05-06)
5.0021	04	HYDRAULIC HAMMER (L=2.4 MT) - OPTIONAL CODE 461229068 (01-02-03) - 461229078 (04-05-06)
5.0021	05	HYDRAULIC HAMMER (L=2.4 MT) - OPTIONAL CODE 461229068 (01-02-03) - 461229078 (04-05-06)
5.0021	06	HYDRAULIC HAMMER (L=2.4 MT) - OPTIONAL CODE 461229068 (01-02-03)
5.0021	07	HYDRAULIC HAMMER (L=2.4 MT) - COMPONENTS - OPTIONAL CODE 461229068 (01-02-03) - 461229078 (04-05-06)
5.0021	08	HYDRAULIC HAMMER (L=2.4 MT) - OPTIONAL CODE 461229068 (01-02-03)
5.0021	09	HYDRAULIC HAMMER (L=2.4 MT) - OPTIONAL CODE 461229068 (01-02-03)
5.0021	10	HYDRAULIC HAMMER (L=2.4 MT) - OPTIONAL CODE 461229068 (01-02-03)

Copyright © New Holland

TABLE OF CONTENTS

5.0021	11	HYDRAULIC HAMMER (L=2.4 MT) - OPTIONAL CODE 461229068 (01-02-03) - 461229078 (04-05-06)
5.0021	12	HYDRAULIC HAMMER (L=2.4 MT) - COMPONENTS - OPTIONAL CODE 461229068 (01-02-03) - 461229078 (04-05-06)
5.0021	13	HYDRAULIC HAMMER (L=2.4 MT) - OPTIONAL CODE 461229078 (04-05-06)
5.0021	14	HYDRAULIC HAMMER (L=2.4 MT) - OPTIONAL CODE 461229078 (04-05-06)
5.0021	15	HYDRAULIC HAMMER (L=2.4 MT) - OPTIONAL CODE 461229078 (04-05-06)
5.0021	16	HYDRAULIC HAMMER (L=2.4 MT) - OPTIONAL CODE 461229078 (04-05-06)
5.0021	17	HYDRAULIC HAMMER (L=2.4 MT) - OPTIONAL CODE 461229078 (04-05-06)
5.0021	18	HYDRAULIC HAMMER (L=2.4 MT) - OPTIONAL CODE 461229068 (01-02-03) - 461229078 (04-05-06)
5.0022	01	DIPPER STICK (L=2.4M) - OPTIONAL CODE 781145128
5.0022	02	DIPPER STICK (L=2.4M) - OPTIONAL CODE 781145128
5.0022	03	DIPPER STICK (L=2.4M) - OPTIONAL CODE 781145128
5.0022	04	DIPPER STICK (L=2.4M) - OPTIONAL CODE 781145128
5.0023	01	HYDRAULIC HAMMER (L=2.94 MT) - OPTIONAL CODE 461232058 (01-02-03) - 461232068 (04-05-06)
5.0023	02	HYDRAULIC HAMMER (L=2.94 MT) - COMPONENTS - OPTIONAL CODE 461232058 (01-02-03) - 461232068 (04-05-06)
5.0023	03	HYDRAULIC HAMMER (L=2.94 MT) - COMPONENTS - OPTIONAL CODE 461232058 (01-02-03) - 461232068 (04-05-06)
5.0023	04	HYDRAULIC HAMMER (L=2.94 MT) - OPTIONAL CODE 461232058 (01-02-03) - 461232068 (04-05-06)
5.0023	05	HYDRAULIC HAMMER (L=2.94 MT) - OPTIONAL CODE 461232058 (01-02-03) - 461232068 (04-05-06)
5.0023	06	HYDRAULIC HAMMER (L=2.94 MT) - OPTIONAL CODE 461232058 (01-02-03)
5.0023	07	HYDRAULIC HAMMER (L=2.94 MT) - COMPONENTS - OPTIONAL CODE 461232058 (01-02-03) - 461232068 (04-05-06)
5.0023	08	HYDRAULIC HAMMER (L=2.94 MT) - OPTIONAL CODE 461232058 (01-02-03)
5.0023	09	HYDRAULIC HAMMER (L=2.94 MT) - OPTIONAL CODE 461232058 (01-02-03)
5.0023	10	HYDRAULIC HAMMER (L=2.94 MT) - OPTIONAL CODE 461232058 (01-02-03)
5.0023	11	HYDRAULIC HAMMER (L=2.94 MT) - OPTIONAL CODE 461232058 (01-02-03) - 461232068 (04-05-06)
5.0023	12	HYDRAULIC HAMMER (L=2.94 MT) - COMPONENTS - OPTIONAL CODE 461232058 (01-02-03) - 461232068 (04-05-06)
5.0023	13	HYDRAULIC HAMMER (L=2.94 MT) - OPTIONAL CODE 461232068 (04-05-06)
5.0023	14	HYDRAULIC HAMMER (L=2.94 MT) - OPTIONAL CODE 461232068 (04-05-06)
5.0023	15	HYDRAULIC HAMMER (L=2.94 MT) - OPTIONAL CODE 461232068 (04-05-06)
5.0023	16	HYDRAULIC HAMMER (L=2.94 MT) - OPTIONAL CODE 461232068 (04-05-06)
5.0023	17	HYDRAULIC HAMMER (L=2.94 MT) - OPTIONAL CODE 461232068 (04-05-06)
5.0023	18	HYDRAULIC HAMMER (L=2.94 MT) - OPTIONAL CODE 461232058 (01-02-03) - 461232068 (04-05-06)
5.0024	01	HYDRAULIC HAMMER (L=3.5 MT) - OPTIONAL CODE 461235028 (01-02-03) - 461235038 (04-05-06)
5.0024	02	HYDRAULIC HAMMER (L=3.5 MT) - COMPONENTS - OPTIONAL CODE 461235028 (01-02-03) - 461235038 (04-05-06)
5.0024	03	HYDRAULIC HAMMER (L=3.5 MT) - COMPONENTS - OPTIONAL CODE 461235028 (01-02-03) - 461235038 (04-05-06)
5.0024	04	HYDRAULIC HAMMER (L=3.5 MT) - OPTIONAL CODE 461235028 (01-02-03) - 461235038 (04-05-06)
5.0024	05	HYDRAULIC HAMMER (L=3.5 MT) - OPTIONAL CODE 461235028 (01-02-03) - 461235038 (04-05-06)
5.0024	06	HYDRAULIC HAMMER (L=3.5 MT) - OPTIONAL CODE 461235028 (01-02-03)
5.0024	07	HYDRAULIC HAMMER (L=3.5 MT) - COMPONENTS - OPTIONAL CODE 461235028 (01-02-03) - 461235038 (04-05-06)

Copyright © New Holland

TABLE OF CONTENTS

5.0024	08	HYDRAULIC HAMMER (L=3.5 MT) - OPTIONAL CODE 461235028 (01-02-03)
5.0024	09	HYDRAULIC HAMMER (L=3.5 MT) - OPTIONAL CODE 461235028 (01-02-03)
5.0024	10	HYDRAULIC HAMMER (L=3.5 MT) - OPTIONAL CODE 461235028 (01-02-03)
5.0024	11	HYDRAULIC HAMMER (L=3.5 MT) - OPTIONAL CODE 461235028 (01-02-03) - 461235038 (04-05-06)
5.0024	12	HYDRAULIC HAMMER (L=3.5 MT) - COMPONENTS - OPTIONAL CODE 461235028 (01-02-03) - 461235038 (04-05-06)
5.0024	13	HYDRAULIC HAMMER (L=3.5 MT) - OPTIONAL CODE 461235038 (04-05-06)
5.0024	14	HYDRAULIC HAMMER (L=3.5 MT) - OPTIONAL CODE 461235038 (04-05-06)
5.0024	15	HYDRAULIC HAMMER (L=3.5 MT) - OPTIONAL CODE 461235038 (04-05-06)
5.0024	16	HYDRAULIC HAMMER (L=3.5 MT) - OPTIONAL CODE 461235038 (04-05-06)
5.0024	17	HYDRAULIC HAMMER (L=3.5 MT) - OPTIONAL CODE 461235038 (04-05-06)
5.0024	18	HYDRAULIC HAMMER (L=3.5 MT) - OPTIONAL CODE 461235028 (01-02-03) - 461235038 (04-05-06)
5.0032	01	BIODEGRADABLE OIL - OPTIONAL CODE 781489018 (01-02-03) - 781489008 (04-05-06)
5.0038	01	DIPPER STICK (L=3.5M) - OPTIONAL CODE 781149028
5.0038	02	DIPPER STICK (L=3.5M) - OPTIONAL CODE 781149028
5.0038	03	DIPPER STICK (L=3.5M) - OPTIONAL CODE 781149028
5.0038	04	DIPPER STICK (L=3.5M) - OPTIONAL CODE 781149028
5.0040	01	MONITOR INSTALLATION - OPTIONAL CODE 461223048
5.0040	02	MONITOR INSTALLATION - OPTIONAL CODE 461223048
5.0040	03	MONITOR INSTALLATION - OPTIONAL CODE 461223048
5.0042	01	LOWER FRAME GUARD - OPTIONAL CODE 781624068
5.0043	01	ARM PROTECTION - OPTIONAL CODE 461220008
5.0052	01	TRACK GUIDE - OPTIONAL CODE 781652048
5.0076	01	BUCKET ROTATION (L=2.08 MT) - OPTIONAL CODE 461241148 (01-02-03) - 461241158 (04-05-06)
5.0076	02	BUCKET ROTATION (L=2.08 MT) - COMPONENTS - OPTIONAL CODE 461241148 (01-02-03) - 461241158 (04-05-06)
5.0076	03	BUCKET ROTATION (L=2.08 MT) - OPTIONAL CODE 461241148 (01-02-03)
5.0076	04	BUCKET ROTATION (L=2.08 MT) - OPTIONAL CODE 461241158 (04-05-06)
5.0076	05	BUCKET ROTATION (L=2.08 MT) - OPTIONAL CODE 461241148 (01-02-03) - 461241158 (04-05-06)
5.0076	06	BUCKET ROTATION (L=2.08 MT) - COMPONENTS - OPTIONAL CODE 461241148 (01-02-03) - 461241158 (04-05-06)
5.0076	07	BUCKET ROTATION (L=2.08 MT) - OPTIONAL CODE 461241148 (01-02-03) - 461241158 (04-05-06)
5.0076	08	BUCKET ROTATION (L=2.08 MT) - COMPONENTS - OPTIONAL CODE 461241148 (01-02-03) - 461241158 (04-05-06)
5.0076	09	BUCKET ROTATION (L=2.08 MT) - COMPONENTS - OPTIONAL CODE 461241148 (01-02-03) - 461241158 (04-05-06)
5.0076	10	BUCKET ROTATION (L=2.08 MT) - OPTIONAL CODE 461241148 (01-02-03) - 461241158 (04-05-06)
5.0076	11	BUCKET ROTATION (L=2.08 MT) - OPTIONAL CODE 461241148 (01-02-03)
5.0076	12	BUCKET ROTATION (L=2.08 MT) - OPTIONAL CODE 461241158 (04-05-06)
5.0076	13	BUCKET ROTATION (L=2.08 MT) - OPTIONAL CODE 461241158 (04-05-06)
5.0076	14	BUCKET ROTATION (L=2.08 MT) - OPTIONAL CODE 461241148 (01-02-03) - 461241158 (04-05-06)
5.0076	15	BUCKET ROTATION (L=2.08 MT) - OPTIONAL CODE 461241148 (01-02-03) - 461241158 (04-05-06)
5.0077	01	BUCKET ROTATION (L=2.4 MT) - OPTIONAL CODE 461244068 (01-02-03) - 461244078 (04-05-06)
5.0077	02	BUCKET ROTATION (L=2.4 MT) - OPTIONAL CODE 461244068 (01-02-03)
5.0077	03	BUCKET ROTATION (L=2.4 MT) - OPTIONAL CODE 461244078 (04-05-06)

Copyright © New Holland

TABLE OF CONTENTS

5.0077	04	BUCKET ROTATION (L=2.4 MT) - OPTIONAL CODE 461244068 (01-02-03) - 461244078 (04-05-06)
5.0077	05	BUCKET ROTATION (L=2.4 MT) - OPTIONAL CODE 461244068 (01-02-03) - 461244078 (04-05-06)
5.0077	06	BUCKET ROTATION (L=2.4 MT) - OPTIONAL CODE 461244068 (01-02-03) - 461244078 (04-05-06)
5.0077	07	BUCKET ROTATION (L=2.4 MT) - OPTIONAL CODE 461244068 (01-02-03)
5.0077	08	BUCKET ROTATION (L=2.4 MT) - OPTIONAL CODE 461244078 (04-05-06)
5.0077	09	BUCKET ROTATION (L=2.4 MT) - OPTIONAL CODE 461244078 (04-05-06)
5.0077	10	BUCKET ROTATION (L=2.4 MT) - OPTIONAL CODE 461244068 (01-02-03) - 461244078 (04-05-06)
5.0077	11	BUCKET ROTATION (L=2.4 MT) - OPTIONAL CODE 461244068 (01-02-03) - 461244078 (04-05-06)
5.0078	01	BUCKET ROTATION (L=2.94 MT) - OPTIONAL CODE 461247058 (01-02-03) - 461247068 (04-05-06)
5.0078	02	BUCKET ROTATION (L=2.94 MT) - OPTIONAL CODE 461247058 (01-02-03)
5.0078	03	BUCKET ROTATION (L=2.94 MT) - OPTIONAL CODE 461247068 (04-05-06)
5.0078	04	BUCKET ROTATION (L=2.94 MT) - OPTIONAL CODE 461247058 (01-02-03) - 461247068 (04-05-06)
5.0078	05	BUCKET ROTATION (L=2.94 MT) - OPTIONAL CODE 461247058 (01-02-03) - 461247068 (04-05-06)
5.0078	06	BUCKET ROTATION (L=2.94 MT) - OPTIONAL CODE 461247058 (01-02-03) - 461247068 (04-05-06)
5.0078	07	BUCKET ROTATION (L=2.94 MT) - OPTIONAL CODE 461247058 (01-02-03)
5.0078	08	BUCKET ROTATION (L=2.94 MT) - OPTIONAL CODE 461247068 (04-05-06)
5.0078	09	BUCKET ROTATION (L=2.94 MT) - OPTIONAL CODE 461247068 (04-05-06)
5.0078	10	BUCKET ROTATION (L=2.94 MT) - OPTIONAL CODE 461247058 (01-02-03) - 461247068 (04-05-06)
5.0078	11	BUCKET ROTATION (L=2.94 MT) - OPTIONAL CODE 461247058 (01-02-03) - 461247068 (04-05-06)
5.0079	01	BUCKET ROTATION (L=3.5 MT) - OPTIONAL CODE 461250028 (01-02-03) - 461250038 (04-05-06)
5.0079	02	BUCKET ROTATION (L=3.5 MT) - OPTIONAL CODE 461250028 (01-02-03)
5.0079	03	BUCKET ROTATION (L=3.5 MT) - OPTIONAL CODE 461250038 (04-05-06)
5.0079	04	BUCKET ROTATION (L=3.5 MT) - OPTIONAL CODE 461250028 (01-02-03) - 461250038 (04-05-06)
5.0079	05	BUCKET ROTATION (L=3.5 MT) - OPTIONAL CODE 461250028 (01-02-03) - 461250038 (04-05-06)
5.0079	06	BUCKET ROTATION (L=3.5 MT) - OPTIONAL CODE 461250028 (01-02-03) - 461250038 (04-05-06)
5.0079	07	BUCKET ROTATION (L=3.5 MT) - OPTIONAL CODE 461250028 (01-02-03)
5.0079	08	BUCKET ROTATION (L=3.5 MT) - OPTIONAL CODE 461250038 (04-05-06)
5.0079	09	BUCKET ROTATION (L=3.5 MT) - OPTIONAL CODE 461250038 (04-05-06)
5.0079	10	BUCKET ROTATION (L=3.5 MT) - OPTIONAL CODE 461250028 (01-02-03) - 461250038 (04-05-06)
5.0079	11	BUCKET ROTATION (L=3.5 MT) - OPTIONAL CODE 461250028 (01-02-03) - 461250038 (04-05-06)
5.0086	01	BOOM/ARM WITHOUT SAFETY VALVE - VERSION (01-02-03) - OPTIONAL CODE 461134028
5.0086	02	BOOM/ARM WITHOUT SAFETY VALVE - VERSION (01-02-03) - OPTIONAL CODE 461134028
5.0086	03	BOOM/ARM WITHOUT SAFETY VALVE - VERSION (01-02-03) - OPTIONAL CODE 461134028
5.0086	04	BOOM/ARM WITHOUT SAFETY VALVE - VERSION (01-02-03) - OPTIONAL CODE 461134028

Copyright © New Holland

TABLE OF CONTENTS

5.0087	01	BOOM/ARM WITHOUT SAFETY VALVE - VERSION (04-05-06) - OPTIONAL CODE 461134038
5.0087	02	BOOM/ARM WITHOUT SAFETY VALVE - VERSION (04-05-06) - OPTIONAL CODE 461134038
5.0087	03	BOOM/ARM WITHOUT SAFETY VALVE - VERSION (04-05-06) - OPTIONAL CODE 461134038
5.0087	04	BOOM/ARM WITHOUT SAFETY VALVE - VERSION (04-05-06) - OPTIONAL CODE 461134038
5.0088	01	OBJECT HANDLING - VERSION (01-02-03) - OPTIONAL CODE 781583888
5.0088	02	OBJECT HANDLING - VERSION (01-02-03) - OPTIONAL CODE 781583888
5.0088	03	OBJECT HANDLING - VERSION (01-02-03) - OPTIONAL CODE 781583888
5.0088	04	OBJECT HANDLING - VERSION (01-02-03) - OPTIONAL CODE 781583888
5.0088	05	OBJECT HANDLING - VERSION (01-02-03) - OPTIONAL CODE 781583888
5.0088	06	OBJECT HANDLING - COMPONENTS - VERSION (01-02-03) - OPTIONAL CODE 781583888
5.0088	07	OBJECT HANDLING - VERSION (01-02-03) - OPTIONAL CODE 781583888
5.0088	08	OBJECT HANDLING - VERSION (01-02-03) - OPTIONAL CODE 781583888
5.0088	09	OBJECT HANDLING - VERSION (01-02-03) - OPTIONAL CODE 781583888
5.0089	01	OBJECT HANDLING - VERSION (04-05-06) - OPTIONAL CODE 781583898
5.0089	02	OBJECT HANDLING - VERSION (04-05-06) - OPTIONAL CODE 781583898
5.0089	03	OBJECT HANDLING - VERSION (04-05-06) - OPTIONAL CODE 781583898
5.0089	04	OBJECT HANDLING - VERSION (04-05-06) - OPTIONAL CODE 781583898
5.0089	05	OBJECT HANDLING - VERSION (04-05-06) - OPTIONAL CODE 781583898
5.0089	06	OBJECT HANDLING - COMPONENTS - VERSION (04-05-06) - OPTIONAL CODE 781583898
5.0089	07	OBJECT HANDLING - VERSION (04-05-06) - OPTIONAL CODE 781583898
5.0089	08	OBJECT HANDLING - VERSION (04-05-06) - OPTIONAL CODE 781583898
5.0089	09	OBJECT HANDLING - VERSION (04-05-06) - OPTIONAL CODE 781583898
5.0101	01	BUCKET - (L=750MM) - OPTIONAL CODE 781099008
5.0102	01	BUCKET - (L=850MM) - OPTIONAL CODE 781499008
5.0103	01	BUCKET - (L=1000MM) - OPTIONAL CODE 781107008
5.0104	01	BUCKET - (L=1200MM) - OPTIONAL CODE 781110008
5.0105	01	BUCKET - (L=1300MM) - OPTIONAL CODE 781112008
5.0106	01	BUCKET - (L=1500MM) - OPTIONAL CODE 781114008
5.0144	01	LINK ROD - OPTIONAL CODE 781479048
5.0148	01	HYDRAULIC QUICK COUPLING - OPTIONAL CODE 781128068
5.0148	02	HYDRAULIC QUICK COUPLING - COMPONENTS - OPTIONAL CODE 781128068
5.0156	01	SEAT AT MECHANICAL SUSPENSION - OPTIONAL CODE 781768078
5.0159	01	PNEUM. CUSHIONING HEATED SEAT - OPTIONAL CODE 781000058
5.0208	01	CAB GUARD AND CAB LIGHTS - OPTIONAL CODE 461488008
5.0208	02	CAB GUARD AND CAB LIGHTS - OPTIONAL CODE 461488008
5.0208	03	CAB GUARD AND CAB LIGHTS - OPTIONAL CODE 461488008
5.0208	04	CAB GUARD AND CAB LIGHTS - OPTIONAL CODE 461488008
5.0209	01	CAB GUARD - OPTIONAL CODE 781647118
5.0209	02	CAB GUARD - OPTIONAL CODE 781647118
5.0209	03	CAB GUARD - OPTIONAL CODE 781647118
5.0530	01	DIPPER STICK (L=2.08M) - OPTIONAL CODE 781491058
5.0530	02	DIPPER STICK (L=2.08M) - OPTIONAL CODE 781491058
5.0530	03	DIPPER STICK (L=2.08M) - OPTIONAL CODE 781491058
5.0530	04	DIPPER STICK (L=2.08M) - OPTIONAL CODE 781491058
5.0580	01	SUN CANOPY AND CAB LIGHTS - OPTIONAL CODE 461221018
5.0580	02	SUN CANOPY AND CAB LIGHTS - OPTIONAL CODE 461221018
5.0585	01	BEACON ASSY, ROTATING - OPTIONAL CODE 781427028
5.0585	02	BEACON ASSY, ROTATING - OPTIONAL CODE 781427028

Copyright © New Holland

Copyright © New Holland

SECTION INDEX

Engine

0 - FILTERS	00	MAINTENANCE PARTS
0 - VERSION	00	IDENTIFICATION AND VERSION LIST
0.000	01	ENGINE SUSPENSIONS
0.000	02	PIPING - ENGINE OIL
0.000	03	ENGINE - COMPONENTS
0.001	01	AIR CLEANER
0.001	02	AIR CLEANER
0.002	01	MUFFLER
0.003	01	RADIATOR
0.003	02	RADIATOR (WATER)
0.003	03	RADIATOR
0.003	04	RADIATOR - COMPONENTS
0.004	01	ACCELERATOR CONTROLS
0.021	01	ENGINE
0.040	01	CRANKCASE
0.040	02	CRANKCASE
0.040	03	CRANKCASE
0.042	01	ENGINE OIL SUMP
0.043	01	CRANKCASE COVERS
0.043	02	CRANKCASE COVERS
0.043	03	CRANKCASE COVERS
0.045	01	BREATHER - ENGINE
0.060	01	CYLINDER HEAD
0.063	01	CYLINDER HEAD COVERS
0.066	01	ROCKER SHAFT
0.071	01	INTAKE MANIFOLD
0.077	01	EXHAUST MANIFOLD
0.080	01	CRANKSHAFT
0.081	01	CONNECTING ROD
0.082	01	PISTON - ENGINE
0.083	01	FLYWHEEL - ENGINE
0.084	01	PULLEY - CRANKSHAFT
0.120	01	CAMSHAFT - TIMING CONTROL
0.140	01	INJECTION PUMP
0.140	02	INJECTION PUMP - CONTROL
0.140	03	INJECTION EQUIPMENT - INJECTOR
0.149	01	INJECTION EQUIPMENT - PIPING
0.149	02	INJECTION EQUIPMENT - PIPING
0.200	01	FUEL FILTER
0.201	01	FUEL PUMP
0.203	01	PIPING - FUEL
0.240	01	TURBOCHARGER
0.270	01	ENGINE OIL DIPSTICK
0.300	01	OIL PUMP - ENGINE
0.302	01	OIL FILTERS - ENGINE
0.305	01	PIPING - ENGINE OIL
0.310	01	HEAT EXCHANGER - ENGINE
0.320	01	WATER PUMP
0.323	01	PIPING - ENGINE COOLING SYSTEM
0.326	01	THERMOSTAT - ENGINE COOLING SYSTEM
0.340	01	WATER PUMP - CONTROL
0.345	01	FAN DRIVE
0.350	01	POWER TAKE OFF
0.360	01	STARTER MOTOR
0.360	02	STARTER MOTOR - COMPONENTS

Copyright © New Holland

SECTION INDEX
Engine

0.400	01	ALTERNATOR
0.400	02	ALTERNATOR - COMPONENTS
0.450	01	HOOKS - ENGINE

Copyright © New Holland

Copyright © New Holland

0.000	01	p1	03/10

ENGINE SUSPENSIONS
SOSPENSIONI MOTORE
MOTORAUFHAENGUNG
SUSPENSIONS DU MOTEUR

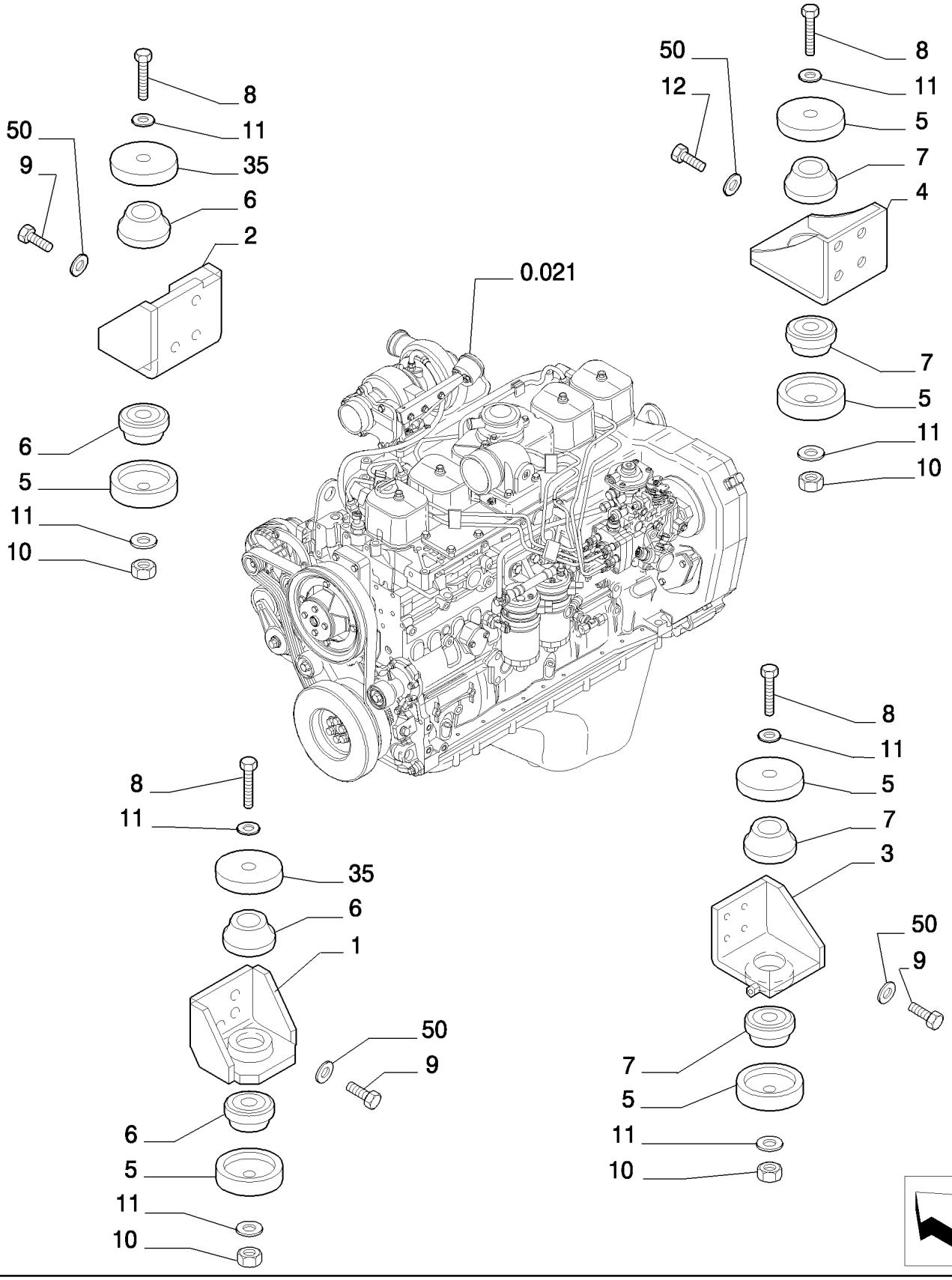

Copyright © New Holland

ANCLAJES MOTOR
ENGINE SUSPENSIONS
ENGINE SUSPENSIONS
ENGINE SUSPENSIONS

R	N	P.N.	MOD	Q	Description Denominacion	Descrizione Beskrivelse	Bezeichnung Denominação	Description Beschrijving	L.C.
1		87525249		1	BRACKET SOPORTE	STAFFA BESLAG	HALTERUNG SUPORTE	SUPPORT STEUN	225S
2		87525250		1	BRACKET SOPORTE	STAFFA BESLAG	HALTERUNG SUPORTE	SUPPORT STEUN	225S
3		87587716		1	BRACKET SOPORTE	STAFFA BESLAG	HALTERUNG SUPORTE	SUPPORT STEUN	225S
4		72203740		1	BRACKET SOPORTE	STAFFA BESLAG	HALTERUNG SUPORTE	SUPPORT STEUN	225S
5		72203750		6	COVER CUBIERTA	COPERCHIO DÆKSEL	ABDECKUNG COBERTURA	COUVERCLE AFSCHERMING	265C
6		72203757		4	SEAT CUSHION COJÍN DE ASIENTO	CUSCINO SEDILE SÆDEPOLSTRING	SITZKISSEN ALMOFADA DO BANCO	COUSSIN DE SIEGE ZITKUSSEN	345C
7		72203758		4	RUBBER MOUNTING SOPORTE DE GOMA	SUPPORTO IN GOMMA GUMMIBØSNING	GUMMILAGER MONTAGEM DE BORRA	SUPPORT EN CAOUTCH RUBBEREN BEVESTIGIN	P777
8		11123734		4	SCREW TORNILLO	VITE SKRUE	SCHRAUBE PARAFUSO	VIS SCHROEF	040V
9		11112634		10	SCREW TORNILLO	VITE SKRUE	SCHRAUBE PARAFUSO	VIS SCHROEF	040V
10		11703221		4	NUT, M18 TUERCA	DADO MØTRIK	MUTTER PORCA	ECROU MOER	010D
11		14497031		8	WASHER, M18 x 34 ARANDELA	RONDELLA FLADSKIVE	UNTERLEGSCHEIBE ANILHA	RONDELLE SLUITRING	131R
12		11113034		4	SCREW TORNILLO	VITE SKRUE	SCHRAUBE PARAFUSO	VIS SCHROEF	040V
35		87525263		2	WASHER ARANDELA	RONDELLA FLADSKIVE	UNTERLEGSCHEIBE ANILHA	RONDELLE SLUITRING	131R
50		14496731		14	WASHER, M12 x 24 x 2.5 Thk ARANDELA	RONDELLA FLADSKIVE	UNTERLEGSCHEIBE ANILHA	RONDELLE SLUITRING	131R

Copyright © New Holland

0.000	02	p1	03/10

PIPING - ENGINE OIL
TUBAZIONI - OLIO MOTORE
LEITUNGEN - MOTORÖL
TUYAUTERIES - HUILE DU MOTEUR

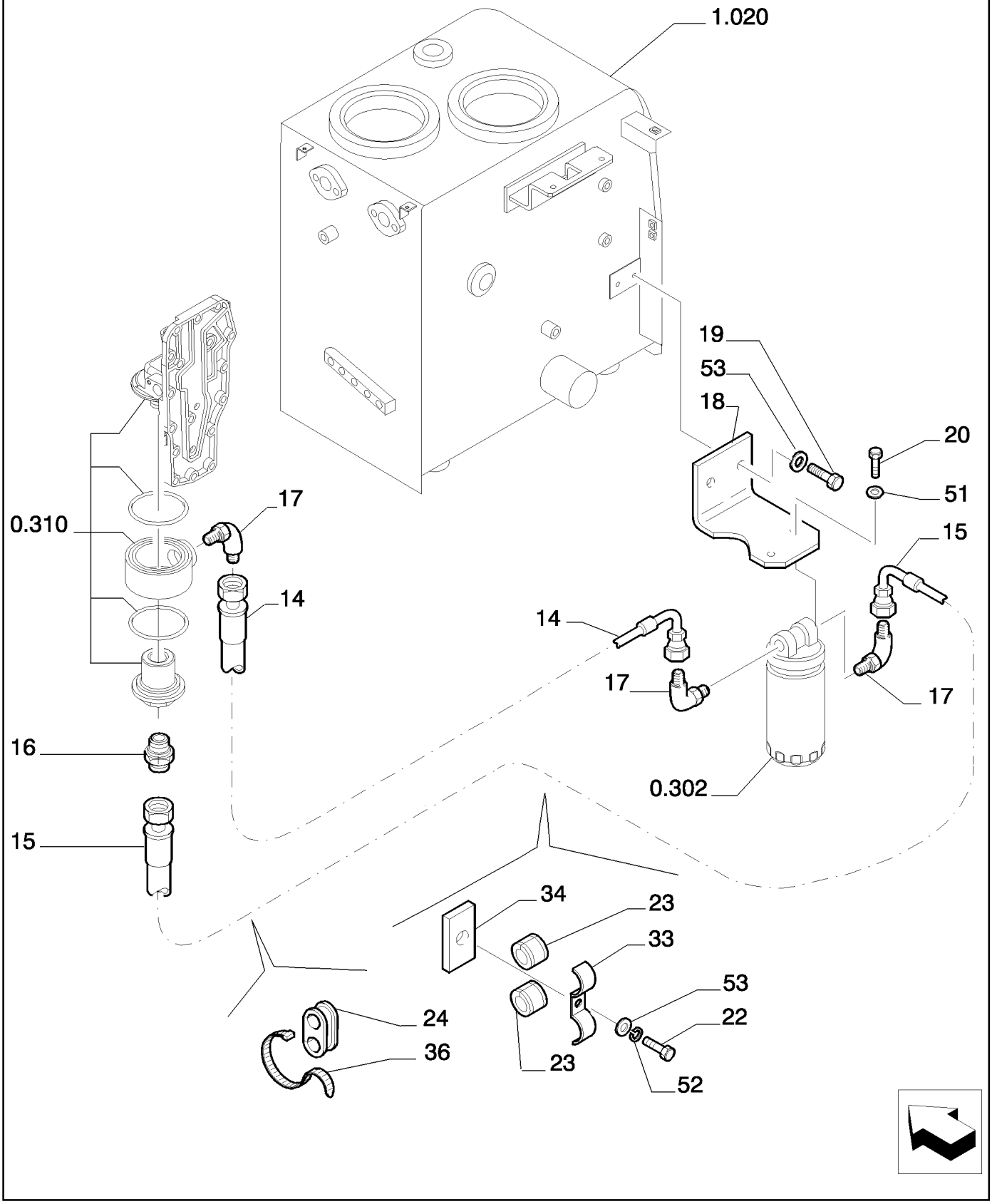

Copyright © New Holland

TUBERIAS - ACEITE DEL MOTOR
PIPING - ENGINE OIL
PIPING - ENGINE OIL
PIPING - ENGINE OIL

R	N	P.N.	MOD	Q	Description Denominacion	Descrizione Beskrivelse	Bezeichnung Denominação	Description Beschrijving	L.C.
14		87555883		1	FLEXIBLE HOSE TUBO FLEXIBLE	TUBO FLESSIBILE FLEKSIBEL SLANGE	BIEGSAMER SCHLAUCH MANGUEIRA FLEXÍVEL	TUYAU FLEXIBLE FLEXIBELE SLANG	192T
15		87555884		1	FLEXIBLE HOSE TUBO FLEXIBLE	TUBO FLESSIBILE FLEKSIBEL SLANGE	BIEGSAMER SCHLAUCH MANGUEIRA FLEXÍVEL	TUYAU FLEXIBLE FLEXIBELE SLANG	192T
16		87640939		1	HYD CONNECTOR CONECTOR HIDRÁULIC	CONNETTORE IDRAULI HYDRAULIKSTIK	HYDR STECKVERBINDE CONECTOR HID.	CONNECTEUR HYDRAU HYDRAULISCHE AANSL	020R
17		87612013		3	HYD CONNECTOR, 90° CONECTOR HIDRÁULIC	CONNETTORE IDRAULI HYDRAULIKSTIK	HYDR STECKVERBINDE CONECTOR HID.	CONNECTEUR HYDRAU HYDRAULISCHE AANSL	020R
18		87525261		1	BRACKET SOPORTE	STAFFA BESLAG	HALTERUNG SUPORTE	SUPPORT STEUN	225S
19		11106234		2	BOLT, Hex, M10 x 25, 10.9, Full Thd PERNO	BULLONE BOLT	SCHRAUBE PARAFUSO	VIS BOUT	140B
20		16043434		2	BOLT, Hex, M8 x 20, 10.9, Full Thd PERNO	BULLONE BOLT	SCHRAUBE PARAFUSO	VIS BOUT	140B
22		11107434		1	SCREW TORNILLO	VITE SKRUE	SCHRAUBE PARAFUSO	VIS SCHROEF	040V
23		72203763		2	SEAL ANILLO DE CIERRE	GUARNIZIONE; TENUTA PAKNING	DICHTUNG VEDANTE	JOINT AFDICHTING	132A
24		72203762		1	GASKET JUNTA	GUARNIZIONE PAKNING	DICHTUNG JUNTA	JOINT PAKKING	123G
33		72203761		1	BRACKET SOPORTE	STAFFA BESLAG	HALTERUNG SUPORTE	SUPPORT STEUN	225S
34		72203760		1	PLATE PLACA	PIASTRA PLADE	PLATTE CHAPA	PLAQUE PLAAT	105P
36		4982514		1	CABLE STRAP BANDA DE CABLE	FASCETTA PER CAVO KABELSTROP	KABELBINDER BRAÇADEIRA DE CABO	BRIDE DE CABLE BUNDELBAND	P716
51		14496531		2	WASHER, M8 x 17 x 1.6 ARANDELA	RONDELLA FLADSKIVE	UNTERLEGSCHEIBE ANILHA	RONDELLE SLUITRING	131R
52		10516874		1	LOCK WASHER ARANDELA DE BLOQUE	RONDELLA DI SICUREZ LÅSESKIVE	SICHERUNGSSCHEIBE ANILHA DE RETENÇÃO	RONDELLE FREIN BORGRING	132R
53		14496631		3	WASHER, M10 x 21 x 2 ARANDELA	RONDELLA FLADSKIVE	UNTERLEGSCHEIBE ANILHA	RONDELLE SLUITRING	131R

Copyright © New Holland

ENGINE - COMPONENTS
MOTORE TERMICO - COMPONENTI
MOTOR - BESTANDTEILE
MOTEUR THERMIQUE - COMPOSANTS

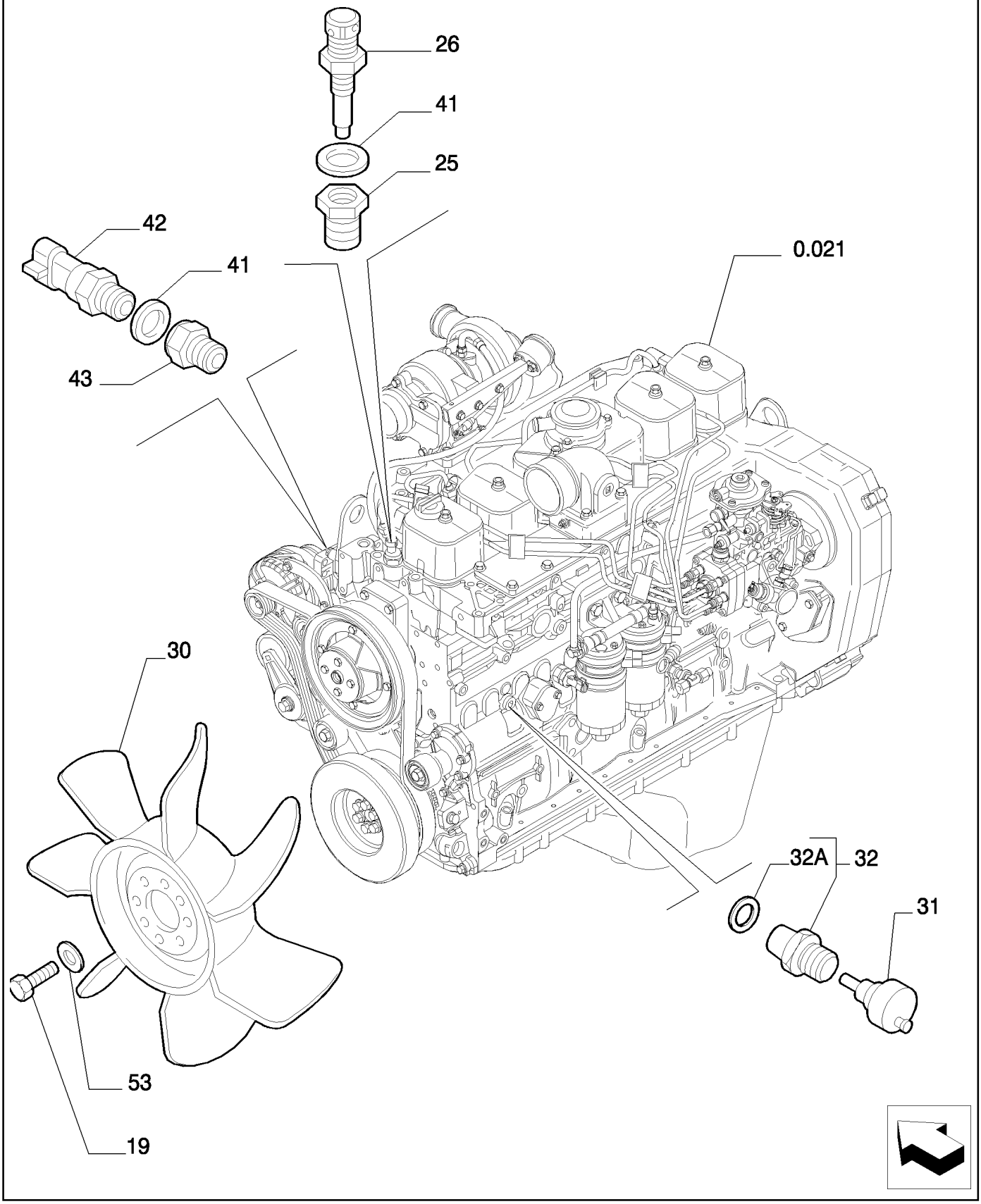

Copyright © New Holland

MOTOR - COMPONENTES
ENGINE - COMPONENTS
ENGINE - COMPONENTS
ENGINE - COMPONENTS

R	N	P.N.	MOD	Q	Description Denominacion	Descrizione Beskrivelse	Bezeichnung Denominação	Description Beschrijving	L.C.
19		11106234		4	BOLT, Hex, M10 x 25, 10.9, Full Thd PERNO	BULLONE BOLT	SCHRAUBE PARAFUSO	VIS BOUT	140B
25		YN02P01032P1		1	HYD CONNECTOR CONECTOR HIDRÁULIC	CONNETTORE IDRAULI HYDRAULIKSTIK	HYDR STECKVERBINDE CONECTOR HID.	CONNECTEUR HYDRAU HYDRAULISCHE AANSL	020R
26		71451711		1	SENDER UNIT UNIDAD EMISORA	TRASMETTITORE SENDER	SIGNALGEBER TRANSMISSOR	ENS. TRANSMETTEUR SENSOREENHEID	160T
30		87550707		1	FAN VENTILADOR	VENTOLA VENTILATOR	GEBLÄSE VENTOINHA	VENTILATEUR VENTILATOR	030V
31		71451954		1	PRESSURE SWITCH, - PRESSURE INTERRUPTOR DE PRES	PRESSOSTATO KONTAKT, TRYK	DRUCKSCHALTER INTERRUPTOR DE PRES	PRESSOSTAT DRUKSCHAKELAAR	079I
32		72109072		1	HYD CONNECTOR, - ASS CONECTOR HIDRÁULIC	CONNETTORE IDRAULI HYDRAULIKSTIK	HYDR STECKVERBINDE CONECTOR HID.	CONNECTEUR HYDRAU HYDRAULISCHE AANSL	020R
32A		72109073		1	GASKET JUNTA	GUARNIZIONE PAKNING	DICHTUNG JUNTA	JOINT PAKKING	123G
41		71488736		2	GASKET JUNTA	GUARNIZIONE PAKNING	DICHTUNG JUNTA	JOINT PAKKING	123G
42		87568522		1	THERMOSTAT TERMOSTATO	TERMOSTATO TERMOSTAT	THERMOSTAT TERMÓSTATO	THERMOSTAT THERMOSTAAT	096T
43		71450201		1	HYD CONNECTOR CONECTOR HIDRÁULIC	CONNETTORE IDRAULI HYDRAULIKSTIK	HYDR STECKVERBINDE CONECTOR HID.	CONNECTEUR HYDRAU HYDRAULISCHE AANSL	020R
53		14496631		4	WASHER, M10 x 21 x 2 ARANDELA	RONDELLA FLADSKIVE	UNTERLEGSCHEIBE ANILHA	RONDELLE SLUITRING	131R

Copyright © New Holland

0.001	01	p1	03/10

AIR CLEANER
FILTRO ARIA
LUFTFILTER
FILTRE A AIR

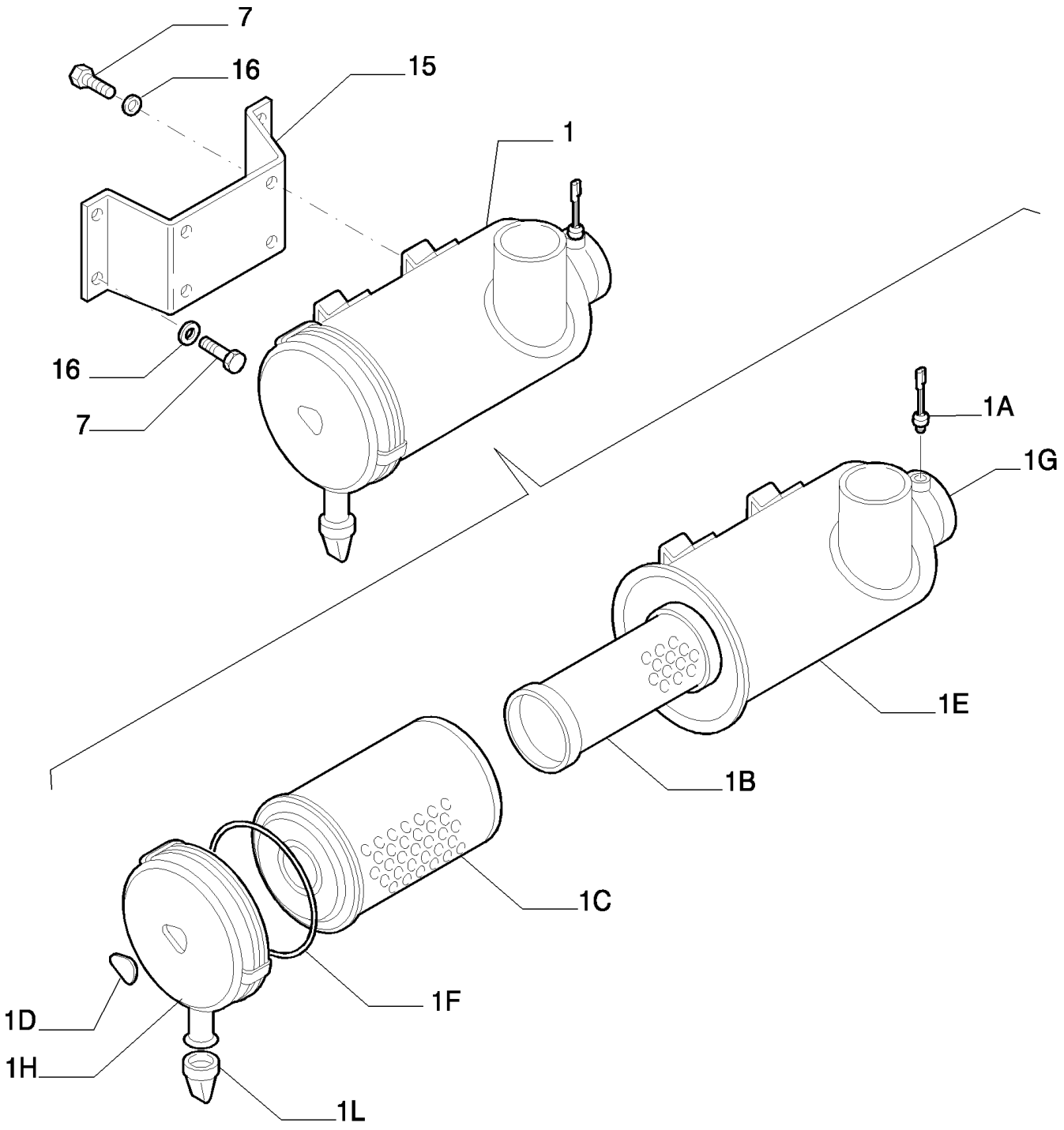

Copyright © New Holland

FILTRO DE AIRE
AIR CLEANER
AIR CLEANER
AIR CLEANER

R	N	P.N.	MOD	Q	Description Denominacion	Descrizione Beskrivelse	Bezeichnung Denominação	Description Beschrijving	L.C.
1		87530988		1	AIR FILTER, - ASSY FILTRO DE AIRE	FILTRO ARIA LUFTFILTER	LUFTFILTER FILTRO DE AR	FILTRE A AIR LUCHTFILTER	066F
1A		72211062		1	SENSOR SENSOR	SENSORE FØLER	SENSOR SENSOR	CAPTEUR SENSOR	608S
1B		87564846		1	AIR FILTER, - SAFETY FILTRO DE AIRE	FILTRO ARIA LUFTFILTER	LUFTFILTER FILTRO DE AR	FILTRE A AIR LUCHTFILTER	066F
1C		87564844		1	AIR FILTER, - MAIN FILTRO DE AIRE	FILTRO ARIA LUFTFILTER	LUFTFILTER FILTRO DE AR	FILTRE A AIR LUCHTFILTER	066F
1D		NS		1	NOT SERVICED NO SE REPARA	NON SOTTOPOSTO A M. SERVICERES IKKE	NICHT ALS ERS-T LIEFE PEÇA NÃO FORNECIDA	NON ENTRETENU NIET VERKRIJGBAAR	061N
1E		NS		1	NOT SERVICED NO SE REPARA	NON SOTTOPOSTO A M. SERVICERES IKKE	NICHT ALS ERS-T LIEFE PEÇA NÃO FORNECIDA	NON ENTRETENU NIET VERKRIJGBAAR	061N
1F		87585125		1	O-RING JUNTA TÓRICA	ANELLO TOROIDALE O-RING	O-RING O-RING	JOINT TORIQUE O-RING	055A
1G		NS		1	NOT SERVICED NO SE REPARA	NON SOTTOPOSTO A M. SERVICERES IKKE	NICHT ALS ERS-T LIEFE PEÇA NÃO FORNECIDA	NON ENTRETENU NIET VERKRIJGBAAR	061N
1H		87585128		1	COVER CUBIERTA	COPERCHIO DÆKSEL	ABDECKUNG COBERTURA	COUVERCLE AFSCHERMING	265C
1L		72217392		1	DUST VALVE VÁLVULA DE POLVO	VALVOLA ANTIPOLVERE STØVVENTIL	STAUBVENTIL VÁLVULA ALÍVIO	VALVE A POUSSIERE STOFVENTIEL	P677
7		11106234		8	BOLT, Hex, M10 x 25, 10.9, Full Thd PERNO	BULLONE BOLT	SCHRAUBE PARAFUSO	VIS BOUT	140B
15		{YN11P01153P1}		1					
16		14496631		8	WASHER, M10 x 21 x 2 ARANDELA	RONDELLA FLADSKIVE	UNTERLEGSCHEIBE ANILHA	RONDELLE SLUITRING	131R

Copyright © New Holland

0.001	02	p1	03/10

AIR CLEANER
FILTRO ARIA
LUFTFILTER
FILTRE A AIR

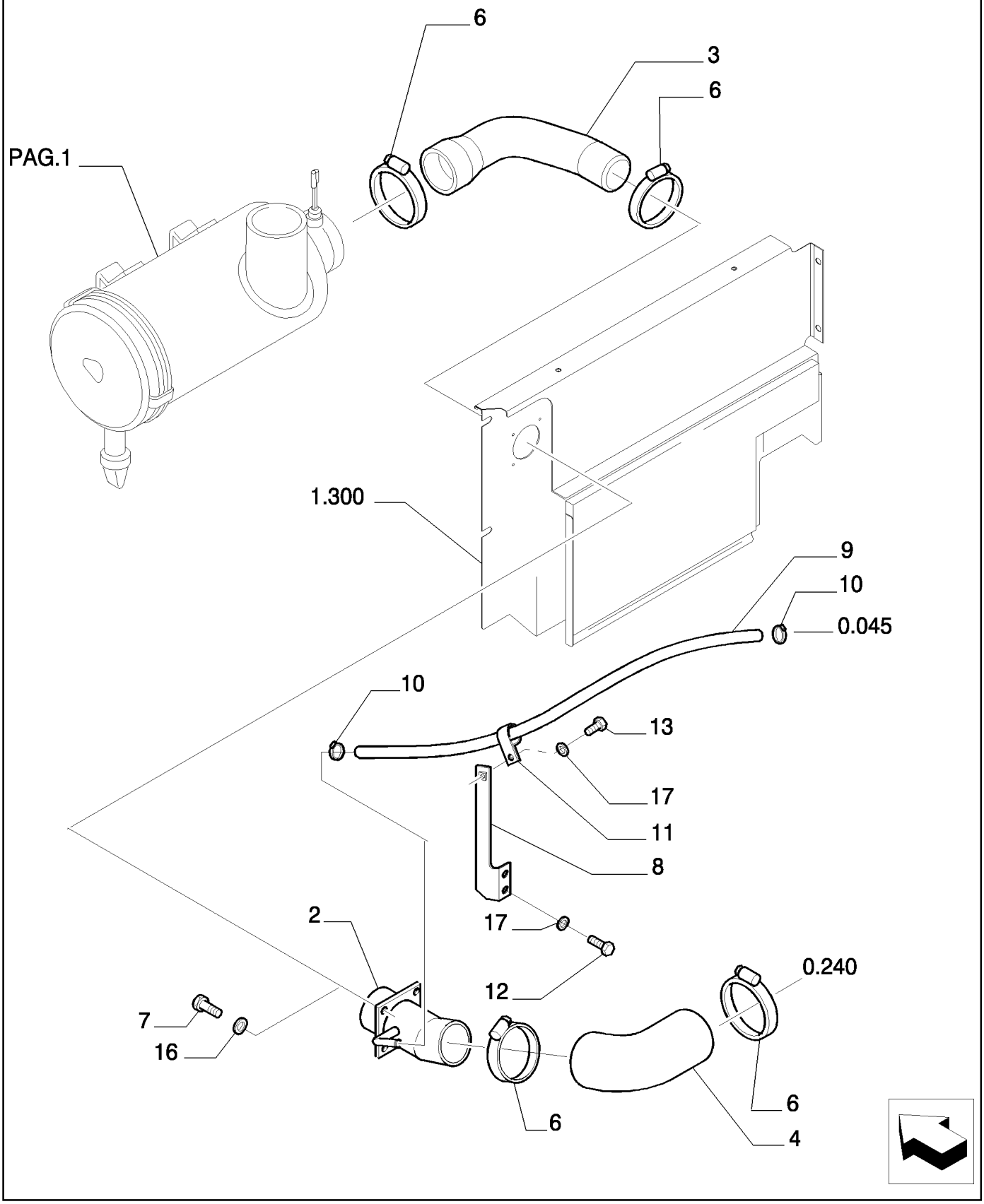

Copyright © New Holland

FILTRO DE AIRE
AIR CLEANER
AIR CLEANER
AIR CLEANER

R	N	P.N.	MOD	Q	Description Denominacion	Descrizione Beskrivelse	Bezeichnung Denominação	Description Beschrijving	L.C.
2		87530989		1	RIGID TUBE TUBO RÍGIDO	TUBO RIGIDO STIFT RØR	ROHR TUBO RÍGIDO	TUYAU RIGIDE VASTE LEIDING	193T
3		87530994		1	FLEXIBLE HOSE TUBO FLEXIBLE	TUBO FLESSIBILE FLEKSIBEL SLANGE	BIEGSAMER SCHLAUCH MANGUEIRA FLEXÍVEL	TUYAU FLEXIBLE FLEXIBELE SLANG	192T
4		87530995		1	FLEXIBLE HOSE TUBO FLEXIBLE	TUBO FLESSIBILE FLEKSIBEL SLANGE	BIEGSAMER SCHLAUCH MANGUEIRA FLEXÍVEL	TUYAU FLEXIBLE FLEXIBELE SLANG	192T
6		72220488		4	HOSE CLIP ABRAZADERA DE MANG	FERMO DEL TUBO FLES SLANGEKLEMME	SCHLAUCHKLEMME FIXADOR DE MANGUEIR	COLLIER POUR FLEXIBL SLANGKLEM	180C
7		11106234		4	BOLT, Hex, M10 x 25, 10.9, Full Thd PERNO	BULLONE BOLT	SCHRAUBE PARAFUSO	VIS BOUT	140B
8		72209389		1	BRACKET SOPORTE	STAFFA BESLAG	HALTERUNG SUPORTE	SUPPORT STEUN	225S
9		87530996		1	FLEXIBLE HOSE TUBO FLEXIBLE	TUBO FLESSIBILE FLEKSIBEL SLANGE	BIEGSAMER SCHLAUCH MANGUEIRA FLEXÍVEL	TUYAU FLEXIBLE FLEXIBELE SLANG	192T
10		422050700		2	CLAMP ABRAZADERA	MORSETTO SPÆNDEBÅND	KLEMME BRAÇADEIRA	COLLIER KLEM	120M
11		71403661		1	CLIP ABRAZADERA	FERMO KLIPS	KLAMMER FIXADOR	COLLIER KLEM	045F
12		16043634		2	BOLT, Hex, M8 x 25, 10.9, Full Thd PERNO	BULLONE BOLT	SCHRAUBE PARAFUSO	VIS BOUT	140B
13		16043434		1	BOLT, Hex, M8 x 20, 10.9, Full Thd PERNO	BULLONE BOLT	SCHRAUBE PARAFUSO	VIS BOUT	140B
16		14496631		4	WASHER, M10 x 21 x 2 ARANDELA	RONDELLA FLADSKIVE	UNTERLEGSCHEIBE ANILHA	RONDELLE SLUITRING	131R
17		14496531		3	WASHER, M8 x 17 x 1.6 ARANDELA	RONDELLA FLADSKIVE	UNTERLEGSCHEIBE ANILHA	RONDELLE SLUITRING	131R

Copyright © New Holland

0.002	01	p1	03/10

MUFFLER
SILENZIATORE
SCHALLDAEMPFER
SILENCIEUX

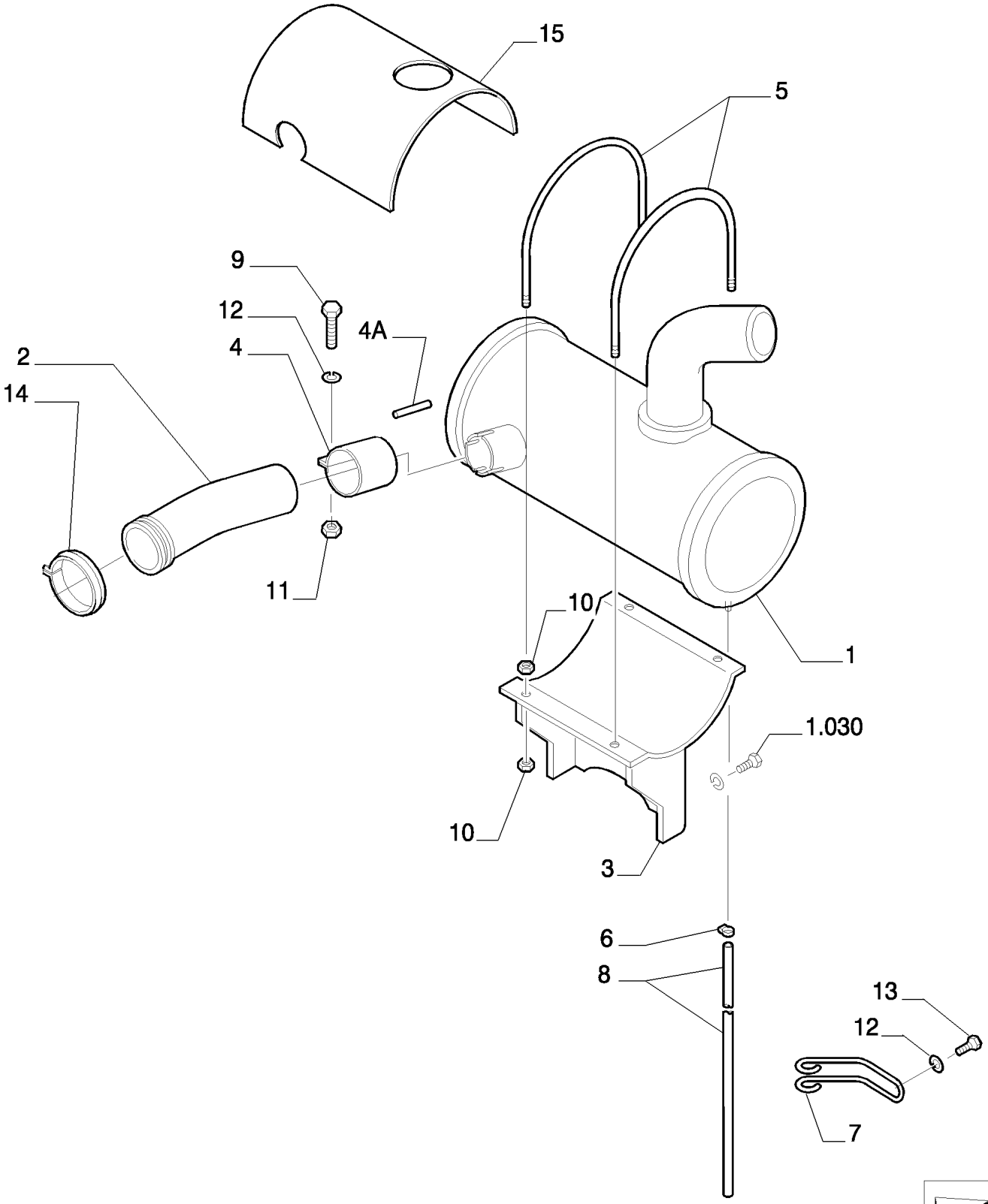

Copyright © New Holland

SILENCIADOR
MUFFLER
MUFFLER
MUFFLER

R	N	P.N.	MOD	Q	Description Denominacion	Descrizione Beskrivelse	Bezeichnung Denominação	Description Beschrijving	L.C.
1		87534195		1	MUFFLER SILENCIADOR	MARMITTA LYDDÆMPER	SCHALLDÄMPFER SILENCIADOR	SILENCIEUX UITLAATDEMPER	160S
2		87534197		1	RIGID TUBE TUBO RÍGIDO	TUBO RIGIDO STIFT RØR	ROHR TUBO RÍGIDO	TUYAU RIGIDE VASTE LEIDING	193T
3		87534200		1	BRACKET SOPORTE	STAFFA BESLAG	HALTERUNG SUPORTE	SUPPORT STEUN	225S
4		72204526		1	HOSE CLIP, - ASSY ABRAZADERA DE MANG	FERMO DEL TUBO FLES SLANGEKLEMME	SCHLAUCHKLEMME FIXADOR DE MANGUEIF	COLLIER POUR FLEXIBL SLANGKLEM	180C
4A		72219489		1	GASKET JUNTA	GUARNIZIONE PAKNING	DICHTUNG JUNTA	JOINT PAKKING	123G
5		87534202		2	U-BOLT HORQUILLA	BULLONE A U BØJLESKRUE	U-SCHRAUBE MOLA DE ENGATE	BOULON EN U VEERKLEM	100C
6		ZC16X01200		1	CLIP ABRAZADERA	FERMO KLIPS	KLAMMER FIXADOR	COLLIER KLEM	045F
7		87536553		1	CLIP ABRAZADERA	FERMO KLIPS	KLAMMER FIXADOR	COLLIER KLEM	045F
8		72204524		1	FLEXIBLE HOSE TUBO FLEXIBLE	TUBO FLESSIBILE FLEKSIBEL SLANGE	BIEGSAMER SCHLAUCH MANGUEIRA FLEXÍVEL	TUYAU FLEXIBLE FLEXIBELE SLANG	192T
9		11106634		2	BOLT, Hex, M10 x 35, 10.9, Full Thd PERNO	BULLONE BOLT	SCHRAUBE PARAFUSO	VIS BOUT	140B
10		16100821		8	NUT, M8, Cl 10 TUERCA	DADO MØTRIK	MUTTER PORCA	ECROU MOER	010D
11		11701721		2	NUT, M10, Cl 10 TUERCA	DADO MØTRIK	MUTTER PORCA	ECROU MOER	010D
12		14496631		3	WASHER, M10 x 21 x 2 ARANDELA	RONDELLA FLADSKIVE	UNTERLEGSCHEIBE ANILHA	RONDELLE SLUITRING	131R
13		11106034		1	BOLT, Hex, M10 x 20, 10.9, Full Thd PERNO	BULLONE BOLT	SCHRAUBE PARAFUSO	VIS BOUT	140B
14		72107089		1	COLLAR COLLAR	COLLARE SLANGEBÅND	RINGE ANEL	COLLIER KRAAG	031F
15		87628538		1	GUARD DEFENSA	PROTEZIONE BESKYTTELSESSKÆRM	SCHUTZABDECKUNG PROTECÇÃO	PROTECTION AFSCHERMING	070R

Copyright © New Holland

0.003	01	p1	03/10

RADIATOR
RADIATORE
KÜHLER
RADIATEUR

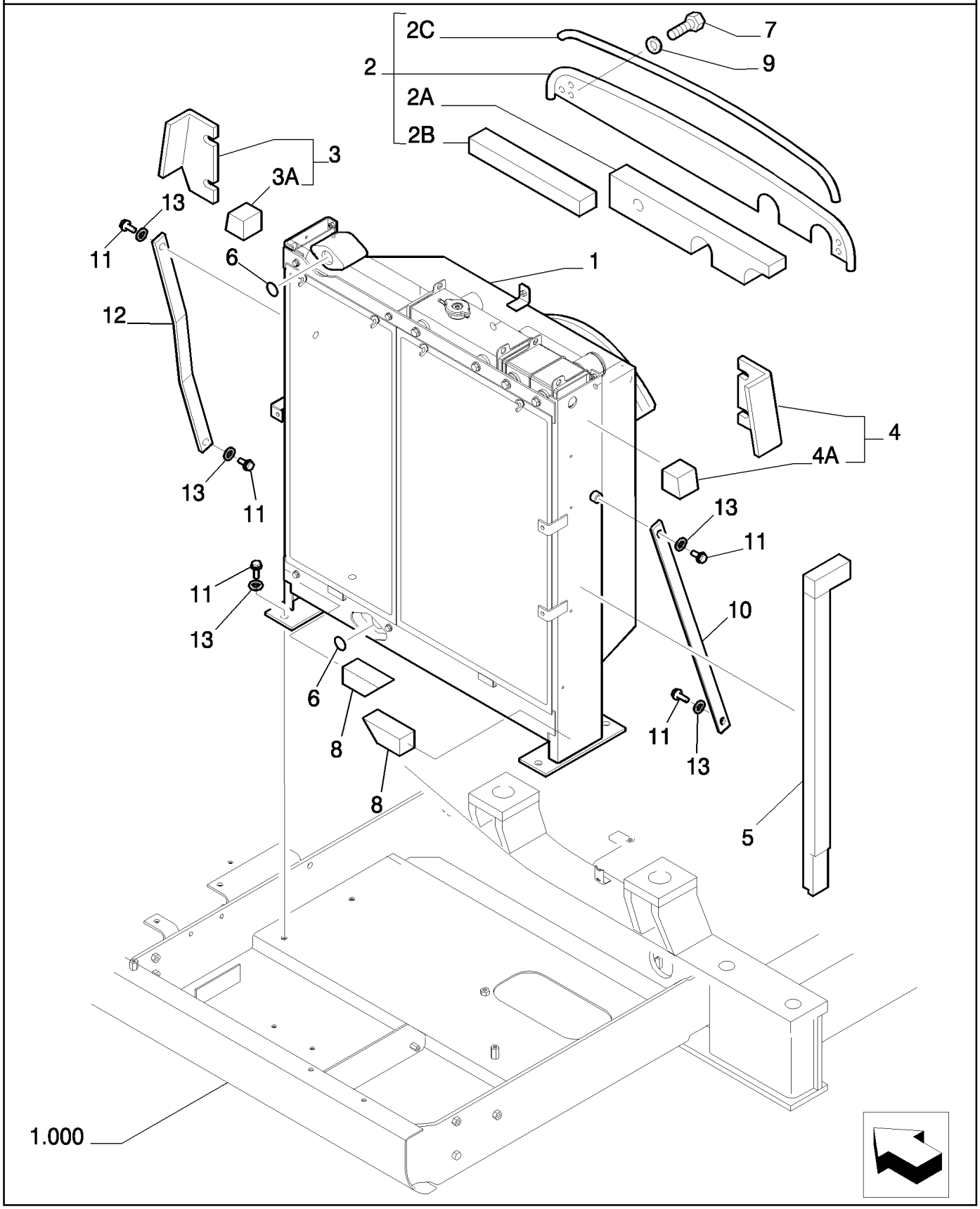

Copyright © New Holland

RADIADOR
RADIATOR
RADIATOR
RADIATOR

R	N	P.N.	MOD	Q	Description Denominacion	Descrizione Beskrivelse	Bezeichnung Denominação	Description Beschrijving	L.C.
1	1	87723741		1	RADIATOR RADIADOR	RADIATORE KØLER	KÜHLER ARREFECEDOR	RADIATEUR RADIATEUR	025R
2		87523525		1	PLATE, - ASSY PLACA	PIASTRA PLADE	PLATTE CHAPA	PLAQUE PLAAT	105P
2A		87523527		1	INSULATOR AISLADOR	ISOLATORE ISOLATOR	ISOLATOR ISOLADOR	ISOLANT ISOLATIE	085I
2B		87524790		1	INSULATOR AISLADOR	ISOLATORE ISOLATOR	ISOLATOR ISOLADOR	ISOLANT ISOLATIE	085I
2C		87547571		1	GASKET JUNTA	GUARNIZIONE PAKNING	DICHTUNG JUNTA	JOINT PAKKING	123G
3		87523519		1	PLATE, - ASSY PLACA	PIASTRA PLADE	PLATTE CHAPA	PLAQUE PLAAT	105P
3A		87523521		1	INSULATOR AISLADOR	ISOLATORE ISOLATOR	ISOLATOR ISOLADOR	ISOLANT ISOLATIE	085I
4		87523522		1	PLATE, - ASSY PLACA	PIASTRA PLADE	PLATTE CHAPA	PLAQUE PLAAT	105P
4A		87523524		1	INSULATOR AISLADOR	ISOLATORE ISOLATOR	ISOLATOR ISOLADOR	ISOLANT ISOLATIE	085I
5		87340506		1	INSULATOR AISLADOR	ISOLATORE ISOLATOR	ISOLATOR ISOLADOR	ISOLANT ISOLATIE	085I
6		87340507		2	O-RING JUNTA TÓRICA	ANELLO TOROIDALE O-RING	O-RING O-RING	JOINT TORIQUE O-RING	055A
7		16043434		4	BOLT, Hex, M8 x 20, 10.9, Full Thd PERNO	BULLONE BOLT	SCHRAUBE PARAFUSO	VIS BOUT	140B
8		87340508		2	INSULATOR AISLADOR	ISOLATORE ISOLATOR	ISOLATOR ISOLADOR	ISOLANT ISOLATIE	085I
9		14496531		4	WASHER, M8 x 17 x 1.6 ARANDELA	RONDELLA FLADSKIVE	UNTERLEGSCHEIBE ANILHA	RONDELLE SLUITRING	131R
10		87523517		1	BAR BARRA	BARRA BJÆLKE	BAR BARRA	BARRE STANG	530B
11		11112634		8	SCREW TORNILLO	VITE SKRUE	SCHRAUBE PARAFUSO	VIS SCHROEF	040V
12		87523518		1	BAR BARRA	BARRA BJÆLKE	BAR BARRA	BARRE STANG	530B
13		14496731		8	WASHER, M12 x 24 x 2.5 Thk ARANDELA	RONDELLA FLADSKIVE	UNTERLEGSCHEIBE ANILHA	RONDELLE SLUITRING	131R

(1) ASSY SEE PAGE 4

Copyright © New Holland

0.003	02	p1	03/10

RADIATOR (WATER)
RADIATORE (ACQUA)
KÜHLER
RADIATEUR

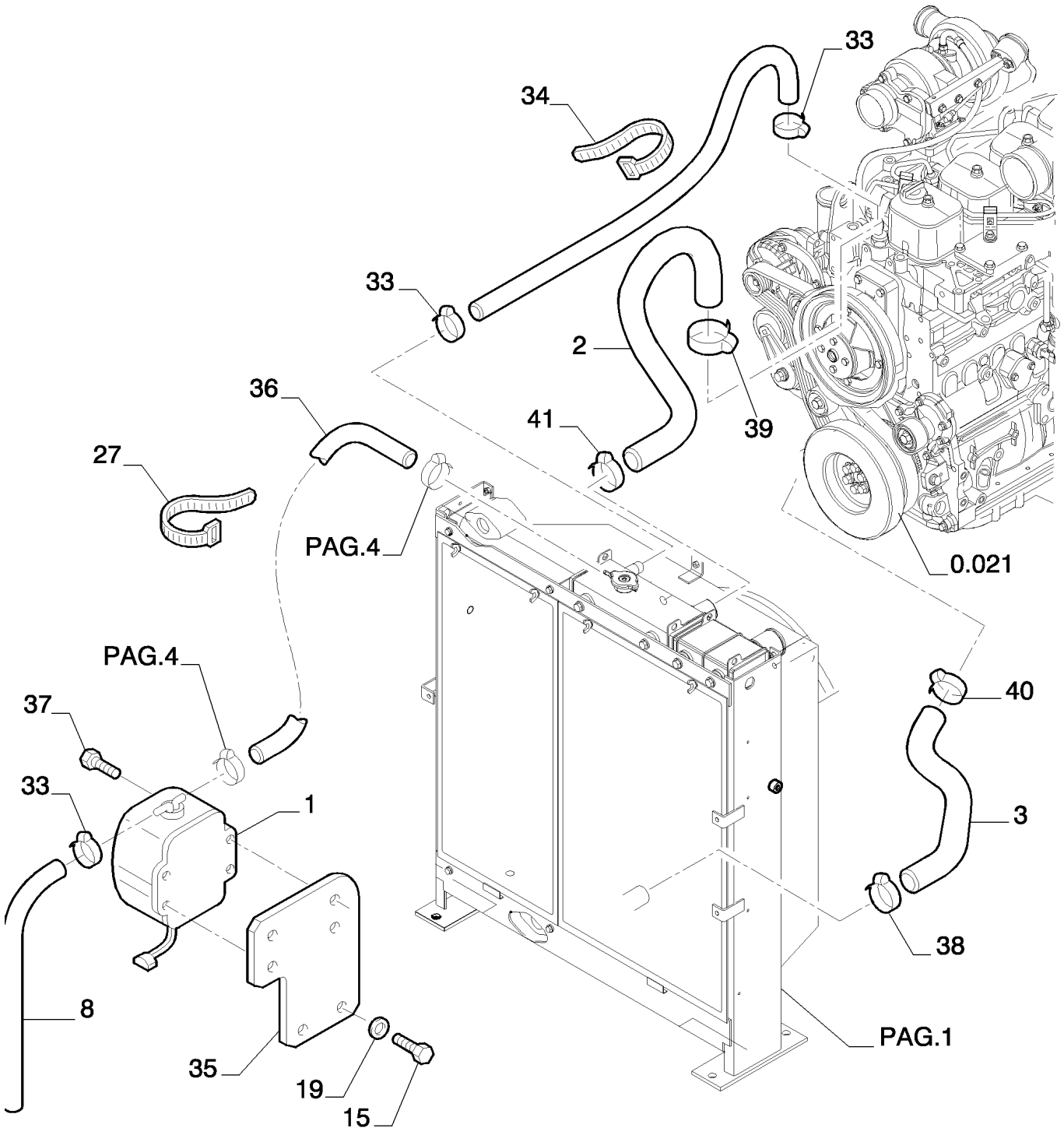

Copyright © New Holland

RADIADOR
RADIATOR (WATER)
RADIATOR (WATER)
RADIATOR (WATER)

R	N	P.N.	MOD	Q	Description Denominacion	Descrizione Beskrivelse	Bezeichnung Denominação	Description Beschrijving	L.C.
1		72201239		1	CONTAINER RECIPIENTE	CONTENITORE BEHOLDER	BEHÄLTER RECIPIENTE	CONTENEUR OPVANGBAK	254C
2		87526661		1	FLEXIBLE HOSE TUBO FLEXIBLE	TUBO FLESSIBILE FLEKSIBEL SLANGE	BIEGSAMER SCHLAUCH MANGUEIRA FLEXÍVEL	TUYAU FLEXIBLE FLEXIBELE SLANG	192T
3		87526660		1	FLEXIBLE HOSE TUBO FLEXIBLE	TUBO FLESSIBILE FLEKSIBEL SLANGE	BIEGSAMER SCHLAUCH MANGUEIRA FLEXÍVEL	TUYAU FLEXIBLE FLEXIBELE SLANG	192T
8		87557648		1	FLEXIBLE HOSE TUBO FLEXIBLE	TUBO FLESSIBILE FLEKSIBEL SLANGE	BIEGSAMER SCHLAUCH MANGUEIRA FLEXÍVEL	TUYAU FLEXIBLE FLEXIBELE SLANG	192T
15		11106434		2	BOLT, Hex, M10 x 30, 10.9, Full Thd PERNO	BULLONE BOLT	SCHRAUBE PARAFUSO	VIS BOUT	140B
19		14496631		2	WASHER, M10 x 21 x 2 ARANDELA	RONDELLA FLADSKIVE	UNTERLEGSCHEIBE ANILHA	RONDELLE SLUITRING	131R
27		72203537		5	COLLAR COLLAR	COLLARE SLANGEBÅND	RINGE ANEL	COLLIER KRAAG	031F
33		ZC16X01200		3	CLIP ABRAZADERA	FERMO KLIPS	KLAMMER FIXADOR	COLLIER KLEM	045F
34		4982514		1	CABLE STRAP BANDA DE CABLE	FASCETTA PER CAVO KABELSTROP	KABELBINDER BRAÇADEIRA DE CABO	BRIDE DE CABLE BUNDELBAND	P716
35		87557649		1	BRACKET SOPORTE	STAFFA BESLAG	HALTERUNG SUPORTE	SUPPORT STEUN	225S
36		87526677		1	FLEXIBLE HOSE TUBO FLEXIBLE	TUBO FLESSIBILE FLEKSIBEL SLANGE	BIEGSAMER SCHLAUCH MANGUEIRA FLEXÍVEL	TUYAU FLEXIBLE FLEXIBELE SLANG	192T
37		16043634		4	BOLT, Hex, M8 x 25, 10.9, Full Thd PERNO	BULLONE BOLT	SCHRAUBE PARAFUSO	VIS BOUT	140B
38		71464956		1	HOSE CLIP ABRAZADERA DE MANG	FERMO DEL TUBO FLES SLANGEKLEMME	SCHLAUCHKLEMME FIXADOR DE MANGUEIR	COLLIER POUR FLEXIBL SLANGKLEM	180C
39		71416864		1	CLAMP, #38, 2.06"-2.37", T-Bolt ABRAZADERA	MORSETTO SPÆNDEBÅND	KLEMME BRAÇADEIRA	COLLIER KLEM	120M
40		71406248		1	CLAMP, #40, 2.12"-2.44", T-Bolt ABRAZADERA	MORSETTO SPÆNDEBÅND	KLEMME BRAÇADEIRA	COLLIER KLEM	120M
41		87664173		1	COLLAR COLLAR	COLLARE SLANGEBÅND	RINGE ANEL	COLLIER KRAAG	031F

Copyright © New Holland

0.003	03	p1	03/10

RADIATOR
RADIATORE
KÜHLER
RADIATEUR

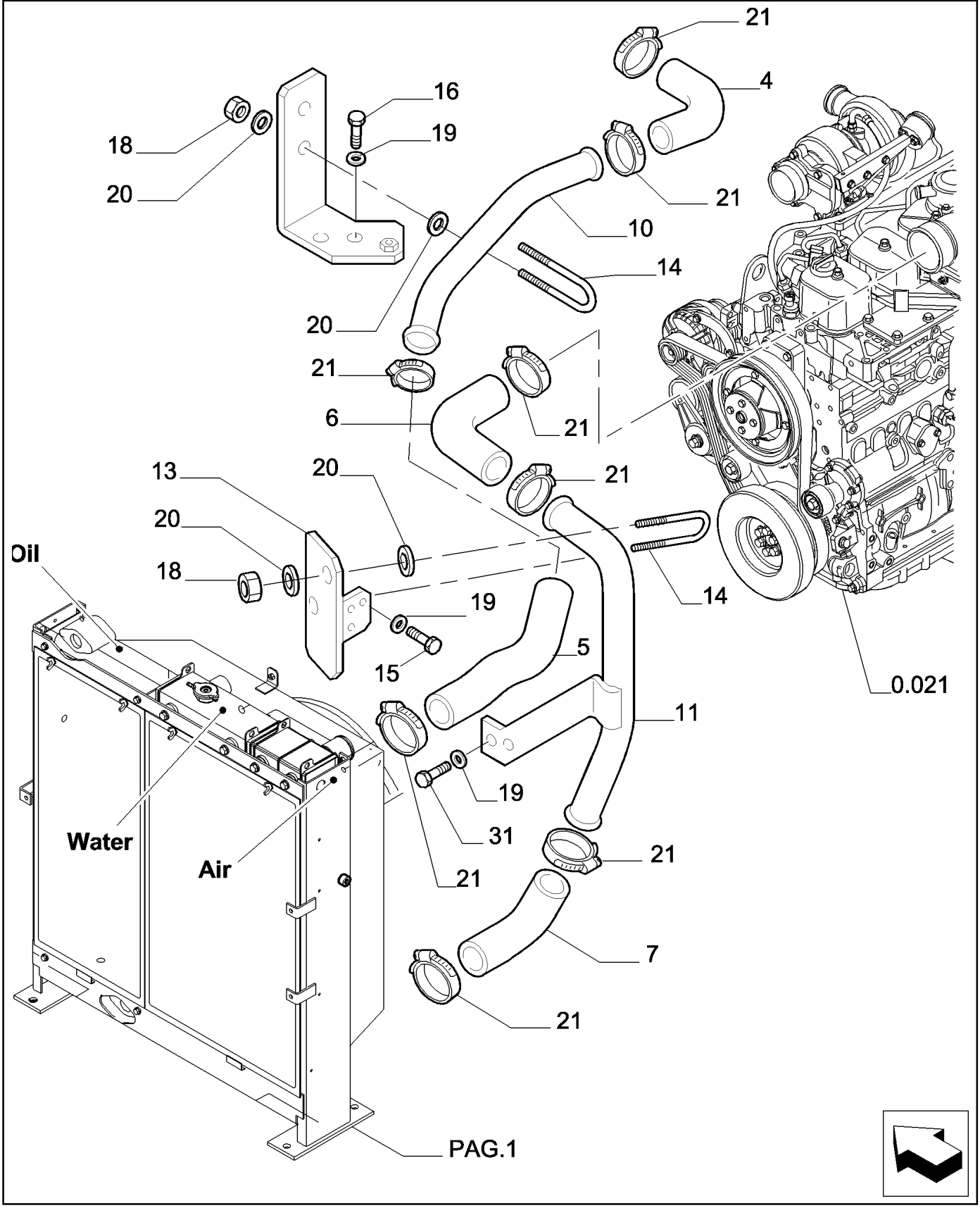

Copyright © New Holland

RADIADOR
RADIATOR
RADIATOR
RADIATOR

R	N	P.N.	MOD	Q	Description Denominacion	Descrizione Beskrivelse	Bezeichnung Denominação	Description Beschrijving	L.C.
4		87526662		1	FLEXIBLE HOSE TUBO FLEXIBLE	TUBO FLESSIBILE FLEKSIBEL SLANGE	BIEGSAMER SCHLAUCH MANGUEIRA FLEXÍVEL	TUYAU FLEXIBLE FLEXIBELE SLANG	192T
5		87579445		1	FLEXIBLE HOSE TUBO FLEXIBLE	TUBO FLESSIBILE FLEKSIBEL SLANGE	BIEGSAMER SCHLAUCH MANGUEIRA FLEXÍVEL	TUYAU FLEXIBLE FLEXIBELE SLANG	192T
6		87526664		1	FLEXIBLE HOSE TUBO FLEXIBLE	TUBO FLESSIBILE FLEKSIBEL SLANGE	BIEGSAMER SCHLAUCH MANGUEIRA FLEXÍVEL	TUYAU FLEXIBLE FLEXIBELE SLANG	192T
7		87526665		1	FLEXIBLE HOSE TUBO FLEXIBLE	TUBO FLESSIBILE FLEKSIBEL SLANGE	BIEGSAMER SCHLAUCH MANGUEIRA FLEXÍVEL	TUYAU FLEXIBLE FLEXIBELE SLANG	192T
10		87526666		1	RIGID TUBE TUBO RÍGIDO	TUBO RIGIDO STIFT RØR	ROHR TUBO RÍGIDO	TUYAU RIGIDE VASTE LEIDING	193T
11		87526667		1	RIGID TUBE TUBO RÍGIDO	TUBO RIGIDO STIFT RØR	ROHR TUBO RÍGIDO	TUYAU RIGIDE VASTE LEIDING	193T
12		87526669		1	PLATE PLACA	PIASTRA PLADE	PLATTE CHAPA	PLAQUE PLAAT	105P
13		87526672		1	PLATE PLACA	PIASTRA PLADE	PLATTE CHAPA	PLAQUE PLAAT	105P
14		72201251		2	U-BOLT HORQUILLA	BULLONE A U BØJLESKRUE	U-SCHRAUBE MOLA DE ENGATE	BOULON EN U VEERKLEM	100C
15		11106434		2	BOLT, Hex, M10 x 30, 10.9, Full Thd PERNO	BULLONE BOLT	SCHRAUBE PARAFUSO	VIS BOUT	140B
16		11107434		2	SCREW TORNILLO	VITE SKRUE	SCHRAUBE PARAFUSO	VIS SCHROEF	040V
18		16100821		8	NUT, M8, Cl 10 TUERCA	DADO MØTRIK	MUTTER PORCA	ECROU MOER	010D
19		14496631		6	WASHER, M10 x 21 x 2 ARANDELA	RONDELLA FLADSKIVE	UNTERLEGSCHEIBE ANILHA	RONDELLE SLUITRING	131R
20		14496531		8	WASHER, M8 x 17 x 1.6 ARANDELA	RONDELLA FLADSKIVE	UNTERLEGSCHEIBE ANILHA	RONDELLE SLUITRING	131R
21		71431617		7	CLAMP, #60, 2.75"-3.06", T-Bolt ABRAZADERA	MORSETTO SPÆNDEBÅND	KLEMME BRAÇADEIRA	COLLIER KLEM	120M
23		71406250		1	COLLAR COLLAR	COLLARE SLANGEBÅND	RINGE ANEL	COLLIER KRAAG	031F
31		11106034		2	BOLT, Hex, M10 x 20, 10.9, Full Thd PERNO	BULLONE BOLT	SCHRAUBE PARAFUSO	VIS BOUT	140B

Copyright © New Holland

RADIATOR - COMPONENTS
RADIATORE - COMPONENTI
KÜHLER - EINZELTEILE
RADIATEUR - COMPOSANTS

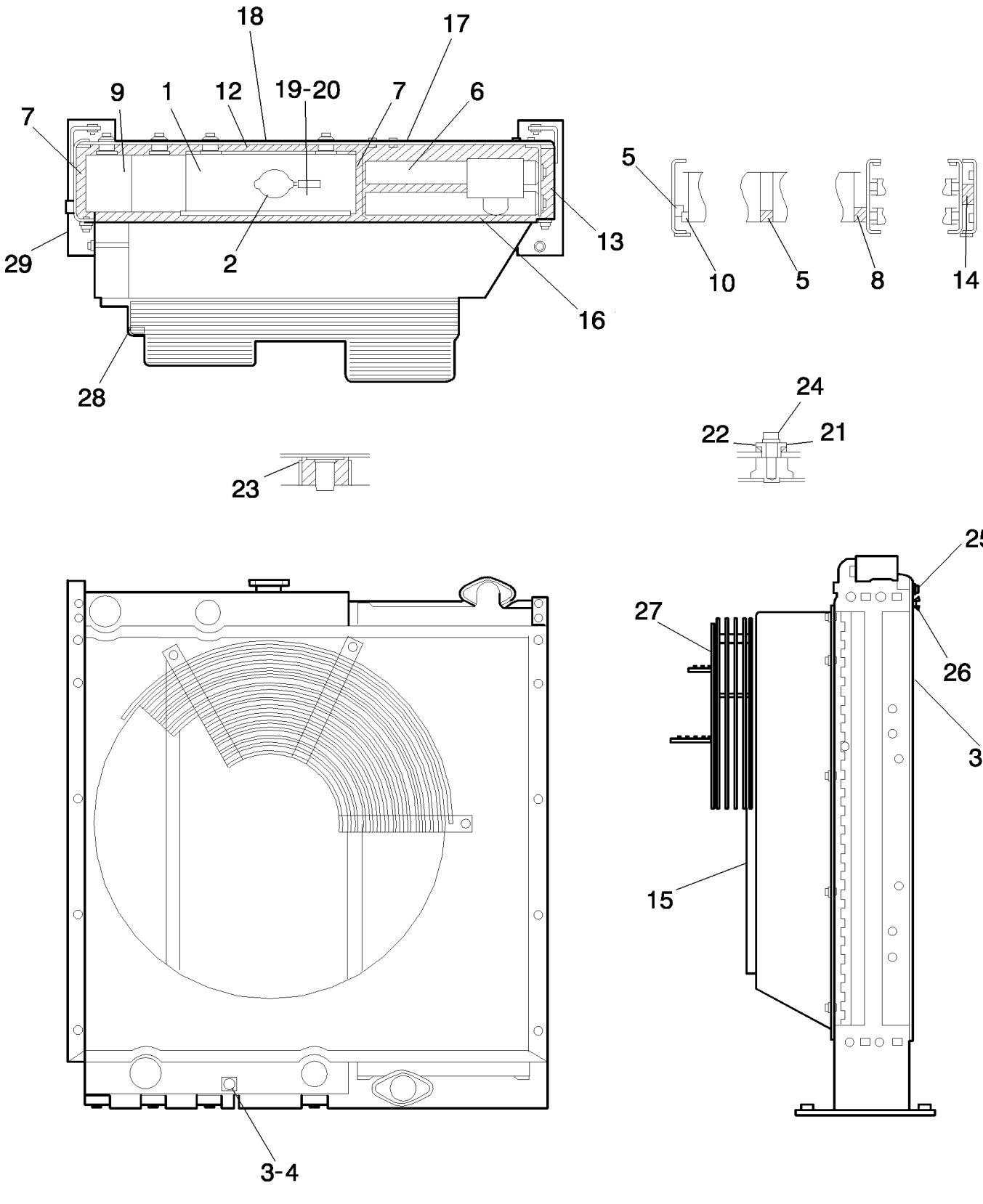

Copyright © New Holland

RADIADOR - COMPONENTES
RADIATOR - COMPONENTS
RADIATOR - COMPONENTS
RADIATOR - COMPONENTS

R	N	P.N.	MOD	Q	Description Denominacion	Descrizione Beskrivelse	Bezeichnung Denominação	Description Beschrijving	L.C.
1		YN05P00062S001		1	RADIATOR RADIADOR	RADIATORE KØLER	KÜHLER ARREFECEDOR	RADIATEUR RADIATEUR	025R
2		72953999		1	DUST CAP CAPUCHÓN ANTIPOLVC	CAPPUCCIO PARAPOLV STØVHÆTTE	STAUBKAPPE TAMPA CONTRA POEIR/	CACHE-POUSSIERE STOFKAP	066C
3		72215424		1	DRAINCOCK/TAP SUPPLY GRIFO	RUBINETTO HANE	ABLASSHAHN/ZULAUF BUJÃO DRENAGEM/ABA	ROBINET VOEDING AFTAPKRAAN	150R
4		72210208		1	FLEXIBLE HOSE TUBO FLEXIBLE	TUBO FLESSIBILE FLEKSIBEL SLANGE	BIEGSAMER SCHLAUCH MANGUEIRA FLEXÍVEL	TUYAU FLEXIBLE FLEXIBELE SLANG	192T
5		72210216		2	INSULATOR AISLADOR	ISOLATORE ISOLATOR	ISOLATOR ISOLADOR	ISOLANT ISOLATIE	085I
6		YN05P00058S002		1	OIL COOLER REFRIGERADOR DE ACI	RADIATORE OLIO OLIEKØLER	ÖLKÜHLER REFRIGERADOR DO ÓL	REFROIDISSEUR D'HUIL OLIEKOELER	026R
7		YN05P00058S019		4	INSULATOR AISLADOR	ISOLATORE ISOLATOR	ISOLATOR ISOLADOR	ISOLANT ISOLATIE	085I
8		YN05P00058S023		1	INSULATOR AISLADOR	ISOLATORE ISOLATOR	ISOLATOR ISOLADOR	ISOLANT ISOLATIE	085I
9		YN05P00058S003		1	COOLER REFRIGERADOR	RADIATORE KØLER	KÜHLER REFRIGERADOR	REFROIDISSEUR KOELER	2130
10		YN05P00058S022		1	INSULATOR AISLADOR	ISOLATORE ISOLATOR	ISOLATOR ISOLADOR	ISOLANT ISOLATIE	085I
12		YN05P00062S012		2	INSULATOR AISLADOR	ISOLATORE ISOLATOR	ISOLATOR ISOLADOR	ISOLANT ISOLATIE	085I
13		YN05P00062S013		2	INSULATOR AISLADOR	ISOLATORE ISOLATOR	ISOLATOR ISOLADOR	ISOLANT ISOLATIE	085I
14		YN05P00062S014		1	INSULATOR AISLADOR	ISOLATORE ISOLATOR	ISOLATOR ISOLADOR	ISOLANT ISOLATIE	085I
15		YN05P00062S015		1	GUARD DEFENSA	PROTEZIONE BESKYTTELSESSKÆRM	SCHUTZABDECKUNG PROTECÇÃO	PROTECTION AFSCHERMING	070R
16		YN05P00062S016		2	GASKET JUNTA	GUARNIZIONE PAKNING	DICHTUNG JUNTA	JOINT PAKKING	123G
17		YN05P00058S005		1	GUARD DEFENSA	PROTEZIONE BESKYTTELSESSKÆRM	SCHUTZABDECKUNG PROTECÇÃO	PROTECTION AFSCHERMING	070R
18		YN05P00062S018		1	GUARD DEFENSA	PROTEZIONE BESKYTTELSESSKÆRM	SCHUTZABDECKUNG PROTECÇÃO	PROTECTION AFSCHERMING	070R
19		72213767		1	HOSE TUBO	TUBO FLESSIBILE SLANGE	SCHLAUCH MANGUEIRA	FLEXIBLE SLANG	030M
20		72213766		2	CLIP ABRAZADERA	FERMO KLIPS	KLAMMER FIXADOR	COLLIER KLEM	045F
21		YN05P00058S012		4	COLLAR COLLAR	COLLARE SLANGEBÅND	RINGE ANEL	COLLIER KRAAG	031F
22		YN05P00058S013		4	SEAT CUSHION COJÍN DE ASIENTO	CUSCINO SEDILE SÆDEPOLSTRING	SITZKISSEN ALMOFADA DO BANCO	COUSSIN DE SIEGE ZITKUSSEN	345C
23		YN05P00058S014		4	SEAT CUSHION COJÍN DE ASIENTO	CUSCINO SEDILE SÆDEPOLSTRING	SITZKISSEN ALMOFADA DO BANCO	COUSSIN DE SIEGE ZITKUSSEN	345C
24		72954857		4	SCREW TORNILLO	VITE SKRUE	SCHRAUBE PARAFUSO	VIS SCHROEF	040V
25		87353624		4	SCREW TORNILLO	VITE SKRUE	SCHRAUBE PARAFUSO	VIS SCHROEF	040V
26		72210213		4	SCREW TORNILLO	VITE SKRUE	SCHRAUBE PARAFUSO	VIS SCHROEF	040V

RADIATOR ASSY P/N 87723741

E215B

Copyright © New Holland

RADIATOR - COMPONENTS
RADIATORE - COMPONENTI
KÜHLER - EINZELTEILE
RADIATEUR - COMPOSANTS

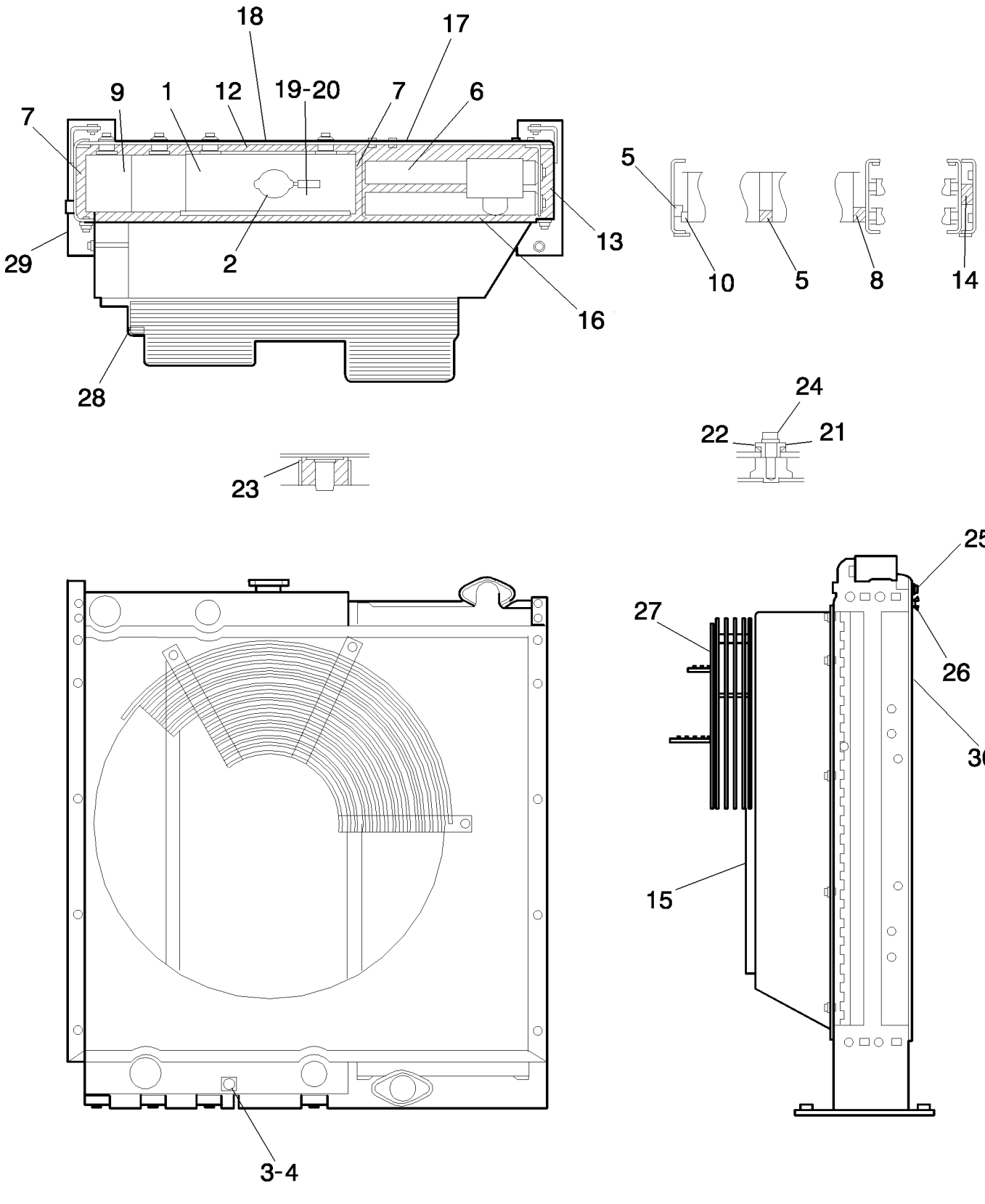

Copyright © New Holland

RADIADOR - COMPONENTES
RADIATOR - COMPONENTS
RADIATOR - COMPONENTS
RADIATOR - COMPONENTS

R	N	P.N.	MOD	Q	Description Denominacion	Descrizione Beskrivelse	Bezeichnung Denominação	Description Beschrijving	L.C.
27		YN05P00062S027		1	GUARD DEFENSA	PROTEZIONE BESKYTTELSESSKÆRM	SCHUTZABDECKUNG PROTECÇÃO	PROTECTION AFSCHERMING	070R
28		72210209		13	SCREW TORNILLO	VITE SKRUE	SCHRAUBE PARAFUSO	VIS SCHROEF	040V
29		YN05P00062S029		1	SUPPORT SOPORTE	SUPPORTO BESLAG	STÜTZE SUPORTE	SUPPORT STEUN	300S
30		YN05P00058S032		1	GASKET JUNTA	GUARNIZIONE PAKNING	DICHTUNG JUNTA	JOINT PAKKING	123G

RADIATOR ASSY P/N 87723741

E215B

Copyright © New Holland

0.004	01	p1	03/10

ACCELERATOR CONTROLS
COMANDI ACCELERATORE
GASREGULIERUNG
COMMANDES D'ACCELERATEUR

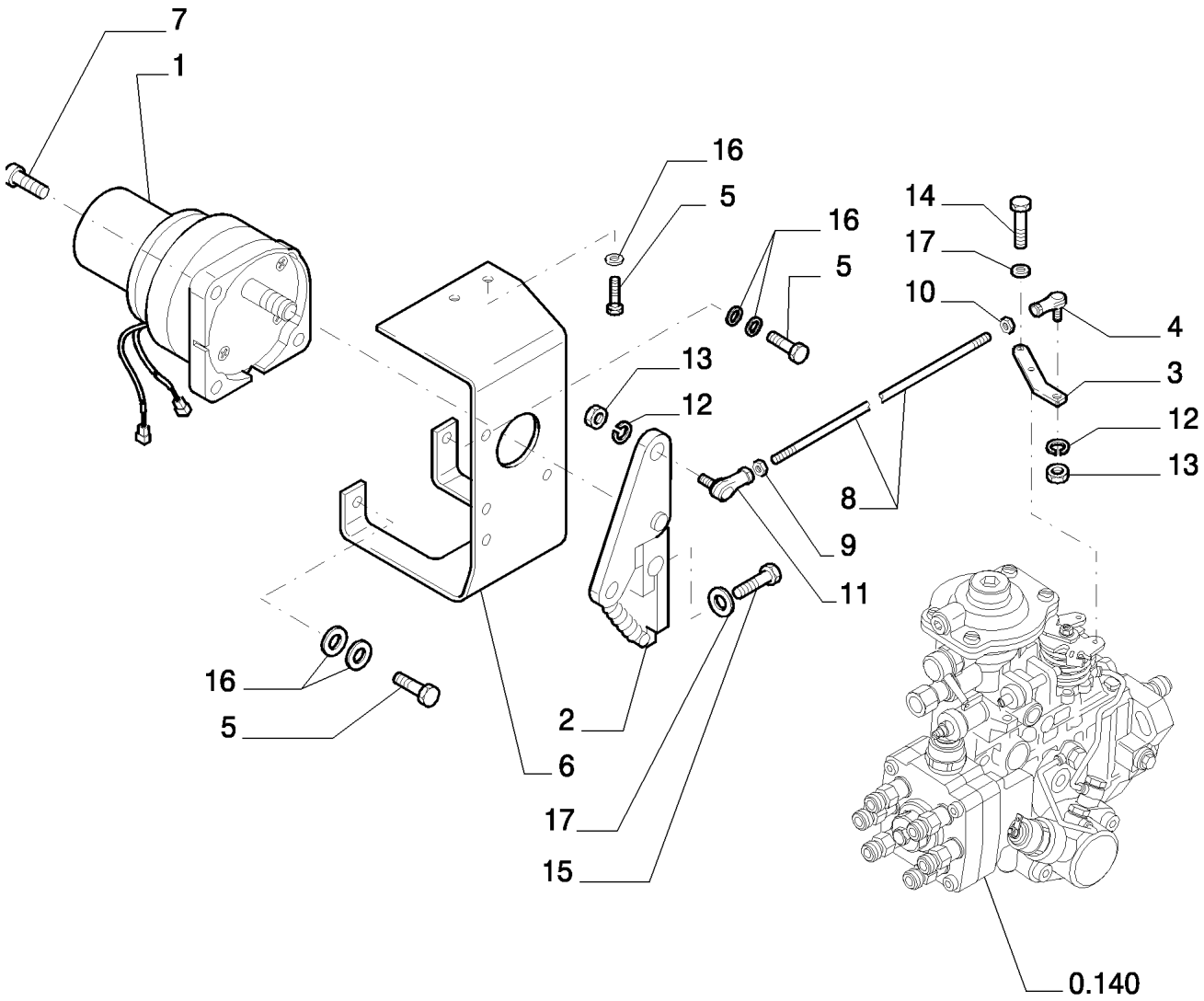

Copyright © New Holland

MANDOS DEL ACELERADOR
ACCELERATOR CONTROLS
ACCELERATOR CONTROLS
ACCELERATOR CONTROLS

R	N	P.N.	MOD	Q	Description Denominacion	Descrizione Beskrivelse	Bezeichnung Denominação	Description Beschrijving	L.C.
1		72204659		1	SMALL ELECTRIC MOTOR MOTOR ELÉCTRICO PE(	MOTORINO ELETTRICO LILLE EL-MOTOR	KLEINER ELEKTROMOT MOTOR ELÉCTRICO PE(	PETIT MOTEUR ELECTR KLEINE ELEKTROMOTO	137M
2		87636398		1	LEVER PALANCA	LEVA ARM	HEBEL ALAVANCA	LEVIER HEFBOOM	045L
3		87636399		1	PLATE PLACA	PIASTRA PLADE	PLATTE CHAPA	PLAQUE PLAAT	105P
4		72209399		1	BALL JOINT RÓTULA	GIUNTO SFERICO KUGLELED	KUGELGELENK RÓTULA	JOINT A ROTULE KOGELGEWRICHT	070G
5		16043631		4	BOLT, Hex, M8 x 25, 10.9 PERNO	BULLONE BOLT	SCHRAUBE PARAFUSO	VIS BOUT	140B
6		87636405		1	SUPPORT SOPORTE	SUPPORTO BESLAG	STÜTZE SUPORTE	SUPPORT STEUN	300S
7		14420331		3	SCREW, Hex Soc Hd, M10 x 35, 10.9 TORNILLO	VITE SKRUE	SCHRAUBE PARAFUSO	VIS SCHROEF	040V
8		87636401		1	ROD VARILLA	ASTA STANG	STANGE HASTE	TIGE STANG	090A
9		12164721		1	NUT, M10 x 1.25, Cl 10 TUERCA	DADO MØTRIK	MUTTER PORCA	ECROU MOER	010D
10		10789721		1	NUT, M10 x 1.25, Cl 10, LH TUERCA	DADO MØTRIK	MUTTER PORCA	ECROU MOER	010D
11		72209400		1	BALL JOINT RÓTULA	GIUNTO SFERICO KUGLELED	KUGELGELENK RÓTULA	JOINT A ROTULE KOGELGEWRICHT	070G
12		10516671		2	LOCK WASHER ARANDELA DE BLOQUE	RONDELLA DI SICUREZ LÅSESKIVE	SICHERUNGSSCHEIBE ANILHA DE RETENÇÃO	RONDELLE FREIN BORGRING	132R
13		16100821		2	NUT, M8, Cl 10 TUERCA	DADO MØTRIK	MUTTER PORCA	ECROU MOER	010D
14		10902231		2	BOLT, Hex, M6 x 16, 10.9 PERNO	BULLONE BOLT	SCHRAUBE PARAFUSO	VIS BOUT	140B
15		10902431		1	BOLT, Hex, M6 x 20, 10.9 PERNO	BULLONE BOLT	SCHRAUBE PARAFUSO	VIS BOUT	140B
16		12646721		6	WASHER, M8 x 20 x 2 ARANDELA	RONDELLA FLADSKIVE	UNTERLEGSCHEIBE ANILHA	RONDELLE SLUITRING	131R
17		14496431		3	WASHER, M6.4 x 12.5 x 1.6 Thk ARANDELA	RONDELLA FLADSKIVE	UNTERLEGSCHEIBE ANILHA	RONDELLE SLUITRING	131R

Copyright © New Holland

ENGINE
MOTORE
MOTOR
MOTEUR

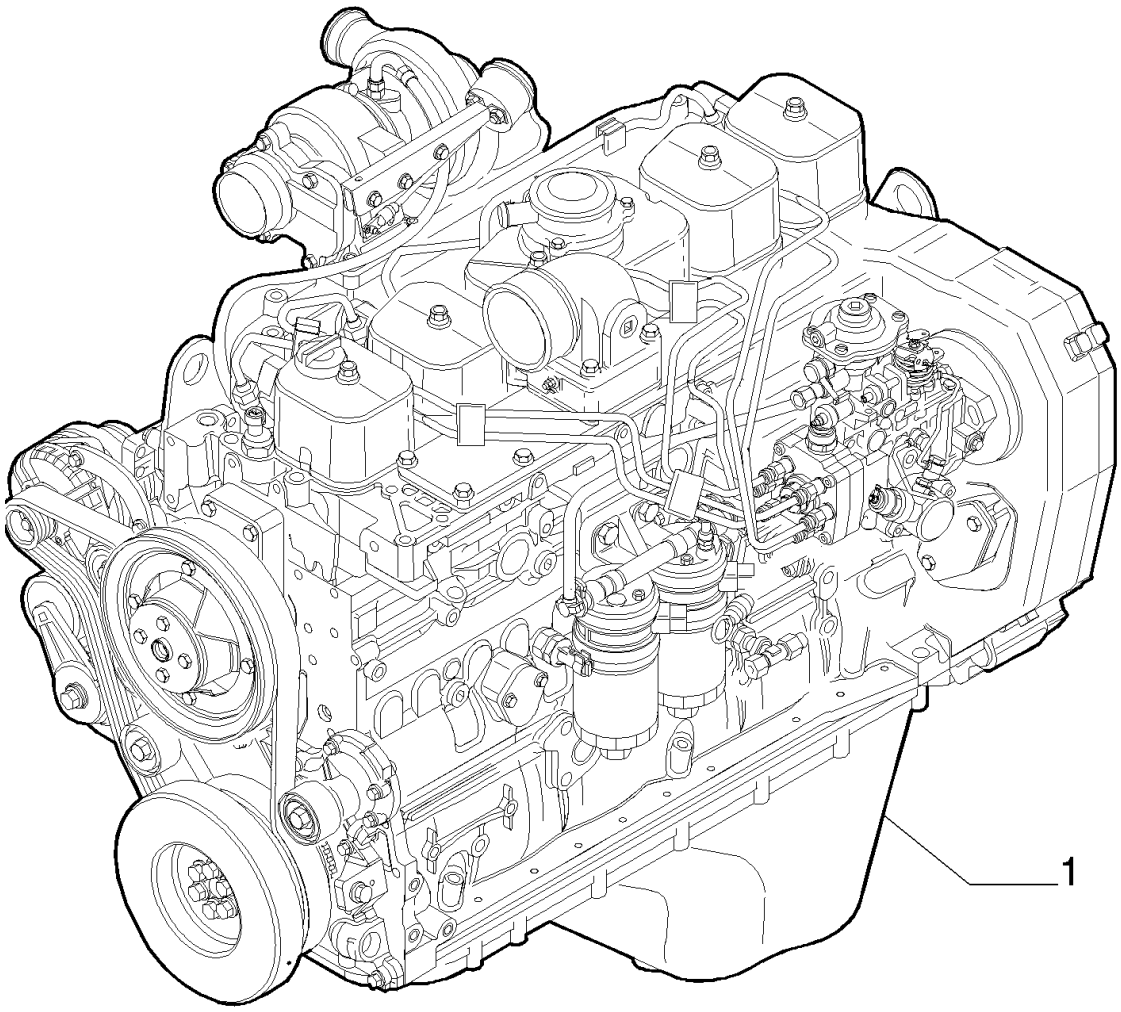

Copyright © New Holland

MOTOR
ENGINE
ENGINE
ENGINE

R	N	P.N.	MOD	Q	Description Denominacion	Descrizione Beskrivelse	Bezeichnung Denominação	Description Beschrijving	L.C.
1		**504126942**		1	ENGINE, - ASSY (F4GE9684E*J600)				
						MOTORE	MOTOR	MOTEUR	130M
					MOTOR	MOTOR	MOTOR	MOTOR	
		84131847		1	SHORT ENGINE, - ASSY	MOTORE ALLEGGERITC	KURZBLOCK	MOTEUR COURT	139M
					MOTOR ALIGERADO	SHORT BLOCK	BLOCO DE MOTOR SIMF	KORTE MOTOR	

Copyright © New Holland

CRANKCASE
BASAMENTO MOTORE
KURBELGEHÄUSE
BLOC CYLINDRE

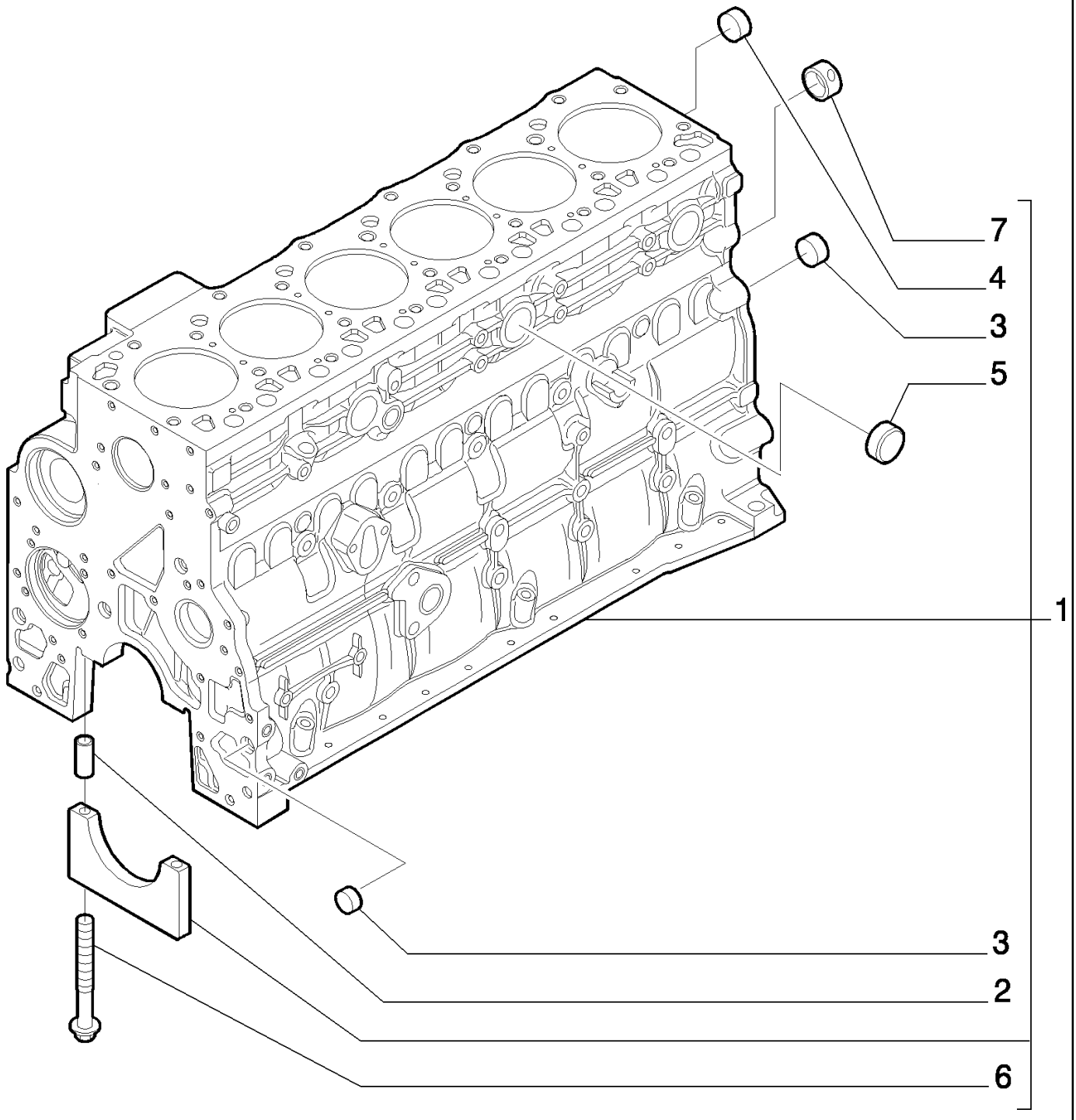

Copyright © New Holland

BLOQUE CILINDROS
CRANKCASE
CRANKCASE
CRANKCASE

R	N	P.N.	MOD	Q	Description Denominacion	Descrizione Beskrivelse	Bezeichnung Denominação	Description Beschrijving	L.C.
1		2830076		1	CYLINDER BLOCK, - ASSY BLOQUE DE CILINDRO	MONOBLOCCO KRUMTAPHUS	ZYLINDERBLOCK BLOCO DE CILINDRO	BLOC-CYLINDRES CILINDERBLOK	020B
2		4899026		14	DOWEL, M18 x 10 L BULÓN	PERNO DYVEL	PASSSTIFT PERNO-GUIA	GOUJON PASPEN	090G
3		4895039		3	EXPANSION PLUG, M17.73 TAPÓN DE EXPANSIÓN	TAPPO A ESPANSIONE EKSPANSIONSPROP	SPREIZSTOPFEN BUJÃO DE EXPANSÃO	BOUCHON D'EXPANSIOI VERLENGPLUG	A084
4		4895038		6	EXPANSION PLUG, M58.06 TAPÓN DE EXPANSIÓN	TAPPO A ESPANSIONE EKSPANSIONSPROP	SPREIZSTOPFEN BUJÃO DE EXPANSÃO	BOUCHON D'EXPANSIOI VERLENGPLUG	A084
5		4895228		3	EXPANSION PLUG, 35.23mm TAPÓN DE EXPANSIÓN	TAPPO A ESPANSIONE EKSPANSIONSPROP	SPREIZSTOPFEN BUJÃO DE EXPANSÃO	BOUCHON D'EXPANSIOI VERLENGPLUG	A084
6		4891353		14	SCREW, Flg Hd, M12 x 1.5 x 120 TORNILLO	VITE SKRUE	SCHRAUBE PARAFUSO	VIS SCHROEF	040V
7		4895040		1	BUSHING CASQUILLO	BOCCOLA BØSNING	BUCHSE CASQUILHO	BAGUE BUS	095B

Copyright © New Holland

0.040	02	p1	03/10

CRANKCASE
BASAMENTO MOTORE
KURBELGEHAUSE
BLOC CYLINDRE

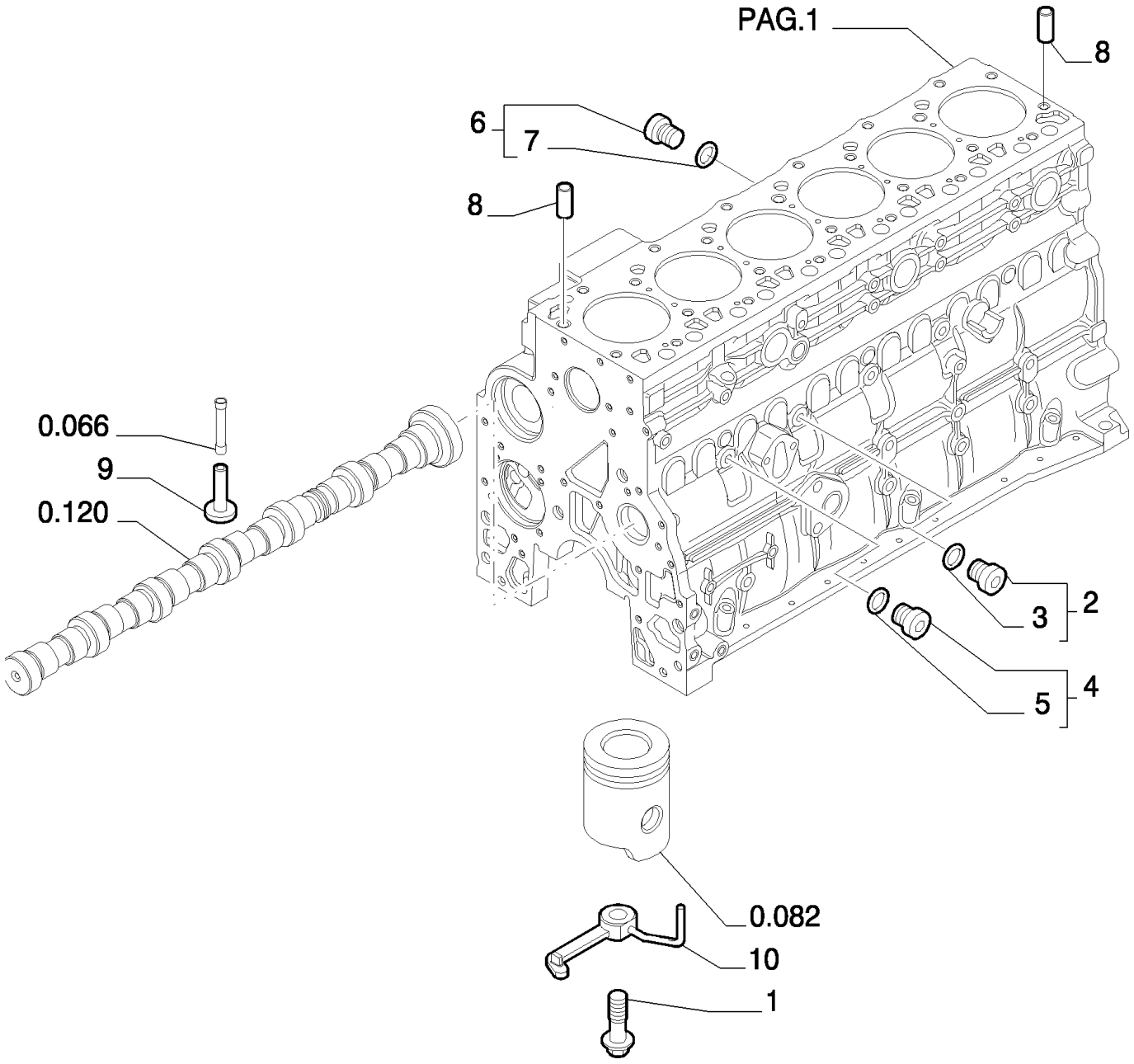

Copyright © New Holland

BLOQUE CILINDROS
CRANKCASE
CRANKCASE
CRANKCASE

R	N	P.N.	MOD	Q	Description Denominacion	Descrizione Beskrivelse	Bezeichnung Denominação	Description Beschrijving	L.C.
1		4894218		6	SCREW, Special, M8 x 20 TORNILLO	VITE SKRUE	SCHRAUBE PARAFUSO	VIS SCHROEF	040V
2		4895605		1	HEX SOCKET PLUG, M14 x 1.5, - Assy TAPÓN DE CABEZA HEX	TAPPO A BRUGOLA SEKSKANTET PROP	INNENSECHSKANTSTOI TAMPÃO SEXTAVADO IN	BOUCHON SIX PANS CR INBUSPLUG	A086
3		4899115		1	O-RING, M11.3 ID x 2.2 Thk JUNTA TÓRICA	ANELLO TOROIDALE O-RING	O-RING O-RING	JOINT TORIQUE O-RING	055A
4		4899009		1	PLUG, M10 x 1.5, Assy TAPÓN	TAPPO PROP	STOPFEN TAMPÃO	BOUCHON PLUG	050T
5		4899072		1	O-RING, M8.1 ID x 1.6 Thk JUNTA TÓRICA	ANELLO TOROIDALE O-RING	O-RING O-RING	JOINT TORIQUE O-RING	055A
6		4895392		3	HEX SOCKET PLUG, M18 x 1.5, - Assy TAPÓN DE CABEZA HEX	TAPPO A BRUGOLA SEKSKANTET PROP	INNENSECHSKANTSTOI TAMPÃO SEXTAVADO IN	BOUCHON SIX PANS CR INBUSPLUG	A086
7		4895393		1	O-RING, M15.3 ID x 2.2 Thk JUNTA TÓRICA	ANELLO TOROIDALE O-RING	O-RING O-RING	JOINT TORIQUE O-RING	055A
8		4895049		2	DOWEL, M16.05 x 10 L BULÓN	PERNO DYVEL	PASSSTIFT PERNO-GUIA	GOUJON PASPEN	090G
9		4895180		12	TAPPET LEVA	PUNTERIA VENTILLØFTER	STÖSSEL IMPULSOR	POUSSOIR DE SOUPAPI KLEPSTOTER	240P
10		504047260		6	LUBE OIL JET NOZZLE BOQ. INYEC. ACEITE LU	UGELLO OLIO LUBRIFIC DYSE, SMØREOLIE	SCHMIERÖLSPRITZDÜS PULVERIZADOR	GICLEUR D'HUILE SMEEROLIESPROEIER	020U

Copyright © New Holland

0.040	03	p1	03/10

CRANKCASE
BASAMENTO MOTORE
KURBELGEHAUSE
BLOC CYLINDRE

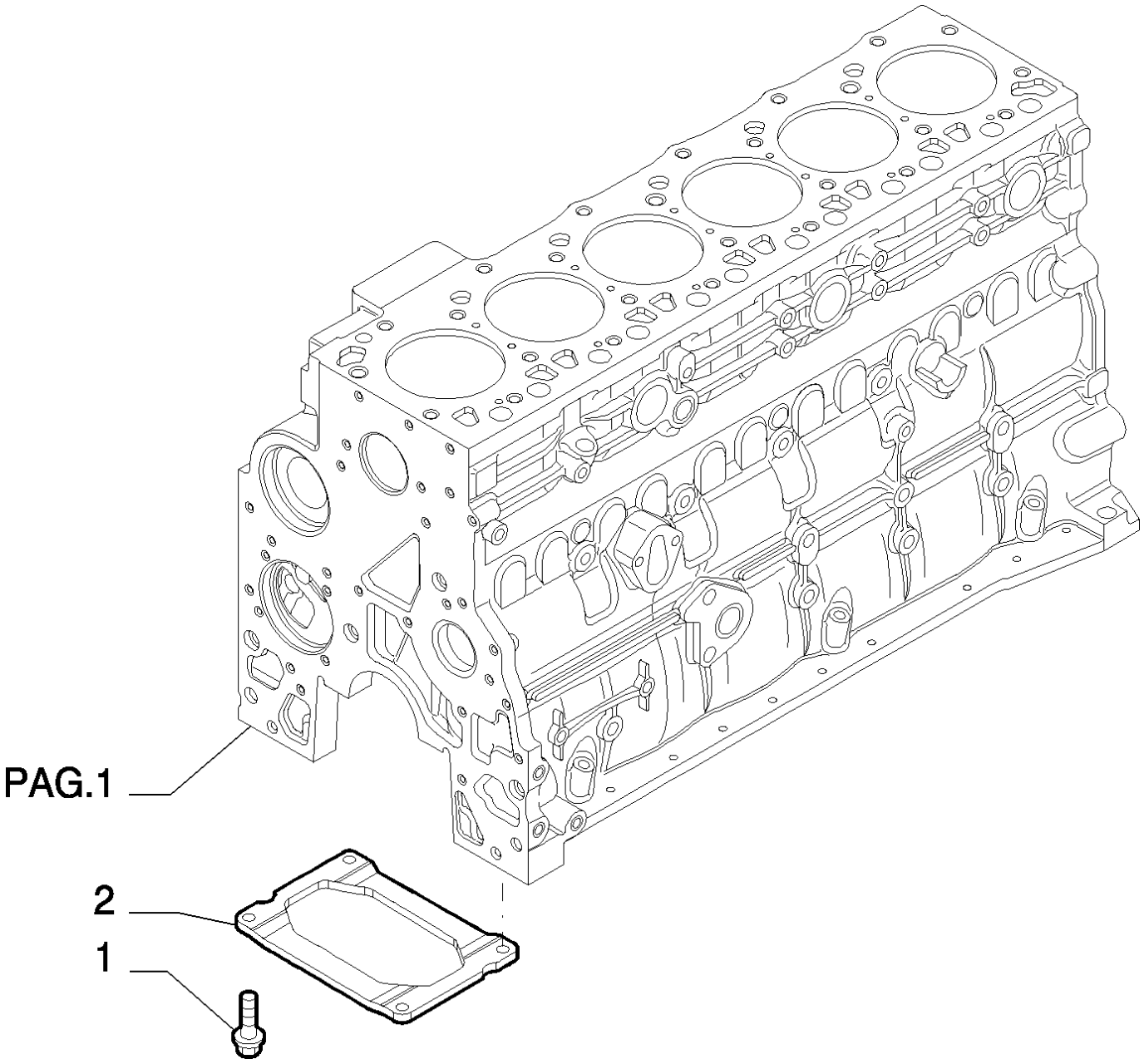

Copyright © New Holland

BLOQUE CILINDROS
CRANKCASE
CRANKCASE
CRANKCASE

R	N	P.N.	MOD	Q	Description Denominacion	Descrizione Beskrivelse	Bezeichnung Denominação	Description Beschrijving	L.C.
1		4899032		4	SCREW, Hex Flg, M10 x 1.5 x 25 VITE TORNILLO	SKRUE	SCHRAUBE PARAFUSO	VIS SCHROEF	040V
2		504076109		1	STIFFENER REFUERZO	RINFORZO AFSTIVER	VERSTEIFUNG REFORÇO	RENFORT VERSTEVIGING	P359

Copyright © New Holland

0.042	01	p1	03/10

ENGINE OIL SUMP
COPPA OLIO MOTORE
MOTORÖLWANNE
CARTER D'HUILE

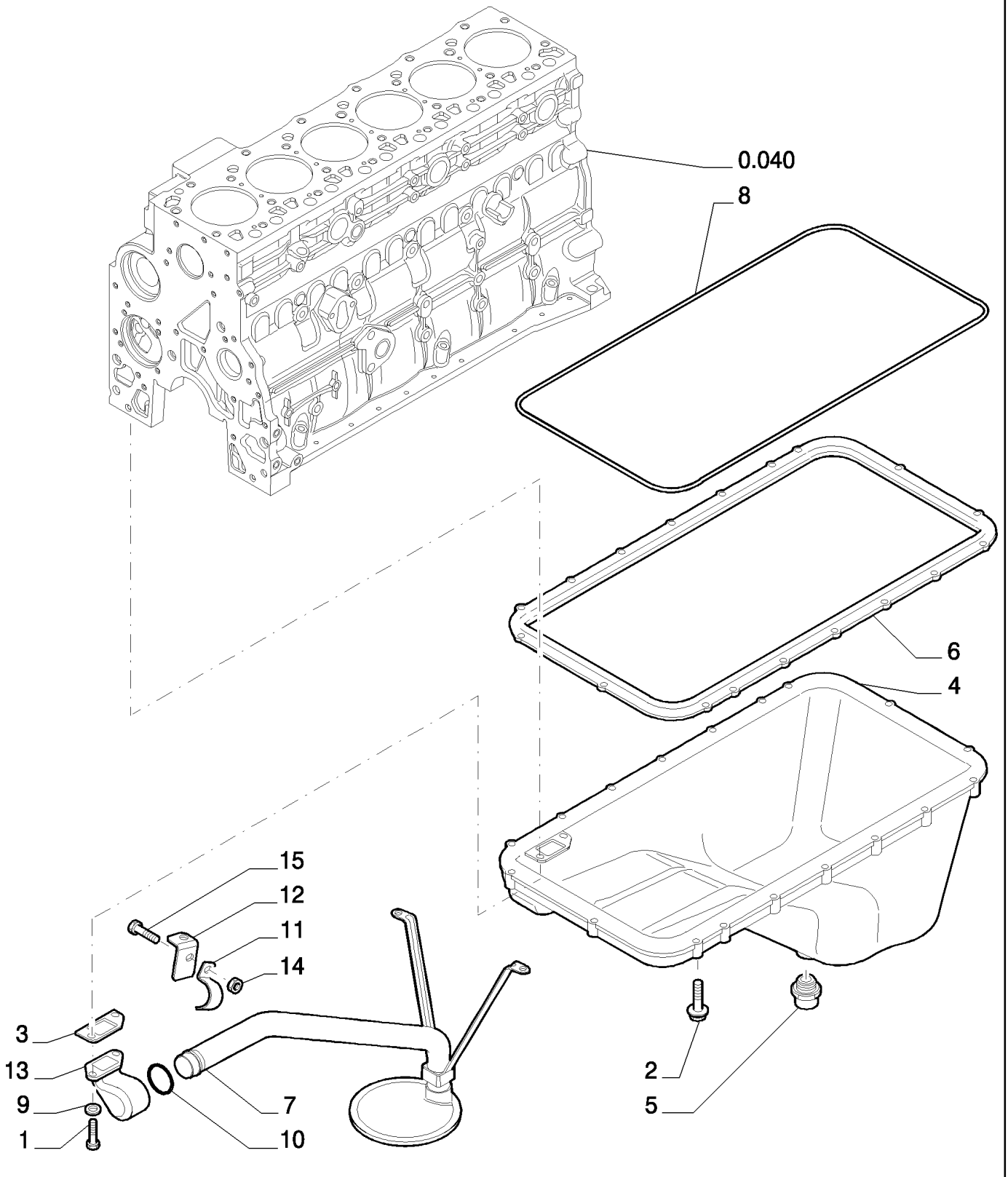

Copyright © New Holland

CARTER DE ACEITE
ENGINE OIL SUMP
ENGINE OIL SUMP
ENGINE OIL SUMP

R	N	P.N.	MOD	Q	Description Denominacion	Descrizione Beskrivelse	Bezeichnung Denominação	Description Beschrijving	L.C.
1		16690624		2	SCREW, 8X25 TORNILLO	VITE SKRUE	SCHRAUBE PARAFUSO	VIS SCHROEF	040V
2		4899091		18	SCREW, Hex Flg, M8 x 1.25 x 40 TORNILLO	VITE SKRUE	SCHRAUBE PARAFUSO	VIS SCHROEF	040V
3		4898301		1	GASKET JUNTA	GUARNIZIONE PAKNING	DICHTUNG JUNTA	JOINT PAKKING	123G
4		2852308		1	ENGINE OIL PAN CUBETA DE ACEITE DE	COPPA DELL'OLIO MOT BUNDKAR	MOTORÖLWANNE CÁRTER DE ÓLEO	CARTER D'HUILE MOTE MOTOROLIECARTER	274C
5		2853894		1	DRAIN PLUG TAPÓN DE VACIADO	TAPPO DI SCARICO AFTAPNINGSPROP	ABLASSSCHRAUBE BUJÃO DE DESCARGA	BOUCHON DE VIDANGE AFTAPPLUG	056T
6		4897858		1	SPACER SEPARADOR	DISTANZIALE AFSTANDSSTYKKE	DISTANZSTÜCK ESPAÇADOR	ENTRETOISE AFSTANDSSTUK	075D
7		2854127		1	STRAINER ELEMENT CEDAZO	ELEMENTO FILTRANTE SIGTEELEMENT	SIEBEINSATZ ELEMENTO FILTRANTE	TAMIS DE CREPINE FILTERELEMENT	8600
8		4897861		1	GASKET JUNTA	GUARNIZIONE PAKNING	DICHTUNG JUNTA	JOINT PAKKING	123G
9		2852661		2	WASHER, D=8X15 ARANDELA	RONDELLA FLADSKIVE	UNTERLEGSCHEIBE ANILHA	RONDELLE SLUITRING	131R
10		2852662		1	GASKET JUNTA	GUARNIZIONE PAKNING	DICHTUNG JUNTA	JOINT PAKKING	123G
11		2852663		1	CLAMP ABRAZADERA	MORSETTO SPÆNDEBÅND	KLEMME BRAÇADEIRA	COLLIER KLEM	120M
12		504047522		1	BRACKET SOPORTE	STAFFA BESLAG	HALTERUNG SUPORTE	SUPPORT STEUN	225S
13		2852659		1	HYD CONNECTOR CONECTOR HIDRÁULIC	CONNETTORE IDRAULI HYDRAULIKSTIK	HYDR STECKVERBINDE CONECTOR HID.	CONNECTEUR HYDRAU HYDRAULISCHE AANSL	020R
14		4899003		1	FLANGE NUT, M8 x 1.25 TUERCA DE BRIDA	DADO FLANGIATO FLANGEMØTRIK	FLANSCHMUTTER PORCA FLANGEADA	ECROU A EMBASE FLENSMOER	A069
15		4899068		1	SCREW, Hex Flg , M8 x 1.25 x 16 TORNILLO	VITE SKRUE	SCHRAUBE PARAFUSO	VIS SCHROEF	040V

Copyright © New Holland

0.043	01	p1	03/10

CRANKCASE COVERS
COPERCHI BASAMENTO
DECKEL DES KURBELGEHAUSES
COUVERCLES DE BATI

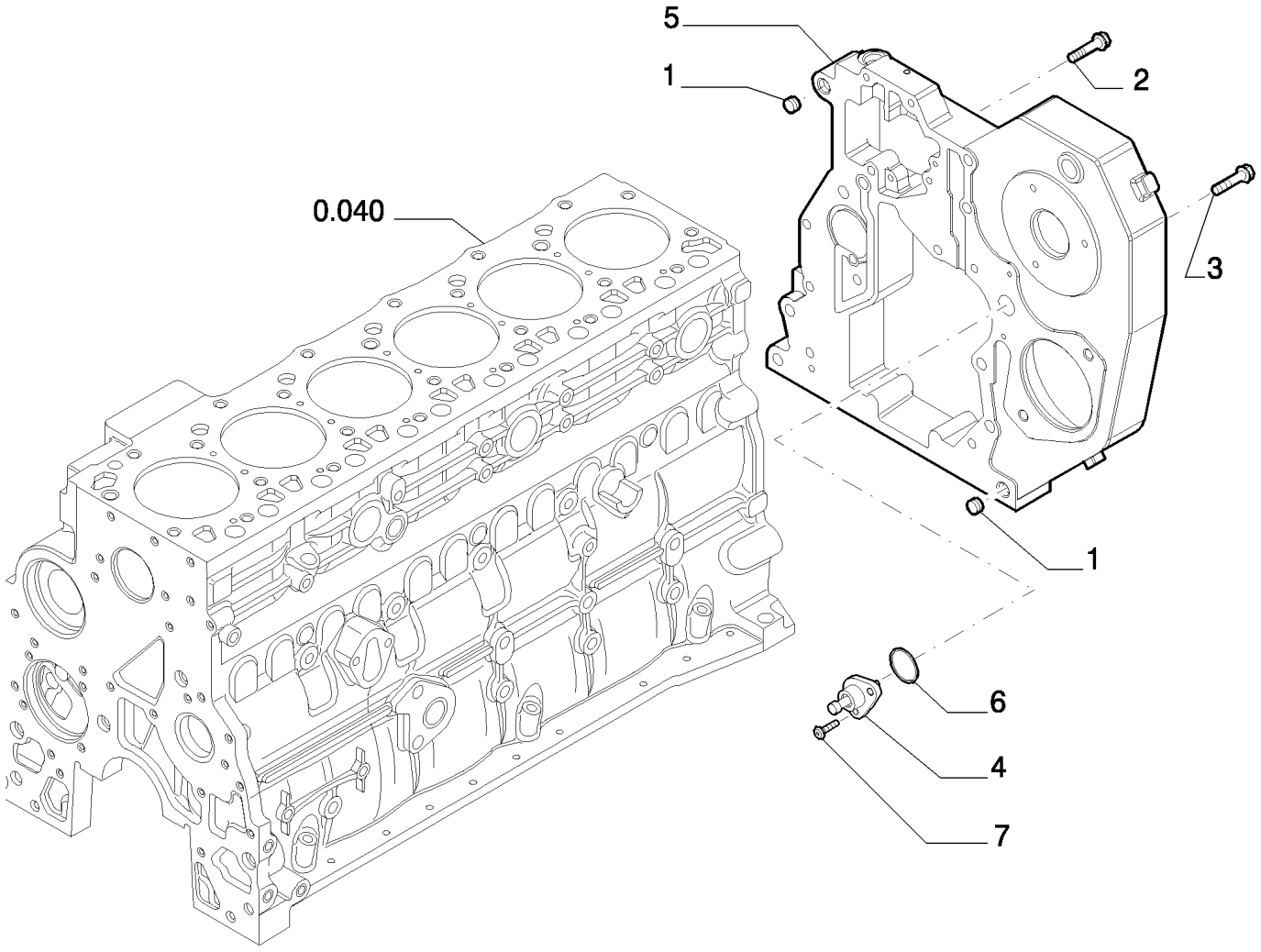

Copyright © New Holland

TAPAS DEL BLOQUE
CRANKCASE COVERS
CRANKCASE COVERS
CRANKCASE COVERS

R	N	P.N.	MOD	Q	Description Denominacion	Descrizione Beskrivelse	Bezeichnung Denominação	Description Beschrijving	L.C.
1		4899026		2	DOWEL, M18 x 10 L BULÓN	PERNO DYVEL	PASSSTIFT PERNO-GUIA	GOUJON PASPEN	090G
2		4899091		4	SCREW, Hex Flg, M8 x 1.25 x 40 TORNILLO	VITE SKRUE	SCHRAUBE PARAFUSO	VIS SCHROEF	040V
3		4899093		5	SCREW, Hex Flg, M10 x 1.5 x 30 TORNILLO	VITE SKRUE	SCHRAUBE PARAFUSO	VIS SCHROEF	040V
3		4899073		1	SCREW, Hex Flg, M12 x 1.75 x 30 TORNILLO	VITE SKRUE	SCHRAUBE PARAFUSO	VIS SCHROEF	040V
4		2855287		1	HOUSING, Timing Pin ALOJAMIENTO	ALLOGGIAMENTO HUS	GEHÄUSE ALOJAMENTO	CARTER HUIS	014V
5		504035017		1	COVER CUBIERTA	COPERCHIO DÆKSEL	ABDECKUNG COBERTURA	COUVERCLE AFSCHERMING	265C
6		17278780		1	O-RING JUNTA TÓRICA	ANELLO TOROIDALE O-RING	O-RING O-RING	JOINT TORIQUE O-RING	055A
7		4895355		2	SCREW, Torx Rd Hd, M5 x .8 x 17 TORNILLO	VITE SKRUE	SCHRAUBE PARAFUSO	VIS SCHROEF	040V

Copyright © New Holland

0.043	02	p1	03/10

CRANKCASE COVERS
COPERCHI BASAMENTO
DECKEL DES KURBELGEHAUSES
COUVERCLES DE BATI

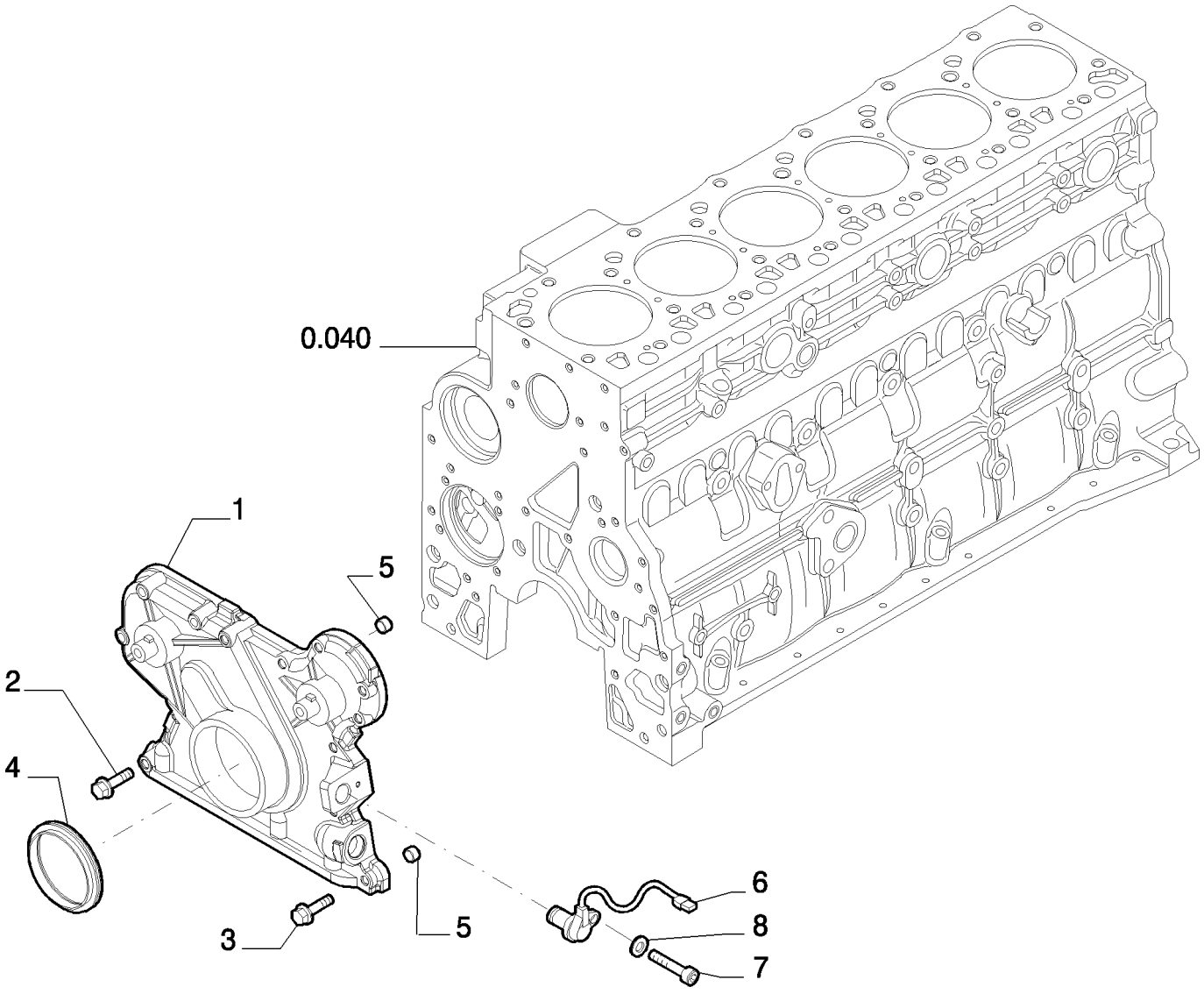

Copyright © New Holland

TAPAS DEL BLOQUE
CRANKCASE COVERS
CRANKCASE COVERS
CRANKCASE COVERS

R	N	P.N.	MOD	Q	Description Denominacion	Descrizione Beskrivelse	Bezeichnung Denominação	Description Beschrijving	L.C.
1		4897026		1	COVER, - FRONT CUBIERTA	COPERCHIO DÆKSEL	ABDECKUNG COBERTURA	COUVERCLE AFSCHERMING	265C
2		4899078		5	SCREW, Hex Flg, M8 x 1.25 x 45 TORNILLO	VITE SKRUE	SCHRAUBE PARAFUSO	VIS SCHROEF	040V
3		4899063		8	SCREW, Hex Flg, M8 x 1.25 x 30 TORNILLO	VITE SKRUE	SCHRAUBE PARAFUSO	VIS SCHROEF	040V
4		4890832		1	OIL SEAL, M70 x 100 x 12.5/16 JUNTA DE ACEITE	PARAOLIO OLIESEGL	ÖLDICHTUNG VEDANTE DE ÓLEO	JOINT ETANCHEITE D'HI OLIEAFDICHTING	P278
5		4891209		2	DOWEL, M13 x 8 L BULÓN	PERNO DYVEL	PASSSTIFT PERNO-GUIA	GOUJON PASPEN	090G
6		4890189		1	SENSOR SENSOR	SENSORE FØLER	SENSOR SENSOR	CAPTEUR SENSOR	608S
7		4899110		1	SCREW, Hex Flg, M6 x 1 x 20 TORNILLO	VITE SKRUE	SCHRAUBE PARAFUSO	VIS SCHROEF	040V
8		17094614		1	WASHER ARANDELA	RONDELLA FLADSKIVE	UNTERLEGSCHEIBE ANILHA	RONDELLE SLUITRING	131R

Copyright © New Holland

0.043	03	p1	03/10

CRANKCASE COVERS
COPERCHI BASAMENTO
DECKEL DES KURBELGEHAUSES
COUVERCLES DE BATI

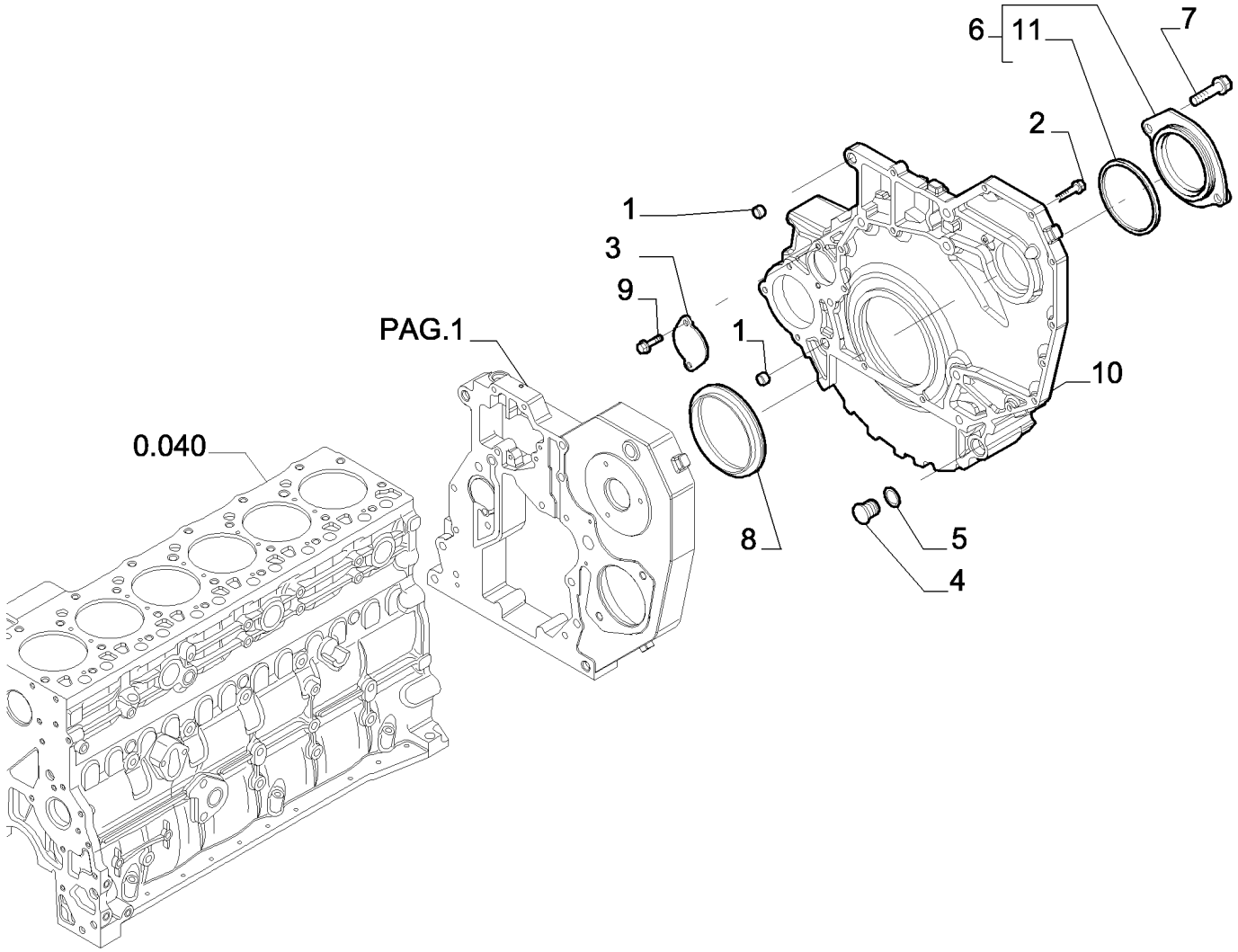

Copyright © New Holland

TAPAS DEL BLOQUE
CRANKCASE COVERS
CRANKCASE COVERS
CRANKCASE COVERS

R	N	P.N.	MOD	Q	Description Denominacion	Descrizione Beskrivelse	Bezeichnung Denominação	Description Beschrijving	L.C.
1		4899026		2	DOWEL, M18 x 10 L BULÓN	PERNO DYVEL	PASSSTIFT PERNO-GUIA	GOUJON PASPEN	090G
2		4899109		2	SCREW, Hex, M10 x 1.5 x 80 TORNILLO	VITE SKRUE	SCHRAUBE PARAFUSO	VIS SCHROEF	040V
2		4892915		11	FLANGE BOLT, Hex, M10 x 1.5 x 40 PERNO DE CORONA	BULLONE FLANGIATO FLANGEBOLT	FLANSCHSCHRAUBE PARAFUSO FLANGEAD(	VIS A EMBASE FLENSBOUT	A027
2		4899076		5	SCREW, Hex Flg, M12 x 1.75 x 80 TORNILLO	VITE SKRUE	SCHRAUBE PARAFUSO	VIS SCHROEF	040V
2		4899074		3	SCREW, Hex Flg, M12 x 1.75 x 120 TORNILLO	VITE SKRUE	SCHRAUBE PARAFUSO	VIS SCHROEF	040V
3		4895155		1	COVER CUBIERTA	COPERCHIO DÆKSEL	ABDECKUNG COBERTURA	COUVERCLE AFSCHERMING	265C
4		4895378		1	BUTTON PLUG, M29.2 TAPÓN DE BOTÓN	TAPPO A PRESSIONE KNAPPROP	KNOPFFÖRMIGER STOF TAMPÃO DE PRESSÃO	BOUCHON BOUTON PLUG MET PLATTE KOP	A082
5		4895379		1	O-RING, M21.82 ID x 3.53 Thk JUNTA TÓRICA	ANELLO TOROIDALE O-RING	O-RING O-RING	JOINT TORIQUE O-RING	055A
6		504115364		1	COVER, - ASSY CUBIERTA	COPERCHIO DÆKSEL	ABDECKUNG COBERTURA	COUVERCLE AFSCHERMING	265C
7		4899020		2	FLANGE BOLT, Hex, M8 x 1.25 x 20 PERNO DE CORONA	BULLONE FLANGIATO FLANGEBOLT	FLANSCHSCHRAUBE PARAFUSO FLANGEAD(	VIS A EMBASE FLENSBOUT	A027
8		4890833		1	OIL SEAL, M130 x 155 x 12.5/16 JUNTA DE ACEITE	PARAOLIO OLIESEGL	ÖLDICHTUNG VEDANTE DE ÓLEO	JOINT ETANCHEITE D'HI OLIEAFDICHTING	P278
9		4899068		2	SCREW, Hex Flg , M8 x 1.25 x 16 TORNILLO	VITE SKRUE	SCHRAUBE PARAFUSO	VIS SCHROEF	040V
10		504128011		1	COVER, - REAR CUBIERTA	COPERCHIO DÆKSEL	ABDECKUNG COBERTURA	COUVERCLE AFSCHERMING	265C
11		17285481		1	GASKET JUNTA	GUARNIZIONE PAKNING	DICHTUNG JUNTA	JOINT PAKKING	123G

Copyright © New Holland

0.045	01	p1	03/10

BREATHER - ENGINE
SFIATATOIO - MOTORE
ENTLÜFTER - MOTOR
RENIFLARD - MOTEUR

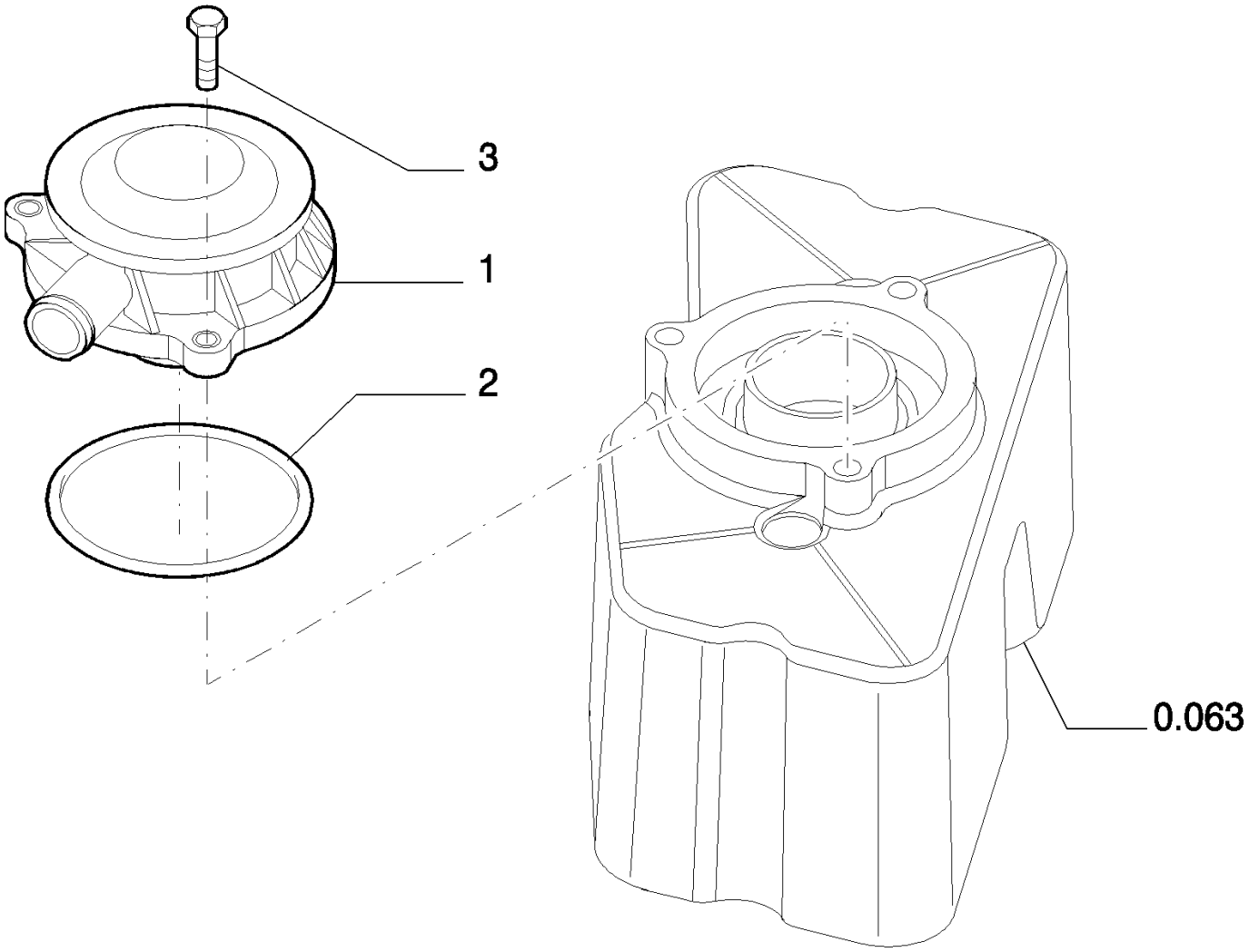

Copyright © New Holland

RESPIRADERO - MOTOR
BREATHER - ENGINE
BREATHER - ENGINE
BREATHER - ENGINE

R	N	P.N.	MOD	Q	Description Denominacion	Descrizione Beskrivelse	Bezeichnung Denominação	Description Beschrijving	L.C.
1		500315794		1	BREATHER RESPIRADERO	SFIATO UDLUFTNINGSSKRUE	ENTLÜFTER RESPIRADOURO	RENIFLARD ONTLUCHTER	145S
2		500315795		1	GASKET JUNTA	GUARNIZIONE PAKNING	DICHTUNG JUNTA	JOINT PAKKING	123G
3		4899110		3	SCREW, Hex Flg, M6 x 1 x 20 TORNILLO	VITE SKRUE	SCHRAUBE PARAFUSO	VIS SCHROEF	040V

Copyright © New Holland

0.060	01	p1	03/10

CYLINDER HEAD
TESTA CILINDRI
ZYLINDERKOPF
CULASSE DE CYLINDRE

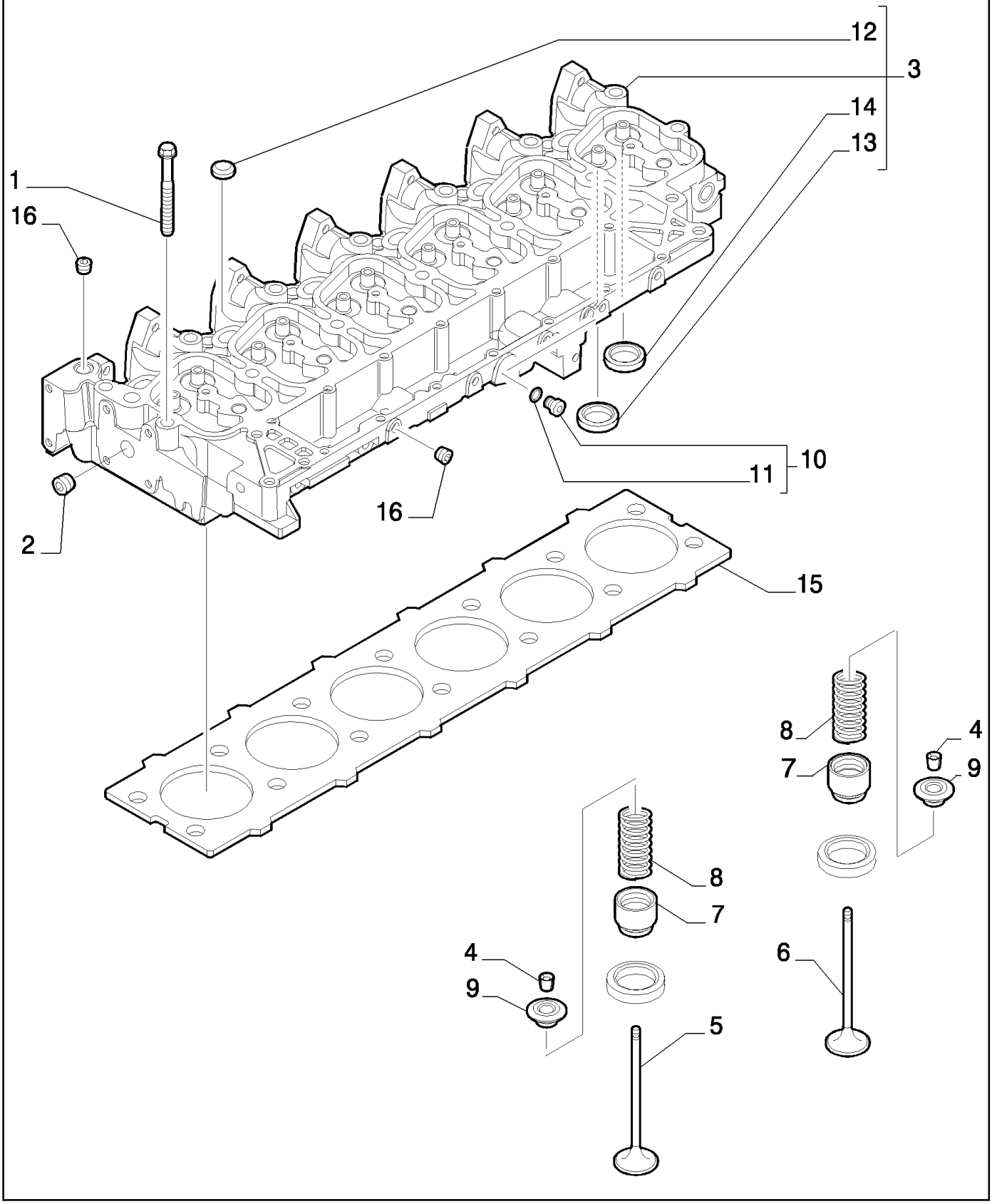

Copyright © New Holland

CULATA DE CILINDROS
CYLINDER HEAD
CYLINDER HEAD
CYLINDER HEAD

R	N	P.N.	MOD	Q	Description Denominacion	Descrizione Beskrivelse	Bezeichnung Denominação	Description Beschrijving	L.C.
1		4892861		6	SCREW, Wash Hd, M12 x 1.25 x 73				
						VITE	SCHRAUBE	VIS	040V
					TORNILLO	SKRUE	PARAFUSO	SCHROEF	
1		4892859		14	SCREW, Wash Hd, M12 x 1.25 x 143				
						VITE	SCHRAUBE	VIS	040V
					TORNILLO	SKRUE	PARAFUSO	SCHROEF	
2		4895085		1	EXPANSION PLUG, 25.74mm, OD				
						TAPPO A ESPANSIONE	SPREIZSTOPFEN	BOUCHON D'EXPANSIO	A084
					TAPÓN DE EXPANSIÓN	EKSPANSIONSPROP	BUJÃO DE EXPANSÃO	VERLENGPLUG	
3		4895765		1	CYLINDER HEAD, - ASSY	TESTATA	ZYLINDERKOPF	CULASSE	113T
					CULATA	CYLINDERHOVED	CABEÇA DE CILINDRO	CILINDERKOP	
		87536204		1	CYLINDER HEAD, - ASSY	Include Ref. 4,5,6,7,8,9,13,14			
						TESTATA	ZYLINDERKOPF	CULASSE	113T
					CULATA	CYLINDERHOVED	CABEÇA DE CILINDRO	CILINDERKOP	
4		4895183		24	COLLET	ANELLO METALLICO	SPANNELEMENT	COLLET	142B
					ANILLO METÁLICO	FJEDERLÅS	FREIO	SPANHULS	
5		4895188		6	STD ENGINE EXHAUST VALVE				
						VALV. SCARICO MOTOR	STANDARD-MOTORAUS	SOUP. ECHAPPEMENT M	112V
					VALV. ESCAPE MOTOR	UDSTØDNINGSVENTIL,	VÁLVULA DE ESCAPE	STANDAARDUITLAATKL	
6		4895187		6	STD ENGINE INLET VALVE	VALV. ASPIR. MOTORE S	STANDARD-MOTOREINL	SOUP. ADMISSION MOT	111V
					VALV. ADM. DE MOTOR	INDSUGNINGSVENTIL, S	VÁLVULA DE ADMISSÃC	STANDAARDINLAATKLE	
7		4895347		12	SEAL	GUARNIZIONE; TENUTA	DICHTUNG	JOINT	132A
					ANILLO DE CIERRE	PAKNING	VEDANTE	AFDICHTING	
8		4895215		12	VALVE SPRING	MOLLA DELLA VALVOLA	VENTILFEDER	RESSORT DE SOUPAPE	P463
					RESORTE DE VÁLVULA	VENTILFJEDER	MOLA DE VÁLVULA	KLEPVEER	
9		4895184		12	RETAINER	FERMO	HALTERUNG	DISPOSITIF DE RETENU	109R
					RETENEDOR	HOLDER	RETENTOR	HOUDER	
10		4899009		1	PLUG, M10 x 1.5, Assy	TAPPO	STOPFEN	BOUCHON	050T
					TAPÓN	PROP	TAMPÃO	PLUG	
11		4899072		1	O-RING, M8.1 ID x 1.6 Thk	ANELLO TOROIDALE	O-RING	JOINT TORIQUE	055A
					JUNTA TÓRICA	O-RING	O-RING	O-RING	
12		4895179		3	EXPANSION PLUG, M20.93				
						TAPPO A ESPANSIONE	SPREIZSTOPFEN	BOUCHON D'EXPANSIO	A084
					TAPÓN DE EXPANSIÓN	EKSPANSIONSPROP	BUJÃO DE EXPANSÃO	VERLENGPLUG	
13		4897178		6	VALVE SEAT, Exhaust	SEDE VALVOLA	VENTILSITZ	SIEGE DE SOUPAPE	074S
					ASIENTO DE VÁLVULA	VENTIL, SÆDE	SEDE DE VÁLVULA	KLEPZITTING	
14		4897179		6	VALVE SEAT, Intake	SEDE VALVOLA	VENTILSITZ	SIEGE DE SOUPAPE	074S
					ASIENTO DE VÁLVULA	VENTIL, SÆDE	SEDE DE VÁLVULA	KLEPZITTING	
15		2830922		1	CYLINDER HEAD GASKET, SP=1.25				
						GUARNIZIONE TESTATA	ZYLINDERKOPFDICHTU	JOINT DE CULASSE	129G
					JUNTA DE CULATA	TOPPAKNING	JUNTA CABEÇA DO CILI	CILINDERKOPPAKKING	
15		2830923		1	CYLINDER HEAD GASKET, SP=1.15				
						GUARNIZIONE TESTATA	ZYLINDERKOPFDICHTU	JOINT DE CULASSE	129G
					JUNTA DE CULATA	TOPPAKNING	JUNTA CABEÇA DO CILI	CILINDERKOPPAKKING	
16		4895078		5	PIPE PLUG, 1/2"-14	TAPPO PER TUBI	ROHRSTOPFEN	BOUCHON DE TUYAU	A087
					TAPÓN DE TUBO	RØRPROP	TAMPÃO PARA TUBO	LEIDINGDOP	

Copyright © New Holland

0.063	01	p1	03/10

CYLINDER HEAD COVERS
COPERCHI TESTA CILINDRI
VENTILDECKEL
COUVERCLES CULASSE

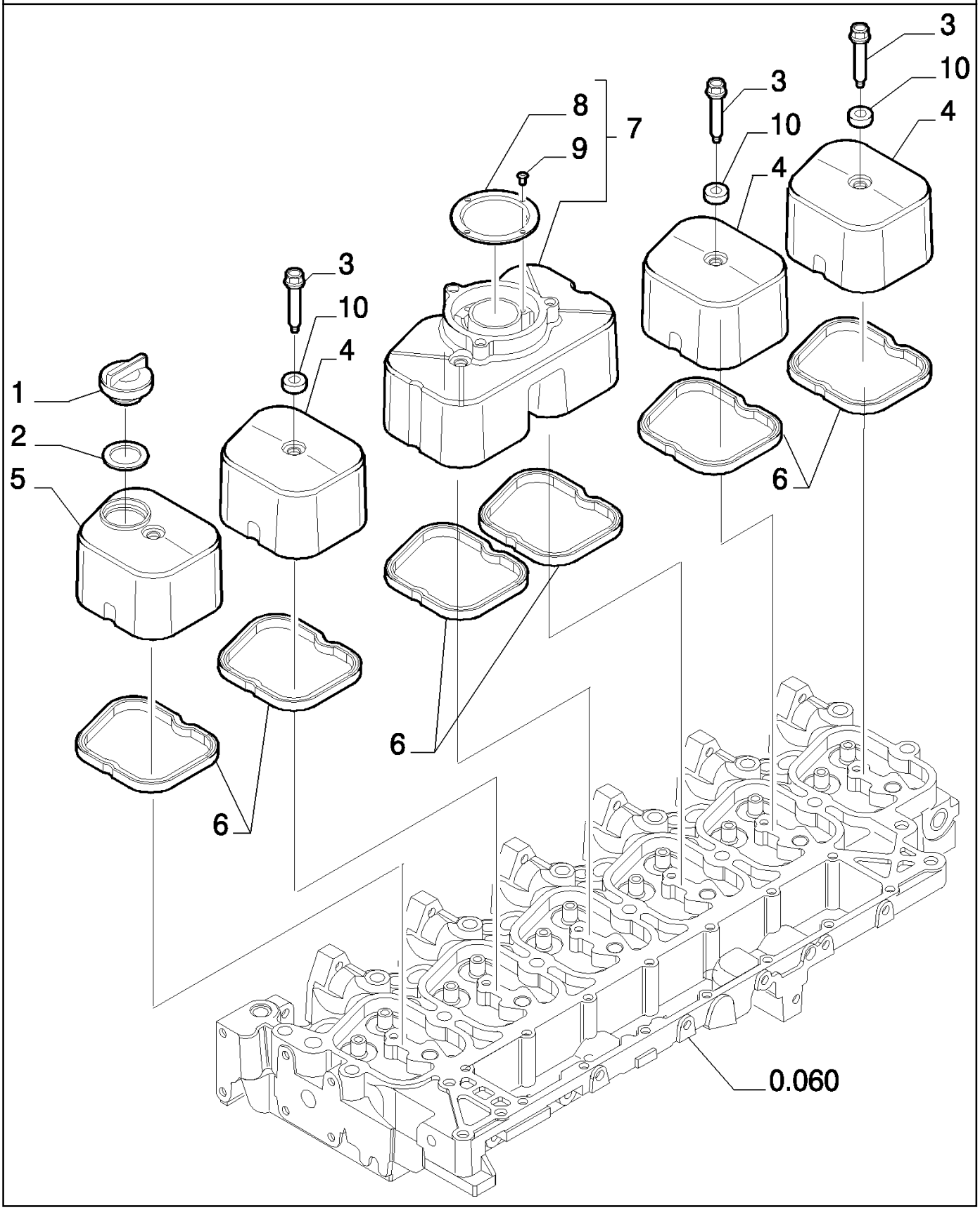

Copyright © New Holland

TAPAS CULATA
CYLINDER HEAD COVERS
CYLINDER HEAD COVERS
CYLINDER HEAD COVERS

R	N	P.N.	MOD	Q	Description Denominacion	Descrizione Beskrivelse	Bezeichnung Denominação	Description Beschrijving	L.C.
1		4895202		1	FILLER CAP TAPÓN DE DEPÓSITO	TAPPO BOCCHETT. RIF PÅFYLDNINGSDÆKSEL	EINFÜLLKAPPE TAMPA BOCAL ENCHIMI	BOUCHON DE REMPLIS VULDOP	P676
2		4895296		1	SEAL, Rectangular, 30mm ID x 3 Thk ANILLO DE CIERRE	GUARNIZIONE; TENUTA PAKNING	DICHTUNG VEDANTE	JOINT AFDICHTING	132A
3		4895214		6	SCREW, Special, Hex, Flg Hd, M8 x 33 TORNILLO	VITE SKRUE	SCHRAUBE PARAFUSO	VIS SCHROEF	040V
4		504065040		3	COVER CUBIERTA	COPERCHIO DÆKSEL	ABDECKUNG COBERTURA	COUVERCLE AFSCHERMING	265C
5		504065039		1	COVER CUBIERTA	COPERCHIO DÆKSEL	ABDECKUNG COBERTURA	COUVERCLE AFSCHERMING	265C
6		504053522		6	GASKET JUNTA	GUARNIZIONE PAKNING	DICHTUNG JUNTA	JOINT PAKKING	123G
7		2830784		1	VALVE COVER, - ASSY TAPA DE VÁLVULA	COPERCHIO VALVOLA VENTILDÆKSEL	VENTILDECKEL TAMPA DAS VÁLVULAS	COUVERCLE DE SOUPA KLEPPENDEKSEL	P889
8		2830775		1	BAFFLE DEFLECTOR	DEFLETTORE SKÆRMPLADE	LEITBLECH CHAPA DEFLECTORA	DEFLECTEUR KEERSCHOT	0420
9		16784504		4	SCREW TORNILLO	VITE SKRUE	SCHRAUBE PARAFUSO	VIS SCHROEF	040V
10		4895360		6	ISOLATOR AISLADOR	ISOLATORE ISOLATOR	ISOLATOR ISOLADOR	ISOLANT ISOLATIE	Z082

Copyright © New Holland

0.066	01	p1	03/10

ROCKER SHAFT
ALBERO BILANCIERE
KIPPHEBELWELLE
AXE DE CULBUTEUR

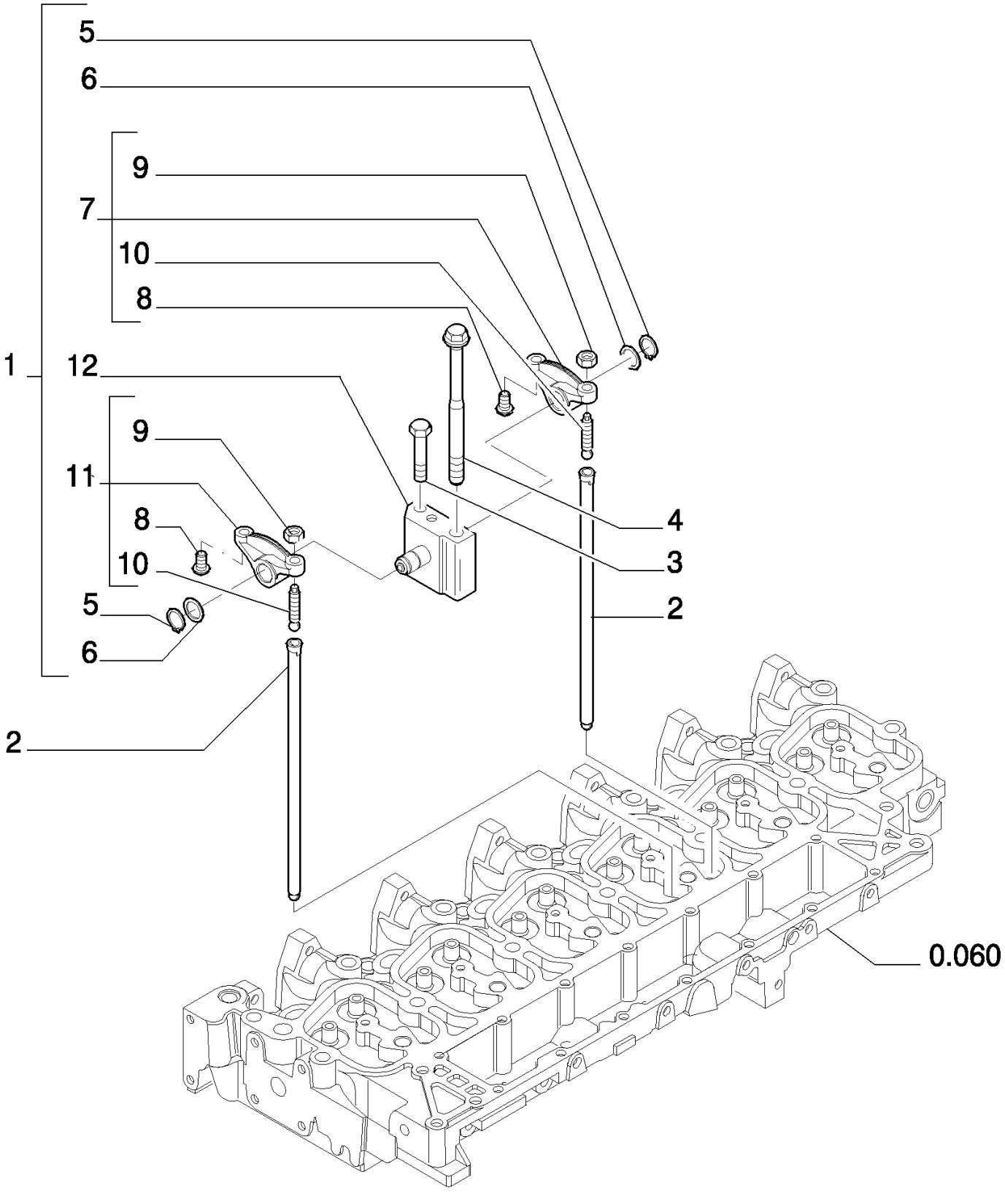

Copyright © New Holland

EJE BALANCINES
ROCKER SHAFT
ROCKER SHAFT
ROCKER SHAFT

R	N	P.N.	MOD	Q	Description Denominacion	Descrizione Beskrivelse	Bezeichnung Denominação	Description Beschrijving	L.C.
1		4895195		6	ROCKER, - Assy BASCULADOR	BILANCIERE VIPPEARM	SCHWINGE BASCULADOR	CULBUTEUR TUIMELAAR	P055
2		4895361		12	PUSH ROD VÁSTAGO DE EMPUJE	ASTA DI SPINTA SKUBBESTANG	STÖSSELSTANGE HASTE DE IMPULSO	TIGE DE POUSSEE STOTERSTANG	P307
3		504067723		6	SCREW, M8 x 75 TORNILLO	VITE SKRUE	SCHRAUBE PARAFUSO	VIS SCHROEF	040V
4		4892860		6	SCREW, Wash Hd, M12 x 1.25 x 183 TORNILLO	VITE SKRUE	SCHRAUBE PARAFUSO	VIS SCHROEF	040V
5		4895363		2	SNAP RING ANILLO DE RESORTE	ANELLO ELASTICO LÅSERING	SPRENGRING ANEL	ANNEAU D'ARRET VEERRING	054A
6		4895364		2	WASHER ARANDELA	RONDELLA FLADSKIVE	UNTERLEGSCHEIBE ANILHA	RONDELLE SLUITRING	131R
7		4895196		1	ROCKER ARM, Exhaust, - Assy BRAZO DE BALANCÍN	BILANCIERE VIPPEARM	KIPPHEBELARM BALANCEIRO	BRAS DE CULBUTEUR TUIMELAARARM	055B
8		4895365		2	INSERT PIEZA DE INSERCIÓN	INSERTO INDSATS	EINSATZ CASQUILHO ; ENCAIXE	INSERT INZETSTUK	055I
9		4895198		2	NUT, 3/8"-24, Heavy TUERCA	DADO MØTRIK	MUTTER PORCA	ECROU MOER	010D
10		4895199		2	ADJUSTMENT SCREW TORNILLO DE REGLAJE	VITE DI REGOLAZIONE JUSTERINGSSKRUE	EINSTELLSCHRAUBE PARAFUSO DE AJUSTE	VIS DE REGLAGE STELSCHROEF	051V
11		4895200		1	ROCKER ARM, Intake, - Assy BRAZO DE BALANCÍN	BILANCIERE VIPPEARM	KIPPHEBELARM BALANCEIRO	BRAS DE CULBUTEUR TUIMELAARARM	055B
12		4895204		1	SHAFT EJE	ALBERO AKSEL	WELLE VEIO	ARBRE AS	016A

Copyright © New Holland

0.071	01	p1	03/10

INTAKE MANIFOLD
COLLETTORE ASPIRAZIONE
ANSAUGROHR
CONDUIT D'ADMISSION

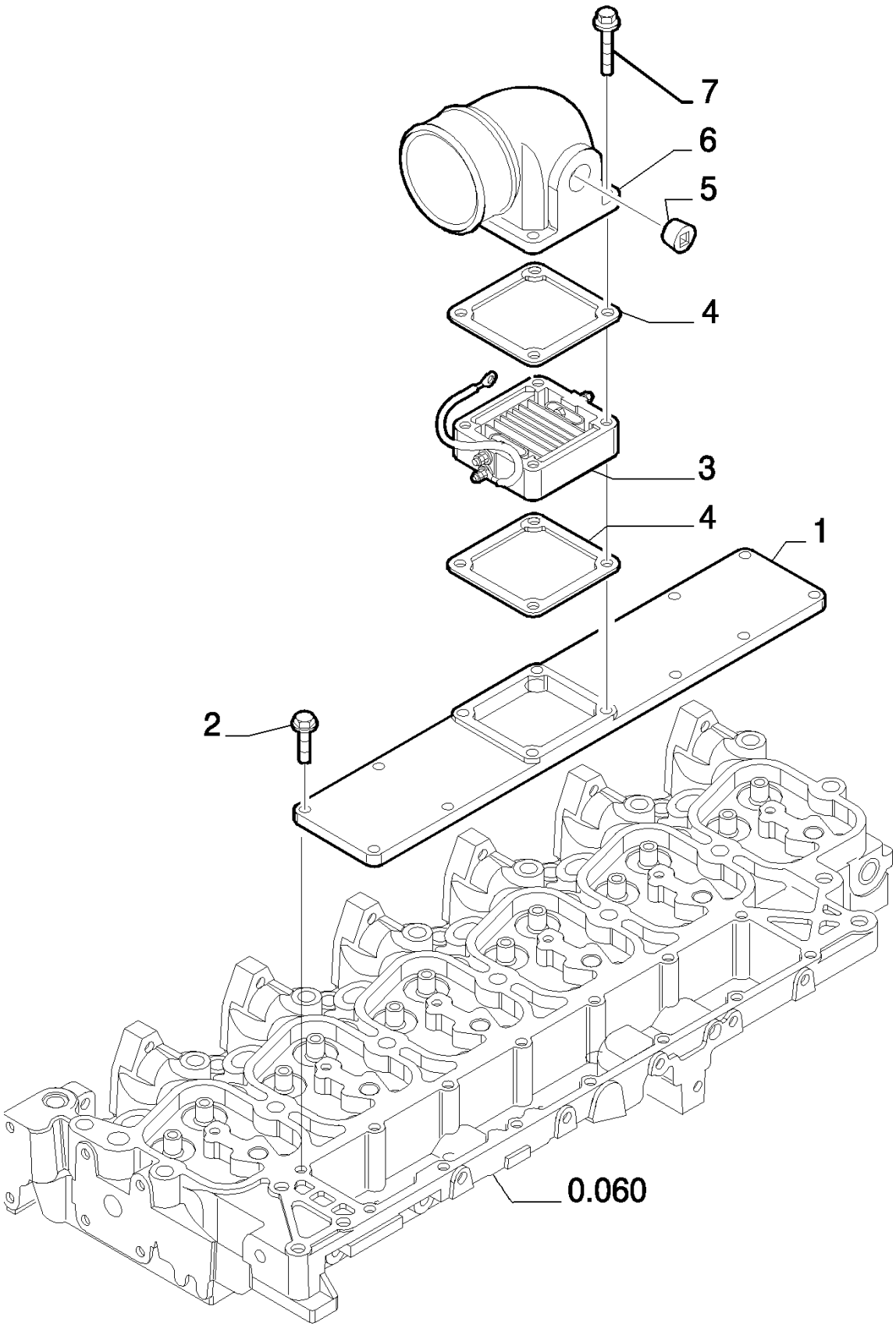

Copyright © New Holland

COLLECTOR DE ASPIRACION
INTAKE MANIFOLD
INTAKE MANIFOLD
INTAKE MANIFOLD

R	N	P.N.	MOD	Q	Description Denominacion	Descrizione Beskrivelse	Bezeichnung Denominação	Description Beschrijving	L.C.
1		504064867		1	COVER CUBIERTA	COPERCHIO DÆKSEL	ABDECKUNG COBERTURA	COUVERCLE AFSCHERMING	265C
2		4899039		10	SCREW, Hex Flg, M8 x 1.25 x 25 VITE TORNILLO	 SKRUE	SCHRAUBE PARAFUSO	VIS SCHROEF	040V
3		2831019		1	HEATER CALENTADOR	RISCALDATORE VARMEAPPARAT	HEIZUNG AQUECEDOR	CHAUFFAGE VERWARMING	105R
4		4899921		2	GASKET JUNTA	GUARNIZIONE PAKNING	DICHTUNG JUNTA	JOINT PAKKING	123G
5		4893036		1	PIPE PLUG, 3/4"-14 NPTF TAPÓN DE TUBO	TAPPO PER TUBI RØRPROP	ROHRSTOPFEN TAMPÃO PARA TUBO	BOUCHON DE TUYAU LEIDINGDOP	A087
6		4895424		1	INLET MANIFOLD COLECTOR DE ADMISIĆ	COLLETTORE DI ASPIRA INDSUGNINGSMANIFOL	EINLASSKRÜMMER COLECTOR DE ADMISSÃ	COLLECTEUR D'ADMISS INLAATSPRUITSTUK	225C
7		4895294		4	SCREW, Hex Flg, M8 x 1.25 x 80 VITE TORNILLO	 SKRUE	SCHRAUBE PARAFUSO	VIS SCHROEF	040V

Copyright © New Holland

0.077	01	p1	03/10

EXHAUST MANIFOLD
COLLETTORE DI SCARICO
AUSPUFFKRUEMMER
CONDUIT D'ECHAPPEMENT

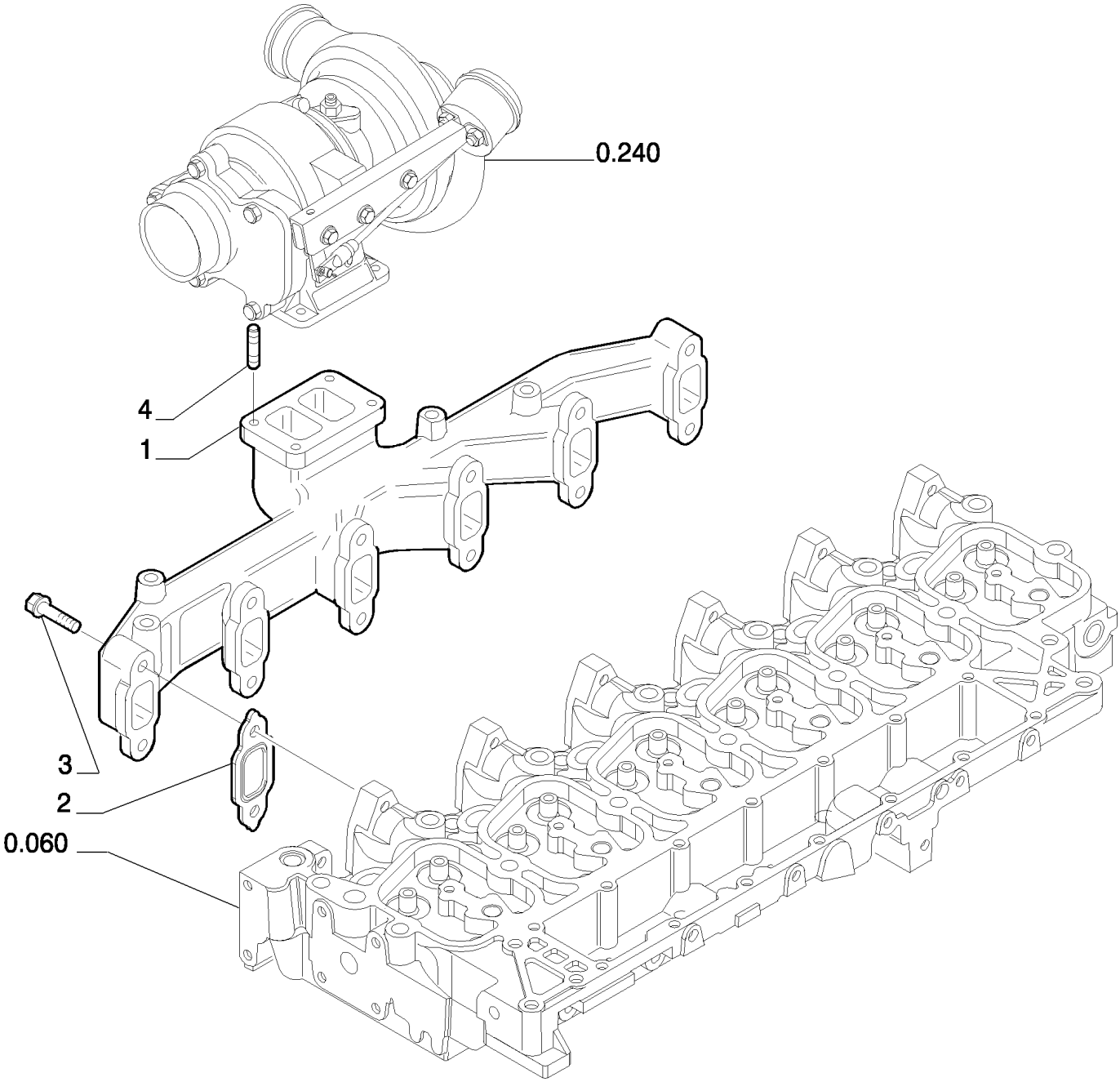

Copyright © New Holland

COLLECTOR DE ESCAPE
EXHAUST MANIFOLD
EXHAUST MANIFOLD
EXHAUST MANIFOLD

R	N	P.N.	MOD	Q	Description Denominacion	Descrizione Beskrivelse	Bezeichnung Denominação	Description Beschrijving	L.C.
1		504067220		1	EXHAUST MANIFOLD COLECTOR DE ESCAPE	COLLETTORE DI SCARI(UDSTØDNINGSMANIFOI	AUSPUFFKRÜMMER COLECTOR DE ESCAPE	COLLECTEUR D'ECHAPI UITLAATSPRUITSTUK	230C
2		504081248		6	GASKET JUNTA	GUARNIZIONE PAKNING	DICHTUNG JUNTA	JOINT PAKKING	123G
3		504085705		12	SCREW, M10X1,5X65 TORNILLO	VITE SKRUE	SCHRAUBE PARAFUSO	VIS SCHROEF	040V
4		4899085		4	STUD PRISIONERO	PRIGIONIERO STØTTEBOLT	GEWINDEBOLZEN PINO ROSCADO	GOUJON TAPEIND	210P

Copyright © New Holland

0.080	01	p1	03/10

CRANKSHAFT
ALBERO MOTORE
KURBELWELLE
VILEBREQUIN

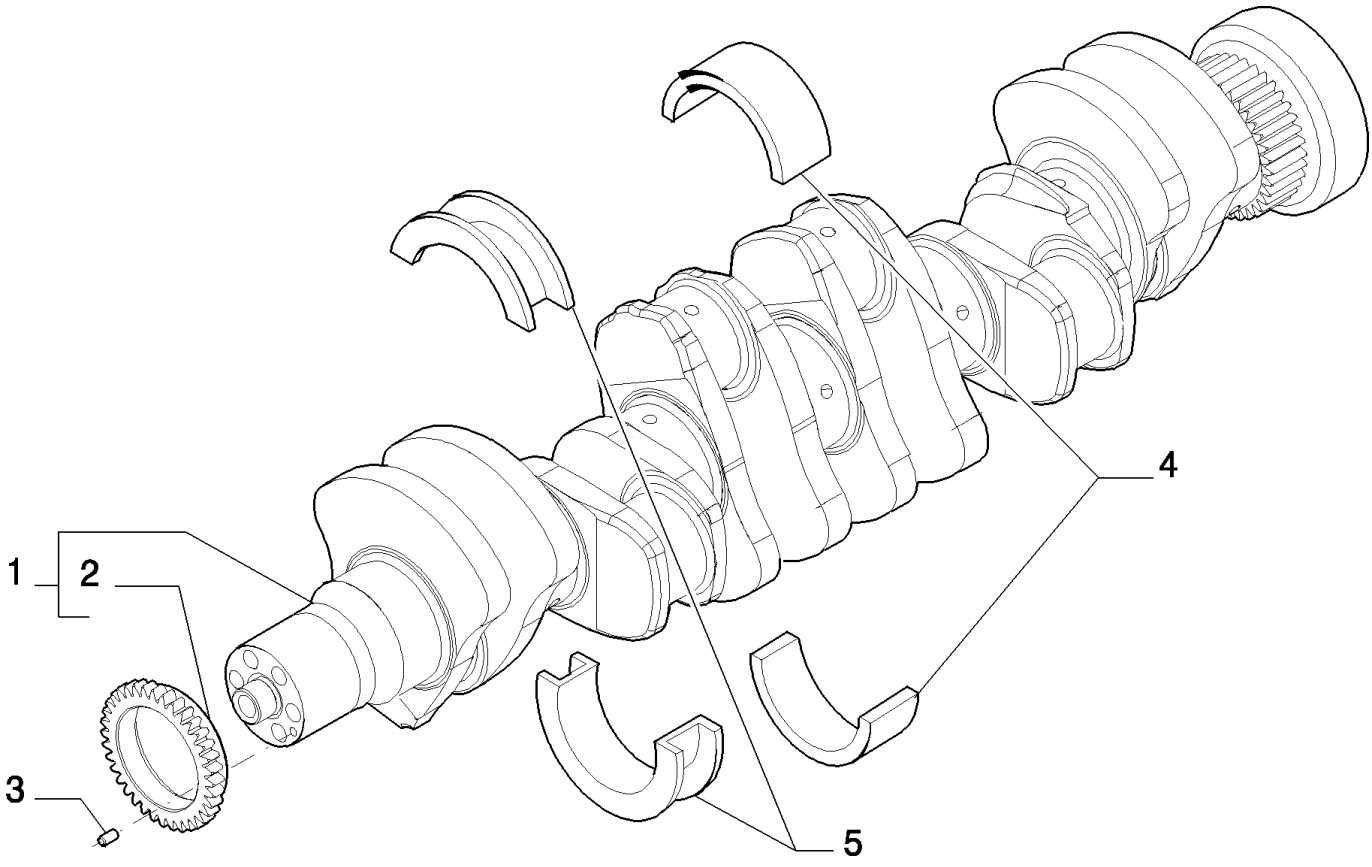

Copyright © New Holland

CIGUENAL
CRANKSHAFT
CRANKSHAFT
CRANKSHAFT

R	N	P.N.	MOD	Q	Description Denominacion	Descrizione Beskrivelse	Bezeichnung Denominação	Description Beschrijving	L.C.
1		504057571		1	CRANKSHAFT, - ASSY CIGÜEÑAL	ALBERO MOTORE KRUMTAPAKSEL	KURBELWELLE CAMBOTA	VILEBREQUIN KRUKAS	018A
2		4893386		1	GEAR, 36 T ENGRANAJE	INGRANAGGIO TANDHJUL	ZAHNRAD ENGRENAGEM	PIGNON TANDWIEL	050I
3		4899046		1	DOWEL, M6 x 9 L BULÓN	PERNO DYVEL	PASSSTIFT PERNO-GUIA	GOUJON PASPEN	090G
4		2992147		6	CRANKSHAFT BEARING COJINETE DE CIGÜEÑA	CUSCINETTO ALBERO M KRUMTAPLEJE	KURBELWELLENLAGER ROLAMENTO DA CAMBO	ROULEMENT VILEBREQ KRUKASLAGER	P110
4		2992148		6	SET OF MAIN BRGS -0.254 JUEGO BRGS PRIN. -0,2	KIT CUSC. PRINC. -0,25 SÆT M/ HOVEDLEJER -0	HAUPTLAGERSATZ -0, CONJ. CASQUILHOS -0.2	JEU PALIERS PRINC. -0, SET HOOFDLAGERS -0,	332S
4		2992149		6	SET OF MAIN BRGS -0.508 JUEGO BRGS PRIN. -0,5	KIT CUSC. PRINC. -0,50 SÆT M/ HOVEDLEJER -0	HAUPTLAGERSATZ -0, CONJ. CASQUILHOS -0.5	JEU PALIERS PRINC. -0, SET HOOFDLAGERS -0,	333S
5		2992153		1	SET OF THRUST WASHERS (STD), STD (THRUST) JUEGO ARAND. EMP. (S	KIT ROND. REGGISP. (S TRYKSKIVESÆT (STD)	STANDARDDRUCKSCHE CONJ ANILHAS ENCOST	JEU ANNEAUX BUTEE (S SET DRUKRINGEN (STA	350S
5		2992154		1	SET OF THRUST WASHERS +0.508, +0.250 (THRUST) JUEGO ARAND. EMP. +0	KIT ROND. REGGISP. +0 TRYKSKIVESÆT +0.508	DRUCKSCHEIBENSATZ CONJ ANILHAS ENCOST	JEU ANNEAUX BUTEE + SET DRUKRINGEN +0,5(	353S
5		2992155		1	SET OF THRUST WASHERS +0.25, +0.500 (THRUST) JUEGO ARAND. EMP. +0	KIT ROND. REGGISP. +0 TRYKSKIVESÆT +0.25	DRUCKSCHEIBENSATZ CONJ ANILHAS ENCOST	KIT JEU ANN. BUTEE +0, SET DRUKRINGEN +0,25	352S

Copyright © New Holland

0.081	01	p1	03/10

CONNECTING ROD
BIELLA MOTORE
PLEUEL
BIELLE

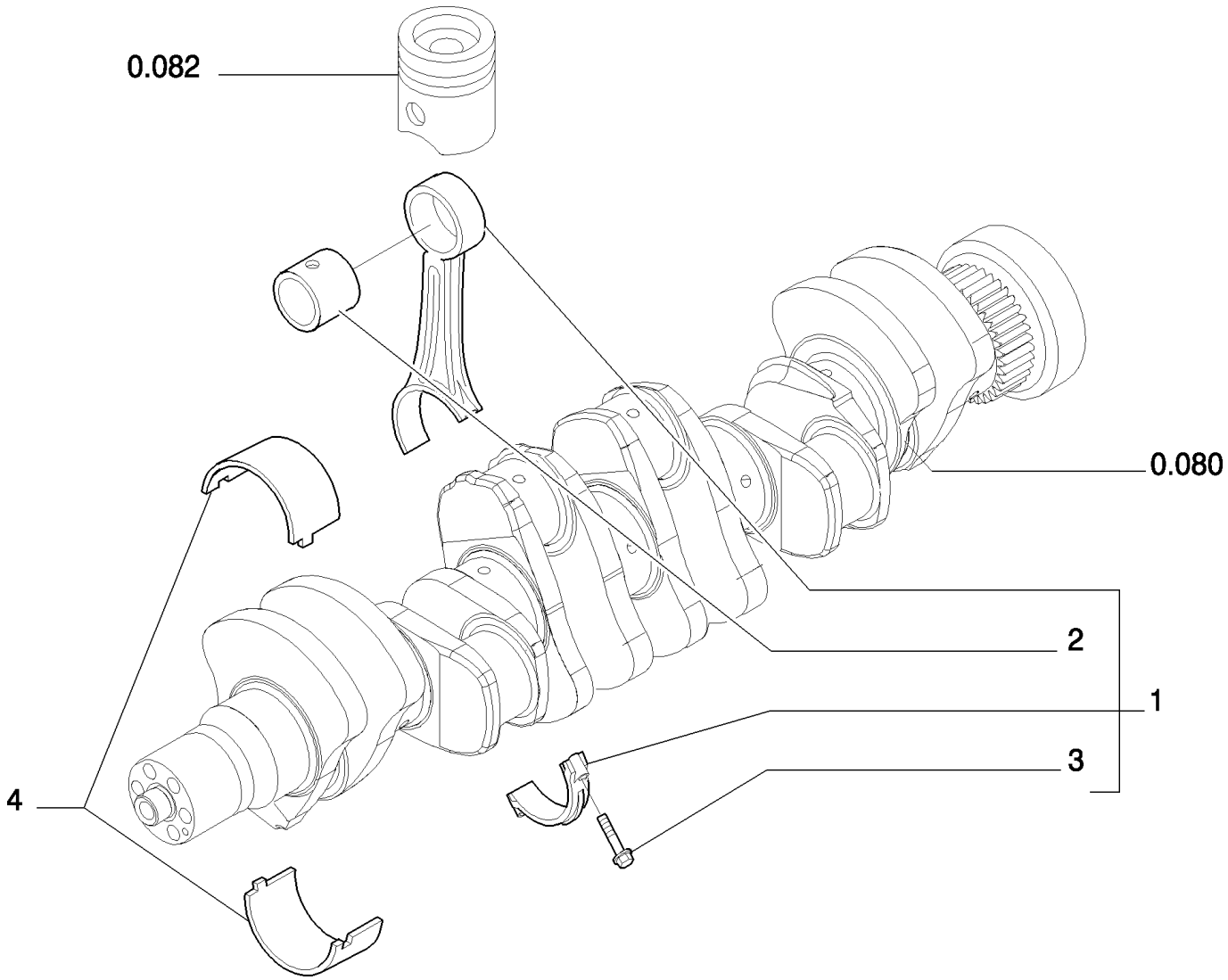

Copyright © New Holland

BIELA PISTON
CONNECTING ROD
CONNECTING ROD
CONNECTING ROD

R	N	P.N.	MOD	Q	Description Denominacion	Descrizione Beskrivelse	Bezeichnung Denominação	Description Beschrijving	L.C.
1		2831298		6	CONNECTING ROD, - ASSY				
						BIELLA	PLEUELSTANGE	BIELLE	051B
					BIELA	PLEJLSTANG	BIELA	DRIJFSTANG	
2		4892708		1	BUSHING	BOCCOLA	BUCHSE	BAGUE	095B
					CASQUILLO	BØSNING	CASQUILHO	BUS	
3		2831297		2	FLANGE BOLT, Hex, M10 x 1.25 x 52				
						BULLONE FLANGIATO	FLANSCHSCHRAUBE	VIS A EMBASE	A027
					PERNO DE CORONA	FLANGEBOLT	PARAFUSO FLANGEAD(	FLENSBOUT	
4		8093882		6	SET OF CONN ROD BRGS (STD)				
						KIT CUSCIN. BIELLA (ST	SATZ PLEUELLAGER (S	JEU PALIERS PRINC. (S	315S
					JUEGO RODAM. BRGS (S	PLEJLLEJESÆT, STD.	CONJ CHUMAC. BIELA (S	SET DRIJFSTANGLAGRS	
4		8094960		6	SET OF CONN ROD BRGS (STD), (-0.250), (+0,4)				
						KIT CUSCIN. BIELLA (ST	SATZ PLEUELLAGER (S	JEU PALIERS PRINC. (S	315S
					JUEGO RODAM. BRGS (S	PLEJLLEJESÆT, STD.	CONJ CHUMAC. BIELA (S	SET DRIJFSTANGLAGRS	
4		8094961		6	SET OF CONN ROD BRGS (STD), (-0.500), (+0,6)				
						KIT CUSCIN. BIELLA (ST	SATZ PLEUELLAGER (S	JEU PALIERS PRINC. (S	315S
					JUEGO RODAM. BRGS (S	PLEJLLEJESÆT, STD.	CONJ CHUMAC. BIELA (S	SET DRIJFSTANGLAGRS	

Copyright © New Holland

0.082	01	p1	03/10

PISTON - ENGINE
STANTUFFO - MOTORE
KOLBEN - MOTOR
PISTON - MOTEUR

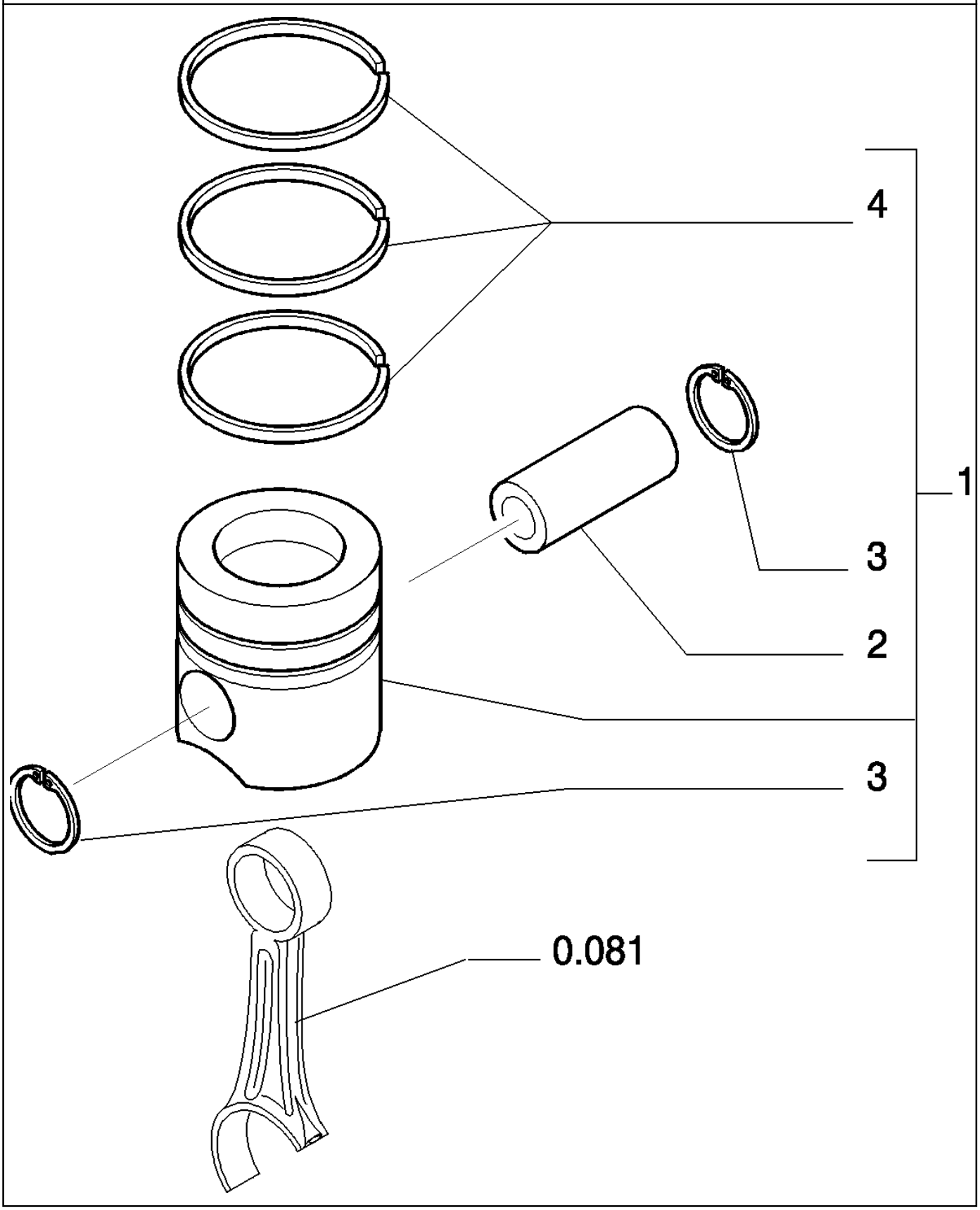

Copyright © New Holland

EMBOLO - MOTOR
PISTON - ENGINE
PISTON - ENGINE
PISTON - ENGINE

R	N	P.N.	MOD	Q	Description Denominacion	Descrizione Beskrivelse	Bezeichnung Denominação	Description Beschrijving	L.C.
1		8093880		6	PISTON & RINGS KIT, (STD)				
						KIT PIST. E FASCE ELAS	KOLBEN- UND RINGSAT	KIT DE PISTONS+SEGMI	313S
					KIT DE PISTONES Y ANI	STEMPEL OG RINGE	KIT DE PISTÃO E ANÉIS	KIT MET ZUIGER + ZGR\	
1		8094556		6	PISTON & RINGS KIT, (+0,4)				
						KIT PIST. E FASCE ELAS	KOLBEN- UND RINGSAT	KIT DE PISTONS+SEGMI	313S
					KIT DE PISTONES Y ANI	STEMPEL OG RINGE	KIT DE PISTÃO E ANÉIS	KIT MET ZUIGER + ZGR\	
2		4892712		1	PISTON PIN	PERNO DEL PISTONE	KOLBENBOLZEN	AXE DE PISTON	084P
					BULÓN DEL PISTÓN	STEMPELPIND	CAVILHA DE PISTÃO	ZUIGERPEN	
3		504093651		2	LOCKING RING	ANELLO DI BLOCCAGGI	SICHERUNGSRING	BAGUE DE BLOCAGE	051A
					ANILLO DE BLOQUEO	LÅSESKIVE	ANEL DE SEGURANÇA	BORGRING	
4		8093881		1	PISTON RINGS KIT, (STD) Includes (1 ea) 2852036 Wear Ring, 2830158 Piston Ring, 2852037 Oil Scraper Ring				
						KIT FASCE ELAST. PIST	KOLBENRINGSATZ	KIT SEGMENTS DE PIST	309S
					KIT ANILLAS DE PISTON	STEMPELRINGESÆT	KIT SEGMENTOS DE PIS	KIT MET ZUIGERVEREN	
4		8093949		1	SET OF PISTON RINGS +0.4				
						KIT FASCE EL. PIST. +0,	KOLBENRINGSATZ +0,4	JEU SEGMENTS PISTON	343S
					JUEGO AN. DE PISTÓN -	SÆT M/ STEMPELRINGE	CONJ SEGMENT PISTÃC	SET ZUIGERVEREN +0,4	

Copyright © New Holland

0.083	01	p1	03/10

FLYWHEEL - ENGINE
VOLANO - MOTORE
SCHWUNGRAND - MOTOR
VOLANT - MOTEUR

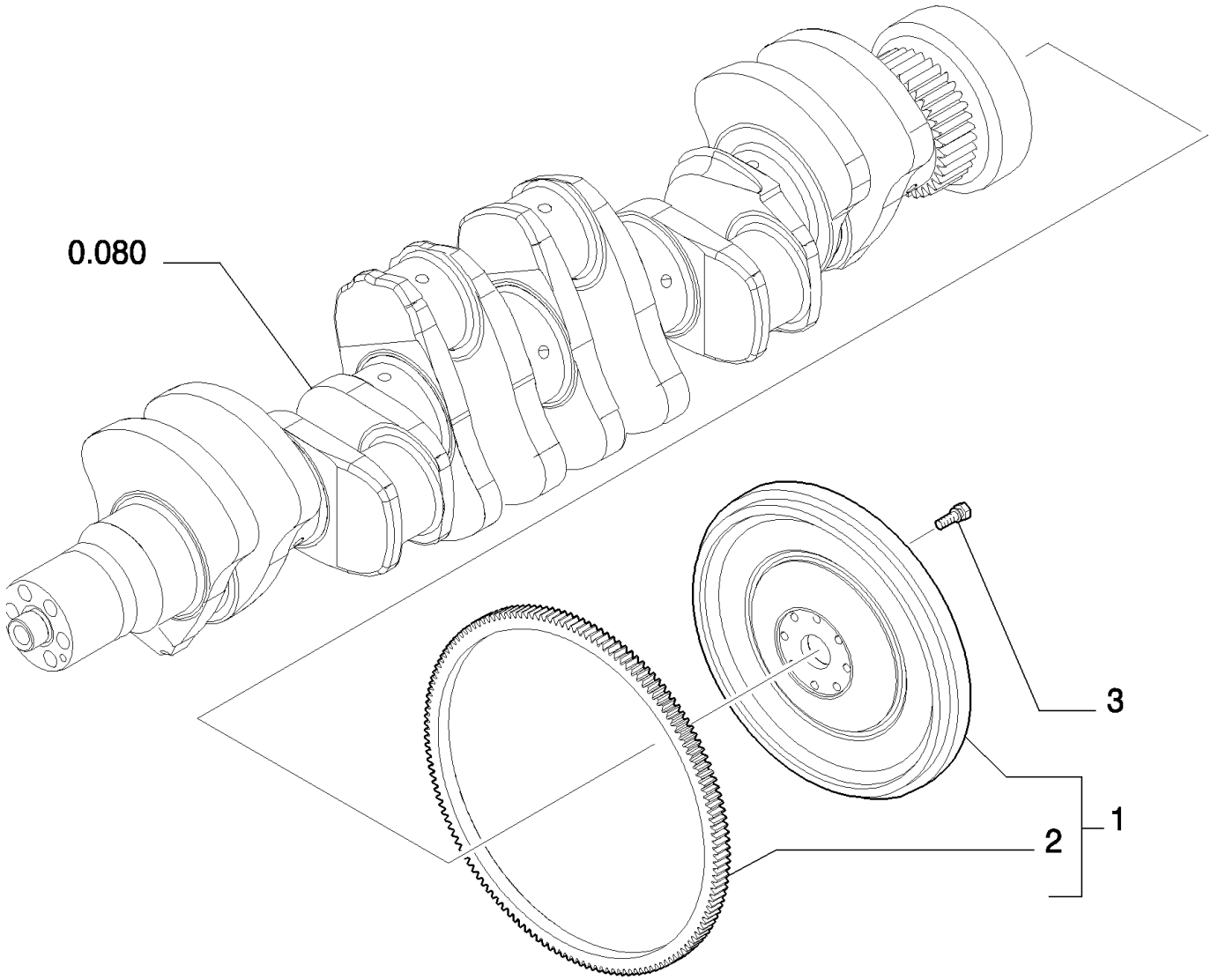

Copyright © New Holland

VOLANTE MOTOR
FLYWHEEL - ENGINE
FLYWHEEL - ENGINE
FLYWHEEL - ENGINE

R	N	P.N.	MOD	Q	Description Denominacion	Descrizione Beskrivelse	Bezeichnung Denominação	Description Beschrijving	L.C.
1		500389866		1	ENGINE FLYWHEEL, - ASSY				
						VOLANO MOTORE	MOTORSCHWUNGRAD	VOLANT MOTEUR	048V
					VOLANTE DE MOTOR	MOTOR SVINGHJUL	VOLANTE DO MOTOR	MOTORVLIEGWIEL	
2		500388140		1	RING GEAR	CORONA DENTATA	ZAHNKRANZ	COURONNE DENTEE	297C
					CORONA DENTADA	TANDKRANS	COROA DENTADA	RINGWIEL	
3		4894641		8	SCREW, Wash Hd, M12 x 1.25 x 31				
						VITE	SCHRAUBE	VIS	040V
					TORNILLO	SKRUE	PARAFUSO	SCHROEF	

Copyright © New Holland

0.084	01	p1	03/10

PULLEY - CRANKSHAFT
PULEGGIA - ALBERO MOTORE
RIEMENSCHEIBE - KURBELWELLE
POULIE - VILEBREQUIN

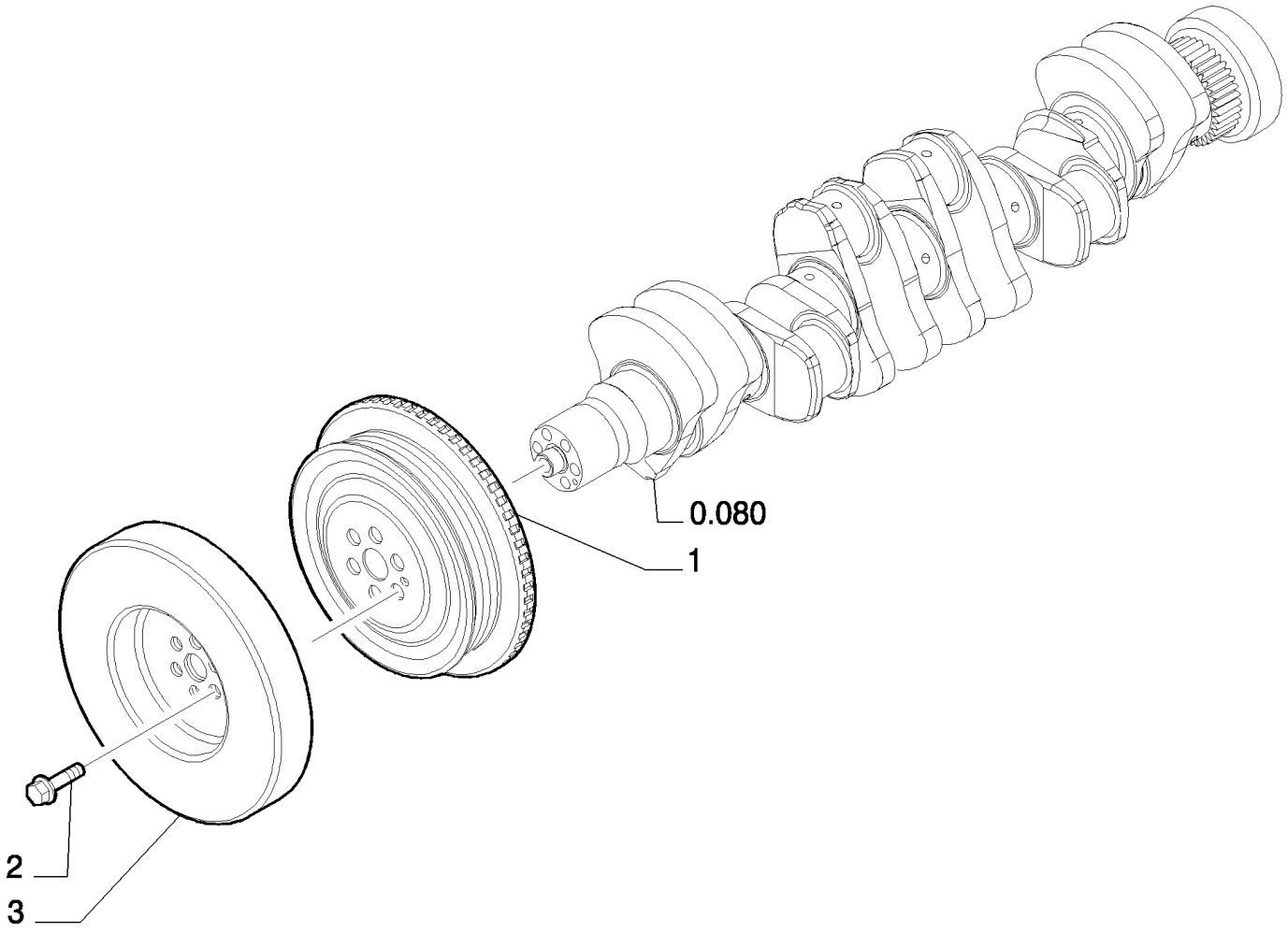

Copyright © New Holland

POLEA - CIGUENAL
PULLEY - CRANKSHAFT
PULLEY - CRANKSHAFT
PULLEY - CRANKSHAFT

R	N	P.N.	MOD	Q	Description Denominacion	Descrizione Beskrivelse	Bezeichnung Denominação	Description Beschrijving	L.C.
1		504035186		1	PULLEY POLEA	PULEGGIA REMSKIVE	RIEMENSCHEIBE POLIA	POULIE RIEMSCHIJF	230P
2		4892867		6	SCREW, Torx Wash Hd, M12 x 1.25 x 78.5 TORNILLO	VITE SKRUE	SCHRAUBE PARAFUSO	VIS SCHROEF	040V
3		4892893		1	DAMPER AMORTIGUADOR	AMMORTIZZATORE SVINGNINGSDÆMPER	DÄMPFER AMORTECEDOR	AMORTISSEUR DEMPER	164S

Copyright © New Holland

0.120	01	p1	03/10

CAMSHAFT - TIMING CONTROL
ALBERO AD ECCENTRICI - COMANDO DISTRIBUZIONE
EXZENTERWELLE - STEUERUNGSANTRIEB
ARBRE A CAMES - COMMANDE DE DISTRIBUTION

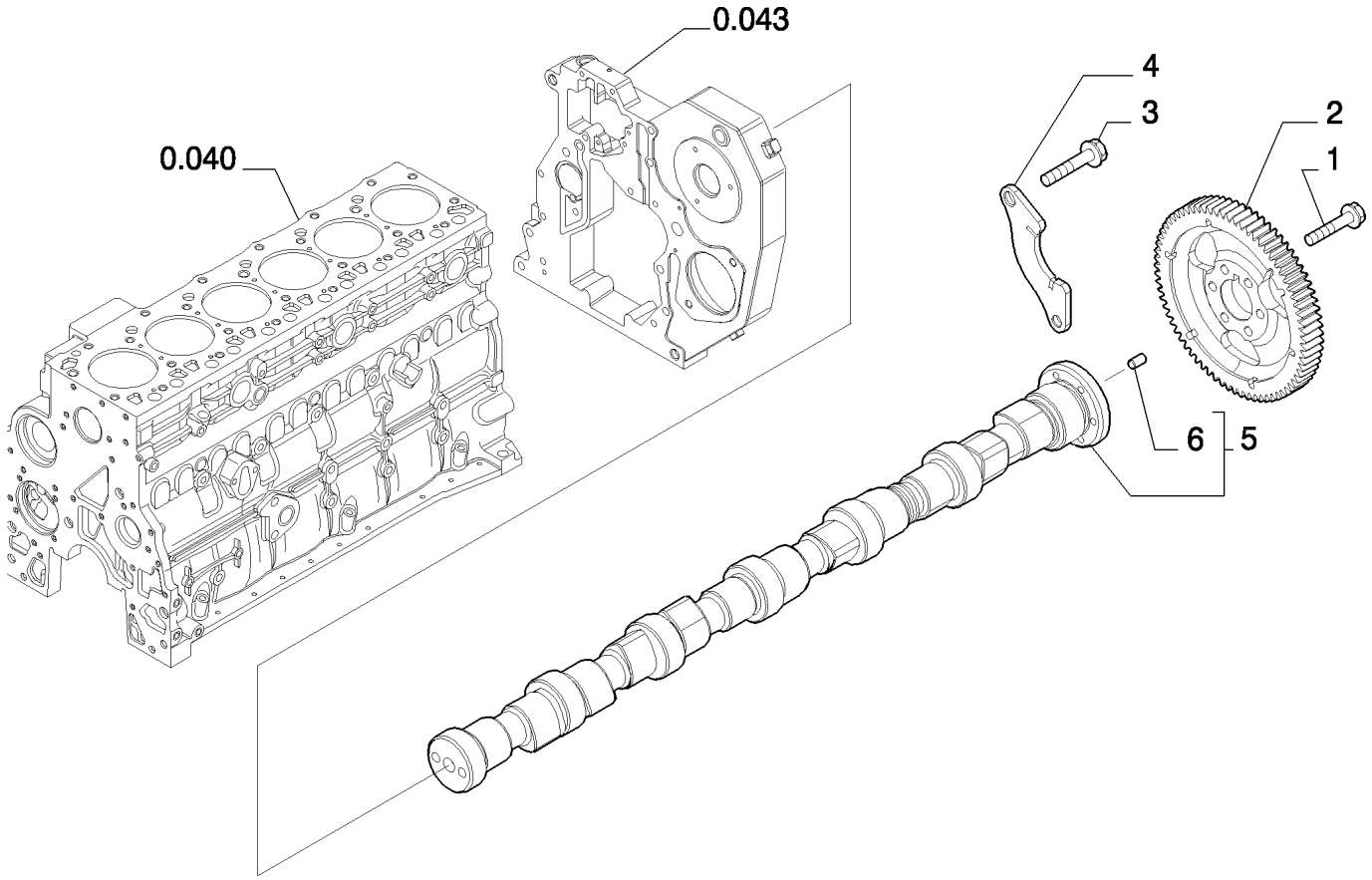

Copyright © New Holland

ARBOL DE LEVAS - PINONES DE LA DISTRIBUCION
CAMSHAFT - TIMING CONTROL
CAMSHAFT - TIMING CONTROL
CAMSHAFT - TIMING CONTROL

R	N	P.N.	MOD	Q	Description Denominacion	Descrizione Beskrivelse	Bezeichnung Denominação	Description Beschrijving	L.C.
1		4899079		6	SCREW, Hex Flg, M8 x 1.25 x 25				
						VITE	SCHRAUBE	VIS	040V
					TORNILLO	SKRUE	PARAFUSO	SCHROEF	
2		4896622		1	DRIVEN GEAR	INGRANAGGIO CONDOT	ANGETRIEBENES RAD	PIGNON MENE	051I
					PIÑÓN CONDUCIDO	DREVET TANDHJUL	ENGRENAGEM ACCION/	AANGEDREVEN TANDW	
3		4899068		2	SCREW, Hex Flg , M8 x 1.25 x 16				
						VITE	SCHRAUBE	VIS	040V
					TORNILLO	SKRUE	PARAFUSO	SCHROEF	
4		4897457		1	SUPPORT	SUPPORTO	STÜTZE	SUPPORT	300S
					SOPORTE	BESLAG	SUPORTE	STEUN	
5		2855612		1	CAMSHAFT, - ASSY	ALBERO A CAMME	NOCKENWELLE	ARBRE A CAMES	017A
					ÁRBOL DE LEVAS	KNASTAKSEL	ÁRVORE DE CAMES	NOKKENAS	
6		4899080		1	DOWEL, M6 x 8 L	PERNO	PASSSTIFT	GOUJON	090G
					BULÓN	DYVEL	PERNO-GUIA	PASPEN	

Copyright © New Holland

0.140	01	p1	03/10

INJECTION PUMP
POMPA INIEZIONE
EINSPRITZPUMPE
POMPE D'INJECTION

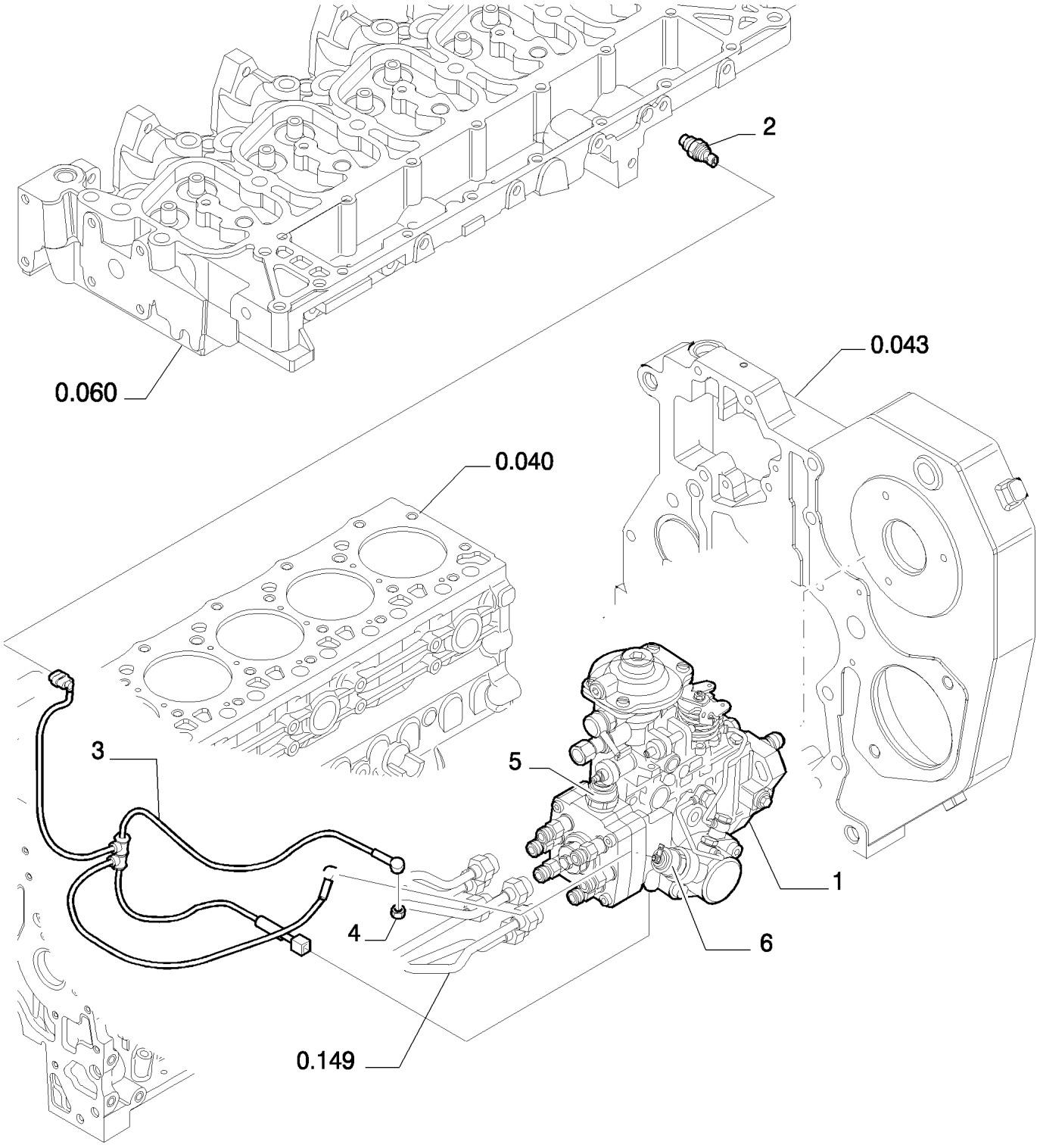

Copyright © New Holland

BOMBA DE INYECCION
INJECTION PUMP
INJECTION PUMP
INJECTION PUMP

R	N	P.N.	MOD	Q	Description Denominacion	Descrizione Beskrivelse	Bezeichnung Denominação	Description Beschrijving	L.C.
1		2855718		1	FUEL INJECTION PUMP, - ASSY BOMBA DE INY. DE COM	POMPA INIEZ. CARBURA INDSPRØJTNINGSPUMP	KRAFTSTOFFEINPRITZP BOMBA INJECÇÃO COM	POMPE INJECT. CARBUI INSPUITPOMP	158P
2		504032877		1	TEMPERATURE SENDER, Water Temperature EMISOR DE TEMPERATI	TRASMETT. TEMPERATI TEMPERATURSENDER	TEMPERATURGEBER SENSOR DE TEMPERAT	TRANSMETTEUR TEMPI TEMPERATUURSENSOI	Z366
3		504060728		1	WIRE HARNESS GRUPO DE CABLES	CABLAGGIO KABELNET	KABELBAUM CABLAGEM	FAISCEAU ELECTRIQUE KABELBOOM	070I
4		16979231		2	NUT TUERCA	DADO MØTRIK	MUTTER PORCA	ECROU MOER	010D
5		99478110		1	SOLENOID SOLENOIDE	SOLENOIDE MAGNETVENTIL	MAGNETSCHALTER SOLENÓIDE	SOLENOIDE SOLENOÏDE	168S
6		99478153		1	ELECTROMAGNET ELECTROIMÁN	ELETTROMAGNETE ELEKTROMAGNET	ELEKTROMAGNET ELECTROÍMAN	ELECTROAIMANT ELEKTROMAGNEET	030E

Copyright © New Holland

0.140	02	p1	03/10

INJECTION PUMP - CONTROL
POMPA INIEZIONE - COMANDO
EINSPRITZPUMPE - BETAETIGUNGSVORRICHT
POMPE D'INJECTION - COMMANDE

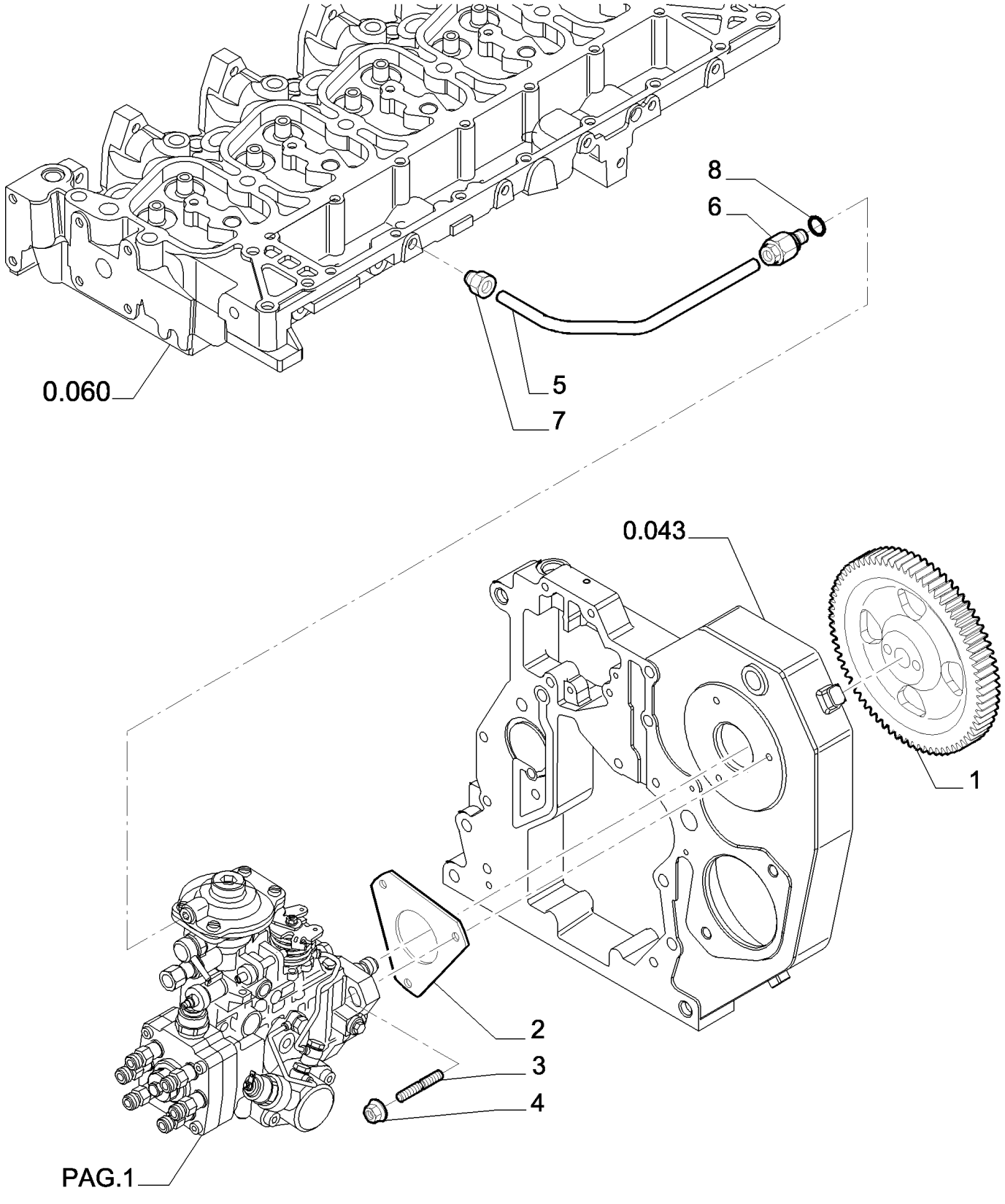

Copyright © New Holland

BOMBA DE INYECCION - MANDO
INJECTION PUMP - CONTROL
INJECTION PUMP - CONTROL
INJECTION PUMP - CONTROL

R	N	P.N.	MOD	Q	Description Denominacion	Descrizione Beskrivelse	Bezeichnung Denominação	Description Beschrijving	L.C.
1		4896616		1	DRIVEN GEAR PIÑÓN CONDUCIDO	INGRANAGGIO CONDOT DREVET TANDHJUL	ANGETRIEBENES RAD ENGRENAGEM ACCION/	PIGNON MENE AANGEDREVEN TANDW	051I
2		504083433		1	GASKET JUNTA	GUARNIZIONE PAKNING	DICHTUNG JUNTA	JOINT PAKKING	123G
3		504065125		3	STUD PRISIONERO	PRIGIONIERO STØTTEBOLT	GEWINDEBOLZEN PINO ROSCADO	GOUJON TAPEIND	210P
4		4899003		3	FLANGE NUT, M8 x 1.25 TUERCA DE BRIDA	DADO FLANGIATO FLANGEMØTRIK	FLANSCHMUTTER PORCA FLANGEADA	ECROU A EMBASE FLENSMOER	A069
5		504038511		1	FLEXIBLE HOSE TUBO FLEXIBLE	TUBO FLESSIBILE FLEKSIBEL SLANGE	BIEGSAMER SCHLAUCH MANGUEIRA FLEXÍVEL	TUYAU FLEXIBLE FLEXIBELE SLANG	192T
6		4893518		1	FITTING, M8 x 1 x 29.5 L ACOPLAMIENTO	RACCORDO FITTING	ARMATUR CONECTOR	RACCORD AANSLUITING	3300
7		4896770		1	FITTING, M10 x 1 ACOPLAMIENTO	RACCORDO FITTING	ARMATUR CONECTOR	RACCORD AANSLUITING	3300
8		4858605		1	SEAL ANILLO DE CIERRE	GUARNIZIONE; TENUTA PAKNING	DICHTUNG VEDANTE	JOINT AFDICHTING	132A

Copyright © New Holland

0.140	03	p1	03/10

INJECTION EQUIPMENT - INJECTOR
GRUPPO INIEZIONE - INIETTORE
EINSPRITZAUSRUESTUNG - EINSPRITZDUESE
GROUPE D'INJECTION - INJECTEUR

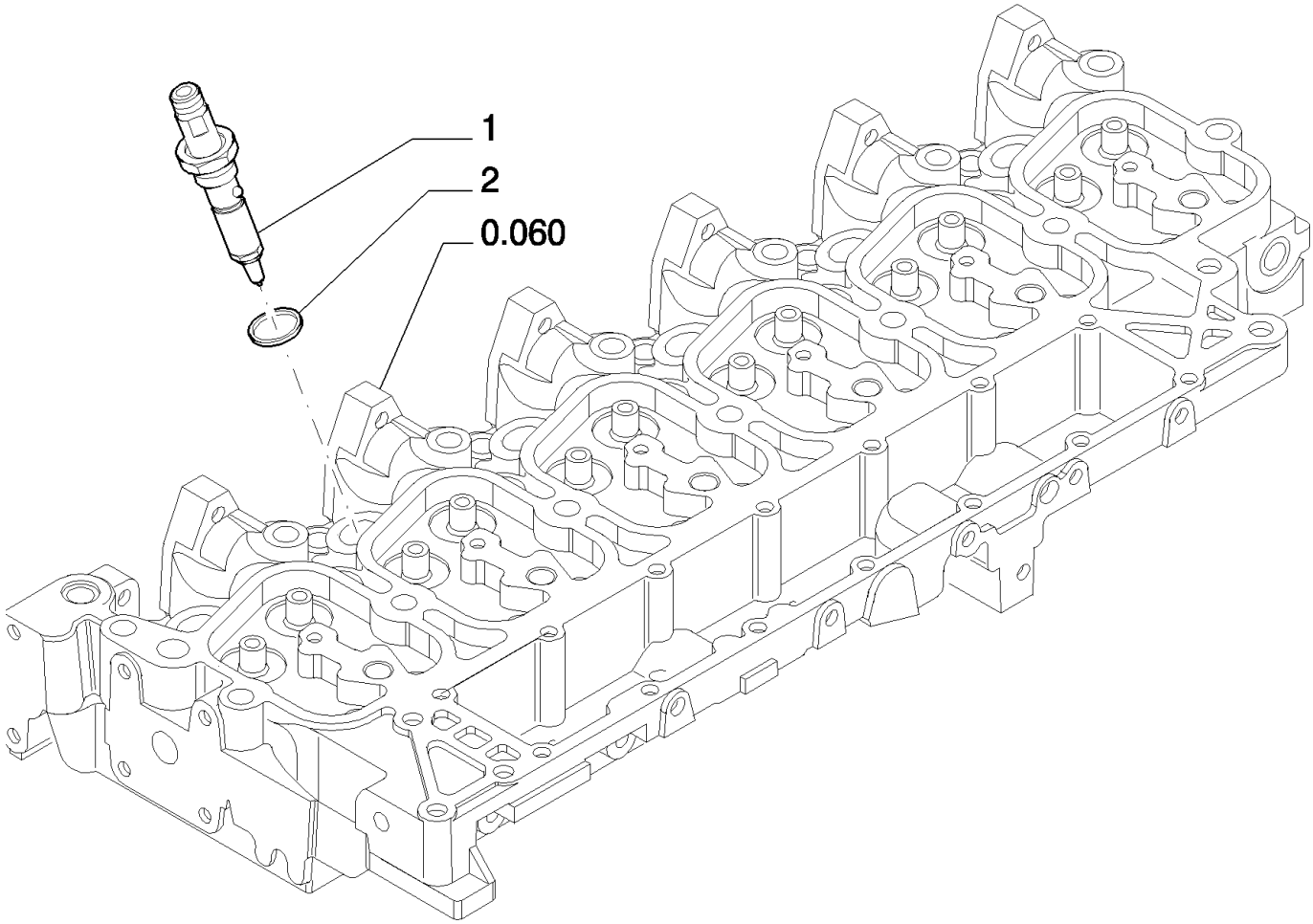

Copyright © New Holland

GRUPO DE INYECCION - INYECTOR
INJECTION EQUIPMENT - INJECTOR
INJECTION EQUIPMENT - INJECTOR
INJECTION EQUIPMENT - INJECTOR

R	N	P.N.	MOD	Q	Description Denominacion	Descrizione Beskrivelse	Bezeichnung Denominação	Description Beschrijving	L.C.
1		504125149		6	FUEL SYSTEM INJECTOR INYECTOR DE SIST. COI	INIETT. SISTEMA CARBU BRÆNDSTOFPUMPE	KRAFTSTOFFEINSPRITZ INJECTOR SISTEMA COI	INJECTEUR DE CARBUR VERSTUIVER	089I
2		4895297		6	SEAL, Rectangular, 15.6mm ID x 1.68 Thk ANILLO DE CIERRE	GUARNIZIONE; TENUTA PAKNING	DICHTUNG VEDANTE	JOINT AFDICHTING	132A

Copyright © New Holland

0.149	01	p1	03/10

INJECTION EQUIPMENT - PIPING
GRUPPO INIEZIONE - TUBAZIONI
EINSPRITZAUSRUESTUNG - LEITUNGEN
GROUPE D'INJECTION - TUYAUTERIE

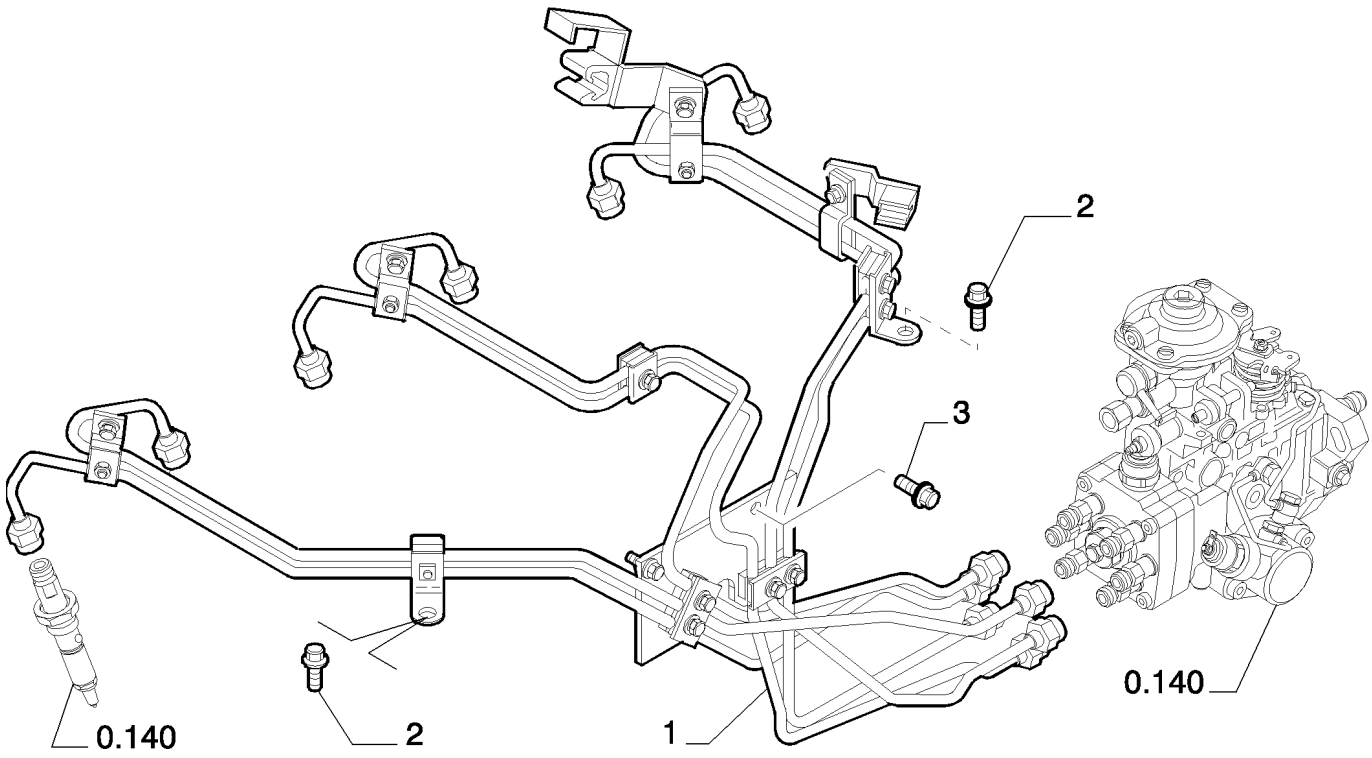

Copyright © New Holland

GRUPO DE INYECCION - TUBERIAS
INJECTION EQUIPMENT - PIPING
INJECTION EQUIPMENT - PIPING
INJECTION EQUIPMENT - PIPING

R	N	P.N.	MOD	Q	Description Denominacion	Descrizione Beskrivelse	Bezeichnung Denominação	Description Beschrijving	L.C.
1		504061554		1	KIT KIT	KIT SÆT	SATZ KIT	KIT KIT	305C
2		4896884		2	SCREW, Hex Flg, M8 x 1.25 x 16 TORNILLO	VITE SKRUE	SCHRAUBE PARAFUSO	VIS SCHROEF	040V
3		4899039		2	SCREW, Hex Flg, M8 x 1.25 x 25 TORNILLO	VITE SKRUE	SCHRAUBE PARAFUSO	VIS SCHROEF	040V

Copyright © New Holland

INJECTION EQUIPMENT - PIPING
GRUPPO INIEZIONE - TUBAZIONI
EINSPRITZAUSRUESTUNG - LEITUNGEN
GROUPE D'INJECTION - TUYAUTERIE

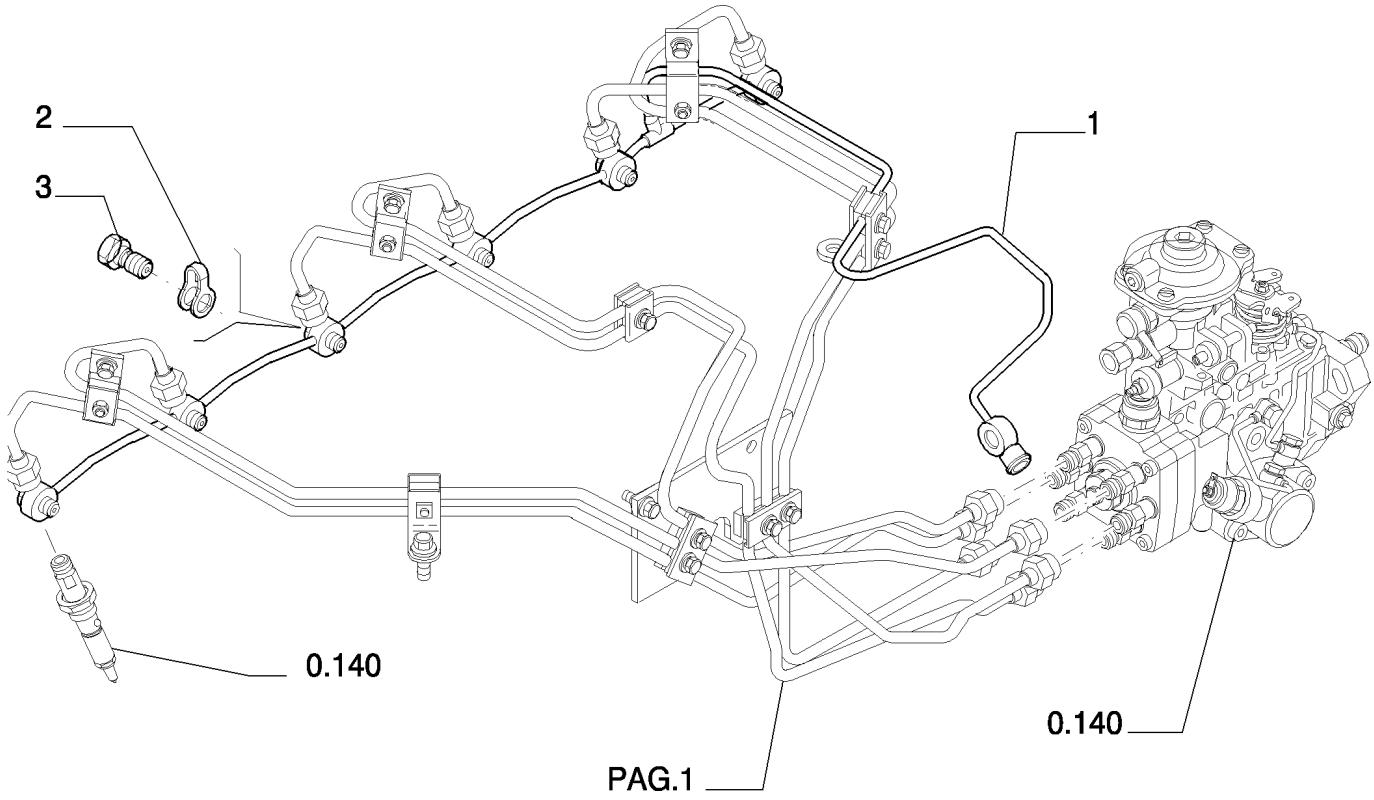

Copyright © New Holland

GRUPO DE INYECCION - TUBERIAS
INJECTION EQUIPMENT - PIPING
INJECTION EQUIPMENT - PIPING
INJECTION EQUIPMENT - PIPING

R	N	P.N.	MOD	Q	Description Denominacion	Descrizione Beskrivelse	Bezeichnung Denominação	Description Beschrijving	L.C.
1		504061555		1	RETURN PIPE TUBO DE RETORNO	TUBO DI RITORNO RETURRØR	RÜCKLAUFROHR TUBO DE RETORNO	TUYAU DE RETOUR TERUGVOERLEIDING	P840
2		4895305		6	SEAL ANILLO DE CIERRE	GUARNIZIONE; TENUTA PAKNING	DICHTUNG VEDANTE	JOINT AFDICHTING	132A
3		4895244		6	BANJO BOLT PERNO BANJO	BULLONE MASCHIO BANJOBOLT	HOHLSCHRAUBE PARAFUSO DE LIGAÇÃC	VIS BANJO BANJOBOUT	090B

Copyright © New Holland

0.200	01	p1	03/10

FUEL FILTER
FILTRO COMBUSTIBILE
KRAFTSTOFFILTER
FILTRE COMBUSTIBLE

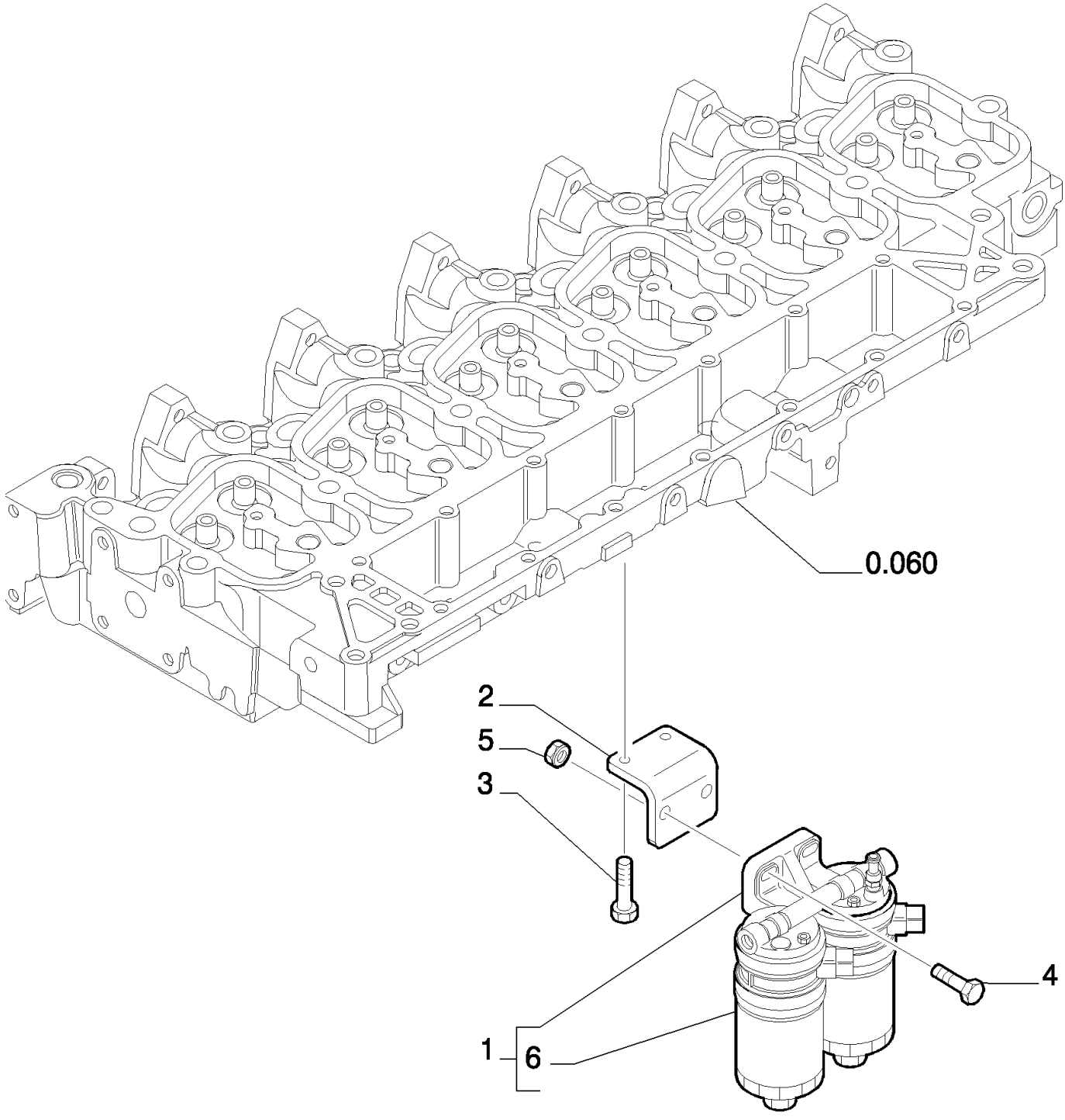

Copyright © New Holland

FILTRO COMBUSTIBLE
FUEL FILTER
FUEL FILTER
FUEL FILTER

R	N	P.N.	MOD	Q	Description Denominacion	Descrizione Beskrivelse	Bezeichnung Denominação	Description Beschrijving	L.C.
1		504079373		1	FILTER, - ASSY FILTRO	FILTRO FILTER	FILTER FILTRO	FILTRE FILTER	065F
2		504002420		1	SUPPORT SOPORTE	SUPPORTO BESLAG	STÜTZE SUPORTE	SUPPORT STEUN	300S
3		4899068		2	SCREW, Hex Flg , M8 x 1.25 x 16 TORNILLO	VITE SKRUE	SCHRAUBE PARAFUSO	VIS SCHROEF	040V
4		4899093		2	SCREW, Hex Flg, M10 x 1.5 x 30 TORNILLO	VITE SKRUE	SCHRAUBE PARAFUSO	VIS SCHROEF	040V
5		4895166		2	NUT, M10X1,5 TUERCA	DADO MØTRIK	MUTTER PORCA	ECROU MOER	010D
6		504073234		2	FUEL FILTER FILTRO DE COMBUSTIB	FILTRO CARBURANTE BRÆNDSTOFFILTER	KRAFTSTOFFFILTER FILTRO DE COMBUSTÍVI	FILTRE A CARBURANT BRANDSTOFFILTER	064F

Copyright © New Holland

0.201	01	p1	03/10

FUEL PUMP
POMPA ALIMENTAZIONE
KRAFTSTOFFPUMPE
POMPE D'ALIMENTATION

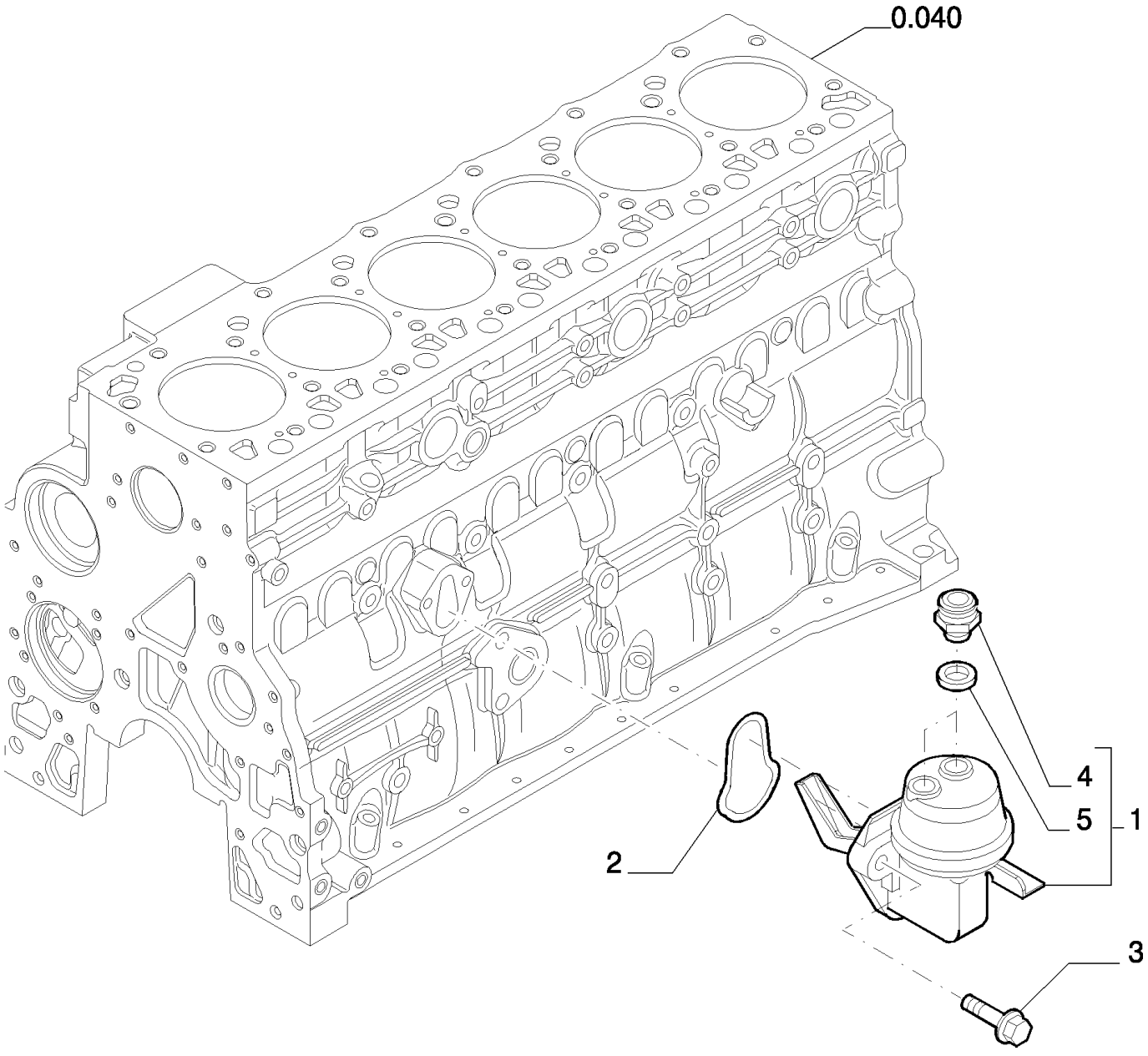

Copyright © New Holland

BOMBA DE ALIMENTACION
FUEL PUMP
FUEL PUMP
FUEL PUMP

R	N	P.N.	MOD	Q	Description Denominacion	Descrizione Beskrivelse	Bezeichnung Denominação	Description Beschrijving	L.C.
1		2830266		1	FUEL PUMP, ASSY BOMBA DE COMBUSTIB	POMPA CARBURANTE BRÆNDSTOFPUMPE	KRAFTSTOFFPUMPE BOMBA DE COMBUSTÍV	POMPE A CARBURANT BRANDSTOFPOMP	154P
2		2830156		1	O-RING, 70 Duro, M2.62 Thk JUNTA TÓRICA	ANELLO TOROIDALE O-RING	O-RING O-RING	JOINT TORIQUE O-RING	055A
3		4899031		2	SCREW, Hex Flg, M8 x 1.25 x 25 TORNILLO	VITE SKRUE	SCHRAUBE PARAFUSO	VIS SCHROEF	040V
4		4890964		2	FITTING, M12 x 1.5 ACOPLAMIENTO	RACCORDO FITTING	ARMATUR CONECTOR	RACCORD AANSLUITING	3300
5		4894721		2	SEALING WASHER, M12.2 x 17 x 1.5 Thk ARANDELA HERMÉTICA	ROSETTA DI TENUTA TÆTNINGSSKIVE	DICHTSCHEIBE ANILHA DE VEDAÇÃO	RONDELLE D'ETANCHEI AFDICHTRING	133R

Copyright © New Holland

0.203	01	p1	03/10

PIPING - FUEL
TUBAZIONI - COMBUSTIBILE
LEITUNGEN - KRAFTSTOFF
TUYAUTERIES - COMBUSTIBILE

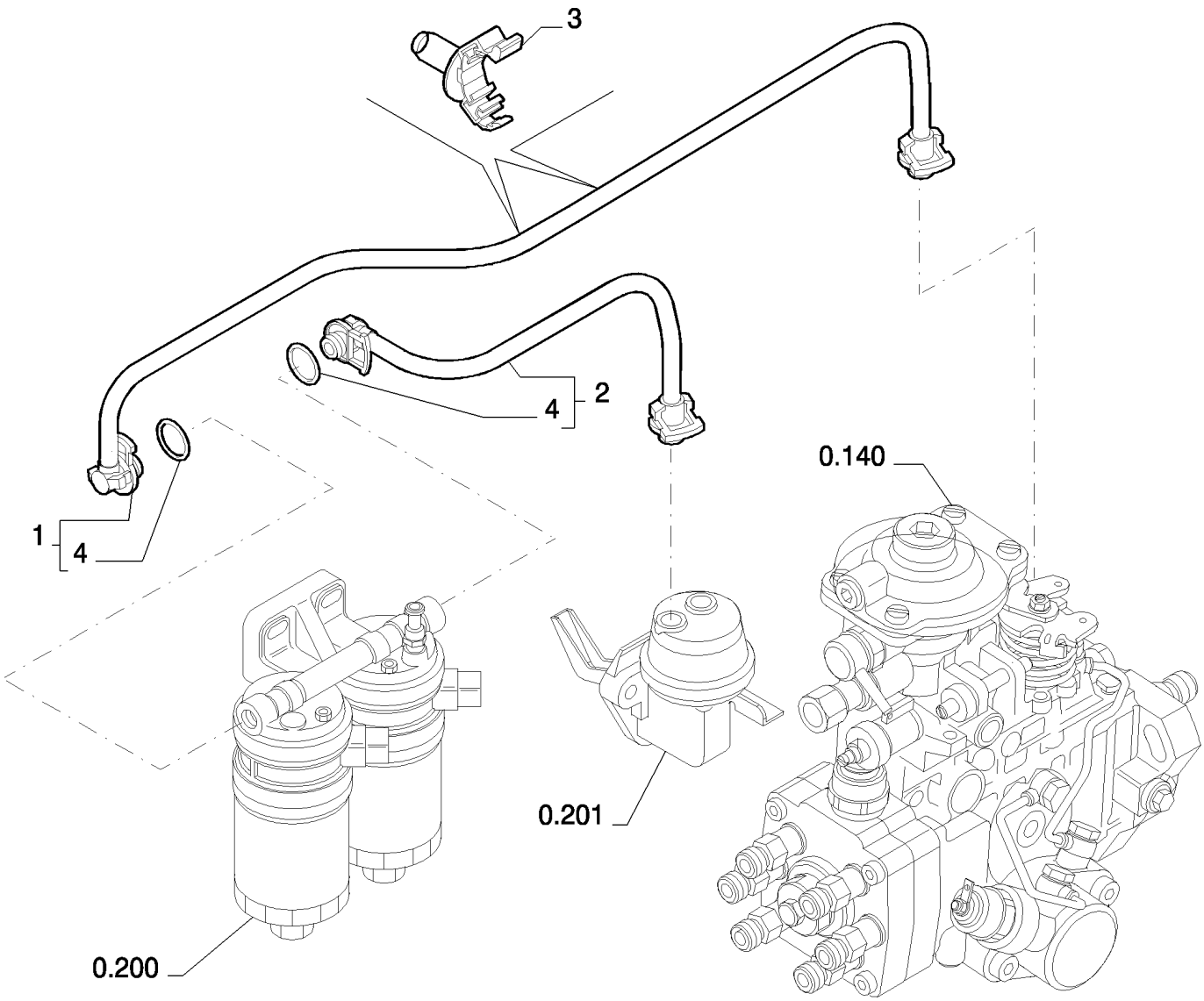

Copyright © New Holland

TUBERIAS - COMBUSTIBLE
PIPING - FUEL
PIPING - FUEL
PIPING - FUEL

R	N	P.N.	MOD	Q	Description Denominacion	Descrizione Beskrivelse	Bezeichnung Denominação	Description Beschrijving	L.C.
1		504072176		1	PIPE, - ASSY TUBO	TUBO PÅFYLDNINGSSTUDS	ROHR TUBO DE ENCHIMENTO	TUYAU BUIS	200T
2		504072177		1	RIGID TUBE, - ASSY TUBO RÍGIDO	TUBO RIGIDO STIFT RØR	ROHR TUBO RÍGIDO	TUYAU RIGIDE VASTE LEIDING	193T
3		504065285		2	CLAMP ABRAZADERA	MORSETTO SPÆNDEBÅND	KLEMME BRAÇADEIRA	COLLIER KLEM	120M
4		4894095		2	O-RING, M8 ID x 2.5 Thk JUNTA TÓRICA	ANELLO TOROIDALE O-RING	O-RING O-RING	JOINT TORIQUE O-RING	055A

Copyright © New Holland

0.240	01	p1	03/10

TURBOCHARGER
TURBOCOMPRESSORE
TURBOLADER
TURBOCOMPRESSEUR

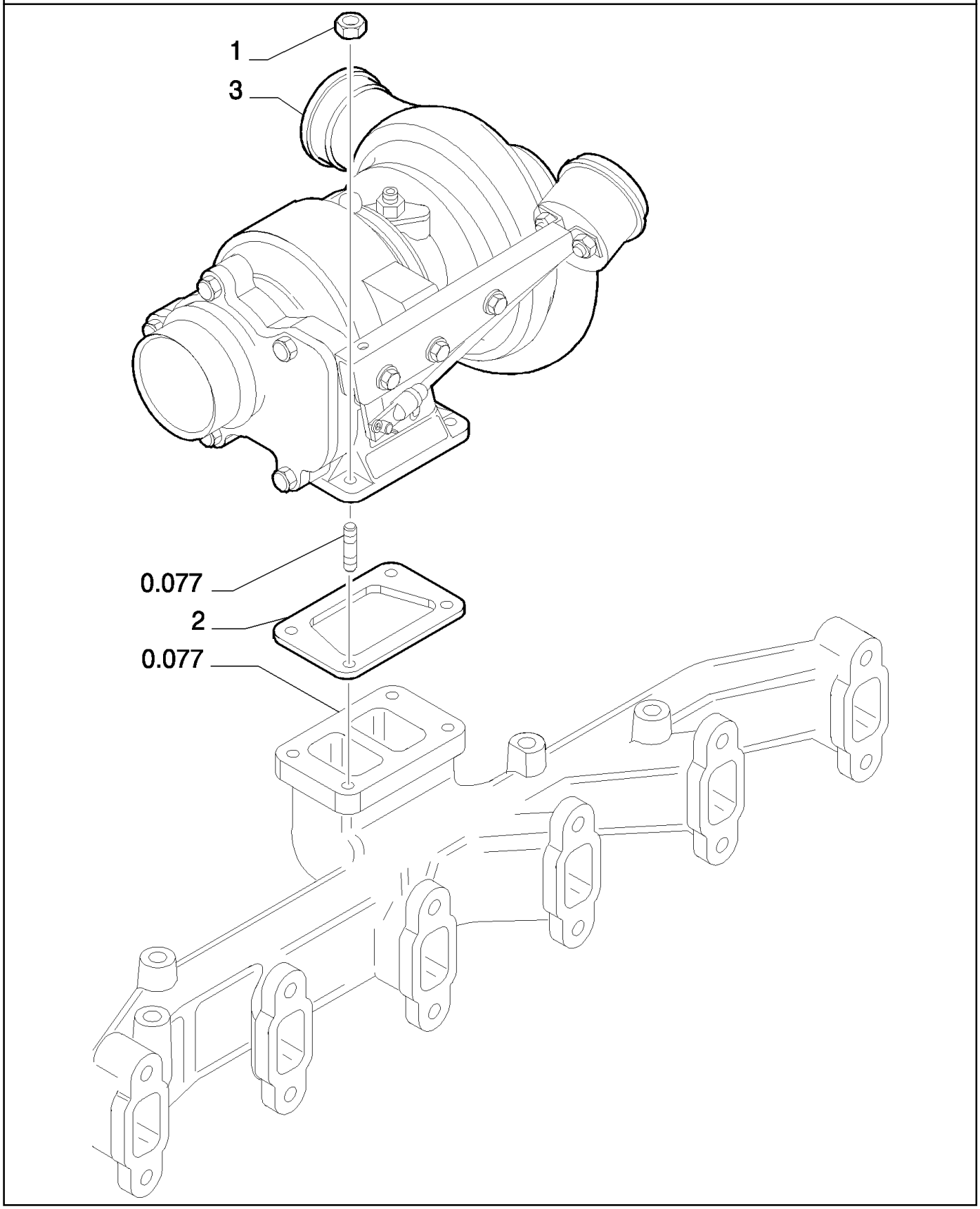

Copyright © New Holland

TURBOCOMPRESOR
TURBOCHARGER
TURBOCHARGER
TURBOCHARGER

R	N	P.N.	MOD	Q	Description Denominacion	Descrizione Beskrivelse	Bezeichnung Denominação	Description Beschrijving	L.C.
1		4899086		4	NUT TUERCA	DADO MØTRIK	MUTTER PORCA	ECROU MOER	010D
2		4895132		1	GASKET JUNTA	GUARNIZIONE PAKNING	DICHTUNG JUNTA	JOINT PAKKING	123G
3		2855890		1	TURBOCHARGER TURBOCOMPRESOR	TURBOCOMPRESSORE TURBOLADER	TURBOLADER TURBOCOMPRESSOR	TURBOCOMPRESSEUR TURBOCOMPRESSOR	210T

Copyright © New Holland

0.270	01	p1	03/10

ENGINE OIL DIPSTICK
ASTA LIVELLO OLIO MOTORE
MOTORÖLMEßSTAB
JAUGE DE NIVEAU

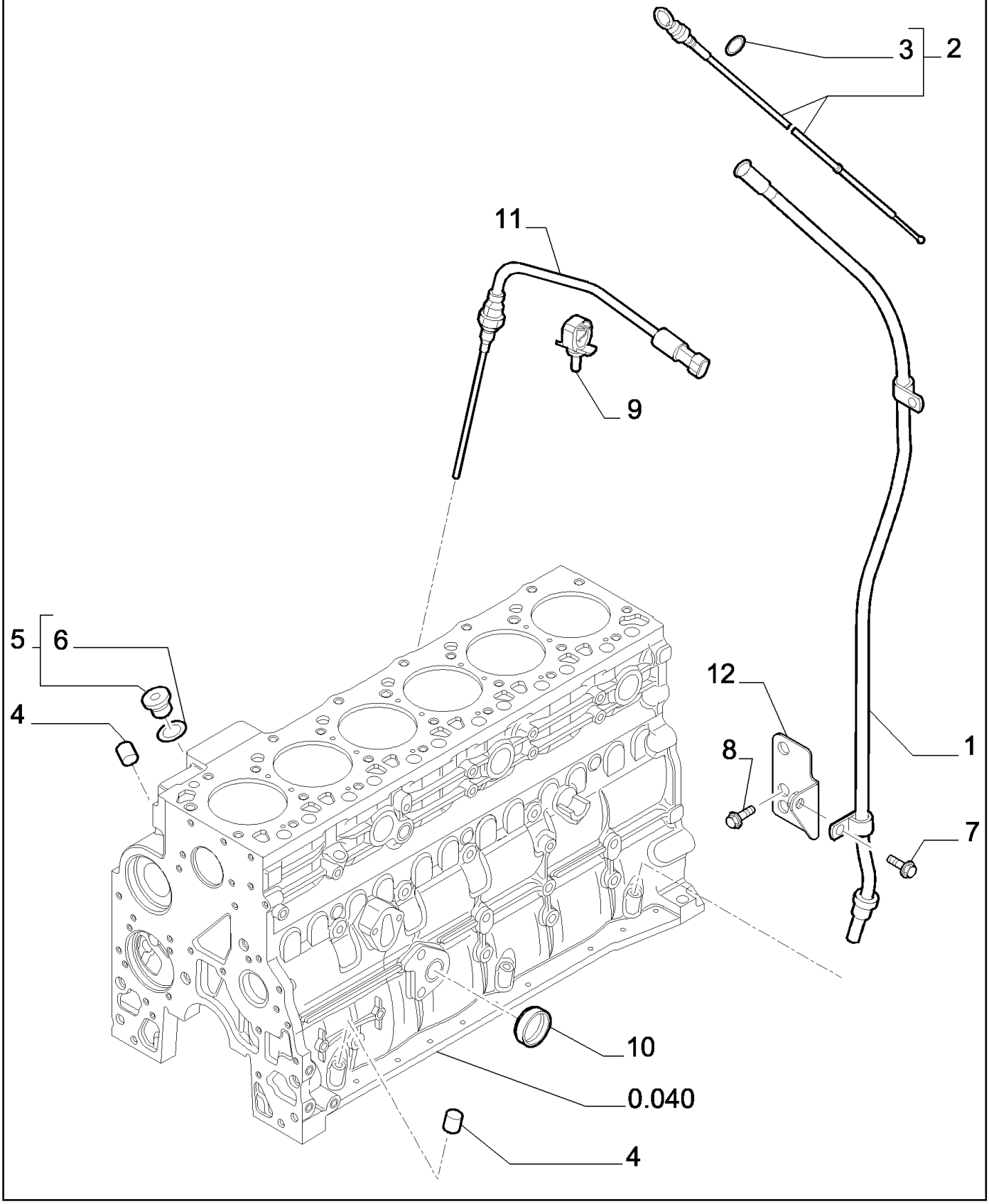

Copyright © New Holland

VARILLA DE NIVEL
ENGINE OIL DIPSTICK
ENGINE OIL DIPSTICK
ENGINE OIL DIPSTICK

R	N	P.N.	MOD	Q	Description Denominacion	Descrizione Beskrivelse	Bezeichnung Denominação	Description Beschrijving	L.C.
1		504051712		1	TUBE TUBO	TUBO RØR	ROHR TUBO	TUBE LEIDING	195T
2		504045920		1	DIPSTICK, - ASSY VARILLA DE NIVEL	ASTINA DI LIVELLO MÅLEPIND	MESSSTAB VARETA DE NÍVEL	JAUGE DE NIVEAU PEILSTOK	091A
3		4898502		1	O-RING, M9.25 ID x 1.78 Thk JUNTA TÓRICA	ANELLO TOROIDALE O-RING	O-RING O-RING	JOINT TORIQUE O-RING	055A
4		4895406		2	EXPANSION PLUG, 9.8mm OD TAPÓN DE EXPANSIÓN	TAPPO A ESPANSIONE EKSPANSIONSPROP	SPREIZSTOPFEN BUJÃO DE EXPANSÃO	BOUCHON D'EXPANSIOI VERLENGPLUG	A084
5		4897330		1	HEX SOCKET PLUG, M12 x 1.5, - Assy TAPÓN DE CABEZA HEX	TAPPO A BRUGOLA SEKSKANTET PROP	INNENSECHSKANTSTOI TAMPÃO SEXTAVADO IN	BOUCHON SIX PANS CR INBUSPLUG	A086
6		4895610		1	O-RING, M9.3 ID x 2.2 Thk JUNTA TÓRICA	ANELLO TOROIDALE O-RING	O-RING O-RING	JOINT TORIQUE O-RING	055A
7		16597924		1	SCREW, M8X14 TORNILLO	VITE SKRUE	SCHRAUBE PARAFUSO	VIS SCHROEF	040V
8		16587924		1	SCREW, M12X25 TORNILLO	VITE SKRUE	SCHRAUBE PARAFUSO	VIS SCHROEF	040V
9		504046336		1	BRACKET SOPORTE	STAFFA BESLAG	HALTERUNG SUPORTE	SUPPORT STEUN	225S
10		4895037		1	EXPANSION PLUG, 32.03mm TAPÓN DE EXPANSIÓN	TAPPO A ESPANSIONE EKSPANSIONSPROP	SPREIZSTOPFEN BUJÃO DE EXPANSÃO	BOUCHON D'EXPANSIOI VERLENGPLUG	A084
11		504025613		1	SWITCH INTERRUPTOR	INTERRUTTORE KONTAKT	SCHALTER INTERRUPTOR	CONTACTEUR SCHAKELAAR	075I
12		504051850		1	BRACKET SOPORTE	STAFFA BESLAG	HALTERUNG SUPORTE	SUPPORT STEUN	225S

Copyright © New Holland

OIL PUMP - ENGINE
POMPA OLIO - MOTORE
ÖLPUMPE - MOTOR
POMPE A HUILE - MOTEUR

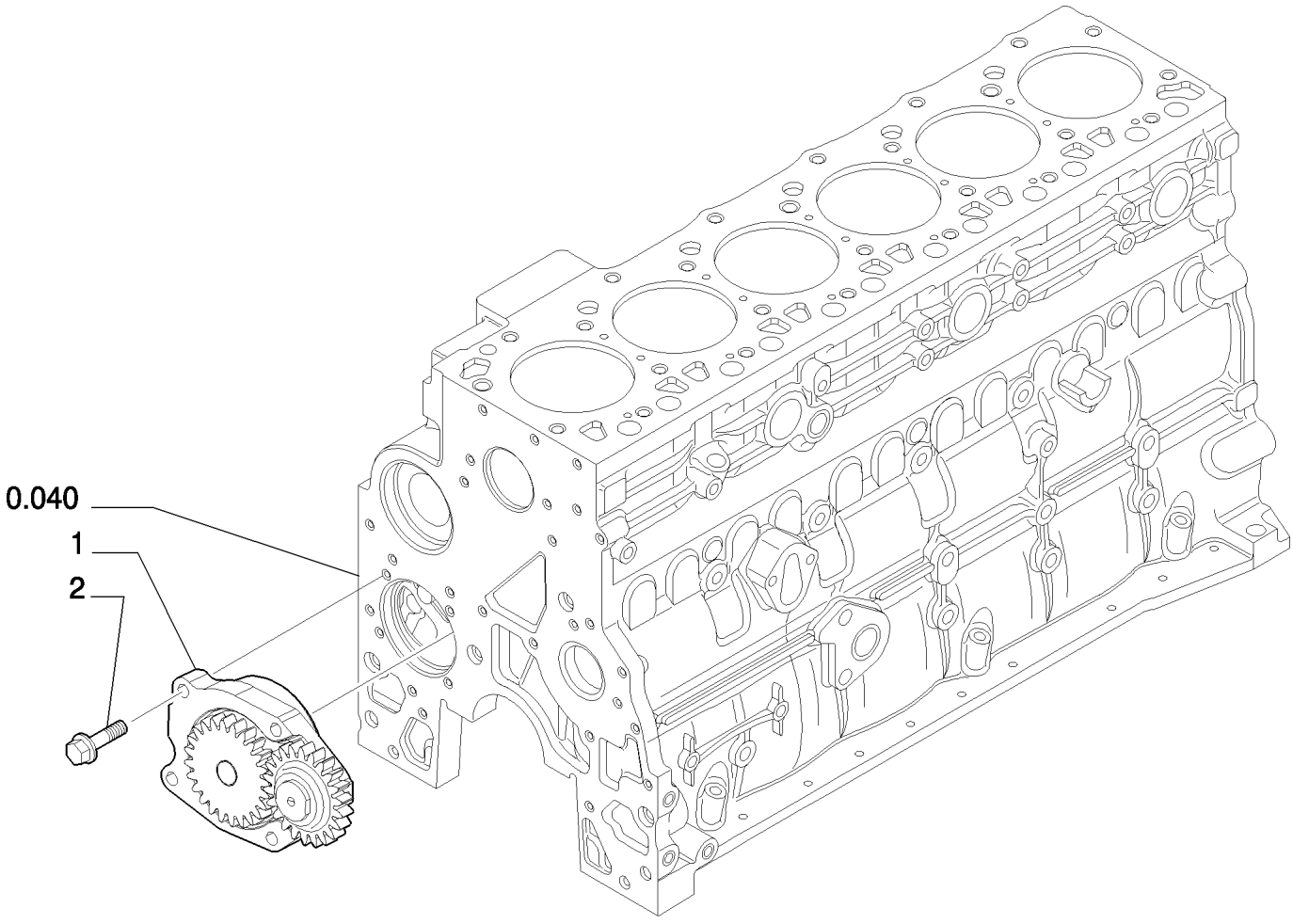

Copyright © New Holland

BOMBA DE ACEITE - MOTOR
OIL PUMP - ENGINE
OIL PUMP - ENGINE
OIL PUMP - ENGINE

R	N	P.N.	MOD	Q	Description Denominacion	Descrizione Beskrivelse	Bezeichnung Denominação	Description Beschrijving	L.C.
1		4897481		1	ENGINE OIL PUMP BOMBA DE ACEITE DE M	POMPA OLIO MOTORE MOTOROLIEPUMPE	MOTORÖLPUMPE BOMBA DE ÓLEO DO MO	POMPE A HUILE MOTEU MOTOROLIEPOMP	153P
2		4899090		4	SCREW, Hex Flg, M8 x 1.25 x 30 VITE TORNILLO	 SKRUE	 SCHRAUBE PARAFUSO	 VIS SCHROEF	040V

Copyright © New Holland

0.302	01	p1	03/10

OIL FILTERS - ENGINE
FILTRO OLIO - MOTORE
ÖLFILTER - MOTOR
FILTRE A HUILE - MOTEUR

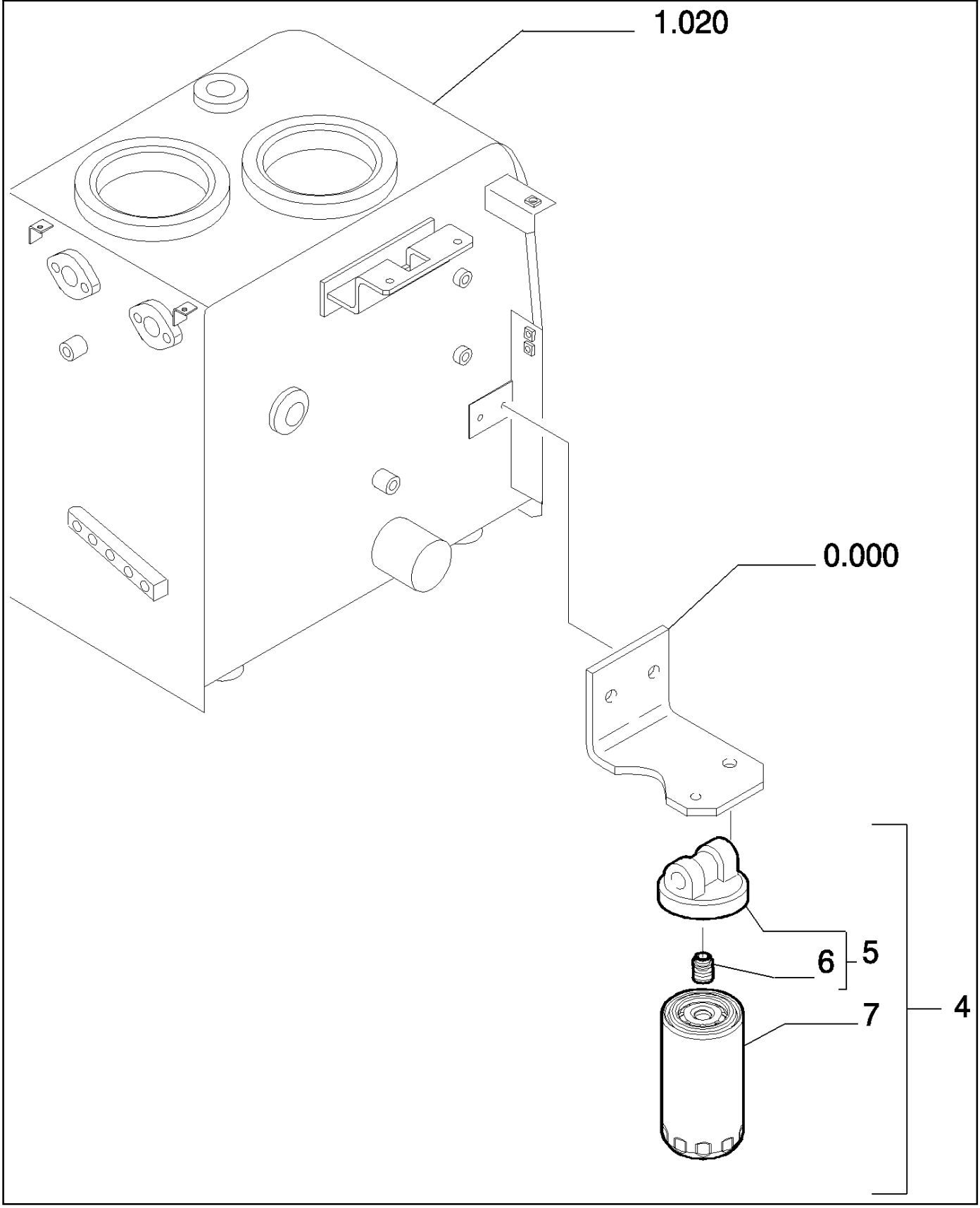

Copyright © New Holland

FILTRO DE ACEITE - MOTOR
OIL FILTERS - ENGINE
OIL FILTERS - ENGINE
OIL FILTERS - ENGINE

R	N	P.N.	MOD	Q	Description Denominacion	Descrizione Beskrivelse	Bezeichnung Denominação	Description Beschrijving	L.C.
4		72130493		1	ENGINE OIL FILTER, - ASSY FILTRO DE ACEITE DE M	FILTRO OLIO MOTORE MOTOROLIEFILTER	MOTORÖLFILTER FILTRO DE ÓLEO DO MC	FILTRE A HUILE MOTEU MOTOROLIEFILTER	067F
5		504039282		1	FILTER HEAD, - ASSY CABEZA DE FILTRO	TESTA DEL FILTRO FILTERHOVED	FILTERKOPF CABEÇA DO FILTRO	TETE DE FILTRE FILTERKOP	A007
6		4893391		1	ADAPTER, M24 x 2 x M27 x 2 ADAPTADOR	ADATTATORE ADAPTER	ADAPTER ADAPTADOR	ADAPTATEUR ADAPTER	001A
7		72130494		1	ENGINE OIL FILTER FILTRO DE ACEITE DE M	FILTRO OLIO MOTORE MOTOROLIEFILTER	MOTORÖLFILTER FILTRO DE ÓLEO DO MC	FILTRE A HUILE MOTEU MOTOROLIEFILTER	067F

Copyright © New Holland

0.305	01	p1	03/10

PIPING - ENGINE OIL
TUBAZIONI - OLIO MOTORE
LEITUNGEN - MOTOROEL
TUYAUTERIES - HUILE DU MOTEUR

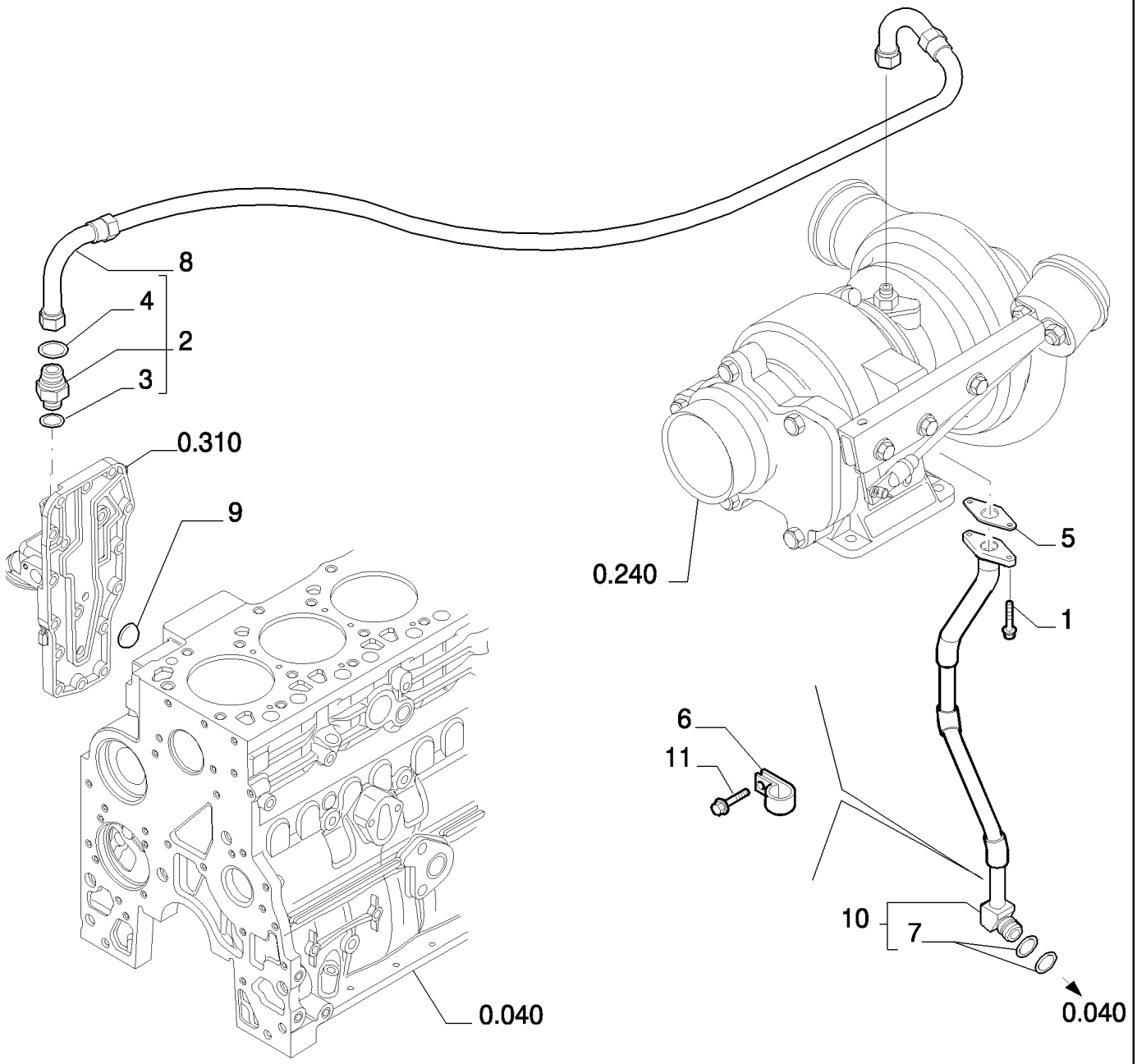

Copyright © New Holland

TUBERIAS - ACEITE DEL MOTOR
PIPING - ENGINE OIL
PIPING - ENGINE OIL
PIPING - ENGINE OIL

R	N	P.N.	MOD	Q	Description Denominacion	Descrizione Beskrivelse	Bezeichnung Denominação	Description Beschrijving	L.C.
1		4899079		2	SCREW, Hex Flg, M8 x 1.25 x 25				
						VITE	SCHRAUBE	VIS	040V
					TORNILLO	SKRUE	PARAFUSO	SCHROEF	
2		4895107		2	HYD CONNECTOR, 11/16"-16 x M12, - Assy				
						CONNETTORE IDRAULI(	HYDR STECKVERBINDE	CONNECTEUR HYDRAU	020R
					CONECTOR HIDRÁULIC(	HYDRAULIKSTIK	CONECTOR HID.	HYDRAULISCHE AANSL(	
3		4899107		1	O-RING, .414" ID x .072" Thk				
						ANELLO TOROIDALE	O-RING	JOINT TORIQUE	055A
					JUNTA TÓRICA	O-RING	O-RING	O-RING	
4		4899108		1	O-RING, .364" ID x .070" Thk				
						ANELLO TOROIDALE	O-RING	JOINT TORIQUE	055A
					JUNTA TÓRICA	O-RING	O-RING	O-RING	
5		4891288		1	GASKET	GUARNIZIONE	DICHTUNG	JOINT	123G
					JUNTA	PAKNING	JUNTA	PAKKING	
6		4899827		1	SUPPORT	SUPPORTO	STÜTZE	SUPPORT	300S
					SOPORTE	BESLAG	SUPORTE	STEUN	
7		4899058		2	O-RING, M17.12 ID x 2.62 Thk				
						ANELLO TOROIDALE	O-RING	JOINT TORIQUE	055A
					JUNTA TÓRICA	O-RING	O-RING	O-RING	
8		504084095		1	HOSE	TUBO FLESSIBILE	SCHLAUCH	FLEXIBLE	030M
					TUBO	SLANGE	MANGUEIRA	SLANG	
9		4895089		1	PLUG, .886" OD	TAPPO	STOPFEN	BOUCHON	050T
					TAPÓN	PROP	TAMPÃO	PLUG	
10		504019911		1	RIGID TUBE, - ASSY	TUBO RIGIDO	ROHR	TUYAU RIGIDE	193T
					TUBO RÍGIDO	STIFT RØR	TUBO RÍGIDO	VASTE LEIDING	
11		16587924		1	SCREW, M12X25	VITE	SCHRAUBE	VIS	040V
					TORNILLO	SKRUE	PARAFUSO	SCHROEF	

Copyright © New Holland

0.310	01	p1	03/10

HEAT EXCHANGER - ENGINE
SCAMBIATORE DI CALORE - MOTORE
WAERMETAUSCHER - MOTOR
EXCHANGEUR DE TEMPERATURE - MOTEUR

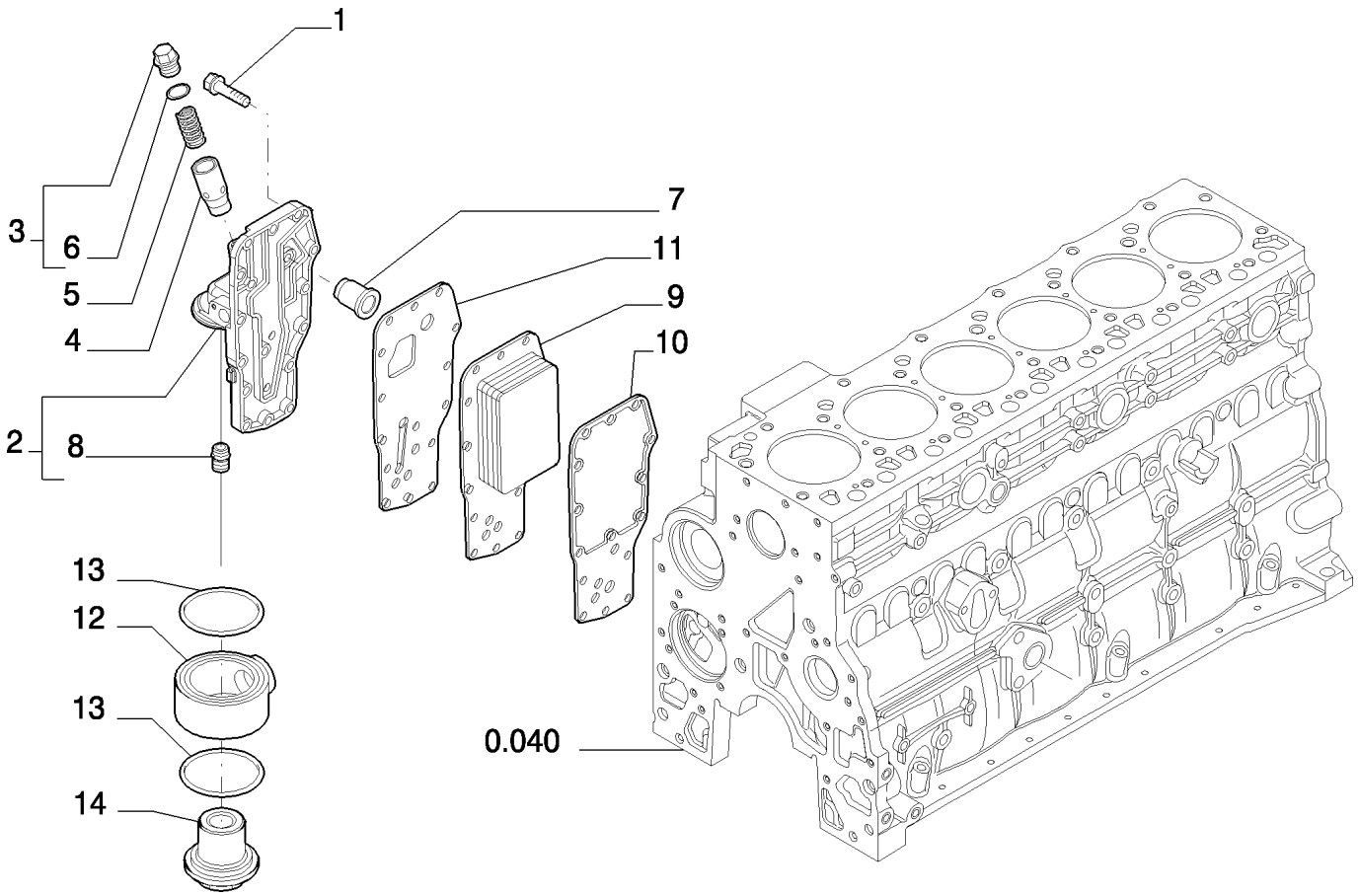

Copyright © New Holland

CAMBIADOR DE CALOR - MOTOR
HEAT EXCHANGER - ENGINE
HEAT EXCHANGER - ENGINE
HEAT EXCHANGER - ENGINE

R	N	P.N.	MOD	Q	Description Denominacion	Descrizione Beskrivelse	Bezeichnung Denominação	Description Beschrijving	L.C.
1		4899019		15	SCREW, Hex Flg, M8 x 1.25 x 35				
						VITE	SCHRAUBE	VIS	040V
					TORNILLO	SKRUE	PARAFUSO	SCHROEF	
2		4899643		1	FILTER HEAD, - ASSY	TESTA DEL FILTRO	FILTERKOPF	TETE DE FILTRE	A007
					CABEZA DE FILTRO	FILTERHOVED	CABEÇA DO FILTRO	FILTERKOP	
3		504096409		1	PLUG, - ASSY	TAPPO	STOPFEN	BOUCHON	050T
					TAPÓN	PROP	TAMPÃO	PLUG	
4		4896404		1	PLUNGER	PISTONCINO; STANTUFI	PLUNGER	PLONGEUR	130P
					ÉMBOLO	STEMPEL	ÊMBOLO	PLUNJER	
5		4895045		1	SPRING	MOLLA	FEDER	RESSORT	100M
					RESORTE	FJEDER	MOLA	VEER	
6		17916280		1	GASKET	GUARNIZIONE	DICHTUNG	JOINT	123G
					JUNTA	PAKNING	JUNTA	PAKKING	
7		4896410		1	PRESSURE RELIEF VALVE				
						VALV. LIMITATRICE PRE	DRUCKENTLASTUNGSV	CLAPET DECHARGE PR	007V
					VÁLV. ALIVIO DE PRESI(	SIKKERHEDSVENTIL	VÁLVULA DE ALÍVIO PRI	OVERDRUKKLEP	
8		4893391		1	ADAPTER, M24 x 2 x M27 x 2				
						ADATTATORE	ADAPTER	ADAPTATEUR	001A
					ADAPTADOR	ADAPTER	ADAPTADOR	ADAPTER	
9		4896407		1	OIL COOLER	RADIATORE OLIO	ÖLKÜHLER	REFROIDISSEUR D'HUIL	026R
					REFRIGERADOR DE ACI	OLIEKØLER	REFRIGERADOR DO ÓL	OLIEKOELER	
10		2830559		1	GASKET	GUARNIZIONE	DICHTUNG	JOINT	123G
					JUNTA	PAKNING	JUNTA	PAKKING	
11		4896409		1	GASKET	GUARNIZIONE	DICHTUNG	JOINT	123G
					JUNTA	PAKNING	JUNTA	PAKKING	
12		500389886		1	SUPPORT	SUPPORTO	STÜTZE	SUPPORT	300S
					SOPORTE	BESLAG	SUPORTE	STEUN	
13		17290181		2	SEALING ELEMENT	ELEMENTO DI TENUTA	DICHTELEMENT	ELEMENTS D'ETANCHEI	021E
					ELEMENTO DE ESTANQ	PAKNINGSELEMENT	ELEMENTO DE VEDAÇÃ	AFDICHTINGSELEMENT	
14		500396330		1	HYD CONNECTOR	CONNETTORE IDRAULI(	HYDR STECKVERBINDE	CONNECTEUR HYDRAU	020R
					CONECTOR HIDRÁULIC(	HYDRAULIKSTIK	CONECTOR HID.	HYDRAULISCHE AANSLI	

Copyright © New Holland

0.320	01	p1	03/10

WATER PUMP
POMPA ACQUA
WASSERPUMPE
POMPE A EAU

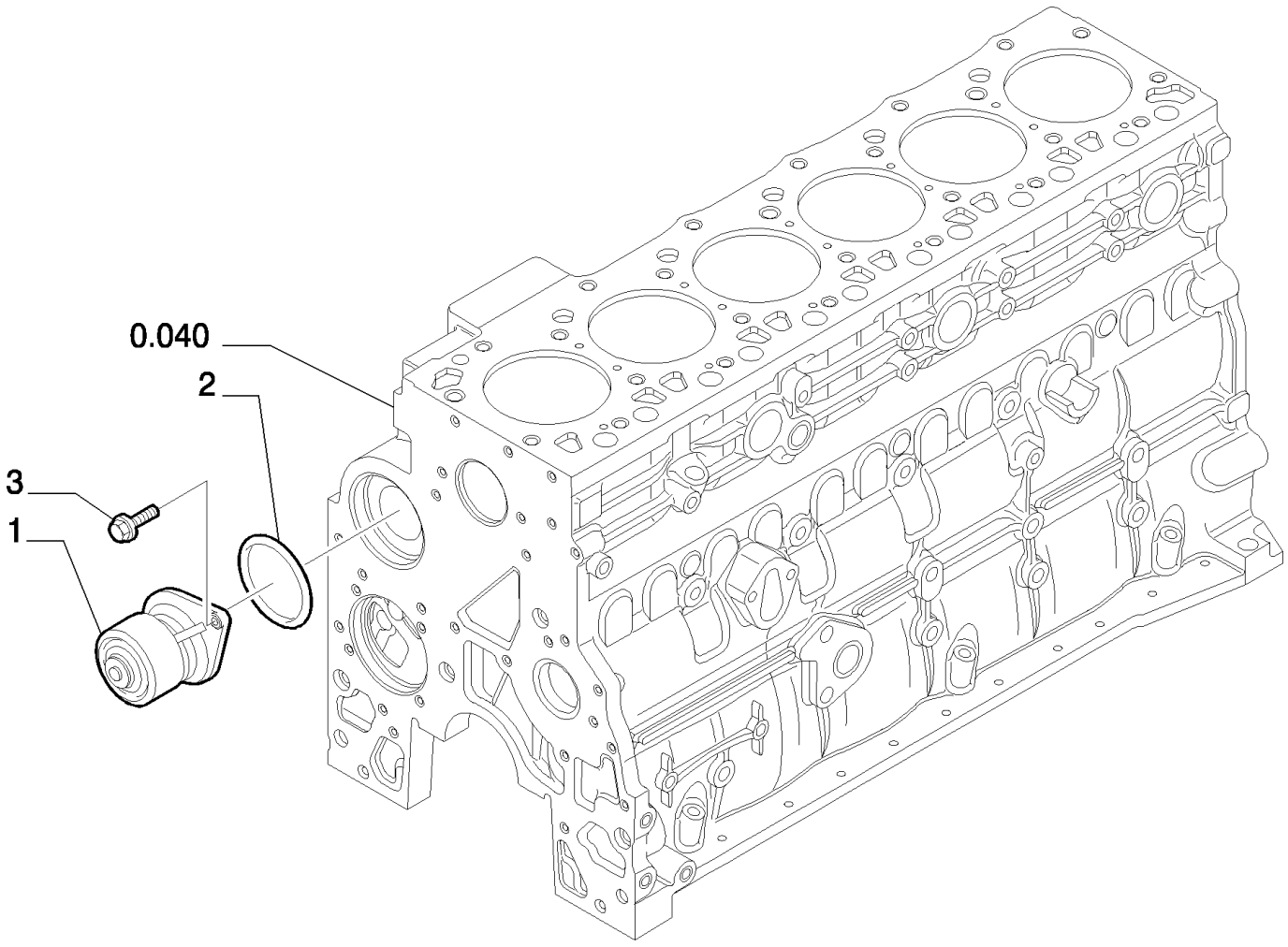

Copyright © New Holland

BOMBA DE AGUA
WATER PUMP
WATER PUMP
WATER PUMP

R	N	P.N.	MOD	Q	Description Denominacion	Descrizione Beskrivelse	Bezeichnung Denominação	Description Beschrijving	L.C.
1		504078557		1	WATER PUMP BOMBA DE AGUA	POMPA ACQUA VANDPUMPE	WASSERPUMPE BOMBA DE ÁGUA	POMPE A EAU WATERPOMP	152P
2		504062856		1	GASKET JUNTA	GUARNIZIONE PAKNING	DICHTUNG JUNTA	JOINT PAKKING	123G
3		4899079		2	SCREW, Hex Flg, M8 x 1.25 x 25 TORNILLO	VITE SKRUE	SCHRAUBE PARAFUSO	VIS SCHROEF	040V

Copyright © New Holland

0.323	01	p1	03/10

PIPING - ENGINE COOLING SYSTEM
TUBAZIONI - RAFFREDDAMENTO MOTORE
LEITUNGEN - KUEHLUNG DES MOTORS
TUYAUTERIES - REFROIDISSEMENT MOTEUR

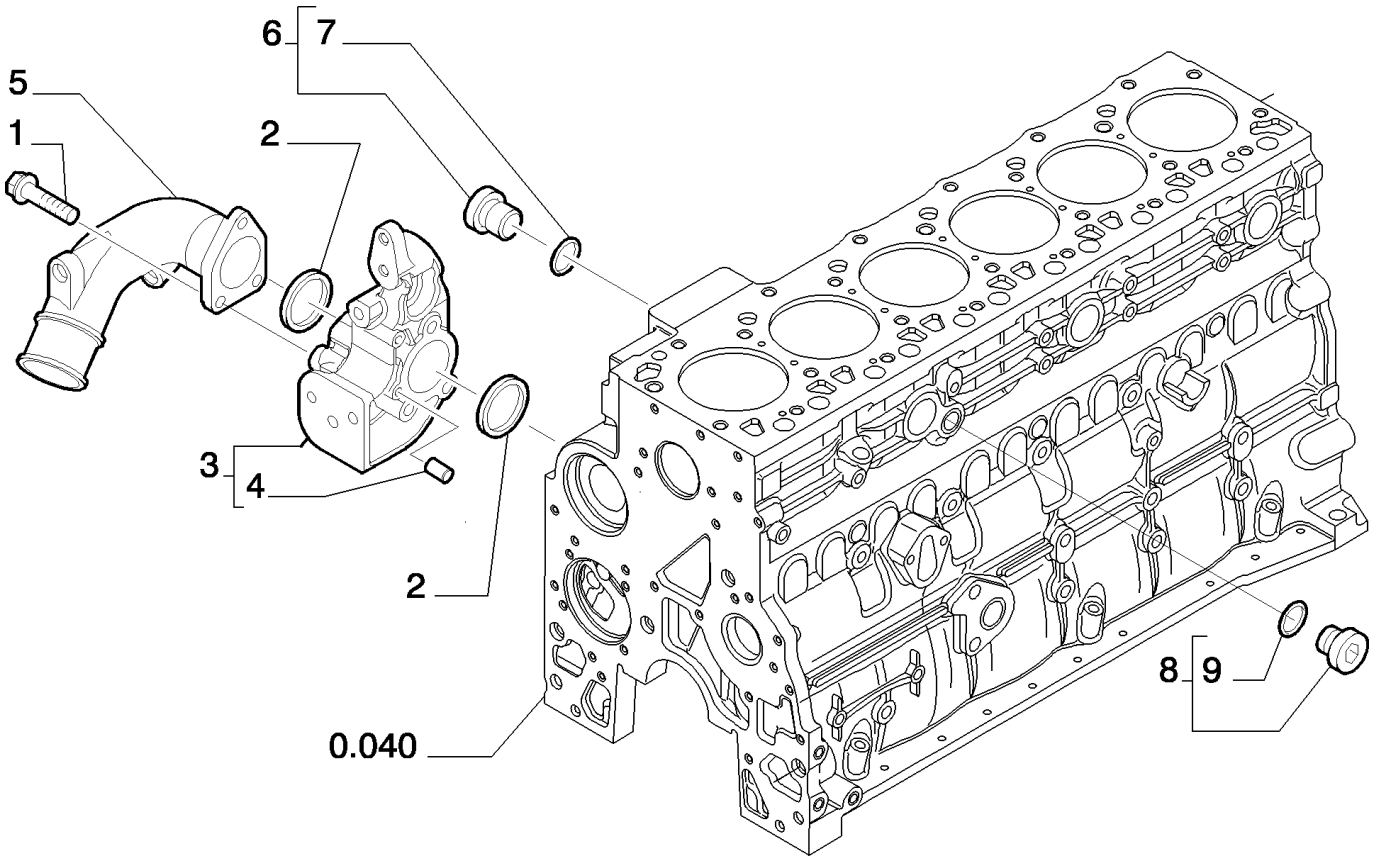

Copyright © New Holland

TUBERIAS - REFRIGERACION DEL MOTOR
PIPING - ENGINE COOLING SYSTEM
PIPING - ENGINE COOLING SYSTEM
PIPING - ENGINE COOLING SYSTEM

R	N	P.N.	MOD	Q	Description Denominacion	Descrizione Beskrivelse	Bezeichnung Denominação	Description Beschrijving	L.C.
1		16593024		3	SCREW, M10X90 TORNILLO	VITE SKRUE	SCHRAUBE PARAFUSO	VIS SCHROEF	040V
2		504062710		2	O-RING JUNTA TÓRICA	ANELLO TOROIDALE O-RING	O-RING O-RING	JOINT TORIQUE O-RING	055A
3		500387647		1	SUPPORT, - ASSY SOPORTE	SUPPORTO BESLAG	STÜTZE SUPORTE	SUPPORT STEUN	300S
4		4895576		2	DOWEL BULÓN	PERNO DYVEL	PASSSTIFT PERNO-GUIA	GOUJON PASPEN	090G
5		504042847		1	ELBOW CODO	GOMITO VINKELRØR	KNIESTÜCK COTOVELO	COUDE KNIESTUK	085G
6		4895392		2	HEX SOCKET PLUG, M18 x 1.5, - Assy TAPÓN DE CABEZA HEX	TAPPO A BRUGOLA SEKSKANTET PROP	INNENSECHSKANTSTOI TAMPÃO SEXTAVADO IN	BOUCHON SIX PANS CR INBUSPLUG	A086
7		4895393		1	O-RING, M15.3 ID x 2.2 Thi JUNTA TÓRICA	ANELLO TOROIDALE O-RING	O-RING O-RING	JOINT TORIQUE O-RING	055A
8		4895625		1	O-RING, M13.3 ID x 2.2 Thi JUNTA TÓRICA	ANELLO TOROIDALE O-RING	O-RING O-RING	JOINT TORIQUE O-RING	055A
9		4895623		1	HEX SOCKET PLUG, M16 x 1.5, - Assy TAPÓN DE CABEZA HEX	TAPPO A BRUGOLA SEKSKANTET PROP	INNENSECHSKANTSTOI TAMPÃO SEXTAVADO IN	BOUCHON SIX PANS CR INBUSPLUG	A086

Copyright © New Holland

0.326	01	p1	03/10

THERMOSTAT - ENGINE COOLING SYSTEM
TERMOSTATO - RAFFREDDAMENTO MOTORE
THERMOSTAT - KUEHLUNG DES MOTORS
THERMOSTAT - REFROIDISSEMENT MOTEUR

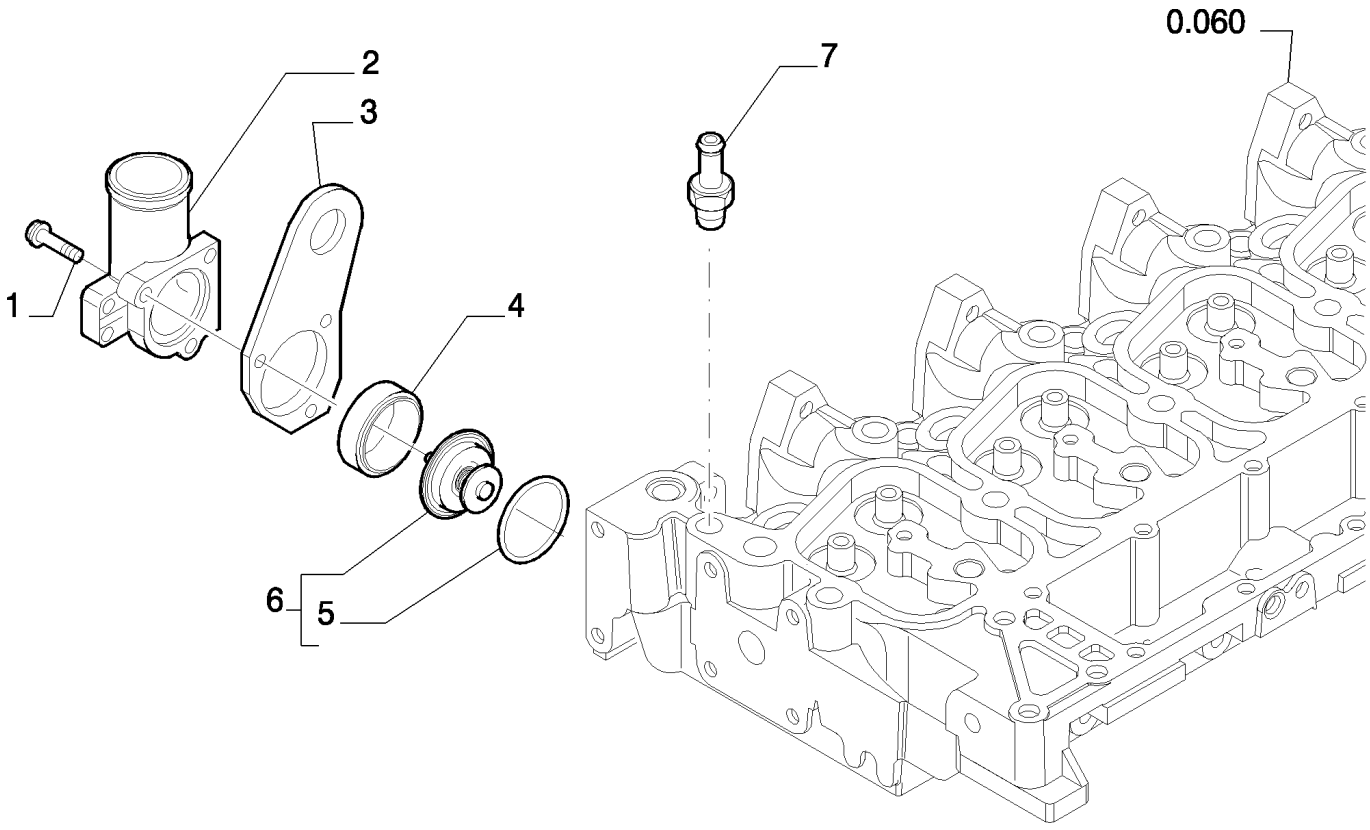

Copyright © New Holland

TERMOSTATO - REFRIGERACION DEL MOTOR
THERMOSTAT - ENGINE COOLING SYSTEM
THERMOSTAT - ENGINE COOLING SYSTEM
THERMOSTAT - ENGINE COOLING SYSTEM

R	N	P.N.	MOD	Q	Description Denominacion	Descrizione Beskrivelse	Bezeichnung Denominação	Description Beschrijving	L.C.
1		4899091		3	SCREW, Hex Flg, M8 x 1.25 x 40				
						VITE	SCHRAUBE	VIS	040V
					TORNILLO	SKRUE	PARAFUSO	SCHROEF	
2		504079269		1	MANIFOLD	COLLETTORE	VERTEILER	COLLECTEUR	198C
					COLECTOR	MANIFOLD	COLECTOR	VERDEELSTUK	
3		504079607		1	BRACKET	STAFFA	HALTERUNG	SUPPORT	225S
					SOPORTE	BESLAG	SUPORTE	STEUN	
4		504078856		1	SEAL	GUARNIZIONE; TENUTA	DICHTUNG	JOINT	132A
					ANILLO DE CIERRE	PAKNING	VEDANTE	AFDICHTING	
5		504030960		1	GASKET	GUARNIZIONE	DICHTUNG	JOINT	123G
					JUNTA	PAKNING	JUNTA	PAKKING	
6		504078966		1	THERMOSTAT, - ASSY, OD=60.8mm				
						TERMOSTATO	THERMOSTAT	THERMOSTAT	096T
					TERMOSTATO	TERMOSTAT	TERMÓSTATO	THERMOSTAAT	
7		504043984		1	FITTING, 1/2"-14 NPTF x M10 Barb				
						RACCORDO	ARMATUR	RACCORD	3300
					ACOPLAMIENTO	FITTING	CONECTOR	AANSLUITING	

Copyright © New Holland

0.340	01	p1	03/10

WATER PUMP - CONTROL
POMPA ACQUA - COMANDO
WASSERPUMPE - BETAETIGUNGSVORRICHT
POMPE A EAU - COMMANDE

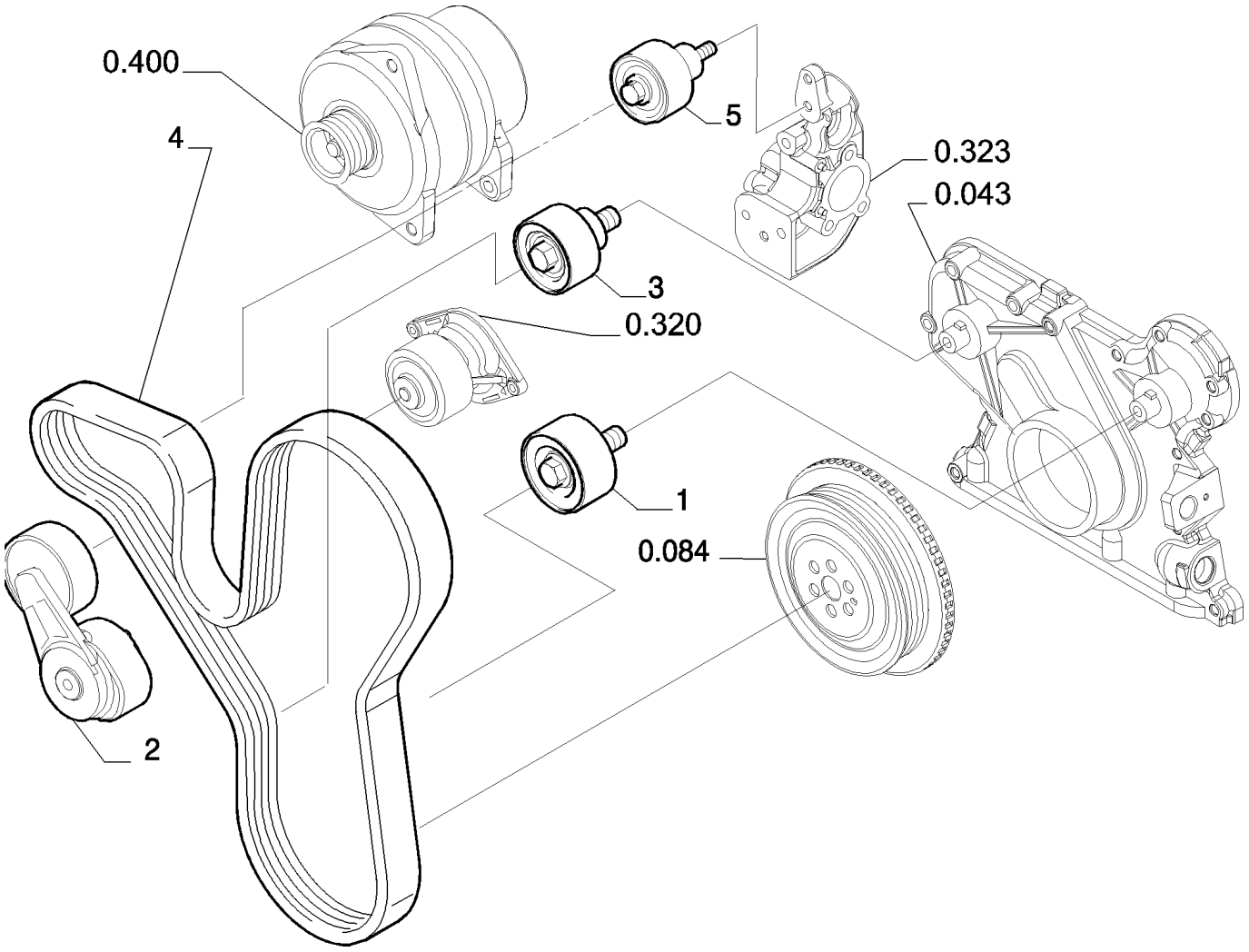

Copyright © New Holland

BOMBA DE AGUA - MANDO
WATER PUMP - CONTROL
WATER PUMP - CONTROL
WATER PUMP - CONTROL

R	N	P.N.	MOD	Q	Description Denominacion	Descrizione Beskrivelse	Bezeichnung Denominação	Description Beschrijving	L.C.
1		504065877		1	BELT TENSIONER TENSOR DE CORREA	TENDICINGHIA REMSTRAMMER	GURTSTRAFFER TENSOR DE CORREIA	TENDEUR DE COURROI RIEMSPANNER	087T
2		504065874		1	BELT TENSIONER TENSOR DE CORREA	TENDICINGHIA REMSTRAMMER	GURTSTRAFFER TENSOR DE CORREIA	TENDEUR DE COURROI RIEMSPANNER	087T
3		504065878		1	SHIFTER ROLLER RODILLO CAMBIADOR	RULLO SELETTORE SKIFTERULLE	SCHALTWALZE ROLDANA	GALET SCHAKELROL	P734
4		2853208		1	BELT CORREA	CINGHIA REM	RIEMEN CORREIA	COURROIE RIEMEN	0660
5		504065879		1	PULLEY POLEA	PULEGGIA REMSKIVE	RIEMENSCHEIBE POLIA	POULIE RIEMSCHIJF	230P

Copyright © New Holland

0.345	01	p1	03/10

FAN DRIVE
COMANDO VENTILATORE
LUEFTERANTRIEB
COMMANDE DE VENTILATEUR

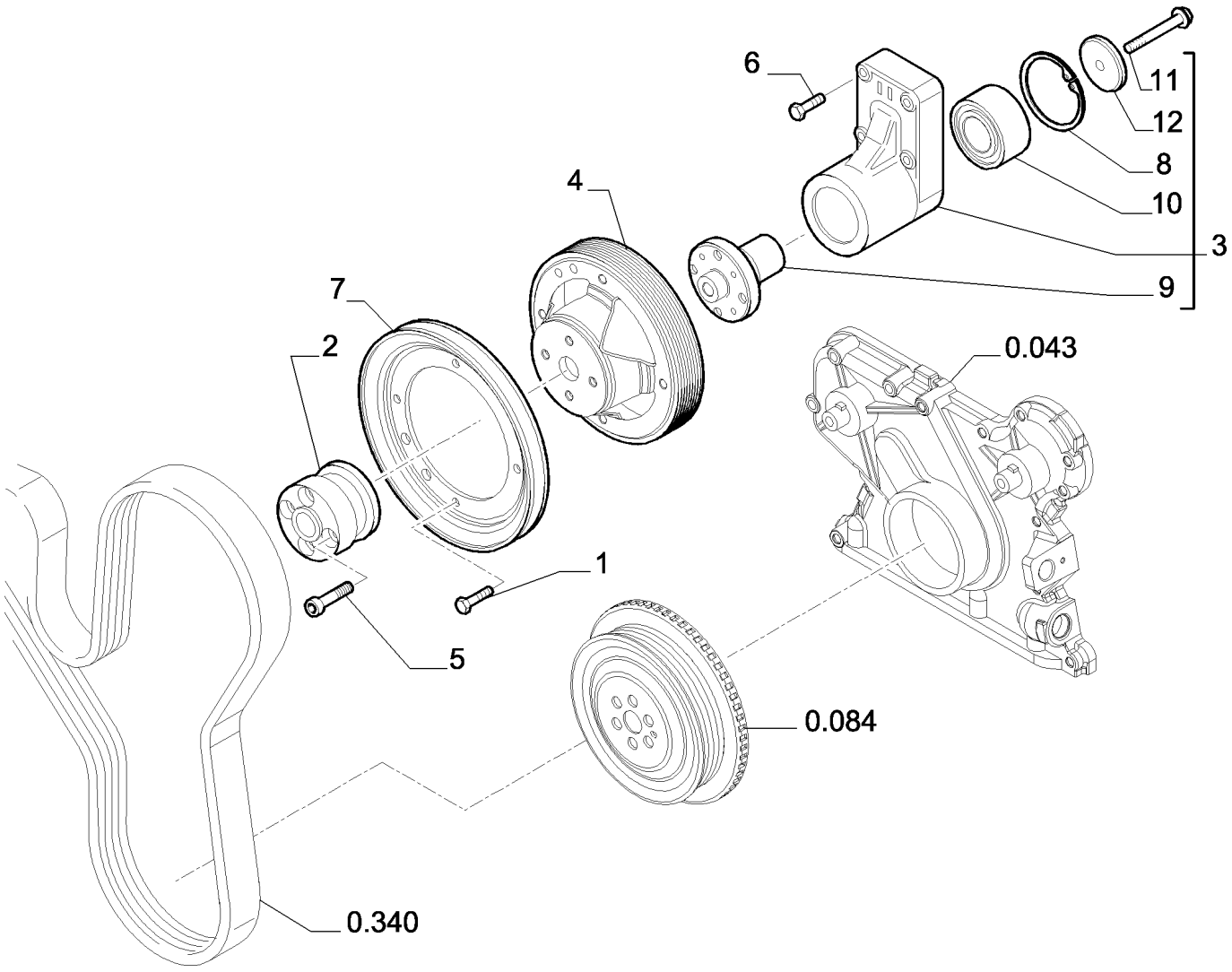

Copyright © New Holland

POLEA DEL VENTILADOR
FAN DRIVE
FAN DRIVE
FAN DRIVE

R	N	P.N.	MOD	Q	Description Denominacion	Descrizione Beskrivelse	Bezeichnung Denominação	Description Beschrijving	L.C.
1		16586324		4	SCREW, M8X20 TORNILLO	VITE SKRUE	SCHRAUBE PARAFUSO	VIS SCHROEF	040V
2		504054732		1	SPACER SEPARADOR	DISTANZIALE AFSTANDSSTYKKE	DISTANZSTÜCK ESPAÇADOR	ENTRETOISE AFSTANDSSTUK	075D
3		504202791		1	SUPPORT, - ASSY SOPORTE	SUPPORTO BESLAG	STÜTZE SUPORTE	SUPPORT STEUN	300S
4		500389850		1	PULLEY POLEA	PULEGGIA REMSKIVE	RIEMENSCHEIBE POLIA	POULIE RIEMSCHIJF	230P
5		4899109		4	SCREW, Hex, M10 x 1.5 x 80 TORNILLO	VITE SKRUE	SCHRAUBE PARAFUSO	VIS SCHROEF	040V
6		4895323		4	FLANGE BOLT, Hex, M8 x 1 x 40 PERNO DE CORONA	BULLONE FLANGIATO FLANGEBOLT	FLANSCHSCHRAUBE PARAFUSO FLANGEAD(	VIS A EMBASE FLENSBOUT	A027
7		500389865		1	PULLEY POLEA	PULEGGIA REMSKIVE	RIEMENSCHEIBE POLIA	POULIE RIEMSCHIJF	230P
8		500395697		1	SNAP RING, M68.2, Int ANILLO DE RESORTE	ANELLO ELASTICO LÅSERING	SPRENGRING ANEL	ANNEAU D'ARRET VEERRING	054A
9		4892426		1	HUB CUBO	MOZZO NAV	NABE CUBO	MOYEU NAAF	135M
10		4892732		1	BALL BEARING RODAMIENTO DE BOLA:	CUSCINETTO A SFERE KUGLELEJE	KUGELLAGER ROLAMENTO DE ESFER	ROULEMENT A BILLES KOGELLAGER	343C
11		16592824		1	SCREW TORNILLO	VITE SKRUE	SCHRAUBE PARAFUSO	VIS SCHROEF	040V
12		4890732		1	RETAINER RETENEDOR	FERMO HOLDER	HALTERUNG RETENTOR	DISPOSITIF DE RETENU HOUDER	109R

Copyright © New Holland

0.350	01	p1	03/10

POWER TAKE OFF
PRESA DI FORZA
NABENANTRIEB
PRISE DE FORCE

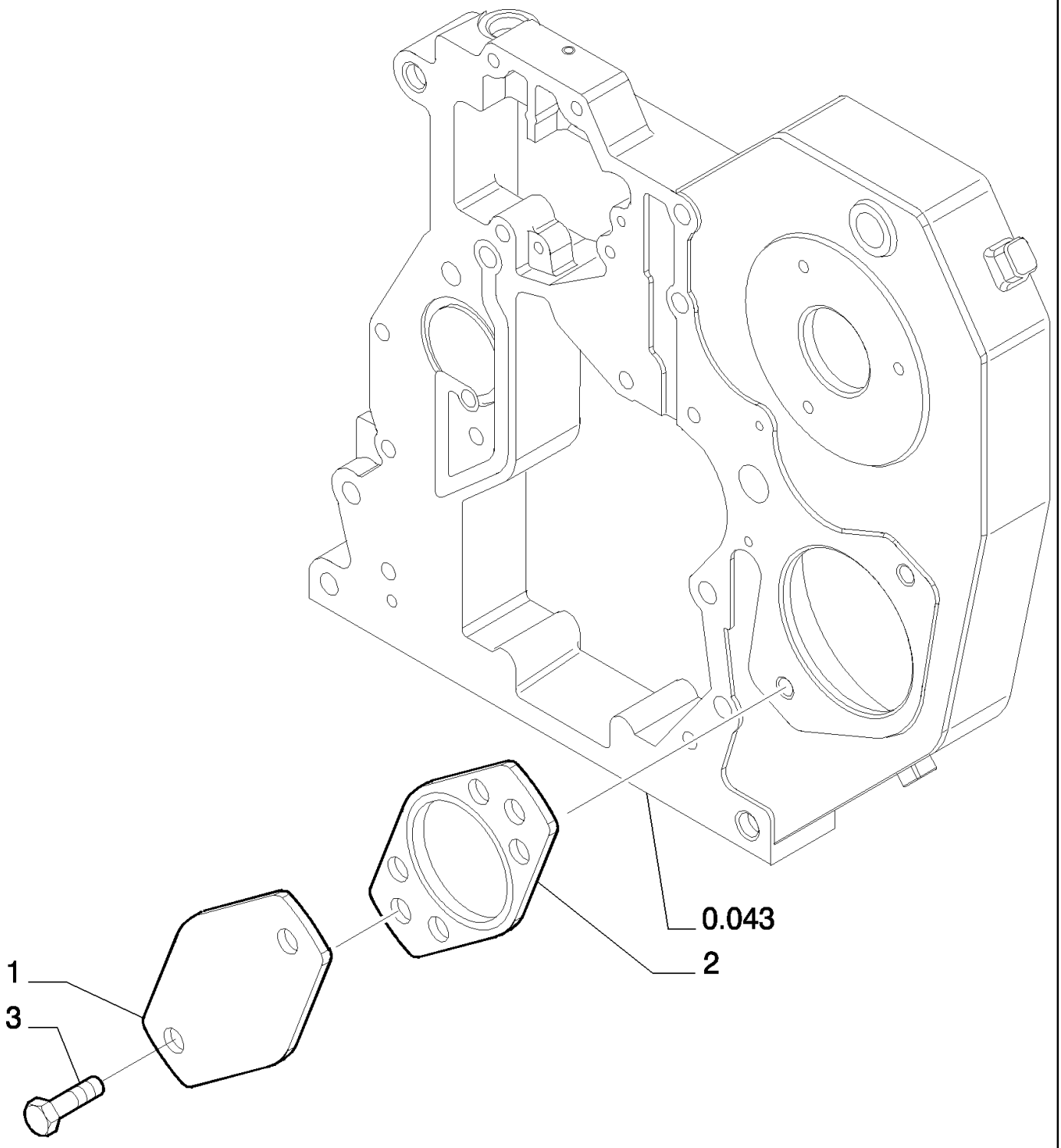

Copyright © New Holland

TOMA DE FUERZA
POWER TAKE OFF
POWER TAKE OFF
POWER TAKE OFF

R	N	P.N.	MOD	Q	Description Denominacion	Descrizione Beskrivelse	Bezeichnung Denominação	Description Beschrijving	L.C.
1		504049033		1	COVER CUBIERTA	COPERCHIO DÆKSEL	ABDECKUNG COBERTURA	COUVERCLE AFSCHERMING	265C
2		4896897		1	GASKET JUNTA	GUARNIZIONE PAKNING	DICHTUNG JUNTA	JOINT PAKKING	123G
3		4899037		2	SCREW TORNILLO	VITE SKRUE	SCHRAUBE PARAFUSO	VIS SCHROEF	040V

Copyright © New Holland

0.360	01	p1	03/10

STARTER MOTOR
MOTORINO AVVIAMENTO
ANLASSER
DEMARREAR

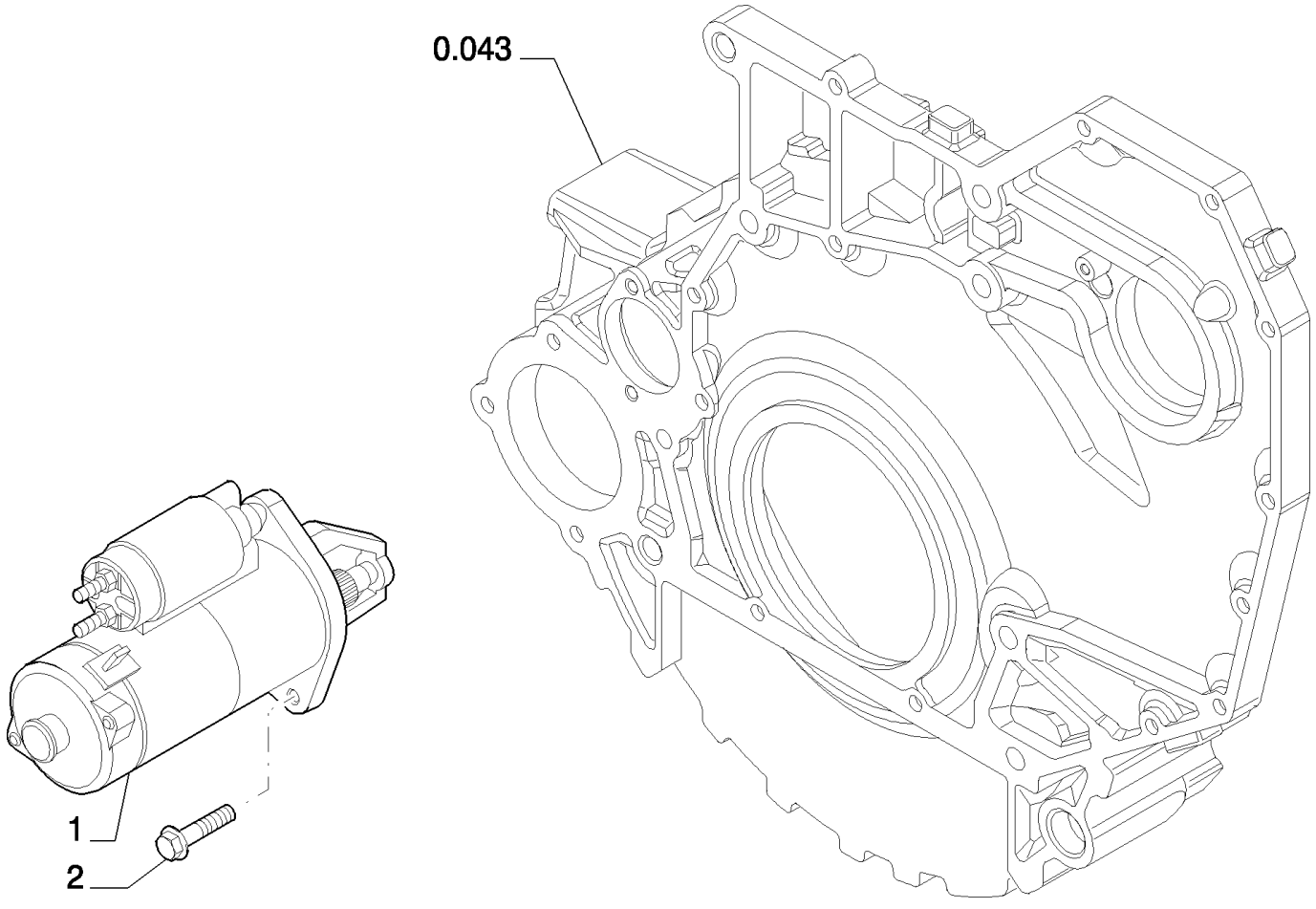

Copyright © New Holland

MOTOR DE ARRANQUE
STARTER MOTOR
STARTER MOTOR
STARTER MOTOR

R	N	P.N.	MOD	Q	Description Denominacion	Descrizione Beskrivelse	Bezeichnung Denominação	Description Beschrijving	L.C.
1	1	504036695		1	STARTER MOTOR MOTOR DE ARRANQUE	MOTORINO DI AVVIAME STARTMOTOR	ANLASSERMOTOR MOTOR DE ARRANQUE	DEMARREUR STARTMOTOR	133M
2		16587224		3	SCREW, M10X1.5X30 TORNILLO	VITE SKRUE	SCHRAUBE PARAFUSO	VIS SCHROEF	040V

(1) ASSY SEE PAGE 2

Copyright © New Holland

0.360	02	p1	03/10

STARTER MOTOR - COMPONENTS
MOTORINO D'AVVIAMENTO - COMPONENTI
ANLASSER - BESTANDTEILE
DEMARREUR - COMPOSANTS

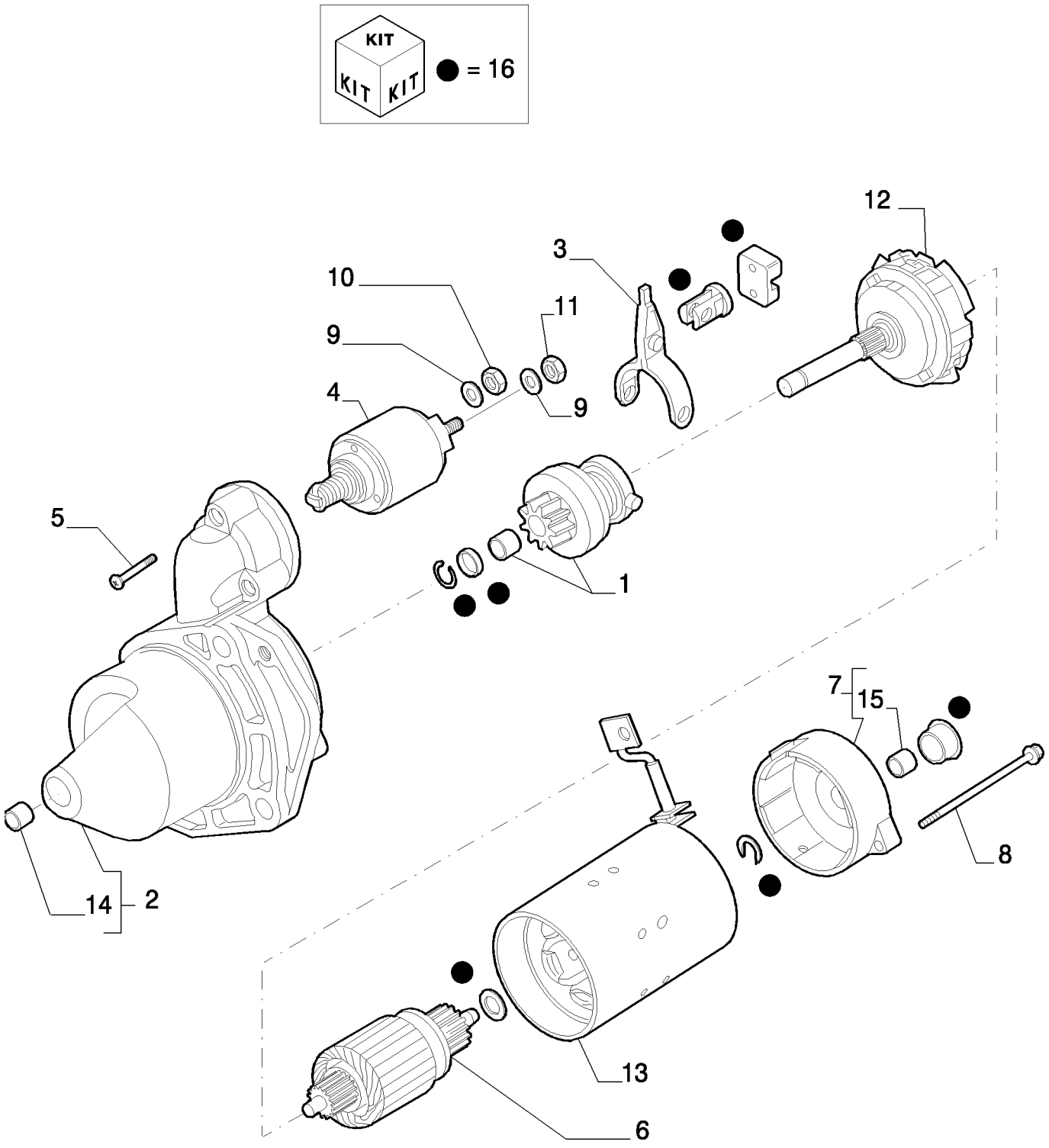

Copyright © New Holland

MOTOR DE ARRANQUE - COMPONENTES
STARTER MOTOR - COMPONENTS
STARTER MOTOR - COMPONENTS
STARTER MOTOR - COMPONENTS

R	N	P.N.	MOD	Q	Description Denominacion	Descrizione Beskrivelse	Bezeichnung Denominação	Description Beschrijving	L.C.
1		42537064		1	PINION, - ASSY PIÑÓN	PIGNONE SPIDSHJUL	RITZEL PINHÃO	PIGNON PIGNON	P045
2		8093957		1	HOUSING, - ASSY ALOJAMIENTO	ALLOGGIAMENTO HUS	GEHÄUSE ALOJAMENTO	CARTER HUIS	014V
3		42537069		1	CLEVIS MOSQUETÓN	FORCELLA DI ATTACCO GAFFELBOLT	SCHÄKEL FORQUILHA	CHAPE GAFFEL	084F
4		8093958		1	SOLENOID SOLENOIDE	SOLENOIDE MAGNETVENTIL	MAGNETSCHALTER SOLENÓIDE	SOLENOIDE SOLENOÏDE	168S
5		42534008		3	SCREW TORNILLO	VITE SKRUE	SCHRAUBE PARAFUSO	VIS SCHROEF	040V
6		42537071		1	SWITCH INTERRUPTOR	INTERRUTTORE KONTAKT	SCHALTER INTERRUPTOR	CONTACTEUR SCHAKELAAR	075I
7		8093959		1	HOUSING, - ASSY ALOJAMIENTO	ALLOGGIAMENTO HUS	GEHÄUSE ALOJAMENTO	CARTER HUIS	014V
8		42537076		2	SCREW TORNILLO	VITE SKRUE	SCHRAUBE PARAFUSO	VIS SCHROEF	040V
9		42534012		2	LOCK WASHER ARANDELA DE BLOQUE	RONDELLA DI SICUREZ LÅSESKIVE	SICHERUNGSSCHEIBE ANILHA DE RETENÇÃO	RONDELLE FREIN BORGRING	132R
10		1306937		1	NUT TUERCA	DADO MØTRIK	MUTTER PORCA	ECROU MOER	010D
11		42537822		1	NUT TUERCA	DADO MØTRIK	MUTTER PORCA	ECROU MOER	010D
12		8093960		1	COVER, - ASSY CUBIERTA	COPERCHIO DÆKSEL	ABDECKUNG COBERTURA	COUVERCLE AFSCHERMING	265C
13		42546435		1	BLOCK BLOQUE	BLOCCO MOTORBLOK	BLOCK BLOCO	BLOC BLOK	074B
14		8190143		1	BUSHING CASQUILLO	BOCCOLA BØSNING	BUCHSE CASQUILHO	BAGUE BUS	095B
15		42535275		1	BUSHING CASQUILLO	BOCCOLA BØSNING	BUCHSE CASQUILHO	BAGUE BUS	095B
16		42537082		1	STARTER MTR REPAIR KIT KIT REP. MOTOR ARRAI	KIT RIPAR. MOT. AVVIAI STARMOTOR REP. SÆT	ANLASSERMOT-REPAR/ KIT MOTOR ARRANQUE	KIT REPAR. DEMARREU REPARAT.KIT V. STARTI	019K

STARTER MOTOR (504043695)

E215B

Copyright © New Holland

0.400	01	p1	03/10

ALTERNATOR
ALTERNATORE
DREHSTROMLICHTMASCHINE
ALTERNATEUR

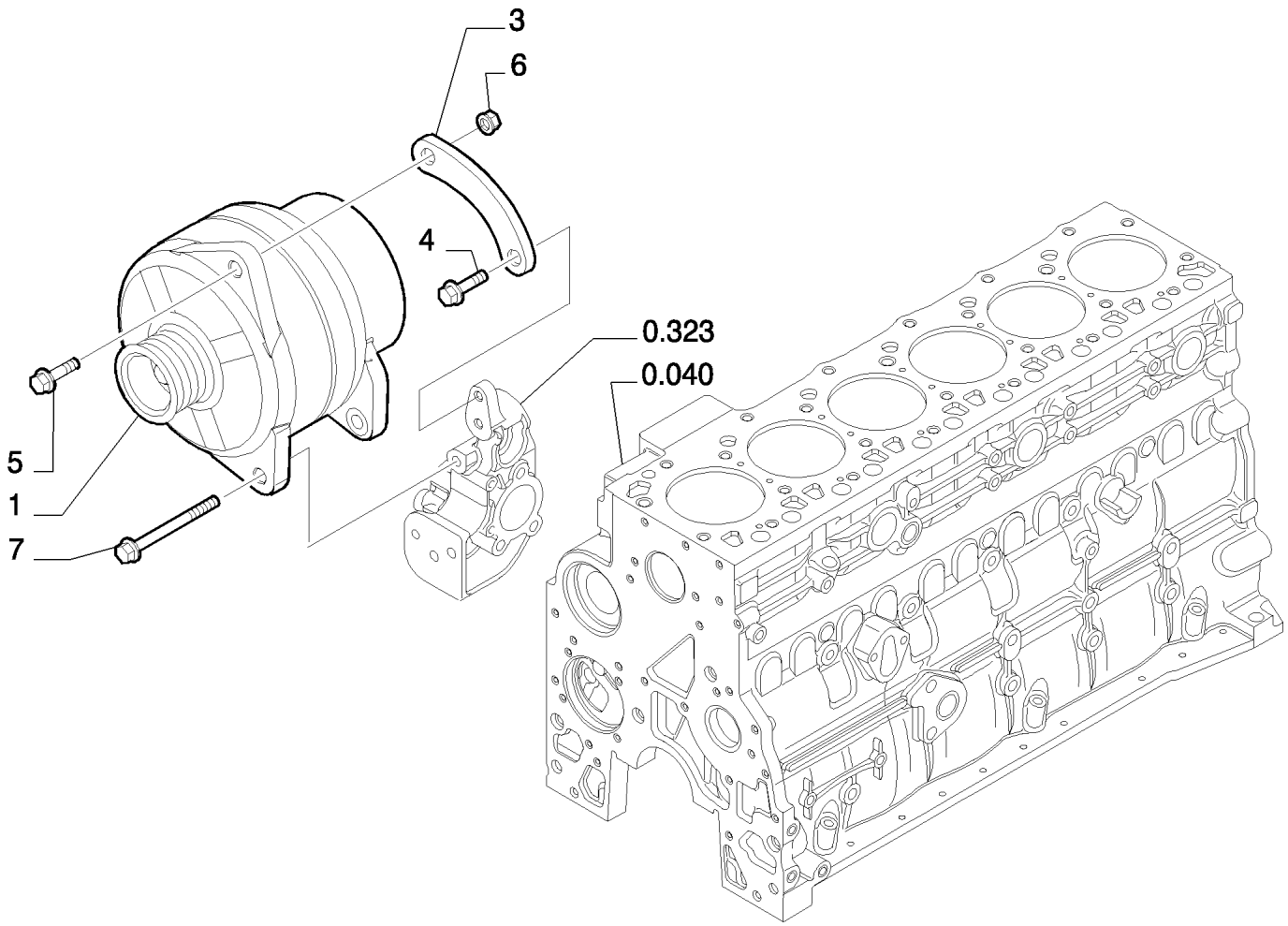

Copyright © New Holland

ALTERNADOR
ALTERNATOR
ALTERNATOR
ALTERNATOR

R	N	P.N.	MOD	Q	Description Denominacion	Descrizione Beskrivelse	Bezeichnung Denominação	Description Beschrijving	L.C.
1	1	**4892318**		1	ALTERNATOR ALTERNADOR	ALTERNATORE GENERATOR	LICHTMASCHINE ALTERNADOR	ALTERNATEUR DYNAMO	025A
3		**4893840**		1	BRACKET SOPORTE	STAFFA BESLAG	HALTERUNG SUPORTE	SUPPORT STEUN	225S
4		**4895291**		1	SCREW, Hex Flg, M10 x 1.5 x 20 VITE TORNILLO	SCHRAUBE SKRUE	VIS SCHROEF	040V
5		**4899093**		1	SCREW, Hex Flg, M10 x 1.5 x 30 VITE TORNILLO	SCHRAUBE SKRUE	VIS SCHROEF	040V
6		**4895166**		1	NUT, M10X1.5 TUERCA	DADO MØTRIK	MUTTER PORCA	ECROU MOER	010D
7		**4899122**		1	SCREW, Hex Flg, M10 x 1.5 x 110 VITE TORNILLO	SCHRAUBE SKRUE	VIS SCHROEF	040V

(1) ASSY SEE PAGE 2

Copyright © New Holland

0.400	02	p1	03/10

ALTERNATOR - COMPONENTS
ALTERNATORE - COMPONENTI
DREHSTROMLICHTMASCHINE - BESTANDTEILE
ALTERNATEUR - COMPOSANTS

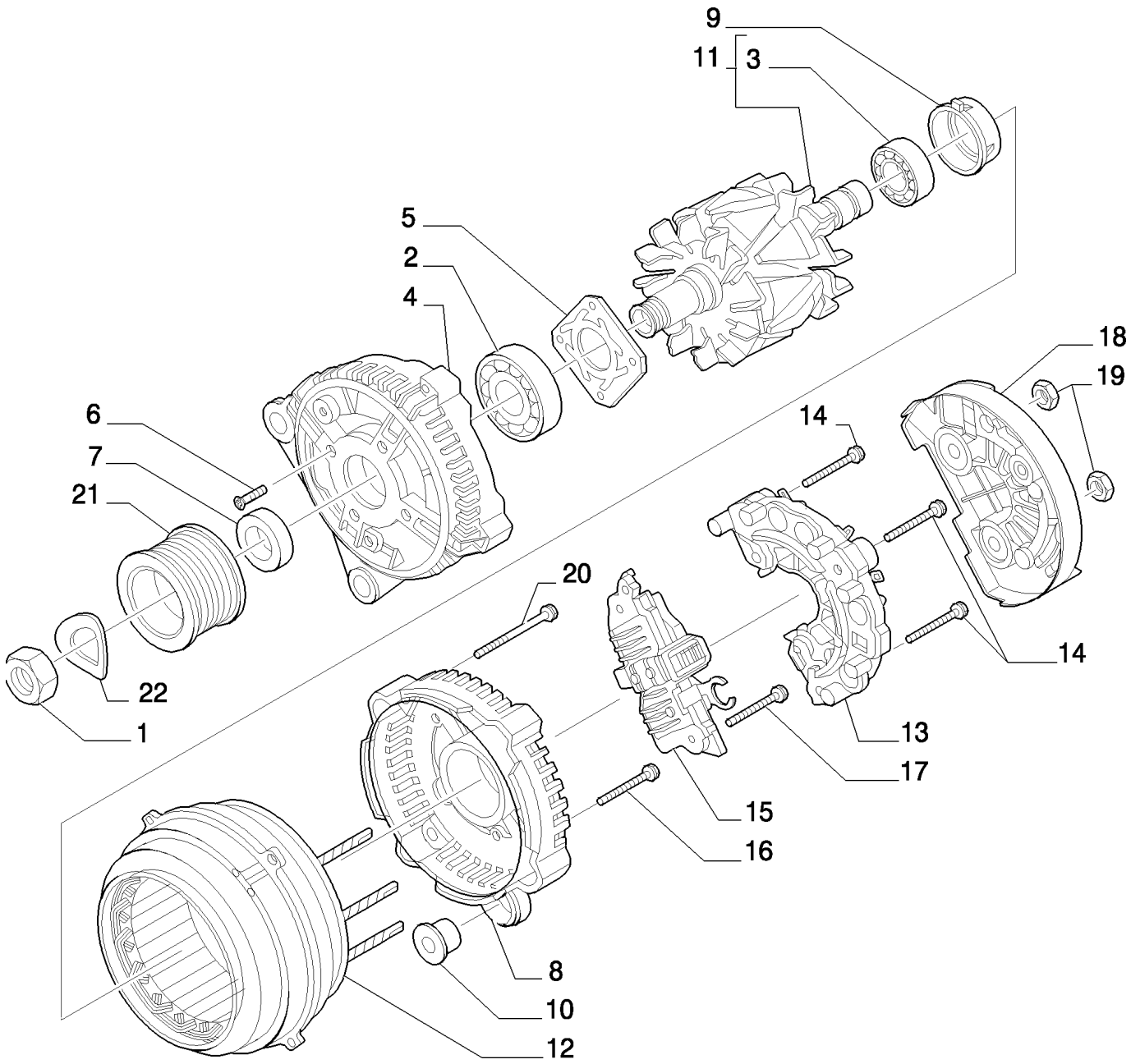

Copyright © New Holland

ALTERNADOR - COMPONENTES
ALTERNATOR - COMPONENTS
ALTERNATOR - COMPONENTS
ALTERNATOR - COMPONENTS

R	N	P.N.	MOD	Q	Description Denominacion	Descrizione Beskrivelse	Bezeichnung Denominação	Description Beschrijving	L.C.
1		1113178		1	NUT, M16X1.5 TUERCA	DADO MØTRIK	MUTTER PORCA	ECROU MOER	010D
2		2991636		1	BEARING COJINETE	CUSCINETTO LEJE	LAGER ROLAMENTO	ROULEMENT LAGER	0600
3		2991637		1	BEARING COJINETE	CUSCINETTO LEJE	LAGER ROLAMENTO	ROULEMENT LAGER	0600
4		42537056		1	HOUSING ALOJAMIENTO	ALLOGGIAMENTO HUS	GEHÄUSE ALOJAMENTO	CARTER HUIS	014V
5		42537057		1	RETAINING PLATE PLACA DE RETENCIÓN	PIASTRA DI TENUTA FASTSPÆNDINGSPLADI	HALTEPLATTE PLACA DE FIXAÇÃO	PLAQUE DE RETENUE BEVESTIGINGSPLAAT	114P
6		42537058		4	SCREW TORNILLO	VITE SKRUE	SCHRAUBE PARAFUSO	VIS SCHROEF	040V
7		42533805		1	SPACER SEPARADOR	DISTANZIALE AFSTANDSSTYKKE	DISTANZSTÜCK ESPAÇADOR	ENTRETOISE AFSTANDSSTUK	075D
8		42537670		1	HOUSING ALOJAMIENTO	ALLOGGIAMENTO HUS	GEHÄUSE ALOJAMENTO	CARTER HUIS	014V
9		42533807		1	CAP TAPÓN	TAPPO TANKDÆKSEL	KAPPE TAMPÃO	CAPUCHON DOP	052T
10		42537051		2	BUSHING CASQUILLO	BOCCOLA BØSNING	BUCHSE CASQUILHO	BAGUE BUS	095B
11		42537060		1	ROTOR, - ASSY ROTOR	ROTORE ROTOR	ROTOR ROTOR	ROTOR ROTOR	145R
12		42537061		1	STATOR ESTATOR	STATORE STATOR	STATOR ESTATOR	STATOR STATOR	8480
13		42537054		1	RECTIFIER RECTIFICADOR	RADDRIZZATORE ENSRETTER	GLEICHRICHTER RECTIFICADOR	REDRESSEUR GELIJKRICHTER	032R
14		42537878		3	SCREW TORNILLO	VITE SKRUE	SCHRAUBE PARAFUSO	VIS SCHROEF	040V
15		42537055		1	VOLTAGE REGULATOR REGULADOR DE TENSIC	REGOLATORE DI TENSI SPÆNDINGSREGULATC	SPANNUNGSREGLER REGULADOR DE TENSÃ	REGULATEUR DE TENS SPANNINGSREGELAAR	169R
16		42536305		1	SCREW TORNILLO	VITE SKRUE	SCHRAUBE PARAFUSO	VIS SCHROEF	040V
17		42536304		2	SCREW TORNILLO	VITE SKRUE	SCHRAUBE PARAFUSO	VIS SCHROEF	040V
18		42533816		1	COVER CUBIERTA	COPERCHIO DÆKSEL	ABDECKUNG COBERTURA	COUVERCLE AFSCHERMING	265C
19		42533817		2	NUT TUERCA	DADO MØTRIK	MUTTER PORCA	ECROU MOER	010D
20		42533819		4	SCREW TORNILLO	VITE SKRUE	SCHRAUBE PARAFUSO	VIS SCHROEF	040V
21		42535631		1	PULLEY POLEA	PULEGGIA REMSKIVE	RIEMENSCHEIBE POLIA	POULIE RIEMSCHIJF	230P
22		42531183		1	WASHER ARANDELA	RONDELLA FLADSKIVE	UNTERLEGSCHEIBE ANILHA	RONDELLE SLUITRING	131R

ALTERNATOR ASSY P/N 4892318

E215B

Copyright © New Holland

0.450	01	p1	03/10

HOOKS - ENGINE
GANCI MANOVRA - MOTORE
ANKERHAKEN - MOTOR
CROCHETS DE MANOEUVRE - MOTEUR

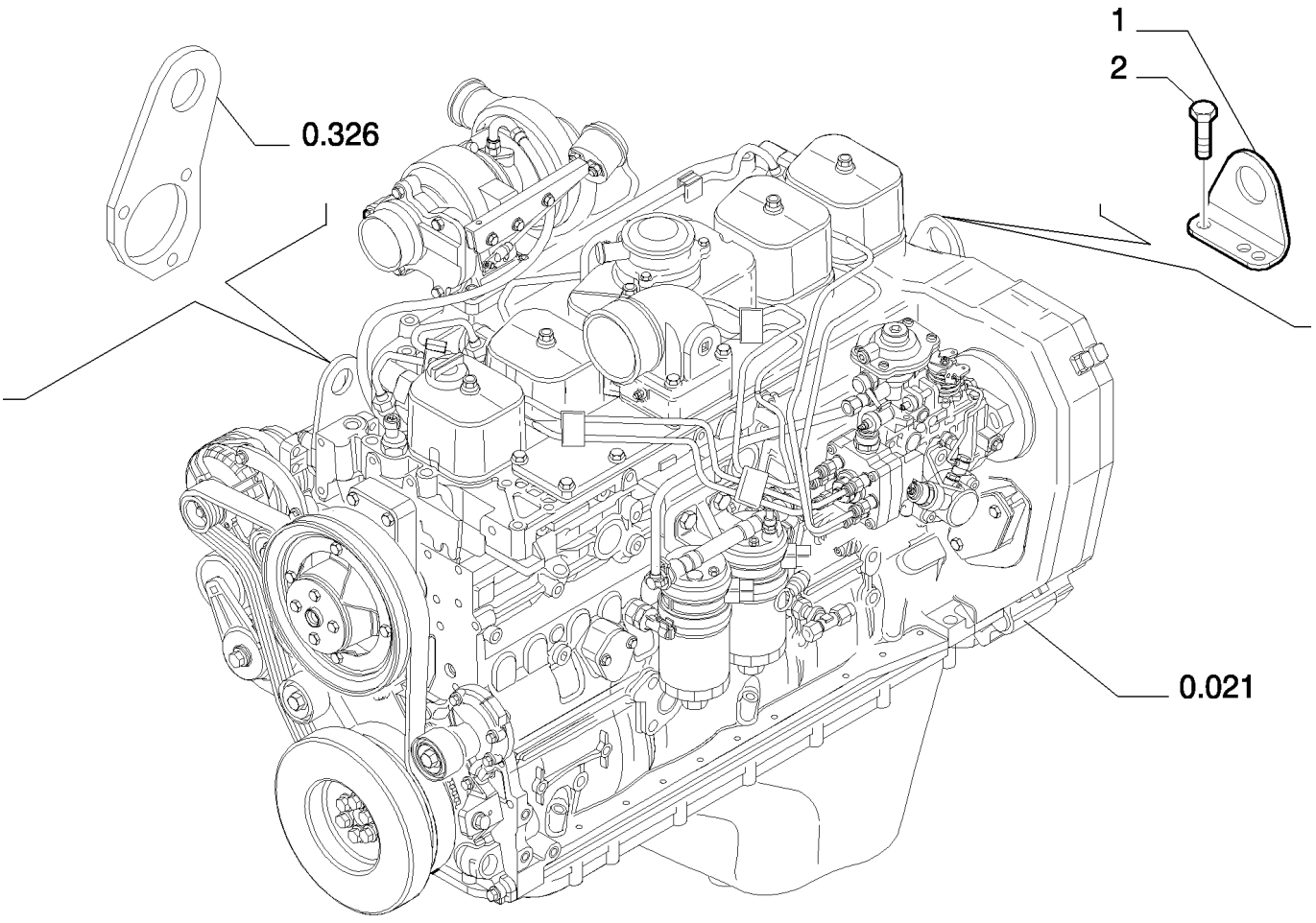

Copyright © New Holland

GANCHOS DE MANOIBRA - MOTOR
HOOKS - ENGINE
HOOKS - ENGINE
HOOKS - ENGINE

R	N	P.N.	MOD	Q	Description Denominacion	Descrizione Beskrivelse	Bezeichnung Denominação	Description Beschrijving	L.C.
1		504026078		1	LIFTING RING ANILLO DE ELEVACIÓN	ANELLO DI SOLLEVAME LØFTERING	HUBÖSE ANEL DE ELEVAÇÃO	ANNEAU DE LEVAGE HEFOOG	P747
2		4899073		2	SCREW, Hex Flg, M12 x 1.75 x 30 VITE TORNILLO	 SKRUE	 SCHRAUBE PARAFUSO	 VIS SCHROEF	040V

Copyright © New Holland

Copyright © New Holland

SECTION INDEX
Superstructure

1.000	01	UPPER FRAME
1.000	02	UPPER FRAME
1.000	03	UPPER FRAME
1.000	04	UPPER FRAME
1.000	05	UPPER FRAME
1.010	01	FUEL TANK
1.010	02	PIPING FUEL
1.016	01	FUEL TRANSFER PUMP
1.016	02	FUEL TRANSFER PUMP - COMPONENTS
1.020	01	OIL TANK
1.030	01	HYDRAULIC PUMP
1.030	02	HYDRAULIC PUMP - COMPONENTS
1.030	03	HYDRAULIC PUMP - COMPONENTS
1.030	04	HYDRAULIC PUMP - COMPONENTS
1.030	05	HYDRAULIC PUMP - COMPONENTS
1.030	06	HYDRAULIC PUMP - COMPONENTS
1.040	01	SWING REDUCTION UNIT
1.040	02	SWING REDUCTION UNIT - COMPONENTS
1.040	03	SWING REDUCTION UNIT - COMPONENTS
1.050	01	HYDRAULIC CONTROL VALVE
1.050	02	PIPING PILOT - DISTRIBUTOR - VERSION (01-02-03)
1.050	03	PIPING PILOT - DISTRIBUTOR - VERSION (01-02-03)
1.050	04	PIPING PILOT - DISTRIBUTOR - VERSION (01-02-03)
1.050	05	HYDRAULIC CONTROL VALVE - COMPONENTS
1.050	06	HYDRAULIC CONTROL VALVE - COMPONENTS
1.050	07	HYDRAULIC CONTROL VALVE - COMPONENTS
1.050	08	HYDRAULIC CONTROL VALVE - COMPONENTS
1.050	09	HYDRAULIC CONTROL VALVE - COMPONENTS
1.050	10	HYDRAULIC CONTROL VALVE - COMPONENTS
1.050	11	HYDRAULIC CONTROL VALVE - COMPONENTS
1.050	12	HYDRAULIC CONTROL VALVE - COMPONENTS
1.050	13	HYDRAULIC CONTROL VALVE - COMPONENTS
1.050	14	HYDRAULIC CONTROL VALVE - COMPONENTS
1.051	01	HYDRAULIC CONTROL VALVE - VERSION (04-05-06)
1.051	02	HYDRAULIC CONTROL VALVE - COMPONENTS - VERSION (04-05-06)
1.051	03	HYDRAULIC CONTROL VALVE - COMPONENTS - VERSION (04-05-06)
1.060	01	HYDRAULIC PUMP PILOT SYSTEM PIPES
1.060	02	HYDRAULIC PUMP PILOT SYSTEM PIPES - COMPONENTS
1.060	03	HYDRAULIC PUMP PILOT SYSTEM PIPES
1.060	04	HYDRAULIC PUMP PILOT SYSTEM PIPES
1.061	01	OIL RETURN PIPES
1.061	02	OIL RETURN PIPES
1.065	01	HYDRAULIC LINES SWIVEL
1.070	01	CONTROLS
1.070	02	CONTROLS
1.080	01	PILOT PIPING (1)
1.080	02	PILOT PIPING (1)
1.080	03	PILOT PIPING (1) - VERSION (04-05-06)
1.081	01	PILOT PIPING (2)
1.081	02	PILOT PIPING (2)
1.081	03	PILOT PIPING (2) - COMPONENTS
1.082	01	BLOCK - OPT - VERSION (01-02-03)
1.082	02	BLOCK - OPT - VERSION (04-05-06)
1.083	01	PILOT PIPING (3)
1.083	02	PILOT PIPING (3)

Copyright © New Holland

SECTION INDEX
Superstructure

1.083	03	PILOT PIPING (3)
1.083	04	PILOT PIPING (3) - VERSION (04-05-06)
1.085	01	PILOT PIPING (5) - VERSION (04-05-06)
1.090	01	PILOT PIPING - MANIPULATOR
1.090	02	PILOT PIPING - MANIPULATOR
1.090	03	PILOT PIPING - MANIPULATOR - COMPONENTS
1.091	01	PILOT PIPING - PEDAL - VERSION (04-05-06)
1.091	02	PILOT PIPING - PEDAL - COMPONENTS - VERSION (04-05-06)
1.092	01	TRAVEL PILOT SYSTEM PIPES
1.092	02	TRAVEL PILOT SYSTEM PIPES - COMPONENTS
1.093	01	FIXINGS FOR SERVOCONTROL PIPES
1.200	01	DASHBOARD
1.200	02	DASHBOARD
1.200	03	DASHBOARD
1.200	04	DASHBOARD
1.220	01	ELECTRIC SYSTEM
1.220	02	ELECTRIC SYSTEM - COMPONENTS
1.220	03	ELECTRIC SYSTEM
1.220	04	ELECTRIC SYSTEM
1.220	05	ELECTRIC SYSTEM
1.220	06	ELECTRIC SYSTEM
1.220	07	ELECTRIC SYSTEM
1.220	08	ELECTRIC SYSTEM
1.220	09	ELECTRIC SYSTEM
1.220	10	ELECTRIC SYSTEM
1.220	11	ELECTRIC SYSTEM
1.220	12	ELECTRIC SYSTEM
1.220	13	ELECTRIC SYSTEM
1.220	14	ELECTRIC SYSTEM
1.220	15	ELECTRIC SYSTEM
1.220	16	ELECTRIC SYSTEM
1.230	01	WINDOW WASHER
1.250	01	CAB
1.250	02	CAB
1.250	03	CAB
1.250	04	SEAT BELT
1.250	05	CAB GUARD
1.250	06	CAB MIRROR
1.250	07	ARMREST
1.260	01	PANEL ASSY, INSTRUMENT
1.260	02	PANEL ASSY, INSTRUMENT
1.260	03	PANEL ASSY, INSTRUMENT
1.260	04	PANEL ASSY, INSTRUMENT - COMPONENTS
1.260	05	PANEL ASSY, INSTRUMENT
1.270	01	FLOOR-CAB
1.270	02	FLOOR-CAB - VERSION (01-02-03)
1.270	03	FLOOR-CAB - VERSION (04-05-06)
1.280	01	RADIO
1.295	01	AIR CONDITIONING
1.295	02	AIR CONDITIONING
1.295	03	AIR CONDITIONING
1.295	04	AIR CONDITIONING
1.295	05	AIR CONDITIONING
1.300	01	HOODS - GUARDS
1.300	02	HOODS - GUARDS

Copyright © New Holland

SECTION INDEX
Superstructure

1.300	03	HOODS - GUARDS
1.300	04	HOODS - GUARDS
1.300	05	HOODS - GUARDS
1.300	06	HOODS - GUARDS
1.300	07	HOODS - GUARDS
1.300	08	HOODS - GUARDS
1.300	09	HOODS - GUARDS
1.300	10	HOODS - GUARDS
1.300	11	HOODS - MIRROR, REAR-VIEW
1.300	12	HOODS - MIRROR, REAR-VIEW

Copyright © New Holland

1.000	01	p1	03/10

UPPER FRAME
TELAIO SUPERIORE
RAHMENOBEN
CHASSIS SUPERIEUR

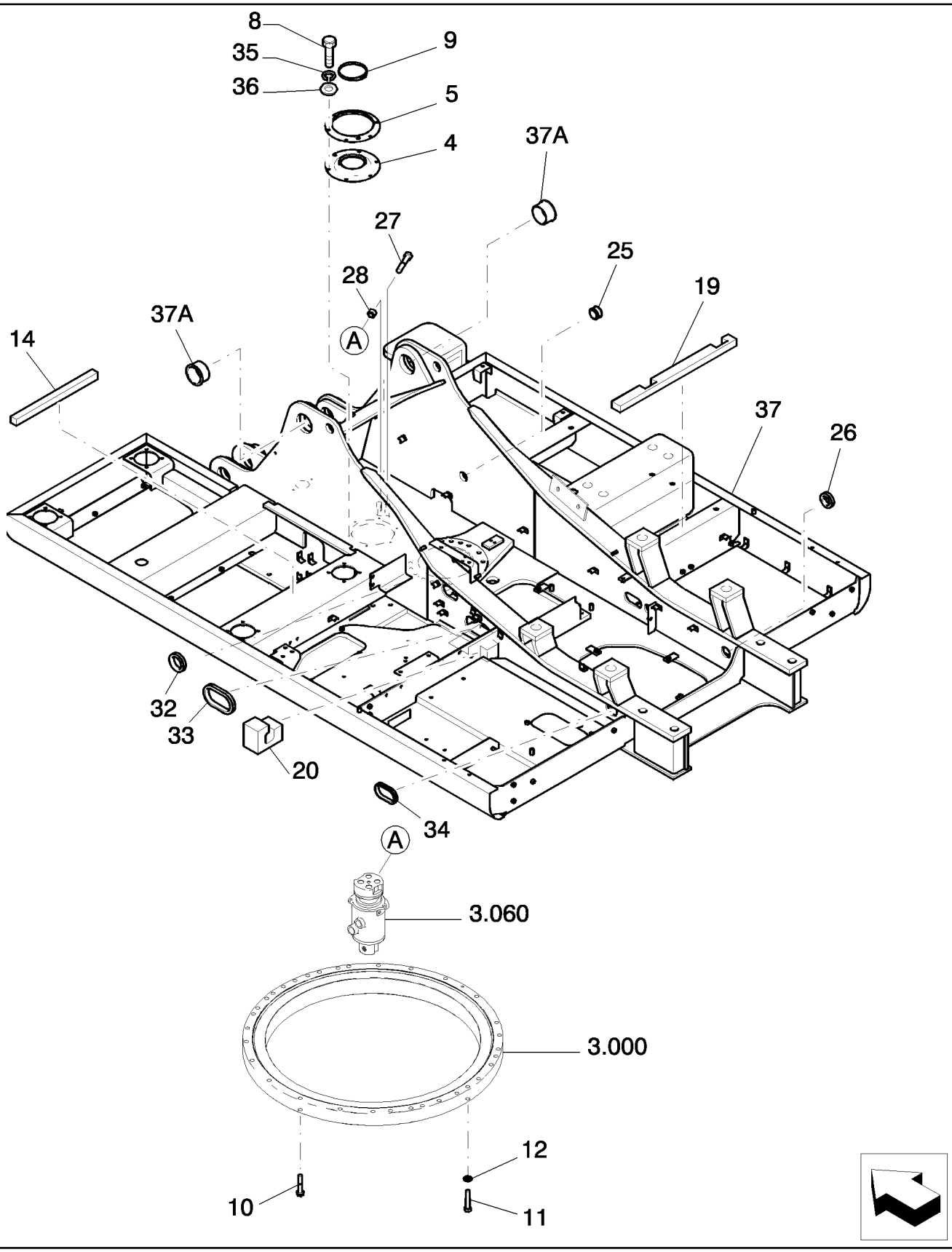

Copyright © New Holland

CHASIS SUPERIOR
UPPER FRAME
UPPER FRAME
UPPER FRAME

R	N	P.N.	MOD	Q	Description Denominacion	Descrizione Beskrivelse	Bezeichnung Denominação	Description Beschrijving	L.C.
4		87638740		1	GASKET JUNTA	GUARNIZIONE PAKNING	DICHTUNG JUNTA	JOINT PAKKING	123G
5		87369423		1	PLATE PLACA	PIASTRA PLADE	PLATTE CHAPA	PLAQUE PLAAT	105P
8		11106234		6	BOLT, Hex, M10 x 25, 10.9, Full Thd PERNO	BULLONE BOLT	SCHRAUBE PARAFUSO	VIS BOUT	140B
9		72955421		1	CLIP ABRAZADERA	FERMO KLIPS	KLAMMER FIXADOR	COLLIER KLEM	045F
10		11125774		32	SCREW TORNILLO	VITE SKRUE	SCHRAUBE PARAFUSO	VIS SCHROEF	040V
11		HS53C20105G1		1	CAP TAPÓN	TAPPO TANKDÆKSEL	KAPPE TAMPÃO	CAPUCHON DOP	052T
12		71415214		1	WASHER ARANDELA	RONDELLA FLADSKIVE	UNTERLEGSCHEIBE ANILHA	RONDELLE SLUITRING	131R
14		{XLQ52F01761P1}		1					
19		87539083		1	INSULATOR AISLADOR	ISOLATORE ISOLATOR	ISOLATOR ISOLADOR	ISOLANT ISOLATIE	085I
20		87539082		1	INSULATOR AISLADOR	ISOLATORE ISOLATOR	ISOLATOR ISOLADOR	ISOLANT ISOLATIE	085I
25		72207066		1	INSULATOR AISLADOR	ISOLATORE ISOLATOR	ISOLATOR ISOLADOR	ISOLANT ISOLATIE	085I
26		87537863		1	GASKET JUNTA	GUARNIZIONE PAKNING	DICHTUNG JUNTA	JOINT PAKKING	123G
27		15246234		1	SCREW TORNILLO	VITE SKRUE	SCHRAUBE PARAFUSO	VIS SCHROEF	040V
28		12164521		1	NUT, M24 x 2, Cl 10 TUERCA	DADO MØTRIK	MUTTER PORCA	ECROU MOER	010D
32		87549842		1	GASKET JUNTA	GUARNIZIONE PAKNING	DICHTUNG JUNTA	JOINT PAKKING	123G
33		87549843		1	GASKET JUNTA	GUARNIZIONE PAKNING	DICHTUNG JUNTA	JOINT PAKKING	123G
34		87549844		1	GASKET JUNTA	GUARNIZIONE PAKNING	DICHTUNG JUNTA	JOINT PAKKING	123G
35		10516874		6	LOCK WASHER ARANDELA DE BLOQUE	RONDELLA DI SICUREZ LÅSESKIVE	SICHERUNGSSCHEIBE ANILHA DE RETENÇÃO	RONDELLE FREIN BORGRING	132R
36		14496631		6	WASHER, M10 x 21 x 2 ARANDELA	RONDELLA FLADSKIVE	UNTERLEGSCHEIBE ANILHA	RONDELLE SLUITRING	131R
37		84273175		1	FRAME, - ASSY BASTIDOR	TELAIO RAMME	GESTELL ESTRUTURA	CHASSIS RAAM	077T
37A		72230470		2	BUSHING CASQUILLO	BOCCOLA BØSNING	BUCHSE CASQUILHO	BAGUE BUS	095B

Copyright © New Holland

1.000	02	p1	03/10

UPPER FRAME
TELAIO SUPERIORE
RAHMENOBEN
CHASSIS SUPERIEUR

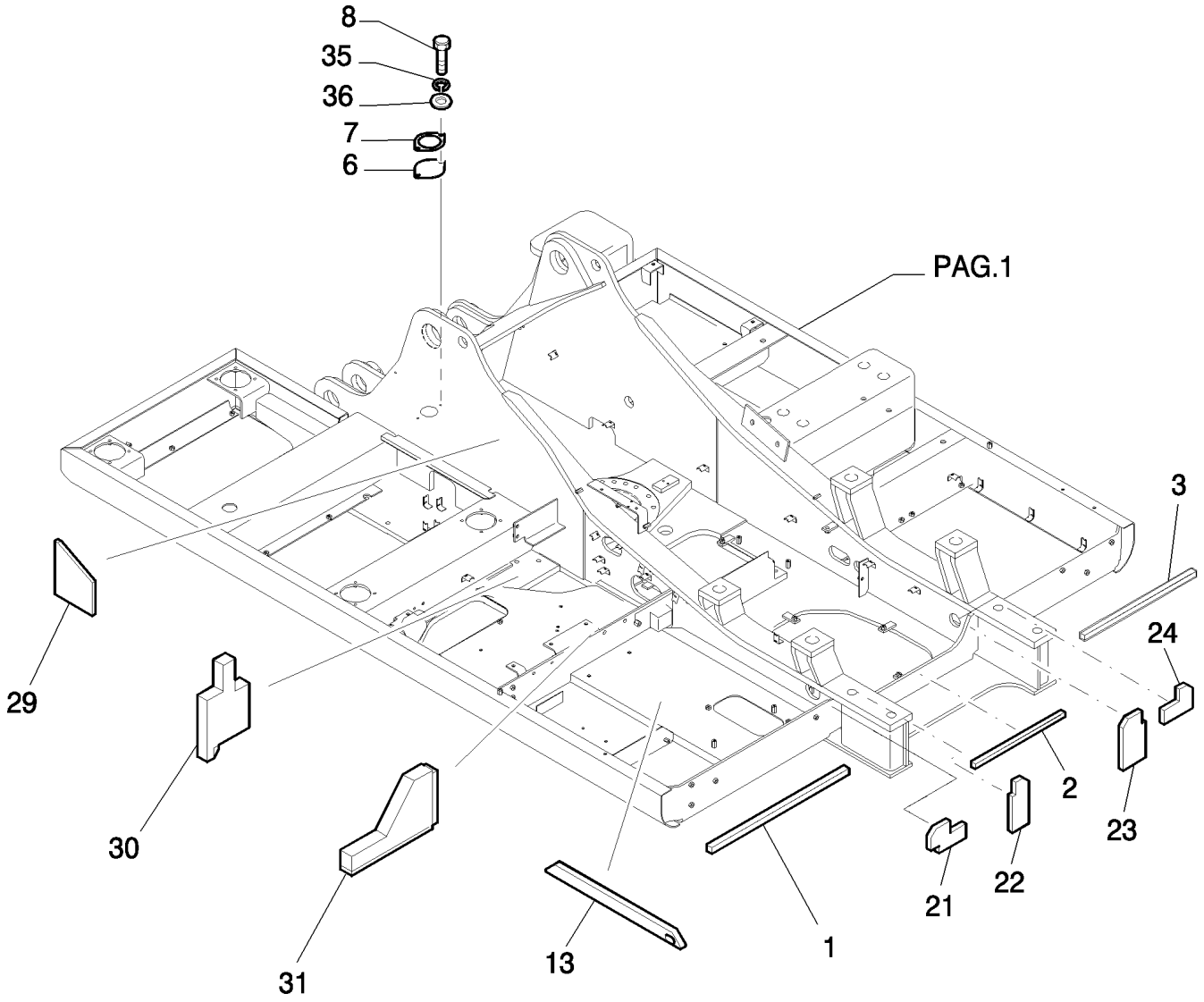

Copyright © New Holland

CHASIS SUPERIOR
UPPER FRAME
UPPER FRAME
UPPER FRAME

R	N	P.N.	MOD	Q	Description Denominacion	Descrizione Beskrivelse	Bezeichnung Denominação	Description Beschrijving	L.C.
1		87537857		1	INSULATOR AISLADOR	ISOLATORE ISOLATOR	ISOLATOR ISOLADOR	ISOLANT ISOLATIE	085I
2		87537858		1	INSULATOR AISLADOR	ISOLATORE ISOLATOR	ISOLATOR ISOLADOR	ISOLANT ISOLATIE	085I
3		87537859		1	INSULATOR AISLADOR	ISOLATORE ISOLATOR	ISOLATOR ISOLADOR	ISOLANT ISOLATIE	085I
6		71442115		1	FLANGE BRIDA	FLANGIA FLANGE	FLANSCH FLANGE	BRIDE FLENS	070F
7		71442116		1	GASKET JUNTA	GUARNIZIONE PAKNING	DICHTUNG JUNTA	JOINT PAKKING	123G
8		11106234		2	BOLT, Hex, M10 x 25, 10.9, Full Thd PERNO	BULLONE BOLT	SCHRAUBE PARAFUSO	VIS BOUT	140B
13		87549839		1	INSULATOR AISLADOR	ISOLATORE ISOLATOR	ISOLATOR ISOLADOR	ISOLANT ISOLATIE	085I
21		87539081		1	INSULATOR AISLADOR	ISOLATORE ISOLATOR	ISOLATOR ISOLADOR	ISOLANT ISOLATIE	085I
22		87539080		1	INSULATOR AISLADOR	ISOLATORE ISOLATOR	ISOLATOR ISOLADOR	ISOLANT ISOLATIE	085I
23		87537862		1	INSULATOR AISLADOR	ISOLATORE ISOLATOR	ISOLATOR ISOLADOR	ISOLANT ISOLATIE	085I
24		87537861		1	INSULATOR AISLADOR	ISOLATORE ISOLATOR	ISOLATOR ISOLADOR	ISOLANT ISOLATIE	085I
29		{XLQ52F01762P1}		1					
30		YM52F01151D1		1	INSULATOR AISLADOR	ISOLATORE ISOLATOR	ISOLATOR ISOLADOR	ISOLANT ISOLATIE	085I
31		87549841		1	INSULATOR AISLADOR	ISOLATORE ISOLATOR	ISOLATOR ISOLADOR	ISOLANT ISOLATIE	085I
35		10516874		2	LOCK WASHER ARANDELA DE BLOQUE	RONDELLA DI SICUREZ LÅSESKIVE	SICHERUNGSSCHEIBE ANILHA DE RETENÇÃO	RONDELLE FREIN BORGRING	132R
36		14496631		2	WASHER, M10 x 21 x 2 ARANDELA	RONDELLA FLADSKIVE	UNTERLEGSCHEIBE ANILHA	RONDELLE SLUITRING	131R

Copyright © New Holland

1.000	03	p1	03/10

UPPER FRAME
TELAIO SUPERIORE
RAHMENOBEN
CHASSIS SUPERIEUR

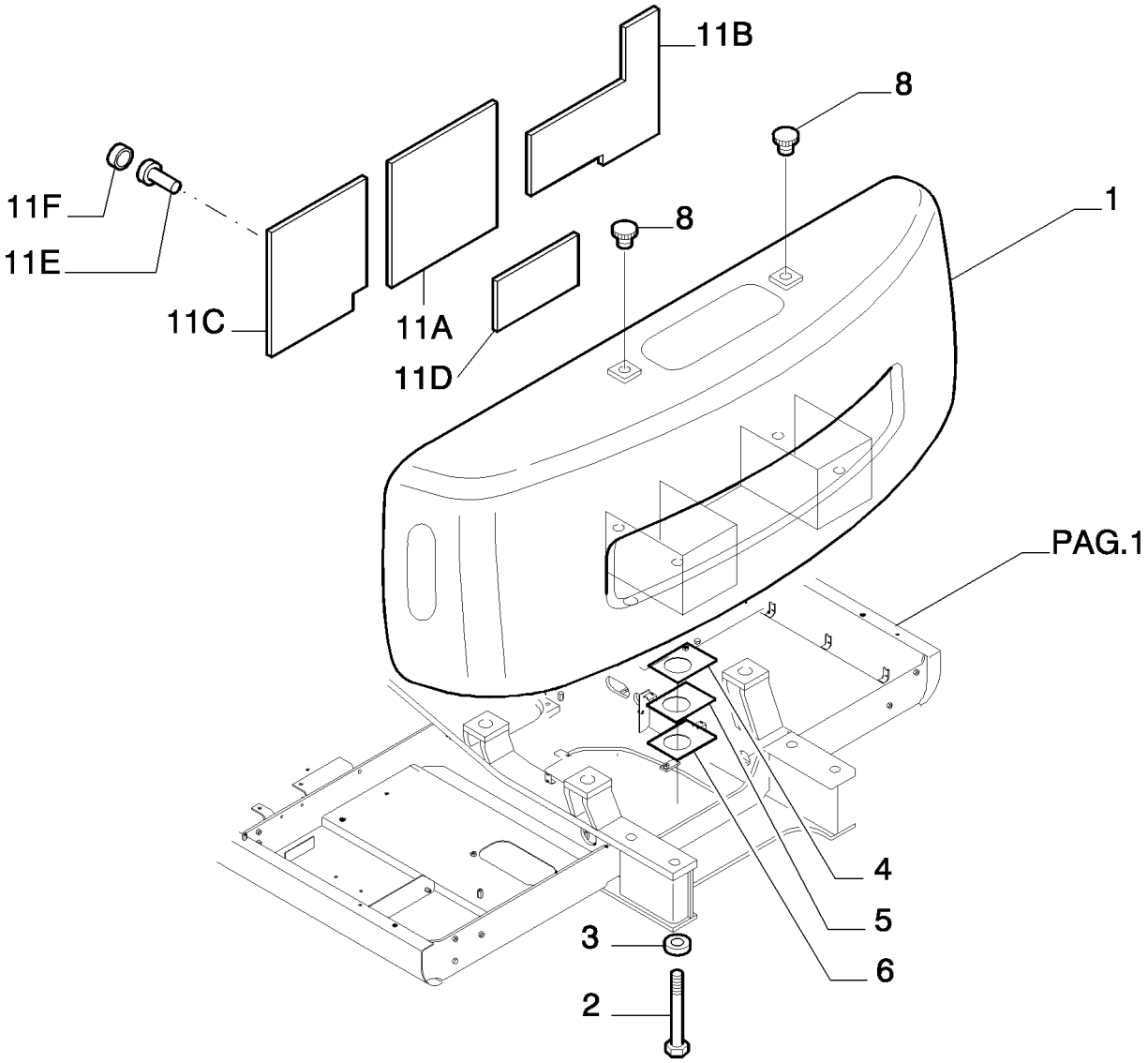

KIT 11

Copyright © New Holland

CHASIS SUPERIOR
UPPER FRAME
UPPER FRAME
UPPER FRAME

R	N	P.N.	MOD	Q	Description Denominacion	Descrizione Beskrivelse	Bezeichnung Denominação	Description Beschrijving	L.C.
1		87576370		1	WEIGHT LASTRE	PESO; ZAVORRA FRONTVÆGT	GEWICHT BALASTRO	POIDS GEWICHT	010Z
2		87550714		4	SCREW TORNILLO	VITE SKRUE	SCHRAUBE PARAFUSO	VIS SCHROEF	040V
3		72202943		4	WASHER ARANDELA	RONDELLA FLADSKIVE	UNTERLEGSCHEIBE ANILHA	RONDELLE SLUITRING	131R
4		72202944		3	SHIM, 2.5mm Thk SUPLEMENTO	SPESSORE MELLEMLÆG	AUSGLEICHSSCHEIBE CALÇO DE AFINAÇÃO	CALE VULPLAATJE	198S
5		72202945		3	SHIM, 1.5mm Thk SUPLEMENTO	SPESSORE MELLEMLÆG	AUSGLEICHSSCHEIBE CALÇO DE AFINAÇÃO	CALE VULPLAATJE	198S
6		72202946		4	SHIM, 3mm Thk SUPLEMENTO	SPESSORE MELLEMLÆG	AUSGLEICHSSCHEIBE CALÇO DE AFINAÇÃO	CALE VULPLAATJE	198S
8		71415426		2	PLUG TAPÓN	TAPPO PROP	STOPFEN TAMPÃO	BOUCHON PLUG	050T
11		87356990		1	KIT, Includes ref. 11A to 11F KIT	KIT SÆT	SATZ KIT	KIT KIT	305C
11A		NSS		1	NOT SERVICED SEPARATELY NON FORNITO SEPARA NO SE REPARA POR SE	NICHT A SEP ERS-T LIEF SERVICERES IKKE SEP/	NON ENTRET. SEPAREM SEM REPARAÇÃO EM S	064N NIET LOS VERKRIJGBA/
11B		NSS		1	NOT SERVICED SEPARATELY NON FORNITO SEPARA NO SE REPARA POR SE	NICHT A SEP ERS-T LIEF SERVICERES IKKE SEP/	NON ENTRET. SEPAREM SEM REPARAÇÃO EM S	064N NIET LOS VERKRIJGBA/
11C		NSS		1	NOT SERVICED SEPARATELY NON FORNITO SEPARA NO SE REPARA POR SE	NICHT A SEP ERS-T LIEF SERVICERES IKKE SEP/	NON ENTRET. SEPAREM SEM REPARAÇÃO EM S	064N NIET LOS VERKRIJGBA/
11D		NSS		1	NOT SERVICED SEPARATELY NON FORNITO SEPARA NO SE REPARA POR SE	NICHT A SEP ERS-T LIEF SERVICERES IKKE SEP/	NON ENTRET. SEPAREM SEM REPARAÇÃO EM S	064N NIET LOS VERKRIJGBA/
11E		71421784		12	CLIP ABRAZADERA	FERMO KLIPS	KLAMMER FIXADOR	COLLIER KLEM	045F
11F		84141769		12	GASKET JUNTA	GUARNIZIONE PAKNING	DICHTUNG JUNTA	JOINT PAKKING	123G

Copyright © New Holland

1.000	04	p1	03/10

UPPER FRAME
TELAIO SUPERIORE
RAHMENOBEN
CHASSIS SUPERIEUR

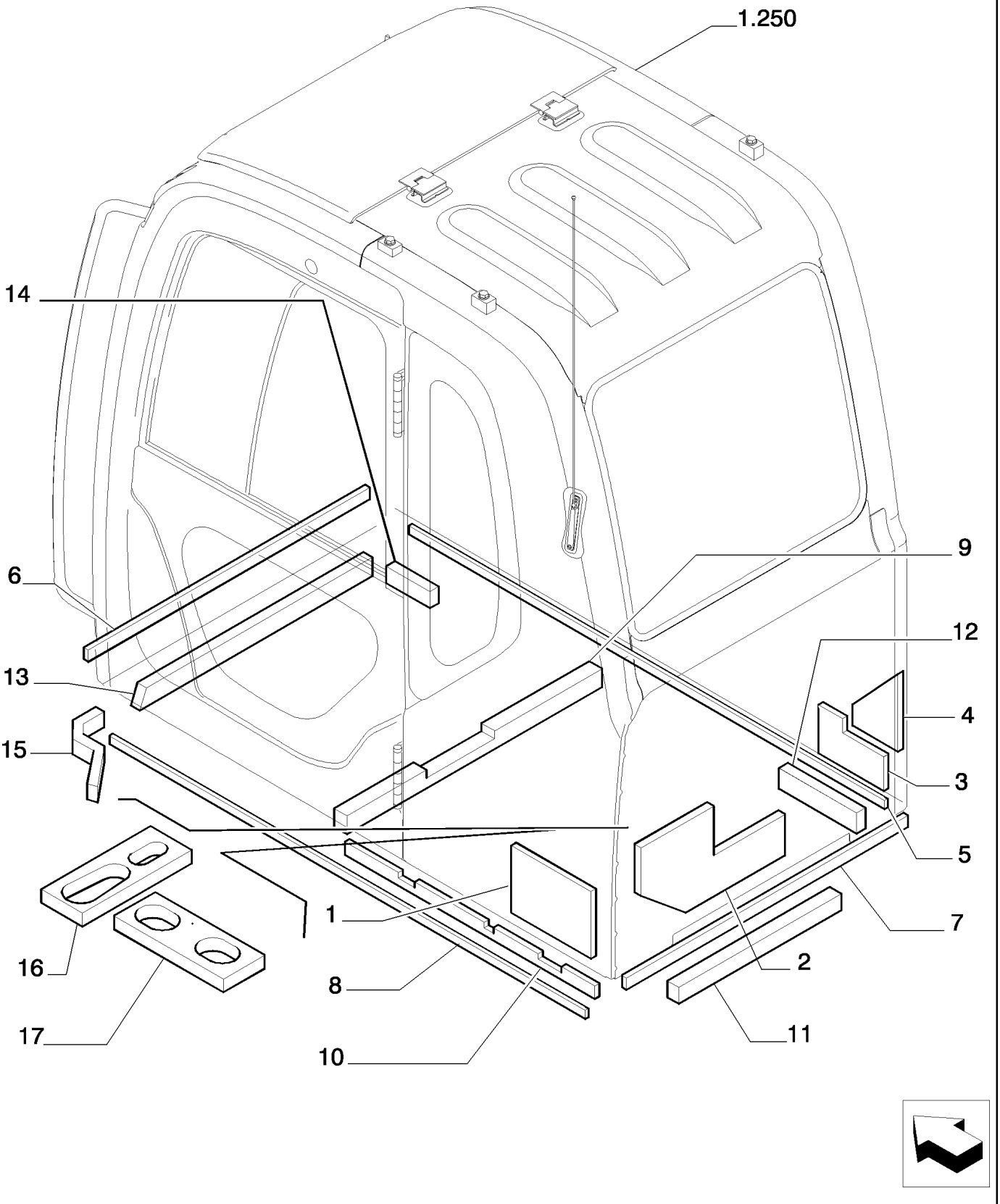

Copyright © New Holland

CHASIS SUPERIOR
UPPER FRAME
UPPER FRAME
UPPER FRAME

R	N	P.N.	MOD	Q	Description Denominacion	Descrizione Beskrivelse	Bezeichnung Denominação	Description Beschrijving	L.C.
1		YN26C01003P1		1	INSULATOR AISLADOR	ISOLATORE ISOLATOR	ISOLATOR ISOLADOR	ISOLANT ISOLATIE	085I
2		YN26C01023P1		1	INSULATOR AISLADOR	ISOLATORE ISOLATOR	ISOLATOR ISOLADOR	ISOLANT ISOLATIE	085I
3		YN26C01004P1		1	INSULATOR AISLADOR	ISOLATORE ISOLATOR	ISOLATOR ISOLADOR	ISOLANT ISOLATIE	085I
4		YN26C01005P1		1	INSULATOR AISLADOR	ISOLATORE ISOLATOR	ISOLATOR ISOLADOR	ISOLANT ISOLATIE	085I
5		YN26C01006P1		1	INSULATOR AISLADOR	ISOLATORE ISOLATOR	ISOLATOR ISOLADOR	ISOLANT ISOLATIE	085I
6		YN26C01007P1		1	INSULATOR AISLADOR	ISOLATORE ISOLATOR	ISOLATOR ISOLADOR	ISOLANT ISOLATIE	085I
7		YN26C01008P1		1	INSULATOR AISLADOR	ISOLATORE ISOLATOR	ISOLATOR ISOLADOR	ISOLANT ISOLATIE	085I
8		YN26C01009P1		1	INSULATOR AISLADOR	ISOLATORE ISOLATOR	ISOLATOR ISOLADOR	ISOLANT ISOLATIE	085I
9		YN26C01010P1		1	INSULATOR AISLADOR	ISOLATORE ISOLATOR	ISOLATOR ISOLADOR	ISOLANT ISOLATIE	085I
10		YN26C01011P1		1	INSULATOR AISLADOR	ISOLATORE ISOLATOR	ISOLATOR ISOLADOR	ISOLANT ISOLATIE	085I
11		YN26C01012P1		1	INSULATOR AISLADOR	ISOLATORE ISOLATOR	ISOLATOR ISOLADOR	ISOLANT ISOLATIE	085I
12		YN26C01013P1		1	INSULATOR AISLADOR	ISOLATORE ISOLATOR	ISOLATOR ISOLADOR	ISOLANT ISOLATIE	085I
13		YN26C01014P1		1	INSULATOR AISLADOR	ISOLATORE ISOLATOR	ISOLATOR ISOLADOR	ISOLANT ISOLATIE	085I
14		YN26C01015P1		1	INSULATOR AISLADOR	ISOLATORE ISOLATOR	ISOLATOR ISOLADOR	ISOLANT ISOLATIE	085I
15		YN26C01016P1		1	INSULATOR AISLADOR	ISOLATORE ISOLATOR	ISOLATOR ISOLADOR	ISOLANT ISOLATIE	085I
16		YN26C01024P1		1	INSULATOR AISLADOR	ISOLATORE ISOLATOR	ISOLATOR ISOLADOR	ISOLANT ISOLATIE	085I
17		YN26C01018P1		1	INSULATOR AISLADOR	ISOLATORE ISOLATOR	ISOLATOR ISOLADOR	ISOLANT ISOLATIE	085I

Copyright © New Holland

1.000	05	p1	03/10

UPPER FRAME
TELAIO SUPERIORE
RAHMENOBEN
CHASSIS SUPERIEUR

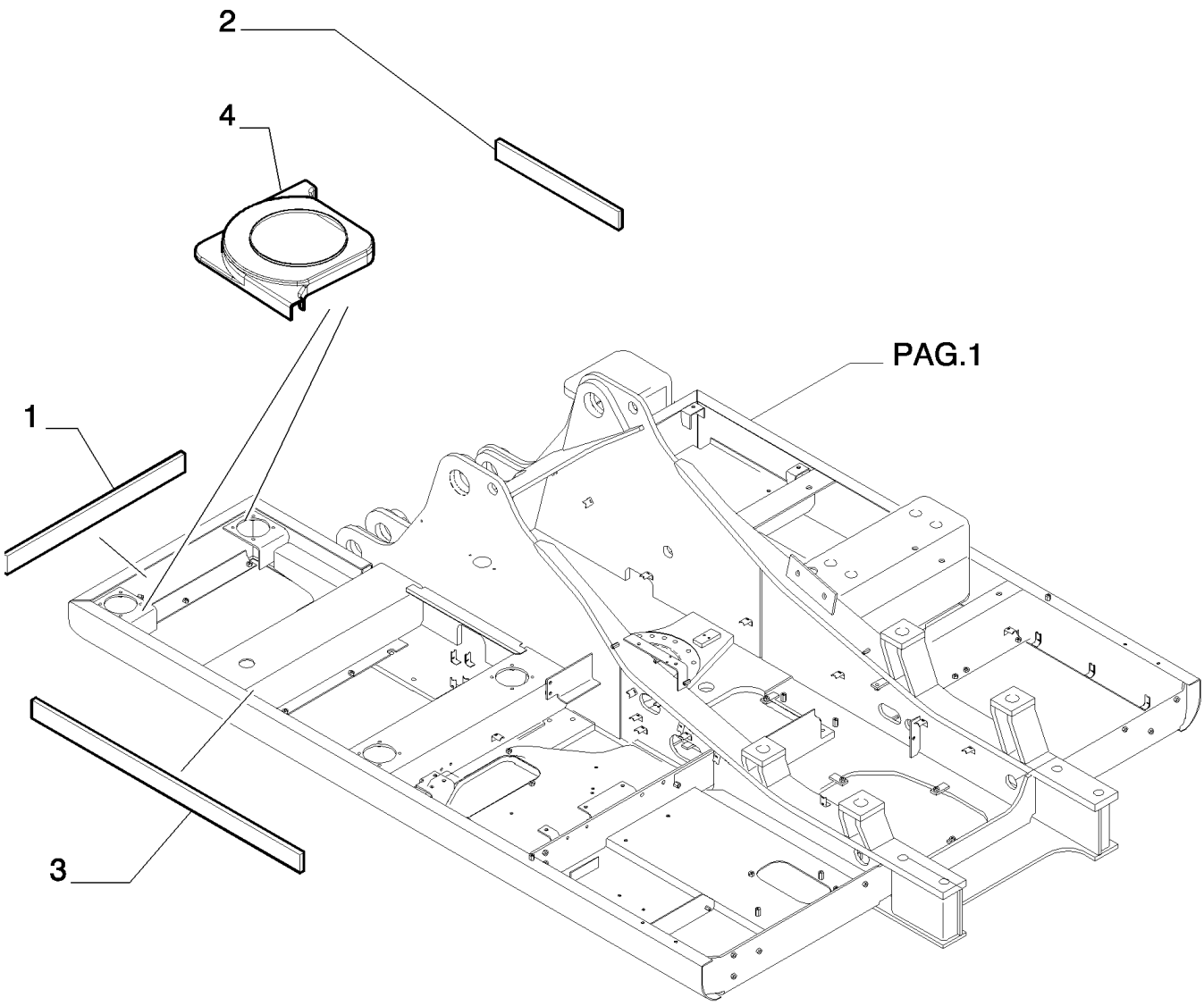

Copyright © New Holland

CHASIS SUPERIOR
UPPER FRAME
UPPER FRAME
UPPER FRAME

R	N	P.N.	MOD	Q	Description Denominacion	Descrizione Beskrivelse	Bezeichnung Denominação	Description Beschrijving	L.C.
1		YN26C01025P1		1	GASKET JUNTA	GUARNIZIONE PAKNING	DICHTUNG JUNTA	JOINT PAKKING	123G
2		YN26C01026P1		1	GASKET JUNTA	GUARNIZIONE PAKNING	DICHTUNG JUNTA	JOINT PAKKING	123G
3		YN26C01027P1		1	GASKET JUNTA	GUARNIZIONE PAKNING	DICHTUNG JUNTA	JOINT PAKKING	123G
4		YN26C01029P1		2	GASKET JUNTA	GUARNIZIONE PAKNING	DICHTUNG JUNTA	JOINT PAKKING	123G

Copyright © New Holland

1.010	01	p1	03/10

FUEL TANK
SERBATOIO COMBUSTIBILE
KRAFTSTOFFTANK
RESERVOIR DE COMBUSTIBLE

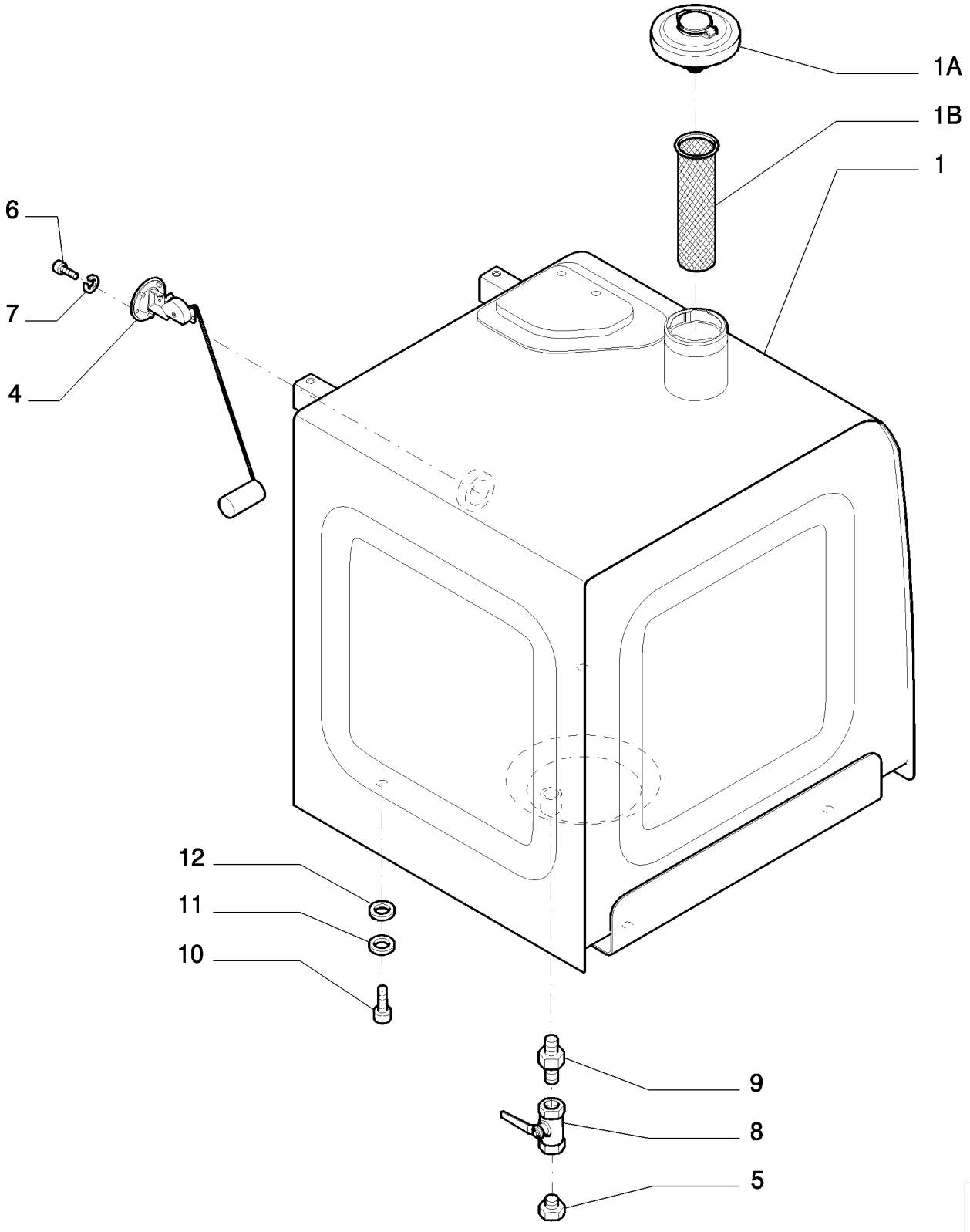

Copyright © New Holland

TANQUE COMBUSTIBLE
FUEL TANK
FUEL TANK
FUEL TANK

R	N	P.N.	MOD	Q	Description Denominacion	Descrizione Beskrivelse	Bezeichnung Denominação	Description Beschrijving	L.C.
1		72230242		1	FUEL TANK, - ASSY DEPÓSITO DE COMBUS	SERBATOIO CARBURAN BRÆNDSTOFTANK	KRAFTSTOFFTANK DEPÓSITO DE COMBUS	RESERVOIR DE CARBUI BRANDSTOFTANK	108S
1A		87748274		1	PLUG TAPÓN	TAPPO PROP	STOPFEN TAMPÃO	BOUCHON PLUG	050T
1B		72105459		1	FILTER FILTRO	FILTRO FILTER	FILTER FILTRO	FILTRE FILTER	065F
4		87539072		1	SENSOR SENSOR	SENSORE FØLER	SENSOR SENSOR	CAPTEUR SENSOR	608S
5		4976587		1	PLUG TAPÓN	TAPPO PROP	STOPFEN TAMPÃO	BOUCHON PLUG	050T
6		13274024		5	SCREW TORNILLO	VITE SKRUE	SCHRAUBE PARAFUSO	VIS SCHROEF	040V
7		11195474		5	LOCK WASHER ARANDELA DE BLOQUE	RONDELLA DI SICUREZ LÅSESKIVE	SICHERUNGSSCHEIBE ANILHA DE RETENÇÃO	RONDELLE FREIN BORGRING	132R
8		71405228		1	DRAINCOCK/TAP SUPPLY GRIFO	RUBINETTO HANE	ABLASSHAHN/ZULAUF BUJÃO DRENAGEM/ABA	ROBINET VOEDING AFTAPKRAAN	150R
9		71405229		1	HYD CONNECTOR CONECTOR HIDRÁULIC	CONNETTORE IDRAULI HYDRAULIKSTIK	HYDR STECKVERBINDE CONECTOR HID.	CONNECTEUR HYDRAU HYDRAULISCHE AANSL	020R
10		11118534		4	SCREW TORNILLO	VITE SKRUE	SCHRAUBE PARAFUSO	VIS SCHROEF	040V
11		71405003		4	WASHER ARANDELA	RONDELLA FLADSKIVE	UNTERLEGSCHEIBE ANILHA	RONDELLE SLUITRING	131R
12		72202973		3	SHIM, 1mm Thk SUPLEMENTO	SPESSORE MELLEMLÆG	AUSGLEICHSSCHEIBE CALÇO DE AFINAÇÃO	CALE VULPLAATJE	198S

Copyright © New Holland

1.010	02	p1	03/10

PIPING FUEL
TUBAZIONI COMBUSTIBILE
LEITUNGEN - KRAFTSTOFF
TUYAUTERIES COMBUSTIBLE

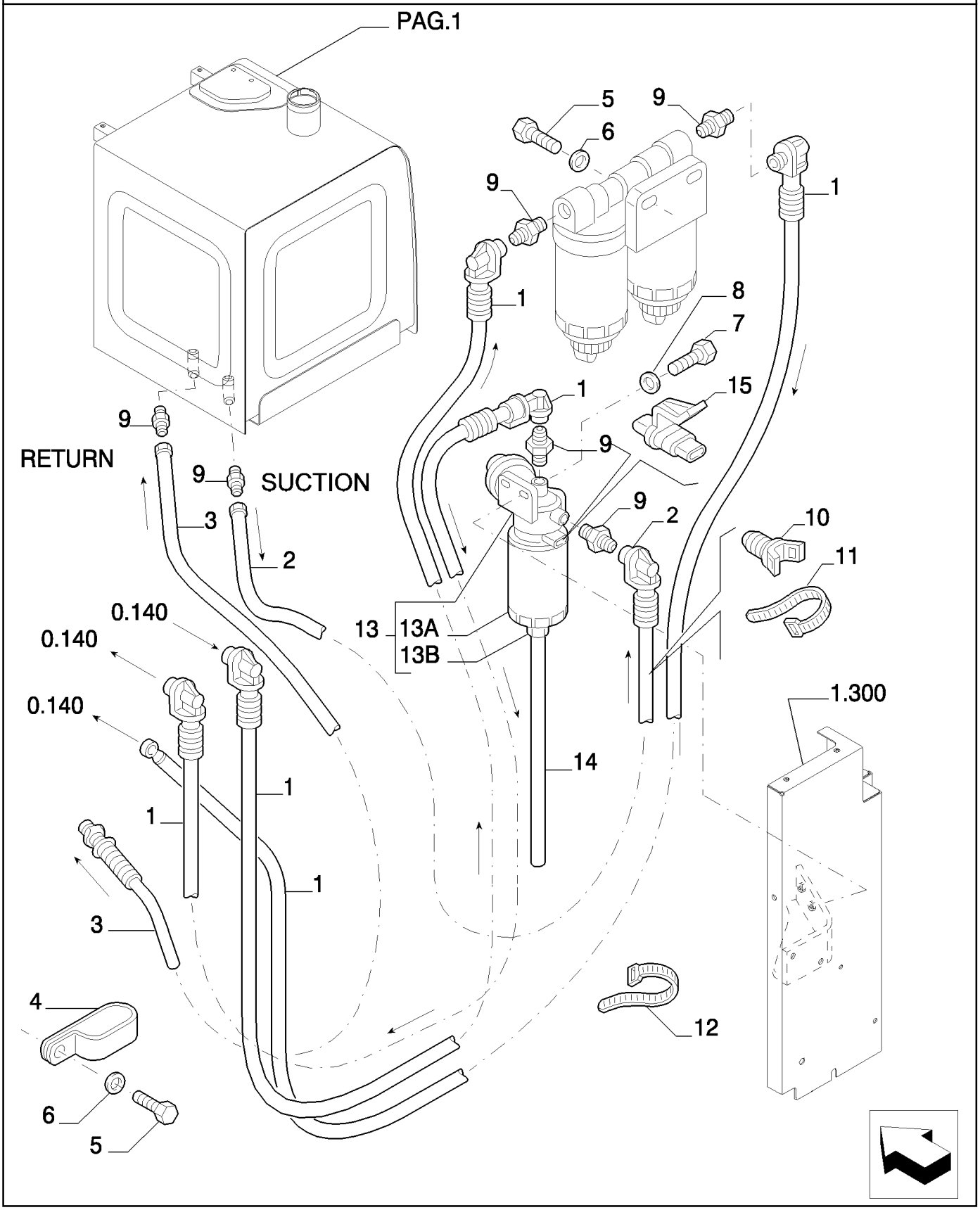

Copyright © New Holland

TUBERIAS COMBUSTIBLE
PIPING FUEL
PIPING FUEL
PIPING FUEL

R	N	P.N.	MOD	Q	Description Denominacion	Descrizione Beskrivelse	Bezeichnung Denominação	Description Beschrijving	L.C.
1		87540076		3	FLEXIBLE HOSE TUBO FLEXIBLE	TUBO FLESSIBILE FLEKSIBEL SLANGE	BIEGSAMER SCHLAUCH MANGUEIRA FLEXÍVEL	TUYAU FLEXIBLE FLEXIBELE SLANG	192T
2		87540077		1	FLEXIBLE HOSE TUBO FLEXIBLE	TUBO FLESSIBILE FLEKSIBEL SLANGE	BIEGSAMER SCHLAUCH MANGUEIRA FLEXÍVEL	TUYAU FLEXIBLE FLEXIBELE SLANG	192T
3		87540078		1	FLEXIBLE HOSE TUBO FLEXIBLE	TUBO FLESSIBILE FLEKSIBEL SLANGE	BIEGSAMER SCHLAUCH MANGUEIRA FLEXÍVEL	TUYAU FLEXIBLE FLEXIBELE SLANG	192T
4		71403661		1	CLIP ABRAZADERA	FERMO KLIPS	KLAMMER FIXADOR	COLLIER KLEM	045F
5		11112434		3	BOLT, Hex, M12 x 30, 10.9, Full Thd PERNO	BULLONE BOLT	SCHRAUBE PARAFUSO	VIS BOUT	140B
6		14496731		3	WASHER, M12 x 24 x 2.5 Thk ARANDELA	RONDELLA FLADSKIVE	UNTERLEGSCHEIBE ANILHA	RONDELLE SLUITRING	131R
7		11106434		2	BOLT, Hex, M10 x 30, 10.9, Full Thd PERNO	BULLONE BOLT	SCHRAUBE PARAFUSO	VIS BOUT	140B
8		14496631		2	WASHER, M10 x 21 x 2 ARANDELA	RONDELLA FLADSKIVE	UNTERLEGSCHEIBE ANILHA	RONDELLE SLUITRING	131R
9		72108835		6	HYD CONNECTOR CONECTOR HIDRÁULIC	CONNETTORE IDRAULIC HYDRAULIKSTIK	HYDR STECKVERBINDE CONECTOR HID.	CONNECTEUR HYDRAU HYDRAULISCHE AANSL	020R
10		87526680		2	RETAINER COLLAR COLLAR DE RETENCIÓN	COLLARE DI FISSAGGIC RING, SPÆNDE	HALTERING ANEL DE FIXAÇÃO	COLLIER DE RETENUE BORGKRAAG	230S
11		72951499		2	CLIP ABRAZADERA	FERMO KLIPS	KLAMMER FIXADOR	COLLIER KLEM	045F
12		4982514		7	CABLE STRAP BANDA DE CABLE	FASCETTA PER CAVO KABELSTROP	KABELBINDER BRAÇADEIRA DE CABO	BRIDE DE CABLE BUNDELBAND	P716
13		87435522		1	FILTER ASSY, - ASSY CONJUNTO DE FILTRO	FILTRO, COMPLESSIVO FILTERENHED	FILTERBAUGRUPPE CONJUNTO DE FILTRO	ENSEMBLE DE FILTRE FILTEREENHEID	P496
13A		87435525		1	FUEL FILTER FILTRO DE COMBUSTIB	FILTRO CARBURANTE BRÆNDSTOFFILTER	KRAFTSTOFFFILTER FILTRO DE COMBUSTÍV	FILTRE A CARBURANT BRANDSTOFFILTER	064F
13B		87438159		1	SENSOR SENSOR	SENSORE FØLER	SENSOR SENSOR	CAPTEUR SENSOR	608S
14		72206056		1	FLEXIBLE HOSE TUBO FLEXIBLE	TUBO FLESSIBILE FLEKSIBEL SLANGE	BIEGSAMER SCHLAUCH MANGUEIRA FLEXÍVEL	TUYAU FLEXIBLE FLEXIBELE SLANG	192T
15		87530862		1	PLUG TAPÓN	TAPPO PROP	STOPFEN TAMPÃO	BOUCHON PLUG	050T

Copyright © New Holland

1.016	01	p1	03/10

FUEL TRANSFER PUMP
POMPA TRAVASO COMBUSTIBILE
KRAFTSTOFFORDERPUMPE
POMPE TRAVASEMENT COMBUSTIBLE

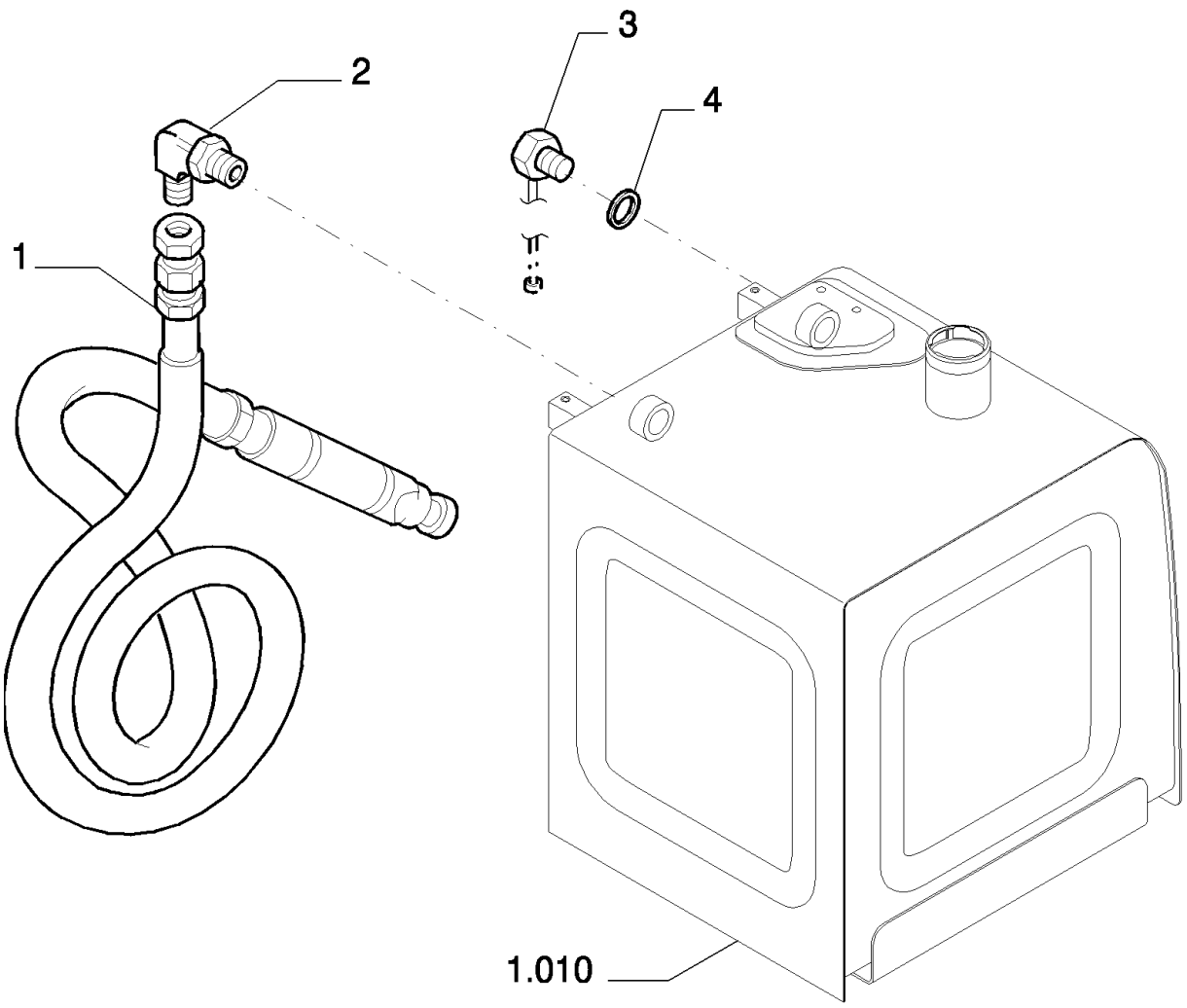

Copyright © New Holland

BOMBA REPOSTADO COMBUSTIBLE
FUEL TRANSFER PUMP
FUEL TRANSFER PUMP
FUEL TRANSFER PUMP

R	N	P.N.	MOD	Q	Description Denominacion	Descrizione Beskrivelse	Bezeichnung Denominação	Description Beschrijving	L.C.
1	1	87475074		1	FUEL PUMP BOMBA DE COMBUSTIB	POMPA CARBURANTE BRÆNDSTOFPUMPE	KRAFTSTOFFPUMPE BOMBA DE COMBUSTÍV	POMPE A CARBURANT BRANDSTOFPOMP	154P
2		87579592		1	HYD CONNECTOR CONECTOR HIDRÁULIC	CONNETTORE IDRAULI HYDRAULIKSTIK	HYDR STECKVERBINDE CONECTOR HID.	CONNECTEUR HYDRAU HYDRAULISCHE AANSL	020R
3		72202085		1	WARNING LIGHT LUZ DE ADVERTENCIA	SPIA LUMINOSA ADVARSELSLAMPE	WARNLEUCHTE LUZ INDICADORA	VOYANT D'ALERTE WAARSCHUWINGSLAMI	035I
4		72204223		1	SEAL ANILLO DE CIERRE	GUARNIZIONE; TENUTA PAKNING	DICHTUNG VEDANTE	JOINT AFDICHTING	132A

(1) ASSY SEE PAGE 2

Copyright © New Holland

1.016	02	p1	03/10

FUEL TRANSFER PUMP - COMPONENTS
POMPA TRAVASO COMBUSTIBILE - COMPONENTI
KRAFTSTOFFORDERPUMPE - BESTANDTEILE
POMPE TRAVASEMENT COMBUSTIBLE - COMPOSANTS

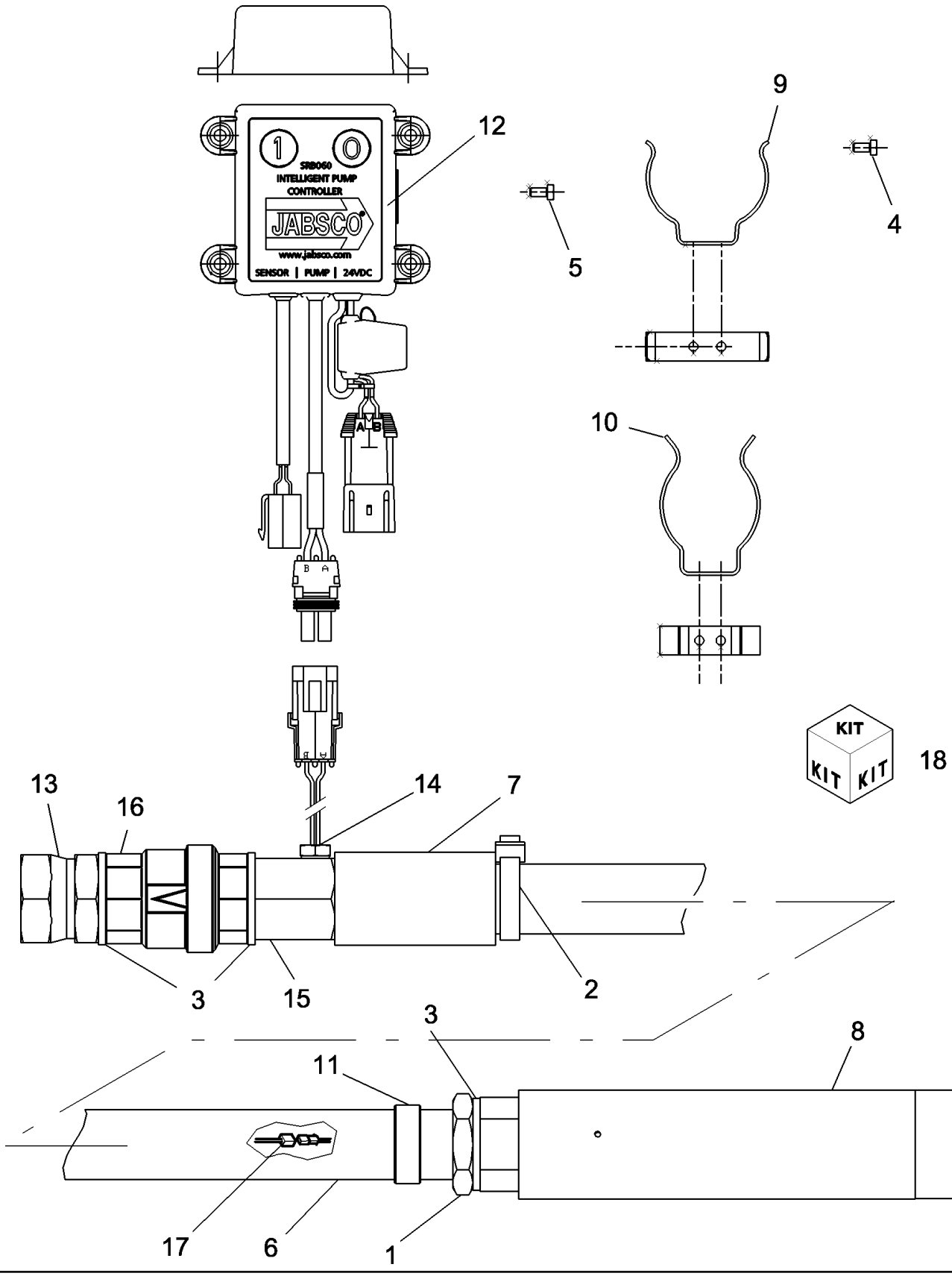

Copyright © New Holland

BOMBA REPOSTADO COMBUSTIBLE - COMPONENTES
FUEL TRANSFER PUMP - COMPONENTS
FUEL TRANSFER PUMP - COMPONENTS
FUEL TRANSFER PUMP - COMPONENTS

R	N	P.N.	MOD	Q	Description Denominacion	Descrizione Beskrivelse	Bezeichnung Denominação	Description Beschrijving	L.C.
1		87497378		1	HYD CONNECTOR CONECTOR HIDRÁULIC	CONNETTORE IDRAULI HYDRAULIKSTIK	HYDR STECKVERBINDE CONECTOR HID.	CONNECTEUR HYDRAU HYDRAULISCHE AANSL	020R
2		87497379		1	RETAINER RETENEDOR	FERMO HOLDER	HALTERUNG RETENTOR	DISPOSITIF DE RETENU HOUDER	109R
3		87497380		3	WASHER ARANDELA	RONDELLA FLADSKIVE	UNTERLEGSCHEIBE ANILHA	RONDELLE SLUITRING	131R
4		87497381		4	SCREW TORNILLO	VITE SKRUE	SCHRAUBE PARAFUSO	VIS SCHROEF	040V
5		87497382		4	SCREW TORNILLO	VITE SKRUE	SCHRAUBE PARAFUSO	VIS SCHROEF	040V
6		87497383		1	FLEXIBLE HOSE TUBO FLEXIBLE	TUBO FLESSIBILE FLEKSIBEL SLANGE	BIEGSAMER SCHLAUCH MANGUEIRA FLEXÍVEL	TUYAU FLEXIBLE FLEXIBELE SLANG	192T
7		87497384		1	RIGID TUBE TUBO RÍGIDO	TUBO RIGIDO STIFT RØR	ROHR TUBO RÍGIDO	TUYAU RIGIDE VASTE LEIDING	193T
8		87497385		1	FUEL PUMP BOMBA DE COMBUSTIB	POMPA CARBURANTE BRÆNDSTOFPUMPE	KRAFTSTOFFPUMPE BOMBA DE COMBUSTÍV	POMPE A CARBURANT BRANDSTOFPOMP	154P
9		87497386		1	RETAINER RETENEDOR	FERMO HOLDER	HALTERUNG RETENTOR	DISPOSITIF DE RETENU HOUDER	109R
10		87497387		1	RETAINER RETENEDOR	FERMO HOLDER	HALTERUNG RETENTOR	DISPOSITIF DE RETENU HOUDER	109R
11		87497399		2	RING ANILLO	ANELLO RING	RING ANEL	ANNEAU RING	045A
12		87487428		1	SWITCH INTERRUPTOR	INTERRUTTORE KONTAKT	SCHALTER INTERRUPTOR	CONTACTEUR SCHAKELAAR	075I
13		87497400		1	HYD CONNECTOR CONECTOR HIDRÁULIC	CONNETTORE IDRAULI HYDRAULIKSTIK	HYDR STECKVERBINDE CONECTOR HID.	CONNECTEUR HYDRAU HYDRAULISCHE AANSL	020R
14		87497401		1	ELECTRIC CABLE CABLE ELÉCTRICO	CAVO ELETTRICO EL-KABEL	ELEKTROKABEL CABO ELÉCTRICO	CABLE ELECTRIQUE ELEKTRICITEITSKABEL	111C
15		87497402		1	HYD CONNECTOR CONECTOR HIDRÁULIC	CONNETTORE IDRAULI HYDRAULIKSTIK	HYDR STECKVERBINDE CONECTOR HID.	CONNECTEUR HYDRAU HYDRAULISCHE AANSL	020R
16		87487429		1	HYDRAULIC VALVE VÁLVULA HIDRÁULICA	DISTRIBUTORE IDRAUL HYDRAULIKVENTIL	HYDRAULIKVENTIL VÁLVULA HIDRÁULICA	SOUPAPE HYDRAULIQU HYDRAULISCHE KLEP	010V
17		87497639		2	HYD CONNECTOR CONECTOR HIDRÁULIC	CONNETTORE IDRAULI HYDRAULIKSTIK	HYDR STECKVERBINDE CONECTOR HID.	CONNECTEUR HYDRAU HYDRAULISCHE AANSL	020R
18		87475075		1	REPAIR KIT, Includes item from 1 to 11, item from 13 to 15 and item 17 KIT DE REPARACIÓN	KIT DI RIPARAZIONE REPARATIONSSÆT	REPARATURSATZ KIT DE REPARAÇÃO	KIT DE REPARATION REPARATIEKIT	003K

FUEL TRANSFER PUMP ASSY P/N 87475074

E215B

Copyright © New Holland

1.020	01	p1	03/10

OIL TANK
SERBATOIO OLIO
ÖLTANK
RESERVOIR D'HUILE

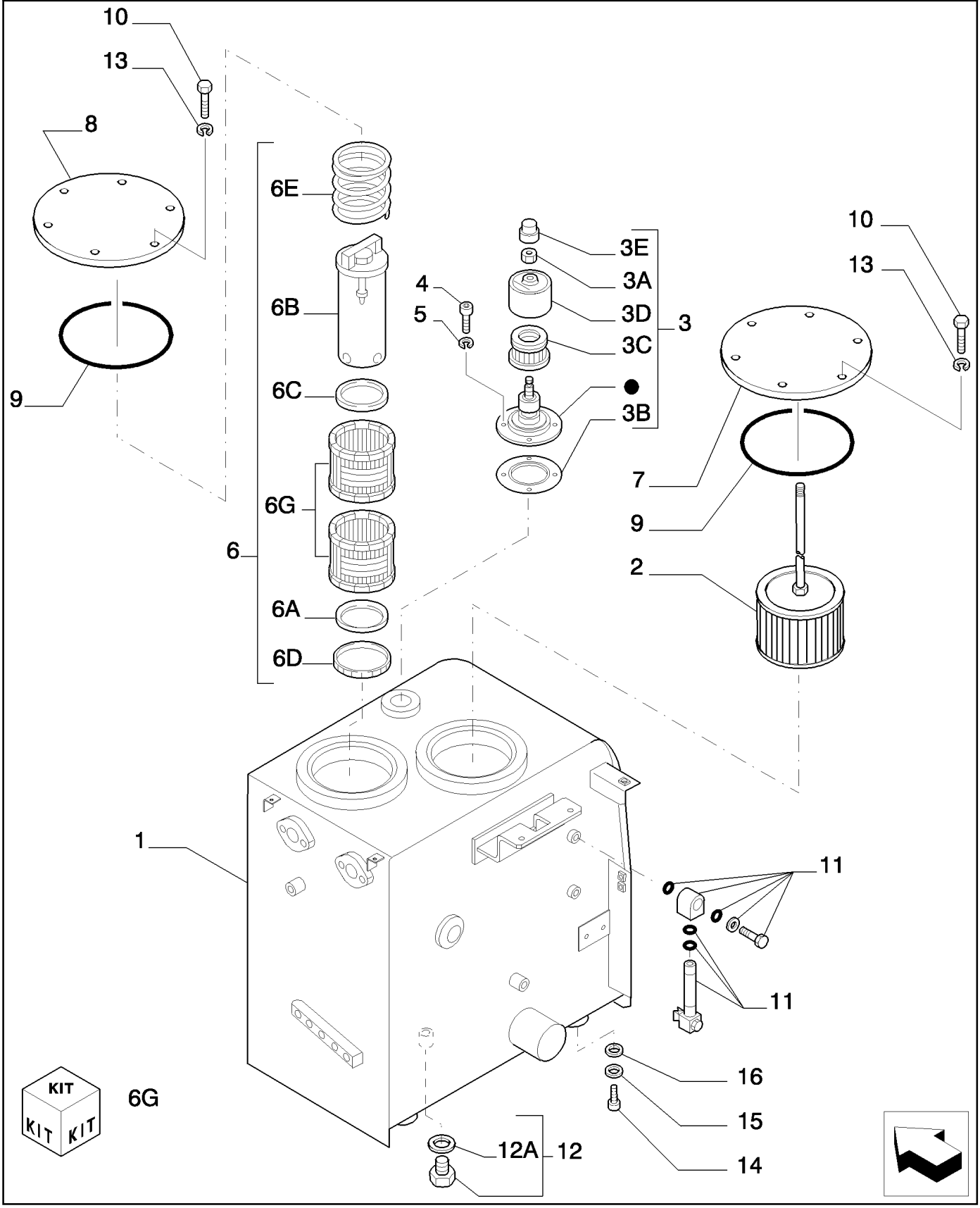

Copyright © New Holland

DEPOSITO DE ACEITE
OIL TANK
OIL TANK
OIL TANK

R	N	P.N.	MOD	Q	Description Denominacion	Descrizione Beskrivelse	Bezeichnung Denominação	Description Beschrijving	L.C.
1		72230256		1	TANK DEPÓSITO	SERBATOIO TANK	TANK DEPÓSITO	RESERVOIR TANK	115S
2		72230408		1	HYDRAULIC OIL FILTER FILTRO DE ACEITE HIDF	FILTRO OLIO IDRAULICC HYDRAULIKOLIEFILTER	HYDRAULIKÖLFILTER FILTRO DO ÓLEO HIDRÁ	FILTRE A HUILE HYDR. HYDRAULISCHE-OLIEFIL	074F
3		72202082		1	BREATHER ASSY., - ASSY RESPIRADERO (CONJUI	SFIATATOIO,COMPLESS BREATHER ASSY.	BELUEFTER (KPLT.) RESPIRO CONJUNTO	RENIFLARD (ASSEMBLE BREATHER ASSY.	P466
3A		72214500		1	NUT TUERCA	DADO MØTRIK	MUTTER PORCA	ECROU MOER	010D
3B		72214501		1	GASKET JUNTA	GUARNIZIONE PAKNING	DICHTUNG JUNTA	JOINT PAKKING	123G
3C		72214502		1	ELEMENT ELEMENTO	ELEMENTO ELEMENT	ELEMENT ELEMENTO	ELEMENT ELEMENT	020E
3D		72214503		1	COVER CUBIERTA	COPERCHIO DÆKSEL	ABDECKUNG COBERTURA	COUVERCLE AFSCHERMING	265C
3E		72214504		1	DUST CAP CAPUCHÓN ANTIPOLVC	CAPPUCCIO PARAPOLV STØVHÆTTE	STAUBKAPPE TAMPA CONTRA POEIR/	CACHE-POUSSIERE STOFKAP	066C
4		14305234		4	SCREW TORNILLO	VITE SKRUE	SCHRAUBE PARAFUSO	VIS SCHROEF	040V
5		10516474		4	LOCK WASHER ARANDELA DE BLOQUE	RONDELLA DI SICUREZ LÅSESKIVE	SICHERUNGSSCHEIBE ANILHA DE RETENÇÃO	RONDELLE FREIN BORGRING	132R
6		84165067		1	HYDRAULIC OIL FILTER, - ASSY FILTRO DE ACEITE HIDF	FILTRO OLIO IDRAULICC HYDRAULIKOLIEFILTER	HYDRAULIKÖLFILTER FILTRO DO ÓLEO HIDRÁ	FILTRE A HUILE HYDR. HYDRAULISCHE-OLIEFIL	074F
6A		YN52V01008S002		1	PLATE PLACA	PIASTRA PLADE	PLATTE CHAPA	PLAQUE PLAAT	105P
6B		72150710		1	VALVE VÁLVULA	VALVOLA VENTIL	VENTIL VÁLVULA	SOUPAPE KLEP	9620
6C	1	72957828		1	O-RING JUNTA TÓRICA	ANELLO TOROIDALE O-RING	O-RING O-RING	JOINT TORIQUE O-RING	055A
6D	1	72150175		1	PACKING EMPAQUETADURA	IMBALLAGGIO EMBALLAGE	PACKMATERIAL; PACKU EMBALAGEM	GARNITURE PAKKING	5950
6E		72962321		1	SPRING RESORTE	MOLLA FJEDER	FEDER MOLA	RESSORT VEER	100M
6G		YN52V01016R800		1	KIT KIT	KIT SÆT	SATZ KIT	KIT KIT	305C
7		72202074		1	FLANGE BRIDA	FLANGIA FLANGE	FLANSCH FLANGE	BRIDE FLENS	070F
8		72202073		1	COVER CUBIERTA	COPERCHIO DÆKSEL	ABDECKUNG COBERTURA	COUVERCLE AFSCHERMING	265C
9		14482780		2	O-RING JUNTA TÓRICA	ANELLO TOROIDALE O-RING	O-RING O-RING	JOINT TORIQUE O-RING	055A
10		11106134		12	BOLT, Hex, M10 x 22, 10.9, Full Thd PERNO	BULLONE BOLT	SCHRAUBE PARAFUSO	VIS BOUT	140B
11		87524750		1	LEVEL GAUGE INDICADOR DE NIVEL	INDICATORE DI LIVELLC NIVEAUMÅLER	FÜLLSTANDSANZEIGE INDICADOR DE NÍVEL	JAUGE DE NIVEAU NIVEAUMETER	031I
12		71406271		1	PLUG, - ASSY TAPÓN	TAPPO PROP	STOPFEN TAMPÃO	BOUCHON PLUG	050T
12A		71404162		1	O-RING JUNTA TÓRICA	ANELLO TOROIDALE O-RING	O-RING O-RING	JOINT TORIQUE O-RING	055A

(1) KIT - YN52V01016R800

Copyright © New Holland

1.020	01	p2	03/10

OIL TANK
SERBATOIO OLIO
ÖLTANK
RESERVOIR D'HUILE

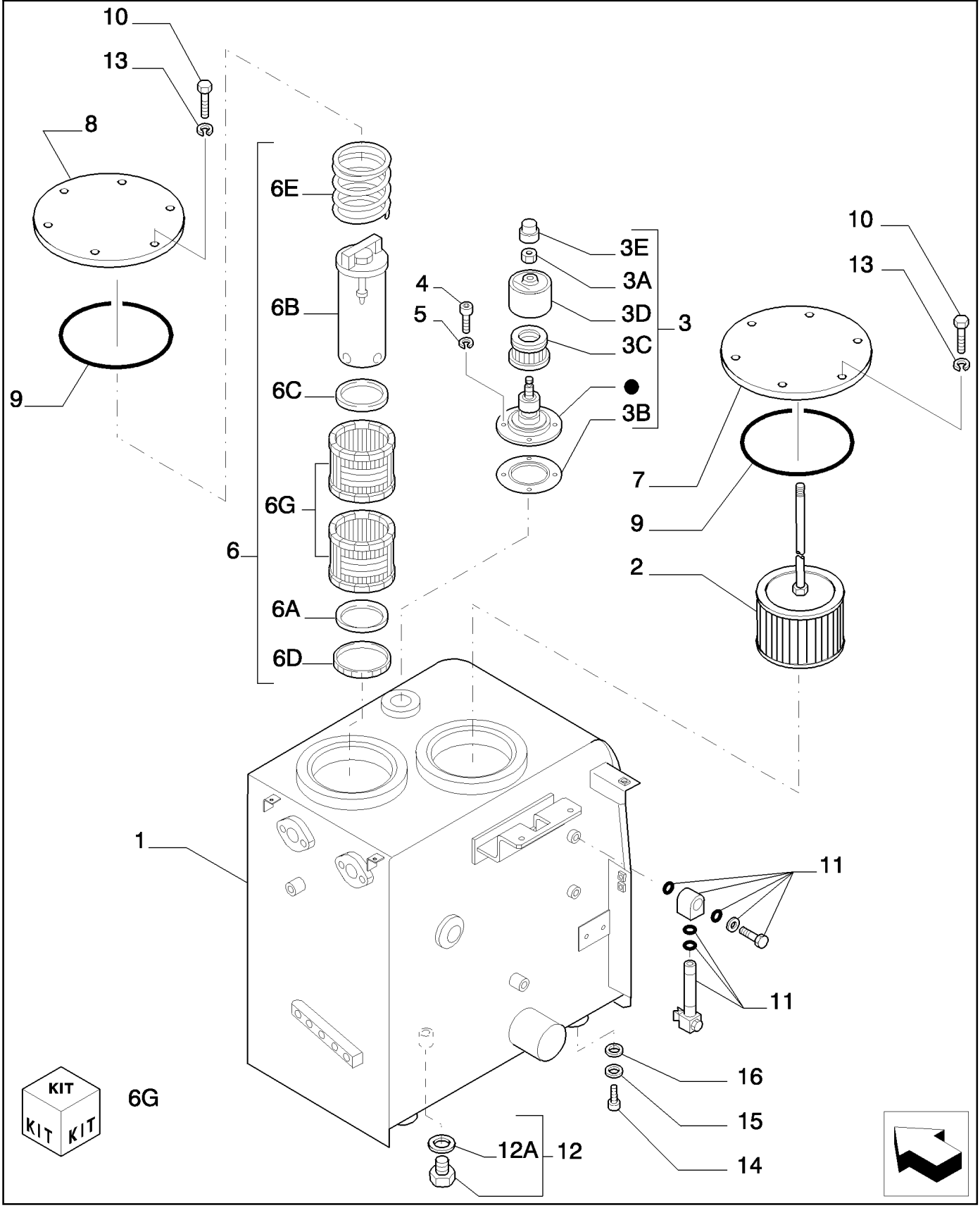

Copyright © New Holland

DEPOSITO DE ACEITE
OIL TANK
OIL TANK
OIL TANK

R	N	P.N.	MOD	Q	Description Denominacion	Descrizione Beskrivelse	Bezeichnung Denominação	Description Beschrijving	L.C.
13		**10571874**		12	WASHER ARANDELA	RONDELLA FLADSKIVE	UNTERLEGSCHEIBE ANILHA	RONDELLE SLUITRING	131R
14		**11118534**		4	SCREW TORNILLO	VITE SKRUE	SCHRAUBE PARAFUSO	VIS SCHROEF	040V
15		**71405003**		4	WASHER ARANDELA	RONDELLA FLADSKIVE	UNTERLEGSCHEIBE ANILHA	RONDELLE SLUITRING	131R
16		**72202973**		3	SHIM, 1mm Thk SUPLEMENTO	SPESSORE MELLEMLÆG	AUSGLEICHSSCHEIBE CALÇO DE AFINAÇÃO	CALE VULPLAATJE	198S

Copyright © New Holland

1.030	01	p1	03/10

HYDRAULIC PUMP
POMPA IMPIANTO IDRAULICO
HYDRAULIKPUMPE
POMPE CIRCUIT HYDR.

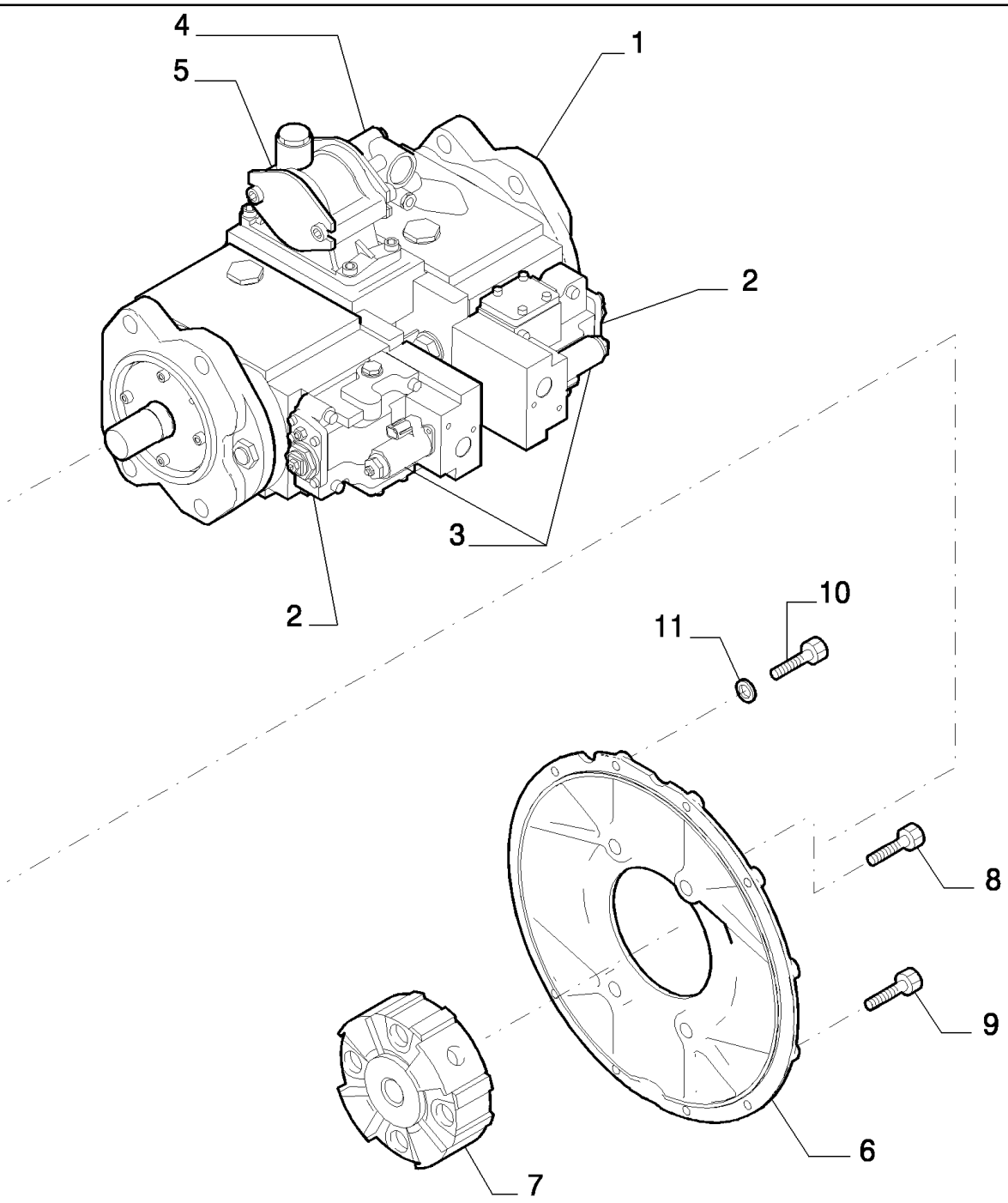

Copyright © New Holland

BOMBA HIDRAULICA
HYDRAULIC PUMP
HYDRAULIC PUMP
HYDRAULIC PUMP

R	N	P.N.	MOD	Q	Description Denominacion	Descrizione Beskrivelse	Bezeichnung Denominação	Description Beschrijving	L.C.
1-5		87528088		1	HYDRAULIC PUMP, - ASSY				
						POMPA IDRAULICA	HYDRAULIKPUMPE	POMPE HYDRAULIQUE	155P
					BOMBA HIDRÁULICO	HYDRAULIKPUMPE	BOMBA HIDRÁULICA	HYDRAULISCHE POMP	
1	1	YN10V00043F1		1	HYDRAULIC PUMP	POMPA IDRAULICA	HYDRAULIKPUMPE	POMPE HYDRAULIQUE	155P
					BOMBA HIDRÁULICO	HYDRAULIKPUMPE	BOMBA HIDRÁULICA	HYDRAULISCHE POMP	
2	2	YN10V01009F1		2	SPEED GOVERNOR	REGOLATORE DI VELOC	DREHZAHLREGLER	REGULATEUR DE VITES	028R
					LIMITADOR DE VELOCID	HASTIGHEDSREGULAT(	REGULADOR DE VELOC	SNELHEIDSREGELAAR	
3	3	YN35V00052F1		2	VALVE	VALVOLA	VENTIL	SOUPAPE	9620
					VÁLVULA	VENTIL	VÁLVULA	KLEP	
4	4	YN10V00033F2		1	HYDRAULIC PUMP	POMPA IDRAULICA	HYDRAULIKPUMPE	POMPE HYDRAULIQUE	155P
					BOMBA HIDRÁULICO	HYDRAULIKPUMPE	BOMBA HIDRÁULICA	HYDRAULISCHE POMP	
5	5	YB46W00001F2		1	GEAR	INGRANAGGIO	ZAHNRAD	PIGNON	050I
					ENGRANAJE	TANDHJUL	ENGRENAGEM	TANDWIEL	
6		87528089		1	BRACKET	STAFFA	HALTERUNG	SUPPORT	225S
					SOPORTE	BESLAG	SUPORTE	STEUN	
7		87528090		1	UNIVERSAL JOINT	GIUNTO UNIVERSALE	UNIVERSALGELENK	JOINT UNIVERSEL	067G
					JUNTA UNIVERSAL	UNIVERSALLED	JUNTA UNIVERSAL	KRUISKOPPELING	
8		71456596		4	SCREW	VITE	SCHRAUBE	VIS	040V
					TORNILLO	SKRUE	PARAFUSO	SCHROEF	
9		11106634		5	BOLT, Hex, M10 x 35, 10.9, Full Thd				
						BULLONE	SCHRAUBE	VIS	140B
					PERNO	BOLT	PARAFUSO	BOUT	
10		11107034		3	SCREW	VITE	SCHRAUBE	VIS	040V
					TORNILLO	SKRUE	PARAFUSO	SCHROEF	
11		14496631		3	WASHER, M10 x 21 x 2	RONDELLA	UNTERLEGSCHEIBE	RONDELLE	131R
					ARANDELA	FLADSKIVE	ANILHA	SLUITRING	

(1) ASSY SEE PAGE 2
(2) ASSY SEE PAGE 3
(3) ASSY SEE PAGE 4
(4) ASSY SEE PAGE 5
(5) ASSY SEE PAGE 6

Copyright © New Holland

1.030	02	p1	03/10

HYDRAULIC PUMP - COMPONENTS
POMPA IMPIANTO IDRAULICO - COMPONENTI
HYDRAULIKPUMPE - BESTANDTEILE
POMPE CIRCUIT HYDR. - COMPOSANTS

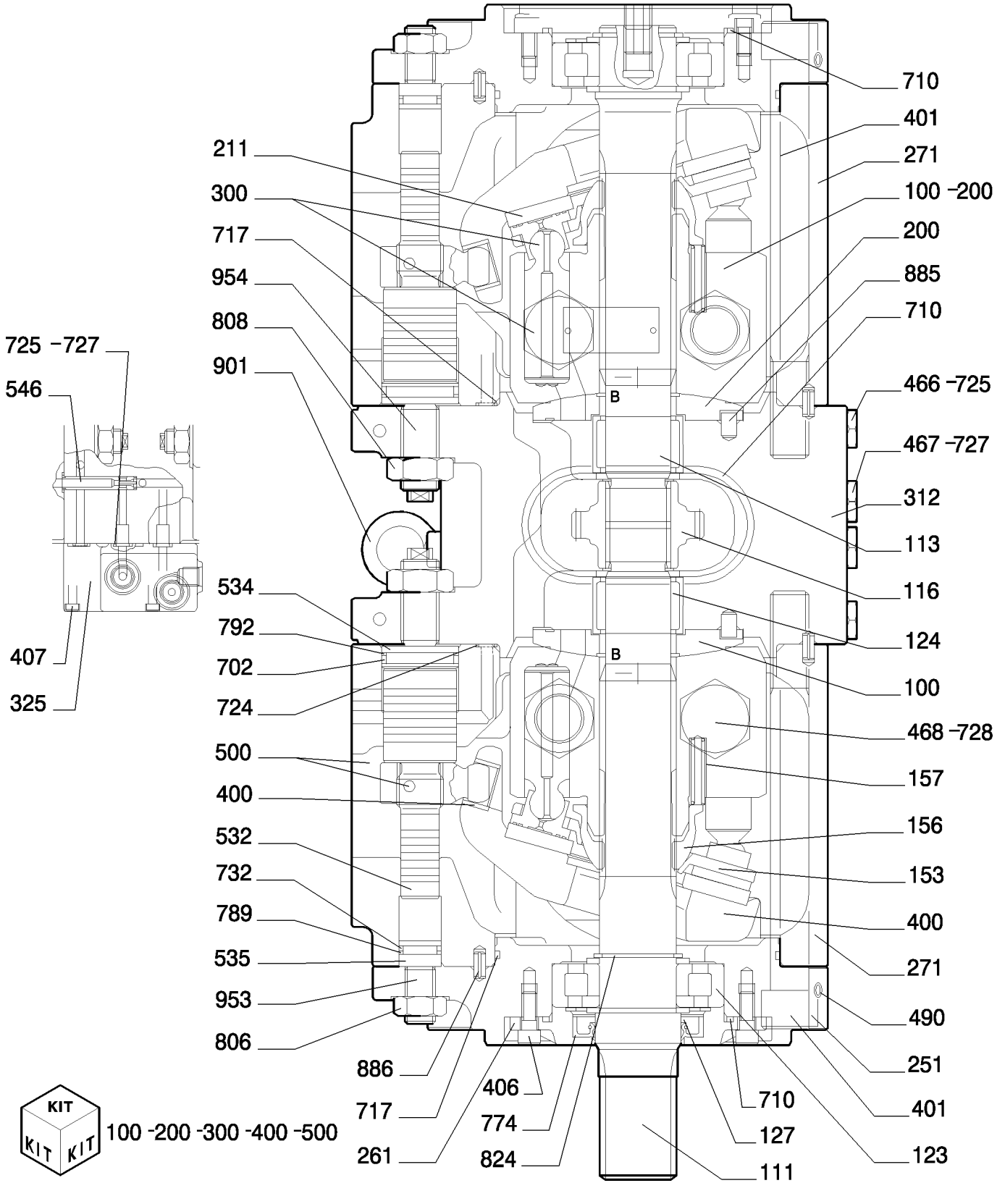

Copyright © New Holland

BOMBA HIDRAULICA - COMPONENTES
HYDRAULIC PUMP - COMPONENTS
HYDRAULIC PUMP - COMPONENTS
HYDRAULIC PUMP - COMPONENTS

R	N	P.N.	MOD	Q	Description Denominacion	Descrizione Beskrivelse	Bezeichnung Denominação	Description Beschrijving	L.C.
100		YN10V00043R100		1	REPAIR KIT KIT DE REPARACIÓN	KIT DI RIPARAZIONE REPARATIONSSÆT	REPARATURSATZ KIT DE REPARAÇÃO	KIT DE REPARATION REPARATIEKIT	003K
111		YN10V00043S111		1	SHAFT EJE	ALBERO AKSEL	WELLE VEIO	ARBRE AS	016A
113		87333059		1	SHAFT EJE	ALBERO AKSEL	WELLE VEIO	ARBRE AS	016A
116		87333061		1	GEAR ENGRANAJE	INGRANAGGIO TANDHJUL	ZAHNRAD ENGRENAGEM	PIGNON TANDWIEL	050I
123		87333062		2	ROLLER BEARING COJINETE DE RODILLOS	CUSCINETTO A RULLINI RULLELEJE	ROLLENLAGER ROLAMENTO DE ROLOS	ROULEMENT A ROULEA ROLLAGER	346C
124		72963976		2	NEEDLE BEARING COJINETE DE AGUJAS	CUSCINETTO AD AGHI NÅLELEJE	NADELLAGER ROLAMENTO DE AGULH	ROULEMENT A AIGUILLI NAALDLAGER	344C
127		72962215		4	SPACER SEPARADOR	DISTANZIALE AFSTANDSSTYKKE	DISTANZSTÜCK ESPAÇADOR	ENTRETOISE AFSTANDSSTUK	075D
153		72962148		2	PLATE PLACA	PIASTRA PLADE	PLATTE CHAPA	PLAQUE PLAAT	105P
156		72963962		2	BUSHING CASQUILLO	BOCCOLA BØSNING	BUCHSE CASQUILHO	BAGUE BUS	095B
157		72962149		18	SPRING RESORTE	MOLLA FJEDER	FEDER MOLA	RESSORT VEER	100M
200		YN10V00043R200		1	REPAIR KIT KIT DE REPARACIÓN	KIT DI RIPARAZIONE REPARATIONSSÆT	REPARATURSATZ KIT DE REPARAÇÃO	KIT DE REPARATION REPARATIEKIT	003K
211		72962208		2	PLATE PLACA	PIASTRA PLADE	PLATTE CHAPA	PLAQUE PLAAT	105P
251		87333063		2	SUPPORT SOPORTE	SUPPORTO BESLAG	STÜTZE SUPORTE	SUPPORT STEUN	300S
261		87333064		1	COVER CUBIERTA	COPERCHIO DÆKSEL	ABDECKUNG COBERTURA	COUVERCLE AFSCHERMING	265C
271		YN10V00043S271		2	BOX CAJA	CASSA; SCATOLA KASSE	KASTEN; OFF KASTENA CAIXA	BOITIER DOOS	035S
300		72209803		1	KIT KIT	KIT SÆT	SATZ KIT	KIT KIT	305C
312		LC10V00010S312		1	BLOCK BLOQUE	BLOCCO MOTORBLOK	BLOCK BLOCO	BLOC BLOK	074B
325		YN10V00043S325		1	COVER CUBIERTA	COPERCHIO DÆKSEL	ABDECKUNG COBERTURA	COUVERCLE AFSCHERMING	265C
400		72209806		1	KIT KIT	KIT SÆT	SATZ KIT	KIT KIT	305C
401		87333069		8	SCREW TORNILLO	VITE SKRUE	SCHRAUBE PARAFUSO	VIS SCHROEF	040V
406		14306370		8	SCREW TORNILLO	VITE SKRUE	SCHRAUBE PARAFUSO	VIS SCHROEF	040V
407		14304870		3	SCREW TORNILLO	VITE SKRUE	SCHRAUBE PARAFUSO	VIS SCHROEF	040V
466		72209813		2	PLUG TAPÓN	TAPPO PROP	STOPFEN TAMPÃO	BOUCHON PLUG	050T
467		2441U549S464		2	PLUG TAPÓN	TAPPO PROP	STOPFEN BUJAO	BOUCHON PLUG	6400
468		72209878		4	PLUG TAPÓN	TAPPO PROP	STOPFEN TAMPÃO	BOUCHON PLUG	050T

HYDRAULIC PUMP ASSY P/N YN10V00043F1

E215B

Copyright © New Holland

1.030	02	p2	03/10

HYDRAULIC PUMP - COMPONENTS
POMPA IMPIANTO IDRAULICO - COMPONENTI
HYDRAULIKPUMPE - BESTANDTEILE
POMPE CIRCUIT HYDR. - COMPOSANTS

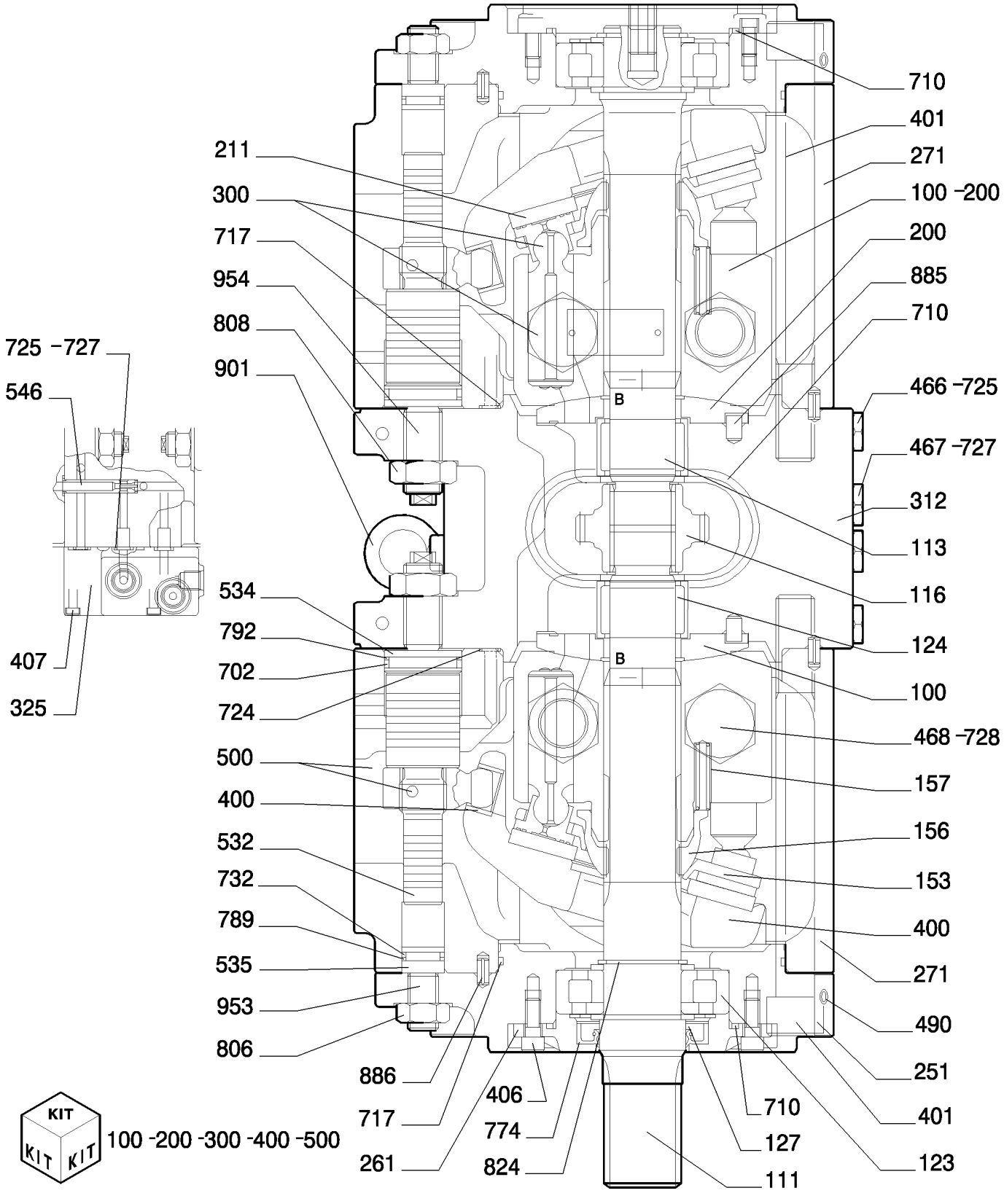

Copyright © New Holland

BOMBA HIDRAULICA - COMPONENTES
HYDRAULIC PUMP - COMPONENTS
HYDRAULIC PUMP - COMPONENTS
HYDRAULIC PUMP - COMPONENTS

R	N	P.N.	MOD	Q	Description Denominacion	Descrizione Beskrivelse	Bezeichnung Denominação	Description Beschrijving	L.C.
490		72209815		32	PLUG TAPÓN	TAPPO PROP	STOPFEN TAMPÃO	BOUCHON PLUG	050T
500		72209807		1	KIT KIT	KIT SÆT	SATZ KIT	KIT KIT	305C
532		87333070		2	PISTON PISTÓN	PISTONE STEMPEL	KOLBEN PISTÃO	PISTON ZUIGER	235S
534		87333071		2	STOP TOPE	ARRESTO; FERMO STOP	STOP BATENTE	BUTEE AANSLAG	080A
535		72962150		2	STOP TOPE	ARRESTO; FERMO STOP	STOP BATENTE	BUTEE AANSLAG	080A
546		YN10V00043S546		2	SPACER SEPARADOR	DISTANZIALE AFSTANDSSTYKKE	DISTANZSTÜCK ESPAÇADOR	ENTRETOISE AFSTANDSSTUK	075D
702		72215461		2	GASKET JUNTA	GUARNIZIONE PAKNING	DICHTUNG JUNTA	JOINT PAKKING	123G
710		72217471		3	O-RING JUNTA TÓRICA	ANELLO TOROIDALE O-RING	O-RING O-RING	JOINT TORIQUE O-RING	055A
717		72217374		4	GASKET JUNTA	GUARNIZIONE PAKNING	DICHTUNG JUNTA	JOINT PAKKING	123G
724		72215395		16	GASKET JUNTA	GUARNIZIONE PAKNING	DICHTUNG JUNTA	JOINT PAKKING	123G
725		72215387		9	GASKET JUNTA	GUARNIZIONE PAKNING	DICHTUNG JUNTA	JOINT PAKKING	123G
727		72217475		3	GASKET JUNTA	GUARNIZIONE PAKNING	DICHTUNG JUNTA	JOINT PAKKING	123G
728		72217375		4	GASKET JUNTA	GUARNIZIONE PAKNING	DICHTUNG JUNTA	JOINT PAKKING	123G
732		72215463		2	GASKET JUNTA	GUARNIZIONE PAKNING	DICHTUNG JUNTA	JOINT PAKKING	123G
774		72217376		1	GASKET JUNTA	GUARNIZIONE PAKNING	DICHTUNG JUNTA	JOINT PAKKING	123G
789		72964469		2	RING ANILLO	ANELLO RING	RING ANEL	ANNEAU RING	045A
792		72211285		2	RING ANILLO	ANELLO RING	RING ANEL	ANNEAU RING	045A
806		72964485		2	NUT TUERCA	DADO MØTRIK	MUTTER PORCA	ECROU MOER	010D
808		ZN18C20012		2	NUT TUERCA	DADO MØTRIK	MUTTER PORCA	ECROU MOER	010D
824		72211282		2	O-RING JUNTA TÓRICA	ANELLO TOROIDALE O-RING	O-RING O-RING	JOINT TORIQUE O-RING	055A
885		72962216		2	PIN PASADOR	PERNO STIFT	PIN PERNO	BROCHE PEN	080P
886		72958881		4	PIN PASADOR	PERNO STIFT	PIN PERNO	BROCHE PEN	080P
901		72958882		2	BOLT PERNO	BULLONE BOLT	SCHRAUBE PARAFUSO	VIS BOUT	140B
953		72209801		2	KIT KIT	KIT SÆT	SATZ KIT	KIT KIT	305C
954		72209802		2	SCREW TORNILLO	VITE SKRUE	SCHRAUBE PARAFUSO	VIS SCHROEF	040V

HYDRAULIC PUMP ASSY P/N YN10V00043F1

E215B

Copyright © New Holland

HYDRAULIC PUMP - COMPONENTS
POMPA IMPIANTO IDRAULICO - COMPONENTI
HYDRAULIKPUMPE - BESTANDTEILE
POMPE CIRCUIT HYDR. - COMPOSANTS

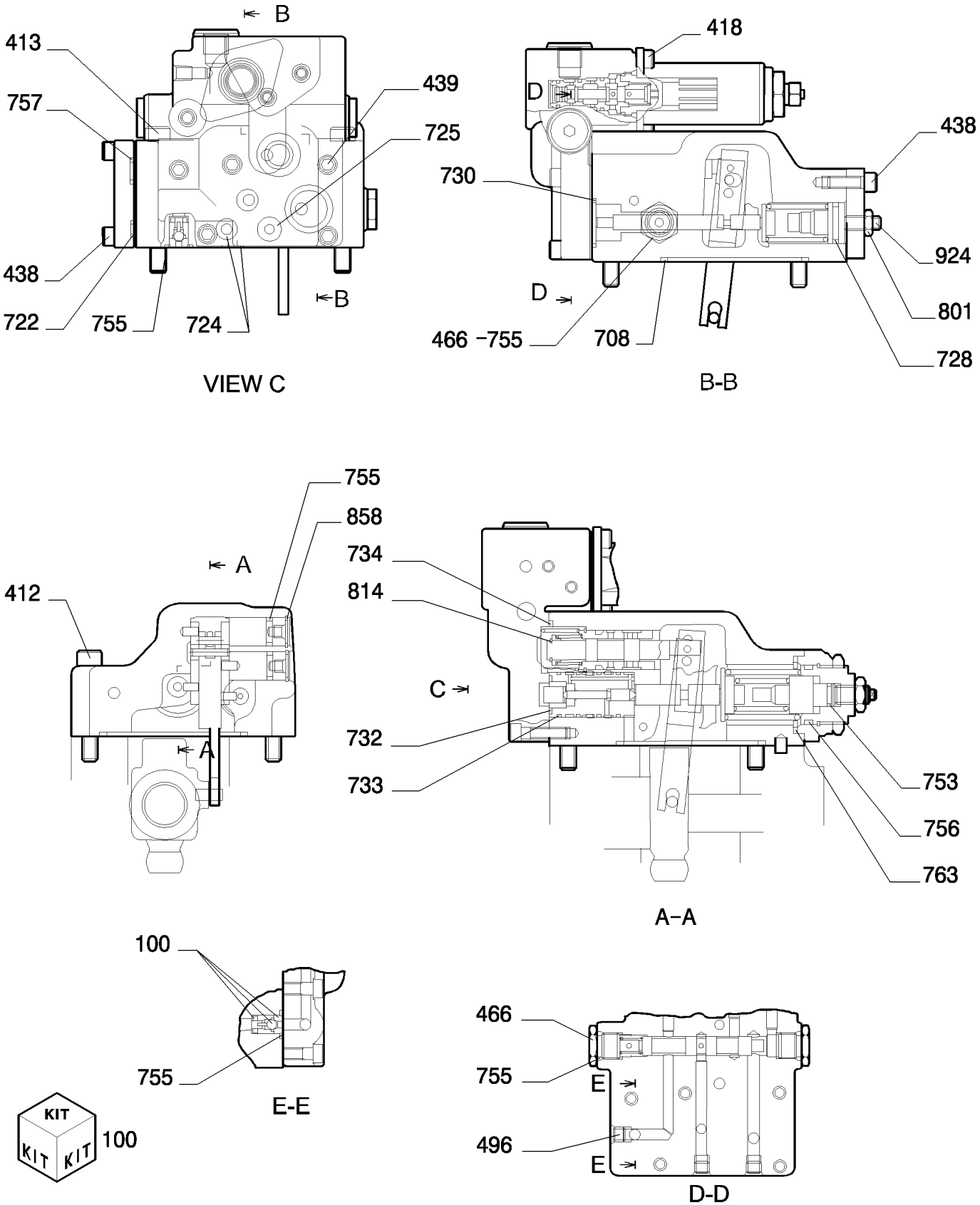

Copyright © New Holland

BOMBA HIDRAULICA - COMPONENTES
HYDRAULIC PUMP - COMPONENTS
HYDRAULIC PUMP - COMPONENTS
HYDRAULIC PUMP - COMPONENTS

R	N	P.N.	MOD	Q	Description Denominacion	Descrizione Beskrivelse	Bezeichnung Denominação	Description Beschrijving	L.C.
100		72962151		1	REPAIR KIT KIT DE REPARACIÓN	KIT DI RIPARAZIONE REPARATIONSSÆT	REPARATURSATZ KIT DE REPARAÇÃO	KIT DE REPARATION REPARATIEKIT	003K
412		14306970		2	SCREW TORNILLO	VITE SKRUE	SCHRAUBE PARAFUSO	VIS SCHROEF	040V
413		14309070		2	SCREW TORNILLO	VITE SKRUE	SCHRAUBE PARAFUSO	VIS SCHROEF	040V
418		72209810		2	SCREW TORNILLO	VITE SKRUE	SCHRAUBE PARAFUSO	VIS SCHROEF	040V
438		14305334		8	SCREW, Hex Soc Hd, M6 x 20, 10.9 TORNILLO	VITE SKRUE	SCHRAUBE PARAFUSO	VIS SCHROEF	040V
439		14305470		5	SCREW TORNILLO	VITE SKRUE	SCHRAUBE PARAFUSO	VIS SCHROEF	040V
466		72209813		3	PLUG TAPÓN	TAPPO PROP	STOPFEN TAMPÃO	BOUCHON PLUG	050T
496		72209815		17	PLUG TAPÓN	TAPPO PROP	STOPFEN TAMPÃO	BOUCHON PLUG	050T
708		72215396		1	GASKET JUNTA	GUARNIZIONE PAKNING	DICHTUNG JUNTA	JOINT PAKKING	123G
722		72217377		3	GASKET JUNTA	GUARNIZIONE PAKNING	DICHTUNG JUNTA	JOINT PAKKING	123G
724		72215395		8	GASKET JUNTA	GUARNIZIONE PAKNING	DICHTUNG JUNTA	JOINT PAKKING	123G
725		72217378		1	GASKET JUNTA	GUARNIZIONE PAKNING	DICHTUNG JUNTA	JOINT PAKKING	123G
728		72215463		1	GASKET JUNTA	GUARNIZIONE PAKNING	DICHTUNG JUNTA	JOINT PAKKING	123G
730		72215357		1	GASKET JUNTA	GUARNIZIONE PAKNING	DICHTUNG JUNTA	JOINT PAKKING	123G
732		72217476		1	GASKET JUNTA	GUARNIZIONE PAKNING	DICHTUNG JUNTA	JOINT PAKKING	123G
733		72217379		1	GASKET JUNTA	GUARNIZIONE PAKNING	DICHTUNG JUNTA	JOINT PAKKING	123G
734		72217380		1	GASKET JUNTA	GUARNIZIONE PAKNING	DICHTUNG JUNTA	JOINT PAKKING	123G
753		72217381		1	GASKET JUNTA	GUARNIZIONE PAKNING	DICHTUNG JUNTA	JOINT PAKKING	123G
755		72215387		7	GASKET JUNTA	GUARNIZIONE PAKNING	DICHTUNG JUNTA	JOINT PAKKING	123G
756		72217382		1	GASKET JUNTA	GUARNIZIONE PAKNING	DICHTUNG JUNTA	JOINT PAKKING	123G
757		72215386		1	GASKET JUNTA	GUARNIZIONE PAKNING	DICHTUNG JUNTA	JOINT PAKKING	123G
763		72215461		1	GASKET JUNTA	GUARNIZIONE PAKNING	DICHTUNG JUNTA	JOINT PAKKING	123G
801		16102324		1	NUT, Thin, M8 x 1.25, Cl 05 TUERCA	DADO MØTRIK	MUTTER PORCA	ECROU MOER	010D
814		72219119		1	GASKET JUNTA	GUARNIZIONE PAKNING	DICHTUNG JUNTA	JOINT PAKKING	123G
858		11066371		2	RING ANILLO	ANELLO RING	RING ANEL	ANNEAU RING	045A

PUMP ASSY P/N YN10V01009F1

E215B

Copyright © New Holland

HYDRAULIC PUMP - COMPONENTS
POMPA IMPIANTO IDRAULICO - COMPONENTI
HYDRAULIKPUMPE - BESTANDTEILE
POMPE CIRCUIT HYDR. - COMPOSANTS

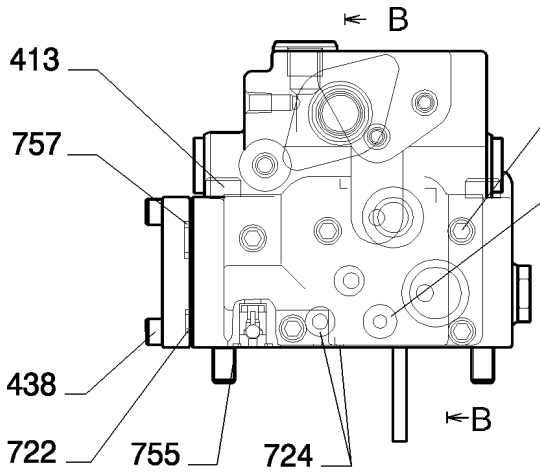

VIEW C

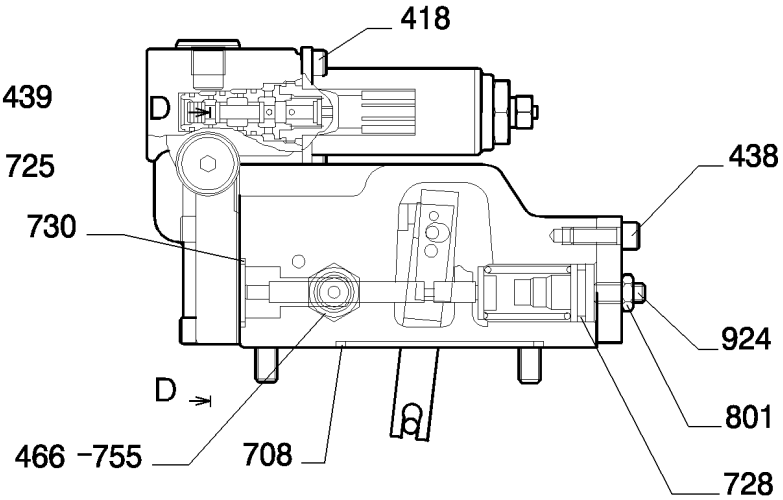

B-B

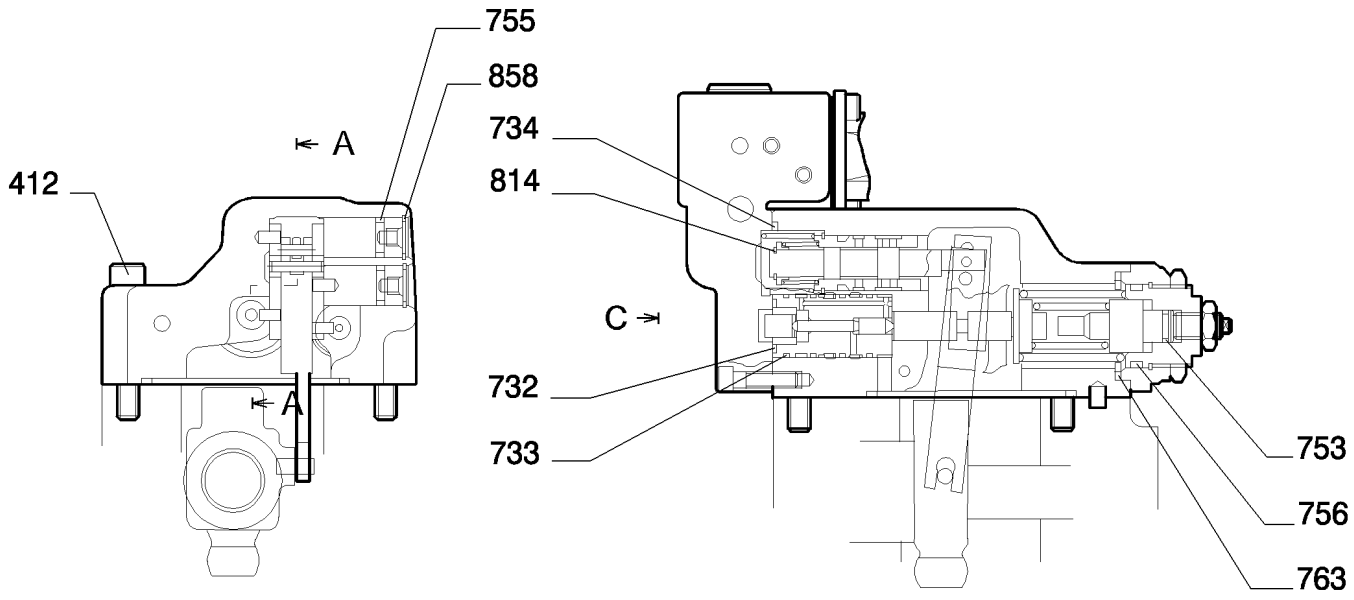

A-A

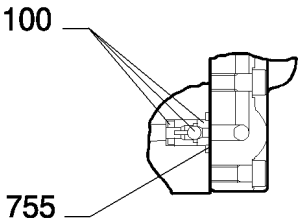

E-E

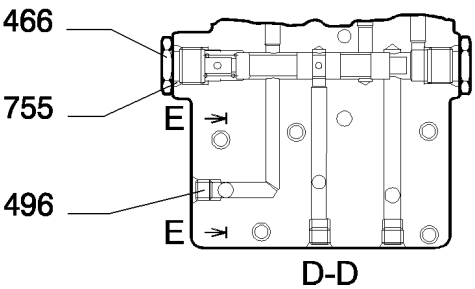

D-D



100

Copyright © New Holland

BOMBA HIDRAULICA - COMPONENTES
HYDRAULIC PUMP - COMPONENTS
HYDRAULIC PUMP - COMPONENTS
HYDRAULIC PUMP - COMPONENTS

R	N	P.N.	MOD	Q	Description Denominacion	Descrizione Beskrivelse	Bezeichnung Denominação	Description Beschrijving	L.C.
924		72209832		1	KIT KIT	KIT SÆT	SATZ KIT	KIT KIT	305C

PUMP ASSY P/N YN10V01009F1

E215B

Copyright © New Holland

1.030	04	p1	03/10

HYDRAULIC PUMP - COMPONENTS
POMPA IMPIANTO IDRAULICO - COMPONENTI
HYDRAULIKPUMPE - BESTANDTEILE
POMPE CIRCUIT HYDR. - COMPOSANTS

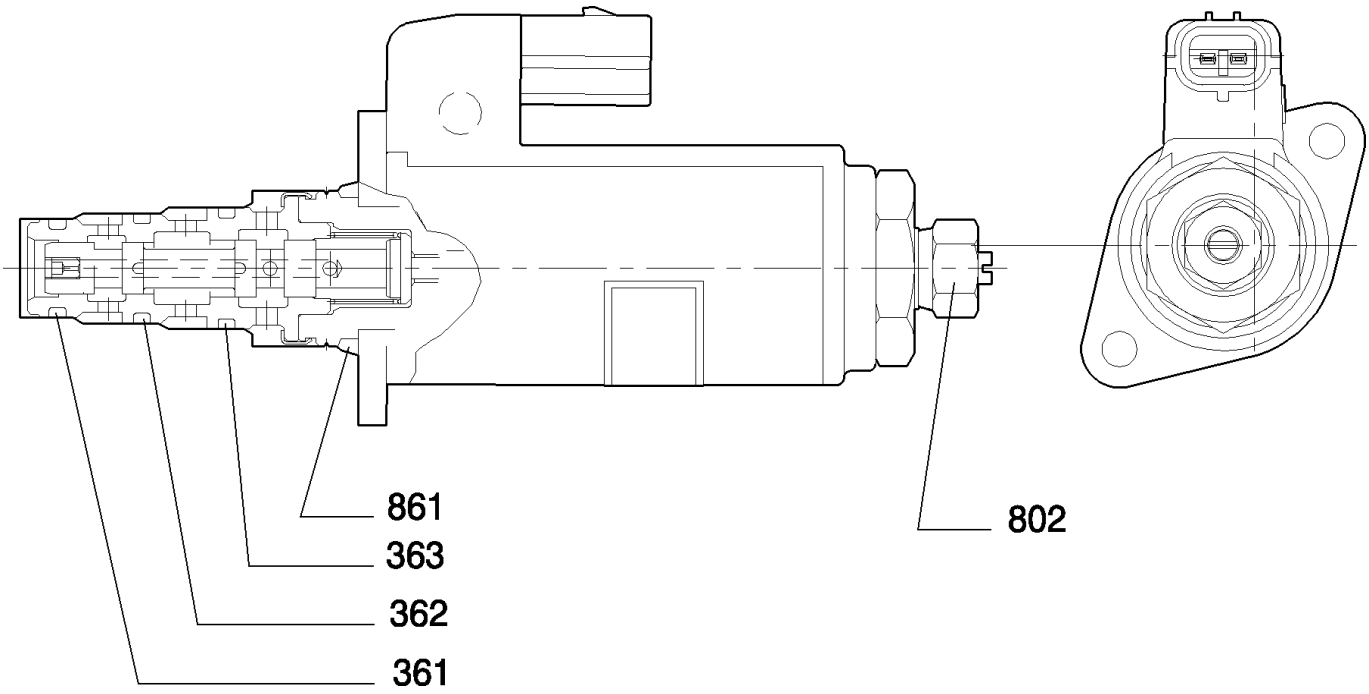

Copyright © New Holland

BOMBA HIDRAULICA - COMPONENTES
HYDRAULIC PUMP - COMPONENTS
HYDRAULIC PUMP - COMPONENTS
HYDRAULIC PUMP - COMPONENTS

R	N	P.N.	MOD	Q	Description Denominacion	Descrizione Beskrivelse	Bezeichnung Denominação	Description Beschrijving	L.C.
361		72209833		1	O-RING JUNTA TÓRICA	ANELLO TOROIDALE O-RING	O-RING O-RING	JOINT TORIQUE O-RING	055A
362		72209834		1	O-RING JUNTA TÓRICA	ANELLO TOROIDALE O-RING	O-RING O-RING	JOINT TORIQUE O-RING	055A
363		72209835		1	O-RING JUNTA TÓRICA	ANELLO TOROIDALE O-RING	O-RING O-RING	JOINT TORIQUE O-RING	055A
802		72219365		1	PLUG TAPÓN	TAPPO PROP	STOPFEN TAMPÃO	BOUCHON PLUG	050T
861		72209824		1	O-RING JUNTA TÓRICA	ANELLO TOROIDALE O-RING	O-RING O-RING	JOINT TORIQUE O-RING	055A

VALVE ASSY P/N YN35V00052F1

E215B

Copyright © New Holland

1.030	05	p1	03/10

HYDRAULIC PUMP - COMPONENTS
POMPA IMPIANTO IDRAULICO - COMPONENTI
HYDRAULIKPUMPE - BESTANDTEILE
POMPE CIRCUIT HYDR. - COMPOSANTS

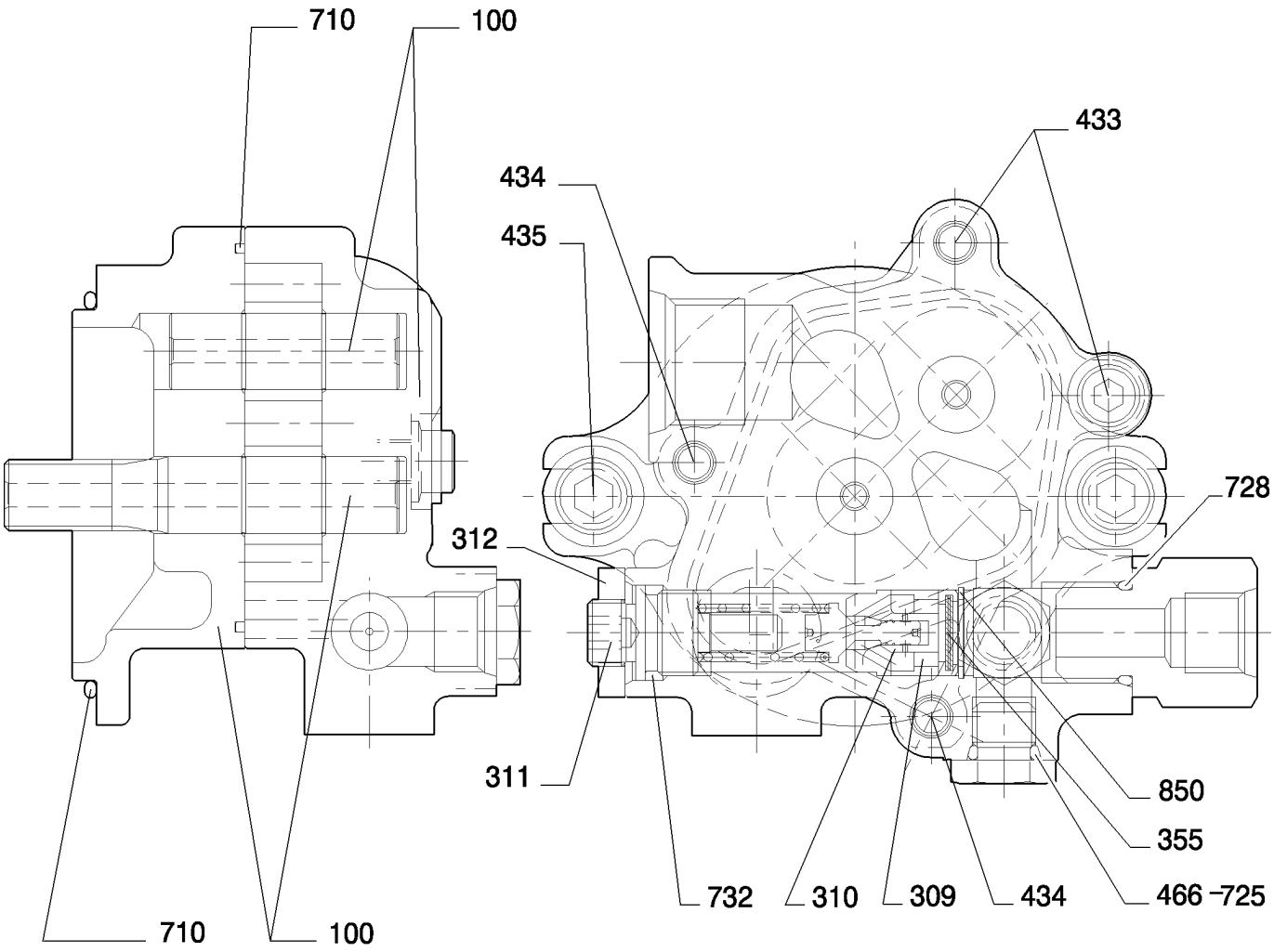

KIT 100

Copyright © New Holland

BOMBA HIDRAULICA - COMPONENTES
HYDRAULIC PUMP - COMPONENTS
HYDRAULIC PUMP - COMPONENTS
HYDRAULIC PUMP - COMPONENTS

R	N	P.N.	MOD	Q	Description Denominacion	Descrizione Beskrivelse	Bezeichnung Denominação	Description Beschrijving	L.C.
309		72963995		1	RING ANILLO	ANELLO RING	RING ANEL	ANNEAU RING	045A
310		72963996		1	SPRING RESORTE	MOLLA FJEDER	FEDER MOLA	RESSORT VEER	100M
311		72963997		1	ADJUSTMENT SCREW TORNILLO DE REGLAJE	VITE DI REGOLAZIONE JUSTERINGSSKRUE	EINSTELLSCHRAUBE PARAFUSO DE AJUSTE	VIS DE REGLAGE STELSCHROEF	051V
312		72960479		1	NUT TUERCA	DADO MØTRIK	MUTTER PORCA	ECROU MOER	010D
350		72150353		1	REPAIR KIT KIT DE REPARACIÓN	KIT DI RIPARAZIONE REPARATIONSSÆT	REPARATURSATZ KIT DE REPARAÇÃO	KIT DE REPARATION REPARATIEKIT	003K
355		72963968		1	FILTER FILTRO	FILTRO FILTER	FILTER FILTRO	FILTRE FILTER	065F
433		72963969		2	SCREW TORNILLO	VITE SKRUE	SCHRAUBE PARAFUSO	VIS SCHROEF	040V
434		72963970		2	SCREW TORNILLO	VITE SKRUE	SCHRAUBE PARAFUSO	VIS SCHROEF	040V
435		72150352		2	SCREW TORNILLO	VITE SKRUE	SCHRAUBE PARAFUSO	VIS SCHROEF	040V
466		72209813		2	PLUG TAPÓN	TAPPO PROP	STOPFEN TAMPÃO	BOUCHON PLUG	050T
700		72963972		1	RING ANILLO	ANELLO RING	RING ANEL	ANNEAU RING	045A
710		72209836		1	O-RING JUNTA TÓRICA	ANELLO TOROIDALE O-RING	O-RING O-RING	JOINT TORIQUE O-RING	055A
725		72209827		2	O-RING JUNTA TÓRICA	ANELLO TOROIDALE O-RING	O-RING O-RING	JOINT TORIQUE O-RING	055A
728		72209821		1	O-RING JUNTA TÓRICA	ANELLO TOROIDALE O-RING	O-RING O-RING	JOINT TORIQUE O-RING	055A
732		72209823		1	O-RING JUNTA TÓRICA	ANELLO TOROIDALE O-RING	O-RING O-RING	JOINT TORIQUE O-RING	055A
850		72964498		1	RING ANILLO	ANELLO RING	RING ANEL	ANNEAU RING	045A

PUMP ASSY P/N YN10V00033F2

E215B

Copyright © New Holland

1.030	06	p1	03/10

HYDRAULIC PUMP - COMPONENTS
POMPA IMPIANTO IDRAULICO - COMPONENTI
HYDRAULIKPUMPE - BESTANDTEILE
POMPE CIRCUIT HYDR. - COMPOSANTS

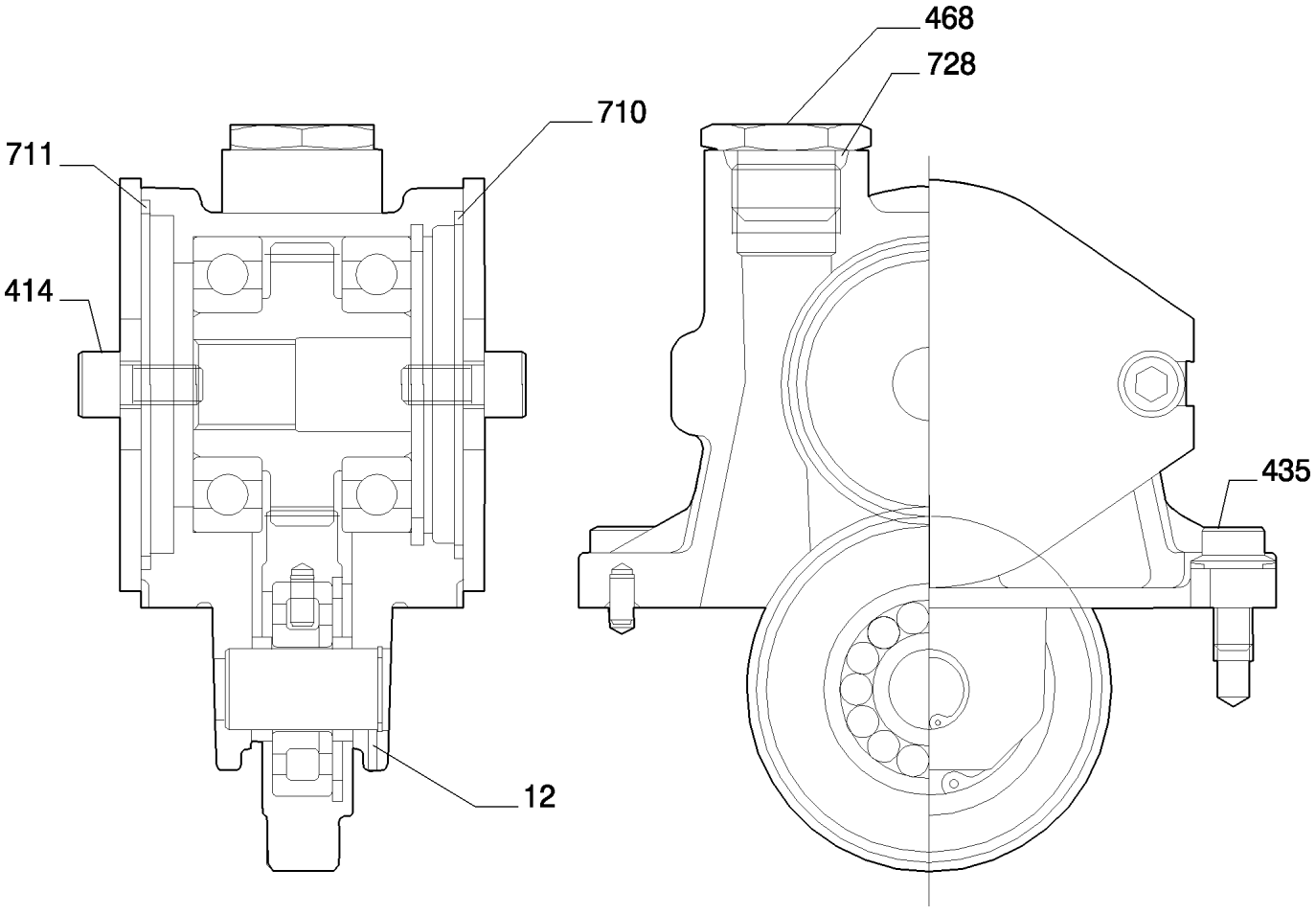

Copyright © New Holland

BOMBA HIDRAULICA - COMPONENTES
HYDRAULIC PUMP - COMPONENTS
HYDRAULIC PUMP - COMPONENTS
HYDRAULIC PUMP - COMPONENTS

R	N	P.N.	MOD	Q	Description Denominacion	Descrizione Beskrivelse	Bezeichnung Denominação	Description Beschrijving	L.C.
12		87363966		1	PIN PASADOR	PERNO STIFT	PIN PERNO	BROCHE PEN	080P
414		72209876		4	SCREW TORNILLO	VITE SKRUE	SCHRAUBE PARAFUSO	VIS SCHROEF	040V
435		72209877		4	SCREW TORNILLO	VITE SKRUE	SCHRAUBE PARAFUSO	VIS SCHROEF	040V
468		72209878		1	PLUG TAPÓN	TAPPO PROP	STOPFEN TAMPÃO	BOUCHON PLUG	050T
710		72209836		1	O-RING JUNTA TÓRICA	ANELLO TOROIDALE O-RING	O-RING O-RING	JOINT TORIQUE O-RING	055A
711		72209879		1	O-RING JUNTA TÓRICA	ANELLO TOROIDALE O-RING	O-RING O-RING	JOINT TORIQUE O-RING	055A
728		72209838		1	O-RING JUNTA TÓRICA	ANELLO TOROIDALE O-RING	O-RING O-RING	JOINT TORIQUE O-RING	055A

GEAR CASE ASSY P/N YB46W00001F2

E215B

Copyright © New Holland

1.040	01	p1	03/10

SWING REDUCTION UNIT
MOTORIDUTTORE DI ROTAZIONE
UNTERSETZUNGGETRIEBE
MOTOREDUCTOR ROTACION

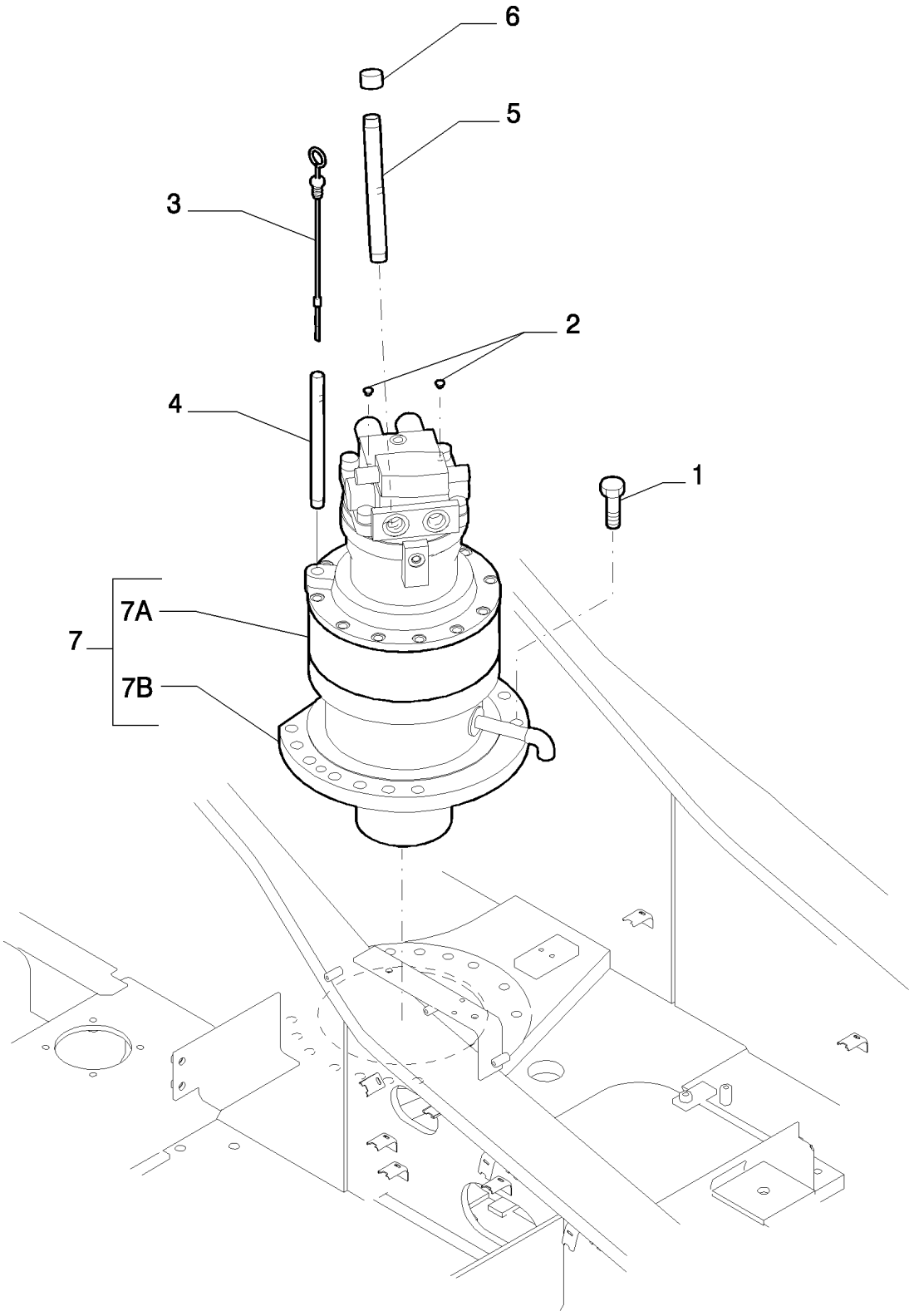

Copyright © New Holland

REDUCTOR DE ROTACION
SWING REDUCTION UNIT
SWING REDUCTION UNIT
SWING REDUCTION UNIT

R	N	P.N.	MOD	Q	Description Denominacion	Descrizione Beskrivelse	Bezeichnung Denominação	Description Beschrijving	L.C.
1		11124834		13	SCREW TORNILLO	VITE SKRUE	SCHRAUBE PARAFUSO	VIS SCHROEF	040V
2		87643225		2	PLUG TAPÓN	TAPPO PROP	STOPFEN TAMPÃO	BOUCHON PLUG	050T
3		87369427		1	LEVEL GAUGE INDICADOR DE NIVEL	INDICATORE DI LIVELLO NIVEAUMÅLER	FÜLLSTANDSANZEIGE INDICADOR DE NÍVEL	JAUGE DE NIVEAU NIVEAUMETER	031I
4		87540132		1	RIGID TUBE TUBO RÍGIDO	TUBO RIGIDO STIFT RØR	ROHR TUBO RÍGIDO	TUYAU RIGIDE VASTE LEIDING	193T
5		84189984		1	RIGID TUBE TUBO RÍGIDO	TUBO RIGIDO STIFT RØR	ROHR TUBO RÍGIDO	TUYAU RIGIDE VASTE LEIDING	193T
6		87369430		1	PLUG TAPÓN	TAPPO PROP	STOPFEN TAMPÃO	BOUCHON PLUG	050T
7		YN15V00036F3		1	MOTOR, - ASSY MOTOR	MOTORINO; MOTORE MOTOR	MOTOR MOTOR	MOTEUR MOTOR	Z560
7A	1	87540130		1	HYDRAULIC MOTOR MOTOR HIDRÁULICO	MOTORE IDRAULICO HYDRAULIKMOTOR	HYDRAULIKMOTOR MOTOR HIDRÁULICO	MOTEUR HYDRAULIQUE HYDRAULISCHE MOTOF	900M
7B	2	YN32W00022F2		1	GEAR REDUCTION UNIT UNIDAD DE RED. DE EN	RIDUTTORE ENHED TIL GEARREDUK	UNTERSETZUNGSGETR REDUTOR	REDUCTEUR TANDWIELREDUCTIEKA	058R

(1) ASSY SEE PAGE 2
(2) ASSY SEE PAGE 3

Copyright © New Holland

1.040	02	p1	03/10

SWING REDUCTION UNIT - COMPONENTS
MOTORIDUTTORE DI ROTAZIONE - COMPONENTI
UNTERSETZUNGGETRIEBE - BESTANDTEILE
MOTOREDUCTOR ROTACION - COMPOSANTS

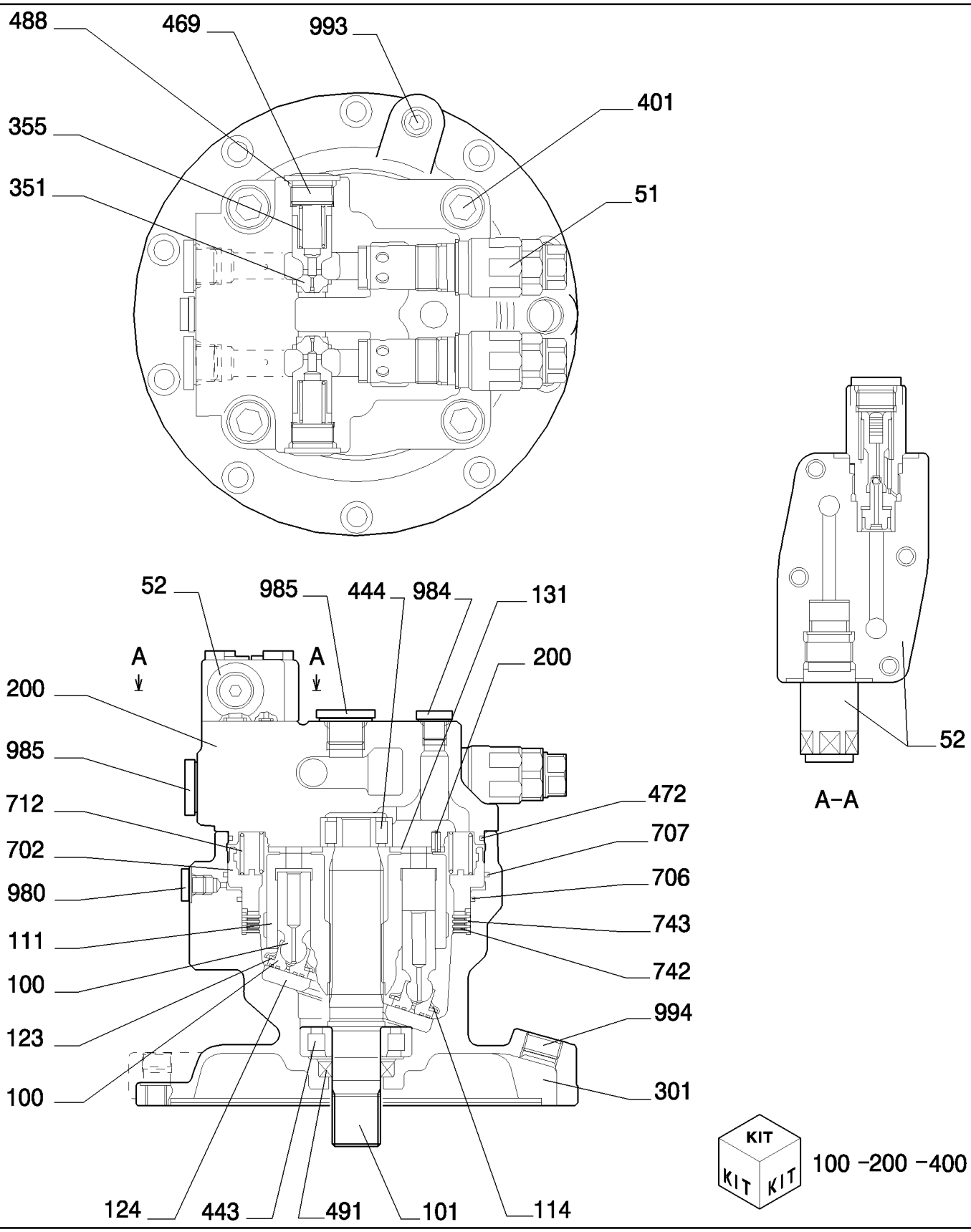

Copyright © New Holland

REDUCTOR DE ROTACION - COMPONENTES
SWING REDUCTION UNIT - COMPONENTS
SWING REDUCTION UNIT - COMPONENTS
SWING REDUCTION UNIT - COMPONENTS

R	N	P.N.	MOD	Q	Description Denominacion	Descrizione Beskrivelse	Bezeichnung Denominação	Description Beschrijving	L.C.
51		YN22V00014FA		2	VALVE VÁLVULA	VALVOLA VENTIL	VENTIL VÁLVULA	SOUPAPE KLEP	9620
52		72210003		1	HYDRAULIC VALVE VÁLVULA HIDRÁULICA	DISTRIBUTORE IDRAULI HYDRAULIKVENTIL	HYDRAULIKVENTIL VÁLVULA HIDRÁULICA	SOUPAPE HYDRAULIQU HYDRAULISCHE KLEP	010V
100		72210004		1	KIT KIT	KIT SÆT	SATZ KIT	KIT KIT	305C
101		72209976		1	SHAFT EJE	ALBERO AKSEL	WELLE VEIO	ARBRE AS	016A
111		72209977		1	CYLINDER CILINDRO	CILINDRO CYLINDER	ZYLINDER CILINDRO	VERIN CILINDER	164C
114		72209978		1	SPRING RESORTE	MOLLA FJEDER	FEDER MOLA	RESSORT VEER	100M
123		72209979		1	PLATE PLACA	PIASTRA PLADE	PLATTE CHAPA	PLAQUE PLAAT	105P
124		72209980		1	PLATE PLACA	PIASTRA PLADE	PLATTE CHAPA	PLAQUE PLAAT	105P
131		72209981		1	PLATE PLACA	PIASTRA PLADE	PLATTE CHAPA	PLAQUE PLAAT	105P
200		72210005		1	KIT KIT	KIT SÆT	SATZ KIT	KIT KIT	305C
301		YN15V00035S301		1	BOX CAJA	CASSA; SCATOLA KASSE	KASTEN; OFF KASTENA CAIXA	BOITIER DOOS	035S
351		72209982		2	HYDRAULIC VALVE VÁLVULA HIDRÁULICA	DISTRIBUTORE IDRAULI HYDRAULIKVENTIL	HYDRAULIKVENTIL VÁLVULA HIDRÁULICA	SOUPAPE HYDRAULIQU HYDRAULISCHE KLEP	010V
355		72209983		2	SPRING RESORTE	MOLLA FJEDER	FEDER MOLA	RESSORT VEER	100M
400		72215377		1	KIT KIT	KIT SÆT	SATZ KIT	KIT KIT	305C
401		72209984		4	SCREW TORNILLO	VITE SKRUE	SCHRAUBE PARAFUSO	VIS SCHROEF	040V
443		72209985		1	BEARING ASSY CONJUNTO DE COJINET	COMPLESSIVO CUSCINI LEJESAMLING	LAGERBAURUPPE CHUMACEIRA	ROULEMENT LAGEREENHEID	341C
444		72209986		1	BEARING ASSY CONJUNTO DE COJINET	COMPLESSIVO CUSCINI LEJESAMLING	LAGERBAURUPPE CHUMACEIRA	ROULEMENT LAGEREENHEID	341C
469		72209987		2	PLUG TAPÓN	TAPPO PROP	STOPFEN TAMPÃO	BOUCHON PLUG	050T
472	1	72215374		1	GASKET JUNTA	GUARNIZIONE PAKNING	DICHTUNG JUNTA	JOINT PAKKING	123G
488	1	72209989		2	O-RING JUNTA TÓRICA	ANELLO TOROIDALE O-RING	O-RING O-RING	JOINT TORIQUE O-RING	055A
491	1	YN15V00035S491		1	GASKET JUNTA	GUARNIZIONE PAKNING	DICHTUNG JUNTA	JOINT PAKKING	123G
702		72209991		1	PLUNGER ÉMBOLO	PISTONCINO; STANTUFI STEMPEL	PLUNGER ÊMBOLO	PLONGEUR PLUNJER	130P
706	1	72209992		1	O-RING JUNTA TÓRICA	ANELLO TOROIDALE O-RING	O-RING O-RING	JOINT TORIQUE O-RING	055A
707	1	72209993		1	O-RING JUNTA TÓRICA	ANELLO TOROIDALE O-RING	O-RING O-RING	JOINT TORIQUE O-RING	055A
712		72209994		18	SPRING RESORTE	MOLLA FJEDER	FEDER MOLA	RESSORT VEER	100M

(1) KIT - 72215377

HYDRAULIC MOTOR ASSY P/N 87540130

E215B

Copyright © New Holland

1.040	02	p2	03/10

SWING REDUCTION UNIT - COMPONENTS
MOTORIDUTTORE DI ROTAZIONE - COMPONENTI
UNTERSETZUNGGETRIEBE - BESTANDTEILE
MOTOREDUCTOR ROTACION - COMPOSANTS

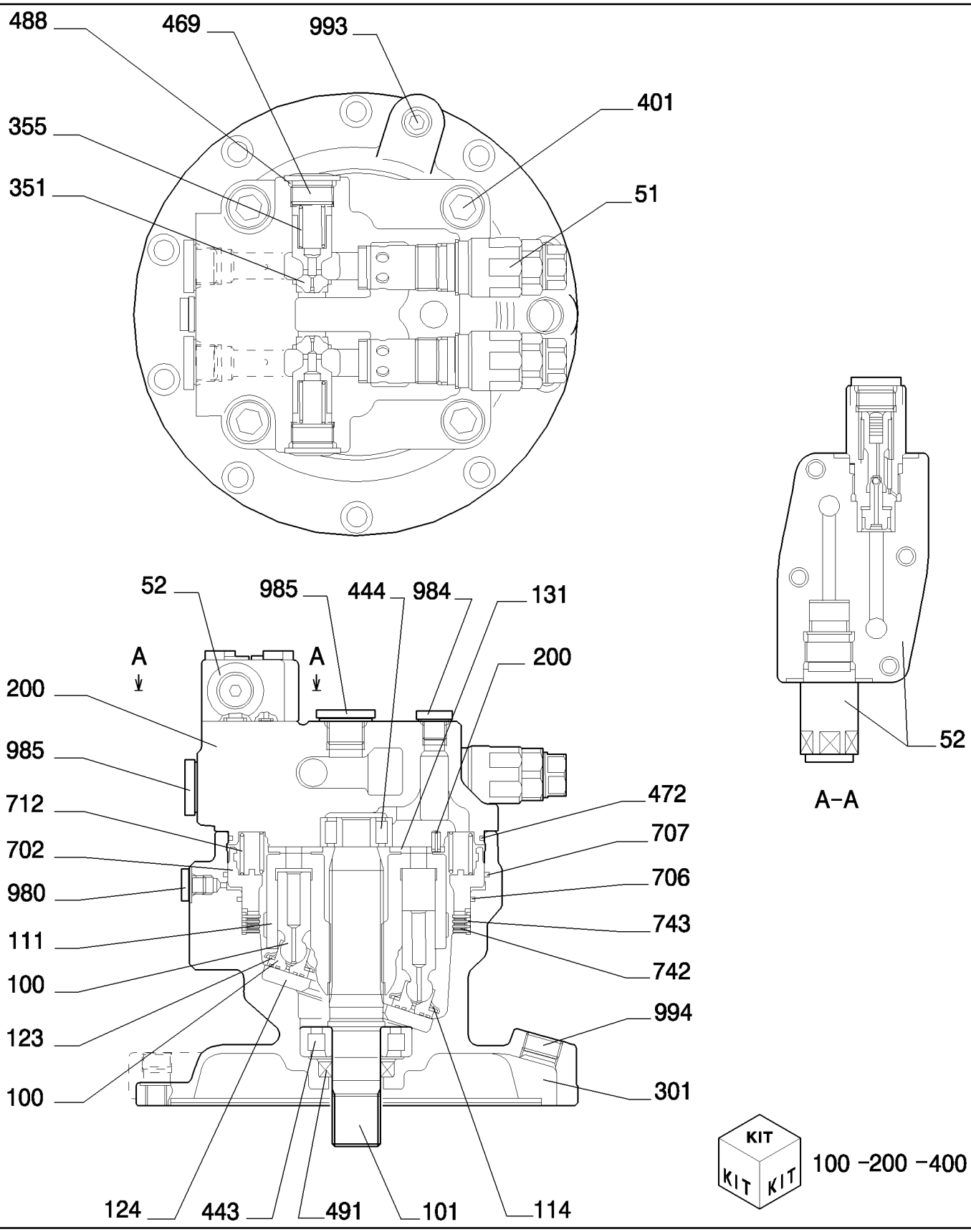

Copyright © New Holland

REDUCTOR DE ROTACION - COMPONENTES
SWING REDUCTION UNIT - COMPONENTS
SWING REDUCTION UNIT - COMPONENTS
SWING REDUCTION UNIT - COMPONENTS

R	N	P.N.	MOD	Q	Description Denominacion	Descrizione Beskrivelse	Bezeichnung Denominação	Description Beschrijving	L.C.
742		72209995		3	PLATE PLACA	PIASTRA PLADE	PLATTE CHAPA	PLAQUE PLAAT	105P
743		72209996		4	PLATE PLACA	PIASTRA PLADE	PLATTE CHAPA	PLAQUE PLAAT	105P
980		YN15V00035S980		1	PLUG TAPÓN	TAPPO PROP	STOPFEN TAMPÃO	BOUCHON PLUG	050T
984		YN15V00035S984		1	PLUG TAPÓN	TAPPO PROP	STOPFEN TAMPÃO	BOUCHON PLUG	050T
985		YN15V00035S985		1	PLUG TAPÓN	TAPPO PROP	STOPFEN TAMPÃO	BOUCHON PLUG	050T
993		72210000		1	PLUG TAPÓN	TAPPO PROP	STOPFEN TAMPÃO	BOUCHON PLUG	050T
994		72210001		1	PLUG TAPÓN	TAPPO PROP	STOPFEN TAMPÃO	BOUCHON PLUG	050T

HYDRAULIC MOTOR ASSY P/N 87540130

E215B

Copyright © New Holland

1.040	03	p1	03/10

SWING REDUCTION UNIT - COMPONENTS
MOTORIDUTTORE DI ROTAZIONE - COMPONENTI
UNTERSETZUNGGETRIEBE - BESTANDTEILE
MOTOREDUCTOR ROTACION - COMPOSANTS

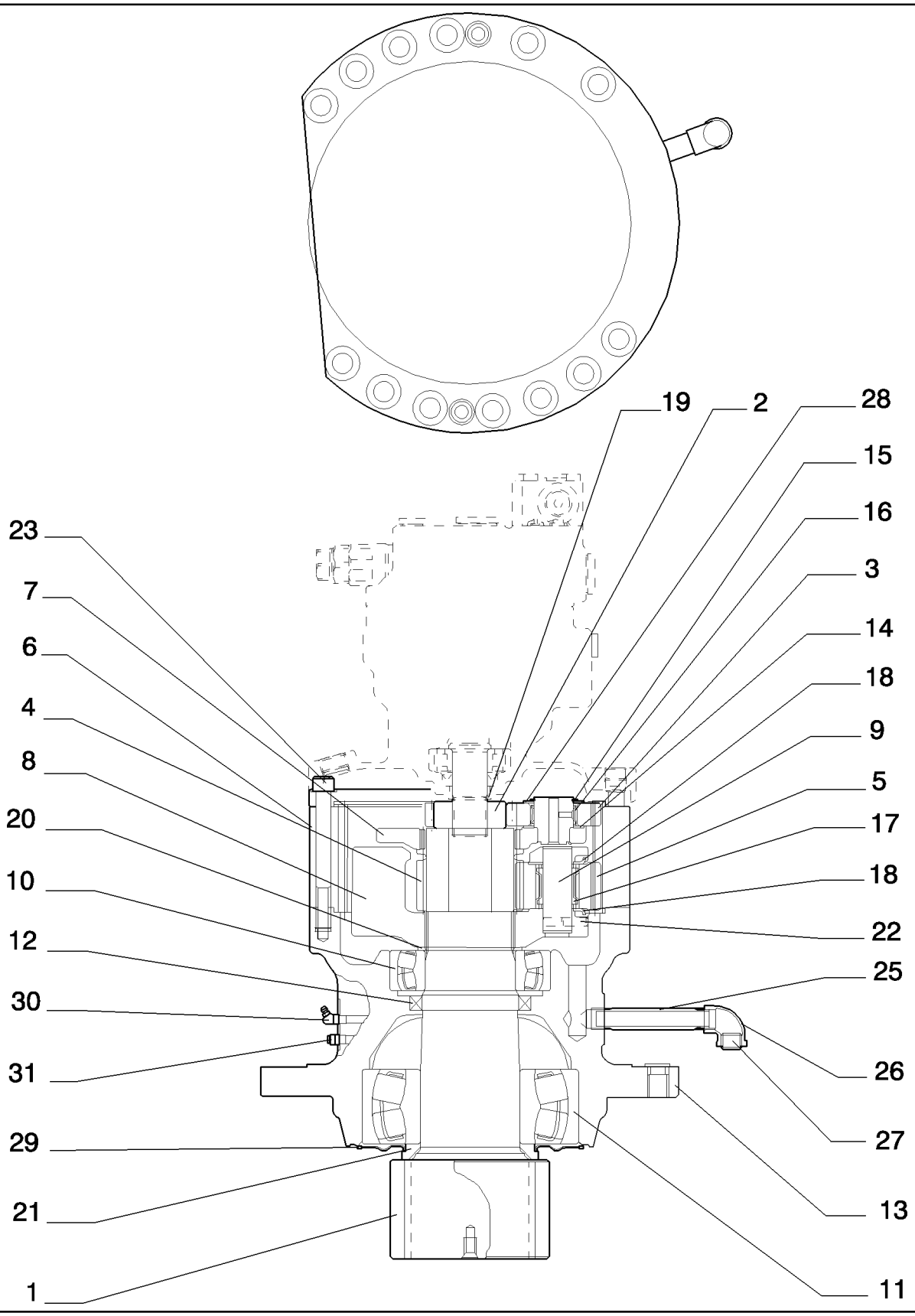

Copyright © New Holland

REDUCTOR DE ROTACION - COMPONENTES
SWING REDUCTION UNIT - COMPONENTS
SWING REDUCTION UNIT - COMPONENTS
SWING REDUCTION UNIT - COMPONENTS

R	N	P.N.	MOD	Q	Description Denominacion	Descrizione Beskrivelse	Bezeichnung Denominação	Description Beschrijving	L.C.
1		YN32W01051P1		1	SHAFT EJE	ALBERO AKSEL	WELLE VEIO	ARBRE AS	016A
2		YN32W01052P1		1	GEAR ENGRANAJE	INGRANAGGIO TANDHJUL	ZAHNRAD ENGRENAGEM	PIGNON TANDWIEL	050I
3		YN32W01117P1		4	GEAR ENGRANAJE	INGRANAGGIO TANDHJUL	ZAHNRAD ENGRENAGEM	PIGNON TANDWIEL	050I
4		YN32W01054P1		1	GEAR ENGRANAJE	INGRANAGGIO TANDHJUL	ZAHNRAD ENGRENAGEM	PIGNON TANDWIEL	050I
5		YN32W01055P1		4	GEAR ENGRANAJE	INGRANAGGIO TANDHJUL	ZAHNRAD ENGRENAGEM	PIGNON TANDWIEL	050I
6		YN32W01056P1		1	RING GEAR CORONA DENTADA	CORONA DENTATA TANDKRANS	ZAHNKRANZ COROA DENTADA	COURONNE DENTEE RINGWIEL	297C
7		YN32W01118F1		1	SPIDER CRUCETA	CROCIERA KRYDS	ZAPFENKREUZ CRUZETA	CROISILLON KRUISSTUK	320C
8		YN32W01058P1		1	CARRIER SOPORTE	SUPPORTO MEDBRINGER	TRÄGER SUPORTE	SUPPORT DRAGER	196P
9		YN32W01067P1		4	SHAFT EJE	ALBERO AKSEL	WELLE VEIO	ARBRE AS	016A
10		72210015		1	BEARING ASSY CONJUNTO DE COJINET	COMPLESSIVO CUSCINI LEJESAMLING	LAGERBAURUPPE CHUMACEIRA	ROULEMENT LAGEREENHEID	341C
11		72210012		1	BEARING ASSY CONJUNTO DE COJINET	COMPLESSIVO CUSCINI LEJESAMLING	LAGERBAURUPPE CHUMACEIRA	ROULEMENT LAGEREENHEID	341C
12		YN32W01060P1		1	GASKET JUNTA	GUARNIZIONE PAKNING	DICHTUNG JUNTA	JOINT PAKKING	123G
13		YN32W01104P1		1	BOX CAJA	CASSA; SCATOLA KASSE	KASTEN; OFF KASTENA CAIXA	BOITIER DOOS	035S
14		YN32W01026P1		4	THRUST WASHER ARANDELA DE EMPUJE	RONDELLA REGGISPINT TRYKSKIVE	DRUCKSCHEIBE ANILHA DE ENCOSTO	ANNEAU DE BUTEE DRUKRING	023R
15		YN32W01028P1		4	THRUST WASHER ARANDELA DE EMPUJE	RONDELLA REGGISPINT TRYKSKIVE	DRUCKSCHEIBE ANILHA DE ENCOSTO	ANNEAU DE BUTEE DRUKRING	023R
16		YN32W01022P1		3	ROLLER RODILLO	RULLO VALSE	WALZE ROLETE	GALET ROL	500R
17		YN32W01072P1		4	BEARING ASSY CONJUNTO DE COJINET	COMPLESSIVO CUSCINI LEJESAMLING	LAGERBAURUPPE CHUMACEIRA	ROULEMENT LAGEREENHEID	341C
18		YN32W01063P1		8	WASHER ARANDELA	RONDELLA FLADSKIVE	UNTERLEGSCHEIBE ANILHA	RONDELLE SLUITRING	131R
19		11068370		1	LOCKING RING ANILLO DE BLOQUEO	ANELLO DI BLOCCAGGI LÅSESKIVE	SICHERUNGSRING ANEL DE SEGURANÇA	BAGUE DE BLOCAGE BORGRING	051A
20		11071370		1	RING ANILLO	ANELLO RING	RING ANEL	ANNEAU RING	045A
21		YN32W01082P1		1	SLEEVE MANGUITO	MANICOTTO BØSNING	BUCHSE MANGA	CHEMISE HOES; HULS	145B
22		72210023		4	PIN PASADOR	PERNO STIFT	PIN PERNO	BROCHE PEN	080P
23		HS23C14135G1		11	SCREW TORNILLO	VITE SKRUE	SCHRAUBE PARAFUSO	VIS SCHROEF	040V
25		YN32W01080D1		1	RIGID TUBE TUBO RÍGIDO	TUBO RIGIDO STIFT RØR	ROHR TUBO RÍGIDO	TUYAU RIGIDE VASTE LEIDING	193T
26		ZG31U08000		1	HYD CONNECTOR CONECTOR HIDRÁULIC	CONNETTORE IDRAULIC HYDRAULIKSTIK	HYDR STECKVERBINDE CONECTOR HID.	CONNECTEUR HYDRAU HYDRAULISCHE AANSL	020R

REDUCTION SWING ASSY P/N YN32W00022F2

E215B

Copyright © New Holland

1.040	03	p2	03/10

SWING REDUCTION UNIT - COMPONENTS
MOTORIDUTTORE DI ROTAZIONE - COMPONENTI
UNTERSETZUNGGETRIEBE - BESTANDTEILE
MOTOREDUCTOR ROTACION - COMPOSANTS

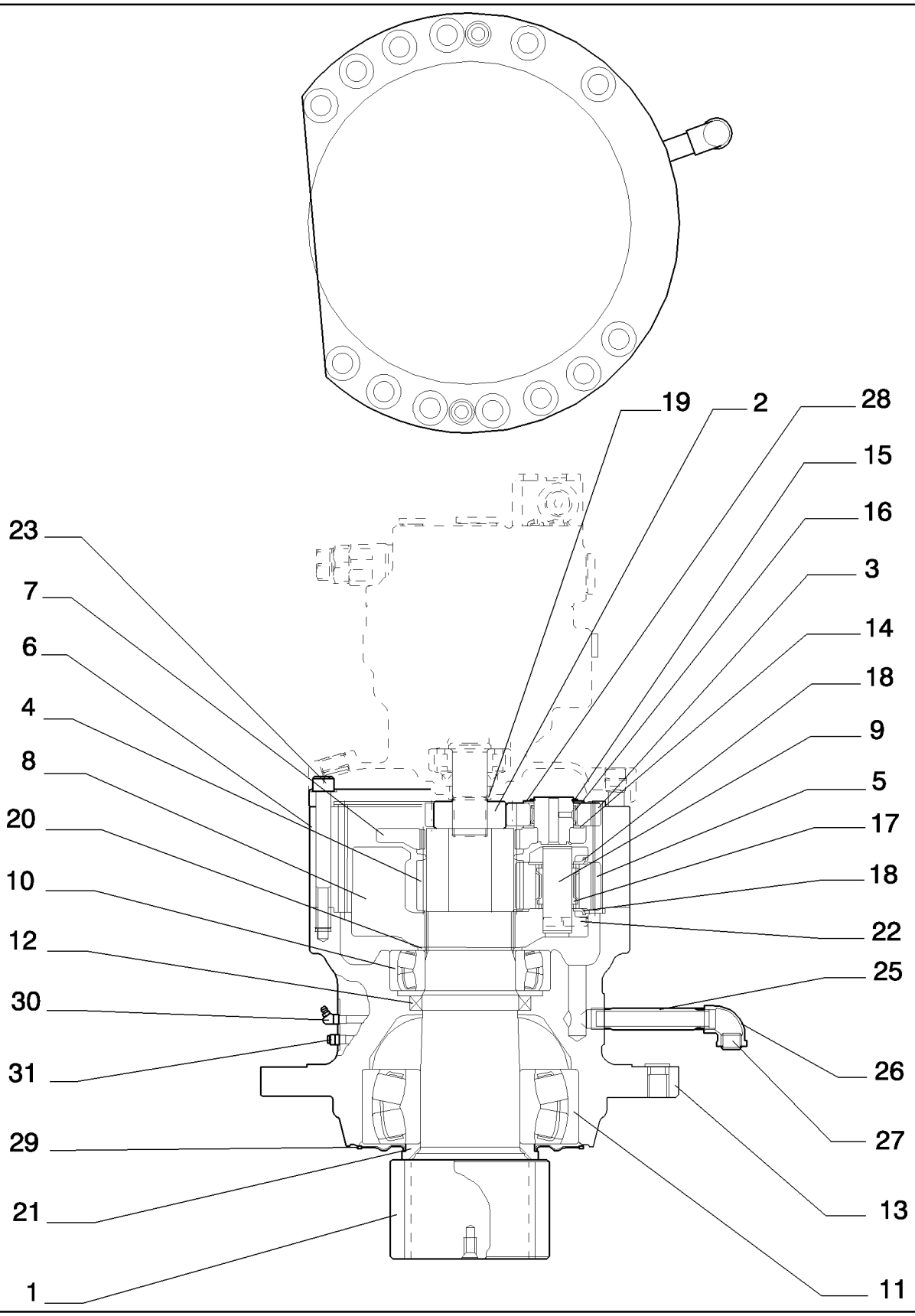

Copyright © New Holland

REDUCTOR DE ROTACION - COMPONENTES
SWING REDUCTION UNIT - COMPONENTS
SWING REDUCTION UNIT - COMPONENTS
SWING REDUCTION UNIT - COMPONENTS

R	N	P.N.	MOD	Q	Description Denominacion	Descrizione Beskrivelse	Bezeichnung Denominação	Description Beschrijving	L.C.
27		72210000		1	PLUG TAPÓN	TAPPO PROP	STOPFEN TAMPÃO	BOUCHON PLUG	050T
28		72211282		3	O-RING JUNTA TÓRICA	ANELLO TOROIDALE O-RING	O-RING O-RING	JOINT TORIQUE O-RING	055A
29		YN32W01081P1		1	GASKET JUNTA	GUARNIZIONE PAKNING	DICHTUNG JUNTA	JOINT PAKKING	123G
30		72283072		1	LUBE NIPPLE BOQUILLA DE LUBRICA(	INGRASSATORE SMØRENIPPEL	SCHMIERNIPPEL COPO DE LUBRIFICAÇÃ	GRAISSEUR SMEERNIPPEL	060I
31		72960350		1	VALVE VÁLVULA	VALVOLA VENTIL	VENTIL VÁLVULA	SOUPAPE KLEP	9620

Copyright © New Holland

1.050	01	p1	03/10

HYDRAULIC CONTROL VALVE
DISTRIBUTORE IDRAULICO
STEUERGERAET
DISTRIBUTEUR

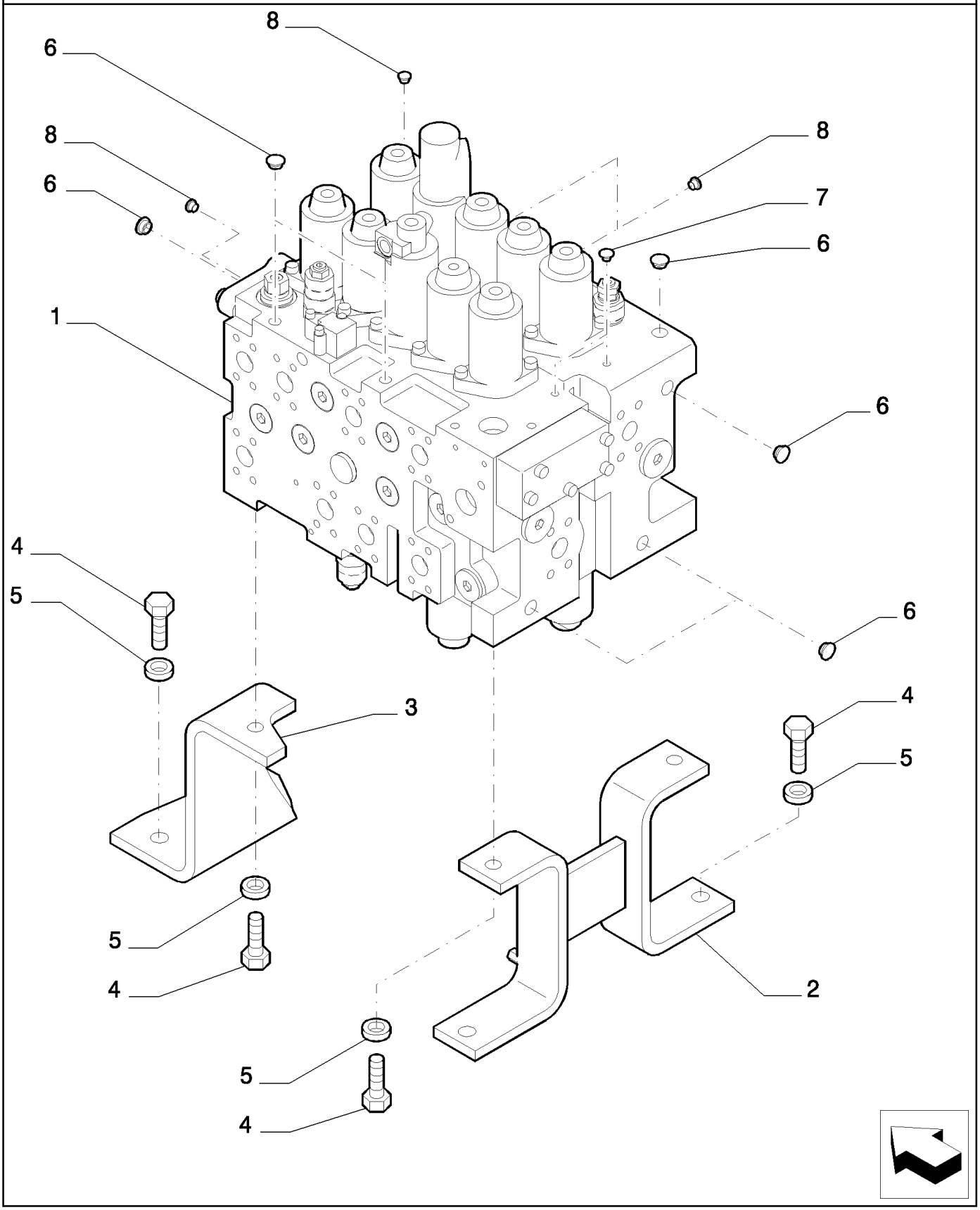

Copyright © New Holland

DISTRIBUIDOR
HYDRAULIC CONTROL VALVE
HYDRAULIC CONTROL VALVE
HYDRAULIC CONTROL VALVE

R	N	P.N.	MOD	Q	Description Denominacion	Descrizione Beskrivelse	Bezeichnung Denominação	Description Beschrijving	L.C.
1	1	YN30V00116F4		1	HYDRAULIC VALVE VÁLVULA HIDRÁULICA	DISTRIBUTORE IDRAULI HYDRAULIKVENTIL	HYDRAULIKVENTIL VÁLVULA HIDRÁULICA	SOUPAPE HYDRAULIQU HYDRAULISCHE KLEP	010V
2		87397165		1	BRACKET SOPORTE	STAFFA BESLAG	HALTERUNG SUPORTE	SUPPORT STEUN	225S
3		87397163		1	BRACKET SOPORTE	STAFFA BESLAG	HALTERUNG SUPORTE	SUPPORT STEUN	225S
4		11118734		7	SCREW TORNILLO	VITE SKRUE	SCHRAUBE PARAFUSO	VIS SCHROEF	040V
5		14496931		7	WASHER, M16 x 30 x 3 ARANDELA	RONDELLA FLADSKIVE	UNTERLEGSCHEIBE ANILHA	RONDELLE SLUITRING	131R
6		87643223		8	PLUG TAPÓN	TAPPO PROP	STOPFEN TAMPÃO	BOUCHON PLUG	050T
7		87643224		2	PLUG TAPÓN	TAPPO PROP	STOPFEN TAMPÃO	BOUCHON PLUG	050T
8		87643225		4	PLUG TAPÓN	TAPPO PROP	STOPFEN TAMPÃO	BOUCHON PLUG	050T

(1) ASSY SEE PAGE 5÷14

Copyright © New Holland

1.050	02	p1	03/10

PIPING PILOT - DISTRIBUTOR - VERSION (01-02-03)
TUBAZIONI SERVOCOMANDI - DISTRIBUTORE - VERSION (01-02-03)
LEITUNGEN- SERVOSTEU. - STEUERGERAET - VERSION (01-02-03)
TUYAUTERIES SERVOCOMMANDES - DISTRIBUTEUR - VERSION (01-02-03)

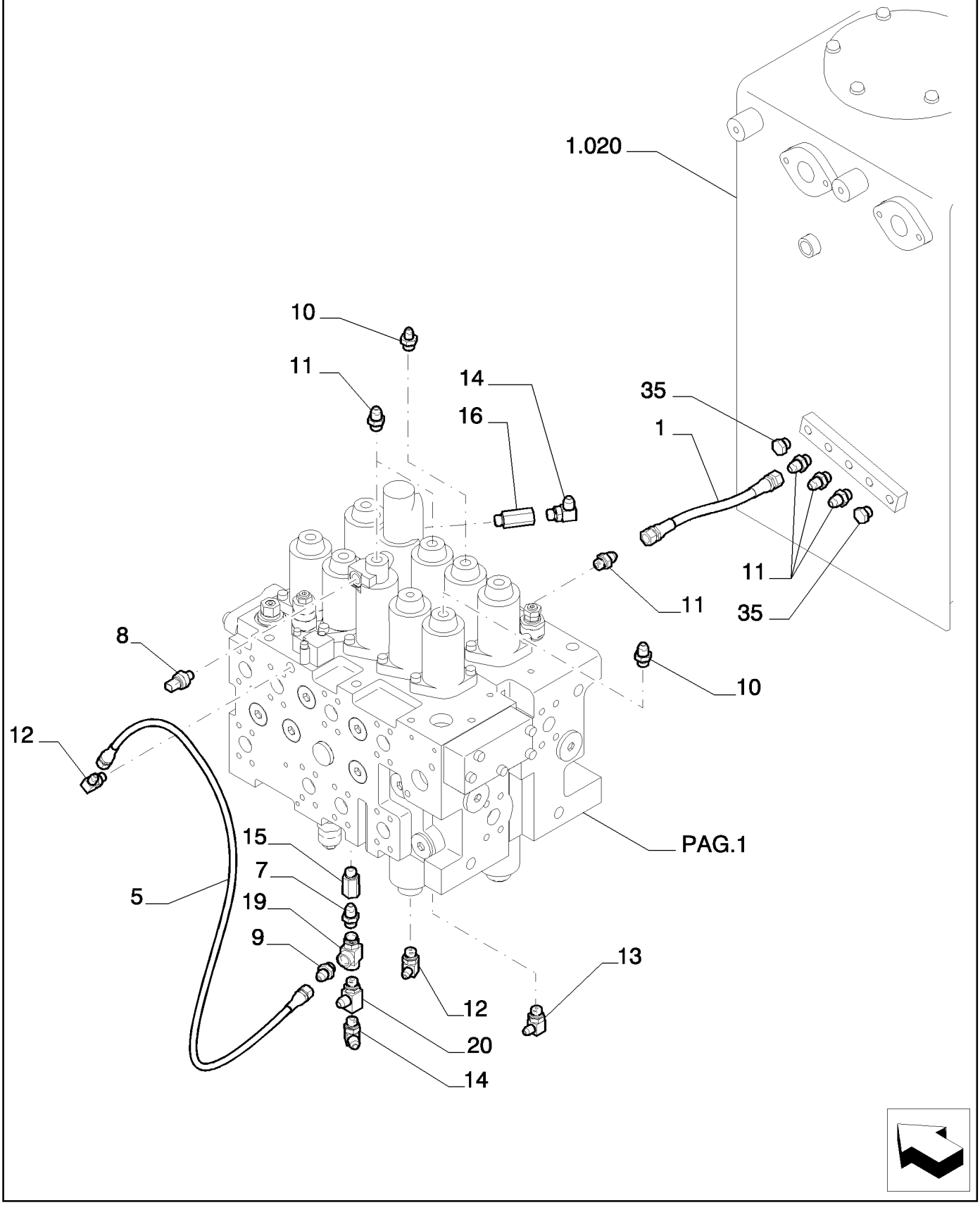

Copyright © New Holland

TUBERIAS SERVOMANDOS - DISTRIBUIDOR - VERSION (01-02-03)
PIPING PILOT - DISTRIBUTOR - VERSION (01-02-03)
PIPING PILOT - DISTRIBUTOR - VERSION (01-02-03)
PIPING PILOT - DISTRIBUTOR - VERSION (01-02-03)

R	N	P.N.	MOD	Q	Description Denominacion	Descrizione Beskrivelse	Bezeichnung Denominação	Description Beschrijving	L.C.
1		87397171		1	FLEXIBLE HOSE TUBO FLEXIBLE	TUBO FLESSIBILE FLEKSIBEL SLANGE	BIEGSAMER SCHLAUCH MANGUEIRA FLEXÍVEL	TUYAU FLEXIBLE FLEXIBELE SLANG	192T
5		72214782		1	FLEXIBLE HOSE TUBO FLEXIBLE	TUBO FLESSIBILE FLEKSIBEL SLANGE	BIEGSAMER SCHLAUCH MANGUEIRA FLEXÍVEL	TUYAU FLEXIBLE FLEXIBELE SLANG	192T
7		72209013		1	HYDRAULIC VALVE VÁLVULA HIDRÁULICA	DISTRIBUTORE IDRAULI HYDRAULIKVENTIL	HYDRAULIKVENTIL VÁLVULA HIDRÁULICA	SOUPAPE HYDRAULIQU HYDRAULISCHE KLEP	010V
8		87397450		1	SENSOR SENSOR	SENSORE FØLER	SENSOR SENSOR	CAPTEUR SENSOR	608S
9		72214744		1	HYD CONNECTOR CONECTOR HIDRÁULIC	CONNETTORE IDRAULI HYDRAULIKSTIK	HYDR STECKVERBINDE CONECTOR HID.	CONNECTEUR HYDRAU HYDRAULISCHE AANSL	020R
10		72214522		2	HYD CONNECTOR CONECTOR HIDRÁULIC	CONNETTORE IDRAULI HYDRAULIKSTIK	HYDR STECKVERBINDE CONECTOR HID.	CONNECTEUR HYDRAU HYDRAULISCHE AANSL	020R
11		72214523		6	HYD CONNECTOR CONECTOR HIDRÁULIC	CONNETTORE IDRAULI HYDRAULIKSTIK	HYDR STECKVERBINDE CONECTOR HID.	CONNECTEUR HYDRAU HYDRAULISCHE AANSL	020R
12		72214524		2	HYD CONNECTOR CONECTOR HIDRÁULIC	CONNETTORE IDRAULI HYDRAULIKSTIK	HYDR STECKVERBINDE CONECTOR HID.	CONNECTEUR HYDRAU HYDRAULISCHE AANSL	020R
13		72214525		1	HYD CONNECTOR CONECTOR HIDRÁULIC	CONNETTORE IDRAULI HYDRAULIKSTIK	HYDR STECKVERBINDE CONECTOR HID.	CONNECTEUR HYDRAU HYDRAULISCHE AANSL	020R
14		72214526		2	HYD CONNECTOR CONECTOR HIDRÁULIC	CONNETTORE IDRAULI HYDRAULIKSTIK	HYDR STECKVERBINDE CONECTOR HID.	CONNECTEUR HYDRAU HYDRAULISCHE AANSL	020R
15		87579055		1	HYD CONNECTOR CONECTOR HIDRÁULIC	CONNETTORE IDRAULI HYDRAULIKSTIK	HYDR STECKVERBINDE CONECTOR HID.	CONNECTEUR HYDRAU HYDRAULISCHE AANSL	020R
16		72284849		1	HYD CONNECTOR CONECTOR HIDRÁULIC	CONNETTORE IDRAULI HYDRAULIKSTIK	HYDR STECKVERBINDE CONECTOR HID.	CONNECTEUR HYDRAU HYDRAULISCHE AANSL	020R
19		87557652		1	HYD CONNECTOR CONECTOR HIDRÁULIC	CONNETTORE IDRAULI HYDRAULIKSTIK	HYDR STECKVERBINDE CONECTOR HID.	CONNECTEUR HYDRAU HYDRAULISCHE AANSL	020R
20		72960345		1	TEE RACOR EN T	PEZZO A T T-STYKKE	T-STÜCK TÊ	RACCORD EN T T-STUK	9020
35		72214558		2	PLUG TAPÓN	TAPPO PROP	STOPFEN TAMPÃO	BOUCHON PLUG	050T

Copyright © New Holland

1.050	03	p1	03/10

PIPING PILOT - DISTRIBUTOR - VERSION (01-02-03)
TUBAZIONI SERVOCOMANDI - DISTRIBUTORE - VERSIONE (01-02-03)
LEITUNGEN- SERVOSTEU. - STEUERGERAET - VERSION (01-02-03)
TUYAUTERIES SERVOCOMMANDES - DISTRIBUTEUR - VERSION (01-02-03)

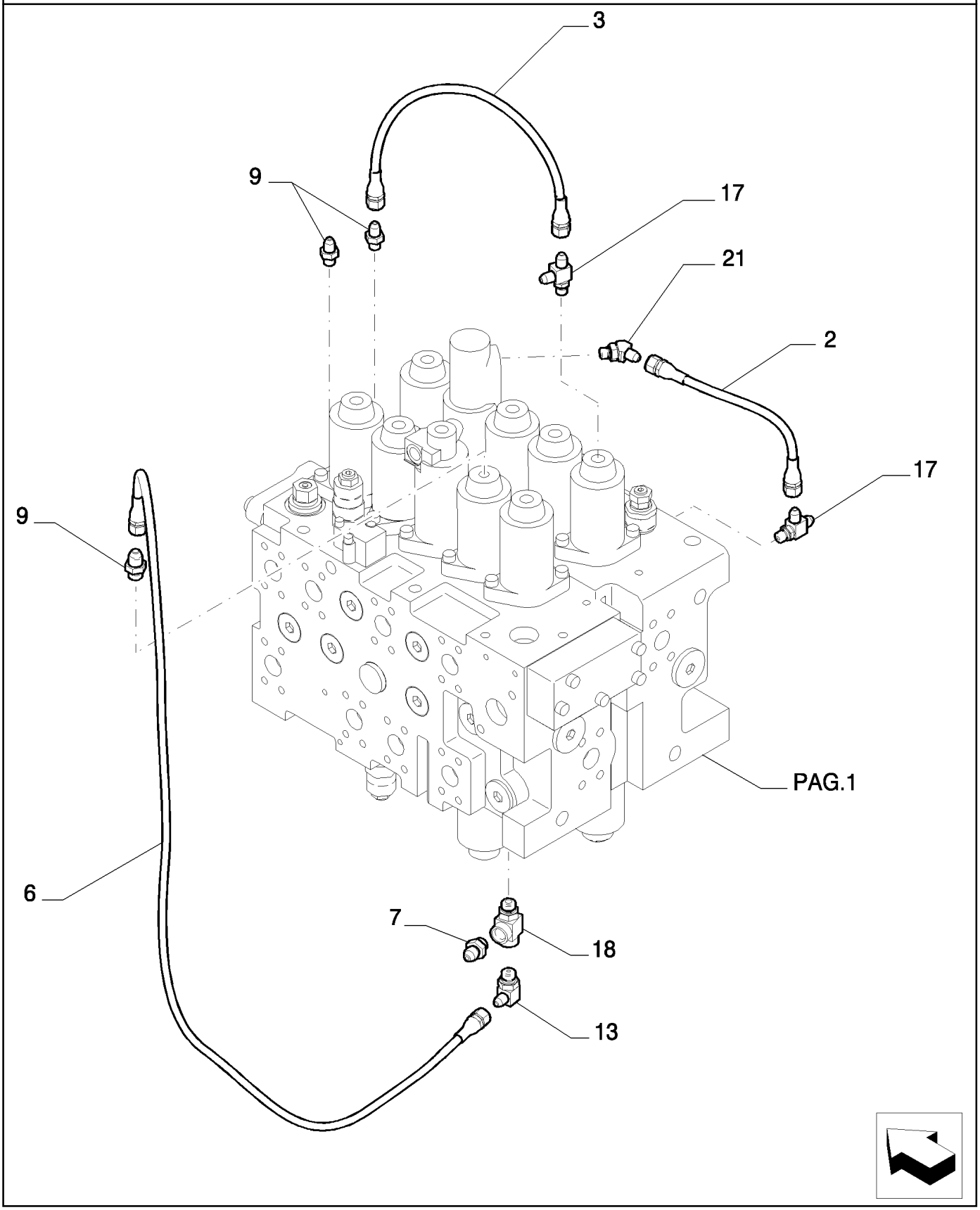

Copyright © New Holland

TUBERIAS SERVOMANDOS - DISTRIBUIDOR - VERSION (01-02-03)
PIPING PILOT - DISTRIBUTOR - VERSION (01-02-03)
PIPING PILOT - DISTRIBUTOR - VERSION (01-02-03)
PIPING PILOT - DISTRIBUTOR - VERSION (01-02-03)

R	N	P.N.	MOD	Q	Description Denominacion	Descrizione Beskrivelse	Bezeichnung Denominação	Description Beschrijving	L.C.
2		87397448		1	FLEXIBLE HOSE TUBO FLEXIBLE	TUBO FLESSIBILE FLEKSIBEL SLANGE	BIEGSAMER SCHLAUCH MANGUEIRA FLEXÍVEL	TUYAU FLEXIBLE FLEXIBELE SLANG	192T
3		72214535		1	FLEXIBLE HOSE TUBO FLEXIBLE	TUBO FLESSIBILE FLEKSIBEL SLANGE	BIEGSAMER SCHLAUCH MANGUEIRA FLEXÍVEL	TUYAU FLEXIBLE FLEXIBELE SLANG	192T
6		87397568		1	FLEXIBLE HOSE TUBO FLEXIBLE	TUBO FLESSIBILE FLEKSIBEL SLANGE	BIEGSAMER SCHLAUCH MANGUEIRA FLEXÍVEL	TUYAU FLEXIBLE FLEXIBELE SLANG	192T
7		72209013		1	HYDRAULIC VALVE VÁLVULA HIDRÁULICA	DISTRIBUTORE IDRAULI HYDRAULIKVENTIL	HYDRAULIKVENTIL VÁLVULA HIDRÁULICA	SOUPAPE HYDRAULIQU HYDRAULISCHE KLEP	010V
9		72214744		3	HYD CONNECTOR CONECTOR HIDRÁULIC	CONNETTORE IDRAULI HYDRAULIKSTIK	HYDR STECKVERBINDE CONECTOR HID.	CONNECTEUR HYDRAU HYDRAULISCHE AANSL	020R
13		72214525		1	HYD CONNECTOR CONECTOR HIDRÁULIC	CONNETTORE IDRAULI HYDRAULIKSTIK	HYDR STECKVERBINDE CONECTOR HID.	CONNECTEUR HYDRAU HYDRAULISCHE AANSL	020R
17		72214527		2	HYD CONNECTOR CONECTOR HIDRÁULIC	CONNETTORE IDRAULI HYDRAULIKSTIK	HYDR STECKVERBINDE CONECTOR HID.	CONNECTEUR HYDRAU HYDRAULISCHE AANSL	020R
18		72283559		1	TEE RACOR EN T	PEZZO A T T-STYKKE	T-STÜCK TÊ	RACCORD EN T T-STUK	9020
21		87397451		1	HYD CONNECTOR CONECTOR HIDRÁULIC	CONNETTORE IDRAULI HYDRAULIKSTIK	HYDR STECKVERBINDE CONECTOR HID.	CONNECTEUR HYDRAU HYDRAULISCHE AANSL	020R

Copyright © New Holland

1.050	04	p1	03/10

PIPING PILOT - DISTRIBUTOR - VERSION (01-02-03)
TUBAZIONI SERVOCOMANDI - DISTRIBUTORE - VERSIONE (01-02-03)
LEITUNGEN- SERVOSTEU. - STEUERGERAET - VERSION (01-02-03)
TUYAUTERIES SERVOCOMMANDES - DISTRIBUTEUR - VERSION (01-02-03)

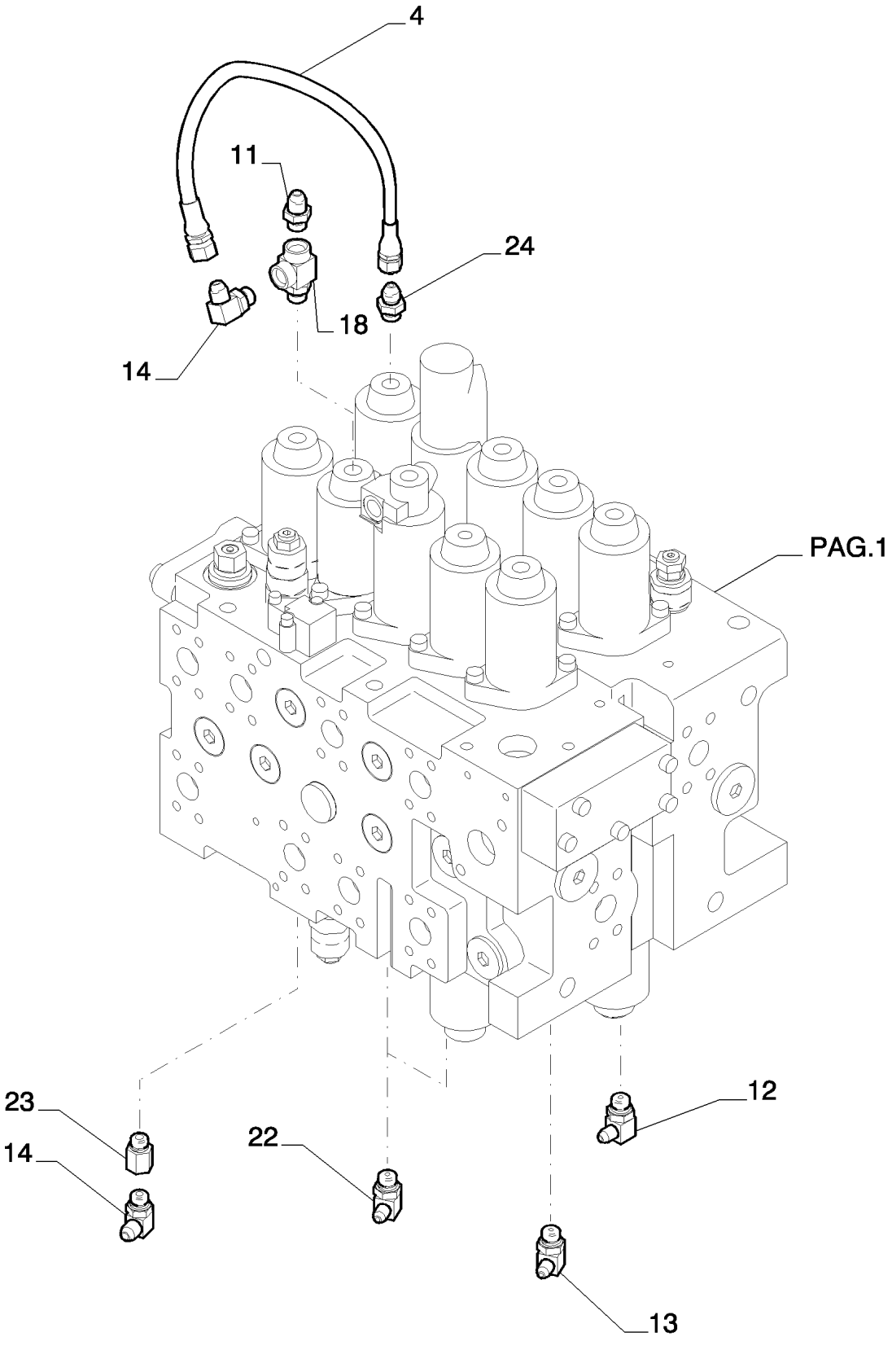

Copyright © New Holland

TUBERIAS SERVOMANDOS - DISTRIBUIDOR - VERSION (01-02-03)
PIPING PILOT - DISTRIBUTOR - VERSION (01-02-03)
PIPING PILOT - DISTRIBUTOR - VERSION (01-02-03)
PIPING PILOT - DISTRIBUTOR - VERSION (01-02-03)

R	N	P.N.	MOD	Q	Description Denominacion	Descrizione Beskrivelse	Bezeichnung Denominação	Description Beschrijving	L.C.
4		87397449		1	FLEXIBLE HOSE TUBO FLEXIBLE	TUBO FLESSIBILE FLEKSIBEL SLANGE	BIEGSAMER SCHLAUCH MANGUEIRA FLEXÍVEL	TUYAU FLEXIBLE FLEXIBELE SLANG	192T
11		72214523		1	HYD CONNECTOR CONECTOR HIDRÁULIC	CONNETTORE IDRAULIC HYDRAULIKSTIK	HYDR STECKVERBINDE CONECTOR HID.	CONNECTEUR HYDRAU HYDRAULISCHE AANSL	020R
12		72214524		1	HYD CONNECTOR CONECTOR HIDRÁULIC	CONNETTORE IDRAULIC HYDRAULIKSTIK	HYDR STECKVERBINDE CONECTOR HID.	CONNECTEUR HYDRAU HYDRAULISCHE AANSL	020R
13		72214525		1	HYD CONNECTOR CONECTOR HIDRÁULIC	CONNETTORE IDRAULIC HYDRAULIKSTIK	HYDR STECKVERBINDE CONECTOR HID.	CONNECTEUR HYDRAU HYDRAULISCHE AANSL	020R
14		72214526		2	HYD CONNECTOR CONECTOR HIDRÁULIC	CONNETTORE IDRAULIC HYDRAULIKSTIK	HYDR STECKVERBINDE CONECTOR HID.	CONNECTEUR HYDRAU HYDRAULISCHE AANSL	020R
18		72283559		1	TEE RACOR EN T	PEZZO A T T-STYKKE	T-STÜCK TÊ	RACCORD EN T T-STUK	9020
22		72214541		2	ELBOW CODO	GOMITO VINKELRØR	KNIESTÜCK COTOVELO	COUDE KNIESTUK	085G
23		72214521		1	HYD CONNECTOR CONECTOR HIDRÁULIC	CONNETTORE IDRAULIC HYDRAULIKSTIK	HYDR STECKVERBINDE CONECTOR HID.	CONNECTEUR HYDRAU HYDRAULISCHE AANSL	020R
24		72205980		1	HYDRAULIC VALVE VÁLVULA HIDRÁULICA	DISTRIBUTORE IDRAULI HYDRAULIKVENTIL	HYDRAULIKVENTIL VÁLVULA HIDRÁULICA	SOUPAPE HYDRAULIQU HYDRAULISCHE KLEP	010V

Copyright © New Holland

1.050	05	p1	03/10

HYDRAULIC CONTROL VALVE - COMPONENTS
DISTRIBUTORE IDRAULICO - COMPONENTI
STEUERGERAET - BESTANDTEILE
DISTRIBUTEUR - COMPOSANTS

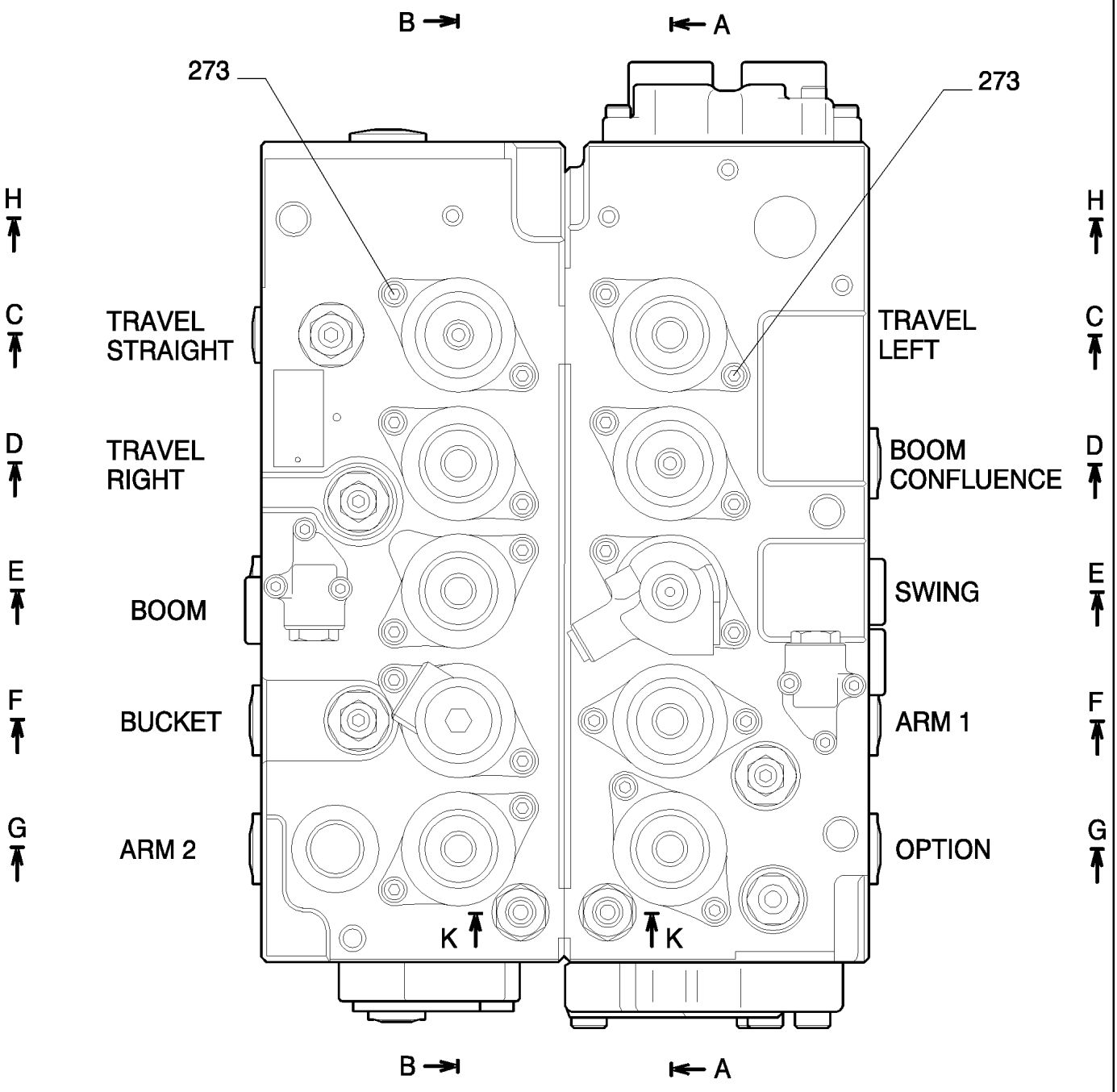

Copyright © New Holland

DISTRIBUIDOR - COMPONENTES
HYDRAULIC CONTROL VALVE - COMPONENTS
HYDRAULIC CONTROL VALVE - COMPONENTS
HYDRAULIC CONTROL VALVE - COMPONENTS

R	N	P.N.	MOD	Q	Description Denominacion	Descrizione Beskrivelse	Bezeichnung Denominação	Description Beschrijving	L.C.
273		14306470		20	SCREW, Hex Soc Hd, M8 x 25, 12.9 TORNILLO	VITE SKRUE	SCHRAUBE PARAFUSO	VIS SCHROEF	040V

CONTROL VALVE ASSY P/N YN30V00116F4

E215B

Copyright © New Holland

HYDRAULIC CONTROL VALVE - COMPONENTS
DISTRIBUTORE IDRAULICO - COMPONENTI
STEUERGERAET - BESTANDTEILE
DISTRIBUTEUR - COMPOSANTS

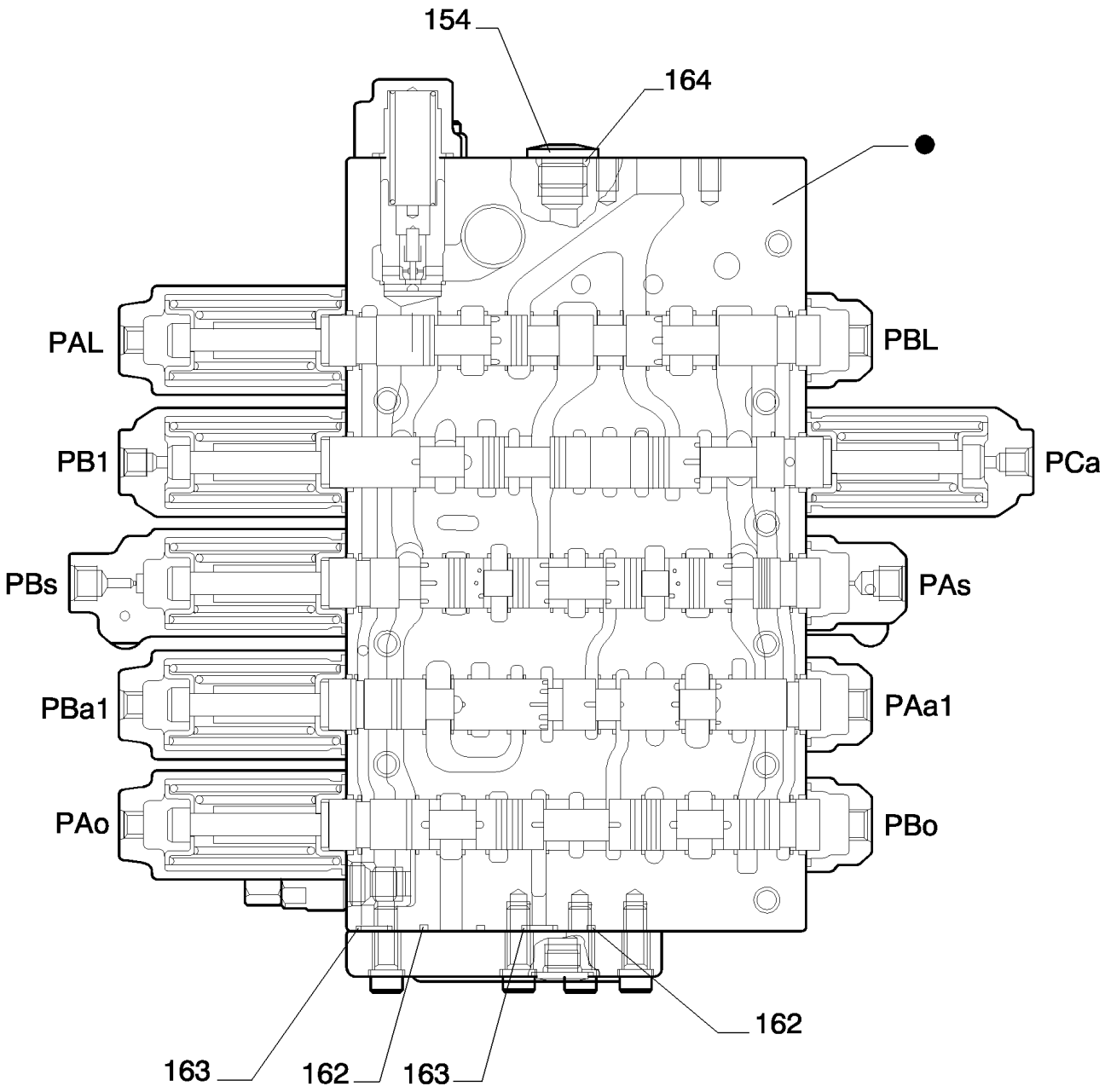

SECTION A–A

PARTS MARKED ● ARE NOT SUPPLIED AS SPARES
I PARTICOLARI CONTRASSEGNATI CON ● NON VENGONO FORNITI DI RICAMBIO

Copyright © New Holland

DISTRIBUIDOR - COMPONENTES
HYDRAULIC CONTROL VALVE - COMPONENTS
HYDRAULIC CONTROL VALVE - COMPONENTS
HYDRAULIC CONTROL VALVE - COMPONENTS

R	N	P.N.	MOD	Q	Description Denominacion	Descrizione Beskrivelse	Bezeichnung Denominação	Description Beschrijving	L.C.
154		**72210072**		1	PLUG TAPÓN	TAPPO PROP	STOPFEN TAMPÃO	BOUCHON PLUG	050T
162		**72209839**		2	O-RING JUNTA TÓRICA	ANELLO TOROIDALE O-RING	O-RING O-RING	JOINT TORIQUE O-RING	055A
163		**72210077**		2	O-RING JUNTA TÓRICA	ANELLO TOROIDALE O-RING	O-RING O-RING	JOINT TORIQUE O-RING	055A
164		**72209838**		1	O-RING JUNTA TÓRICA	ANELLO TOROIDALE O-RING	O-RING O-RING	JOINT TORIQUE O-RING	055A

CONTROL VALVE ASSY P/N YN30V00116F4

E215B

Copyright © New Holland

HYDRAULIC CONTROL VALVE - COMPONENTS
DISTRIBUTORE IDRAULICO - COMPONENTI
STEUERGERAET - BESTANDTEILE
DISTRIBUTEUR - COMPOSANTS

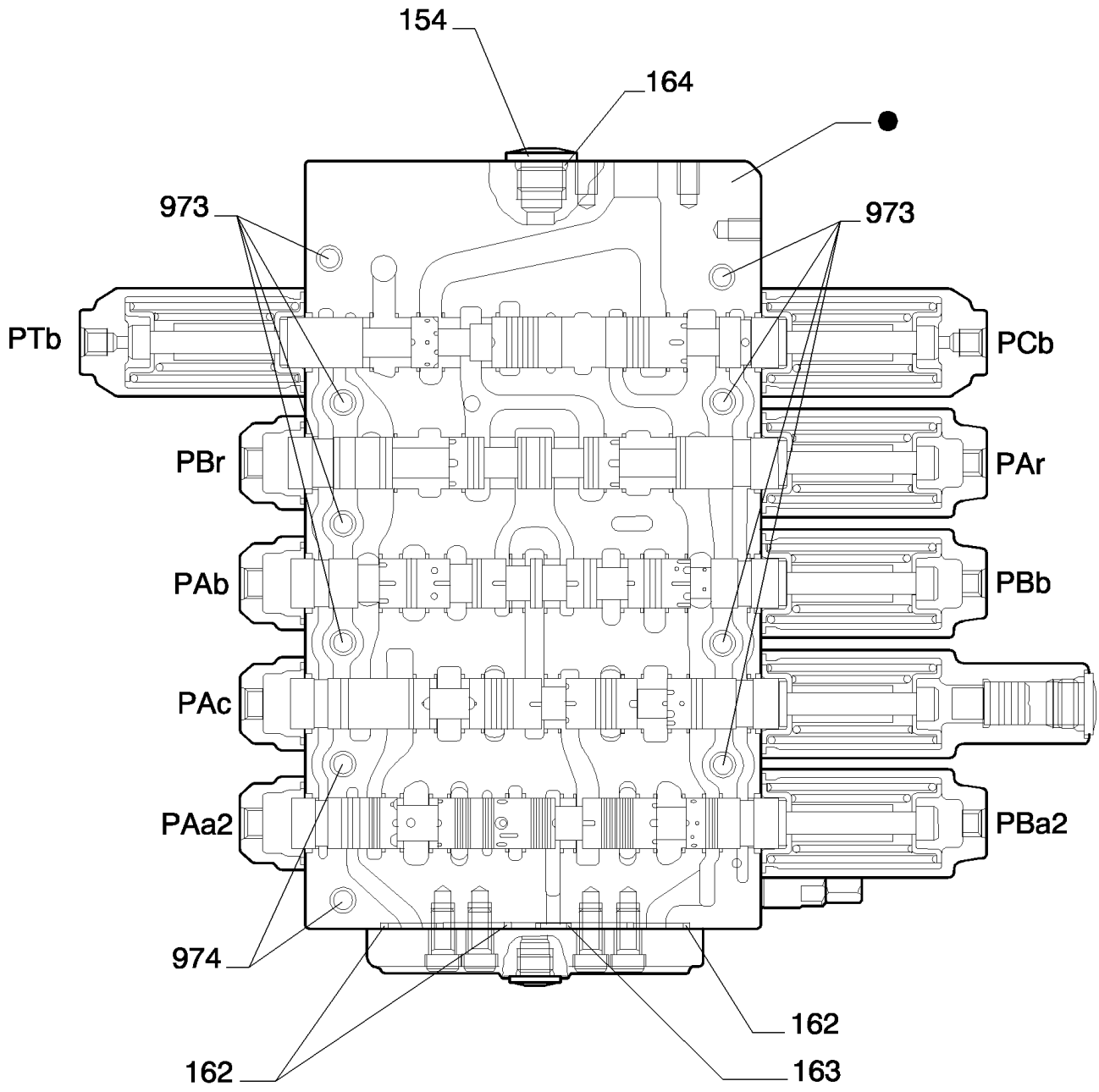

SECTION B–B

PARTS MARKED ● ARE NOT SUPPLIED AS SPARES
I PARTICOLARI CONTRASSEGNATI CON ● NON VENGONO FORNITI DI RICAMBIO

Copyright © New Holland

DISTRIBUIDOR - COMPONENTES
HYDRAULIC CONTROL VALVE - COMPONENTS
HYDRAULIC CONTROL VALVE - COMPONENTS
HYDRAULIC CONTROL VALVE - COMPONENTS

R	N	P.N.	MOD	Q	Description Denominacion	Descrizione Beskrivelse	Bezeichnung Denominação	Description Beschrijving	L.C.
154		72210072		1	PLUG TAPÓN	TAPPO PROP	STOPFEN TAMPÃO	BOUCHON PLUG	050T
162		72209839		3	O-RING JUNTA TÓRICA	ANELLO TOROIDALE O-RING	O-RING O-RING	JOINT TORIQUE O-RING	055A
163		72210077		1	O-RING JUNTA TÓRICA	ANELLO TOROIDALE O-RING	O-RING O-RING	JOINT TORIQUE O-RING	055A
164		72209838		1	O-RING JUNTA TÓRICA	ANELLO TOROIDALE O-RING	O-RING O-RING	JOINT TORIQUE O-RING	055A
973		LC30V00036S973		8	SCREW TORNILLO	VITE SKRUE	SCHRAUBE PARAFUSO	VIS SCHROEF	040V
974		LC30V00036S974		2	SCREW TORNILLO	VITE SKRUE	SCHRAUBE PARAFUSO	VIS SCHROEF	040V

CONTROL VALVE ASSY P/N YN30V00116F4

E215B

Copyright © New Holland

1.050	08	p1	03/10

HYDRAULIC CONTROL VALVE - COMPONENTS
DISTRIBUTORE IDRAULICO - COMPONENTI
STEUERGERAET - BESTANDTEILE
DISTRIBUTEUR - COMPOSANTS

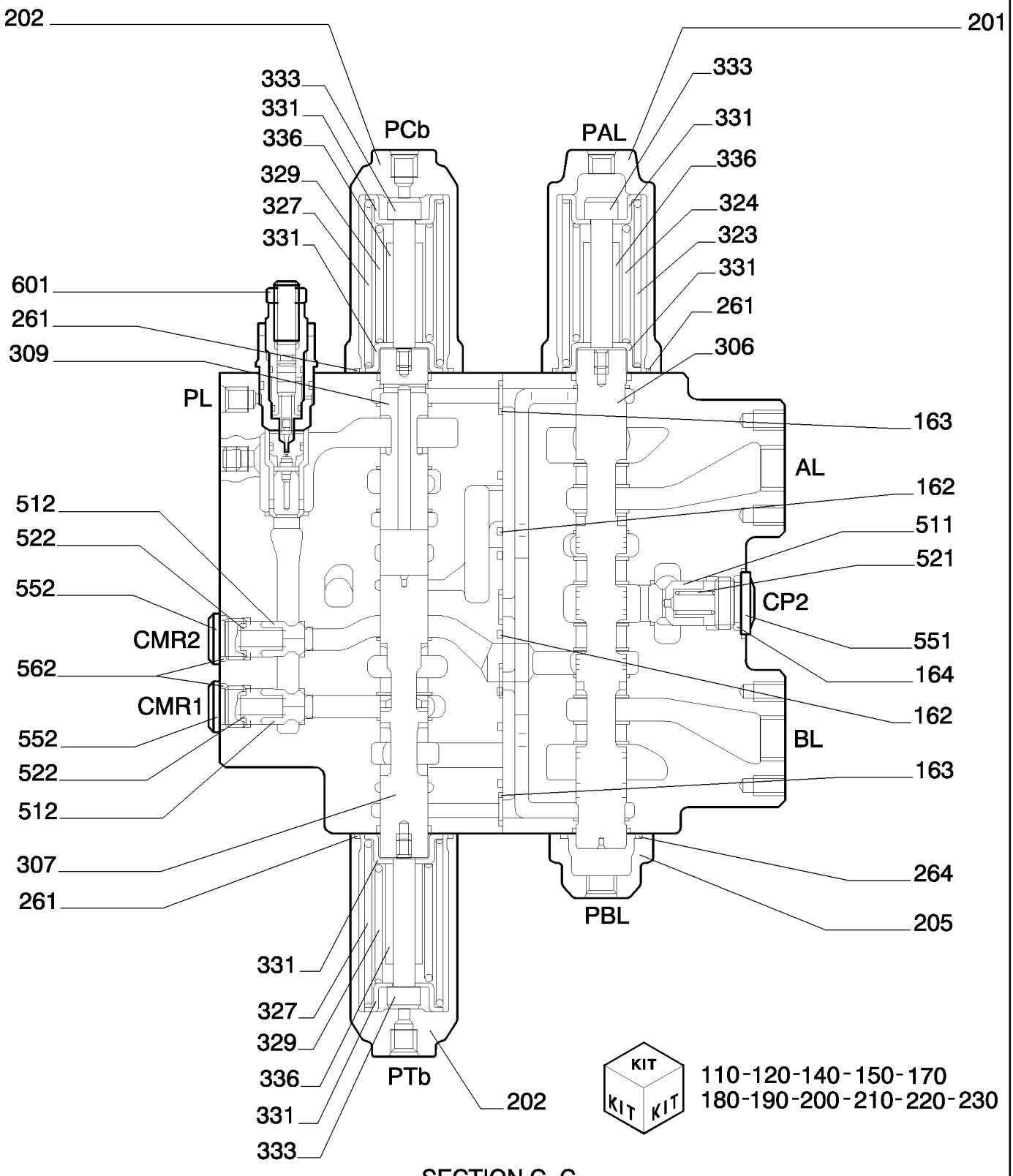

Copyright © New Holland

DISTRIBUIDOR - COMPONENTES
HYDRAULIC CONTROL VALVE - COMPONENTS
HYDRAULIC CONTROL VALVE - COMPONENTS
HYDRAULIC CONTROL VALVE - COMPONENTS

R	N	P.N.	MOD	Q	Description Denominacion	Descrizione Beskrivelse	Bezeichnung Denominação	Description Beschrijving	L.C.
110		YN30V00116R110		1	REPAIR KIT KIT DE REPARACIÓN	KIT DI RIPARAZIONE REPARATIONSSÆT	REPARATURSATZ KIT DE REPARAÇÃO	KIT DE REPARATION REPARATIEKIT	003K
120		YN30V00101R120		1	REPAIR KIT KIT DE REPARACIÓN	KIT DI RIPARAZIONE REPARATIONSSÆT	REPARATURSATZ KIT DE REPARAÇÃO	KIT DE REPARATION REPARATIEKIT	003K
140		YN30V00101R140		1	REPAIR KIT KIT DE REPARACIÓN	KIT DI RIPARAZIONE REPARATIONSSÆT	REPARATURSATZ KIT DE REPARAÇÃO	KIT DE REPARATION REPARATIEKIT	003K
150		YN30V00116R150		1	REPAIR KIT KIT DE REPARACIÓN	KIT DI RIPARAZIONE REPARATIONSSÆT	REPARATURSATZ KIT DE REPARAÇÃO	KIT DE REPARATION REPARATIEKIT	003K
162		72209839		2	O-RING JUNTA TÓRICA	ANELLO TOROIDALE O-RING	O-RING O-RING	JOINT TORIQUE O-RING	055A
163		72210077		2	O-RING JUNTA TÓRICA	ANELLO TOROIDALE O-RING	O-RING O-RING	JOINT TORIQUE O-RING	055A
164		72209838		1	O-RING JUNTA TÓRICA	ANELLO TOROIDALE O-RING	O-RING O-RING	JOINT TORIQUE O-RING	055A
170		YN30V00116R170		1	REPAIR KIT KIT DE REPARACIÓN	KIT DI RIPARAZIONE REPARATIONSSÆT	REPARATURSATZ KIT DE REPARAÇÃO	KIT DE REPARATION REPARATIEKIT	003K
180		YN30V00101R190		1	REPAIR KIT KIT DE REPARACIÓN	KIT DI RIPARAZIONE REPARATIONSSÆT	REPARATURSATZ KIT DE REPARAÇÃO	KIT DE REPARATION REPARATIEKIT	003K
190		YN30V00101R200		1	REPAIR KIT KIT DE REPARACIÓN	KIT DI RIPARAZIONE REPARATIONSSÆT	REPARATURSATZ KIT DE REPARAÇÃO	KIT DE REPARATION REPARATIEKIT	003K
200		YN30V00101R210		1	REPAIR KIT KIT DE REPARACIÓN	KIT DI RIPARAZIONE REPARATIONSSÆT	REPARATURSATZ KIT DE REPARAÇÃO	KIT DE REPARATION REPARATIEKIT	003K
201		YN30V00101S201		1	GUARD DEFENSA	PROTEZIONE BESKYTTELSESSKÆRM	SCHUTZABDECKUNG PROTECÇÃO	PROTECTION AFSCHERMING	070R
202		YF30V00011S202		2	COVER CUBIERTA	COPERCHIO DÆKSEL	ABDECKUNG COBERTURA	COUVERCLE AFSCHERMING	265C
205		YN30V00001S205		1	COVER CUBIERTA	COPERCHIO DÆKSEL	ABDECKUNG COBERTURA	COUVERCLE AFSCHERMING	265C
210		YN30V00101R220		1	SPOOL BOBINA	STELO SPOLE	KOLBENSCHIEBER CARRETO	TIROIR SPOEL	134P
220		LQ30V00028R220		1	REPAIR KIT KIT DE REPARACIÓN	KIT DI RIPARAZIONE REPARATIONSSÆT	REPARATURSATZ KIT DE REPARAÇÃO	KIT DE REPARATION REPARATIEKIT	003K
230		YF30V00011R210		1	KIT KIT	KIT SÆT	SATZ KIT	KIT KIT	305C
261		72950285		3	O-RING JUNTA TÓRICA	ANELLO TOROIDALE O-RING	O-RING O-RING	JOINT TORIQUE O-RING	055A
264		71404168		1	O-RING JUNTA TÓRICA	ANELLO TOROIDALE O-RING	O-RING O-RING	JOINT TORIQUE O-RING	055A
306	1	YN30V00116S306		1	SPOOL BOBINA	STELO SPOLE	KOLBENSCHIEBER CARRETO	TIROIR SPOEL	134P
307	2	LQ30V00028S307		1	SPOOL BOBINA	STELO SPOLE	KOLBENSCHIEBER CARRETO	TIROIR SPOEL	134P
309	3	YN30V00101S309		1	SPOOL BOBINA	STELO SPOLE	KOLBENSCHIEBER CARRETO	TIROIR SPOEL	134P
323	4	72210124		1	SPRING RESORTE	MOLLA FJEDER	FEDER MOLA	RESSORT VEER	100M

(1) KIT - ITEM 150
(2) KIT - ITEM 220
(3) KIT - ITEM 180
(4) KIT - ITEM 150,200

CONTROL VALVE ASSY P/N YN30V00116F4

E215B

Copyright © New Holland

HYDRAULIC CONTROL VALVE - COMPONENTS
DISTRIBUTORE IDRAULICO - COMPONENTI
STEUERGERAET - BESTANDTEILE
DISTRIBUTEUR - COMPOSANTS

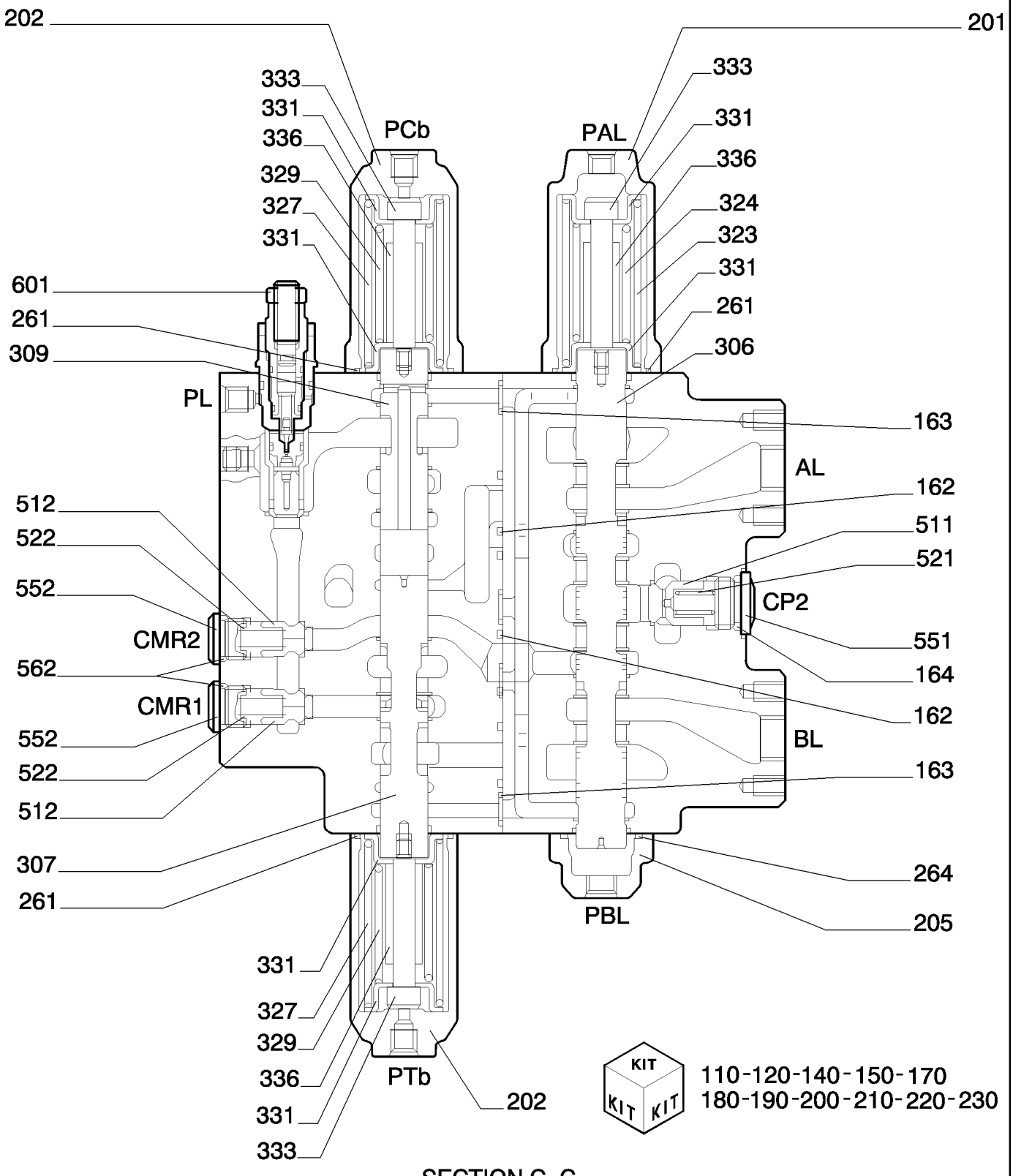

Copyright © New Holland

DISTRIBUIDOR - COMPONENTES
HYDRAULIC CONTROL VALVE - COMPONENTS
HYDRAULIC CONTROL VALVE - COMPONENTS
HYDRAULIC CONTROL VALVE - COMPONENTS

R	N	P.N.	MOD	Q	Description Denominacion	Descrizione Beskrivelse	Bezeichnung Denominação	Description Beschrijving	L.C.
324	1	87333132		1	SPRING RESORTE	MOLLA FJEDER	FEDER MOLA	RESSORT VEER	100M
327	2	YN30V00101S327		2	SPRING RESORTE	MOLLA FJEDER	FEDER MOLA	RESSORT VEER	100M
329	2	YN30V00101S329		2	SPRING RESORTE	MOLLA FJEDER	FEDER MOLA	RESSORT VEER	100M
331	3	72210127		6	SEAT/SLOT ASIENTO/RANURA	SEDE/ASOLA SÆDE	SITZ/SCHLITZ SUPORTE	SIEGE/FENTE ZITTING/SLEUF	069S
333	3	72210126		3	SCREW TORNILLO	VITE SKRUE	SCHRAUBE PARAFUSO	VIS SCHROEF	040V
336	4	72210125		3	STOP TOPE	ARRESTO; FERMO STOP	STOP BATENTE	BUTEE AANSLAG	080A
511		YN30V00101S341		1	HYDRAULIC VALVE VÁLVULA HIDRÁULICA	DISTRIBUTORE IDRAULI HYDRAULIKVENTIL	HYDRAULIKVENTIL VÁLVULA HIDRÁULICA	SOUPAPE HYDRAULIQU HYDRAULISCHE KLEP	010V
512		72958811		2	POPPET RESORTE	PISTONCINO POPNITTE	KEGELVENTIL VÁLVULA DE HASTE E P	CLAPET KLEP	012V
521		72210091		1	SPRING RESORTE	MOLLA FJEDER	FEDER MOLA	RESSORT VEER	100M
522		YN30V00101S522		2	SPRING RESORTE	MOLLA FJEDER	FEDER MOLA	RESSORT VEER	100M
551		YN30V00001S551		1	PLUG TAPÓN	TAPPO PROP	STOPFEN TAMPÃO	BOUCHON PLUG	050T
552		72211160		2	PLUG TAPÓN	TAPPO PROP	STOPFEN TAMPÃO	BOUCHON PLUG	050T
562		72209824		2	O-RING JUNTA TÓRICA	ANELLO TOROIDALE O-RING	O-RING O-RING	JOINT TORIQUE O-RING	055A
601		YN22V00001F8		1	HYDRAULIC VALVE VÁLVULA HIDRÁULICA	DISTRIBUTORE IDRAULI HYDRAULIKVENTIL	HYDRAULIKVENTIL VÁLVULA HIDRÁULICA	SOUPAPE HYDRAULIQU HYDRAULISCHE KLEP	010V

(1) KIT - ITEM 150,200
(2) KIT - ITEM 180,190,220
(3) KIT - ITEM 110,120,140,150,170,180,190,200,210,220,230
(4) KIT - ITEM 110,120,150,180,190,200,210,220,230

CONTROL VALVE ASSY P/N YN30V00116F4

E215B

Copyright © New Holland

HYDRAULIC CONTROL VALVE - COMPONENTS
DISTRIBUTORE IDRAULICO - COMPONENTI
STEUERGERAET - BESTANDTEILE
DISTRIBUTEUR - COMPOSANTS

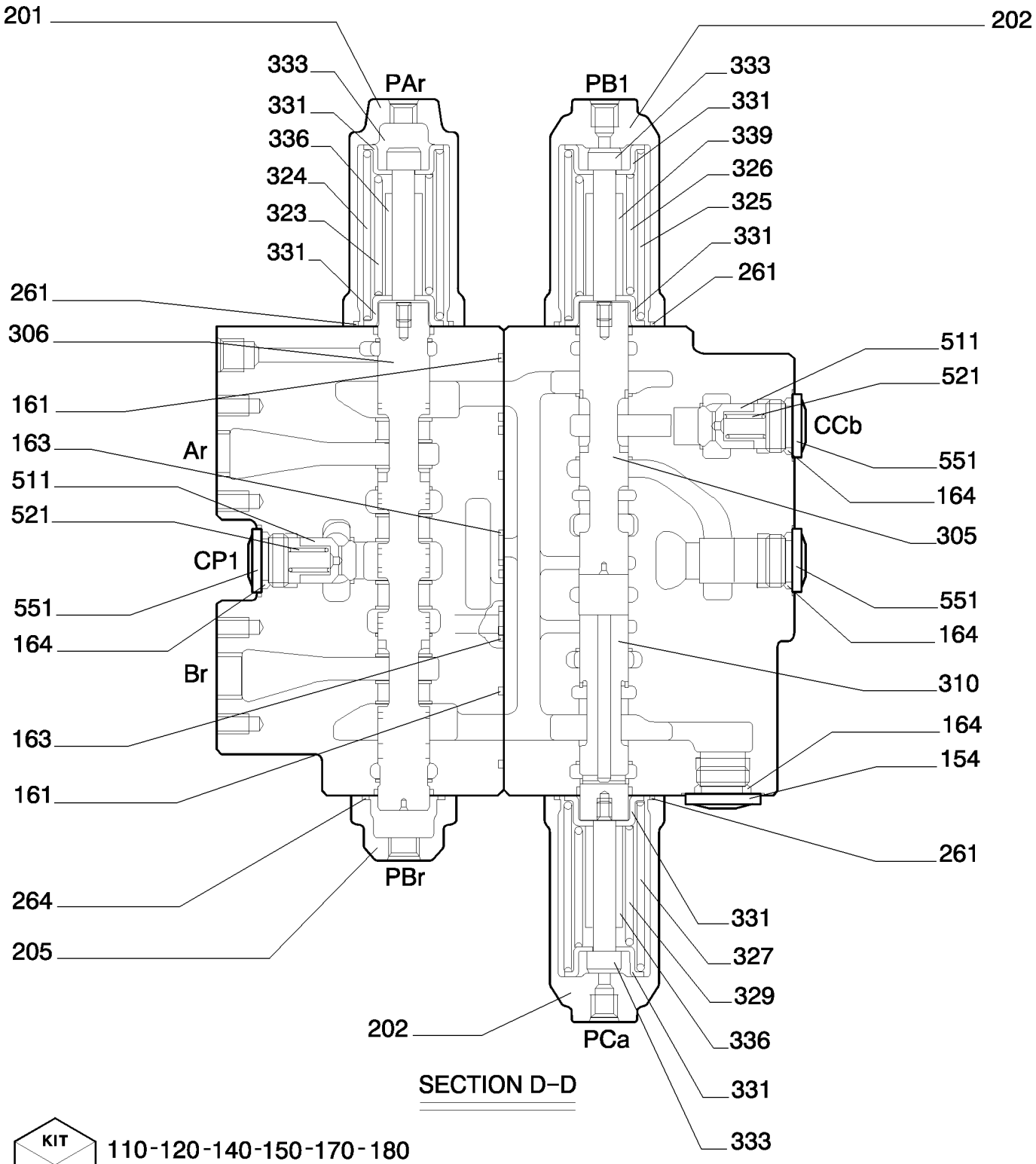

SECTION D–D

KIT KIT KIT 110-120-140-150-170-180
190-200-210-220-230

Copyright © New Holland

DISTRIBUIDOR - COMPONENTES
HYDRAULIC CONTROL VALVE - COMPONENTS
HYDRAULIC CONTROL VALVE - COMPONENTS
HYDRAULIC CONTROL VALVE - COMPONENTS

R	N	P.N.	MOD	Q	Description Denominacion	Descrizione Beskrivelse	Bezeichnung Denominação	Description Beschrijving	L.C.
110		YN30V00116R110		1	REPAIR KIT KIT DE REPARACIÓN	KIT DI RIPARAZIONE REPARATIONSSÆT	REPARATURSATZ KIT DE REPARAÇÃO	KIT DE REPARATION REPARATIEKIT	003K
120		YN30V00101R120		1	REPAIR KIT KIT DE REPARACIÓN	KIT DI RIPARAZIONE REPARATIONSSÆT	REPARATURSATZ KIT DE REPARAÇÃO	KIT DE REPARATION REPARATIEKIT	003K
140		YN30V00101R140		1	REPAIR KIT KIT DE REPARACIÓN	KIT DI RIPARAZIONE REPARATIONSSÆT	REPARATURSATZ KIT DE REPARAÇÃO	KIT DE REPARATION REPARATIEKIT	003K
150		YN30V00116R150		1	REPAIR KIT KIT DE REPARACIÓN	KIT DI RIPARAZIONE REPARATIONSSÆT	REPARATURSATZ KIT DE REPARAÇÃO	KIT DE REPARATION REPARATIEKIT	003K
154		72210072		1	PLUG TAPÓN	TAPPO PROP	STOPFEN TAMPÃO	BOUCHON PLUG	050T
161		70924192		2	O-RING JUNTA TÓRICA	ANELLO TOROIDALE O-RING	O-RING O-RING	JOINT TORIQUE O-RING	055A
163		72210077		2	O-RING JUNTA TÓRICA	ANELLO TOROIDALE O-RING	O-RING O-RING	JOINT TORIQUE O-RING	055A
164		72209838		4	O-RING JUNTA TÓRICA	ANELLO TOROIDALE O-RING	O-RING O-RING	JOINT TORIQUE O-RING	055A
170		YN30V00116R170		1	REPAIR KIT KIT DE REPARACIÓN	KIT DI RIPARAZIONE REPARATIONSSÆT	REPARATURSATZ KIT DE REPARAÇÃO	KIT DE REPARATION REPARATIEKIT	003K
180		YN30V00101R190		1	REPAIR KIT KIT DE REPARACIÓN	KIT DI RIPARAZIONE REPARATIONSSÆT	REPARATURSATZ KIT DE REPARAÇÃO	KIT DE REPARATION REPARATIEKIT	003K
190		YN30V00101R200		1	REPAIR KIT KIT DE REPARACIÓN	KIT DI RIPARAZIONE REPARATIONSSÆT	REPARATURSATZ KIT DE REPARAÇÃO	KIT DE REPARATION REPARATIEKIT	003K
200		YN30V00101R210		1	REPAIR KIT KIT DE REPARACIÓN	KIT DI RIPARAZIONE REPARATIONSSÆT	REPARATURSATZ KIT DE REPARAÇÃO	KIT DE REPARATION REPARATIEKIT	003K
201		YN30V00101S201		1	GUARD DEFENSA	PROTEZIONE BESKYTTELSESSKÆRM	SCHUTZABDECKUNG PROTECÇÃO	PROTECTION AFSCHERMING	070R
202		YF30V00011S202		2	COVER CUBIERTA	COPERCHIO DÆKSEL	ABDECKUNG COBERTURA	COUVERCLE AFSCHERMING	265C
205		YN30V00001S205		1	COVER CUBIERTA	COPERCHIO DÆKSEL	ABDECKUNG COBERTURA	COUVERCLE AFSCHERMING	265C
210		YN30V00101R220		1	SPOOL BOBINA	STELO SPOLE	KOLBENSCHIEBER CARRETO	TIROIR SPOEL	134P
220		LQ30V00028R220		1	REPAIR KIT KIT DE REPARACIÓN	KIT DI RIPARAZIONE REPARATIONSSÆT	REPARATURSATZ KIT DE REPARAÇÃO	KIT DE REPARATION REPARATIEKIT	003K
230		YF30V00011R210		1	KIT KIT	KIT SÆT	SATZ KIT	KIT KIT	305C
261		72950285		3	O-RING JUNTA TÓRICA	ANELLO TOROIDALE O-RING	O-RING O-RING	JOINT TORIQUE O-RING	055A
264		71404168		1	O-RING JUNTA TÓRICA	ANELLO TOROIDALE O-RING	O-RING O-RING	JOINT TORIQUE O-RING	055A
305	1	YN30V00101S305		1	SPOOL BOBINA	STELO SPOLE	KOLBENSCHIEBER CARRETO	TIROIR SPOEL	134P
306	2	YN30V00101S306		1	REPAIR KIT KIT DE REPARACIÓN	KIT DI RIPARAZIONE REPARATIONSSÆT	REPARATURSATZ KIT DE REPARAÇÃO	KIT DE REPARATION REPARATIEKIT	003K
310	3	YN30V00101S310		1	SPOOL BOBINA	STELO SPOLE	KOLBENSCHIEBER CARRETO	TIROIR SPOEL	134P

(1) KIT - ITEM 140
(2) KIT - ITEM 150
(3) KIT - ITEM 190

CONTROL VALVE ASSY P/N YN30V00116F4

E215B

Copyright © New Holland

1.050	09	p2	03/10

HYDRAULIC CONTROL VALVE - COMPONENTS
DISTRIBUTORE IDRAULICO - COMPONENTI
STEUERGERAET - BESTANDTEILE
DISTRIBUTEUR - COMPOSANTS

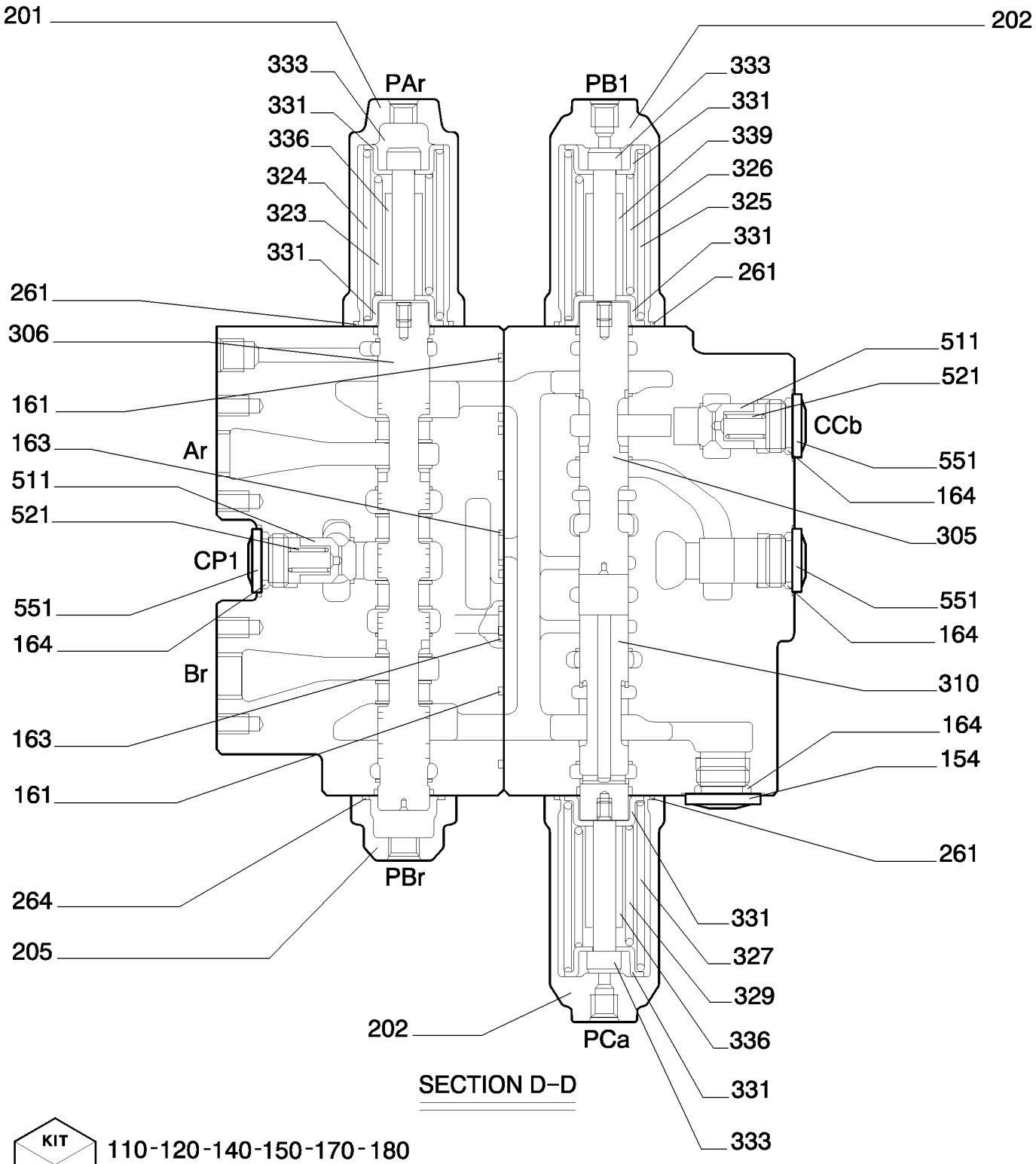

SECTION D–D

KIT KIT KIT 110-120-140-150-170-180
190-200-210-220-230

Copyright © New Holland

DISTRIBUIDOR - COMPONENTES
HYDRAULIC CONTROL VALVE - COMPONENTS
HYDRAULIC CONTROL VALVE - COMPONENTS
HYDRAULIC CONTROL VALVE - COMPONENTS

R	N	P.N.	MOD	Q	Description Denominacion	Descrizione Beskrivelse	Bezeichnung Denominação	Description Beschrijving	L.C.
323	1	**72210124**		1	SPRING RESORTE	MOLLA FJEDER	FEDER MOLA	RESSORT VEER	100M
324	1	**87333132**		1	SPRING RESORTE	MOLLA FJEDER	FEDER MOLA	RESSORT VEER	100M
325	2	**72964212**		1	SPRING RESORTE	MOLLA FJEDER	FEDER MOLA	RESSORT VEER	100M
326	2	**YN30V00101S326**		1	SPRING RESORTE	MOLLA FJEDER	FEDER MOLA	RESSORT VEER	100M
327	3	**YN30V00101S327**		1	SPRING RESORTE	MOLLA FJEDER	FEDER MOLA	RESSORT VEER	100M
329	3	**YN30V00101S329**		1	SPRING RESORTE	MOLLA FJEDER	FEDER MOLA	RESSORT VEER	100M
331	4	**72210127**		6	SEAT/SLOT ASIENTO/RANURA	SEDE/ASOLA SÆDE	SITZ/SCHLITZ SUPORTE	SIEGE/FENTE ZITTING/SLEUF	069S
333	4	**72210126**		3	SCREW TORNILLO	VITE SKRUE	SCHRAUBE PARAFUSO	VIS SCHROEF	040V
336	5	**72210125**		2	STOP TOPE	ARRESTO; FERMO STOP	STOP BATENTE	BUTEE AANSLAG	080A
339	2	**YN30V00001S339**		1	STOP TOPE	ARRESTO; FERMO STOP	STOP BATENTE	BUTEE AANSLAG	080A
511		**YN30V00101S341**		2	HYDRAULIC VALVE VÁLVULA HIDRÁULICA	DISTRIBUTORE IDRAULI HYDRAULIKVENTIL	HYDRAULIKVENTIL VÁLVULA HIDRÁULICA	SOUPAPE HYDRAULIQU HYDRAULISCHE KLEP	010V
521		**72210091**		2	SPRING RESORTE	MOLLA FJEDER	FEDER MOLA	RESSORT VEER	100M
551		**YN30V00001S551**		3	PLUG TAPÓN	TAPPO PROP	STOPFEN TAMPÃO	BOUCHON PLUG	050T

(1) KIT - ITEM 150,200
(2) KIT - ITEM 140
(3) KIT - ITEM 180,190,220
(4) KIT - ITEM 110,120,140,150,170,180,190,200,210,220,230
(5) KIT - ITEM 110,120,150,180,190,200,210,220,230

CONTROL VALVE ASSY P/N YN30V00116F4

E215B

Copyright © New Holland

HYDRAULIC CONTROL VALVE - COMPONENTS
DISTRIBUTORE IDRAULICO - COMPONENTI
STEUERGERAET - BESTANDTEILE
DISTRIBUTEUR - COMPOSANTS

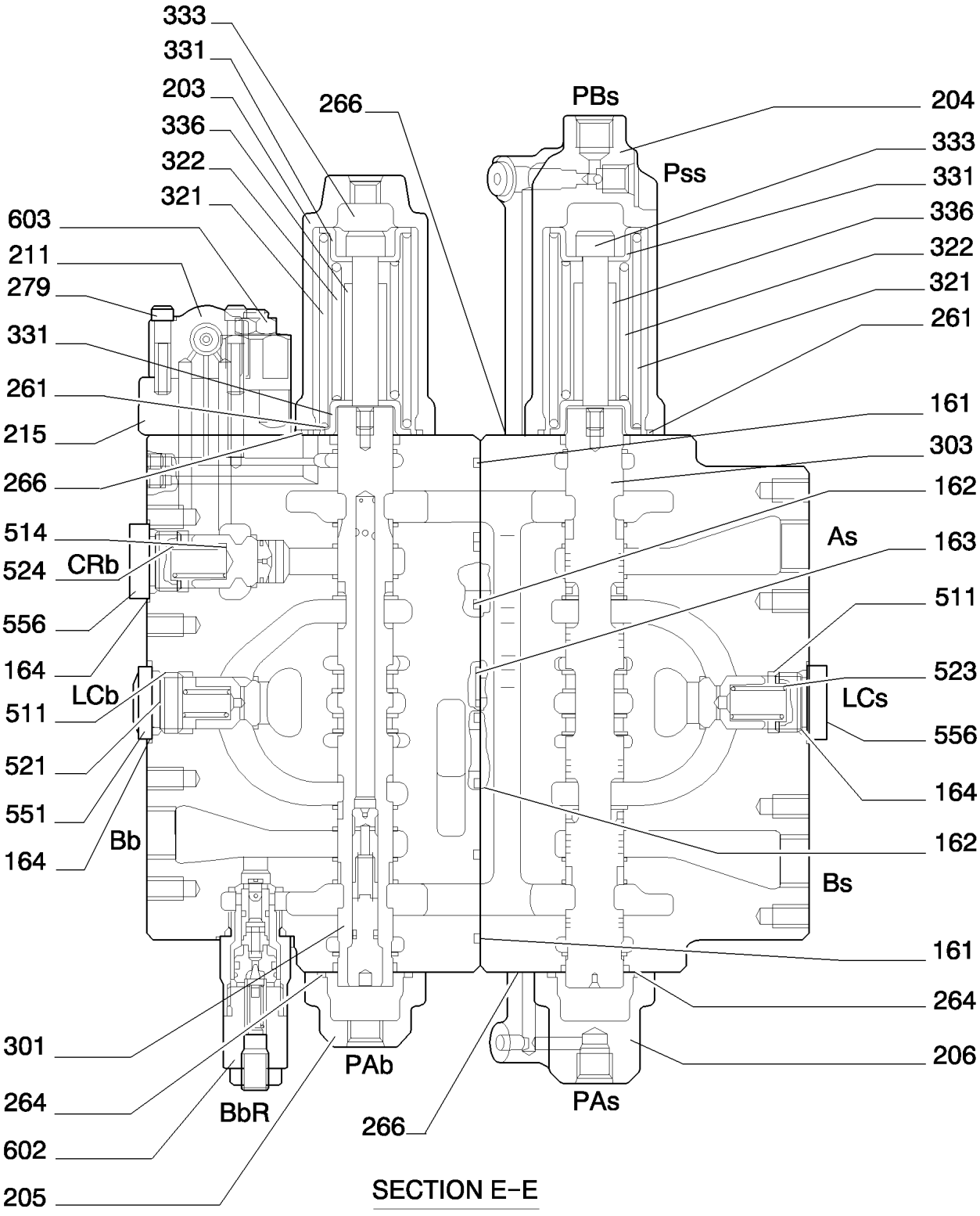

SECTION E-E

KIT KIT KIT 110-120-140-150-170-180
190-200-210-220-230

Copyright © New Holland

DISTRIBUIDOR - COMPONENTES
HYDRAULIC CONTROL VALVE - COMPONENTS
HYDRAULIC CONTROL VALVE - COMPONENTS
HYDRAULIC CONTROL VALVE - COMPONENTS

R	N	P.N.	MOD	Q	Description Denominacion	Descrizione Beskrivelse	Bezeichnung Denominação	Description Beschrijving	L.C.
110		YN30V00116R110		1	REPAIR KIT KIT DE REPARACIÓN	KIT DI RIPARAZIONE REPARATIONSSÆT	REPARATURSATZ KIT DE REPARAÇÃO	KIT DE REPARATION REPARATIEKIT	003K
120		YN30V00101R120		1	REPAIR KIT KIT DE REPARACIÓN	KIT DI RIPARAZIONE REPARATIONSSÆT	REPARATURSATZ KIT DE REPARAÇÃO	KIT DE REPARATION REPARATIEKIT	003K
140		YN30V00101R140		1	REPAIR KIT KIT DE REPARACIÓN	KIT DI RIPARAZIONE REPARATIONSSÆT	REPARATURSATZ KIT DE REPARAÇÃO	KIT DE REPARATION REPARATIEKIT	003K
150		YN30V00116R150		1	REPAIR KIT KIT DE REPARACIÓN	KIT DI RIPARAZIONE REPARATIONSSÆT	REPARATURSATZ KIT DE REPARAÇÃO	KIT DE REPARATION REPARATIEKIT	003K
161		70924192		2	O-RING JUNTA TÓRICA	ANELLO TOROIDALE O-RING	O-RING O-RING	JOINT TORIQUE O-RING	055A
162		72209839		2	O-RING JUNTA TÓRICA	ANELLO TOROIDALE O-RING	O-RING O-RING	JOINT TORIQUE O-RING	055A
163		72210077		1	O-RING JUNTA TÓRICA	ANELLO TOROIDALE O-RING	O-RING O-RING	JOINT TORIQUE O-RING	055A
164		72209838		3	O-RING JUNTA TÓRICA	ANELLO TOROIDALE O-RING	O-RING O-RING	JOINT TORIQUE O-RING	055A
170		YN30V00116R170		1	REPAIR KIT KIT DE REPARACIÓN	KIT DI RIPARAZIONE REPARATIONSSÆT	REPARATURSATZ KIT DE REPARAÇÃO	KIT DE REPARATION REPARATIEKIT	003K
180		YN30V00101R190		1	REPAIR KIT KIT DE REPARACIÓN	KIT DI RIPARAZIONE REPARATIONSSÆT	REPARATURSATZ KIT DE REPARAÇÃO	KIT DE REPARATION REPARATIEKIT	003K
190		YN30V00101R200		1	REPAIR KIT KIT DE REPARACIÓN	KIT DI RIPARAZIONE REPARATIONSSÆT	REPARATURSATZ KIT DE REPARAÇÃO	KIT DE REPARATION REPARATIEKIT	003K
200		YN30V00101R210		1	REPAIR KIT KIT DE REPARACIÓN	KIT DI RIPARAZIONE REPARATIONSSÆT	REPARATURSATZ KIT DE REPARAÇÃO	KIT DE REPARATION REPARATIEKIT	003K
203		YN30V00101S203		1	GUARD DEFENSA	PROTEZIONE BESKYTTELSESSKÆRM	SCHUTZABDECKUNG PROTECÇÃO	PROTECTION AFSCHERMING	070R
204		YN30V00101S204		1	GUARD DEFENSA	PROTEZIONE BESKYTTELSESSKÆRM	SCHUTZABDECKUNG PROTECÇÃO	PROTECTION AFSCHERMING	070R
205		YN30V00001S205		1	COVER CUBIERTA	COPERCHIO DÆKSEL	ABDECKUNG COBERTURA	COUVERCLE AFSCHERMING	265C
206		YN30V00101S206		1	GUARD DEFENSA	PROTEZIONE BESKYTTELSESSKÆRM	SCHUTZABDECKUNG PROTECÇÃO	PROTECTION AFSCHERMING	070R
210		YN30V00101R220		1	SPOOL BOBINA	STELO SPOLE	KOLBENSCHIEBER CARRETO	TIROIR SPOEL	134P
211		YN30V00119F1		1	VALVE, - ASSY VÁLVULA	VALVOLA VENTIL	VENTIL VÁLVULA	SOUPAPE KLEP	9620
211A		72215596		4	GASKET, Not illustrated JUNTA	GUARNIZIONE PAKNING	DICHTUNG JUNTA	JOINT PAKKING	123G
211B		14305670		3	SCREW, Not illustrated TORNILLO	VITE SKRUE	SCHRAUBE PARAFUSO	VIS SCHROEF	040V
215		YN30V00116S215		1	HYDRAULIC VALVE VÁLVULA HIDRÁULICA	DISTRIBUTORE IDRAULI HYDRAULIKVENTIL	HYDRAULIKVENTIL VÁLVULA HIDRÁULICA	SOUPAPE HYDRAULIQU HYDRAULISCHE KLEP	010V
220		LQ30V00028R220		1	REPAIR KIT KIT DE REPARACIÓN	KIT DI RIPARAZIONE REPARATIONSSÆT	REPARATURSATZ KIT DE REPARAÇÃO	KIT DE REPARATION REPARATIEKIT	003K
230		YF30V00011R210		1	KIT KIT	KIT SÆT	SATZ KIT	KIT KIT	305C
261		72950285		2	O-RING JUNTA TÓRICA	ANELLO TOROIDALE O-RING	O-RING O-RING	JOINT TORIQUE O-RING	055A
264		71404168		2	O-RING JUNTA TÓRICA	ANELLO TOROIDALE O-RING	O-RING O-RING	JOINT TORIQUE O-RING	055A

CONTROL VALVE ASSY P/N YN30V00116F4

E215B

Copyright © New Holland

HYDRAULIC CONTROL VALVE - COMPONENTS
DISTRIBUTORE IDRAULICO - COMPONENTI
STEUERGERAET - BESTANDTEILE
DISTRIBUTEUR - COMPOSANTS

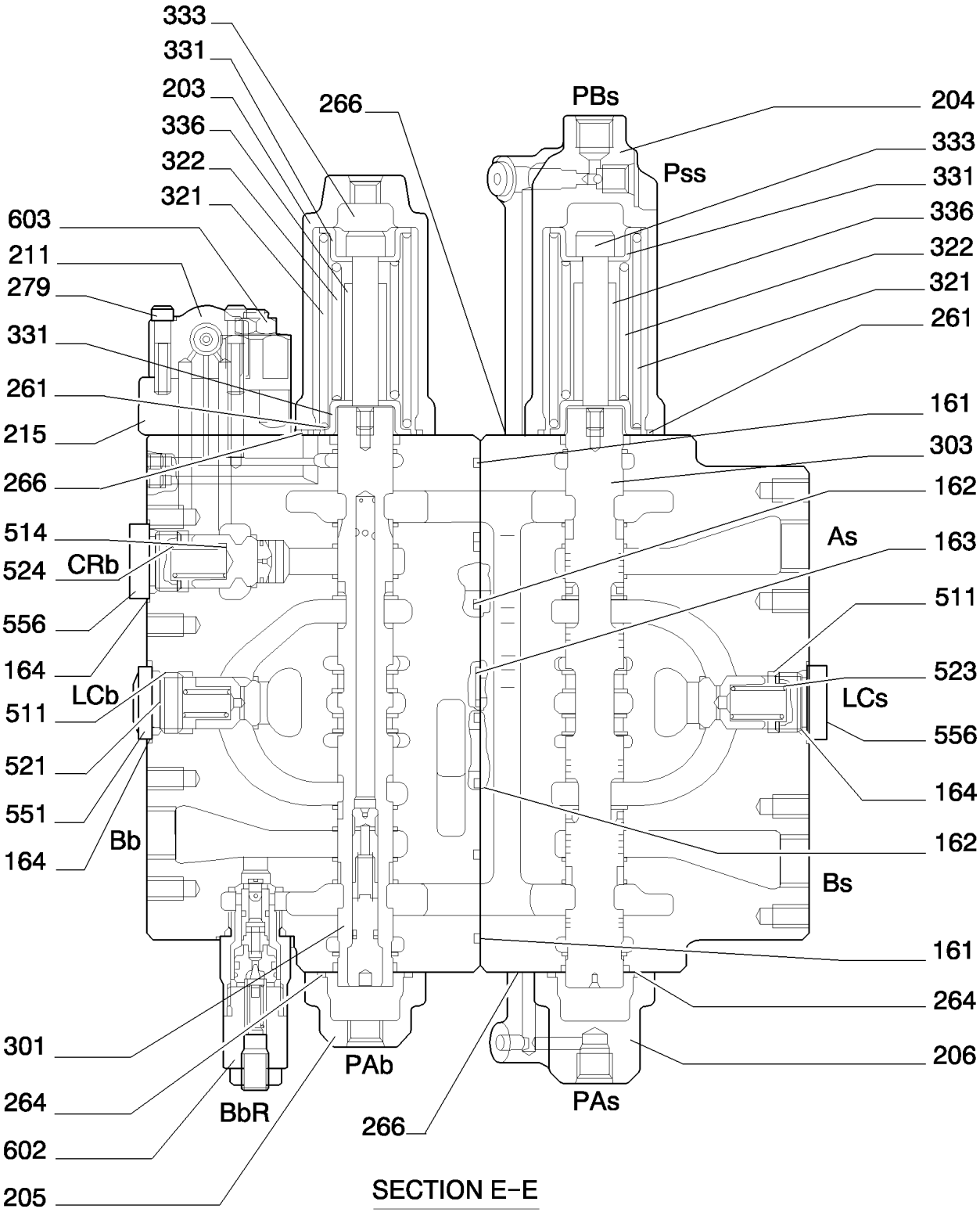

SECTION E-E

KIT KIT KIT 110-120-140-150-170-180
190-200-210-220-230

Copyright © New Holland

DISTRIBUIDOR - COMPONENTES
HYDRAULIC CONTROL VALVE - COMPONENTS
HYDRAULIC CONTROL VALVE - COMPONENTS
HYDRAULIC CONTROL VALVE - COMPONENTS

R	N	P.N.	MOD	Q	Description Denominacion	Descrizione Beskrivelse	Bezeichnung Denominação	Description Beschrijving	L.C.
266		72215596		3	GASKET JUNTA	GUARNIZIONE PAKNING	DICHTUNG JUNTA	JOINT PAKKING	123G
279		14309270		3	SCREW TORNILLO	VITE SKRUE	SCHRAUBE PARAFUSO	VIS SCHROEF	040V
301	1	YN30V00101S010		1	SPOOL BOBINA	STELO SPOLE	KOLBENSCHIEBER CARRETO	TIROIR SPOEL	134P
303	2	YN30V00101S303		1	SPOOL BOBINA	STELO SPOLE	KOLBENSCHIEBER CARRETO	TIROIR SPOEL	134P
321	3	72964210		2	SPRING RESORTE	MOLLA FJEDER	FEDER MOLA	RESSORT VEER	100M
322	4	72964211		2	SPRING RESORTE	MOLLA FJEDER	FEDER MOLA	RESSORT VEER	100M
331	5	72210127		4	SEAT/SLOT ASIENTO/RANURA	SEDE/ASOLA SÆDE	SITZ/SCHLITZ SUPORTE	SIEGE/FENTE ZITTING/SLEUF	069S
333	5	72210126		2	SCREW TORNILLO	VITE SKRUE	SCHRAUBE PARAFUSO	VIS SCHROEF	040V
336	6	72210125		2	STOP TOPE	ARRESTO; FERMO STOP	STOP BATENTE	BUTEE AANSLAG	080A
511		YN30V00101S341		2	HYDRAULIC VALVE VÁLVULA HIDRÁULICA	DISTRIBUTORE IDRAULI HYDRAULIKVENTIL	HYDRAULIKVENTIL VÁLVULA HIDRÁULICA	SOUPAPE HYDRAULIQU HYDRAULISCHE KLEP	010V
514		YN30V00101S514		1	HYDRAULIC VALVE VÁLVULA HIDRÁULICA	DISTRIBUTORE IDRAULI HYDRAULIKVENTIL	HYDRAULIKVENTIL VÁLVULA HIDRÁULICA	SOUPAPE HYDRAULIQU HYDRAULISCHE KLEP	010V
521		72210091		1	SPRING RESORTE	MOLLA FJEDER	FEDER MOLA	RESSORT VEER	100M
523		72210093		1	SPRING RESORTE	MOLLA FJEDER	FEDER MOLA	RESSORT VEER	100M
524		72210094		1	SPRING RESORTE	MOLLA FJEDER	FEDER MOLA	RESSORT VEER	100M
551		YN30V00001S551		1	PLUG TAPÓN	TAPPO PROP	STOPFEN TAMPÃO	BOUCHON PLUG	050T
556		72209841		2	PLUG TAPÓN	TAPPO PROP	STOPFEN TAMPÃO	BOUCHON PLUG	050T
602		72210098		1	HYDRAULIC VALVE VÁLVULA HIDRÁULICA	DISTRIBUTORE IDRAULI HYDRAULIKVENTIL	HYDRAULIKVENTIL VÁLVULA HIDRÁULICA	SOUPAPE HYDRAULIQU HYDRAULISCHE KLEP	010V
603		72210099		1	HYDRAULIC VALVE VÁLVULA HIDRÁULICA	DISTRIBUTORE IDRAULI HYDRAULIKVENTIL	HYDRAULIKVENTIL VÁLVULA HIDRÁULICA	SOUPAPE HYDRAULIQU HYDRAULISCHE KLEP	010V

(1) KIT - ITEM 210
(2) KIT - ITEM 120
(3) KIT - ITEM 110,120,170,210,230
(4) KIT - ITEM 110,120,210,230
(5) KIT - ITEM 110,120,140,150,170,180,190,200,210,220,230
(6) KIT - ITEM 110,120,150,180,190,200,210,220,230

CONTROL VALVE ASSY P/N YN30V00116F4

E215B

Copyright © New Holland

1.050	11	p1	03/10

HYDRAULIC CONTROL VALVE - COMPONENTS
DISTRIBUTORE IDRAULICO - COMPONENTI
STEUERGERAET - BESTANDTEILE
DISTRIBUTEUR - COMPOSANTS

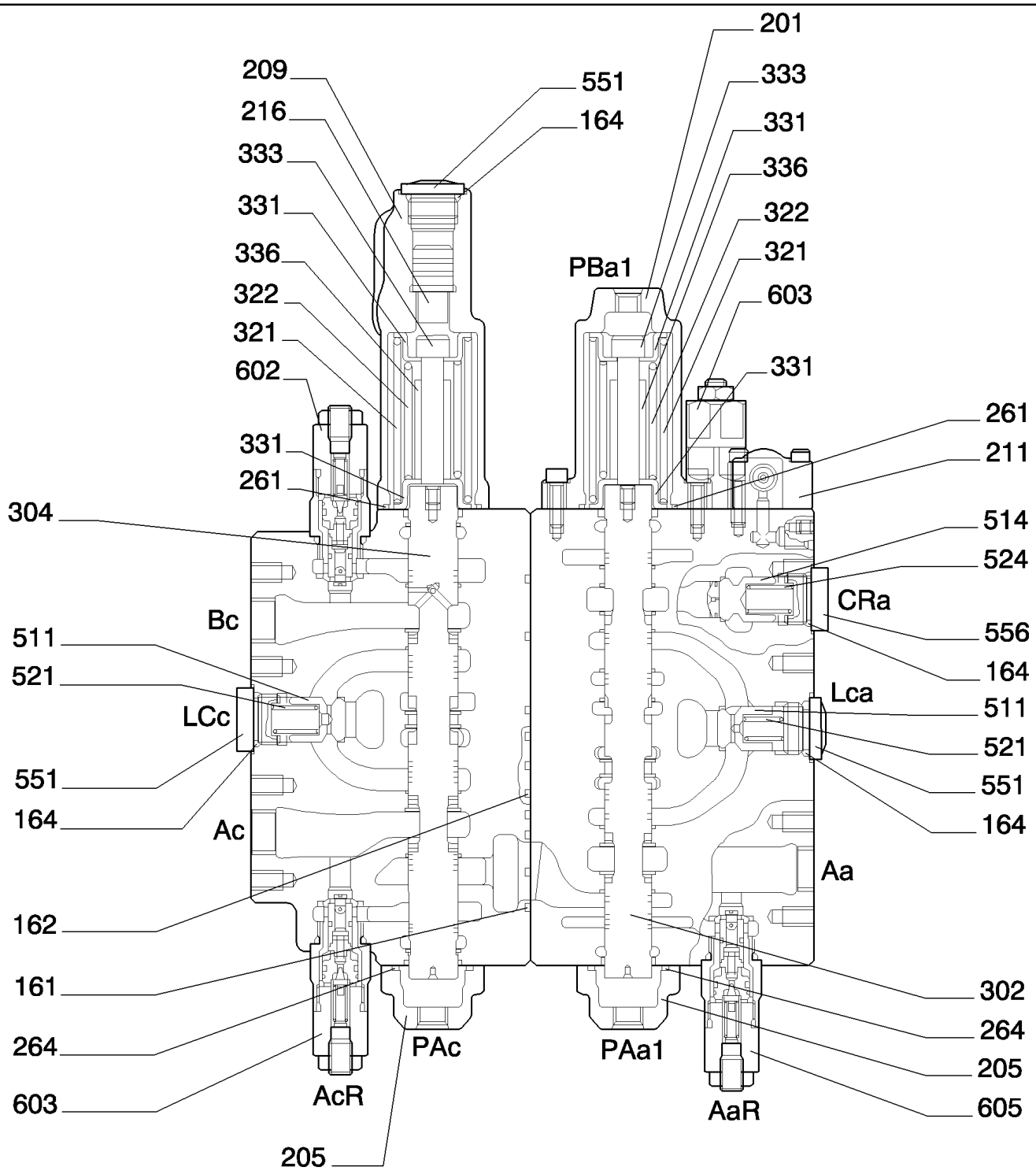

SECTION F–F

KIT KIT KIT

110-120-140-150-170-180
190-200-210-220-230

Copyright © New Holland

DISTRIBUIDOR - COMPONENTES
HYDRAULIC CONTROL VALVE - COMPONENTS
HYDRAULIC CONTROL VALVE - COMPONENTS
HYDRAULIC CONTROL VALVE - COMPONENTS

R	N	P.N.	MOD	Q	Description Denominacion	Descrizione Beskrivelse	Bezeichnung Denominação	Description Beschrijving	L.C.
110		YN30V00116R110		1	REPAIR KIT KIT DE REPARACIÓN	KIT DI RIPARAZIONE REPARATIONSSÆT	REPARATURSATZ KIT DE REPARAÇÃO	KIT DE REPARATION REPARATIEKIT	003K
120		YN30V00101R120		1	REPAIR KIT KIT DE REPARACIÓN	KIT DI RIPARAZIONE REPARATIONSSÆT	REPARATURSATZ KIT DE REPARAÇÃO	KIT DE REPARATION REPARATIEKIT	003K
140		YN30V00101R140		1	REPAIR KIT KIT DE REPARACIÓN	KIT DI RIPARAZIONE REPARATIONSSÆT	REPARATURSATZ KIT DE REPARAÇÃO	KIT DE REPARATION REPARATIEKIT	003K
150		YN30V00116R150		1	REPAIR KIT KIT DE REPARACIÓN	KIT DI RIPARAZIONE REPARATIONSSÆT	REPARATURSATZ KIT DE REPARAÇÃO	KIT DE REPARATION REPARATIEKIT	003K
161		70924192		1	O-RING JUNTA TÓRICA	ANELLO TOROIDALE O-RING	O-RING O-RING	JOINT TORIQUE O-RING	055A
162		72209839		1	O-RING JUNTA TÓRICA	ANELLO TOROIDALE O-RING	O-RING O-RING	JOINT TORIQUE O-RING	055A
164		72209838		4	O-RING JUNTA TÓRICA	ANELLO TOROIDALE O-RING	O-RING O-RING	JOINT TORIQUE O-RING	055A
170		YN30V00116R170		1	REPAIR KIT KIT DE REPARACIÓN	KIT DI RIPARAZIONE REPARATIONSSÆT	REPARATURSATZ KIT DE REPARAÇÃO	KIT DE REPARATION REPARATIEKIT	003K
180		YN30V00101R190		1	REPAIR KIT KIT DE REPARACIÓN	KIT DI RIPARAZIONE REPARATIONSSÆT	REPARATURSATZ KIT DE REPARAÇÃO	KIT DE REPARATION REPARATIEKIT	003K
190		YN30V00101R200		1	REPAIR KIT KIT DE REPARACIÓN	KIT DI RIPARAZIONE REPARATIONSSÆT	REPARATURSATZ KIT DE REPARAÇÃO	KIT DE REPARATION REPARATIEKIT	003K
200		YN30V00101R210		1	REPAIR KIT KIT DE REPARACIÓN	KIT DI RIPARAZIONE REPARATIONSSÆT	REPARATURSATZ KIT DE REPARAÇÃO	KIT DE REPARATION REPARATIEKIT	003K
201		YN30V00101S201		1	GUARD DEFENSA	PROTEZIONE BESKYTTELSESSKÆRM	SCHUTZABDECKUNG PROTECÇÃO	PROTECTION AFSCHERMING	070R
205		YN30V00001S205		2	COVER CUBIERTA	COPERCHIO DÆKSEL	ABDECKUNG COBERTURA	COUVERCLE AFSCHERMING	265C
209		YN30V00101S209		1	GUARD DEFENSA	PROTEZIONE BESKYTTELSESSKÆRM	SCHUTZABDECKUNG PROTECÇÃO	PROTECTION AFSCHERMING	070R
210		YN30V00101R220		1	SPOOL BOBINA	STELO SPOLE	KOLBENSCHIEBER CARRETO	TIROIR SPOEL	134P
211		YN30V00119F1		1	VALVE, - ASSY VÁLVULA	VALVOLA VENTIL	VENTIL VÁLVULA	SOUPAPE KLEP	9620
211A		72215596		4	GASKET, Not illustrated JUNTA	GUARNIZIONE PAKNING	DICHTUNG JUNTA	JOINT PAKKING	123G
211B		14305670		3	SCREW, Not illustrated TORNILLO	VITE SKRUE	SCHRAUBE PARAFUSO	VIS SCHROEF	040V
216		YN30V00101S216		1	PISTON PISTÓN	PISTONE STEMPEL	KOLBEN PISTÃO	PISTON ZUIGER	235S
220		LQ30V00028R220		1	REPAIR KIT KIT DE REPARACIÓN	KIT DI RIPARAZIONE REPARATIONSSÆT	REPARATURSATZ KIT DE REPARAÇÃO	KIT DE REPARATION REPARATIEKIT	003K
230		YF30V00011R210		1	KIT KIT	KIT SÆT	SATZ KIT	KIT KIT	305C
261		72950285		2	O-RING JUNTA TÓRICA	ANELLO TOROIDALE O-RING	O-RING O-RING	JOINT TORIQUE O-RING	055A
264		71404168		2	O-RING JUNTA TÓRICA	ANELLO TOROIDALE O-RING	O-RING O-RING	JOINT TORIQUE O-RING	055A
302	1	YN30V00116S302		1	SPOOL BOBINA	STELO SPOLE	KOLBENSCHIEBER CARRETO	TIROIR SPOEL	134P

(1) KIT - ITEM 110

CONTROL VALVE ASSY P/N YN30V00116F4

E215B

Copyright © New Holland

HYDRAULIC CONTROL VALVE - COMPONENTS
DISTRIBUTORE IDRAULICO - COMPONENTI
STEUERGERAET - BESTANDTEILE
DISTRIBUTEUR - COMPOSANTS

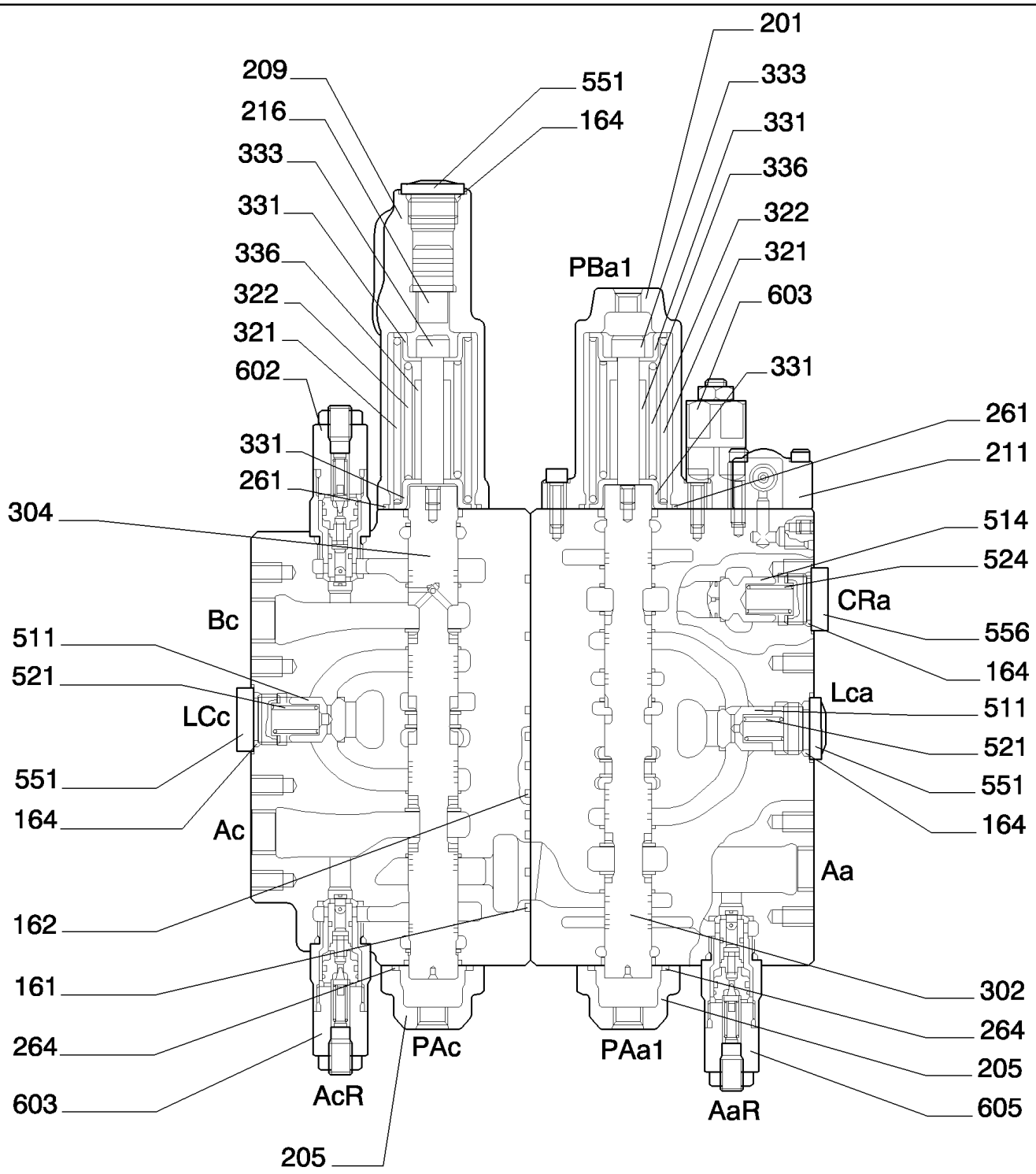

SECTION F–F

KIT KIT KIT
110-120-140-150-170-180
190-200-210-220-230

Copyright © New Holland

DISTRIBUIDOR - COMPONENTES
HYDRAULIC CONTROL VALVE - COMPONENTS
HYDRAULIC CONTROL VALVE - COMPONENTS
HYDRAULIC CONTROL VALVE - COMPONENTS

R	N	P.N.	MOD	Q	Description Denominacion	Descrizione Beskrivelse	Bezeichnung Denominação	Description Beschrijving	L.C.
304	1	YF30V00011S304		1	PLATE PLACA	PIASTRA PLADE	PLATTE CHAPA	PLAQUE PLAAT	105P
321	2	72964210		2	SPRING RESORTE	MOLLA FJEDER	FEDER MOLA	RESSORT VEER	100M
322	3	72964211		2	SPRING RESORTE	MOLLA FJEDER	FEDER MOLA	RESSORT VEER	100M
331	4	72210127		4	SEAT/SLOT ASIENTO/RANURA	SEDE/ASOLA SÆDE	SITZ/SCHLITZ SUPORTE	SIEGE/FENTE ZITTING/SLEUF	069S
333	4	72210126		2	SCREW TORNILLO	VITE SKRUE	SCHRAUBE PARAFUSO	VIS SCHROEF	040V
336	5	72210125		2	STOP TOPE	ARRESTO; FERMO STOP	STOP BATENTE	BUTEE AANSLAG	080A
511		YN30V00101S341		2	HYDRAULIC VALVE VÁLVULA HIDRÁULICA	DISTRIBUTORE IDRAULI HYDRAULIKVENTIL	HYDRAULIKVENTIL VÁLVULA HIDRÁULICA	SOUPAPE HYDRAULIQU HYDRAULISCHE KLEP	010V
514		YN30V00101S514		1	HYDRAULIC VALVE VÁLVULA HIDRÁULICA	DISTRIBUTORE IDRAULI HYDRAULIKVENTIL	HYDRAULIKVENTIL VÁLVULA HIDRÁULICA	SOUPAPE HYDRAULIQU HYDRAULISCHE KLEP	010V
521		72210091		2	SPRING RESORTE	MOLLA FJEDER	FEDER MOLA	RESSORT VEER	100M
524		72210094		1	SPRING RESORTE	MOLLA FJEDER	FEDER MOLA	RESSORT VEER	100M
551		YN30V00001S551		3	PLUG TAPÓN	TAPPO PROP	STOPFEN TAMPÃO	BOUCHON PLUG	050T
556		72209841		1	PLUG TAPÓN	TAPPO PROP	STOPFEN TAMPÃO	BOUCHON PLUG	050T
602		72210098		1	HYDRAULIC VALVE VÁLVULA HIDRÁULICA	DISTRIBUTORE IDRAULI HYDRAULIKVENTIL	HYDRAULIKVENTIL VÁLVULA HIDRÁULICA	SOUPAPE HYDRAULIQU HYDRAULISCHE KLEP	010V
603		72210099		2	HYDRAULIC VALVE VÁLVULA HIDRÁULICA	DISTRIBUTORE IDRAULI HYDRAULIKVENTIL	HYDRAULIKVENTIL VÁLVULA HIDRÁULICA	SOUPAPE HYDRAULIQU HYDRAULISCHE KLEP	010V
605		72210100		1	HYDRAULIC VALVE VÁLVULA HIDRÁULICA	DISTRIBUTORE IDRAULI HYDRAULIKVENTIL	HYDRAULIKVENTIL VÁLVULA HIDRÁULICA	SOUPAPE HYDRAULIQU HYDRAULISCHE KLEP	010V

(1) KIT - ITEM 230
(2) KIT - ITEM 110,120,170,210,230
(3) KIT - ITEM 110,120,210,230
(4) KIT - ITEM 110,120,140,150,170,180,190,200,210,220,230
(5) KIT - ITEM 110,120,150,180,190,200,210,220,230

CONTROL VALVE ASSY P/N YN30V00116F4

E215B

Copyright © New Holland

1.050	12	p1	03/10

HYDRAULIC CONTROL VALVE - COMPONENTS
DISTRIBUTORE IDRAULICO - COMPONENTI
STEUERGERAET - BESTANDTEILE
DISTRIBUTEUR - COMPOSANTS

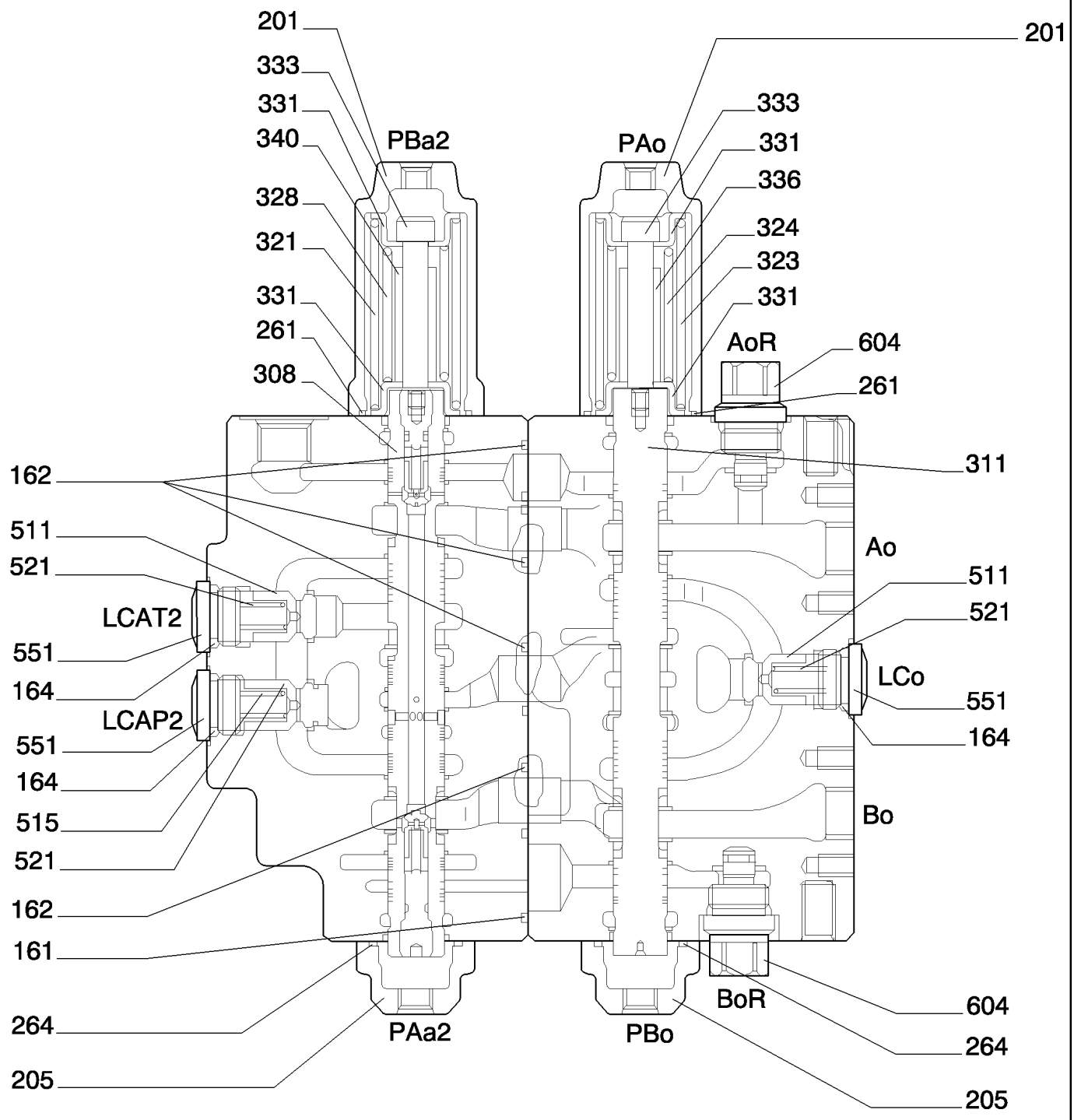

SECTION G-G

KIT KIT KIT 110-120-140-150-170-180
190-200-210-220-230

Copyright © New Holland

DISTRIBUIDOR - COMPONENTES
HYDRAULIC CONTROL VALVE - COMPONENTS
HYDRAULIC CONTROL VALVE - COMPONENTS
HYDRAULIC CONTROL VALVE - COMPONENTS

R	N	P.N.	MOD	Q	Description Denominacion	Descrizione Beskrivelse	Bezeichnung Denominação	Description Beschrijving	L.C.
110		YN30V00116R110		1	REPAIR KIT KIT DE REPARACIÓN	KIT DI RIPARAZIONE REPARATIONSSÆT	REPARATURSATZ KIT DE REPARAÇÃO	KIT DE REPARATION REPARATIEKIT	003K
120		YN30V00101R120		1	REPAIR KIT KIT DE REPARACIÓN	KIT DI RIPARAZIONE REPARATIONSSÆT	REPARATURSATZ KIT DE REPARAÇÃO	KIT DE REPARATION REPARATIEKIT	003K
140		YN30V00101R140		1	REPAIR KIT KIT DE REPARACIÓN	KIT DI RIPARAZIONE REPARATIONSSÆT	REPARATURSATZ KIT DE REPARAÇÃO	KIT DE REPARATION REPARATIEKIT	003K
150		YN30V00116R150		1	REPAIR KIT KIT DE REPARACIÓN	KIT DI RIPARAZIONE REPARATIONSSÆT	REPARATURSATZ KIT DE REPARAÇÃO	KIT DE REPARATION REPARATIEKIT	003K
161		70924192		1	O-RING JUNTA TÓRICA	ANELLO TOROIDALE O-RING	O-RING O-RING	JOINT TORIQUE O-RING	055A
162		72209839		4	O-RING JUNTA TÓRICA	ANELLO TOROIDALE O-RING	O-RING O-RING	JOINT TORIQUE O-RING	055A
164		72209838		3	O-RING JUNTA TÓRICA	ANELLO TOROIDALE O-RING	O-RING O-RING	JOINT TORIQUE O-RING	055A
170		YN30V00116R170		1	REPAIR KIT KIT DE REPARACIÓN	KIT DI RIPARAZIONE REPARATIONSSÆT	REPARATURSATZ KIT DE REPARAÇÃO	KIT DE REPARATION REPARATIEKIT	003K
180		YN30V00101R190		1	REPAIR KIT KIT DE REPARACIÓN	KIT DI RIPARAZIONE REPARATIONSSÆT	REPARATURSATZ KIT DE REPARAÇÃO	KIT DE REPARATION REPARATIEKIT	003K
190		YN30V00101R200		1	REPAIR KIT KIT DE REPARACIÓN	KIT DI RIPARAZIONE REPARATIONSSÆT	REPARATURSATZ KIT DE REPARAÇÃO	KIT DE REPARATION REPARATIEKIT	003K
200		YN30V00101R210		1	REPAIR KIT KIT DE REPARACIÓN	KIT DI RIPARAZIONE REPARATIONSSÆT	REPARATURSATZ KIT DE REPARAÇÃO	KIT DE REPARATION REPARATIEKIT	003K
201		YN30V00101S201		2	GUARD DEFENSA	PROTEZIONE BESKYTTELSESSKÆRM	SCHUTZABDECKUNG PROTECÇÃO	PROTECTION AFSCHERMING	070R
205		YN30V00001S205		2	COVER CUBIERTA	COPERCHIO DÆKSEL	ABDECKUNG COBERTURA	COUVERCLE AFSCHERMING	265C
210		YN30V00101R220		1	SPOOL BOBINA	STELO SPOLE	KOLBENSCHIEBER CARRETO	TIROIR SPOEL	134P
220		LQ30V00028R220		1	REPAIR KIT KIT DE REPARACIÓN	KIT DI RIPARAZIONE REPARATIONSSÆT	REPARATURSATZ KIT DE REPARAÇÃO	KIT DE REPARATION REPARATIEKIT	003K
230		YF30V00011R210		1	KIT KIT	KIT SÆT	SATZ KIT	KIT KIT	305C
261		72950285		2	O-RING JUNTA TÓRICA	ANELLO TOROIDALE O-RING	O-RING O-RING	JOINT TORIQUE O-RING	055A
264		71404168		2	O-RING JUNTA TÓRICA	ANELLO TOROIDALE O-RING	O-RING O-RING	JOINT TORIQUE O-RING	055A
308	1	YN30V00116S308		1	SPOOL BOBINA	STELO SPOLE	KOLBENSCHIEBER CARRETO	TIROIR SPOEL	134P
311	2	YN30V00101S311		1	SPOOL BOBINA	STELO SPOLE	KOLBENSCHIEBER CARRETO	TIROIR SPOEL	134P
321	3	72964210		1	SPRING RESORTE	MOLLA FJEDER	FEDER MOLA	RESSORT VEER	100M
323	4	72210124		1	SPRING RESORTE	MOLLA FJEDER	FEDER MOLA	RESSORT VEER	100M
324	4	87333132		1	SPRING RESORTE	MOLLA FJEDER	FEDER MOLA	RESSORT VEER	100M

(1) KIT - ITEM 170
(2) KIT - ITEM 200
(3) KIT - ITEM 110,120,170,210,230
(4) KIT - ITEM 150,200

CONTROL VALVE ASSY P/N YN30V00116F4

E215B

Copyright © New Holland

1.050	12	p2	03/10

HYDRAULIC CONTROL VALVE - COMPONENTS
DISTRIBUTORE IDRAULICO - COMPONENTI
STEUERGERAET - BESTANDTEILE
DISTRIBUTEUR - COMPOSANTS

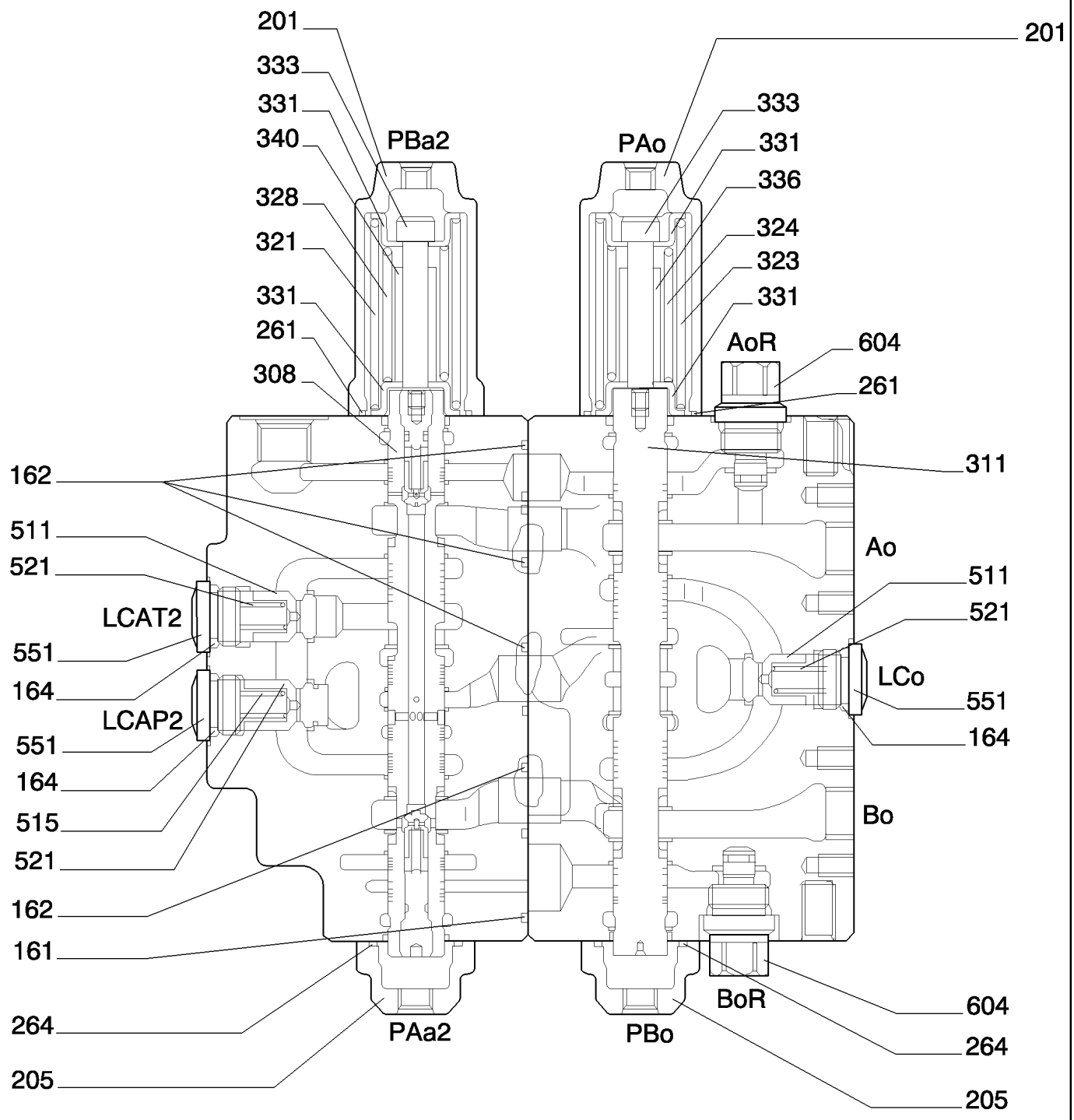

SECTION G-G

KIT KIT KIT

110-120-140-150-170-180
190-200-210-220-230

Copyright © New Holland

DISTRIBUIDOR - COMPONENTES
HYDRAULIC CONTROL VALVE - COMPONENTS
HYDRAULIC CONTROL VALVE - COMPONENTS
HYDRAULIC CONTROL VALVE - COMPONENTS

R	N	P.N.	MOD	Q	Description Denominacion	Descrizione Beskrivelse	Bezeichnung Denominação	Description Beschrijving	L.C.
328	1	YN30V00101S328		1	SPRING RESORTE	MOLLA FJEDER	FEDER MOLA	RESSORT VEER	100M
331	2	72210127		4	SEAT/SLOT ASIENTO/RANURA	SEDE/ASOLA SÆDE	SITZ/SCHLITZ SUPORTE	SIEGE/FENTE ZITTING/SLEUF	069S
333	2	72210127		2	SEAT/SLOT ASIENTO/RANURA	SEDE/ASOLA SÆDE	SITZ/SCHLITZ SUPORTE	SIEGE/FENTE ZITTING/SLEUF	069S
336	3	72210125		1	STOP TOPE	ARRESTO; FERMO STOP	STOP BATENTE	BUTEE AANSLAG	080A
340	1	YN30V00101S340		1	CLIP ABRAZADERA	FERMO KLIPS	KLAMMER FIXADOR	COLLIER KLEM	045F
511		YN30V00101S341		2	HYDRAULIC VALVE VÁLVULA HIDRÁULICA	DISTRIBUTORE IDRAULI HYDRAULIKVENTIL	HYDRAULIKVENTIL VÁLVULA HIDRÁULICA	SOUPAPE HYDRAULIQU HYDRAULISCHE KLEP	010V
515		2436U1231S513		1	POPPET RESORTE	PISTONCINO POPNITTE	KEGELVENTIL VÁLVULA DE HASTE E P	CLAPET KLEP	012V
521		72210091		3	SPRING RESORTE	MOLLA FJEDER	FEDER MOLA	RESSORT VEER	100M
551		YN30V00001S551		3	PLUG TAPÓN	TAPPO PROP	STOPFEN TAMPÃO	BOUCHON PLUG	050T
604		YN30V01062P1		2	PLUG TAPÓN	TAPPO PROP	STOPFEN TAMPÃO	BOUCHON PLUG	050T

(1) KIT - ITEM 170
(2) KIT - ITEM 110,120,140,150,170,180,190,200,210,220,230
(3) KIT - ITEM 110,120,150,180,190,200,210,220,230

CONTROL VALVE ASSY P/N YN30V00116F4

E215B

Copyright © New Holland

HYDRAULIC CONTROL VALVE - COMPONENTS
DISTRIBUTORE IDRAULICO - COMPONENTI
STEUERGERAET - BESTANDTEILE
DISTRIBUTEUR - COMPOSANTS

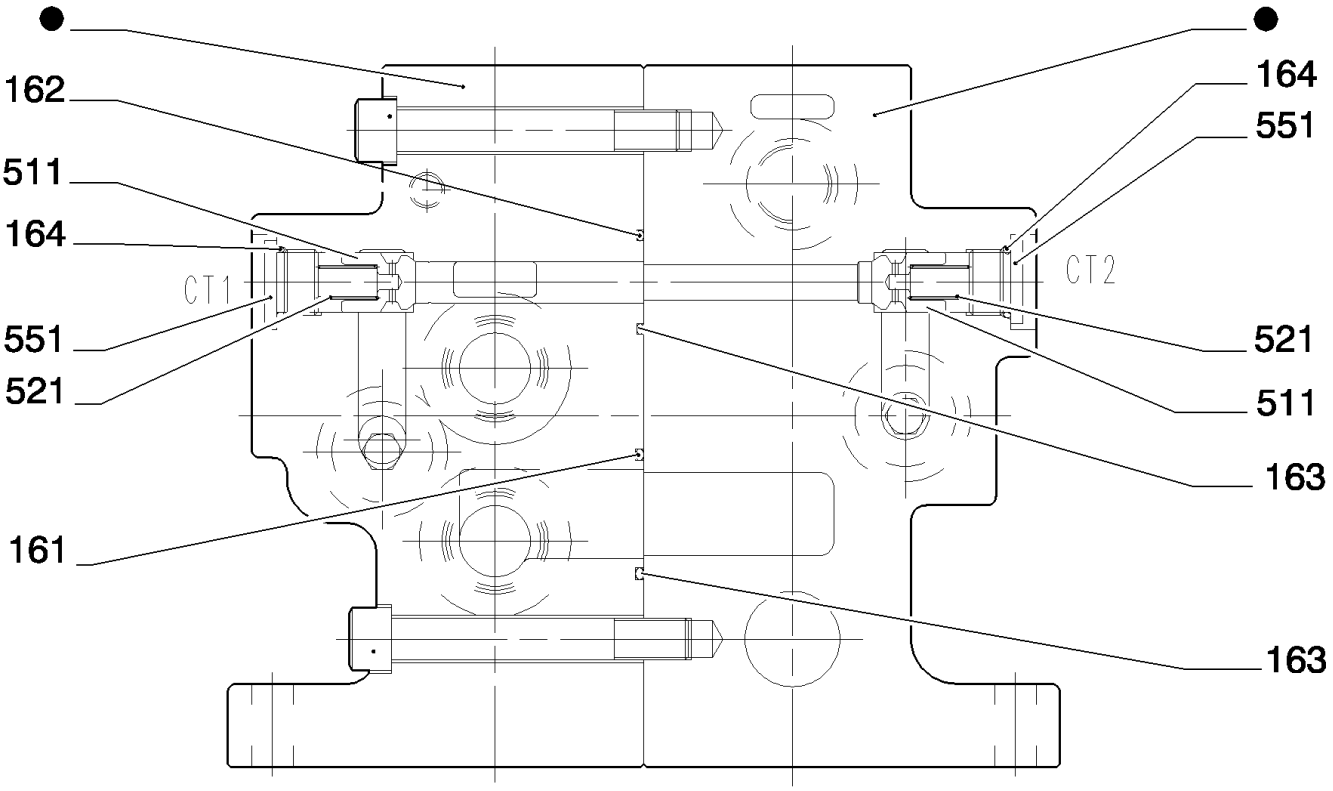

SECTION H-H

PARTS MARKED ● ARE NOT SUPPLIED AS SPARES
I PARTICOLARI CONTRASSEGNATI CON ● NON VENGONO FORNITI DI RICAMBIO

Copyright © New Holland

DISTRIBUIDOR - COMPONENTES
HYDRAULIC CONTROL VALVE - COMPONENTS
HYDRAULIC CONTROL VALVE - COMPONENTS
HYDRAULIC CONTROL VALVE - COMPONENTS

R	N	P.N.	MOD	Q	Description Denominacion	Descrizione Beskrivelse	Bezeichnung Denominação	Description Beschrijving	L.C.
161		70924192		1	O-RING JUNTA TÓRICA	ANELLO TOROIDALE O-RING	O-RING O-RING	JOINT TORIQUE O-RING	055A
162		72209839		1	O-RING JUNTA TÓRICA	ANELLO TOROIDALE O-RING	O-RING O-RING	JOINT TORIQUE O-RING	055A
163		72210077		2	O-RING JUNTA TÓRICA	ANELLO TOROIDALE O-RING	O-RING O-RING	JOINT TORIQUE O-RING	055A
164		72209838		2	O-RING JUNTA TÓRICA	ANELLO TOROIDALE O-RING	O-RING O-RING	JOINT TORIQUE O-RING	055A
511		YN30V00101S341		2	HYDRAULIC VALVE VÁLVULA HIDRÁULICA	DISTRIBUTORE IDRAULI HYDRAULIKVENTIL	HYDRAULIKVENTIL VÁLVULA HIDRÁULICA	SOUPAPE HYDRAULIQU HYDRAULISCHE KLEP	010V
521		72210091		2	SPRING RESORTE	MOLLA FJEDER	FEDER MOLA	RESSORT VEER	100M
551		YN30V00001S551		2	PLUG TAPÓN	TAPPO PROP	STOPFEN TAMPÃO	BOUCHON PLUG	050T

Copyright © New Holland

1.050	14	p1	03/10

HYDRAULIC CONTROL VALVE - COMPONENTS
DISTRIBUTORE IDRAULICO - COMPONENTI
STEUERGERAET - BESTANDTEILE
DISTRIBUTEUR - COMPOSANTS

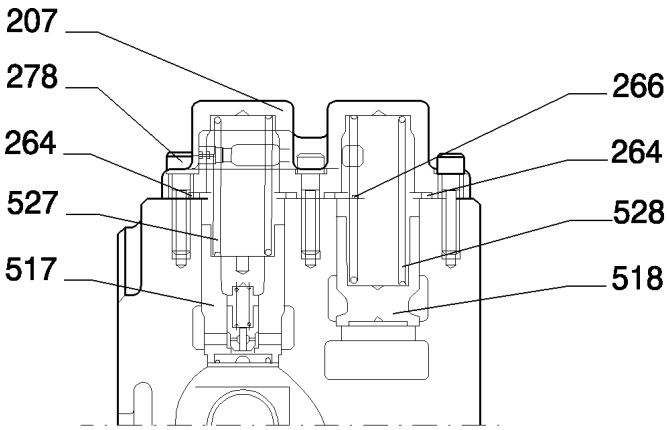

SECTION J-J

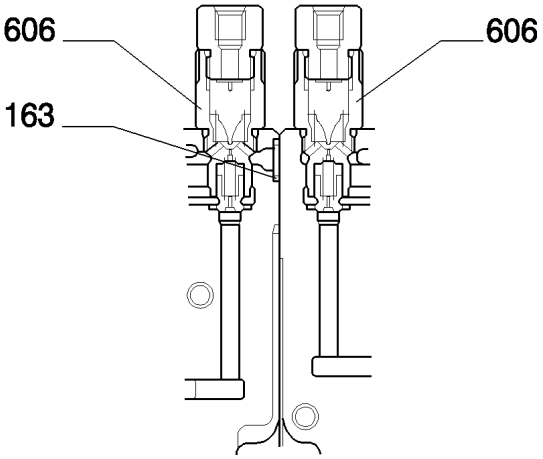

SECTION K-K

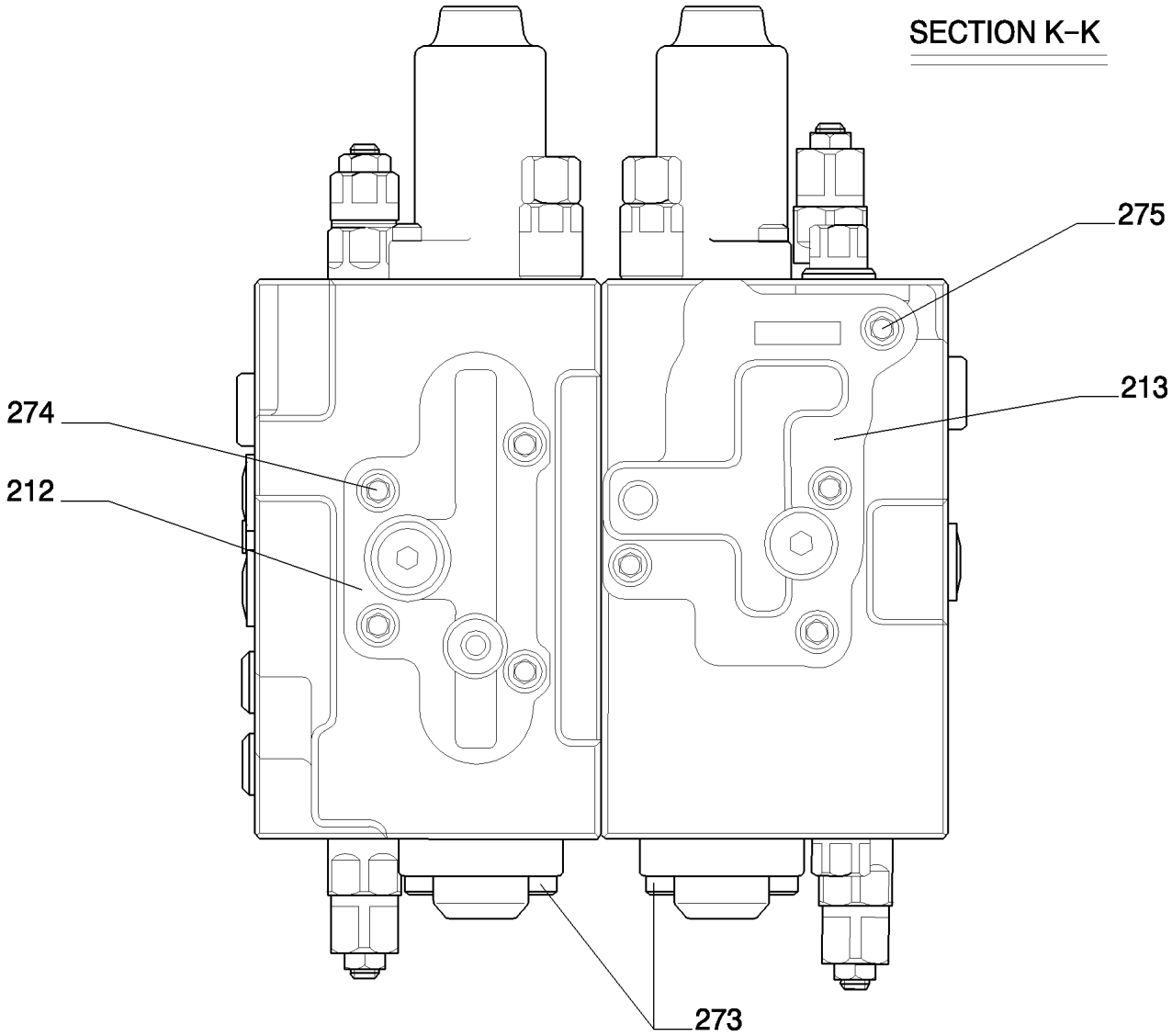

Copyright © New Holland

DISTRIBUIDOR - COMPONENTES
HYDRAULIC CONTROL VALVE - COMPONENTS
HYDRAULIC CONTROL VALVE - COMPONENTS
HYDRAULIC CONTROL VALVE - COMPONENTS

R	N	P.N.	MOD	Q	Description Denominacion	Descrizione Beskrivelse	Bezeichnung Denominação	Description Beschrijving	L.C.
163		72210077		1	O-RING JUNTA TÓRICA	ANELLO TOROIDALE O-RING	O-RING O-RING	JOINT TORIQUE O-RING	055A
207		YN30V00101S207		1	GUARD DEFENSA	PROTEZIONE BESKYTTELSESSKÆRM	SCHUTZABDECKUNG PROTECÇÃO	PROTECTION AFSCHERMING	070R
212		YF30V00011S212		1	PLATE PLACA	PIASTRA PLADE	PLATTE CHAPA	PLAQUE PLAAT	105P
213		YF30V00011S213		1	PLATE PLACA	PIASTRA PLADE	PLATTE CHAPA	PLAQUE PLAAT	105P
264		71404168		2	O-RING JUNTA TÓRICA	ANELLO TOROIDALE O-RING	O-RING O-RING	JOINT TORIQUE O-RING	055A
266		72215596		1	GASKET JUNTA	GUARNIZIONE PAKNING	DICHTUNG JUNTA	JOINT PAKKING	123G
273		14306470		20	SCREW, Hex Soc Hd, M8 x 25, 12.9 TORNILLO	VITE SKRUE	SCHRAUBE PARAFUSO	VIS SCHROEF	040V
274		14311070		4	SCREW TORNILLO	VITE SKRUE	SCHRAUBE PARAFUSO	VIS SCHROEF	040V
275		14422170		4	SCREW TORNILLO	VITE SKRUE	SCHRAUBE PARAFUSO	VIS SCHROEF	040V
278		14306670		5	SCREW TORNILLO	VITE SKRUE	SCHRAUBE PARAFUSO	VIS SCHROEF	040V
517		YN30V00101S517		1	HYDRAULIC VALVE VÁLVULA HIDRÁULICA	DISTRIBUTORE IDRAULI HYDRAULIKVENTIL	HYDRAULIKVENTIL VÁLVULA HIDRÁULICA	SOUPAPE HYDRAULIQU HYDRAULISCHE KLEP	010V
518		YN30V00101S518		1	HYDRAULIC VALVE VÁLVULA HIDRÁULICA	DISTRIBUTORE IDRAULI HYDRAULIKVENTIL	HYDRAULIKVENTIL VÁLVULA HIDRÁULICA	SOUPAPE HYDRAULIQU HYDRAULISCHE KLEP	010V
527		YN30V00101S527		1	SPRING RESORTE	MOLLA FJEDER	FEDER MOLA	RESSORT VEER	100M
528		YN30V00101S528		1	SPRING RESORTE	MOLLA FJEDER	FEDER MOLA	RESSORT VEER	100M
606		YN30V00120F2		2	VALVE VÁLVULA	VALVOLA VENTIL	VENTIL VÁLVULA	SOUPAPE KLEP	9620

CONTROL VALVE ASSY P/N YN30V00116F4

E215B

Copyright © New Holland

1.051	01	p1	03/10

HYDRAULIC CONTROL VALVE - VERSION (04-05-06)
DISTRIBUTORE IDRAULICO - VERSIONE (04-05-06)
STEUERGERAET - VERSION (04-05-06)
DISTRIBUTEUR - VERSION (04-05-06)

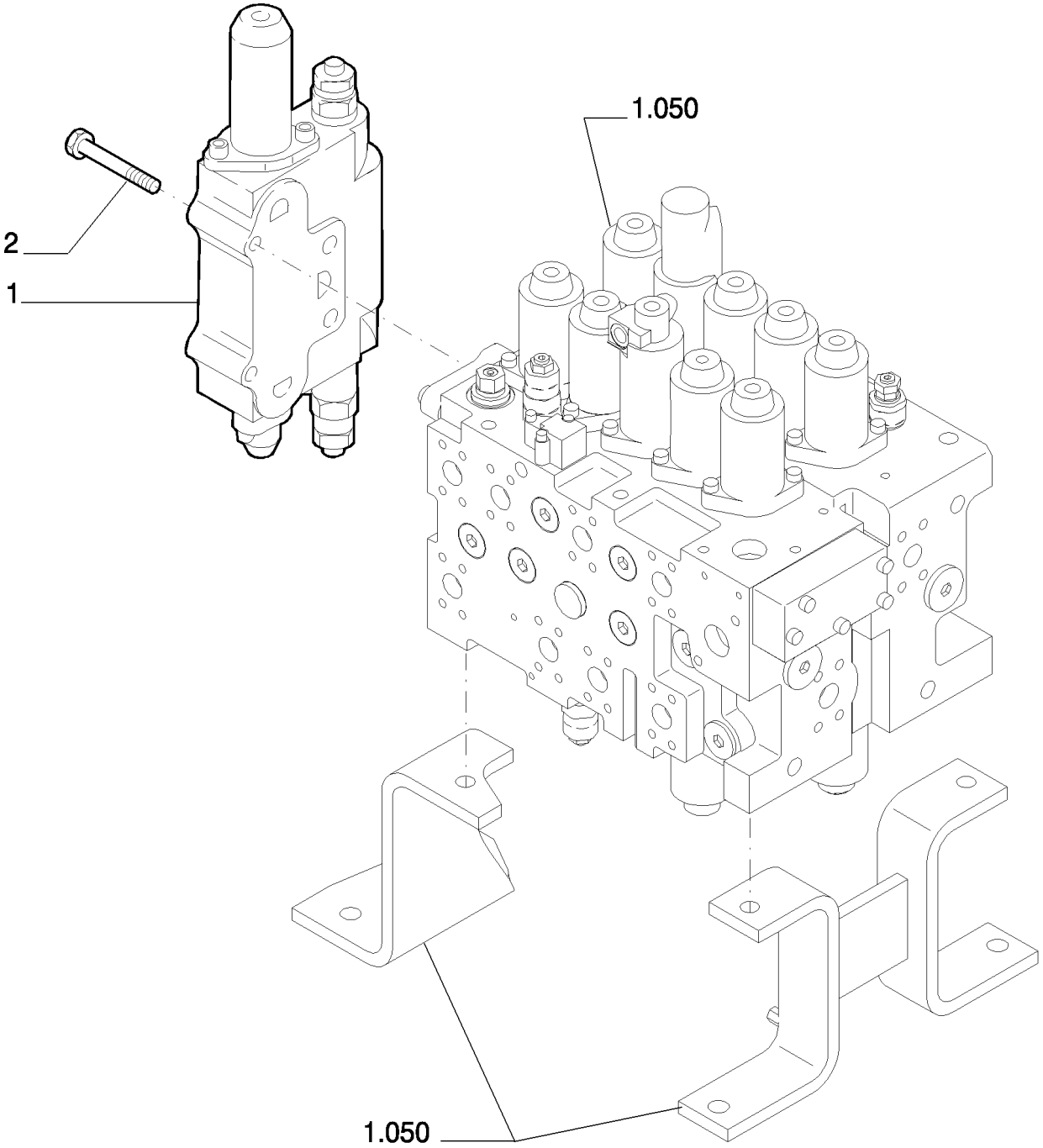

Copyright © New Holland

DISTRIBUIDOR - VERSION (04-05-06)
HYDRAULIC CONTROL VALVE - VERSION (04-05-06)
HYDRAULIC CONTROL VALVE - VERSION (04-05-06)
HYDRAULIC CONTROL VALVE - VERSION (04-05-06)

R	N	P.N.	MOD	Q	Description Denominacion	Descrizione Beskrivelse	Bezeichnung Denominação	Description Beschrijving	L.C.
1	1	87586053		1	HYDRAULIC VALVE VÁLVULA HIDRÁULICA	DISTRIBUTORE IDRAULI HYDRAULIKVENTIL	HYDRAULIKVENTIL VÁLVULA HIDRÁULICA	SOUPAPE HYDRAULIQU HYDRAULISCHE KLEP	010V
2		14423234		4	SCREW TORNILLO	VITE SKRUE	SCHRAUBE PARAFUSO	VIS SCHROEF	040V

(1) ASSY SEE PAGE 2

Copyright © New Holland

1.051	02	p1	03/10

HYDRAULIC CONTROL VALVE - COMPONENTS - VERSION (04-05-06)
DISTRIBUTORE IDRAULICO - COMPONENTI - VERSIONE (04-05-06)
STEUERGERAET - BESTANDTEILE - VERSION (04-05-06)
DISTRIBUTEUR - COMPOSANTS - VERSION (04-05-06)

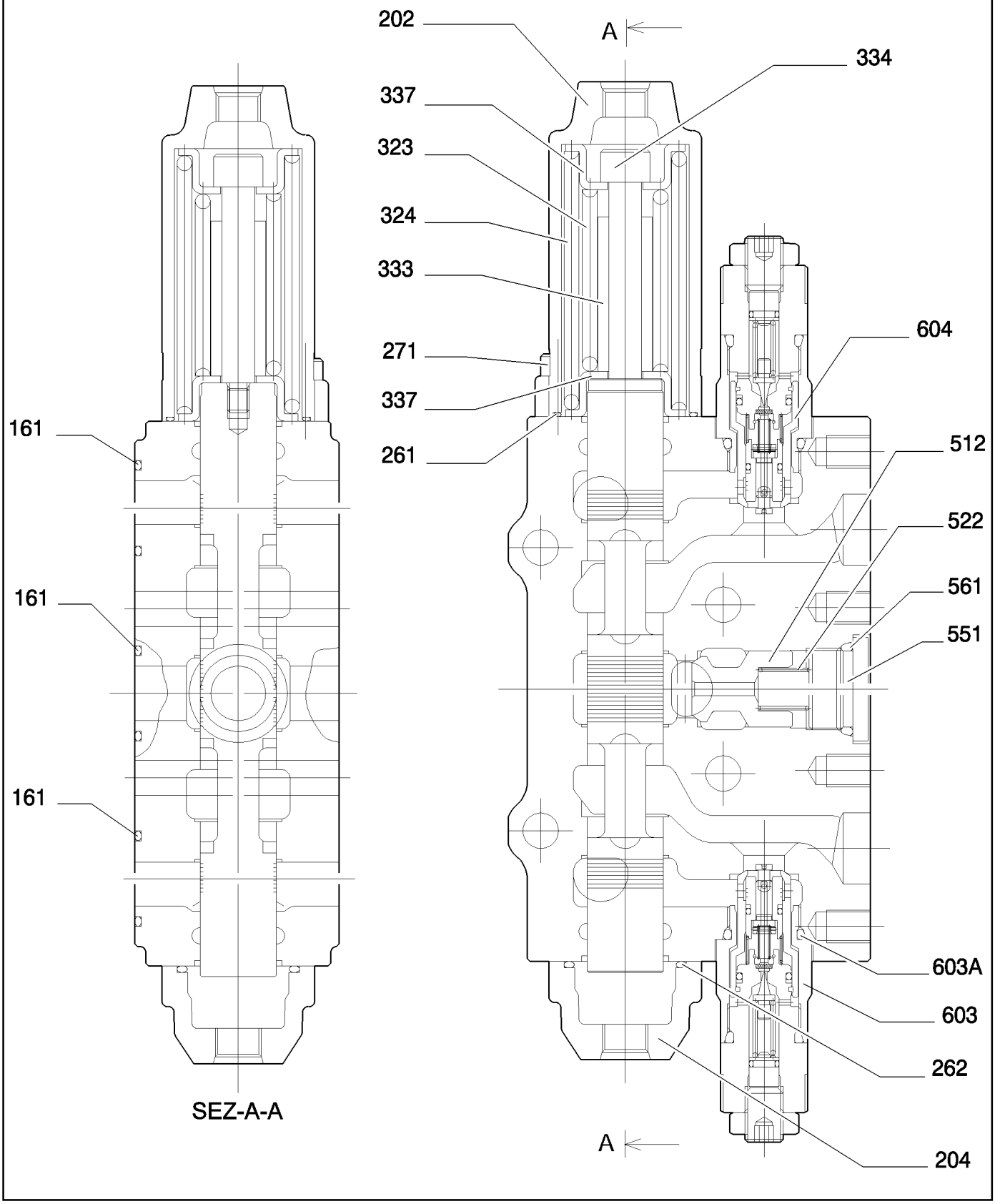

Copyright © New Holland

DISTRIBUIDOR - COMPONENTES - VERSION (04-05-06)
HYDRAULIC CONTROL VALVE - COMPONENTS - VERSION (04-05-06)
HYDRAULIC CONTROL VALVE - COMPONENTS - VERSION (04-05-06)
HYDRAULIC CONTROL VALVE - COMPONENTS - VERSION (04-05-06)

R	N	P.N.	MOD	Q	Description Denominacion	Descrizione Beskrivelse	Bezeichnung Denominação	Description Beschrijving	L.C.
161		72209839		3	O-RING JUNTA TÓRICA	ANELLO TOROIDALE O-RING	O-RING O-RING	JOINT TORIQUE O-RING	055A
202		72210080		1	COVER CUBIERTA	COPERCHIO DÆKSEL	ABDECKUNG COBERTURA	COUVERCLE AFSCHERMING	265C
204		72210435		1	COVER CUBIERTA	COPERCHIO DÆKSEL	ABDECKUNG COBERTURA	COUVERCLE AFSCHERMING	265C
261		72210087		1	O-RING JUNTA TÓRICA	ANELLO TOROIDALE O-RING	O-RING O-RING	JOINT TORIQUE O-RING	055A
262		72209830		1	O-RING JUNTA TÓRICA	ANELLO TOROIDALE O-RING	O-RING O-RING	JOINT TORIQUE O-RING	055A
271		14306470		4	SCREW, Hex Soc Hd, M8 x 25, 12.9 TORNILLO	VITE SKRUE	SCHRAUBE PARAFUSO	VIS SCHROEF	040V
323		72210436		1	SPRING RESORTE	MOLLA FJEDER	FEDER MOLA	RESSORT VEER	100M
324		72210437		1	SPRING RESORTE	MOLLA FJEDER	FEDER MOLA	RESSORT VEER	100M
333		72210438		1	CLIP ABRAZADERA	FERMO KLIPS	KLAMMER FIXADOR	COLLIER KLEM	045F
334		72210439		1	SCREW TORNILLO	VITE SKRUE	SCHRAUBE PARAFUSO	VIS SCHROEF	040V
337		72210440		2	SEAT/SLOT ASIENTO/RANURA	SEDE/ASOLA SÆDE	SITZ/SCHLITZ SUPORTE	SIEGE/FENTE ZITTING/SLEUF	069S
512		72210441		1	HYDRAULIC VALVE VÁLVULA HIDRÁULICA	DISTRIBUTORE IDRAULI HYDRAULIKVENTIL	HYDRAULIKVENTIL VÁLVULA HIDRÁULICA	SOUPAPE HYDRAULIQU HYDRAULISCHE KLEP	010V
522		72210442		1	SPRING RESORTE	MOLLA FJEDER	FEDER MOLA	RESSORT VEER	100M
551		72210443		1	PLUG TAPÓN	TAPPO PROP	STOPFEN TAMPÃO	BOUCHON PLUG	050T
561		72209822		1	O-RING JUNTA TÓRICA	ANELLO TOROIDALE O-RING	O-RING O-RING	JOINT TORIQUE O-RING	055A
603		72210098		1	HYDRAULIC VALVE, - ASSY VÁLVULA HIDRÁULICA	DISTRIBUTORE IDRAULI HYDRAULIKVENTIL	HYDRAULIKVENTIL VÁLVULA HIDRÁULICA	SOUPAPE HYDRAULIQU HYDRAULISCHE KLEP	010V
603A		72209838		1	O-RING JUNTA TÓRICA	ANELLO TOROIDALE O-RING	O-RING O-RING	JOINT TORIQUE O-RING	055A
604	1	72210099		1	HYDRAULIC VALVE VÁLVULA HIDRÁULICA	DISTRIBUTORE IDRAULI HYDRAULIKVENTIL	HYDRAULIKVENTIL VÁLVULA HIDRÁULICA	SOUPAPE HYDRAULIQU HYDRAULISCHE KLEP	010V

(1) ASSY SEE PAGE 3

CONTROL VALVE ASSY P/N 87586053

E215B

Copyright © New Holland

1.051	03	p1	03/10

HYDRAULIC CONTROL VALVE - COMPONENTS - VERSION (04-05-06)
DISTRIBUTORE IDRAULICO - COMPONENTI - VERSIONE (04-05-06)
STEUERGERAET - BESTANDTEILE - VERSION (04-05-06)
DISTRIBUTEUR - COMPOSANTS - VERSION (04-05-06)

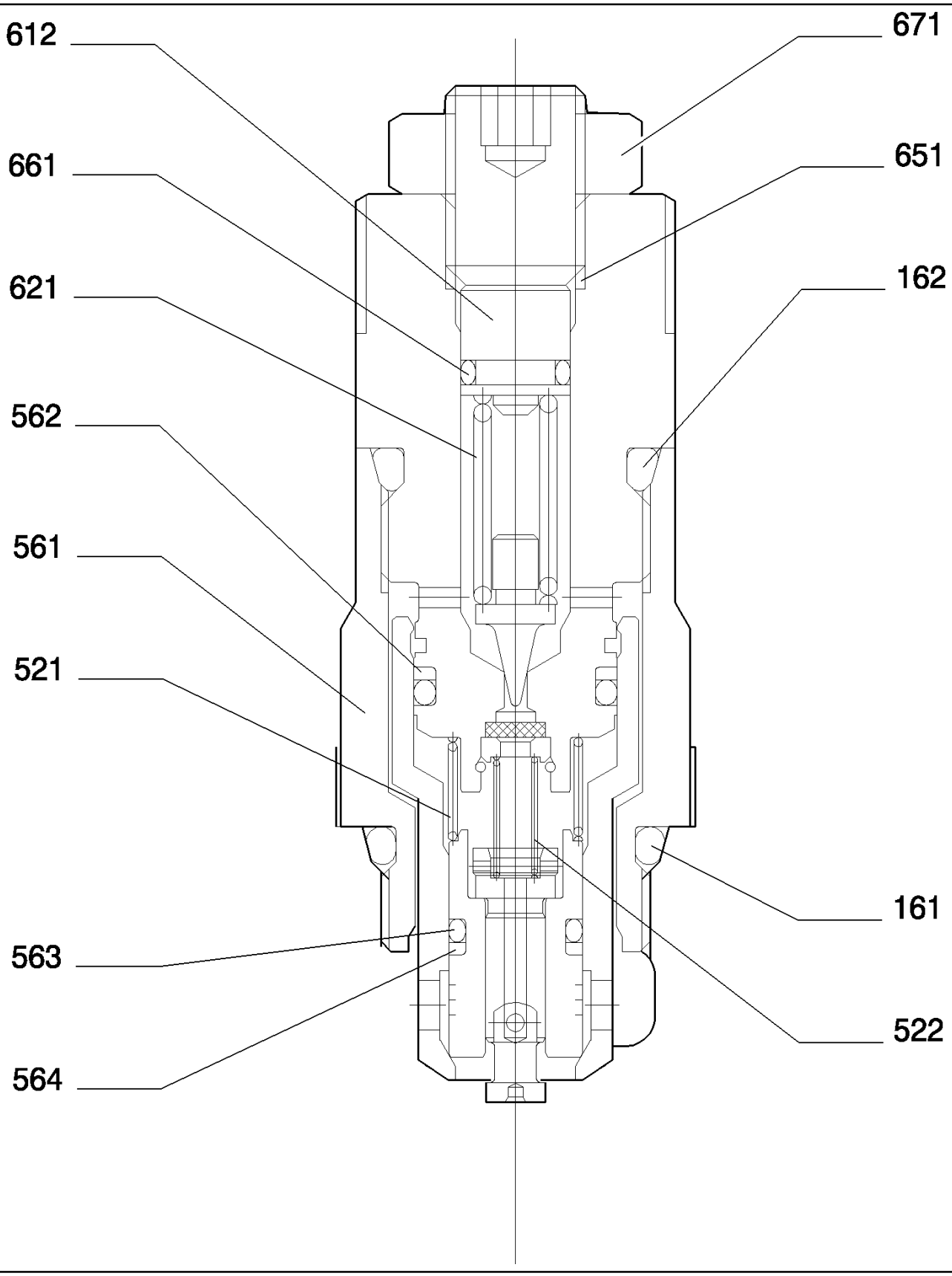

Copyright © New Holland

DISTRIBUIDOR - COMPONENTES - VERSION (04-05-06)
HYDRAULIC CONTROL VALVE - COMPONENTS - VERSION (04-05-06)
HYDRAULIC CONTROL VALVE - COMPONENTS - VERSION (04-05-06)
HYDRAULIC CONTROL VALVE - COMPONENTS - VERSION (04-05-06)

R	N	P.N.	MOD	Q	Description Denominacion	Descrizione Beskrivelse	Bezeichnung Denominação	Description Beschrijving	L.C.
161		72209838		1	O-RING JUNTA TÓRICA	ANELLO TOROIDALE O-RING	O-RING O-RING	JOINT TORIQUE O-RING	055A
162		72216048		1	GASKET JUNTA	GUARNIZIONE PAKNING	DICHTUNG JUNTA	JOINT PAKKING	123G
521		72215527		1	SPRING RESORTE	MOLLA FJEDER	FEDER MOLA	RESSORT VEER	100M
522		72216049		1	SPRING RESORTE	MOLLA FJEDER	FEDER MOLA	RESSORT VEER	100M
561		72215528		1	GASKET JUNTA	GUARNIZIONE PAKNING	DICHTUNG JUNTA	JOINT PAKKING	123G
562		72215529		1	RING ANILLO	ANELLO RING	RING ANEL	ANNEAU RING	045A
563		72216050		1	GASKET JUNTA	GUARNIZIONE PAKNING	DICHTUNG JUNTA	JOINT PAKKING	123G
564		72216201		1	RING ANILLO	ANELLO RING	RING ANEL	ANNEAU RING	045A
612		72216202		1	SPRING RESORTE	MOLLA FJEDER	FEDER MOLA	RESSORT VEER	100M
621		72216207		1	SPRING RESORTE	MOLLA FJEDER	FEDER MOLA	RESSORT VEER	100M
651		72216204		1	SCREW TORNILLO	VITE SKRUE	SCHRAUBE PARAFUSO	VIS SCHROEF	040V
661		72209818		1	O-RING JUNTA TÓRICA	ANELLO TOROIDALE O-RING	O-RING O-RING	JOINT TORIQUE O-RING	055A
671		72216209		1	NUT TUERCA	DADO MØTRIK	MUTTER PORCA	ECROU MOER	010D

VALVE ASSY P/N 72210099

E215B

Copyright © New Holland

1.060	01	p1	03/10

HYDRAULIC PUMP PILOT SYSTEM PIPES
TUBAZIONI SERVOCOMANDI POMPA IDRAULICA
LEITUNGEN DER SERVOLENKUNG DER HYDRAULIKPUMPE
TUYAUTERIES COMMANDES ASSISTEES POMPE HYDRAULIQUE

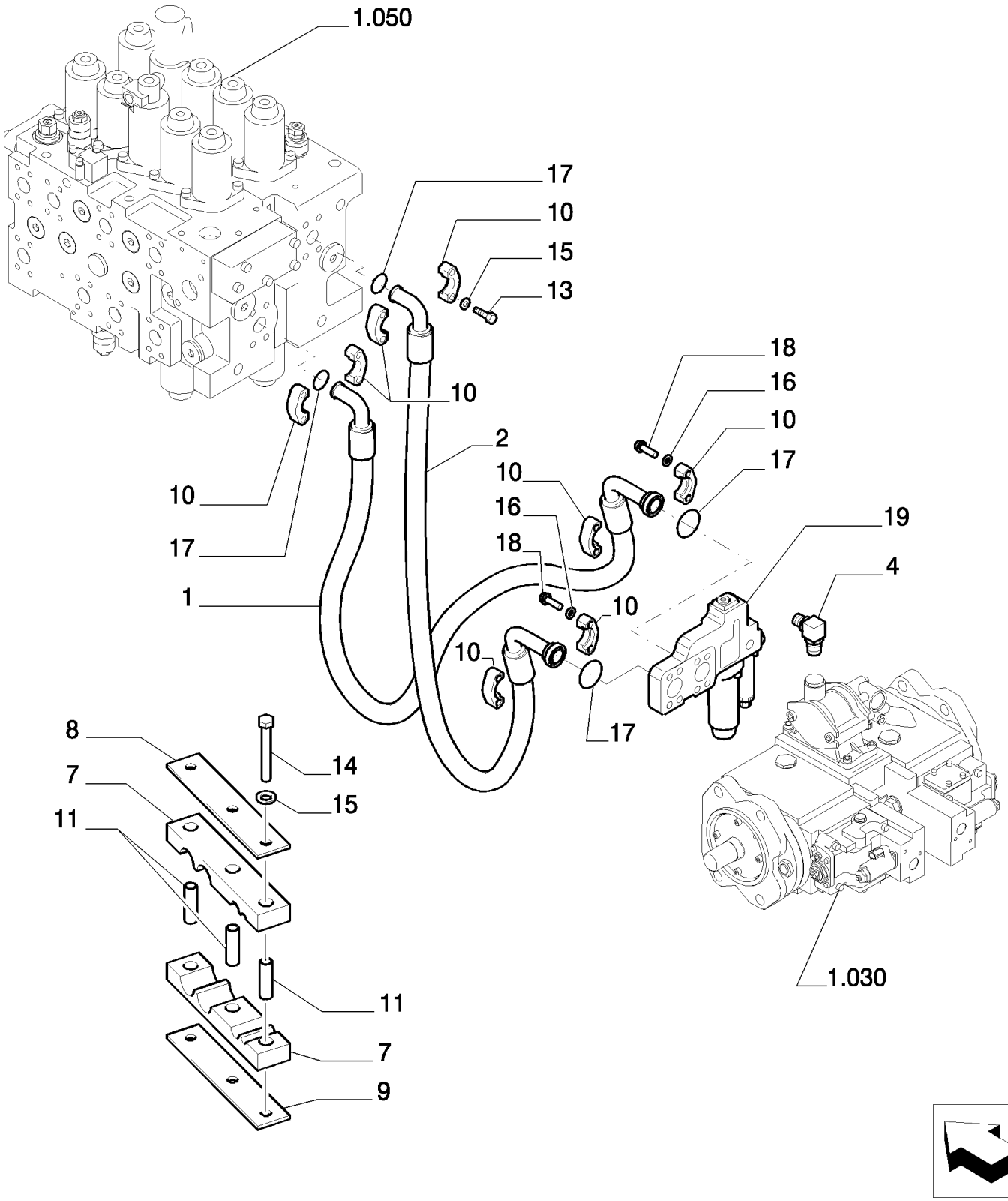

Copyright © New Holland

CONDUCTOS SERVOMANDOS BOMBA HIDRAULICA
HYDRAULIC PUMP PILOT SYSTEM PIPES
HYDRAULIC PUMP PILOT SYSTEM PIPES
HYDRAULIC PUMP PILOT SYSTEM PIPES

R	N	P.N.	MOD	Q	Description Denominacion	Descrizione Beskrivelse	Bezeichnung Denominação	Description Beschrijving	L.C.
1		87524900		1	FLEXIBLE HOSE TUBO FLEXIBLE	TUBO FLESSIBILE FLEKSIBEL SLANGE	BIEGSAMER SCHLAUCH MANGUEIRA FLEXÍVEL	TUYAU FLEXIBLE FLEXIBELE SLANG	192T
2		87524901		1	FLEXIBLE HOSE TUBO FLEXIBLE	TUBO FLESSIBILE FLEKSIBEL SLANGE	BIEGSAMER SCHLAUCH MANGUEIRA FLEXÍVEL	TUYAU FLEXIBLE FLEXIBELE SLANG	192T
4		72214734		1	HYD CONNECTOR CONECTOR HIDRÁULIC	CONNETTORE IDRAULIC HYDRAULIKSTIK	HYDR STECKVERBINDE CONECTOR HID.	CONNECTEUR HYDRAU HYDRAULISCHE AANSLI	020R
7		87524904		2	CLAMP ABRAZADERA	MORSETTO SPÆNDEBÅND	KLEMME BRAÇADEIRA	COLLIER KLEM	120M
8		87524905		1	PLATE PLACA	PIASTRA PLADE	PLATTE CHAPA	PLAQUE PLAAT	105P
9		YN30H01215P1		1	PLATE PLACA	PIASTRA PLADE	PLATTE CHAPA	PLAQUE PLAAT	105P
10		71404313		8	HALF-FLANGE SEMIBRIDA	SEMIFLANGIA FLANGEHALVDEL	FLANSCHHÄLFTE MEIA FLANGE	DEMI-BRIDE FLENSHELFT	417S
11		ZY26X06056		3	SPACER SEPARADOR	DISTANZIALE AFSTANDSSTYKKE	DISTANZSTÜCK ESPAÇADOR	ENTRETOISE AFSTANDSSTUK	075D
13		11112834		8	BOLT, Hex, M12 x 40, 10.9, Full Thd PERNO	BULLONE BOLT	SCHRAUBE PARAFUSO	VIS BOUT	140B
14		11114034		3	BOLT, Hex, M12 x 90, 10.9, Full Thd PERNO	BULLONE BOLT	SCHRAUBE PARAFUSO	VIS BOUT	140B
15		14496731		11	WASHER, M12 x 24 x 2.5 Thk ARANDELA	RONDELLA FLADSKIVE	UNTERLEGSCHEIBE ANILHA	RONDELLE SLUITRING	131R
16		10517074		8	LOCK WASHER ARANDELA DE BLOQUE	RONDELLA DI SICUREZ LÅSESKIVE	SICHERUNGSSCHEIBE ANILHA DE RETENÇÃO	RONDELLE FREIN BORGRING	132R
17		72215443		4	O-RING JUNTA TÓRICA	ANELLO TOROIDALE O-RING	O-RING O-RING	JOINT TORIQUE O-RING	055A
18		14423234		8	SCREW TORNILLO	VITE SKRUE	SCHRAUBE PARAFUSO	VIS SCHROEF	040V
19	1	87524907		1	HYDRAULIC VALVE VÁLVULA HIDRÁULICA	DISTRIBUTORE IDRAULI HYDRAULIKVENTIL	HYDRAULIKVENTIL VÁLVULA HIDRÁULICA	SOUPAPE HYDRAULIQU HYDRAULISCHE KLEP	010V

(1) ASSY SEE PAGE 2

Copyright © New Holland

1.060	02	p1	03/10

HYDRAULIC PUMP PILOT SYSTEM PIPES - COMPONENTS
TUBAZIONI SERVOCOMANDI POMPA IDRAULICA - COMPONENTI
LEITUNGEN DER SERVOLENKUNG DER HYDRAULIKPUMPE - BESTANDTEILE
TUYAUTERIES COMMANDES ASSISTEES POMPE HYDRAULIQUE - COMPOSANTS

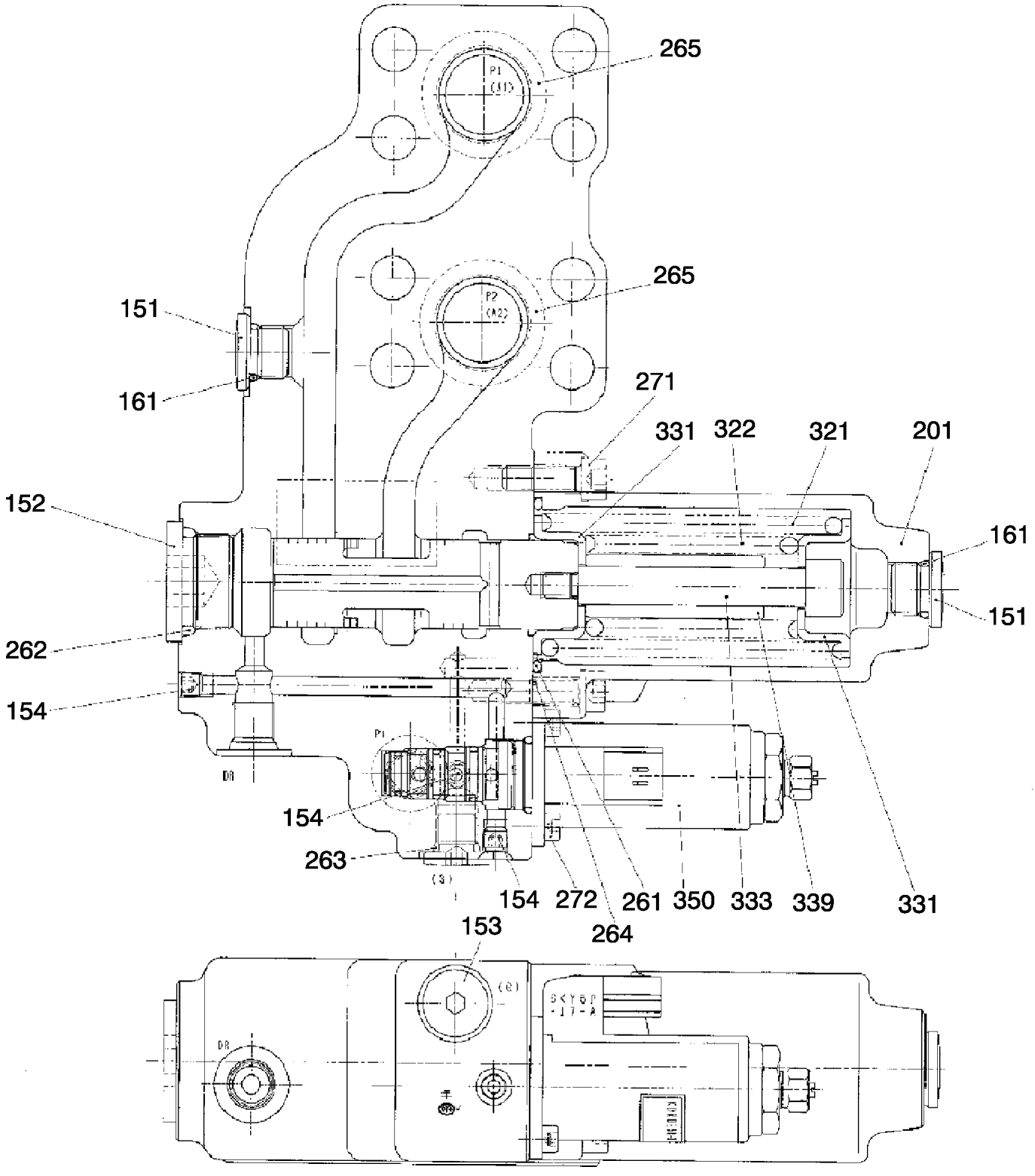

Copyright © New Holland

CONDUCTOS SERVOMANDOS BOMBA HIDRAULICA - COMPONENTES
HYDRAULIC PUMP PILOT SYSTEM PIPES - COMPONENTS
HYDRAULIC PUMP PILOT SYSTEM PIPES - COMPONENTS
HYDRAULIC PUMP PILOT SYSTEM PIPES - COMPONENTS

R	N	P.N.	MOD	Q	Description Denominacion	Descrizione Beskrivelse	Bezeichnung Denominação	Description Beschrijving	L.C.
151		72961479		2	PLUG TAPÓN	TAPPO PROP	STOPFEN TAMPÃO	BOUCHON PLUG	050T
152		2436U1198S551		1	PLUG TAPÓN	TAPPO PROP	STOPFEN TAMPÃO	BOUCHON PLUG	050T
153		72209843		1	PLUG TAPÓN	TAPPO PROP	STOPFEN TAMPÃO	BOUCHON PLUG	050T
154		72209815		3	PLUG TAPÓN	TAPPO PROP	STOPFEN TAMPÃO	BOUCHON PLUG	050T
161		72209820		2	O-RING JUNTA TÓRICA	ANELLO TOROIDALE O-RING	O-RING O-RING	JOINT TORIQUE O-RING	055A
201		YN30V00101S203		1	GUARD DEFENSA	PROTEZIONE BESKYTTELSESSKÆRM	SCHUTZABDECKUNG PROTECÇÃO	PROTECTION AFSCHERMING	070R
261		72950285		1	O-RING JUNTA TÓRICA	ANELLO TOROIDALE O-RING	O-RING O-RING	JOINT TORIQUE O-RING	055A
262		72209989		1	O-RING JUNTA TÓRICA	ANELLO TOROIDALE O-RING	O-RING O-RING	JOINT TORIQUE O-RING	055A
263		72209827		1	O-RING JUNTA TÓRICA	ANELLO TOROIDALE O-RING	O-RING O-RING	JOINT TORIQUE O-RING	055A
264		72215596		1	GASKET JUNTA	GUARNIZIONE PAKNING	DICHTUNG JUNTA	JOINT PAKKING	123G
265		72215443		2	O-RING JUNTA TÓRICA	ANELLO TOROIDALE O-RING	O-RING O-RING	JOINT TORIQUE O-RING	055A
271		14306470		2	SCREW, Hex Soc Hd, M8 x 25, 12.9 TORNILLO	VITE SKRUE	SCHRAUBE PARAFUSO	VIS SCHROEF	040V
272		72209810		2	SCREW TORNILLO	VITE SKRUE	SCHRAUBE PARAFUSO	VIS SCHROEF	040V
321		YN30V00101S327		1	SPRING RESORTE	MOLLA FJEDER	FEDER MOLA	RESSORT VEER	100M
322		YN30V00101S329		1	SPRING RESORTE	MOLLA FJEDER	FEDER MOLA	RESSORT VEER	100M
331		72210127		2	SEAT/SLOT ASIENTO/RANURA	SEDE/ASOLA SÆDE	SITZ/SCHLITZ SUPORTE	SIEGE/FENTE ZITTING/SLEUF	069S
333		72210126		1	SCREW TORNILLO	VITE SKRUE	SCHRAUBE PARAFUSO	VIS SCHROEF	040V
339		72210125		1	STOP TOPE	ARRESTO; FERMO STOP	STOP BATENTE	BUTEE AANSLAG	080A
350		YN35V00048F1		1	VALVE VÁLVULA	VALVOLA VENTIL	VENTIL VÁLVULA	SOUPAPE KLEP	9620

VALVE ASSY P/N 87524907

E215B

Copyright © New Holland

1.060	03	p1	03/10

HYDRAULIC PUMP PILOT SYSTEM PIPES
TUBAZIONI SERVOCOMANDI POMPA IDRAULICA
LEITUNGEN DER SERVOLENKUNG DER HYDRAULIKPUMPE
TUYAUTERIES COMMANDES ASSISTEES POMPE HYDRAULIQUE

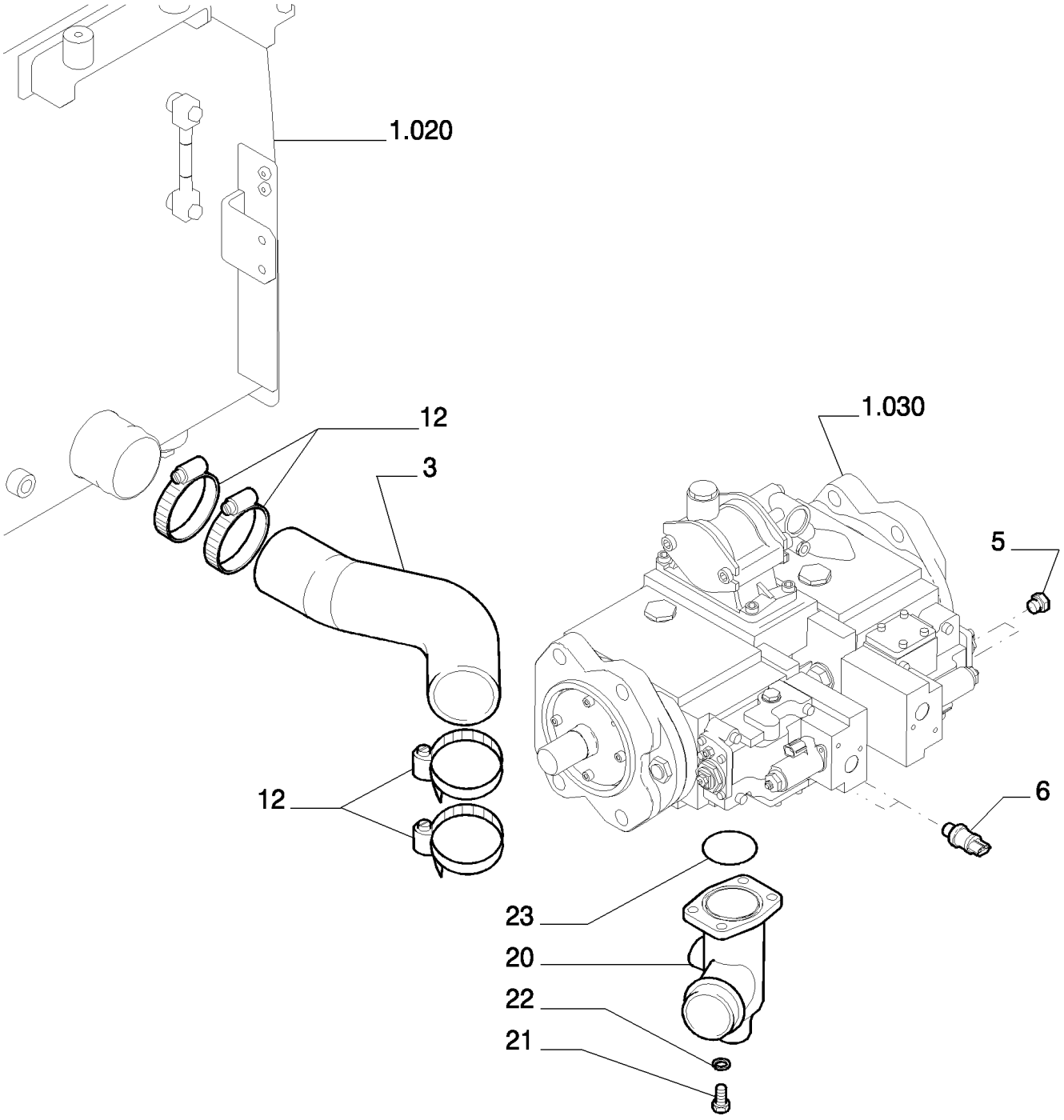

Copyright © New Holland

CONDUCTOS SERVOMANDOS BOMBA HIDRAULICA
HYDRAULIC PUMP PILOT SYSTEM PIPES
HYDRAULIC PUMP PILOT SYSTEM PIPES
HYDRAULIC PUMP PILOT SYSTEM PIPES

R	N	P.N.	MOD	Q	Description Denominacion	Descrizione Beskrivelse	Bezeichnung Denominação	Description Beschrijving	L.C.
3		87524902		1	FLEXIBLE HOSE TUBO FLEXIBLE	TUBO FLESSIBILE FLEKSIBEL SLANGE	BIEGSAMER SCHLAUCH MANGUEIRA FLEXÍVEL	TUYAU FLEXIBLE FLEXIBELE SLANG	192T
5		72214663		2	PLUG TAPÓN	TAPPO PROP	STOPFEN TAMPÃO	BOUCHON PLUG	050T
6		LS52S00015P1		2	SENSOR SENSOR	SENSORE FØLER	SENSOR SENSOR	CAPTEUR SENSOR	608S
12		71406250		4	COLLAR COLLAR	COLLARE SLANGEBÅND	RINGE ANEL	COLLIER KRAAG	031F
20		87530582		1	ELBOW CODO	GOMITO VINKELRØR	KNIESTÜCK COTOVELO	COUDE KNIESTUK	085G
21		14422034		4	SCREW, Hex Soc Hd, M12 x 30, 10.9 TORNILLO	VITE SKRUE	SCHRAUBE PARAFUSO	VIS SCHROEF	040V
22		10517074		4	LOCK WASHER ARANDELA DE BLOQUE	RONDELLA DI SICUREZ LÅSESKIVE	SICHERUNGSSCHEIBE ANILHA DE RETENÇÃO	RONDELLE FREIN BORGRING	132R
23		87397561		1	O-RING JUNTA TÓRICA	ANELLO TOROIDALE O-RING	O-RING O-RING	JOINT TORIQUE O-RING	055A

Copyright © New Holland

1.060	04	p1	03/10

HYDRAULIC PUMP PILOT SYSTEM PIPES
TUBAZIONI SERVOCOMANDI POMPA IDRAULICA
LEITUNGEN DER SERVOLENKUNG DER HYDRAULIKPUMPE
TUYAUTERIES COMMANDES ASSISTEES POMPE HYDRAULIQUE

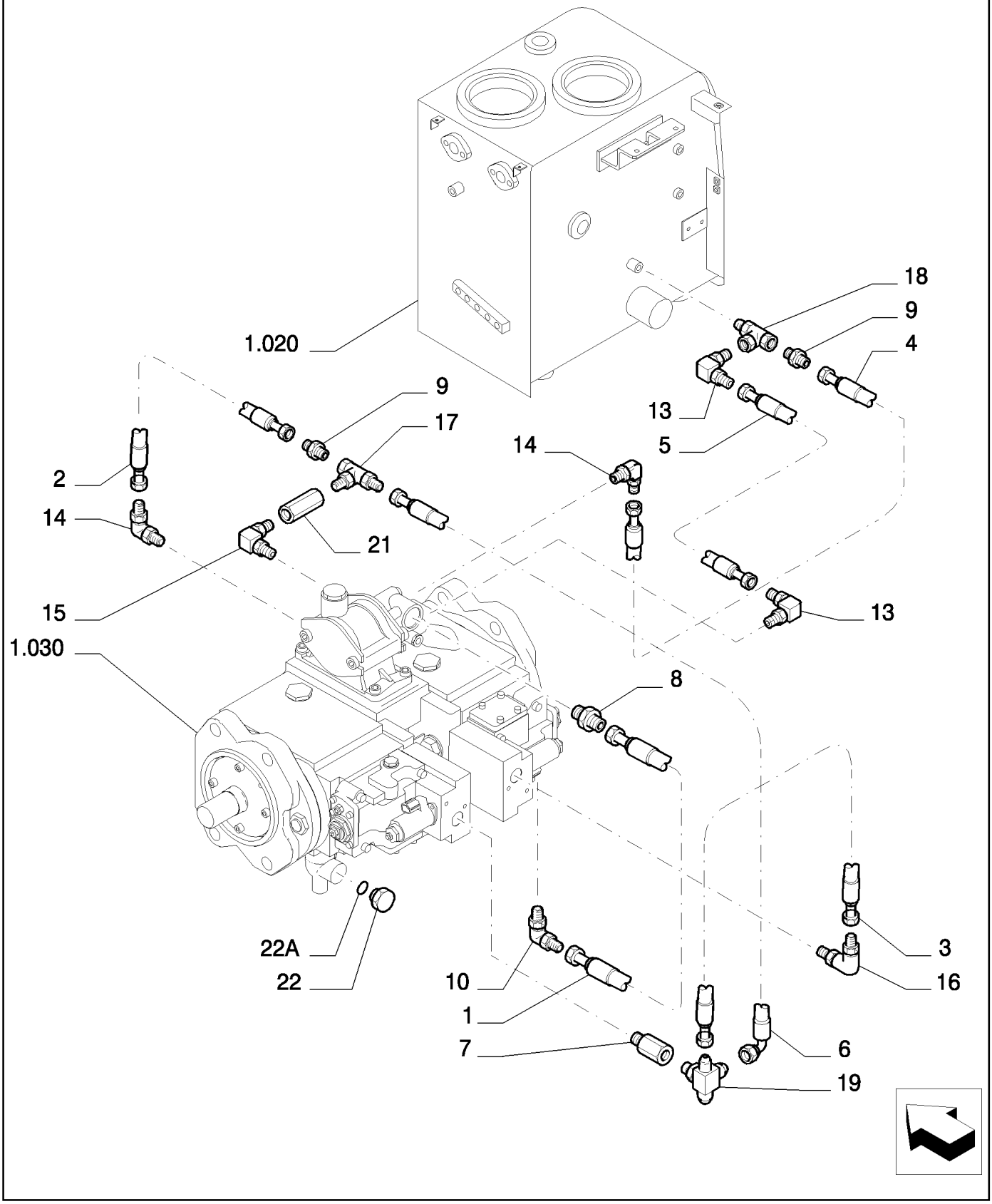

Copyright © New Holland

CONDUCTOS SERVOMANDOS BOMBA HIDRAULICA
HYDRAULIC PUMP PILOT SYSTEM PIPES
HYDRAULIC PUMP PILOT SYSTEM PIPES
HYDRAULIC PUMP PILOT SYSTEM PIPES

R	N	P.N.	MOD	Q	Description Denominacion	Descrizione Beskrivelse	Bezeichnung Denominação	Description Beschrijving	L.C.
1		87338497		1	FLEXIBLE HOSE TUBO FLEXIBLE	TUBO FLESSIBILE FLEKSIBEL SLANGE	BIEGSAMER SCHLAUCH MANGUEIRA FLEXÍVEL	TUYAU FLEXIBLE FLEXIBELE SLANG	192T
2		87531056		1	FLEXIBLE HOSE TUBO FLEXIBLE	TUBO FLESSIBILE FLEKSIBEL SLANGE	BIEGSAMER SCHLAUCH MANGUEIRA FLEXÍVEL	TUYAU FLEXIBLE FLEXIBELE SLANG	192T
3		72214533		1	FLEXIBLE HOSE TUBO FLEXIBLE	TUBO FLESSIBILE FLEKSIBEL SLANGE	BIEGSAMER SCHLAUCH MANGUEIRA FLEXÍVEL	TUYAU FLEXIBLE FLEXIBELE SLANG	192T
4		72214534		1	FLEXIBLE HOSE TUBO FLEXIBLE	TUBO FLESSIBILE FLEKSIBEL SLANGE	BIEGSAMER SCHLAUCH MANGUEIRA FLEXÍVEL	TUYAU FLEXIBLE FLEXIBELE SLANG	192T
5		87532888		1	FLEXIBLE HOSE TUBO FLEXIBLE	TUBO FLESSIBILE FLEKSIBEL SLANGE	BIEGSAMER SCHLAUCH MANGUEIRA FLEXÍVEL	TUYAU FLEXIBLE FLEXIBELE SLANG	192T
6		72954173		1	HOSE TUBO	TUBO FLESSIBILE SLANGE	SCHLAUCH MANGUEIRA	FLEXIBLE SLANG	030M
7		72217409		1	HYD CONNECTOR CONECTOR HIDRÁULIC	CONNETTORE IDRAULI HYDRAULIKSTIK	HYDR STECKVERBINDE CONECTOR HID.	CONNECTEUR HYDRAU HYDRAULISCHE AANSL	020R
8		72214717		1	HYD CONNECTOR CONECTOR HIDRÁULIC	CONNETTORE IDRAULI HYDRAULIKSTIK	HYDR STECKVERBINDE CONECTOR HID.	CONNECTEUR HYDRAU HYDRAULISCHE AANSL	020R
9		72214744		2	HYD CONNECTOR CONECTOR HIDRÁULIC	CONNETTORE IDRAULI HYDRAULIKSTIK	HYDR STECKVERBINDE CONECTOR HID.	CONNECTEUR HYDRAU HYDRAULISCHE AANSL	020R
10		72214734		1	HYD CONNECTOR CONECTOR HIDRÁULIC	CONNETTORE IDRAULI HYDRAULIKSTIK	HYDR STECKVERBINDE CONECTOR HID.	CONNECTEUR HYDRAU HYDRAULISCHE AANSL	020R
13		72214526		2	HYD CONNECTOR CONECTOR HIDRÁULIC	CONNETTORE IDRAULI HYDRAULIKSTIK	HYDR STECKVERBINDE CONECTOR HID.	CONNECTEUR HYDRAU HYDRAULISCHE AANSL	020R
14		72214542		2	HYD CONNECTOR CONECTOR HIDRÁULIC	CONNETTORE IDRAULI HYDRAULIKSTIK	HYDR STECKVERBINDE CONECTOR HID.	CONNECTEUR HYDRAU HYDRAULISCHE AANSL	020R
15		87532891		1	HYD CONNECTOR CONECTOR HIDRÁULIC	CONNETTORE IDRAULI HYDRAULIKSTIK	HYDR STECKVERBINDE CONECTOR HID.	CONNECTEUR HYDRAU HYDRAULISCHE AANSL	020R
16		72214735		1	HYD CONNECTOR CONECTOR HIDRÁULIC	CONNETTORE IDRAULI HYDRAULIKSTIK	HYDR STECKVERBINDE CONECTOR HID.	CONNECTEUR HYDRAU HYDRAULISCHE AANSL	020R
17		87532892		1	HYD CONNECTOR CONECTOR HIDRÁULIC	CONNETTORE IDRAULI HYDRAULIKSTIK	HYDR STECKVERBINDE CONECTOR HID.	CONNECTEUR HYDRAU HYDRAULISCHE AANSL	020R
18		72283853		1	TEE RACOR EN T	PEZZO A T T-STYKKE	T-STÜCK TÊ	RACCORD EN T T-STUK	9020
19		87532893		1	HYD CONNECTOR CONECTOR HIDRÁULIC	CONNETTORE IDRAULI HYDRAULIKSTIK	HYDR STECKVERBINDE CONECTOR HID.	CONNECTEUR HYDRAU HYDRAULISCHE AANSL	020R
21		87338500		1	FILTER FILTRO	FILTRO FILTER	FILTER FILTRO	FILTRE FILTER	065F
22		71404615		1	PLUG, - ASSY TAPÓN	TAPPO PROP	STOPFEN TAMPÃO	BOUCHON PLUG	050T
22A		70924192		1	O-RING JUNTA TÓRICA	ANELLO TOROIDALE O-RING	O-RING O-RING	JOINT TORIQUE O-RING	055A

Copyright © New Holland

1.061	01	p1	03/10

OIL RETURN PIPES
TUBAZIONI RITORNO OLIO
ÖLRÜCKLAUFLEITUNG
TUYAUTERIES RETOUR HUILE

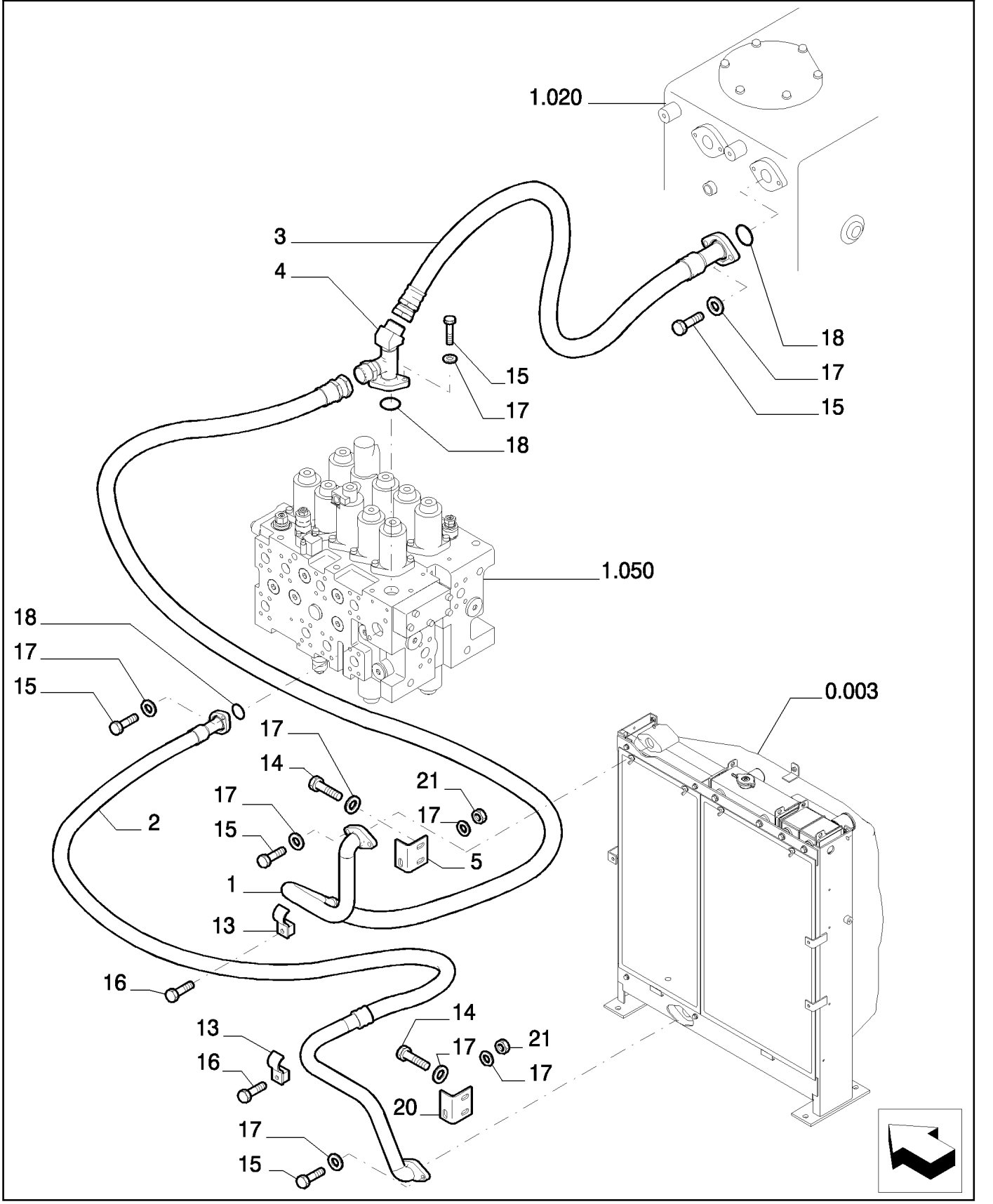

Copyright © New Holland

CONDUCTOS RETORNO ACEITE
OIL RETURN PIPES
OIL RETURN PIPES
OIL RETURN PIPES

R	N	P.N.	MOD	Q	Description Denominacion	Descrizione Beskrivelse	Bezeichnung Denominação	Description Beschrijving	L.C.
1		87573248		1	RIGID TUBE TUBO RÍGIDO	TUBO RIGIDO STIFT RØR	ROHR TUBO RÍGIDO	TUYAU RIGIDE VASTE LEIDING	193T
2		87533580		1	RIGID TUBE TUBO RÍGIDO	TUBO RIGIDO STIFT RØR	ROHR TUBO RÍGIDO	TUYAU RIGIDE VASTE LEIDING	193T
3		87533586		1	FLEXIBLE HOSE TUBO FLEXIBLE	TUBO FLESSIBILE FLEKSIBEL SLANGE	BIEGSAMER SCHLAUCH MANGUEIRA FLEXÍVEL	TUYAU FLEXIBLE FLEXIBELE SLANG	192T
4		87533854		1	HYD CONNECTOR CONECTOR HIDRÁULIC	CONNETTORE IDRAULIC HYDRAULIKSTIK	HYDR STECKVERBINDE CONECTOR HID.	CONNECTEUR HYDRAU HYDRAULISCHE AANSL	020R
5		87533907		1	PLATE PLACA	PIASTRA PLADE	PLATTE CHAPA	PLAQUE PLAAT	105P
13		72204335		2	BRACKET SOPORTE	STAFFA BESLAG	HALTERUNG SUPORTE	SUPPORT STEUN	225S
14		11112434		4	BOLT, Hex, M12 x 30, 10.9, Full Thd PERNO	BULLONE BOLT	SCHRAUBE PARAFUSO	VIS BOUT	140B
15		11112634		10	SCREW TORNILLO	VITE SKRUE	SCHRAUBE PARAFUSO	VIS SCHROEF	040V
16		11113334		2	SCREW TORNILLO	VITE SKRUE	SCHRAUBE PARAFUSO	VIS SCHROEF	040V
17		14496731		16	WASHER, M12 x 24 x 2.5 Thk ARANDELA	RONDELLA FLADSKIVE	UNTERLEGSCHEIBE ANILHA	RONDELLE SLUITRING	131R
18		87397569		3	O-RING JUNTA TÓRICA	ANELLO TOROIDALE O-RING	O-RING O-RING	JOINT TORIQUE O-RING	055A
20		87534279		1	PLATE PLACA	PIASTRA PLADE	PLATTE CHAPA	PLAQUE PLAAT	105P
21		11702921		2	NUT, M12, Cl 10 TUERCA	DADO MØTRIK	MUTTER PORCA	ECROU MOER	010D

Copyright © New Holland

1.061	02	p1	03/10

OIL RETURN PIPES
TUBAZIONI RITORNO OLIO
ÖLRÜCKLAUFLEITUNG
TUYAUTERIES RETOUR HUILE

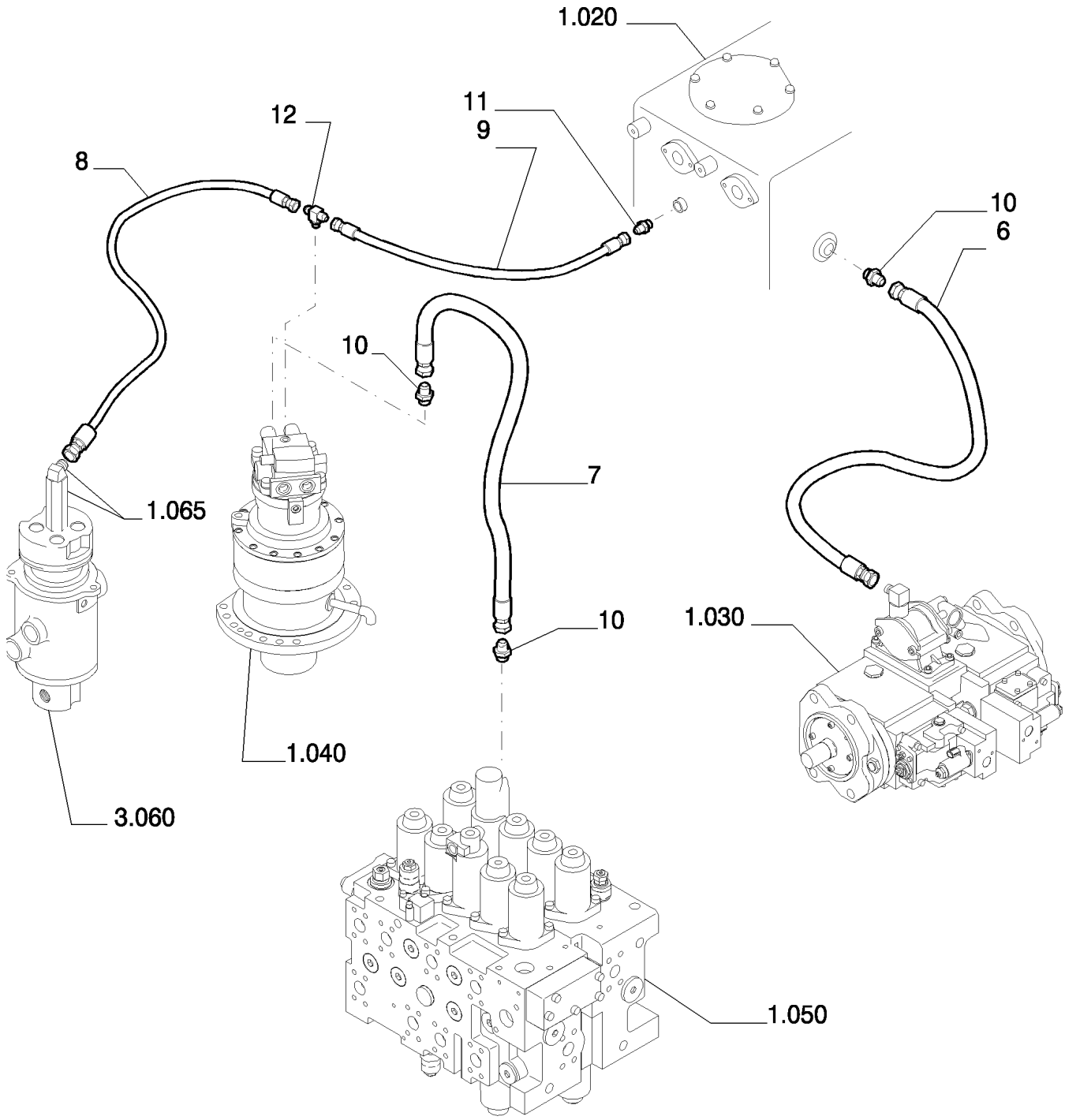

Copyright © New Holland

CONDUCTOS RETORNO ACEITE
OIL RETURN PIPES
OIL RETURN PIPES
OIL RETURN PIPES

R	N	P.N.	MOD	Q	Description Denominacion	Descrizione Beskrivelse	Bezeichnung Denominação	Description Beschrijving	L.C.
6		72955472		1	HOSE TUBO	TUBO FLESSIBILE SLANGE	SCHLAUCH MANGUEIRA	FLEXIBLE SLANG	030M
7		87532949		1	FLEXIBLE HOSE TUBO FLEXIBLE	TUBO FLESSIBILE FLEKSIBEL SLANGE	BIEGSAMER SCHLAUCH MANGUEIRA FLEXÍVEL	TUYAU FLEXIBLE FLEXIBELE SLANG	192T
8		87557658		1	FLEXIBLE HOSE TUBO FLEXIBLE	TUBO FLESSIBILE FLEKSIBEL SLANGE	BIEGSAMER SCHLAUCH MANGUEIRA FLEXÍVEL	TUYAU FLEXIBLE FLEXIBELE SLANG	192T
9		72214668		1	FLEXIBLE HOSE TUBO FLEXIBLE	TUBO FLESSIBILE FLEKSIBEL SLANGE	BIEGSAMER SCHLAUCH MANGUEIRA FLEXÍVEL	TUYAU FLEXIBLE FLEXIBELE SLANG	192T
10		72214717		3	HYD CONNECTOR CONECTOR HIDRÁULIC	CONNETTORE IDRAULI HYDRAULIKSTIK	HYDR STECKVERBINDE CONECTOR HID.	CONNECTEUR HYDRAU HYDRAULISCHE AANSL	020R
11		72217405		1	HYD CONNECTOR CONECTOR HIDRÁULIC	CONNETTORE IDRAULI HYDRAULIKSTIK	HYDR STECKVERBINDE CONECTOR HID.	CONNECTEUR HYDRAU HYDRAULISCHE AANSL	020R
12		72954986		1	TEE RACOR EN T	PEZZO A T T-STYKKE	T-STÜCK TÊ	RACCORD EN T T-STUK	9020

Copyright © New Holland

1.065	01	p1	03/10

HYDRAULIC LINES SWIVEL
RACCORDI GIUNTO CENTRALE
HYDRAULIC LINES SWIVEL
HYDRAULIC LINES SWIVEL

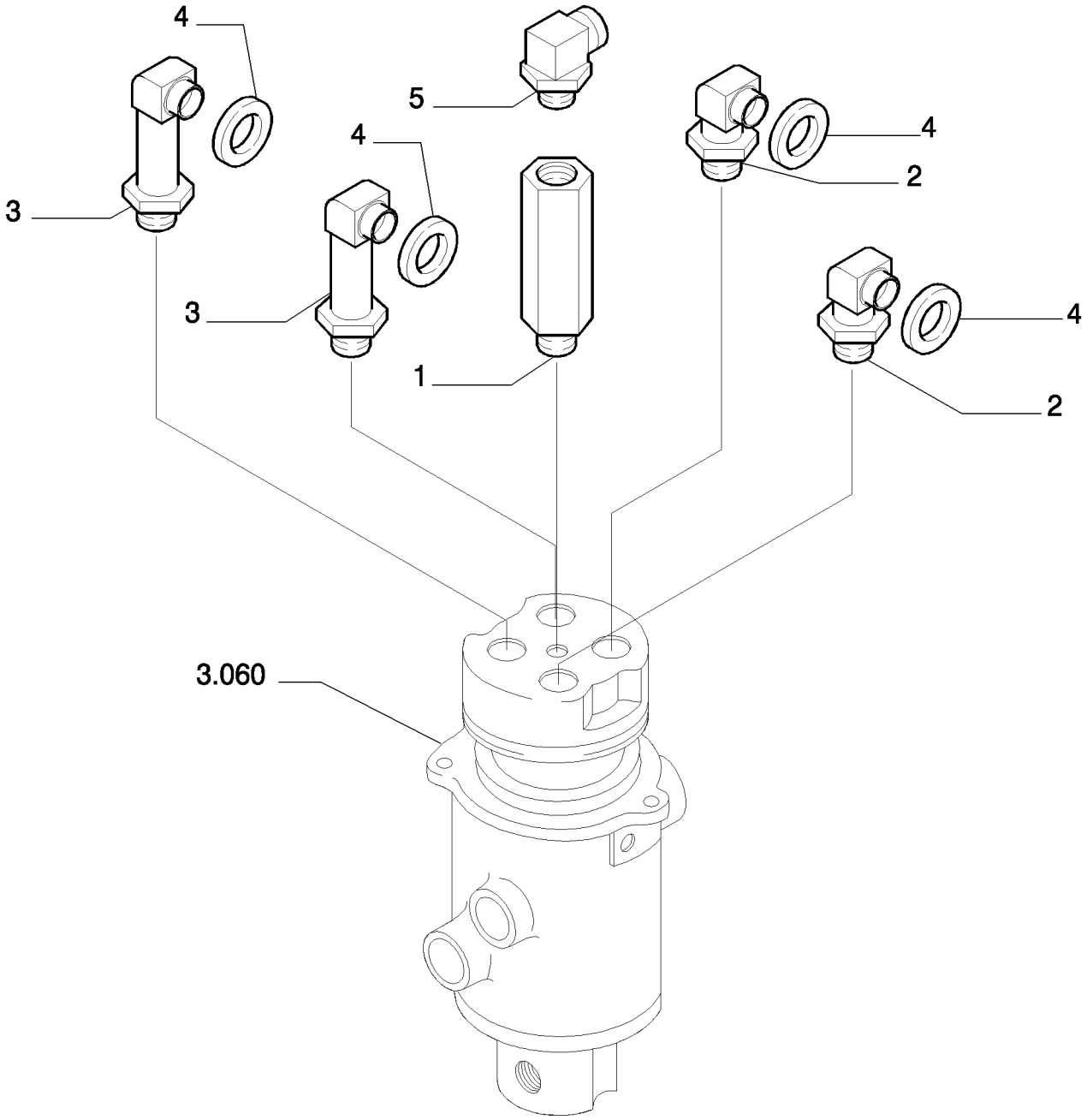

Copyright © New Holland

HYDRAULIC LINES SWIVEL
HYDRAULIC LINES SWIVEL
HYDRAULIC LINES SWIVEL
HYDRAULIC LINES SWIVEL

R	N	P.N.	MOD	Q	Description Denominacion	Descrizione Beskrivelse	Bezeichnung Denominação	Description Beschrijving	L.C.
1		72214762		1	HYD CONNECTOR CONECTOR HIDRÁULIC(	CONNETTORE IDRAULI(HYDRAULIKSTIK	HYDR STECKVERBINDE CONECTOR HID.	CONNECTEUR HYDRAU HYDRAULISCHE AANSL	020R
2		72214711		2	HYD CONNECTOR CONECTOR HIDRÁULIC(	CONNETTORE IDRAULI(HYDRAULIKSTIK	HYDR STECKVERBINDE CONECTOR HID.	CONNECTEUR HYDRAU HYDRAULISCHE AANSL	020R
3		87338432		2	HYD CONNECTOR CONECTOR HIDRÁULIC(	CONNETTORE IDRAULI(HYDRAULIKSTIK	HYDR STECKVERBINDE CONECTOR HID.	CONNECTEUR HYDRAU HYDRAULISCHE AANSL	020R
4		70923843		4	SNAP RING ANILLO DE RESORTE	ANELLO ELASTICO LÅSERING	SPRENGRING ANEL	ANNEAU D'ARRET VEERRING	054A
5		72214669		1	HYD CONNECTOR CONECTOR HIDRÁULIC(	CONNETTORE IDRAULI(HYDRAULIKSTIK	HYDR STECKVERBINDE CONECTOR HID.	CONNECTEUR HYDRAU HYDRAULISCHE AANSL	020R

Copyright © New Holland

1.070	01	p1	03/10

CONTROLS
COMANDI
GERAETEBETAETIGUNG
COMMANDES

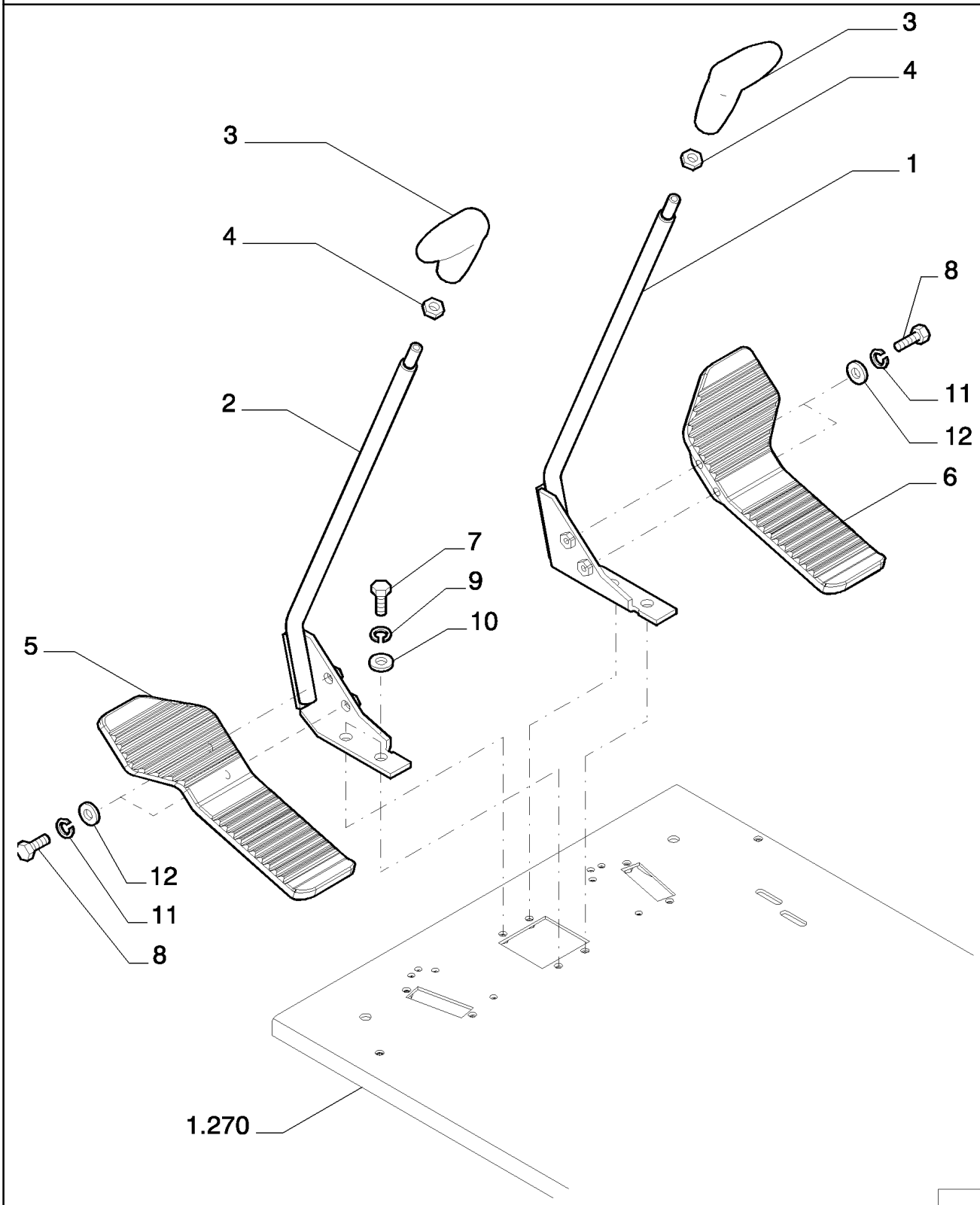

Copyright © New Holland

MANDOS
CONTROLS
CONTROLS
CONTROLS

R	N	P.N.	MOD	Q	Description Denominacion	Descrizione Beskrivelse	Bezeichnung Denominação	Description Beschrijving	L.C.
1		87524864		1	LEVER PALANCA	LEVA ARM	HEBEL ALAVANCA	LEVIER HEFBOOM	045L
2		87524865		1	LEVER PALANCA	LEVA ARM	HEBEL ALAVANCA	LEVIER HEFBOOM	045L
3		72203856		2	HANDLE GRIP PERILLA	IMPUGNATURA HÅNDGREB	HANDGRIFF GARRA	POIGNEE DE MAINTIEN HANDGREEP	025I
4		16101521		2	NUT, M12 x 1.25, Cl 10 TUERCA	DADO MØTRIK	MUTTER PORCA	ECROU MOER	010D
5		87524873		1	PEDAL PEDAL	PEDALE PEDAL	PEDAL PEDAL	PEDALE PEDAAL	060P
6		87524874		1	PEDAL PEDAL	PEDALE PEDAL	PEDAL PEDAL	PEDALE PEDAAL	060P
7		11106034		4	BOLT, Hex, M10 x 20, 10.9, Full Thd PERNO	BULLONE BOLT	SCHRAUBE PARAFUSO	VIS BOUT	140B
8		16043634		4	BOLT, Hex, M8 x 25, 10.9, Full Thd PERNO	BULLONE BOLT	SCHRAUBE PARAFUSO	VIS BOUT	140B
9		14496631		4	WASHER, M10 x 21 x 2 ARANDELA	RONDELLA FLADSKIVE	UNTERLEGSCHEIBE ANILHA	RONDELLE SLUITRING	131R
10		10516874		4	LOCK WASHER ARANDELA DE BLOQUE	RONDELLA DI SICUREZ LÅSESKIVE	SICHERUNGSSCHEIBE ANILHA DE RETENÇÃO	RONDELLE FREIN BORGRING	132R
11		14496531		4	WASHER, M8 x 17 x 1.6 ARANDELA	RONDELLA FLADSKIVE	UNTERLEGSCHEIBE ANILHA	RONDELLE SLUITRING	131R
12		10516674		4	LOCK WASHER, M8 ARANDELA DE BLOQUE	RONDELLA DI SICUREZ LÅSESKIVE	SICHERUNGSSCHEIBE ANILHA DE RETENÇÃO	RONDELLE FREIN BORGRING	132R

Copyright © New Holland

CONTROLS
COMANDI
GERAETEBETAETIGUNG
COMMANDES

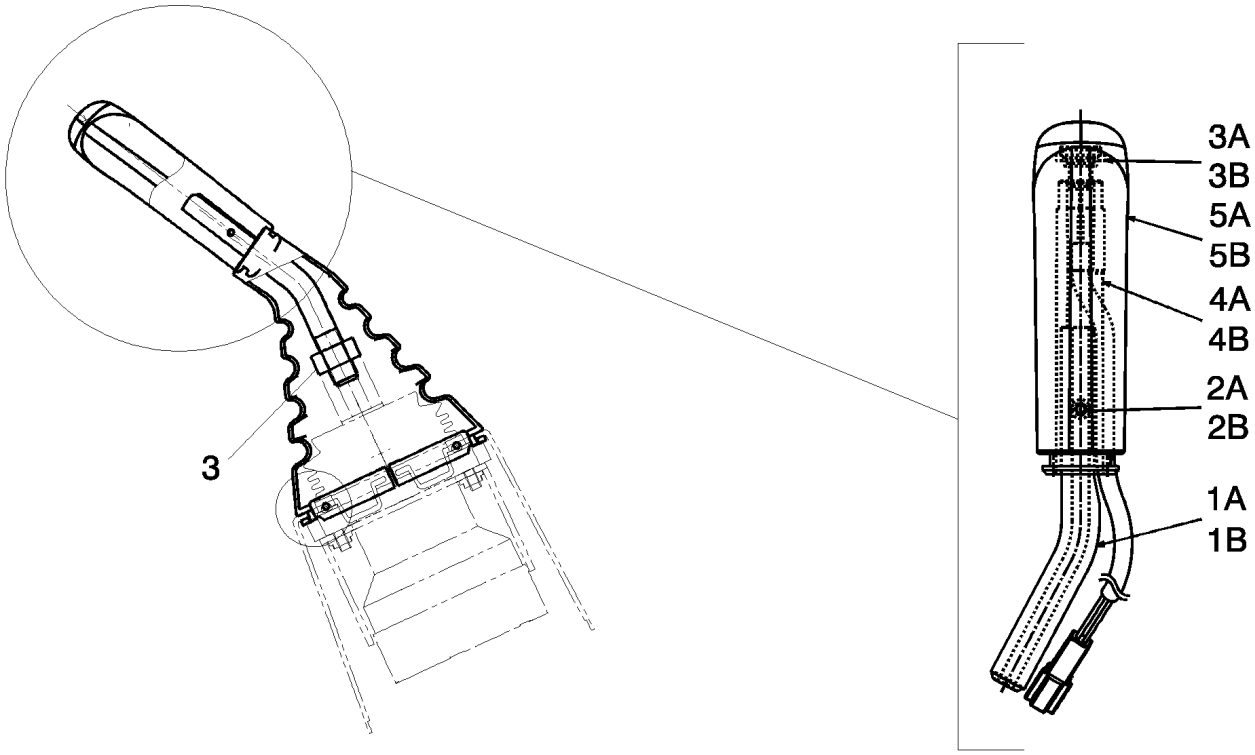

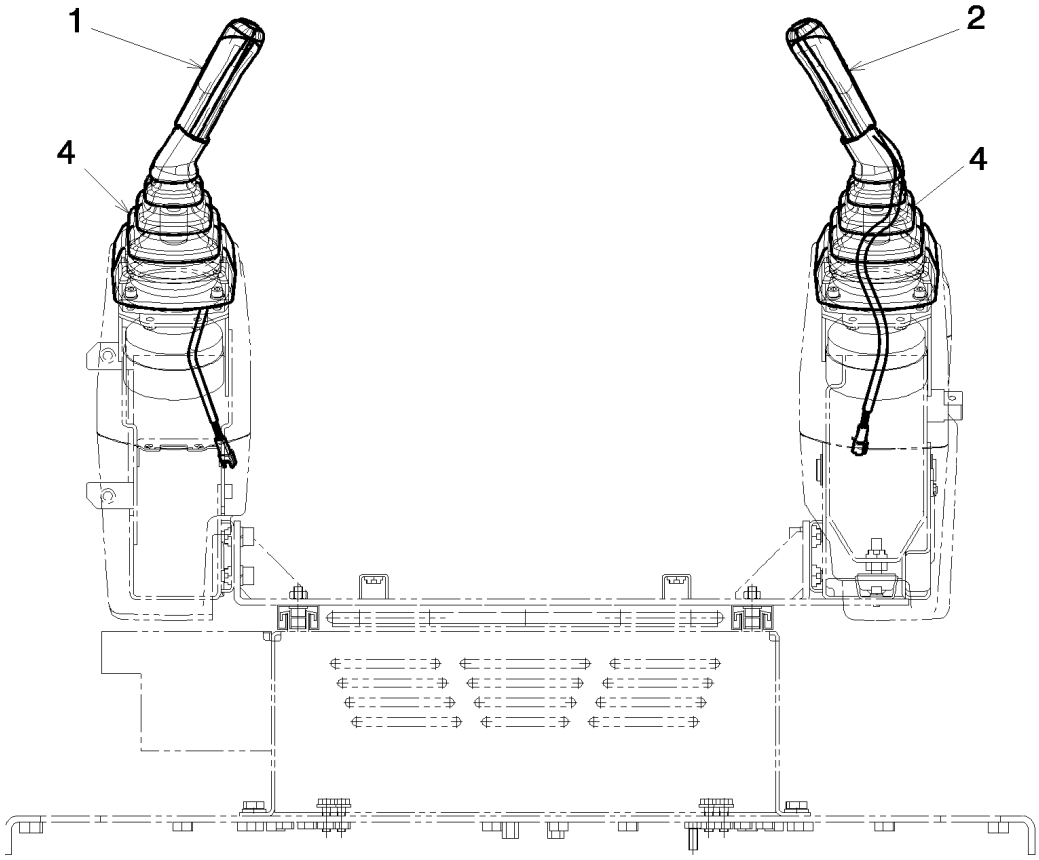

Copyright © New Holland

MANDOS
CONTROLS
CONTROLS
CONTROLS

R	N	P.N.	MOD	Q	Description Denominacion	Descrizione Beskrivelse	Bezeichnung Denominação	Description Beschrijving	L.C.
1		YN03M02139F2		1	HANDLE GRIP, - RIGHT ASSY				
						IMPUGNATURA	HANDGRIFF	POIGNEE DE MAINTIEN	025I
					PERILLA	HÅNDGREB	GARRA	HANDGREEP	
1A		YN03M02140P1		1	LEVER	LEVA	HEBEL	LEVIER	045L
					PALANCA	ARM	ALAVANCA	HEFBOOM	
1B		YN03M02019P1		1	SCREW	VITE	SCHRAUBE	VIS	040V
					TORNILLO	SKRUE	PARAFUSO	SCHROEF	
1C		YN50E00017P1		1	SWITCH	INTERRUTTORE	SCHALTER	CONTACTEUR	075I
					INTERRUPTOR	KONTAKT	INTERRUPTOR	SCHAKELAAR	
1D		YN03M01866P1		1	CASE	CASSA; SCATOLA	GEHÄUSE	CARTER	101A
					ESTUCHE	KASSE	CAIXA	HUIS	
1E		YN03M01867P1		1	GRIP, - HORN	IMPUGNATURA	GRIFF	POIGNEE	4000
					MANGO	GREB	MAÇANETA	GRIPTANG	
2		YN03M02139F1		1	HANDLE GRIP, - LEFT ASSY				
						IMPUGNATURA	HANDGRIFF	POIGNEE DE MAINTIEN	025I
					PERILLA	HÅNDGREB	GARRA	HANDGREEP	
2A		YN03M02141P1		1	LEVER	LEVA	HEBEL	LEVIER	045L
					PALANCA	ARM	ALAVANCA	HEFBOOM	
2B		YN03M02019P1		1	SCREW	VITE	SCHRAUBE	VIS	040V
					TORNILLO	SKRUE	PARAFUSO	SCHROEF	
2C		YN50E00017P1		1	SWITCH	INTERRUTTORE	SCHALTER	CONTACTEUR	075I
					INTERRUPTOR	KONTAKT	INTERRUPTOR	SCHAKELAAR	
2D		YN03M01866P1		1	CASE	CASSA; SCATOLA	GEHÄUSE	CARTER	101A
					ESTUCHE	KASSE	CAIXA	HUIS	
2E		YN03M01863P1		1	GRIP, - POWER BOOST	IMPUGNATURA	GRIFF	POIGNEE	4000
					MANGO	GREB	MAÇANETA	GRIPTANG	
3		12163224		2	NUT	DADO	MUTTER	ECROU	010D
					TUERCA	MØTRIK	PORCA	MOER	
4		YN03M02113P1		2	BELLOWS	SOFFIETTI	FALTENBALG	SOUFFLET	169S
					FUELLE	BLÆSEBÆLG	FOLE	BALGEN	

Copyright © New Holland

1.080	01	p1	03/10

PILOT PIPING (1)
TUBAZIONI SERVOCOMANDI (1)
LEITUNGEN-SERVOSTEU. (1)
TUYAUT. SERVOCOMMANDES (1)

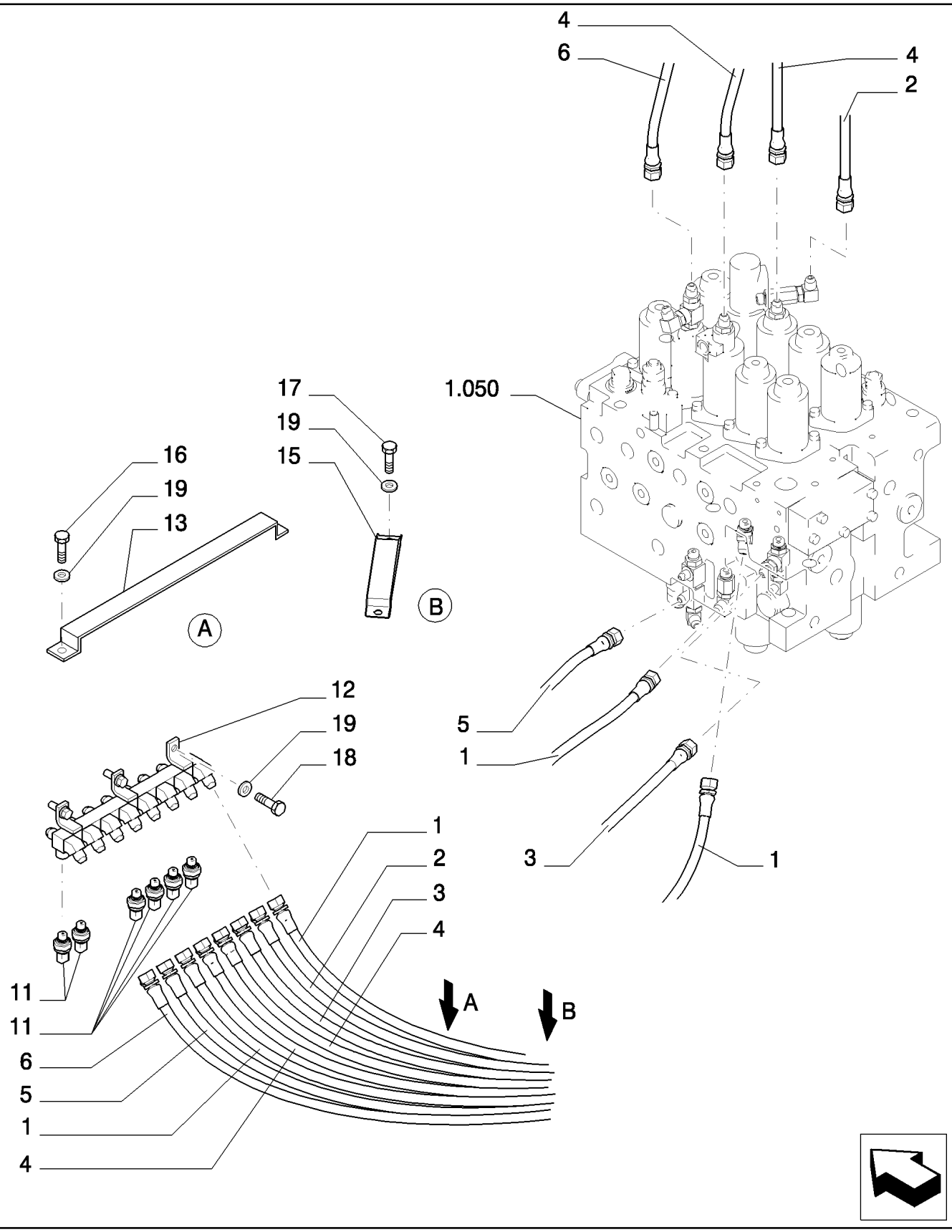

Copyright © New Holland

TUBERIAS SERVOMANDOS (1)
PILOT PIPING (1)
PILOT PIPING (1)
PILOT PIPING (1)

R	N	P.N.	MOD	Q	Description Denominacion	Descrizione Beskrivelse	Bezeichnung Denominação	Description Beschrijving	L.C.
1		87531068		2	FLEXIBLE HOSE TUBO FLEXIBLE	TUBO FLESSIBILE FLEKSIBEL SLANGE	BIEGSAMER SCHLAUCH MANGUEIRA FLEXÍVEL	TUYAU FLEXIBLE FLEXIBELE SLANG	192T
2		87531050		1	FLEXIBLE HOSE TUBO FLEXIBLE	TUBO FLESSIBILE FLEKSIBEL SLANGE	BIEGSAMER SCHLAUCH MANGUEIRA FLEXÍVEL	TUYAU FLEXIBLE FLEXIBELE SLANG	192T
3		87338408		1	FLEXIBLE HOSE TUBO FLEXIBLE	TUBO FLESSIBILE FLEKSIBEL SLANGE	BIEGSAMER SCHLAUCH MANGUEIRA FLEXÍVEL	TUYAU FLEXIBLE FLEXIBELE SLANG	192T
4		87531069		2	FLEXIBLE HOSE TUBO FLEXIBLE	TUBO FLESSIBILE FLEKSIBEL SLANGE	BIEGSAMER SCHLAUCH MANGUEIRA FLEXÍVEL	TUYAU FLEXIBLE FLEXIBELE SLANG	192T
5		87531048		1	FLEXIBLE HOSE TUBO FLEXIBLE	TUBO FLESSIBILE FLEKSIBEL SLANGE	BIEGSAMER SCHLAUCH MANGUEIRA FLEXÍVEL	TUYAU FLEXIBLE FLEXIBELE SLANG	192T
6		87531049		1	FLEXIBLE HOSE TUBO FLEXIBLE	TUBO FLESSIBILE FLEKSIBEL SLANGE	BIEGSAMER SCHLAUCH MANGUEIRA FLEXÍVEL	TUYAU FLEXIBLE FLEXIBELE SLANG	192T
11		87608371		6	SENSOR SENSOR	SENSORE FØLER	SENSOR SENSOR	CAPTEUR SENSOR	608S
12		87338542		1	BLOCK BLOQUE	BLOCCO MOTORBLOK	BLOCK BLOCO	BLOC BLOK	074B
13		87531061		1	PLATE PLACA	PIASTRA PLADE	PLATTE CHAPA	PLAQUE PLAAT	105P
15		87338540		1	BRACKET SOPORTE	STAFFA BESLAG	HALTERUNG SUPORTE	SUPPORT STEUN	225S
16		11106634		2	BOLT, Hex, M10 x 35, 10.9, Full Thd PERNO	BULLONE BOLT	SCHRAUBE PARAFUSO	VIS BOUT	140B
17		11106034		2	BOLT, Hex, M10 x 20, 10.9, Full Thd PERNO	BULLONE BOLT	SCHRAUBE PARAFUSO	VIS BOUT	140B
18		11106434		3	BOLT, Hex, M10 x 30, 10.9, Full Thd PERNO	BULLONE BOLT	SCHRAUBE PARAFUSO	VIS BOUT	140B
19		14496631		7	WASHER, M10 x 21 x 2 ARANDELA	RONDELLA FLADSKIVE	UNTERLEGSCHEIBE ANILHA	RONDELLE SLUITRING	131R

Copyright © New Holland

1.080	02	p1	03/10

PILOT PIPING (1)
TUBAZIONI SERVOCOMANDI (1)
LEITUNGEN-SERVOSTEU. (1)
TUYAUT. SERVOCOMMANDES (1)

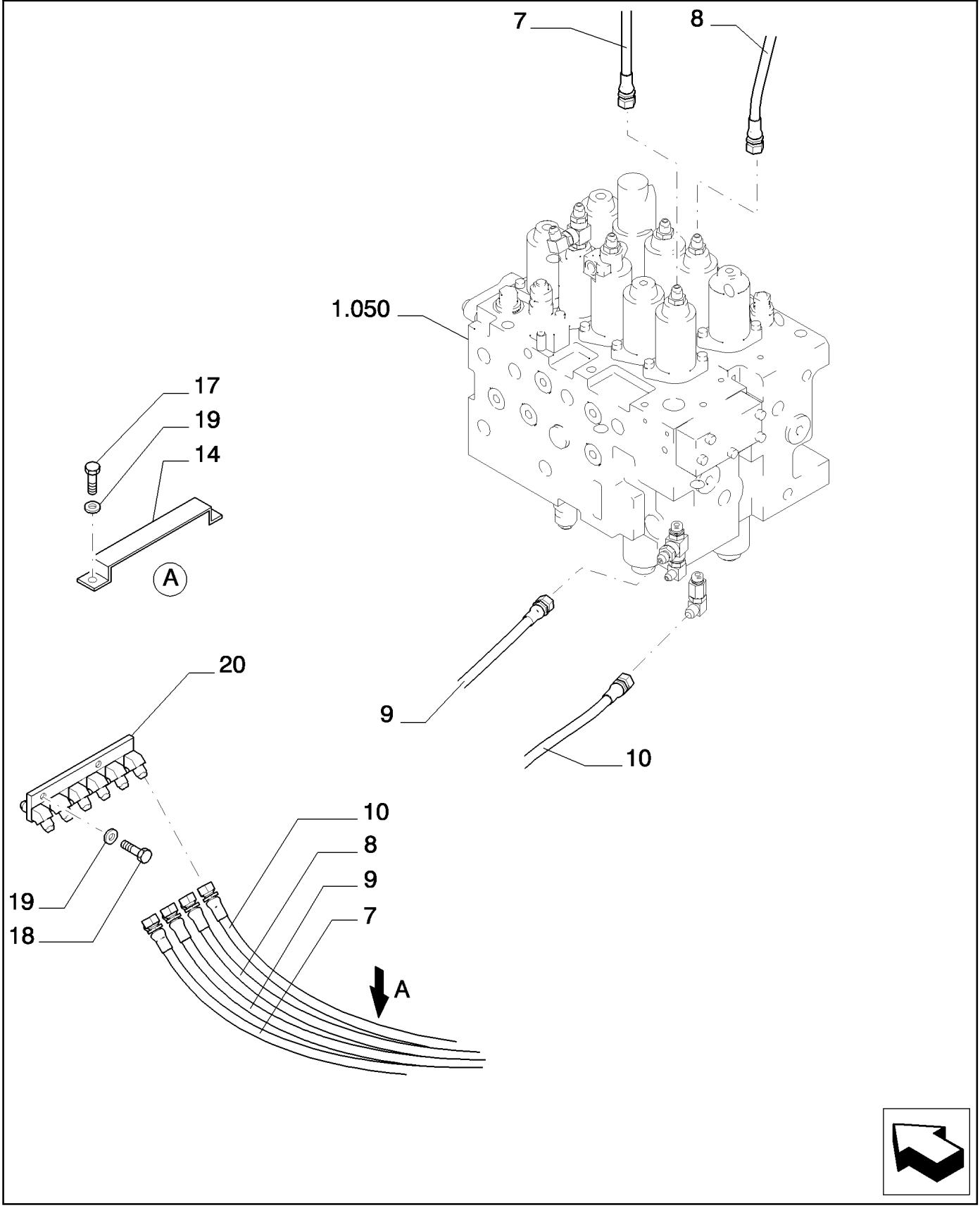

Copyright © New Holland

TUBERIAS SERVOMANDOS (1)
PILOT PIPING (1)
PILOT PIPING (1)
PILOT PIPING (1)

R	N	P.N.	MOD	Q	Description Denominacion	Descrizione Beskrivelse	Bezeichnung Denominação	Description Beschrijving	L.C.
7		87397568		1	FLEXIBLE HOSE TUBO FLEXIBLE	TUBO FLESSIBILE FLEKSIBEL SLANGE	BIEGSAMER SCHLAUCH MANGUEIRA FLEXÍVEL	TUYAU FLEXIBLE FLEXIBELE SLANG	192T
8		72214775		1	FLEXIBLE HOSE TUBO FLEXIBLE	TUBO FLESSIBILE FLEKSIBEL SLANGE	BIEGSAMER SCHLAUCH MANGUEIRA FLEXÍVEL	TUYAU FLEXIBLE FLEXIBELE SLANG	192T
9		87531051		1	FLEXIBLE HOSE TUBO FLEXIBLE	TUBO FLESSIBILE FLEKSIBEL SLANGE	BIEGSAMER SCHLAUCH MANGUEIRA FLEXÍVEL	TUYAU FLEXIBLE FLEXIBELE SLANG	192T
10		87531052		1	FLEXIBLE HOSE TUBO FLEXIBLE	TUBO FLESSIBILE FLEKSIBEL SLANGE	BIEGSAMER SCHLAUCH MANGUEIRA FLEXÍVEL	TUYAU FLEXIBLE FLEXIBELE SLANG	192T
14		87531053		1	BRACKET SOPORTE	STAFFA BESLAG	HALTERUNG SUPORTE	SUPPORT STEUN	225S
17		11106034		2	BOLT, Hex, M10 x 20, 10.9, Full Thd PERNO	BULLONE BOLT	SCHRAUBE PARAFUSO	VIS BOUT	140B
18		11106434		2	BOLT, Hex, M10 x 30, 10.9, Full Thd PERNO	BULLONE BOLT	SCHRAUBE PARAFUSO	VIS BOUT	140B
19		14496631		4	WASHER, M10 x 21 x 2 ARANDELA	RONDELLA FLADSKIVE	UNTERLEGSCHEIBE ANILHA	RONDELLE SLUITRING	131R
20		{LB64H01021P1}		1					

Copyright © New Holland

1.080	03	p1	05/10

PILOT PIPING (1) - VERSION (04-05-06)
TUBAZIONI SERVOCOMANDI (1) - VERSIONE (04-05-06)
LEITUNGEN-SERVOSTEU. (1) - VERSION (04-05-06)
TUYAUT. SERVOCOMMANDES (1) - VERSION (04-05-06)

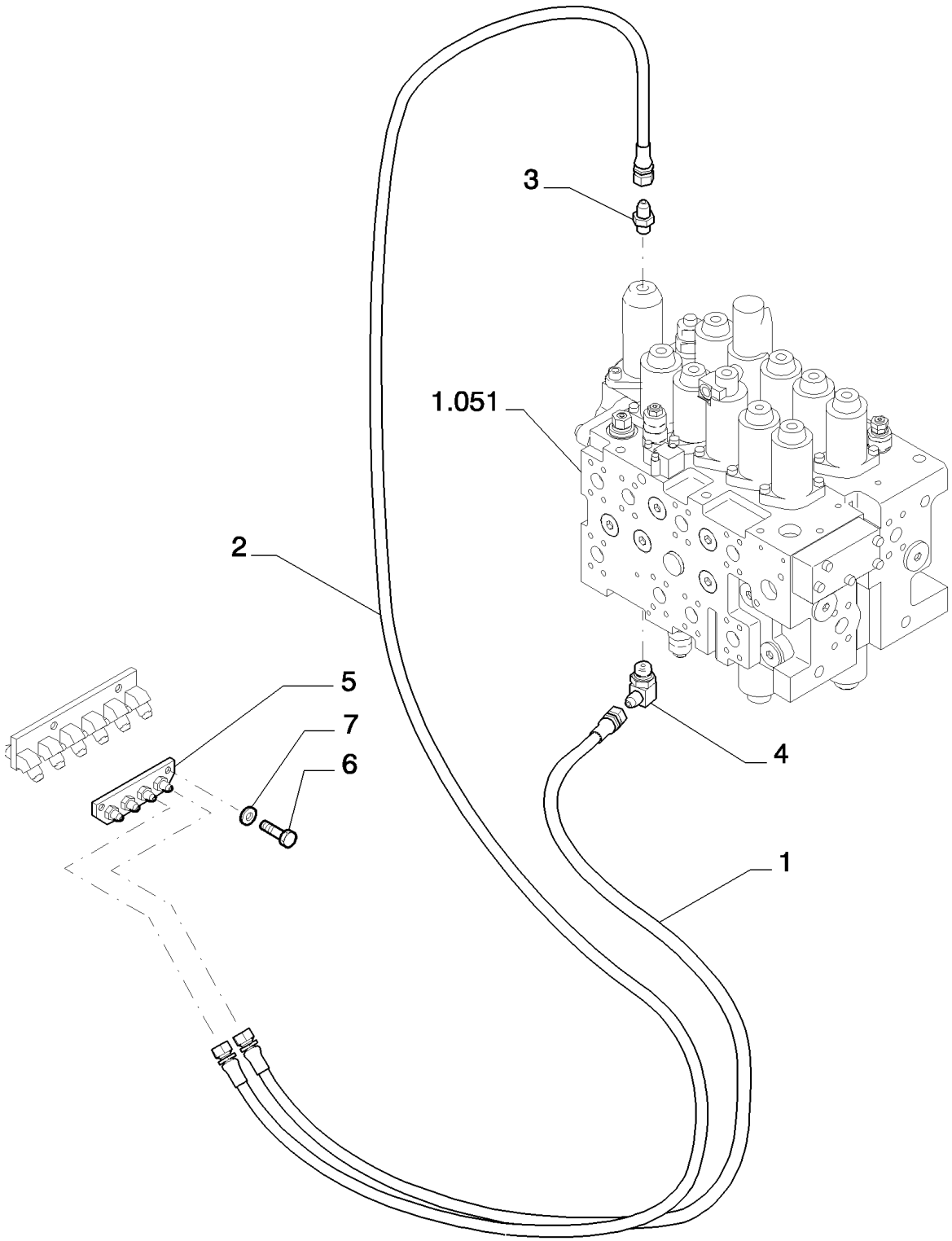

Copyright © New Holland

TUBERIAS SERVOMANDOS (1) - VERSION (04-05-06)
PILOT PIPING (1) - VERSION (04-05-06)
PILOT PIPING (1) - VERSION (04-05-06)
PILOT PIPING (1) - VERSION (04-05-06)

R	N	P.N.	MOD	Q	Description Denominacion	Descrizione Beskrivelse	Bezeichnung Denominação	Description Beschrijving	L.C.
1		72214782		1	FLEXIBLE HOSE TUBO FLEXIBLE	TUBO FLESSIBILE FLEKSIBEL SLANGE	BIEGSAMER SCHLAUCH MANGUEIRA FLEXÍVEL	TUYAU FLEXIBLE FLEXIBELE SLANG	192T
2		87536897		1	FLEXIBLE HOSE TUBO FLEXIBLE	TUBO FLESSIBILE FLEKSIBEL SLANGE	BIEGSAMER SCHLAUCH MANGUEIRA FLEXÍVEL	TUYAU FLEXIBLE FLEXIBELE SLANG	192T
3		72214522		1	HYD CONNECTOR CONECTOR HIDRÁULIC	CONNETTORE IDRAULIC HYDRAULIKSTIK	HYDR STECKVERBINDE CONECTOR HID.	CONNECTEUR HYDRAU HYDRAULISCHE AANSL	020R
4		72214561		1	HYD CONNECTOR CONECTOR HIDRÁULIC	CONNETTORE IDRAULIC HYDRAULIKSTIK	HYDR STECKVERBINDE CONECTOR HID.	CONNECTEUR HYDRAU HYDRAULISCHE AANSL	020R
5		{LB64H01022P1}		1					
6		14306234		2	SCREW, Hex Soc Hd, M8 x 16, 10.9 TORNILLO	VITE SKRUE	SCHRAUBE PARAFUSO	VIS SCHROEF	040V
7		10516674		2	LOCK WASHER, M8 ARANDELA DE BLOQUE	RONDELLA DI SICUREZ LÅSESKIVE	SICHERUNGSSCHEIBE ANILHA DE RETENÇÃO	RONDELLE FREIN BORGRING	132R

Copyright © New Holland

1.081	01	p1	03/10

PILOT PIPING (2)
TUBAZIONI SERVOCOMANDI (2)
LEITUNGEN-SERVOSTEU. (2)
TUYAUT. SERVOCOMMANDES (2)

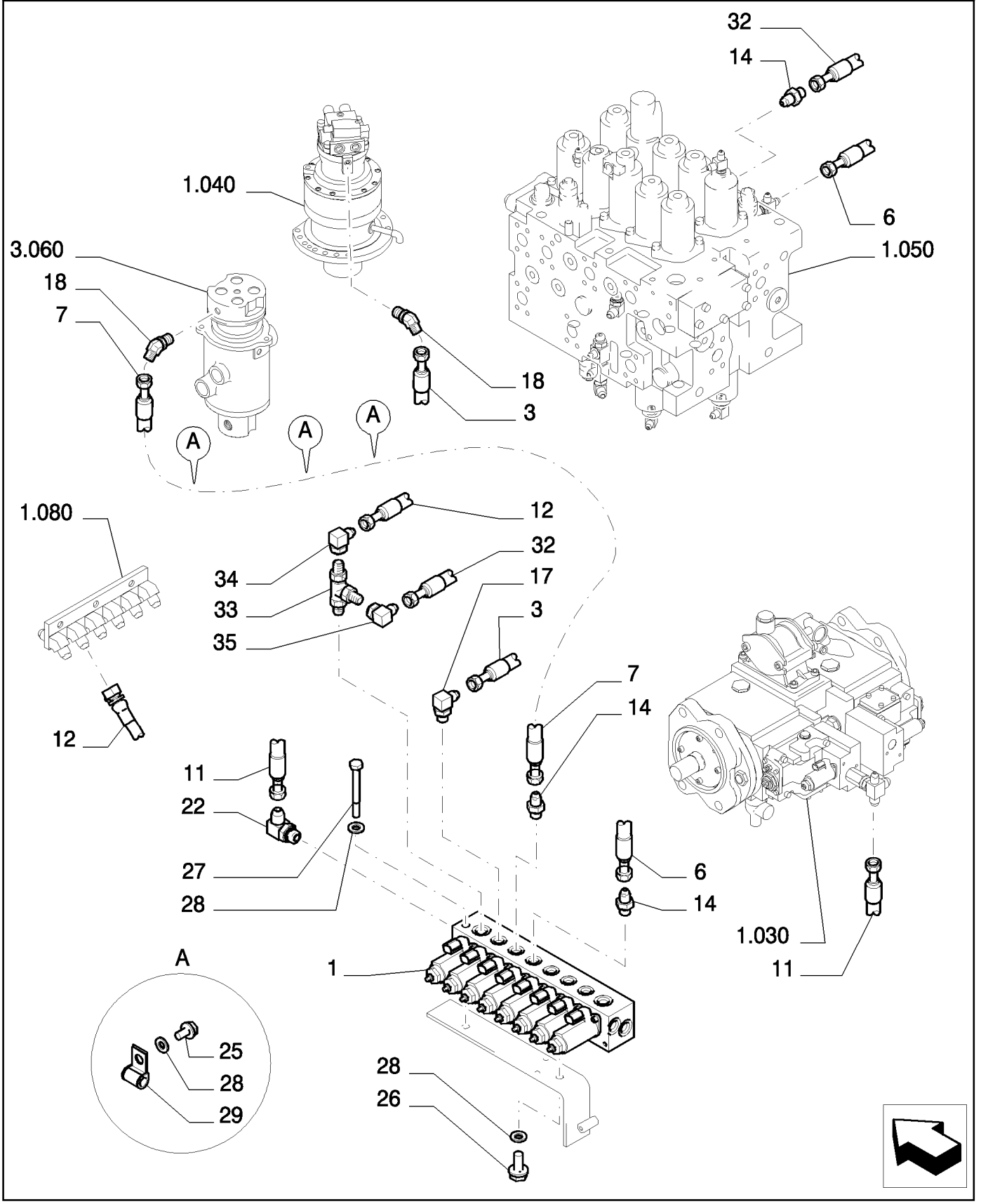

Copyright © New Holland

TUBERIAS SERVOMANDOS (2)
PILOT PIPING (2)
PILOT PIPING (2)
PILOT PIPING (2)

R	N	P.N.	MOD	Q	Description Denominacion	Descrizione Beskrivelse	Bezeichnung Denominação	Description Beschrijving	L.C.
1	1	87338533		1	HYDRAULIC VALVE VÁLVULA HIDRÁULICA	DISTRIBUTORE IDRAULI HYDRAULIKVENTIL	HYDRAULIKVENTIL VÁLVULA HIDRÁULICA	SOUPAPE HYDRAULIQU HYDRAULISCHE KLEP	010V
3		87524894		1	FLEXIBLE HOSE TUBO FLEXIBLE	TUBO FLESSIBILE FLEKSIBEL SLANGE	BIEGSAMER SCHLAUCH MANGUEIRA FLEXÍVEL	TUYAU FLEXIBLE FLEXIBELE SLANG	192T
6		87521521		1	FLEXIBLE HOSE TUBO FLEXIBLE	TUBO FLESSIBILE FLEKSIBEL SLANGE	BIEGSAMER SCHLAUCH MANGUEIRA FLEXÍVEL	TUYAU FLEXIBLE FLEXIBELE SLANG	192T
7		72214547		1	FLEXIBLE HOSE TUBO FLEXIBLE	TUBO FLESSIBILE FLEKSIBEL SLANGE	BIEGSAMER SCHLAUCH MANGUEIRA FLEXÍVEL	TUYAU FLEXIBLE FLEXIBELE SLANG	192T
11		87529936		1	FLEXIBLE HOSE TUBO FLEXIBLE	TUBO FLESSIBILE FLEKSIBEL SLANGE	BIEGSAMER SCHLAUCH MANGUEIRA FLEXÍVEL	TUYAU FLEXIBLE FLEXIBELE SLANG	192T
12		87529937		1	FLEXIBLE HOSE TUBO FLEXIBLE	TUBO FLESSIBILE FLEKSIBEL SLANGE	BIEGSAMER SCHLAUCH MANGUEIRA FLEXÍVEL	TUYAU FLEXIBLE FLEXIBELE SLANG	192T
14		72214744		3	HYD CONNECTOR CONECTOR HIDRÁULIC	CONNETTORE IDRAULI HYDRAULIKSTIK	HYDR STECKVERBINDE CONECTOR HID.	CONNECTEUR HYDRAU HYDRAULISCHE AANSL	020R
17		72214524		1	HYD CONNECTOR CONECTOR HIDRÁULIC	CONNETTORE IDRAULI HYDRAULIKSTIK	HYDR STECKVERBINDE CONECTOR HID.	CONNECTEUR HYDRAU HYDRAULISCHE AANSL	020R
18		72214542		2	HYD CONNECTOR CONECTOR HIDRÁULIC	CONNETTORE IDRAULI HYDRAULIKSTIK	HYDR STECKVERBINDE CONECTOR HID.	CONNECTEUR HYDRAU HYDRAULISCHE AANSL	020R
22		72214548		1	HYD CONNECTOR CONECTOR HIDRÁULIC	CONNETTORE IDRAULI HYDRAULIKSTIK	HYDR STECKVERBINDE CONECTOR HID.	CONNECTEUR HYDRAU HYDRAULISCHE AANSL	020R
25		11106034		3	BOLT, Hex, M10 x 20, 10.9, Full Thd BULLONE PERNO	BOLT PARAFUSO	SCHRAUBE VIS BOUT		140B
26		11106234		1	BOLT, Hex, M10 x 25, 10.9, Full Thd BULLONE PERNO	BOLT PARAFUSO	SCHRAUBE VIS BOUT		140B
27		11108034		1	SCREW TORNILLO	VITE SKRUE	SCHRAUBE PARAFUSO	VIS SCHROEF	040V
28		14496631		5	WASHER, M10 x 21 x 2 ARANDELA	RONDELLA FLADSKIVE	UNTERLEGSCHEIBE ANILHA	RONDELLE SLUITRING	131R
29		71416130		3	CLAMP ABRAZADERA	MORSETTO SPÆNDEBÅND	KLEMME BRAÇADEIRA	COLLIER KLEM	120M
32		72214556		1	FLEXIBLE HOSE TUBO FLEXIBLE	TUBO FLESSIBILE FLEKSIBEL SLANGE	BIEGSAMER SCHLAUCH MANGUEIRA FLEXÍVEL	TUYAU FLEXIBLE FLEXIBELE SLANG	192T
33		YB26V00001F1		1	HYDRAULIC VALVE VÁLVULA HIDRÁULICA	DISTRIBUTORE IDRAULI HYDRAULIKVENTIL	HYDRAULIKVENTIL VÁLVULA HIDRÁULICA	SOUPAPE HYDRAULIQU HYDRAULISCHE KLEP	010V
34		87529939		1	HYD CONNECTOR CONECTOR HIDRÁULIC	CONNETTORE IDRAULI HYDRAULIKSTIK	HYDR STECKVERBINDE CONECTOR HID.	CONNECTEUR HYDRAU HYDRAULISCHE AANSL	020R
35		2444R596D2		1	ELBOW CODO	GOMITO VINKELRØR	KNIESTÜCK COTOVELO	COUDE KNIESTUK	085G

(1) ASSY SEE PAGE 3

Copyright © New Holland

1.081	02	p1	03/10

PILOT PIPING (2)
TUBAZIONI SERVOCOMANDI (2)
LEITUNGEN-SERVOSTEU. (2)
TUYAUT. SERVOCOMMANDES (2)

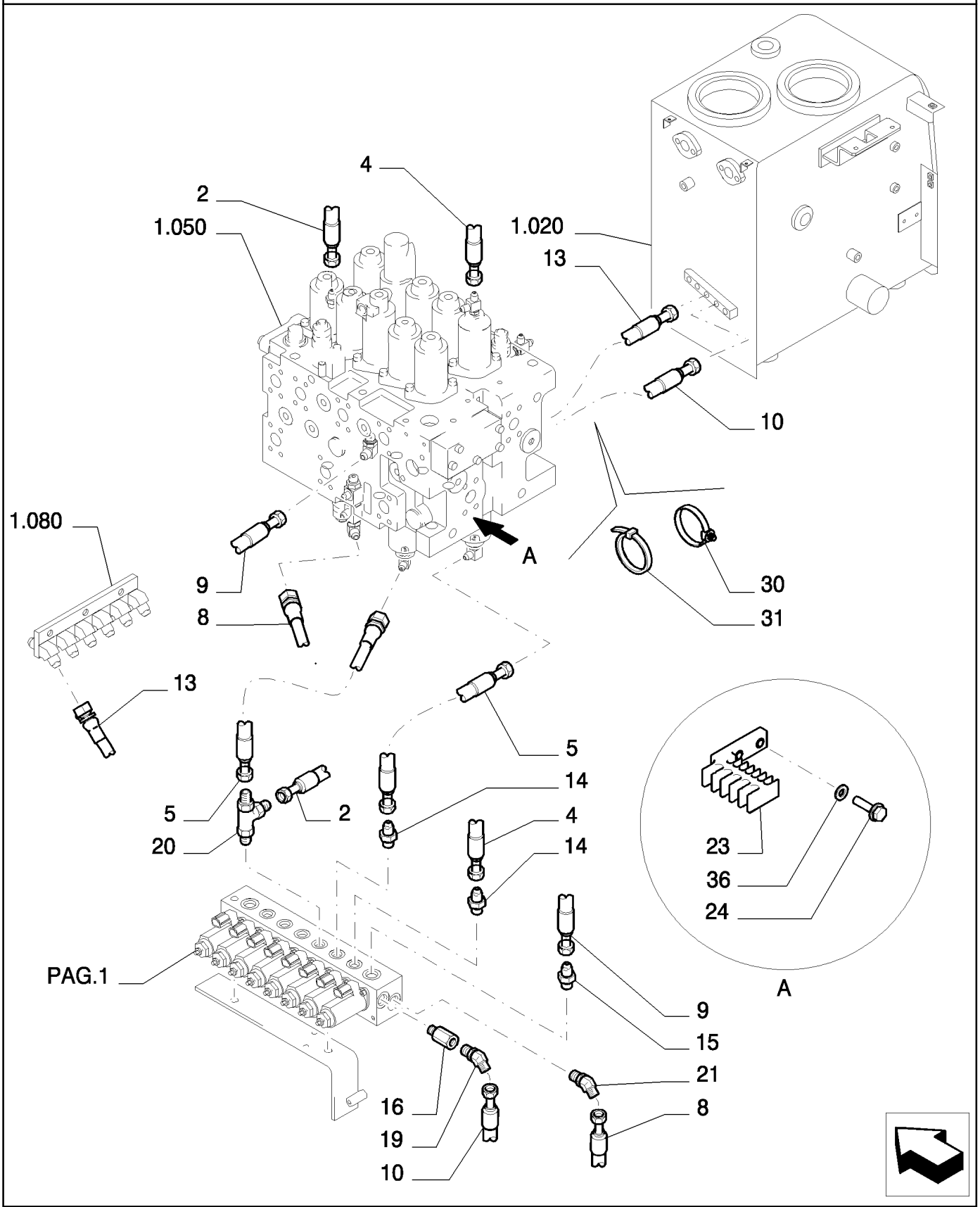

Copyright © New Holland

TUBERIAS SERVOMANDOS (2)
PILOT PIPING (2)
PILOT PIPING (2)
PILOT PIPING (2)

R	N	P.N.	MOD	Q	Description Denominacion	Descrizione Beskrivelse	Bezeichnung Denominação	Description Beschrijving	L.C.
2		72214740		1	FLEXIBLE HOSE TUBO FLEXIBLE	TUBO FLESSIBILE FLEKSIBEL SLANGE	BIEGSAMER SCHLAUCH MANGUEIRA FLEXÍVEL	TUYAU FLEXIBLE FLEXIBELE SLANG	192T
4		72214535		1	FLEXIBLE HOSE TUBO FLEXIBLE	TUBO FLESSIBILE FLEKSIBEL SLANGE	BIEGSAMER SCHLAUCH MANGUEIRA FLEXÍVEL	TUYAU FLEXIBLE FLEXIBELE SLANG	192T
5		72214543		2	FLEXIBLE HOSE TUBO FLEXIBLE	TUBO FLESSIBILE FLEKSIBEL SLANGE	BIEGSAMER SCHLAUCH MANGUEIRA FLEXÍVEL	TUYAU FLEXIBLE FLEXIBELE SLANG	192T
8		87529935		1	FLEXIBLE HOSE TUBO FLEXIBLE	TUBO FLESSIBILE FLEKSIBEL SLANGE	BIEGSAMER SCHLAUCH MANGUEIRA FLEXÍVEL	TUYAU FLEXIBLE FLEXIBELE SLANG	192T
9		72214550		1	FLEXIBLE HOSE TUBO FLEXIBLE	TUBO FLESSIBILE FLEKSIBEL SLANGE	BIEGSAMER SCHLAUCH MANGUEIRA FLEXÍVEL	TUYAU FLEXIBLE FLEXIBELE SLANG	192T
10		72214731		1	FLEXIBLE HOSE TUBO FLEXIBLE	TUBO FLESSIBILE FLEKSIBEL SLANGE	BIEGSAMER SCHLAUCH MANGUEIRA FLEXÍVEL	TUYAU FLEXIBLE FLEXIBELE SLANG	192T
13		87529938		1	FLEXIBLE HOSE TUBO FLEXIBLE	TUBO FLESSIBILE FLEKSIBEL SLANGE	BIEGSAMER SCHLAUCH MANGUEIRA FLEXÍVEL	TUYAU FLEXIBLE FLEXIBELE SLANG	192T
14		72214744		2	HYD CONNECTOR CONECTOR HIDRÁULIC	CONNETTORE IDRAULIC HYDRAULIKSTIK	HYDR STECKVERBINDE CONECTOR HID.	CONNECTEUR HYDRAU HYDRAULISCHE AANSL	020R
15		72214523		1	HYD CONNECTOR CONECTOR HIDRÁULIC	CONNETTORE IDRAULIC HYDRAULIKSTIK	HYDR STECKVERBINDE CONECTOR HID.	CONNECTEUR HYDRAU HYDRAULISCHE AANSL	020R
16		72214521		1	HYD CONNECTOR CONECTOR HIDRÁULIC	CONNETTORE IDRAULIC HYDRAULIKSTIK	HYDR STECKVERBINDE CONECTOR HID.	CONNECTEUR HYDRAU HYDRAULISCHE AANSL	020R
19		72214541		1	ELBOW CODO	GOMITO VINKELRØR	KNIESTÜCK COTOVELO	COUDE KNIESTUK	085G
20		72214527		1	HYD CONNECTOR CONECTOR HIDRÁULIC	CONNETTORE IDRAULIC HYDRAULIKSTIK	HYDR STECKVERBINDE CONECTOR HID.	CONNECTEUR HYDRAU HYDRAULISCHE AANSL	020R
21		87338398		1	HYD CONNECTOR CONECTOR HIDRÁULIC	CONNETTORE IDRAULIC HYDRAULIKSTIK	HYDR STECKVERBINDE CONECTOR HID.	CONNECTEUR HYDRAU HYDRAULISCHE AANSL	020R
23		87338536		1	COLLAR COLLAR	COLLARE SLANGEBÅND	RINGE ANEL	COLLIER KRAAG	031F
24		16043834		2	BOLT, Hex, M8 x 30, 10.9, Full Thd PERNO	BULLONE BOLT	SCHRAUBE PARAFUSO	VIS BOUT	140B
30		87526680		4	RETAINER COLLAR COLLAR DE RETENCIÓN	COLLARE DI FISSAGGIO RING, SPÆNDE	HALTERING ANEL DE FIXAÇÃO	COLLIER DE RETENUE BORGKRAAG	230S
31		4982514		4	CABLE STRAP BANDA DE CABLE	FASCETTA PER CAVO KABELSTROP	KABELBINDER BRAÇADEIRA DE CABO	BRIDE DE CABLE BUNDELBAND	P716
36		14496531		2	WASHER, M8 x 17 x 1.6 ARANDELA	RONDELLA FLADSKIVE	UNTERLEGSCHEIBE ANILHA	RONDELLE SLUITRING	131R

Copyright © New Holland

1.081	03	p1	03/10

PILOT PIPING (2) - COMPONENTS
TUBAZIONI SERVOCOMANDI (2) - COMPONENTI
LEITUNGEN-SERVOSTEU. (2) - BESTANDTEILE
TUYAUT. SERVOCOMMANDES (2) - COMPOSANTS

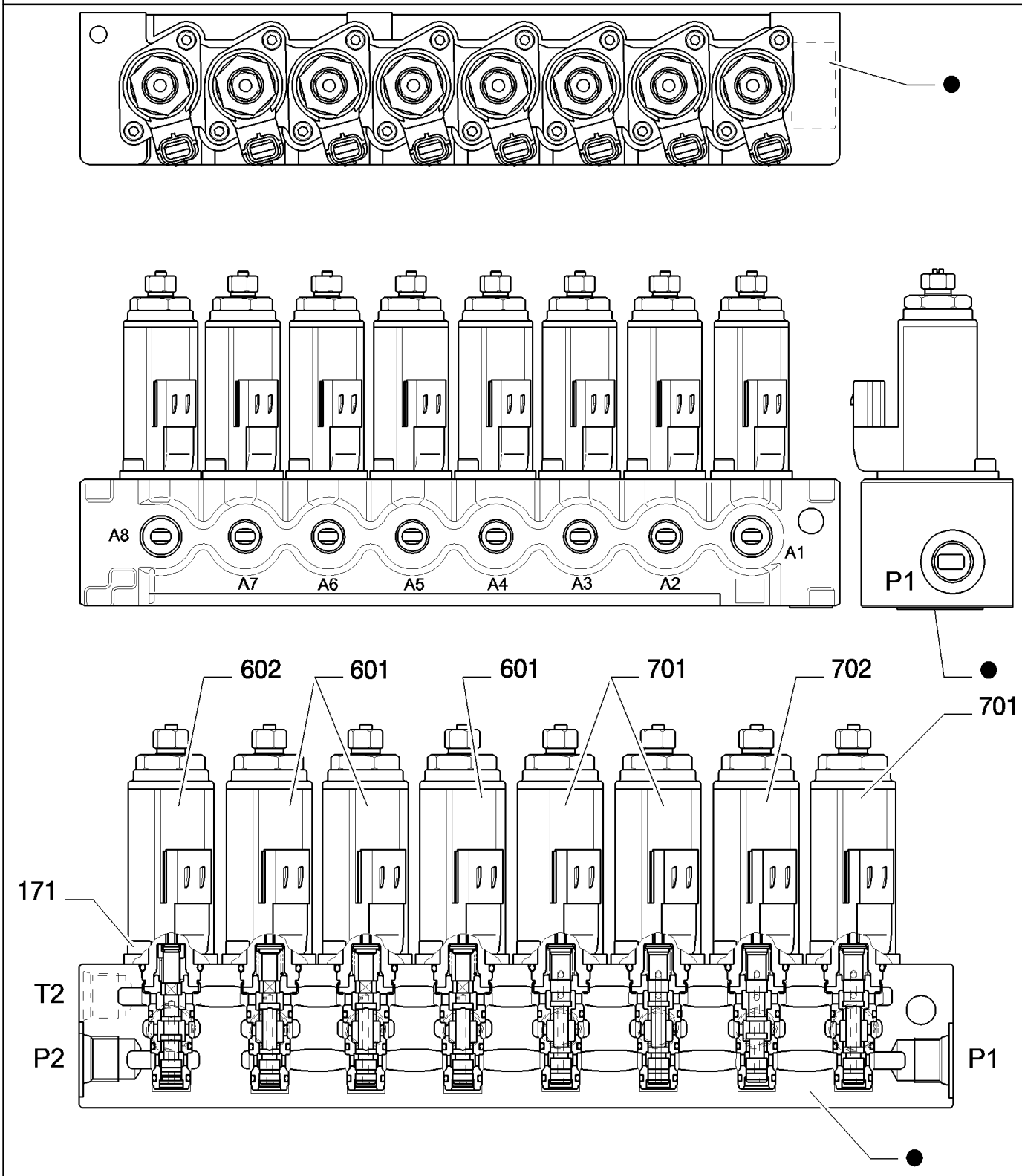

PARTS MARKED ● ARE NOT SUPPLIED AS SPARES
I PARTICOLARI CONTRASSEGNATI CON ● NON VENGONO FORNITI DI RICAMBIO

Copyright © New Holland

TUBERIAS SERVOMANDOS (2) - COMPONENTES
PILOT PIPING (2) - COMPONENTS
PILOT PIPING (2) - COMPONENTS
PILOT PIPING (2) - COMPONENTS

R	N	P.N.	MOD	Q	Description Denominacion	Descrizione Beskrivelse	Bezeichnung Denominação	Description Beschrijving	L.C.
171		72209810		16	SCREW TORNILLO	VITE SKRUE	SCHRAUBE PARAFUSO	VIS SCHROEF	040V
601		YN35V00048F1		3	VALVE VÁLVULA	VALVOLA VENTIL	VENTIL VÁLVULA	SOUPAPE KLEP	9620
602		YN35V00049F1		1	VALVE VÁLVULA	VALVOLA VENTIL	VENTIL VÁLVULA	SOUPAPE KLEP	9620
701		YN35V00050F1		3	VALVE VÁLVULA	VALVOLA VENTIL	VENTIL VÁLVULA	SOUPAPE KLEP	9620
702		YN35V00051F1		1	VALVE VÁLVULA	VALVOLA VENTIL	VENTIL VÁLVULA	SOUPAPE KLEP	9620

SOLENOID VALVE ASSY P/N 87338533

Copyright © New Holland

1.082	01	p1	03/10

BLOCK - OPT - VERSION (01-02-03)
BLOCCHETTO - OPT - VERSIONE (01-02-03)
PLATTE - OPT - VERSION (01-02-03)
TAQUET - OPT - VERSION (01-02-03)

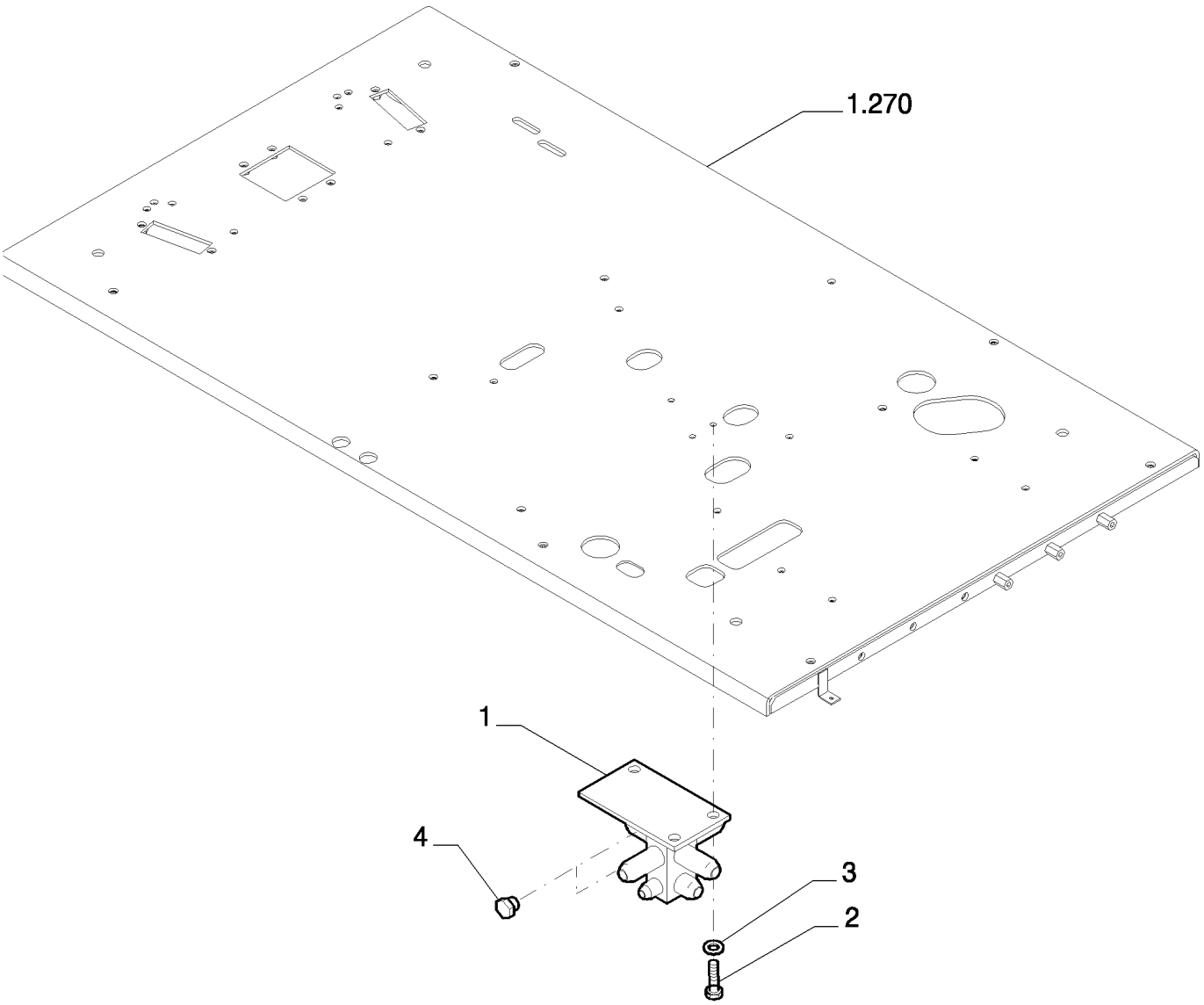

Copyright © New Holland

BLOQUETE - OPT - VERSION (01-02-03)
BLOCK - OPT - VERSION (01-02-03)
BLOCK - OPT - VERSION (01-02-03)
BLOCK - OPT - VERSION (01-02-03)

R	N	P.N.	MOD	Q	Description Denominacion	Descrizione Beskrivelse	Bezeichnung Denominação	Description Beschrijving	L.C.
1		87519949		1	BLOCK BLOQUE	BLOCCO MOTORBLOK	BLOCK BLOCO	BLOC BLOK	074B
2		16043434		3	BOLT, Hex, M8 x 20, 10.9, Full Thd PERNO	BULLONE BOLT	SCHRAUBE PARAFUSO	VIS BOUT	140B
3		14496531		3	WASHER, M8 x 17 x 1.6 ARANDELA	RONDELLA FLADSKIVE	UNTERLEGSCHEIBE ANILHA	RONDELLE SLUITRING	131R
4		72214546		2	PLUG TAPÓN	TAPPO PROP	STOPFEN TAMPÃO	BOUCHON PLUG	050T

Copyright © New Holland

1.082	02	p1	03/10

BLOCK - OPT - VERSION (04-05-06)
BLOCCHETTO - OPT - VERSIONE (04-05-06)
PLATTE - OPT - VERSION (04-05-06)
TAQUET - OPT - VERSION (04-05-06)

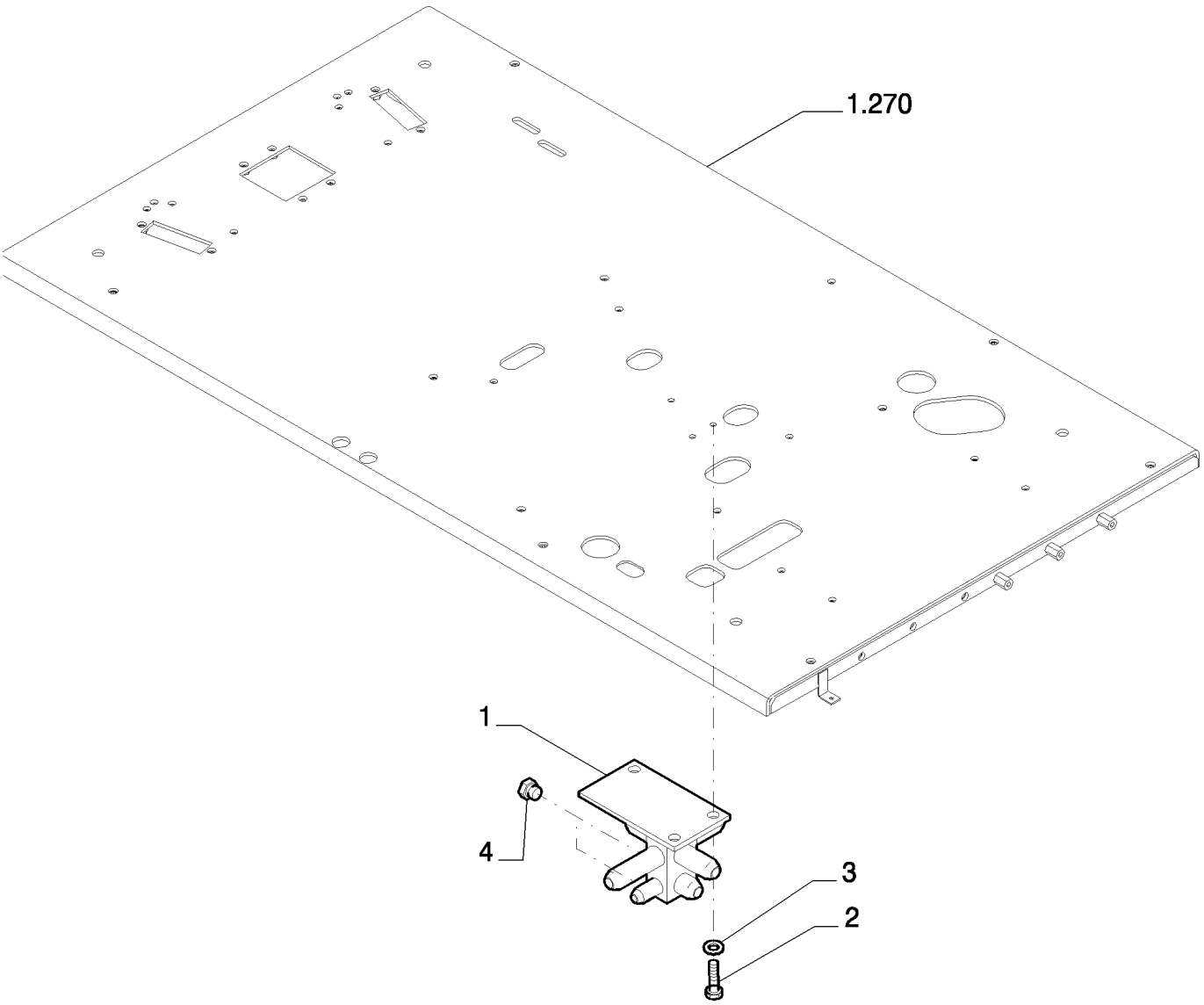

Copyright © New Holland

BLOQUETE - OPT - VERSION (04-05-06)
BLOCK - OPT - VERSION (04-05-06)
BLOCK - OPT - VERSION (04-05-06)
BLOCK - OPT - VERSION (04-05-06)

R	N	P.N.	MOD	Q	Description Denominacion	Descrizione Beskrivelse	Bezeichnung Denominação	Description Beschrijving	L.C.
1		87519950		1	BLOCK BLOQUE	BLOCCO MOTORBLOK	BLOCK BLOCO	BLOC BLOK	074B
2		16043434		3	BOLT, Hex, M8 x 20, 10.9, Full Thd PERNO	BULLONE BOLT	SCHRAUBE PARAFUSO	VIS BOUT	140B
3		14496531		3	WASHER, M8 x 17 x 1.6 ARANDELA	RONDELLA FLADSKIVE	UNTERLEGSCHEIBE ANILHA	RONDELLE SLUITRING	131R
4		72214546		2	PLUG TAPÓN	TAPPO PROP	STOPFEN TAMPÃO	BOUCHON PLUG	050T

Copyright © New Holland

1.083	01	p1	03/10

PILOT PIPING (3)
TUBAZIONI SERVOCOMANDI (3)
LEITUNGEN-SERVOSTEU. (3)
TUYAUT. SERVOCOMMANDES (3)

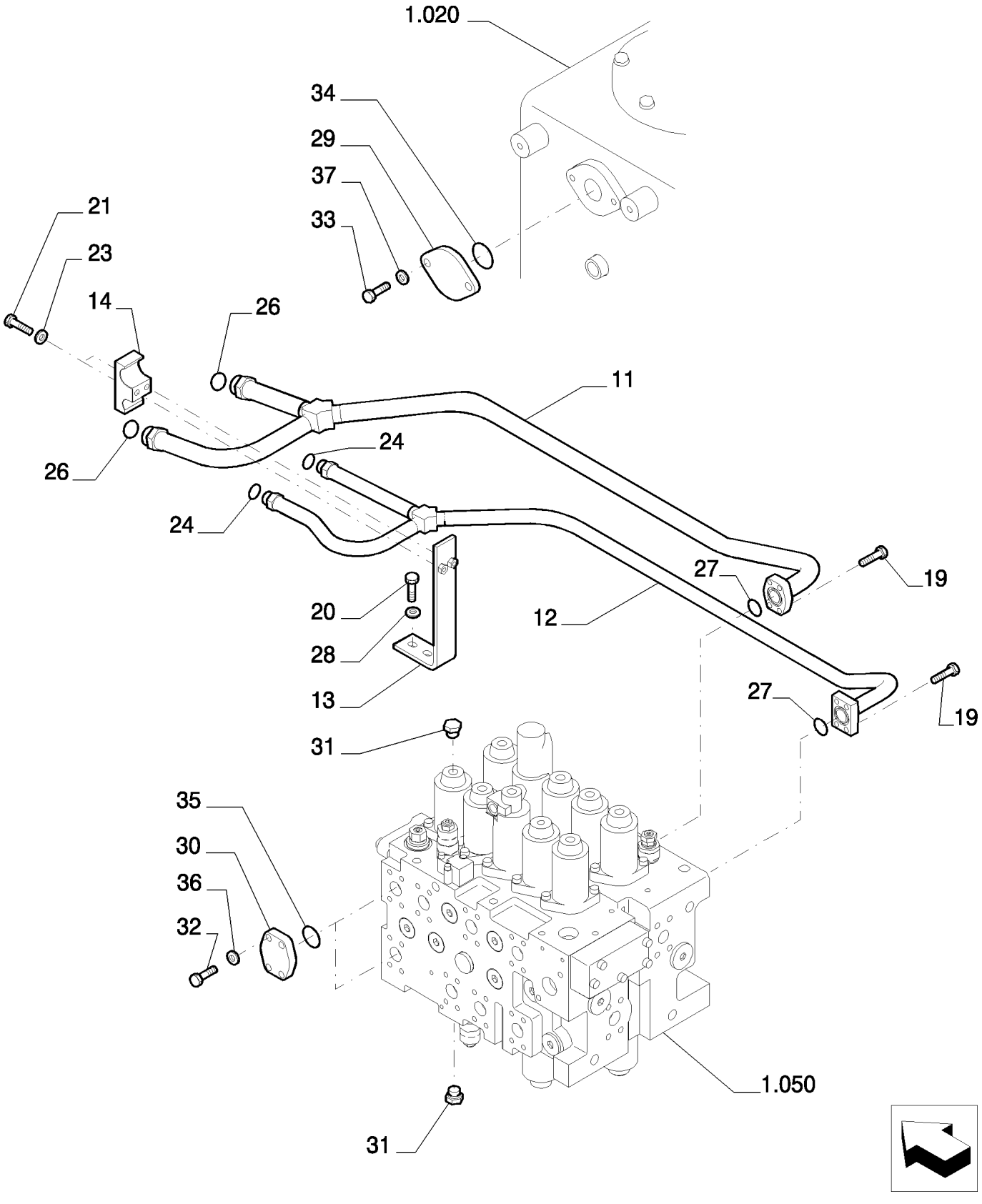

Copyright © New Holland

TUBERIAS SERVOMANDOS (3)
PILOT PIPING (3)
PILOT PIPING (3)
PILOT PIPING (3)

R	N	P.N.	MOD	Q	Description Denominacion	Descrizione Beskrivelse	Bezeichnung Denominação	Description Beschrijving	L.C.
11		87528664		1	RIGID TUBE TUBO RÍGIDO	TUBO RIGIDO STIFT RØR	ROHR TUBO RÍGIDO	TUYAU RIGIDE VASTE LEIDING	193T
12		87528665		1	RIGID TUBE TUBO RÍGIDO	TUBO RIGIDO STIFT RØR	ROHR TUBO RÍGIDO	TUYAU RIGIDE VASTE LEIDING	193T
13		87531539		1	BRACKET SOPORTE	STAFFA BESLAG	HALTERUNG SUPORTE	SUPPORT STEUN	225S
14		87532008		1	BRACKET SOPORTE	STAFFA BESLAG	HALTERUNG SUPORTE	SUPPORT STEUN	225S
19		87612011		8	SCREW TORNILLO	VITE SKRUE	SCHRAUBE PARAFUSO	VIS SCHROEF	040V
20		11112634		2	SCREW TORNILLO	VITE SKRUE	SCHRAUBE PARAFUSO	VIS SCHROEF	040V
21		11107734		2	SCREW TORNILLO	VITE SKRUE	SCHRAUBE PARAFUSO	VIS SCHROEF	040V
23		14496631		2	WASHER, M10 x 21 x 2 ARANDELA	RONDELLA FLADSKIVE	UNTERLEGSCHEIBE ANILHA	RONDELLE SLUITRING	131R
24		71484462		2	O-RING JUNTA TÓRICA	ANELLO TOROIDALE O-RING	O-RING O-RING	JOINT TORIQUE O-RING	055A
26		70931640		2	GASKET JUNTA	GUARNIZIONE PAKNING	DICHTUNG JUNTA	JOINT PAKKING	123G
27		72215443		2	O-RING JUNTA TÓRICA	ANELLO TOROIDALE O-RING	O-RING O-RING	JOINT TORIQUE O-RING	055A
28		14496731		2	WASHER, M12 x 24 x 2.5 Thk ARANDELA	RONDELLA FLADSKIVE	UNTERLEGSCHEIBE ANILHA	RONDELLE SLUITRING	131R
29		87397565		1	PLUG TAPÓN	TAPPO PROP	STOPFEN TAMPÃO	BOUCHON PLUG	050T
30		87397570		2	COVER CUBIERTA	COPERCHIO DÆKSEL	ABDECKUNG COBERTURA	COUVERCLE AFSCHERMING	265C
31		72214558		2	PLUG TAPÓN	TAPPO PROP	STOPFEN TAMPÃO	BOUCHON PLUG	050T
32		11106434		8	BOLT, Hex, M10 x 30, 10.9, Full Thd PERNO	BULLONE BOLT	SCHRAUBE PARAFUSO	VIS BOUT	140B
33		11112434		2	BOLT, Hex, M12 x 30, 10.9, Full Thd PERNO	BULLONE BOLT	SCHRAUBE PARAFUSO	VIS BOUT	140B
34		87397569		1	O-RING JUNTA TÓRICA	ANELLO TOROIDALE O-RING	O-RING O-RING	JOINT TORIQUE O-RING	055A
35		72215443		2	O-RING JUNTA TÓRICA	ANELLO TOROIDALE O-RING	O-RING O-RING	JOINT TORIQUE O-RING	055A
36		14496631		8	WASHER, M10 x 21 x 2 ARANDELA	RONDELLA FLADSKIVE	UNTERLEGSCHEIBE ANILHA	RONDELLE SLUITRING	131R
37		14496731		2	WASHER, M12 x 24 x 2.5 Thk ARANDELA	RONDELLA FLADSKIVE	UNTERLEGSCHEIBE ANILHA	RONDELLE SLUITRING	131R

Copyright © New Holland

1.083	02	p1	03/10

PILOT PIPING (3)
TUBAZIONI SERVOCOMANDI (3)
LEITUNGEN-SERVOSTEU. (3)
TUYAUT. SERVOCOMMANDES (3)

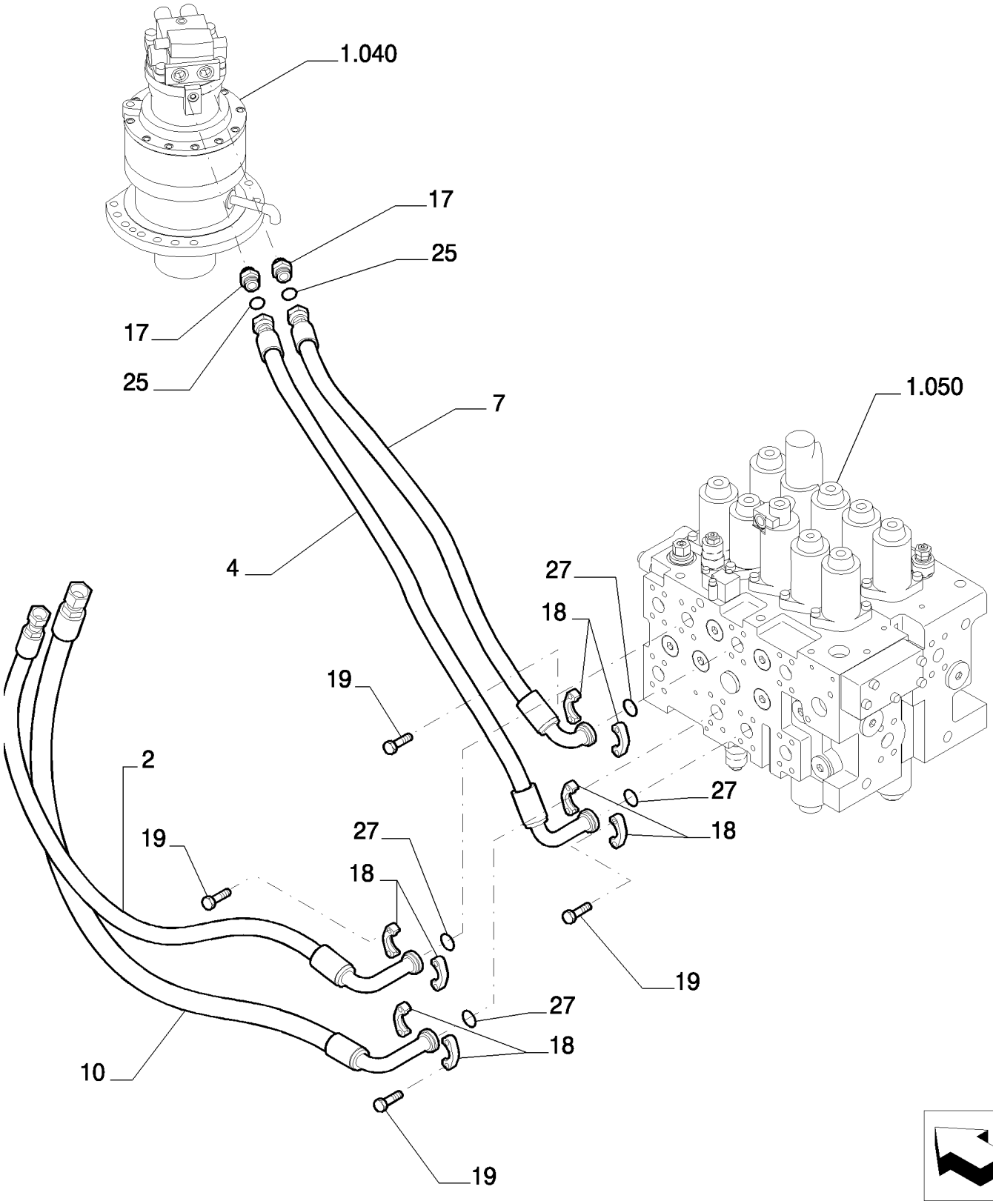

Copyright © New Holland

TUBERIAS SERVOMANDOS (3)
PILOT PIPING (3)
PILOT PIPING (3)
PILOT PIPING (3)

R	N	P.N.	MOD	Q	Description Denominacion	Descrizione Beskrivelse	Bezeichnung Denominação	Description Beschrijving	L.C.
2		87603347		1	FLEXIBLE HOSE TUBO FLEXIBLE	TUBO FLESSIBILE FLEKSIBEL SLANGE	BIEGSAMER SCHLAUCH MANGUEIRA FLEXÍVEL	TUYAU FLEXIBLE FLEXIBELE SLANG	192T
4		87603351		1	FLEXIBLE HOSE TUBO FLEXIBLE	TUBO FLESSIBILE FLEKSIBEL SLANGE	BIEGSAMER SCHLAUCH MANGUEIRA FLEXÍVEL	TUYAU FLEXIBLE FLEXIBELE SLANG	192T
7		87603345		1	FLEXIBLE HOSE TUBO FLEXIBLE	TUBO FLESSIBILE FLEKSIBEL SLANGE	BIEGSAMER SCHLAUCH MANGUEIRA FLEXÍVEL	TUYAU FLEXIBLE FLEXIBELE SLANG	192T
10		87528129		1	FLEXIBLE HOSE TUBO FLEXIBLE	TUBO FLESSIBILE FLEKSIBEL SLANGE	BIEGSAMER SCHLAUCH MANGUEIRA FLEXÍVEL	TUYAU FLEXIBLE FLEXIBELE SLANG	192T
17		72214714		2	HYD CONNECTOR CONECTOR HIDRÁULIC	CONNETTORE IDRAULI HYDRAULIKSTIK	HYDR STECKVERBINDE CONECTOR HID.	CONNECTEUR HYDRAU HYDRAULISCHE AANSL	020R
18		71404311		8	HALF-FLANGE SEMIBRIDA	SEMIFLANGIA FLANGEHALVDEL	FLANSCHHÄLFTE MEIA FLANGE	DEMI-BRIDE FLENSHELFT	417S
19		87612011		16	SCREW TORNILLO	VITE SKRUE	SCHRAUBE PARAFUSO	VIS SCHROEF	040V
25		70923843		2	SNAP RING ANILLO DE RESORTE	ANELLO ELASTICO LÅSERING	SPRENGRING ANEL	ANNEAU D'ARRET VEERRING	054A
27		72215443		4	O-RING JUNTA TÓRICA	ANELLO TOROIDALE O-RING	O-RING O-RING	JOINT TORIQUE O-RING	055A

Copyright © New Holland

1.083	03	p1	03/10

PILOT PIPING (3)
TUBAZIONI SERVOCOMANDI (3)
LEITUNGEN-SERVOSTEU. (3)
TUYAUT. SERVOCOMMANDES (3)

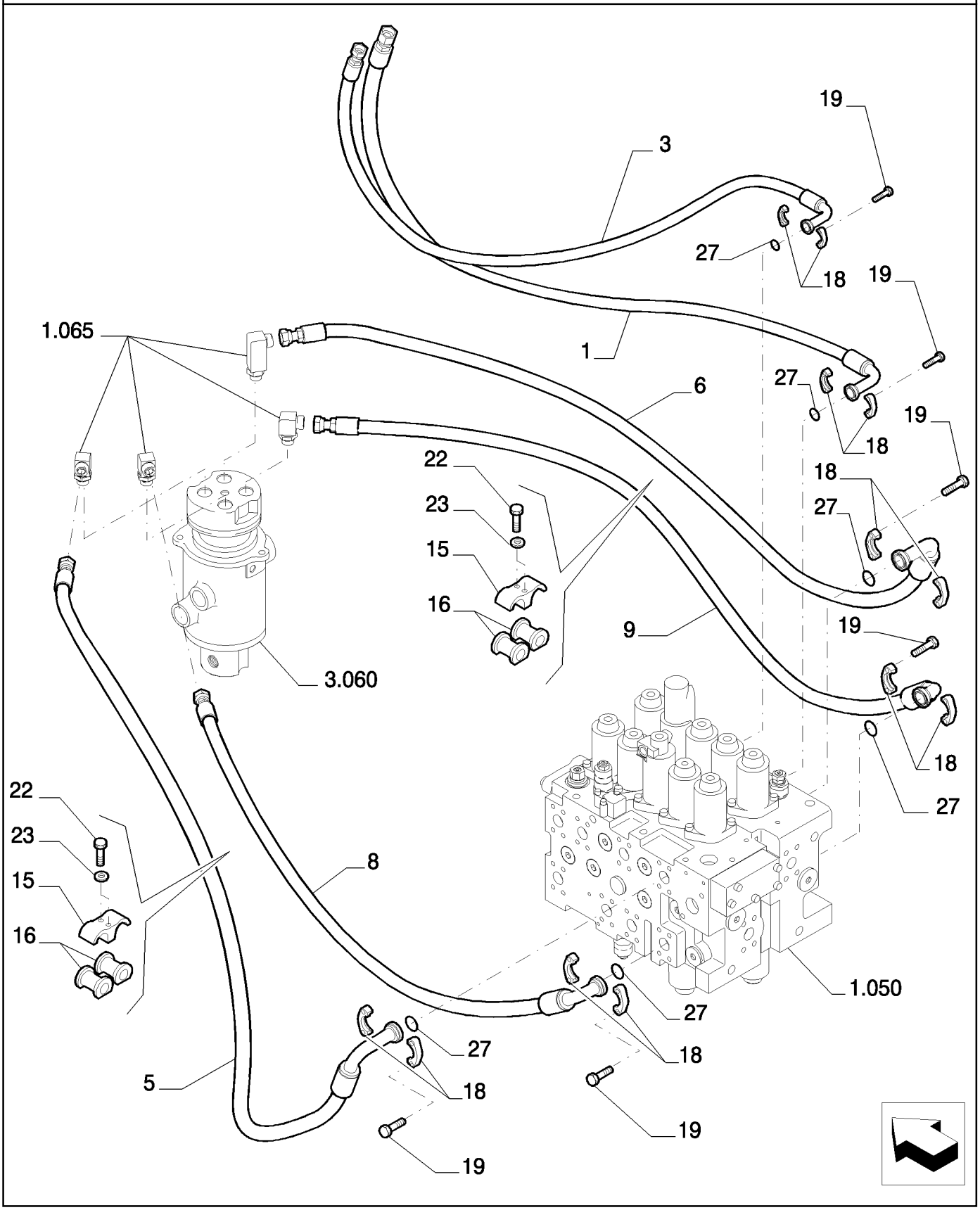

Copyright © New Holland

TUBERIAS SERVOMANDOS (3)
PILOT PIPING (3)
PILOT PIPING (3)
PILOT PIPING (3)

R	N	P.N.	MOD	Q	Description Denominacion	Descrizione Beskrivelse	Bezeichnung Denominação	Description Beschrijving	L.C.
1		87527880		1	FLEXIBLE HOSE TUBO FLEXIBLE	TUBO FLESSIBILE FLEKSIBEL SLANGE	BIEGSAMER SCHLAUCH MANGUEIRA FLEXÍVEL	TUYAU FLEXIBLE FLEXIBELE SLANG	192T
3		87603348		1	FLEXIBLE HOSE TUBO FLEXIBLE	TUBO FLESSIBILE FLEKSIBEL SLANGE	BIEGSAMER SCHLAUCH MANGUEIRA FLEXÍVEL	TUYAU FLEXIBLE FLEXIBELE SLANG	192T
5		87603349		1	FLEXIBLE HOSE TUBO FLEXIBLE	TUBO FLESSIBILE FLEKSIBEL SLANGE	BIEGSAMER SCHLAUCH MANGUEIRA FLEXÍVEL	TUYAU FLEXIBLE FLEXIBELE SLANG	192T
6		87603350		1	FLEXIBLE HOSE TUBO FLEXIBLE	TUBO FLESSIBILE FLEKSIBEL SLANGE	BIEGSAMER SCHLAUCH MANGUEIRA FLEXÍVEL	TUYAU FLEXIBLE FLEXIBELE SLANG	192T
8		87603343		1	FLEXIBLE HOSE TUBO FLEXIBLE	TUBO FLESSIBILE FLEKSIBEL SLANGE	BIEGSAMER SCHLAUCH MANGUEIRA FLEXÍVEL	TUYAU FLEXIBLE FLEXIBELE SLANG	192T
9		87603344		1	FLEXIBLE HOSE TUBO FLEXIBLE	TUBO FLESSIBILE FLEKSIBEL SLANGE	BIEGSAMER SCHLAUCH MANGUEIRA FLEXÍVEL	TUYAU FLEXIBLE FLEXIBELE SLANG	192T
15		72204618		2	RETAINER COLLAR COLLAR DE RETENCIÓN	COLLARE DI FISSAGGIO RING, SPÆNDE	HALTERING ANEL DE FIXAÇÃO	COLLIER DE RETENUE BORGKRAAG	230S
16		72204607		4	BUSHING CASQUILLO	BOCCOLA BØSNING	BUCHSE CASQUILHO	BAGUE BUS	095B
18		71404311		12	HALF-FLANGE SEMIBRIDA	SEMIFLANGIA FLANGEHALVDEL	FLANSCHHÄLFTE MEIA FLANGE	DEMI-BRIDE FLENSHELFT	417S
19		87612011		24	SCREW TORNILLO	VITE SKRUE	SCHRAUBE PARAFUSO	VIS SCHROEF	040V
22		11107434		4	SCREW TORNILLO	VITE SKRUE	SCHRAUBE PARAFUSO	VIS SCHROEF	040V
23		14496631		4	WASHER, M10 x 21 x 2 ARANDELA	RONDELLA FLADSKIVE	UNTERLEGSCHEIBE ANILHA	RONDELLE SLUITRING	131R
27		72215443		6	O-RING JUNTA TÓRICA	ANELLO TOROIDALE O-RING	O-RING O-RING	JOINT TORIQUE O-RING	055A

Copyright © New Holland

1.083	04	p1	03/10

PILOT PIPING (3) - VERSION (04-05-06)
TUBAZIONI SERVOCOMANDI (3) - VERSIONE (04-05-06)
LEITUNGEN-SERVOSTEU. (3) - VERSION (04-05-06)
TUYAUT. SERVOCOMMANDES (3) - VERSION (04-05-06)

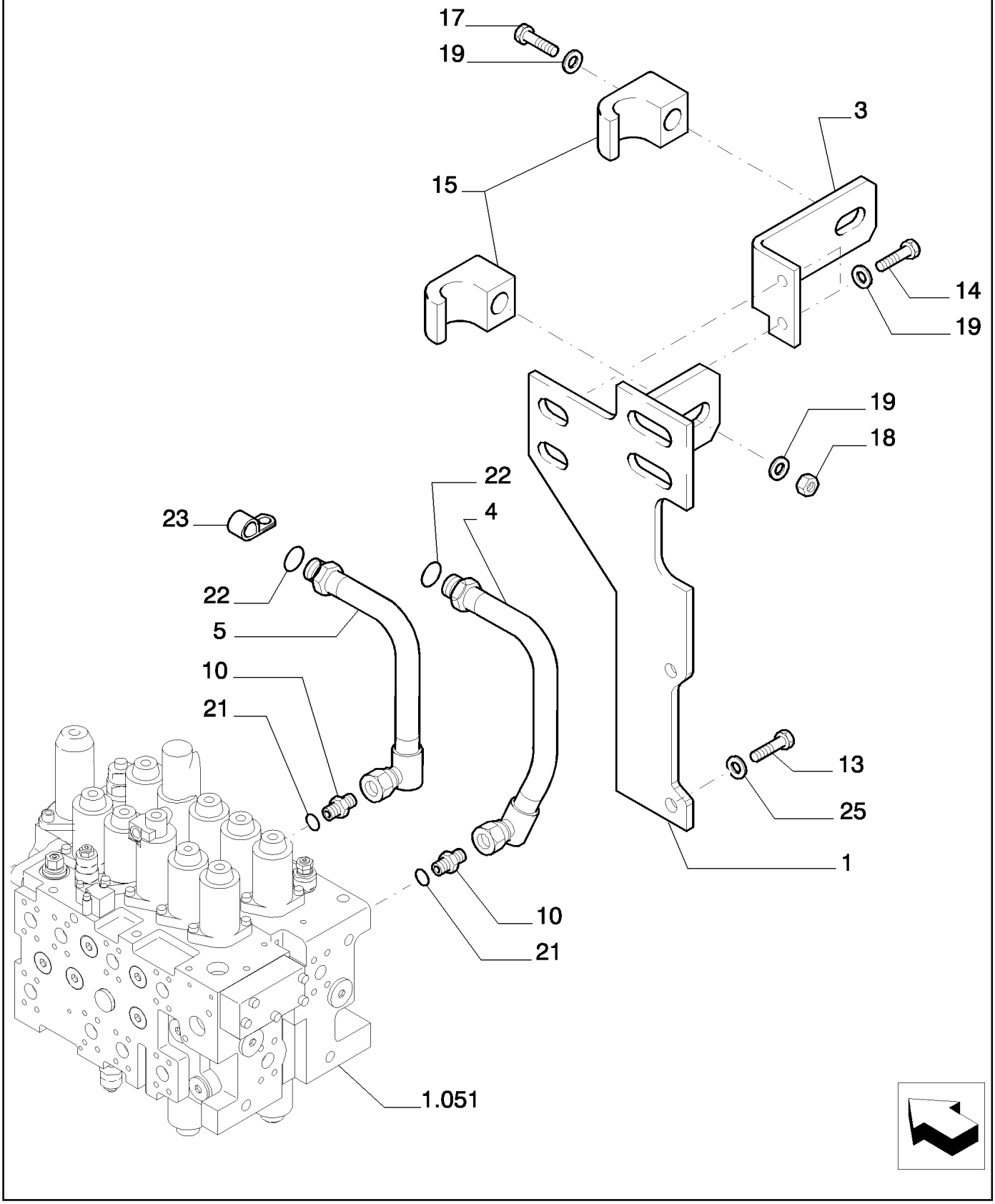

Copyright © New Holland

TUBERIAS SERVOMANDOS (3) - VERSION (04-05-06)
PILOT PIPING (3) - VERSION (04-05-06)
PILOT PIPING (3) - VERSION (04-05-06)
PILOT PIPING (3) - VERSION (04-05-06)

R	N	P.N.	MOD	Q	Description Denominacion	Descrizione Beskrivelse	Bezeichnung Denominação	Description Beschrijving	L.C.
1		87536305		1	SUPPORT SOPORTE	SUPPORTO BESLAG	STÜTZE SUPORTE	SUPPORT STEUN	300S
3		87536667		1	SUPPORT SOPORTE	SUPPORTO BESLAG	STÜTZE SUPORTE	SUPPORT STEUN	300S
4		87536531		1	RIGID TUBE TUBO RÍGIDO	TUBO RIGIDO STIFT RØR	ROHR TUBO RÍGIDO	TUYAU RIGIDE VASTE LEIDING	193T
5		87536532		1	RIGID TUBE TUBO RÍGIDO	TUBO RIGIDO STIFT RØR	ROHR TUBO RÍGIDO	TUYAU RIGIDE VASTE LEIDING	193T
10		72214714		2	HYD CONNECTOR CONECTOR HIDRÁULIC(	CONNETTORE IDRAULI(HYDRAULIKSTIK	HYDR STECKVERBINDE CONECTOR HID.	CONNECTEUR HYDRAU HYDRAULISCHE AANSL	020R
13		11112234		2	BOLT, Hex, M12 x 25, 10.9, Full Thd PERNO	BULLONE BOLT	SCHRAUBE PARAFUSO	VIS BOUT	140B
14		11106434		2	BOLT, Hex, M10 x 30, 10.9, Full Thd PERNO	BULLONE BOLT	SCHRAUBE PARAFUSO	VIS BOUT	140B
15		72960052		2	CLAMP ABRAZADERA	MORSETTO SPÆNDEBÅND	KLEMME BRAÇADEIRA	COLLIER KLEM	120M
17		11107434		2	SCREW TORNILLO	VITE SKRUE	SCHRAUBE PARAFUSO	VIS SCHROEF	040V
18		11701721		2	NUT, M10, Cl 10 TUERCA	DADO MØTRIK	MUTTER PORCA	ECROU MOER	010D
19		14496631		6	WASHER, M10 x 21 x 2 ARANDELA	RONDELLA FLADSKIVE	UNTERLEGSCHEIBE ANILHA	RONDELLE SLUITRING	131R
21		70923843		2	SNAP RING ANILLO DE RESORTE	ANELLO ELASTICO LÅSERING	SPRENGRING ANEL	ANNEAU D'ARRET VEERRING	054A
22		71484462		2	O-RING JUNTA TÓRICA	ANELLO TOROIDALE O-RING	O-RING O-RING	JOINT TORIQUE O-RING	055A
23		71405770		1	CLAMP ABRAZADERA	MORSETTO SPÆNDEBÅND	KLEMME BRAÇADEIRA	COLLIER KLEM	120M
25		14496731		2	WASHER, M12 x 24 x 2.5 Thk ARANDELA	RONDELLA FLADSKIVE	UNTERLEGSCHEIBE ANILHA	RONDELLE SLUITRING	131R

Copyright © New Holland

1.085	01	p1	03/10

PILOT PIPING (5) - VERSION (04-05-06)
TUBAZIONI SERVOCOMANDI (5) - VERSIONE (04-05-06)
LEITUNGEN-SERVOSTEU. (5) - VERSION (04-05-06)
TUYAUT. SERVOCOMMANDES (5) - VERSION (04-05-06)

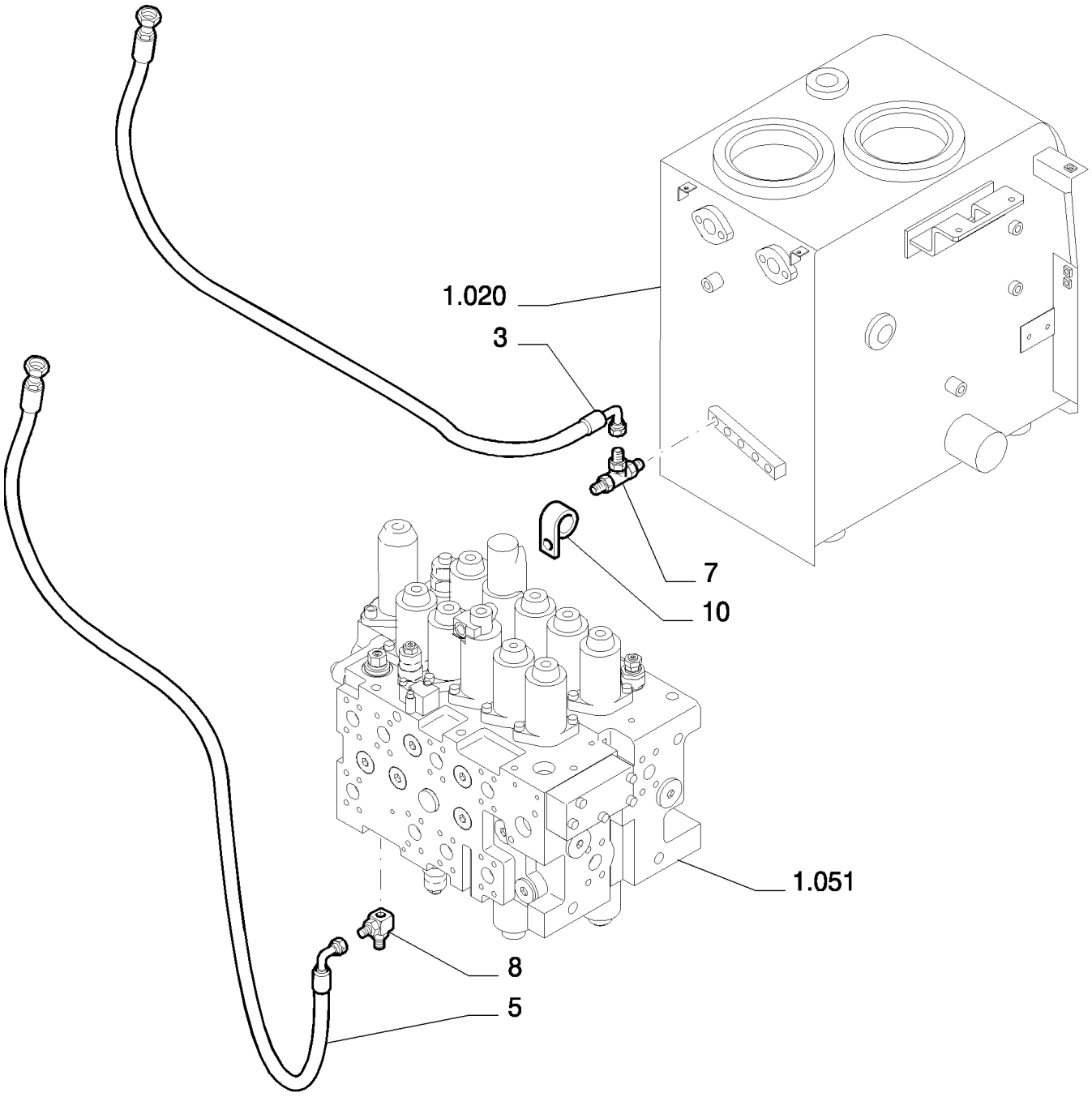

Copyright © New Holland

TUBERIAS SERVOMANDOS (5) - VERSION (04-05-06)
PILOT PIPING (5) - VERSION (04-05-06)
PILOT PIPING (5) - VERSION (04-05-06)
PILOT PIPING (5) - VERSION (04-05-06)

R	N	P.N.	MOD	Q	Description Denominacion	Descrizione Beskrivelse	Bezeichnung Denominação	Description Beschrijving	L.C.
3		87622869		1	FLEXIBLE HOSE TUBO FLEXIBLE	TUBO FLESSIBILE FLEKSIBEL SLANGE	BIEGSAMER SCHLAUCH MANGUEIRA FLEXÍVEL	TUYAU FLEXIBLE FLEXIBELE SLANG	192T
5		87622868		1	FLEXIBLE HOSE TUBO FLEXIBLE	TUBO FLESSIBILE FLEKSIBEL SLANGE	BIEGSAMER SCHLAUCH MANGUEIRA FLEXÍVEL	TUYAU FLEXIBLE FLEXIBELE SLANG	192T
7		72954985		1	TEE RACOR EN T	PEZZO A T T-STYKKE	T-STÜCK TÊ	RACCORD EN T T-STUK	9020
8		72960345		1	TEE RACOR EN T	PEZZO A T T-STYKKE	T-STÜCK TÊ	RACCORD EN T T-STUK	9020
10		71405944		1	CLIP ABRAZADERA	FERMO KLIPS	KLAMMER FIXADOR	COLLIER KLEM	045F

Copyright © New Holland

1.090	01	p1	03/10

PILOT PIPING - MANIPULATOR
TUBAZIONI SERVOCOMANDI - MANIPOLATORE
LEITUNGEN-SERVOSTEU - STEUERHEBEL
TUYAUT. SERVOCOMMANDES - MANIPULATEUR

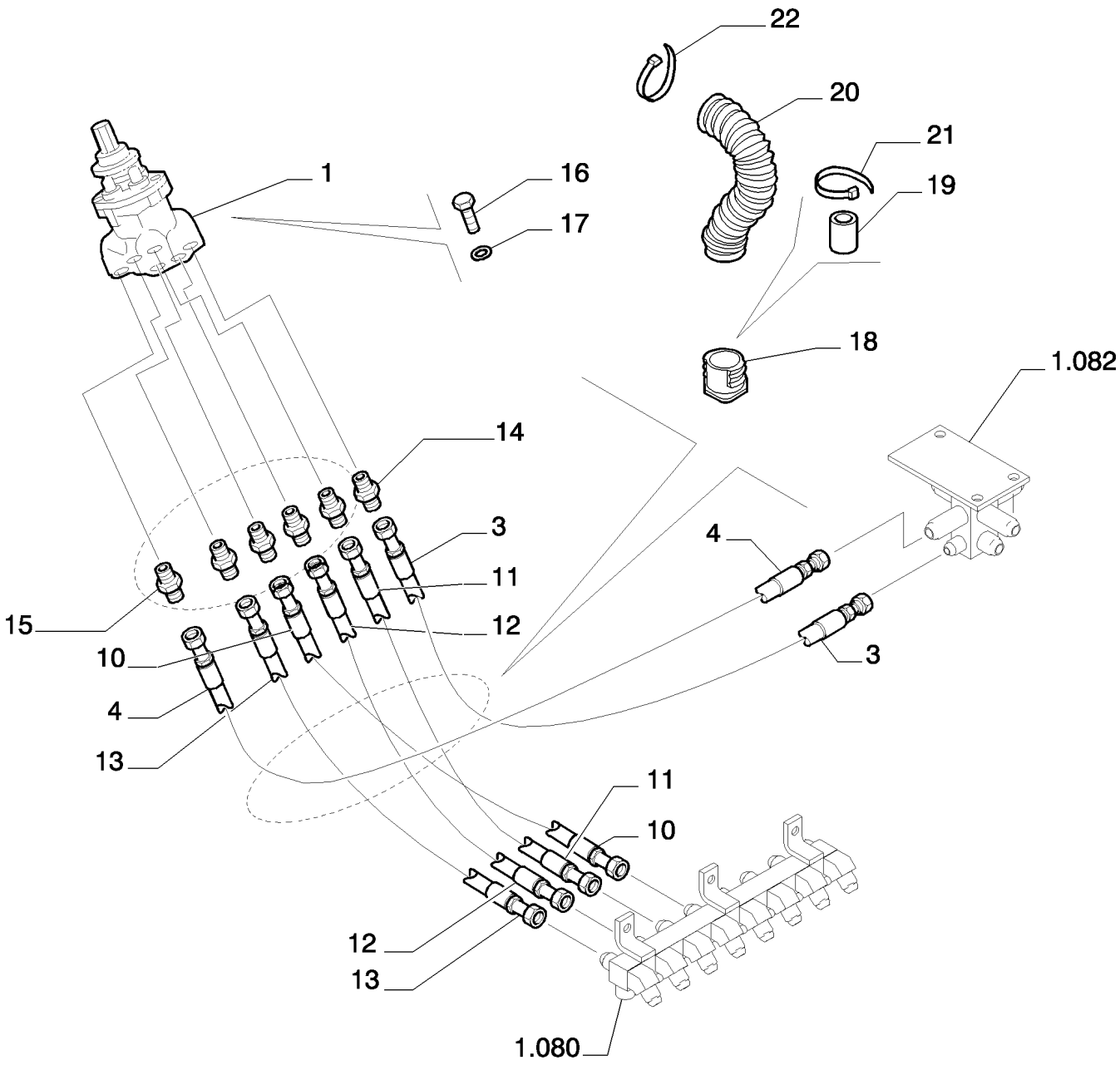

Copyright © New Holland

TUBERIAS SERVOMANDOS - MANIPULADOR
PILOT PIPING - MANIPULATOR
PILOT PIPING - MANIPULATOR
PILOT PIPING - MANIPULATOR

R	N	P.N.	MOD	Q	Description Denominacion	Descrizione Beskrivelse	Bezeichnung Denominação	Description Beschrijving	L.C.
1	1	87532882		1	HYDRAULIC VALVE VÁLVULA HIDRÁULICA	DISTRIBUTORE IDRAULI HYDRAULIKVENTIL	HYDRAULIKVENTIL VÁLVULA HIDRÁULICA	SOUPAPE HYDRAULIQU HYDRAULISCHE KLEP	010V
3		{LS68H01016D7}		1					
4		2420R537D115		1	FLEXIBLE HOSE TUBO FLEXIBLE	TUBO FLESSIBILE FLEKSIBEL SLANGE	BIEGSAMER SCHLAUCH MANGUEIRA FLEXÍVEL	TUYAU FLEXIBLE FLEXIBELE SLANG	192T
10		87707297		1	FLEXIBLE HOSE TUBO FLEXIBLE	TUBO FLESSIBILE FLEKSIBEL SLANGE	BIEGSAMER SCHLAUCH MANGUEIRA FLEXÍVEL	TUYAU FLEXIBLE FLEXIBELE SLANG	192T
11		87594883		1	FLEXIBLE HOSE TUBO FLEXIBLE	TUBO FLESSIBILE FLEKSIBEL SLANGE	BIEGSAMER SCHLAUCH MANGUEIRA FLEXÍVEL	TUYAU FLEXIBLE FLEXIBELE SLANG	192T
12		{HX23L06155CB}		1					
13		{HX23L06160CG}		1					
14		87522432		1	HYD CONNECTOR CONECTOR HIDRÁULIC	CONNETTORE IDRAULI HYDRAULIKSTIK	HYDR STECKVERBINDE CONECTOR HID.	CONNECTEUR HYDRAU HYDRAULISCHE AANSL	020R
15		72214523		5	HYD CONNECTOR CONECTOR HIDRÁULIC	CONNETTORE IDRAULI HYDRAULIKSTIK	HYDR STECKVERBINDE CONECTOR HID.	CONNECTEUR HYDRAU HYDRAULISCHE AANSL	020R
16		14305434		4	SCREW TORNILLO	VITE SKRUE	SCHRAUBE PARAFUSO	VIS SCHROEF	040V
17		14496431		4	WASHER, M6.4 x 12.5 x 1.6 Thk ARANDELA	RONDELLA FLADSKIVE	UNTERLEGSCHEIBE ANILHA	RONDELLE SLUITRING	131R
18		72202453		1	HOSE TUBO	TUBO FLESSIBILE SLANGE	SCHLAUCH MANGUEIRA	FLEXIBLE SLANG	030M
19		LQ68H01031P1		1	GASKET JUNTA	GUARNIZIONE PAKNING	DICHTUNG JUNTA	JOINT PAKKING	123G
20		LQ68H01030D1		1	COVER CUBIERTA	COPERCHIO DÆKSEL	ABDECKUNG COBERTURA	COUVERCLE AFSCHERMING	265C
21		72951499		1	CLIP ABRAZADERA	FERMO KLIPS	KLAMMER FIXADOR	COLLIER KLEM	045F
22		72951496		1	CLIP ABRAZADERA	FERMO KLIPS	KLAMMER FIXADOR	COLLIER KLEM	045F

(1) ASSY SEE PAGE 3

Copyright © New Holland

1.090	02	p1	03/10

PILOT PIPING - MANIPULATOR
TUBAZIONI SERVOCOMANDI - MANIPOLATORE
LEITUNGEN-SERVOSTEU - STEUERHEBEL
TUYAUT. SERVOCOMMANDES - MANIPULATEUR

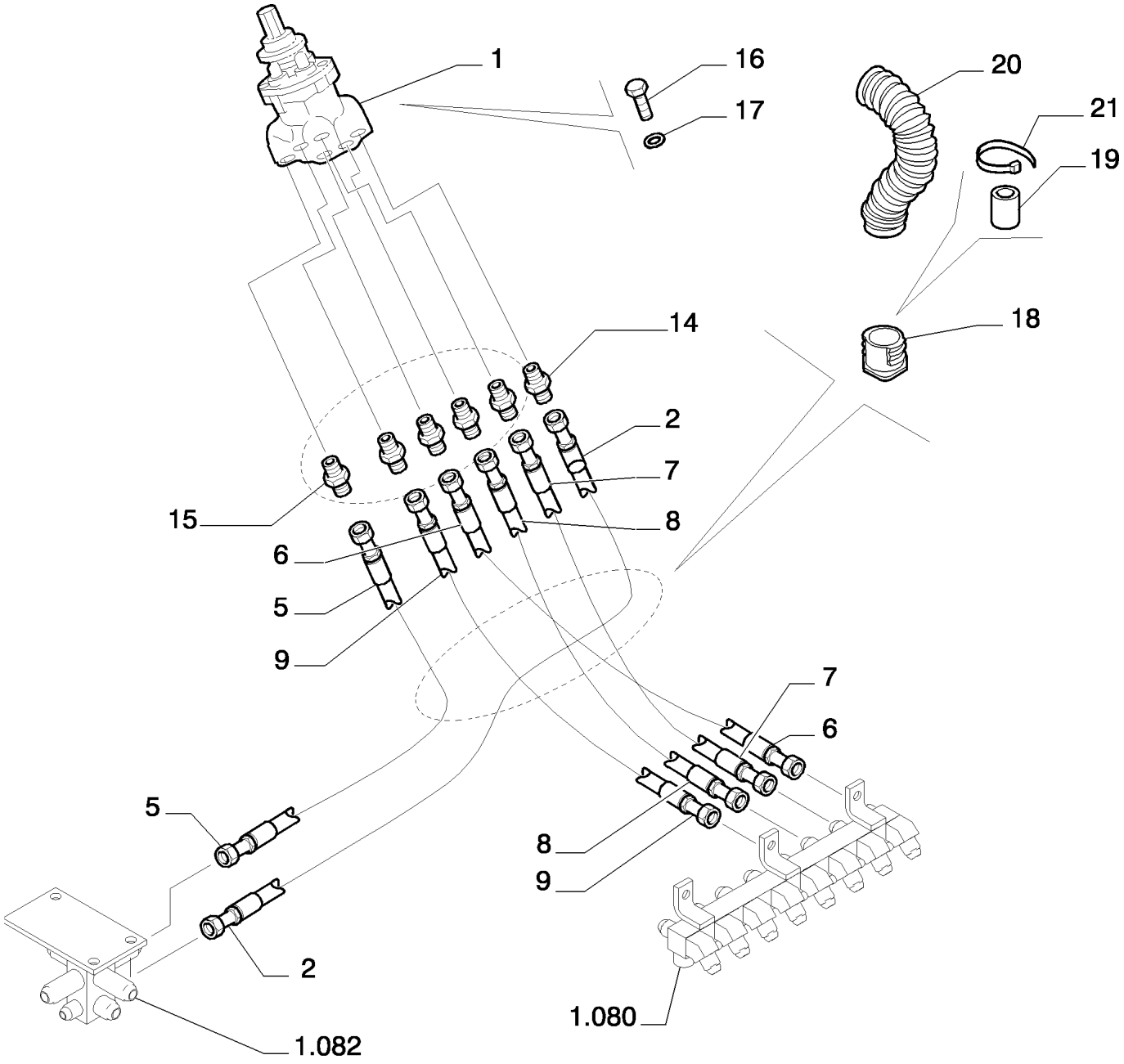

Copyright © New Holland

TUBERIAS SERVOMANDOS - MANIPULADOR
PILOT PIPING - MANIPULATOR
PILOT PIPING - MANIPULATOR
PILOT PIPING - MANIPULATOR

R	N	P.N.	MOD	Q	Description Denominacion	Descrizione Beskrivelse	Bezeichnung Denominação	Description Beschrijving	L.C.
1	1	87532882		1	HYDRAULIC VALVE VÁLVULA HIDRÁULICA	DISTRIBUTORE IDRAULI HYDRAULIKVENTIL	HYDRAULIKVENTIL VÁLVULA HIDRÁULICA	SOUPAPE HYDRAULIQU HYDRAULISCHE KLEP	010V
2		{LS68H01016D9}		1					
5		87654116		1	FLEXIBLE HOSE TUBO FLEXIBLE	TUBO FLESSIBILE FLEKSIBEL SLANGE	BIEGSAMER SCHLAUCH MANGUEIRA FLEXÍVEL	TUYAU FLEXIBLE FLEXIBELE SLANG	192T
6		{HX23L06185CR}		1					
7		{HX23L06190CB}		1					
8		87700850		1	FLEXIBLE HOSE TUBO FLEXIBLE	TUBO FLESSIBILE FLEKSIBEL SLANGE	BIEGSAMER SCHLAUCH MANGUEIRA FLEXÍVEL	TUYAU FLEXIBLE FLEXIBELE SLANG	192T
9		{HX23L06190CH}		1					
14		87522432		1	HYD CONNECTOR CONECTOR HIDRÁULIC	CONNETTORE IDRAULI HYDRAULIKSTIK	HYDR STECKVERBINDE CONECTOR HID.	CONNECTEUR HYDRAU HYDRAULISCHE AANSL	020R
15		72214523		5	HYD CONNECTOR CONECTOR HIDRÁULIC	CONNETTORE IDRAULI HYDRAULIKSTIK	HYDR STECKVERBINDE CONECTOR HID.	CONNECTEUR HYDRAU HYDRAULISCHE AANSL	020R
16		14305434		4	SCREW TORNILLO	VITE SKRUE	SCHRAUBE PARAFUSO	VIS SCHROEF	040V
17		14496431		4	WASHER, M6.4 x 12.5 x 1.6 Thk ARANDELA	RONDELLA FLADSKIVE	UNTERLEGSCHEIBE ANILHA	RONDELLE SLUITRING	131R
18		72202453		1	HOSE TUBO	TUBO FLESSIBILE SLANGE	SCHLAUCH MANGUEIRA	FLEXIBLE SLANG	030M
19		LQ68H01031P1		1	GASKET JUNTA	GUARNIZIONE PAKNING	DICHTUNG JUNTA	JOINT PAKKING	123G
20		LQ68H01030D1		1	COVER CUBIERTA	COPERCHIO DÆKSEL	ABDECKUNG COBERTURA	COUVERCLE AFSCHERMING	265C
21		72951499		1	CLIP ABRAZADERA	FERMO KLIPS	KLAMMER FIXADOR	COLLIER KLEM	045F

(1) ASSY SEE PAGE 3

Copyright © New Holland

1.090	03	p1	03/10

PILOT PIPING - MANIPULATOR - COMPONENTS
TUBAZIONI SERVOCOMANDI - MANIPOLATORE - COMPONENTI
LEITUNGEN-SERVOSTEU - STEUERHEBELL - BESTANDTEILE
TUYAUT. SERVOCOMMANDES - MANIPULATEUR - COMPOSANTS

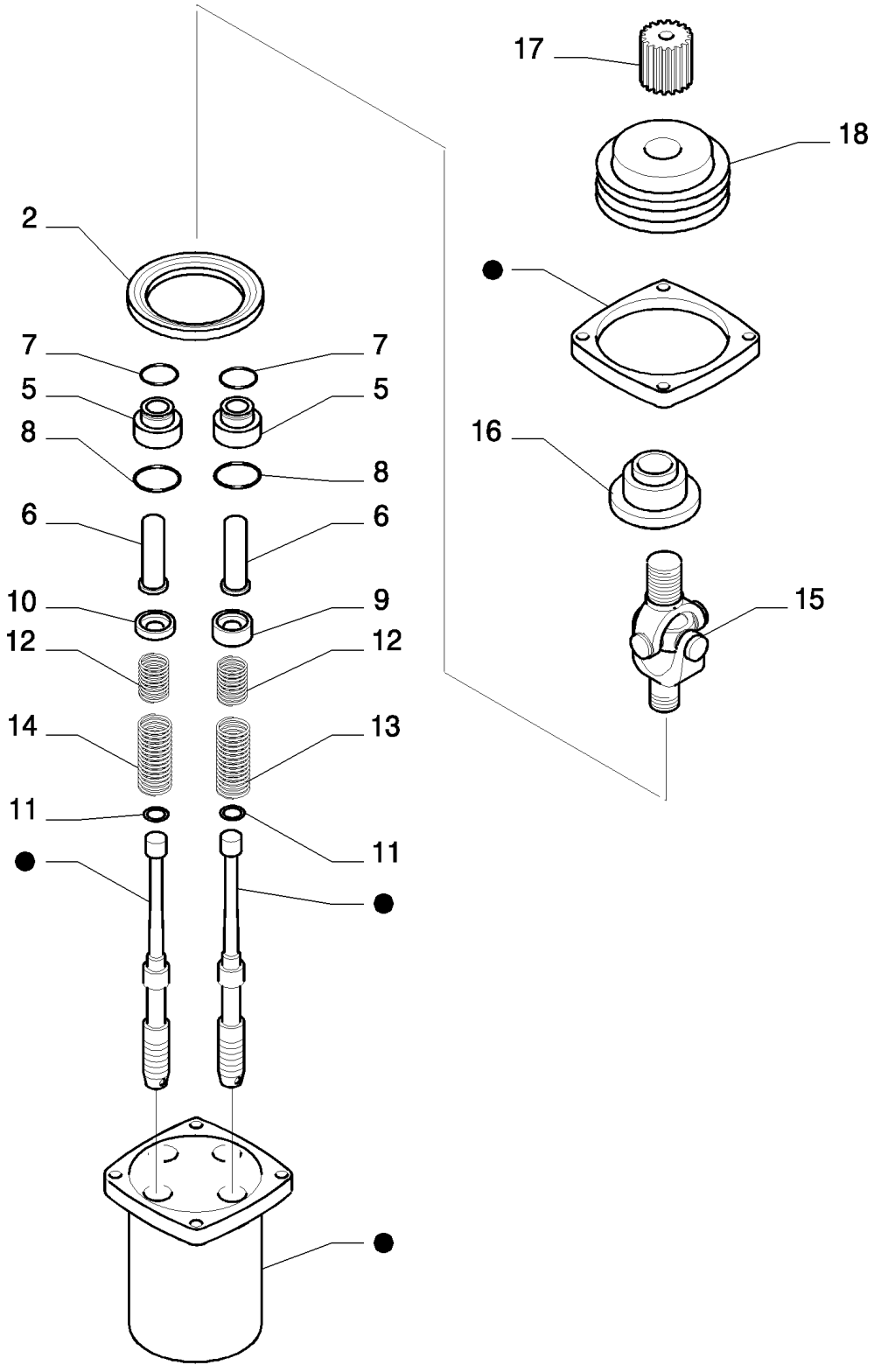

PARTS MARKED ● ARE NOT SUPPLIED AS SPARES
I PARTICOLARI CONTRASSEGNATI CON ● NON VENGONO FORNITI DI RICAMBIO

Copyright © New Holland

TUBERIAS SERVOMANDOS - MANIPULADOR - COMPONENTES
PILOT PIPING - MANIPULATOR - COMPONENTS
PILOT PIPING - MANIPULATOR - COMPONENTS
PILOT PIPING - MANIPULATOR - COMPONENTS

R	N	P.N.	MOD	Q	Description Denominacion	Descrizione Beskrivelse	Bezeichnung Denominação	Description Beschrijving	L.C.
2		72209857		1	PLATE PLACA	PIASTRA PLADE	PLATTE CHAPA	PLAQUE PLAAT	105P
5		72209858		4	PLUG TAPÓN	TAPPO PROP	STOPFEN TAMPÃO	BOUCHON PLUG	050T
6		72209859		4	ROD VARILLA	ASTA STANG	STANGE HASTE	TIGE STANG	090A
7		72209860		4	GASKET JUNTA	GUARNIZIONE PAKNING	DICHTUNG JUNTA	JOINT PAKKING	123G
8		72209824		4	O-RING JUNTA TÓRICA	ANELLO TOROIDALE O-RING	O-RING O-RING	JOINT TORIQUE O-RING	055A
9		72209861		2	SEAT/SLOT ASIENTO/RANURA	SEDE/ASOLA SÆDE	SITZ/SCHLITZ SUPORTE	SIEGE/FENTE ZITTING/SLEUF	069S
10		72209863		2	SEAT/SLOT ASIENTO/RANURA	SEDE/ASOLA SÆDE	SITZ/SCHLITZ SUPORTE	SIEGE/FENTE ZITTING/SLEUF	069S
11		72209862		4	WASHER ARANDELA	RONDELLA FLADSKIVE	UNTERLEGSCHEIBE ANILHA	RONDELLE SLUITRING	131R
12		72280271		4	SPRING RESORTE	MOLLA FJEDER	FEDER MOLA	RESSORT VEER	100M
13		72209865		2	SPRING RESORTE	MOLLA FJEDER	FEDER MOLA	RESSORT VEER	100M
14		72209866		2	SPRING RESORTE	MOLLA FJEDER	FEDER MOLA	RESSORT VEER	100M
15		72209867		1	FLEXIBLE JOINT JUNTA FLEXIBLE	GIUNTO FLESSIBILE KARDANLED	ELASTISCHES GELENK JUNTA FLEXÍVEL	JOINT FLEXIBLE FLEXIBELE KOPPELING	065G
16		72209868		1	PLATE PLACA	PIASTRA PLADE	PLATTE CHAPA	PLAQUE PLAAT	105P
17		72209869		1	NUT TUERCA	DADO MØTRIK	MUTTER PORCA	ECROU MOER	010D
18		72209870		1	BOOT FUNDA	PARAPOLVERE MANCHET	MANSCHETTE COBERTURA DE PROTE	SOUFFLET HOES	330C

PILOT VALVE ASSY P/N 87532882

E215B

Copyright © New Holland

1.091	01	p1	05/10

PILOT PIPING - PEDAL - VERSION (04-05-06)
TUBAZIONI SERVOCOMANDI - PEDALE - VERSIONE (04-05-06)
LEITUNGEN-SERVOSTEU - PEDAL - VERSION (04-05-06)
TUYAUT. SERVOCOMMANDES - PEDALE - VERSION (04-05-06)

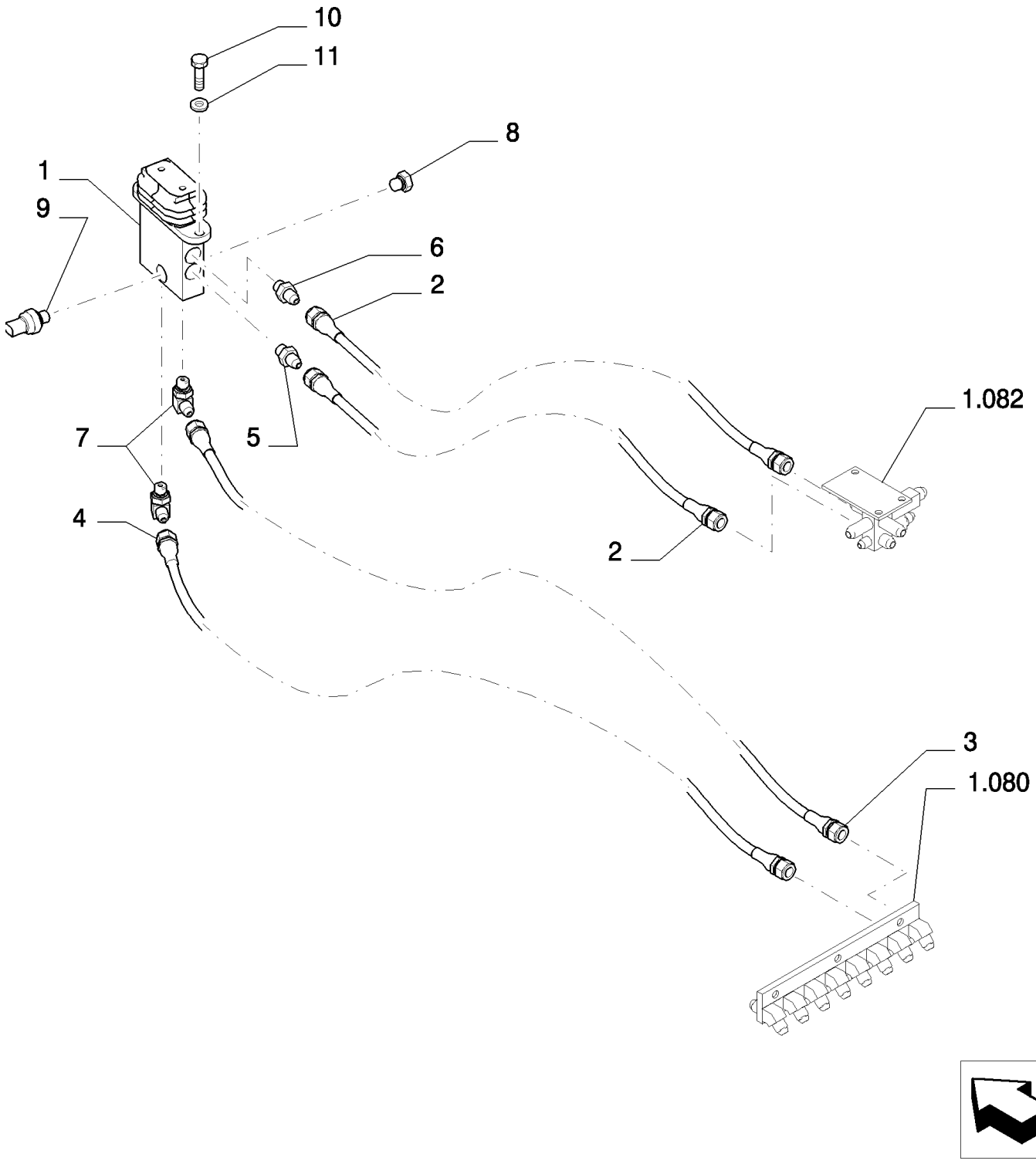

Copyright © New Holland

TUBERIAS SERVOMANDOS - PEDAL - VERSION (04-05-06)
PILOT PIPING - PEDAL - VERSION (04-05-06)
PILOT PIPING - PEDAL - VERSION (04-05-06)
PILOT PIPING - PEDAL - VERSION (04-05-06)

R	N	P.N.	MOD	Q	Description Denominacion	Descrizione Beskrivelse	Bezeichnung Denominação	Description Beschrijving	L.C.
1	1	72204155		1	HYDRAULIC VALVE VÁLVULA HIDRÁULICA	DISTRIBUTORE IDRAULI HYDRAULIKVENTIL	HYDRAULIKVENTIL VÁLVULA HIDRÁULICA	SOUPAPE HYDRAULIQU HYDRAULISCHE KLEP	010V
2		87338415		2	FLEXIBLE HOSE TUBO FLEXIBLE	TUBO FLESSIBILE FLEKSIBEL SLANGE	BIEGSAMER SCHLAUCH MANGUEIRA FLEXÍVEL	TUYAU FLEXIBLE FLEXIBELE SLANG	192T
3		87533078		1	FLEXIBLE HOSE TUBO FLEXIBLE	TUBO FLESSIBILE FLEKSIBEL SLANGE	BIEGSAMER SCHLAUCH MANGUEIRA FLEXÍVEL	TUYAU FLEXIBLE FLEXIBELE SLANG	192T
4		87537460		1	FLEXIBLE HOSE TUBO FLEXIBLE	TUBO FLESSIBILE FLEKSIBEL SLANGE	BIEGSAMER SCHLAUCH MANGUEIRA FLEXÍVEL	TUYAU FLEXIBLE FLEXIBELE SLANG	192T
5		87522432		1	HYD CONNECTOR CONECTOR HIDRÁULIC	CONNETTORE IDRAULI HYDRAULIKSTIK	HYDR STECKVERBINDE CONECTOR HID.	CONNECTEUR HYDRAU HYDRAULISCHE AANSL	020R
6		72214744		1	HYD CONNECTOR CONECTOR HIDRÁULIC	CONNETTORE IDRAULI HYDRAULIKSTIK	HYDR STECKVERBINDE CONECTOR HID.	CONNECTEUR HYDRAU HYDRAULISCHE AANSL	020R
7		72214524		2	HYD CONNECTOR CONECTOR HIDRÁULIC	CONNETTORE IDRAULI HYDRAULIKSTIK	HYDR STECKVERBINDE CONECTOR HID.	CONNECTEUR HYDRAU HYDRAULISCHE AANSL	020R
8		72214663		1	PLUG TAPÓN	TAPPO PROP	STOPFEN TAMPÃO	BOUCHON PLUG	050T
9		87608371		1	SENSOR SENSOR	SENSORE FØLER	SENSOR SENSOR	CAPTEUR SENSOR	608S
10		11106434		2	BOLT, Hex, M10 x 30, 10.9, Full Thd PERNO	BULLONE BOLT	SCHRAUBE PARAFUSO	VIS BOUT	140B
11		12641031		2	LOCK WASHER ARANDELA DE BLOQUE	RONDELLA DI SICUREZ LÅSESKIVE	SICHERUNGSSCHEIBE ANILHA DE RETENÇÃO	RONDELLE FREIN BORGRING	132R

(1) ASSY SEE PAGE 2

Copyright © New Holland

1.091	02	p1	03/10

PILOT PIPING - PEDAL - COMPONENTS - VERSION (04-05-06)
TUBAZIONI SERVOCOMANDI - PEDALE - COMPONENTI - VERSIONE (04-05-06)
LEITUNGEN-SERVOSTEU - PEDAL - BESTANDTEILE - VERSION (04-05-06)
TUYAUT. SERVOCOMMANDES - PEDALE - COMPOSANTS - VERSION (04-05-06)

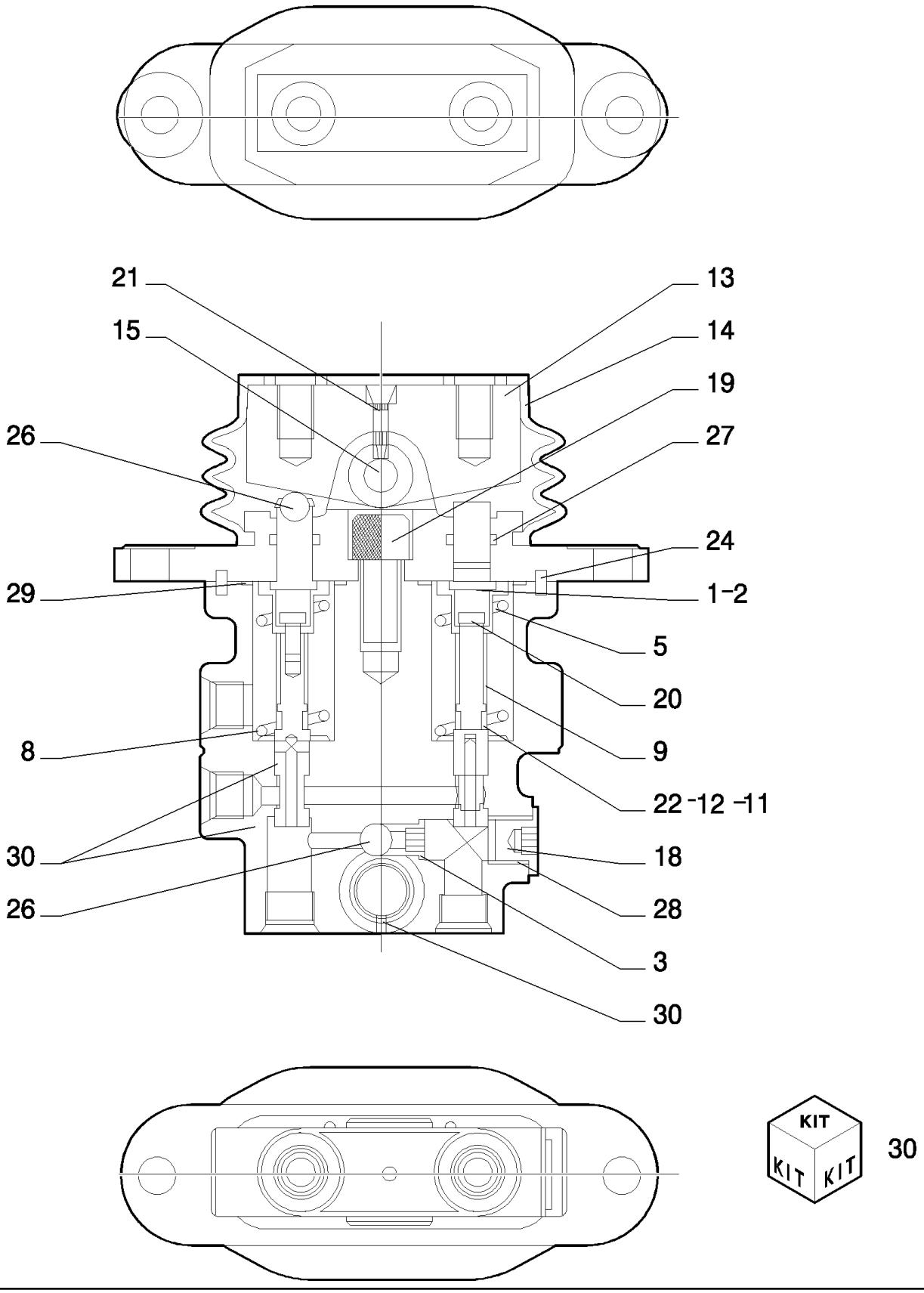

Copyright © New Holland

TUBERIAS SERVOMANDOS - PEDAL - COMPONENTES - VERSION (04-05-06)
PILOT PIPING - PEDAL - COMPONENTS - VERSION (04-05-06)
PILOT PIPING - PEDAL - COMPONENTS - VERSION (04-05-06)
PILOT PIPING - PEDAL - COMPONENTS - VERSION (04-05-06)

R	N	P.N.	MOD	Q	Description Denominacion	Descrizione Beskrivelse	Bezeichnung Denominação	Description Beschrijving	L.C.
1		72210484		2	SHIM SUPLEMENTO	SPESSORE MELLEMLÆG	AUSGLEICHSSCHEIBE CALÇO DE AFINAÇÃO	CALE VULPLAATJE	198S
2		72210485		2	SHIM SUPLEMENTO	SPESSORE MELLEMLÆG	AUSGLEICHSSCHEIBE CALÇO DE AFINAÇÃO	CALE VULPLAATJE	198S
3		72210219		1	SEAT/SLOT ASIENTO/RANURA	SEDE/ASOLA SÆDE	SITZ/SCHLITZ SUPORTE	SIEGE/FENTE ZITTING/SLEUF	069S
5		72210483		2	SLEEVE MANGUITO	MANICOTTO TRYKLEJE, KOBLING	BUCHSE MANGA	CHEMISE MOF; BUS	031M
8		72210486		1	SPRING RESORTE	MOLLA FJEDER	FEDER MOLA	RESSORT VEER	100M
9		72210223		2	SPRING RESORTE	MOLLA FJEDER	FEDER MOLA	RESSORT VEER	100M
11		72210487		2	SHIM SUPLEMENTO	SPESSORE MELLEMLÆG	AUSGLEICHSSCHEIBE CALÇO DE AFINAÇÃO	CALE VULPLAATJE	198S
12		72210488		1	SHIM SUPLEMENTO	SPESSORE MELLEMLÆG	AUSGLEICHSSCHEIBE CALÇO DE AFINAÇÃO	CALE VULPLAATJE	198S
13		72210489		1	CAM LEVA	CAMMA KAM	NOCKE EXCÊNTRICO	CAME NOK	040C
14		72210225		1	BOOT FUNDA	PARAPOLVERE MANCHET	MANSCHETTE COBERTURA DE PROTE	SOUFFLET HOES	330C
15		72210226		1	PIN PASADOR	PERNO STIFT	PIN PERNO	BROCHE PEN	080P
18		72210230		1	PLUG TAPÓN	TAPPO PROP	STOPFEN TAMPÃO	BOUCHON PLUG	050T
19		72210490		1	SCREW TORNILLO	VITE SKRUE	SCHRAUBE PARAFUSO	VIS SCHROEF	040V
20		72210232		2	SCREW TORNILLO	VITE SKRUE	SCHRAUBE PARAFUSO	VIS SCHROEF	040V
21		72210233		2	PLUG TAPÓN	TAPPO PROP	STOPFEN TAMPÃO	BOUCHON PLUG	050T
22		72210234		2	WASHER ARANDELA	RONDELLA FLADSKIVE	UNTERLEGSCHEIBE ANILHA	RONDELLE SLUITRING	131R
24		72210492		2	PIN PASADOR	PERNO STIFT	PIN PERNO	BROCHE PEN	080P
26		72210237		3	BALL BOLA	SFERA KUGLE	KUGEL ESFERA	BILLE KOGEL	140S
27		72210491		2	O-RING JUNTA TÓRICA	ANELLO TOROIDALE O-RING	O-RING O-RING	JOINT TORIQUE O-RING	055A
28		72209827		1	O-RING JUNTA TÓRICA	ANELLO TOROIDALE O-RING	O-RING O-RING	JOINT TORIQUE O-RING	055A
29		72210493		2	O-RING JUNTA TÓRICA	ANELLO TOROIDALE O-RING	O-RING O-RING	JOINT TORIQUE O-RING	055A
30		72210494		1	KIT KIT	KIT SÆT	SATZ KIT	KIT KIT	305C

VALVE ASSY P/N 72204155

E215B

Copyright © New Holland

1.092	01	p1	03/10

TRAVEL PILOT SYSTEM PIPES
TUBAZIONI SERVOCOMANDI TRASLAZIONE
LEITUNGEN DES SERVOLENKUNGSANTRIEBS
TUYAUTERIES COMMANDES ASSISTEES TRASLATION

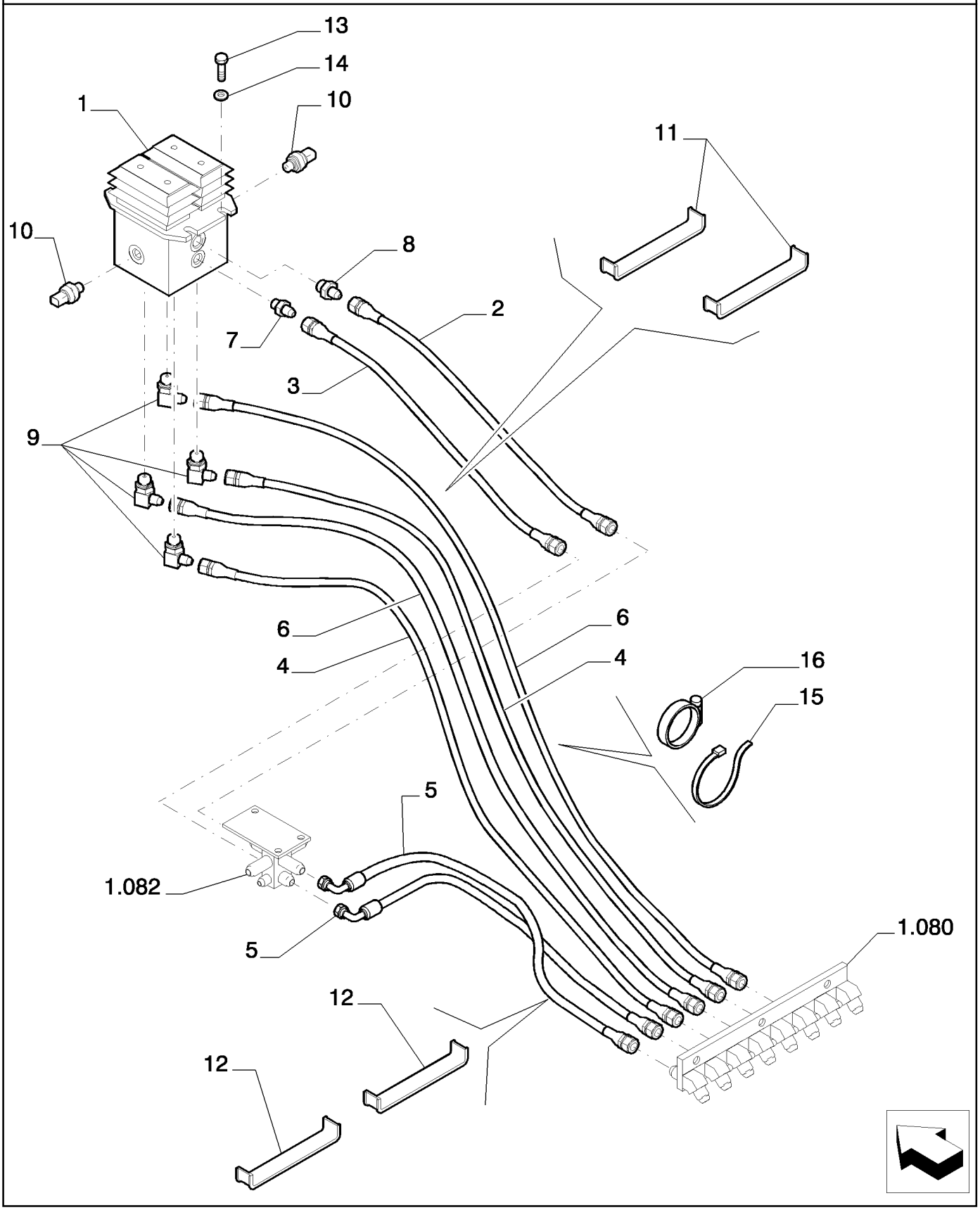

Copyright © New Holland

CONDUCTOS SERVOMANDOS TRASLACION
TRAVEL PILOT SYSTEM PIPES
TRAVEL PILOT SYSTEM PIPES
TRAVEL PILOT SYSTEM PIPES

R	N	P.N.	MOD	Q	Description Denominacion	Descrizione Beskrivelse	Bezeichnung Denominação	Description Beschrijving	L.C.
1	1	87529503		1	HYDRAULIC VALVE VÁLVULA HIDRÁULICA	DISTRIBUTORE IDRAULI HYDRAULIKVENTIL	HYDRAULIKVENTIL VÁLVULA HIDRÁULICA	SOUPAPE HYDRAULIQU HYDRAULISCHE KLEP	010V
2		87703006		1	FLEXIBLE HOSE TUBO FLEXIBLE	TUBO FLESSIBILE FLEKSIBEL SLANGE	BIEGSAMER SCHLAUCH MANGUEIRA FLEXÍVEL	TUYAU FLEXIBLE FLEXIBELE SLANG	192T
3		87645092		1	FLEXIBLE HOSE TUBO FLEXIBLE	TUBO FLESSIBILE FLEKSIBEL SLANGE	BIEGSAMER SCHLAUCH MANGUEIRA FLEXÍVEL	TUYAU FLEXIBLE FLEXIBELE SLANG	192T
4		87533078		2	FLEXIBLE HOSE TUBO FLEXIBLE	TUBO FLESSIBILE FLEKSIBEL SLANGE	BIEGSAMER SCHLAUCH MANGUEIRA FLEXÍVEL	TUYAU FLEXIBLE FLEXIBELE SLANG	192T
5		{HX33L06082DX}		2					
6		87537460		2	FLEXIBLE HOSE TUBO FLEXIBLE	TUBO FLESSIBILE FLEKSIBEL SLANGE	BIEGSAMER SCHLAUCH MANGUEIRA FLEXÍVEL	TUYAU FLEXIBLE FLEXIBELE SLANG	192T
7		87522432		1	HYD CONNECTOR CONECTOR HIDRÁULIC	CONNETTORE IDRAULIC HYDRAULIKSTIK	HYDR STECKVERBINDE CONECTOR HID.	CONNECTEUR HYDRAU HYDRAULISCHE AANSL	020R
8		72214522		1	HYD CONNECTOR CONECTOR HIDRÁULIC	CONNETTORE IDRAULIC HYDRAULIKSTIK	HYDR STECKVERBINDE CONECTOR HID.	CONNECTEUR HYDRAU HYDRAULISCHE AANSL	020R
9		72214525		4	HYD CONNECTOR CONECTOR HIDRÁULIC	CONNETTORE IDRAULIC HYDRAULIKSTIK	HYDR STECKVERBINDE CONECTOR HID.	CONNECTEUR HYDRAU HYDRAULISCHE AANSL	020R
10		87608371		2	SENSOR SENSOR	SENSORE FØLER	SENSOR SENSOR	CAPTEUR SENSOR	608S
11		87533102		2	GASKET JUNTA	GUARNIZIONE PAKNING	DICHTUNG JUNTA	JOINT PAKKING	123G
12		YF62H01001P1		2	RUBBER BAND CINTA DE GOMA	NASTRO DI GOMMA GUMMIBÅND	GUMMIBAND CINTA DE BORRACHA	BANDE EN CAOUTCHOU RUBBEREN BAND	021N
13		11106434		4	BOLT, Hex, M10 x 30, 10.9, Full Thd PERNO	BULLONE BOLT	SCHRAUBE PARAFUSO	VIS BOUT	140B
14		14496631		4	WASHER, M10 x 21 x 2 ARANDELA	RONDELLA FLADSKIVE	UNTERLEGSCHEIBE ANILHA	RONDELLE SLUITRING	131R
15		72951499		1	CLIP ABRAZADERA	FERMO KLIPS	KLAMMER FIXADOR	COLLIER KLEM	045F
16		87526680		1	RETAINER COLLAR COLLAR DE RETENCIÓN	COLLARE DI FISSAGGIC RING, SPÆNDE	HALTERING ANEL DE FIXAÇÃO	COLLIER DE RETENUE BORGKRAAG	230S

(1) ASSY SEE PAGE 2

Copyright © New Holland

1.092	02	p1	03/10

TRAVEL PILOT SYSTEM PIPES - COMPONENTS
TUBAZIONI SERVOCOMANDI TRASLAZIONE - COMPONENTI
LEITUNGEN DES SERVOLENKUNGSANTRIEBS - BESTANDTEILE
TUYAUTERIES COMMANDES ASSISTEES TRASLATION - COMPOSANTS

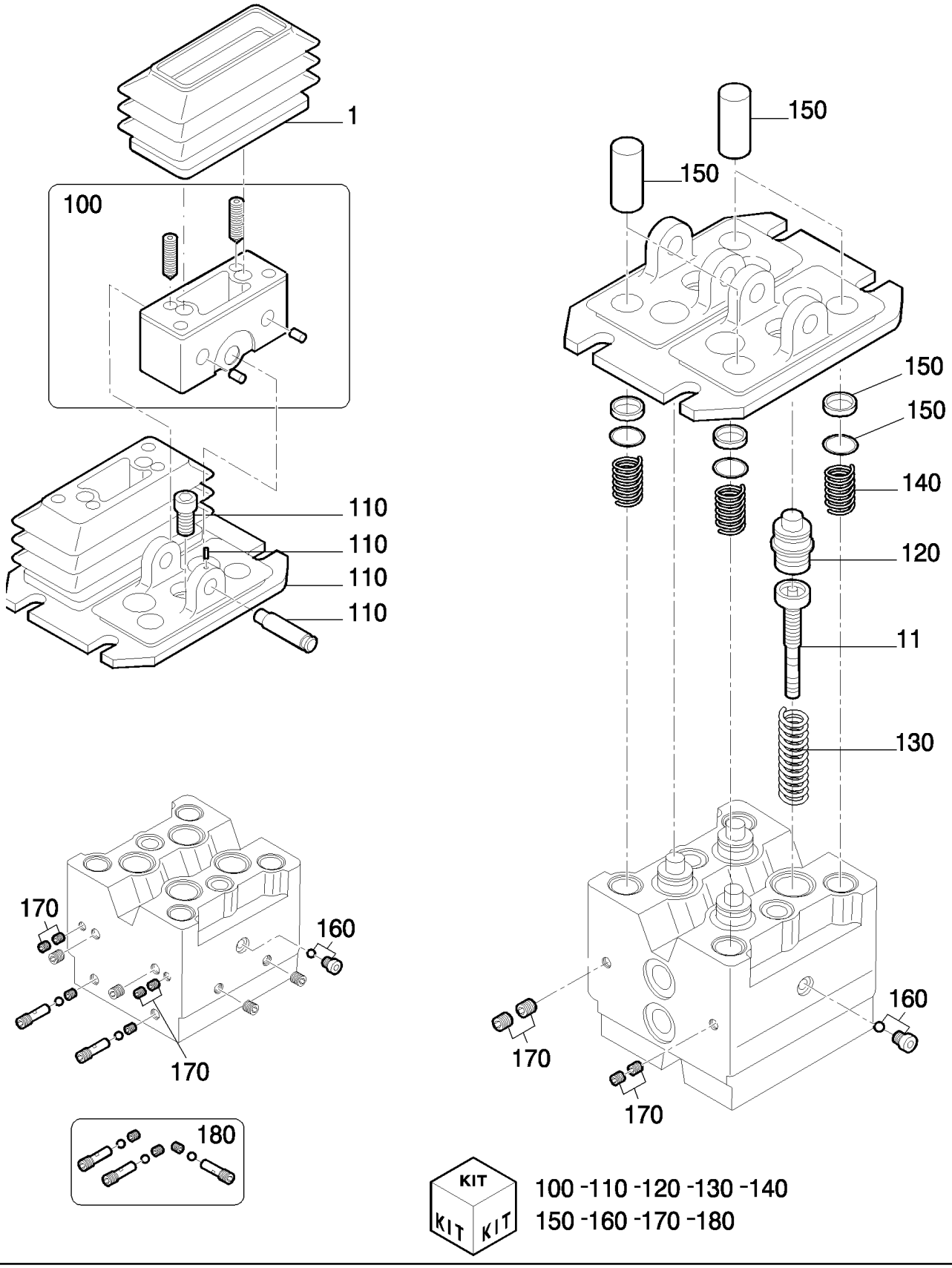

100 -110 -120 -130 -140
150 -160 -170 -180

Copyright © New Holland

CONDUCTOS SERVOMANDOS TRASLACION - COMPONENTES
TRAVEL PILOT SYSTEM PIPES - COMPONENTS
TRAVEL PILOT SYSTEM PIPES - COMPONENTS
TRAVEL PILOT SYSTEM PIPES - COMPONENTS

R	N	P.N.	MOD	Q	Description Denominacion	Descrizione Beskrivelse	Bezeichnung Denominação	Description Beschrijving	L.C.
1		YN30V00105S005		2	COVER CUBIERTA	COPERCHIO DÆKSEL	ABDECKUNG COBERTURA	COUVERCLE AFSCHERMING	265C
11		YN30V00105S010		4	ROD VARILLA	ASTA STANG	STANGE HASTE	TIGE STANG	090A
100		YN30V00105R100		1	KIT KIT	KIT SÆT	SATZ KIT	KIT KIT	305C
110		YN30V00105R110		1	KIT KIT	KIT SÆT	SATZ KIT	KIT KIT	305C
120		YN30V00105R120		1	KIT KIT	KIT SÆT	SATZ KIT	KIT KIT	305C
130		YN30V00105R130		1	KIT KIT	KIT SÆT	SATZ KIT	KIT KIT	305C
140		YN30V00105R140		1	KIT KIT	KIT SÆT	SATZ KIT	KIT KIT	305C
150		YN30V00105R150		1	KIT KIT	KIT SÆT	SATZ KIT	KIT KIT	305C
160		YN30V00105R160		1	KIT KIT	KIT SÆT	SATZ KIT	KIT KIT	305C
170		YN30V00105R170		1	KIT KIT	KIT SÆT	SATZ KIT	KIT KIT	305C
180		YN30V00105R180		1	KIT KIT	KIT SÆT	SATZ KIT	KIT KIT	305C

VALVE ASSY P/N 87529503

E215B

Copyright © New Holland

1.093	01	p1	03/10

FIXINGS FOR SERVOCONTROL PIPES
FISSAGGI TUBAZIONI SERVOCOMANDI
BEFESTIGUNGEN DER ROHRLEITUNGEN FUR DIE SERVOSTEUERUNG
FIXATION DES TUYAUX DES SERVOCOMMANDES

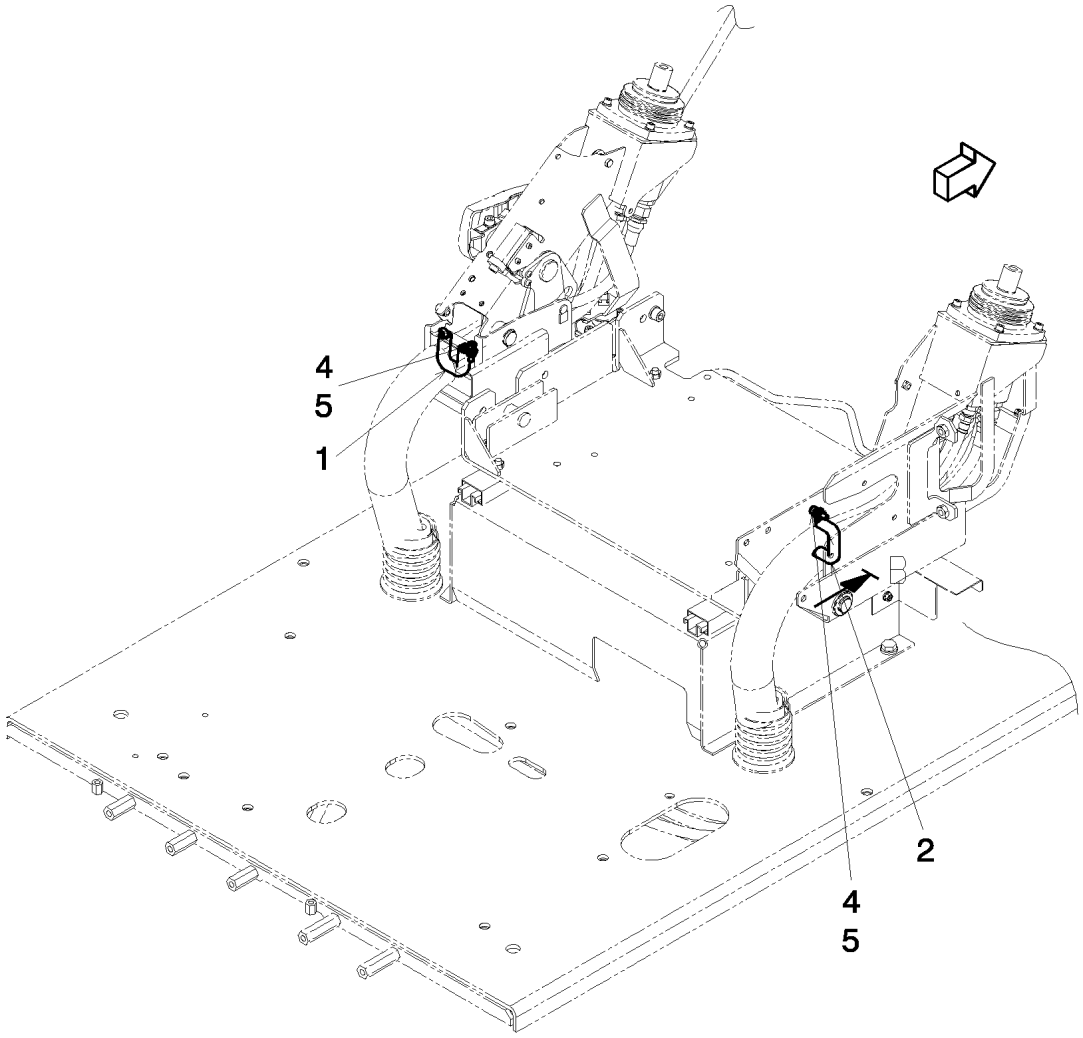

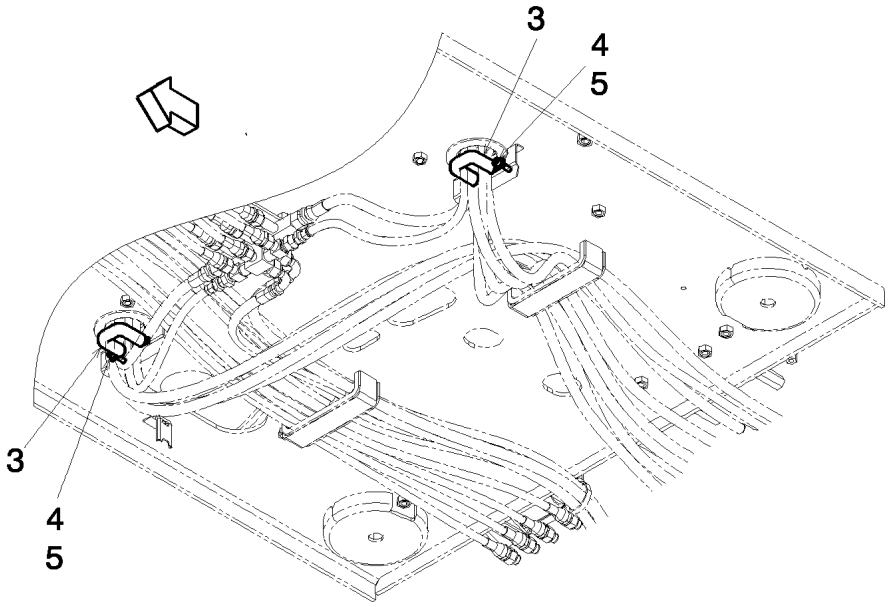

Copyright © New Holland

FIJACIONES TUBOS SERVOMANDOS
FIXINGS FOR SERVOCONTROL PIPES
FIXINGS FOR SERVOCONTROL PIPES
FIXINGS FOR SERVOCONTROL PIPES

R	N	P.N.	MOD	Q	Description Denominacion	Descrizione Beskrivelse	Bezeichnung Denominação	Description Beschrijving	L.C.
1		YN12P01205F1		1	CLAMP ABRAZADERA	MORSETTO SPÆNDEBÅND	KLEMME BRAÇADEIRA	COLLIER KLEM	120M
2		87528679		1	BRACKET SOPORTE	STAFFA BESLAG	HALTERUNG SUPORTE	SUPPORT STEUN	225S
3		87528672		2	BRACKET SOPORTE	STAFFA BESLAG	HALTERUNG SUPORTE	SUPPORT STEUN	225S
4		14305334		4	SCREW, Hex Soc Hd, M6 x 20, 10.9 TORNILLO	VITE SKRUE	SCHRAUBE PARAFUSO	VIS SCHROEF	040V
5		10516474		4	LOCK WASHER ARANDELA DE BLOQUE	RONDELLA DI SICUREZ LÅSESKIVE	SICHERUNGSSCHEIBE ANILHA DE RETENÇÃO	RONDELLE FREIN BORGRING	132R

Copyright © New Holland

1.200	01	p1	03/10

DASHBOARD
CRUSCOTTO
ARMATURENBRETT
PLANCHE DE BORD

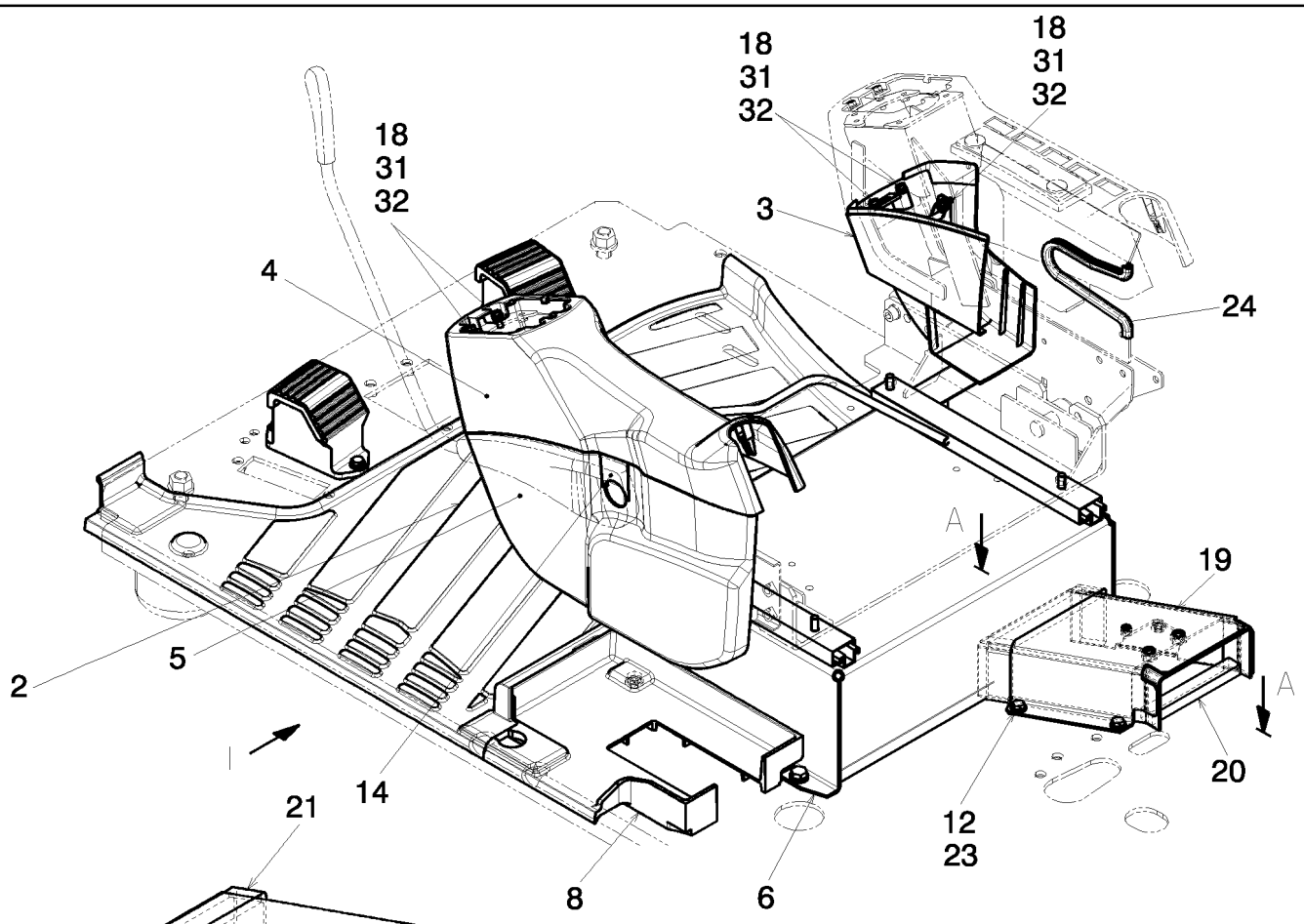

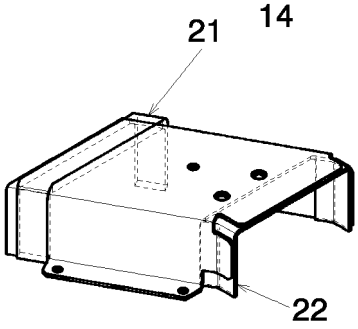

BEFORE INSTALL ITEM 19 (DUCT)

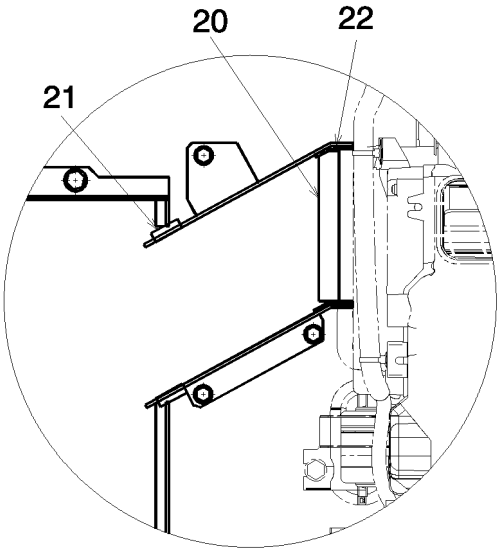

SECTION A A

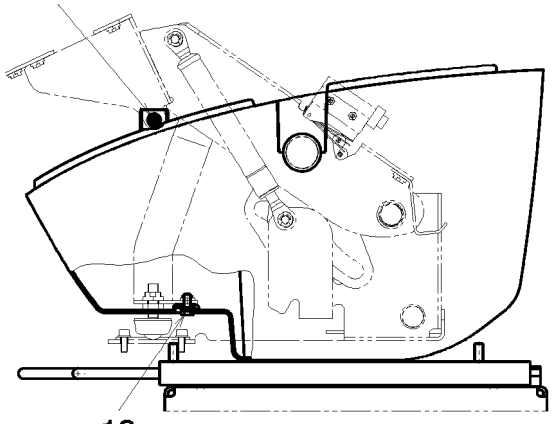

VIEW

Copyright © New Holland

TABLERO
DASHBOARD
DASHBOARD
DASHBOARD

R	N	P.N.	MOD	Q	Description Denominacion	Descrizione Beskrivelse	Bezeichnung Denominação	Description Beschrijving	L.C.
2		YN26M00072P1		1	CARPET ALFOMBRA	TAPPETINO TÆPPE	TEPPICH TAPETE	TAPIS VLOERBEDEKKING	P015
3		YN03M02109F1		1	COVER, - LOWER RIGHT CUBIERTA	COPERCHIO DÆKSEL	ABDECKUNG COBERTURA	COUVERCLE AFSCHERMING	265C
4		YN03M02110F1		1	COVER, - UPPER LEFT CUBIERTA	COPERCHIO DÆKSEL	ABDECKUNG COBERTURA	COUVERCLE AFSCHERMING	265C
5		YN03M02111F1		1	COVER, - LOWER LEFT CUBIERTA	COPERCHIO DÆKSEL	ABDECKUNG COBERTURA	COUVERCLE AFSCHERMING	265C
6		YN25M01240P1		1	SUPPORT SOPORTE	SUPPORTO BESLAG	STÜTZE SUPORTE	SUPPORT STEUN	300S
8		YN26M00077P1		1	CARPET ALFOMBRA	TAPPETINO TÆPPE	TEPPICH TAPETE	TAPIS VLOERBEDEKKING	P015
12		14496531		3	WASHER, M8 x 17 x 1.6 ARANDELA	RONDELLA FLADSKIVE	UNTERLEGSCHEIBE ANILHA	RONDELLE SLUITRING	131R
14		YN03M02112P1		1	COVER CUBIERTA	COPERCHIO DÆKSEL	ABDECKUNG COBERTURA	COUVERCLE AFSCHERMING	265C
18		16043834		8	BOLT, Hex, M8 x 30, 10.9, Full Thd PERNO	BULLONE BOLT	SCHRAUBE PARAFUSO	VIS BOUT	140B
19		YN20M01797P1		1	DUCT CONDUCTO	CONDOTTO KANAL	LEITUNG CONDUTA	CONDUITE KANAAL	223C
20		YN20M01794P1		1	INSULATOR AISLADOR	ISOLATORE ISOLATOR	ISOLATOR ISOLADOR	ISOLANT ISOLATIE	085I
21		YN20M01795P1		1	INSULATOR AISLADOR	ISOLATORE ISOLATOR	ISOLATOR ISOLADOR	ISOLANT ISOLATIE	085I
22		YN20M01796P1		1	INSULATOR AISLADOR	ISOLATORE ISOLATOR	ISOLATOR ISOLADOR	ISOLANT ISOLATIE	085I
23		16043434		3	BOLT, Hex, M8 x 20, 10.9, Full Thd PERNO	BULLONE BOLT	SCHRAUBE PARAFUSO	VIS BOUT	140B
24		YT02C01515D7		1	GASKET JUNTA	GUARNIZIONE PAKNING	DICHTUNG JUNTA	JOINT PAKKING	123G
31		10516474		8	LOCK WASHER ARANDELA DE BLOQUE	RONDELLA DI SICUREZ LÅSESKIVE	SICHERUNGSSCHEIBE ANILHA DE RETENÇÃO	RONDELLE FREIN BORGRING	132R
32		14496431		8	WASHER, M6.4 x 12.5 x 1.6 Thk ARANDELA	RONDELLA FLADSKIVE	UNTERLEGSCHEIBE ANILHA	RONDELLE SLUITRING	131R

Copyright © New Holland

1.200	02	p1	03/10

DASHBOARD
CRUSCOTTO
ARMATURENBRETT
PLANCHE DE BORD

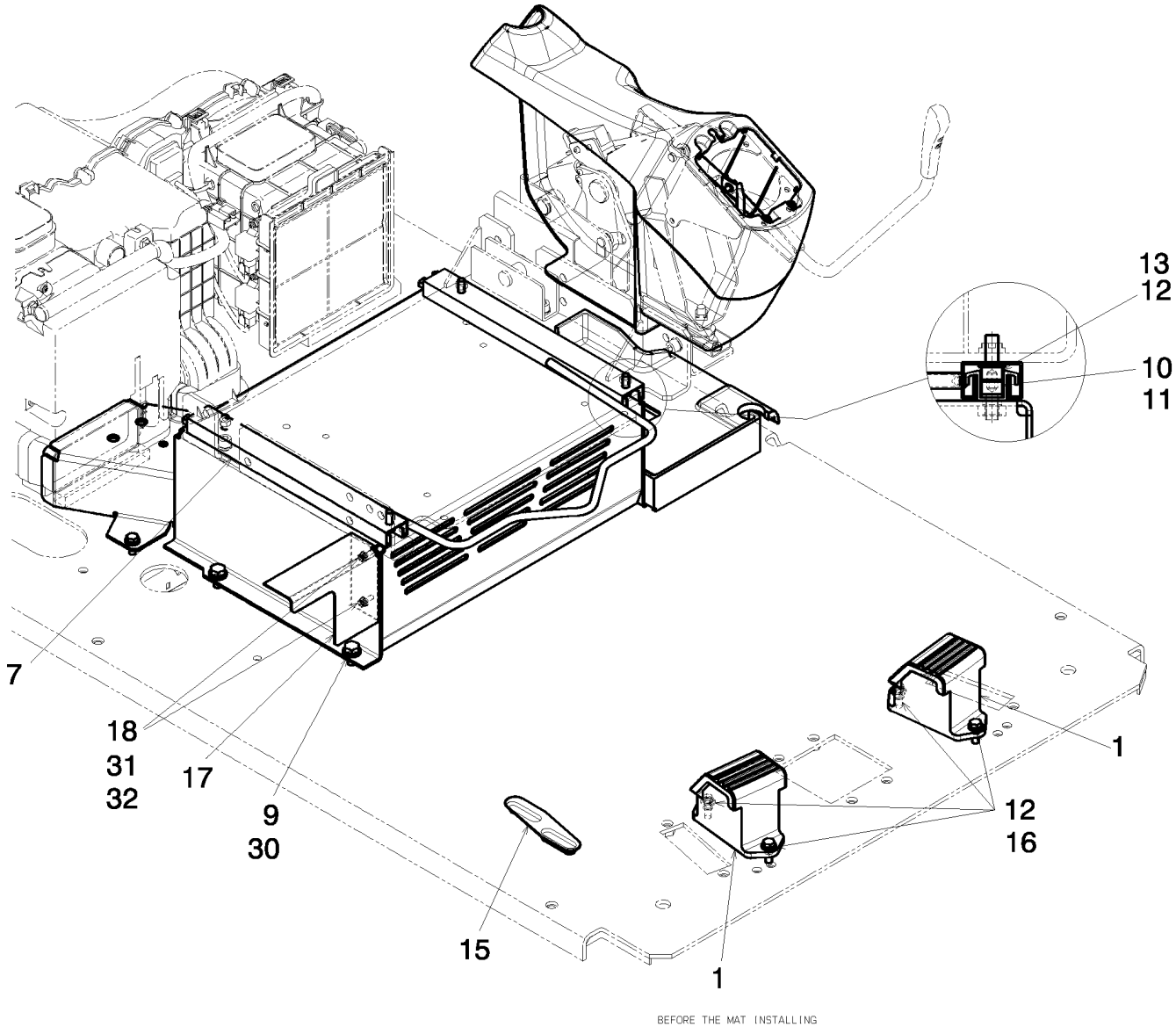

Copyright © New Holland

TABLERO
DASHBOARD
DASHBOARD
DASHBOARD

R	N	P.N.	MOD	Q	Description Denominacion	Descrizione Beskrivelse	Bezeichnung Denominação	Description Beschrijving	L.C.
1		87521852		2	SUPPORT SOPORTE	SUPPORTO BESLAG	STÜTZE SUPORTE	SUPPORT STEUN	300S
7		YN25M01238F1		1	CROSSRAIL TRAVESAÑO	BARRA TRASVERSALE TRAVERS	TRAVERSE TRAVESSA	TRAVERSE DWARSBALK	180T
9		11106034		4	BOLT, Hex, M10 x 20, 10.9, Full Thd PERNO	BULLONE BOLT	SCHRAUBE PARAFUSO	VIS BOUT	140B
10		14306234		4	SCREW, Hex Soc Hd, M8 x 16, 10.9 TORNILLO	VITE SKRUE	SCHRAUBE PARAFUSO	VIS SCHROEF	040V
11		10516674		4	LOCK WASHER, M8 ARANDELA DE BLOQUE	RONDELLA DI SICUREZ LÅSESKIVE	SICHERUNGSSCHEIBE ANILHA DE RETENÇÃO	RONDELLE FREIN BORGRING	132R
12		14496531		8	WASHER, M8 x 17 x 1.6 ARANDELA	RONDELLA FLADSKIVE	UNTERLEGSCHEIBE ANILHA	RONDELLE SLUITRING	131R
13		14306334		4	SCREW TORNILLO	VITE SKRUE	SCHRAUBE PARAFUSO	VIS SCHROEF	040V
15		YN03M02085P2		1	GROMMET PASACABLES	ANELLO PASSACAVO RING	TÜLLE PASSA-FIOS	PASSE-FIL DOORVOERTULE	131A
16		16043834		4	BOLT, Hex, M8 x 30, 10.9, Full Thd PERNO	BULLONE BOLT	SCHRAUBE PARAFUSO	VIS BOUT	140B
17		YN25M01239P1		1	PLATE PLACA	PIASTRA PLADE	PLATTE CHAPA	PLAQUE PLAAT	105P
18		16043834		2	BOLT, Hex, M8 x 30, 10.9, Full Thd PERNO	BULLONE BOLT	SCHRAUBE PARAFUSO	VIS BOUT	140B
30		14496631		4	WASHER, M10 x 21 x 2 ARANDELA	RONDELLA FLADSKIVE	UNTERLEGSCHEIBE ANILHA	RONDELLE SLUITRING	131R
31		10516474		2	LOCK WASHER ARANDELA DE BLOQUE	RONDELLA DI SICUREZ LÅSESKIVE	SICHERUNGSSCHEIBE ANILHA DE RETENÇÃO	RONDELLE FREIN BORGRING	132R
32		14496431		2	WASHER, M6.4 x 12.5 x 1.6 Thk ARANDELA	RONDELLA FLADSKIVE	UNTERLEGSCHEIBE ANILHA	RONDELLE SLUITRING	131R

Copyright © New Holland

1.200	03	p1	03/10

DASHBOARD
CRUSCOTTO
ARMATURENBRETT
PLANCHE DE BORD

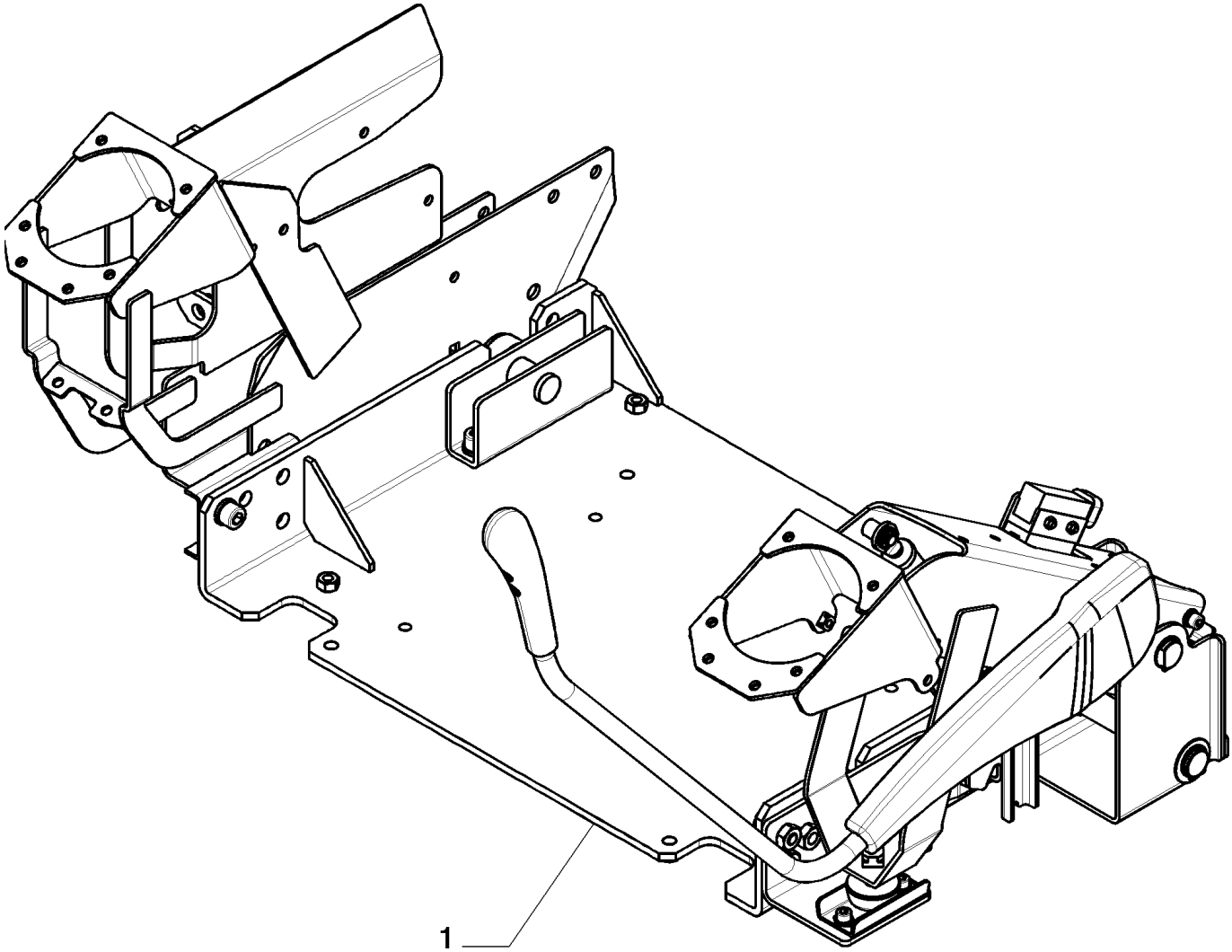

Copyright © New Holland

TABLERO
DASHBOARD
DASHBOARD
DASHBOARD

R	N	P.N.	MOD	Q	Description Denominacion	Descrizione Beskrivelse	Bezeichnung Denominação	Description Beschrijving	L.C.
1		YN03M00304F1		1	CONTROL CONTROL	COMANDO KONTROL	BEDIENELEMENT CONTROLO	COMMANDE REGELING	189C

Copyright © New Holland

1.200	04	p1	03/10

DASHBOARD
CRUSCOTTO
ARMATURENBRETT
PLANCHE DE BORD

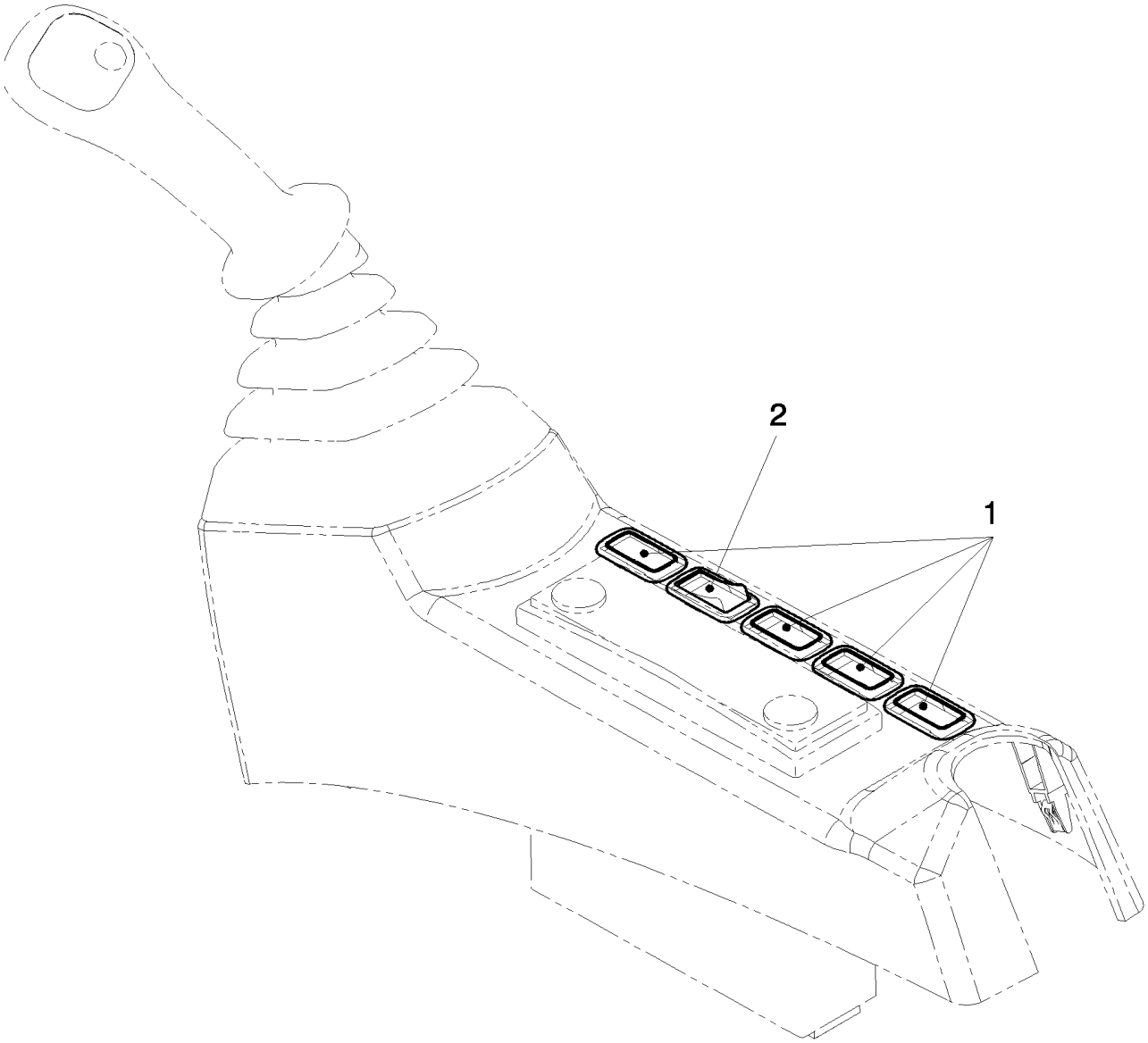

Copyright © New Holland

TABLERO
DASHBOARD
DASHBOARD
DASHBOARD

R	N	P.N.	MOD	Q	Description Denominacion	Descrizione Beskrivelse	Bezeichnung Denominação	Description Beschrijving	L.C.
1		87527533		4	PLUG TAPÓN	TAPPO PROP	STOPFEN TAMPÃO	BOUCHON PLUG	050T
2		84136413		1	SWITCH INTERRUPTOR	INTERRUTTORE KONTAKT	SCHALTER INTERRUPTOR	CONTACTEUR SCHAKELAAR	075I

Copyright © New Holland

1.220	01	p1	03/10

ELECTRIC SYSTEM
IMPIANTO ELETTRICO
ELEKTRISCHE ANLAGE
INSTALLATION ELECTRIQUE

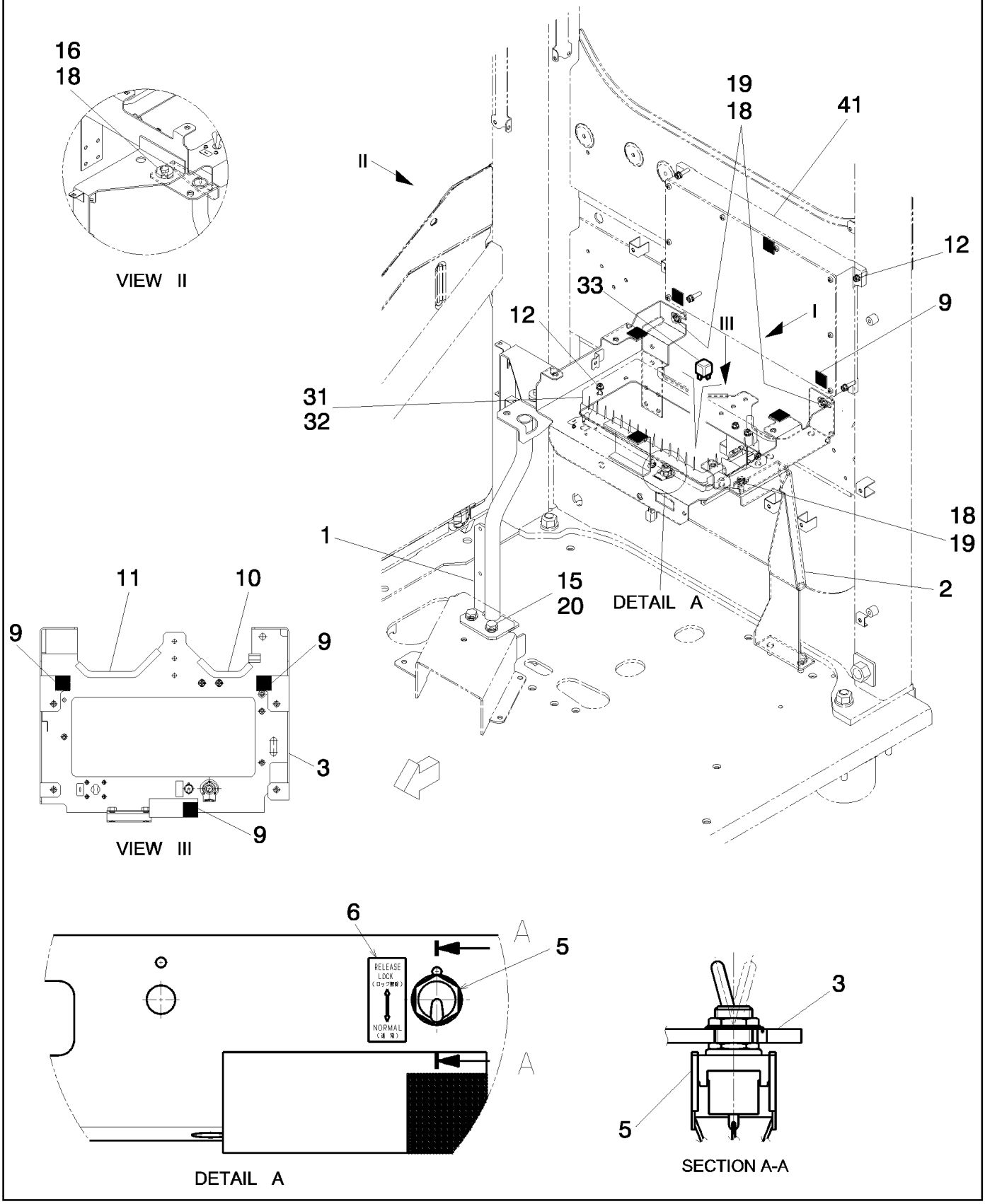

Copyright © New Holland

INSTALACION ELECTRICA
ELECTRIC SYSTEM
ELECTRIC SYSTEM
ELECTRIC SYSTEM

R	N	P.N.	MOD	Q	Description Denominacion	Descrizione Beskrivelse	Bezeichnung Denominação	Description Beschrijving	L.C.
1		YN22E01322P1		1	SUPPORT SOPORTE	SUPPORTO BESLAG	STÜTZE SUPORTE	SUPPORT STEUN	300S
2		YN22E01355P1		1	SUPPORT SOPORTE	SUPPORTO BESLAG	STÜTZE SUPORTE	SUPPORT STEUN	300S
3		YN22E01357P1		1	SUPPORT SOPORTE	SUPPORTO BESLAG	STÜTZE SUPORTE	SUPPORT STEUN	300S
5		87584110		1	SWITCH INTERRUPTOR	INTERRUTTORE KONTAKT	SCHALTER INTERRUPTOR	CONTACTEUR SCHAKELAAR	075I
6		72203539		1	DATA PLAQUE PLACA DE DATOS	TARGHETTA DATI DATASKILT	DATENSCHILD PLACA IDENTIFICADOR/	PLAQUE D'IDENTIFICAT GEGEVENSPLAATJE	065T
9		YN22E01334P1		6	COLLAR COLLAR	COLLARE SLANGEBÅND	RINGE ANEL	COLLIER KRAAG	031F
10		72950894		1	SOFT TRIM REVESTIMIENTO SUAVE	RIVESTIMENTO MORBID POLSTRING	VERKLEIDUNG REVESTIMENTO	GARNITURE ZACHTE BEKLEDING	115R
11		72955941		1	SOFT TRIM REVESTIMIENTO SUAVE	RIVESTIMENTO MORBID POLSTRING	VERKLEIDUNG REVESTIMENTO	GARNITURE ZACHTE BEKLEDING	115R
12		72952745		7	SCREW TORNILLO	VITE SKRUE	SCHRAUBE PARAFUSO	VIS SCHROEF	040V
15		11106234		4	BOLT, Hex, M10 x 25, 10.9, Full Thd PERNO	BULLONE BOLT	SCHRAUBE PARAFUSO	VIS BOUT	140B
16		72956186		1	WASHER ARANDELA	RONDELLA FLADSKIVE	UNTERLEGSCHEIBE ANILHA	RONDELLE SLUITRING	131R
18		16043434		4	BOLT, Hex, M8 x 20, 10.9, Full Thd PERNO	BULLONE BOLT	SCHRAUBE PARAFUSO	VIS BOUT	140B
19		14496531		3	WASHER, M8 x 17 x 1.6 ARANDELA	RONDELLA FLADSKIVE	UNTERLEGSCHEIBE ANILHA	RONDELLE SLUITRING	131R
20		14496631		4	WASHER, M10 x 21 x 2 ARANDELA	RONDELLA FLADSKIVE	UNTERLEGSCHEIBE ANILHA	RONDELLE SLUITRING	131R
31	1	87557543		1	BOX CAJA	CASSA; SCATOLA KASSE	KASTEN; OFF KASTENA CAIXA	BOITIER DOOS	035S
32		87621308		1	DATA PLAQUE PLACA DE DATOS	TARGHETTA DATI DATASKILT	DATENSCHILD PLACA IDENTIFICADOR/	PLAQUE D'IDENTIFICAT GEGEVENSPLAATJE	065T
33		87559156		1	RELAY RELÉ	RELÈ RELÆ	RELAIS RELÉ	RELAIS RELAIS	011R
41		YN22E00395F1		1	ELECTRONIC CONTROL UNIT, - ASSY, Include Software UNIDAD DE CONTROL E	CENTRALINA ELETTRON ELEKTRONIKBOKS	ELEKTRON STEUERGEF UNID CONTR. ELECTRÓ	UNITE CMDE ELECTRON ELEKTRON. REGELEEN	655C

(1) ASSY SEE PAGE 2

Copyright © New Holland

ELECTRIC SYSTEM - COMPONENTS
IMPIANTO ELETTRICO - COMPONENTI
ELEKTRISCHE ANLAGE - BESTANDTEILE
INSTALLATION ELECTRIQUE - COMPOSANTS

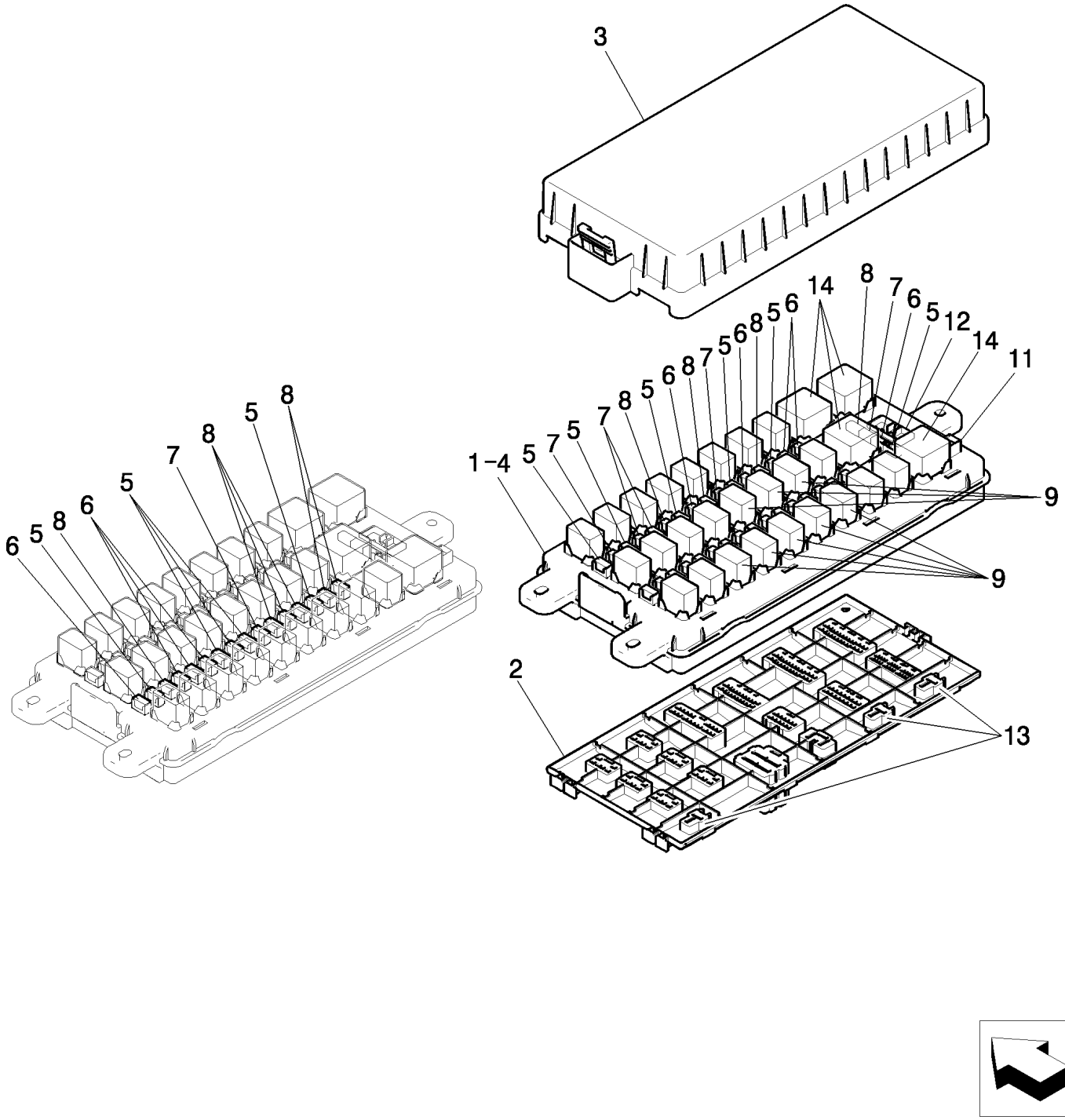

Copyright © New Holland

INSTALACION ELECTRICA - COMPONENTES
ELECTRIC SYSTEM - COMPONENTS
ELECTRIC SYSTEM - COMPONENTS
ELECTRIC SYSTEM - COMPONENTS

R	N	P.N.	MOD	Q	Description Denominacion	Descrizione Beskrivelse	Bezeichnung Denominação	Description Beschrijving	L.C.
1		YN24E00016S001		1	BOX CAJA	CASSA; SCATOLA KASSE	KASTEN; OFF KASTENA CAIXA	BOITIER DOOS	035S
2		YN24E00016S002		1	BOX CAJA	CASSA; SCATOLA KASSE	KASTEN; OFF KASTENA CAIXA	BOITIER DOOS	035S
3		YN24E00016S003		1	GUARD DEFENSA	PROTEZIONE BESKYTTELSESSKÆRM	SCHUTZABDECKUNG PROTECÇÃO	PROTECTION AFSCHERMING	070R
4		YN24E00016S004		1	PRINTED CIRCUIT BOARD PLACA DE CIRCUITO IM	CIRCUITO STAMPATO PRINTKORT	PLATINE PLACA CIRCUITOS IMPF	CIRCUIT IMPRIME PRINTPLAAT	179C
5		YN24E00016S005		11	FUSE FUSIBLE	FUSIBILE SIKRING	SICHERUNG FUSÍVEL	FUSIBLE ZEKERING	110F
6		YN24E00016S006		9	FUSE FUSIBLE	FUSIBILE SIKRING	SICHERUNG FUSÍVEL	FUSIBLE ZEKERING	110F
7		YN24E00016S007		6	FUSE FUSIBLE	FUSIBILE SIKRING	SICHERUNG FUSÍVEL	FUSIBLE ZEKERING	110F
8		YN24E00016S008		10	FUSE FUSIBLE	FUSIBILE SIKRING	SICHERUNG FUSÍVEL	FUSIBLE ZEKERING	110F
9		87559156		8	RELAY RELÉ	RELÈ RELÆ	RELAIS RELÉ	RELAIS RELAIS	011R
11		YN24E00016S011		1	HANDLE MANECILLA	MANIGLIA HÅNDTAG	GRIFF PEGA	POIGNEE HENDEL	020M
12		YN24E00016S012		1	WIRE CONNECTOR CONECTOR DE CABLE	CONNETTORE DEL FILC SAMLEMUFFE	KABELSTECKVERBINDE CONECTOR DE FIOS	CONNECTEUR DU FIL DRAADCONNECTOR	250C
13		YN24E00016S013		3	WIRE CONNECTOR CONECTOR DE CABLE	CONNETTORE DEL FILC SAMLEMUFFE	KABELSTECKVERBINDE CONECTOR DE FIOS	CONNECTEUR DU FIL DRAADCONNECTOR	250C
14		87611990		4	RELAY RELÉ	RELÈ RELÆ	RELAIS RELÉ	RELAIS RELAIS	011R

RELAY BOX ASSY P/N 87557543

E215B

Copyright © New Holland

1.220	03	p1	03/10

ELECTRIC SYSTEM
IMPIANTO ELETTRICO
ELEKTRISCHE ANLAGE
INSTALLATION ELECTRIQUE

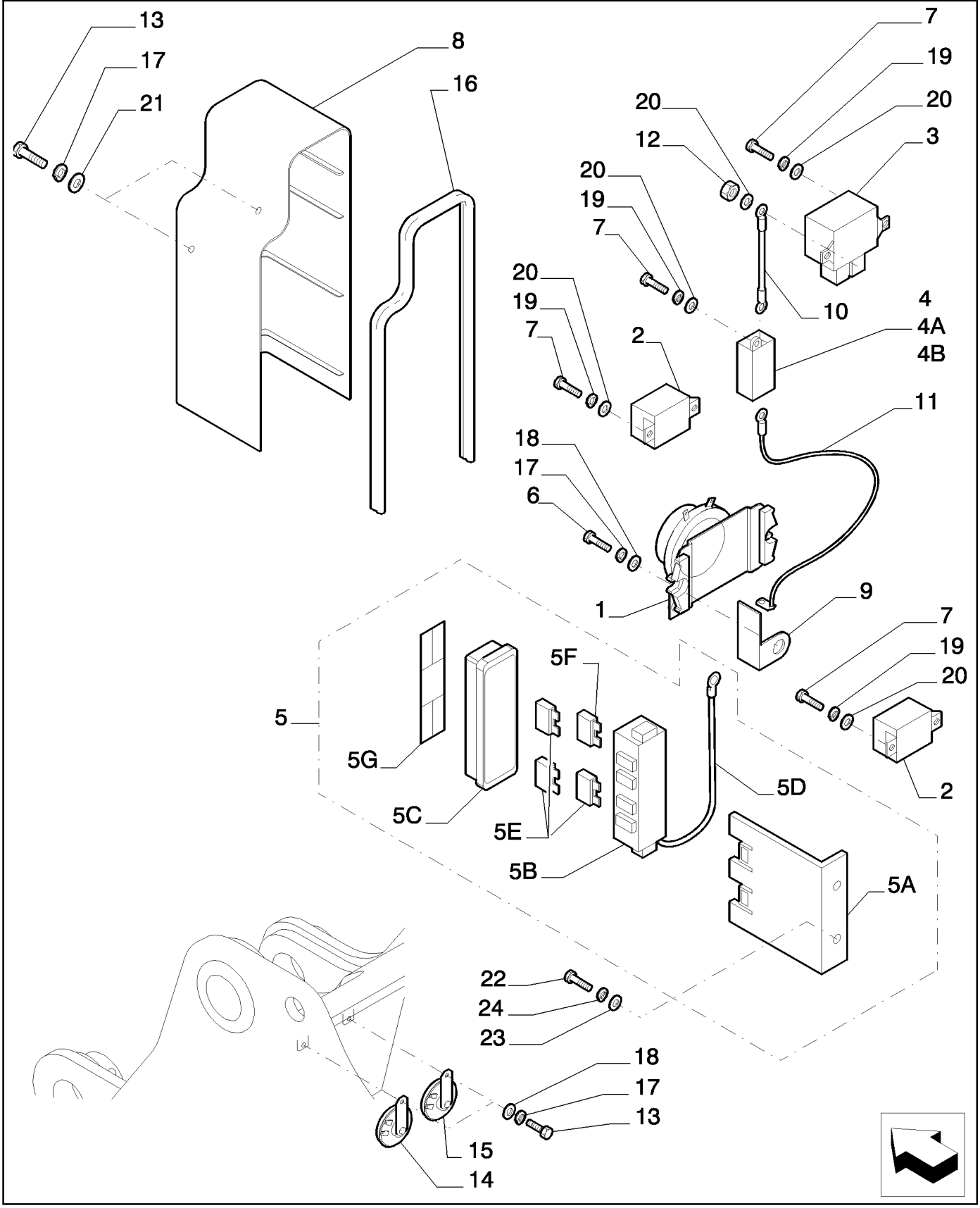

Copyright © New Holland

INSTALACION ELECTRICA
ELECTRIC SYSTEM
ELECTRIC SYSTEM
ELECTRIC SYSTEM

R	N	P.N.	MOD	Q	Description Denominacion	Descrizione Beskrivelse	Bezeichnung Denominação	Description Beschrijving	L.C.
1		87559395		1	RELAY RELÉ	RELÈ RELÆ	RELAIS RELÉ	RELAIS RELAIS	011R
2		71403889		2	RELAY RELÉ	RELÈ RELÆ	RELAIS RELÉ	RELAIS RELAIS	011R
3		71451677		1	RELAY RELÉ	RELÈ RELÆ	RELAIS RELÉ	RELAIS RELAIS	011R
4		71451914		1	FUSE BOX, - ASSY CAJA DE FUSIBLES	SCATOLA FUSIBILI SIKRINGSBOKS	SICHERUNGSKASTEN CAIXA DE FUSÍVEIS	BOITE A FUSIBLES ZEKERINGSKAST	037S
4A		71451490		1	HOUSING ALOJAMIENTO	ALLOGGIAMENTO HUS	GEHÄUSE ALOJAMENTO	CARTER HUIS	014V
4B		71451489		1	FUSE, 150A FUSIBLE	FUSIBILE SIKRING	SICHERUNG FUSÍVEL	FUSIBLE ZEKERING	110F
5		87565331		1	FUSE BOX, - ASSY CAJA DE FUSIBLES	SCATOLA FUSIBILI SIKRINGSBOKS	SICHERUNGSKASTEN CAIXA DE FUSÍVEIS	BOITE A FUSIBLES ZEKERINGSKAST	037S
5A		87565332		1	BRACKET SOPORTE	STAFFA BESLAG	HALTERUNG SUPORTE	SUPPORT STEUN	225S
5B		87565334		1	BOX CAJA	CASSA; SCATOLA KASSE	KASTEN; OFF KASTENA CAIXA	BOITIER DOOS	035S
5C		87565335		1	COVER CUBIERTA	COPERCHIO DÆKSEL	ABDECKUNG COBERTURA	COUVERCLE AFSCHERMING	265C
5D		87565336		1	HARNESS MAZO DE CABLES	CABLAGGIO LEDNINGSNET	KABELBAUM CABLAGEM	FAISCEAU KABELBOOM	4160
5E		11055690		3	FUSE, 60A FUSIBLE	FUSIBILE SIKRING	SICHERUNG FUSÍVEL	FUSIBLE ZEKERING	110F
5F		87559396		1	FUSE, 100A FUSIBLE	FUSIBILE SIKRING	SICHERUNG FUSÍVEL	FUSIBLE ZEKERING	110F
5G		87565339		1	DECAL CALCOMANÍA	DECALCOMANIA TRANSFER	AUFKLEBER DÍSTICO	AUTOCOLLANT STICKER	012D
6		87565340		1	COVER CUBIERTA	COPERCHIO DÆKSEL	ABDECKUNG COBERTURA	COUVERCLE AFSCHERMING	265C
7		87565337		1	GASKET JUNTA	GUARNIZIONE PAKNING	DICHTUNG JUNTA	JOINT PAKKING	123G
8		87565341		1	BRACKET SOPORTE	STAFFA BESLAG	HALTERUNG SUPORTE	SUPPORT STEUN	225S
9		71452048		1	ELECTRIC CABLE CABLE ELÉCTRICO	CAVO ELETTRICO EL-KABEL	ELEKTROKABEL CABO ELÉCTRICO	CABLE ELECTRIQUE ELEKTRICITEITSKABEL	111C
10		87565343		1	ELECTRIC CABLE CABLE ELÉCTRICO	CAVO ELETTRICO EL-KABEL	ELEKTROKABEL CABO ELÉCTRICO	CABLE ELECTRIQUE ELEKTRICITEITSKABEL	111C
11		87357734		1	HORN BOCINA	AVVISATORE ACUSTICC HORN	HUPE BUZINA	AVERTISSEUR SONORE CLAXON	105A
12		87565344		1	HORN BOCINA	AVVISATORE ACUSTICC HORN	HUPE BUZINA	AVERTISSEUR SONORE CLAXON	105A
13		15896221		2	NUT, M6, Cl 10 TUERCA	DADO MØTRIK	MUTTER PORCA	ECROU MOER	010D
14		14305234		10	SCREW TORNILLO	VITE SKRUE	SCHRAUBE PARAFUSO	VIS SCHROEF	040V
15		14496431		12	WASHER, M6.4 x 12.5 x 1.6 Thk ARANDELA	RONDELLA FLADSKIVE	UNTERLEGSCHEIBE ANILHA	RONDELLE SLUITRING	131R
16		10516474		10	LOCK WASHER ARANDELA DE BLOQUE	RONDELLA DI SICUREZ LÅSESKIVE	SICHERUNGSSCHEIBE ANILHA DE RETENÇÃO	RONDELLE FREIN BORGRING	132R

Copyright © New Holland

1.220	03	p2	03/10

ELECTRIC SYSTEM
IMPIANTO ELETTRICO
ELEKTRISCHE ANLAGE
INSTALLATION ELECTRIQUE

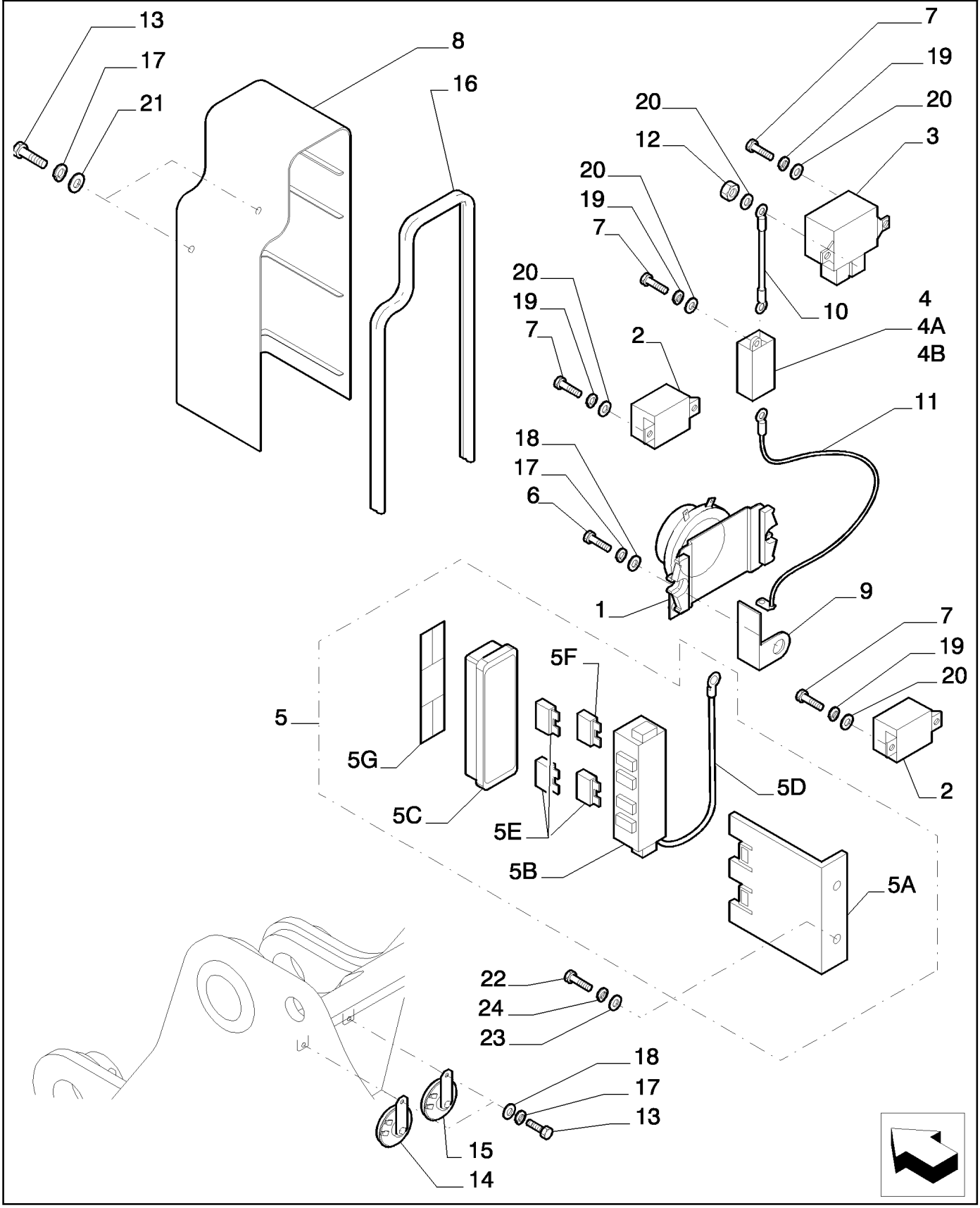

Copyright © New Holland

INSTALACION ELECTRICA
ELECTRIC SYSTEM
ELECTRIC SYSTEM
ELECTRIC SYSTEM

R	N	P.N.	MOD	Q	Description Denominacion	Descrizione Beskrivelse	Bezeichnung Denominação	Description Beschrijving	L.C.
17		16043634		2	BOLT, Hex, M8 x 25, 10.9, Full Thd				
						BULLONE	SCHRAUBE	VIS	140B
					PERNO	BOLT	PARAFUSO	BOUT	
18		14496531		6	WASHER, M8 x 17 x 1.6	RONDELLA	UNTERLEGSCHEIBE	RONDELLE	131R
					ARANDELA	FLADSKIVE	ANILHA	SLUITRING	
19		10516674		6	LOCK WASHER, M8	RONDELLA DI SICUREZ	SICHERUNGSSCHEIBE	RONDELLE FREIN	132R
					ARANDELA DE BLOQUE	LÅSESKIVE	ANILHA DE RETENÇÃO	BORGRING	
20		16043434		4	BOLT, Hex, M8 x 20, 10.9, Full Thd				
						BULLONE	SCHRAUBE	VIS	140B
					PERNO	BOLT	PARAFUSO	BOUT	

Copyright © New Holland

1.220	04	p1	03/10

ELECTRIC SYSTEM
IMPIANTO ELETTRICO
ELEKTRISCHE ANLAGE
INSTALLATION ELECTRIQUE

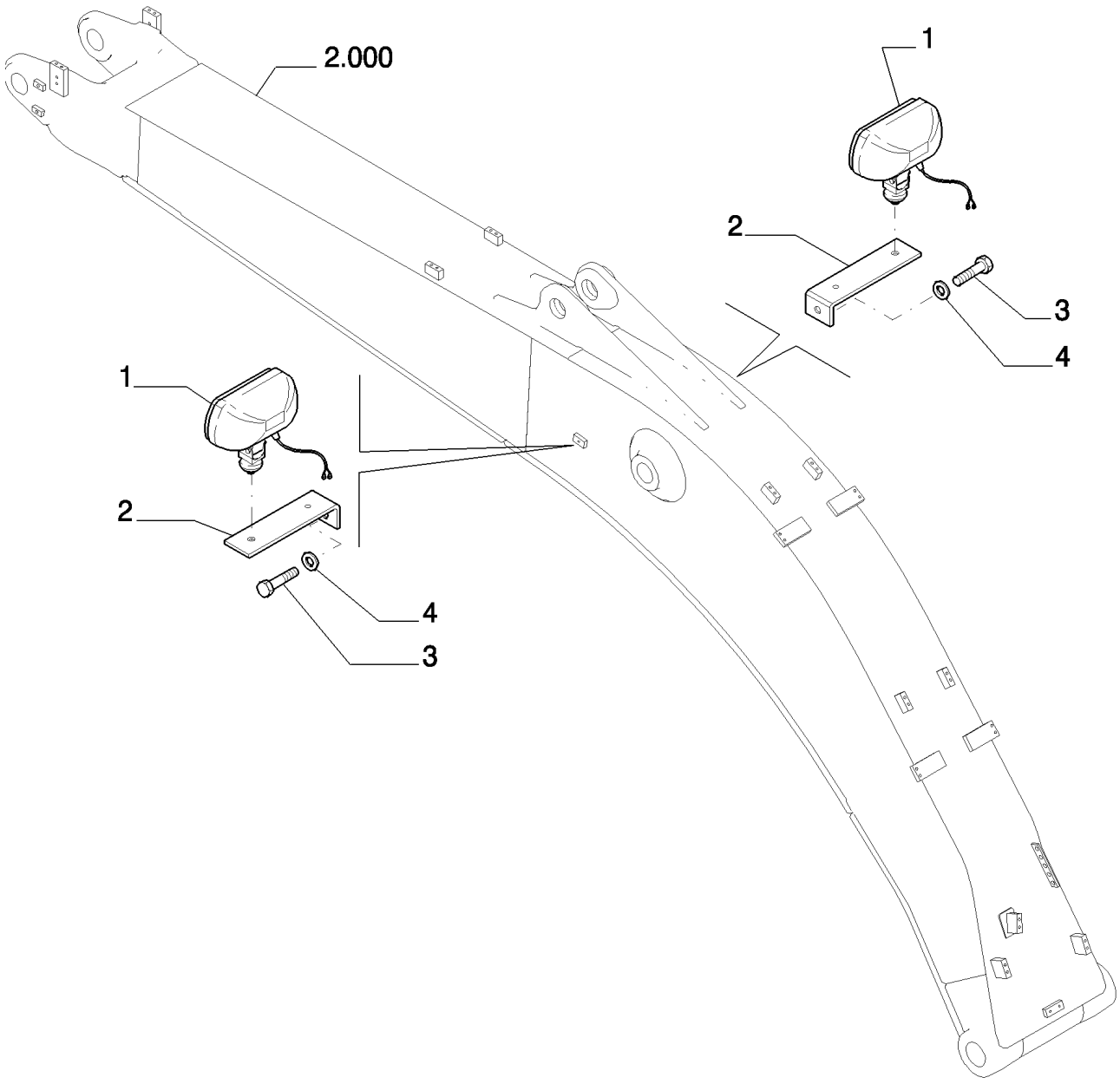

Copyright © New Holland

INSTALACION ELECTRICA
ELECTRIC SYSTEM
ELECTRIC SYSTEM
ELECTRIC SYSTEM

R	N	P.N.	MOD	Q	Description Denominacion	Descrizione Beskrivelse	Bezeichnung Denominação	Description Beschrijving	L.C.
1		87555081		2	HEADLAMP FARO	FARO HOVEDLAMPE	FRONTSCHEINWERFER FAROL	FEU KOPLAMP	220P
2		87559668		2	BRACKET SOPORTE	STAFFA BESLAG	HALTERUNG SUPORTE	SUPPORT STEUN	225S
3		11115334		2	BOLT, Hex, M14 x 25, 10.9, Full Thd PERNO	BULLONE BOLT	SCHRAUBE PARAFUSO	VIS BOUT	140B
4		10517174		2	LOCK WASHER ARANDELA DE BLOQUE	RONDELLA DI SICUREZ LÅSESKIVE	SICHERUNGSSCHEIBE ANILHA DE RETENÇÃO	RONDELLE FREIN BORGRING	132R

Copyright © New Holland

1.220	05	p1	03/10

ELECTRIC SYSTEM
IMPIANTO ELETTRICO
ELEKTRISCHE ANLAGE
INSTALLATION ELECTRIQUE

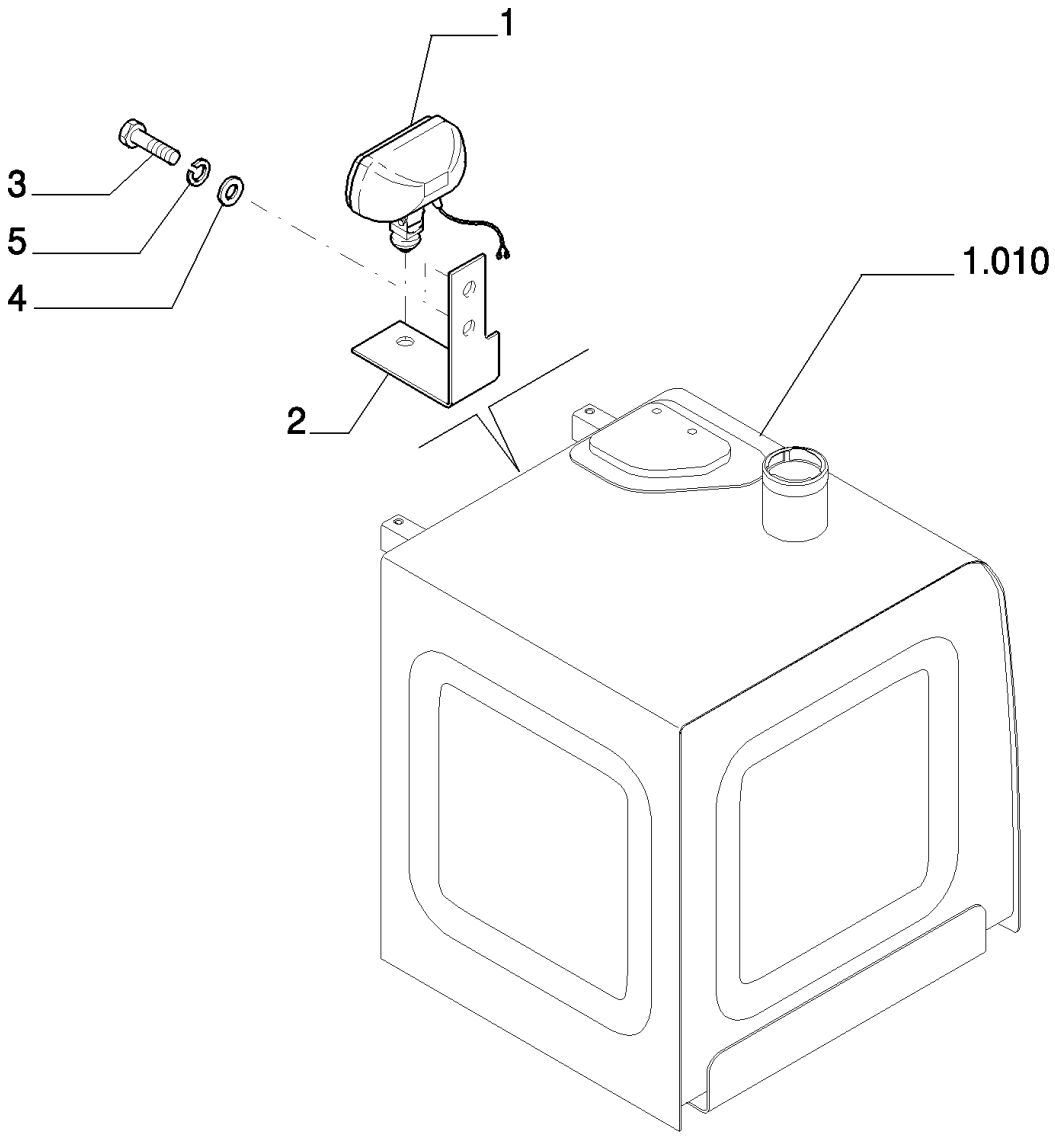

Copyright © New Holland

INSTALACION ELECTRICA
ELECTRIC SYSTEM
ELECTRIC SYSTEM
ELECTRIC SYSTEM

R	N	P.N.	MOD	Q	Description Denominacion	Descrizione Beskrivelse	Bezeichnung Denominação	Description Beschrijving	L.C.
1		87555081		1	HEADLAMP FARO	FARO HOVEDLAMPE	FRONTSCHEINWERFER FAROL	FEU KOPLAMP	220P
2		87559666		1	BRACKET SOPORTE	STAFFA BESLAG	HALTERUNG SUPORTE	SUPPORT STEUN	225S
3		11106234		2	BOLT, Hex, M10 x 25, 10.9, Full Thd PERNO	BULLONE BOLT	SCHRAUBE PARAFUSO	VIS BOUT	140B
4		14496631		2	WASHER, M10 x 21 x 2 ARANDELA	RONDELLA FLADSKIVE	UNTERLEGSCHEIBE ANILHA	RONDELLE SLUITRING	131R
5		10516874		2	LOCK WASHER ARANDELA DE BLOQUE	RONDELLA DI SICUREZ LÅSESKIVE	SICHERUNGSSCHEIBE ANILHA DE RETENÇÃO	RONDELLE FREIN BORGRING	132R

Copyright © New Holland

ELECTRIC SYSTEM
IMPIANTO ELETTRICO
ELEKTRISCHE ANLAGE
INSTALLATION ELECTRIQUE

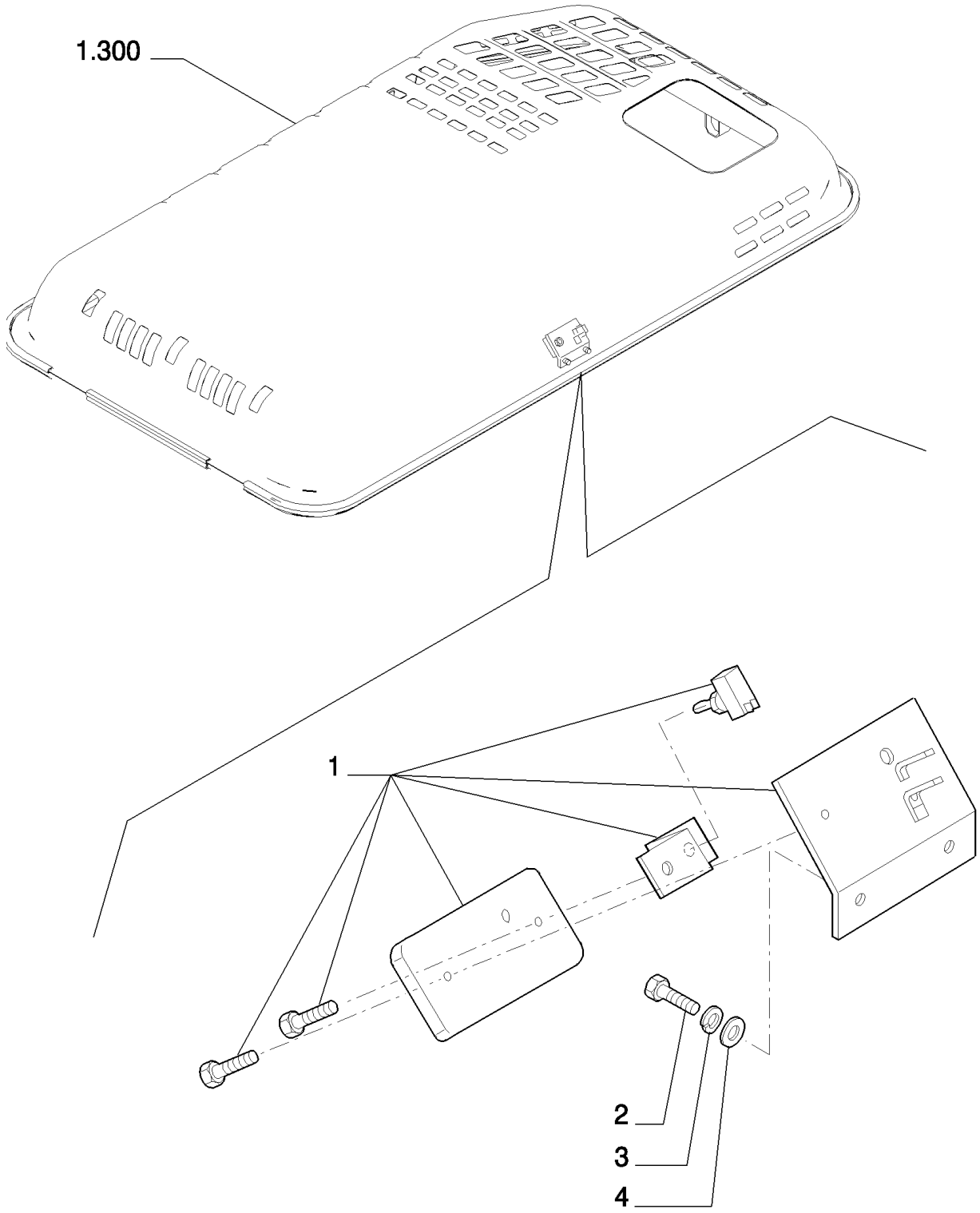

Copyright © New Holland

INSTALACION ELECTRICA
ELECTRIC SYSTEM
ELECTRIC SYSTEM
ELECTRIC SYSTEM

R	N	P.N.	MOD	Q	Description Denominacion	Descrizione Beskrivelse	Bezeichnung Denominação	Description Beschrijving	L.C.
1		71451946		1	CEILING LAMP LÁMPARA DE TECHO	PLAFONIERA LOFTLAMPE	DECKENLEUCHTE LUZ DE TECTO	LAMPE PLAFONNIER PLAFONDLAMP	135P
2		10902434		2	BOLT, Hex, M6 x 20, 10.9, Full Thd PERNO	BULLONE BOLT	SCHRAUBE PARAFUSO	VIS BOUT	140B
3		14496431		2	WASHER, M6.4 x 12.5 x 1.6 Thk ARANDELA	RONDELLA FLADSKIVE	UNTERLEGSCHEIBE ANILHA	RONDELLE SLUITRING	131R
4		10516474		2	LOCK WASHER ARANDELA DE BLOQUE	RONDELLA DI SICUREZ LÅSESKIVE	SICHERUNGSSCHEIBE ANILHA DE RETENÇÃO	RONDELLE FREIN BORGRING	132R

Copyright © New Holland

1.220	07	p1	03/10

ELECTRIC SYSTEM
IMPIANTO ELETTRICO
ELEKTRISCHE ANLAGE
INSTALLATION ELECTRIQUE

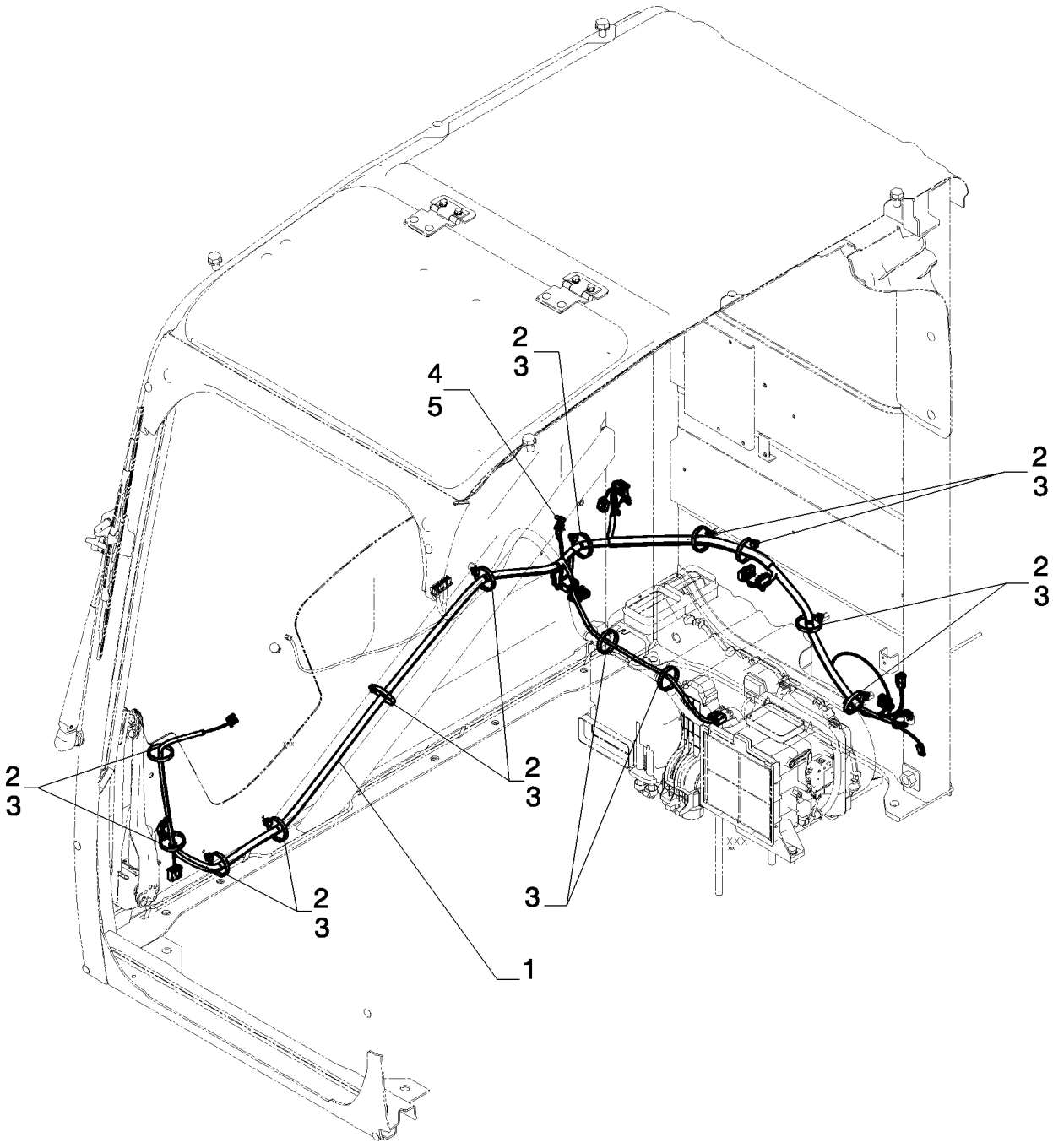

Copyright © New Holland

INSTALACION ELECTRICA
ELECTRIC SYSTEM
ELECTRIC SYSTEM
ELECTRIC SYSTEM

R	N	P.N.	MOD	Q	Description Denominacion	Descrizione Beskrivelse	Bezeichnung Denominação	Description Beschrijving	L.C.
1		YN14E01119P1		1	WIRE HARNESS GRUPO DE CABLES	CABLAGGIO KABELNET	KABELBAUM CABLAGEM	FAISCEAU ELECTRIQUE KABELBOOM	070I
2		87526680		10	RETAINER COLLAR COLLAR DE RETENCIÓN	COLLARE DI FISSAGGIO RING, SPÆNDE	HALTERING ANEL DE FIXAÇÃO	COLLIER DE RETENUE BORGKRAAG	230S
3		72951499		13	CLIP ABRAZADERA	FERMO KLIPS	KLAMMER FIXADOR	COLLIER KLEM	045F
4		10902234		1	BOLT, Hex, M6 x 16, 10.9, Full Thd PERNO	BULLONE BOLT	SCHRAUBE PARAFUSO	VIS BOUT	140B
5		14496431		1	WASHER, M6.4 x 12.5 x 1.6 Thk ARANDELA	RONDELLA FLADSKIVE	UNTERLEGSCHEIBE ANILHA	RONDELLE SLUITRING	131R

Copyright © New Holland

1.220	08	p1	04/10

ELECTRIC SYSTEM
IMPIANTO ELETTRICO
ELEKTRISCHE ANLAGE
INSTALLATION ELECTRIQUE

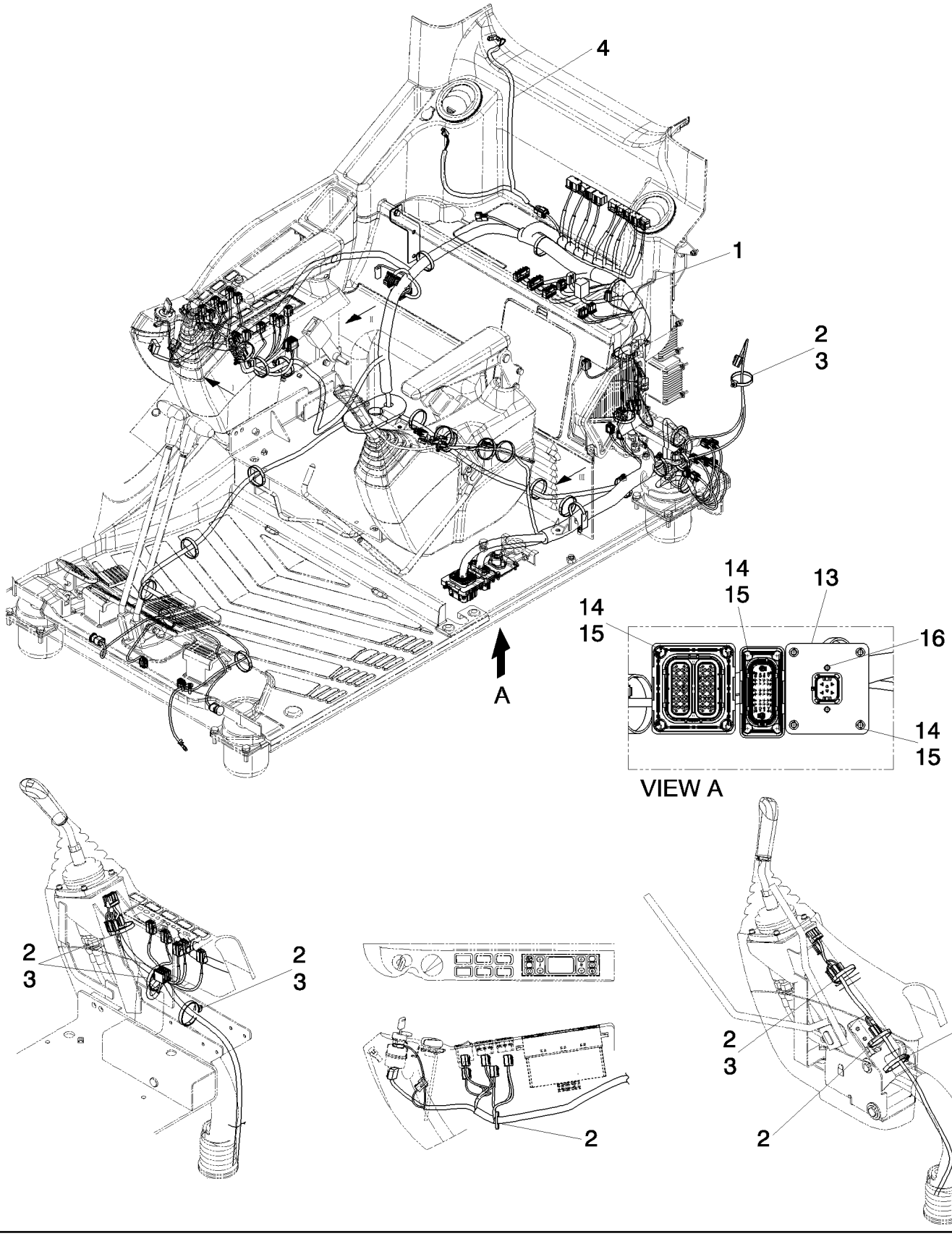

Copyright © New Holland

INSTALACION ELECTRICA
ELECTRIC SYSTEM
ELECTRIC SYSTEM
ELECTRIC SYSTEM

R	N	P.N.	MOD	Q	Description Denominacion	Descrizione Beskrivelse	Bezeichnung Denominação	Description Beschrijving	L.C.
1		{YN13E01634P1}		1					
2		72951499		8	CLIP ABRAZADERA	FERMO KLIPS	KLAMMER FIXADOR	COLLIER KLEM	045F
3		87526680		6	RETAINER COLLAR COLLAR DE RETENCIÓN	COLLARE DI FISSAGGIO RING, SPÆNDE	HALTERING ANEL DE FIXAÇÃO	COLLIER DE RETENUE BORGKRAAG	230S
4		LB13E01042P1		1	WIRE HARNESS GRUPO DE CABLES	CABLAGGIO KABELNET	KABELBAUM CABLAGEM	FAISCEAU ELECTRIQUE KABELBOOM	070I
13		{LB13E01040P1}		1					
14		11195474		12	LOCK WASHER ARANDELA DE BLOQUE	RONDELLA DI SICUREZ LÅSESKIVE	SICHERUNGSSCHEIBE ANILHA DE RETENÇÃO	RONDELLE FREIN BORGRING	132R
15		10977834		12	BOLT, Hex, M5 x 16, 10.9, Full Thd PERNO	BULLONE BOLT	SCHRAUBE PARAFUSO	VIS BOUT	140B
16		15903804		2	SELF-TAP SCREW, Cross Pan Hd, M4.8 x 13 TORNILLO AUTORROSC	VITE AUTOFILETTANTE SELVLÅSENDE BOLT	SELBSTSCHN SCHRAUE PARAFUSO	VIS AUTOTARAUDEUSE ZELFTAPPENDE SCHRC	062V

Copyright © New Holland

1.220	09	p1	03/10

ELECTRIC SYSTEM
IMPIANTO ELETTRICO
ELEKTRISCHE ANLAGE
INSTALLATION ELECTRIQUE

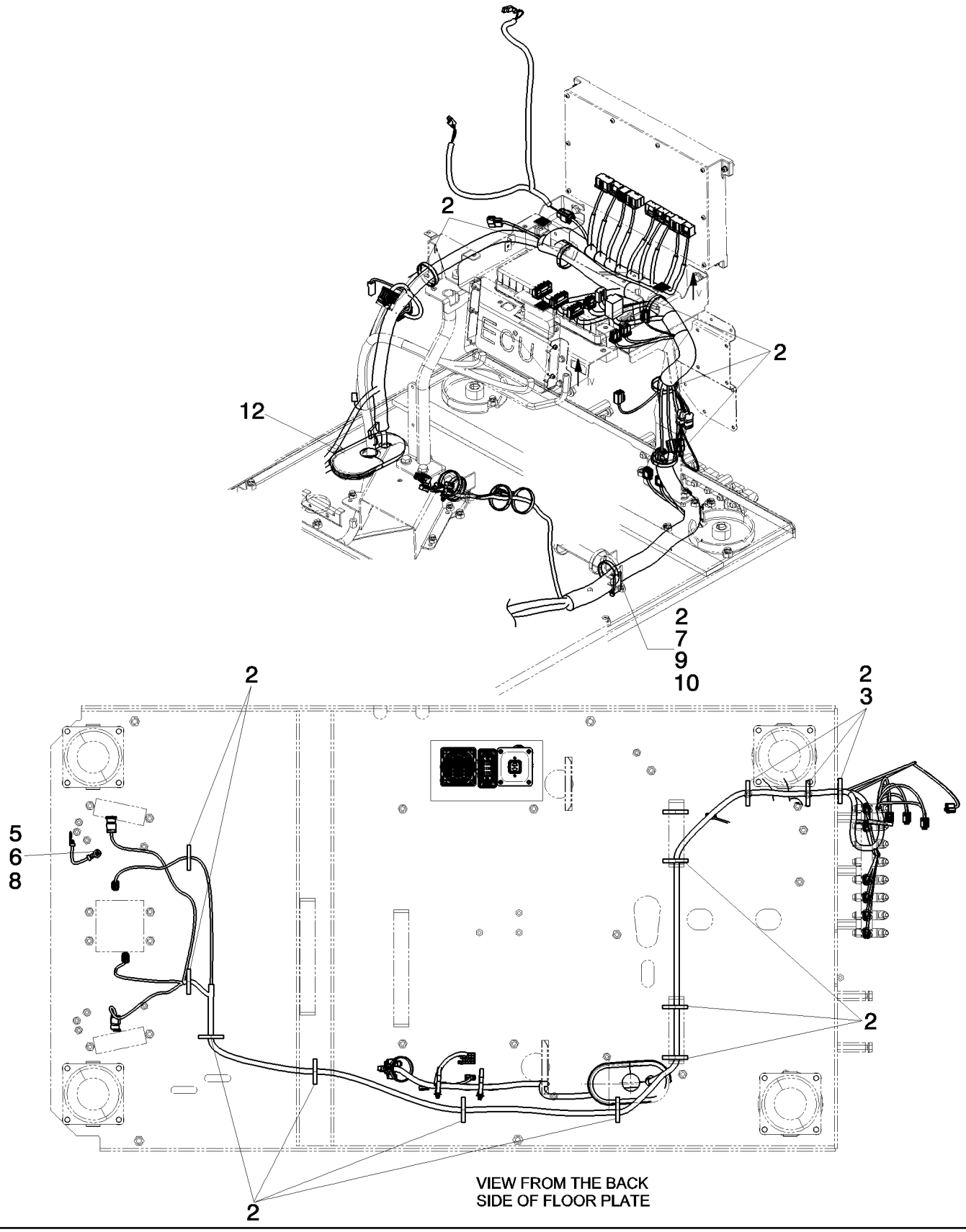

Copyright © New Holland

INSTALACION ELECTRICA
ELECTRIC SYSTEM
ELECTRIC SYSTEM
ELECTRIC SYSTEM

R	N	P.N.	MOD	Q	Description Denominacion	Descrizione Beskrivelse	Bezeichnung Denominação	Description Beschrijving	L.C.
2		72951499		20	CLIP ABRAZADERA	FERMO KLIPS	KLAMMER FIXADOR	COLLIER KLEM	045F
3		87526680		3	RETAINER COLLAR COLLAR DE RETENCIÓN	COLLARE DI FISSAGGIC RING, SPÆNDE	HALTERING ANEL DE FIXAÇÃO	COLLIER DE RETENUE BORGKRAAG	230S
5		10516674		1	LOCK WASHER, M8 ARANDELA DE BLOQUE	RONDELLA DI SICUREZ LÅSESKIVE	SICHERUNGSSCHEIBE ANILHA DE RETENÇÃO	RONDELLE FREIN BORGRING	132R
6		16100821		1	NUT, M8, Cl 10 TUERCA	DADO MØTRIK	MUTTER PORCA	ECROU MOER	010D
7		LQ13E01215P1		1	PLATE PLACA	PIASTRA PLADE	PLATTE CHAPA	PLAQUE PLAAT	105P
8		87564296		1	ELECTRIC CABLE CABLE ELÉCTRICO	CAVO ELETTRICO EL-KABEL	ELEKTROKABEL CABO ELÉCTRICO	CABLE ELECTRIQUE ELEKTRICITEITSKABEL	111C
9		14496531		1	WASHER, M8 x 17 x 1.6 ARANDELA	RONDELLA FLADSKIVE	UNTERLEGSCHEIBE ANILHA	RONDELLE SLUITRING	131R
10		16043234		1	BOLT, Hex, M8 x 16, 10.9, Full Thd PERNO	BULLONE BOLT	SCHRAUBE PARAFUSO	VIS BOUT	140B
12		LQ13E01233P1		1	GASKET JUNTA	GUARNIZIONE PAKNING	DICHTUNG JUNTA	JOINT PAKKING	123G

Copyright © New Holland

1.220	10	p1	03/10

ELECTRIC SYSTEM
IMPIANTO ELETTRICO
ELEKTRISCHE ANLAGE
INSTALLATION ELECTRIQUE

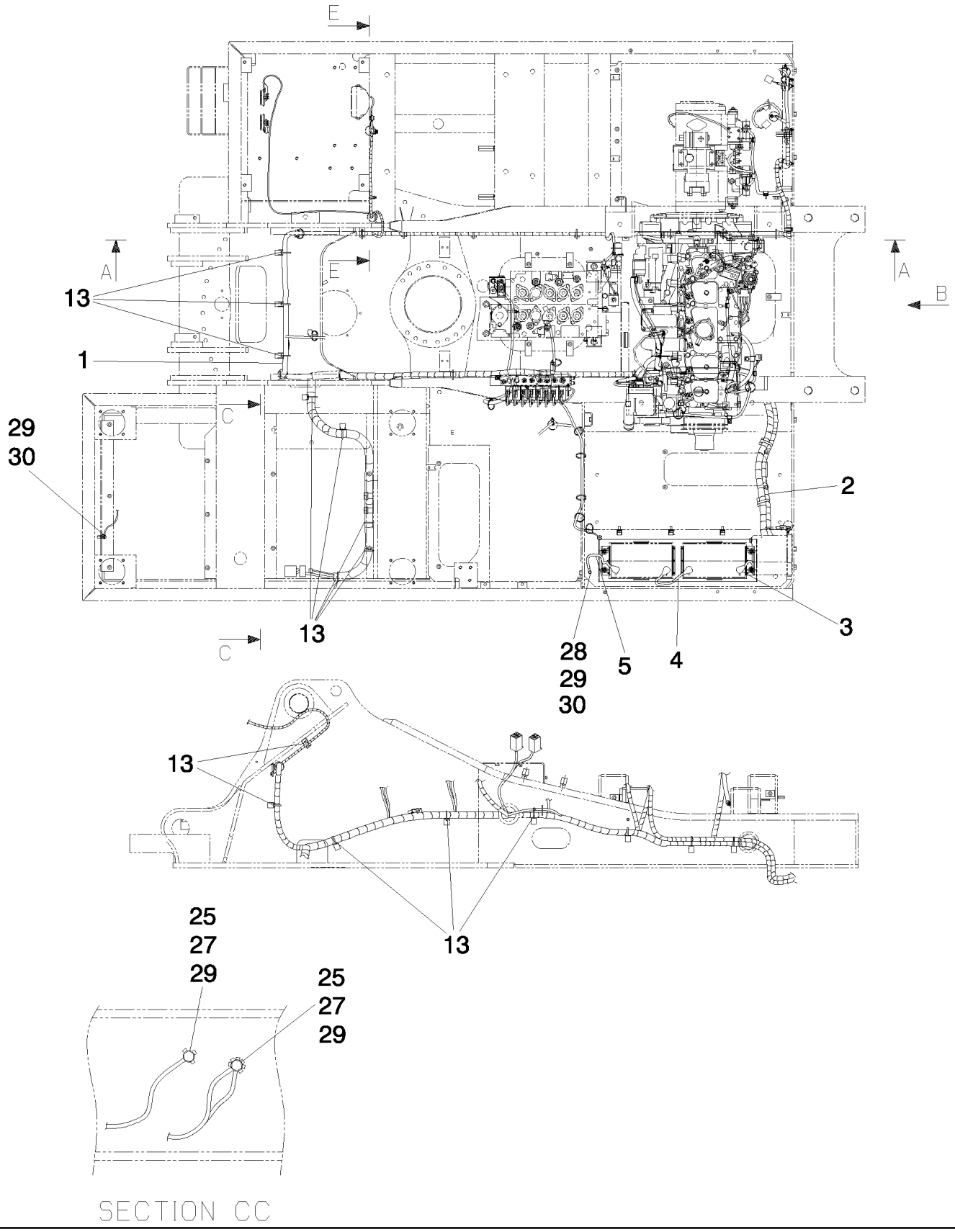

Copyright © New Holland

INSTALACION ELECTRICA
ELECTRIC SYSTEM
ELECTRIC SYSTEM
ELECTRIC SYSTEM

R	N	P.N.	MOD	Q	Description Denominacion	Descrizione Beskrivelse	Bezeichnung Denominação	Description Beschrijving	L.C.
1		YN13E01606P1		1	WIRE HARNESS GRUPO DE CABLES	CABLAGGIO KABELNET	KABELBAUM CABLAGEM	FAISCEAU ELECTRIQUE KABELBOOM	070I
2		87571058		1	ELECTRIC CABLE CABLE ELÉCTRICO	CAVO ELETTRICO EL-KABEL	ELEKTROKABEL CABO ELÉCTRICO	CABLE ELECTRIQUE ELEKTRICITEITSKABEL	111C
3		87571059		1	ELECTRIC CABLE CABLE ELÉCTRICO	CAVO ELETTRICO EL-KABEL	ELEKTROKABEL CABO ELÉCTRICO	CABLE ELECTRIQUE ELEKTRICITEITSKABEL	111C
4		71450316		1	ELECTRIC CABLE CABLE ELÉCTRICO	CAVO ELETTRICO EL-KABEL	ELEKTROKABEL CABO ELÉCTRICO	CABLE ELECTRIQUE ELEKTRICITEITSKABEL	111C
5		71450318		1	ELECTRIC CABLE CABLE ELÉCTRICO	CAVO ELETTRICO EL-KABEL	ELEKTROKABEL CABO ELÉCTRICO	CABLE ELECTRIQUE ELEKTRICITEITSKABEL	111C
13		72951499		8	CLIP ABRAZADERA	FERMO KLIPS	KLAMMER FIXADOR	COLLIER KLEM	045F
25		16043434		2	BOLT, Hex, M8 x 20, 10.9, Full Thd PERNO	BULLONE BOLT	SCHRAUBE PARAFUSO	VIS BOUT	140B
27		10516674		2	LOCK WASHER, M8 ARANDELA DE BLOQUE	RONDELLA DI SICUREZ LÅSESKIVE	SICHERUNGSSCHEIBE ANILHA DE RETENÇÃO	RONDELLE FREIN BORGRING	132R
28		11106034		1	BOLT, Hex, M10 x 20, 10.9, Full Thd PERNO	BULLONE BOLT	SCHRAUBE PARAFUSO	VIS BOUT	140B
29		14496631		1	WASHER, M10 x 21 x 2 ARANDELA	RONDELLA FLADSKIVE	UNTERLEGSCHEIBE ANILHA	RONDELLE SLUITRING	131R
30		16100821		2	NUT, M8, Cl 10 TUERCA	DADO MØTRIK	MUTTER PORCA	ECROU MOER	010D

Copyright © New Holland

ELECTRIC SYSTEM
IMPIANTO ELETTRICO
ELEKTRISCHE ANLAGE
INSTALLATION ELECTRIQUE

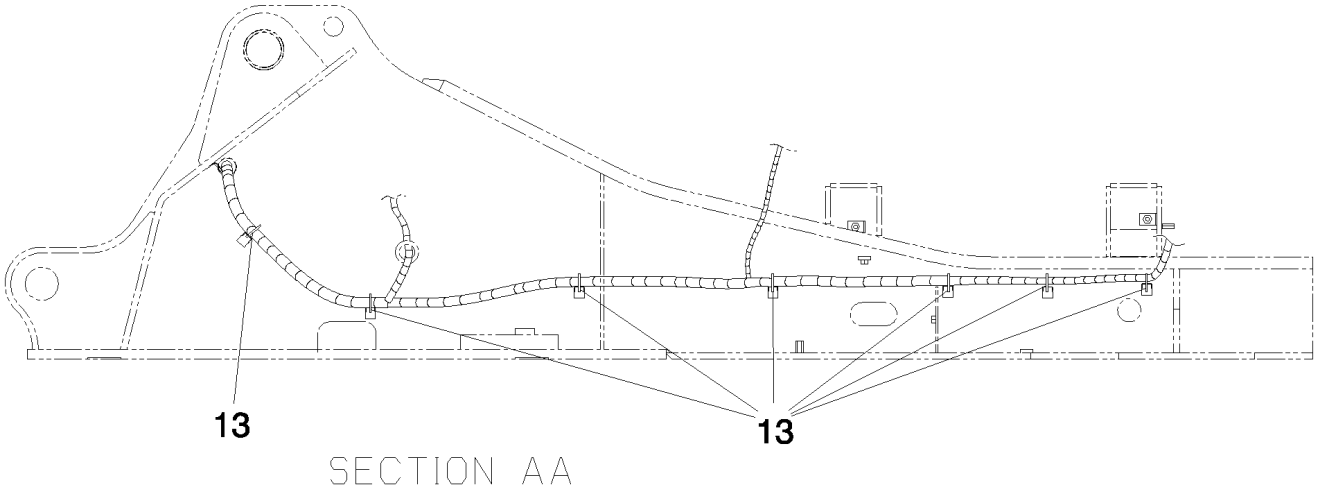

SECTION AA

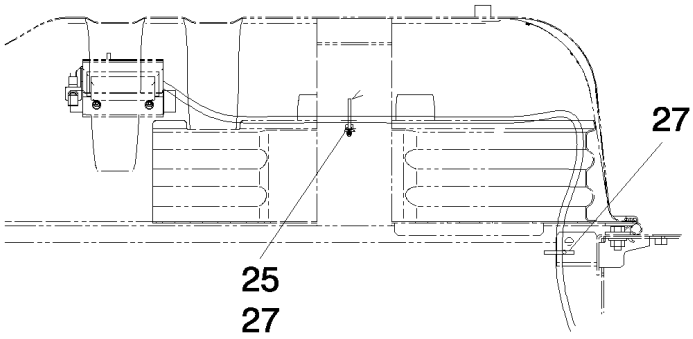

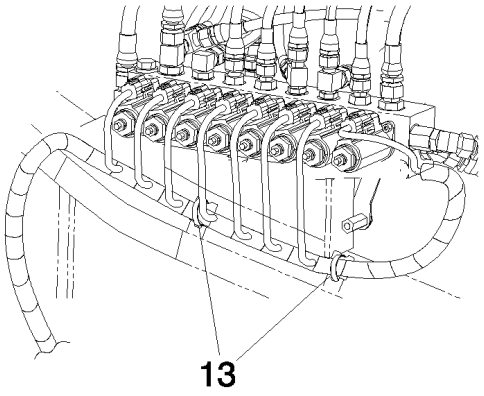

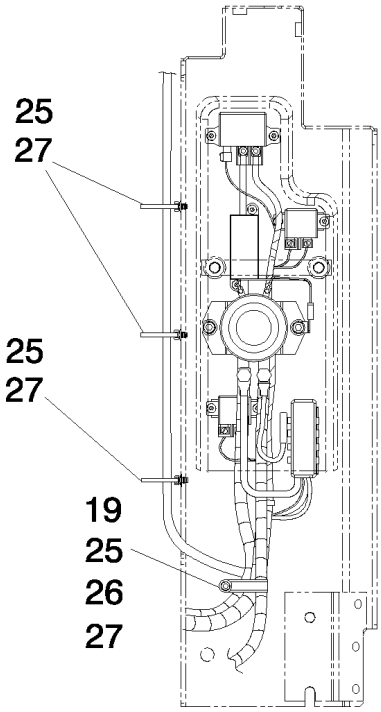

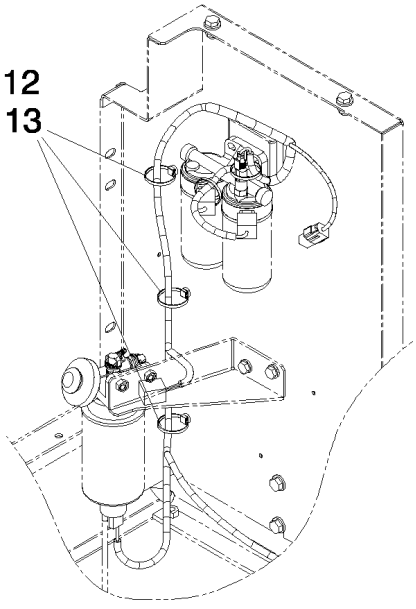

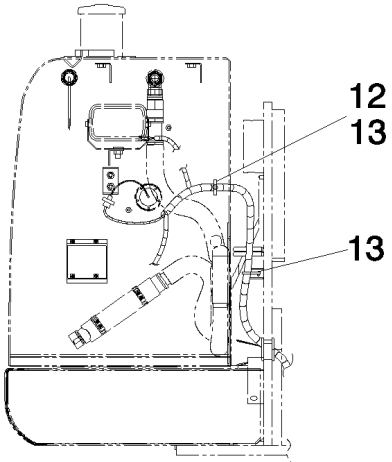

SECTION EE

Copyright © New Holland

INSTALACION ELECTRICA
ELECTRIC SYSTEM
ELECTRIC SYSTEM
ELECTRIC SYSTEM

R	N	P.N.	MOD	Q	Description Denominacion	Descrizione Beskrivelse	Bezeichnung Denominação	Description Beschrijving	L.C.
12		87526680		4	RETAINER COLLAR COLLAR DE RETENCIÓN	COLLARE DI FISSAGGIO RING, SPÆNDE	HALTERING ANEL DE FIXAÇÃO	COLLIER DE RETENUE BORGKRAAG	230S
13		72951499		14	CLIP ABRAZADERA	FERMO KLIPS	KLAMMER FIXADOR	COLLIER KLEM	045F
19		71425615		1	CLIP ABRAZADERA	FERMO KLIPS	KLAMMER FIXADOR	COLLIER KLEM	045F
25		16043434		5	BOLT, Hex, M8 x 20, 10.9, Full Thd PERNO	BULLONE BOLT	SCHRAUBE PARAFUSO	VIS BOUT	140B
26		12642021		1	WASHER ARANDELA	RONDELLA FLADSKIVE	UNTERLEGSCHEIBE ANILHA	RONDELLE SLUITRING	131R
27		10516674		6	LOCK WASHER, M8 ARANDELA DE BLOQUE	RONDELLA DI SICUREZZ LÅSESKIVE	SICHERUNGSSCHEIBE ANILHA DE RETENÇÃO	RONDELLE FREIN BORGRING	132R

Copyright © New Holland

1.220	12	p1	03/10

ELECTRIC SYSTEM
IMPIANTO ELETTRICO
ELEKTRISCHE ANLAGE
INSTALLATION ELECTRIQUE

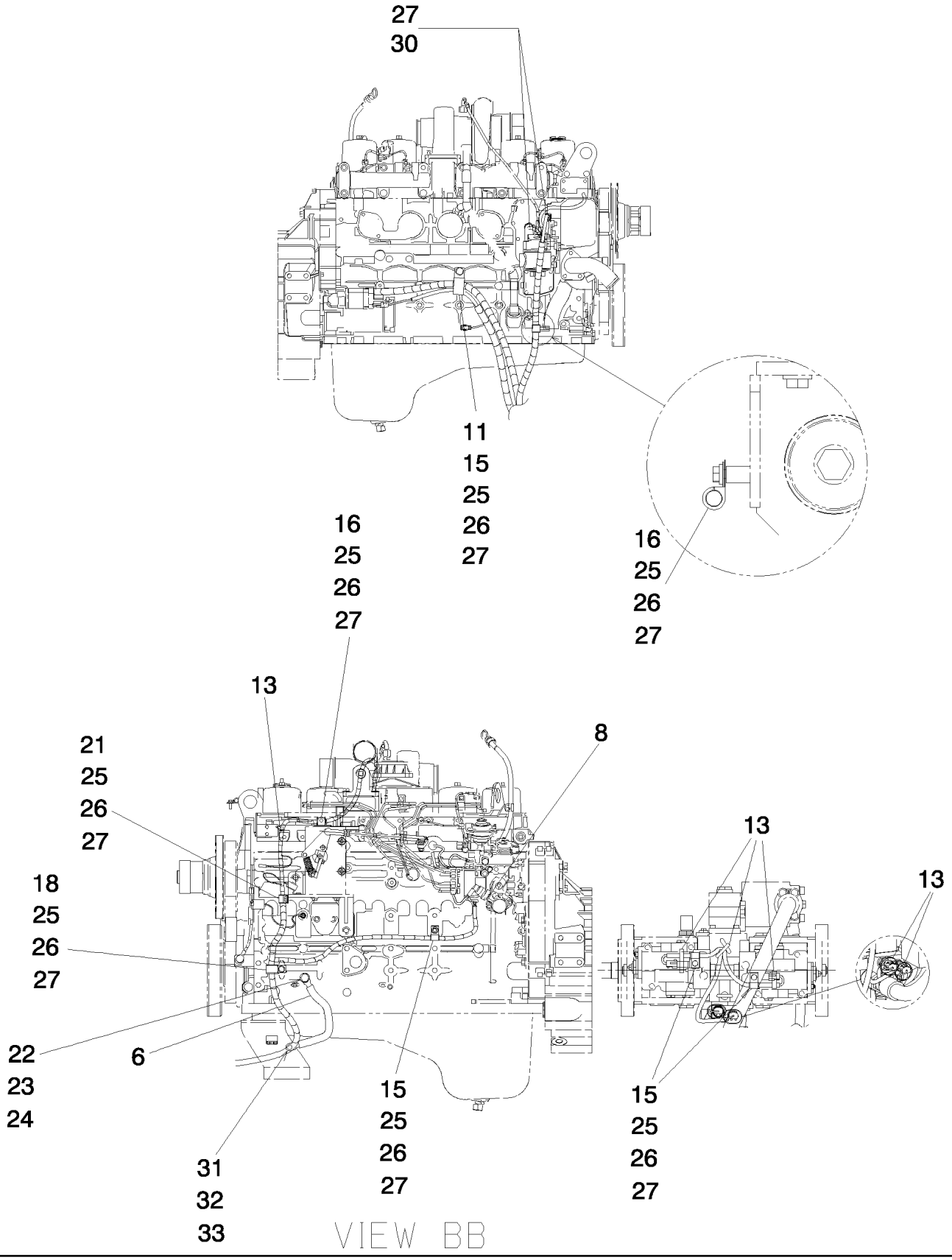

Copyright © New Holland

INSTALACION ELECTRICA
ELECTRIC SYSTEM
ELECTRIC SYSTEM
ELECTRIC SYSTEM

R	N	P.N.	MOD	Q	Description Denominacion	Descrizione Beskrivelse	Bezeichnung Denominação	Description Beschrijving	L.C.
6		71450342		1	ELECTRIC CABLE CABLE ELÉCTRICO	CAVO ELETTRICO EL-KABEL	ELEKTROKABEL CABO ELÉCTRICO	CABLE ELECTRIQUE ELEKTRICITEITSKABEL	111C
8		87550878		1	ELECTRIC CABLE CABLE ELÉCTRICO	CAVO ELETTRICO EL-KABEL	ELEKTROKABEL CABO ELÉCTRICO	CABLE ELECTRIQUE ELEKTRICITEITSKABEL	111C
11		87571060		1	BRACKET SOPORTE	STAFFA BESLAG	HALTERUNG SUPORTE	SUPPORT STEUN	225S
13		72951499		6	CLIP ABRAZADERA	FERMO KLIPS	KLAMMER FIXADOR	COLLIER KLEM	045F
15		71416130		4	CLAMP ABRAZADERA	MORSETTO SPÆNDEBÅND	KLEMME BRAÇADEIRA	COLLIER KLEM	120M
16		71415899		2	CLIP, M14, M12 Bolt ABRAZADERA	FERMO KLIPS	KLAMMER FIXADOR	COLLIER KLEM	045F
18		71405770		1	CLAMP ABRAZADERA	MORSETTO SPÆNDEBÅND	KLEMME BRAÇADEIRA	COLLIER KLEM	120M
21		71405944		1	CLIP ABRAZADERA	FERMO KLIPS	KLAMMER FIXADOR	COLLIER KLEM	045F
22		11112134		1	SCREW TORNILLO	VITE SKRUE	SCHRAUBE PARAFUSO	VIS SCHROEF	040V
23		14496731		1	WASHER, M12 x 24 x 2.5 Thk ARANDELA	RONDELLA FLADSKIVE	UNTERLEGSCHEIBE ANILHA	RONDELLE SLUITRING	131R
24		10517074		1	LOCK WASHER ARANDELA DE BLOQUE	RONDELLA DI SICUREZ LÅSESKIVE	SICHERUNGSSCHEIBE ANILHA DE RETENÇÃO	RONDELLE FREIN BORGRING	132R
25		16043434		8	BOLT, Hex, M8 x 20, 10.9, Full Thd PERNO	BULLONE BOLT	SCHRAUBE PARAFUSO	VIS BOUT	140B
26		12642021		8	WASHER ARANDELA	RONDELLA FLADSKIVE	UNTERLEGSCHEIBE ANILHA	RONDELLE SLUITRING	131R
27		10516674		10	LOCK WASHER, M8 ARANDELA DE BLOQUE	RONDELLA DI SICUREZ LÅSESKIVE	SICHERUNGSSCHEIBE ANILHA DE RETENÇÃO	RONDELLE FREIN BORGRING	132R
30		16100821		2	NUT, M8, Cl 10 TUERCA	DADO MØTRIK	MUTTER PORCA	ECROU MOER	010D
31		10979234		1	BOLT, Hex, M10 x 16, 10.9, Full Thd PERNO	BULLONE BOLT	SCHRAUBE PARAFUSO	VIS BOUT	140B
32		10516874		1	LOCK WASHER ARANDELA DE BLOQUE	RONDELLA DI SICUREZ LÅSESKIVE	SICHERUNGSSCHEIBE ANILHA DE RETENÇÃO	RONDELLE FREIN BORGRING	132R
33		14496631		1	WASHER, M10 x 21 x 2 ARANDELA	RONDELLA FLADSKIVE	UNTERLEGSCHEIBE ANILHA	RONDELLE SLUITRING	131R

Copyright © New Holland

ELECTRIC SYSTEM
IMPIANTO ELETTRICO
ELEKTRISCHE ANLAGE
INSTALLATION ELECTRIQUE

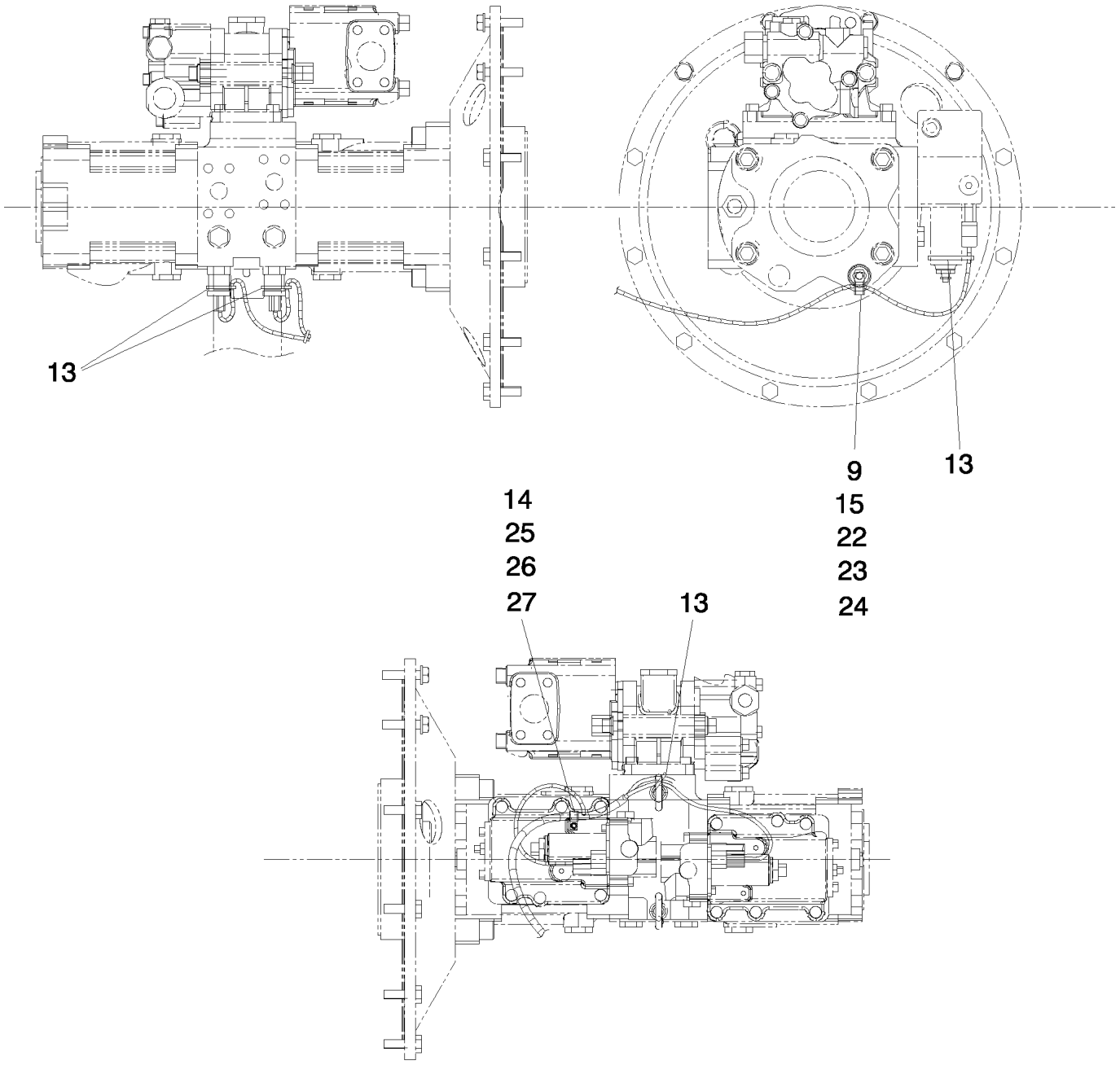

Copyright © New Holland

INSTALACION ELECTRICA
ELECTRIC SYSTEM
ELECTRIC SYSTEM
ELECTRIC SYSTEM

R	N	P.N.	MOD	Q	Description Denominacion	Descrizione Beskrivelse	Bezeichnung Denominação	Description Beschrijving	L.C.
9		11113434		1	SCREW TORNILLO	VITE SKRUE	SCHRAUBE PARAFUSO	VIS SCHROEF	040V
13		72951499		4	CLIP ABRAZADERA	FERMO KLIPS	KLAMMER FIXADOR	COLLIER KLEM	045F
14		87576371		1	GASKET JUNTA	GUARNIZIONE PAKNING	DICHTUNG JUNTA	JOINT PAKKING	123G
15		71416130		1	CLAMP ABRAZADERA	MORSETTO SPÆNDEBÅND	KLEMME BRAÇADEIRA	COLLIER KLEM	120M
22		11112134		1	SCREW TORNILLO	VITE SKRUE	SCHRAUBE PARAFUSO	VIS SCHROEF	040V
23		14496731		1	WASHER, M12 x 24 x 2.5 Thk ARANDELA	RONDELLA FLADSKIVE	UNTERLEGSCHEIBE ANILHA	RONDELLE SLUITRING	131R
24		10517074		1	LOCK WASHER ARANDELA DE BLOQUE	RONDELLA DI SICUREZ LÅSESKIVE	SICHERUNGSSCHEIBE ANILHA DE RETENÇÃO	RONDELLE FREIN BORGRING	132R
25		16043434		1	BOLT, Hex, M8 x 20, 10.9, Full Thd PERNO	BULLONE BOLT	SCHRAUBE PARAFUSO	VIS BOUT	140B
26		12642021		1	WASHER ARANDELA	RONDELLA FLADSKIVE	UNTERLEGSCHEIBE ANILHA	RONDELLE SLUITRING	131R
27		10516674		1	LOCK WASHER, M8 ARANDELA DE BLOQUE	RONDELLA DI SICUREZ LÅSESKIVE	SICHERUNGSSCHEIBE ANILHA DE RETENÇÃO	RONDELLE FREIN BORGRING	132R

Copyright © New Holland

1.220	14	p1	03/10

ELECTRIC SYSTEM
IMPIANTO ELETTRICO
ELEKTRISCHE ANLAGE
INSTALLATION ELECTRIQUE

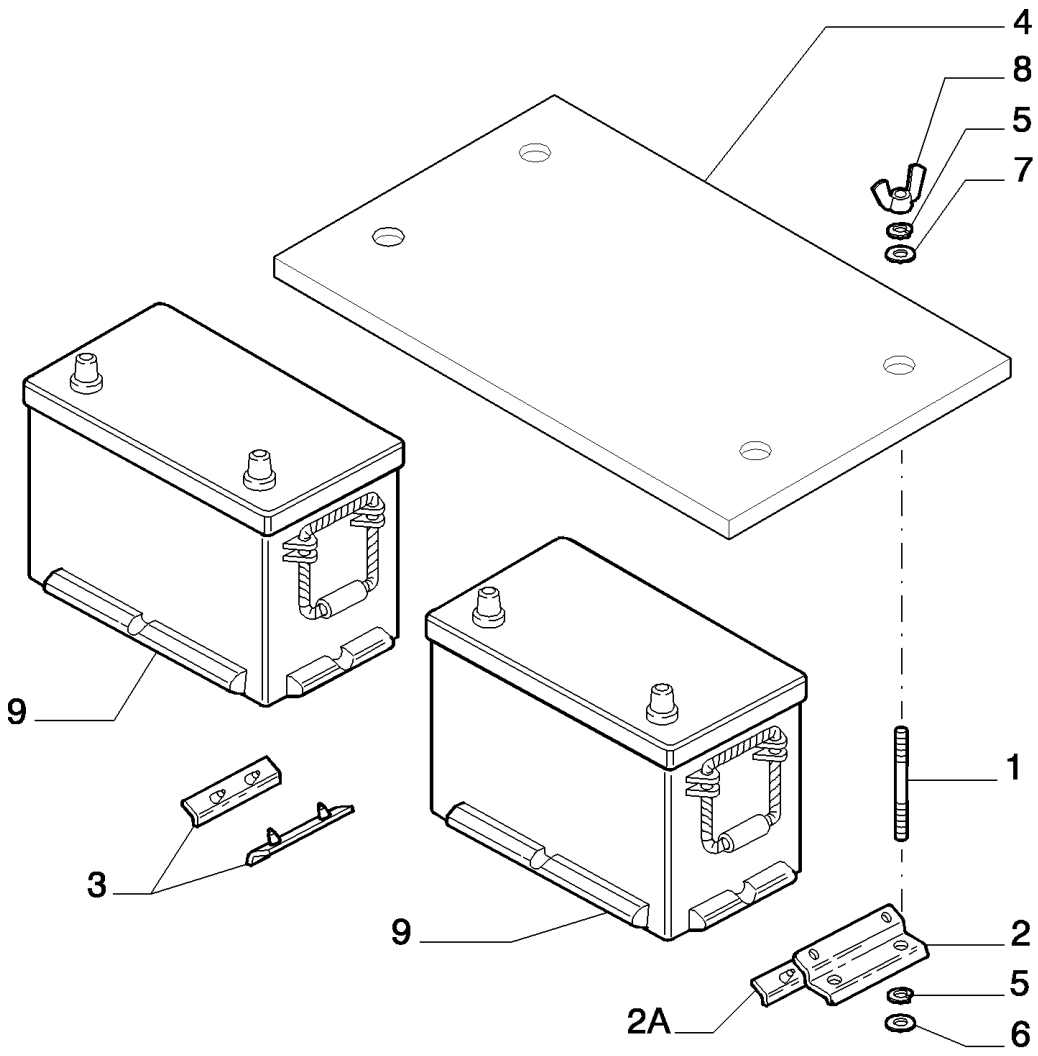

Copyright © New Holland

INSTALACION ELECTRICA
ELECTRIC SYSTEM
ELECTRIC SYSTEM
ELECTRIC SYSTEM

R	N	P.N.	MOD	Q	Description Denominacion	Descrizione Beskrivelse	Bezeichnung Denominação	Description Beschrijving	L.C.
1		87559748		4	TIE-ROD TIRANTE	TIRANTE TRÆKSTANG	SPURSTANGE TIRANTE	TIRANT TREKSTANG	142T
2		71451371		2	BRACKET, - ASSY SOPORTE	STAFFA BESLAG	HALTERUNG SUPORTE	SUPPORT STEUN	225S
2A		71451372		1	PAD PASTILLA	CUSCINO; TAMPONE BREMSEKLODS	UNTERLAGE ESPAÇADOR	COUSSIN BLOK	060T
3		71451372		2	PAD PASTILLA	CUSCINO; TAMPONE BREMSEKLODS	UNTERLAGE ESPAÇADOR	COUSSIN BLOK	060T
4		87559749		1	GUARD DEFENSA	PROTEZIONE BESKYTTELSESSKÆRM	SCHUTZABDECKUNG PROTECÇÃO	PROTECTION AFSCHERMING	070R
5		10516874		8	LOCK WASHER ARANDELA DE BLOQUE	RONDELLA DI SICUREZ LÅSESKIVE	SICHERUNGSSCHEIBE ANILHA DE RETENÇÃO	RONDELLE FREIN BORGRING	132R
6		14496631		4	WASHER, M10 x 21 x 2 ARANDELA	RONDELLA FLADSKIVE	UNTERLEGSCHEIBE ANILHA	RONDELLE SLUITRING	131R
7		79047640		4	WASHER ARANDELA	RONDELLA FLADSKIVE	UNTERLEGSCHEIBE ANILHA	RONDELLE SLUITRING	131R
8		10101901		4	NUT TUERCA	DADO MØTRIK	MUTTER PORCA	ECROU MOER	010D
9		71418183		2	DRY BATTERY, 12V - 100AH - 440A BATERÍA SECA	BATTERIA A SECCO TØRBATTERI	TROCKENBATTERIE BATERIA SECA	BATTERIE SECHE DROGE ACCU	038B

Copyright © New Holland

1.220	15	p1	03/10

ELECTRIC SYSTEM
IMPIANTO ELETTRICO
ELEKTRISCHE ANLAGE
INSTALLATION ELECTRIQUE

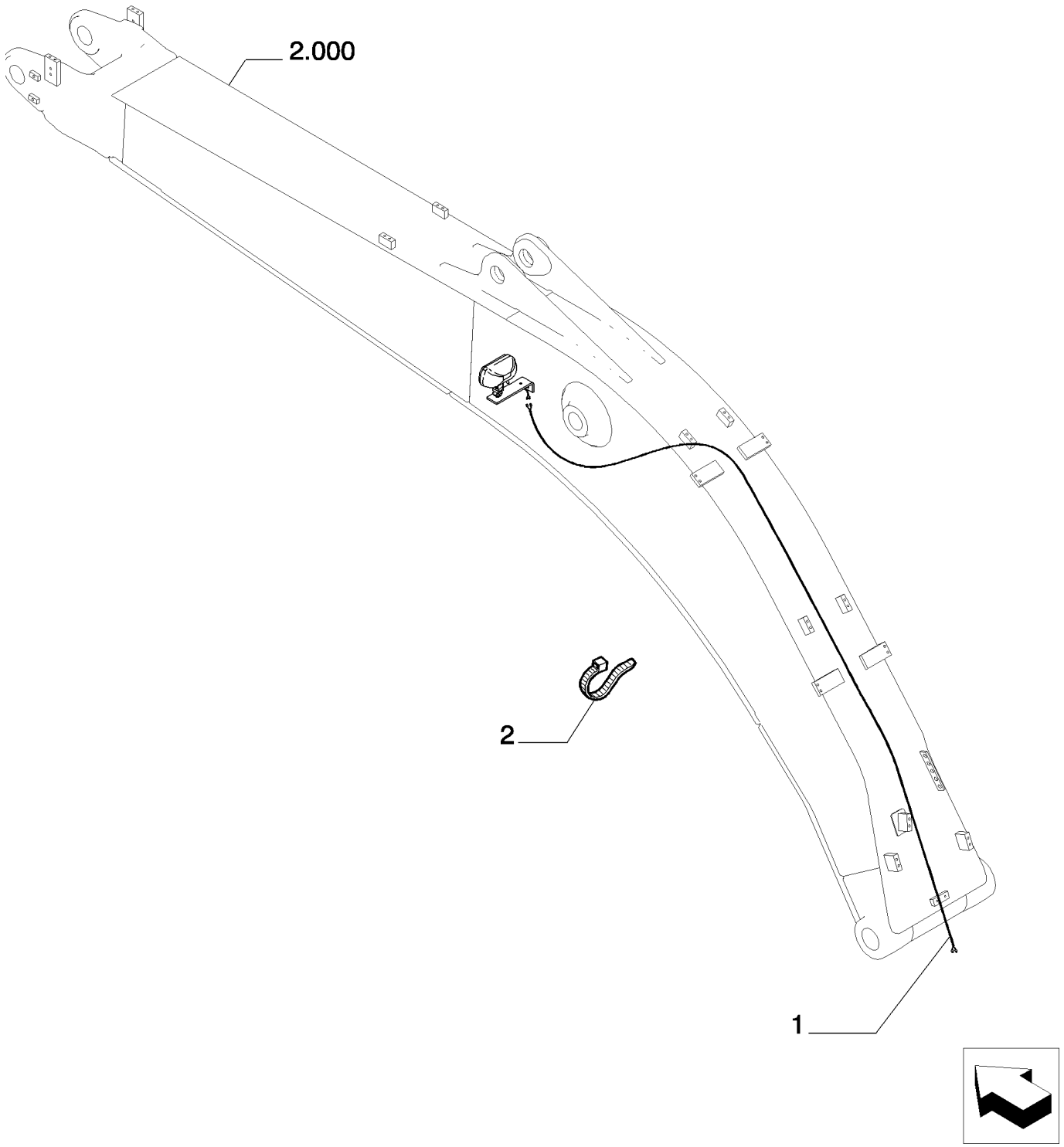

Copyright © New Holland

INSTALACION ELECTRICA
ELECTRIC SYSTEM
ELECTRIC SYSTEM
ELECTRIC SYSTEM

R	N	P.N.	MOD	Q	Description Denominacion	Descrizione Beskrivelse	Bezeichnung Denominação	Description Beschrijving	L.C.
1		**{LB15E01006P1}**		1					
2		**72951499**		8	CLIP ABRAZADERA	FERMO KLIPS	KLAMMER FIXADOR	COLLIER KLEM	045F

Copyright © New Holland

ELECTRIC SYSTEM
IMPIANTO ELETTRICO
ELEKTRISCHE ANLAGE
INSTALLATION ELECTRIQUE

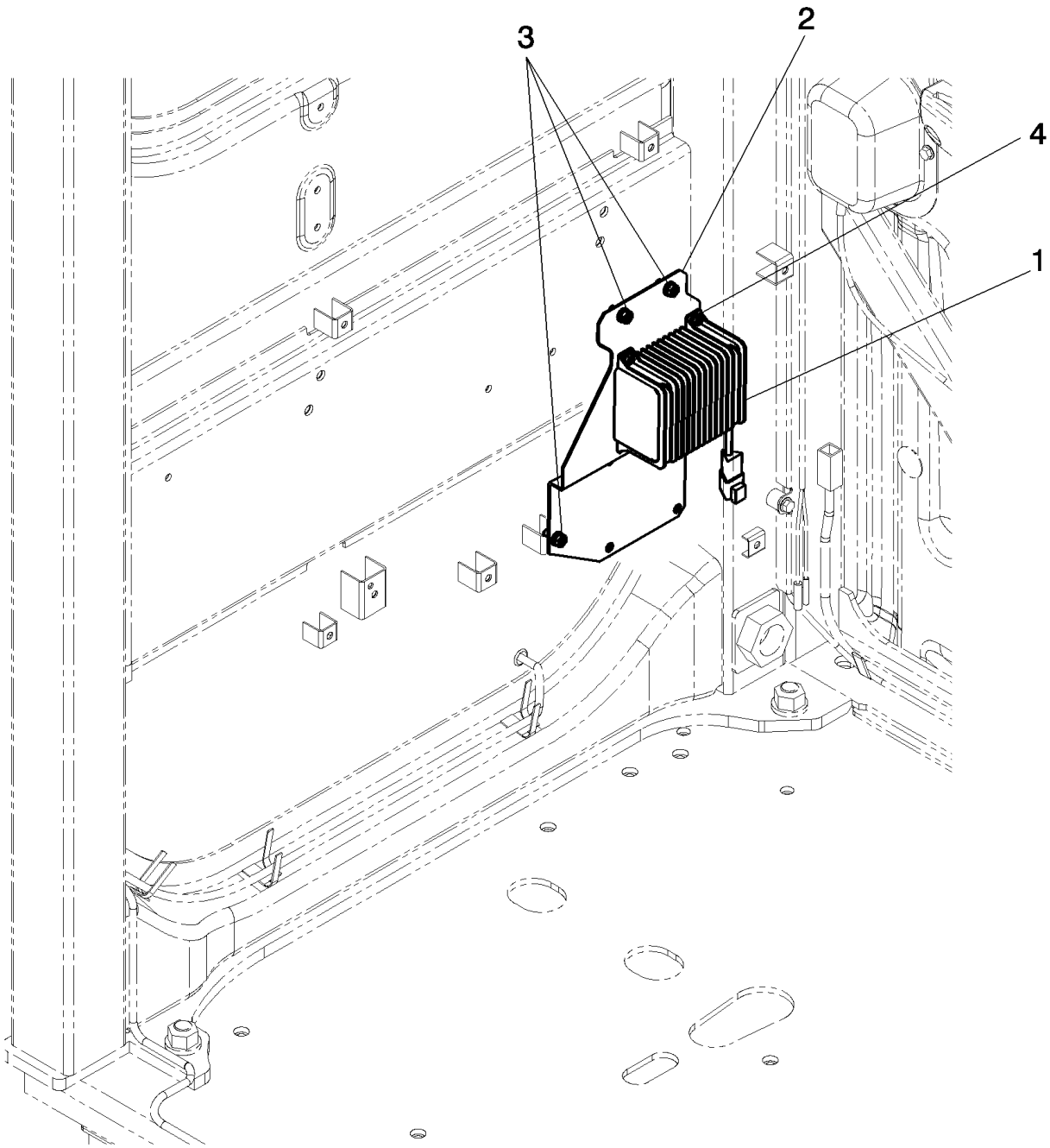

Copyright © New Holland

INSTALACION ELECTRICA
ELECTRIC SYSTEM
ELECTRIC SYSTEM
ELECTRIC SYSTEM

R	N	P.N.	MOD	Q	Description Denominacion	Descrizione Beskrivelse	Bezeichnung Denominação	Description Beschrijving	L.C.
1		84130880		1	VOLTAGE REGULATOR REGULADOR DE TENSIO	REGOLATORE DI TENSI SPÆNDINGSREGULATO	SPANNUNGSREGLER REGULADOR DE TENSÃ	REGULATEUR DE TENS SPANNINGSREGELAAR	169R
2		YN22E01335P1		1	BRACKET SOPORTE	STAFFA BESLAG	HALTERUNG SUPORTE	SUPPORT STEUN	225S
3		72209121		3	SCREW TORNILLO	VITE SKRUE	SCHRAUBE PARAFUSO	VIS SCHROEF	040V
4		72952742		4	SCREW TORNILLO	VITE SKRUE	SCHRAUBE PARAFUSO	VIS SCHROEF	040V

Copyright © New Holland

1.230	01	p1	03/10

WINDOW WASHER
IMPIANTO LAVAVETRO
SCHEIBENWASCHER
LAVE GLACE

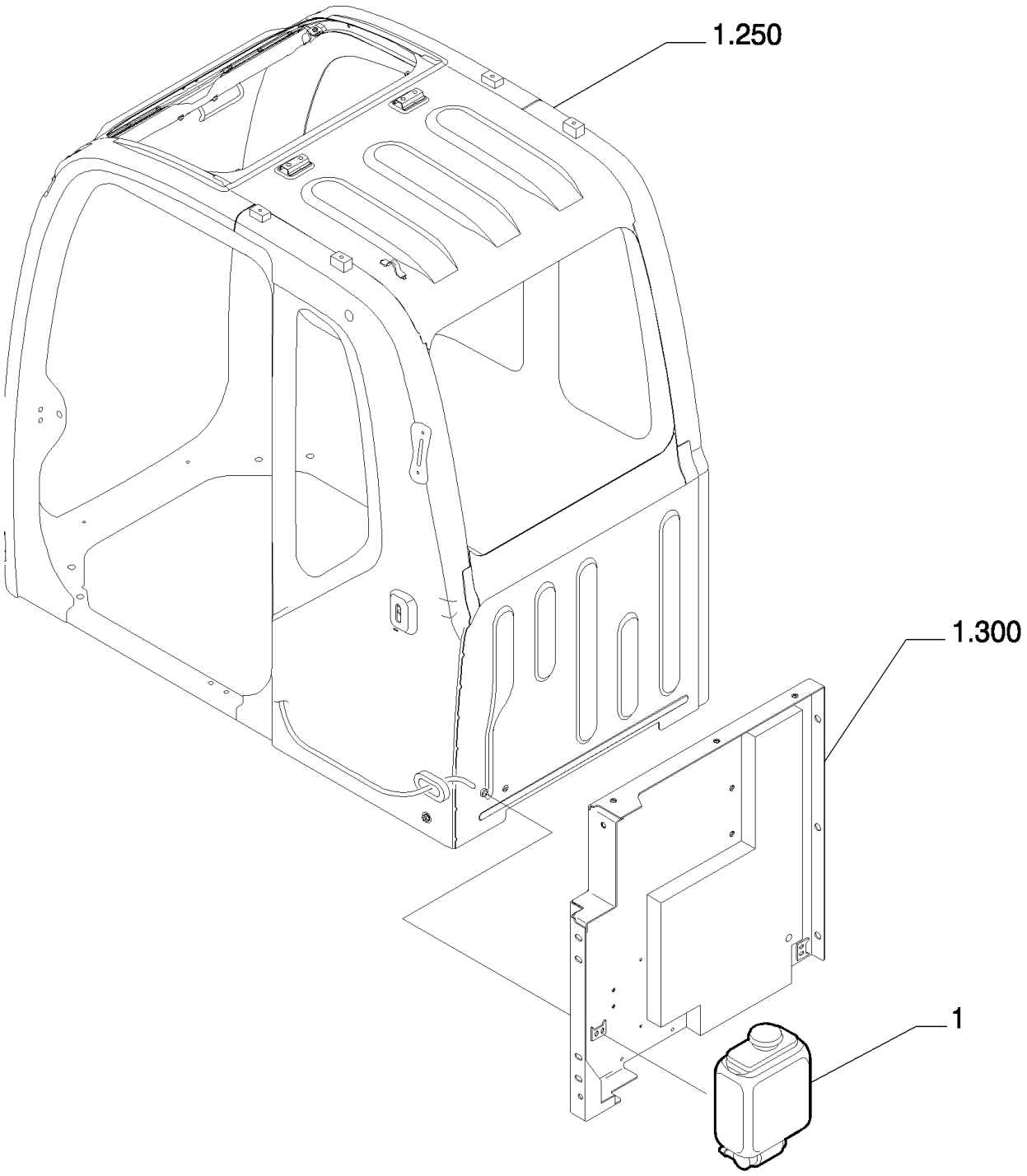

Copyright © New Holland

LAVAPARABRISAS
WINDOW WASHER
WINDOW WASHER
WINDOW WASHER

R	N	P.N.	MOD	Q	Description Denominacion	Descrizione Beskrivelse	Bezeichnung Denominação	Description Beschrijving	L.C.
1		422702800		1	TANK DEPÓSITO	SERBATOIO TANK	TANK DEPÓSITO	RESERVOIR TANK	115S

Copyright © New Holland

1.250	01	p1	03/10

CAB
CABINA
FAHRERHAUS
CABINE

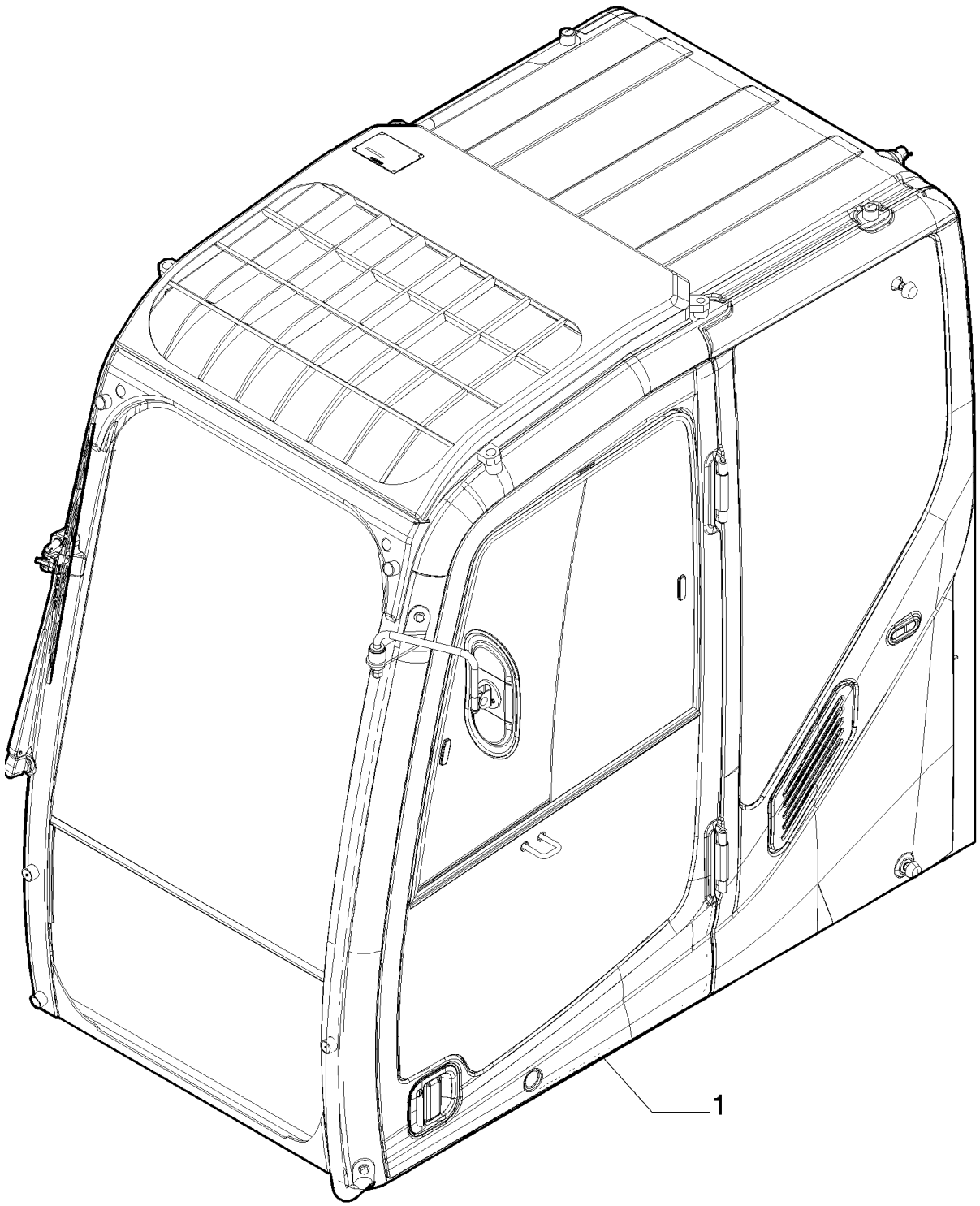

Copyright © New Holland

CABINA
CAB
CAB
CAB

R	N	P.N.	MOD	Q	Description Denominacion	Descrizione Beskrivelse	Bezeichnung Denominação	Description Beschrijving	L.C.
1	1	LQ02C00021F1		1	CAB CABINA	CABINA KABINE	KABINE CABINA	CABINE CABINE	008C

(1) ASSY SEE PAGE 2

Copyright © New Holland

1.250	02	p1	03/10

CAB
CABINA
FAHRERHAUS
CABINE

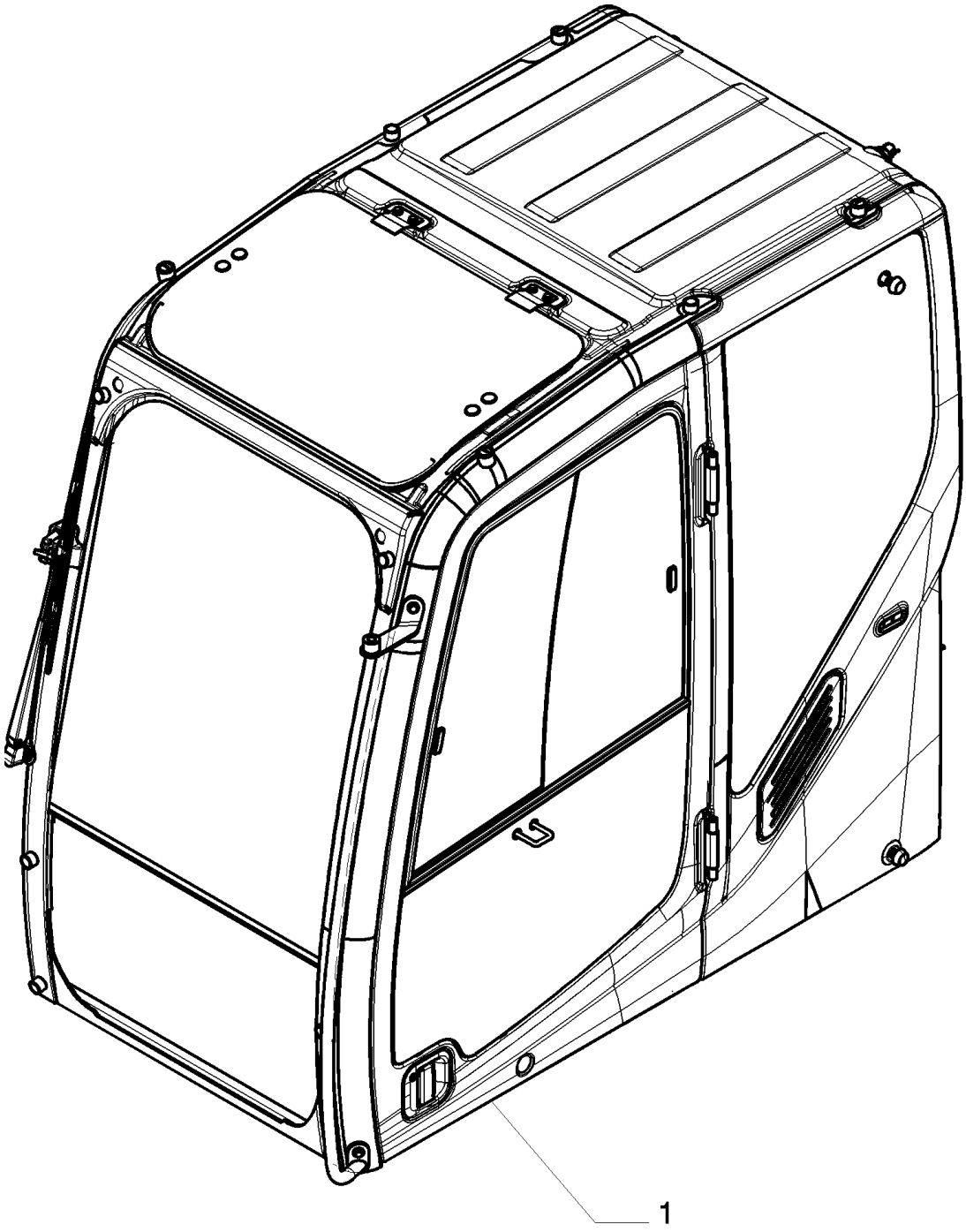

Copyright © New Holland

CABINA
CAB
CAB
CAB

R	N	P.N.	MOD	Q	Description Denominacion	Descrizione Beskrivelse	Bezeichnung Denominação	Description Beschrijving	L.C.
1		LQ02C00022F1		1	CAB CABINA	CABINA KABINE	KABINE CABINA	CABINE CABINE	008C

Copyright © New Holland

1.250	03	p1	03/10

CAB
CABINA
FAHRERHAUS
CABINE

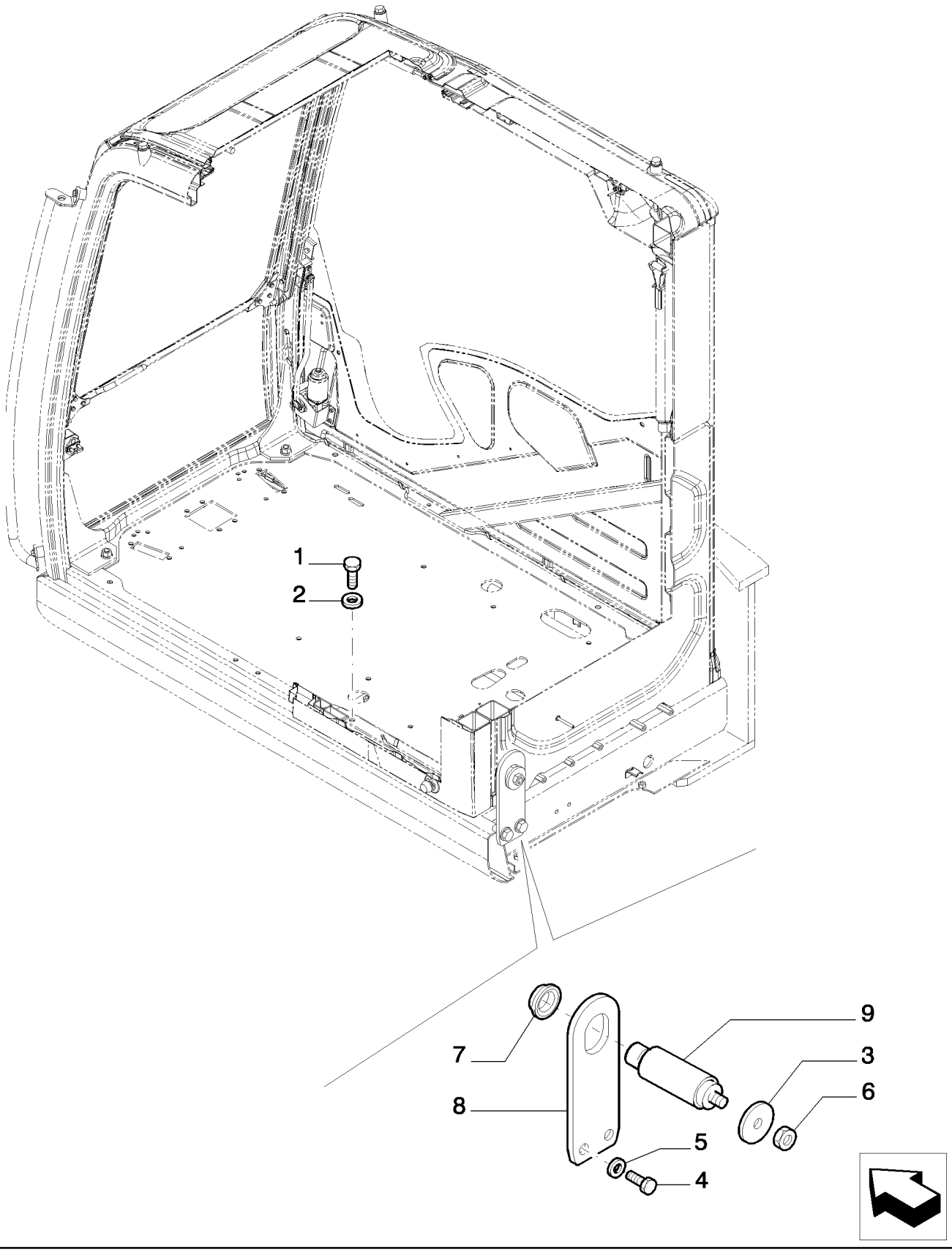

Copyright © New Holland

CABINA
CAB
CAB
CAB

R	N	P.N.	MOD	Q	Description Denominacion	Descrizione Beskrivelse	Bezeichnung Denominação	Description Beschrijving	L.C.
1		11112634		4	SCREW TORNILLO	VITE SKRUE	SCHRAUBE PARAFUSO	VIS SCHROEF	040V
2		72201225		4	WASHER ARANDELA	RONDELLA FLADSKIVE	UNTERLEGSCHEIBE ANILHA	RONDELLE SLUITRING	131R
3		LQ02C01276P1		1	WASHER ARANDELA	RONDELLA FLADSKIVE	UNTERLEGSCHEIBE ANILHA	RONDELLE SLUITRING	131R
4		11124534		2	SCREW TORNILLO	VITE SKRUE	SCHRAUBE PARAFUSO	VIS SCHROEF	040V
5		72955844		2	WASHER ARANDELA	RONDELLA FLADSKIVE	UNTERLEGSCHEIBE ANILHA	RONDELLE SLUITRING	131R
6		ZN17C20012		1	NUT TUERCA	DADO MØTRIK	MUTTER PORCA	ECROU MOER	010D
7		LQ02C01193P1		1	INSULATOR AISLADOR	ISOLATORE ISOLATOR	ISOLATOR ISOLADOR	ISOLANT ISOLATIE	085I
8		LQ02C01211P1		1	PLATE PLACA	PIASTRA PLADE	PLATTE CHAPA	PLAQUE PLAAT	105P
9		LQ02C01277P1		1	PIN PASADOR	PERNO STIFT	PIN PERNO	BROCHE PEN	080P

Copyright © New Holland

1.250	04	p1	03/10

SEAT BELT
CINTURE DI SICUREZZA
SICHERHEITSGURT
CEINTURE DE SECURITE'

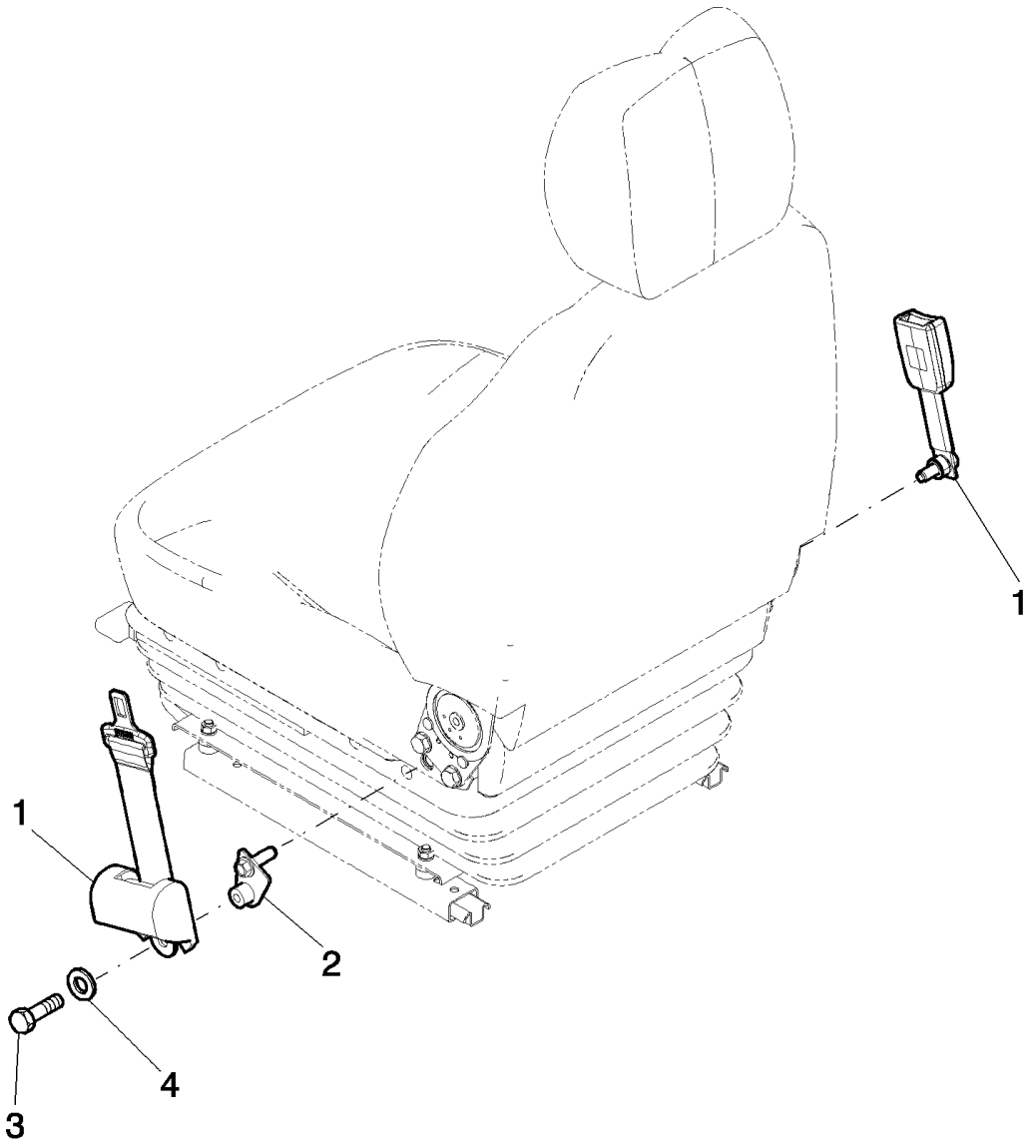

Copyright © New Holland

CINTURON DE SEGURIDAD
SEAT BELT
SEAT BELT
SEAT BELT

R	N	P.N.	MOD	Q	Description Denominacion	Descrizione Beskrivelse	Bezeichnung Denominação	Description Beschrijving	L.C.
1		YN25M00081F1		1	SEAT BELT CINTURÓN DE SEGURID	CINTURA DI SICUREZZA SIKKERHEDSBÆLTE	SICHERHEITSGURT CINTO DE SEGURANÇA	CEINTURE DE SECURIT VEILIGHEIDSGORDEL	182C
2		YN25M01242P1		1	BRACKET SOPORTE	STAFFA BESLAG	HALTERUNG SUPORTE	SUPPORT STEUN	225S
3		11106034		1	BOLT, Hex, M10 x 20, 10.9, Full Thd PERNO	BULLONE BOLT	SCHRAUBE PARAFUSO	VIS BOUT	140B
4		14496631		1	WASHER, M10 x 21 x 2 ARANDELA	RONDELLA FLADSKIVE	UNTERLEGSCHEIBE ANILHA	RONDELLE SLUITRING	131R

Copyright © New Holland

1.250	05	p1	03/10

CAB GUARD
RIPARO CABINA
SCHUTZAB. DES FAHRERHAUSES
PROTECTION CABINE

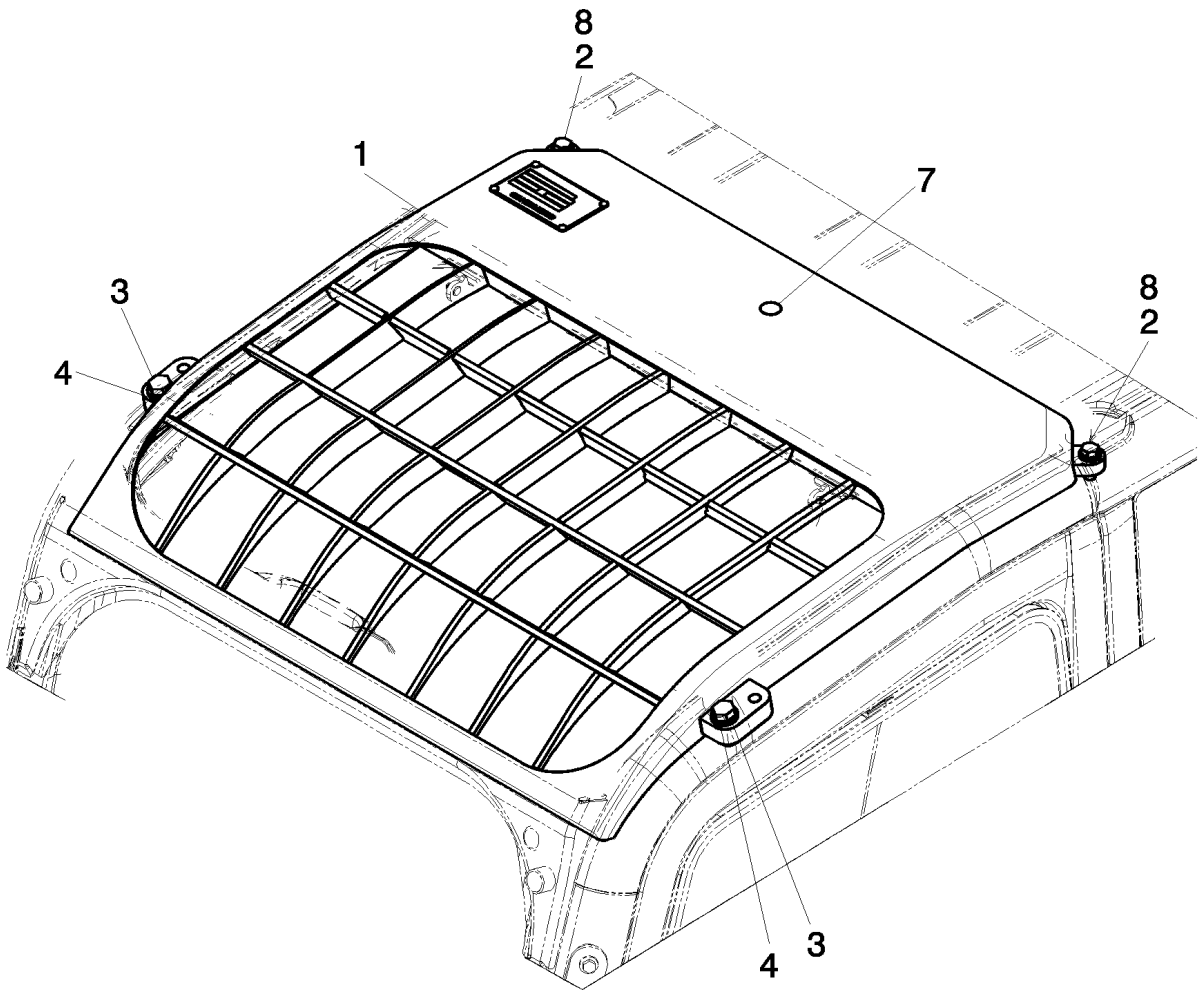

Copyright © New Holland

DEFENSA CABINA
CAB GUARD
CAB GUARD
CAB GUARD

R	N	P.N.	MOD	Q	Description Denominacion	Descrizione Beskrivelse	Bezeichnung Denominação	Description Beschrijving	L.C.
1		LQ02C01213P1		1	GUARD DEFENSA	PROTEZIONE BESKYTTELSESSKÆRM	SCHUTZABDECKUNG PROTECÇÃO	PROTECTION AFSCHERMING	070R
2		11112634		2	SCREW TORNILLO	VITE SKRUE	SCHRAUBE PARAFUSO	VIS SCHROEF	040V
3		11118734		2	SCREW TORNILLO	VITE SKRUE	SCHRAUBE PARAFUSO	VIS SCHROEF	040V
4		71405003		2	WASHER ARANDELA	RONDELLA FLADSKIVE	UNTERLEGSCHEIBE ANILHA	RONDELLE SLUITRING	131R
7		{LQ02C01310P1}		1					
8		14496731		2	WASHER, M12 x 24 x 2.5 Thk ARANDELA	RONDELLA FLADSKIVE	UNTERLEGSCHEIBE ANILHA	RONDELLE SLUITRING	131R

Copyright © New Holland

1.250	06	p1	03/10

CAB MIRROR
CABINA, SPECCHIO RETROVISORE
FAHRERHAUS, RÜCKSPIEGEL
CABINE, RÉTROVISEUR

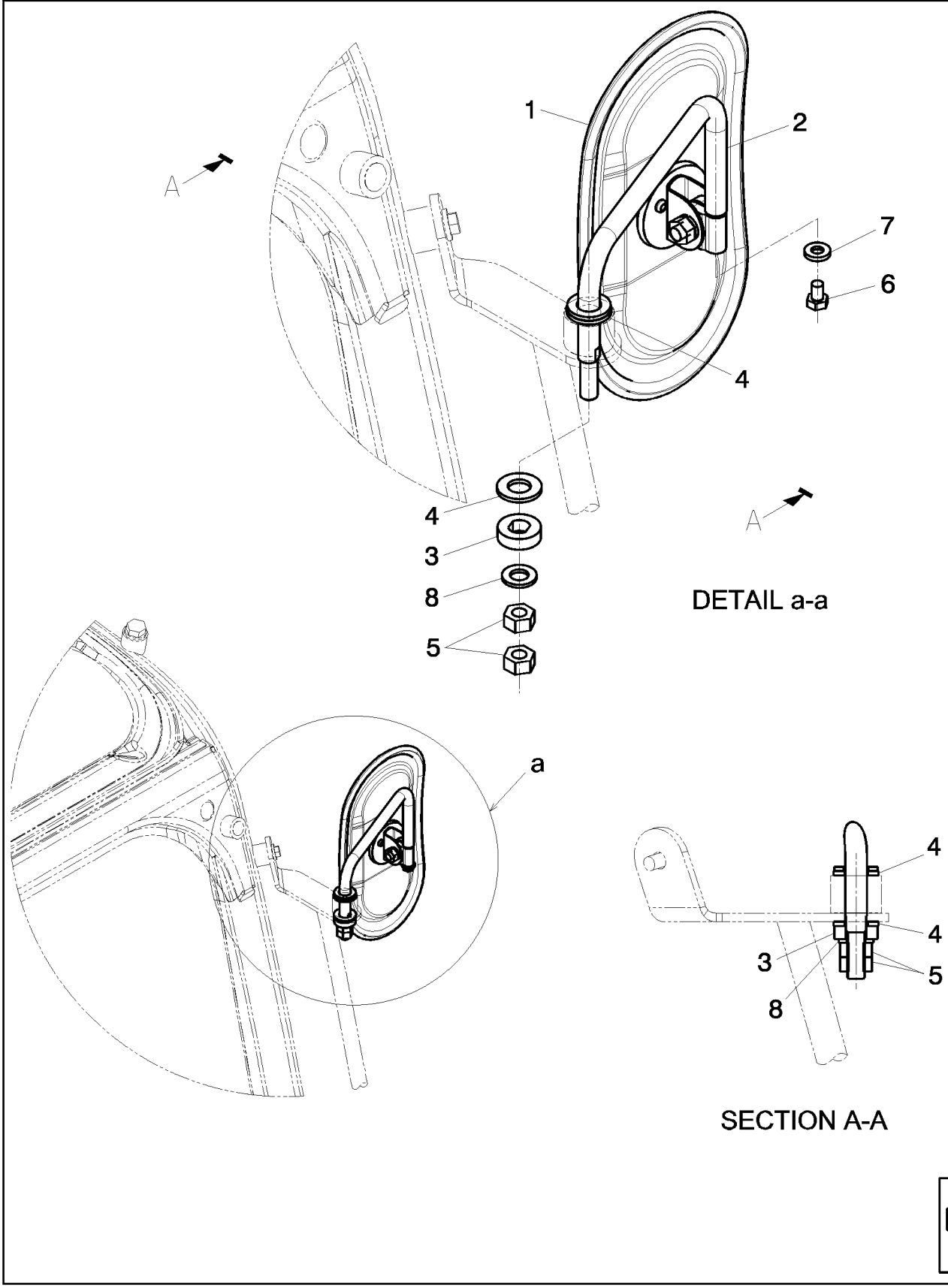

Copyright © New Holland

CABINA, ESPEJO RETROVISOR
CAB MIRROR
CAB MIRROR
CAB MIRROR

R	N	P.N.	MOD	Q	Description Denominacion	Descrizione Beskrivelse	Bezeichnung Denominação	Description Beschrijving	L.C.
1		87612553		1	REAR VIEW MIRROR ESPEJO RETROVISOR	SPECCHIETTO RETROV BAKSPEJL	RÜCKSPIEGEL ESPELHO RETROVISOR	RETROVISEUR ARRIERE ACHTERUITKIJKSPIEGE	185S
2		LQ52C01026P1		1	STAY TIRANTE	PUNTELLO OPHOLD	STREBE APOIO	ETAI AANSLAG	P357
3		LQ52C01025P1		1	WASHER ARANDELA	RONDELLA FLADSKIVE	UNTERLEGSCHEIBE ANILHA	RONDELLE SLUITRING	131R
4		LQ52C01021P1		2	WASHER ARANDELA	RONDELLA FLADSKIVE	UNTERLEGSCHEIBE ANILHA	RONDELLE SLUITRING	131R
5		11702921		2	NUT, M12, Cl 10 TUERCA	DADO MØTRIK	MUTTER PORCA	ECROU MOER	010D
6		16043034		1	SCREW TORNILLO	VITE SKRUE	SCHRAUBE PARAFUSO	VIS SCHROEF	040V
7		14496531		1	WASHER, M8 x 17 x 1.6 ARANDELA	RONDELLA FLADSKIVE	UNTERLEGSCHEIBE ANILHA	RONDELLE SLUITRING	131R
8		72951749		1	WASHER ARANDELA	RONDELLA FLADSKIVE	UNTERLEGSCHEIBE ANILHA	RONDELLE SLUITRING	131R

Copyright © New Holland

1.250	07	p1	03/10

ARMREST
BRACCIOLO SEDILE
ARMLEHNE
ACCOUDOIR DE SIEGE

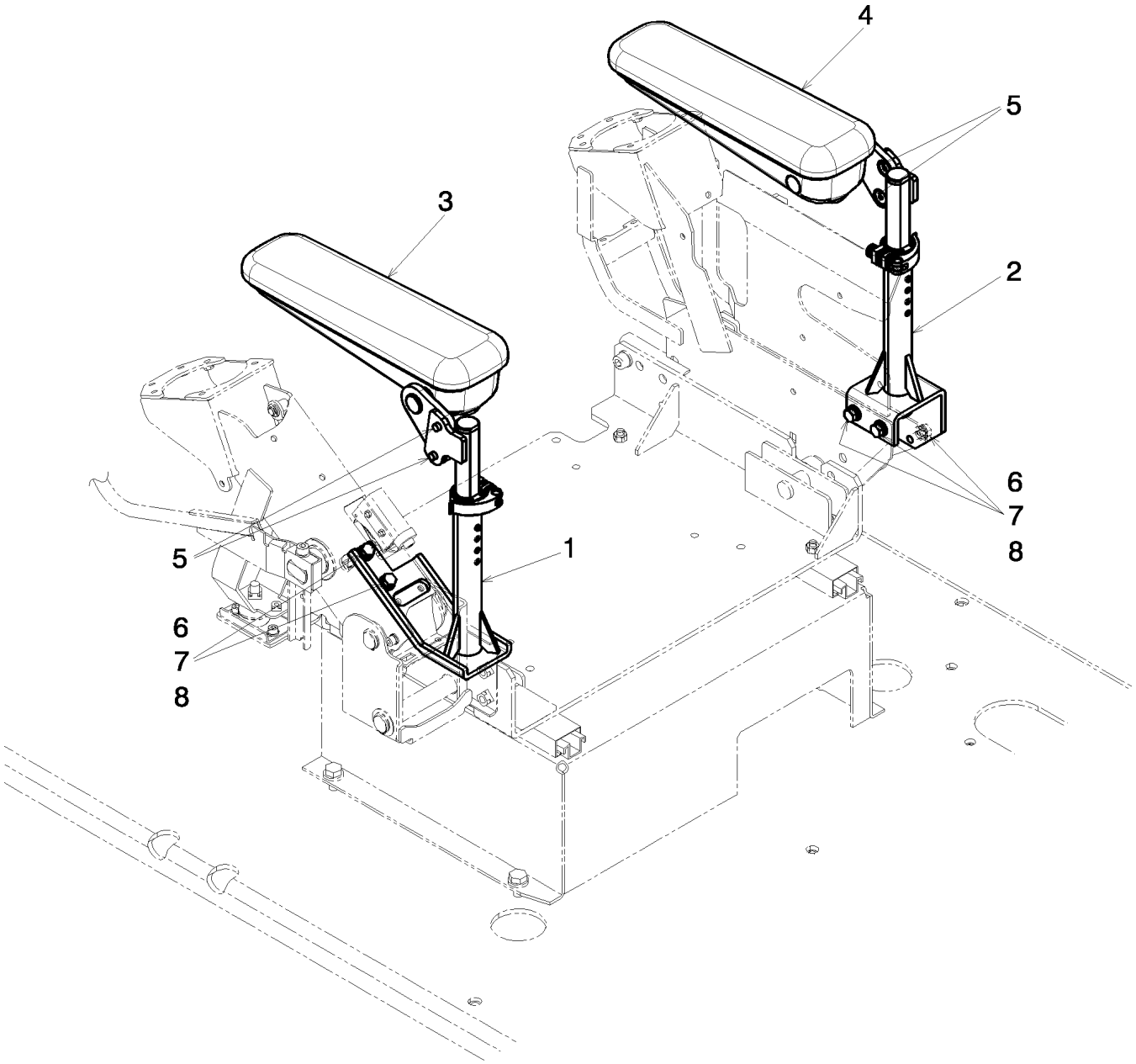

Copyright © New Holland

APOYABRAZO
ARMREST
ARMREST
ARMREST

R	N	P.N.	MOD	Q	Description Denominacion	Descrizione Beskrivelse	Bezeichnung Denominação	Description Beschrijving	L.C.
1		YN25M01235P1		1	BRACKET, - LEFT SOPORTE	STAFFA BESLAG	HALTERUNG SUPORTE	SUPPORT STEUN	225S
2		YN25M01234P1		1	BRACKET, - RIGHT SOPORTE	STAFFA BESLAG	HALTERUNG SUPORTE	SUPPORT STEUN	225S
3		87570965		1	ARMREST, - LEFT REPOSABRAZOS	BRACCIOLO ARMLÆN	ARMLEHNE APOIO DE BRAÇOS	ACCOUDOIR ARMLEUNING	074A
4		87570967		1	ARMREST, - RIGHT REPOSABRAZOS	BRACCIOLO ARMLÆN	ARMLEHNE APOIO DE BRAÇOS	ACCOUDOIR ARMLEUNING	074A
5		14442034		4	SCREW, CSK, Soc Hd, M8 x 20, Cl 10.9 TORNILLO	VITE SKRUE	SCHRAUBE PARAFUSO	VIS SCHROEF	040V
6		16043434		5	BOLT, Hex, M8 x 20, 10.9, Full Thd PERNO	BULLONE BOLT	SCHRAUBE PARAFUSO	VIS BOUT	140B
7		10516674		5	LOCK WASHER, M8 ARANDELA DE BLOQUE	RONDELLA DI SICUREZ LÅSESKIVE	SICHERUNGSSCHEIBE ANILHA DE RETENÇÃO	RONDELLE FREIN BORGRING	132R
8		14496531		5	WASHER, M8 x 17 x 1.6 ARANDELA	RONDELLA FLADSKIVE	UNTERLEGSCHEIBE ANILHA	RONDELLE SLUITRING	131R

Copyright © New Holland

1.260	01	p1	03/10

PANEL ASSY, INSTRUMENT
PANNELLATURE, STRUMENTI
PANEL-MONTAGE, WERKZEUGE
ASSEMBLEE DE PANNEAU, INSTRUMENT

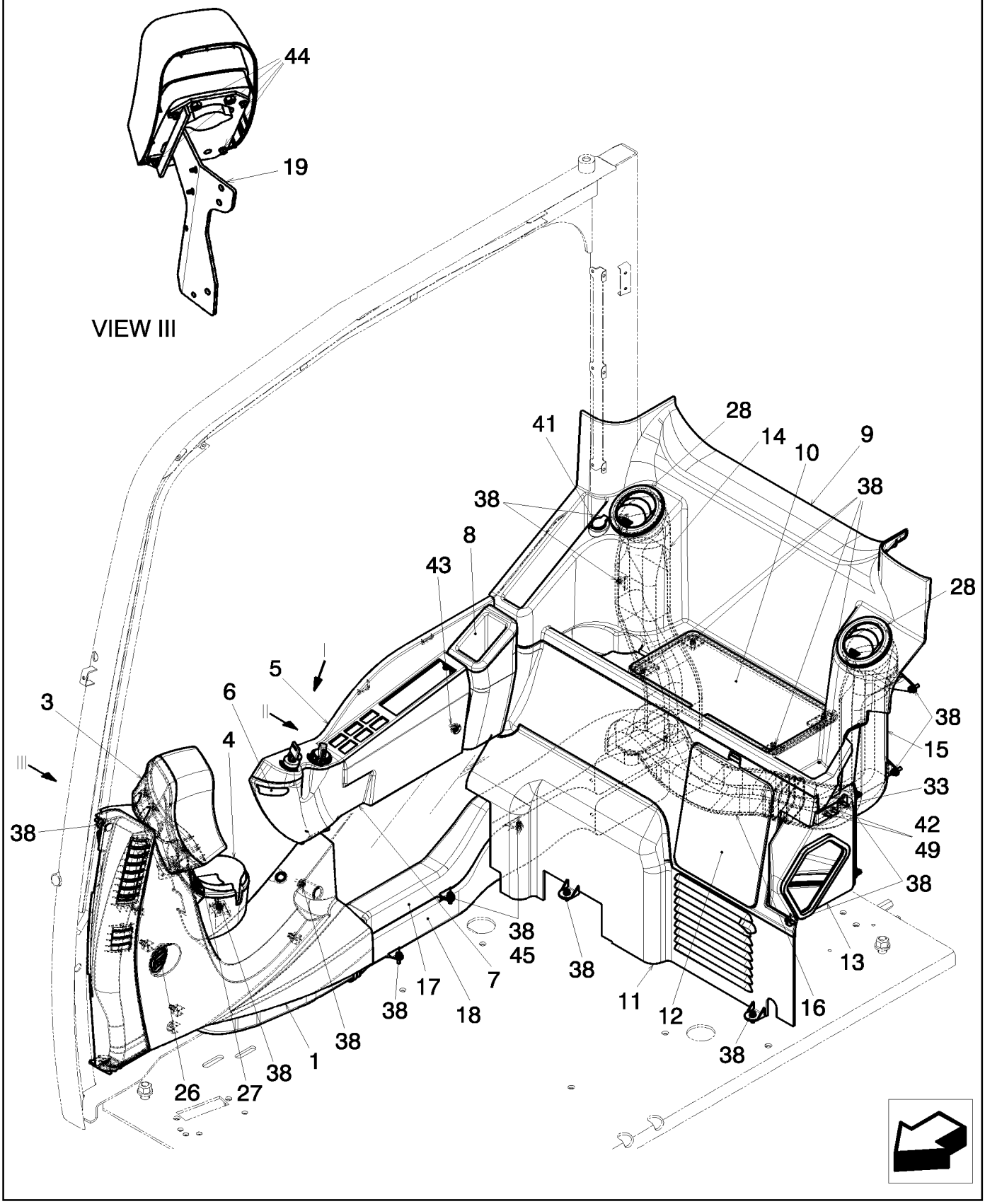

Copyright © New Holland

ASAMBLEA DE PANEL, INSTRUMENT
PANEL ASSY, INSTRUMENT
PANEL ASSY, INSTRUMENT
PANEL ASSY, INSTRUMENT

R	N	P.N.	MOD	Q	Description Denominacion	Descrizione Beskrivelse	Bezeichnung Denominação	Description Beschrijving	L.C.
1		YN17M01432F1		1	COVER CUBIERTA	COPERCHIO DÆKSEL	ABDECKUNG COBERTURA	COUVERCLE AFSCHERMING	265C
3		YN17M01464P1		1	COVER CUBIERTA	COPERCHIO DÆKSEL	ABDECKUNG COBERTURA	COUVERCLE AFSCHERMING	265C
4		YN17M01435F1		1	SUPPORT SOPORTE	SUPPORTO BESLAG	STÜTZE SUPORTE	SUPPORT STEUN	300S
5		YN17M01436F1		1	COVER CUBIERTA	COPERCHIO DÆKSEL	ABDECKUNG COBERTURA	COUVERCLE AFSCHERMING	265C
6		YN17M01437P1		1	PLUG TAPÓN	TAPPO PROP	STOPFEN TAMPÃO	BOUCHON PLUG	050T
7		YN17M01438F1		1	COVER CUBIERTA	COPERCHIO DÆKSEL	ABDECKUNG COBERTURA	COUVERCLE AFSCHERMING	265C
8		YN17M01439F1		1	COVER CUBIERTA	COPERCHIO DÆKSEL	ABDECKUNG COBERTURA	COUVERCLE AFSCHERMING	265C
9		YN17M01440F1		1	COVER CUBIERTA	COPERCHIO DÆKSEL	ABDECKUNG COBERTURA	COUVERCLE AFSCHERMING	265C
10		YN17M01441F1		1	COVER CUBIERTA	COPERCHIO DÆKSEL	ABDECKUNG COBERTURA	COUVERCLE AFSCHERMING	265C
11		YN17M01442F1		1	COVER CUBIERTA	COPERCHIO DÆKSEL	ABDECKUNG COBERTURA	COUVERCLE AFSCHERMING	265C
12		YN17M01443F1		1	COVER CUBIERTA	COPERCHIO DÆKSEL	ABDECKUNG COBERTURA	COUVERCLE AFSCHERMING	265C
13		YN20M01773F1		1	DUCT CONDUCTO	CONDOTTO KANAL	LEITUNG CONDUTA	CONDUITE KANAAL	223C
14		YN20M01771F1		1	DUCT CONDUCTO	CONDOTTO KANAL	LEITUNG CONDUTA	CONDUITE KANAAL	223C
15		YN20M01772F1		1	DUCT CONDUCTO	CONDOTTO KANAL	LEITUNG CONDUTA	CONDUITE KANAAL	223C
16		YN20M01774F1		1	DUCT CONDUCTO	CONDOTTO KANAL	LEITUNG CONDUTA	CONDUITE KANAAL	223C
17		YN20M01779P1		1	DUCT CONDUCTO	CONDOTTO KANAL	LEITUNG CONDUTA	CONDUITE KANAAL	223C
18		YN20M01780P1		1	DUCT CONDUCTO	CONDOTTO KANAL	LEITUNG CONDUTA	CONDUITE KANAAL	223C
19		YN17M01480P1		1	BRACKET SOPORTE	STAFFA BESLAG	HALTERUNG SUPORTE	SUPPORT STEUN	225S
26		LQ58S00002P1		1	HOURMETER CONTADOR DE HORAS	CONTAORE TIMETÆLLER	BETRIEBSSTUNDENZÄH CONTADOR DE HORAS	HOROMETRE URENTELLER	248C
27		PU20M01002P1		1	CONVEYOR TRANSPORTADOR	CONVOGLIATORE TRANSPORTBÅND	FÖRDERER TRANSPORTADOR	CONVOYEUR TRANSPORTEUR	260C
28		YN20M01791P1		2	CONVEYOR TRANSPORTADOR	CONVOGLIATORE TRANSPORTBÅND	FÖRDERER TRANSPORTADOR	CONVOYEUR TRANSPORTEUR	260C
33		YN17M01448P1		1	BRACKET SOPORTE	STAFFA BESLAG	HALTERUNG SUPORTE	SUPPORT STEUN	225S
38		72954868		18	SCREW TORNILLO	VITE SKRUE	SCHRAUBE PARAFUSO	VIS SCHROEF	040V
41		87524810		1	SEAT/SLOT ASIENTO/RANURA	SEDE/ASOLA SÆDE	SITZ/SCHLITZ SUPORTE	SIEGE/FENTE ZITTING/SLEUF	069S
42		10902234		2	BOLT, Hex, M6 x 16, 10.9, Full Thd PERNO	BULLONE BOLT	SCHRAUBE PARAFUSO	VIS BOUT	140B

Copyright © New Holland

1.260	01	p2	03/10

PANEL ASSY, INSTRUMENT
PANNELLATURE, STRUMENTI
PANEL-MONTAGE, WERKZEUGE
ASSEMBLEE DE PANNEAU, INSTRUMENT

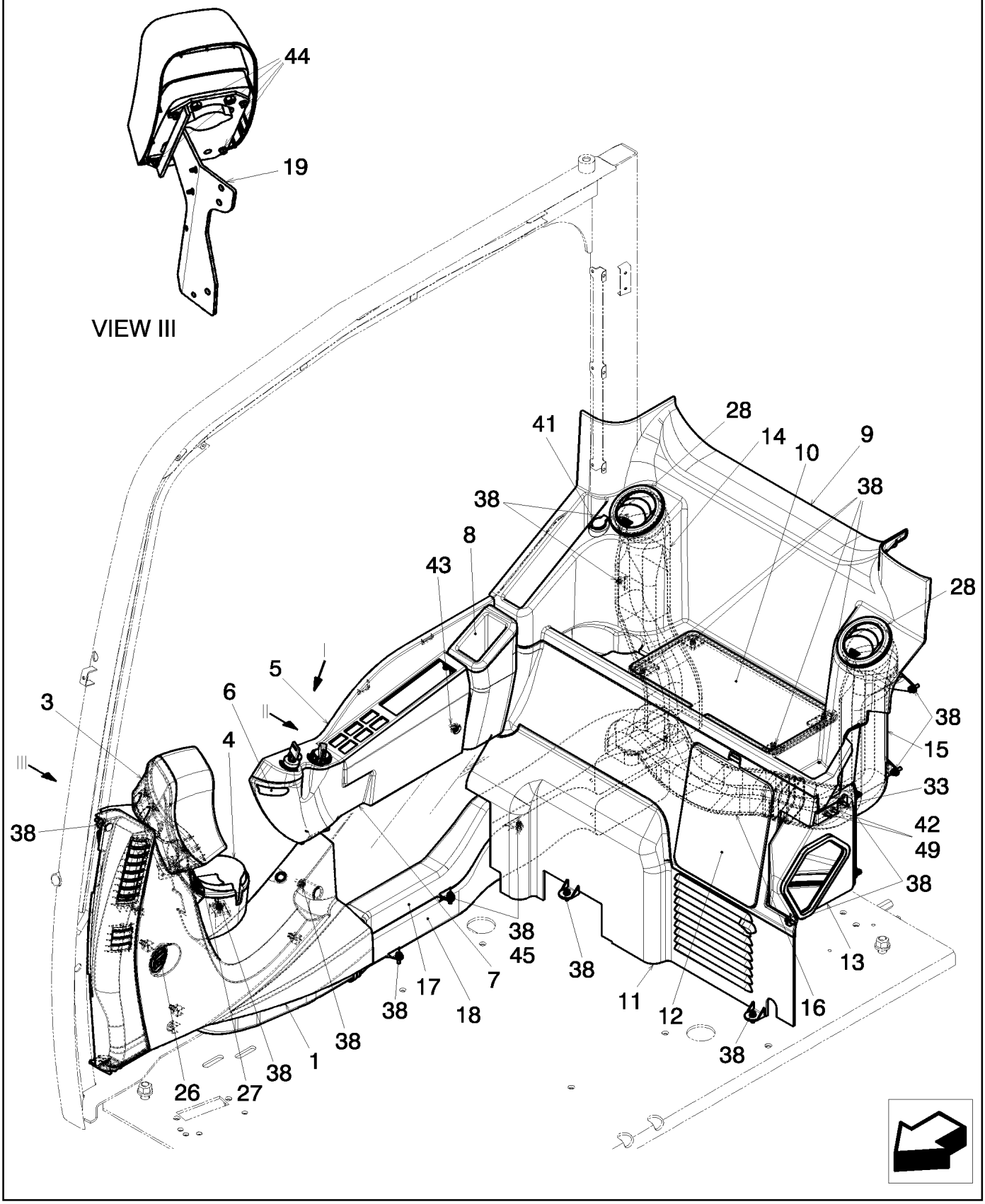

Copyright © New Holland

ASAMBLEA DE PANEL, INSTRUMENT
PANEL ASSY, INSTRUMENT
PANEL ASSY, INSTRUMENT
PANEL ASSY, INSTRUMENT

R	N	P.N.	MOD	Q	Description Denominacion	Descrizione Beskrivelse	Bezeichnung Denominação	Description Beschrijving	L.C.
43		YN17M01162D2		1	SCREW TORNILLO	VITE SKRUE	SCHRAUBE PARAFUSO	VIS SCHROEF	040V
44		72952742		4	SCREW TORNILLO	VITE SKRUE	SCHRAUBE PARAFUSO	VIS SCHROEF	040V
45		15896221		2	NUT, M6, Cl 10 TUERCA	DADO MØTRIK	MUTTER PORCA	ECROU MOER	010D
49		14496431		2	WASHER, M6.4 x 12.5 x 1.6 Thk ARANDELA	RONDELLA FLADSKIVE	UNTERLEGSCHEIBE ANILHA	RONDELLE SLUITRING	131R

Copyright © New Holland

1.260	02	p1	03/10

PANEL ASSY, INSTRUMENT
PANNELLATURE, STRUMENTI
PANEL-MONTAGE, WERKZEUGE
ASSEMBLEE DE PANNEAU, INSTRUMENT

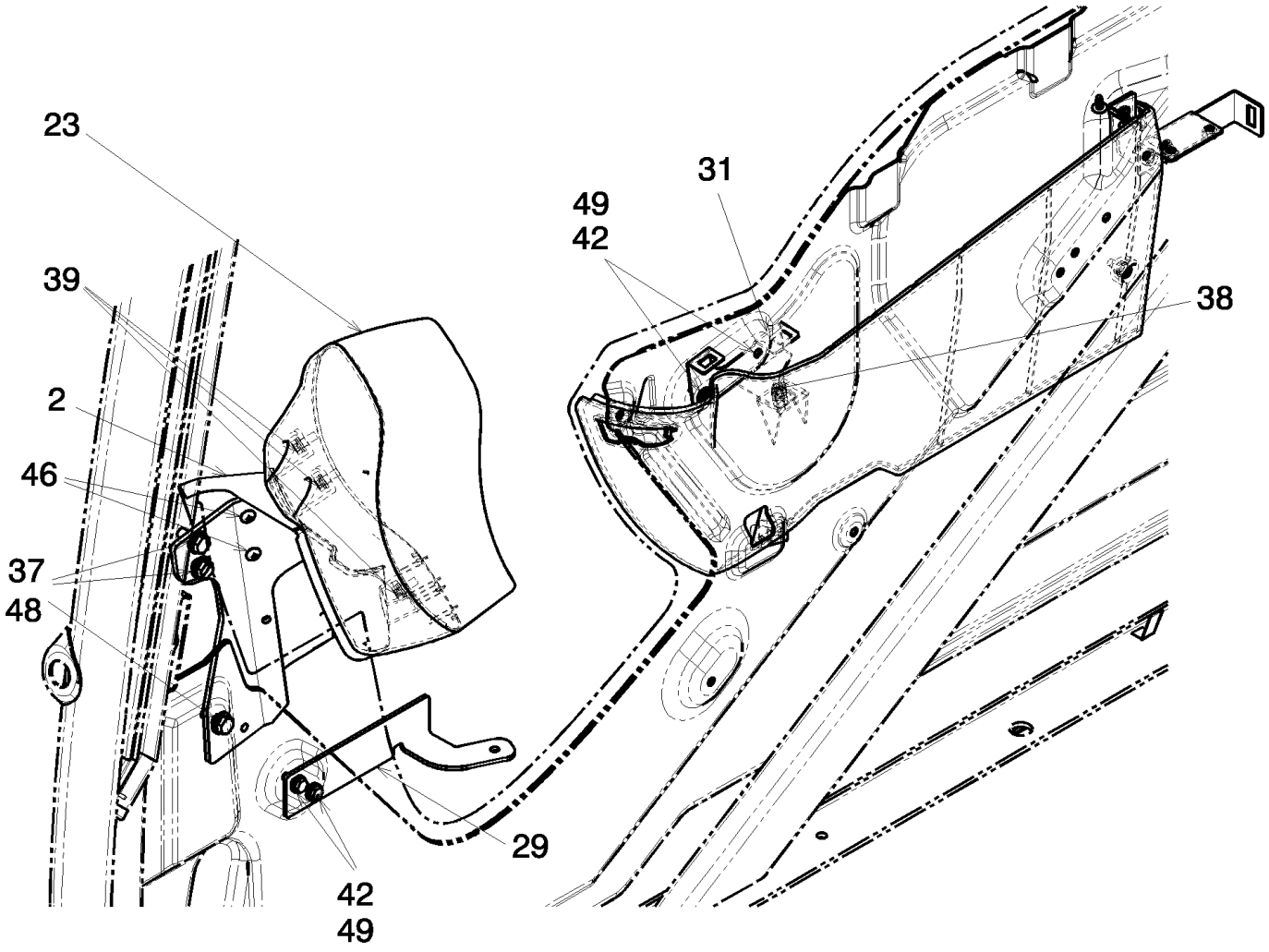

Copyright © New Holland

ASAMBLEA DE PANEL, INSTRUMENT
PANEL ASSY, INSTRUMENT
PANEL ASSY, INSTRUMENT
PANEL ASSY, INSTRUMENT

R	N	P.N.	MOD	Q	Description Denominacion	Descrizione Beskrivelse	Bezeichnung Denominação	Description Beschrijving	L.C.
2		**YN17M01433F1**		1	COVER CUBIERTA	COPERCHIO DÆKSEL	ABDECKUNG COBERTURA	COUVERCLE AFSCHERMING	265C
23	1	**87681693**		1	CONTROL MONITOR CONTROL DE MONITOR	MONITOR MONITOR, KONTROL	ÜBERWACHUNGSMONI MONITOR DE CONTROL	MONITEUR DE COMMAN MONITOR	880M
29		**YN17M01444P1**		1	BRACKET SOPORTE	STAFFA BESLAG	HALTERUNG SUPORTE	SUPPORT STEUN	225S
31		**YN17M01446P1**		1	BRACKET SOPORTE	STAFFA BESLAG	HALTERUNG SUPORTE	SUPPORT STEUN	225S
37		**16043434**		3	BOLT, Hex, M8 x 20, 10.9, Full Thd PERNO	BULLONE BOLT	SCHRAUBE PARAFUSO	VIS BOUT	140B
38		**72954868**		1	SCREW TORNILLO	VITE SKRUE	SCHRAUBE PARAFUSO	VIS SCHROEF	040V
39		**72209121**		3	SCREW TORNILLO	VITE SKRUE	SCHRAUBE PARAFUSO	VIS SCHROEF	040V
42		**10902234**		4	BOLT, Hex, M6 x 16, 10.9, Full Thd PERNO	BULLONE BOLT	SCHRAUBE PARAFUSO	VIS BOUT	140B
46		**YN17M01449P1**		2	SCREW TORNILLO	VITE SKRUE	SCHRAUBE PARAFUSO	VIS SCHROEF	040V
48		**14496531**		3	WASHER, M8 x 17 x 1.6 ARANDELA	RONDELLA FLADSKIVE	UNTERLEGSCHEIBE ANILHA	RONDELLE SLUITRING	131R
49		**14496431**		4	WASHER, M6.4 x 12.5 x 1.6 Thk ARANDELA	RONDELLA FLADSKIVE	UNTERLEGSCHEIBE ANILHA	RONDELLE SLUITRING	131R

(1) ASSY SEE PAGE 4

Copyright © New Holland

1.260	03	p1	03/10

PANEL ASSY, INSTRUMENT
PANNELLATURE, STRUMENTI
PANEL-MONTAGE, WERKZEUGE
ASSEMBLEE DE PANNEAU, INSTRUMENT

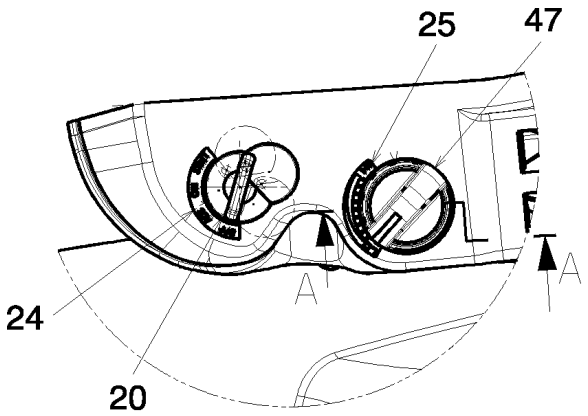

VIEW I

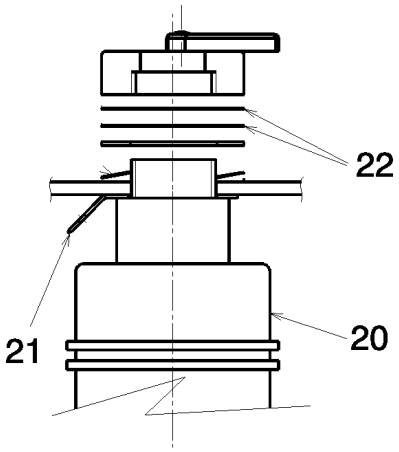

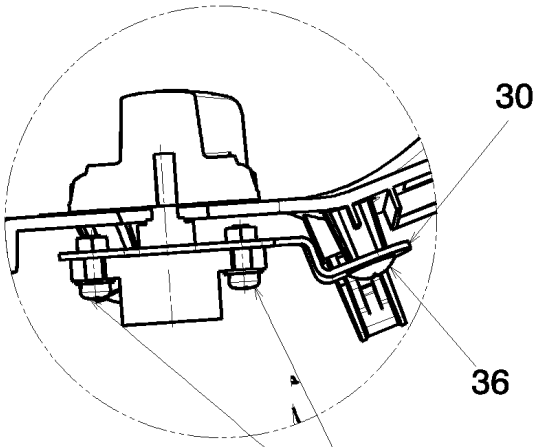

SECTION A-A

40
50
51

VIEW II

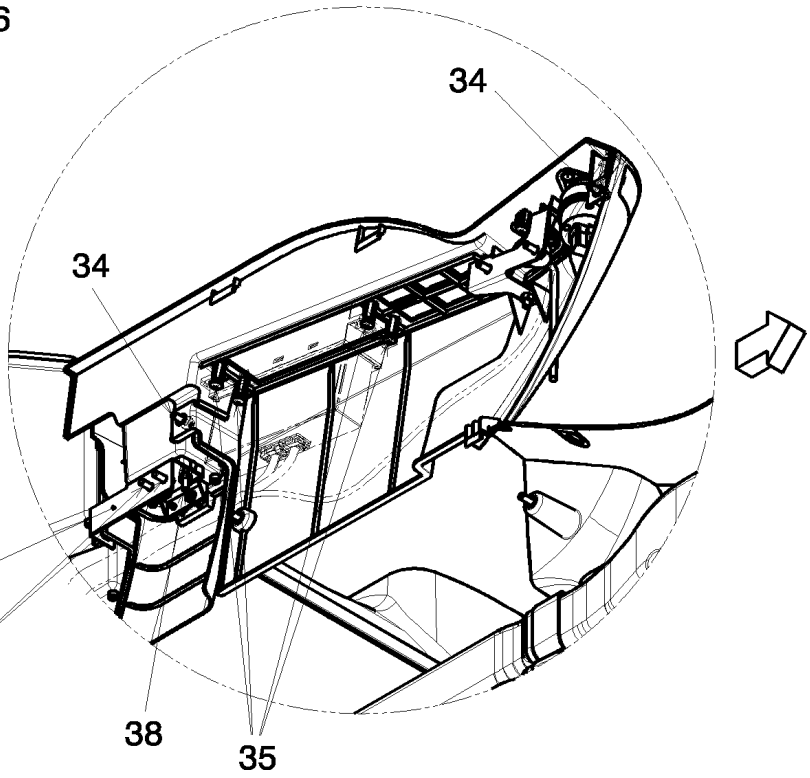

Copyright © New Holland

ASAMBLEA DE PANEL, INSTRUMENT
PANEL ASSY, INSTRUMENT
PANEL ASSY, INSTRUMENT
PANEL ASSY, INSTRUMENT

R	N	P.N.	MOD	Q	Description Denominacion	Descrizione Beskrivelse	Bezeichnung Denominação	Description Beschrijving	L.C.
20		72953349		1	IGNITION SWITCH CONMUTADOR DE ARR/	INTERRUTTORE ACCEN KONTAKT, TÆNDING	ZÜNDSCHALTER COMUTADOR	CONTACTEUR DE DEM/ CONTACTSCHAKELAAR	P654
21		YN01E01021P1		1	TERMINAL TERMINAL	TERMINALE; MORSETTC AKSELTAP	KLEMME TERMINAL	BORNE AANSLUITKLEM	094T
22		87623250		2	WASHER ARANDELA	RONDELLA FLADSKIVE	UNTERLEGSCHEIBE ANILHA	RONDELLE SLUITRING	131R
24		YN17M01463P1		1	DECAL CALCOMANÍA	DECALCOMANIA TRANSFER	AUFKLEBER DÍSTICO	AUTOCOLLANT STICKER	012D
25		YN17M01462P1		1	DECAL CALCOMANÍA	DECALCOMANIA TRANSFER	AUFKLEBER DÍSTICO	AUTOCOLLANT STICKER	012D
30		YN17M01445P1		1	BRACKET SOPORTE	STAFFA BESLAG	HALTERUNG SUPORTE	SUPPORT STEUN	225S
32		YN17M01447P1		1	BRACKET SOPORTE	STAFFA BESLAG	HALTERUNG SUPORTE	SUPPORT STEUN	225S
34		YN17M01162D1		2	SCREW TORNILLO	VITE SKRUE	SCHRAUBE PARAFUSO	VIS SCHROEF	040V
35		YN17M01466P1		4	SCREW TORNILLO	VITE SKRUE	SCHRAUBE PARAFUSO	VIS SCHROEF	040V
36		YN17M01467P1		2	SCREW TORNILLO	VITE SKRUE	SCHRAUBE PARAFUSO	VIS SCHROEF	040V
38		72954868		2	SCREW TORNILLO	VITE SKRUE	SCHRAUBE PARAFUSO	VIS SCHROEF	040V
40		13272014		2	SCREW, Pan Hd, M4 x 12 TORNILLO	VITE SKRUE	SCHRAUBE PARAFUSO	VIS SCHROEF	040V
42		10902234		2	BOLT, Hex, M6 x 16, 10.9, Full Thd PERNO	BULLONE BOLT	SCHRAUBE PARAFUSO	VIS BOUT	140B
47		LQ52S00025P1		1	POTENTIOMETER POTENCIÓMETRO	POTENZIOMETRO POTENTIOMETER	POTENTIOMETER POTENCIÓMETRO	POTENTIOMETRE POTENTIOMETER	550P
49		14496431		2	WASHER, M6.4 x 12.5 x 1.6 Thk ARANDELA	RONDELLA FLADSKIVE	UNTERLEGSCHEIBE ANILHA	RONDELLE SLUITRING	131R
50		11195374		2	LOCK WASHER ARANDELA DE BLOQUE	RONDELLA DI SICUREZ/ LÅSESKIVE	SICHERUNGSSCHEIBE ANILHA DE RETENÇÃO	RONDELLE FREIN BORGRING	132R
51		14497731		2	WASHER ARANDELA	RONDELLA FLADSKIVE	UNTERLEGSCHEIBE ANILHA	RONDELLE SLUITRING	131R

Copyright © New Holland

1.260	04	p1	03/10

PANEL ASSY, INSTRUMENT - COMPONENTS
PANNELLATURE, STRUMENTI - COMPONENTI
PANEL-MONTAGE, WERKZEUGE - BESTANDTEILE
ASSEMBLEE DE PANNEAU, INSTRUMENT - COMPOSANTS

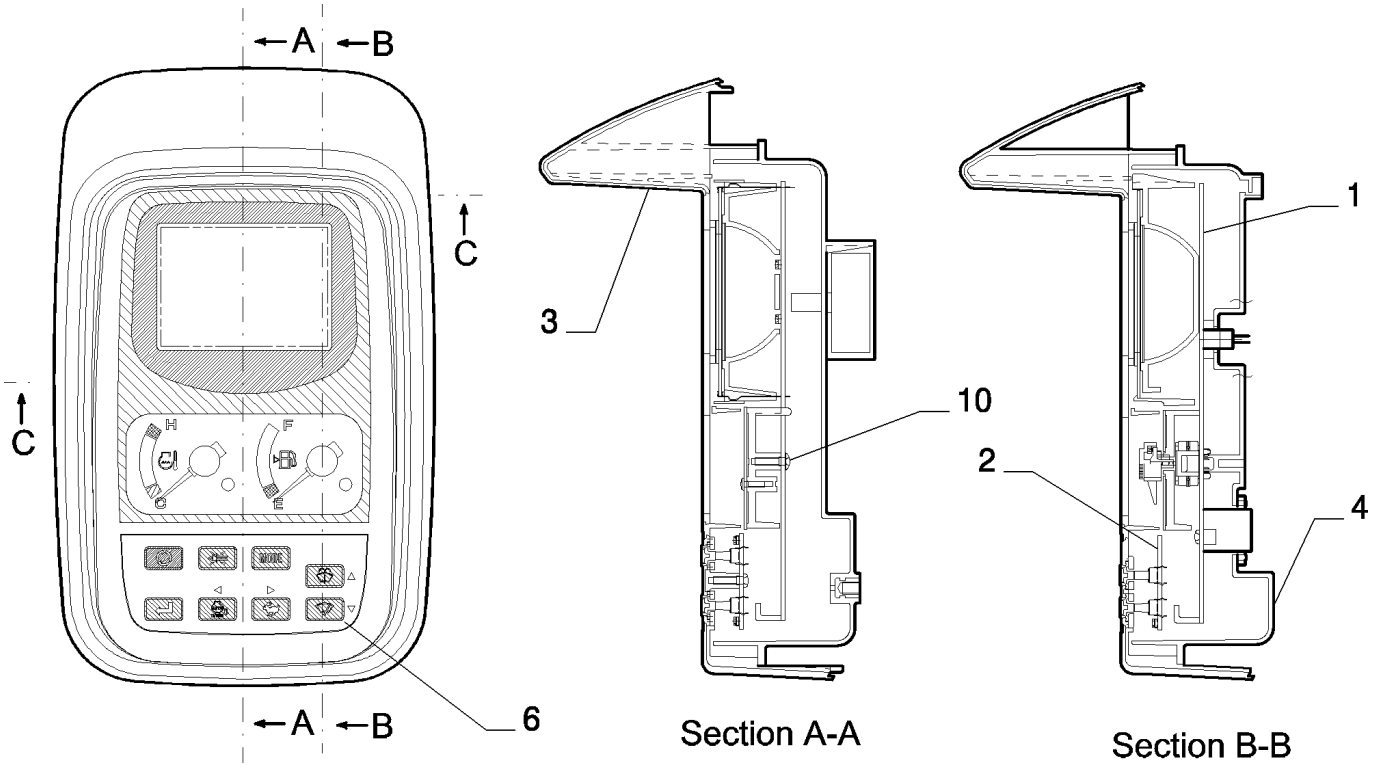

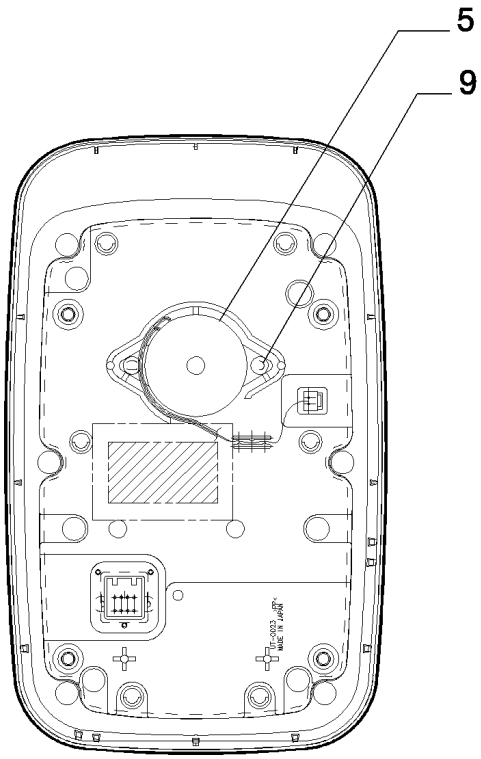

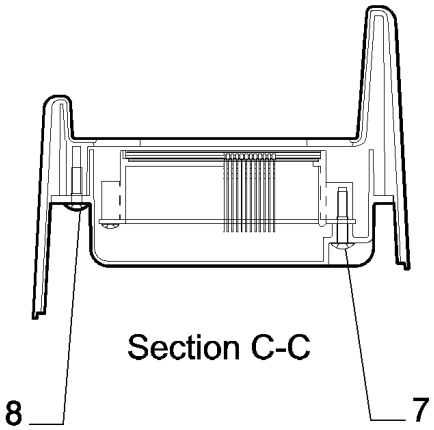

Copyright © New Holland

ASAMBLEA DE PANEL, INSTRUMENT - COMPONENTES
PANEL ASSY, INSTRUMENT - COMPONENTS
PANEL ASSY, INSTRUMENT - COMPONENTS
PANEL ASSY, INSTRUMENT - COMPONENTS

R	N	P.N.	MOD	Q	Description Denominacion	Descrizione Beskrivelse	Bezeichnung Denominação	Description Beschrijving	L.C.
1		YN59S00021S001		1	CONTROL MONITOR CONTROL DE MONITOR	MONITOR MONITOR, KONTROL	ÜBERWACHUNGSMONI MONITOR DE CONTROL	MONITEUR DE COMMAN MONITOR	880M
2		YN59S00021S002		1	PRINTED CIRCUIT BOARD PLACA DE CIRCUITO IMI	CIRCUITO STAMPATO PRINTKORT	PLATINE PLACA CIRCUITOS IMPF	CIRCUIT IMPRIME PRINTPLAAT	179C
3		YN59S00021S003		1	COVER CUBIERTA	COPERCHIO DÆKSEL	ABDECKUNG COBERTURA	COUVERCLE AFSCHERMING	265C
4		YN59S00021S004		1	COVER CUBIERTA	COPERCHIO DÆKSEL	ABDECKUNG COBERTURA	COUVERCLE AFSCHERMING	265C
5		YN59S00021S005		1	BUZZER ZUMBADOR	SEGNALATORE ACUSTI SUMMER	WARNSUMMER AVISO SONORO	AVERTISSEUR SONORE ALARM	297S
6		YN59S00021S006		1	PANEL PANEL	PANNELLO PANEL	PLATTE PAINEL	PANNEAU PANEEL	025P
7		YN59S00021S007		6	SCREW TORNILLO	VITE SKRUE	SCHRAUBE PARAFUSO	VIS SCHROEF	040V
8		YN59S00021S008		6	SCREW TORNILLO	VITE SKRUE	SCHRAUBE PARAFUSO	VIS SCHROEF	040V
9		YN59S00021S009		2	SCREW TORNILLO	VITE SKRUE	SCHRAUBE PARAFUSO	VIS SCHROEF	040V
10		YN59S00021S010		7	SCREW TORNILLO	VITE SKRUE	SCHRAUBE PARAFUSO	VIS SCHROEF	040V

GAUGE, CLUSTER ASSY P/N 87681693

E215B

Copyright © New Holland

1.260	05	p1	03/10

PANEL ASSY, INSTRUMENT
PANNELLATURE, STRUMENTI
PANEL-MONTAGE, WERKZEUGE
ASSEMBLEE DE PANNEAU, INSTRUMENT

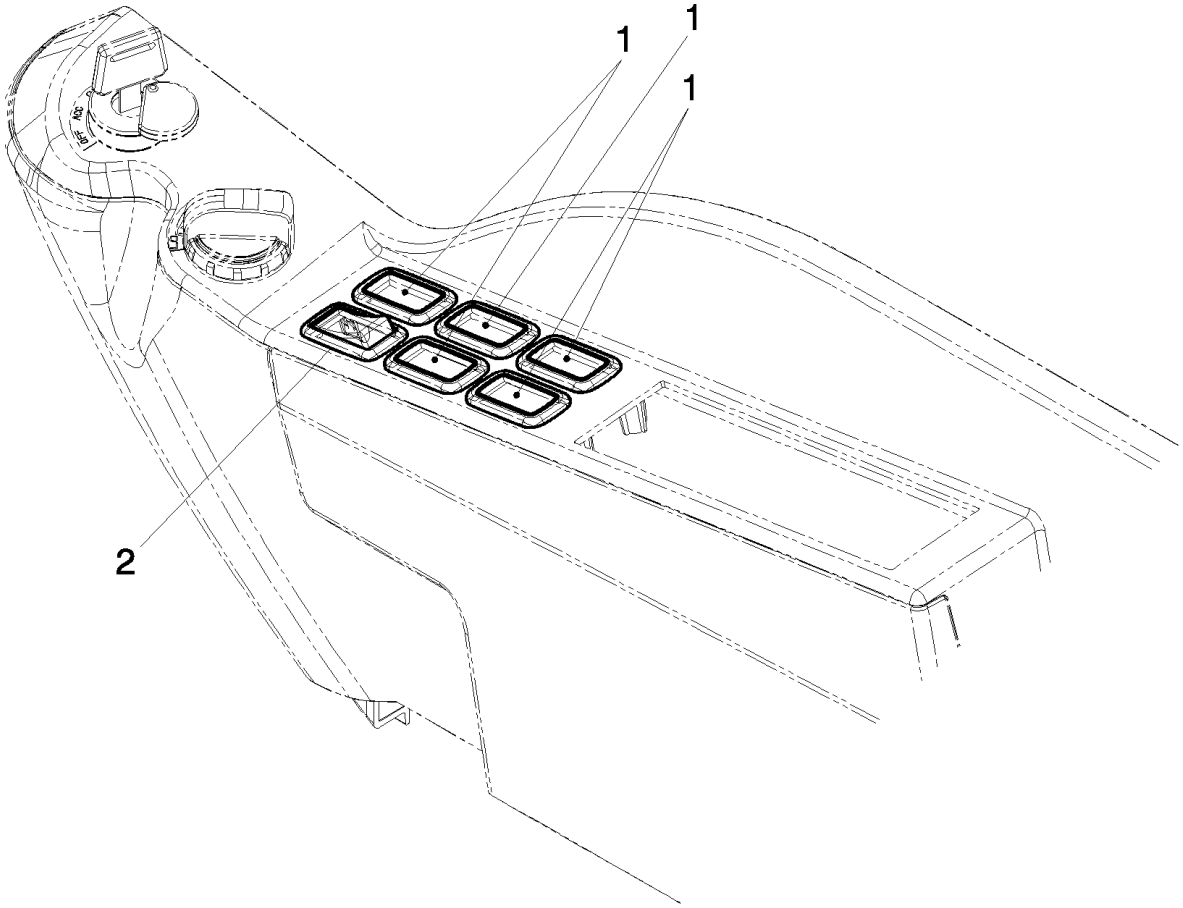

Copyright © New Holland

ASAMBLEA DE PANEL, INSTRUMENT
PANEL ASSY, INSTRUMENT
PANEL ASSY, INSTRUMENT
PANEL ASSY, INSTRUMENT

R	N	P.N.	MOD	Q	Description Denominacion	Descrizione Beskrivelse	Bezeichnung Denominação	Description Beschrijving	L.C.
1		87527533		5	PLUG TAPÓN	TAPPO PROP	STOPFEN TAMPÃO	BOUCHON PLUG	050T
2		87527530		1	SWITCH INTERRUPTOR	INTERRUTTORE KONTAKT	SCHALTER INTERRUPTOR	CONTACTEUR SCHAKELAAR	075I

Copyright © New Holland

1.270	01	p1	03/10

FLOOR-CAB
PAVIMENTO CABINA
BODEN-FAHRERHAUS
PLANCHER DE CABINE

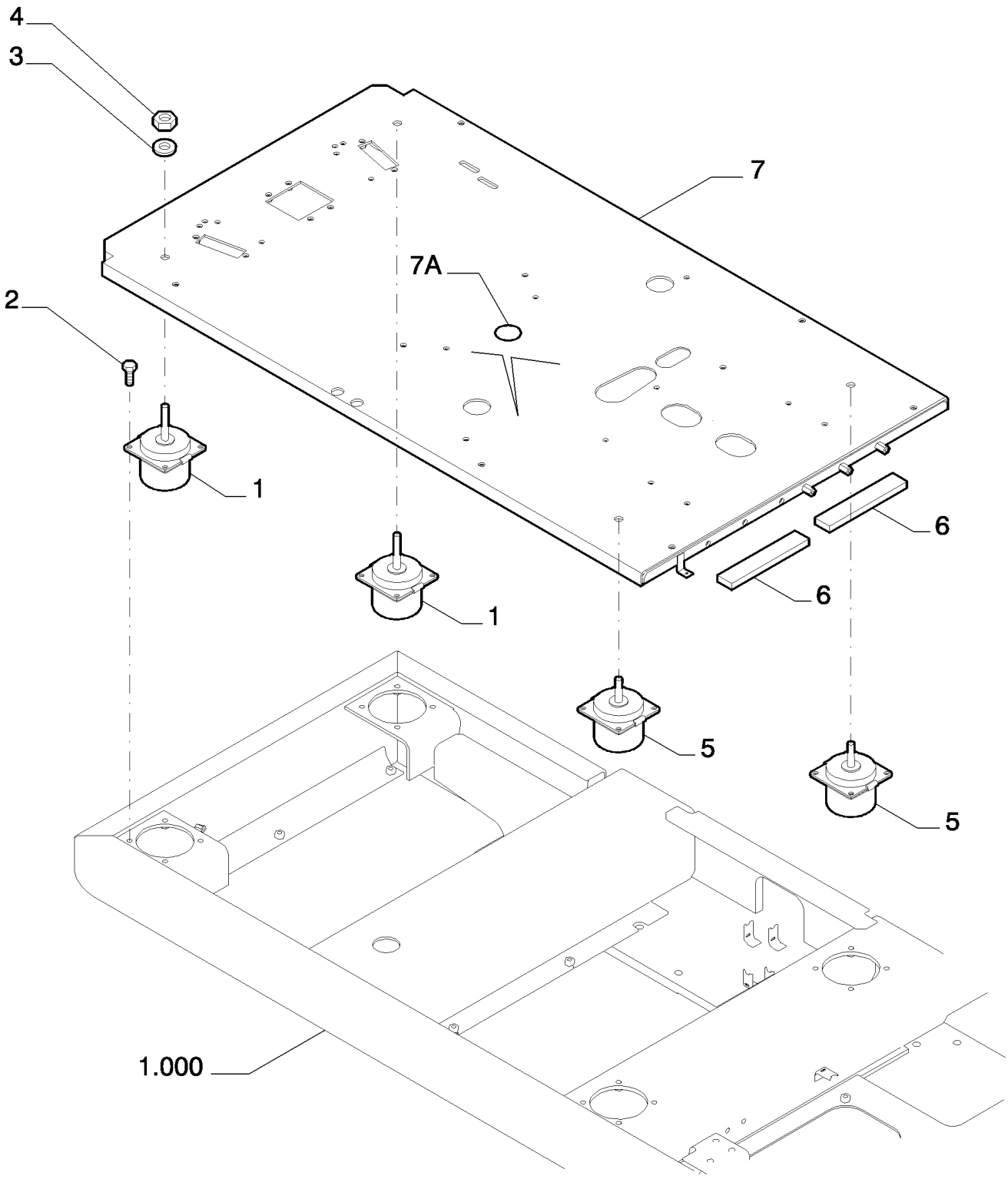

Copyright © New Holland

PISO DE LA CABINA
FLOOR-CAB
FLOOR-CAB
FLOOR-CAB

R	N	P.N.	MOD	Q	Description Denominacion	Descrizione Beskrivelse	Bezeichnung Denominação	Description Beschrijving	L.C.
1		YN03M02125P1		2	INSULATOR BLOCK BLOQUE DE AISLADOR	BLOCCO ISOLANTE ISOLATORBLOK	ISOLIERSTÜCK BLOCO ISOLADOR	BLOC ISOLANT ISOLATIEBLOK	061T
2		11106634		16	BOLT, Hex, M10 x 35, 10.9, Full Thd PERNO	BULLONE BOLT	SCHRAUBE PARAFUSO	VIS BOUT	140B
3		71405003		4	WASHER ARANDELA	RONDELLA FLADSKIVE	UNTERLEGSCHEIBE ANILHA	RONDELLE SLUITRING	131R
4		12163321		4	NUT, M16, Cl 10 TUERCA	DADO MØTRIK	MUTTER PORCA	ECROU MOER	010D
5		YN03M02126P1		2	INSULATOR BLOCK BLOQUE DE AISLADOR	BLOCCO ISOLANTE ISOLATORBLOK	ISOLIERSTÜCK BLOCO ISOLADOR	BLOC ISOLANT ISOLATIEBLOK	061T
6		YN03M02128P1		2	GASKET JUNTA	GUARNIZIONE PAKNING	DICHTUNG JUNTA	JOINT PAKKING	123G
7		XLB03M01014F1		1	PLATE, - ASSY PLACA	PIASTRA PLADE	PLATTE CHAPA	PLAQUE PLAAT	105P
7A		LB03M01015P1		1	DECAL CALCOMANÍA	DECALCOMANIA TRANSFER	AUFKLEBER DÍSTICO	AUTOCOLLANT STICKER	012D

Copyright © New Holland

1.270	02	p1	03/10

FLOOR-CAB - VERSION (01-02-03)
PAVIMENTO CABINA - VERSION (01-02-03)
BODEN-FAHRERHAUS - VERSION (01-02-03)
PLANCHER DE CABINE - VERSION (01-02-03)

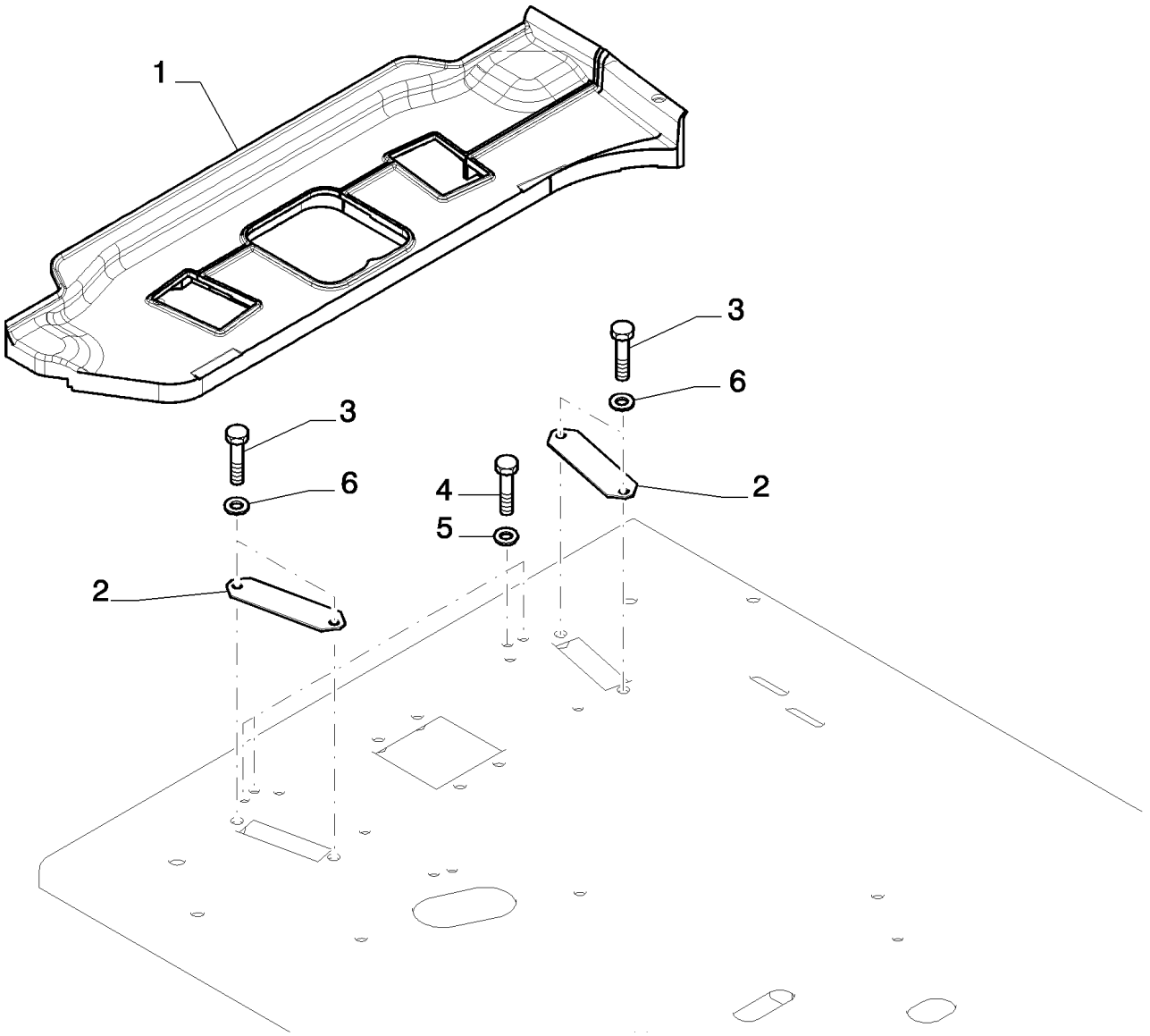

Copyright © New Holland

PISO DE LA CABINA - VERSION (01-02-03)
FLOOR-CAB - VERSION (01-02-03)
FLOOR-CAB - VERSION (01-02-03)
FLOOR-CAB - VERSION (01-02-03)

R	N	P.N.	MOD	Q	Description Denominacion	Descrizione Beskrivelse	Bezeichnung Denominação	Description Beschrijving	L.C.
1		YN26M00076P1		1	CARPET ALFOMBRA	TAPPETINO TÆPPE	TEPPICH TAPETE	TAPIS VLOERBEDEKKING	P015
2		87746013		2	PLATE PLACA	PIASTRA PLADE	PLATTE CHAPA	PLAQUE PLAAT	105P
3		11106034		4	BOLT, Hex, M10 x 20, 10.9, Full Thd PERNO	BULLONE BOLT	SCHRAUBE PARAFUSO	VIS BOUT	140B
4		16043434		4	BOLT, Hex, M8 x 20, 10.9, Full Thd PERNO	BULLONE BOLT	SCHRAUBE PARAFUSO	VIS BOUT	140B
5		14496531		4	WASHER, M8 x 17 x 1.6 ARANDELA	RONDELLA FLADSKIVE	UNTERLEGSCHEIBE ANILHA	RONDELLE SLUITRING	131R
6		14496631		4	WASHER, M10 x 21 x 2 ARANDELA	RONDELLA FLADSKIVE	UNTERLEGSCHEIBE ANILHA	RONDELLE SLUITRING	131R

Copyright © New Holland

1.270	03	p1	03/10

FLOOR-CAB - VERSION (04-05-06)
PAVIMENTO CABINA - VERSION (04-05-06)
BODEN-FAHRERHAUS - VERSION (04-05-06)
PLANCHER DE CABINE - VERSION (04-05-06)

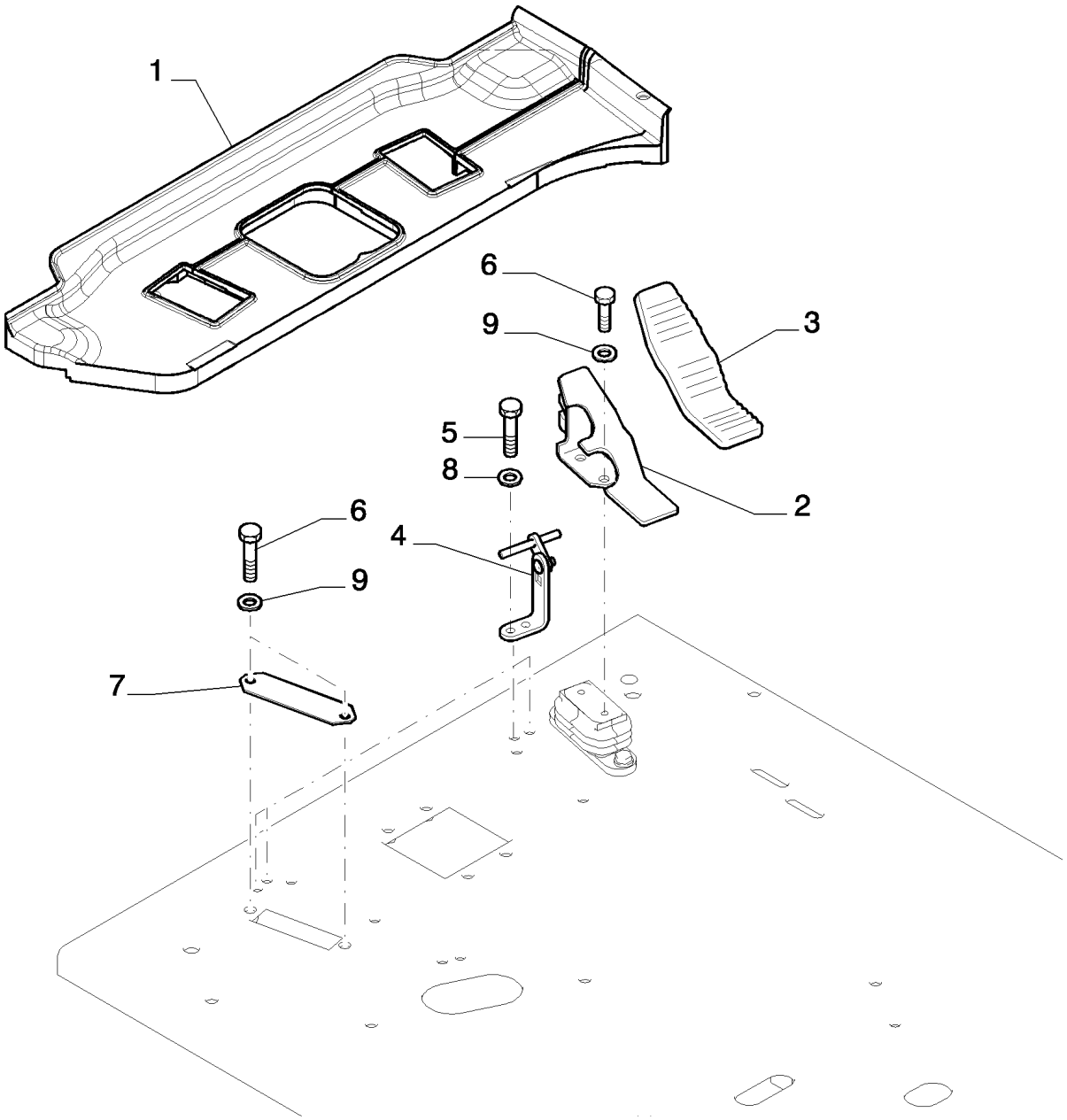

Copyright © New Holland

PISO DE LA CABINA - VERSION (04-05-06)
FLOOR-CAB - VERSION (04-05-06)
FLOOR-CAB - VERSION (04-05-06)
FLOOR-CAB - VERSION (04-05-06)

R	N	P.N.	MOD	Q	Description Denominacion	Descrizione Beskrivelse	Bezeichnung Denominação	Description Beschrijving	L.C.
1		YN26M00076P1		1	CARPET ALFOMBRA	TAPPETINO TÆPPE	TEPPICH TAPETE	TAPIS VLOERBEDEKKING	P015
2		87539195		1	PEDAL PEDAL	PEDALE PEDAL	PEDAL PEDAL	PEDALE PEDAAL	060P
3		87539205		1	RUBBER PEDAL PAD PASTILLA DE PEDAL DE	RIVESTIMENTO PEDALE GUMMIPEDALBELÆGNI	GUMMIPEDALAUFLAGE BORRACHA COBERTUR	PATIN DE PEDALE CAO RUBBEREN PEDAALBEK	292C
4		87539206		1	BRACKET SOPORTE	STAFFA BESLAG	HALTERUNG SUPORTE	SUPPORT STEUN	225S
5		16043434		4	BOLT, Hex, M8 x 20, 10.9, Full Thd PERNO	BULLONE BOLT	SCHRAUBE PARAFUSO	VIS BOUT	140B
6		11106034		4	BOLT, Hex, M10 x 20, 10.9, Full Thd PERNO	BULLONE BOLT	SCHRAUBE PARAFUSO	VIS BOUT	140B
7		87746013		1	PLATE PLACA	PIASTRA PLADE	PLATTE CHAPA	PLAQUE PLAAT	105P
8		14496531		4	WASHER, M8 x 17 x 1.6 ARANDELA	RONDELLA FLADSKIVE	UNTERLEGSCHEIBE ANILHA	RONDELLE SLUITRING	131R
9		14496631		4	WASHER, M10 x 21 x 2 ARANDELA	RONDELLA FLADSKIVE	UNTERLEGSCHEIBE ANILHA	RONDELLE SLUITRING	131R

Copyright © New Holland

1.280	01	p1	03/10

RADIO
AUTORADIO
AUTORADIDAPPARAT
AUTORADIO

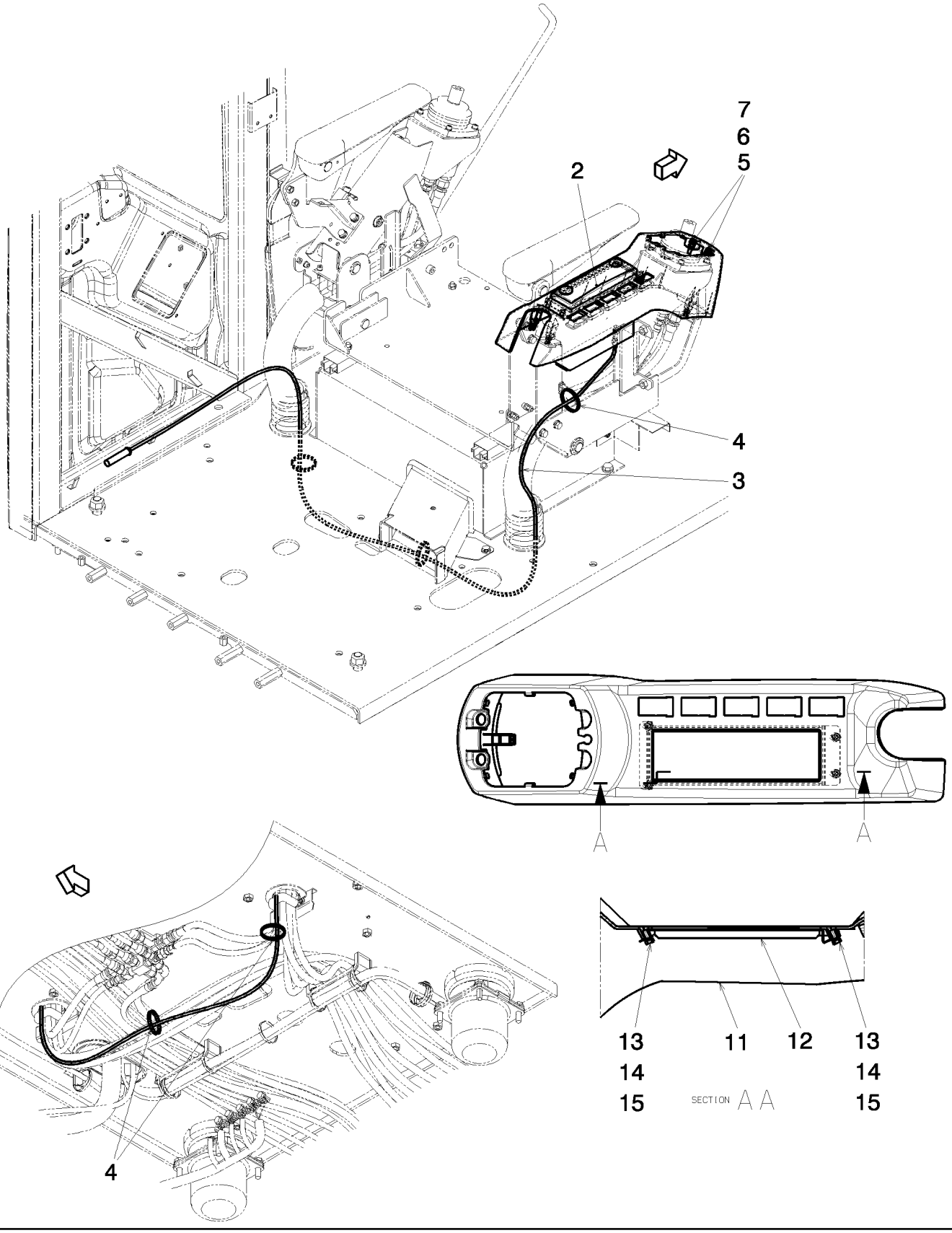

Copyright © New Holland

AUTORRADIO
RADIO
RADIO
RADIO

R	N	P.N.	MOD	Q	Description Denominacion	Descrizione Beskrivelse	Bezeichnung Denominação	Description Beschrijving	L.C.
2		73313187		1	RADIO RADIO	AUTORADIO RADIO	RADIO RÁDIO	RADIO RADIO	042R
3		72203961		1	ELECTRIC CABLE CABLE ELÉCTRICO	CAVO ELETTRICO EL-KABEL	ELEKTROKABEL CABO ELÉCTRICO	CABLE ELECTRIQUE ELEKTRICITEITSKABEL	111C
4		4982514		3	CABLE STRAP BANDA DE CABLE	FASCETTA PER CAVO KABELSTROP	KABELBINDER BRAÇADEIRA DE CABO	BRIDE DE CABLE BUNDELBAND	P716
5		10902634		2	SCREW TORNILLO	VITE SKRUE	SCHRAUBE PARAFUSO	VIS SCHROEF	040V
6		14496431		2	WASHER, M6.4 x 12.5 x 1.6 Thk ARANDELA	RONDELLA FLADSKIVE	UNTERLEGSCHEIBE ANILHA	RONDELLE SLUITRING	131R
7		10516474		2	LOCK WASHER ARANDELA DE BLOQUE	RONDELLA DI SICUREZ LÅSESKIVE	SICHERUNGSSCHEIBE ANILHA DE RETENÇÃO	RONDELLE FREIN BORGRING	132R
11		YN03M02108F1		1	COVER CUBIERTA	COPERCHIO DÆKSEL	ABDECKUNG COBERTURA	COUVERCLE AFSCHERMING	265C
12		YN54E01033P1		1	BRACKET SOPORTE	STAFFA BESLAG	HALTERUNG SUPORTE	SUPPORT STEUN	225S
13		14304134		4	SCREW TORNILLO	VITE SKRUE	SCHRAUBE PARAFUSO	VIS SCHROEF	040V
14		14496321		4	WASHER ARANDELA	RONDELLA FLADSKIVE	UNTERLEGSCHEIBE ANILHA	RONDELLE SLUITRING	131R
15		11195474		4	LOCK WASHER ARANDELA DE BLOQUE	RONDELLA DI SICUREZ LÅSESKIVE	SICHERUNGSSCHEIBE ANILHA DE RETENÇÃO	RONDELLE FREIN BORGRING	132R

Copyright © New Holland

1.295	01	p1	03/10

AIR CONDITIONING
CONDIZIONAMENTO CABINA
KLIMAANLAGE
CLIMATISEUR

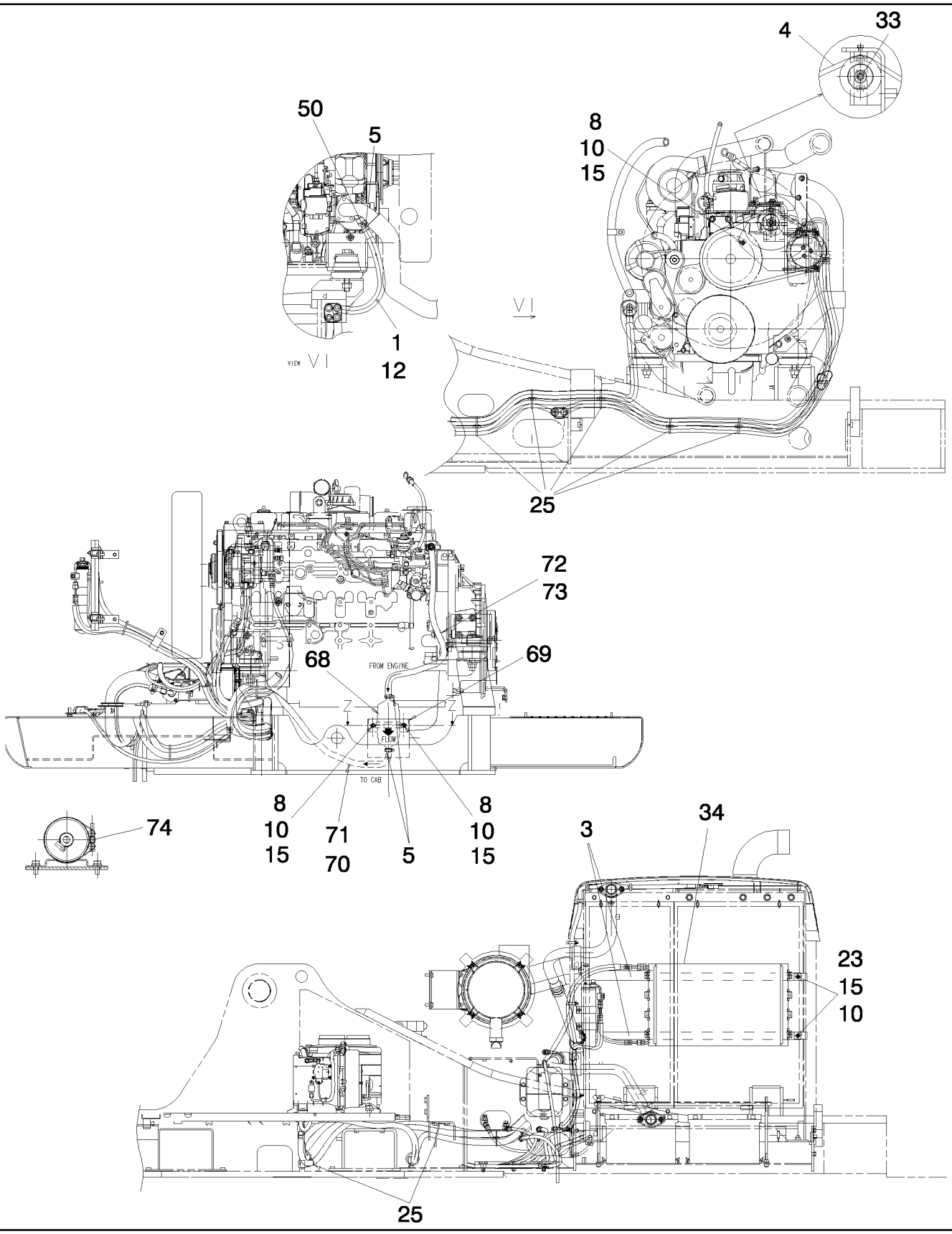

Copyright © New Holland

CLIMATIZADOR
AIR CONDITIONING
AIR CONDITIONING
AIR CONDITIONING

R	N	P.N.	MOD	Q	Description Denominacion	Descrizione Beskrivelse	Bezeichnung Denominação	Description Beschrijving	L.C.
1		87633122		1	FLEXIBLE HOSE TUBO FLEXIBLE	TUBO FLESSIBILE FLEKSIBEL SLANGE	BIEGSAMER SCHLAUCH MANGUEIRA FLEXÍVEL	TUYAU FLEXIBLE FLEXIBELE SLANG	192T
3		87736586		2	BRACKET SOPORTE	STAFFA BESLAG	HALTERUNG SUPORTE	SUPPORT STEUN	225S
4		72204603		1	BELT, TRANSMISSION CORREA DE TRANSMIS	CINGHIA DI TRASMISSIC DRIVREM	ANTRIEBS RIEMEN CORREIA DE TRANSMIS	COURROIE DE TRANSM AANDRIJFRIEM	173C
5		422050500		3	CLAMP ABRAZADERA	MORSETTO SPÆNDEBÅND	KLEMME BRAÇADEIRA	COLLIER KLEM	120M
8		16043434		4	BOLT, Hex, M8 x 20, 10.9, Full Thd PERNO	BULLONE BOLT	SCHRAUBE PARAFUSO	VIS BOUT	140B
10		14496531		6	WASHER, M8 x 17 x 1.6 ARANDELA	RONDELLA FLADSKIVE	UNTERLEGSCHEIBE ANILHA	RONDELLE SLUITRING	131R
12		87529445		1	FLEXIBLE HOSE TUBO FLEXIBLE	TUBO FLESSIBILE FLEKSIBEL SLANGE	BIEGSAMER SCHLAUCH MANGUEIRA FLEXÍVEL	TUYAU FLEXIBLE FLEXIBELE SLANG	192T
15		10516674		6	LOCK WASHER, M8 ARANDELA DE BLOQUE	RONDELLA DI SICUREZ LÅSESKIVE	SICHERUNGSSCHEIBE ANILHA DE RETENÇÃO	RONDELLE FREIN BORGRING	132R
23		16043634		2	BOLT, Hex, M8 x 25, 10.9, Full Thd PERNO	BULLONE BOLT	SCHRAUBE PARAFUSO	VIS BOUT	140B
25		4982514		7	CABLE STRAP BANDA DE CABLE	FASCETTA PER CAVO KABELSTROP	KABELBINDER BRAÇADEIRA DE CABO	BRIDE DE CABLE BUNDELBAND	P716
33		72209721		1	PULLEY POLEA	PULEGGIA REMSKIVE	RIEMENSCHEIBE POLIA	POULIE RIEMSCHIJF	230P
34		87575958		1	CONDENSER CONDENSADOR	CONDENSATORE KONDENSATOR	KONDENSATOR CONDENSADOR	CONDENSATEUR CONDENSOR	220C
50		72213804		1	HYD CONNECTOR CONECTOR HIDRÁULIC	CONNETTORE IDRAULIC HYDRAULIKSTIK	HYDR STECKVERBINDE CONECTOR HID.	CONNECTEUR HYDRAU HYDRAULISCHE AANSL	020R
58		87529521		1	FLEXIBLE HOSE TUBO FLEXIBLE	TUBO FLESSIBILE FLEKSIBEL SLANGE	BIEGSAMER SCHLAUCH MANGUEIRA FLEXÍVEL	TUYAU FLEXIBLE FLEXIBELE SLANG	192T
68		84123792		1	FILTER FILTRO	FILTRO FILTER	FILTER FILTRO	FILTRE FILTER	065F
69		84123793		1	COLLAR COLLAR	COLLARE SLANGEBÅND	RINGE ANEL	COLLIER KRAAG	031F
70		72209632		1	FLEXIBLE HOSE TUBO FLEXIBLE	TUBO FLESSIBILE FLEKSIBEL SLANGE	BIEGSAMER SCHLAUCH MANGUEIRA FLEXÍVEL	TUYAU FLEXIBLE FLEXIBELE SLANG	192T
71		87633128		1	FLEXIBLE HOSE TUBO FLEXIBLE	TUBO FLESSIBILE FLEKSIBEL SLANGE	BIEGSAMER SCHLAUCH MANGUEIRA FLEXÍVEL	TUYAU FLEXIBLE FLEXIBELE SLANG	192T
72		72282535		1	HOSE TUBO	TUBO FLESSIBILE SLANGE	SCHLAUCH MANGUEIRA	FLEXIBLE SLANG	030M
73		84124313		1	FLEXIBLE HOSE TUBO FLEXIBLE	TUBO FLESSIBILE FLEKSIBEL SLANGE	BIEGSAMER SCHLAUCH MANGUEIRA FLEXÍVEL	TUYAU FLEXIBLE FLEXIBELE SLANG	192T
74		84161860		1	RIGID TUBE TUBO RÍGIDO	TUBO RIGIDO STIFT RØR	ROHR TUBO RÍGIDO	TUYAU RIGIDE VASTE LEIDING	193T

Copyright © New Holland

AIR CONDITIONING
CONDIZIONAMENTO CABINA
KLIMAANLAGE
CLIMATISEUR

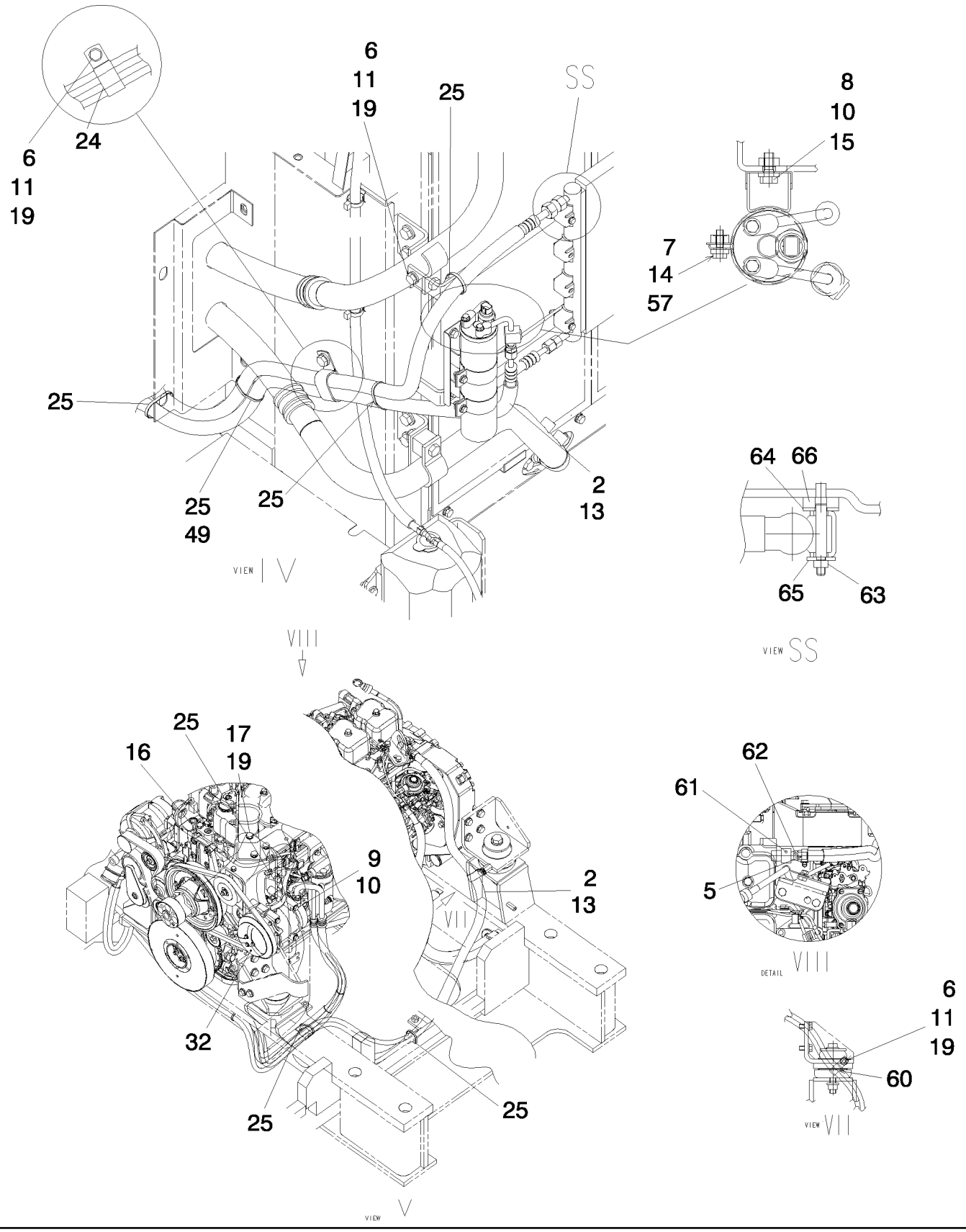

Copyright © New Holland

CLIMATIZADOR
AIR CONDITIONING
AIR CONDITIONING
AIR CONDITIONING

R	N	P.N.	MOD	Q	Description Denominacion	Descrizione Beskrivelse	Bezeichnung Denominação	Description Beschrijving	L.C.
2		87743991		1	FLEXIBLE HOSE TUBO FLEXIBLE	TUBO FLESSIBILE FLEKSIBEL SLANGE	BIEGSAMER SCHLAUCH MANGUEIRA FLEXÍVEL	TUYAU FLEXIBLE FLEXIBELE SLANG	192T
5		422050500		1	CLAMP ABRAZADERA	MORSETTO SPÆNDEBÅND	KLEMME BRAÇADEIRA	COLLIER KLEM	120M
6		11106234		4	BOLT, Hex, M10 x 25, 10.9, Full Thd PERNO	BULLONE BOLT	SCHRAUBE PARAFUSO	VIS BOUT	140B
7		10902434		2	BOLT, Hex, M6 x 20, 10.9, Full Thd PERNO	BULLONE BOLT	SCHRAUBE PARAFUSO	VIS BOUT	140B
8		16043434		2	BOLT, Hex, M8 x 20, 10.9, Full Thd PERNO	BULLONE BOLT	SCHRAUBE PARAFUSO	VIS BOUT	140B
9		16046134		4	BOLT, Hex, M8 x 100, 10.9 PERNO	BULLONE BOLT	SCHRAUBE PARAFUSO	VIS BOUT	140B
10		14496531		6	WASHER, M8 x 17 x 1.6 ARANDELA	RONDELLA FLADSKIVE	UNTERLEGSCHEIBE ANILHA	RONDELLE SLUITRING	131R
11		10516874		4	LOCK WASHER ARANDELA DE BLOQUE	RONDELLA DI SICUREZ LÅSESKIVE	SICHERUNGSSCHEIBE ANILHA DE RETENÇÃO	RONDELLE FREIN BORGRING	132R
13		YN20M01094DC		1	RIGID TUBE TUBO RÍGIDO	TUBO RIGIDO STIFT RØR	ROHR TUBO RÍGIDO	TUYAU RIGIDE VASTE LEIDING	193T
14		10516474		2	LOCK WASHER ARANDELA DE BLOQUE	RONDELLA DI SICUREZ LÅSESKIVE	SICHERUNGSSCHEIBE ANILHA DE RETENÇÃO	RONDELLE FREIN BORGRING	132R
15		10516674		2	LOCK WASHER, M8 ARANDELA DE BLOQUE	RONDELLA DI SICUREZ LÅSESKIVE	SICHERUNGSSCHEIBE ANILHA DE RETENÇÃO	RONDELLE FREIN BORGRING	132R
16		87529448		1	BRACKET SOPORTE	STAFFA BESLAG	HALTERUNG SUPORTE	SUPPORT STEUN	225S
17		11107334		1	SCREW TORNILLO	VITE SKRUE	SCHRAUBE PARAFUSO	VIS SCHROEF	040V
19		14496631		5	WASHER, M10 x 21 x 2 ARANDELA	RONDELLA FLADSKIVE	UNTERLEGSCHEIBE ANILHA	RONDELLE SLUITRING	131R
24		71415385		1	CLIP ABRAZADERA	FERMO KLIPS	KLAMMER FIXADOR	COLLIER KLEM	045F
25		4982514		7	CABLE STRAP BANDA DE CABLE	FASCETTA PER CAVO KABELSTROP	KABELBINDER BRAÇADEIRA DE CABO	BRIDE DE CABLE BUNDELBAND	P716
32		72203934		1	AIR COMPRESSOR, Not serviced separately - Order p/n 72206499 (Incl. ref 32+33) COMPRESOR DE AIRE	COMPRESSORE ARIA LUFTKOMPRESSOR	LUFTKOMPRESSOR COMPRESSOR DE AR	COMPRESSEUR D'AIR LUCHTCOMPRESSOR	216C
49		87526680		1	RETAINER COLLAR COLLAR DE RETENCIÓN	COLLARE DI FISSAGGIC RING, SPÆNDE	HALTERING ANEL DE FIXAÇÃO	COLLIER DE RETENUE BORGKRAAG	230S
57		14496431		2	WASHER, M6.4 x 12.5 x 1.6 Thk ARANDELA	RONDELLA FLADSKIVE	UNTERLEGSCHEIBE ANILHA	RONDELLE SLUITRING	131R
60		71403661		1	CLIP ABRAZADERA	FERMO KLIPS	KLAMMER FIXADOR	COLLIER KLEM	045F
61		71475456		1	HYD CONNECTOR CONECTOR HIDRÁULIC	CONNETTORE IDRAULIC HYDRAULIKSTIK	HYDR STECKVERBINDE CONECTOR HID.	CONNECTEUR HYDRAU HYDRAULISCHE AANSL	020R
63		15896221		4	NUT, M6, Cl 10 TUERCA	DADO MØTRIK	MUTTER PORCA	ECROU MOER	010D
64		12647004		4	WASHER, M8 x 25 x 2.5 ARANDELA	RONDELLA FLADSKIVE	UNTERLEGSCHEIBE ANILHA	RONDELLE SLUITRING	131R

Copyright © New Holland

AIR CONDITIONING
CONDIZIONAMENTO CABINA
KLIMAANLAGE
CLIMATISEUR

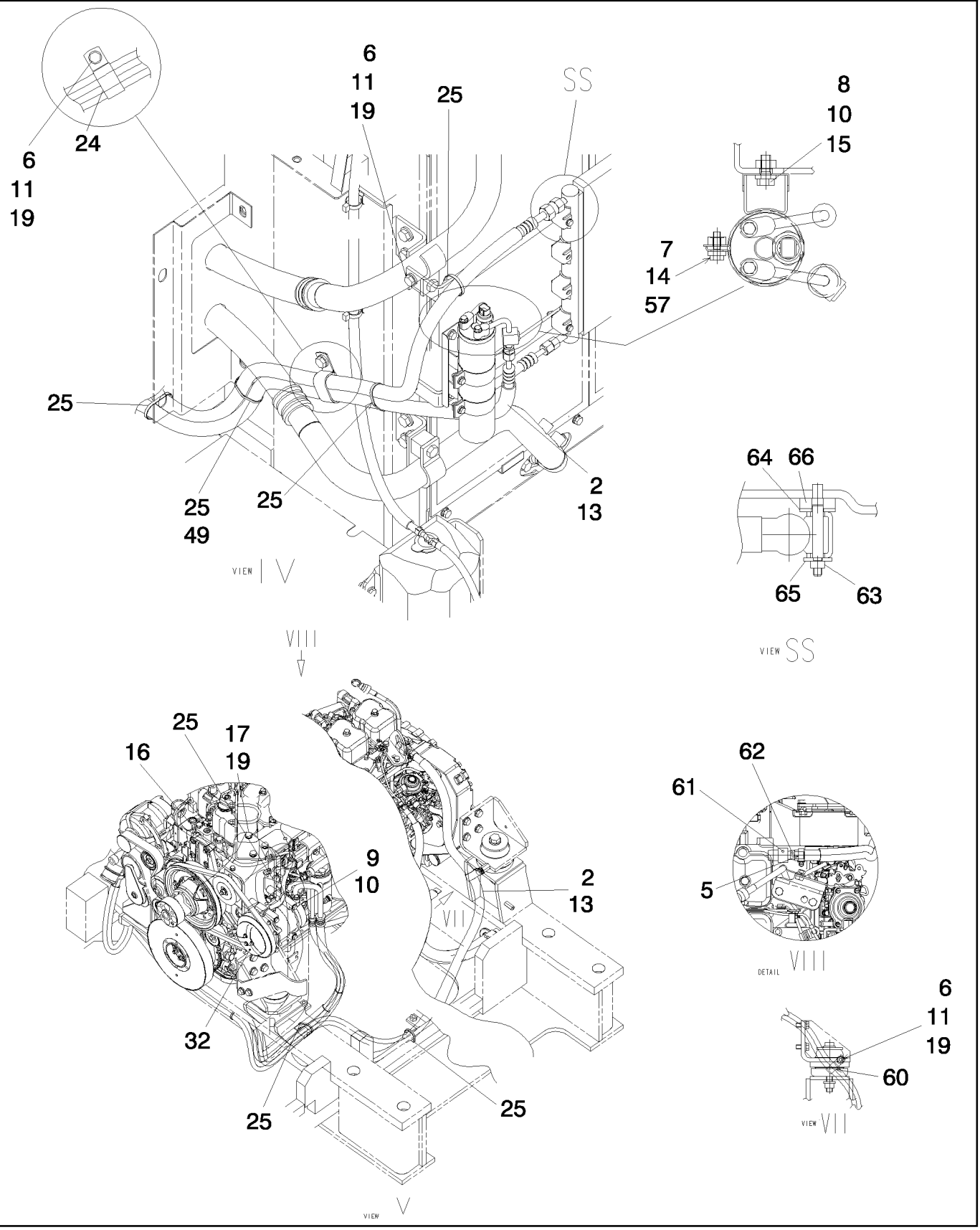

Copyright © New Holland

CLIMATIZADOR
AIR CONDITIONING
AIR CONDITIONING
AIR CONDITIONING

R	N	P.N.	MOD	Q	Description Denominacion	Descrizione Beskrivelse	Bezeichnung Denominação	Description Beschrijving	L.C.
65		10523404		4	WASHER, M6 x 18 x 2 ARANDELA	RONDELLA FLADSKIVE	UNTERLEGSCHEIBE ANILHA	RONDELLE SLUITRING	131R
66		87720558		4	GASKET JUNTA	GUARNIZIONE PAKNING	DICHTUNG JUNTA	JOINT PAKKING	123G

Copyright © New Holland

1.295	03	p1	04/10

AIR CONDITIONING
CONDIZIONAMENTO CABINA
KLIMAANLAGE
CLIMATISEUR

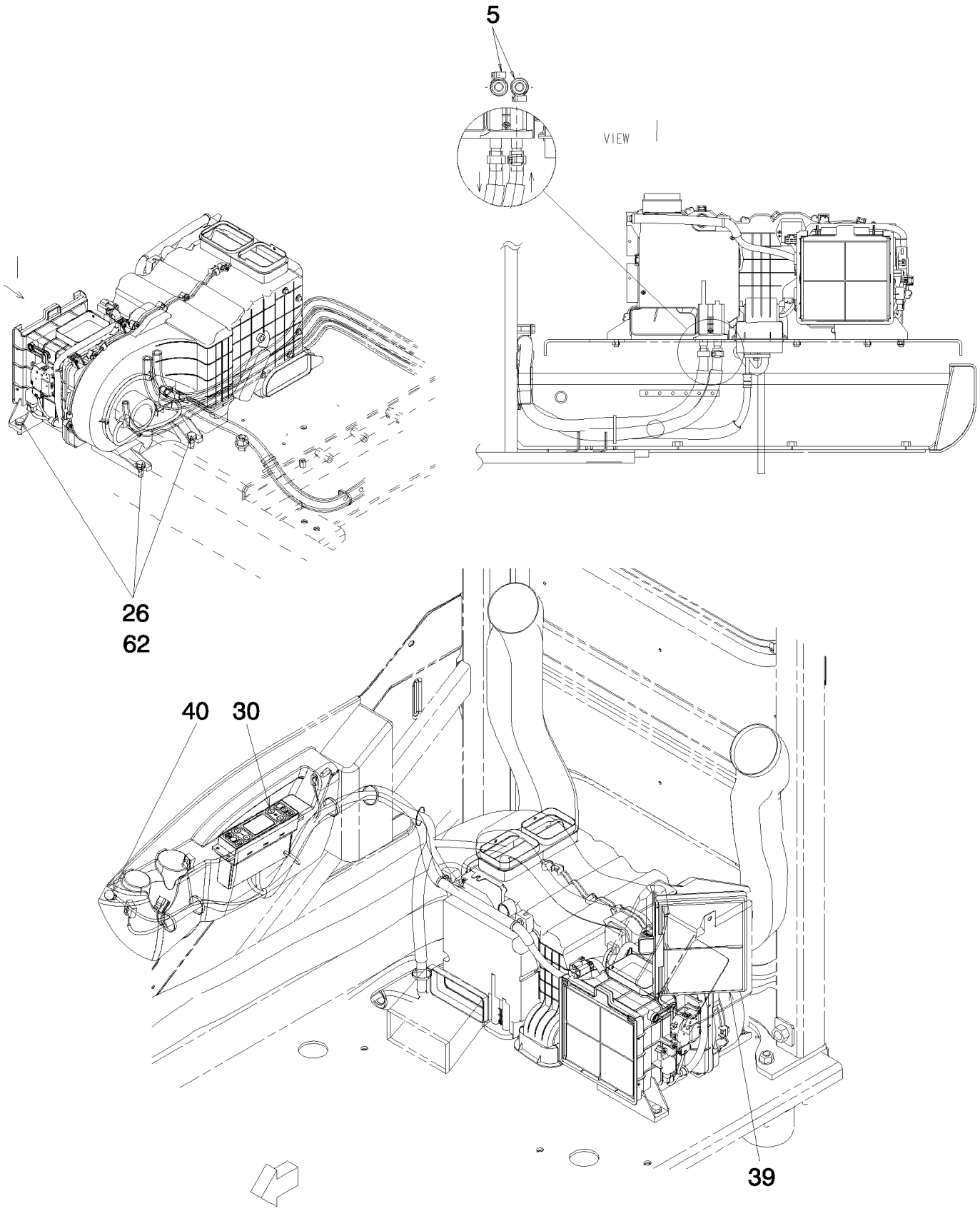

Copyright © New Holland

CLIMATIZADOR
AIR CONDITIONING
AIR CONDITIONING
AIR CONDITIONING

R	N	P.N.	MOD	Q	Description Denominacion	Descrizione Beskrivelse	Bezeichnung Denominação	Description Beschrijving	L.C.
5		422050500		2	CLAMP ABRAZADERA	MORSETTO SPÆNDEBÅND	KLEMME BRAÇADEIRA	COLLIER KLEM	120M
26		11106434		5	BOLT, Hex, M10 x 30, 10.9, Full Thd BULLONE PERNO	 BOLT	 SCHRAUBE PARAFUSO	 VIS BOUT	140B
30		LQ20M01328P1		1	GUARD DEFENSA	PROTEZIONE BESKYTTELSESSKÆRM	SCHUTZABDECKUNG PROTECÇÃO	PROTECTION AFSCHERMING	070R
39		LQ50V01008P1		1	FILTER FILTRO	FILTRO FILTER	FILTER FILTRO	FILTRE FILTER	065F
40		87529502		1	SENSOR SENSOR	SENSORE FØLER	SENSOR SENSOR	CAPTEUR SENSOR	608S
62		14496631		5	WASHER, M10 x 21 x 2 ARANDELA	RONDELLA FLADSKIVE	UNTERLEGSCHEIBE ANILHA	RONDELLE SLUITRING	131R

Copyright © New Holland

AIR CONDITIONING
CONDIZIONAMENTO CABINA
KLIMAANLAGE
CLIMATISEUR

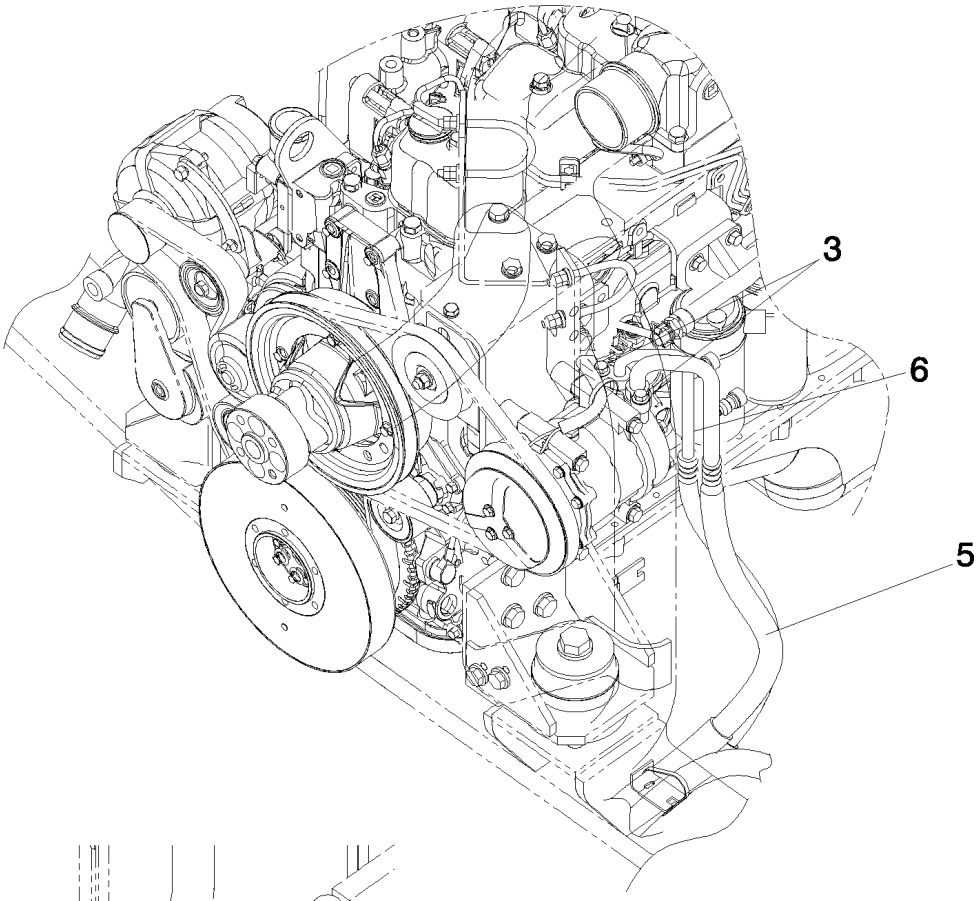

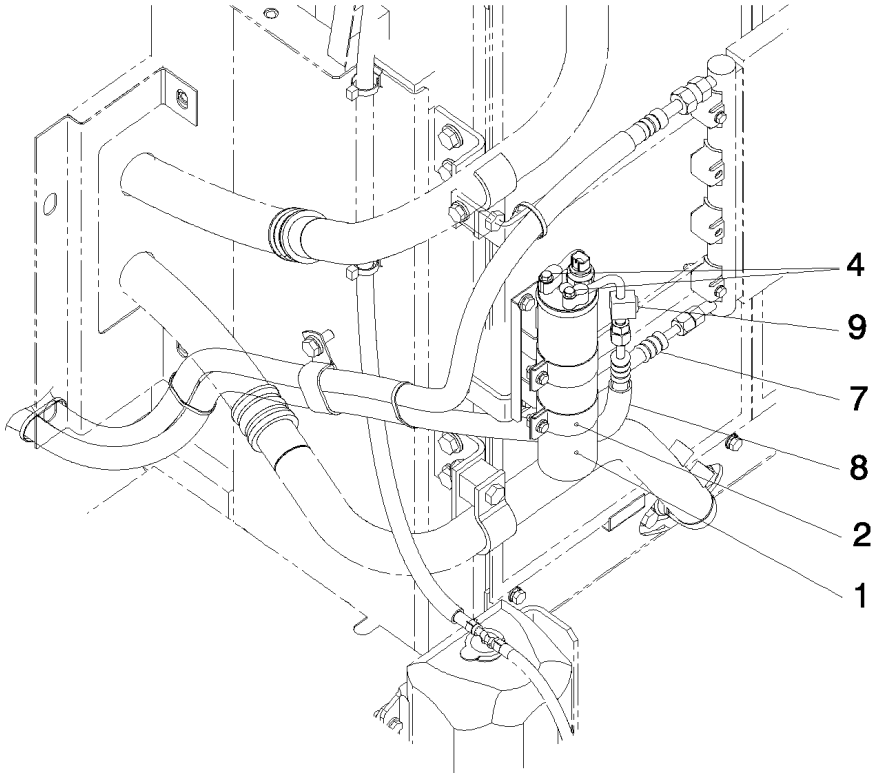

Copyright © New Holland

CLIMATIZADOR
AIR CONDITIONING
AIR CONDITIONING
AIR CONDITIONING

R	N	P.N.	MOD	Q	Description Denominacion	Descrizione Beskrivelse	Bezeichnung Denominação	Description Beschrijving	L.C.
1		87529489		1	RECEIVER-DRYER RECEPTOR-SECADOR	SERBATOIO-ESSICCATO VANDUDSKILLER	TROCKNERPATRONE DESIDRATADOR	RESERVOIR DESHYDRA FILTERDROGER	058D
2		87529490		1	BRACKET SOPORTE	STAFFA BESLAG	HALTERUNG SUPORTE	SUPPORT STEUN	225S
3		72203915		2	SCREW TORNILLO	VITE SKRUE	SCHRAUBE PARAFUSO	VIS SCHROEF	040V
4		72203912		2	SCREW TORNILLO	VITE SKRUE	SCHRAUBE PARAFUSO	VIS SCHROEF	040V
5		YN20M01782F1		1	FLEXIBLE HOSE TUBO FLEXIBLE	TUBO FLESSIBILE FLEKSIBEL SLANGE	BIEGSAMER SCHLAUCH MANGUEIRA FLEXÍVEL	TUYAU FLEXIBLE FLEXIBELE SLANG	192T
6		87529496		1	FLEXIBLE HOSE TUBO FLEXIBLE	TUBO FLESSIBILE FLEKSIBEL SLANGE	BIEGSAMER SCHLAUCH MANGUEIRA FLEXÍVEL	TUYAU FLEXIBLE FLEXIBELE SLANG	192T
7		87529497		1	FLEXIBLE HOSE TUBO FLEXIBLE	TUBO FLESSIBILE FLEKSIBEL SLANGE	BIEGSAMER SCHLAUCH MANGUEIRA FLEXÍVEL	TUYAU FLEXIBLE FLEXIBELE SLANG	192T
8		YN20M01760F1		1	FLEXIBLE HOSE TUBO FLEXIBLE	TUBO FLESSIBILE FLEKSIBEL SLANGE	BIEGSAMER SCHLAUCH MANGUEIRA FLEXÍVEL	TUYAU FLEXIBLE FLEXIBELE SLANG	192T
9		87532858		1	RIGID TUBE TUBO RÍGIDO	TUBO RIGIDO STIFT RØR	ROHR TUBO RÍGIDO	TUYAU RIGIDE VASTE LEIDING	193T

Copyright © New Holland

AIR CONDITIONING
CONDIZIONAMENTO CABINA
KLIMAANLAGE
CLIMATISEUR

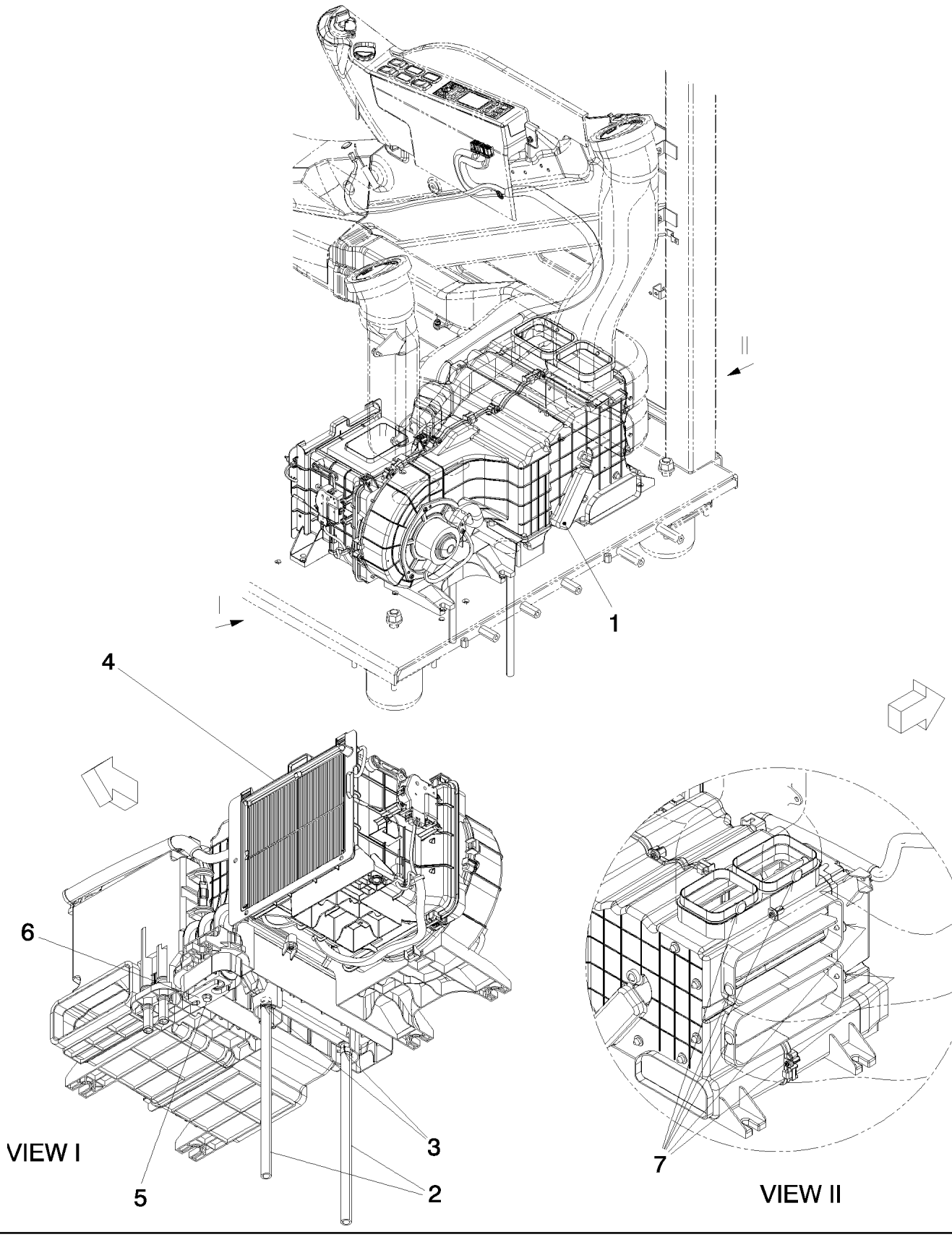

Copyright © New Holland

CLIMATIZADOR
AIR CONDITIONING
AIR CONDITIONING
AIR CONDITIONING

R	N	P.N.	MOD	Q	Description Denominacion	Descrizione Beskrivelse	Bezeichnung Denominação	Description Beschrijving	L.C.
1		LQ20M00059F1		1	AIR CONDITIONING CLIMATIZADOR	CONDIZIONATORE AIRCONDITION	KLIMAANLAGE CLIMATIZADOR	CLIMATISEUR LUCHTKOELER	221C
2		87529476		2	FLEXIBLE HOSE TUBO FLEXIBLE	TUBO FLESSIBILE FLEKSIBEL SLANGE	BIEGSAMER SCHLAUCH MANGUEIRA FLEXÍVEL	TUYAU FLEXIBLE FLEXIBELE SLANG	192T
3		24100U1176S5		2	CLAMP ABRAZADERA	MORSETTO SPÆNDEBÅND	KLEMME BRAÇADEIRA	COLLIER KLEM	120M
4		LQ50V01007P1		1	FILTER FILTRO	FILTRO FILTER	FILTER FILTRO	FILTRE FILTER	065F
5		YT20M00009S005		1	SCREW TORNILLO	VITE SKRUE	SCHRAUBE PARAFUSO	VIS SCHROEF	040V
6		LQ20M01169P1		11	PLATE PLACA	PIASTRA PLADE	PLATTE CHAPA	PLAQUE PLAAT	105P
7		YN20M00016S078		6	CLIP ABRAZADERA	FERMO KLIPS	KLAMMER FIXADOR	COLLIER KLEM	045F

Copyright © New Holland

1.300	01	p1	03/10

HOODS - GUARDS
COFANI - RIPARI
MOTORHAUBER - SCHUTZ.
CAPOTS - PROTECTIONS

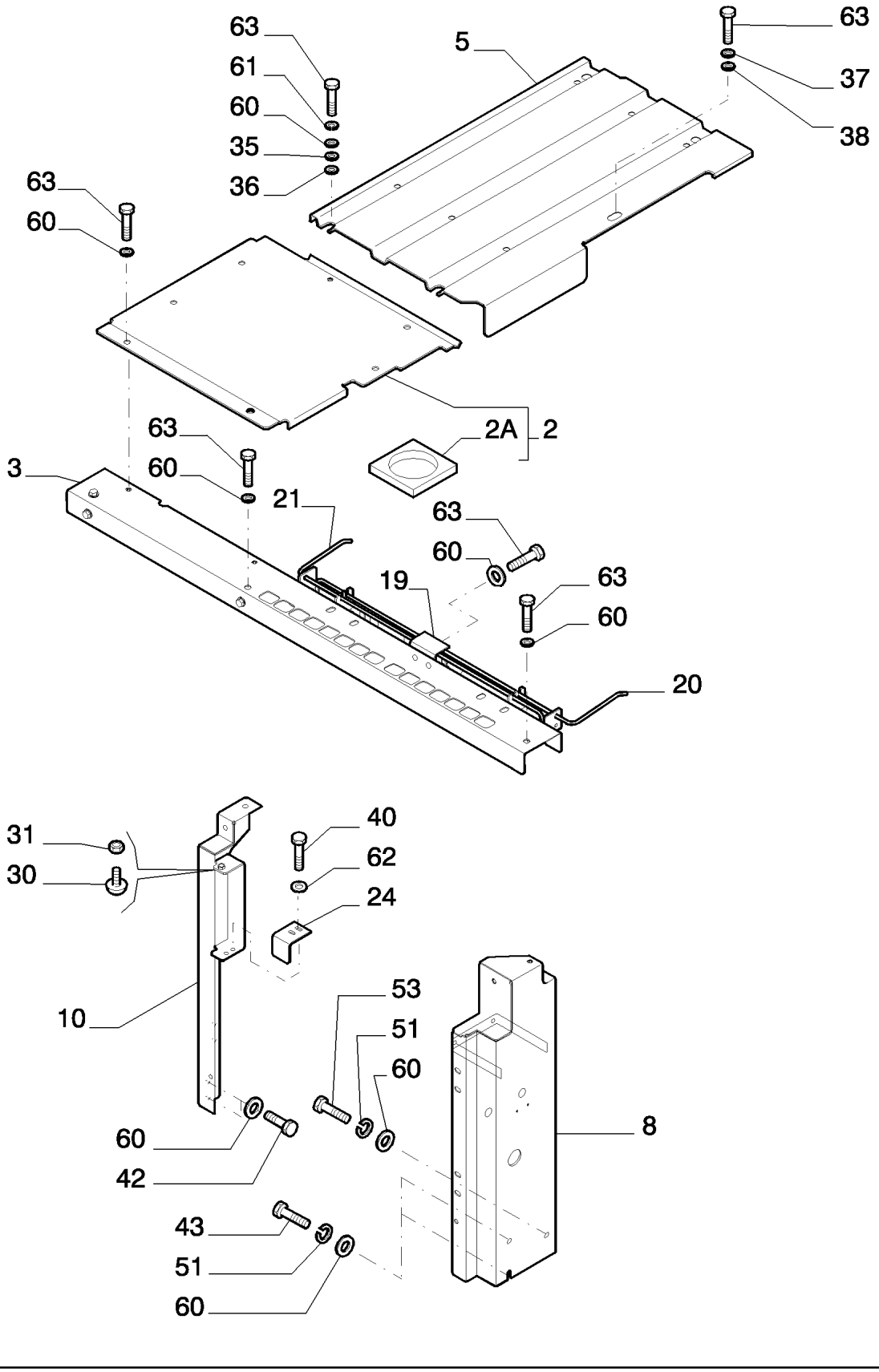

Copyright © New Holland

CAPOTES - PROTECCIONES
HOODS - GUARDS
HOODS - GUARDS
HOODS - GUARDS

R	N	P.N.	MOD	Q	Description Denominacion	Descrizione Beskrivelse	Bezeichnung Denominação	Description Beschrijving	L.C.
2		YN21C04470P1		1	GUARD, - ASSY DEFENSA	PROTEZIONE BESKYTTELSESSKÆRM	SCHUTZABDECKUNG PROTECÇÃO	PROTECTION AFSCHERMING	070R
2A		LC21C01040P1		1	INSULATING PANEL PANEL AISLANTE	PANNELLO ISOLANTE ISOLERINGSPANEL	DÄMMTAFEL REVESTIMENTO ISOLAD	PANNEAU ISOLANT ISOLATIEPANEEL	117R
3		YN21C04455P1		1	SUPPORT SOPORTE	SUPPORTO BESLAG	STÜTZE SUPORTE	SUPPORT STEUN	300S
5		87531569		1	GUARD DEFENSA	PROTEZIONE BESKYTTELSESSKÆRM	SCHUTZABDECKUNG PROTECÇÃO	PROTECTION AFSCHERMING	070R
8		87576417		1	PILLAR PILAR	MONTANTE STOLPE	SÄULE PILAR	MONTANT STIJL	115M
10		87558718		1	PILLAR PILAR	MONTANTE STOLPE	SÄULE PILAR	MONTANT STIJL	115M
19		87531609		1	PLATE PLACA	PIASTRA PLADE	PLATTE CHAPA	PLAQUE PLAAT	105P
20		87531610		1	BAR BARRA	BARRA BJÆLKE	BAR BARRA	BARRE STANG	530B
21		87531611		1	BAR BARRA	BARRA BJÆLKE	BAR BARRA	BARRE STANG	530B
24		87579589		1	PLATE PLACA	PIASTRA PLADE	PLATTE CHAPA	PLAQUE PLAAT	105P
30		72201210		1	RUBBER BUMPER PARACHOQUES DE GOI	Paraurti, in gomma STØDVÆRN, GUMMI	GUMMISTOSSFÄNGER PÁRA-CHOQUES DE BO	PARE-CHOC CAOUTCHO RUBBEREN BUMPER	030P
31		12164721		1	NUT, M10 x 1.25, Cl 10 TUERCA	DADO MØTRIK	MUTTER PORCA	ECROU MOER	010D
35		72206258		4	WASHER ARANDELA	RONDELLA FLADSKIVE	UNTERLEGSCHEIBE ANILHA	RONDELLE SLUITRING	131R
36		72201227		4	WASHER ARANDELA	RONDELLA FLADSKIVE	UNTERLEGSCHEIBE ANILHA	RONDELLE SLUITRING	131R
37		72964141		1	WASHER ARANDELA	RONDELLA FLADSKIVE	UNTERLEGSCHEIBE ANILHA	RONDELLE SLUITRING	131R
38		72964142		1	WASHER ARANDELA	RONDELLA FLADSKIVE	UNTERLEGSCHEIBE ANILHA	RONDELLE SLUITRING	131R
40		16043434		2	BOLT, Hex, M8 x 20, 10.9, Full Thd PERNO	BULLONE BOLT	SCHRAUBE PARAFUSO	VIS BOUT	140B
42		11112434		2	BOLT, Hex, M12 x 30, 10.9, Full Thd PERNO	BULLONE BOLT	SCHRAUBE PARAFUSO	VIS BOUT	140B
43		11112834		2	BOLT, Hex, M12 x 40, 10.9, Full Thd PERNO	BULLONE BOLT	SCHRAUBE PARAFUSO	VIS BOUT	140B
51		4952483		3	WASHER ARANDELA	RONDELLA FLADSKIVE	UNTERLEGSCHEIBE ANILHA	RONDELLE SLUITRING	131R
53		11112674		1	SCREW TORNILLO	VITE SKRUE	SCHRAUBE PARAFUSO	VIS SCHROEF	040V
60		72201225		22	WASHER ARANDELA	RONDELLA FLADSKIVE	UNTERLEGSCHEIBE ANILHA	RONDELLE SLUITRING	131R
61		10517074		4	LOCK WASHER ARANDELA DE BLOQUE	RONDELLA DI SICUREZ LÅSESKIVE	SICHERUNGSSCHEIBE ANILHA DE RETENÇÃO	RONDELLE FREIN BORGRING	132R
62		14496531		2	WASHER, M8 x 17 x 1.6 ARANDELA	RONDELLA FLADSKIVE	UNTERLEGSCHEIBE ANILHA	RONDELLE SLUITRING	131R

Copyright © New Holland

1.300	01	p2	03/10

HOODS - GUARDS
COFANI - RIPARI
MOTORHAUBER - SCHUTZ.
CAPOTS - PROTECTIONS

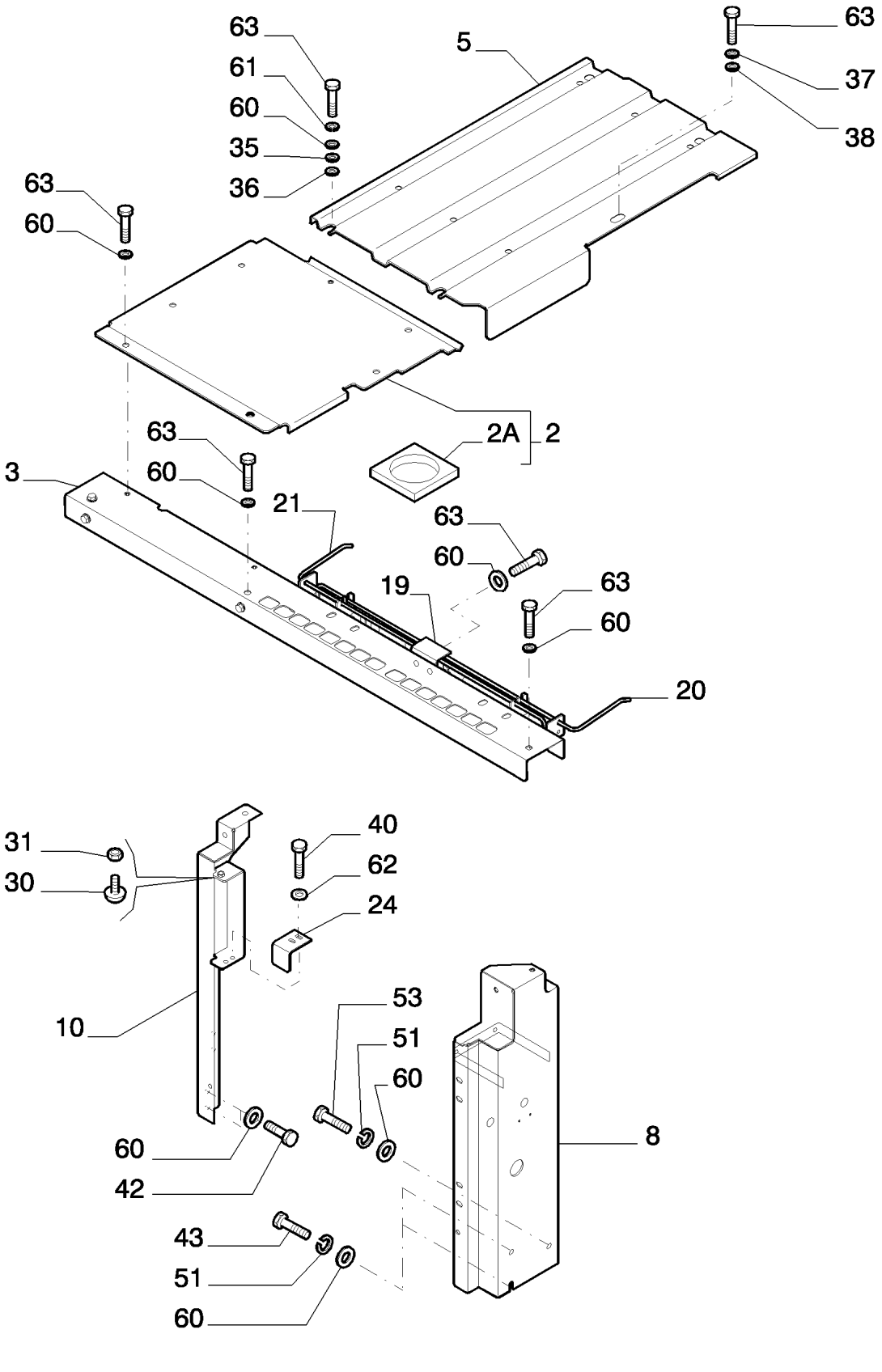

Copyright © New Holland

CAPOTES - PROTECCIONES
HOODS - GUARDS
HOODS - GUARDS
HOODS - GUARDS

R	N	P.N.	MOD	Q	Description Denominacion	Descrizione Beskrivelse	Bezeichnung Denominação	Description Beschrijving	L.C.
63		11112234		18	BOLT, Hex, M12 x 25, 10.9, Full Thd PERNO	BULLONE BOLT	SCHRAUBE PARAFUSO	VIS BOUT	140B

Copyright © New Holland

1.300	02	p1	03/10

HOODS - GUARDS
COFANI - RIPARI
MOTORHAUBER - SCHUTZ.
CAPOTS - PROTECTIONS

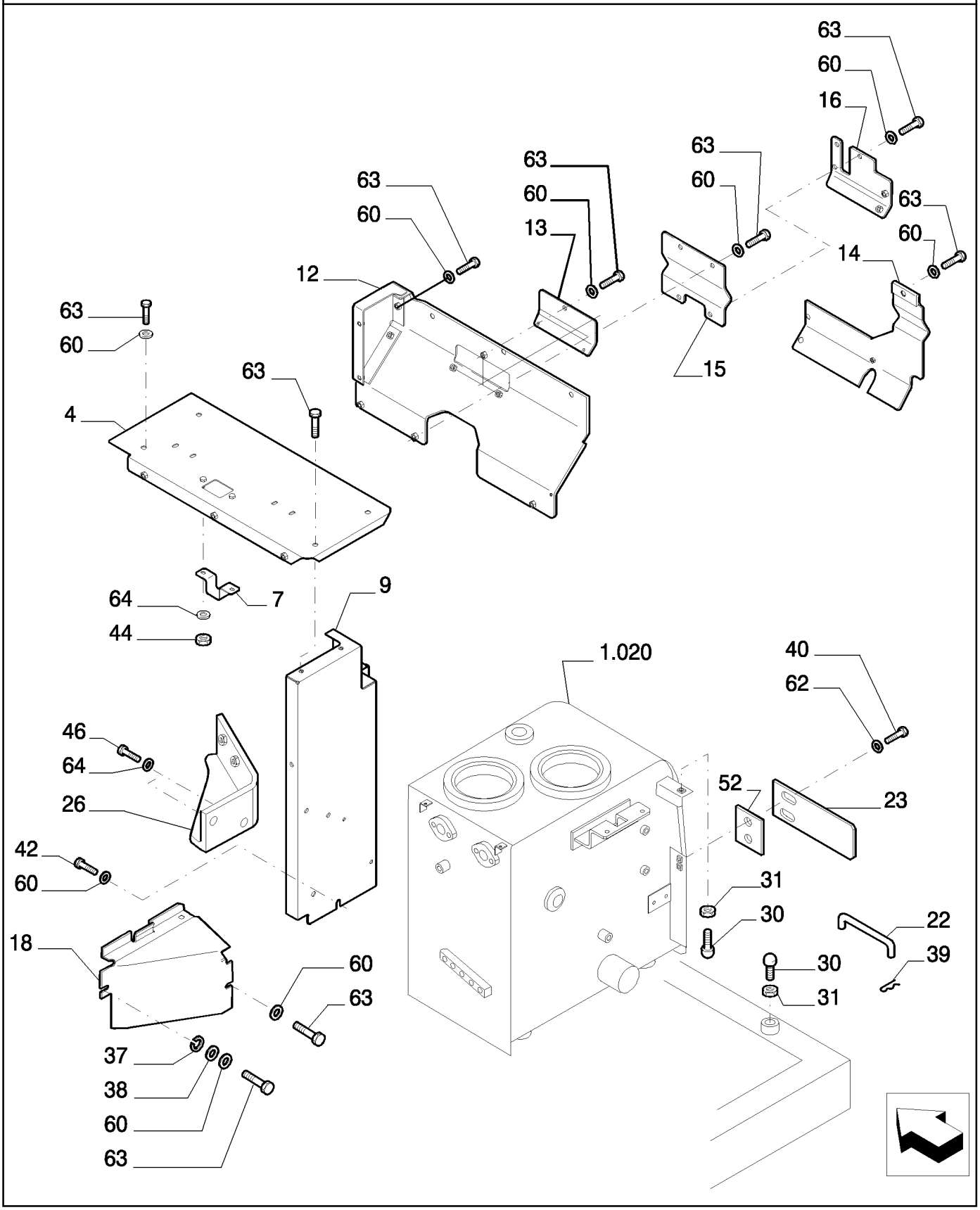

Copyright © New Holland

CAPOTES - PROTECCIONES
HOODS - GUARDS
HOODS - GUARDS
HOODS - GUARDS

R	N	P.N.	MOD	Q	Description Denominacion	Descrizione Beskrivelse	Bezeichnung Denominação	Description Beschrijving	L.C.
4		87558716		1	GUARD DEFENSA	PROTEZIONE BESKYTTELSESSKÆRM	SCHUTZABDECKUNG PROTECÇÃO	PROTECTION AFSCHERMING	070R
7		87531555		1	PLATE PLACA	PIASTRA PLADE	PLATTE CHAPA	PLAQUE PLAAT	105P
9		87576537		1	PILLAR PILAR	MONTANTE STOLPE	SÄULE PILAR	MONTANT STIJL	115M
12		87531590		1	GUARD DEFENSA	PROTEZIONE BESKYTTELSESSKÆRM	SCHUTZABDECKUNG PROTECÇÃO	PROTECTION AFSCHERMING	070R
13		87531595		1	PLATE PLACA	PIASTRA PLADE	PLATTE CHAPA	PLAQUE PLAAT	105P
14		87545734		1	GUARD DEFENSA	PROTEZIONE BESKYTTELSESSKÆRM	SCHUTZABDECKUNG PROTECÇÃO	PROTECTION AFSCHERMING	070R
15		87543996		1	GUARD DEFENSA	PROTEZIONE BESKYTTELSESSKÆRM	SCHUTZABDECKUNG PROTECÇÃO	PROTECTION AFSCHERMING	070R
16		87531602		1	GUARD DEFENSA	PROTEZIONE BESKYTTELSESSKÆRM	SCHUTZABDECKUNG PROTECÇÃO	PROTECTION AFSCHERMING	070R
18		87531608		1	PLATE PLACA	PIASTRA PLADE	PLATTE CHAPA	PLAQUE PLAAT	105P
22		87537856		1	ROD VARILLA	ASTA STANG	STANGE HASTE	TIGE STANG	090A
23		87579588		1	PLATE PLACA	PIASTRA PLADE	PLATTE CHAPA	PLAQUE PLAAT	105P
26		87576553		1	PLATE PLACA	PIASTRA PLADE	PLATTE CHAPA	PLAQUE PLAAT	105P
30		72201210		2	RUBBER BUMPER PARACHOQUES DE GOI	Paraurti, in gomma STØDVÆRN, GUMMI	GUMMISTOSSFÄNGER PÁRA-CHOQUES DE BO	PARE-CHOC CAOUTCH(RUBBEREN BUMPER	030P
31		12164721		2	NUT, M10 x 1.25, Cl 10 TUERCA	DADO MØTRIK	MUTTER PORCA	ECROU MOER	010D
37		72964141		1	WASHER ARANDELA	RONDELLA FLADSKIVE	UNTERLEGSCHEIBE ANILHA	RONDELLE SLUITRING	131R
38		72964142		1	WASHER ARANDELA	RONDELLA FLADSKIVE	UNTERLEGSCHEIBE ANILHA	RONDELLE SLUITRING	131R
39		72275189		1	COTTER PIN PASADOR	COPPIGLIA SPLITBOLT	SPLINT TROÇO DE ABRIR	GOUPILLE FENDUE SPLITPEN	270C
40		16043434		2	BOLT, Hex, M8 x 20, 10.9, Full Thd PERNO	BULLONE BOLT	SCHRAUBE PARAFUSO	VIS BOUT	140B
42		11112434		3	BOLT, Hex, M12 x 30, 10.9, Full Thd PERNO	BULLONE BOLT	SCHRAUBE PARAFUSO	VIS BOUT	140B
44		11701721		2	NUT, M10, Cl 10 TUERCA	DADO MØTRIK	MUTTER PORCA	ECROU MOER	010D
46		11106034		2	BOLT, Hex, M10 x 20, 10.9, Full Thd PERNO	BULLONE BOLT	SCHRAUBE PARAFUSO	VIS BOUT	140B
52		87579587		1	SHIM SUPLEMENTO	SPESSORE MELLEMLÆG	AUSGLEICHSSCHEIBE CALÇO DE AFINAÇÃO	CALE VULPLAATJE	198S
60		72201225		25	WASHER ARANDELA	RONDELLA FLADSKIVE	UNTERLEGSCHEIBE ANILHA	RONDELLE SLUITRING	131R
62		14496531		2	WASHER, M8 x 17 x 1.6 ARANDELA	RONDELLA FLADSKIVE	UNTERLEGSCHEIBE ANILHA	RONDELLE SLUITRING	131R

Copyright © New Holland

1.300	02	p2	03/10

HOODS - GUARDS
COFANI - RIPARI
MOTORHAUBER - SCHUTZ.
CAPOTS - PROTECTIONS

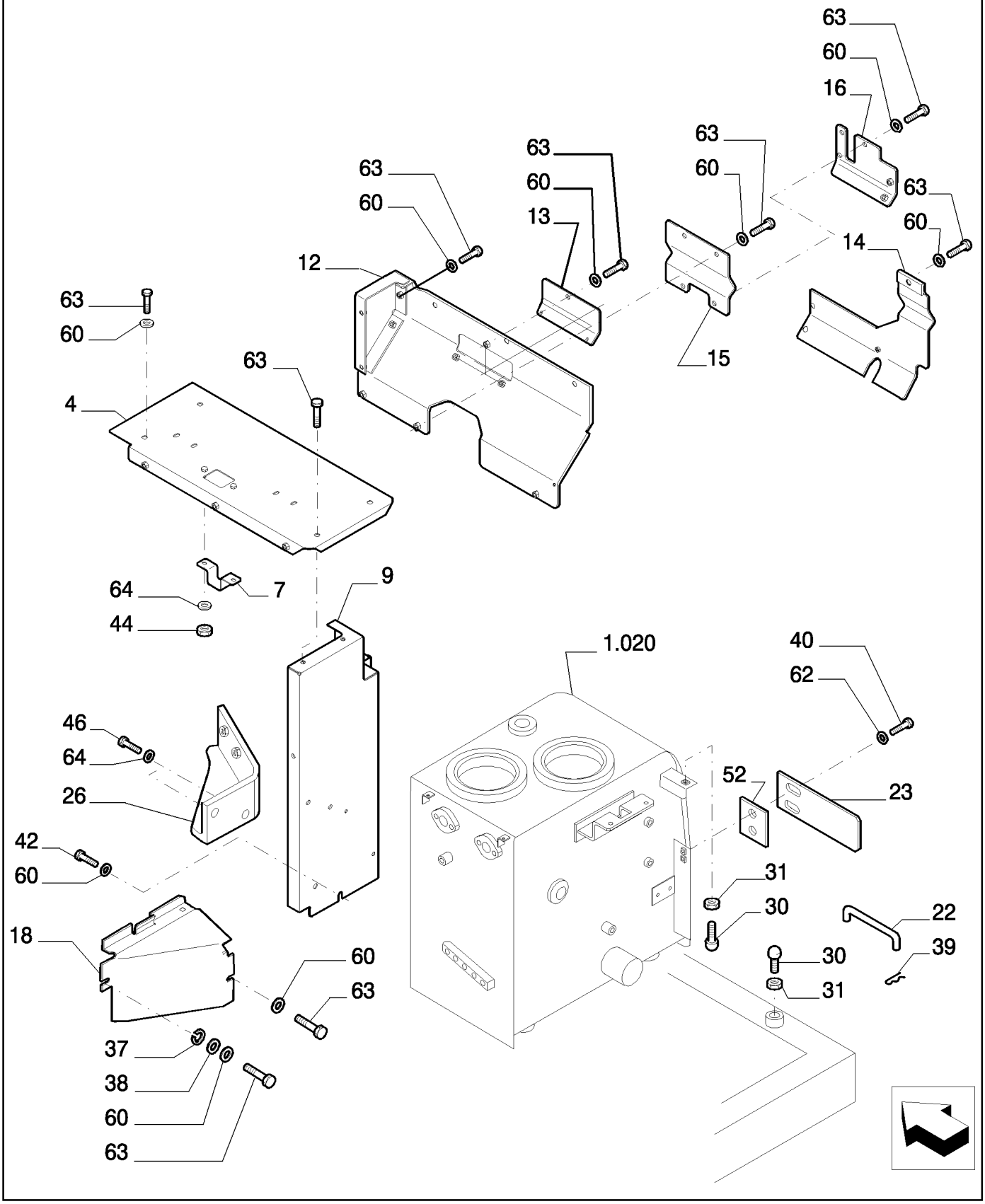

Copyright © New Holland

CAPOTES - PROTECCIONES
HOODS - GUARDS
HOODS - GUARDS
HOODS - GUARDS

R	N	P.N.	MOD	Q	Description Denominacion	Descrizione Beskrivelse	Bezeichnung Denominação	Description Beschrijving	L.C.
63		**11112234**		22	BOLT, Hex, M12 x 25, 10.9, Full Thd BULLONE PERNO	 BULLONE BOLT	 SCHRAUBE PARAFUSO	 VIS BOUT	140B
64		**14496631**		4	WASHER, M10 x 21 x 2 ARANDELA	RONDELLA FLADSKIVE	UNTERLEGSCHEIBE ANILHA	RONDELLE SLUITRING	131R

Copyright © New Holland

1.300	03	p1	03/10

HOODS - GUARDS
COFANI - RIPARI
MOTORHAUBER - SCHUTZ.
CAPOTS - PROTECTIONS

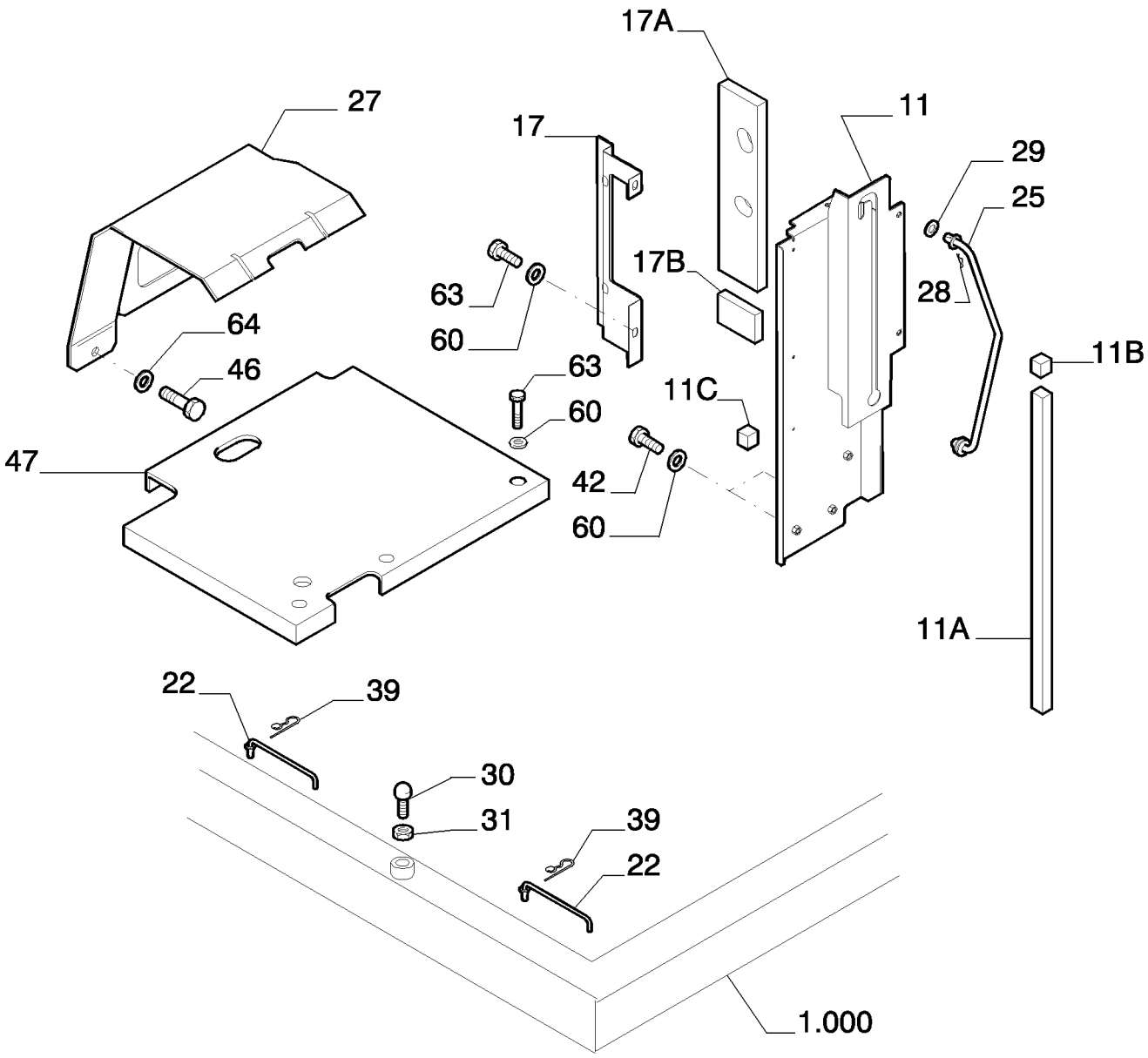

Copyright © New Holland

CAPOTES - PROTECCIONES
HOODS - GUARDS
HOODS - GUARDS
HOODS - GUARDS

R	N	P.N.	MOD	Q	Description Denominacion	Descrizione Beskrivelse	Bezeichnung Denominação	Description Beschrijving	L.C.
11		87531583		1	GUARD, - ASSY DEFENSA	PROTEZIONE BESKYTTELSESSKÆRM	SCHUTZABDECKUNG PROTECÇÃO	PROTECTION AFSCHERMING	070R
11A		YN21C03282P1		1	FOAM INSULATION ESPUMA AISLANTE	ISOLANTE IN SCHIUMA SKUM ISOLERING	SCHAUMSTOFFISOLIER ISOLAMENTO DE ESPUI	MOUSSE ISOLANTE SCHUIMISOLATIE	051S
11B		YN21C03283P1		1	FOAM INSULATION ESPUMA AISLANTE	ISOLANTE IN SCHIUMA SKUM ISOLERING	SCHAUMSTOFFISOLIER ISOLAMENTO DE ESPUI	MOUSSE ISOLANTE SCHUIMISOLATIE	051S
11C		YN21C03284P1		1	FOAM INSULATION ESPUMA AISLANTE	ISOLANTE IN SCHIUMA SKUM ISOLERING	SCHAUMSTOFFISOLIER ISOLAMENTO DE ESPUI	MOUSSE ISOLANTE SCHUIMISOLATIE	051S
17		87545735		1	GUARD, - ASSY DEFENSA	PROTEZIONE BESKYTTELSESSKÆRM	SCHUTZABDECKUNG PROTECÇÃO	PROTECTION AFSCHERMING	070R
17A		YN21C03463P1		1	RUBBER GOMA	GOMMA GUMMI	GUMMI BORRACHA	CAOUTCHOUC RUBBER	P321
17B		YN21C03610P1		1	FOAM INSULATION ESPUMA AISLANTE	ISOLANTE IN SCHIUMA SKUM ISOLERING	SCHAUMSTOFFISOLIER ISOLAMENTO DE ESPUI	MOUSSE ISOLANTE SCHUIMISOLATIE	051S
22		87537856		2	ROD VARILLA	ASTA STANG	STANGE HASTE	TIGE STANG	090A
25		87531614		1	PILLAR PILAR	MONTANTE STOLPE	SÄULE PILAR	MONTANT STIJL	115M
27		87531619		1	PLATE PLACA	PIASTRA PLADE	PLATTE CHAPA	PLAQUE PLAAT	105P
28		87361706		1	COTTER PIN PASADOR	COPPIGLIA SPLITBOLT	SPLINT TROÇO DE ABRIR	GOUPILLE FENDUE SPLITPEN	270C
29		14496931		1	WASHER, M16 x 30 x 3 ARANDELA	RONDELLA FLADSKIVE	UNTERLEGSCHEIBE ANILHA	RONDELLE SLUITRING	131R
30		72201210		1	RUBBER BUMPER PARACHOQUES DE GOI	Paraurti, in gomma STØDVÆRN, GUMMI	GUMMISTOSSFÄNGER PÁRA-CHOQUES DE BO	PARE-CHOC CAOUTCHO RUBBEREN BUMPER	030P
31		12164721		1	NUT, M10 x 1.25, Cl 10 TUERCA	DADO MØTRIK	MUTTER PORCA	ECROU MOER	010D
39		72275189		2	COTTER PIN PASADOR	COPPIGLIA SPLITBOLT	SPLINT TROÇO DE ABRIR	GOUPILLE FENDUE SPLITPEN	270C
42		11112434		2	BOLT, Hex, M12 x 30, 10.9, Full Thd PERNO	BULLONE BOLT	SCHRAUBE PARAFUSO	VIS BOUT	140B
46		11106034		3	BOLT, Hex, M10 x 20, 10.9, Full Thd PERNO	BULLONE BOLT	SCHRAUBE PARAFUSO	VIS BOUT	140B
47		YN21C04473P1		1	PLATE PLACA	PIASTRA PLADE	PLATTE CHAPA	PLAQUE PLAAT	105P
60		72201225		12	WASHER ARANDELA	RONDELLA FLADSKIVE	UNTERLEGSCHEIBE ANILHA	RONDELLE SLUITRING	131R
63		11112234		10	BOLT, Hex, M12 x 25, 10.9, Full Thd PERNO	BULLONE BOLT	SCHRAUBE PARAFUSO	VIS BOUT	140B
64		14496631		3	WASHER, M10 x 21 x 2 ARANDELA	RONDELLA FLADSKIVE	UNTERLEGSCHEIBE ANILHA	RONDELLE SLUITRING	131R

Copyright © New Holland

1.300	04	p1	03/10

HOODS - GUARDS
COFANI - RIPARI
MOTORHAUBER - SCHUTZ.
CAPOTS - PROTECTIONS

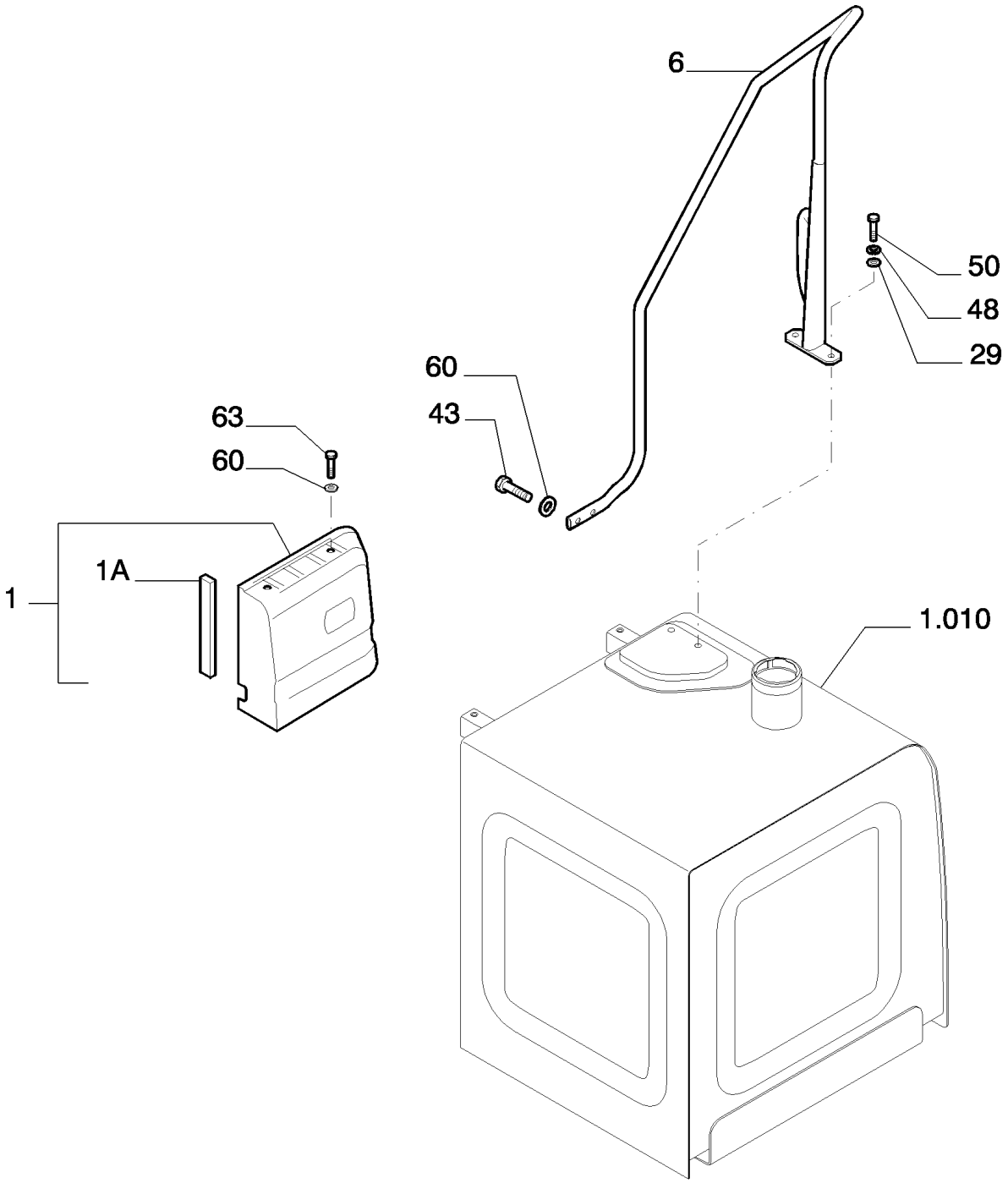

Copyright © New Holland

CAPOTES - PROTECCIONES
HOODS - GUARDS
HOODS - GUARDS
HOODS - GUARDS

R	N	P.N.	MOD	Q	Description Denominacion	Descrizione Beskrivelse	Bezeichnung Denominação	Description Beschrijving	L.C.
1		87597943		1	GUARD, - ASSY DEFENSA	PROTEZIONE BESKYTTELSESSKÆRM	SCHUTZABDECKUNG PROTECÇÃO	PROTECTION AFSCHERMING	070R
1A		87589997		2	GASKET JUNTA	GUARNIZIONE PAKNING	DICHTUNG JUNTA	JOINT PAKKING	123G
6		87579586		1	PILLAR PILAR	MONTANTE STOLPE	SÄULE PILAR	MONTANT STIJL	115M
29		14496931		2	WASHER, M16 x 30 x 3 ARANDELA	RONDELLA FLADSKIVE	UNTERLEGSCHEIBE ANILHA	RONDELLE SLUITRING	131R
43		11112834		2	BOLT, Hex, M12 x 40, 10.9, Full Thd PERNO	BULLONE BOLT	SCHRAUBE PARAFUSO	VIS BOUT	140B
48		10517274		2	LOCK WASHER ARANDELA DE BLOQUE	RONDELLA DI SICUREZ LÅSESKIVE	SICHERUNGSSCHEIBE ANILHA DE RETENÇÃO	RONDELLE FREIN BORGRING	132R
50		11127434		2	SCREW TORNILLO	VITE SKRUE	SCHRAUBE PARAFUSO	VIS SCHROEF	040V
60		72201225		4	WASHER ARANDELA	RONDELLA FLADSKIVE	UNTERLEGSCHEIBE ANILHA	RONDELLE SLUITRING	131R
63		11112234		2	BOLT, Hex, M12 x 25, 10.9, Full Thd PERNO	BULLONE BOLT	SCHRAUBE PARAFUSO	VIS BOUT	140B

Copyright © New Holland

1.300	05	p1	03/10

HOODS - GUARDS
COFANI - RIPARI
MOTORHAUBER - SCHUTZ.
CAPOTS - PROTECTIONS

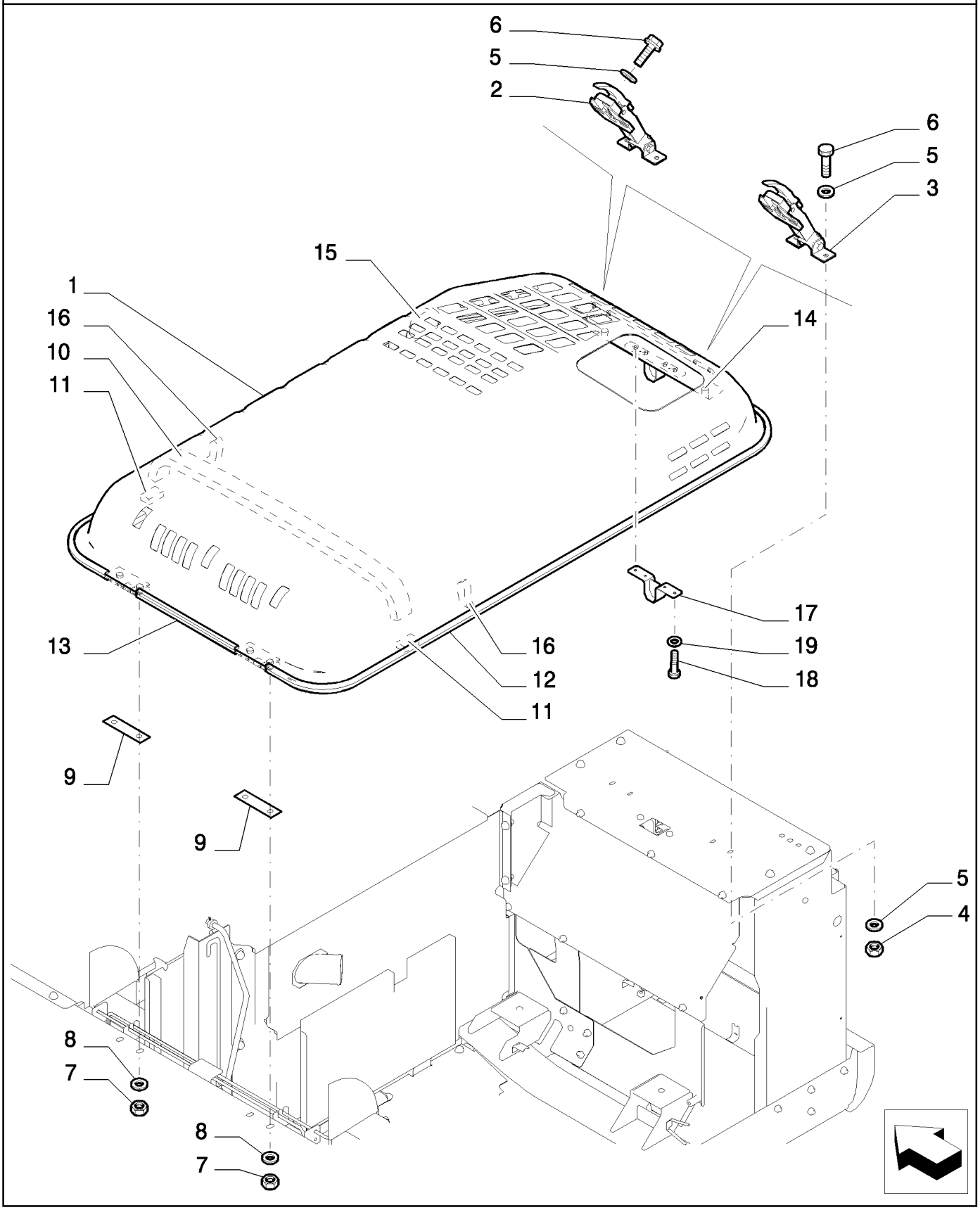

Copyright © New Holland

CAPOTES - PROTECCIONES
HOODS - GUARDS
HOODS - GUARDS
HOODS - GUARDS

R	N	P.N.	MOD	Q	Description Denominacion	Descrizione Beskrivelse	Bezeichnung Denominação	Description Beschrijving	L.C.
1		87533050		1	COWLING CAPÓ	COFANO MOTORHJELM	HAUBE COBERTURA	CAPOT KAP	176C
2		87579057		1	HANDLE MANECILLA	MANIGLIA HÅNDTAG	GRIFF PEGA	POIGNEE HENDEL	020M
3		87579056		1	HANDLE MANECILLA	MANIGLIA HÅNDTAG	GRIFF PEGA	POIGNEE HENDEL	020M
4		16100821		4	NUT, M8, Cl 10 TUERCA	DADO MØTRIK	MUTTER PORCA	ECROU MOER	010D
5		14496531		12	WASHER, M8 x 17 x 1.6 ARANDELA	RONDELLA FLADSKIVE	UNTERLEGSCHEIBE ANILHA	RONDELLE SLUITRING	131R
6		16043434		8	BOLT, Hex, M8 x 20, 10.9, Full Thd PERNO	BULLONE BOLT	SCHRAUBE PARAFUSO	VIS BOUT	140B
7		11702921		4	NUT, M12, Cl 10 TUERCA	DADO MØTRIK	MUTTER PORCA	ECROU MOER	010D
8		72201225		4	WASHER ARANDELA	RONDELLA FLADSKIVE	UNTERLEGSCHEIBE ANILHA	RONDELLE SLUITRING	131R
9		87572226		2	SHIM SUPLEMENTO	SPESSORE MELLEMLÆG	AUSGLEICHSSCHEIBE CALÇO DE AFINAÇÃO	CALE VULPLAATJE	198S
10		87533361		1	INSULATOR AISLADOR	ISOLATORE ISOLATOR	ISOLATOR ISOLADOR	ISOLANT ISOLATIE	085I
11		87356672		2	INSULATOR AISLADOR	ISOLATORE ISOLATOR	ISOLATOR ISOLADOR	ISOLANT ISOLATIE	085I
12		87533362		1	GASKET JUNTA	GUARNIZIONE PAKNING	DICHTUNG JUNTA	JOINT PAKKING	123G
13		87533363		1	GASKET JUNTA	GUARNIZIONE PAKNING	DICHTUNG JUNTA	JOINT PAKKING	123G
14		87356682		2	OILER FABRIC TEJIDO DE ENGRASADO	TAMPONE DI LUBRIFICA SMØREFILT	SCHMIERTUCH PANO DE LUBRIFICAÇÃ	FEUTRE DE GRAISSAGE SMEERVILT	026T
15		87356683		1	HANDLE MANECILLA	MANIGLIA HÅNDTAG	GRIFF PEGA	POIGNEE HENDEL	020M
16		87533364		2	INSULATOR AISLADOR	ISOLATORE ISOLATOR	ISOLATOR ISOLADOR	ISOLANT ISOLATIE	085I
17		87533365		1	PLATE PLACA	PIASTRA PLADE	PLATTE CHAPA	PLAQUE PLAAT	105P
18		16043434		4	BOLT, Hex, M8 x 20, 10.9, Full Thd PERNO	BULLONE BOLT	SCHRAUBE PARAFUSO	VIS BOUT	140B
19		14496531		4	WASHER, M8 x 17 x 1.6 ARANDELA	RONDELLA FLADSKIVE	UNTERLEGSCHEIBE ANILHA	RONDELLE SLUITRING	131R

Copyright © New Holland

1.300	06	p1	03/10

HOODS - GUARDS
COFANI - RIPARI
MOTORHAUBER - SCHUTZ.
CAPOTS - PROTECTIONS

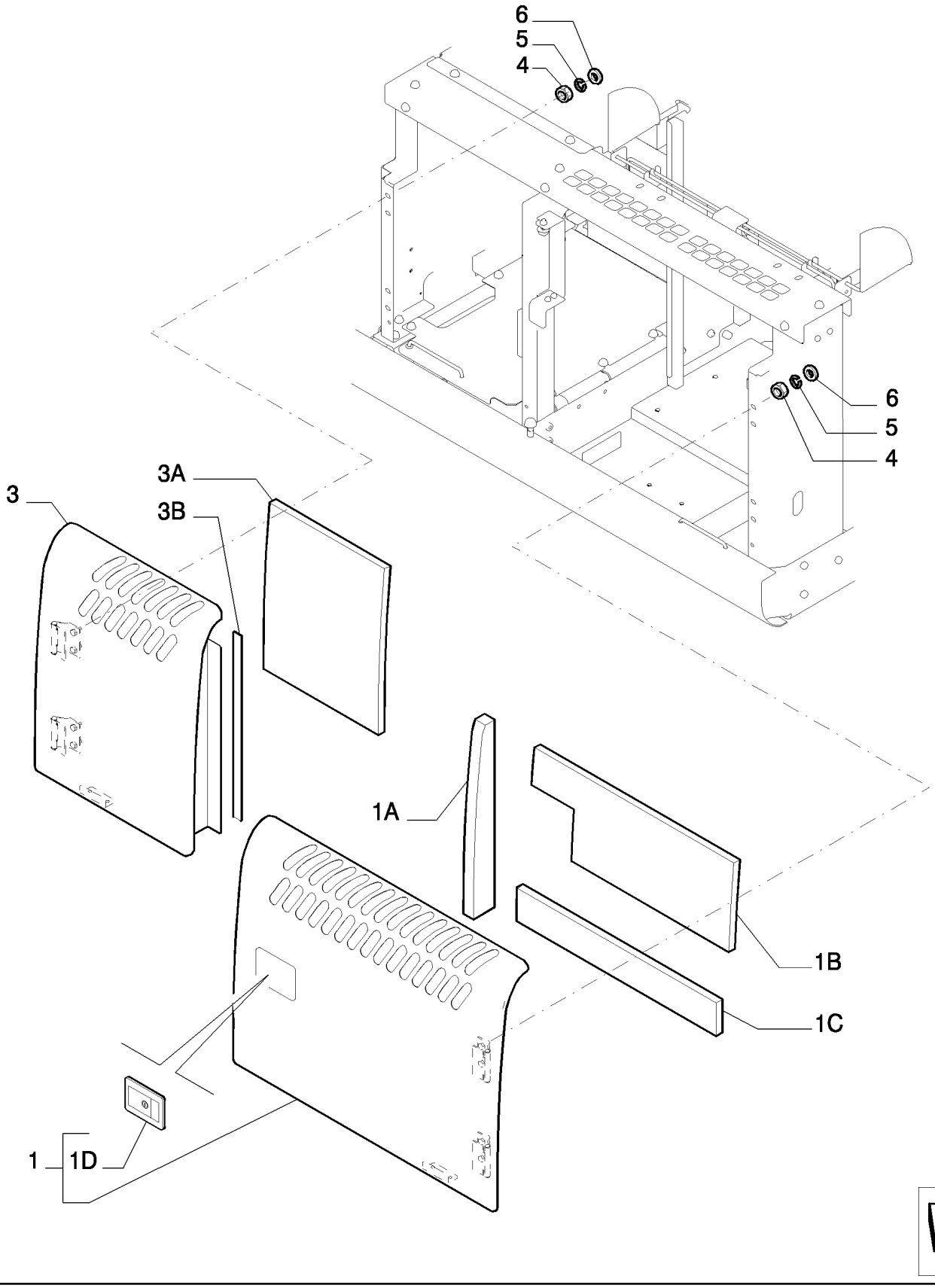

Copyright © New Holland

CAPOTES - PROTECCIONES
HOODS - GUARDS
HOODS - GUARDS
HOODS - GUARDS

R	N	P.N.	MOD	Q	Description Denominacion	Descrizione Beskrivelse	Bezeichnung Denominação	Description Beschrijving	L.C.
1		87531620		1	LID, - ASSY TAPA	COPERCHIO LÅG	DECKEL TAMPA	COUVERCLE DEKSEL	205S
1A		87533036		1	GASKET JUNTA	GUARNIZIONE PAKNING	DICHTUNG JUNTA	JOINT PAKKING	123G
1B		87533037		1	INSULATOR AISLADOR	ISOLATORE ISOLATOR	ISOLATOR ISOLADOR	ISOLANT ISOLATIE	085I
1C		87533038		1	INSULATOR AISLADOR	ISOLATORE ISOLATOR	ISOLATOR ISOLADOR	ISOLANT ISOLATIE	085I
1D		87652542		1	LOCK CERRADURA	BLOCCO LÅS	SCHLOSS FECHADURA	SERRURE SLOT	120S
3		YN21C04637F1		1	PANEL, - ASSY PANEL	PANNELLO PANEL	PLATTE PAINEL	PANNEAU PANEEL	025P
3A		87533048		1	INSULATOR AISLADOR	ISOLATORE ISOLATOR	ISOLATOR ISOLADOR	ISOLANT ISOLATIE	085I
3B		YN21C02462P1		1	RUBBER BAND CINTA DE GOMA	NASTRO DI GOMMA GUMMIBÅND	GUMMIBAND CINTA DE BORRACHA	BANDE EN CAOUTCHOU RUBBEREN BAND	021N
4		11701721		8	NUT, M10, Cl 10 TUERCA	DADO MØTRIK	MUTTER PORCA	ECROU MOER	010D
5		10516874		8	LOCK WASHER ARANDELA DE BLOQUE	RONDELLA DI SICUREZ LÅSESKIVE	SICHERUNGSSCHEIBE ANILHA DE RETENÇÃO	RONDELLE FREIN BORGRING	132R
6		72201224		8	WASHER ARANDELA	RONDELLA FLADSKIVE	UNTERLEGSCHEIBE ANILHA	RONDELLE SLUITRING	131R

Copyright © New Holland

1.300	07	p1	03/10

HOODS - GUARDS
COFANI - RIPARI
MOTORHAUBER - SCHUTZ.
CAPOTS - PROTECTIONS

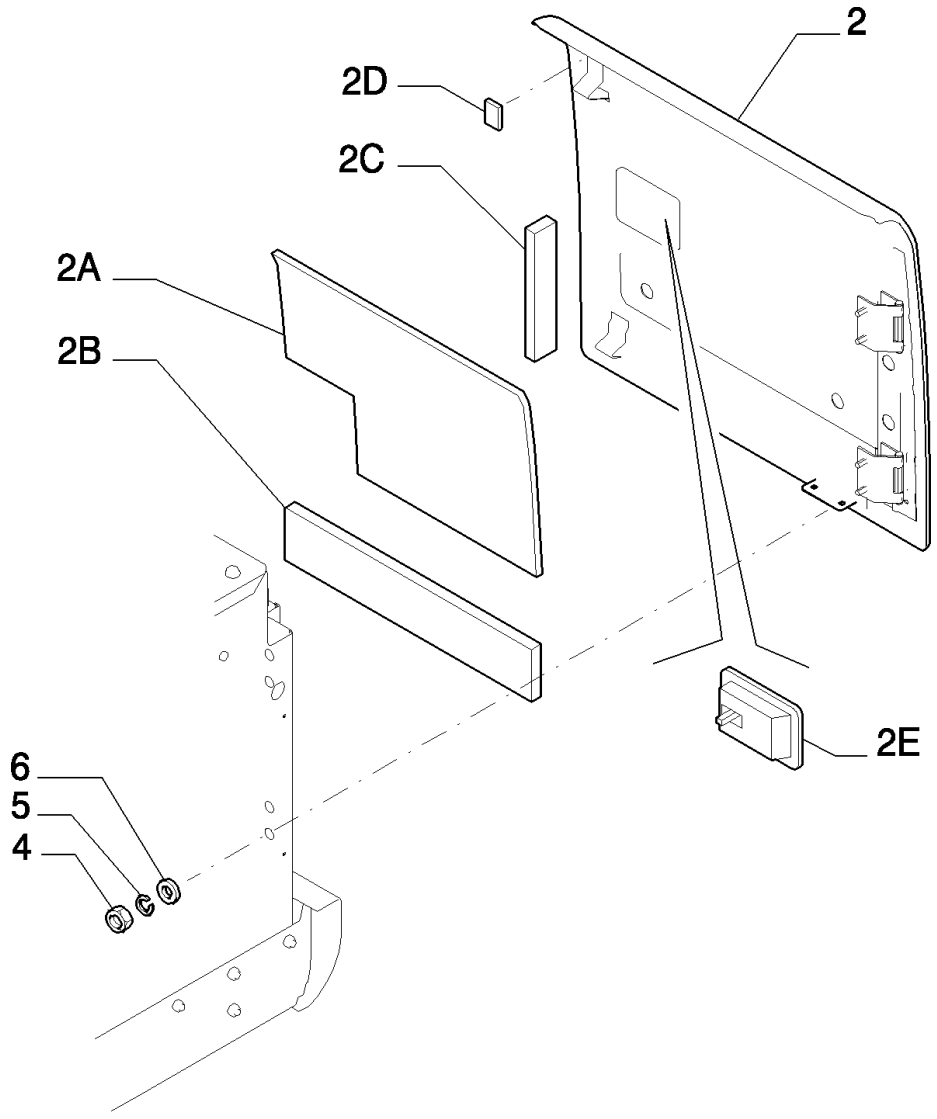

Copyright © New Holland

CAPOTES - PROTECCIONS
HOODS - GUARDS
HOODS - GUARDS
HOODS - GUARDS

R	N	P.N.	MOD	Q	Description Denominacion	Descrizione Beskrivelse	Bezeichnung Denominação	Description Beschrijving	L.C.
2		87533039		1	LID, - ASSY TAPA	COPERCHIO LÅG	DECKEL TAMPA	COUVERCLE DEKSEL	205S
2A		87533042		1	INSULATOR AISLADOR	ISOLATORE ISOLATOR	ISOLATOR ISOLADOR	ISOLANT ISOLATIE	085I
2B		87533043		1	INSULATOR AISLADOR	ISOLATORE ISOLATOR	ISOLATOR ISOLADOR	ISOLANT ISOLATIE	085I
2C		87531528		1	GASKET JUNTA	GUARNIZIONE PAKNING	DICHTUNG JUNTA	JOINT PAKKING	123G
2D		72210559		1	GASKET JUNTA	GUARNIZIONE PAKNING	DICHTUNG JUNTA	JOINT PAKKING	123G
2E		87652542		1	LOCK CERRADURA	BLOCCO LÅS	SCHLOSS FECHADURA	SERRURE SLOT	120S
4		11701721		4	NUT, M10, Cl 10 TUERCA	DADO MØTRIK	MUTTER PORCA	ECROU MOER	010D
5		10516874		4	LOCK WASHER ARANDELA DE BLOQUE	RONDELLA DI SICUREZ LÅSESKIVE	SICHERUNGSSCHEIBE ANILHA DE RETENÇÃO	RONDELLE FREIN BORGRING	132R
6		72201224		4	WASHER ARANDELA	RONDELLA FLADSKIVE	UNTERLEGSCHEIBE ANILHA	RONDELLE SLUITRING	131R

Copyright © New Holland

1.300	08	p1	03/10

HOODS - GUARDS
COFANI - RIPARI
MOTORHAUBER - SCHUTZ.
CAPOTS - PROTECTIONS

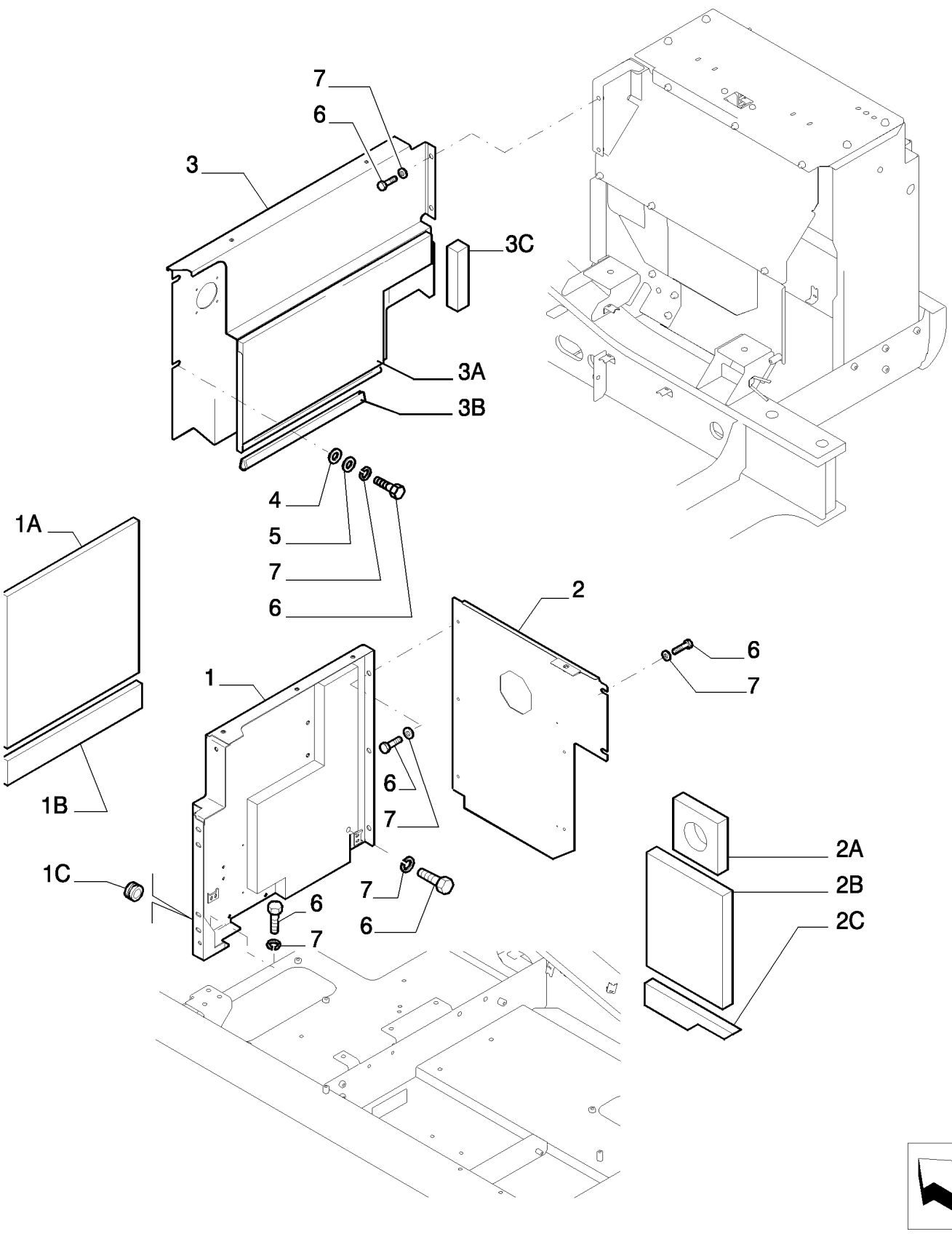

Copyright © New Holland

CAPOTES - PROTECCIONS
HOODS - GUARDS
HOODS - GUARDS
HOODS - GUARDS

R	N	P.N.	MOD	Q	Description Denominacion	Descrizione Beskrivelse	Bezeichnung Denominação	Description Beschrijving	L.C.
1		YN21C04431F1		1	GUARD, - ASSY DEFENSA	PROTEZIONE BESKYTTELSESSKÆRM	SCHUTZABDECKUNG PROTECÇÃO	PROTECTION AFSCHERMING	070R
1A		YN21C03244P2		1	FOAM INSULATION ESPUMA AISLANTE	ISOLANTE IN SCHIUMA SKUM ISOLERING	SCHAUMSTOFFISOLIER ISOLAMENTO DE ESPUI	MOUSSE ISOLANTE SCHUIMISOLATIE	051S
1B		{LB21C01277P1}		1					
1C		71425116		1	RUBBER BUSHING CASQUILLO DE GOMA	BOCCOLA IN GOMMA GUMMIBØSNING	GUMMIBUCHSE CASQUILHO DE BORRA	BAGUE EN CAOUTCHOU RUBBEREN BUS	100B
2		YN21C04434F1		1	GUARD, - ASSY DEFENSA	PROTEZIONE BESKYTTELSESSKÆRM	SCHUTZABDECKUNG PROTECÇÃO	PROTECTION AFSCHERMING	070R
2A		YN21C03195P1		1	FOAM INSULATION ESPUMA AISLANTE	ISOLANTE IN SCHIUMA SKUM ISOLERING	SCHAUMSTOFFISOLIER ISOLAMENTO DE ESPUI	MOUSSE ISOLANTE SCHUIMISOLATIE	051S
2B		{YN21C04437P1}		1					
2C		{YN21C04438P1}		1					
3		87531530		1	GUARD, - ASSY DEFENSA	PROTEZIONE BESKYTTELSESSKÆRM	SCHUTZABDECKUNG PROTECÇÃO	PROTECTION AFSCHERMING	070R
3A		YN21C02682P1		1	FOAM INSULATION ESPUMA AISLANTE	ISOLANTE IN SCHIUMA SKUM ISOLERING	SCHAUMSTOFFISOLIER ISOLAMENTO DE ESPUI	MOUSSE ISOLANTE SCHUIMISOLATIE	051S
3B		87531536		1	STRIP BANDA	NASTRO LISTE	STREIFEN CINTA	BANDE STRIP; STROOK	8660
3C		{YN21C02777P2}		1					
4		72964141		2	WASHER ARANDELA	RONDELLA FLADSKIVE	UNTERLEGSCHEIBE ANILHA	RONDELLE SLUITRING	131R
5		72964142		2	WASHER ARANDELA	RONDELLA FLADSKIVE	UNTERLEGSCHEIBE ANILHA	RONDELLE SLUITRING	131R
6		11112234		17	BOLT, Hex, M12 x 25, 10.9, Full Thd PERNO	BULLONE BOLT	SCHRAUBE PARAFUSO	VIS BOUT	140B
7		14496731		17	WASHER, M12 x 24 x 2.5 Thk ARANDELA	RONDELLA FLADSKIVE	UNTERLEGSCHEIBE ANILHA	RONDELLE SLUITRING	131R

Copyright © New Holland

1.300	09	p1	03/10

HOODS - GUARDS
COFANI - RIPARI
MOTORHAUBER - SCHUTZ.
CAPOTS - PROTECTIONS

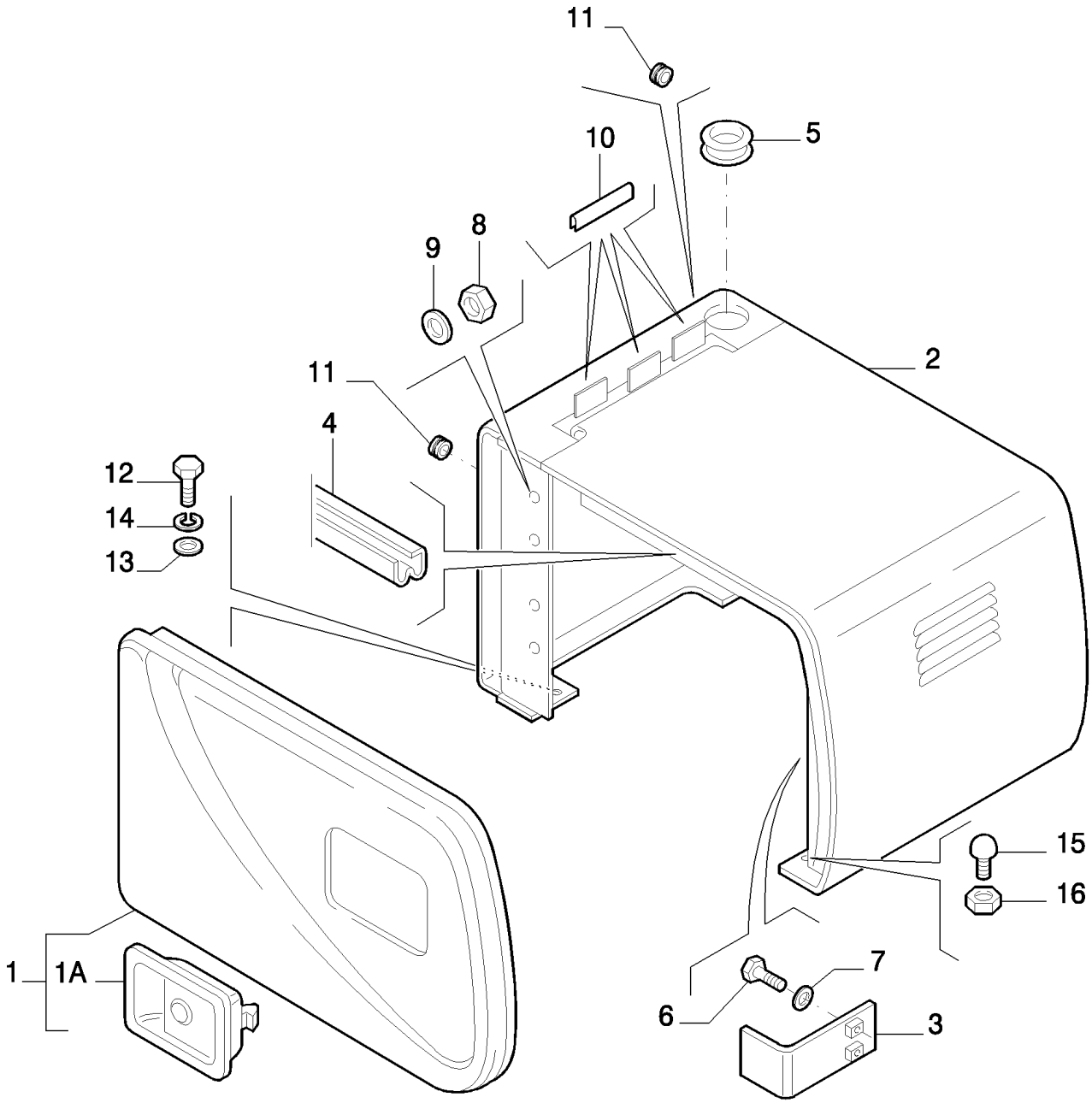

Copyright © New Holland

CAPOTES - PROTECCIONES
HOODS - GUARDS
HOODS - GUARDS
HOODS - GUARDS

R	N	P.N.	MOD	Q	Description Denominacion	Descrizione Beskrivelse	Bezeichnung Denominação	Description Beschrijving	L.C.
1		87619048		1	LID, - ASSY TAPA	COPERCHIO LÅG	DECKEL TAMPA	COUVERCLE DEKSEL	205S
1A		87652542		1	LOCK CERRADURA	BLOCCO LÅS	SCHLOSS FECHADURA	SERRURE SLOT	120S
2		87491614		1	TOOL BOX CAJA DE HERRAMIENTA	CASSETTA ATTREZZI VÆRKTØJSKASSE	WERKZEUGKASTEN CAIXA DE FERRAMENTA	BOITE A OUTILS GEREEDSCHAPSKIST	087C
3		87560621		1	BRACKET SOPORTE	STAFFA BESLAG	HALTERUNG SUPORTE	SUPPORT STEUN	225S
4		87560623		1	GASKET JUNTA	GUARNIZIONE PAKNING	DICHTUNG JUNTA	JOINT PAKKING	123G
5		72207066		1	INSULATOR AISLADOR	ISOLATORE ISOLATOR	ISOLATOR ISOLADOR	ISOLANT ISOLATIE	085I
6		11106234		2	BOLT, Hex, M10 x 25, 10.9, Full Thd PERNO	BULLONE BOLT	SCHRAUBE PARAFUSO	VIS BOUT	140B
7		14496631		2	WASHER, M10 x 21 x 2 ARANDELA	RONDELLA FLADSKIVE	UNTERLEGSCHEIBE ANILHA	RONDELLE SLUITRING	131R
8		11701721		4	NUT, M10, Cl 10 TUERCA	DADO MØTRIK	MUTTER PORCA	ECROU MOER	010D
9		72201224		4	WASHER ARANDELA	RONDELLA FLADSKIVE	UNTERLEGSCHEIBE ANILHA	RONDELLE SLUITRING	131R
10		72963810		3	RUBBER WEATHERSTRIP BANDA CLIMÁTICA DE G	GUARNIZIONE DI GOMM GUMMITÆTNINGSLISTE	GUMMIDICHTUNG PERFIL DE BORRACHA	CAOUTCHOUC D'ETANC RUBBEREN AFDICHTST	216P
11		71425116		2	RUBBER BUSHING CASQUILLO DE GOMA	BOCCOLA IN GOMMA GUMMIBØSNING	GUMMIBUCHSE CASQUILHO DE BORRA	BAGUE EN CAOUTCHOU RUBBEREN BUS	100B
12		11112434		4	BOLT, Hex, M12 x 30, 10.9, Full Thd PERNO	BULLONE BOLT	SCHRAUBE PARAFUSO	VIS BOUT	140B
13		14496731		4	WASHER, M12 x 24 x 2.5 Thk ARANDELA	RONDELLA FLADSKIVE	UNTERLEGSCHEIBE ANILHA	RONDELLE SLUITRING	131R
14		10517074		4	LOCK WASHER ARANDELA DE BLOQUE	RONDELLA DI SICUREZ LÅSESKIVE	SICHERUNGSSCHEIBE ANILHA DE RETENÇÃO	RONDELLE FREIN BORGRING	132R
15		72201210		1	RUBBER BUMPER PARACHOQUES DE GOI	Paraurti, in gomma STØDVÆRN, GUMMI	GUMMISTOSSFÄNGER PÁRA-CHOQUES DE BO	PARE-CHOC CAOUTCHO RUBBEREN BUMPER	030P
16		12164721		1	NUT, M10 x 1.25, Cl 10 TUERCA	DADO MØTRIK	MUTTER PORCA	ECROU MOER	010D

Copyright © New Holland

1.300	10	p1	03/10

HOODS - GUARDS
COFANI - RIPARI
MOTORHAUBER - SCHUTZ.
CAPOTS - PROTECTIONS

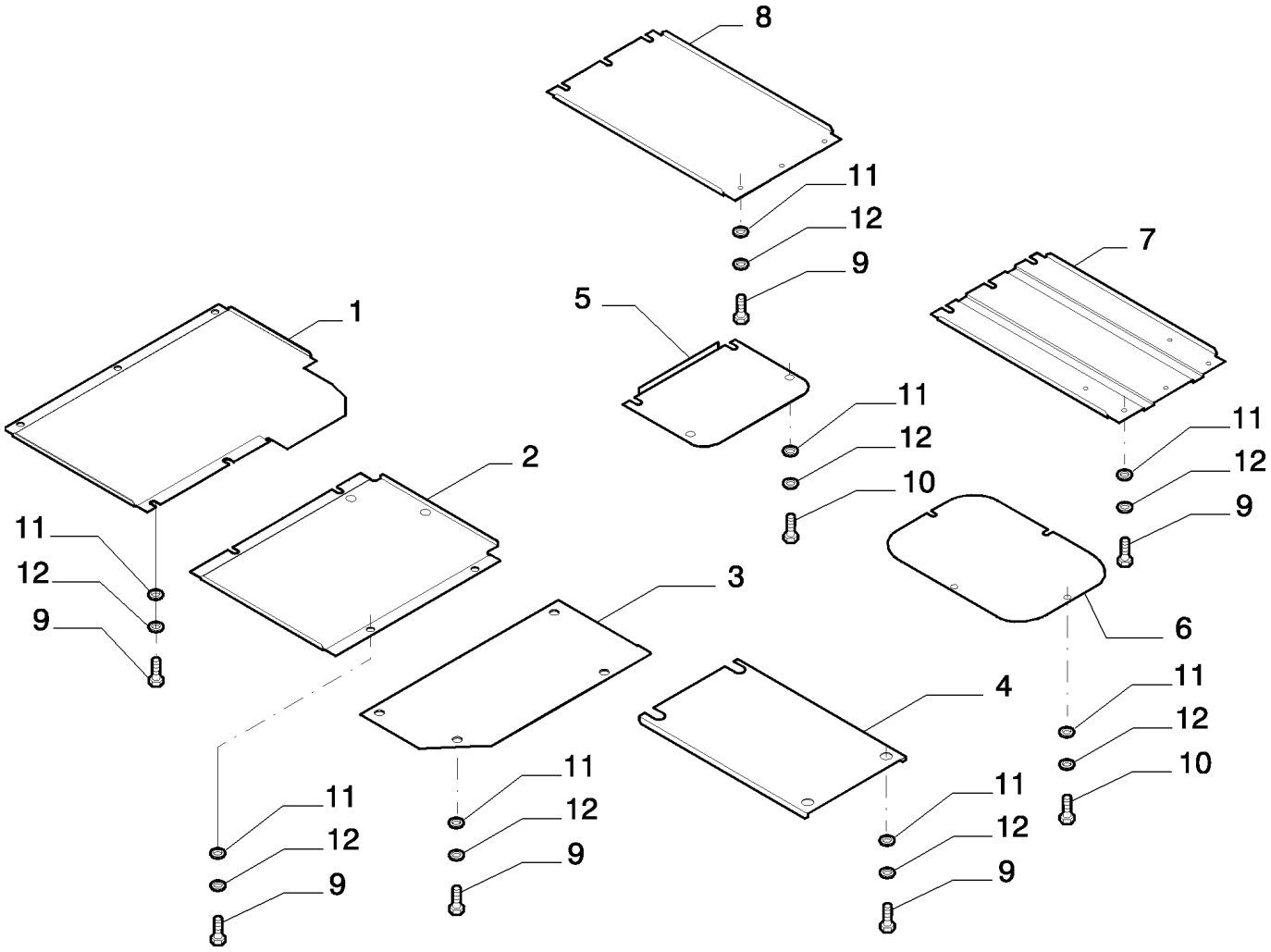

Copyright © New Holland

CAPOTES - PROTECCIONES
HOODS - GUARDS
HOODS - GUARDS
HOODS - GUARDS

R	N	P.N.	MOD	Q	Description Denominacion	Descrizione Beskrivelse	Bezeichnung Denominação	Description Beschrijving	L.C.
1		YN24C01372P1		1	COVER CUBIERTA	COPERCHIO DÆKSEL	ABDECKUNG COBERTURA	COUVERCLE AFSCHERMING	265C
2		YN24C01373P1		1	COVER CUBIERTA	COPERCHIO DÆKSEL	ABDECKUNG COBERTURA	COUVERCLE AFSCHERMING	265C
3		YN24C01374P1		1	COVER CUBIERTA	COPERCHIO DÆKSEL	ABDECKUNG COBERTURA	COUVERCLE AFSCHERMING	265C
4		YN24C01271P1		1	COVER COBERTURA	COPERTURA AFDAEKNING	ABDECKUNG COBERTURA	COUVERTURE AFSCHERMING	271C
5		87610905		1	GUARD DEFENSA	PROTEZIONE BESKYTTELSESSKÆRM	SCHUTZABDECKUNG PROTECÇÃO	PROTECTION AFSCHERMING	070R
6		87551717		1	GUARD DEFENSA	PROTEZIONE BESKYTTELSESSKÆRM	SCHUTZABDECKUNG PROTECÇÃO	PROTECTION AFSCHERMING	070R
7		87531043		1	GUARD DEFENSA	PROTEZIONE BESKYTTELSESSKÆRM	SCHUTZABDECKUNG PROTECÇÃO	PROTECTION AFSCHERMING	070R
8		87531044		1	GUARD DEFENSA	PROTEZIONE BESKYTTELSESSKÆRM	SCHUTZABDECKUNG PROTECÇÃO	PROTECTION AFSCHERMING	070R
9		11112434		30	BOLT, Hex, M12 x 30, 10.9, Full Thd PERNO	BULLONE BOLT	SCHRAUBE PARAFUSO	VIS BOUT	140B
10		11112834		8	BOLT, Hex, M12 x 40, 10.9, Full Thd PERNO	BULLONE BOLT	SCHRAUBE PARAFUSO	VIS BOUT	140B
11		14496731		38	WASHER, M12 x 24 x 2.5 Thk ARANDELA	RONDELLA FLADSKIVE	UNTERLEGSCHEIBE ANILHA	RONDELLE SLUITRING	131R
12		10517074		38	LOCK WASHER ARANDELA DE BLOQUE	RONDELLA DI SICUREZ LÅSESKIVE	SICHERUNGSSCHEIBE ANILHA DE RETENÇÃO	RONDELLE FREIN BORGRING	132R

Copyright © New Holland

1.300	11	p1	03/10

HOODS - MIRROR, REAR-VIEW
COFANI - SPECCHIO RETROVISORE
MOTORHAUBER - RÜCKSPIEGEL
CAPOTS - RÉTROVISEUR

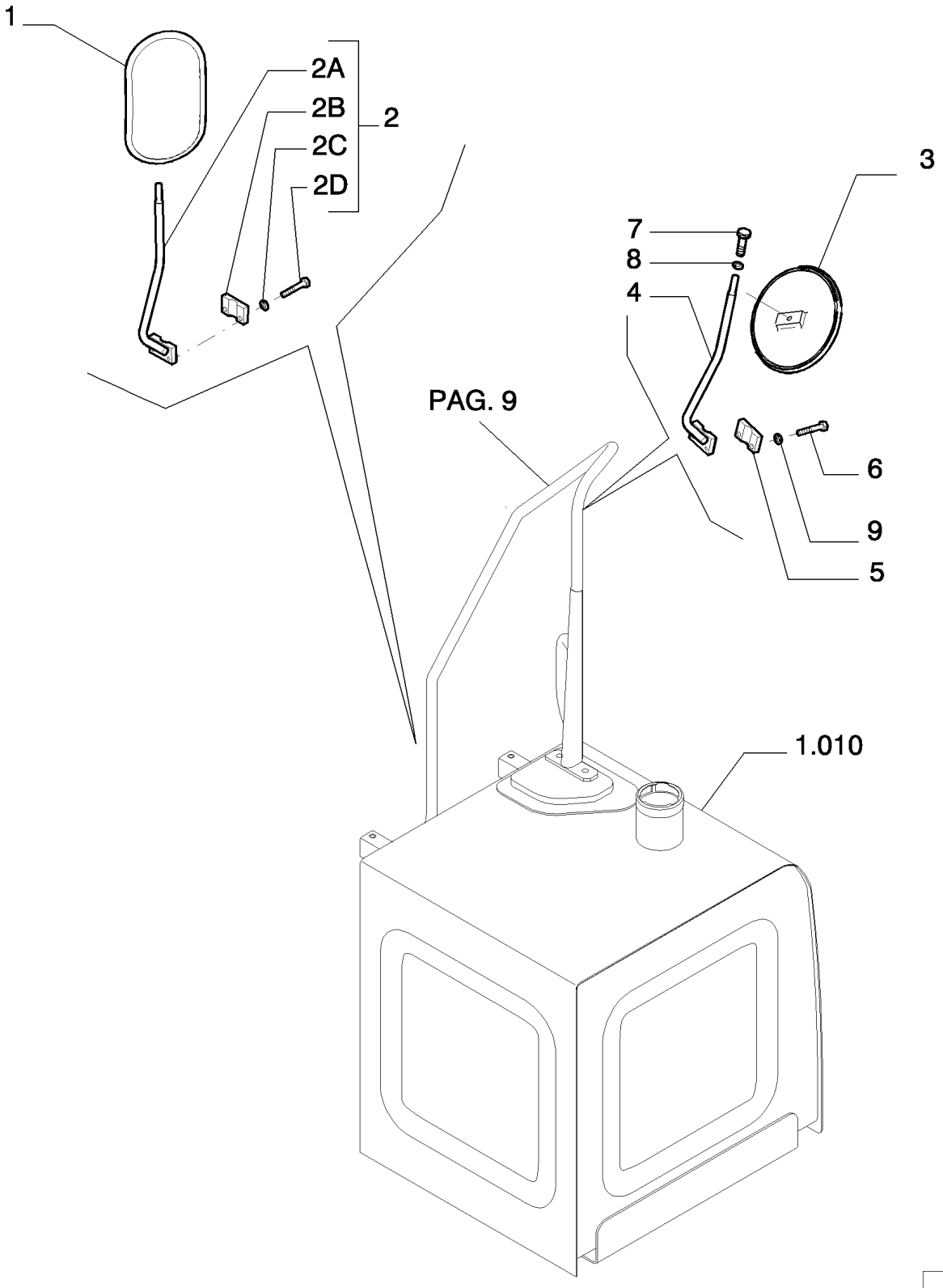

Copyright © New Holland

CAPOTES - ESPEJO RETROVISOR
HOODS - MIRROR, REAR-VIEW
HOODS - MIRROR, REAR-VIEW
HOODS - MIRROR, REAR-VIEW

R	N	P.N.	MOD	Q	Description Denominacion	Descrizione Beskrivelse	Bezeichnung Denominação	Description Beschrijving	L.C.
1		87612553		1	REAR VIEW MIRROR ESPEJO RETROVISOR	SPECCHIETTO RETROV BAKSPEJL	RÜCKSPIEGEL ESPELHO RETROVISOR	RETROVISEUR ARRIERE ACHTERUITKIJKSPIEGE	185S
2		87616670		2	PILLAR, - ASSY PILAR	MONTANTE STOLPE	SÄULE PILAR	MONTANT STIJL	115M
2A		87616671		1	SUPPORT SOPORTE	SUPPORTO BESLAG	STÜTZE SUPORTE	SUPPORT STEUN	300S
2B		87616672		1	BLOCK BLOQUE	BLOCCO MOTORBLOK	BLOCK BLOCO	BLOC BLOK	074B
2C		10516674		2	LOCK WASHER, M8 ARANDELA DE BLOQUE	RONDELLA DI SICUREZ LÅSESKIVE	SICHERUNGSSCHEIBE ANILHA DE RETENÇÃO	RONDELLE FREIN BORGRING	132R
2D		16044134		2	BOLT, Hex, M8 x 45, 10.9 PERNO	BULLONE BOLT	SCHRAUBE PARAFUSO	VIS BOUT	140B
3		72950241		1	MIRROR ESPEJO	SPECCHIETTO SPEJL	SPIEGEL ESPELHO	RETROVISEUR SPIEGEL	5580
4		87718026		1	PILLAR PILAR	MONTANTE STOLPE	SÄULE PILAR	MONTANT STIJL	115M
5		87616672		1	BLOCK BLOQUE	BLOCCO MOTORBLOK	BLOCK BLOCO	BLOC BLOK	074B
6		16044134		2	BOLT, Hex, M8 x 45, 10.9 PERNO	BULLONE BOLT	SCHRAUBE PARAFUSO	VIS BOUT	140B
7		16043034		1	SCREW TORNILLO	VITE SKRUE	SCHRAUBE PARAFUSO	VIS SCHROEF	040V
8		14496531		1	WASHER, M8 x 17 x 1.6 ARANDELA	RONDELLA FLADSKIVE	UNTERLEGSCHEIBE ANILHA	RONDELLE SLUITRING	131R
9		10516674		2	LOCK WASHER, M8 ARANDELA DE BLOQUE	RONDELLA DI SICUREZ LÅSESKIVE	SICHERUNGSSCHEIBE ANILHA DE RETENÇÃO	RONDELLE FREIN BORGRING	132R

Copyright © New Holland

1.300	12	p1	03/10

HOODS - MIRROR, REAR-VIEW
COFANI - SPECCHIO RETROVISORE
MOTORHAUBER - RÜCKSPIEGEL
CAPOTS - RÉTROVISEUR

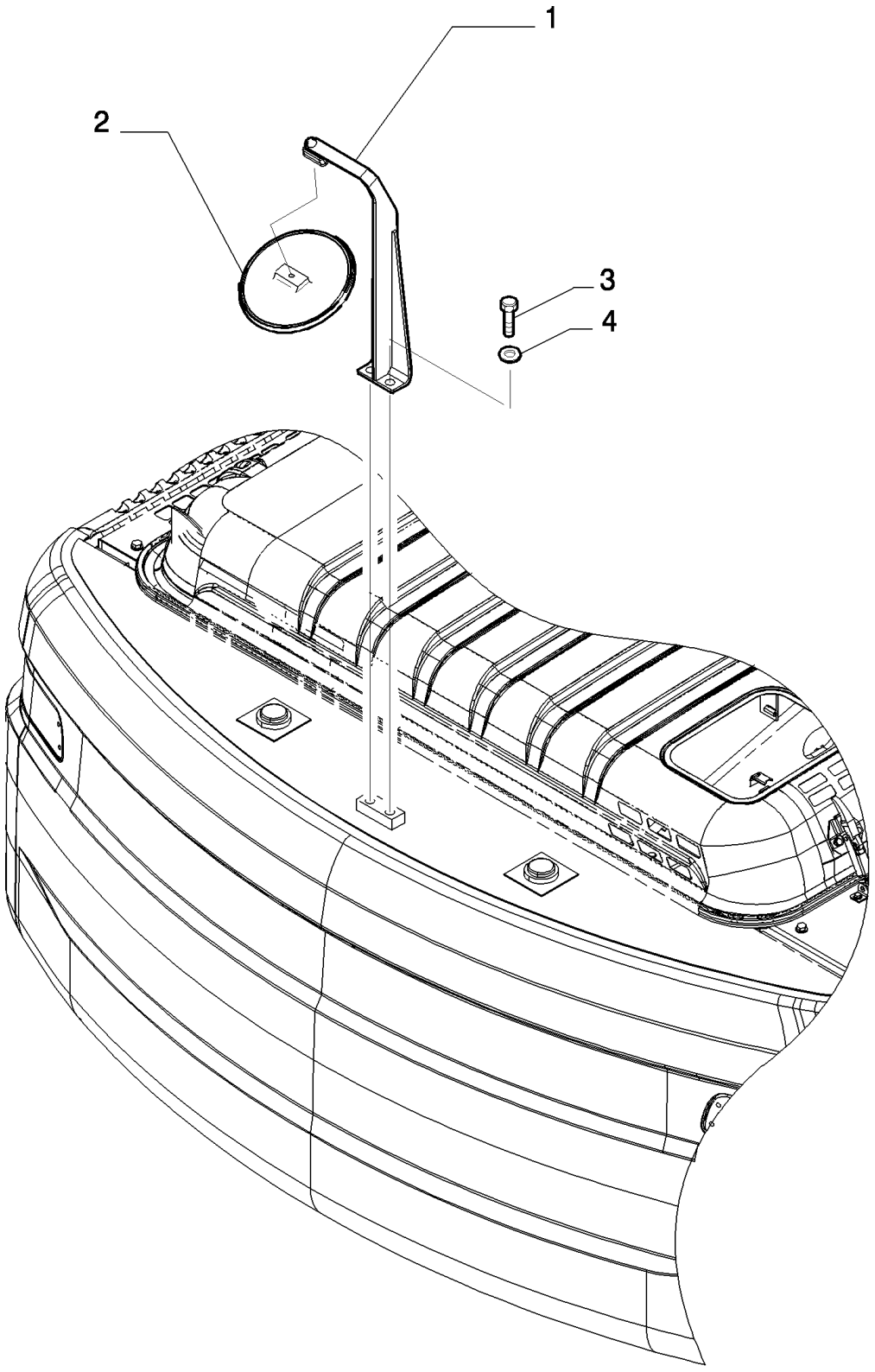

Copyright © New Holland

CAPOTES - ESPEJO RETROVISOR
HOODS - MIRROR, REAR-VIEW
HOODS - MIRROR, REAR-VIEW
HOODS - MIRROR, REAR-VIEW

R	N	P.N.	MOD	Q	Description Denominacion	Descrizione Beskrivelse	Bezeichnung Denominação	Description Beschrijving	L.C.
1		87641272		1	TIE-ROD TIRANTE	TIRANTE TRÆKSTANG	SPURSTANGE TIRANTE	TIRANT TREKSTANG	142T
2		87641273		1	REAR VIEW MIRROR ESPEJO RETROVISOR	SPECCHIETTO RETROV BAKSPEJL	RÜCKSPIEGEL ESPELHO RETROVISOR	RETROVISEUR ARRIERE ACHTERUITKIJKSPIEGE	185S
3		11112434		2	BOLT, Hex, M12 x 30, 10.9, Full Thd PERNO	BULLONE BOLT	SCHRAUBE PARAFUSO	VIS BOUT	140B
4		14496731		2	WASHER, M12 x 24 x 2.5 Thk ARANDELA	RONDELLA FLADSKIVE	UNTERLEGSCHEIBE ANILHA	RONDELLE SLUITRING	131R

Copyright © New Holland

Copyright © New Holland

SECTION INDEX
Front-End Attachments

2.000	01	MONOBLOC BOOM - VERSION (01-02-03)
2.000	02	MONOBLOC BOOM - VERSION (01-02-03)
2.001	01	LIFT BOOM - VERSION (04-05-06)
2.001	02	LIFT BOOM - VERSION (04-05-06)
2.002	01	POSITIONER ARM - VERSION (04-05-06)
2.030	01	BOOM PIPING - VERSION (01-02-03)
2.030	02	LIFT CYLINDER - COMPONENTS
2.030	03	DIPPER STICK CYLINDER - COMPONENTS
2.030	04	BUCKET CYLINDER - COMPONENTS
2.030	05	BUCKET CYLINDER
2.031	01	BOOM PIPING - VERSION (04-05-06)
2.031	02	BOOM PIPING - VERSION (04-05-06)
2.031	03	POSITIONER CYLINDER - COMPONENTS - VERSION (04-05-06)
2.031	04	POSITIONER SAFETY VALVE - VERSION (04-05-06)
2.031	05	POSITIONER SAFETY VALVE - VERSION (04-05-06)
2.031	06	POSITIONER SAFETY VALVE - COMPONENTS - VERSION (04-05-06)
2.040	01	LUBRIC. FITTING PIPING - VERSION (01-02-03)
2.041	01	LUBRIC. FITTING PIPING - VERSION (04-05-06)
2.041	02	LUBRIC. FITTING PIPING - VERSION (04-05-06)
2.050	01	BUCKET INSTALLATION

Copyright © New Holland

2.000	01	p1	03/10

MONOBLOC BOOM - VERSION (01-02-03)
BRACCIO MONOBLOCCO - VERSIONE (01-02-03)
MONOBLOCK-AUSLEGER - VERSION (01-02-03)
BRAS MONOBLOQUE - VERSION (01-02-03)

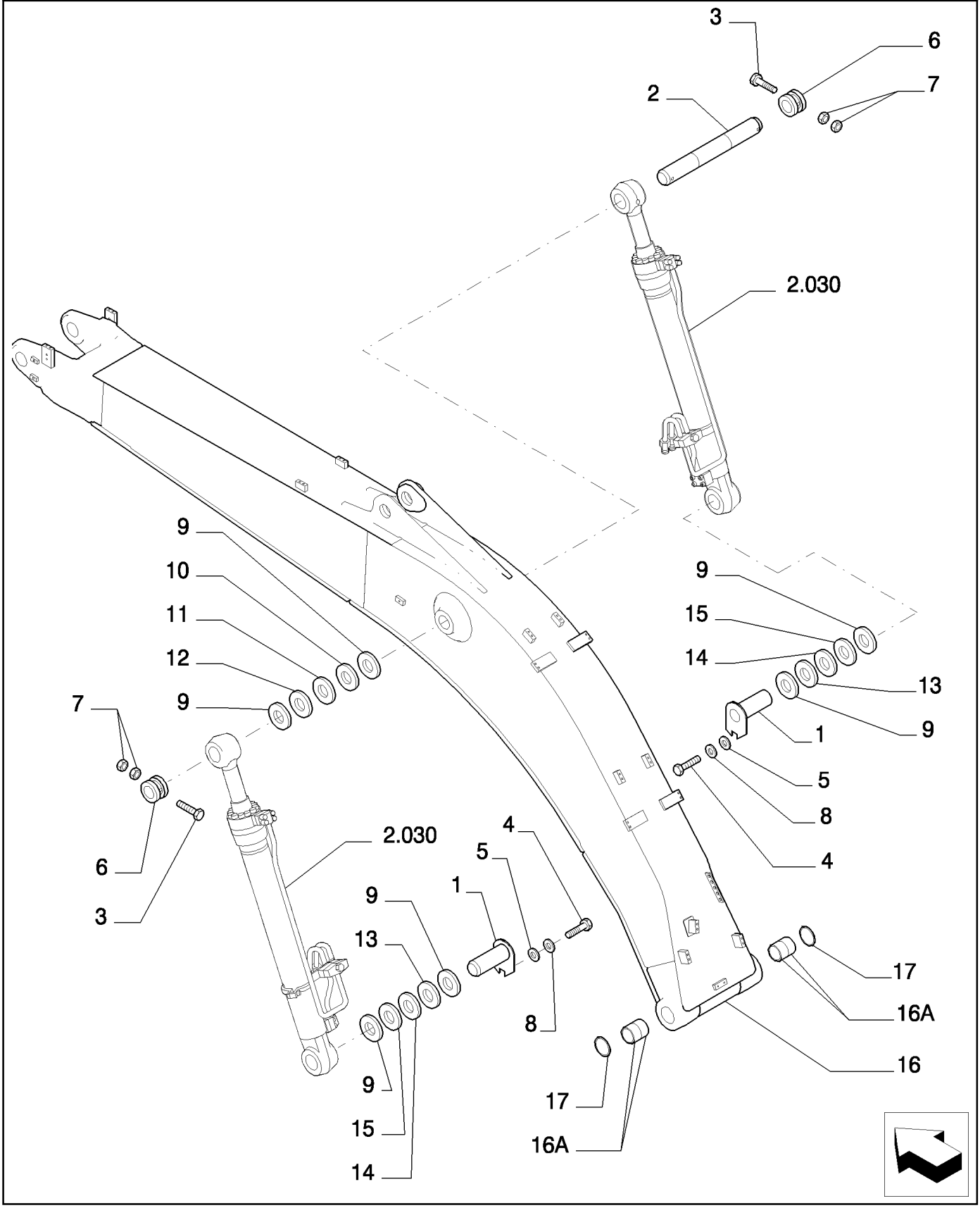

Copyright © New Holland

BRAZO MONOBLOQUE - VERSION (01-02-03)
MONOBLOC BOOM - VERSION (01-02-03)
MONOBLOC BOOM - VERSION (01-02-03)
MONOBLOC BOOM - VERSION (01-02-03)

R	N	P.N.	MOD	Q	Description Denominacion	Descrizione Beskrivelse	Bezeichnung Denominação	Description Beschrijving	L.C.
1		87533378		2	PIN PASADOR	PERNO STIFT	PIN PERNO	BROCHE PEN	080P
2		87533381		1	PIN PASADOR	PERNO STIFT	PIN PERNO	BROCHE PEN	080P
3		11120934		2	BOLT, Hex, M16 x 150, 10.9 PERNO	BULLONE BOLT	SCHRAUBE PARAFUSO	VIS BOUT	140B
4		11127434		2	SCREW TORNILLO	VITE SKRUE	SCHRAUBE PARAFUSO	VIS SCHROEF	040V
5		72962036		2	PLATE PLACA	PIASTRA PLADE	PLATTE CHAPA	PLAQUE PLAAT	105P
6		72953989		2	BOSS REFUERZO	RILIEVO BUKKEL	AUGE SALIÊNCIA	BOSSAGE VERDIKKING	Z411
7		12163321		4	NUT, M16, Cl 10 TUERCA	DADO MØTRIK	MUTTER PORCA	ECROU MOER	010D
8		14496931		2	WASHER, M16 x 30 x 3 ARANDELA	RONDELLA FLADSKIVE	UNTERLEGSCHEIBE ANILHA	RONDELLE SLUITRING	131R
9		72203151		6	SHIM, 2mm Thk SUPLEMENTO	SPESSORE MELLEMLÆG	AUSGLEICHSSCHEIBE CALÇO DE AFINAÇÃO	CALE VULPLAATJE	198S
10		72203148		2	SHIM, 0.5mm Thk SUPLEMENTO	SPESSORE MELLEMLÆG	AUSGLEICHSSCHEIBE CALÇO DE AFINAÇÃO	CALE VULPLAATJE	198S
11		72203149		2	SHIM, 0.9mm Thk SUPLEMENTO	SPESSORE MELLEMLÆG	AUSGLEICHSSCHEIBE CALÇO DE AFINAÇÃO	CALE VULPLAATJE	198S
12		72203150		2	SHIM, 1.6mm Thk SUPLEMENTO	SPESSORE MELLEMLÆG	AUSGLEICHSSCHEIBE CALÇO DE AFINAÇÃO	CALE VULPLAATJE	198S
13		72203147		2	SHIM, 0.5mm Thk SUPLEMENTO	SPESSORE MELLEMLÆG	AUSGLEICHSSCHEIBE CALÇO DE AFINAÇÃO	CALE VULPLAATJE	198S
14		72203153		2	SHIM, 0.9mm Thk SUPLEMENTO	SPESSORE MELLEMLÆG	AUSGLEICHSSCHEIBE CALÇO DE AFINAÇÃO	CALE VULPLAATJE	198S
15		72203154		2	SHIM, 1.6mm Thk SUPLEMENTO	SPESSORE MELLEMLÆG	AUSGLEICHSSCHEIBE CALÇO DE AFINAÇÃO	CALE VULPLAATJE	198S
16		84173832		1	ARM, - ASSY BRAZO	BRACCIO ARM	ARM BRAÇO	BRAS ARM	130B
16A		87521245		4	BUSHING CASQUILLO	BOCCOLA BØSNING	BUCHSE CASQUILHO	BAGUE BUS	095B
17		87531507		2	GASKET JUNTA	GUARNIZIONE PAKNING	DICHTUNG JUNTA	JOINT PAKKING	123G

Copyright © New Holland

2.000	02	p1	03/10

MONOBLOC BOOM - VERSION (01-02-03)
BRACCIO MONOBLOCCO - VERSIONE (01-02-03)
MONOBLOCK-AUSLEGER - VERSION (01-02-03)
BRAS MONOBLOQUE - VERSION (01-02-03)

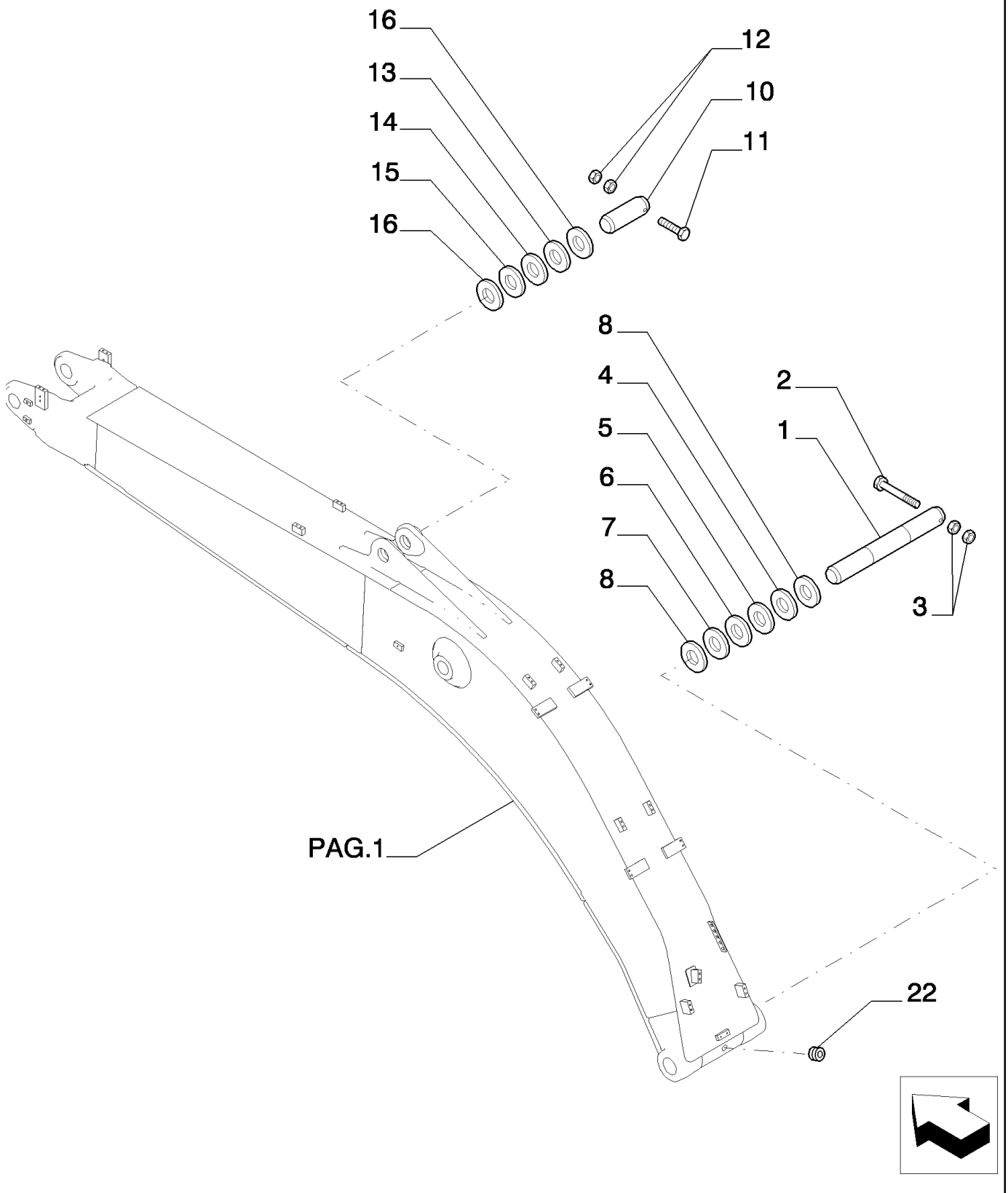

Copyright © New Holland

BRAZO MONOBLOQUE - VERSION (01-02-03)
MONOBLOC BOOM - VERSION (01-02-03)
MONOBLOC BOOM - VERSION (01-02-03)
MONOBLOC BOOM - VERSION (01-02-03)

R	N	P.N.	MOD	Q	Description Denominacion	Descrizione Beskrivelse	Bezeichnung Denominação	Description Beschrijving	L.C.
1		87532944		1	PIN PASADOR	PERNO STIFT	PIN PERNO	BROCHE PEN	080P
2		87334470		1	SCREW TORNILLO	VITE SKRUE	SCHRAUBE PARAFUSO	VIS SCHROEF	040V
3		12163521		2	NUT, M20, Cl 10 TUERCA	DADO MØTRIK	MUTTER PORCA	ECROU MOER	010D
4		72203140		1	SHIM, 0.5mm Thk SUPLEMENTO	SPESSORE MELLEMLÆG	AUSGLEICHSSCHEIBE CALÇO DE AFINAÇÃO	CALE VULPLAATJE	198S
5		72203141		1	SHIM, 0.9mm Thk SUPLEMENTO	SPESSORE MELLEMLÆG	AUSGLEICHSSCHEIBE CALÇO DE AFINAÇÃO	CALE VULPLAATJE	198S
6		87620686		1	SHIM SUPLEMENTO	SPESSORE MELLEMLÆG	AUSGLEICHSSCHEIBE CALÇO DE AFINAÇÃO	CALE VULPLAATJE	198S
7		87620687		1	SHIM SUPLEMENTO	SPESSORE MELLEMLÆG	AUSGLEICHSSCHEIBE CALÇO DE AFINAÇÃO	CALE VULPLAATJE	198S
8		72203145		2	SHIM, 2mm Thk SUPLEMENTO	SPESSORE MELLEMLÆG	AUSGLEICHSSCHEIBE CALÇO DE AFINAÇÃO	CALE VULPLAATJE	198S
10		87533375		1	PIN PASADOR	PERNO STIFT	PIN PERNO	BROCHE PEN	080P
11		11120934		1	BOLT, Hex, M16 x 150, 10.9 PERNO	BULLONE BOLT	SCHRAUBE PARAFUSO	VIS BOUT	140B
12		12163321		4	NUT, M16, Cl 10 TUERCA	DADO MØTRIK	MUTTER PORCA	ECROU MOER	010D
13		72203147		1	SHIM, 0.5mm Thk SUPLEMENTO	SPESSORE MELLEMLÆG	AUSGLEICHSSCHEIBE CALÇO DE AFINAÇÃO	CALE VULPLAATJE	198S
14		72203153		1	SHIM, 0.9mm Thk SUPLEMENTO	SPESSORE MELLEMLÆG	AUSGLEICHSSCHEIBE CALÇO DE AFINAÇÃO	CALE VULPLAATJE	198S
15		72203154		1	SHIM, 1.6mm Thk SUPLEMENTO	SPESSORE MELLEMLÆG	AUSGLEICHSSCHEIBE CALÇO DE AFINAÇÃO	CALE VULPLAATJE	198S
16		72203151		2	SHIM, 2mm Thk SUPLEMENTO	SPESSORE MELLEMLÆG	AUSGLEICHSSCHEIBE CALÇO DE AFINAÇÃO	CALE VULPLAATJE	198S
22		71404856		1	PLUG TAPÓN	TAPPO PROP	STOPFEN TAMPÃO	BOUCHON PLUG	050T

Copyright © New Holland

2.001	01	p1	03/10

LIFT BOOM - VERSION (04-05-06)
BRACCIO SOLLEVAMENTO - VERSIONE (04-05-06)
GRUNDAUSLEGER - VERSION (04-05-06)
PIED DE FLECHE - VERSION (04-05-06)

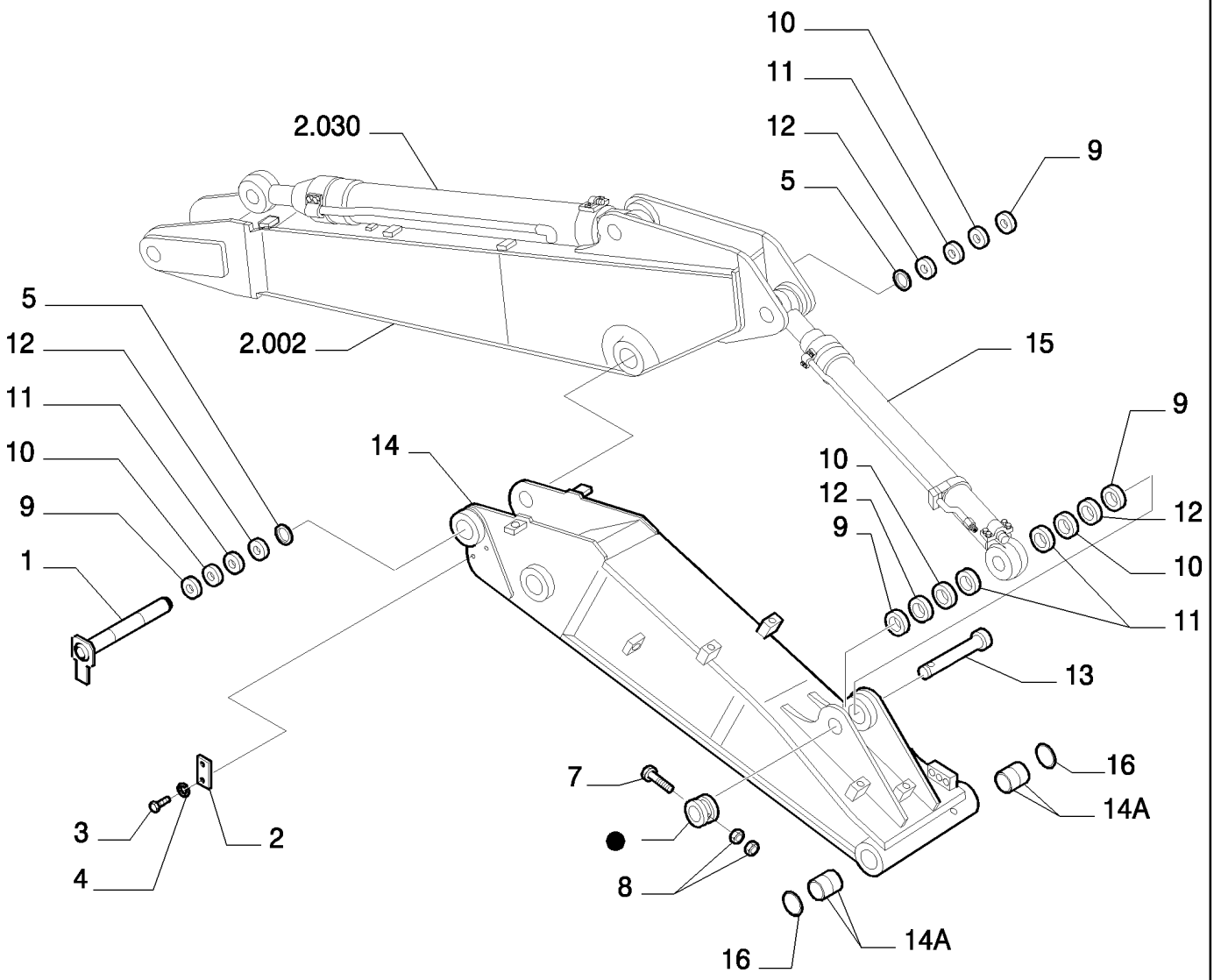

PARTS MARKED ● ARE NOT SUPPLIED AS SPARES
I PARTICOLARI CONTRASSEGNATI CON ● NON VENGONO FORNITI DI RICAMBIO

Copyright © New Holland

BRAZO DE ELEVACION - VERSION (04-05-06)
LIFT BOOM - VERSION (04-05-06)
LIFT BOOM - VERSION (04-05-06)
LIFT BOOM - VERSION (04-05-06)

R	N	P.N.	MOD	Q	Description Denominacion	Descrizione Beskrivelse	Bezeichnung Denominação	Description Beschrijving	L.C.
1		87346806		1	PIN PASADOR	PERNO STIFT	PIN PERNO	BROCHE PEN	080P
2		87330694		1	PLATE PLACA	PIASTRA PLADE	PLATTE CHAPA	PLAQUE PLAAT	105P
3		11112234		2	BOLT, Hex, M12 x 25, 10.9, Full Thd PERNO	BULLONE BOLT	SCHRAUBE PARAFUSO	VIS BOUT	140B
4		10517074		2	LOCK WASHER ARANDELA DE BLOQUE	RONDELLA DI SICUREZ LÅSESKIVE	SICHERUNGSSCHEIBE ANILHA DE RETENÇÃO	RONDELLE FREIN BORGRING	132R
5		71415090		2	GASKET JUNTA	GUARNIZIONE PAKNING	DICHTUNG JUNTA	JOINT PAKKING	123G
7		11120934		1	BOLT, Hex, M16 x 150, 10.9 PERNO	BULLONE BOLT	SCHRAUBE PARAFUSO	VIS BOUT	140B
8		12163321		2	NUT, M16, Cl 10 TUERCA	DADO MØTRIK	MUTTER PORCA	ECROU MOER	010D
9		72203145		4	SHIM, 2mm Thk SUPLEMENTO	SPESSORE MELLEMLÆG	AUSGLEICHSSCHEIBE CALÇO DE AFINAÇÃO	CALE VULPLAATJE	198S
10		72203141		4	SHIM, 0.9mm Thk SUPLEMENTO	SPESSORE MELLEMLÆG	AUSGLEICHSSCHEIBE CALÇO DE AFINAÇÃO	CALE VULPLAATJE	198S
11		72203140		4	SHIM, 0.5mm Thk SUPLEMENTO	SPESSORE MELLEMLÆG	AUSGLEICHSSCHEIBE CALÇO DE AFINAÇÃO	CALE VULPLAATJE	198S
12		72203157		4	SHIM, 1.6mm Thk SUPLEMENTO	SPESSORE MELLEMLÆG	AUSGLEICHSSCHEIBE CALÇO DE AFINAÇÃO	CALE VULPLAATJE	198S
13		72211525		1	PIN PASADOR	PERNO STIFT	PIN PERNO	BROCHE PEN	080P
14		84125579		1	ARM, - ASSY BRAZO	BRACCIO ARM	ARM BRAÇO	BRAS ARM	130B
14A		87521245		4	BUSHING CASQUILLO	BOCCOLA BØSNING	BUCHSE CASQUILHO	BAGUE BUS	095B
15	1	87332765		1	CYLINDER CILINDRO	CILINDRO CYLINDER	ZYLINDER CILINDRO	VERIN CILINDER	164C
16		87531507		2	GASKET JUNTA	GUARNIZIONE PAKNING	DICHTUNG JUNTA	JOINT PAKKING	123G

(1) ASSY SEE SGR. 2.031 PAGE 3

Copyright © New Holland

2.001	02	p1	03/10

LIFT BOOM - VERSION (04-05-06)
BRACCIO SOLLEVAMENTO - VERSIONE (04-05-06)
GRUNDAUSLEGER - VERSION (04-05-06)
PIED DE FLECHE - VERSION (04-05-06)

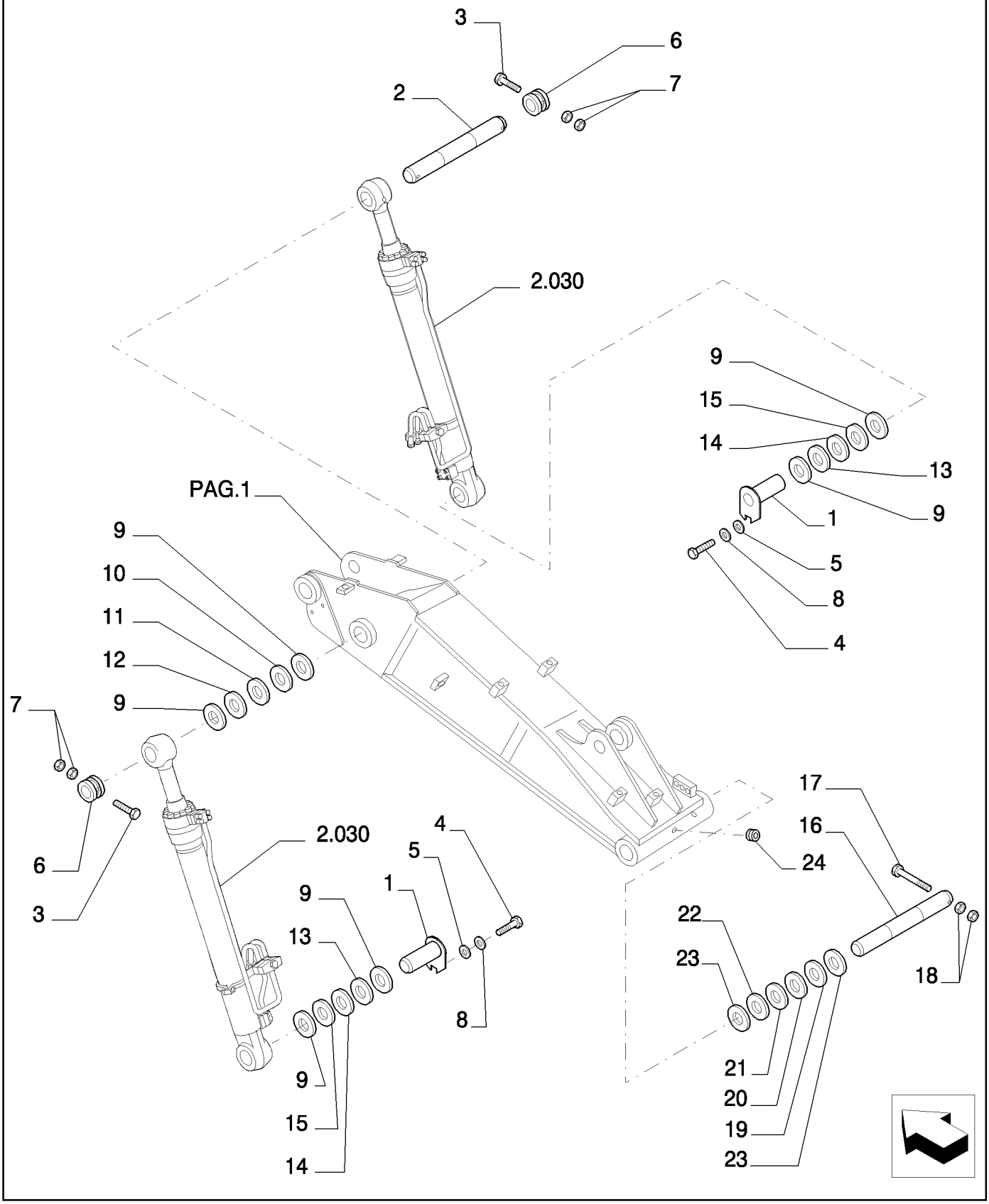

Copyright © New Holland

BRAZO DE ELEVACION - VERSION (04-05-06)
LIFT BOOM - VERSION (04-05-06)
LIFT BOOM - VERSION (04-05-06)
LIFT BOOM - VERSION (04-05-06)

R	N	P.N.	MOD	Q	Description Denominacion	Descrizione Beskrivelse	Bezeichnung Denominação	Description Beschrijving	L.C.
1		87533378		2	PIN PASADOR	PERNO STIFT	PIN PERNO	BROCHE PEN	080P
2		87533381		1	PIN PASADOR	PERNO STIFT	PIN PERNO	BROCHE PEN	080P
3		11120934		2	BOLT, Hex, M16 x 150, 10.9 PERNO	BULLONE BOLT	SCHRAUBE PARAFUSO	VIS BOUT	140B
4		11127434		2	SCREW TORNILLO	VITE SKRUE	SCHRAUBE PARAFUSO	VIS SCHROEF	040V
5		72962036		2	PLATE PLACA	PIASTRA PLADE	PLATTE CHAPA	PLAQUE PLAAT	105P
6		72953989		2	BOSS REFUERZO	RILIEVO BUKKEL	AUGE SALIÊNCIA	BOSSAGE VERDIKKING	Z411
7		12163321		4	NUT, M16, Cl 10 TUERCA	DADO MØTRIK	MUTTER PORCA	ECROU MOER	010D
8		14496931		2	WASHER, M16 x 30 x 3 ARANDELA	RONDELLA FLADSKIVE	UNTERLEGSCHEIBE ANILHA	RONDELLE SLUITRING	131R
9		72203151		6	SHIM, 2mm Thk SUPLEMENTO	SPESSORE MELLEMLÆG	AUSGLEICHSSCHEIBE CALÇO DE AFINAÇÃO	CALE VULPLAATJE	198S
10		72203148		1	SHIM, 0.5mm Thk SUPLEMENTO	SPESSORE MELLEMLÆG	AUSGLEICHSSCHEIBE CALÇO DE AFINAÇÃO	CALE VULPLAATJE	198S
11		72203149		1	SHIM, 0.9mm Thk SUPLEMENTO	SPESSORE MELLEMLÆG	AUSGLEICHSSCHEIBE CALÇO DE AFINAÇÃO	CALE VULPLAATJE	198S
12		72203150		1	SHIM, 1.6mm Thk SUPLEMENTO	SPESSORE MELLEMLÆG	AUSGLEICHSSCHEIBE CALÇO DE AFINAÇÃO	CALE VULPLAATJE	198S
13		72203147		1	SHIM, 0.5mm Thk SUPLEMENTO	SPESSORE MELLEMLÆG	AUSGLEICHSSCHEIBE CALÇO DE AFINAÇÃO	CALE VULPLAATJE	198S
14		72203153		1	SHIM, 0.9mm Thk SUPLEMENTO	SPESSORE MELLEMLÆG	AUSGLEICHSSCHEIBE CALÇO DE AFINAÇÃO	CALE VULPLAATJE	198S
15		72203154		1	SHIM, 1.6mm Thk SUPLEMENTO	SPESSORE MELLEMLÆG	AUSGLEICHSSCHEIBE CALÇO DE AFINAÇÃO	CALE VULPLAATJE	198S
16		87532944		1	PIN PASADOR	PERNO STIFT	PIN PERNO	BROCHE PEN	080P
17		87334470		1	SCREW TORNILLO	VITE SKRUE	SCHRAUBE PARAFUSO	VIS SCHROEF	040V
18		12163521		2	NUT, M20, Cl 10 TUERCA	DADO MØTRIK	MUTTER PORCA	ECROU MOER	010D
19		72203140		1	SHIM, 0.5mm Thk SUPLEMENTO	SPESSORE MELLEMLÆG	AUSGLEICHSSCHEIBE CALÇO DE AFINAÇÃO	CALE VULPLAATJE	198S
20		72203141		1	SHIM, 0.9mm Thk SUPLEMENTO	SPESSORE MELLEMLÆG	AUSGLEICHSSCHEIBE CALÇO DE AFINAÇÃO	CALE VULPLAATJE	198S
21		87620686		1	SHIM SUPLEMENTO	SPESSORE MELLEMLÆG	AUSGLEICHSSCHEIBE CALÇO DE AFINAÇÃO	CALE VULPLAATJE	198S
22		87620687		1	SHIM SUPLEMENTO	SPESSORE MELLEMLÆG	AUSGLEICHSSCHEIBE CALÇO DE AFINAÇÃO	CALE VULPLAATJE	198S
23		72203145		2	SHIM, 2mm Thk SUPLEMENTO	SPESSORE MELLEMLÆG	AUSGLEICHSSCHEIBE CALÇO DE AFINAÇÃO	CALE VULPLAATJE	198S
24		71404856		1	PLUG TAPÓN	TAPPO PROP	STOPFEN TAMPÃO	BOUCHON PLUG	050T

Copyright © New Holland

2.002	01	p1	03/10

POSITIONER ARM - VERSION (04-05-06)
BRACCIO POSIZIONATORE - VERSIONE (04-05-06)
AUSLEGERORBERTEIL - VERSION (04-05-06)
FLECHE - VERSION (04-05-06)

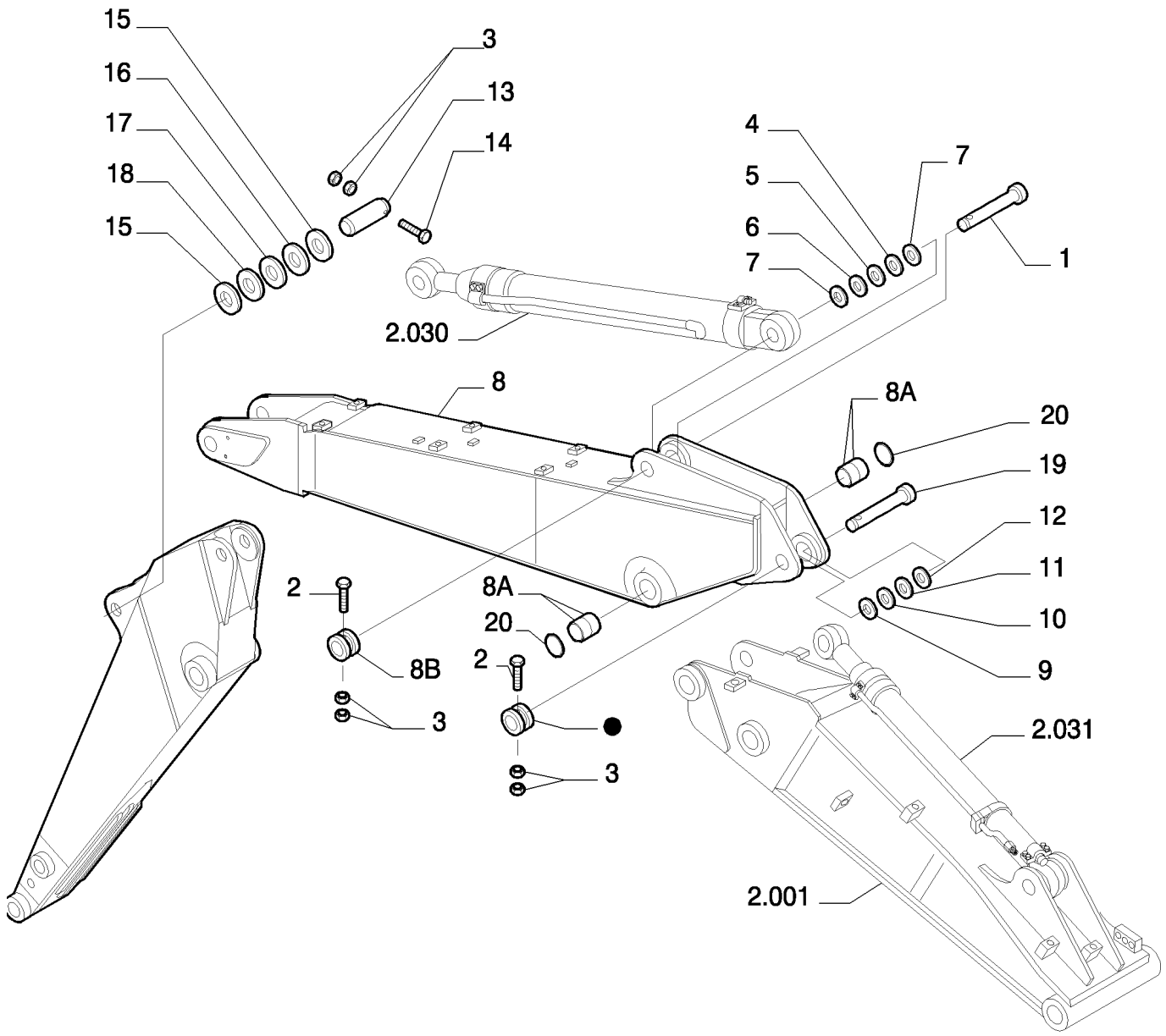

PARTS MARKED ● ARE NOT SUPPLIED AS SPARES
I PARTICOLARI CONTRASSEGNATI CON ● NON VENGONO FORNITI DI RICAMBIO

Copyright © New Holland

BRAZO CENTRAL - VERSION (04-05-06)
POSITIONER ARM - VERSION (04-05-06)
POSITIONER ARM - VERSION (04-05-06)
POSITIONER ARM - VERSION (04-05-06)

R	N	P.N.	MOD	Q	Description Denominacion	Descrizione Beskrivelse	Bezeichnung Denominação	Description Beschrijving	L.C.
1		87533375		1	PIN PASADOR	PERNO STIFT	PIN PERNO	BROCHE PEN	080P
2		11120934		2	BOLT, Hex, M16 x 150, 10.9 PERNO	BULLONE BOLT	SCHRAUBE PARAFUSO	VIS BOUT	140B
3		12163321		6	NUT, M16, Cl 10 TUERCA	DADO MØTRIK	MUTTER PORCA	ECROU MOER	010D
4		72203147		1	SHIM, 0.5mm Thk SUPLEMENTO	SPESSORE MELLEMLÆG	AUSGLEICHSSCHEIBE CALÇO DE AFINAÇÃO	CALE VULPLAATJE	198S
5		72203153		1	SHIM, 0.9mm Thk SUPLEMENTO	SPESSORE MELLEMLÆG	AUSGLEICHSSCHEIBE CALÇO DE AFINAÇÃO	CALE VULPLAATJE	198S
6		72203154		1	SHIM, 1.6mm Thk SUPLEMENTO	SPESSORE MELLEMLÆG	AUSGLEICHSSCHEIBE CALÇO DE AFINAÇÃO	CALE VULPLAATJE	198S
7		72203151		2	SHIM, 2mm Thk SUPLEMENTO	SPESSORE MELLEMLÆG	AUSGLEICHSSCHEIBE CALÇO DE AFINAÇÃO	CALE VULPLAATJE	198S
8		87529928		1	ARM, - ASSY BRAZO	BRACCIO ARM	ARM BRAÇO	BRAS ARM	130B
8A		87521245		1	BUSHING CASQUILLO	BOCCOLA BØSNING	BUCHSE CASQUILHO	BAGUE BUS	095B
8B		72200426		1	BUSHING CASQUILLO	BOCCOLA BØSNING	BUCHSE CASQUILHO	BAGUE BUS	095B
9		72203145		2	SHIM, 2mm Thk SUPLEMENTO	SPESSORE MELLEMLÆG	AUSGLEICHSSCHEIBE CALÇO DE AFINAÇÃO	CALE VULPLAATJE	198S
10		72203141		2	SHIM, 0.9mm Thk SUPLEMENTO	SPESSORE MELLEMLÆG	AUSGLEICHSSCHEIBE CALÇO DE AFINAÇÃO	CALE VULPLAATJE	198S
11		72203140		2	SHIM, 0.5mm Thk SUPLEMENTO	SPESSORE MELLEMLÆG	AUSGLEICHSSCHEIBE CALÇO DE AFINAÇÃO	CALE VULPLAATJE	198S
12		72203157		2	SHIM, 1.6mm Thk SUPLEMENTO	SPESSORE MELLEMLÆG	AUSGLEICHSSCHEIBE CALÇO DE AFINAÇÃO	CALE VULPLAATJE	198S
13		87533371		1	PIN PASADOR	PERNO STIFT	PIN PERNO	BROCHE PEN	080P
14		11120734		1	SCREW TORNILLO	VITE SKRUE	SCHRAUBE PARAFUSO	VIS SCHROEF	040V
15		72202203		2	SHIM, 2mm Thk SUPLEMENTO	SPESSORE MELLEMLÆG	AUSGLEICHSSCHEIBE CALÇO DE AFINAÇÃO	CALE VULPLAATJE	198S
16		72202198		1	SHIM, 0.5mm Thk SUPLEMENTO	SPESSORE MELLEMLÆG	AUSGLEICHSSCHEIBE CALÇO DE AFINAÇÃO	CALE VULPLAATJE	198S
17		72202199		1	SHIM, 0.9mm Thk SUPLEMENTO	SPESSORE MELLEMLÆG	AUSGLEICHSSCHEIBE CALÇO DE AFINAÇÃO	CALE VULPLAATJE	198S
18		72202200		1	SHIM, 1.6mm Thk SUPLEMENTO	SPESSORE MELLEMLÆG	AUSGLEICHSSCHEIBE CALÇO DE AFINAÇÃO	CALE VULPLAATJE	198S
19		87535897		1	PIN PASADOR	PERNO STIFT	PIN PERNO	BROCHE PEN	080P
20		87531507		2	GASKET JUNTA	GUARNIZIONE PAKNING	DICHTUNG JUNTA	JOINT PAKKING	123G

Copyright © New Holland

2.030	01	p1	03/10

BOOM PIPING - VERSION (01-02-03)
TUBAZIONI BRACCI - VERSIONE (01-02-03)
LEITUNGEN-VORDER - VERSION (01-02-03)
TUYAUTERIES AVANT - VERSION (01-02-03)

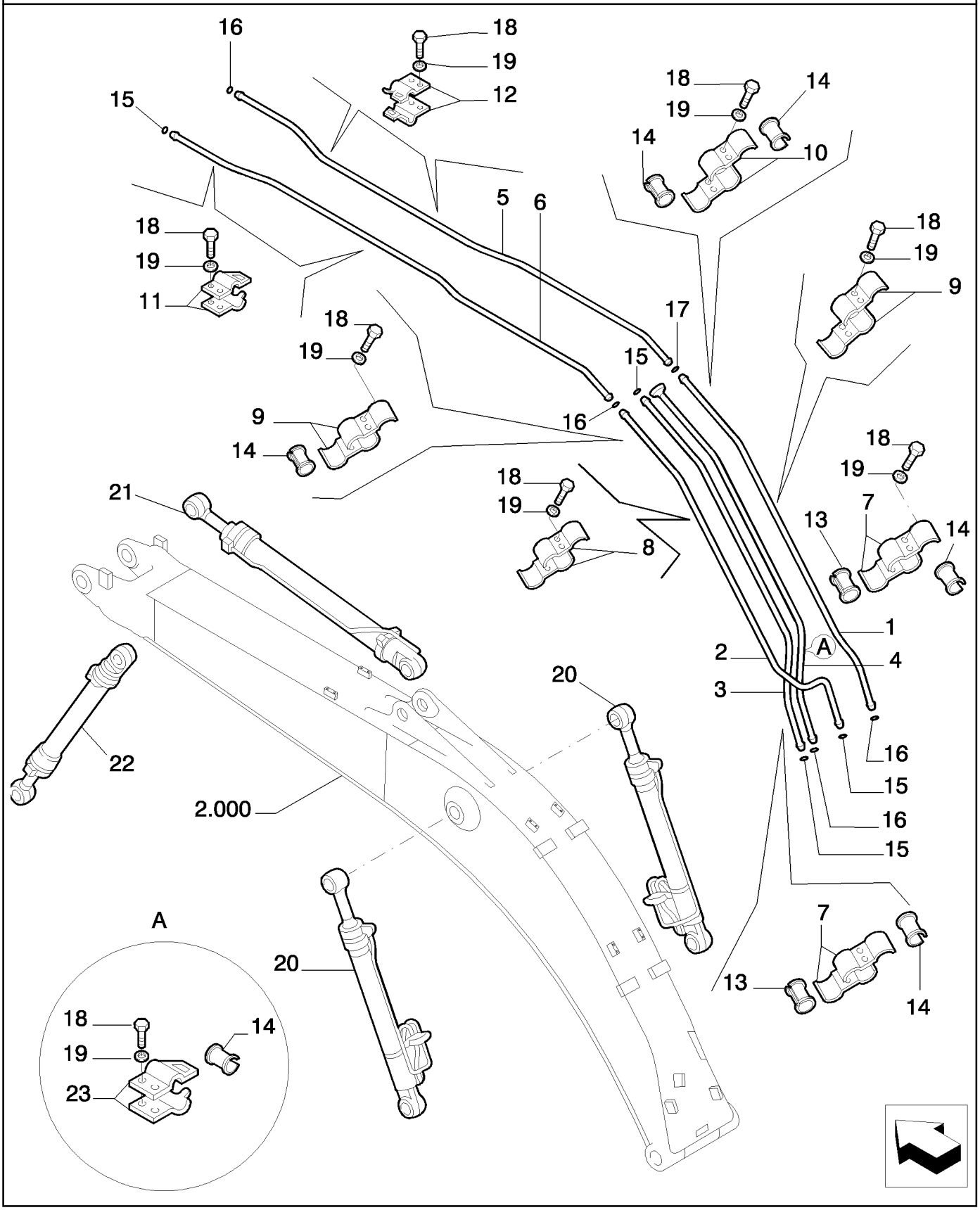

Copyright © New Holland

TUBERIAS ANTERIORES - VERSION (01-02-03)
BOOM PIPING - VERSION (01-02-03)
BOOM PIPING - VERSION (01-02-03)
BOOM PIPING - VERSION (01-02-03)

R	N	P.N.	MOD	Q	Description Denominacion	Descrizione Beskrivelse	Bezeichnung Denominação	Description Beschrijving	L.C.
1		87517167		1	RIGID TUBE TUBO RÍGIDO	TUBO RIGIDO STIFT RØR	ROHR TUBO RÍGIDO	TUYAU RIGIDE VASTE LEIDING	193T
2		87517169		1	RIGID TUBE TUBO RÍGIDO	TUBO RIGIDO STIFT RØR	ROHR TUBO RÍGIDO	TUYAU RIGIDE VASTE LEIDING	193T
3		87517171		1	RIGID TUBE TUBO RÍGIDO	TUBO RIGIDO STIFT RØR	ROHR TUBO RÍGIDO	TUYAU RIGIDE VASTE LEIDING	193T
4		87477496		1	RIGID TUBE TUBO RÍGIDO	TUBO RIGIDO STIFT RØR	ROHR TUBO RÍGIDO	TUYAU RIGIDE VASTE LEIDING	193T
5		87517176		1	RIGID TUBE TUBO RÍGIDO	TUBO RIGIDO STIFT RØR	ROHR TUBO RÍGIDO	TUYAU RIGIDE VASTE LEIDING	193T
6		87517178		1	RIGID TUBE TUBO RÍGIDO	TUBO RIGIDO STIFT RØR	ROHR TUBO RÍGIDO	TUYAU RIGIDE VASTE LEIDING	193T
7		87343330		4	BRACKET SOPORTE	STAFFA BESLAG	HALTERUNG SUPORTE	SUPPORT STEUN	225S
8		87343333		2	BRACKET SOPORTE	STAFFA BESLAG	HALTERUNG SUPORTE	SUPPORT STEUN	225S
9		87343335		4	BRACKET SOPORTE	STAFFA BESLAG	HALTERUNG SUPORTE	SUPPORT STEUN	225S
10		87343337		2	BRACKET SOPORTE	STAFFA BESLAG	HALTERUNG SUPORTE	SUPPORT STEUN	225S
11		87343090		2	BRACKET SOPORTE	STAFFA BESLAG	HALTERUNG SUPORTE	SUPPORT STEUN	225S
12		87343093		2	BRACKET SOPORTE	STAFFA BESLAG	HALTERUNG SUPORTE	SUPPORT STEUN	225S
13		87343521		4	BUSHING CASQUILLO	BOCCOLA BØSNING	BUCHSE CASQUILHO	BAGUE BUS	095B
14		72151580		4	BUSHING CASQUILLO	BOCCOLA BØSNING	BUCHSE CASQUILHO	BAGUE BUS	095B
15		70923843		4	SNAP RING ANILLO DE RESORTE	ANELLO ELASTICO LÅSERING	SPRENGRING ANEL	ANNEAU D'ARRET VEERRING	054A
16		70931640		4	GASKET JUNTA	GUARNIZIONE PAKNING	DICHTUNG JUNTA	JOINT PAKKING	123G
17		71404460		1	O-RING JUNTA TÓRICA	ANELLO TOROIDALE O-RING	O-RING O-RING	JOINT TORIQUE O-RING	055A
18		11112634		16	SCREW TORNILLO	VITE SKRUE	SCHRAUBE PARAFUSO	VIS SCHROEF	040V
19		14496731		16	WASHER, M12 x 24 x 2.5 Thk ARANDELA	RONDELLA FLADSKIVE	UNTERLEGSCHEIBE ANILHA	RONDELLE SLUITRING	131R
20	1	87395450		2	CYLINDER CILINDRO	CILINDRO CYLINDER	ZYLINDER CILINDRO	VERIN CILINDER	164C
21	2	87535533		1	CYLINDER CILINDRO	CILINDRO CYLINDER	ZYLINDER CILINDRO	VERIN CILINDER	164C
22	3	87349049		1	CYLINDER CILINDRO	CILINDRO CYLINDER	ZYLINDER CILINDRO	VERIN CILINDER	164C

(1) ASSY SEE PAGE 2
(2) ASSY SEE PAGE 3
(3) ASSY SEE PAGE 4

Copyright © New Holland

2.030	02	p1	03/10

LIFT CYLINDER - COMPONENTS
CILINDRO SOLLEV. - COMPONENTI
HUBZYLINDER - BESTANDTEILE
VERIN DE RELEVAGE - COMPOSANTS

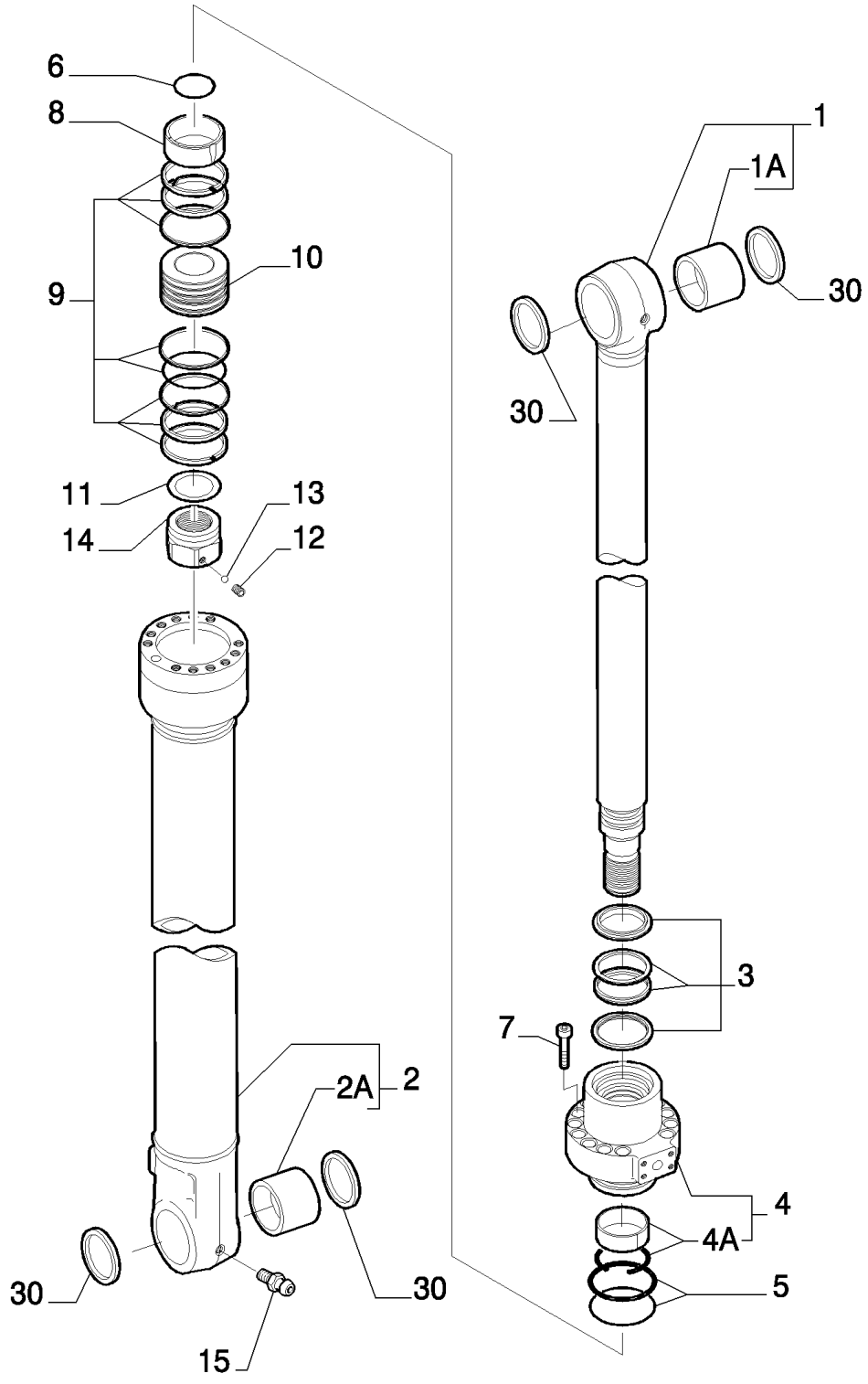

KIT KIT KIT 3-5-9

Copyright © New Holland

GATO ELEVACION - COMPONENTES
LIFT CYLINDER - COMPONENTS
LIFT CYLINDER - COMPONENTS
LIFT CYLINDER - COMPONENTS

R	N	P.N.	MOD	Q	Description Denominacion	Descrizione Beskrivelse	Bezeichnung Denominação	Description Beschrijving	L.C.
1		87395451		1	ROD, - ASSY VARILLA	ASTA STANG	STANGE HASTE	TIGE STANG	090A
1A		87543176		2	BUSHING CASQUILLO	BOCCOLA BØSNING	BUCHSE CASQUILHO	BAGUE BUS	095B
2		87395454		1	BARREL, - ASSY CILINDRO	CANNA DEL CILINDRO CYLINDER	ZYLINDERROHR CORPO DE CILINDRO	CYLINDRE CILINDERHUIS	301C
2A		87543176		1	BUSHING CASQUILLO	BOCCOLA BØSNING	BUCHSE CASQUILHO	BAGUE BUS	095B
3		72104592		1	KIT KIT	KIT SÆT	SATZ KIT	KIT KIT	305C
4		71418476		1	CYLINDER HEAD, - ASSY CULATA	TESTATA CYLINDERHOVED	ZYLINDERKOPF CABEÇA DE CILINDRO	CULASSE CILINDERKOP	113T
4A		71447620		1	KIT KIT	KIT SÆT	SATZ KIT	KIT KIT	305C
5		71445704		1	KIT KIT	KIT SÆT	SATZ KIT	KIT KIT	305C
6		71418479		1	SEALRING RETÉN	ANELLO DI TENUTA PAKNINGSRING	DICHTRING ANEL VEDADOR	BAGUE D'ETANCHEITE KEERRING	Z125
7		14426874		12	SCREW, Hex Soc Hd, M16 x 75, 12.9 TORNILLO	VITE SKRUE	SCHRAUBE PARAFUSO	VIS SCHROEF	040V
8		71418480		1	BUSHING CASQUILLO	BOCCOLA BØSNING	BUCHSE CASQUILHO	BAGUE BUS	095B
9		71418481		1	SEAL KIT KIT DE JUNTAS	KIT GUARNIZIONI PAKNINGSSÆT	DICHTUNGSSATZ KIT DE VEDANTE	KIT DE JOINTS KIT MET AFDICHTINGEN	630S
10		71418483		1	PISTON PISTÓN	PISTONE STEMPEL	KOLBEN PISTÃO	PISTON ZUIGER	235S
11		71445714		1	WASHER ARANDELA	RONDELLA FLADSKIVE	UNTERLEGSCHEIBE ANILHA	RONDELLE SLUITRING	131R
12		71445626		1	DOWEL BULÓN	PERNO DYVEL	PASSSTIFT PERNO-GUIA	GOUJON PASPEN	090G
13		71445627		1	BALL BOLA	SFERA KUGLE	KUGEL ESFERA	BILLE KOGEL	140S
14		72104630		1	NUT TUERCA	DADO MØTRIK	MUTTER PORCA	ECROU MOER	010D
15		13407211		2	LUBE NIPPLE, M10 x 1 BOQUILLA DE LUBRICA(	INGRASSATORE SMØRENIPPEL	SCHMIERNIPPEL COPO DE LUBRIFICAÇÃ	GRAISSEUR SMEERNIPPEL	060I
30		72104596		4	SEAL, 85X100X5 ANILLO DE CIERRE	GUARNIZIONE; TENUTA PAKNING	DICHTUNG VEDANTE	JOINT AFDICHTING	132A

87395450/REP REP.DE LEVANTAMENTO COMPLETO

Copyright © New Holland

2.030	03	p1	03/10

DIPPER STICK CYLINDER - COMPONENTS
CILINDRO PENETRAZIONE - COMPONENTI
LÖFFELSTIELZYLINDER - BESTANDTEILE
VERIN D'ENFONCEMENT - COMPOSANTS

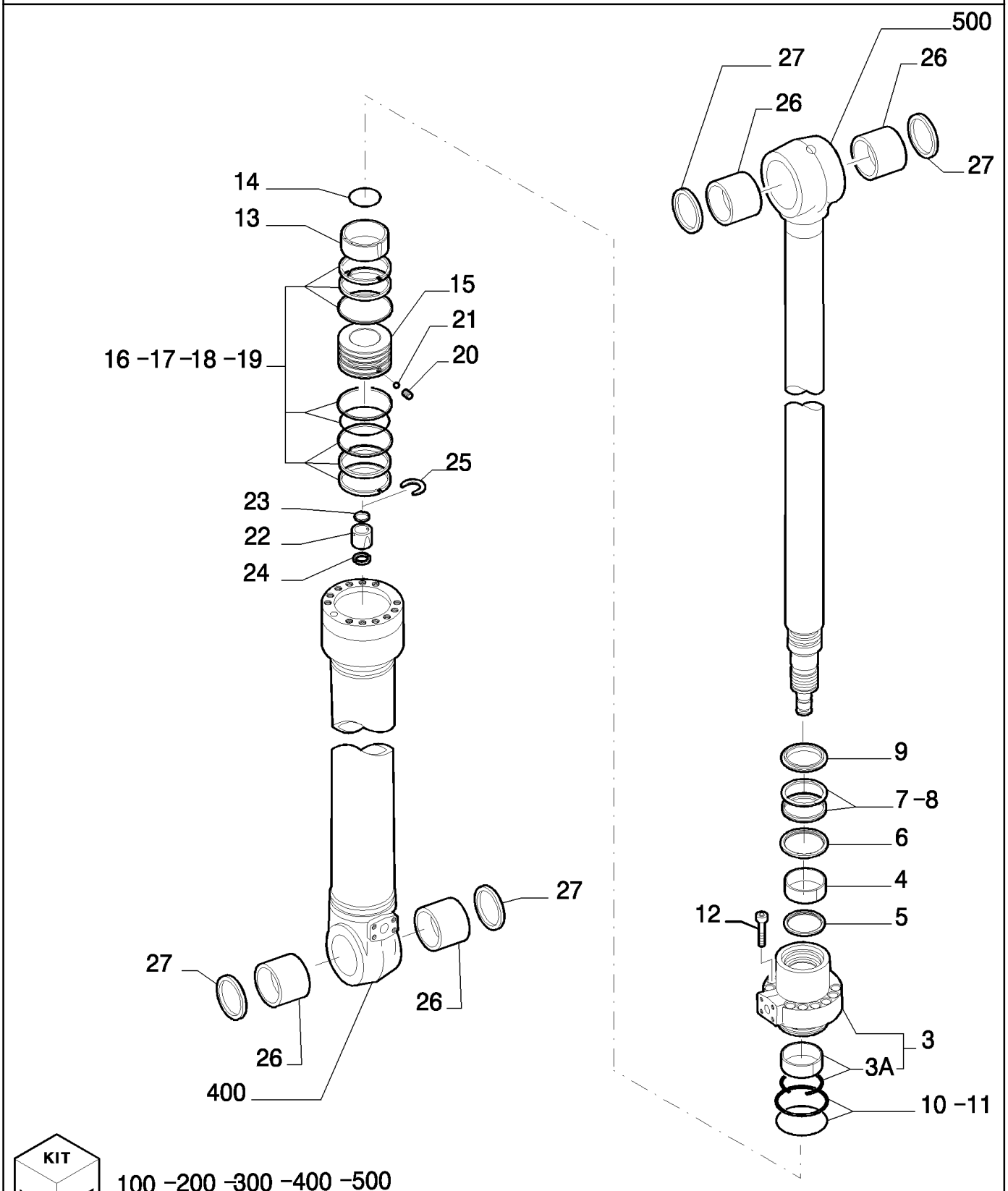

Copyright © New Holland

GATO DE PENETRACION - COMPONENTES
DIPPER STICK CYLINDER - COMPONENTS
DIPPER STICK CYLINDER - COMPONENTS
DIPPER STICK CYLINDER - COMPONENTS

PROFUNDIDADE PENETRAÇÃO

R	N	P.N.	MOD	Q	Description Denominacion	Descrizione Beskrivelse	Bezeichnung Denominação	Description Beschrijving	L.C.
3		71469208		1	BASE PLATE, - ASSY PLACA DE BASE	PIASTRA DI BASE ENDEPLADE	GRUNDPLATTE CHAPA DE FUNDO	PLAQUE D'APPUI BODEMPLAAT	080F
3A		71447621		1	KIT KIT	KIT SÆT	SATZ KIT	KIT KIT	305C
4		71445617		1	BUSHING CASQUILLO	BOCCOLA BØSNING	BUCHSE CASQUILHO	BAGUE BUS	095B
5		71445618		1	RING ANILLO	ANELLO RING	RING ANEL	ANNEAU RING	045A
6	1	87552690		1	O-RING JUNTA TÓRICA	ANELLO TOROIDALE O-RING	O-RING O-RING	JOINT TORIQUE O-RING	055A
7	1	87552691		1	O-RING JUNTA TÓRICA	ANELLO TOROIDALE O-RING	O-RING O-RING	JOINT TORIQUE O-RING	055A
8	1	71418434		1	RING ANILLO	ANELLO RING	RING ANEL	ANNEAU RING	045A
9	1	71418432		1	RING ANILLO	ANELLO RING	RING ANEL	ANNEAU RING	045A
10	1	71465031		1	O-RING JUNTA TÓRICA	ANELLO TOROIDALE O-RING	O-RING O-RING	JOINT TORIQUE O-RING	055A
11	1	71465030		1	GASKET JUNTA	GUARNIZIONE PAKNING	DICHTUNG JUNTA	JOINT PAKKING	123G
12		14428774		12	SCREW, Hex Soc Hd, M18 x 80, 12.9 VITE TORNILLO	 SKRUE	 SCHRAUBE PARAFUSO	 VIS SCHROEF	040V
13		87552692		1	BUSHING CASQUILLO	BOCCOLA BØSNING	BUCHSE CASQUILHO	BAGUE BUS	095B
14	2	87552693		1	GASKET JUNTA	GUARNIZIONE PAKNING	DICHTUNG JUNTA	JOINT PAKKING	123G
15		87552694		1	PISTON PISTÓN	PISTONE STEMPEL	KOLBEN PISTÃO	PISTON ZUIGER	235S
16	2	71445664		1	GASKET JUNTA	GUARNIZIONE PAKNING	DICHTUNG JUNTA	JOINT PAKKING	123G
17	2	71465036		1	RING ANILLO	ANELLO RING	RING ANEL	ANNEAU RING	045A
18	2	87552695		1	O-RING JUNTA TÓRICA	ANELLO TOROIDALE O-RING	O-RING O-RING	JOINT TORIQUE O-RING	055A
19	2	71445662		1	RING ANILLO	ANELLO RING	RING ANEL	ANNEAU RING	045A
20		71445657		1	DOWEL BULÓN	PERNO DYVEL	PASSSTIFT PERNO-GUIA	GOUJON PASPEN	090G
21		71445658		1	BALL BOLA	SFERA KUGLE	KUGEL ESFERA	BILLE KOGEL	140S
22		87552696		1	BUSHING CASQUILLO	BOCCOLA BØSNING	BUCHSE CASQUILHO	BAGUE BUS	095B
23	2	71418452		1	GASKET JUNTA	GUARNIZIONE PAKNING	DICHTUNG JUNTA	JOINT PAKKING	123G
24		71418454		1	HALF-RING SEMIANILLO	SEMIANELLO HALVRING	HALBRING MEIO ANEL	DEMI-RONDELLE RINGHELFT	090S
25		71418453		1	STOP TOPE	ARRESTO; FERMO STOP	STOP BATENTE	BUTEE AANSLAG	080A

(1) KIT - 87576765 - 87576767
(2) KIT - 87576766- 87576767

87535533/REP REP.DE PENETRAÇÃO COMPLETO

DIPPER STICK CYLINDER ASSY P/N 87535533

E215B

Copyright © New Holland

2.030	03	p2	03/10

DIPPER STICK CYLINDER - COMPONENTS
CILINDRO PENETRAZIONE - COMPONENTI
LÖFFELSTIELZYLINDER - BESTANDTEILE
VERIN D'ENFONCEMENT - COMPOSANTS

PROFUNDIDADE PENETRAÇÃO

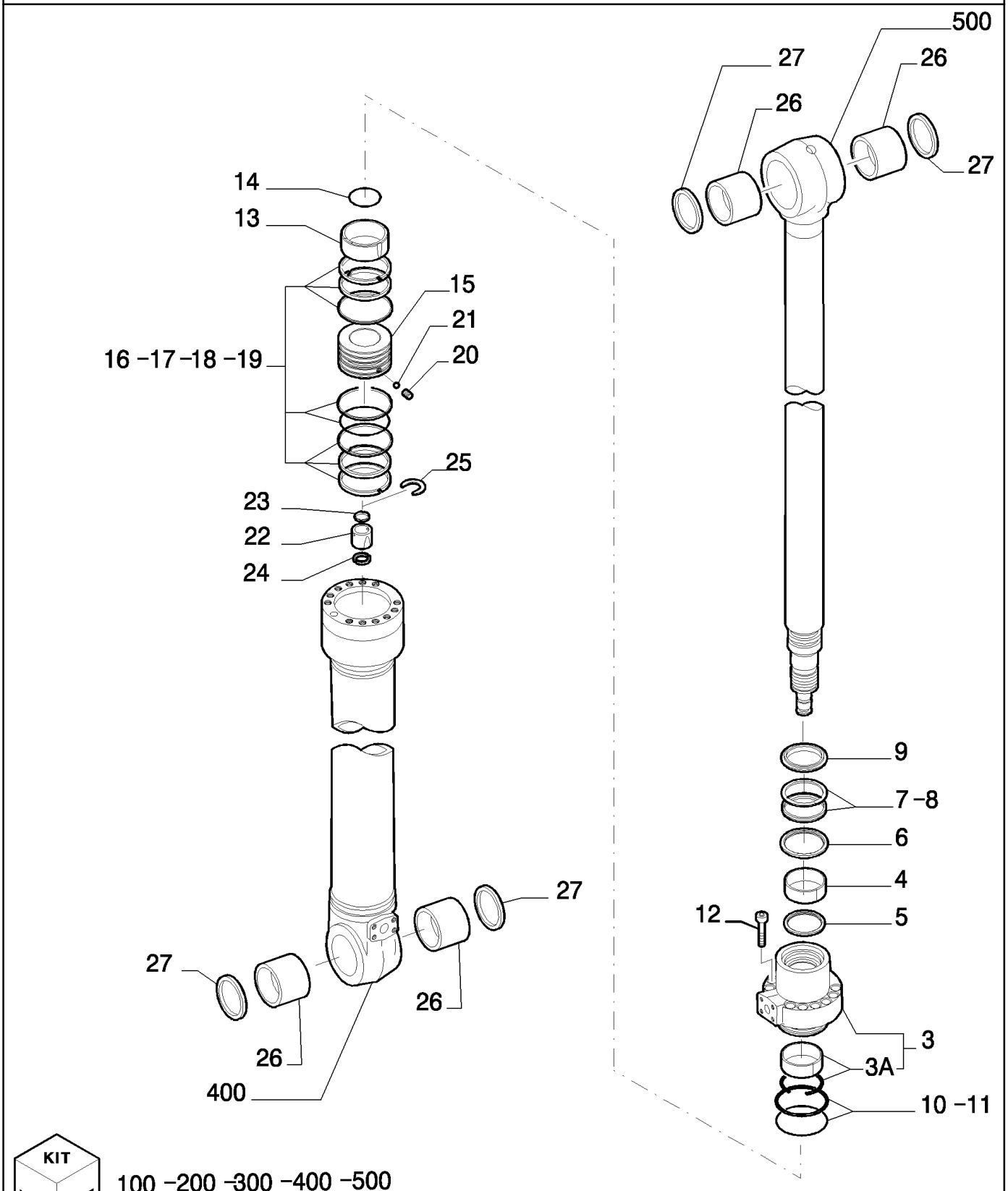

KIT KIT KIT 100 -200 -300 -400 -500

Copyright © New Holland

GATO DE PENETRACION - COMPONENTES
DIPPER STICK CYLINDER - COMPONENTS
DIPPER STICK CYLINDER - COMPONENTS
DIPPER STICK CYLINDER - COMPONENTS

PROFUNDIDADE PENETRAÇÃO

R	N	P.N.	MOD	Q	Description Denominacion	Descrizione Beskrivelse	Bezeichnung Denominação	Description Beschrijving	L.C.
26	1	**87552697**		4	BUSHING CASQUILLO	BOCCOLA BØSNING	BUCHSE CASQUILHO	BAGUE BUS	095B
27	1	**87552698**		4	O-RING JUNTA TÓRICA	ANELLO TOROIDALE O-RING	O-RING O-RING	JOINT TORIQUE O-RING	055A
100		**87576765**		1	KIT KIT	KIT SÆT	SATZ KIT	KIT KIT	305C
200		**87576766**		1	KIT KIT	KIT SÆT	SATZ KIT	KIT KIT	305C
300		**87576767**		1	KIT KIT	KIT SÆT	SATZ KIT	KIT KIT	305C
400		**87576768**		1	KIT KIT	KIT SÆT	SATZ KIT	KIT KIT	305C
500		**87576769**		1	KIT KIT	KIT SÆT	SATZ KIT	KIT KIT	305C

(1) KIT - 87576768 - 87576769

87535533/REP REP.DE PROFUNDIDADE COMPLETO

Copyright © New Holland

2.030	04	p1	03/10

BUCKET CYLINDER - COMPONENTS
CILINDRO BENNA - COMPONENTI
LÖFFELKIPPZYLINDER - BESTANDTEILE
CYLINDRE DE GODET - COMPOSANTS

CAÇAMBA

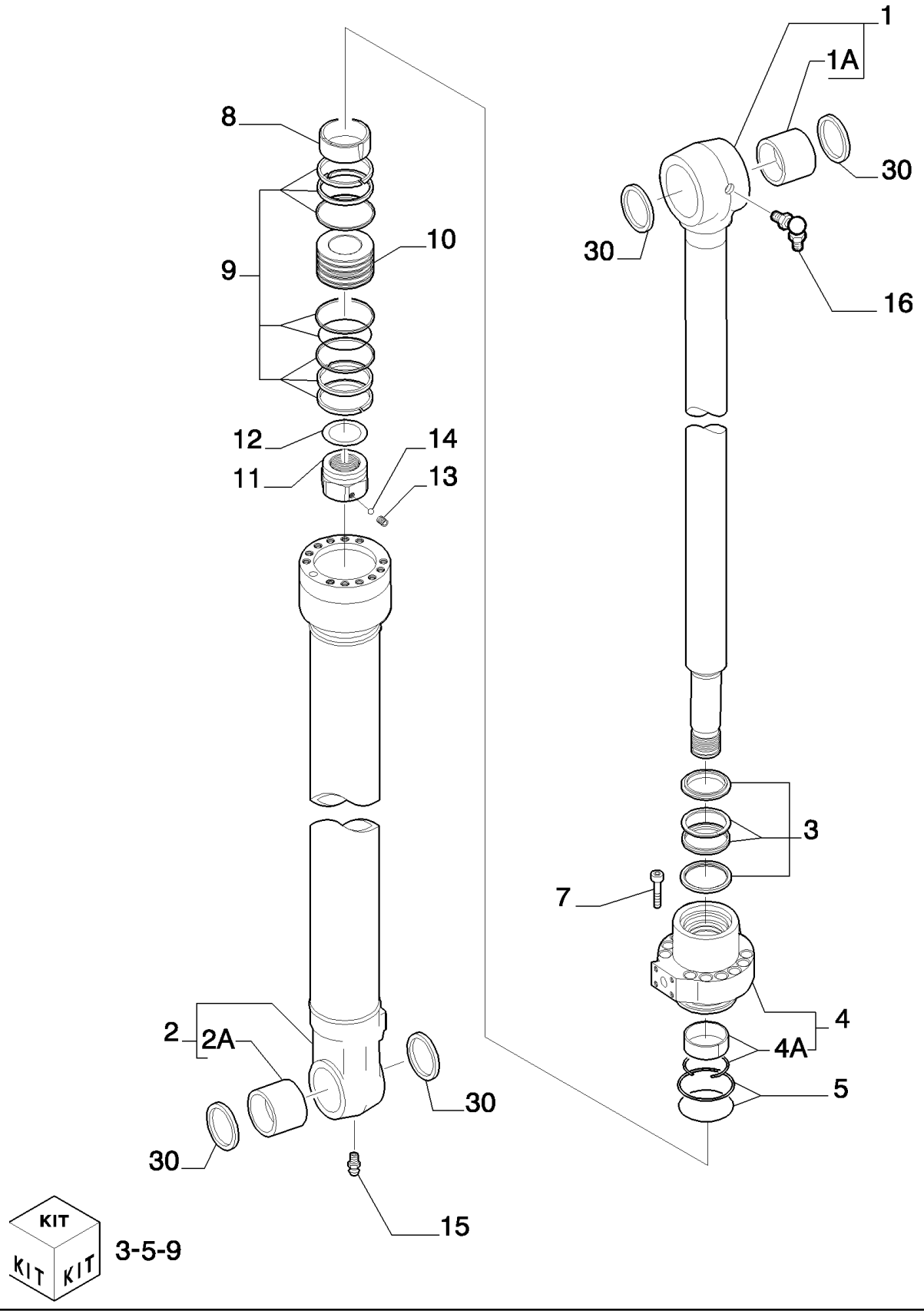

Copyright © New Holland

GATO DE CUCHARA - COMPONENTES
BUCKET CYLINDER - COMPONENTS
BUCKET CYLINDER - COMPONENTS
BUCKET CYLINDER - COMPONENTS

CAÇAMBA

R	N	P.N.	MOD	Q	Description Denominacion	Descrizione Beskrivelse	Bezeichnung Denominação	Description Beschrijving	L.C.
1		87349053		1	ROD, - ASSY VARILLA	ASTA STANG	STANGE HASTE	TIGE STANG	090A
1A		87543175		2	BUSHING CASQUILLO	BOCCOLA BØSNING	BUCHSE CASQUILHO	BAGUE BUS	095B
2		87349054		1	BARREL, - ASSY CILINDRO	CANNA DEL CILINDRO CYLINDER	ZYLINDERROHR CORPO DE CILINDRO	CYLINDRE CILINDERHUIS	301C
2A		87543175		2	BUSHING CASQUILLO	BOCCOLA BØSNING	BUCHSE CASQUILHO	BAGUE BUS	095B
3		72104631		1	KIT KIT	KIT SÆT	SATZ KIT	KIT KIT	305C
4		72104628		1	BASE PLATE, - ASSY PLACA DE BASE	PIASTRA DI BASE ENDEPLADE	GRUNDPLATTE CHAPA DE FUNDO	PLAQUE D'APPUI BODEMPLAAT	080F
4A		71447625		1	KIT KIT	KIT SÆT	SATZ KIT	KIT KIT	305C
5		71445704		1	KIT KIT	KIT SÆT	SATZ KIT	KIT KIT	305C
7		14426874		12	SCREW, Hex Soc Hd, M16 x 75, 12.9 TORNILLO	VITE SKRUE	SCHRAUBE PARAFUSO	VIS SCHROEF	040V
8		87369444		1	BUSHING CASQUILLO	BOCCOLA BØSNING	BUCHSE CASQUILHO	BAGUE BUS	095B
9		71418481		1	SEAL KIT KIT DE JUNTAS	KIT GUARNIZIONI PAKNINGSSÆT	DICHTUNGSSATZ KIT DE VEDANTE	KIT DE JOINTS KIT MET AFDICHTINGEN	630S
10		71418483		1	PISTON PISTÓN	PISTONE STEMPEL	KOLBEN PISTÃO	PISTON ZUIGER	235S
11		72104630		1	NUT, 62 TUERCA	DADO MØTRIK	MUTTER PORCA	ECROU MOER	010D
12		71445714		1	WASHER ARANDELA	RONDELLA FLADSKIVE	UNTERLEGSCHEIBE ANILHA	RONDELLE SLUITRING	131R
13		71445626		1	DOWEL BULÓN	PERNO DYVEL	PASSSTIFT PERNO-GUIA	GOUJON PASPEN	090G
14		71445627		1	BALL BOLA	SFERA KUGLE	KUGEL ESFERA	BILLE KOGEL	140S
15		13407211		1	LUBE NIPPLE, M10 x 1 BOQUILLA DE LUBRICA(	INGRASSATORE SMØRENIPPEL	SCHMIERNIPPEL COPO DE LUBRIFICAÇÃ	GRAISSEUR SMEERNIPPEL	060I
16		13408411		1	LUBE NIPPLE, 90°, M10 x1 BOQUILLA DE LUBRICA(	INGRASSATORE SMØRENIPPEL	SCHMIERNIPPEL COPO DE LUBRIFICAÇÃ	GRAISSEUR SMEERNIPPEL	060I
30		71415158		4	GASKET JUNTA	GUARNIZIONE PAKNING	DICHTUNG JUNTA	JOINT PAKKING	123G

87349049/REP REP.DE BASCULAMENTO COMPLETO

BUCKET CYLINDER ASSY P/N 87349049

E215B

Copyright © New Holland

2.030	05	p1	03/10

BUCKET CYLINDER
CILINDRO BENNA
LÖFFELKIPPZYLINDER
CYLINDRE DE GODET

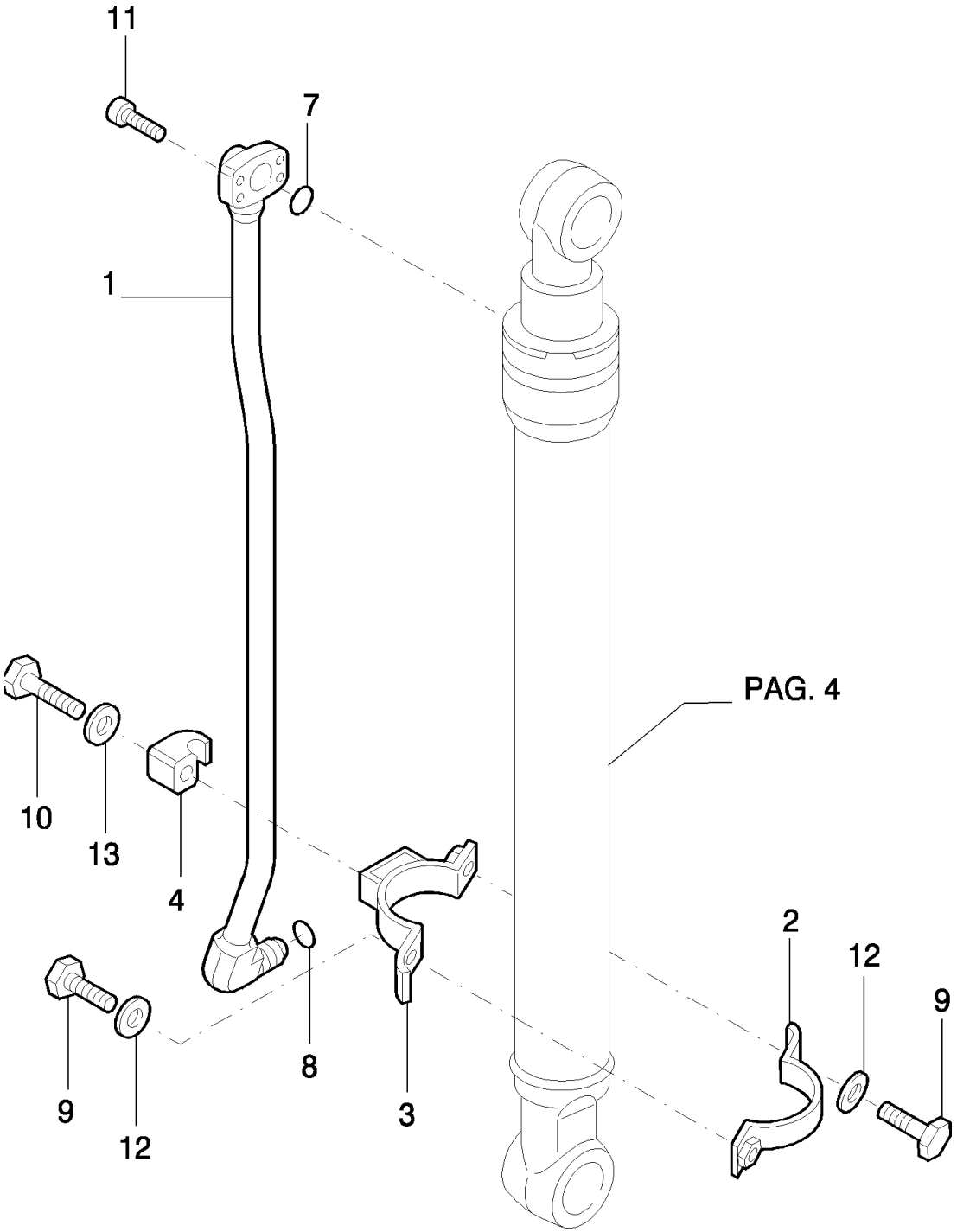

Copyright © New Holland

GATO DE CUCHARA
BUCKET CYLINDER
BUCKET CYLINDER
BUCKET CYLINDER

R	N	P.N.	MOD	Q	Description Denominacion	Descrizione Beskrivelse	Bezeichnung Denominação	Description Beschrijving	L.C.
1		87542038		1	RIGID TUBE TUBO RÍGIDO	TUBO RIGIDO STIFT RØR	ROHR TUBO RÍGIDO	TUYAU RIGIDE VASTE LEIDING	193T
2		87542040		1	STRAP BANDA	FASCETTA STROP	BAND BANDA	BRIDE RIEM	532B
3		87542042		1	STRAP BANDA	FASCETTA STROP	BAND BANDA	BRIDE RIEM	532B
4		72201683		1	BRACKET SOPORTE	STAFFA BESLAG	HALTERUNG SUPORTE	SUPPORT STEUN	225S
7		70924110		1	O-RING JUNTA TÓRICA	ANELLO TOROIDALE O-RING	O-RING O-RING	JOINT TORIQUE O-RING	055A
8		70923843		1	SNAP RING ANILLO DE RESORTE	ANELLO ELASTICO LÅSERING	SPRENGRING ANEL	ANNEAU D'ARRET VEERRING	054A
9		11106434		2	BOLT, Hex, M10 x 30, 10.9, Full Thd PERNO	BULLONE BOLT	SCHRAUBE PARAFUSO	VIS BOUT	140B
10		11107334		1	SCREW TORNILLO	VITE SKRUE	SCHRAUBE PARAFUSO	VIS SCHROEF	040V
11		14420334		4	SCREW TORNILLO	VITE SKRUE	SCHRAUBE PARAFUSO	VIS SCHROEF	040V
12		10516874		2	LOCK WASHER ARANDELA DE BLOQUE	RONDELLA DI SICUREZ LÅSESKIVE	SICHERUNGSSCHEIBE ANILHA DE RETENÇÃO	RONDELLE FREIN BORGRING	132R
13		14496631		1	WASHER, M10 x 21 x 2 ARANDELA	RONDELLA FLADSKIVE	UNTERLEGSCHEIBE ANILHA	RONDELLE SLUITRING	131R

Copyright © New Holland

2.031	01	p1	03/10

BOOM PIPING - VERSION (04-05-06)
TUBAZIONI BRACCI - VERSIONE (04-05-06)
LEITUNGEN-VORDER - VERSION (04-05-06)
TUYAUTERIES AVANT - VERSION (04-05-06)

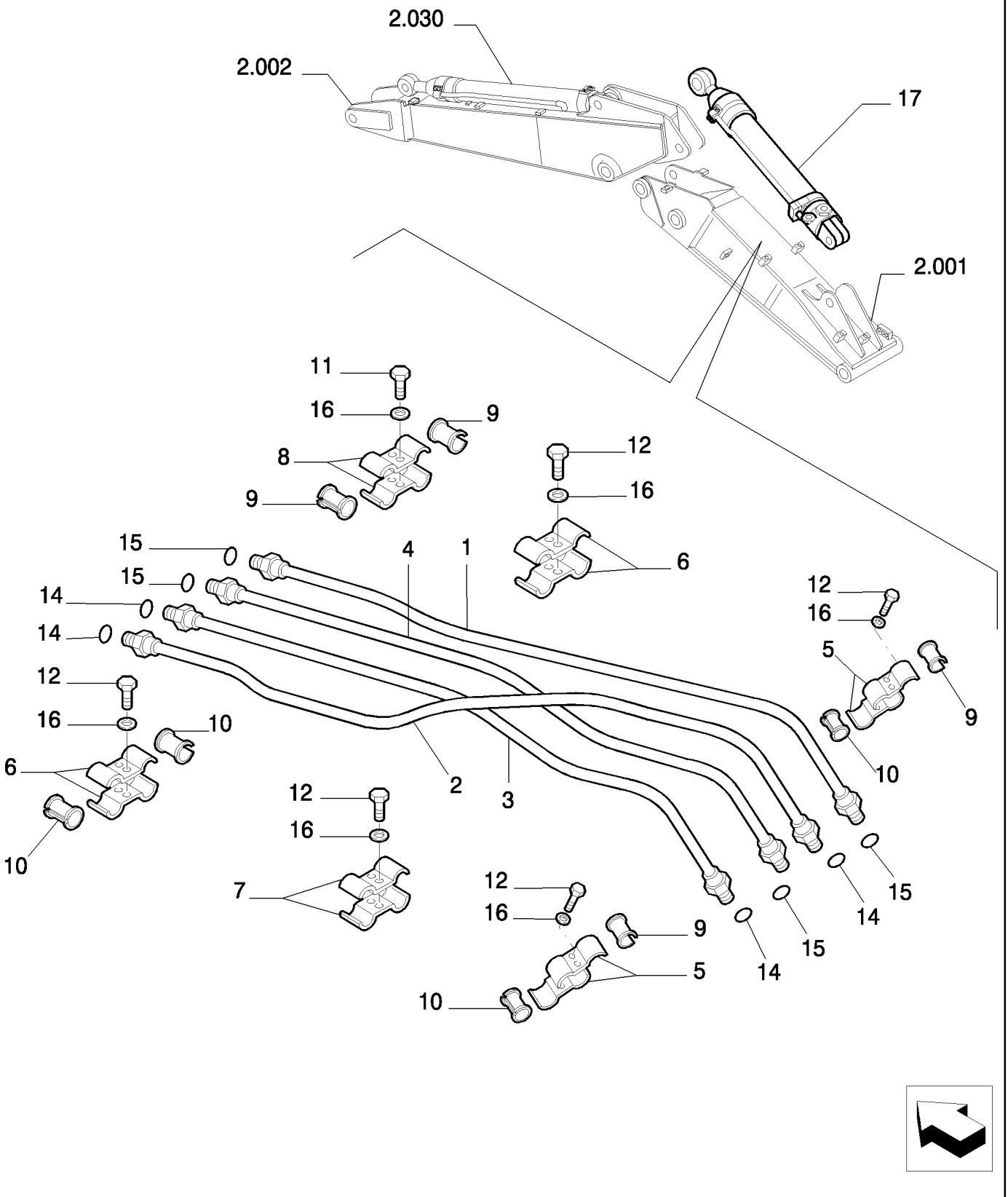

Copyright © New Holland

TUBERIAS ANTERIORES - VERSION (04-05-06)
BOOM PIPING - VERSION (04-05-06)
BOOM PIPING - VERSION (04-05-06)
BOOM PIPING - VERSION (04-05-06)

R	N	P.N.	MOD	Q	Description Denominacion	Descrizione Beskrivelse	Bezeichnung Denominação	Description Beschrijving	L.C.
1		87518149		1	RIGID TUBE TUBO RÍGIDO	TUBO RIGIDO STIFT RØR	ROHR TUBO RÍGIDO	TUYAU RIGIDE VASTE LEIDING	193T
2		87518151		1	RIGID TUBE TUBO RÍGIDO	TUBO RIGIDO STIFT RØR	ROHR TUBO RÍGIDO	TUYAU RIGIDE VASTE LEIDING	193T
3		87518153		1	RIGID TUBE TUBO RÍGIDO	TUBO RIGIDO STIFT RØR	ROHR TUBO RÍGIDO	TUYAU RIGIDE VASTE LEIDING	193T
4		87518155		1	RIGID TUBE TUBO RÍGIDO	TUBO RIGIDO STIFT RØR	ROHR TUBO RÍGIDO	TUYAU RIGIDE VASTE LEIDING	193T
5		87343330		4	BRACKET SOPORTE	STAFFA BESLAG	HALTERUNG SUPORTE	SUPPORT STEUN	225S
6		87343335		4	BRACKET SOPORTE	STAFFA BESLAG	HALTERUNG SUPORTE	SUPPORT STEUN	225S
7		87343333		2	BRACKET SOPORTE	STAFFA BESLAG	HALTERUNG SUPORTE	SUPPORT STEUN	225S
8		87343337		2	BRACKET SOPORTE	STAFFA BESLAG	HALTERUNG SUPORTE	SUPPORT STEUN	225S
9		72151580		4	BUSHING CASQUILLO	BOCCOLA BØSNING	BUCHSE CASQUILHO	BAGUE BUS	095B
10		87343521		4	BUSHING CASQUILLO	BOCCOLA BØSNING	BUCHSE CASQUILHO	BAGUE BUS	095B
11		11112834		2	BOLT, Hex, M12 x 40, 10.9, Full Thd PERNO	BULLONE BOLT	SCHRAUBE PARAFUSO	VIS BOUT	140B
12		11112634		10	SCREW TORNILLO	VITE SKRUE	SCHRAUBE PARAFUSO	VIS SCHROEF	040V
14		70923843		4	SNAP RING ANILLO DE RESORTE	ANELLO ELASTICO LÅSERING	SPRENGRING ANEL	ANNEAU D'ARRET VEERRING	054A
15		70931640		4	GASKET JUNTA	GUARNIZIONE PAKNING	DICHTUNG JUNTA	JOINT PAKKING	123G
16		14496731		12	WASHER, M12 x 24 x 2.5 Thk ARANDELA	RONDELLA FLADSKIVE	UNTERLEGSCHEIBE ANILHA	RONDELLE SLUITRING	131R
17	1	87332765		1	CYLINDER CILINDRO	CILINDRO CYLINDER	ZYLINDER CILINDRO	VERIN CILINDER	164C

(1) ASSY SEE PAGE 3

Copyright © New Holland

2.031	02	p1	03/10

BOOM PIPING - VERSION (04-05-06)
TUBAZIONI BRACCI - VERSIONE (04-05-06)
LEITUNGEN-VORDER - VERSION (04-05-06)
TUYAUTERIES AVANT - VERSION (04-05-06)

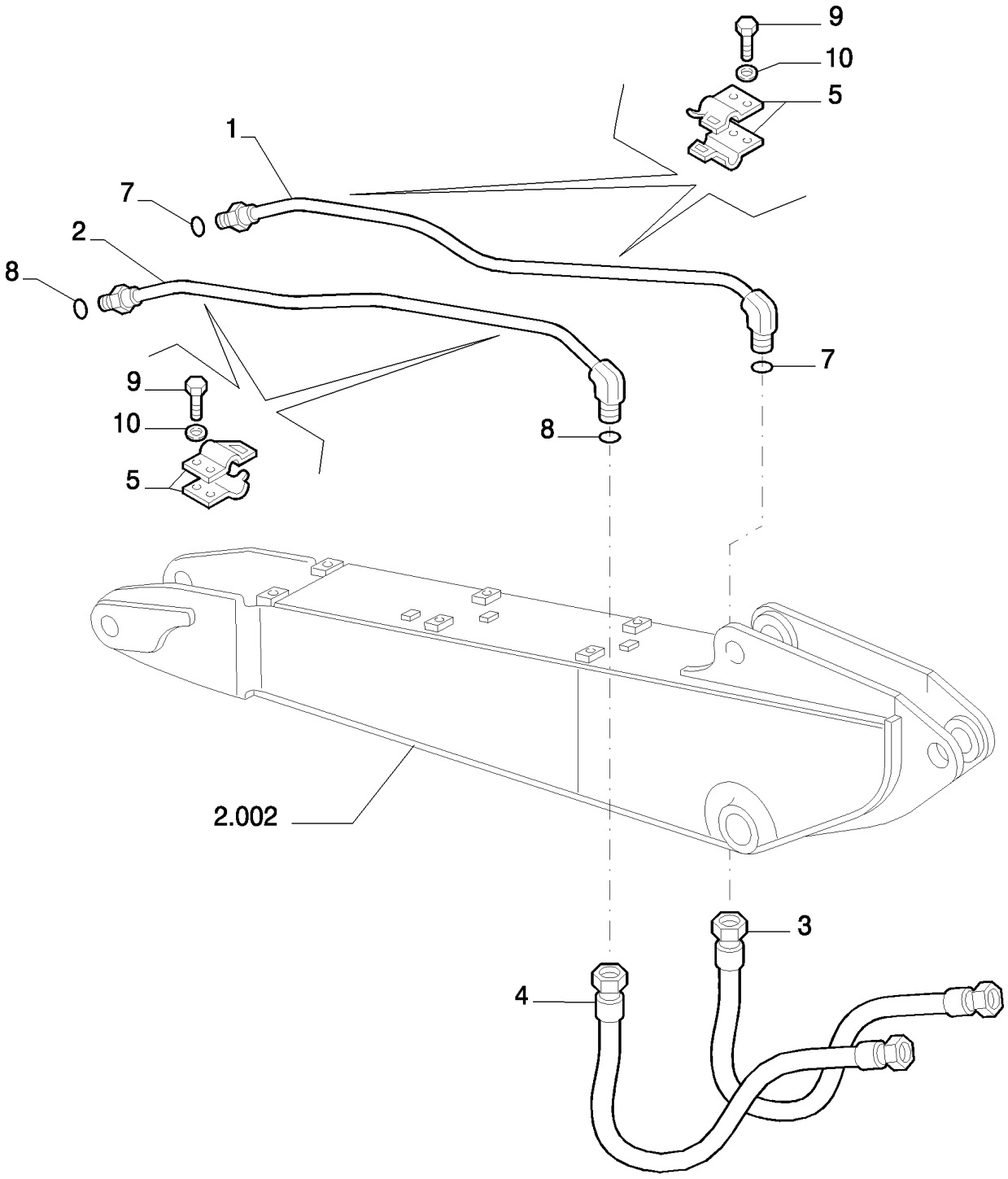

Copyright © New Holland

TUBERIAS ANTERIORES - VERSION (04-05-06)
BOOM PIPING - VERSION (04-05-06)
BOOM PIPING - VERSION (04-05-06)
BOOM PIPING - VERSION (04-05-06)

R	N	P.N.	MOD	Q	Description Denominacion	Descrizione Beskrivelse	Bezeichnung Denominação	Description Beschrijving	L.C.
1		87518158		1	RIGID TUBE TUBO RÍGIDO	TUBO RIGIDO STIFT RØR	ROHR TUBO RÍGIDO	TUYAU RIGIDE VASTE LEIDING	193T
2		87518160		1	RIGID TUBE TUBO RÍGIDO	TUBO RIGIDO STIFT RØR	ROHR TUBO RÍGIDO	TUYAU RIGIDE VASTE LEIDING	193T
3		87383027		1	FLEXIBLE HOSE TUBO FLEXIBLE	TUBO FLESSIBILE FLEKSIBEL SLANGE	BIEGSAMER SCHLAUCH MANGUEIRA FLEXÍVEL	TUYAU FLEXIBLE FLEXIBELE SLANG	192T
4		72216453		1	FLEXIBLE HOSE TUBO FLEXIBLE	TUBO FLESSIBILE FLEKSIBEL SLANGE	BIEGSAMER SCHLAUCH MANGUEIRA FLEXÍVEL	TUYAU FLEXIBLE FLEXIBELE SLANG	192T
5		87343090		4	BRACKET SOPORTE	STAFFA BESLAG	HALTERUNG SUPORTE	SUPPORT STEUN	225S
6		87343093		4	BRACKET SOPORTE	STAFFA BESLAG	HALTERUNG SUPORTE	SUPPORT STEUN	225S
7		70931640		2	GASKET JUNTA	GUARNIZIONE PAKNING	DICHTUNG JUNTA	JOINT PAKKING	123G
8		70923843		2	SNAP RING ANILLO DE RESORTE	ANELLO ELASTICO LÅSERING	SPRENGRING ANEL	ANNEAU D'ARRET VEERRING	054A
9		11112634		8	SCREW TORNILLO	VITE SKRUE	SCHRAUBE PARAFUSO	VIS SCHROEF	040V
10		14496731		8	WASHER, M12 x 24 x 2.5 Thk ARANDELA	RONDELLA FLADSKIVE	UNTERLEGSCHEIBE ANILHA	RONDELLE SLUITRING	131R

Copyright © New Holland

2.031	03	p1	03/10

POSITIONER CYLINDER - COMPONENTS - VERSION (04-05-06)
CILINDRO POSIZIONATORE - COMPONENTI - VERSIONE (04-05-06)
STELLZYLINDER - BESTANDTEILE - VERSION (04-05-06)
VERIN POSITIONNEUR - COMPOSANTS - VERSION (04-05-06)

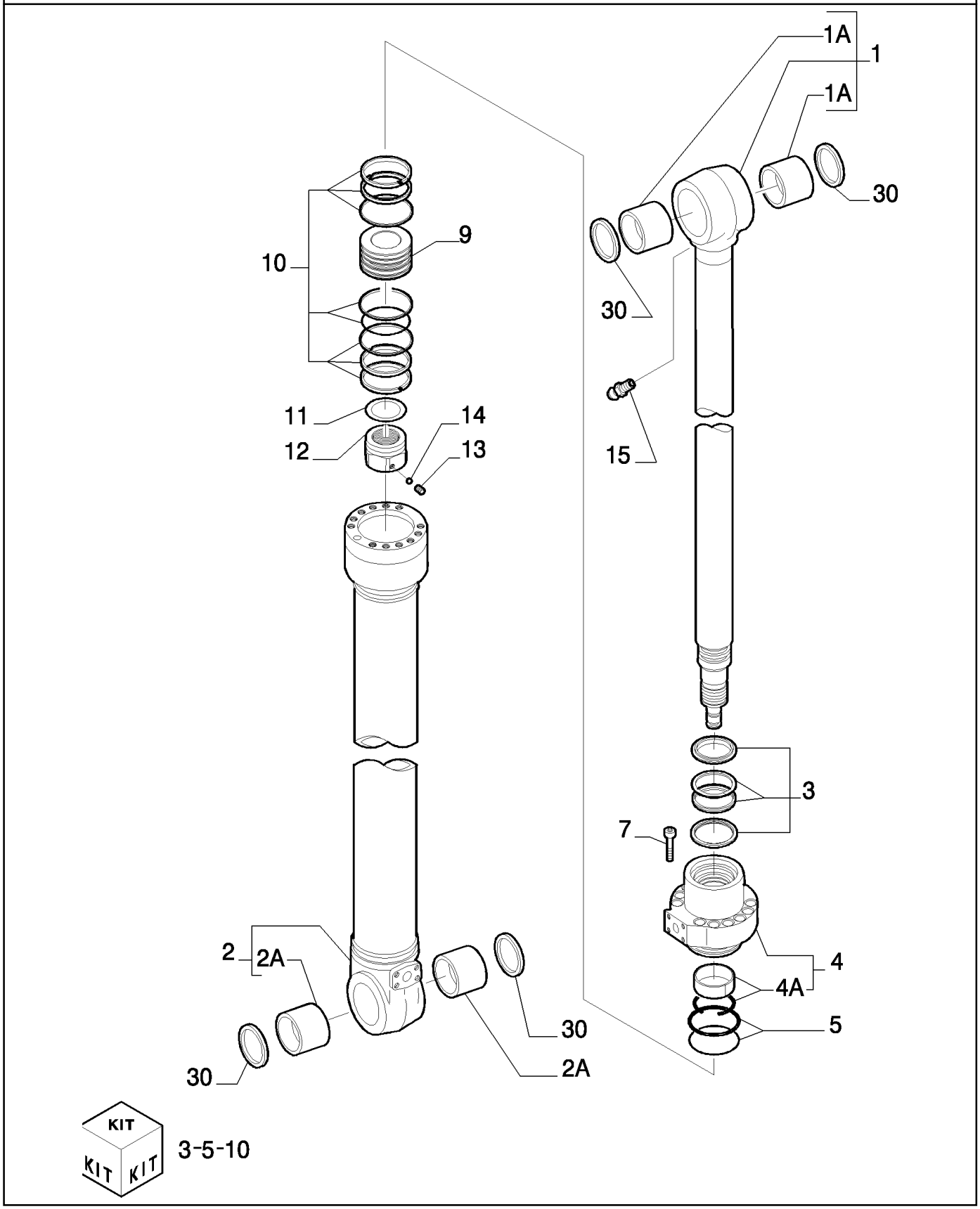

Copyright © New Holland

GATO POSICIONADOR - COMPONENTES - VERSION (04-05-06)
POSITIONER CYLINDER - COMPONENTS - VERSION (04-05-06)
POSITIONER CYLINDER - COMPONENTS - VERSION (04-05-06)
POSITIONER CYLINDER - COMPONENTS - VERSION (04-05-06)

POSICIONAMENTO

R	N	P.N.	MOD	Q	Description Denominacion	Descrizione Beskrivelse	Bezeichnung Denominação	Description Beschrijving	L.C.
1		87339899		1	ROD, - ASSY VARILLA	ASTA STANG	STANGE HASTE	TIGE STANG	090A
1A		87521245		1	BUSHING CASQUILLO	BOCCOLA BØSNING	BUCHSE CASQUILHO	BAGUE BUS	095B
2		87339903		1	BARREL, - ASSY CILINDRO	CANNA DEL CILINDRO CYLINDER	ZYLINDERROHR CORPO DE CILINDRO	CYLINDRE CILINDERHUIS	301C
2A		87588861		1	BUSHING CASQUILLO	BOCCOLA BØSNING	BUCHSE CASQUILHO	BAGUE BUS	095B
3		72111748		1	KIT KIT	KIT SÆT	SATZ KIT	KIT KIT	305C
4		71418537		1	BASE PLATE, - ASSY PLACA DE BASE	PIASTRA DI BASE ENDEPLADE	GRUNDPLATTE CHAPA DE FUNDO	PLAQUE D'APPUI BODEMPLAAT	080F
4A		71447622		1	KIT KIT	KIT SÆT	SATZ KIT	KIT KIT	305C
5		71418539		1	KIT KIT	KIT SÆT	SATZ KIT	KIT KIT	305C
7		14432774		10	SCREW TORNILLO	VITE SKRUE	SCHRAUBE PARAFUSO	VIS SCHROEF	040V
9		71418545		1	PISTON PISTÓN	PISTONE STEMPEL	KOLBEN PISTÃO	PISTON ZUIGER	235S
10		71418542		1	SEAL KIT KIT DE JUNTAS	KIT GUARNIZIONI PAKNINGSSÆT	DICHTUNGSSATZ KIT DE VEDANTE	KIT DE JOINTS KIT MET AFDICHTINGEN	630S
11		71445656		1	WASHER ARANDELA	RONDELLA FLADSKIVE	UNTERLEGSCHEIBE ANILHA	RONDELLE SLUITRING	131R
12		71474984		1	NUT TUERCA	DADO MØTRIK	MUTTER PORCA	ECROU MOER	010D
13		71445657		1	DOWEL BULÓN	PERNO DYVEL	PASSSTIFT PERNO-GUIA	GOUJON PASPEN	090G
14		71445658		1	BALL BOLA	SFERA KUGLE	KUGEL ESFERA	BILLE KOGEL	140S
15		13407211		1	LUBE NIPPLE, M10 x 1 BOQUILLA DE LUBRICA(	INGRASSATORE SMØRENIPPEL	SCHMIERNIPPEL COPO DE LUBRIFICAÇÃ	GRAISSEUR SMEERNIPPEL	060I
30		71415090		4	GASKET JUNTA	GUARNIZIONE PAKNING	DICHTUNG JUNTA	JOINT PAKKING	123G

87332765/REP REP.DE POSICIONAMENTO COMPLETO

POSITIONER CYLINDER ASSY P/N 87332765

E215B

Copyright © New Holland

2.031	04	p1	03/10

POSITIONER SAFETY VALVE - VERSION (04-05-06)
VALVOLA ANTICAD. POSIZIONATORE - VERSIONE (04-05-06)
AUSLEGERORBERTEIL GEGENFALLV. - VERSION (04-05-06)
VALVE ANTI-CHUTE DE FLECHE - VERSION (04-05-06)

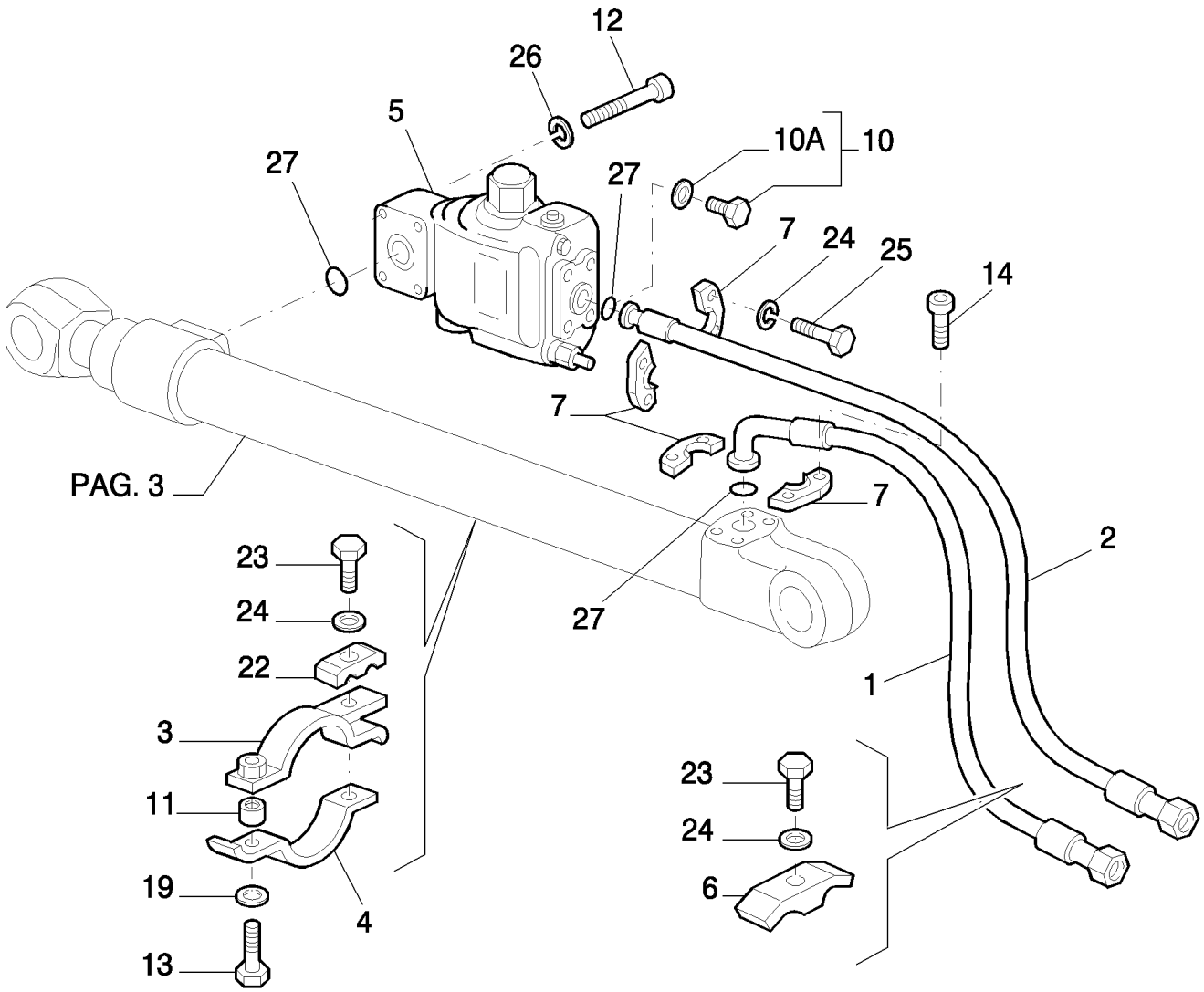

Copyright © New Holland

VALVULA ANTIC. BRAZO CENTRAL - VERSION (04-05-06)
POSITIONER SAFETY VALVE - VERSION (04-05-06)
POSITIONER SAFETY VALVE - VERSION (04-05-06)
POSITIONER SAFETY VALVE - VERSION (04-05-06)

R	N	P.N.	MOD	Q	Description Denominacion	Descrizione Beskrivelse	Bezeichnung Denominação	Description Beschrijving	L.C.
1		87622205		1	FLEXIBLE HOSE TUBO FLEXIBLE	TUBO FLESSIBILE FLEKSIBEL SLANGE	BIEGSAMER SCHLAUCH MANGUEIRA FLEXÍVEL	TUYAU FLEXIBLE FLEXIBELE SLANG	192T
2		87622204		1	FLEXIBLE HOSE TUBO FLEXIBLE	TUBO FLESSIBILE FLEKSIBEL SLANGE	BIEGSAMER SCHLAUCH MANGUEIRA FLEXÍVEL	TUYAU FLEXIBLE FLEXIBELE SLANG	192T
3		87343348		1	STRAP BANDA	FASCETTA STROP	BAND BANDA	BRIDE RIEM	532B
4		{71420662}		1					
5	1	87353360		1	HYDRAULIC VALVE VÁLVULA HIDRÁULICA	DISTRIBUTORE IDRAULI HYDRAULIKVENTIL	HYDRAULIKVENTIL VÁLVULA HIDRÁULICA	SOUPAPE HYDRAULIQU HYDRAULISCHE KLEP	010V
6		71405815		1	CLIP ABRAZADERA	FERMO KLIPS	KLAMMER FIXADOR	COLLIER KLEM	045F
7		71404313		4	HALF-FLANGE SEMIBRIDA	SEMIFLANGIA FLANGEHALVDEL	FLANSCHHÄLFTE MEIA FLANGE	DEMI-BRIDE FLENSHELFT	417S
10		72214663		1	PLUG, - ASSY TAPÓN	TAPPO PROP	STOPFEN TAMPÃO	BOUCHON PLUG	050T
10A		71404163		1	O-RING, 90 Duro, M10.8 ID x 2.4 Thk JUNTA TÓRICA	ANELLO TOROIDALE O-RING	O-RING O-RING	JOINT TORIQUE O-RING	055A
11		71420545		2	SPACER SEPARADOR	DISTANZIALE AFSTANDSSTYKKE	DISTANZSTÜCK ESPAÇADOR	ENTRETOISE AFSTANDSSTUK	075D
12		14422934		4	SCREW TORNILLO	VITE SKRUE	SCHRAUBE PARAFUSO	VIS SCHROEF	040V
13		11106834		2	SCREW TORNILLO	VITE SKRUE	SCHRAUBE PARAFUSO	VIS SCHROEF	040V
14		14422234		4	SCREW TORNILLO	VITE SKRUE	SCHRAUBE PARAFUSO	VIS SCHROEF	040V
19		14496631		2	WASHER, M10 x 21 x 2 ARANDELA	RONDELLA FLADSKIVE	UNTERLEGSCHEIBE ANILHA	RONDELLE SLUITRING	131R
22		71405814		1	CLIP ABRAZADERA	FERMO KLIPS	KLAMMER FIXADOR	COLLIER KLEM	045F
23		11113434		2	SCREW TORNILLO	VITE SKRUE	SCHRAUBE PARAFUSO	VIS SCHROEF	040V
24		14496731		6	WASHER, M12 x 24 x 2.5 Thk ARANDELA	RONDELLA FLADSKIVE	UNTERLEGSCHEIBE ANILHA	RONDELLE SLUITRING	131R
25		14422434		4	SCREW TORNILLO	VITE SKRUE	SCHRAUBE PARAFUSO	VIS SCHROEF	040V
26		10517074		4	LOCK WASHER ARANDELA DE BLOQUE	RONDELLA DI SICUREZ LÅSESKIVE	SICHERUNGSSCHEIBE ANILHA DE RETENÇÃO	RONDELLE FREIN BORGRING	132R
27		70924200		3	O-RING JUNTA TÓRICA	ANELLO TOROIDALE O-RING	O-RING O-RING	JOINT TORIQUE O-RING	055A

(1) ASSY SEE PAGE 6

Copyright © New Holland

2.031	05	p1	03/10

POSITIONER SAFETY VALVE - VERSION (04-05-06)
VALVOLA ANTICAD. POSIZIONATORE - VERSIONE (04-05-06)
AUSLEGERORBERTEIL GEGENFALLV. - VERSION (04-05-06)
VALVE ANTI-CHUTE DE FLECHE - VERSION (04-05-06)

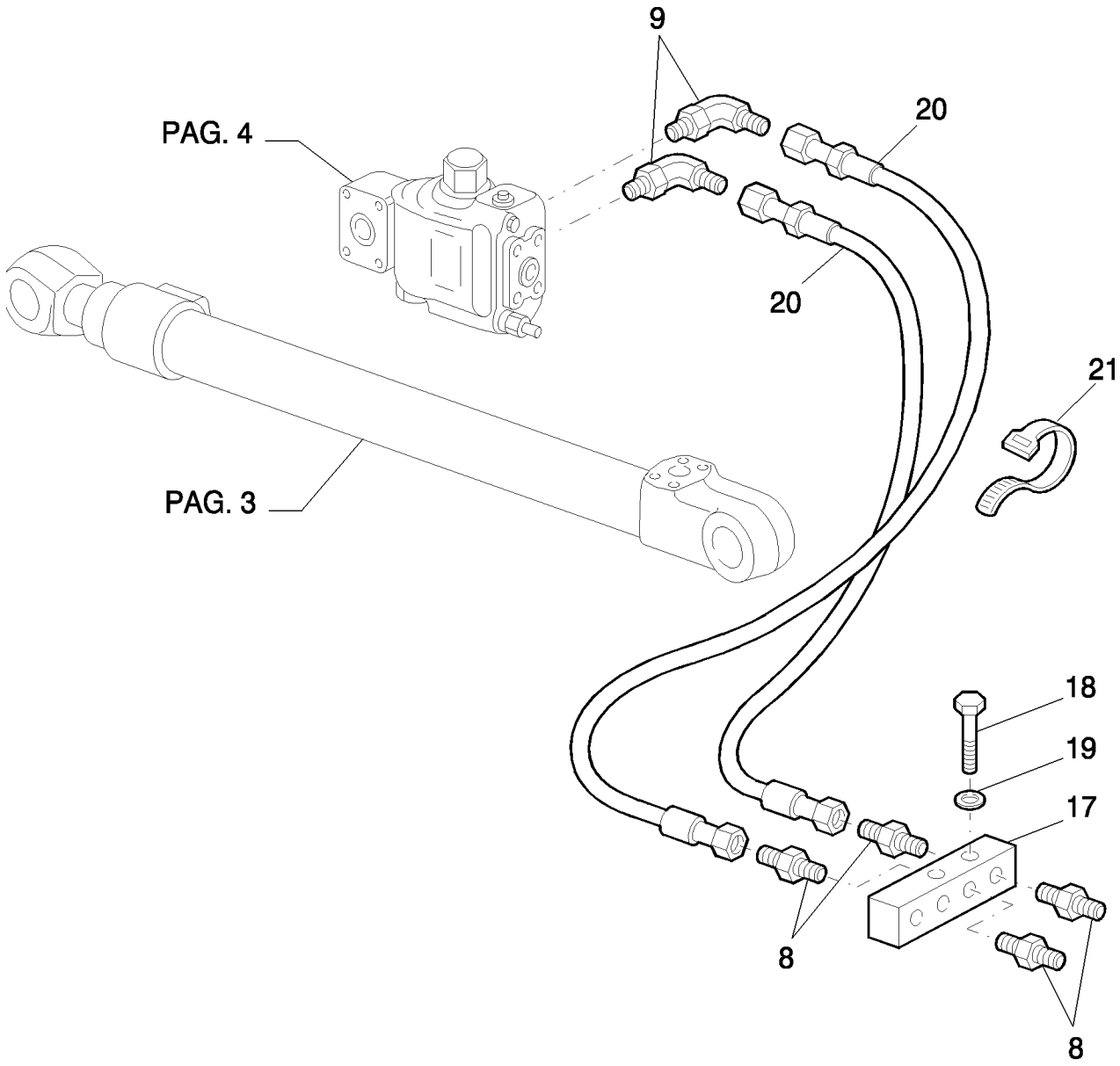

Copyright © New Holland

VALVULA ANTIC. BRAZO CENTRAL - VERSION (04-05-06)
POSITIONER SAFETY VALVE - VERSION (04-05-06)
POSITIONER SAFETY VALVE - VERSION (04-05-06)
POSITIONER SAFETY VALVE - VERSION (04-05-06)

R	N	P.N.	MOD	Q	Description Denominacion	Descrizione Beskrivelse	Bezeichnung Denominação	Description Beschrijving	L.C.
8		72214523		4	HYD CONNECTOR CONECTOR HIDRÁULIC	CONNETTORE IDRAULIC HYDRAULIKSTIK	HYDR STECKVERBINDE CONECTOR HID.	CONNECTEUR HYDRAU HYDRAULISCHE AANSL	020R
9		72214548		2	HYD CONNECTOR CONECTOR HIDRÁULIC	CONNETTORE IDRAULIC HYDRAULIKSTIK	HYDR STECKVERBINDE CONECTOR HID.	CONNECTEUR HYDRAU HYDRAULISCHE AANSL	020R
17		87396723		1	BLOCK BLOQUE	BLOCCO MOTORBLOK	BLOCK BLOCO	BLOC BLOK	074B
18		11107334		2	SCREW TORNILLO	VITE SKRUE	SCHRAUBE PARAFUSO	VIS SCHROEF	040V
19		14496631		2	WASHER, M10 x 21 x 2 ARANDELA	RONDELLA FLADSKIVE	UNTERLEGSCHEIBE ANILHA	RONDELLE SLUITRING	131R
20		87571727		2	FLEXIBLE HOSE TUBO FLEXIBLE	TUBO FLESSIBILE FLEKSIBEL SLANGE	BIEGSAMER SCHLAUCH MANGUEIRA FLEXÍVEL	TUYAU FLEXIBLE FLEXIBELE SLANG	192T
21		4982514		3	CABLE STRAP BANDA DE CABLE	FASCETTA PER CAVO KABELSTROP	KABELBINDER BRAÇADEIRA DE CABO	BRIDE DE CABLE BUNDELBAND	P716

Copyright © New Holland

POSITIONER SAFETY VALVE - COMPONENTS - VERSION (04-05-06)
VALVOLA ANTICAD. POSIZIONATORE - COMPONENTI - VERSIONE (04-05-06)
AUSLEGERORBERTEIL GEGENFALLV. - BESTANDTEILE - VERSION (04-05-06)
VALVE ANTI-CHUTE DE FLECHE - COMPOSANTS - VERSION (04-05-06)

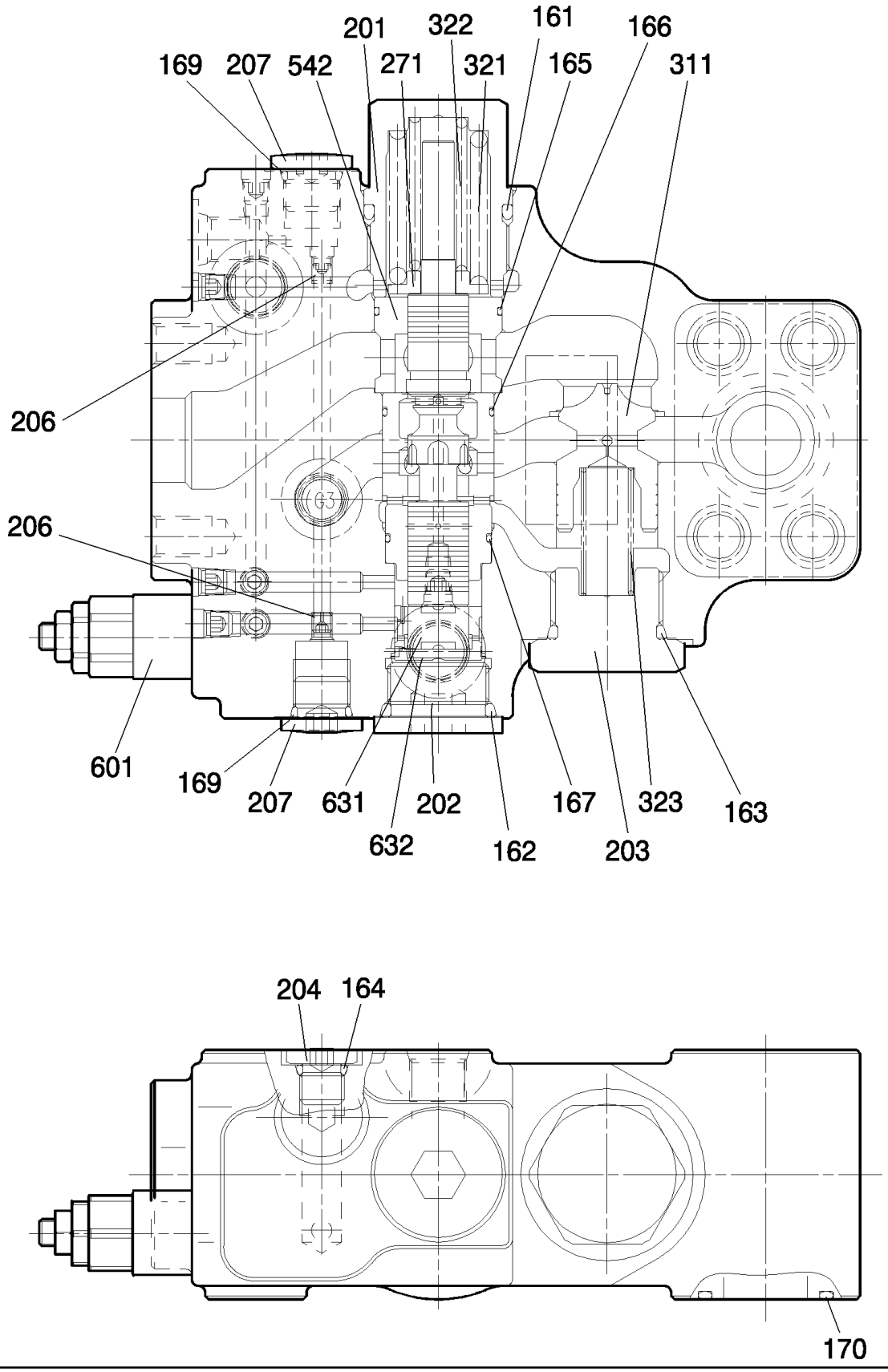

Copyright © New Holland

VALVULA ANTIC. BRAZO CENTRAL - COMPONENTES - VERSION (04-05-06)
POSITIONER SAFETY VALVE - COMPONENTS - VERSION (04-05-06)
POSITIONER SAFETY VALVE - COMPONENTS - VERSION (04-05-06)
POSITIONER SAFETY VALVE - COMPONENTS - VERSION (04-05-06)

R	N	P.N.	MOD	Q	Description Denominacion	Descrizione Beskrivelse	Bezeichnung Denominação	Description Beschrijving	L.C.
161		71444332		1	O-RING JUNTA TÓRICA	ANELLO TOROIDALE O-RING	O-RING O-RING	JOINT TORIQUE O-RING	055A
162		72209989		1	O-RING JUNTA TÓRICA	ANELLO TOROIDALE O-RING	O-RING O-RING	JOINT TORIQUE O-RING	055A
163		72210050		1	O-RING JUNTA TÓRICA	ANELLO TOROIDALE O-RING	O-RING O-RING	JOINT TORIQUE O-RING	055A
164		72209827		1	O-RING JUNTA TÓRICA	ANELLO TOROIDALE O-RING	O-RING O-RING	JOINT TORIQUE O-RING	055A
165		YN28V00019S165		1	O-RING JUNTA TÓRICA	ANELLO TOROIDALE O-RING	O-RING O-RING	JOINT TORIQUE O-RING	055A
166		72957825		1	O-RING JUNTA TÓRICA	ANELLO TOROIDALE O-RING	O-RING O-RING	JOINT TORIQUE O-RING	055A
167		YN28V00019S167		1	O-RING JUNTA TÓRICA	ANELLO TOROIDALE O-RING	O-RING O-RING	JOINT TORIQUE O-RING	055A
169		72209820		2	O-RING JUNTA TÓRICA	ANELLO TOROIDALE O-RING	O-RING O-RING	JOINT TORIQUE O-RING	055A
170		72209830		1	O-RING JUNTA TÓRICA	ANELLO TOROIDALE O-RING	O-RING O-RING	JOINT TORIQUE O-RING	055A
201		YN28V00019S201		1	PLUG TAPÓN	TAPPO PROP	STOPFEN TAMPÃO	BOUCHON PLUG	050T
202		2436U1198S551		1	PLUG TAPÓN	TAPPO PROP	STOPFEN TAMPÃO	BOUCHON PLUG	050T
203		YN28V00019S203		1	PLUG TAPÓN	TAPPO PROP	STOPFEN TAMPÃO	BOUCHON PLUG	050T
204		72209843		1	PLUG TAPÓN	TAPPO PROP	STOPFEN TAMPÃO	BOUCHON PLUG	050T
206		YN28V00019S206		2	RING ANILLO	ANELLO RING	RING ANEL	ANNEAU RING	045A
207		72210074		2	PLUG TAPÓN	TAPPO PROP	STOPFEN TAMPÃO	BOUCHON PLUG	050T
271		YN28V00019S271		1	SEAT/SLOT ASIENTO/RANURA	SEDE/ASOLA SÆDE	SITZ/SCHLITZ SUPORTE	SIEGE/FENTE ZITTING/SLEUF	069S
311		YN28V00019S311		1	SUPPORT SOPORTE	SUPPORTO BESLAG	STÜTZE SUPORTE	SUPPORT STEUN	300S
321		YN28V00019S321		1	SPRING RESORTE	MOLLA FJEDER	FEDER MOLA	RESSORT VEER	100M
322		YN28V00019S322		1	SPRING RESORTE	MOLLA FJEDER	FEDER MOLA	RESSORT VEER	100M
323		YN28V00019S323		1	SPRING RESORTE	MOLLA FJEDER	FEDER MOLA	RESSORT VEER	100M
542		YN28V00019S542		1	BUSHING CASQUILLO	BOCCOLA BØSNING	BUCHSE CASQUILHO	BAGUE BUS	095B
601		YN22V00037F1		1	HYDRAULIC VALVE VÁLVULA HIDRÁULICA	DISTRIBUTORE IDRAULI HYDRAULIKVENTIL	HYDRAULIKVENTIL VÁLVULA HIDRÁULICA	SOUPAPE HYDRAULIQU HYDRAULISCHE KLEP	010V
631		YN28V00019S631		1	PISTON PISTÓN	PISTONE STEMPEL	KOLBEN PISTÃO	PISTON ZUIGER	235S
632		YN28V00019S632		1	PISTON PISTÓN	PISTONE STEMPEL	KOLBEN PISTÃO	PISTON ZUIGER	235S

VALVE ASSY P/N 87353360

E215B

Copyright © New Holland

2.040	01	p1	03/10

LUBRIC. FITTING PIPING - VERSION (01-02-03)
TUBAZIONI INGRASSATORI - VERSIONE (01-02-03)
LEITUNGEN-SCHMIERNIPPLER - VERSION (01-02-03)
TUYAUTERIES DE GRAISSEURS - VERSION (01-02-03)

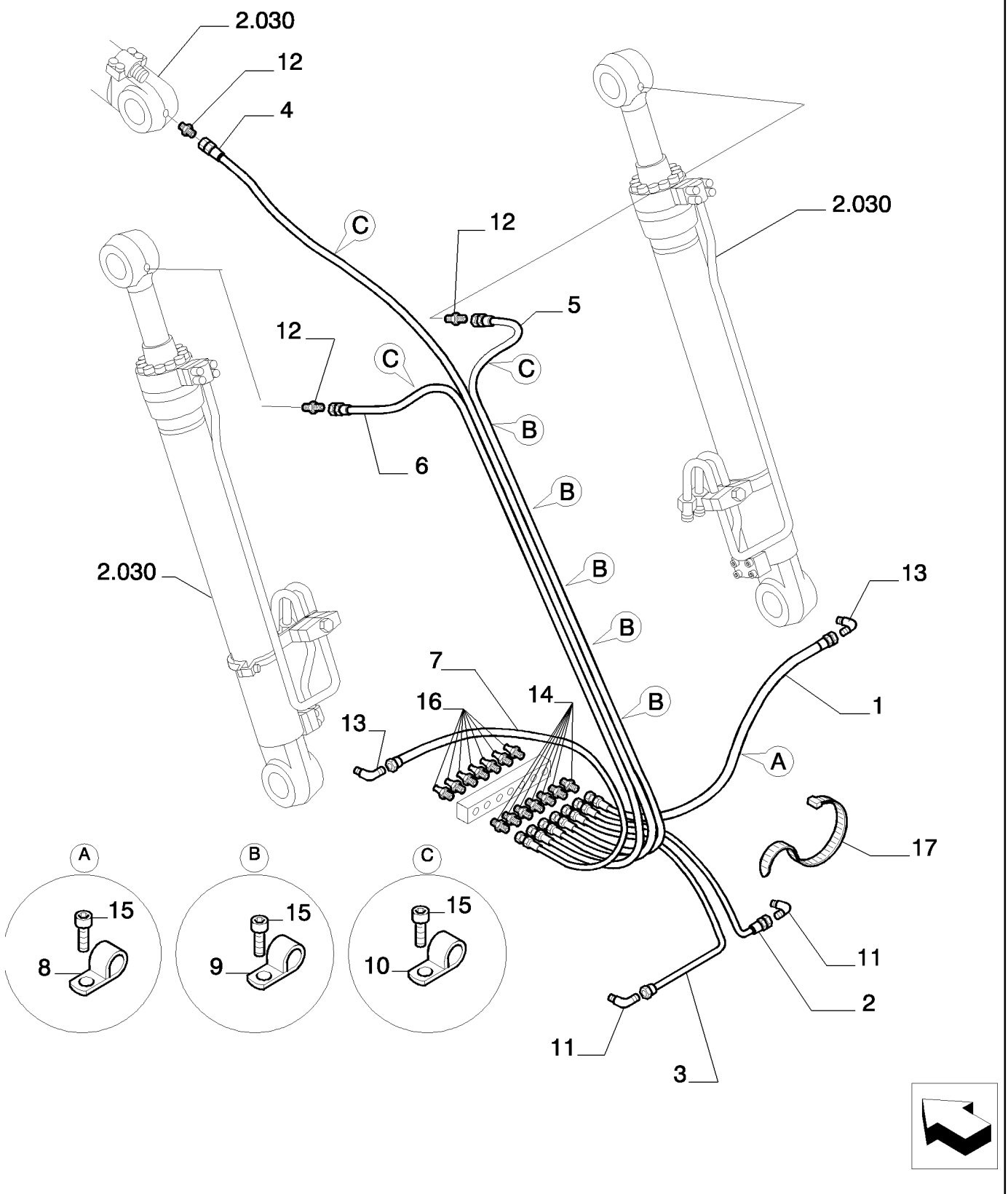

Copyright © New Holland

RUBERIAS DE ENGRASADORES - VERSION (01-02-03)
LUBRIC. FITTING PIPING - VERSION (01-02-03)
LUBRIC. FITTING PIPING - VERSION (01-02-03)
LUBRIC. FITTING PIPING - VERSION (01-02-03)

R	N	P.N.	MOD	Q	Description Denominacion	Descrizione Beskrivelse	Bezeichnung Denominação	Description Beschrijving	L.C.
1		87356298		1	FLEXIBLE HOSE TUBO FLEXIBLE	TUBO FLESSIBILE FLEKSIBEL SLANGE	BIEGSAMER SCHLAUCH MANGUEIRA FLEXÍVEL	TUYAU FLEXIBLE FLEXIBELE SLANG	192T
2		87356300		1	FLEXIBLE HOSE TUBO FLEXIBLE	TUBO FLESSIBILE FLEKSIBEL SLANGE	BIEGSAMER SCHLAUCH MANGUEIRA FLEXÍVEL	TUYAU FLEXIBLE FLEXIBELE SLANG	192T
3		87356301		1	FLEXIBLE HOSE TUBO FLEXIBLE	TUBO FLESSIBILE FLEKSIBEL SLANGE	BIEGSAMER SCHLAUCH MANGUEIRA FLEXÍVEL	TUYAU FLEXIBLE FLEXIBELE SLANG	192T
4		87557690		1	FLEXIBLE HOSE TUBO FLEXIBLE	TUBO FLESSIBILE FLEKSIBEL SLANGE	BIEGSAMER SCHLAUCH MANGUEIRA FLEXÍVEL	TUYAU FLEXIBLE FLEXIBELE SLANG	192T
5		87557691		1	FLEXIBLE HOSE TUBO FLEXIBLE	TUBO FLESSIBILE FLEKSIBEL SLANGE	BIEGSAMER SCHLAUCH MANGUEIRA FLEXÍVEL	TUYAU FLEXIBLE FLEXIBELE SLANG	192T
6		87557692		1	FLEXIBLE HOSE TUBO FLEXIBLE	TUBO FLESSIBILE FLEKSIBEL SLANGE	BIEGSAMER SCHLAUCH MANGUEIRA FLEXÍVEL	TUYAU FLEXIBLE FLEXIBELE SLANG	192T
7		87557671		1	FLEXIBLE HOSE TUBO FLEXIBLE	TUBO FLESSIBILE FLEKSIBEL SLANGE	BIEGSAMER SCHLAUCH MANGUEIRA FLEXÍVEL	TUYAU FLEXIBLE FLEXIBELE SLANG	192T
8		72220290		1	CLAMP COLLAR	MORSETTO CLAMP	SCHELLE BRACADEIRA	COLLIER CLAMP	1640
9		10441690		5	HOSE CLIP ABRAZADERA DE MANG	FERMO DEL TUBO FLES SLANGEKLEMME	SCHLAUCHKLEMME FIXADOR DE MANGUEIF	COLLIER POUR FLEXIBL SLANGKLEM	180C
10		72219899		3	BRACKET SOPORTE	STAFFA BESLAG	HALTERUNG SUPORTE	SUPPORT STEUN	225S
11		87557723		2	HYD CONNECTOR CONECTOR HIDRÁULIC(	CONNETTORE IDRAULI(HYDRAULIKSTIK	HYDR STECKVERBINDE CONECTOR HID.	CONNECTEUR HYDRAU HYDRAULISCHE AANSL	020R
12		87557724		3	HYD CONNECTOR CONECTOR HIDRÁULIC(	CONNETTORE IDRAULI(HYDRAULIKSTIK	HYDR STECKVERBINDE CONECTOR HID.	CONNECTEUR HYDRAU HYDRAULISCHE AANSL	020R
13		87557774		2	HYD CONNECTOR CONECTOR HIDRÁULIC(	CONNETTORE IDRAULI(HYDRAULIKSTIK	HYDR STECKVERBINDE CONECTOR HID.	CONNECTEUR HYDRAU HYDRAULISCHE AANSL	020R
14		87557773		7	HYD CONNECTOR CONECTOR HIDRÁULIC(	CONNETTORE IDRAULI(HYDRAULIKSTIK	HYDR STECKVERBINDE CONECTOR HID.	CONNECTEUR HYDRAU HYDRAULISCHE AANSL	020R
15		14305134		9	SCREW TORNILLO	VITE SKRUE	SCHRAUBE PARAFUSO	VIS SCHROEF	040V
16		13407211		7	LUBE NIPPLE, M10 x 1 BOQUILLA DE LUBRICA(	INGRASSATORE SMØRENIPPEL	SCHMIERNIPPEL COPO DE LUBRIFICAÇÃ	GRAISSEUR SMEERNIPPEL	060I
17		4982514		R	CABLE STRAP BANDA DE CABLE	FASCETTA PER CAVO KABELSTROP	KABELBINDER BRAÇADEIRA DE CABO	BRIDE DE CABLE BUNDELBAND	P716

Copyright © New Holland

2.041	01	p1	03/10

LUBRIC. FITTING PIPING - VERSION (04-05-06)
TUBAZIONI INGRASSATORI - VERSIONE (04-05-06)
LEITUNGEN-SCHMIERNIPPLER - VERSION (04-05-06)
TUYAUTERIES DE GRAISSEURS - VERSION (04-05-06)

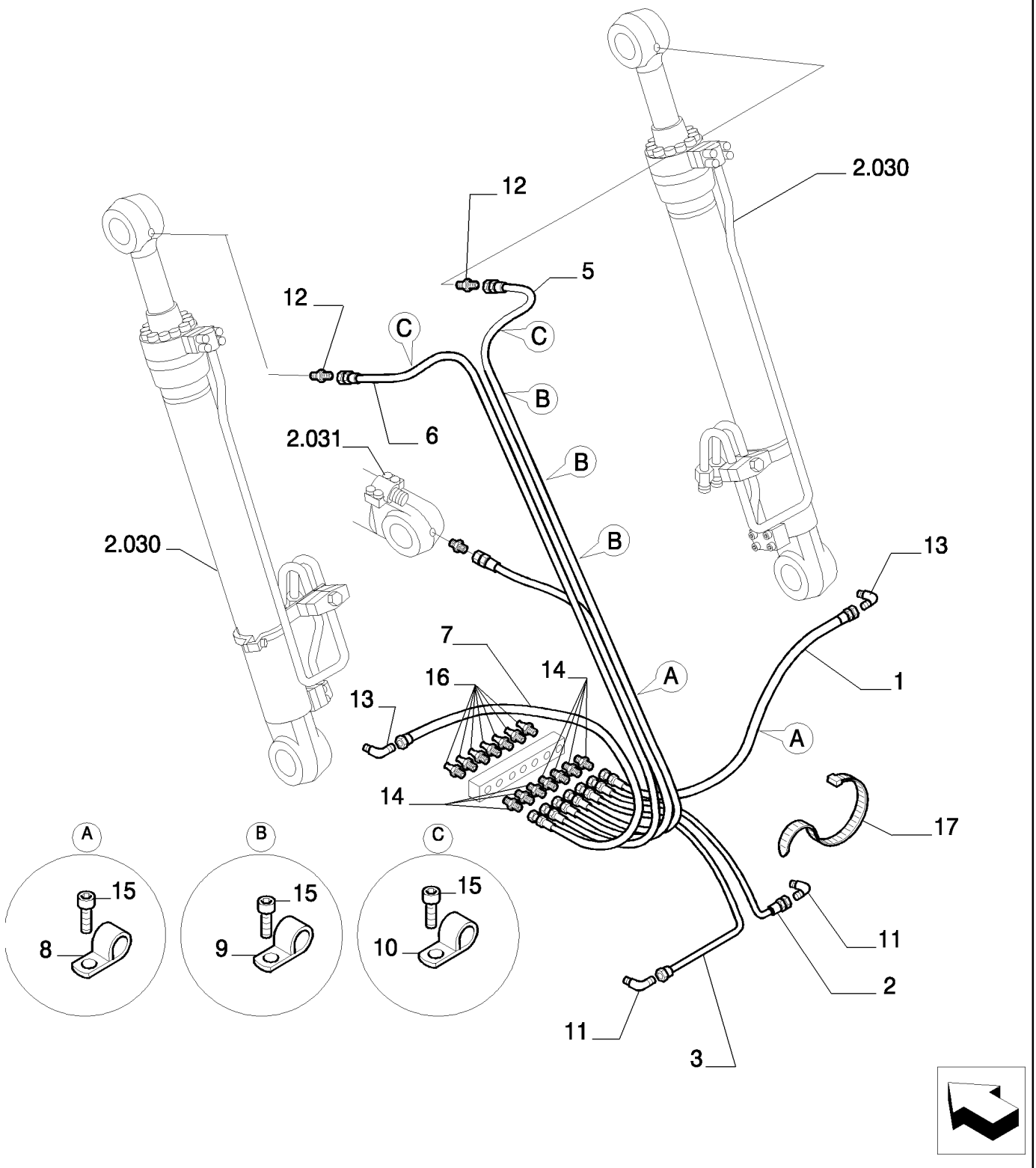

Copyright © New Holland

RUBERIAS DE ENGRASADORES - VERSION (04-05-06)
LUBRIC. FITTING PIPING - VERSION (04-05-06)
LUBRIC. FITTING PIPING - VERSION (04-05-06)
LUBRIC. FITTING PIPING - VERSION (04-05-06)

R	N	P.N.	MOD	Q	Description Denominacion	Descrizione Beskrivelse	Bezeichnung Denominação	Description Beschrijving	L.C.
1		87557693		1	FLEXIBLE HOSE TUBO FLEXIBLE	TUBO FLESSIBILE FLEKSIBEL SLANGE	BIEGSAMER SCHLAUCH MANGUEIRA FLEXÍVEL	TUYAU FLEXIBLE FLEXIBELE SLANG	192T
2		87557694		1	FLEXIBLE HOSE TUBO FLEXIBLE	TUBO FLESSIBILE FLEKSIBEL SLANGE	BIEGSAMER SCHLAUCH MANGUEIRA FLEXÍVEL	TUYAU FLEXIBLE FLEXIBELE SLANG	192T
3		87557695		1	FLEXIBLE HOSE TUBO FLEXIBLE	TUBO FLESSIBILE FLEKSIBEL SLANGE	BIEGSAMER SCHLAUCH MANGUEIRA FLEXÍVEL	TUYAU FLEXIBLE FLEXIBELE SLANG	192T
4		87557668		1	FLEXIBLE HOSE TUBO FLEXIBLE	TUBO FLESSIBILE FLEKSIBEL SLANGE	BIEGSAMER SCHLAUCH MANGUEIRA FLEXÍVEL	TUYAU FLEXIBLE FLEXIBELE SLANG	192T
5		87557669		1	FLEXIBLE HOSE TUBO FLEXIBLE	TUBO FLESSIBILE FLEKSIBEL SLANGE	BIEGSAMER SCHLAUCH MANGUEIRA FLEXÍVEL	TUYAU FLEXIBLE FLEXIBELE SLANG	192T
6		87557670		1	FLEXIBLE HOSE TUBO FLEXIBLE	TUBO FLESSIBILE FLEKSIBEL SLANGE	BIEGSAMER SCHLAUCH MANGUEIRA FLEXÍVEL	TUYAU FLEXIBLE FLEXIBELE SLANG	192T
7		87557696		1	FLEXIBLE HOSE TUBO FLEXIBLE	TUBO FLESSIBILE FLEKSIBEL SLANGE	BIEGSAMER SCHLAUCH MANGUEIRA FLEXÍVEL	TUYAU FLEXIBLE FLEXIBELE SLANG	192T
8		10441690		2	HOSE CLIP ABRAZADERA DE MANG	FERMO DEL TUBO FLES SLANGEKLEMME	SCHLAUCHKLEMME FIXADOR DE MANGUEIF	COLLIER POUR FLEXIBL SLANGKLEM	180C
9		72219901		3	CLAMP ABRAZADERA	MORSETTO SPÆNDEBÅND	KLEMME BRAÇADEIRA	COLLIER KLEM	120M
10		72219899		2	BRACKET SOPORTE	STAFFA BESLAG	HALTERUNG SUPORTE	SUPPORT STEUN	225S
11		87557723		2	HYD CONNECTOR CONECTOR HIDRÁULIC(	CONNETTORE IDRAULI(HYDRAULIKSTIK	HYDR STECKVERBINDE CONECTOR HID.	CONNECTEUR HYDRAU HYDRAULISCHE AANSL	020R
12		87557724		3	HYD CONNECTOR CONECTOR HIDRÁULIC(	CONNETTORE IDRAULI(HYDRAULIKSTIK	HYDR STECKVERBINDE CONECTOR HID.	CONNECTEUR HYDRAU HYDRAULISCHE AANSL	020R
13		87557774		2	HYD CONNECTOR CONECTOR HIDRÁULIC(	CONNETTORE IDRAULI(HYDRAULIKSTIK	HYDR STECKVERBINDE CONECTOR HID.	CONNECTEUR HYDRAU HYDRAULISCHE AANSL	020R
14		87557773		7	HYD CONNECTOR CONECTOR HIDRÁULIC(	CONNETTORE IDRAULI(HYDRAULIKSTIK	HYDR STECKVERBINDE CONECTOR HID.	CONNECTEUR HYDRAU HYDRAULISCHE AANSL	020R
15		14305134		7	SCREW TORNILLO	VITE SKRUE	SCHRAUBE PARAFUSO	VIS SCHROEF	040V
16		13407211		7	LUBE NIPPLE, M10 x 1 BOQUILLA DE LUBRICA(	INGRASSATORE SMØRENIPPEL	SCHMIERNIPPEL COPO DE LUBRIFICAÇÃ	GRAISSEUR SMEERNIPPEL	060I
17		4982514		R	CABLE STRAP BANDA DE CABLE	FASCETTA PER CAVO KABELSTROP	KABELBINDER BRAÇADEIRA DE CABO	BRIDE DE CABLE BUNDELBAND	P716

Copyright © New Holland

2.041	02	p1	03/10

LUBRIC. FITTING PIPING - VERSION (04-05-06)
TUBAZIONI INGRASSATORI - VERSIONE (04-05-06)
LEITUNGEN-SCHMIERNIPPLER - VERSION (04-05-06)
TUYAUTERIES DE GRAISSEURS - VERSION (04-05-06)

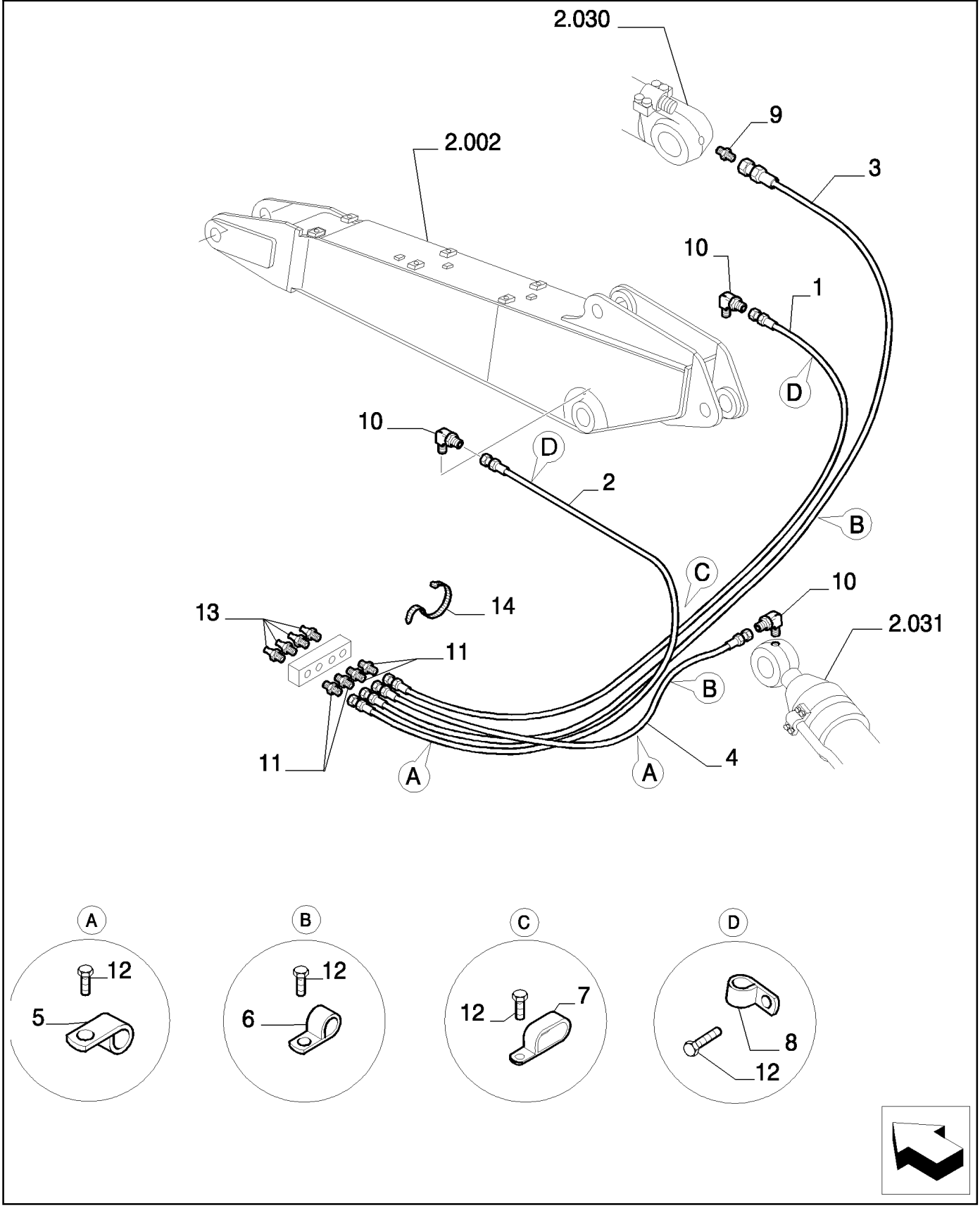

Copyright © New Holland

RUBERIAS DE ENGRASADORES - VERSION (04-05-06)
LUBRIC. FITTING PIPING - VERSION (04-05-06)
LUBRIC. FITTING PIPING - VERSION (04-05-06)
LUBRIC. FITTING PIPING - VERSION (04-05-06)

R	N	P.N.	MOD	Q	Description Denominacion	Descrizione Beskrivelse	Bezeichnung Denominação	Description Beschrijving	L.C.
1		87557672		1	FLEXIBLE HOSE TUBO FLEXIBLE	TUBO FLESSIBILE FLEKSIBEL SLANGE	BIEGSAMER SCHLAUCH MANGUEIRA FLEXÍVEL	TUYAU FLEXIBLE FLEXIBELE SLANG	192T
2		87557673		1	FLEXIBLE HOSE TUBO FLEXIBLE	TUBO FLESSIBILE FLEKSIBEL SLANGE	BIEGSAMER SCHLAUCH MANGUEIRA FLEXÍVEL	TUYAU FLEXIBLE FLEXIBELE SLANG	192T
3		87557674		1	FLEXIBLE HOSE TUBO FLEXIBLE	TUBO FLESSIBILE FLEKSIBEL SLANGE	BIEGSAMER SCHLAUCH MANGUEIRA FLEXÍVEL	TUYAU FLEXIBLE FLEXIBELE SLANG	192T
4		87356299		1	FLEXIBLE HOSE TUBO FLEXIBLE	TUBO FLESSIBILE FLEKSIBEL SLANGE	BIEGSAMER SCHLAUCH MANGUEIRA FLEXÍVEL	TUYAU FLEXIBLE FLEXIBELE SLANG	192T
5		87356265		2	CLAMP ABRAZADERA	MORSETTO SPÆNDEBÅND	KLEMME BRAÇADEIRA	COLLIER KLEM	120M
6		10441690		2	HOSE CLIP ABRAZADERA DE MANG	FERMO DEL TUBO FLES SLANGEKLEMME	SCHLAUCHKLEMME FIXADOR DE MANGUEIF	COLLIER POUR FLEXIBL SLANGKLEM	180C
7		72219901		1	CLAMP ABRAZADERA	MORSETTO SPÆNDEBÅND	KLEMME BRAÇADEIRA	COLLIER KLEM	120M
8		72219899		2	BRACKET SOPORTE	STAFFA BESLAG	HALTERUNG SUPORTE	SUPPORT STEUN	225S
9		87557724		1	HYD CONNECTOR CONECTOR HIDRÁULIC	CONNETTORE IDRAULI HYDRAULIKSTIK	HYDR STECKVERBINDE CONECTOR HID.	CONNECTEUR HYDRAU HYDRAULISCHE AANSL	020R
10		87557774		3	HYD CONNECTOR CONECTOR HIDRÁULIC	CONNETTORE IDRAULI HYDRAULIKSTIK	HYDR STECKVERBINDE CONECTOR HID.	CONNECTEUR HYDRAU HYDRAULISCHE AANSL	020R
11		87557773		4	HYD CONNECTOR CONECTOR HIDRÁULIC	CONNETTORE IDRAULI HYDRAULIKSTIK	HYDR STECKVERBINDE CONECTOR HID.	CONNECTEUR HYDRAU HYDRAULISCHE AANSL	020R
12		14305134		7	SCREW TORNILLO	VITE SKRUE	SCHRAUBE PARAFUSO	VIS SCHROEF	040V
13		13407211		4	LUBE NIPPLE, M10 x 1 BOQUILLA DE LUBRICA	INGRASSATORE SMØRENIPPEL	SCHMIERNIPPEL COPO DE LUBRIFICAÇÃ	GRAISSEUR SMEERNIPPEL	060I
14		4982514		R	CABLE STRAP BANDA DE CABLE	FASCETTA PER CAVO KABELSTROP	KABELBINDER BRAÇADEIRA DE CABO	BRIDE DE CABLE BUNDELBAND	P716

Copyright © New Holland

2.050	01	p1	03/10

BUCKET INSTALLATION
MONTAGGIO BENNA
LÖFFELMONTAGE
MONTAGE GODET

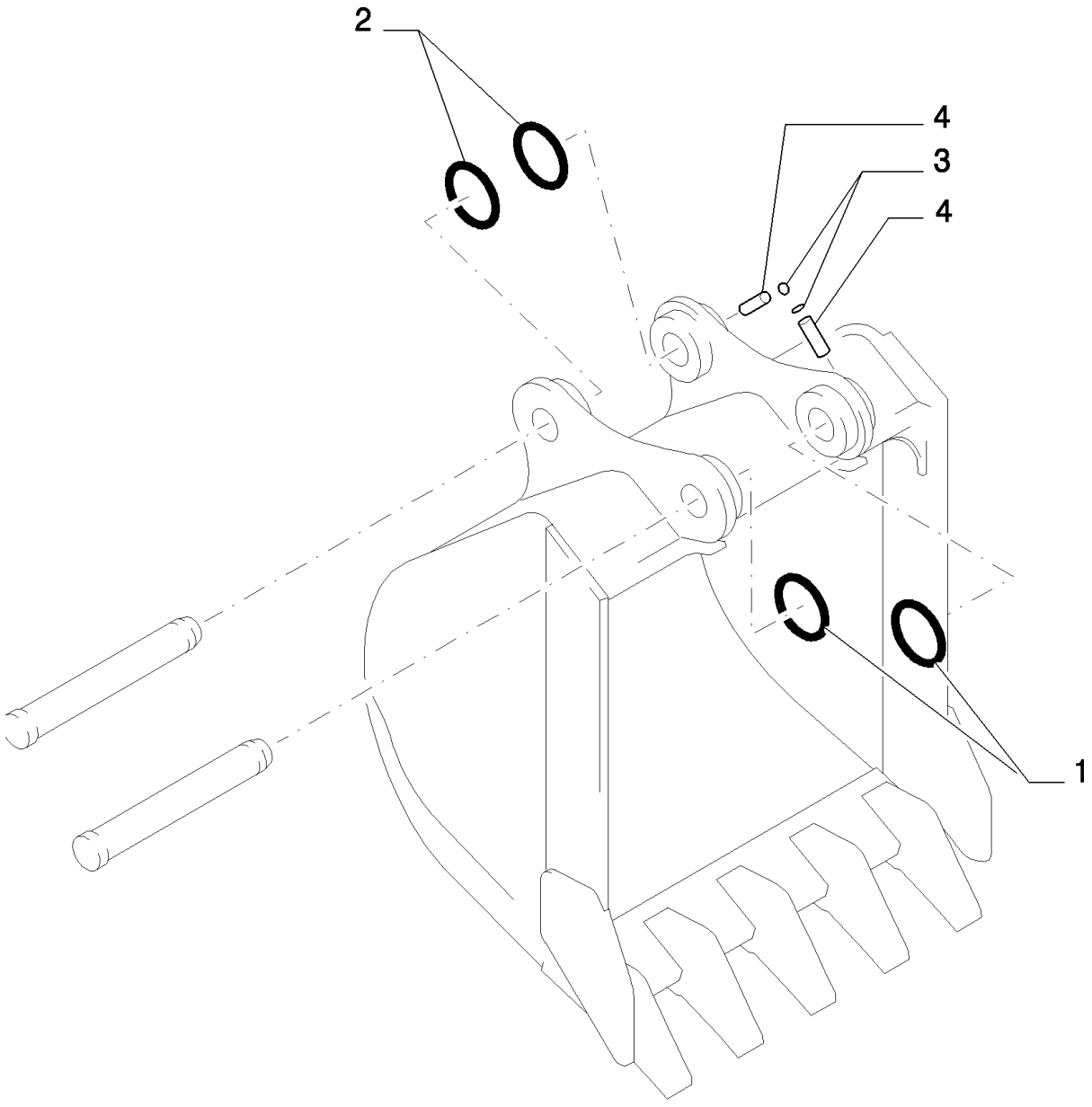

Copyright © New Holland

MONTAJE CUCHARA
BUCKET INSTALLATION
BUCKET INSTALLATION
BUCKET INSTALLATION

R	N	P.N.	MOD	Q	Description Denominacion	Descrizione Beskrivelse	Bezeichnung Denominação	Description Beschrijving	L.C.
1		72953884		2	O-RING JUNTA TÓRICA	ANELLO TOROIDALE O-RING	O-RING O-RING	JOINT TORIQUE O-RING	055A
2		71415157		2	O-RING JUNTA TÓRICA	ANELLO TOROIDALE O-RING	O-RING O-RING	JOINT TORIQUE O-RING	055A
3		71415094		2	RING ANILLO	ANELLO RING	RING ANEL	ANNEAU RING	045A
4		10100730		2	PIN PASADOR	PERNO STIFT	PIN PERNO	BROCHE PEN	080P

Copyright © New Holland

Copyright © New Holland

SECTION INDEX
Undercarriage

3.000	01	LOWER FRAME - VERSION (01-04)
3.000	02	LOWER FRAME
3.000	03	LOWER FRAME
3.001	01	LOWER FRAME - VERSION (02-05)
3.002	01	LOWER FRAME - VERSION (03-06)
3.010	01	TRAVEL REDUCTION UNITS
3.010	02	TRAVEL REDUCTION UNITS - COMPONENTS
3.010	03	TRAVEL REDUCTION UNITS - COMPONENTS
3.010	04	TRAVEL REDUCTION UNITS - COMPONENTS
3.020	01	TRACK IDLER
3.020	02	TRACK IDLER - COMPONENTS
3.020	03	TRACK IDLER - COMPONENTS
3.030	01	TRACK CARRIER ROLLER
3.030	02	TRACK CARRIER ROLLER - COMPONENTS
3.040	01	TRACK ROLLER
3.040	02	TRACK ROLLER - COMPONENTS
3.060	01	ROTARY DISTRIBUTOR
3.060	02	ROTARY DISTRIBUTOR - COMPONENTS
3.070	01	TRAVEL PIPING (LOWER)

Copyright © New Holland

LOWER FRAME - VERSION (01-04)
TELAIO INFERIORE - VERSIONE (01-04)
RAHMEN-UNTER - VERSION (01-04)
CHASSIS INFERIEUR - VERSION (01-04)

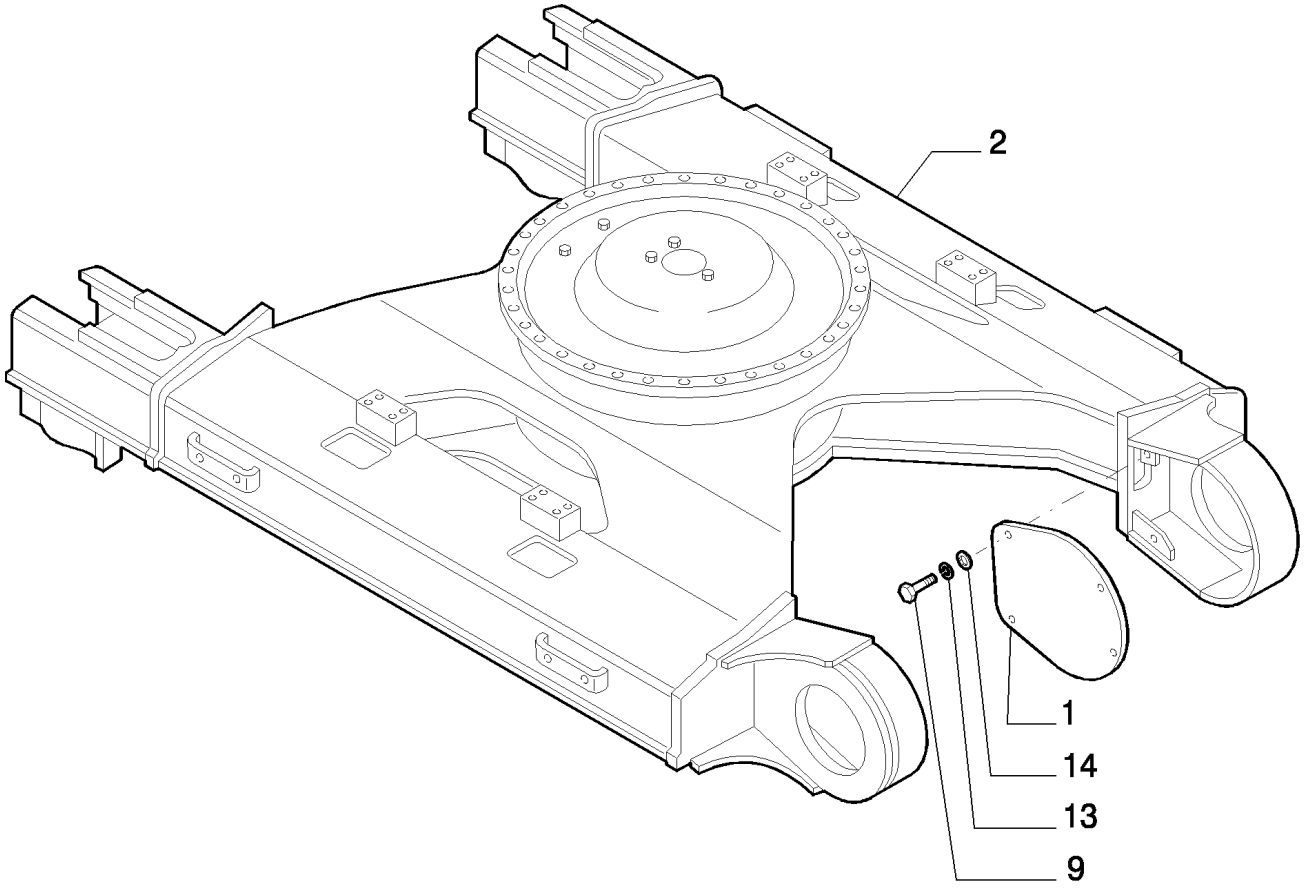

Copyright © New Holland

CHASIS INFERIOR - VERSION (01-04)
LOWER FRAME - VERSION (01-04)
LOWER FRAME - VERSION (01-04)
LOWER FRAME - VERSION (01-04)

R	N	P.N.	MOD	Q	Description Denominacion	Descrizione Beskrivelse	Bezeichnung Denominação	Description Beschrijving	L.C.
1		87600530		2	GUARD DEFENSA	PROTEZIONE BESKYTTELSESSKÆRM	SCHUTZABDECKUNG PROTECÇÃO	PROTECTION AFSCHERMING	070R
2		72230151		1	FRAME BASTIDOR	TELAIO RAMME	GESTELL ESTRUTURA	CHASSIS RAAM	077T
9		11112234		8	BOLT, Hex, M12 x 25, 10.9, Full Thd PERNO	BULLONE BOLT	SCHRAUBE PARAFUSO	VIS BOUT	140B
13		10517074		8	LOCK WASHER ARANDELA DE BLOQUE	RONDELLA DI SICUREZ LÅSESKIVE	SICHERUNGSSCHEIBE ANILHA DE RETENÇÃO	RONDELLE FREIN BORGRING	132R
14		14496731		8	WASHER, M12 x 24 x 2.5 Thk ARANDELA	RONDELLA FLADSKIVE	UNTERLEGSCHEIBE ANILHA	RONDELLE SLUITRING	131R

Copyright © New Holland

3.000	02	p1	03/10

LOWER FRAME
TELAIO INFERIORE
RAHMEN-UNTER
CHASSIS INFERIEUR

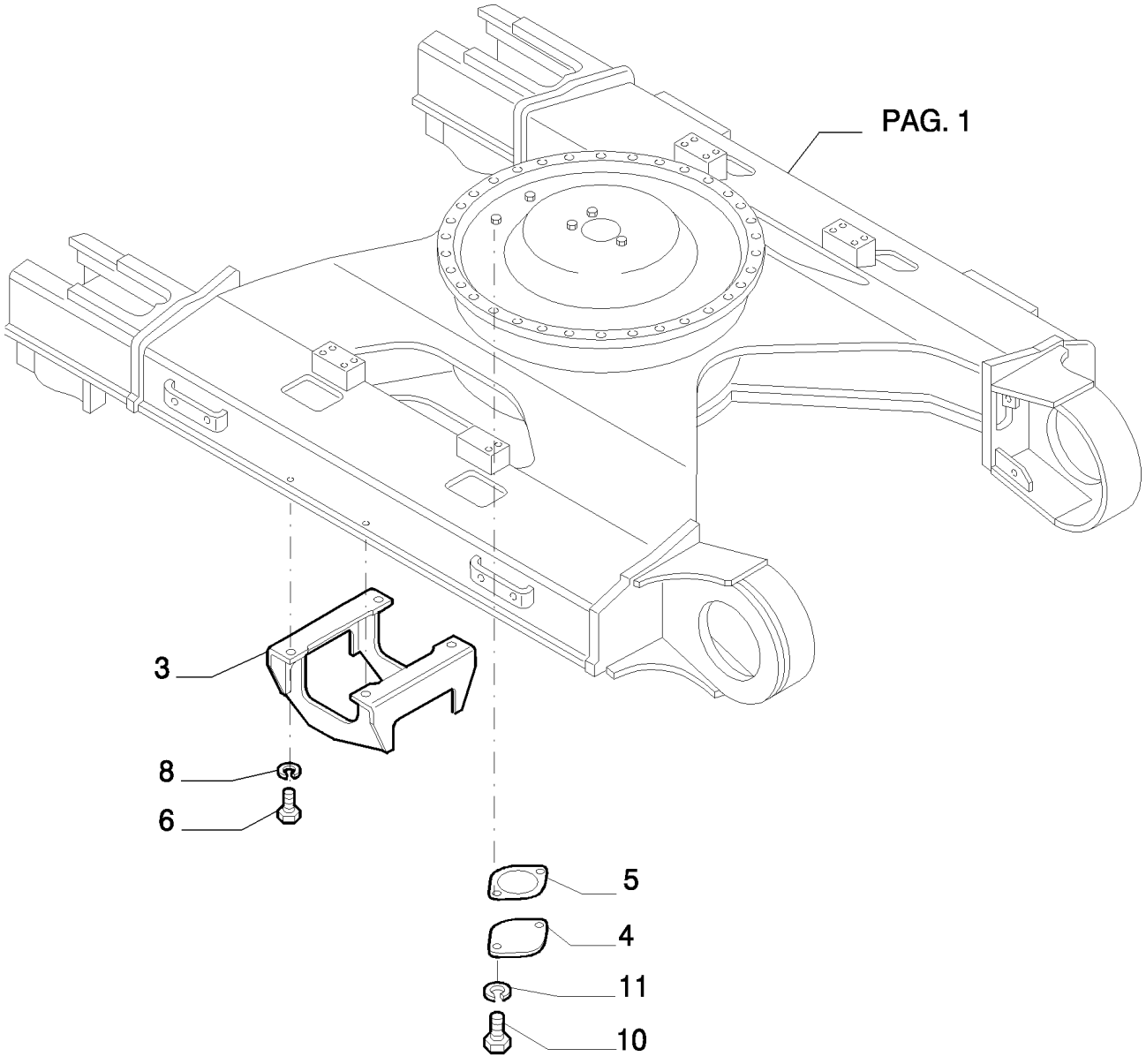

Copyright © New Holland

CHASIS INFERIOR
LOWER FRAME
LOWER FRAME
LOWER FRAME

R	N	P.N.	MOD	Q	Description Denominacion	Descrizione Beskrivelse	Bezeichnung Denominação	Description Beschrijving	L.C.
3		72230325		2	GUIDE GUÍA	GUIDA STYR	FÜHRUNG GUIA	GUIDE GELEIDER	145G
4		71442021		1	FLANGE BRIDA	FLANGIA FLANGE	FLANSCH FLANGE	BRIDE FLENS	070F
5		71442022		1	GASKET JUNTA	GUARNIZIONE PAKNING	DICHTUNG JUNTA	JOINT PAKKING	123G
6		15984134		8	BOLT, Hex, M18 x 1.5 x 45, 10.9, Full Thd PERNO	BULLONE BOLT	SCHRAUBE PARAFUSO	VIS BOUT	140B
8		10517374		8	LOCK WASHER ARANDELA DE BLOQUE	RONDELLA DI SICUREZ LÅSESKIVE	SICHERUNGSSCHEIBE ANILHA DE RETENÇÃO	RONDELLE FREIN BORGRING	132R
10		11106234		2	BOLT, Hex, M10 x 25, 10.9, Full Thd PERNO	BULLONE BOLT	SCHRAUBE PARAFUSO	VIS BOUT	140B
11		10516874		2	LOCK WASHER ARANDELA DE BLOQUE	RONDELLA DI SICUREZ LÅSESKIVE	SICHERUNGSSCHEIBE ANILHA DE RETENÇÃO	RONDELLE FREIN BORGRING	132R

Copyright © New Holland

LOWER FRAME
TELAIO INFERIORE
RAHMEN-UNTER
CHASSIS INFERIEUR

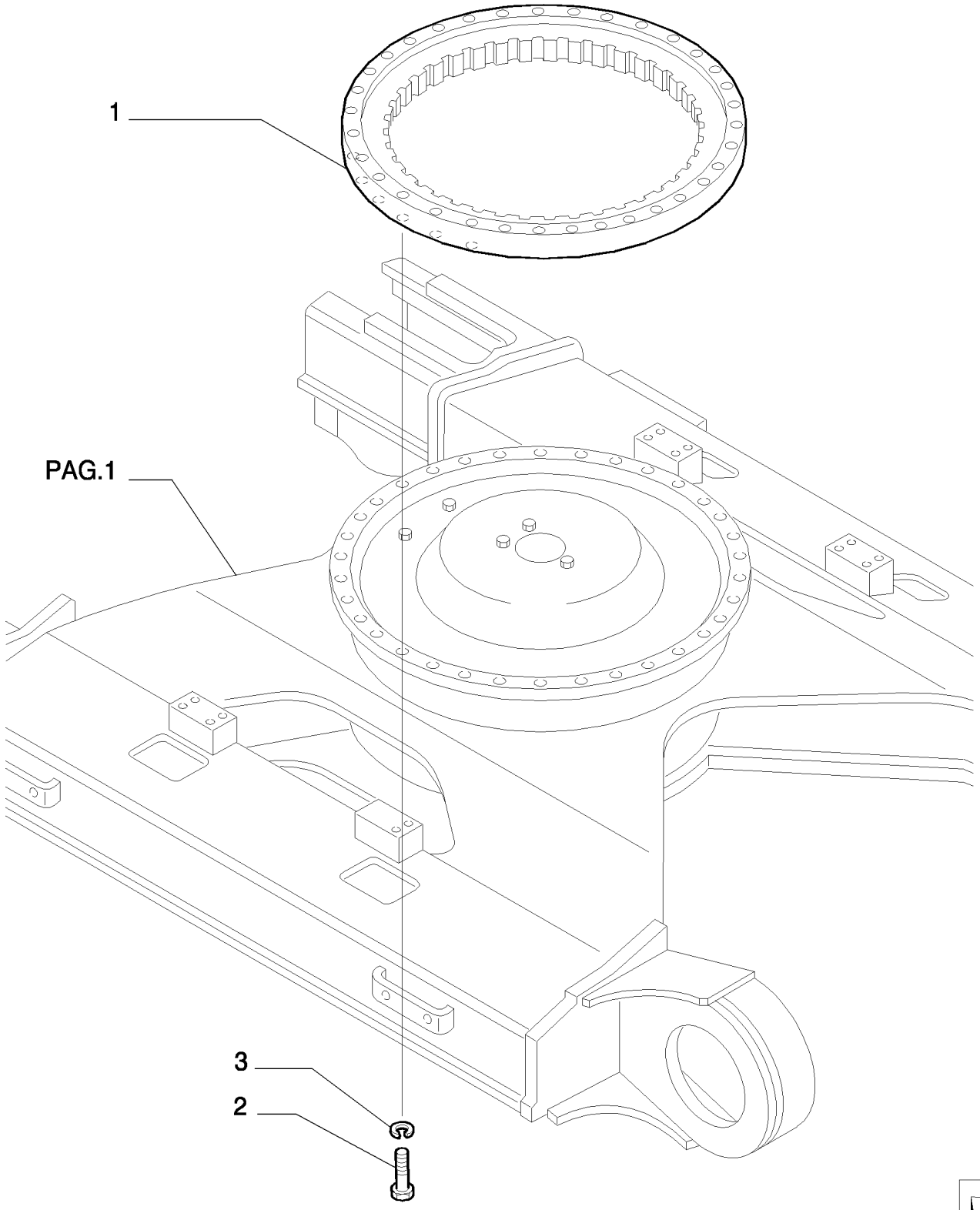

Copyright © New Holland

CHASIS INFERIOR
LOWER FRAME
LOWER FRAME
LOWER FRAME

R	N	P.N.	MOD	Q	Description Denominacion	Descrizione Beskrivelse	Bezeichnung Denominação	Description Beschrijving	L.C.
1		87472588		1	SLEWING RING ANILLO DE BALANCEO	ANELLO GIREVOLE DREJERING	DREHKRANZ COROA	COURONNE D'ORIENTA ZWENKENDE RING	Z455
2		15988474		36	SCREW TORNILLO	VITE SKRUE	SCHRAUBE PARAFUSO	VIS SCHROEF	040V
3		10517474		36	LOCK WASHER ARANDELA DE BLOQUE	RONDELLA DI SICUREZ LÅSESKIVE	SICHERUNGSSCHEIBE ANILHA DE RETENÇÃO	RONDELLE FREIN BORGRING	132R

Copyright © New Holland

3.001	01	p1	03/10

LOWER FRAME - VERSION (02-05)
TELAIO INFERIORE - VERSIONE (02-05)
RAHMEN-UNTER - VERSION (02-05)
CHASSIS INFERIEUR - VERSION (02-05)

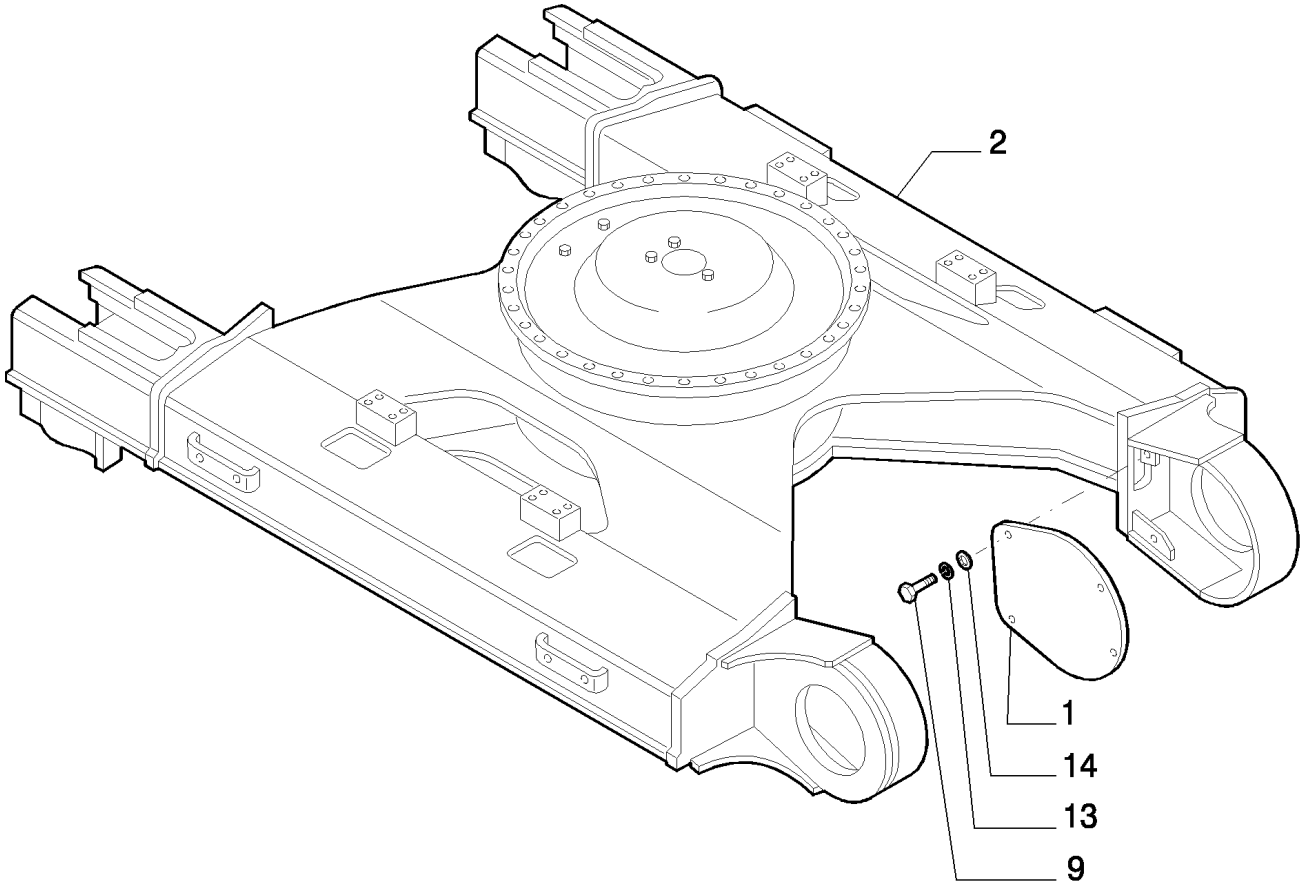

Copyright © New Holland

CHASIS INFERIOR - VERSION (02-05)
LOWER FRAME - VERSION (02-05)
LOWER FRAME - VERSION (02-05)
LOWER FRAME - VERSION (02-05)

R	N	P.N.	MOD	Q	Description Denominacion	Descrizione Beskrivelse	Bezeichnung Denominação	Description Beschrijving	L.C.
1		87600530		2	GUARD DEFENSA	PROTEZIONE BESKYTTELSESSKÆRM	SCHUTZABDECKUNG PROTECÇÃO	PROTECTION AFSCHERMING	070R
2		87377643		1	FRAME BASTIDOR	TELAIO RAMME	GESTELL ESTRUTURA	CHASSIS RAAM	077T
9		11112234		8	BOLT, Hex, M12 x 25, 10.9, Full Thd PERNO	BULLONE BOLT	SCHRAUBE PARAFUSO	VIS BOUT	140B
13		10517074		8	LOCK WASHER, 12 ARANDELA DE BLOQUE	RONDELLA DI SICUREZ LÅSESKIVE	SICHERUNGSSCHEIBE ANILHA DE RETENÇÃO	RONDELLE FREIN BORGRING	132R
14		14496731		8	WASHER, M12 x 24 x 2.5 Thk ARANDELA	RONDELLA FLADSKIVE	UNTERLEGSCHEIBE ANILHA	RONDELLE SLUITRING	131R

Copyright © New Holland

3.002	01	p1	03/10

LOWER FRAME - VERSION (03-06)
TELAIO INFERIORE - VERSIONE (03-06)
RAHMEN-UNTER - VERSION (03-06)
CHASSIS INFERIEUR - VERSION (03-06)

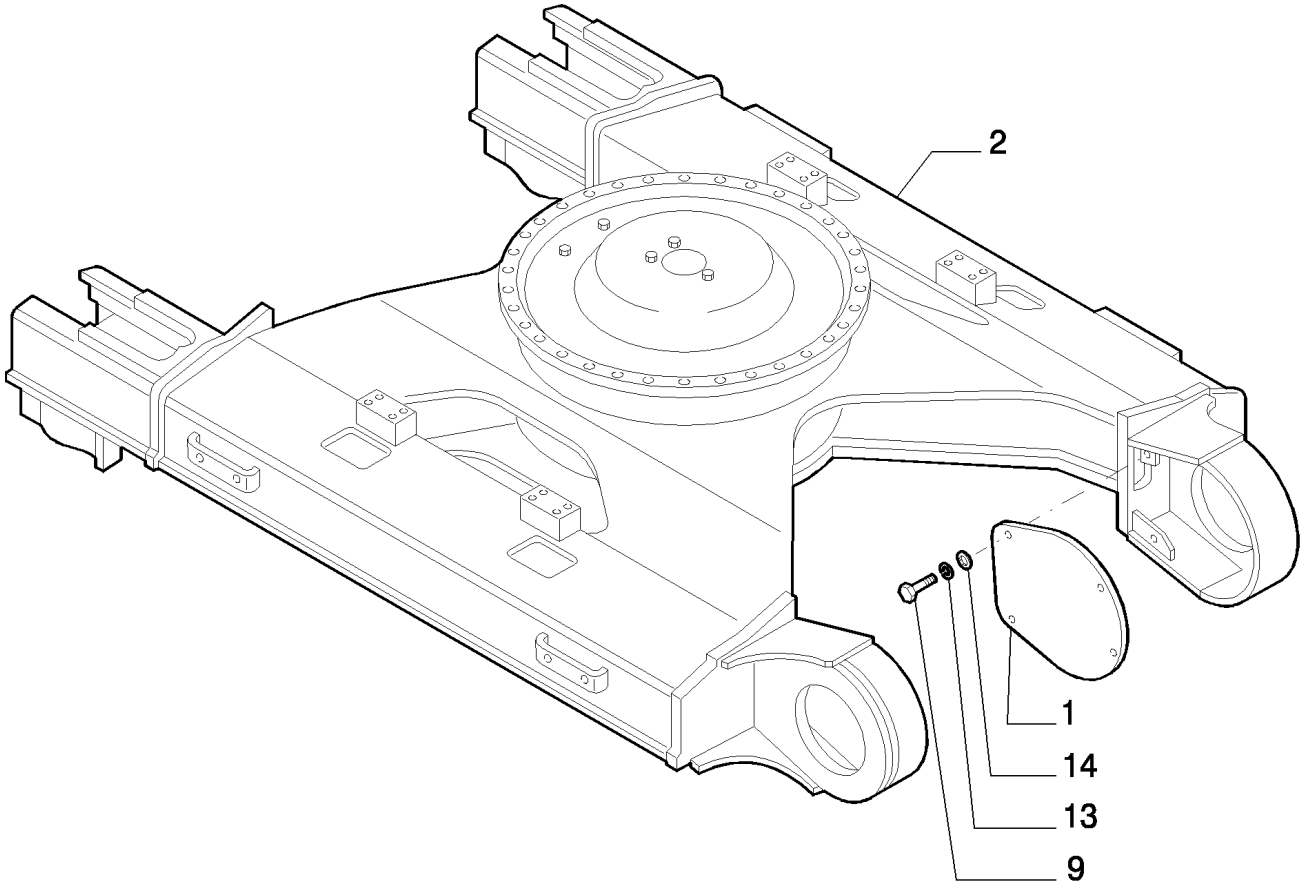

Copyright © New Holland

CHASIS INFERIOR - VERSION (03-06)
LOWER FRAME - VERSION (03-06)
LOWER FRAME - VERSION (03-06)
LOWER FRAME - VERSION (03-06)

R	N	P.N.	MOD	Q	Description Denominacion	Descrizione Beskrivelse	Bezeichnung Denominação	Description Beschrijving	L.C.
1		87600530		2	GUARD DEFENSA	PROTEZIONE BESKYTTELSESSKÆRM	SCHUTZABDECKUNG PROTECÇÃO	PROTECTION AFSCHERMING	070R
2		72230333		1	FRAME BASTIDOR	TELAIO RAMME	GESTELL ESTRUTURA	CHASSIS RAAM	077T
9		11112234		8	BOLT, Hex, M12 x 25, 10.9, Full Thd PERNO	BULLONE BOLT	SCHRAUBE PARAFUSO	VIS BOUT	140B
13		10517074		8	LOCK WASHER, 12 ARANDELA DE BLOQUE	RONDELLA DI SICUREZ LÅSESKIVE	SICHERUNGSSCHEIBE ANILHA DE RETENÇÃO	RONDELLE FREIN BORGRING	132R
14		14496731		8	WASHER, M12 x 24 x 2.5 Thk ARANDELA	RONDELLA FLADSKIVE	UNTERLEGSCHEIBE ANILHA	RONDELLE SLUITRING	131R

Copyright © New Holland

3.010	01	p1	05/10

TRAVEL REDUCTION UNITS
MOTORIDUTTORI DI TRASLAZIONE
UNTERSETZUNG - FAHRANTRIEB
MOTORED. TRANSLATION

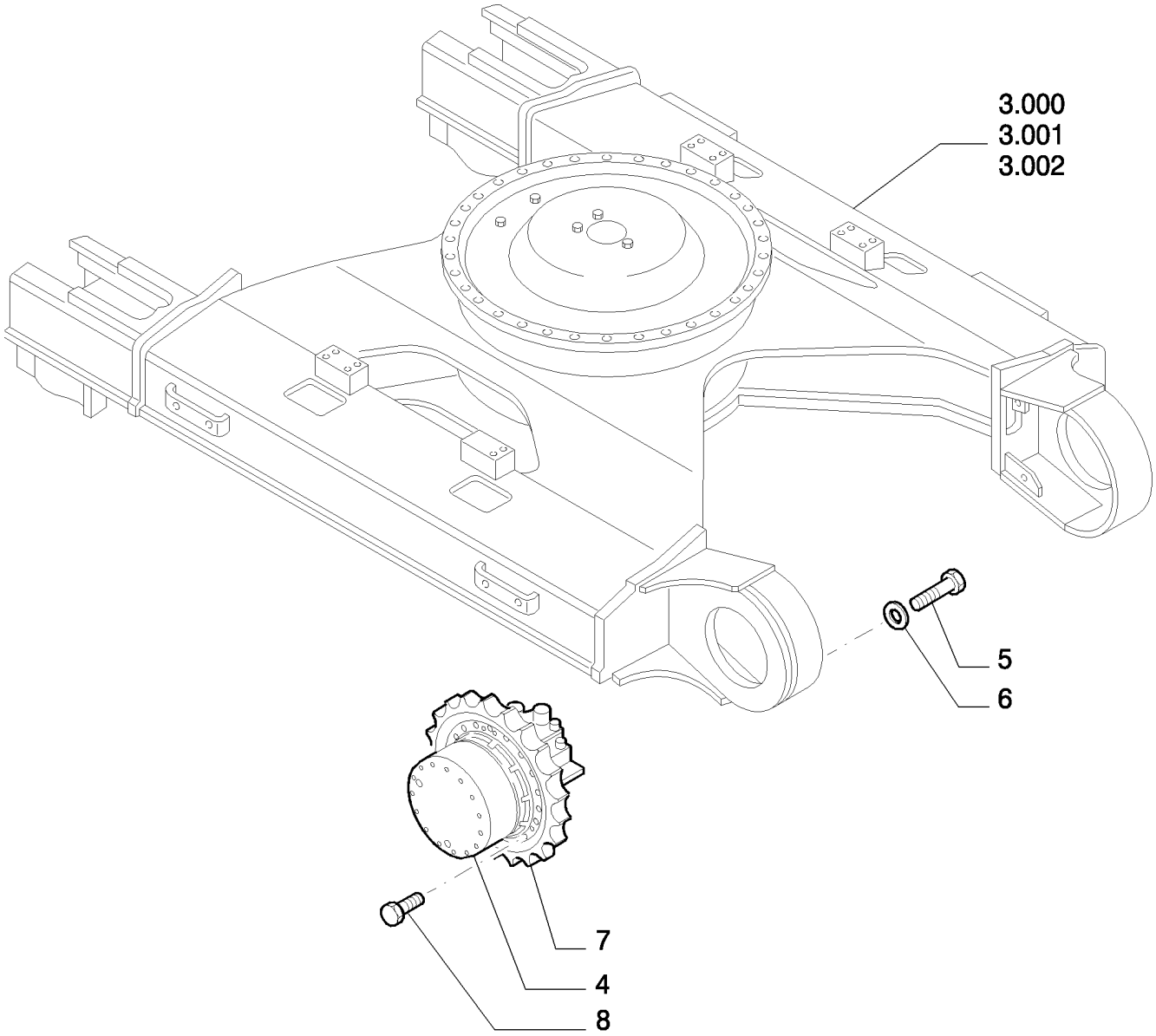

Copyright © New Holland

REDUCTORES DE TRANSLACION
TRAVEL REDUCTION UNITS
TRAVEL REDUCTION UNITS
TRAVEL REDUCTION UNITS

R	N	P.N.	MOD	Q	Description Denominacion	Descrizione Beskrivelse	Bezeichnung Denominação	Description Beschrijving	L.C.
4	1	**84142692**		2	HYDRAULIC MOTOR MOTOR HIDRÁULICO	MOTORE IDRAULICO HYDRAULIKMOTOR	HYDRAULIKMOTOR MOTOR HIDRÁULICO	MOTEUR HYDRAULIQUE HYDRAULISCHE MOTOF	900M
5		**11119174**		54	SCREW TORNILLO	VITE SKRUE	SCHRAUBE PARAFUSO	VIS SCHROEF	040V
6		**71405003**		54	WASHER ARANDELA	RONDELLA FLADSKIVE	UNTERLEGSCHEIBE ANILHA	RONDELLE SLUITRING	131R
7		**72230314**		2	DRIVING SPROCKET PIÑÓN DE TRANSMISIÓI	PIGNONE MOTORE DRIVKÆDEHJUL	ANTRIEBSZAHNRAD RODA MOTRIZ	PIGNON D'ENTRAINEME AANDRIJFKETTINGWIEL	163R
8		**11124774**		40	SCREW TORNILLO	VITE SKRUE	SCHRAUBE PARAFUSO	VIS SCHROEF	040V

(1) ASSY SEE PAGE 2-3-4

Copyright © New Holland

TRAVEL REDUCTION UNITS - COMPONENTS
MOTORIDUTTORI DI TRASLAZIONE - COMPONENTI
UNTERSETZUNG - FAHRANTRIEB - BESTANDTEILE
MOTORED. TRANSLATION - COMPOSANTS

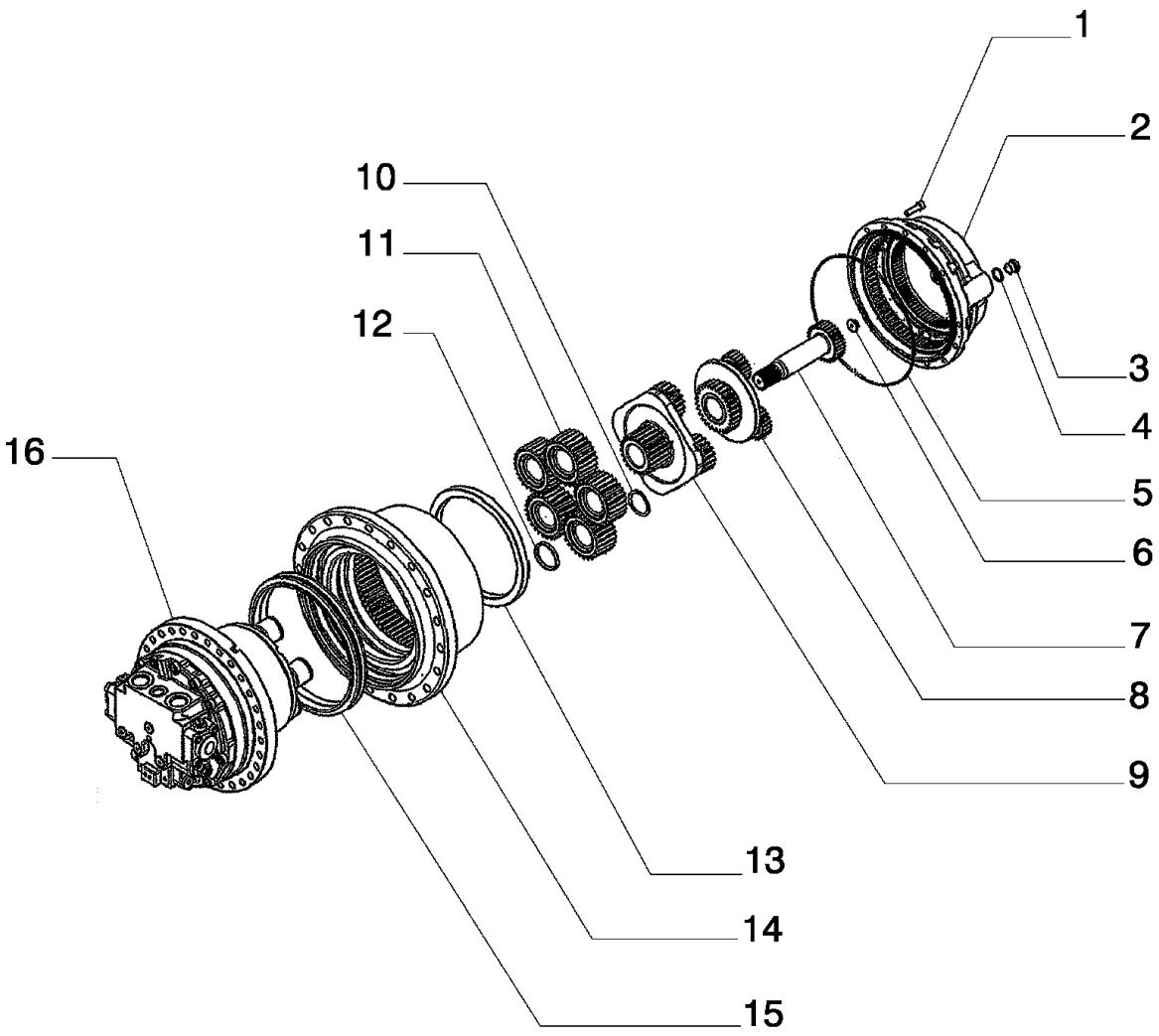

Copyright © New Holland

REDUCTORES DE TRANSLACION - COMPONENTES
TRAVEL REDUCTION UNITS - COMPONENTS
TRAVEL REDUCTION UNITS - COMPONENTS
TRAVEL REDUCTION UNITS - COMPONENTS

R	N	P.N.	MOD	Q	Description Denominacion	Descrizione Beskrivelse	Bezeichnung Denominação	Description Beschrijving	L.C.
1		14420271		13	SCREW, Hex Soc Hd, M10 x 30, 12.9 TORNILLO	VITE SKRUE	SCHRAUBE PARAFUSO	VIS SCHROEF	040V
2		87602328		1	COVER CUBIERTA	COPERCHIO DÆKSEL	ABDECKUNG COBERTURA	COUVERCLE AFSCHERMING	265C
3		71418385		2	PLUG TAPÓN	TAPPO PROP	STOPFEN TAMPÃO	BOUCHON PLUG	050T
4		71418386		2	WASHER ARANDELA	RONDELLA FLADSKIVE	UNTERLEGSCHEIBE ANILHA	RONDELLE SLUITRING	131R
5		71433948		1	GASKET JUNTA	GUARNIZIONE PAKNING	DICHTUNG JUNTA	JOINT PAKKING	123G
6		71471056		1	BRAKE PAD PASTILLA DE FRENO	PASTIGLIA FRENI BREMSEKLODS	BREMSBELAG CALÇO DO TRAVÃO	PLAQUETTE DE FREIN REMBLOK	042P
7		87602331		1	GEAR ENGRANAJE	INGRANAGGIO TANDHJUL	ZAHNRAD ENGRENAGEM	PIGNON TANDWIEL	050I
8		87602333		1	KIT KIT	KIT SÆT	SATZ KIT	KIT KIT	305C
9		87602334		1	KIT KIT	KIT SÆT	SATZ KIT	KIT KIT	305C
10		87602338		5	RING ANILLO	ANELLO RING	RING ANEL	ANNEAU RING	045A
11		87602340		5	KIT KIT	KIT SÆT	SATZ KIT	KIT KIT	305C
12		87602363		5	SPACER SEPARADOR	DISTANZIALE AFSTANDSSTYKKE	DISTANZSTÜCK ESPAÇADOR	ENTRETOISE AFSTANDSSTUK	075D
13		87602365		1	NUT TUERCA	DADO MØTRIK	MUTTER PORCA	ECROU MOER	010D
14		87602366		1	BODY CUERPO	CORPO HUS	KAROSSERIE CORPO	CORPS HUIS	300C
15		71418383		1	GASKET JUNTA	GUARNIZIONE PAKNING	DICHTUNG JUNTA	JOINT PAKKING	123G
16	1	84142872		1	HYDRAULIC MOTOR MOTOR HIDRÁULICO	MOTORE IDRAULICO HYDRAULIKMOTOR	HYDRAULIKMOTOR MOTOR HIDRÁULICO	MOTEUR HYDRAULIQUE HYDRAULISCHE MOTOF	900M

(1) ASSY SEE PAGE 4

MOTOR TRAVEL ASSY P/N 84142692

E215B

Copyright © New Holland

TRAVEL REDUCTION UNITS - COMPONENTS
MOTORIDUTTORI DI TRASLAZIONE - COMPONENTI
UNTERSETZUNG - FAHRANTRIEB - BESTANDTEILE
MOTORED. TRANSLATION - COMPOSANTS

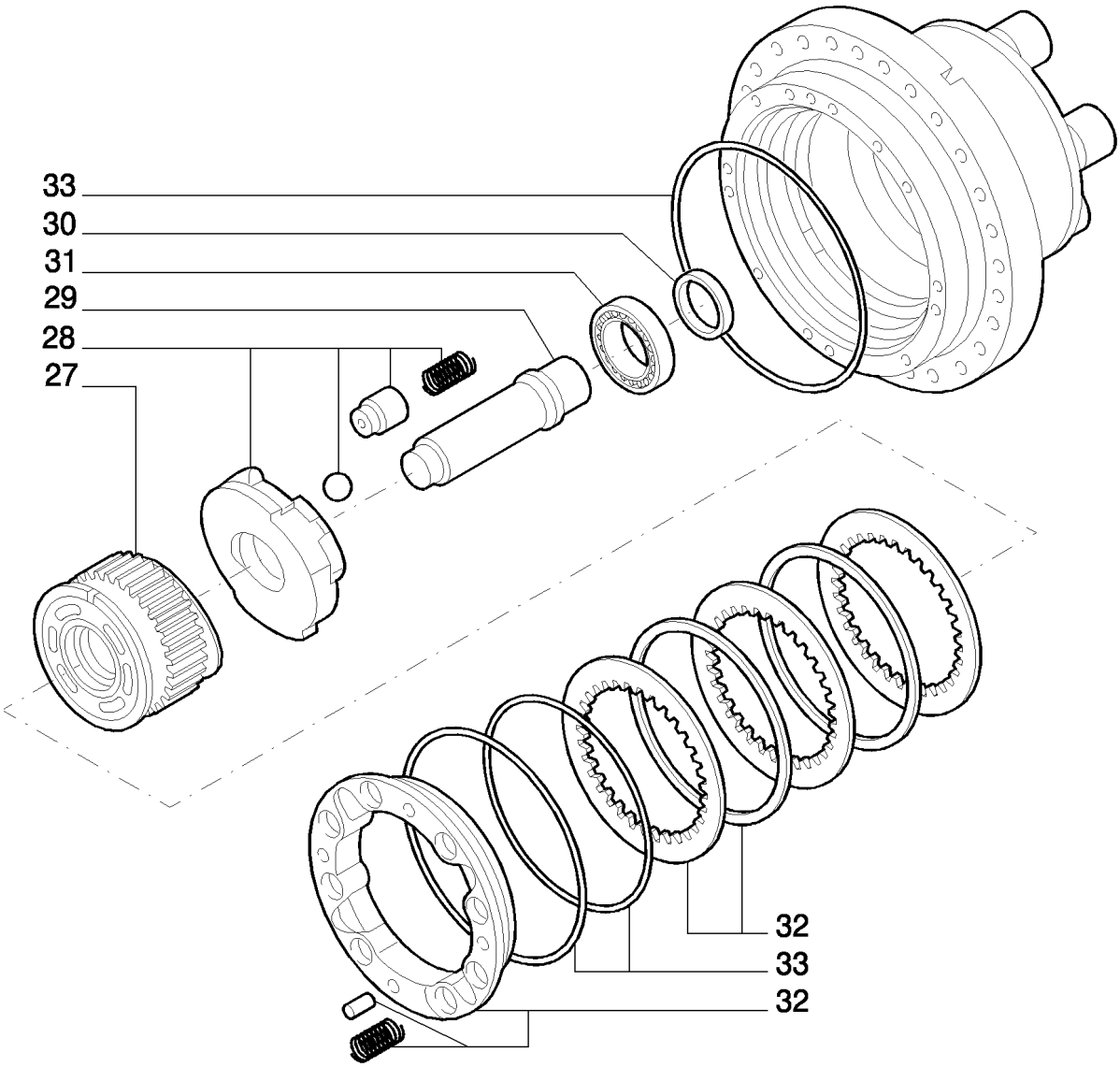

Copyright © New Holland

REDUCTORES DE TRANSLACION - COMPONENTES
TRAVEL REDUCTION UNITS - COMPONENTS
TRAVEL REDUCTION UNITS - COMPONENTS
TRAVEL REDUCTION UNITS - COMPONENTS

R	N	P.N.	MOD	Q	Description Denominacion	Descrizione Beskrivelse	Bezeichnung Denominação	Description Beschrijving	L.C.
27		72210465		1	KIT KIT	KIT SÆT	SATZ KIT	KIT KIT	305C
28		87602454		1	KIT KIT	KIT SÆT	SATZ KIT	KIT KIT	305C
29		72210467		1	SHAFT EJE	ALBERO AKSEL	WELLE VEIO	ARBRE AS	016A
30		87602455		1	RUBBER RING ANILLO DE GOMA	ANELLO DI GOMMA GUMMISKIVE	GUMMIRING ANEL DE BORRACHA	BAGUE EN CAOUTCHOU RUBBEREN RING	048A
31		72210469		1	KIT KIT	KIT SÆT	SATZ KIT	KIT KIT	305C
32		72210470		1	KIT KIT	KIT SÆT	SATZ KIT	KIT KIT	305C
33		87602456		1	KIT KIT	KIT SÆT	SATZ KIT	KIT KIT	305C

Copyright © New Holland

3.010	04	p1	05/10

TRAVEL REDUCTION UNITS - COMPONENTS
MOTORIDUTTORI DI TRASLAZIONE - COMPONENTI
UNTERSETZUNG - FAHRANTRIEB - BESTANDTEILE
MOTORED. TRANSLATION - COMPOSANTS

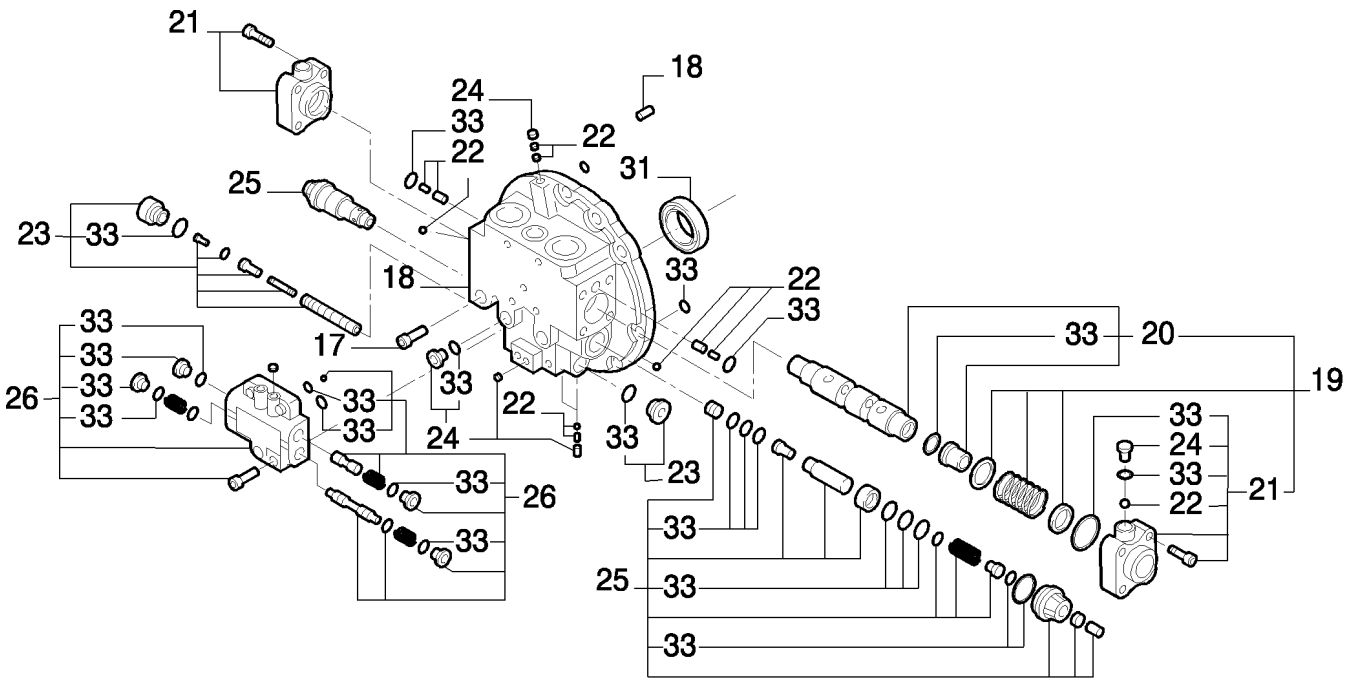

Copyright © New Holland

REDUCTORES DE TRANSLACION - COMPONENTES
TRAVEL REDUCTION UNITS - COMPONENTS
TRAVEL REDUCTION UNITS - COMPONENTS
TRAVEL REDUCTION UNITS - COMPONENTS

R	N	P.N.	MOD	Q	Description Denominacion	Descrizione Beskrivelse	Bezeichnung Denominação	Description Beschrijving	L.C.
17		71412008		10	SCREW TORNILLO	VITE SKRUE	SCHRAUBE PARAFUSO	VIS SCHROEF	040V
18		87602441		1	KIT KIT	KIT SÆT	SATZ KIT	KIT KIT	305C
19		87562240		1	KIT KIT	KIT SÆT	SATZ KIT	KIT KIT	305C
20		87562242		1	KIT KIT	KIT SÆT	SATZ KIT	KIT KIT	305C
21		72210460		1	PLUG TAPÓN	TAPPO PROP	STOPFEN TAMPÃO	BOUCHON PLUG	050T
22		72210461		1	KIT KIT	KIT SÆT	SATZ KIT	KIT KIT	305C
23		72210462		1	KIT KIT	KIT SÆT	SATZ KIT	KIT KIT	305C
24		72210463		1	KIT KIT	KIT SÆT	SATZ KIT	KIT KIT	305C
25		72210464		1	KIT KIT	KIT SÆT	SATZ KIT	KIT KIT	305C
26		87602453		1	HYDRAULIC VALVE VÁLVULA HIDRÁULICA	DISTRIBUTORE IDRAULI HYDRAULIKVENTIL	HYDRAULIKVENTIL VÁLVULA HIDRÁULICA	SOUPAPE HYDRAULIQU HYDRAULISCHE KLEP	010V
31		72210469		1	KIT KIT	KIT SÆT	SATZ KIT	KIT KIT	305C
33		87602456		1	KIT KIT	KIT SÆT	SATZ KIT	KIT KIT	305C

MOTOR TRAVEL ASSY P/N 84142692

E215B

Copyright © New Holland

3.020	01	p1	03/10

TRACK IDLER
TENDICINGOLO
LEITRAD
TENDEUR DE CHENILLE

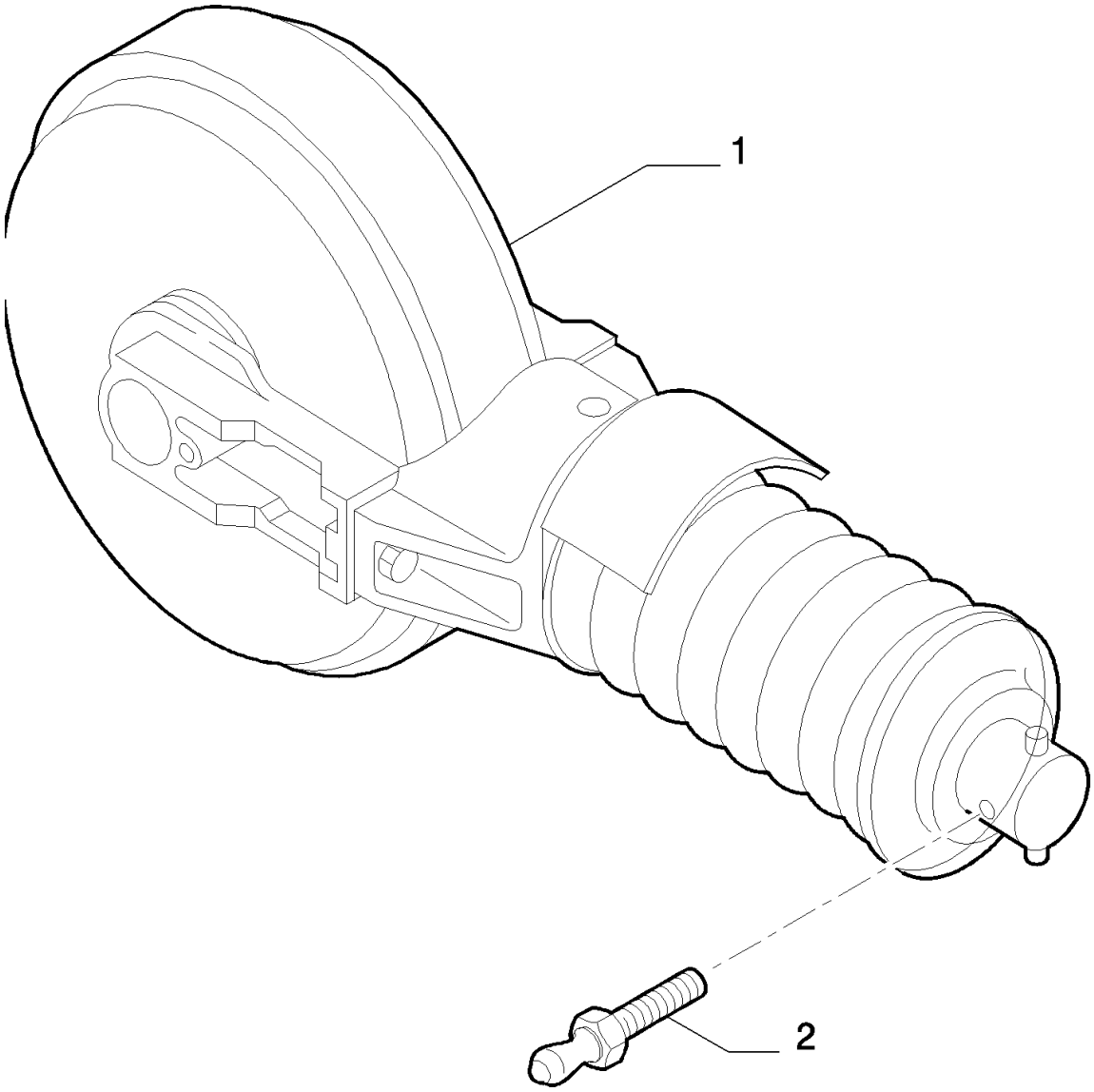

Copyright © New Holland

RUEDA GUIADORA
TRACK IDLER
TRACK IDLER
TRACK IDLER

R	N	P.N.	MOD	Q	Description Denominacion	Descrizione Beskrivelse	Bezeichnung Denominação	Description Beschrijving	L.C.
1	1	**84176247**		2	IDLER WHEEL RUEDA DE TENSOR	RUOTA TENDICINGOLO MELLEMHJUL	LEITRAD RODA INTERMÉDIA	POULIE DE RENVOI SPANROL	161R
2		**72209157**		2	HYDRAULIC VALVE VÁLVULA HIDRÁULICA	DISTRIBUTORE IDRAULI HYDRAULIKVENTIL	HYDRAULIKVENTIL VÁLVULA HIDRÁULICA	SOUPAPE HYDRAULIQU HYDRAULISCHE KLEP	010V

(1) ASSY SEE PAGE 2-3

Copyright © New Holland

3.020	02	p1	03/10

TRACK IDLER - COMPONENTS
TENDICINGOLO - COMPONENTI
LEITRAD - BESTANDTEILE
TENDEUR DE CHENILLE - COMPOSANTS

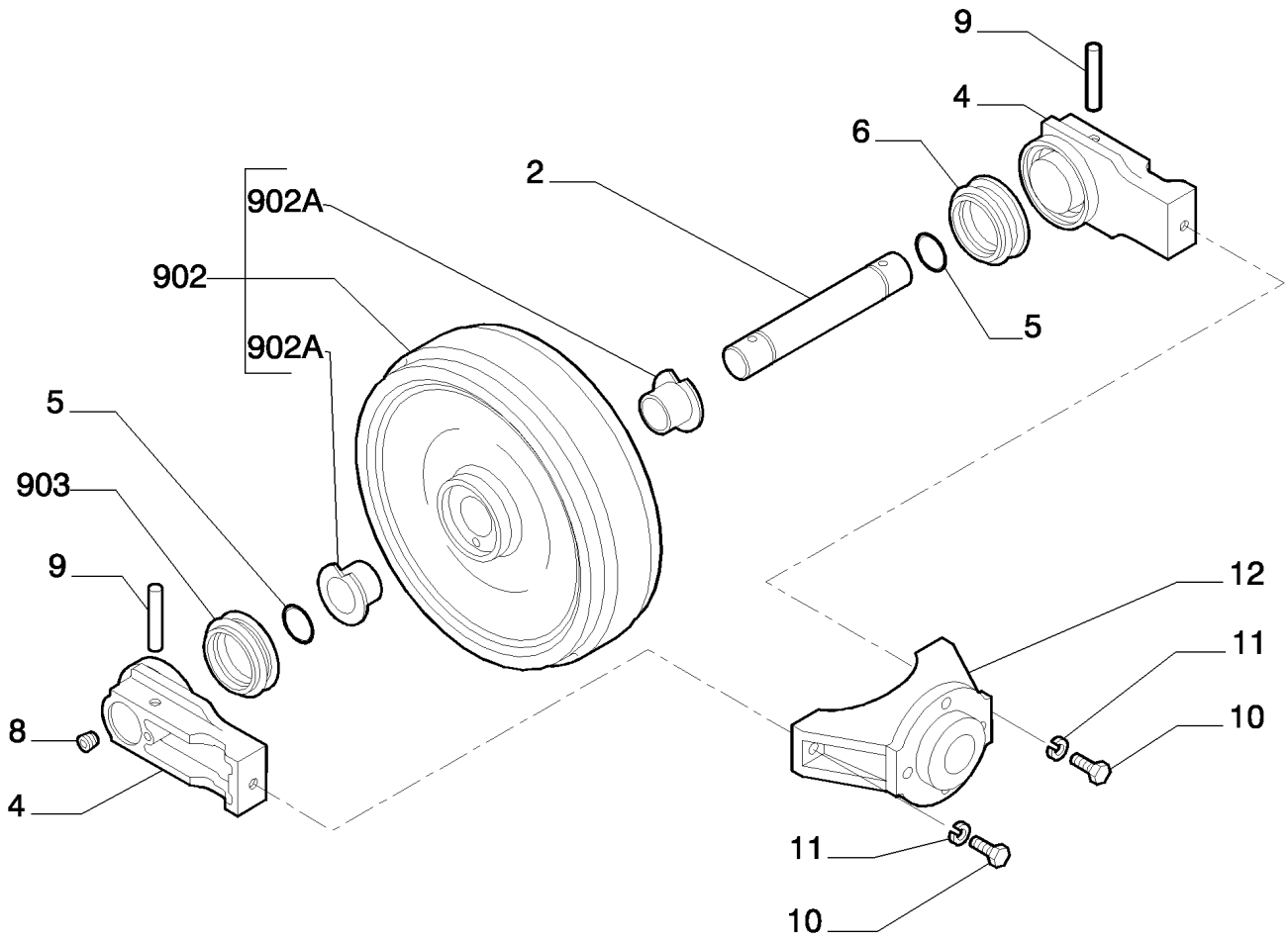

KIT 900

Copyright © New Holland

RUEDA GUIADORA - COMPONENTES
TRACK IDLER - COMPONENTS
TRACK IDLER - COMPONENTS
TRACK IDLER - COMPONENTS

R	N	P.N.	MOD	Q	Description Denominacion	Descrizione Beskrivelse	Bezeichnung Denominação	Description Beschrijving	L.C.
2		72210164		1	SHAFT EJE	ALBERO AKSEL	WELLE VEIO	ARBRE AS	016A
4		72210165		2	SUPPORT SOPORTE	SUPPORTO BESLAG	STÜTZE SUPORTE	SUPPORT STEUN	300S
5		71401327		2	SEAL ANILLO DE CIERRE	GUARNIZIONE; TENUTA PAKNING	DICHTUNG VEDANTE	JOINT AFDICHTING	132A
8		71401352		2	PLUG TAPÓN	TAPPO PROP	STOPFEN TAMPÃO	BOUCHON PLUG	050T
9		72210170		2	ROLL PIN BULÓN DE GIRO	SPINA ELASTICA SPLIT	SPANNSTIFT TROÇO	GOUPILLE ELASTIQUE ROLPEN	200S
10		71318802		2	SCREW TORNILLO	VITE SKRUE	SCHRAUBE PARAFUSO	VIS SCHROEF	040V
11		10517270		2	LOCK WASHER ARANDELA DE BLOQUE	RONDELLA DI SICUREZ LÅSESKIVE	SICHERUNGSSCHEIBE ANILHA DE RETENÇÃO	RONDELLE FREIN BORGRING	132R
12		YN54D01051P1		1	YOKE ARTICULACIÓN	FORCELLA GAFFEL	GABEL GARFO	CHAPE GAFFEL	085F
900		72210182		1	IDLER WHEEL RUEDA DE TENSOR	RUOTA TENDICINGOLO MELLEMHJUL	LEITRAD RODA INTERMÉDIA	POULIE DE RENVOI SPANROL	161R
902		71401321		1	WHEEL, - ASSY RUEDA	RUOTA HJUL	RAD RODA	ROUE WIEL	160R
902A		71401325		2	BUSHING CASQUILLO	BOCCOLA BØSNING	BUCHSE CASQUILHO	BAGUE BUS	095B
903		87654320		4	KIT KIT	KIT SÆT	SATZ KIT	KIT KIT	305C

TRACK IDLER ASSY P/N 84176247

E215B

Copyright © New Holland

3.020	03	p1	03/10

TRACK IDLER - COMPONENTS
TENDICINGOLO - COMPONENTI
LEITRAD - BESTANDTEILE
TENDEUR DE CHENILLE - COMPOSANTS

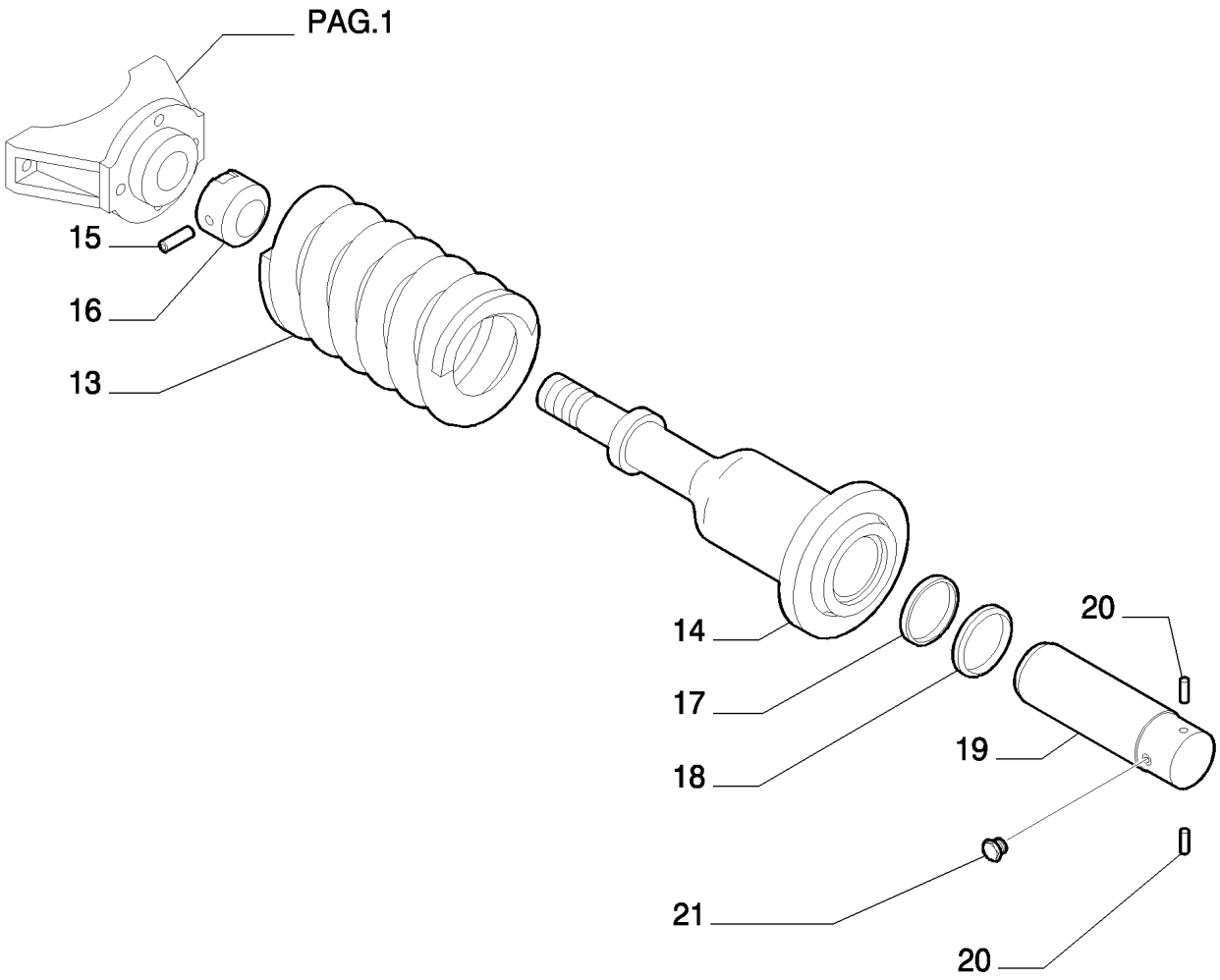

KIT 901

Copyright © New Holland

RUEDA GUIADORA - COMPONENTES
TRACK IDLER - COMPONENTS
TRACK IDLER - COMPONENTS
TRACK IDLER - COMPONENTS

R	N	P.N.	MOD	Q	Description Denominacion	Descrizione Beskrivelse	Bezeichnung Denominação	Description Beschrijving	L.C.
13		YN54D01062P1		1	SPRING RESORTE	MOLLA FJEDER	FEDER MOLA	RESSORT VEER	100M
14		YN70V00010P1		1	CYLINDER CILINDRO	CILINDRO CYLINDER	ZYLINDER CILINDRO	VERIN CILINDER	164C
15		79083943		1	ROLL PIN, 6X80 BULÓN DE GIRO	SPINA ELASTICA SPLIT	SPANNSTIFT TROÇO	GOUPILLE ELASTIQUE ROLPEN	200S
16		72210527		1	NUT TUERCA	DADO MØTRIK	MUTTER PORCA	ECROU MOER	010D
17		71466905		1	WIPER SEAL JUNTA ROZANTE	GUARNIZIONE, RASCHI/ SKRABERING	ABSTREIFDICHTUNG VEDANTE LIMPA PÁRA-I	JOINT RACLEUR RUITENWISSERAFDICH	Z350
18		45482627		1	SEAL ANILLO DE CIERRE	GUARNIZIONE; TENUTA PAKNING	DICHTUNG VEDANTE	JOINT AFDICHTING	132A
19		87561516		1	PISTON PISTÓN	PISTONE STEMPEL	KOLBEN PISTÃO	PISTON ZUIGER	235S
20		72210181		2	ROLL PIN BULÓN DE GIRO	SPINA ELASTICA SPLIT	SPANNSTIFT TROÇO	GOUPILLE ELASTIQUE ROLPEN	200S
21		220208300		1	PLUG TAPÓN	TAPPO PROP	STOPFEN TAMPÃO	BOUCHON PLUG	050T
901		YN54D00014F2		1	IDLER WHEEL RUEDA DE TENSOR	RUOTA TENDICINGOLO MELLEMHJUL	LEITRAD RODA INTERMÉDIA	POULIE DE RENVOI SPANROL	161R

TRACK IDLER ASSY P/N 84176247

E215B

Copyright © New Holland

3.030	01	p1	03/10

TRACK CARRIER ROLLER
RULLO SOSTEGNO CINGOLO
STUETZROLLE
GALET DE RETOUR DE CHENILLE

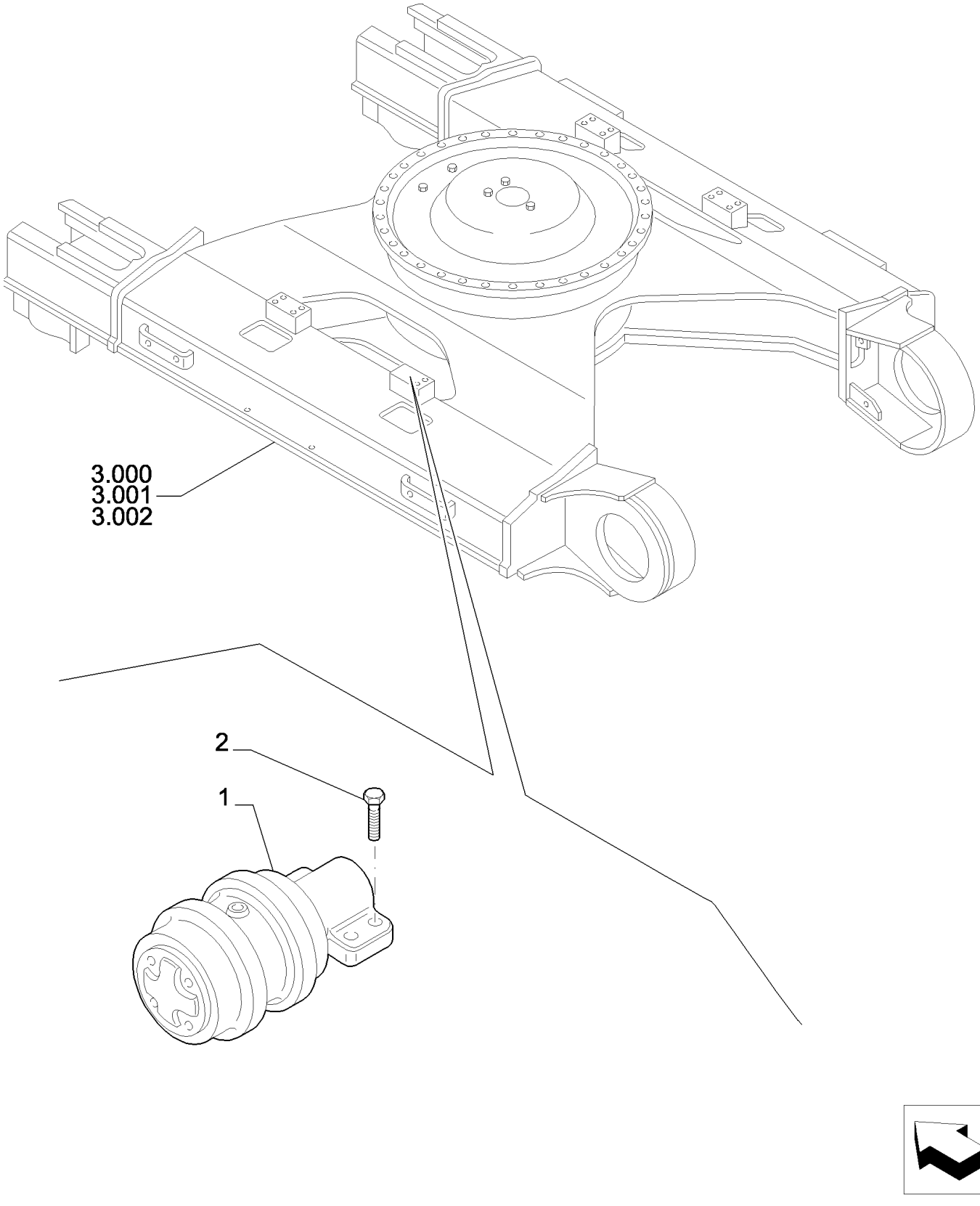

Copyright © New Holland

RUEDA DE SOPORTEDE LA ORUGA
TRACK CARRIER ROLLER
TRACK CARRIER ROLLER
TRACK CARRIER ROLLER

R	N	P.N.	MOD	Q	Description Denominacion	Descrizione Beskrivelse	Bezeichnung Denominação	Description Beschrijving	L.C.
1	1	72230318		4	TRACK ROLLER RODILLO PARA CADENA	RULLO PER CINGOLO LARVEFODSRULLE	LAUFROLLE ROLETES PARA CORRE	GALET DE CHENILLE GELEIDEROL V. RUPSKI	154R
2		11118774		16	SCREW TORNILLO	VITE SKRUE	SCHRAUBE PARAFUSO	VIS SCHROEF	040V

(1) ASSY SEE PAGE 2

Copyright © New Holland

3.030	02	p1	03/10

TRACK CARRIER ROLLER - COMPONENTS
RULLO SOSTEGNO CINGOLO - COMPONENTI
STUETZROLLE - BESTANDTEILE
GALET DE RETOUR DE CHENILLE - COMPOSANTS

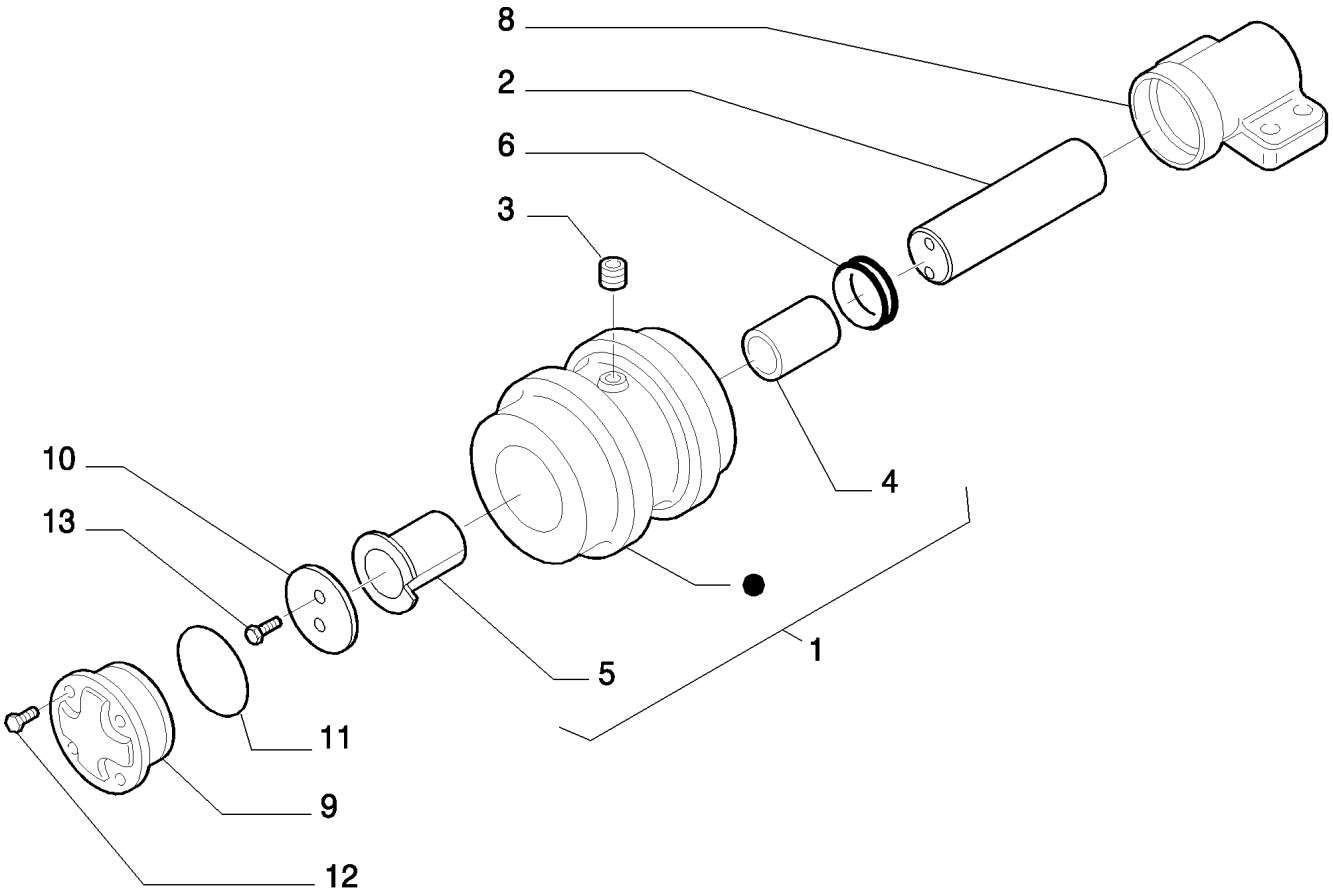

PARTS MARKED ● ARE NOT SUPPLIED AS SPARES
I PARTICOLARI CONTRASSEGNATI CON ● NON VENGONO FORNITI DI RICAMBIO

Copyright © New Holland

RUEDA DE SOPORTEDE LA ORUGA - COMPONENTES
TRACK CARRIER ROLLER - COMPONENTS
TRACK CARRIER ROLLER - COMPONENTS
TRACK CARRIER ROLLER - COMPONENTS

R	N	P.N.	MOD	Q	Description Denominacion	Descrizione Beskrivelse	Bezeichnung Denominação	Description Beschrijving	L.C.
1		87559754		1	TRACK ROLLER, - ASSY RODILLO PARA CADEN/	RULLO PER CINGOLO LARVEFODSRULLE	LAUFROLLE ROLETES PARA CORRE	GALET DE CHENILLE GELEIDEROL V. RUPSKI	154R
2		71400964		1	ROLLER SHAFT EJE DE RODILLO	ALBERO PORTARULLI RULLEAKSEL	ROLLENWELLE VEIO DE ROLAMENTOS	ARBRE PORTE-GALET ROLAS	020A
3		71400954		1	PLUG TAPÓN	TAPPO PROP	STOPFEN TAMPÃO	BOUCHON PLUG	050T
4		71400968		1	BUSHING CASQUILLO	BOCCOLA BØSNING	BUCHSE CASQUILHO	BAGUE BUS	095B
5		87559743		1	BUSHING CASQUILLO	BOCCOLA BØSNING	BUCHSE CASQUILHO	BAGUE BUS	095B
6		87559755		1	KIT KIT	KIT SÆT	SATZ KIT	KIT KIT	305C
8		87559745		1	SUPPORT SOPORTE	SUPPORTO BESLAG	STÜTZE SUPORTE	SUPPORT STEUN	300S
9		87559747		1	COVER CUBIERTA	COPERCHIO DÆKSEL	ABDECKUNG COBERTURA	COUVERCLE AFSCHERMING	265C
10		71400952		1	WASHER ARANDELA	RONDELLA FLADSKIVE	UNTERLEGSCHEIBE ANILHA	RONDELLE SLUITRING	131R
11		76046537		1	GASKET JUNTA	GUARNIZIONE PAKNING	DICHTUNG JUNTA	JOINT PAKKING	123G
12		15970734		4	BOLT, Hex, M10 x 1.25 x 25, 10.9, Full Thd PERNO	BULLONE BOLT	SCHRAUBE PARAFUSO	VIS BOUT	140B
13		76046530		2	SCREW TORNILLO	VITE SKRUE	SCHRAUBE PARAFUSO	VIS SCHROEF	040V

TRACK CARRIER ROLLEY ASSY P/N 72230318

E215B

Copyright © New Holland

3.040	01	p1	03/10

TRACK ROLLER
RULLO CARRELLO CINGOLO
LAUFROLLE DER RAUPENKETTE
GALET PORTEUR DE CHENILLE

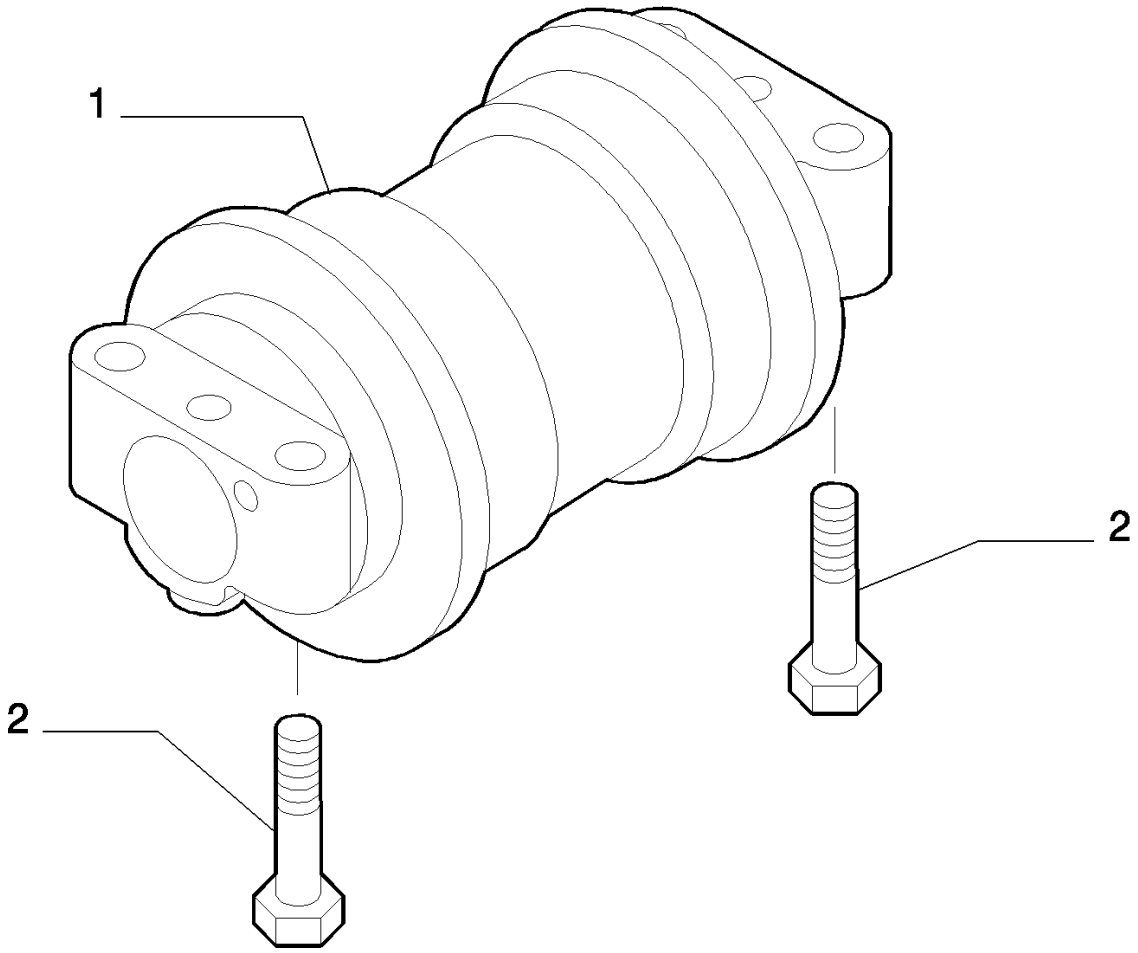

Copyright © New Holland

RODILLO DE APOYO DE LA ORUGA
TRACK ROLLER
TRACK ROLLER
TRACK ROLLER

R	N	P.N.	MOD	Q	Description Denominacion	Descrizione Beskrivelse	Bezeichnung Denominação	Description Beschrijving	L.C.
1	1	87499036		16	TRACK ROLLER RODILLO PARA CADENA	RULLO PER CINGOLO LARVEFODSRULLE	LAUFROLLE ROLETES PARA CORRE	GALET DE CHENILLE GELEIDEROL V. RUPSKI	154R
2		72955862		64	PLUG TAPÓN	TAPPO PROP	STOPFEN TAMPÃO	BOUCHON PLUG	050T

(1) ASSY SEE PAGE 2

Copyright © New Holland

3.040	02	p1	03/10

TRACK ROLLER - COMPONENTS
RULLO CARRELLO CINGOLO - COMPONENTI
LAUFROLLE DER RAUPENKETTE - BESTANDTEILE
GALET PORTEUR DE CHENILLE - COMPOSANTS

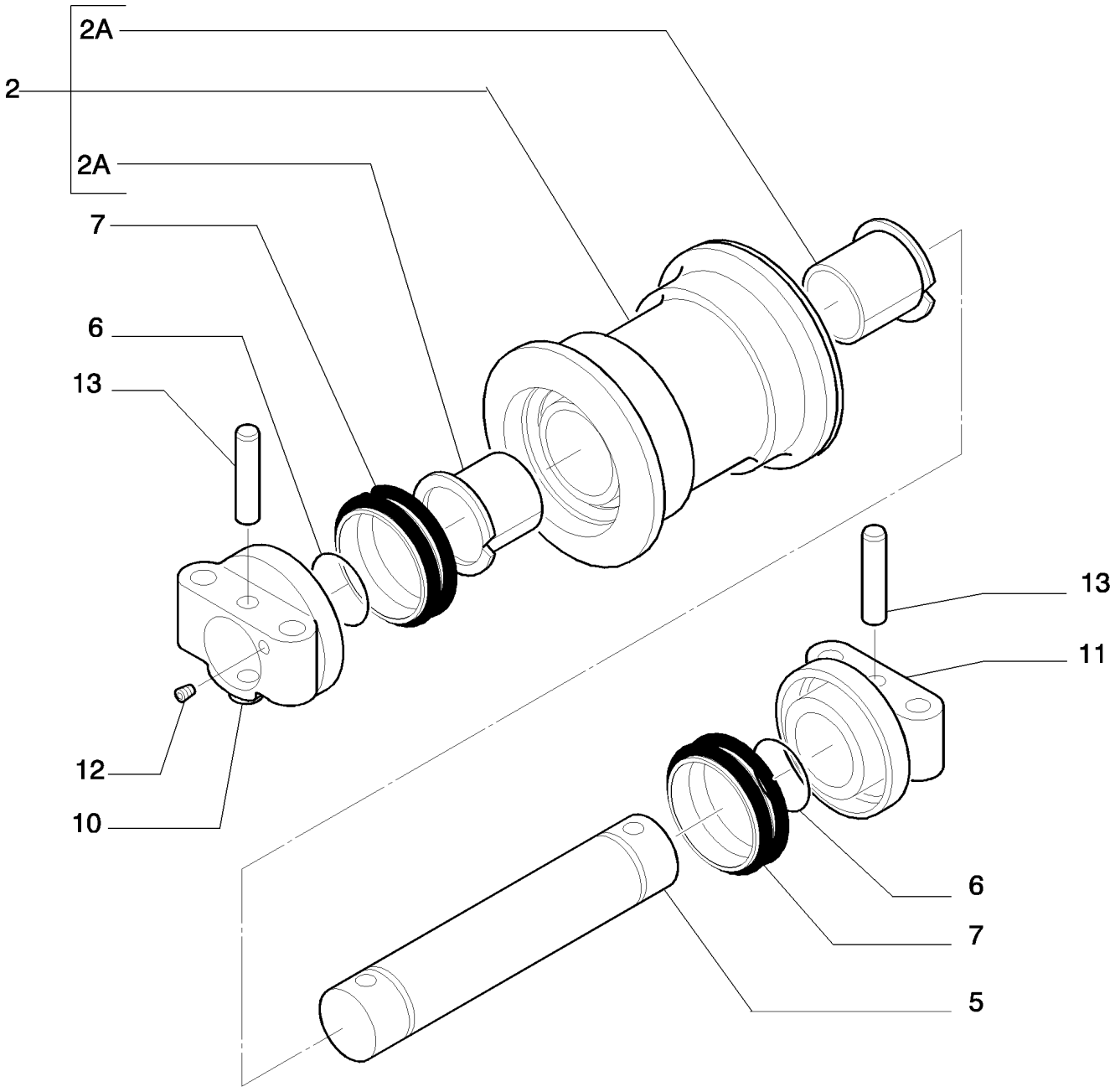

Copyright © New Holland

RODILLO DE APOYO DE LA ORUGA - COMPONENTES
TRACK ROLLER - COMPONENTS
TRACK ROLLER - COMPONENTS
TRACK ROLLER - COMPONENTS

R	N	P.N.	MOD	Q	Description Denominacion	Descrizione Beskrivelse	Bezeichnung Denominação	Description Beschrijving	L.C.
2		87499037		1	TRACK ROLLER, - ASSY RODILLO PARA CADEN/	RULLO PER CINGOLO LARVEFODSRULLE	LAUFROLLE ROLETES PARA CORRE	GALET DE CHENILLE GELEIDEROL V. RUPSKI	154R
2A		87499039		2	BUSHING CASQUILLO	BOCCOLA BØSNING	BUCHSE CASQUILHO	BAGUE BUS	095B
5		87499040		1	PIN PASADOR	PERNO STIFT	PIN PERNO	BROCHE PEN	080P
6		87499041		2	GASKET JUNTA	GUARNIZIONE PAKNING	DICHTUNG JUNTA	JOINT PAKKING	123G
7		87499042		2	GASKET JUNTA	GUARNIZIONE PAKNING	DICHTUNG JUNTA	JOINT PAKKING	123G
10		87499045		1	SUPPORT SOPORTE	SUPPORTO BESLAG	STÜTZE SUPORTE	SUPPORT STEUN	300S
11		87499048		1	SUPPORT SOPORTE	SUPPORTO BESLAG	STÜTZE SUPORTE	SUPPORT STEUN	300S
12		71400954		1	PLUG TAPÓN	TAPPO PROP	STOPFEN TAMPÃO	BOUCHON PLUG	050T
13		87499047		2	PIN PASADOR	PERNO STIFT	PIN PERNO	BROCHE PEN	080P

TRACK ROLLER ASSY P/N 87499036

E215B

Copyright © New Holland

3.060	01	p1	03/10

ROTARY DISTRIBUTOR
DISTRIBUTORE ROTANTE
DREHDURCHFUEHRUNG
DISTRIBUTEUR ROTATIF

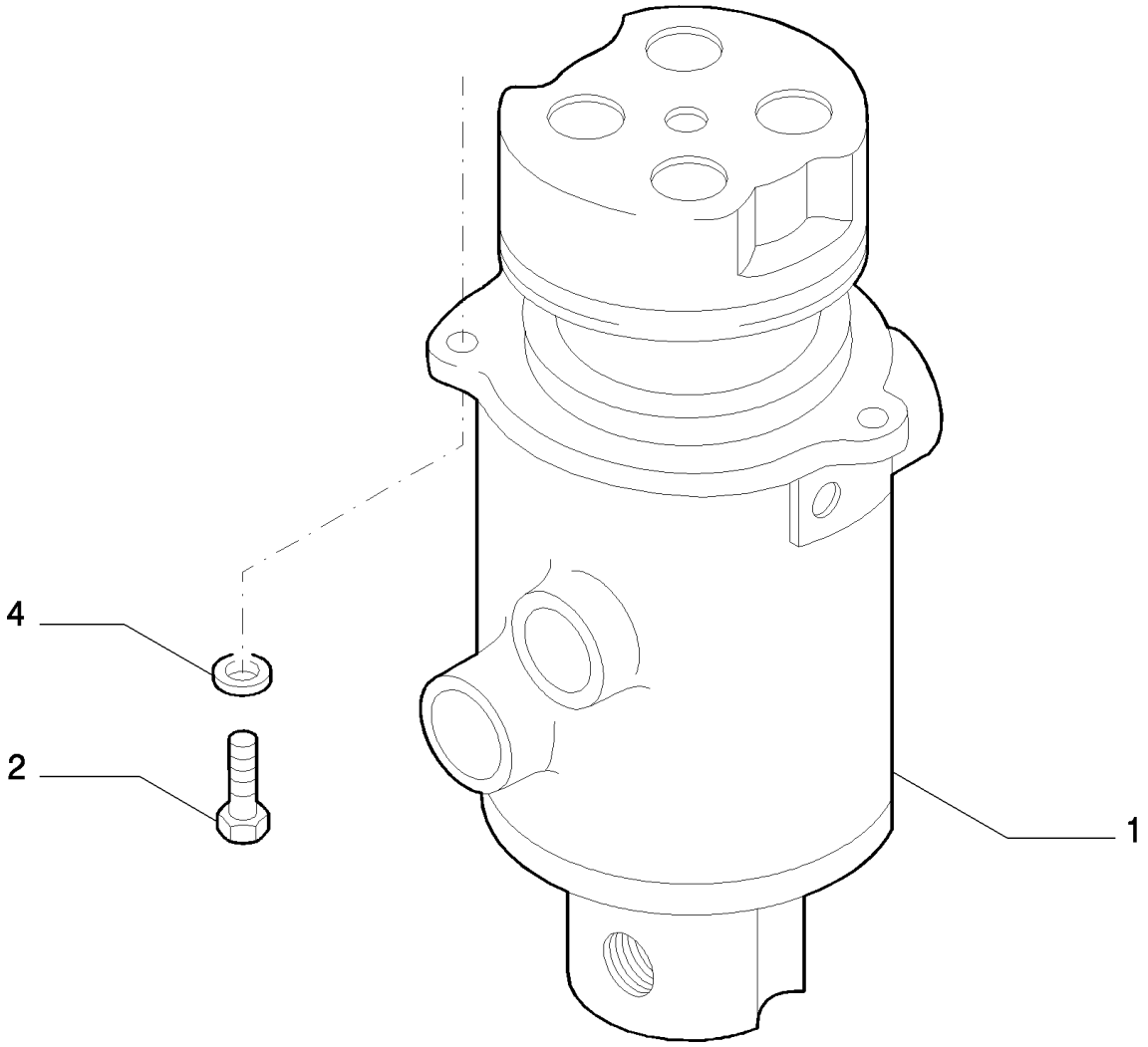

Copyright © New Holland

DISTRIBUIDOR ROTATIVO
ROTARY DISTRIBUTOR
ROTARY DISTRIBUTOR
ROTARY DISTRIBUTOR

R	N	P.N.	MOD	Q	Description Denominacion	Descrizione Beskrivelse	Bezeichnung Denominação	Description Beschrijving	L.C.
1	1	**87532117**		1	MULTIPOLE CONNECTOR CONECTOR MULTIPOLA	CONNETTORE MULTIPC MULTISTIK	MEHRPOL STECKVERBI CONECTOR MULTIPOLA	CONNECTEUR MULTIPC MEERPOLIGE CONNECT	073G
2		**11112834**		3	BOLT, Hex, M12 x 40, 10.9, Full Thd PERNO	BULLONE BOLT	SCHRAUBE PARAFUSO	VIS BOUT	140B
3		**14496731**		3	WASHER, M12 x 24 x 2.5 Thk ARANDELA	RONDELLA FLADSKIVE	UNTERLEGSCHEIBE ANILHA	RONDELLE SLUITRING	131R

(1) ASSY SEE PAGE 2

Copyright © New Holland

ROTARY DISTRIBUTOR - COMPONENTS
DISTRIBUTORE ROTANTE - COMPONENTI
DREHDURCHFUEHRUNG - BESTANDTEILE
DISTRIBUTEUR ROTATIF - COMPOSANTS

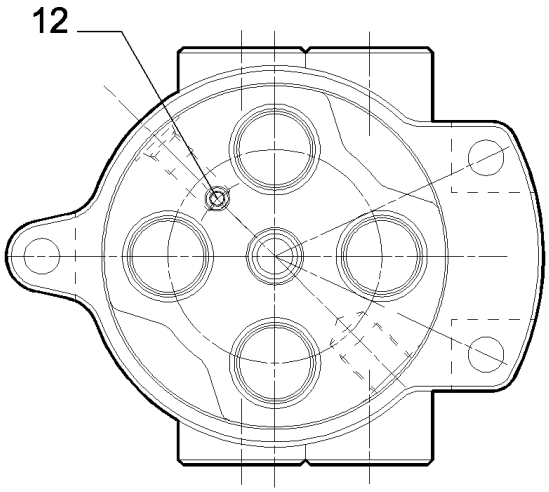

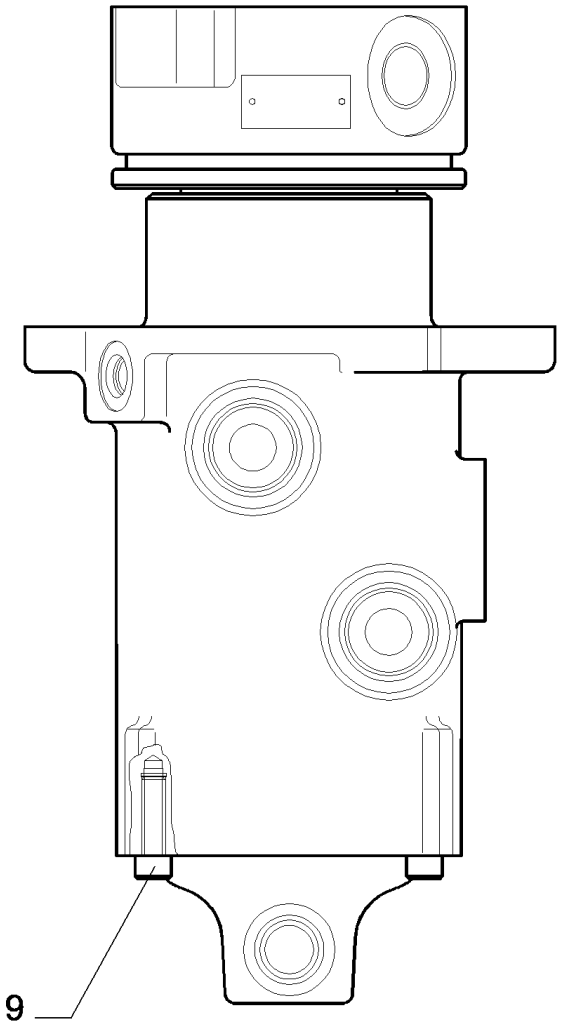

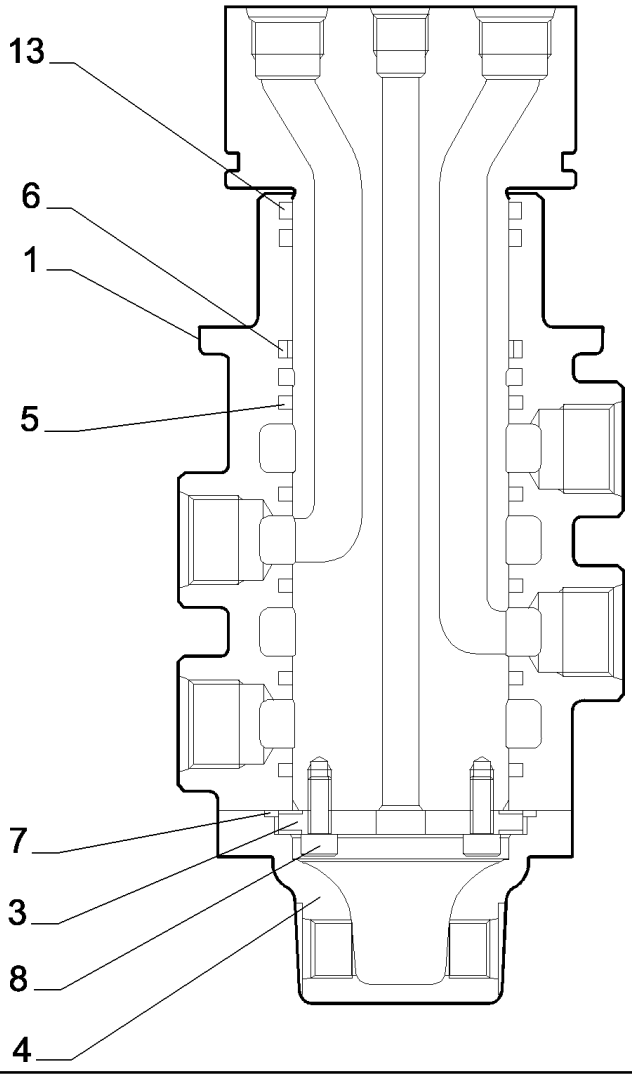

Copyright © New Holland

DISTRIBUIDOR ROTATIVO - COMPONENTES
ROTARY DISTRIBUTOR - COMPONENTS
ROTARY DISTRIBUTOR - COMPONENTS
ROTARY DISTRIBUTOR - COMPONENTS

R	N	P.N.	MOD	Q	Description Denominacion	Descrizione Beskrivelse	Bezeichnung Denominação	Description Beschrijving	L.C.
1		YN55V01073P1		1	BODY CUERPO	CORPO HUS	KAROSSERIE CORPO	CORPS HUIS	300C
3		72210243		1	PLATE PLACA	PIASTRA PLADE	PLATTE CHAPA	PLAQUE PLAAT	105P
4		YN55V01062P1		1	GUARD DEFENSA	PROTEZIONE BESKYTTELSESSKÆRM	SCHUTZABDECKUNG PROTECÇÃO	PROTECTION AFSCHERMING	070R
5		72960147		5	SEAL ANILLO DE CIERRE	GUARNIZIONE; TENUTA PAKNING	DICHTUNG VEDANTE	JOINT AFDICHTING	132A
6		72210246		1	GASKET JUNTA	GUARNIZIONE PAKNING	DICHTUNG JUNTA	JOINT PAKKING	123G
7		72210247		1	O-RING JUNTA TÓRICA	ANELLO TOROIDALE O-RING	O-RING O-RING	JOINT TORIQUE O-RING	055A
8		14306370		2	SCREW TORNILLO	VITE SKRUE	SCHRAUBE PARAFUSO	VIS SCHROEF	040V
9		14306570		3	SCREW TORNILLO	VITE SKRUE	SCHRAUBE PARAFUSO	VIS SCHROEF	040V
12		72951026		1	PLUG TAPÓN	TAPPO PROP	STOPFEN TAMPÃO	BOUCHON PLUG	050T
13		2445R152D1		2	O-RING JUNTA TÓRICA	ANELLO TOROIDALE O-RING	O-RING O-RING	JOINT TORIQUE O-RING	055A

UNIVERSAL JOINT ASSY P/N 87532117

E215B

Copyright © New Holland

3.070	01	p1	03/10

TRAVEL PIPING (LOWER)
TUBAZIONI TRASLAZIONE (INF.)
LEITUNGEN-UNTER
TUYAUTERIES INFERIEURES

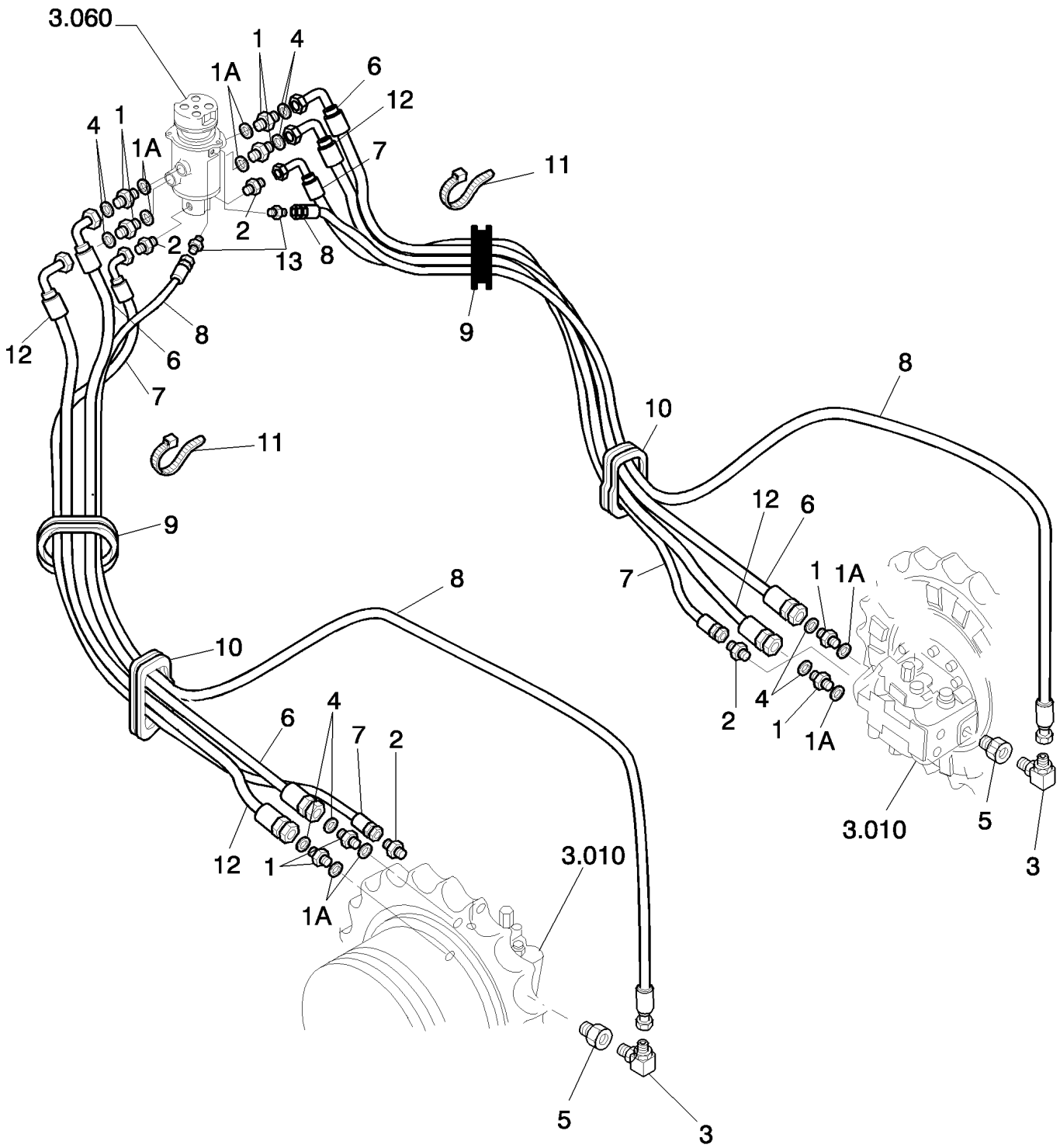

Copyright © New Holland

TUBERIAS INFERIORES
TRAVEL PIPING (LOWER)
TRAVEL PIPING (LOWER)
TRAVEL PIPING (LOWER)

R	N	P.N.	MOD	Q	Description Denominacion	Descrizione Beskrivelse	Bezeichnung Denominação	Description Beschrijving	L.C.
1		71404365		8	HYD CONNECTOR, - ASS' CONECTOR HIDRÁULIC(	CONNETTORE IDRAULI(HYDRAULIKSTIK	HYDR STECKVERBINDE CONECTOR HID.	CONNECTEUR HYDRAU HYDRAULISCHE AANSL	020R
1A		71404161		1	O-RING JUNTA TÓRICA	ANELLO TOROIDALE O-RING	O-RING O-RING	JOINT TORIQUE O-RING	055A
2		72217405		4	HYD CONNECTOR CONECTOR HIDRÁULIC(	CONNETTORE IDRAULI(HYDRAULIKSTIK	HYDR STECKVERBINDE CONECTOR HID.	CONNECTEUR HYDRAU HYDRAULISCHE AANSL	020R
3		72214524		2	HYD CONNECTOR CONECTOR HIDRÁULIC(	CONNETTORE IDRAULI(HYDRAULIKSTIK	HYDR STECKVERBINDE CONECTOR HID.	CONNECTEUR HYDRAU HYDRAULISCHE AANSL	020R
4		70923843		8	SNAP RING ANILLO DE RESORTE	ANELLO ELASTICO LÅSERING	SPRENGRING ANEL	ANNEAU D'ARRET VEERRING	054A
5		72202385		2	HYD CONNECTOR CONECTOR HIDRÁULIC(	CONNETTORE IDRAULI(HYDRAULIKSTIK	HYDR STECKVERBINDE CONECTOR HID.	CONNECTEUR HYDRAU HYDRAULISCHE AANSL	020R
6		72203002		2	HYDRAULIC HOSE TUBO HIDRÁULICO	TUBO FLESSIBILE IDRAI SLANGE, HYDRAULIK	HYDRAULIKSCHLAUCH MANGUEIRA HIDRÁULIC	FLEXIBLE HYDRAULIQU HYDRAULISCHE SLANG	A058
7		87557379		2	FLEXIBLE HOSE TUBO FLEXIBLE	TUBO FLESSIBILE FLEKSIBEL SLANGE	BIEGSAMER SCHLAUCH MANGUEIRA FLEXÍVEL	TUYAU FLEXIBLE FLEXIBELE SLANG	192T
8		87557380		2	FLEXIBLE HOSE TUBO FLEXIBLE	TUBO FLESSIBILE FLEKSIBEL SLANGE	BIEGSAMER SCHLAUCH MANGUEIRA FLEXÍVEL	TUYAU FLEXIBLE FLEXIBELE SLANG	192T
9		72230304		2	INSULATOR AISLADOR	ISOLATORE ISOLATOR	ISOLATOR ISOLADOR	ISOLANT ISOLATIE	085I
10		72203003		2	INSULATOR AISLADOR	ISOLATORE ISOLATOR	ISOLATOR ISOLADOR	ISOLANT ISOLATIE	085I
11		4982514		6	CABLE STRAP BANDA DE CABLE	FASCETTA PER CAVO KABELSTROP	KABELBINDER BRAÇADEIRA DE CABO	BRIDE DE CABLE BUNDELBAND	P716
12		72203001		2	HYDRAULIC HOSE TUBO HIDRÁULICO	TUBO FLESSIBILE IDRAI SLANGE, HYDRAULIK	HYDRAULIKSCHLAUCH MANGUEIRA HIDRÁULIC	FLEXIBLE HYDRAULIQU HYDRAULISCHE SLANG	A058
13		72214744		2	HYD CONNECTOR CONECTOR HIDRÁULIC(	CONNETTORE IDRAULI(HYDRAULIKSTIK	HYDR STECKVERBINDE CONECTOR HID.	CONNECTEUR HYDRAU HYDRAULISCHE AANSL	020R

Copyright © New Holland

Copyright © New Holland

SECTION INDEX
Tool Kits-Decals

4.200	01	TOOLS KIT
4.520	01	DECALS
4.520	02	DECALS
4.520	03	DECALS
4.520	04	DECALS

Copyright © New Holland

4.200	01	p1	03/10

TOOLS KIT
ACCESSORI MANUTENZIONE
BORDWERKZEUG
OUTILS

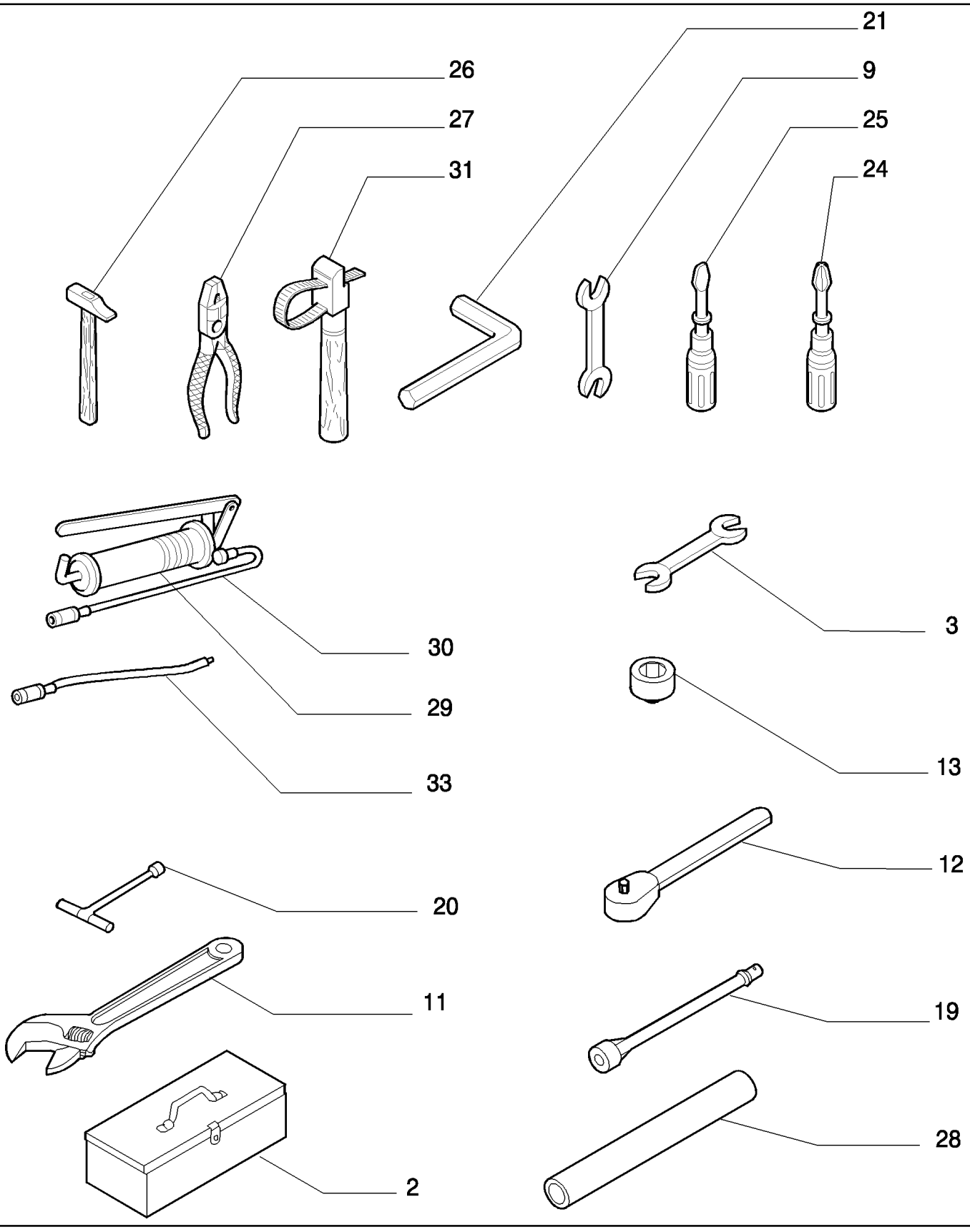

Copyright © New Holland

HERRAMIENTAS
TOOLS KIT
TOOLS KIT
TOOLS KIT

R	N	P.N.	MOD	Q	Description Denominacion	Descrizione Beskrivelse	Bezeichnung Denominação	Description Beschrijving	L.C.
2		71405981		1	TOOL BOX CAJA DE HERRAMIENTA	CASSETTA ATTREZZI VÆRKTØJSKASSE	WERKZEUGKASTEN CAIXA DE FERRAMENTA	BOITE A OUTILS GEREEDSCHAPSKIST	087C
3		14549879		1	OPEN END WRENCH, 19X22 LLAVE PLANA	CHIAVE A FORCHETTA FASTNØGLE	MAULSCHLÜSSEL CHAVE PLANA	CLE PLATE STEEKSLEUTEL	P414
3		14522421		1	OPEN END WRENCH, 13X17 LLAVE PLANA	CHIAVE A FORCHETTA FASTNØGLE	MAULSCHLÜSSEL CHAVE PLANA	CLE PLATE STEEKSLEUTEL	P414
3		14549579		1	OPEN END WRENCH, 12X14 LLAVE PLANA	CHIAVE A FORCHETTA FASTNØGLE	MAULSCHLÜSSEL CHAVE PLANA	CLE PLATE STEEKSLEUTEL	P414
3		14525021		1	OPEN END WRENCH, 8X10 LLAVE PLANA	CHIAVE A FORCHETTA FASTNØGLE	MAULSCHLÜSSEL CHAVE PLANA	CLE PLATE STEEKSLEUTEL	P414
3		14550079		1	OPEN END WRENCH, 24X27 LLAVE PLANA	CHIAVE A FORCHETTA FASTNØGLE	MAULSCHLÜSSEL CHAVE PLANA	CLE PLATE STEEKSLEUTEL	P414
9		71405982		1	KEY, LOCK, 30X32 LLAVE	CHIAVE NOEGLE,VAERKTOEJ	SCHLUESSEL CHAVE	CLEE DE SECURITEE SLEUTEL	150C
9		71405983		1	KEY, LOCK, 36X41 LLAVE	CHIAVE NOEGLE,VAERKTOEJ	SCHLUESSEL CHAVE	CLEE DE SECURITEE SLEUTEL	150C
11		71405985		1	KEY, LOCK LLAVE	CHIAVE NOEGLE,VAERKTOEJ	SCHLUESSEL CHAVE	CLEE DE SECURITEE SLEUTEL	150C
12		71405986		1	KEY, LOCK, 1/2" LLAVE	CHIAVE NOEGLE,VAERKTOEJ	SCHLUESSEL CHAVE	CLEE DE SECURITEE SLEUTEL	150C
13		71405987		1	KEY, 17 LLAVE	CHIAVE KILE	FEDERKEIL CHAVETA PARALELA	CLE SPIE	060L
13		71405988		1	KEY, LOCK, 19 LLAVE	CHIAVE NOEGLE,VAERKTOEJ	SCHLUESSEL CHAVE	CLEE DE SECURITEE SLEUTEL	150C
13		71405989		1	KEY, LOCK, 22 LLAVE	CHIAVE NOEGLE,VAERKTOEJ	SCHLUESSEL CHAVE	CLEE DE SECURITEE SLEUTEL	150C
13		71405990		1	KEY, 24 LLAVE	CHIAVE KILE	FEDERKEIL CHAVETA PARALELA	CLE SPIE	060L
13		71405991		1	KEY, 27 LLAVE	CHIAVE KILE	SCHLÜSSEL CHAVE	CLE SLEUTEL	P830
13		71405992		1	KEY, LOCK, 30 LLAVE	CHIAVE NOEGLE,VAERKTOEJ	SCHLUESSEL CHAVE	CLEE DE SECURITEE SLEUTEL	150C
19		71405993		1	SPECIAL TOOL HERRAMIENTA ESPECIA	ATTREZZO SPECIALE SPECIALVÆRKTØJ	SPEZIALWERKZEUG FERRAMENTA ESPECIA	OUTIL SPECIAL SPECIAAL GEREEDSCH	116A
20		71407471		1	KEY, LOCK, 11 LLAVE	CHIAVE NOEGLE,VAERKTOEJ	SCHLUESSEL CHAVE	CLEE DE SECURITEE SLEUTEL	150C
21		14534079		1	KEY, LOCK, 4 LLAVE	CHIAVE NOEGLE,VAERKTOEJ	SCHLUESSEL CHAVE	CLEE DE SECURITEE SLEUTEL	150C
21		14534279		1	KEY, LOCK, 6 LLAVE	CHIAVE NOEGLE,VAERKTOEJ	SCHLUESSEL CHAVE	CLEE DE SECURITEE SLEUTEL	150C
21		14534379		1	KEY, LOCK, 8 LLAVE	CHIAVE NOEGLE,VAERKTOEJ	SCHLUESSEL CHAVE	CLEE DE SECURITEE SLEUTEL	150C
21		14534479		1	KEY, 10 LLAVE	CHIAVE KILE	FEDERKEIL CHAVETA PARALELA	CLE SPIE	060L
21		14534579		1	SPECIAL WRENCH, 12 LLAVE ESPECIAL	CHIAVE SPECIALE SPECIALNØGLE	SPEZIALSCHLÜSSEL CHAVE ESPECIAL	CLE SPECIALE SPECIALE MOERSLEUTI	P083

Copyright © New Holland

4.200	01	p2	03/10

TOOLS KIT
ACCESSORI MANUTENZIONE
BORDWERKZEUG
OUTILS

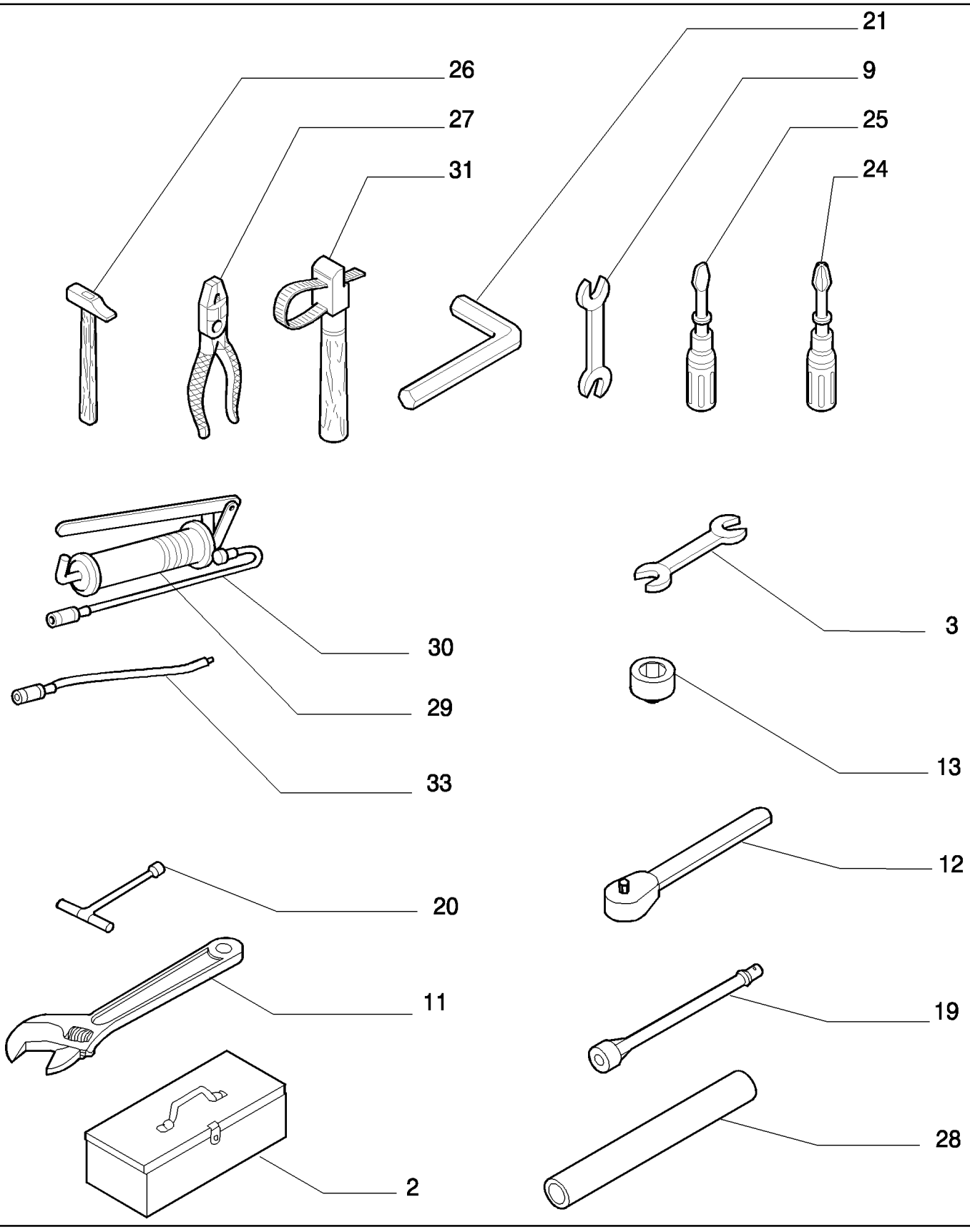

Copyright © New Holland

HERRAMIENTAS
TOOLS KIT
TOOLS KIT
TOOLS KIT

R	N	P.N.	MOD	Q	Description Denominacion	Descrizione Beskrivelse	Bezeichnung Denominação	Description Beschrijving	L.C.
24		14626090		1	SCREWDRIVER, 4.5X177 DESTORNILLADOR	CACCIAVITE SKRUETRÆKKER	SCHRAUBENDREHER CHAVE DE PARAFUSOS	TOURNEVIS SCHROEVENDRAAIER	010C
25		14626290		1	SCREWDRIVER, 6.5X303 DESTORNILLADOR	CACCIAVITE SKRUETRÆKKER	SCHRAUBENDREHER CHAVE DE PARAFUSOS	TOURNEVIS SCHROEVENDRAAIER	010C
26		14582790		1	HAMMER MARTILLO	MARTELLO HAMMER	HAMMER MARTELO	MARTEAU HAMER	051M
27		14626671		1	PLIERS PINZAS	PINZE TANG	ZANGE ALICATE	PINCES TANG	125P
28		71405995		1	RIGID TUBE TUBO RÍGIDO	TUBO RIGIDO STIFT RØR	ROHR TUBO RÍGIDO	TUYAU RIGIDE VASTE LEIDING	193T
29		71406374		1	HYDRAULIC PUMP BOMBA HIDRÁULICO	POMPA IDRAULICA HYDRAULIKPUMPE	HYDRAULIKPUMPE BOMBA HIDRÁULICA	POMPE HYDRAULIQUE HYDRAULISCHE POMP	155P
30		79028981		1	FLEXIBLE HOSE, For greasing TUBO FLEXIBLE	TUBO FLESSIBILE FLEKSIBEL SLANGE	BIEGSAMER SCHLAUCH MANGUEIRA FLEXÍVEL	TUYAU FLEXIBLE FLEXIBELE SLANG	192T
31		71491520		1	SPECIAL WRENCH LLAVE ESPECIAL	CHIAVE SPECIALE SPECIALNØGLE	SPEZIALSCHLÜSSEL CHAVE ESPECIAL	CLE SPECIALE SPECIALE MOERSLEUTI	P083
33		72209585		1	EXTENSION EXTENSIÓN	PROLUNGA FORLÆNGNING	ERWEITERUNG EXTENSÃO	RALLONGE VERLENGSTUK	226P

Copyright © New Holland

4.520	01	p1	03/10

DECALS
TARGHE
KLEBESCHILDER
PLAQUES

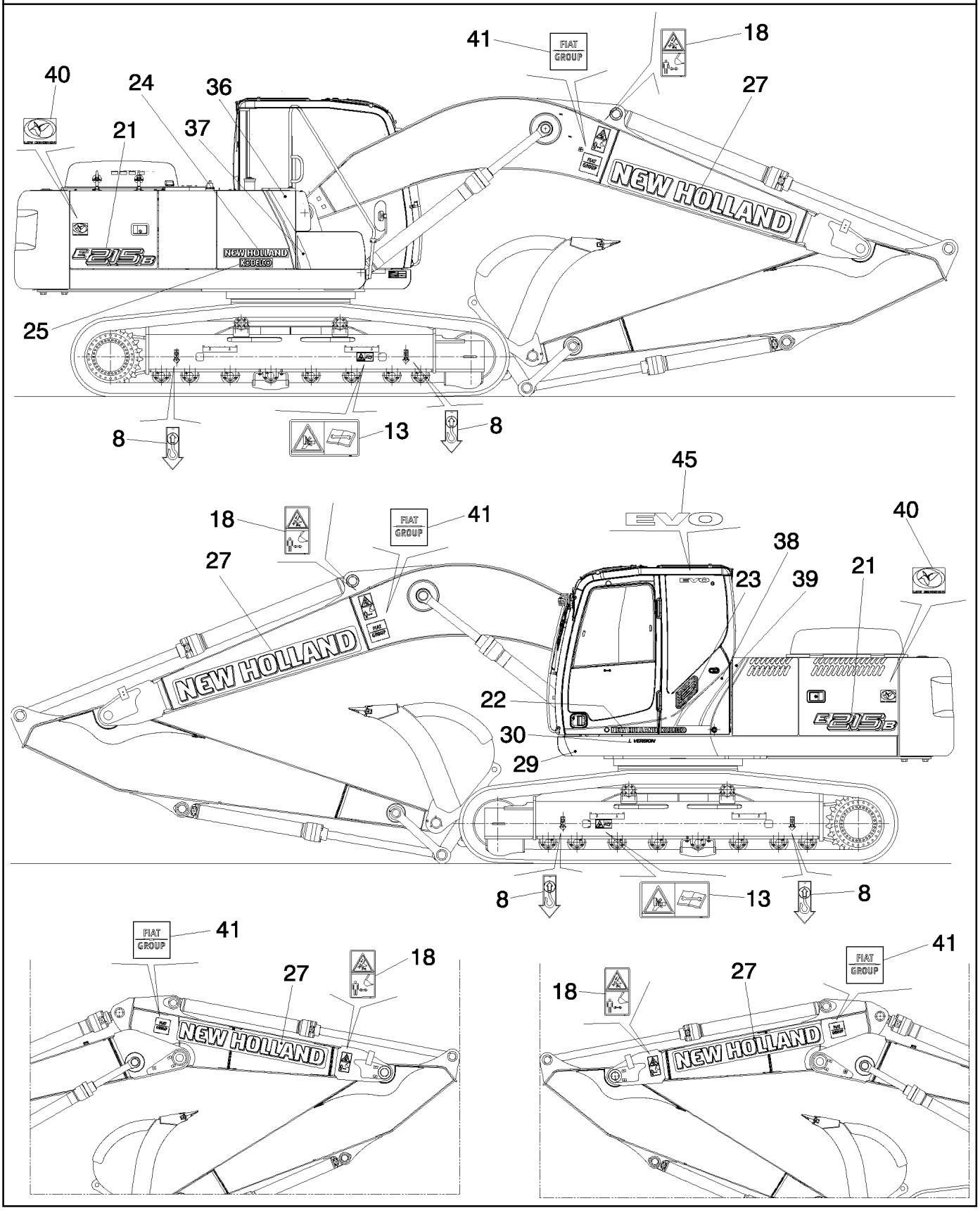

Copyright © New Holland

CALCOMANIAS
DECALS
DECALS
DECALS

R	N	P.N.	MOD	Q	Description Denominacion	Descrizione Beskrivelse	Bezeichnung Denominação	Description Beschrijving	L.C.
8		71433093		4	DECAL CALCOMANÍA	DECALCOMANIA TRANSFER	AUFKLEBER DÍSTICO	AUTOCOLLANT STICKER	012D
13		71433088		2	IDEOGRAM IDEOGRAMA	IDEOGRAMMA IDEOGRAM	IDEOGRAMM IDEOGRAMA	IDEOGRAMME IDEOGRAM	Z515
18		71433122		2	IDEOGRAM IDEOGRAMA	IDEOGRAMMA IDEOGRAM	IDEOGRAMM IDEOGRAMA	IDEOGRAMME IDEOGRAM	Z515
21		87597935		2	DECAL CALCOMANÍA	DECALCOMANIA TRANSFER	AUFKLEBER DÍSTICO	AUTOCOLLANT STICKER	012D
22		LB22T00016P1		1	DECAL CALCOMANÍA	DECALCOMANIA TRANSFER	AUFKLEBER DÍSTICO	AUTOCOLLANT STICKER	012D
23		LB22T00015P1		1	DECAL CALCOMANÍA	DECALCOMANIA TRANSFER	AUFKLEBER DÍSTICO	AUTOCOLLANT STICKER	012D
24		72130429		1	DECAL CALCOMANÍA	DECALCOMANIA TRANSFER	AUFKLEBER DÍSTICO	AUTOCOLLANT STICKER	012D
25		72130465		1	DECAL CALCOMANÍA	DECALCOMANIA TRANSFER	AUFKLEBER DÍSTICO	AUTOCOLLANT STICKER	012D
27		72130467		2	DECAL CALCOMANÍA	DECALCOMANIA TRANSFER	AUFKLEBER DÍSTICO	AUTOCOLLANT STICKER	012D
29		87597937		1	DECAL CALCOMANÍA	DECALCOMANIA TRANSFER	AUFKLEBER DÍSTICO	AUTOCOLLANT STICKER	012D
30	1	87597938		1	DECAL CALCOMANÍA	DECALCOMANIA TRANSFER	AUFKLEBER DÍSTICO	AUTOCOLLANT STICKER	012D
30	2	87600095		1	DECAL CALCOMANÍA	DECALCOMANIA TRANSFER	AUFKLEBER DÍSTICO	AUTOCOLLANT STICKER	012D
30	3	87600093		1	DECAL CALCOMANÍA	DECALCOMANIA TRANSFER	AUFKLEBER DÍSTICO	AUTOCOLLANT STICKER	012D
36		87597939		1	DECAL CALCOMANÍA	DECALCOMANIA TRANSFER	AUFKLEBER DÍSTICO	AUTOCOLLANT STICKER	012D
37		87597940		1	DECAL CALCOMANÍA	DECALCOMANIA TRANSFER	AUFKLEBER DÍSTICO	AUTOCOLLANT STICKER	012D
38		LB22T01002P1		1	DECAL CALCOMANÍA	DECALCOMANIA TRANSFER	AUFKLEBER DÍSTICO	AUTOCOLLANT STICKER	012D
39		YB22T01004P1		1	DECAL CALCOMANÍA	DECALCOMANIA TRANSFER	AUFKLEBER DÍSTICO	AUTOCOLLANT STICKER	012D
40		87701340		2	DECAL CALCOMANÍA	DECALCOMANIA TRANSFER	AUFKLEBER DÍSTICO	AUTOCOLLANT STICKER	012D
41		87702830		2	DECAL CALCOMANÍA	DECALCOMANIA TRANSFER	AUFKLEBER DÍSTICO	AUTOCOLLANT STICKER	012D
45		LB22T01004P1		1	DECAL CALCOMANÍA	DECALCOMANIA TRANSFER	AUFKLEBER DÍSTICO	AUTOCOLLANT STICKER	012D

(1) FOR VERSION 01-04
(2) FOR VERSION 02-05
(3) FOR VERSION 03-06

Copyright © New Holland

4.520	02	p1	03/10

DECALS
TARGHE
KLEBESCHILDER
PLAQUES

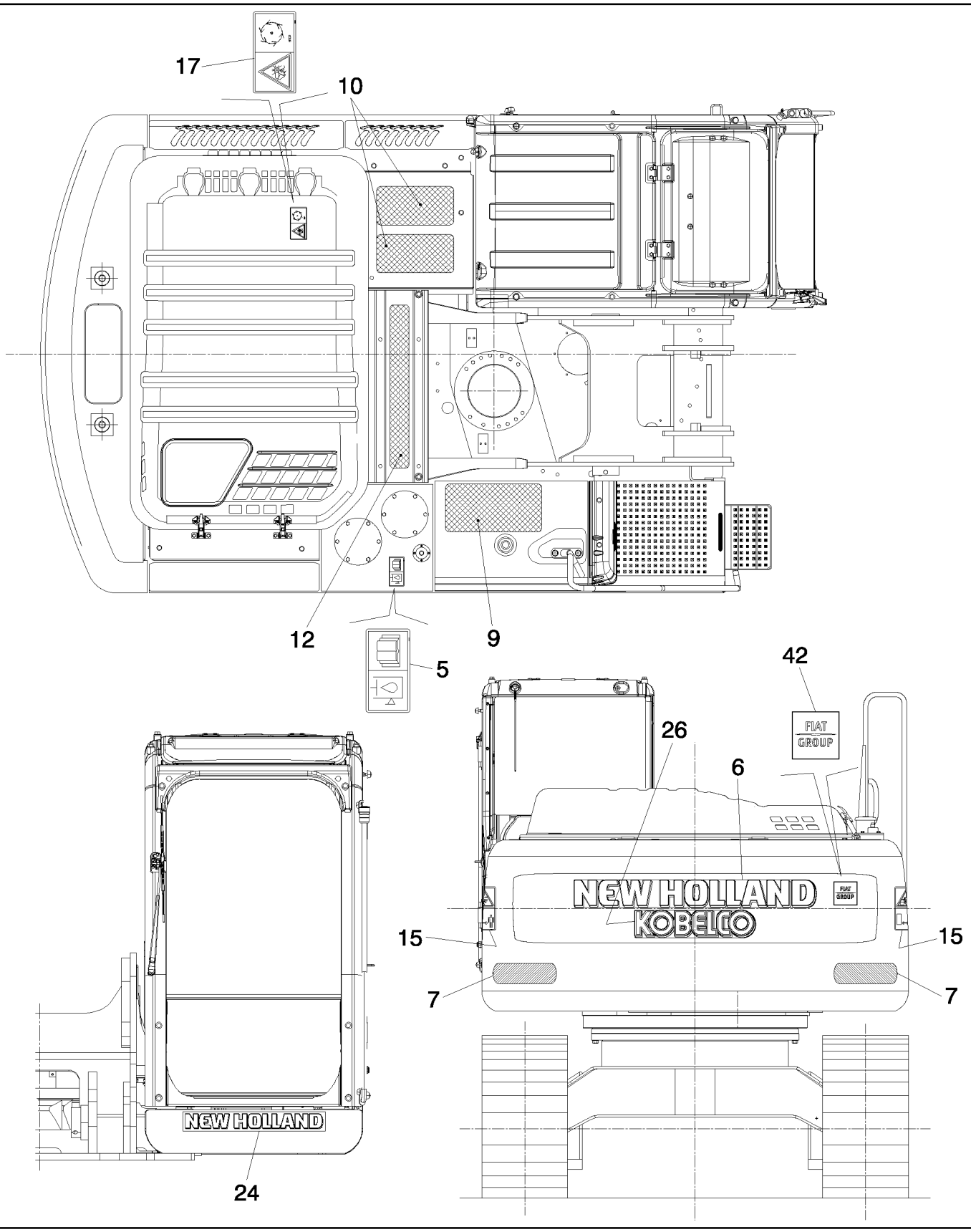

Copyright © New Holland

CALCOMANIAS
DECALS
DECALS
DECALS

R	N	P.N.	MOD	Q	Description Denominacion	Descrizione Beskrivelse	Bezeichnung Denominação	Description Beschrijving	L.C.
5		71468156		1	DATA PLAQUE PLACA DE DATOS	TARGHETTA DATI DATASKILT	DATENSCHILD PLACA IDENTIFICADOR/	PLAQUE D'IDENTIFICAT GEGEVENSPLAATJE	065T
6		87597934		1	DECAL CALCOMANÍA	DECALCOMANIA TRANSFER	AUFKLEBER DÍSTICO	AUTOCOLLANT STICKER	012D
7		72209583		2	REFLECTOR REFLECTOR	RIFLETTORE BAGREFLEKS	REFLEKTOR REFLECTOR	CATADIOPTRE REFLECTOR	090C
9		71468153		1	ANTI-SKID STRIP BANDA ANTIDESLIZAMI	NASTRO ANTISDRUCCI SKRIDSIKKER STRIMME	GLEITSCHUTZSTREIFEN FITA ANTI-DESLIZAMEN	BANDE ANTI-DERAPANT ANTISLIPSTROOK	407S
10		72207108		2	ANTI-SKID STRIP BANDA ANTIDESLIZAMI	NASTRO ANTISDRUCCI SKRIDSIKKER STRIMME	GLEITSCHUTZSTREIFEN FITA ANTI-DESLIZAMEN	BANDE ANTI-DERAPANT ANTISLIPSTROOK	407S
12		71469305		1	DECAL CALCOMANÍA	DECALCOMANIA TRANSFER	AUFKLEBER DÍSTICO	AUTOCOLLANT STICKER	012D
15		71433121		2	IDEOGRAM IDEOGRAMA	IDEOGRAMMA IDEOGRAM	IDEOGRAMM IDEOGRAMA	IDEOGRAMME IDEOGRAM	Z515
17		71433096		1	DECAL CALCOMANÍA	DECALCOMANIA TRANSFER	AUFKLEBER DÍSTICO	AUTOCOLLANT STICKER	012D
24		72130429		1	DECAL CALCOMANÍA	DECALCOMANIA TRANSFER	AUFKLEBER DÍSTICO	AUTOCOLLANT STICKER	012D
26		87597936		1	DECAL CALCOMANÍA	DECALCOMANIA TRANSFER	AUFKLEBER DÍSTICO	AUTOCOLLANT STICKER	012D
42		87691652		1	DECAL CALCOMANÍA	DECALCOMANIA TRANSFER	AUFKLEBER DÍSTICO	AUTOCOLLANT STICKER	012D

Copyright © New Holland

DECALS
TARGHE
KLEBESCHILDER
PLAQUES

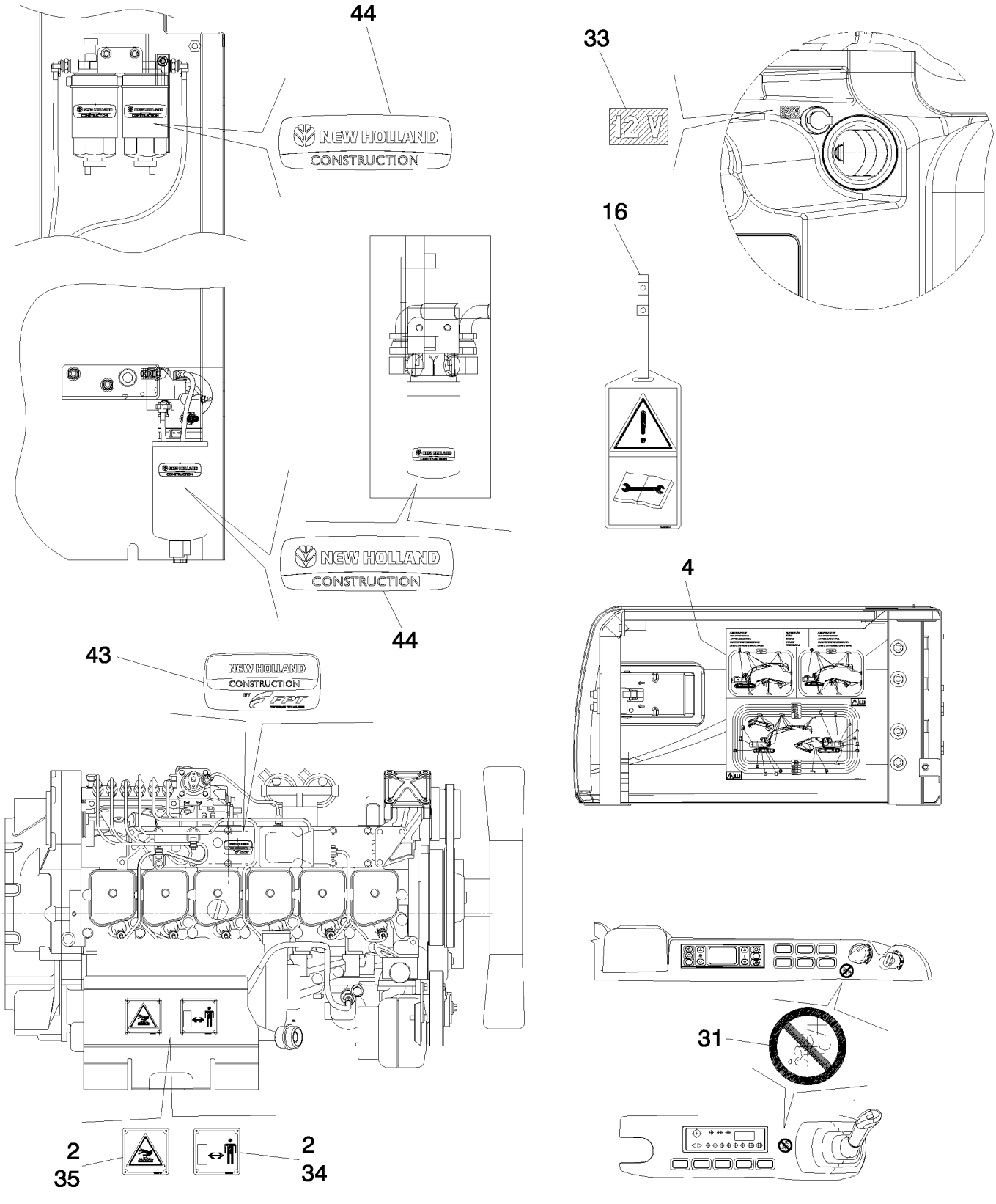

Copyright © New Holland

CALCOMANIAS
DECALS
DECALS
DECALS

R	N	P.N.	MOD	Q	Description Denominacion	Descrizione Beskrivelse	Bezeichnung Denominação	Description Beschrijving	L.C.
2		13683701		8	RIVET REMACHE	RIVETTO NITTE	NIET REBITE	RIVET KLINKNAGEL	055R
4		87600091		1	DECAL CALCOMANÍA	DECALCOMANIA TRANSFER	AUFKLEBER DÍSTICO	AUTOCOLLANT STICKER	012D
16		71433086		1	LABEL ETIQUETA	ETICHETTA ETIKET	KENNZEICHNUNG ETIQUETA	ETIQUETTE LABEL	077E
31		72116240		2	DECAL CALCOMANÍA	DECALCOMANIA TRANSFER	AUFKLEBER DÍSTICO	AUTOCOLLANT STICKER	012D
33		72211750		1	DECAL CALCOMANÍA	DECALCOMANIA TRANSFER	AUFKLEBER DÍSTICO	AUTOCOLLANT STICKER	012D
34		71468528		1	DATA PLAQUE PLACA DE DATOS	TARGHETTA DATI DATASKILT	DATENSCHILD PLACA IDENTIFICADOR/	PLAQUE D'IDENTIFICATI GEGEVENSPLAATJE	065T
35		71468529		1	DATA PLAQUE PLACA DE DATOS	TARGHETTA DATI DATASKILT	DATENSCHILD PLACA IDENTIFICADOR/	PLAQUE D'IDENTIFICATI GEGEVENSPLAATJE	065T
43		87490305		1	DECAL CALCOMANÍA	DECALCOMANIA TRANSFER	AUFKLEBER DÍSTICO	AUTOCOLLANT STICKER	012D
44		84123944		4	DECAL CALCOMANÍA	DECALCOMANIA TRANSFER	AUFKLEBER DÍSTICO	AUTOCOLLANT STICKER	012D

Copyright © New Holland

DECALS
TARGHE
KLEBESCHILDER
PLAQUES

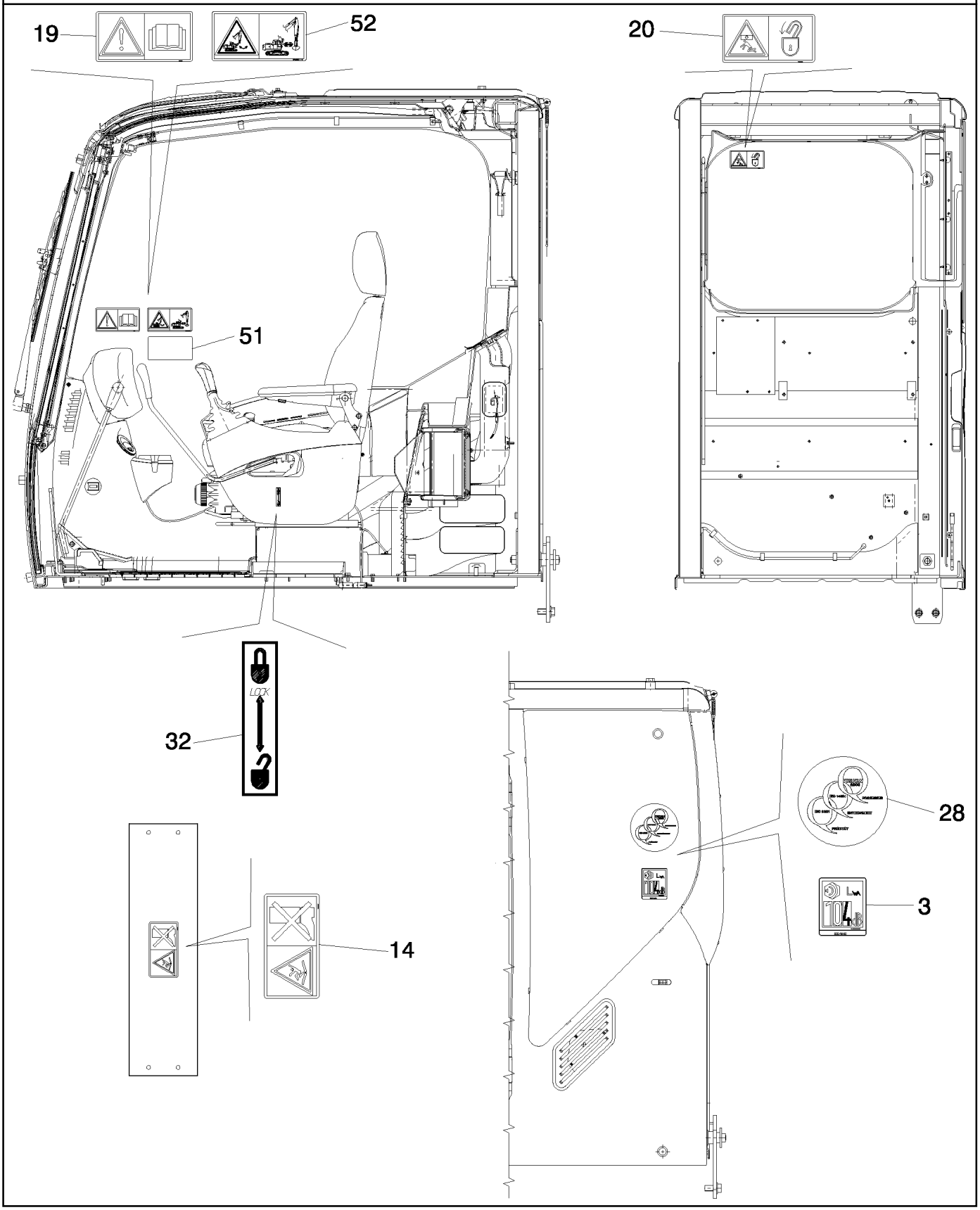

Copyright © New Holland

CALCOMANIAS
DECALS
DECALS
DECALS

R	N	P.N.	MOD	Q	Description Denominacion	Descrizione Beskrivelse	Bezeichnung Denominação	Description Beschrijving	L.C.
3		71477094		1	DATA PLAQUE PLACA DE DATOS	TARGHETTA DATI DATASKILT	DATENSCHILD PLACA IDENTIFICADOR/	PLAQUE D'IDENTIFICAT GEGEVENSPLAATJE	065T
14		71437694		1	DATA PLAQUE PLACA DE DATOS	TARGHETTA DATI DATASKILT	DATENSCHILD PLACA IDENTIFICADOR/	PLAQUE D'IDENTIFICAT GEGEVENSPLAATJE	065T
19		71433123		1	DECAL CALCOMANÍA	DECALCOMANIA TRANSFER	AUFKLEBER DÍSTICO	AUTOCOLLANT STICKER	012D
20		71433079		1	IDEOGRAM IDEOGRAMA	IDEOGRAMMA IDEOGRAM	IDEOGRAMM IDEOGRAMA	IDEOGRAMME IDEOGRAM	Z515
28		72211238		1	DECAL CALCOMANÍA	DECALCOMANIA TRANSFER	AUFKLEBER DÍSTICO	AUTOCOLLANT STICKER	012D
32		71406009		1	DATA PLAQUE PLACA DE DATOS	TARGHETTA DATI DATASKILT	DATENSCHILD PLACA IDENTIFICADOR/	PLAQUE D'IDENTIFICAT GEGEVENSPLAATJE	065T
51		71415031		1	IDEOGRAM IDEOGRAMA	IDEOGRAMMA IDEOGRAM	IDEOGRAMM IDEOGRAMA	IDEOGRAMME IDEOGRAM	Z515
52		87616673		1	DECAL CALCOMANÍA	DECALCOMANIA TRANSFER	AUFKLEBER DÍSTICO	AUTOCOLLANT STICKER	012D

Copyright © New Holland

Copyright © New Holland

SECTION INDEX
Optionals

5.0001	01	TRACK CHAIN (L=500MM) - VERSION (01-04) - OPTIONAL CODE 956000168
5.0002	01	TRACK CHAIN (L=600MM) - OPTIONAL CODE 956000248
5.0003	01	TRACK CHAIN (L=700MM) - OPTIONAL CODE 956000348
5.0004	01	TRACK CHAIN (L=800MM) - VERSION (02-03-05-06) - OPTIONAL CODE 956000528
5.0005	01	TRACK CHAIN (L=900MM) - VERSION (02-03-05-06) - OPTIONAL CODE 956000738
5.0013	01	DIPPER STICK (L=2.94M) - OPTIONAL CODE 781147078
5.0013	02	DIPPER STICK (L=2.94M) - OPTIONAL CODE 781147078
5.0013	03	DIPPER STICK (L=2.94M) - OPTIONAL CODE 781147078
5.0013	04	DIPPER STICK (L=2.94M) - OPTIONAL CODE 781147078
5.0020	01	HYDRAULIC HAMMER (L=2.08 MT) - OPTIONAL CODE 461226128 (01-02-03) - 461226138 (04-05-06)
5.0020	02	HYDRAULIC HAMMER (L=2.08 MT) - COMPONENTS - OPTIONAL CODE 461226128 (01-02-03) - 461226138 (04-05-06)
5.0020	03	HYDRAULIC HAMMER (L=2.08 MT) - COMPONENTS - OPTIONAL CODE 461226128 (01-02-03) - 461226138 (04-05-06)
5.0020	04	HYDRAULIC HAMMER (L=2.08 MT) - OPTIONAL CODE 461226128 (01-02-03) - 461226138 (04-05-06)
5.0020	05	HYDRAULIC HAMMER (L=2.08 MT) - OPTIONAL CODE 461226128 (01-02-03) - 461226138 (04-05-06)
5.0020	06	HYDRAULIC HAMMER (L=2.08 MT) - OPTIONAL CODE 461226128 (01-02-03)
5.0020	07	HYDRAULIC HAMMER (L=2.08 MT) - COMPONENTS - OPTIONAL CODE 461226128 (01-02-03) - 461226138 (04-05-06)
5.0020	08	HYDRAULIC HAMMER (L=2.08 MT) - OPTIONAL CODE 461226128 (01-02-03)
5.0020	09	HYDRAULIC HAMMER (L=2.08 MT) - OPTIONAL CODE 461226128 (01-02-03)
5.0020	10	HYDRAULIC HAMMER (L=2.08 MT) - OPTIONAL CODE 461226128 (01-02-03)
5.0020	11	HYDRAULIC HAMMER (L=2.08 MT) - OPTIONAL CODE 461226128 (01-02-03) - 461226138 (04-05-06)
5.0020	12	HYDRAULIC HAMMER (L=2.08 MT) - COMPONENTS - OPTIONAL CODE 461226128 (01-02-03) - 461226138 (04-05-06)
5.0020	13	HYDRAULIC HAMMER (L=2.08 MT) - OPTIONAL CODE 461226138 (04-05-06)
5.0020	14	HYDRAULIC HAMMER (L=2.08 MT) - OPTIONAL CODE 461226138 (04-05-06)
5.0020	15	HYDRAULIC HAMMER (L=2.08 MT) - OPTIONAL CODE 461226138 (04-05-06)
5.0020	16	HYDRAULIC HAMMER (L=2.08 MT) - OPTIONAL CODE 461226138 (04-05-06)
5.0020	17	HYDRAULIC HAMMER (L=2.08 MT) - OPTIONAL CODE 461226138 (04-05-06)
5.0020	18	HYDRAULIC HAMMER (L=2.08 MT) - OPTIONAL CODE 461226128 (01-02-03) - 461226138 (04-05-06)
5.0021	01	HYDRAULIC HAMMER (L=2.4 MT) - OPTIONAL CODE 461229068 (01-02-03) - 461229078 (04-05-06)
5.0021	02	HYDRAULIC HAMMER (L=2.4 MT) - COMPONENTS - OPTIONAL CODE 461229068 (01-02-03) - 461229078 (04-05-06)
5.0021	03	HYDRAULIC HAMMER (L=2.4 MT) - COMPONENTS - OPTIONAL CODE 461229068 (01-02-03) - 461229078 (04-05-06)
5.0021	04	HYDRAULIC HAMMER (L=2.4 MT) - OPTIONAL CODE 461229068 (01-02-03) - 461229078 (04-05-06)
5.0021	05	HYDRAULIC HAMMER (L=2.4 MT) - OPTIONAL CODE 461229068 (01-02-03) - 461229078 (04-05-06)
5.0021	06	HYDRAULIC HAMMER (L=2.4 MT) - OPTIONAL CODE 461229068 (01-02-03)
5.0021	07	HYDRAULIC HAMMER (L=2.4 MT) - COMPONENTS - OPTIONAL CODE 461229068 (01-02-03) - 461229078 (04-05-06)
5.0021	08	HYDRAULIC HAMMER (L=2.4 MT) - OPTIONAL CODE 461229068 (01-02-03)
5.0021	09	HYDRAULIC HAMMER (L=2.4 MT) - OPTIONAL CODE 461229068 (01-02-03)
5.0021	10	HYDRAULIC HAMMER (L=2.4 MT) - OPTIONAL CODE 461229068 (01-02-03)
5.0021	11	HYDRAULIC HAMMER (L=2.4 MT) - OPTIONAL CODE 461229068 (01-02-03) - 461229078 (04-05-06)

Copyright © New Holland

SECTION INDEX
Optionals

5.0021	12	HYDRAULIC HAMMER (L=2.4 MT) - COMPONENTS - OPTIONAL CODE 461229068 (01-02-03) - 461229078 (04-05-06)
5.0021	13	HYDRAULIC HAMMER (L=2.4 MT) - OPTIONAL CODE 461229078 (04-05-06)
5.0021	14	HYDRAULIC HAMMER (L=2.4 MT) - OPTIONAL CODE 461229078 (04-05-06)
5.0021	15	HYDRAULIC HAMMER (L=2.4 MT) - OPTIONAL CODE 461229078 (04-05-06)
5.0021	16	HYDRAULIC HAMMER (L=2.4 MT) - OPTIONAL CODE 461229078 (04-05-06)
5.0021	17	HYDRAULIC HAMMER (L=2.4 MT) - OPTIONAL CODE 461229078 (04-05-06)
5.0021	18	HYDRAULIC HAMMER (L=2.4 MT) - OPTIONAL CODE 461229068 (01-02-03) - 461229078 (04-05-06)
5.0022	01	DIPPER STICK (L=2.4M) - OPTIONAL CODE 781145128
5.0022	02	DIPPER STICK (L=2.4M) - OPTIONAL CODE 781145128
5.0022	03	DIPPER STICK (L=2.4M) - OPTIONAL CODE 781145128
5.0022	04	DIPPER STICK (L=2.4M) - OPTIONAL CODE 781145128
5.0023	01	HYDRAULIC HAMMER (L=2.94 MT) - OPTIONAL CODE 461232058 (01-02-03) - 461232068 (04-05-06)
5.0023	02	HYDRAULIC HAMMER (L=2.94 MT) - COMPONENTS - OPTIONAL CODE 461232058 (01-02-03) - 461232068 (04-05-06)
5.0023	03	HYDRAULIC HAMMER (L=2.94 MT) - COMPONENTS - OPTIONAL CODE 461232058 (01-02-03) - 461232068 (04-05-06)
5.0023	04	HYDRAULIC HAMMER (L=2.94 MT) - OPTIONAL CODE 461232058 (01-02-03) - 461232068 (04-05-06)
5.0023	05	HYDRAULIC HAMMER (L=2.94 MT) - OPTIONAL CODE 461232058 (01-02-03) - 461232068 (04-05-06)
5.0023	06	HYDRAULIC HAMMER (L=2.94 MT) - OPTIONAL CODE 461232058 (01-02-03)
5.0023	07	HYDRAULIC HAMMER (L=2.94 MT) - COMPONENTS - OPTIONAL CODE 461232058 (01-02-03) - 461232068 (04-05-06)
5.0023	08	HYDRAULIC HAMMER (L=2.94 MT) - OPTIONAL CODE 461232058 (01-02-03)
5.0023	09	HYDRAULIC HAMMER (L=2.94 MT) - OPTIONAL CODE 461232058 (01-02-03)
5.0023	10	HYDRAULIC HAMMER (L=2.94 MT) - OPTIONAL CODE 461232058 (01-02-03)
5.0023	11	HYDRAULIC HAMMER (L=2.94 MT) - OPTIONAL CODE 461232058 (01-02-03) - 461232068 (04-05-06)
5.0023	12	HYDRAULIC HAMMER (L=2.94 MT) - COMPONENTS - OPTIONAL CODE 461232058 (01-02-03) - 461232068 (04-05-06)
5.0023	13	HYDRAULIC HAMMER (L=2.94 MT) - OPTIONAL CODE 461232068 (04-05-06)
5.0023	14	HYDRAULIC HAMMER (L=2.94 MT) - OPTIONAL CODE 461232068 (04-05-06)
5.0023	15	HYDRAULIC HAMMER (L=2.94 MT) - OPTIONAL CODE 461232068 (04-05-06)
5.0023	16	HYDRAULIC HAMMER (L=2.94 MT) - OPTIONAL CODE 461232068 (04-05-06)
5.0023	17	HYDRAULIC HAMMER (L=2.94 MT) - OPTIONAL CODE 461232068 (04-05-06)
5.0023	18	HYDRAULIC HAMMER (L=2.94 MT) - OPTIONAL CODE 461232058 (01-02-03) - 461232068 (04-05-06)
5.0024	01	HYDRAULIC HAMMER (L=3.5 MT) - OPTIONAL CODE 461235028 (01-02-03) - 461235038 (04-05-06)
5.0024	02	HYDRAULIC HAMMER (L=3.5 MT) - COMPONENTS - OPTIONAL CODE 461235028 (01-02-03) - 461235038 (04-05-06)
5.0024	03	HYDRAULIC HAMMER (L=3.5 MT) - COMPONENTS - OPTIONAL CODE 461235028 (01-02-03) - 461235038 (04-05-06)
5.0024	04	HYDRAULIC HAMMER (L=3.5 MT) - OPTIONAL CODE 461235028 (01-02-03) - 461235038 (04-05-06)
5.0024	05	HYDRAULIC HAMMER (L=3.5 MT) - OPTIONAL CODE 461235028 (01-02-03) - 461235038 (04-05-06)
5.0024	06	HYDRAULIC HAMMER (L=3.5 MT) - OPTIONAL CODE 461235028 (01-02-03)
5.0024	07	HYDRAULIC HAMMER (L=3.5 MT) - COMPONENTS - OPTIONAL CODE 461235028 (01-02-03) - 461235038 (04-05-06)
5.0024	08	HYDRAULIC HAMMER (L=3.5 MT) - OPTIONAL CODE 461235028 (01-02-03)
5.0024	09	HYDRAULIC HAMMER (L=3.5 MT) - OPTIONAL CODE 461235028 (01-02-03)

Copyright © New Holland

SECTION INDEX
Optionals

5.0024	10	HYDRAULIC HAMMER (L=3.5 MT) - OPTIONAL CODE 461235028 (01-02-03)
5.0024	11	HYDRAULIC HAMMER (L=3.5 MT) - OPTIONAL CODE 461235028 (01-02-03) - 461235038 (04-05-06)
5.0024	12	HYDRAULIC HAMMER (L=3.5 MT) - COMPONENTS - OPTIONAL CODE 461235028 (01-02-03) - 461235038 (04-05-06)
5.0024	13	HYDRAULIC HAMMER (L=3.5 MT) - OPTIONAL CODE 461235038 (04-05-06)
5.0024	14	HYDRAULIC HAMMER (L=3.5 MT) - OPTIONAL CODE 461235038 (04-05-06)
5.0024	15	HYDRAULIC HAMMER (L=3.5 MT) - OPTIONAL CODE 461235038 (04-05-06)
5.0024	16	HYDRAULIC HAMMER (L=3.5 MT) - OPTIONAL CODE 461235038 (04-05-06)
5.0024	17	HYDRAULIC HAMMER (L=3.5 MT) - OPTIONAL CODE 461235038 (04-05-06)
5.0024	18	HYDRAULIC HAMMER (L=3.5 MT) - OPTIONAL CODE 461235028 (01-02-03) - 461235038 (04-05-06)
5.0032	01	BIODEGRADABLE OIL - OPTIONAL CODE 781489018 (01-02-03) - 781489008 (04-05-06)
5.0038	01	DIPPER STICK (L=3.5M) - OPTIONAL CODE 781149028
5.0038	02	DIPPER STICK (L=3.5M) - OPTIONAL CODE 781149028
5.0038	03	DIPPER STICK (L=3.5M) - OPTIONAL CODE 781149028
5.0038	04	DIPPER STICK (L=3.5M) - OPTIONAL CODE 781149028
5.0040	01	MONITOR INSTALLATION - OPTIONAL CODE 461223048
5.0040	02	MONITOR INSTALLATION - OPTIONAL CODE 461223048
5.0040	03	MONITOR INSTALLATION - OPTIONAL CODE 461223048
5.0042	01	LOWER FRAME GUARD - OPTIONAL CODE 781624068
5.0043	01	ARM PROTECTION - OPTIONAL CODE 461220008
5.0052	01	TRACK GUIDE - OPTIONAL CODE 781652048
5.0076	01	BUCKET ROTATION (L=2.08 MT) - OPTIONAL CODE 461241148 (01-02-03) - 461241158 (04-05-06)
5.0076	02	BUCKET ROTATION (L=2.08 MT) - COMPONENTS - OPTIONAL CODE 461241148 (01-02-03) - 461241158 (04-05-06)
5.0076	03	BUCKET ROTATION (L=2.08 MT) - OPTIONAL CODE 461241148 (01-02-03)
5.0076	04	BUCKET ROTATION (L=2.08 MT) - OPTIONAL CODE 461241158 (04-05-06)
5.0076	05	BUCKET ROTATION (L=2.08 MT) - OPTIONAL CODE 461241148 (01-02-03) - 461241158 (04-05-06)
5.0076	06	BUCKET ROTATION (L=2.08 MT) - COMPONENTS - OPTIONAL CODE 461241148 (01-02-03) - 461241158 (04-05-06)
5.0076	07	BUCKET ROTATION (L=2.08 MT) - OPTIONAL CODE 461241148 (01-02-03) - 461241158 (04-05-06)
5.0076	08	BUCKET ROTATION (L=2.08 MT) - COMPONENTS - OPTIONAL CODE 461241148 (01-02-03) - 461241158 (04-05-06)
5.0076	09	BUCKET ROTATION (L=2.08 MT) - COMPONENTS - OPTIONAL CODE 461241148 (01-02-03) - 461241158 (04-05-06)
5.0076	10	BUCKET ROTATION (L=2.08 MT) - OPTIONAL CODE 461241148 (01-02-03) - 461241158 (04-05-06)
5.0076	11	BUCKET ROTATION (L=2.08 MT) - OPTIONAL CODE 461241148 (01-02-03)
5.0076	12	BUCKET ROTATION (L=2.08 MT) - OPTIONAL CODE 461241158 (04-05-06)
5.0076	13	BUCKET ROTATION (L=2.08 MT) - OPTIONAL CODE 461241158 (04-05-06)
5.0076	14	BUCKET ROTATION (L=2.08 MT) - OPTIONAL CODE 461241148 (01-02-03) - 461241158 (04-05-06)
5.0076	15	BUCKET ROTATION (L=2.08 MT) - OPTIONAL CODE 461241148 (01-02-03) - 461241158 (04-05-06)
5.0077	01	BUCKET ROTATION (L=2.4 MT) - OPTIONAL CODE 461244068 (01-02-03) - 461244078 (04-05-06)
5.0077	02	BUCKET ROTATION (L=2.4 MT) - OPTIONAL CODE 461244068 (01-02-03)
5.0077	03	BUCKET ROTATION (L=2.4 MT) - OPTIONAL CODE 461244078 (04-05-06)
5.0077	04	BUCKET ROTATION (L=2.4 MT) - OPTIONAL CODE 461244068 (01-02-03) - 461244078 (04-05-06)

Copyright © New Holland

SECTION INDEX
Optionals

5.0077	05	BUCKET ROTATION (L=2.4 MT) - OPTIONAL CODE 461244068 (01-02-03) - 461244078 (04-05-06)
5.0077	06	BUCKET ROTATION (L=2.4 MT) - OPTIONAL CODE 461244068 (01-02-03) - 461244078 (04-05-06)
5.0077	07	BUCKET ROTATION (L=2.4 MT) - OPTIONAL CODE 461244068 (01-02-03)
5.0077	08	BUCKET ROTATION (L=2.4 MT) - OPTIONAL CODE 461244078 (04-05-06)
5.0077	09	BUCKET ROTATION (L=2.4 MT) - OPTIONAL CODE 461244078 (04-05-06)
5.0077	10	BUCKET ROTATION (L=2.4 MT) - OPTIONAL CODE 461244068 (01-02-03) - 461244078 (04-05-06)
5.0077	11	BUCKET ROTATION (L=2.4 MT) - OPTIONAL CODE 461244068 (01-02-03) - 461244078 (04-05-06)
5.0078	01	BUCKET ROTATION (L=2.94 MT) - OPTIONAL CODE 461247058 (01-02-03) - 461247068 (04-05-06)
5.0078	02	BUCKET ROTATION (L=2.94 MT) - OPTIONAL CODE 461247058 (01-02-03)
5.0078	03	BUCKET ROTATION (L=2.94 MT) - OPTIONAL CODE 461247068 (04-05-06)
5.0078	04	BUCKET ROTATION (L=2.94 MT) - OPTIONAL CODE 461247058 (01-02-03) - 461247068 (04-05-06)
5.0078	05	BUCKET ROTATION (L=2.94 MT) - OPTIONAL CODE 461247058 (01-02-03) - 461247068 (04-05-06)
5.0078	06	BUCKET ROTATION (L=2.94 MT) - OPTIONAL CODE 461247058 (01-02-03) - 461247068 (04-05-06)
5.0078	07	BUCKET ROTATION (L=2.94 MT) - OPTIONAL CODE 461247058 (01-02-03)
5.0078	08	BUCKET ROTATION (L=2.94 MT) - OPTIONAL CODE 461247068 (04-05-06)
5.0078	09	BUCKET ROTATION (L=2.94 MT) - OPTIONAL CODE 461247068 (04-05-06)
5.0078	10	BUCKET ROTATION (L=2.94 MT) - OPTIONAL CODE 461247058 (01-02-03) - 461247068 (04-05-06)
5.0078	11	BUCKET ROTATION (L=2.94 MT) - OPTIONAL CODE 461247058 (01-02-03) - 461247068 (04-05-06)
5.0079	01	BUCKET ROTATION (L=3.5 MT) - OPTIONAL CODE 461250028 (01-02-03) - 461250038 (04-05-06)
5.0079	02	BUCKET ROTATION (L=3.5 MT) - OPTIONAL CODE 461250028 (01-02-03)
5.0079	03	BUCKET ROTATION (L=3.5 MT) - OPTIONAL CODE 461250038 (04-05-06)
5.0079	04	BUCKET ROTATION (L=3.5 MT) - OPTIONAL CODE 461250028 (01-02-03) - 461250038 (04-05-06)
5.0079	05	BUCKET ROTATION (L=3.5 MT) - OPTIONAL CODE 461250028 (01-02-03) - 461250038 (04-05-06)
5.0079	06	BUCKET ROTATION (L=3.5 MT) - OPTIONAL CODE 461250028 (01-02-03) - 461250038 (04-05-06)
5.0079	07	BUCKET ROTATION (L=3.5 MT) - OPTIONAL CODE 461250028 (01-02-03)
5.0079	08	BUCKET ROTATION (L=3.5 MT) - OPTIONAL CODE 461250038 (04-05-06)
5.0079	09	BUCKET ROTATION (L=3.5 MT) - OPTIONAL CODE 461250038 (04-05-06)
5.0079	10	BUCKET ROTATION (L=3.5 MT) - OPTIONAL CODE 461250028 (01-02-03) - 461250038 (04-05-06)
5.0079	11	BUCKET ROTATION (L=3.5 MT) - OPTIONAL CODE 461250028 (01-02-03) - 461250038 (04-05-06)
5.0086	01	BOOM/ARM WITHOUT SAFETY VALVE - VERSION (01-02-03) - OPTIONAL CODE 461134028
5.0086	02	BOOM/ARM WITHOUT SAFETY VALVE - VERSION (01-02-03) - OPTIONAL CODE 461134028
5.0086	03	BOOM/ARM WITHOUT SAFETY VALVE - VERSION (01-02-03) - OPTIONAL CODE 461134028
5.0086	04	BOOM/ARM WITHOUT SAFETY VALVE - VERSION (01-02-03) - OPTIONAL CODE 461134028
5.0087	01	BOOM/ARM WITHOUT SAFETY VALVE - VERSION (04-05-06) - OPTIONAL CODE 461134038

Copyright © New Holland

SECTION INDEX
Optionals

5.0087	02	BOOM/ARM WITHOUT SAFETY VALVE - VERSION (04-05-06) - OPTIONAL CODE 461134038
5.0087	03	BOOM/ARM WITHOUT SAFETY VALVE - VERSION (04-05-06) - OPTIONAL CODE 461134038
5.0087	04	BOOM/ARM WITHOUT SAFETY VALVE - VERSION (04-05-06) - OPTIONAL CODE 461134038
5.0088	01	OBJECT HANDLING - VERSION (01-02-03) - OPTIONAL CODE 781583888
5.0088	02	OBJECT HANDLING - VERSION (01-02-03) - OPTIONAL CODE 781583888
5.0088	03	OBJECT HANDLING - VERSION (01-02-03) - OPTIONAL CODE 781583888
5.0088	04	OBJECT HANDLING - VERSION (01-02-03) - OPTIONAL CODE 781583888
5.0088	05	OBJECT HANDLING - VERSION (01-02-03) - OPTIONAL CODE 781583888
5.0088	06	OBJECT HANDLING - COMPONENTS - VERSION (01-02-03) - OPTIONAL CODE 781583888
5.0088	07	OBJECT HANDLING - VERSION (01-02-03) - OPTIONAL CODE 781583888
5.0088	08	OBJECT HANDLING - VERSION (01-02-03) - OPTIONAL CODE 781583888
5.0088	09	OBJECT HANDLING - VERSION (01-02-03) - OPTIONAL CODE 781583888
5.0089	01	OBJECT HANDLING - VERSION (04-05-06) - OPTIONAL CODE 781583898
5.0089	02	OBJECT HANDLING - VERSION (04-05-06) - OPTIONAL CODE 781583898
5.0089	03	OBJECT HANDLING - VERSION (04-05-06) - OPTIONAL CODE 781583898
5.0089	04	OBJECT HANDLING - VERSION (04-05-06) - OPTIONAL CODE 781583898
5.0089	05	OBJECT HANDLING - VERSION (04-05-06) - OPTIONAL CODE 781583898
5.0089	06	OBJECT HANDLING - COMPONENTS - VERSION (04-05-06) - OPTIONAL CODE 781583898
5.0089	07	OBJECT HANDLING - VERSION (04-05-06) - OPTIONAL CODE 781583898
5.0089	08	OBJECT HANDLING - VERSION (04-05-06) - OPTIONAL CODE 781583898
5.0089	09	OBJECT HANDLING - VERSION (04-05-06) - OPTIONAL CODE 781583898
5.0101	01	BUCKET - (L=750MM) - OPTIONAL CODE 781099008
5.0102	01	BUCKET - (L=850MM) - OPTIONAL CODE 781499008
5.0103	01	BUCKET - (L=1000MM) - OPTIONAL CODE 781107008
5.0104	01	BUCKET - (L=1200MM) - OPTIONAL CODE 781110008
5.0105	01	BUCKET - (L=1300MM) - OPTIONAL CODE 781112008
5.0106	01	BUCKET - (L=1500MM) - OPTIONAL CODE 781114008
5.0144	01	LINK ROD - OPTIONAL CODE 781479048
5.0148	01	HYDRAULIC QUICK COUPLING - OPTIONAL CODE 781128068
5.0148	02	HYDRAULIC QUICK COUPLING - COMPONENTS - OPTIONAL CODE 781128068
5.0156	01	SEAT AT MECHANICAL SUSPENSION - OPTIONAL CODE 781768078
5.0159	01	PNEUM. CUSHIONING HEATED SEAT - OPTIONAL CODE 781000058
5.0208	01	CAB GUARD AND CAB LIGHTS - OPTIONAL CODE 461488008
5.0208	02	CAB GUARD AND CAB LIGHTS - OPTIONAL CODE 461488008
5.0208	03	CAB GUARD AND CAB LIGHTS - OPTIONAL CODE 461488008
5.0208	04	CAB GUARD AND CAB LIGHTS - OPTIONAL CODE 461488008
5.0209	01	CAB GUARD - OPTIONAL CODE 781647118
5.0209	02	CAB GUARD - OPTIONAL CODE 781647118
5.0209	03	CAB GUARD - OPTIONAL CODE 781647118
5.0530	01	DIPPER STICK (L=2.08M) - OPTIONAL CODE 781491058
5.0530	02	DIPPER STICK (L=2.08M) - OPTIONAL CODE 781491058
5.0530	03	DIPPER STICK (L=2.08M) - OPTIONAL CODE 781491058
5.0530	04	DIPPER STICK (L=2.08M) - OPTIONAL CODE 781491058
5.0580	01	SUN CANOPY AND CAB LIGHTS - OPTIONAL CODE 461221018
5.0580	02	SUN CANOPY AND CAB LIGHTS - OPTIONAL CODE 461221018
5.0585	01	BEACON ASSY, ROTATING - OPTIONAL CODE 781427028
5.0585	02	BEACON ASSY, ROTATING - OPTIONAL CODE 781427028

Copyright © New Holland

5.0001	01	p1	03/10

TRACK CHAIN (L=500MM) - VERSION (01-04) - OPTIONAL CODE 956000168
CATENARIA (L=500MM) - VERSIONE (01-04) - CODICE VARIANTE 956000168
KEITENZUG (L=500MM) - VERSION (01-04) - OPTIONAL CODE 956000168
CHENILLES (L=500MM) - VERSION (01-04) - OPTIONAL CODE 956000168

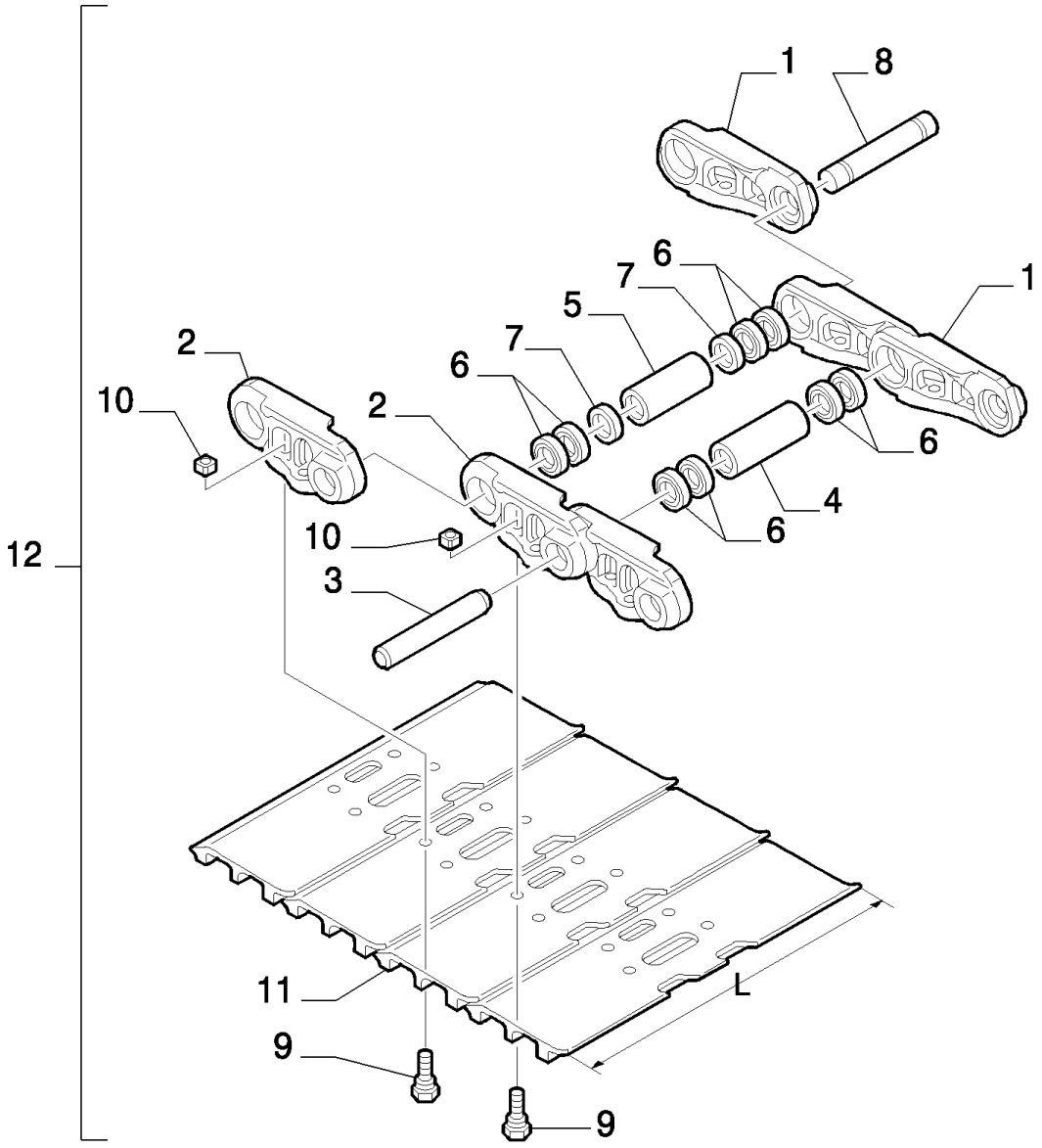

Copyright © New Holland

CADENA DE ORUGA (L=500MM) - VERSION (01-04) - OPTIONAL CODE 956000168
TRACK CHAIN (L=500MM) - VERSION (01-04) - OPTIONAL CODE 956000168
TRACK CHAIN (L=500MM) - VERSION (01-04) - OPTIONAL CODE 956000168
TRACK CHAIN (L=500MM) - VERSION (01-04) - OPTIONAL CODE 956000168

R	N	P.N.	MOD	Q	Description Denominacion	Descrizione Beskrivelse	Bezeichnung Denominação	Description Beschrijving	L.C.
1-8		72210200		1	CHAIN, - ASSY CADENA	CATENA KÆDE	KETTE CORRENTE	CHAINE KETTING	095C
1		72210186		49	TRACK LINK, - RIGHT ESLABÓN	MAGLIA DEL CINGOLO KÆDELASKE	KETTENGLIED ELO	MAILLON DE CHENILLE RUPSSCHAKEL	010M
2		72210187		49	TRACK LINK, - LEFT ESLABÓN	MAGLIA DEL CINGOLO KÆDELASKE	KETTENGLIED ELO	MAILLON DE CHENILLE RUPSSCHAKEL	010M
3		72210188		48	PIN PASADOR	PERNO STIFT	PIN PERNO	BROCHE PEN	080P
4		72210189		48	BUSHING CASQUILLO	BOCCOLA BØSNING	BUCHSE CASQUILHO	BAGUE BUS	095B
5		72210190		1	BUSHING CASQUILLO	BOCCOLA BØSNING	BUCHSE CASQUILHO	BAGUE BUS	095B
6		71461019		96	SEAL ANILLO DE CIERRE	GUARNIZIONE; TENUTA PAKNING	DICHTUNG VEDANTE	JOINT AFDICHTING	132A
7		72210191		2	SPACER SEPARADOR	DISTANZIALE AFSTANDSSTYKKE	DISTANZSTÜCK ESPAÇADOR	ENTRETOISE AFSTANDSSTUK	075D
8		72210192		1	PIN PASADOR	PERNO STIFT	PIN PERNO	BROCHE PEN	080P
9		72210193		196	SCREW TORNILLO	VITE SKRUE	SCHRAUBE PARAFUSO	VIS SCHROEF	040V
10		76030024		196	NUT TUERCA	DADO MØTRIK	MUTTER PORCA	ECROU MOER	010D
11		72210194		49	TRACK SHOE, 500 MM ZAPATA DE PISTA	PATTINO DEL CINGOLO LARVEFODSKASSE	BODENPLATTE SAPATA	TUILE DE CHENILLE RUPSBANDSCHAKEL	295S
12		87352425		2	TRACK ASSY, WITH 500 MM SHOES - ASSY CONJUNTO DE SEGUIM	COMPLESSIVO CINGOL LARVEFODSSÆT	LAUFKETTENBAUGRUP RASTO, COMPLETO	CHEMIN RUPSEENHEID	097C

Copyright © New Holland

5.0002	01	p1	03/10

TRACK CHAIN (L=600MM) - OPTIONAL CODE 956000248
CATENARIA (L=600MM) - CODICE VARIANTE 956000248
KEITENZUG (L=600MM) - OPTIONAL CODE 956000248
CHENILLES (L=600MM) - OPTIONAL CODE 956000248

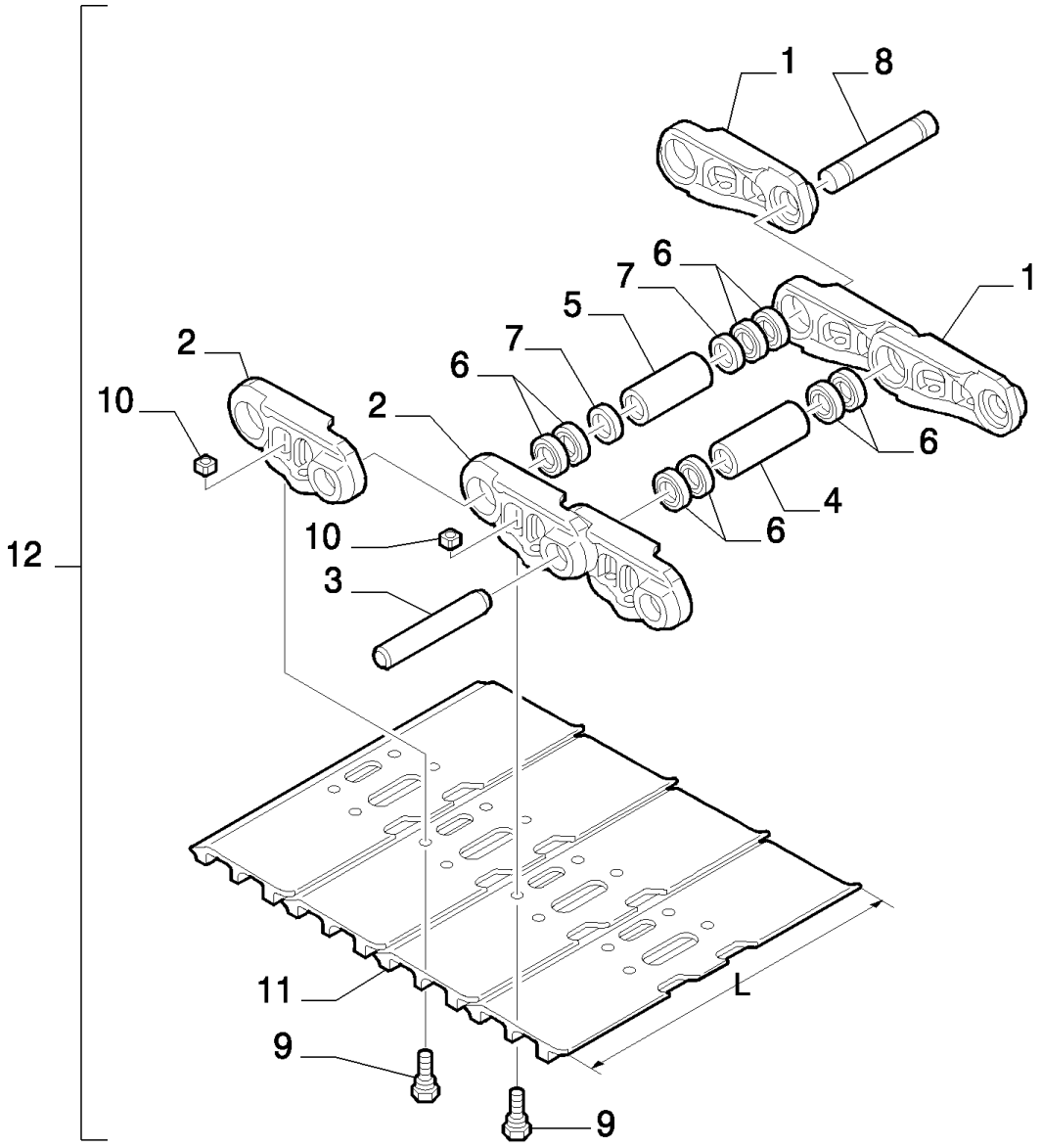

Copyright © New Holland

CADENA DE ORUGA (L=600MM) - OPTIONAL CODE 956000248
TRACK CHAIN (L=600MM) - OPTIONAL CODE 956000248
TRACK CHAIN (L=600MM) - OPTIONAL CODE 956000248
TRACK CHAIN (L=600MM) - OPTIONAL CODE 956000248

R	N	P.N.	MOD	Q	Description Denominacion	Descrizione Beskrivelse	Bezeichnung Denominação	Description Beschrijving	L.C.
1-8		72210200		1	CHAIN, - ASSY CADENA	CATENA KÆDE	KETTE CORRENTE	CHAINE KETTING	095C
1		72210186		49	TRACK LINK, - RIGHT ESLABÓN	MAGLIA DEL CINGOLO KÆDELASKE	KETTENGLIED ELO	MAILLON DE CHENILLE RUPSSCHAKEL	010M
2		72210187		49	TRACK LINK, - LEFT ESLABÓN	MAGLIA DEL CINGOLO KÆDELASKE	KETTENGLIED ELO	MAILLON DE CHENILLE RUPSSCHAKEL	010M
3		72210188		48	PIN PASADOR	PERNO STIFT	PIN PERNO	BROCHE PEN	080P
4		72210189		48	BUSHING CASQUILLO	BOCCOLA BØSNING	BUCHSE CASQUILHO	BAGUE BUS	095B
5		72210190		1	BUSHING CASQUILLO	BOCCOLA BØSNING	BUCHSE CASQUILHO	BAGUE BUS	095B
6		71461019		96	SEAL ANILLO DE CIERRE	GUARNIZIONE; TENUTA PAKNING	DICHTUNG VEDANTE	JOINT AFDICHTING	132A
7		72210191		2	SPACER SEPARADOR	DISTANZIALE AFSTANDSSTYKKE	DISTANZSTÜCK ESPAÇADOR	ENTRETOISE AFSTANDSSTUK	075D
8		72210192		1	PIN PASADOR	PERNO STIFT	PIN PERNO	BROCHE PEN	080P
9		72210193		196	SCREW TORNILLO	VITE SKRUE	SCHRAUBE PARAFUSO	VIS SCHROEF	040V
10		76030024		196	NUT TUERCA	DADO MØTRIK	MUTTER PORCA	ECROU MOER	010D
11		72210195		49	TRACK SHOE, 600 MM ZAPATA DE PISTA	PATTINO DEL CINGOLO LARVEFODSKASSE	BODENPLATTE SAPATA	TUILE DE CHENILLE RUPSBANDSCHAKEL	295S
12		72202489		2	TRACK ASSY, WITH 600 MM SHOES - ASSY CONJUNTO DE SEGUIM	COMPLESSIVO CINGOL LARVEFODSSÆT	LAUFKETTENBAUGRUP RASTO, COMPLETO	CHEMIN RUPSEENHEID	097C

Copyright © New Holland

5.0003	01	p1	03/10

TRACK CHAIN (L=700MM) - OPTIONAL CODE 956000348
CATENARIA (L=700MM) - CODICE VARIANTE 956000348
KEITENZUG (L=700MM) - OPTIONAL CODE 956000348
CHENILLES (L=700MM) - OPTIONAL CODE 956000348

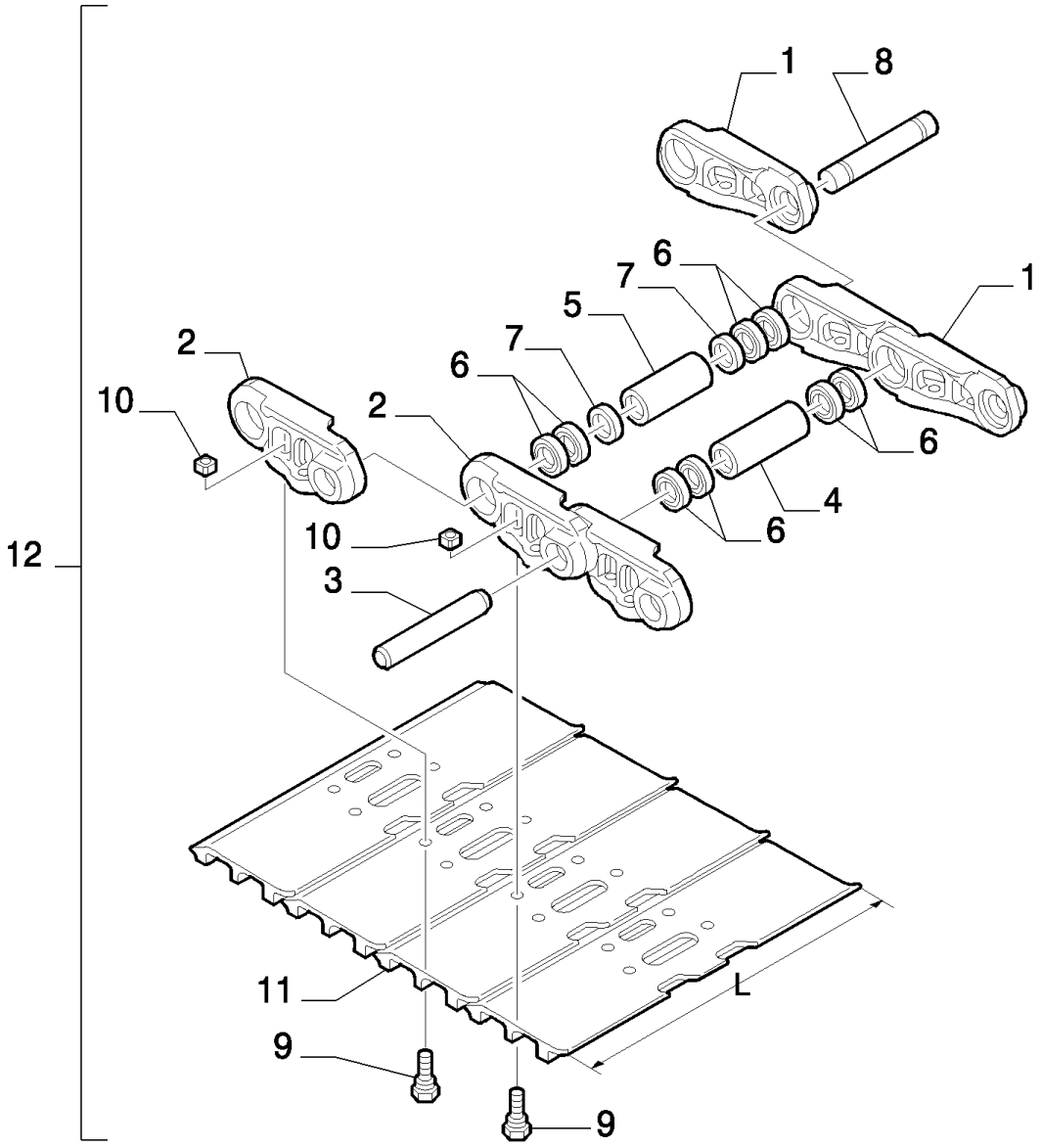

Copyright © New Holland

CADENA DE ORUGA (L=700MM) - OPTIONAL CODE 956000348
TRACK CHAIN (L=700MM) - OPTIONAL CODE 956000348
TRACK CHAIN (L=700MM) - OPTIONAL CODE 956000348
TRACK CHAIN (L=700MM) - OPTIONAL CODE 956000348

R	N	P.N.	MOD	Q	Description Denominacion	Descrizione Beskrivelse	Bezeichnung Denominação	Description Beschrijving	L.C.
1-8		72210200		1	CHAIN, - ASSY CADENA	CATENA KÆDE	KETTE CORRENTE	CHAINE KETTING	095C
1		72210186		49	TRACK LINK, - RIGHT ESLABÓN	MAGLIA DEL CINGOLO KÆDELASKE	KETTENGLIED ELO	MAILLON DE CHENILLE RUPSSCHAKEL	010M
2		72210187		49	TRACK LINK, - LEFT ESLABÓN	MAGLIA DEL CINGOLO KÆDELASKE	KETTENGLIED ELO	MAILLON DE CHENILLE RUPSSCHAKEL	010M
3		72210188		48	PIN PASADOR	PERNO STIFT	PIN PERNO	BROCHE PEN	080P
4		72210189		48	BUSHING CASQUILLO	BOCCOLA BØSNING	BUCHSE CASQUILHO	BAGUE BUS	095B
5		72210190		1	BUSHING CASQUILLO	BOCCOLA BØSNING	BUCHSE CASQUILHO	BAGUE BUS	095B
6		71461019		96	SEAL ANILLO DE CIERRE	GUARNIZIONE; TENUTA PAKNING	DICHTUNG VEDANTE	JOINT AFDICHTING	132A
7		72210191		2	SPACER SEPARADOR	DISTANZIALE AFSTANDSSTYKKE	DISTANZSTÜCK ESPAÇADOR	ENTRETOISE AFSTANDSSTUK	075D
8		72210192		1	PIN PASADOR	PERNO STIFT	PIN PERNO	BROCHE PEN	080P
9		72210193		196	SCREW TORNILLO	VITE SKRUE	SCHRAUBE PARAFUSO	VIS SCHROEF	040V
10		76030024		196	NUT TUERCA	DADO MØTRIK	MUTTER PORCA	ECROU MOER	010D
11		72210196		49	TRACK SHOE, 700 MM ZAPATA DE PISTA	PATTINO DEL CINGOLO LARVEFODSKASSE	BODENPLATTE SAPATA	TUILE DE CHENILLE RUPSBANDSCHAKEL	295S
12		72203521		2	TRACK ASSY, - WITH 700 MM SHOES - ASSY CONJUNTO DE SEGUIM	COMPLESSIVO CINGOL LARVEFODSSÆT	LAUFKETTENBAUGRUP RASTO, COMPLETO	CHEMIN RUPSEENHEID	097C

Copyright © New Holland

5.0004	01	p1	03/10

TRACK CHAIN (L=800MM) - VERSION (02-03-05-06) - OPTIONAL CODE 956000528
CATENARIA (L=800MM) - VERSIONE (02-03-05-06) - CODICE VARIANTE 956000528
KEITENZUG (L=800MM) - VERSION (02-03-05-06) - OPTIONAL CODE 956000528
CHENILLES (L=800MM) - VERSION (02-03-05-06) - OPTIONAL CODE 956000528

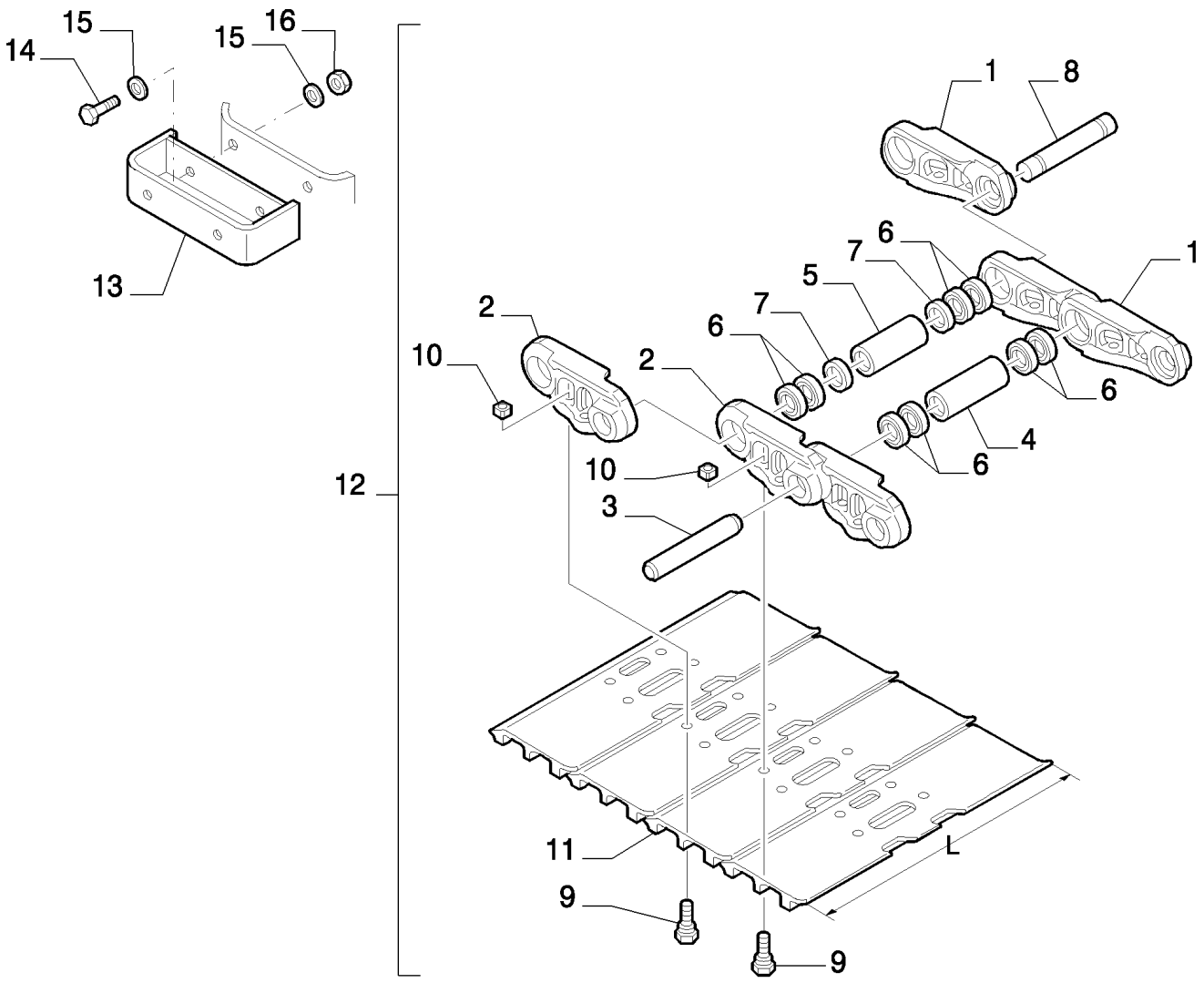

Copyright © New Holland

CADENA DE ORUGA (L=800MM) - VERSION (02-03-05-06) - OPTIONAL CODE 956000528
TRACK CHAIN (L=800MM) - VERSION (02-03-05-06) - OPTIONAL CODE 956000528
TRACK CHAIN (L=800MM) - VERSION (02-03-05-06) - OPTIONAL CODE 956000528
TRACK CHAIN (L=800MM) - VERSION (02-03-05-06) - OPTIONAL CODE 956000528

R	N	P.N.	MOD	Q	Description Denominacion	Descrizione Beskrivelse	Bezeichnung Denominação	Description Beschrijving	L.C.
1-8		72210200		1	CHAIN, - ASSY CADENA	CATENA KÆDE	KETTE CORRENTE	CHAINE KETTING	095C
1		72210186		49	TRACK LINK, - RIGHT ESLABÓN	MAGLIA DEL CINGOLO KÆDELASKE	KETTENGLIED ELO	MAILLON DE CHENILLE RUPSSCHAKEL	010M
2		72210187		49	TRACK LINK, - LEFT ESLABÓN	MAGLIA DEL CINGOLO KÆDELASKE	KETTENGLIED ELO	MAILLON DE CHENILLE RUPSSCHAKEL	010M
3		72210188		48	PIN PASADOR	PERNO STIFT	PIN PERNO	BROCHE PEN	080P
4		72210189		48	BUSHING CASQUILLO	BOCCOLA BØSNING	BUCHSE CASQUILHO	BAGUE BUS	095B
5		72210190		1	BUSHING CASQUILLO	BOCCOLA BØSNING	BUCHSE CASQUILHO	BAGUE BUS	095B
6		71461019		96	SEAL ANILLO DE CIERRE	GUARNIZIONE; TENUTA PAKNING	DICHTUNG VEDANTE	JOINT AFDICHTING	132A
7		72210191		2	SPACER SEPARADOR	DISTANZIALE AFSTANDSSTYKKE	DISTANZSTÜCK ESPAÇADOR	ENTRETOISE AFSTANDSSTUK	075D
8		72210192		1	PIN PASADOR	PERNO STIFT	PIN PERNO	BROCHE PEN	080P
9		72210193		196	SCREW TORNILLO	VITE SKRUE	SCHRAUBE PARAFUSO	VIS SCHROEF	040V
10		76030024		196	NUT TUERCA	DADO MØTRIK	MUTTER PORCA	ECROU MOER	010D
11		72210197		49	TRACK SHOE, 800 MM ZAPATA DE PISTA	PATTINO DEL CINGOLO LARVEFODSKASSE	BODENPLATTE SAPATA	TUILE DE CHENILLE RUPSBANDSCHAKEL	295S
12		72203523		2	TRACK ASSY, - WITH 800 MM SHOES - ASSY CONJUNTO DE SEGUIM	COMPLESSIVO CINGOL LARVEFODSSÆT	LAUFKETTENBAUGRUP RASTO, COMPLETO	CHEMIN RUPSEENHEID	097C
13		71472914		4	SPACER SEPARADOR	DISTANZIALE AFSTANDSSTYKKE	DISTANZSTÜCK ESPAÇADOR	ENTRETOISE AFSTANDSSTUK	075D
14		11113034		8	SCREW, 12X45 TORNILLO	VITE SKRUE	SCHRAUBE PARAFUSO	VIS SCHROEF	040V
15		14496721		16	WASHER, M12 x 24 x 2.5 ARANDELA	RONDELLA FLADSKIVE	UNTERLEGSCHEIBE ANILHA	RONDELLE SLUITRING	131R
16		11702921		8	NUT, M12, Cl 10 TUERCA	DADO MØTRIK	MUTTER PORCA	ECROU MOER	010D

Copyright © New Holland

5.0005	01	p1	03/10

TRACK CHAIN (L=900MM) - VERSION (02-03-05-06) - OPTIONAL CODE 956000738
CATENARIA (L=900MM) - VERSIONE (02-03-05-06) - CODICE VARIANTE 956000738
KEITENZUG (L=900MM) - VERSION (02-03-05-06) - OPTIONAL CODE 956000738
CHENILLES (L=900MM) - VERSION (02-03-05-06) - OPTIONAL CODE 956000738

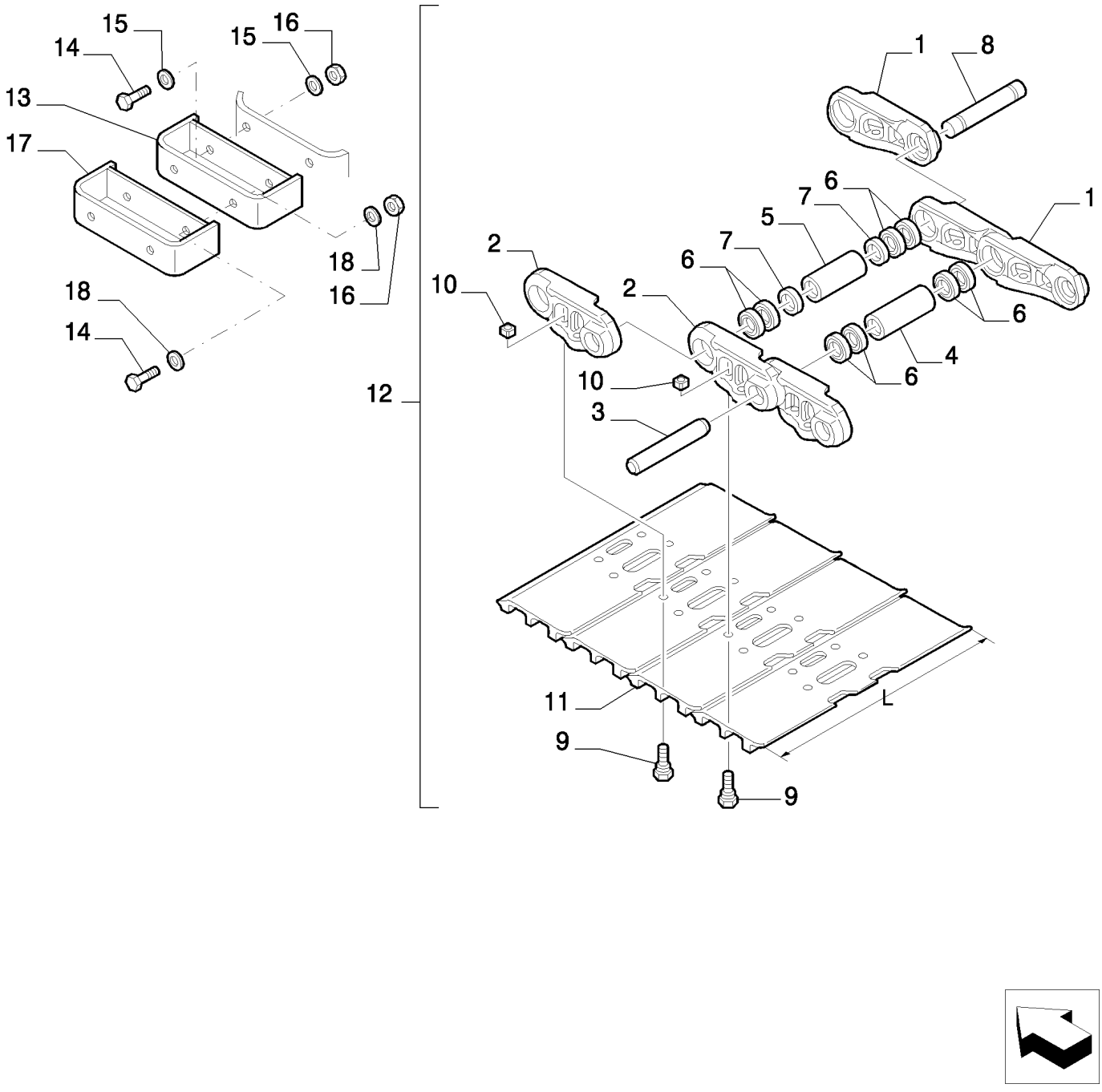

Copyright © New Holland

CADENA DE ORUGA (L=900MM) - VERSION (02-03-05-06) - OPTIONAL CODE 956000738
TRACK CHAIN (L=900MM) - VERSION (02-03-05-06) - OPTIONAL CODE 956000738
TRACK CHAIN (L=900MM) - VERSION (02-03-05-06) - OPTIONAL CODE 956000738
TRACK CHAIN (L=900MM) - VERSION (02-03-05-06) - OPTIONAL CODE 956000738

R	N	P.N.	MOD	Q	Description Denominacion	Descrizione Beskrivelse	Bezeichnung Denominação	Description Beschrijving	L.C.
1-8		72210200		1	CHAIN, - ASSY CADENA	CATENA KÆDE	KETTE CORRENTE	CHAINE KETTING	095C
1		72210186		49	TRACK LINK, - RIGHT ESLABÓN	MAGLIA DEL CINGOLO KÆDELASKE	KETTENGLIED ELO	MAILLON DE CHENILLE RUPSSCHAKEL	010M
2		72210187		49	TRACK LINK, - LEFT ESLABÓN	MAGLIA DEL CINGOLO KÆDELASKE	KETTENGLIED ELO	MAILLON DE CHENILLE RUPSSCHAKEL	010M
3		72210188		48	PIN PASADOR	PERNO STIFT	PIN PERNO	BROCHE PEN	080P
4		72210189		48	BUSHING CASQUILLO	BOCCOLA BØSNING	BUCHSE CASQUILHO	BAGUE BUS	095B
5		72210190		1	BUSHING CASQUILLO	BOCCOLA BØSNING	BUCHSE CASQUILHO	BAGUE BUS	095B
6		71461019		96	SEAL ANILLO DE CIERRE	GUARNIZIONE; TENUTA PAKNING	DICHTUNG VEDANTE	JOINT AFDICHTING	132A
7		72210191		2	SPACER SEPARADOR	DISTANZIALE AFSTANDSSTYKKE	DISTANZSTÜCK ESPAÇADOR	ENTRETOISE AFSTANDSSTUK	075D
8		72210192		1	PIN PASADOR	PERNO STIFT	PIN PERNO	BROCHE PEN	080P
9		72210193		196	SCREW TORNILLO	VITE SKRUE	SCHRAUBE PARAFUSO	VIS SCHROEF	040V
10		76030024		196	NUT TUERCA	DADO MØTRIK	MUTTER PORCA	ECROU MOER	010D
11		72210198		49	TRACK SHOE, 900 MM ZAPATA DE PISTA	PATTINO DEL CINGOLO LARVEFODSKASSE	BODENPLATTE SAPATA	TUILE DE CHENILLE RUPSBANDSCHAKEL	295S
12		72203525		2	TRACK ASSY, - WITH 900 MM SHOES - ASSY CONJUNTO DE SEGUIM	COMPLESSIVO CINGOL LARVEFODSSÆT	LAUFKETTENBAUGRUP RASTO, COMPLETO	CHEMIN RUPSEENHEID	097C
13		71472914		4	SPACER SEPARADOR	DISTANZIALE AFSTANDSSTYKKE	DISTANZSTÜCK ESPAÇADOR	ENTRETOISE AFSTANDSSTUK	075D
14		11113034		16	SCREW, 12X45 TORNILLO	VITE SKRUE	SCHRAUBE PARAFUSO	VIS SCHROEF	040V
15		14496721		16	WASHER, M12 x 24 x 2.5 ARANDELA	RONDELLA FLADSKIVE	UNTERLEGSCHEIBE ANILHA	RONDELLE SLUITRING	131R
16		11702921		16	NUT, M12, Cl 10 TUERCA	DADO MØTRIK	MUTTER PORCA	ECROU MOER	010D
17		87638528		4	BRACKET SOPORTE	STAFFA BESLAG	HALTERUNG SUPORTE	SUPPORT STEUN	225S
18		14496731		16	WASHER, M12 x 24 x 2.5 Thk ARANDELA	RONDELLA FLADSKIVE	UNTERLEGSCHEIBE ANILHA	RONDELLE SLUITRING	131R

Copyright © New Holland

5.0013	01	p1	03/10

DIPPER STICK (L=2.94M) - OPTIONAL CODE 781147078
BRACCIO PENETRAZIONE (L=2.94M) - CODICE VARIANTE 781147078
LOEFFELSTIEL (L=2.94M) - OPTIONAL CODE 781147078
BILANCIER (L=2.94M) - OPTIONAL CODE 781147078

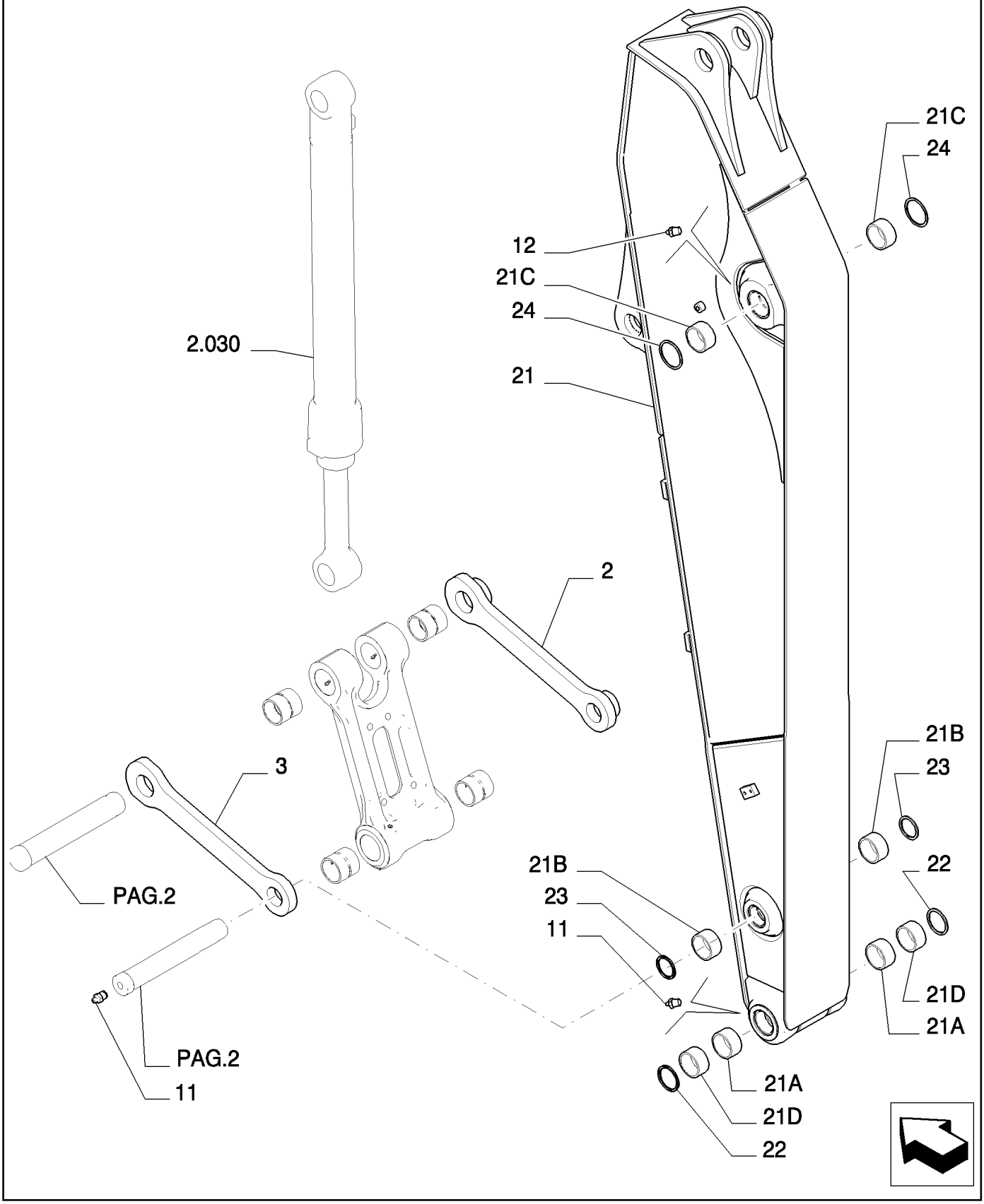

Copyright © New Holland

BRAZO TERMINAL (L=2.94M) - OPTIONAL CODE 781147078
DIPPER STICK (L=2.94M) - OPTIONAL CODE 781147078
DIPPER STICK (L=2.94M) - OPTIONAL CODE 781147078
DIPPER STICK (L=2.94M) - OPTIONAL CODE 781147078

R	N	P.N.	MOD	Q	Description Denominacion	Descrizione Beskrivelse	Bezeichnung Denominação	Description Beschrijving	L.C.
2		72202183		1	LINK CONROD BIELA DE ESLABÓN	BIELLA TIRANTE PLEJLSTANG	PLEUEL BIELA	BIELLE DRIJFSTANG	050B
3		72202178		1	LINK CONROD BIELA DE ESLABÓN	BIELLA TIRANTE PLEJLSTANG	PLEUEL BIELA	BIELLE DRIJFSTANG	050B
11		72283478		2	LUBE NIPPLE BOQUILLA DE LUBRICA(	INGRASSATORE SMØRENIPPEL	SCHMIERNIPPEL COPO DE LUBRIFICAÇÃ	GRAISSEUR SMEERNIPPEL	060I
12		71433287		1	LUBE NIPPLE BOQUILLA DE LUBRICA(	INGRASSATORE SMØRENIPPEL	SCHMIERNIPPEL COPO DE LUBRIFICAÇÃ	GRAISSEUR SMEERNIPPEL	060I
21		87532229		1	ARM, - ASSY BRAZO	BRACCIO ARM	ARM BRAÇO	BRAS ARM	130B
21A		87533342		2	BUSHING CASQUILLO	BOCCOLA BØSNING	BUCHSE CASQUILHO	BAGUE BUS	095B
21B		87525505		2	BUSHING CASQUILLO	BOCCOLA BØSNING	BUCHSE CASQUILHO	BAGUE BUS	095B
21C		87533338		2	BUSHING CASQUILLO	BOCCOLA BØSNING	BUCHSE CASQUILHO	BAGUE BUS	095B
21D		87533336		2	BUSHING CASQUILLO	BOCCOLA BØSNING	BUCHSE CASQUILHO	BAGUE BUS	095B
22		71415158		2	GASKET JUNTA	GUARNIZIONE PAKNING	DICHTUNG JUNTA	JOINT PAKKING	123G
23		72202212		2	SEAL ANILLO DE CIERRE	GUARNIZIONE; TENUTA PAKNING	DICHTUNG VEDANTE	JOINT AFDICHTING	132A
24		87531507		2	GASKET JUNTA	GUARNIZIONE PAKNING	DICHTUNG JUNTA	JOINT PAKKING	123G

Copyright © New Holland

5.0013	02	p1	03/10

DIPPER STICK (L=2.94M) - OPTIONAL CODE 781147078
BRACCIO PENETRAZIONE (L=2.94M) - CODICE VARIANTE 781147078
LOEFFELSTIEL (L=2.94M) - OPTIONAL CODE 781147078
BILANCIER (L=2.94M) - OPTIONAL CODE 781147078

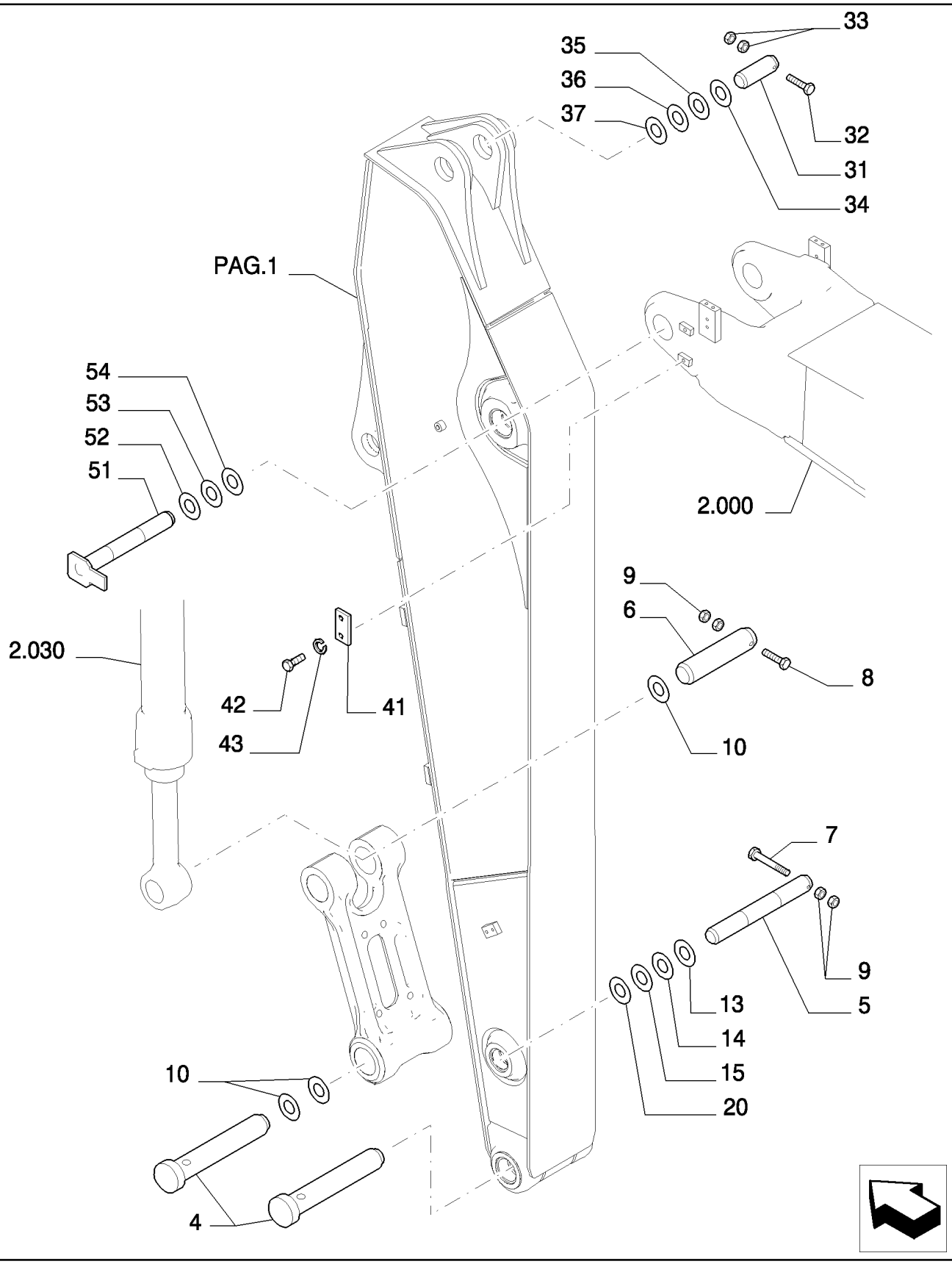

Copyright © New Holland

BRAZO TERMINAL (L=2.94M) - OPTIONAL CODE 781147078
DIPPER STICK (L=2.94M) - OPTIONAL CODE 781147078
DIPPER STICK (L=2.94M) - OPTIONAL CODE 781147078
DIPPER STICK (L=2.94M) - OPTIONAL CODE 781147078

R	N	P.N.	MOD	Q	Description Denominacion	Descrizione Beskrivelse	Bezeichnung Denominação	Description Beschrijving	L.C.
4		87536913		2	PIN PASADOR	PERNO STIFT	PIN PERNO	BROCHE PEN	080P
5		87349050		1	PIN PASADOR	PERNO STIFT	PIN PERNO	BROCHE PEN	080P
6		87349048		1	PIN PASADOR	PERNO STIFT	PIN PERNO	BROCHE PEN	080P
7		11120531		1	BOLT, Hex, M16 x 130, 10.9 PERNO	BULLONE BOLT	SCHRAUBE PARAFUSO	VIS BOUT	140B
8		11120734		1	SCREW TORNILLO	VITE SKRUE	SCHRAUBE PARAFUSO	VIS SCHROEF	040V
9		12163321		4	NUT, M16, Cl 10 TUERCA	DADO MØTRIK	MUTTER PORCA	ECROU MOER	010D
10		71415158		6	GASKET JUNTA	GUARNIZIONE PAKNING	DICHTUNG JUNTA	JOINT PAKKING	123G
13		72202194		1	SHIM, 0.5mm Thk, (M72 ID x 130) SUPLEMENTO	SPESSORE MELLEMLÆG	AUSGLEICHSSCHEIBE CALÇO DE AFINAÇÃO	CALE VULPLAATJE	198S
14		72202195		1	SHIM, 0.9mm Thk, (M72 ID x 130) SUPLEMENTO	SPESSORE MELLEMLÆG	AUSGLEICHSSCHEIBE CALÇO DE AFINAÇÃO	CALE VULPLAATJE	198S
15		72202197		1	SHIM, 1.6mm Thk SUPLEMENTO	SPESSORE MELLEMLÆG	AUSGLEICHSSCHEIBE CALÇO DE AFINAÇÃO	CALE VULPLAATJE	198S
16		72202198		2	SHIM, 0.5mm Thk SUPLEMENTO	SPESSORE MELLEMLÆG	AUSGLEICHSSCHEIBE CALÇO DE AFINAÇÃO	CALE VULPLAATJE	198S
17		72202199		2	SHIM, 0.9mm Thk SUPLEMENTO	SPESSORE MELLEMLÆG	AUSGLEICHSSCHEIBE CALÇO DE AFINAÇÃO	CALE VULPLAATJE	198S
18		72202200		2	SHIM, 1.6mm Thk SUPLEMENTO	SPESSORE MELLEMLÆG	AUSGLEICHSSCHEIBE CALÇO DE AFINAÇÃO	CALE VULPLAATJE	198S
19		72202203		4	SHIM, 2mm Thk SUPLEMENTO	SPESSORE MELLEMLÆG	AUSGLEICHSSCHEIBE CALÇO DE AFINAÇÃO	CALE VULPLAATJE	198S
20		72202204		2	SHIM, 2mm Thk, (M72 ID x 130) SUPLEMENTO	SPESSORE MELLEMLÆG	AUSGLEICHSSCHEIBE CALÇO DE AFINAÇÃO	CALE VULPLAATJE	198S
31		87533375		1	PIN PASADOR	PERNO STIFT	PIN PERNO	BROCHE PEN	080P
32		11120931		1	SCREW TORNILLO	VITE SKRUE	SCHRAUBE PARAFUSO	VIS SCHROEF	040V
33		12163321		2	NUT, M16, Cl 10 TUERCA	DADO MØTRIK	MUTTER PORCA	ECROU MOER	010D
34		72202218		2	SHIM, 2mm Thk SUPLEMENTO	SPESSORE MELLEMLÆG	AUSGLEICHSSCHEIBE CALÇO DE AFINAÇÃO	CALE VULPLAATJE	198S
35		72203147		1	SHIM, 0.5mm Thk SUPLEMENTO	SPESSORE MELLEMLÆG	AUSGLEICHSSCHEIBE CALÇO DE AFINAÇÃO	CALE VULPLAATJE	198S
36		72203153		1	SHIM, 0.9mm Thk SUPLEMENTO	SPESSORE MELLEMLÆG	AUSGLEICHSSCHEIBE CALÇO DE AFINAÇÃO	CALE VULPLAATJE	198S
37		72203154		1	SHIM, 1.6mm Thk SUPLEMENTO	SPESSORE MELLEMLÆG	AUSGLEICHSSCHEIBE CALÇO DE AFINAÇÃO	CALE VULPLAATJE	198S
41		87536886		1	PLATE PLACA	PIASTRA PLADE	PLATTE CHAPA	PLAQUE PLAAT	105P
42		16249031		2	SCREW TORNILLO	VITE SKRUE	SCHRAUBE PARAFUSO	VIS SCHROEF	040V

Copyright © New Holland

5.0013	02	p2	03/10

DIPPER STICK (L=2.94M) - OPTIONAL CODE 781147078
BRACCIO PENETRAZIONE (L=2.94M) - CODICE VARIANTE 781147078
LOEFFELSTIEL (L=2.94M) - OPTIONAL CODE 781147078
BILANCIER (L=2.94M) - OPTIONAL CODE 781147078

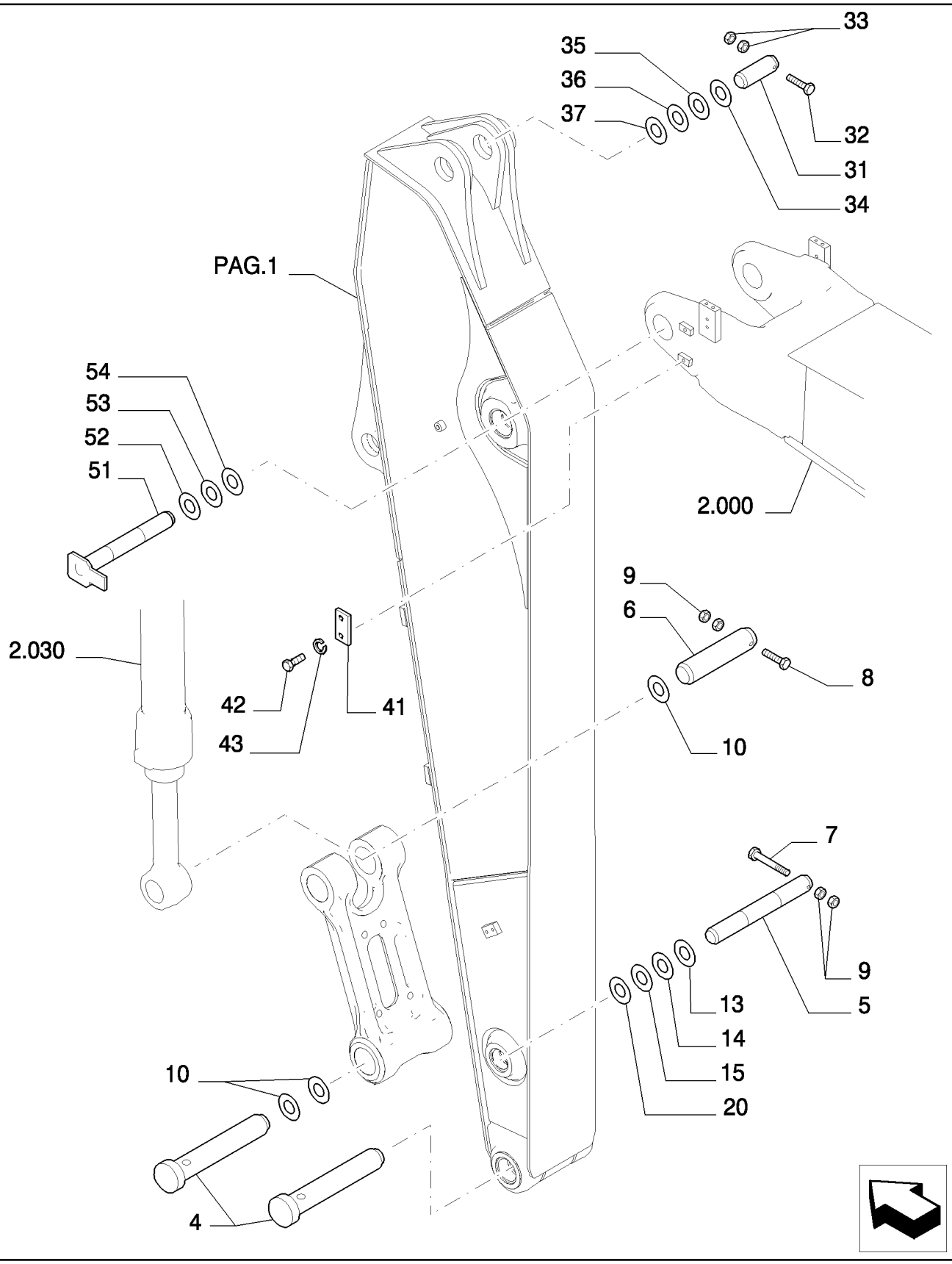

Copyright © New Holland

BRAZO TERMINAL (L=2.94M) - OPTIONAL CODE 781147078
DIPPER STICK (L=2.94M) - OPTIONAL CODE 781147078
DIPPER STICK (L=2.94M) - OPTIONAL CODE 781147078
DIPPER STICK (L=2.94M) - OPTIONAL CODE 781147078

R	N	P.N.	MOD	Q	Description Denominacion	Descrizione Beskrivelse	Bezeichnung Denominação	Description Beschrijving	L.C.
43		10520121		2	WASHER ARANDELA	RONDELLA FLADSKIVE	UNTERLEGSCHEIBE ANILHA	RONDELLE SLUITRING	131R
51		87536903		1	PIN PASADOR	PERNO STIFT	PIN PERNO	BROCHE PEN	080P
52		72203145		2	SHIM, 2mm Thk SUPLEMENTO	SPESSORE MELLEMLÆG	AUSGLEICHSSCHEIBE CALÇO DE AFINAÇÃO	CALE VULPLAATJE	198S
53		72203140		1	SHIM, 0.5mm Thk SUPLEMENTO	SPESSORE MELLEMLÆG	AUSGLEICHSSCHEIBE CALÇO DE AFINAÇÃO	CALE VULPLAATJE	198S
54		72203141		1	SHIM, 0.9mm Thk SUPLEMENTO	SPESSORE MELLEMLÆG	AUSGLEICHSSCHEIBE CALÇO DE AFINAÇÃO	CALE VULPLAATJE	198S

Copyright © New Holland

5.0013	03	p1	03/10

DIPPER STICK (L=2.94M) - OPTIONAL CODE 781147078
BRACCIO PENETRAZIONE (L=2.94M) - CODICE VARIANTE 781147078
LOEFFELSTIEL (L=2.94M) - OPTIONAL CODE 781147078
BILANCIER (L=2.94M) - OPTIONAL CODE 781147078

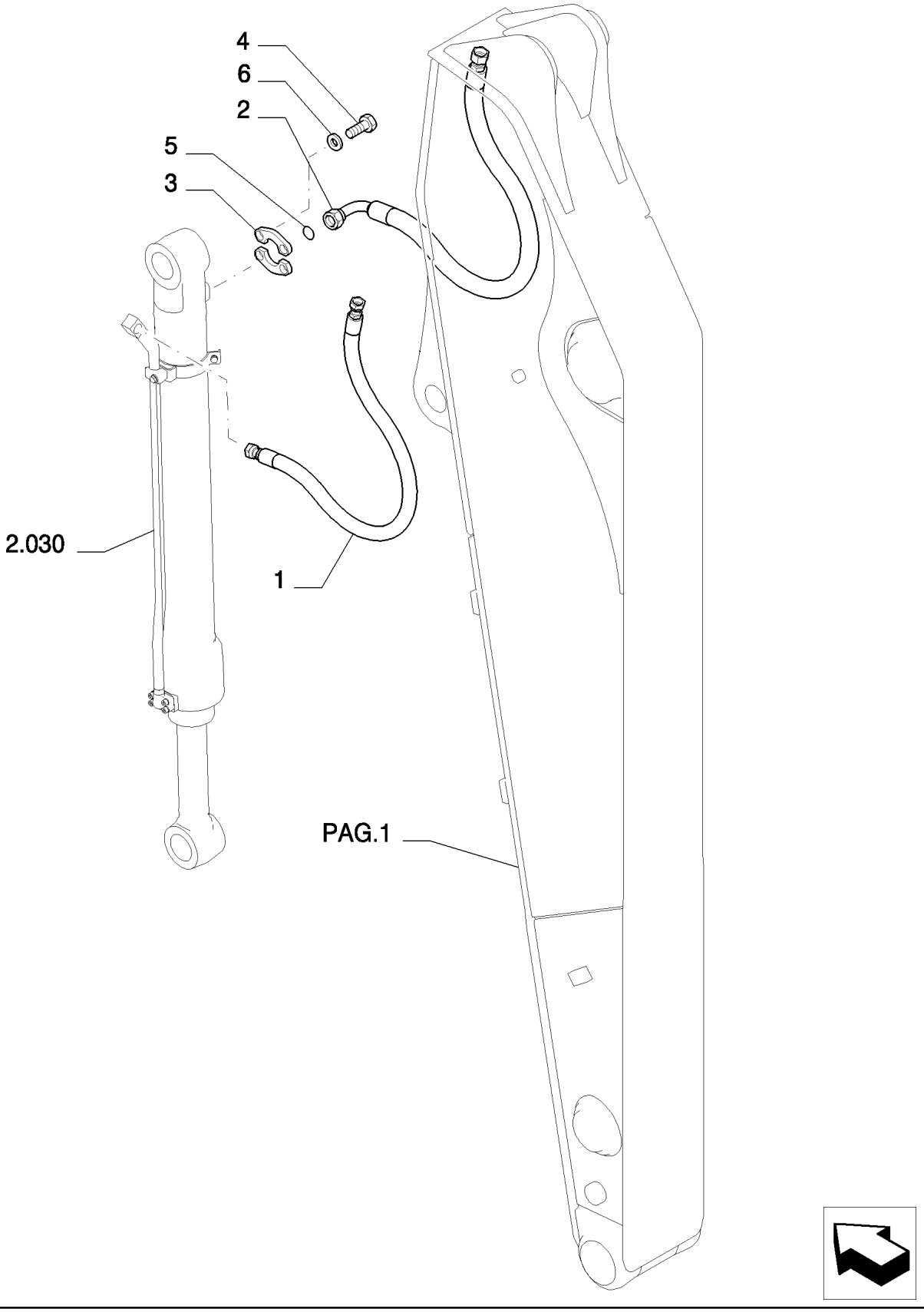

Copyright © New Holland

BRAZO TERMINAL (L=2.94M) - OPTIONAL CODE 781147078
DIPPER STICK (L=2.94M) - OPTIONAL CODE 781147078
DIPPER STICK (L=2.94M) - OPTIONAL CODE 781147078
DIPPER STICK (L=2.94M) - OPTIONAL CODE 781147078

R	N	P.N.	MOD	Q	Description Denominacion	Descrizione Beskrivelse	Bezeichnung Denominação	Description Beschrijving	L.C.
1		72205013		1	FLEXIBLE HOSE TUBO FLEXIBLE	TUBO FLESSIBILE FLEKSIBEL SLANGE	BIEGSAMER SCHLAUCH MANGUEIRA FLEXÍVEL	TUYAU FLEXIBLE FLEXIBELE SLANG	192T
2		87533392		1	FLEXIBLE HOSE TUBO FLEXIBLE	TUBO FLESSIBILE FLEKSIBEL SLANGE	BIEGSAMER SCHLAUCH MANGUEIRA FLEXÍVEL	TUYAU FLEXIBLE FLEXIBELE SLANG	192T
3		71404313		2	HALF-FLANGE SEMIBRIDA	SEMIFLANGIA FLANGEHALVDEL	FLANSCHHÄLFTE MEIA FLANGE	DEMI-BRIDE FLENSHELFT	417S
4		14422234		4	SCREW TORNILLO	VITE SKRUE	SCHRAUBE PARAFUSO	VIS SCHROEF	040V
5		70924200		1	O-RING JUNTA TÓRICA	ANELLO TOROIDALE O-RING	O-RING O-RING	JOINT TORIQUE O-RING	055A
6		10517074		4	LOCK WASHER ARANDELA DE BLOQUE	RONDELLA DI SICUREZ LÅSESKIVE	SICHERUNGSSCHEIBE ANILHA DE RETENÇÃO	RONDELLE FREIN BORGRING	132R

Copyright © New Holland

5.0013	04	p1	03/10

DIPPER STICK (L=2.94M) - OPTIONAL CODE 781147078
BRACCIO PENETRAZIONE (L=2.94M) - CODICE VARIANTE 781147078
LOEFFELSTIEL (L=2.94M) - OPTIONAL CODE 781147078
BILANCIER (L=2.94M) - OPTIONAL CODE 781147078

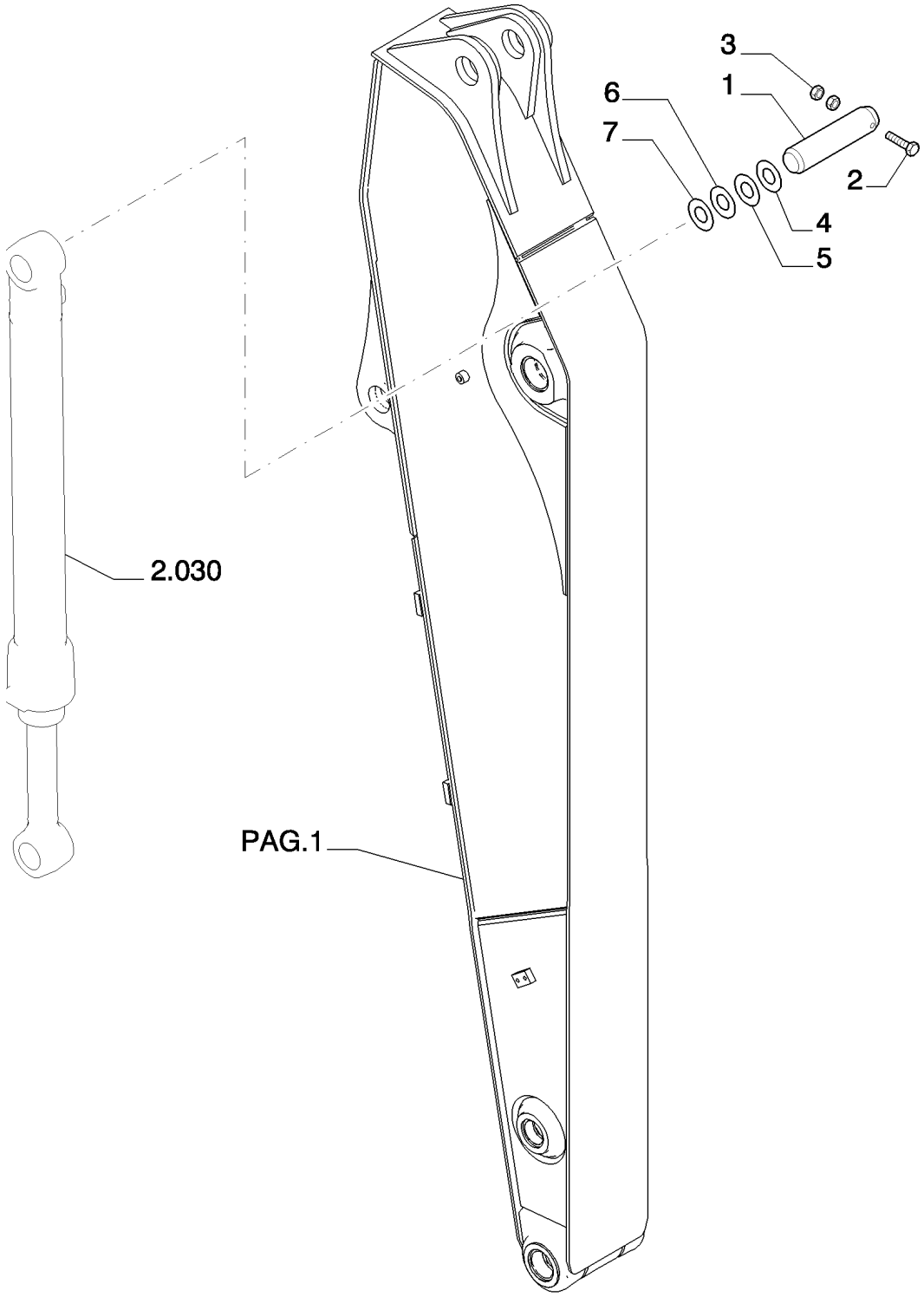

Copyright © New Holland

BRAZO TERMINAL (L=2.94M) - OPTIONAL CODE 781147078
DIPPER STICK (L=2.94M) - OPTIONAL CODE 781147078
DIPPER STICK (L=2.94M) - OPTIONAL CODE 781147078
DIPPER STICK (L=2.94M) - OPTIONAL CODE 781147078

R	N	P.N.	MOD	Q	Description Denominacion	Descrizione Beskrivelse	Bezeichnung Denominação	Description Beschrijving	L.C.
1		87533371		1	PIN PASADOR	PERNO STIFT	PIN PERNO	BROCHE PEN	080P
2		11120734		1	SCREW TORNILLO	VITE SKRUE	SCHRAUBE PARAFUSO	VIS SCHROEF	040V
3		12163321		2	NUT, M16, Cl 10 TUERCA	DADO MØTRIK	MUTTER PORCA	ECROU MOER	010D
4		72202203		2	SHIM, 2mm Thk SUPLEMENTO	SPESSORE MELLEMLÆG	AUSGLEICHSSCHEIBE CALÇO DE AFINAÇÃO	CALE VULPLAATJE	198S
5		72202198		5	SHIM, 0.5mm Thk SUPLEMENTO	SPESSORE MELLEMLÆG	AUSGLEICHSSCHEIBE CALÇO DE AFINAÇÃO	CALE VULPLAATJE	198S
6		72202199		1	SHIM, 0.9mm Thk SUPLEMENTO	SPESSORE MELLEMLÆG	AUSGLEICHSSCHEIBE CALÇO DE AFINAÇÃO	CALE VULPLAATJE	198S
7		72202200		1	SHIM, 1.6mm Thk SUPLEMENTO	SPESSORE MELLEMLÆG	AUSGLEICHSSCHEIBE CALÇO DE AFINAÇÃO	CALE VULPLAATJE	198S

Copyright © New Holland

5.0020	01	p1	03/10

HYDRAULIC HAMMER (L=2.08 MT) - OPTIONAL CODE 461226128 (01-02-03) - 461226138 (04-05-06)
MARTELLO IDRAULICO (L=2.08 MT) - CODICE VARIANTE 461226128 (01-02-03) - 461226138 (04-05-06)
HYDRAULISCHER HAMMER (L=2.08 MT) - OPTIONAL CODE 461226128 (01-02-03) - 461226138 (04-05-06)
MARTEAU HYDRAULIQUE (L=2.08 MT) - OPTIONAL CODE 461226128 (01-02-03) - 461226138 (04-05-06)

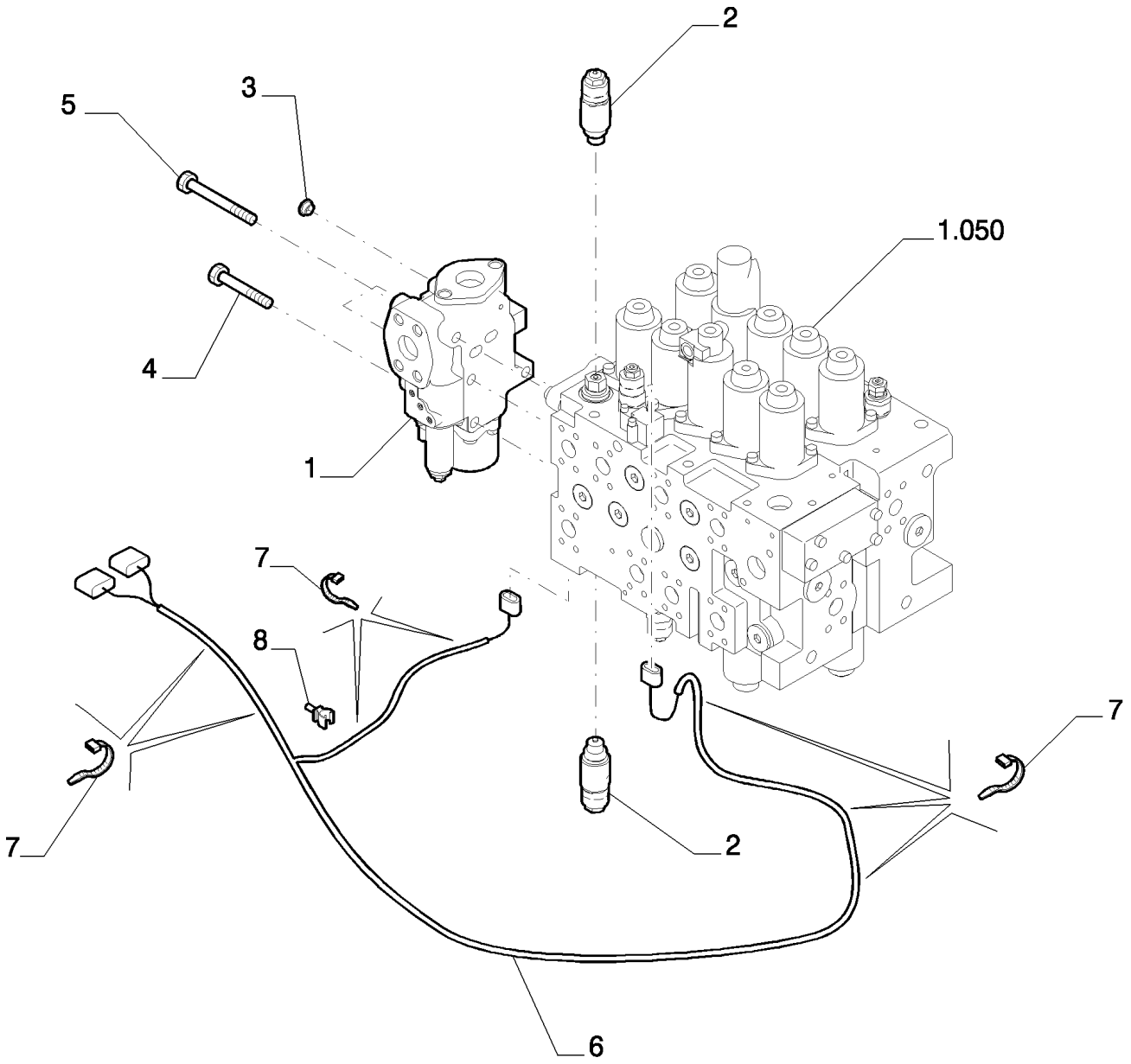

Copyright © New Holland

MARTILLO HIDRÁULICO (L=2.08 MT) - OPTIONAL CODE 461226128 (01-02-03) - 461226138 (04-05-06)
HYDRAULIC HAMMER (L=2.08 MT) - OPTIONAL CODE 461226128 (01-02-03) - 461226138 (04-05-06)
HYDRAULIC HAMMER (L=2.08 MT) - OPTIONAL CODE 461226128 (01-02-03) - 461226138 (04-05-06)
HYDRAULIC HAMMER (L=2.08 MT) - OPTIONAL CODE 461226128 (01-02-03) - 461226138 (04-05-06)

R	N	P.N.	MOD	Q	Description Denominacion	Descrizione Beskrivelse	Bezeichnung Denominação	Description Beschrijving	L.C.
1	1	87520007		1	HYDRAULIC VALVE VÁLVULA HIDRÁULICA	DISTRIBUTORE IDRAULI HYDRAULIKVENTIL	HYDRAULIKVENTIL VÁLVULA HIDRÁULICA	SOUPAPE HYDRAULIQU HYDRAULISCHE KLEP	010V
2	2	87579594		2	HYDRAULIC VALVE VÁLVULA HIDRÁULICA	DISTRIBUTORE IDRAULI HYDRAULIKVENTIL	HYDRAULIKVENTIL VÁLVULA HIDRÁULICA	SOUPAPE HYDRAULIQU HYDRAULISCHE KLEP	010V
3		87643223		1	PLUG TAPÓN	TAPPO PROP	STOPFEN TAMPÃO	BOUCHON PLUG	050T
4		14423034		1	SCREW TORNILLO	VITE SKRUE	SCHRAUBE PARAFUSO	VIS SCHROEF	040V
5		87609321		3	SCREW TORNILLO	VITE SKRUE	SCHRAUBE PARAFUSO	VIS SCHROEF	040V
6		87599406		1	ELECTRIC CABLE CABLE ELÉCTRICO	CAVO ELETTRICO EL-KABEL	ELEKTROKABEL CABO ELÉCTRICO	CABLE ELECTRIQUE ELEKTRICITEITSKABEL	111C
7		4982514		7	CABLE STRAP BANDA DE CABLE	FASCETTA PER CAVO KABELSTROP	KABELBINDER BRAÇADEIRA DE CABO	BRIDE DE CABLE BUNDELBAND	P716
8		87526680		1	RETAINER COLLAR COLLAR DE RETENCIÓN	COLLARE DI FISSAGGIC RING, SPÆNDE	HALTERING ANEL DE FIXAÇÃO	COLLIER DE RETENUE BORGKRAAG	230S

(1) ASSY SEE PAGE 2
(2) ASSY SEE PAGE 3

Copyright © New Holland

5.0020	02	p1	03/10

HYDRAULIC HAMMER (L=2.08 MT) - COMPONENTS - OPTIONAL CODE 461226128 (01-02-03) - 461226138 (04-05-06)
MARTELLO IDRAULICO (L=2.08 MT) - COMPONENTI - OPTIONAL CODE 461226128 (01-02-03) - 461226138 (04-05-06)
HYDRAULISCHER HAMMER (L=2.08 MT) - BESTANDTEILE - OPTIONAL CODE 461226128 (01-02-03) - 461226138 (04-05-06)
MARTEAU HYDRAULIQUE (L=2.08 MT) - COMPOSANTS - OPTIONAL CODE 461226128 (01-02-03) - 461226138 (04-05-06)

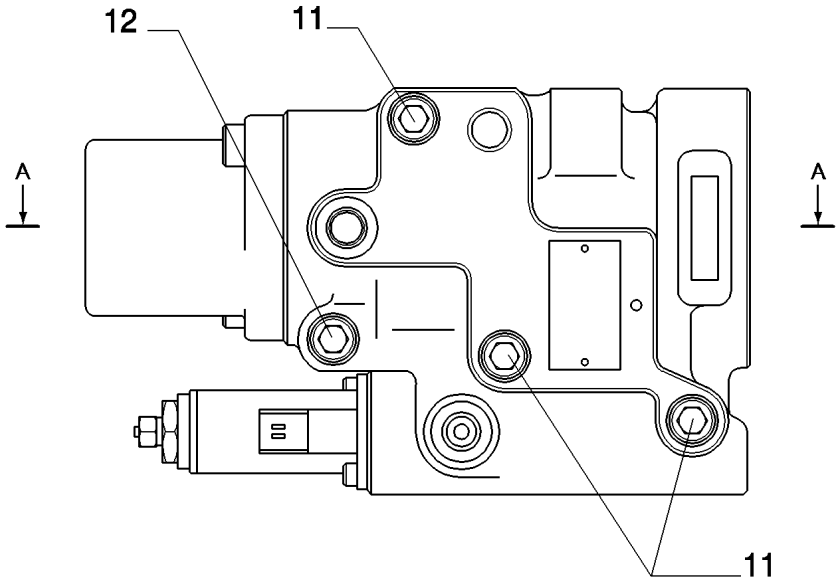

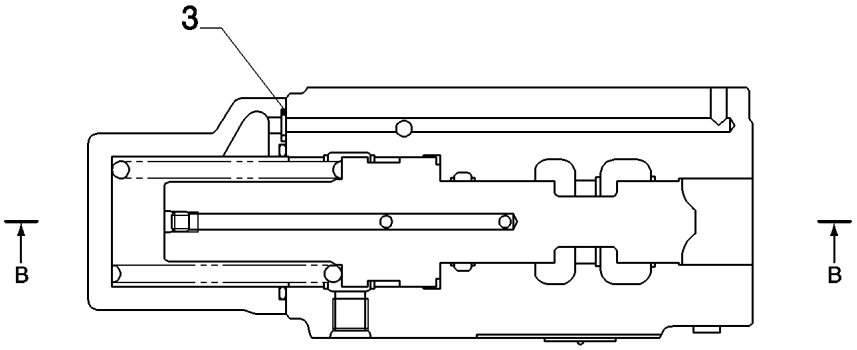

Sez. A–A

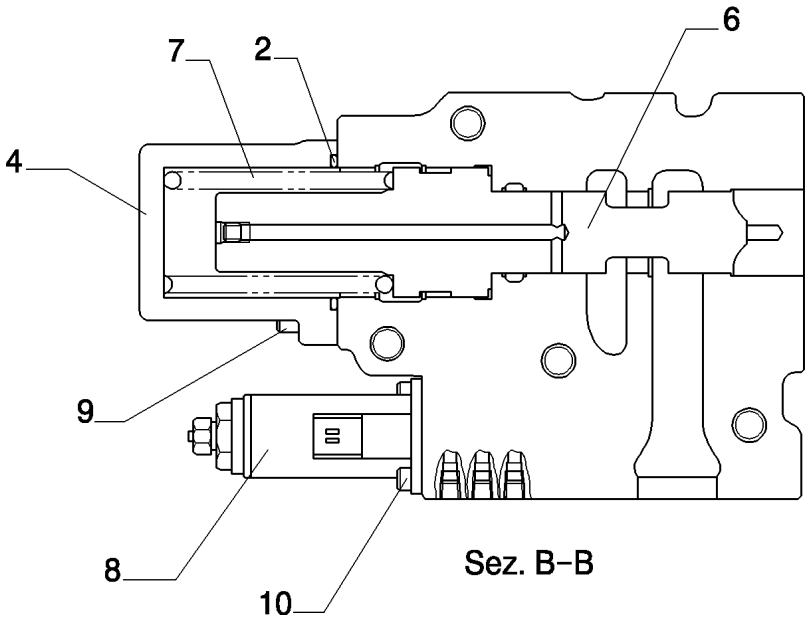

Sez. B–B

Copyright © New Holland

MARTILLO HIDRÁULICO (L=2.08 MT) - COMPONENTES - OPTIONAL CODE 461226128 (01-02-03) - 461226138 (04-05-06)
HYDRAULIC HAMMER (L=2.08 MT) - COMPONENTS - OPTIONAL CODE 461226128 (01-02-03) - 461226138 (04-05-06)
HYDRAULIC HAMMER (L=2.08 MT) - COMPONENTS - OPTIONAL CODE 461226128 (01-02-03) - 461226138 (04-05-06)
HYDRAULIC HAMMER (L=2.08 MT) - COMPONENTS - OPTIONAL CODE 461226128 (01-02-03) - 461226138 (04-05-06)

R	N	P.N.	MOD	Q	Description Denominacion	Descrizione Beskrivelse	Bezeichnung Denominação	Description Beschrijving	L.C.
2		72960987		1	O-RING JUNTA TÓRICA	ANELLO TOROIDALE O-RING	O-RING O-RING	JOINT TORIQUE O-RING	055A
3		72283326		1	O-RING JUNTA TÓRICA	ANELLO TOROIDALE O-RING	O-RING O-RING	JOINT TORIQUE O-RING	055A
4		YN30V00104S201		1	COVER CUBIERTA	COPERCHIO DÆKSEL	ABDECKUNG COBERTURA	COUVERCLE AFSCHERMING	265C
6		YN30V00104S301		1	SPOOL BOBINA	STELO SPOLE	KOLBENSCHIEBER CARRETO	TIROIR SPOEL	134P
7		YN30V00104S321		1	SPRING RESORTE	MOLLA FJEDER	FEDER MOLA	RESSORT VEER	100M
8		YN35V00050F1		1	VALVE VÁLVULA	VALVOLA VENTIL	VENTIL VÁLVULA	SOUPAPE KLEP	9620
9		14420170		2	SCREW TORNILLO	VITE SKRUE	SCHRAUBE PARAFUSO	VIS SCHROEF	040V
10		72209810		2	SCREW TORNILLO	VITE SKRUE	SCHRAUBE PARAFUSO	VIS SCHROEF	040V
11		72964521		3	SCREW TORNILLO	VITE SKRUE	SCHRAUBE PARAFUSO	VIS SCHROEF	040V
12		14423070		1	SCREW TORNILLO	VITE SKRUE	SCHRAUBE PARAFUSO	VIS SCHROEF	040V

VALVE ASSY P/N 87520007

E215B

Copyright © New Holland

5.0020	03	p1	03/10

HYDRAULIC HAMMER (L=2.08 MT) - COMPONENTS - OPTIONAL CODE 461226128 (01-02-03) - 461226138 (04-05-06)
MARTELLO IDRAULICO (L=2.08 MT) - COMPONENTI - CODICE VARIANTE 461226128 (01-02-03) - 461226138 (04-05-06)
HYDRAULISCHER HAMMER (L=2.08 MT) - BESTANDTEILE - OPTIONAL CODE 461226128 (01-02-03) - 461226138 (04-05-06)
MARTEAU HYDRAULIQUE (L=2.08 MT) - COMPOSANTS - OPTIONAL CODE 461226128 (01-02-03) - 461226138 (04-05-06)

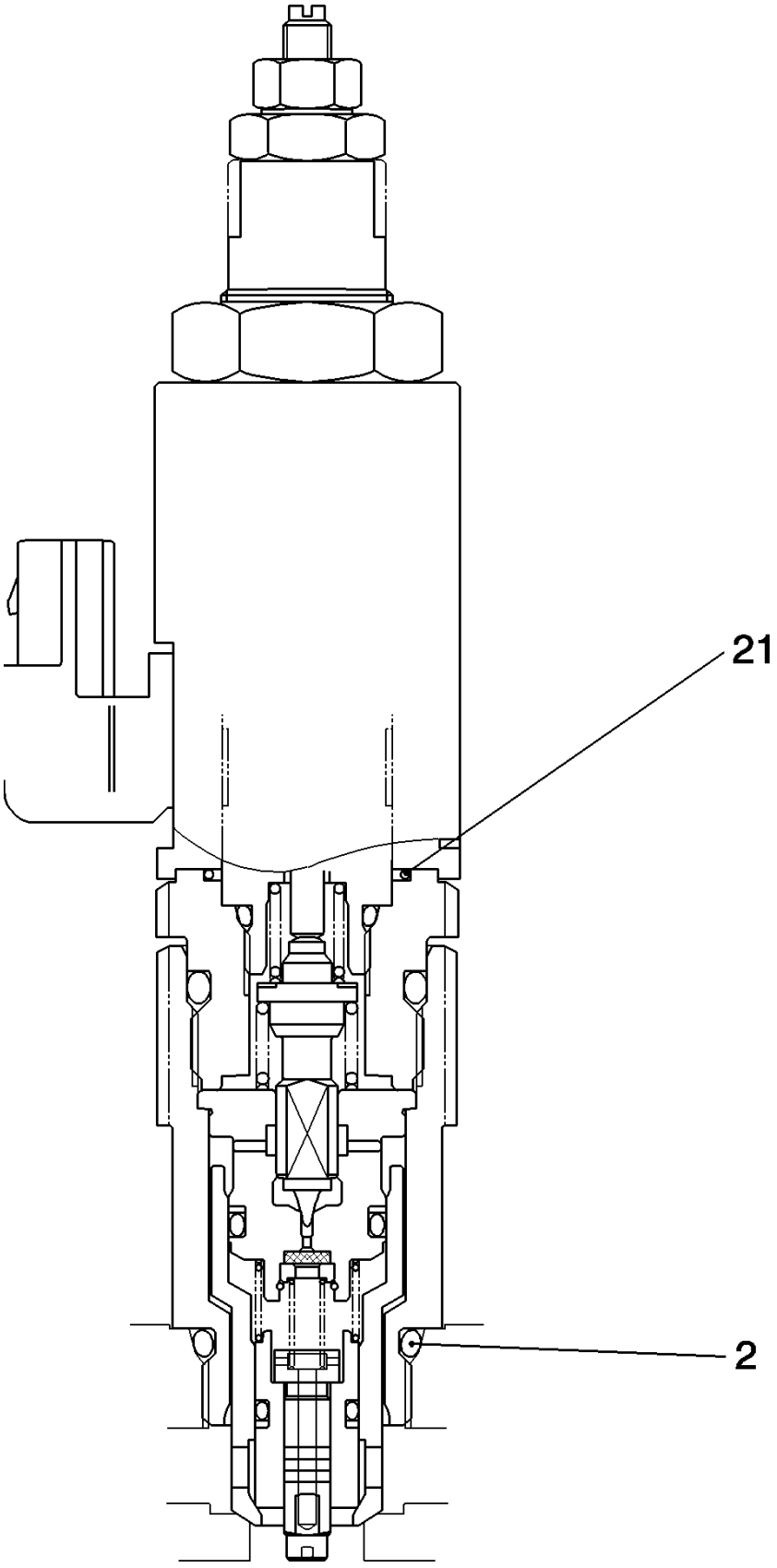

Copyright © New Holland

MARTILLO HIDRÁULICO (L=2.08 MT) - COMPONENTES - OPTIONAL CODE 461226128 (01-02-03) - 461226138 (04-05-06)
HYDRAULIC HAMMER (L=2.08 MT) - COMPONENTS - OPTIONAL CODE 461226128 (01-02-03) - 461226138 (04-05-06)
HYDRAULIC HAMMER (L=2.08 MT) - COMPONENTS - OPTIONAL CODE 461226128 (01-02-03) - 461226138 (04-05-06)
HYDRAULIC HAMMER (L=2.08 MT) - COMPONENTS - OPTIONAL CODE 461226128 (01-02-03) - 461226138 (04-05-06)

R	N	P.N.	MOD	Q	Description Denominacion	Descrizione Beskrivelse	Bezeichnung Denominação	Description Beschrijving	L.C.
2		72209838		1	O-RING JUNTA TÓRICA	ANELLO TOROIDALE O-RING	O-RING O-RING	JOINT TORIQUE O-RING	055A
21		YN22V00035S701		1	O-RING JUNTA TÓRICA	ANELLO TOROIDALE O-RING	O-RING O-RING	JOINT TORIQUE O-RING	055A

VALVE ASSY P/N 87579594

E215B

Copyright © New Holland

5.0020	04	p1	03/10

HYDRAULIC HAMMER (L=2.08 MT) - OPTIONAL CODE 461226128 (01-02-03) - 461226138 (04-05-06)
MARTELLO IDRAULICO (L=2.08 MT) - CODICE VARIANTE 461226128 (01-02-03) - 461226138 (04-05-06)
HYDRAULISCHER HAMMER (L=2.08 MT) - OPTIONAL CODE 461226128 (01-02-03) - 461226138 (04-05-06)
MARTEAU HYDRAULIQUE (L=2.08 MT) - OPTIONAL CODE 461226128 (01-02-03) - 461226138 (04-05-06)

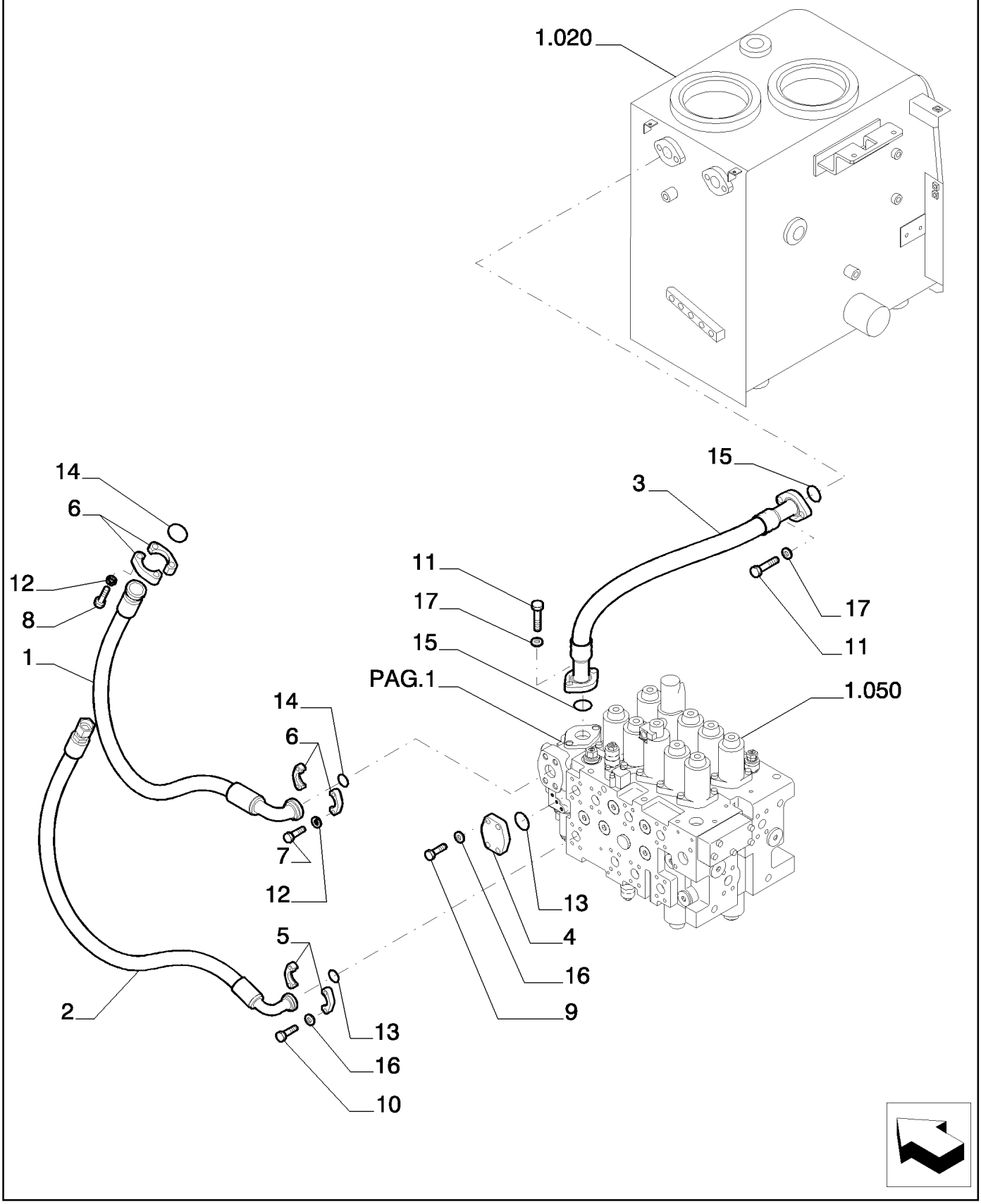

Copyright © New Holland

MARTILLO HIDRÁULICO (L=2.08 MT) - OPTIONAL CODE 461226128 (01-02-03) - 461226138 (04-05-06)
HYDRAULIC HAMMER (L=2.08 MT) - OPTIONAL CODE 461226128 (01-02-03) - 461226138 (04-05-06)
HYDRAULIC HAMMER (L=2.08 MT) - OPTIONAL CODE 461226128 (01-02-03) - 461226138 (04-05-06)
HYDRAULIC HAMMER (L=2.08 MT) - OPTIONAL CODE 461226128 (01-02-03) - 461226138 (04-05-06)

R	N	P.N.	MOD	Q	Description Denominacion	Descrizione Beskrivelse	Bezeichnung Denominação	Description Beschrijving	L.C.
1		87521883		1	FLEXIBLE HOSE TUBO FLEXIBLE	TUBO FLESSIBILE FLEKSIBEL SLANGE	BIEGSAMER SCHLAUCH MANGUEIRA FLEXÍVEL	TUYAU FLEXIBLE FLEXIBELE SLANG	192T
2		87521884		1	FLEXIBLE HOSE TUBO FLEXIBLE	TUBO FLESSIBILE FLEKSIBEL SLANGE	BIEGSAMER SCHLAUCH MANGUEIRA FLEXÍVEL	TUYAU FLEXIBLE FLEXIBELE SLANG	192T
3		87521882		1	FLEXIBLE HOSE TUBO FLEXIBLE	TUBO FLESSIBILE FLEKSIBEL SLANGE	BIEGSAMER SCHLAUCH MANGUEIRA FLEXÍVEL	TUYAU FLEXIBLE FLEXIBELE SLANG	192T
4		87397570		1	COVER CUBIERTA	COPERCHIO DÆKSEL	ABDECKUNG COBERTURA	COUVERCLE AFSCHERMING	265C
5		71404311		2	HALF-FLANGE SEMIBRIDA	SEMIFLANGIA FLANGEHALVDEL	FLANSCHHÄLFTE MEIA FLANGE	DEMI-BRIDE FLENSHELFT	417S
6		71444029		4	HALF-FLANGE SEMIBRIDA	SEMIFLANGIA FLANGEHALVDEL	FLANSCHHÄLFTE MEIA FLANGE	DEMI-BRIDE FLENSHELFT	417S
7		11116034		4	SCREW TORNILLO	VITE SKRUE	SCHRAUBE PARAFUSO	VIS SCHROEF	040V
8		11116234		4	SCREW TORNILLO	VITE SKRUE	SCHRAUBE PARAFUSO	VIS SCHROEF	040V
9		11106434		4	BOLT, Hex, M10 x 30, 10.9, Full Thd PERNO	BULLONE BOLT	SCHRAUBE PARAFUSO	VIS BOUT	140B
10		11106634		4	BOLT, Hex, M10 x 35, 10.9, Full Thd PERNO	BULLONE BOLT	SCHRAUBE PARAFUSO	VIS BOUT	140B
11		11112634		4	SCREW TORNILLO	VITE SKRUE	SCHRAUBE PARAFUSO	VIS SCHROEF	040V
12		10517174		8	LOCK WASHER ARANDELA DE BLOQUE	RONDELLA DI SICUREZ LÅSESKIVE	SICHERUNGSSCHEIBE ANILHA DE RETENÇÃO	RONDELLE FREIN BORGRING	132R
13		70924200		2	O-RING JUNTA TÓRICA	ANELLO TOROIDALE O-RING	O-RING O-RING	JOINT TORIQUE O-RING	055A
14		70924192		2	O-RING JUNTA TÓRICA	ANELLO TOROIDALE O-RING	O-RING O-RING	JOINT TORIQUE O-RING	055A
15		87397569		2	O-RING JUNTA TÓRICA	ANELLO TOROIDALE O-RING	O-RING O-RING	JOINT TORIQUE O-RING	055A
16		14496631		8	WASHER, M10 x 21 x 2 ARANDELA	RONDELLA FLADSKIVE	UNTERLEGSCHEIBE ANILHA	RONDELLE SLUITRING	131R
17		14496731		4	WASHER, M12 x 24 x 2.5 Thk ARANDELA	RONDELLA FLADSKIVE	UNTERLEGSCHEIBE ANILHA	RONDELLE SLUITRING	131R

Copyright © New Holland

5.0020	05	p1	03/10

HYDRAULIC HAMMER (L=2.08 MT) - OPTIONAL CODE 461226128 (01-02-03) - 461226138 (04-05-06)
MARTELLO IDRAULICO (L=2.08 MT) - CODICE VARIANTE 461226128 (01-02-03) - 461226138 (04-05-06)
HYDRAULISCHER HAMMER (L=2.08 MT) - OPTIONAL CODE 461226128 (01-02-03) - 461226138 (04-05-06)
MARTEAU HYDRAULIQUE (L=2.08 MT) - OPTIONAL CODE 461226128 (01-02-03) - 461226138 (04-05-06)

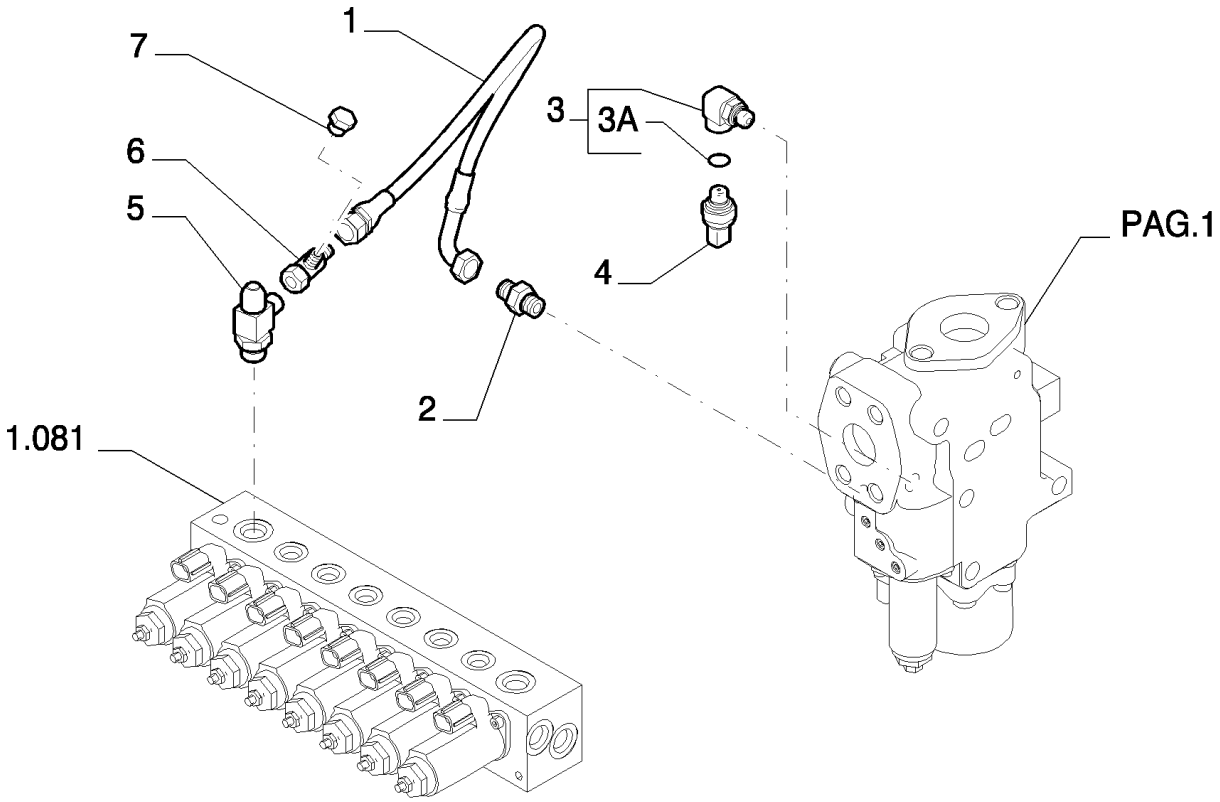

Copyright © New Holland

MARTILLO HIDRÁULICO (L=2.08 MT) - OPTIONAL CODE 461226128 (01-02-03) - 461226138 (04-05-06)
HYDRAULIC HAMMER (L=2.08 MT) - OPTIONAL CODE 461226128 (01-02-03) - 461226138 (04-05-06)
HYDRAULIC HAMMER (L=2.08 MT) - OPTIONAL CODE 461226128 (01-02-03) - 461226138 (04-05-06)
HYDRAULIC HAMMER (L=2.08 MT) - OPTIONAL CODE 461226128 (01-02-03) - 461226138 (04-05-06)

R	N	P.N.	MOD	Q	Description Denominacion	Descrizione Beskrivelse	Bezeichnung Denominação	Description Beschrijving	L.C.
1		87522431		1	FLEXIBLE HOSE TUBO FLEXIBLE	TUBO FLESSIBILE FLEKSIBEL SLANGE	BIEGSAMER SCHLAUCH MANGUEIRA FLEXÍVEL	TUYAU FLEXIBLE FLEXIBELE SLANG	192T
2		87522432		1	HYD CONNECTOR CONECTOR HIDRÁULIC	CONNETTORE IDRAULIC HYDRAULIKSTIK	HYDR STECKVERBINDE CONECTOR HID.	CONNECTEUR HYDRAU HYDRAULISCHE AANSL	020R
3		72215288		1	HYD CONNECTOR, - ASS' CONECTOR HIDRÁULIC	CONNETTORE IDRAULIC HYDRAULIKSTIK	HYDR STECKVERBINDE CONECTOR HID.	CONNECTEUR HYDRAU HYDRAULISCHE AANSL	020R
3A		72209827		1	O-RING JUNTA TÓRICA	ANELLO TOROIDALE O-RING	O-RING O-RING	JOINT TORIQUE O-RING	055A
4		87608371		1	SENSOR SENSOR	SENSORE FØLER	SENSOR SENSOR	CAPTEUR SENSOR	608S
5		2444Z3421		1	TEE RACOR EN T	PEZZO A T T-STYKKE	T-STÜCK TÊ	RACCORD EN T T-STUK	9020
6		72954988		1	TEE RACOR EN T	PEZZO A T T-STYKKE	T-STÜCK TÊ	RACCORD EN T T-STUK	9020
7		72214546		1	PLUG TAPÓN	TAPPO PROP	STOPFEN TAMPÃO	BOUCHON PLUG	050T

Copyright © New Holland

5.0020	06	p1	05/10

HYDRAULIC HAMMER (L=2.08 MT) - OPTIONAL CODE 461226128 (01-02-03)
MARTELLO IDRAULICO (L=2.08 MT) - OPTIONAL CODE 461226128 (01-02-03)
HYDRAULISCHER HAMMER (L=2.08 MT) - OPTIONAL CODE 461226128 (01-02-03)
MARTEAU HYDRAULIQUE (L=2.08 MT) - OPTIONAL CODE 461226128 (01-02-03)

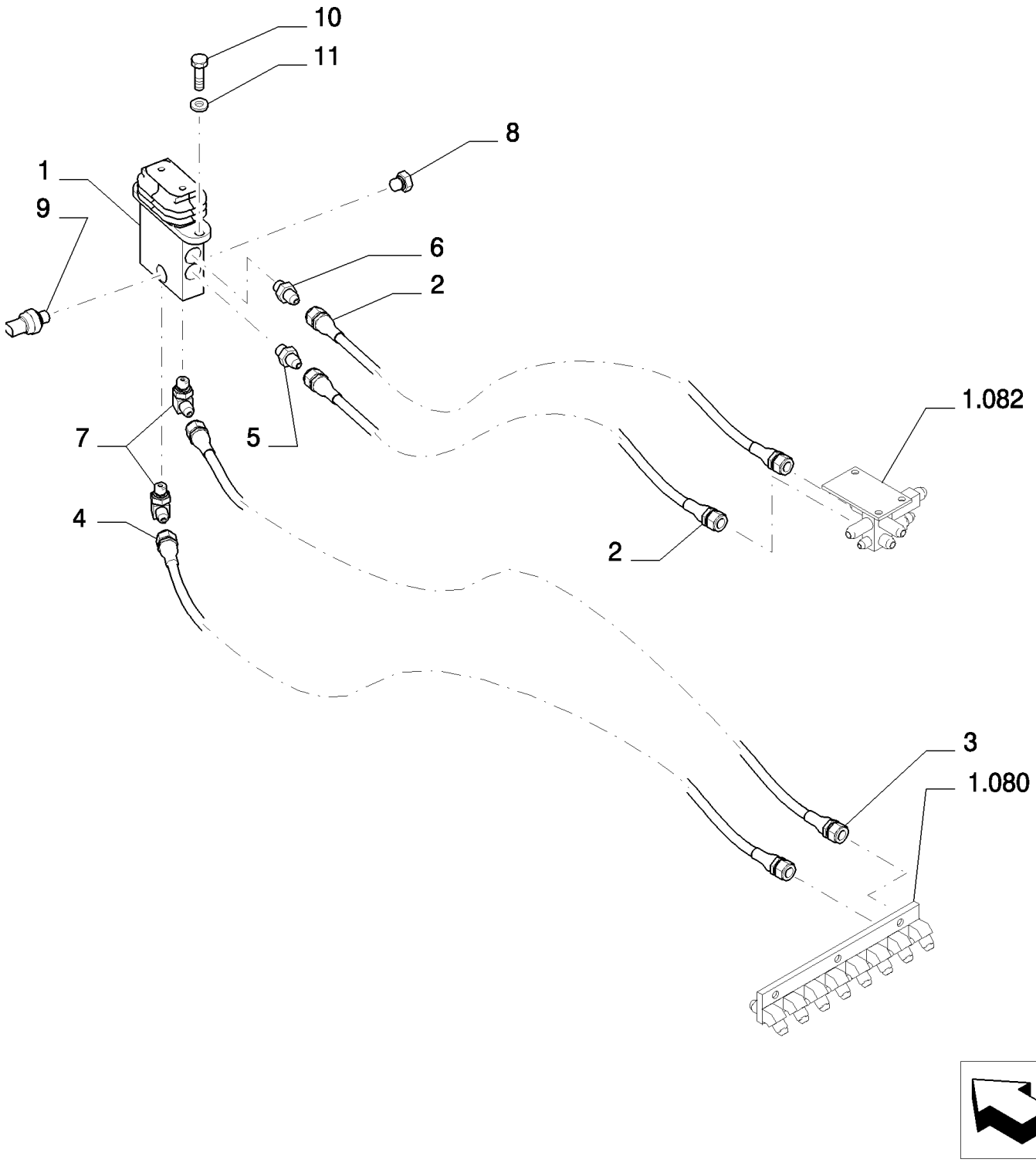

Copyright © New Holland

MARTILLO HIDRÁULICO (L=2.08 MT) - OPTIONAL CODE 461226128 (01-02-03)
HYDRAULIC HAMMER (L=2.08 MT) - OPTIONAL CODE 461226128 (01-02-03)
HYDRAULIC HAMMER (L=2.08 MT) - OPTIONAL CODE 461226128 (01-02-03)
HYDRAULIC HAMMER (L=2.08 MT) - OPTIONAL CODE 461226128 (01-02-03)

R	N	P.N.	MOD	Q	Description Denominacion	Descrizione Beskrivelse	Bezeichnung Denominação	Description Beschrijving	L.C.
1	1	72204155		1	HYDRAULIC VALVE VÁLVULA HIDRÁULICA	DISTRIBUTORE IDRAULI HYDRAULIKVENTIL	HYDRAULIKVENTIL VÁLVULA HIDRÁULICA	SOUPAPE HYDRAULIQU HYDRAULISCHE KLEP	010V
2		87338415		2	FLEXIBLE HOSE TUBO FLEXIBLE	TUBO FLESSIBILE FLEKSIBEL SLANGE	BIEGSAMER SCHLAUCH MANGUEIRA FLEXÍVEL	TUYAU FLEXIBLE FLEXIBELE SLANG	192T
3		87533078		1	FLEXIBLE HOSE TUBO FLEXIBLE	TUBO FLESSIBILE FLEKSIBEL SLANGE	BIEGSAMER SCHLAUCH MANGUEIRA FLEXÍVEL	TUYAU FLEXIBLE FLEXIBELE SLANG	192T
4		87537460		1	FLEXIBLE HOSE TUBO FLEXIBLE	TUBO FLESSIBILE FLEKSIBEL SLANGE	BIEGSAMER SCHLAUCH MANGUEIRA FLEXÍVEL	TUYAU FLEXIBLE FLEXIBELE SLANG	192T
5		87522432		1	HYD CONNECTOR CONECTOR HIDRÁULIC	CONNETTORE IDRAULI HYDRAULIKSTIK	HYDR STECKVERBINDE CONECTOR HID.	CONNECTEUR HYDRAU HYDRAULISCHE AANSL	020R
6		72214744		1	HYD CONNECTOR CONECTOR HIDRÁULIC	CONNETTORE IDRAULI HYDRAULIKSTIK	HYDR STECKVERBINDE CONECTOR HID.	CONNECTEUR HYDRAU HYDRAULISCHE AANSL	020R
7		72214524		2	HYD CONNECTOR CONECTOR HIDRÁULIC	CONNETTORE IDRAULI HYDRAULIKSTIK	HYDR STECKVERBINDE CONECTOR HID.	CONNECTEUR HYDRAU HYDRAULISCHE AANSL	020R
8		72214663		1	PLUG TAPÓN	TAPPO PROP	STOPFEN TAMPÃO	BOUCHON PLUG	050T
9		87608371		1	SENSOR SENSOR	SENSORE FØLER	SENSOR SENSOR	CAPTEUR SENSOR	608S
10		11106434		2	BOLT, Hex, M10 x 30, 10.9, Full Thd PERNO	BULLONE BOLT	SCHRAUBE PARAFUSO	VIS BOUT	140B
11		12641031		2	LOCK WASHER ARANDELA DE BLOQUE	RONDELLA DI SICUREZ LÅSESKIVE	SICHERUNGSSCHEIBE ANILHA DE RETENÇÃO	RONDELLE FREIN BORGRING	132R

(1) ASSY SEE PAGE 7

Copyright © New Holland

5.0020	07	p1	03/10

HYDRAULIC HAMMER (L=2.08 MT) - COMPONENTS - OPTIONAL CODE 461226128 (01-02-03) - 461226138 (04-05-06)
MARTELLO IDRAULICO (L=2.08 MT) - COMPONENTI - OPTIONAL CODE 461226128 (01-02-03) - 461226138 (04-05-06)
HYDRAULISCHER HAMMER (L=2.08 MT) - BESTANDTEILE - OPTIONAL CODE 461226128 (01-02-03) - 461226138 (04-05-06)
MARTEAU HYDRAULIQUE (L=2.08 MT) - COMPOSANTS - OPTIONAL CODE 461226128 (01-02-03) - 461226138 (04-05-06)

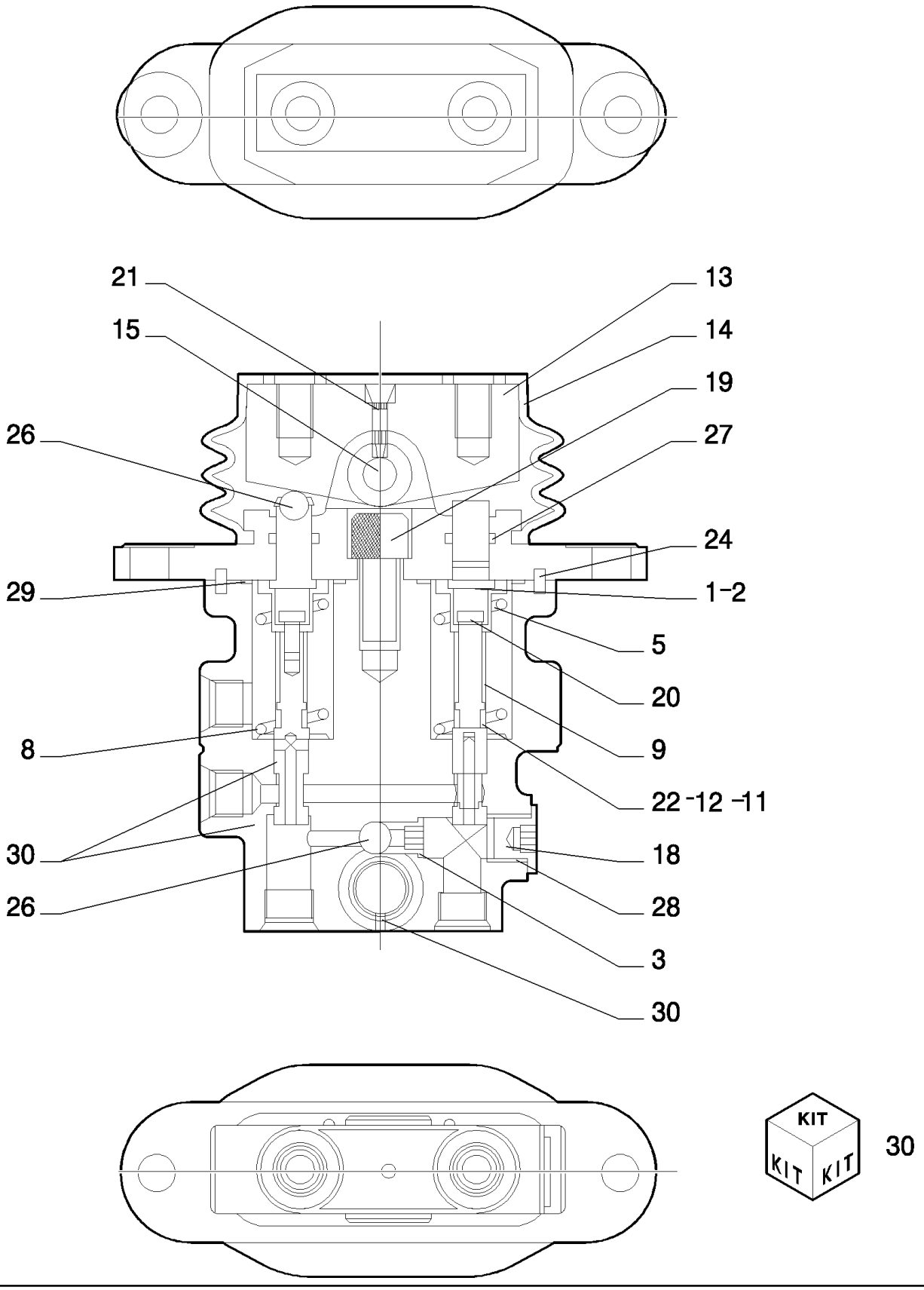

Copyright © New Holland

MARTILLO HIDRÁULICO (L=2.08 MT) - COMPONENTES - OPTIONAL CODE 461226128 (01-02-03) - 461226138 (04-05-06)
HYDRAULIC HAMMER (L=2.08 MT) - COMPONENTS - OPTIONAL CODE 461226128 (01-02-03) - 461226138 (04-05-06)
HYDRAULIC HAMMER (L=2.08 MT) - COMPONENTS - OPTIONAL CODE 461226128 (01-02-03) - 461226138 (04-05-06)
HYDRAULIC HAMMER (L=2.08 MT) - COMPONENTS - OPTIONAL CODE 461226128 (01-02-03) - 461226138 (04-05-06)

R	N	P.N.	MOD	Q	Description Denominacion	Descrizione Beskrivelse	Bezeichnung Denominação	Description Beschrijving	L.C.
1		72210484		2	SHIM SUPLEMENTO	SPESSORE MELLEMLÆG	AUSGLEICHSSCHEIBE CALÇO DE AFINAÇÃO	CALE VULPLAATJE	198S
2		72210485		2	SHIM SUPLEMENTO	SPESSORE MELLEMLÆG	AUSGLEICHSSCHEIBE CALÇO DE AFINAÇÃO	CALE VULPLAATJE	198S
3		72210219		1	SEAT/SLOT ASIENTO/RANURA	SEDE/ASOLA SÆDE	SITZ/SCHLITZ SUPORTE	SIEGE/FENTE ZITTING/SLEUF	069S
5		72210483		2	SLEEVE MANGUITO	MANICOTTO TRYKLEJE, KOBLING	BUCHSE MANGA	CHEMISE MOF; BUS	031M
8		72210486		1	SPRING RESORTE	MOLLA FJEDER	FEDER MOLA	RESSORT VEER	100M
9		72210223		2	SPRING RESORTE	MOLLA FJEDER	FEDER MOLA	RESSORT VEER	100M
11		72210487		2	SHIM SUPLEMENTO	SPESSORE MELLEMLÆG	AUSGLEICHSSCHEIBE CALÇO DE AFINAÇÃO	CALE VULPLAATJE	198S
12		72210488		1	SHIM SUPLEMENTO	SPESSORE MELLEMLÆG	AUSGLEICHSSCHEIBE CALÇO DE AFINAÇÃO	CALE VULPLAATJE	198S
13		72210489		1	CAM LEVA	CAMMA KAM	NOCKE EXCÊNTRICO	CAME NOK	040C
14		72210225		1	BOOT FUNDA	PARAPOLVERE MANCHET	MANSCHETTE COBERTURA DE PROTE	SOUFFLET HOES	330C
15		72210226		1	PIN PASADOR	PERNO STIFT	PIN PERNO	BROCHE PEN	080P
18		72210230		1	PLUG TAPÓN	TAPPO PROP	STOPFEN TAMPÃO	BOUCHON PLUG	050T
19		72210490		1	SCREW TORNILLO	VITE SKRUE	SCHRAUBE PARAFUSO	VIS SCHROEF	040V
20		72210232		2	SCREW TORNILLO	VITE SKRUE	SCHRAUBE PARAFUSO	VIS SCHROEF	040V
21		72210233		2	PLUG TAPÓN	TAPPO PROP	STOPFEN TAMPÃO	BOUCHON PLUG	050T
22		72210234		2	WASHER ARANDELA	RONDELLA FLADSKIVE	UNTERLEGSCHEIBE ANILHA	RONDELLE SLUITRING	131R
24		72210492		2	PIN PASADOR	PERNO STIFT	PIN PERNO	BROCHE PEN	080P
26		72210237		3	BALL BOLA	SFERA KUGLE	KUGEL ESFERA	BILLE KOGEL	140S
27		72210491		2	O-RING JUNTA TÓRICA	ANELLO TOROIDALE O-RING	O-RING O-RING	JOINT TORIQUE O-RING	055A
28		72209827		1	O-RING JUNTA TÓRICA	ANELLO TOROIDALE O-RING	O-RING O-RING	JOINT TORIQUE O-RING	055A
29		72210493		2	O-RING JUNTA TÓRICA	ANELLO TOROIDALE O-RING	O-RING O-RING	JOINT TORIQUE O-RING	055A
30		72210494		1	KIT KIT	KIT SÆT	SATZ KIT	KIT KIT	305C

VALVE ASSY P/N 72204155

E215B

Copyright © New Holland

5.0020	08	p1	03/10

HYDRAULIC HAMMER (L=2.08 MT) - OPTIONAL CODE 461226128 (01-02-03)
MARTELLO IDRAULICO (L=2.08 MT) - CODICE VARIANTE 461226128 (01-02-03)
HYDRAULISCHER HAMMER (L=2.08 MT) - OPTIONAL CODE 461226128 (01-02-03)
MARTEAU HYDRAULIQUE (L=2.08 MT) - OPTIONAL CODE 461226128 (01-02-03)

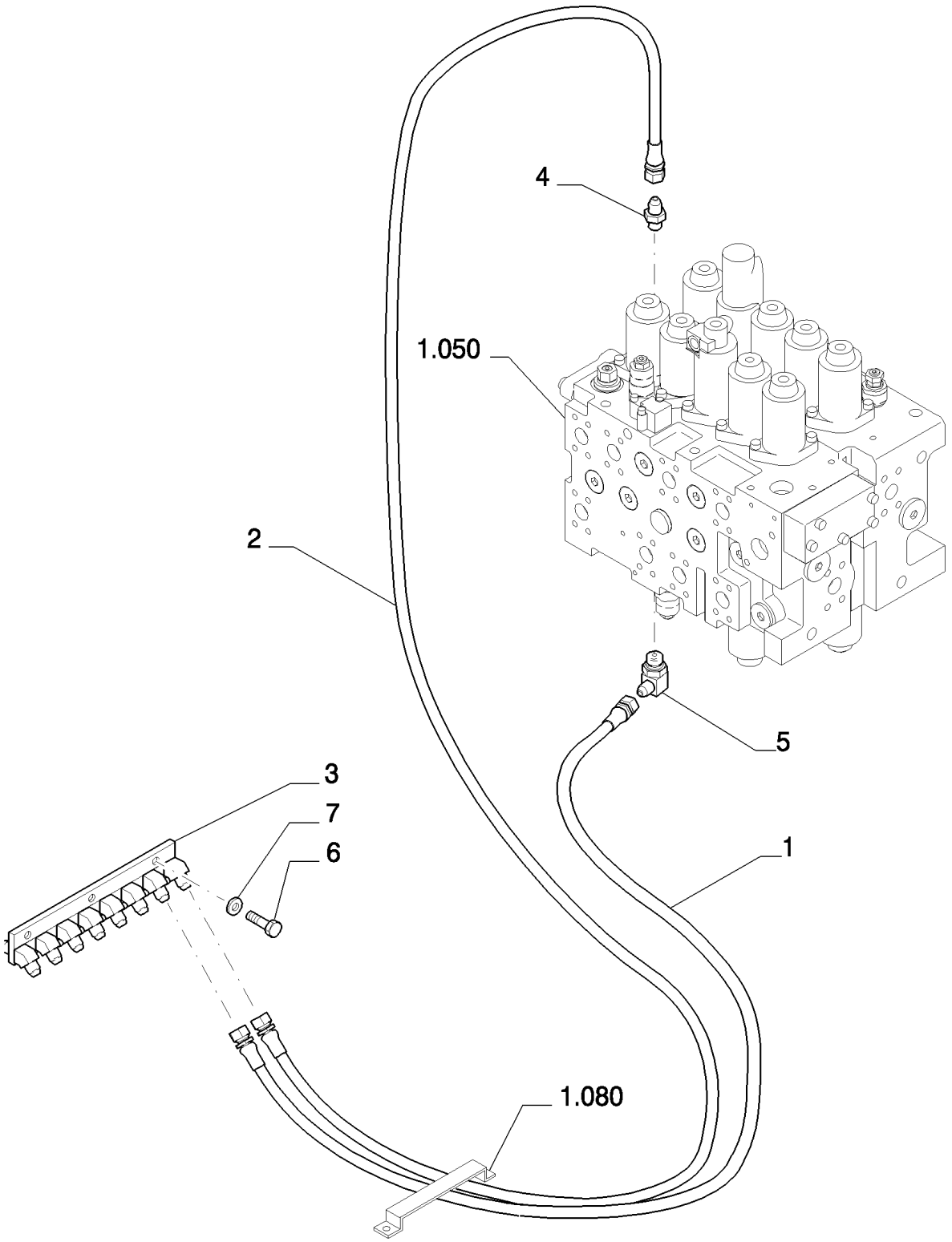

Copyright © New Holland

MARTILLO HIDRÁULICO (L=2.08 MT) - OPTIONAL CODE 461226128 (01-02-03)
HYDRAULIC HAMMER (L=2.08 MT) - OPTIONAL CODE 461226128 (01-02-03)
HYDRAULIC HAMMER (L=2.08 MT) - OPTIONAL CODE 461226128 (01-02-03)
HYDRAULIC HAMMER (L=2.08 MT) - OPTIONAL CODE 461226128 (01-02-03)

R	N	P.N.	MOD	Q	Description Denominacion	Descrizione Beskrivelse	Bezeichnung Denominação	Description Beschrijving	L.C.
1		72214543		1	FLEXIBLE HOSE TUBO FLEXIBLE	TUBO FLESSIBILE FLEKSIBEL SLANGE	BIEGSAMER SCHLAUCH MANGUEIRA FLEXÍVEL	TUYAU FLEXIBLE FLEXIBELE SLANG	192T
2		87536897		1	FLEXIBLE HOSE TUBO FLEXIBLE	TUBO FLESSIBILE FLEKSIBEL SLANGE	BIEGSAMER SCHLAUCH MANGUEIRA FLEXÍVEL	TUYAU FLEXIBLE FLEXIBELE SLANG	192T
3		87537888		1	BLOCK BLOQUE	BLOCCO MOTORBLOK	BLOCK BLOCO	BLOC BLOK	074B
4		72214522		1	HYD CONNECTOR CONECTOR HIDRÁULIC	CONNETTORE IDRAULIC HYDRAULIKSTIK	HYDR STECKVERBINDE CONECTOR HID.	CONNECTEUR HYDRAU HYDRAULISCHE AANSL	020R
5		72214561		1	HYD CONNECTOR CONECTOR HIDRÁULIC	CONNETTORE IDRAULIC HYDRAULIKSTIK	HYDR STECKVERBINDE CONECTOR HID.	CONNECTEUR HYDRAU HYDRAULISCHE AANSL	020R
6		11106434		3	BOLT, Hex, M10 x 30, 10.9, Full Thd PERNO	BULLONE BOLT	SCHRAUBE PARAFUSO	VIS BOUT	140B
7		12641031		3	LOCK WASHER ARANDELA DE BLOQUE	RONDELLA DI SICUREZ LÅSESKIVE	SICHERUNGSSCHEIBE ANILHA DE RETENÇÃO	RONDELLE FREIN BORGRING	132R

Copyright © New Holland

5.0020	09	p1	03/10

HYDRAULIC HAMMER (L=2.08 MT) - OPTIONAL CODE 461226128 (01-02-03)
MARTELLO IDRAULICO (L=2.08 MT) - CODICE VARIANTE 461226128 (01-02-03)
HYDRAULISCHER HAMMER (L=2.08 MT) - OPTIONAL CODE 461226128 (01-02-03)
MARTEAU HYDRAULIQUE (L=2.08 MT) - OPTIONAL CODE 461226128 (01-02-03)

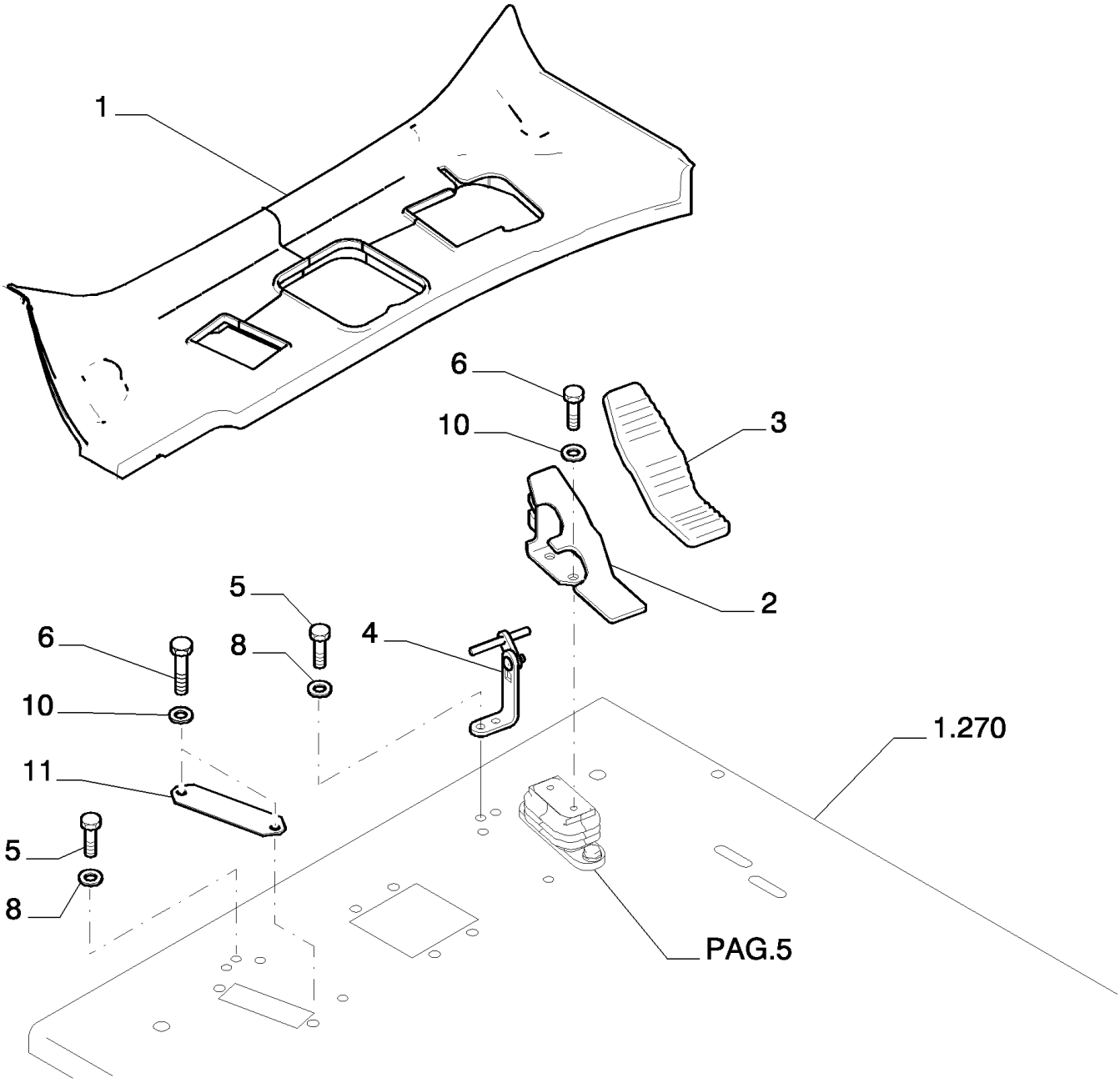

Copyright © New Holland

MARTILLO HIDRÁULICO (L=2.08 MT) - OPTIONAL CODE 461226128 (01-02-03)
HYDRAULIC HAMMER (L=2.08 MT) - OPTIONAL CODE 461226128 (01-02-03)
HYDRAULIC HAMMER (L=2.08 MT) - OPTIONAL CODE 461226128 (01-02-03)
HYDRAULIC HAMMER (L=2.08 MT) - OPTIONAL CODE 461226128 (01-02-03)

R	N	P.N.	MOD	Q	Description Denominacion	Descrizione Beskrivelse	Bezeichnung Denominação	Description Beschrijving	L.C.
1		YN26M00074P1		1	CARPET ALFOMBRA	TAPPETINO TÆPPE	TEPPICH TAPETE	TAPIS VLOERBEDEKKING	P015
2		87539195		1	PEDAL PEDAL	PEDALE PEDAL	PEDAL PEDAL	PEDALE PEDAAL	060P
3		87539205		1	RUBBER PEDAL PAD PASTILLA DE PEDAL DE	RIVESTIMENTO PEDALE GUMMIPEDALBELÆGNI	GUMMIPEDALAUFLAGE BORRACHA COBERTUR	PATIN DE PEDALE CAO RUBBEREN PEDAALBEK	292C
4		87539206		1	BRACKET SOPORTE	STAFFA BESLAG	HALTERUNG SUPORTE	SUPPORT STEUN	225S
5		16043434		4	BOLT, Hex, M8 x 20, 10.9, Full Thd PERNO	BULLONE BOLT	SCHRAUBE PARAFUSO	VIS BOUT	140B
6		11106034		4	BOLT, Hex, M10 x 20, 10.9, Full Thd PERNO	BULLONE BOLT	SCHRAUBE PARAFUSO	VIS BOUT	140B
8		14496531		4	WASHER, M8 x 17 x 1.6 ARANDELA	RONDELLA FLADSKIVE	UNTERLEGSCHEIBE ANILHA	RONDELLE SLUITRING	131R
10		14496631		4	WASHER, M10 x 21 x 2 ARANDELA	RONDELLA FLADSKIVE	UNTERLEGSCHEIBE ANILHA	RONDELLE SLUITRING	131R
11		87746013		1	PLATE PLACA	PIASTRA PLADE	PLATTE CHAPA	PLAQUE PLAAT	105P

Copyright © New Holland

5.0020	10	p1	03/10

HYDRAULIC HAMMER (L=2.08 MT) - OPTIONAL CODE 461226128 (01-02-03)
MARTELLO IDRAULICO (L=2.08 MT) - CODICE VARIANTE 461226128 (01-02-03)
HYDRAULISCHER HAMMER (L=2.08 MT) - OPTIONAL CODE 461226128 (01-02-03)
MARTEAU HYDRAULIQUE (L=2.08 MT) - OPTIONAL CODE 461226128 (01-02-03)

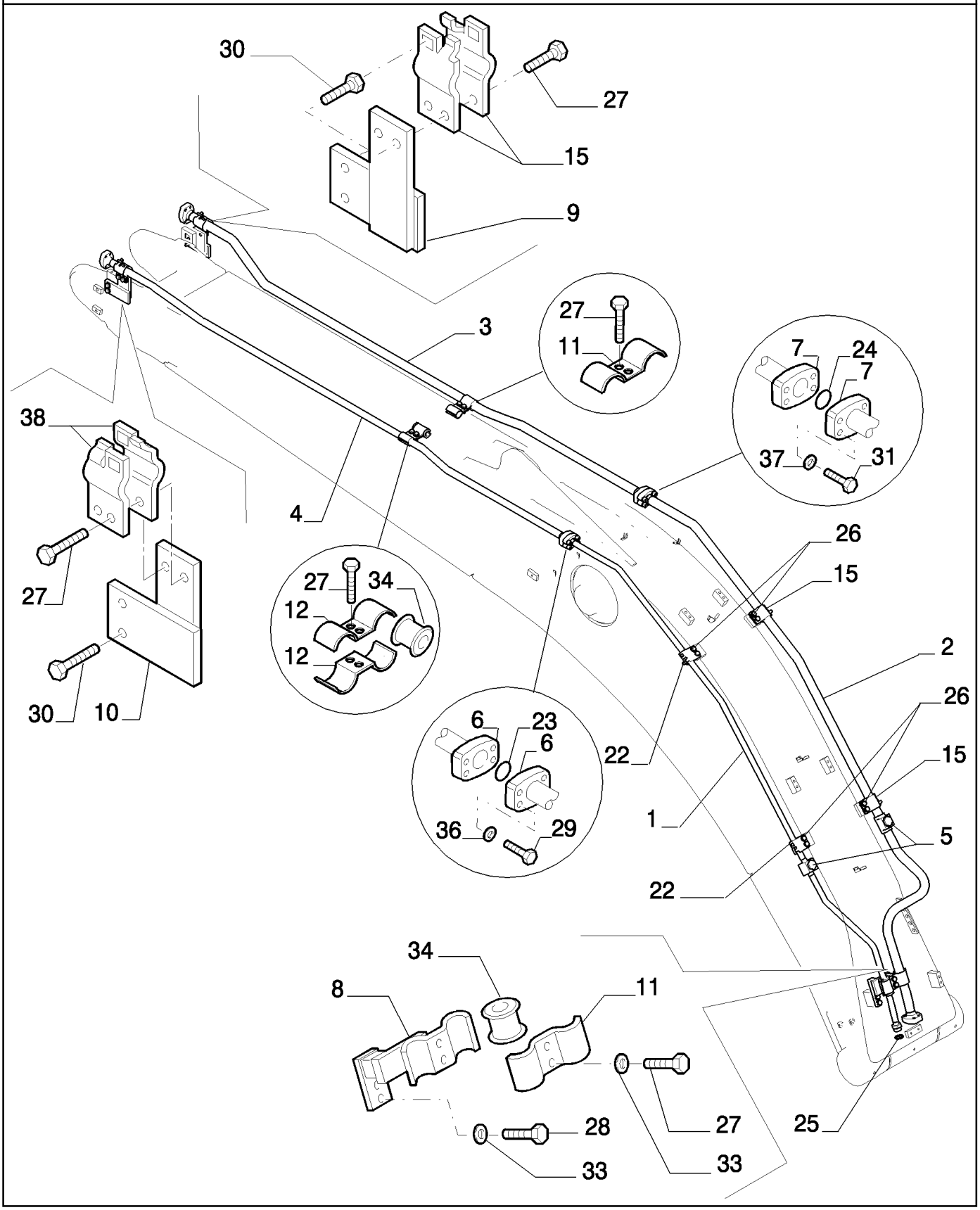

Copyright © New Holland

MARTILLO HIDRÁULICO (L=2.08 MT) - OPTIONAL CODE 461226128 (01-02-03)
HYDRAULIC HAMMER (L=2.08 MT) - OPTIONAL CODE 461226128 (01-02-03)
HYDRAULIC HAMMER (L=2.08 MT) - OPTIONAL CODE 461226128 (01-02-03)
HYDRAULIC HAMMER (L=2.08 MT) - OPTIONAL CODE 461226128 (01-02-03)

R	N	P.N.	MOD	Q	Description Denominacion	Descrizione Beskrivelse	Bezeichnung Denominação	Description Beschrijving	L.C.
1		87543992		1	RIGID TUBE TUBO RÍGIDO	TUBO RIGIDO STIFT RØR	ROHR TUBO RÍGIDO	TUYAU RIGIDE VASTE LEIDING	193T
2		87543993		1	RIGID TUBE TUBO RÍGIDO	TUBO RIGIDO STIFT RØR	ROHR TUBO RÍGIDO	TUYAU RIGIDE VASTE LEIDING	193T
3		87543994		1	RIGID TUBE TUBO RÍGIDO	TUBO RIGIDO STIFT RØR	ROHR TUBO RÍGIDO	TUYAU RIGIDE VASTE LEIDING	193T
4		87543995		1	RIGID TUBE TUBO RÍGIDO	TUBO RIGIDO STIFT RØR	ROHR TUBO RÍGIDO	TUYAU RIGIDE VASTE LEIDING	193T
6		71404313		2	HALF-FLANGE SEMIBRIDA	SEMIFLANGIA FLANGEHALVDEL	FLANSCHHÄLFTE MEIA FLANGE	DEMI-BRIDE FLENSHELFT	417S
7		71444029		2	HALF-FLANGE SEMIBRIDA	SEMIFLANGIA FLANGEHALVDEL	FLANSCHHÄLFTE MEIA FLANGE	DEMI-BRIDE FLENSHELFT	417S
8		84147125		1	BRACKET SOPORTE	STAFFA BESLAG	HALTERUNG SUPORTE	SUPPORT STEUN	225S
9		87359468		1	PLATE PLACA	PIASTRA PLADE	PLATTE CHAPA	PLAQUE PLAAT	105P
10		87359469		1	PLATE PLACA	PIASTRA PLADE	PLATTE CHAPA	PLAQUE PLAAT	105P
11		87343330		4	BRACKET SOPORTE	STAFFA BESLAG	HALTERUNG SUPORTE	SUPPORT STEUN	225S
12		87343335		2	BRACKET SOPORTE	STAFFA BESLAG	HALTERUNG SUPORTE	SUPPORT STEUN	225S
15		87349692		6	BRACKET SOPORTE	STAFFA BESLAG	HALTERUNG SUPORTE	SUPPORT STEUN	225S
22		87343090		4	BRACKET SOPORTE	STAFFA BESLAG	HALTERUNG SUPORTE	SUPPORT STEUN	225S
23		72215443		1	O-RING JUNTA TÓRICA	ANELLO TOROIDALE O-RING	O-RING O-RING	JOINT TORIQUE O-RING	055A
24		70924192		1	O-RING JUNTA TÓRICA	ANELLO TOROIDALE O-RING	O-RING O-RING	JOINT TORIQUE O-RING	055A
25		70931640		1	GASKET JUNTA	GUARNIZIONE PAKNING	DICHTUNG JUNTA	JOINT PAKKING	123G
26		11112434		8	BOLT, Hex, M12 x 30, 10.9, Full Thd PERNO	BULLONE BOLT	SCHRAUBE PARAFUSO	VIS BOUT	140B
27		11112634		10	SCREW TORNILLO	VITE SKRUE	SCHRAUBE PARAFUSO	VIS SCHROEF	040V
28		11113334		2	SCREW TORNILLO	VITE SKRUE	SCHRAUBE PARAFUSO	VIS SCHROEF	040V
29		14422434		4	SCREW TORNILLO	VITE SKRUE	SCHRAUBE PARAFUSO	VIS SCHROEF	040V
30		11112834		4	BOLT, Hex, M12 x 40, 10.9, Full Thd PERNO	BULLONE BOLT	SCHRAUBE PARAFUSO	VIS BOUT	140B
31		14424534		4	SCREW TORNILLO	VITE SKRUE	SCHRAUBE PARAFUSO	VIS SCHROEF	040V
33		14496731		24	WASHER, M12 x 24 x 2.5 Thk ARANDELA	RONDELLA FLADSKIVE	UNTERLEGSCHEIBE ANILHA	RONDELLE SLUITRING	131R
34		87343521		2	BUSHING CASQUILLO	BOCCOLA BØSNING	BUCHSE CASQUILHO	BAGUE BUS	095B

Copyright © New Holland

5.0020	10	p2	03/10

HYDRAULIC HAMMER (L=2.08 MT) - OPTIONAL CODE 461226128 (01-02-03)
MARTELLO IDRAULICO (L=2.08 MT) - CODICE VARIANTE 461226128 (01-02-03)
HYDRAULISCHER HAMMER (L=2.08 MT) - OPTIONAL CODE 461226128 (01-02-03)
MARTEAU HYDRAULIQUE (L=2.08 MT) - OPTIONAL CODE 461226128 (01-02-03)

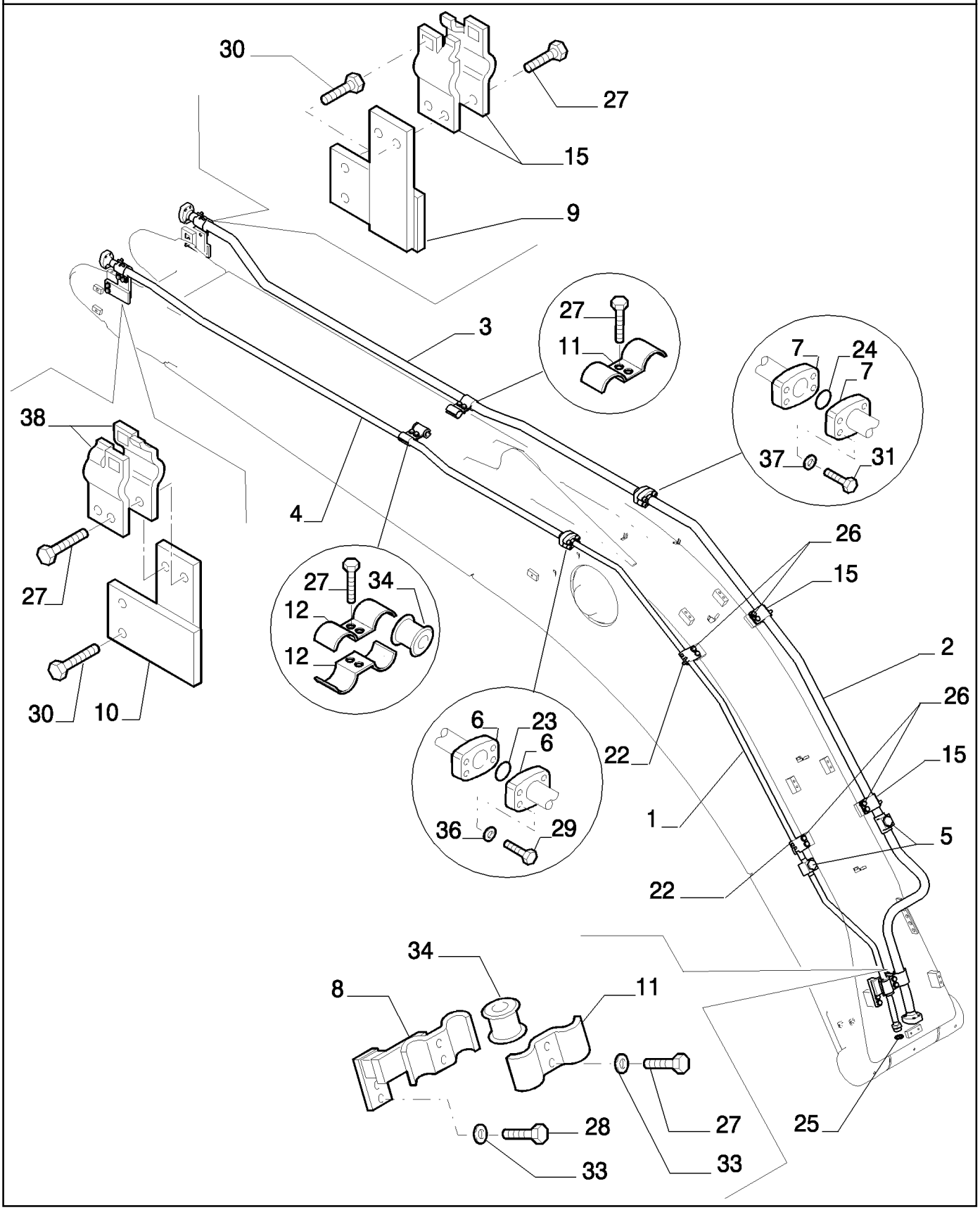

Copyright © New Holland

MARTILLO HIDRÁULICO (L=2.08 MT) - OPTIONAL CODE 461226128 (01-02-03)
HYDRAULIC HAMMER (L=2.08 MT) - OPTIONAL CODE 461226128 (01-02-03)
HYDRAULIC HAMMER (L=2.08 MT) - OPTIONAL CODE 461226128 (01-02-03)
HYDRAULIC HAMMER (L=2.08 MT) - OPTIONAL CODE 461226128 (01-02-03)

R	N	P.N.	MOD	Q	Description Denominacion	Descrizione Beskrivelse	Bezeichnung Denominação	Description Beschrijving	L.C.
36		10517074		4	LOCK WASHER ARANDELA DE BLOQUE	RONDELLA DI SICUREZ LÅSESKIVE	SICHERUNGSSCHEIBE ANILHA DE RETENÇÃO	RONDELLE FREIN BORGRING	132R
37		10517174		4	LOCK WASHER ARANDELA DE BLOQUE	RONDELLA DI SICUREZ LÅSESKIVE	SICHERUNGSSCHEIBE ANILHA DE RETENÇÃO	RONDELLE FREIN BORGRING	132R
38		87343093		2	BRACKET SOPORTE	STAFFA BESLAG	HALTERUNG SUPORTE	SUPPORT STEUN	225S

Copyright © New Holland

5.0020	11	p1	03/10

HYDRAULIC HAMMER (L=2.08 MT) - OPTIONAL CODE 461226128 (01-02-03) - 461226138 (04-05-06)
MARTELLO IDRAULICO (L=2.08 MT) - CODICE VARIANTE 461226128 (01-02-03) - 461226138 (04-05-06)
HYDRAULISCHER HAMMER (L=2.08 MT) - OPTIONAL CODE 461226128 (01-02-03) - 461226138 (04-05-06)
MARTEAU HYDRAULIQUE (L=2.08 MT) - OPTIONAL CODE 461226128 (01-02-03) - 461226138 (04-05-06)

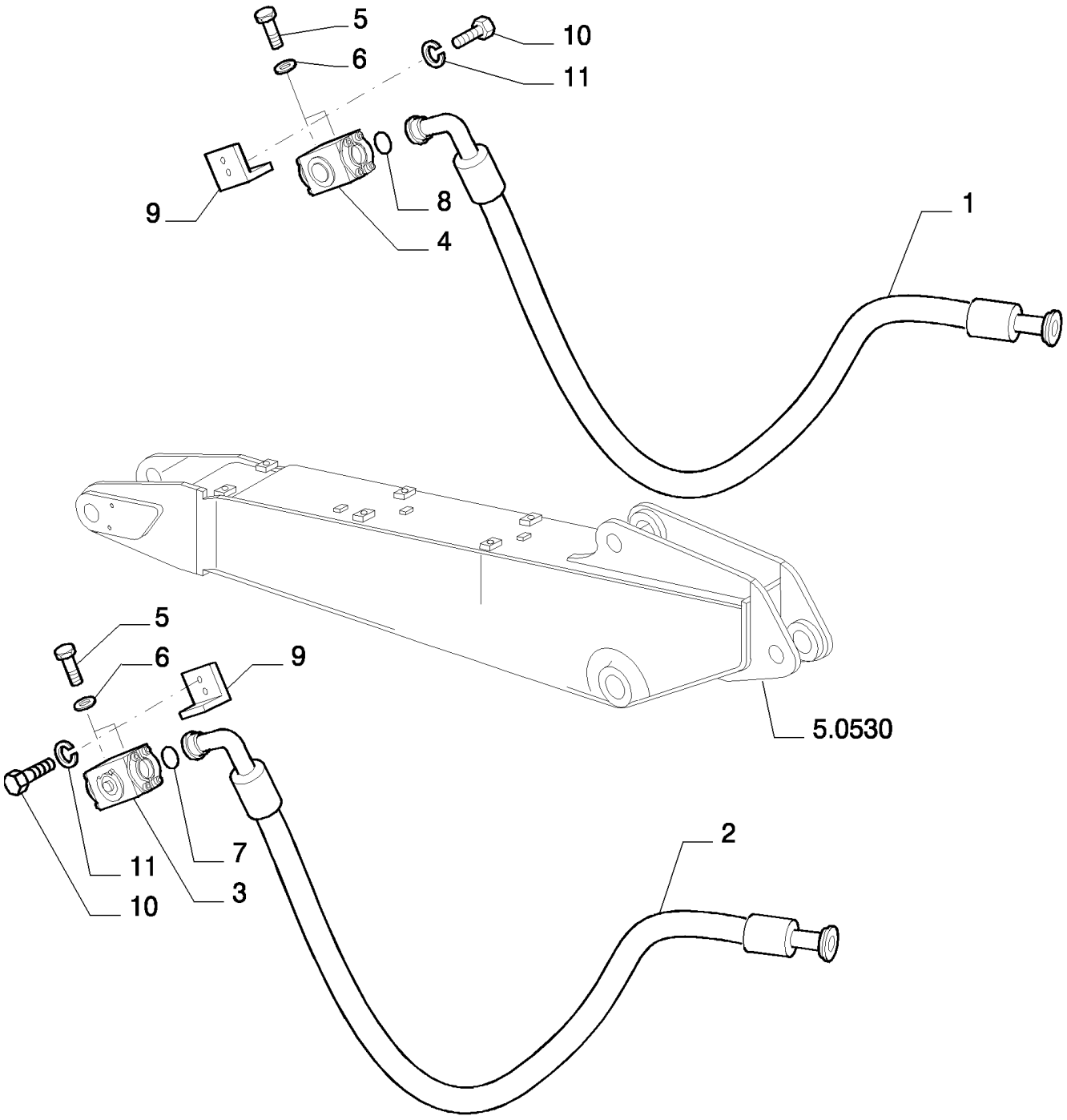

Copyright © New Holland

MARTILLO HIDRÁULICO (L=2.08 MT) - OPTIONAL CODE 461226128 (01-02-03) - 461226138 (04-05-06)
HYDRAULIC HAMMER (L=2.08 MT) - OPTIONAL CODE 461226128 (01-02-03) - 461226138 (04-05-06)
HYDRAULIC HAMMER (L=2.08 MT) - OPTIONAL CODE 461226128 (01-02-03) - 461226138 (04-05-06)
HYDRAULIC HAMMER (L=2.08 MT) - OPTIONAL CODE 461226128 (01-02-03) - 461226138 (04-05-06)

R	N	P.N.	MOD	Q	Description Denominacion	Descrizione Beskrivelse	Bezeichnung Denominação	Description Beschrijving	L.C.
1		87556738		1	FLEXIBLE HOSE TUBO FLEXIBLE	TUBO FLESSIBILE FLEKSIBEL SLANGE	BIEGSAMER SCHLAUCH MANGUEIRA FLEXÍVEL	TUYAU FLEXIBLE FLEXIBELE SLANG	192T
2		87556737		1	FLEXIBLE HOSE TUBO FLEXIBLE	TUBO FLESSIBILE FLEKSIBEL SLANGE	BIEGSAMER SCHLAUCH MANGUEIRA FLEXÍVEL	TUYAU FLEXIBLE FLEXIBELE SLANG	192T
3		72215206		1	HYDRAULIC VALVE VÁLVULA HIDRÁULICA	DISTRIBUTORE IDRAULI HYDRAULIKVENTIL	HYDRAULIKVENTIL VÁLVULA HIDRÁULICA	SOUPAPE HYDRAULIQU HYDRAULISCHE KLEP	010V
4	1	72215205		1	HYDRAULIC VALVE VÁLVULA HIDRÁULICA	DISTRIBUTORE IDRAULI HYDRAULIKVENTIL	HYDRAULIKVENTIL VÁLVULA HIDRÁULICA	SOUPAPE HYDRAULIQU HYDRAULISCHE KLEP	010V
5		11106234		4	BOLT, Hex, M10 x 25, 10.9, Full Thd PERNO	BULLONE BOLT	SCHRAUBE PARAFUSO	VIS BOUT	140B
6		10516874		4	LOCK WASHER ARANDELA DE BLOQUE	RONDELLA DI SICUREZ LÅSESKIVE	SICHERUNGSSCHEIBE ANILHA DE RETENÇÃO	RONDELLE FREIN BORGRING	132R
7		70924200		1	O-RING JUNTA TÓRICA	ANELLO TOROIDALE O-RING	O-RING O-RING	JOINT TORIQUE O-RING	055A
8		70924192		1	O-RING JUNTA TÓRICA	ANELLO TOROIDALE O-RING	O-RING O-RING	JOINT TORIQUE O-RING	055A
9		87381234		2	BRACKET SOPORTE	STAFFA BESLAG	HALTERUNG SUPORTE	SUPPORT STEUN	225S
10		11112434		4	BOLT, Hex, M12 x 30, 10.9, Full Thd PERNO	BULLONE BOLT	SCHRAUBE PARAFUSO	VIS BOUT	140B
11		10517074		4	LOCK WASHER ARANDELA DE BLOQUE	RONDELLA DI SICUREZ LÅSESKIVE	SICHERUNGSSCHEIBE ANILHA DE RETENÇÃO	RONDELLE FREIN BORGRING	132R

(1) ASSY SEE PAGE 12

Copyright © New Holland

5.0020	12	p1	03/10

HYDRAULIC HAMMER (L=2.08 MT) - COMPONENTS - OPTIONAL CODE 461226128 (01-02-03) - 461226138 (04-05-06)
MARTELLO IDRAULICO (L=2.08 MT) - COMPONENTI - CODICE VARIANTE 461226128 (01-02-03) - 461226138 (04-05-06)
HYDRAULISCHER HAMMER (L=2.08 MT) - BESTANDTEILE - OPTIONAL CODE 461226128 (01-02-03) - 461226138 (04-05-06)
MARTEAU HYDRAULIQUE (L=2.08 MT) - COMPOSANTS - OPTIONAL CODE 461226128 (01-02-03) - 461226138 (04-05-06)

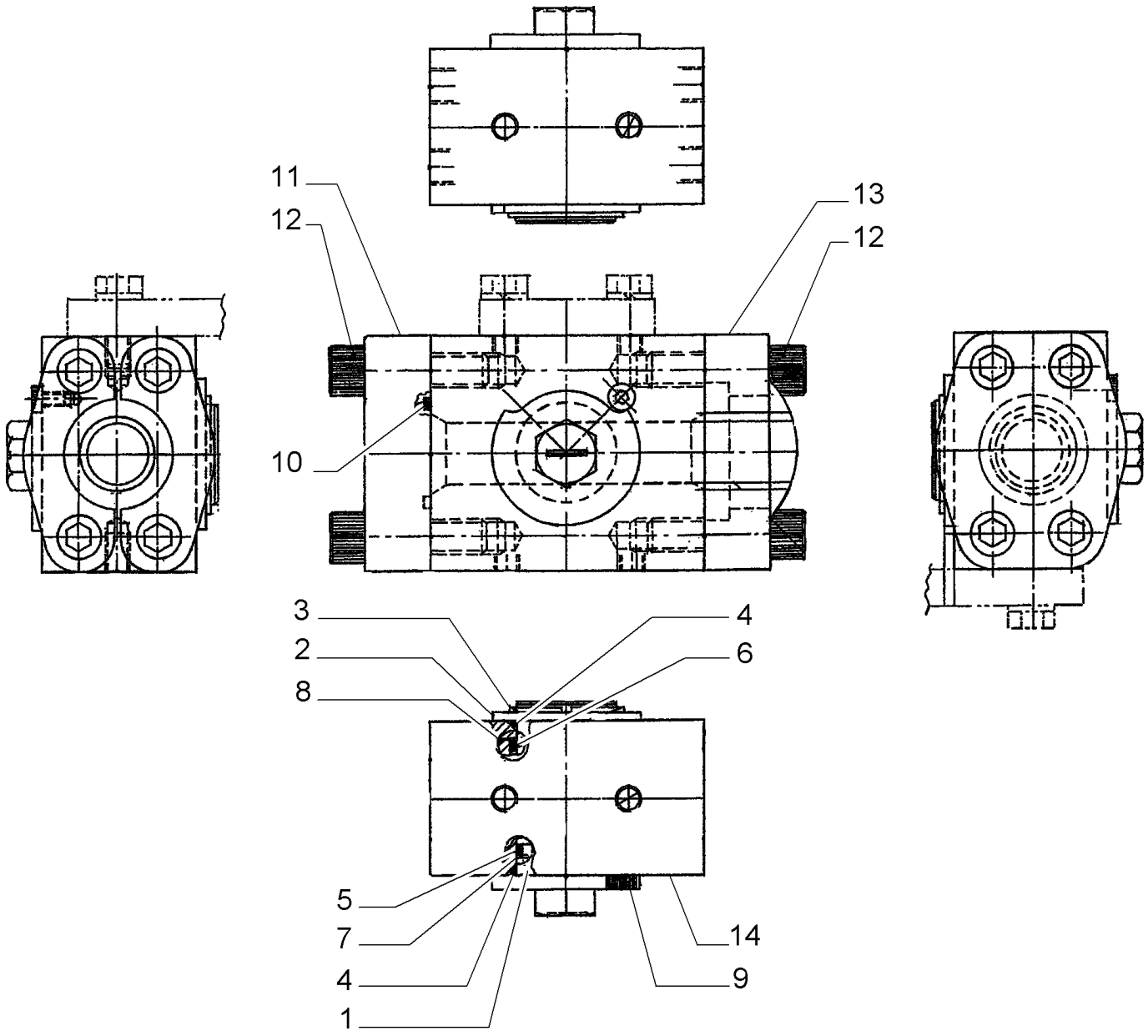

Copyright © New Holland

MARTILLO HIDRÁULICO (L=2.08 MT) - COMPONENTES - OPTIONAL CODE 461226128 (01-02-03) - 461226138 (04-05-06)
HYDRAULIC HAMMER (L=2.08 MT) - COMPONENTS - OPTIONAL CODE 461226128 (01-02-03) - 461226138 (04-05-06)
HYDRAULIC HAMMER (L=2.08 MT) - COMPONENTS - OPTIONAL CODE 461226128 (01-02-03) - 461226138 (04-05-06)
HYDRAULIC HAMMER (L=2.08 MT) - COMPONENTS - OPTIONAL CODE 461226128 (01-02-03) - 461226138 (04-05-06)

R	N	P.N.	MOD	Q	Description Denominacion	Descrizione Beskrivelse	Bezeichnung Denominação	Description Beschrijving	L.C.
1		72219279		1	PIN PASADOR	PERNO STIFT	PIN PERNO	BROCHE PEN	080P
2		72219249		1	SPACER SEPARADOR	DISTANZIALE AFSTANDSSTYKKE	DISTANZSTÜCK ESPAÇADOR	ENTRETOISE AFSTANDSSTUK	075D
3		72219250		1	RING ANILLO	ANELLO RING	RING ANEL	ANNEAU RING	045A
4		72219252		2	GASKET JUNTA	GUARNIZIONE PAKNING	DICHTUNG JUNTA	JOINT PAKKING	123G
5		72219255		1	GASKET JUNTA	GUARNIZIONE PAKNING	DICHTUNG JUNTA	JOINT PAKKING	123G
6		72219253		1	GASKET JUNTA	GUARNIZIONE PAKNING	DICHTUNG JUNTA	JOINT PAKKING	123G
7		72219256		1	RING ANILLO	ANELLO RING	RING ANEL	ANNEAU RING	045A
8		72219254		1	RING ANILLO	ANELLO RING	RING ANEL	ANNEAU RING	045A
9		72219251		1	SCREW, 6X8 TORNILLO	VITE SKRUE	SCHRAUBE PARAFUSO	VIS SCHROEF	040V
10		72219287		1	GASKET JUNTA	GUARNIZIONE PAKNING	DICHTUNG JUNTA	JOINT PAKKING	123G
11		72219288		1	FLANGE BRIDA	FLANGIA FLANGE	FLANSCH FLANGE	BRIDE FLENS	070F
12		72219289		8	SCREW, 14X50 TORNILLO	VITE SKRUE	SCHRAUBE PARAFUSO	VIS SCHROEF	040V
13		72219290		2	HALF-FLANGE SEMIBRIDA	SEMIFLANGIA FLANGEHALVDEL	FLANSCHHÄLFTE MEIA FLANGE	DEMI-BRIDE FLENSHELFT	417S
14		72219278		1	BODY CUERPO	CORPO HUS	KAROSSERIE CORPO	CORPS HUIS	300C

VALVE ASSY P/N 72215205

E215B

Copyright © New Holland

5.0020	13	p1	05/10

HYDRAULIC HAMMER (L=2.08 MT) - OPTIONAL CODE 461226138 (04-05-06)
MARTELLO IDRAULICO (L=2.08 MT) - OPTIONAL CODE 461226138 (04-05-06)
HYDRAULISCHER HAMMER (L=2.08 MT) - OPTIONAL CODE 461226138 (04-05-06)
MARTEAU HYDRAULIQUE (L=2.08 MT) - OPTIONAL CODE 461226138 (04-05-06)

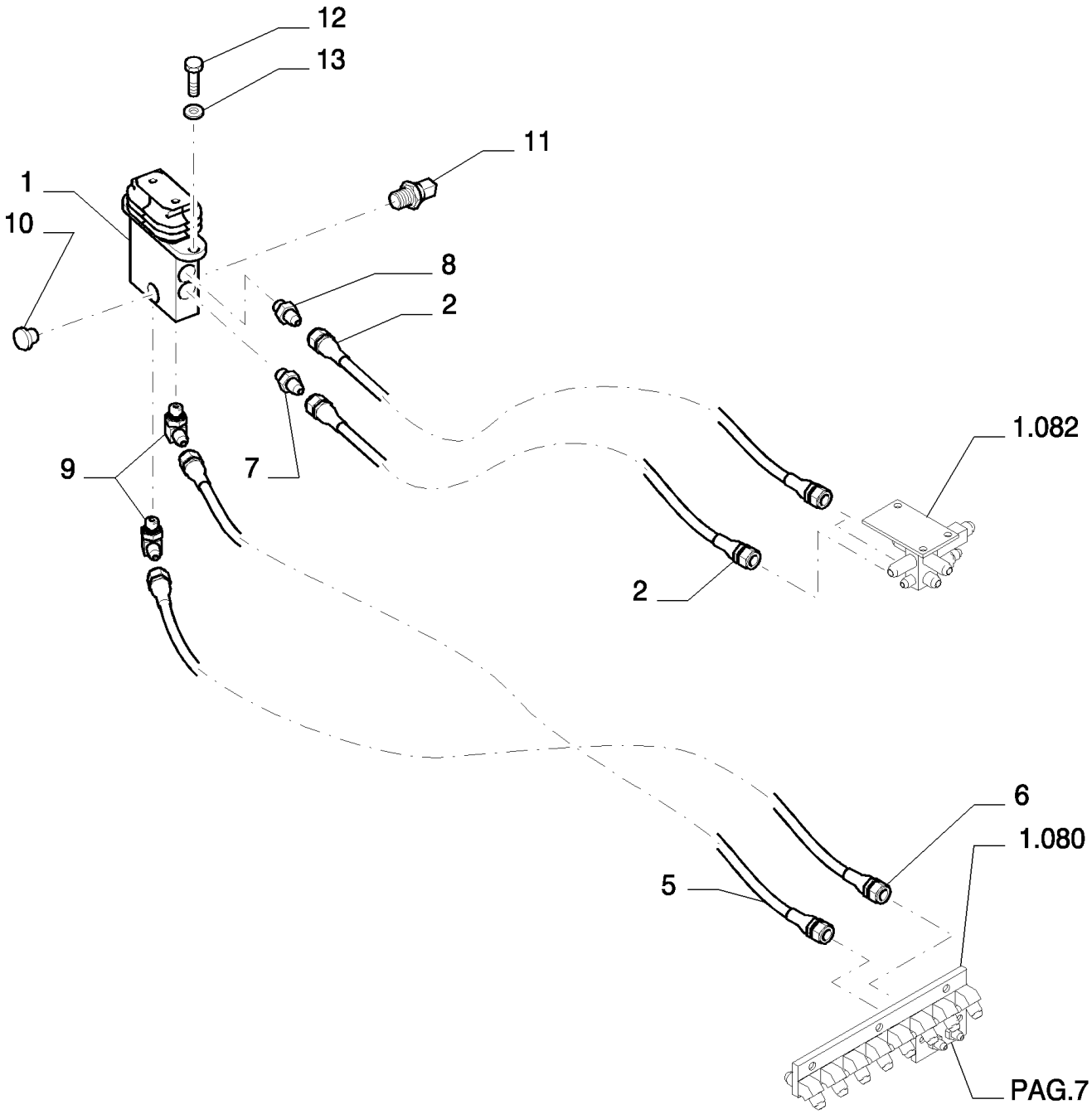

Copyright © New Holland

MARTILLO HIDRÁULICO (L=2.08 MT) - OPTIONAL CODE 461226138 (04-05-06)
HYDRAULIC HAMMER (L=2.08 MT) - OPTIONAL CODE 461226138 (04-05-06)
HYDRAULIC HAMMER (L=2.08 MT) - OPTIONAL CODE 461226138 (04-05-06)
HYDRAULIC HAMMER (L=2.08 MT) - OPTIONAL CODE 461226138 (04-05-06)

R	N	P.N.	MOD	Q	Description Denominacion	Descrizione Beskrivelse	Bezeichnung Denominação	Description Beschrijving	L.C.
1	1	72204155		1	HYDRAULIC VALVE VÁLVULA HIDRÁULICA	DISTRIBUTORE IDRAULI HYDRAULIKVENTIL	HYDRAULIKVENTIL VÁLVULA HIDRÁULICA	SOUPAPE HYDRAULIQU HYDRAULISCHE KLEP	010V
2		87338415		2	FLEXIBLE HOSE TUBO FLEXIBLE	TUBO FLESSIBILE FLEKSIBEL SLANGE	BIEGSAMER SCHLAUCH MANGUEIRA FLEXÍVEL	TUYAU FLEXIBLE FLEXIBELE SLANG	192T
5		2420R349D170		1	FLEXIBLE HOSE TUBO FLEXIBLE	TUBO FLESSIBILE FLEKSIBEL SLANGE	BIEGSAMER SCHLAUCH MANGUEIRA FLEXÍVEL	TUYAU FLEXIBLE FLEXIBELE SLANG	192T
6		2420R349D175		1	FLEXIBLE HOSE TUBO FLEXIBLE	TUBO FLESSIBILE FLEKSIBEL SLANGE	BIEGSAMER SCHLAUCH MANGUEIRA FLEXÍVEL	TUYAU FLEXIBLE FLEXIBELE SLANG	192T
7		87522432		1	HYD CONNECTOR CONECTOR HIDRÁULIC	CONNETTORE IDRAULI HYDRAULIKSTIK	HYDR STECKVERBINDE CONECTOR HID.	CONNECTEUR HYDRAU HYDRAULISCHE AANSL	020R
8		72214744		1	HYD CONNECTOR CONECTOR HIDRÁULIC	CONNETTORE IDRAULI HYDRAULIKSTIK	HYDR STECKVERBINDE CONECTOR HID.	CONNECTEUR HYDRAU HYDRAULISCHE AANSL	020R
9		72214524		2	HYD CONNECTOR CONECTOR HIDRÁULIC	CONNETTORE IDRAULI HYDRAULIKSTIK	HYDR STECKVERBINDE CONECTOR HID.	CONNECTEUR HYDRAU HYDRAULISCHE AANSL	020R
10		72214663		1	PLUG TAPÓN	TAPPO PROP	STOPFEN TAMPÃO	BOUCHON PLUG	050T
11		87608371		1	SENSOR SENSOR	SENSORE FØLER	SENSOR SENSOR	CAPTEUR SENSOR	608S
12		11106434		2	BOLT, Hex, M10 x 30, 10.9, Full Thd PERNO	BULLONE BOLT	SCHRAUBE PARAFUSO	VIS BOUT	140B
13		12641031		2	LOCK WASHER ARANDELA DE BLOQUE	RONDELLA DI SICUREZ LÅSESKIVE	SICHERUNGSSCHEIBE ANILHA DE RETENÇÃO	RONDELLE FREIN BORGRING	132R

(1) ASSY SEE PAGE 7

Copyright © New Holland

5.0020	14	p1	03/10

HYDRAULIC HAMMER (L=2.08 MT) - OPTIONAL CODE 461226138 (04-05-06)
MARTELLO IDRAULICO (L=2.08 MT) - CODICE VARIANTE 461226138 (04-05-06)
HYDRAULISCHER HAMMER (L=2.08 MT) - OPTIONAL CODE 461226138 (04-05-06)
MARTEAU HYDRAULIQUE (L=2.08 MT) - OPTIONAL CODE 461226138 (04-05-06)

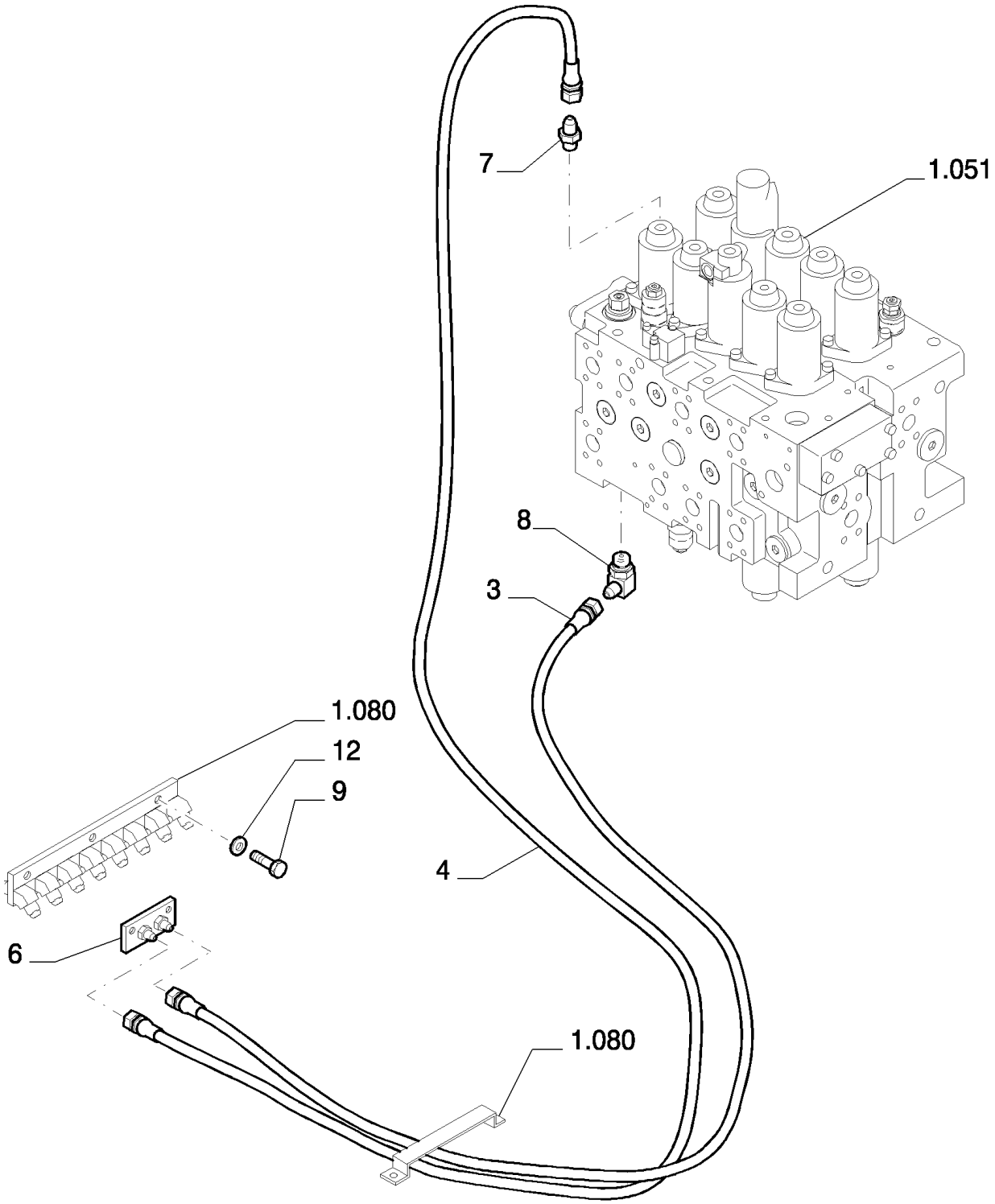

Copyright © New Holland

MARTILLO HIDRÁULICO (L=2.08 MT) - OPTIONAL CODE 461226138 (04-05-06)
HYDRAULIC HAMMER (L=2.08 MT) - OPTIONAL CODE 461226138 (04-05-06)
HYDRAULIC HAMMER (L=2.08 MT) - OPTIONAL CODE 461226138 (04-05-06)
HYDRAULIC HAMMER (L=2.08 MT) - OPTIONAL CODE 461226138 (04-05-06)

R	N	P.N.	MOD	Q	Description Denominacion	Descrizione Beskrivelse	Bezeichnung Denominação	Description Beschrijving	L.C.
3		72214739		1	FLEXIBLE HOSE TUBO FLEXIBLE	TUBO FLESSIBILE FLEKSIBEL SLANGE	BIEGSAMER SCHLAUCH MANGUEIRA FLEXÍVEL	TUYAU FLEXIBLE FLEXIBELE SLANG	192T
4		87536897		1	FLEXIBLE HOSE TUBO FLEXIBLE	TUBO FLESSIBILE FLEKSIBEL SLANGE	BIEGSAMER SCHLAUCH MANGUEIRA FLEXÍVEL	TUYAU FLEXIBLE FLEXIBELE SLANG	192T
6		87579546		1	BLOCK BLOQUE	BLOCCO MOTORBLOK	BLOCK BLOCO	BLOC BLOK	074B
7		72214522		1	HYD CONNECTOR CONECTOR HIDRÁULIC	CONNETTORE IDRAULIC HYDRAULIKSTIK	HYDR STECKVERBINDE CONECTOR HID.	CONNECTEUR HYDRAU HYDRAULISCHE AANSL	020R
8		72214561		1	HYD CONNECTOR CONECTOR HIDRÁULIC	CONNETTORE IDRAULIC HYDRAULIKSTIK	HYDR STECKVERBINDE CONECTOR HID.	CONNECTEUR HYDRAU HYDRAULISCHE AANSL	020R
9		11106434		3	BOLT, Hex, M10 x 30, 10.9, Full Thd PERNO	BULLONE BOLT	SCHRAUBE PARAFUSO	VIS BOUT	140B
12		12641031		3	LOCK WASHER ARANDELA DE BLOQUE	RONDELLA DI SICUREZ LÅSESKIVE	SICHERUNGSSCHEIBE ANILHA DE RETENÇÃO	RONDELLE FREIN BORGRING	132R

Copyright © New Holland

5.0020	15	p1	03/10

HYDRAULIC HAMMER (L=2.08 MT) - OPTIONAL CODE 461226138 (04-05-06)
MARTELLO IDRAULICO (L=2.08 MT) - CODICE VARIANTE 461226138 (04-05-06)
HYDRAULISCHER HAMMER (L=2.08 MT) - OPTIONAL CODE 461226138 (04-05-06)
MARTEAU HYDRAULIQUE (L=2.08 MT) - OPTIONAL CODE 461226138 (04-05-06)

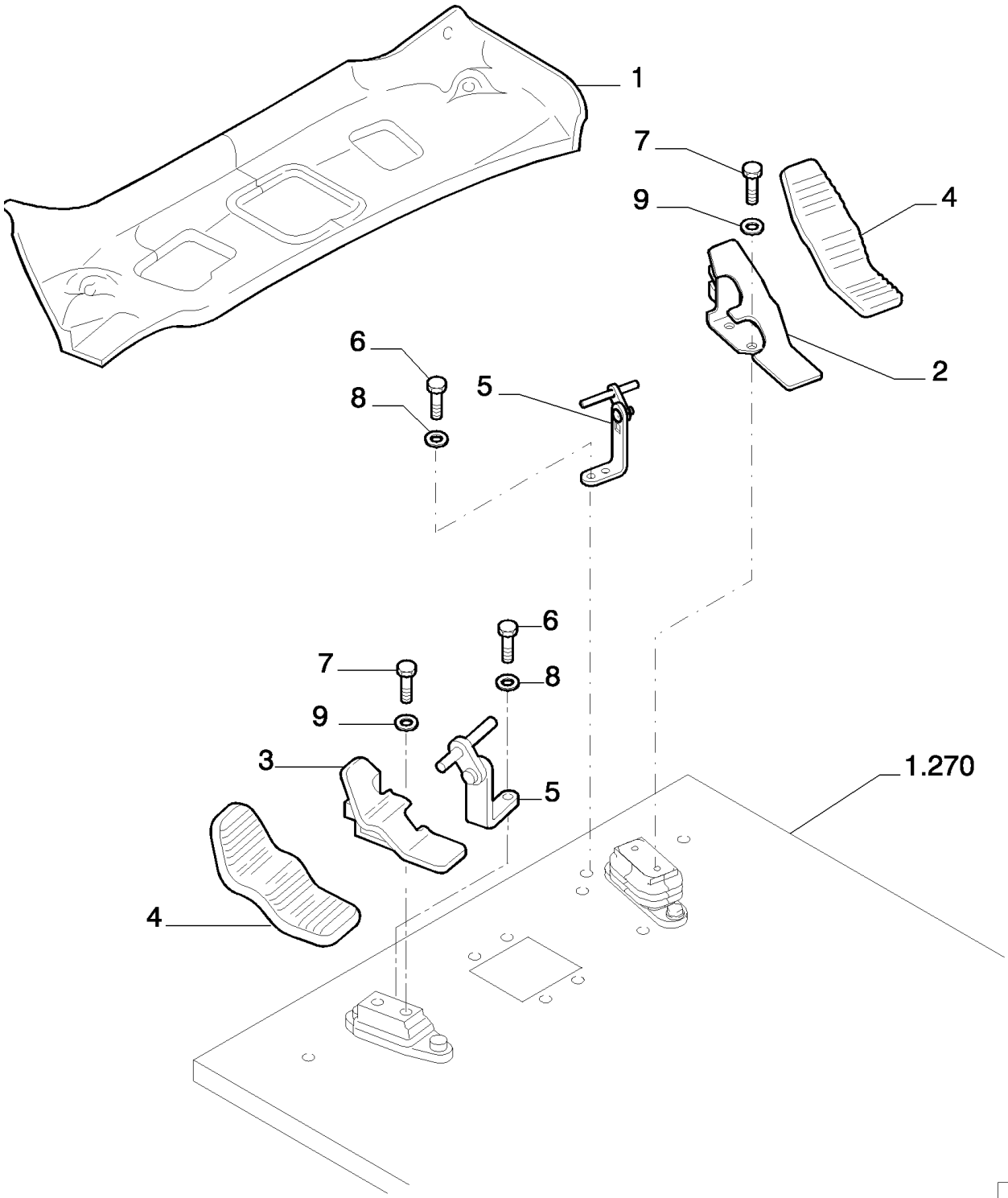

Copyright © New Holland

MARTILLO HIDRÁULICO (L=2.08 MT) - OPTIONAL CODE 461226138 (04-05-06)
HYDRAULIC HAMMER (L=2.08 MT) - OPTIONAL CODE 461226138 (04-05-06)
HYDRAULIC HAMMER (L=2.08 MT) - OPTIONAL CODE 461226138 (04-05-06)
HYDRAULIC HAMMER (L=2.08 MT) - OPTIONAL CODE 461226138 (04-05-06)

R	N	P.N.	MOD	Q	Description Denominacion	Descrizione Beskrivelse	Bezeichnung Denominação	Description Beschrijving	L.C.
1		YN26M00075P1		1	FLOOR MAT ALFOMBRA	TAPPETINO GULVMÅTTE	BODENMATTE TAPETE DE CHÃO	TAPIS DE SOL VLOERMAT	Z068
2		87539195		1	PEDAL PEDAL	PEDALE PEDAL	PEDAL PEDAL	PEDALE PEDAAL	060P
3		87539200		1	PEDAL PEDAL	PEDALE PEDAL	PEDAL PEDAL	PEDALE PEDAAL	060P
4		87539205		2	RUBBER PEDAL PAD PASTILLA DE PEDAL DE	RIVESTIMENTO PEDALE GUMMIPEDALBELÆGNI	GUMMIPEDALAUFLAGE BORRACHA COBERTUR	PATIN DE PEDALE CAO RUBBEREN PEDAALBEK	292C
5		87539206		2	BRACKET SOPORTE	STAFFA BESLAG	HALTERUNG SUPORTE	SUPPORT STEUN	225S
6		16043434		4	BOLT, Hex, M8 x 20, 10.9, Full Thd PERNO	BULLONE BOLT	SCHRAUBE PARAFUSO	VIS BOUT	140B
7		11106034		4	BOLT, Hex, M10 x 20, 10.9, Full Thd PERNO	BULLONE BOLT	SCHRAUBE PARAFUSO	VIS BOUT	140B
8		14496531		4	WASHER, M8 x 17 x 1.6 ARANDELA	RONDELLA FLADSKIVE	UNTERLEGSCHEIBE ANILHA	RONDELLE SLUITRING	131R
9		14496631		4	WASHER, M10 x 21 x 2 ARANDELA	RONDELLA FLADSKIVE	UNTERLEGSCHEIBE ANILHA	RONDELLE SLUITRING	131R

Copyright © New Holland

5.0020	16	p1	03/10

HYDRAULIC HAMMER (L=2.08 MT) - OPTIONAL CODE 461226138 (04-05-06)
MARTELLO IDRAULICO (L=2.08 MT) - CODICE VARIANTE 461226138 (04-05-06)
HYDRAULISCHER HAMMER (L=2.08 MT) - OPTIONAL CODE 461226138 (04-05-06)
MARTEAU HYDRAULIQUE (L=2.08 MT) - OPTIONAL CODE 461226138 (04-05-06)

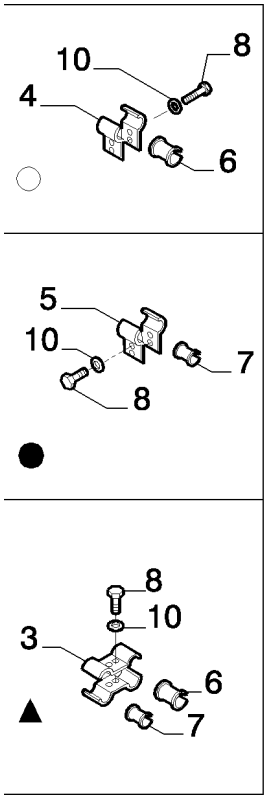

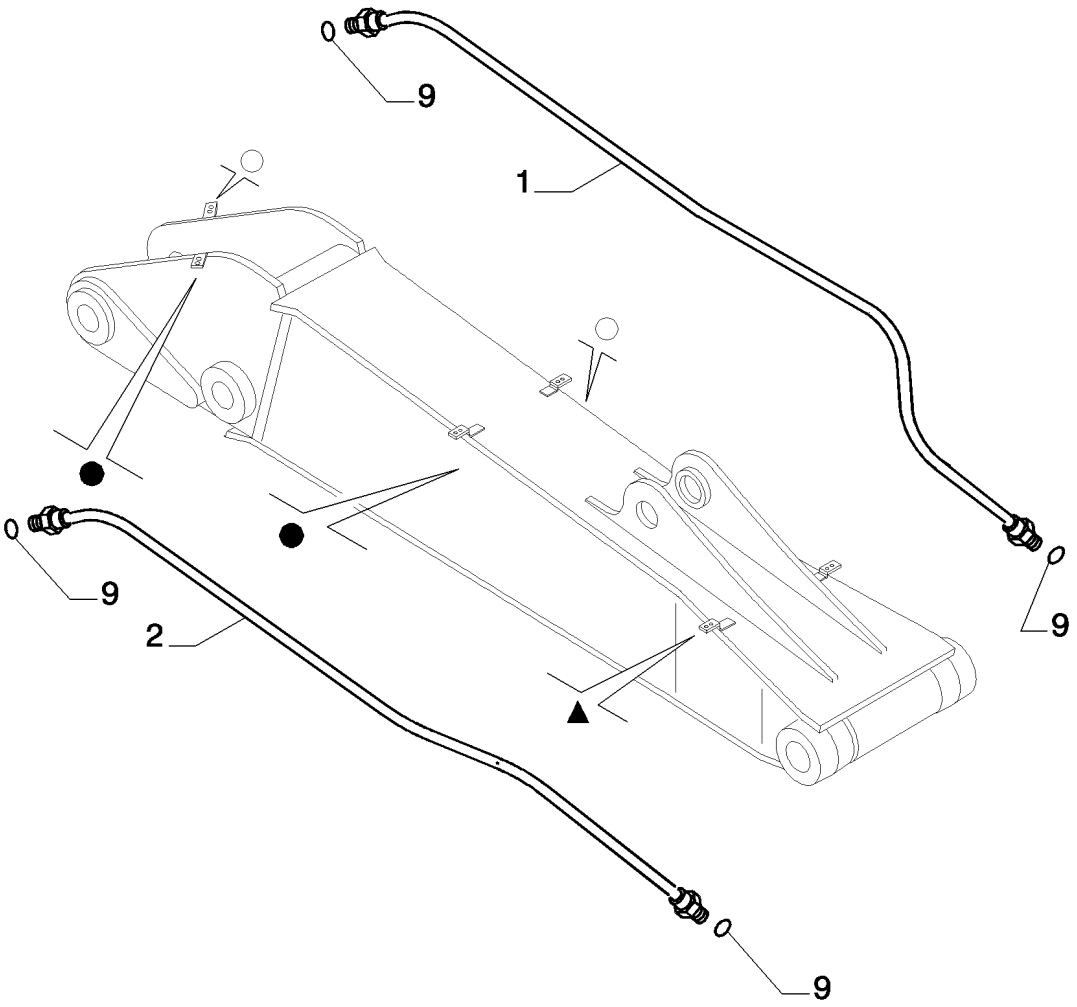

Copyright © New Holland

MARTILLO HIDRÁULICO (L=2.08 MT) - OPTIONAL CODE 461226138 (04-05-06)
HYDRAULIC HAMMER (L=2.08 MT) - OPTIONAL CODE 461226138 (04-05-06)
HYDRAULIC HAMMER (L=2.08 MT) - OPTIONAL CODE 461226138 (04-05-06)
HYDRAULIC HAMMER (L=2.08 MT) - OPTIONAL CODE 461226138 (04-05-06)

R	N	P.N.	MOD	Q	Description Denominacion	Descrizione Beskrivelse	Bezeichnung Denominação	Description Beschrijving	L.C.
1		87632032		1	RIGID TUBE TUBO RÍGIDO	TUBO RIGIDO STIFT RØR	ROHR TUBO RÍGIDO	TUYAU RIGIDE VASTE LEIDING	193T
2		87632030		1	RIGID TUBE TUBO RÍGIDO	TUBO RIGIDO STIFT RØR	ROHR TUBO RÍGIDO	TUYAU RIGIDE VASTE LEIDING	193T
3		87349655		2	BRACKET SOPORTE	STAFFA BESLAG	HALTERUNG SUPORTE	SUPPORT STEUN	225S
4		87349673		4	BRACKET SOPORTE	STAFFA BESLAG	HALTERUNG SUPORTE	SUPPORT STEUN	225S
5		87349692		4	BRACKET SOPORTE	STAFFA BESLAG	HALTERUNG SUPORTE	SUPPORT STEUN	225S
6		87349642		3	BUSHING CASQUILLO	BOCCOLA BØSNING	BUCHSE CASQUILHO	BAGUE BUS	095B
7		87349648		3	BUSHING CASQUILLO	BOCCOLA BØSNING	BUCHSE CASQUILHO	BAGUE BUS	095B
8		11112634		10	SCREW TORNILLO	VITE SKRUE	SCHRAUBE PARAFUSO	VIS SCHROEF	040V
9		70931640		2	GASKET JUNTA	GUARNIZIONE PAKNING	DICHTUNG JUNTA	JOINT PAKKING	123G
10		14496731		10	WASHER, M12 x 24 x 2.5 Thk ARANDELA	RONDELLA FLADSKIVE	UNTERLEGSCHEIBE ANILHA	RONDELLE SLUITRING	131R

Copyright © New Holland

5.0020	17	p1	03/10

HYDRAULIC HAMMER (L=2.08 MT) - OPTIONAL CODE 461226138 (04-05-06)
MARTELLO IDRAULICO (L=2.08 MT) - CODICE VARIANTE 461226138 (04-05-06)
HYDRAULISCHER HAMMER (L=2.08 MT) - OPTIONAL CODE 461226138 (04-05-06)
MARTEAU HYDRAULIQUE (L=2.08 MT) - OPTIONAL CODE 461226138 (04-05-06)

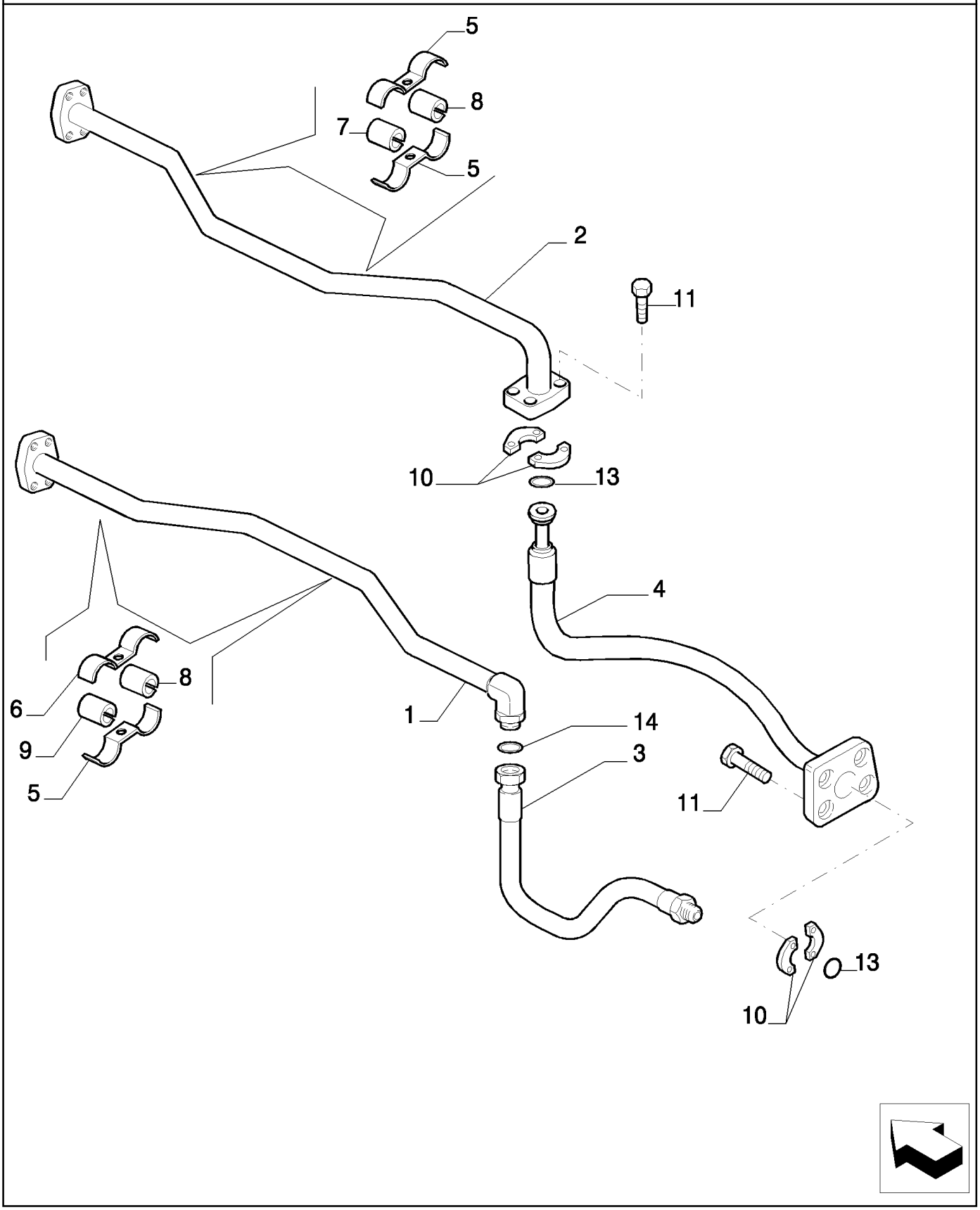

Copyright © New Holland

MARTILLO HIDRÁULICO (L=2.08 MT) - OPTIONAL CODE 461226138 (04-05-06)
HYDRAULIC HAMMER (L=2.08 MT) - OPTIONAL CODE 461226138 (04-05-06)
HYDRAULIC HAMMER (L=2.08 MT) - OPTIONAL CODE 461226138 (04-05-06)
HYDRAULIC HAMMER (L=2.08 MT) - OPTIONAL CODE 461226138 (04-05-06)

R	N	P.N.	MOD	Q	Description Denominacion	Descrizione Beskrivelse	Bezeichnung Denominação	Description Beschrijving	L.C.
1		87529912		1	RIGID TUBE TUBO RÍGIDO	TUBO RIGIDO STIFT RØR	ROHR TUBO RÍGIDO	TUYAU RIGIDE VASTE LEIDING	193T
2		87572206		1	RIGID TUBE TUBO RÍGIDO	TUBO RIGIDO STIFT RØR	ROHR TUBO RÍGIDO	TUYAU RIGIDE VASTE LEIDING	193T
3		72207171		1	FLEXIBLE HOSE TUBO FLEXIBLE	TUBO FLESSIBILE FLEKSIBEL SLANGE	BIEGSAMER SCHLAUCH MANGUEIRA FLEXÍVEL	TUYAU FLEXIBLE FLEXIBELE SLANG	192T
4		87572218		1	FLEXIBLE HOSE TUBO FLEXIBLE	TUBO FLESSIBILE FLEKSIBEL SLANGE	BIEGSAMER SCHLAUCH MANGUEIRA FLEXÍVEL	TUYAU FLEXIBLE FLEXIBELE SLANG	192T
5		87349655		4	BRACKET SOPORTE	STAFFA BESLAG	HALTERUNG SUPORTE	SUPPORT STEUN	225S
6		87353061		4	BRACKET SOPORTE	STAFFA BESLAG	HALTERUNG SUPORTE	SUPPORT STEUN	225S
7		87349642		2	BUSHING CASQUILLO	BOCCOLA BØSNING	BUCHSE CASQUILHO	BAGUE BUS	095B
8		72151580		4	BUSHING CASQUILLO	BOCCOLA BØSNING	BUCHSE CASQUILHO	BAGUE BUS	095B
9		87343521		2	BUSHING CASQUILLO	BOCCOLA BØSNING	BUCHSE CASQUILHO	BAGUE BUS	095B
10		71444029		4	HALF-FLANGE SEMIBRIDA	SEMIFLANGIA FLANGEHALVDEL	FLANSCHHÄLFTE MEIA FLANGE	DEMI-BRIDE FLENSHELFT	417S
11		14424534		8	SCREW TORNILLO	VITE SKRUE	SCHRAUBE PARAFUSO	VIS SCHROEF	040V
13		70924192		2	O-RING JUNTA TÓRICA	ANELLO TOROIDALE O-RING	O-RING O-RING	JOINT TORIQUE O-RING	055A
14		70931640		1	GASKET JUNTA	GUARNIZIONE PAKNING	DICHTUNG JUNTA	JOINT PAKKING	123G

Copyright © New Holland

5.0020	18	p1	03/10

HYDRAULIC HAMMER (L=2.08 MT) - OPTIONAL CODE 461226128 (01-02-03) - 461226138 (04-05-06)
MARTELLO IDRAULICO (L=2.08 MT) - CODICE VARIANTE 461226128 (01-02-03) - 461226138 (04-05-06)
HYDRAULISCHER HAMMER (L=2.08 MT) - OPTIONAL CODE 461226128 (01-02-03) - 461226138 (04-05-06)
MARTEAU HYDRAULIQUE (L=2.08 MT) - OPTIONAL CODE 461226128 (01-02-03) - 461226138 (04-05-06)

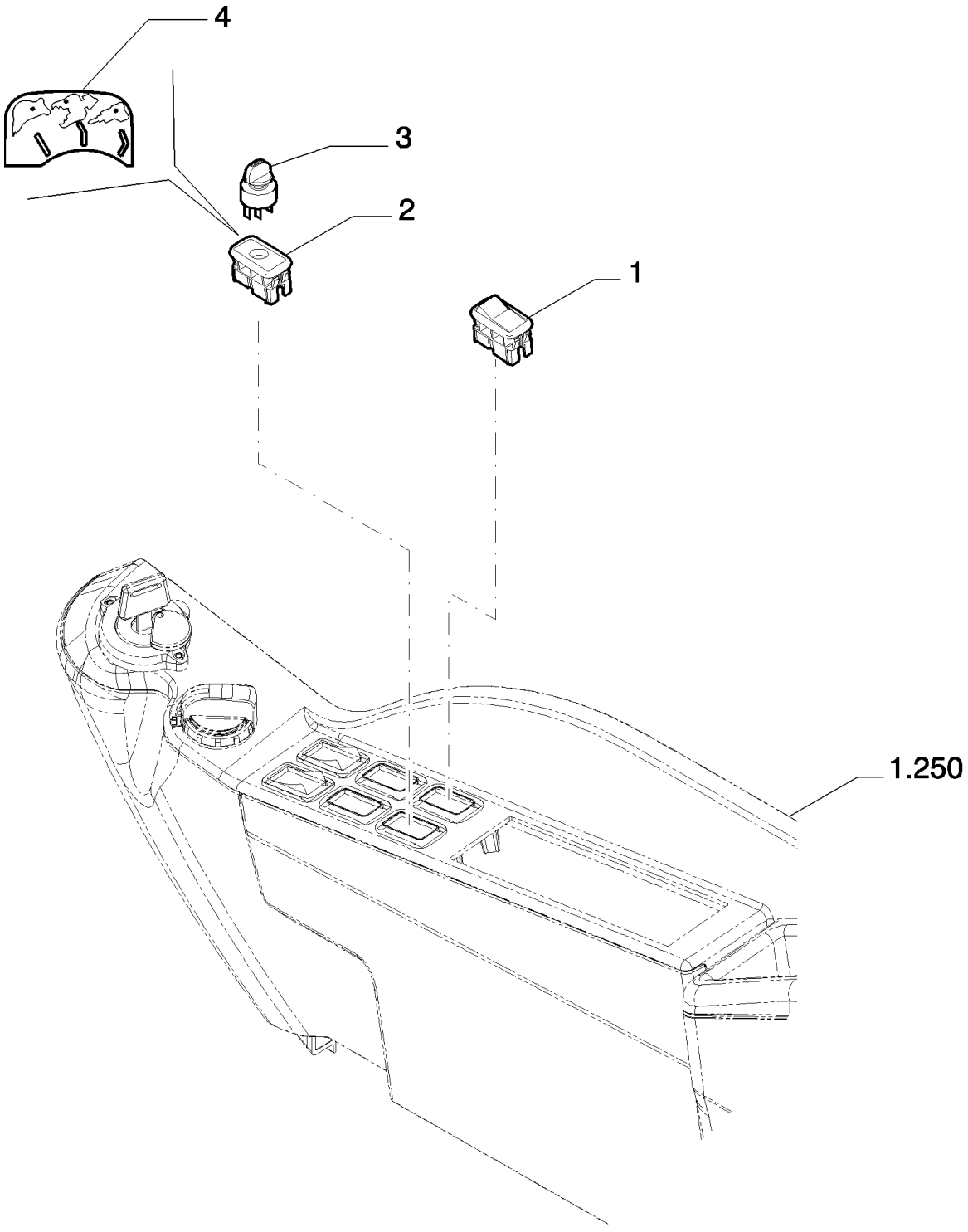

Copyright © New Holland

MARTILLO HIDRÁULICO (L=2.08 MT) - OPTIONAL CODE 461226128 (01-02-03) - 461226138 (04-05-06)
HYDRAULIC HAMMER (L=2.08 MT) - OPTIONAL CODE 461226128 (01-02-03) - 461226138 (04-05-06)
HYDRAULIC HAMMER (L=2.08 MT) - OPTIONAL CODE 461226128 (01-02-03) - 461226138 (04-05-06)
HYDRAULIC HAMMER (L=2.08 MT) - OPTIONAL CODE 461226128 (01-02-03) - 461226138 (04-05-06)

R	N	P.N.	MOD	Q	Description Denominacion	Descrizione Beskrivelse	Bezeichnung Denominação	Description Beschrijving	L.C.
1		87527531		1	SWITCH INTERRUPTOR	INTERRUTTORE KONTAKT	SCHALTER INTERRUPTOR	CONTACTEUR SCHAKELAAR	075I
2		YN17M01313P3		1	BRACKET SOPORTE	STAFFA BESLAG	HALTERUNG SUPORTE	SUPPORT STEUN	225S
3		72280246		1	SWITCH INTERRUPTOR	INTERRUTTORE KONTAKT	SCHALTER INTERRUPTOR	CONTACTEUR SCHAKELAAR	075I
4		YN17M01417P1		1	LABEL ETIQUETA	ETICHETTA ETIKET	KENNZEICHNUNG ETIQUETA	ETIQUETTE LABEL	077E

Copyright © New Holland

5.0021	01	p1	03/10

HYDRAULIC HAMMER (L=2.4 MT) - OPTIONAL CODE 461229068 (01-02-03) - 461229078 (04-05-06)
MARTELLO IDRAULICO (L=2.4 MT) - CODICE VARIANTE 461229068 (01-02-03) - 461229078 (04-05-06)
HYDRAULISCHER HAMMER (L=2.4 MT) - OPTIONAL CODE 461229068 (01-02-03) - 461229078 (04-05-06)
MARTEAU HYDRAULIQUE (L=2.4 MT) - OPTIONAL CODE 461229068 (01-02-03) - 461229078 (04-05-06)

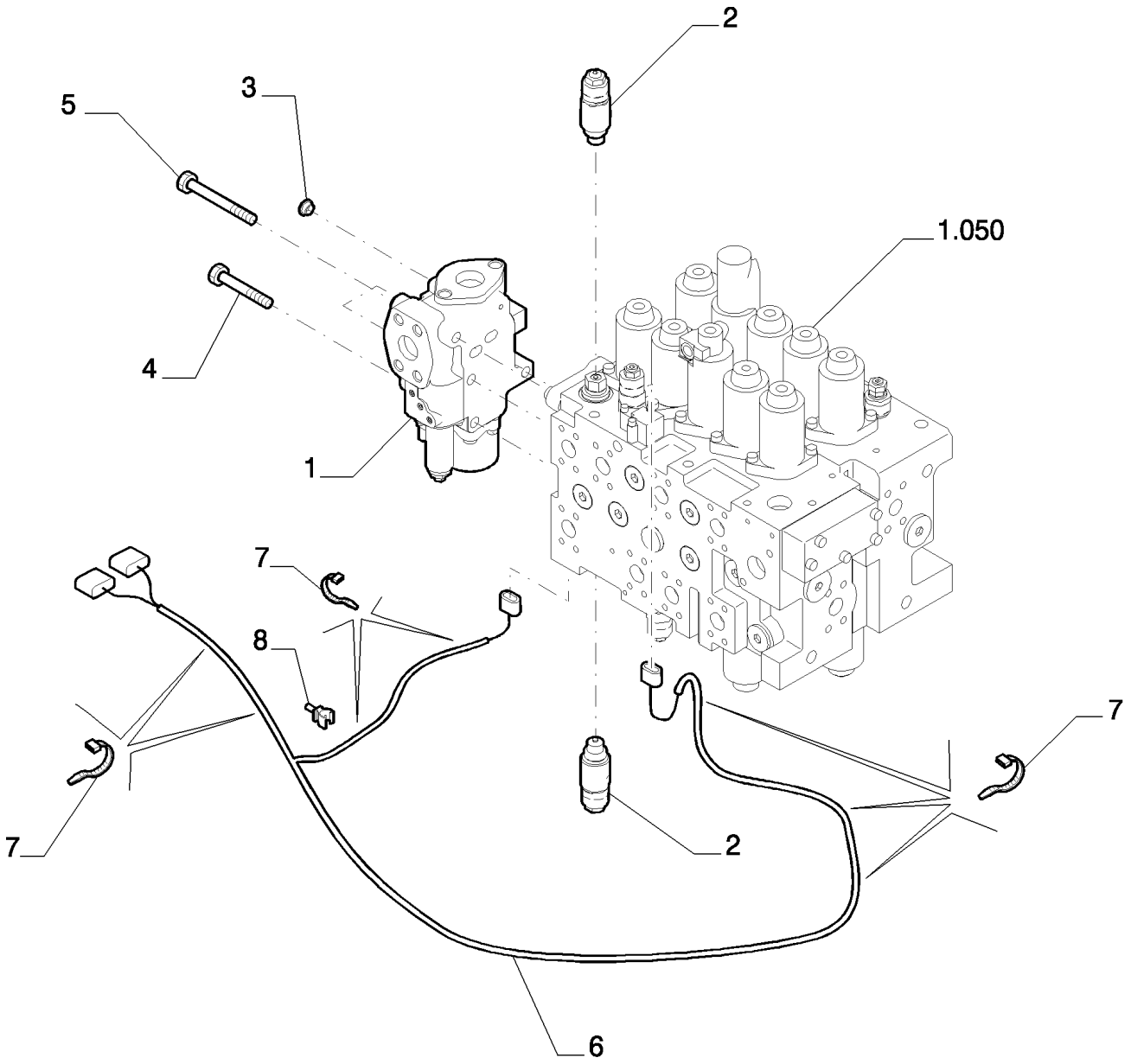

Copyright © New Holland

MARTILLO HIDRÁULICO (L=2.4 MT) - OPTIONAL CODE 461229068 (01-02-03) - 461229078 (04-05-06)
HYDRAULIC HAMMER (L=2.4 MT) - OPTIONAL CODE 461229068 (01-02-03) - 461229078 (04-05-06)
HYDRAULIC HAMMER (L=2.4 MT) - OPTIONAL CODE 461229068 (01-02-03) - 461229078 (04-05-06)
HYDRAULIC HAMMER (L=2.4 MT) - OPTIONAL CODE 461229068 (01-02-03) - 461229078 (04-05-06)

R	N	P.N.	MOD	Q	Description Denominacion	Descrizione Beskrivelse	Bezeichnung Denominação	Description Beschrijving	L.C.
1	1	87520007		1	HYDRAULIC VALVE VÁLVULA HIDRÁULICA	DISTRIBUTORE IDRAULI HYDRAULIKVENTIL	HYDRAULIKVENTIL VÁLVULA HIDRÁULICA	SOUPAPE HYDRAULIQU HYDRAULISCHE KLEP	010V
2	2	87579594		2	HYDRAULIC VALVE VÁLVULA HIDRÁULICA	DISTRIBUTORE IDRAULI HYDRAULIKVENTIL	HYDRAULIKVENTIL VÁLVULA HIDRÁULICA	SOUPAPE HYDRAULIQU HYDRAULISCHE KLEP	010V
3		87643223		1	PLUG TAPÓN	TAPPO PROP	STOPFEN TAMPÃO	BOUCHON PLUG	050T
4		14423034		1	SCREW TORNILLO	VITE SKRUE	SCHRAUBE PARAFUSO	VIS SCHROEF	040V
5		87609321		3	SCREW TORNILLO	VITE SKRUE	SCHRAUBE PARAFUSO	VIS SCHROEF	040V
6		87599406		1	ELECTRIC CABLE CABLE ELÉCTRICO	CAVO ELETTRICO EL-KABEL	ELEKTROKABEL CABO ELÉCTRICO	CABLE ELECTRIQUE ELEKTRICITEITSKABEL	111C
7		4982514		7	CABLE STRAP BANDA DE CABLE	FASCETTA PER CAVO KABELSTROP	KABELBINDER BRAÇADEIRA DE CABO	BRIDE DE CABLE BUNDELBAND	P716
8		87526680		1	RETAINER COLLAR COLLAR DE RETENCIÓN	COLLARE DI FISSAGGIC RING, SPÆNDE	HALTERING ANEL DE FIXAÇÃO	COLLIER DE RETENUE BORGKRAAG	230S

(1) ASSY SEE PAGE 2
(2) ASSY SEE PAGE 3

Copyright © New Holland

5.0021	02	p1	03/10

HYDRAULIC HAMMER (L=2.4 MT) - COMPONENTS - OPTIONAL CODE 461229068 (01-02-03) - 461229078 (04-05-06)
MARTELLO IDRAULICO (L=2.4 MT) - COMPONENTI - OPTIONAL CODE 461229068 (01-02-03) - 461229078 (04-05-06)
HYDRAULISCHER HAMMER (L=2.4 MT) - BESTANDTEILE - OPTIONAL CODE 461229068 (01-02-03) - 461229078 (04-05-06)
MARTEAU HYDRAULIQUE (L=2.4 MT) - COMPOSANTS - OPTIONAL CODE 461229068 (01-02-03) - 461229078 (04-05-06)

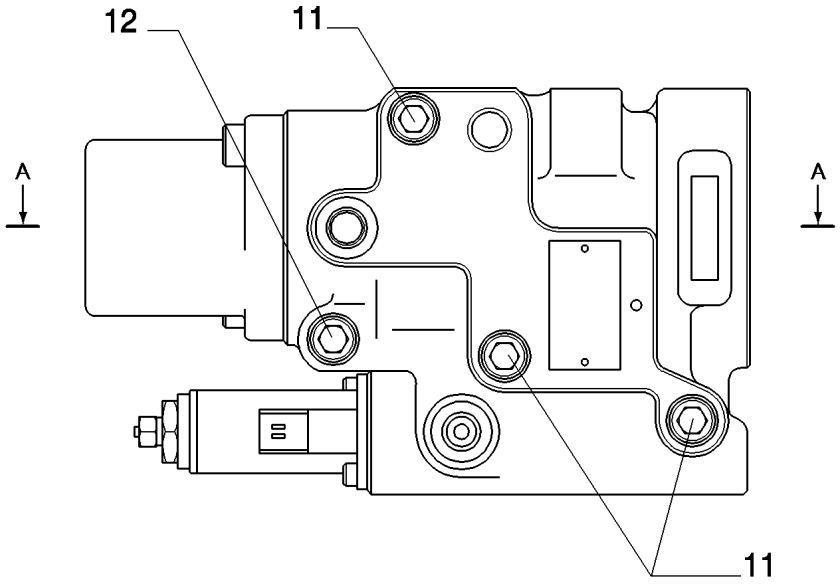

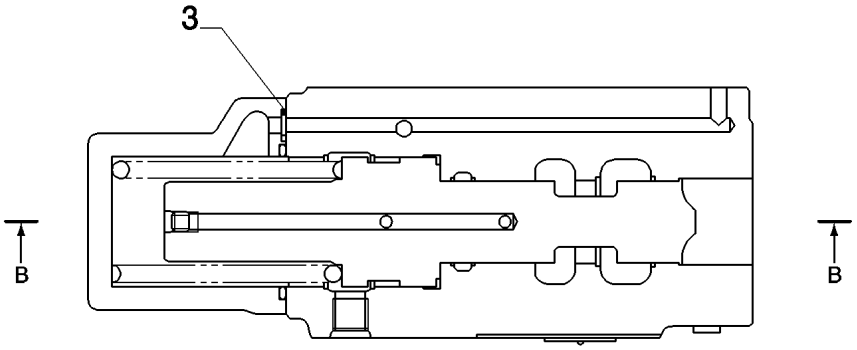

Sez. A–A

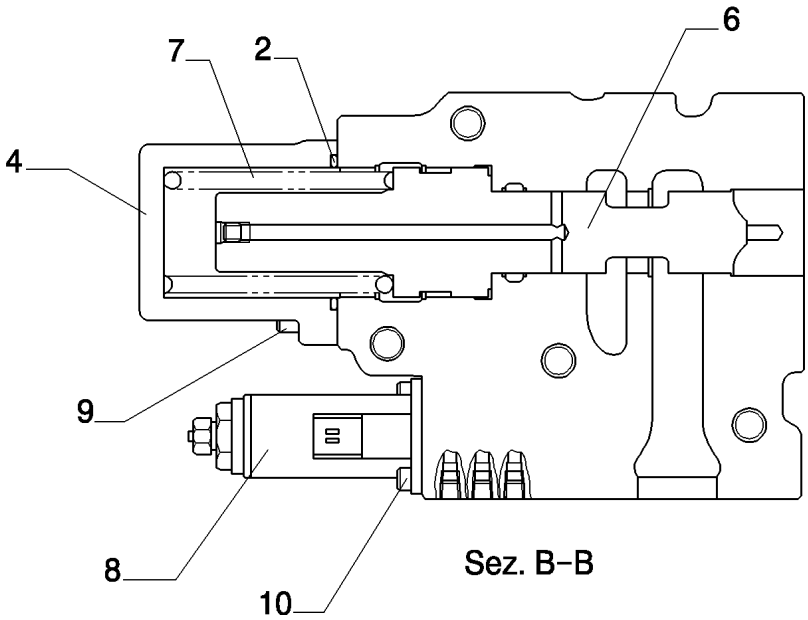

Sez. B–B

Copyright © New Holland

MARTILLO HIDRÁULICO (L=2.4 MT) - COMPONENTES - OPTIONAL CODE 461229068 (01-02-03) - 461229078 (04-05-06)
HYDRAULIC HAMMER (L=2.4 MT) - COMPONENTS - OPTIONAL CODE 461229068 (01-02-03) - 461229078 (04-05-06)
HYDRAULIC HAMMER (L=2.4 MT) - COMPONENTS - OPTIONAL CODE 461229068 (01-02-03) - 461229078 (04-05-06)
HYDRAULIC HAMMER (L=2.4 MT) - COMPONENTS - OPTIONAL CODE 461229068 (01-02-03) - 461229078 (04-05-06)

R	N	P.N.	MOD	Q	Description Denominacion	Descrizione Beskrivelse	Bezeichnung Denominação	Description Beschrijving	L.C.
2		72960987		1	O-RING JUNTA TÓRICA	ANELLO TOROIDALE O-RING	O-RING O-RING	JOINT TORIQUE O-RING	055A
3		72283326		1	O-RING JUNTA TÓRICA	ANELLO TOROIDALE O-RING	O-RING O-RING	JOINT TORIQUE O-RING	055A
4		YN30V00104S201		1	COVER CUBIERTA	COPERCHIO DÆKSEL	ABDECKUNG COBERTURA	COUVERCLE AFSCHERMING	265C
6		YN30V00104S301		1	SPOOL BOBINA	STELO SPOLE	KOLBENSCHIEBER CARRETO	TIROIR SPOEL	134P
7		YN30V00104S321		1	SPRING RESORTE	MOLLA FJEDER	FEDER MOLA	RESSORT VEER	100M
8		YN35V00050F1		1	VALVE VÁLVULA	VALVOLA VENTIL	VENTIL VÁLVULA	SOUPAPE KLEP	9620
9		14420170		2	SCREW TORNILLO	VITE SKRUE	SCHRAUBE PARAFUSO	VIS SCHROEF	040V
10		72209810		2	SCREW TORNILLO	VITE SKRUE	SCHRAUBE PARAFUSO	VIS SCHROEF	040V
11		72964521		3	SCREW TORNILLO	VITE SKRUE	SCHRAUBE PARAFUSO	VIS SCHROEF	040V
12		14423070		1	SCREW TORNILLO	VITE SKRUE	SCHRAUBE PARAFUSO	VIS SCHROEF	040V

VALVE ASSY P/N 87520007

E215B

Copyright © New Holland

5.0021	03	p1	03/10

HYDRAULIC HAMMER (L=2.4 MT) - COMPONENTS - OPTIONAL CODE 461229068 (01-02-03) - 461229078 (04-05-06)
MARTELLO IDRAULICO (L=2.4 MT) - COMPONENTI - CODICE VARIANTE 461229068 (01-02-03) - 461229078 (04-05-06)
HYDRAULISCHER HAMMER (L=2.4 MT) - BESTANDTEILE - OPTIONAL CODE 461229068 (01-02-03) - 461229078 (04-05-06)
MARTEAU HYDRAULIQUE (L=2.4 MT) - COMPOSANTS - OPTIONAL CODE 461229068 (01-02-03) - 461229078 (04-05-06)

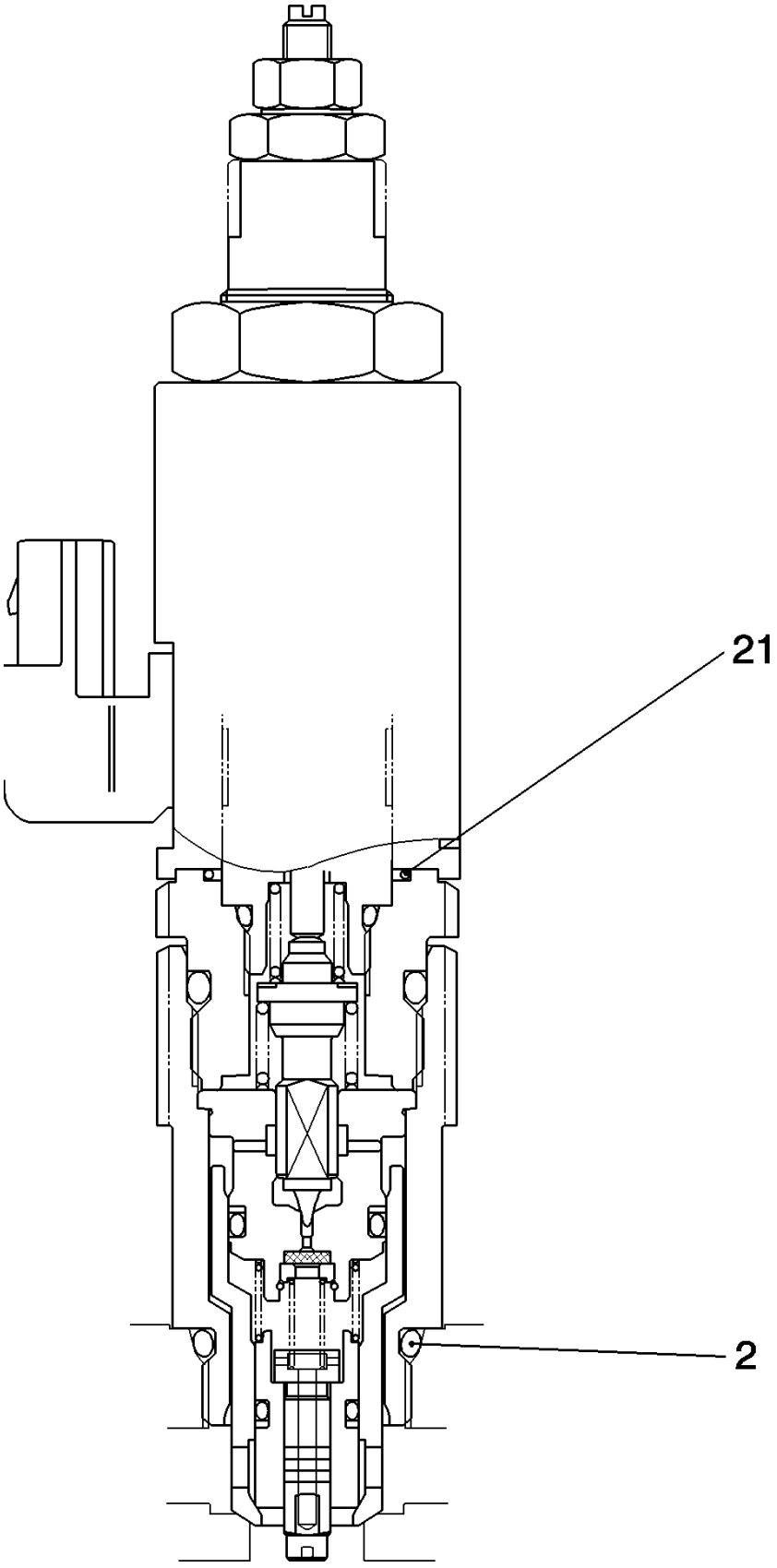

Copyright © New Holland

MARTILLO HIDRÁULICO (L=2.4 MT) - COMPONENTES - OPTIONAL CODE 461229068 (01-02-03) - 461229078 (04-05-06)
HYDRAULIC HAMMER (L=2.4 MT) - COMPONENTS - OPTIONAL CODE 461229068 (01-02-03) - 461229078 (04-05-06)
HYDRAULIC HAMMER (L=2.4 MT) - COMPONENTS - OPTIONAL CODE 461229068 (01-02-03) - 461229078 (04-05-06)
HYDRAULIC HAMMER (L=2.4 MT) - COMPONENTS - OPTIONAL CODE 461229068 (01-02-03) - 461229078 (04-05-06)

R	N	P.N.	MOD	Q	Description Denominacion	Descrizione Beskrivelse	Bezeichnung Denominação	Description Beschrijving	L.C.
2		72209838		1	O-RING JUNTA TÓRICA	ANELLO TOROIDALE O-RING	O-RING O-RING	JOINT TORIQUE O-RING	055A
21		YN22V00035S701		1	O-RING JUNTA TÓRICA	ANELLO TOROIDALE O-RING	O-RING O-RING	JOINT TORIQUE O-RING	055A

Copyright © New Holland

5.0021	04	p1	03/10

HYDRAULIC HAMMER (L=2.4 MT) - OPTIONAL CODE 461229068 (01-02-03) - 461229078 (04-05-06)
MARTELLO IDRAULICO (L=2.4 MT) - CODICE VARIANTE 461229068 (01-02-03) - 461229078 (04-05-06)
HYDRAULISCHER HAMMER (L=2.4 MT) - OPTIONAL CODE 461229068 (01-02-03) - 461229078 (04-05-06)
MARTEAU HYDRAULIQUE (L=2.4 MT) - OPTIONAL CODE 461229068 (01-02-03) - 461229078 (04-05-06)

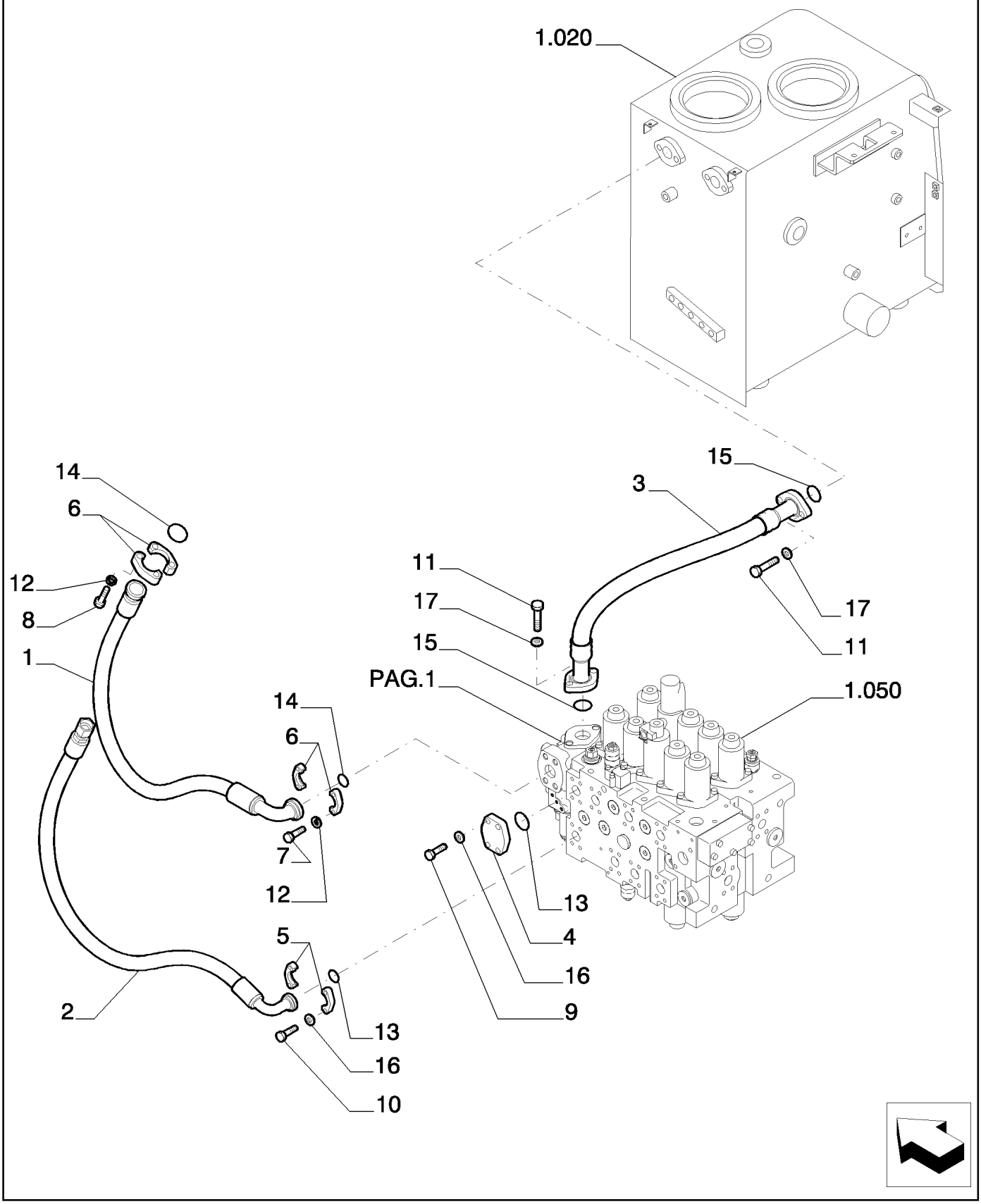

Copyright © New Holland

MARTILLO HIDRÁULICO (L=2.4 MT) - OPTIONAL CODE 461229068 (01-02-03) - 461229078 (04-05-06)
HYDRAULIC HAMMER (L=2.4 MT) - OPTIONAL CODE 461229068 (01-02-03) - 461229078 (04-05-06)
HYDRAULIC HAMMER (L=2.4 MT) - OPTIONAL CODE 461229068 (01-02-03) - 461229078 (04-05-06)
HYDRAULIC HAMMER (L=2.4 MT) - OPTIONAL CODE 461229068 (01-02-03) - 461229078 (04-05-06)

R	N	P.N.	MOD	Q	Description Denominacion	Descrizione Beskrivelse	Bezeichnung Denominação	Description Beschrijving	L.C.
1		87521883		1	FLEXIBLE HOSE TUBO FLEXIBLE	TUBO FLESSIBILE FLEKSIBEL SLANGE	BIEGSAMER SCHLAUCH MANGUEIRA FLEXÍVEL	TUYAU FLEXIBLE FLEXIBELE SLANG	192T
2		87521884		1	FLEXIBLE HOSE TUBO FLEXIBLE	TUBO FLESSIBILE FLEKSIBEL SLANGE	BIEGSAMER SCHLAUCH MANGUEIRA FLEXÍVEL	TUYAU FLEXIBLE FLEXIBELE SLANG	192T
3		87521882		1	FLEXIBLE HOSE TUBO FLEXIBLE	TUBO FLESSIBILE FLEKSIBEL SLANGE	BIEGSAMER SCHLAUCH MANGUEIRA FLEXÍVEL	TUYAU FLEXIBLE FLEXIBELE SLANG	192T
4		87397570		1	COVER CUBIERTA	COPERCHIO DÆKSEL	ABDECKUNG COBERTURA	COUVERCLE AFSCHERMING	265C
5		71404311		2	HALF-FLANGE SEMIBRIDA	SEMIFLANGIA FLANGEHALVDEL	FLANSCHHÄLFTE MEIA FLANGE	DEMI-BRIDE FLENSHELFT	417S
6		71444029		4	HALF-FLANGE SEMIBRIDA	SEMIFLANGIA FLANGEHALVDEL	FLANSCHHÄLFTE MEIA FLANGE	DEMI-BRIDE FLENSHELFT	417S
7		11116034		4	SCREW TORNILLO	VITE SKRUE	SCHRAUBE PARAFUSO	VIS SCHROEF	040V
8		11116234		4	SCREW TORNILLO	VITE SKRUE	SCHRAUBE PARAFUSO	VIS SCHROEF	040V
9		11106434		4	BOLT, Hex, M10 x 30, 10.9, Full Thd PERNO	BULLONE BOLT	SCHRAUBE PARAFUSO	VIS BOUT	140B
10		11106634		4	BOLT, Hex, M10 x 35, 10.9, Full Thd PERNO	BULLONE BOLT	SCHRAUBE PARAFUSO	VIS BOUT	140B
11		11112634		4	SCREW TORNILLO	VITE SKRUE	SCHRAUBE PARAFUSO	VIS SCHROEF	040V
12		10517174		8	LOCK WASHER ARANDELA DE BLOQUE	RONDELLA DI SICUREZ LÅSESKIVE	SICHERUNGSSCHEIBE ANILHA DE RETENÇÃO	RONDELLE FREIN BORGRING	132R
13		70924200		2	O-RING JUNTA TÓRICA	ANELLO TOROIDALE O-RING	O-RING O-RING	JOINT TORIQUE O-RING	055A
14		70924192		2	O-RING JUNTA TÓRICA	ANELLO TOROIDALE O-RING	O-RING O-RING	JOINT TORIQUE O-RING	055A
15		87397569		2	O-RING JUNTA TÓRICA	ANELLO TOROIDALE O-RING	O-RING O-RING	JOINT TORIQUE O-RING	055A
16		14496631		8	WASHER, M10 x 21 x 2 ARANDELA	RONDELLA FLADSKIVE	UNTERLEGSCHEIBE ANILHA	RONDELLE SLUITRING	131R
17		14496731		4	WASHER, M12 x 24 x 2.5 Thk ARANDELA	RONDELLA FLADSKIVE	UNTERLEGSCHEIBE ANILHA	RONDELLE SLUITRING	131R

Copyright © New Holland

5.0021	05	p1	03/10

HYDRAULIC HAMMER (L=2.4 MT) - OPTIONAL CODE 461229068 (01-02-03) - 461229078 (04-05-06)
MARTELLO IDRAULICO (L=2.4 MT) - CODICE VARIANTE 461229068 (01-02-03) - 461229078 (04-05-06)
HYDRAULISCHER HAMMER (L=2.4 MT) - OPTIONAL CODE 461229068 (01-02-03) - 461229078 (04-05-06)
MARTEAU HYDRAULIQUE (L=2.4 MT) - OPTIONAL CODE 461229068 (01-02-03) - 461229078 (04-05-06)

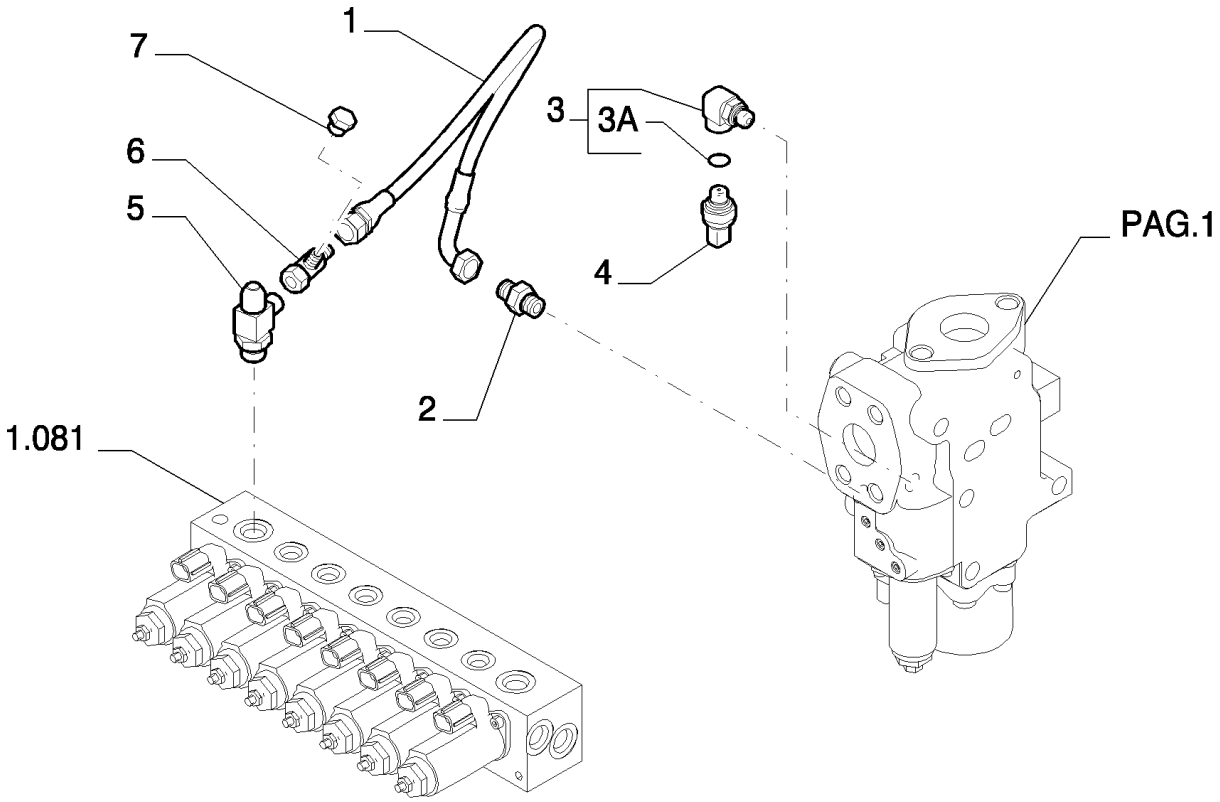

Copyright © New Holland

MARTILLO HIDRÁULICO (L=2.4 MT) - OPTIONAL CODE 461229068 (01-02-03) - 461229078 (04-05-06)
HYDRAULIC HAMMER (L=2.4 MT) - OPTIONAL CODE 461229068 (01-02-03) - 461229078 (04-05-06)
HYDRAULIC HAMMER (L=2.4 MT) - OPTIONAL CODE 461229068 (01-02-03) - 461229078 (04-05-06)
HYDRAULIC HAMMER (L=2.4 MT) - OPTIONAL CODE 461229068 (01-02-03) - 461229078 (04-05-06)

R	N	P.N.	MOD	Q	Description Denominacion	Descrizione Beskrivelse	Bezeichnung Denominação	Description Beschrijving	L.C.
1		87522431		1	FLEXIBLE HOSE TUBO FLEXIBLE	TUBO FLESSIBILE FLEKSIBEL SLANGE	BIEGSAMER SCHLAUCH MANGUEIRA FLEXÍVEL	TUYAU FLEXIBLE FLEXIBELE SLANG	192T
2		87522432		1	HYD CONNECTOR CONECTOR HIDRÁULIC	CONNETTORE IDRAULIC HYDRAULIKSTIK	HYDR STECKVERBINDE CONECTOR HID.	CONNECTEUR HYDRAU HYDRAULISCHE AANSL	020R
3		72215288		1	HYD CONNECTOR, - ASS' CONECTOR HIDRÁULIC	CONNETTORE IDRAULIC HYDRAULIKSTIK	HYDR STECKVERBINDE CONECTOR HID.	CONNECTEUR HYDRAU HYDRAULISCHE AANSL	020R
3A		72209827		1	O-RING JUNTA TÓRICA	ANELLO TOROIDALE O-RING	O-RING O-RING	JOINT TORIQUE O-RING	055A
4		87608371		1	SENSOR SENSOR	SENSORE FØLER	SENSOR SENSOR	CAPTEUR SENSOR	608S
5		2444Z3421		1	TEE RACOR EN T	PEZZO A T T-STYKKE	T-STÜCK TÊ	RACCORD EN T T-STUK	9020
6		72954988		1	TEE RACOR EN T	PEZZO A T T-STYKKE	T-STÜCK TÊ	RACCORD EN T T-STUK	9020
7		72214546		1	PLUG TAPÓN	TAPPO PROP	STOPFEN TAMPÃO	BOUCHON PLUG	050T

Copyright © New Holland

5.0021	06	p1	05/10

HYDRAULIC HAMMER (L=2.4 MT) - OPTIONAL CODE 461229068 (01-02-03)
MARTELLO IDRAULICO (L=2.4 MT) - OPTIONAL CODE 461229068 (01-02-03)
HYDRAULISCHER HAMMER (L=2.4 MT) - OPTIONAL CODE 461229068 (01-02-03)
MARTEAU HYDRAULIQUE (L=2.4 MT) - OPTIONAL CODE 461229068 (01-02-03)

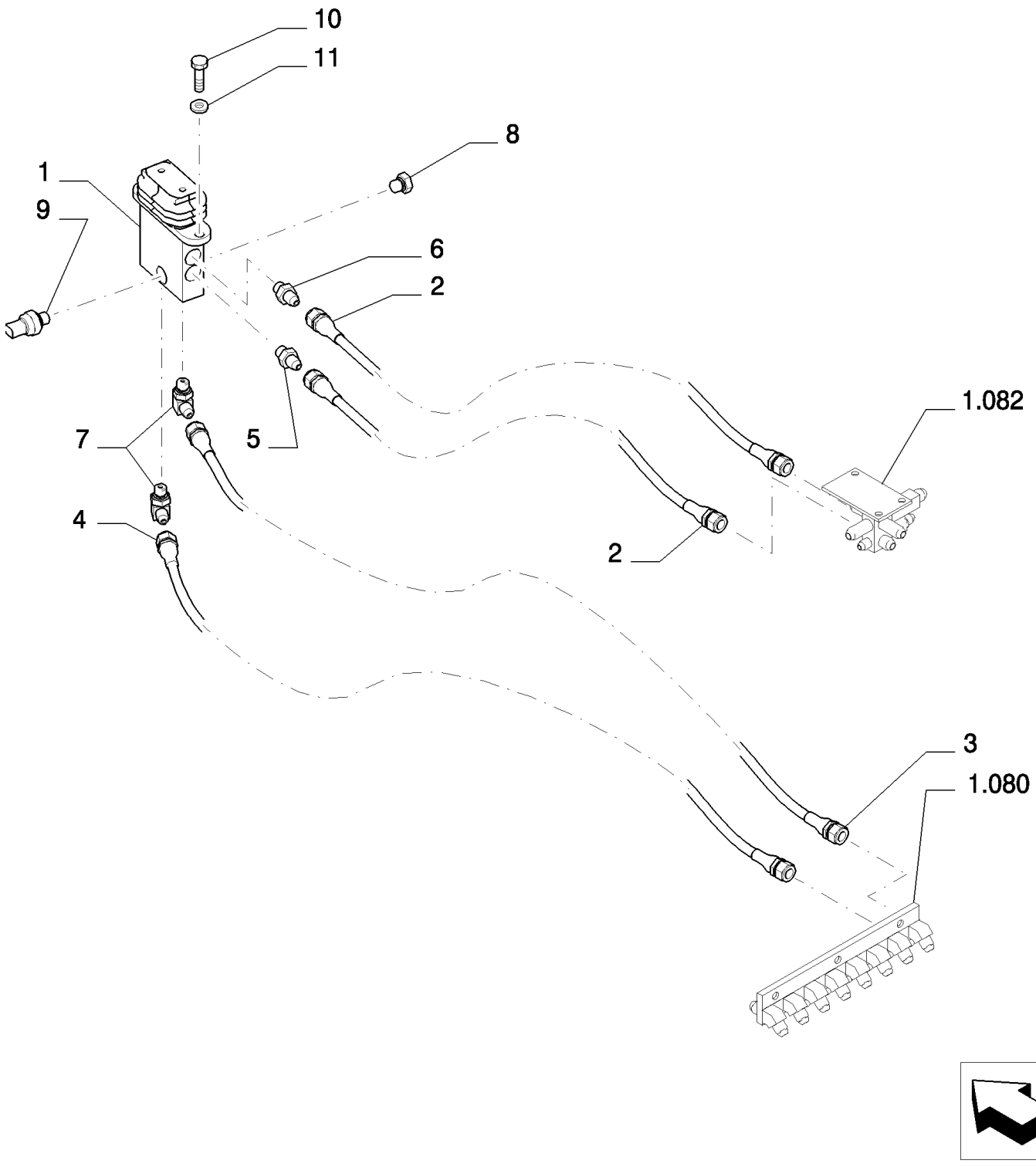

Copyright © New Holland

MARTILLO HIDRÁULICO (L=2.4 MT) - OPTIONAL CODE 461229068 (01-02-03)
HYDRAULIC HAMMER (L=2.4 MT) - OPTIONAL CODE 461229068 (01-02-03)
HYDRAULIC HAMMER (L=2.4 MT) - OPTIONAL CODE 461229068 (01-02-03)
HYDRAULIC HAMMER (L=2.4 MT) - OPTIONAL CODE 461229068 (01-02-03)

R	N	P.N.	MOD	Q	Description Denominacion	Descrizione Beskrivelse	Bezeichnung Denominação	Description Beschrijving	L.C.
1	1	72204155		1	HYDRAULIC VALVE VÁLVULA HIDRÁULICA	DISTRIBUTORE IDRAULI HYDRAULIKVENTIL	HYDRAULIKVENTIL VÁLVULA HIDRÁULICA	SOUPAPE HYDRAULIQU HYDRAULISCHE KLEP	010V
2		87338415		2	FLEXIBLE HOSE TUBO FLEXIBLE	TUBO FLESSIBILE FLEKSIBEL SLANGE	BIEGSAMER SCHLAUCH MANGUEIRA FLEXÍVEL	TUYAU FLEXIBLE FLEXIBELE SLANG	192T
3		87533078		1	FLEXIBLE HOSE TUBO FLEXIBLE	TUBO FLESSIBILE FLEKSIBEL SLANGE	BIEGSAMER SCHLAUCH MANGUEIRA FLEXÍVEL	TUYAU FLEXIBLE FLEXIBELE SLANG	192T
4		87537460		1	FLEXIBLE HOSE TUBO FLEXIBLE	TUBO FLESSIBILE FLEKSIBEL SLANGE	BIEGSAMER SCHLAUCH MANGUEIRA FLEXÍVEL	TUYAU FLEXIBLE FLEXIBELE SLANG	192T
5		87522432		1	HYD CONNECTOR CONECTOR HIDRÁULIC	CONNETTORE IDRAULI HYDRAULIKSTIK	HYDR STECKVERBINDE CONECTOR HID.	CONNECTEUR HYDRAU HYDRAULISCHE AANSL	020R
6		72214744		1	HYD CONNECTOR CONECTOR HIDRÁULIC	CONNETTORE IDRAULI HYDRAULIKSTIK	HYDR STECKVERBINDE CONECTOR HID.	CONNECTEUR HYDRAU HYDRAULISCHE AANSL	020R
7		72214524		2	HYD CONNECTOR CONECTOR HIDRÁULIC	CONNETTORE IDRAULI HYDRAULIKSTIK	HYDR STECKVERBINDE CONECTOR HID.	CONNECTEUR HYDRAU HYDRAULISCHE AANSL	020R
8		72214663		1	PLUG TAPÓN	TAPPO PROP	STOPFEN TAMPÃO	BOUCHON PLUG	050T
9		87608371		1	SENSOR SENSOR	SENSORE FØLER	SENSOR SENSOR	CAPTEUR SENSOR	608S
10		11106434		2	BOLT, Hex, M10 x 30, 10.9, Full Thd PERNO	BULLONE BOLT	SCHRAUBE PARAFUSO	VIS BOUT	140B
11		12641031		2	LOCK WASHER ARANDELA DE BLOQUE	RONDELLA DI SICUREZ LÅSESKIVE	SICHERUNGSSCHEIBE ANILHA DE RETENÇÃO	RONDELLE FREIN BORGRING	132R

(1) ASSY SEE PAGE 7

Copyright © New Holland

5.0021	07	p1	03/10

HYDRAULIC HAMMER (L=2.4 MT) - COMPONENTS - OPTIONAL CODE 461229068 (01-02-03) - 461229078 (04-05-06)
MARTELLO IDRAULICO (L=2.4 MT) - COMPONENTI - OPTIONAL CODE 461229068 (01-02-03) - 461229078 (04-05-06)
HYDRAULISCHER HAMMER (L=2.4 MT) - BESTANDTEILE - OPTIONAL CODE 461229068 (01-02-03) - 461229078 (04-05-06)
MARTEAU HYDRAULIQUE (L=2.4 MT) - COMPOSANTS - OPTIONAL CODE 461229068 (01-02-03) - 461229078 (04-05-06)

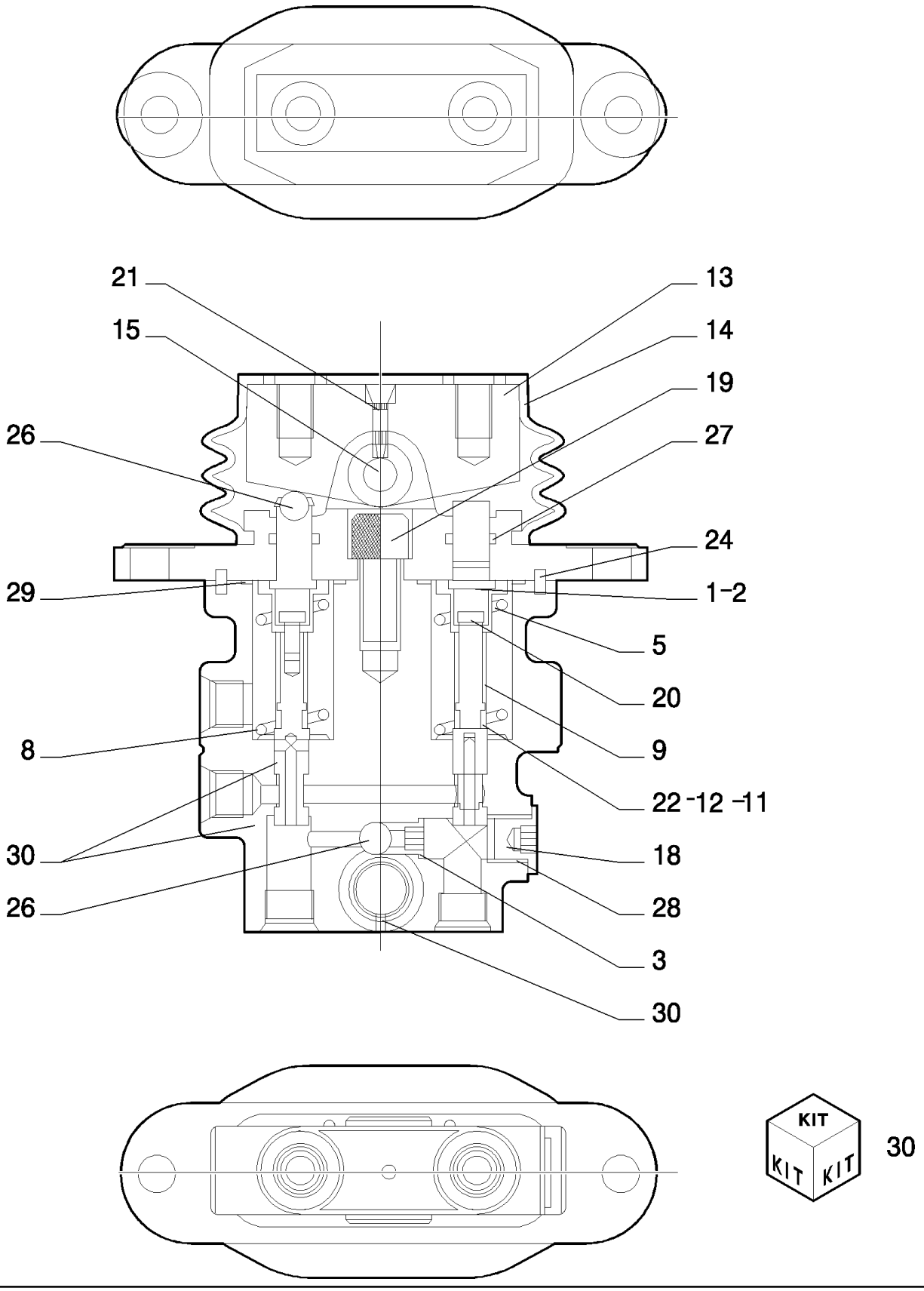

Copyright © New Holland

MARTILLO HIDRÁULICO (L=2.4 MT) - COMPONENTES - OPTIONAL CODE 461229068 (01-02-03) - 461229078 (04-05-06)
HYDRAULIC HAMMER (L=2.4 MT) - COMPONENTS - OPTIONAL CODE 461229068 (01-02-03) - 461229078 (04-05-06)
HYDRAULIC HAMMER (L=2.4 MT) - COMPONENTS - OPTIONAL CODE 461229068 (01-02-03) - 461229078 (04-05-06)
HYDRAULIC HAMMER (L=2.4 MT) - COMPONENTS - OPTIONAL CODE 461229068 (01-02-03) - 461229078 (04-05-06)

R	N	P.N.	MOD	Q	Description Denominacion	Descrizione Beskrivelse	Bezeichnung Denominação	Description Beschrijving	L.C.
1		72210484		2	SHIM SUPLEMENTO	SPESSORE MELLEMLÆG	AUSGLEICHSSCHEIBE CALÇO DE AFINAÇÃO	CALE VULPLAATJE	198S
2		72210485		2	SHIM SUPLEMENTO	SPESSORE MELLEMLÆG	AUSGLEICHSSCHEIBE CALÇO DE AFINAÇÃO	CALE VULPLAATJE	198S
3		72210219		1	SEAT/SLOT ASIENTO/RANURA	SEDE/ASOLA SÆDE	SITZ/SCHLITZ SUPORTE	SIEGE/FENTE ZITTING/SLEUF	069S
5		72210483		2	SLEEVE MANGUITO	MANICOTTO TRYKLEJE, KOBLING	BUCHSE MANGA	CHEMISE MOF; BUS	031M
8		72210486		1	SPRING RESORTE	MOLLA FJEDER	FEDER MOLA	RESSORT VEER	100M
9		72210223		2	SPRING RESORTE	MOLLA FJEDER	FEDER MOLA	RESSORT VEER	100M
11		72210487		2	SHIM SUPLEMENTO	SPESSORE MELLEMLÆG	AUSGLEICHSSCHEIBE CALÇO DE AFINAÇÃO	CALE VULPLAATJE	198S
12		72210488		1	SHIM SUPLEMENTO	SPESSORE MELLEMLÆG	AUSGLEICHSSCHEIBE CALÇO DE AFINAÇÃO	CALE VULPLAATJE	198S
13		72210489		1	CAM LEVA	CAMMA KAM	NOCKE EXCÊNTRICO	CAME NOK	040C
14		72210225		1	BOOT FUNDA	PARAPOLVERE MANCHET	MANSCHETTE COBERTURA DE PROTE	SOUFFLET HOES	330C
15		72210226		1	PIN PASADOR	PERNO STIFT	PIN PERNO	BROCHE PEN	080P
18		72210230		1	PLUG TAPÓN	TAPPO PROP	STOPFEN TAMPÃO	BOUCHON PLUG	050T
19		72210490		1	SCREW TORNILLO	VITE SKRUE	SCHRAUBE PARAFUSO	VIS SCHROEF	040V
20		72210232		2	SCREW TORNILLO	VITE SKRUE	SCHRAUBE PARAFUSO	VIS SCHROEF	040V
21		72210233		2	PLUG TAPÓN	TAPPO PROP	STOPFEN TAMPÃO	BOUCHON PLUG	050T
22		72210234		2	WASHER ARANDELA	RONDELLA FLADSKIVE	UNTERLEGSCHEIBE ANILHA	RONDELLE SLUITRING	131R
24		72210492		2	PIN PASADOR	PERNO STIFT	PIN PERNO	BROCHE PEN	080P
26		72210237		3	BALL BOLA	SFERA KUGLE	KUGEL ESFERA	BILLE KOGEL	140S
27		72210491		2	O-RING JUNTA TÓRICA	ANELLO TOROIDALE O-RING	O-RING O-RING	JOINT TORIQUE O-RING	055A
28		72209827		1	O-RING JUNTA TÓRICA	ANELLO TOROIDALE O-RING	O-RING O-RING	JOINT TORIQUE O-RING	055A
29		72210493		2	O-RING JUNTA TÓRICA	ANELLO TOROIDALE O-RING	O-RING O-RING	JOINT TORIQUE O-RING	055A
30		72210494		1	KIT KIT	KIT SÆT	SATZ KIT	KIT KIT	305C

VALVE ASSY P/N 72204155

E215B

Copyright © New Holland

5.0021	08	p1	03/10

HYDRAULIC HAMMER (L=2.4 MT) - OPTIONAL CODE 461229068 (01-02-03)
MARTELLO IDRAULICO (L=2.4 MT) - CODICE VARIANTE 461229068 (01-02-03)
HYDRAULISCHER HAMMER (L=2.4 MT) - OPTIONAL CODE 461229068 (01-02-03)
MARTEAU HYDRAULIQUE (L=2.4 MT) - OPTIONAL CODE 461229068 (01-02-03)

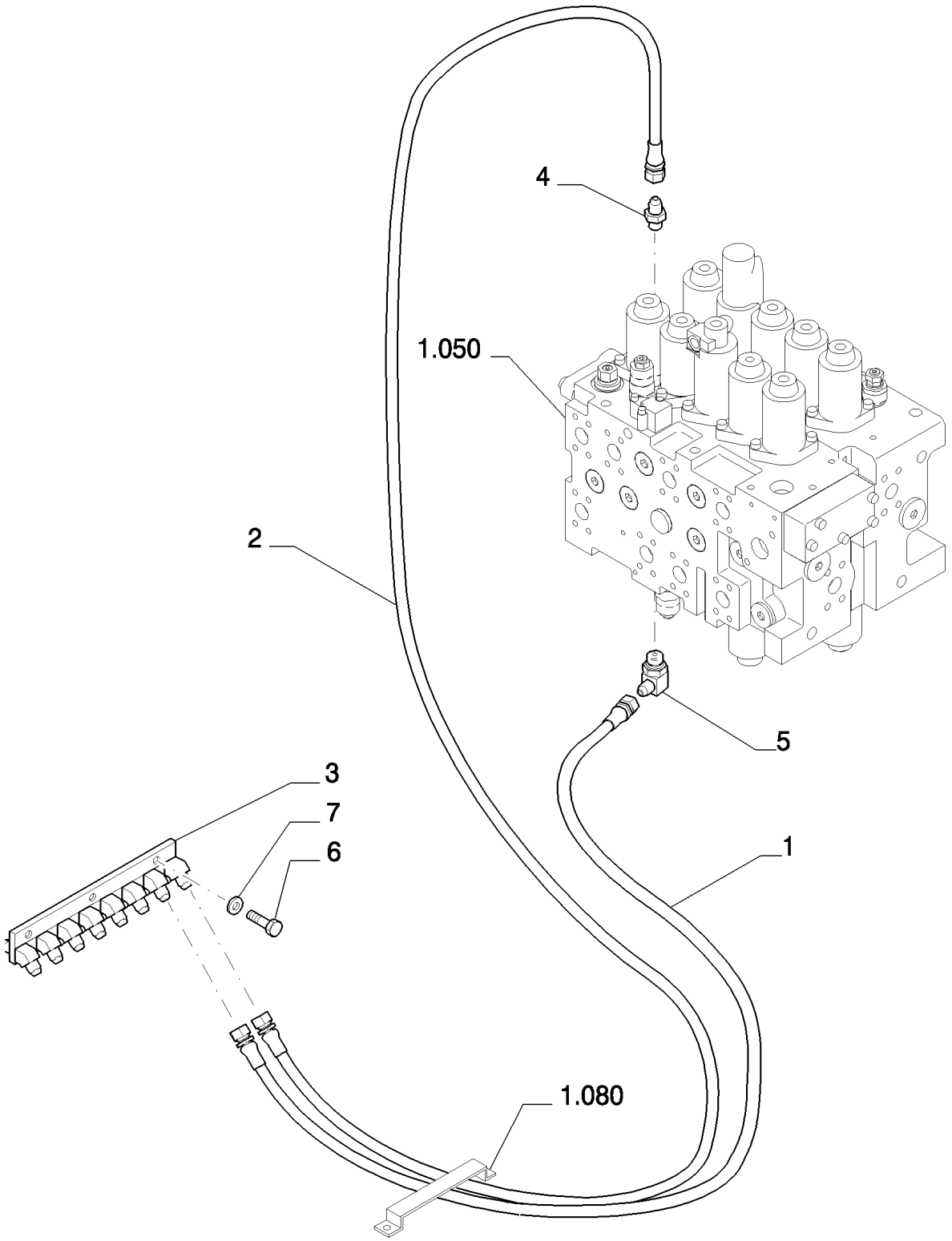

Copyright © New Holland

MARTILLO HIDRÁULICO (L=2.4 MT) - OPTIONAL CODE 461229068 (01-02-03)
HYDRAULIC HAMMER (L=2.4 MT) - OPTIONAL CODE 461229068 (01-02-03)
HYDRAULIC HAMMER (L=2.4 MT) - OPTIONAL CODE 461229068 (01-02-03)
HYDRAULIC HAMMER (L=2.4 MT) - OPTIONAL CODE 461229068 (01-02-03)

R	N	P.N.	MOD	Q	Description Denominacion	Descrizione Beskrivelse	Bezeichnung Denominação	Description Beschrijving	L.C.
1		72214543		1	FLEXIBLE HOSE TUBO FLEXIBLE	TUBO FLESSIBILE FLEKSIBEL SLANGE	BIEGSAMER SCHLAUCH MANGUEIRA FLEXÍVEL	TUYAU FLEXIBLE FLEXIBELE SLANG	192T
2		87536897		1	FLEXIBLE HOSE TUBO FLEXIBLE	TUBO FLESSIBILE FLEKSIBEL SLANGE	BIEGSAMER SCHLAUCH MANGUEIRA FLEXÍVEL	TUYAU FLEXIBLE FLEXIBELE SLANG	192T
3		87537888		1	BLOCK BLOQUE	BLOCCO MOTORBLOK	BLOCK BLOCO	BLOC BLOK	074B
4		72214522		1	HYD CONNECTOR CONECTOR HIDRÁULIC	CONNETTORE IDRAULIC HYDRAULIKSTIK	HYDR STECKVERBINDE CONECTOR HID.	CONNECTEUR HYDRAU HYDRAULISCHE AANSL	020R
5		72214561		1	HYD CONNECTOR CONECTOR HIDRÁULIC	CONNETTORE IDRAULIC HYDRAULIKSTIK	HYDR STECKVERBINDE CONECTOR HID.	CONNECTEUR HYDRAU HYDRAULISCHE AANSL	020R
6		11106434		3	BOLT, Hex, M10 x 30, 10.9, Full Thd PERNO	BULLONE BOLT	SCHRAUBE PARAFUSO	VIS BOUT	140B
7		12641031		3	LOCK WASHER ARANDELA DE BLOQUE	RONDELLA DI SICUREZ LÅSESKIVE	SICHERUNGSSCHEIBE ANILHA DE RETENÇÃO	RONDELLE FREIN BORGRING	132R

Copyright © New Holland

5.0021	09	p1	03/10

HYDRAULIC HAMMER (L=2.4 MT) - OPTIONAL CODE 461229068 (01-02-03)
MARTELLO IDRAULICO (L=2.4 MT) - CODICE VARIANTE 461229068 (01-02-03)
HYDRAULISCHER HAMMER (L=2.4 MT) - OPTIONAL CODE 461229068 (01-02-03)
MARTEAU HYDRAULIQUE (L=2.4 MT) - OPTIONAL CODE 461229068 (01-02-03)

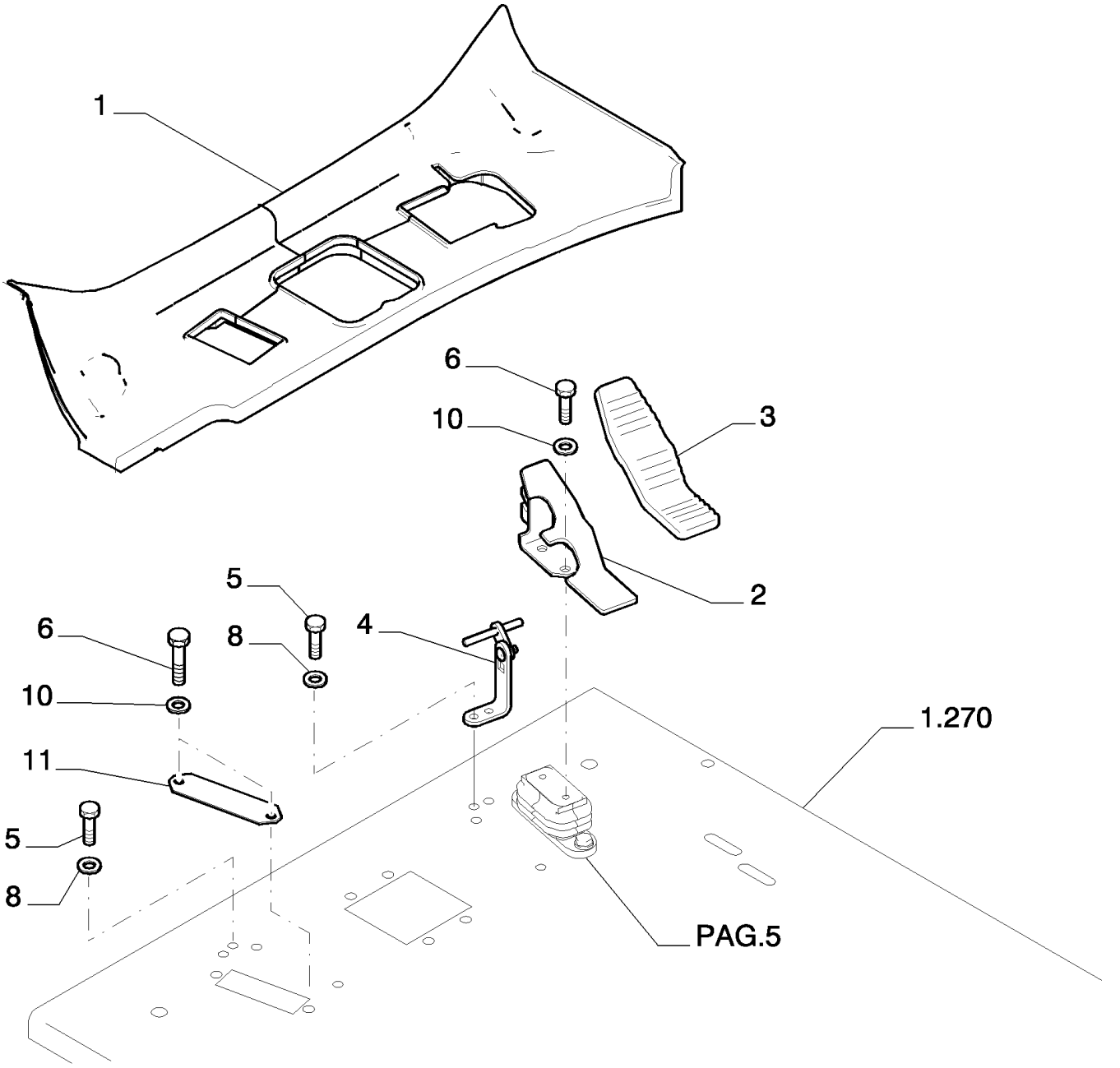

Copyright © New Holland

MARTILLO HIDRÁULICO (L=2.4 MT) - OPTIONAL CODE 461229068 (01-02-03)
HYDRAULIC HAMMER (L=2.4 MT) - OPTIONAL CODE 461229068 (01-02-03)
HYDRAULIC HAMMER (L=2.4 MT) - OPTIONAL CODE 461229068 (01-02-03)
HYDRAULIC HAMMER (L=2.4 MT) - OPTIONAL CODE 461229068 (01-02-03)

R	N	P.N.	MOD	Q	Description Denominacion	Descrizione Beskrivelse	Bezeichnung Denominação	Description Beschrijving	L.C.
1		YN26M00074P1		1	CARPET ALFOMBRA	TAPPETINO TÆPPE	TEPPICH TAPETE	TAPIS VLOERBEDEKKING	P015
2		87539195		1	PEDAL PEDAL	PEDALE PEDAL	PEDAL PEDAL	PEDALE PEDAAL	060P
3		87539205		1	RUBBER PEDAL PAD PASTILLA DE PEDAL DE	RIVESTIMENTO PEDALE GUMMIPEDALBELÆGNI	GUMMIPEDALAUFLAGE BORRACHA COBERTUR	PATIN DE PEDALE CAO RUBBEREN PEDAALBEK	292C
4		87539206		1	BRACKET SOPORTE	STAFFA BESLAG	HALTERUNG SUPORTE	SUPPORT STEUN	225S
5		16043434		4	BOLT, Hex, M8 x 20, 10.9, Full Thd PERNO	BULLONE BOLT	SCHRAUBE PARAFUSO	VIS BOUT	140B
6		11106034		4	BOLT, Hex, M10 x 20, 10.9, Full Thd PERNO	BULLONE BOLT	SCHRAUBE PARAFUSO	VIS BOUT	140B
8		14496531		4	WASHER, M8 x 17 x 1.6 ARANDELA	RONDELLA FLADSKIVE	UNTERLEGSCHEIBE ANILHA	RONDELLE SLUITRING	131R
10		14496631		4	WASHER, M10 x 21 x 2 ARANDELA	RONDELLA FLADSKIVE	UNTERLEGSCHEIBE ANILHA	RONDELLE SLUITRING	131R
11		87746013		1	PLATE PLACA	PIASTRA PLADE	PLATTE CHAPA	PLAQUE PLAAT	105P

Copyright © New Holland

5.0021	10	p1	03/10

HYDRAULIC HAMMER (L=2.4 MT) - OPTIONAL CODE 461229068 (01-02-03)
MARTELLO IDRAULICO (L=2.4 MT) - CODICE VARIANTE 461229068 (01-02-03)
HYDRAULISCHER HAMMER (L=2.4 MT) - OPTIONAL CODE 461229068 (01-02-03)
MARTEAU HYDRAULIQUE (L=2.4 MT) - OPTIONAL CODE 461229068 (01-02-03)

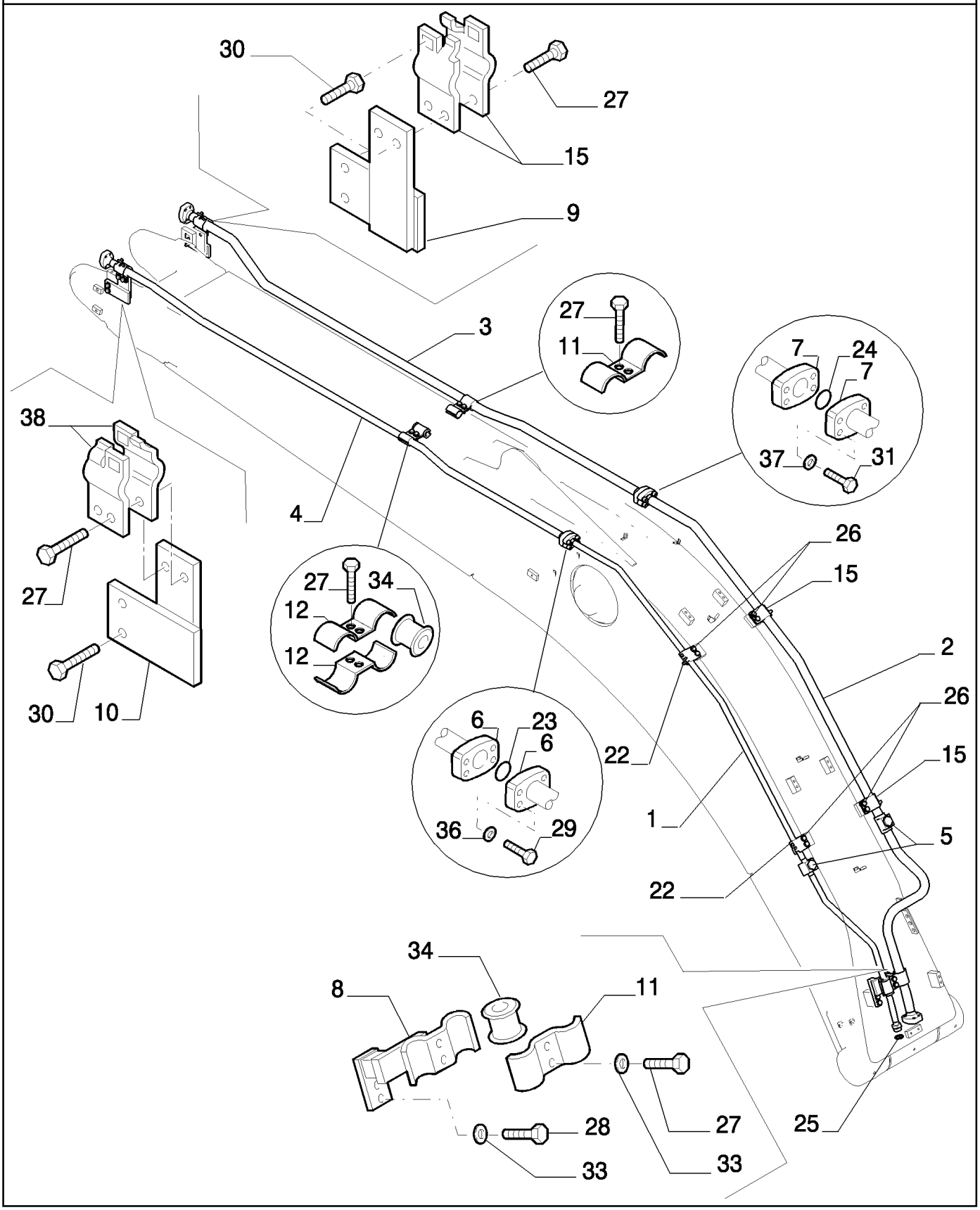

Copyright © New Holland

MARTILLO HIDRÁULICO (L=2.4 MT) - OPTIONAL CODE 461229068 (01-02-03)
HYDRAULIC HAMMER (L=2.4 MT) - OPTIONAL CODE 461229068 (01-02-03)
HYDRAULIC HAMMER (L=2.4 MT) - OPTIONAL CODE 461229068 (01-02-03)
HYDRAULIC HAMMER (L=2.4 MT) - OPTIONAL CODE 461229068 (01-02-03)

R	N	P.N.	MOD	Q	Description Denominacion	Descrizione Beskrivelse	Bezeichnung Denominação	Description Beschrijving	L.C.
1		87543992		1	RIGID TUBE TUBO RÍGIDO	TUBO RIGIDO STIFT RØR	ROHR TUBO RÍGIDO	TUYAU RIGIDE VASTE LEIDING	193T
2		87543993		1	RIGID TUBE TUBO RÍGIDO	TUBO RIGIDO STIFT RØR	ROHR TUBO RÍGIDO	TUYAU RIGIDE VASTE LEIDING	193T
3		87543994		1	RIGID TUBE TUBO RÍGIDO	TUBO RIGIDO STIFT RØR	ROHR TUBO RÍGIDO	TUYAU RIGIDE VASTE LEIDING	193T
4		87543995		1	RIGID TUBE TUBO RÍGIDO	TUBO RIGIDO STIFT RØR	ROHR TUBO RÍGIDO	TUYAU RIGIDE VASTE LEIDING	193T
6		71404313		2	HALF-FLANGE SEMIBRIDA	SEMIFLANGIA FLANGEHALVDEL	FLANSCHHÄLFTE MEIA FLANGE	DEMI-BRIDE FLENSHELFT	417S
7		71444029		2	HALF-FLANGE SEMIBRIDA	SEMIFLANGIA FLANGEHALVDEL	FLANSCHHÄLFTE MEIA FLANGE	DEMI-BRIDE FLENSHELFT	417S
8		84147125		1	BRACKET SOPORTE	STAFFA BESLAG	HALTERUNG SUPORTE	SUPPORT STEUN	225S
9		87359468		1	PLATE PLACA	PIASTRA PLADE	PLATTE CHAPA	PLAQUE PLAAT	105P
10		87359469		1	PLATE PLACA	PIASTRA PLADE	PLATTE CHAPA	PLAQUE PLAAT	105P
11		87343330		4	BRACKET SOPORTE	STAFFA BESLAG	HALTERUNG SUPORTE	SUPPORT STEUN	225S
12		87343335		2	BRACKET SOPORTE	STAFFA BESLAG	HALTERUNG SUPORTE	SUPPORT STEUN	225S
15		87349692		6	BRACKET SOPORTE	STAFFA BESLAG	HALTERUNG SUPORTE	SUPPORT STEUN	225S
22		87343090		4	BRACKET SOPORTE	STAFFA BESLAG	HALTERUNG SUPORTE	SUPPORT STEUN	225S
23		72215443		1	O-RING JUNTA TÓRICA	ANELLO TOROIDALE O-RING	O-RING O-RING	JOINT TORIQUE O-RING	055A
24		70924192		1	O-RING JUNTA TÓRICA	ANELLO TOROIDALE O-RING	O-RING O-RING	JOINT TORIQUE O-RING	055A
25		70931640		1	GASKET JUNTA	GUARNIZIONE PAKNING	DICHTUNG JUNTA	JOINT PAKKING	123G
26		11112434		8	BOLT, Hex, M12 x 30, 10.9, Full Thd PERNO	BULLONE BOLT	SCHRAUBE PARAFUSO	VIS BOUT	140B
27		11112634		10	SCREW TORNILLO	VITE SKRUE	SCHRAUBE PARAFUSO	VIS SCHROEF	040V
28		11113334		2	SCREW TORNILLO	VITE SKRUE	SCHRAUBE PARAFUSO	VIS SCHROEF	040V
29		14422434		4	SCREW TORNILLO	VITE SKRUE	SCHRAUBE PARAFUSO	VIS SCHROEF	040V
30		11112834		4	BOLT, Hex, M12 x 40, 10.9, Full Thd PERNO	BULLONE BOLT	SCHRAUBE PARAFUSO	VIS BOUT	140B
31		14424534		4	SCREW TORNILLO	VITE SKRUE	SCHRAUBE PARAFUSO	VIS SCHROEF	040V
33		14496731		24	WASHER, M12 x 24 x 2.5 Thk ARANDELA	RONDELLA FLADSKIVE	UNTERLEGSCHEIBE ANILHA	RONDELLE SLUITRING	131R
34		87343521		2	BUSHING CASQUILLO	BOCCOLA BØSNING	BUCHSE CASQUILHO	BAGUE BUS	095B

Copyright © New Holland

5.0021	10	p2	03/10

HYDRAULIC HAMMER (L=2.4 MT) - OPTIONAL CODE 461229068 (01-02-03)
MARTELLO IDRAULICO (L=2.4 MT) - CODICE VARIANTE 461229068 (01-02-03)
HYDRAULISCHER HAMMER (L=2.4 MT) - OPTIONAL CODE 461229068 (01-02-03)
MARTEAU HYDRAULIQUE (L=2.4 MT) - OPTIONAL CODE 461229068 (01-02-03)

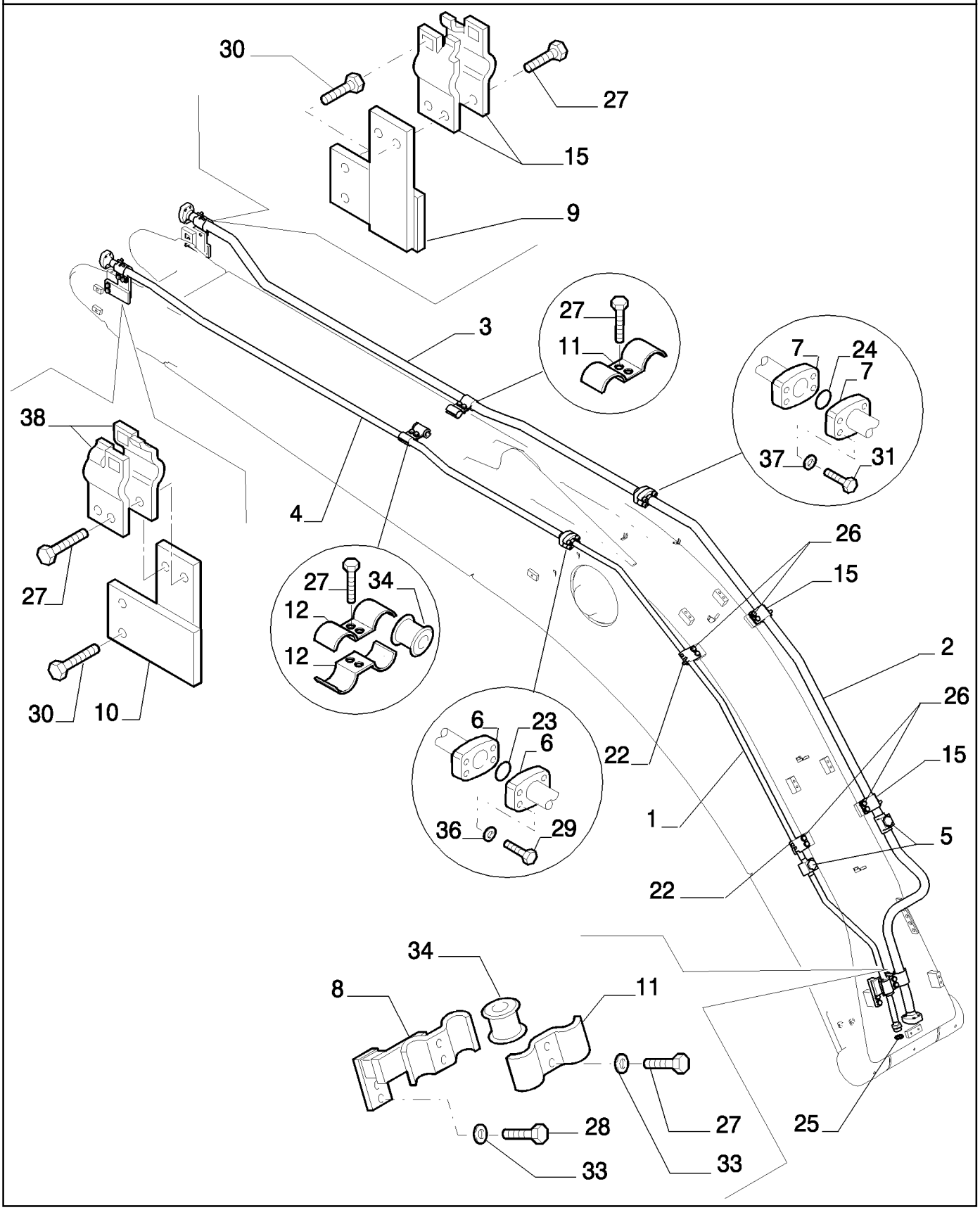

Copyright © New Holland

MARTILLO HIDRÁULICO (L=2.4 MT) - OPTIONAL CODE 461229068 (01-02-03)
HYDRAULIC HAMMER (L=2.4 MT) - OPTIONAL CODE 461229068 (01-02-03)
HYDRAULIC HAMMER (L=2.4 MT) - OPTIONAL CODE 461229068 (01-02-03)
HYDRAULIC HAMMER (L=2.4 MT) - OPTIONAL CODE 461229068 (01-02-03)

R	N	P.N.	MOD	Q	Description Denominacion	Descrizione Beskrivelse	Bezeichnung Denominação	Description Beschrijving	L.C.
36		10517074		4	LOCK WASHER ARANDELA DE BLOQUE	RONDELLA DI SICUREZ LÅSESKIVE	SICHERUNGSSCHEIBE ANILHA DE RETENÇÃO	RONDELLE FREIN BORGRING	132R
37		10517174		4	LOCK WASHER ARANDELA DE BLOQUE	RONDELLA DI SICUREZ LÅSESKIVE	SICHERUNGSSCHEIBE ANILHA DE RETENÇÃO	RONDELLE FREIN BORGRING	132R
38		87343093		2	BRACKET SOPORTE	STAFFA BESLAG	HALTERUNG SUPORTE	SUPPORT STEUN	225S

Copyright © New Holland

5.0021	11	p1	03/10

HYDRAULIC HAMMER (L=2.4 MT) - OPTIONAL CODE 461229068 (01-02-03) - 461229078 (04-05-06)
MARTELLO IDRAULICO (L=2.4 MT) - CODICE VARIANTE 461229068 (01-02-03) - 461229078 (04-05-06)
HYDRAULISCHER HAMMER (L=2.4 MT) - OPTIONAL CODE 461229068 (01-02-03) - 461229078 (04-05-06)
MARTEAU HYDRAULIQUE (L=2.4 MT) - OPTIONAL CODE 461229068 (01-02-03) - 461229078 (04-05-06)

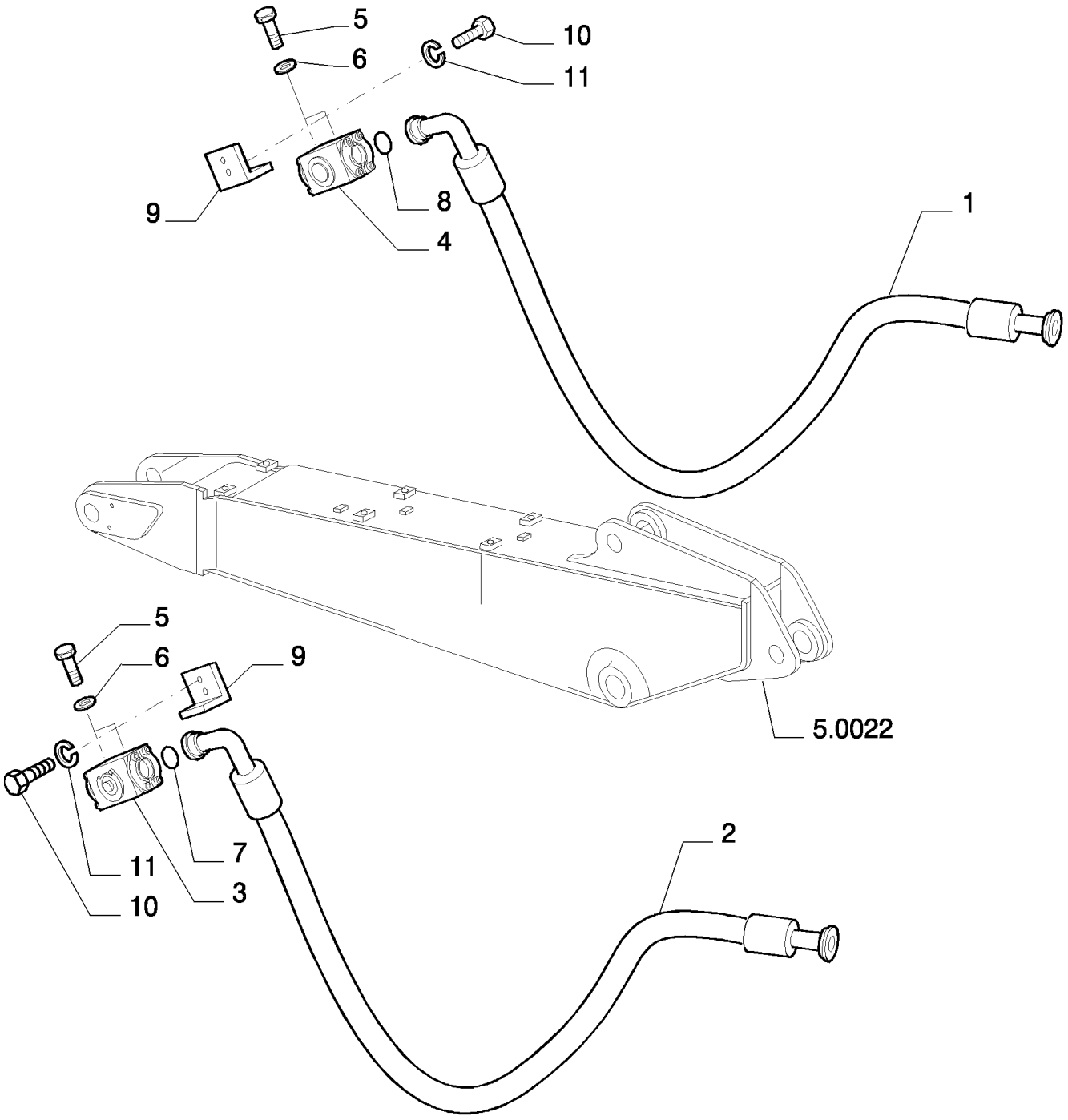

Copyright © New Holland

MARTILLO HIDRÁULICO (L=2.4 MT) - OPTIONAL CODE 461229068 (01-02-03) - 461229078 (04-05-06)
HYDRAULIC HAMMER (L=2.4 MT) - OPTIONAL CODE 461229068 (01-02-03) - 461229078 (04-05-06)
HYDRAULIC HAMMER (L=2.4 MT) - OPTIONAL CODE 461229068 (01-02-03) - 461229078 (04-05-06)
HYDRAULIC HAMMER (L=2.4 MT) - OPTIONAL CODE 461229068 (01-02-03) - 461229078 (04-05-06)

R	N	P.N.	MOD	Q	Description Denominacion	Descrizione Beskrivelse	Bezeichnung Denominação	Description Beschrijving	L.C.
1		87556738		1	FLEXIBLE HOSE TUBO FLEXIBLE	TUBO FLESSIBILE FLEKSIBEL SLANGE	BIEGSAMER SCHLAUCH MANGUEIRA FLEXÍVEL	TUYAU FLEXIBLE FLEXIBELE SLANG	192T
2		87556737		1	FLEXIBLE HOSE TUBO FLEXIBLE	TUBO FLESSIBILE FLEKSIBEL SLANGE	BIEGSAMER SCHLAUCH MANGUEIRA FLEXÍVEL	TUYAU FLEXIBLE FLEXIBELE SLANG	192T
3		72215206		1	HYDRAULIC VALVE VÁLVULA HIDRÁULICA	DISTRIBUTORE IDRAULI HYDRAULIKVENTIL	HYDRAULIKVENTIL VÁLVULA HIDRÁULICA	SOUPAPE HYDRAULIQU HYDRAULISCHE KLEP	010V
4	1	72215205		1	HYDRAULIC VALVE VÁLVULA HIDRÁULICA	DISTRIBUTORE IDRAULI HYDRAULIKVENTIL	HYDRAULIKVENTIL VÁLVULA HIDRÁULICA	SOUPAPE HYDRAULIQU HYDRAULISCHE KLEP	010V
5		11106234		4	BOLT, Hex, M10 x 25, 10.9, Full Thd PERNO	BULLONE BOLT	SCHRAUBE PARAFUSO	VIS BOUT	140B
6		10516874		4	LOCK WASHER ARANDELA DE BLOQUE	RONDELLA DI SICUREZ LÅSESKIVE	SICHERUNGSSCHEIBE ANILHA DE RETENÇÃO	RONDELLE FREIN BORGRING	132R
7		70924200		1	O-RING JUNTA TÓRICA	ANELLO TOROIDALE O-RING	O-RING O-RING	JOINT TORIQUE O-RING	055A
8		70924192		1	O-RING JUNTA TÓRICA	ANELLO TOROIDALE O-RING	O-RING O-RING	JOINT TORIQUE O-RING	055A
9		87381234		2	BRACKET SOPORTE	STAFFA BESLAG	HALTERUNG SUPORTE	SUPPORT STEUN	225S
10		11112434		4	BOLT, Hex, M12 x 30, 10.9, Full Thd PERNO	BULLONE BOLT	SCHRAUBE PARAFUSO	VIS BOUT	140B
11		10517074		4	LOCK WASHER ARANDELA DE BLOQUE	RONDELLA DI SICUREZ LÅSESKIVE	SICHERUNGSSCHEIBE ANILHA DE RETENÇÃO	RONDELLE FREIN BORGRING	132R

(1) ASSY SEE PAGE 12

Copyright © New Holland

5.0021	12	p1	03/10

HYDRAULIC HAMMER (L=2.4 MT) - COMPONENTS - OPTIONAL CODE 461229068 (01-02-03) - 461229078 (04-05-06)
MARTELLO IDRAULICO (L=2.4 MT) - COMPONENTI - CODICE VARIANTE 461229068 (01-02-03) - 461229078 (04-05-06)
HYDRAULISCHER HAMMER (L=2.4 MT) - BESTANDTEILE - OPTIONAL CODE 461229068 (01-02-03) - 461229078 (04-05-06)
MARTEAU HYDRAULIQUE (L=2.4 MT) - COMPOSANTS - OPTIONAL CODE 461229068 (01-02-03) - 461229078 (04-05-06)

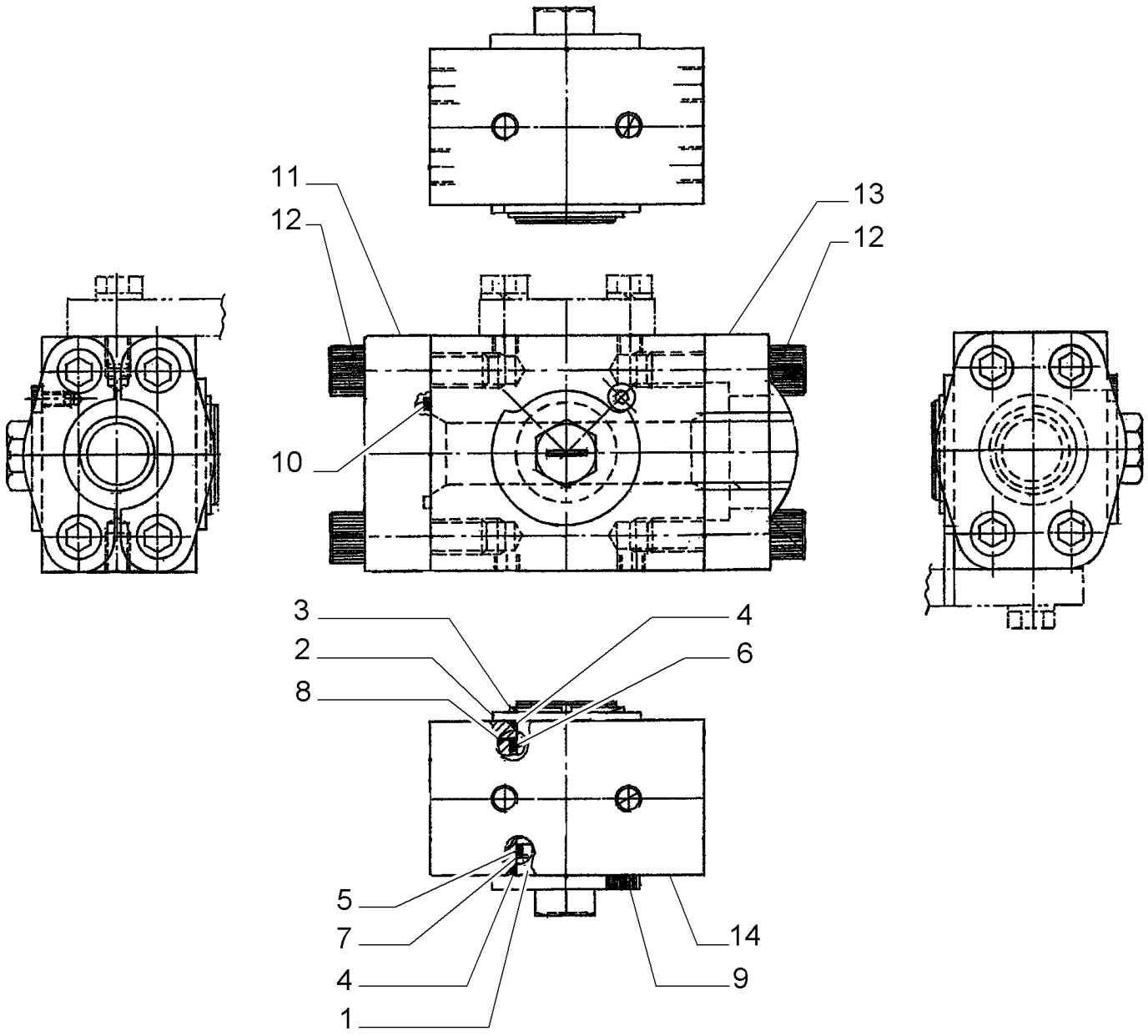

Copyright © New Holland

MARTILLO HIDRÁULICO (L=2.4 MT) - COMPONENTES - OPTIONAL CODE 461229068 (01-02-03) - 461229078 (04-05-06)
HYDRAULIC HAMMER (L=2.4 MT) - COMPONENTS - OPTIONAL CODE 461229068 (01-02-03) - 461229078 (04-05-06)
HYDRAULIC HAMMER (L=2.4 MT) - COMPONENTS - OPTIONAL CODE 461229068 (01-02-03) - 461229078 (04-05-06)
HYDRAULIC HAMMER (L=2.4 MT) - COMPONENTS - OPTIONAL CODE 461229068 (01-02-03) - 461229078 (04-05-06)

R	N	P.N.	MOD	Q	Description Denominacion	Descrizione Beskrivelse	Bezeichnung Denominação	Description Beschrijving	L.C.
1		72219279		1	PIN PASADOR	PERNO STIFT	PIN PERNO	BROCHE PEN	080P
2		72219249		1	SPACER SEPARADOR	DISTANZIALE AFSTANDSSTYKKE	DISTANZSTÜCK ESPAÇADOR	ENTRETOISE AFSTANDSSTUK	075D
3		72219250		1	RING ANILLO	ANELLO RING	RING ANEL	ANNEAU RING	045A
4		72219252		2	GASKET JUNTA	GUARNIZIONE PAKNING	DICHTUNG JUNTA	JOINT PAKKING	123G
5		72219255		1	GASKET JUNTA	GUARNIZIONE PAKNING	DICHTUNG JUNTA	JOINT PAKKING	123G
6		72219253		1	GASKET JUNTA	GUARNIZIONE PAKNING	DICHTUNG JUNTA	JOINT PAKKING	123G
7		72219256		1	RING ANILLO	ANELLO RING	RING ANEL	ANNEAU RING	045A
8		72219254		1	RING ANILLO	ANELLO RING	RING ANEL	ANNEAU RING	045A
9		72219251		1	SCREW, 6X8 TORNILLO	VITE SKRUE	SCHRAUBE PARAFUSO	VIS SCHROEF	040V
10		72219287		1	GASKET JUNTA	GUARNIZIONE PAKNING	DICHTUNG JUNTA	JOINT PAKKING	123G
11		72219288		1	FLANGE BRIDA	FLANGIA FLANGE	FLANSCH FLANGE	BRIDE FLENS	070F
12		72219289		8	SCREW, 14X50 TORNILLO	VITE SKRUE	SCHRAUBE PARAFUSO	VIS SCHROEF	040V
13		72219290		2	HALF-FLANGE SEMIBRIDA	SEMIFLANGIA FLANGEHALVDEL	FLANSCHHÄLFTE MEIA FLANGE	DEMI-BRIDE FLENSHELFT	417S
14		72219278		1	BODY CUERPO	CORPO HUS	KAROSSERIE CORPO	CORPS HUIS	300C

VALVE ASSY P/N 72215205

E215B

Copyright © New Holland

5.0021	13	p1	05/10

HYDRAULIC HAMMER (L=2.4 MT) - OPTIONAL CODE 461229078 (04-05-06)
MARTELLO IDRAULICO (L=2.4 MT) - OPTIONAL CODE 461229078 (04-05-06)
HYDRAULISCHER HAMMER (L=2.4 MT) - OPTIONAL CODE 461229078 (04-05-06)
MARTEAU HYDRAULIQUE (L=2.4 MT) - OPTIONAL CODE 461229078 (04-05-06)

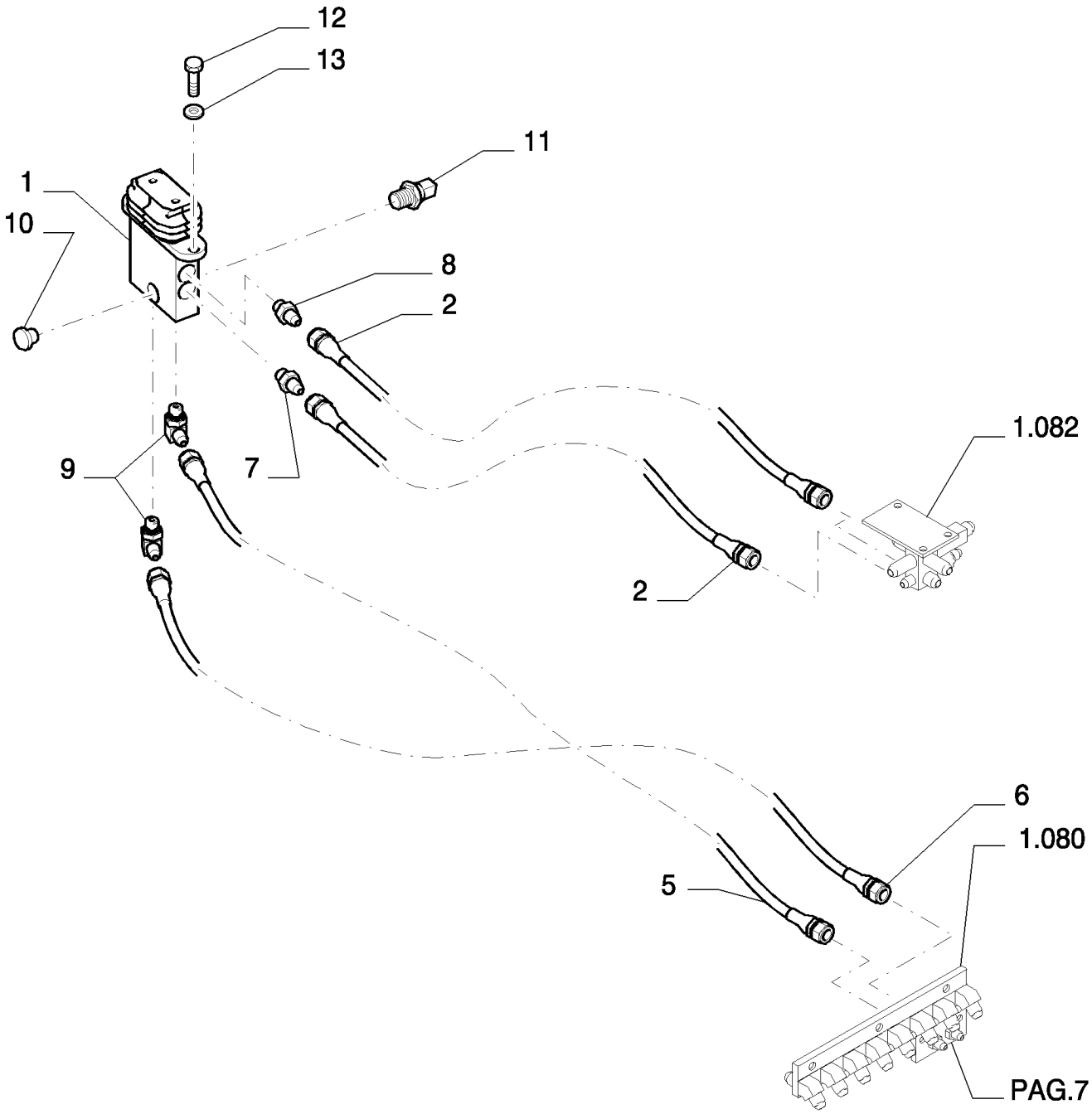

Copyright © New Holland

MARTILLO HIDRÁULICO (L=2.4 MT) - OPTIONAL CODE 461229078 (04-05-06)
HYDRAULIC HAMMER (L=2.4 MT) - OPTIONAL CODE 461229078 (04-05-06)
HYDRAULIC HAMMER (L=2.4 MT) - OPTIONAL CODE 461229078 (04-05-06)
HYDRAULIC HAMMER (L=2.4 MT) - OPTIONAL CODE 461229078 (04-05-06)

R	N	P.N.	MOD	Q	Description Denominacion	Descrizione Beskrivelse	Bezeichnung Denominação	Description Beschrijving	L.C.
1	1	72204155		1	HYDRAULIC VALVE VÁLVULA HIDRÁULICA	DISTRIBUTORE IDRAULI HYDRAULIKVENTIL	HYDRAULIKVENTIL VÁLVULA HIDRÁULICA	SOUPAPE HYDRAULIQU HYDRAULISCHE KLEP	010V
2		87338415		2	FLEXIBLE HOSE TUBO FLEXIBLE	TUBO FLESSIBILE FLEKSIBEL SLANGE	BIEGSAMER SCHLAUCH MANGUEIRA FLEXÍVEL	TUYAU FLEXIBLE FLEXIBELE SLANG	192T
5		2420R349D170		1	FLEXIBLE HOSE TUBO FLEXIBLE	TUBO FLESSIBILE FLEKSIBEL SLANGE	BIEGSAMER SCHLAUCH MANGUEIRA FLEXÍVEL	TUYAU FLEXIBLE FLEXIBELE SLANG	192T
6		2420R349D175		1	FLEXIBLE HOSE TUBO FLEXIBLE	TUBO FLESSIBILE FLEKSIBEL SLANGE	BIEGSAMER SCHLAUCH MANGUEIRA FLEXÍVEL	TUYAU FLEXIBLE FLEXIBELE SLANG	192T
7		87522432		1	HYD CONNECTOR CONECTOR HIDRÁULIC	CONNETTORE IDRAULI HYDRAULIKSTIK	HYDR STECKVERBINDE CONECTOR HID.	CONNECTEUR HYDRAU HYDRAULISCHE AANSL	020R
8		72214744		1	HYD CONNECTOR CONECTOR HIDRÁULIC	CONNETTORE IDRAULI HYDRAULIKSTIK	HYDR STECKVERBINDE CONECTOR HID.	CONNECTEUR HYDRAU HYDRAULISCHE AANSL	020R
9		72214524		2	HYD CONNECTOR CONECTOR HIDRÁULIC	CONNETTORE IDRAULI HYDRAULIKSTIK	HYDR STECKVERBINDE CONECTOR HID.	CONNECTEUR HYDRAU HYDRAULISCHE AANSL	020R
10		72214663		1	PLUG TAPÓN	TAPPO PROP	STOPFEN TAMPÃO	BOUCHON PLUG	050T
11		87608371		1	SENSOR SENSOR	SENSORE FØLER	SENSOR SENSOR	CAPTEUR SENSOR	608S
12		11106434		2	BOLT, Hex, M10 x 30, 10.9, Full Thd PERNO	BULLONE BOLT	SCHRAUBE PARAFUSO	VIS BOUT	140B
13		12641031		2	LOCK WASHER ARANDELA DE BLOQUE	RONDELLA DI SICUREZ LÅSESKIVE	SICHERUNGSSCHEIBE ANILHA DE RETENÇÃO	RONDELLE FREIN BORGRING	132R

(1) ASSY SEE PAGE 7

Copyright © New Holland

5.0021	14	p1	03/10

HYDRAULIC HAMMER (L=2.4 MT) - OPTIONAL CODE 461229078 (04-05-06)
MARTELLO IDRAULICO (L=2.4 MT) - CODICE VARIANTE 461229078 (04-05-06)
HYDRAULISCHER HAMMER (L=2.4 MT) - OPTIONAL CODE 461229078 (04-05-06)
MARTEAU HYDRAULIQUE (L=2.4 MT) - OPTIONAL CODE 461229078 (04-05-06)

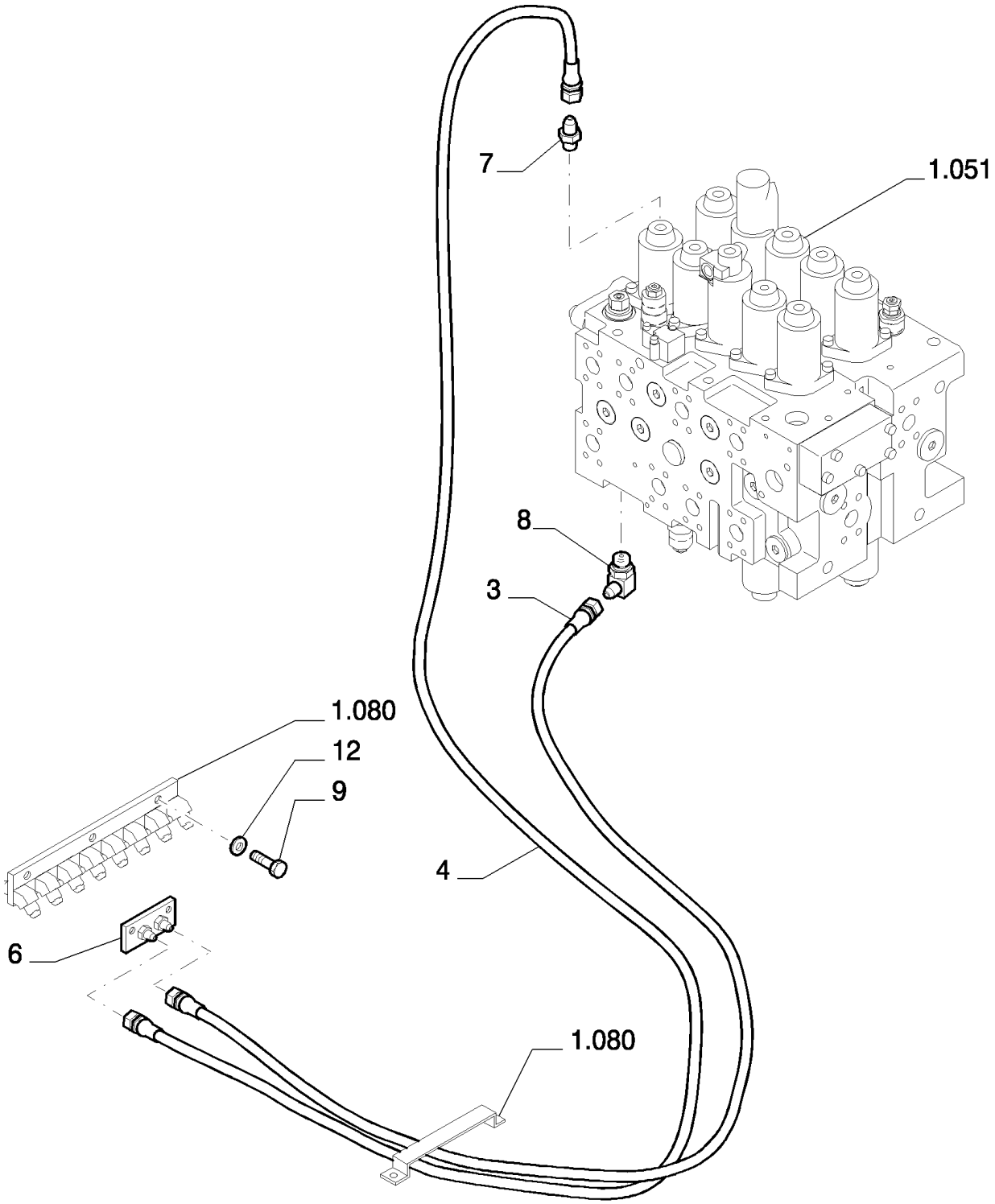

Copyright © New Holland

MARTILLO HIDRÁULICO (L=2.4 MT) - OPTIONAL CODE 461229078 (04-05-06)
HYDRAULIC HAMMER (L=2.4 MT) - OPTIONAL CODE 461229078 (04-05-06)
HYDRAULIC HAMMER (L=2.4 MT) - OPTIONAL CODE 461229078 (04-05-06)
HYDRAULIC HAMMER (L=2.4 MT) - OPTIONAL CODE 461229078 (04-05-06)

R	N	P.N.	MOD	Q	Description Denominacion	Descrizione Beskrivelse	Bezeichnung Denominação	Description Beschrijving	L.C.
3		72214739		1	FLEXIBLE HOSE TUBO FLEXIBLE	TUBO FLESSIBILE FLEKSIBEL SLANGE	BIEGSAMER SCHLAUCH MANGUEIRA FLEXÍVEL	TUYAU FLEXIBLE FLEXIBELE SLANG	192T
4		87536897		1	FLEXIBLE HOSE TUBO FLEXIBLE	TUBO FLESSIBILE FLEKSIBEL SLANGE	BIEGSAMER SCHLAUCH MANGUEIRA FLEXÍVEL	TUYAU FLEXIBLE FLEXIBELE SLANG	192T
6		87579546		1	BLOCK BLOQUE	BLOCCO MOTORBLOK	BLOCK BLOCO	BLOC BLOK	074B
7		72214522		1	HYD CONNECTOR CONECTOR HIDRÁULIC	CONNETTORE IDRAULIC HYDRAULIKSTIK	HYDR STECKVERBINDE CONECTOR HID.	CONNECTEUR HYDRAU HYDRAULISCHE AANSL	020R
8		72214561		1	HYD CONNECTOR CONECTOR HIDRÁULIC	CONNETTORE IDRAULIC HYDRAULIKSTIK	HYDR STECKVERBINDE CONECTOR HID.	CONNECTEUR HYDRAU HYDRAULISCHE AANSL	020R
9		11106434		3	BOLT, Hex, M10 x 30, 10.9, Full Thd PERNO	BULLONE BOLT	SCHRAUBE PARAFUSO	VIS BOUT	140B
12		12641031		3	LOCK WASHER ARANDELA DE BLOQUE	RONDELLA DI SICUREZ LÅSESKIVE	SICHERUNGSSCHEIBE ANILHA DE RETENÇÃO	RONDELLE FREIN BORGRING	132R

Copyright © New Holland

5.0021	15	p1	03/10

HYDRAULIC HAMMER (L=2.4 MT) - OPTIONAL CODE 461229078 (04-05-06)
MARTELLO IDRAULICO (L=2.4 MT) - CODICE VARIANTE 461229078 (04-05-06)
HYDRAULISCHER HAMMER (L=2.4 MT) - OPTIONAL CODE 461229078 (04-05-06)
MARTEAU HYDRAULIQUE (L=2.4 MT) - OPTIONAL CODE 461229078 (04-05-06)

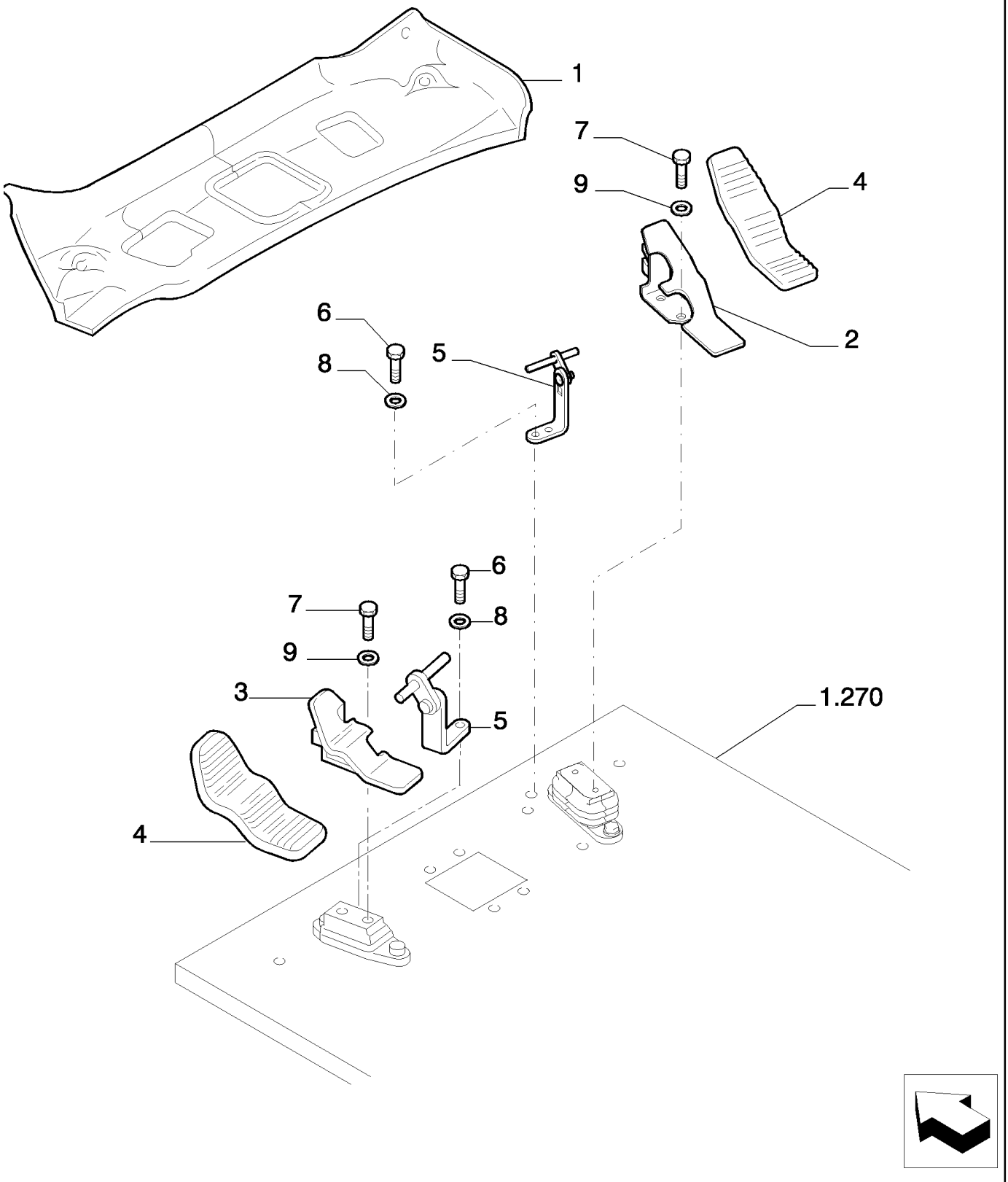

Copyright © New Holland

MARTILLO HIDRÁULICO (L=2.4 MT) - OPTIONAL CODE 461229078 (04-05-06)
HYDRAULIC HAMMER (L=2.4 MT) - OPTIONAL CODE 461229078 (04-05-06)
HYDRAULIC HAMMER (L=2.4 MT) - OPTIONAL CODE 461229078 (04-05-06)
HYDRAULIC HAMMER (L=2.4 MT) - OPTIONAL CODE 461229078 (04-05-06)

R	N	P.N.	MOD	Q	Description Denominacion	Descrizione Beskrivelse	Bezeichnung Denominação	Description Beschrijving	L.C.
1		YN26M00075P1		1	FLOOR MAT ALFOMBRA	TAPPETINO GULVMÅTTE	BODENMATTE TAPETE DE CHÃO	TAPIS DE SOL VLOERMAT	Z068
2		87539195		1	PEDAL PEDAL	PEDALE PEDAL	PEDAL PEDAL	PEDALE PEDAAL	060P
3		87539200		1	PEDAL PEDAL	PEDALE PEDAL	PEDAL PEDAL	PEDALE PEDAAL	060P
4		87539205		2	RUBBER PEDAL PAD PASTILLA DE PEDAL DE	RIVESTIMENTO PEDALE GUMMIPEDALBELÆGNI	GUMMIPEDALAUFLAGE BORRACHA COBERTUR	PATIN DE PEDALE CAO RUBBEREN PEDAALBEK	292C
5		87539206		2	BRACKET SOPORTE	STAFFA BESLAG	HALTERUNG SUPORTE	SUPPORT STEUN	225S
6		16043434		4	BOLT, Hex, M8 x 20, 10.9, Full Thd PERNO	BULLONE BOLT	SCHRAUBE PARAFUSO	VIS BOUT	140B
7		11106034		4	BOLT, Hex, M10 x 20, 10.9, Full Thd PERNO	BULLONE BOLT	SCHRAUBE PARAFUSO	VIS BOUT	140B
8		14496531		4	WASHER, M8 x 17 x 1.6 ARANDELA	RONDELLA FLADSKIVE	UNTERLEGSCHEIBE ANILHA	RONDELLE SLUITRING	131R
9		14496631		4	WASHER, M10 x 21 x 2 ARANDELA	RONDELLA FLADSKIVE	UNTERLEGSCHEIBE ANILHA	RONDELLE SLUITRING	131R

Copyright © New Holland

5.0021	16	p1	03/10

HYDRAULIC HAMMER (L=2.4 MT) - OPTIONAL CODE 461229078 (04-05-06)
MARTELLO IDRAULICO (L=2.4 MT) - CODICE VARIANTE 461229078 (04-05-06)
HYDRAULISCHER HAMMER (L=2.4 MT) - OPTIONAL CODE 461229078 (04-05-06)
MARTEAU HYDRAULIQUE (L=2.4 MT) - OPTIONAL CODE 461229078 (04-05-06)

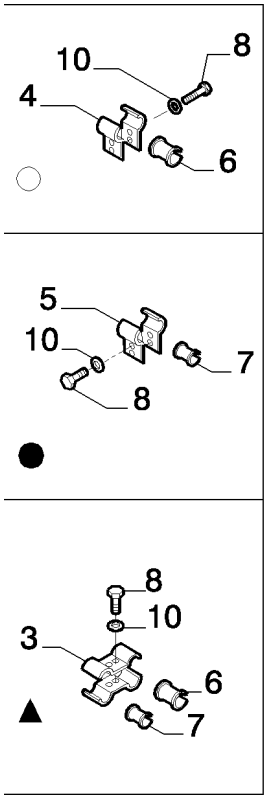

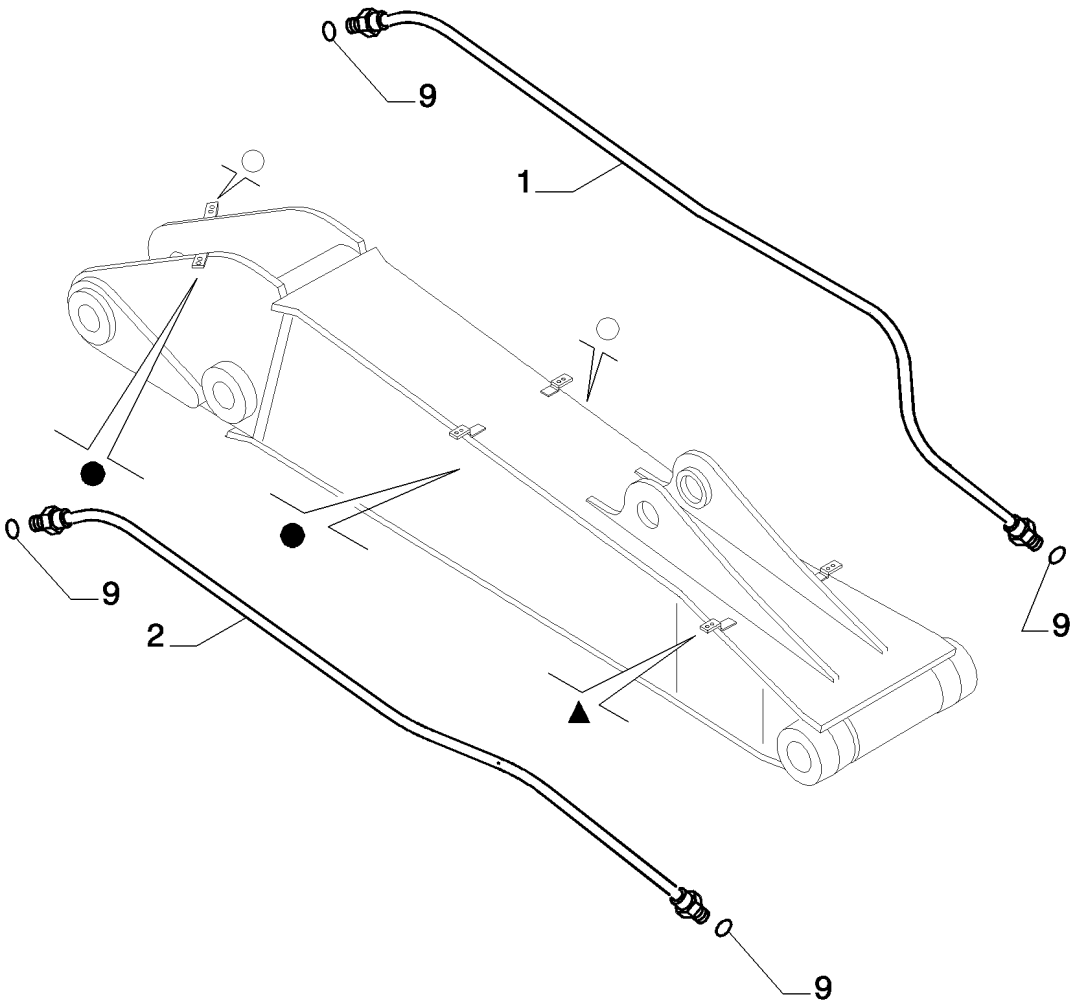

Copyright © New Holland

MARTILLO HIDRÁULICO (L=2.4 MT) - OPTIONAL CODE 461229078 (04-05-06)
HYDRAULIC HAMMER (L=2.4 MT) - OPTIONAL CODE 461229078 (04-05-06)
HYDRAULIC HAMMER (L=2.4 MT) - OPTIONAL CODE 461229078 (04-05-06)
HYDRAULIC HAMMER (L=2.4 MT) - OPTIONAL CODE 461229078 (04-05-06)

R	N	P.N.	MOD	Q	Description Denominacion	Descrizione Beskrivelse	Bezeichnung Denominação	Description Beschrijving	L.C.
1		87632032		1	RIGID TUBE TUBO RÍGIDO	TUBO RIGIDO STIFT RØR	ROHR TUBO RÍGIDO	TUYAU RIGIDE VASTE LEIDING	193T
2		87632030		1	RIGID TUBE TUBO RÍGIDO	TUBO RIGIDO STIFT RØR	ROHR TUBO RÍGIDO	TUYAU RIGIDE VASTE LEIDING	193T
3		87349655		2	BRACKET SOPORTE	STAFFA BESLAG	HALTERUNG SUPORTE	SUPPORT STEUN	225S
4		87349673		4	BRACKET SOPORTE	STAFFA BESLAG	HALTERUNG SUPORTE	SUPPORT STEUN	225S
5		87349692		4	BRACKET SOPORTE	STAFFA BESLAG	HALTERUNG SUPORTE	SUPPORT STEUN	225S
6		87349642		3	BUSHING CASQUILLO	BOCCOLA BØSNING	BUCHSE CASQUILHO	BAGUE BUS	095B
7		87349648		3	BUSHING CASQUILLO	BOCCOLA BØSNING	BUCHSE CASQUILHO	BAGUE BUS	095B
8		11112634		10	SCREW TORNILLO	VITE SKRUE	SCHRAUBE PARAFUSO	VIS SCHROEF	040V
9		70931640		2	GASKET JUNTA	GUARNIZIONE PAKNING	DICHTUNG JUNTA	JOINT PAKKING	123G
10		14496731		10	WASHER, M12 x 24 x 2.5 Thk ARANDELA	RONDELLA FLADSKIVE	UNTERLEGSCHEIBE ANILHA	RONDELLE SLUITRING	131R

Copyright © New Holland

5.0021	17	p1	03/10

HYDRAULIC HAMMER (L=2.4 MT) - OPTIONAL CODE 461229078 (04-05-06)
MARTELLO IDRAULICO (L=2.4 MT) - CODICE VARIANTE 461229078 (04-05-06)
HYDRAULISCHER HAMMER (L=2.4 MT) - OPTIONAL CODE 461229078 (04-05-06)
MARTEAU HYDRAULIQUE (L=2.4 MT) - OPTIONAL CODE 461229078 (04-05-06)

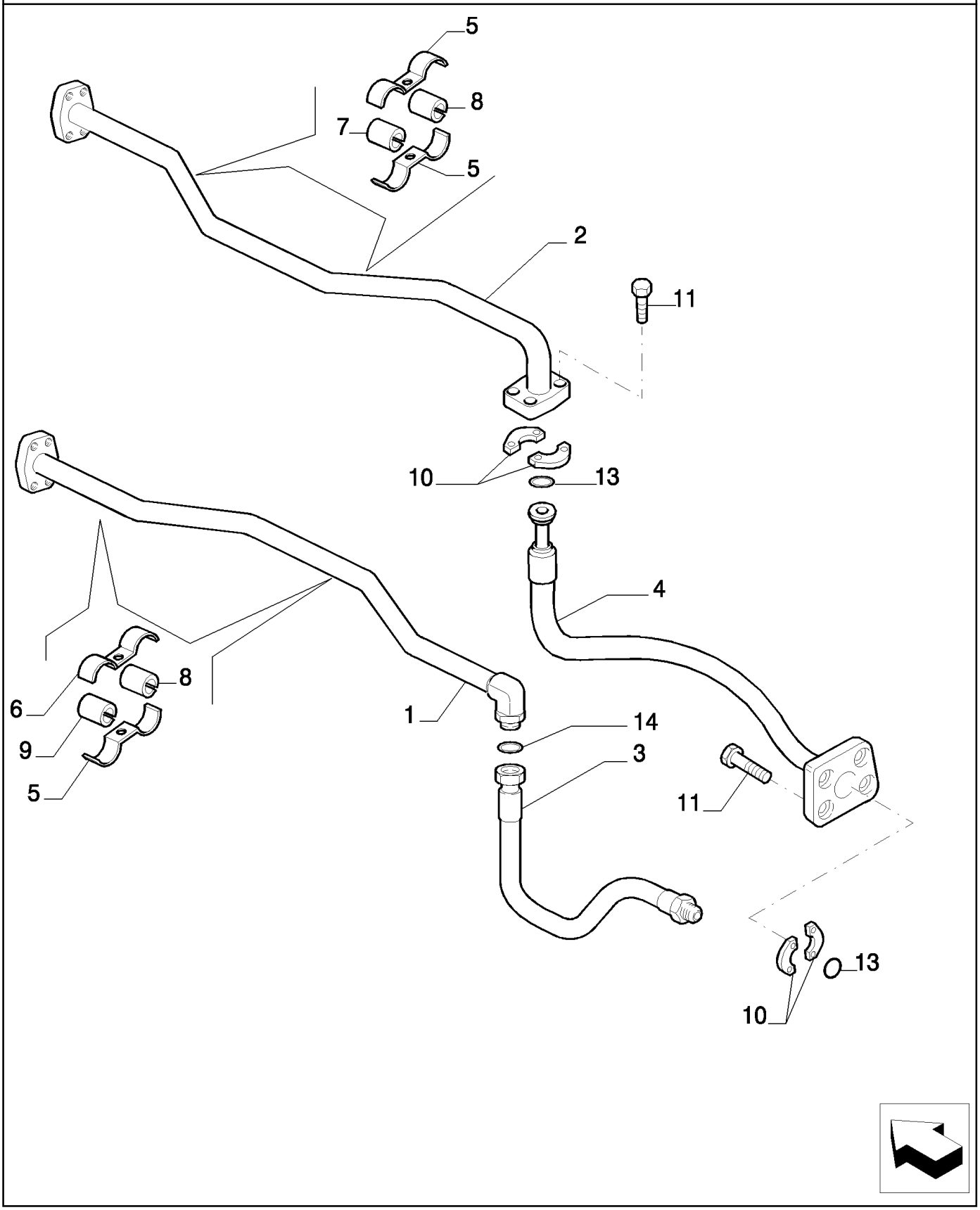

Copyright © New Holland

MARTILLO HIDRÁULICO (L=2.4 MT) - OPTIONAL CODE 461229078 (04-05-06)
HYDRAULIC HAMMER (L=2.4 MT) - OPTIONAL CODE 461229078 (04-05-06)
HYDRAULIC HAMMER (L=2.4 MT) - OPTIONAL CODE 461229078 (04-05-06)
HYDRAULIC HAMMER (L=2.4 MT) - OPTIONAL CODE 461229078 (04-05-06)

R	N	P.N.	MOD	Q	Description Denominacion	Descrizione Beskrivelse	Bezeichnung Denominação	Description Beschrijving	L.C.
1		87529912		1	RIGID TUBE TUBO RÍGIDO	TUBO RIGIDO STIFT RØR	ROHR TUBO RÍGIDO	TUYAU RIGIDE VASTE LEIDING	193T
2		87572206		1	RIGID TUBE TUBO RÍGIDO	TUBO RIGIDO STIFT RØR	ROHR TUBO RÍGIDO	TUYAU RIGIDE VASTE LEIDING	193T
3		72207171		1	FLEXIBLE HOSE TUBO FLEXIBLE	TUBO FLESSIBILE FLEKSIBEL SLANGE	BIEGSAMER SCHLAUCH MANGUEIRA FLEXÍVEL	TUYAU FLEXIBLE FLEXIBELE SLANG	192T
4		87572218		1	FLEXIBLE HOSE TUBO FLEXIBLE	TUBO FLESSIBILE FLEKSIBEL SLANGE	BIEGSAMER SCHLAUCH MANGUEIRA FLEXÍVEL	TUYAU FLEXIBLE FLEXIBELE SLANG	192T
5		87349655		4	BRACKET SOPORTE	STAFFA BESLAG	HALTERUNG SUPORTE	SUPPORT STEUN	225S
6		87353061		4	BRACKET SOPORTE	STAFFA BESLAG	HALTERUNG SUPORTE	SUPPORT STEUN	225S
7		87349642		2	BUSHING CASQUILLO	BOCCOLA BØSNING	BUCHSE CASQUILHO	BAGUE BUS	095B
8		72151580		4	BUSHING CASQUILLO	BOCCOLA BØSNING	BUCHSE CASQUILHO	BAGUE BUS	095B
9		87343521		2	BUSHING CASQUILLO	BOCCOLA BØSNING	BUCHSE CASQUILHO	BAGUE BUS	095B
10		71444029		4	HALF-FLANGE SEMIBRIDA	SEMIFLANGIA FLANGEHALVDEL	FLANSCHHÄLFTE MEIA FLANGE	DEMI-BRIDE FLENSHELFT	417S
11		14424534		8	SCREW TORNILLO	VITE SKRUE	SCHRAUBE PARAFUSO	VIS SCHROEF	040V
13		70924192		2	O-RING JUNTA TÓRICA	ANELLO TOROIDALE O-RING	O-RING O-RING	JOINT TORIQUE O-RING	055A
14		70931640		1	GASKET JUNTA	GUARNIZIONE PAKNING	DICHTUNG JUNTA	JOINT PAKKING	123G

Copyright © New Holland

5.0021	18	p1	03/10

HYDRAULIC HAMMER (L=2.4 MT) - OPTIONAL CODE 461229068 (01-02-03) - 461229078 (04-05-06)
MARTELLO IDRAULICO (L=2.4 MT) - CODICE VARIANTE 461229068 (01-02-03) - 461229078 (04-05-06)
HYDRAULISCHER HAMMER (L=2.4 MT) - OPTIONAL CODE 461229068 (01-02-03) - 461229078 (04-05-06)
MARTEAU HYDRAULIQUE (L=2.4 MT) - OPTIONAL CODE 461229068 (01-02-03) - 461229078 (04-05-06)

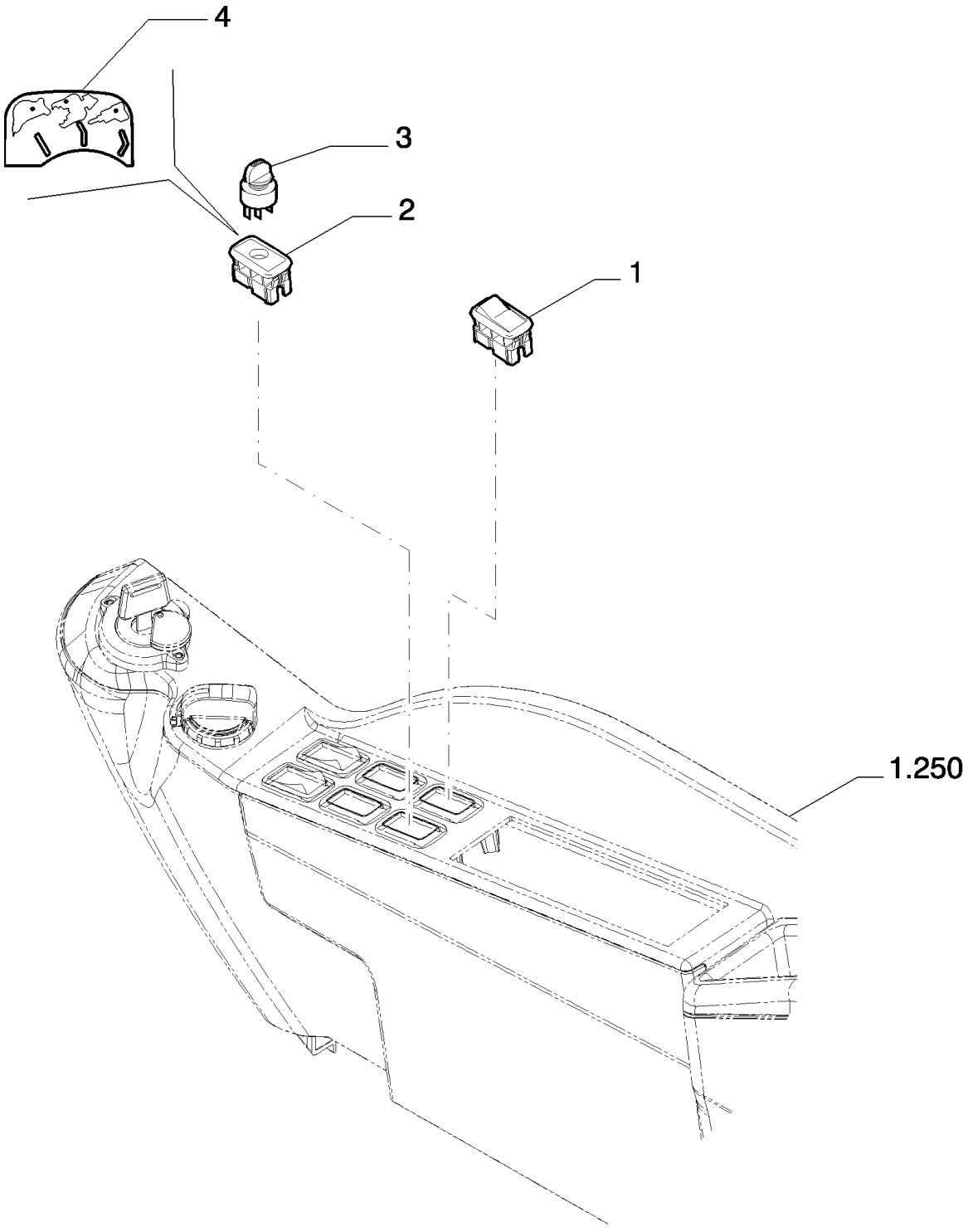

Copyright © New Holland

MARTILLO HIDRÁULICO (L=2.4 MT) - OPTIONAL CODE 461229068 (01-02-03) - 461229078 (04-05-06)
HYDRAULIC HAMMER (L=2.4 MT) - OPTIONAL CODE 461229068 (01-02-03) - 461229078 (04-05-06)
HYDRAULIC HAMMER (L=2.4 MT) - OPTIONAL CODE 461229068 (01-02-03) - 461229078 (04-05-06)
HYDRAULIC HAMMER (L=2.4 MT) - OPTIONAL CODE 461229068 (01-02-03) - 461229078 (04-05-06)

R	N	P.N.	MOD	Q	Description Denominacion	Descrizione Beskrivelse	Bezeichnung Denominação	Description Beschrijving	L.C.
1		87527531		1	SWITCH INTERRUPTOR	INTERRUTTORE KONTAKT	SCHALTER INTERRUPTOR	CONTACTEUR SCHAKELAAR	075I
2		YN17M01313P3		1	BRACKET SOPORTE	STAFFA BESLAG	HALTERUNG SUPORTE	SUPPORT STEUN	225S
3		72280246		1	SWITCH INTERRUPTOR	INTERRUTTORE KONTAKT	SCHALTER INTERRUPTOR	CONTACTEUR SCHAKELAAR	075I
4		YN17M01417P1		1	LABEL ETIQUETA	ETICHETTA ETIKET	KENNZEICHNUNG ETIQUETA	ETIQUETTE LABEL	077E

Copyright © New Holland

5.0022	01	p1	03/10

DIPPER STICK (L=2.4M) - OPTIONAL CODE 781145128
BRACCIO PENETRAZIONE (L=2.4M) - CODICE VARIANTE 781145128
LOEFFELSTIEL (L=2.4M) - OPTIONAL CODE 781145128
BILANCIER (L=2.4M) - OPTIONAL CODE 781145128

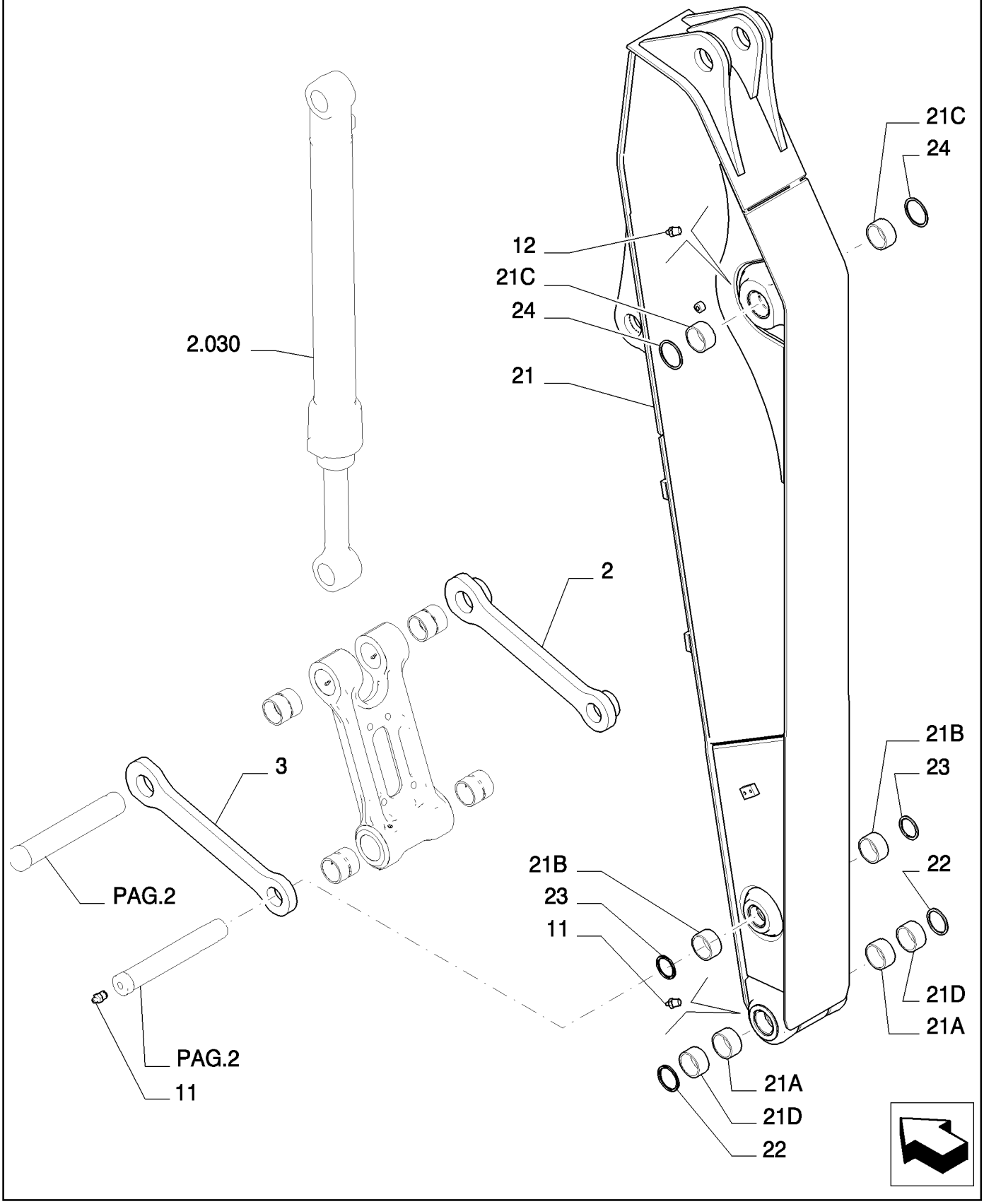

Copyright © New Holland

BRAZO TERMINAL (L=2.4M) - OPTIONAL CODE 781145128
DIPPER STICK (L=2.4M) - OPTIONAL CODE 781145128
DIPPER STICK (L=2.4M) - OPTIONAL CODE 781145128
DIPPER STICK (L=2.4M) - OPTIONAL CODE 781145128

R	N	P.N.	MOD	Q	Description Denominacion	Descrizione Beskrivelse	Bezeichnung Denominação	Description Beschrijving	L.C.
2		72202183		1	LINK CONROD BIELA DE ESLABÓN	BIELLA TIRANTE PLEJLSTANG	PLEUEL BIELA	BIELLE DRIJFSTANG	050B
3		72202178		1	LINK CONROD BIELA DE ESLABÓN	BIELLA TIRANTE PLEJLSTANG	PLEUEL BIELA	BIELLE DRIJFSTANG	050B
11		72283478		2	LUBE NIPPLE BOQUILLA DE LUBRICA(	INGRASSATORE SMØRENIPPEL	SCHMIERNIPPEL COPO DE LUBRIFICAÇÃ	GRAISSEUR SMEERNIPPEL	060I
12		71433287		1	LUBE NIPPLE BOQUILLA DE LUBRICA(	INGRASSATORE SMØRENIPPEL	SCHMIERNIPPEL COPO DE LUBRIFICAÇÃ	GRAISSEUR SMEERNIPPEL	060I
21		87540358		1	ARM, - ASSY BRAZO	BRACCIO ARM	ARM BRAÇO	BRAS ARM	130B
21A		87533342		2	BUSHING CASQUILLO	BOCCOLA BØSNING	BUCHSE CASQUILHO	BAGUE BUS	095B
21B		87525505		2	BUSHING CASQUILLO	BOCCOLA BØSNING	BUCHSE CASQUILHO	BAGUE BUS	095B
21C		87533338		2	BUSHING CASQUILLO	BOCCOLA BØSNING	BUCHSE CASQUILHO	BAGUE BUS	095B
21D		87533336		2	BUSHING CASQUILLO	BOCCOLA BØSNING	BUCHSE CASQUILHO	BAGUE BUS	095B
22		71415158		2	GASKET JUNTA	GUARNIZIONE PAKNING	DICHTUNG JUNTA	JOINT PAKKING	123G
23		72202212		2	SEAL ANILLO DE CIERRE	GUARNIZIONE; TENUTA PAKNING	DICHTUNG VEDANTE	JOINT AFDICHTING	132A
24		87531507		2	GASKET JUNTA	GUARNIZIONE PAKNING	DICHTUNG JUNTA	JOINT PAKKING	123G

Copyright © New Holland

5.0022	02	p1	03/10

DIPPER STICK (L=2.4M) - OPTIONAL CODE 781145128
BRACCIO PENETRAZIONE (L=2.4M) - CODICE VARIANTE 781145128
LOEFFELSTIEL (L=2.4M) - OPTIONAL CODE 781145128
BILANCIER (L=2.4M) - OPTIONAL CODE 781145128

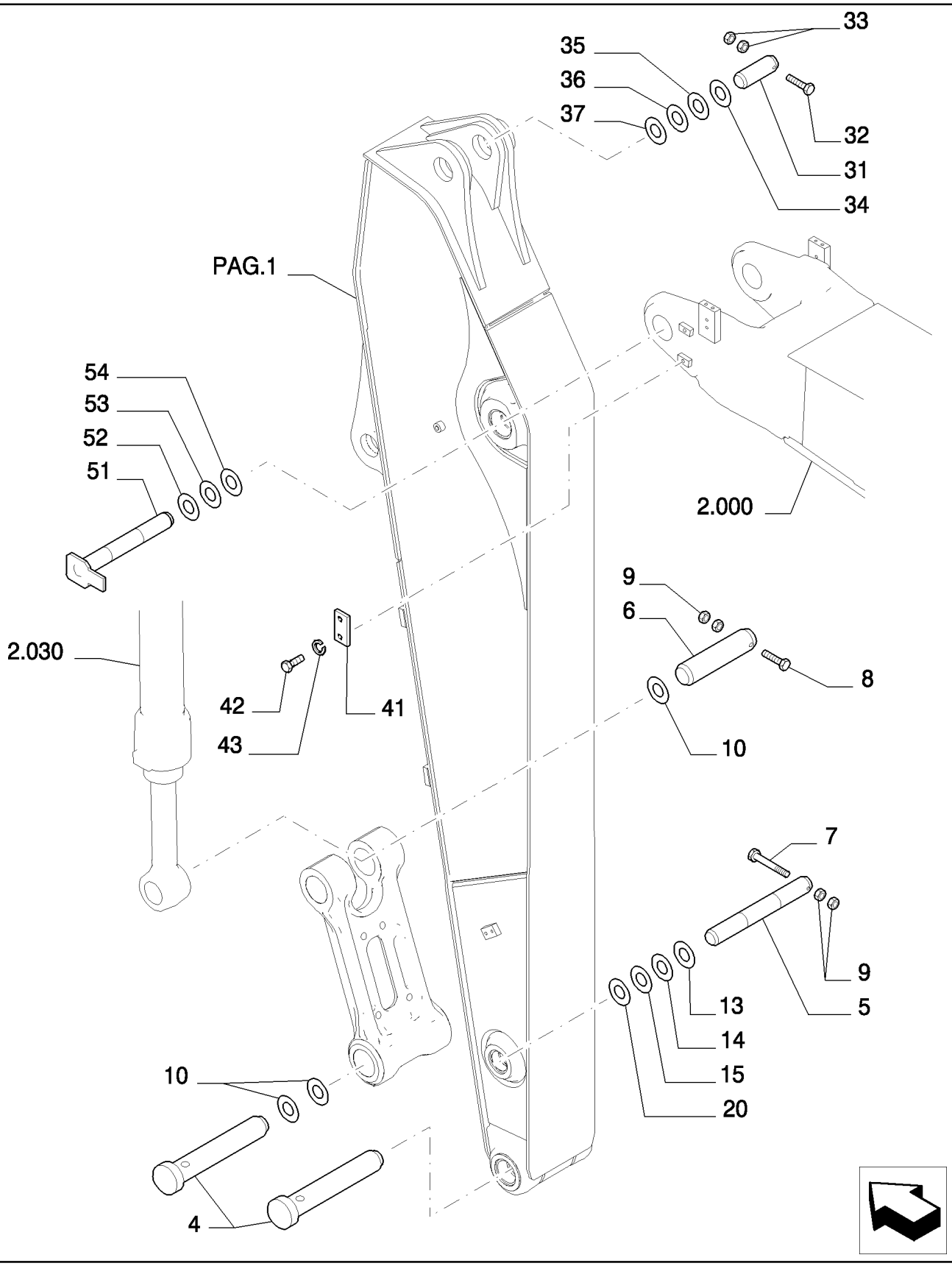

Copyright © New Holland

BRAZO TERMINAL (L=2.4M) - OPTIONAL CODE 781145128
DIPPER STICK (L=2.4M) - OPTIONAL CODE 781145128
DIPPER STICK (L=2.4M) - OPTIONAL CODE 781145128
DIPPER STICK (L=2.4M) - OPTIONAL CODE 781145128

R	N	P.N.	MOD	Q	Description Denominacion	Descrizione Beskrivelse	Bezeichnung Denominação	Description Beschrijving	L.C.
4		87536913		2	PIN PASADOR	PERNO STIFT	PIN PERNO	BROCHE PEN	080P
5		87349050		1	PIN PASADOR	PERNO STIFT	PIN PERNO	BROCHE PEN	080P
6		87349048		1	PIN PASADOR	PERNO STIFT	PIN PERNO	BROCHE PEN	080P
7		11120531		1	BOLT, Hex, M16 x 130, 10.9 PERNO	BULLONE BOLT	SCHRAUBE PARAFUSO	VIS BOUT	140B
8		11120734		1	SCREW TORNILLO	VITE SKRUE	SCHRAUBE PARAFUSO	VIS SCHROEF	040V
9		12163321		4	NUT, M16, Cl 10 TUERCA	DADO MØTRIK	MUTTER PORCA	ECROU MOER	010D
10		71415158		6	GASKET JUNTA	GUARNIZIONE PAKNING	DICHTUNG JUNTA	JOINT PAKKING	123G
13		72202194		1	SHIM, 0.5mm Thk, (M72 ID x 130) SUPLEMENTO	SPESSORE MELLEMLÆG	AUSGLEICHSSCHEIBE CALÇO DE AFINAÇÃO	CALE VULPLAATJE	198S
14		72202195		1	SHIM, 0.9mm Thk, (M72 ID x 130) SUPLEMENTO	SPESSORE MELLEMLÆG	AUSGLEICHSSCHEIBE CALÇO DE AFINAÇÃO	CALE VULPLAATJE	198S
15		72202197		1	SHIM, 1.6mm Thk SUPLEMENTO	SPESSORE MELLEMLÆG	AUSGLEICHSSCHEIBE CALÇO DE AFINAÇÃO	CALE VULPLAATJE	198S
16		72202198		2	SHIM, 0.5mm Thk SUPLEMENTO	SPESSORE MELLEMLÆG	AUSGLEICHSSCHEIBE CALÇO DE AFINAÇÃO	CALE VULPLAATJE	198S
17		72202199		2	SHIM, 0.9mm Thk SUPLEMENTO	SPESSORE MELLEMLÆG	AUSGLEICHSSCHEIBE CALÇO DE AFINAÇÃO	CALE VULPLAATJE	198S
18		72202200		2	SHIM, 1.6mm Thk SUPLEMENTO	SPESSORE MELLEMLÆG	AUSGLEICHSSCHEIBE CALÇO DE AFINAÇÃO	CALE VULPLAATJE	198S
19		72202203		4	SHIM, 2mm Thk SUPLEMENTO	SPESSORE MELLEMLÆG	AUSGLEICHSSCHEIBE CALÇO DE AFINAÇÃO	CALE VULPLAATJE	198S
20		72202204		2	SHIM, 2mm Thk, (M72 ID x 130) SUPLEMENTO	SPESSORE MELLEMLÆG	AUSGLEICHSSCHEIBE CALÇO DE AFINAÇÃO	CALE VULPLAATJE	198S
31		87533375		1	PIN PASADOR	PERNO STIFT	PIN PERNO	BROCHE PEN	080P
32		11120931		1	SCREW TORNILLO	VITE SKRUE	SCHRAUBE PARAFUSO	VIS SCHROEF	040V
33		12163321		2	NUT, M16, Cl 10 TUERCA	DADO MØTRIK	MUTTER PORCA	ECROU MOER	010D
34		72202218		2	SHIM, 2mm Thk SUPLEMENTO	SPESSORE MELLEMLÆG	AUSGLEICHSSCHEIBE CALÇO DE AFINAÇÃO	CALE VULPLAATJE	198S
35		72203147		1	SHIM, 0.5mm Thk SUPLEMENTO	SPESSORE MELLEMLÆG	AUSGLEICHSSCHEIBE CALÇO DE AFINAÇÃO	CALE VULPLAATJE	198S
36		72203153		1	SHIM, 0.9mm Thk SUPLEMENTO	SPESSORE MELLEMLÆG	AUSGLEICHSSCHEIBE CALÇO DE AFINAÇÃO	CALE VULPLAATJE	198S
37		72203154		1	SHIM, 1.6mm Thk SUPLEMENTO	SPESSORE MELLEMLÆG	AUSGLEICHSSCHEIBE CALÇO DE AFINAÇÃO	CALE VULPLAATJE	198S
41		87536886		1	PLATE PLACA	PIASTRA PLADE	PLATTE CHAPA	PLAQUE PLAAT	105P
42		16249031		2	SCREW TORNILLO	VITE SKRUE	SCHRAUBE PARAFUSO	VIS SCHROEF	040V

Copyright © New Holland

5.0022	02	p2	03/10

DIPPER STICK (L=2.4M) - OPTIONAL CODE 781145128
BRACCIO PENETRAZIONE (L=2.4M) - CODICE VARIANTE 781145128
LOEFFELSTIEL (L=2.4M) - OPTIONAL CODE 781145128
BILANCIER (L=2.4M) - OPTIONAL CODE 781145128

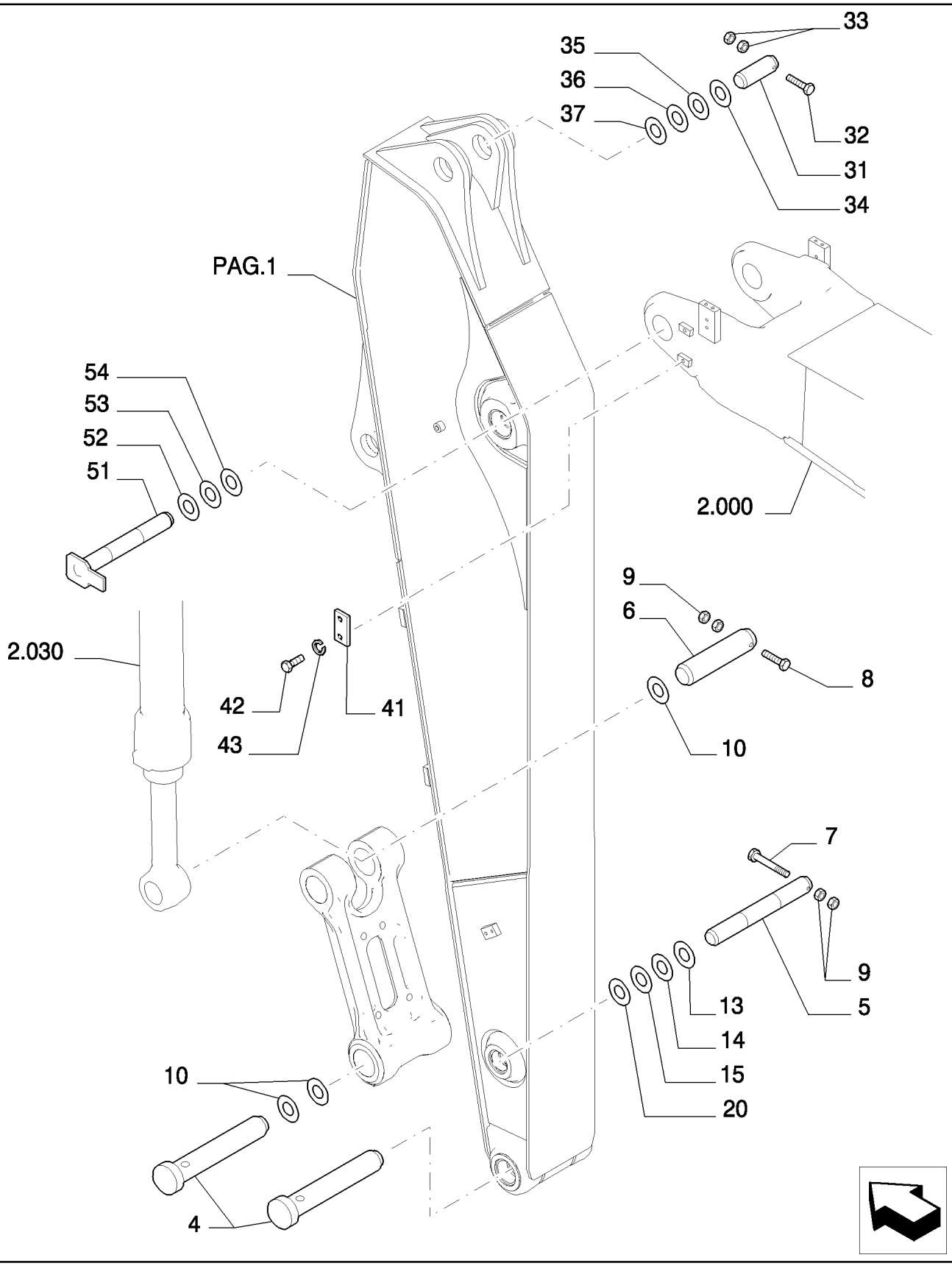

Copyright © New Holland

BRAZO TERMINAL (L=2.4M) - OPTIONAL CODE 781145128
DIPPER STICK (L=2.4M) - OPTIONAL CODE 781145128
DIPPER STICK (L=2.4M) - OPTIONAL CODE 781145128
DIPPER STICK (L=2.4M) - OPTIONAL CODE 781145128

R	N	P.N.	MOD	Q	Description Denominacion	Descrizione Beskrivelse	Bezeichnung Denominação	Description Beschrijving	L.C.
43		10520121		2	WASHER ARANDELA	RONDELLA FLADSKIVE	UNTERLEGSCHEIBE ANILHA	RONDELLE SLUITRING	131R
51		87536903		1	PIN PASADOR	PERNO STIFT	PIN PERNO	BROCHE PEN	080P
52		72203145		2	SHIM, 2mm Thk SUPLEMENTO	SPESSORE MELLEMLÆG	AUSGLEICHSSCHEIBE CALÇO DE AFINAÇÃO	CALE VULPLAATJE	198S
53		72203140		1	SHIM, 0.5mm Thk SUPLEMENTO	SPESSORE MELLEMLÆG	AUSGLEICHSSCHEIBE CALÇO DE AFINAÇÃO	CALE VULPLAATJE	198S
54		72203141		1	SHIM, 0.9mm Thk SUPLEMENTO	SPESSORE MELLEMLÆG	AUSGLEICHSSCHEIBE CALÇO DE AFINAÇÃO	CALE VULPLAATJE	198S

Copyright © New Holland

5.0022	03	p1	03/10

DIPPER STICK (L=2.4M) - OPTIONAL CODE 781145128
BRACCIO PENETRAZIONE (L=2.4M) - CODICE VARIANTE 781145128
LOEFFELSTIEL (L=2.4M) - OPTIONAL CODE 781145128
BILANCIER (L=2.4M) - OPTIONAL CODE 781145128

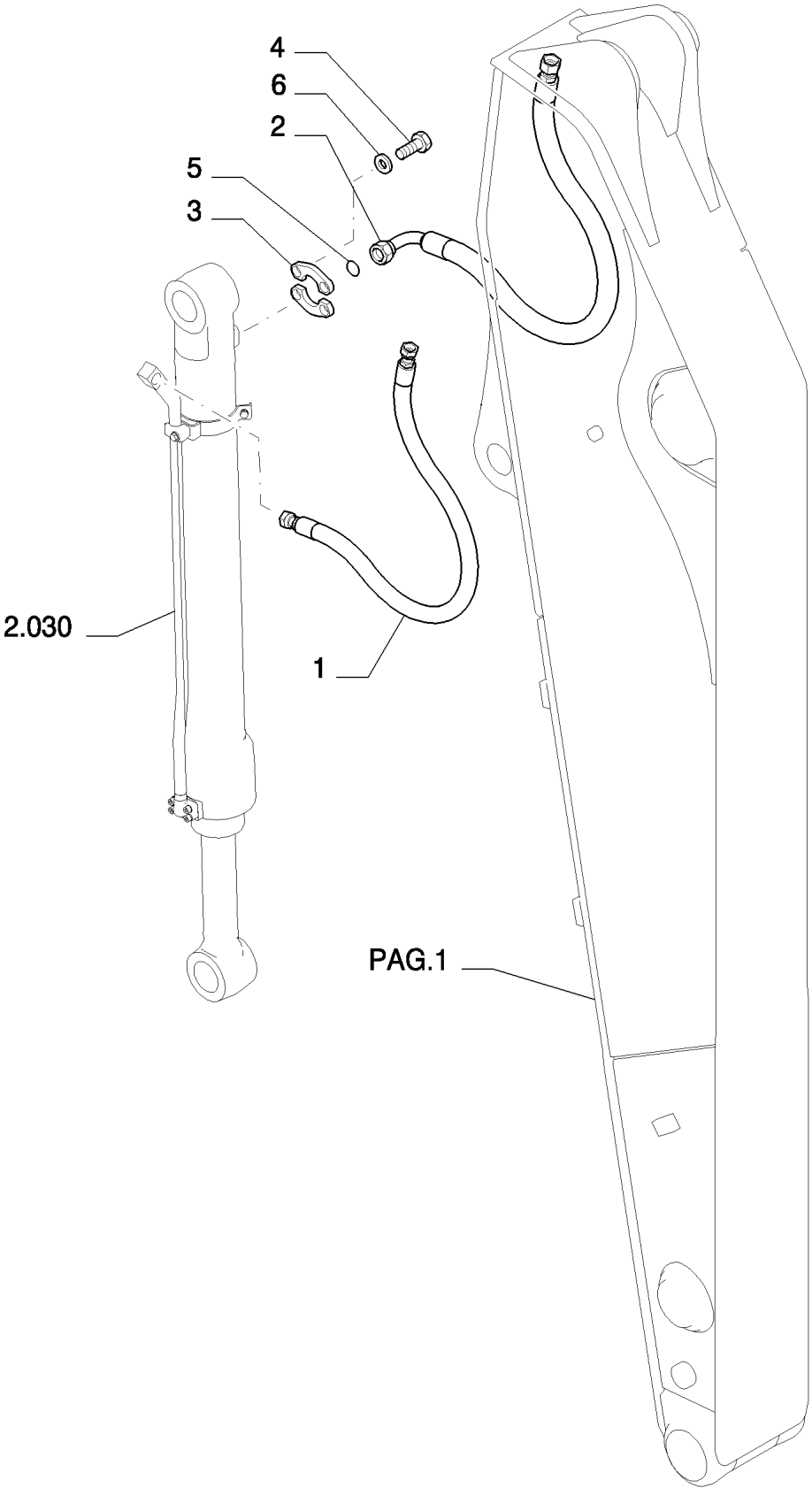

Copyright © New Holland

BRAZO TERMINAL (L=2.4M) - OPTIONAL CODE 781145128
DIPPER STICK (L=2.4M) - OPTIONAL CODE 781145128
DIPPER STICK (L=2.4M) - OPTIONAL CODE 781145128
DIPPER STICK (L=2.4M) - OPTIONAL CODE 781145128

R	N	P.N.	MOD	Q	Description Denominacion	Descrizione Beskrivelse	Bezeichnung Denominação	Description Beschrijving	L.C.
1		87547562		1	FLEXIBLE HOSE TUBO FLEXIBLE	TUBO FLESSIBILE FLEKSIBEL SLANGE	BIEGSAMER SCHLAUCH MANGUEIRA FLEXÍVEL	TUYAU FLEXIBLE FLEXIBELE SLANG	192T
2		87533392		1	FLEXIBLE HOSE TUBO FLEXIBLE	TUBO FLESSIBILE FLEKSIBEL SLANGE	BIEGSAMER SCHLAUCH MANGUEIRA FLEXÍVEL	TUYAU FLEXIBLE FLEXIBELE SLANG	192T
3		71404313		2	HALF-FLANGE SEMIBRIDA	SEMIFLANGIA FLANGEHALVDEL	FLANSCHHÄLFTE MEIA FLANGE	DEMI-BRIDE FLENSHELFT	417S
4		14422234		4	SCREW TORNILLO	VITE SKRUE	SCHRAUBE PARAFUSO	VIS SCHROEF	040V
5		70924200		1	O-RING JUNTA TÓRICA	ANELLO TOROIDALE O-RING	O-RING O-RING	JOINT TORIQUE O-RING	055A
6		10517074		4	LOCK WASHER ARANDELA DE BLOQUE	RONDELLA DI SICUREZ LÅSESKIVE	SICHERUNGSSCHEIBE ANILHA DE RETENÇÃO	RONDELLE FREIN BORGRING	132R

Copyright © New Holland

5.0022	04	p1	03/10

DIPPER STICK (L=2.4M) - OPTIONAL CODE 781145128
BRACCIO PENETRAZIONE (L=2.4M) - CODICE VARIANTE 781145128
LOEFFELSTIEL (L=2.4M) - OPTIONAL CODE 781145128
BILANCIER (L=2.4M) - OPTIONAL CODE 781145128

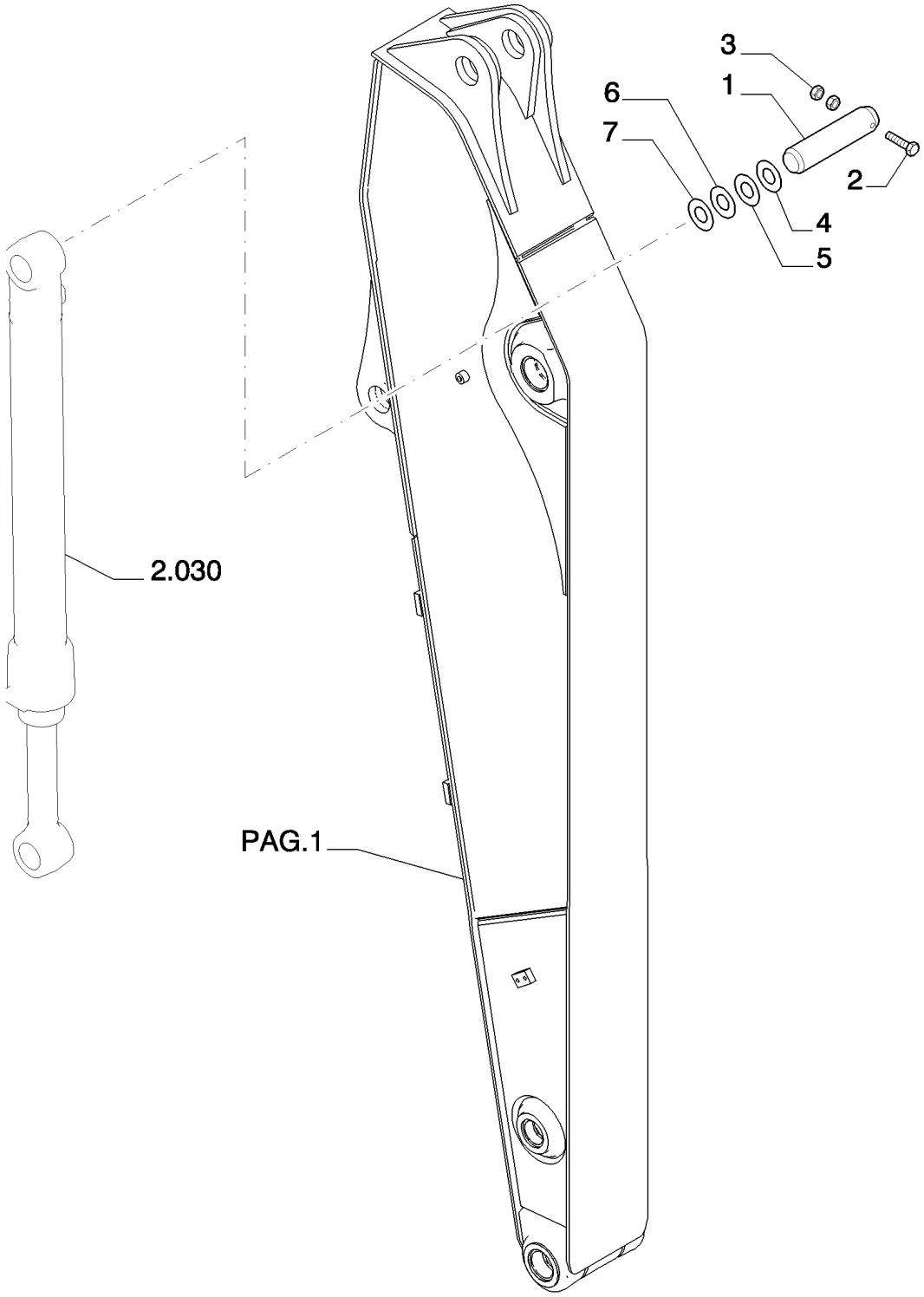

Copyright © New Holland

BRAZO TERMINAL (L=2.4M) - OPTIONAL CODE 781145128
DIPPER STICK (L=2.4M) - OPTIONAL CODE 781145128
DIPPER STICK (L=2.4M) - OPTIONAL CODE 781145128
DIPPER STICK (L=2.4M) - OPTIONAL CODE 781145128

R	N	P.N.	MOD	Q	Description Denominacion	Descrizione Beskrivelse	Bezeichnung Denominação	Description Beschrijving	L.C.
1		87533371		1	PIN PASADOR	PERNO STIFT	PIN PERNO	BROCHE PEN	080P
2		11120734		1	SCREW TORNILLO	VITE SKRUE	SCHRAUBE PARAFUSO	VIS SCHROEF	040V
3		12163321		2	NUT, M16, Cl 10 TUERCA	DADO MØTRIK	MUTTER PORCA	ECROU MOER	010D
4		72202203		2	SHIM, 2mm Thk SUPLEMENTO	SPESSORE MELLEMLÆG	AUSGLEICHSSCHEIBE CALÇO DE AFINAÇÃO	CALE VULPLAATJE	198S
5		72202198		5	SHIM, 0.5mm Thk SUPLEMENTO	SPESSORE MELLEMLÆG	AUSGLEICHSSCHEIBE CALÇO DE AFINAÇÃO	CALE VULPLAATJE	198S
6		72202199		1	SHIM, 0.9mm Thk SUPLEMENTO	SPESSORE MELLEMLÆG	AUSGLEICHSSCHEIBE CALÇO DE AFINAÇÃO	CALE VULPLAATJE	198S
7		72202200		1	SHIM, 1.6mm Thk SUPLEMENTO	SPESSORE MELLEMLÆG	AUSGLEICHSSCHEIBE CALÇO DE AFINAÇÃO	CALE VULPLAATJE	198S

Copyright © New Holland

5.0023	01	p1	03/10

HYDRAULIC HAMMER (L=2.94 MT) - OPTIONAL CODE 461232058 (01-02-03) - 461232068 (04-05-06)
MARTELLO IDRAULICO (L=2.94 MT) - CODICE VARIANTE 461232058 (01-02-03) - 461232068 (04-05-06)
HYDRAULISCHER HAMMER (L=2.94 MT) - OPTIONAL CODE 461232058 (01-02-03) - 461232068 (04-05-06)
MARTEAU HYDRAULIQUE (L=2.94 MT) - OPTIONAL CODE 461232058 (01-02-03) - 461232068 (04-05-06)

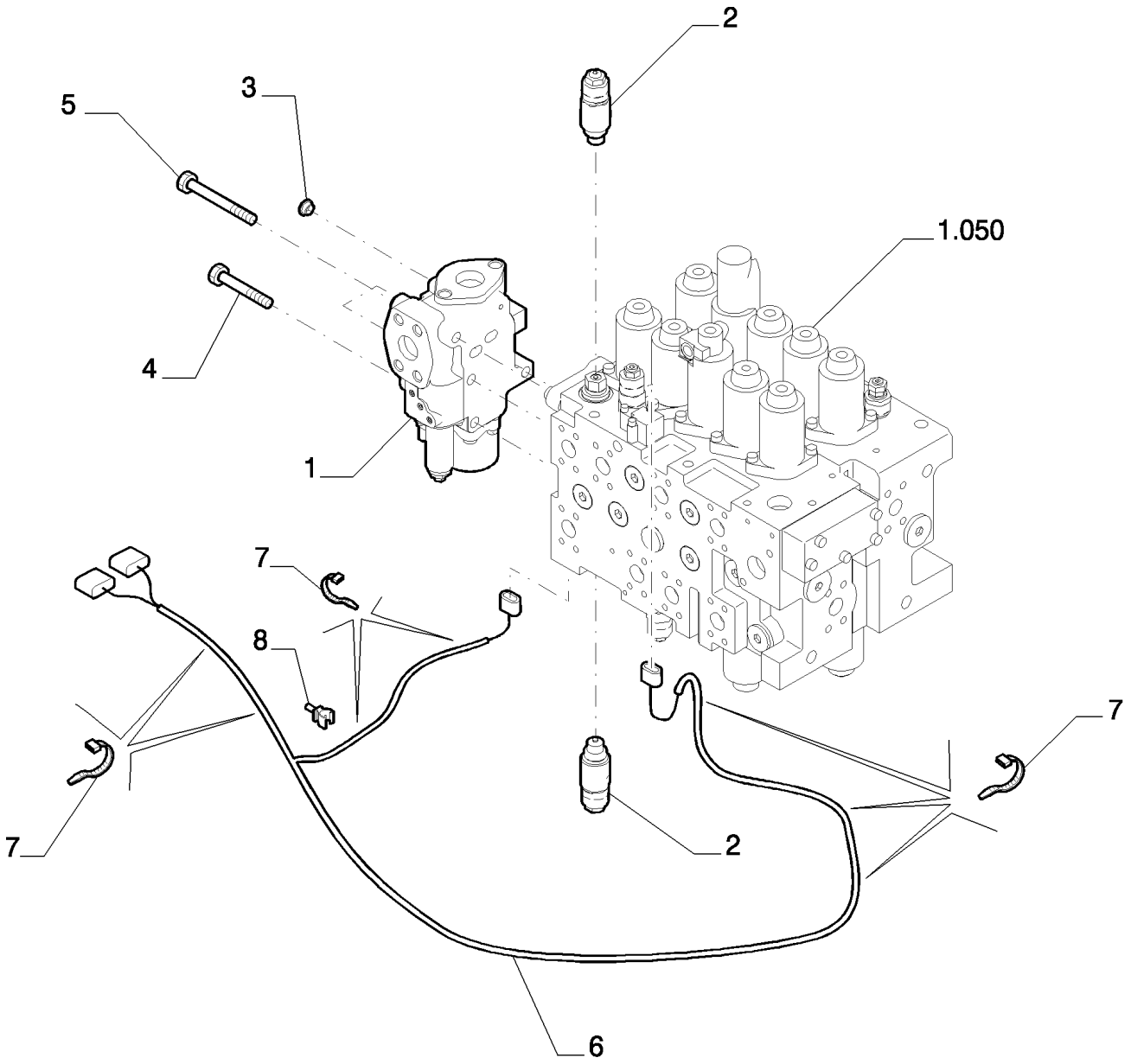

Copyright © New Holland

MARTILLO HIDRÁULICO (L=2.94 MT) - OPTIONAL CODE 461232058 (01-02-03) - 461232068 (04-05-06)
HYDRAULIC HAMMER (L=2.94 MT) - OPTIONAL CODE 461232058 (01-02-03) - 461232068 (04-05-06)
HYDRAULIC HAMMER (L=2.94 MT) - OPTIONAL CODE 461232058 (01-02-03) - 461232068 (04-05-06)
HYDRAULIC HAMMER (L=2.94 MT) - OPTIONAL CODE 461232058 (01-02-03) - 461232068 (04-05-06)

R	N	P.N.	MOD	Q	Description Denominacion	Descrizione Beskrivelse	Bezeichnung Denominação	Description Beschrijving	L.C.
1	1	87520007		1	HYDRAULIC VALVE VÁLVULA HIDRÁULICA	DISTRIBUTORE IDRAULI HYDRAULIKVENTIL	HYDRAULIKVENTIL VÁLVULA HIDRÁULICA	SOUPAPE HYDRAULIQU HYDRAULISCHE KLEP	010V
2	2	87579594		2	HYDRAULIC VALVE VÁLVULA HIDRÁULICA	DISTRIBUTORE IDRAULI HYDRAULIKVENTIL	HYDRAULIKVENTIL VÁLVULA HIDRÁULICA	SOUPAPE HYDRAULIQU HYDRAULISCHE KLEP	010V
3		87643223		1	PLUG TAPÓN	TAPPO PROP	STOPFEN TAMPÃO	BOUCHON PLUG	050T
4		14423034		1	SCREW TORNILLO	VITE SKRUE	SCHRAUBE PARAFUSO	VIS SCHROEF	040V
5		87609321		3	SCREW TORNILLO	VITE SKRUE	SCHRAUBE PARAFUSO	VIS SCHROEF	040V
6		87599406		1	ELECTRIC CABLE CABLE ELÉCTRICO	CAVO ELETTRICO EL-KABEL	ELEKTROKABEL CABO ELÉCTRICO	CABLE ELECTRIQUE ELEKTRICITEITSKABEL	111C
7		4982514		7	CABLE STRAP BANDA DE CABLE	FASCETTA PER CAVO KABELSTROP	KABELBINDER BRAÇADEIRA DE CABO	BRIDE DE CABLE BUNDELBAND	P716
8		87526680		1	RETAINER COLLAR COLLAR DE RETENCIÓN	COLLARE DI FISSAGGIC RING, SPÆNDE	HALTERING ANEL DE FIXAÇÃO	COLLIER DE RETENUE BORGKRAAG	230S

(1) ASSY SEE PAGE 2
(2) ASSY SEE PAGE 3

Copyright © New Holland

HYDRAULIC HAMMER (L=2.94 MT) - COMPONENTS - OPTIONAL CODE 461232058 (01-02-03) - 461232068 (04-05-06)
MARTELLO IDRAULICO (L=2.94 MT) - COMPONENTI - OPTIONAL CODE 461232058 (01-02-03) - 461232068 (04-05-06)
HYDRAULISCHER HAMMER (L=2.94 MT) - BESTANDTEILE - OPTIONAL CODE 461232058 (01-02-03) - 461232068 (04-05-06)
MARTEAU HYDRAULIQUE (L=2.94 MT) - COMPOSANTS - OPTIONAL CODE 461232058 (01-02-03) - 461232068 (04-05-06)

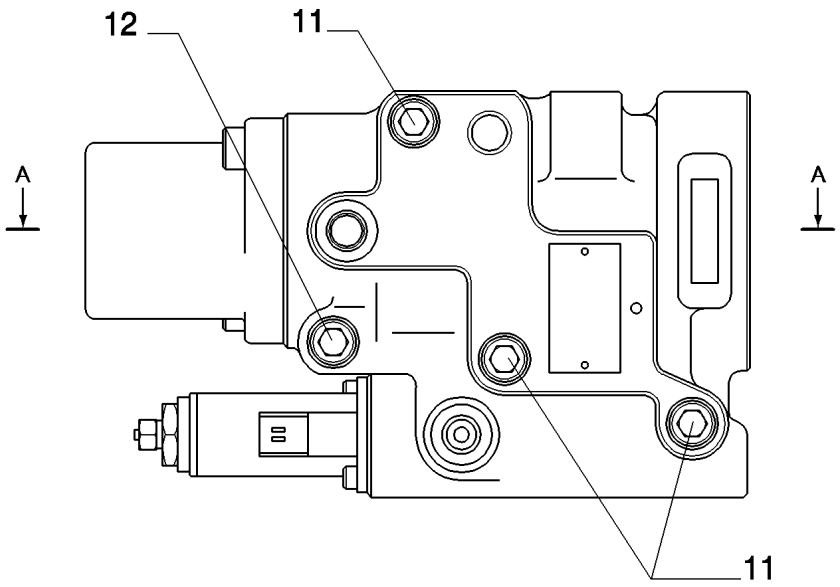

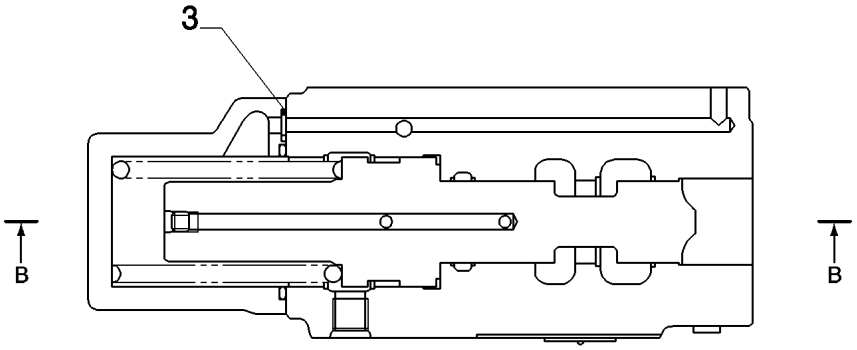

Sez. A–A

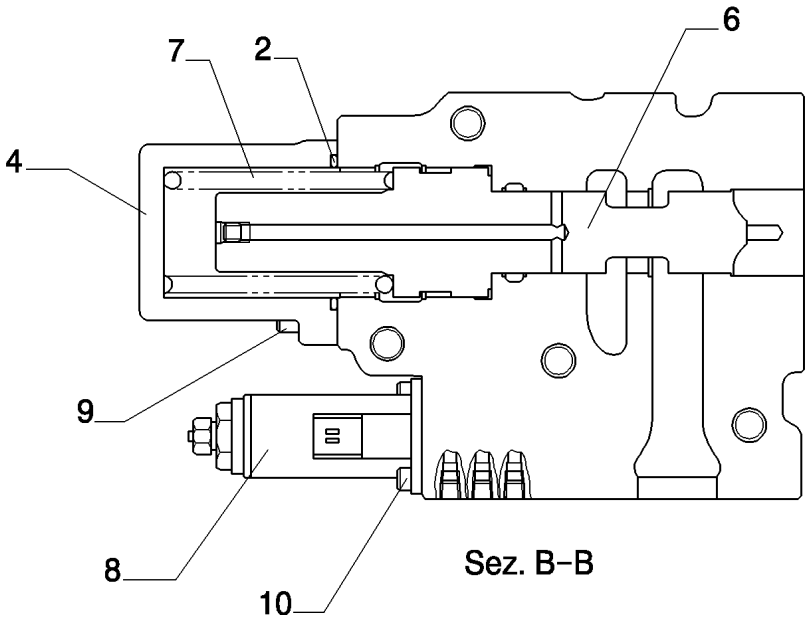

Sez. B–B

Copyright © New Holland

MARTILLO HIDRÁULICO (L=2.94 MT) - COMPONENTES - OPTIONAL CODE 461232058 (01-02-03) - 461232068 (04-05-06)
HYDRAULIC HAMMER (L=2.94 MT) - COMPONENTS - OPTIONAL CODE 461232058 (01-02-03) - 461232068 (04-05-06)
HYDRAULIC HAMMER (L=2.94 MT) - COMPONENTS - OPTIONAL CODE 461232058 (01-02-03) - 461232068 (04-05-06)
HYDRAULIC HAMMER (L=2.94 MT) - COMPONENTS - OPTIONAL CODE 461232058 (01-02-03) - 461232068 (04-05-06)

R	N	P.N.	MOD	Q	Description Denominacion	Descrizione Beskrivelse	Bezeichnung Denominação	Description Beschrijving	L.C.
2		72960987		1	O-RING JUNTA TÓRICA	ANELLO TOROIDALE O-RING	O-RING O-RING	JOINT TORIQUE O-RING	055A
3		72283326		1	O-RING JUNTA TÓRICA	ANELLO TOROIDALE O-RING	O-RING O-RING	JOINT TORIQUE O-RING	055A
4		YN30V00104S201		1	COVER CUBIERTA	COPERCHIO DÆKSEL	ABDECKUNG COBERTURA	COUVERCLE AFSCHERMING	265C
6		YN30V00104S301		1	SPOOL BOBINA	STELO SPOLE	KOLBENSCHIEBER CARRETO	TIROIR SPOEL	134P
7		YN30V00104S321		1	SPRING RESORTE	MOLLA FJEDER	FEDER MOLA	RESSORT VEER	100M
8		YN35V00050F1		1	VALVE VÁLVULA	VALVOLA VENTIL	VENTIL VÁLVULA	SOUPAPE KLEP	9620
9		14420170		2	SCREW TORNILLO	VITE SKRUE	SCHRAUBE PARAFUSO	VIS SCHROEF	040V
10		72209810		2	SCREW TORNILLO	VITE SKRUE	SCHRAUBE PARAFUSO	VIS SCHROEF	040V
11		72964521		3	SCREW TORNILLO	VITE SKRUE	SCHRAUBE PARAFUSO	VIS SCHROEF	040V
12		14423070		1	SCREW TORNILLO	VITE SKRUE	SCHRAUBE PARAFUSO	VIS SCHROEF	040V

VALVE ASSY P/N 87520007

E215B

Copyright © New Holland

5.0023	03	p1	03/10

HYDRAULIC HAMMER (L=2.94 MT) - COMPONENTS - OPTIONAL CODE 461232058 (01-02-03) - 461232068 (04-05-06)
MARTELLO IDRAULICO (L=2.94 MT) - COMPONENTI - CODICE VARIANTE 461232058 (01-02-03) - 461232068 (04-05-06)
HYDRAULISCHER HAMMER (L=2.94 MT) - BESTANDTEILE - OPTIONAL CODE 461232058 (01-02-03) - 461232068 (04-05-06)
MARTEAU HYDRAULIQUE (L=2.94 MT) - COMPOSANTS - OPTIONAL CODE 461232058 (01-02-03) - 461232068 (04-05-06)

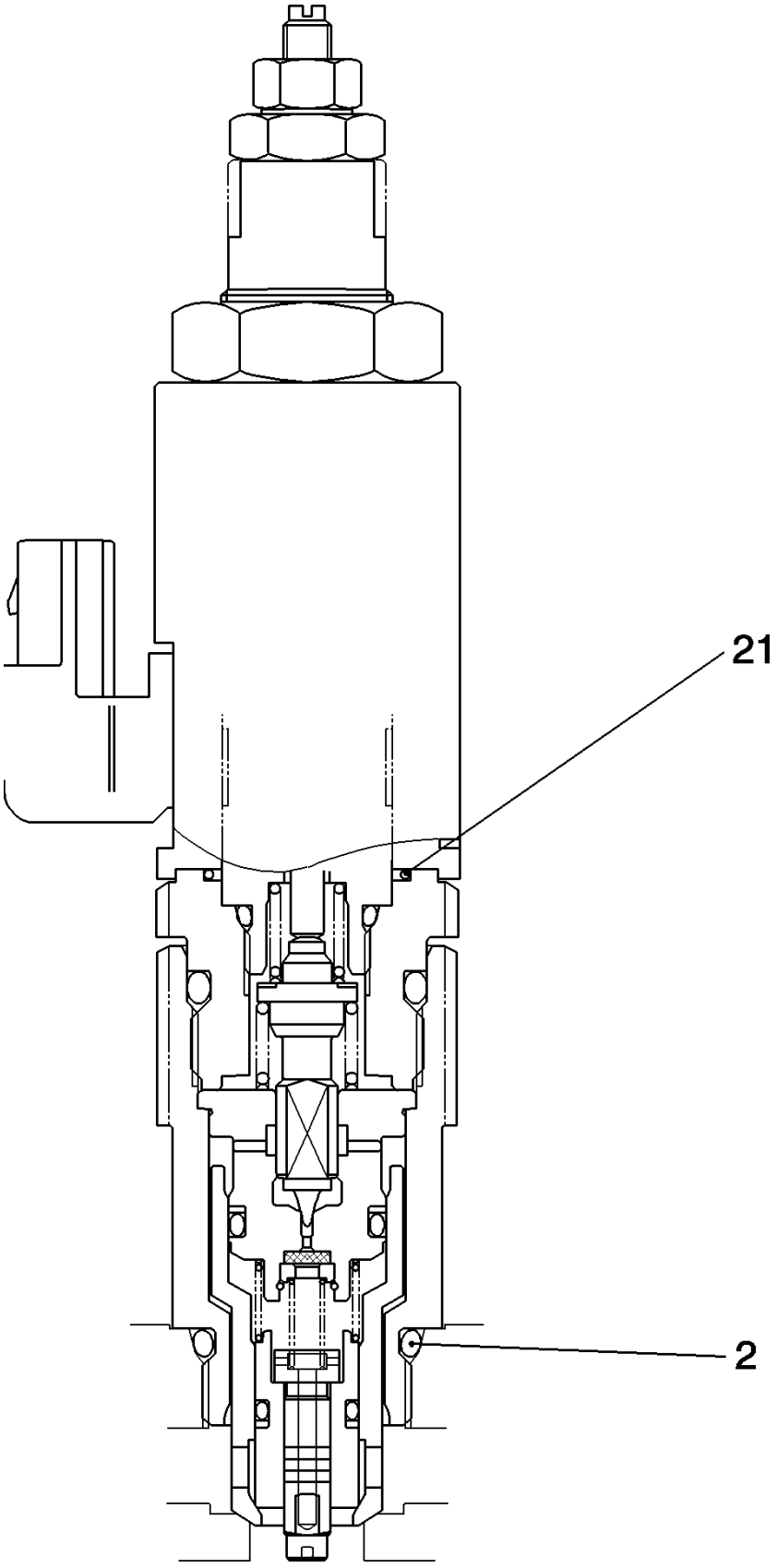

Copyright © New Holland

MARTILLO HIDRÁULICO (L=2.94 MT) - COMPONENTES - OPTIONAL CODE 461232058 (01-02-03) - 461232068 (04-05-06)
HYDRAULIC HAMMER (L=2.94 MT) - COMPONENTS - OPTIONAL CODE 461232058 (01-02-03) - 461232068 (04-05-06)
HYDRAULIC HAMMER (L=2.94 MT) - COMPONENTS - OPTIONAL CODE 461232058 (01-02-03) - 461232068 (04-05-06)
HYDRAULIC HAMMER (L=2.94 MT) - COMPONENTS - OPTIONAL CODE 461232058 (01-02-03) - 461232068 (04-05-06)

R	N	P.N.	MOD	Q	Description Denominacion	Descrizione Beskrivelse	Bezeichnung Denominação	Description Beschrijving	L.C.
2		72209838		1	O-RING JUNTA TÓRICA	ANELLO TOROIDALE O-RING	O-RING O-RING	JOINT TORIQUE O-RING	055A
21		YN22V00035S701		1	O-RING JUNTA TÓRICA	ANELLO TOROIDALE O-RING	O-RING O-RING	JOINT TORIQUE O-RING	055A

VALVE ASSY P/N 87579594

E215B

Copyright © New Holland

5.0023	04	p1	03/10

HYDRAULIC HAMMER (L=2.94 MT) - OPTIONAL CODE 461232058 (01-02-03) - 461232068 (04-05-06)
MARTELLO IDRAULICO (L=2.94 MT) - CODICE VARIANTE 461232058 (01-02-03) - 461232068 (04-05-06)
HYDRAULISCHER HAMMER (L=2.94 MT) - OPTIONAL CODE 461232058 (01-02-03) - 461232068 (04-05-06)
MARTEAU HYDRAULIQUE (L=2.94 MT) - OPTIONAL CODE 461232058 (01-02-03) - 461232068 (04-05-06)

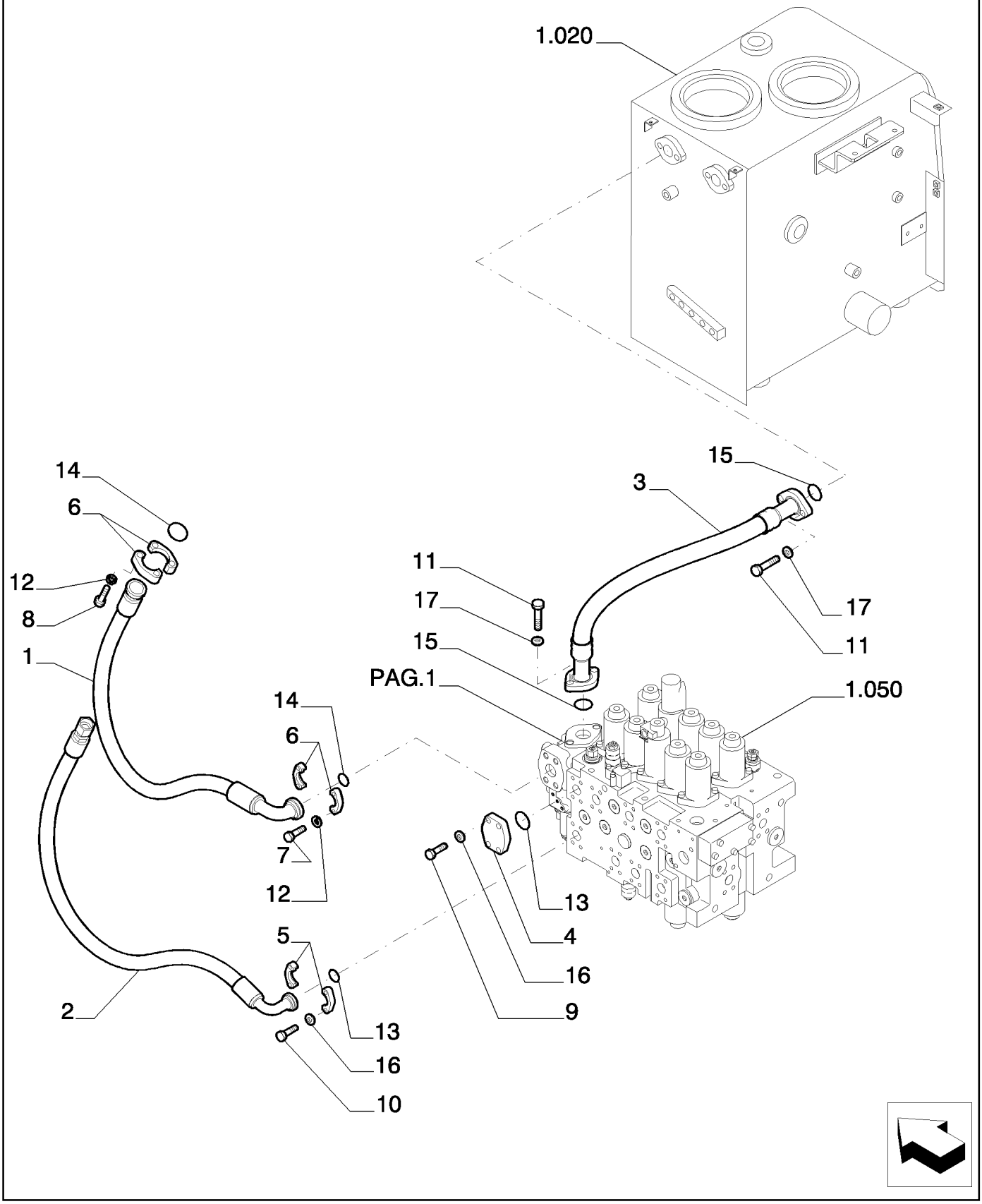

Copyright © New Holland

MARTILLO HIDRÁULICO (L=2.94 MT) - OPTIONAL CODE 461232058 (01-02-03) - 461232068 (04-05-06)
HYDRAULIC HAMMER (L=2.94 MT) - OPTIONAL CODE 461232058 (01-02-03) - 461232068 (04-05-06)
HYDRAULIC HAMMER (L=2.94 MT) - OPTIONAL CODE 461232058 (01-02-03) - 461232068 (04-05-06)
HYDRAULIC HAMMER (L=2.94 MT) - OPTIONAL CODE 461232058 (01-02-03) - 461232068 (04-05-06)

R	N	P.N.	MOD	Q	Description Denominacion	Descrizione Beskrivelse	Bezeichnung Denominação	Description Beschrijving	L.C.
1		87521883		1	FLEXIBLE HOSE TUBO FLEXIBLE	TUBO FLESSIBILE FLEKSIBEL SLANGE	BIEGSAMER SCHLAUCH MANGUEIRA FLEXÍVEL	TUYAU FLEXIBLE FLEXIBELE SLANG	192T
2		87521884		1	FLEXIBLE HOSE TUBO FLEXIBLE	TUBO FLESSIBILE FLEKSIBEL SLANGE	BIEGSAMER SCHLAUCH MANGUEIRA FLEXÍVEL	TUYAU FLEXIBLE FLEXIBELE SLANG	192T
3		87521882		1	FLEXIBLE HOSE TUBO FLEXIBLE	TUBO FLESSIBILE FLEKSIBEL SLANGE	BIEGSAMER SCHLAUCH MANGUEIRA FLEXÍVEL	TUYAU FLEXIBLE FLEXIBELE SLANG	192T
4		87397570		1	COVER CUBIERTA	COPERCHIO DÆKSEL	ABDECKUNG COBERTURA	COUVERCLE AFSCHERMING	265C
5		71404311		2	HALF-FLANGE SEMIBRIDA	SEMIFLANGIA FLANGEHALVDEL	FLANSCHHÄLFTE MEIA FLANGE	DEMI-BRIDE FLENSHELFT	417S
6		71444029		4	HALF-FLANGE SEMIBRIDA	SEMIFLANGIA FLANGEHALVDEL	FLANSCHHÄLFTE MEIA FLANGE	DEMI-BRIDE FLENSHELFT	417S
7		11116034		4	SCREW TORNILLO	VITE SKRUE	SCHRAUBE PARAFUSO	VIS SCHROEF	040V
8		11116234		4	SCREW TORNILLO	VITE SKRUE	SCHRAUBE PARAFUSO	VIS SCHROEF	040V
9		11106434		4	BOLT, Hex, M10 x 30, 10.9, Full Thd PERNO	BULLONE BOLT	SCHRAUBE PARAFUSO	VIS BOUT	140B
10		11106634		4	BOLT, Hex, M10 x 35, 10.9, Full Thd PERNO	BULLONE BOLT	SCHRAUBE PARAFUSO	VIS BOUT	140B
11		11112634		4	SCREW TORNILLO	VITE SKRUE	SCHRAUBE PARAFUSO	VIS SCHROEF	040V
12		10517174		8	LOCK WASHER ARANDELA DE BLOQUE	RONDELLA DI SICUREZ LÅSESKIVE	SICHERUNGSSCHEIBE ANILHA DE RETENÇÃO	RONDELLE FREIN BORGRING	132R
13		70924200		2	O-RING JUNTA TÓRICA	ANELLO TOROIDALE O-RING	O-RING O-RING	JOINT TORIQUE O-RING	055A
14		70924192		2	O-RING JUNTA TÓRICA	ANELLO TOROIDALE O-RING	O-RING O-RING	JOINT TORIQUE O-RING	055A
15		87397569		2	O-RING JUNTA TÓRICA	ANELLO TOROIDALE O-RING	O-RING O-RING	JOINT TORIQUE O-RING	055A
16		14496631		8	WASHER, M10 x 21 x 2 ARANDELA	RONDELLA FLADSKIVE	UNTERLEGSCHEIBE ANILHA	RONDELLE SLUITRING	131R
17		14496731		4	WASHER, M12 x 24 x 2.5 Thk ARANDELA	RONDELLA FLADSKIVE	UNTERLEGSCHEIBE ANILHA	RONDELLE SLUITRING	131R

Copyright © New Holland

5.0023	05	p1	03/10

HYDRAULIC HAMMER (L=2.94 MT) - OPTIONAL CODE 461232058 (01-02-03) - 461232068 (04-05-06)
MARTELLO IDRAULICO (L=2.94 MT) - CODICE VARIANTE 461232058 (01-02-03) - 461232068 (04-05-06)
HYDRAULISCHER HAMMER (L=2.94 MT) - OPTIONAL CODE 461232058 (01-02-03) - 461232068 (04-05-06)
MARTEAU HYDRAULIQUE (L=2.94 MT) - OPTIONAL CODE 461232058 (01-02-03) - 461232068 (04-05-06)

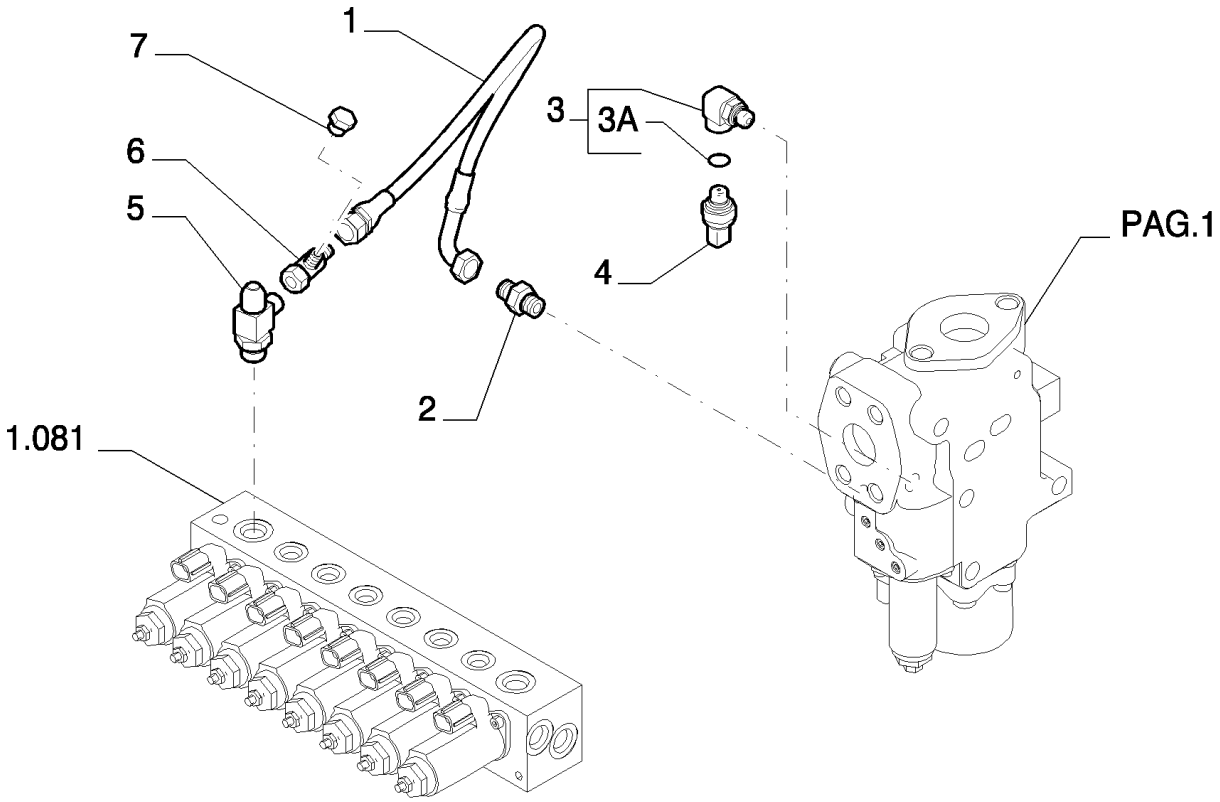

Copyright © New Holland

MARTILLO HIDRÁULICO (L=2.94 MT) - OPTIONAL CODE 461232058 (01-02-03) - 461232068 (04-05-06)
HYDRAULIC HAMMER (L=2.94 MT) - OPTIONAL CODE 461232058 (01-02-03) - 461232068 (04-05-06)
HYDRAULIC HAMMER (L=2.94 MT) - OPTIONAL CODE 461232058 (01-02-03) - 461232068 (04-05-06)
HYDRAULIC HAMMER (L=2.94 MT) - OPTIONAL CODE 461232058 (01-02-03) - 461232068 (04-05-06)

R	N	P.N.	MOD	Q	Description Denominacion	Descrizione Beskrivelse	Bezeichnung Denominação	Description Beschrijving	L.C.
1		87522431		1	FLEXIBLE HOSE TUBO FLEXIBLE	TUBO FLESSIBILE FLEKSIBEL SLANGE	BIEGSAMER SCHLAUCH MANGUEIRA FLEXÍVEL	TUYAU FLEXIBLE FLEXIBELE SLANG	192T
2		87522432		1	HYD CONNECTOR CONECTOR HIDRÁULIC	CONNETTORE IDRAULIC HYDRAULIKSTIK	HYDR STECKVERBINDE CONECTOR HID.	CONNECTEUR HYDRAU HYDRAULISCHE AANSL	020R
3		72215288		1	HYD CONNECTOR, - ASS' CONECTOR HIDRÁULIC	CONNETTORE IDRAULIC HYDRAULIKSTIK	HYDR STECKVERBINDE CONECTOR HID.	CONNECTEUR HYDRAU HYDRAULISCHE AANSL	020R
3A		72209827		1	O-RING JUNTA TÓRICA	ANELLO TOROIDALE O-RING	O-RING O-RING	JOINT TORIQUE O-RING	055A
4		87608371		1	SENSOR SENSOR	SENSORE FØLER	SENSOR SENSOR	CAPTEUR SENSOR	608S
5		2444Z3421		1	TEE RACOR EN T	PEZZO A T T-STYKKE	T-STÜCK TÊ	RACCORD EN T T-STUK	9020
6		72954988		1	TEE RACOR EN T	PEZZO A T T-STYKKE	T-STÜCK TÊ	RACCORD EN T T-STUK	9020
7		72214546		1	PLUG TAPÓN	TAPPO PROP	STOPFEN TAMPÃO	BOUCHON PLUG	050T

Copyright © New Holland

5.0023	06	p1	05/10

HYDRAULIC HAMMER (L=2.94 MT) - OPTIONAL CODE 461232058 (01-02-03)
MARTELLO IDRAULICO (L=2.94 MT) - OPTIONAL CODE 461232058 (01-02-03)
HYDRAULISCHER HAMMER (L=2.94 MT) - OPTIONAL CODE 461232058 (01-02-03)
MARTEAU HYDRAULIQUE (L=2.94 MT) - OPTIONAL CODE 461232058 (01-02-03)

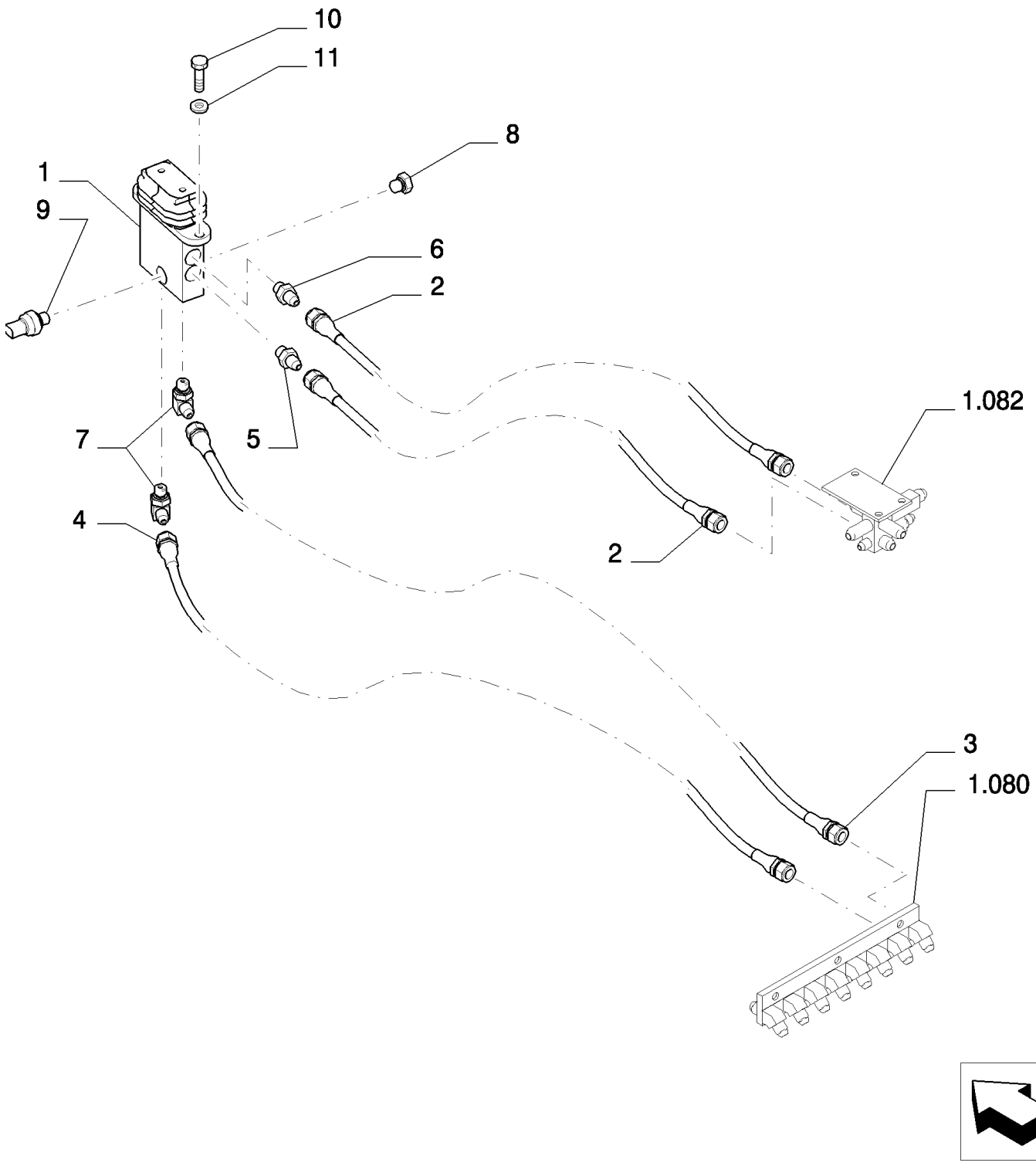

Copyright © New Holland

MARTILLO HIDRÁULICO (L=2.94 MT) - OPTIONAL CODE 461232058 (01-02-03)
HYDRAULIC HAMMER (L=2.94 MT) - OPTIONAL CODE 461232058 (01-02-03)
HYDRAULIC HAMMER (L=2.94 MT) - OPTIONAL CODE 461232058 (01-02-03)
HYDRAULIC HAMMER (L=2.94 MT) - OPTIONAL CODE 461232058 (01-02-03)

R	N	P.N.	MOD	Q	Description Denominacion	Descrizione Beskrivelse	Bezeichnung Denominação	Description Beschrijving	L.C.
1	1	72204155		1	HYDRAULIC VALVE VÁLVULA HIDRÁULICA	DISTRIBUTORE IDRAULI HYDRAULIKVENTIL	HYDRAULIKVENTIL VÁLVULA HIDRÁULICA	SOUPAPE HYDRAULIQU HYDRAULISCHE KLEP	010V
2		87338415		2	FLEXIBLE HOSE TUBO FLEXIBLE	TUBO FLESSIBILE FLEKSIBEL SLANGE	BIEGSAMER SCHLAUCH MANGUEIRA FLEXÍVEL	TUYAU FLEXIBLE FLEXIBELE SLANG	192T
3		87533078		1	FLEXIBLE HOSE TUBO FLEXIBLE	TUBO FLESSIBILE FLEKSIBEL SLANGE	BIEGSAMER SCHLAUCH MANGUEIRA FLEXÍVEL	TUYAU FLEXIBLE FLEXIBELE SLANG	192T
4		87537460		1	FLEXIBLE HOSE TUBO FLEXIBLE	TUBO FLESSIBILE FLEKSIBEL SLANGE	BIEGSAMER SCHLAUCH MANGUEIRA FLEXÍVEL	TUYAU FLEXIBLE FLEXIBELE SLANG	192T
5		87522432		1	HYD CONNECTOR CONECTOR HIDRÁULIC	CONNETTORE IDRAULI HYDRAULIKSTIK	HYDR STECKVERBINDE CONECTOR HID.	CONNECTEUR HYDRAU HYDRAULISCHE AANSL	020R
6		72214744		1	HYD CONNECTOR CONECTOR HIDRÁULIC	CONNETTORE IDRAULI HYDRAULIKSTIK	HYDR STECKVERBINDE CONECTOR HID.	CONNECTEUR HYDRAU HYDRAULISCHE AANSL	020R
7		72214524		2	HYD CONNECTOR CONECTOR HIDRÁULIC	CONNETTORE IDRAULI HYDRAULIKSTIK	HYDR STECKVERBINDE CONECTOR HID.	CONNECTEUR HYDRAU HYDRAULISCHE AANSL	020R
8		72214663		1	PLUG TAPÓN	TAPPO PROP	STOPFEN TAMPÃO	BOUCHON PLUG	050T
9		87608371		1	SENSOR SENSOR	SENSORE FØLER	SENSOR SENSOR	CAPTEUR SENSOR	608S
10		11106434		2	BOLT, Hex, M10 x 30, 10.9, Full Thd PERNO	BULLONE BOLT	SCHRAUBE PARAFUSO	VIS BOUT	140B
11		12641031		2	LOCK WASHER ARANDELA DE BLOQUE	RONDELLA DI SICUREZ LÅSESKIVE	SICHERUNGSSCHEIBE ANILHA DE RETENÇÃO	RONDELLE FREIN BORGRING	132R

(1) ASSY SEE PAGE 7

Copyright © New Holland

5.0023	07	p1	03/10

HYDRAULIC HAMMER (L=2.94 MT) - COMPONENTS - OPTIONAL CODE 461232058 (01-02-03) - 461232068 (04-05-06)
MARTELLO IDRAULICO (L=2.94 MT) - COMPONENTI - OPTIONAL CODE 461232058 (01-02-03) - 461232068 (04-05-06)
HYDRAULISCHER HAMMER (L=2.94 MT) - BESTANDTEILE - OPTIONAL CODE 461232058 (01-02-03) - 461232068 (04-05-06)
MARTEAU HYDRAULIQUE (L=2.94 MT) - COMPOSANTS - OPTIONAL CODE 461232058 (01-02-03) - 461232068 (04-05-06)

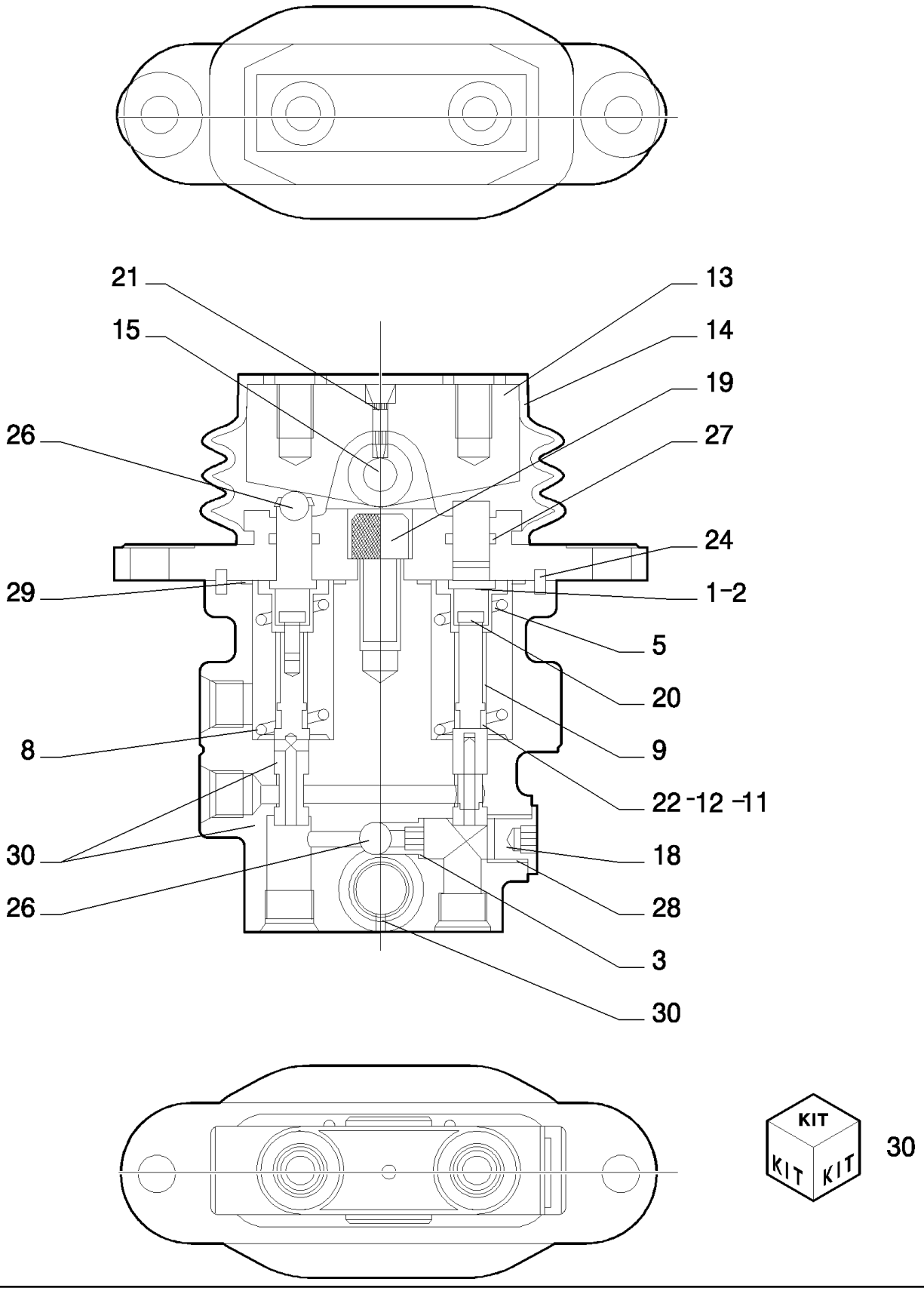

Copyright © New Holland

MARTILLO HIDRÁULICO (L=2.94 MT) - COMPONENTES - OPTIONAL CODE 461232058 (01-02-03) - 461232068 (04-05-06)
HYDRAULIC HAMMER (L=2.94 MT) - COMPONENTS - OPTIONAL CODE 461232058 (01-02-03) - 461232068 (04-05-06)
HYDRAULIC HAMMER (L=2.94 MT) - COMPONENTS - OPTIONAL CODE 461232058 (01-02-03) - 461232068 (04-05-06)
HYDRAULIC HAMMER (L=2.94 MT) - COMPONENTS - OPTIONAL CODE 461232058 (01-02-03) - 461232068 (04-05-06)

R	N	P.N.	MOD	Q	Description Denominacion	Descrizione Beskrivelse	Bezeichnung Denominação	Description Beschrijving	L.C.
1		72210484		2	SHIM SUPLEMENTO	SPESSORE MELLEMLÆG	AUSGLEICHSSCHEIBE CALÇO DE AFINAÇÃO	CALE VULPLAATJE	198S
2		72210485		2	SHIM SUPLEMENTO	SPESSORE MELLEMLÆG	AUSGLEICHSSCHEIBE CALÇO DE AFINAÇÃO	CALE VULPLAATJE	198S
3		72210219		1	SEAT/SLOT ASIENTO/RANURA	SEDE/ASOLA SÆDE	SITZ/SCHLITZ SUPORTE	SIEGE/FENTE ZITTING/SLEUF	069S
5		72210483		2	SLEEVE MANGUITO	MANICOTTO TRYKLEJE, KOBLING	BUCHSE MANGA	CHEMISE MOF; BUS	031M
8		72210486		1	SPRING RESORTE	MOLLA FJEDER	FEDER MOLA	RESSORT VEER	100M
9		72210223		2	SPRING RESORTE	MOLLA FJEDER	FEDER MOLA	RESSORT VEER	100M
11		72210487		2	SHIM SUPLEMENTO	SPESSORE MELLEMLÆG	AUSGLEICHSSCHEIBE CALÇO DE AFINAÇÃO	CALE VULPLAATJE	198S
12		72210488		1	SHIM SUPLEMENTO	SPESSORE MELLEMLÆG	AUSGLEICHSSCHEIBE CALÇO DE AFINAÇÃO	CALE VULPLAATJE	198S
13		72210489		1	CAM LEVA	CAMMA KAM	NOCKE EXCÊNTRICO	CAME NOK	040C
14		72210225		1	BOOT FUNDA	PARAPOLVERE MANCHET	MANSCHETTE COBERTURA DE PROTE	SOUFFLET HOES	330C
15		72210226		1	PIN PASADOR	PERNO STIFT	PIN PERNO	BROCHE PEN	080P
18		72210230		1	PLUG TAPÓN	TAPPO PROP	STOPFEN TAMPÃO	BOUCHON PLUG	050T
19		72210490		1	SCREW TORNILLO	VITE SKRUE	SCHRAUBE PARAFUSO	VIS SCHROEF	040V
20		72210232		2	SCREW TORNILLO	VITE SKRUE	SCHRAUBE PARAFUSO	VIS SCHROEF	040V
21		72210233		2	PLUG TAPÓN	TAPPO PROP	STOPFEN TAMPÃO	BOUCHON PLUG	050T
22		72210234		2	WASHER ARANDELA	RONDELLA FLADSKIVE	UNTERLEGSCHEIBE ANILHA	RONDELLE SLUITRING	131R
24		72210492		2	PIN PASADOR	PERNO STIFT	PIN PERNO	BROCHE PEN	080P
26		72210237		3	BALL BOLA	SFERA KUGLE	KUGEL ESFERA	BILLE KOGEL	140S
27		72210491		2	O-RING JUNTA TÓRICA	ANELLO TOROIDALE O-RING	O-RING O-RING	JOINT TORIQUE O-RING	055A
28		72209827		1	O-RING JUNTA TÓRICA	ANELLO TOROIDALE O-RING	O-RING O-RING	JOINT TORIQUE O-RING	055A
29		72210493		2	O-RING JUNTA TÓRICA	ANELLO TOROIDALE O-RING	O-RING O-RING	JOINT TORIQUE O-RING	055A
30		72210494		1	KIT KIT	KIT SÆT	SATZ KIT	KIT KIT	305C

VALVE ASSY P/N 72204155

E215B

Copyright © New Holland

5.0023	08	p1	03/10

HYDRAULIC HAMMER (L=2.94 MT) - OPTIONAL CODE 461232058 (01-02-03)
MARTELLO IDRAULICO (L=2.94 MT) - CODICE VARIANTE 461232058 (01-02-03)
HYDRAULISCHER HAMMER (L=2.94 MT) - OPTIONAL CODE 461232058 (01-02-03)
MARTEAU HYDRAULIQUE (L=2.94 MT) - OPTIONAL CODE 461232058 (01-02-03)

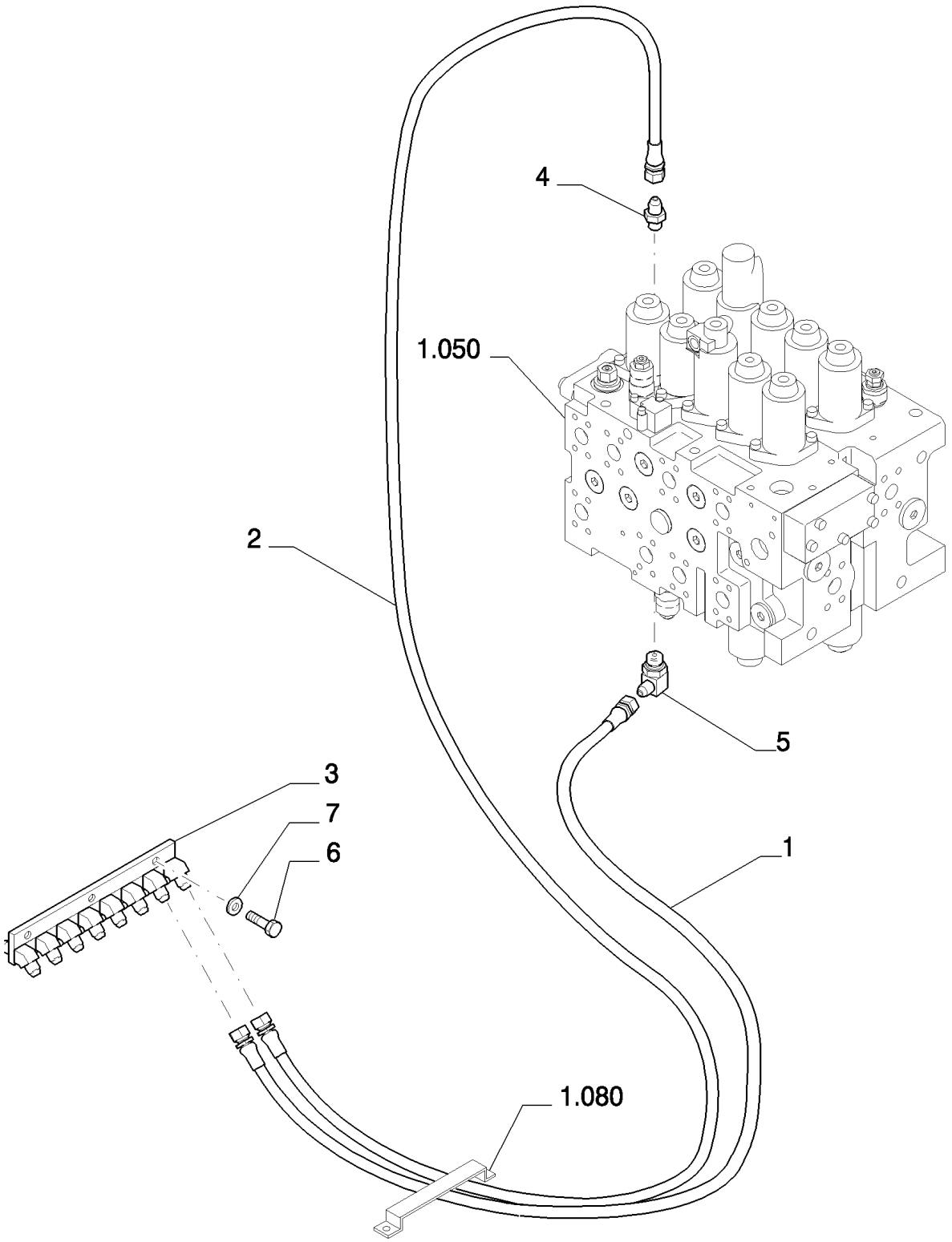

Copyright © New Holland

MARTILLO HIDRÁULICO (L=2.94 MT) - OPTIONAL CODE 461232058 (01-02-03)
HYDRAULIC HAMMER (L=2.94 MT) - OPTIONAL CODE 461232058 (01-02-03)
HYDRAULIC HAMMER (L=2.94 MT) - OPTIONAL CODE 461232058 (01-02-03)
HYDRAULIC HAMMER (L=2.94 MT) - OPTIONAL CODE 461232058 (01-02-03)

R	N	P.N.	MOD	Q	Description Denominacion	Descrizione Beskrivelse	Bezeichnung Denominação	Description Beschrijving	L.C.
1		72214543		1	FLEXIBLE HOSE TUBO FLEXIBLE	TUBO FLESSIBILE FLEKSIBEL SLANGE	BIEGSAMER SCHLAUCH MANGUEIRA FLEXÍVEL	TUYAU FLEXIBLE FLEXIBELE SLANG	192T
2		87536897		1	FLEXIBLE HOSE TUBO FLEXIBLE	TUBO FLESSIBILE FLEKSIBEL SLANGE	BIEGSAMER SCHLAUCH MANGUEIRA FLEXÍVEL	TUYAU FLEXIBLE FLEXIBELE SLANG	192T
3		87537888		1	BLOCK BLOQUE	BLOCCO MOTORBLOK	BLOCK BLOCO	BLOC BLOK	074B
4		72214522		1	HYD CONNECTOR CONECTOR HIDRÁULIC	CONNETTORE IDRAULIC HYDRAULIKSTIK	HYDR STECKVERBINDE CONECTOR HID.	CONNECTEUR HYDRAU HYDRAULISCHE AANSL	020R
5		72214561		1	HYD CONNECTOR CONECTOR HIDRÁULIC	CONNETTORE IDRAULIC HYDRAULIKSTIK	HYDR STECKVERBINDE CONECTOR HID.	CONNECTEUR HYDRAU HYDRAULISCHE AANSL	020R
6		11106434		3	BOLT, Hex, M10 x 30, 10.9, Full Thd PERNO	BULLONE BOLT	SCHRAUBE PARAFUSO	VIS BOUT	140B
7		12641031		3	LOCK WASHER ARANDELA DE BLOQUE	RONDELLA DI SICUREZ LÅSESKIVE	SICHERUNGSSCHEIBE ANILHA DE RETENÇÃO	RONDELLE FREIN BORGRING	132R

Copyright © New Holland

5.0023	09	p1	03/10

HYDRAULIC HAMMER (L=2.94 MT) - OPTIONAL CODE 461232058 (01-02-03)
MARTELLO IDRAULICO (L=2.94 MT) - CODICE VARIANTE 461232058 (01-02-03)
HYDRAULISCHER HAMMER (L=2.94 MT) - OPTIONAL CODE 461232058 (01-02-03)
MARTEAU HYDRAULIQUE (L=2.94 MT) - OPTIONAL CODE 461232058 (01-02-03)

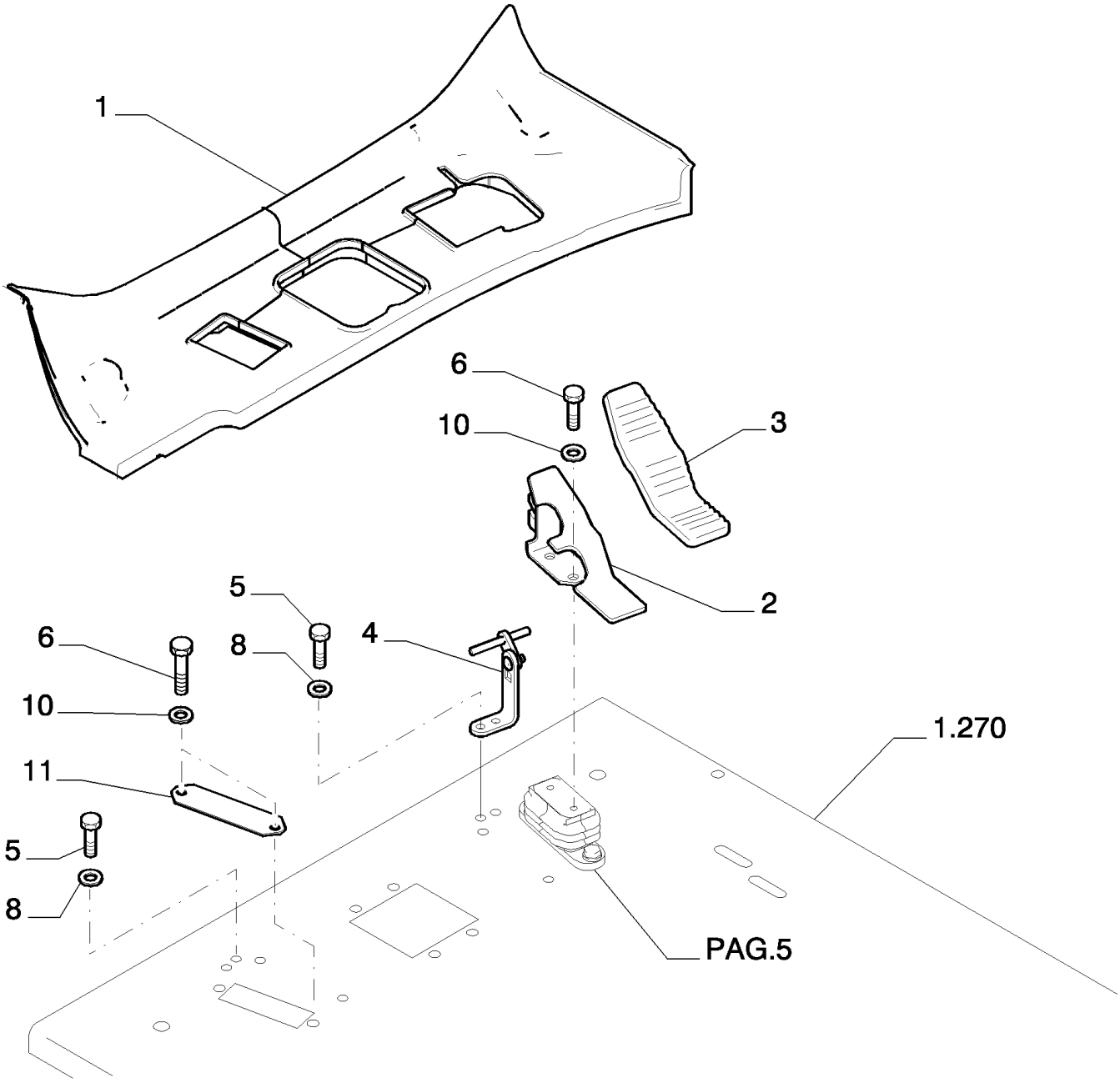

Copyright © New Holland

MARTILLO HIDRÁULICO (L=2.94 MT) - OPTIONAL CODE 461232058 (01-02-03)
HYDRAULIC HAMMER (L=2.94 MT) - OPTIONAL CODE 461232058 (01-02-03)
HYDRAULIC HAMMER (L=2.94 MT) - OPTIONAL CODE 461232058 (01-02-03)
HYDRAULIC HAMMER (L=2.94 MT) - OPTIONAL CODE 461232058 (01-02-03)

R	N	P.N.	MOD	Q	Description Denominacion	Descrizione Beskrivelse	Bezeichnung Denominação	Description Beschrijving	L.C.
1		YN26M00074P1		1	CARPET ALFOMBRA	TAPPETINO TÆPPE	TEPPICH TAPETE	TAPIS VLOERBEDEKKING	P015
2		87539195		1	PEDAL PEDAL	PEDALE PEDAL	PEDAL PEDAL	PEDALE PEDAAL	060P
3		87539205		1	RUBBER PEDAL PAD PASTILLA DE PEDAL DE	RIVESTIMENTO PEDALE GUMMIPEDALBELÆGNI	GUMMIPEDALAUFLAGE BORRACHA COBERTUR	PATIN DE PEDALE CAO RUBBEREN PEDAALBEK	292C
4		87539206		1	BRACKET SOPORTE	STAFFA BESLAG	HALTERUNG SUPORTE	SUPPORT STEUN	225S
5		16043434		4	BOLT, Hex, M8 x 20, 10.9, Full Thd PERNO	BULLONE BOLT	SCHRAUBE PARAFUSO	VIS BOUT	140B
6		11106034		4	BOLT, Hex, M10 x 20, 10.9, Full Thd PERNO	BULLONE BOLT	SCHRAUBE PARAFUSO	VIS BOUT	140B
8		14496531		4	WASHER, M8 x 17 x 1.6 ARANDELA	RONDELLA FLADSKIVE	UNTERLEGSCHEIBE ANILHA	RONDELLE SLUITRING	131R
10		14496631		4	WASHER, M10 x 21 x 2 ARANDELA	RONDELLA FLADSKIVE	UNTERLEGSCHEIBE ANILHA	RONDELLE SLUITRING	131R
11		87746013		1	PLATE PLACA	PIASTRA PLADE	PLATTE CHAPA	PLAQUE PLAAT	105P

Copyright © New Holland

5.0023	10	p1	03/10

HYDRAULIC HAMMER (L=2.94 MT) - OPTIONAL CODE 461232058 (01-02-03)
MARTELLO IDRAULICO (L=2.94 MT) - CODICE VARIANTE 461232058 (01-02-03)
HYDRAULISCHER HAMMER (L=2.94 MT) - OPTIONAL CODE 461232058 (01-02-03)
MARTEAU HYDRAULIQUE (L=2.94 MT) - OPTIONAL CODE 461232058 (01-02-03)

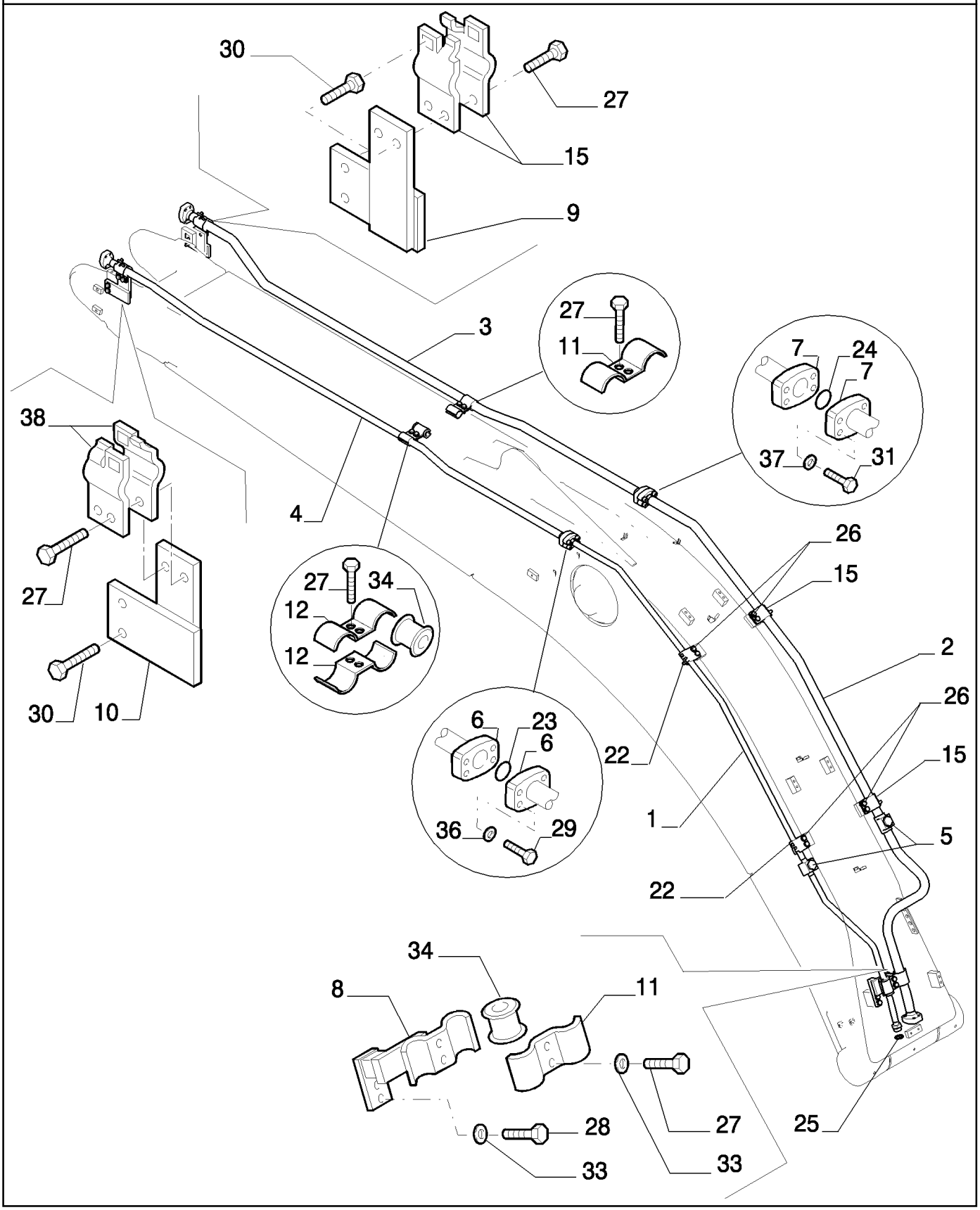

Copyright © New Holland

MARTILLO HIDRÁULICO (L=2.94 MT) - OPTIONAL CODE 461232058 (01-02-03)
HYDRAULIC HAMMER (L=2.94 MT) - OPTIONAL CODE 461232058 (01-02-03)
HYDRAULIC HAMMER (L=2.94 MT) - OPTIONAL CODE 461232058 (01-02-03)
HYDRAULIC HAMMER (L=2.94 MT) - OPTIONAL CODE 461232058 (01-02-03)

R	N	P.N.	MOD	Q	Description Denominacion	Descrizione Beskrivelse	Bezeichnung Denominação	Description Beschrijving	L.C.
1		87543992		1	RIGID TUBE TUBO RÍGIDO	TUBO RIGIDO STIFT RØR	ROHR TUBO RÍGIDO	TUYAU RIGIDE VASTE LEIDING	193T
2		87543993		1	RIGID TUBE TUBO RÍGIDO	TUBO RIGIDO STIFT RØR	ROHR TUBO RÍGIDO	TUYAU RIGIDE VASTE LEIDING	193T
3		87543994		1	RIGID TUBE TUBO RÍGIDO	TUBO RIGIDO STIFT RØR	ROHR TUBO RÍGIDO	TUYAU RIGIDE VASTE LEIDING	193T
4		87543995		1	RIGID TUBE TUBO RÍGIDO	TUBO RIGIDO STIFT RØR	ROHR TUBO RÍGIDO	TUYAU RIGIDE VASTE LEIDING	193T
6		71404313		2	HALF-FLANGE SEMIBRIDA	SEMIFLANGIA FLANGEHALVDEL	FLANSCHHÄLFTE MEIA FLANGE	DEMI-BRIDE FLENSHELFT	417S
7		71444029		2	HALF-FLANGE SEMIBRIDA	SEMIFLANGIA FLANGEHALVDEL	FLANSCHHÄLFTE MEIA FLANGE	DEMI-BRIDE FLENSHELFT	417S
8		84147125		1	BRACKET SOPORTE	STAFFA BESLAG	HALTERUNG SUPORTE	SUPPORT STEUN	225S
9		87359468		1	PLATE PLACA	PIASTRA PLADE	PLATTE CHAPA	PLAQUE PLAAT	105P
10		87359469		1	PLATE PLACA	PIASTRA PLADE	PLATTE CHAPA	PLAQUE PLAAT	105P
11		87343330		4	BRACKET SOPORTE	STAFFA BESLAG	HALTERUNG SUPORTE	SUPPORT STEUN	225S
12		87343335		2	BRACKET SOPORTE	STAFFA BESLAG	HALTERUNG SUPORTE	SUPPORT STEUN	225S
15		87349692		6	BRACKET SOPORTE	STAFFA BESLAG	HALTERUNG SUPORTE	SUPPORT STEUN	225S
22		87343090		4	BRACKET SOPORTE	STAFFA BESLAG	HALTERUNG SUPORTE	SUPPORT STEUN	225S
23		72215443		1	O-RING JUNTA TÓRICA	ANELLO TOROIDALE O-RING	O-RING O-RING	JOINT TORIQUE O-RING	055A
24		70924192		1	O-RING JUNTA TÓRICA	ANELLO TOROIDALE O-RING	O-RING O-RING	JOINT TORIQUE O-RING	055A
25		70931640		1	GASKET JUNTA	GUARNIZIONE PAKNING	DICHTUNG JUNTA	JOINT PAKKING	123G
26		11112434		8	BOLT, Hex, M12 x 30, 10.9, Full Thd PERNO	BULLONE BOLT	SCHRAUBE PARAFUSO	VIS BOUT	140B
27		11112634		10	SCREW TORNILLO	VITE SKRUE	SCHRAUBE PARAFUSO	VIS SCHROEF	040V
28		11113334		2	SCREW TORNILLO	VITE SKRUE	SCHRAUBE PARAFUSO	VIS SCHROEF	040V
29		14422434		4	SCREW TORNILLO	VITE SKRUE	SCHRAUBE PARAFUSO	VIS SCHROEF	040V
30		11112834		4	BOLT, Hex, M12 x 40, 10.9, Full Thd PERNO	BULLONE BOLT	SCHRAUBE PARAFUSO	VIS BOUT	140B
31		14424534		4	SCREW TORNILLO	VITE SKRUE	SCHRAUBE PARAFUSO	VIS SCHROEF	040V
33		14496731		24	WASHER, M12 x 24 x 2.5 Thk ARANDELA	RONDELLA FLADSKIVE	UNTERLEGSCHEIBE ANILHA	RONDELLE SLUITRING	131R
34		87343521		2	BUSHING CASQUILLO	BOCCOLA BØSNING	BUCHSE CASQUILHO	BAGUE BUS	095B

Copyright © New Holland

5.0023	10	p2	03/10

HYDRAULIC HAMMER (L=2.94 MT) - OPTIONAL CODE 461232058 (01-02-03)
MARTELLO IDRAULICO (L=2.94 MT) - CODICE VARIANTE 461232058 (01-02-03)
HYDRAULISCHER HAMMER (L=2.94 MT) - OPTIONAL CODE 461232058 (01-02-03)
MARTEAU HYDRAULIQUE (L=2.94 MT) - OPTIONAL CODE 461232058 (01-02-03)

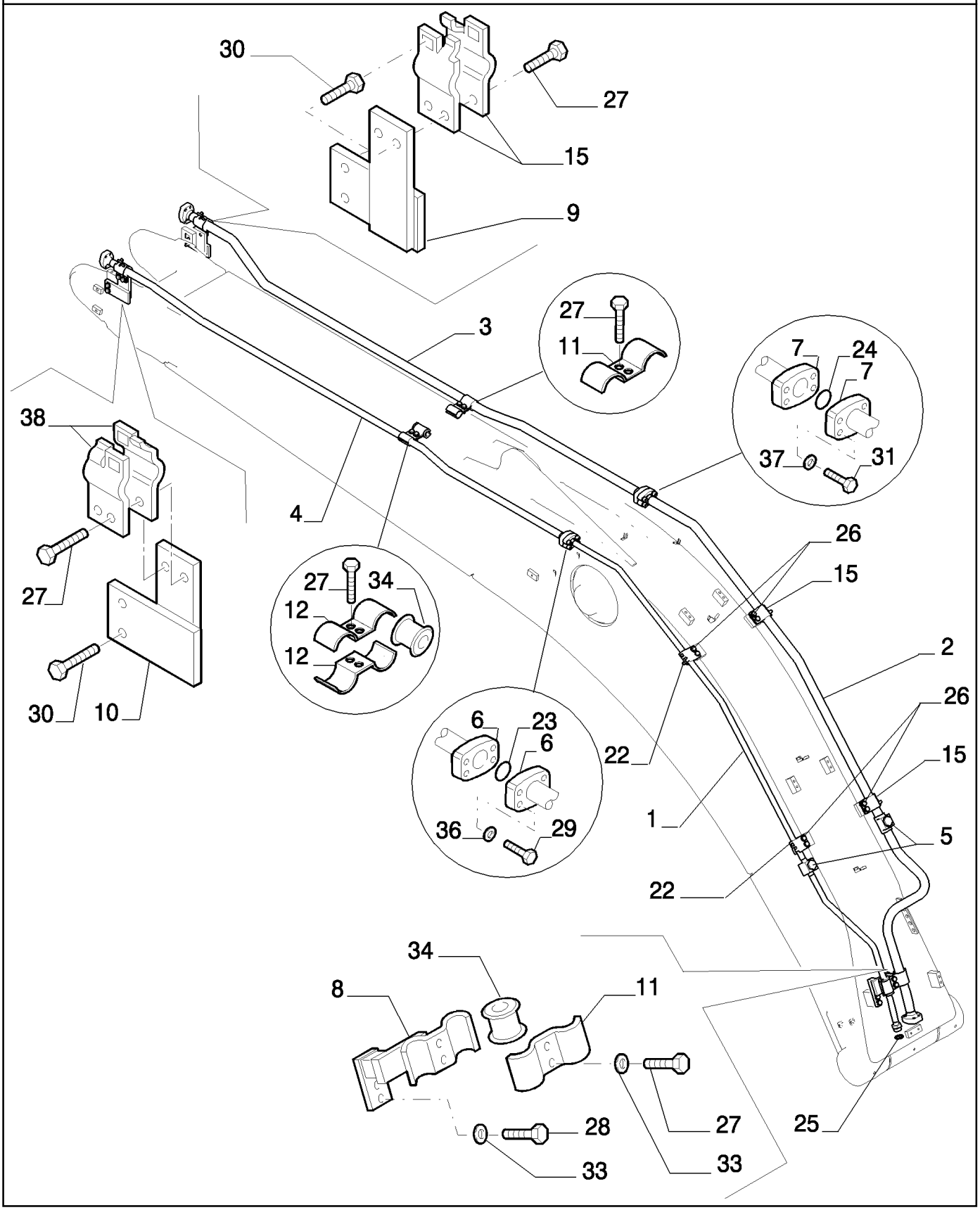

Copyright © New Holland

MARTILLO HIDRÁULICO (L=2.94 MT) - OPTIONAL CODE 461232058 (01-02-03)
HYDRAULIC HAMMER (L=2.94 MT) - OPTIONAL CODE 461232058 (01-02-03)
HYDRAULIC HAMMER (L=2.94 MT) - OPTIONAL CODE 461232058 (01-02-03)
HYDRAULIC HAMMER (L=2.94 MT) - OPTIONAL CODE 461232058 (01-02-03)

R	N	P.N.	MOD	Q	Description Denominacion	Descrizione Beskrivelse	Bezeichnung Denominação	Description Beschrijving	L.C.
36		10517074		4	LOCK WASHER ARANDELA DE BLOQUE	RONDELLA DI SICUREZ LÅSESKIVE	SICHERUNGSSCHEIBE ANILHA DE RETENÇÃO	RONDELLE FREIN BORGRING	132R
37		10517174		4	LOCK WASHER ARANDELA DE BLOQUE	RONDELLA DI SICUREZ LÅSESKIVE	SICHERUNGSSCHEIBE ANILHA DE RETENÇÃO	RONDELLE FREIN BORGRING	132R
38		87343093		2	BRACKET SOPORTE	STAFFA BESLAG	HALTERUNG SUPORTE	SUPPORT STEUN	225S

Copyright © New Holland

5.0023	11	p1	03/10

HYDRAULIC HAMMER (L=2.94 MT) - OPTIONAL CODE 461232058 (01-02-03) - 461232068 (04-05-06)
MARTELLO IDRAULICO (L=2.94 MT) - CODICE VARIANTE 461232058 (01-02-03) - 461232068 (04-05-06)
HYDRAULISCHER HAMMER (L=2.94 MT) - OPTIONAL CODE 461232058 (01-02-03) - 461232068 (04-05-06)
MARTEAU HYDRAULIQUE (L=2.94 MT) - OPTIONAL CODE 461232058 (01-02-03) - 461232068 (04-05-06)

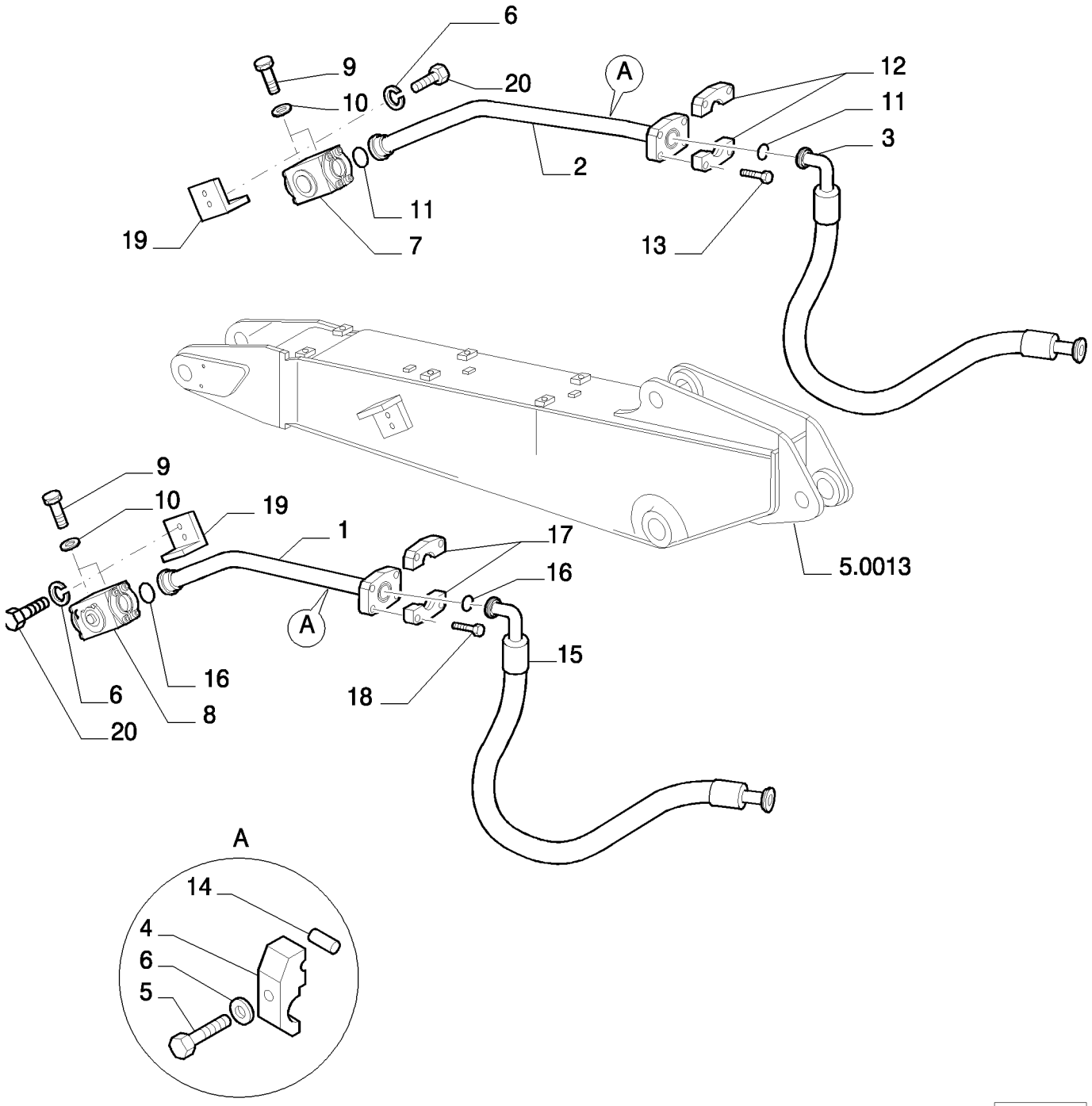

Copyright © New Holland

MARTILLO HIDRÁULICO (L=2.94 MT) - OPTIONAL CODE 461232058 (01-02-03) - 461232068 (04-05-06)
HYDRAULIC HAMMER (L=2.94 MT) - OPTIONAL CODE 461232058 (01-02-03) - 461232068 (04-05-06)
HYDRAULIC HAMMER (L=2.94 MT) - OPTIONAL CODE 461232058 (01-02-03) - 461232068 (04-05-06)
HYDRAULIC HAMMER (L=2.94 MT) - OPTIONAL CODE 461232058 (01-02-03) - 461232068 (04-05-06)

R	N	P.N.	MOD	Q	Description Denominacion	Descrizione Beskrivelse	Bezeichnung Denominação	Description Beschrijving	L.C.
1		87382952		1	RIGID TUBE TUBO RÍGIDO	TUBO RIGIDO STIFT RØR	ROHR TUBO RÍGIDO	TUYAU RIGIDE VASTE LEIDING	193T
2		87382954		1	RIGID TUBE TUBO RÍGIDO	TUBO RIGIDO STIFT RØR	ROHR TUBO RÍGIDO	TUYAU RIGIDE VASTE LEIDING	193T
3		87556738		1	FLEXIBLE HOSE TUBO FLEXIBLE	TUBO FLESSIBILE FLEKSIBEL SLANGE	BIEGSAMER SCHLAUCH MANGUEIRA FLEXÍVEL	TUYAU FLEXIBLE FLEXIBELE SLANG	192T
4		71466017		2	BRACKET, SUPPORTING PIEZA DE APOYO	SQUADRETTA STOETTEBESLAG	SCHALTER,AUTOM.AUS PECA DE SUPORTE	EQUERRE DRAAGARM	215S
5		11113534		2	BOLT, Hex, M12 x 65, 10.9, Full Thd PERNO	BULLONE BOLT	SCHRAUBE PARAFUSO	VIS BOUT	140B
6		10517074		6	LOCK WASHER ARANDELA DE BLOQUE	RONDELLA DI SICUREZ LÅSESKIVE	SICHERUNGSSCHEIBE ANILHA DE RETENÇÃO	RONDELLE FREIN BORGRING	132R
7	1	72215205		1	HYDRAULIC VALVE VÁLVULA HIDRÁULICA	DISTRIBUTORE IDRAULI HYDRAULIKVENTIL	HYDRAULIKVENTIL VÁLVULA HIDRÁULICA	SOUPAPE HYDRAULIQU HYDRAULISCHE KLEP	010V
8		72215206		1	HYDRAULIC VALVE VÁLVULA HIDRÁULICA	DISTRIBUTORE IDRAULI HYDRAULIKVENTIL	HYDRAULIKVENTIL VÁLVULA HIDRÁULICA	SOUPAPE HYDRAULIQU HYDRAULISCHE KLEP	010V
9		11106434		4	BOLT, Hex, M10 x 30, 10.9, Full Thd PERNO	BULLONE BOLT	SCHRAUBE PARAFUSO	VIS BOUT	140B
10		10516874		4	LOCK WASHER ARANDELA DE BLOQUE	RONDELLA DI SICUREZ LÅSESKIVE	SICHERUNGSSCHEIBE ANILHA DE RETENÇÃO	RONDELLE FREIN BORGRING	132R
11		70924192		2	O-RING JUNTA TÓRICA	ANELLO TOROIDALE O-RING	O-RING O-RING	JOINT TORIQUE O-RING	055A
12		71444029		2	HALF-FLANGE SEMIBRIDA	SEMIFLANGIA FLANGEHALVDEL	FLANSCHHÄLFTE MEIA FLANGE	DEMI-BRIDE FLENSHELFT	417S
13		14424534		4	SCREW TORNILLO	VITE SKRUE	SCHRAUBE PARAFUSO	VIS SCHROEF	040V
14		72219245		2	RIGID TUBE TUBO RÍGIDO	TUBO RIGIDO STIFT RØR	ROHR TUBO RÍGIDO	TUYAU RIGIDE VASTE LEIDING	193T
15		87556737		1	FLEXIBLE HOSE TUBO FLEXIBLE	TUBO FLESSIBILE FLEKSIBEL SLANGE	BIEGSAMER SCHLAUCH MANGUEIRA FLEXÍVEL	TUYAU FLEXIBLE FLEXIBELE SLANG	192T
16		70924200		2	O-RING JUNTA TÓRICA	ANELLO TOROIDALE O-RING	O-RING O-RING	JOINT TORIQUE O-RING	055A
17		71404313		2	HALF-FLANGE SEMIBRIDA	SEMIFLANGIA FLANGEHALVDEL	FLANSCHHÄLFTE MEIA FLANGE	DEMI-BRIDE FLENSHELFT	417S
18		14422334		4	SCREW, Hex Soc Hd, M12 x 45, 10.9 TORNILLO	VITE SKRUE	SCHRAUBE PARAFUSO	VIS SCHROEF	040V
19		87381234		2	BRACKET SOPORTE	STAFFA BESLAG	HALTERUNG SUPORTE	SUPPORT STEUN	225S
20		11112434		4	BOLT, Hex, M12 x 30, 10.9, Full Thd PERNO	BULLONE BOLT	SCHRAUBE PARAFUSO	VIS BOUT	140B

(1) ASSY SEE PAGE 12

Copyright © New Holland

5.0023	12	p1	03/10

HYDRAULIC HAMMER (L=2.94 MT) - COMPONENTS - OPTIONAL CODE 461232058 (01-02-03) - 461232068 (04-05-06)
MARTELLO IDRAULICO (L=2.94 MT) - COMPONENTI - CODICE VARIANTE 461232058 (01-02-03) - 461232068 (04-05-06)
HYDRAULISCHER HAMMER (L=2.94 MT) - BESTANDTEILE - OPTIONAL CODE 461232058 (01-02-03) - 461232068 (04-05-06)
MARTEAU HYDRAULIQUE (L=2.94 MT) - COMPOSANTS - OPTIONAL CODE 461232058 (01-02-03) - 461232068 (04-05-06)

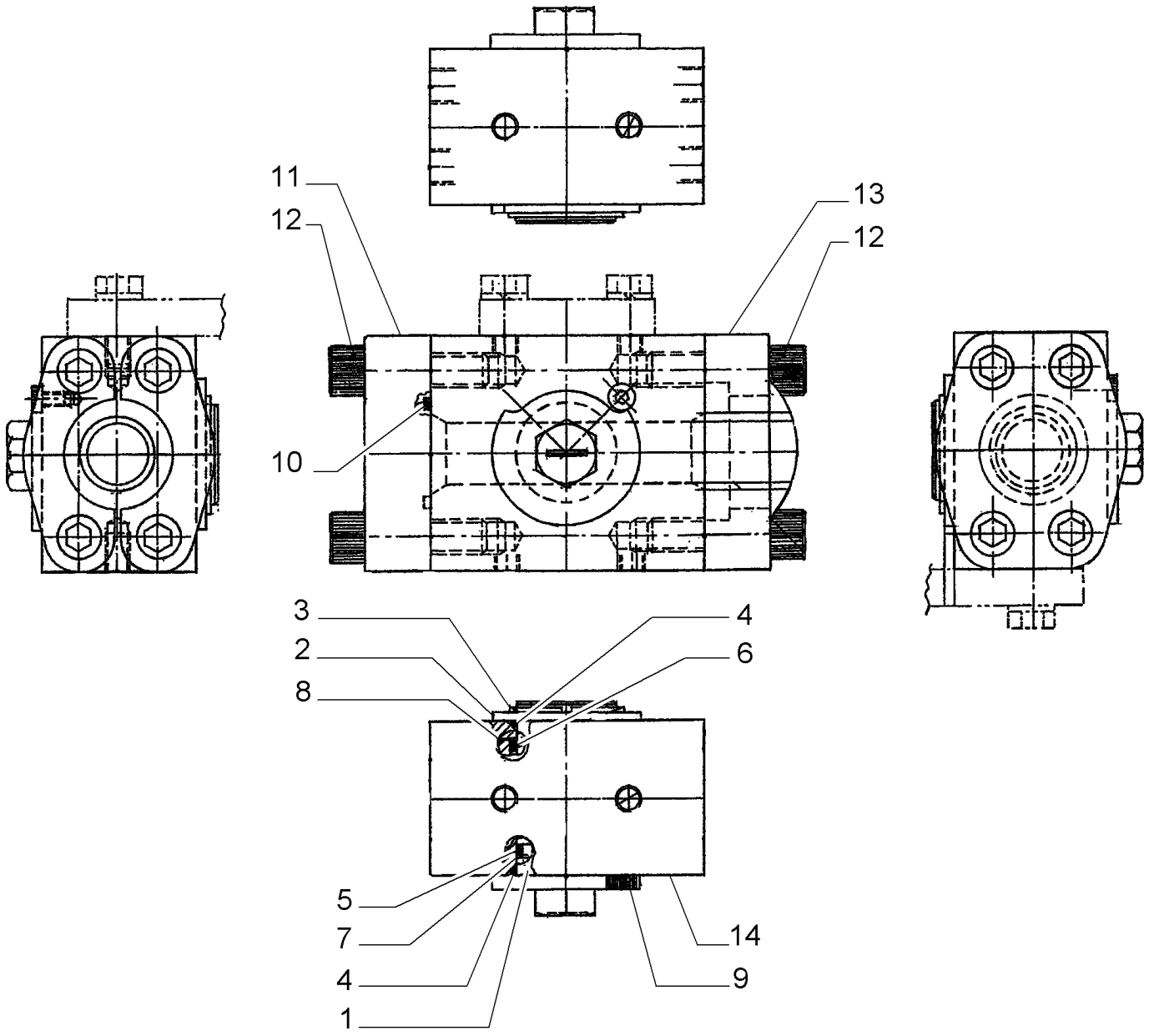

Copyright © New Holland

MARTILLO HIDRÁULICO (L=2.94 MT) - COMPONENTES - OPTIONAL CODE461232058 (01-02-03) - 461232068 (04-05-06)
HYDRAULIC HAMMER (L=2.94 MT) - COMPONENTS - OPTIONAL CODE 461232058 (01-02-03) - 461232068 (04-05-06)
HYDRAULIC HAMMER (L=2.94 MT) - COMPONENTS - OPTIONAL CODE 461232058 (01-02-03) - 461232068 (04-05-06)
HYDRAULIC HAMMER (L=2.94 MT) - COMPONENTS - OPTIONAL CODE 461232058 (01-02-03) - 461232068 (04-05-06)

R	N	P.N.	MOD	Q	Description Denominacion	Descrizione Beskrivelse	Bezeichnung Denominação	Description Beschrijving	L.C.
1		72219279		1	PIN PASADOR	PERNO STIFT	PIN PERNO	BROCHE PEN	080P
2		72219249		1	SPACER SEPARADOR	DISTANZIALE AFSTANDSSTYKKE	DISTANZSTÜCK ESPAÇADOR	ENTRETOISE AFSTANDSSTUK	075D
3		72219250		1	RING ANILLO	ANELLO RING	RING ANEL	ANNEAU RING	045A
4		72219252		2	GASKET JUNTA	GUARNIZIONE PAKNING	DICHTUNG JUNTA	JOINT PAKKING	123G
5		72219255		1	GASKET JUNTA	GUARNIZIONE PAKNING	DICHTUNG JUNTA	JOINT PAKKING	123G
6		72219253		1	GASKET JUNTA	GUARNIZIONE PAKNING	DICHTUNG JUNTA	JOINT PAKKING	123G
7		72219256		1	RING ANILLO	ANELLO RING	RING ANEL	ANNEAU RING	045A
8		72219254		1	RING ANILLO	ANELLO RING	RING ANEL	ANNEAU RING	045A
9		72219251		1	SCREW, 6X8 TORNILLO	VITE SKRUE	SCHRAUBE PARAFUSO	VIS SCHROEF	040V
10		72219287		1	GASKET JUNTA	GUARNIZIONE PAKNING	DICHTUNG JUNTA	JOINT PAKKING	123G
11		72219288		1	FLANGE BRIDA	FLANGIA FLANGE	FLANSCH FLANGE	BRIDE FLENS	070F
12		72219289		8	SCREW, 14X50 TORNILLO	VITE SKRUE	SCHRAUBE PARAFUSO	VIS SCHROEF	040V
13		72219290		2	HALF-FLANGE SEMIBRIDA	SEMIFLANGIA FLANGEHALVDEL	FLANSCHHÄLFTE MEIA FLANGE	DEMI-BRIDE FLENSHELFT	417S
14		72219278		1	BODY CUERPO	CORPO HUS	KAROSSERIE CORPO	CORPS HUIS	300C

VALVE ASSY P/N 72215205

E215B

Copyright © New Holland

5.0023	13	p1	05/10

HYDRAULIC HAMMER (L=2.94 MT) - OPTIONAL CODE 461232068 (04-05-06)
MARTELLO IDRAULICO (L=2.94 MT) - OPTIONAL CODE 461232068 (04-05-06)
HYDRAULISCHER HAMMER (L=2.94 MT) - OPTIONAL CODE 461232068 (04-05-06)
MARTEAU HYDRAULIQUE (L=2.94 MT) - OPTIONAL CODE 461232068 (04-05-06)

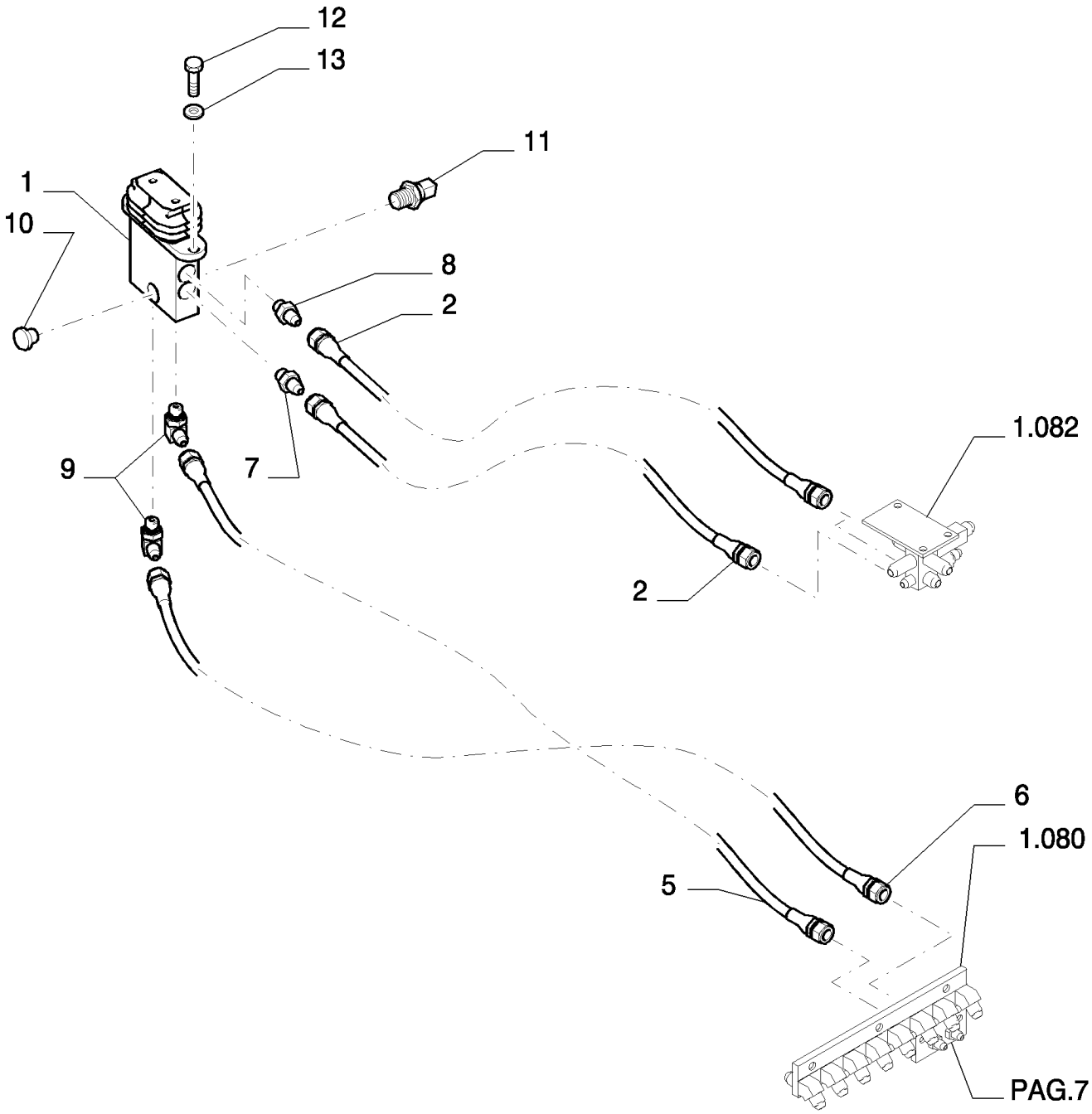

Copyright © New Holland

MARTILLO HIDRÁULICO (L=2.94 MT) - OPTIONAL CODE 461232068 (04-05-06)
HYDRAULIC HAMMER (L=2.94 MT) - OPTIONAL CODE 461232068 (04-05-06)
HYDRAULIC HAMMER (L=2.94 MT) - OPTIONAL CODE 461232068 (04-05-06)
HYDRAULIC HAMMER (L=2.94 MT) - OPTIONAL CODE 461232068 (04-05-06)

R	N	P.N.	MOD	Q	Description Denominacion	Descrizione Beskrivelse	Bezeichnung Denominação	Description Beschrijving	L.C.
1	1	72204155		1	HYDRAULIC VALVE VÁLVULA HIDRÁULICA	DISTRIBUTORE IDRAULI HYDRAULIKVENTIL	HYDRAULIKVENTIL VÁLVULA HIDRÁULICA	SOUPAPE HYDRAULIQU HYDRAULISCHE KLEP	010V
2		87338415		2	FLEXIBLE HOSE TUBO FLEXIBLE	TUBO FLESSIBILE FLEKSIBEL SLANGE	BIEGSAMER SCHLAUCH MANGUEIRA FLEXÍVEL	TUYAU FLEXIBLE FLEXIBELE SLANG	192T
5		2420R349D170		1	FLEXIBLE HOSE TUBO FLEXIBLE	TUBO FLESSIBILE FLEKSIBEL SLANGE	BIEGSAMER SCHLAUCH MANGUEIRA FLEXÍVEL	TUYAU FLEXIBLE FLEXIBELE SLANG	192T
6		2420R349D175		1	FLEXIBLE HOSE TUBO FLEXIBLE	TUBO FLESSIBILE FLEKSIBEL SLANGE	BIEGSAMER SCHLAUCH MANGUEIRA FLEXÍVEL	TUYAU FLEXIBLE FLEXIBELE SLANG	192T
7		87522432		1	HYD CONNECTOR CONECTOR HIDRÁULIC	CONNETTORE IDRAULI HYDRAULIKSTIK	HYDR STECKVERBINDE CONECTOR HID.	CONNECTEUR HYDRAU HYDRAULISCHE AANSL	020R
8		72214744		1	HYD CONNECTOR CONECTOR HIDRÁULIC	CONNETTORE IDRAULI HYDRAULIKSTIK	HYDR STECKVERBINDE CONECTOR HID.	CONNECTEUR HYDRAU HYDRAULISCHE AANSL	020R
9		72214524		2	HYD CONNECTOR CONECTOR HIDRÁULIC	CONNETTORE IDRAULI HYDRAULIKSTIK	HYDR STECKVERBINDE CONECTOR HID.	CONNECTEUR HYDRAU HYDRAULISCHE AANSL	020R
10		72214663		1	PLUG TAPÓN	TAPPO PROP	STOPFEN TAMPÃO	BOUCHON PLUG	050T
11		87608371		1	SENSOR SENSOR	SENSORE FØLER	SENSOR SENSOR	CAPTEUR SENSOR	608S
12		11106434		2	BOLT, Hex, M10 x 30, 10.9, Full Thd PERNO	BULLONE BOLT	SCHRAUBE PARAFUSO	VIS BOUT	140B
13		12641031		2	LOCK WASHER ARANDELA DE BLOQUE	RONDELLA DI SICUREZ LÅSESKIVE	SICHERUNGSSCHEIBE ANILHA DE RETENÇÃO	RONDELLE FREIN BORGRING	132R

(1) ASSY SEE PAGE 7

Copyright © New Holland

5.0023	14	p1	03/10

HYDRAULIC HAMMER (L=2.94 MT) - OPTIONAL CODE 461232068 (04-05-06)
MARTELLO IDRAULICO (L=2.94 MT) - CODICE VARIANTE 461232068 (04-05-06)
HYDRAULISCHER HAMMER (L=2.94 MT) - OPTIONAL CODE 461232068 (04-05-06)
MARTEAU HYDRAULIQUE (L=2.94 MT) - OPTIONAL CODE 461232068 (04-05-06)

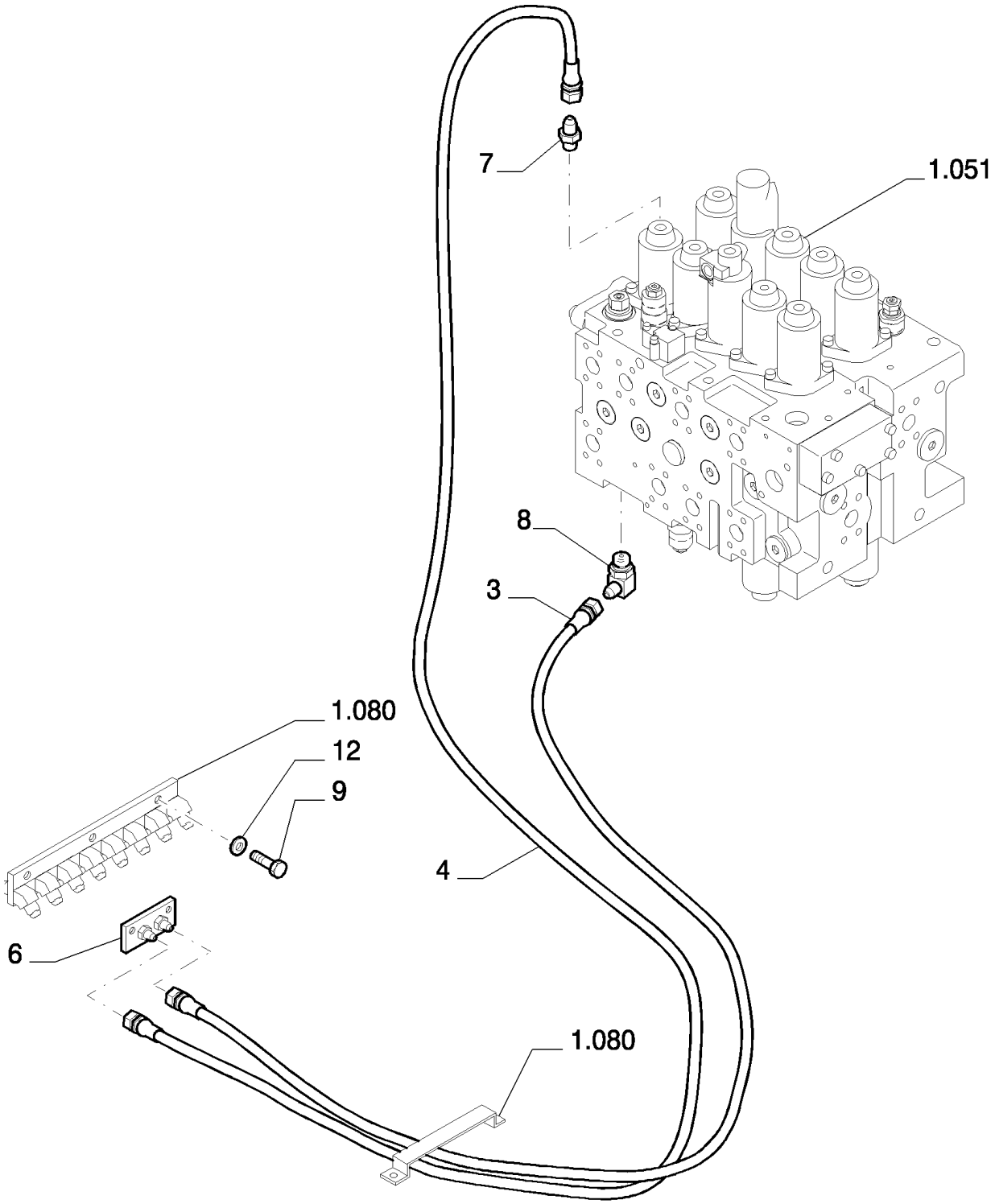

Copyright © New Holland

MARTILLO HIDRÁULICO (L=2.94 MT) - OPTIONAL CODE 461232068 (04-05-06)
HYDRAULIC HAMMER (L=2.94 MT) - OPTIONAL CODE 461232068 (04-05-06)
HYDRAULIC HAMMER (L=2.94 MT) - OPTIONAL CODE 461232068 (04-05-06)
HYDRAULIC HAMMER (L=2.94 MT) - OPTIONAL CODE 461232068 (04-05-06)

R	N	P.N.	MOD	Q	Description Denominacion	Descrizione Beskrivelse	Bezeichnung Denominação	Description Beschrijving	L.C.
3		72214739		1	FLEXIBLE HOSE TUBO FLEXIBLE	TUBO FLESSIBILE FLEKSIBEL SLANGE	BIEGSAMER SCHLAUCH MANGUEIRA FLEXÍVEL	TUYAU FLEXIBLE FLEXIBELE SLANG	192T
4		87536897		1	FLEXIBLE HOSE TUBO FLEXIBLE	TUBO FLESSIBILE FLEKSIBEL SLANGE	BIEGSAMER SCHLAUCH MANGUEIRA FLEXÍVEL	TUYAU FLEXIBLE FLEXIBELE SLANG	192T
6		87579546		1	BLOCK BLOQUE	BLOCCO MOTORBLOK	BLOCK BLOCO	BLOC BLOK	074B
7		72214522		1	HYD CONNECTOR CONECTOR HIDRÁULIC	CONNETTORE IDRAULIC HYDRAULIKSTIK	HYDR STECKVERBINDE CONECTOR HID.	CONNECTEUR HYDRAU HYDRAULISCHE AANSL	020R
8		72214561		1	HYD CONNECTOR CONECTOR HIDRÁULIC	CONNETTORE IDRAULIC HYDRAULIKSTIK	HYDR STECKVERBINDE CONECTOR HID.	CONNECTEUR HYDRAU HYDRAULISCHE AANSL	020R
9		11106434		3	BOLT, Hex, M10 x 30, 10.9, Full Thd PERNO	BULLONE BOLT	SCHRAUBE PARAFUSO	VIS BOUT	140B
12		12641031		3	LOCK WASHER ARANDELA DE BLOQUE	RONDELLA DI SICUREZ LÅSESKIVE	SICHERUNGSSCHEIBE ANILHA DE RETENÇÃO	RONDELLE FREIN BORGRING	132R

Copyright © New Holland

5.0023	15	p1	03/10

HYDRAULIC HAMMER (L=2.94 MT) - OPTIONAL CODE 461232068 (04-05-06)
MARTELLO IDRAULICO (L=2.94 MT) - CODICE VARIANTE 461232068 (04-05-06)
HYDRAULISCHER HAMMER (L=2.94 MT) - OPTIONAL CODE 461232068 (04-05-06)
MARTEAU HYDRAULIQUE (L=2.94 MT) - OPTIONAL CODE 461232068 (04-05-06)

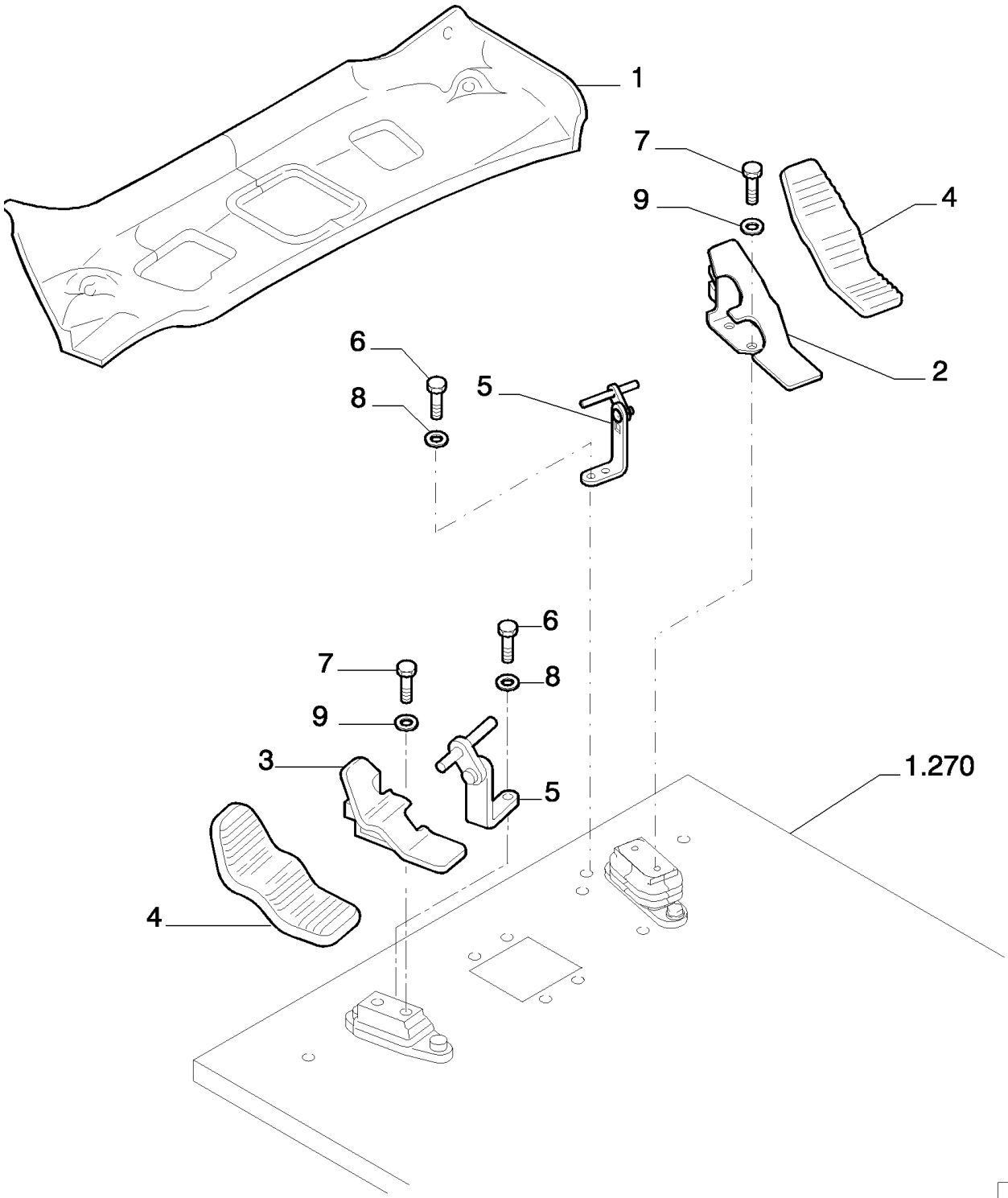

Copyright © New Holland

MARTILLO HIDRÁULICO (L=2.94 MT) - OPTIONAL CODE 461232068 (04-05-06)
HYDRAULIC HAMMER (L=2.94 MT) - OPTIONAL CODE 461232068 (04-05-06)
HYDRAULIC HAMMER (L=2.94 MT) - OPTIONAL CODE 461232068 (04-05-06)
HYDRAULIC HAMMER (L=2.94 MT) - OPTIONAL CODE 461232068 (04-05-06)

R	N	P.N.	MOD	Q	Description Denominacion	Descrizione Beskrivelse	Bezeichnung Denominação	Description Beschrijving	L.C.
1		YN26M00075P1		1	FLOOR MAT ALFOMBRA	TAPPETINO GULVMÅTTE	BODENMATTE TAPETE DE CHÃO	TAPIS DE SOL VLOERMAT	Z068
2		87539195		1	PEDAL PEDAL	PEDALE PEDAL	PEDAL PEDAL	PEDALE PEDAAL	060P
3		87539200		1	PEDAL PEDAL	PEDALE PEDAL	PEDAL PEDAL	PEDALE PEDAAL	060P
4		87539205		2	RUBBER PEDAL PAD PASTILLA DE PEDAL DE	RIVESTIMENTO PEDALE GUMMIPEDALBELÆGNI	GUMMIPEDALAUFLAGE BORRACHA COBERTUR	PATIN DE PEDALE CAOU RUBBEREN PEDAALBEK	292C
5		87539206		2	BRACKET SOPORTE	STAFFA BESLAG	HALTERUNG SUPORTE	SUPPORT STEUN	225S
6		16043434		4	BOLT, Hex, M8 x 20, 10.9, Full Thd PERNO	BULLONE BOLT	SCHRAUBE PARAFUSO	VIS BOUT	140B
7		11106034		4	BOLT, Hex, M10 x 20, 10.9, Full Thd PERNO	BULLONE BOLT	SCHRAUBE PARAFUSO	VIS BOUT	140B
8		14496531		4	WASHER, M8 x 17 x 1.6 ARANDELA	RONDELLA FLADSKIVE	UNTERLEGSCHEIBE ANILHA	RONDELLE SLUITRING	131R
9		14496631		4	WASHER, M10 x 21 x 2 ARANDELA	RONDELLA FLADSKIVE	UNTERLEGSCHEIBE ANILHA	RONDELLE SLUITRING	131R

Copyright © New Holland

5.0023	16	p1	03/10

HYDRAULIC HAMMER (L=2.94 MT) - OPTIONAL CODE 461232068 (04-05-06)
MARTELLO IDRAULICO (L=2.94 MT) - CODICE VARIANTE 461232068 (04-05-06)
HYDRAULISCHER HAMMER (L=2.94 MT) - OPTIONAL CODE 461232068 (04-05-06)
MARTEAU HYDRAULIQUE (L=2.94 MT) - OPTIONAL CODE 461232068 (04-05-06)

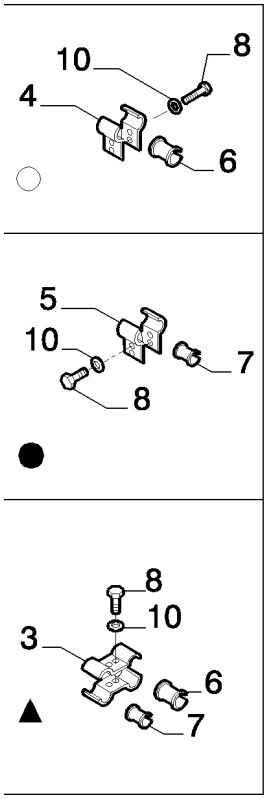

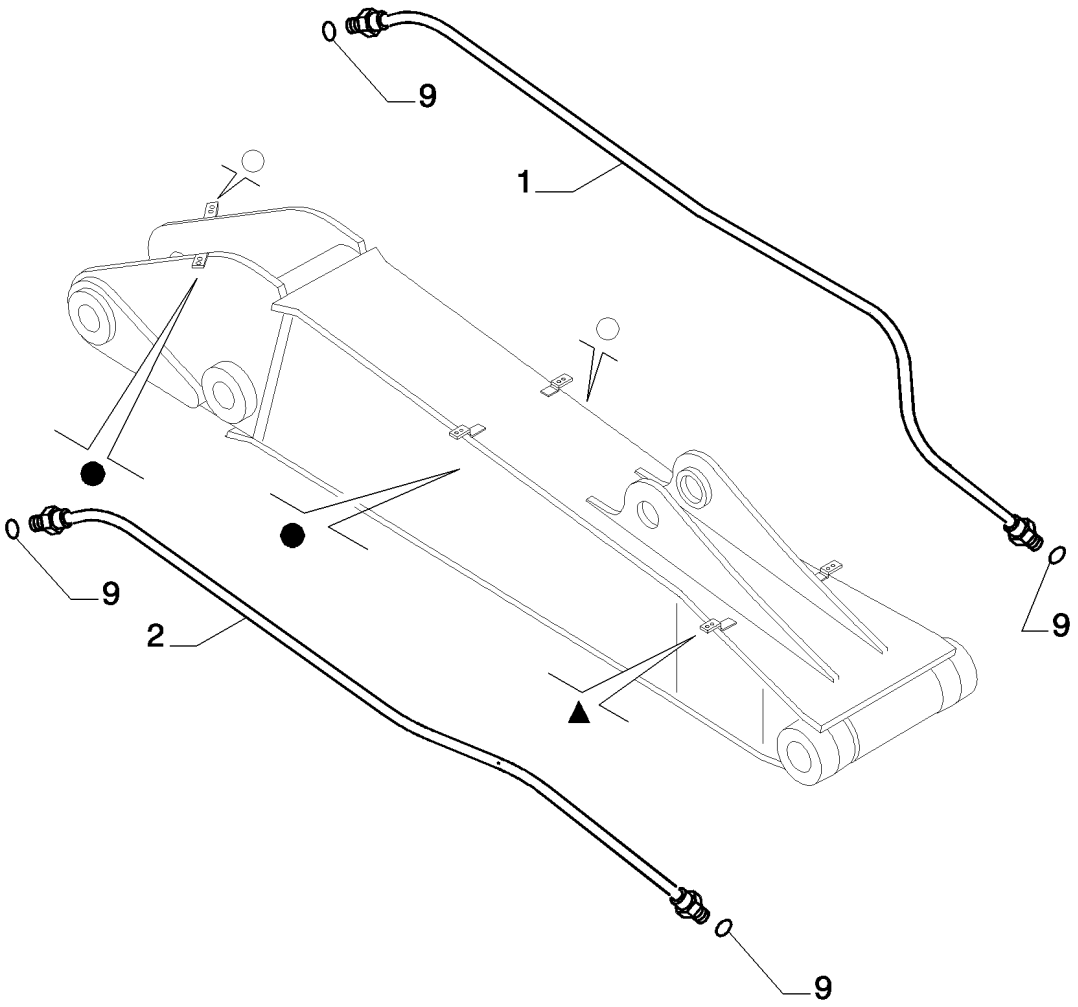

Copyright © New Holland

MARTILLO HIDRÁULICO (L=2.94 MT) - OPTIONAL CODE 461232068 (04-05-06)
HYDRAULIC HAMMER (L=2.94 MT) - OPTIONAL CODE 461232068 (04-05-06)
HYDRAULIC HAMMER (L=2.94 MT) - OPTIONAL CODE 461232068 (04-05-06)
HYDRAULIC HAMMER (L=2.94 MT) - OPTIONAL CODE 461232068 (04-05-06)

R	N	P.N.	MOD	Q	Description Denominacion	Descrizione Beskrivelse	Bezeichnung Denominação	Description Beschrijving	L.C.
1		87632032		1	RIGID TUBE TUBO RÍGIDO	TUBO RIGIDO STIFT RØR	ROHR TUBO RÍGIDO	TUYAU RIGIDE VASTE LEIDING	193T
2		87632030		1	RIGID TUBE TUBO RÍGIDO	TUBO RIGIDO STIFT RØR	ROHR TUBO RÍGIDO	TUYAU RIGIDE VASTE LEIDING	193T
3		87349655		2	BRACKET SOPORTE	STAFFA BESLAG	HALTERUNG SUPORTE	SUPPORT STEUN	225S
4		87349673		4	BRACKET SOPORTE	STAFFA BESLAG	HALTERUNG SUPORTE	SUPPORT STEUN	225S
5		87349692		4	BRACKET SOPORTE	STAFFA BESLAG	HALTERUNG SUPORTE	SUPPORT STEUN	225S
6		87349642		3	BUSHING CASQUILLO	BOCCOLA BØSNING	BUCHSE CASQUILHO	BAGUE BUS	095B
7		87349648		3	BUSHING CASQUILLO	BOCCOLA BØSNING	BUCHSE CASQUILHO	BAGUE BUS	095B
8		11112634		10	SCREW TORNILLO	VITE SKRUE	SCHRAUBE PARAFUSO	VIS SCHROEF	040V
9		70931640		2	GASKET JUNTA	GUARNIZIONE PAKNING	DICHTUNG JUNTA	JOINT PAKKING	123G
10		14496731		10	WASHER, M12 x 24 x 2.5 Thk ARANDELA	RONDELLA FLADSKIVE	UNTERLEGSCHEIBE ANILHA	RONDELLE SLUITRING	131R

Copyright © New Holland

5.0023	17	p1	03/10

HYDRAULIC HAMMER (L=2.94 MT) - OPTIONAL CODE 461232068 (04-05-06)
MARTELLO IDRAULICO (L=2.94 MT) - CODICE VARIANTE 461232068 (04-05-06)
HYDRAULISCHER HAMMER (L=2.94 MT) - OPTIONAL CODE 461232068 (04-05-06)
MARTEAU HYDRAULIQUE (L=2.94 MT) - OPTIONAL CODE 461232068 (04-05-06)

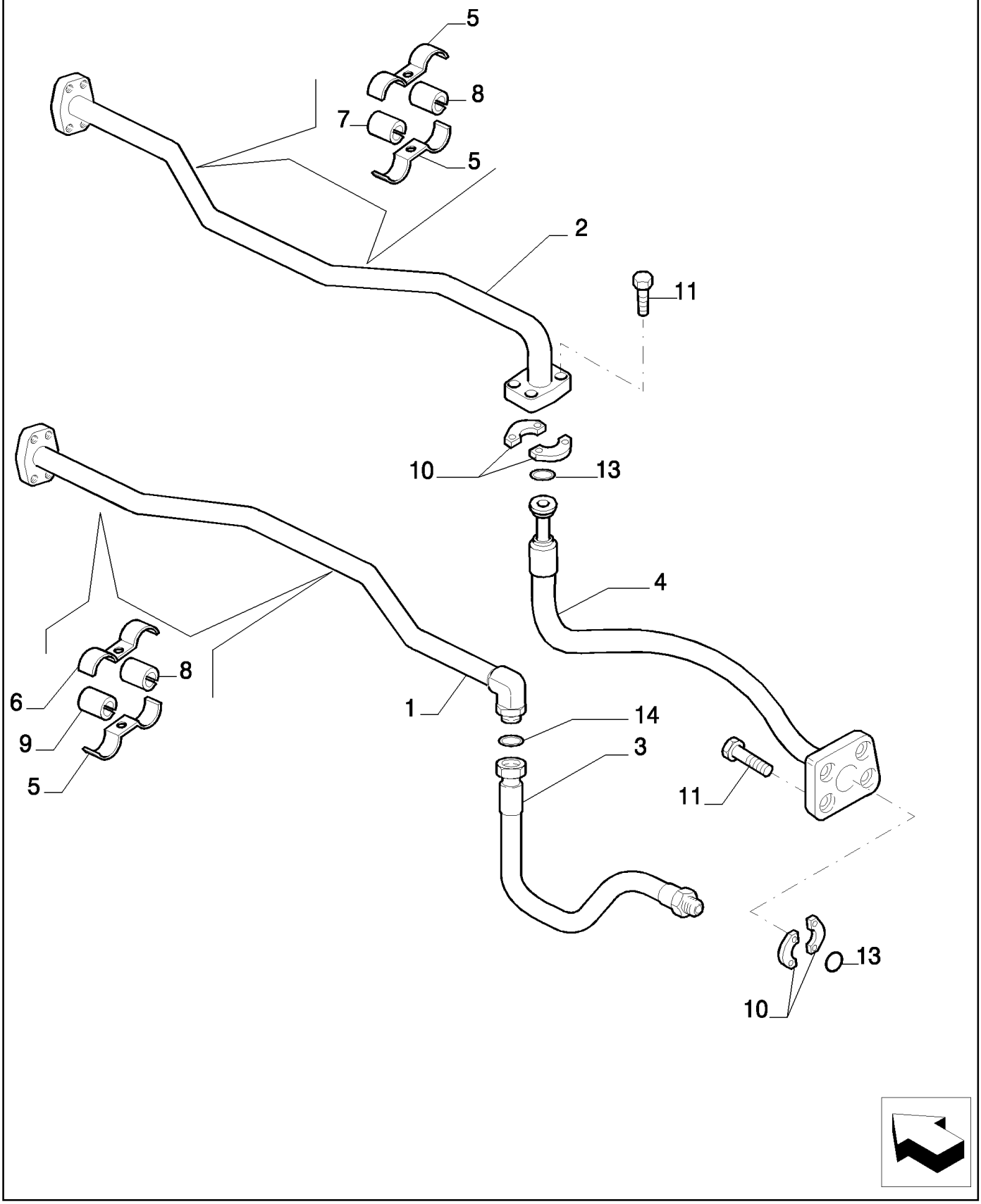

Copyright © New Holland

MARTILLO HIDRÁULICO (L=2.94 MT) - OPTIONAL CODE 461232068 (04-05-06)
HYDRAULIC HAMMER (L=2.94 MT) - OPTIONAL CODE 461232068 (04-05-06)
HYDRAULIC HAMMER (L=2.94 MT) - OPTIONAL CODE 461232068 (04-05-06)
HYDRAULIC HAMMER (L=2.94 MT) - OPTIONAL CODE 461232068 (04-05-06)

R	N	P.N.	MOD	Q	Description Denominacion	Descrizione Beskrivelse	Bezeichnung Denominação	Description Beschrijving	L.C.
1		87529912		1	RIGID TUBE TUBO RÍGIDO	TUBO RIGIDO STIFT RØR	ROHR TUBO RÍGIDO	TUYAU RIGIDE VASTE LEIDING	193T
2		87572206		1	RIGID TUBE TUBO RÍGIDO	TUBO RIGIDO STIFT RØR	ROHR TUBO RÍGIDO	TUYAU RIGIDE VASTE LEIDING	193T
3		72207171		1	FLEXIBLE HOSE TUBO FLEXIBLE	TUBO FLESSIBILE FLEKSIBEL SLANGE	BIEGSAMER SCHLAUCH MANGUEIRA FLEXÍVEL	TUYAU FLEXIBLE FLEXIBELE SLANG	192T
4		87572218		1	FLEXIBLE HOSE TUBO FLEXIBLE	TUBO FLESSIBILE FLEKSIBEL SLANGE	BIEGSAMER SCHLAUCH MANGUEIRA FLEXÍVEL	TUYAU FLEXIBLE FLEXIBELE SLANG	192T
5		87349655		4	BRACKET SOPORTE	STAFFA BESLAG	HALTERUNG SUPORTE	SUPPORT STEUN	225S
6		87353061		4	BRACKET SOPORTE	STAFFA BESLAG	HALTERUNG SUPORTE	SUPPORT STEUN	225S
7		87349642		2	BUSHING CASQUILLO	BOCCOLA BØSNING	BUCHSE CASQUILHO	BAGUE BUS	095B
8		72151580		4	BUSHING CASQUILLO	BOCCOLA BØSNING	BUCHSE CASQUILHO	BAGUE BUS	095B
9		87343521		2	BUSHING CASQUILLO	BOCCOLA BØSNING	BUCHSE CASQUILHO	BAGUE BUS	095B
10		71444029		4	HALF-FLANGE SEMIBRIDA	SEMIFLANGIA FLANGEHALVDEL	FLANSCHHÄLFTE MEIA FLANGE	DEMI-BRIDE FLENSHELFT	417S
11		14424534		8	SCREW TORNILLO	VITE SKRUE	SCHRAUBE PARAFUSO	VIS SCHROEF	040V
13		70924192		2	O-RING JUNTA TÓRICA	ANELLO TOROIDALE O-RING	O-RING O-RING	JOINT TORIQUE O-RING	055A
14		70931640		1	GASKET JUNTA	GUARNIZIONE PAKNING	DICHTUNG JUNTA	JOINT PAKKING	123G

Copyright © New Holland

5.0023	18	p1	03/10

HYDRAULIC HAMMER (L=2.94 MT) - OPTIONAL CODE 461232058 (01-02-03) - 461232068 (04-05-06)
MARTELLO IDRAULICO (L=2.94 MT) - CODICE VARIANTE 461232058 (01-02-03) - 461232068 (04-05-06)
HYDRAULISCHER HAMMER (L=2.94 MT) - OPTIONAL CODE 461232058 (01-02-03) - 461232068 (04-05-06)
MARTEAU HYDRAULIQUE (L=2.94 MT) - OPTIONAL CODE 461232058 (01-02-03) - 461232068 (04-05-06)

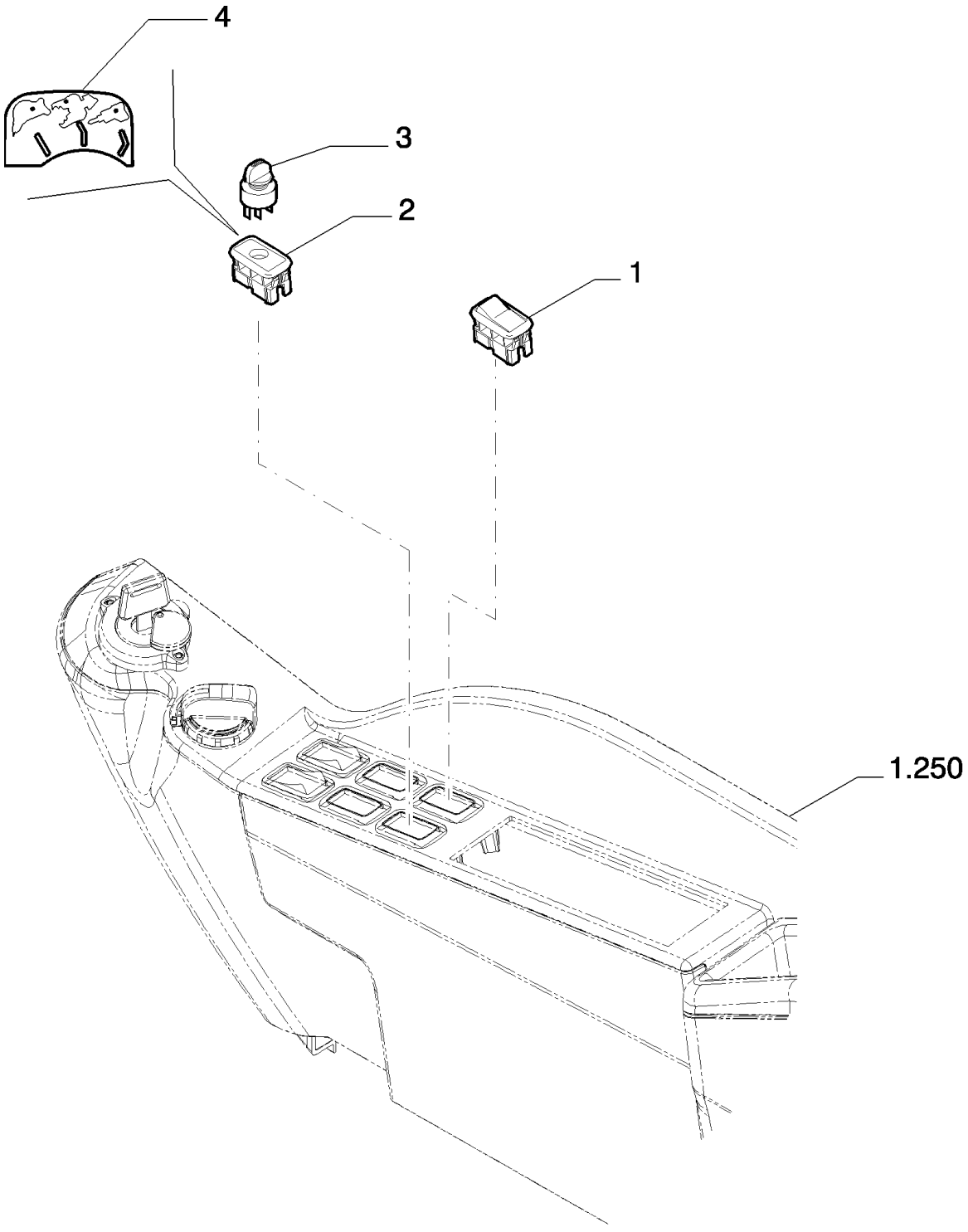

Copyright © New Holland

MARTILLO HIDRÁULICO (L=2.94 MT) - OPTIONAL CODE 461232058 (01-02-03) - 461232068 (04-05-06)
HYDRAULIC HAMMER (L=2.94 MT) - OPTIONAL CODE 461232058 (01-02-03) - 461232068 (04-05-06)
HYDRAULIC HAMMER (L=2.94 MT) - OPTIONAL CODE 461232058 (01-02-03) - 461232068 (04-05-06)
HYDRAULIC HAMMER (L=2.94 MT) - OPTIONAL CODE 461232058 (01-02-03) - 461232068 (04-05-06)

R	N	P.N.	MOD	Q	Description Denominacion	Descrizione Beskrivelse	Bezeichnung Denominação	Description Beschrijving	L.C.
1		87527531		1	SWITCH INTERRUPTOR	INTERRUTTORE KONTAKT	SCHALTER INTERRUPTOR	CONTACTEUR SCHAKELAAR	075I
2		YN17M01313P3		1	BRACKET SOPORTE	STAFFA BESLAG	HALTERUNG SUPORTE	SUPPORT STEUN	225S
3		72280246		1	SWITCH INTERRUPTOR	INTERRUTTORE KONTAKT	SCHALTER INTERRUPTOR	CONTACTEUR SCHAKELAAR	075I
4		YN17M01417P1		1	LABEL ETIQUETA	ETICHETTA ETIKET	KENNZEICHNUNG ETIQUETA	ETIQUETTE LABEL	077E

Copyright © New Holland

5.0024	01	p1	03/10

HYDRAULIC HAMMER (L=3.5 MT) - OPTIONAL CODE 461235028 (01-02-03) - 461235038 (04-05-06)
MARTELLO IDRAULICO (L=3.5 MT) - CODICE VARIANTE 461235028 (01-02-03) - 461235038 (04-05-06)
HYDRAULISCHER HAMMER (L=3.5 MT) - OPTIONAL CODE 461235028 (01-02-03) - 461235038 (04-05-06)
MARTEAU HYDRAULIQUE (L=3.5 MT) - OPTIONAL CODE 461235028 (01-02-03) - 461235038 (04-05-06)

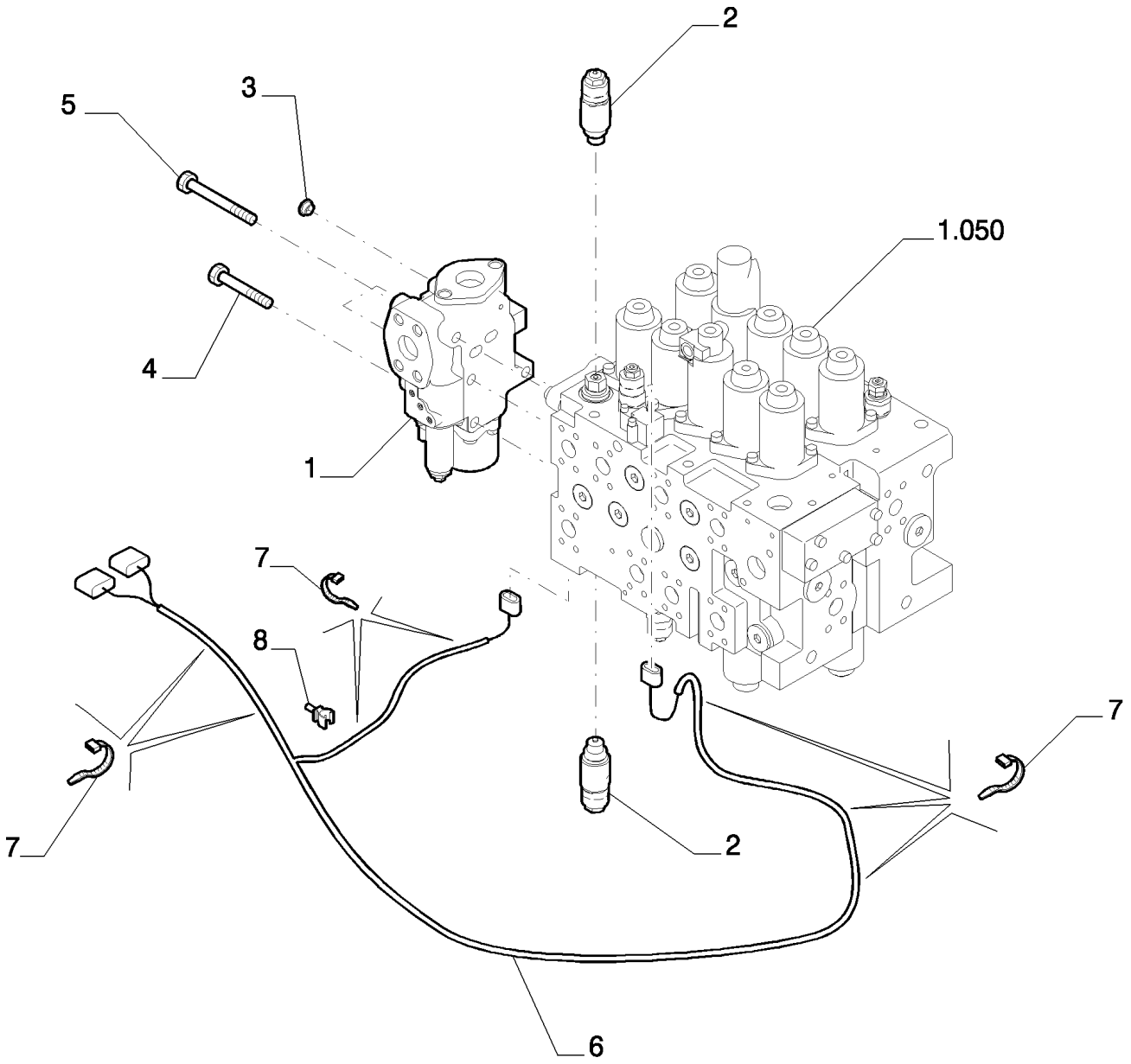

Copyright © New Holland

MARTILLO HIDRÁULICO (L=3.5 MT) - OPTIONAL CODE 461235028 (01-02-03) - 461235038 (04-05-06)
HYDRAULIC HAMMER (L=3.5 MT) - OPTIONAL CODE 461235028 (01-02-03) - 461235038 (04-05-06)
HYDRAULIC HAMMER (L=3.5 MT) - OPTIONAL CODE 461235028 (01-02-03) - 461235038 (04-05-06)
HYDRAULIC HAMMER (L=3.5 MT) - OPTIONAL CODE 461235028 (01-02-03) - 461235038 (04-05-06)

R	N	P.N.	MOD	Q	Description Denominacion	Descrizione Beskrivelse	Bezeichnung Denominação	Description Beschrijving	L.C.
1	1	87520007		1	HYDRAULIC VALVE VÁLVULA HIDRÁULICA	DISTRIBUTORE IDRAULI HYDRAULIKVENTIL	HYDRAULIKVENTIL VÁLVULA HIDRÁULICA	SOUPAPE HYDRAULIQU HYDRAULISCHE KLEP	010V
2	2	87579594		2	HYDRAULIC VALVE VÁLVULA HIDRÁULICA	DISTRIBUTORE IDRAULI HYDRAULIKVENTIL	HYDRAULIKVENTIL VÁLVULA HIDRÁULICA	SOUPAPE HYDRAULIQU HYDRAULISCHE KLEP	010V
3		87643223		1	PLUG TAPÓN	TAPPO PROP	STOPFEN TAMPÃO	BOUCHON PLUG	050T
4		14423034		1	SCREW TORNILLO	VITE SKRUE	SCHRAUBE PARAFUSO	VIS SCHROEF	040V
5		87609321		3	SCREW TORNILLO	VITE SKRUE	SCHRAUBE PARAFUSO	VIS SCHROEF	040V
6		87599406		1	ELECTRIC CABLE CABLE ELÉCTRICO	CAVO ELETTRICO EL-KABEL	ELEKTROKABEL CABO ELÉCTRICO	CABLE ELECTRIQUE ELEKTRICITEITSKABEL	111C
7		4982514		7	CABLE STRAP BANDA DE CABLE	FASCETTA PER CAVO KABELSTROP	KABELBINDER BRAÇADEIRA DE CABO	BRIDE DE CABLE BUNDELBAND	P716
8		87526680		1	RETAINER COLLAR COLLAR DE RETENCIÓN	COLLARE DI FISSAGGIC RING, SPÆNDE	HALTERING ANEL DE FIXAÇÃO	COLLIER DE RETENUE BORGKRAAG	230S

(1) ASSY SEE PAGE 2
(2) ASSY SEE PAGE 3

Copyright © New Holland

5.0024	02	p1	03/10

HYDRAULIC HAMMER (L=3.5 MT) - COMPONENTS - OPTIONAL CODE 461235028 (01-02-03) - 461235038 (04-05-06)
MARTELLO IDRAULICO (L=3.5 MT) - COMPONENTI - OPTIONAL CODE 461235028 (01-02-03) - 461235038 (04-05-06)
HYDRAULISCHER HAMMER (L=3.5 MT) - BESTANDTEILE - OPTIONAL CODE 461235028 (01-02-03) - 461235038 (04-05-06)
MARTEAU HYDRAULIQUE (L=3.5 MT) - COMPOSANTS - OPTIONAL CODE 461235028 (01-02-03) - 461235038 (04-05-06)

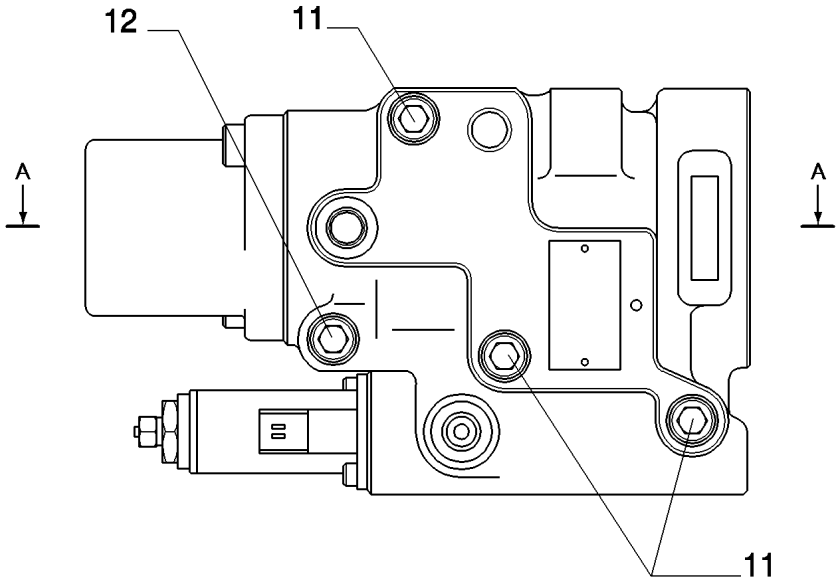

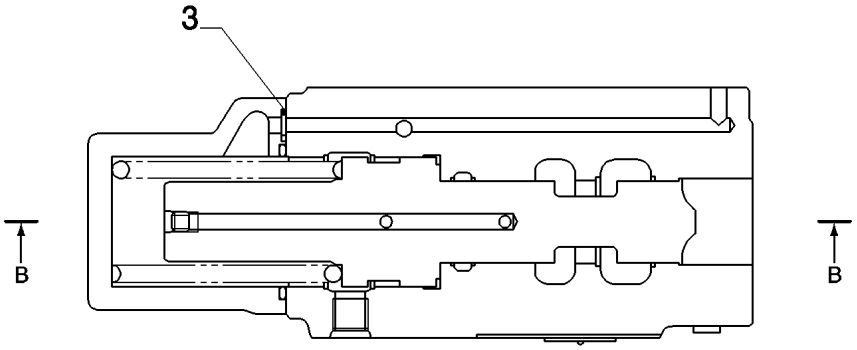

Sez. A–A

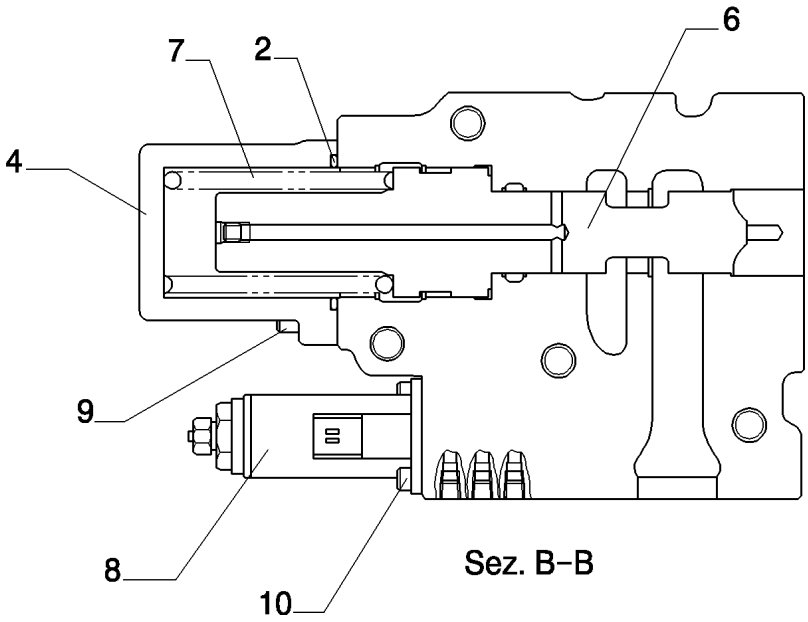

Sez. B–B

Copyright © New Holland

MARTILLO HIDRÁULICO (L=3.5 MT) - COMPONENTES - OPTIONAL CODE 461235028 (01-02-03) - 461235038 (04-05-06)
HYDRAULIC HAMMER (L=3.5 MT) - COMPONENTS - OPTIONAL CODE 461235028 (01-02-03) - 461235038 (04-05-06)
HYDRAULIC HAMMER (L=3.5 MT) - COMPONENTS - OPTIONAL CODE 461235028 (01-02-03) - 461235038 (04-05-06)
HYDRAULIC HAMMER (L=3.5 MT) - COMPONENTS - OPTIONAL CODE 461235028 (01-02-03) - 461235038 (04-05-06)

R	N	P.N.	MOD	Q	Description Denominacion	Descrizione Beskrivelse	Bezeichnung Denominação	Description Beschrijving	L.C.
2		72960987		1	O-RING JUNTA TÓRICA	ANELLO TOROIDALE O-RING	O-RING O-RING	JOINT TORIQUE O-RING	055A
3		72283326		1	O-RING JUNTA TÓRICA	ANELLO TOROIDALE O-RING	O-RING O-RING	JOINT TORIQUE O-RING	055A
4		YN30V00104S201		1	COVER CUBIERTA	COPERCHIO DÆKSEL	ABDECKUNG COBERTURA	COUVERCLE AFSCHERMING	265C
6		YN30V00104S301		1	SPOOL BOBINA	STELO SPOLE	KOLBENSCHIEBER CARRETO	TIROIR SPOEL	134P
7		YN30V00104S321		1	SPRING RESORTE	MOLLA FJEDER	FEDER MOLA	RESSORT VEER	100M
8		YN35V00050F1		1	VALVE VÁLVULA	VALVOLA VENTIL	VENTIL VÁLVULA	SOUPAPE KLEP	9620
9		14420170		2	SCREW TORNILLO	VITE SKRUE	SCHRAUBE PARAFUSO	VIS SCHROEF	040V
10		72209810		2	SCREW TORNILLO	VITE SKRUE	SCHRAUBE PARAFUSO	VIS SCHROEF	040V
11		72964521		3	SCREW TORNILLO	VITE SKRUE	SCHRAUBE PARAFUSO	VIS SCHROEF	040V
12		14423070		1	SCREW TORNILLO	VITE SKRUE	SCHRAUBE PARAFUSO	VIS SCHROEF	040V

VALVE ASSY P/N 87520007

E215B

Copyright © New Holland

5.0024	03	p1	03/10

HYDRAULIC HAMMER (L=3.5 MT) - COMPONENTS - OPTIONAL CODE 461235028 (01-02-03) - 461235038 (04-05-06)
MARTELLO IDRAULICO (L=3.5 MT) - COMPONENTI - CODICE VARIANTE 461235028 (01-02-03) - 461235038 (04-05-06)
HYDRAULISCHER HAMMER (L=3.5 MT) - BESTANDTEILE - OPTIONAL CODE 461235028 (01-02-03) - 461235038 (04-05-06)
MARTEAU HYDRAULIQUE (L=3.5 MT) - COMPOSANTS - OPTIONAL CODE 461235028 (01-02-03) - 461235038 (04-05-06)

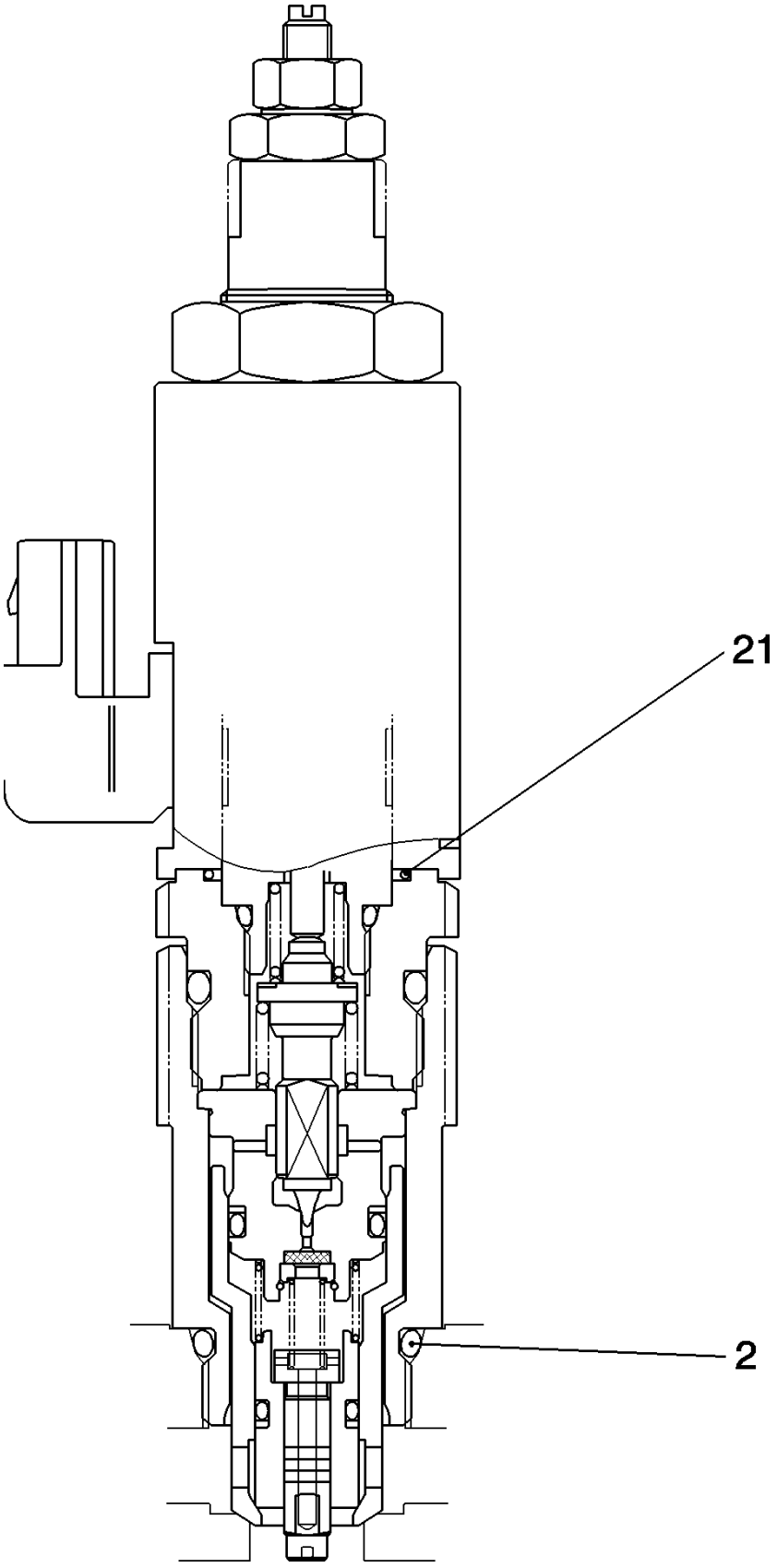

Copyright © New Holland

MARTILLO HIDRÁULICO (L=3.5 MT) - COMPONENTES - OPTIONAL CODE 461235028 (01-02-03) - 461235038 (04-05-06)
HYDRAULIC HAMMER (L=3.5 MT) - COMPONENTS - OPTIONAL CODE 461235028 (01-02-03) - 461235038 (04-05-06)
HYDRAULIC HAMMER (L=3.5 MT) - COMPONENTS - OPTIONAL CODE 461235028 (01-02-03) - 461235038 (04-05-06)
HYDRAULIC HAMMER (L=3.5 MT) - COMPONENTS - OPTIONAL CODE 461235028 (01-02-03) - 461235038 (04-05-06)

R	N	P.N.	MOD	Q	Description Denominacion	Descrizione Beskrivelse	Bezeichnung Denominação	Description Beschrijving	L.C.
2		72209838		1	O-RING JUNTA TÓRICA	ANELLO TOROIDALE O-RING	O-RING O-RING	JOINT TORIQUE O-RING	055A
21		YN22V00035S701		1	O-RING JUNTA TÓRICA	ANELLO TOROIDALE O-RING	O-RING O-RING	JOINT TORIQUE O-RING	055A

Copyright © New Holland

5.0024	04	p1	03/10

HYDRAULIC HAMMER (L=3.5 MT) - OPTIONAL CODE 461235028 (01-02-03) - 461235038 (04-05-06)
MARTELLO IDRAULICO (L=3.5 MT) - CODICE VARIANTE 461235028 (01-02-03) - 461235038 (04-05-06)
HYDRAULISCHER HAMMER (L=3.5 MT) - OPTIONAL CODE 461235028 (01-02-03) - 461235038 (04-05-06)
MARTEAU HYDRAULIQUE (L=3.5 MT) - OPTIONAL CODE 461235028 (01-02-03) - 461235038 (04-05-06)

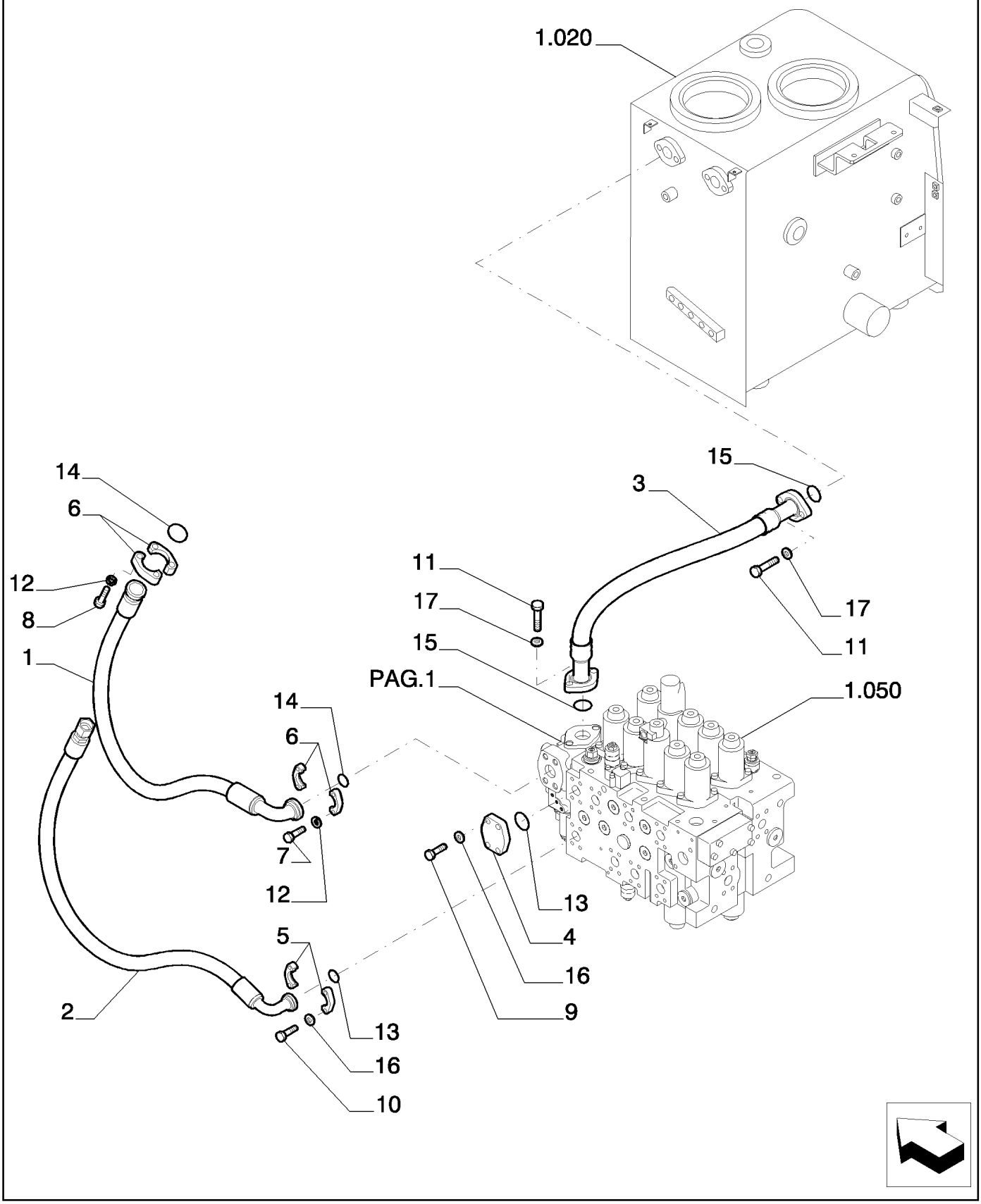

Copyright © New Holland

MARTILLO HIDRÁULICO (L=3.5 MT) - OPTIONAL CODE 461235028 (01-02-03) - 461235038 (04-05-06)
HYDRAULIC HAMMER (L=3.5 MT) - OPTIONAL CODE 461235028 (01-02-03) - 461235038 (04-05-06)
HYDRAULIC HAMMER (L=3.5 MT) - OPTIONAL CODE 461235028 (01-02-03) - 461235038 (04-05-06)
HYDRAULIC HAMMER (L=3.5 MT) - OPTIONAL CODE 461235028 (01-02-03) - 461235038 (04-05-06)

R	N	P.N.	MOD	Q	Description Denominacion	Descrizione Beskrivelse	Bezeichnung Denominação	Description Beschrijving	L.C.
1		87521883		1	FLEXIBLE HOSE TUBO FLEXIBLE	TUBO FLESSIBILE FLEKSIBEL SLANGE	BIEGSAMER SCHLAUCH MANGUEIRA FLEXÍVEL	TUYAU FLEXIBLE FLEXIBELE SLANG	192T
2		87521884		1	FLEXIBLE HOSE TUBO FLEXIBLE	TUBO FLESSIBILE FLEKSIBEL SLANGE	BIEGSAMER SCHLAUCH MANGUEIRA FLEXÍVEL	TUYAU FLEXIBLE FLEXIBELE SLANG	192T
3		87521882		1	FLEXIBLE HOSE TUBO FLEXIBLE	TUBO FLESSIBILE FLEKSIBEL SLANGE	BIEGSAMER SCHLAUCH MANGUEIRA FLEXÍVEL	TUYAU FLEXIBLE FLEXIBELE SLANG	192T
4		87397570		1	COVER CUBIERTA	COPERCHIO DÆKSEL	ABDECKUNG COBERTURA	COUVERCLE AFSCHERMING	265C
5		71404311		2	HALF-FLANGE SEMIBRIDA	SEMIFLANGIA FLANGEHALVDEL	FLANSCHHÄLFTE MEIA FLANGE	DEMI-BRIDE FLENSHELFT	417S
6		71444029		4	HALF-FLANGE SEMIBRIDA	SEMIFLANGIA FLANGEHALVDEL	FLANSCHHÄLFTE MEIA FLANGE	DEMI-BRIDE FLENSHELFT	417S
7		11116034		4	SCREW TORNILLO	VITE SKRUE	SCHRAUBE PARAFUSO	VIS SCHROEF	040V
8		11116234		4	SCREW TORNILLO	VITE SKRUE	SCHRAUBE PARAFUSO	VIS SCHROEF	040V
9		11106434		4	BOLT, Hex, M10 x 30, 10.9, Full Thd PERNO	BULLONE BOLT	SCHRAUBE PARAFUSO	VIS BOUT	140B
10		11106634		4	BOLT, Hex, M10 x 35, 10.9, Full Thd PERNO	BULLONE BOLT	SCHRAUBE PARAFUSO	VIS BOUT	140B
11		11112634		4	SCREW TORNILLO	VITE SKRUE	SCHRAUBE PARAFUSO	VIS SCHROEF	040V
12		10517174		8	LOCK WASHER ARANDELA DE BLOQUE	RONDELLA DI SICUREZ LÅSESKIVE	SICHERUNGSSCHEIBE ANILHA DE RETENÇÃO	RONDELLE FREIN BORGRING	132R
13		70924200		2	O-RING JUNTA TÓRICA	ANELLO TOROIDALE O-RING	O-RING O-RING	JOINT TORIQUE O-RING	055A
14		70924192		2	O-RING JUNTA TÓRICA	ANELLO TOROIDALE O-RING	O-RING O-RING	JOINT TORIQUE O-RING	055A
15		87397569		2	O-RING JUNTA TÓRICA	ANELLO TOROIDALE O-RING	O-RING O-RING	JOINT TORIQUE O-RING	055A
16		14496631		8	WASHER, M10 x 21 x 2 ARANDELA	RONDELLA FLADSKIVE	UNTERLEGSCHEIBE ANILHA	RONDELLE SLUITRING	131R
17		14496731		4	WASHER, M12 x 24 x 2.5 Thk ARANDELA	RONDELLA FLADSKIVE	UNTERLEGSCHEIBE ANILHA	RONDELLE SLUITRING	131R

Copyright © New Holland

5.0024	05	p1	03/10

HYDRAULIC HAMMER (L=3.5 MT) - OPTIONAL CODE 461235028 (01-02-03) - 461235038 (04-05-06)
MARTELLO IDRAULICO (L=3.5 MT) - CODICE VARIANTE 461235028 (01-02-03) - 461235038 (04-05-06)
HYDRAULISCHER HAMMER (L=3.5 MT) - OPTIONAL CODE 461235028 (01-02-03) - 461235038 (04-05-06)
MARTEAU HYDRAULIQUE (L=3.5 MT) - OPTIONAL CODE 461235028 (01-02-03) - 461235038 (04-05-06)

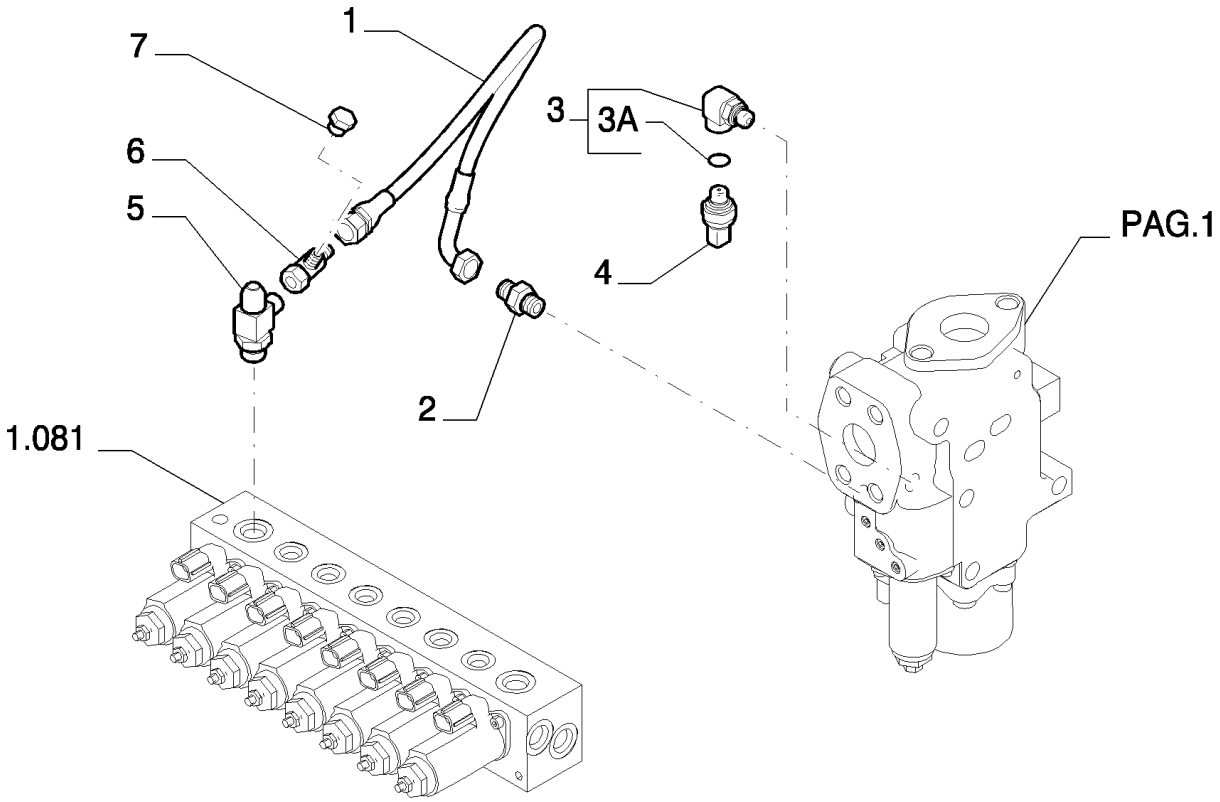

Copyright © New Holland

MARTILLO HIDRÁULICO (L=3.5 MT) - OPTIONAL CODE 461235028 (01-02-03) - 461235038 (04-05-06)
HYDRAULIC HAMMER (L=3.5 MT) - OPTIONAL CODE 461235028 (01-02-03) - 461235038 (04-05-06)
HYDRAULIC HAMMER (L=3.5 MT) - OPTIONAL CODE 461235028 (01-02-03) - 461235038 (04-05-06)
HYDRAULIC HAMMER (L=3.5 MT) - OPTIONAL CODE 461235028 (01-02-03) - 461235038 (04-05-06)

R	N	P.N.	MOD	Q	Description Denominacion	Descrizione Beskrivelse	Bezeichnung Denominação	Description Beschrijving	L.C.
1		87522431		1	FLEXIBLE HOSE TUBO FLEXIBLE	TUBO FLESSIBILE FLEKSIBEL SLANGE	BIEGSAMER SCHLAUCH MANGUEIRA FLEXÍVEL	TUYAU FLEXIBLE FLEXIBELE SLANG	192T
2		87522432		1	HYD CONNECTOR CONECTOR HIDRÁULIC	CONNETTORE IDRAULIC HYDRAULIKSTIK	HYDR STECKVERBINDE CONECTOR HID.	CONNECTEUR HYDRAU HYDRAULISCHE AANSL	020R
3		72215288		1	HYD CONNECTOR, - ASS' CONECTOR HIDRÁULIC	CONNETTORE IDRAULIC HYDRAULIKSTIK	HYDR STECKVERBINDE CONECTOR HID.	CONNECTEUR HYDRAU HYDRAULISCHE AANSL	020R
3A		72209827		1	O-RING JUNTA TÓRICA	ANELLO TOROIDALE O-RING	O-RING O-RING	JOINT TORIQUE O-RING	055A
4		87608371		1	SENSOR SENSOR	SENSORE FØLER	SENSOR SENSOR	CAPTEUR SENSOR	608S
5		2444Z3421		1	TEE RACOR EN T	PEZZO A T T-STYKKE	T-STÜCK TÊ	RACCORD EN T T-STUK	9020
6		72954988		1	TEE RACOR EN T	PEZZO A T T-STYKKE	T-STÜCK TÊ	RACCORD EN T T-STUK	9020
7		72214546		1	PLUG TAPÓN	TAPPO PROP	STOPFEN TAMPÃO	BOUCHON PLUG	050T

Copyright © New Holland

5.0024	06	p1	05/10

HYDRAULIC HAMMER (L=3.5 MT) - OPTIONAL CODE 461235028 (01-02-03)
MARTELLO IDRAULICO (L=3.5 MT) - OPTIONAL CODE 461235028 (01-02-03)
HYDRAULISCHER HAMMER (L=3.5 MT) - OPTIONAL CODE 461235028 (01-02-03)
MARTEAU HYDRAULIQUE (L=3.5 MT) - OPTIONAL CODE 461235028 (01-02-03)

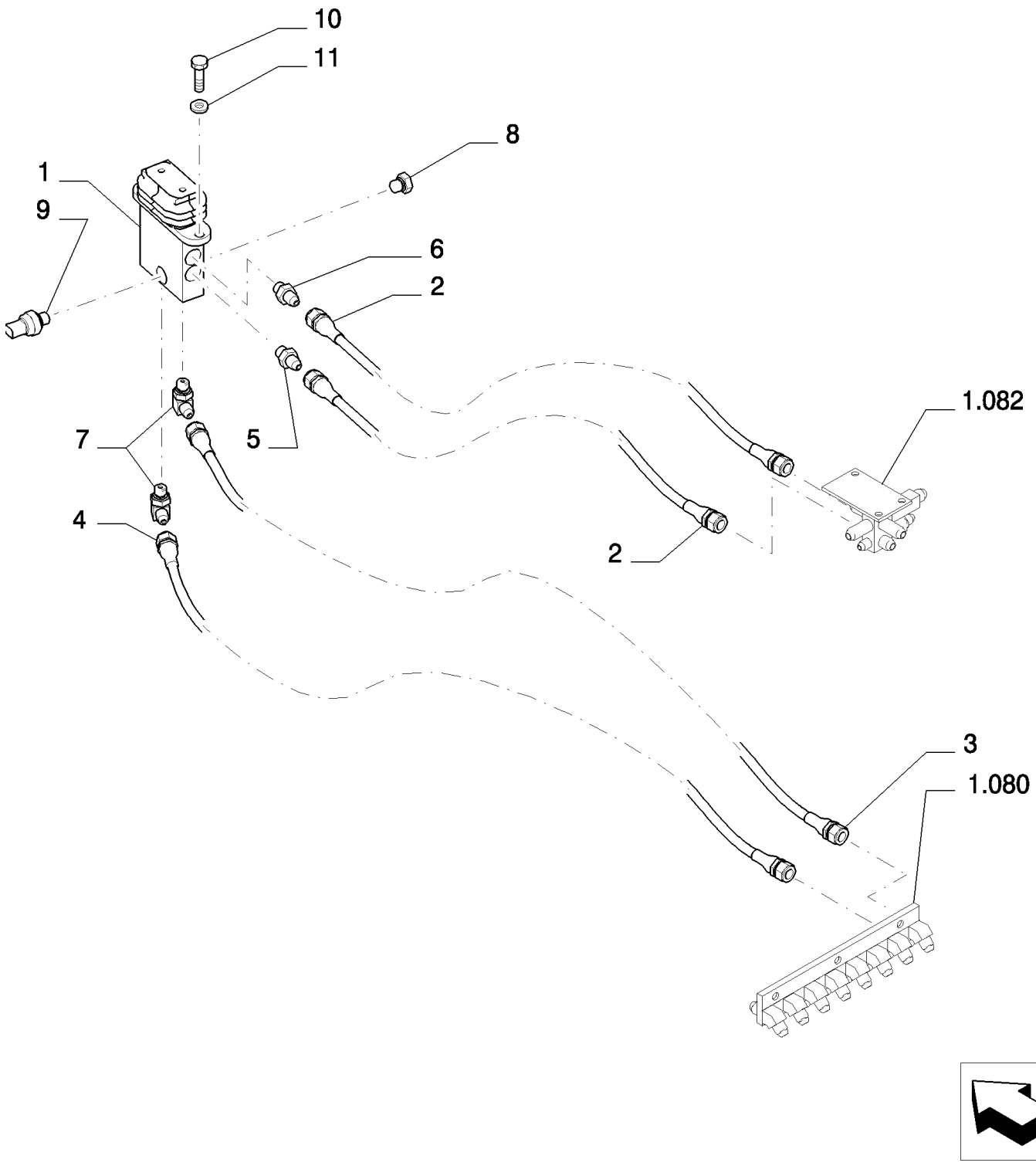

Copyright © New Holland

MARTILLO HIDRÁULICO (L=3.5 MT) - OPTIONAL CODE 461235028 (01-02-03)
HYDRAULIC HAMMER (L=3.5 MT) - OPTIONAL CODE 461235028 (01-02-03)
HYDRAULIC HAMMER (L=3.5 MT) - OPTIONAL CODE 461235028 (01-02-03)
HYDRAULIC HAMMER (L=3.5 MT) - OPTIONAL CODE 461235028 (01-02-03)

R	N	P.N.	MOD	Q	Description Denominacion	Descrizione Beskrivelse	Bezeichnung Denominação	Description Beschrijving	L.C.
1	1	72204155		1	HYDRAULIC VALVE VÁLVULA HIDRÁULICA	DISTRIBUTORE IDRAULI HYDRAULIKVENTIL	HYDRAULIKVENTIL VÁLVULA HIDRÁULICA	SOUPAPE HYDRAULIQU HYDRAULISCHE KLEP	010V
2		87338415		2	FLEXIBLE HOSE TUBO FLEXIBLE	TUBO FLESSIBILE FLEKSIBEL SLANGE	BIEGSAMER SCHLAUCH MANGUEIRA FLEXÍVEL	TUYAU FLEXIBLE FLEXIBELE SLANG	192T
3		87533078		1	FLEXIBLE HOSE TUBO FLEXIBLE	TUBO FLESSIBILE FLEKSIBEL SLANGE	BIEGSAMER SCHLAUCH MANGUEIRA FLEXÍVEL	TUYAU FLEXIBLE FLEXIBELE SLANG	192T
4		87537460		1	FLEXIBLE HOSE TUBO FLEXIBLE	TUBO FLESSIBILE FLEKSIBEL SLANGE	BIEGSAMER SCHLAUCH MANGUEIRA FLEXÍVEL	TUYAU FLEXIBLE FLEXIBELE SLANG	192T
5		87522432		1	HYD CONNECTOR CONECTOR HIDRÁULIC	CONNETTORE IDRAULI HYDRAULIKSTIK	HYDR STECKVERBINDE CONECTOR HID.	CONNECTEUR HYDRAU HYDRAULISCHE AANSL	020R
6		72214744		1	HYD CONNECTOR CONECTOR HIDRÁULIC	CONNETTORE IDRAULI HYDRAULIKSTIK	HYDR STECKVERBINDE CONECTOR HID.	CONNECTEUR HYDRAU HYDRAULISCHE AANSL	020R
7		72214524		2	HYD CONNECTOR CONECTOR HIDRÁULIC	CONNETTORE IDRAULI HYDRAULIKSTIK	HYDR STECKVERBINDE CONECTOR HID.	CONNECTEUR HYDRAU HYDRAULISCHE AANSL	020R
8		72214663		1	PLUG TAPÓN	TAPPO PROP	STOPFEN TAMPÃO	BOUCHON PLUG	050T
9		87608371		1	SENSOR SENSOR	SENSORE FØLER	SENSOR SENSOR	CAPTEUR SENSOR	608S
10		11106434		2	BOLT, Hex, M10 x 30, 10.9, Full Thd PERNO	BULLONE BOLT	SCHRAUBE PARAFUSO	VIS BOUT	140B
11		12641031		2	LOCK WASHER ARANDELA DE BLOQUE	RONDELLA DI SICUREZ LÅSESKIVE	SICHERUNGSSCHEIBE ANILHA DE RETENÇÃO	RONDELLE FREIN BORGRING	132R

(1) ASSY SEE PAGE 7

Copyright © New Holland

5.0024	07	p1	03/10

HYDRAULIC HAMMER (L=3.5 MT) - COMPONENTS - OPTIONAL CODE 461235028 (01-02-03) - 461235038 (04-05-06)
MARTELLO IDRAULICO (L=3.5 MT) - COMPONENTI - OPTIONAL CODE461235028 (01-02-03) - 461235038 (04-05-06)
HYDRAULISCHER HAMMER (L=3.5 MT) - BESTANDTEILE - OPTIONAL CODE 461235028 (01-02-03) - 461235038 (04-05-06)
MARTEAU HYDRAULIQUE (L=3.5 MT) - COMPOSANTS - OPTIONAL CODE 461235028 (01-02-03) - 461235038 (04-05-06)

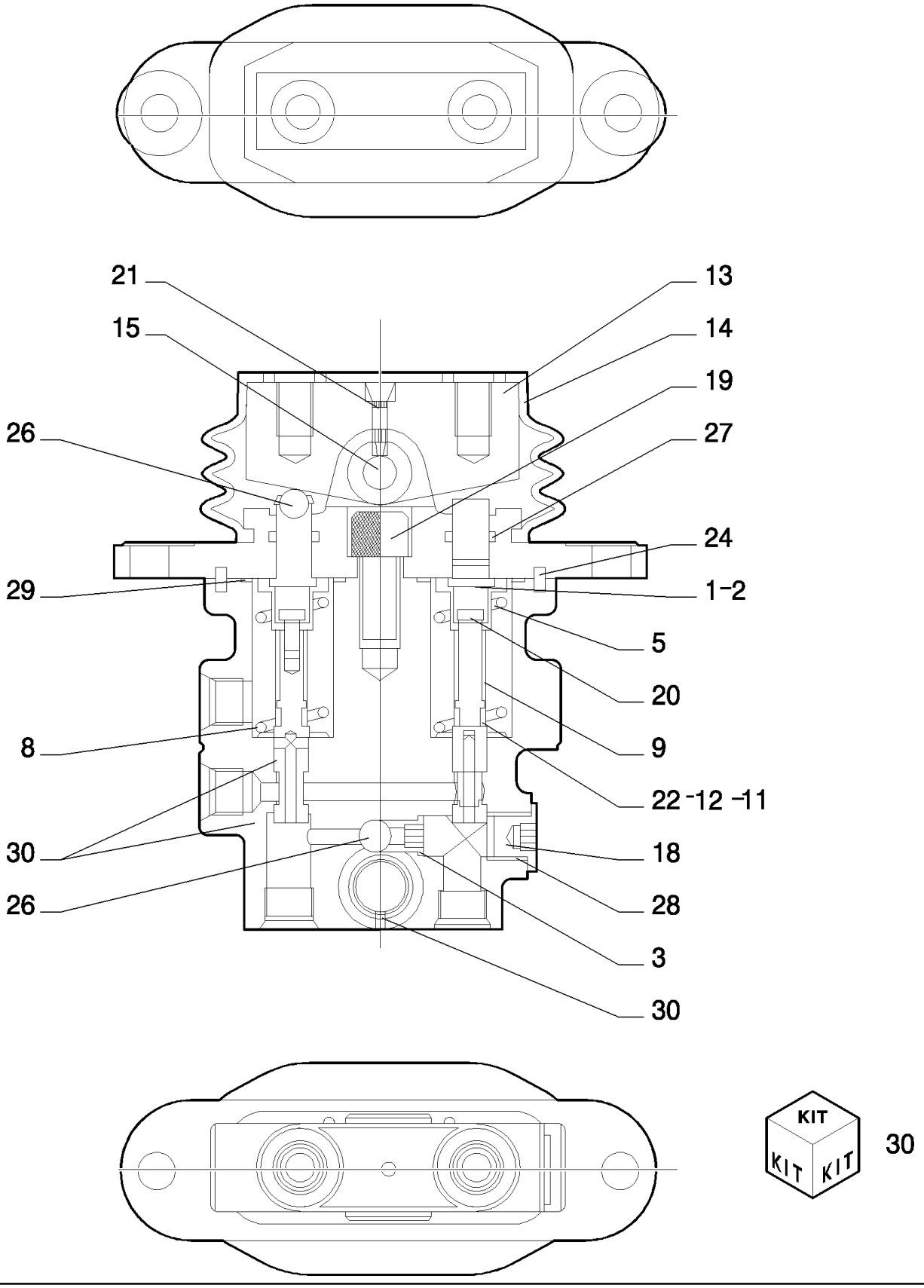

Copyright © New Holland

MARTILLO HIDRÁULICO (L=3.5 MT) - COMPONENTES - OPTIONAL CODE 461235028 (01-02-03) - 461235038 (04-05-06)
HYDRAULIC HAMMER (L=3.5 MT) - COMPONENTS - OPTIONAL CODE 461235028 (01-02-03) - 461235038 (04-05-06)
HYDRAULIC HAMMER (L=3.5 MT) - COMPONENTS - OPTIONAL CODE 461235028 (01-02-03) - 461235038 (04-05-06)
HYDRAULIC HAMMER (L=3.5 MT) - COMPONENTS - OPTIONAL CODE 461235028 (01-02-03) - 461235038 (04-05-06)

R	N	P.N.	MOD	Q	Description Denominacion	Descrizione Beskrivelse	Bezeichnung Denominação	Description Beschrijving	L.C.
1		72210484		2	SHIM SUPLEMENTO	SPESSORE MELLEMLÆG	AUSGLEICHSSCHEIBE CALÇO DE AFINAÇÃO	CALE VULPLAATJE	198S
2		72210485		2	SHIM SUPLEMENTO	SPESSORE MELLEMLÆG	AUSGLEICHSSCHEIBE CALÇO DE AFINAÇÃO	CALE VULPLAATJE	198S
3		72210219		1	SEAT/SLOT ASIENTO/RANURA	SEDE/ASOLA SÆDE	SITZ/SCHLITZ SUPORTE	SIEGE/FENTE ZITTING/SLEUF	069S
5		72210483		2	SLEEVE MANGUITO	MANICOTTO TRYKLEJE, KOBLING	BUCHSE MANGA	CHEMISE MOF; BUS	031M
8		72210486		1	SPRING RESORTE	MOLLA FJEDER	FEDER MOLA	RESSORT VEER	100M
9		72210223		2	SPRING RESORTE	MOLLA FJEDER	FEDER MOLA	RESSORT VEER	100M
11		72210487		2	SHIM SUPLEMENTO	SPESSORE MELLEMLÆG	AUSGLEICHSSCHEIBE CALÇO DE AFINAÇÃO	CALE VULPLAATJE	198S
12		72210488		1	SHIM SUPLEMENTO	SPESSORE MELLEMLÆG	AUSGLEICHSSCHEIBE CALÇO DE AFINAÇÃO	CALE VULPLAATJE	198S
13		72210489		1	CAM LEVA	CAMMA KAM	NOCKE EXCÊNTRICO	CAME NOK	040C
14		72210225		1	BOOT FUNDA	PARAPOLVERE MANCHET	MANSCHETTE COBERTURA DE PROTE	SOUFFLET HOES	330C
15		72210226		1	PIN PASADOR	PERNO STIFT	PIN PERNO	BROCHE PEN	080P
18		72210230		1	PLUG TAPÓN	TAPPO PROP	STOPFEN TAMPÃO	BOUCHON PLUG	050T
19		72210490		1	SCREW TORNILLO	VITE SKRUE	SCHRAUBE PARAFUSO	VIS SCHROEF	040V
20		72210232		2	SCREW TORNILLO	VITE SKRUE	SCHRAUBE PARAFUSO	VIS SCHROEF	040V
21		72210233		2	PLUG TAPÓN	TAPPO PROP	STOPFEN TAMPÃO	BOUCHON PLUG	050T
22		72210234		2	WASHER ARANDELA	RONDELLA FLADSKIVE	UNTERLEGSCHEIBE ANILHA	RONDELLE SLUITRING	131R
24		72210492		2	PIN PASADOR	PERNO STIFT	PIN PERNO	BROCHE PEN	080P
26		72210237		3	BALL BOLA	SFERA KUGLE	KUGEL ESFERA	BILLE KOGEL	140S
27		72210491		2	O-RING JUNTA TÓRICA	ANELLO TOROIDALE O-RING	O-RING O-RING	JOINT TORIQUE O-RING	055A
28		72209827		1	O-RING JUNTA TÓRICA	ANELLO TOROIDALE O-RING	O-RING O-RING	JOINT TORIQUE O-RING	055A
29		72210493		2	O-RING JUNTA TÓRICA	ANELLO TOROIDALE O-RING	O-RING O-RING	JOINT TORIQUE O-RING	055A
30		72210494		1	KIT KIT	KIT SÆT	SATZ KIT	KIT KIT	305C

VALVE ASSY P/N 72204155

E215B

Copyright © New Holland

5.0024	08	p1	03/10

HYDRAULIC HAMMER (L=3.5 MT) - OPTIONAL CODE 461235028 (01-02-03)
MARTELLO IDRAULICO (L=3.5 MT) - CODICE VARIANTE 461235028 (01-02-03)
HYDRAULISCHER HAMMER (L=3.5 MT) - OPTIONAL CODE 461235028 (01-02-03)
MARTEAU HYDRAULIQUE (L=3.5 MT) - OPTIONAL CODE 461235028 (01-02-03)

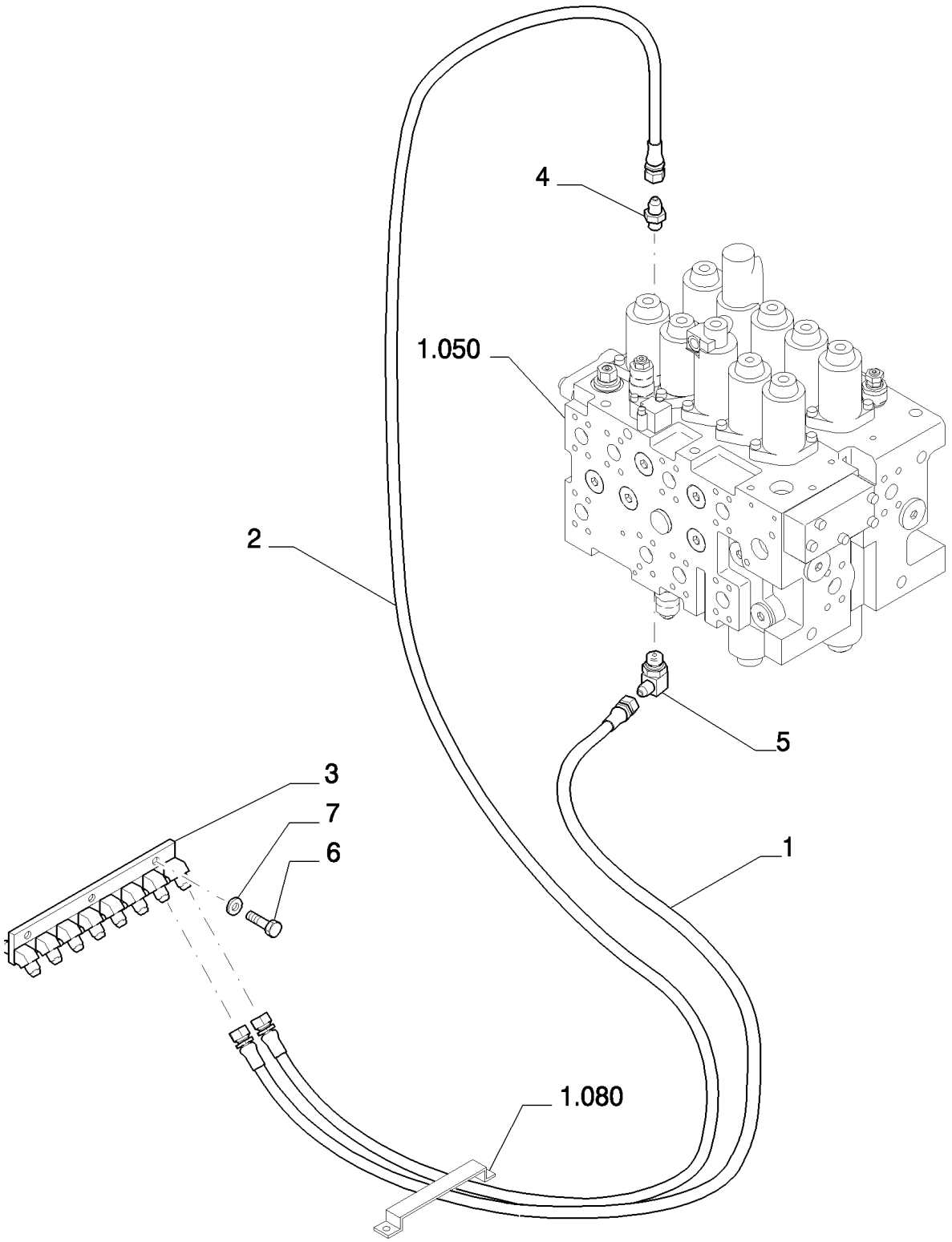

Copyright © New Holland

MARTILLO HIDRÁULICO (L=3.5 MT) - OPTIONAL CODE 461235028 (01-02-03)
HYDRAULIC HAMMER (L=3.5 MT) - OPTIONAL CODE 461235028 (01-02-03)
HYDRAULIC HAMMER (L=3.5 MT) - OPTIONAL CODE 461235028 (01-02-03)
HYDRAULIC HAMMER (L=3.5 MT) - OPTIONAL CODE 461235028 (01-02-03)

R	N	P.N.	MOD	Q	Description Denominacion	Descrizione Beskrivelse	Bezeichnung Denominação	Description Beschrijving	L.C.
1		72214543		1	FLEXIBLE HOSE TUBO FLEXIBLE	TUBO FLESSIBILE FLEKSIBEL SLANGE	BIEGSAMER SCHLAUCH MANGUEIRA FLEXÍVEL	TUYAU FLEXIBLE FLEXIBELE SLANG	192T
2		87536897		1	FLEXIBLE HOSE TUBO FLEXIBLE	TUBO FLESSIBILE FLEKSIBEL SLANGE	BIEGSAMER SCHLAUCH MANGUEIRA FLEXÍVEL	TUYAU FLEXIBLE FLEXIBELE SLANG	192T
3		87537888		1	BLOCK BLOQUE	BLOCCO MOTORBLOK	BLOCK BLOCO	BLOC BLOK	074B
4		72214522		1	HYD CONNECTOR CONECTOR HIDRÁULIC	CONNETTORE IDRAULIC HYDRAULIKSTIK	HYDR STECKVERBINDE CONECTOR HID.	CONNECTEUR HYDRAU HYDRAULISCHE AANSL	020R
5		72214561		1	HYD CONNECTOR CONECTOR HIDRÁULIC	CONNETTORE IDRAULIC HYDRAULIKSTIK	HYDR STECKVERBINDE CONECTOR HID.	CONNECTEUR HYDRAU HYDRAULISCHE AANSL	020R
6		11106434		3	BOLT, Hex, M10 x 30, 10.9, Full Thd PERNO	BULLONE BOLT	SCHRAUBE PARAFUSO	VIS BOUT	140B
7		12641031		3	LOCK WASHER ARANDELA DE BLOQUE	RONDELLA DI SICUREZ LÅSESKIVE	SICHERUNGSSCHEIBE ANILHA DE RETENÇÃO	RONDELLE FREIN BORGRING	132R

Copyright © New Holland

5.0024	09	p1	03/10

HYDRAULIC HAMMER (L=3.5 MT) - OPTIONAL CODE 461235028 (01-02-03)
MARTELLO IDRAULICO (L=3.5 MT) - CODICE VARIANTE 461235028 (01-02-03)
HYDRAULISCHER HAMMER (L=3.5 MT) - OPTIONAL CODE 461235028 (01-02-03)
MARTEAU HYDRAULIQUE (L=3.5 MT) - OPTIONAL CODE 461235028 (01-02-03)

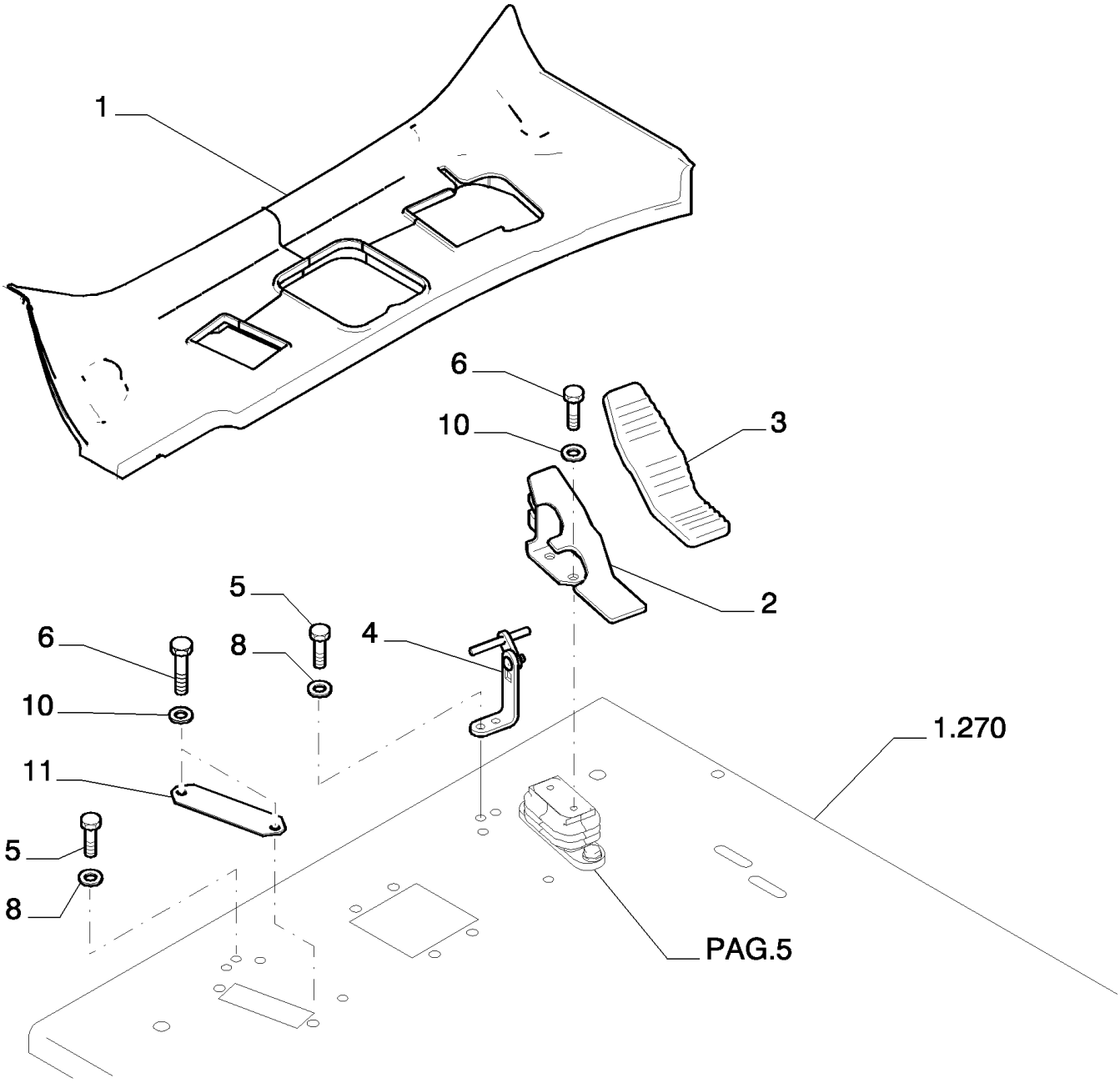

Copyright © New Holland

MARTILLO HIDRÁULICO (L=3.5 MT) - OPTIONAL CODE 461235028 (01-02-03)
HYDRAULIC HAMMER (L=3.5 MT) - OPTIONAL CODE 461235028 (01-02-03)
HYDRAULIC HAMMER (L=3.5 MT) - OPTIONAL CODE 461235028 (01-02-03)
HYDRAULIC HAMMER (L=3.5 MT) - OPTIONAL CODE 461235028 (01-02-03)

R	N	P.N.	MOD	Q	Description Denominacion	Descrizione Beskrivelse	Bezeichnung Denominação	Description Beschrijving	L.C.
1		YN26M00074P1		1	CARPET ALFOMBRA	TAPPETINO TÆPPE	TEPPICH TAPETE	TAPIS VLOERBEDEKKING	P015
2		87539195		1	PEDAL PEDAL	PEDALE PEDAL	PEDAL PEDAL	PEDALE PEDAAL	060P
3		87539205		1	RUBBER PEDAL PAD PASTILLA DE PEDAL DE	RIVESTIMENTO PEDALE GUMMIPEDALBELÆGNI	GUMMIPEDALAUFLAGE BORRACHA COBERTUR	PATIN DE PEDALE CAO RUBBEREN PEDAALBEK	292C
4		87539206		1	BRACKET SOPORTE	STAFFA BESLAG	HALTERUNG SUPORTE	SUPPORT STEUN	225S
5		16043434		4	BOLT, Hex, M8 x 20, 10.9, Full Thd PERNO	BULLONE BOLT	SCHRAUBE PARAFUSO	VIS BOUT	140B
6		11106034		4	BOLT, Hex, M10 x 20, 10.9, Full Thd PERNO	BULLONE BOLT	SCHRAUBE PARAFUSO	VIS BOUT	140B
8		14496531		4	WASHER, M8 x 17 x 1.6 ARANDELA	RONDELLA FLADSKIVE	UNTERLEGSCHEIBE ANILHA	RONDELLE SLUITRING	131R
10		14496631		4	WASHER, M10 x 21 x 2 ARANDELA	RONDELLA FLADSKIVE	UNTERLEGSCHEIBE ANILHA	RONDELLE SLUITRING	131R
11		87746013		1	PLATE PLACA	PIASTRA PLADE	PLATTE CHAPA	PLAQUE PLAAT	105P

Copyright © New Holland

5.0024	10	p1	03/10

HYDRAULIC HAMMER (L=3.5 MT) - OPTIONAL CODE 461235028 (01-02-03)
MARTELLO IDRAULICO (L=3.5 MT) - CODICE VARIANTE 461235028 (01-02-03)
HYDRAULISCHER HAMMER (L=3.5 MT) - OPTIONAL CODE 461235028 (01-02-03)
MARTEAU HYDRAULIQUE (L=3.5 MT) - OPTIONAL CODE 461235028 (01-02-03)

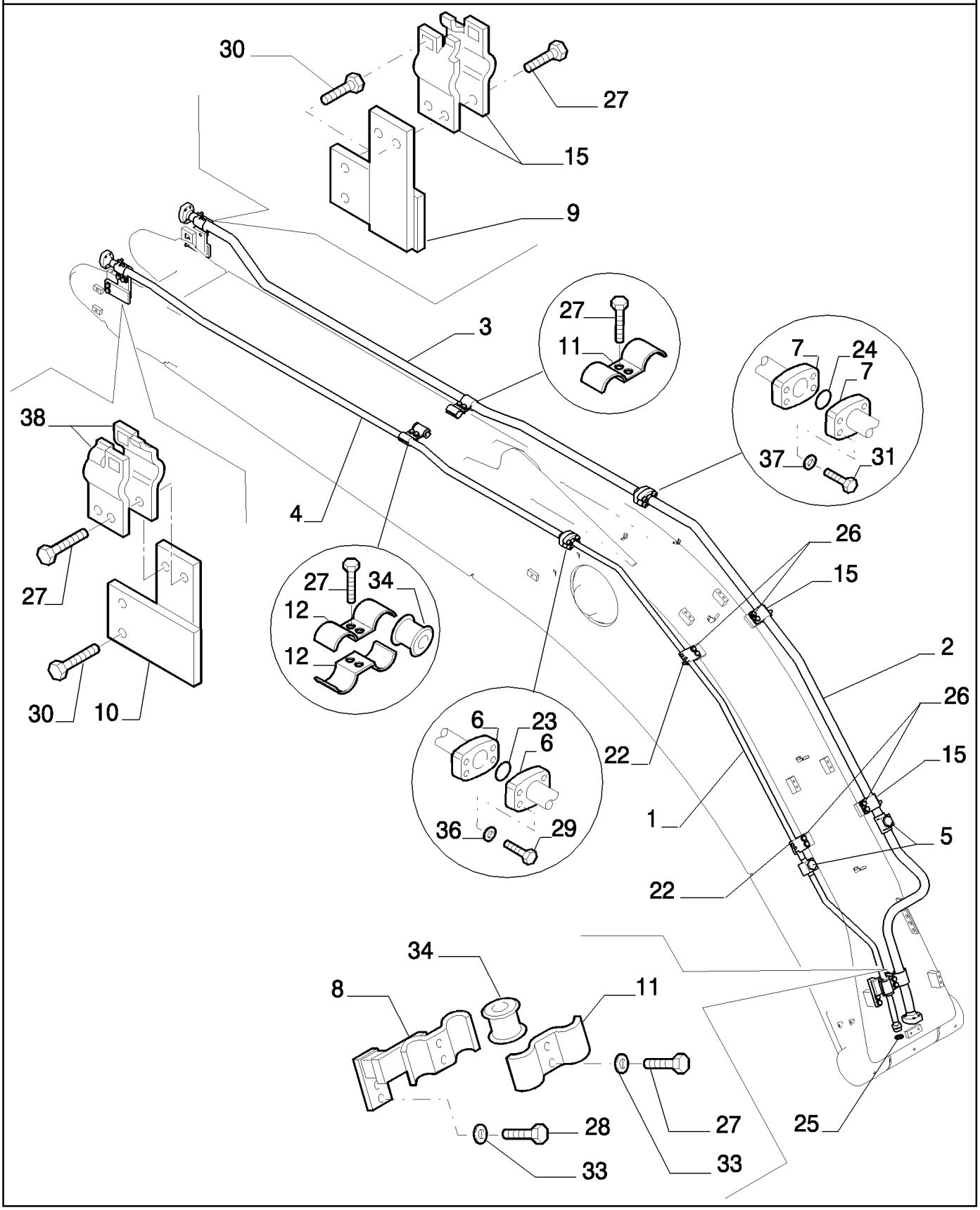

Copyright © New Holland

MARTILLO HIDRÁULICO (L=3.5 MT) - OPTIONAL CODE 461235028 (01-02-03)
HYDRAULIC HAMMER (L=3.5 MT) - OPTIONAL CODE 461235028 (01-02-03)
HYDRAULIC HAMMER (L=3.5 MT) - OPTIONAL CODE 461235028 (01-02-03)
HYDRAULIC HAMMER (L=3.5 MT) - OPTIONAL CODE 461235028 (01-02-03)

R	N	P.N.	MOD	Q	Description Denominacion	Descrizione Beskrivelse	Bezeichnung Denominação	Description Beschrijving	L.C.
1		87543992		1	RIGID TUBE TUBO RÍGIDO	TUBO RIGIDO STIFT RØR	ROHR TUBO RÍGIDO	TUYAU RIGIDE VASTE LEIDING	193T
2		87543993		1	RIGID TUBE TUBO RÍGIDO	TUBO RIGIDO STIFT RØR	ROHR TUBO RÍGIDO	TUYAU RIGIDE VASTE LEIDING	193T
3		87543994		1	RIGID TUBE TUBO RÍGIDO	TUBO RIGIDO STIFT RØR	ROHR TUBO RÍGIDO	TUYAU RIGIDE VASTE LEIDING	193T
4		87543995		1	RIGID TUBE TUBO RÍGIDO	TUBO RIGIDO STIFT RØR	ROHR TUBO RÍGIDO	TUYAU RIGIDE VASTE LEIDING	193T
6		71404313		2	HALF-FLANGE SEMIBRIDA	SEMIFLANGIA FLANGEHALVDEL	FLANSCHHÄLFTE MEIA FLANGE	DEMI-BRIDE FLENSHELFT	417S
7		71444029		2	HALF-FLANGE SEMIBRIDA	SEMIFLANGIA FLANGEHALVDEL	FLANSCHHÄLFTE MEIA FLANGE	DEMI-BRIDE FLENSHELFT	417S
8		84147125		1	BRACKET SOPORTE	STAFFA BESLAG	HALTERUNG SUPORTE	SUPPORT STEUN	225S
9		87359468		1	PLATE PLACA	PIASTRA PLADE	PLATTE CHAPA	PLAQUE PLAAT	105P
10		87359469		1	PLATE PLACA	PIASTRA PLADE	PLATTE CHAPA	PLAQUE PLAAT	105P
11		87343330		4	BRACKET SOPORTE	STAFFA BESLAG	HALTERUNG SUPORTE	SUPPORT STEUN	225S
12		87343335		2	BRACKET SOPORTE	STAFFA BESLAG	HALTERUNG SUPORTE	SUPPORT STEUN	225S
15		87349692		6	BRACKET SOPORTE	STAFFA BESLAG	HALTERUNG SUPORTE	SUPPORT STEUN	225S
22		87343090		4	BRACKET SOPORTE	STAFFA BESLAG	HALTERUNG SUPORTE	SUPPORT STEUN	225S
23		72215443		1	O-RING JUNTA TÓRICA	ANELLO TOROIDALE O-RING	O-RING O-RING	JOINT TORIQUE O-RING	055A
24		70924192		1	O-RING JUNTA TÓRICA	ANELLO TOROIDALE O-RING	O-RING O-RING	JOINT TORIQUE O-RING	055A
25		70931640		1	GASKET JUNTA	GUARNIZIONE PAKNING	DICHTUNG JUNTA	JOINT PAKKING	123G
26		11112434		8	BOLT, Hex, M12 x 30, 10.9, Full Thd PERNO	BULLONE BOLT	SCHRAUBE PARAFUSO	VIS BOUT	140B
27		11112634		10	SCREW TORNILLO	VITE SKRUE	SCHRAUBE PARAFUSO	VIS SCHROEF	040V
28		11113334		2	SCREW TORNILLO	VITE SKRUE	SCHRAUBE PARAFUSO	VIS SCHROEF	040V
29		14422434		4	SCREW TORNILLO	VITE SKRUE	SCHRAUBE PARAFUSO	VIS SCHROEF	040V
30		11112834		4	BOLT, Hex, M12 x 40, 10.9, Full Thd PERNO	BULLONE BOLT	SCHRAUBE PARAFUSO	VIS BOUT	140B
31		14424534		4	SCREW TORNILLO	VITE SKRUE	SCHRAUBE PARAFUSO	VIS SCHROEF	040V
33		14496731		24	WASHER, M12 x 24 x 2.5 Thk ARANDELA	RONDELLA FLADSKIVE	UNTERLEGSCHEIBE ANILHA	RONDELLE SLUITRING	131R
34		87343521		2	BUSHING CASQUILLO	BOCCOLA BØSNING	BUCHSE CASQUILHO	BAGUE BUS	095B

Copyright © New Holland

5.0024	10	p2	03/10

HYDRAULIC HAMMER (L=3.5 MT) - OPTIONAL CODE 461235028 (01-02-03)
MARTELLO IDRAULICO (L=3.5 MT) - CODICE VARIANTE 461235028 (01-02-03)
HYDRAULISCHER HAMMER (L=3.5 MT) - OPTIONAL CODE 461235028 (01-02-03)
MARTEAU HYDRAULIQUE (L=3.5 MT) - OPTIONAL CODE 461235028 (01-02-03)

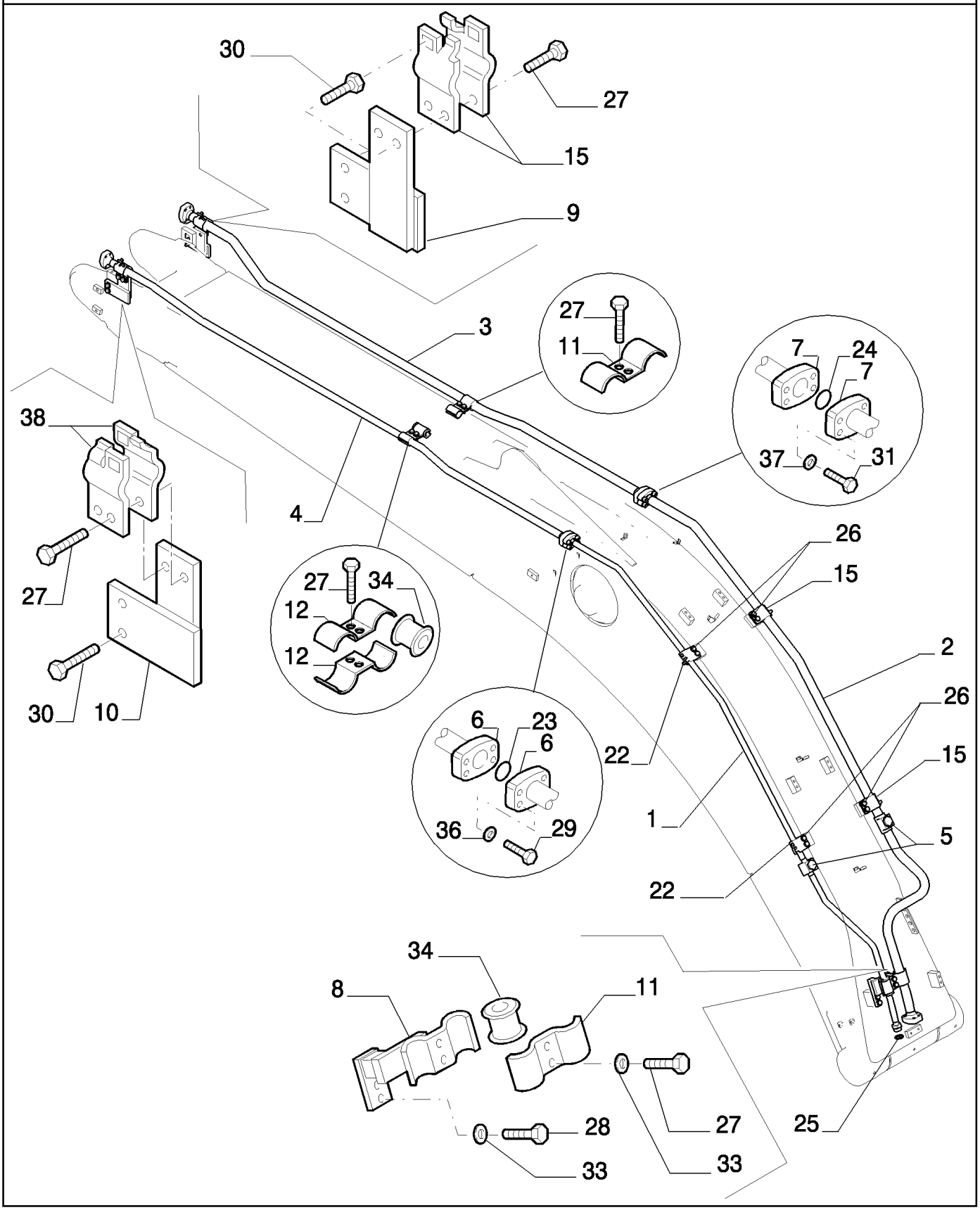

Copyright © New Holland

MARTILLO HIDRÁULICO (L=3.5 MT) - OPTIONAL CODE 461235028 (01-02-03)
HYDRAULIC HAMMER (L=3.5 MT) - OPTIONAL CODE 461235028 (01-02-03)
HYDRAULIC HAMMER (L=3.5 MT) - OPTIONAL CODE 461235028 (01-02-03)
HYDRAULIC HAMMER (L=3.5 MT) - OPTIONAL CODE 461235028 (01-02-03)

R	N	P.N.	MOD	Q	Description Denominacion	Descrizione Beskrivelse	Bezeichnung Denominação	Description Beschrijving	L.C.
36		10517074		4	LOCK WASHER ARANDELA DE BLOQUE	RONDELLA DI SICUREZ LÅSESKIVE	SICHERUNGSSCHEIBE ANILHA DE RETENÇÃO	RONDELLE FREIN BORGRING	132R
37		10517174		4	LOCK WASHER ARANDELA DE BLOQUE	RONDELLA DI SICUREZ LÅSESKIVE	SICHERUNGSSCHEIBE ANILHA DE RETENÇÃO	RONDELLE FREIN BORGRING	132R
38		87343093		2	BRACKET SOPORTE	STAFFA BESLAG	HALTERUNG SUPORTE	SUPPORT STEUN	225S

Copyright © New Holland

5.0024	11	p1	03/10

HYDRAULIC HAMMER (L=3.5 MT) - OPTIONAL CODE 461235028 (01-02-03) - 461235038 (04-05-06)
MARTELLO IDRAULICO (L=3.5 MT) - CODICE VARIANTE 461235028 (01-02-03) - 461235038 (04-05-06)
HYDRAULISCHER HAMMER (L=3.5 MT) - OPTIONAL CODE 461235028 (01-02-03) - 461235038 (04-05-06)
MARTEAU HYDRAULIQUE (L=3.5 MT) - OPTIONAL CODE 461235028 (01-02-03) - 461235038 (04-05-06)

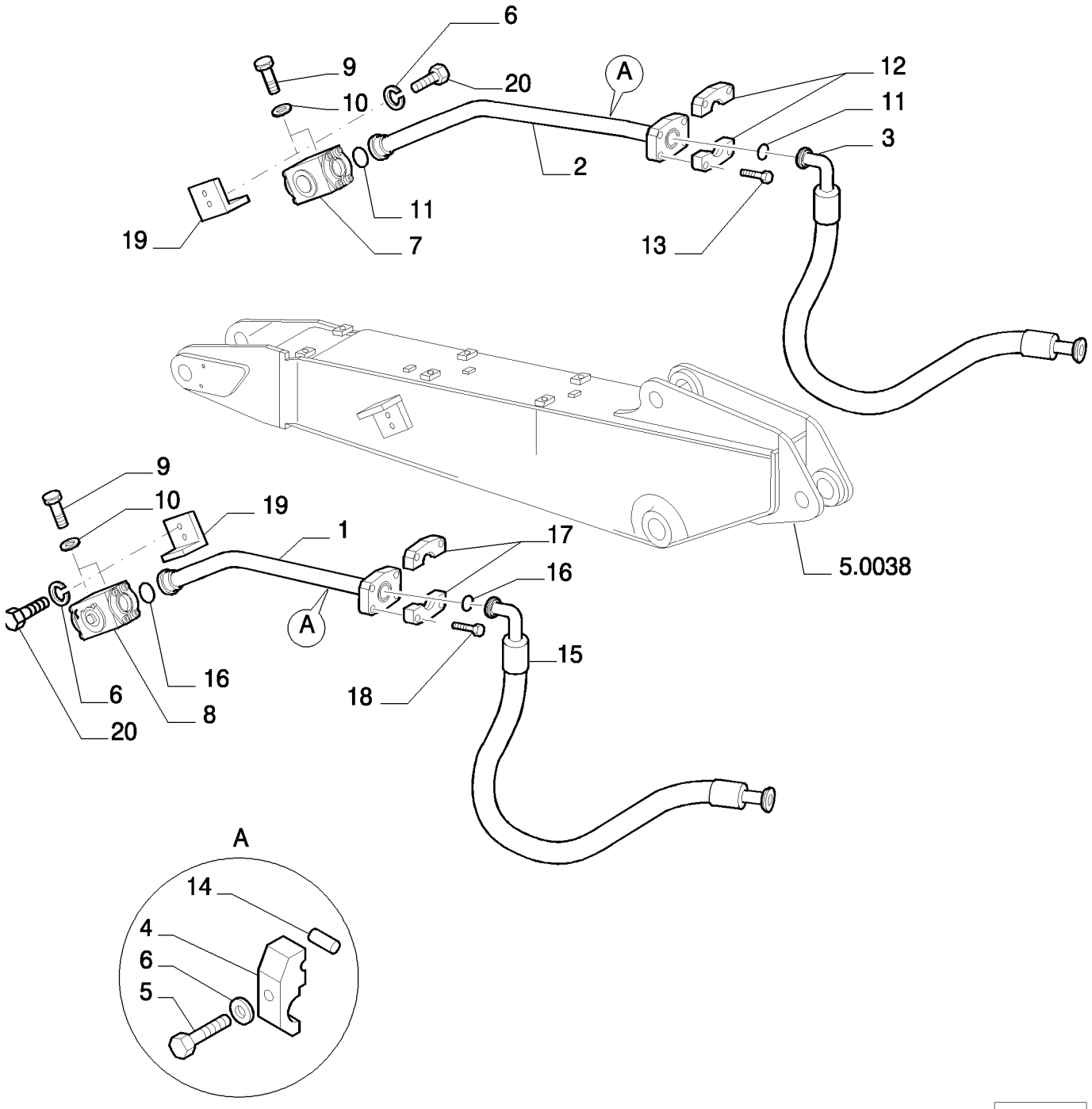

Copyright © New Holland

MARTILLO HIDRÁULICO (L=3.5 MT) - OPTIONAL CODE 461235028 (01-02-03) - 461235038 (04-05-06)
HYDRAULIC HAMMER (L=3.5 MT) - OPTIONAL CODE 461235028 (01-02-03) - 461235038 (04-05-06)
HYDRAULIC HAMMER (L=3.5 MT) - OPTIONAL CODE 461235028 (01-02-03) - 461235038 (04-05-06)
HYDRAULIC HAMMER (L=3.5 MT) - OPTIONAL CODE 461235028 (01-02-03) - 461235038 (04-05-06)

R	N	P.N.	MOD	Q	Description Denominacion	Descrizione Beskrivelse	Bezeichnung Denominação	Description Beschrijving	L.C.
1		87382952		1	RIGID TUBE TUBO RÍGIDO	TUBO RIGIDO STIFT RØR	ROHR TUBO RÍGIDO	TUYAU RIGIDE VASTE LEIDING	193T
2		87382954		1	RIGID TUBE TUBO RÍGIDO	TUBO RIGIDO STIFT RØR	ROHR TUBO RÍGIDO	TUYAU RIGIDE VASTE LEIDING	193T
3		87555669		1	FLEXIBLE HOSE TUBO FLEXIBLE	TUBO FLESSIBILE FLEKSIBEL SLANGE	BIEGSAMER SCHLAUCH MANGUEIRA FLEXÍVEL	TUYAU FLEXIBLE FLEXIBELE SLANG	192T
4		71466017		2	BRACKET, SUPPORTING PIEZA DE APOYO	SQUADRETTA STOETTEBESLAG	SCHALTER,AUTOM.AUS PECA DE SUPORTE	EQUERRE DRAAGARM	215S
5		11113534		2	BOLT, Hex, M12 x 65, 10.9, Full Thd PERNO	BULLONE BOLT	SCHRAUBE PARAFUSO	VIS BOUT	140B
6		10517074		6	LOCK WASHER ARANDELA DE BLOQUE	RONDELLA DI SICUREZ LÅSESKIVE	SICHERUNGSSCHEIBE ANILHA DE RETENÇÃO	RONDELLE FREIN BORGRING	132R
7	1	72215205		1	HYDRAULIC VALVE VÁLVULA HIDRÁULICA	DISTRIBUTORE IDRAULI HYDRAULIKVENTIL	HYDRAULIKVENTIL VÁLVULA HIDRÁULICA	SOUPAPE HYDRAULIQU HYDRAULISCHE KLEP	010V
8		72215206		1	HYDRAULIC VALVE VÁLVULA HIDRÁULICA	DISTRIBUTORE IDRAULI HYDRAULIKVENTIL	HYDRAULIKVENTIL VÁLVULA HIDRÁULICA	SOUPAPE HYDRAULIQU HYDRAULISCHE KLEP	010V
9		11106434		4	BOLT, Hex, M10 x 30, 10.9, Full Thd PERNO	BULLONE BOLT	SCHRAUBE PARAFUSO	VIS BOUT	140B
10		10516874		4	LOCK WASHER ARANDELA DE BLOQUE	RONDELLA DI SICUREZ LÅSESKIVE	SICHERUNGSSCHEIBE ANILHA DE RETENÇÃO	RONDELLE FREIN BORGRING	132R
11		70924192		2	O-RING JUNTA TÓRICA	ANELLO TOROIDALE O-RING	O-RING O-RING	JOINT TORIQUE O-RING	055A
12		71444029		2	HALF-FLANGE SEMIBRIDA	SEMIFLANGIA FLANGEHALVDEL	FLANSCHHÄLFTE MEIA FLANGE	DEMI-BRIDE FLENSHELFT	417S
13		14424534		4	SCREW TORNILLO	VITE SKRUE	SCHRAUBE PARAFUSO	VIS SCHROEF	040V
14		72219245		2	RIGID TUBE TUBO RÍGIDO	TUBO RIGIDO STIFT RØR	ROHR TUBO RÍGIDO	TUYAU RIGIDE VASTE LEIDING	193T
15		87558547		1	FLEXIBLE HOSE TUBO FLEXIBLE	TUBO FLESSIBILE FLEKSIBEL SLANGE	BIEGSAMER SCHLAUCH MANGUEIRA FLEXÍVEL	TUYAU FLEXIBLE FLEXIBELE SLANG	192T
16		70924200		2	O-RING JUNTA TÓRICA	ANELLO TOROIDALE O-RING	O-RING O-RING	JOINT TORIQUE O-RING	055A
17		71404313		2	HALF-FLANGE SEMIBRIDA	SEMIFLANGIA FLANGEHALVDEL	FLANSCHHÄLFTE MEIA FLANGE	DEMI-BRIDE FLENSHELFT	417S
18		14422334		4	SCREW, Hex Soc Hd, M12 x 45, 10.9 TORNILLO	VITE SKRUE	SCHRAUBE PARAFUSO	VIS SCHROEF	040V
19		87381234		2	BRACKET SOPORTE	STAFFA BESLAG	HALTERUNG SUPORTE	SUPPORT STEUN	225S
20		11112434		4	BOLT, Hex, M12 x 30, 10.9, Full Thd PERNO	BULLONE BOLT	SCHRAUBE PARAFUSO	VIS BOUT	140B

(1) ASSY SEE PAGE 12

Copyright © New Holland

5.0024	12	p1	03/10

HYDRAULIC HAMMER (L=3.5 MT) - COMPONENTS - OPTIONAL CODE 461235028 (01-02-03) - 461235038 (04-05-06)
MARTELLO IDRAULICO (L=3.5 MT) - COMPONENTI - CODICE VARIANTE 461235028 (01-02-03) - 461235038 (04-05-06)
HYDRAULISCHER HAMMER (L=3.5 MT) - BESTANDTEILE - OPTIONAL CODE 461235028 (01-02-03) - 461235038 (04-05-06)
MARTEAU HYDRAULIQUE (L=3.5 MT) - COMPOSANTS - OPTIONAL CODE 461235028 (01-02-03) - 461235038 (04-05-06)

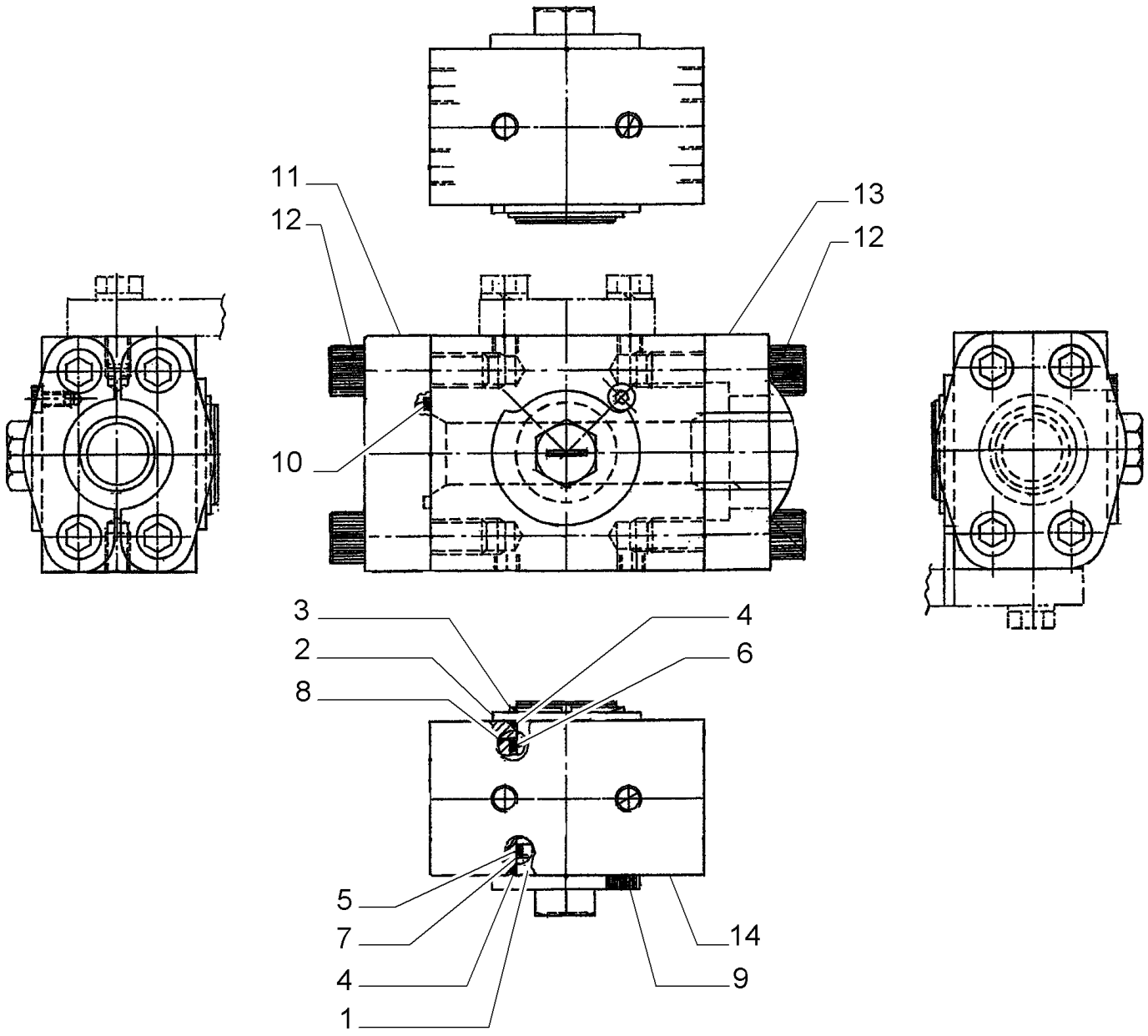

Copyright © New Holland

MARTILLO HIDRÁULICO (L=3.5 MT) - COMPONENTES - OPTIONAL CODE 461235028 (01-02-03) - 461235038 (04-05-06)
HYDRAULIC HAMMER (L=3.5 MT) - COMPONENTS - OPTIONAL CODE 461235028 (01-02-03) - 461235038 (04-05-06)
HYDRAULIC HAMMER (L=3.5 MT) - COMPONENTS - OPTIONAL CODE 461235028 (01-02-03) - 461235038 (04-05-06)
HYDRAULIC HAMMER (L=3.5 MT) - COMPONENTS - OPTIONAL CODE 461235028 (01-02-03) - 461235038 (04-05-06)

R	N	P.N.	MOD	Q	Description Denominacion	Descrizione Beskrivelse	Bezeichnung Denominação	Description Beschrijving	L.C.
1		72219279		1	PIN PASADOR	PERNO STIFT	PIN PERNO	BROCHE PEN	080P
2		72219249		1	SPACER SEPARADOR	DISTANZIALE AFSTANDSSTYKKE	DISTANZSTÜCK ESPAÇADOR	ENTRETOISE AFSTANDSSTUK	075D
3		72219250		1	RING ANILLO	ANELLO RING	RING ANEL	ANNEAU RING	045A
4		72219252		2	GASKET JUNTA	GUARNIZIONE PAKNING	DICHTUNG JUNTA	JOINT PAKKING	123G
5		72219255		1	GASKET JUNTA	GUARNIZIONE PAKNING	DICHTUNG JUNTA	JOINT PAKKING	123G
6		72219253		1	GASKET JUNTA	GUARNIZIONE PAKNING	DICHTUNG JUNTA	JOINT PAKKING	123G
7		72219256		1	RING ANILLO	ANELLO RING	RING ANEL	ANNEAU RING	045A
8		72219254		1	RING ANILLO	ANELLO RING	RING ANEL	ANNEAU RING	045A
9		72219251		1	SCREW, 6X8 TORNILLO	VITE SKRUE	SCHRAUBE PARAFUSO	VIS SCHROEF	040V
10		72219287		1	GASKET JUNTA	GUARNIZIONE PAKNING	DICHTUNG JUNTA	JOINT PAKKING	123G
11		72219288		1	FLANGE BRIDA	FLANGIA FLANGE	FLANSCH FLANGE	BRIDE FLENS	070F
12		72219289		8	SCREW, 14X50 TORNILLO	VITE SKRUE	SCHRAUBE PARAFUSO	VIS SCHROEF	040V
13		72219290		2	HALF-FLANGE SEMIBRIDA	SEMIFLANGIA FLANGEHALVDEL	FLANSCHHÄLFTE MEIA FLANGE	DEMI-BRIDE FLENSHELFT	417S
14		72219278		1	BODY CUERPO	CORPO HUS	KAROSSERIE CORPO	CORPS HUIS	300C

VALVE ASSY P/N 72215205

E215B

Copyright © New Holland

5.0024	13	p1	05/10

HYDRAULIC HAMMER (L=3.5 MT) - OPTIONAL CODE 461235038 (04-05-06)
MARTELLO IDRAULICO (L=3.5 MT) - OPTIONAL CODE 461235038 (04-05-06)
HYDRAULISCHER HAMMER (L=3.5 MT) - OPTIONAL CODE 461235038 (04-05-06)
MARTEAU HYDRAULIQUE (L=3.5 MT) - OPTIONAL CODE 461235038 (04-05-06)

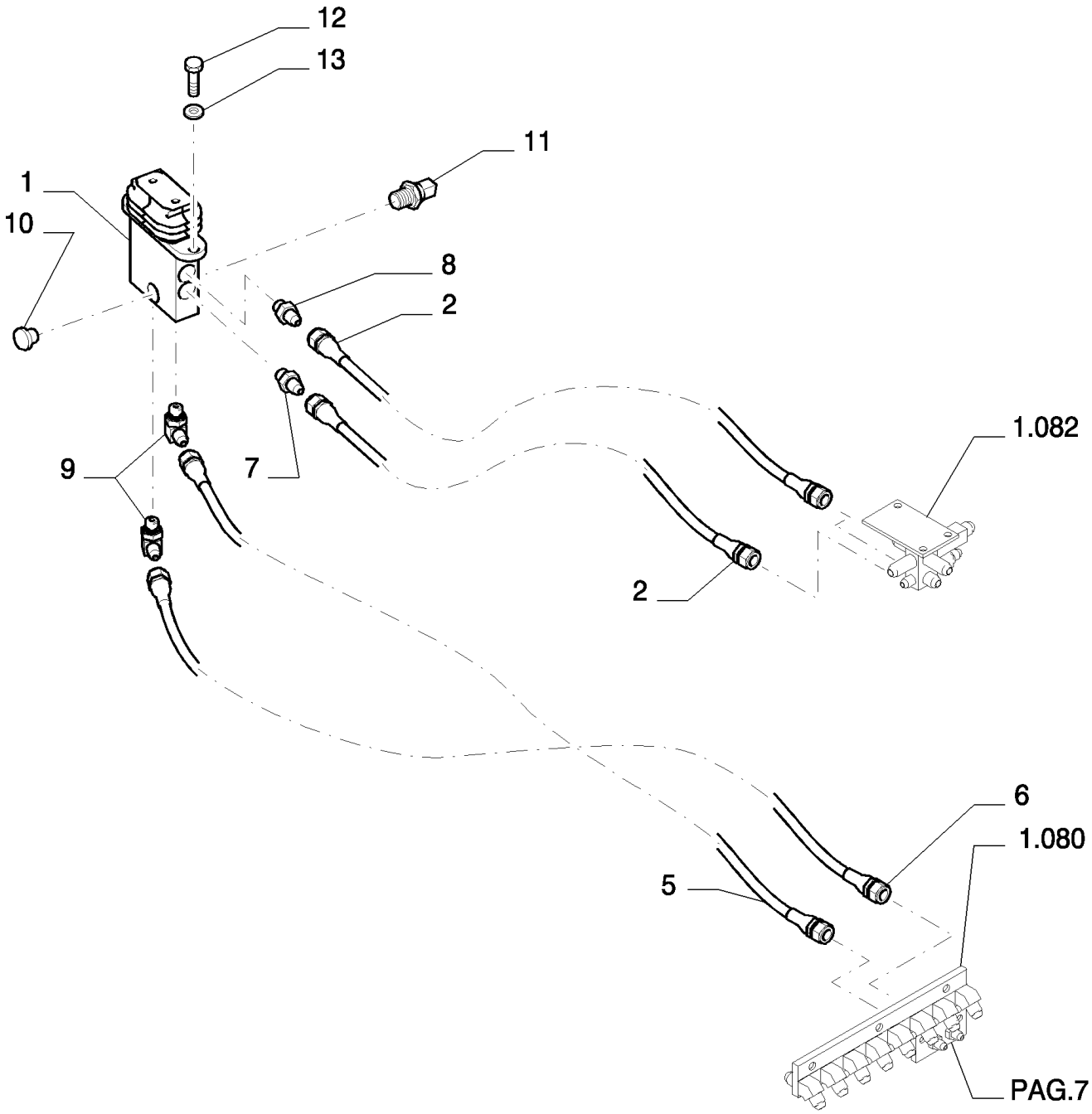

Copyright © New Holland

MARTILLO HIDRÁULICO (L=3.5 MT) - OPTIONAL CODE 461235038 (04-05-06)
HYDRAULIC HAMMER (L=3.5 MT) - OPTIONAL CODE 461235038 (04-05-06)
HYDRAULIC HAMMER (L=3.5 MT) - OPTIONAL CODE 461235038 (04-05-06)
HYDRAULIC HAMMER (L=3.5 MT) - OPTIONAL CODE 461235038 (04-05-06)

R	N	P.N.	MOD	Q	Description Denominacion	Descrizione Beskrivelse	Bezeichnung Denominação	Description Beschrijving	L.C.
1	1	72204155		1	HYDRAULIC VALVE VÁLVULA HIDRÁULICA	DISTRIBUTORE IDRAULI HYDRAULIKVENTIL	HYDRAULIKVENTIL VÁLVULA HIDRÁULICA	SOUPAPE HYDRAULIQU HYDRAULISCHE KLEP	010V
2		87338415		2	FLEXIBLE HOSE TUBO FLEXIBLE	TUBO FLESSIBILE FLEKSIBEL SLANGE	BIEGSAMER SCHLAUCH MANGUEIRA FLEXÍVEL	TUYAU FLEXIBLE FLEXIBELE SLANG	192T
5		2420R349D170		1	FLEXIBLE HOSE TUBO FLEXIBLE	TUBO FLESSIBILE FLEKSIBEL SLANGE	BIEGSAMER SCHLAUCH MANGUEIRA FLEXÍVEL	TUYAU FLEXIBLE FLEXIBELE SLANG	192T
6		2420R349D175		1	FLEXIBLE HOSE TUBO FLEXIBLE	TUBO FLESSIBILE FLEKSIBEL SLANGE	BIEGSAMER SCHLAUCH MANGUEIRA FLEXÍVEL	TUYAU FLEXIBLE FLEXIBELE SLANG	192T
7		87522432		1	HYD CONNECTOR CONECTOR HIDRÁULIC	CONNETTORE IDRAULI HYDRAULIKSTIK	HYDR STECKVERBINDE CONECTOR HID.	CONNECTEUR HYDRAU HYDRAULISCHE AANSL	020R
8		72214744		1	HYD CONNECTOR CONECTOR HIDRÁULIC	CONNETTORE IDRAULI HYDRAULIKSTIK	HYDR STECKVERBINDE CONECTOR HID.	CONNECTEUR HYDRAU HYDRAULISCHE AANSL	020R
9		72214524		2	HYD CONNECTOR CONECTOR HIDRÁULIC	CONNETTORE IDRAULI HYDRAULIKSTIK	HYDR STECKVERBINDE CONECTOR HID.	CONNECTEUR HYDRAU HYDRAULISCHE AANSL	020R
10		72214663		1	PLUG TAPÓN	TAPPO PROP	STOPFEN TAMPÃO	BOUCHON PLUG	050T
11		87608371		1	SENSOR SENSOR	SENSORE FØLER	SENSOR SENSOR	CAPTEUR SENSOR	608S
12		11106434		2	BOLT, Hex, M10 x 30, 10.9, Full Thd PERNO	BULLONE BOLT	SCHRAUBE PARAFUSO	VIS BOUT	140B
13		12641031		2	LOCK WASHER ARANDELA DE BLOQUE	RONDELLA DI SICUREZ LÅSESKIVE	SICHERUNGSSCHEIBE ANILHA DE RETENÇÃO	RONDELLE FREIN BORGRING	132R

(1) ASSY SEE PAGE 7

Copyright © New Holland

5.0024	14	p1	03/10

HYDRAULIC HAMMER (L=3.5 MT) - OPTIONAL CODE 461235038 (04-05-06)
MARTELLO IDRAULICO (L=3.5 MT) - CODICE VARIANTE 461235038 (04-05-06)
HYDRAULISCHER HAMMER (L=3.5 MT) - OPTIONAL CODE 461235038 (04-05-06)
MARTEAU HYDRAULIQUE (L=3.5 MT) - OPTIONAL CODE 461235038 (04-05-06)

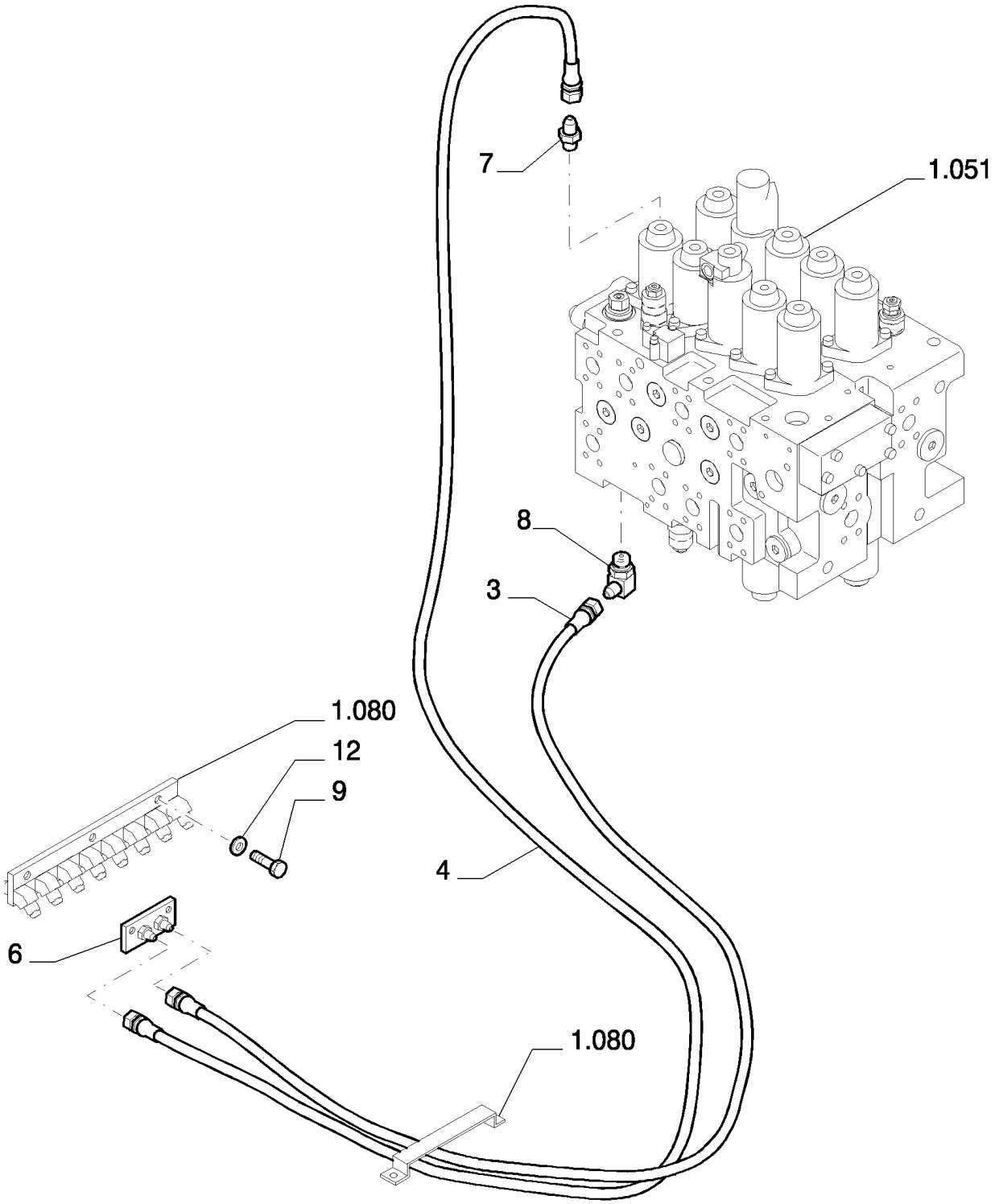

Copyright © New Holland

MARTILLO HIDRÁULICO (L=3.5 MT) - OPTIONAL CODE 461235038 (04-05-06)
HYDRAULIC HAMMER (L=3.5 MT) - OPTIONAL CODE 461235038 (04-05-06)
HYDRAULIC HAMMER (L=3.5 MT) - OPTIONAL CODE 461235038 (04-05-06)
HYDRAULIC HAMMER (L=3.5 MT) - OPTIONAL CODE 461235038 (04-05-06)

R	N	P.N.	MOD	Q	Description Denominacion	Descrizione Beskrivelse	Bezeichnung Denominação	Description Beschrijving	L.C.
3		72214739		1	FLEXIBLE HOSE TUBO FLEXIBLE	TUBO FLESSIBILE FLEKSIBEL SLANGE	BIEGSAMER SCHLAUCH MANGUEIRA FLEXÍVEL	TUYAU FLEXIBLE FLEXIBELE SLANG	192T
4		87536897		1	FLEXIBLE HOSE TUBO FLEXIBLE	TUBO FLESSIBILE FLEKSIBEL SLANGE	BIEGSAMER SCHLAUCH MANGUEIRA FLEXÍVEL	TUYAU FLEXIBLE FLEXIBELE SLANG	192T
6		87579546		1	BLOCK BLOQUE	BLOCCO MOTORBLOK	BLOCK BLOCO	BLOC BLOK	074B
7		72214522		1	HYD CONNECTOR CONECTOR HIDRÁULIC	CONNETTORE IDRAULIC HYDRAULIKSTIK	HYDR STECKVERBINDE CONECTOR HID.	CONNECTEUR HYDRAU HYDRAULISCHE AANSL	020R
8		72214561		1	HYD CONNECTOR CONECTOR HIDRÁULIC	CONNETTORE IDRAULIC HYDRAULIKSTIK	HYDR STECKVERBINDE CONECTOR HID.	CONNECTEUR HYDRAU HYDRAULISCHE AANSL	020R
9		11106434		3	BOLT, Hex, M10 x 30, 10.9, Full Thd PERNO	BULLONE BOLT	SCHRAUBE PARAFUSO	VIS BOUT	140B
12		12641031		3	LOCK WASHER ARANDELA DE BLOQUE	RONDELLA DI SICUREZ LÅSESKIVE	SICHERUNGSSCHEIBE ANILHA DE RETENÇÃO	RONDELLE FREIN BORGRING	132R

Copyright © New Holland

5.0024	15	p1	03/10

HYDRAULIC HAMMER (L=3.5 MT) - OPTIONAL CODE 461235038 (04-05-06)
MARTELLO IDRAULICO (L=3.5 MT) - CODICE VARIANTE 461235038 (04-05-06)
HYDRAULISCHER HAMMER (L=3.5 MT) - OPTIONAL CODE 461235038 (04-05-06)
MARTEAU HYDRAULIQUE (L=3.5 MT) - OPTIONAL CODE 461235038 (04-05-06)

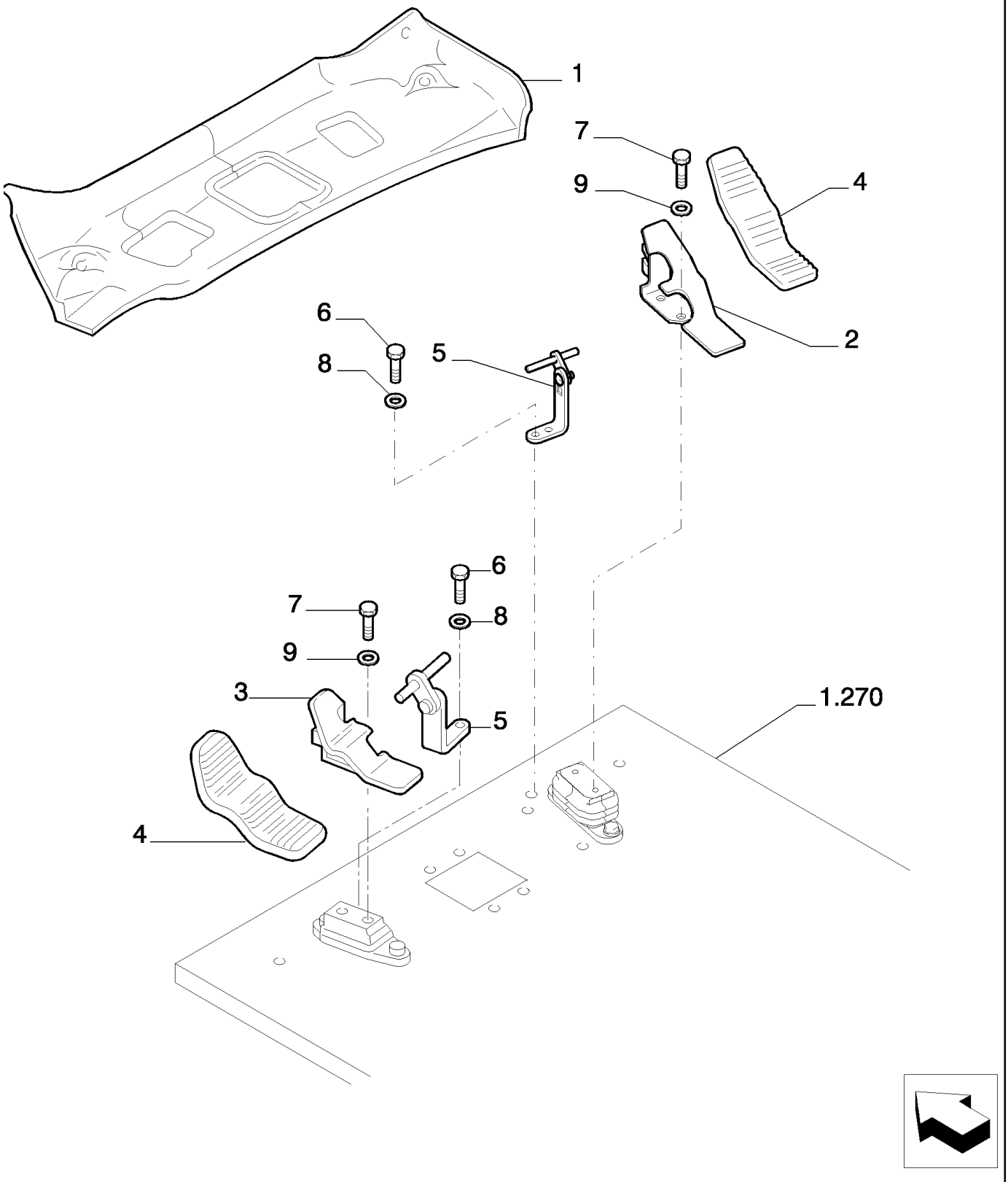

Copyright © New Holland

MARTILLO HIDRÁULICO (L=3.5 MT) - OPTIONAL CODE 461235038 (04-05-06)
HYDRAULIC HAMMER (L=3.5 MT) - OPTIONAL CODE 461235038 (04-05-06)
HYDRAULIC HAMMER (L=3.5 MT) - OPTIONAL CODE 461235038 (04-05-06)
HYDRAULIC HAMMER (L=3.5 MT) - OPTIONAL CODE 461235038 (04-05-06)

R	N	P.N.	MOD	Q	Description Denominacion	Descrizione Beskrivelse	Bezeichnung Denominação	Description Beschrijving	L.C.
1		YN26M00075P1		1	FLOOR MAT ALFOMBRA	TAPPETINO GULVMÅTTE	BODENMATTE TAPETE DE CHÃO	TAPIS DE SOL VLOERMAT	Z068
2		87539195		1	PEDAL PEDAL	PEDALE PEDAL	PEDAL PEDAL	PEDALE PEDAAL	060P
3		87539200		1	PEDAL PEDAL	PEDALE PEDAL	PEDAL PEDAL	PEDALE PEDAAL	060P
4		87539205		2	RUBBER PEDAL PAD PASTILLA DE PEDAL DE	RIVESTIMENTO PEDALE GUMMIPEDALBELÆGNI	GUMMIPEDALAUFLAGE BORRACHA COBERTUR	PATIN DE PEDALE CAO RUBBEREN PEDAALBEK	292C
5		87539206		2	BRACKET SOPORTE	STAFFA BESLAG	HALTERUNG SUPORTE	SUPPORT STEUN	225S
6		16043434		4	BOLT, Hex, M8 x 20, 10.9, Full Thd PERNO	BULLONE BOLT	SCHRAUBE PARAFUSO	VIS BOUT	140B
7		11106034		4	BOLT, Hex, M10 x 20, 10.9, Full Thd PERNO	BULLONE BOLT	SCHRAUBE PARAFUSO	VIS BOUT	140B
8		14496531		4	WASHER, M8 x 17 x 1.6 ARANDELA	RONDELLA FLADSKIVE	UNTERLEGSCHEIBE ANILHA	RONDELLE SLUITRING	131R
9		14496631		4	WASHER, M10 x 21 x 2 ARANDELA	RONDELLA FLADSKIVE	UNTERLEGSCHEIBE ANILHA	RONDELLE SLUITRING	131R

Copyright © New Holland

5.0024	16	p1	03/10

HYDRAULIC HAMMER (L=3.5 MT) - OPTIONAL CODE 461235038 (04-05-06)
MARTELLO IDRAULICO (L=3.5 MT) - CODICE VARIANTE 461235038 (04-05-06)
HYDRAULISCHER HAMMER (L=3.5 MT) - OPTIONAL CODE 461235038 (04-05-06)
MARTEAU HYDRAULIQUE (L=3.5 MT) - OPTIONAL CODE 461235038 (04-05-06)

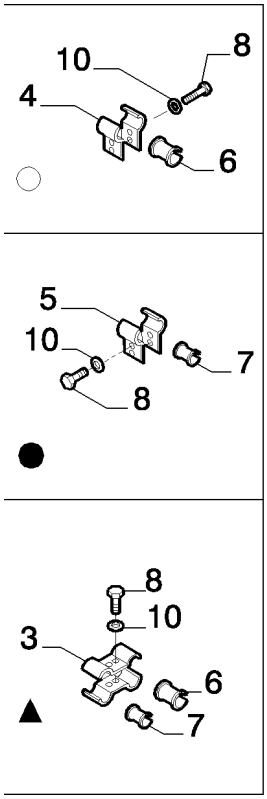

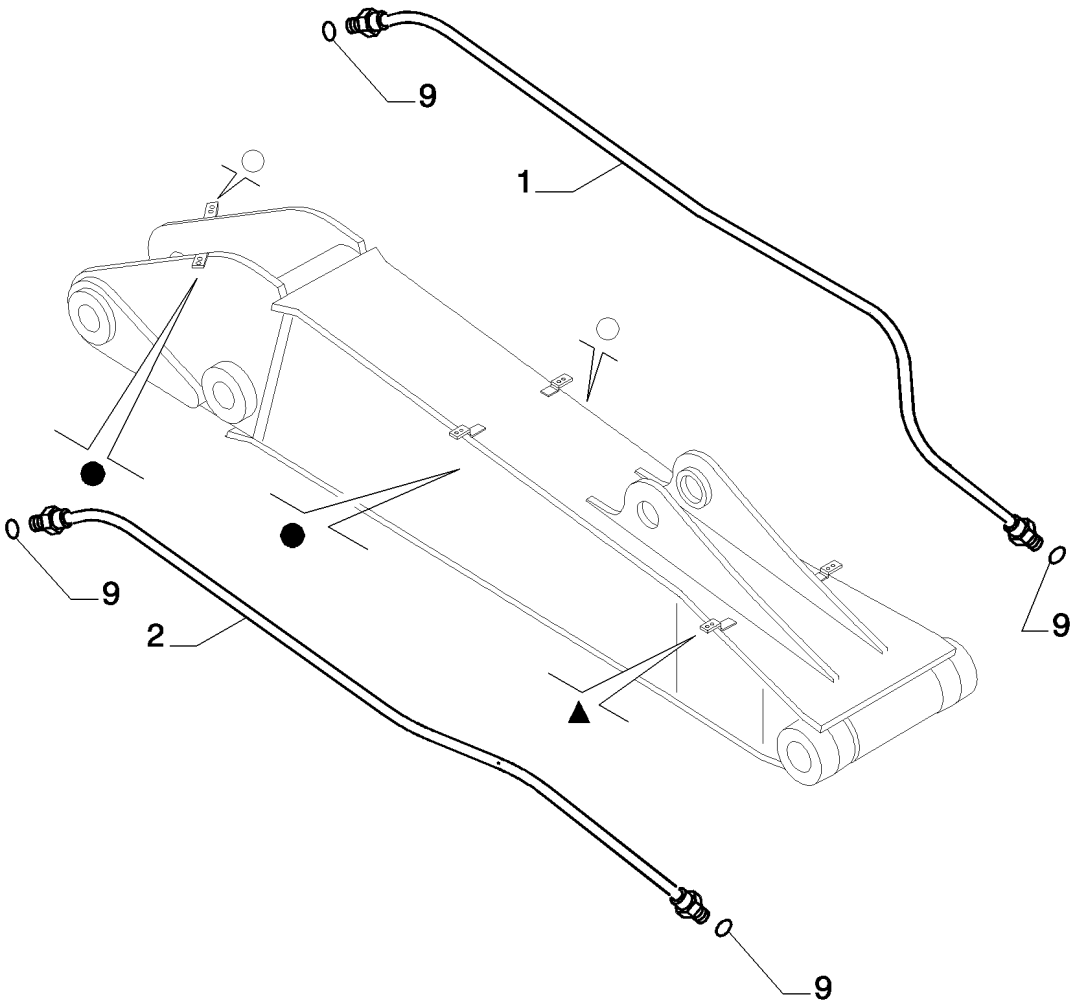

Copyright © New Holland

MARTILLO HIDRÁULICO (L=3.5 MT) - OPTIONAL CODE 461235038 (04-05-06)
HYDRAULIC HAMMER (L=3.5 MT) - OPTIONAL CODE 461235038 (04-05-06)
HYDRAULIC HAMMER (L=3.5 MT) - OPTIONAL CODE 461235038 (04-05-06)
HYDRAULIC HAMMER (L=3.5 MT) - OPTIONAL CODE 461235038 (04-05-06)

R	N	P.N.	MOD	Q	Description Denominacion	Descrizione Beskrivelse	Bezeichnung Denominação	Description Beschrijving	L.C.
1		87632032		1	RIGID TUBE TUBO RÍGIDO	TUBO RIGIDO STIFT RØR	ROHR TUBO RÍGIDO	TUYAU RIGIDE VASTE LEIDING	193T
2		87632030		1	RIGID TUBE TUBO RÍGIDO	TUBO RIGIDO STIFT RØR	ROHR TUBO RÍGIDO	TUYAU RIGIDE VASTE LEIDING	193T
3		87349655		2	BRACKET SOPORTE	STAFFA BESLAG	HALTERUNG SUPORTE	SUPPORT STEUN	225S
4		87349673		4	BRACKET SOPORTE	STAFFA BESLAG	HALTERUNG SUPORTE	SUPPORT STEUN	225S
5		87349692		4	BRACKET SOPORTE	STAFFA BESLAG	HALTERUNG SUPORTE	SUPPORT STEUN	225S
6		87349642		3	BUSHING CASQUILLO	BOCCOLA BØSNING	BUCHSE CASQUILHO	BAGUE BUS	095B
7		87349648		3	BUSHING CASQUILLO	BOCCOLA BØSNING	BUCHSE CASQUILHO	BAGUE BUS	095B
8		11112634		10	SCREW TORNILLO	VITE SKRUE	SCHRAUBE PARAFUSO	VIS SCHROEF	040V
9		70931640		2	GASKET JUNTA	GUARNIZIONE PAKNING	DICHTUNG JUNTA	JOINT PAKKING	123G
10		14496731		10	WASHER, M12 x 24 x 2.5 Thk ARANDELA	RONDELLA FLADSKIVE	UNTERLEGSCHEIBE ANILHA	RONDELLE SLUITRING	131R

Copyright © New Holland

5.0024	17	p1	03/10

HYDRAULIC HAMMER (L=3.5 MT) - OPTIONAL CODE 461235038 (04-05-06)
MARTELLO IDRAULICO (L=3.5 MT) - CODICE VARIANTE 461235038 (04-05-06)
HYDRAULISCHER HAMMER (L=3.5 MT) - OPTIONAL CODE 461235038 (04-05-06)
MARTEAU HYDRAULIQUE (L=3.5 MT) - OPTIONAL CODE 461235038 (04-05-06)

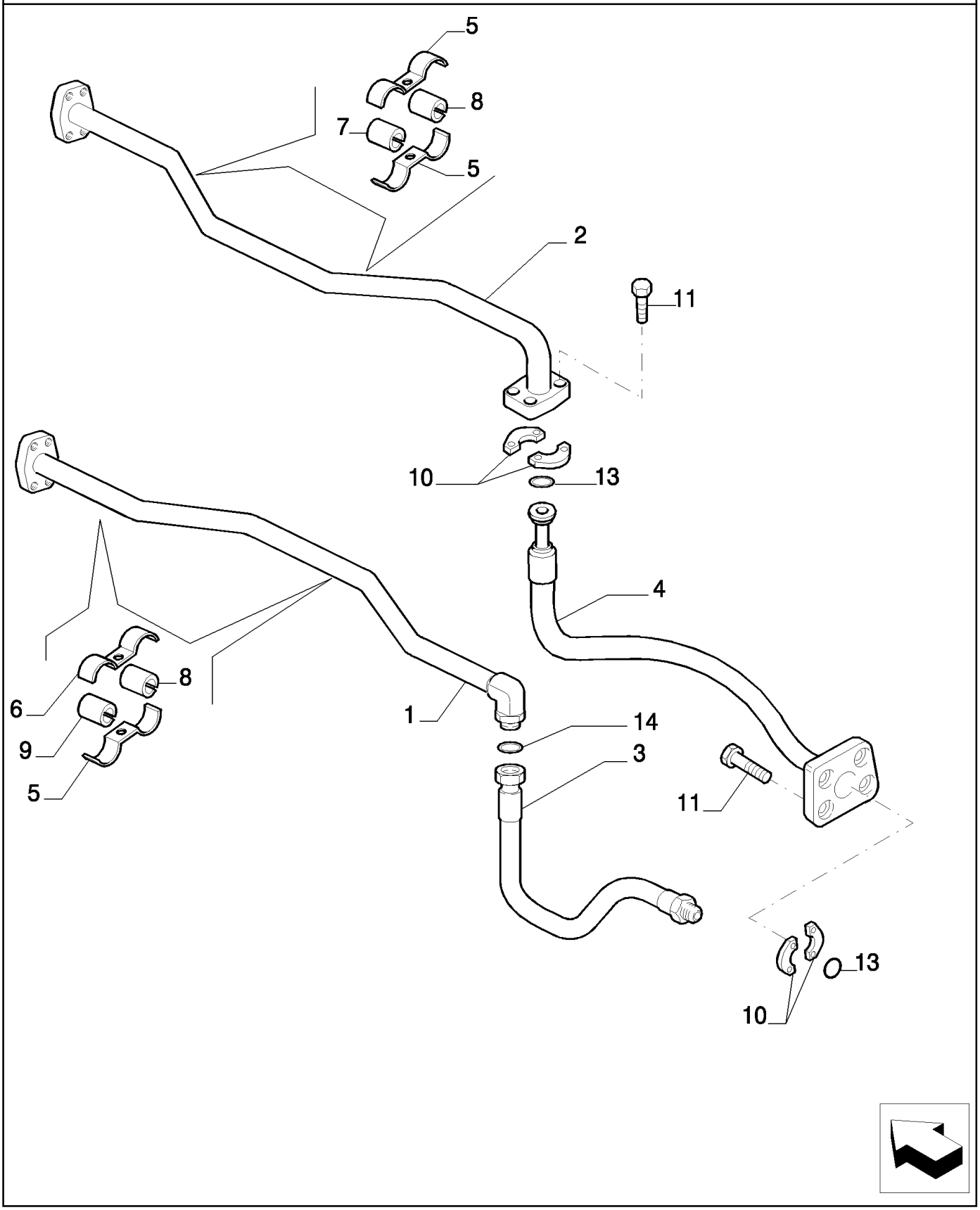

Copyright © New Holland

MARTILLO HIDRÁULICO (L=3.5 MT) - OPTIONAL CODE 461235038 (04-05-06)
HYDRAULIC HAMMER (L=3.5 MT) - OPTIONAL CODE 461235038 (04-05-06)
HYDRAULIC HAMMER (L=3.5 MT) - OPTIONAL CODE 461235038 (04-05-06)
HYDRAULIC HAMMER (L=3.5 MT) - OPTIONAL CODE 461235038 (04-05-06)

R	N	P.N.	MOD	Q	Description Denominacion	Descrizione Beskrivelse	Bezeichnung Denominação	Description Beschrijving	L.C.
1		87529912		1	RIGID TUBE TUBO RÍGIDO	TUBO RIGIDO STIFT RØR	ROHR TUBO RÍGIDO	TUYAU RIGIDE VASTE LEIDING	193T
2		87572206		1	RIGID TUBE TUBO RÍGIDO	TUBO RIGIDO STIFT RØR	ROHR TUBO RÍGIDO	TUYAU RIGIDE VASTE LEIDING	193T
3		72207171		1	FLEXIBLE HOSE TUBO FLEXIBLE	TUBO FLESSIBILE FLEKSIBEL SLANGE	BIEGSAMER SCHLAUCH MANGUEIRA FLEXÍVEL	TUYAU FLEXIBLE FLEXIBELE SLANG	192T
4		87572218		1	FLEXIBLE HOSE TUBO FLEXIBLE	TUBO FLESSIBILE FLEKSIBEL SLANGE	BIEGSAMER SCHLAUCH MANGUEIRA FLEXÍVEL	TUYAU FLEXIBLE FLEXIBELE SLANG	192T
5		87349655		4	BRACKET SOPORTE	STAFFA BESLAG	HALTERUNG SUPORTE	SUPPORT STEUN	225S
6		87353061		4	BRACKET SOPORTE	STAFFA BESLAG	HALTERUNG SUPORTE	SUPPORT STEUN	225S
7		87349642		2	BUSHING CASQUILLO	BOCCOLA BØSNING	BUCHSE CASQUILHO	BAGUE BUS	095B
8		72151580		4	BUSHING CASQUILLO	BOCCOLA BØSNING	BUCHSE CASQUILHO	BAGUE BUS	095B
9		87343521		2	BUSHING CASQUILLO	BOCCOLA BØSNING	BUCHSE CASQUILHO	BAGUE BUS	095B
10		71444029		4	HALF-FLANGE SEMIBRIDA	SEMIFLANGIA FLANGEHALVDEL	FLANSCHHÄLFTE MEIA FLANGE	DEMI-BRIDE FLENSHELFT	417S
11		14424534		8	SCREW TORNILLO	VITE SKRUE	SCHRAUBE PARAFUSO	VIS SCHROEF	040V
13		70924192		2	O-RING JUNTA TÓRICA	ANELLO TOROIDALE O-RING	O-RING O-RING	JOINT TORIQUE O-RING	055A
14		70931640		1	GASKET JUNTA	GUARNIZIONE PAKNING	DICHTUNG JUNTA	JOINT PAKKING	123G

Copyright © New Holland

5.0024	18	p1	03/10

HYDRAULIC HAMMER (L=3.5 MT) - OPTIONAL CODE 461235028 (01-02-03) - 461235038 (04-05-06)
MARTELLO IDRAULICO (L=3.5 MT) - CODICE VARIANTE 461235028 (01-02-03) - 461235038 (04-05-06)
HYDRAULISCHER HAMMER (L=3.5 MT) - OPTIONAL CODE 461235028 (01-02-03) - 461235038 (04-05-06)
MARTEAU HYDRAULIQUE (L=3.5 MT) - OPTIONAL CODE 461235028 (01-02-03) - 461235038 (04-05-06)

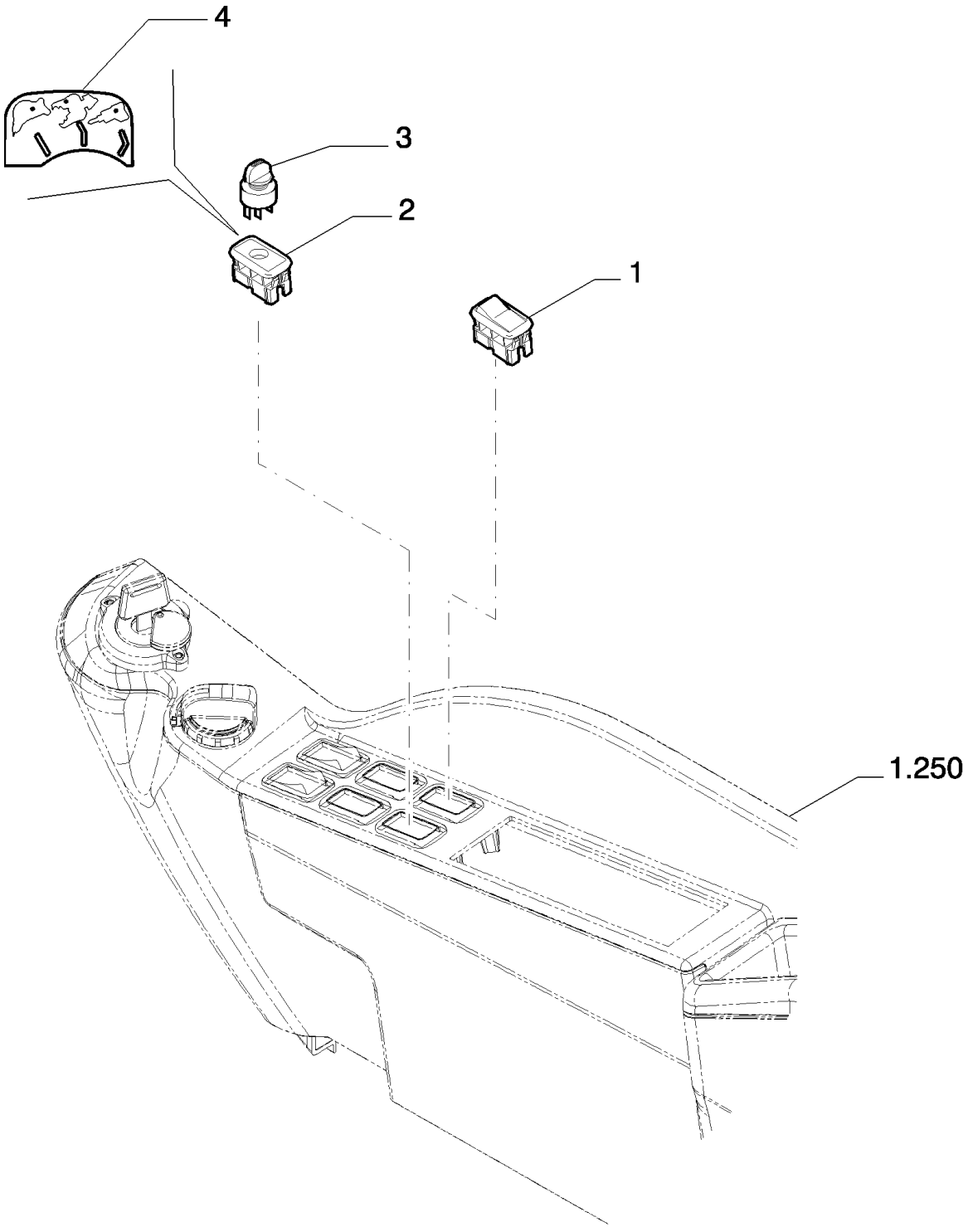

Copyright © New Holland

MARTILLO HIDRÁULICO (L=3.5 MT) - OPTIONAL CODE 461235028 (01-02-03) - 461235038 (04-05-06)
HYDRAULIC HAMMER (L=3.5 MT) - OPTIONAL CODE 461235028 (01-02-03) - 461235038 (04-05-06)
HYDRAULIC HAMMER (L=3.5 MT) - OPTIONAL CODE 461235028 (01-02-03) - 461235038 (04-05-06)
HYDRAULIC HAMMER (L=3.5 MT) - OPTIONAL CODE 461235028 (01-02-03) - 461235038 (04-05-06)

R	N	P.N.	MOD	Q	Description Denominacion	Descrizione Beskrivelse	Bezeichnung Denominação	Description Beschrijving	L.C.
1		87527531		1	SWITCH INTERRUPTOR	INTERRUTTORE KONTAKT	SCHALTER INTERRUPTOR	CONTACTEUR SCHAKELAAR	075I
2		YN17M01313P3		1	BRACKET SOPORTE	STAFFA BESLAG	HALTERUNG SUPORTE	SUPPORT STEUN	225S
3		72280246		1	SWITCH INTERRUPTOR	INTERRUTTORE KONTAKT	SCHALTER INTERRUPTOR	CONTACTEUR SCHAKELAAR	075I
4		YN17M01417P1		1	LABEL ETIQUETA	ETICHETTA ETIKET	KENNZEICHNUNG ETIQUETA	ETIQUETTE LABEL	077E

Copyright © New Holland

BIODEGRADABLE OIL - OPTIONAL CODE 781489018 (01-02-03) - 781489008 (04-05-06)
OLIO BIODEGRADABILE - CODICE VARIANTE 781489018 (01-02-03) - 781489008 (04-05-06)
BIOLOGISCH ABBAUBARES ÖL - OPTIONAL CODE 781489018 (01-02-03) - 781489008 (04-05-06)
HUILE BIODÉGRADABLE - OPTIONAL CODE 781489018 (01-02-03) - 781489008 (04-05-06)

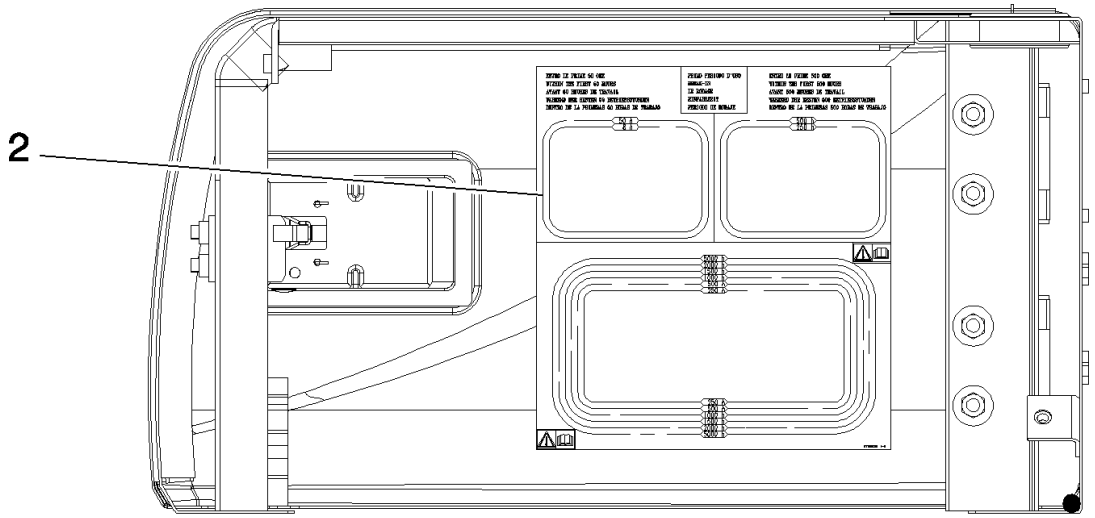

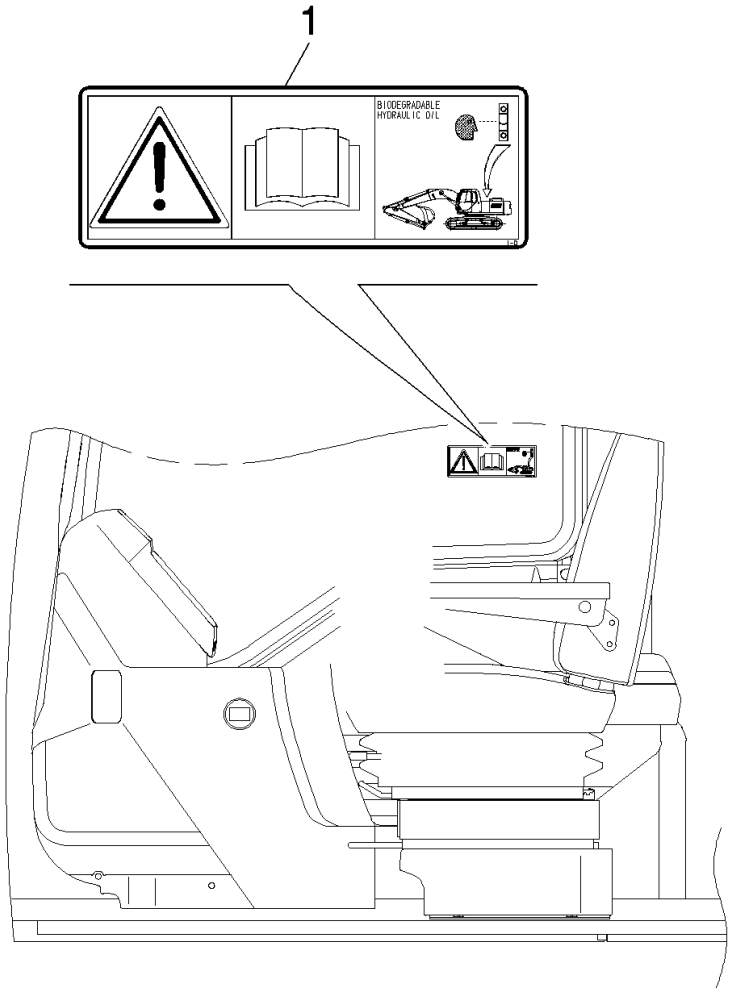

Copyright © New Holland

ACEITE BIODEGRADABLE - OPTIONAL CODE 781489018 (01-02-03) - 781489008 (04-05-06)
BIODEGRADABLE OIL - OPTIONAL CODE 781489018 (01-02-03) - 781489008 (04-05-06)
BIODEGRADABLE OIL - OPTIONAL CODE 781489018 (01-02-03) - 781489008 (04-05-06)
BIODEGRADABLE OIL - OPTIONAL CODE 781489018 (01-02-03) - 781489008 (04-05-06)

R	N	P.N.	MOD	Q	Description Denominacion	Descrizione Beskrivelse	Bezeichnung Denominação	Description Beschrijving	L.C.
1		72211775		1	DATA PLAQUE PLACA DE DATOS	TARGHETTA DATI DATASKILT	DATENSCHILD PLACA IDENTIFICADOR/	PLAQUE D'IDENTIFICAT GEGEVENSPLAATJE	065T
2		87489568		1	DECAL CALCOMANÍA	DECALCOMANIA TRANSFER	AUFKLEBER DÍSTICO	AUTOCOLLANT STICKER	012D

Copyright © New Holland

5.0038	01	p1	03/10

DIPPER STICK (L=3.5M) - OPTIONAL CODE 781149028
BRACCIO PENETRAZIONE (L=3.5M) - CODICE VARIANTE 781149028
LOEFFELSTIEL (L=3.5M) - OPTIONAL CODE 781149028
BILANCIER (L=3.5M) - OPTIONAL CODE 781149028

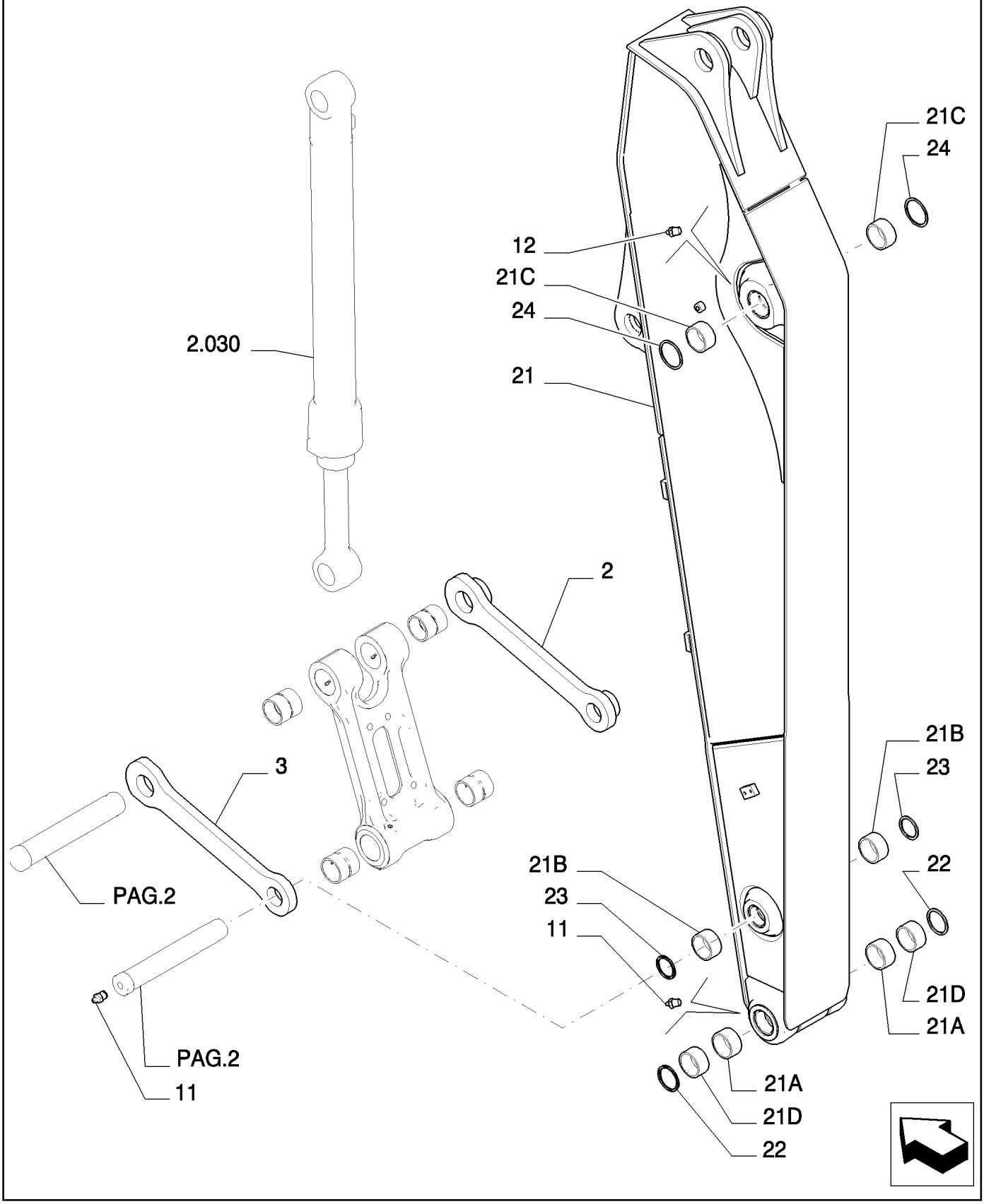

Copyright © New Holland

BRAZO TERMINAL (L=3.5M) - OPTIONAL CODE 781149028
DIPPER STICK (L=3.5M) - OPTIONAL CODE 781149028
DIPPER STICK (L=3.5M) - OPTIONAL CODE 781149028
DIPPER STICK (L=3.5M) - OPTIONAL CODE 781149028

R	N	P.N.	MOD	Q	Description Denominacion	Descrizione Beskrivelse	Bezeichnung Denominação	Description Beschrijving	L.C.
2		72202183		1	LINK CONROD BIELA DE ESLABÓN	BIELLA TIRANTE PLEJLSTANG	PLEUEL BIELA	BIELLE DRIJFSTANG	050B
3		72202178		1	LINK CONROD BIELA DE ESLABÓN	BIELLA TIRANTE PLEJLSTANG	PLEUEL BIELA	BIELLE DRIJFSTANG	050B
11		72283478		2	LUBE NIPPLE BOQUILLA DE LUBRICA(	INGRASSATORE SMØRENIPPEL	SCHMIERNIPPEL COPO DE LUBRIFICAÇÃ	GRAISSEUR SMEERNIPPEL	060I
12		71433287		1	LUBE NIPPLE BOQUILLA DE LUBRICA(	INGRASSATORE SMØRENIPPEL	SCHMIERNIPPEL COPO DE LUBRIFICAÇÃ	GRAISSEUR SMEERNIPPEL	060I
21		87540359		1	ARM, - ASSY BRAZO	BRACCIO ARM	ARM BRAÇO	BRAS ARM	130B
21A		87533342		2	BUSHING CASQUILLO	BOCCOLA BØSNING	BUCHSE CASQUILHO	BAGUE BUS	095B
21B		87525505		2	BUSHING CASQUILLO	BOCCOLA BØSNING	BUCHSE CASQUILHO	BAGUE BUS	095B
21C		87533338		2	BUSHING CASQUILLO	BOCCOLA BØSNING	BUCHSE CASQUILHO	BAGUE BUS	095B
21D		87533336		2	BUSHING CASQUILLO	BOCCOLA BØSNING	BUCHSE CASQUILHO	BAGUE BUS	095B
22		71415158		2	GASKET JUNTA	GUARNIZIONE PAKNING	DICHTUNG JUNTA	JOINT PAKKING	123G
23		72202212		2	SEAL ANILLO DE CIERRE	GUARNIZIONE; TENUTA PAKNING	DICHTUNG VEDANTE	JOINT AFDICHTING	132A
24		87531507		2	GASKET JUNTA	GUARNIZIONE PAKNING	DICHTUNG JUNTA	JOINT PAKKING	123G

Copyright © New Holland

5.0038	02	p1	03/10

DIPPER STICK (L=3.5M) - OPTIONAL CODE 781149028
BRACCIO PENETRAZIONE (L=3.5M) - CODICE VARIANTE 781149028
LOEFFELSTIEL (L=3.5M) - OPTIONAL CODE 781149028
BILANCIER (L=3.5M) - OPTIONAL CODE 781149028

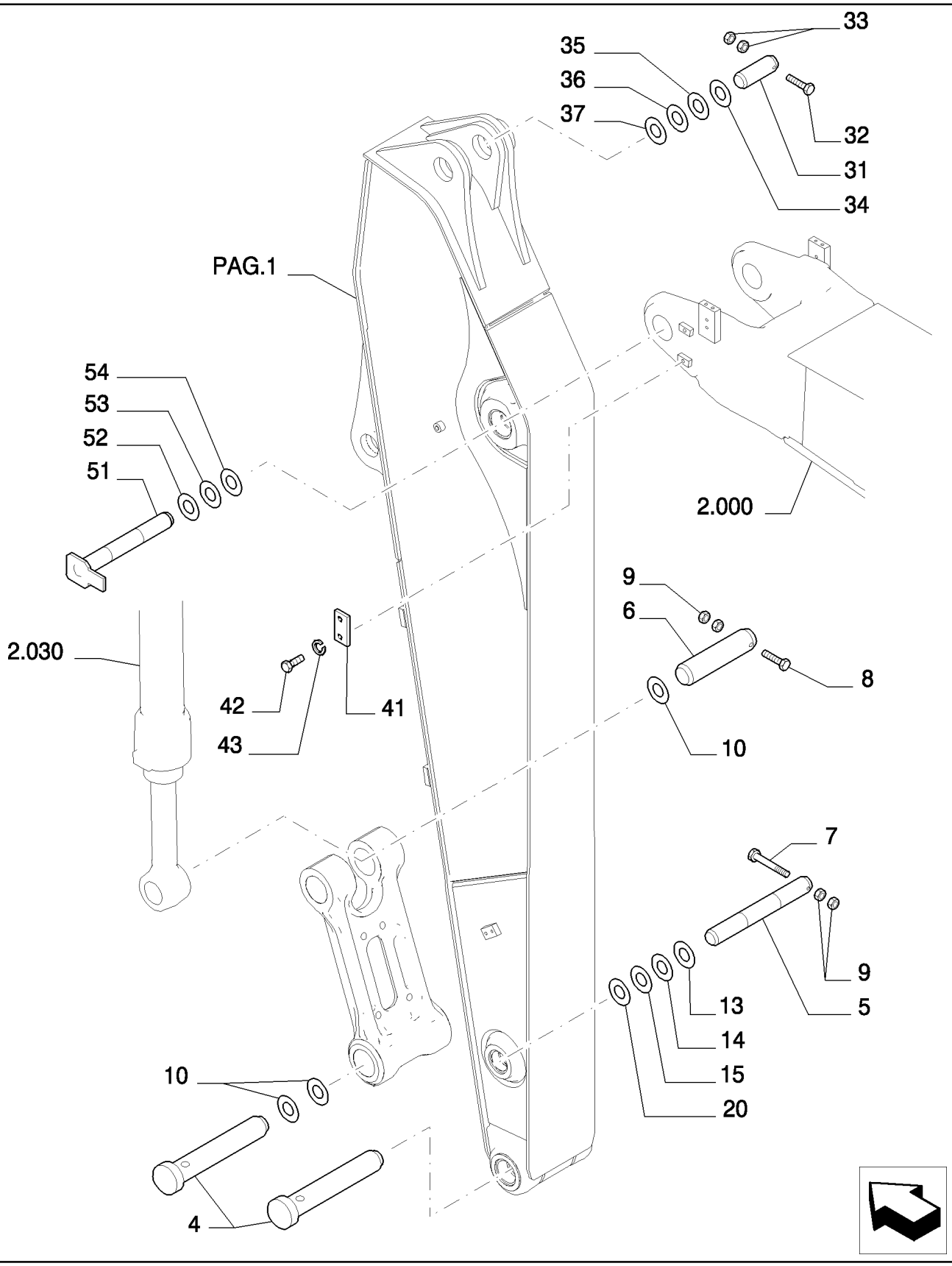

Copyright © New Holland

BRAZO TERMINAL (L=3.5M) - OPTIONAL CODE 781149028
DIPPER STICK (L=3.5M) - OPTIONAL CODE 781149028
DIPPER STICK (L=3.5M) - OPTIONAL CODE 781149028
DIPPER STICK (L=3.5M) - OPTIONAL CODE 781149028

R	N	P.N.	MOD	Q	Description Denominacion	Descrizione Beskrivelse	Bezeichnung Denominação	Description Beschrijving	L.C.
4		87536913		2	PIN PASADOR	PERNO STIFT	PIN PERNO	BROCHE PEN	080P
5		87349050		1	PIN PASADOR	PERNO STIFT	PIN PERNO	BROCHE PEN	080P
6		87349048		1	PIN PASADOR	PERNO STIFT	PIN PERNO	BROCHE PEN	080P
7		11120531		1	BOLT, Hex, M16 x 130, 10.9 PERNO	BULLONE BOLT	SCHRAUBE PARAFUSO	VIS BOUT	140B
8		11120734		1	SCREW TORNILLO	VITE SKRUE	SCHRAUBE PARAFUSO	VIS SCHROEF	040V
9		12163321		4	NUT, M16, Cl 10 TUERCA	DADO MØTRIK	MUTTER PORCA	ECROU MOER	010D
10		71415158		6	GASKET JUNTA	GUARNIZIONE PAKNING	DICHTUNG JUNTA	JOINT PAKKING	123G
13		72202194		1	SHIM, 0.5mm Thk, (M72 ID x 130) SUPLEMENTO	SPESSORE MELLEMLÆG	AUSGLEICHSSCHEIBE CALÇO DE AFINAÇÃO	CALE VULPLAATJE	198S
14		72202195		1	SHIM, 0.9mm Thk, (M72 ID x 130) SUPLEMENTO	SPESSORE MELLEMLÆG	AUSGLEICHSSCHEIBE CALÇO DE AFINAÇÃO	CALE VULPLAATJE	198S
15		72202197		1	SHIM, 1.6mm Thk SUPLEMENTO	SPESSORE MELLEMLÆG	AUSGLEICHSSCHEIBE CALÇO DE AFINAÇÃO	CALE VULPLAATJE	198S
16		72202198		2	SHIM, 0.5mm Thk SUPLEMENTO	SPESSORE MELLEMLÆG	AUSGLEICHSSCHEIBE CALÇO DE AFINAÇÃO	CALE VULPLAATJE	198S
17		72202199		2	SHIM, 0.9mm Thk SUPLEMENTO	SPESSORE MELLEMLÆG	AUSGLEICHSSCHEIBE CALÇO DE AFINAÇÃO	CALE VULPLAATJE	198S
18		72202200		2	SHIM, 1.6mm Thk SUPLEMENTO	SPESSORE MELLEMLÆG	AUSGLEICHSSCHEIBE CALÇO DE AFINAÇÃO	CALE VULPLAATJE	198S
19		72202203		4	SHIM, 2mm Thk SUPLEMENTO	SPESSORE MELLEMLÆG	AUSGLEICHSSCHEIBE CALÇO DE AFINAÇÃO	CALE VULPLAATJE	198S
20		72202204		2	SHIM, 2mm Thk, (M72 ID x 130) SUPLEMENTO	SPESSORE MELLEMLÆG	AUSGLEICHSSCHEIBE CALÇO DE AFINAÇÃO	CALE VULPLAATJE	198S
31		87533375		1	PIN PASADOR	PERNO STIFT	PIN PERNO	BROCHE PEN	080P
32		11120931		1	SCREW TORNILLO	VITE SKRUE	SCHRAUBE PARAFUSO	VIS SCHROEF	040V
33		12163321		2	NUT, M16, Cl 10 TUERCA	DADO MØTRIK	MUTTER PORCA	ECROU MOER	010D
34		72202218		2	SHIM, 2mm Thk SUPLEMENTO	SPESSORE MELLEMLÆG	AUSGLEICHSSCHEIBE CALÇO DE AFINAÇÃO	CALE VULPLAATJE	198S
35		72203147		1	SHIM, 0.5mm Thk SUPLEMENTO	SPESSORE MELLEMLÆG	AUSGLEICHSSCHEIBE CALÇO DE AFINAÇÃO	CALE VULPLAATJE	198S
36		72203153		1	SHIM, 0.9mm Thk SUPLEMENTO	SPESSORE MELLEMLÆG	AUSGLEICHSSCHEIBE CALÇO DE AFINAÇÃO	CALE VULPLAATJE	198S
37		72203154		1	SHIM, 1.6mm Thk SUPLEMENTO	SPESSORE MELLEMLÆG	AUSGLEICHSSCHEIBE CALÇO DE AFINAÇÃO	CALE VULPLAATJE	198S
41		87536886		1	PLATE PLACA	PIASTRA PLADE	PLATTE CHAPA	PLAQUE PLAAT	105P
42		16249031		2	SCREW TORNILLO	VITE SKRUE	SCHRAUBE PARAFUSO	VIS SCHROEF	040V

Copyright © New Holland

5.0038	02	p2	03/10

DIPPER STICK (L=3.5M) - OPTIONAL CODE 781149028
BRACCIO PENETRAZIONE (L=3.5M) - CODICE VARIANTE 781149028
LOEFFELSTIEL (L=3.5M) - OPTIONAL CODE 781149028
BILANCIER (L=3.5M) - OPTIONAL CODE 781149028

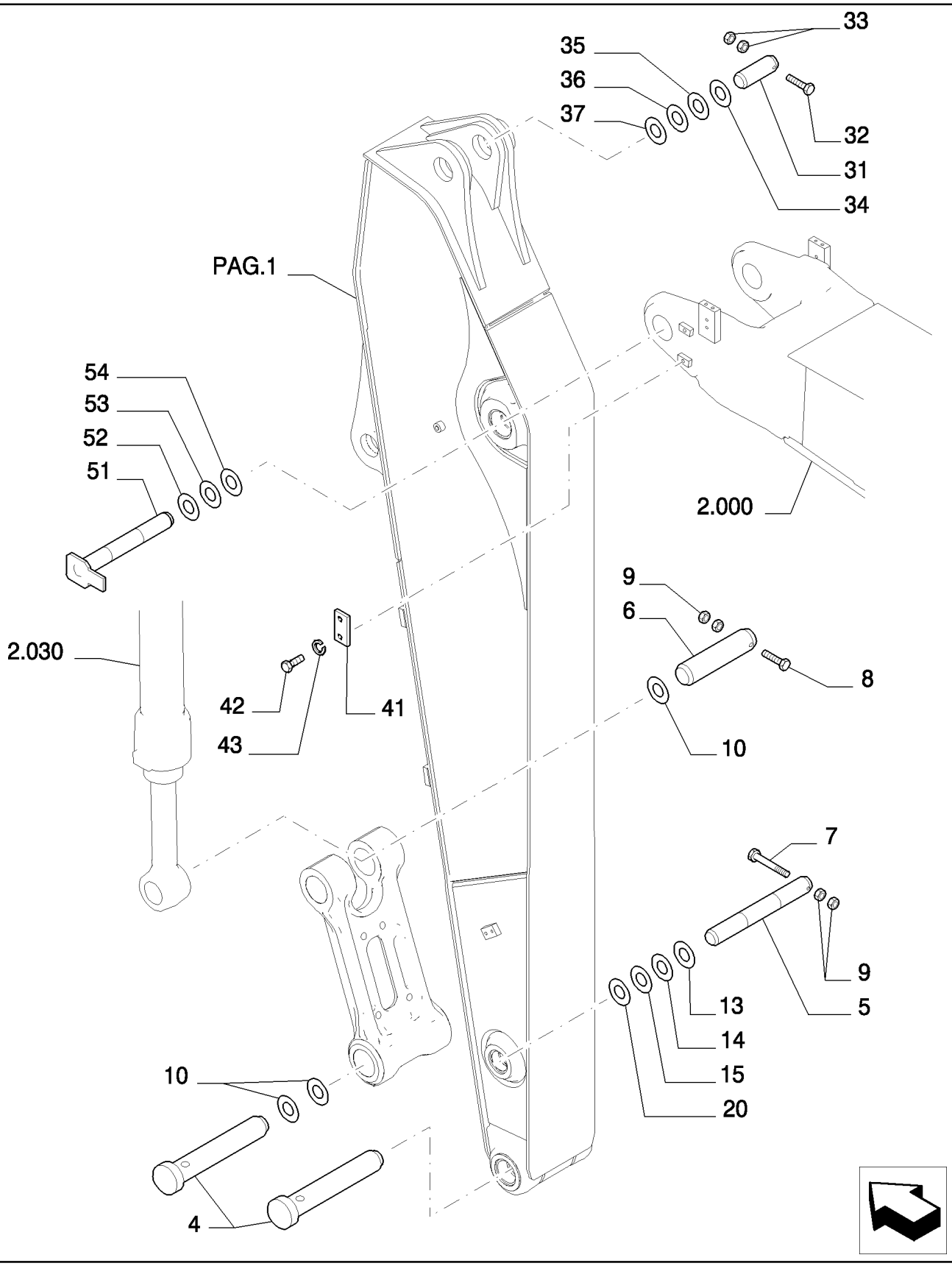

Copyright © New Holland

BRAZO TERMINAL (L=3.5M) - OPTIONAL CODE 781149028
DIPPER STICK (L=3.5M) - OPTIONAL CODE 781149028
DIPPER STICK (L=3.5M) - OPTIONAL CODE 781149028
DIPPER STICK (L=3.5M) - OPTIONAL CODE 781149028

R	N	P.N.	MOD	Q	Description Denominacion	Descrizione Beskrivelse	Bezeichnung Denominação	Description Beschrijving	L.C.
43		10520121		2	WASHER ARANDELA	RONDELLA FLADSKIVE	UNTERLEGSCHEIBE ANILHA	RONDELLE SLUITRING	131R
51		87536903		1	PIN PASADOR	PERNO STIFT	PIN PERNO	BROCHE PEN	080P
52		72203145		2	SHIM, 2mm Thk SUPLEMENTO	SPESSORE MELLEMLÆG	AUSGLEICHSSCHEIBE CALÇO DE AFINAÇÃO	CALE VULPLAATJE	198S
53		72203140		1	SHIM, 0.5mm Thk SUPLEMENTO	SPESSORE MELLEMLÆG	AUSGLEICHSSCHEIBE CALÇO DE AFINAÇÃO	CALE VULPLAATJE	198S
54		72203141		1	SHIM, 0.9mm Thk SUPLEMENTO	SPESSORE MELLEMLÆG	AUSGLEICHSSCHEIBE CALÇO DE AFINAÇÃO	CALE VULPLAATJE	198S

Copyright © New Holland

5.0038	03	p1	03/10

DIPPER STICK (L=3.5M) - OPTIONAL CODE 781149028
BRACCIO PENETRAZIONE (L=3.5M) - CODICE VARIANTE 781149028
LOEFFELSTIEL (L=3.5M) - OPTIONAL CODE 781149028
BILANCIER (L=3.5M) - OPTIONAL CODE 781149028

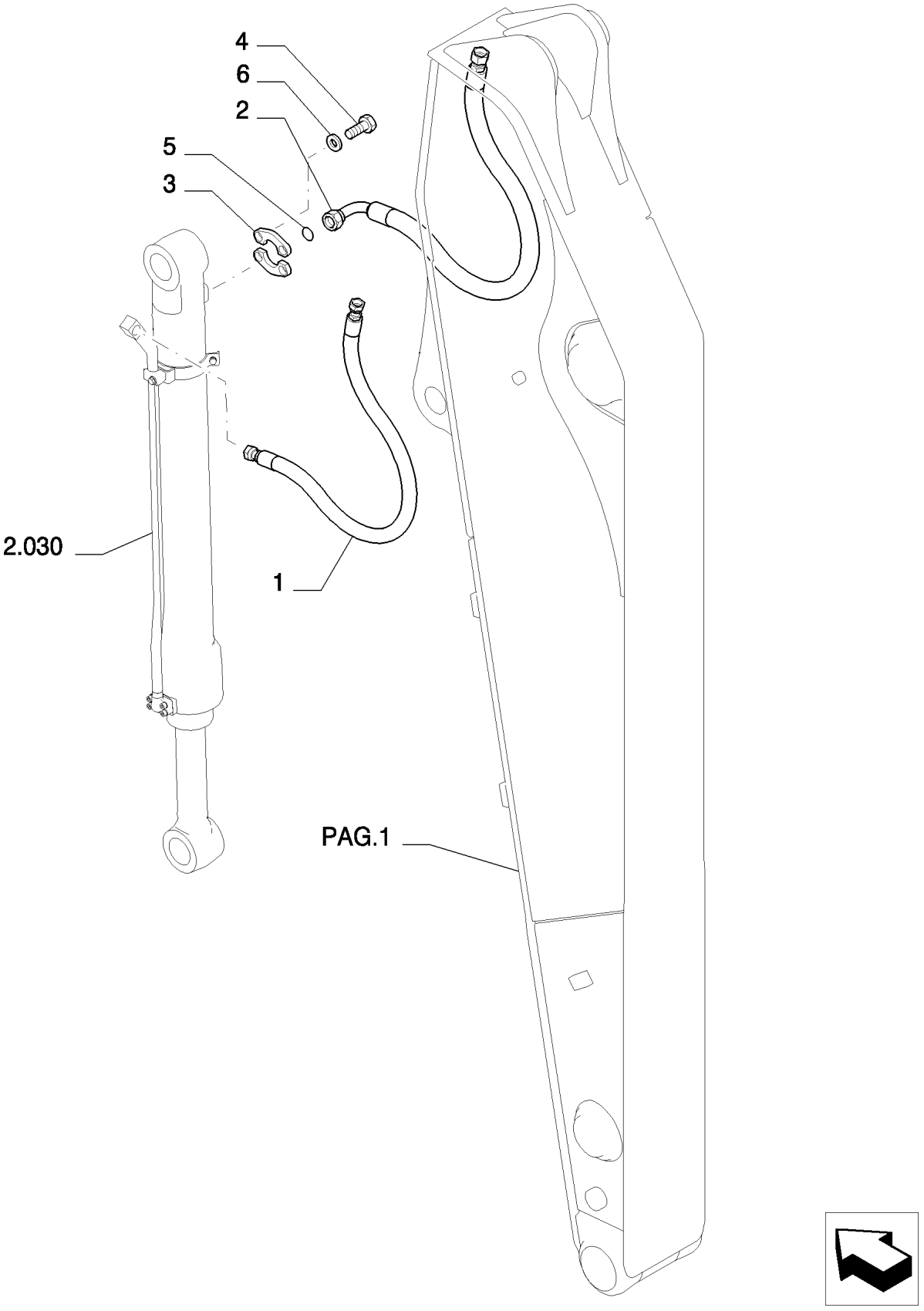

Copyright © New Holland

BRAZO TERMINAL (L=3.5M) - OPTIONAL CODE 781149028
DIPPER STICK (L=3.5M) - OPTIONAL CODE 781149028
DIPPER STICK (L=3.5M) - OPTIONAL CODE 781149028
DIPPER STICK (L=3.5M) - OPTIONAL CODE 781149028

R	N	P.N.	MOD	Q	Description Denominacion	Descrizione Beskrivelse	Bezeichnung Denominação	Description Beschrijving	L.C.
1		87547564		1	FLEXIBLE HOSE TUBO FLEXIBLE	TUBO FLESSIBILE FLEKSIBEL SLANGE	BIEGSAMER SCHLAUCH MANGUEIRA FLEXÍVEL	TUYAU FLEXIBLE FLEXIBELE SLANG	192T
2		87657736		1	FLEXIBLE HOSE TUBO FLEXIBLE	TUBO FLESSIBILE FLEKSIBEL SLANGE	BIEGSAMER SCHLAUCH MANGUEIRA FLEXÍVEL	TUYAU FLEXIBLE FLEXIBELE SLANG	192T
3		71404313		2	HALF-FLANGE SEMIBRIDA	SEMIFLANGIA FLANGEHALVDEL	FLANSCHHÄLFTE MEIA FLANGE	DEMI-BRIDE FLENSHELFT	417S
4		14422234		4	SCREW TORNILLO	VITE SKRUE	SCHRAUBE PARAFUSO	VIS SCHROEF	040V
5		70924200		1	O-RING JUNTA TÓRICA	ANELLO TOROIDALE O-RING	O-RING O-RING	JOINT TORIQUE O-RING	055A
6		10517074		4	LOCK WASHER ARANDELA DE BLOQUE	RONDELLA DI SICUREZ LÅSESKIVE	SICHERUNGSSCHEIBE ANILHA DE RETENÇÃO	RONDELLE FREIN BORGRING	132R

Copyright © New Holland

5.0038	04	p1	03/10

DIPPER STICK (L=3.5M) - OPTIONAL CODE 781149028
BRACCIO PENETRAZIONE (L=3.5M) - CODICE VARIANTE 781149028
LOEFFELSTIEL (L=3.5M) - OPTIONAL CODE 781149028
BILANCIER (L=3.5M) - OPTIONAL CODE 781149028

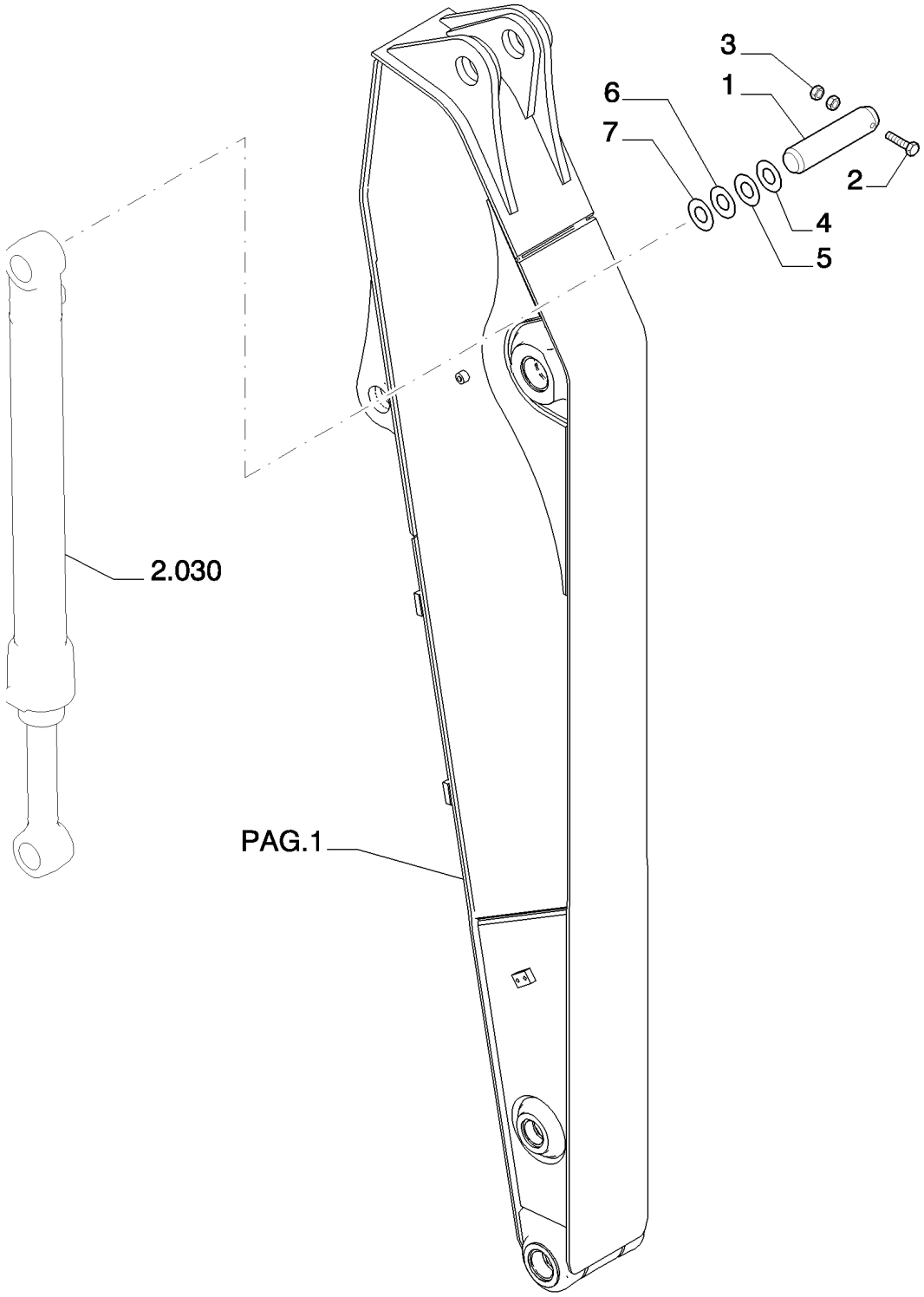

Copyright © New Holland

BRAZO TERMINAL (L=3.5M) - OPTIONAL CODE 781149028
DIPPER STICK (L=3.5M) - OPTIONAL CODE 781149028
DIPPER STICK (L=3.5M) - OPTIONAL CODE 781149028
DIPPER STICK (L=3.5M) - OPTIONAL CODE 781149028

R	N	P.N.	MOD	Q	Description Denominacion	Descrizione Beskrivelse	Bezeichnung Denominação	Description Beschrijving	L.C.
1		87533371		1	PIN PASADOR	PERNO STIFT	PIN PERNO	BROCHE PEN	080P
2		11120734		1	SCREW TORNILLO	VITE SKRUE	SCHRAUBE PARAFUSO	VIS SCHROEF	040V
3		12163321		2	NUT, M16, Cl 10 TUERCA	DADO MØTRIK	MUTTER PORCA	ECROU MOER	010D
4		72202203		2	SHIM, 2mm Thk SUPLEMENTO	SPESSORE MELLEMLÆG	AUSGLEICHSSCHEIBE CALÇO DE AFINAÇÃO	CALE VULPLAATJE	198S
5		72202198		5	SHIM, 0.5mm Thk SUPLEMENTO	SPESSORE MELLEMLÆG	AUSGLEICHSSCHEIBE CALÇO DE AFINAÇÃO	CALE VULPLAATJE	198S
6		72202199		1	SHIM, 0.9mm Thk SUPLEMENTO	SPESSORE MELLEMLÆG	AUSGLEICHSSCHEIBE CALÇO DE AFINAÇÃO	CALE VULPLAATJE	198S
7		72202200		1	SHIM, 1.6mm Thk SUPLEMENTO	SPESSORE MELLEMLÆG	AUSGLEICHSSCHEIBE CALÇO DE AFINAÇÃO	CALE VULPLAATJE	198S

Copyright © New Holland

5.0040	01	p1	03/10

MONITOR INSTALLATION - OPTIONAL CODE 461223048
INSTALLAZIONE MONITOR - CODICE VARIANTE 461223048
INSTALLIERUNG MONITOR - OPTIONAL CODE 461223048
INSTALLATION MONITEUR - OPTIONAL CODE 461223048

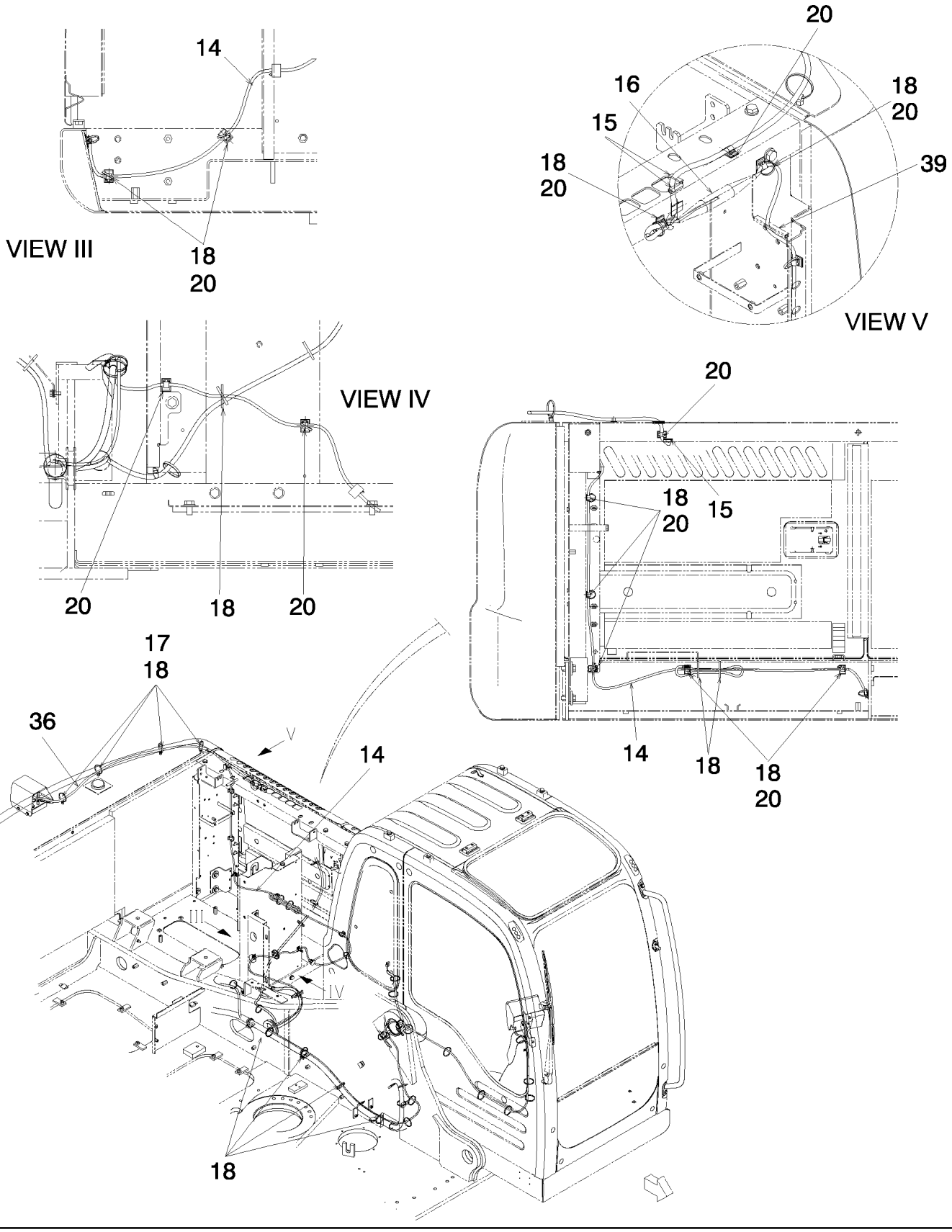

Copyright © New Holland

INSTALACION MONITOR - OPTIONAL CODE 461223048
MONITOR INSTALLATION - OPTIONAL CODE 461223048
MONITOR INSTALLATION - OPTIONAL CODE 461223048
MONITOR INSTALLATION - OPTIONAL CODE 461223048

R	N	P.N.	MOD	Q	Description Denominacion	Descrizione Beskrivelse	Bezeichnung Denominação	Description Beschrijving	L.C.
14		87657732		1	CABLE CABLE	CAVO KABEL	KABEL CABO	CABLE KABEL	650C
15		87692485		2	GASKET JUNTA	GUARNIZIONE PAKNING	DICHTUNG JUNTA	JOINT PAKKING	123G
16		87662922		1	GUARD DEFENSA	PROTEZIONE BESKYTTELSESSKÆRM	SCHUTZABDECKUNG PROTECÇÃO	PROTECTION AFSCHERMING	070R
17		87526680		4	RETAINER COLLAR COLLAR DE RETENCIÓN	COLLARE DI FISSAGGIC RING, SPÆNDE	HALTERING ANEL DE FIXAÇÃO	COLLIER DE RETENUE BORGKRAAG	230S
18		72951499		20	CLIP ABRAZADERA	FERMO KLIPS	KLAMMER FIXADOR	COLLIER KLEM	045F
20		87662794		13	COLLAR COLLAR	COLLARE SLANGEBÅND	RINGE ANEL	COLLIER KRAAG	031F
36		87657411		1	RIGID TUBE TUBO RÍGIDO	TUBO RIGIDO STIFT RØR	ROHR TUBO RÍGIDO	TUYAU RIGIDE VASTE LEIDING	193T
39		87662791		1	GASKET JUNTA	GUARNIZIONE PAKNING	DICHTUNG JUNTA	JOINT PAKKING	123G

Copyright © New Holland

5.0040	02	p1	03/10

MONITOR INSTALLATION - OPTIONAL CODE 461223048
INSTALLAZIONE MONITOR - CODICE VARIANTE 461223048
INSTALLIERUNG MONITOR - OPTIONAL CODE 461223048
INSTALLATION MONITEUR - OPTIONAL CODE 461223048

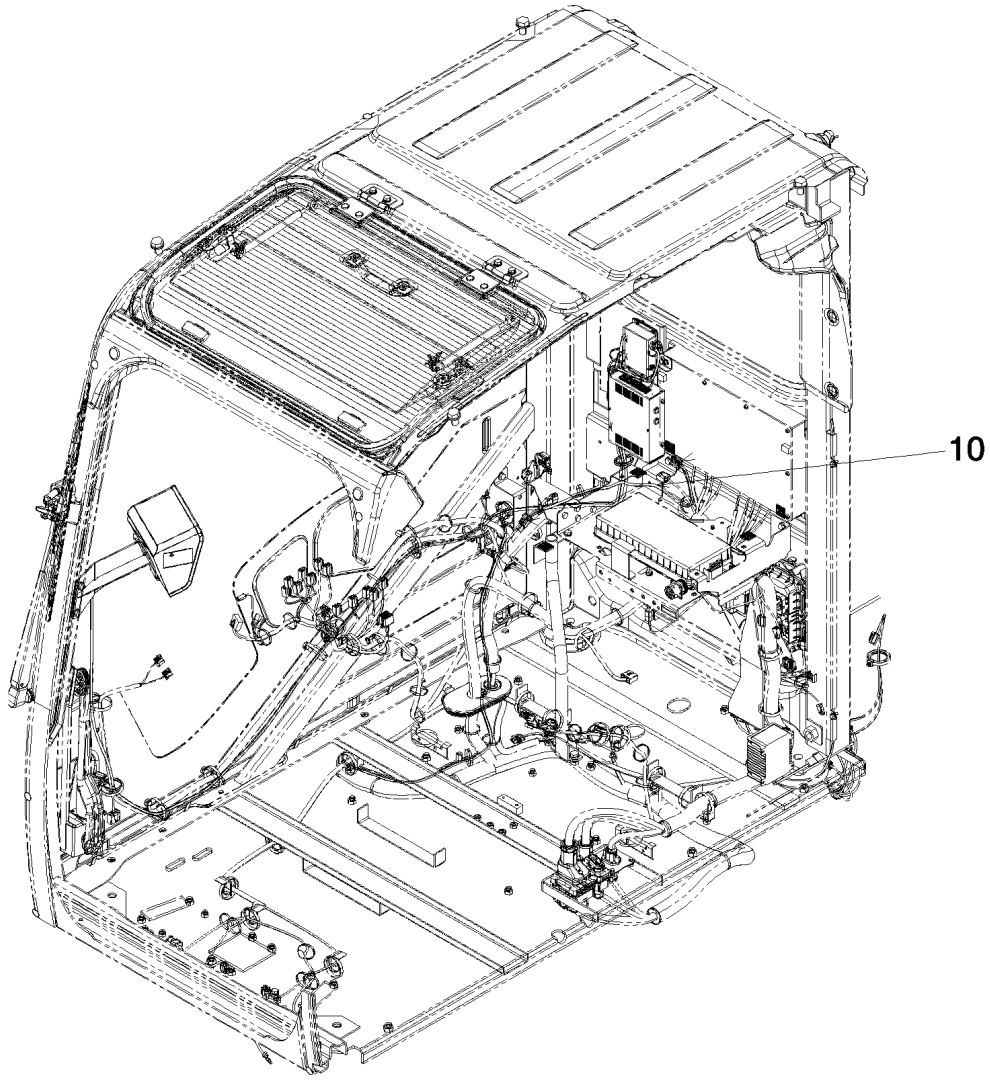

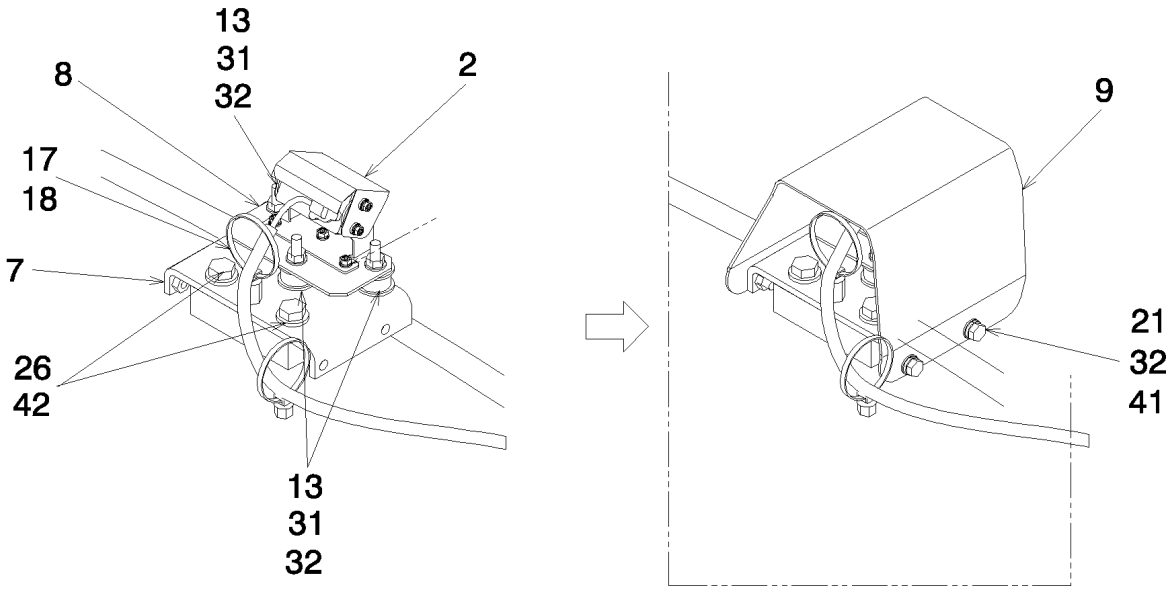

Copyright © New Holland

INSTALACION MONITOR - OPTIONAL CODE 461223048
MONITOR INSTALLATION - OPTIONAL CODE 461223048
MONITOR INSTALLATION - OPTIONAL CODE 461223048
MONITOR INSTALLATION - OPTIONAL CODE 461223048

R	N	P.N.	MOD	Q	Description Denominacion	Descrizione Beskrivelse	Bezeichnung Denominação	Description Beschrijving	L.C.
2		87657720		1	CONTROL MONITOR CONTROL DE MONITOR	MONITOR MONITOR, KONTROL	ÜBERWACHUNGSMONI MONITOR DE CONTROL	MONITEUR DE COMMAN MONITOR	880M
7		87657724		1	BRACKET SOPORTE	STAFFA BESLAG	HALTERUNG SUPORTE	SUPPORT STEUN	225S
8		87657725		1	PLATE PLACA	PIASTRA PLADE	PLATTE CHAPA	PLAQUE PLAAT	105P
9		87657726		1	GUARD DEFENSA	PROTEZIONE BESKYTTELSESSKÆRM	SCHUTZABDECKUNG PROTECÇÃO	PROTECTION AFSCHERMING	070R
10		87657727		1	ELECTRIC CABLE CABLE ELÉCTRICO	CAVO ELETTRICO EL-KABEL	ELEKTROKABEL CABO ELÉCTRICO	CABLE ELECTRIQUE ELEKTRICITEITSKABEL	111C
13		87657729		3	INSULATOR BLOCK BLOQUE DE AISLADOR	BLOCCO ISOLANTE ISOLATORBLOK	ISOLIERSTÜCK BLOCO ISOLADOR	BLOC ISOLANT ISOLATIEBLOK	061T
17		87526680		1	RETAINER COLLAR COLLAR DE RETENCIÓN	COLLARE DI FISSAGGIC RING, SPÆNDE	HALTERING ANEL DE FIXAÇÃO	COLLIER DE RETENUE BORGKRAAG	230S
18		72951499		1	CLIP ABRAZADERA	FERMO KLIPS	KLAMMER FIXADOR	COLLIER KLEM	045F
21		16043634		4	BOLT, Hex, M8 x 25, 10.9, Full Thd PERNO	BULLONE BOLT	SCHRAUBE PARAFUSO	VIS BOUT	140B
26		11112434		2	BOLT, Hex, M12 x 30, 10.9, Full Thd PERNO	BULLONE BOLT	SCHRAUBE PARAFUSO	VIS BOUT	140B
31		16100821		3	NUT, M8, Cl 10 TUERCA	DADO MØTRIK	MUTTER PORCA	ECROU MOER	010D
32		14496531		12	WASHER, M8 x 17 x 1.6 ARANDELA	RONDELLA FLADSKIVE	UNTERLEGSCHEIBE ANILHA	RONDELLE SLUITRING	131R
41		10516674		4	LOCK WASHER, M8 ARANDELA DE BLOQUE	RONDELLA DI SICUREZ LÅSESKIVE	SICHERUNGSSCHEIBE ANILHA DE RETENÇÃO	RONDELLE FREIN BORGRING	132R
42		14496731		2	WASHER, M12 x 24 x 2.5 Thk ARANDELA	RONDELLA FLADSKIVE	UNTERLEGSCHEIBE ANILHA	RONDELLE SLUITRING	131R

Copyright © New Holland

5.0040	03	p1	03/10

MONITOR INSTALLATION - OPTIONAL CODE 461223048
INSTALLAZIONE MONITOR - CODICE VARIANTE 461223048
INSTALLIERUNG MONITOR - OPTIONAL CODE 461223048
INSTALLATION MONITEUR - OPTIONAL CODE 461223048

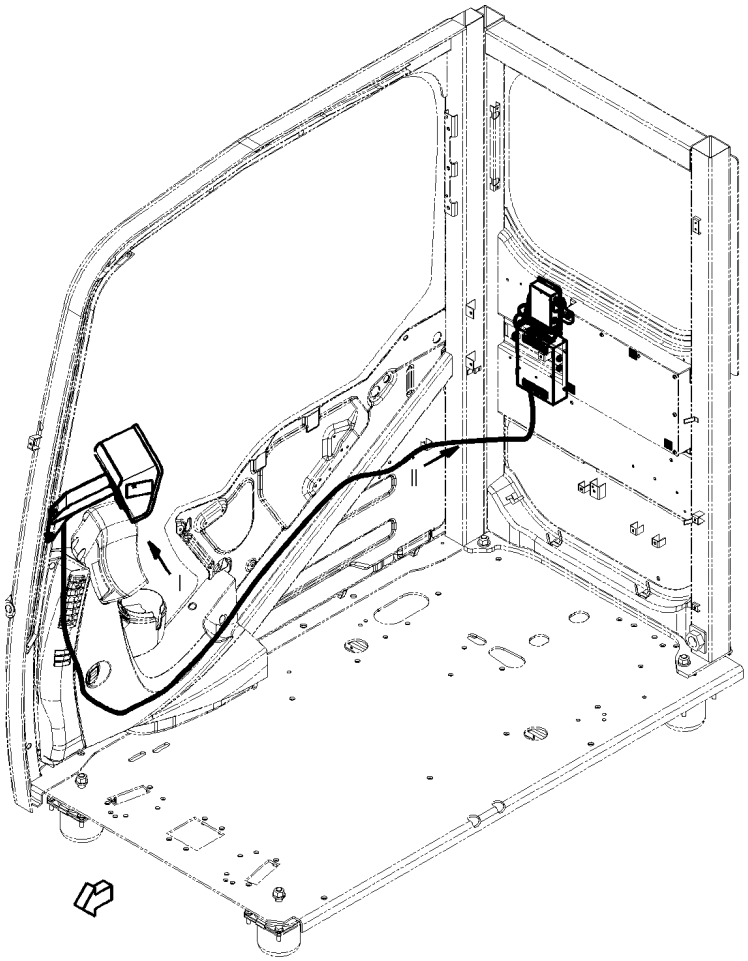

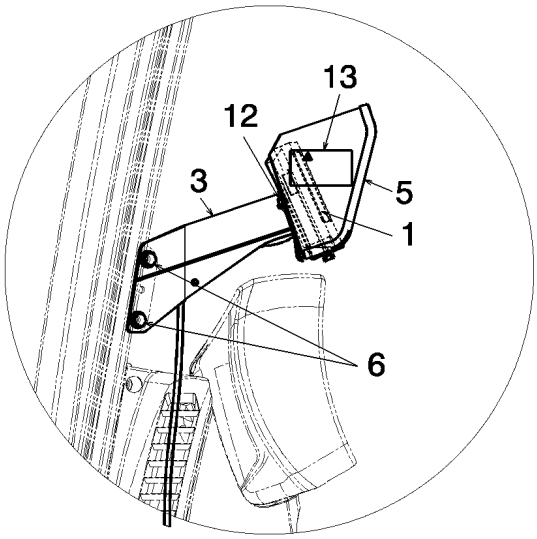

VIEW I

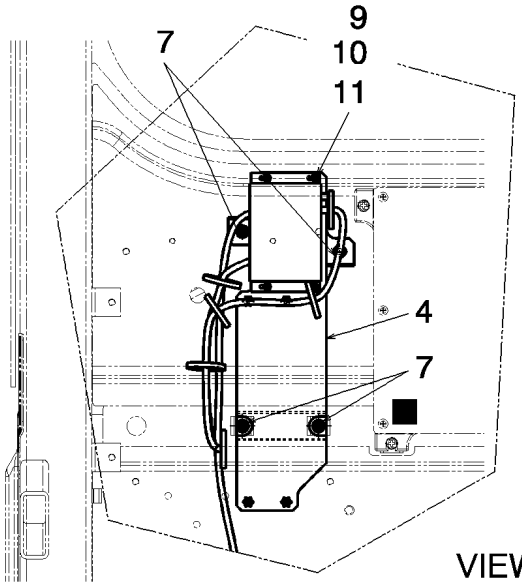

VIEW II

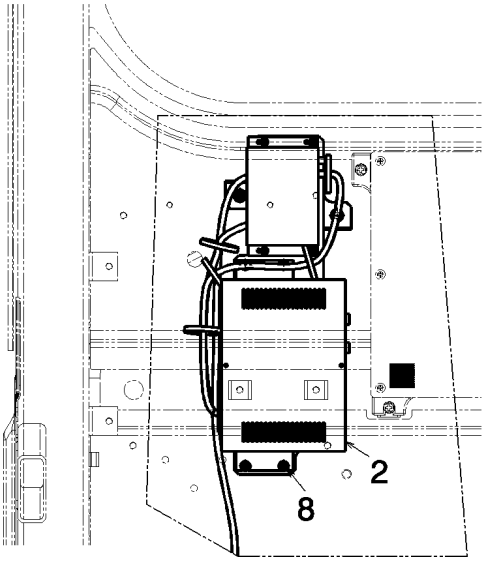

Copyright © New Holland

INSTALACION MONITOR - OPTIONAL CODE 461223048
MONITOR INSTALLATION - OPTIONAL CODE 461223048
MONITOR INSTALLATION - OPTIONAL CODE 461223048
MONITOR INSTALLATION - OPTIONAL CODE 461223048

R	N	P.N.	MOD	Q	Description Denominacion	Descrizione Beskrivelse	Bezeichnung Denominação	Description Beschrijving	L.C.
1		87657719		1	CONTROL MONITOR CONTROL DE MONITOR	MONITOR MONITOR, KONTROL	ÜBERWACHUNGSMONI MONITOR DE CONTROL	MONITEUR DE COMMAN MONITOR	880M
2		87662793		1	BOX CAJA	CASSA; SCATOLA KASSE	KASTEN; OFF KASTENA CAIXA	BOITIER DOOS	035S
3		YN55E01092P1		1	BRACKET SOPORTE	STAFFA BESLAG	HALTERUNG SUPORTE	SUPPORT STEUN	225S
4		YN55E01088P1		1	BRACKET SOPORTE	STAFFA BESLAG	HALTERUNG SUPORTE	SUPPORT STEUN	225S
5		87657728		1	GUARD DEFENSA	PROTEZIONE BESKYTTELSESSKÆRM	SCHUTZABDECKUNG PROTECÇÃO	PROTECTION AFSCHERMING	070R
6		16043234		2	BOLT, Hex, M8 x 16, 10.9, Full Thd PERNO	BULLONE BOLT	SCHRAUBE PARAFUSO	VIS BOUT	140B
7		10902234		4	BOLT, Hex, M6 x 16, 10.9, Full Thd PERNO	BULLONE BOLT	SCHRAUBE PARAFUSO	VIS BOUT	140B
8		10977634		4	SCREW TORNILLO	VITE SKRUE	SCHRAUBE PARAFUSO	VIS SCHROEF	040V
9		13270411		4	SCREW, Cross Pan Hd, M3 x 8 TORNILLO	VITE SKRUE	SCHRAUBE PARAFUSO	VIS SCHROEF	040V
10		14496101		4	WASHER ARANDELA	RONDELLA FLADSKIVE	UNTERLEGSCHEIBE ANILHA	RONDELLE SLUITRING	131R
11		16101721		4	NUT, M3, Cl 10 TUERCA	DADO MØTRIK	MUTTER PORCA	ECROU MOER	010D
12		15896421		1	NUT, M5, Cl 10 TUERCA	DADO MØTRIK	MUTTER PORCA	ECROU MOER	010D
13		87676786		1	DATA PLAQUE PLACA DE DATOS	TARGHETTA DATI DATASKILT	DATENSCHILD PLACA IDENTIFICADOR/	PLAQUE D'IDENTIFICAT GEGEVENSPLAATJE	065T

Copyright © New Holland

5.0042	01	p1	03/10

LOWER FRAME GUARD - OPTIONAL CODE 781624068
RIPARO TELAIO INFERIORE - CODICE VARIANTE 781624068
SCHUTZVORRICHTUNG UNTERER RAHMEN - OPTIONAL CODE 781624068
TABLIER CHASSIS INFERIEUR - OPTIONAL CODE 781624068

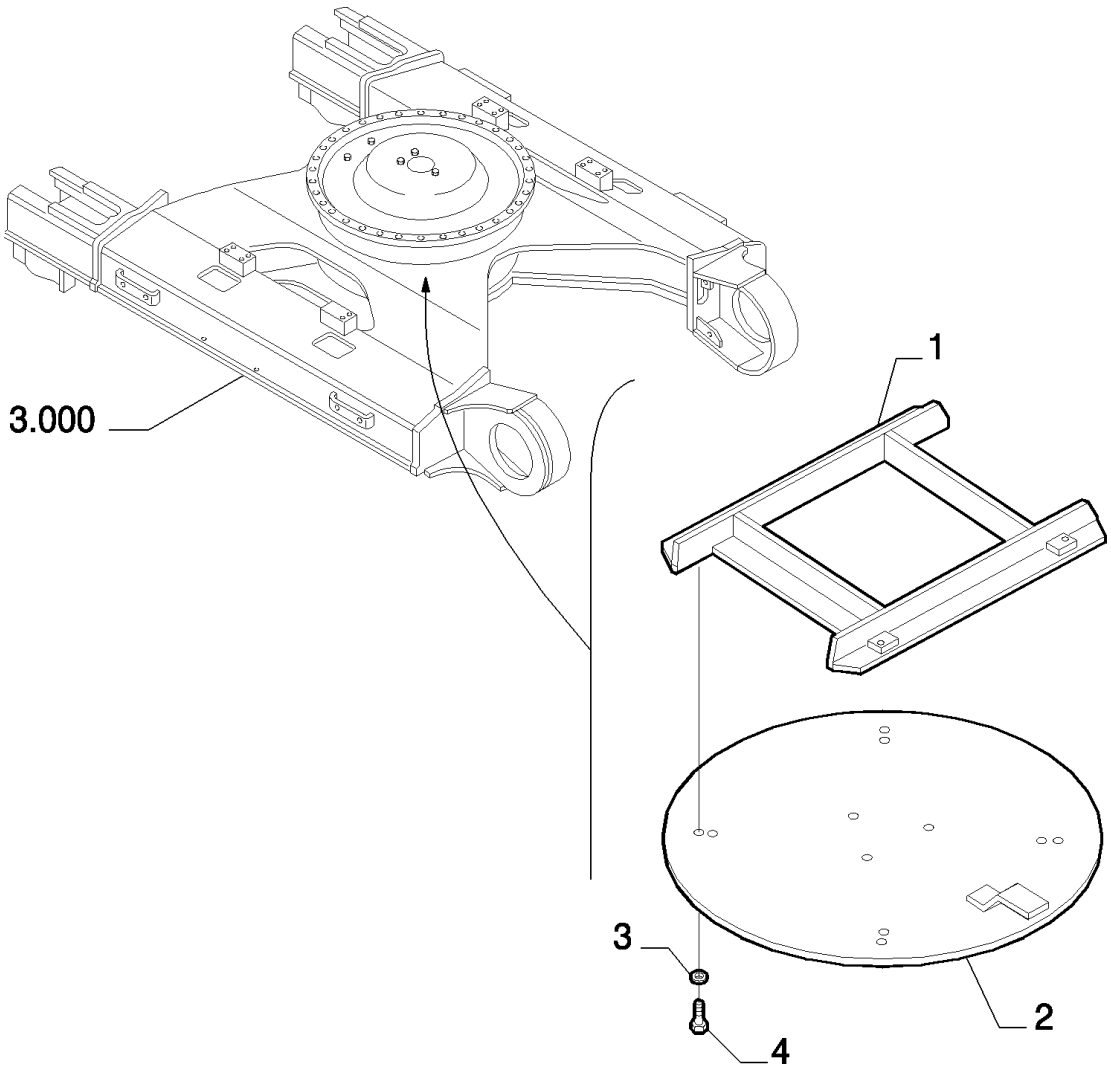

Copyright © New Holland

PROTECCION ESTRUCTURA INFERIOR - OPTIONAL CODE 781624068
LOWER FRAME GUARD - OPTIONAL CODE 781624068
LOWER FRAME GUARD - OPTIONAL CODE 781624068
LOWER FRAME GUARD - OPTIONAL CODE 781624068

R	N	P.N.	MOD	Q	Description Denominacion	Descrizione Beskrivelse	Bezeichnung Denominação	Description Beschrijving	L.C.
1		87562678		1	SUPPORT SOPORTE	SUPPORTO BESLAG	STÜTZE SUPORTE	SUPPORT STEUN	300S
2		71406454		1	GUARD DEFENSA	PROTEZIONE BESKYTTELSESSKÆRM	SCHUTZABDECKUNG PROTECÇÃO	PROTECTION AFSCHERMING	070R
3		71405003		4	WASHER ARANDELA	RONDELLA FLADSKIVE	UNTERLEGSCHEIBE ANILHA	RONDELLE SLUITRING	131R
4		11119034		4	SCREW TORNILLO	VITE SKRUE	SCHRAUBE PARAFUSO	VIS SCHROEF	040V

Copyright © New Holland

5.0043	01	p1	03/10

ARM PROTECTION - OPTIONAL CODE 461220008
PROTEZIONE BRACCIO - CODICE VARIANTE 461220008
ARM PROTECTION - OPTIONAL CODE 461220008
ARM PROTECTION - OPTIONAL CODE 461220008

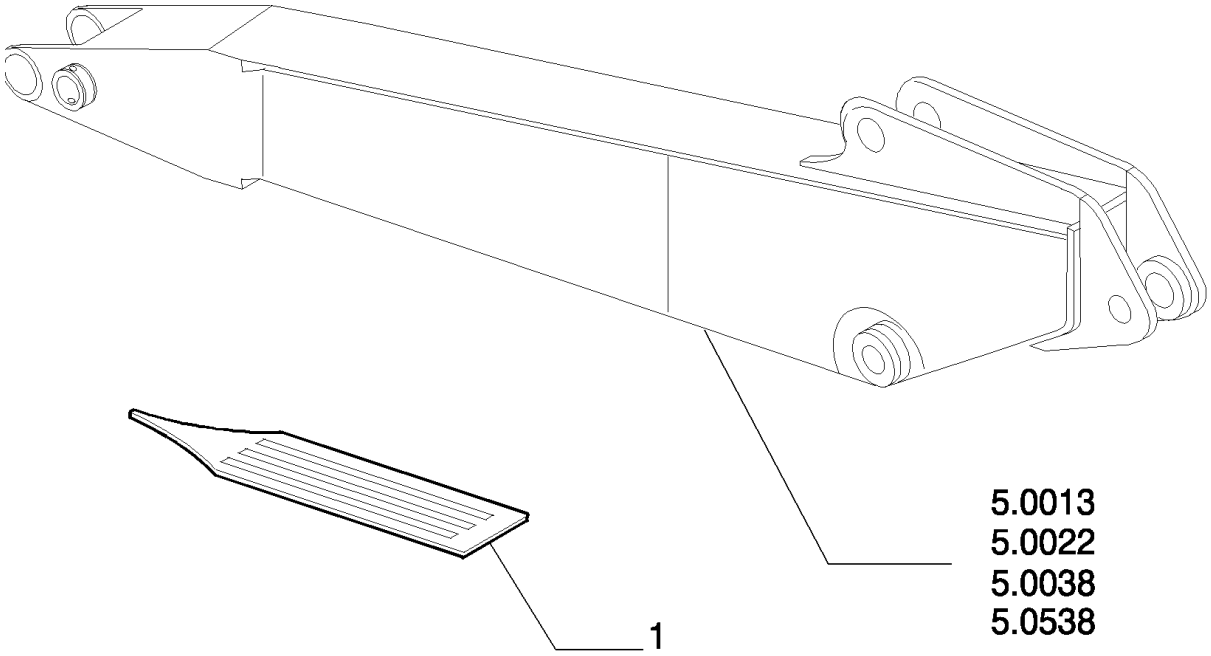

Copyright © New Holland

ARM PROTECTION - OPTIONAL CODE 461220008
ARM PROTECTION - OPTIONAL CODE 461220008
ARM PROTECTION - OPTIONAL CODE 461220008
ARM PROTECTION - OPTIONAL CODE 461220008

R	N	P.N.	MOD	Q	Description Denominacion	Descrizione Beskrivelse	Bezeichnung Denominação	Description Beschrijving	L.C.
1		72207182		1	PLATE PLACA	PIASTRA PLADE	PLATTE CHAPA	PLAQUE PLAAT	105P

Copyright © New Holland

5.0052	01	p1	03/10

TRACK GUIDE - OPTIONAL CODE 781652048
GUIDA CINGOLO - CODICE VARIANTE 781652048
RAUPENFUHRUNG - OPTIONAL CODE 781652048
GUIDE CHENILLE - OPTIONAL CODE 781652048

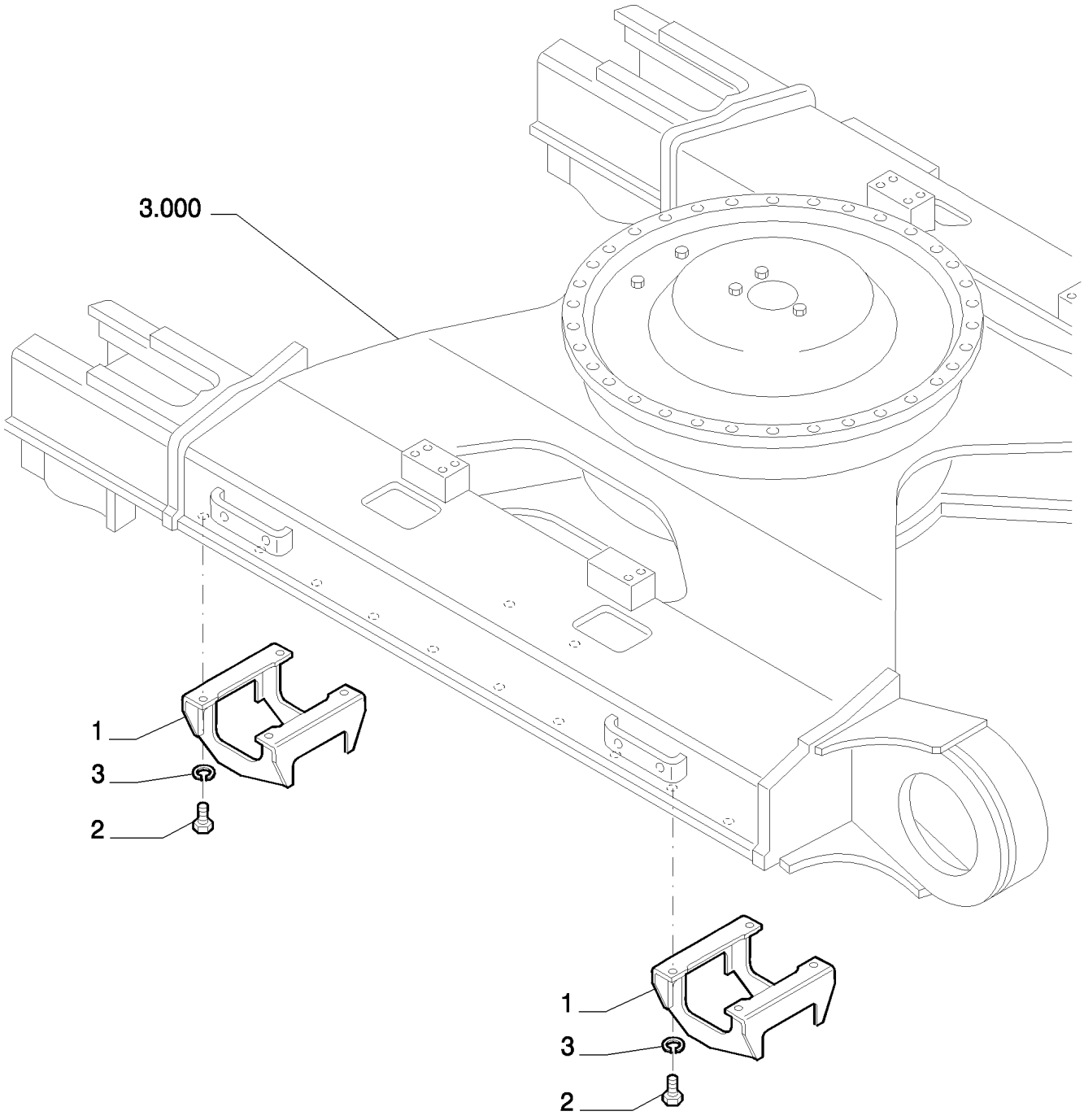

Copyright © New Holland

GUIA ORUGA - OPTIONAL CODE 781652048
TRACK GUIDE - OPTIONAL CODE 781652048
TRACK GUIDE - OPTIONAL CODE 781652048
TRACK GUIDE - OPTIONAL CODE 781652048

R	N	P.N.	MOD	Q	Description Denominacion	Descrizione Beskrivelse	Bezeichnung Denominação	Description Beschrijving	L.C.
1		72230325		4	GUIDE GUÍA	GUIDA STYR	FÜHRUNG GUIA	GUIDE GELEIDER	145G
2		15984134		16	BOLT, Hex, M18 x 1.5 x 45, 10.9, Full Thd PERNO	BULLONE BOLT	SCHRAUBE PARAFUSO	VIS BOUT	140B
3		10517374		16	LOCK WASHER ARANDELA DE BLOQUE	RONDELLA DI SICUREZ LÅSESKIVE	SICHERUNGSSCHEIBE ANILHA DE RETENÇÃO	RONDELLE FREIN BORGRING	132R

Copyright © New Holland

5.0076	01	p1	03/10

BUCKET ROTATION (L=2.08 MT) - OPTIONAL CODE 461241148 (01-02-03) - 461241158 (04-05-06)
ROTAZIONE BENNA (L=2.08 MT) - CODICE VARIANTE 461241148 (01-02-03) - 461241158 (04-05-06)
UMDREHUNGSWANNE (L=2.08 MT) - OPTIONAL CODE 461241148 (01-02-03) - 461241158 (04-05-06)
GODET ROTATIF (L=2.08 MT) - OPTIONAL CODE 461241148 (01-02-03) - 461241158 (04-05-06)

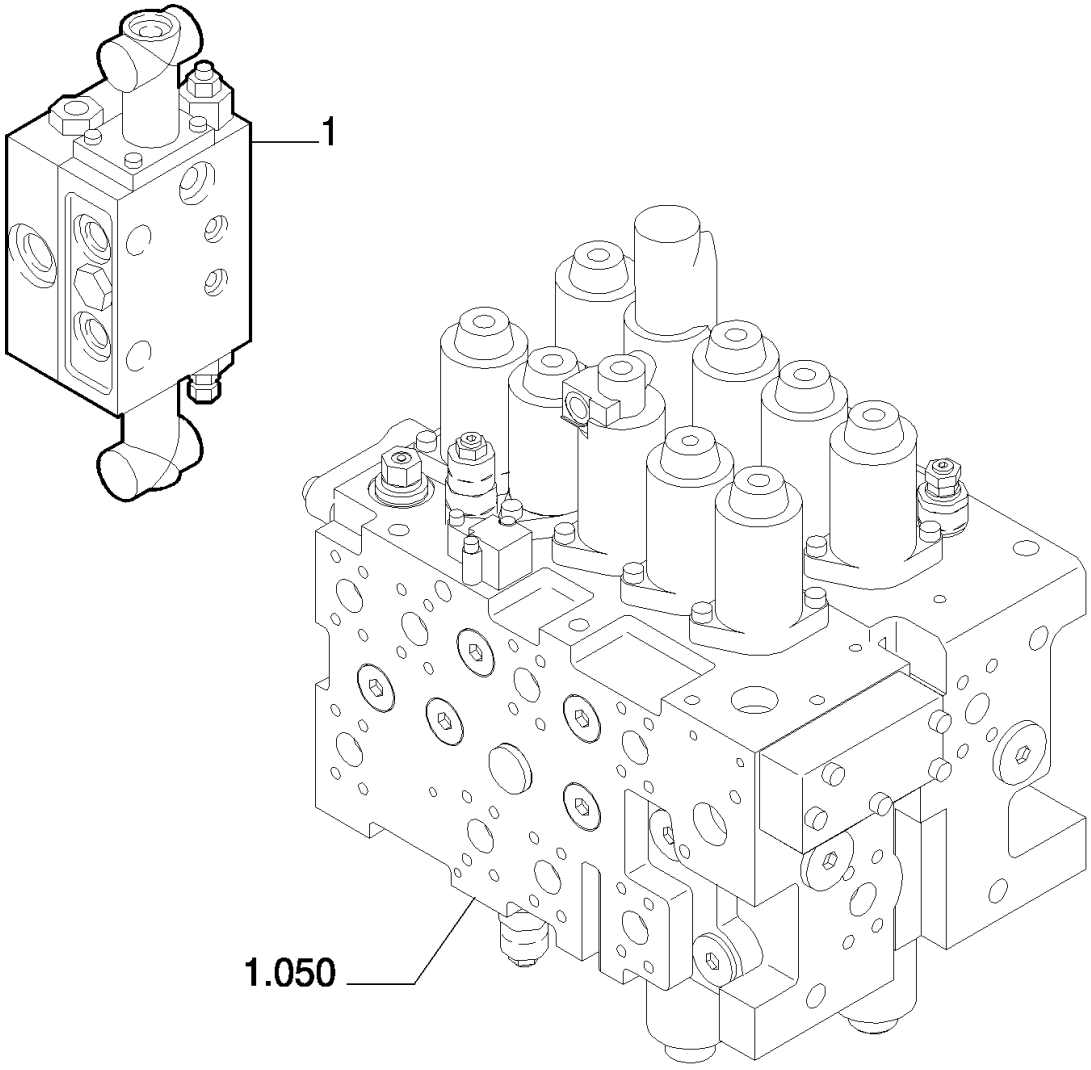

Copyright © New Holland

CUCHARA RODEANTE (L=2.08 MT) - OPTIONAL CODE 461241148 (01-02-03) - 461241158 (04-05-06)
BUCKET ROTATION (L=2.08 MT) - OPTIONAL CODE 461241148 (01-02-03) - 461241158 (04-05-06)
BUCKET ROTATION (L=2.08 MT) - OPTIONAL CODE 461241148 (01-02-03) - 461241158 (04-05-06)
BUCKET ROTATION (L=2.08 MT) - OPTIONAL CODE 461241148 (01-02-03) - 461241158 (04-05-06)

R	N	P.N.	MOD	Q	Description Denominacion	Descrizione Beskrivelse	Bezeichnung Denominação	Description Beschrijving	L.C.
1	1	**87386068**		1	HYDRAULIC VALVE VÁLVULA HIDRÁULICA	DISTRIBUTORE IDRAULI HYDRAULIKVENTIL	HYDRAULIKVENTIL VÁLVULA HIDRÁULICA	SOUPAPE HYDRAULIQU HYDRAULISCHE KLEP	010V

(1) ASSY SEE PAGE 2

Copyright © New Holland

BUCKET ROTATION (L=2.08 MT) - COMPONENTS - OPTIONAL CODE 461241148 (01-02-03) - 461241158 (04-05-06)
ROTAZIONE BENNA (L=2.08 MT) - COMPONENTI - CODICE VARIANTE 461241148 (01-02-03) - 461241158 (04-05-06)
UMDREHUNGSWANNE (L=2.08 MT) - BESTANDTEILE - OPTIONAL CODE 461241148 (01-02-03) - 461241158 (04-05-06)
GODET ROTATIF (L=2.08 MT) - COMPOSANTS - OPTIONAL CODE 461241148 (01-02-03) - 461241158 (04-05-06)

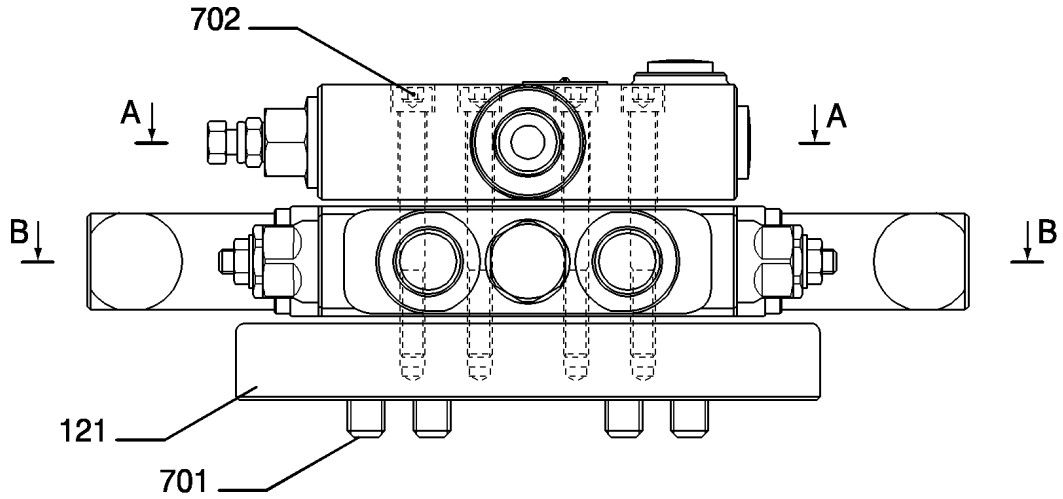

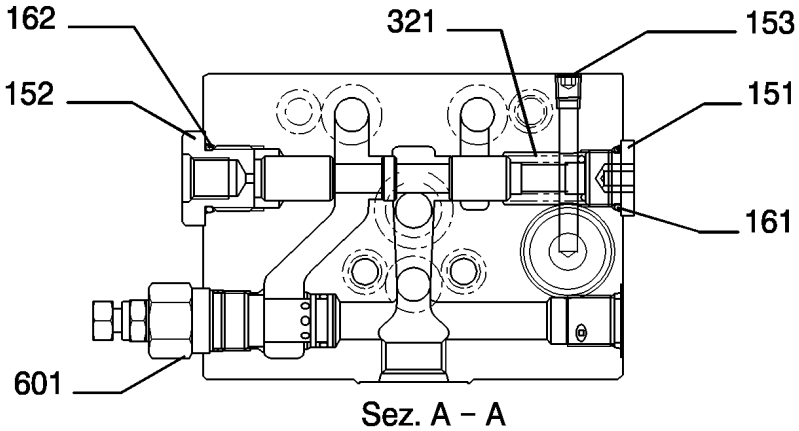

Sez. A – A

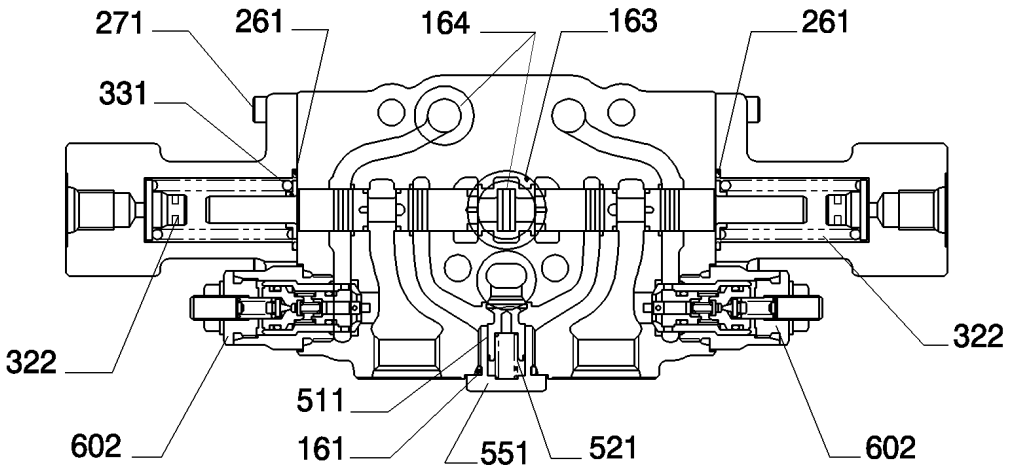

Sez. B – B

Copyright © New Holland

CUCHARA RODEANTE (L=2.08 MT) - COMPONENTES - OPTIONAL CODE 461241148 (01-02-03) - 461241158 (04-05-06)
BUCKET ROTATION (L=2.08 MT) - COMPONENTS - OPTIONAL CODE 461241148 (01-02-03) - 461241158 (04-05-06)
BUCKET ROTATION (L=2.08 MT) - COMPONENTS - OPTIONAL CODE 461241148 (01-02-03) - 461241158 (04-05-06)
BUCKET ROTATION (L=2.08 MT) - COMPONENTS - OPTIONAL CODE 461241148 (01-02-03) - 461241158 (04-05-06)

R	N	P.N.	MOD	Q	Description Denominacion	Descrizione Beskrivelse	Bezeichnung Denominação	Description Beschrijving	L.C.
121		YN30V00108S121		1	PLATE PLACA	PIASTRA PLADE	PLATTE CHAPA	PLAQUE PLAAT	105P
151		72209842		1	PLUG TAPÓN	TAPPO PROP	STOPFEN TAMPÃO	BOUCHON PLUG	050T
152		YN30V00107S152		1	PLUG TAPÓN	TAPPO PROP	STOPFEN TAMPÃO	BOUCHON PLUG	050T
153		72209815		1	PLUG TAPÓN	TAPPO PROP	STOPFEN TAMPÃO	BOUCHON PLUG	050T
161		72209823		2	O-RING JUNTA TÓRICA	ANELLO TOROIDALE O-RING	O-RING O-RING	JOINT TORIQUE O-RING	055A
162		71404166		1	O-RING JUNTA TÓRICA	ANELLO TOROIDALE O-RING	O-RING O-RING	JOINT TORIQUE O-RING	055A
163		72209824		2	O-RING JUNTA TÓRICA	ANELLO TOROIDALE O-RING	O-RING O-RING	JOINT TORIQUE O-RING	055A
164		72210077		6	O-RING JUNTA TÓRICA	ANELLO TOROIDALE O-RING	O-RING O-RING	JOINT TORIQUE O-RING	055A
261		YN30V00108S261		2	O-RING JUNTA TÓRICA	ANELLO TOROIDALE O-RING	O-RING O-RING	JOINT TORIQUE O-RING	055A
271		YN35V00017S171		8	SCREW TORNILLO	VITE SKRUE	SCHRAUBE PARAFUSO	VIS SCHROEF	040V
321		YN30V00107S321		1	SPRING RESORTE	MOLLA FJEDER	FEDER MOLA	RESSORT VEER	100M
322		EM30V00001S321		2	SPRING RESORTE	MOLLA FJEDER	FEDER MOLA	RESSORT VEER	100M
331		YA30V00002S331		2	SEAT/SLOT ASIENTO/RANURA	SEDE/ASOLA SÆDE	SITZ/SCHLITZ SUPORTE	SIEGE/FENTE ZITTING/SLEUF	069S
332		YA30V00002S332		2	SEAT/SLOT ASIENTO/RANURA	SEDE/ASOLA SÆDE	SITZ/SCHLITZ SUPORTE	SIEGE/FENTE ZITTING/SLEUF	069S
511		YA30V00002S511		1	VALVE POPPET RESORTE DE VÁLVULA	VALVOLA A FUNGO DOKVENTIL	VENTILTELLER VÁLVULA	CLAPET A RESSORT KLEPSCHOTEL	P048
521		YA30V00002S521		1	SPRING RESORTE	MOLLA FJEDER	FEDER MOLA	RESSORT VEER	100M
551		YA30V00002S551		1	PLUG TAPÓN	TAPPO PROP	STOPFEN TAMPÃO	BOUCHON PLUG	050T
601		YN22V00040F2		1	HYDRAULIC VALVE VÁLVULA HIDRÁULICA	DISTRIBUTORE IDRAULI HYDRAULIKVENTIL	HYDRAULIKVENTIL VÁLVULA HIDRÁULICA	SOUPAPE HYDRAULIQU HYDRAULISCHE KLEP	010V
602		YN22V00041F2		2	HYDRAULIC VALVE VÁLVULA HIDRÁULICA	DISTRIBUTORE IDRAULI HYDRAULIKVENTIL	HYDRAULIKVENTIL VÁLVULA HIDRÁULICA	SOUPAPE HYDRAULIQU HYDRAULISCHE KLEP	010V
701		14311070		4	SCREW TORNILLO	VITE SKRUE	SCHRAUBE PARAFUSO	VIS SCHROEF	040V
702		14359570		4	SCREW TORNILLO	VITE SKRUE	SCHRAUBE PARAFUSO	VIS SCHROEF	040V

VALVE ASSY P/N 87386068

E215B

Copyright © New Holland

5.0076	03	p1	03/10

BUCKET ROTATION (L=2.08 MT) - OPTIONAL CODE 461241148 (01-02-03)
ROTAZIONE BENNA (L=2.08 MT) - CODICE VARIANTE 461241148 (01-02-03)
UMDREHUNGSWANNE (L=2.08 MT) - OPTIONAL CODE 461241148 (01-02-03)
GODET ROTATIF (L=2.08 MT) - OPTIONAL CODE 461241148 (01-02-03)

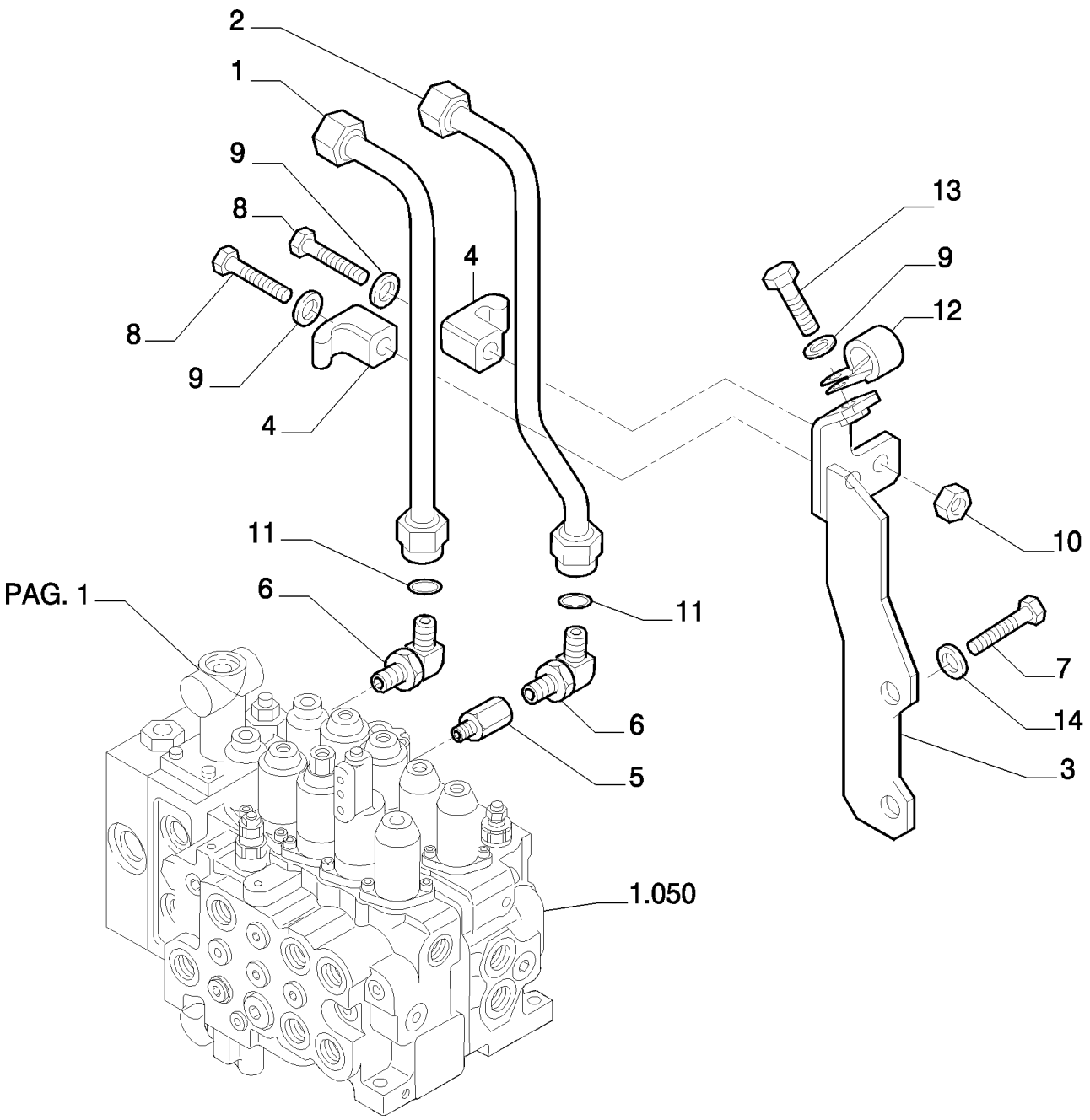

Copyright © New Holland

CUCHARA RODEANTE (L=2.08 MT) - OPTIONAL CODE 461241148 (01-02-03)
BUCKET ROTATION (L=2.08 MT) - OPTIONAL CODE 461241148 (01-02-03)
BUCKET ROTATION (L=2.08 MT) - OPTIONAL CODE 461241148 (01-02-03)
BUCKET ROTATION (L=2.08 MT) - OPTIONAL CODE 461241148 (01-02-03)

R	N	P.N.	MOD	Q	Description Denominacion	Descrizione Beskrivelse	Bezeichnung Denominação	Description Beschrijving	L.C.
1		87532096		1	RIGID TUBE TUBO RÍGIDO	TUBO RIGIDO STIFT RØR	ROHR TUBO RÍGIDO	TUYAU RIGIDE VASTE LEIDING	193T
2		87532097		1	RIGID TUBE TUBO RÍGIDO	TUBO RIGIDO STIFT RØR	ROHR TUBO RÍGIDO	TUYAU RIGIDE VASTE LEIDING	193T
3		87532102		1	BRACKET SOPORTE	STAFFA BESLAG	HALTERUNG SUPORTE	SUPPORT STEUN	225S
4		72954322		2	CLAMP ABRAZADERA	MORSETTO SPÆNDEBÅND	KLEMME BRAÇADEIRA	COLLIER KLEM	120M
5		72214808		1	HYD CONNECTOR CONECTOR HIDRÁULIC(	CONNETTORE IDRAULI(HYDRAULIKSTIK	HYDR STECKVERBINDE CONECTOR HID.	CONNECTEUR HYDRAU HYDRAULISCHE AANSL	020R
6		87532105		2	HYD CONNECTOR CONECTOR HIDRÁULIC(	CONNETTORE IDRAULI(HYDRAULIKSTIK	HYDR STECKVERBINDE CONECTOR HID.	CONNECTEUR HYDRAU HYDRAULISCHE AANSL	020R
7		11112234		2	BOLT, Hex, M12 x 25, 10.9, Full Thd PERNO	BULLONE BOLT	SCHRAUBE PARAFUSO	VIS BOUT	140B
8		11107434		2	SCREW TORNILLO	VITE SKRUE	SCHRAUBE PARAFUSO	VIS SCHROEF	040V
9		14496631		3	WASHER, M10 x 21 x 2 ARANDELA	RONDELLA FLADSKIVE	UNTERLEGSCHEIBE ANILHA	RONDELLE SLUITRING	131R
10		11701721		2	NUT, M10, Cl 10 TUERCA	DADO MØTRIK	MUTTER PORCA	ECROU MOER	010D
11		71404166		2	O-RING JUNTA TÓRICA	ANELLO TOROIDALE O-RING	O-RING O-RING	JOINT TORIQUE O-RING	055A
12		71405770		1	CLAMP ABRAZADERA	MORSETTO SPÆNDEBÅND	KLEMME BRAÇADEIRA	COLLIER KLEM	120M
13		11106234		1	BOLT, Hex, M10 x 25, 10.9, Full Thd PERNO	BULLONE BOLT	SCHRAUBE PARAFUSO	VIS BOUT	140B
14		14496731		2	WASHER, M12 x 24 x 2.5 Thk ARANDELA	RONDELLA FLADSKIVE	UNTERLEGSCHEIBE ANILHA	RONDELLE SLUITRING	131R

Copyright © New Holland

5.0076	04	p1	03/10

BUCKET ROTATION (L=2.08 MT) - OPTIONAL CODE 461241158 (04-05-06)
ROTAZIONE BENNA (L=2.08 MT) - CODICE VARIANTE 461241158 (04-05-06)
UMDREHUNGSWANNE (L=2.08 MT) - OPTIONAL CODE 461241158 (04-05-06)
GODET ROTATIF (L=2.08 MT) - OPTIONAL CODE 461241158 (04-05-06)

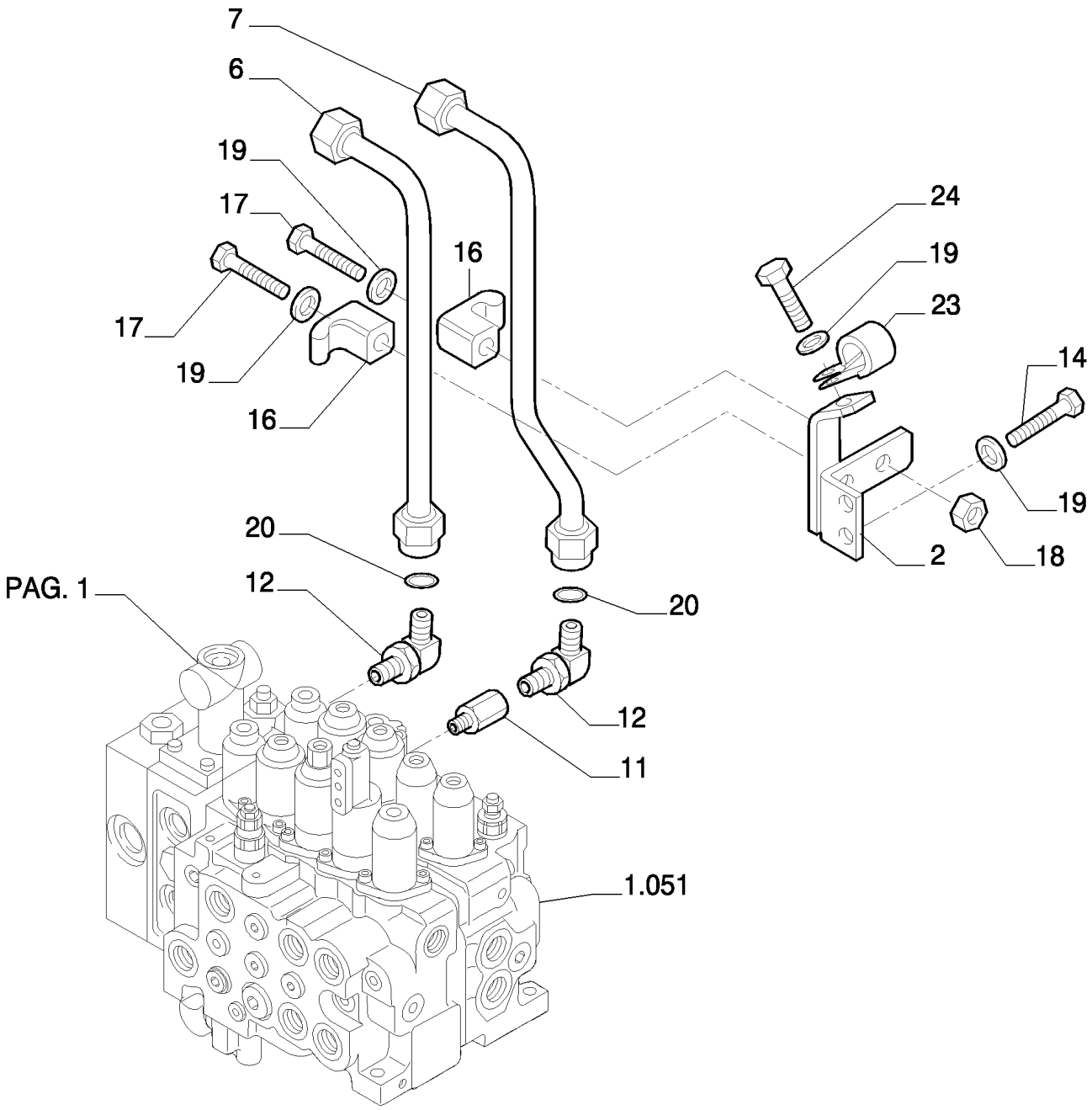

Copyright © New Holland

CUCHARA RODEANTE (L=2.08 MT) - OPTIONAL CODE 461241158 (04-05-06)
BUCKET ROTATION (L=2.08 MT) - OPTIONAL CODE 461241158 (04-05-06)
BUCKET ROTATION (L=2.08 MT) - OPTIONAL CODE 461241158 (04-05-06)
BUCKET ROTATION (L=2.08 MT) - OPTIONAL CODE 461241158 (04-05-06)

R	N	P.N.	MOD	Q	Description Denominacion	Descrizione Beskrivelse	Bezeichnung Denominação	Description Beschrijving	L.C.
2		87557635		1	SUPPORT SOPORTE	SUPPORTO BESLAG	STÜTZE SUPORTE	SUPPORT STEUN	300S
6		87557640		1	RIGID TUBE TUBO RÍGIDO	TUBO RIGIDO STIFT RØR	ROHR TUBO RÍGIDO	TUYAU RIGIDE VASTE LEIDING	193T
7		87557638		1	RIGID TUBE TUBO RÍGIDO	TUBO RIGIDO STIFT RØR	ROHR TUBO RÍGIDO	TUYAU RIGIDE VASTE LEIDING	193T
11		72214808		1	HYD CONNECTOR CONECTOR HIDRÁULIC	CONNETTORE IDRAULIC HYDRAULIKSTIK	HYDR STECKVERBINDE CONECTOR HID.	CONNECTEUR HYDRAU HYDRAULISCHE AANSL	020R
12		87532105		2	HYD CONNECTOR CONECTOR HIDRÁULIC	CONNETTORE IDRAULIC HYDRAULIKSTIK	HYDR STECKVERBINDE CONECTOR HID.	CONNECTEUR HYDRAU HYDRAULISCHE AANSL	020R
14		11106434		2	BOLT, Hex, M10 x 30, 10.9, Full Thd PERNO	BULLONE BOLT	SCHRAUBE PARAFUSO	VIS BOUT	140B
16		72954322		2	CLAMP ABRAZADERA	MORSETTO SPÆNDEBÅND	KLEMME BRAÇADEIRA	COLLIER KLEM	120M
17		11107434		2	SCREW TORNILLO	VITE SKRUE	SCHRAUBE PARAFUSO	VIS SCHROEF	040V
18		11701721		2	NUT, M10, Cl 10 TUERCA	DADO MØTRIK	MUTTER PORCA	ECROU MOER	010D
19		14496631		5	WASHER, M10 x 21 x 2 ARANDELA	RONDELLA FLADSKIVE	UNTERLEGSCHEIBE ANILHA	RONDELLE SLUITRING	131R
20		71404166		2	O-RING JUNTA TÓRICA	ANELLO TOROIDALE O-RING	O-RING O-RING	JOINT TORIQUE O-RING	055A
23		71405770		1	CLAMP ABRAZADERA	MORSETTO SPÆNDEBÅND	KLEMME BRAÇADEIRA	COLLIER KLEM	120M
24		11106234		1	BOLT, Hex, M10 x 25, 10.9, Full Thd PERNO	BULLONE BOLT	SCHRAUBE PARAFUSO	VIS BOUT	140B

Copyright © New Holland

5.0076	05	p1	03/10

BUCKET ROTATION (L=2.08 MT) - OPTIONAL CODE 461241148 (01-02-03) - 461241158 (04-05-06)
ROTAZIONE BENNA (L=2.08 MT) - CODICE VARIANTE 461241148 (01-02-03) - 461241158 (04-05-06)
UMDREHUNGSWANNE (L=2.08 MT) - OPTIONAL CODE 461241148 (01-02-03) - 461241158 (04-05-06)
GODET ROTATIF (L=2.08 MT) - OPTIONAL CODE 461241148 (01-02-03) - 461241158 (04-05-06)

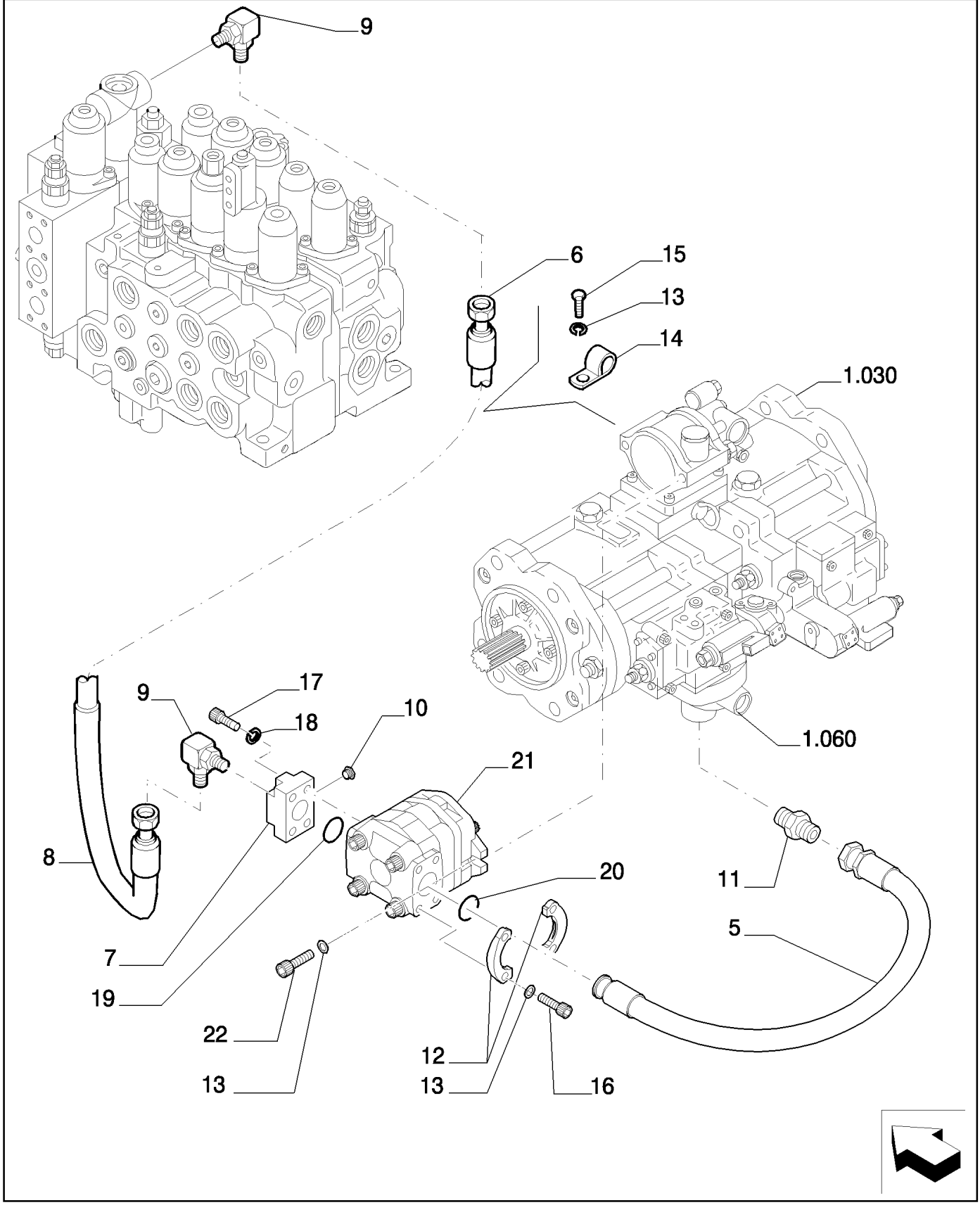

Copyright © New Holland

CUCHARA RODEANTE (L=2.08 MT) - OPTIONAL CODE 461241148 (01-02-03) - 461241158 (04-05-06)
BUCKET ROTATION (L=2.08 MT) - OPTIONAL CODE 461241148 (01-02-03) - 461241158 (04-05-06)
BUCKET ROTATION (L=2.08 MT) - OPTIONAL CODE 461241148 (01-02-03) - 461241158 (04-05-06)
BUCKET ROTATION (L=2.08 MT) - OPTIONAL CODE 461241148 (01-02-03) - 461241158 (04-05-06)

R	N	P.N.	MOD	Q	Description Denominacion	Descrizione Beskrivelse	Bezeichnung Denominação	Description Beschrijving	L.C.
5		87528092		1	FLEXIBLE HOSE TUBO FLEXIBLE	TUBO FLESSIBILE FLEKSIBEL SLANGE	BIEGSAMER SCHLAUCH MANGUEIRA FLEXÍVEL	TUYAU FLEXIBLE FLEXIBELE SLANG	192T
6		87530581		1	FLEXIBLE HOSE TUBO FLEXIBLE	TUBO FLESSIBILE FLEKSIBEL SLANGE	BIEGSAMER SCHLAUCH MANGUEIRA FLEXÍVEL	TUYAU FLEXIBLE FLEXIBELE SLANG	192T
7		72204754		1	FLANGE BRIDA	FLANGIA FLANGE	FLANSCH FLANGE	BRIDE FLENS	070F
8		87375394		1	FLEXIBLE SHEATH RECUBRIMIENTO FLEXI	GUAINA FLESSIBILE FLEKSIBELT SVØB	UMMANTELUNG PEÇA FLEXÍVEL	GAINE SOUPLE FLEXIBELE MANTEL	140G
9		72214763		2	HYD CONNECTOR CONECTOR HIDRÁULIC	CONNETTORE IDRAULIC HYDRAULIKSTIK	HYDR STECKVERBINDE CONECTOR HID.	CONNECTEUR HYDRAU HYDRAULISCHE AANSL	020R
10		72214663		1	PLUG TAPÓN	TAPPO PROP	STOPFEN TAMPÃO	BOUCHON PLUG	050T
11		87530584		1	HYD CONNECTOR CONECTOR HIDRÁULIC	CONNETTORE IDRAULIC HYDRAULIKSTIK	HYDR STECKVERBINDE CONECTOR HID.	CONNECTEUR HYDRAU HYDRAULISCHE AANSL	020R
12		71404909		2	FLANGE BRIDA	FLANGIA FLANGE	FLANSCH FLANGE	BRIDE FLENS	070F
13		14496631		8	WASHER, M10 x 21 x 2 ARANDELA	RONDELLA FLADSKIVE	UNTERLEGSCHEIBE ANILHA	RONDELLE SLUITRING	131R
14		71405770		2	CLAMP ABRAZADERA	MORSETTO SPÆNDEBÅND	KLEMME BRAÇADEIRA	COLLIER KLEM	120M
15		ZM73C10020		2	BOLT PERNO	BULLONE BOLT	SCHRAUBE PARAFUSO	VIS BOUT	140B
16		11106634		4	BOLT, Hex, M10 x 35, 10.9, Full Thd PERNO	BULLONE BOLT	SCHRAUBE PARAFUSO	VIS BOUT	140B
17		14420534		4	SCREW TORNILLO	VITE SKRUE	SCHRAUBE PARAFUSO	VIS SCHROEF	040V
18		10516874		4	LOCK WASHER ARANDELA DE BLOQUE	RONDELLA DI SICUREZ LÅSESKIVE	SICHERUNGSSCHEIBE ANILHA DE RETENÇÃO	RONDELLE FREIN BORGRING	132R
19		72215443		1	O-RING JUNTA TÓRICA	ANELLO TOROIDALE O-RING	O-RING O-RING	JOINT TORIQUE O-RING	055A
20		70924192		1	O-RING JUNTA TÓRICA	ANELLO TOROIDALE O-RING	O-RING O-RING	JOINT TORIQUE O-RING	055A
21	1	72204291		1	HYDRAULIC PUMP BOMBA HIDRÁULICO	POMPA IDRAULICA HYDRAULIKPUMPE	HYDRAULIKPUMPE BOMBA HIDRÁULICA	POMPE HYDRAULIQUE HYDRAULISCHE POMP	155P
22		14420234		2	SCREW TORNILLO	VITE SKRUE	SCHRAUBE PARAFUSO	VIS SCHROEF	040V

(1) ASSY SEE PAGE 6

Copyright © New Holland

5.0076	06	p1	03/10

BUCKET ROTATION (L=2.08 MT) - COMPONENTS - OPTIONAL CODE 461241148 (01-02-03) - 461241158 (04-05-06)
ROTAZIONE BENNA (L=2.08 MT) - COMPONENTI - CODICE VARIANTE 461241148 (01-02-03) - 461241158 (04-05-06)
UMDREHUNGSWANNE (L=2.08 MT) - BESTANDTEILE - OPTIONAL CODE 461241148 (01-02-03) - 461241158 (04-05-06)
GODET ROTATIF (L=2.08 MT) - COMPOSANTS - OPTIONAL CODE 461241148 (01-02-03) - 461241158 (04-05-06)

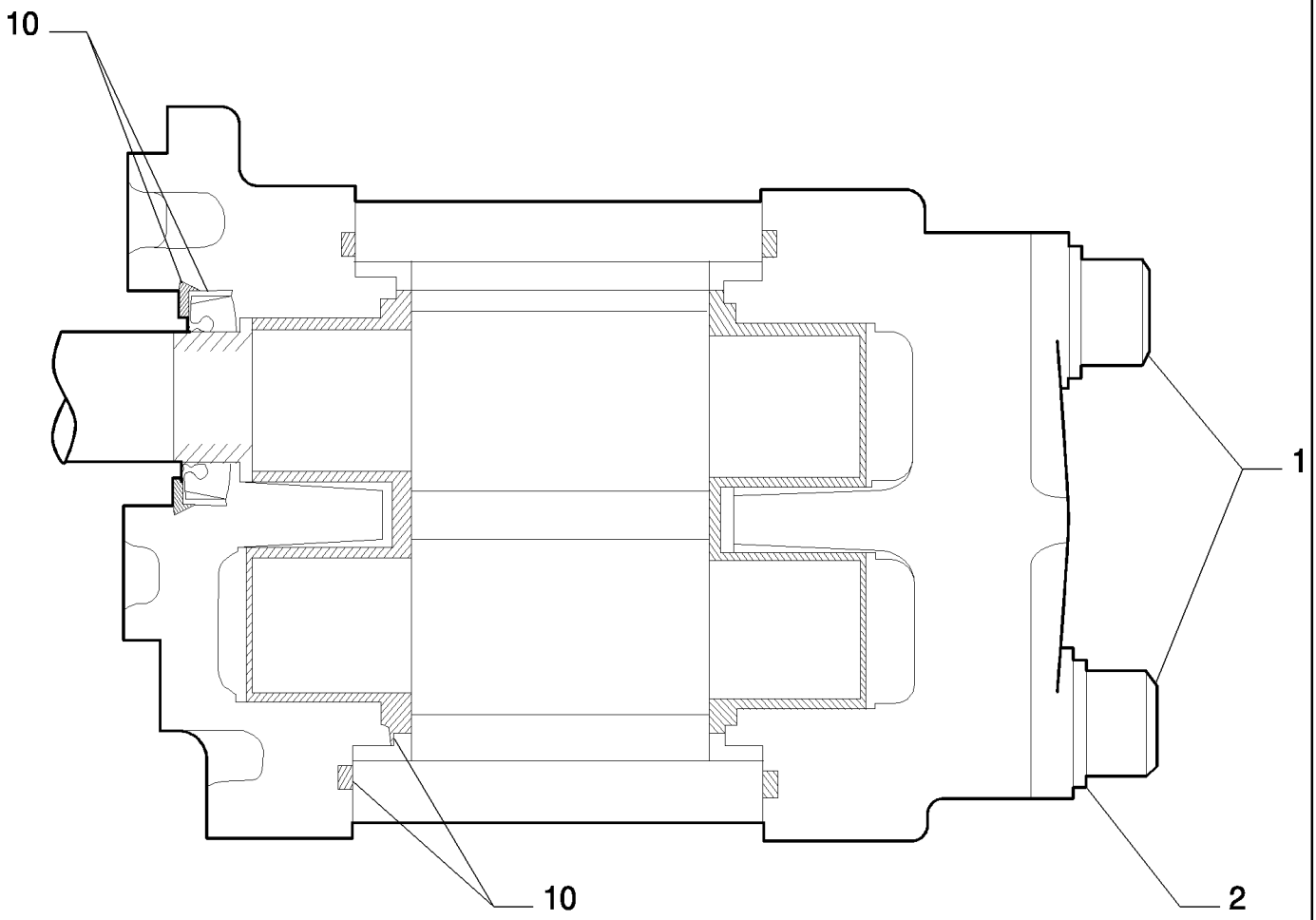

KIT 10

Copyright © New Holland

CUCHARA RODEANTE (L=2.08 MT) - COMPONENTES - OPTIONAL CODE 461241148 (01-02-03) - 461241158 (04-05-06)
BUCKET ROTATION (L=2.08 MT) - COMPONENTS - OPTIONAL CODE 461241148 (01-02-03) - 461241158 (04-05-06)
BUCKET ROTATION (L=2.08 MT) - COMPONENTS - OPTIONAL CODE 461241148 (01-02-03) - 461241158 (04-05-06)
BUCKET ROTATION (L=2.08 MT) - COMPONENTS - OPTIONAL CODE 461241148 (01-02-03) - 461241158 (04-05-06)

R	N	P.N.	MOD	Q	Description Denominacion	Descrizione Beskrivelse	Bezeichnung Denominação	Description Beschrijving	L.C.
1		72210444		4	SCREW TORNILLO	VITE SKRUE	SCHRAUBE PARAFUSO	VIS SCHROEF	040V
2		YN10V00019S056		4	WASHER ARANDELA	RONDELLA FLADSKIVE	UNTERLEGSCHEIBE ANILHA	RONDELLE SLUITRING	131R
10		72210446		1	KIT KIT	KIT SÆT	SATZ KIT	KIT KIT	305C

Copyright © New Holland

5.0076	07	p1	03/10

BUCKET ROTATION (L=2.08 MT) - OPTIONAL CODE 461241148 (01-02-03) - 461241158 (04-05-06)
ROTAZIONE BENNA (L=2.08 MT) - CODICE VARIANTE 461241148 (01-02-03) - 461241158 (04-05-06)
UMDREHUNGSWANNE (L=2.08 MT) - OPTIONAL CODE 461241148 (01-02-03) - 461241158 (04-05-06)
GODET ROTATIF (L=2.08 MT) - OPTIONAL CODE 461241148 (01-02-03) - 461241158 (04-05-06)

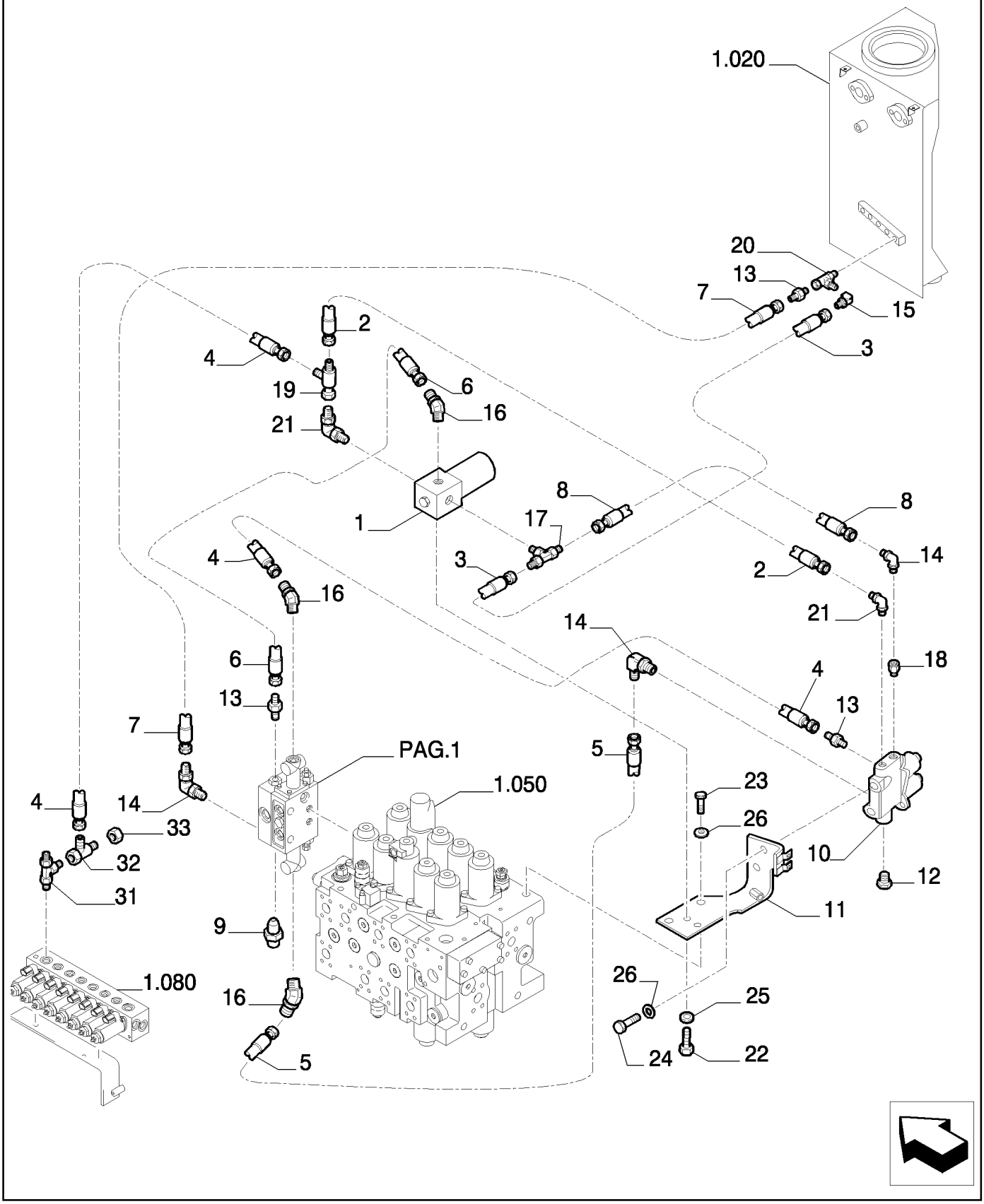

Copyright © New Holland

CUCHARA RODEANTE (L=2.08 MT) - OPTIONAL CODE 461241148 (01-02-03) - 461241158 (04-05-06)
BUCKET ROTATION (L=2.08 MT) - OPTIONAL CODE 461241148 (01-02-03) - 461241158 (04-05-06)
BUCKET ROTATION (L=2.08 MT) - OPTIONAL CODE 461241148 (01-02-03) - 461241158 (04-05-06)
BUCKET ROTATION (L=2.08 MT) - OPTIONAL CODE 461241148 (01-02-03) - 461241158 (04-05-06)

R	N	P.N.	MOD	Q	Description Denominacion	Descrizione Beskrivelse	Bezeichnung Denominação	Description Beschrijving	L.C.
1	1	72955526		1	VALVE VÁLVULA	VALVOLA VENTIL	VENTIL VÁLVULA	SOUPAPE KLEP	9620
2		87397448		1	FLEXIBLE HOSE TUBO FLEXIBLE	TUBO FLESSIBILE FLEKSIBEL SLANGE	BIEGSAMER SCHLAUCH MANGUEIRA FLEXÍVEL	TUYAU FLEXIBLE FLEXIBELE SLANG	192T
3		87532906		1	HOSE TUBO	TUBO FLESSIBILE SLANGE	SCHLAUCH MANGUEIRA	FLEXIBLE SLANG	030M
4		72214535		2	FLEXIBLE HOSE TUBO FLEXIBLE	TUBO FLESSIBILE FLEKSIBEL SLANGE	BIEGSAMER SCHLAUCH MANGUEIRA FLEXÍVEL	TUYAU FLEXIBLE FLEXIBELE SLANG	192T
5		72214539		1	FLEXIBLE HOSE TUBO FLEXIBLE	TUBO FLESSIBILE FLEKSIBEL SLANGE	BIEGSAMER SCHLAUCH MANGUEIRA FLEXÍVEL	TUYAU FLEXIBLE FLEXIBELE SLANG	192T
6		87645092		1	FLEXIBLE HOSE TUBO FLEXIBLE	TUBO FLESSIBILE FLEKSIBEL SLANGE	BIEGSAMER SCHLAUCH MANGUEIRA FLEXÍVEL	TUYAU FLEXIBLE FLEXIBELE SLANG	192T
7		87687417		1	FLEXIBLE HOSE TUBO FLEXIBLE	TUBO FLESSIBILE FLEKSIBEL SLANGE	BIEGSAMER SCHLAUCH MANGUEIRA FLEXÍVEL	TUYAU FLEXIBLE FLEXIBELE SLANG	192T
8		87532907		1	HOSE TUBO	TUBO FLESSIBILE SLANGE	SCHLAUCH MANGUEIRA	FLEXIBLE SLANG	030M
9		87524903		1	SENSOR SENSOR	SENSORE FØLER	SENSOR SENSOR	CAPTEUR SENSOR	608S
10	2	87531523		1	HYDRAULIC VALVE VÁLVULA HIDRÁULICA	DISTRIBUTORE IDRAULI HYDRAULIKVENTIL	HYDRAULIKVENTIL VÁLVULA HIDRÁULICA	SOUPAPE HYDRAULIQU HYDRAULISCHE KLEP	010V
11		87687414		1	BRACKET SOPORTE	STAFFA BESLAG	HALTERUNG SUPORTE	SUPPORT STEUN	225S
12		72214663		1	PLUG TAPÓN	TAPPO PROP	STOPFEN TAMPÃO	BOUCHON PLUG	050T
13		72214744		3	HYD CONNECTOR CONECTOR HIDRÁULIC	CONNETTORE IDRAULI HYDRAULIKSTIK	HYDR STECKVERBINDE CONECTOR HID.	CONNECTEUR HYDRAU HYDRAULISCHE AANSL	020R
14		72214524		3	HYD CONNECTOR CONECTOR HIDRÁULIC	CONNETTORE IDRAULI HYDRAULIKSTIK	HYDR STECKVERBINDE CONECTOR HID.	CONNECTEUR HYDRAU HYDRAULISCHE AANSL	020R
15		72214525		1	HYD CONNECTOR CONECTOR HIDRÁULIC	CONNETTORE IDRAULI HYDRAULIKSTIK	HYDR STECKVERBINDE CONECTOR HID.	CONNECTEUR HYDRAU HYDRAULISCHE AANSL	020R
16		72214542		3	HYD CONNECTOR CONECTOR HIDRÁULIC	CONNETTORE IDRAULI HYDRAULIKSTIK	HYDR STECKVERBINDE CONECTOR HID.	CONNECTEUR HYDRAU HYDRAULISCHE AANSL	020R
17		72955434		1	TEE RACOR EN T	PEZZO A T T-STYKKE	T-STÜCK TÊ	RACCORD EN T T-STUK	9020
18		72217408		1	HYD CONNECTOR CONECTOR HIDRÁULIC	CONNETTORE IDRAULI HYDRAULIKSTIK	HYDR STECKVERBINDE CONECTOR HID.	CONNECTEUR HYDRAU HYDRAULISCHE AANSL	020R
19		72954988		1	TEE RACOR EN T	PEZZO A T T-STYKKE	T-STÜCK TÊ	RACCORD EN T T-STUK	9020
20		72283853		1	TEE RACOR EN T	PEZZO A T T-STYKKE	T-STÜCK TÊ	RACCORD EN T T-STUK	9020
21		72214735		2	HYD CONNECTOR CONECTOR HIDRÁULIC	CONNETTORE IDRAULI HYDRAULIKSTIK	HYDR STECKVERBINDE CONECTOR HID.	CONNECTEUR HYDRAU HYDRAULISCHE AANSL	020R
22		10902234		2	BOLT, Hex, M6 x 16, 10.9, Full Thd PERNO	BULLONE BOLT	SCHRAUBE PARAFUSO	VIS BOUT	140B
23		11106234		2	BOLT, Hex, M10 x 25, 10.9, Full Thd PERNO	BULLONE BOLT	SCHRAUBE PARAFUSO	VIS BOUT	140B

(1) ASSY SEE PAGE 8
(2) ASSY SEE PAGE 9

Copyright © New Holland

5.0076	07	p2	03/10

BUCKET ROTATION (L=2.08 MT) - OPTIONAL CODE 461241148 (01-02-03) - 461241158 (04-05-06)
ROTAZIONE BENNA (L=2.08 MT) - CODICE VARIANTE 461241148 (01-02-03) - 461241158 (04-05-06)
UMDREHUNGSWANNE (L=2.08 MT) - OPTIONAL CODE 461241148 (01-02-03) - 461241158 (04-05-06)
GODET ROTATIF (L=2.08 MT) - OPTIONAL CODE 461241148 (01-02-03) - 461241158 (04-05-06)

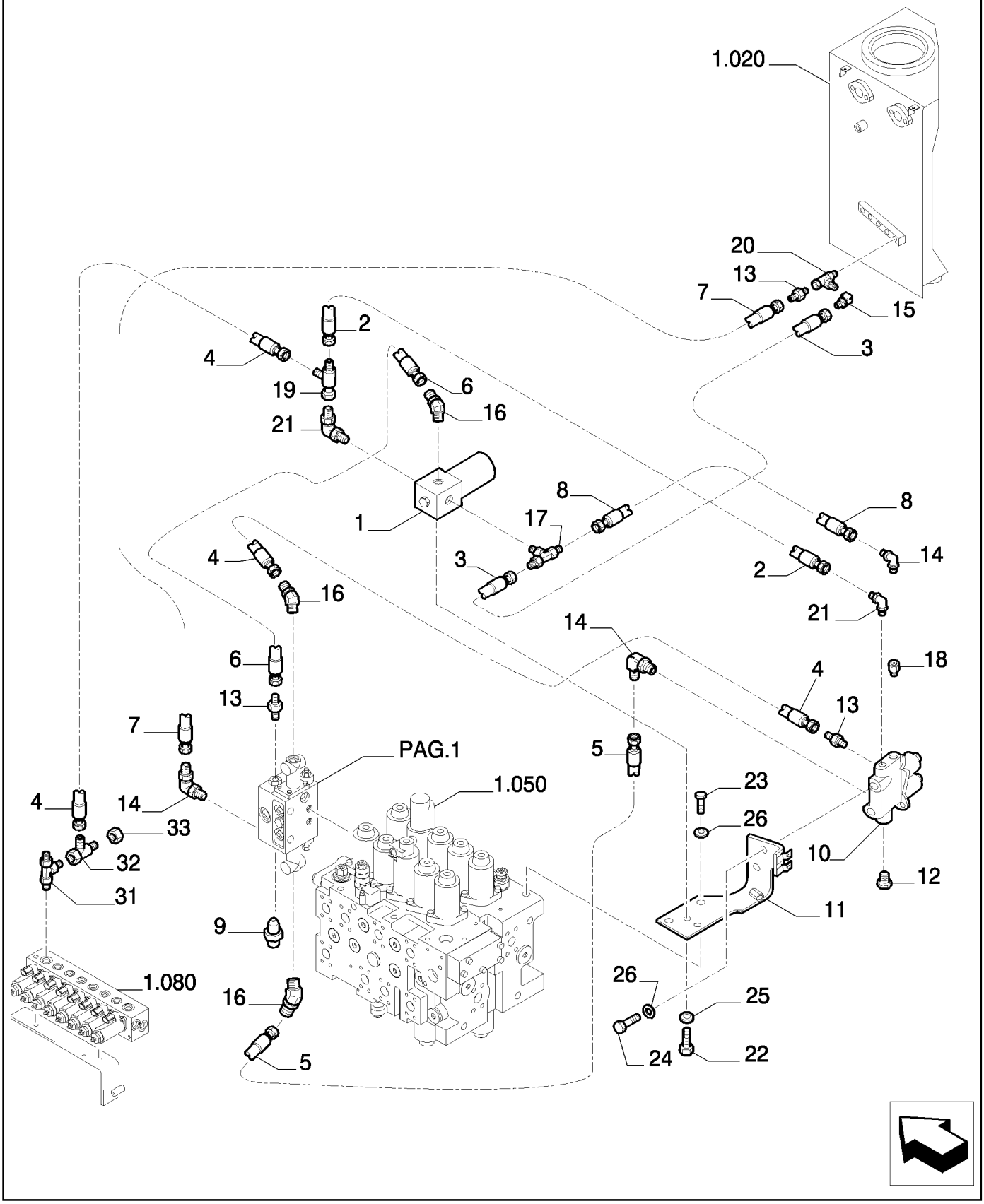

Copyright © New Holland

CUCHARA RODEANTE (L=2.08 MT) - OPTIONAL CODE 461241148 (01-02-03) - 461241158 (04-05-06)
BUCKET ROTATION (L=2.08 MT) - OPTIONAL CODE 461241148 (01-02-03) - 461241158 (04-05-06)
BUCKET ROTATION (L=2.08 MT) - OPTIONAL CODE 461241148 (01-02-03) - 461241158 (04-05-06)
BUCKET ROTATION (L=2.08 MT) - OPTIONAL CODE 461241148 (01-02-03) - 461241158 (04-05-06)

R	N	P.N.	MOD	Q	Description Denominacion	Descrizione Beskrivelse	Bezeichnung Denominação	Description Beschrijving	L.C.
24		11106034		2	BOLT, Hex, M10 x 20, 10.9, Full Thd PERNO	BULLONE BOLT	SCHRAUBE PARAFUSO	VIS BOUT	140B
25		14496431		2	WASHER, M6.4 x 12.5 x 1.6 Thk ARANDELA	RONDELLA FLADSKIVE	UNTERLEGSCHEIBE ANILHA	RONDELLE SLUITRING	131R
26		14496631		4	WASHER, M10 x 21 x 2 ARANDELA	RONDELLA FLADSKIVE	UNTERLEGSCHEIBE ANILHA	RONDELLE SLUITRING	131R
31		87338401		1	HYD CONNECTOR CONECTOR HIDRÁULIC	CONNETTORE IDRAULI HYDRAULIKSTIK	HYDR STECKVERBINDE CONECTOR HID.	CONNECTEUR HYDRAU HYDRAULISCHE AANSL	020R
32		72954988		1	TEE RACOR EN T	PEZZO A T T-STYKKE	T-STÜCK TÊ	RACCORD EN T T-STUK	9020
33		72214546		1	PLUG TAPÓN	TAPPO PROP	STOPFEN TAMPÃO	BOUCHON PLUG	050T

Copyright © New Holland

BUCKET ROTATION (L=2.08 MT) - COMPONENTS - OPTIONAL CODE 461241148 (01-02-03) - 461241158 (04-05-06)
ROTAZIONE BENNA (L=2.08 MT) - COMPONENTI - CODICE VARIANTE 461241148 (01-02-03) - 461241158 (04-05-06)
UMDREHUNGSWANNE (L=2.08 MT) - BESTANDTEILE - OPTIONAL CODE 461241148 (01-02-03) - 461241158 (04-05-06)
GODET ROTATIF (L=2.08 MT) - COMPOSANTS - OPTIONAL CODE 461241148 (01-02-03) - 461241158 (04-05-06)

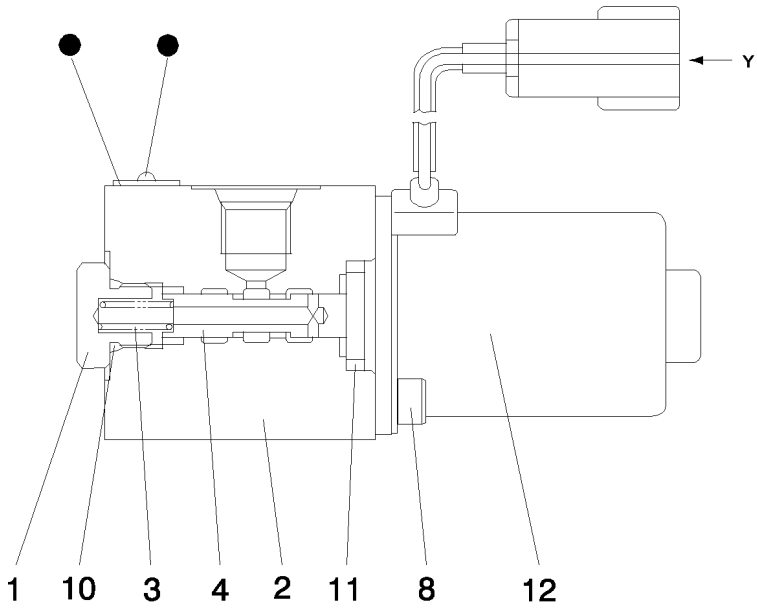

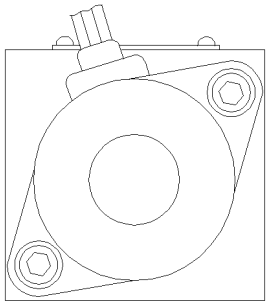

VIEW Y

PARTS MARKED ● ARE NOT SUPPLIED AS SPARES
I PARTICOLARI CONTRASSEGNATI CON ● NON VENGONO FORNITI DI RICAMBIO

Copyright © New Holland

CUCHARA RODEANTE (L=2.08 MT) - COMPONENTES - OPTIONAL CODE 461241148 (01-02-03) - 461241158 (04-05-06)
BUCKET ROTATION (L=2.08 MT) - COMPONENTS - OPTIONAL CODE 461241148 (01-02-03) - 461241158 (04-05-06)
BUCKET ROTATION (L=2.08 MT) - COMPONENTS - OPTIONAL CODE 461241148 (01-02-03) - 461241158 (04-05-06)
BUCKET ROTATION (L=2.08 MT) - COMPONENTS - OPTIONAL CODE 461241148 (01-02-03) - 461241158 (04-05-06)

R	N	P.N.	MOD	Q	Description Denominacion	Descrizione Beskrivelse	Bezeichnung Denominação	Description Beschrijving	L.C.
1		72215300		1	PLUG TAPÓN	TAPPO PROP	STOPFEN TAMPÃO	BOUCHON PLUG	050T
2		72150613		1	BODY CUERPO	CORPO HUS	KAROSSERIE CORPO	CORPS HUIS	300C
3		72210447		1	SPRING RESORTE	MOLLA FJEDER	FEDER MOLA	RESSORT VEER	100M
4		72150614		1	SPOOL BOBINA	STELO SPOLE	KOLBENSCHIEBER CARRETO	TIROIR SPOEL	134P
8		72215301		2	SCREW TORNILLO	VITE SKRUE	SCHRAUBE PARAFUSO	VIS SCHROEF	040V
10		72210491		1	O-RING JUNTA TÓRICA	ANELLO TOROIDALE O-RING	O-RING O-RING	JOINT TORIQUE O-RING	055A
11		72210450		1	O-RING JUNTA TÓRICA	ANELLO TOROIDALE O-RING	O-RING O-RING	JOINT TORIQUE O-RING	055A
12		72210451		1	HYDRAULIC VALVE VÁLVULA HIDRÁULICA	DISTRIBUTORE IDRAULI HYDRAULIKVENTIL	HYDRAULIKVENTIL VÁLVULA HIDRÁULICA	SOUPAPE HYDRAULIQU HYDRAULISCHE KLEP	010V

SOLENOID VALVE ASSY P/N 72955526

E215B

Copyright © New Holland

5.0076	09	p1	03/10

BUCKET ROTATION (L=2.08 MT) - COMPONENTS - OPTIONAL CODE 461241148 (01-02-03) - 461241158 (04-05-06)
ROTAZIONE BENNA (L=2.08 MT) - COMPONENTI - CODICE VARIANTE 461241148 (01-02-03) - 461241158 (04-05-06)
UMDREHUNGSWANNE (L=2.08 MT) - BESTANDTEILE - OPTIONAL CODE 461241148 (01-02-03) - 461241158 (04-05-06)
GODET ROTATIF (L=2.08 MT) - COMPOSANTS - OPTIONAL CODE 461241148 (01-02-03) - 461241158 (04-05-06)

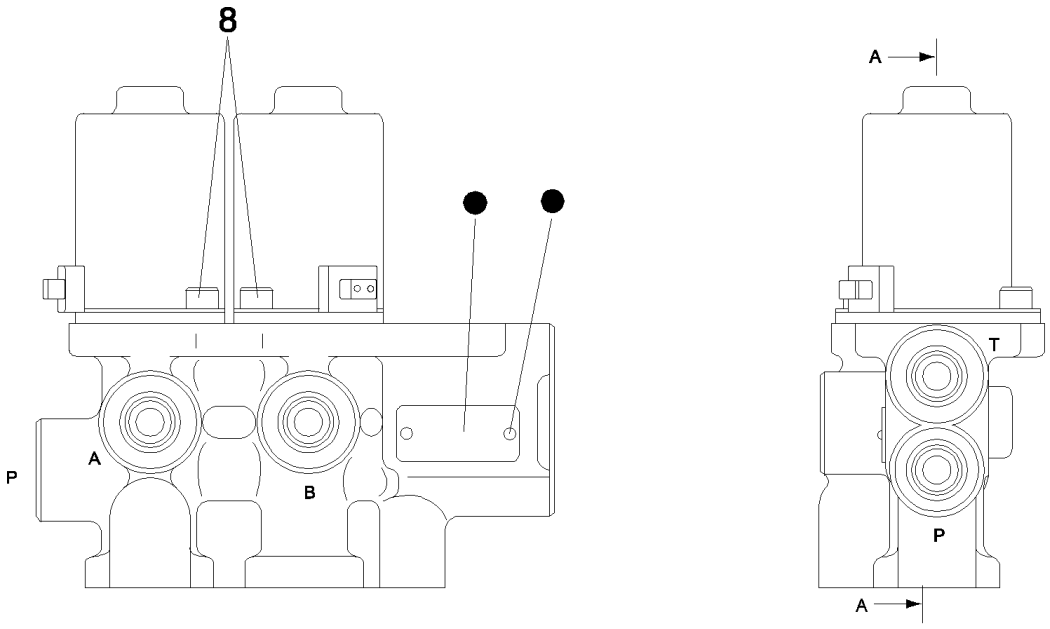

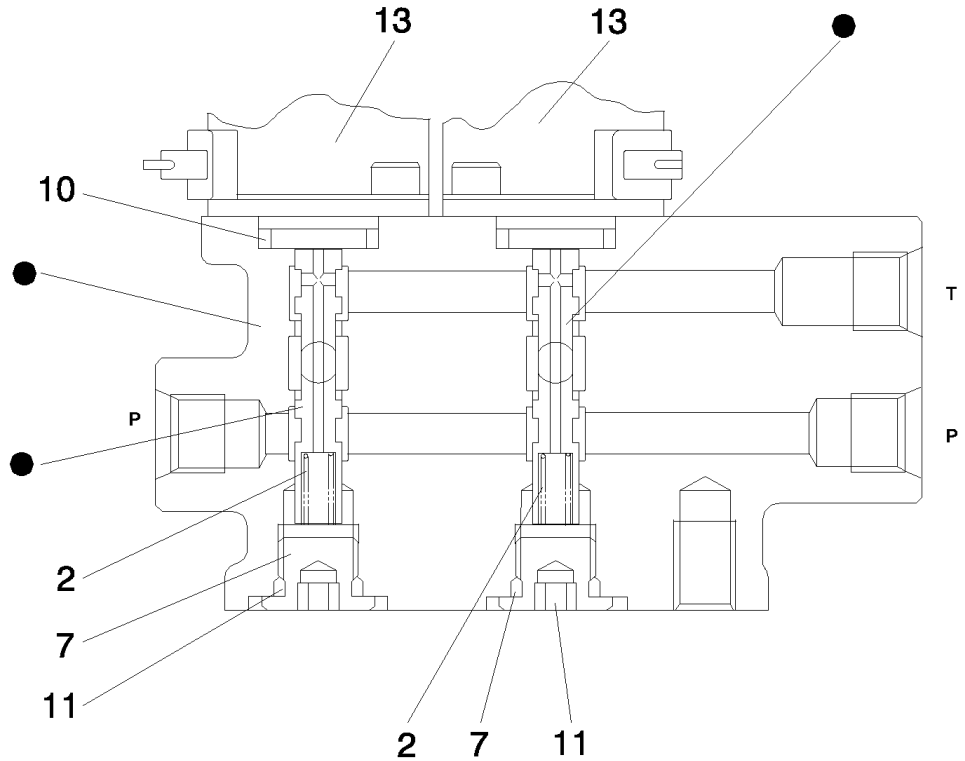

SECTION A-A

PARTS MARKED ● ARE NOT SUPPLIED AS SPARES
I PARTICOLARI CONTRASSEGNATI CON ● NON VENGONO FORNITI DI RICAMBIO

Copyright © New Holland

CUCHARA RODEANTE (L=2.08 MT) - COMPONENTES - OPTIONAL CODE 461241148 (01-02-03) - 461241158 (04-05-06)
BUCKET ROTATION (L=2.08 MT) - COMPONENTS - OPTIONAL CODE 461241148 (01-02-03) - 461241158 (04-05-06)
BUCKET ROTATION (L=2.08 MT) - COMPONENTS - OPTIONAL CODE 461241148 (01-02-03) - 461241158 (04-05-06)
BUCKET ROTATION (L=2.08 MT) - COMPONENTS - OPTIONAL CODE 461241148 (01-02-03) - 461241158 (04-05-06)

R	N	P.N.	MOD	Q	Description Denominacion	Descrizione Beskrivelse	Bezeichnung Denominação	Description Beschrijving	L.C.
2		72210447		2	SPRING RESORTE	MOLLA FJEDER	FEDER MOLA	RESSORT VEER	100M
7		72210448		2	PLUG TAPÓN	TAPPO PROP	STOPFEN TAMPÃO	BOUCHON PLUG	050T
8		72210449		4	SCREW TORNILLO	VITE SKRUE	SCHRAUBE PARAFUSO	VIS SCHROEF	040V
10		72210450		2	O-RING JUNTA TÓRICA	ANELLO TOROIDALE O-RING	O-RING O-RING	JOINT TORIQUE O-RING	055A
11		72209827		2	O-RING JUNTA TÓRICA	ANELLO TOROIDALE O-RING	O-RING O-RING	JOINT TORIQUE O-RING	055A
13		72210451		2	HYDRAULIC VALVE VÁLVULA HIDRÁULICA	DISTRIBUTORE IDRAULI HYDRAULIKVENTIL	HYDRAULIKVENTIL VÁLVULA HIDRÁULICA	SOUPAPE HYDRAULIQU HYDRAULISCHE KLEP	010V

SOLENOID VALVE ASSY P/N 87531523

E215B

Copyright © New Holland

5.0076	10	p1	03/10

BUCKET ROTATION (L=2.08 MT) - OPTIONAL CODE 461241148 (01-02-03) - 461241158 (04-05-06)
ROTAZIONE BENNA (L=2.08 MT) - CODICE VARIANTE 461241148 (01-02-03) - 461241158 (04-05-06)
UMDREHUNGSWANNE (L=2.08 MT) - OPTIONAL CODE 461241148 (01-02-03) - 461241158 (04-05-06)
GODET ROTATIF (L=2.08 MT) - OPTIONAL CODE 461241148 (01-02-03) - 461241158 (04-05-06)

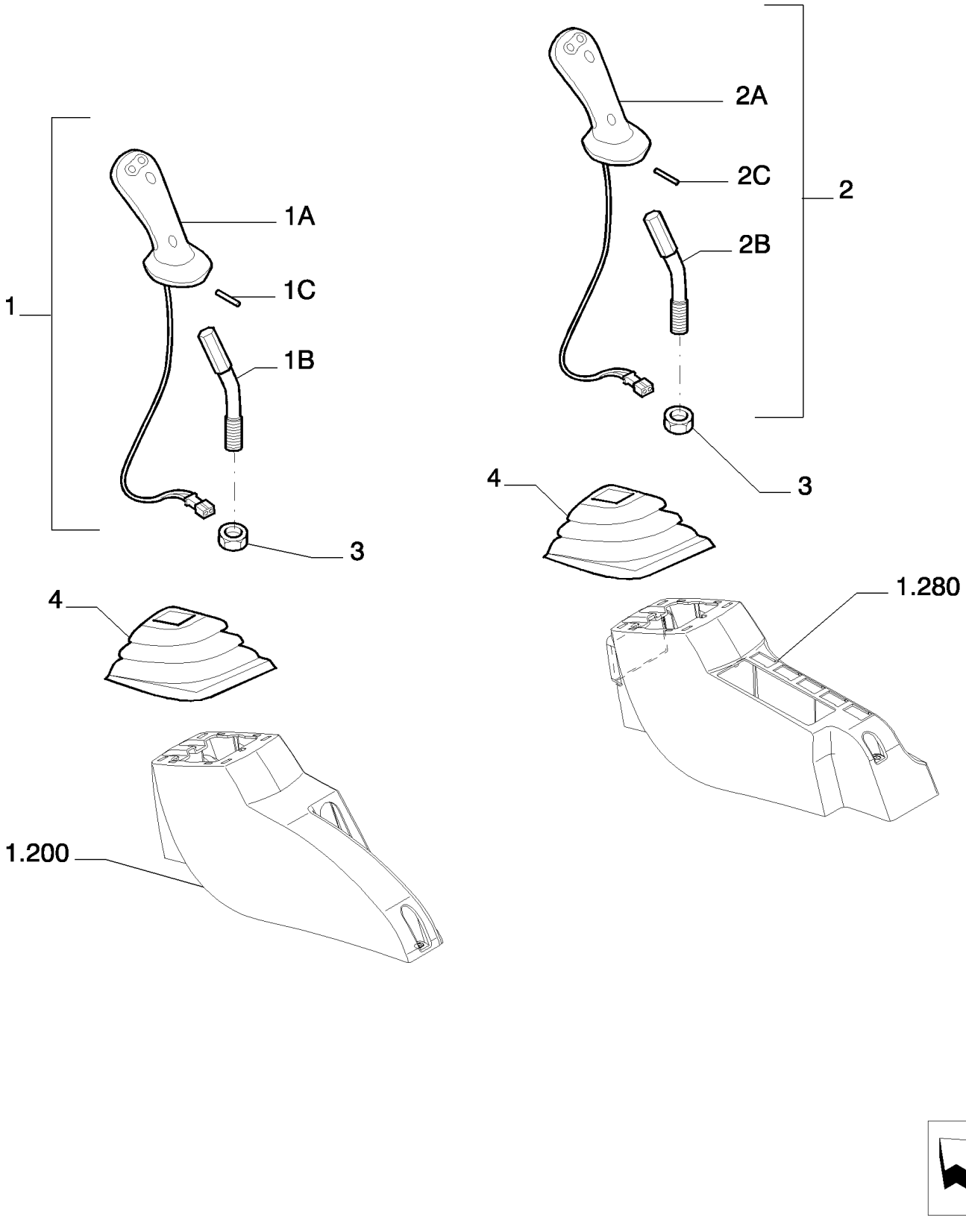

Copyright © New Holland

CUCHARA RODEANTE (L=2.08 MT) - OPTIONAL CODE 461241148 (01-02-03) - 461241158 (04-05-06)
BUCKET ROTATION (L=2.08 MT) - OPTIONAL CODE 461241148 (01-02-03) - 461241158 (04-05-06)
BUCKET ROTATION (L=2.08 MT) - OPTIONAL CODE 461241148 (01-02-03) - 461241158 (04-05-06)
BUCKET ROTATION (L=2.08 MT) - OPTIONAL CODE 461241148 (01-02-03) - 461241158 (04-05-06)

R	N	P.N.	MOD	Q	Description Denominacion	Descrizione Beskrivelse	Bezeichnung Denominação	Description Beschrijving	L.C.
1		{YN03M02148F1}		1	LEFT - ASSY				
1A		71485944		1	HANDLE GRIP PERILLA	IMPUGNATURA HÅNDGREB	HANDGRIFF GARRA	POIGNEE DE MAINTIEN HANDGREEP	025I
1B		YN03M02134P1		1	LEVER PALANCA	LEVA ARM	HEBEL ALAVANCA	LEVIER HEFBOOM	045L
1C		14601271		1	ROLL PIN BULÓN DE GIRO	SPINA ELASTICA SPLIT	SPANNSTIFT TROÇO	GOUPILLE ELASTIQUE ROLPEN	200S
2		{YN03M02149F1}		1	RIGHT - ASSY				
2A		71485944		1	HANDLE GRIP PERILLA	IMPUGNATURA HÅNDGREB	HANDGRIFF GARRA	POIGNEE DE MAINTIEN HANDGREEP	025I
2B		YN03M02134P1		1	LEVER PALANCA	LEVA ARM	HEBEL ALAVANCA	LEVIER HEFBOOM	045L
2C		14601271		1	ROLL PIN BULÓN DE GIRO	SPINA ELASTICA SPLIT	SPANNSTIFT TROÇO	GOUPILLE ELASTIQUE ROLPEN	200S
3		12163224		2	NUT TUERCA	DADO MØTRIK	MUTTER PORCA	ECROU MOER	010D
4		YN03M02114P1		2	BELLOWS FUELLE	SOFFIETTI BLÆSEBÆLG	FALTENBALG FOLE	SOUFFLET BALGEN	169S

Copyright © New Holland

5.0076	11	p1	03/10

BUCKET ROTATION (L=2.08 MT) - OPTIONAL CODE 461241148 (01-02-03)
ROTAZIONE BENNA (L=2.08 MT) - CODICE VARIANTE 461241148 (01-02-03)
UMDREHUNGSWANNE (L=2.08 MT) - OPTIONAL CODE 461241148 (01-02-03)
GODET ROTATIF (L=2.08 MT) - OPTIONAL CODE 461241148 (01-02-03)

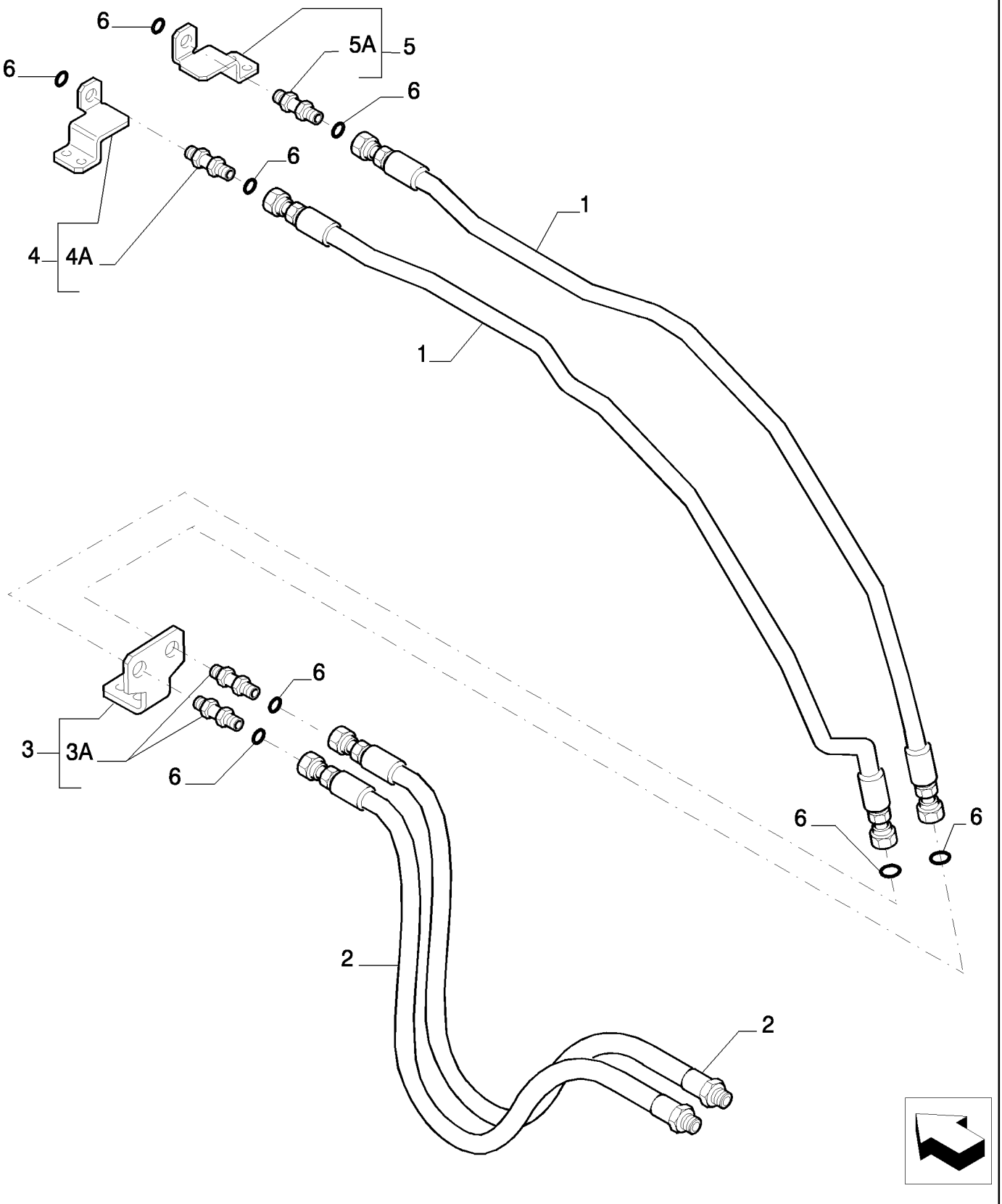

Copyright © New Holland

CUCHARA RODEANTE (L=2.08 MT) - OPTIONAL CODE 461241148 (01-02-03)
BUCKET ROTATION (L=2.08 MT) - OPTIONAL CODE 461241148 (01-02-03)
BUCKET ROTATION (L=2.08 MT) - OPTIONAL CODE 461241148 (01-02-03)
BUCKET ROTATION (L=2.08 MT) - OPTIONAL CODE 461241148 (01-02-03)

R	N	P.N.	MOD	Q	Description Denominacion	Descrizione Beskrivelse	Bezeichnung Denominação	Description Beschrijving	L.C.
1		87396720		2	FLEXIBLE HOSE TUBO FLEXIBLE	TUBO FLESSIBILE FLEKSIBEL SLANGE	BIEGSAMER SCHLAUCH MANGUEIRA FLEXÍVEL	TUYAU FLEXIBLE FLEXIBELE SLANG	192T
2		87396721		2	FLEXIBLE HOSE TUBO FLEXIBLE	TUBO FLESSIBILE FLEKSIBEL SLANGE	BIEGSAMER SCHLAUCH MANGUEIRA FLEXÍVEL	TUYAU FLEXIBLE FLEXIBELE SLANG	192T
3		87396715		1	BRACKET, - ASSY SOPORTE	STAFFA BESLAG	HALTERUNG SUPORTE	SUPPORT STEUN	225S
3A		72204201		2	HYD CONNECTOR CONECTOR HIDRÁULIC(	CONNETTORE IDRAULIC(HYDRAULIKSTIK	HYDR STECKVERBINDE CONECTOR HID.	CONNECTEUR HYDRAU HYDRAULISCHE AANSL	020R
4		87396711		1	BRACKET, - ASSY SOPORTE	STAFFA BESLAG	HALTERUNG SUPORTE	SUPPORT STEUN	225S
4A		72204201		1	HYD CONNECTOR CONECTOR HIDRÁULIC(	CONNETTORE IDRAULIC(HYDRAULIKSTIK	HYDR STECKVERBINDE CONECTOR HID.	CONNECTEUR HYDRAU HYDRAULISCHE AANSL	020R
5		87396713		1	BRACKET, - ASSY SOPORTE	STAFFA BESLAG	HALTERUNG SUPORTE	SUPPORT STEUN	225S
5A		72204201		1	HYD CONNECTOR CONECTOR HIDRÁULIC(	CONNETTORE IDRAULIC(HYDRAULIKSTIK	HYDR STECKVERBINDE CONECTOR HID.	CONNECTEUR HYDRAU HYDRAULISCHE AANSL	020R
6		70923841		8	O-RING, M12.42 ID x 1.78 Thk ANELLO TOROIDALE JUNTA TÓRICA	O-RING O-RING	O-RING O-RING	JOINT TORIQUE O-RING	055A
7		4982514		36	CABLE STRAP BANDA DE CABLE	FASCETTA PER CAVO KABELSTROP	KABELBINDER BRAÇADEIRA DE CABO	BRIDE DE CABLE BUNDELBAND	P716

Copyright © New Holland

5.0076	12	p1	03/10

BUCKET ROTATION (L=2.08 MT) - OPTIONAL CODE 461241158 (04-05-06)
ROTAZIONE BENNA (L=2.08 MT) - CODICE VARIANTE 461241158 (04-05-06)
UMDREHUNGSWANNE (L=2.08 MT) - OPTIONAL CODE 461241158 (04-05-06)
GODET ROTATIF (L=2.08 MT) - OPTIONAL CODE 461241158 (04-05-06)

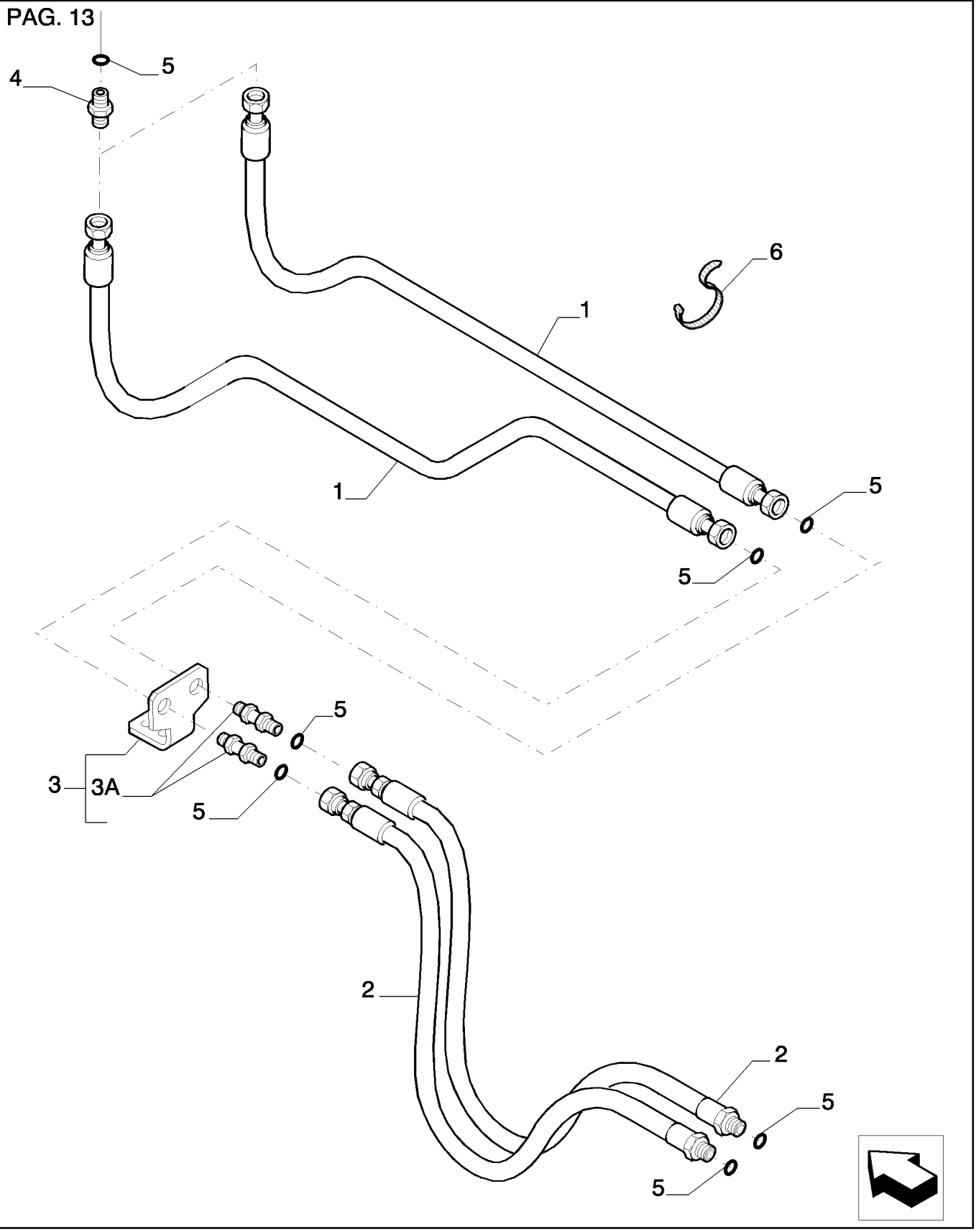

Copyright © New Holland

CUCHARA RODEANTE (L=2.08 MT) - OPTIONAL CODE 461241158 (04-05-06)
BUCKET ROTATION (L=2.08 MT) - OPTIONAL CODE 461241158 (04-05-06)
BUCKET ROTATION (L=2.08 MT) - OPTIONAL CODE 461241158 (04-05-06)
BUCKET ROTATION (L=2.08 MT) - OPTIONAL CODE 461241158 (04-05-06)

R	N	P.N.	MOD	Q	Description Denominacion	Descrizione Beskrivelse	Bezeichnung Denominação	Description Beschrijving	L.C.
1		87396727		2	FLEXIBLE HOSE TUBO FLEXIBLE	TUBO FLESSIBILE FLEKSIBEL SLANGE	BIEGSAMER SCHLAUCH MANGUEIRA FLEXÍVEL	TUYAU FLEXIBLE FLEXIBELE SLANG	192T
2		87396721		2	FLEXIBLE HOSE TUBO FLEXIBLE	TUBO FLESSIBILE FLEKSIBEL SLANGE	BIEGSAMER SCHLAUCH MANGUEIRA FLEXÍVEL	TUYAU FLEXIBLE FLEXIBELE SLANG	192T
3		87396684		1	BRACKET, - ASSY SOPORTE	STAFFA BESLAG	HALTERUNG SUPORTE	SUPPORT STEUN	225S
3A		72204201		2	HYD CONNECTOR CONECTOR HIDRÁULIC	CONNETTORE IDRAULIC HYDRAULIKSTIK	HYDR STECKVERBINDE CONECTOR HID.	CONNECTEUR HYDRAU HYDRAULISCHE AANSL	020R
4		87556832		2	HYD CONNECTOR CONECTOR HIDRÁULIC	CONNETTORE IDRAULIC HYDRAULIKSTIK	HYDR STECKVERBINDE CONECTOR HID.	CONNECTEUR HYDRAU HYDRAULISCHE AANSL	020R
5		70923841		8	O-RING, M12.42 ID x 1.78 Thk JUNTA TÓRICA	ANELLO TOROIDALE O-RING	O-RING O-RING	JOINT TORIQUE O-RING	055A
6		4982514		8	CABLE STRAP BANDA DE CABLE	FASCETTA PER CAVO KABELSTROP	KABELBINDER BRAÇADEIRA DE CABO	BRIDE DE CABLE BUNDELBAND	P716

Copyright © New Holland

5.0076	13	p1	03/10

BUCKET ROTATION (L=2.08 MT) - OPTIONAL CODE 461241158 (04-05-06)
ROTAZIONE BENNA (L=2.08 MT) - CODICE VARIANTE 461241158 (04-05-06)
UMDREHUNGSWANNE (L=2.08 MT) - OPTIONAL CODE 461241158 (04-05-06)
GODET ROTATIF (L=2.08 MT) - OPTIONAL CODE 461241158 (04-05-06)

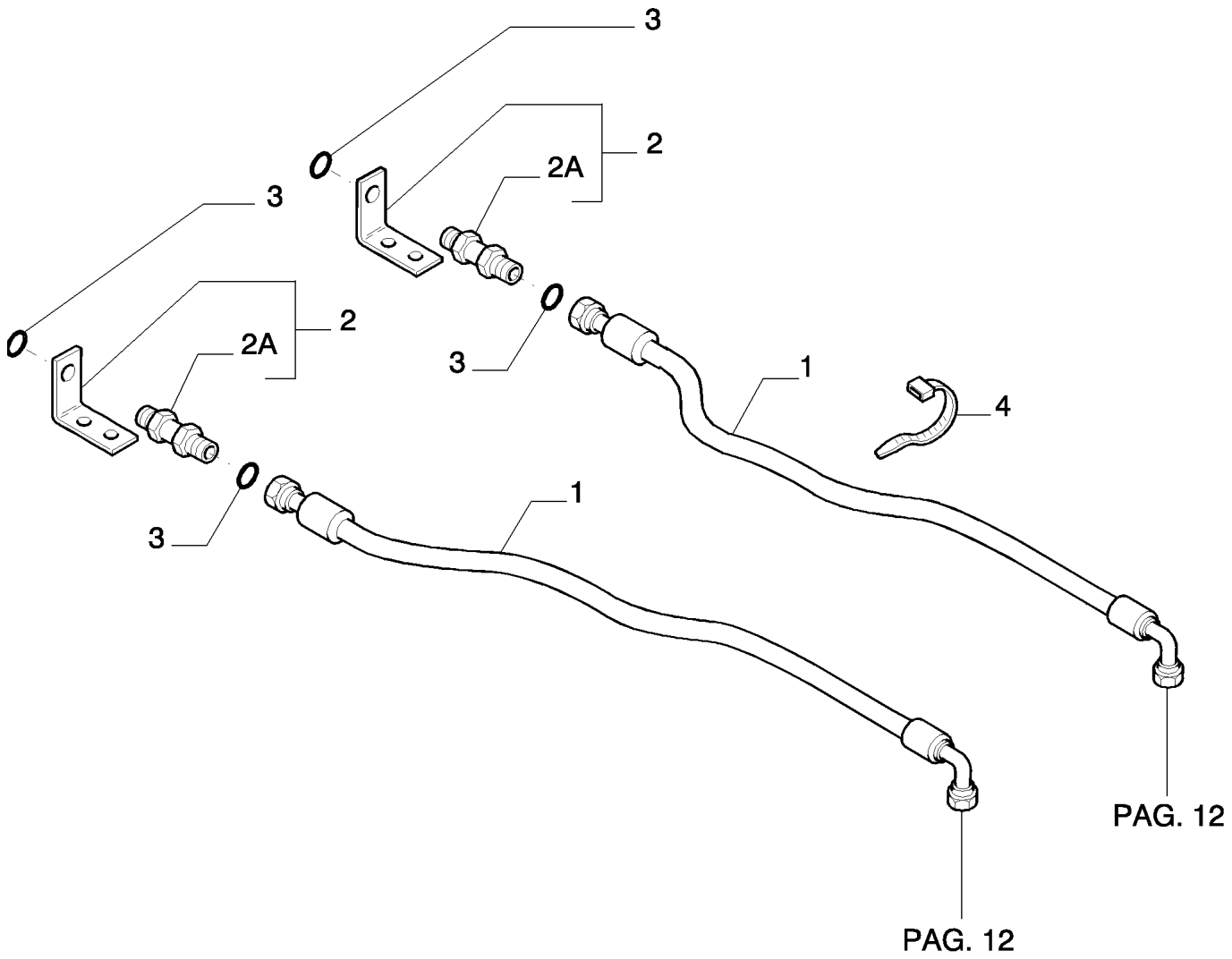

Copyright © New Holland

CUCHARA RODEANTE (L=2.08 MT) - OPTIONAL CODE 461241158 (04-05-06)
BUCKET ROTATION (L=2.08 MT) - OPTIONAL CODE 461241158 (04-05-06)
BUCKET ROTATION (L=2.08 MT) - OPTIONAL CODE 461241158 (04-05-06)
BUCKET ROTATION (L=2.08 MT) - OPTIONAL CODE 461241158 (04-05-06)

R	N	P.N.	MOD	Q	Description Denominacion	Descrizione Beskrivelse	Bezeichnung Denominação	Description Beschrijving	L.C.
1		{87383050}		2					
2		87343179		2	BRACKET, - ASSY SOPORTE	STAFFA BESLAG	HALTERUNG SUPORTE	SUPPORT STEUN	225S
2A		72204201		1	HYD CONNECTOR CONECTOR HIDRÁULIC(	CONNETTORE IDRAULI(HYDRAULIKSTIK	HYDR STECKVERBINDE CONECTOR HID.	CONNECTEUR HYDRAU HYDRAULISCHE AANSL	020R
3		70923841		4	O-RING, M12.42 ID x 1.78 Thk JUNTA TÓRICA	ANELLO TOROIDALE O-RING	O-RING O-RING	JOINT TORIQUE O-RING	055A
4		4982514		8	CABLE STRAP BANDA DE CABLE	FASCETTA PER CAVO KABELSTROP	KABELBINDER BRAÇADEIRA DE CABO	BRIDE DE CABLE BUNDELBAND	P716

Copyright © New Holland

5.0076	14	p1	03/10

BUCKET ROTATION (L=2.08 MT) - OPTIONAL CODE 461241148 (01-02-03) - 461241158 (04-05-06)
ROTAZIONE BENNA (L=2.08 MT) - CODICE VARIANTE 461241148 (01-02-03) - 461241158 (04-05-06)
UMDREHUNGSWANNE (L=2.08 MT) - OPTIONAL CODE 461241148 (01-02-03) - 461241158 (04-05-06)
GODET ROTATIF (L=2.08 MT) - OPTIONAL CODE 461241148 (01-02-03) - 461241158 (04-05-06)

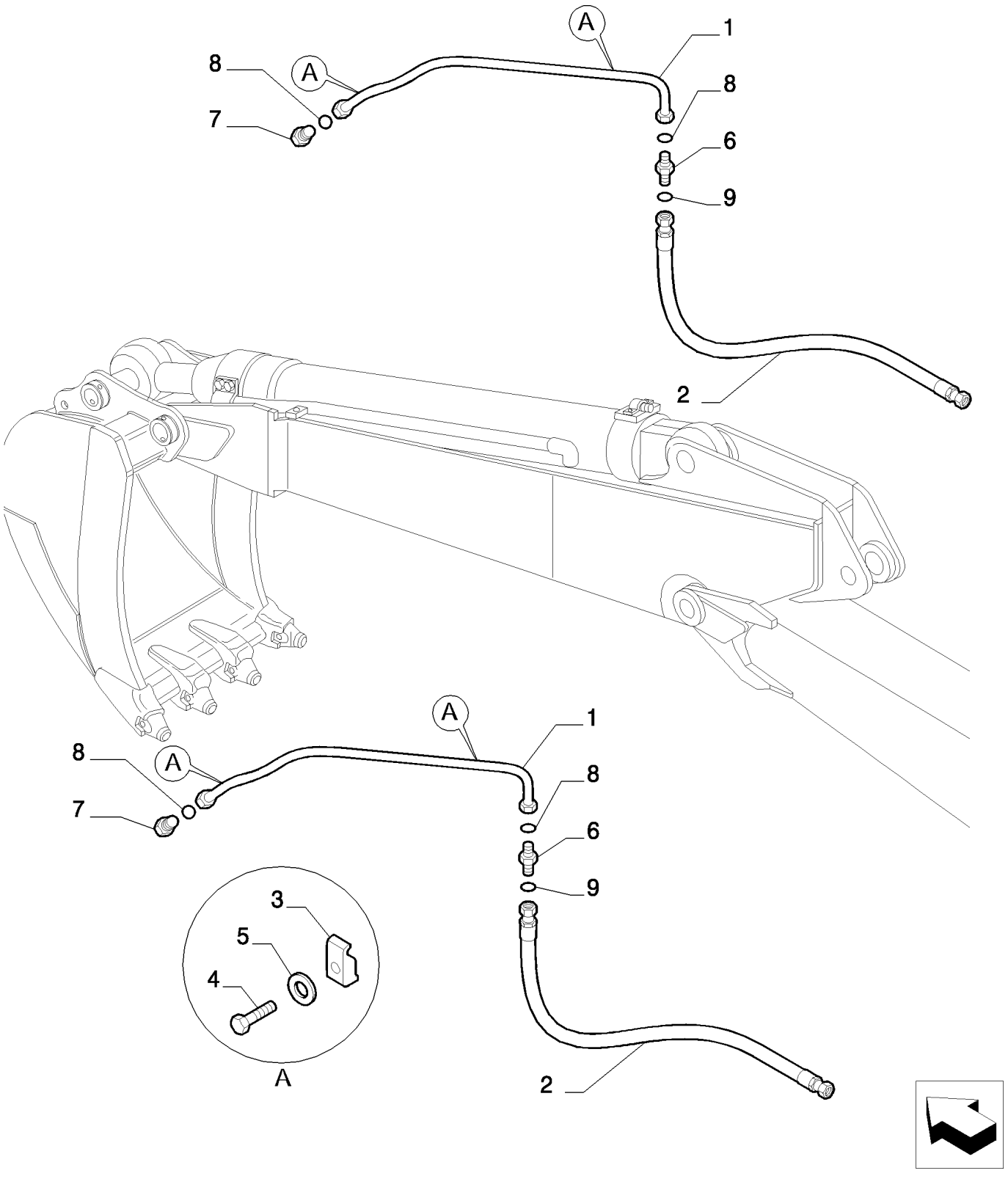

Copyright © New Holland

CUCHARA RODEANTE (L=2.08 MT) - OPTIONAL CODE 461241148 (01-02-03) - 461241158 (04-05-06)
BUCKET ROTATION (L=2.08 MT) - OPTIONAL CODE 461241148 (01-02-03) - 461241158 (04-05-06)
BUCKET ROTATION (L=2.08 MT) - OPTIONAL CODE 461241148 (01-02-03) - 461241158 (04-05-06)
BUCKET ROTATION (L=2.08 MT) - OPTIONAL CODE 461241148 (01-02-03) - 461241158 (04-05-06)

R	N	P.N.	MOD	Q	Description Denominacion	Descrizione Beskrivelse	Bezeichnung Denominação	Description Beschrijving	L.C.
1		87381217		2	RIGID TUBE TUBO RÍGIDO	TUBO RIGIDO STIFT RØR	ROHR TUBO RÍGIDO	TUYAU RIGIDE VASTE LEIDING	193T
2		72212247		2	FLEXIBLE HOSE TUBO FLEXIBLE	TUBO FLESSIBILE FLEKSIBEL SLANGE	BIEGSAMER SCHLAUCH MANGUEIRA FLEXÍVEL	TUYAU FLEXIBLE FLEXIBELE SLANG	192T
3		71466172		4	BRACKET SOPORTE	STAFFA BESLAG	HALTERUNG SUPORTE	SUPPORT STEUN	225S
4		11113234		4	BOLT, Hex, M12 x 50, 10.9 PERNO	BULLONE BOLT	SCHRAUBE PARAFUSO	VIS BOUT	140B
5		10517074		4	LOCK WASHER ARANDELA DE BLOQUE	RONDELLA DI SICUREZ LÅSESKIVE	SICHERUNGSSCHEIBE ANILHA DE RETENÇÃO	RONDELLE FREIN BORGRING	132R
6		72204293		2	HYD CONNECTOR CONECTOR HIDRÁULIC	CONNETTORE IDRAULI HYDRAULIKSTIK	HYDR STECKVERBINDE CONECTOR HID.	CONNECTEUR HYDRAU HYDRAULISCHE AANSL	020R
7		72204294		2	HYD CONNECTOR CONECTOR HIDRÁULIC	CONNETTORE IDRAULI HYDRAULIKSTIK	HYDR STECKVERBINDE CONECTOR HID.	CONNECTEUR HYDRAU HYDRAULISCHE AANSL	020R
8		71484462		4	O-RING JUNTA TÓRICA	ANELLO TOROIDALE O-RING	O-RING O-RING	JOINT TORIQUE O-RING	055A
9		70923841		2	O-RING, M12.42 ID x 1.78 Thk JUNTA TÓRICA	ANELLO TOROIDALE O-RING	O-RING O-RING	JOINT TORIQUE O-RING	055A

Copyright © New Holland

5.0076	15	p1	03/10

BUCKET ROTATION (L=2.08 MT) - OPTIONAL CODE 461241148 (01-02-03) - 461241158 (04-05-06)
ROTAZIONE BENNA (L=2.08 MT) - CODICE VARIANTE 461241148 (01-02-03) - 461241158 (04-05-06)
UMDREHUNGSWANNE (L=2.08 MT) - OPTIONAL CODE 461241148 (01-02-03) - 461241158 (04-05-06)
GODET ROTATIF (L=2.08 MT) - OPTIONAL CODE 461241148 (01-02-03) - 461241158 (04-05-06)

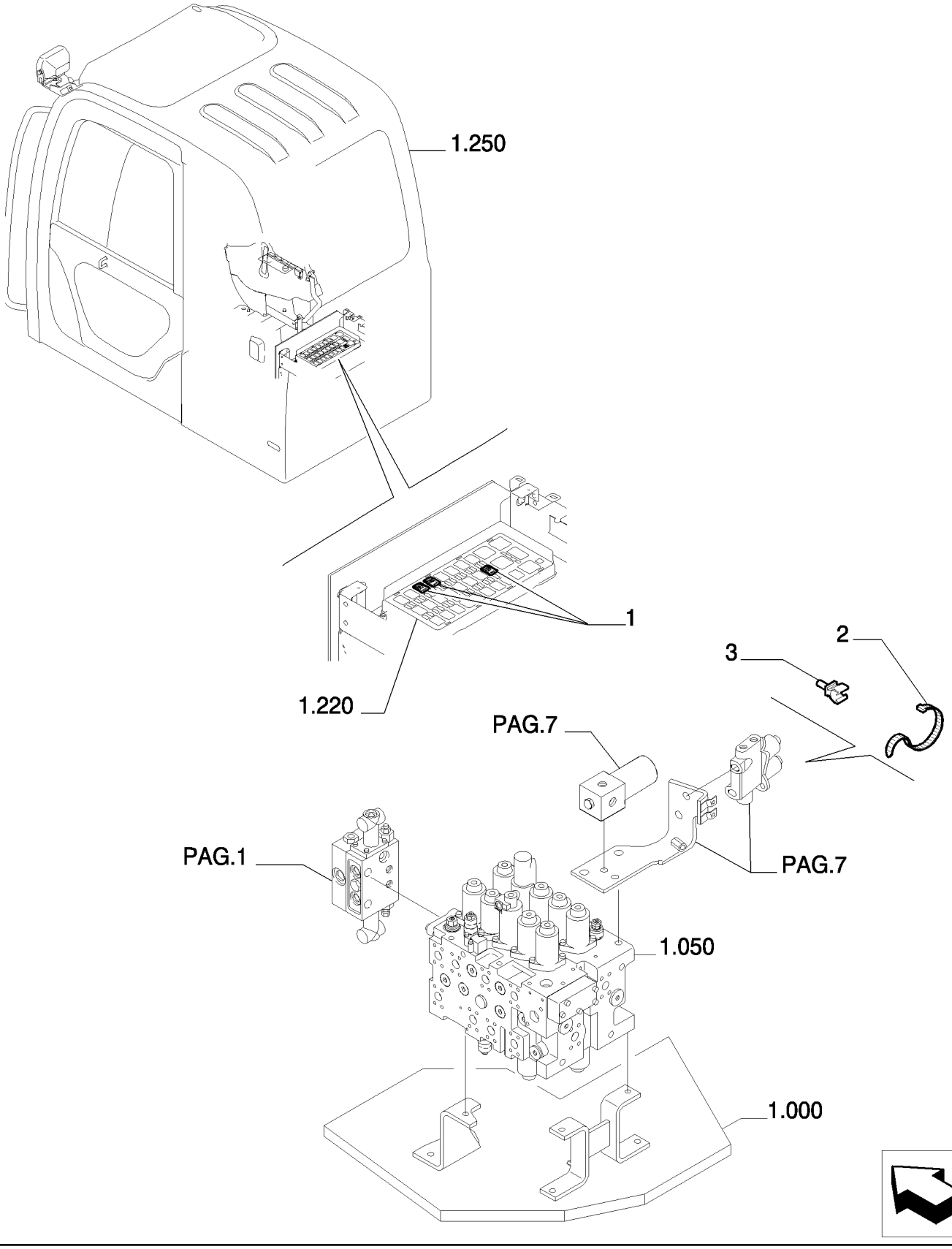

Copyright © New Holland

CUCHARA RODEANTE (L=2.08 MT) - OPTIONAL CODE 461241148 (01-02-03) - 461241158 (04-05-06)
BUCKET ROTATION (L=2.08 MT) - OPTIONAL CODE 461241148 (01-02-03) - 461241158 (04-05-06)
BUCKET ROTATION (L=2.08 MT) - OPTIONAL CODE 461241148 (01-02-03) - 461241158 (04-05-06)
BUCKET ROTATION (L=2.08 MT) - OPTIONAL CODE 461241148 (01-02-03) - 461241158 (04-05-06)

R	N	P.N.	MOD	Q	Description Denominacion	Descrizione Beskrivelse	Bezeichnung Denominação	Description Beschrijving	L.C.
1		87559156		3	RELAY RELÉ	RELÈ RELÆ	RELAIS RELÉ	RELAIS RELAIS	011R
2		72951499		4	CLIP ABRAZADERA	FERMO KLIPS	KLAMMER FIXADOR	COLLIER KLEM	045F
3		87526680		1	RETAINER COLLAR COLLAR DE RETENCIÓN	COLLARE DI FISSAGGIO RING, SPÆNDE	HALTERING ANEL DE FIXAÇÃO	COLLIER DE RETENUE BORGKRAAG	230S

Copyright © New Holland

5.0077	01	p1	03/10

BUCKET ROTATION (L=2.4 MT) - OPTIONAL CODE 461244068 (01-02-03) - 461244078 (04-05-06)
ROTAZIONE BENNA (L=2.4 MT) - CODICE VARIANTE 461244068 (01-02-03) - 461244078 (04-05-06)
UMDREHUNGSWANNE (L=2.4 MT) - OPTIONAL CODE 461244068 (01-02-03) - 461244078 (04-05-06)
GODET ROTATIF (L=2.4 MT) - OPTIONAL CODE 461244068 (01-02-03) - 461244078 (04-05-06)

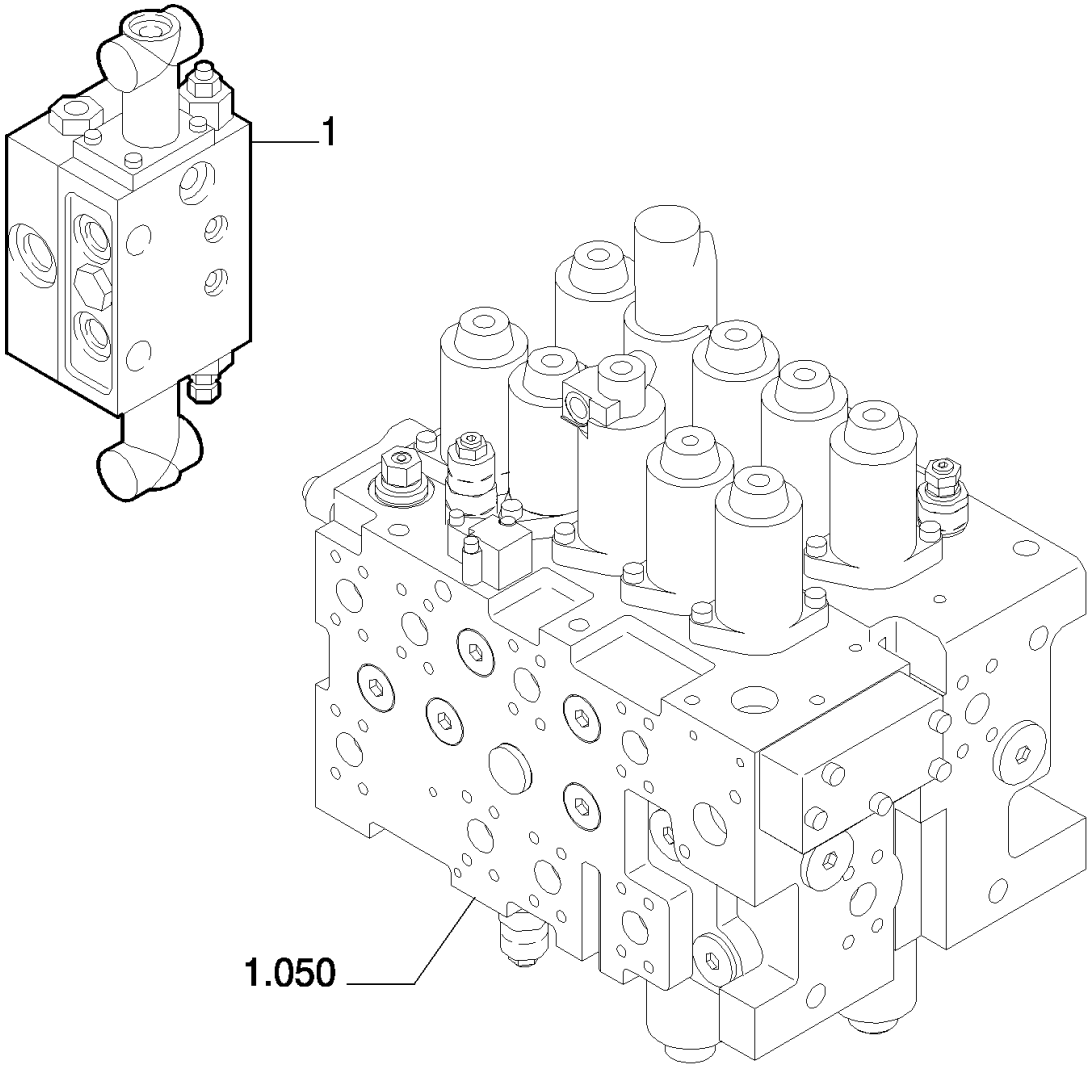

Copyright © New Holland

CUCHARA RODEANTE (L=2.4 MT) - OPTIONAL CODE 461244068 (01-02-03) - 461244078 (04-05-06)
BUCKET ROTATION (L=2.4 MT) - OPTIONAL CODE 461244068 (01-02-03) - 461244078 (04-05-06)
BUCKET ROTATION (L=2.4 MT) - OPTIONAL CODE 461244068 (01-02-03) - 461244078 (04-05-06)
BUCKET ROTATION (L=2.4 MT) - OPTIONAL CODE 461244068 (01-02-03) - 461244078 (04-05-06)

R	N	P.N.	MOD	Q	Description Denominacion	Descrizione Beskrivelse	Bezeichnung Denominação	Description Beschrijving	L.C.
1	1	**87386068**		1	HYDRAULIC VALVE VÁLVULA HIDRÁULICA	DISTRIBUTORE IDRAULI HYDRAULIKVENTIL	HYDRAULIKVENTIL VÁLVULA HIDRÁULICA	SOUPAPE HYDRAULIQU HYDRAULISCHE KLEP	010V

(1) ASSY SEE SGR. 5.0076 PAGE 2

Copyright © New Holland

5.0077	02	p1	03/10

BUCKET ROTATION (L=2.4 MT) - OPTIONAL CODE 461244068 (01-02-03)
ROTAZIONE BENNA (L=2.4 MT) - CODICE VARIANTE 461244068 (01-02-03)
UMDREHUNGSWANNE (L=2.4 MT) - OPTIONAL CODE 461244068 (01-02-03)
GODET ROTATIF (L=2.4 MT) - OPTIONAL CODE 461244068 (01-02-03)

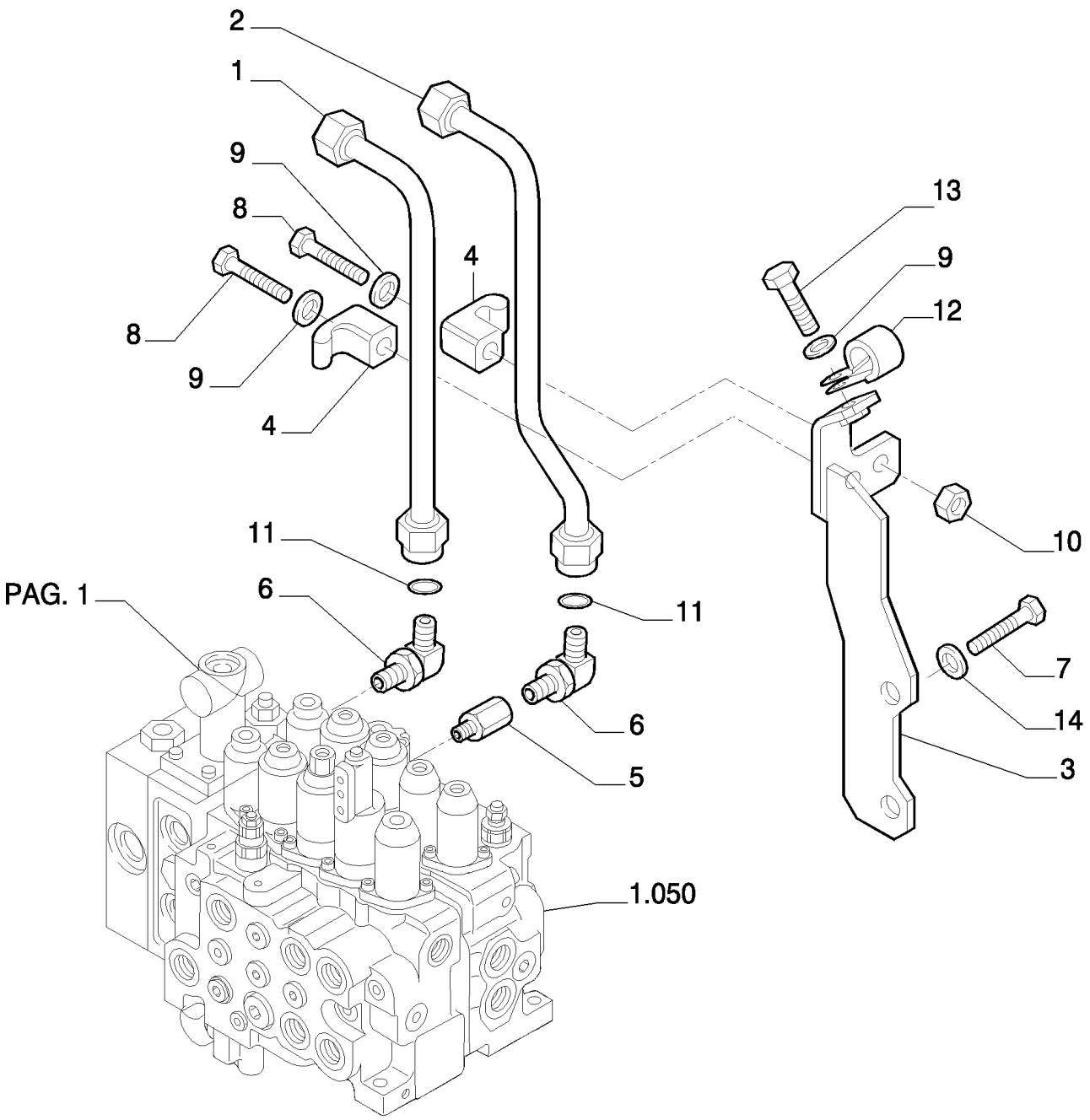

Copyright © New Holland

CUCHARA RODEANTE (L=2.4 MT) - OPTIONAL CODE 461244068 (01-02-03)
BUCKET ROTATION (L=2.4 MT) - OPTIONAL CODE 461244068 (01-02-03)
BUCKET ROTATION (L=2.4 MT) - OPTIONAL CODE 461244068 (01-02-03)
BUCKET ROTATION (L=2.4 MT) - OPTIONAL CODE 461244068 (01-02-03)

R	N	P.N.	MOD	Q	Description Denominacion	Descrizione Beskrivelse	Bezeichnung Denominação	Description Beschrijving	L.C.
1		87532096		1	RIGID TUBE TUBO RÍGIDO	TUBO RIGIDO STIFT RØR	ROHR TUBO RÍGIDO	TUYAU RIGIDE VASTE LEIDING	193T
2		87532097		1	RIGID TUBE TUBO RÍGIDO	TUBO RIGIDO STIFT RØR	ROHR TUBO RÍGIDO	TUYAU RIGIDE VASTE LEIDING	193T
3		87532102		1	BRACKET SOPORTE	STAFFA BESLAG	HALTERUNG SUPORTE	SUPPORT STEUN	225S
4		72954322		2	CLAMP ABRAZADERA	MORSETTO SPÆNDEBÅND	KLEMME BRAÇADEIRA	COLLIER KLEM	120M
5		72214808		1	HYD CONNECTOR CONECTOR HIDRÁULIC(	CONNETTORE IDRAULI(HYDRAULIKSTIK	HYDR STECKVERBINDE CONECTOR HID.	CONNECTEUR HYDRAU HYDRAULISCHE AANSL	020R
6		87532105		2	HYD CONNECTOR CONECTOR HIDRÁULIC(	CONNETTORE IDRAULI(HYDRAULIKSTIK	HYDR STECKVERBINDE CONECTOR HID.	CONNECTEUR HYDRAU HYDRAULISCHE AANSL	020R
7		11112234		2	BOLT, Hex, M12 x 25, 10.9, Full Thd PERNO	BULLONE BOLT	SCHRAUBE PARAFUSO	VIS BOUT	140B
8		11107434		2	SCREW TORNILLO	VITE SKRUE	SCHRAUBE PARAFUSO	VIS SCHROEF	040V
9		14496631		3	WASHER, M10 x 21 x 2 ARANDELA	RONDELLA FLADSKIVE	UNTERLEGSCHEIBE ANILHA	RONDELLE SLUITRING	131R
10		11701721		2	NUT, M10, Cl 10 TUERCA	DADO MØTRIK	MUTTER PORCA	ECROU MOER	010D
11		71404166		2	O-RING JUNTA TÓRICA	ANELLO TOROIDALE O-RING	O-RING O-RING	JOINT TORIQUE O-RING	055A
12		71405770		1	CLAMP ABRAZADERA	MORSETTO SPÆNDEBÅND	KLEMME BRAÇADEIRA	COLLIER KLEM	120M
13		11106234		1	BOLT, Hex, M10 x 25, 10.9, Full Thd PERNO	BULLONE BOLT	SCHRAUBE PARAFUSO	VIS BOUT	140B
14		14496731		2	WASHER, M12 x 24 x 2.5 Thk ARANDELA	RONDELLA FLADSKIVE	UNTERLEGSCHEIBE ANILHA	RONDELLE SLUITRING	131R

Copyright © New Holland

5.0077	03	p1	03/10

BUCKET ROTATION (L=2.4 MT) - OPTIONAL CODE 461244078 (04-05-06)
ROTAZIONE BENNA (L=2.4 MT) - CODICE VARIANTE 461244078 (04-05-06)
UMDREHUNGSWANNE (L=2.4 MT) - OPTIONAL CODE 461244078 (04-05-06)
GODET ROTATIF (L=2.4 MT) - OPTIONAL CODE 461244078 (04-05-06)

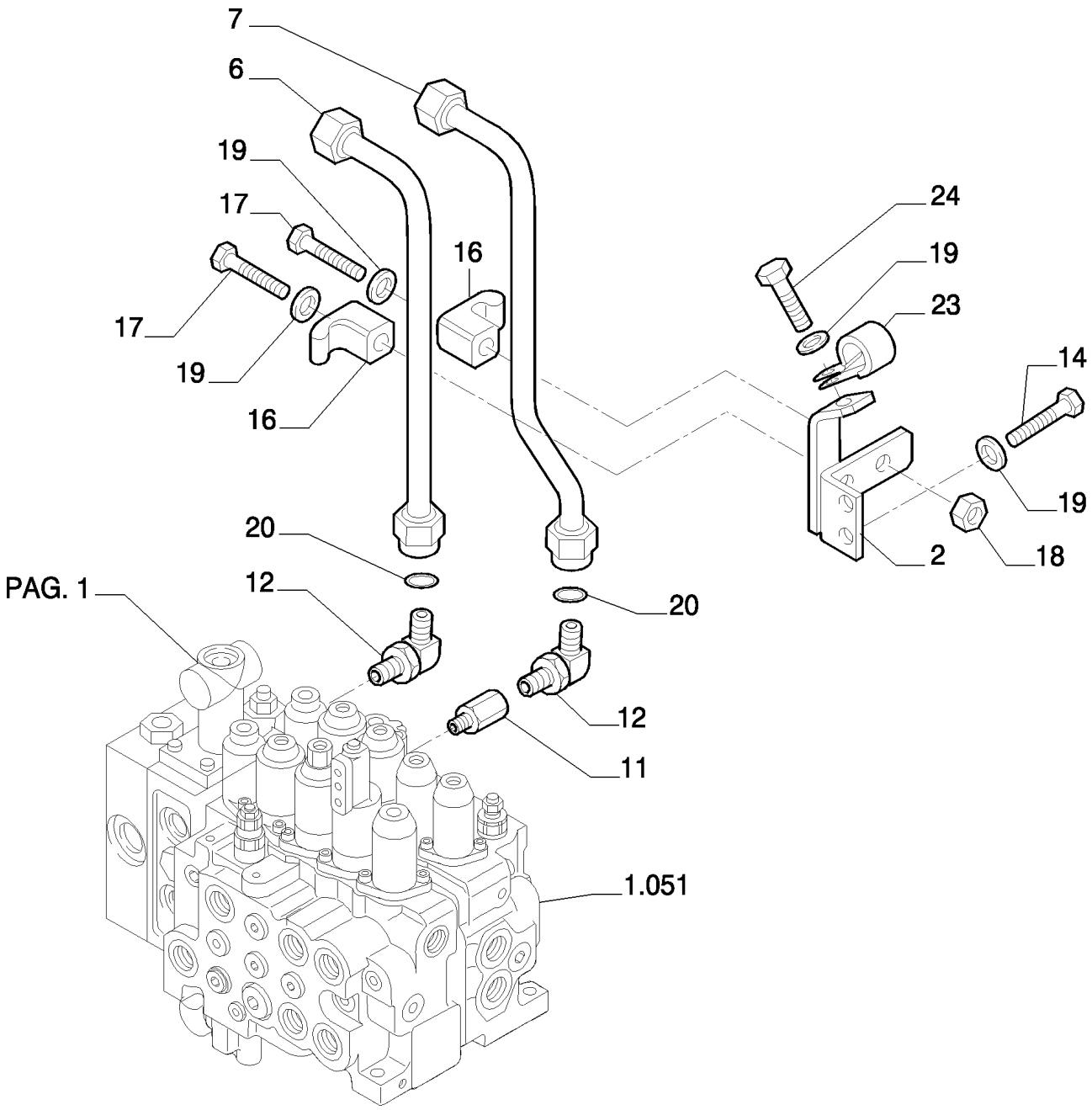

Copyright © New Holland

CUCHARA RODEANTE (L=2.4 MT) - OPTIONAL CODE 461244078 (04-05-06)
BUCKET ROTATION (L=2.4 MT) - OPTIONAL CODE 461244078 (04-05-06)
BUCKET ROTATION (L=2.4 MT) - OPTIONAL CODE 461244078 (04-05-06)
BUCKET ROTATION (L=2.4 MT) - OPTIONAL CODE 461244078 (04-05-06)

R	N	P.N.	MOD	Q	Description Denominacion	Descrizione Beskrivelse	Bezeichnung Denominação	Description Beschrijving	L.C.
2		87557635		1	SUPPORT SOPORTE	SUPPORTO BESLAG	STÜTZE SUPORTE	SUPPORT STEUN	300S
6		87557640		1	RIGID TUBE TUBO RÍGIDO	TUBO RIGIDO STIFT RØR	ROHR TUBO RÍGIDO	TUYAU RIGIDE VASTE LEIDING	193T
7		87557638		1	RIGID TUBE TUBO RÍGIDO	TUBO RIGIDO STIFT RØR	ROHR TUBO RÍGIDO	TUYAU RIGIDE VASTE LEIDING	193T
11		72214808		1	HYD CONNECTOR CONECTOR HIDRÁULIC(	CONNETTORE IDRAULIC(HYDRAULIKSTIK	HYDR STECKVERBINDE CONECTOR HID.	CONNECTEUR HYDRAU HYDRAULISCHE AANSL	020R
12		87532105		2	HYD CONNECTOR CONECTOR HIDRÁULIC(	CONNETTORE IDRAULIC(HYDRAULIKSTIK	HYDR STECKVERBINDE CONECTOR HID.	CONNECTEUR HYDRAU HYDRAULISCHE AANSL	020R
14		11106434		2	BOLT, Hex, M10 x 30, 10.9, Full Thd PERNO	BULLONE BOLT	SCHRAUBE PARAFUSO	VIS BOUT	140B
16		72954322		2	CLAMP ABRAZADERA	MORSETTO SPÆNDEBÅND	KLEMME BRAÇADEIRA	COLLIER KLEM	120M
17		11107434		2	SCREW TORNILLO	VITE SKRUE	SCHRAUBE PARAFUSO	VIS SCHROEF	040V
18		11701721		2	NUT, M10, Cl 10 TUERCA	DADO MØTRIK	MUTTER PORCA	ECROU MOER	010D
19		14496631		5	WASHER, M10 x 21 x 2 ARANDELA	RONDELLA FLADSKIVE	UNTERLEGSCHEIBE ANILHA	RONDELLE SLUITRING	131R
20		71404166		2	O-RING JUNTA TÓRICA	ANELLO TOROIDALE O-RING	O-RING O-RING	JOINT TORIQUE O-RING	055A
23		71405770		1	CLAMP ABRAZADERA	MORSETTO SPÆNDEBÅND	KLEMME BRAÇADEIRA	COLLIER KLEM	120M
24		11106234		1	BOLT, Hex, M10 x 25, 10.9, Full Thd PERNO	BULLONE BOLT	SCHRAUBE PARAFUSO	VIS BOUT	140B

Copyright © New Holland

5.0077	04	p1	03/10

BUCKET ROTATION (L=2.4 MT) - OPTIONAL CODE 461244068 (01-02-03) - 461244078 (04-05-06)
ROTAZIONE BENNA (L=2.4 MT) - CODICE VARIANTE 461244068 (01-02-03) - 461244078 (04-05-06)
UMDREHUNGSWANNE (L=2.4 MT) - OPTIONAL CODE 461244068 (01-02-03) - 461244078 (04-05-06)
GODET ROTATIF (L=2.4 MT) - OPTIONAL CODE 461244068 (01-02-03) - 461244078 (04-05-06)

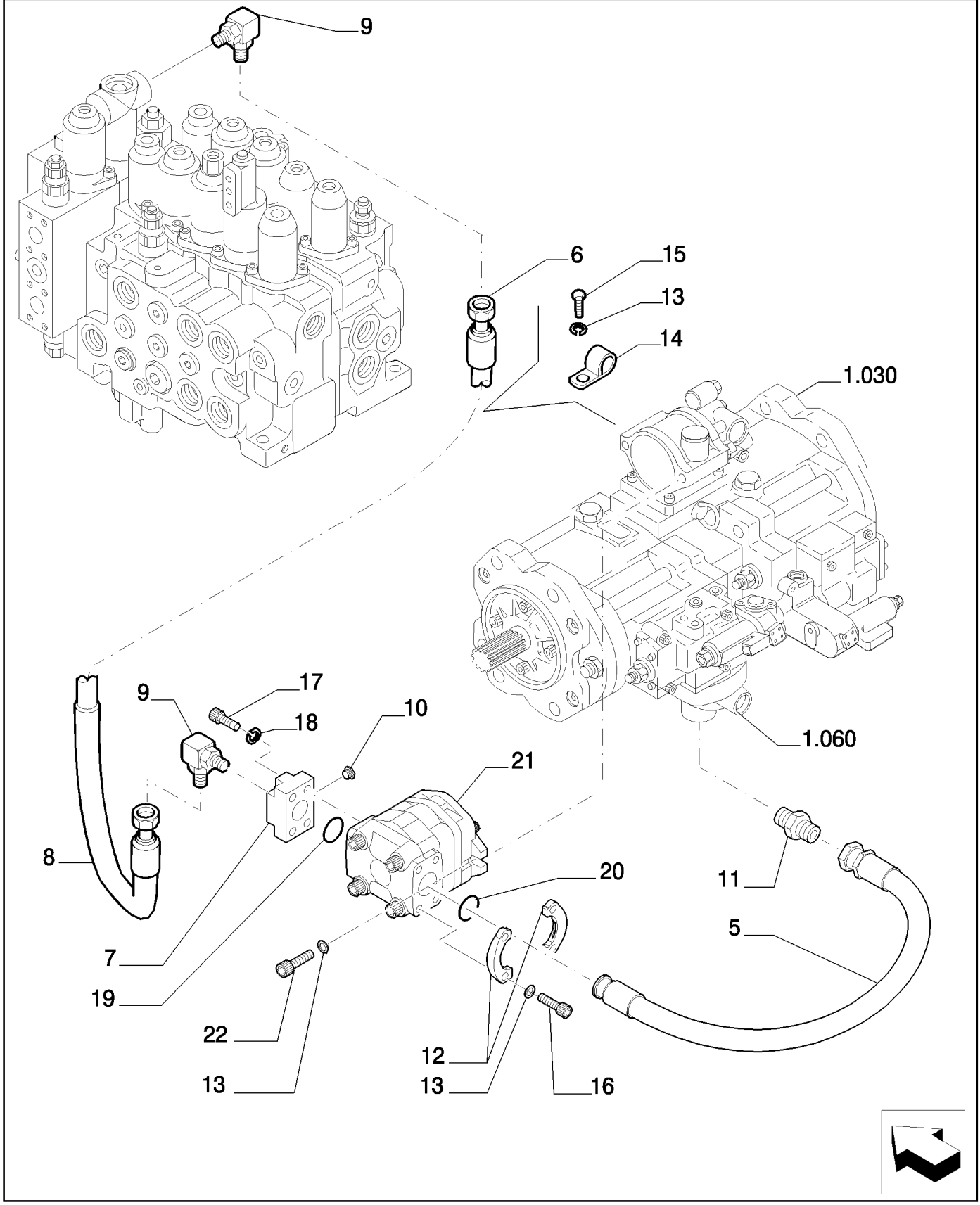

Copyright © New Holland

CUCHARA RODEANTE (L=2.4 MT) - OPTIONAL CODE 461244068 (01-02-03) - 461244078 (04-05-06)
BUCKET ROTATION (L=2.4 MT) - OPTIONAL CODE 461244068 (01-02-03) - 461244078 (04-05-06)
BUCKET ROTATION (L=2.4 MT) - OPTIONAL CODE 461244068 (01-02-03) - 461244078 (04-05-06)
BUCKET ROTATION (L=2.4 MT) - OPTIONAL CODE 461244068 (01-02-03) - 461244078 (04-05-06)

R	N	P.N.	MOD	Q	Description Denominacion	Descrizione Beskrivelse	Bezeichnung Denominação	Description Beschrijving	L.C.
5		87528092		1	FLEXIBLE HOSE TUBO FLEXIBLE	TUBO FLESSIBILE FLEKSIBEL SLANGE	BIEGSAMER SCHLAUCH MANGUEIRA FLEXÍVEL	TUYAU FLEXIBLE FLEXIBELE SLANG	192T
6		87530581		1	FLEXIBLE HOSE TUBO FLEXIBLE	TUBO FLESSIBILE FLEKSIBEL SLANGE	BIEGSAMER SCHLAUCH MANGUEIRA FLEXÍVEL	TUYAU FLEXIBLE FLEXIBELE SLANG	192T
7		72204754		1	FLANGE BRIDA	FLANGIA FLANGE	FLANSCH FLANGE	BRIDE FLENS	070F
8		87375394		1	FLEXIBLE SHEATH RECUBRIMIENTO FLEXI	GUAINA FLESSIBILE FLEKSIBELT SVØB	UMMANTELUNG PEÇA FLEXÍVEL	GAINE SOUPLE FLEXIBELE MANTEL	140G
9		72214763		2	HYD CONNECTOR CONECTOR HIDRÁULIC	CONNETTORE IDRAULIC HYDRAULIKSTIK	HYDR STECKVERBINDE CONECTOR HID.	CONNECTEUR HYDRAU HYDRAULISCHE AANSL	020R
10		72214663		1	PLUG TAPÓN	TAPPO PROP	STOPFEN TAMPÃO	BOUCHON PLUG	050T
11		87530584		1	HYD CONNECTOR CONECTOR HIDRÁULIC	CONNETTORE IDRAULIC HYDRAULIKSTIK	HYDR STECKVERBINDE CONECTOR HID.	CONNECTEUR HYDRAU HYDRAULISCHE AANSL	020R
12		71404909		2	FLANGE BRIDA	FLANGIA FLANGE	FLANSCH FLANGE	BRIDE FLENS	070F
13		14496631		8	WASHER, M10 x 21 x 2 ARANDELA	RONDELLA FLADSKIVE	UNTERLEGSCHEIBE ANILHA	RONDELLE SLUITRING	131R
14		71405770		2	CLAMP ABRAZADERA	MORSETTO SPÆNDEBÅND	KLEMME BRAÇADEIRA	COLLIER KLEM	120M
15		ZM73C10020		2	BOLT PERNO	BULLONE BOLT	SCHRAUBE PARAFUSO	VIS BOUT	140B
16		11106634		4	BOLT, Hex, M10 x 35, 10.9, Full Thd PERNO	BULLONE BOLT	SCHRAUBE PARAFUSO	VIS BOUT	140B
17		14420534		4	SCREW TORNILLO	VITE SKRUE	SCHRAUBE PARAFUSO	VIS SCHROEF	040V
18		10516874		4	LOCK WASHER ARANDELA DE BLOQUE	RONDELLA DI SICUREZ LÅSESKIVE	SICHERUNGSSCHEIBE ANILHA DE RETENÇÃO	RONDELLE FREIN BORGRING	132R
19		72215443		1	O-RING JUNTA TÓRICA	ANELLO TOROIDALE O-RING	O-RING O-RING	JOINT TORIQUE O-RING	055A
20		70924192		1	O-RING JUNTA TÓRICA	ANELLO TOROIDALE O-RING	O-RING O-RING	JOINT TORIQUE O-RING	055A
21	1	72204291		1	HYDRAULIC PUMP BOMBA HIDRÁULICO	POMPA IDRAULICA HYDRAULIKPUMPE	HYDRAULIKPUMPE BOMBA HIDRÁULICA	POMPE HYDRAULIQUE HYDRAULISCHE POMP	155P
22		14420234		2	SCREW TORNILLO	VITE SKRUE	SCHRAUBE PARAFUSO	VIS SCHROEF	040V

(1) ASSY SEE SGR. 5.0076 PAGE 6

Copyright © New Holland

5.0077	05	p1	03/10

BUCKET ROTATION (L=2.4 MT) - OPTIONAL CODE 461244068 (01-02-03) - 461244078 (04-05-06)
ROTAZIONE BENNA (L=2.4 MT) - CODICE VARIANTE 461244068 (01-02-03) - 461244078 (04-05-06)
UMDREHUNGSWANNE (L=2.4 MT) - OPTIONAL CODE 461244068 (01-02-03) - 461244078 (04-05-06)
GODET ROTATIF (L=2.4 MT) - OPTIONAL CODE 461244068 (01-02-03) - 461244078 (04-05-06)

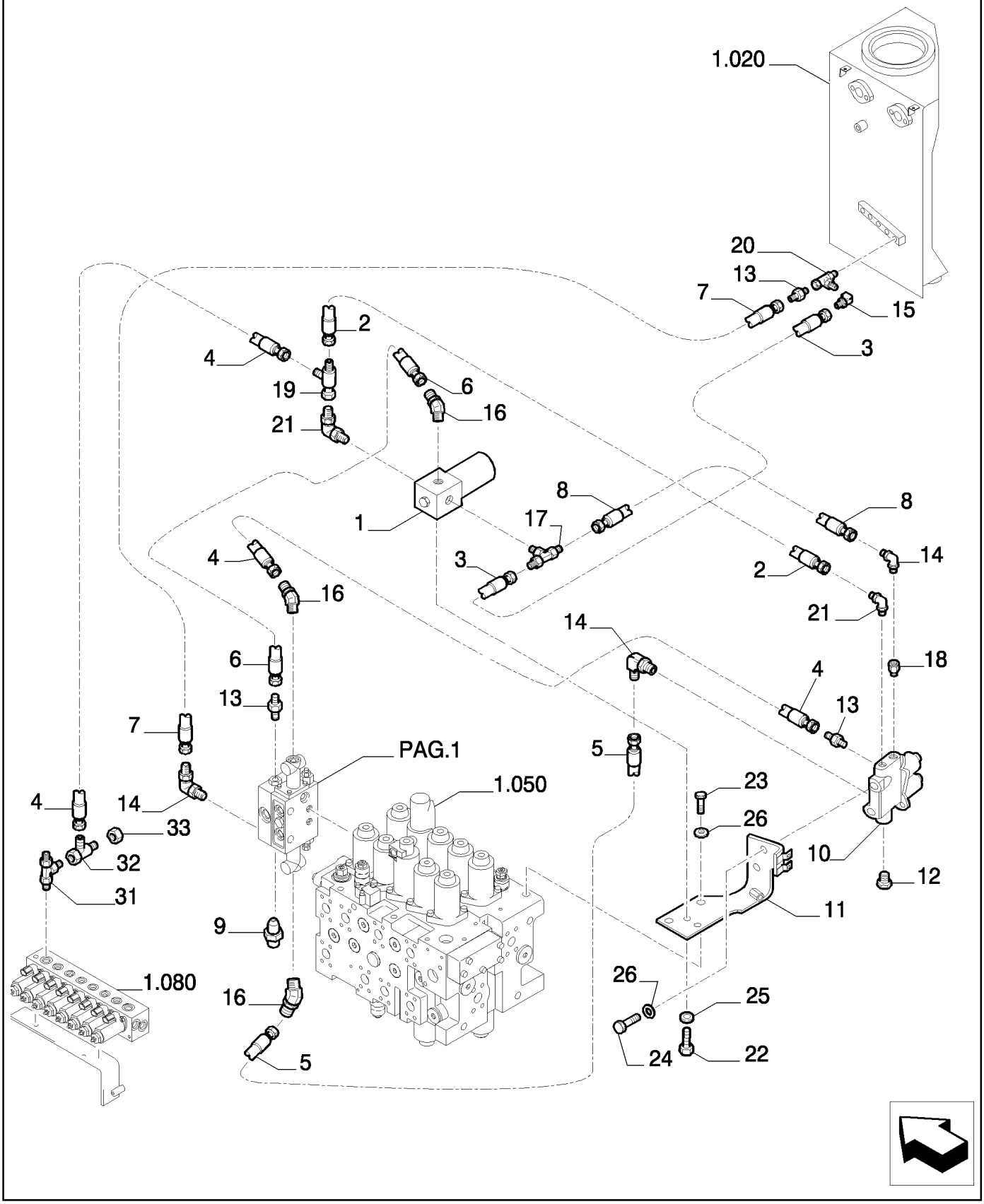

Copyright © New Holland

CUCHARA RODEANTE (L=2.4 MT) - OPTIONAL CODE 461244068 (01-02-03) - 461244078 (04-05-06)
BUCKET ROTATION (L=2.4 MT) - OPTIONAL CODE 461244068 (01-02-03) - 461244078 (04-05-06)
BUCKET ROTATION (L=2.4 MT) - OPTIONAL CODE 461244068 (01-02-03) - 461244078 (04-05-06)
BUCKET ROTATION (L=2.4 MT) - OPTIONAL CODE 461244068 (01-02-03) - 461244078 (04-05-06)

R	N	P.N.	MOD	Q	Description Denominacion	Descrizione Beskrivelse	Bezeichnung Denominação	Description Beschrijving	L.C.
1	1	72955526		1	VALVE VÁLVULA	VALVOLA VENTIL	VENTIL VÁLVULA	SOUPAPE KLEP	9620
2		87397448		1	FLEXIBLE HOSE TUBO FLEXIBLE	TUBO FLESSIBILE FLEKSIBEL SLANGE	BIEGSAMER SCHLAUCH MANGUEIRA FLEXÍVEL	TUYAU FLEXIBLE FLEXIBELE SLANG	192T
3		87532906		1	HOSE TUBO	TUBO FLESSIBILE SLANGE	SCHLAUCH MANGUEIRA	FLEXIBLE SLANG	030M
4		72214535		2	FLEXIBLE HOSE TUBO FLEXIBLE	TUBO FLESSIBILE FLEKSIBEL SLANGE	BIEGSAMER SCHLAUCH MANGUEIRA FLEXÍVEL	TUYAU FLEXIBLE FLEXIBELE SLANG	192T
5		72214539		1	FLEXIBLE HOSE TUBO FLEXIBLE	TUBO FLESSIBILE FLEKSIBEL SLANGE	BIEGSAMER SCHLAUCH MANGUEIRA FLEXÍVEL	TUYAU FLEXIBLE FLEXIBELE SLANG	192T
6		87645092		1	FLEXIBLE HOSE TUBO FLEXIBLE	TUBO FLESSIBILE FLEKSIBEL SLANGE	BIEGSAMER SCHLAUCH MANGUEIRA FLEXÍVEL	TUYAU FLEXIBLE FLEXIBELE SLANG	192T
7		87687417		1	FLEXIBLE HOSE TUBO FLEXIBLE	TUBO FLESSIBILE FLEKSIBEL SLANGE	BIEGSAMER SCHLAUCH MANGUEIRA FLEXÍVEL	TUYAU FLEXIBLE FLEXIBELE SLANG	192T
8		87532907		1	HOSE TUBO	TUBO FLESSIBILE SLANGE	SCHLAUCH MANGUEIRA	FLEXIBLE SLANG	030M
9		87524903		1	SENSOR SENSOR	SENSORE FØLER	SENSOR SENSOR	CAPTEUR SENSOR	608S
10	2	87531523		1	HYDRAULIC VALVE VÁLVULA HIDRÁULICA	DISTRIBUTORE IDRAULI HYDRAULIKVENTIL	HYDRAULIKVENTIL VÁLVULA HIDRÁULICA	SOUPAPE HYDRAULIQU HYDRAULISCHE KLEP	010V
11		87687414		1	BRACKET SOPORTE	STAFFA BESLAG	HALTERUNG SUPORTE	SUPPORT STEUN	225S
12		72214663		1	PLUG TAPÓN	TAPPO PROP	STOPFEN TAMPÃO	BOUCHON PLUG	050T
13		72214744		3	HYD CONNECTOR CONECTOR HIDRÁULIC	CONNETTORE IDRAULI HYDRAULIKSTIK	HYDR STECKVERBINDE CONECTOR HID.	CONNECTEUR HYDRAU HYDRAULISCHE AANSL	020R
14		72214524		3	HYD CONNECTOR CONECTOR HIDRÁULIC	CONNETTORE IDRAULI HYDRAULIKSTIK	HYDR STECKVERBINDE CONECTOR HID.	CONNECTEUR HYDRAU HYDRAULISCHE AANSL	020R
15		72214525		1	HYD CONNECTOR CONECTOR HIDRÁULIC	CONNETTORE IDRAULI HYDRAULIKSTIK	HYDR STECKVERBINDE CONECTOR HID.	CONNECTEUR HYDRAU HYDRAULISCHE AANSL	020R
16		72214542		3	HYD CONNECTOR CONECTOR HIDRÁULIC	CONNETTORE IDRAULI HYDRAULIKSTIK	HYDR STECKVERBINDE CONECTOR HID.	CONNECTEUR HYDRAU HYDRAULISCHE AANSL	020R
17		72955434		1	TEE RACOR EN T	PEZZO A T T-STYKKE	T-STÜCK TÊ	RACCORD EN T T-STUK	9020
18		72217408		1	HYD CONNECTOR CONECTOR HIDRÁULIC	CONNETTORE IDRAULI HYDRAULIKSTIK	HYDR STECKVERBINDE CONECTOR HID.	CONNECTEUR HYDRAU HYDRAULISCHE AANSL	020R
19		72954988		1	TEE RACOR EN T	PEZZO A T T-STYKKE	T-STÜCK TÊ	RACCORD EN T T-STUK	9020
20		72283853		1	TEE RACOR EN T	PEZZO A T T-STYKKE	T-STÜCK TÊ	RACCORD EN T T-STUK	9020
21		72214735		2	HYD CONNECTOR CONECTOR HIDRÁULIC	CONNETTORE IDRAULI HYDRAULIKSTIK	HYDR STECKVERBINDE CONECTOR HID.	CONNECTEUR HYDRAU HYDRAULISCHE AANSL	020R
22		10902234		2	BOLT, Hex, M6 x 16, 10.9, Full Thd PERNO	BULLONE BOLT	SCHRAUBE PARAFUSO	VIS BOUT	140B
23		11106234		2	BOLT, Hex, M10 x 25, 10.9, Full Thd PERNO	BULLONE BOLT	SCHRAUBE PARAFUSO	VIS BOUT	140B

(1) ASSY SEE SGR. 5.0076 PAGE 8
(2) ASSY SEE SGR. 5.0076 PAGE 9

Copyright © New Holland

5.0077	05	p2	03/10

BUCKET ROTATION (L=2.4 MT) - OPTIONAL CODE 461244068 (01-02-03) - 461244078 (04-05-06)
ROTAZIONE BENNA (L=2.4 MT) - CODICE VARIANTE 461244068 (01-02-03) - 461244078 (04-05-06)
UMDREHUNGSWANNE (L=2.4 MT) - OPTIONAL CODE 461244068 (01-02-03) - 461244078 (04-05-06)
GODET ROTATIF (L=2.4 MT) - OPTIONAL CODE 461244068 (01-02-03) - 461244078 (04-05-06)

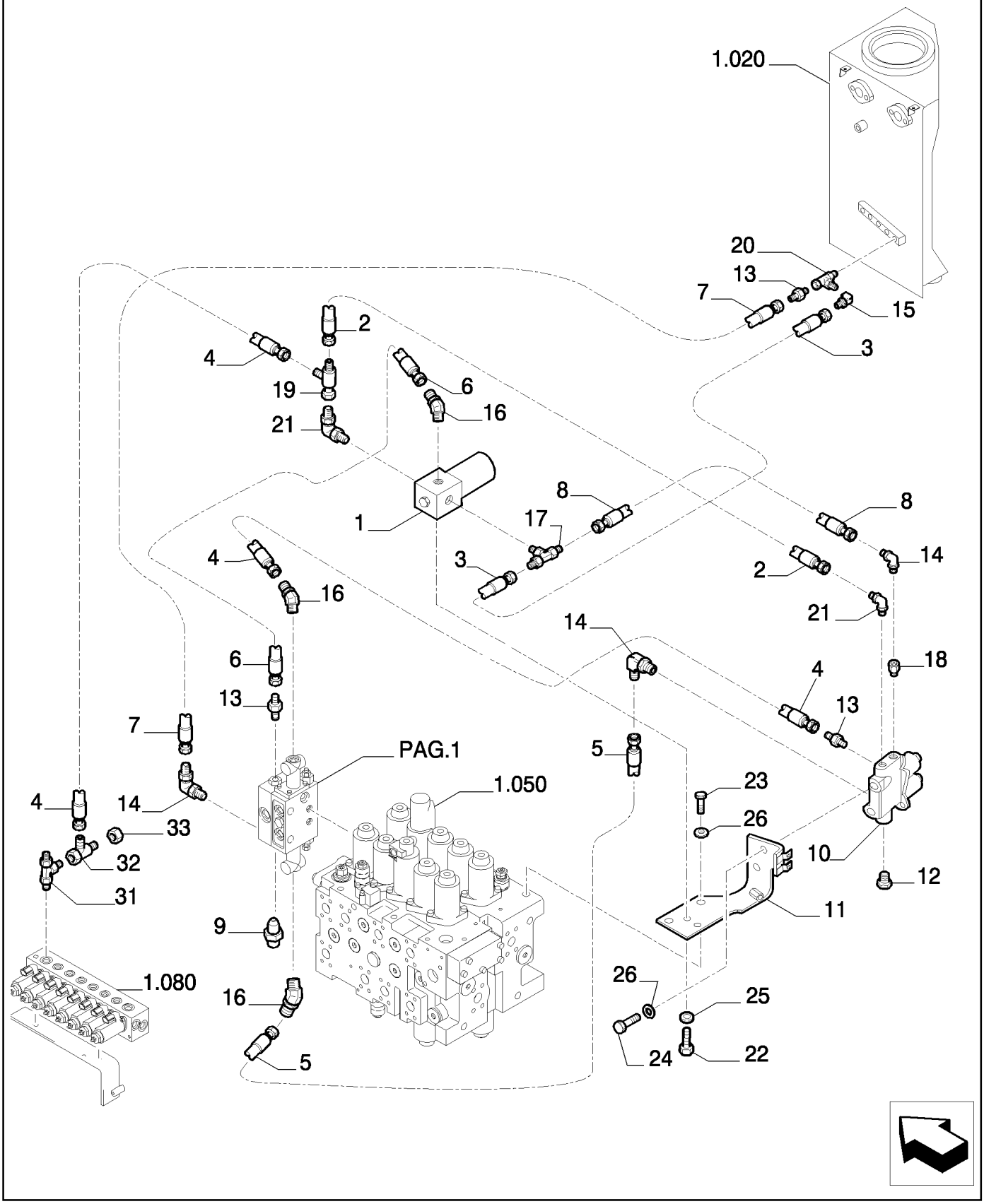

Copyright © New Holland

CUCHARA RODEANTE (L=2.4 MT) - OPTIONAL CODE 461244068 (01-02-03) - 461244078 (04-05-06)
BUCKET ROTATION (L=2.4 MT) - OPTIONAL CODE 461244068 (01-02-03) - 461244078 (04-05-06)
BUCKET ROTATION (L=2.4 MT) - OPTIONAL CODE 461244068 (01-02-03) - 461244078 (04-05-06)
BUCKET ROTATION (L=2.4 MT) - OPTIONAL CODE 461244068 (01-02-03) - 461244078 (04-05-06)

R	N	P.N.	MOD	Q	Description Denominacion	Descrizione Beskrivelse	Bezeichnung Denominação	Description Beschrijving	L.C.
24		11106034		2	BOLT, Hex, M10 x 20, 10.9, Full Thd PERNO	BULLONE BOLT	SCHRAUBE PARAFUSO	VIS BOUT	140B
25		14496431		2	WASHER, M6.4 x 12.5 x 1.6 Thk ARANDELA	RONDELLA FLADSKIVE	UNTERLEGSCHEIBE ANILHA	RONDELLE SLUITRING	131R
26		14496631		4	WASHER, M10 x 21 x 2 ARANDELA	RONDELLA FLADSKIVE	UNTERLEGSCHEIBE ANILHA	RONDELLE SLUITRING	131R
31		87338401		1	HYD CONNECTOR CONECTOR HIDRÁULIC	CONNETTORE IDRAULI HYDRAULIKSTIK	HYDR STECKVERBINDE CONECTOR HID.	CONNECTEUR HYDRAU HYDRAULISCHE AANSL	020R
32		72954988		1	TEE RACOR EN T	PEZZO A T T-STYKKE	T-STÜCK TÊ	RACCORD EN T T-STUK	9020
33		72214546		1	PLUG TAPÓN	TAPPO PROP	STOPFEN TAMPÃO	BOUCHON PLUG	050T

Copyright © New Holland

5.0077	06	p1	03/10

BUCKET ROTATION (L=2.4 MT) - OPTIONAL CODE 461244068 (01-02-03) - 461244078 (04-05-06)
ROTAZIONE BENNA (L=2.4 MT) - CODICE VARIANTE 461244068 (01-02-03) - 461244078 (04-05-06)
UMDREHUNGSWANNE (L=2.4 MT) - OPTIONAL CODE 461244068 (01-02-03) - 461244078 (04-05-06)
GODET ROTATIF (L=2.4 MT) - OPTIONAL CODE 461244068 (01-02-03) - 461244078 (04-05-06)

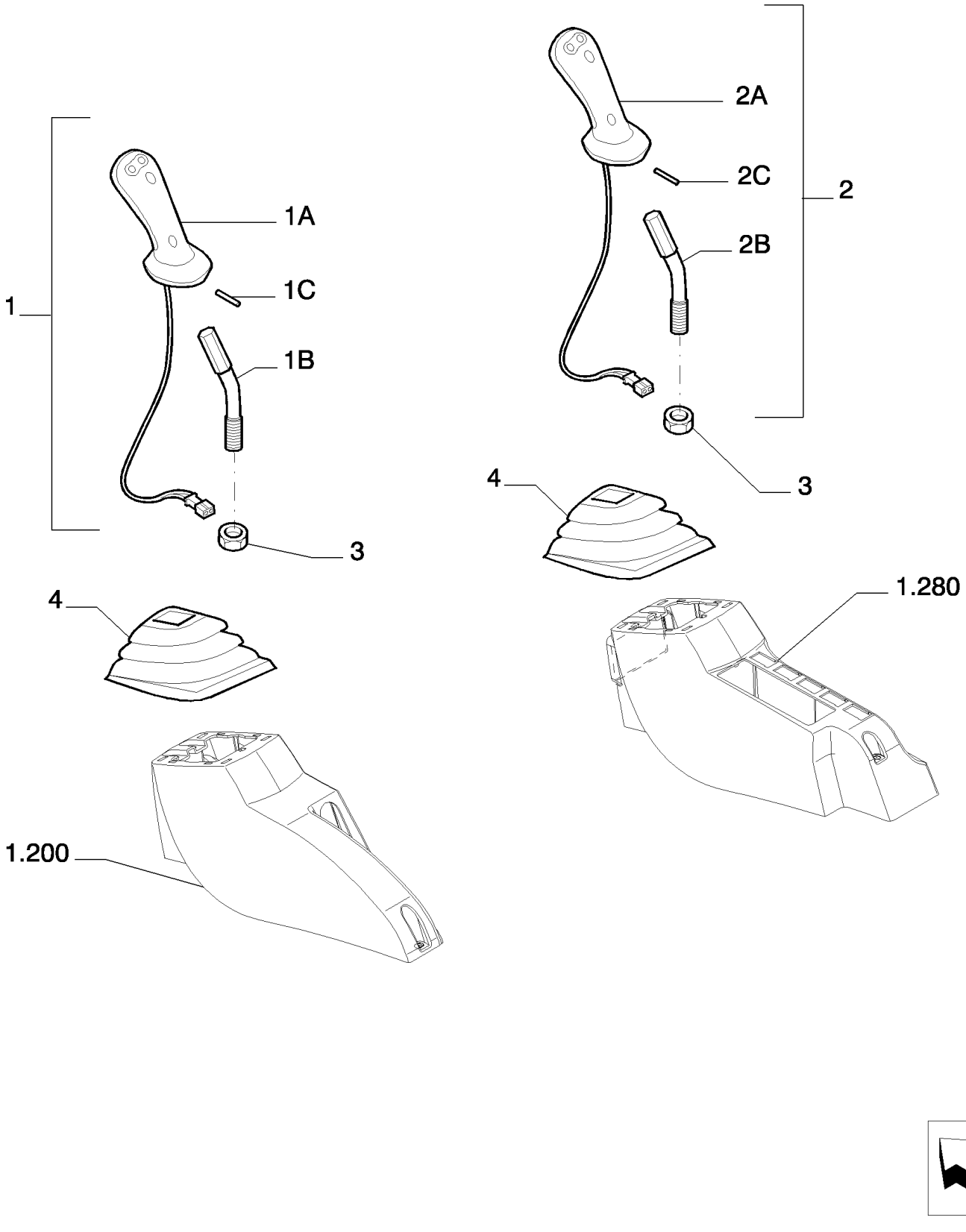

Copyright © New Holland

CUCHARA RODEANTE (L=2.4 MT) - OPTIONAL CODE 461244068 (01-02-03) - 461244078 (04-05-06)
BUCKET ROTATION (L=2.4 MT) - OPTIONAL CODE 461244068 (01-02-03) - 461244078 (04-05-06)
BUCKET ROTATION (L=2.4 MT) - OPTIONAL CODE 461244068 (01-02-03) - 461244078 (04-05-06)
BUCKET ROTATION (L=2.4 MT) - OPTIONAL CODE 461244068 (01-02-03) - 461244078 (04-05-06)

R	N	P.N.	MOD	Q	Description Denominacion	Descrizione Beskrivelse	Bezeichnung Denominação	Description Beschrijving	L.C.
1		{YN03M02148F1}		1	LEFT - ASSY				
1A		71485944		1	HANDLE GRIP PERILLA	IMPUGNATURA HÅNDGREB	HANDGRIFF GARRA	POIGNEE DE MAINTIEN HANDGREEP	025I
1B		YN03M02134P1		1	LEVER PALANCA	LEVA ARM	HEBEL ALAVANCA	LEVIER HEFBOOM	045L
1C		14601271		1	ROLL PIN BULÓN DE GIRO	SPINA ELASTICA SPLIT	SPANNSTIFT TROÇO	GOUPILLE ELASTIQUE ROLPEN	200S
2		{YN03M02149F1}		1	RIGHT - ASSY				
2A		71485944		1	HANDLE GRIP PERILLA	IMPUGNATURA HÅNDGREB	HANDGRIFF GARRA	POIGNEE DE MAINTIEN HANDGREEP	025I
2B		YN03M02134P1		1	LEVER PALANCA	LEVA ARM	HEBEL ALAVANCA	LEVIER HEFBOOM	045L
2C		14601271		1	ROLL PIN BULÓN DE GIRO	SPINA ELASTICA SPLIT	SPANNSTIFT TROÇO	GOUPILLE ELASTIQUE ROLPEN	200S
3		12163224		2	NUT TUERCA	DADO MØTRIK	MUTTER PORCA	ECROU MOER	010D
4		YN03M02114P1		2	BELLOWS FUELLE	SOFFIETTI BLÆSEBÆLG	FALTENBALG FOLE	SOUFFLET BALGEN	169S

Copyright © New Holland

5.0077	07	p1	03/10

BUCKET ROTATION (L=2.4 MT) - OPTIONAL CODE 461244068 (01-02-03)
ROTAZIONE BENNA (L=2.4 MT) - CODICE VARIANTE 461244068 (01-02-03)
UMDREHUNGSWANNE (L=2.4 MT) - OPTIONAL CODE 461244068 (01-02-03)
GODET ROTATIF (L=2.4 MT) - OPTIONAL CODE 461244068 (01-02-03)

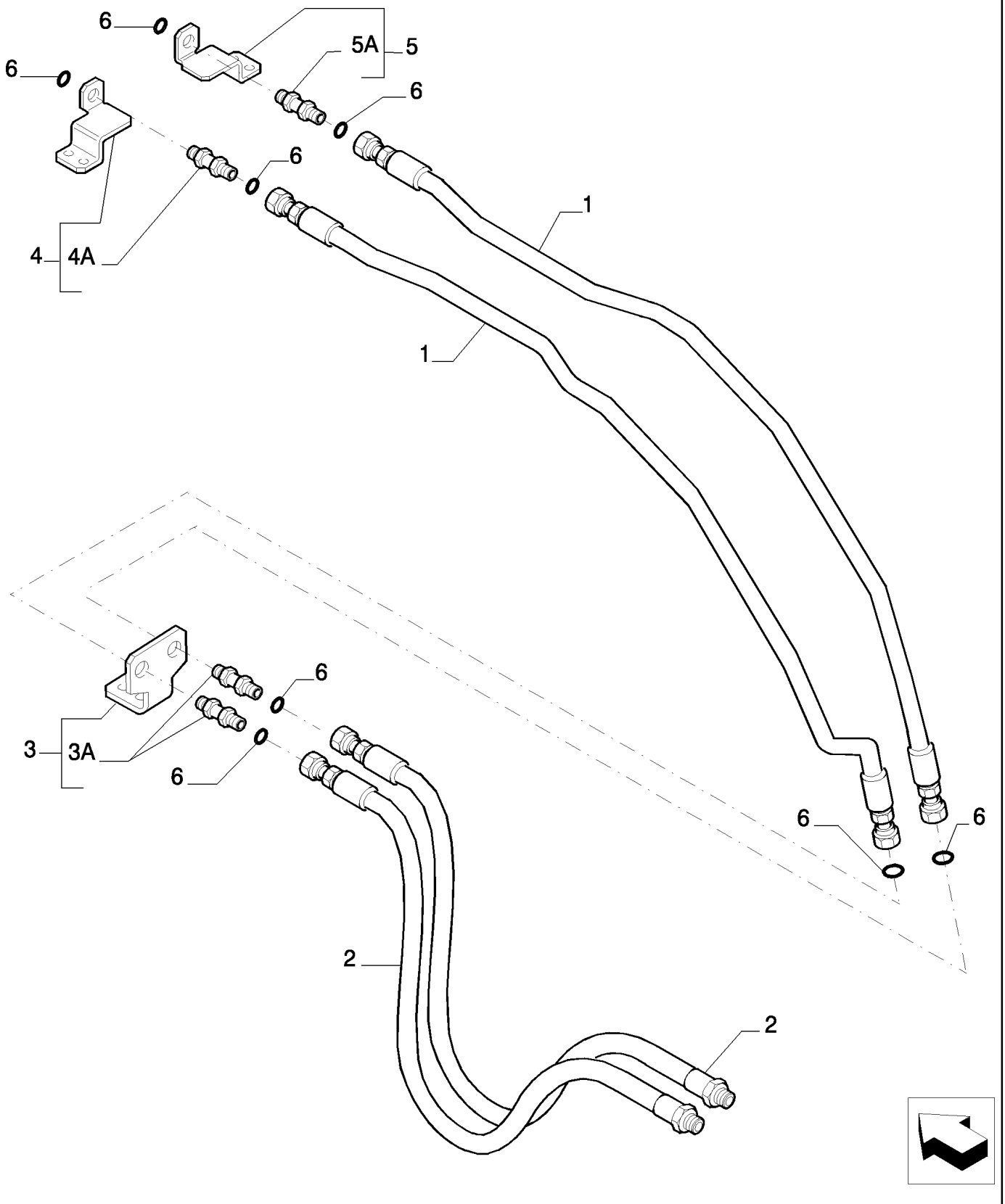

Copyright © New Holland

CUCHARA RODEANTE (L=2.4 MT) - OPTIONAL CODE 461244068 (01-02-03)
BUCKET ROTATION (L=2.4 MT) - OPTIONAL CODE 461244068 (01-02-03)
BUCKET ROTATION (L=2.4 MT) - OPTIONAL CODE 461244068 (01-02-03)
BUCKET ROTATION (L=2.4 MT) - OPTIONAL CODE 461244068 (01-02-03)

R	N	P.N.	MOD	Q	Description Denominacion	Descrizione Beskrivelse	Bezeichnung Denominação	Description Beschrijving	L.C.
1		87396720		2	FLEXIBLE HOSE TUBO FLEXIBLE	TUBO FLESSIBILE FLEKSIBEL SLANGE	BIEGSAMER SCHLAUCH MANGUEIRA FLEXÍVEL	TUYAU FLEXIBLE FLEXIBELE SLANG	192T
2		87396721		2	FLEXIBLE HOSE TUBO FLEXIBLE	TUBO FLESSIBILE FLEKSIBEL SLANGE	BIEGSAMER SCHLAUCH MANGUEIRA FLEXÍVEL	TUYAU FLEXIBLE FLEXIBELE SLANG	192T
3		87396715		1	BRACKET, - ASSY SOPORTE	STAFFA BESLAG	HALTERUNG SUPORTE	SUPPORT STEUN	225S
3A		72204201		2	HYD CONNECTOR CONECTOR HIDRÁULIC	CONNETTORE IDRAULIC HYDRAULIKSTIK	HYDR STECKVERBINDE CONECTOR HID.	CONNECTEUR HYDRAU HYDRAULISCHE AANSL	020R
4		87396711		1	BRACKET, - ASSY SOPORTE	STAFFA BESLAG	HALTERUNG SUPORTE	SUPPORT STEUN	225S
4A		72204201		1	HYD CONNECTOR CONECTOR HIDRÁULIC	CONNETTORE IDRAULIC HYDRAULIKSTIK	HYDR STECKVERBINDE CONECTOR HID.	CONNECTEUR HYDRAU HYDRAULISCHE AANSL	020R
5		87396713		1	BRACKET, - ASSY SOPORTE	STAFFA BESLAG	HALTERUNG SUPORTE	SUPPORT STEUN	225S
5A		72204201		1	HYD CONNECTOR CONECTOR HIDRÁULIC	CONNETTORE IDRAULIC HYDRAULIKSTIK	HYDR STECKVERBINDE CONECTOR HID.	CONNECTEUR HYDRAU HYDRAULISCHE AANSL	020R
6		70923841		8	O-RING, M12.42 ID x 1.78 Thk ANELLO TOROIDALE JUNTA TÓRICA	O-RING O-RING	O-RING O-RING	JOINT TORIQUE O-RING	055A
7		4982514		36	CABLE STRAP BANDA DE CABLE	FASCETTA PER CAVO KABELSTROP	KABELBINDER BRAÇADEIRA DE CABO	BRIDE DE CABLE BUNDELBAND	P716

Copyright © New Holland

5.0077	08	p1	03/10

BUCKET ROTATION (L=2.4 MT) - OPTIONAL CODE 461244078 (04-05-06)
ROTAZIONE BENNA (L=2.4 MT) - CODICE VARIANTE 461244078 (04-05-06)
UMDREHUNGSWANNE (L=2.4 MT) - OPTIONAL CODE 461244078 (04-05-06)
GODET ROTATIF (L=2.4 MT) - OPTIONAL CODE 461244078 (04-05-06)

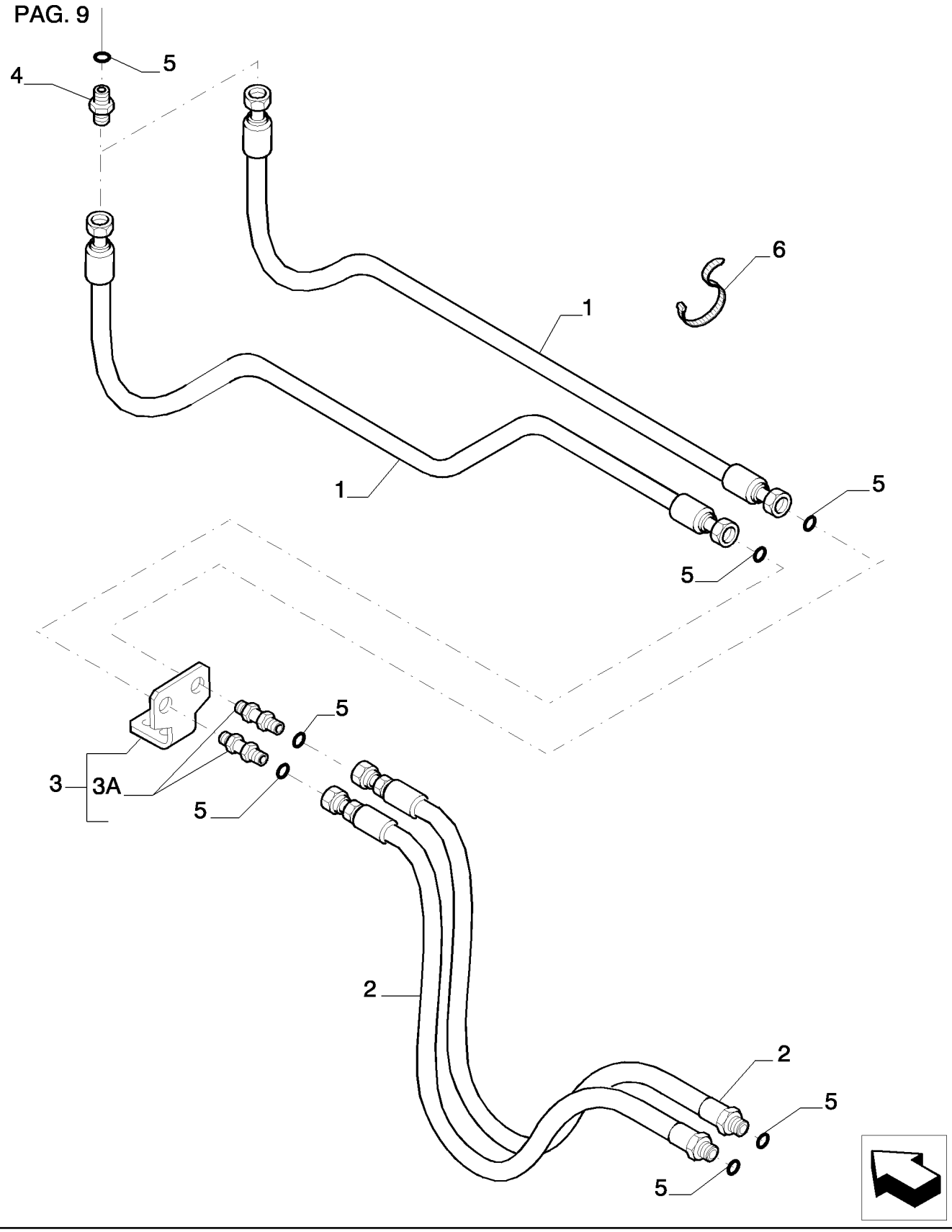

Copyright © New Holland

CUCHARA RODEANTE (L=2.4 MT) - OPTIONAL CODE 461244078 (04-05-06)
BUCKET ROTATION (L=2.4 MT) - OPTIONAL CODE 461244078 (04-05-06)
BUCKET ROTATION (L=2.4 MT) - OPTIONAL CODE 461244078 (04-05-06)
BUCKET ROTATION (L=2.4 MT) - OPTIONAL CODE 461244078 (04-05-06)

R	N	P.N.	MOD	Q	Description Denominacion	Descrizione Beskrivelse	Bezeichnung Denominação	Description Beschrijving	L.C.
1		87396727		2	FLEXIBLE HOSE TUBO FLEXIBLE	TUBO FLESSIBILE FLEKSIBEL SLANGE	BIEGSAMER SCHLAUCH MANGUEIRA FLEXÍVEL	TUYAU FLEXIBLE FLEXIBELE SLANG	192T
2		87396721		2	FLEXIBLE HOSE TUBO FLEXIBLE	TUBO FLESSIBILE FLEKSIBEL SLANGE	BIEGSAMER SCHLAUCH MANGUEIRA FLEXÍVEL	TUYAU FLEXIBLE FLEXIBELE SLANG	192T
3		87396684		1	BRACKET, - ASSY SOPORTE	STAFFA BESLAG	HALTERUNG SUPORTE	SUPPORT STEUN	225S
3A		72204201		2	HYD CONNECTOR CONECTOR HIDRÁULIC	CONNETTORE IDRAULIC HYDRAULIKSTIK	HYDR STECKVERBINDE CONECTOR HID.	CONNECTEUR HYDRAU HYDRAULISCHE AANSL	020R
4		87556832		2	HYD CONNECTOR CONECTOR HIDRÁULIC	CONNETTORE IDRAULIC HYDRAULIKSTIK	HYDR STECKVERBINDE CONECTOR HID.	CONNECTEUR HYDRAU HYDRAULISCHE AANSL	020R
5		70923841		8	O-RING, M12.42 ID x 1.78 Thk JUNTA TÓRICA	ANELLO TOROIDALE O-RING	O-RING O-RING	JOINT TORIQUE O-RING	055A
6		4982514		8	CABLE STRAP BANDA DE CABLE	FASCETTA PER CAVO KABELSTROP	KABELBINDER BRAÇADEIRA DE CABO	BRIDE DE CABLE BUNDELBAND	P716

Copyright © New Holland

5.0077	09	p1	03/10

BUCKET ROTATION (L=2.4 MT) - OPTIONAL CODE 461244078 (04-05-06)
ROTAZIONE BENNA (L=2.4 MT) - CODICE VARIANTE 461244078 (04-05-06)
UMDREHUNGSWANNE (L=2.4 MT) - OPTIONAL CODE 461244078 (04-05-06)
GODET ROTATIF (L=2.4 MT) - OPTIONAL CODE 461244078 (04-05-06)

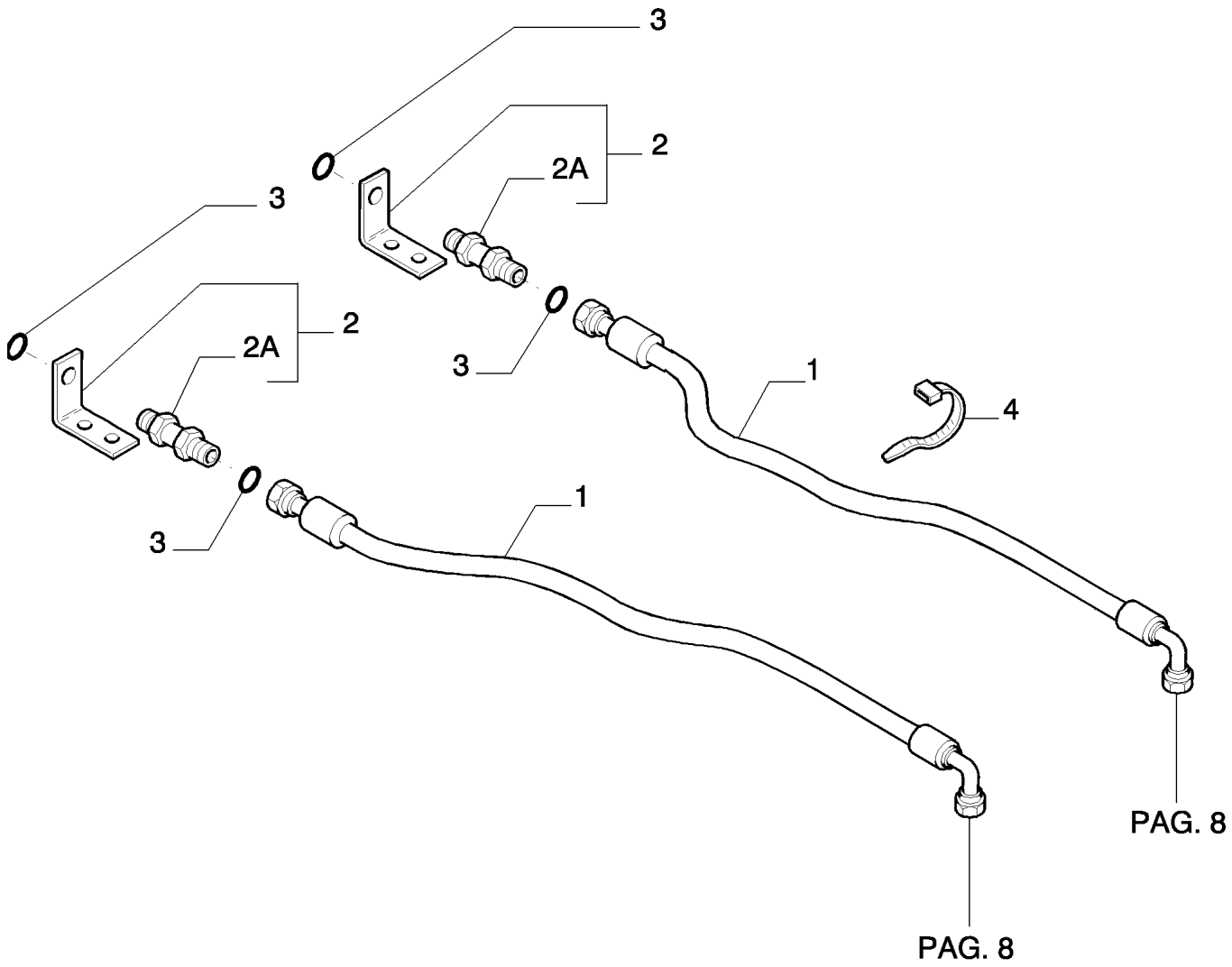

Copyright © New Holland

CUCHARA RODEANTE (L=2.4 MT) - OPTIONAL CODE 461244078 (04-05-06)
BUCKET ROTATION (L=2.4 MT) - OPTIONAL CODE 461244078 (04-05-06)
BUCKET ROTATION (L=2.4 MT) - OPTIONAL CODE 461244078 (04-05-06)
BUCKET ROTATION (L=2.4 MT) - OPTIONAL CODE 461244078 (04-05-06)

R	N	P.N.	MOD	Q	Description Denominacion	Descrizione Beskrivelse	Bezeichnung Denominação	Description Beschrijving	L.C.
1		{87383050}		2					
2		87343179		2	BRACKET, - ASSY SOPORTE	STAFFA BESLAG	HALTERUNG SUPORTE	SUPPORT STEUN	225S
2A		72204201		1	HYD CONNECTOR CONECTOR HIDRÁULIC(	CONNETTORE IDRAULI(HYDRAULIKSTIK	HYDR STECKVERBINDE CONECTOR HID.	CONNECTEUR HYDRAU HYDRAULISCHE AANSL	020R
3		70923841		4	O-RING, M12.42 ID x 1.78 Thk JUNTA TÓRICA	ANELLO TOROIDALE O-RING	O-RING O-RING	JOINT TORIQUE O-RING	055A
4		4982514		8	CABLE STRAP BANDA DE CABLE	FASCETTA PER CAVO KABELSTROP	KABELBINDER BRAÇADEIRA DE CABO	BRIDE DE CABLE BUNDELBAND	P716

Copyright © New Holland

5.0077	10	p1	03/10

BUCKET ROTATION (L=2.4 MT) - OPTIONAL CODE 461244068 (01-02-03) - 461244078 (04-05-06)
ROTAZIONE BENNA (L=2.4 MT) - CODICE VARIANTE 461244068 (01-02-03) - 461244078 (04-05-06)
UMDREHUNGSWANNE (L=2.4 MT) - OPTIONAL CODE 461244068 (01-02-03) - 461244078 (04-05-06)
GODET ROTATIF (L=2.4 MT) - OPTIONAL CODE 461244068 (01-02-03) - 461244078 (04-05-06)

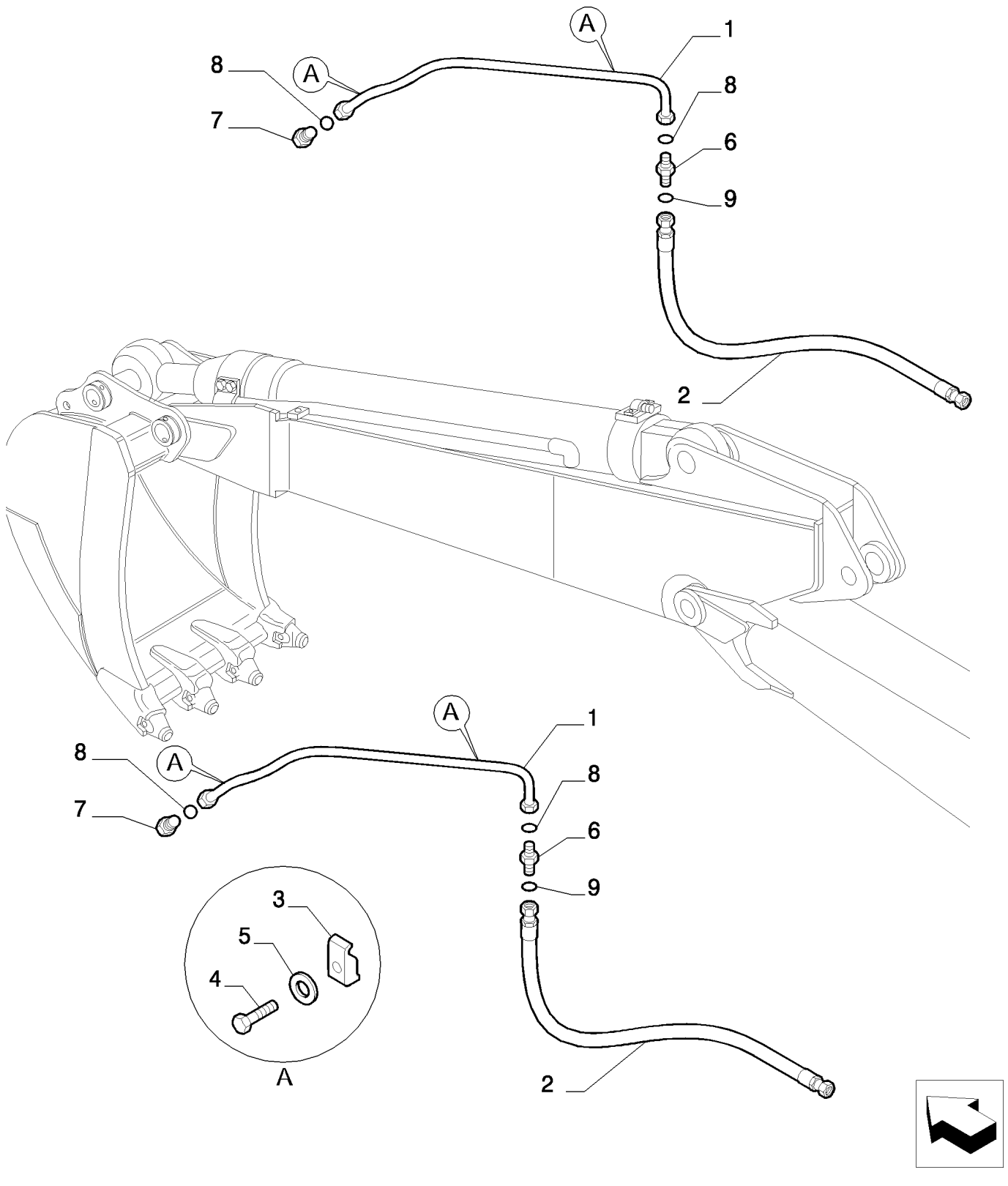

Copyright © New Holland

CUCHARA RODEANTE (L=2.4 MT) - OPTIONAL CODE 461244068 (01-02-03) - 461244078 (04-05-06)
BUCKET ROTATION (L=2.4 MT) - OPTIONAL CODE 461244068 (01-02-03) - 461244078 (04-05-06)
BUCKET ROTATION (L=2.4 MT) - OPTIONAL CODE 461244068 (01-02-03) - 461244078 (04-05-06)
BUCKET ROTATION (L=2.4 MT) - OPTIONAL CODE 461244068 (01-02-03) - 461244078 (04-05-06)

R	N	P.N.	MOD	Q	Description Denominacion	Descrizione Beskrivelse	Bezeichnung Denominação	Description Beschrijving	L.C.
1		87381217		2	RIGID TUBE TUBO RÍGIDO	TUBO RIGIDO STIFT RØR	ROHR TUBO RÍGIDO	TUYAU RIGIDE VASTE LEIDING	193T
2		72212247		2	FLEXIBLE HOSE TUBO FLEXIBLE	TUBO FLESSIBILE FLEKSIBEL SLANGE	BIEGSAMER SCHLAUCH MANGUEIRA FLEXÍVEL	TUYAU FLEXIBLE FLEXIBELE SLANG	192T
3		71466172		4	BRACKET SOPORTE	STAFFA BESLAG	HALTERUNG SUPORTE	SUPPORT STEUN	225S
4		11113234		4	BOLT, Hex, M12 x 50, 10.9 PERNO	BULLONE BOLT	SCHRAUBE PARAFUSO	VIS BOUT	140B
5		10517074		4	LOCK WASHER ARANDELA DE BLOQUE	RONDELLA DI SICUREZ LÅSESKIVE	SICHERUNGSSCHEIBE ANILHA DE RETENÇÃO	RONDELLE FREIN BORGRING	132R
6		72204293		2	HYD CONNECTOR CONECTOR HIDRÁULIC	CONNETTORE IDRAULI HYDRAULIKSTIK	HYDR STECKVERBINDE CONECTOR HID.	CONNECTEUR HYDRAU HYDRAULISCHE AANSL	020R
7		72204294		2	HYD CONNECTOR CONECTOR HIDRÁULIC	CONNETTORE IDRAULI HYDRAULIKSTIK	HYDR STECKVERBINDE CONECTOR HID.	CONNECTEUR HYDRAU HYDRAULISCHE AANSL	020R
8		71484462		4	O-RING JUNTA TÓRICA	ANELLO TOROIDALE O-RING	O-RING O-RING	JOINT TORIQUE O-RING	055A
9		70923841		2	O-RING, M12.42 ID x 1.78 Thk JUNTA TÓRICA	ANELLO TOROIDALE O-RING	O-RING O-RING	JOINT TORIQUE O-RING	055A

Copyright © New Holland

5.0077	11	p1	03/10

BUCKET ROTATION (L=2.4 MT) - OPTIONAL CODE 461244068 (01-02-03) - 461244078 (04-05-06)
ROTAZIONE BENNA (L=2.4 MT) - CODICE VARIANTE 461244068 (01-02-03) - 461244078 (04-05-06)
UMDREHUNGSWANNE (L=2.4 MT) - OPTIONAL CODE 461244068 (01-02-03) - 461244078 (04-05-06)
GODET ROTATIF (L=2.4 MT) - OPTIONAL CODE 461244068 (01-02-03) - 461244078 (04-05-06)

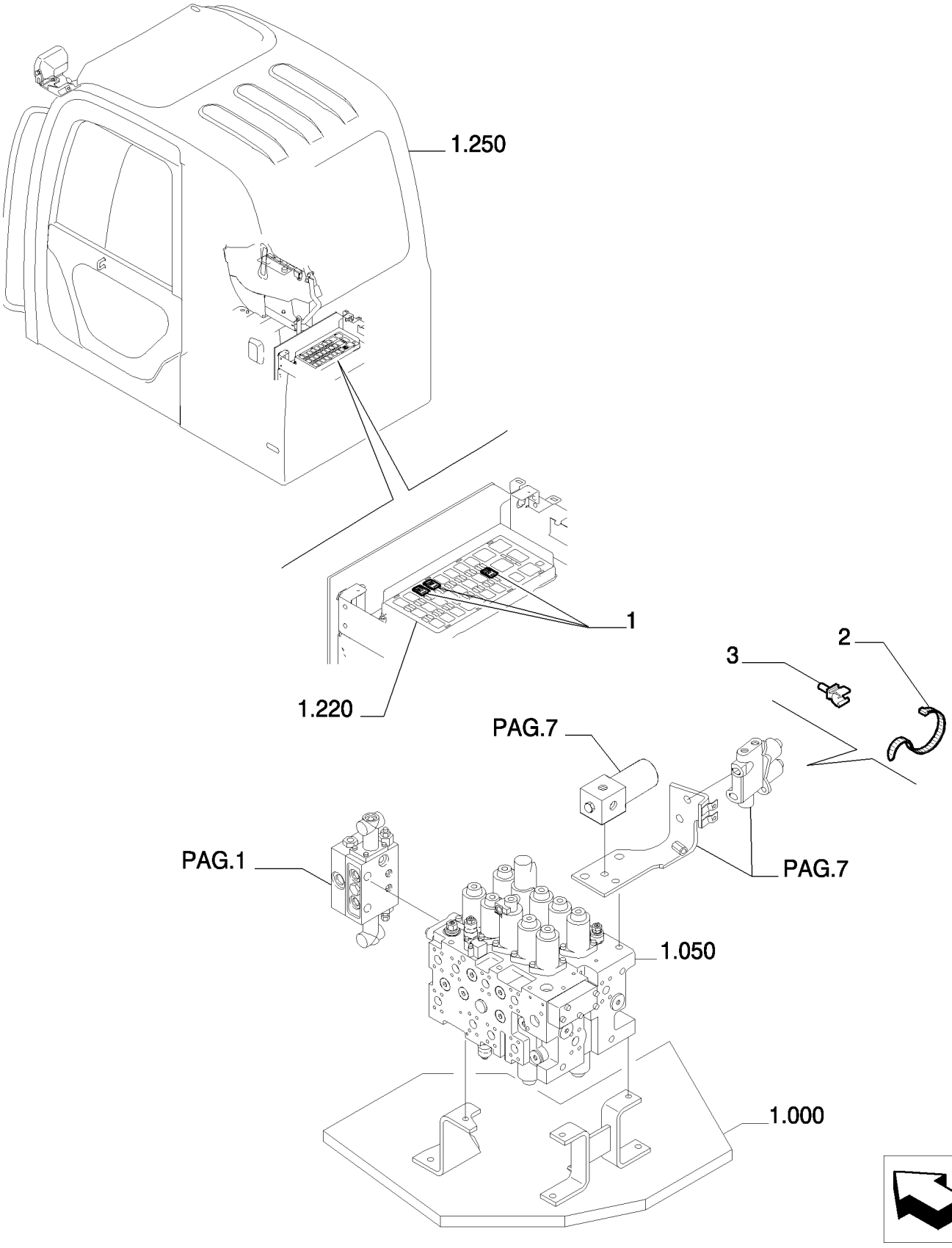

Copyright © New Holland

CUCHARA RODEANTE (L=2.4 MT) - OPTIONAL CODE 461244068 (01-02-03) - 461244078 (04-05-06)
BUCKET ROTATION (L=2.4 MT) - OPTIONAL CODE 461244068 (01-02-03) - 461244078 (04-05-06)
BUCKET ROTATION (L=2.4 MT) - OPTIONAL CODE 461244068 (01-02-03) - 461244078 (04-05-06)
BUCKET ROTATION (L=2.4 MT) - OPTIONAL CODE 461244068 (01-02-03) - 461244078 (04-05-06)

R	N	P.N.	MOD	Q	Description Denominacion	Descrizione Beskrivelse	Bezeichnung Denominação	Description Beschrijving	L.C.
1		87559156		3	RELAY RELÉ	RELÈ RELÆ	RELAIS RELÉ	RELAIS RELAIS	011R
2		72951499		4	CLIP ABRAZADERA	FERMO KLIPS	KLAMMER FIXADOR	COLLIER KLEM	045F
3		87526680		1	RETAINER COLLAR COLLAR DE RETENCIÓN	COLLARE DI FISSAGGIC RING, SPÆNDE	HALTERING ANEL DE FIXAÇÃO	COLLIER DE RETENUE BORGKRAAG	230S

Copyright © New Holland

5.0078	01	p1	03/10

BUCKET ROTATION (L=2.94 MT) - OPTIONAL CODE 461247058 (01-02-03) - 461247068 (04-05-06)
ROTAZIONE BENNA (L=2.94 MT) - CODICE VARIANTE 461247058 (01-02-03) - 461247068 (04-05-06)
UMDREHUNGSWANNE (L=2.94 MT) - OPTIONAL CODE 461247058 (01-02-03) - 461247068 (04-05-06)
GODET ROTATIF (L=2.94 MT) - OPTIONAL CODE 461247058 (01-02-03) - 461247068 (04-05-06)

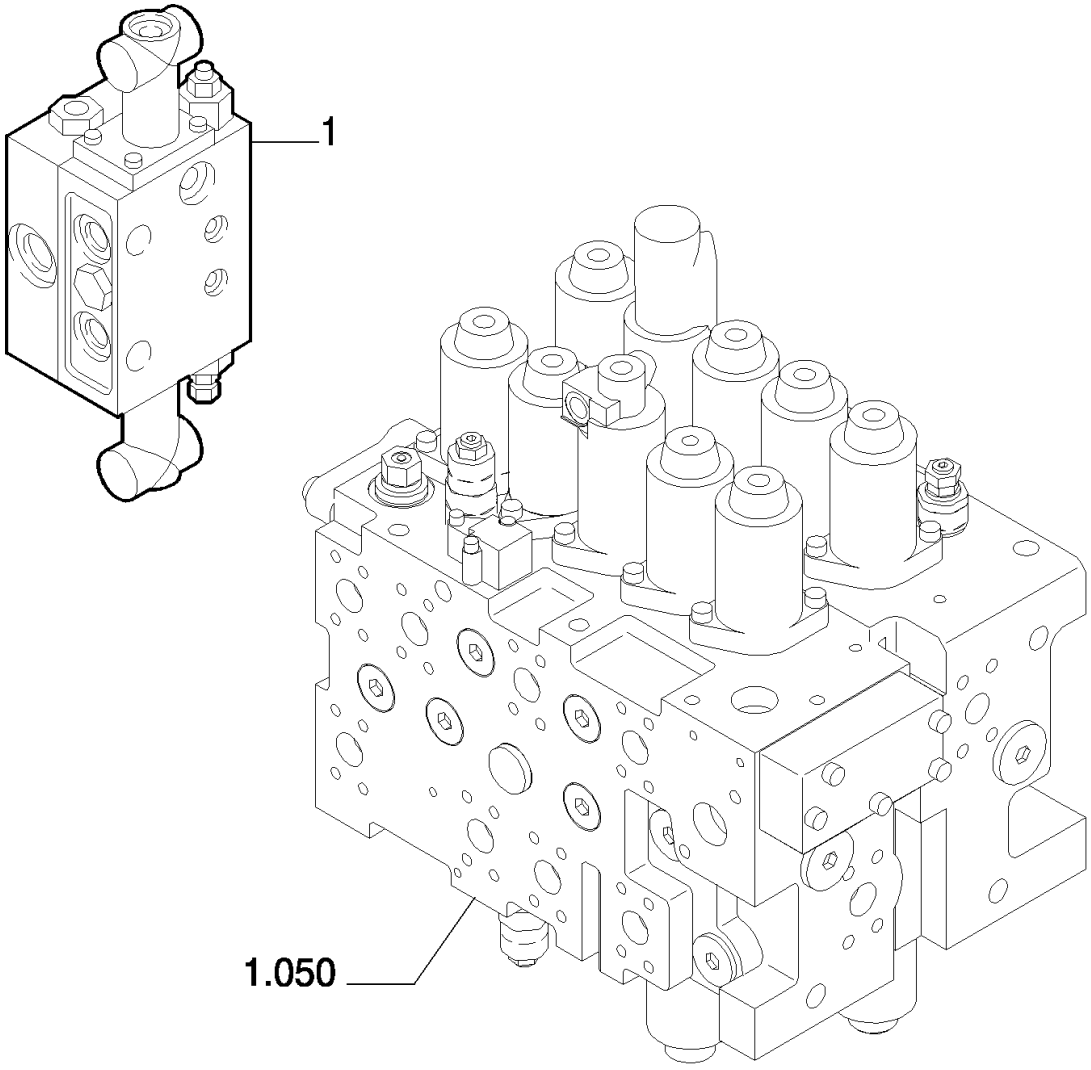

Copyright © New Holland

CUCHARA RODEANTE (L=2.94 MT) - OPTIONAL CODE 461247058 (01-02-03) - 461247068 (04-05-06)
BUCKET ROTATION (L=2.94 MT) - OPTIONAL CODE 461247058 (01-02-03) - 461247068 (04-05-06)
BUCKET ROTATION (L=2.94 MT) - OPTIONAL CODE 461247058 (01-02-03) - 461247068 (04-05-06)
BUCKET ROTATION (L=2.94 MT) - OPTIONAL CODE 461247058 (01-02-03) - 461247068 (04-05-06)

R	N	P.N.	MOD	Q	Description Denominacion	Descrizione Beskrivelse	Bezeichnung Denominação	Description Beschrijving	L.C.
1	1	**87386068**		1	HYDRAULIC VALVE VÁLVULA HIDRÁULICA	DISTRIBUTORE IDRAULI HYDRAULIKVENTIL	HYDRAULIKVENTIL VÁLVULA HIDRÁULICA	SOUPAPE HYDRAULIQU HYDRAULISCHE KLEP	010V

(1) ASSY SEE SGR. 5.0076 PAGE 2

Copyright © New Holland

5.0078	02	p1	03/10

BUCKET ROTATION (L=2.94 MT) - OPTIONAL CODE 461247058 (01-02-03)
ROTAZIONE BENNA (L=2.94 MT) - CODICE VARIANTE 461247058 (01-02-03)
UMDREHUNGSWANNE (L=2.94 MT) - OPTIONAL CODE 461247058 (01-02-03)
GODET ROTATIF (L=2.94 MT) - OPTIONAL CODE 461247058 (01-02-03)

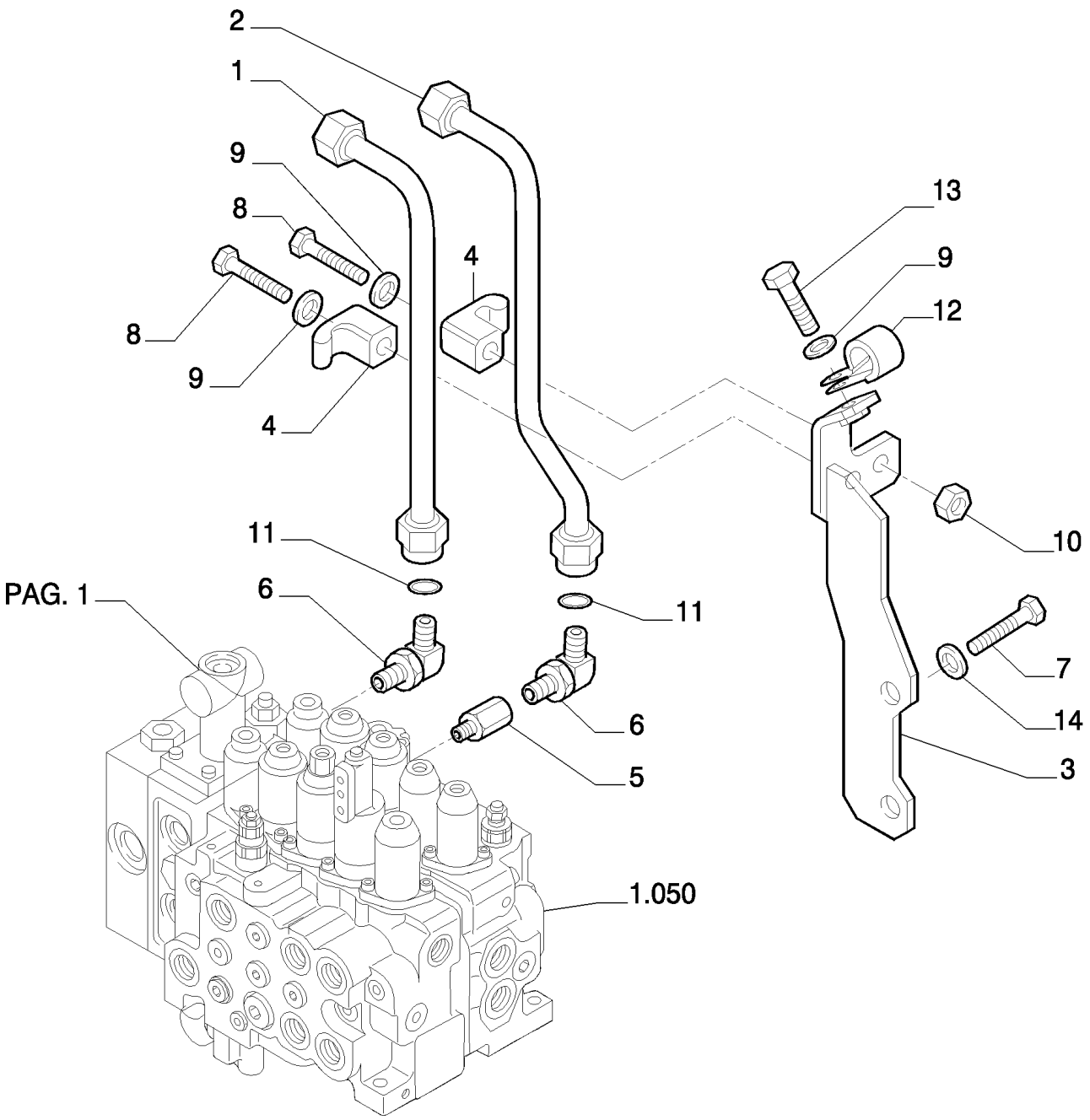

Copyright © New Holland

CUCHARA RODEANTE (L=2.94 MT) - OPTIONAL CODE 461247058 (01-02-03)
BUCKET ROTATION (L=2.94 MT) - OPTIONAL CODE 461247058 (01-02-03)
BUCKET ROTATION (L=2.94 MT) - OPTIONAL CODE 461247058 (01-02-03)
BUCKET ROTATION (L=2.94 MT) - OPTIONAL CODE 461247058 (01-02-03)

R	N	P.N.	MOD	Q	Description Denominacion	Descrizione Beskrivelse	Bezeichnung Denominação	Description Beschrijving	L.C.
1		87532096		1	RIGID TUBE TUBO RÍGIDO	TUBO RIGIDO STIFT RØR	ROHR TUBO RÍGIDO	TUYAU RIGIDE VASTE LEIDING	193T
2		87532097		1	RIGID TUBE TUBO RÍGIDO	TUBO RIGIDO STIFT RØR	ROHR TUBO RÍGIDO	TUYAU RIGIDE VASTE LEIDING	193T
3		87532102		1	BRACKET SOPORTE	STAFFA BESLAG	HALTERUNG SUPORTE	SUPPORT STEUN	225S
4		72954322		2	CLAMP ABRAZADERA	MORSETTO SPÆNDEBÅND	KLEMME BRAÇADEIRA	COLLIER KLEM	120M
5		72214808		1	HYD CONNECTOR CONECTOR HIDRÁULIC(	CONNETTORE IDRAULI(HYDRAULIKSTIK	HYDR STECKVERBINDE CONECTOR HID.	CONNECTEUR HYDRAU HYDRAULISCHE AANSL	020R
6		87532105		2	HYD CONNECTOR CONECTOR HIDRÁULIC(	CONNETTORE IDRAULI(HYDRAULIKSTIK	HYDR STECKVERBINDE CONECTOR HID.	CONNECTEUR HYDRAU HYDRAULISCHE AANSL	020R
7		11112234		2	BOLT, Hex, M12 x 25, 10.9, Full Thd PERNO	BULLONE BOLT	SCHRAUBE PARAFUSO	VIS BOUT	140B
8		11107434		2	SCREW TORNILLO	VITE SKRUE	SCHRAUBE PARAFUSO	VIS SCHROEF	040V
9		14496631		3	WASHER, M10 x 21 x 2 ARANDELA	RONDELLA FLADSKIVE	UNTERLEGSCHEIBE ANILHA	RONDELLE SLUITRING	131R
10		11701721		2	NUT, M10, Cl 10 TUERCA	DADO MØTRIK	MUTTER PORCA	ECROU MOER	010D
11		71404166		2	O-RING JUNTA TÓRICA	ANELLO TOROIDALE O-RING	O-RING O-RING	JOINT TORIQUE O-RING	055A
12		71405770		1	CLAMP ABRAZADERA	MORSETTO SPÆNDEBÅND	KLEMME BRAÇADEIRA	COLLIER KLEM	120M
13		11106234		1	BOLT, Hex, M10 x 25, 10.9, Full Thd PERNO	BULLONE BOLT	SCHRAUBE PARAFUSO	VIS BOUT	140B
14		14496731		2	WASHER, M12 x 24 x 2.5 Thk ARANDELA	RONDELLA FLADSKIVE	UNTERLEGSCHEIBE ANILHA	RONDELLE SLUITRING	131R

Copyright © New Holland

5.0078	03	p1	03/10

BUCKET ROTATION (L=2.94 MT) - OPTIONAL CODE 461247068 (04-05-06)
ROTAZIONE BENNA (L=2.94 MT) - CODICE VARIANTE 461247068 (04-05-06)
UMDREHUNGSWANNE (L=2.94 MT) - OPTIONAL CODE 461247068 (04-05-06)
GODET ROTATIF (L=2.94 MT) - OPTIONAL CODE 461247068 (04-05-06)

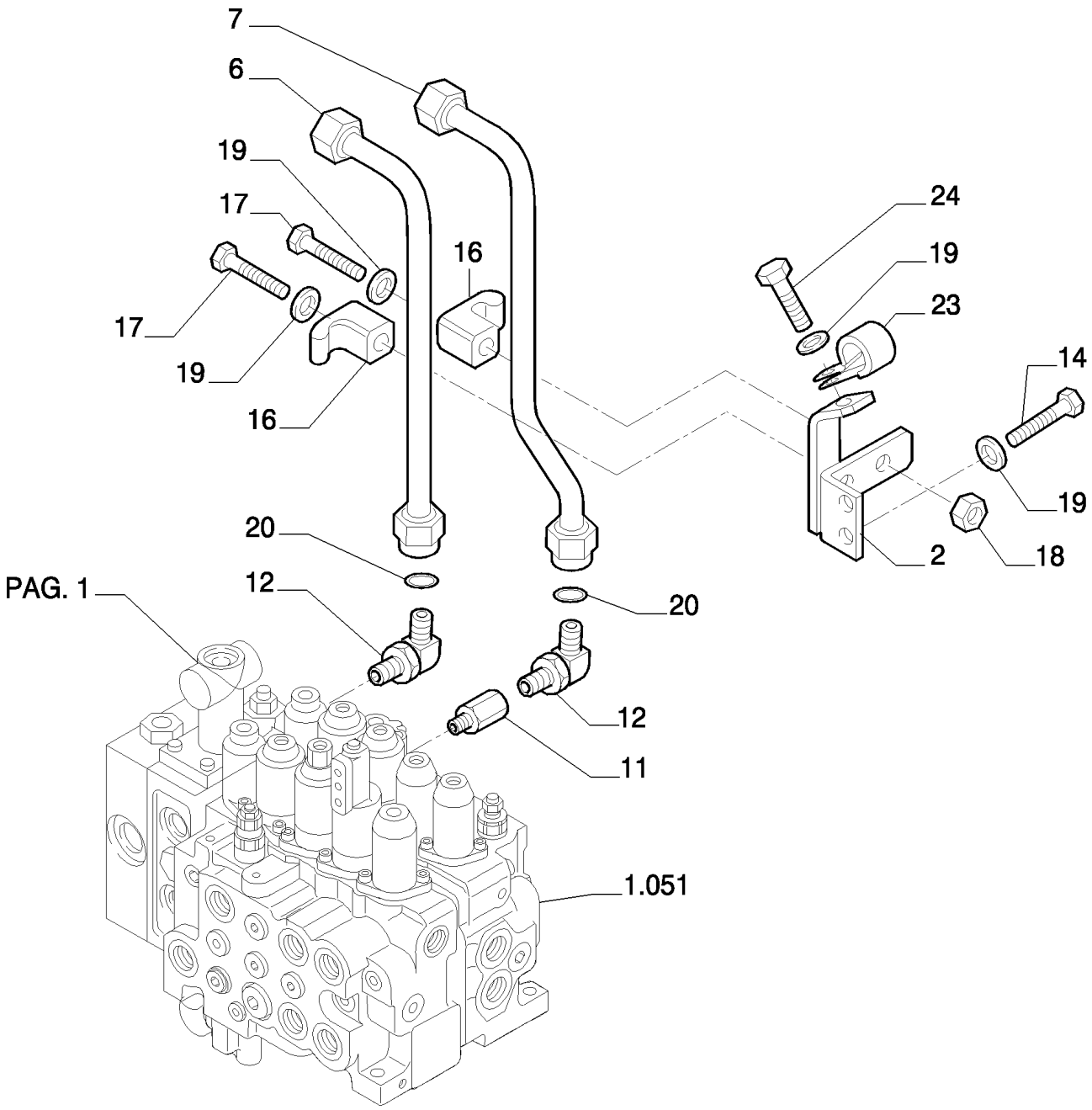

Copyright © New Holland

CUCHARA RODEANTE (L=2.94 MT) - OPTIONAL CODE 461247068 (04-05-06)
BUCKET ROTATION (L=2.94 MT) - OPTIONAL CODE 461247068 (04-05-06)
BUCKET ROTATION (L=2.94 MT) - OPTIONAL CODE 461247068 (04-05-06)
BUCKET ROTATION (L=2.94 MT) - OPTIONAL CODE 461247068 (04-05-06)

R	N	P.N.	MOD	Q	Description Denominacion	Descrizione Beskrivelse	Bezeichnung Denominação	Description Beschrijving	L.C.
2		87557635		1	SUPPORT SOPORTE	SUPPORTO BESLAG	STÜTZE SUPORTE	SUPPORT STEUN	300S
6		87557640		1	RIGID TUBE TUBO RÍGIDO	TUBO RIGIDO STIFT RØR	ROHR TUBO RÍGIDO	TUYAU RIGIDE VASTE LEIDING	193T
7		87557638		1	RIGID TUBE TUBO RÍGIDO	TUBO RIGIDO STIFT RØR	ROHR TUBO RÍGIDO	TUYAU RIGIDE VASTE LEIDING	193T
11		72214808		1	HYD CONNECTOR CONECTOR HIDRÁULIC	CONNETTORE IDRAULIC HYDRAULIKSTIK	HYDR STECKVERBINDE CONECTOR HID.	CONNECTEUR HYDRAU HYDRAULISCHE AANSL	020R
12		87532105		2	HYD CONNECTOR CONECTOR HIDRÁULIC	CONNETTORE IDRAULIC HYDRAULIKSTIK	HYDR STECKVERBINDE CONECTOR HID.	CONNECTEUR HYDRAU HYDRAULISCHE AANSL	020R
14		11106434		2	BOLT, Hex, M10 x 30, 10.9, Full Thd PERNO	BULLONE BOLT	SCHRAUBE PARAFUSO	VIS BOUT	140B
16		72954322		2	CLAMP ABRAZADERA	MORSETTO SPÆNDEBÅND	KLEMME BRAÇADEIRA	COLLIER KLEM	120M
17		11107434		2	SCREW TORNILLO	VITE SKRUE	SCHRAUBE PARAFUSO	VIS SCHROEF	040V
18		11701721		2	NUT, M10, Cl 10 TUERCA	DADO MØTRIK	MUTTER PORCA	ECROU MOER	010D
19		14496631		5	WASHER, M10 x 21 x 2 ARANDELA	RONDELLA FLADSKIVE	UNTERLEGSCHEIBE ANILHA	RONDELLE SLUITRING	131R
20		71404166		2	O-RING JUNTA TÓRICA	ANELLO TOROIDALE O-RING	O-RING O-RING	JOINT TORIQUE O-RING	055A
23		71405770		1	CLAMP ABRAZADERA	MORSETTO SPÆNDEBÅND	KLEMME BRAÇADEIRA	COLLIER KLEM	120M
24		11106234		1	BOLT, Hex, M10 x 25, 10.9, Full Thd PERNO	BULLONE BOLT	SCHRAUBE PARAFUSO	VIS BOUT	140B

Copyright © New Holland

5.0078	04	p1	03/10

BUCKET ROTATION (L=2.94 MT) - OPTIONAL CODE 461247058 (01-02-03) - 461247068 (04-05-06)
ROTAZIONE BENNA (L=2.94 MT) - CODICE VARIANTE 461247058 (01-02-03) - 461247068 (04-05-06)
UMDREHUNGSWANNE (L=2.94 MT) - OPTIONAL CODE 461247058 (01-02-03) - 461247068 (04-05-06)
GODET ROTATIF (L=2.94 MT) - OPTIONAL CODE 461247058 (01-02-03) - 461247068 (04-05-06)

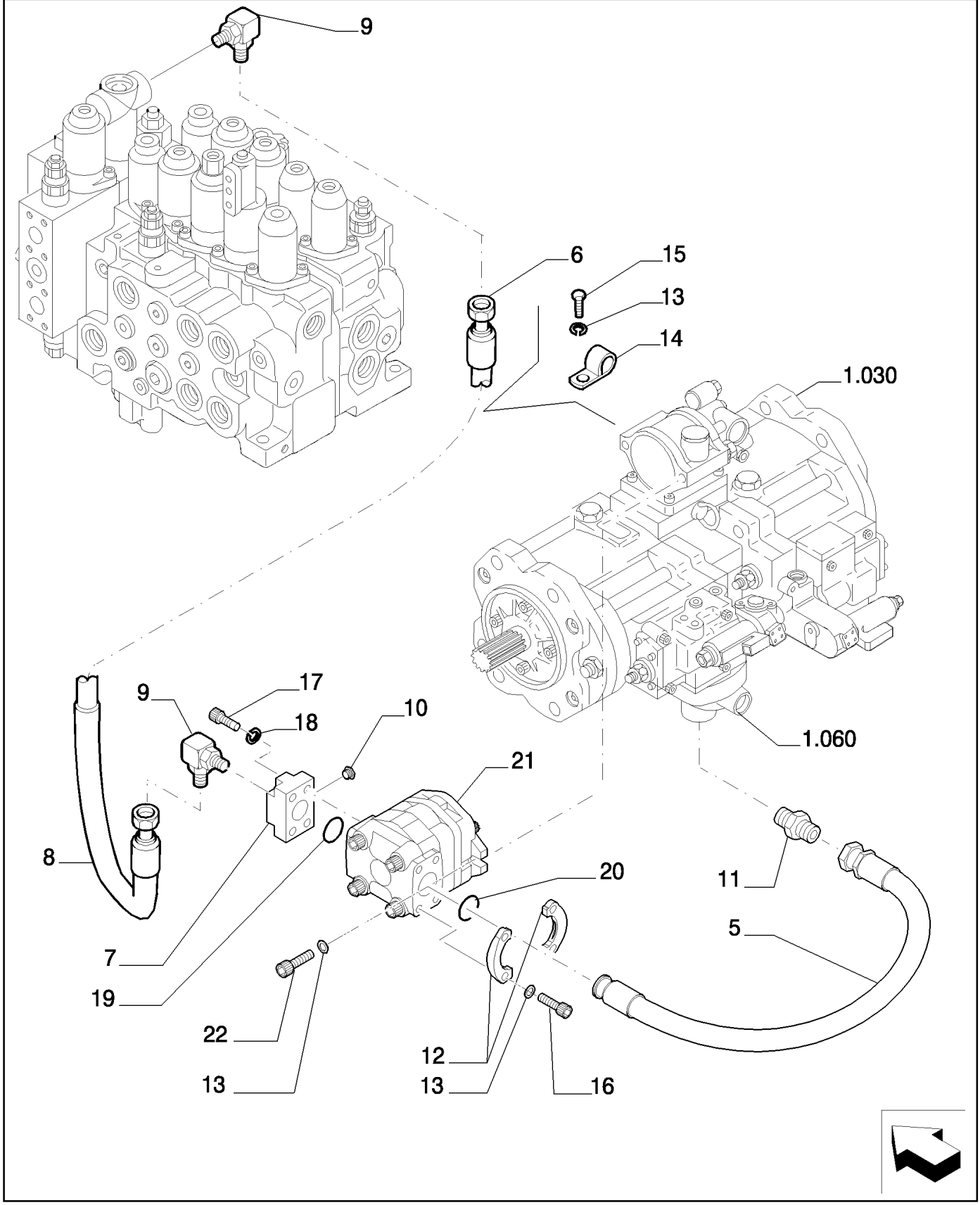

Copyright © New Holland

CUCHARA RODEANTE (L=2.94 MT) - OPTIONAL CODE 461247058 (01-02-03) - 461247068 (04-05-06)
BUCKET ROTATION (L=2.94 MT) - OPTIONAL CODE 461247058 (01-02-03) - 461247068 (04-05-06)
BUCKET ROTATION (L=2.94 MT) - OPTIONAL CODE 461247058 (01-02-03) - 461247068 (04-05-06)
BUCKET ROTATION (L=2.94 MT) - OPTIONAL CODE 461247058 (01-02-03) - 461247068 (04-05-06)

R	N	P.N.	MOD	Q	Description Denominacion	Descrizione Beskrivelse	Bezeichnung Denominação	Description Beschrijving	L.C.
5		87528092		1	FLEXIBLE HOSE TUBO FLEXIBLE	TUBO FLESSIBILE FLEKSIBEL SLANGE	BIEGSAMER SCHLAUCH MANGUEIRA FLEXÍVEL	TUYAU FLEXIBLE FLEXIBELE SLANG	192T
6		87530581		1	FLEXIBLE HOSE TUBO FLEXIBLE	TUBO FLESSIBILE FLEKSIBEL SLANGE	BIEGSAMER SCHLAUCH MANGUEIRA FLEXÍVEL	TUYAU FLEXIBLE FLEXIBELE SLANG	192T
7		72204754		1	FLANGE BRIDA	FLANGIA FLANGE	FLANSCH FLANGE	BRIDE FLENS	070F
8		87375394		1	FLEXIBLE SHEATH RECUBRIMIENTO FLEXI	GUAINA FLESSIBILE FLEKSIBELT SVØB	UMMANTELUNG PEÇA FLEXÍVEL	GAINE SOUPLE FLEXIBELE MANTEL	140G
9		72214763		2	HYD CONNECTOR CONECTOR HIDRÁULIC	CONNETTORE IDRAULIC HYDRAULIKSTIK	HYDR STECKVERBINDE CONECTOR HID.	CONNECTEUR HYDRAU HYDRAULISCHE AANSL	020R
10		72214663		1	PLUG TAPÓN	TAPPO PROP	STOPFEN TAMPÃO	BOUCHON PLUG	050T
11		87530584		1	HYD CONNECTOR CONECTOR HIDRÁULIC	CONNETTORE IDRAULIC HYDRAULIKSTIK	HYDR STECKVERBINDE CONECTOR HID.	CONNECTEUR HYDRAU HYDRAULISCHE AANSL	020R
12		71404909		2	FLANGE BRIDA	FLANGIA FLANGE	FLANSCH FLANGE	BRIDE FLENS	070F
13		14496631		8	WASHER, M10 x 21 x 2 ARANDELA	RONDELLA FLADSKIVE	UNTERLEGSCHEIBE ANILHA	RONDELLE SLUITRING	131R
14		71405770		2	CLAMP ABRAZADERA	MORSETTO SPÆNDEBÅND	KLEMME BRAÇADEIRA	COLLIER KLEM	120M
15		ZM73C10020		2	BOLT PERNO	BULLONE BOLT	SCHRAUBE PARAFUSO	VIS BOUT	140B
16		11106634		4	BOLT, Hex, M10 x 35, 10.9, Full Thd PERNO	BULLONE BOLT	SCHRAUBE PARAFUSO	VIS BOUT	140B
17		14420534		4	SCREW TORNILLO	VITE SKRUE	SCHRAUBE PARAFUSO	VIS SCHROEF	040V
18		10516874		4	LOCK WASHER ARANDELA DE BLOQUE	RONDELLA DI SICUREZ LÅSESKIVE	SICHERUNGSSCHEIBE ANILHA DE RETENÇÃO	RONDELLE FREIN BORGRING	132R
19		72215443		1	O-RING JUNTA TÓRICA	ANELLO TOROIDALE O-RING	O-RING O-RING	JOINT TORIQUE O-RING	055A
20		70924192		1	O-RING JUNTA TÓRICA	ANELLO TOROIDALE O-RING	O-RING O-RING	JOINT TORIQUE O-RING	055A
21	1	72204291		1	HYDRAULIC PUMP BOMBA HIDRÁULICO	POMPA IDRAULICA HYDRAULIKPUMPE	HYDRAULIKPUMPE BOMBA HIDRÁULICA	POMPE HYDRAULIQUE HYDRAULISCHE POMP	155P
22		14420234		2	SCREW TORNILLO	VITE SKRUE	SCHRAUBE PARAFUSO	VIS SCHROEF	040V

(1) ASSY SEE SGR. 5.0076 PAGE 6

Copyright © New Holland

5.0078	05	p1	03/10

BUCKET ROTATION (L=2.94 MT) - OPTIONAL CODE 461247058 (01-02-03) - 461247068 (04-05-06)
ROTAZIONE BENNA (L=2.94 MT) - CODICE VARIANTE 461247058 (01-02-03) - 461247068 (04-05-06)
UMDREHUNGSWANNE (L=2.94 MT) - OPTIONAL CODE 461247058 (01-02-03) - 461247068 (04-05-06)
GODET ROTATIF (L=2.94 MT) - OPTIONAL CODE 461247058 (01-02-03) - 461247068 (04-05-06)

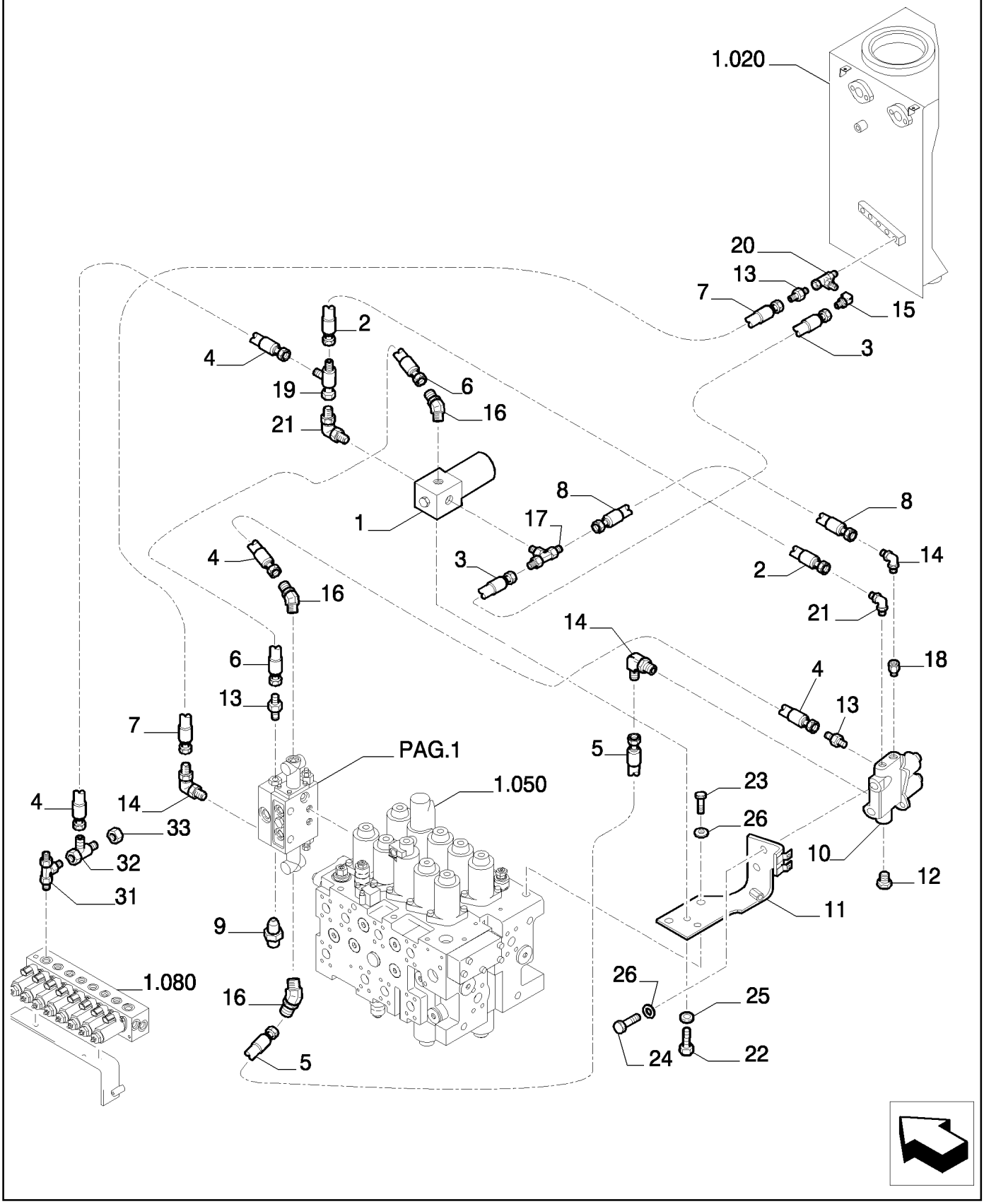

Copyright © New Holland

CUCHARA RODEANTE (L=2.94 MT) - OPTIONAL CODE 461247058 (01-02-03) - 461247068 (04-05-06)
BUCKET ROTATION (L=2.94 MT) - OPTIONAL CODE 461247058 (01-02-03) - 461247068 (04-05-06)
BUCKET ROTATION (L=2.94 MT) - OPTIONAL CODE 461247058 (01-02-03) - 461247068 (04-05-06)
BUCKET ROTATION (L=2.94 MT) - OPTIONAL CODE 461247058 (01-02-03) - 461247068 (04-05-06)

R	N	P.N.	MOD	Q	Description Denominacion	Descrizione Beskrivelse	Bezeichnung Denominação	Description Beschrijving	L.C.
1	1	72955526		1	VALVE VÁLVULA	VALVOLA VENTIL	VENTIL VÁLVULA	SOUPAPE KLEP	9620
2		87397448		1	FLEXIBLE HOSE TUBO FLEXIBLE	TUBO FLESSIBILE FLEKSIBEL SLANGE	BIEGSAMER SCHLAUCH MANGUEIRA FLEXÍVEL	TUYAU FLEXIBLE FLEXIBELE SLANG	192T
3		87532906		1	HOSE TUBO	TUBO FLESSIBILE SLANGE	SCHLAUCH MANGUEIRA	FLEXIBLE SLANG	030M
4		72214535		2	FLEXIBLE HOSE TUBO FLEXIBLE	TUBO FLESSIBILE FLEKSIBEL SLANGE	BIEGSAMER SCHLAUCH MANGUEIRA FLEXÍVEL	TUYAU FLEXIBLE FLEXIBELE SLANG	192T
5		72214539		1	FLEXIBLE HOSE TUBO FLEXIBLE	TUBO FLESSIBILE FLEKSIBEL SLANGE	BIEGSAMER SCHLAUCH MANGUEIRA FLEXÍVEL	TUYAU FLEXIBLE FLEXIBELE SLANG	192T
6		87645092		1	FLEXIBLE HOSE TUBO FLEXIBLE	TUBO FLESSIBILE FLEKSIBEL SLANGE	BIEGSAMER SCHLAUCH MANGUEIRA FLEXÍVEL	TUYAU FLEXIBLE FLEXIBELE SLANG	192T
7		87687417		1	FLEXIBLE HOSE TUBO FLEXIBLE	TUBO FLESSIBILE FLEKSIBEL SLANGE	BIEGSAMER SCHLAUCH MANGUEIRA FLEXÍVEL	TUYAU FLEXIBLE FLEXIBELE SLANG	192T
8		87532907		1	HOSE TUBO	TUBO FLESSIBILE SLANGE	SCHLAUCH MANGUEIRA	FLEXIBLE SLANG	030M
9		87524903		1	SENSOR SENSOR	SENSORE FØLER	SENSOR SENSOR	CAPTEUR SENSOR	608S
10	2	87531523		1	HYDRAULIC VALVE VÁLVULA HIDRÁULICA	DISTRIBUTORE IDRAULI HYDRAULIKVENTIL	HYDRAULIKVENTIL VÁLVULA HIDRÁULICA	SOUPAPE HYDRAULIQU HYDRAULISCHE KLEP	010V
11		87687414		1	BRACKET SOPORTE	STAFFA BESLAG	HALTERUNG SUPORTE	SUPPORT STEUN	225S
12		72214663		1	PLUG TAPÓN	TAPPO PROP	STOPFEN TAMPÃO	BOUCHON PLUG	050T
13		72214744		3	HYD CONNECTOR CONECTOR HIDRÁULIC	CONNETTORE IDRAULI HYDRAULIKSTIK	HYDR STECKVERBINDE CONECTOR HID.	CONNECTEUR HYDRAU HYDRAULISCHE AANSL	020R
14		72214524		3	HYD CONNECTOR CONECTOR HIDRÁULIC	CONNETTORE IDRAULI HYDRAULIKSTIK	HYDR STECKVERBINDE CONECTOR HID.	CONNECTEUR HYDRAU HYDRAULISCHE AANSL	020R
15		72214525		1	HYD CONNECTOR CONECTOR HIDRÁULIC	CONNETTORE IDRAULI HYDRAULIKSTIK	HYDR STECKVERBINDE CONECTOR HID.	CONNECTEUR HYDRAU HYDRAULISCHE AANSL	020R
16		72214542		3	HYD CONNECTOR CONECTOR HIDRÁULIC	CONNETTORE IDRAULI HYDRAULIKSTIK	HYDR STECKVERBINDE CONECTOR HID.	CONNECTEUR HYDRAU HYDRAULISCHE AANSL	020R
17		72955434		1	TEE RACOR EN T	PEZZO A T T-STYKKE	T-STÜCK TÊ	RACCORD EN T T-STUK	9020
18		72217408		1	HYD CONNECTOR CONECTOR HIDRÁULIC	CONNETTORE IDRAULI HYDRAULIKSTIK	HYDR STECKVERBINDE CONECTOR HID.	CONNECTEUR HYDRAU HYDRAULISCHE AANSL	020R
19		72954988		1	TEE RACOR EN T	PEZZO A T T-STYKKE	T-STÜCK TÊ	RACCORD EN T T-STUK	9020
20		72283853		1	TEE RACOR EN T	PEZZO A T T-STYKKE	T-STÜCK TÊ	RACCORD EN T T-STUK	9020
21		72214735		2	HYD CONNECTOR CONECTOR HIDRÁULIC	CONNETTORE IDRAULI HYDRAULIKSTIK	HYDR STECKVERBINDE CONECTOR HID.	CONNECTEUR HYDRAU HYDRAULISCHE AANSL	020R
22		10902234		2	BOLT, Hex, M6 x 16, 10.9, Full Thd PERNO	BULLONE BOLT	SCHRAUBE PARAFUSO	VIS BOUT	140B
23		11106234		2	BOLT, Hex, M10 x 25, 10.9, Full Thd PERNO	BULLONE BOLT	SCHRAUBE PARAFUSO	VIS BOUT	140B

(1) ASSY SEE SGR. 5.0076 PAGE 8
(2) ASSY SEE SGR. 5.0076 PAGE 9

Copyright © New Holland

5.0078	05	p2	03/10

BUCKET ROTATION (L=2.94 MT) - OPTIONAL CODE 461247058 (01-02-03) - 461247068 (04-05-06)
ROTAZIONE BENNA (L=2.94 MT) - CODICE VARIANTE 461247058 (01-02-03) - 461247068 (04-05-06)
UMDREHUNGSWANNE (L=2.94 MT) - OPTIONAL CODE 461247058 (01-02-03) - 461247068 (04-05-06)
GODET ROTATIF (L=2.94 MT) - OPTIONAL CODE 461247058 (01-02-03) - 461247068 (04-05-06)

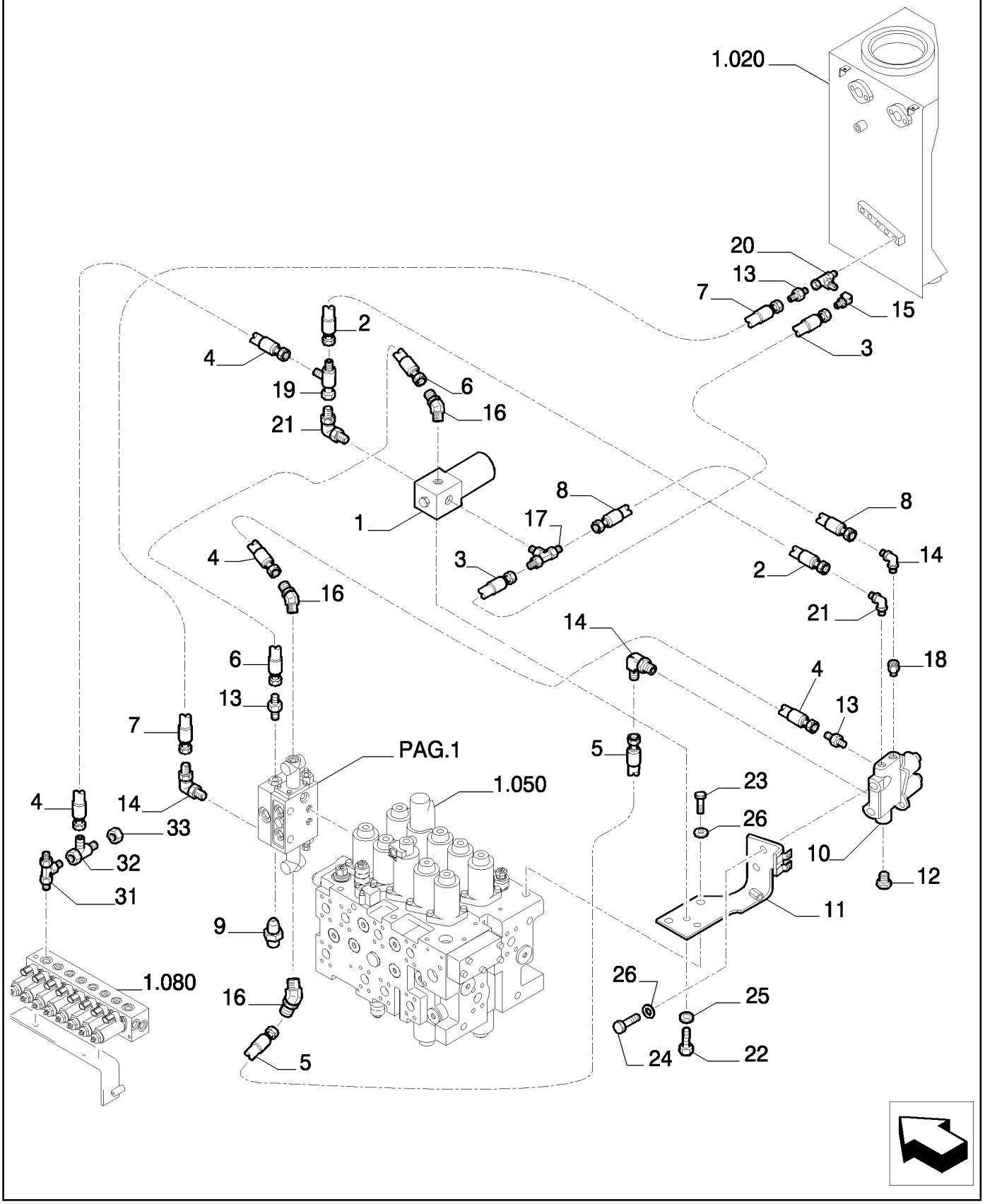

Copyright © New Holland

CUCHARA RODEANTE (L=2.94 MT) - OPTIONAL CODE 461247058 (01-02-03) - 461247068 (04-05-06)
BUCKET ROTATION (L=2.94 MT) - OPTIONAL CODE 461247058 (01-02-03) - 461247068 (04-05-06)
BUCKET ROTATION (L=2.94 MT) - OPTIONAL CODE 461247058 (01-02-03) - 461247068 (04-05-06)
BUCKET ROTATION (L=2.94 MT) - OPTIONAL CODE 461247058 (01-02-03) - 461247068 (04-05-06)

R	N	P.N.	MOD	Q	Description Denominacion	Descrizione Beskrivelse	Bezeichnung Denominação	Description Beschrijving	L.C.
24		11106034		2	BOLT, Hex, M10 x 20, 10.9, Full Thd				
						BULLONE	SCHRAUBE	VIS	140B
					PERNO	BOLT	PARAFUSO	BOUT	
25		14496431		2	WASHER, M6.4 x 12.5 x 1.6 Thk				
						RONDELLA	UNTERLEGSCHEIBE	RONDELLE	131R
					ARANDELA	FLADSKIVE	ANILHA	SLUITRING	
26		14496631		4	WASHER, M10 x 21 x 2	RONDELLA	UNTERLEGSCHEIBE	RONDELLE	131R
					ARANDELA	FLADSKIVE	ANILHA	SLUITRING	
31		87338401		1	HYD CONNECTOR	CONNETTORE IDRAULI(	HYDR STECKVERBINDE	CONNECTEUR HYDRAU	020R
					CONECTOR HIDRÁULIC(	HYDRAULIKSTIK	CONECTOR HID.	HYDRAULISCHE AANSL	
32		72954988		1	TEE	PEZZO A T	T-STÜCK	RACCORD EN T	9020
					RACOR EN T	T-STYKKE	TÊ	T-STUK	
33		72214546		1	PLUG	TAPPO	STOPFEN	BOUCHON	050T
					TAPÓN	PROP	TAMPÃO	PLUG	

Copyright © New Holland

5.0078	06	p1	03/10

BUCKET ROTATION (L=2.94 MT) - OPTIONAL CODE 461247058 (01-02-03) - 461247068 (04-05-06)
ROTAZIONE BENNA (L=2.94 MT) - CODICE VARIANTE 461247058 (01-02-03) - 461247068 (04-05-06)
UMDREHUNGSWANNE (L=2.94 MT) - OPTIONAL CODE 461247058 (01-02-03) - 461247068 (04-05-06)
GODET ROTATIF (L=2.94 MT) - OPTIONAL CODE 461247058 (01-02-03) - 461247068 (04-05-06)

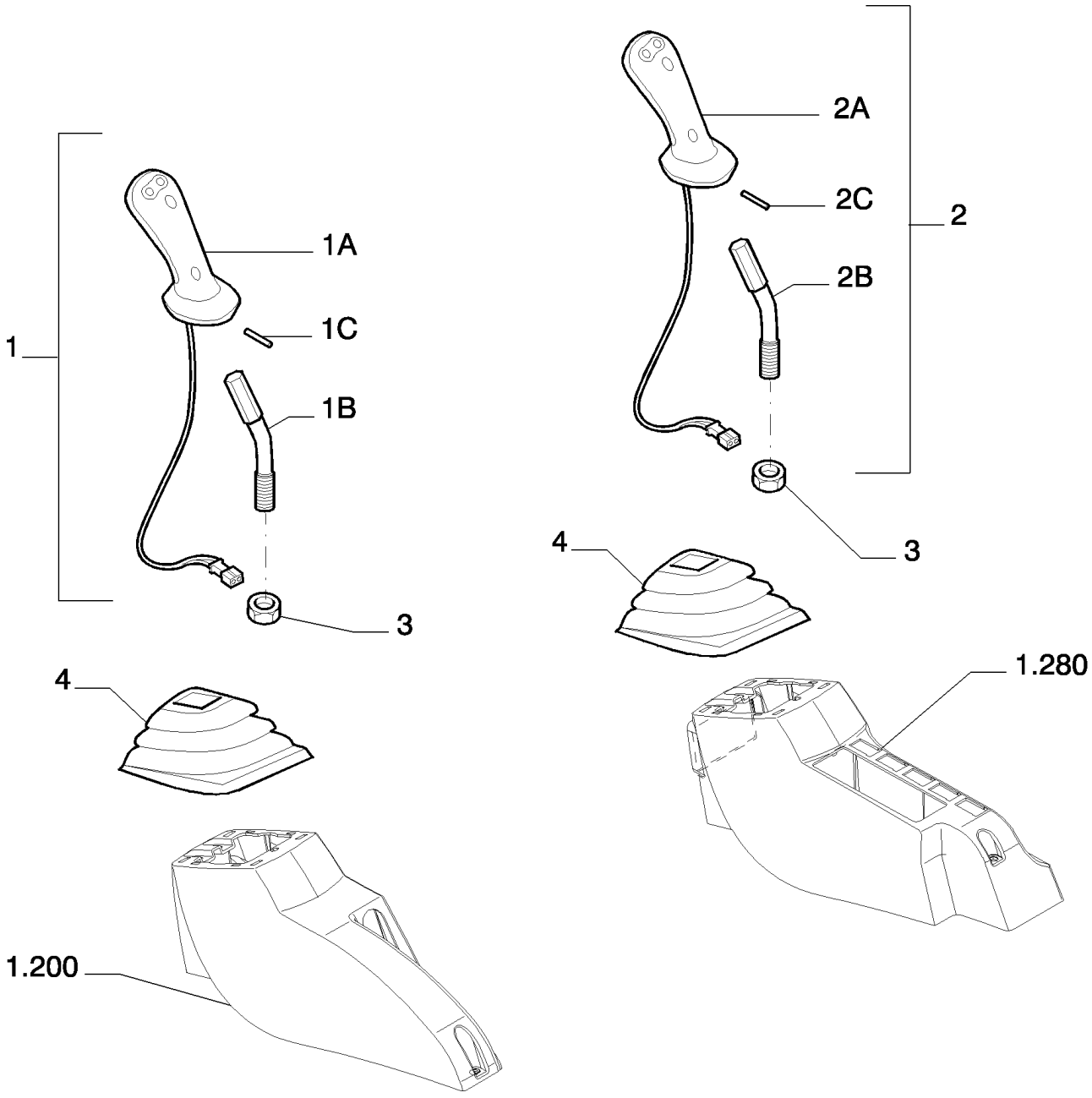

Copyright © New Holland

CUCHARA RODEANTE (L=2.94 MT) - OPTIONAL CODE 461247058 (01-02-03) - 461247068 (04-05-06)
BUCKET ROTATION (L=2.94 MT) - OPTIONAL CODE 461247058 (01-02-03) - 461247068 (04-05-06)
BUCKET ROTATION (L=2.94 MT) - OPTIONAL CODE 461247058 (01-02-03) - 461247068 (04-05-06)
BUCKET ROTATION (L=2.94 MT) - OPTIONAL CODE 461247058 (01-02-03) - 461247068 (04-05-06)

R	N	P.N.	MOD	Q	Description Denominacion	Descrizione Beskrivelse	Bezeichnung Denominação	Description Beschrijving	L.C.
1		{YN03M02148F1}		1	LEFT - ASSY				
1A		71485944		1	HANDLE GRIP PERILLA	IMPUGNATURA HÅNDGREB	HANDGRIFF GARRA	POIGNEE DE MAINTIEN HANDGREEP	025I
1B		YN03M02134P1		1	LEVER PALANCA	LEVA ARM	HEBEL ALAVANCA	LEVIER HEFBOOM	045L
1C		14601271		1	ROLL PIN BULÓN DE GIRO	SPINA ELASTICA SPLIT	SPANNSTIFT TROÇO	GOUPILLE ELASTIQUE ROLPEN	200S
2		{YN03M02149F1}		1	RIGHT - ASSY				
2A		71485944		1	HANDLE GRIP PERILLA	IMPUGNATURA HÅNDGREB	HANDGRIFF GARRA	POIGNEE DE MAINTIEN HANDGREEP	025I
2B		YN03M02134P1		1	LEVER PALANCA	LEVA ARM	HEBEL ALAVANCA	LEVIER HEFBOOM	045L
2C		14601271		1	ROLL PIN BULÓN DE GIRO	SPINA ELASTICA SPLIT	SPANNSTIFT TROÇO	GOUPILLE ELASTIQUE ROLPEN	200S
3		12163224		2	NUT TUERCA	DADO MØTRIK	MUTTER PORCA	ECROU MOER	010D
4		YN03M02114P1		2	BELLOWS FUELLE	SOFFIETTI BLÆSEBÆLG	FALTENBALG FOLE	SOUFFLET BALGEN	169S

Copyright © New Holland

5.0078	07	p1	03/10

BUCKET ROTATION (L=2.94 MT) - OPTIONAL CODE 461247058 (01-02-03)
ROTAZIONE BENNA (L=2.94 MT) - CODICE VARIANTE 461247058 (01-02-03)
UMDREHUNGSWANNE (L=2.94 MT) - OPTIONAL CODE 461247058 (01-02-03)
GODET ROTATIF (L=2.94 MT) - OPTIONAL CODE 461247058 (01-02-03)

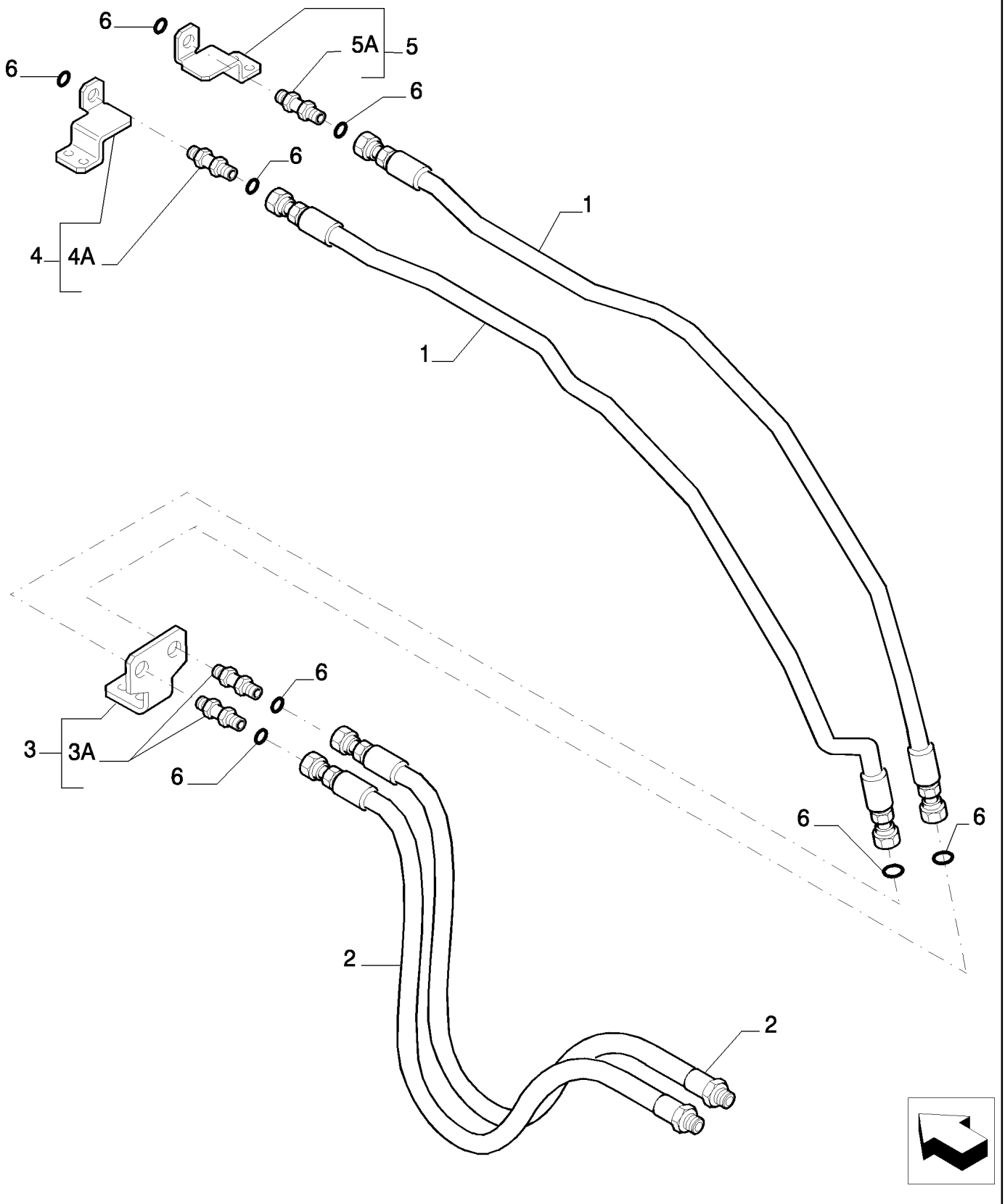

Copyright © New Holland

CUCHARA RODEANTE (L=2.94 MT) - OPTIONAL CODE 461247058 (01-02-03)
BUCKET ROTATION (L=2.94 MT) - OPTIONAL CODE 461247058 (01-02-03)
BUCKET ROTATION (L=2.94 MT) - OPTIONAL CODE 461247058 (01-02-03)
BUCKET ROTATION (L=2.94 MT) - OPTIONAL CODE 461247058 (01-02-03)

R	N	P.N.	MOD	Q	Description Denominacion	Descrizione Beskrivelse	Bezeichnung Denominação	Description Beschrijving	L.C.
1		87396720		2	FLEXIBLE HOSE TUBO FLEXIBLE	TUBO FLESSIBILE FLEKSIBEL SLANGE	BIEGSAMER SCHLAUCH MANGUEIRA FLEXÍVEL	TUYAU FLEXIBLE FLEXIBELE SLANG	192T
2		87396721		2	FLEXIBLE HOSE TUBO FLEXIBLE	TUBO FLESSIBILE FLEKSIBEL SLANGE	BIEGSAMER SCHLAUCH MANGUEIRA FLEXÍVEL	TUYAU FLEXIBLE FLEXIBELE SLANG	192T
3		87396715		1	BRACKET, - ASSY SOPORTE	STAFFA BESLAG	HALTERUNG SUPORTE	SUPPORT STEUN	225S
3A		72204201		2	HYD CONNECTOR CONECTOR HIDRÁULIC(	CONNETTORE IDRAULIC(HYDRAULIKSTIK	HYDR STECKVERBINDE CONECTOR HID.	CONNECTEUR HYDRAU HYDRAULISCHE AANSL	020R
4		87396711		1	BRACKET, - ASSY SOPORTE	STAFFA BESLAG	HALTERUNG SUPORTE	SUPPORT STEUN	225S
4A		72204201		1	HYD CONNECTOR CONECTOR HIDRÁULIC(	CONNETTORE IDRAULIC(HYDRAULIKSTIK	HYDR STECKVERBINDE CONECTOR HID.	CONNECTEUR HYDRAU HYDRAULISCHE AANSL	020R
5		87396713		1	BRACKET, - ASSY SOPORTE	STAFFA BESLAG	HALTERUNG SUPORTE	SUPPORT STEUN	225S
5A		72204201		1	HYD CONNECTOR CONECTOR HIDRÁULIC(	CONNETTORE IDRAULIC(HYDRAULIKSTIK	HYDR STECKVERBINDE CONECTOR HID.	CONNECTEUR HYDRAU HYDRAULISCHE AANSL	020R
6		70923841		8	O-RING, M12.42 ID x 1.78 Thk JUNTA TÓRICA	ANELLO TOROIDALE O-RING	O-RING O-RING	JOINT TORIQUE O-RING	055A
7		4982514		36	CABLE STRAP BANDA DE CABLE	FASCETTA PER CAVO KABELSTROP	KABELBINDER BRAÇADEIRA DE CABO	BRIDE DE CABLE BUNDELBAND	P716

Copyright © New Holland

5.0078	08	p1	03/10

BUCKET ROTATION (L=2.94 MT) - OPTIONAL CODE 461247068 (04-05-06)
ROTAZIONE BENNA (L=2.94 MT) - CODICE VARIANTE 461247068 (04-05-06)
UMDREHUNGSWANNE (L=2.94 MT) - OPTIONAL CODE 461247068 (04-05-06)
GODET ROTATIF (L=2.94 MT) - OPTIONAL CODE 461247068 (04-05-06)

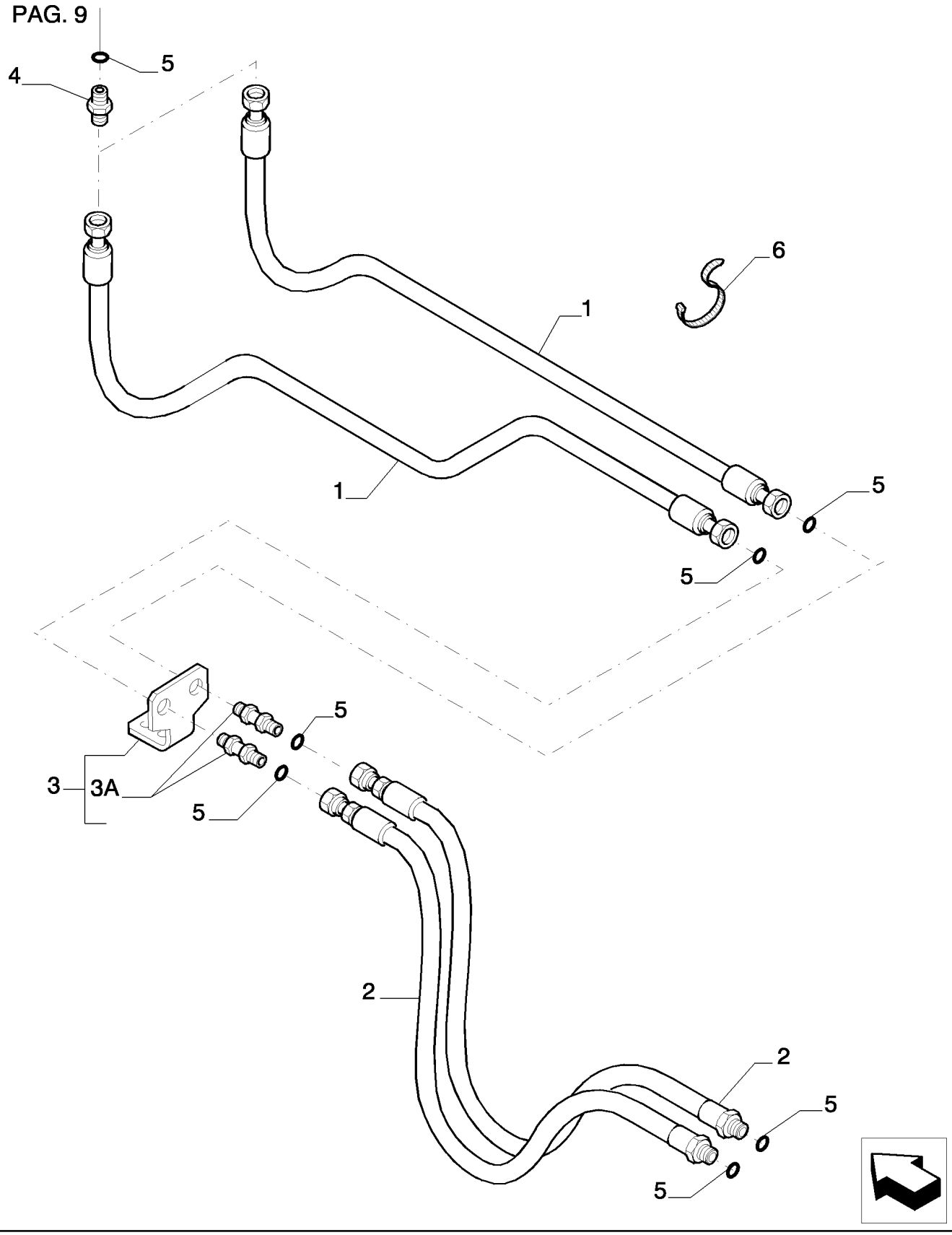

Copyright © New Holland

CUCHARA RODEANTE (L=2.94 MT) - OPTIONAL CODE 461247068 (04-05-06)
BUCKET ROTATION (L=2.94 MT) - OPTIONAL CODE 461247068 (04-05-06)
BUCKET ROTATION (L=2.94 MT) - OPTIONAL CODE 461247068 (04-05-06)
BUCKET ROTATION (L=2.94 MT) - OPTIONAL CODE 461247068 (04-05-06)

R	N	P.N.	MOD	Q	Description Denominacion	Descrizione Beskrivelse	Bezeichnung Denominação	Description Beschrijving	L.C.
1		87396727		2	FLEXIBLE HOSE TUBO FLEXIBLE	TUBO FLESSIBILE FLEKSIBEL SLANGE	BIEGSAMER SCHLAUCH MANGUEIRA FLEXÍVEL	TUYAU FLEXIBLE FLEXIBELE SLANG	192T
2		87396721		2	FLEXIBLE HOSE TUBO FLEXIBLE	TUBO FLESSIBILE FLEKSIBEL SLANGE	BIEGSAMER SCHLAUCH MANGUEIRA FLEXÍVEL	TUYAU FLEXIBLE FLEXIBELE SLANG	192T
3		87396684		1	BRACKET, - ASSY SOPORTE	STAFFA BESLAG	HALTERUNG SUPORTE	SUPPORT STEUN	225S
3A		72204201		2	HYD CONNECTOR CONECTOR HIDRÁULIC	CONNETTORE IDRAULIC HYDRAULIKSTIK	HYDR STECKVERBINDE CONECTOR HID.	CONNECTEUR HYDRAU HYDRAULISCHE AANSL	020R
4		87556832		2	HYD CONNECTOR CONECTOR HIDRÁULIC	CONNETTORE IDRAULIC HYDRAULIKSTIK	HYDR STECKVERBINDE CONECTOR HID.	CONNECTEUR HYDRAU HYDRAULISCHE AANSL	020R
5		70923841		8	O-RING, M12.42 ID x 1.78 Thk JUNTA TÓRICA	ANELLO TOROIDALE O-RING	O-RING O-RING	JOINT TORIQUE O-RING	055A
6		4982514		8	CABLE STRAP BANDA DE CABLE	FASCETTA PER CAVO KABELSTROP	KABELBINDER BRAÇADEIRA DE CABO	BRIDE DE CABLE BUNDELBAND	P716

Copyright © New Holland

5.0078	09	p1	03/10

BUCKET ROTATION (L=2.94 MT) - OPTIONAL CODE 461247068 (04-05-06)
ROTAZIONE BENNA (L=2.94 MT) - CODICE VARIANTE 461247068 (04-05-06)
UMDREHUNGSWANNE (L=2.94 MT) - OPTIONAL CODE 461247068 (04-05-06)
GODET ROTATIF (L=2.94 MT) - OPTIONAL CODE 461247068 (04-05-06)

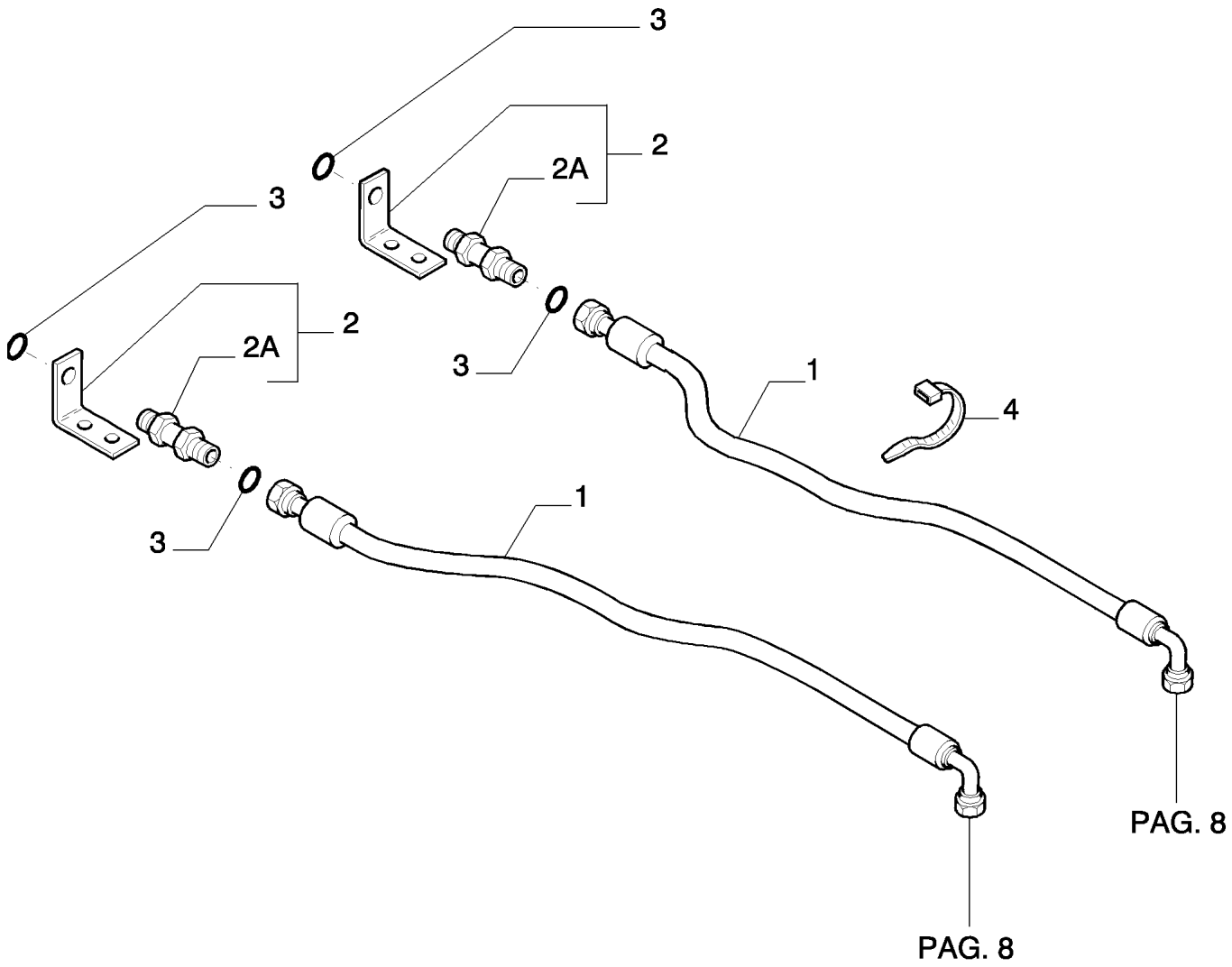

Copyright © New Holland

CUCHARA RODEANTE (L=2.94 MT) - OPTIONAL CODE 461247068 (04-05-06)
BUCKET ROTATION (L=2.94 MT) - OPTIONAL CODE 461247068 (04-05-06)
BUCKET ROTATION (L=2.94 MT) - OPTIONAL CODE 461247068 (04-05-06)
BUCKET ROTATION (L=2.94 MT) - OPTIONAL CODE 461247068 (04-05-06)

R	N	P.N.	MOD	Q	Description Denominacion	Descrizione Beskrivelse	Bezeichnung Denominação	Description Beschrijving	L.C.
1		{87383050}		2					
2		87343179		2	BRACKET, - ASSY SOPORTE	STAFFA BESLAG	HALTERUNG SUPORTE	SUPPORT STEUN	225S
2A		72204201		1	HYD CONNECTOR CONECTOR HIDRÁULIC(	CONNETTORE IDRAULI(HYDRAULIKSTIK	HYDR STECKVERBINDE CONECTOR HID.	CONNECTEUR HYDRAU HYDRAULISCHE AANSL	020R
3		70923841		4	O-RING, M12.42 ID x 1.78 Thk JUNTA TÓRICA	ANELLO TOROIDALE O-RING	O-RING O-RING	JOINT TORIQUE O-RING	055A
4		4982514		8	CABLE STRAP BANDA DE CABLE	FASCETTA PER CAVO KABELSTROP	KABELBINDER BRAÇADEIRA DE CABO	BRIDE DE CABLE BUNDELBAND	P716

Copyright © New Holland

5.0078	10	p1	03/10

BUCKET ROTATION (L=2.94 MT) - OPTIONAL CODE 461247058 (01-02-03) - 461247068 (04-05-06)
ROTAZIONE BENNA (L=2.94 MT) - CODICE VARIANTE 461247058 (01-02-03) - 461247068 (04-05-06)
UMDREHUNGSWANNE (L=2.94 MT) - OPTIONAL CODE 461247058 (01-02-03) - 461247068 (04-05-06)
GODET ROTATIF (L=2.94 MT) - OPTIONAL CODE 461247058 (01-02-03) - 461247068 (04-05-06)

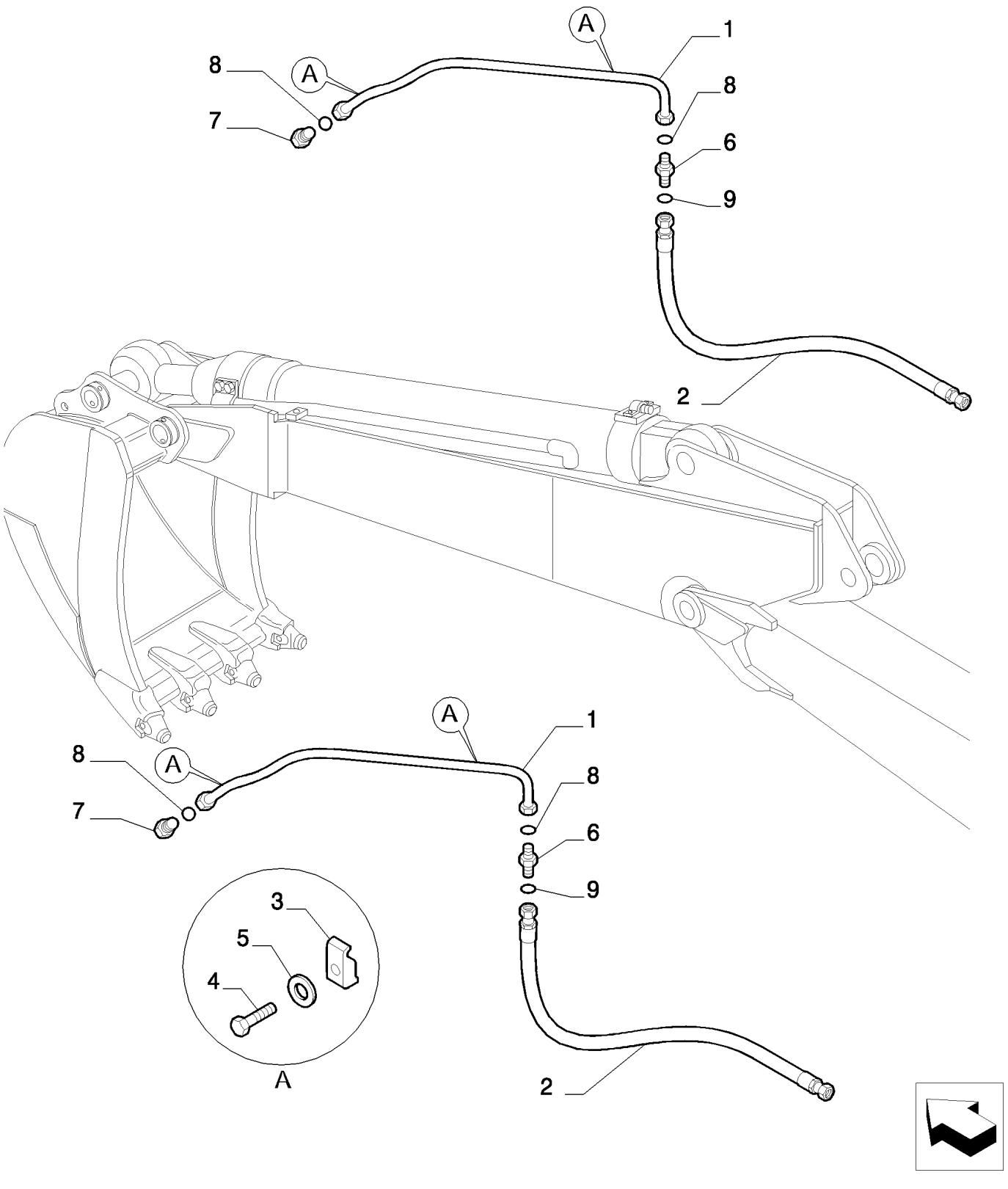

Copyright © New Holland

CUCHARA RODEANTE (L=2.94 MT) - OPTIONAL CODE 461247058 (01-02-03) - 461247068 (04-05-06)
BUCKET ROTATION (L=2.94 MT) - OPTIONAL CODE 461247058 (01-02-03) - 461247068 (04-05-06)
BUCKET ROTATION (L=2.94 MT) - OPTIONAL CODE 461247058 (01-02-03) - 461247068 (04-05-06)
BUCKET ROTATION (L=2.94 MT) - OPTIONAL CODE 461247058 (01-02-03) - 461247068 (04-05-06)

R	N	P.N.	MOD	Q	Description Denominacion	Descrizione Beskrivelse	Bezeichnung Denominação	Description Beschrijving	L.C.
1		87382950		2	RIGID TUBE TUBO RÍGIDO	TUBO RIGIDO STIFT RØR	ROHR TUBO RÍGIDO	TUYAU RIGIDE VASTE LEIDING	193T
2		72212247		2	FLEXIBLE HOSE TUBO FLEXIBLE	TUBO FLESSIBILE FLEKSIBEL SLANGE	BIEGSAMER SCHLAUCH MANGUEIRA FLEXÍVEL	TUYAU FLEXIBLE FLEXIBELE SLANG	192T
3		71466172		4	BRACKET SOPORTE	STAFFA BESLAG	HALTERUNG SUPORTE	SUPPORT STEUN	225S
4		11113234		4	BOLT, Hex, M12 x 50, 10.9 PERNO	BULLONE BOLT	SCHRAUBE PARAFUSO	VIS BOUT	140B
5		10517074		4	LOCK WASHER ARANDELA DE BLOQUE	RONDELLA DI SICUREZ LÅSESKIVE	SICHERUNGSSCHEIBE ANILHA DE RETENÇÃO	RONDELLE FREIN BORGRING	132R
6		72204293		2	HYD CONNECTOR CONECTOR HIDRÁULIC	CONNETTORE IDRAULI HYDRAULIKSTIK	HYDR STECKVERBINDE CONECTOR HID.	CONNECTEUR HYDRAU HYDRAULISCHE AANSL	020R
7		72204294		2	HYD CONNECTOR CONECTOR HIDRÁULIC	CONNETTORE IDRAULI HYDRAULIKSTIK	HYDR STECKVERBINDE CONECTOR HID.	CONNECTEUR HYDRAU HYDRAULISCHE AANSL	020R
8		71484462		4	O-RING JUNTA TÓRICA	ANELLO TOROIDALE O-RING	O-RING O-RING	JOINT TORIQUE O-RING	055A
9		70923841		2	O-RING, M12.42 ID x 1.78 Thk JUNTA TÓRICA	ANELLO TOROIDALE O-RING	O-RING O-RING	JOINT TORIQUE O-RING	055A

Copyright © New Holland

5.0078	11	p1	03/10

BUCKET ROTATION (L=2.94 MT) - OPTIONAL CODE 461247058 (01-02-03) - 461247068 (04-05-06)
ROTAZIONE BENNA (L=2.94 MT) - CODICE VARIANTE 461247058 (01-02-03) - 461247068 (04-05-06)
UMDREHUNGSWANNE (L=2.94 MT) - OPTIONAL CODE 461247058 (01-02-03) - 461247068 (04-05-06)
GODET ROTATIF (L=2.94 MT) - OPTIONAL CODE 461247058 (01-02-03) - 461247068 (04-05-06)

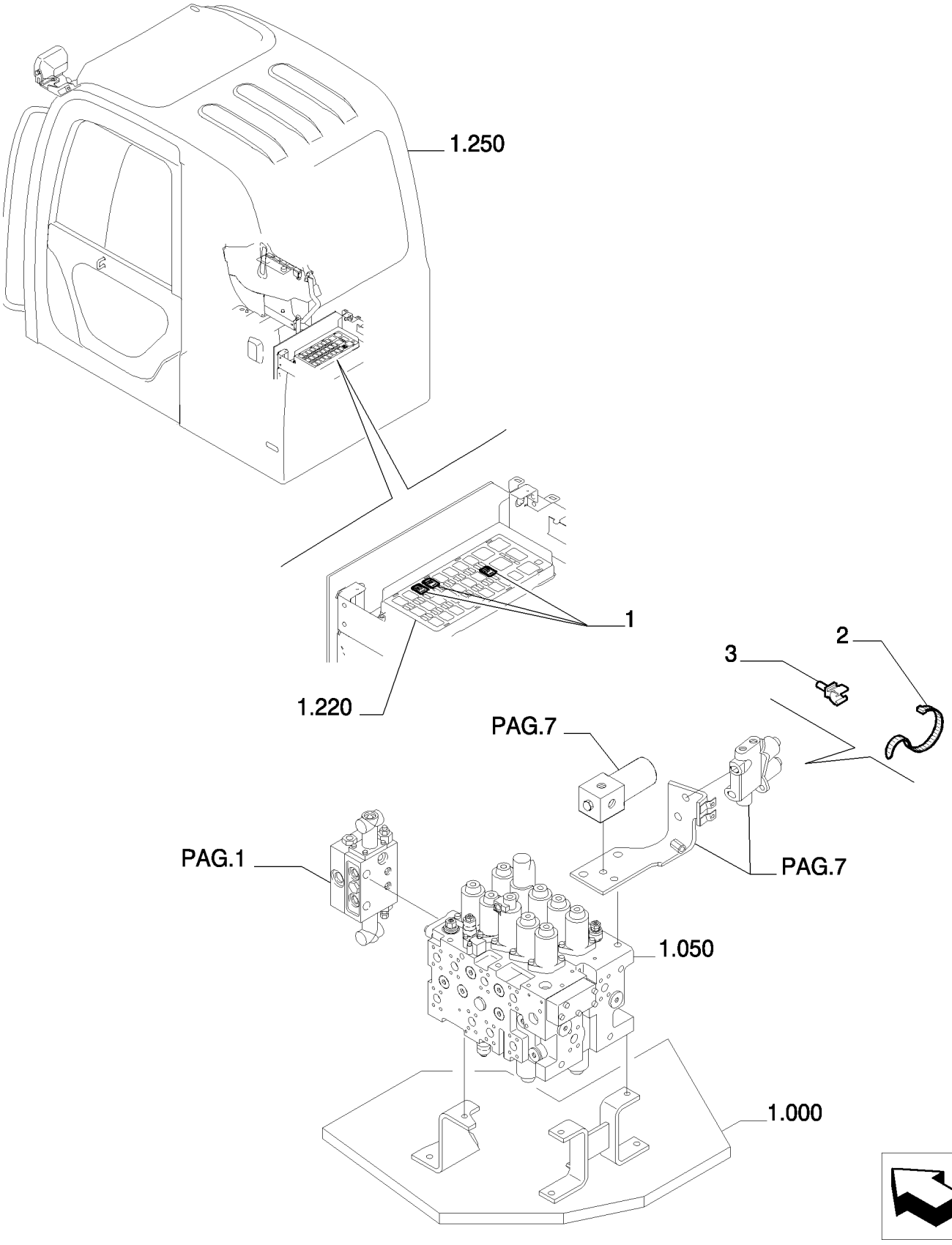

Copyright © New Holland

CUCHARA RODEANTE (L=2.94 MT) - OPTIONAL CODE 461247058 (01-02-03) - 461247068 (04-05-06)
BUCKET ROTATION (L=2.94 MT) - OPTIONAL CODE 461247058 (01-02-03) - 461247068 (04-05-06)
BUCKET ROTATION (L=2.94 MT) - OPTIONAL CODE 461247058 (01-02-03) - 461247068 (04-05-06)
BUCKET ROTATION (L=2.94 MT) - OPTIONAL CODE 461247058 (01-02-03) - 461247068 (04-05-06)

R	N	P.N.	MOD	Q	Description Denominacion	Descrizione Beskrivelse	Bezeichnung Denominação	Description Beschrijving	L.C.
1		87559156		3	RELAY RELÉ	RELÈ RELÆ	RELAIS RELÉ	RELAIS RELAIS	011R
2		72951499		4	CLIP ABRAZADERA	FERMO KLIPS	KLAMMER FIXADOR	COLLIER KLEM	045F
3		87526680		1	RETAINER COLLAR COLLAR DE RETENCIÓN	COLLARE DI FISSAGGIO RING, SPÆNDE	HALTERING ANEL DE FIXAÇÃO	COLLIER DE RETENUE BORGKRAAG	230S

Copyright © New Holland

5.0079	01	p1	03/10

BUCKET ROTATION (L=3.5 MT) - OPTIONAL CODE 461250028 (01-02-03) - 461250038 (04-05-06)
ROTAZIONE BENNA (L=3.5 MT) - CODICE VARIANTE 461250028 (01-02-03) - 461250038 (04-05-06)
UMDREHUNGSWANNE (L=3.5 MT) - OPTIONAL CODE 461250028 (01-02-03) - 461250038 (04-05-06)
GODET ROTATIF (L=3.5 MT) - OPTIONAL CODE 461250028 (01-02-03) - 461250038 (04-05-06)

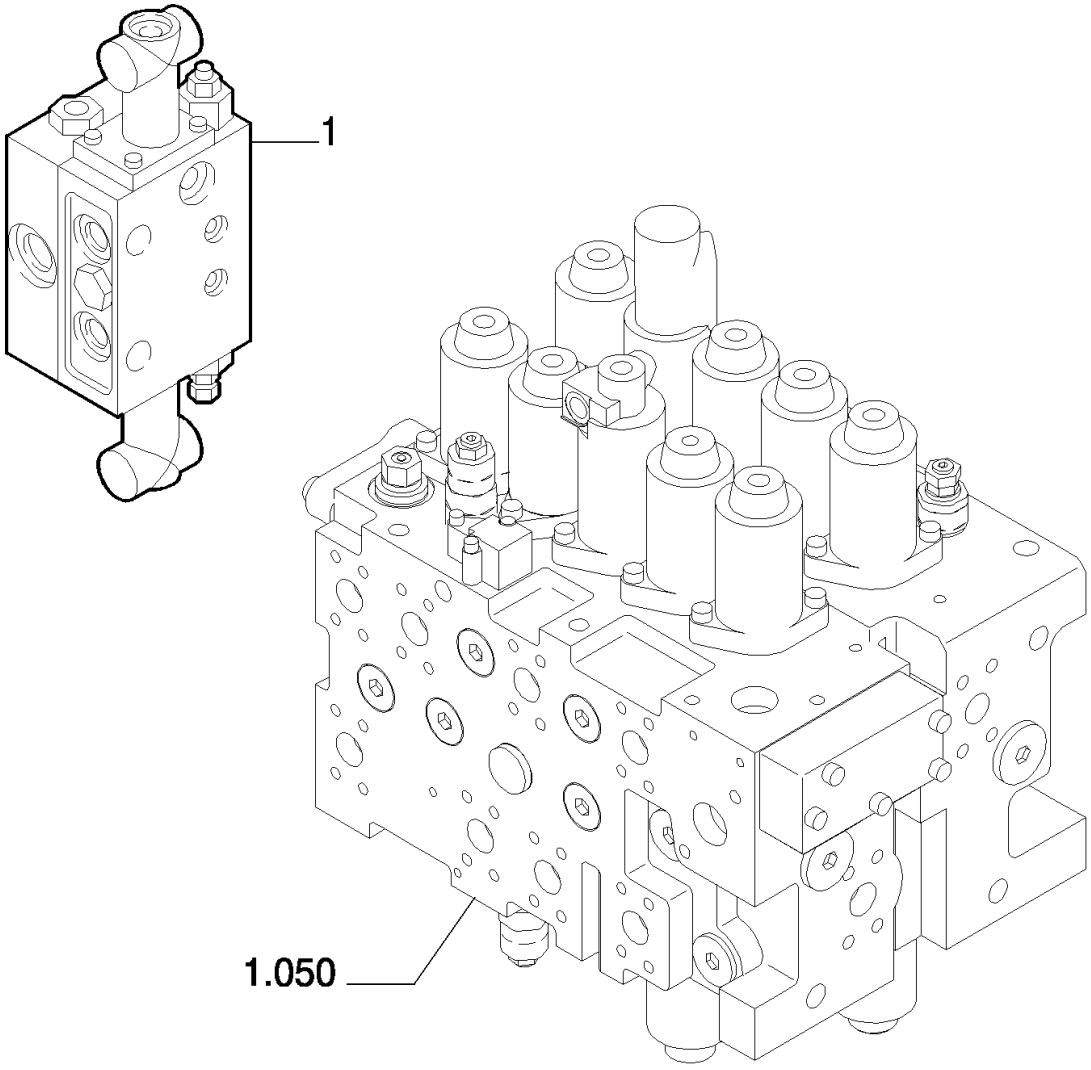

Copyright © New Holland

CUCHARA RODEANTE (L=3.5 MT) - OPTIONAL CODE 461250028 (01-02-03) - 461250038 (04-05-06)
BUCKET ROTATION (L=3.5 MT) - OPTIONAL CODE 461250028 (01-02-03) - 461250038 (04-05-06)
BUCKET ROTATION (L=3.5 MT) - OPTIONAL CODE 461250028 (01-02-03) - 461250038 (04-05-06)
BUCKET ROTATION (L=3.5 MT) - OPTIONAL CODE 461250028 (01-02-03) - 461250038 (04-05-06)

R	N	P.N.	MOD	Q	Description Denominacion	Descrizione Beskrivelse	Bezeichnung Denominação	Description Beschrijving	L.C.
1	1	**87386068**		1	HYDRAULIC VALVE VÁLVULA HIDRÁULICA	DISTRIBUTORE IDRAULI HYDRAULIKVENTIL	HYDRAULIKVENTIL VÁLVULA HIDRÁULICA	SOUPAPE HYDRAULIQU HYDRAULISCHE KLEP	010V

(1) ASSY SEE SGR. 5.0076 PAGE 2

Copyright © New Holland

5.0079	02	p1	03/10

BUCKET ROTATION (L=3.5 MT) - OPTIONAL CODE 461250028 (01-02-03)
ROTAZIONE BENNA (L=3.5 MT) - CODICE VARIANTE 461250028 (01-02-03)
UMDREHUNGSWANNE (L=3.5 MT) - OPTIONAL CODE 461250028 (01-02-03)
GODET ROTATIF (L=3.5 MT) - OPTIONAL CODE 461250028 (01-02-03)

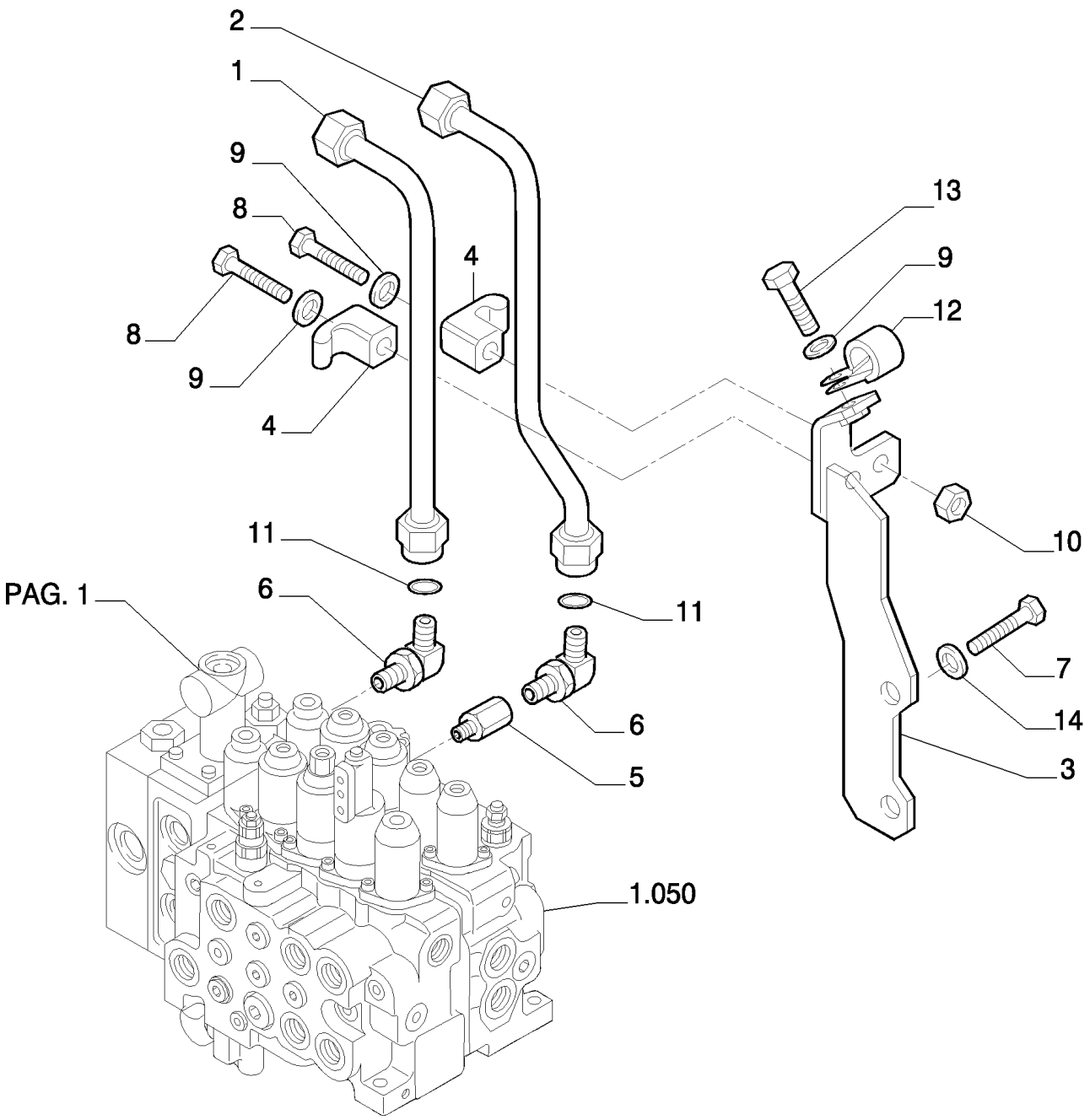

Copyright © New Holland

CUCHARA RODEANTE (L=3.5 MT) - OPTIONAL CODE 461250028 (01-02-03)
BUCKET ROTATION (L=3.5 MT) - OPTIONAL CODE 461250028 (01-02-03)
BUCKET ROTATION (L=3.5 MT) - OPTIONAL CODE 461250028 (01-02-03)
BUCKET ROTATION (L=3.5 MT) - OPTIONAL CODE 461250028 (01-02-03)

R	N	P.N.	MOD	Q	Description Denominacion	Descrizione Beskrivelse	Bezeichnung Denominação	Description Beschrijving	L.C.
1		87532096		1	RIGID TUBE TUBO RÍGIDO	TUBO RIGIDO STIFT RØR	ROHR TUBO RÍGIDO	TUYAU RIGIDE VASTE LEIDING	193T
2		87532097		1	RIGID TUBE TUBO RÍGIDO	TUBO RIGIDO STIFT RØR	ROHR TUBO RÍGIDO	TUYAU RIGIDE VASTE LEIDING	193T
3		87532102		1	BRACKET SOPORTE	STAFFA BESLAG	HALTERUNG SUPORTE	SUPPORT STEUN	225S
4		72954322		2	CLAMP ABRAZADERA	MORSETTO SPÆNDEBÅND	KLEMME BRAÇADEIRA	COLLIER KLEM	120M
5		72214808		1	HYD CONNECTOR CONECTOR HIDRÁULIC(	CONNETTORE IDRAULI(HYDRAULIKSTIK	HYDR STECKVERBINDE CONECTOR HID.	CONNECTEUR HYDRAU HYDRAULISCHE AANSL	020R
6		87532105		2	HYD CONNECTOR CONECTOR HIDRÁULIC(	CONNETTORE IDRAULI(HYDRAULIKSTIK	HYDR STECKVERBINDE CONECTOR HID.	CONNECTEUR HYDRAU HYDRAULISCHE AANSL	020R
7		11112234		2	BOLT, Hex, M12 x 25, 10.9, Full Thd PERNO	BULLONE BOLT	SCHRAUBE PARAFUSO	VIS BOUT	140B
8		11107434		2	SCREW TORNILLO	VITE SKRUE	SCHRAUBE PARAFUSO	VIS SCHROEF	040V
9		14496631		3	WASHER, M10 x 21 x 2 ARANDELA	RONDELLA FLADSKIVE	UNTERLEGSCHEIBE ANILHA	RONDELLE SLUITRING	131R
10		11701721		2	NUT, M10, Cl 10 TUERCA	DADO MØTRIK	MUTTER PORCA	ECROU MOER	010D
11		71404166		2	O-RING JUNTA TÓRICA	ANELLO TOROIDALE O-RING	O-RING O-RING	JOINT TORIQUE O-RING	055A
12		71405770		1	CLAMP ABRAZADERA	MORSETTO SPÆNDEBÅND	KLEMME BRAÇADEIRA	COLLIER KLEM	120M
13		11106234		1	BOLT, Hex, M10 x 25, 10.9, Full Thd PERNO	BULLONE BOLT	SCHRAUBE PARAFUSO	VIS BOUT	140B
14		14496731		2	WASHER, M12 x 24 x 2.5 Thk ARANDELA	RONDELLA FLADSKIVE	UNTERLEGSCHEIBE ANILHA	RONDELLE SLUITRING	131R

Copyright © New Holland

5.0079	03	p1	03/10

BUCKET ROTATION (L=3.5 MT) - OPTIONAL CODE 461250038 (04-05-06)
ROTAZIONE BENNA (L=3.5 MT) - CODICE VARIANTE 461250038 (04-05-06)
UMDREHUNGSWANNE (L=3.5 MT) - OPTIONAL CODE 461250038 (04-05-06)
GODET ROTATIF (L=3.5 MT) - OPTIONAL CODE 461250038 (04-05-06)

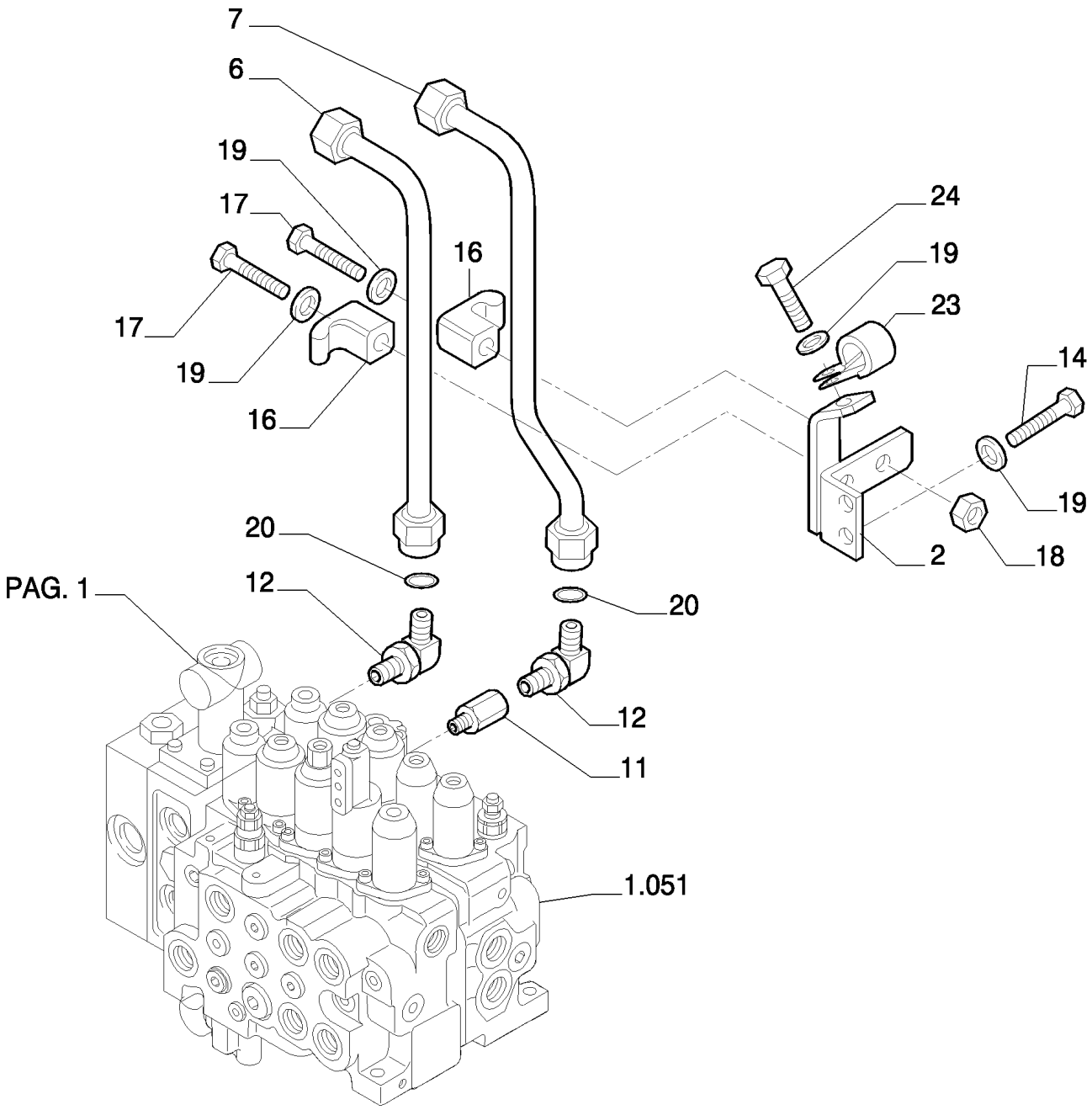

Copyright © New Holland

CUCHARA RODEANTE (L=3.5 MT) - OPTIONAL CODE 461250038 (04-05-06)
BUCKET ROTATION (L=3.5 MT) - OPTIONAL CODE 461250038 (04-05-06)
BUCKET ROTATION (L=3.5 MT) - OPTIONAL CODE 461250038 (04-05-06)
BUCKET ROTATION (L=3.5 MT) - OPTIONAL CODE 461250038 (04-05-06)

R	N	P.N.	MOD	Q	Description Denominacion	Descrizione Beskrivelse	Bezeichnung Denominação	Description Beschrijving	L.C.
2		87557635		1	SUPPORT SOPORTE	SUPPORTO BESLAG	STÜTZE SUPORTE	SUPPORT STEUN	300S
6		87557640		1	RIGID TUBE TUBO RÍGIDO	TUBO RIGIDO STIFT RØR	ROHR TUBO RÍGIDO	TUYAU RIGIDE VASTE LEIDING	193T
7		87557638		1	RIGID TUBE TUBO RÍGIDO	TUBO RIGIDO STIFT RØR	ROHR TUBO RÍGIDO	TUYAU RIGIDE VASTE LEIDING	193T
11		72214808		1	HYD CONNECTOR CONECTOR HIDRÁULIC(	CONNETTORE IDRAULIC(HYDRAULIKSTIK	HYDR STECKVERBINDE CONECTOR HID.	CONNECTEUR HYDRAU HYDRAULISCHE AANSL	020R
12		87532105		2	HYD CONNECTOR CONECTOR HIDRÁULIC(	CONNETTORE IDRAULIC(HYDRAULIKSTIK	HYDR STECKVERBINDE CONECTOR HID.	CONNECTEUR HYDRAU HYDRAULISCHE AANSL	020R
14		11106434		2	BOLT, Hex, M10 x 30, 10.9, Full Thd PERNO	BULLONE BOLT	SCHRAUBE PARAFUSO	VIS BOUT	140B
16		72954322		2	CLAMP ABRAZADERA	MORSETTO SPÆNDEBÅND	KLEMME BRAÇADEIRA	COLLIER KLEM	120M
17		11107434		2	SCREW TORNILLO	VITE SKRUE	SCHRAUBE PARAFUSO	VIS SCHROEF	040V
18		11701721		2	NUT, M10, Cl 10 TUERCA	DADO MØTRIK	MUTTER PORCA	ECROU MOER	010D
19		14496631		5	WASHER, M10 x 21 x 2 ARANDELA	RONDELLA FLADSKIVE	UNTERLEGSCHEIBE ANILHA	RONDELLE SLUITRING	131R
20		71404166		2	O-RING JUNTA TÓRICA	ANELLO TOROIDALE O-RING	O-RING O-RING	JOINT TORIQUE O-RING	055A
23		71405770		1	CLAMP ABRAZADERA	MORSETTO SPÆNDEBÅND	KLEMME BRAÇADEIRA	COLLIER KLEM	120M
24		11106234		1	BOLT, Hex, M10 x 25, 10.9, Full Thd PERNO	BULLONE BOLT	SCHRAUBE PARAFUSO	VIS BOUT	140B

Copyright © New Holland

5.0079	04	p1	03/10

BUCKET ROTATION (L=3.5 MT) - OPTIONAL CODE 461250028 (01-02-03) - 461250038 (04-05-06)
ROTAZIONE BENNA (L=3.5 MT) - CODICE VARIANTE 461250028 (01-02-03) - 461250038 (04-05-06)
UMDREHUNGSWANNE (L=3.5 MT) - OPTIONAL CODE 461250028 (01-02-03) - 461250038 (04-05-06)
GODET ROTATIF (L=3.5 MT) - OPTIONAL CODE 461250028 (01-02-03) - 461250038 (04-05-06)

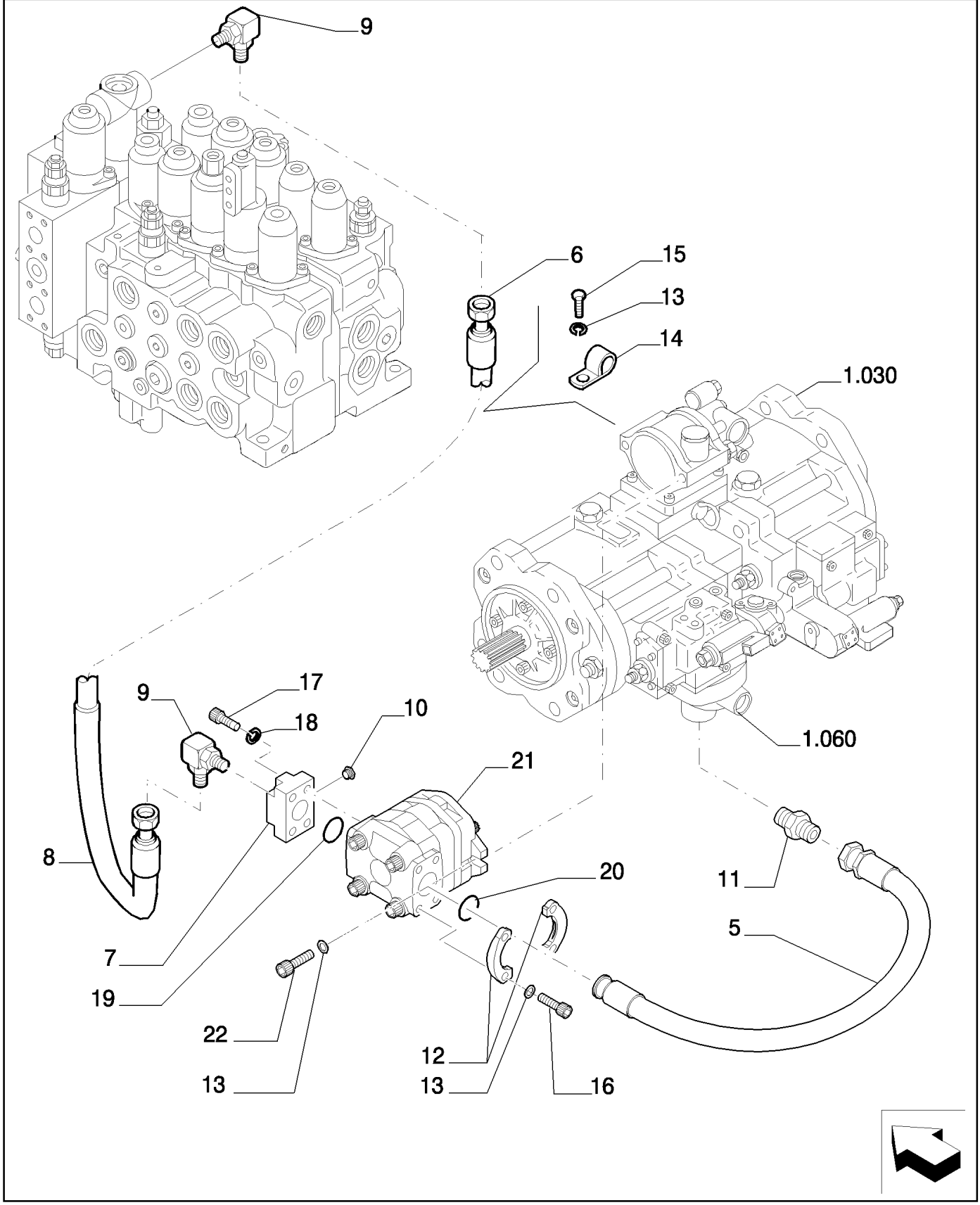

Copyright © New Holland

CUCHARA RODEANTE (L=3.5 MT) - OPTIONAL CODE 461250028 (01-02-03) - 461250038 (04-05-06)
BUCKET ROTATION (L=3.5 MT) - OPTIONAL CODE 461250028 (01-02-03) - 461250038 (04-05-06)
BUCKET ROTATION (L=3.5 MT) - OPTIONAL CODE 461250028 (01-02-03) - 461250038 (04-05-06)
BUCKET ROTATION (L=3.5 MT) - OPTIONAL CODE 461250028 (01-02-03) - 461250038 (04-05-06)

R	N	P.N.	MOD	Q	Description Denominacion	Descrizione Beskrivelse	Bezeichnung Denominação	Description Beschrijving	L.C.
5		87528092		1	FLEXIBLE HOSE TUBO FLEXIBLE	TUBO FLESSIBILE FLEKSIBEL SLANGE	BIEGSAMER SCHLAUCH MANGUEIRA FLEXÍVEL	TUYAU FLEXIBLE FLEXIBELE SLANG	192T
6		87530581		1	FLEXIBLE HOSE TUBO FLEXIBLE	TUBO FLESSIBILE FLEKSIBEL SLANGE	BIEGSAMER SCHLAUCH MANGUEIRA FLEXÍVEL	TUYAU FLEXIBLE FLEXIBELE SLANG	192T
7		72204754		1	FLANGE BRIDA	FLANGIA FLANGE	FLANSCH FLANGE	BRIDE FLENS	070F
8		87375394		1	FLEXIBLE SHEATH RECUBRIMIENTO FLEXI	GUAINA FLESSIBILE FLEKSIBELT SVØB	UMMANTELUNG PEÇA FLEXÍVEL	GAINE SOUPLE FLEXIBELE MANTEL	140G
9		72214763		2	HYD CONNECTOR CONECTOR HIDRÁULIC	CONNETTORE IDRAULI HYDRAULIKSTIK	HYDR STECKVERBINDE CONECTOR HID.	CONNECTEUR HYDRAU HYDRAULISCHE AANSL	020R
10		72214663		1	PLUG TAPÓN	TAPPO PROP	STOPFEN TAMPÃO	BOUCHON PLUG	050T
11		87530584		1	HYD CONNECTOR CONECTOR HIDRÁULIC	CONNETTORE IDRAULI HYDRAULIKSTIK	HYDR STECKVERBINDE CONECTOR HID.	CONNECTEUR HYDRAU HYDRAULISCHE AANSL	020R
12		71404909		2	FLANGE BRIDA	FLANGIA FLANGE	FLANSCH FLANGE	BRIDE FLENS	070F
13		14496631		8	WASHER, M10 x 21 x 2 ARANDELA	RONDELLA FLADSKIVE	UNTERLEGSCHEIBE ANILHA	RONDELLE SLUITRING	131R
14		71405770		2	CLAMP ABRAZADERA	MORSETTO SPÆNDEBÅND	KLEMME BRAÇADEIRA	COLLIER KLEM	120M
15		ZM73C10020		2	BOLT PERNO	BULLONE BOLT	SCHRAUBE PARAFUSO	VIS BOUT	140B
16		11106634		4	BOLT, Hex, M10 x 35, 10.9, Full Thd PERNO	BULLONE BOLT	SCHRAUBE PARAFUSO	VIS BOUT	140B
17		14420534		4	SCREW TORNILLO	VITE SKRUE	SCHRAUBE PARAFUSO	VIS SCHROEF	040V
18		10516874		4	LOCK WASHER ARANDELA DE BLOQUE	RONDELLA DI SICUREZ LÅSESKIVE	SICHERUNGSSCHEIBE ANILHA DE RETENÇÃO	RONDELLE FREIN BORGRING	132R
19		72215443		1	O-RING JUNTA TÓRICA	ANELLO TOROIDALE O-RING	O-RING O-RING	JOINT TORIQUE O-RING	055A
20		70924192		1	O-RING JUNTA TÓRICA	ANELLO TOROIDALE O-RING	O-RING O-RING	JOINT TORIQUE O-RING	055A
21	1	72204291		1	HYDRAULIC PUMP BOMBA HIDRÁULICO	POMPA IDRAULICA HYDRAULIKPUMPE	HYDRAULIKPUMPE BOMBA HIDRÁULICA	POMPE HYDRAULIQUE HYDRAULISCHE POMP	155P
22		14420234		2	SCREW TORNILLO	VITE SKRUE	SCHRAUBE PARAFUSO	VIS SCHROEF	040V

(1) ASSY SEE SGR. 5.0076 PAGE 6

Copyright © New Holland

5.0079	05	p1	03/10

BUCKET ROTATION (L=3.5 MT) - OPTIONAL CODE 461250028 (01-02-03) - 461250038 (04-05-06)
ROTAZIONE BENNA (L=3.5 MT) - CODICE VARIANTE 461250028 (01-02-03) - 461250038 (04-05-06)
UMDREHUNGSWANNE (L=3.5 MT) - OPTIONAL CODE 461250028 (01-02-03) - 461250038 (04-05-06)
GODET ROTATIF (L=3.5 MT) - OPTIONAL CODE 461250028 (01-02-03) - 461250038 (04-05-06)

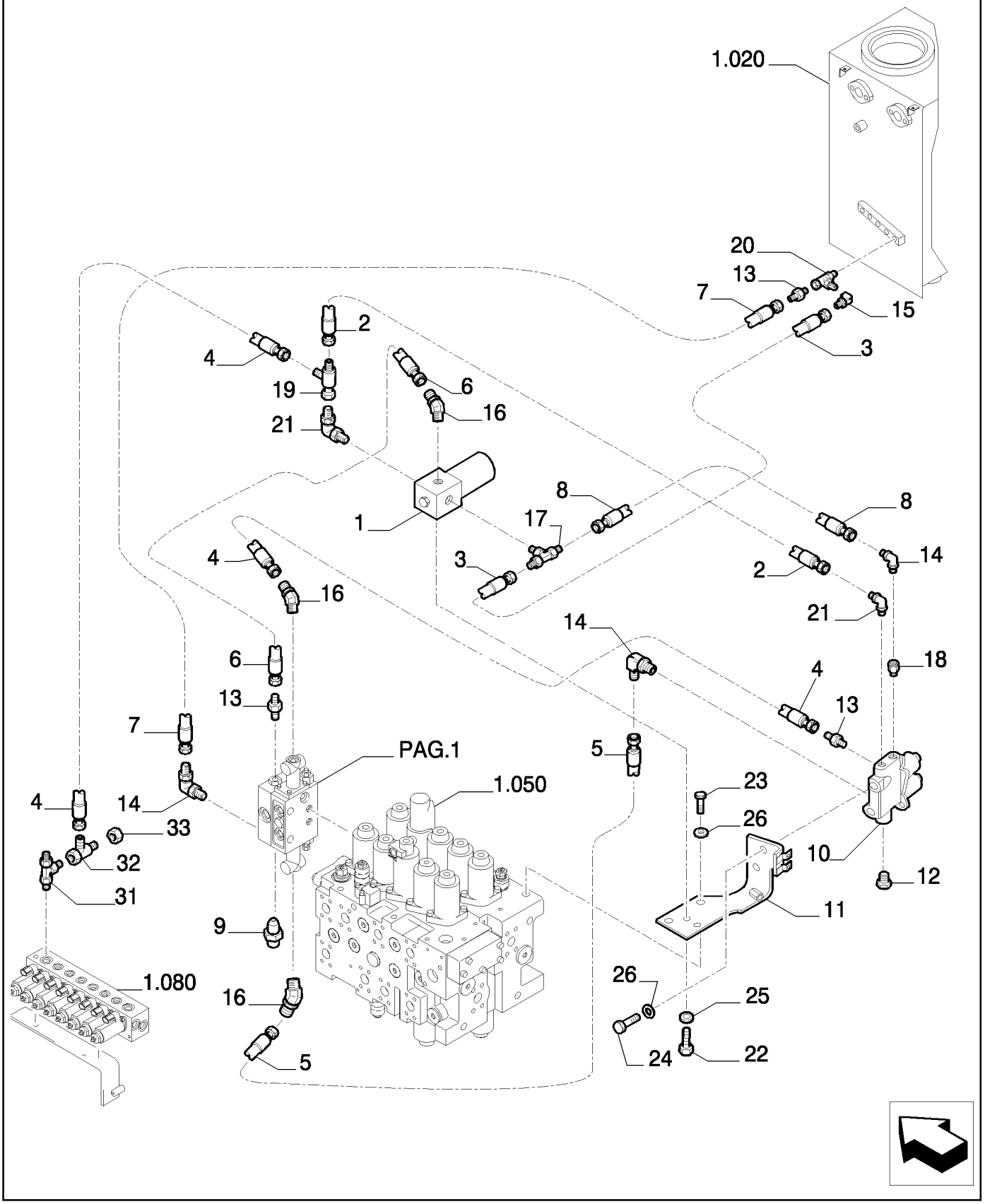

Copyright © New Holland

CUCHARA RODEANTE (L=3.5 MT) - OPTIONAL CODE 461250028 (01-02-03) - 461250038 (04-05-06)
BUCKET ROTATION (L=3.5 MT) - OPTIONAL CODE 461250028 (01-02-03) - 461250038 (04-05-06)
BUCKET ROTATION (L=3.5 MT) - OPTIONAL CODE 461250028 (01-02-03) - 461250038 (04-05-06)
BUCKET ROTATION (L=3.5 MT) - OPTIONAL CODE 461250028 (01-02-03) - 461250038 (04-05-06)

R	N	P.N.	MOD	Q	Description Denominacion	Descrizione Beskrivelse	Bezeichnung Denominação	Description Beschrijving	L.C.
1	1	72955526		1	VALVE VÁLVULA	VALVOLA VENTIL	VENTIL VÁLVULA	SOUPAPE KLEP	9620
2		87397448		1	FLEXIBLE HOSE TUBO FLEXIBLE	TUBO FLESSIBILE FLEKSIBEL SLANGE	BIEGSAMER SCHLAUCH MANGUEIRA FLEXÍVEL	TUYAU FLEXIBLE FLEXIBELE SLANG	192T
3		87532906		1	HOSE TUBO	TUBO FLESSIBILE SLANGE	SCHLAUCH MANGUEIRA	FLEXIBLE SLANG	030M
4		72214535		2	FLEXIBLE HOSE TUBO FLEXIBLE	TUBO FLESSIBILE FLEKSIBEL SLANGE	BIEGSAMER SCHLAUCH MANGUEIRA FLEXÍVEL	TUYAU FLEXIBLE FLEXIBELE SLANG	192T
5		72214539		1	FLEXIBLE HOSE TUBO FLEXIBLE	TUBO FLESSIBILE FLEKSIBEL SLANGE	BIEGSAMER SCHLAUCH MANGUEIRA FLEXÍVEL	TUYAU FLEXIBLE FLEXIBELE SLANG	192T
6		87645092		1	FLEXIBLE HOSE TUBO FLEXIBLE	TUBO FLESSIBILE FLEKSIBEL SLANGE	BIEGSAMER SCHLAUCH MANGUEIRA FLEXÍVEL	TUYAU FLEXIBLE FLEXIBELE SLANG	192T
7		87687417		1	FLEXIBLE HOSE TUBO FLEXIBLE	TUBO FLESSIBILE FLEKSIBEL SLANGE	BIEGSAMER SCHLAUCH MANGUEIRA FLEXÍVEL	TUYAU FLEXIBLE FLEXIBELE SLANG	192T
8		87532907		1	HOSE TUBO	TUBO FLESSIBILE SLANGE	SCHLAUCH MANGUEIRA	FLEXIBLE SLANG	030M
9		87524903		1	SENSOR SENSOR	SENSORE FØLER	SENSOR SENSOR	CAPTEUR SENSOR	608S
10	2	87531523		1	HYDRAULIC VALVE VÁLVULA HIDRÁULICA	DISTRIBUTORE IDRAULI HYDRAULIKVENTIL	HYDRAULIKVENTIL VÁLVULA HIDRÁULICA	SOUPAPE HYDRAULIQU HYDRAULISCHE KLEP	010V
11		87687414		1	BRACKET SOPORTE	STAFFA BESLAG	HALTERUNG SUPORTE	SUPPORT STEUN	225S
12		72214663		1	PLUG TAPÓN	TAPPO PROP	STOPFEN TAMPÃO	BOUCHON PLUG	050T
13		72214744		3	HYD CONNECTOR CONECTOR HIDRÁULIC	CONNETTORE IDRAULI HYDRAULIKSTIK	HYDR STECKVERBINDE CONECTOR HID.	CONNECTEUR HYDRAU HYDRAULISCHE AANSL	020R
14		72214524		3	HYD CONNECTOR CONECTOR HIDRÁULIC	CONNETTORE IDRAULI HYDRAULIKSTIK	HYDR STECKVERBINDE CONECTOR HID.	CONNECTEUR HYDRAU HYDRAULISCHE AANSL	020R
15		72214525		1	HYD CONNECTOR CONECTOR HIDRÁULIC	CONNETTORE IDRAULI HYDRAULIKSTIK	HYDR STECKVERBINDE CONECTOR HID.	CONNECTEUR HYDRAU HYDRAULISCHE AANSL	020R
16		72214542		3	HYD CONNECTOR CONECTOR HIDRÁULIC	CONNETTORE IDRAULI HYDRAULIKSTIK	HYDR STECKVERBINDE CONECTOR HID.	CONNECTEUR HYDRAU HYDRAULISCHE AANSL	020R
17		72955434		1	TEE RACOR EN T	PEZZO A T T-STYKKE	T-STÜCK TÊ	RACCORD EN T T-STUK	9020
18		72217408		1	HYD CONNECTOR CONECTOR HIDRÁULIC	CONNETTORE IDRAULI HYDRAULIKSTIK	HYDR STECKVERBINDE CONECTOR HID.	CONNECTEUR HYDRAU HYDRAULISCHE AANSL	020R
19		72954988		1	TEE RACOR EN T	PEZZO A T T-STYKKE	T-STÜCK TÊ	RACCORD EN T T-STUK	9020
20		72283853		1	TEE RACOR EN T	PEZZO A T T-STYKKE	T-STÜCK TÊ	RACCORD EN T T-STUK	9020
21		72214735		2	HYD CONNECTOR CONECTOR HIDRÁULIC	CONNETTORE IDRAULI HYDRAULIKSTIK	HYDR STECKVERBINDE CONECTOR HID.	CONNECTEUR HYDRAU HYDRAULISCHE AANSL	020R
22		10902234		2	BOLT, Hex, M6 x 16, 10.9, Full Thd PERNO	BULLONE BOLT	SCHRAUBE PARAFUSO	VIS BOUT	140B
23		11106234		2	BOLT, Hex, M10 x 25, 10.9, Full Thd PERNO	BULLONE BOLT	SCHRAUBE PARAFUSO	VIS BOUT	140B

(1) ASSY SEE SGR. 5.0076 PAGE 8
(2) ASSY SEE SGR. 5.0076 PAGE 9

Copyright © New Holland

5.0079	05	p2	03/10

BUCKET ROTATION (L=3.5 MT) - OPTIONAL CODE 461250028 (01-02-03) - 461250038 (04-05-06)
ROTAZIONE BENNA (L=3.5 MT) - CODICE VARIANTE 461250028 (01-02-03) - 461250038 (04-05-06)
UMDREHUNGSWANNE (L=3.5 MT) - OPTIONAL CODE 461250028 (01-02-03) - 461250038 (04-05-06)
GODET ROTATIF (L=3.5 MT) - OPTIONAL CODE 461250028 (01-02-03) - 461250038 (04-05-06)

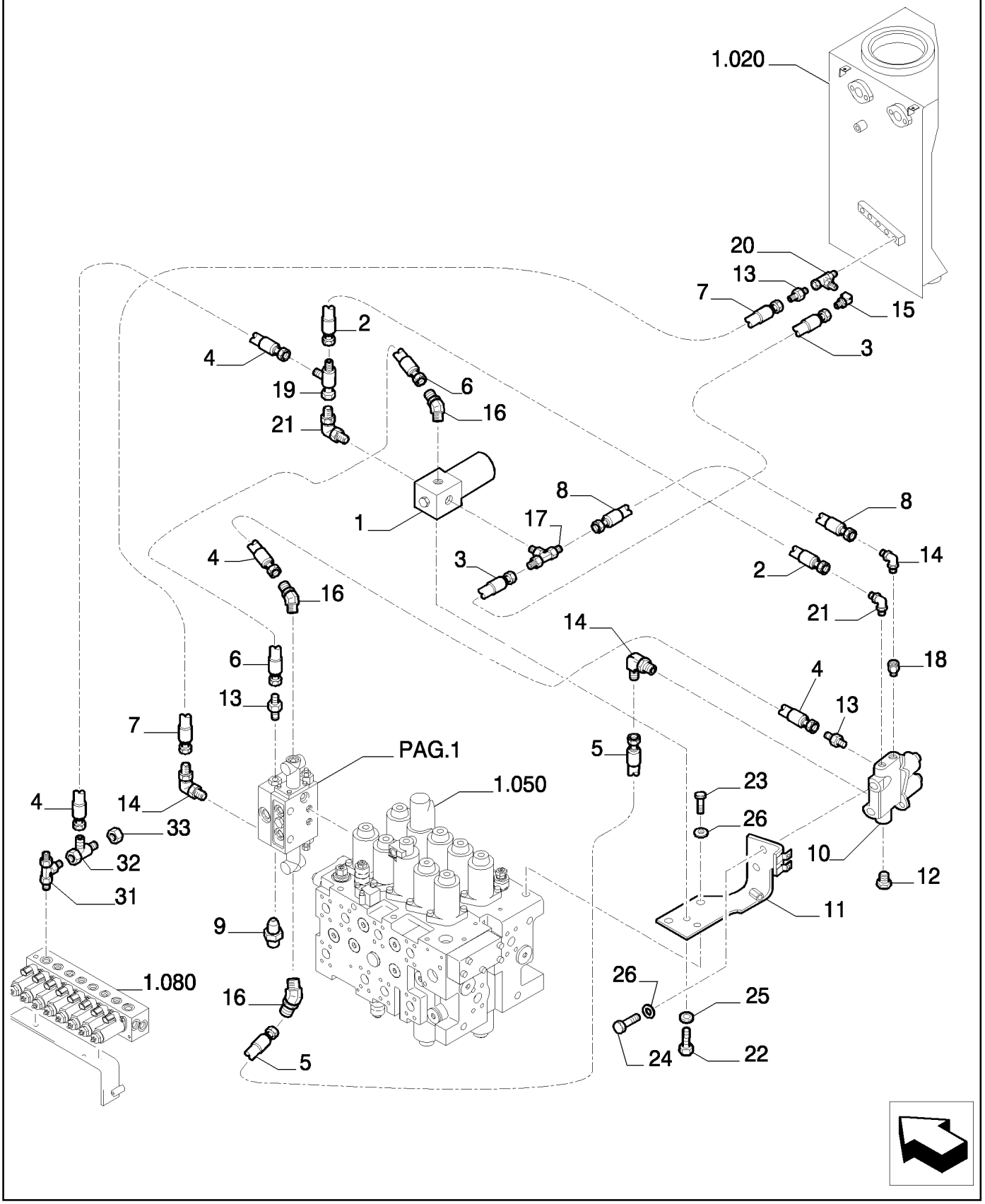

Copyright © New Holland

CUCHARA RODEANTE (L=3.5 MT) - OPTIONAL CODE 461250028 (01-02-03) - 461250038 (04-05-06)
BUCKET ROTATION (L=3.5 MT) - OPTIONAL CODE 461250028 (01-02-03) - 461250038 (04-05-06)
BUCKET ROTATION (L=3.5 MT) - OPTIONAL CODE 461250028 (01-02-03) - 461250038 (04-05-06)
BUCKET ROTATION (L=3.5 MT) - OPTIONAL CODE 461250028 (01-02-03) - 461250038 (04-05-06)

R	N	P.N.	MOD	Q	Description Denominacion	Descrizione Beskrivelse	Bezeichnung Denominação	Description Beschrijving	L.C.
24		11106034		2	BOLT, Hex, M10 x 20, 10.9, Full Thd				
					PERNO	BULLONE BOLT	SCHRAUBE PARAFUSO	VIS BOUT	140B
25		14496431		2	WASHER, M6.4 x 12.5 x 1.6 Thk				
					ARANDELA	RONDELLA FLADSKIVE	UNTERLEGSCHEIBE ANILHA	RONDELLE SLUITRING	131R
26		14496631		4	WASHER, M10 x 21 x 2	RONDELLA	UNTERLEGSCHEIBE	RONDELLE	131R
					ARANDELA	FLADSKIVE	ANILHA	SLUITRING	
31		87338401		1	HYD CONNECTOR	CONNETTORE IDRAULI(	HYDR STECKVERBINDE	CONNECTEUR HYDRAU	020R
					CONECTOR HIDRÁULIC(	HYDRAULIKSTIK	CONECTOR HID.	HYDRAULISCHE AANSL	
32		72954988		1	TEE	PEZZO A T	T-STÜCK	RACCORD EN T	9020
					RACOR EN T	T-STYKKE	TÊ	T-STUK	
33		72214546		1	PLUG	TAPPO	STOPFEN	BOUCHON	050T
					TAPÓN	PROP	TAMPÃO	PLUG	

Copyright © New Holland

5.0079	06	p1	03/10

BUCKET ROTATION (L=3.5 MT) - OPTIONAL CODE 461250028 (01-02-03) - 461250038 (04-05-06)
ROTAZIONE BENNA (L=3.5 MT) - CODICE VARIANTE 461250028 (01-02-03) - 461250038 (04-05-06)
UMDREHUNGSWANNE (L=3.5 MT) - OPTIONAL CODE 461250028 (01-02-03) - 461250038 (04-05-06)
GODET ROTATIF (L=3.5 MT) - OPTIONAL CODE 461250028 (01-02-03) - 461250038 (04-05-06)

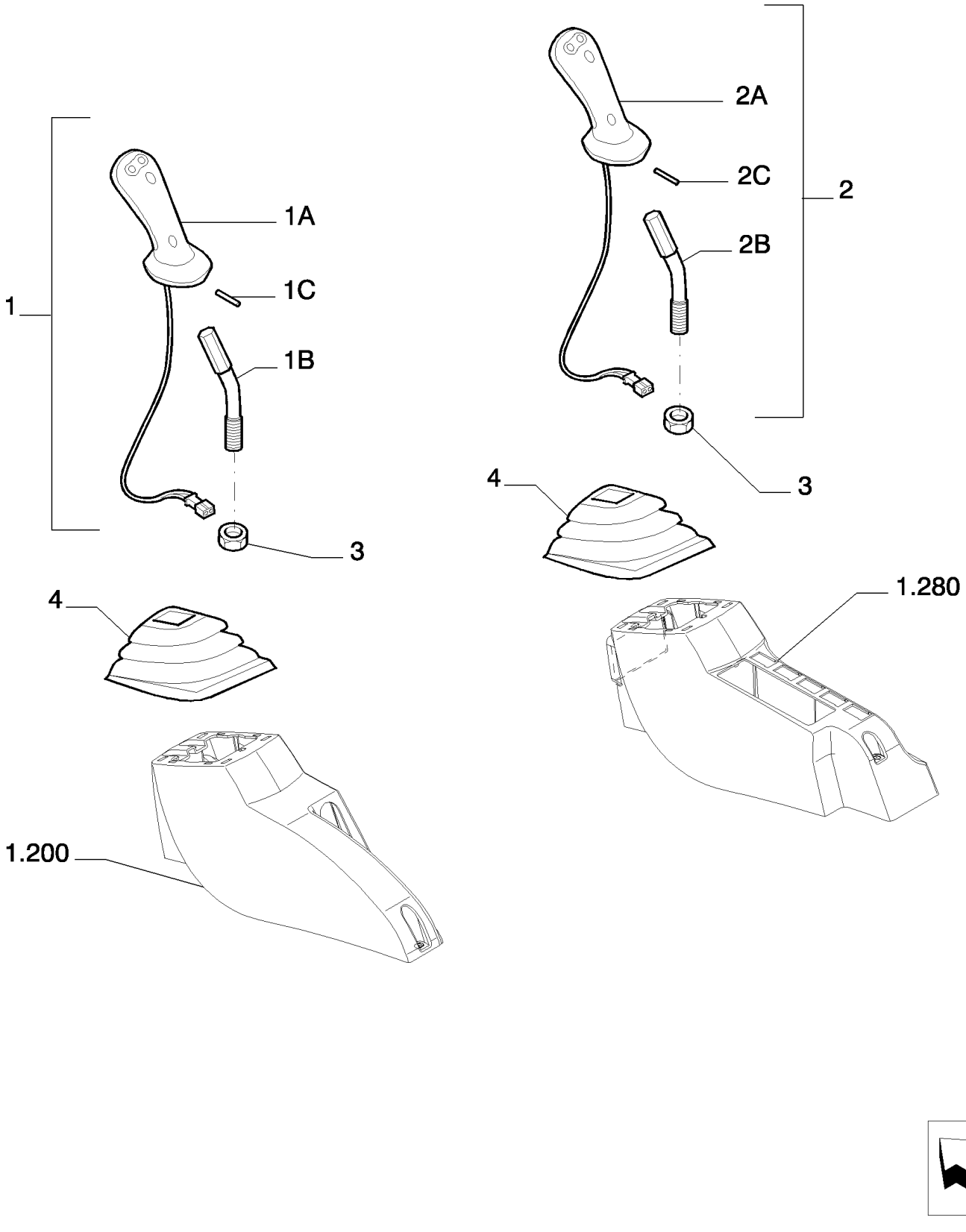

Copyright © New Holland

CUCHARA RODEANTE (L=3.5 MT) - OPTIONAL CODE 461250028 (01-02-03) - 461250038 (04-05-06)
BUCKET ROTATION (L=3.5 MT) - OPTIONAL CODE 461250028 (01-02-03) - 461250038 (04-05-06)
BUCKET ROTATION (L=3.5 MT) - OPTIONAL CODE 461250028 (01-02-03) - 461250038 (04-05-06)
BUCKET ROTATION (L=3.5 MT) - OPTIONAL CODE 461250028 (01-02-03) - 461250038 (04-05-06)

R	N	P.N.	MOD	Q	Description Denominacion	Descrizione Beskrivelse	Bezeichnung Denominação	Description Beschrijving	L.C.
1		{YN03M02148F1}		1	LEFT - ASSY				
1A		71485944		1	HANDLE GRIP PERILLA	IMPUGNATURA HÅNDGREB	HANDGRIFF GARRA	POIGNEE DE MAINTIEN HANDGREEP	025I
1B		YN03M02134P1		1	LEVER PALANCA	LEVA ARM	HEBEL ALAVANCA	LEVIER HEFBOOM	045L
1C		14601271		1	ROLL PIN BULÓN DE GIRO	SPINA ELASTICA SPLIT	SPANNSTIFT TROÇO	GOUPILLE ELASTIQUE ROLPEN	200S
2		{YN03M02149F1}		1	RIGHT - ASSY				
2A		71485944		1	HANDLE GRIP PERILLA	IMPUGNATURA HÅNDGREB	HANDGRIFF GARRA	POIGNEE DE MAINTIEN HANDGREEP	025I
2B		YN03M02134P1		1	LEVER PALANCA	LEVA ARM	HEBEL ALAVANCA	LEVIER HEFBOOM	045L
2C		14601271		1	ROLL PIN BULÓN DE GIRO	SPINA ELASTICA SPLIT	SPANNSTIFT TROÇO	GOUPILLE ELASTIQUE ROLPEN	200S
3		12163224		2	NUT TUERCA	DADO MØTRIK	MUTTER PORCA	ECROU MOER	010D
4		YN03M02114P1		2	BELLOWS FUELLE	SOFFIETTI BLÆSEBÆLG	FALTENBALG FOLE	SOUFFLET BALGEN	169S

Copyright © New Holland

5.0079	07	p1	03/10

BUCKET ROTATION (L=3.5 MT) - OPTIONAL CODE 461250028 (01-02-03)
ROTAZIONE BENNA (L=3.5 MT) - CODICE VARIANTE 461250028 (01-02-03)
UMDREHUNGSWANNE (L=3.5 MT) - OPTIONAL CODE 461250028 (01-02-03)
GODET ROTATIF (L=3.5 MT) - VOPTIONAL CODE 461250028 (01-02-03)

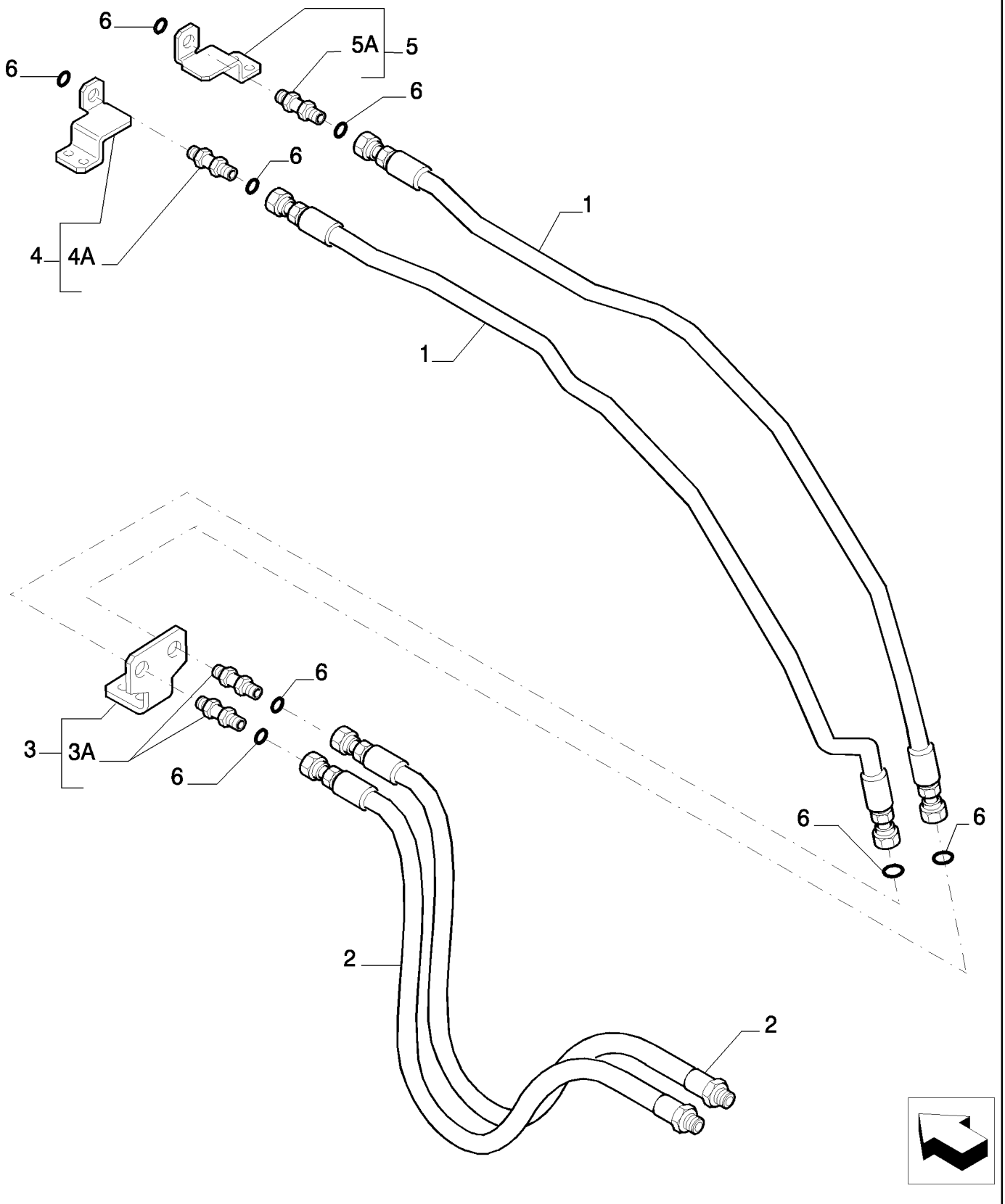

Copyright © New Holland

CUCHARA RODEANTE (L=3.5 MT) - OPTIONAL CODE 461250028 (01-02-03)
BUCKET ROTATION (L=3.5 MT) - OPTIONAL CODE 461250028 (01-02-03)
BUCKET ROTATION (L=3.5 MT) - OPTIONAL CODE 461250028 (01-02-03)
BUCKET ROTATION (L=3.5 MT) - OPTIONAL CODE 461250028 (01-02-03)

R	N	P.N.	MOD	Q	Description Denominacion	Descrizione Beskrivelse	Bezeichnung Denominação	Description Beschrijving	L.C.
1		87396720		2	FLEXIBLE HOSE TUBO FLEXIBLE	TUBO FLESSIBILE FLEKSIBEL SLANGE	BIEGSAMER SCHLAUCH MANGUEIRA FLEXÍVEL	TUYAU FLEXIBLE FLEXIBELE SLANG	192T
2		87396721		2	FLEXIBLE HOSE TUBO FLEXIBLE	TUBO FLESSIBILE FLEKSIBEL SLANGE	BIEGSAMER SCHLAUCH MANGUEIRA FLEXÍVEL	TUYAU FLEXIBLE FLEXIBELE SLANG	192T
3		87396715		1	BRACKET, - ASSY SOPORTE	STAFFA BESLAG	HALTERUNG SUPORTE	SUPPORT STEUN	225S
3A		72204201		2	HYD CONNECTOR CONECTOR HIDRÁULIC	CONNETTORE IDRAULIC HYDRAULIKSTIK	HYDR STECKVERBINDE CONECTOR HID.	CONNECTEUR HYDRAU HYDRAULISCHE AANSL	020R
4		87396711		1	BRACKET, - ASSY SOPORTE	STAFFA BESLAG	HALTERUNG SUPORTE	SUPPORT STEUN	225S
4A		72204201		1	HYD CONNECTOR CONECTOR HIDRÁULIC	CONNETTORE IDRAULIC HYDRAULIKSTIK	HYDR STECKVERBINDE CONECTOR HID.	CONNECTEUR HYDRAU HYDRAULISCHE AANSL	020R
5		87396713		1	BRACKET, - ASSY SOPORTE	STAFFA BESLAG	HALTERUNG SUPORTE	SUPPORT STEUN	225S
5A		72204201		1	HYD CONNECTOR CONECTOR HIDRÁULIC	CONNETTORE IDRAULIC HYDRAULIKSTIK	HYDR STECKVERBINDE CONECTOR HID.	CONNECTEUR HYDRAU HYDRAULISCHE AANSL	020R
6		70923841		8	O-RING, M12.42 ID x 1.78 Thk ANELLO TOROIDALE JUNTA TÓRICA	O-RING O-RING	O-RING O-RING	JOINT TORIQUE O-RING	055A
7		4982514		36	CABLE STRAP BANDA DE CABLE	FASCETTA PER CAVO KABELSTROP	KABELBINDER BRAÇADEIRA DE CABO	BRIDE DE CABLE BUNDELBAND	P716

Copyright © New Holland

5.0079	08	p1	03/10

BUCKET ROTATION (L=3.5 MT) - OPTIONAL CODE 461250038 (04-05-06)
ROTAZIONE BENNA (L=3.5 MT) - CODICE VARIANTE 461250038 (04-05-06)
UMDREHUNGSWANNE (L=3.5 MT) - OPTIONAL CODE 461250038 (04-05-06)
GODET ROTATIF (L=3.5 MT) - OPTIONAL CODE 461250038 (04-05-06)

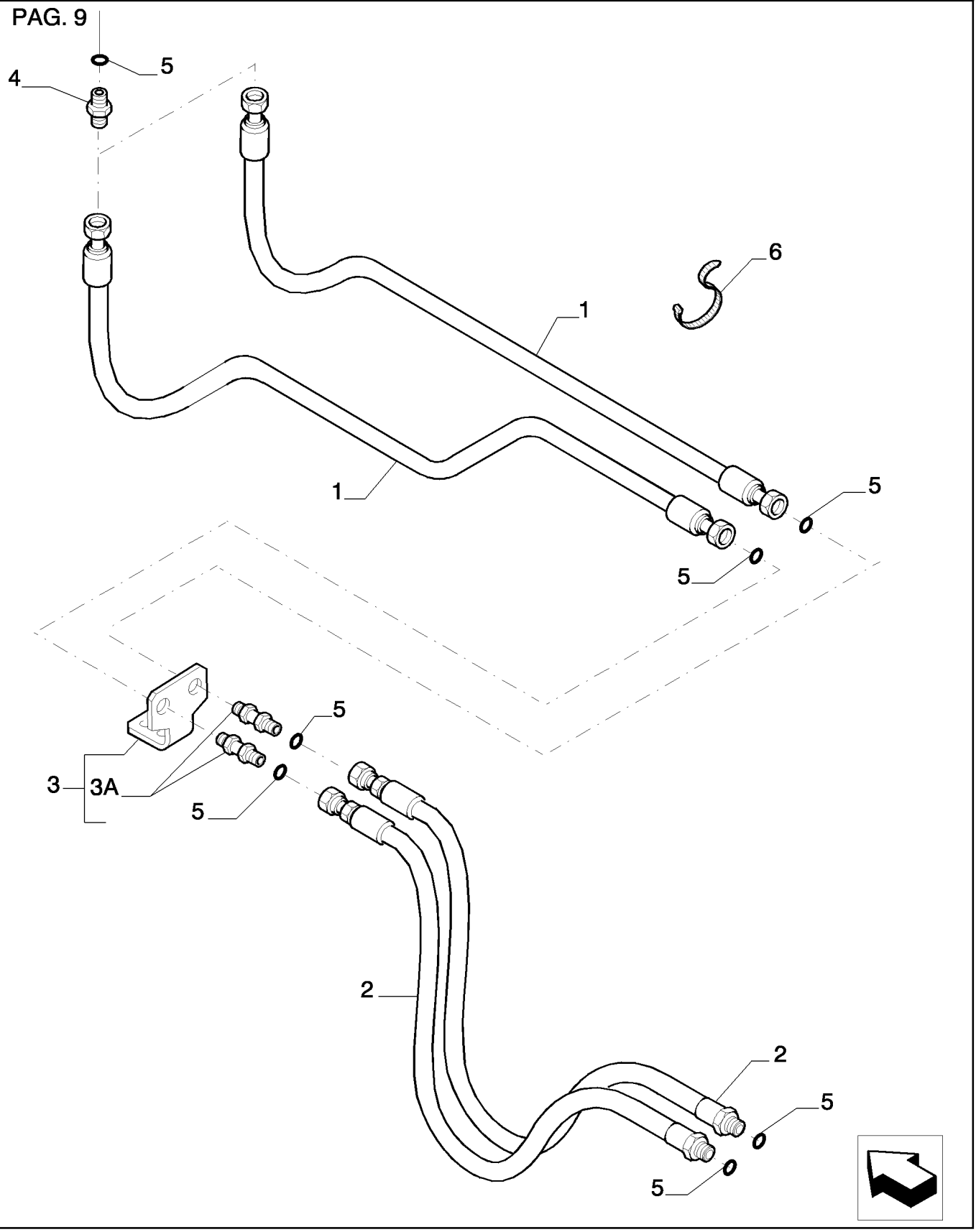

Copyright © New Holland

CUCHARA RODEANTE (L=3.5 MT) - OPTIONAL CODE 461250038 (04-05-06)
BUCKET ROTATION (L=3.5 MT) - OPTIONAL CODE 461250038 (04-05-06)
BUCKET ROTATION (L=3.5 MT) - OPTIONAL CODE 461250038 (04-05-06)
BUCKET ROTATION (L=3.5 MT) - OPTIONAL CODE 461250038 (04-05-06)

R	N	P.N.	MOD	Q	Description Denominacion	Descrizione Beskrivelse	Bezeichnung Denominação	Description Beschrijving	L.C.
1		87396727		2	FLEXIBLE HOSE TUBO FLEXIBLE	TUBO FLESSIBILE FLEKSIBEL SLANGE	BIEGSAMER SCHLAUCH MANGUEIRA FLEXÍVEL	TUYAU FLEXIBLE FLEXIBELE SLANG	192T
2		87396721		2	FLEXIBLE HOSE TUBO FLEXIBLE	TUBO FLESSIBILE FLEKSIBEL SLANGE	BIEGSAMER SCHLAUCH MANGUEIRA FLEXÍVEL	TUYAU FLEXIBLE FLEXIBELE SLANG	192T
3		87396684		1	BRACKET, - ASSY SOPORTE	STAFFA BESLAG	HALTERUNG SUPORTE	SUPPORT STEUN	225S
3A		72204201		2	HYD CONNECTOR CONECTOR HIDRÁULIC	CONNETTORE IDRAULIC HYDRAULIKSTIK	HYDR STECKVERBINDE CONECTOR HID.	CONNECTEUR HYDRAU HYDRAULISCHE AANSL	020R
4		87556832		2	HYD CONNECTOR CONECTOR HIDRÁULIC	CONNETTORE IDRAULIC HYDRAULIKSTIK	HYDR STECKVERBINDE CONECTOR HID.	CONNECTEUR HYDRAU HYDRAULISCHE AANSL	020R
5		70923841		8	O-RING, M12.42 ID x 1.78 Thk JUNTA TÓRICA	ANELLO TOROIDALE O-RING	O-RING O-RING	JOINT TORIQUE O-RING	055A
6		4982514		8	CABLE STRAP BANDA DE CABLE	FASCETTA PER CAVO KABELSTROP	KABELBINDER BRAÇADEIRA DE CABO	BRIDE DE CABLE BUNDELBAND	P716

Copyright © New Holland

5.0079	09	p1	03/10

BUCKET ROTATION (L=3.5 MT) - OPTIONAL CODE 461250038 (04-05-06)
ROTAZIONE BENNA (L=3.5 MT) - CODICE VARIANTE 461250038 (04-05-06)
UMDREHUNGSWANNE (L=3.5 MT) - OPTIONAL CODE 461250038 (04-05-06)
GODET ROTATIF (L=3.5 MT) - OPTIONAL CODE 461250038 (04-05-06)

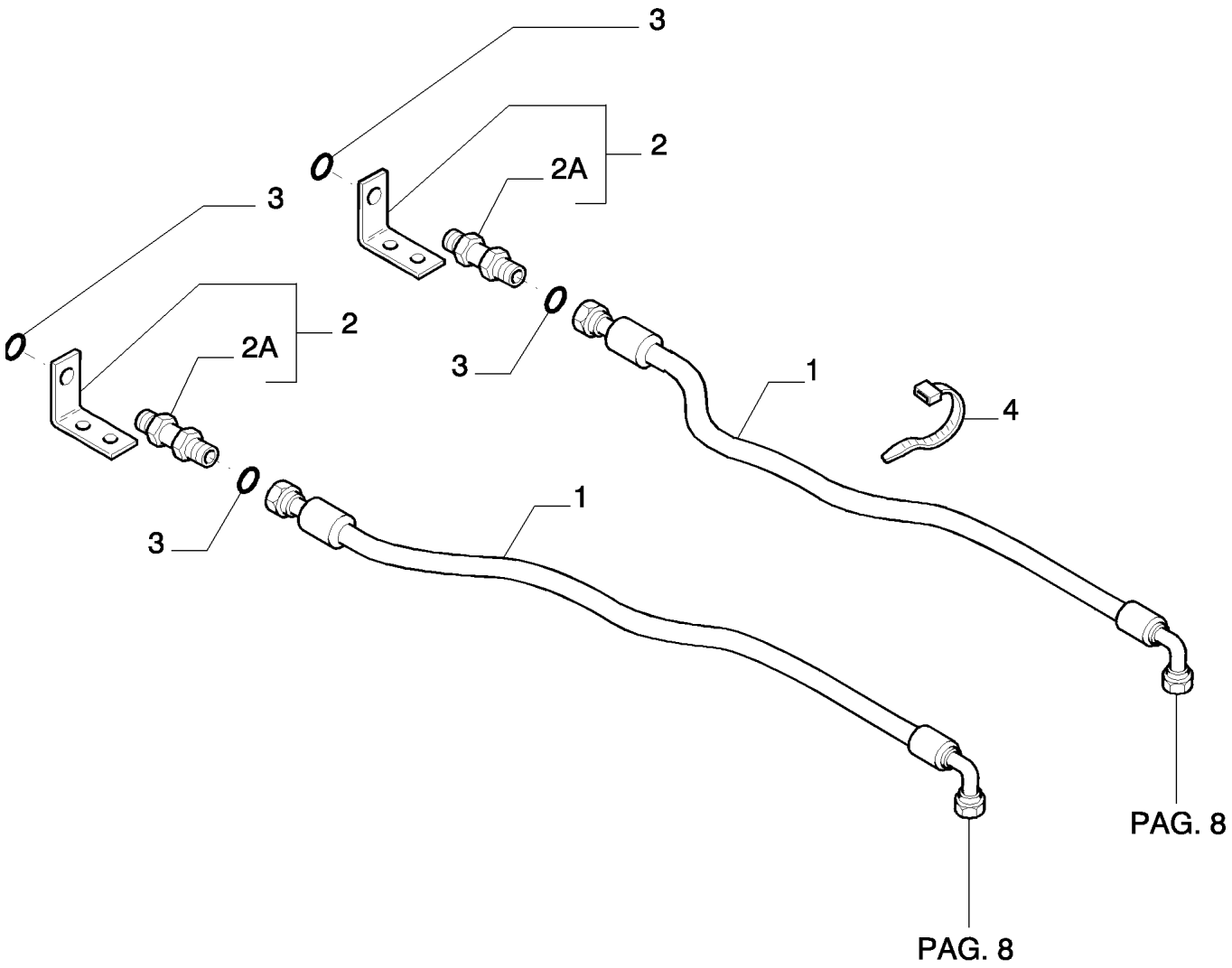

Copyright © New Holland

CUCHARA RODEANTE (L=3.5 MT) - OPTIONAL CODE 461250038 (04-05-06)
BUCKET ROTATION (L=3.5 MT) - OPTIONAL CODE 461250038 (04-05-06)
BUCKET ROTATION (L=3.5 MT) - OPTIONAL CODE 461250038 (04-05-06)
BUCKET ROTATION (L=3.5 MT) - OPTIONAL CODE 461250038 (04-05-06)

R	N	P.N.	MOD	Q	Description Denominacion	Descrizione Beskrivelse	Bezeichnung Denominação	Description Beschrijving	L.C.
1		{87383050}		2					
2		87343179		2	BRACKET, - ASSY SOPORTE	STAFFA BESLAG	HALTERUNG SUPORTE	SUPPORT STEUN	225S
2A		72204201		1	HYD CONNECTOR CONECTOR HIDRÁULIC(	CONNETTORE IDRAULI(HYDRAULIKSTIK	HYDR STECKVERBINDE CONECTOR HID.	CONNECTEUR HYDRAU HYDRAULISCHE AANSL	020R
3		70923841		4	O-RING, M12.42 ID x 1.78 Thk JUNTA TÓRICA	ANELLO TOROIDALE O-RING	O-RING O-RING	JOINT TORIQUE O-RING	055A
4		4982514		8	CABLE STRAP BANDA DE CABLE	FASCETTA PER CAVO KABELSTROP	KABELBINDER BRAÇADEIRA DE CABO	BRIDE DE CABLE BUNDELBAND	P716

Copyright © New Holland

5.0079	10	p1	03/10

BUCKET ROTATION (L=3.5 MT) - OPTIONAL CODE 461250028 (01-02-03) - 461250038 (04-05-06)
ROTAZIONE BENNA (L=3.5 MT) - CODICE VARIANTE 461250028 (01-02-03) - 461250038 (04-05-06)
UMDREHUNGSWANNE (L=3.5 MT) - OPTIONAL CODE 461250028 (01-02-03) - 461250038 (04-05-06)
GODET ROTATIF (L=3.5 MT) - OPTIONAL CODE 461250028 (01-02-03) - 461250038 (04-05-06)

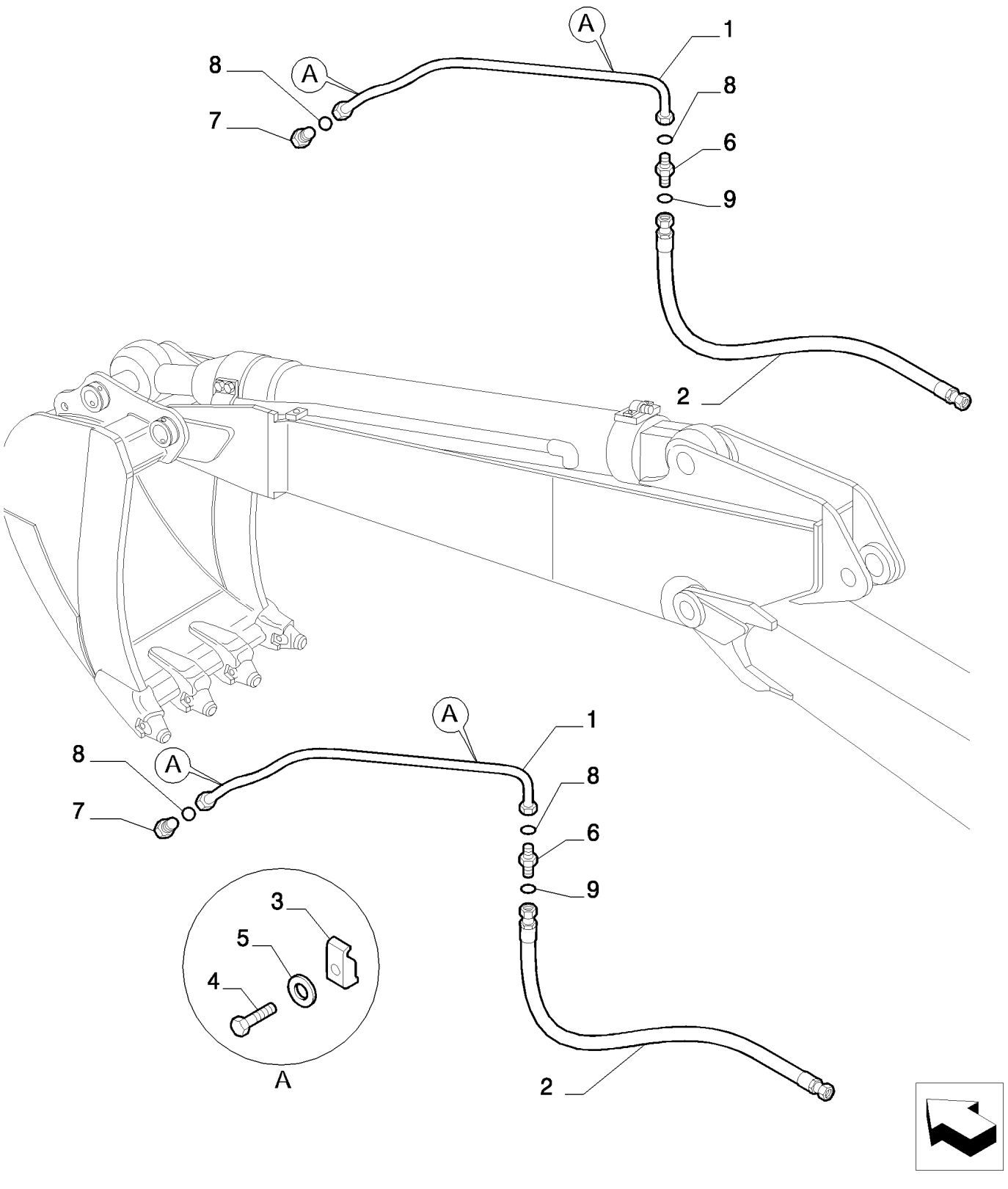

Copyright © New Holland

CUCHARA RODEANTE (L=3.5 MT) - OPTIONAL CODE 461250028 (01-02-03) - 461250038 (04-05-06)
BUCKET ROTATION (L=3.5 MT) - OPTIONAL CODE 461250028 (01-02-03) - 461250038 (04-05-06)
BUCKET ROTATION (L=3.5 MT) - OPTIONAL CODE 461250028 (01-02-03) - 461250038 (04-05-06)
BUCKET ROTATION (L=3.5 MT) - OPTIONAL CODE 461250028 (01-02-03) - 461250038 (04-05-06)

R	N	P.N.	MOD	Q	Description Denominacion	Descrizione Beskrivelse	Bezeichnung Denominação	Description Beschrijving	L.C.
1		87382950		2	RIGID TUBE TUBO RÍGIDO	TUBO RIGIDO STIFT RØR	ROHR TUBO RÍGIDO	TUYAU RIGIDE VASTE LEIDING	193T
2		87382965		2	FLEXIBLE HOSE TUBO FLEXIBLE	TUBO FLESSIBILE FLEKSIBEL SLANGE	BIEGSAMER SCHLAUCH MANGUEIRA FLEXÍVEL	TUYAU FLEXIBLE FLEXIBELE SLANG	192T
3		71466172		4	BRACKET SOPORTE	STAFFA BESLAG	HALTERUNG SUPORTE	SUPPORT STEUN	225S
4		11113234		4	BOLT, Hex, M12 x 50, 10.9 PERNO	BULLONE BOLT	SCHRAUBE PARAFUSO	VIS BOUT	140B
5		10517074		4	LOCK WASHER ARANDELA DE BLOQUE	RONDELLA DI SICUREZ LÅSESKIVE	SICHERUNGSSCHEIBE ANILHA DE RETENÇÃO	RONDELLE FREIN BORGRING	132R
6		72204293		2	HYD CONNECTOR CONECTOR HIDRÁULIC	CONNETTORE IDRAULI HYDRAULIKSTIK	HYDR STECKVERBINDE CONECTOR HID.	CONNECTEUR HYDRAU HYDRAULISCHE AANSL	020R
7		72204294		2	HYD CONNECTOR CONECTOR HIDRÁULIC	CONNETTORE IDRAULI HYDRAULIKSTIK	HYDR STECKVERBINDE CONECTOR HID.	CONNECTEUR HYDRAU HYDRAULISCHE AANSL	020R
8		71484462		4	O-RING JUNTA TÓRICA	ANELLO TOROIDALE O-RING	O-RING O-RING	JOINT TORIQUE O-RING	055A
9		70923841		2	O-RING, M12.42 ID x 1.78 Thk JUNTA TÓRICA	ANELLO TOROIDALE O-RING	O-RING O-RING	JOINT TORIQUE O-RING	055A

Copyright © New Holland

5.0079	11	p1	03/10

BUCKET ROTATION (L=3.5 MT) - OPTIONAL CODE 461250028 (01-02-03) - 461250038 (04-05-06)
ROTAZIONE BENNA (L=3.5 MT) - CODICE VARIANTE 461250028 (01-02-03) - 461250038 (04-05-06)
UMDREHUNGSWANNE (L=3.5 MT) - OPTIONAL CODE 461250028 (01-02-03) - 461250038 (04-05-06)
GODET ROTATIF (L=3.5 MT) - OPTIONAL CODE 461250028 (01-02-03) - 461250038 (04-05-06)

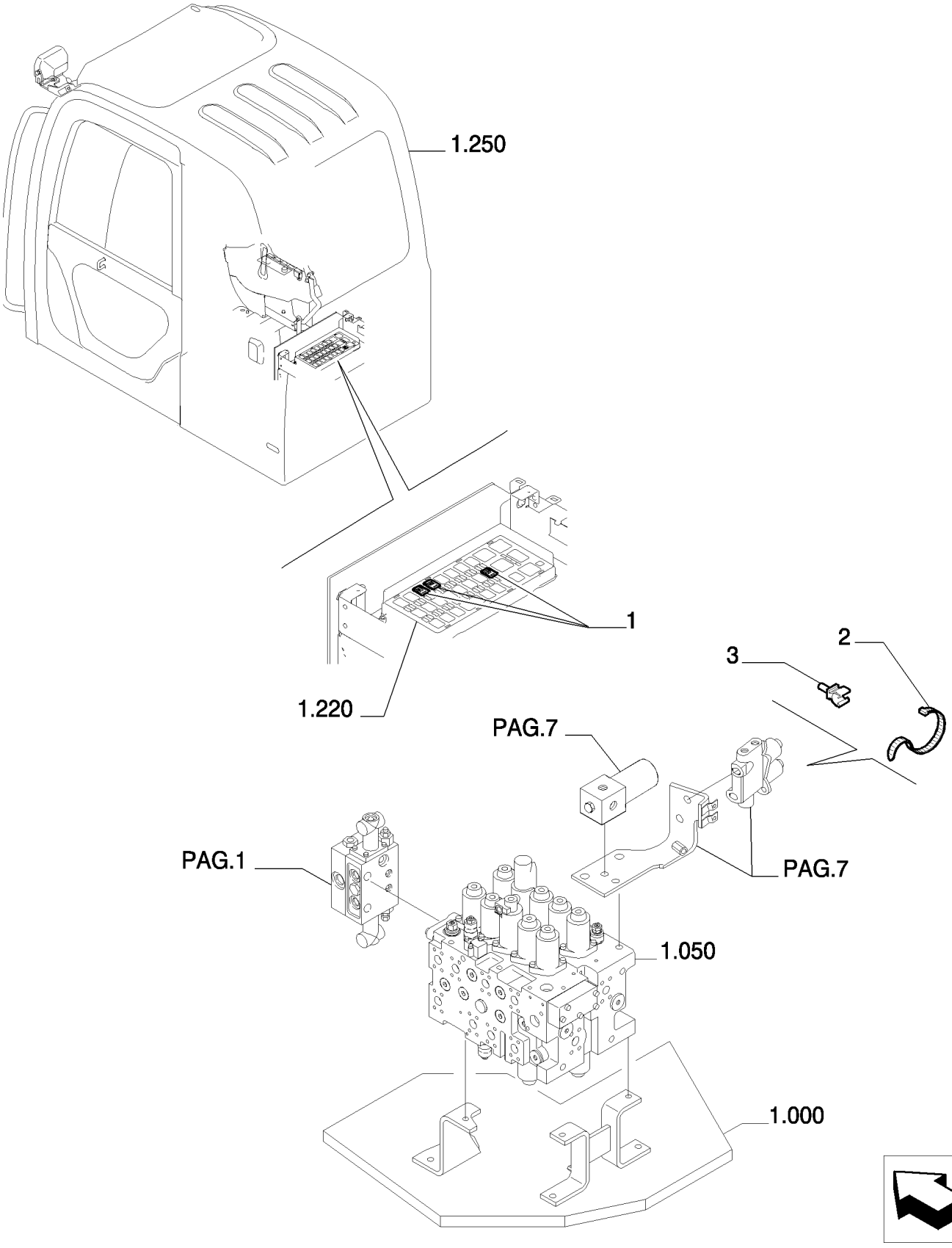

Copyright © New Holland

CUCHARA RODEANTE (L=3.5 MT) - OPTIONAL CODE 461250028 (01-02-03) - 461250038 (04-05-06)
BUCKET ROTATION (L=3.5 MT) - OPTIONAL CODE 461250028 (01-02-03) - 461250038 (04-05-06)
BUCKET ROTATION (L=3.5 MT) - OPTIONAL CODE 461250028 (01-02-03) - 461250038 (04-05-06)
BUCKET ROTATION (L=3.5 MT) - OPTIONAL CODE 461250028 (01-02-03) - 461250038 (04-05-06)

R	N	P.N.	MOD	Q	Description Denominacion	Descrizione Beskrivelse	Bezeichnung Denominação	Description Beschrijving	L.C.
1		87559156		3	RELAY RELÉ	RELÈ RELÆ	RELAIS RELÉ	RELAIS RELAIS	011R
2		72951499		4	CLIP ABRAZADERA	FERMO KLIPS	KLAMMER FIXADOR	COLLIER KLEM	045F
3		87526680		1	RETAINER COLLAR COLLAR DE RETENCIÓN	COLLARE DI FISSAGGIO RING, SPÆNDE	HALTERING ANEL DE FIXAÇÃO	COLLIER DE RETENUE BORGKRAAG	230S

Copyright © New Holland

5.0086	01	p1	03/10

BOOM/ARM WITHOUT SAFETY VALVE - VERSION (01-02-03) - OPTIONAL CODE 461134028
SOLLEVAMENTO/PENETRAZIONE SENZA VALVOLA ANTICAD. - VERSIONE (01-02-03) - CODICE VARIANTE 461134028
ANHEBEN/EINDRINGEN OHNE SICHERHEITSVENTIL. - VERSION (01-02-03) - OPTIONAL CODE 461134028
VALVE ANTI-CHUTE DE BALANCIER - VERSION (01-02-03) - OPTIONAL CODE 461134028

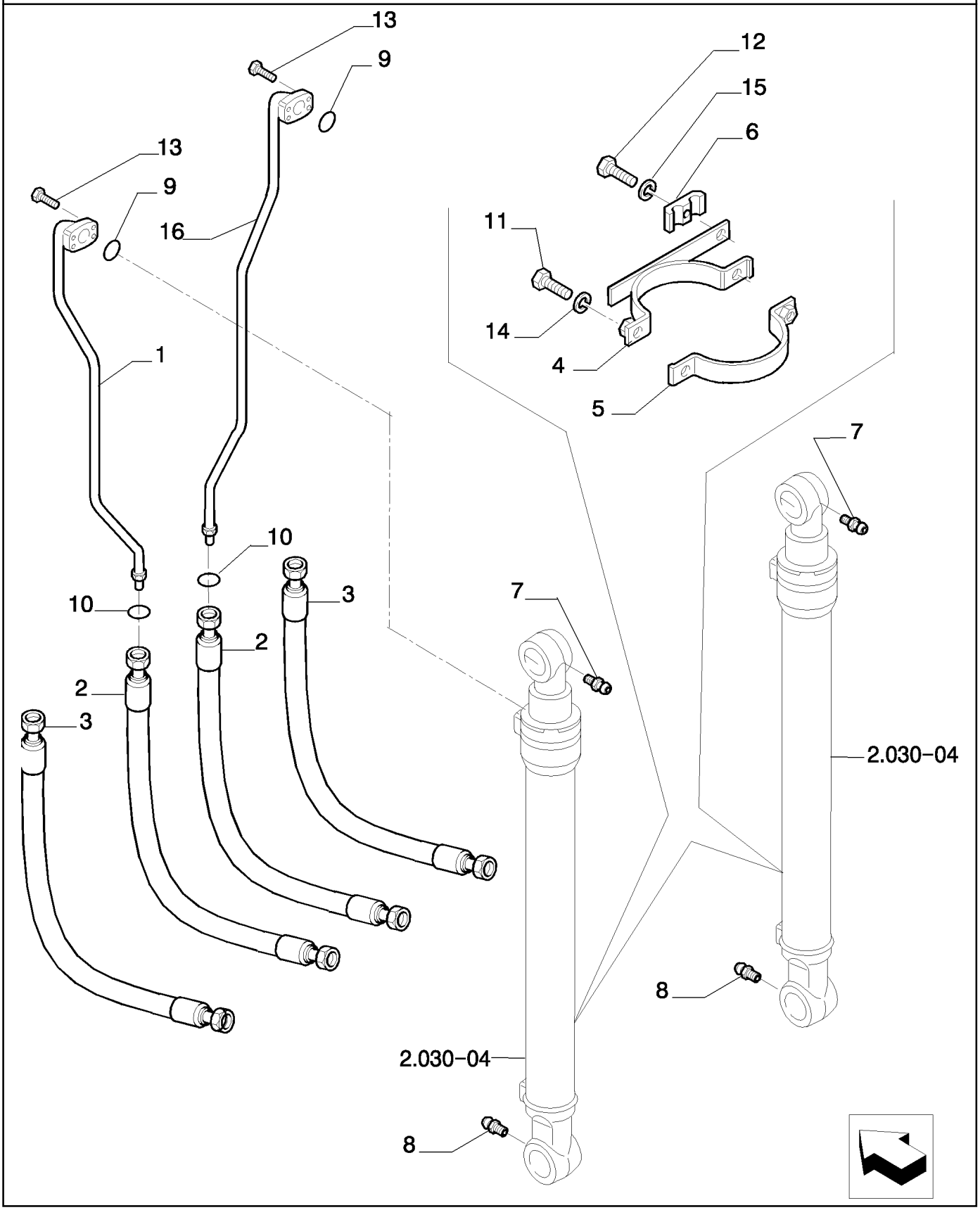

Copyright © New Holland

VALVULA ANTIC. BRAZO TERMINAL - VERSION (01-02-03) - OPTIONAL CODE 461134028
BOOM/ARM WITHOUT SAFETY VALVE - VERSION (01-02-03) - OPTIONAL CODE 461134028
BOOM/ARM WITHOUT SAFETY VALVE - VERSION (01-02-03) - OPTIONAL CODE 461134028
BOOM/ARM WITHOUT SAFETY VALVE - VERSION (01-02-03) - OPTIONAL CODE 461134028

R	N	P.N.	MOD	Q	Description Denominacion	Descrizione Beskrivelse	Bezeichnung Denominação	Description Beschrijving	L.C.
1		87539962		1	RIGID TUBE TUBO RÍGIDO	TUBO RIGIDO STIFT RØR	ROHR TUBO RÍGIDO	TUYAU RIGIDE VASTE LEIDING	193T
2		87346192		2	FLEXIBLE HOSE TUBO FLEXIBLE	TUBO FLESSIBILE FLEKSIBEL SLANGE	BIEGSAMER SCHLAUCH MANGUEIRA FLEXÍVEL	TUYAU FLEXIBLE FLEXIBELE SLANG	192T
3		87346193		2	FLEXIBLE HOSE TUBO FLEXIBLE	TUBO FLESSIBILE FLEKSIBEL SLANGE	BIEGSAMER SCHLAUCH MANGUEIRA FLEXÍVEL	TUYAU FLEXIBLE FLEXIBELE SLANG	192T
4		87609987		2	STRAP BANDA	FASCETTA STROP	BAND BANDA	BRIDE RIEM	532B
5		87545187		2	STRAP BANDA	FASCETTA STROP	BAND BANDA	BRIDE RIEM	532B
6		72955399		2	CLAMP ABRAZADERA	MORSETTO SPÆNDEBÅND	KLEMME BRAÇADEIRA	COLLIER KLEM	120M
7		72160573		2	PIN PASADOR	PERNO STIFT	PIN PERNO	BROCHE PEN	080P
8		72283478		2	LUBE NIPPLE BOQUILLA DE LUBRICA(	INGRASSATORE SMØRENIPPEL	SCHMIERNIPPEL COPO DE LUBRIFICAÇÃ	GRAISSEUR SMEERNIPPEL	060I
9		70924110		2	O-RING JUNTA TÓRICA	ANELLO TOROIDALE O-RING	O-RING O-RING	JOINT TORIQUE O-RING	055A
10		71484462		2	O-RING JUNTA TÓRICA	ANELLO TOROIDALE O-RING	O-RING O-RING	JOINT TORIQUE O-RING	055A
11		11106434		4	BOLT, Hex, M10 x 30, 10.9, Full Thd PERNO	BULLONE BOLT	SCHRAUBE PARAFUSO	VIS BOUT	140B
12		11113534		2	BOLT, Hex, M12 x 65, 10.9, Full Thd PERNO	BULLONE BOLT	SCHRAUBE PARAFUSO	VIS BOUT	140B
13		14420234		8	SCREW TORNILLO	VITE SKRUE	SCHRAUBE PARAFUSO	VIS SCHROEF	040V
14		10516874		4	LOCK WASHER ARANDELA DE BLOQUE	RONDELLA DI SICUREZ LÅSESKIVE	SICHERUNGSSCHEIBE ANILHA DE RETENÇÃO	RONDELLE FREIN BORGRING	132R
15		14496731		2	WASHER, M12 x 24 x 2.5 Thk ARANDELA	RONDELLA FLADSKIVE	UNTERLEGSCHEIBE ANILHA	RONDELLE SLUITRING	131R
16		87539965		1	RIGID TUBE TUBO RÍGIDO	TUBO RIGIDO STIFT RØR	ROHR TUBO RÍGIDO	TUYAU RIGIDE VASTE LEIDING	193T

Copyright © New Holland

5.0086	02	p1	03/10

BOOM/ARM WITHOUT SAFETY VALVE - VERSION (01-02-03) - OPTIONAL CODE 461134028
SOLLEVAMENTO/PENETRAZIONE SENZA VALVOLA ANTICAD. - VERSIONE (01-02-03) - CODICE VARIANTE 461134028
LOEFFELSTIEL GEGENFALLVENTIL - VERSION (01-02-03) - OPTIONAL CODE 461134028
SOULEVEMENT/PENETRATION SANS VALVE ANTI-CH. - VERSION (01-02-03) - OPTIONAL CODE 461134028

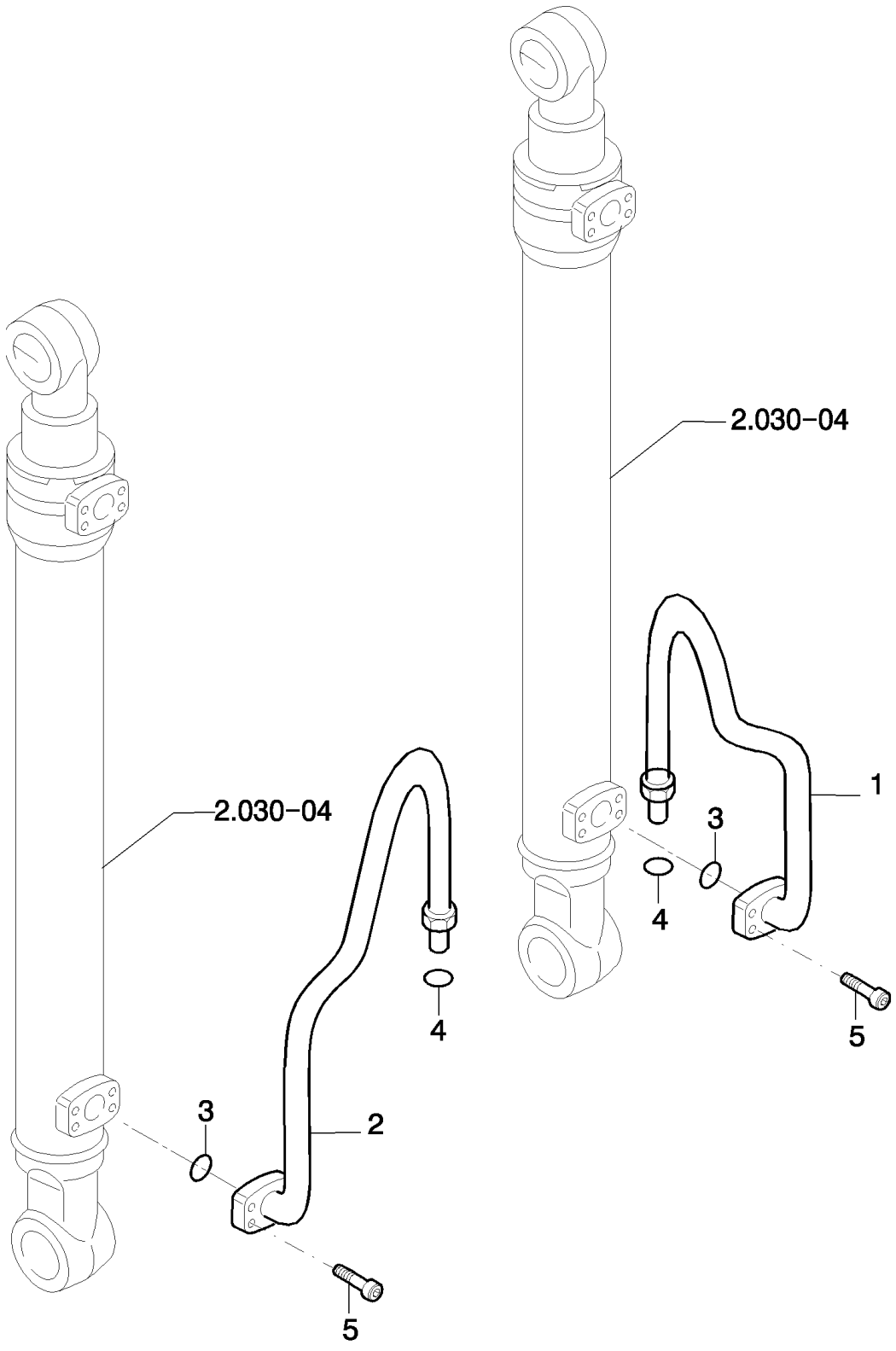

Copyright © New Holland

ELEVACIÓN/PENETRACIÓN SIN VÁLVULA ANTICAD. - VERSION (01-02-03) - OPTIONAL CODE 461134028
BOOM/ARM WITHOUT SAFETY VALVE - VERSION (01-02-03) - OPTIONAL CODE 461134028
BOOM/ARM WITHOUT SAFETY VALVE - VERSION (01-02-03) - OPTIONAL CODE 461134028
BOOM/ARM WITHOUT SAFETY VALVE - VERSION (01-02-03) - OPTIONAL CODE 461134028

R	N	P.N.	MOD	Q	Description Denominacion	Descrizione Beskrivelse	Bezeichnung Denominação	Description Beschrijving	L.C.
1		87539963		1	RIGID TUBE TUBO RÍGIDO	TUBO RIGIDO STIFT RØR	ROHR TUBO RÍGIDO	TUYAU RIGIDE VASTE LEIDING	193T
2		87539964		1	RIGID TUBE TUBO RÍGIDO	TUBO RIGIDO STIFT RØR	ROHR TUBO RÍGIDO	TUYAU RIGIDE VASTE LEIDING	193T
3		70924200		2	O-RING JUNTA TÓRICA	ANELLO TOROIDALE O-RING	O-RING O-RING	JOINT TORIQUE O-RING	055A
4		70931640		2	GASKET JUNTA	GUARNIZIONE PAKNING	DICHTUNG JUNTA	JOINT PAKKING	123G
5		14422234		8	SCREW TORNILLO	VITE SKRUE	SCHRAUBE PARAFUSO	VIS SCHROEF	040V

Copyright © New Holland

5.0086	03	p1	03/10

BOOM/ARM WITHOUT SAFETY VALVE - VERSION (01-02-03) - OPTIONAL CODE 461134028
SOLLEVAMENTO/PENETRAZIONE SENZA VALVOLA ANTICAD. - VERSIONE (01-02-03) - CODICE VARIANTE 461134028
ANHEBEN/EINDRINGEN OHNE SICHERHEITSVENTIL. - VERSION (01-02-03) - OPTIONAL CODE 461134028
SOULEVEMENT/PENETRATION SANS VALVE ANTI-CH. - VERSION (01-02-03) - OPTIONAL CODE 461134028

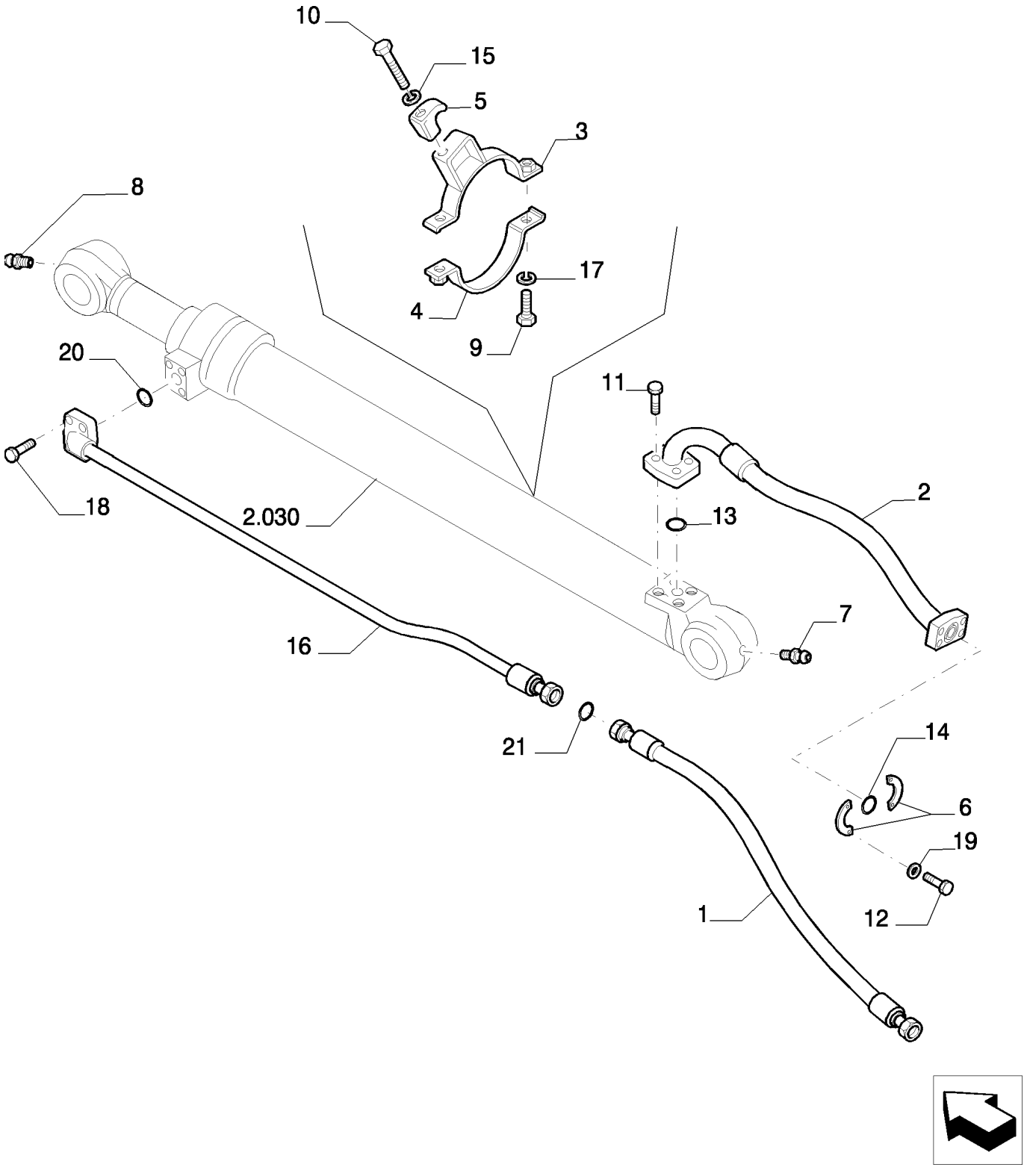

Copyright © New Holland

ELEVACIÓN/PENETRACIÓN SIN VÁLVULA ANTICAD. - VERSION (01-02-03) - OPTIONAL CODE 461134028
BOOM/ARM WITHOUT SAFETY VALVE - VERSION (01-02-03) - OPTIONAL CODE 461134028
BOOM/ARM WITHOUT SAFETY VALVE - VERSION (01-02-03) - OPTIONAL CODE 461134028
BOOM/ARM WITHOUT SAFETY VALVE - VERSION (01-02-03) - OPTIONAL CODE 461134028

R	N	P.N.	MOD	Q	Description Denominacion	Descrizione Beskrivelse	Bezeichnung Denominação	Description Beschrijving	L.C.
1		87544502		1	FLEXIBLE HOSE TUBO FLEXIBLE	TUBO FLESSIBILE FLEKSIBEL SLANGE	BIEGSAMER SCHLAUCH MANGUEIRA FLEXÍVEL	TUYAU FLEXIBLE FLEXIBELE SLANG	192T
2		87544499		1	FLEXIBLE HOSE TUBO FLEXIBLE	TUBO FLESSIBILE FLEKSIBEL SLANGE	BIEGSAMER SCHLAUCH MANGUEIRA FLEXÍVEL	TUYAU FLEXIBLE FLEXIBELE SLANG	192T
3		87544495		1	STRAP BANDA	FASCETTA STROP	BAND BANDA	BRIDE RIEM	532B
4		87544500		1	STRAP BANDA	FASCETTA STROP	BAND BANDA	BRIDE RIEM	532B
5		72201683		1	BRACKET SOPORTE	STAFFA BESLAG	HALTERUNG SUPORTE	SUPPORT STEUN	225S
6		71444029		2	HALF-FLANGE SEMIBRIDA	SEMIFLANGIA FLANGEHALVDEL	FLANSCHHÄLFTE MEIA FLANGE	DEMI-BRIDE FLENSHELFT	417S
7		72160573		1	PIN PASADOR	PERNO STIFT	PIN PERNO	BROCHE PEN	080P
8		72283478		1	LUBE NIPPLE BOQUILLA DE LUBRICA(	INGRASSATORE SMØRENIPPEL	SCHMIERNIPPEL COPO DE LUBRIFICAÇÃ	GRAISSEUR SMEERNIPPEL	060I
9		11106434		2	BOLT, Hex, M10 x 30, 10.9, Full Thd PERNO	BULLONE BOLT	SCHRAUBE PARAFUSO	VIS BOUT	140B
10		11113334		1	SCREW TORNILLO	VITE SKRUE	SCHRAUBE PARAFUSO	VIS SCHROEF	040V
11		14422274		4	SCREW TORNILLO	VITE SKRUE	SCHRAUBE PARAFUSO	VIS SCHROEF	040V
12		14424534		4	SCREW TORNILLO	VITE SKRUE	SCHRAUBE PARAFUSO	VIS SCHROEF	040V
13		72215443		1	O-RING JUNTA TÓRICA	ANELLO TOROIDALE O-RING	O-RING O-RING	JOINT TORIQUE O-RING	055A
14		70924192		1	O-RING JUNTA TÓRICA	ANELLO TOROIDALE O-RING	O-RING O-RING	JOINT TORIQUE O-RING	055A
15		14496731		1	WASHER, M12 x 24 x 2.5 Thk ARANDELA	RONDELLA FLADSKIVE	UNTERLEGSCHEIBE ANILHA	RONDELLE SLUITRING	131R
16		87533389		1	RIGID TUBE TUBO RÍGIDO	TUBO RIGIDO STIFT RØR	ROHR TUBO RÍGIDO	TUYAU RIGIDE VASTE LEIDING	193T
17		10516874		2	LOCK WASHER ARANDELA DE BLOQUE	RONDELLA DI SICUREZ LÅSESKIVE	SICHERUNGSSCHEIBE ANILHA DE RETENÇÃO	RONDELLE FREIN BORGRING	132R
18		14422234		4	SCREW TORNILLO	VITE SKRUE	SCHRAUBE PARAFUSO	VIS SCHROEF	040V
19		10517174		4	LOCK WASHER ARANDELA DE BLOQUE	RONDELLA DI SICUREZ LÅSESKIVE	SICHERUNGSSCHEIBE ANILHA DE RETENÇÃO	RONDELLE FREIN BORGRING	132R
20		70924200		1	O-RING JUNTA TÓRICA	ANELLO TOROIDALE O-RING	O-RING O-RING	JOINT TORIQUE O-RING	055A
21		70923843		1	SNAP RING ANILLO DE RESORTE	ANELLO ELASTICO LÅSERING	SPRENGRING ANEL	ANNEAU D'ARRET VEERRING	054A

Copyright © New Holland

BOOM/ARM WITHOUT SAFETY VALVE - VERSION (01-02-03) - OPTIONAL CODE 461134028
SOLLEVAMENTO/PENETRAZIONE SENZA VALVOLA ANTICAD. - VERSIONE (01-02-03) - CODICE VARIANTE 461134028
ANHEBEN/EINDRINGEN OHNE SICHERHEITSVENTIL. - VERSION (01-02-03) - OPTIONAL CODE 461134028
SOULEVEMENT/PENETRATION SANS VALVE ANTI-CH. - VERSION (01-02-03) - OPTIONAL CODE 461134028

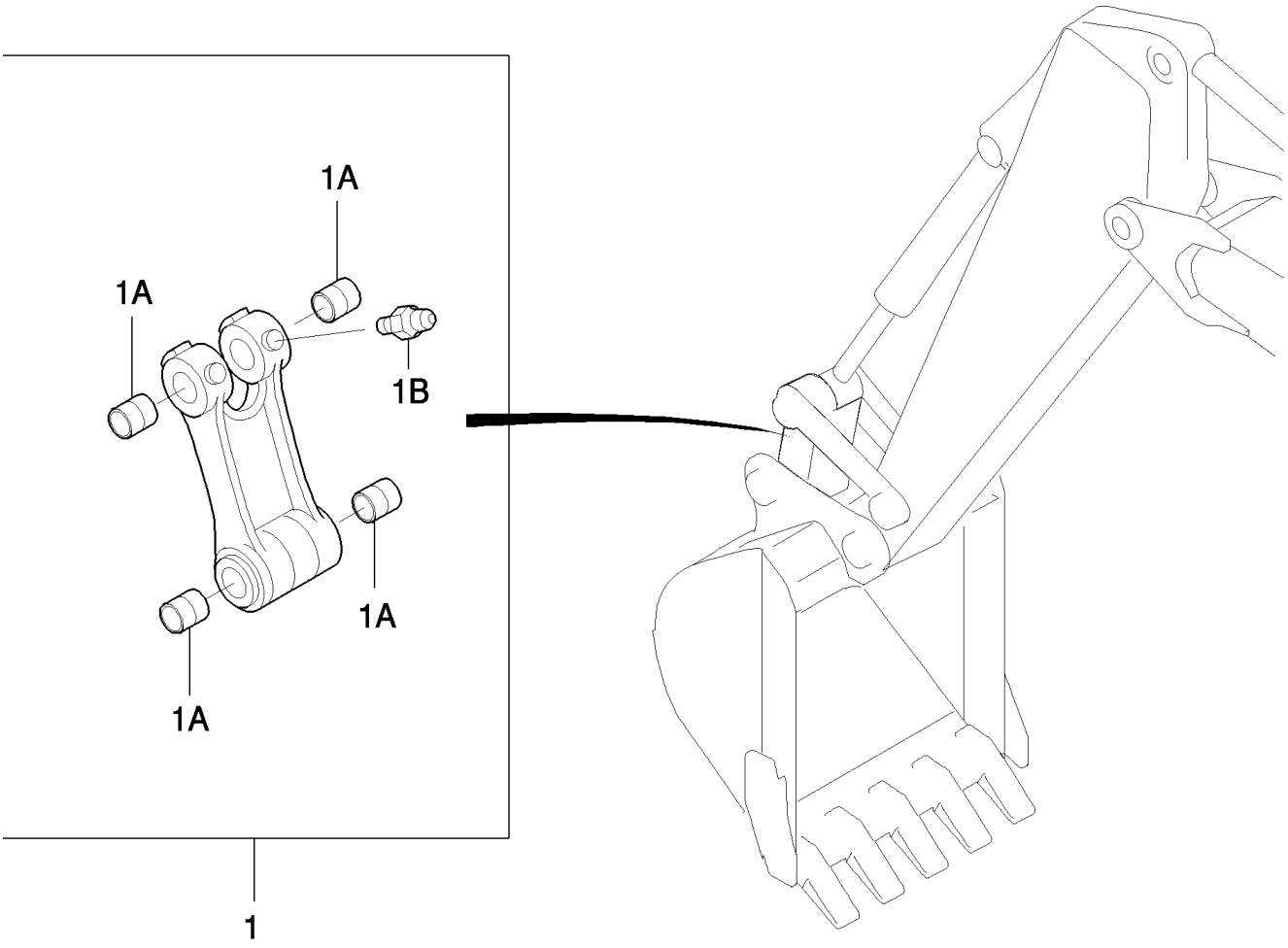

Copyright © New Holland

ELEVACIÓN/PENETRACIÓN SIN VÁLVULA ANTICAD. - VERSION (01-02-03) - OPTIONAL CODE 461134028
BOOM/ARM WITHOUT SAFETY VALVE - VERSION (01-02-03) - OPTIONAL CODE 461134028
BOOM/ARM WITHOUT SAFETY VALVE - VERSION (01-02-03) - OPTIONAL CODE 461134028
BOOM/ARM WITHOUT SAFETY VALVE - VERSION (01-02-03) - OPTIONAL CODE 461134028

R	N	P.N.	MOD	Q	Description Denominacion	Descrizione Beskrivelse	Bezeichnung Denominação	Description Beschrijving	L.C.
1		87354132		1	LINK CONROD, - ASSY BIELA DE ESLABÓN	BIELLA TIRANTE PLEJLSTANG	PLEUEL BIELA	BIELLE DRIJFSTANG	050B
1A		87543300		4	BUSHING CASQUILLO	BOCCOLA BØSNING	BUCHSE CASQUILHO	BAGUE BUS	095B
1B		13407211		3	LUBE NIPPLE, M10 x 1 BOQUILLA DE LUBRICA(	INGRASSATORE SMØRENIPPEL	SCHMIERNIPPEL COPO DE LUBRIFICAÇÃ	GRAISSEUR SMEERNIPPEL	060I

Copyright © New Holland

5.0087	01	p1	03/10

BOOM/ARM WITHOUT SAFETY VALVE - VERSION (04-05-06) - OPTIONAL CODE 461134038
SOLLEVAMENTO/PENETRAZIONE SENZA VALVOLA ANTICAD. - VERSIONE (04-05-06) - CODICE VARIANTE 461134038
ANHEBEN/EINDRINGEN OHNE SICHERHEITSVENTIL. - VERSION (04-05-06) - OPTIONAL CODE 461134038
SOULEVEMENT/PENETRATION SANS VALVE ANTI-CH. - VERSION (04-05-06) - OPTIONAL CODE 461134038

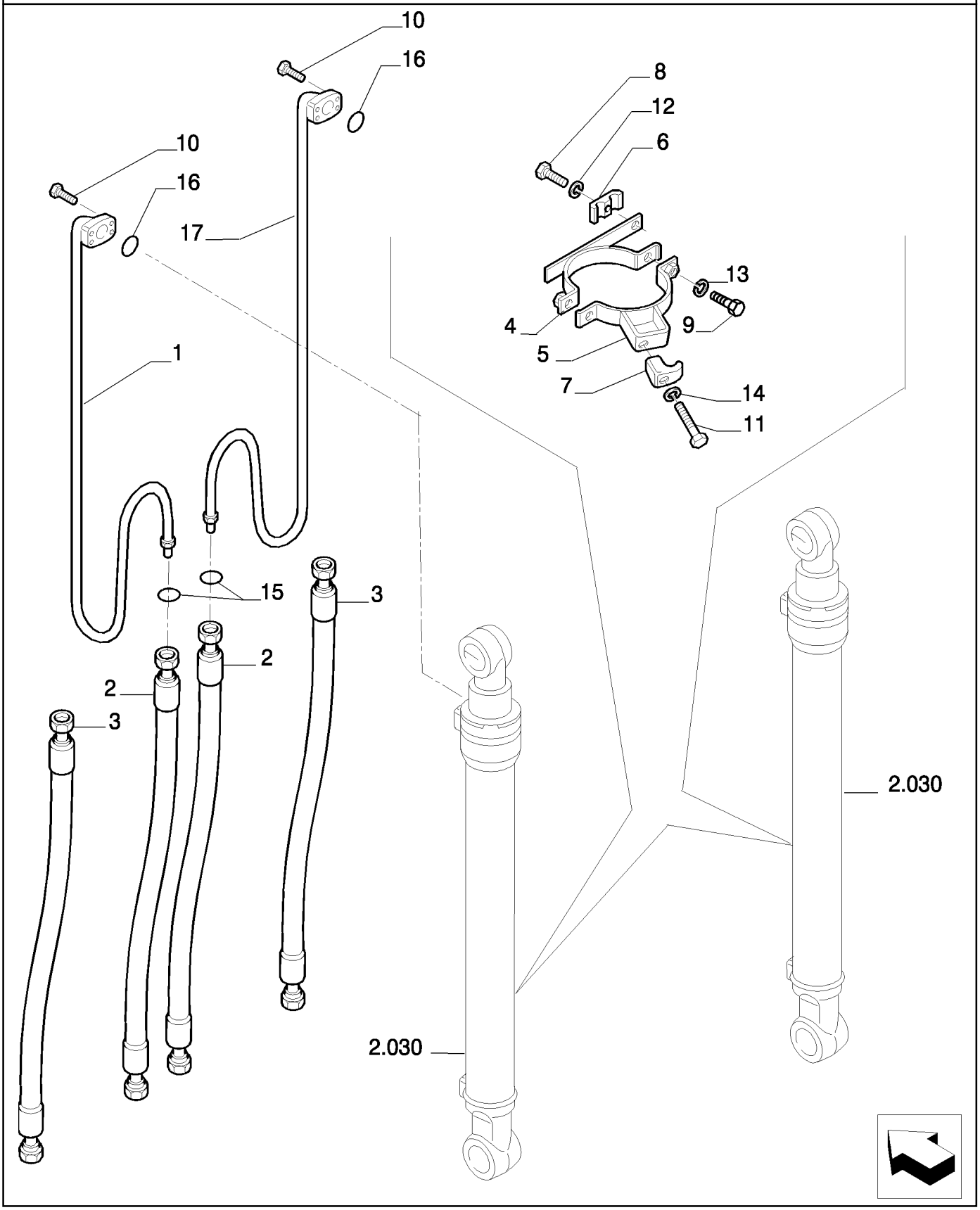

Copyright © New Holland

ELEVACIÓN/PENETRACIÓN SIN VÁLVULA ANTICAD. - VERSION (04-05-06) - OPTIONAL CODE 461134038
BOOM/ARM WITHOUT SAFETY VALVE - VERSION (04-05-06) - OPTIONAL CODE 461134038
BOOM/ARM WITHOUT SAFETY VALVE - VERSION (04-05-06) - OPTIONAL CODE 461134038
BOOM/ARM WITHOUT SAFETY VALVE - VERSION (04-05-06) - OPTIONAL CODE 461134038

R	N	P.N.	MOD	Q	Description Denominacion	Descrizione Beskrivelse	Bezeichnung Denominação	Description Beschrijving	L.C.
1		87396773		1	RIGID TUBE TUBO RÍGIDO	TUBO RIGIDO STIFT RØR	ROHR TUBO RÍGIDO	TUYAU RIGIDE VASTE LEIDING	193T
2		87346192		2	FLEXIBLE HOSE TUBO FLEXIBLE	TUBO FLESSIBILE FLEKSIBEL SLANGE	BIEGSAMER SCHLAUCH MANGUEIRA FLEXÍVEL	TUYAU FLEXIBLE FLEXIBELE SLANG	192T
3		87346193		2	FLEXIBLE HOSE TUBO FLEXIBLE	TUBO FLESSIBILE FLEKSIBEL SLANGE	BIEGSAMER SCHLAUCH MANGUEIRA FLEXÍVEL	TUYAU FLEXIBLE FLEXIBELE SLANG	192T
4		87610969		2	STRAP BANDA	FASCETTA STROP	BAND BANDA	BRIDE RIEM	532B
5		87610970		2	STRAP BANDA	FASCETTA STROP	BAND BANDA	BRIDE RIEM	532B
6		72955399		2	CLAMP ABRAZADERA	MORSETTO SPÆNDEBÅND	KLEMME BRAÇADEIRA	COLLIER KLEM	120M
7		71415855		2	CLIP ABRAZADERA	FERMO KLIPS	KLAMMER FIXADOR	COLLIER KLEM	045F
8		11113534		2	BOLT, Hex, M12 x 65, 10.9, Full Thd PERNO	BULLONE BOLT	SCHRAUBE PARAFUSO	VIS BOUT	140B
9		11106434		4	BOLT, Hex, M10 x 30, 10.9, Full Thd PERNO	BULLONE BOLT	SCHRAUBE PARAFUSO	VIS BOUT	140B
10		14420334		8	SCREW TORNILLO	VITE SKRUE	SCHRAUBE PARAFUSO	VIS SCHROEF	040V
11		11107034		2	SCREW TORNILLO	VITE SKRUE	SCHRAUBE PARAFUSO	VIS SCHROEF	040V
12		14496731		2	WASHER, M12 x 24 x 2.5 Thk ARANDELA	RONDELLA FLADSKIVE	UNTERLEGSCHEIBE ANILHA	RONDELLE SLUITRING	131R
13		10516874		4	LOCK WASHER ARANDELA DE BLOQUE	RONDELLA DI SICUREZ LÅSESKIVE	SICHERUNGSSCHEIBE ANILHA DE RETENÇÃO	RONDELLE FREIN BORGRING	132R
14		14496631		2	WASHER, M10 x 21 x 2 ARANDELA	RONDELLA FLADSKIVE	UNTERLEGSCHEIBE ANILHA	RONDELLE SLUITRING	131R
15		71484462		2	O-RING JUNTA TÓRICA	ANELLO TOROIDALE O-RING	O-RING O-RING	JOINT TORIQUE O-RING	055A
16		70924110		2	O-RING JUNTA TÓRICA	ANELLO TOROIDALE O-RING	O-RING O-RING	JOINT TORIQUE O-RING	055A
17		87396775		1	RIGID TUBE TUBO RÍGIDO	TUBO RIGIDO STIFT RØR	ROHR TUBO RÍGIDO	TUYAU RIGIDE VASTE LEIDING	193T

Copyright © New Holland

5.0087	02	p1	03/10

BOOM/ARM WITHOUT SAFETY VALVE - VERSION (04-05-06) - OPTIONAL CODE 461134038
SOLLEVAMENTO/PENETRAZIONE SENZA VALVOLA ANTICAD. - VERSIONE (04-05-06) - CODICE VARIANTE 461134038
ANHEBEN/EINDRINGEN OHNE SICHERHEITSVENTIL. - VERSION (04-05-06) - OPTIONAL CODE 461134038
SOULEVEMENT/PENETRATION SANS VALVE ANTI-CH. - VERSION (04-05-06) - OPTIONAL CODE 461134038

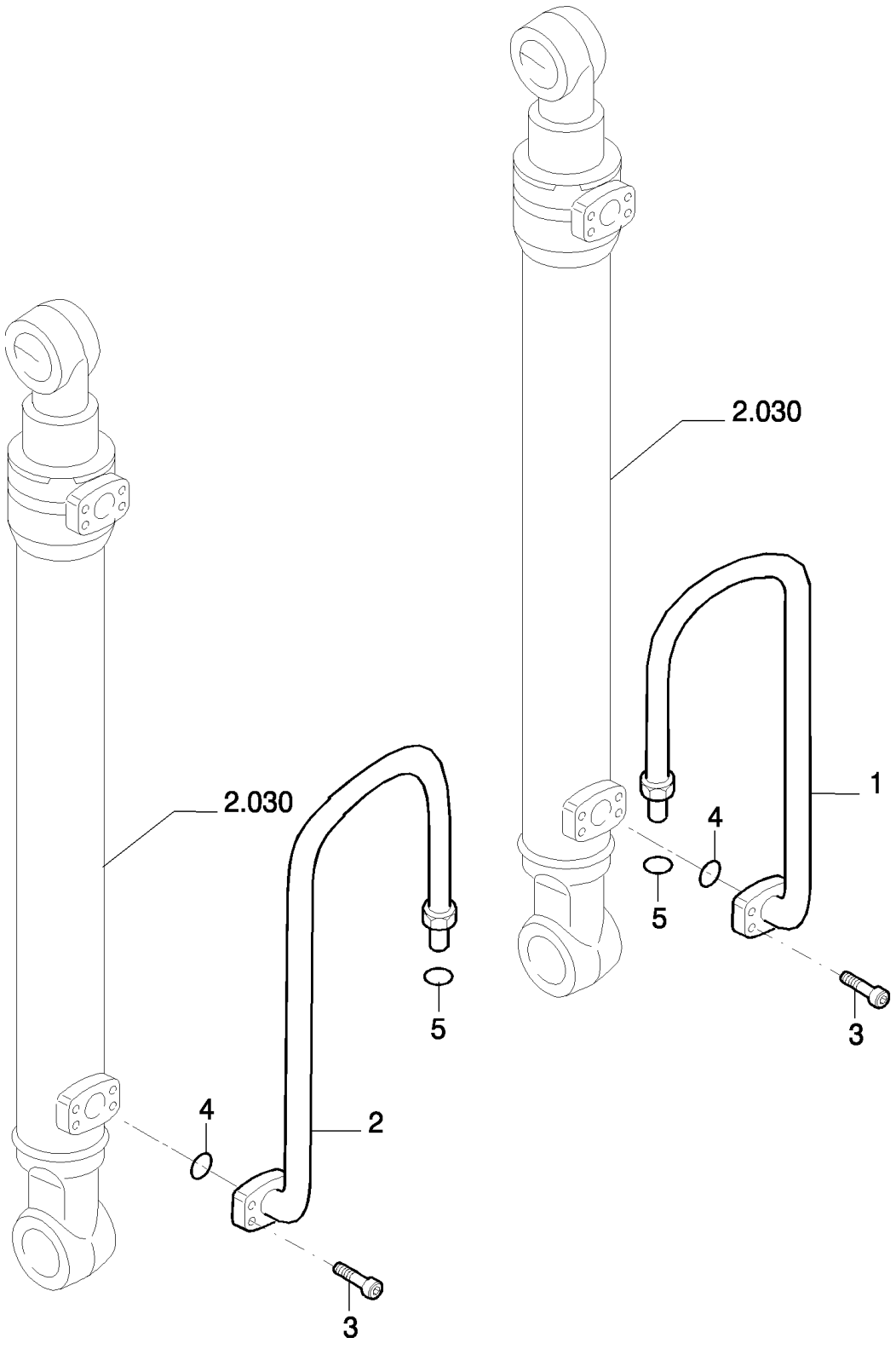

Copyright © New Holland

ELEVACIÓN/PENETRACIÓN SIN VÁLVULA ANTICAD. - VERSION (04-05-06) - OPTIONAL CODE 461134038
BOOM/ARM WITHOUT SAFETY VALVE - VERSION (04-05-06) - OPTIONAL CODE 461134038
BOOM/ARM WITHOUT SAFETY VALVE - VERSION (04-05-06) - OPTIONAL CODE 461134038
BOOM/ARM WITHOUT SAFETY VALVE - VERSION (04-05-06) - OPTIONAL CODE 461134038

R	N	P.N.	MOD	Q	Description Denominacion	Descrizione Beskrivelse	Bezeichnung Denominação	Description Beschrijving	L.C.
1		87396776		1	RIGID TUBE TUBO RÍGIDO	TUBO RIGIDO STIFT RØR	ROHR TUBO RÍGIDO	TUYAU RIGIDE VASTE LEIDING	193T
2		87557247		1	RIGID TUBE TUBO RÍGIDO	TUBO RIGIDO STIFT RØR	ROHR TUBO RÍGIDO	TUYAU RIGIDE VASTE LEIDING	193T
3		14422234		8	SCREW TORNILLO	VITE SKRUE	SCHRAUBE PARAFUSO	VIS SCHROEF	040V
4		70924200		2	O-RING JUNTA TÓRICA	ANELLO TOROIDALE O-RING	O-RING O-RING	JOINT TORIQUE O-RING	055A
5		70931640		2	GASKET JUNTA	GUARNIZIONE PAKNING	DICHTUNG JUNTA	JOINT PAKKING	123G

Copyright © New Holland

5.0087	03	p1	03/10

BOOM/ARM WITHOUT SAFETY VALVE - VERSION (04-05-06) - OPTIONAL CODE 461134038
SOLLEVAMENTO/PENETRAZIONE SENZA VALVOLA ANTICAD. - VERSIONE (04-05-06) - CODICE VARIANTE 461134038
ANHEBEN/EINDRINGEN OHNE SICHERHEITSVENTIL. - VERSION (04-05-06) - OPTIONAL CODE 461134038
SOULEVEMENT/PENETRATION SANS VALVE ANTI-CH. - VERSION (04-05-06) - OPTIONAL CODE 461134038

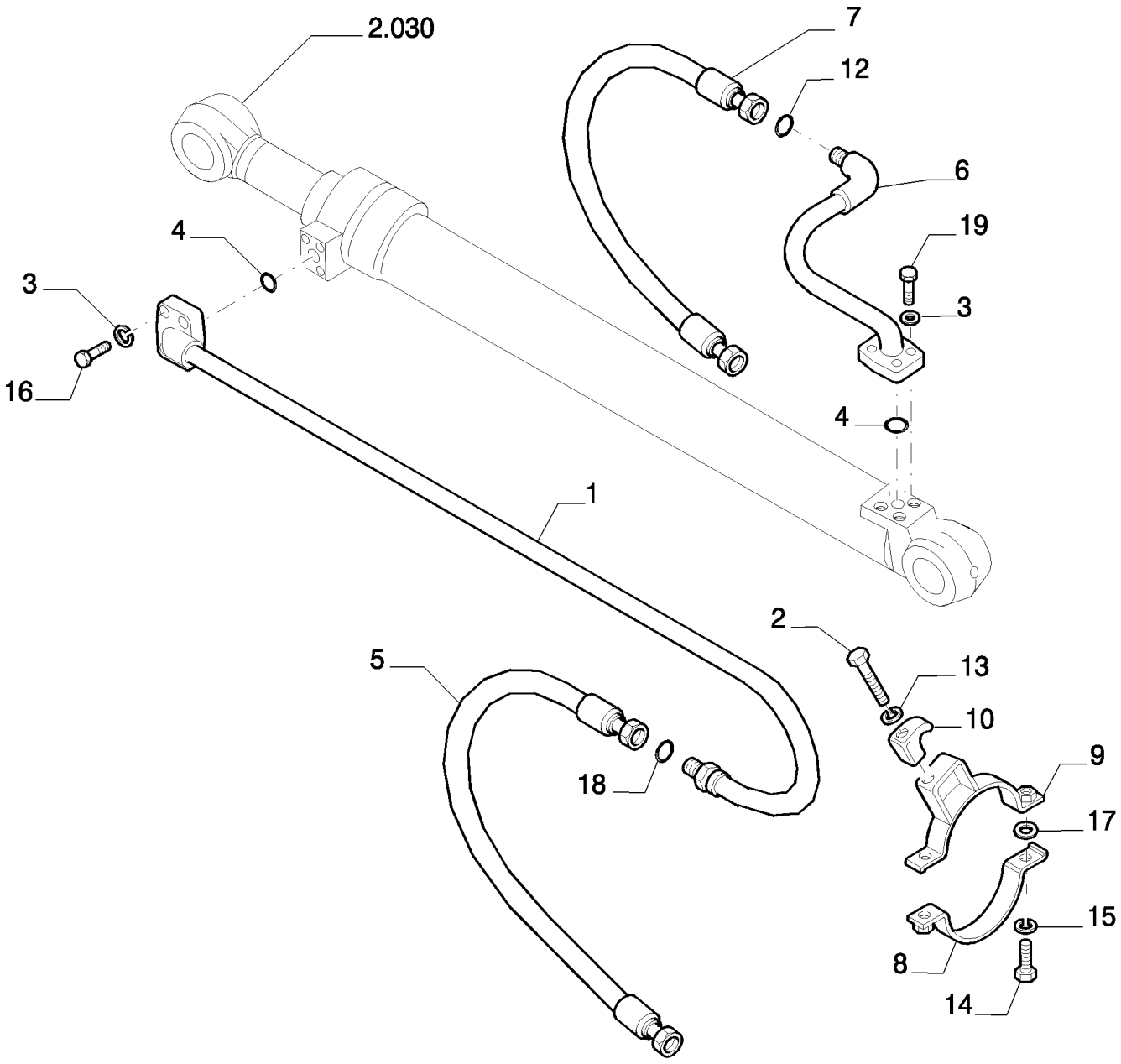

Copyright © New Holland

ELEVACIÓN/PENETRACIÓN SIN VÁLVULA ANTICAD. - VERSION (04-05-06) - OPTIONAL CODE 461134038
BOOM/ARM WITHOUT SAFETY VALVE - VERSION (04-05-06) - OPTIONAL CODE 461134038
BOOM/ARM WITHOUT SAFETY VALVE - VERSION (04-05-06) - OPTIONAL CODE 461134038
BOOM/ARM WITHOUT SAFETY VALVE - VERSION (04-05-06) - OPTIONAL CODE 461134038

R	N	P.N.	MOD	Q	Description Denominacion	Descrizione Beskrivelse	Bezeichnung Denominação	Description Beschrijving	L.C.
1		87572213		1	RIGID TUBE TUBO RÍGIDO	TUBO RIGIDO STIFT RØR	ROHR TUBO RÍGIDO	TUYAU RIGIDE VASTE LEIDING	193T
2		11113434		1	SCREW TORNILLO	VITE SKRUE	SCHRAUBE PARAFUSO	VIS SCHROEF	040V
3		10517074		8	LOCK WASHER ARANDELA DE BLOQUE	RONDELLA DI SICUREZ LÅSESKIVE	SICHERUNGSSCHEIBE ANILHA DE RETENÇÃO	RONDELLE FREIN BORGRING	132R
4		70924200		2	O-RING JUNTA TÓRICA	ANELLO TOROIDALE O-RING	O-RING O-RING	JOINT TORIQUE O-RING	055A
5		72203669		1	FLEXIBLE HOSE TUBO FLEXIBLE	TUBO FLESSIBILE FLEKSIBEL SLANGE	BIEGSAMER SCHLAUCH MANGUEIRA FLEXÍVEL	TUYAU FLEXIBLE FLEXIBELE SLANG	192T
6		87572209		1	RIGID TUBE TUBO RÍGIDO	TUBO RIGIDO STIFT RØR	ROHR TUBO RÍGIDO	TUYAU RIGIDE VASTE LEIDING	193T
7		87575698		1	FLEXIBLE HOSE TUBO FLEXIBLE	TUBO FLESSIBILE FLEKSIBEL SLANGE	BIEGSAMER SCHLAUCH MANGUEIRA FLEXÍVEL	TUYAU FLEXIBLE FLEXIBELE SLANG	192T
8		87345200		1	STRAP BANDA	FASCETTA STROP	BAND BANDA	BRIDE RIEM	532B
9		87572208		1	BRACKET SOPORTE	STAFFA BESLAG	HALTERUNG SUPORTE	SUPPORT STEUN	225S
10		71416090		1	CLIP ABRAZADERA	FERMO KLIPS	KLAMMER FIXADOR	COLLIER KLEM	045F
12		71404460		1	O-RING JUNTA TÓRICA	ANELLO TOROIDALE O-RING	O-RING O-RING	JOINT TORIQUE O-RING	055A
13		14496731		1	WASHER, M12 x 24 x 2.5 Thk ARANDELA	RONDELLA FLADSKIVE	UNTERLEGSCHEIBE ANILHA	RONDELLE SLUITRING	131R
14		11106434		2	BOLT, Hex, M10 x 30, 10.9, Full Thd PERNO	BULLONE BOLT	SCHRAUBE PARAFUSO	VIS BOUT	140B
15		10516874		2	LOCK WASHER ARANDELA DE BLOQUE	RONDELLA DI SICUREZ LÅSESKIVE	SICHERUNGSSCHEIBE ANILHA DE RETENÇÃO	RONDELLE FREIN BORGRING	132R
16		14422234		4	SCREW TORNILLO	VITE SKRUE	SCHRAUBE PARAFUSO	VIS SCHROEF	040V
17		72205175		2	SPACER SEPARADOR	DISTANZIALE AFSTANDSSTYKKE	DISTANZSTÜCK ESPAÇADOR	ENTRETOISE AFSTANDSSTUK	075D
18		70923843		1	SNAP RING ANILLO DE RESORTE	ANELLO ELASTICO LÅSERING	SPRENGRING ANEL	ANNEAU D'ARRET VEERRING	054A
19		14422434		4	SCREW TORNILLO	VITE SKRUE	SCHRAUBE PARAFUSO	VIS SCHROEF	040V

Copyright © New Holland

5.0087	04	p1	03/10

BOOM/ARM WITHOUT SAFETY VALVE - VERSION (04-05-06) - OPTIONAL CODE 461134038
SOLLEVAMENTO/PENETRAZIONE SENZA VALVOLA ANTICAD. - VERSIONE (04-05-06) - CODICE VARIANTE 461134038
ANHEBEN/EINDRINGEN OHNE SICHERHEITSVENTIL. - VERSION (04-05-06) - OPTIONAL CODE 461134038
SOULEVEMENT/PENETRATION SANS VALVE ANTI-CH. - VERSION (04-05-06) - OPTIONAL CODE 461134038

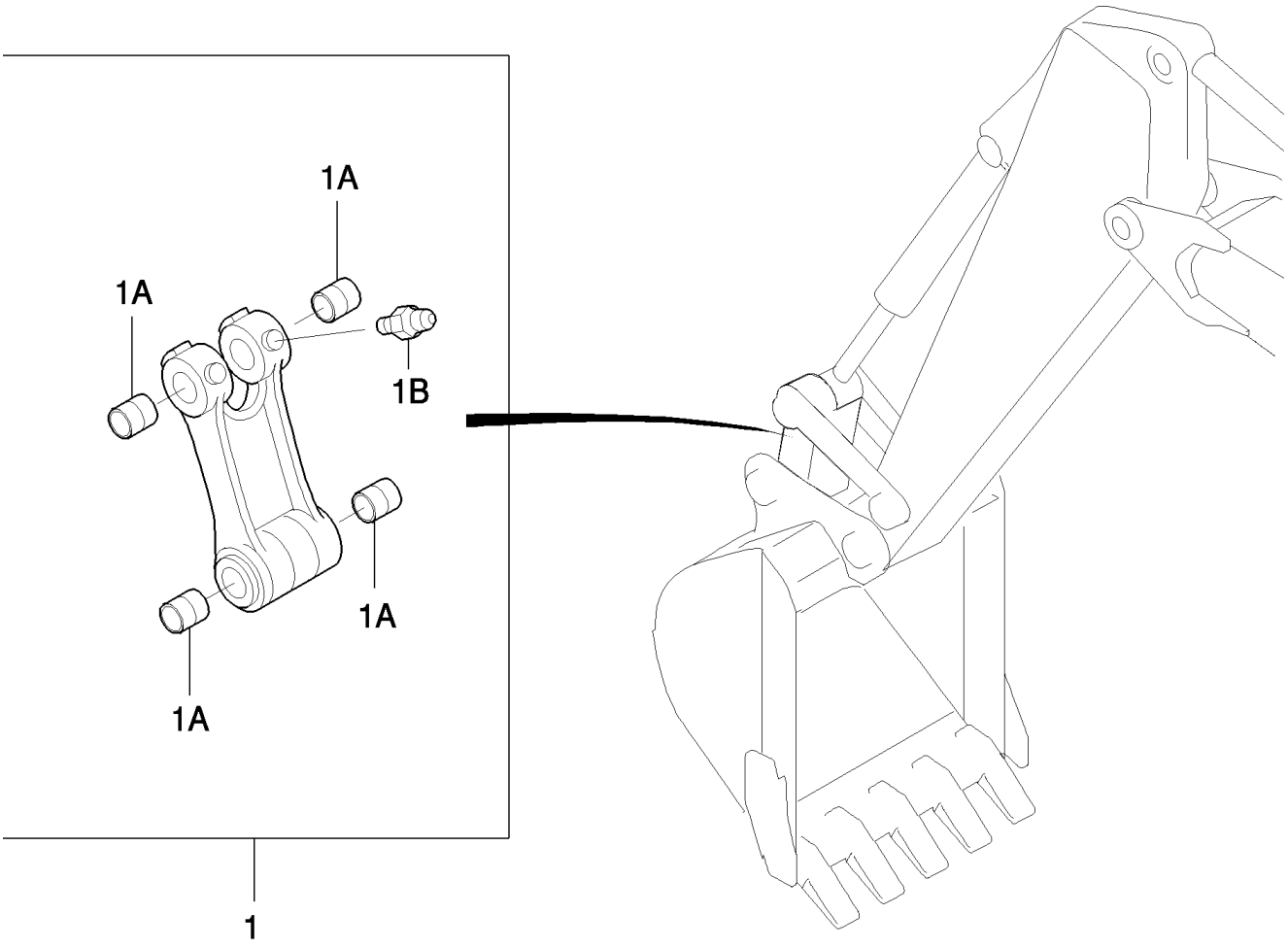

Copyright © New Holland

ELEVACIÓN/PENETRACIÓN SIN VÁLVULA ANTICAD. - VERSION (04-05-06) - OPTIONAL CODE 461134038
BOOM/ARM WITHOUT SAFETY VALVE - VERSION (04-05-06) - OPTIONAL CODE 461134038
BOOM/ARM WITHOUT SAFETY VALVE - VERSION (04-05-06) - OPTIONAL CODE 461134038
BOOM/ARM WITHOUT SAFETY VALVE - VERSION (04-05-06) - OPTIONAL CODE 461134038

R	N	P.N.	MOD	Q	Description Denominacion	Descrizione Beskrivelse	Bezeichnung Denominação	Description Beschrijving	L.C.
1		87354132		1	LINK CONROD, - ASSY BIELA DE ESLABÓN	BIELLA TIRANTE PLEJLSTANG	PLEUEL BIELA	BIELLE DRIJFSTANG	050B
1A		87543300		4	BUSHING CASQUILLO	BOCCOLA BØSNING	BUCHSE CASQUILHO	BAGUE BUS	095B
1B		13407211		3	LUBE NIPPLE, M10 x 1 BOQUILLA DE LUBRICA(	INGRASSATORE SMØRENIPPEL	SCHMIERNIPPEL COPO DE LUBRIFICAÇÃ	GRAISSEUR SMEERNIPPEL	060I

Copyright © New Holland

5.0088	01	p1	03/10

OBJECT HANDLING - VERSION (01-02-03) - OPTIONAL CODE 781583888
MOVIM. CARICHI SOSPESI - VERSIONE (01-02-03) - CODICE VARIANTE 781583888
BEW. LAST - VERSION (01-02-03) - OPTIONAL CODE 781583888
MOUV. FARDEAU - VERSION (01-02-03) - OPTIONAL CODE 781583888

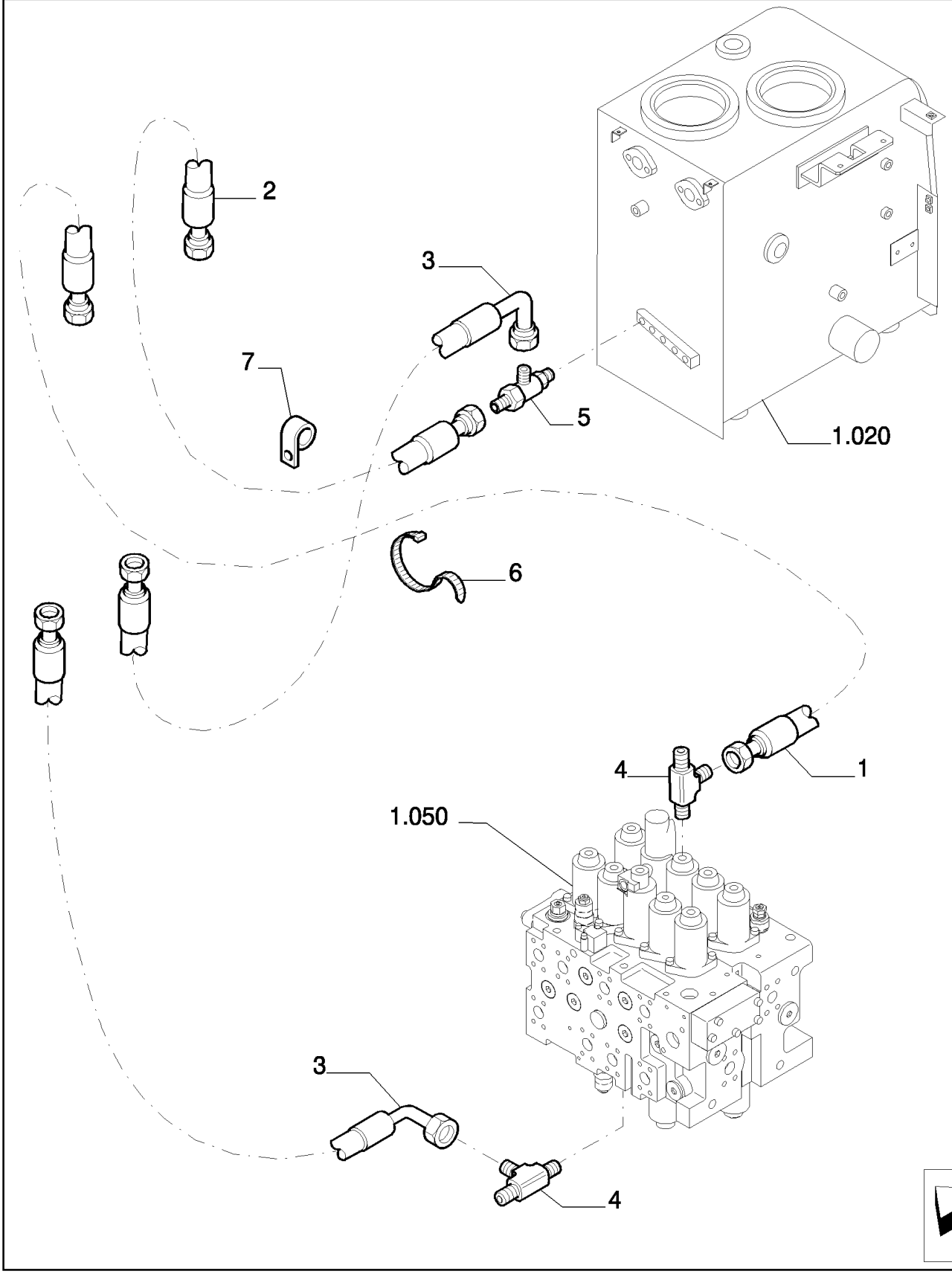

Copyright © New Holland

MOV. PESO - VERSION (01-02-03) - OPTIONAL CODE 781583888
OBJECT HANDLING - VERSION (01-02-03) - OPTIONAL CODE 781583888
OBJECT HANDLING - VERSION (01-02-03) - OPTIONAL CODE 781583888
OBJECT HANDLING - VERSION (01-02-03) - OPTIONAL CODE 781583888

R	N	P.N.	MOD	Q	Description Denominacion	Descrizione Beskrivelse	Bezeichnung Denominação	Description Beschrijving	L.C.
1		87622865		1	FLEXIBLE HOSE TUBO FLEXIBLE	TUBO FLESSIBILE FLEKSIBEL SLANGE	BIEGSAMER SCHLAUCH MANGUEIRA FLEXÍVEL	TUYAU FLEXIBLE FLEXIBELE SLANG	192T
2		87622866		1	FLEXIBLE HOSE TUBO FLEXIBLE	TUBO FLESSIBILE FLEKSIBEL SLANGE	BIEGSAMER SCHLAUCH MANGUEIRA FLEXÍVEL	TUYAU FLEXIBLE FLEXIBELE SLANG	192T
3		87622869		2	FLEXIBLE HOSE TUBO FLEXIBLE	TUBO FLESSIBILE FLEKSIBEL SLANGE	BIEGSAMER SCHLAUCH MANGUEIRA FLEXÍVEL	TUYAU FLEXIBLE FLEXIBELE SLANG	192T
4		87333054		2	TEE RACOR EN T	PEZZO A T T-STYKKE	T-STÜCK TÊ	RACCORD EN T T-STUK	9020
5		72954985		1	TEE RACOR EN T	PEZZO A T T-STYKKE	T-STÜCK TÊ	RACCORD EN T T-STUK	9020
6		4982514		14	CABLE STRAP BANDA DE CABLE	FASCETTA PER CAVO KABELSTROP	KABELBINDER BRAÇADEIRA DE CABO	BRIDE DE CABLE BUNDELBAND	P716
7		71405944		1	CLIP ABRAZADERA	FERMO KLIPS	KLAMMER FIXADOR	COLLIER KLEM	045F

Copyright © New Holland

5.0088	02	p1	03/10

OBJECT HANDLING - VERSION (01-02-03) - OPTIONAL CODE 781583888
MOVIM. CARICHI SOSPESI - VERSIONE (01-02-03) - CODICE VARIANTE 781583888
BEW. LAST - VERSION (01-02-03) - OPTIONAL CODE 781583888
MOUV. FARDEAU - VERSION (01-02-03) - OPTIONAL CODE 781583888

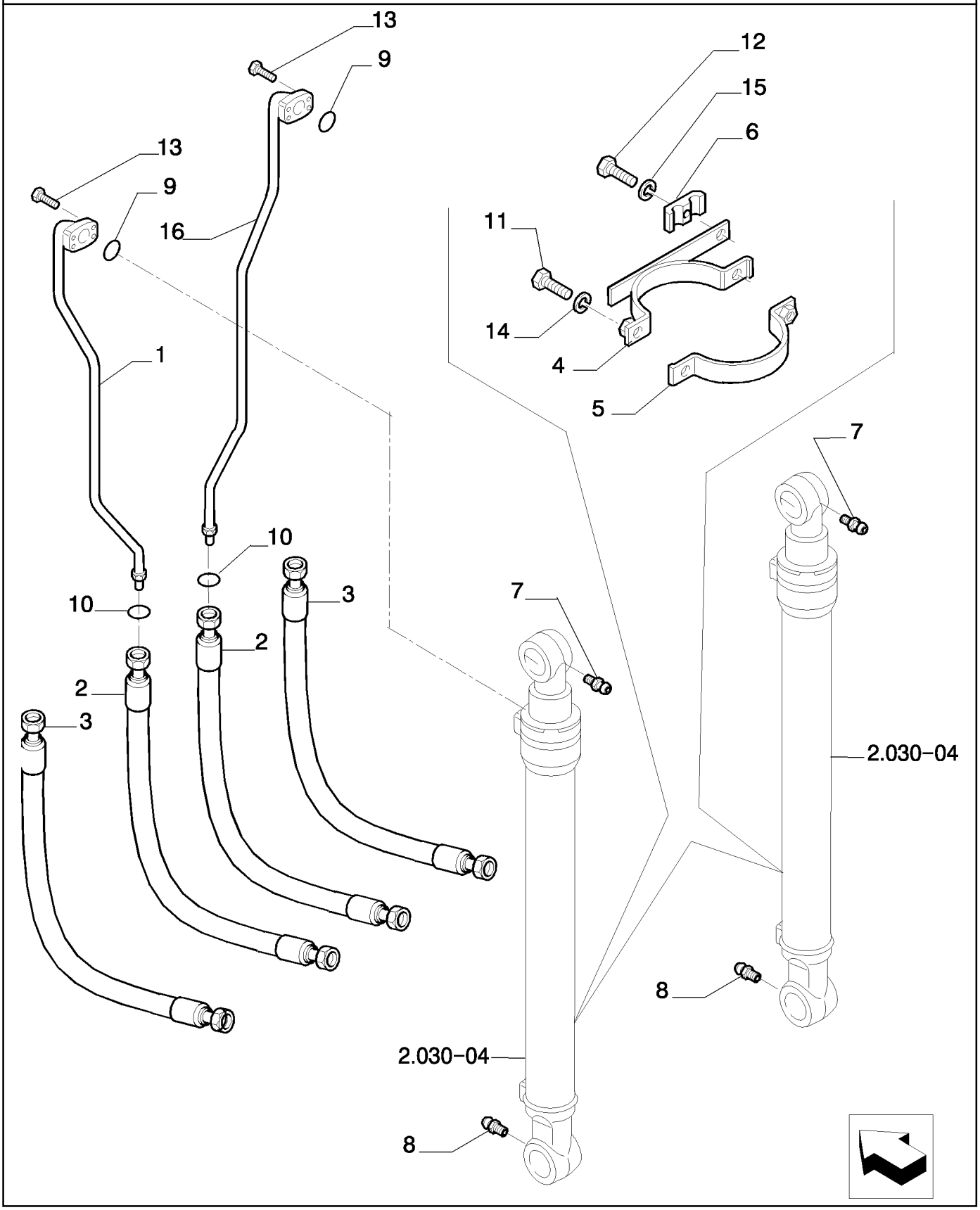

Copyright © New Holland

MOV. PESO - VERSION (01-02-03) - OPTIONAL CODE 781583888
OBJECT HANDLING - VERSION (01-02-03) - OPTIONAL CODE 781583888
OBJECT HANDLING - VERSION (01-02-03) - OPTIONAL CODE 781583888
OBJECT HANDLING - VERSION (01-02-03) - OPTIONAL CODE 781583888

R	N	P.N.	MOD	Q	Description Denominacion	Descrizione Beskrivelse	Bezeichnung Denominação	Description Beschrijving	L.C.
1		87539962		1	RIGID TUBE TUBO RÍGIDO	TUBO RIGIDO STIFT RØR	ROHR TUBO RÍGIDO	TUYAU RIGIDE VASTE LEIDING	193T
2		87346192		2	FLEXIBLE HOSE TUBO FLEXIBLE	TUBO FLESSIBILE FLEKSIBEL SLANGE	BIEGSAMER SCHLAUCH MANGUEIRA FLEXÍVEL	TUYAU FLEXIBLE FLEXIBELE SLANG	192T
3		87346193		2	FLEXIBLE HOSE TUBO FLEXIBLE	TUBO FLESSIBILE FLEKSIBEL SLANGE	BIEGSAMER SCHLAUCH MANGUEIRA FLEXÍVEL	TUYAU FLEXIBLE FLEXIBELE SLANG	192T
4		87545186		2	STRAP BANDA	FASCETTA STROP	BAND BANDA	BRIDE RIEM	532B
5		87545187		2	STRAP BANDA	FASCETTA STROP	BAND BANDA	BRIDE RIEM	532B
6		72955399		2	CLAMP ABRAZADERA	MORSETTO SPÆNDEBÅND	KLEMME BRAÇADEIRA	COLLIER KLEM	120M
7		72160573		2	PIN PASADOR	PERNO STIFT	PIN PERNO	BROCHE PEN	080P
8		72283478		2	LUBE NIPPLE BOQUILLA DE LUBRICA(	INGRASSATORE SMØRENIPPEL	SCHMIERNIPPEL COPO DE LUBRIFICAÇÃ	GRAISSEUR SMEERNIPPEL	060I
9		70924110		2	O-RING JUNTA TÓRICA	ANELLO TOROIDALE O-RING	O-RING O-RING	JOINT TORIQUE O-RING	055A
10		71484462		2	O-RING JUNTA TÓRICA	ANELLO TOROIDALE O-RING	O-RING O-RING	JOINT TORIQUE O-RING	055A
11		11106434		4	BOLT, Hex, M10 x 30, 10.9, Full Thd PERNO	BULLONE BOLT	SCHRAUBE PARAFUSO	VIS BOUT	140B
12		11113534		2	BOLT, Hex, M12 x 65, 10.9, Full Thd PERNO	BULLONE BOLT	SCHRAUBE PARAFUSO	VIS BOUT	140B
13		14420234		8	SCREW TORNILLO	VITE SKRUE	SCHRAUBE PARAFUSO	VIS SCHROEF	040V
14		10516874		4	LOCK WASHER ARANDELA DE BLOQUE	RONDELLA DI SICUREZ LÅSESKIVE	SICHERUNGSSCHEIBE ANILHA DE RETENÇÃO	RONDELLE FREIN BORGRING	132R
15		14496731		2	WASHER, M12 x 24 x 2.5 Thk ARANDELA	RONDELLA FLADSKIVE	UNTERLEGSCHEIBE ANILHA	RONDELLE SLUITRING	131R
16		87539965		1	RIGID TUBE TUBO RÍGIDO	TUBO RIGIDO STIFT RØR	ROHR TUBO RÍGIDO	TUYAU RIGIDE VASTE LEIDING	193T

Copyright © New Holland

5.0088	03	p1	03/10

OBJECT HANDLING - VERSION (01-02-03) - OPTIONAL CODE 781583888
MOVIM. CARICHI SOSPESI - VERSIONE (01-02-03) - CODICE VARIANTE 781583888
BEW. LAST - VERSION (01-02-03) - OPTIONAL CODE 781583888
MOUV. FARDEAU - VERSION (01-02-03) - OPTIONAL CODE 781583888

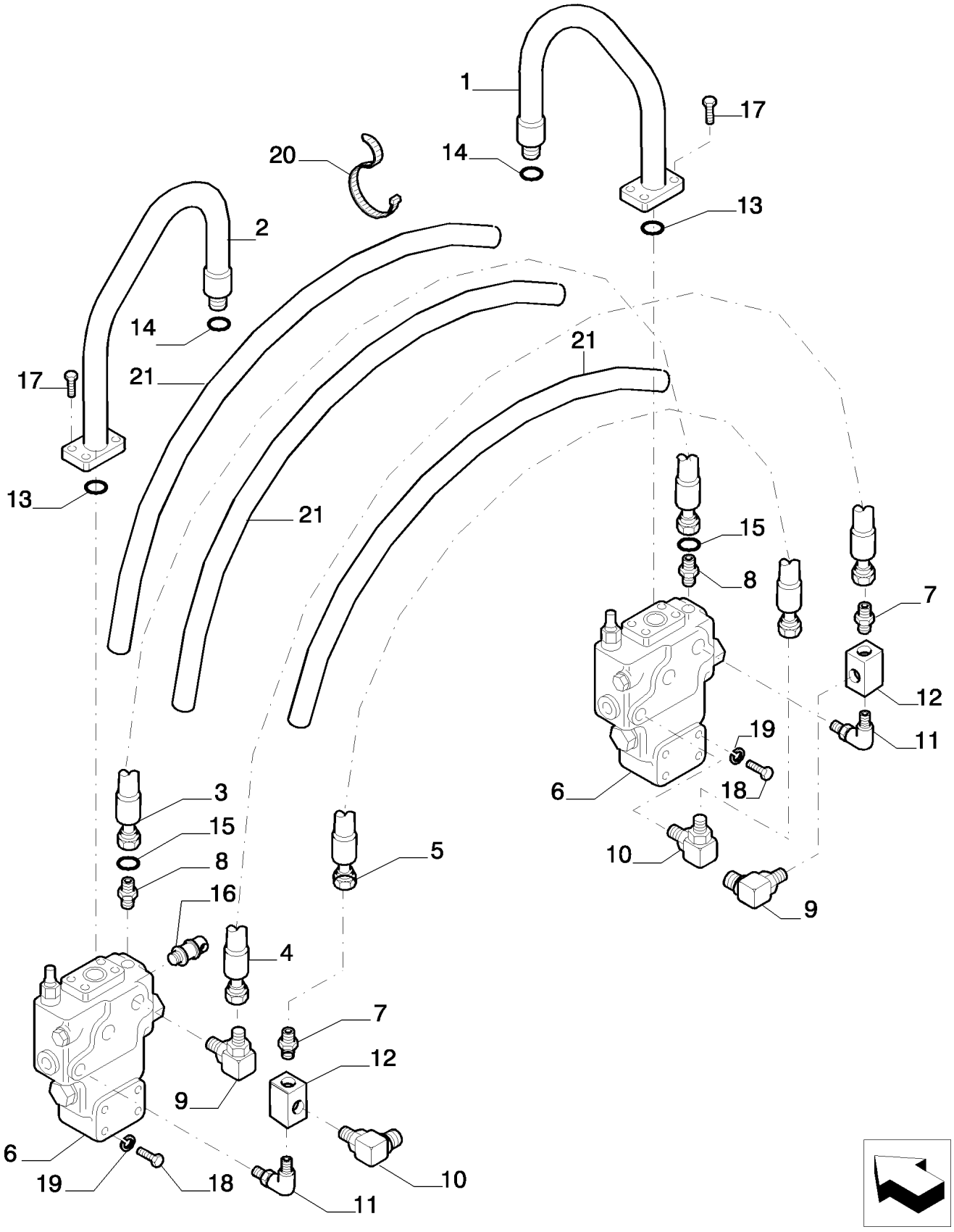

Copyright © New Holland

MOV. PESO - VERSION (01-02-03) - OPTIONAL CODE 781583888
OBJECT HANDLING - VERSION (01-02-03) - OPTIONAL CODE 781583888
OBJECT HANDLING - VERSION (01-02-03) - OPTIONAL CODE 781583888
OBJECT HANDLING - VERSION (01-02-03) - OPTIONAL CODE 781583888

R	N	P.N.	MOD	Q	Description Denominacion	Descrizione Beskrivelse	Bezeichnung Denominação	Description Beschrijving	L.C.
1		87539088		1	RIGID TUBE TUBO RÍGIDO	TUBO RIGIDO STIFT RØR	ROHR TUBO RÍGIDO	TUYAU RIGIDE VASTE LEIDING	193T
2		87539089		1	RIGID TUBE TUBO RÍGIDO	TUBO RIGIDO STIFT RØR	ROHR TUBO RÍGIDO	TUYAU RIGIDE VASTE LEIDING	193T
3		87540129		1	FLEXIBLE HOSE TUBO FLEXIBLE	TUBO FLESSIBILE FLEKSIBEL SLANGE	BIEGSAMER SCHLAUCH MANGUEIRA FLEXÍVEL	TUYAU FLEXIBLE FLEXIBELE SLANG	192T
4		87540133		1	FLEXIBLE HOSE TUBO FLEXIBLE	TUBO FLESSIBILE FLEKSIBEL SLANGE	BIEGSAMER SCHLAUCH MANGUEIRA FLEXÍVEL	TUYAU FLEXIBLE FLEXIBELE SLANG	192T
5		72954954		1	HOSE TUBO	TUBO FLESSIBILE SLANGE	SCHLAUCH MANGUEIRA	FLEXIBLE SLANG	030M
6		84227438		2	HYDRAULIC VALVE VÁLVULA HIDRÁULICA	DISTRIBUTORE IDRAULI HYDRAULIKVENTIL	HYDRAULIKVENTIL VÁLVULA HIDRÁULICA	SOUPAPE HYDRAULIQU HYDRAULISCHE KLEP	010V
7		72214523		2	HYD CONNECTOR CONECTOR HIDRÁULIC	CONNETTORE IDRAULIC HYDRAULIKSTIK	HYDR STECKVERBINDE CONECTOR HID.	CONNECTEUR HYDRAU HYDRAULISCHE AANSL	020R
8		72216769		2	HYD CONNECTOR CONECTOR HIDRÁULIC	CONNETTORE IDRAULIC HYDRAULIKSTIK	HYDR STECKVERBINDE CONECTOR HID.	CONNECTEUR HYDRAU HYDRAULISCHE AANSL	020R
9		72214526		2	HYD CONNECTOR CONECTOR HIDRÁULIC	CONNETTORE IDRAULIC HYDRAULIKSTIK	HYDR STECKVERBINDE CONECTOR HID.	CONNECTEUR HYDRAU HYDRAULISCHE AANSL	020R
10		72214548		2	HYD CONNECTOR CONECTOR HIDRÁULIC	CONNETTORE IDRAULIC HYDRAULIKSTIK	HYDR STECKVERBINDE CONECTOR HID.	CONNECTEUR HYDRAU HYDRAULISCHE AANSL	020R
11		72214540		2	ELBOW CODO	GOMITO VINKELRØR	KNIESTÜCK COTOVELO	COUDE KNIESTUK	085G
12		72283559		2	TEE RACOR EN T	PEZZO A T T-STYKKE	T-STÜCK TÊ	RACCORD EN T T-STUK	9020
13		72215443		2	O-RING JUNTA TÓRICA	ANELLO TOROIDALE O-RING	O-RING O-RING	JOINT TORIQUE O-RING	055A
14		70931640		2	GASKET JUNTA	GUARNIZIONE PAKNING	DICHTUNG JUNTA	JOINT PAKKING	123G
15		72206112		2	O-RING JUNTA TÓRICA	ANELLO TOROIDALE O-RING	O-RING O-RING	JOINT TORIQUE O-RING	055A
16		87524903		1	SENSOR SENSOR	SENSORE FØLER	SENSOR SENSOR	CAPTEUR SENSOR	608S
17		14422234		8	SCREW TORNILLO	VITE SKRUE	SCHRAUBE PARAFUSO	VIS SCHROEF	040V
18		14422934		8	SCREW TORNILLO	VITE SKRUE	SCHRAUBE PARAFUSO	VIS SCHROEF	040V
19		10517074		8	LOCK WASHER ARANDELA DE BLOQUE	RONDELLA DI SICUREZ LÅSESKIVE	SICHERUNGSSCHEIBE ANILHA DE RETENÇÃO	RONDELLE FREIN BORGRING	132R
20		4982514		10	CABLE STRAP BANDA DE CABLE	FASCETTA PER CAVO KABELSTROP	KABELBINDER BRAÇADEIRA DE CABO	BRIDE DE CABLE BUNDELBAND	P716
21		72963318		3	TUBE TUBO	TUBO RØR	ROHR TUBO	TUBE LEIDING	195T

Copyright © New Holland

5.0088	04	p1	03/10

OBJECT HANDLING - VERSION (01-02-03) - OPTIONAL CODE 781583888
MOVIM. CARICHI SOSPESI - VERSIONE (01-02-03) - CODICE VARIANTE 781583888
BEW. LAST - VERSION (01-02-03) - OPTIONAL CODE 781583888
MOUV. FARDEAU - VERSION (01-02-03) - OPTIONAL CODE 781583888

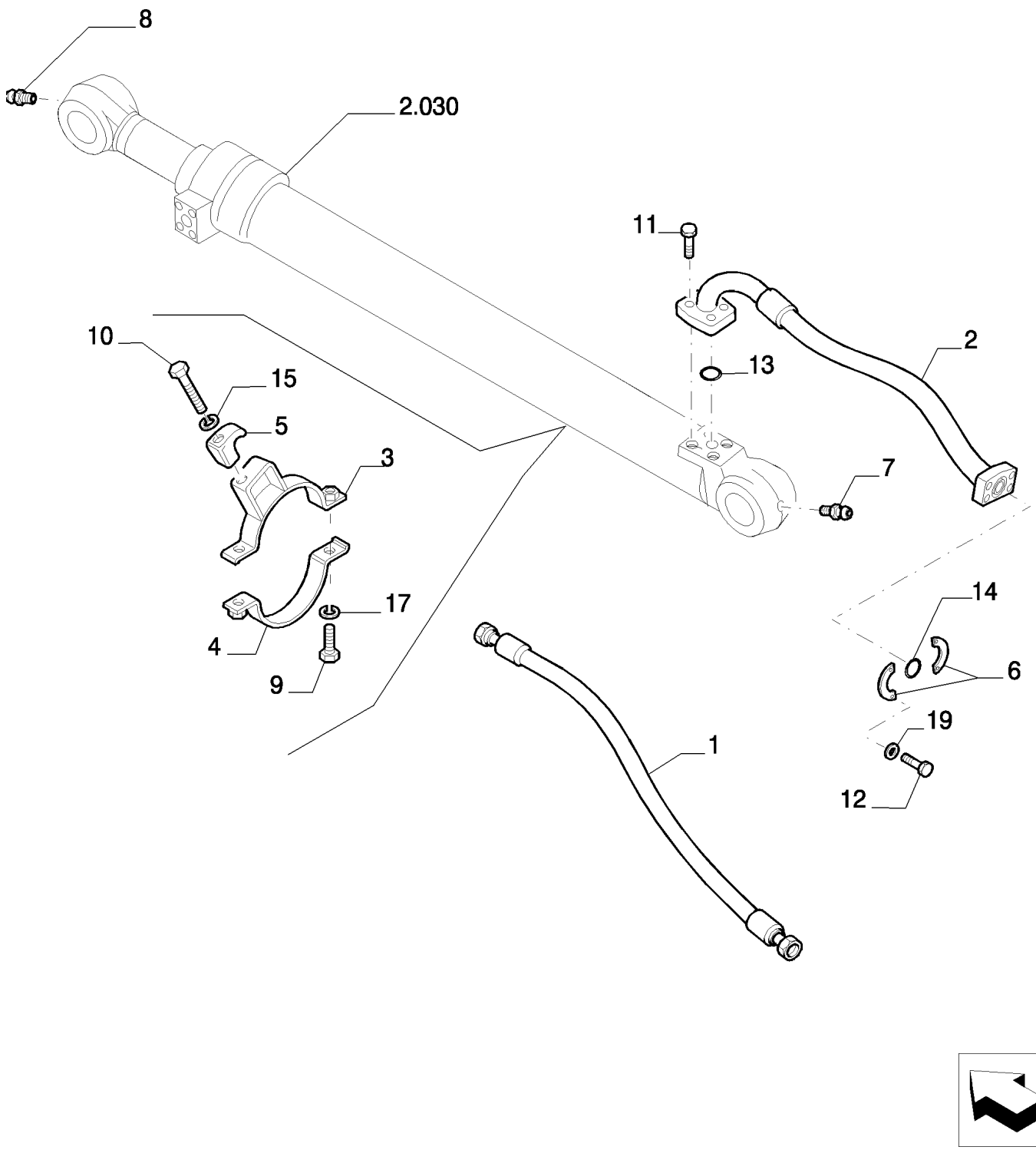

Copyright © New Holland

MOV. PESO - VERSION (01-02-03) - OPTIONAL CODE 781583888
OBJECT HANDLING - VERSION (01-02-03) - OPTIONAL CODE 781583888
OBJECT HANDLING - VERSION (01-02-03) - OPTIONAL CODE 781583888
OBJECT HANDLING - VERSION (01-02-03) - OPTIONAL CODE 781583888

R	N	P.N.	MOD	Q	Description Denominacion	Descrizione Beskrivelse	Bezeichnung Denominação	Description Beschrijving	L.C.
1		87544502		1	FLEXIBLE HOSE TUBO FLEXIBLE	TUBO FLESSIBILE FLEKSIBEL SLANGE	BIEGSAMER SCHLAUCH MANGUEIRA FLEXÍVEL	TUYAU FLEXIBLE FLEXIBELE SLANG	192T
2		87544499		1	FLEXIBLE HOSE TUBO FLEXIBLE	TUBO FLESSIBILE FLEKSIBEL SLANGE	BIEGSAMER SCHLAUCH MANGUEIRA FLEXÍVEL	TUYAU FLEXIBLE FLEXIBELE SLANG	192T
3		87544495		1	STRAP BANDA	FASCETTA STROP	BAND BANDA	BRIDE RIEM	532B
4		87544500		1	STRAP BANDA	FASCETTA STROP	BAND BANDA	BRIDE RIEM	532B
5		72201683		1	BRACKET SOPORTE	STAFFA BESLAG	HALTERUNG SUPORTE	SUPPORT STEUN	225S
6		71444029		2	HALF-FLANGE SEMIBRIDA	SEMIFLANGIA FLANGEHALVDEL	FLANSCHHÄLFTE MEIA FLANGE	DEMI-BRIDE FLENSHELFT	417S
7		72160573		1	PIN PASADOR	PERNO STIFT	PIN PERNO	BROCHE PEN	080P
8		72283478		1	LUBE NIPPLE BOQUILLA DE LUBRICA(	INGRASSATORE SMØRENIPPEL	SCHMIERNIPPEL COPO DE LUBRIFICAÇÃ	GRAISSEUR SMEERNIPPEL	060I
9		11106434		2	BOLT, Hex, M10 x 30, 10.9, Full Thd PERNO	BULLONE BOLT	SCHRAUBE PARAFUSO	VIS BOUT	140B
10		11113334		1	SCREW TORNILLO	VITE SKRUE	SCHRAUBE PARAFUSO	VIS SCHROEF	040V
11		14422274		4	SCREW TORNILLO	VITE SKRUE	SCHRAUBE PARAFUSO	VIS SCHROEF	040V
12		14424534		4	SCREW TORNILLO	VITE SKRUE	SCHRAUBE PARAFUSO	VIS SCHROEF	040V
13		72215443		1	O-RING JUNTA TÓRICA	ANELLO TOROIDALE O-RING	O-RING O-RING	JOINT TORIQUE O-RING	055A
14		70924192		1	O-RING JUNTA TÓRICA	ANELLO TOROIDALE O-RING	O-RING O-RING	JOINT TORIQUE O-RING	055A
15		14496731		1	WASHER, M12 x 24 x 2.5 Thk ARANDELA	RONDELLA FLADSKIVE	UNTERLEGSCHEIBE ANILHA	RONDELLE SLUITRING	131R
17		10516874		2	LOCK WASHER ARANDELA DE BLOQUE	RONDELLA DI SICUREZ LÅSESKIVE	SICHERUNGSSCHEIBE ANILHA DE RETENÇÃO	RONDELLE FREIN BORGRING	132R
19		10517174		4	LOCK WASHER ARANDELA DE BLOQUE	RONDELLA DI SICUREZ LÅSESKIVE	SICHERUNGSSCHEIBE ANILHA DE RETENÇÃO	RONDELLE FREIN BORGRING	132R

Copyright © New Holland

5.0088	05	p1	03/10

OBJECT HANDLING - VERSION (01-02-03) - OPTIONAL CODE 781583888
MOVIM. CARICHI SOSPESI - VERSIONE (01-02-03) - CODICE VARIANTE 781583888
BEW. LAST - VERSION (01-02-03) - OPTIONAL CODE 781583888
MOUV. FARDEAU - VERSION (01-02-03) - OPTIONAL CODE 781583888

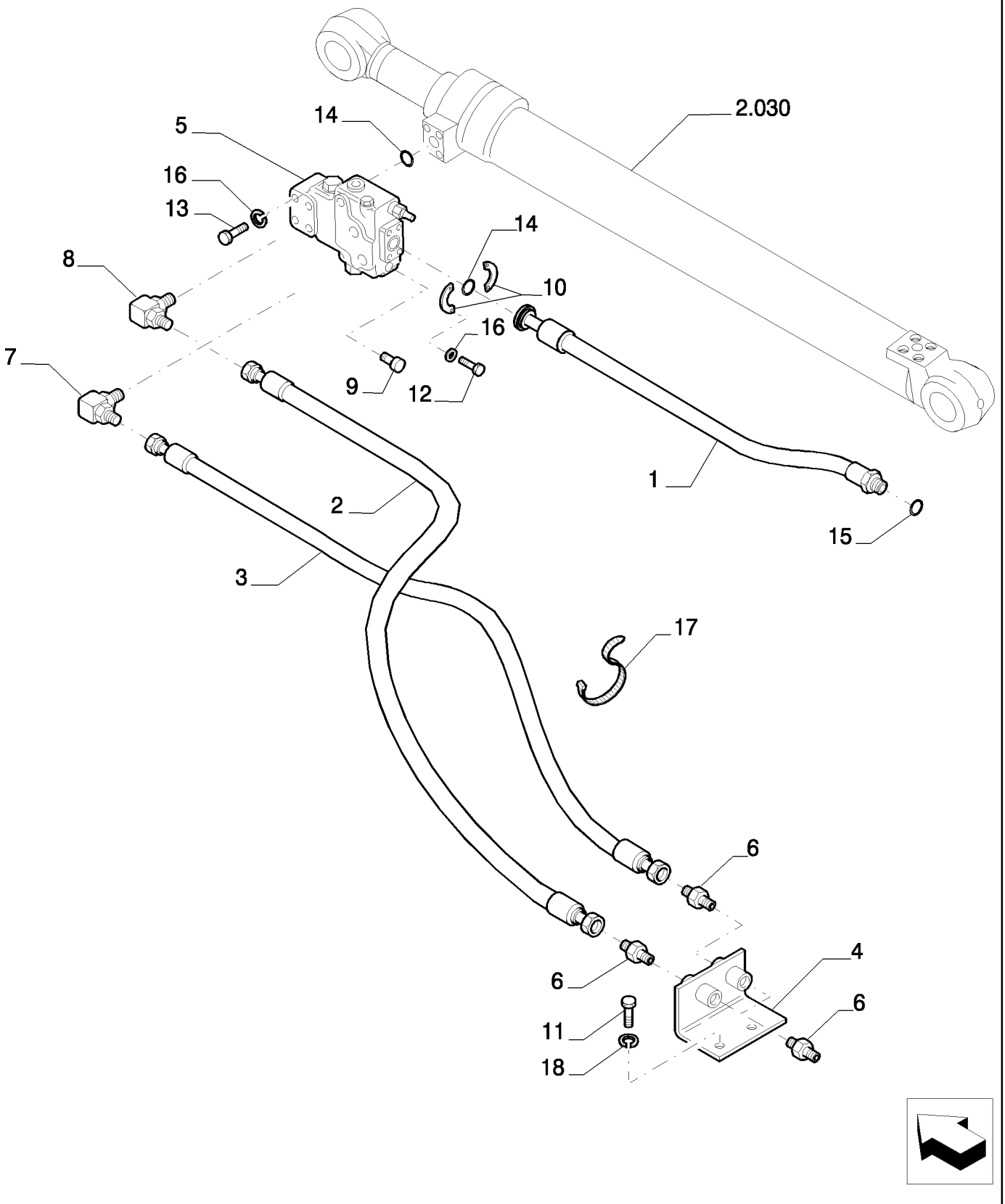

Copyright © New Holland

MOV. PESO - VERSION (01-02-03) - OPTIONAL CODE 781583888
OBJECT HANDLING - VERSION (01-02-03) - OPTIONAL CODE 781583888
OBJECT HANDLING - VERSION (01-02-03) - OPTIONAL CODE 781583888
OBJECT HANDLING - VERSION (01-02-03) - OPTIONAL CODE 781583888

R	N	P.N.	MOD	Q	Description Denominacion	Descrizione Beskrivelse	Bezeichnung Denominação	Description Beschrijving	L.C.
1		87547555		1	RIGID TUBE TUBO RÍGIDO	TUBO RIGIDO STIFT RØR	ROHR TUBO RÍGIDO	TUYAU RIGIDE VASTE LEIDING	193T
2		87547557		1	FLEXIBLE HOSE TUBO FLEXIBLE	TUBO FLESSIBILE FLEKSIBEL SLANGE	BIEGSAMER SCHLAUCH MANGUEIRA FLEXÍVEL	TUYAU FLEXIBLE FLEXIBELE SLANG	192T
3		87547558		1	FLEXIBLE HOSE TUBO FLEXIBLE	TUBO FLESSIBILE FLEKSIBEL SLANGE	BIEGSAMER SCHLAUCH MANGUEIRA FLEXÍVEL	TUYAU FLEXIBLE FLEXIBELE SLANG	192T
4		72955500		1	BRACKET SOPORTE	STAFFA BESLAG	HALTERUNG SUPORTE	SUPPORT STEUN	225S
5	1	87353360		1	HYDRAULIC VALVE VÁLVULA HIDRÁULICA	DISTRIBUTORE IDRAULI HYDRAULIKVENTIL	HYDRAULIKVENTIL VÁLVULA HIDRÁULICA	SOUPAPE HYDRAULIQU HYDRAULISCHE KLEP	010V
6		72214523		4	HYD CONNECTOR CONECTOR HIDRÁULIC	CONNETTORE IDRAULIC HYDRAULIKSTIK	HYDR STECKVERBINDE CONECTOR HID.	CONNECTEUR HYDRAU HYDRAULISCHE AANSL	020R
7		72214526		1	HYD CONNECTOR CONECTOR HIDRÁULIC	CONNETTORE IDRAULIC HYDRAULIKSTIK	HYDR STECKVERBINDE CONECTOR HID.	CONNECTEUR HYDRAU HYDRAULISCHE AANSL	020R
8		72214548		1	HYD CONNECTOR CONECTOR HIDRÁULIC	CONNETTORE IDRAULIC HYDRAULIKSTIK	HYDR STECKVERBINDE CONECTOR HID.	CONNECTEUR HYDRAU HYDRAULISCHE AANSL	020R
9		72214663		1	PLUG TAPÓN	TAPPO PROP	STOPFEN TAMPÃO	BOUCHON PLUG	050T
10		71404313		2	HALF-FLANGE SEMIBRIDA	SEMIFLANGIA FLANGEHALVDEL	FLANSCHHÄLFTE MEIA FLANGE	DEMI-BRIDE FLENSHELFT	417S
11		11106234		2	BOLT, Hex, M10 x 25, 10.9, Full Thd PERNO	BULLONE BOLT	SCHRAUBE PARAFUSO	VIS BOUT	140B
12		14422234		4	SCREW TORNILLO	VITE SKRUE	SCHRAUBE PARAFUSO	VIS SCHROEF	040V
13		14422934		4	SCREW TORNILLO	VITE SKRUE	SCHRAUBE PARAFUSO	VIS SCHROEF	040V
14		72215443		2	O-RING JUNTA TÓRICA	ANELLO TOROIDALE O-RING	O-RING O-RING	JOINT TORIQUE O-RING	055A
15		70923843		1	SNAP RING ANILLO DE RESORTE	ANELLO ELASTICO LÅSERING	SPRENGRING ANEL	ANNEAU D'ARRET VEERRING	054A
16		10517074		8	LOCK WASHER ARANDELA DE BLOQUE	RONDELLA DI SICUREZ LÅSESKIVE	SICHERUNGSSCHEIBE ANILHA DE RETENÇÃO	RONDELLE FREIN BORGRING	132R
17		4982514		17	CABLE STRAP BANDA DE CABLE	FASCETTA PER CAVO KABELSTROP	KABELBINDER BRAÇADEIRA DE CABO	BRIDE DE CABLE BUNDELBAND	P716
18		14496631		2	WASHER, M10 x 21 x 2 ARANDELA	RONDELLA FLADSKIVE	UNTERLEGSCHEIBE ANILHA	RONDELLE SLUITRING	131R

(1) ASSY SEE PAGE 6

Copyright © New Holland

5.0088	06	p1	03/10

OBJECT HANDLING - COMPONENTS - VERSION (01-02-03) - OPTIONAL CODE 781583888
MOVIM. CARICHI SOSPESI - COMPONENTI - VERSIONE (01-02-03) - CODICE VARIANTE 781583888
BEW. LAST - BESTANDTEILE - VERSION (01-02-03) - OPTIONAL CODE 781583888
MOUV. FARDEAU - COMPOSANTS - VERSION (01-02-03) - OPTIONAL CODE 781583888

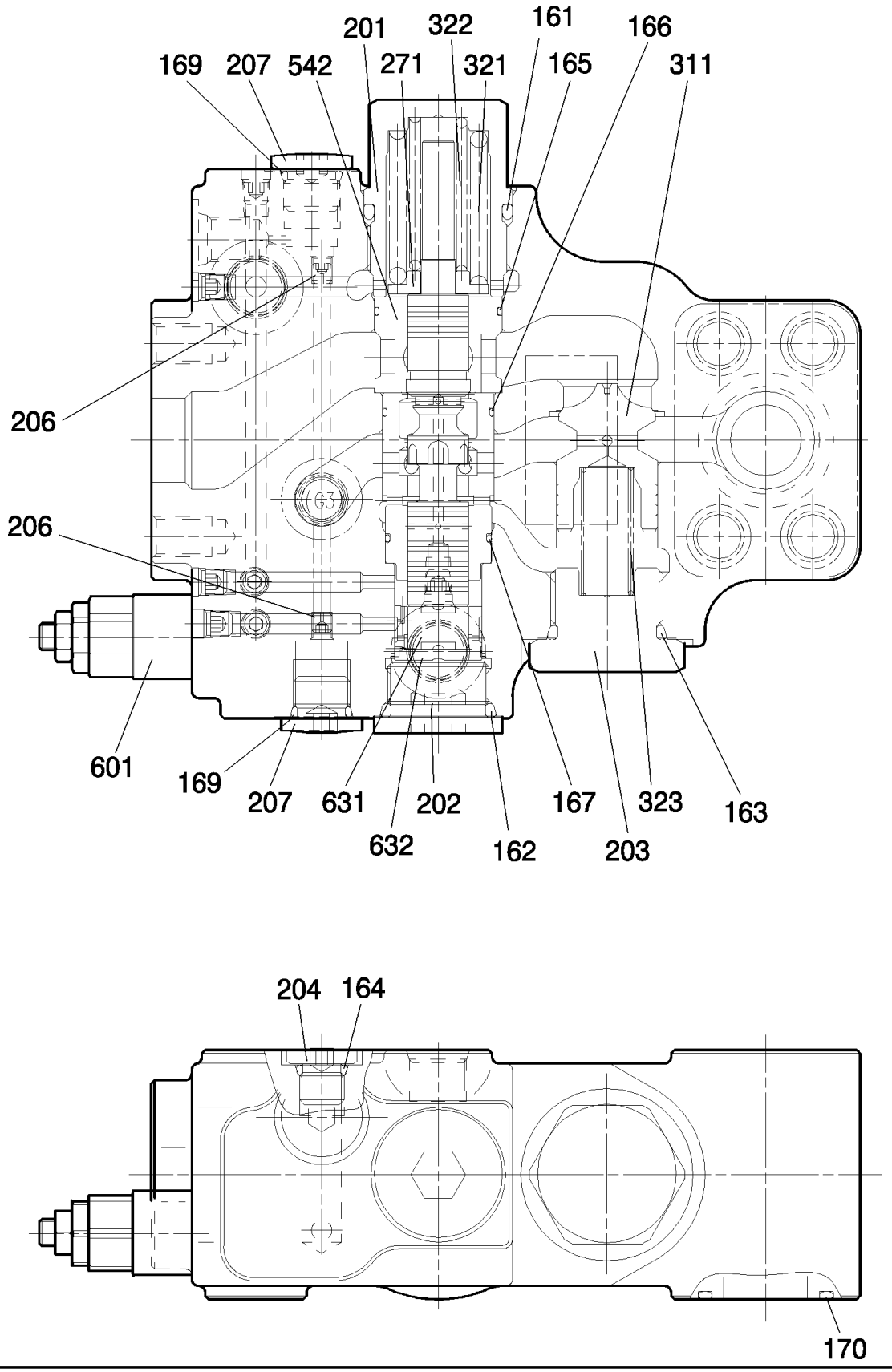

Copyright © New Holland

MOV. PESO - COMPONENTES - VERSION (01-02-03) - OPTIONAL CODE 781583888
OBJECT HANDLING - COMPONENTS - VERSION (01-02-03) - OPTIONAL CODE 781583888
OBJECT HANDLING - COMPONENTS - VERSION (01-02-03) - OPTIONAL CODE 781583888
OBJECT HANDLING - COMPONENTS - VERSION (01-02-03) - OPTIONAL CODE 781583888

R	N	P.N.	MOD	Q	Description Denominacion	Descrizione Beskrivelse	Bezeichnung Denominação	Description Beschrijving	L.C.
161		71444332		1	O-RING JUNTA TÓRICA	ANELLO TOROIDALE O-RING	O-RING O-RING	JOINT TORIQUE O-RING	055A
162		72209989		1	O-RING JUNTA TÓRICA	ANELLO TOROIDALE O-RING	O-RING O-RING	JOINT TORIQUE O-RING	055A
163		72210050		1	O-RING JUNTA TÓRICA	ANELLO TOROIDALE O-RING	O-RING O-RING	JOINT TORIQUE O-RING	055A
164		72209827		1	O-RING JUNTA TÓRICA	ANELLO TOROIDALE O-RING	O-RING O-RING	JOINT TORIQUE O-RING	055A
165		YN28V00019S165		1	O-RING JUNTA TÓRICA	ANELLO TOROIDALE O-RING	O-RING O-RING	JOINT TORIQUE O-RING	055A
166		72957825		1	O-RING JUNTA TÓRICA	ANELLO TOROIDALE O-RING	O-RING O-RING	JOINT TORIQUE O-RING	055A
167		YN28V00019S167		1	O-RING JUNTA TÓRICA	ANELLO TOROIDALE O-RING	O-RING O-RING	JOINT TORIQUE O-RING	055A
169		72209820		2	O-RING JUNTA TÓRICA	ANELLO TOROIDALE O-RING	O-RING O-RING	JOINT TORIQUE O-RING	055A
170		72209830		1	O-RING JUNTA TÓRICA	ANELLO TOROIDALE O-RING	O-RING O-RING	JOINT TORIQUE O-RING	055A
201		YN28V00019S201		1	PLUG TAPÓN	TAPPO PROP	STOPFEN TAMPÃO	BOUCHON PLUG	050T
202		2436U1198S551		1	PLUG TAPÓN	TAPPO PROP	STOPFEN TAMPÃO	BOUCHON PLUG	050T
203		YN28V00019S203		1	PLUG TAPÓN	TAPPO PROP	STOPFEN TAMPÃO	BOUCHON PLUG	050T
204		72209843		1	PLUG TAPÓN	TAPPO PROP	STOPFEN TAMPÃO	BOUCHON PLUG	050T
206		YN28V00019S206		2	RING ANILLO	ANELLO RING	RING ANEL	ANNEAU RING	045A
207		72210074		2	PLUG TAPÓN	TAPPO PROP	STOPFEN TAMPÃO	BOUCHON PLUG	050T
271		YN28V00019S271		1	SEAT/SLOT ASIENTO/RANURA	SEDE/ASOLA SÆDE	SITZ/SCHLITZ SUPORTE	SIEGE/FENTE ZITTING/SLEUF	069S
311		YN28V00019S311		1	SUPPORT SOPORTE	SUPPORTO BESLAG	STÜTZE SUPORTE	SUPPORT STEUN	300S
321		YN28V00019S321		1	SPRING RESORTE	MOLLA FJEDER	FEDER MOLA	RESSORT VEER	100M
322		YN28V00019S322		1	SPRING RESORTE	MOLLA FJEDER	FEDER MOLA	RESSORT VEER	100M
323		YN28V00019S323		1	SPRING RESORTE	MOLLA FJEDER	FEDER MOLA	RESSORT VEER	100M
542		YN28V00019S542		1	BUSHING CASQUILLO	BOCCOLA BØSNING	BUCHSE CASQUILHO	BAGUE BUS	095B
601		YN22V00037F1		1	HYDRAULIC VALVE VÁLVULA HIDRÁULICA	DISTRIBUTORE IDRAULI HYDRAULIKVENTIL	HYDRAULIKVENTIL VÁLVULA HIDRÁULICA	SOUPAPE HYDRAULIQU HYDRAULISCHE KLEP	010V
631		YN28V00019S631		1	PISTON PISTÓN	PISTONE STEMPEL	KOLBEN PISTÃO	PISTON ZUIGER	235S
632		YN28V00019S632		1	PISTON PISTÓN	PISTONE STEMPEL	KOLBEN PISTÃO	PISTON ZUIGER	235S

VALVE ASSY P/N 87353360

E215B

Copyright © New Holland

5.0088	07	p1	03/10

OBJECT HANDLING - VERSION (01-02-03) - OPTIONAL CODE 781583888
MOVIM. CARICHI SOSPESI - VERSIONE (01-02-03) - CODICE VARIANTE 781583888
BEW. LAST - VERSION (01-02-03) - OPTIONAL CODE 781583888
MOUV. FARDEAU - VERSION (01-02-03) - OPTIONAL CODE 781583888

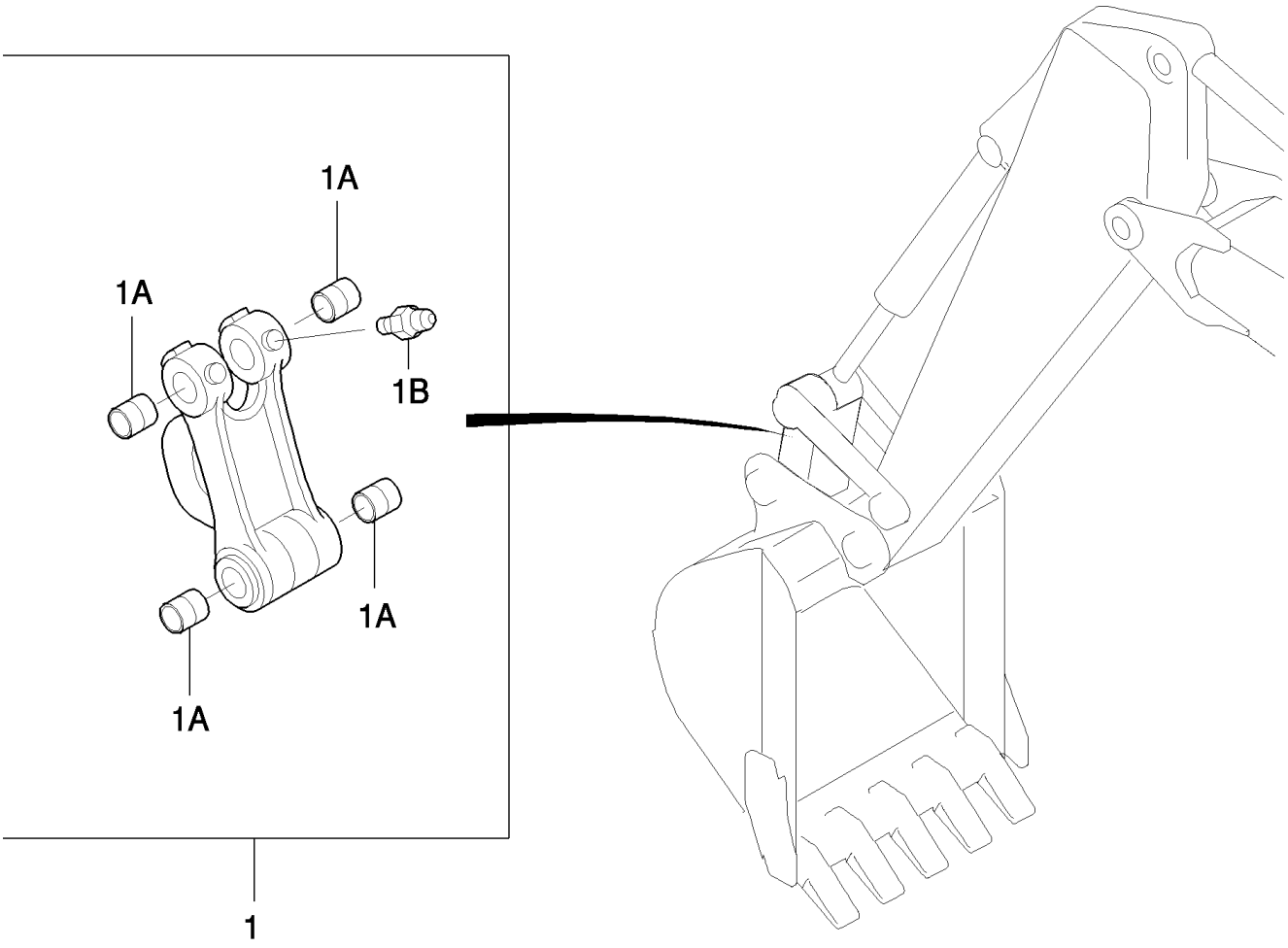

Copyright © New Holland

MOV. PESO - VERSION (01-02-03) - OPTIONAL CODE 781583888
OBJECT HANDLING - VERSION (01-02-03) - OPTIONAL CODE 781583888
OBJECT HANDLING - VERSION (01-02-03) - OPTIONAL CODE 781583888
OBJECT HANDLING - VERSION (01-02-03) - OPTIONAL CODE 781583888

R	N	P.N.	MOD	Q	Description Denominacion	Descrizione Beskrivelse	Bezeichnung Denominação	Description Beschrijving	L.C.
1		87354133		1	LINK CONROD, - ASSY BIELA DE ESLABÓN	BIELLA TIRANTE PLEJLSTANG	PLEUEL BIELA	BIELLE DRIJFSTANG	050B
1A		87543300		4	BUSHING CASQUILLO	BOCCOLA BØSNING	BUCHSE CASQUILHO	BAGUE BUS	095B
1B		13407211		3	LUBE NIPPLE, M10 x 1 BOQUILLA DE LUBRICA(	INGRASSATORE SMØRENIPPEL	SCHMIERNIPPEL COPO DE LUBRIFICAÇÃ	GRAISSEUR SMEERNIPPEL	060I

Copyright © New Holland

5.0088	08	p1	03/10

OBJECT HANDLING - VERSION (01-02-03) - OPTIONAL CODE 781583888
MOVIM. CARICHI SOSPESI - VERSION (01-02-03) - OPTIONAL CODE 781583888
BEW. LAST - VERSION (01-02-03) - OPTIONAL CODE 781583888
MOUV. FARDEAU - VERSION (01-02-03) - OPTIONAL CODE 781583888

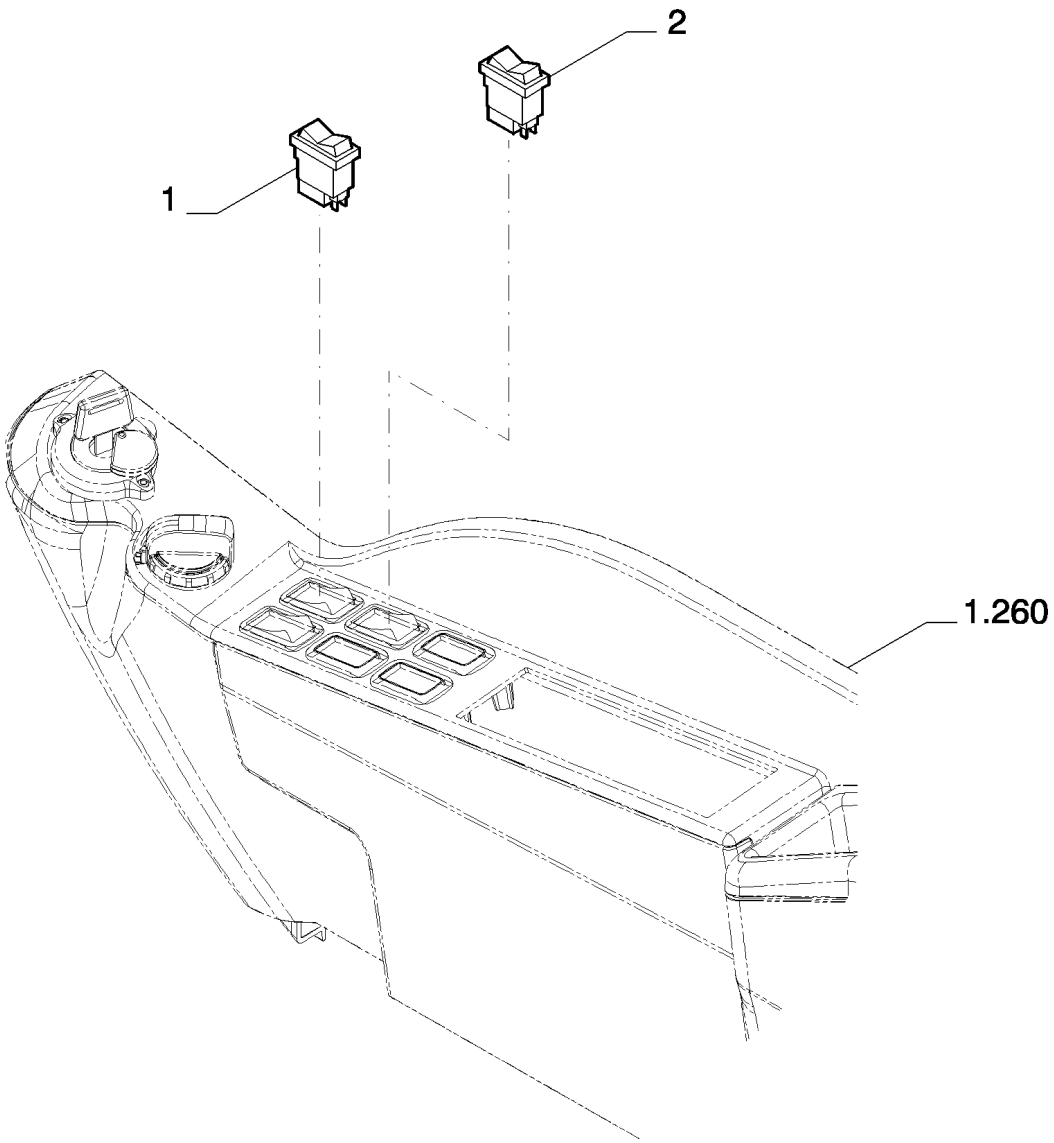

Copyright © New Holland

MOV. PESO - VERSION (01-02-03) - OPTIONAL CODE 781583888
OBJECT HANDLING - VERSION (01-02-03) - OPTIONAL CODE 781583888
OBJECT HANDLING - VERSION (01-02-03) - OPTIONAL CODE 781583888
OBJECT HANDLING - VERSION (01-02-03) - OPTIONAL CODE 781583888

R	N	P.N.	MOD	Q	Description Denominacion	Descrizione Beskrivelse	Bezeichnung Denominação	Description Beschrijving	L.C.
1		87528778		1	SWITCH INTERRUPTOR	INTERRUTTORE KONTAKT	SCHALTER INTERRUPTOR	CONTACTEUR SCHAKELAAR	075I
2		87540814		1	SWITCH INTERRUPTOR	INTERRUTTORE KONTAKT	SCHALTER INTERRUPTOR	CONTACTEUR SCHAKELAAR	075I

Copyright © New Holland

5.0088	09	p1	03/10

OBJECT HANDLING - VERSION (01-02-03) - OPTIONAL CODE 781583888
MOVIM. CARICHI SOSPESI - VERSIONE (01-02-03) - CODICE VARIANTE 781583888
BEW. LAST - VERSION (01-02-03) - OPTIONAL CODE 781583888
MOUV. FARDEAU - VERSION (01-02-03) - OPTIONAL CODE 781583888

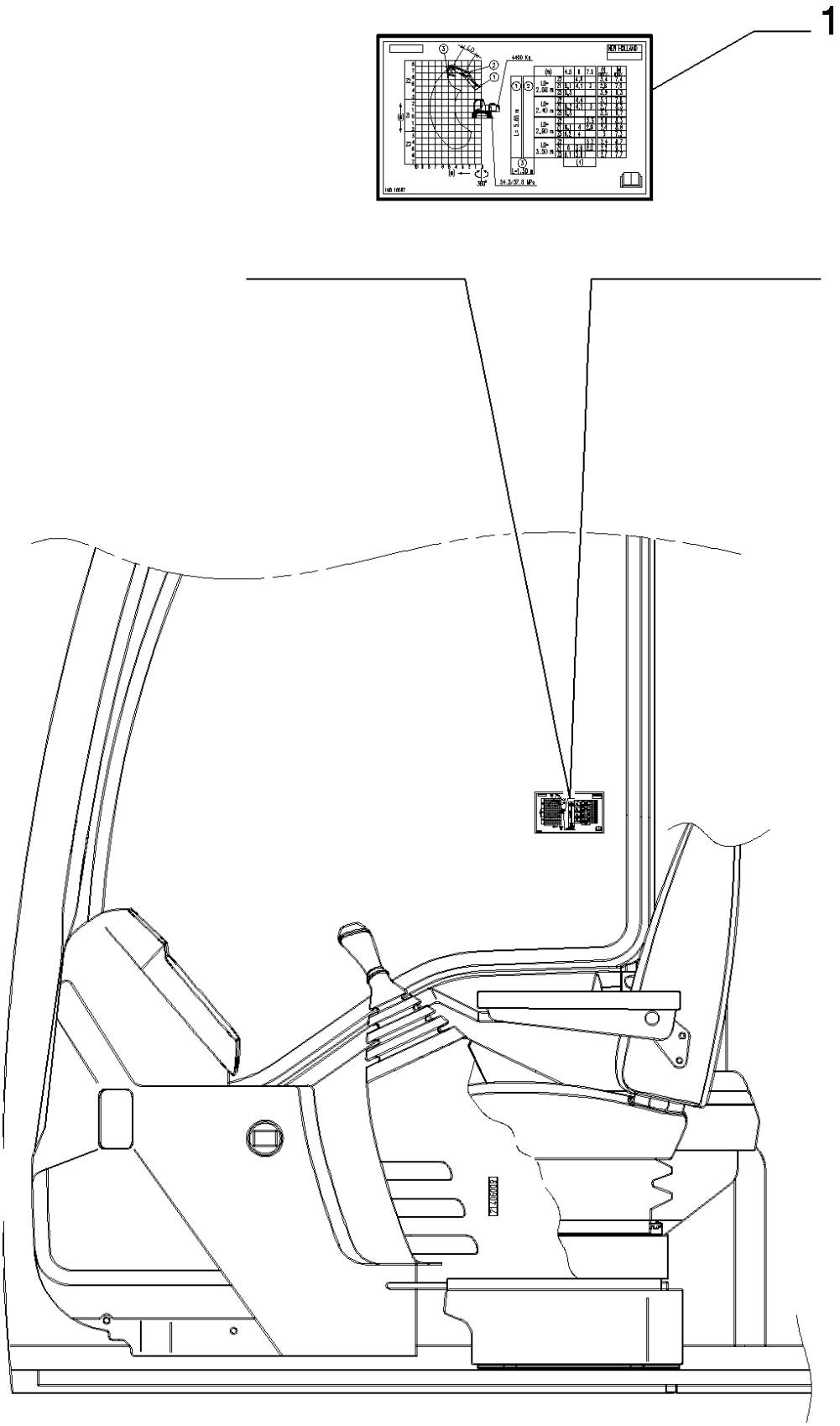

Copyright © New Holland

MOV. PESO - VERSION (01-02-03) - OPTIONAL CODE 781583888
OBJECT HANDLING - VERSION (01-02-03) - OPTIONAL CODE 781583888
OBJECT HANDLING - VERSION (01-02-03) - OPTIONAL CODE 781583888
OBJECT HANDLING - VERSION (01-02-03) - OPTIONAL CODE 781583888

R	N	P.N.	MOD	Q	Description Denominacion	Descrizione Beskrivelse	Bezeichnung Denominação	Description Beschrijving	L.C.
1	1	87610398		1	DATA PLAQUE PLACA DE DATOS	TARGHETTA DATI DATASKILT	DATENSCHILD PLACA IDENTIFICADOR/	PLAQUE D'IDENTIFICAT GEGEVENSPLAATJE	065T
1	2	87610396		1	DATA PLAQUE PLACA DE DATOS	TARGHETTA DATI DATASKILT	DATENSCHILD PLACA IDENTIFICADOR/	PLAQUE D'IDENTIFICAT GEGEVENSPLAATJE	065T
1	3	87610397		1	DATA PLAQUE PLACA DE DATOS	TARGHETTA DATI DATASKILT	DATENSCHILD PLACA IDENTIFICADOR/	PLAQUE D'IDENTIFICAT GEGEVENSPLAATJE	065T

(1) Version 01
(2) Version 02
(3) Version 03

Copyright © New Holland

5.0089	01	p1	03/10

OBJECT HANDLING - VERSION (04-05-06) - OPTIONAL CODE 781583898
MOVIM. CARICHI SOSPESI - VERSIONE (04-05-06) - CODICE VARIANTE 781583898
BEW. LAST - VERSION (04-05-06) - OPTIONAL CODE 781583898
MOUV. FARDEAU - VERSION (04-05-06) - OPTIONAL CODE 781583898

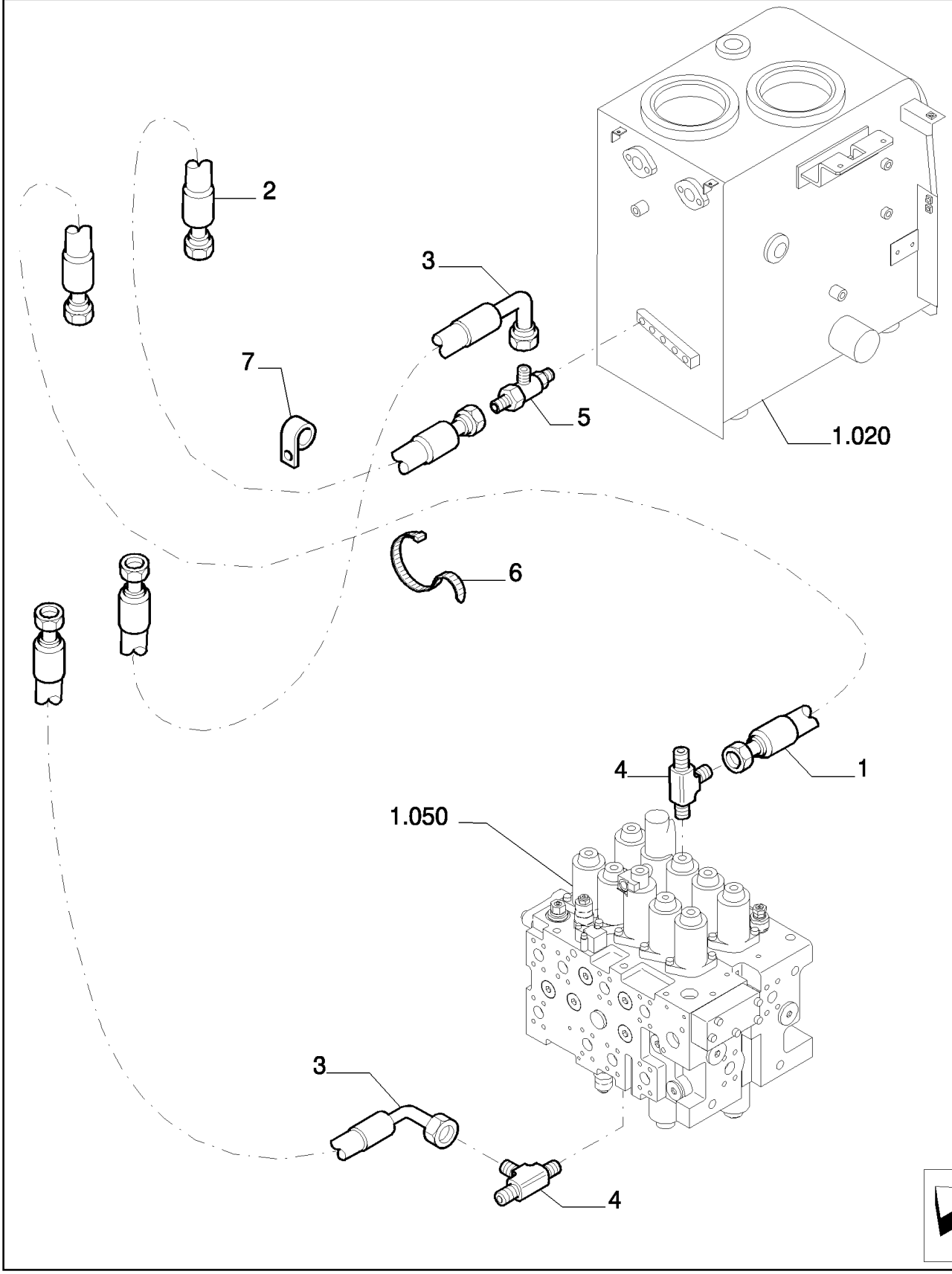

Copyright © New Holland

MOV. PESO - VERSION (04-05-06) - OPTIONAL CODE 781583898
OBJECT HANDLING - VERSION (04-05-06) - OPTIONAL CODE 781583898
OBJECT HANDLING - VERSION (04-05-06) - OPTIONAL CODE 781583898
OBJECT HANDLING - VERSION (04-05-06) - OPTIONAL CODE 781583898

R	N	P.N.	MOD	Q	Description Denominacion	Descrizione Beskrivelse	Bezeichnung Denominação	Description Beschrijving	L.C.
1		87622865		1	FLEXIBLE HOSE TUBO FLEXIBLE	TUBO FLESSIBILE FLEKSIBEL SLANGE	BIEGSAMER SCHLAUCH MANGUEIRA FLEXÍVEL	TUYAU FLEXIBLE FLEXIBELE SLANG	192T
2		87622866		1	FLEXIBLE HOSE TUBO FLEXIBLE	TUBO FLESSIBILE FLEKSIBEL SLANGE	BIEGSAMER SCHLAUCH MANGUEIRA FLEXÍVEL	TUYAU FLEXIBLE FLEXIBELE SLANG	192T
3		87622869		2	FLEXIBLE HOSE TUBO FLEXIBLE	TUBO FLESSIBILE FLEKSIBEL SLANGE	BIEGSAMER SCHLAUCH MANGUEIRA FLEXÍVEL	TUYAU FLEXIBLE FLEXIBELE SLANG	192T
4		87333054		2	TEE RACOR EN T	PEZZO A T T-STYKKE	T-STÜCK TÊ	RACCORD EN T T-STUK	9020
5		72954985		1	TEE RACOR EN T	PEZZO A T T-STYKKE	T-STÜCK TÊ	RACCORD EN T T-STUK	9020
6		4982514		14	CABLE STRAP BANDA DE CABLE	FASCETTA PER CAVO KABELSTROP	KABELBINDER BRAÇADEIRA DE CABO	BRIDE DE CABLE BUNDELBAND	P716
7		71405944		1	CLIP ABRAZADERA	FERMO KLIPS	KLAMMER FIXADOR	COLLIER KLEM	045F

Copyright © New Holland

5.0089	02	p1	03/10

OBJECT HANDLING - VERSION (04-05-06) - OPTIONAL CODE 781583898
MOVIM. CARICHI SOSPESI - VERSIONE (04-05-06) - CODICE VARIANTE 781583898
BEW. LAST - VERSION (04-05-06) - OPTIONAL CODE 781583898
MOUV. FARDEAU - VERSION (04-05-06) - OPTIONAL CODE 781583898

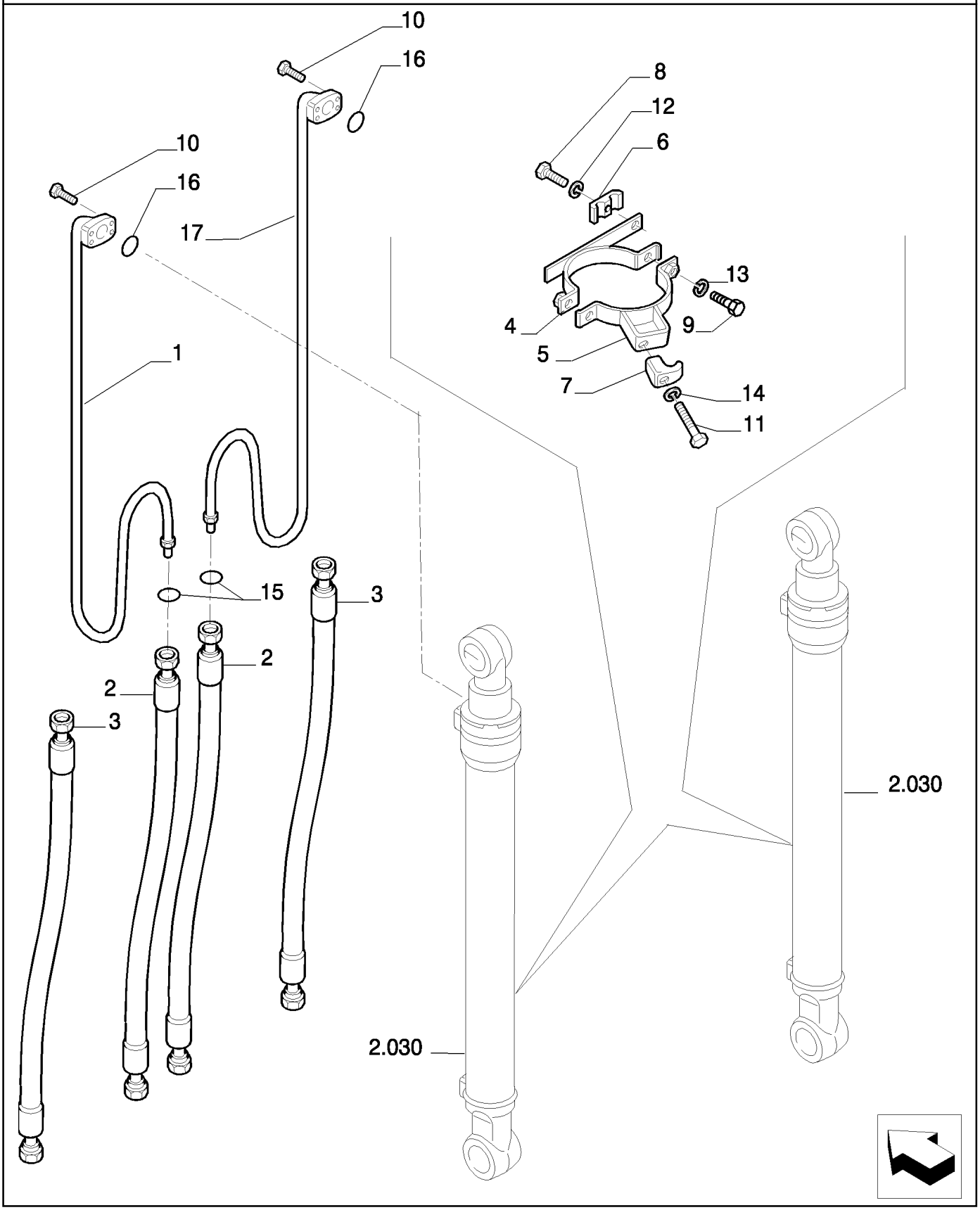

Copyright © New Holland

MOV. PESO - VERSION (04-05-06) - OPTIONAL CODE 781583898
OBJECT HANDLING - VERSION (04-05-06) - OPTIONAL CODE 781583898
OBJECT HANDLING - VERSION (04-05-06) - OPTIONAL CODE 781583898
OBJECT HANDLING - VERSION (04-05-06) - OPTIONAL CODE 781583898

R	N	P.N.	MOD	Q	Description Denominacion	Descrizione Beskrivelse	Bezeichnung Denominação	Description Beschrijving	L.C.
1		87396773		1	RIGID TUBE TUBO RÍGIDO	TUBO RIGIDO STIFT RØR	ROHR TUBO RÍGIDO	TUYAU RIGIDE VASTE LEIDING	193T
2		87346192		2	FLEXIBLE HOSE TUBO FLEXIBLE	TUBO FLESSIBILE FLEKSIBEL SLANGE	BIEGSAMER SCHLAUCH MANGUEIRA FLEXÍVEL	TUYAU FLEXIBLE FLEXIBELE SLANG	192T
3		87346193		2	FLEXIBLE HOSE TUBO FLEXIBLE	TUBO FLESSIBILE FLEKSIBEL SLANGE	BIEGSAMER SCHLAUCH MANGUEIRA FLEXÍVEL	TUYAU FLEXIBLE FLEXIBELE SLANG	192T
4		87610969		2	STRAP BANDA	FASCETTA STROP	BAND BANDA	BRIDE RIEM	532B
5		87610970		2	STRAP BANDA	FASCETTA STROP	BAND BANDA	BRIDE RIEM	532B
6		72955399		2	CLAMP ABRAZADERA	MORSETTO SPÆNDEBÅND	KLEMME BRAÇADEIRA	COLLIER KLEM	120M
7		71415855		2	CLIP ABRAZADERA	FERMO KLIPS	KLAMMER FIXADOR	COLLIER KLEM	045F
8		11113534		2	BOLT, Hex, M12 x 65, 10.9, Full Thd PERNO	BULLONE BOLT	SCHRAUBE PARAFUSO	VIS BOUT	140B
9		11106434		4	BOLT, Hex, M10 x 30, 10.9, Full Thd PERNO	BULLONE BOLT	SCHRAUBE PARAFUSO	VIS BOUT	140B
10		14420334		8	SCREW TORNILLO	VITE SKRUE	SCHRAUBE PARAFUSO	VIS SCHROEF	040V
11		11107034		2	SCREW TORNILLO	VITE SKRUE	SCHRAUBE PARAFUSO	VIS SCHROEF	040V
12		14496731		2	WASHER, M12 x 24 x 2.5 Thk ARANDELA	RONDELLA FLADSKIVE	UNTERLEGSCHEIBE ANILHA	RONDELLE SLUITRING	131R
13		10516874		4	LOCK WASHER ARANDELA DE BLOQUE	RONDELLA DI SICUREZ LÅSESKIVE	SICHERUNGSSCHEIBE ANILHA DE RETENÇÃO	RONDELLE FREIN BORGRING	132R
14		14496631		2	WASHER, M10 x 21 x 2 ARANDELA	RONDELLA FLADSKIVE	UNTERLEGSCHEIBE ANILHA	RONDELLE SLUITRING	131R
15		71484462		2	O-RING JUNTA TÓRICA	ANELLO TOROIDALE O-RING	O-RING O-RING	JOINT TORIQUE O-RING	055A
16		70924110		2	O-RING JUNTA TÓRICA	ANELLO TOROIDALE O-RING	O-RING O-RING	JOINT TORIQUE O-RING	055A
17		87396775		1	RIGID TUBE TUBO RÍGIDO	TUBO RIGIDO STIFT RØR	ROHR TUBO RÍGIDO	TUYAU RIGIDE VASTE LEIDING	193T

Copyright © New Holland

5.0089	03	p1	03/10

OBJECT HANDLING - VERSION (04-05-06) - OPTIONAL CODE 781583898
MOVIM. CARICHI SOSPESI - VERSIONE (04-05-06) - CODICE VARIANTE 781583898
BEW. LAST - VERSION (04-05-06) - OPTIONAL CODE 781583898
MOUV. FARDEAU - VERSION (04-05-06) - OPTIONAL CODE 781583898

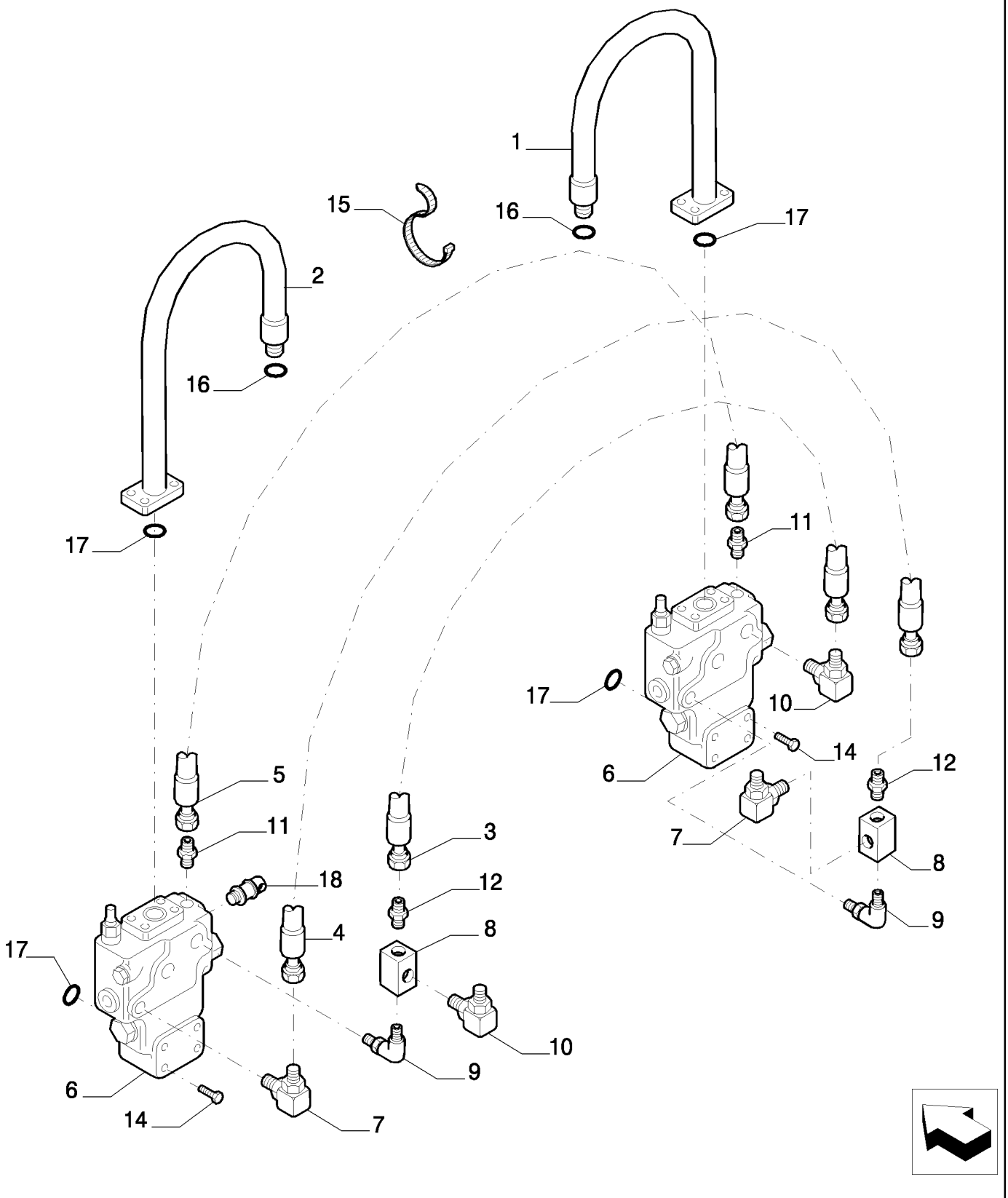

Copyright © New Holland

MOV. PESO - VERSION (04-05-06) - OPTIONAL CODE 781583898
OBJECT HANDLING - VERSION (04-05-06) - OPTIONAL CODE 781583898
OBJECT HANDLING - VERSION (04-05-06) - OPTIONAL CODE 781583898
OBJECT HANDLING - VERSION (04-05-06) - OPTIONAL CODE 781583898

R	N	P.N.	MOD	Q	Description Denominacion	Descrizione Beskrivelse	Bezeichnung Denominação	Description Beschrijving	L.C.
1		87557250		1	RIGID TUBE TUBO RÍGIDO	TUBO RIGIDO STIFT RØR	ROHR TUBO RÍGIDO	TUYAU RIGIDE VASTE LEIDING	193T
2		87557252		1	RIGID TUBE TUBO RÍGIDO	TUBO RIGIDO STIFT RØR	ROHR TUBO RÍGIDO	TUYAU RIGIDE VASTE LEIDING	193T
3		87540133		1	FLEXIBLE HOSE TUBO FLEXIBLE	TUBO FLESSIBILE FLEKSIBEL SLANGE	BIEGSAMER SCHLAUCH MANGUEIRA FLEXÍVEL	TUYAU FLEXIBLE FLEXIBELE SLANG	192T
4		72954954		1	HOSE TUBO	TUBO FLESSIBILE SLANGE	SCHLAUCH MANGUEIRA	FLEXIBLE SLANG	030M
5		87540129		1	FLEXIBLE HOSE TUBO FLEXIBLE	TUBO FLESSIBILE FLEKSIBEL SLANGE	BIEGSAMER SCHLAUCH MANGUEIRA FLEXÍVEL	TUYAU FLEXIBLE FLEXIBELE SLANG	192T
6		84227438		2	HYDRAULIC VALVE VÁLVULA HIDRÁULICA	DISTRIBUTORE IDRAULI HYDRAULIKVENTIL	HYDRAULIKVENTIL VÁLVULA HIDRÁULICA	SOUPAPE HYDRAULIQU HYDRAULISCHE KLEP	010V
7		72214526		2	HYD CONNECTOR CONECTOR HIDRÁULIC	CONNETTORE IDRAULIC HYDRAULIKSTIK	HYDR STECKVERBINDE CONECTOR HID.	CONNECTEUR HYDRAU HYDRAULISCHE AANSL	020R
8		72283559		2	TEE RACOR EN T	PEZZO A T T-STYKKE	T-STÜCK TÊ	RACCORD EN T T-STUK	9020
9		72214540		2	ELBOW CODO	GOMITO VINKELRØR	KNIESTÜCK COTOVELO	COUDE KNIESTUK	085G
10		72214548		2	HYD CONNECTOR CONECTOR HIDRÁULIC	CONNETTORE IDRAULIC HYDRAULIKSTIK	HYDR STECKVERBINDE CONECTOR HID.	CONNECTEUR HYDRAU HYDRAULISCHE AANSL	020R
11		72216769		2	HYD CONNECTOR CONECTOR HIDRÁULIC	CONNETTORE IDRAULIC HYDRAULIKSTIK	HYDR STECKVERBINDE CONECTOR HID.	CONNECTEUR HYDRAU HYDRAULISCHE AANSL	020R
12		72214523		2	HYD CONNECTOR CONECTOR HIDRÁULIC	CONNETTORE IDRAULIC HYDRAULIKSTIK	HYDR STECKVERBINDE CONECTOR HID.	CONNECTEUR HYDRAU HYDRAULISCHE AANSL	020R
13		14422234		8	SCREW TORNILLO	VITE SKRUE	SCHRAUBE PARAFUSO	VIS SCHROEF	040V
14		14422934		8	SCREW TORNILLO	VITE SKRUE	SCHRAUBE PARAFUSO	VIS SCHROEF	040V
15		72951499		4	CLIP ABRAZADERA	FERMO KLIPS	KLAMMER FIXADOR	COLLIER KLEM	045F
16		70931640		2	GASKET JUNTA	GUARNIZIONE PAKNING	DICHTUNG JUNTA	JOINT PAKKING	123G
17		70924200		4	O-RING JUNTA TÓRICA	ANELLO TOROIDALE O-RING	O-RING O-RING	JOINT TORIQUE O-RING	055A
18		87524903		1	SENSOR SENSOR	SENSORE FØLER	SENSOR SENSOR	CAPTEUR SENSOR	608S

Copyright © New Holland

5.0089	04	p1	03/10

OBJECT HANDLING - VERSION (04-05-06) - OPTIONAL CODE 781583898
MOVIM. CARICHI SOSPESI - VERSIONE (04-05-06) - CODICE VARIANTE 781583898
BEW. LAST - VERSION (04-05-06) - OPTIONAL CODE 781583898
MOUV. FARDEAU - VERSION (04-05-06) - OPTIONAL CODE 781583898

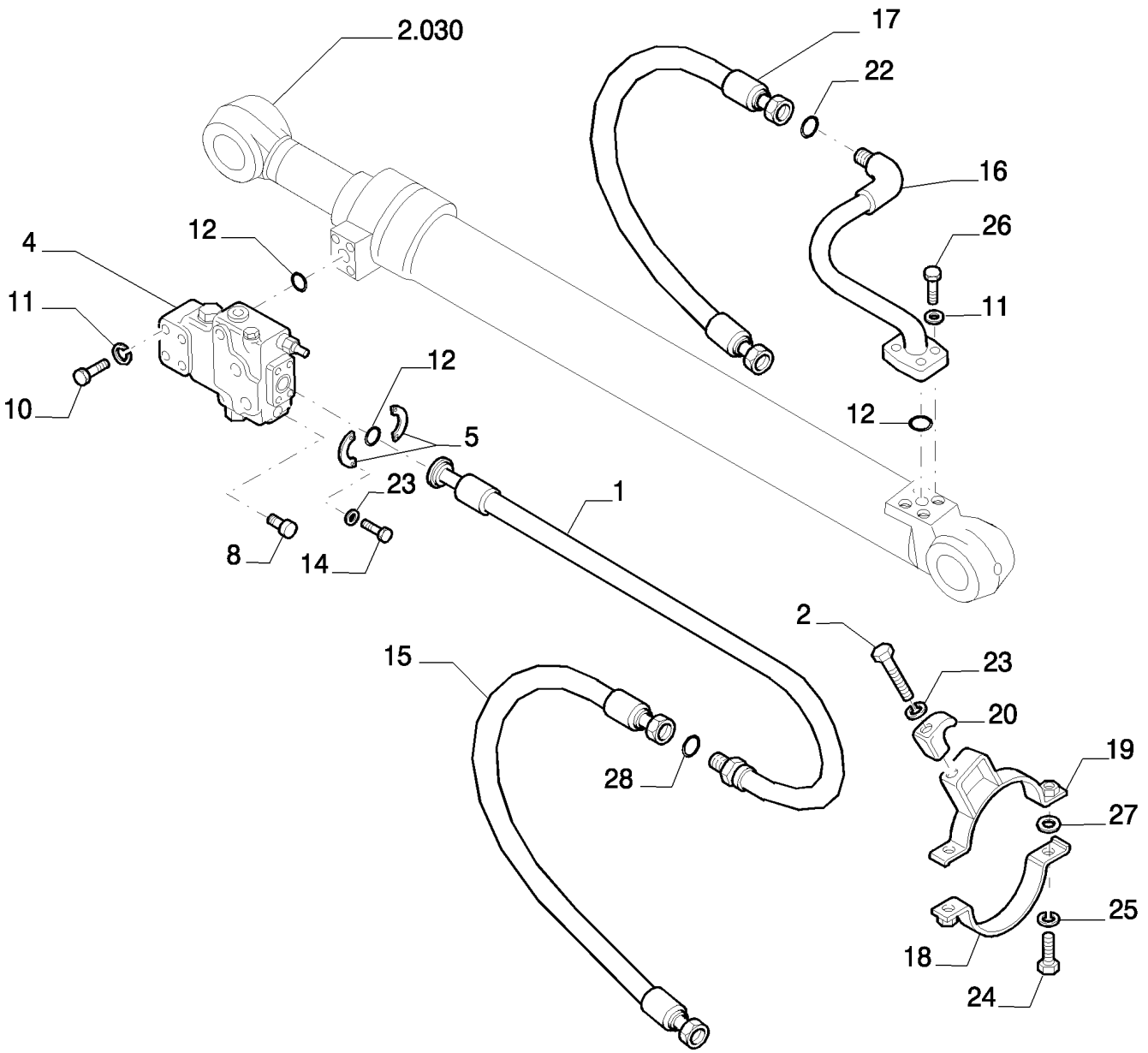

Copyright © New Holland

MOV. PESO - VERSION (04-05-06) - OPTIONAL CODE 781583898
OBJECT HANDLING - VERSION (04-05-06) - OPTIONAL CODE 781583898
OBJECT HANDLING - VERSION (04-05-06) - OPTIONAL CODE 781583898
OBJECT HANDLING - VERSION (04-05-06) - OPTIONAL CODE 781583898

R	N	P.N.	MOD	Q	Description Denominacion	Descrizione Beskrivelse	Bezeichnung Denominação	Description Beschrijving	L.C.
1		87572211		1	RIGID TUBE TUBO RÍGIDO	TUBO RIGIDO STIFT RØR	ROHR TUBO RÍGIDO	TUYAU RIGIDE VASTE LEIDING	193T
2		11113434		1	SCREW TORNILLO	VITE SKRUE	SCHRAUBE PARAFUSO	VIS SCHROEF	040V
4	1	87353360		1	HYDRAULIC VALVE VÁLVULA HIDRÁULICA	DISTRIBUTORE IDRAULI HYDRAULIKVENTIL	HYDRAULIKVENTIL VÁLVULA HIDRÁULICA	SOUPAPE HYDRAULIQU HYDRAULISCHE KLEP	010V
5		71404313		2	HALF-FLANGE SEMIBRIDA	SEMIFLANGIA FLANGEHALVDEL	FLANSCHHÄLFTE MEIA FLANGE	DEMI-BRIDE FLENSHELFT	417S
8		72214663		1	PLUG TAPÓN	TAPPO PROP	STOPFEN TAMPÃO	BOUCHON PLUG	050T
10		14422934		4	SCREW TORNILLO	VITE SKRUE	SCHRAUBE PARAFUSO	VIS SCHROEF	040V
11		10517074		8	LOCK WASHER ARANDELA DE BLOQUE	RONDELLA DI SICUREZ LÅSESKIVE	SICHERUNGSSCHEIBE ANILHA DE RETENÇÃO	RONDELLE FREIN BORGRING	132R
12		70924200		3	O-RING JUNTA TÓRICA	ANELLO TOROIDALE O-RING	O-RING O-RING	JOINT TORIQUE O-RING	055A
14		14422434		4	SCREW TORNILLO	VITE SKRUE	SCHRAUBE PARAFUSO	VIS SCHROEF	040V
15		72203669		1	FLEXIBLE HOSE TUBO FLEXIBLE	TUBO FLESSIBILE FLEKSIBEL SLANGE	BIEGSAMER SCHLAUCH MANGUEIRA FLEXÍVEL	TUYAU FLEXIBLE FLEXIBELE SLANG	192T
16		87572209		1	RIGID TUBE TUBO RÍGIDO	TUBO RIGIDO STIFT RØR	ROHR TUBO RÍGIDO	TUYAU RIGIDE VASTE LEIDING	193T
17		87575698		1	FLEXIBLE HOSE TUBO FLEXIBLE	TUBO FLESSIBILE FLEKSIBEL SLANGE	BIEGSAMER SCHLAUCH MANGUEIRA FLEXÍVEL	TUYAU FLEXIBLE FLEXIBELE SLANG	192T
18		87345200		1	STRAP BANDA	FASCETTA STROP	BAND BANDA	BRIDE RIEM	532B
19		87572208		1	BRACKET SOPORTE	STAFFA BESLAG	HALTERUNG SUPORTE	SUPPORT STEUN	225S
20		71416090		1	CLIP ABRAZADERA	FERMO KLIPS	KLAMMER FIXADOR	COLLIER KLEM	045F
22		71404460		1	O-RING JUNTA TÓRICA	ANELLO TOROIDALE O-RING	O-RING O-RING	JOINT TORIQUE O-RING	055A
23		14496731		5	WASHER, M12 x 24 x 2.5 Thk ARANDELA	RONDELLA FLADSKIVE	UNTERLEGSCHEIBE ANILHA	RONDELLE SLUITRING	131R
24		11106434		2	BOLT, Hex, M10 x 30, 10.9, Full Thd PERNO	BULLONE BOLT	SCHRAUBE PARAFUSO	VIS BOUT	140B
25		10516874		2	LOCK WASHER ARANDELA DE BLOQUE	RONDELLA DI SICUREZ LÅSESKIVE	SICHERUNGSSCHEIBE ANILHA DE RETENÇÃO	RONDELLE FREIN BORGRING	132R
26		14422434		4	SCREW TORNILLO	VITE SKRUE	SCHRAUBE PARAFUSO	VIS SCHROEF	040V
27		72205175		2	SPACER SEPARADOR	DISTANZIALE AFSTANDSSTYKKE	DISTANZSTÜCK ESPAÇADOR	ENTRETOISE AFSTANDSSTUK	075D
28		70923843		1	SNAP RING ANILLO DE RESORTE	ANELLO ELASTICO LÅSERING	SPRENGRING ANEL	ANNEAU D'ARRET VEERRING	054A

(1) ASSY SEE PAGE 6

Copyright © New Holland

5.0089	05	p1	03/10

OBJECT HANDLING - VERSION (04-05-06) - OPTIONAL CODE 781583898
MOVIM. CARICHI SOSPESI - VERSIONE (04-05-06) - CODICE VARIANTE 781583898
BEW. LAST - VERSION (04-05-06) - OPTIONAL CODE 781583898
MOUV. FARDEAU - VERSION (04-05-06) - OPTIONAL CODE 781583898

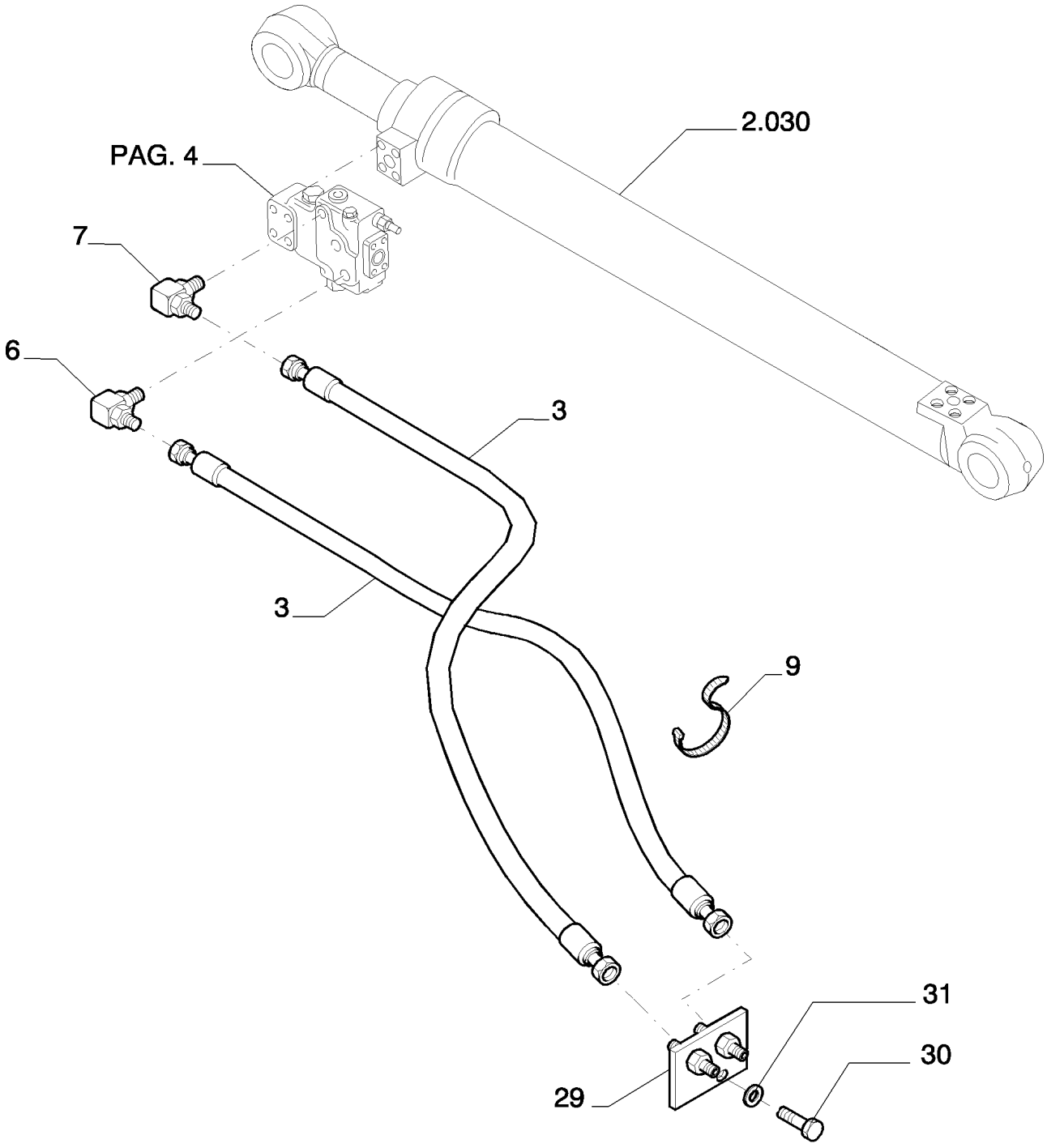

Copyright © New Holland

MOV. PESO - VERSION (04-05-06) - OPTIONAL CODE 781583898
OBJECT HANDLING - VERSION (04-05-06) - OPTIONAL CODE 781583898
OBJECT HANDLING - VERSION (04-05-06) - OPTIONAL CODE 781583898
OBJECT HANDLING - VERSION (04-05-06) - OPTIONAL CODE 781583898

R	N	P.N.	MOD	Q	Description Denominacion	Descrizione Beskrivelse	Bezeichnung Denominação	Description Beschrijving	L.C.
3		87645816		2	FLEXIBLE HOSE TUBO FLEXIBLE	TUBO FLESSIBILE FLEKSIBEL SLANGE	BIEGSAMER SCHLAUCH MANGUEIRA FLEXÍVEL	TUYAU FLEXIBLE FLEXIBELE SLANG	192T
6		72214526		1	HYD CONNECTOR CONECTOR HIDRÁULIC	CONNETTORE IDRAULIC HYDRAULIKSTIK	HYDR STECKVERBINDE CONECTOR HID.	CONNECTEUR HYDRAU HYDRAULISCHE AANSL	020R
7		72214548		1	HYD CONNECTOR CONECTOR HIDRÁULIC	CONNETTORE IDRAULIC HYDRAULIKSTIK	HYDR STECKVERBINDE CONECTOR HID.	CONNECTEUR HYDRAU HYDRAULISCHE AANSL	020R
9		4982514		10	CABLE STRAP BANDA DE CABLE	FASCETTA PER CAVO KABELSTROP	KABELBINDER BRAÇADEIRA DE CABO	BRIDE DE CABLE BUNDELBAND	P716
29		87632058		1	PLATE PLACA	PIASTRA PLADE	PLATTE CHAPA	PLAQUE PLAAT	105P
30		10902434		2	BOLT, Hex, M6 x 20, 10.9, Full Thd PERNO	BULLONE BOLT	SCHRAUBE PARAFUSO	VIS BOUT	140B
31		14496431		2	WASHER, M6.4 x 12.5 x 1.6 Thk ARANDELA	RONDELLA FLADSKIVE	UNTERLEGSCHEIBE ANILHA	RONDELLE SLUITRING	131R

Copyright © New Holland

5.0089	06	p1	03/10

OBJECT HANDLING - COMPONENTS - VERSION (04-05-06) - OPTIONAL CODE 781583898
MOVIM. CARICHI SOSPESI - COMPONENTI - VERSIONE (04-05-06) - CODICE VARIANTE 781583898
BEW. LAST - BESTANDTEILE - VERSION (04-05-06) - OPTIONAL CODE 781583898
MOUV. FARDEAU - COMPOSANTS - VERSION (04-05-06) - OPTIONAL CODE 781583898

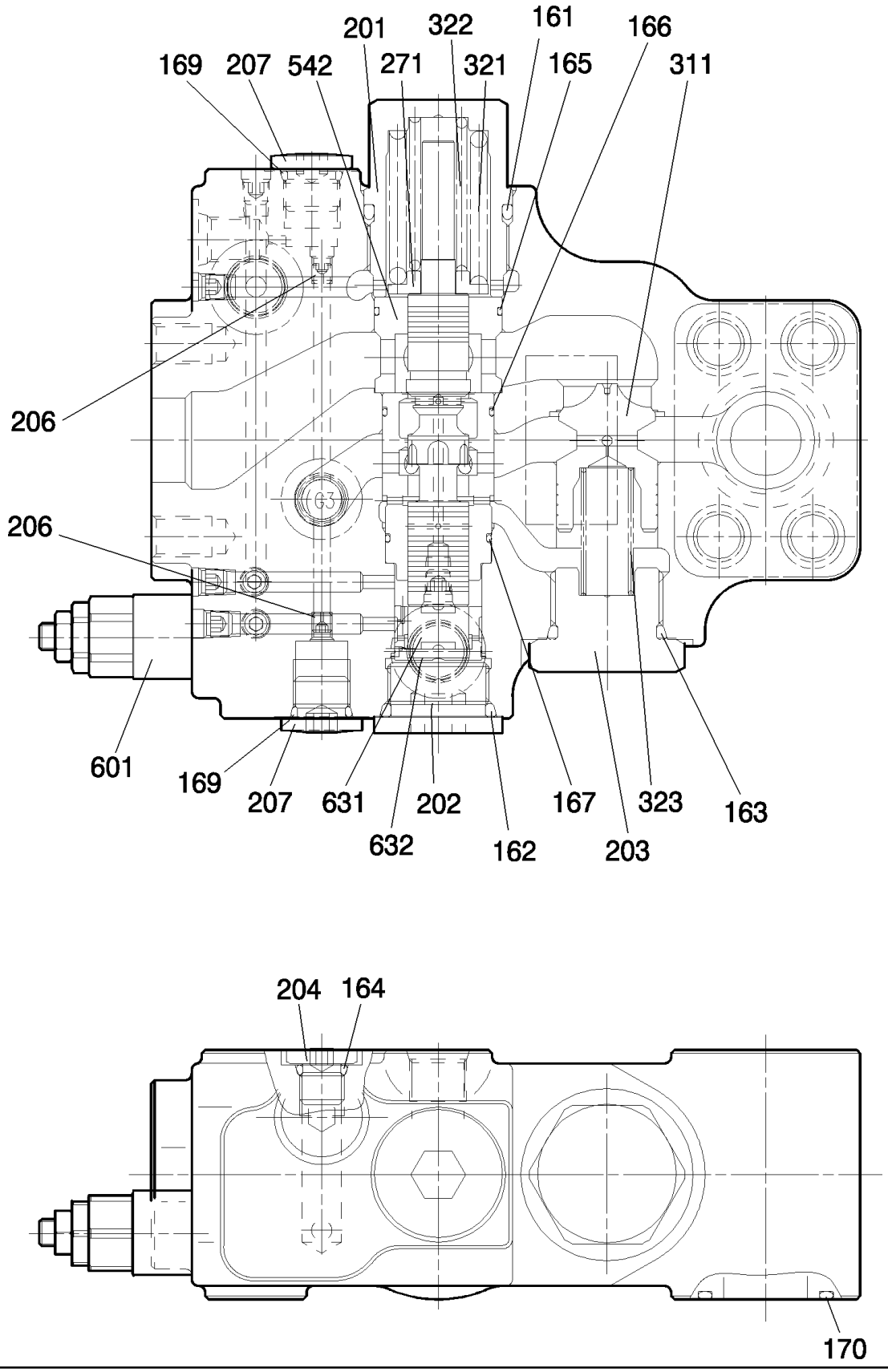

Copyright © New Holland

MOV. PESO - COMPONENTES - VERSION (04-05-06) - OPTIONAL CODE 781583898
OBJECT HANDLING - COMPONENTS - VERSION (04-05-06) - OPTIONAL CODE 781583898
OBJECT HANDLING - COMPONENTS - VERSION (04-05-06) - OPTIONAL CODE 781583898
OBJECT HANDLING - COMPONENTS - VERSION (04-05-06) - OPTIONAL CODE 781583898

R	N	P.N.	MOD	Q	Description Denominacion	Descrizione Beskrivelse	Bezeichnung Denominação	Description Beschrijving	L.C.
161		71444332		1	O-RING JUNTA TÓRICA	ANELLO TOROIDALE O-RING	O-RING O-RING	JOINT TORIQUE O-RING	055A
162		72209989		1	O-RING JUNTA TÓRICA	ANELLO TOROIDALE O-RING	O-RING O-RING	JOINT TORIQUE O-RING	055A
163		72210050		1	O-RING JUNTA TÓRICA	ANELLO TOROIDALE O-RING	O-RING O-RING	JOINT TORIQUE O-RING	055A
164		72209827		1	O-RING JUNTA TÓRICA	ANELLO TOROIDALE O-RING	O-RING O-RING	JOINT TORIQUE O-RING	055A
165		YN28V00019S165		1	O-RING JUNTA TÓRICA	ANELLO TOROIDALE O-RING	O-RING O-RING	JOINT TORIQUE O-RING	055A
166		72957825		1	O-RING JUNTA TÓRICA	ANELLO TOROIDALE O-RING	O-RING O-RING	JOINT TORIQUE O-RING	055A
167		YN28V00019S167		1	O-RING JUNTA TÓRICA	ANELLO TOROIDALE O-RING	O-RING O-RING	JOINT TORIQUE O-RING	055A
169		72209820		2	O-RING JUNTA TÓRICA	ANELLO TOROIDALE O-RING	O-RING O-RING	JOINT TORIQUE O-RING	055A
170		72209830		1	O-RING JUNTA TÓRICA	ANELLO TOROIDALE O-RING	O-RING O-RING	JOINT TORIQUE O-RING	055A
201		YN28V00019S201		1	PLUG TAPÓN	TAPPO PROP	STOPFEN TAMPÃO	BOUCHON PLUG	050T
202		2436U1198S551		1	PLUG TAPÓN	TAPPO PROP	STOPFEN TAMPÃO	BOUCHON PLUG	050T
203		YN28V00019S203		1	PLUG TAPÓN	TAPPO PROP	STOPFEN TAMPÃO	BOUCHON PLUG	050T
204		72209843		1	PLUG TAPÓN	TAPPO PROP	STOPFEN TAMPÃO	BOUCHON PLUG	050T
206		YN28V00019S206		2	RING ANILLO	ANELLO RING	RING ANEL	ANNEAU RING	045A
207		72210074		2	PLUG TAPÓN	TAPPO PROP	STOPFEN TAMPÃO	BOUCHON PLUG	050T
271		YN28V00019S271		1	SEAT/SLOT ASIENTO/RANURA	SEDE/ASOLA SÆDE	SITZ/SCHLITZ SUPORTE	SIEGE/FENTE ZITTING/SLEUF	069S
311		YN28V00019S311		1	SUPPORT SOPORTE	SUPPORTO BESLAG	STÜTZE SUPORTE	SUPPORT STEUN	300S
321		YN28V00019S321		1	SPRING RESORTE	MOLLA FJEDER	FEDER MOLA	RESSORT VEER	100M
322		YN28V00019S322		1	SPRING RESORTE	MOLLA FJEDER	FEDER MOLA	RESSORT VEER	100M
323		YN28V00019S323		1	SPRING RESORTE	MOLLA FJEDER	FEDER MOLA	RESSORT VEER	100M
542		YN28V00019S542		1	BUSHING CASQUILLO	BOCCOLA BØSNING	BUCHSE CASQUILHO	BAGUE BUS	095B
601		YN22V00037F1		1	HYDRAULIC VALVE VÁLVULA HIDRÁULICA	DISTRIBUTORE IDRAULI HYDRAULIKVENTIL	HYDRAULIKVENTIL VÁLVULA HIDRÁULICA	SOUPAPE HYDRAULIQU HYDRAULISCHE KLEP	010V
631		YN28V00019S631		1	PISTON PISTÓN	PISTONE STEMPEL	KOLBEN PISTÃO	PISTON ZUIGER	235S
632		YN28V00019S632		1	PISTON PISTÓN	PISTONE STEMPEL	KOLBEN PISTÃO	PISTON ZUIGER	235S

VALVE ASSY P/N 87353360

E215B

Copyright © New Holland

5.0089	07	p1	03/10

OBJECT HANDLING - VERSION (04-05-06) - OPTIONAL CODE 781583898
MOVIM. CARICHI SOSPESI - VERSIONE (04-05-06) - CODICE VARIANTE 781583898
BEW. LAST - VERSION (04-05-06) - OPTIONAL CODE 781583898
MOUV. FARDEAU - VERSION (04-05-06) - OPTIONAL CODE 781583898

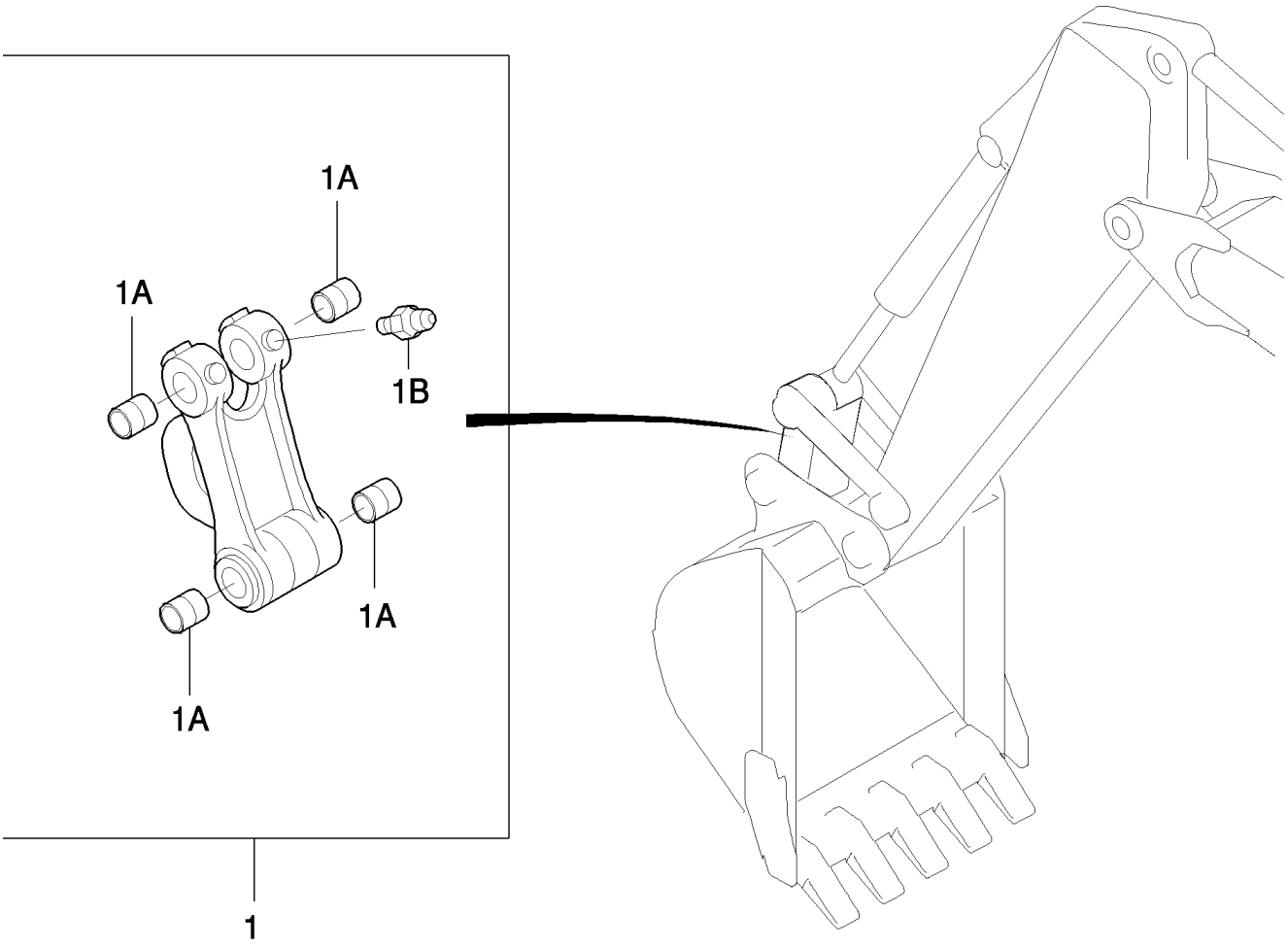

Copyright © New Holland

MOV. PESO - VERSION (04-05-06) - OPTIONAL CODE 781583898
OBJECT HANDLING - VERSION (04-05-06) - OPTIONAL CODE 781583898
OBJECT HANDLING - VERSION (04-05-06) - OPTIONAL CODE 781583898
OBJECT HANDLING - VERSION (04-05-06) - OPTIONAL CODE 781583898

R	N	P.N.	MOD	Q	Description Denominacion	Descrizione Beskrivelse	Bezeichnung Denominação	Description Beschrijving	L.C.
1		87354133		1	LINK CONROD, - ASSY BIELA DE ESLABÓN	BIELLA TIRANTE PLEJLSTANG	PLEUEL BIELA	BIELLE DRIJFSTANG	050B
1A		87543300		4	BUSHING CASQUILLO	BOCCOLA BØSNING	BUCHSE CASQUILHO	BAGUE BUS	095B
1B		13407211		3	LUBE NIPPLE, M10 x 1 BOQUILLA DE LUBRICA(	INGRASSATORE SMØRENIPPEL	SCHMIERNIPPEL COPO DE LUBRIFICAÇÃ	GRAISSEUR SMEERNIPPEL	060I

Copyright © New Holland

5.0089	08	p1	03/10

OBJECT HANDLING - VERSION (04-05-06) - OPTIONAL CODE 781583898
MOVIM. CARICHI SOSPESI - VERSION (04-05-06) - OPTIONAL CODE 781583898
BEW. LAST - VERSION (04-05-06) - OPTIONAL CODE 781583898
MOUV. FARDEAU - VERSION (04-05-06) - OPTIONAL CODE 781583898

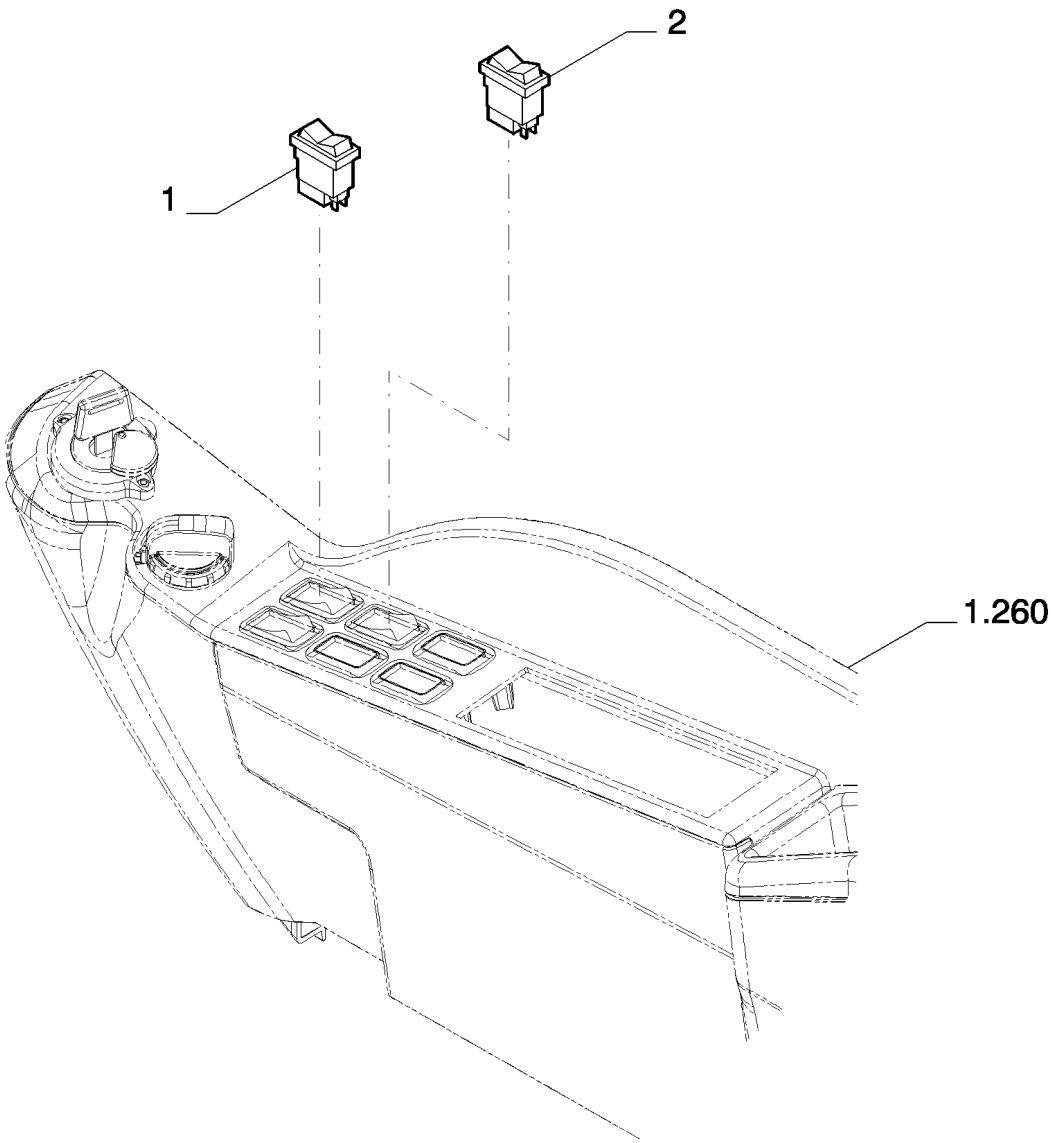

Copyright © New Holland

MOV. PESO - VERSION (04-05-06) - OPTIONAL CODE 781583898
OBJECT HANDLING - VERSION (04-05-06) - OPTIONAL CODE 781583898
OBJECT HANDLING - VERSION (04-05-06) - OPTIONAL CODE 781583898
OBJECT HANDLING - VERSION (04-05-06) - OPTIONAL CODE 781583898

R	N	P.N.	MOD	Q	Description Denominacion	Descrizione Beskrivelse	Bezeichnung Denominação	Description Beschrijving	L.C.
1		87528778		1	SWITCH INTERRUPTOR	INTERRUTTORE KONTAKT	SCHALTER INTERRUPTOR	CONTACTEUR SCHAKELAAR	075I
2		87540814		1	SWITCH INTERRUPTOR	INTERRUTTORE KONTAKT	SCHALTER INTERRUPTOR	CONTACTEUR SCHAKELAAR	075I

Copyright © New Holland

5.0089	09	p1	03/10

OBJECT HANDLING - VERSION (04-05-06) - OPTIONAL CODE 781583898
MOVIM. CARICHI SOSPESI - VERSIONE (04-05-06) - CODICE VARIANTE 781583898
BEW. LAST - VERSION (04-05-06) - OPTIONAL CODE 781583898
MOUV. FARDEAU - VERSION (04-05-06) - OPTIONAL CODE 781583898

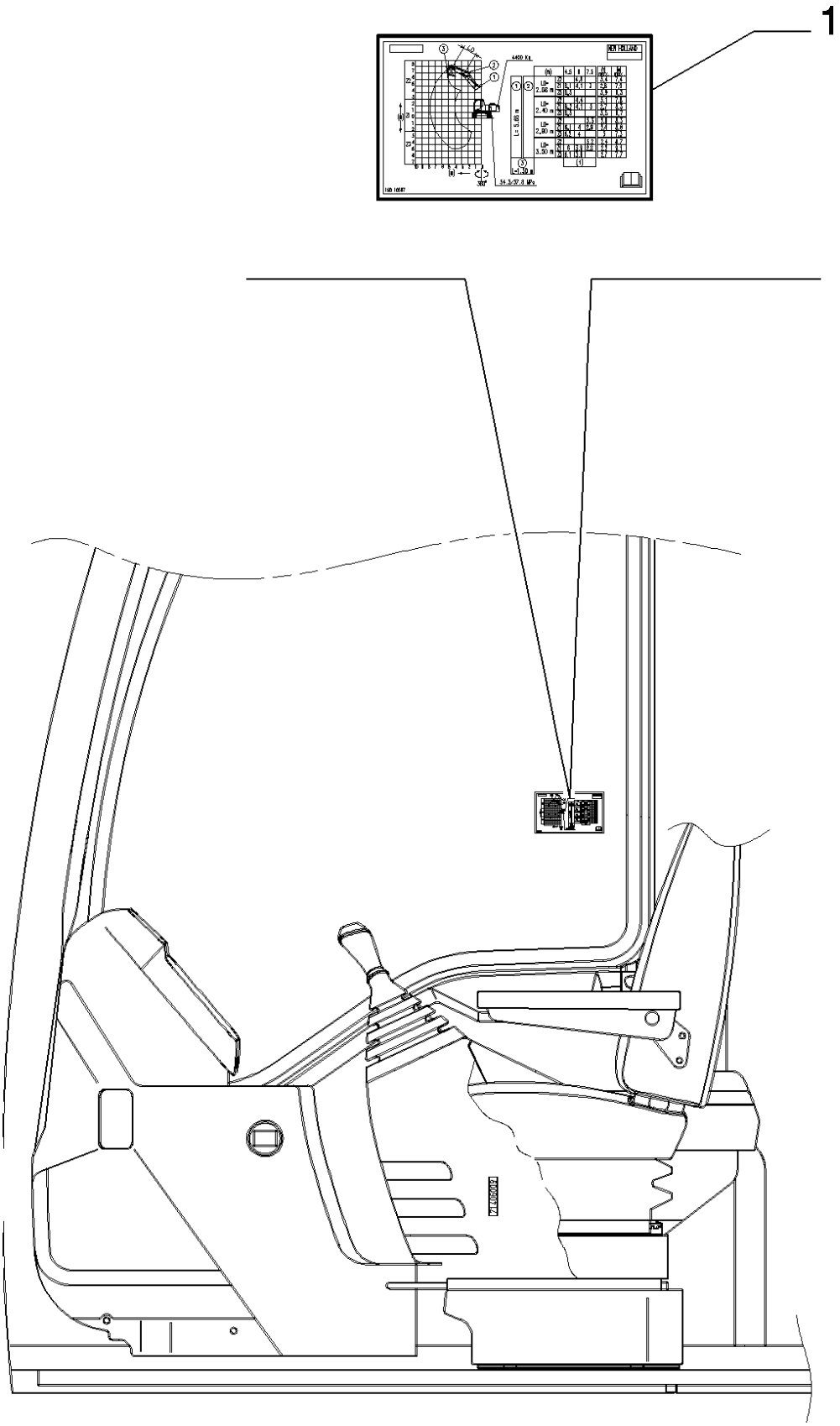

Copyright © New Holland

MOV. PESO - VERSION (04-05-06) - OPTIONAL CODE 781583898
OBJECT HANDLING - VERSION (04-05-06) - OPTIONAL CODE 781583898
OBJECT HANDLING - VERSION (04-05-06) - OPTIONAL CODE 781583898
OBJECT HANDLING - VERSION (04-05-06) - OPTIONAL CODE 781583898

R	N	P.N.	MOD	Q	Description Denominacion	Descrizione Beskrivelse	Bezeichnung Denominação	Description Beschrijving	L.C.
1	1	87611493		1	DATA PLAQUE PLACA DE DATOS	TARGHETTA DATI DATASKILT	DATENSCHILD PLACA IDENTIFICADOR/	PLAQUE D'IDENTIFICAT GEGEVENSPLAATJE	065T
1	2	87611494		1	DATA PLAQUE PLACA DE DATOS	TARGHETTA DATI DATASKILT	DATENSCHILD PLACA IDENTIFICADOR/	PLAQUE D'IDENTIFICAT GEGEVENSPLAATJE	065T
1	3	87611495		1	DATA PLAQUE PLACA DE DATOS	TARGHETTA DATI DATASKILT	DATENSCHILD PLACA IDENTIFICADOR/	PLAQUE D'IDENTIFICAT GEGEVENSPLAATJE	065T

(1) Version 04
(2) Version 05
(3) Version 06

Copyright © New Holland

5.0101	01	p1	03/10

BUCKET - (L=750MM) - OPTIONAL CODE 781099008
BENNA - (L=750MM) - CODICE VARIANTE 781099008
LADESCHAUFEL - (L=750MM) - OPTIONAL CODE 781099008
GODET - (L=750MM) - OPTIONAL CODE 781099008

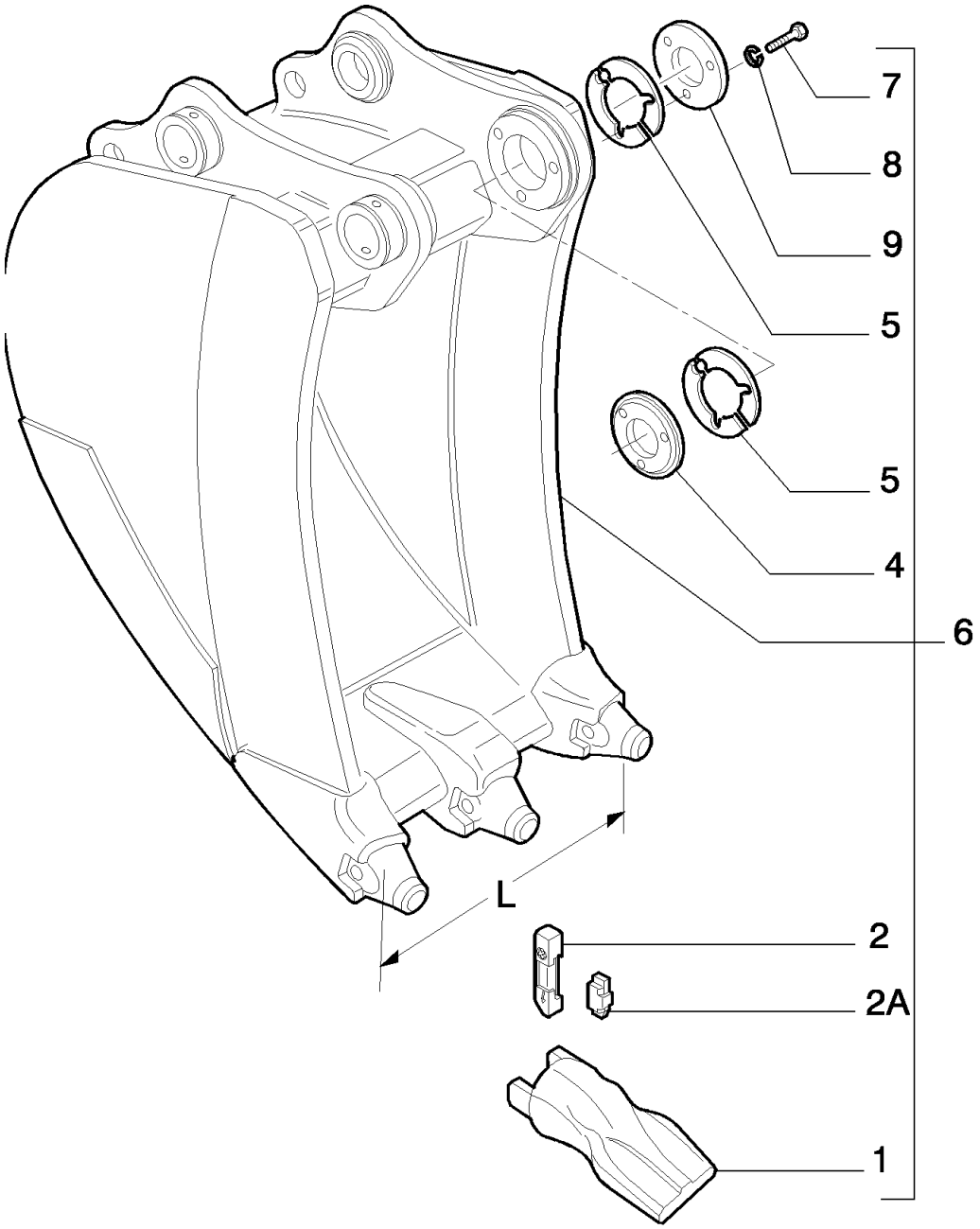

Copyright © New Holland

CUCHARA - (L=750MM) - OPTIONAL CODE 781099008
BUCKET - (L=750MM) - OPTIONAL CODE 781099008
BUCKET - (L=750MM) - OPTIONAL CODE 781099008
BUCKET - (L=750MM) - OPTIONAL CODE 781099008

R	N	P.N.	MOD	Q	Description Denominacion	Descrizione Beskrivelse	Bezeichnung Denominação	Description Beschrijving	L.C.
1		72185342		3	BUCKET TOOTH POINT PÚA DE DIENTE DE CUC	DENTE BENNA SKOVLTANDSPIDS	LÖFFELZAHNSPITZE DENTE DE BALDE	POINTE DE DENT DE GC TANDPUNT VAN GRAAF	492P
2		72204481		3	ROLL PIN, - ASSY BULÓN DE GIRO	SPINA ELASTICA SPLIT	SPANNSTIFT TROÇO	GOUPILLE ELASTIQUE ROLPEN	200S
2A		72206731		1	RETAINER RETENEDOR	FERMO HOLDER	HALTERUNG RETENTOR	DISPOSITIF DE RETENU HOUDER	109R
4		71418801		1	SPACER SEPARADOR	DISTANZIALE AFSTANDSSTYKKE	DISTANZSTÜCK ESPAÇADOR	ENTRETOISE AFSTANDSSTUK	075D
5		71418802		12	SHIM, 1mm Thk SUPLEMENTO	SPESSORE MELLEMLÆG	AUSGLEICHSSCHEIBE CALÇO DE AFINAÇÃO	CALE VULPLAATJE	198S
6		72202344		1	BUCKET, - ASSY CUCHARA	BENNA SKOVL	LÖFFEL BALDE	GODET GRAAFBAK	035B
7		11116834		3	SCREW, 14X2X80 TORNILLO	VITE SKRUE	SCHRAUBE PARAFUSO	VIS SCHROEF	040V
8		10572074		3	LOCK WASHER, 14 ARANDELA DE BLOQUE	RONDELLA DI SICUREZ LÅSESKIVE	SICHERUNGSSCHEIBE ANILHA DE RETENÇÃO	RONDELLE FREIN BORGRING	132R
9		71418803		1	PLATE PLACA	PIASTRA PLADE	PLATTE CHAPA	PLAQUE PLAAT	105P

Copyright © New Holland

5.0102	01	p1	03/10

BUCKET - (L=850MM) - OPTIONAL CODE 781499008
BENNA - (L=850MM) - CODICE VARIANTE 781499008
LADESCHAUFEL - (L=850MM) - OPTIONAL CODE 781499008
GODET - (L=850MM) - OPTIONAL CODE 781499008

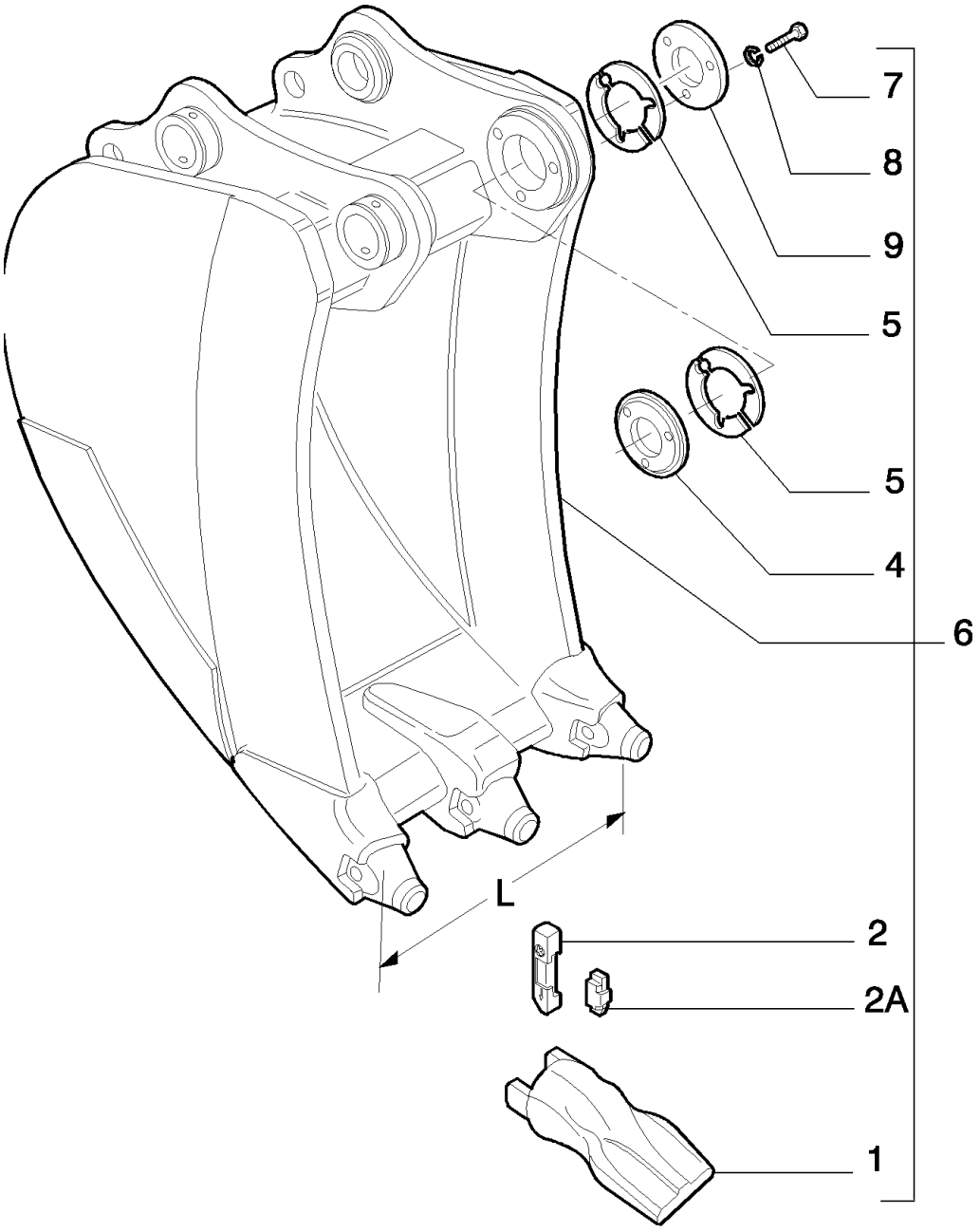

Copyright © New Holland

CUCHARA - (L=850MM) - OPTIONAL CODE 781499008
BUCKET - (L=850MM) - OPTIONAL CODE 781499008
BUCKET - (L=850MM) - OPTIONAL CODE 781499008
BUCKET - (L=850MM) - OPTIONAL CODE 781499008

R	N	P.N.	MOD	Q	Description Denominacion	Descrizione Beskrivelse	Bezeichnung Denominação	Description Beschrijving	L.C.
1		72185342		3	BUCKET TOOTH POINT PÚA DE DIENTE DE CUC	DENTE BENNA SKOVLTANDSPIDS	LÖFFELZAHNSPITZE DENTE DE BALDE	POINTE DE DENT DE GC TANDPUNT VAN GRAAF	492P
2		72204481		3	ROLL PIN, - ASSY BULÓN DE GIRO	SPINA ELASTICA SPLIT	SPANNSTIFT TROÇO	GOUPILLE ELASTIQUE ROLPEN	200S
2A		72206731		1	RETAINER RETENEDOR	FERMO HOLDER	HALTERUNG RETENTOR	DISPOSITIF DE RETENU HOUDER	109R
4		71418801		1	SPACER SEPARADOR	DISTANZIALE AFSTANDSSTYKKE	DISTANZSTÜCK ESPAÇADOR	ENTRETOISE AFSTANDSSTUK	075D
5		71418802		12	SHIM, 1mm Thk SUPLEMENTO	SPESSORE MELLEMLÆG	AUSGLEICHSSCHEIBE CALÇO DE AFINAÇÃO	CALE VULPLAATJE	198S
6		72202346		1	BUCKET, - ASSY CUCHARA	BENNA SKOVL	LÖFFEL BALDE	GODET GRAAFBAK	035B
7		11116834		3	SCREW, 14X2X80 TORNILLO	VITE SKRUE	SCHRAUBE PARAFUSO	VIS SCHROEF	040V
8		10572074		3	LOCK WASHER, 14 ARANDELA DE BLOQUE	RONDELLA DI SICUREZ LÅSESKIVE	SICHERUNGSSCHEIBE ANILHA DE RETENÇÃO	RONDELLE FREIN BORGRING	132R
9		71418803		1	PLATE PLACA	PIASTRA PLADE	PLATTE CHAPA	PLAQUE PLAAT	105P

Copyright © New Holland

5.0103	01	p1	03/10

BUCKET - (L=1000MM) - OPTIONAL CODE 781107008
BENNA - (L=1000MM) - CODICE VARIANTE 781107008
LADESCHAUFEL - (L=1000MM) - OPTIONAL CODE 781107008
GODET - (L=1000MM) - OPTIONAL CODE 781107008

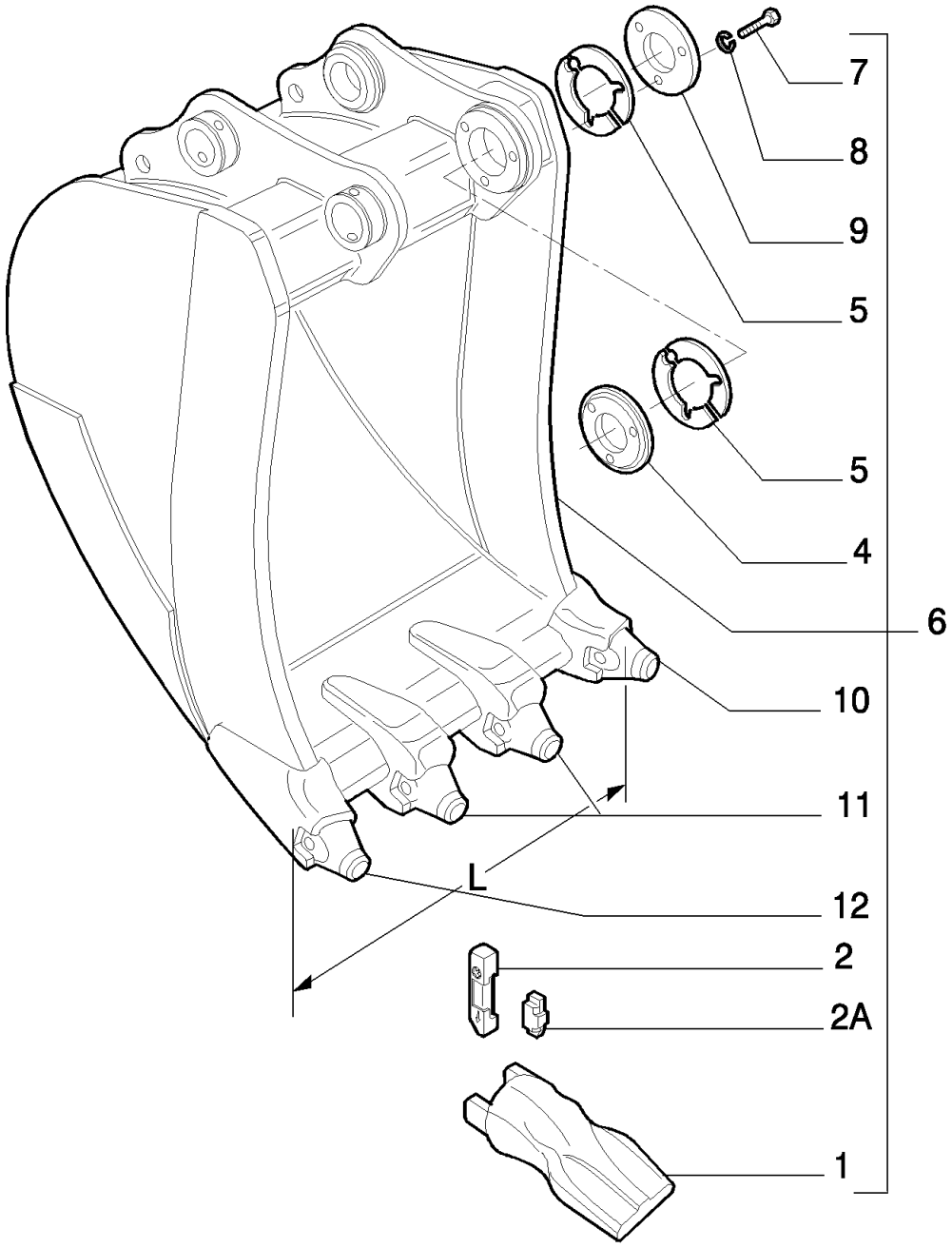

Copyright © New Holland

CUCHARA - (L=1000MM) - OPTIONAL CODE 781107008
BUCKET - (L=1000MM) - OPTIONAL CODE 781107008
BUCKET - (L=1000MM) - OPTIONAL CODE 781107008
BUCKET - (L=1000MM) - OPTIONAL CODE 781107008

R	N	P.N.	MOD	Q	Description Denominacion	Descrizione Beskrivelse	Bezeichnung Denominação	Description Beschrijving	L.C.
1		72204482		4	BUCKET TOOTH DIENTE DE CUCHARA	DENTI BENNA SKOVLTAND	LÖFFELZAHN DENTE DE BALDE	DENT DE GODET TAND VAN BAK	089D
2		72204481		4	ROLL PIN, - ASSY BULÓN DE GIRO	SPINA ELASTICA SPLIT	SPANNSTIFT TROÇO	GOUPILLE ELASTIQUE ROLPEN	200S
2A		72206731		1	RETAINER RETENEDOR	FERMO HOLDER	HALTERUNG RETENTOR	DISPOSITIF DE RETENU HOUDER	109R
4		71418801		1	SPACER SEPARADOR	DISTANZIALE AFSTANDSSTYKKE	DISTANZSTÜCK ESPAÇADOR	ENTRETOISE AFSTANDSSTUK	075D
5		71418802		12	SHIM, 1mm Thk SUPLEMENTO	SPESSORE MELLEMLÆG	AUSGLEICHSSCHEIBE CALÇO DE AFINAÇÃO	CALE VULPLAATJE	198S
6		72202348		1	BUCKET, - ASSY CUCHARA	BENNA SKOVL	LÖFFEL BALDE	GODET GRAAFBAK	035B
7		11116834		3	SCREW, 14X2X80 TORNILLO	VITE SKRUE	SCHRAUBE PARAFUSO	VIS SCHROEF	040V
8		10572074		3	LOCK WASHER, 14 ARANDELA DE BLOQUE	RONDELLA DI SICUREZ LÅSESKIVE	SICHERUNGSSCHEIBE ANILHA DE RETENÇÃO	RONDELLE FREIN BORGRING	132R
9		71418803		1	PLATE PLACA	PIASTRA PLADE	PLATTE CHAPA	PLAQUE PLAAT	105P
10		72204479		1	ANGLE BAR, - RIGHT BARRA ANGULAR	BARRA ANGOLARE VINKELJERN	WINKELEISEN BARRA ANGULAR	CORNIERE HOEKIJZER	060A
11		72204480		2	BUCKET TOOTH SHANK VÁST. DE DIENTE CAVA	GAMBO DENTE BENNA TANDHOLDER	SCHAUFELZAHLHALTEF HASTE	PORTE-DENT DE GODE SCHACHT VAN BAKTAN	187P
12		72204478		1	ANGLE BAR, - LEFT BARRA ANGULAR	BARRA ANGOLARE VINKELJERN	WINKELEISEN BARRA ANGULAR	CORNIERE HOEKIJZER	060A

Copyright © New Holland

5.0104	01	p1	03/10

BUCKET - (L=1200MM) - OPTIONAL CODE 781110008
BENNA - (L=1200MM) - CODICE VARIANTE 781110008
LADESCHAUFEL - (L=1200MM) - OPTIONAL CODE 781110008
GODET - (L=1200MM) - OPTIONAL CODE 781110008

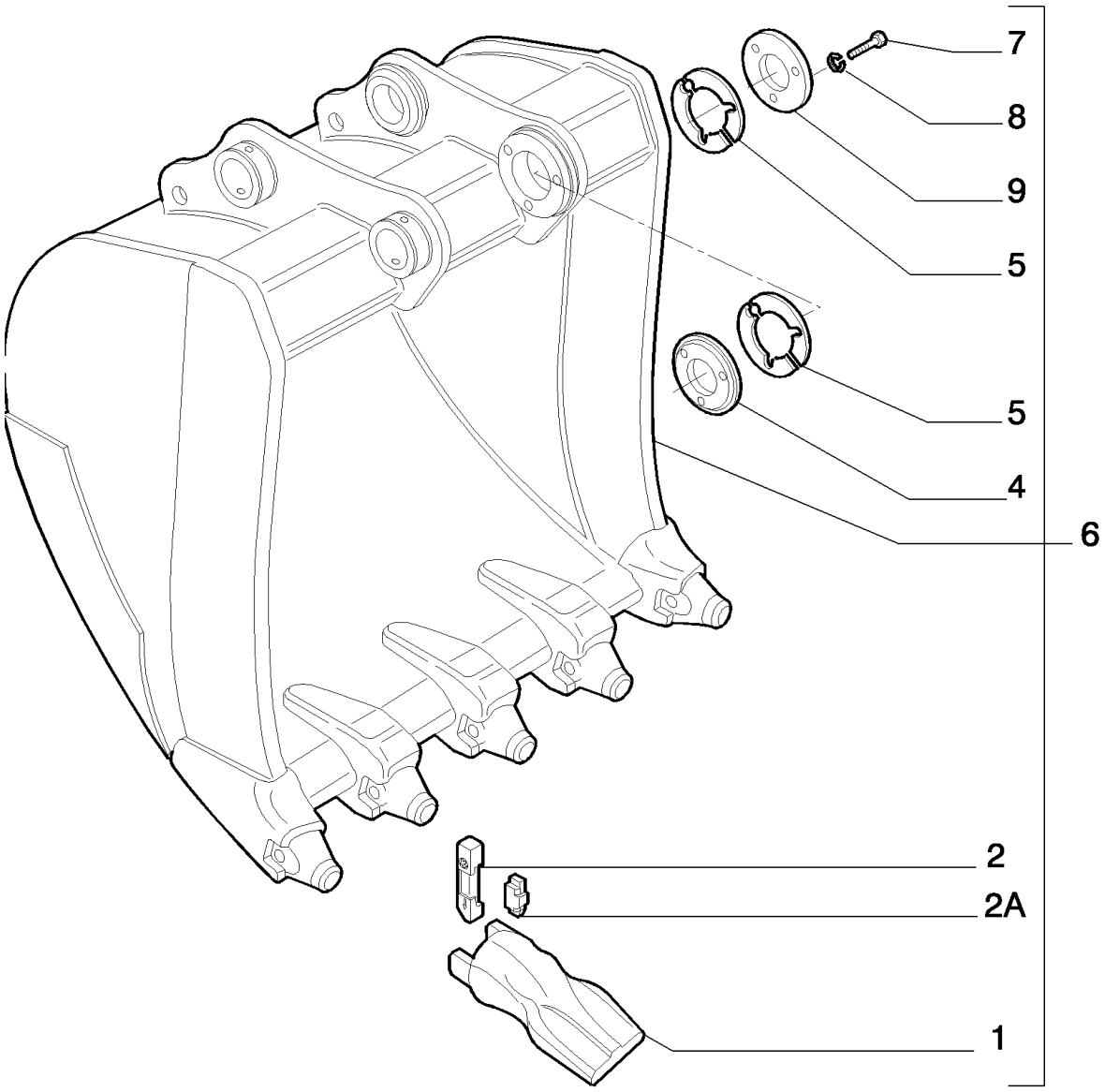

Copyright © New Holland

CUCHARA - (L=1200MM) - OPTIONAL CODE 781110008
BUCKET - (L=1200MM) - OPTIONAL CODE 781110008
BUCKET - (L=1200MM) - OPTIONAL CODE 781110008
BUCKET - (L=1200MM) - OPTIONAL CODE 781110008

R	N	P.N.	MOD	Q	Description Denominacion	Descrizione Beskrivelse	Bezeichnung Denominação	Description Beschrijving	L.C.
1		72185342		5	BUCKET TOOTH POINT PÚA DE DIENTE DE CUC	DENTE BENNA SKOVLTANDSPIDS	LÖFFELZAHNSPITZE DENTE DE BALDE	POINTE DE DENT DE GC TANDPUNT VAN GRAAF	492P
2		72204481		5	ROLL PIN, - ASSY BULÓN DE GIRO	SPINA ELASTICA SPLIT	SPANNSTIFT TROÇO	GOUPILLE ELASTIQUE ROLPEN	200S
2A		72206731		1	RETAINER RETENEDOR	FERMO HOLDER	HALTERUNG RETENTOR	DISPOSITIF DE RETENU HOUDER	109R
4		71418801		1	SPACER SEPARADOR	DISTANZIALE AFSTANDSSTYKKE	DISTANZSTÜCK ESPAÇADOR	ENTRETOISE AFSTANDSSTUK	075D
5		71418802		12	SHIM, 1mm Thk SUPLEMENTO	SPESSORE MELLEMLÆG	AUSGLEICHSSCHEIBE CALÇO DE AFINAÇÃO	CALE VULPLAATJE	198S
6		72202350		1	BUCKET, - ASSY CUCHARA	BENNA SKOVL	LÖFFEL BALDE	GODET GRAAFBAK	035B
7		11116834		3	SCREW, 14X2X80 TORNILLO	VITE SKRUE	SCHRAUBE PARAFUSO	VIS SCHROEF	040V
8		10572074		3	LOCK WASHER, 14 ARANDELA DE BLOQUE	RONDELLA DI SICUREZ LÅSESKIVE	SICHERUNGSSCHEIBE ANILHA DE RETENÇÃO	RONDELLE FREIN BORGRING	132R
9		71418803		1	PLATE PLACA	PIASTRA PLADE	PLATTE CHAPA	PLAQUE PLAAT	105P
10		72204479		1	ANGLE BAR, - RIGHT BARRA ANGULAR	BARRA ANGOLARE VINKELJERN	WINKELEISEN BARRA ANGULAR	CORNIERE HOEKIJZER	060A
11		72204480		3	BUCKET TOOTH SHANK VÁST. DE DIENTE CAVA	GAMBO DENTE BENNA TANDHOLDER	SCHAUFELZAHLHALTEF HASTE	PORTE-DENT DE GODE SCHACHT VAN BAKTAN	187P
12		72204478		1	ANGLE BAR, - LEFT BARRA ANGULAR	BARRA ANGOLARE VINKELJERN	WINKELEISEN BARRA ANGULAR	CORNIERE HOEKIJZER	060A

Copyright © New Holland

5.0105	01	p1	03/10

BUCKET - (L=1300MM) - OPTIONAL CODE 781112008
BENNA - (L=1300MM) - CODICE VARIANTE 781112008
LADESCHAUFEL - (L=1300MM) - OPTIONAL CODE 781112008
GODET - (L=1300MM) - OPTIONAL CODE 781112008

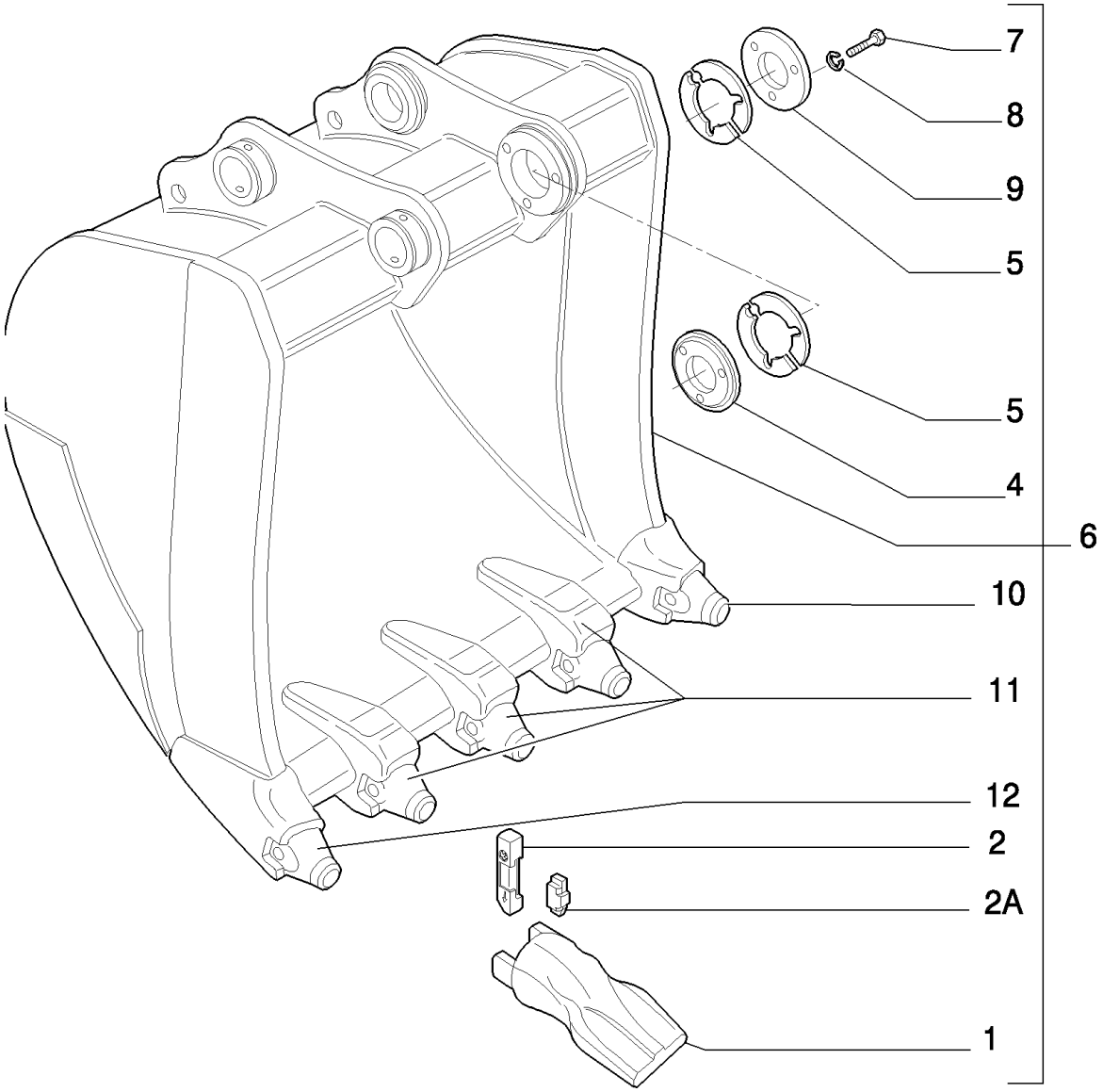

Copyright © New Holland

CUCHARA - (L=1300MM) - OPTIONAL CODE 781112008
BUCKET - (L=1300MM) - OPTIONAL CODE 781112008
BUCKET - (L=1300MM) - OPTIONAL CODE 781112008
BUCKET - (L=1300MM) - OPTIONAL CODE 781112008

R	N	P.N.	MOD	Q	Description Denominacion	Descrizione Beskrivelse	Bezeichnung Denominação	Description Beschrijving	L.C.
1		72185342		5	BUCKET TOOTH POINT PÚA DE DIENTE DE CUC	DENTE BENNA SKOVLTANDSPIDS	LÖFFELZAHNSPITZE DENTE DE BALDE	POINTE DE DENT DE GC TANDPUNT VAN GRAAF	492P
2		72204481		5	ROLL PIN, - ASSY BULÓN DE GIRO	SPINA ELASTICA SPLIT	SPANNSTIFT TROÇO	GOUPILLE ELASTIQUE ROLPEN	200S
2A		72206731		1	RETAINER RETENEDOR	FERMO HOLDER	HALTERUNG RETENTOR	DISPOSITIF DE RETENU HOUDER	109R
4		71418801		1	SPACER SEPARADOR	DISTANZIALE AFSTANDSSTYKKE	DISTANZSTÜCK ESPAÇADOR	ENTRETOISE AFSTANDSSTUK	075D
5		71418802		12	SHIM, 1mm Thk SUPLEMENTO	SPESSORE MELLEMLÆG	AUSGLEICHSSCHEIBE CALÇO DE AFINAÇÃO	CALE VULPLAATJE	198S
6		72202352		1	BUCKET, - ASSY CUCHARA	BENNA SKOVL	LÖFFEL BALDE	GODET GRAAFBAK	035B
7		11116834		3	SCREW, 14X2X80 TORNILLO	VITE SKRUE	SCHRAUBE PARAFUSO	VIS SCHROEF	040V
8		10572074		3	LOCK WASHER, 14 ARANDELA DE BLOQUE	RONDELLA DI SICUREZ LÅSESKIVE	SICHERUNGSSCHEIBE ANILHA DE RETENÇÃO	RONDELLE FREIN BORGRING	132R
9		71418803		1	PLATE PLACA	PIASTRA PLADE	PLATTE CHAPA	PLAQUE PLAAT	105P
10		72204479		1	ANGLE BAR, - RIGHT BARRA ANGULAR	BARRA ANGOLARE VINKELJERN	WINKELEISEN BARRA ANGULAR	CORNIERE HOEKIJZER	060A
11		72204480		3	BUCKET TOOTH SHANK VÁST. DE DIENTE CAVA	GAMBO DENTE BENNA TANDHOLDER	SCHAUFELZAHLHALTEF HASTE	PORTE-DENT DE GODE SCHACHT VAN BAKTAN	187P
12		72204478		1	ANGLE BAR, - LEFT BARRA ANGULAR	BARRA ANGOLARE VINKELJERN	WINKELEISEN BARRA ANGULAR	CORNIERE HOEKIJZER	060A

Copyright © New Holland

5.0106	01	p1	03/10

BUCKET - (L=1500MM) - OPTIONAL CODE 781114008
BENNA - (L=1500MM) - CODICE VARIANTE 781114008
LADESCHAUFEL - (L=1500MM) - OPTIONAL CODE 781114008
GODET - (L=1500MM) - OPTIONAL CODE 781114008

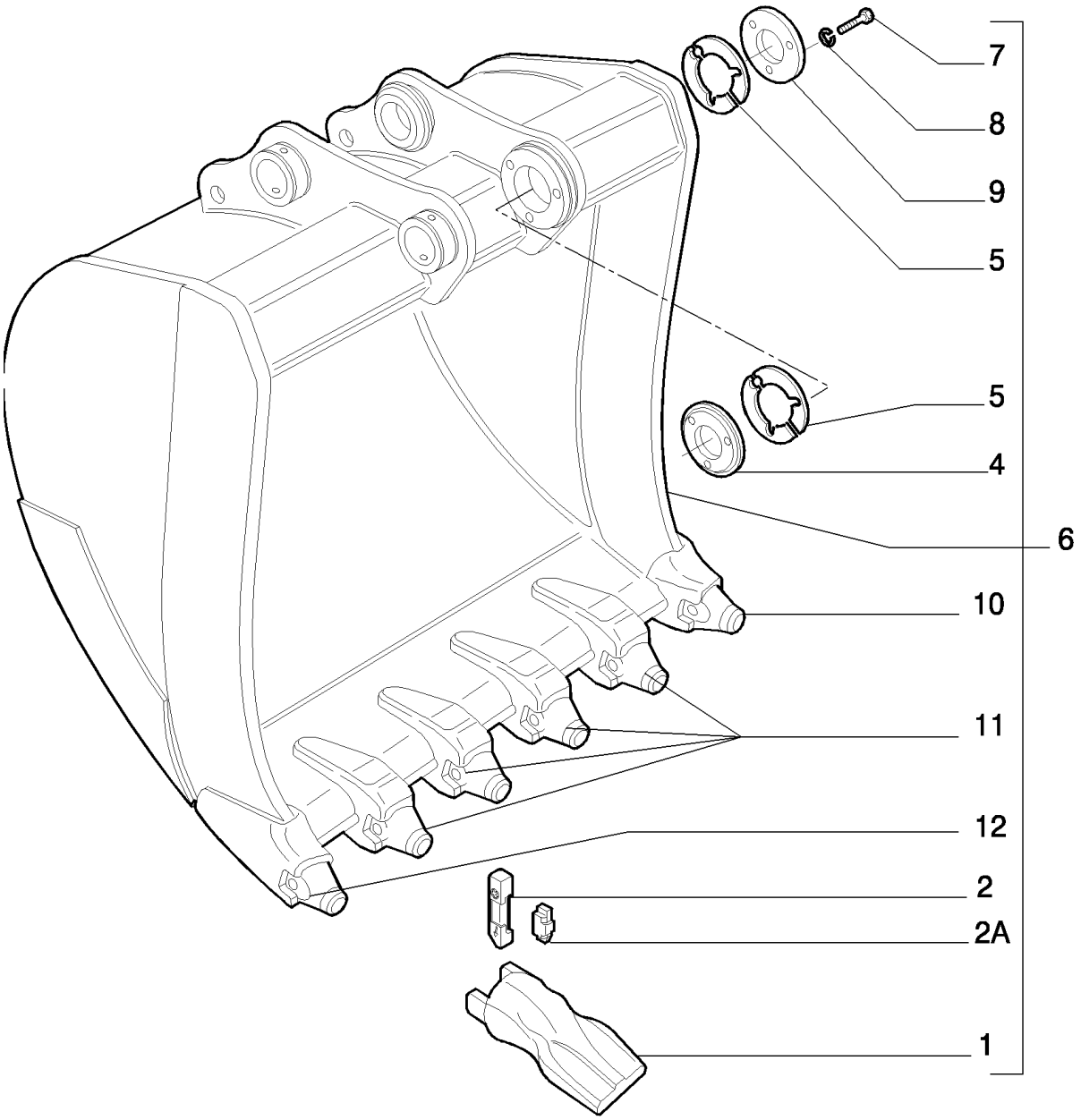

Copyright © New Holland

CUCHARA - (L=1500MM) - OPTIONAL CODE 781114008
BUCKET - (L=1500MM) - OPTIONAL CODE 781114008
BUCKET - (L=1500MM) - OPTIONAL CODE 781114008
BUCKET - (L=1500MM) - OPTIONAL CODE 781114008

R	N	P.N.	MOD	Q	Description Denominacion	Descrizione Beskrivelse	Bezeichnung Denominação	Description Beschrijving	L.C.
1		72185342		6	BUCKET TOOTH POINT PÚA DE DIENTE DE CUC	DENTE BENNA SKOVLTANDSPIDS	LÖFFELZAHNSPITZE DENTE DE BALDE	POINTE DE DENT DE GC TANDPUNT VAN GRAAF	492P
2		72204481		6	ROLL PIN, - ASSY BULÓN DE GIRO	SPINA ELASTICA SPLIT	SPANNSTIFT TROÇO	GOUPILLE ELASTIQUE ROLPEN	200S
2A		72206731		1	RETAINER RETENEDOR	FERMO HOLDER	HALTERUNG RETENTOR	DISPOSITIF DE RETENU HOUDER	109R
4		71418801		1	SPACER SEPARADOR	DISTANZIALE AFSTANDSSTYKKE	DISTANZSTÜCK ESPAÇADOR	ENTRETOISE AFSTANDSSTUK	075D
5		71418802		12	SHIM, 1mm Thk SUPLEMENTO	SPESSORE MELLEMLÆG	AUSGLEICHSSCHEIBE CALÇO DE AFINAÇÃO	CALE VULPLAATJE	198S
6		72202354		1	BUCKET, - ASSY CUCHARA	BENNA SKOVL	LÖFFEL BALDE	GODET GRAAFBAK	035B
7		11116834		3	SCREW, 14X2X80 TORNILLO	VITE SKRUE	SCHRAUBE PARAFUSO	VIS SCHROEF	040V
8		10572074		3	LOCK WASHER, 74 ARANDELA DE BLOQUE	RONDELLA DI SICUREZ LÅSESKIVE	SICHERUNGSSCHEIBE ANILHA DE RETENÇÃO	RONDELLE FREIN BORGRING	132R
9		71418803		1	PLATE PLACA	PIASTRA PLADE	PLATTE CHAPA	PLAQUE PLAAT	105P
10		72204479		1	ANGLE BAR, - RIGHT BARRA ANGULAR	BARRA ANGOLARE VINKELJERN	WINKELEISEN BARRA ANGULAR	CORNIERE HOEKIJZER	060A
11		72204480		4	BUCKET TOOTH SHANK VÁST. DE DIENTE CAVA	GAMBO DENTE BENNA TANDHOLDER	SCHAUFELZAHLHALTEF HASTE	PORTE-DENT DE GODE SCHACHT VAN BAKTAN	187P
12		72204478		1	ANGLE BAR, - LEFT BARRA ANGULAR	BARRA ANGOLARE VINKELJERN	WINKELEISEN BARRA ANGULAR	CORNIERE HOEKIJZER	060A

Copyright © New Holland

5.0144	01	p1	03/10

LINK ROD - OPTIONAL CODE 781479048
BIELLA - CODICE VARIANTE 781479048
GELENKSTANGE - OPTIONAL CODE 781479048
BIELLE - OPTIONAL CODE 781479048

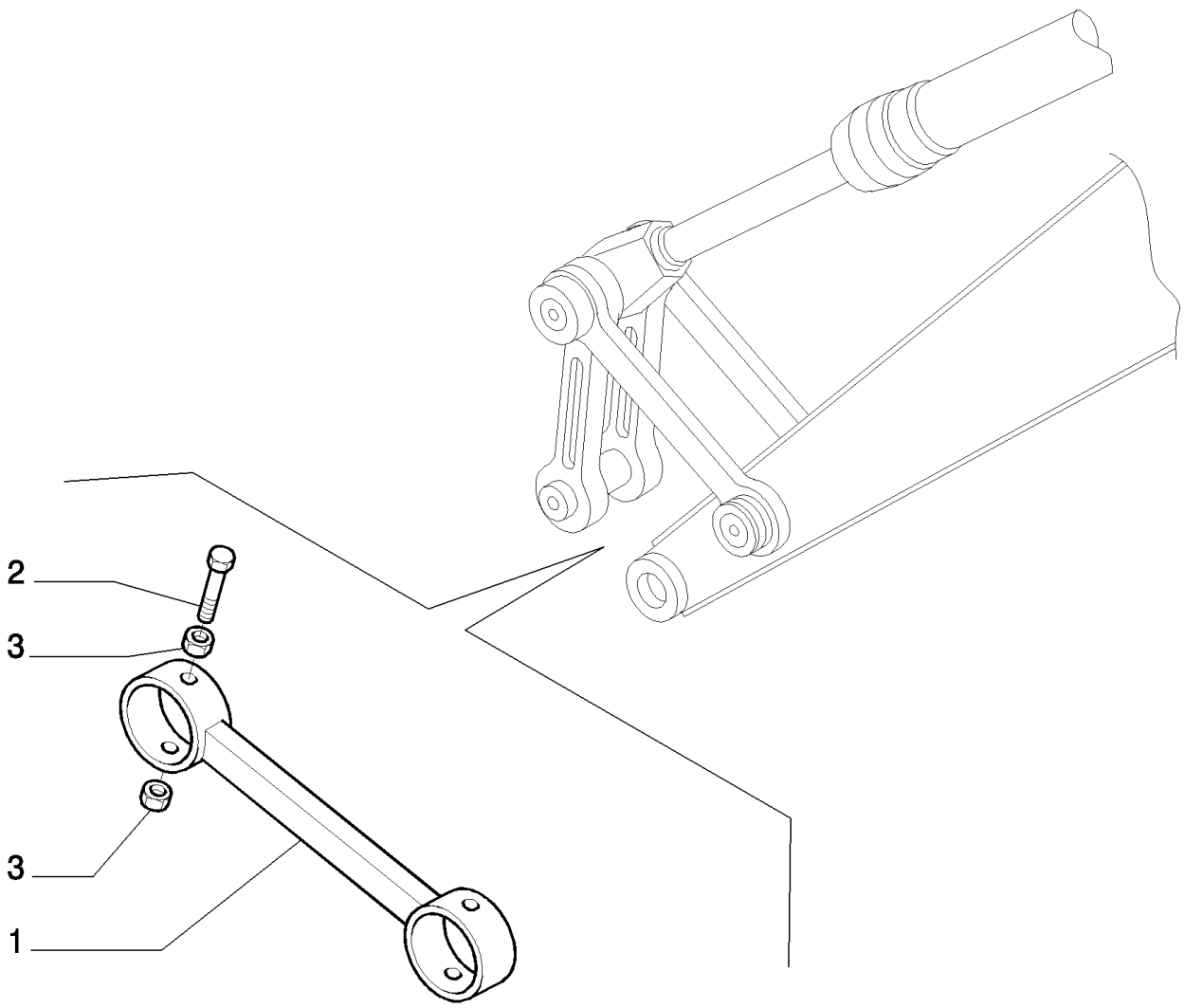

Copyright © New Holland

BIELA - OPTIONAL CODE 781479048
LINK ROD - OPTIONAL CODE 781479048
LINK ROD - OPTIONAL CODE 781479048
LINK ROD - OPTIONAL CODE 781479048

R	N	P.N.	MOD	Q	Description Denominacion	Descrizione Beskrivelse	Bezeichnung Denominação	Description Beschrijving	L.C.
1		71465286		1	LINK CONROD BIELA DE ESLABÓN	BIELLA TIRANTE PLEJLSTANG	PLEUEL BIELA	BIELLE DRIJFSTANG	050B
2		11120734		2	SCREW TORNILLO	VITE SKRUE	SCHRAUBE PARAFUSO	VIS SCHROEF	040V
3		12163321		4	NUT, M16, Cl 10, 16 TUERCA	DADO MØTRIK	MUTTER PORCA	ECROU MOER	010D

Copyright © New Holland

5.0148	01	p1	03/10

HYDRAULIC QUICK COUPLING - OPTIONAL CODE 781128068
ATTACCO RAPIDO IDRAULICO - CODICE VARIANTE 781128068
HYDRAULISCHE SCHNELLVERBINDUNG - OPTIONAL CODE 781128068
FIXATION HYDRAULIQUE RAPIDE - OPTIONAL CODE 781128068

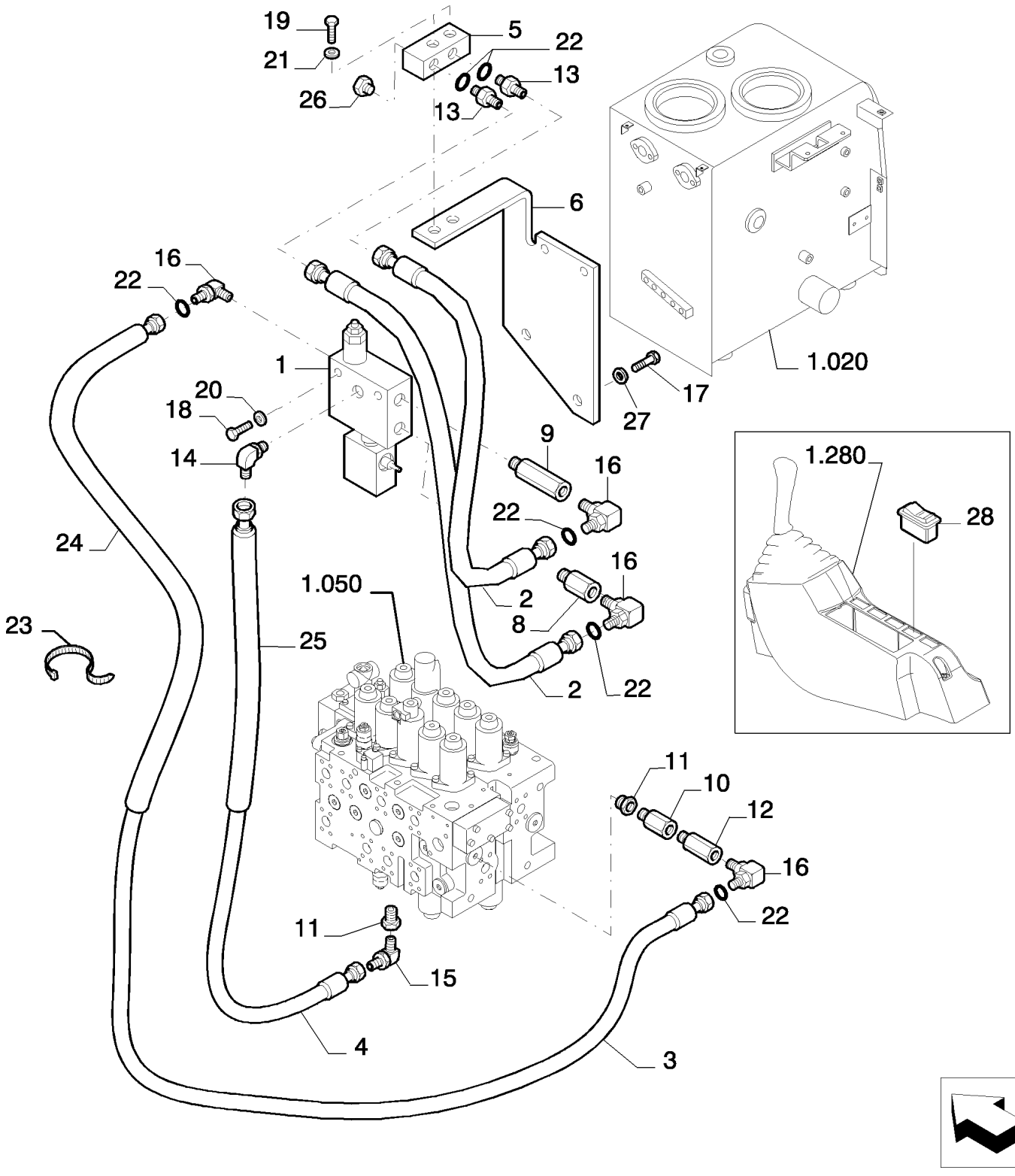

Copyright © New Holland

EMPALME RÁPIDO HIDRÁULICO - OPTIONAL CODE 781128068
HYDRAULIC QUICK COUPLING - OPTIONAL CODE 781128068
HYDRAULIC QUICK COUPLING - OPTIONAL CODE 781128068
HYDRAULIC QUICK COUPLING - OPTIONAL CODE 781128068

R	N	P.N.	MOD	Q	Description Denominacion	Descrizione Beskrivelse	Bezeichnung Denominação	Description Beschrijving	L.C.
1	1	72112166		1	HYDRAULIC VALVE VÁLVULA HIDRÁULICA	DISTRIBUTORE IDRAULI HYDRAULIKVENTIL	HYDRAULIKVENTIL VÁLVULA HIDRÁULICA	SOUPAPE HYDRAULIQU HYDRAULISCHE KLEP	010V
2		87579050		2	FLEXIBLE HOSE TUBO FLEXIBLE	TUBO FLESSIBILE FLEKSIBEL SLANGE	BIEGSAMER SCHLAUCH MANGUEIRA FLEXÍVEL	TUYAU FLEXIBLE FLEXIBELE SLANG	192T
3		87579051		1	FLEXIBLE HOSE TUBO FLEXIBLE	TUBO FLESSIBILE FLEKSIBEL SLANGE	BIEGSAMER SCHLAUCH MANGUEIRA FLEXÍVEL	TUYAU FLEXIBLE FLEXIBELE SLANG	192T
4		72214555		1	FLEXIBLE HOSE TUBO FLEXIBLE	TUBO FLESSIBILE FLEKSIBEL SLANGE	BIEGSAMER SCHLAUCH MANGUEIRA FLEXÍVEL	TUYAU FLEXIBLE FLEXIBELE SLANG	192T
5		87579052		1	BLOCK BLOQUE	BLOCCO MOTORBLOK	BLOCK BLOCO	BLOC BLOK	074B
6		87579053		1	BRACKET SOPORTE	STAFFA BESLAG	HALTERUNG SUPORTE	SUPPORT STEUN	225S
8		72283610		1	HYD CONNECTOR CONECTOR HIDRÁULIC	CONNETTORE IDRAULI HYDRAULIKSTIK	HYDR STECKVERBINDE CONECTOR HID.	CONNECTEUR HYDRAU HYDRAULISCHE AANSL	020R
9		87579054		1	HYD CONNECTOR CONECTOR HIDRÁULIC	CONNETTORE IDRAULI HYDRAULIKSTIK	HYDR STECKVERBINDE CONECTOR HID.	CONNECTEUR HYDRAU HYDRAULISCHE AANSL	020R
10		87579055		1	HYD CONNECTOR CONECTOR HIDRÁULIC	CONNETTORE IDRAULI HYDRAULIKSTIK	HYDR STECKVERBINDE CONECTOR HID.	CONNECTEUR HYDRAU HYDRAULISCHE AANSL	020R
11		72214718		2	HYD CONNECTOR CONECTOR HIDRÁULIC	CONNETTORE IDRAULI HYDRAULIKSTIK	HYDR STECKVERBINDE CONECTOR HID.	CONNECTEUR HYDRAU HYDRAULISCHE AANSL	020R
12		72952762		1	HYD CONNECTOR CONECTOR HIDRÁULIC	CONNETTORE IDRAULI HYDRAULIKSTIK	HYDR STECKVERBINDE CONECTOR HID.	CONNECTEUR HYDRAU HYDRAULISCHE AANSL	020R
13		72216769		2	HYD CONNECTOR CONECTOR HIDRÁULIC	CONNETTORE IDRAULI HYDRAULIKSTIK	HYDR STECKVERBINDE CONECTOR HID.	CONNECTEUR HYDRAU HYDRAULISCHE AANSL	020R
14		72214524		1	HYD CONNECTOR CONECTOR HIDRÁULIC	CONNETTORE IDRAULI HYDRAULIKSTIK	HYDR STECKVERBINDE CONECTOR HID.	CONNECTEUR HYDRAU HYDRAULISCHE AANSL	020R
15		72214525		1	HYD CONNECTOR CONECTOR HIDRÁULIC	CONNETTORE IDRAULI HYDRAULIKSTIK	HYDR STECKVERBINDE CONECTOR HID.	CONNECTEUR HYDRAU HYDRAULISCHE AANSL	020R
16		72206057		4	HYD CONNECTOR CONECTOR HIDRÁULIC	CONNETTORE IDRAULI HYDRAULIKSTIK	HYDR STECKVERBINDE CONECTOR HID.	CONNECTEUR HYDRAU HYDRAULISCHE AANSL	020R
17		11112634		2	SCREW TORNILLO	VITE SKRUE	SCHRAUBE PARAFUSO	VIS SCHROEF	040V
18		16044534		2	BOLT, Hex, M8 x 65, 10.9 PERNO	BULLONE BOLT	SCHRAUBE PARAFUSO	VIS BOUT	140B
19		11107234		2	BOLT, Hex, M10 x 50, 10.9 PERNO	BULLONE BOLT	SCHRAUBE PARAFUSO	VIS BOUT	140B
20		14496531		2	WASHER, M8 x 17 x 1.6 ARANDELA	RONDELLA FLADSKIVE	UNTERLEGSCHEIBE ANILHA	RONDELLE SLUITRING	131R
21		12626231		2	WASHER, M10.2 x 25 x 3 Thk, HT ARANDELA	RONDELLA FLADSKIVE	UNTERLEGSCHEIBE ANILHA	RONDELLE SLUITRING	131R
22		72206112		6	O-RING JUNTA TÓRICA	ANELLO TOROIDALE O-RING	O-RING O-RING	JOINT TORIQUE O-RING	055A
23		4982514		4	CABLE STRAP BANDA DE CABLE	FASCETTA PER CAVO KABELSTROP	KABELBINDER BRAÇADEIRA DE CABO	BRIDE DE CABLE BUNDELBAND	P716
24		72957165		1	TUBE TUBO	TUBO RØR	ROHR TUBO	TUBE LEIDING	195T
25		72214743		1	FLEXIBLE HOSE TUBO FLEXIBLE	TUBO FLESSIBILE FLEKSIBEL SLANGE	BIEGSAMER SCHLAUCH MANGUEIRA FLEXÍVEL	TUYAU FLEXIBLE FLEXIBELE SLANG	192T

(1) ASSY SEE PAGE 2

Copyright © New Holland

5.0148	01	p2	03/10

HYDRAULIC QUICK COUPLING - OPTIONAL CODE 781128068
ATTACCO RAPIDO IDRAULICO - CODICE VARIANTE 781128068
HYDRAULISCHE SCHNELLVERBINDUNG - OPTIONAL CODE 781128068
FIXATION HYDRAULIQUE RAPIDE - OPTIONAL CODE 781128068

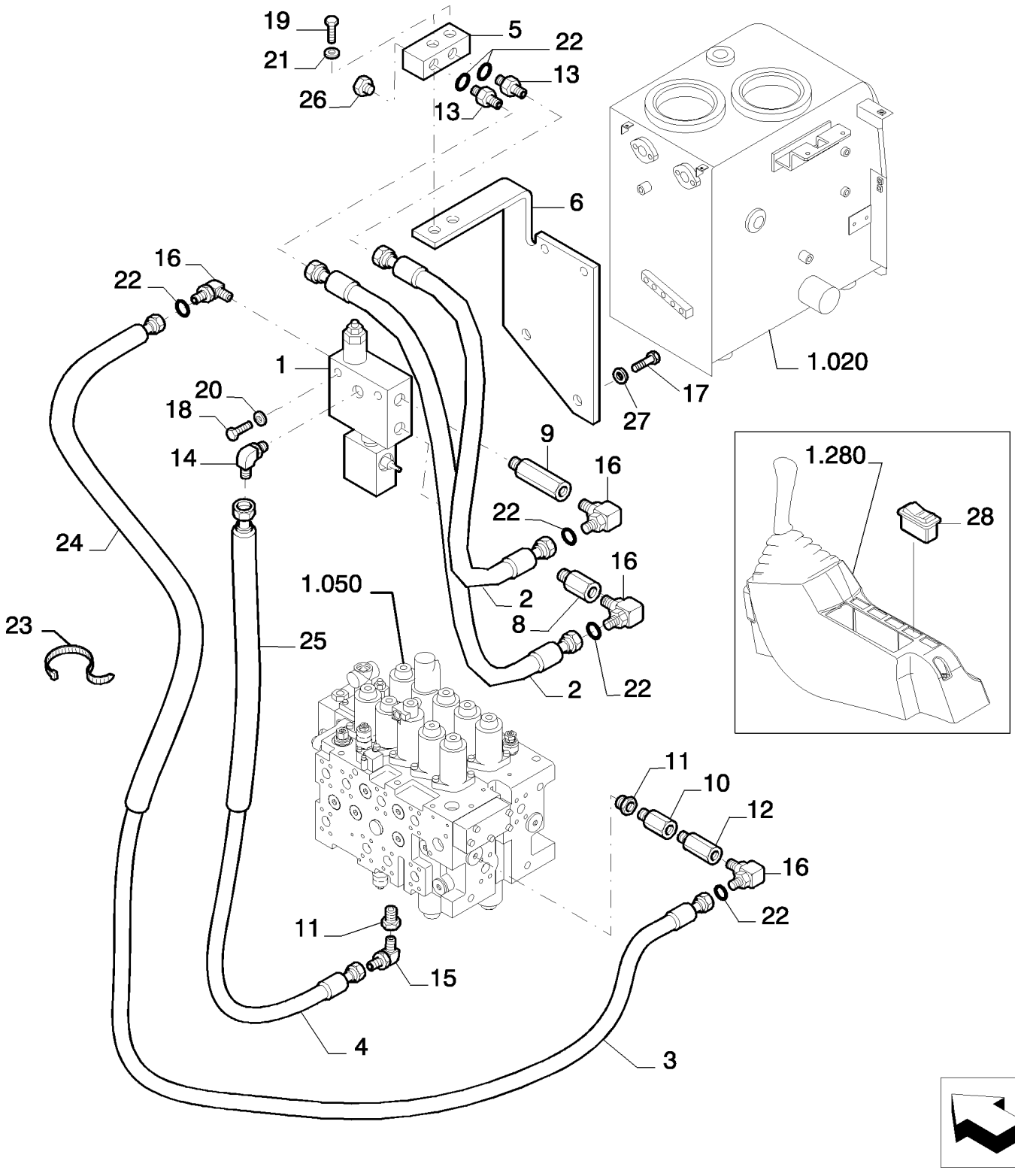

Copyright © New Holland

EMPALME RÁPIDO HIDRÁULICO - OPTIONAL CODE 781128068
HYDRAULIC QUICK COUPLING - OPTIONAL CODE 781128068
HYDRAULIC QUICK COUPLING - OPTIONAL CODE 781128068
HYDRAULIC QUICK COUPLING - OPTIONAL CODE 781128068

R	N	P.N.	MOD	Q	Description Denominacion	Descrizione Beskrivelse	Bezeichnung Denominação	Description Beschrijving	L.C.
26		**72214663**		2	PLUG TAPÓN	TAPPO PROP	STOPFEN TAMPÃO	BOUCHON PLUG	050T
27		**14496731**		2	WASHER, M12 x 24 x 2.5 Thk ARANDELA	RONDELLA FLADSKIVE	UNTERLEGSCHEIBE ANILHA	RONDELLE SLUITRING	131R
28		**YN50S00043D5**		1	SWITCH INTERRUPTOR	INTERRUTTORE KONTAKT	SCHALTER INTERRUPTOR	CONTACTEUR SCHAKELAAR	075I

Copyright © New Holland

5.0148	02	p1	03/10

HYDRAULIC QUICK COUPLING - COMPONENTS - OPTIONAL CODE 781128068
ATTACCO RAPIDO IDRAULICO - COMPONENTI - CODICE VARIANTE 781128068
HYDRAULISCHE SCHNELLVERBINDUNG - BESTANDTEILE - OPTIONAL CODE 781128068
FIXATION HYDRAULIQUE RAPIDE - COMPOSANTS - OPTIONAL CODE 781128068

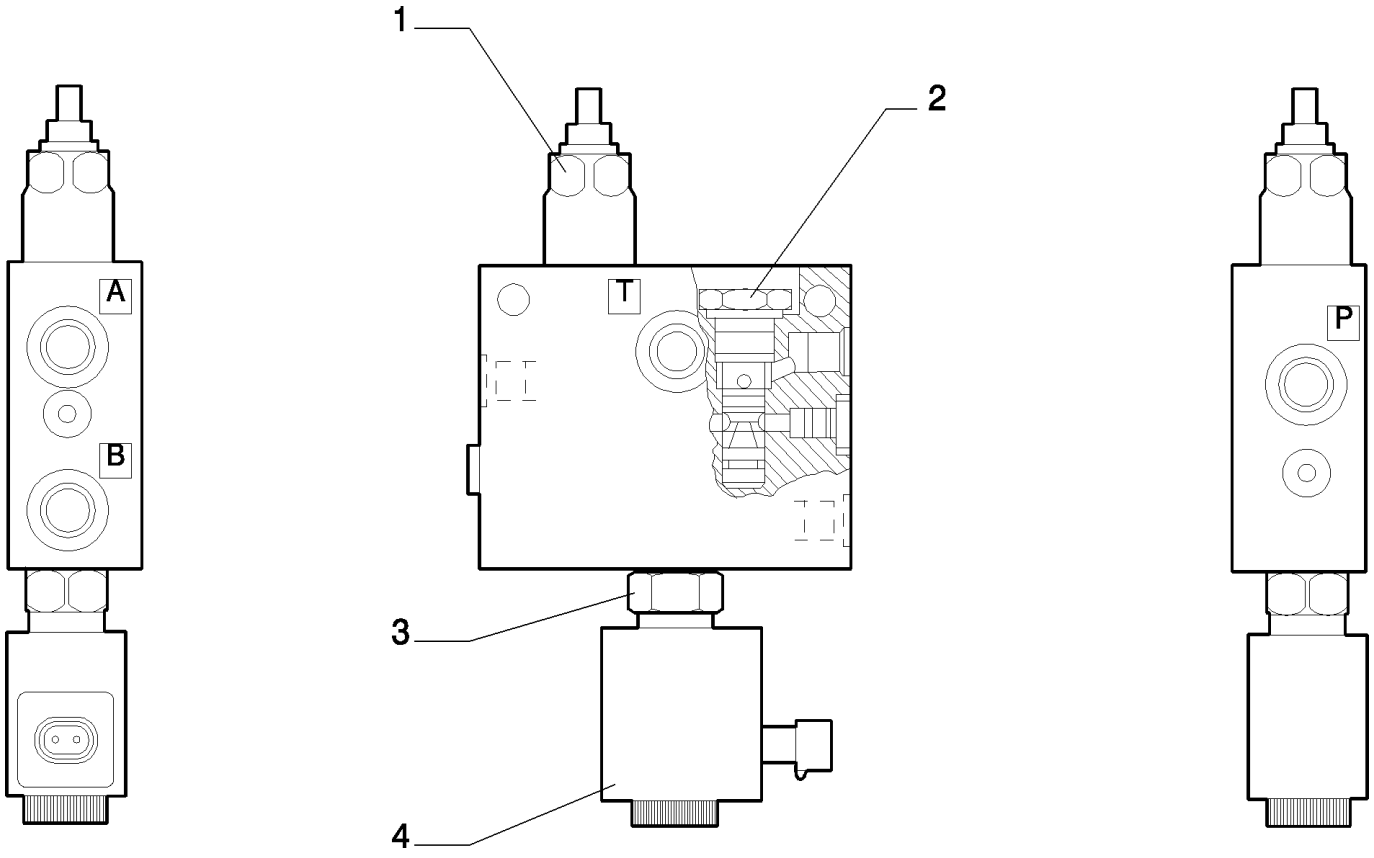

Copyright © New Holland

EMPALME RÁPIDO HIDRÁULICO - COMPONENTES - OPTIONAL CODE 781128068
HYDRAULIC QUICK COUPLING - COMPONENTS - OPTIONAL CODE 781128068
HYDRAULIC QUICK COUPLING - COMPONENTS - OPTIONAL CODE 781128068
HYDRAULIC QUICK COUPLING - COMPONENTS - OPTIONAL CODE 781128068

R	N	P.N.	MOD	Q	Description Denominacion	Descrizione Beskrivelse	Bezeichnung Denominação	Description Beschrijving	L.C.
1		72210495		1	HYDRAULIC VALVE VÁLVULA HIDRÁULICA	DISTRIBUTORE IDRAULI HYDRAULIKVENTIL	HYDRAULIKVENTIL VÁLVULA HIDRÁULICA	SOUPAPE HYDRAULIQU HYDRAULISCHE KLEP	010V
2		72210496		1	HYDRAULIC VALVE VÁLVULA HIDRÁULICA	DISTRIBUTORE IDRAULI HYDRAULIKVENTIL	HYDRAULIKVENTIL VÁLVULA HIDRÁULICA	SOUPAPE HYDRAULIQU HYDRAULISCHE KLEP	010V
3		72210497		1	HYDRAULIC VALVE VÁLVULA HIDRÁULICA	DISTRIBUTORE IDRAULI HYDRAULIKVENTIL	HYDRAULIKVENTIL VÁLVULA HIDRÁULICA	SOUPAPE HYDRAULIQU HYDRAULISCHE KLEP	010V
4		72210498		1	COIL BOBINA	BOBINA SPOLE	SPULE BOBINA	BOBINE SPOEL	083B

VALVE ASSY P/N 72112166

E215B

Copyright © New Holland

5.0156	01	p1	03/10

SEAT AT MECHANICAL SUSPENSION - OPTIONAL CODE 781768078
SEDILE A SOSPENSIONE MECCANICA - CODICE VARIANTE 781768078
SITZ MIT MECHANISCHER FEDERUNG - OPTIONAL CODE 781768078
SIEGE A SUSPENSION MECANIQUE - OPTIONAL CODE 781768078

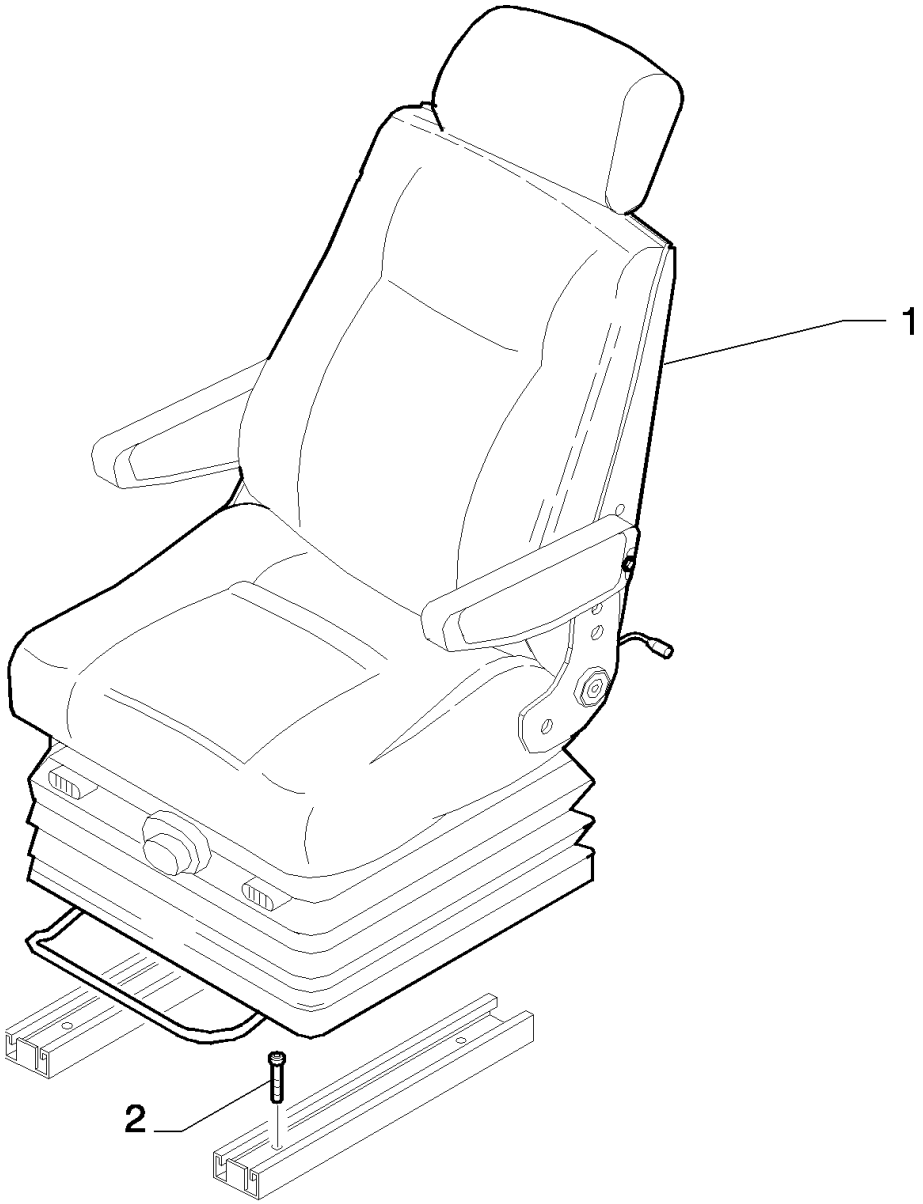

Copyright © New Holland

ASIENTO A SUSPENSION MECANICA - OPTIONAL CODE 781768078
SEAT AT MECHANICAL SUSPENSION - OPTIONAL CODE 781768078
SEAT AT MECHANICAL SUSPENSION - OPTIONAL CODE 781768078
SEAT AT MECHANICAL SUSPENSION - OPTIONAL CODE 781768078

R	N	P.N.	MOD	Q	Description Denominacion	Descrizione Beskrivelse	Bezeichnung Denominação	Description Beschrijving	L.C.
1		{LS25M00006F1}		1					
2		14306334		4	SCREW TORNILLO	VITE SKRUE	SCHRAUBE PARAFUSO	VIS SCHROEF	040V

Copyright © New Holland

5.0159	01	p1	03/10

PNEUM. CUSHIONING HEATED SEAT - OPTIONAL CODE 781000058
SEDILE PNEUMATICO RISCALDATO - CODICE VARIANTE 781000058
LUFTGEFEDERTER BEHEIZTER SITZ - OPTIONAL CODE 781000058
SIEGE PNEUMATIQUE RECHAUFFE - OPTIONAL CODE 781000058

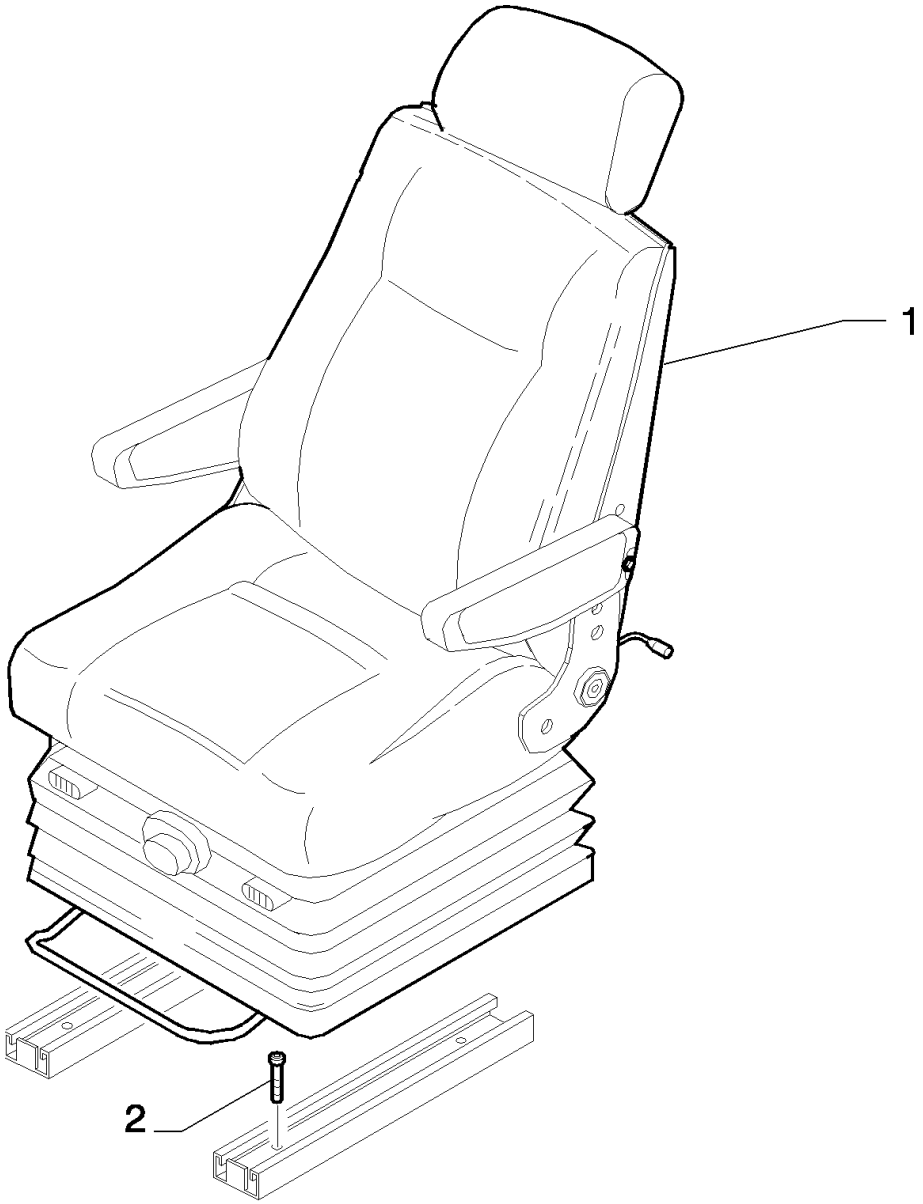

Copyright © New Holland

ASIENTO NEUMATICO CON CALEFACCION - OPTIONAL CODE 781000058
PNEUM. CUSHIONING HEATED SEAT - OPTIONAL CODE 781000058
PNEUM. CUSHIONING HEATED SEAT - OPTIONAL CODE 781000058
PNEUM. CUSHIONING HEATED SEAT - OPTIONAL CODE 781000058

R	N	P.N.	MOD	Q	Description Denominacion	Descrizione Beskrivelse	Bezeichnung Denominação	Description Beschrijving	L.C.
1		{LS25M00005F1}		1					
2		14306334		4	SCREW TORNILLO	VITE SKRUE	SCHRAUBE PARAFUSO	VIS SCHROEF	040V

Copyright © New Holland

5.0208	01	p1	03/10

CAB GUARD AND CAB LIGHTS - OPTIONAL CODE 461488008
RIPARO CABINA E PROIETTORI PER CABINA - CODICE VARIANTE 461488008
SCHUTZAB. DES FAHRERHAUSES UND KABINENSCHEINWERFER - OPTIONAL CODE 461488008
PROTECTION CABINE ET PROJECTOURS POUR CABINE - OPTIONAL CODE 461488008

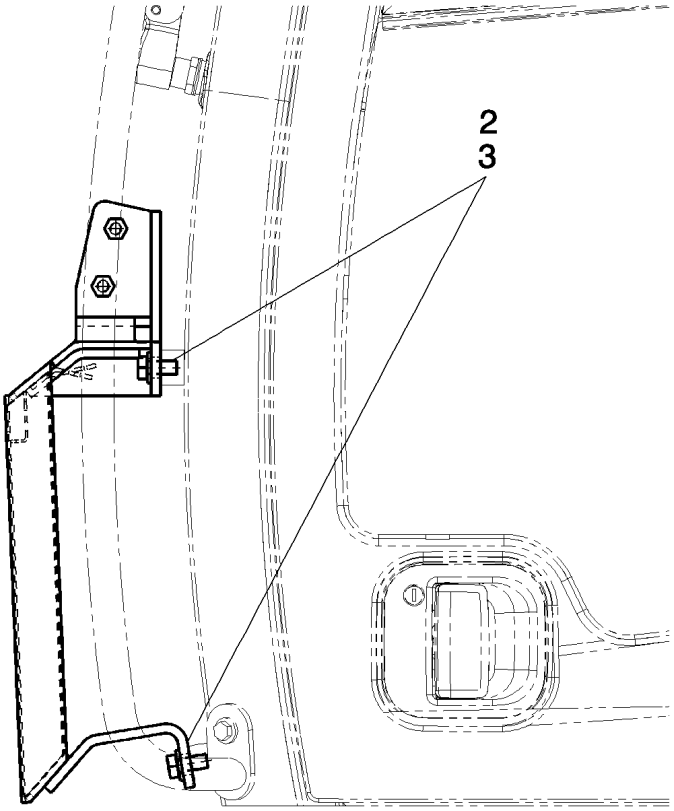

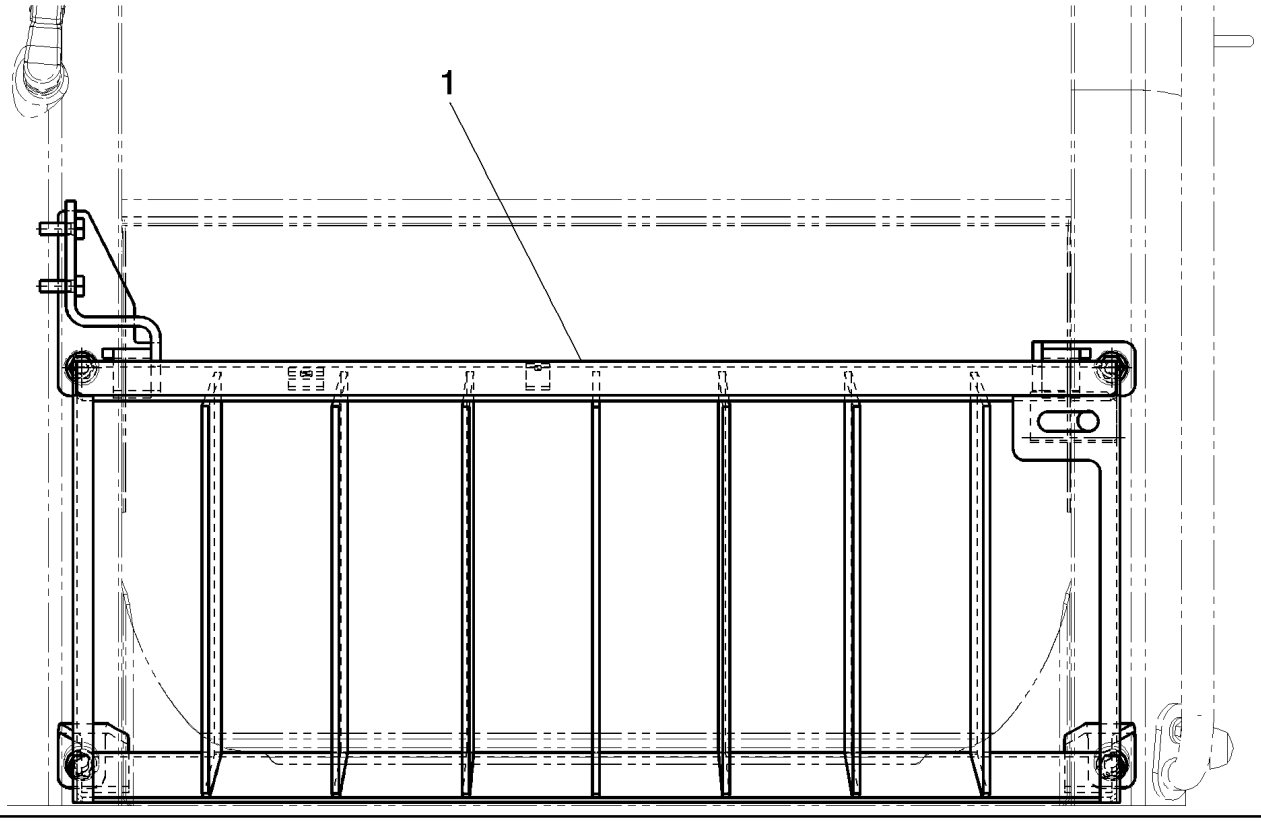

Copyright © New Holland

DEFENSA CABINA Y FAROS PARA CABINA - OPTIONAL CODE 461488008
CAB GUARD AND CAB LIGHTS - OPTIONAL CODE 461488008
CAB GUARD AND CAB LIGHTS - OPTIONAL CODE 461488008
CAB GUARD AND CAB LIGHTS - OPTIONAL CODE 461488008

R	N	P.N.	MOD	Q	Description Denominacion	Descrizione Beskrivelse	Bezeichnung Denominação	Description Beschrijving	L.C.
1		LQ02C01299P1		1	GUARD DEFENSA	PROTEZIONE BESKYTTELSESSKÆRM	SCHUTZABDECKUNG PROTECÇÃO	PROTECTION AFSCHERMING	070R
2		11112234		4	BOLT, Hex, M12 x 25, 10.9, Full Thd PERNO	BULLONE BOLT	SCHRAUBE PARAFUSO	VIS BOUT	140B
3		14496731		4	WASHER, M12 x 24 x 2.5 Thk ARANDELA	RONDELLA FLADSKIVE	UNTERLEGSCHEIBE ANILHA	RONDELLE SLUITRING	131R

Copyright © New Holland

CAB GUARD AND CAB LIGHTS - OPTIONAL CODE 461488008
RIPARO CABINA E PROIETTORI PER CABINA - CODICE VARIANTE 461488008
SCHUTZAB. DES FAHRERHAUSES UND KABINENSCHEINWERFER - OPTIONAL CODE 461488008
PROTECTION CABINE ET PROJECTOURS POUR CABINE - OPTIONAL CODE 461488008

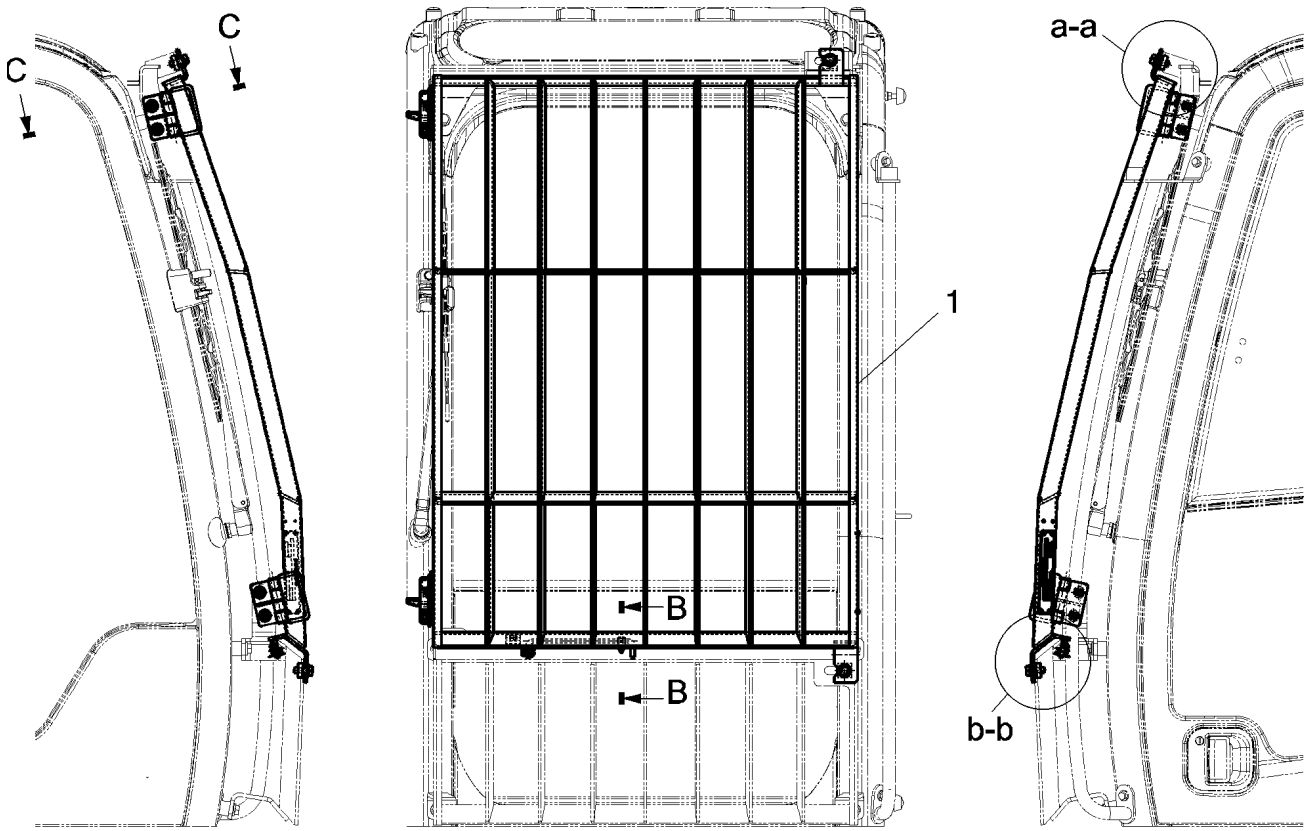

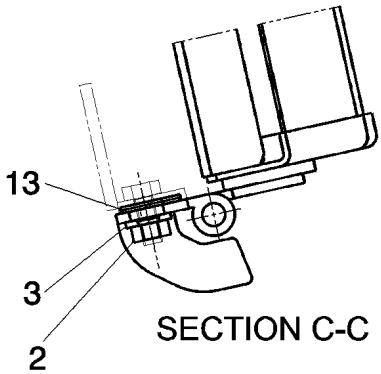

SECTION C-C

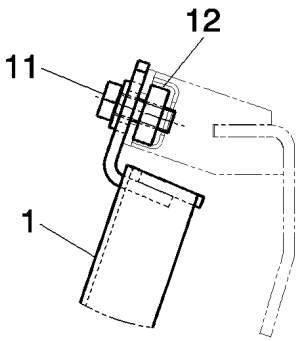

DETAIL a-a

SECTION B-B

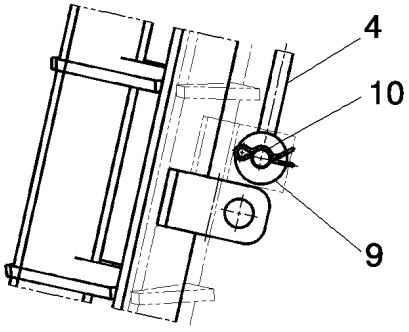

VIEW Y

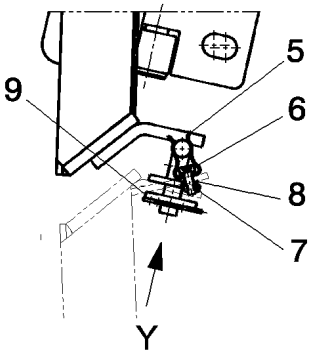

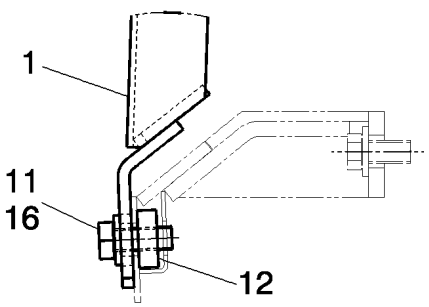

DETAIL b-b

Copyright © New Holland

DEFENSA CABINA Y FAROS PARA CABINA - OPTIONAL CODE 461488008
CAB GUARD AND CAB LIGHTS - OPTIONAL CODE 461488008
CAB GUARD AND CAB LIGHTS - OPTIONAL CODE 461488008
CAB GUARD AND CAB LIGHTS - OPTIONAL CODE 461488008

R	N	P.N.	MOD	Q	Description Denominacion	Descrizione Beskrivelse	Bezeichnung Denominação	Description Beschrijving	L.C.
1		LQ02C01300P1		1	GUARD DEFENSA	PROTEZIONE BESKYTTELSESSKÆRM	SCHUTZABDECKUNG PROTECÇÃO	PROTECTION AFSCHERMING	070R
2		11701721		4	NUT, M10, Cl 10 TUERCA	DADO MØTRIK	MUTTER PORCA	ECROU MOER	010D
3		14496631		4	WASHER, M10 x 21 x 2 ARANDELA	RONDELLA FLADSKIVE	UNTERLEGSCHEIBE ANILHA	RONDELLE SLUITRING	131R
4		87606746		1	ROD VARILLA	ASTA STANG	STANGE HASTE	TIGE STANG	090A
5		87606856		1	COLLAR COLLAR	COLLARE SLANGEBÅND	RINGE ANEL	COLLIER KRAAG	031F
6		84163381		1	SCREW TORNILLO	VITE SKRUE	SCHRAUBE PARAFUSO	VIS SCHROEF	040V
7		10721911		1	NUT TUERCA	DADO MØTRIK	MUTTER PORCA	ECROU MOER	010D
8		14497731		1	WASHER ARANDELA	RONDELLA FLADSKIVE	UNTERLEGSCHEIBE ANILHA	RONDELLE SLUITRING	131R
9		72954209		1	WASHER ARANDELA	RONDELLA FLADSKIVE	UNTERLEGSCHEIBE ANILHA	RONDELLE SLUITRING	131R
10		72275189		1	COTTER PIN PASADOR	COPPIGLIA SPLITBOLT	SPLINT TROÇO DE ABRIR	GOUPILLE FENDUE SPLITPEN	270C
11		11112434		2	BOLT, Hex, M12 x 30, 10.9, Full Thd PERNO	BULLONE BOLT	SCHRAUBE PARAFUSO	VIS BOUT	140B
12		87606857		2	PLATE PLACA	PIASTRA PLADE	PLATTE CHAPA	PLAQUE PLAAT	105P
13		87606858		2	SHIM SUPLEMENTO	SPESSORE MELLEMLÆG	AUSGLEICHSSCHEIBE CALÇO DE AFINAÇÃO	CALE VULPLAATJE	198S
16		14496731		2	WASHER, M12 x 24 x 2.5 Thk ARANDELA	RONDELLA FLADSKIVE	UNTERLEGSCHEIBE ANILHA	RONDELLE SLUITRING	131R

Copyright © New Holland

CAB GUARD AND CAB LIGHTS - OPTIONAL CODE 461488008
RIPARO CABINA E PROIETTORI PER CABINA - CODICE VARIANTE 461488008
SCHUTZAB. DES FAHRERHAUSES UND KABINENSCHEINWERFER - OPTIONAL CODE 461488008
PROTECTION CABINE ET PROJECTOURS POUR CABINE - OPTIONAL CODE 461488008

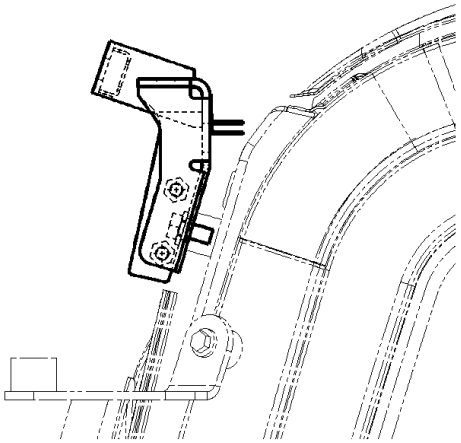

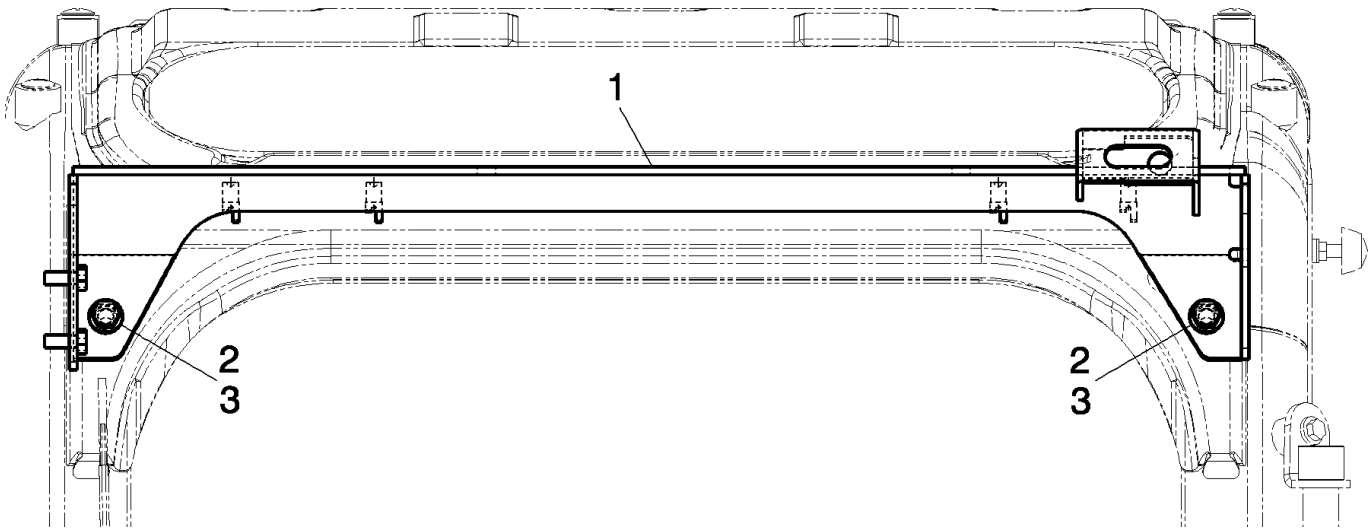

Copyright © New Holland

DEFENSA CABINA Y FAROS PARA CABINA - OPTIONAL CODE 461488008
CAB GUARD AND CAB LIGHTS - OPTIONAL CODE 461488008
CAB GUARD AND CAB LIGHTS - OPTIONAL CODE 461488008
CAB GUARD AND CAB LIGHTS - OPTIONAL CODE 461488008

R	N	P.N.	MOD	Q	Description Denominacion	Descrizione Beskrivelse	Bezeichnung Denominação	Description Beschrijving	L.C.
1		LQ02C01289P1		1	SUPPORT SOPORTE	SUPPORTO BESLAG	STÜTZE SUPORTE	SUPPORT STEUN	300S
2		11112234		2	BOLT, Hex, M12 x 25, 10.9, Full Thd PERNO	BULLONE BOLT	SCHRAUBE PARAFUSO	VIS BOUT	140B
3		14496731		2	WASHER, M12 x 24 x 2.5 Thk ARANDELA	RONDELLA FLADSKIVE	UNTERLEGSCHEIBE ANILHA	RONDELLE SLUITRING	131R

Copyright © New Holland

5.0208	04	p1	03/10

CAB GUARD AND CAB LIGHTS - OPTIONAL CODE 461488008
RIPARO CABINA E PROIETTORI PER CABINA- CODICE VARIANTE 461488008
SCHUTZAB. DES FAHRERHAUSES UND KABINENSCHEINWERFER - OPTIONAL CODE 461488008
PROTECTION CABINE ET PROJECTOURS POUR CABINE - OPTIONAL CODE 461488008

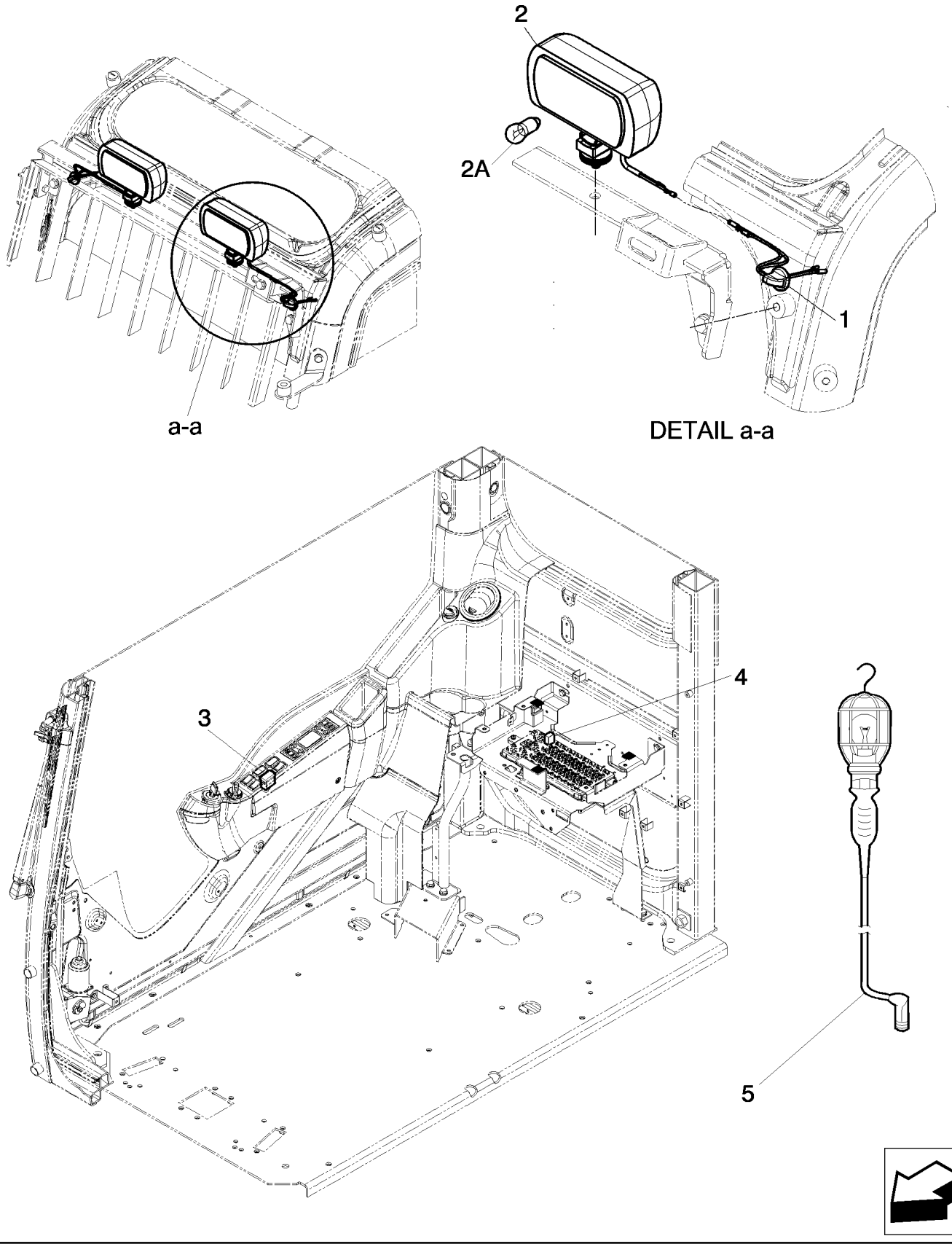

Copyright © New Holland

DEFENSA CABINA Y FAROS PARA CABINA - OPTIONAL CODE 461488008
CAB GUARD AND CAB LIGHTS - OPTIONAL CODE 461488008
CAB GUARD AND CAB LIGHTS - OPTIONAL CODE 461488008
CAB GUARD AND CAB LIGHTS - OPTIONAL CODE 461488008

R	N	P.N.	MOD	Q	Description Denominacion	Descrizione Beskrivelse	Bezeichnung Denominação	Description Beschrijving	L.C.
1		LQ80E01019P1		2	WIRE HARNESS GRUPO DE CABLES	CABLAGGIO KABELNET	KABELBAUM CABLAGEM	FAISCEAU ELECTRIQUE KABELBOOM	070I
2		87555081		2	HEADLAMP, - ASSY FARO	FARO HOVEDLAMPE	FRONTSCHEINWERFER FAROL	FEU KOPLAMP	220P
2A		79069460		1	BULB BOMBILLA	LAMPADINA PÆRE	GLÜHLAMPE LÂMPADA	AMPOULE LAMP	030L
3		87559198		1	SWITCH INTERRUPTOR	INTERRUTTORE KONTAKT	SCHALTER INTERRUPTOR	CONTACTEUR SCHAKELAAR	075I
4		87559156		1	RELAY RELÉ	RELÈ RELÆ	RELAIS RELÉ	RELAIS RELAIS	011R
5		71450974		1	BULB BOMBILLA	LAMPADINA PÆRE	GLÜHLAMPE LÂMPADA	AMPOULE LAMP	030L

Copyright © New Holland

5.0209	01	p1	03/10

CAB GUARD - OPTIONAL CODE 781647118
RIPARO CABINA - CODICE VARIANTE 781647118
SCHUTZAB. DES FAHRERHAUSES - OPTIONAL CODE 781647118
PROTECTION CABINE - OPTIONAL CODE 781647118

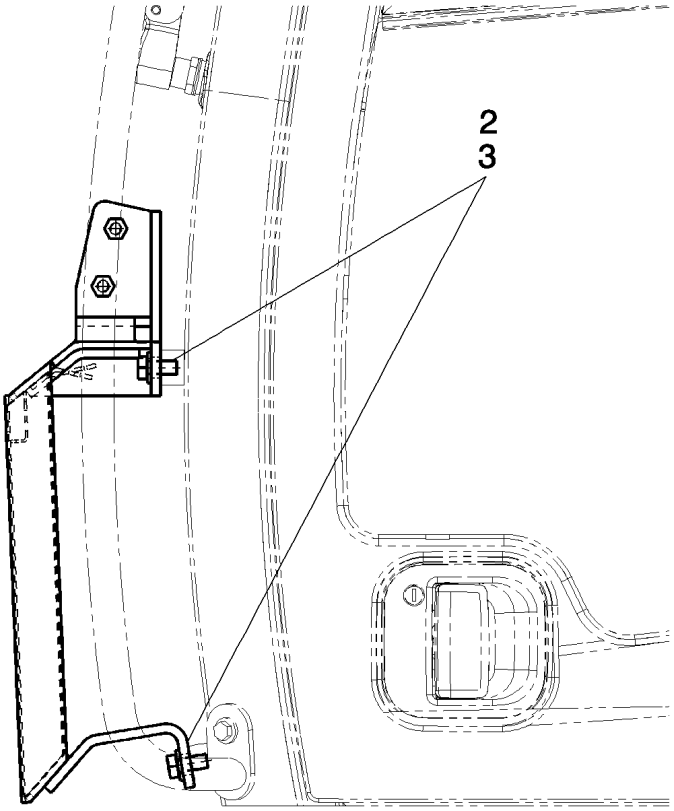

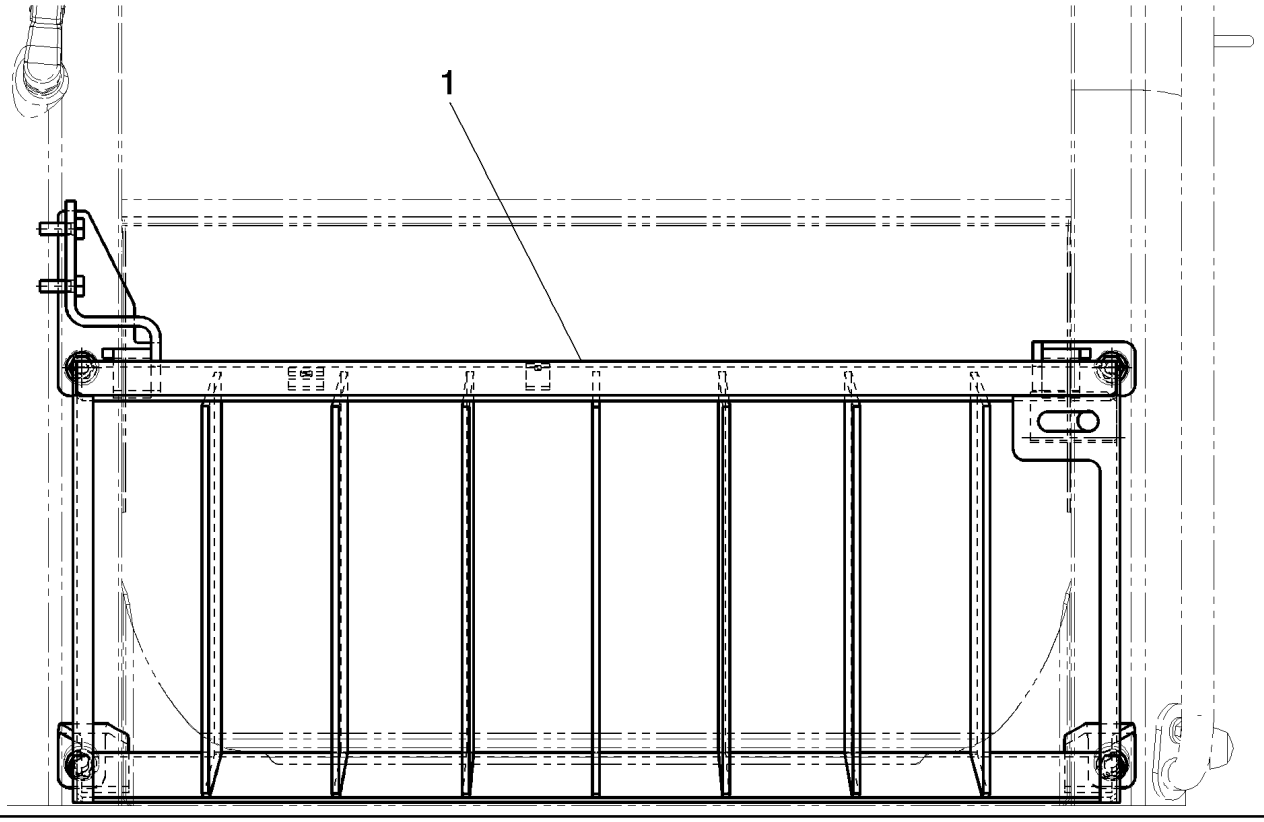

Copyright © New Holland

DEFENSA CABINA - OPTIONAL CODE 781647118
CAB GUARD - OPTIONAL CODE 781647118
CAB GUARD - OPTIONAL CODE 781647118
CAB GUARD - OPTIONAL CODE 781647118

R	N	P.N.	MOD	Q	Description Denominacion	Descrizione Beskrivelse	Bezeichnung Denominação	Description Beschrijving	L.C.
1		LQ02C01299P1		1	GUARD DEFENSA	PROTEZIONE BESKYTTELSESSKÆRM	SCHUTZABDECKUNG PROTECÇÃO	PROTECTION AFSCHERMING	070R
2		11112234		4	BOLT, Hex, M12 x 25, 10.9, Full Thd PERNO	BULLONE BOLT	SCHRAUBE PARAFUSO	VIS BOUT	140B
3		14496731		4	WASHER, M12 x 24 x 2.5 Thk ARANDELA	RONDELLA FLADSKIVE	UNTERLEGSCHEIBE ANILHA	RONDELLE SLUITRING	131R

Copyright © New Holland

5.0209	02	p1	03/10

CAB GUARD - OPTIONAL CODE 781647118
RIPARO CABINA - CODICE VARIANTE 781647118
SCHUTZAB. DES FAHRERHAUSES - OPTIONAL CODE 781647118
PROTECTION CABINE - OPTIONAL CODE 781647118

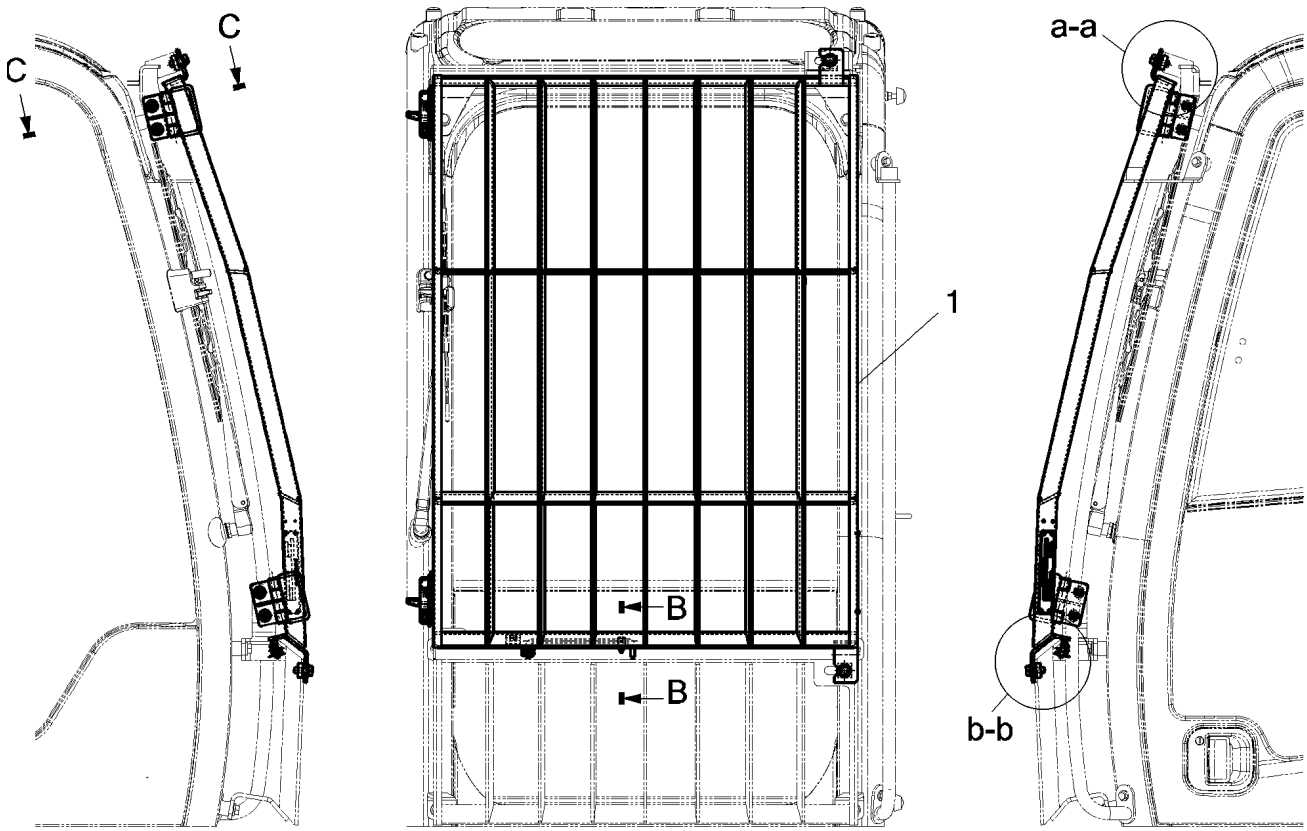

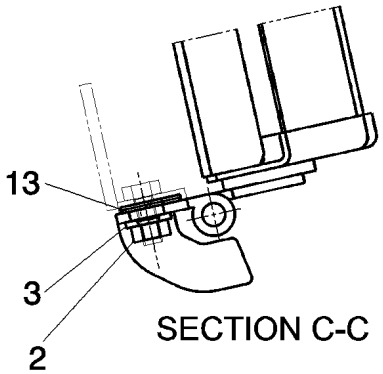

SECTION C-C

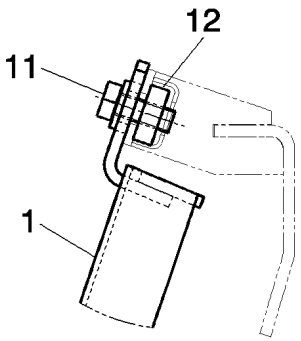

DETAIL a-a

SECTION B-B

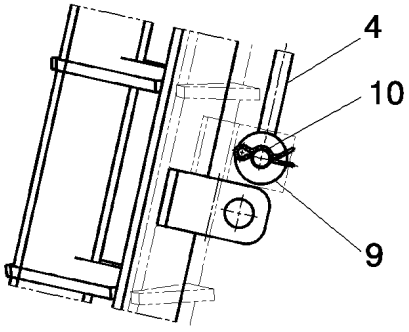

VIEW Y

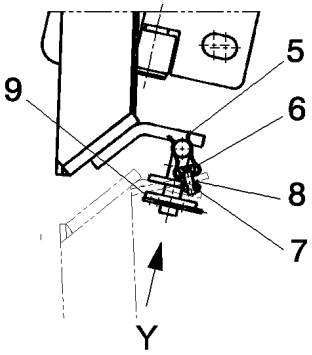

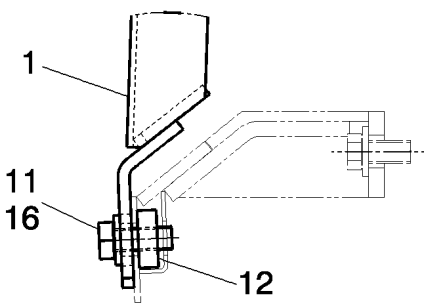

DETAIL b-b

Copyright © New Holland

DEFENSA CABINA - OPTIONAL CODE 781647118
CAB GUARD - OPTIONAL CODE 781647118
CAB GUARD - OPTIONAL CODE 781647118
CAB GUARD - OPTIONAL CODE 781647118

R	N	P.N.	MOD	Q	Description Denominacion	Descrizione Beskrivelse	Bezeichnung Denominação	Description Beschrijving	L.C.
1		LQ02C01300P1		1	GUARD DEFENSA	PROTEZIONE BESKYTTELSESSKÆRM	SCHUTZABDECKUNG PROTECÇÃO	PROTECTION AFSCHERMING	070R
2		11701721		4	NUT, M10, Cl 10 TUERCA	DADO MØTRIK	MUTTER PORCA	ECROU MOER	010D
3		14496631		4	WASHER, M10 x 21 x 2 ARANDELA	RONDELLA FLADSKIVE	UNTERLEGSCHEIBE ANILHA	RONDELLE SLUITRING	131R
4		87606746		1	ROD VARILLA	ASTA STANG	STANGE HASTE	TIGE STANG	090A
5		87606856		1	COLLAR COLLAR	COLLARE SLANGEBÅND	RINGE ANEL	COLLIER KRAAG	031F
6		84163381		1	SCREW TORNILLO	VITE SKRUE	SCHRAUBE PARAFUSO	VIS SCHROEF	040V
7		10721911		1	NUT TUERCA	DADO MØTRIK	MUTTER PORCA	ECROU MOER	010D
8		14497731		1	WASHER ARANDELA	RONDELLA FLADSKIVE	UNTERLEGSCHEIBE ANILHA	RONDELLE SLUITRING	131R
9		72954209		1	WASHER ARANDELA	RONDELLA FLADSKIVE	UNTERLEGSCHEIBE ANILHA	RONDELLE SLUITRING	131R
10		72275189		1	COTTER PIN PASADOR	COPPIGLIA SPLITBOLT	SPLINT TROÇO DE ABRIR	GOUPILLE FENDUE SPLITPEN	270C
11		11112434		2	BOLT, Hex, M12 x 30, 10.9, Full Thd PERNO	BULLONE BOLT	SCHRAUBE PARAFUSO	VIS BOUT	140B
12		87606857		2	PLATE PLACA	PIASTRA PLADE	PLATTE CHAPA	PLAQUE PLAAT	105P
13		87606858		2	SHIM SUPLEMENTO	SPESSORE MELLEMLÆG	AUSGLEICHSSCHEIBE CALÇO DE AFINAÇÃO	CALE VULPLAATJE	198S
16		14496731		2	WASHER, M12 x 24 x 2.5 Thk ARANDELA	RONDELLA FLADSKIVE	UNTERLEGSCHEIBE ANILHA	RONDELLE SLUITRING	131R

Copyright © New Holland

5.0209	03	p1	03/10

CAB GUARD - OPTIONAL CODE 781647118
RIPARO CABINA - CODICE VARIANTE 781647118
SCHUTZAB. DES FAHRERHAUSES - OPTIONAL CODE 781647118
PROTECTION CABINE - OPTIONAL CODE 781647118

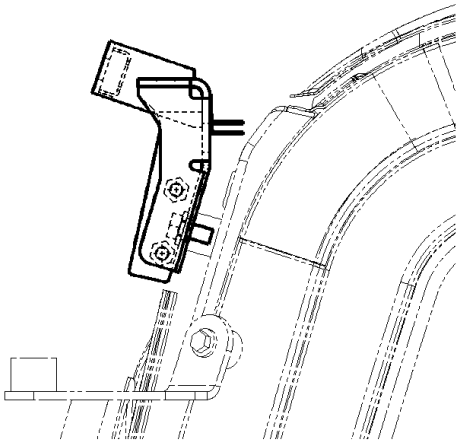

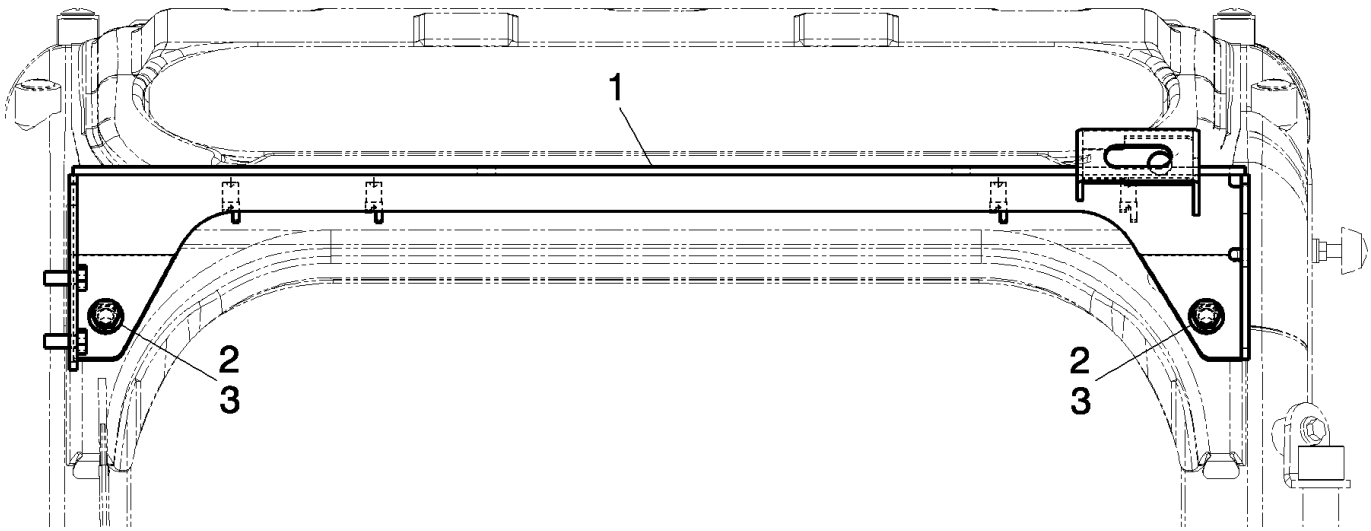

Copyright © New Holland

DEFENSA CABINA - OPTIONAL CODE 781647118
CAB GUARD - OPTIONAL CODE 781647118
CAB GUARD - OPTIONAL CODE 781647118
CAB GUARD - OPTIONAL CODE 781647118

R	N	P.N.	MOD	Q	Description Denominacion	Descrizione Beskrivelse	Bezeichnung Denominação	Description Beschrijving	L.C.
1		LQ02C01289P1		1	SUPPORT SOPORTE	SUPPORTO BESLAG	STÜTZE SUPORTE	SUPPORT STEUN	300S
2		11112234		2	BOLT, Hex, M12 x 25, 10.9, Full Thd PERNO	BULLONE BOLT	SCHRAUBE PARAFUSO	VIS BOUT	140B
3		14496731		2	WASHER, M12 x 24 x 2.5 Thk ARANDELA	RONDELLA FLADSKIVE	UNTERLEGSCHEIBE ANILHA	RONDELLE SLUITRING	131R

Copyright © New Holland

5.0530	01	p1	03/10

DIPPER STICK (L=2.08M) - OPTIONAL CODE 781491058
BRACCIO PENETRAZIONE (L=2.08M) - CODICE VARIANTE 781491058
LOEFFELSTIEL (L=2.08M) - OPTIONAL CODE 781491058
BILANCIER (L=2.08M) - OPTIONAL CODE 781491058

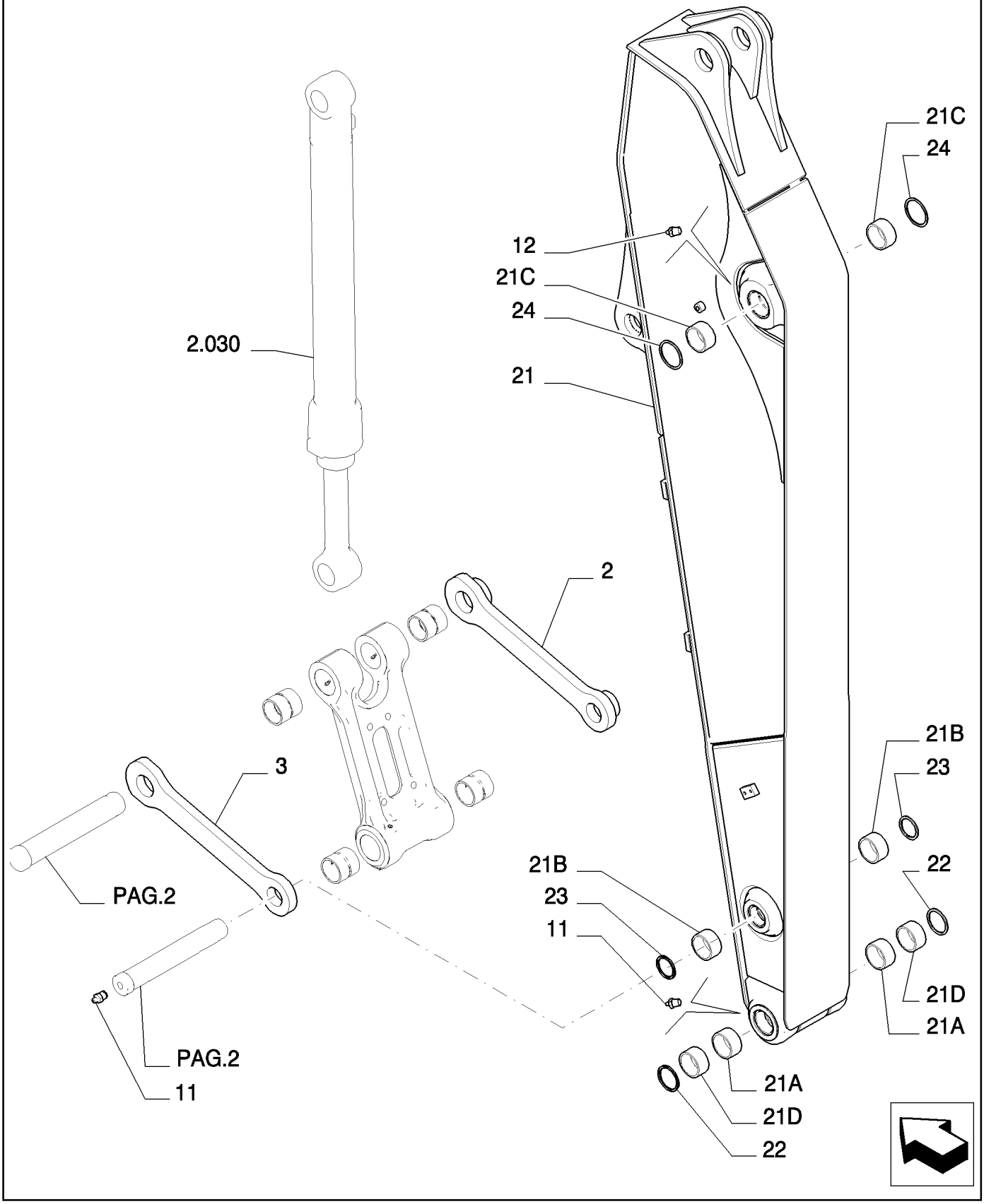

Copyright © New Holland

BRAZO TERMINAL (L=2.08M) - OPTIONAL CODE 781491058
DIPPER STICK (L=2.08M) - OPTIONAL CODE 781491058
DIPPER STICK (L=2.08M) - OPTIONAL CODE 781491058
DIPPER STICK (L=2.08M) - OPTIONAL CODE 781491058

R	N	P.N.	MOD	Q	Description Denominacion	Descrizione Beskrivelse	Bezeichnung Denominação	Description Beschrijving	L.C.
2		72202183		1	LINK CONROD BIELA DE ESLABÓN	BIELLA TIRANTE PLEJLSTANG	PLEUEL BIELA	BIELLE DRIJFSTANG	050B
3		72202178		1	LINK CONROD BIELA DE ESLABÓN	BIELLA TIRANTE PLEJLSTANG	PLEUEL BIELA	BIELLE DRIJFSTANG	050B
11		72283478		2	LUBE NIPPLE BOQUILLA DE LUBRICA(	INGRASSATORE SMØRENIPPEL	SCHMIERNIPPEL COPO DE LUBRIFICAÇÃ	GRAISSEUR SMEERNIPPEL	060I
12		71433287		1	LUBE NIPPLE BOQUILLA DE LUBRICA(	INGRASSATORE SMØRENIPPEL	SCHMIERNIPPEL COPO DE LUBRIFICAÇÃ	GRAISSEUR SMEERNIPPEL	060I
21		87354943		1	ARM, - ASSY BRAZO	BRACCIO ARM	ARM BRAÇO	BRAS ARM	130B
21A		87533342		2	BUSHING CASQUILLO	BOCCOLA BØSNING	BUCHSE CASQUILHO	BAGUE BUS	095B
21B		87525505		2	BUSHING CASQUILLO	BOCCOLA BØSNING	BUCHSE CASQUILHO	BAGUE BUS	095B
21C		87533338		2	BUSHING CASQUILLO	BOCCOLA BØSNING	BUCHSE CASQUILHO	BAGUE BUS	095B
21D		87533336		2	BUSHING CASQUILLO	BOCCOLA BØSNING	BUCHSE CASQUILHO	BAGUE BUS	095B
22		71415158		2	GASKET JUNTA	GUARNIZIONE PAKNING	DICHTUNG JUNTA	JOINT PAKKING	123G
23		72202212		2	SEAL ANILLO DE CIERRE	GUARNIZIONE; TENUTA PAKNING	DICHTUNG VEDANTE	JOINT AFDICHTING	132A
24		87531507		2	GASKET JUNTA	GUARNIZIONE PAKNING	DICHTUNG JUNTA	JOINT PAKKING	123G

Copyright © New Holland

5.0530	02	p1	03/10

DIPPER STICK (L=2.08M) - OPTIONAL CODE 781491058
BRACCIO PENETRAZIONE (L=2.08M) - CODICE VARIANTE 781491058
LOEFFELSTIEL (L=2.08M) - OPTIONAL CODE 781491058
BILANCIER (L=2.08M) - OPTIONAL CODE 781491058

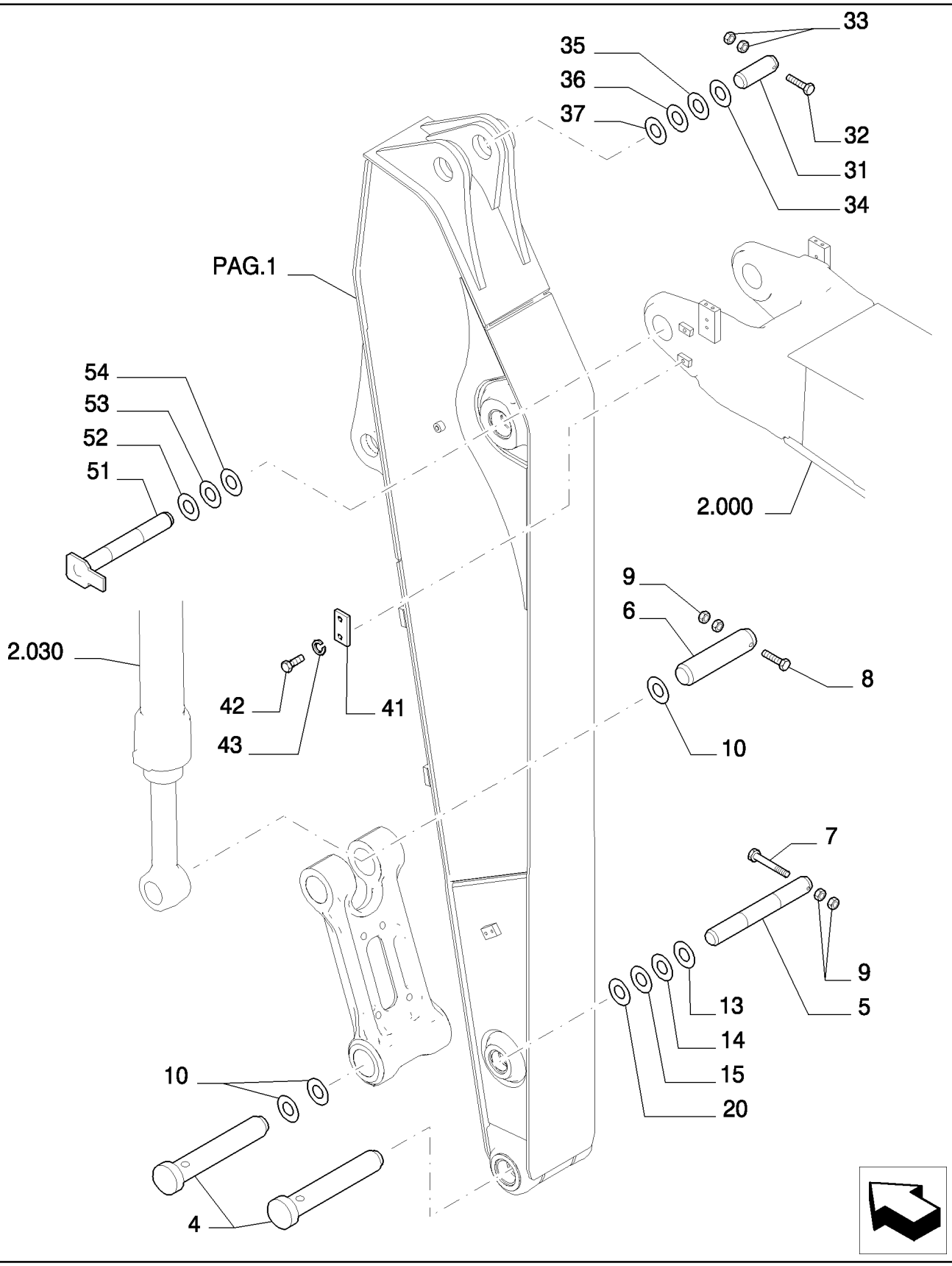

Copyright © New Holland

BRAZO TERMINAL (L=2.08M) - OPTIONAL CODE 781491058
DIPPER STICK (L=2.08M) - OPTIONAL CODE 781491058
DIPPER STICK (L=2.08M) - OPTIONAL CODE 781491058
DIPPER STICK (L=2.08M) - OPTIONAL CODE 781491058

R	N	P.N.	MOD	Q	Description Denominacion	Descrizione Beskrivelse	Bezeichnung Denominação	Description Beschrijving	L.C.
4		87536913		2	PIN PASADOR	PERNO STIFT	PIN PERNO	BROCHE PEN	080P
5		87349050		1	PIN PASADOR	PERNO STIFT	PIN PERNO	BROCHE PEN	080P
6		87349048		1	PIN PASADOR	PERNO STIFT	PIN PERNO	BROCHE PEN	080P
7		11120531		1	BOLT, Hex, M16 x 130, 10.9 PERNO	BULLONE BOLT	SCHRAUBE PARAFUSO	VIS BOUT	140B
8		11120734		1	SCREW TORNILLO	VITE SKRUE	SCHRAUBE PARAFUSO	VIS SCHROEF	040V
9		12163321		4	NUT, M16, Cl 10 TUERCA	DADO MØTRIK	MUTTER PORCA	ECROU MOER	010D
10		71415158		6	GASKET JUNTA	GUARNIZIONE PAKNING	DICHTUNG JUNTA	JOINT PAKKING	123G
13		72202194		1	SHIM, 0.5mm Thk, (M72 ID x 130) SUPLEMENTO	SPESSORE MELLEMLÆG	AUSGLEICHSSCHEIBE CALÇO DE AFINAÇÃO	CALE VULPLAATJE	198S
14		72202195		1	SHIM, 0.9mm Thk, (M72 ID x 130) SUPLEMENTO	SPESSORE MELLEMLÆG	AUSGLEICHSSCHEIBE CALÇO DE AFINAÇÃO	CALE VULPLAATJE	198S
15		72202197		1	SHIM, 1.6mm Thk SUPLEMENTO	SPESSORE MELLEMLÆG	AUSGLEICHSSCHEIBE CALÇO DE AFINAÇÃO	CALE VULPLAATJE	198S
16		72202198		2	SHIM, 0.5mm Thk SUPLEMENTO	SPESSORE MELLEMLÆG	AUSGLEICHSSCHEIBE CALÇO DE AFINAÇÃO	CALE VULPLAATJE	198S
17		72202199		2	SHIM, 0.9mm Thk SUPLEMENTO	SPESSORE MELLEMLÆG	AUSGLEICHSSCHEIBE CALÇO DE AFINAÇÃO	CALE VULPLAATJE	198S
18		72202200		2	SHIM, 1.6mm Thk SUPLEMENTO	SPESSORE MELLEMLÆG	AUSGLEICHSSCHEIBE CALÇO DE AFINAÇÃO	CALE VULPLAATJE	198S
19		72202203		4	SHIM, 2mm Thk SUPLEMENTO	SPESSORE MELLEMLÆG	AUSGLEICHSSCHEIBE CALÇO DE AFINAÇÃO	CALE VULPLAATJE	198S
20		72202204		2	SHIM, 2mm Thk, (M72 ID x 130) SUPLEMENTO	SPESSORE MELLEMLÆG	AUSGLEICHSSCHEIBE CALÇO DE AFINAÇÃO	CALE VULPLAATJE	198S
31		87533375		1	PIN PASADOR	PERNO STIFT	PIN PERNO	BROCHE PEN	080P
32		11120931		1	SCREW TORNILLO	VITE SKRUE	SCHRAUBE PARAFUSO	VIS SCHROEF	040V
33		12163321		2	NUT, M16, Cl 10 TUERCA	DADO MØTRIK	MUTTER PORCA	ECROU MOER	010D
34		72202218		2	SHIM, 2mm Thk SUPLEMENTO	SPESSORE MELLEMLÆG	AUSGLEICHSSCHEIBE CALÇO DE AFINAÇÃO	CALE VULPLAATJE	198S
35		72203147		1	SHIM, 0.5mm Thk SUPLEMENTO	SPESSORE MELLEMLÆG	AUSGLEICHSSCHEIBE CALÇO DE AFINAÇÃO	CALE VULPLAATJE	198S
36		72203153		1	SHIM, 0.9mm Thk SUPLEMENTO	SPESSORE MELLEMLÆG	AUSGLEICHSSCHEIBE CALÇO DE AFINAÇÃO	CALE VULPLAATJE	198S
37		72203154		1	SHIM, 1.6mm Thk SUPLEMENTO	SPESSORE MELLEMLÆG	AUSGLEICHSSCHEIBE CALÇO DE AFINAÇÃO	CALE VULPLAATJE	198S
41		87536886		1	PLATE PLACA	PIASTRA PLADE	PLATTE CHAPA	PLAQUE PLAAT	105P
42		16249031		2	SCREW TORNILLO	VITE SKRUE	SCHRAUBE PARAFUSO	VIS SCHROEF	040V

Copyright © New Holland

5.0530	02	p2	03/10

DIPPER STICK (L=2.08M) - OPTIONAL CODE 781491058
BRACCIO PENETRAZIONE (L=2.08M) - CODICE VARIANTE 781491058
LOEFFELSTIEL (L=2.08M) - OPTIONAL CODE 781491058
BILANCIER (L=2.08M) - OPTIONAL CODE 781491058

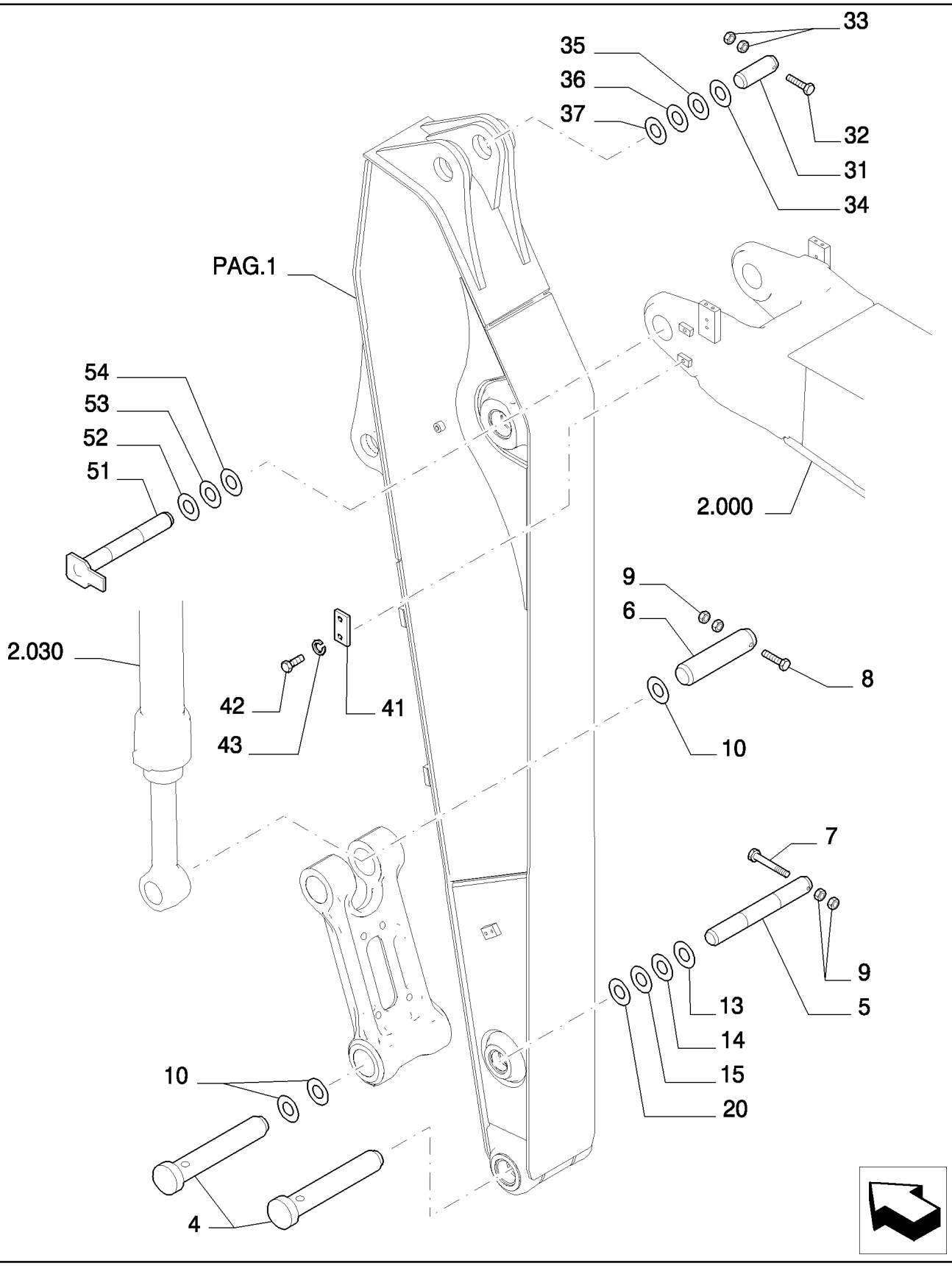

Copyright © New Holland

BRAZO TERMINAL (L=2.08M) - OPTIONAL CODE 781491058
DIPPER STICK (L=2.08M) - OPTIONAL CODE 781491058
DIPPER STICK (L=2.08M) - OPTIONAL CODE 781491058
DIPPER STICK (L=2.08M) - OPTIONAL CODE 781491058

R	N	P.N.	MOD	Q	Description Denominacion	Descrizione Beskrivelse	Bezeichnung Denominação	Description Beschrijving	L.C.
43		10520121		2	WASHER ARANDELA	RONDELLA FLADSKIVE	UNTERLEGSCHEIBE ANILHA	RONDELLE SLUITRING	131R
51		87536903		1	PIN PASADOR	PERNO STIFT	PIN PERNO	BROCHE PEN	080P
52		72203145		2	SHIM, 2mm Thk SUPLEMENTO	SPESSORE MELLEMLÆG	AUSGLEICHSSCHEIBE CALÇO DE AFINAÇÃO	CALE VULPLAATJE	198S
53		72203140		1	SHIM, 0.5mm Thk SUPLEMENTO	SPESSORE MELLEMLÆG	AUSGLEICHSSCHEIBE CALÇO DE AFINAÇÃO	CALE VULPLAATJE	198S
54		72203141		1	SHIM, 0.9mm Thk SUPLEMENTO	SPESSORE MELLEMLÆG	AUSGLEICHSSCHEIBE CALÇO DE AFINAÇÃO	CALE VULPLAATJE	198S

Copyright © New Holland

5.0530	03	p1	03/10

DIPPER STICK (L=2.08M) - OPTIONAL CODE 781491058
BRACCIO PENETRAZIONE (L=2.08M) - CODICE VARIANTE 781491058
LOEFFELSTIEL (L=2.08M) - OPTIONAL CODE 781491058
BILANCIER (L=2.08M) - OPTIONAL CODE 781491058

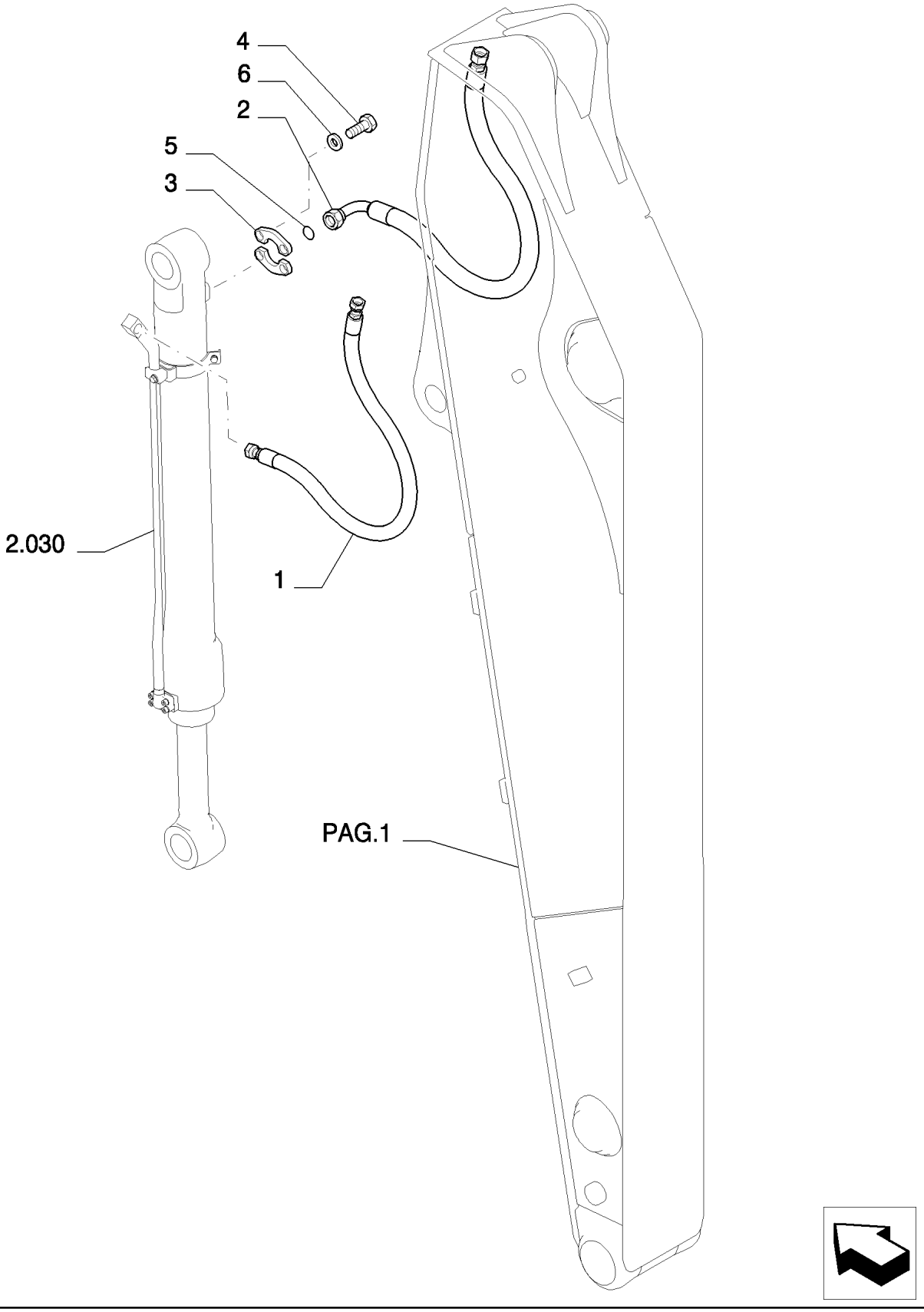

Copyright © New Holland

BRAZO TERMINAL (L=2.08M) - OPTIONAL CODE 781491058
DIPPER STICK (L=2.08M) - OPTIONAL CODE 781491058
DIPPER STICK (L=2.08M) - OPTIONAL CODE 781491058
DIPPER STICK (L=2.08M) - OPTIONAL CODE 781491058

R	N	P.N.	MOD	Q	Description Denominacion	Descrizione Beskrivelse	Bezeichnung Denominação	Description Beschrijving	L.C.
1		87558145		1	FLEXIBLE HOSE TUBO FLEXIBLE	TUBO FLESSIBILE FLEKSIBEL SLANGE	BIEGSAMER SCHLAUCH MANGUEIRA FLEXÍVEL	TUYAU FLEXIBLE FLEXIBELE SLANG	192T
2		87533392		1	FLEXIBLE HOSE TUBO FLEXIBLE	TUBO FLESSIBILE FLEKSIBEL SLANGE	BIEGSAMER SCHLAUCH MANGUEIRA FLEXÍVEL	TUYAU FLEXIBLE FLEXIBELE SLANG	192T
3		71404313		2	HALF-FLANGE SEMIBRIDA	SEMIFLANGIA FLANGEHALVDEL	FLANSCHHÄLFTE MEIA FLANGE	DEMI-BRIDE FLENSHELFT	417S
4		14422234		4	SCREW TORNILLO	VITE SKRUE	SCHRAUBE PARAFUSO	VIS SCHROEF	040V
5		70924200		1	O-RING JUNTA TÓRICA	ANELLO TOROIDALE O-RING	O-RING O-RING	JOINT TORIQUE O-RING	055A
6		10517074		4	LOCK WASHER ARANDELA DE BLOQUE	RONDELLA DI SICUREZ LÅSESKIVE	SICHERUNGSSCHEIBE ANILHA DE RETENÇÃO	RONDELLE FREIN BORGRING	132R

Copyright © New Holland

5.0530	04	p1	03/10

DIPPER STICK (L=2.08M) - OPTIONAL CODE 781491058
BRACCIO PENETRAZIONE (L=2.08M) - CODICE VARIANTE 781491058
LOEFFELSTIEL (L=2.08M) - OPTIONAL CODE 781491058
BILANCIER (L=2.08M) - OPTIONAL CODE 781491058

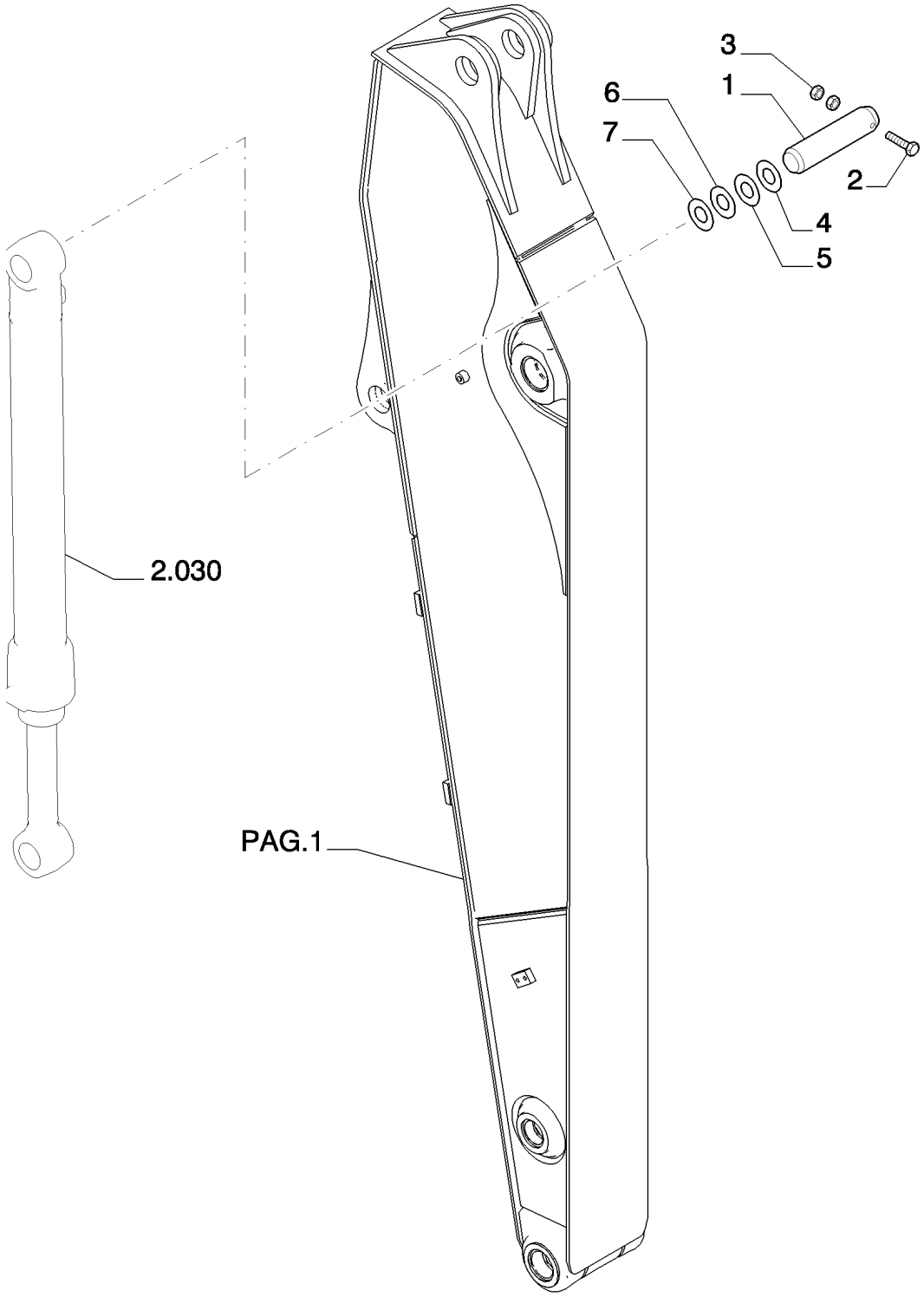

Copyright © New Holland

BRAZO TERMINAL (L=2.08M) - OPTIONAL CODE 781491058
DIPPER STICK (L=2.08M) - OPTIONAL CODE 781491058
DIPPER STICK (L=2.08M) - OPTIONAL CODE 781491058
DIPPER STICK (L=2.08M) - OPTIONAL CODE 781491058

R	N	P.N.	MOD	Q	Description Denominacion	Descrizione Beskrivelse	Bezeichnung Denominação	Description Beschrijving	L.C.
1		87533371		1	PIN PASADOR	PERNO STIFT	PIN PERNO	BROCHE PEN	080P
2		11120734		1	SCREW TORNILLO	VITE SKRUE	SCHRAUBE PARAFUSO	VIS SCHROEF	040V
3		12163321		2	NUT, M16, Cl 10 TUERCA	DADO MØTRIK	MUTTER PORCA	ECROU MOER	010D
4		72202203		2	SHIM, 2mm Thk SUPLEMENTO	SPESSORE MELLEMLÆG	AUSGLEICHSSCHEIBE CALÇO DE AFINAÇÃO	CALE VULPLAATJE	198S
5		72202198		5	SHIM, 0.5mm Thk SUPLEMENTO	SPESSORE MELLEMLÆG	AUSGLEICHSSCHEIBE CALÇO DE AFINAÇÃO	CALE VULPLAATJE	198S
6		72202199		1	SHIM, 0.9mm Thk SUPLEMENTO	SPESSORE MELLEMLÆG	AUSGLEICHSSCHEIBE CALÇO DE AFINAÇÃO	CALE VULPLAATJE	198S
7		72202200		1	SHIM, 1.6mm Thk SUPLEMENTO	SPESSORE MELLEMLÆG	AUSGLEICHSSCHEIBE CALÇO DE AFINAÇÃO	CALE VULPLAATJE	198S

Copyright © New Holland

5.0580	01	p1	03/10

SUN CANOPY AND CAB LIGHTS - OPTIONAL CODE 461221018
TETTUCCIO PARASOLE E PROIETTORI PER CABINA - CODICE VARIANTE 461221018
SONNENBLENDE UND KABINENSCHEINWERFER - OPTIONAL CODE 461221018
TOIT PARE-SOLEIL ET PROJECTOURS POUR CABINE - OPTIONAL CODE 461221018

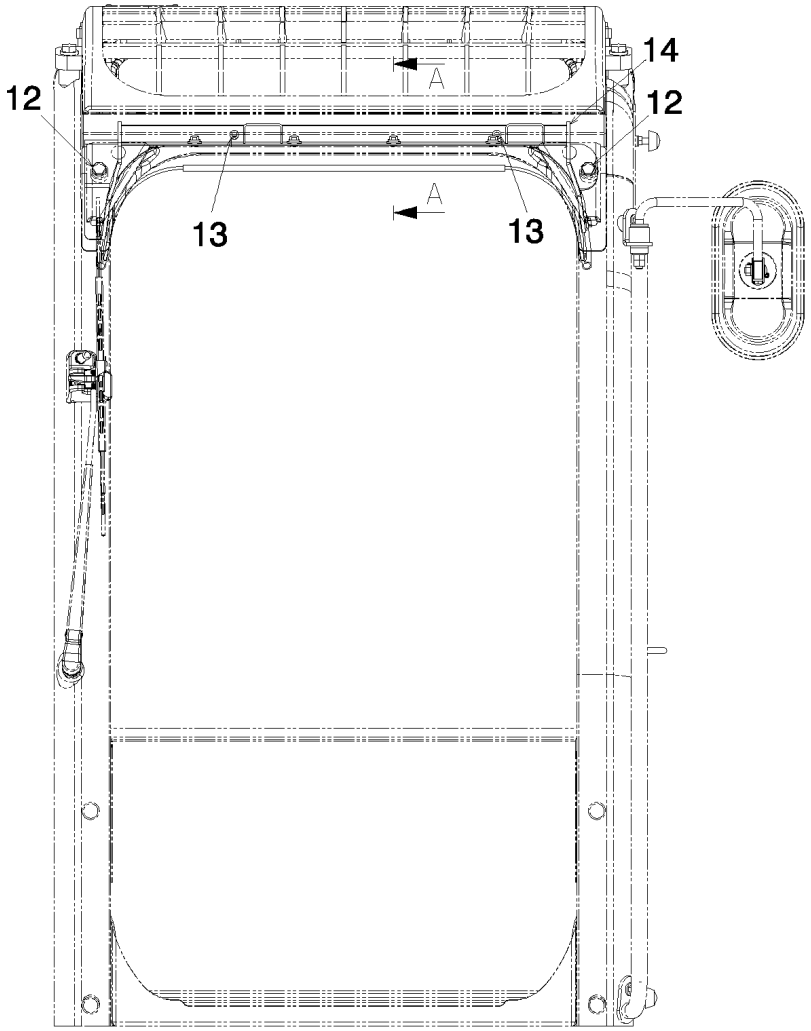

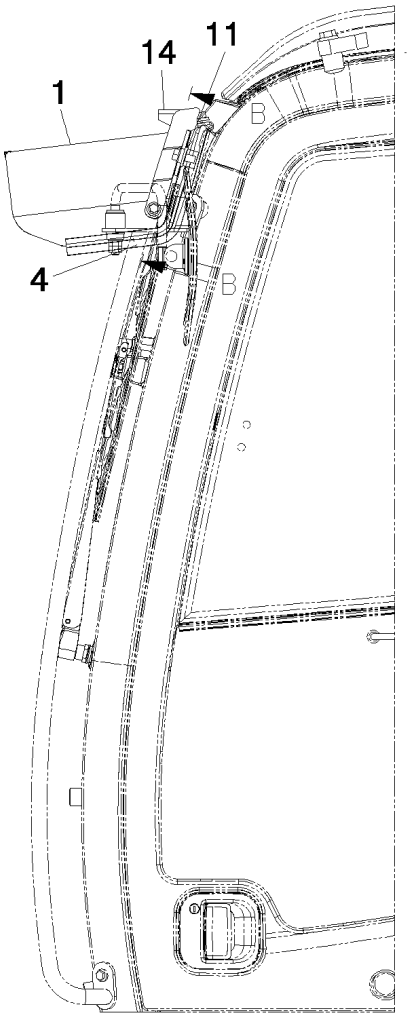

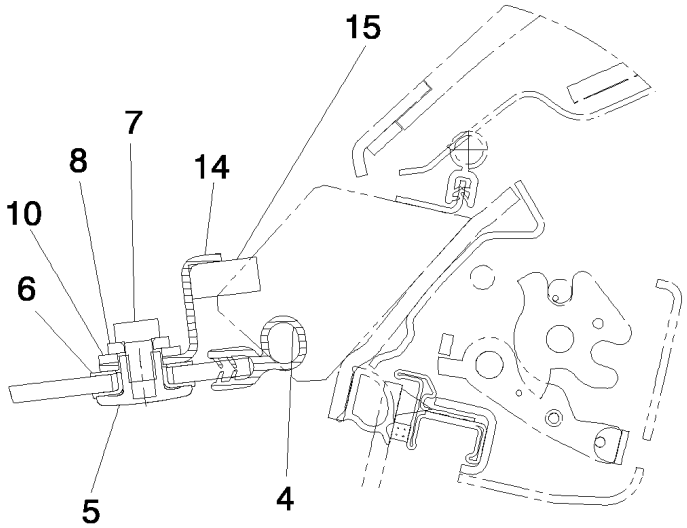

SECTION AA

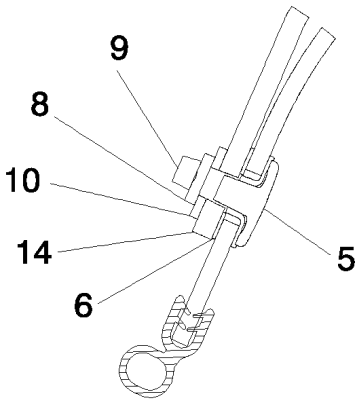

SECTION BB

Copyright © New Holland

TOLDO PARASOL Y FAROS PARA CABINA - OPTIONAL CODE 461221018
SUN CANOPY AND CAB LIGHTS - OPTIONAL CODE 461221018
SUN CANOPY AND CAB LIGHTS - OPTIONAL CODE 461221018
SUN CANOPY AND CAB LIGHTS - OPTIONAL CODE 461221018

R	N	P.N.	MOD	Q	Description Denominacion	Descrizione Beskrivelse	Bezeichnung Denominação	Description Beschrijving	L.C.
1		LQ55C01002F1		1	COVER CUBIERTA	COPERCHIO DÆKSEL	ABDECKUNG COBERTURA	COUVERCLE AFSCHERMING	265C
4		LQ55C01027P1		1	WEATHERSTRIP BANDA CLIMÁTICA	GUARNIZIONE TÆTNINGSLISTE	DICHTSTREIFEN BORRACHA DE PÁRA-BI	BOURRELET D'ETANCH AFDICHTSTRIP	105B
5		72209106		6	RETAINER RETENEDOR	FERMO HOLDER	HALTERUNG RETENTOR	DISPOSITIF DE RETENU HOUDER	109R
6		84151536		6	WASHER ARANDELA	RONDELLA FLADSKIVE	UNTERLEGSCHEIBE ANILHA	RONDELLE SLUITRING	131R
7		16043034		4	SCREW TORNILLO	VITE SKRUE	SCHRAUBE PARAFUSO	VIS SCHROEF	040V
8		12654401		6	WASHER, M8 x 17 x 3 ARANDELA	RONDELLA FLADSKIVE	UNTERLEGSCHEIBE ANILHA	RONDELLE SLUITRING	131R
9		16043234		2	BOLT, Hex, M8 x 16, 10.9, Full Thd PERNO	BULLONE BOLT	SCHRAUBE PARAFUSO	VIS BOUT	140B
10		14496731		8	WASHER, M12 x 24 x 2.5 Thk ARANDELA	RONDELLA FLADSKIVE	UNTERLEGSCHEIBE ANILHA	RONDELLE SLUITRING	131R
11		LQ55C01013P1		2	SPACER SEPARADOR	DISTANZIALE AFSTANDSSTYKKE	DISTANZSTÜCK ESPAÇADOR	ENTRETOISE AFSTANDSSTUK	075D
12		11112434		2	BOLT, Hex, M12 x 30, 10.9, Full Thd PERNO	BULLONE BOLT	SCHRAUBE PARAFUSO	VIS BOUT	140B
13		2420R372D7		2	GROMMET PASACABLES	ANELLO PASSACAVO RING	TÜLLE PASSA-FIOS	PASSE-FIL DOORVOERTULE	131A
14		LC55C01001P1		1	BRACKET SOPORTE	STAFFA BESLAG	HALTERUNG SUPORTE	SUPPORT STEUN	225S
15		LC55C01004P1		1	INSULATOR AISLADOR	ISOLATORE ISOLATOR	ISOLATOR ISOLADOR	ISOLANT ISOLATIE	085I

Copyright © New Holland

5.0580	02	p1	03/10

SUN CANOPY AND CAB LIGHTS - OPTIONAL CODE 461221018
TETTUCCIO PARASOLE E PROIETTORI PER CABINA- CODICE VARIANTE 461221018
SONNENBLENDE UND KABINENSCHEINWERFER - OPTIONAL CODE 461221018
TOIT PARE-SOLEIL ET PROJECTOURS POUR CABINE - OPTIONAL CODE 461221018

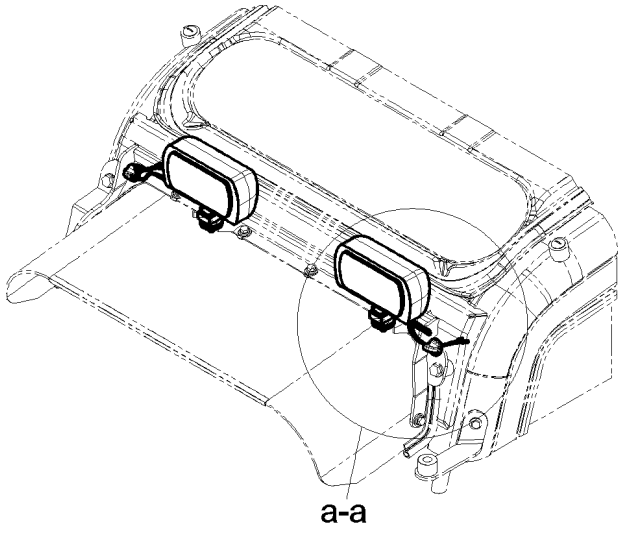

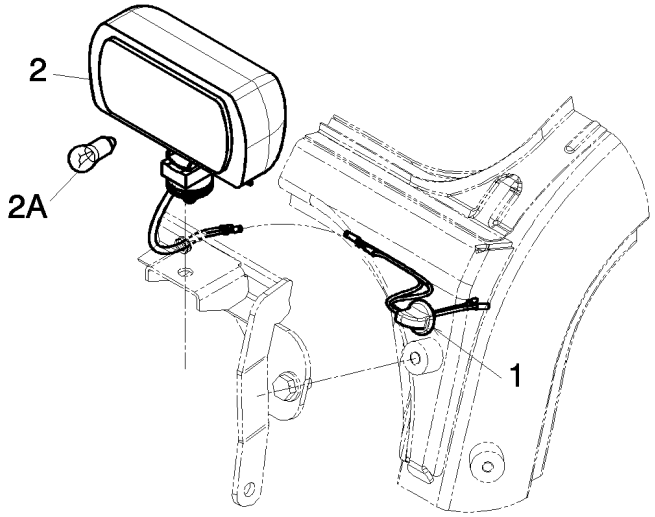

DETAIL a-a

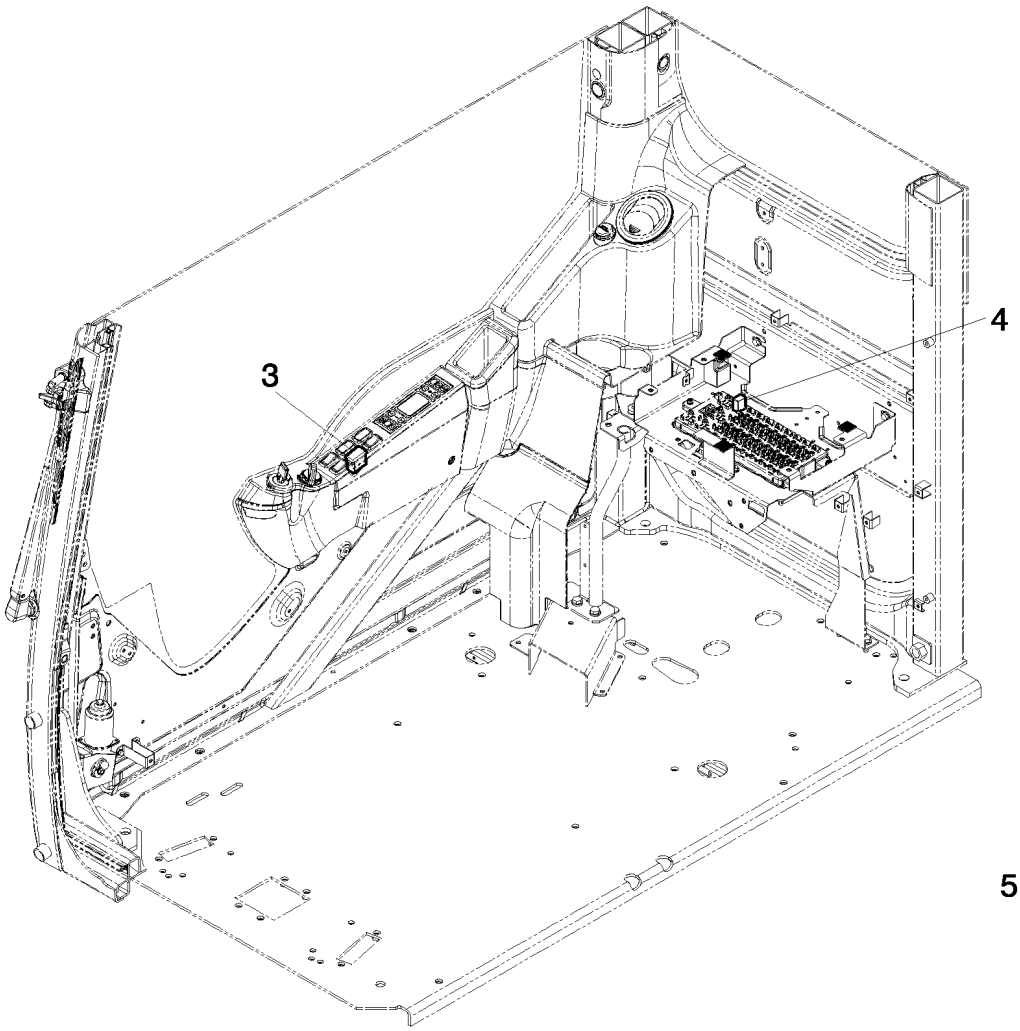

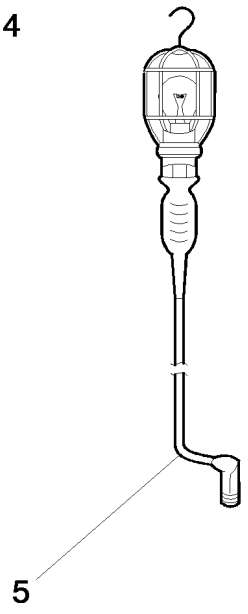

Copyright © New Holland

TOLDO PARASOL Y FAROS PARA CABINA - OPTIONAL CODE 461221018
SUN CANOPY AND CAB LIGHTS - OPTIONAL CODE 461221018
SUN CANOPY AND CAB LIGHTS - OPTIONAL CODE 461221018
SUN CANOPY AND CAB LIGHTS - OPTIONAL CODE 461221018

R	N	P.N.	MOD	Q	Description Denominacion	Descrizione Beskrivelse	Bezeichnung Denominação	Description Beschrijving	L.C.
1		LQ80E01019P1		2	WIRE HARNESS GRUPO DE CABLES	CABLAGGIO KABELNET	KABELBAUM CABLAGEM	FAISCEAU ELECTRIQUE KABELBOOM	070I
2		87555081		2	HEADLAMP, - ASSY FARO	FARO HOVEDLAMPE	FRONTSCHEINWERFER FAROL	FEU KOPLAMP	220P
2A		79069460		1	BULB BOMBILLA	LAMPADINA PÆRE	GLÜHLAMPE LÂMPADA	AMPOULE LAMP	030L
3		87559198		1	SWITCH INTERRUPTOR	INTERRUTTORE KONTAKT	SCHALTER INTERRUPTOR	CONTACTEUR SCHAKELAAR	075I
4		87559156		1	RELAY RELÉ	RELÈ RELÆ	RELAIS RELÉ	RELAIS RELAIS	011R
5		71450974		1	BULB BOMBILLA	LAMPADINA PÆRE	GLÜHLAMPE LÂMPADA	AMPOULE LAMP	030L

Copyright © New Holland

5.0585	01	p1	03/10

BEACON ASSY, ROTATING - OPTIONAL CODE 781427028
LAMPADE ROTANTI - CODICE VARIANTE 781427028
RUNDUMLEUCHTE, KPL - OPTIONAL CODE 781427028
GYROPHARE - OPTIONAL CODE 781427028

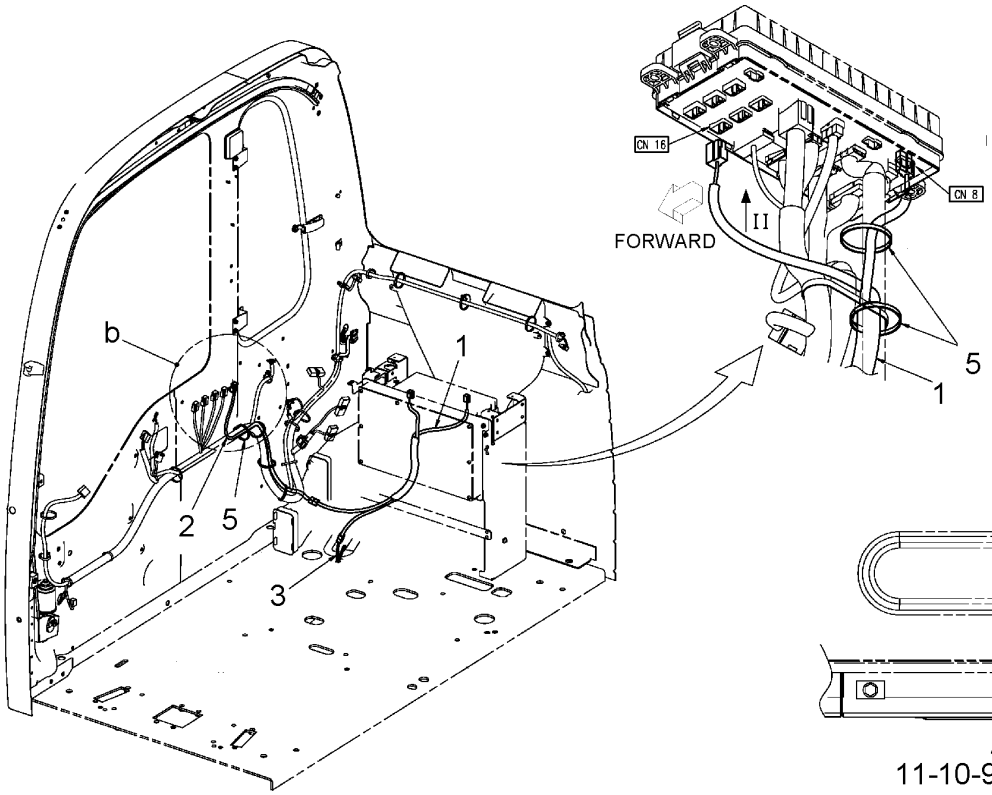

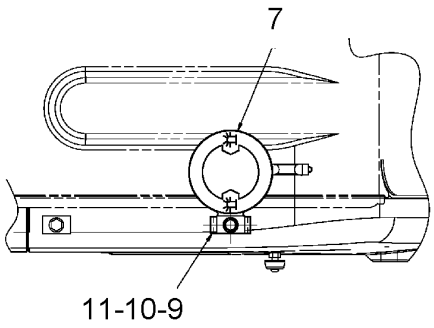

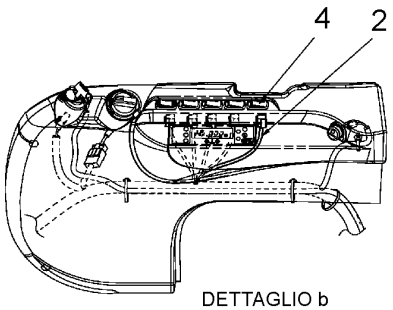

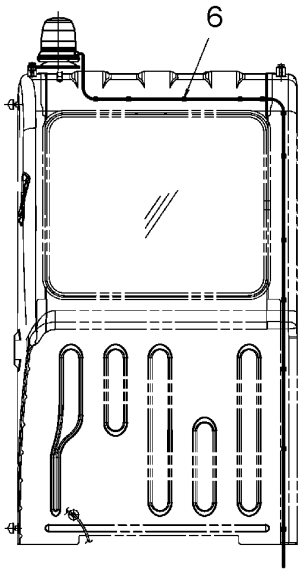

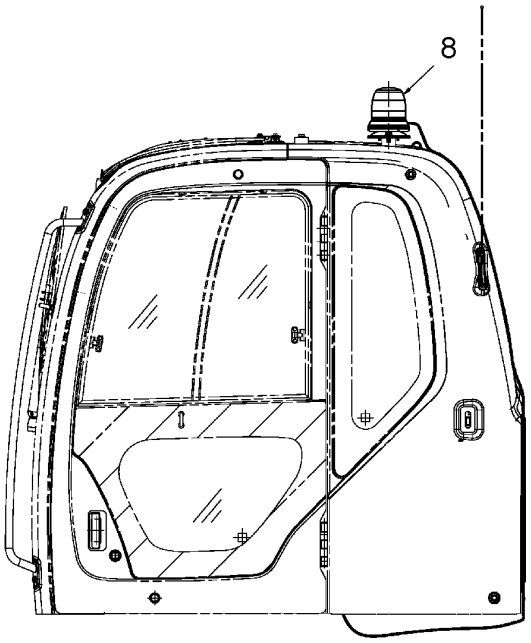

Copyright © New Holland

CONJUNTO DEL FARO, ROTATORIO - OPTIONAL CODE 781427028
BEACON ASSY, ROTATING - OPTIONAL CODE 781427028
BEACON ASSY, ROTATING - OPTIONAL CODE 781427028
BEACON ASSY, ROTATING - OPTIONAL CODE 781427028

R	N	P.N.	MOD	Q	Description Denominacion	Descrizione Beskrivelse	Bezeichnung Denominação	Description Beschrijving	L.C.
1		84175003		1	CABLE CABLE	CAVO KABEL	KABEL CABO	CABLE KABEL	650C
2		84175005		1	CABLE CABLE	CAVO KABEL	KABEL CABO	CABLE KABEL	650C
3		84175009		1	CABLE CABLE	CAVO KABEL	KABEL CABO	CABLE KABEL	650C
4		84164716		1	SWITCH INTERRUPTOR	INTERRUTTORE KONTAKT	SCHALTER INTERRUPTOR	CONTACTEUR SCHAKELAAR	075I
5		72951499		8	CLIP ABRAZADERA	FERMO KLIPS	KLAMMER FIXADOR	COLLIER KLEM	045F
6		71451259		10	RETAINER COLLAR COLLAR DE RETENCIÓN	COLLARE DI FISSAGGIC RING, SPÆNDE	HALTERING ANEL DE FIXAÇÃO	COLLIER DE RETENUE BORGKRAAG	230S
7		84175610		2	DECAL CALCOMANÍA	DECALCOMANIA TRANSFER	AUFKLEBER DÍSTICO	AUTOCOLLANT STICKER	012D
8		71449470		1	BEACON BALIZA	GIROFARO ROTERENDE ADVARSEI	RUNDUMLEUCHTE FAROL ROTATIVO	GYROPHARE ZWAAILICHT	080L
9		84177031		1	BRACKET SOPORTE	STAFFA BESLAG	HALTERUNG SUPORTE	SUPPORT STEUN	225S
10		11112234		1	BOLT, Hex, M12 x 25, 10.9, Full Thd PERNO	BULLONE BOLT	SCHRAUBE PARAFUSO	VIS BOUT	140B
11		14496731		1	WASHER, M12 x 24 x 2.5 Thk ARANDELA	RONDELLA FLADSKIVE	UNTERLEGSCHEIBE ANILHA	RONDELLE SLUITRING	131R

Copyright © New Holland

5.0585	02	p1	03/10

BEACON ASSY, ROTATING - OPTIONAL CODE 781427028
LAMPADE ROTANTI - CODICE VARIANTE 781427028
RUNDUMLEUCHTE, KPL - OPTIONAL CODE 781427028
GYROPHARE - OPTIONAL CODE 781427028

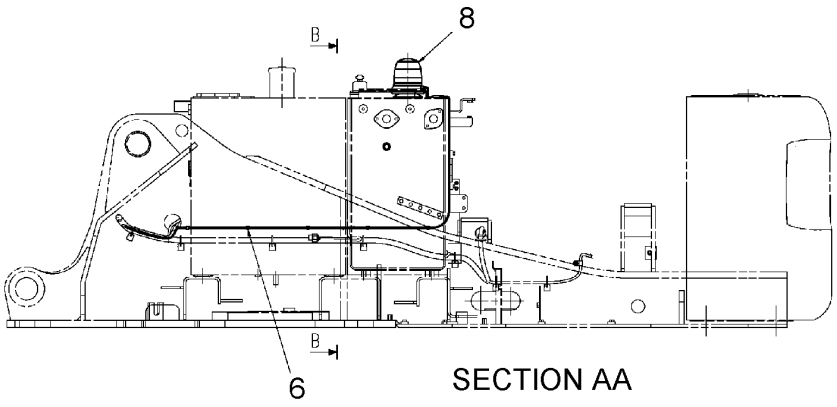

SECTION AA

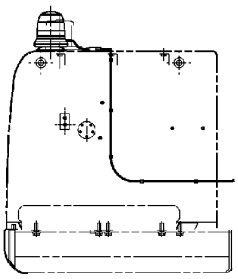

SECTION BB

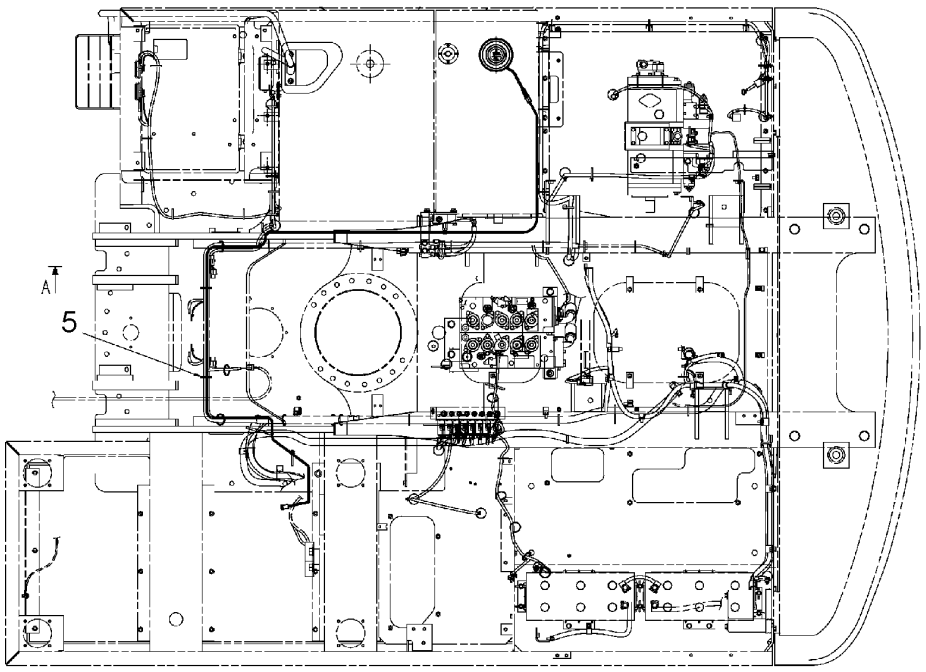

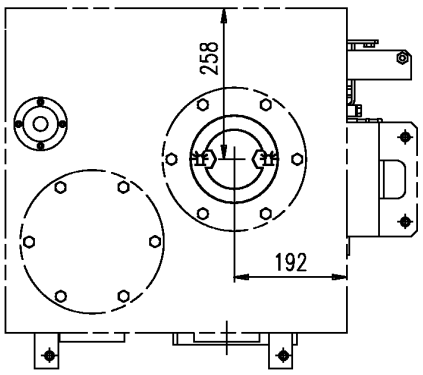

NH128

Copyright © New Holland

CONJUNTO DEL FARO, ROTATORIO - OPTIONAL CODE 781427028
BEACON ASSY, ROTATING - OPTIONAL CODE 781427028
BEACON ASSY, ROTATING - OPTIONAL CODE 781427028
BEACON ASSY, ROTATING - OPTIONAL CODE 781427028

R	N	P.N.	MOD	Q	Description Denominacion	Descrizione Beskrivelse	Bezeichnung Denominação	Description Beschrijving	L.C.
5		72951499		7	CLIP ABRAZADERA	FERMO KLIPS	KLAMMER FIXADOR	COLLIER KLEM	045F
6		71451259		10	RETAINER COLLAR COLLAR DE RETENCIÓN	COLLARE DI FISSAGGIC RING, SPÆNDE	HALTERING ANEL DE FIXAÇÃO	COLLIER DE RETENUE BORGKRAAG	230S
8		71449470		1	BEACON BALIZA	GIROFARO ROTERENDE ADVARSEI	RUNDUMLEUCHTE FAROL ROTATIVO	GYROPHARE ZWAAILICHT	080L

Copyright © New Holland