RUTHZIL TRATOR COMERCIAL DE PEÇAS LTDA 11 97083-6812 ROLANDO CITRANGULO

Bobcat®

Parts Manual
E26 Compact Excavator

JULHO 2011

S/N AJRY11001 & Above

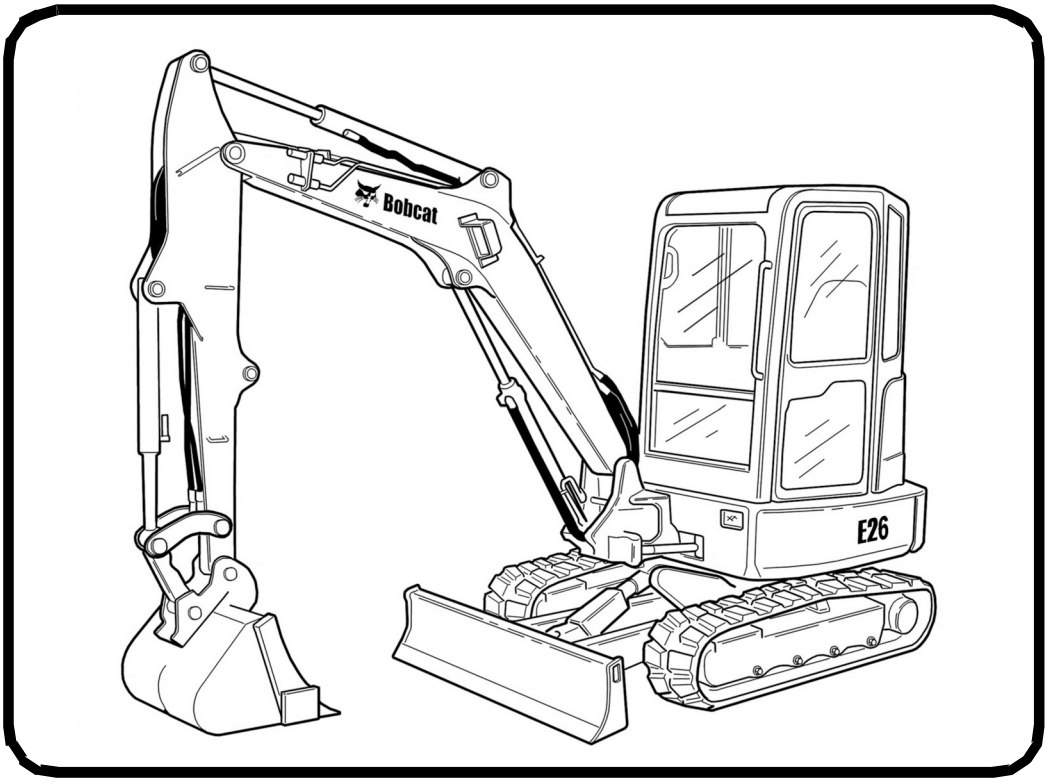

Page 1 - OSS# 2091664 - All rights reserved by Bobcat Company - 08/27/2012 - 11:42:23 - Produced by Ken Cook Co. with mediaioff

6990098 (7-11)

Printed in U.S.A.

© Bobcat Company 2011

GENERAL INFORMATION

Before ordering parts, ALWAYS provide dealer with your product model number and complete serial number information. Before ordering parts, verify correct part numbers and/or serial numbers with your dealer. When using the machine serial number, use the complete number.

The number shown in the quantity column in this manual is the number of parts needed for the illustration on the page. For some parts an "x" will be shown in the quantity column. This "x" indicates that the quantity to be used is "As Needed".

When references LH (Left Hand) and RH (Right Hand) are used in this manual, it is done from the operator's seat in the forward operating position.

When "See Illustration…." appears in the remarks column, refer to the contents page for the illustration title to find page number location.

Some of the illustrations and information found in this parts manual were supplied to Bobcat by machine component companies.

For additional information on the Bobcat website visit www.bobcat.com

ABBREVIATIONS

ACS	**= Advanced Control System**	**MM**	**= Millimeters**
AHC	**= Advanced Hand Controls**	**NAP**	**= Not Available as Parts**
A/C	**= Air Condition**	**NSS**	**= Not Serviced Separately**
ASSY	**= Assembly**	**OD**	**= Outside Diameter**
AUX	**= Auxiliary**	**OM**	**= Operation & Maint Manual**
AWS	**= All Wheel Steer**	**PM**	**= Parts Manual**
BPV	**= Bucket Positioning Valve**	**PWM**	**= Pulse Width Modulation**
BTI	**= Bobcat Technical Information Bulletin**	**QT**	**= Quart**
CYL	**= Cylinder**	**RH**	**= Right Hand**
DLX	**= Deluxe**	**SALES**	**= Sales Deparment**
ELEC	**= Electrical**	**SJC**	**= Selectable Joystick Controls**
EMEA	**= Europe/Middle East/Africa**	**SL**	**= Service Letter**
ENG	**= Engine**	**SM**	**= Service Manual**
GAL	**= Gallon**	**STD**	**= Standard**
HVAC	**= Heating Ventilation & Air Condition**	**TEMP**	**= Temperature**
HYD	**= Hydraulic**	**TRANS**	**= Transmission**
ID	**= Inside Diameter**	**W/A**	**= Welded Assembly**
IGN	**= Ignition**	**W/**	**= With**
INJ	**= Injection**	**W/O**	**= Without**
LH	**= Left Hand**	**"**	**= Inches**
MFR	**= Main Frame**	**'**	**= Feet**

Page 2 - OSS# 2091664 - All rights reserved by Bobcat Company - 08/27/2012 - 11:42:23 - Produced by Ken Cook Co. with mediaioff

GENERAL INFORMATION (Cont'd)

TRANSLATION KITS & DECAL KITS

AR = Argentina (Spanish) BR = Brazil (Portugese) JP = Japanese
(Translation Kit includes Safety Manual, Operators Manual & Decal Kit)

DISPOSITION

(Found in the Remarks Column)

[A] = Use Up
[B] = Use Up on Other Applications
[C] = File PDR Report with Bobcat Parts Sales
[D] = Part Number Error

Page 3 - OSS# 2091664 - All rights reserved by Bobcat Company - 08/27/2012 - 11:42:23 - Produced by Ken Cook Co. with mediaioff

NOTE D'INFORMATION

Pour toute référence au numéro de série de l'engin, toujours donner le numéro complet.

Le chiffré apparaissant dans la colonne des quantités de ce manuel représentent le nombre de pièces nécessaires pour l'illustration reprise sur la page. Dans certains cas, on lira un "x" dans la colonne des quantités. Cet "x" indique que la quantité nécessaire est "selon besoin".

Pour toute référence vers la GAUCHE ou la DROITE dans ce manuel, considérer que la personne se trouve assise dans le siège de l'opérateur, en position de fonctionnement en marche avant.

Certaines illustrations et informations reprises dans ce manuel de pièces de rechange ont été fournies à Bobcat/Ingersoll–Rand par des fabricants de composants.

ABREVIATIONS & SYMBOLES

SALES	= Commander au Service Ventes à Bruxelles
NSS	= Pas vendu séparément
NAP	= Non disponible comme pièce de rechange
*****	= Chapitre, page ou numéro de pièce modifié ou supplémentaire
BTI	= Bobcat Technical Information Bulletin : voir à la fin de la microfiché du modèle concerné ou la microfiche générale reprenant l' ensemble des "BTI".
was 6535403	= était avant 6535403
adj. (adjustment)	= réglage
Assembly	= ensemble
available W/Ref.	= disponible avec réf.
bulk/sold per foot	= en vrac/vendu par pied
does not include	= ne comprend pas
included with	= compris dans
I.D.	= D.I. (diamètre intérieur)
O.D.	= D.E. (diamètre extérieur)
not in kit	= pas en kit
W/ – WO/	= inclus/ – non inclus/
Qty	= quantité requise
see page/ref.	= voir page/réf.
used with ref/	= utilisé avec réf.
0,05 inch thickness	= 0,05 pouce d'épaisseur (un pouce = 25.4 mm)
weld on	= à souder

Page 4 - OSS# 2091664 - All rights reserved by Bobcat Company - 08/27/2012 - 11:42:23 - Produced by Ken Cook Co. with mediaoff

ALLGEMEINE INFORMATIONEN

Bei Angabe der Maschinen-Seriennummer stets die komplette Nummer angeben.

Bei der in der Mengenspalte (Anzahl) in diesem Handbuch angegebenen Zahl handelt es sich um die Anzahl von Teilen, die für die Abbildung auf der betreffenden Seite benötigt werden. Bei manchen Teilen in der Mengenspalte ist ein “x” angegeben. Dieses “x” weist darauf hin, dass sich die Anzahl der verwendeten Teile auf den “Bedarf” bezieht.

Bei Verwendung der Seitenangaben links und rechts in diesem Handbuch gelten diese für die Blickrichtung vom Fahrersitz aus, und zwar in Vorwärts-Betriebsrichtung.

Einige der in diesem Ersatzteilhandbuch aufgeführten Abbildungen und Informationen wurden der Bobcat/Ingersoll-Rand von den Herstellern von Maschinenbauteilen zur Verfügung gestellt.

ABKÜRZUNGEN UND SYMBOLE

SALES	= Bestellung bei der Verkaufsabteilung in Brüssel
NSS	= Nicht einzeln erhältlich
NAP	= Nicht als Ersatzteil erhältlich
*****	= Geänderte oder hinzugefügte Abschnitte, Seiten oder Teilenummern
BTI	= Bobcat Technical Information Bulletin : Siehe am Ende der Mikrokarte des jeweiligen Modells oder der allgemeinen Mikrokarte der BTI.
was 6535403	= War 6535403
adj.	= Einstellung
Assembly	= Baugruppe
available W/Ref.	= erhältlich mit der Referenz
bulk/sold per foot	= Mengenabnahme / Verkauf pro Fuss
does not include	= beinhaltet nicht
included with	= enthalten in
I.D.	= Innendurchmesser
O.D.	= Aussendurchmesser
not in kit	= nicht in Bausatz
W/ - WO/	= mit/ - ohne/
Qty	= Anzahl
see page/ref.	= Siehe Seite / Referenz
used with ref.	= verwendet mit Referenz
0.05 inch thickness	= Dicke : 0.05 Zoll (ein Zoll = 25.4 mm)
weld on	= anschweissen

Page 5 - OSS# 2091664 - All rights reserved by Bobcat Company - 08/27/2012 - 11:42:23 - Produced by Ken Cook Co. with mediaioff

INFORMAZIONI GENERALI

Quando si usa il numero di serie della macchina usare il numero completo.

Il numero mostrato nella colonna della quantità di questo manuale corrisponde al numero di componenti necessari per l'illustrazione della pagina. Per alcuni componenti appare "X" nella colonna delle quantità. Questa "X" indica che la quantità da usare è "come necessario".

See in questo manuale si fa riferimento alla parte destra o sinistra, si intende dal sedile dell'operatore nella posizione in avanti di funzionamento.

Alcune delle illustrazioni e informazioni trovate in questo manuale di componenti sono state fornite alla Bobcat/Ingersoll-Rand da società di componenti di macchine.

SIMBOLI E ABBREVIAZIONI

SALES	= Ordinare al servizio vendite di Bruxelles
NSS	= Non vendute separatamente
NAP	= Non disponibile come componente
*****	= Sezioni, pagine o numeri di componente cambiati o aggiunti
BTI	= (Bobcat Technical information) Ved. al termine del microfiche del modello relativo oppure microfiche generale
was 6535403	= era 6535403
adj. (adjustment)	= regol. (regolazione)
Assembly	= Complessivo
available W/Ref.	= disponibile con rif.
bulk/sold per foot	= alla rinfusa/venduto al piede
does not include	= non comprende
Included with	= compreso con
I.D.	= d. i.
O.D.	= d. e.
not in kit	= non fa parte del kit
W/ - WO/	= con - senza
Qty	= Qtà
see page/ref	= ved. pagina/rif.
used with ref.	= usato con il rif.
0,05 inch thickness	= spessore 0,05 pollici (un pollice = 25,4 mm)
weld on	= a saldare

Page 6 - OSS# 2091664 - All rights reserved by Bobcat Company - 08/27/2012 - 11:42:23 - Produced by Ken Cook Co. with mediaioff

INFORMACION GENERAL

Al utilizar el número de serie de la máquina, debe emplearse el número completo.

El número que figura en la columna de “Unidades” en este manual es el número de piezas que se necesitan para la ilustración que consta en la página. En algunas piezas aparece una “x” en la columna de “Unidades”. Esta “x” indica que las unidades a utilizar son “según sea necesario”.

Cuando se empleen las referencias izq. y dcha., éstas se entienden mirando desde el asiento del conductor, en posición de marcha adelante.

Algunas de las ilustraciones y la información que figuran en este manual de piezas han sido facilitadas a Bobcat/Ingersoll–Rand por empresas de componentes de máquinas.

ABREVIATURAS Y SIMBOLOS

VENTAS	= Pedido al Departamento de Ventas de Bruselas
NSS	= No se vende por separado
NAP	= No disponible como pieza de repuesto
*****	= Secciones, páginas o referencias modificadas o añadidas
BTI	= (Bobcat Tecnical Information) Ver al final de la microficha del modelo afectado o en la microficha general “Boletín de Información Técnica Bobcat”.
was 6535403	= era anteriormente el 6535403
adj. (adjustment)	= ajuste
assembly	= conjunto
available W/Ref.	= disponible con la ref.
bulk/sold per foot	= a granel/vendido por pies
does not include	= no incluye
included with	= incluido en
I.D.	= diámetro interior
O.D.	= diámetro exterior
not in kit	= no en el kit
W/ – WO/	= con/ – sin
Qty	= Unidades
see page /ref.	= ver página/ref.
used with ref.	= empleado con la ref.
0,05 inch thickness	= 0,05 pulgadas de espesor (1 pulgada = 25,4 mm)
weld on	= debe ser soldado

Page 7 - OSS# 2091664 - All rights reserved by Bobcat Company - 08/27/2012 - 11:42:23 - Produced by Ken Cook Co. with mediaioff

ALGEMENE INFORMATIE

Als u het serienummer van de machine gebruikt, geef dan het gehele serienummer.

Het cijfer dat voorkomt in de kolom “Aantal”, in deze handleiding, is het aantal onderdelen dat nodig is van de illustratie op de pagina. Voor sommige onderdelen staat er een “x” in de kolom “Aantal”. Deze “x” betekent dat er een aantal “zoals nodig” vereist is.

Wanneer er in deze handleiding naar “links” en naar “rechts” gerefereerd wordt, moet dit verstaan worden voor een bestuurder die in de bestuurdersstoel zit in de voorwaartse bedrijfsstand.

Sommige van de illustraties en informatie in deze onderdelen-handleiding werden door firma’s van machine-componenten geleverd aan Bobcat/Ingersoll-Rand.

AFKORTINGEN EN SYMBOLEN

SALES	= Bestellen bij de Verkoopafdeling te Brussel
NSS	= Niet afzonderlijk te verkrijgen
NAP	= Niet beschikbaar als onderdeel
*****	= Gewijzigde of toegevoegde paragrafen, pagina’s of onderdeelnummers
BTI	= Bobcat Technical Information Bulletin : Zie einde van de microfiche van het desbetreffende model of einde van de algemene microfiche die het geheel van alle “BTI” herneemt.
was 6535403	= was vroeger 6535403
adj. (adjustment)	= afstelling
Assembly	= geheel
available W/Ref.	= beschikbaar met ref.
bulk/sold per foot	= bulk/aan de meter verkocht
does not include	= bevat niet
includes with	= is bevat in
I.D.	= ϕ inw. (inwendige diameter)
O.D.	= ϕ uitw. (uitwendige diameter)
not in kit	= niet in de kit
W/ - WO/	= met/ - zonder/
Qty	= vereiste aantal
see page/ref.	= zie pagina/ref.
used with ref/	= gebruikt met ref.
0,05 inch thickness	= 0.05 inch dik (een inch = 25.4 mm)
weld on	= te lassen

Page 8 - OSS# 2091664 - All rights reserved by Bobcat Company - 08/27/2012 - 11:42:23 - Produced by Ken Cook Co. with mediaioff

CONTENTS

MAINTENANCE ITEMS 1-12
MAINTENANCE ITEMS 1-4
SCHEDULED MAINTENANCE ITEMS 5-12

MAIN FRAME 13-44
UPPERSTRUCTURE 13-16
COUNTERWEIGHT 17
OPERATOR AREA & SEAT 19
SEAT 21
OPERATOR CAB 23-34
OPERATOR CANOPY 35
INSULATION 37-40
RH COVER 41
REAR DOOR 43

UNDERCARRIAGE 45-52
UNDERCARRIAGE 45
TRACK TENSIONER & IDLER 47
TRACK ROLLER 49-52

WORK EQUIPMENT 53-62
ARM 53
BUCKET LINK 55
BOOM 57
BLADE 59
BOOM SWING FRAME 61

CONTROLS 63-72
CONTROL CONSOLE 63-66
TRAVEL CONTROL 67
THROTTLE CONTROL 69-72

HYDRAULIC SYSTEM 73-166
HYDRAULIC PISTON PUMP 101-104
MANIFOLD ASSY 105
SELECTOR VALVE ASSY 107-110
LH JOYSTICK 111
RH JOYSTICK 113
TRAVEL CONTROLLER 115
BLADE JOYSTICK 117
SWIVEL ASSY 119
TRAVEL MOTOR 121-126
SLEW MOTOR 127-134
HYDRAULIC CONTROL VALVE 135-156
ARM CYLINDER 157
BLADE CYLINDER 159
BOOM CYLINDER 161
BOOM SWING CYLINDER 163
BUCKET CYLINDER 165
HYDRAULIC CIRCUITRY 73-98
HYDRAULIC OIL FILTER 99

ELECTRICAL SYSTEM 167-180
CAB ELECTRICAL CIRCUITRY 167
ENGINE ELECTRICAL CIRCUITRY 169
CONTROLS ELECTRICAL 171-176
ALTERNATOR 177
STARTER 179

Page 9 - OSS# 2091664 - All rights reserved by Bobcat Company - 08/27/2012 - 11:42:23 - Produced by Ken Cook Co. with mediaioff

CONTENTS (Cont'd)

POWER UNIT 181-236
ENGINE & ATTACHING PARTS 181-190
ENGINE & GASKET KITS 191
ENGINE & UPPER GASKET KIT 193
ENGINE & LOWER GASKET KIT 195
CRANKCASE 197
PISTON & CRANKSHAFT 199-202
CAMSHAFT 203
OIL PAN 205
GEARCASE 207
WATER PUMP 209
WATER FLANGE & THERMOSTAT 211
CYLINDER HEAD 213
VALVE & ROCKER ARM 215
ROCKER ARM COVER 217
MANIFOLDS 219
NOZZLE HOLDER & GLOW PLUG 221
NOZZLE HOLDER 223
INJECTION PUMP & FUEL PUMP 225
FUEL CAMSHAFT & GOVERNOR SHAFT 227
IDLE APPARATUS & STOP SOLENOID 229
GOVERNOR 231
SPEED CONTROL PLATE 233
AIR CLEANER 235
ACCESSORIES & OPTIONS 237-324
BEACON KIT 237
BLOCK HEATER 239
CAB KIT 241
CANOPY KIT 243
COUNTERWEIGHT KIT 245
DECALS 247-250
DIRECT TO TANK KIT 251
FIRE EXTINGUISHER 253
FUEL BOWL KIT 255
HEATER & A/C 257-272
HOSE AIR BLEED KIT 273
KEYLESS IGNITION KIT 275
LOAD HOLD 277-282
LONG ARM KIT 283
MIRROR KIT 285
MOTION ALARM KIT 287
PURIFIER 289
RADIO KIT 291
SEAT BELT KIT 293-296
SECONDARY AUXILIARY KIT 297
SECONDARY AUXILARY VALVE 299
SPECIAL APPLICATION KIT 301
STROBE KIT 303
TOP GUARD KIT 305-308
TOP GUARD LIGHT KIT 309
TRACK KIT 311
TRACKS 313-316

Page 10 - OSS# 2091664 - All rights reserved by Bobcat Company - 08/27/2012 - 11:42:23 - Produced by Ken Cook Co. with media1off

CONTENTS (Cont'd)

ACCESSORIES & OPTIONS
TRACK PAD KIT 317
X-CHANGE 319
BULK ITEMS 321-324
NUMERICAL INDEX 326-364

Page 11 - OSS# 2091664 - All rights reserved by Bobcat Company - 08/27/2012 - 11:42:23 - Produced by Ken Cook Co. with media1off

MAINTENANCE ITEMS

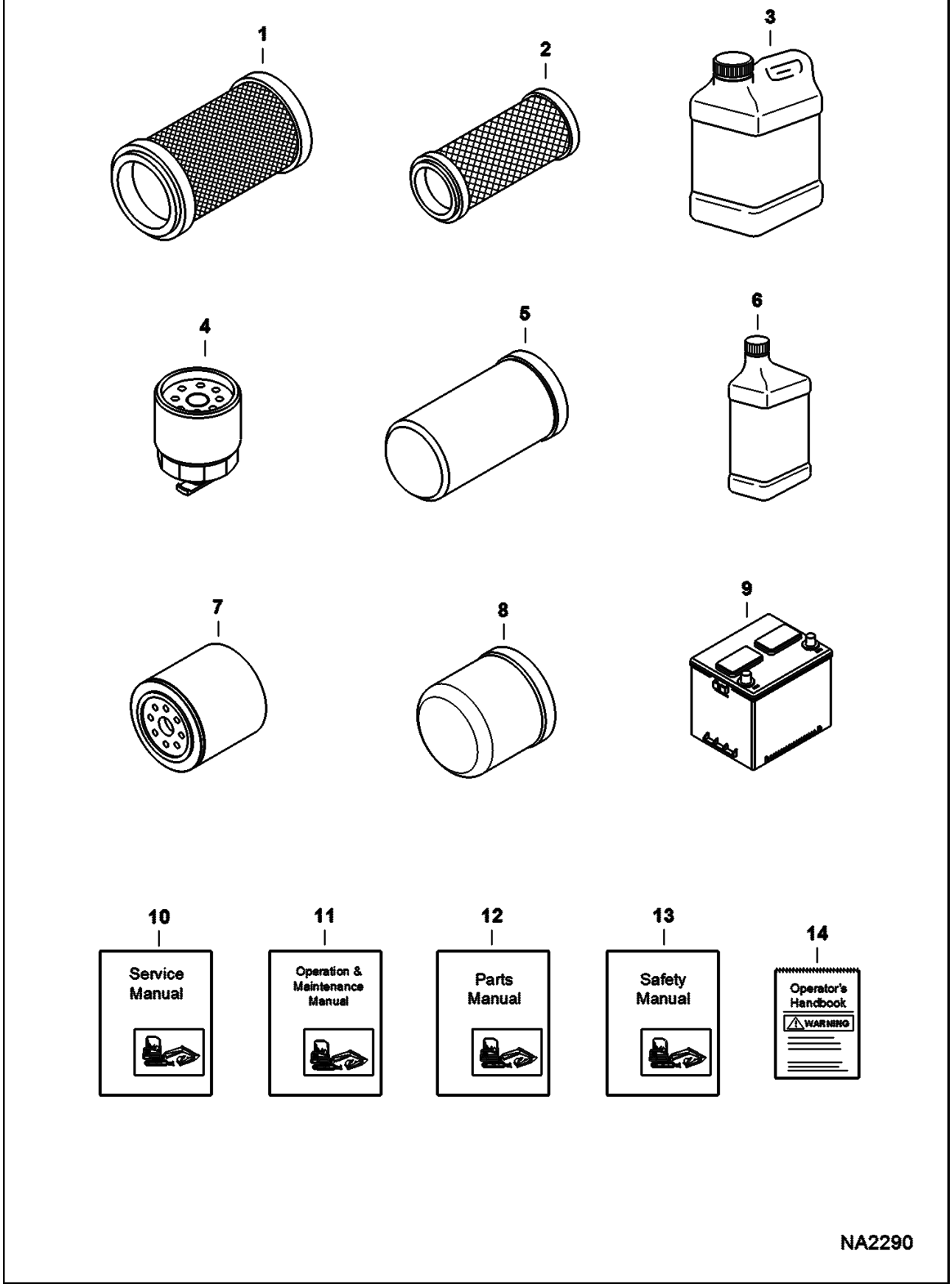

Page 12 - OSS# 2091664 - All rights reserved by Bobcat Company - 08/27/2012 - 11:42:23 - Produced by Ken Cook Co. with media1off

Ref No	Part Number	Description	Remarks	Serial Number	Qty
1	6672467	FILTER, AIR OUTER	See Illustration AIR CLEANER/ PE3875		1
2	6672468	FILTER, AIR INNER	See Illustration AIR CLEANER/ PE3875		1
3	6903117	FLUID, OIL HYD 2.5 GAL 2			x
3	6903118	FLUID, OIL HYD 5 GAL			x
3	6903119	FLUID, OIL HYD 55 GAL			x
4	6667352	FILTER, FUEL W/SEPERATOR 12	See Illustration ENGINE & ATTACHING PARTS/ NA6277		1
5	6661248	FILTER, OIL HYD 12	See Illustration HYDRAULIC OIL FILTER/ NA6101 #3 media - 152,4 mm (6") long		1
6	6903109	OIL 30W QT. 12			x
6	6903110	OIL, 30W GAL. 6			x
6	6903111	OIL 30W 2.5 GAL 2	Dr		x
6	7023076	OIL, 10W30 QT 12	Was 6903107 [A]		x
6	7023077	OIL, 10W30 GAL 6	Was 6903108 [A]		x
6	7023078	OIL, 10W30 2.5 GAL 2	Was 6903112 [A]		x
6	7023080	OIL, 15W40 QT 12	Was 6903105 [A]		x
6	7023081	OIL, 15W40 GAL 6	Was 6903106 [A]		x
6	7023082	OIL, 15W40 2.5 GAL 2	Was 6903113 [A]		x
7	6657635	OIL FILTER	See Illustration GEARCASE/ NA6263		1
8	7009365	FILTER, OIL HYD	See Illustration HYDRAULIC CIRCUITRY/ NA6286		1
9	6670251	BATTERY, DRY 530 AMP	See Illustration CONTROLS ELECTRICAL/ NA6283		1
9	6674687	BATTERY, DRY 600 AMP	See Illustration CONTROLS ELECTRICAL/ NA6283		1
10	6990097	MANUAL	printed		1
10	6990097-CD	MANUAL	CD		1
11	6990096	MANUAL, OPERATION & MAINTENANCE E26 EXCAVATOR	printed		1
11	6990096-CD	MANUAL, OPERATION & MAINTENANCE E26 EXCAVATOR CD	CD		1
12	6990098	MANUAL, PARTS E26 EXCAVATOR	printed		1
12	6990098-CD	MANUAL, PARTS E26 EXCAVATOR CD	CD		1
13	6901951	MANUAL EMI SAFETY - EXCAVATOR			1
14	6987271	HANDBOOK,			1

Page 13 - OSS# 2091664 - All rights reserved by Bobcat Company - 08/27/2012 - 11:42:23 - Produced by Ken Cook Co. with media1off

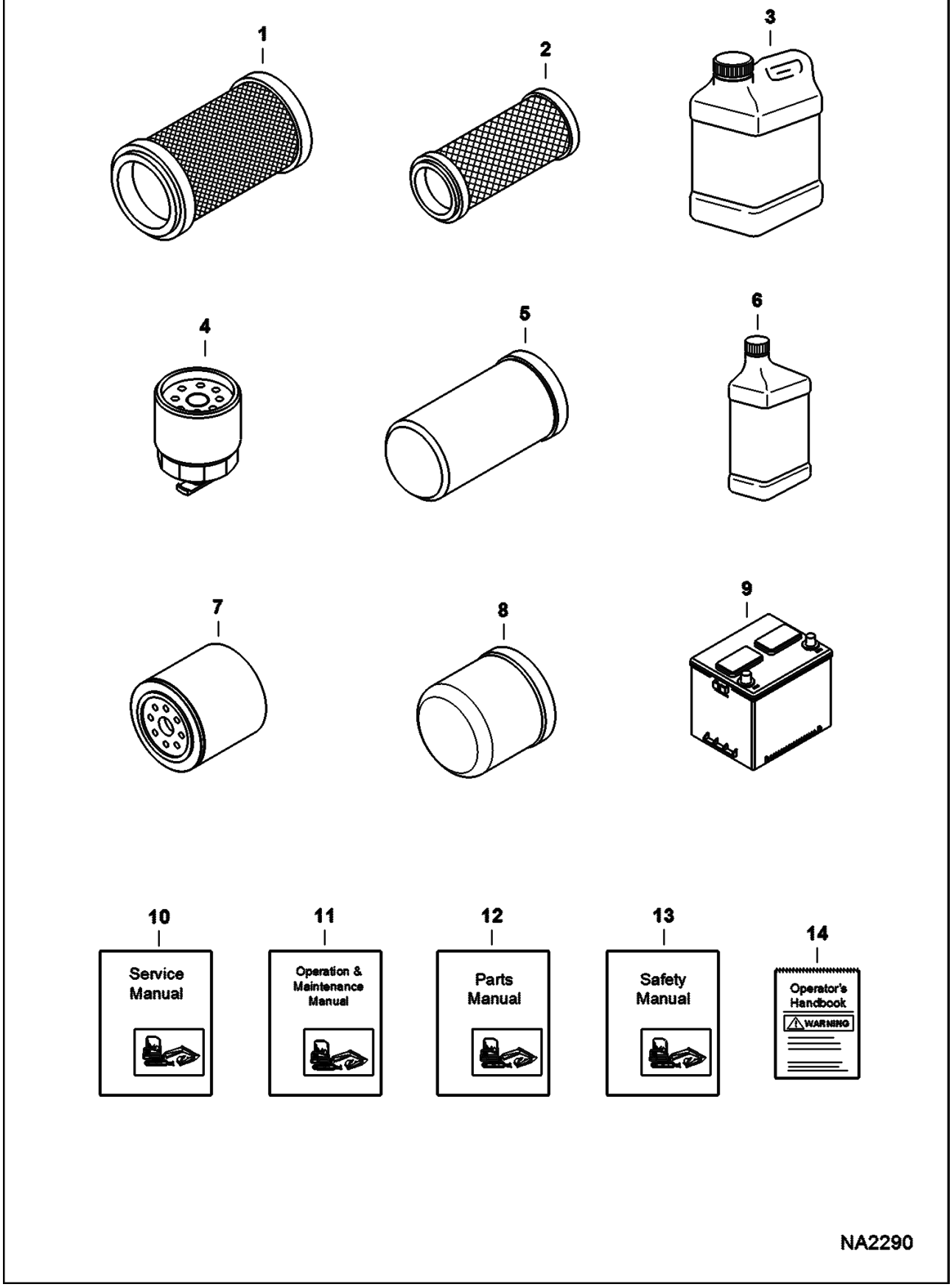

Page 14 - OSS# 2091664 - All rights reserved by Bobcat Company - 08/27/2012 - 11:42:23 - Produced by Ken Cook Co. with media1off

Ref No	Part Number	Description	Remarks	Serial Number	Qty
		OPERATION & MAINTENANCE			

Page 15 - OSS# 2091664 - All rights reserved by Bobcat Company - 08/27/2012 - 11:42:23 - Produced by Ken Cook Co. with media1off

SCHEDULED MAINTENANCE ITEMS
(50 Hour)

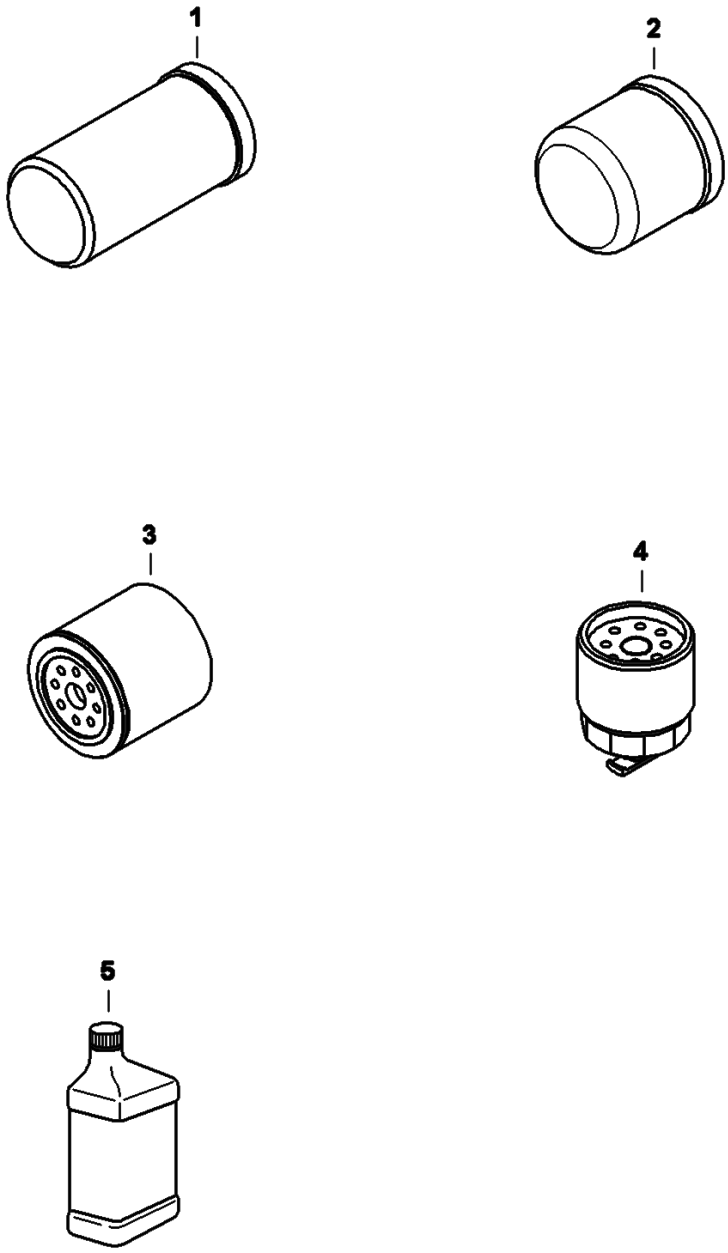

Page 16 - OSS# 2091664 - All rights reserved by Bobcat Company - 08/27/2012 - 11:42:23 - Produced by Ken Cook Co. with media1off

SCHEDULED MAINTENANCE ITEMS (Cont'd)
(50 Hour)

Ref No	Part Number	Description	Remarks	Serial Number	Qty
1	6661248	FILTER, OIL HYD 12	See Illustration HYDRAULIC OIL FILTER/ NA6101 #3 media - 152,4 mm (6") long		1
2	7009365	FILTER, OIL HYD	See Illustration HYDRAULIC CIRCUITRY/ NA6286		1
3	6657635	OIL FILTER	See Illustration GEARCASE/ NA6263		1
4	6667352	FILTER, FUEL W/SEPERATOR 12	See Illustration ENGINE & ATTACHING PARTS/ NA6277		1
5	6903121	LUBE, GEAR 12			x

Page 17 - OSS# 2091664 - All rights reserved by Bobcat Company - 08/27/2012 - 11:42:23 - Produced by Ken Cook Co. with media1off

SCHEDULED MAINTENANCE ITEMS
(250 Hour)

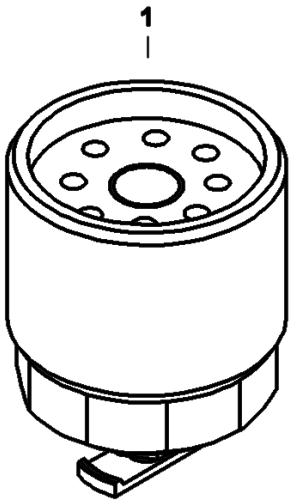

NA2322

Page 18 - OSS# 2091664 - All rights reserved by Bobcat Company - 08/27/2012 - 11:42:23 - Produced by Ken Cook Co. with media1off

SCHEDULED MAINTENANCE ITEMS (Cont'd)
(250 Hour)

Ref No	Part Number	Description	Remarks	Serial Number	Qty
1	6667352	FILTER, FUEL W/SEPERATOR 12	See Illustration ENGINE & ATTACHING PARTS/ NA6277		1

Page 19 - OSS# 2091664 - All rights reserved by Bobcat Company - 08/27/2012 - 11:42:23 - Produced by Ken Cook Co. with media1off

SCHEDULED MAINTENANCE ITEMS
(500 Hour)

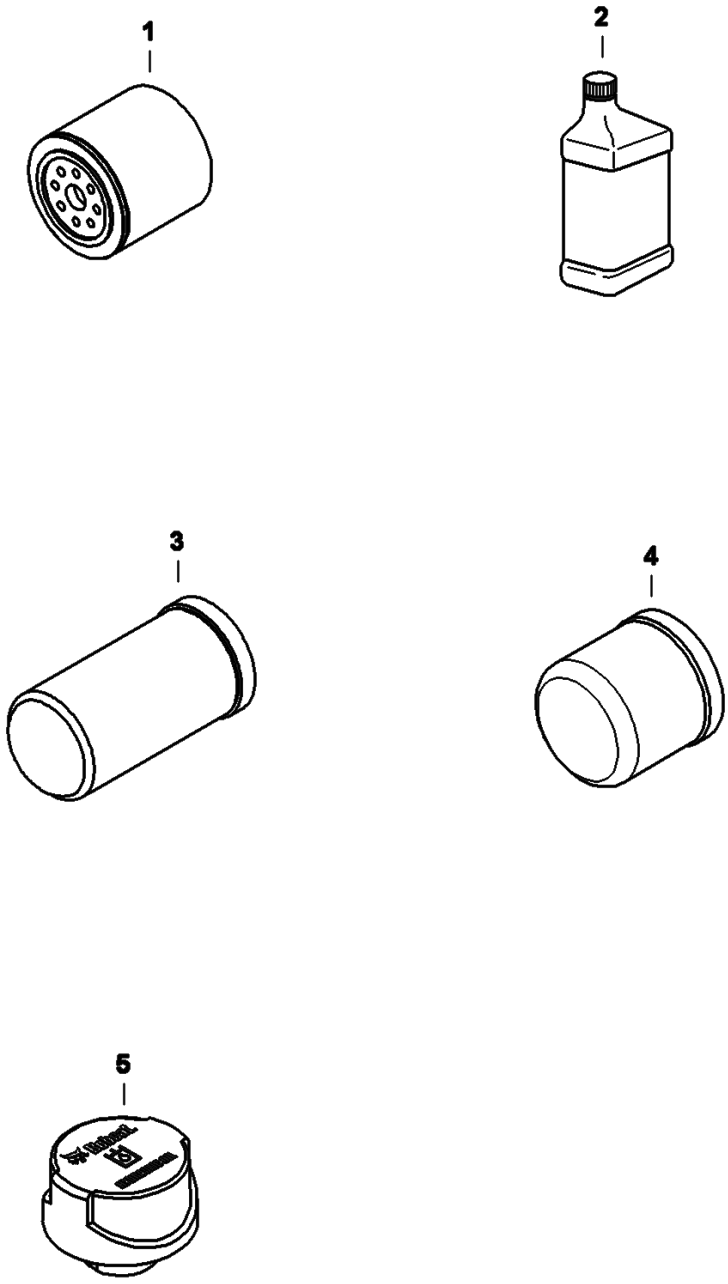

Page 20 - OSS# 2091664 - All rights reserved by Bobcat Company - 08/27/2012 - 11:42:23 - Produced by Ken Cook Co. with media1off

SCHEDULED MAINTENANCE ITEMS (Cont'd)
(500 Hour)

Ref No	Part Number	Description	Remarks	Serial Number	Qty
1	6657635	OIL FILTER	See Illustration GEARCASE/ NA6263		1
2	6903109	OIL 30W QT. 12			x
2	6903110	OIL, 30W GAL. 6			x
2	6903111	OIL 30W 2.5 GAL 2			x
2	7023076	OIL, 10W30 QT 12	Was 6903107 [A]		x
2	7023077	OIL, 10W30 GAL 6	Was 6903108 [A]		x
2	7023078	OIL, 10W30 2.5 GAL 2	Was 6903112 [A]		x
2	7023080	OIL, 15W40 QT 12	Was 6903105 [A]		x
2	7023081	OIL, 15W40 GAL 6	Was 6903106 [A]		x
2	7023082	OIL, 15W40 2.5 GAL 2	Was 6903113 [A]		x
3	6661248	FILTER, OIL HYD 12	See Illustration HYDRAULIC OIL FILTER/ NA6101 #3 media - 152,4 mm (6") long		1
4	7009365	FILTER, OIL HYD	See Illustration HYDRAULIC CIRCUITRY/ NA6286		1
5	6692836	CAP, HYDRAULIC TANK	See Illustration HYDRAULIC CIRCUITRY/ NA6286		1

Page 21 - OSS# 2091664 - All rights reserved by Bobcat Company - 08/27/2012 - 11:42:23 - Produced by Ken Cook Co. with media1off

SCHEDULED MAINTENANCE ITEMS
(1000 Hour)

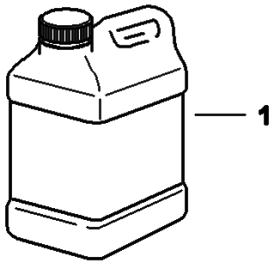

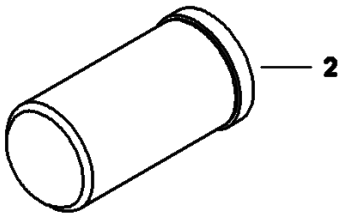

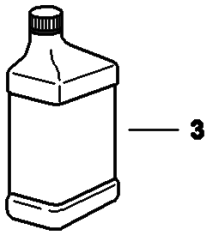

NA2324

Page 22 - OSS# 2091664 - All rights reserved by Bobcat Company - 08/27/2012 - 11:42:23 - Produced by Ken Cook Co. with media1off

SCHEDULED MAINTENANCE ITEMS (Cont'd)
(1000 Hour)

Ref No	Part Number	Description	Remarks	Serial Number	Qty
1	6903117	FLUID, OIL HYD 2.5 GAL 2			x
1	6903118	FLUID, OIL HYD 5 GAL			x
1	6903119	FLUID, OIL HYD 55 GAL			x
2	6661248	FILTER, OIL HYD 12	See Illustration HYDRAULIC OIL FILTER/ NA6101 #3 media - 152,4 mm (6") long		1
3	6903121	LUBE, GEAR 12			x

Page 23 - OSS# 2091664 - All rights reserved by Bobcat Company - 08/27/2012 - 11:42:23 - Produced by Ken Cook Co. with media1off

UPPERSTRUCTURE

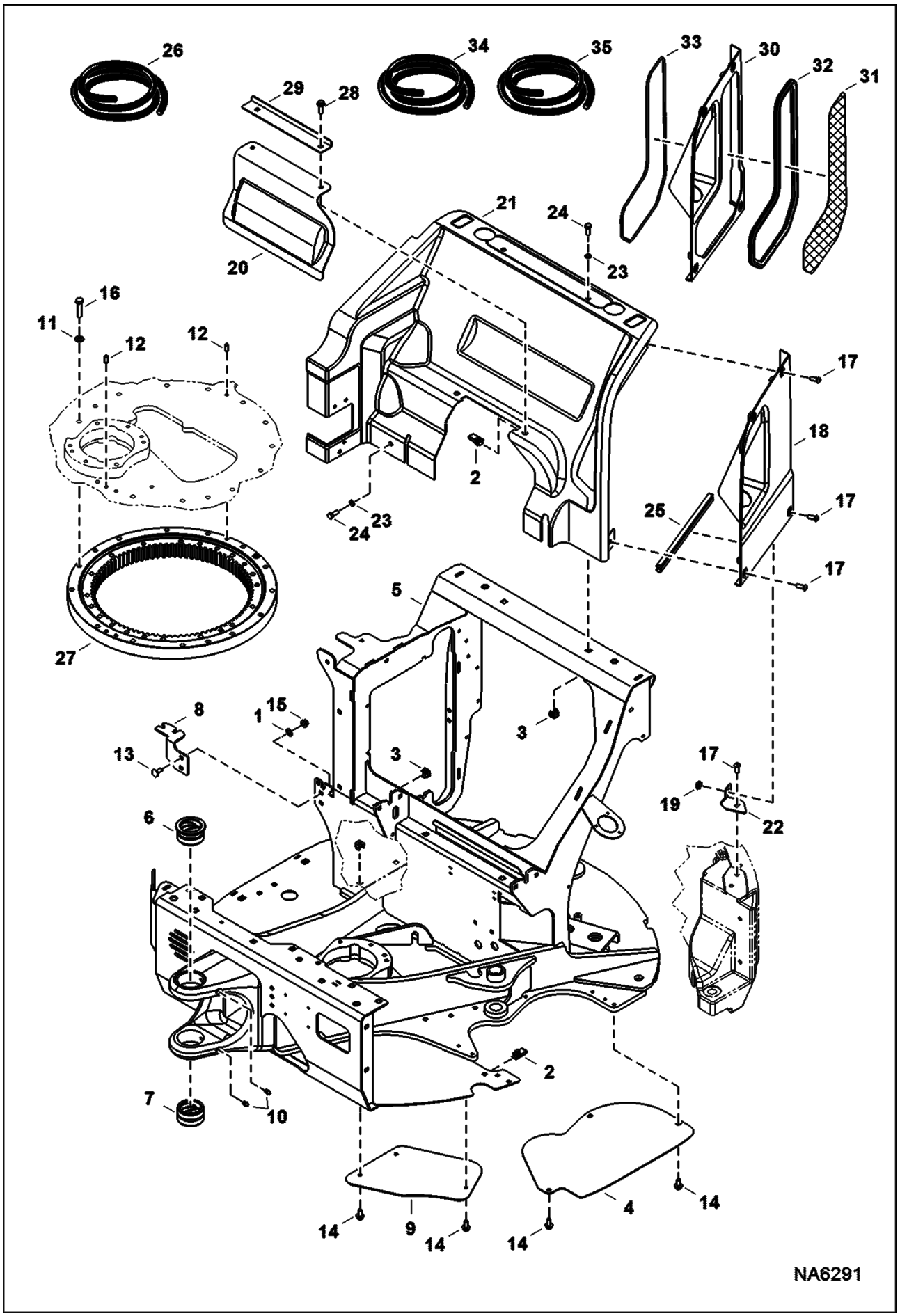

Page 24 - OSS# 2091664 - All rights reserved by Bobcat Company - 08/27/2012 - 11:42:23 - Produced by Ken Cook Co. with media1off

Ref No	Part Number	Description	Remarks	Serial Number	Qty
1	6674264	RETAINER NUT			5
2	6675722	NUT			3
3	7155413	NUT			5
4	7158972	COVER			1
5	7165353	UPPERSTRUCTURE			1
6	7183441	BUSHING, PIVOT			1
7	7191805	BUSHING, PIVOT			1
8	7193426	MOUNT, FILTER			1
9	7199851	COVER			1
10	10H25	FITTING, GREASE 5			2
11	18EM1224	WASHER			15
12	23JM1024	PIN HARDENED PARALLE			2
13	33CM1025	BOLT			2
14	29CM1020	BOLT			6
15	43DM10	NUT			5
16	55CM1250	SCREW			15
17	6817769	BOLT			5
18	7148574	COVER, LH	W/O screen		1
19	7155411	NUT			1
20	7158979	PANEL, ACCESS			1
21	7179422	PANEL, ENG			1
22	7189449	BRACKET, COVER			1
23	15EM100	WASHER			3
24	1CM1025	BOLT			3
25		SEAL	NAP - 320 mm (12.6") long - Order Ref. 26		1
26	7170493	SEAL, BULK	bulk - sold per foot		1
27		RING, SLEW	See Illustration UNDERCARRIAGE/ NA6065		1
28	29CM1030	BOLT			2
29	7198650	PLATE, BRACE			1
30	7203701	COVER, HVAC	W/ screen for HVAC		1
31	7204208	SCREEN			1
32		CHANNEL, LOCKING	NAP - 1525 mm (60") long - Order Ref. 34		1
33		STRIP, FILLER	NAP - 1525 mm (60") long - Order Ref. 35		1
34	6691059	CORD, BULK CHANNEL LOCKING /FT	bulk - sold per foot		x
35	6691060	CORD, BULK STRIP FILLER /FT	bulk - sold per foot		x

Page 25 - OSS# 2091664 - All rights reserved by Bobcat Company - 08/27/2012 - 11:42:23 - Produced by Ken Cook Co. with media1off

UPPERSTRUCTURE
(Side Cover & Screen)

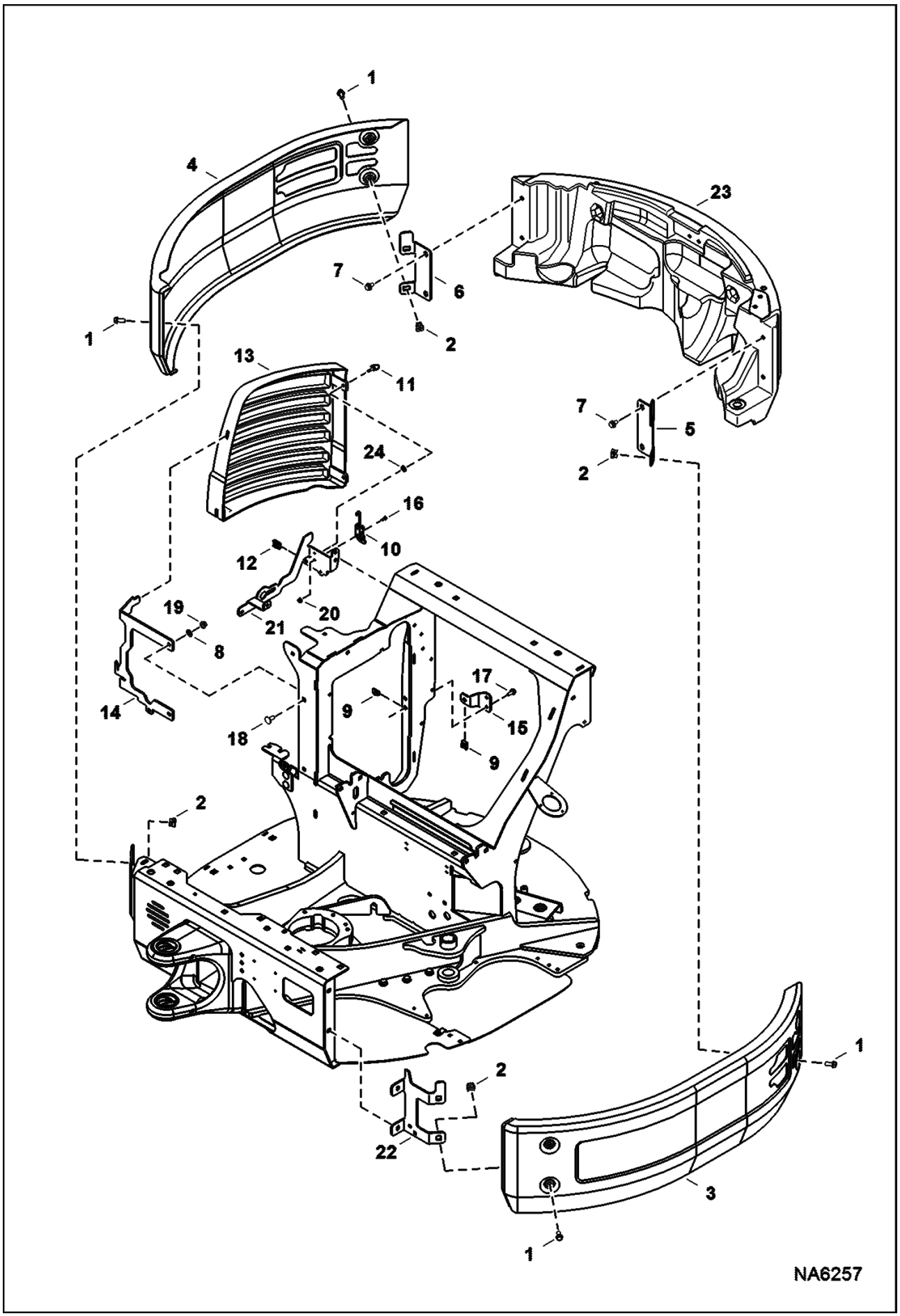

Page 26 - OSS# 2091664 - All rights reserved by Bobcat Company - 08/27/2012 - 11:42:23 - Produced by Ken Cook Co. with media1off

Ref No	Part Number	Description	Remarks	Serial Number	Qty
1	7009798	SCREW			8
2	7155413	NUT			8
3	7203629	COVER, SIDE			1
4	7203630	COVER, SIDE			1
5	7189074	BRACKET, COVER			1
6	7189075	BRACKET, COVER			1
7	29CM1016	BOLT			4
8	6674264	RETAINER NUT			3
9	6676169	NUT			2
10	7020243	LATCH			1
11	7020389	RETAINER			2
12	7186077	CLIP	Was 7020390 [A]		2
13	7194839	SCREEN, DEBRIS			1
14	7194969	BRACKET			1
15	7195021	BRACKET			1
16	1CM512	BOLT			2
17	29CM820	SCREW			2
18	33CM1025	BOLT			3
19	43DM10	NUT			3
20	43DM5	NUT			2
21	7189004	MOUNT, RADIATOR			1
22	7187744	HOLDER			1
23		COUNTERWEIGHT	See Illustration COUNTERWEIGHT/ NA6258		1
24	7186078	WASHER			2

Page 27 - OSS# 2091664 - All rights reserved by Bobcat Company - 08/27/2012 - 11:42:23 - Produced by Ken Cook Co. with media1off

COUNTERWEIGHT

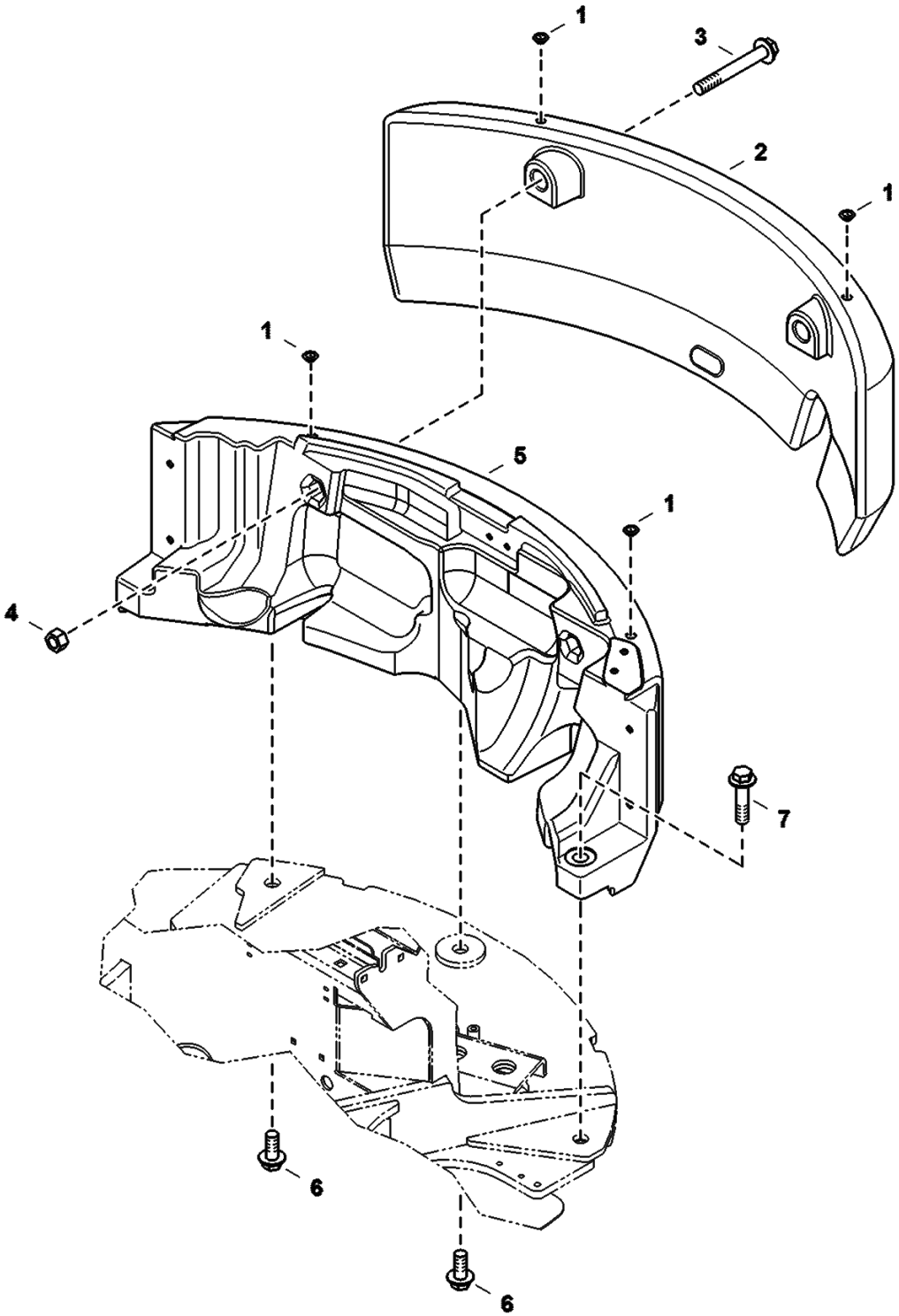

Page 28 - OSS# 2091664 - All rights reserved by Bobcat Company - 08/27/2012 - 11:42:23 - Produced by Ken Cook Co. with media1off

Ref No	Part Number	Description	Remarks	Serial Number	Qty
1	7010676	PLUG			4
2	7198448	COUNTERWEIGHT	add-on		1
3	29CM20150	BOLT			2
4	4DM20	NUT			2
5	7184811	COUNTERWEIGHT			1
6	29CM2045	BOLT			2
7	29CM2080	BOLT			1

Page 29 - OSS# 2091664 - All rights reserved by Bobcat Company - 08/27/2012 - 11:42:23 - Produced by Ken Cook Co. with media1off

OPERATOR AREA & SEAT
(Floor)

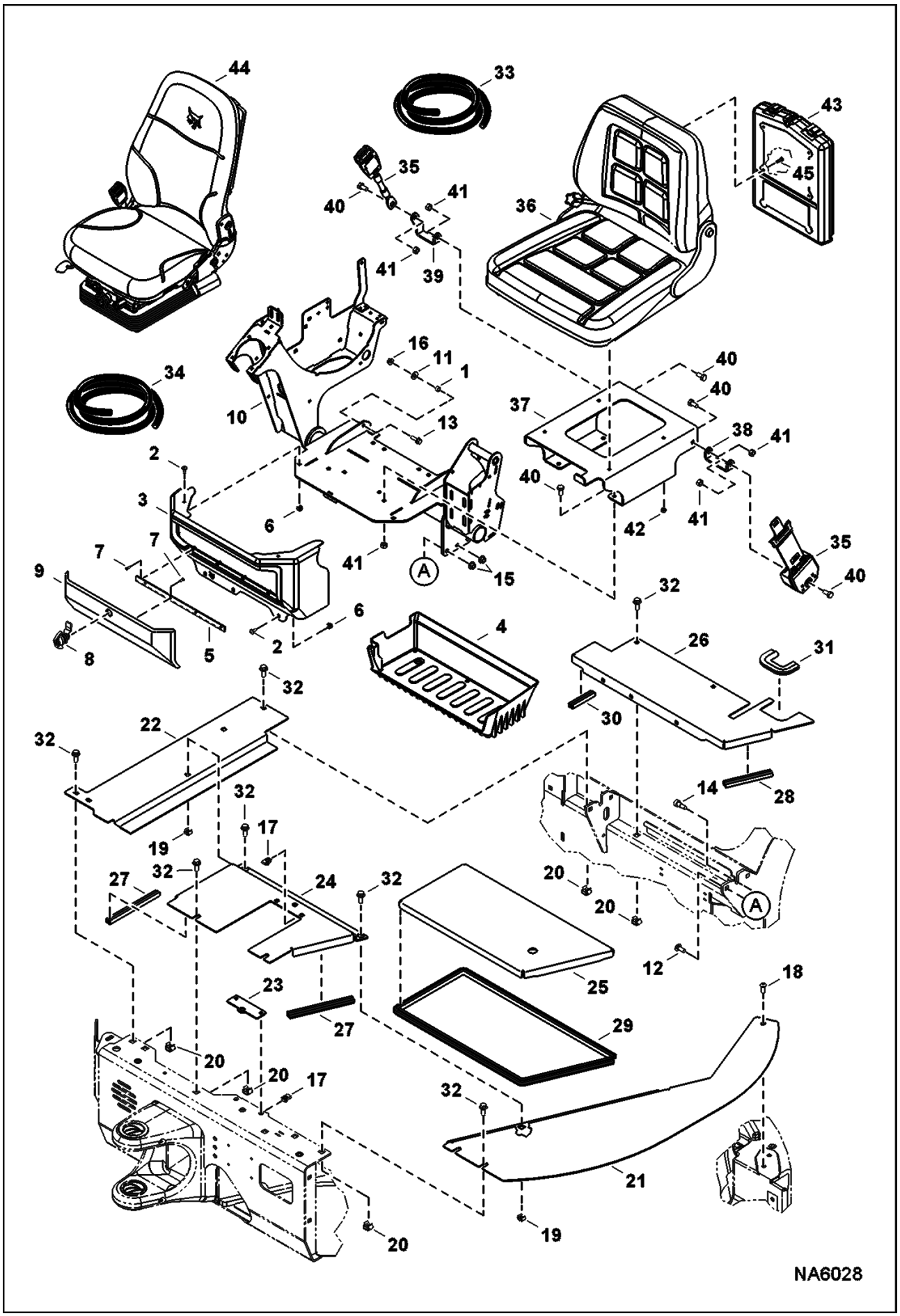

Page 30 - OSS# 2091664 - All rights reserved by Bobcat Company - 08/27/2012 - 11:42:23 - Produced by Ken Cook Co. with media1off

OPERATOR AREA & SEAT (Cont'd)
(Floor)

Ref No	Part Number	Description	Remarks	Serial Number	Qty
1	6802539	SPACER			2
2	6803202	SCREW			5
3	7170706	CONTAINER, STORAGE			1
4	7170708	CONTAINER, STORAGE			1
5	7170709	HINGE, COVER			1
6	7170765	NUT			5
7	7208340	SCREW			8
8	7186648	LATCH, HANDLE			1
9	7188090	DOOR, STORAGE			1
10	7199673	CONTROLLER, JOYSTICK ASSY			1
11	25E16	WSHR			2
12	28CM1025	BOLT			4
13	29CM825	BOLT			2
14	38CM1212	BOLT, SHOULDER			2
15	43DM10	NUT			6
16	51DM8	NUT			8
17	6676169	NUT			4
18	6817769	BOLT			1
19	7155411	NUT			2
20	7155413	NUT			9
21	7160786	PLATE, FLOOR			1
22	7160787	PLATE, FLOOR			1
23	7160789	PLATE, WASHER			1
24	7161772	PLATE, FLOOR			1
25	7161773	PLATE, FLOOR			1
26	7161774	PLATE, FLOOR			1
27		SEAL	NAP - 185 mm (7.28") long - Order Ref. 34		2
28		SEAL	NAP - 145 mm (5.71") long - Order Ref. 34		1
29		SEAL	NAP - 1639,18 mm (64.53") - Order Ref. 34		1
30		SEAL	NAP - 90 mm (3.54") long - Order Ref. 34		1
31		SEAL	NAP - 178,5 mm (7.03") long - Order Ref. 33		1
32	29CM1025	BOLT			11
33	7134803	SEAL, BULK	bulk - sold per foot		x
34	7177959	SEAL, BULK	bulk - sold per foot		x
35	6670865	SEAT BELT			1
36	7180305	SEAT ASSY			1
37	7187733	MOUNT, SEAT	use only W/Ref. 36		1
38	7187734	BRACKET, SEAT BELT			1
39	7187766	BRACKET, SEAT BELT			1
40	1CM1020	BOLT			8
41	53DM10	NUT			8
42	53DM8	NUT			4
42	51DM8	NUT	for suspension seat		4
43	7178637	BOX, MANUAL			1
44		SEAT ASSY	See Illustration SEAT/ NA2287 suspension		1
45	27CM510	SCREW			4

Page 31 - OSS# 2091664 - All rights reserved by Bobcat Company - 08/27/2012 - 11:42:23 - Produced by Ken Cook Co. with media1off

SEAT
(Suspension)

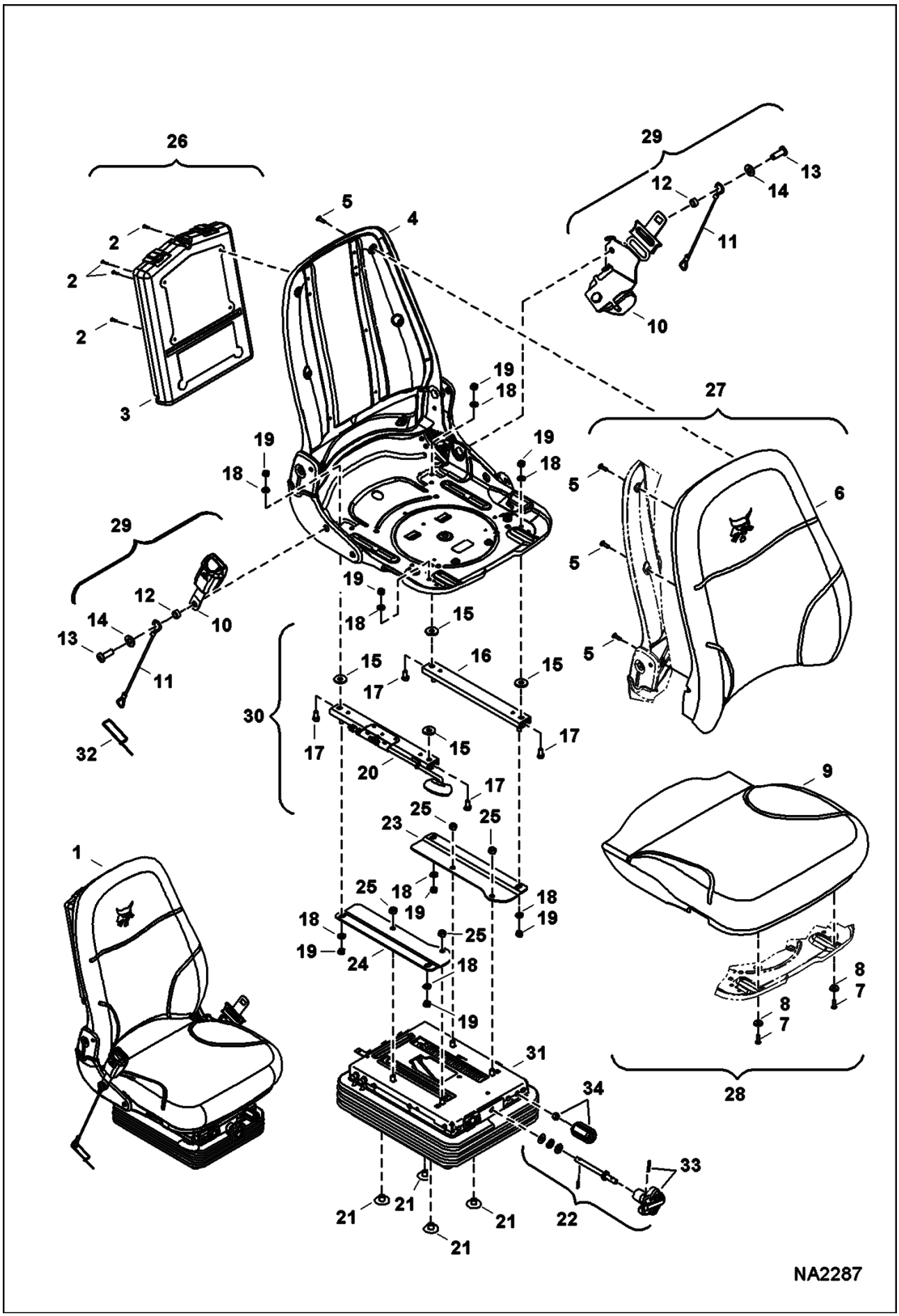

Page 32 - OSS# 2091664 - All rights reserved by Bobcat Company - 08/27/2012 - 11:42:23 - Produced by Ken Cook Co. with media1off

Ref No	Part Number	Description	Remarks	Serial Number	Qty
1	7157550	SEAT, OPERATOR SUSPENSION VINYL	Ref. 2-34		1
1	7169360	SEAT, OPERATOR SUSPENSION CLOTH	Ref. 2-34		1
2		RIVET	NSS		4
3		BOX	NSS - manual		1
4	7012620	KIT, SEAT OPERATOR TOP			1
5		BOLT	NSS		4
6		CUSHION, SEAT	NSS		1
7		BOLT	NSS		4
8		WASHER	NSS		4
9		CUSHION, SEAT	NSS		1
10		SEAT BELT	NSS		1
11		TETHER	NSS		2
12		SPACER	NSS		2
13		BOLT	NSS		2
14		WASHER	NSS		2
15		WASHER	NSS		4
16		SLIDE	NSS		1
17		BOLT	NSS		4
18		WASHER	NSS		8
19		NUT	NSS		8
20		SLIDE	NSS		1
21		PROTECTOR	NSS		4
22	7020238	KIT, KNOB	W/Ref. 33 & 34		1
23		BRACKET	NSS		1
24		BRACKET	NSS		1
25		NUT	NSS		4
26	7012622	KIT, CONTAINER MANUAL	Ref. 2 & 3		1
27	7012625	KIT, BACKREST SEAT	cloth - Ref. 5 & 6		1
27	7012623	KIT, BACKREST SEAT	vinyl - Ref. 5 & 6		1
28	7012626	KIT, CUSHION SEAT	cloth - Ref. 7-9		1
28	7012624	KIT, CUSHION SEAT VINYL	Ref. 7-9		1
29	7012344	BELT, SEAT	Ref. 10-14		1
29		BELT, SEAT	3" KIT		1
30	7012621	KIT, SLIDE	Ref. 15-20		1
31	7020350	KIT, SUSPENSION ASSY	W/Ref. 22 - Was 7012627 [A]		1
32		STRAP	NSS		1
33	7020240	KNOB, ADJUSTMENT WEIGHT			1
34	7020241	KNOB, ADJUSTMENT HEIGHT			1

Page 33 - OSS# 2091664 - All rights reserved by Bobcat Company - 08/27/2012 - 11:42:23 - Produced by Ken Cook Co. with media1off

OPERATOR CAB
(Mounting, Front Windows, & Door)

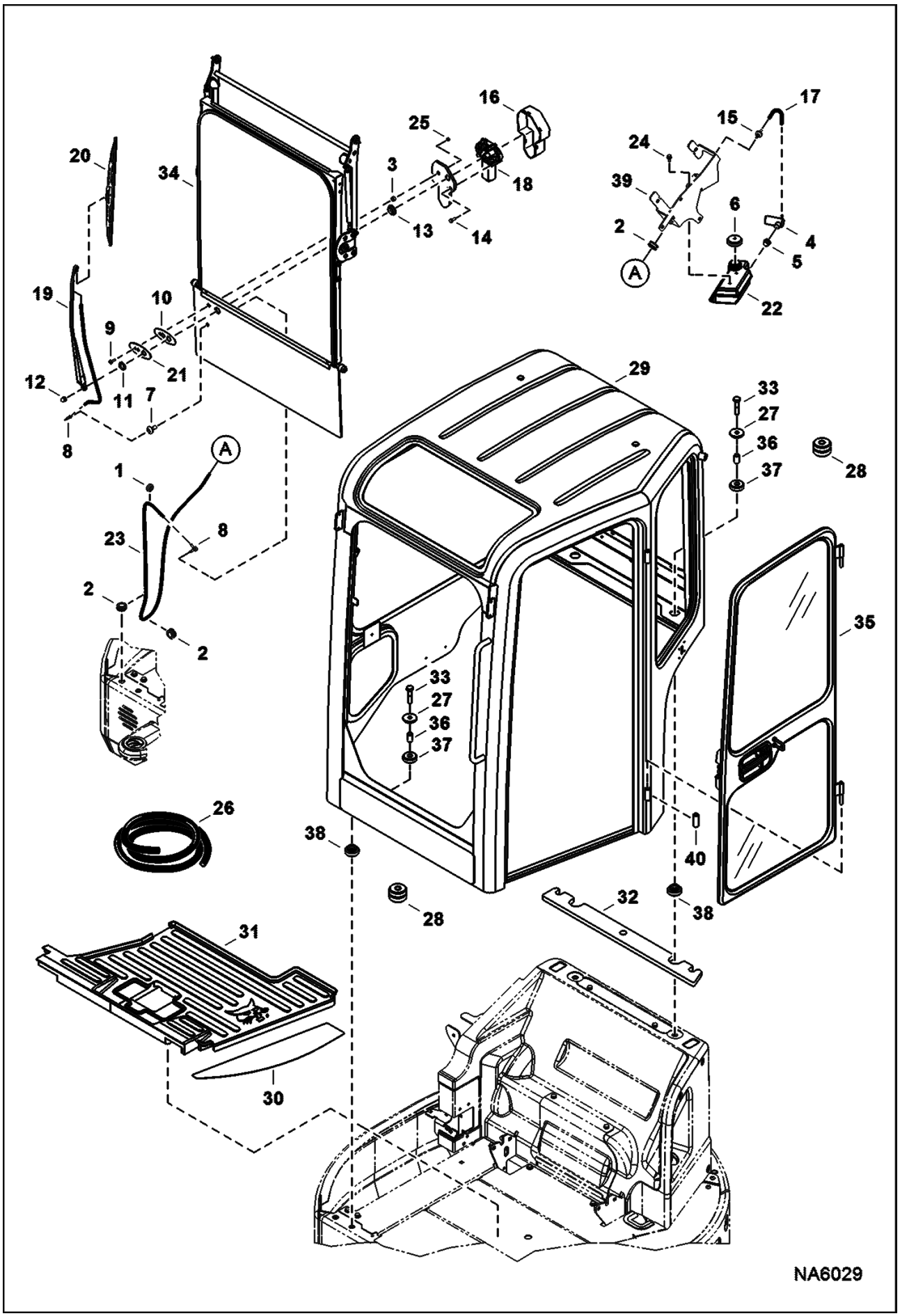

Page 34 - OSS# 2091664 - All rights reserved by Bobcat Company - 08/27/2012 - 11:42:23 - Produced by Ken Cook Co. with media1off

OPERATOR CAB (Cont'd)
(Mounting, Front Windows, & Door)

Ref No	Part Number	Description	Remarks	Serial Number	Qty
1	515069	GROMMET			1
2	6587887	GROMMET			3
3	6664085	BUSHING			1
4	6664554	PUMP, WIPER WASHER			1
5	6666766	GROMMET			1
6	6674993	CAP			1
7	6676499	GROMMET			1
8	6676917	ELBOW			2
9	6677837	BOLT			1
10	6677839	GASKET			1
11	6677842	NUT			1
12	6677843	NUT			1
13	6677847	GROMMET			1
14	6681911	SCREW			2
15	6682462	VALVE			1
16	6685140	COVER			1
17		HOSE	NAP - 102 mm (4") long - Order Ref. 26		1
18	7008934	MOTOR, WIPER			1
19	7008936	ARM, WIPER			1
20	7008937	BLADE, WIPER WINDOW			1
21	7009047	PLATE			1
22	7133211	TANK, WASHER			1
23		HOSE	NAP - 1320 mm (52") long - Order Ref. 26		1
24	35C408	BOLT			2
25	4DM5	NUT			1
26	6708310	HOSE, BULK 100	clear - 0.154" ID - sold per foot		x
27	6805244	WASHER			6
28	7174043	MOUNT, LOAD ISOLATOR ASSY	Ref. 36-38		4
29	7187718	CAB, W/A			1
30	7194930	TREAD, SAFETY			1
31	7199173	MAT, FLOOR	cab		1
32	7202690	SEAL, FOAM			1
33	7CM1460	SCREW			4
34	7155916	WINDOW, CAB FRONT	See Illustration OPERATOR CAB/ NA2790		1
35	7157151	DOOR, CAB ASSY	See Illustration OPERATOR CAB/ NA6043		1
36		TUBE	NSS - Order Ref. 28		4
37		MOUNT	NSS - Order Ref. 28		4
38		MOUNT	NSS - Order Ref. 28		4
39		BRACKET	See Illustration CONTROLS ELECTRICAL/ NA6283		1
40	6719341	HINGE			2

Page 35 - OSS# 2091664 - All rights reserved by Bobcat Company - 08/27/2012 - 11:42:23 - Produced by Ken Cook Co. with media1off

OPERATOR CAB
(Insulation)

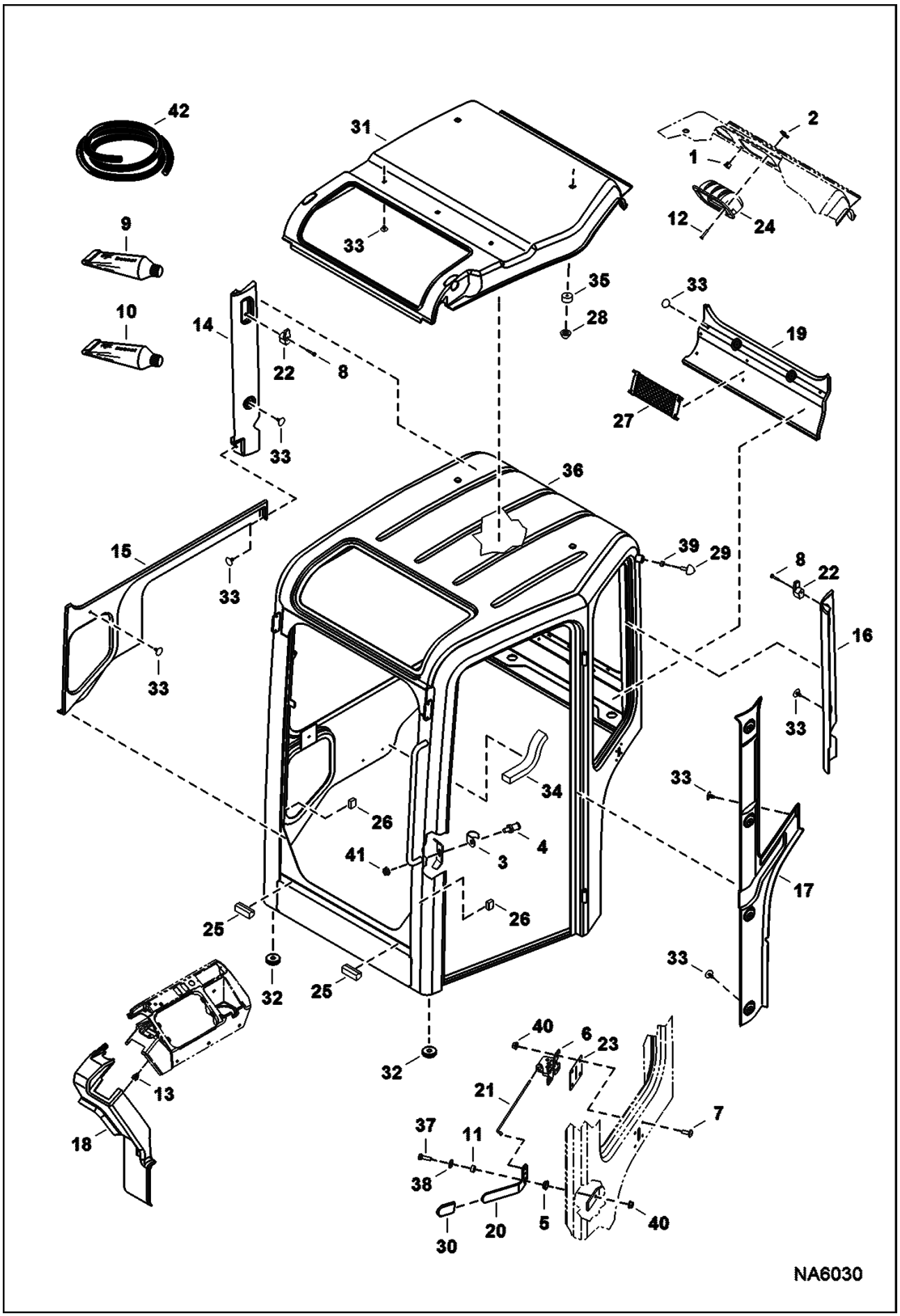

Page 36 - OSS# 2091664 - All rights reserved by Bobcat Company - 08/27/2012 - 11:42:23 - Produced by Ken Cook Co. with media1off

OPERATOR CAB (Cont'd)
(Insulation)

Ref No	Part Number	Description	Remarks	Serial Number	Qty
1	6649949	PLUG			1
2	6685744	CLIP			4
3	6688999	STRIKER GUARD			1
4	6689007	STRIKER BOLT			1
5	6698186	BEARING, CLIP			1
6	6698503	LATCH, HOLD OPEN			1
7	6803202	SCREW			4
8	6808424	SCREW			2
9	6808882	ADHESIVE			x
10	7102268	PRIMER			x
11	7155449	SPACER			1
12	7163690	SCREW			4
13	7165333	CLIP			4
14	7167095	PANEL, RH			1
15	7167096	PANEL, RH			1
16	7167097	PANEL, LH			1
17	7167098	PANEL, LH			1
18	7168404	COVER, RH			1
19	7169993	PANEL, REAR			1
20	7170488	LEVER			1
21	7170489	LINK			1
22	7170632	HOOK, COAT			2
23	7170799	SEAL, LATCH			1
24	7173287	HOLDER			1
25	7174507	MOUNT, WINDOW			2
26		SEAL	NAP - 25,4 mm (1") long - Order Ref. 42		2
27	7176501	HOLDER, MANUAL			1
28	7178702	BUMPER, RUBBER			2
29	7178703	BUMPER, RUBBER			1
30	7178708	COVER, HANDLE			1
31	7179100	HEADLINER			1
32	6682697	GROMMET			1
33	7182464	CLIP			18
34	7182732	INSULATION			1
35	7182957	SPACER			2
36	7187718	CAB, W/A			1
37	1CM620	BOLT			1
38	25E13	WASHER 5			1
39	4DM10	NUT			1
40	51DM6	NUT			5
41	55D7	NUT			1
42	7174508	SEAL, BULK/FT	bulk - sold per foot		x

Page 37 - OSS# 2091664 - All rights reserved by Bobcat Company - 08/27/2012 - 11:42:23 - Produced by Ken Cook Co. with media1off

OPERATOR CAB
(Windows & Seals)

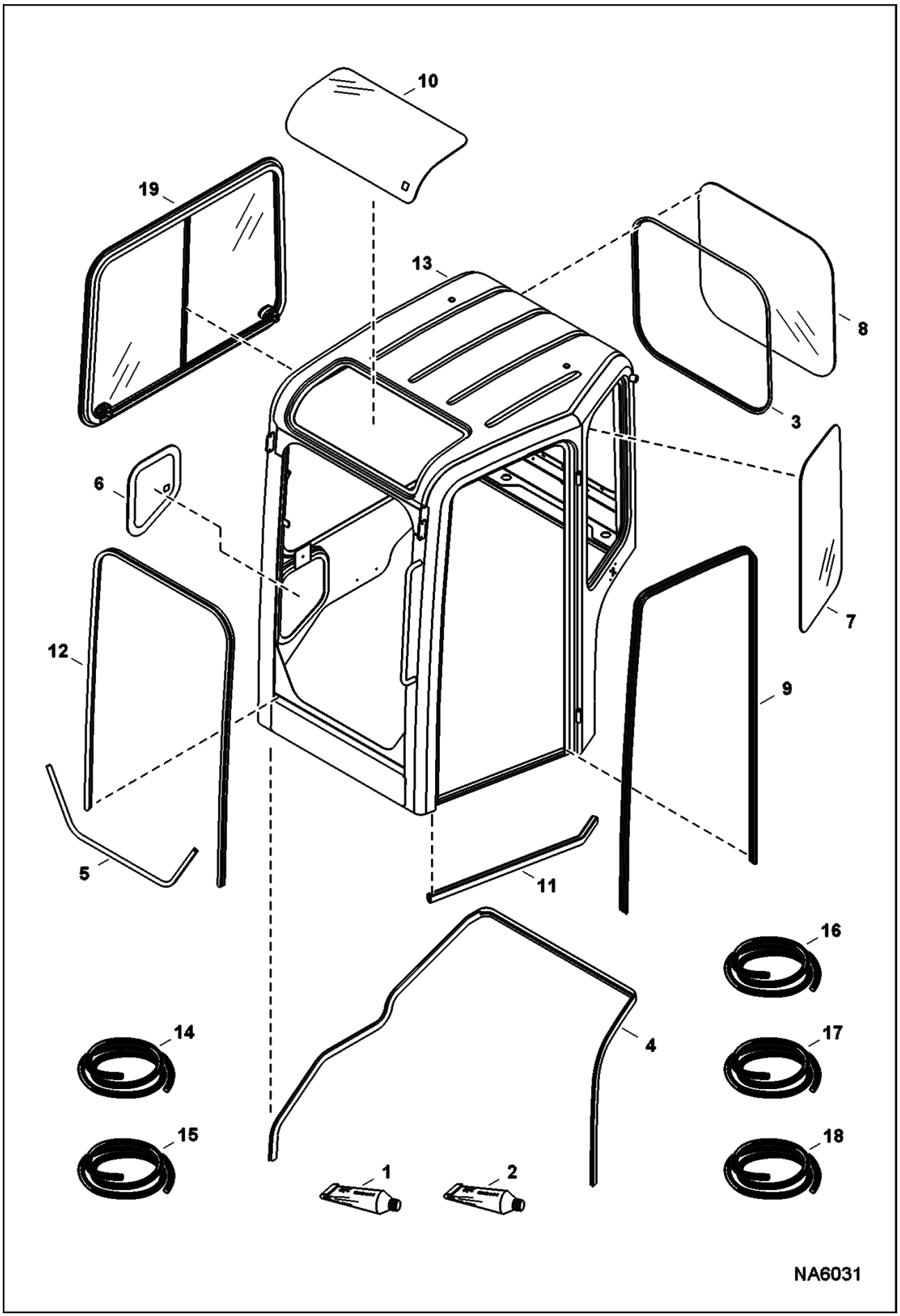

Page 38 - OSS# 2091664 - All rights reserved by Bobcat Company - 08/27/2012 - 11:42:23 - Produced by Ken Cook Co. with media1off

OPERATOR CAB (Cont'd)
(Windows & Seals)

Ref No	Part Number	Description	Remarks	Serial Number	Qty
1	6808882	ADHESIVE			x
2	7102268	PRIMER			1
3		SEAL	NAP - 2500 mm (98.5") long - Order Ref. 14		1
4	7162756	SEAL, CAB			1
5		SEAL	NAP - 1028 mm (40.5") long - Order Ref. 15		1
6	7166468	WINDOW, CAB SIDE FIXED			1
7	7170287	WINDOW, CAB SIDE FIXED			1
8	7170288	WINDOW, CAB REAR			1
9		SEAL	NAP - 3250 mm (128") long - Order Ref. 16		1
10	7180309	WINDOW, CAB TOP			1
11		SEAL	NAP - 813 mm (32") long - Order Ref. 17		1
12		SEAL	NAP - 3000 mm (118.1") long - Order Ref. 18		1
13	7187718	CAB, W/A			1
14	6815939	SEAL	bulk - sold per foot		x
15	7162757	SEAL, BULK	bulk - sold per foot		x
16	7171866	SEAL, BULK	bulk - sold per foot		x
17	7181465	SEAL, BULK / FT	bulk - sold per foot		x
18	7181541	SEAL	bulk - sold per foot - Was 7181540 [A]		x
19	7187777	WINDOW, CAB SLIDING	See Illustration OPERATOR CAB/ NA6124		1

Page 39 - OSS# 2091664 - All rights reserved by Bobcat Company - 08/27/2012 - 11:42:23 - Produced by Ken Cook Co. with media1off

OPERATOR CAB
(Door)

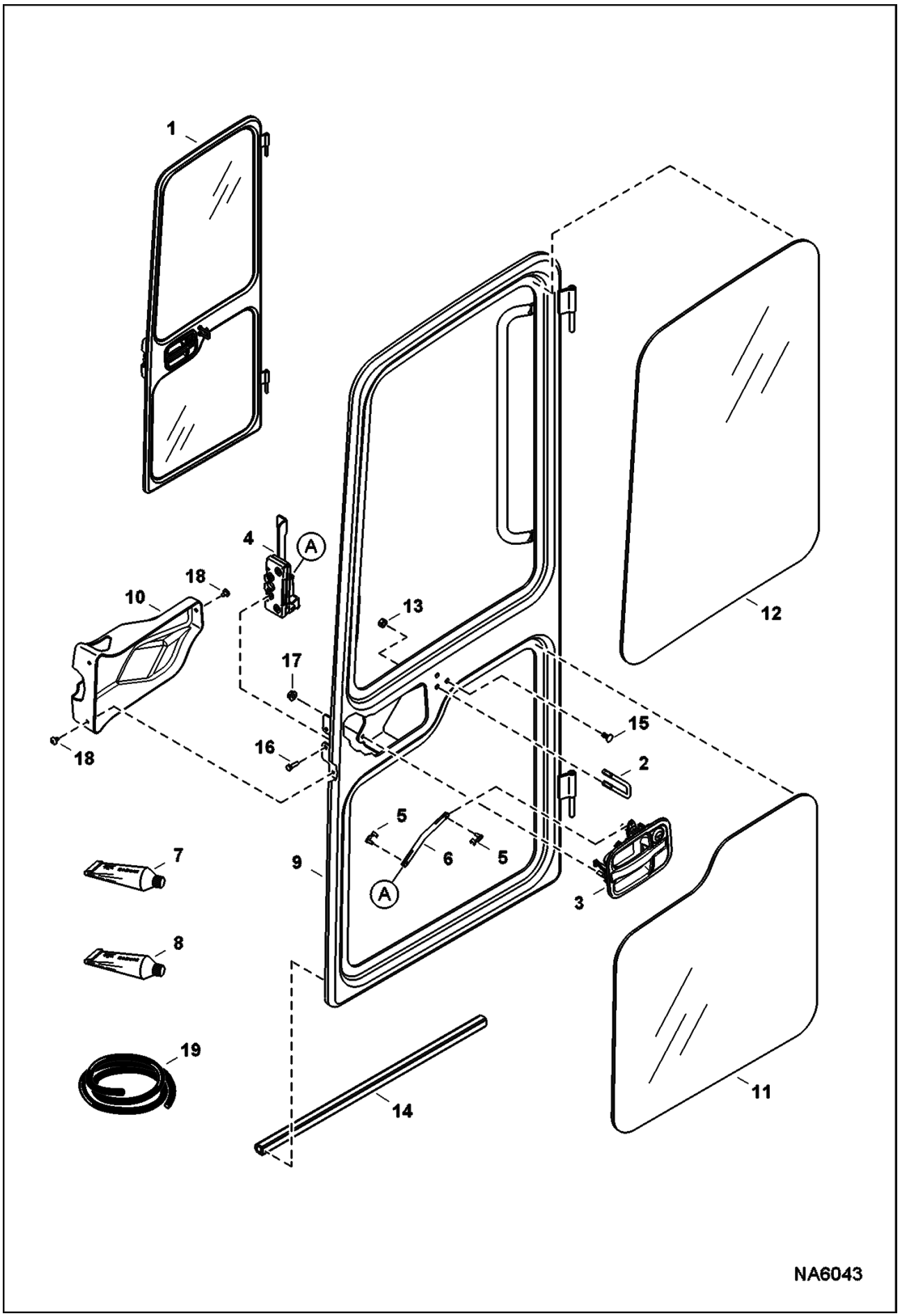

Page 40 - OSS# 2091664 - All rights reserved by Bobcat Company - 08/27/2012 - 11:42:23 - Produced by Ken Cook Co. with media1off

OPERATOR CAB (Cont'd)
(Door)

Ref No	Part Number	Description	Remarks	Serial Number	Qty
1	7157151	DOOR, CAB ASSY	Ref. 2-19		1
2	6698504	U-BOLT			1
3	7008365	HANDLE, DOOR CAB	does not include key - Uses ignition key		1
4	7008366	LATCH, DOOR CAB			1
5	7008367	CLIP, DOOR CAB			2
6	7008368	ROD			1
7	6808882	ADHESIVE			x
8	7102268	PRIMER			x
9		DOOR W/A	NAP - Order Ref. 1		1
10	7189891	COVER, LATCH			1
11	7170289	WINDOW, DOOR CAB LOWER			1
12	7170290	WINDOW, DOOR CAB UPPER			1
13	7170874	NUT			4
14		SEAL, BULB	NAP - 584 mm (23") long - Order Ref. 19		1
15	7012810	PLUG			1
16	1CM620	BOLT			2
17	51DM6	NUT			2
18	6589675	SCREW			2
19	7174361	SEAL, BULK	bulk - sold per foot		x

Page 41 - OSS# 2091664 - All rights reserved by Bobcat Company - 08/27/2012 - 11:42:23 - Produced by Ken Cook Co. with media1off

OPERATOR CAB
(Front Window)

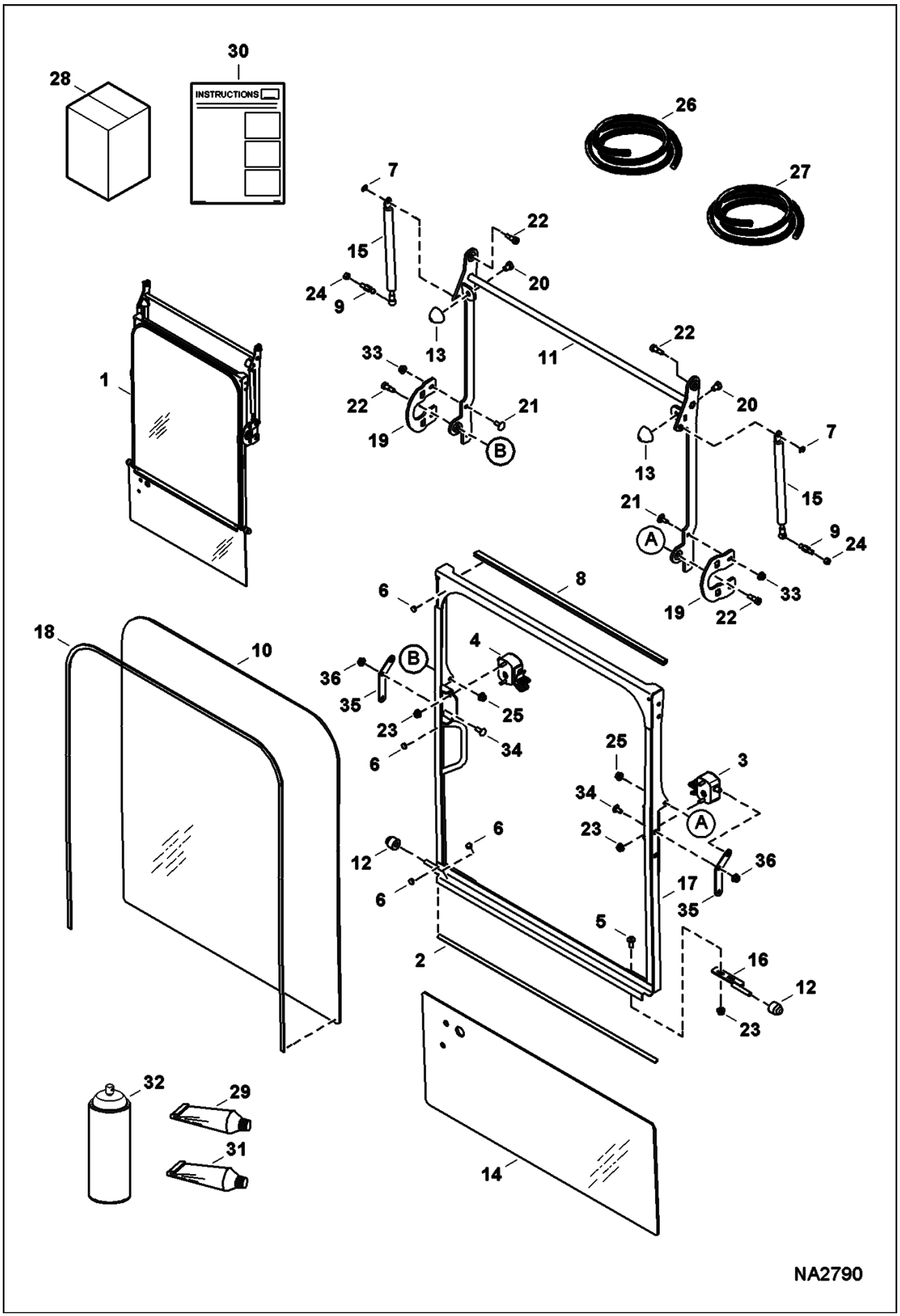

Page 42 - OSS# 2091664 - All rights reserved by Bobcat Company - 08/27/2012 - 11:42:23 - Produced by Ken Cook Co. with media1off

OPERATOR CAB (Cont'd)
(Front Window)

Ref No	Part Number	Description	Remarks	Serial Number	Qty
1	7155916	WINDOW, CAB FRONT	Ref. 2-25, & 33-36		1
2		SEAL, WINDOW	NAP - flat - 711 mm (28") long - Order Ref. 26		1
3	7009561	LATCH, LH			1
4	7009562	LATCH, RH			1
5	6803202	SCREW			2
6	7101512	BUMPER			8
7	9JM60	PIN, RETAINER			2
8		TRIM, WINDOW	NAP - 616 mm (24.2") long - Order Ref. 27		1
9	7177735	STUD, BALL JOINT			2
10		WINDOW, FRONT	NAP - Order Ref. 28		1
11	7194753	LINK, WINDOW FRONT	Also Order Ref. 19		1
12	7178689	ROLLER			2
13	7178702	BUMPER, RUBBER			2
14	7179045	WINDOW, CAB LOWER			1
15	7179320	GAS SPRING			2
16	7179330	PIN			1
17		FRAME, WINDOW W/A	NAP - Order Ref. 1		1
18		SEAL, WINDOW	NAP - 2300 mm (90.5") long - Order Ref. 26		1
19	7194706	PLATE, LATCH	Use W/Ref. 11		2
20	1CM1012	SCREW			2
21	28CM820	BOLT			4
22	38C608	SCREW			4
23	51DM6	NUT			10
24	53DM8	NUT			2
25	83D5	NUT 5			2
26	6648416	SEAL	bulk - sold per foot		x
27	6682492	TRIM	bulk - sold per foot		x
28	7185152	KIT, WINDOW *SEE NOTE*	Ref. 6, 10, 29, & 30 - Also Order Ref. 31 & 32		1
29	6808882	ADHESIVE			1
30	6989489	INSTRUCTIONS			1
31	7102268	PRIMER			1
32	7110861	CLEANER			1
33	51DM8	NUT			4
34	28CM816	BOLT			4
35	7192212	BRACKET, LATCH			2
36	51DM8	NUT			4

Page 43 - OSS# 2091664 - All rights reserved by Bobcat Company - 08/27/2012 - 11:42:23 - Produced by Ken Cook Co. with media1off

OPERATOR CAB
(RH Window) (Slider)

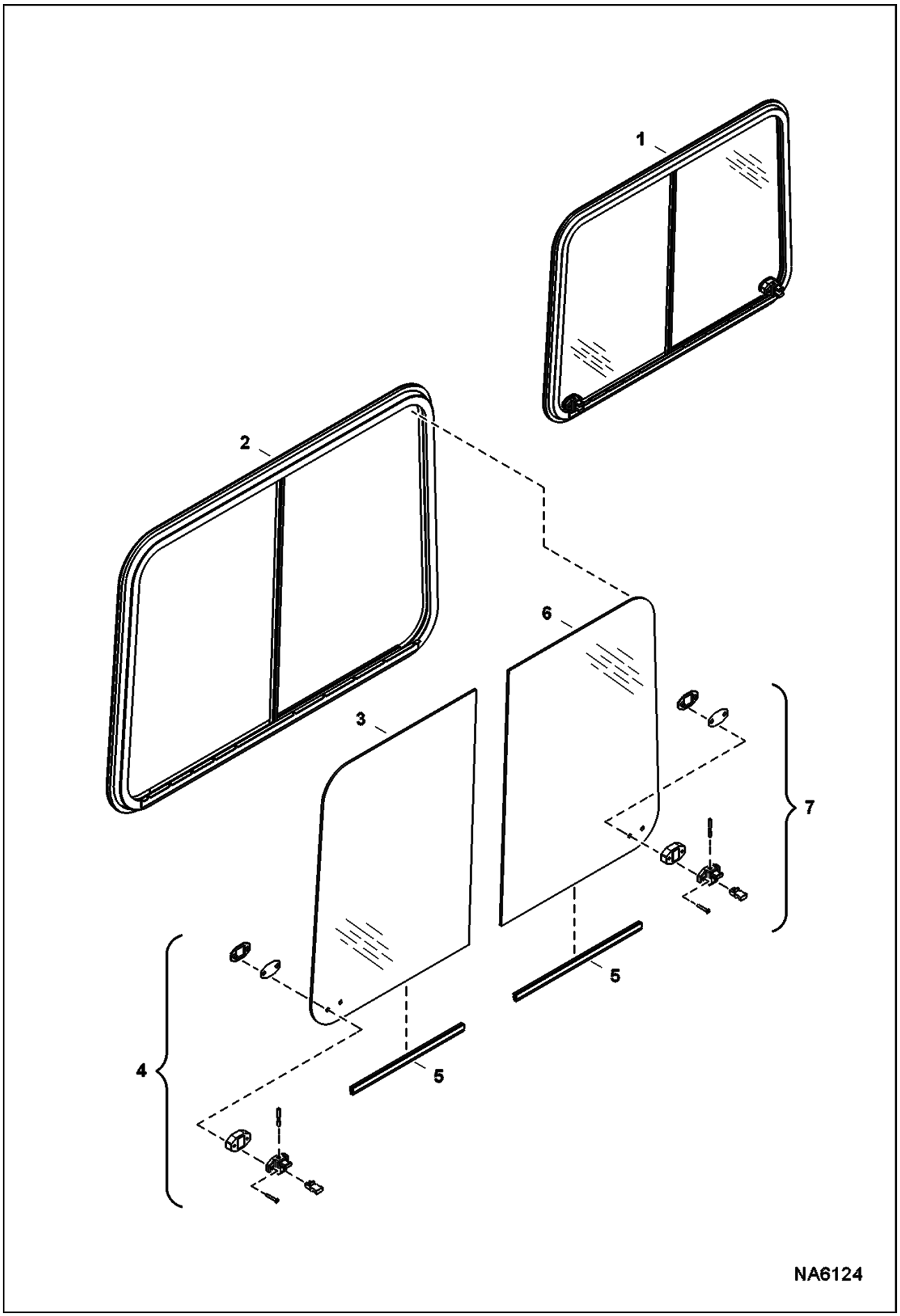

Page 44 - OSS# 2091664 - All rights reserved by Bobcat Company - 08/27/2012 - 11:42:23 - Produced by Ken Cook Co. with media1off

OPERATOR CAB (Cont'd)
(RH Window) (Slider)

Ref No	Part Number	Description	Remarks	Serial Number	Qty
1	7187777	WINDOW, CAB SLIDING	Ref. 2-7		1
2		FRAME, WINDOW	NSS - Order Ref. 1		1
3	7022731	WINDOW, CAB SLIDING FRONT	W/Ref. 4 & 5		1
4		HANDLE, WINDOW SIDE	NSS		1
5		SEAL, WINDOW	NSS		2
6	7022730	WINDOW, CAB SLIDING REAR	W/Ref. 5 & 7		1
7		HANDLE, WINDOW SIDE	NSS		1

Page 45 - OSS# 2091664 - All rights reserved by Bobcat Company - 08/27/2012 - 11:42:23 - Produced by Ken Cook Co. with media1off

OPERATOR CANOPY

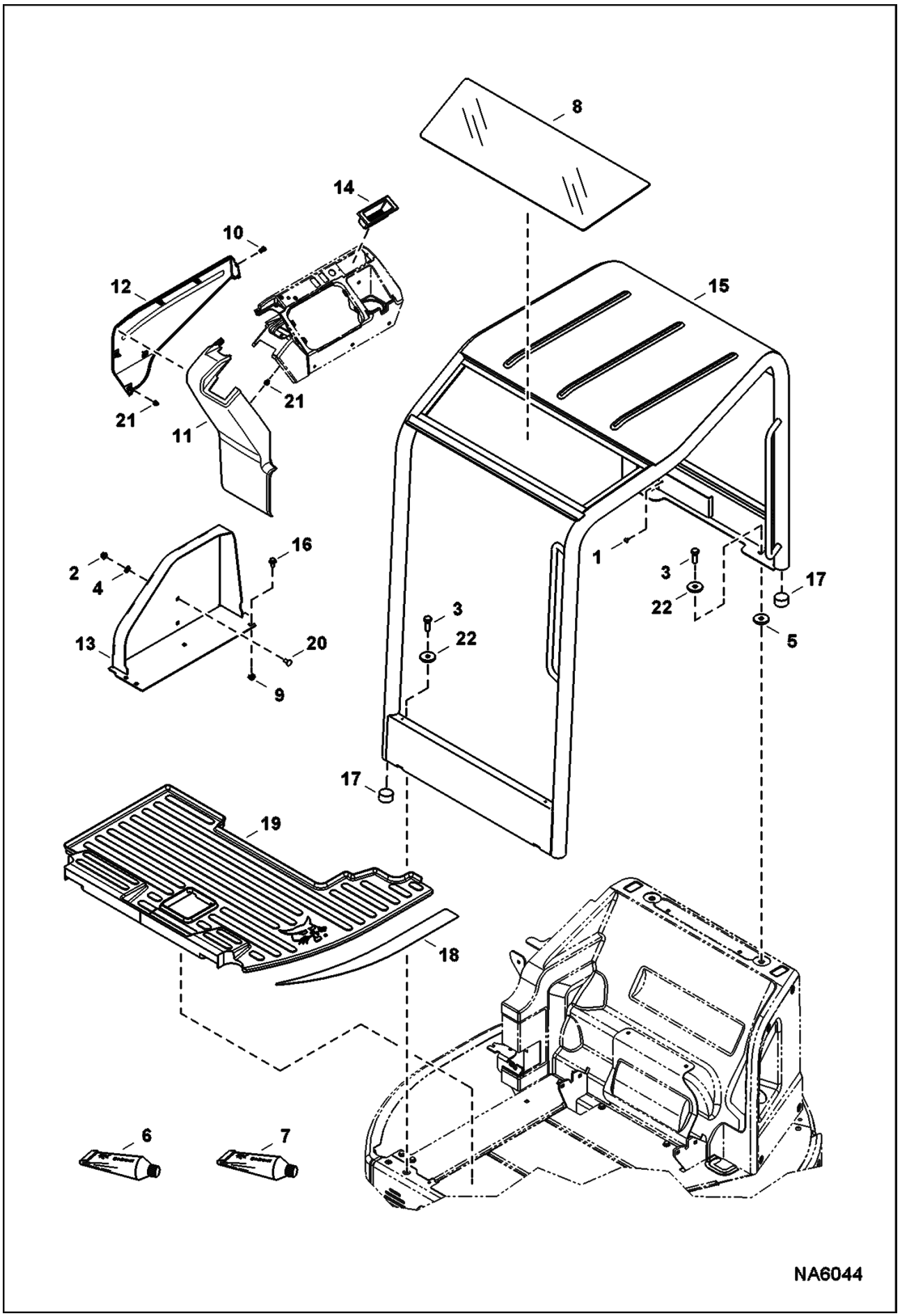

Page 46 - OSS# 2091664 - All rights reserved by Bobcat Company - 08/27/2012 - 11:42:23 - Produced by Ken Cook Co. with mediaioff

Ref No	Part Number	Description	Remarks	Serial Number	Qty
1	6589675	SCREW			1
2	43DM10	NUT			5
3	7CM1440	BOLT			4
4	6674264	RETAINER NUT			3
5	6805244	WASHER			2
6	6808882	ADHESIVE			x
7	7102268	PRIMER			x
8	7143481	WINDOW, CANOPY TOP			1
9	7155411	NUT			2
10	7160383	RIVET, BIRD CAGE			2
11	7165566	COVER, RH			1
12	7165567	COVER, RH			1
13	7170762	PANEL, RH			1
14	7171397	CONTAINER, STORAGE			1
15	7173146	CANOPY, W/A			1
16	29CM1025	BOLT			2
17	7187736	INSULATION			4
18	7195050	TREAD, SAFETY			1
19	7199174	MAT, FLOOR CANOPY			1
20	28CM1020	BOLT			3
21	7165333	CLIP			8
22	7187755	WASHER			4

Page 47 - OSS# 2091664 - All rights reserved by Bobcat Company - 08/27/2012 - 11:42:23 - Produced by Ken Cook Co. with media1off

INSULATION

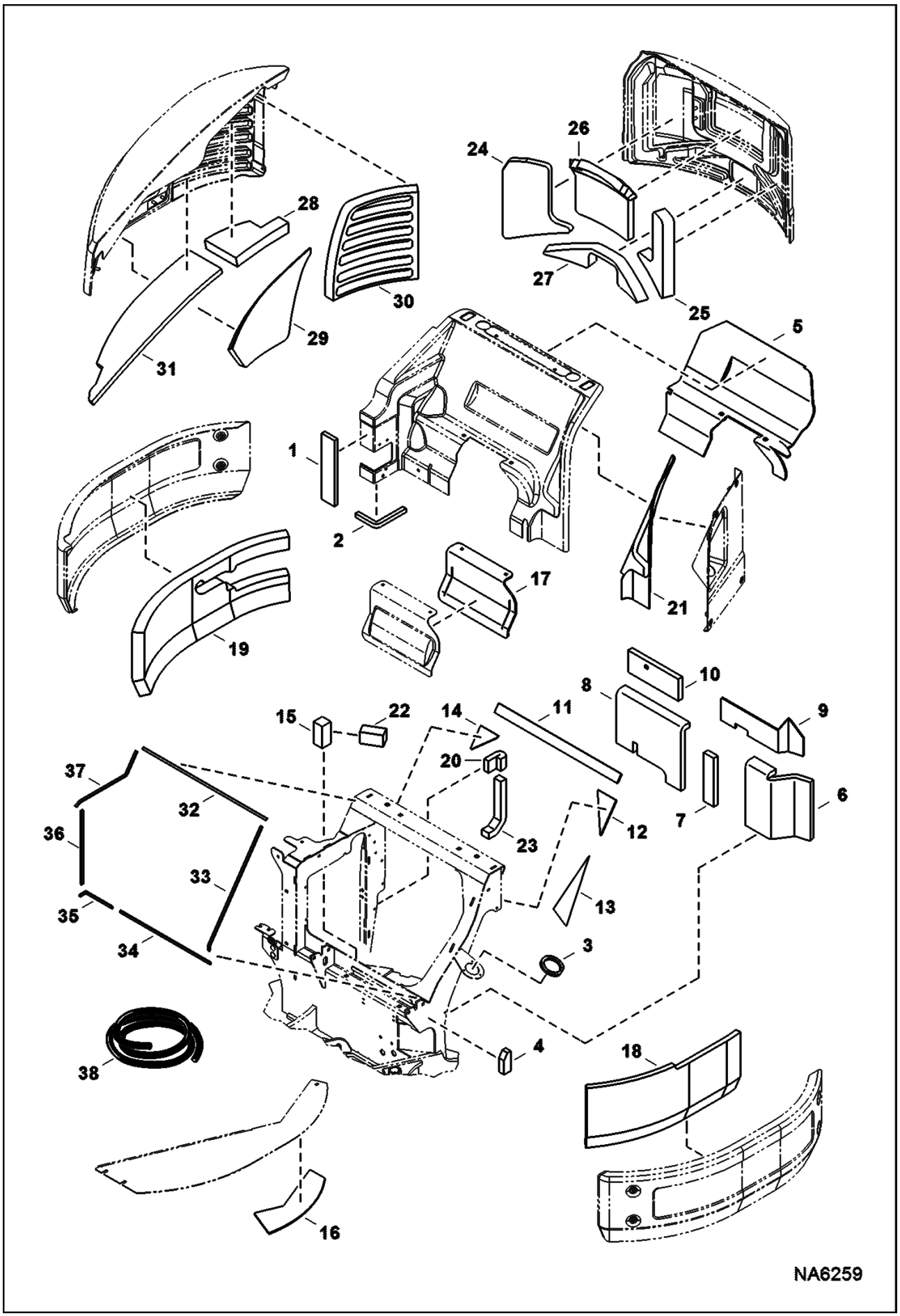

Page 48 - OSS# 2091664 - All rights reserved by Bobcat Company - 08/27/2012 - 11:42:23 - Produced by Ken Cook Co. with media1off

Ref No	Part Number	Description	Remarks	Serial Number	Qty
1	7156375	SEAL, RH PANEL			1
2	7175504	SEAL, ENG			1
3	7176171	INSULATION, PANEL LH			1
4	7180569	INSULATION, PANEL ENG			1
5	7180570	INSULATION, ENG			1
6	7180571	INSULATION, UPPERSTRUCTURE			1
7	7180572	INSULATION, UPPERSTRUCTURE			1
8	7180573	INSULATION, UPPERSTRUCTURE			1
9	7180574	INSULATION, UPPERSTRUCTURE			1
10	7180575	INSULATION, UPPERSTRUCTURE			1
11	7180576	INSULATION, UPPERSTRUCTURE			1
12	7180577	INSULATION, UPPERSTRUCTURE			1
13	7180578	INSULATION, UPPERSTRUCTURE			1
14	7180579	INSULATION, UPPERSTRUCTURE			1
15	7181884	INSULATION, BLOCK			1
16	7185878	INSULATION, FLOOR			1
17	7185879	INSULATION, PANEL ENG			1
18	7185881	INSULATION, SIDE			1
19	7206586	INSULATION, SIDE			1
20	7185883	INSULATION, RADIATOR			1
21	7196872	INSULATION, PANEL ENG			1
22	7196875	INSULATION, COUNTERWEIGHT			1
23	7196876	INSULATION, UPPERSTRUCTURE			1
24	7200417	INSULATION, DOOR REAR			1

Page 49 - OSS# 2091664 - All rights reserved by Bobcat Company - 08/27/2012 - 11:42:23 - Produced by Ken Cook Co. with media1off

INSULATION (Cont'd)

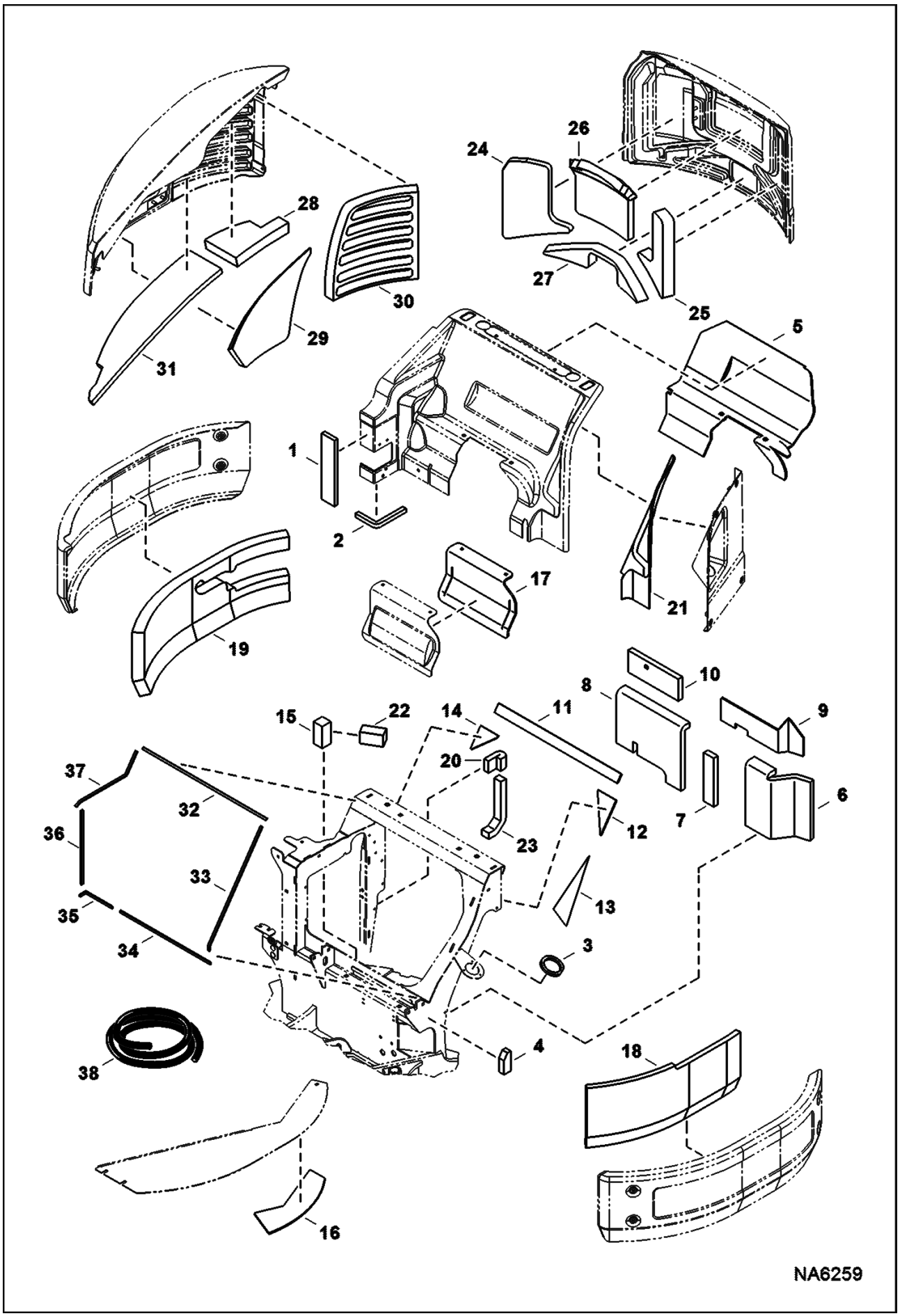

Page 50 - OSS# 2091664 - All rights reserved by Bobcat Company - 08/27/2012 - 11:42:23 - Produced by Ken Cook Co. with media1off

Ref No	Part Number	Description	Remarks	Serial Number	Qty
25	7200418	INSULATION, DOOR REAR			1
26	7200419	INSULATION, DOOR REAR			1
27	7200420	INSULATION, DOOR REAR			1
28	7200421	INSULATION, COVER RH			1
29	7200422	INSULATION, COVER RH			1
30	7200423	INSULATION, COVER RH			1
31	7200518	INSULATION, COVER RH			1
32		SEAL, COVER	NAP - 717 mm (28.22") long - Order Ref. 38		1
33		SEAL, COVER	NAP - 564,5 mm (22.22") long - Order Ref. 38		1
34		SEAL, COVER	NAP - 525 mm (20.67") long - Order Ref. 38		1
35		SEAL, COVER	NAP - 191,9 mm (7.56") long - Order Ref. 38		1
36		SEAL, COVER	NAP - 373,1 mm (14.69") long - Order Ref. 38		1
37		SEAL, COVER	NAP - 403,2 mm (15.87") long - Order Ref. 38		1
38	7135394	SEAL BULK	bulk - sold per foot		x

Page 51 - OSS# 2091664 - All rights reserved by Bobcat Company - 08/27/2012 - 11:42:23 - Produced by Ken Cook Co. with media1off

RH COVER

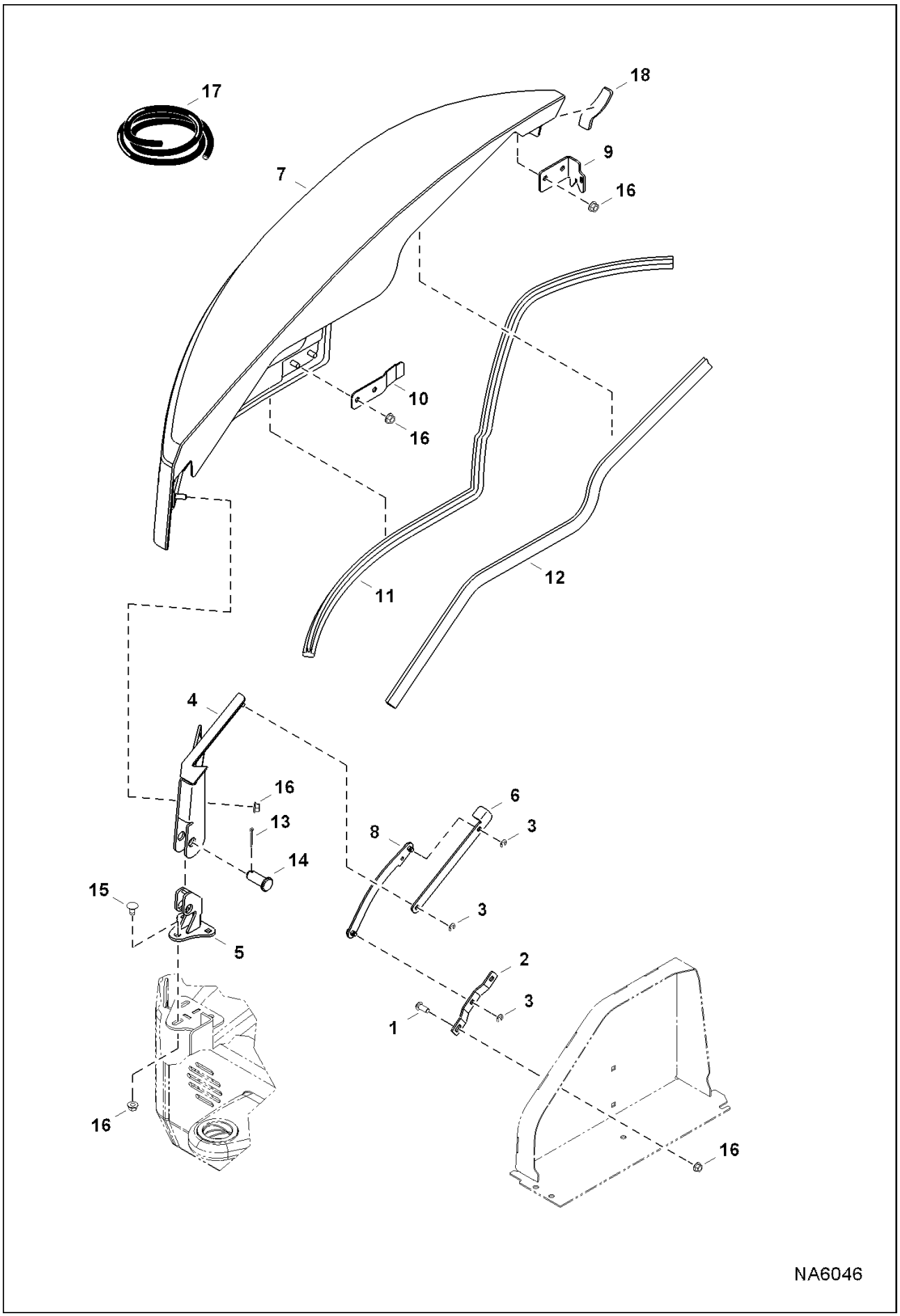

Page 52 - OSS# 2091664 - All rights reserved by Bobcat Company - 08/27/2012 - 11:42:23 - Produced by Ken Cook Co. with media1off

Ref No	Part Number	Description	Remarks	Serial Number	Qty
1	6817769	BOLT			2
2	7165414	BRACKET			1
3	7170446	PIN, RETAINER			3
4	7173069	HINGE, COVER			1
5	7173070	HINGE			1
6	7173078	LINK			1
7	7177852	COVER, RH			1
8	7192417	LINK, ASSY			1
9	7196072	BRACKET, COVER			1
10	7196834	BRACKET, COVER			1
11		SEAL, COVER	NAP - 1461,3 mm (57.5") long - Order Ref. 17		1
12		SEAL, COVER	NAP - 1057,7 mm (41.6") long - Order Ref. 17		1
13	13JM532	PIN, COTTER			1
14	14JM2050	CLEVIS			1
15	33CM1020	BOLT			3
16	43DM10	NUT			10
17	7160901	SEAL, BULK	bulk - sold per foot		x
18	7205558	SEAL, COVER			1

Page 53 - OSS# 2091664 - All rights reserved by Bobcat Company - 08/27/2012 - 11:42:23 - Produced by Ken Cook Co. with media1off

REAR DOOR

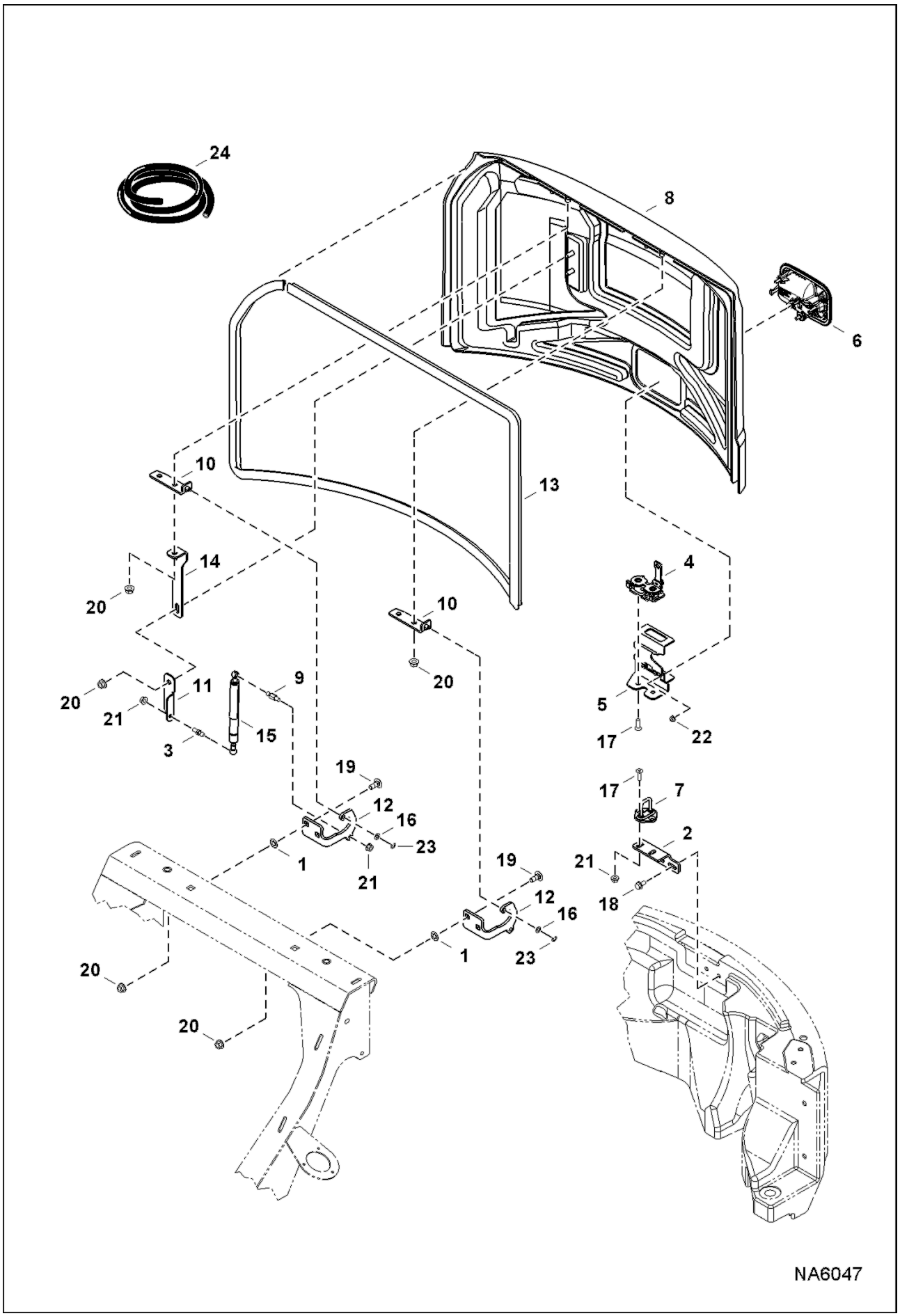

Page 54 - OSS# 2091664 - All rights reserved by Bobcat Company - 08/27/2012 - 11:42:23 - Produced by Ken Cook Co. with media1off

Ref No	Part Number	Description	Remarks	Serial Number	Qty
1	6674264	RETAINER NUT			4
2	7166867	BRACKET			1
3	7170322	STUD, BALL JOINT			1
4	7170871	LATCH, DOOR REAR			1
5	7170872	BRACKET, LATCH			1
6	7170873	LATCH, HANDLE			1
7	7170944	STRIKER, LATCH DOOR			1
8	7173084	REAR DOOR			1
9	7177735	STUD, BALL JOINT			1
10	7196490	HINGE, DOOR REAR			2
11	7196591	PLATE, HOLDER			1
12	7197772	HINGE, DOOR REAR			2
13		SEAL, COVER	NAP - 2784 mm (1109.6") long - Order Ref. 24		1
14	7201816	BRACE			1
15	7202414	GAS SPRING			1
16	15EM80	WASHER			2
17	23GM825	SCREW			4
18	29CM816	SCREW			2
19	33CM1025	BOLT			4
20	43DM10	NUT			10
21	43DM8	NUT			4
22	51DM6	NUT			2
23	9JM60	PIN, RETAINER			2
24	7160901	SEAL, BULK	bulk - sold per foot		x

Page 55 - OSS# 2091664 - All rights reserved by Bobcat Company - 08/27/2012 - 11:42:23 - Produced by Ken Cook Co. with media1off

UNDERCARRIAGE

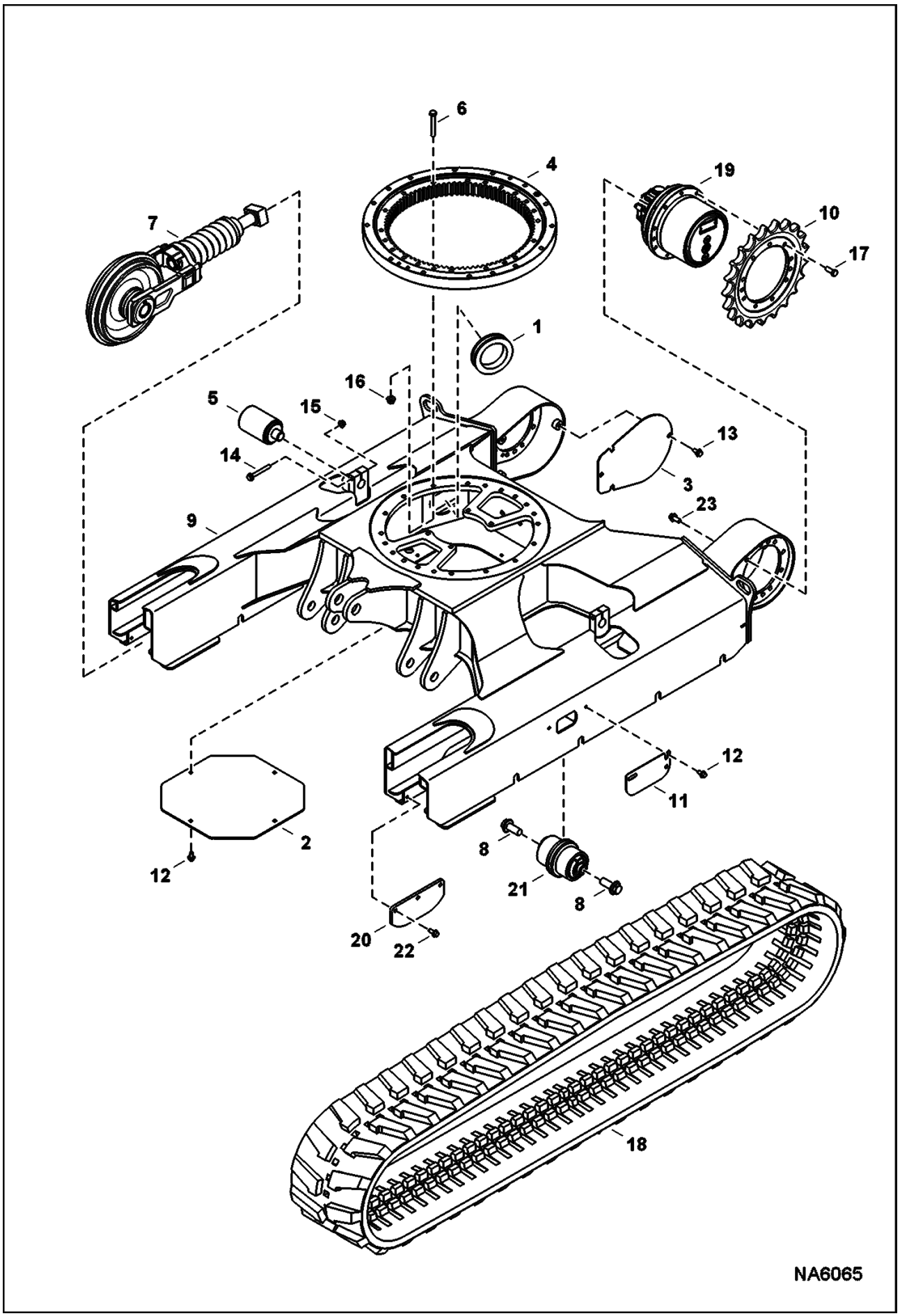

Page 56 - OSS# 2091664 - All rights reserved by Bobcat Company - 08/27/2012 - 11:42:23 - Produced by Ken Cook Co. with mediaioff

Ref No	Part Number	Description	Remarks	Serial Number	Qty
1	7127210	GROMMET			2
2	7142236	COVER, ACCESS			1
3	7142237	COVER, MOTOR			2
4	7153297	RING, SLEW	See Illustration UPPERSTRUCTURE/ NA6291		1
5	7153331	ROLLER, TRACK	See Illustration TRACK ROLLER/ NA6067		2
6	7161099	BOLT			20
7	7169185	IDLER, ASSY	See Illustration TRACK TENSIONER & IDLER/ NA6066		2
8	7011925	BOLT			16
9	7182841	UNDERCARRIAGE			1
10	7199006	SPROCKET, MACHINED			2
11	7201929	COVER			2
12	26GM10020	BOLT			8
13	29CM1020	BOLT			6
14	29CM1080	SCREW			2
15	51DM10	NUT			2
16	51DM12	NUT			20
17	55CM1230	SCREW			22
18		TRACK, RUBBER	See Illustration TRACKS/ NA6195		2
18		TRACK, STEEL	See Illustration TRACKS/ NA2026		2
19		MOTOR, TRAVEL	See Illustration TRAVEL MOTOR/ NA6099		2
20	6596396	PLATE	guide - steel track		4
21		ROLLER, TRACK	See Illustration TRACK ROLLER/ NA2024		8
22	26GM10025	SCREW			12
23	7162236	SCREW			22

Page 57 - OSS# 2091664 - All rights reserved by Bobcat Company - 08/27/2012 - 11:42:23 - Produced by Ken Cook Co. with media1off

TRACK TENSIONER & IDLER

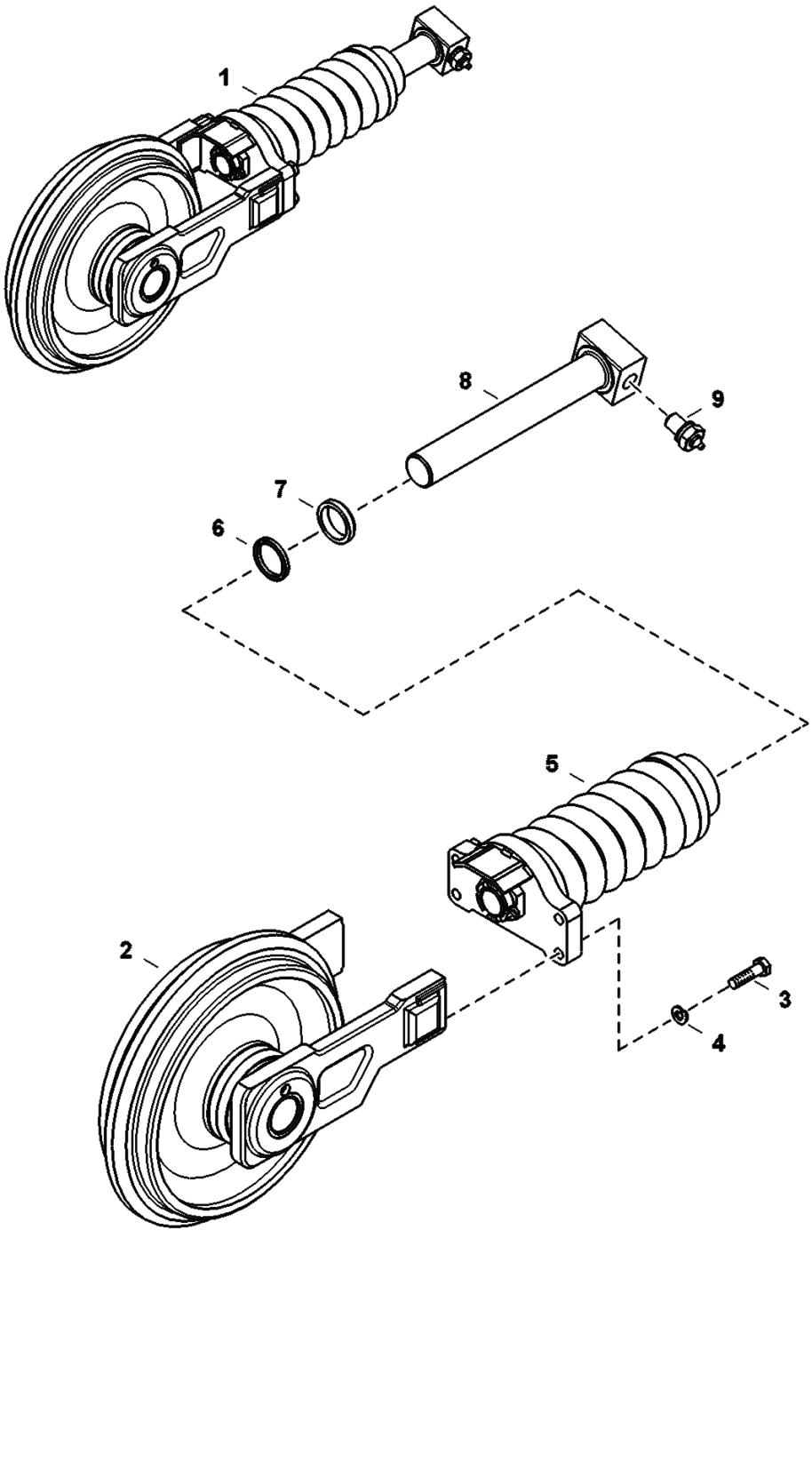

Page 58 - OSS# 2091664 - All rights reserved by Bobcat Company - 08/27/2012 - 11:42:23 - Produced by Ken Cook Co. with media1off

Ref No	Part Number	Description	Remarks	Serial Number	Qty
1	7205956	IDLER, ASSY	rubber track - Ref. 2-8 - Also Order Ref. 9		1
1	7207538	IDLER, ASSY	steel track - Ref. 2-8 - Also Order Ref. 9		1
2	7022139	IDLER, TRACK FRONT			1
3	7022140	BOLT, HEX SOCKET			4
4	7022141	WASHER			4
5	7022142	TENSIONER, TRACK ASSY	rubber track - includes Ref. 6-8		1
5	7023113	TENSIONER, TRACK ASSY	steel track - includes Ref. 6-8		1
6	7022143	RING, WEAR			1
7	7022144	SEAL, WIPER ROD			1
8	7022145	SHAFT, ROD CYL			1
9	7177516	FITTING, GREASE			1

Page 59 - OSS# 2091664 - All rights reserved by Bobcat Company - 08/27/2012 - 11:42:23 - Produced by Ken Cook Co. with media1off

TRACK ROLLER
(Bottom)

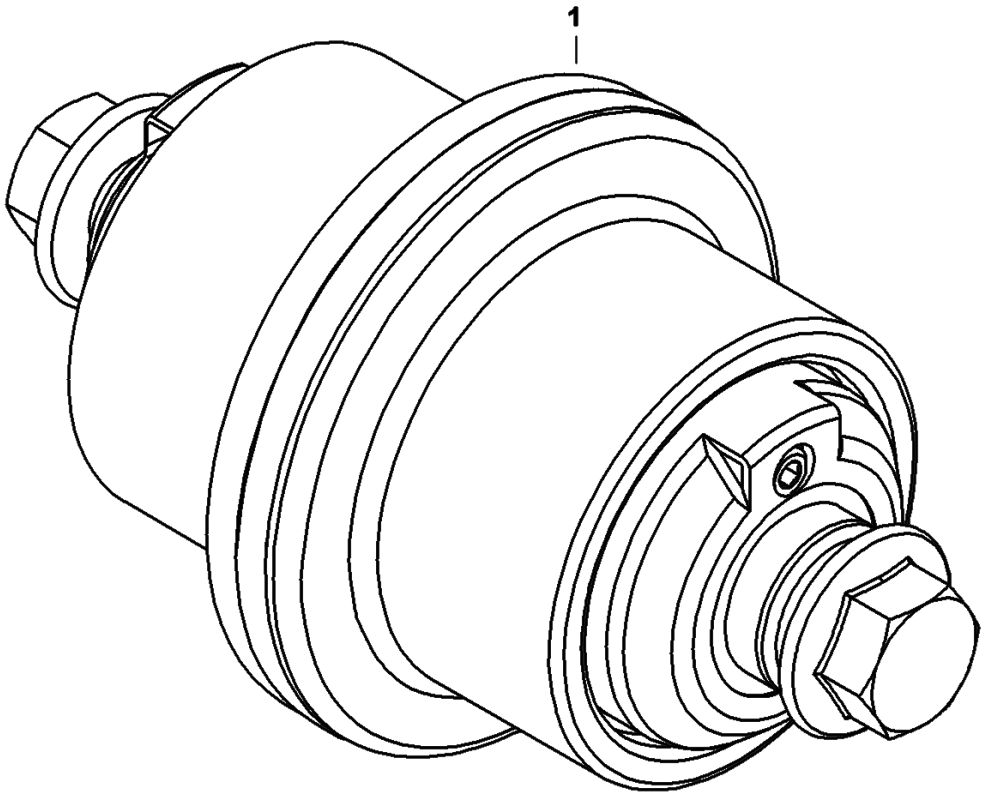

NA2024

Page 60 - OSS# 2091664 - All rights reserved by Bobcat Company - 08/27/2012 - 11:42:23 - Produced by Ken Cook Co. with media1off

TRACK ROLLER (Cont'd)
(Bottom)

Ref No	Part Number	Description	Remarks	Serial Number	Qty
1	7013575	ROLLER, TRACK	for rubber tracks only - Was 6693489 [A]		8
1	7013576	ROLLER, TRACK	for steel tracks only - Was 6693497 [A]		8
1	7011925	BOLT			2

Page 61 - OSS# 2091664 - All rights reserved by Bobcat Company - 08/27/2012 - 11:42:23 - Produced by Ken Cook Co. with media1off

TRACK ROLLER
(Top)

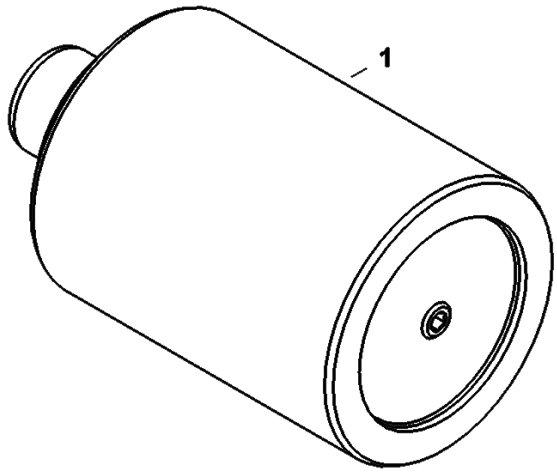

NA6067

Page 62 - OSS# 2091664 - All rights reserved by Bobcat Company - 08/27/2012 - 11:42:23 - Produced by Ken Cook Co. with media1off

Ref No	Part Number	Description	Remarks	Serial Number	Qty
1	7153331	ROLLER, TRACK			2

Page 63 - OSS# 2091664 - All rights reserved by Bobcat Company - 08/27/2012 - 11:42:23 - Produced by Ken Cook Co. with media1off

ARM

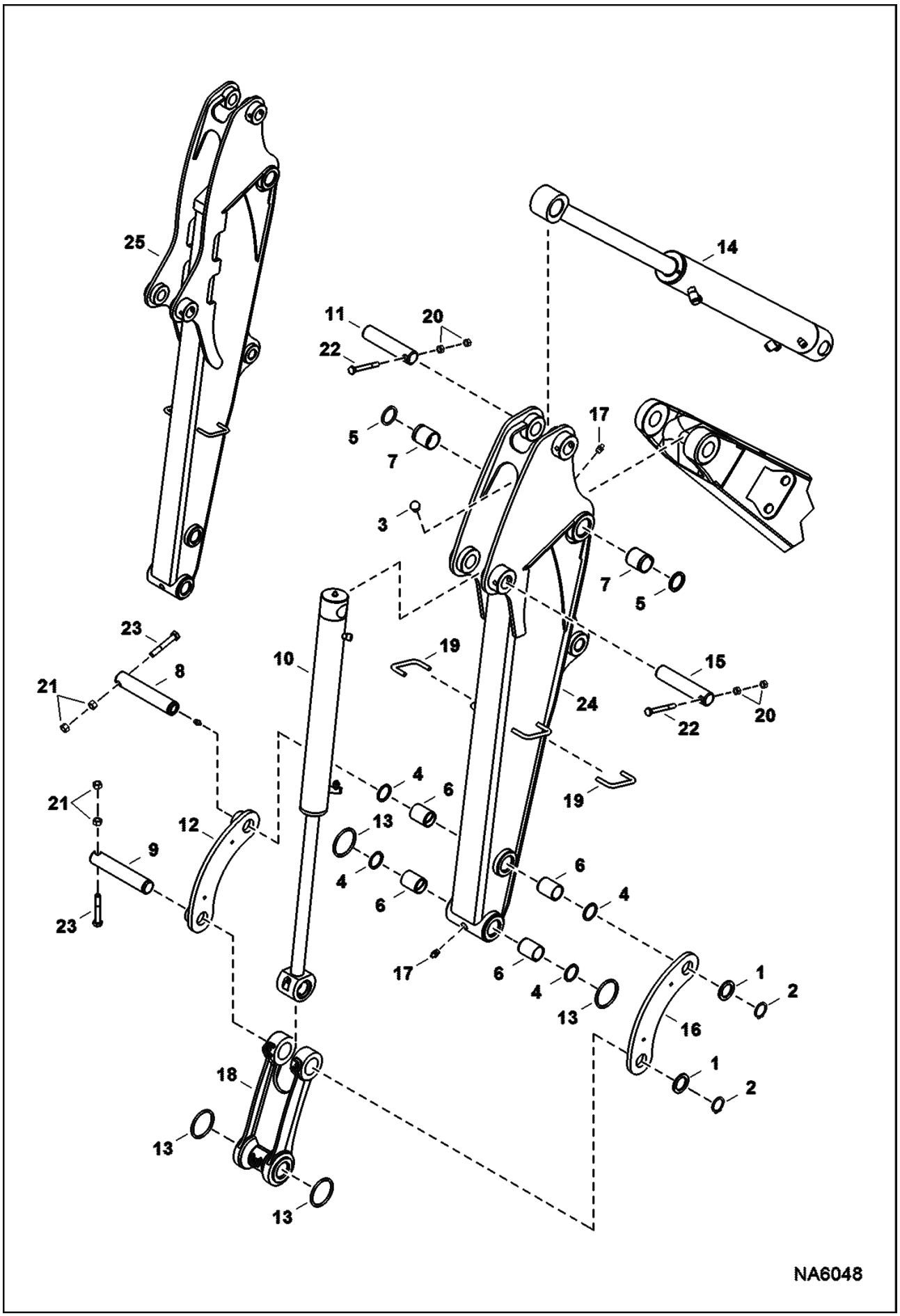

Page 64 - OSS# 2091664 - All rights reserved by Bobcat Company - 08/27/2012 - 11:42:23 - Produced by Ken Cook Co. with media1off

Ref No	Part Number	Description	Remarks	Serial Number	Qty
1	6534111	WASHER			6
2	6534154	RING			6
3	6597572	BUMPER			1
4	6652915	SEAL, OIL			12
5	6660075	SEAL			4
6	6803213	BUSHING, PRESS FIT			4
7	6815277	BUSHING			2
8	7157649	PIN			1
9	7157650	PIN			1
10		CYLINDER, BUCKET	See Illustration BUCKET CYLINDER/ NA6021		1
11	7159418	PIN			1
12	7159419	LINK, ASSY			1
13	7159425	O-RING			4
14		CYLINDER, ARM	See Illustration ARM CYLINDER/ NA6017		1
15	7188793	PIN			1
16	7192877	LINK			1
17	10H25	FITTING, GREASE 5			10
18		LINK, ASSY	See Illustration BUCKET LINK/ NA6049		1
19	6586391	GUIDE	weld-on		2
20	4DM10	NUT			4
21	4DM12	NUT HEX			4
22	7CM1090	Screw Hex HD 10.9			2
23	7CM1280	BOLT			2
24	7206877	ARM, DIPPER W/A EXC	Also Order Ref. 3-7, 13, & 17		1
25	7206870	ARM, DIPPER W/A LONG EXC	Also Order Ref. 3-7, 13, & 17		1

Page 65 - OSS# 2091664 - All rights reserved by Bobcat Company - 08/27/2012 - 11:42:23 - Produced by Ken Cook Co. with media1off

BUCKET LINK

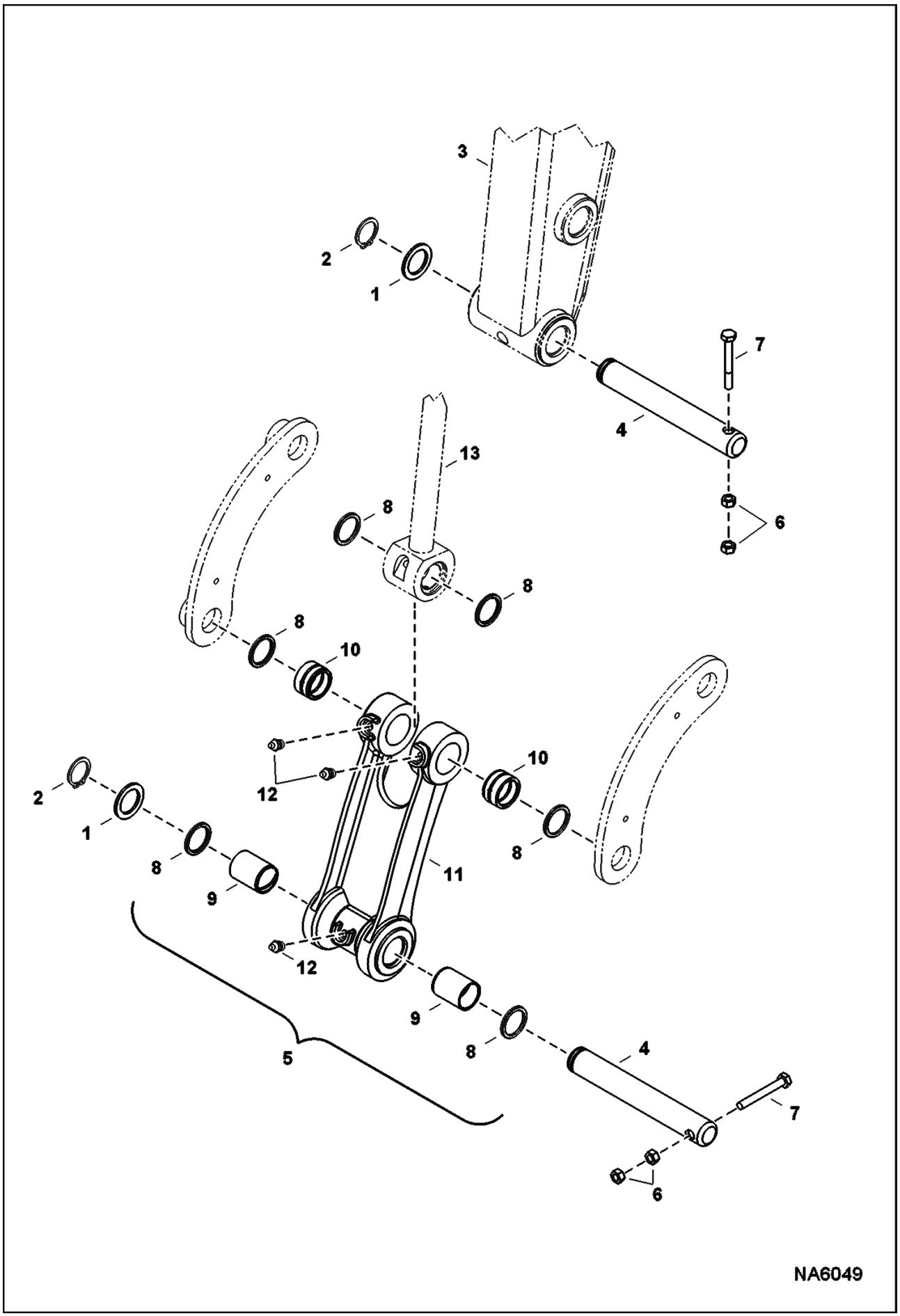

Page 66 - OSS# 2091664 - All rights reserved by Bobcat Company - 08/27/2012 - 11:42:23 - Produced by Ken Cook Co. with media1off

Ref No	Part Number	Description	Remarks	Serial Number	Qty
1	6534111	WASHER			2
2	6534154	RING			2
3		ARM	See Illustration ARM/ NA6048		1
4	7181216	PIN, PIVOT X-CHANGE			2
5	7196521	LINK, ASSY			1
6	4DM10	NUT			4
7	7CM1080	BOLT			2
8	6652915	SEAL, OIL			6
9	6803213	BUSHING, PRESS FIT			2
10	6803309	BUSHING, PRESS FIT			2
11		LINK	NAP - Order Ref. 5		1
12	10H25	FITTING, GREASE 5			3
13		CYLINDER, BUCKET	See Illustration ARM/ NA6048		1

Page 67 - OSS# 2091664 - All rights reserved by Bobcat Company - 08/27/2012 - 11:42:23 - Produced by Ken Cook Co. with media1off

BOOM

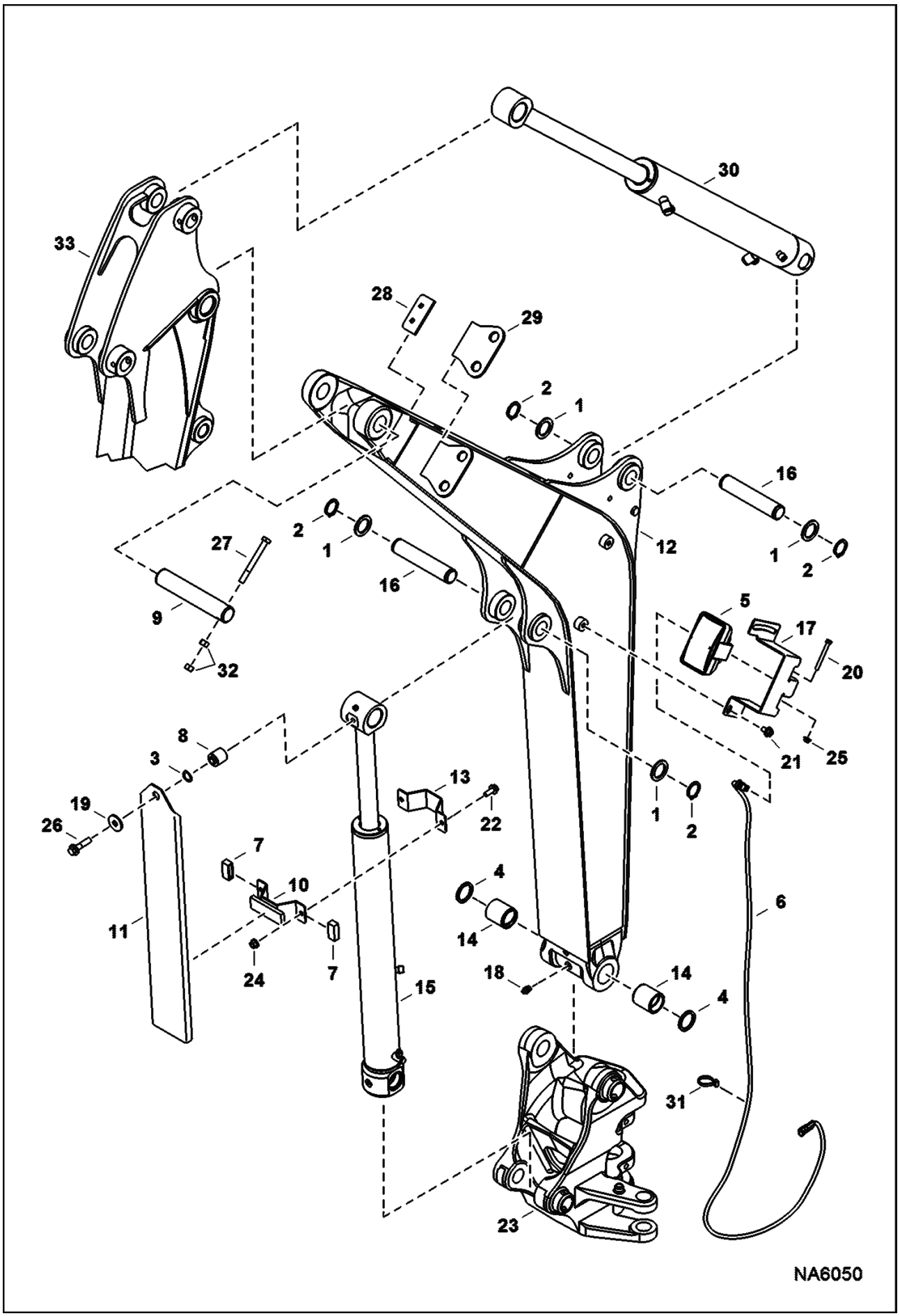

Page 68 - OSS# 2091664 - All rights reserved by Bobcat Company - 08/27/2012 - 11:42:23 - Produced by Ken Cook Co. with mediaioff

Ref No	Part Number	Description	Remarks	Serial Number	Qty
1	6534111	WASHER			4
2	6534154	RING			4
3	6536803	WASHER			1
4	6660075	SEAL			2
5	7018038	LIGHT			1
5	6692400	BULB			x
6	7135895	HARNESS			1
7	7144089	COVER			2
8	7154460	SPACER			1
9	7154697	PIN			1
10	7158551	SHIELD			1
11	7158554	SHIELD, CYL			1
12	7162323	BOOM, ARM DIPPER	Also Order Ref. 4, 14 & 18		1
13	7162368	SHIELD			1
14	7164261	BUSHING, WEAR			2
15		CYLINDER, BOOM	See Illustration BOOM CYLINDER/ NA6019		1
16	7183687	PIN			2
17	7195369	BRACKET, LIGHT WORKING			1
18	10H25	FITTING, GREASE 5			1
19	17EM120	WASHER			1
20	1CM655	SCREW			1
21	29CM1016	BOLT			2
22	29CM1025	BOLT			2
23		BOOM SWING FRAME	See Illustration BOOM SWING FRAME/ NA6052		1
24	51DM10	NUT			2
25	51DM6	NUT			1
26	29CM01235B	BOLT			1
27	7CM12110	BOLT			1
28	7207340	BRACKET	weld-on		1
29	7207339	BRACKET	weld-on		1
30		CYLINDER, ARM	See Illustration ARM CYLINDER/ NA6017		1
31	6624289	STRAP, TIE			3
32	4DM12	NUT HEX			2
33		ARM	See Illustration ARM/ NA6048		1

Page 69 - OSS# 2091664 - All rights reserved by Bobcat Company - 08/27/2012 - 11:42:23 - Produced by Ken Cook Co. with media1off

BLADE

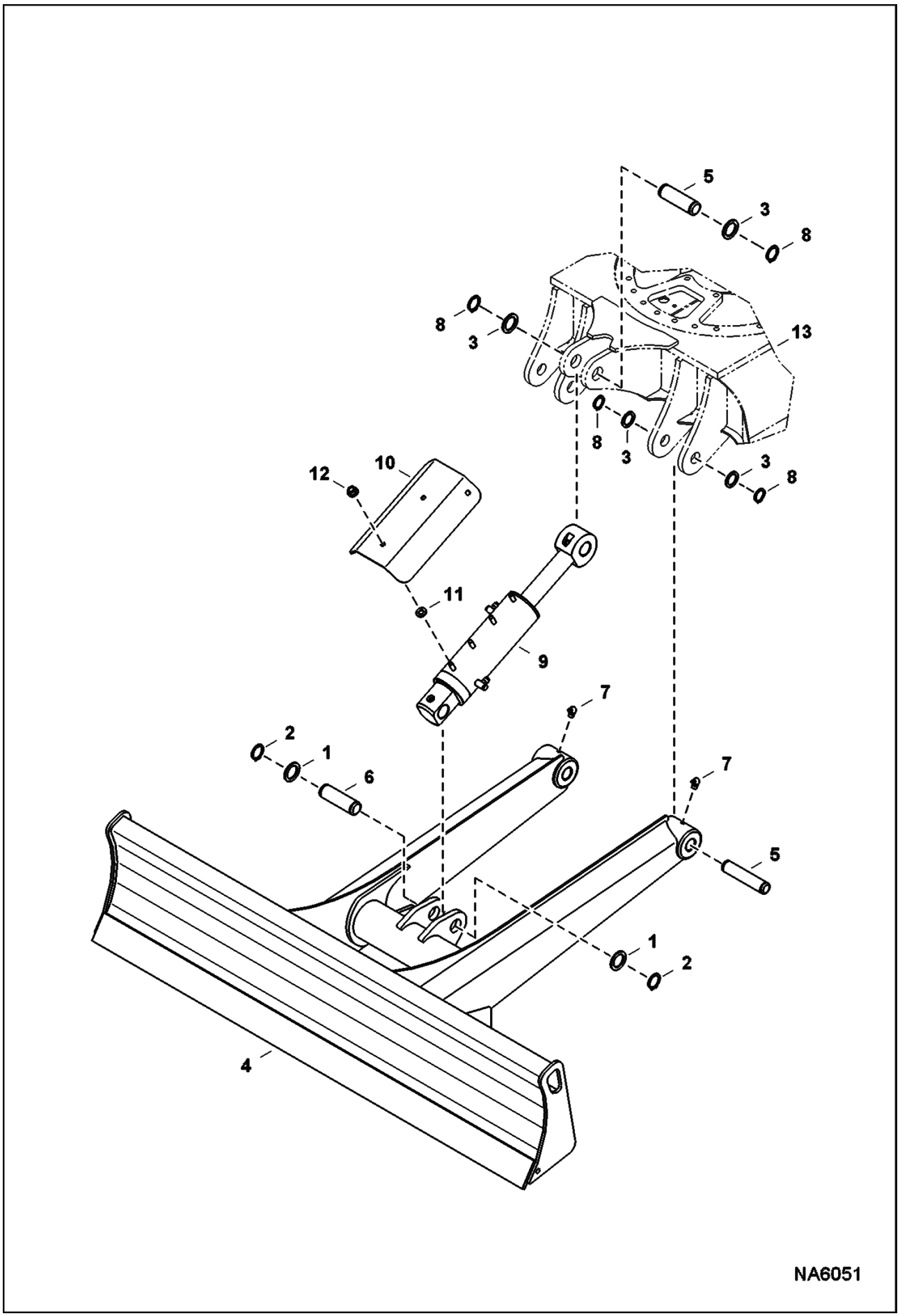

Page 70 - OSS# 2091664 - All rights reserved by Bobcat Company - 08/27/2012 - 11:42:23 - Produced by Ken Cook Co. with media1off

Ref No	Part Number	Description	Remarks	Serial Number	Qty
1	6534111	WASHER			4
2	6534154	RING			4
3	6589699	WASHER			4
4	7185861	BLADE, EXC			1
4	7185862	EDGE, CUTTING WELD-ON 59"			x
5	7191708	PIN, PIVOT			2
6	7191709	PIN, PIVOT			2
7	12H15	FITTING, GREASE 5			2
8	22J19	SNAP RING			4
9		CYLINDER, BLADE	See Illustration BLADE CYLINDER/ NA6018		1
10	7177952	SHIELD, CYL			1
11	1EM100	WASHER			2
12	43DM10	NUT			3
13		UNDERCARRIAGE	See Illustration UNDERCARRIAGE/ NA6065		1

Page 71 - OSS# 2091664 - All rights reserved by Bobcat Company - 08/27/2012 - 11:42:23 - Produced by Ken Cook Co. with media1off

BOOM SWING FRAME

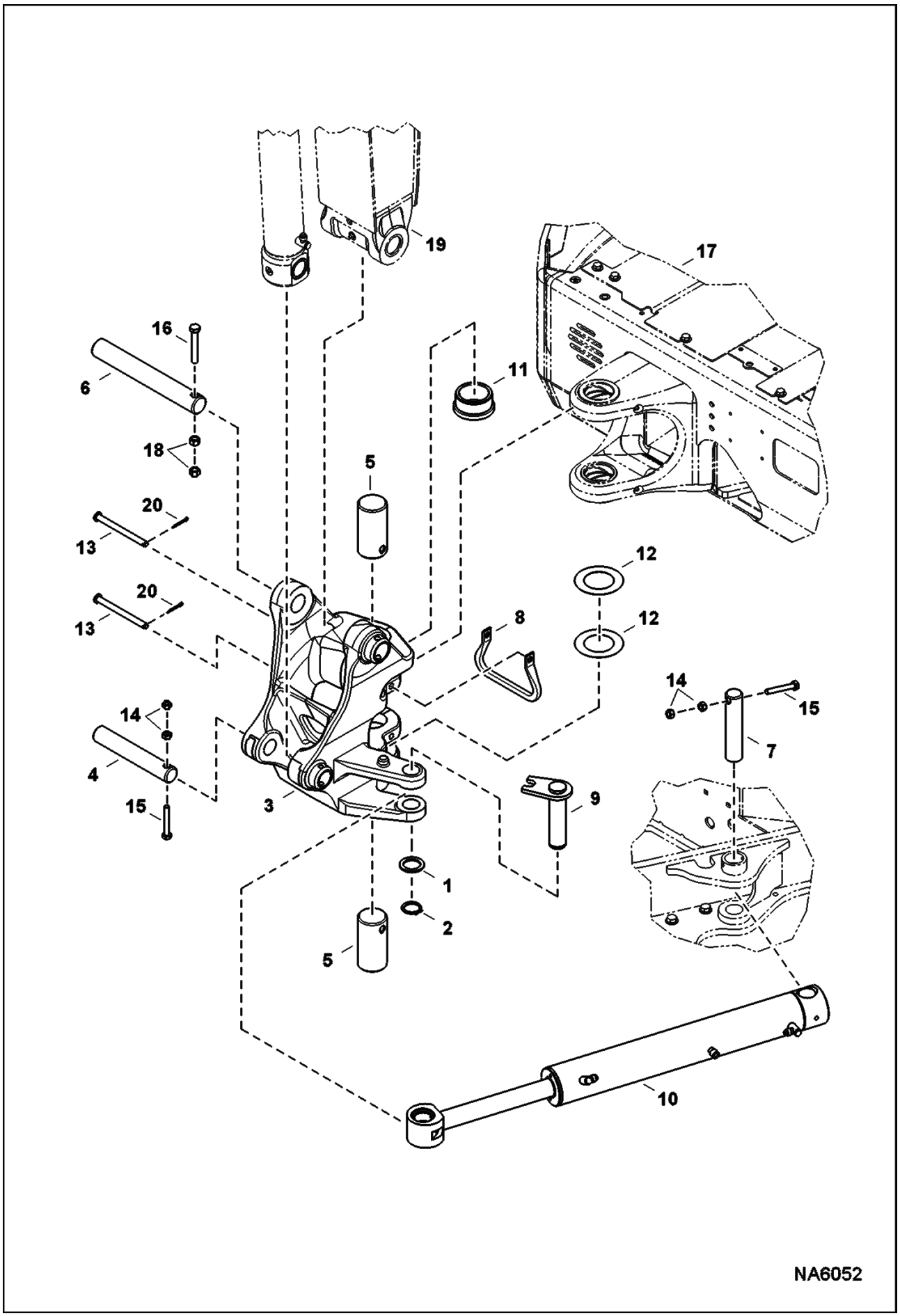

Page 72 - OSS# 2091664 - All rights reserved by Bobcat Company - 08/27/2012 - 11:42:23 - Produced by Ken Cook Co. with media1off

Ref No	Part Number	Description	Remarks	Serial Number	Qty
1	6534111	WASHER			1
2	6534154	RING			1
3	7154369	FRAME, SWING			1
4	7157643	PIN, PIVOT			1
5	7157646	PIN, PIVOT			2
6	7157647	PIN, PIVOT			1
7	7159423	PIN, PIVOT			1
8	7166593	SUPPORT, BRACKET			1
9	7183443	PIN, PIVOT			1
10		CYLINDER, BOOM SWING	See Illustration BOOM SWING CYLINDER/ NA6020		1
11	7192053	BUSHING, WEAR			1
12	7193164	SHIM			2
13	14JM12140	PIN, CLEVIS			2
14	4DM10	NUT			4
15	7CM1070	BOLT			2
16	7CM1280	BOLT			1
17		UPPERSTRUCTURE	See Illustration UPPERSTRUCTURE/ NA6291		1
18	4DM12	NUT HEX			2
19		BOOM	See Illustration BOOM/ NA6050		1
20	13JM320	PIN			2

Page 73 - OSS# 2091664 - All rights reserved by Bobcat Company - 08/27/2012 - 11:42:23 - Produced by Ken Cook Co. with media1off

CONTROL CONSOLE
(RH)

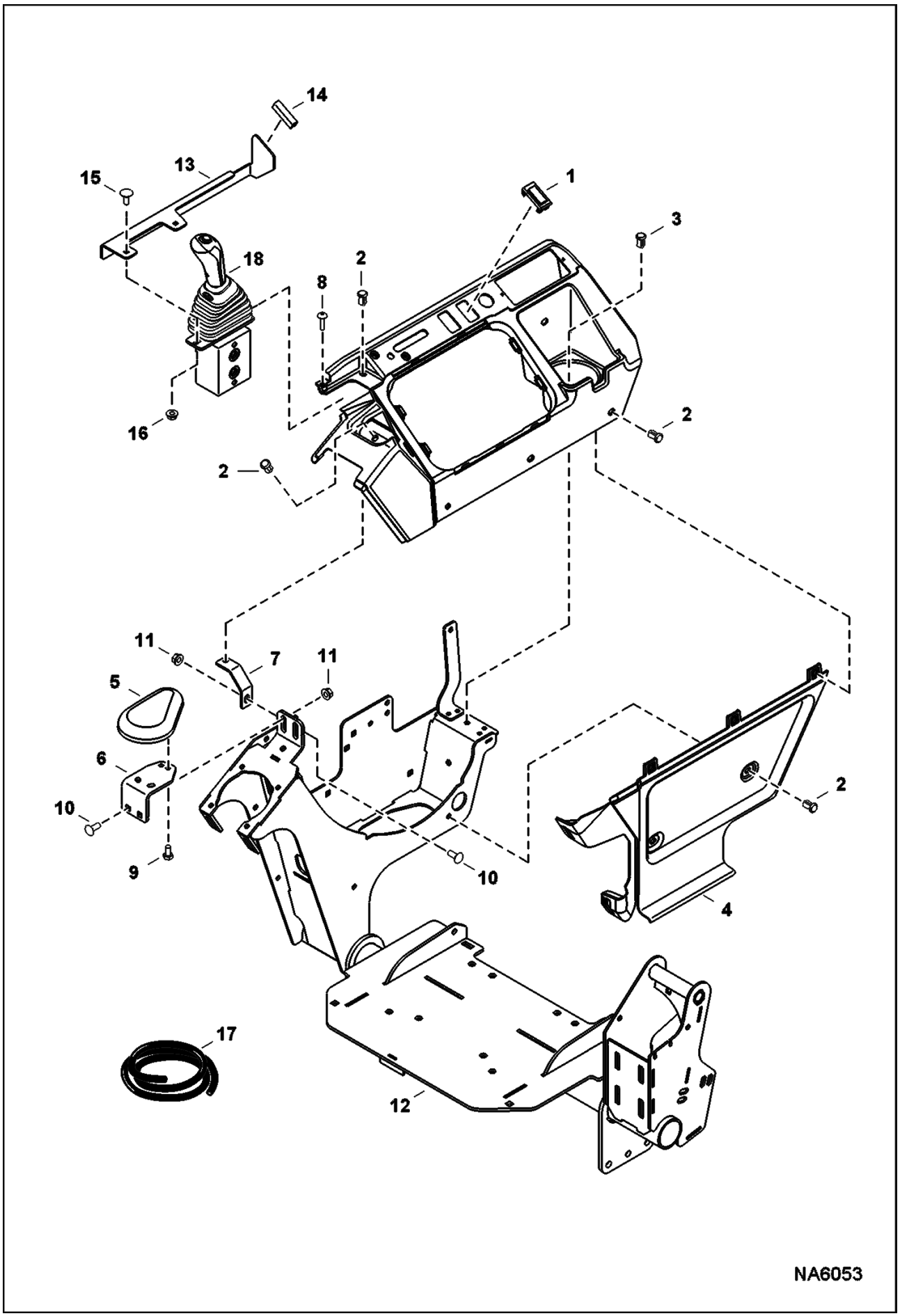

Page 74 - OSS# 2091664 - All rights reserved by Bobcat Company - 08/27/2012 - 11:42:23 - Produced by Ken Cook Co. with media1off

CONTROL CONSOLE (Cont'd)
(RH)

Ref No	Part Number	Description	Remarks	Serial Number	Qty
1	6665314	PLUG			2
2	7160383	RIVET, BIRD CAGE			8
3	7187363	COVER, RH			1
4	7168965	COVER, RH			1
5	7169719	SUPPORT			1
6	7169720	MOUNT, ARMREST			1
7	7174826	BRACKET			1
8	7177015	SCREW			1
9	1CM612	BOLT			3
10	28CM820	BOLT			3
11	51DM8	NUT			3
12		CONTROLLER, JOYSTICK ASSY	See Illustration CONTROL CONSOLE/ NA6054		1
13	7181142	BRACKET, SUPPORT			1
14		TRIM	NAP - 43,8 mm (1.75") long - Order Ref. 17		1
15	21CM616	SCREW			2
16	51DM6	NUT			2
17	6682492	TRIM	bulk - sold per foot		x
18		JOYSTICK, BLADE	See Illustration BLADE JOYSTICK/ NA2308		1

Page 75 - OSS# 2091664 - All rights reserved by Bobcat Company - 08/27/2012 - 11:42:23 - Produced by Ken Cook Co. with media1off

CONTROL CONSOLE
(LH)

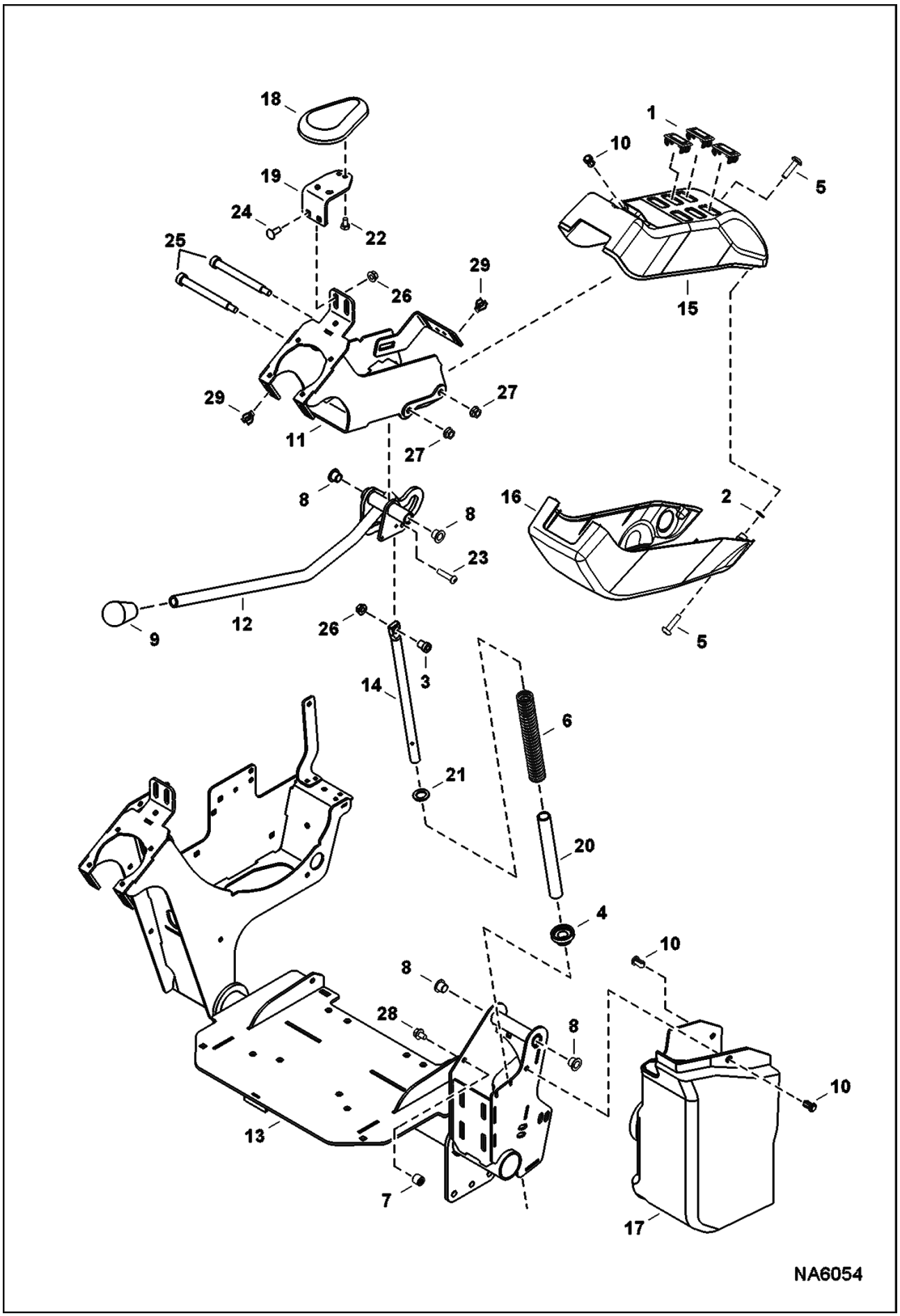

Page 76 - OSS# 2091664 - All rights reserved by Bobcat Company - 08/27/2012 - 11:42:23 - Produced by Ken Cook Co. with media1off

CONTROL CONSOLE (Cont'd)
(LH)

Ref No	Part Number	Description	Remarks	Serial Number	Qty
1	6665314	PLUG			3
2	6675212	RETAINER			1
3	6808749	BUSHING			1
4	6810456	BUSHING			1
5	6816193	SCREW			2
6	7003497	SPRING, COMPRESSION			1
7	7003498	BEARING, ROLLER			1
8	7003499	BUSHING			4
9	7154041	KNOB			1
10	7160383	RIVET, BIRD CAGE			3
11	7164042	CONSOLE, JOYSTICK			1
12	7199664	HANDLE, OPERATING			1
13	7199673	CONTROLLER, JOYSTICK ASSY			1
14	7165097	SHAFT			1
15	7165562	COVER, LH			1
16	7165563	COVER, LH			1
17	7165564	COVER, LH			1
18	7169719	SUPPORT			1
19	7169720	MOUNT, ARMREST			1
20	7171264	SPACER, TUBE			1
21	15EM160	WASHERS			1
22	1CM612	BOLT			3
23	27CM835	SCREW			1
24	28CM820	BOLT			2
25	38C868	SCREW			2
26	51DM8	NUT			3
27	53D6	NUT			2
28	59CM812	SCREW HX FLNG W/T8.8			1
29	7165333	CLIP			4

Page 77 - OSS# 2091664 - All rights reserved by Bobcat Company - 08/27/2012 - 11:42:23 - Produced by Ken Cook Co. with media1off

TRAVEL CONTROL

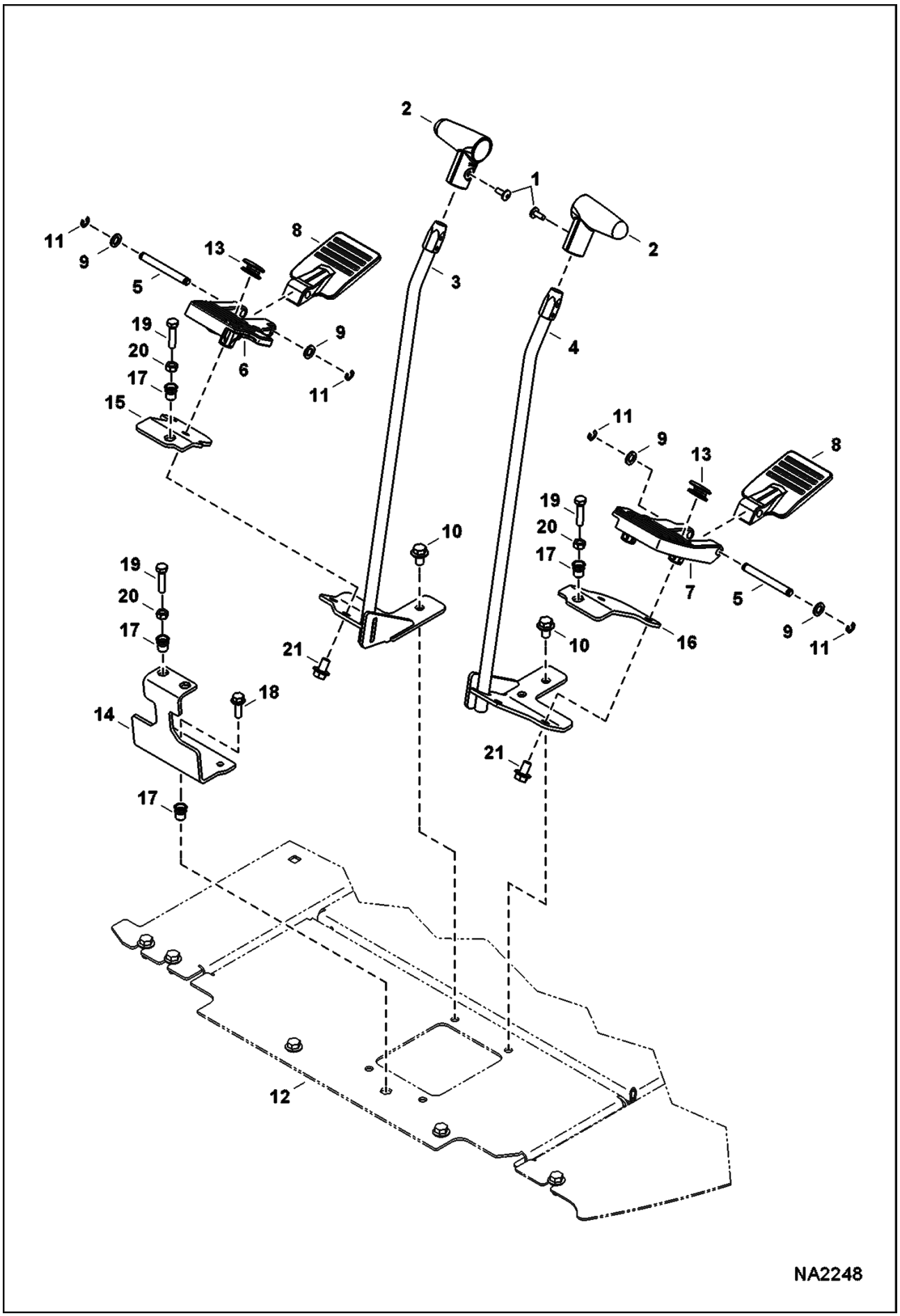

Page 78 - OSS# 2091664 - All rights reserved by Bobcat Company - 08/27/2012 - 11:42:23 - Produced by Ken Cook Co. with media1off

Ref No	Part Number	Description	Remarks	Serial Number	Qty
1	6803202	SCREW			2
2	7163788	HANDLE, LEVER CONTROL			2
3	7164047	LEVER, CONTROL			1
4	7164048	LEVER, CONTROL			1
5	7164061	PIN, HINGE			2
6	7167166	PEDAL, RH			1
7	7167167	PEDAL, LH			1
8	7167168	PEDAL, BACK			2
9	15EM100	WASHER			4
10	29CM1016	BOLT			4
11	9JM70	RETAINER SHAFT			4
12		PLATE, FLOOR	See Illustration OPERATOR AREA & SEAT/ NA6028		1
13	7181057	GROMMET			2
14	7186570	BRACKET	China		1
15	7186572	PLATE	China		1
16	7186698	PLATE			1
17	7186741	INSERT	China		5
18	29CM825	BOLT	China		1
19	4CM835	BOLT	China		4
20	4DM8	NUT	China		4
21	29CM1020	BOLT			4

Page 79 - OSS# 2091664 - All rights reserved by Bobcat Company - 08/27/2012 - 11:42:23 - Produced by Ken Cook Co. with media1off

THROTTLE CONTROL
(Manual)

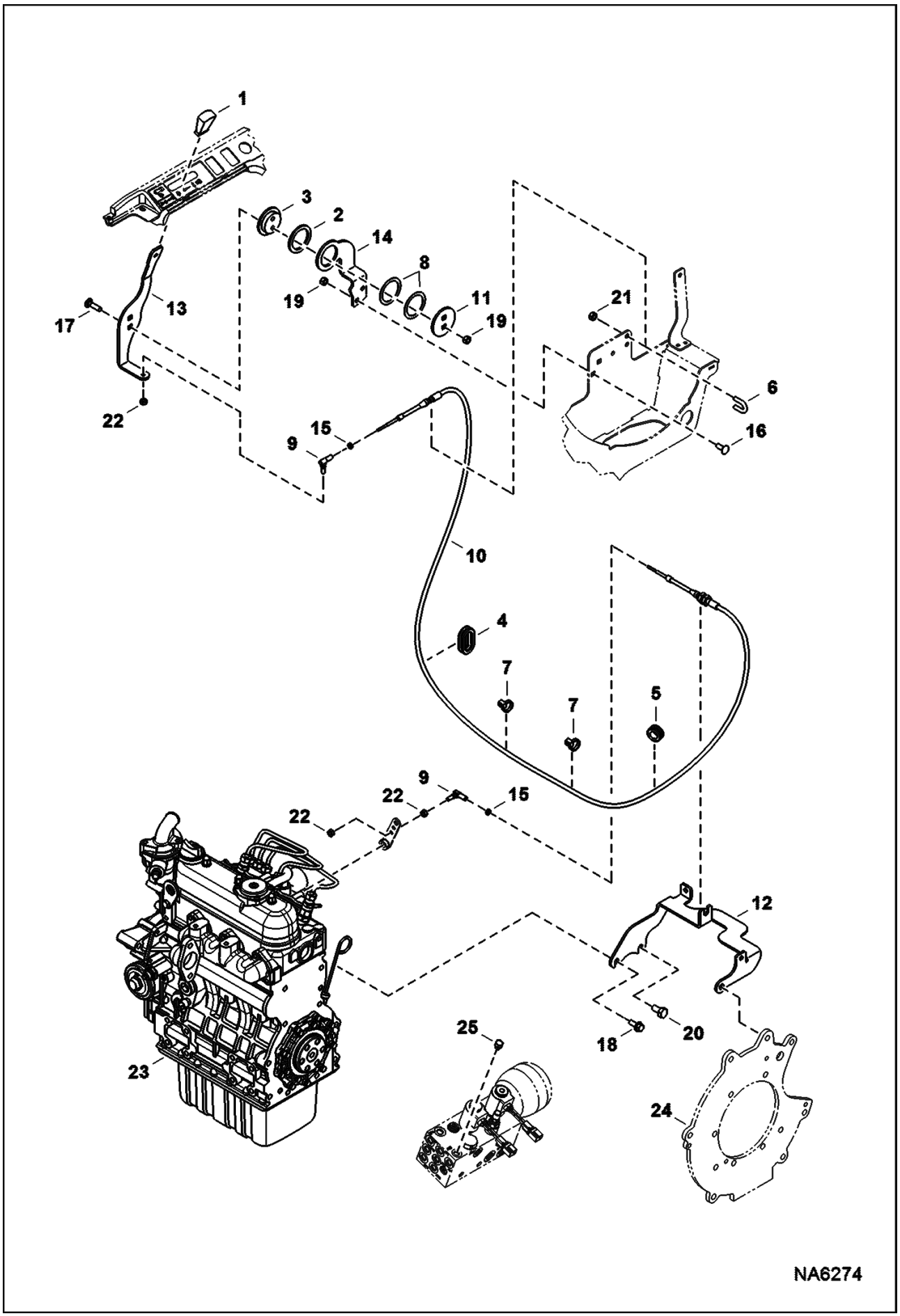

Page 80 - OSS# 2091664 - All rights reserved by Bobcat Company - 08/27/2012 - 11:42:23 - Produced by Ken Cook Co. with media1off

Ref No	Part Number	Description	Remarks	Serial Number	Qty
1	6564452	GRIP			1
2	6567962	WASHER			1
3	6567963	SPACER			1
4	6577961	GROMMET			1
5	6587887	GROMMET			1
6	6592766	U-BOLT			1
7	6624289	STRAP, TIE			2
8	6630945	WASHER			2
9	6644965	BALL JOINT			2
10	6675668	CABLE, THROTTLE			1
11	7114497	WASHER			1
12	7187799	HOLDER, CABLE			1
13	7187750	LEVER, THROTTLE			1
14	7187751	BRACKET, LEVER			1
15	14D10	NUT			2
16	28CM820	BOLT			2
17	28CM830	BOLT			2
18	29CM820	SCREW			1
19	53DM8	NUT			4
20	5CM1020	SCREW			1
21	61D5	NUT			2
22	62D4	NUT			3
23		ENGINE	See Illustration ENGINE & GASKET KITS/ NA6288		1
24		PLATE, FLYWHEEL	See Illustration ENGINE & ATTACHING PARTS/ NA6281		1
25	24K2	PLUG			1
25	79K3	O RING 10			1

Page 81 - OSS# 2091664 - All rights reserved by Bobcat Company - 08/27/2012 - 11:42:23 - Produced by Ken Cook Co. with media1off

THROTTLE CONTROL
(Auto Idle)

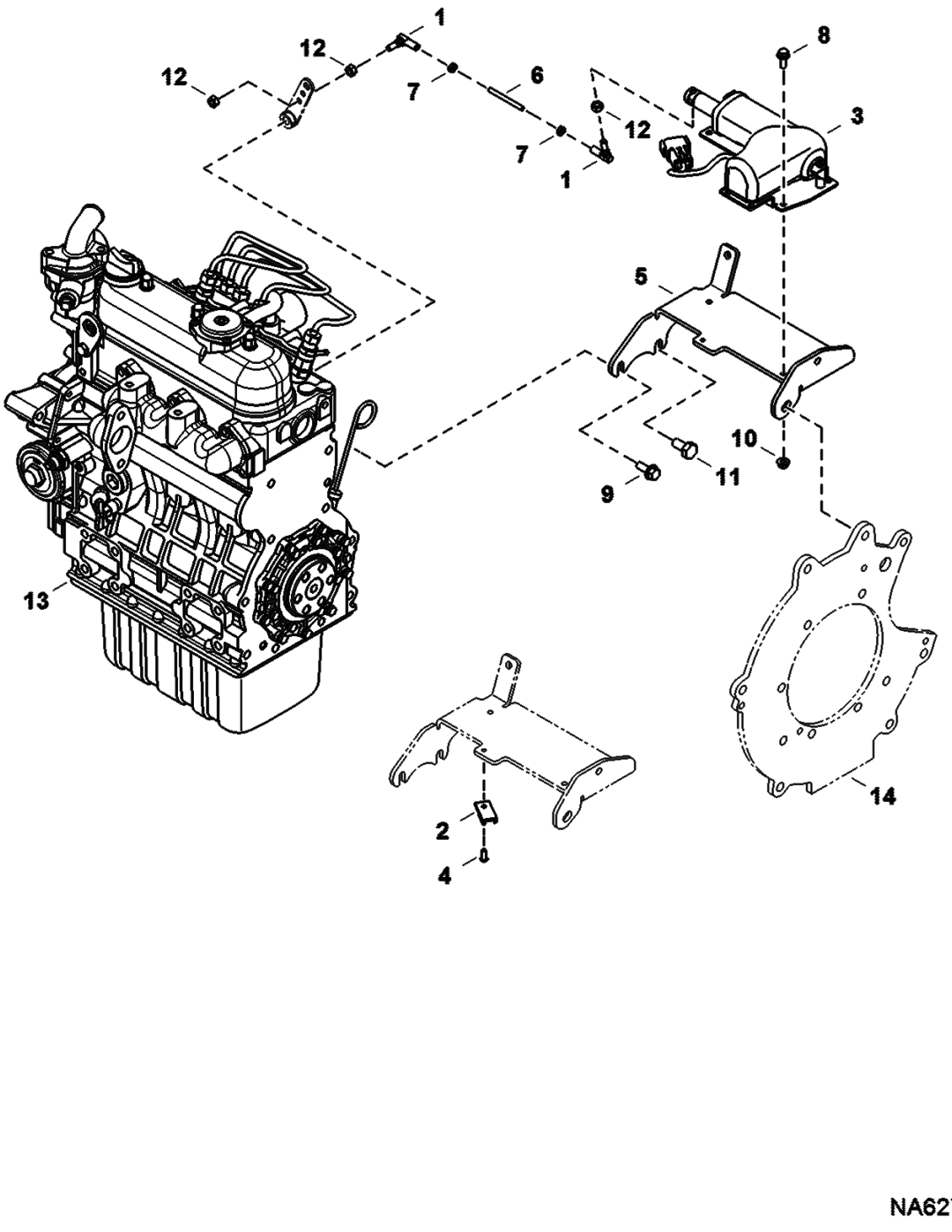

Page 82 - OSS# 2091664 - All rights reserved by Bobcat Company - 08/27/2012 - 11:42:23 - Produced by Ken Cook Co. with media1off

Ref No	Part Number	Description	Remarks	Serial Number	Qty
1	6644965	BALL JOINT			2
2	6665000	CLIP			1
3	6698169	ACTUATOR, THROTTLE			1
4	6814428	RIVET			1
5	7187894	BRACKET, THROTTLE			1
6	7187896	LINK, THROTTLE			1
7	14D10	NUT			2
8	29CM616	BOLT			3
9	29CM820	SCREW			1
10	51DM6	NUT			3
11	5CM1020	SCREW			1
12	62D4	NUT			3
13		ENGINE	See Illustration ENGINE & GASKET KITS/ NA6288		1
14		PLATE, FLYWHEEL	See Illustration ENGINE & ATTACHING PARTS/ NA6281		1

Page 83 - OSS# 2091664 - All rights reserved by Bobcat Company - 08/27/2012 - 11:42:23 - Produced by Ken Cook Co. with media1off

HYDRAULIC CIRCUITRY
(Upper/Swing)

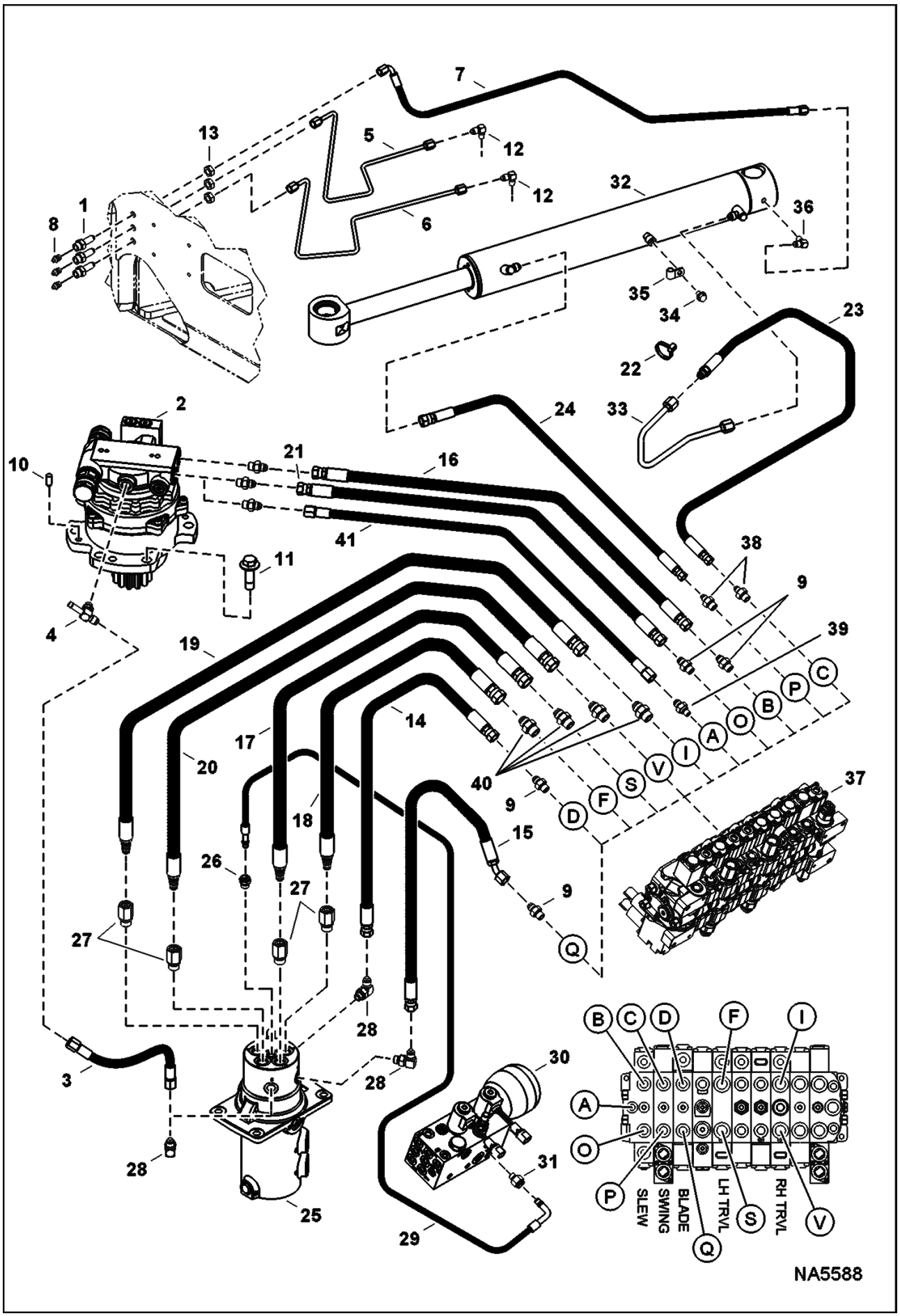

Page 84 - OSS# 2091664 - All rights reserved by Bobcat Company - 08/27/2012 - 11:42:23 - Produced by Ken Cook Co. with media1off

HYDRAULIC CIRCUITRY (Cont'd)
(Upper/Swing)

Ref No	Part Number	Description	Remarks	Serial Number	Qty
1	6807184	FITTING			3
2	7008800	MOTOR, HYD SLEW	See Illustration SLEW MOTOR/ NA6100		1
3	7165867	HOSE, HYD			1
4	7174613	TEE			1
4	79K6	O RING 10			x
5	7175737	TUBELINE, HYD			1
6	7175738	TUBELINE, HYD			1
7	7179579	HOSE, HYD			1
8	10H25	FITTING, GREASE 5			3
9	15KB0606	FITTING, HYD CONNECTOR			7
9	79K6	O RING 10			x
10	23JM1024	PIN HARDENED PARALLE			2
11	60CM1650	SCREW HX FLNGW/T10.9			6
12	83F3	ELBOW 5			2
13	86F3	LOCKNUT			3
14	7161482	HOSE, HYD			1
15	7161483	HOSE, HYD			1
16	7165859	HOSE, HYD			1
17	7194325	HOSE, HYD	Also Order Ref. 27		1
18	7194326	HOSE, HYD	Also Order Ref. 27		1
19	7194327	HOSE, HYD	Also Order Ref. 27		1
20	7194328	HOSE, HYD	Also Order Ref. 27		1
21	7200900	HOSE, HYD			1
22	6624289	STRAP, TIE			1
23	7192270	HOSE, HYD			1
24	7204143	HOSE, HYD			1
25	7143734	SWIVEL, HYD ASSY	See Illustration SWIVEL ASSY/ NA2262		1
26	10L0606	FITTING, HYD CONNECTOR			3
26	78K6	O'RING			x
26	7011053	CLIP			x
27	15HB0808	FITTING	Also Order hose		4
27	78K8	O RING			x
28	17KB0606	FITTING			3
28	79K6	O RING 10			x
29	7202276	HOSE, HYD			1
30	7204476	MANIFOLD, HYD ASSY	See Illustration MANIFOLD ASSY/ NA6098		1
31	10L0604	FITTING, HYD CONNECTOR			1
31	78K4	O'RING			x
31	7011053	CLIP			x
32	7188883	CYLINDER, SWING	See Illustration BOOM SWING CYLINDER/ NA6020		1
33	7189020	TUBELINE, HYD			1
34	29CM812	BOLT			1
35	30H22	CLIP			1
36	83F3	ELBOW 5			1
37	7188867	VALVE, CONTROL	See Illustration HYDRAULIC CONTROL VALVE/ NA6140		1
38	15KB0406	FTG HYD S			2

Page 85 - OSS# 2091664 - All rights reserved by Bobcat Company - 08/27/2012 - 11:42:23 - Produced by Ken Cook Co. with media1off

HYDRAULIC CIRCUITRY (Cont'd)
(Upper/Swing)

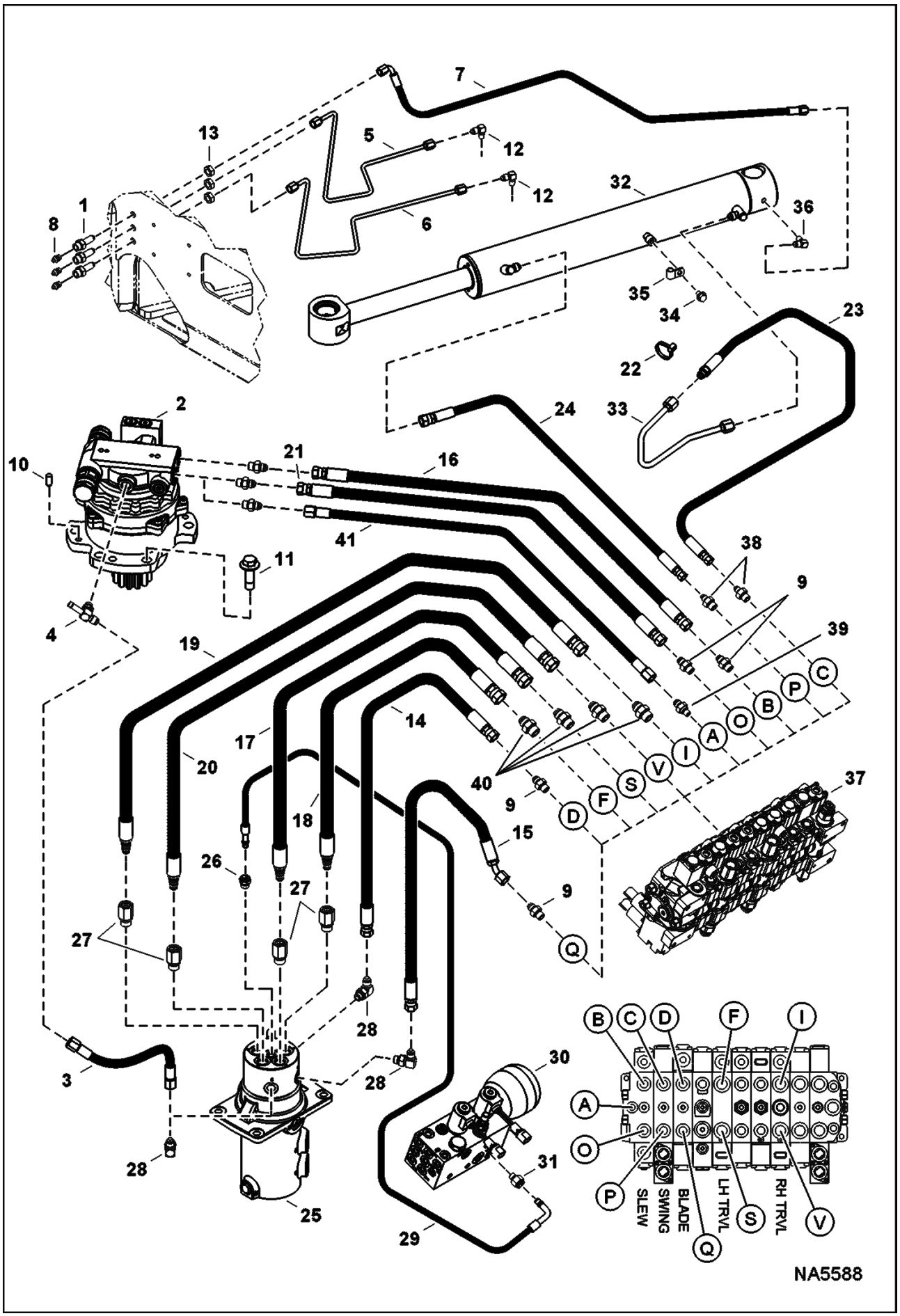

Page 86 - OSS# 2091664 - All rights reserved by Bobcat Company - 08/27/2012 - 11:42:23 - Produced by Ken Cook Co. with media1off

Ref No	Part Number	Description	Remarks	Serial Number	Qty
		CONNECTOR			
38	79K6	O RING 10			x
39	15KB0604	FTG HYD S CONNECTOR			1
39	79K4	O RING 10			x
40	15KB0808	FITTING, HYD CONNECTOR			4
40	79K8	O RING 10			x
41	7165860	HOSE, HYD			1

Page 87 - OSS# 2091664 - All rights reserved by Bobcat Company - 08/27/2012 - 11:42:23 - Produced by Ken Cook Co. with media1off

HYDRAULIC CIRCUITRY
(Lower)

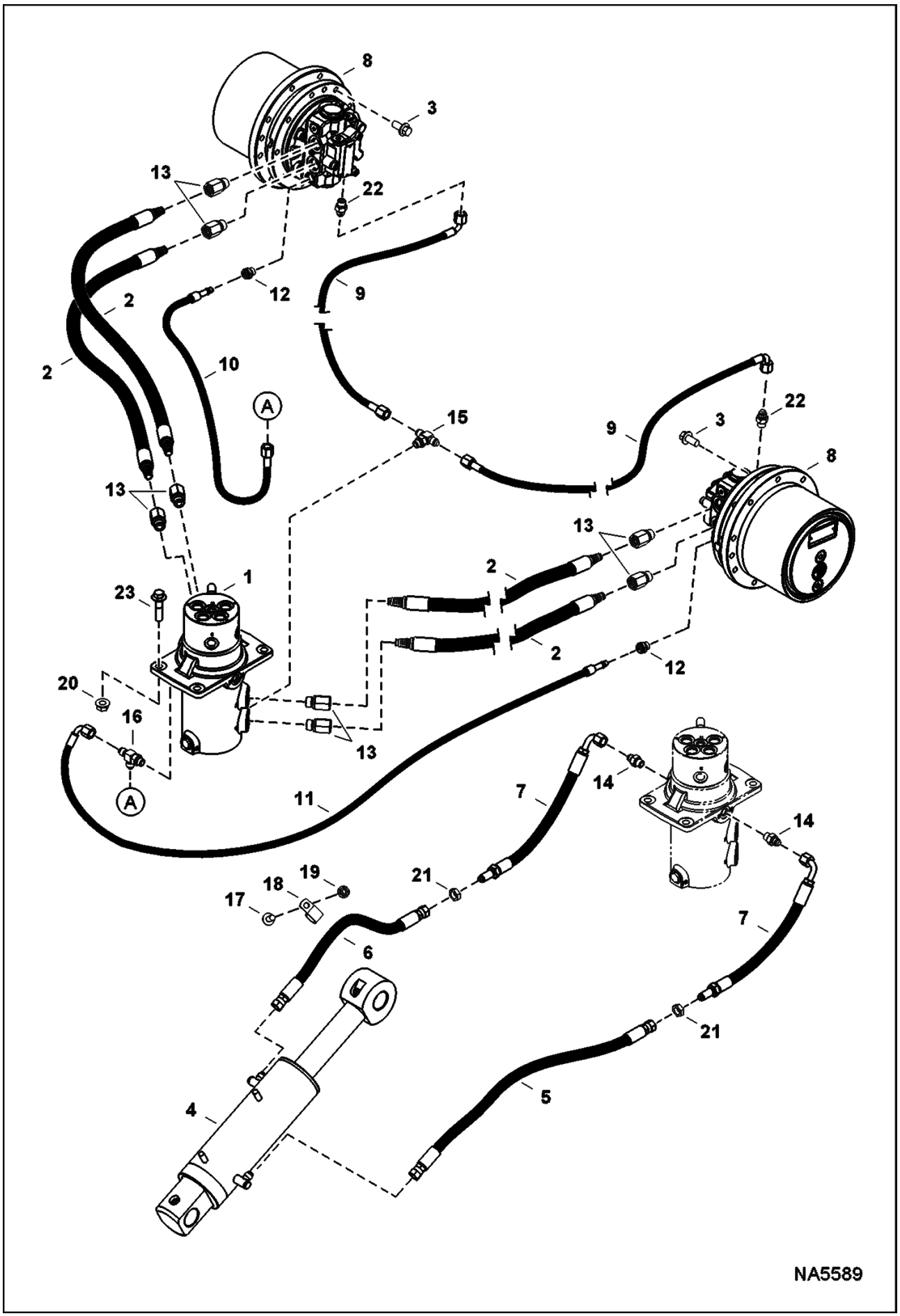

Page 88 - OSS# 2091664 - All rights reserved by Bobcat Company - 08/27/2012 - 11:42:23 - Produced by Ken Cook Co. with media1off

HYDRAULIC CIRCUITRY (Cont'd)
(Lower)

Ref No	Part Number	Description	Remarks	Serial Number	Qty
1	7143734	SWIVEL, HYD ASSY	See Illustration SWIVEL ASSY/ NA2262		1
2	7156353	HOSE, HYD ASSY	Also Order Ref. 13		4
3	7162236	SCREW			22
4	7164575	CYLINDER, BLADE	See Illustration HYDRAULIC CONTROL VALVE/ NA6140		1
5	7165840	HOSE, HYD			1
6	7165841	HOSE, HYD			1
7	7165842	HOSE, HYD			2
8	7190517	MOTOR, DRIVE HYD TRAVEL	See Illustration TRAVEL MOTOR/ NA6099		2
9	7196735	HOSE, HYD			2
10	7199056	HOSE, HYD			1
11	7199057	HOSE, HYD			1
12	10L0606	FITTING, HYD CONNECTOR			3
12	78K6	O'RING			x
12	7011053	CLIP			x
13	15HB0808	FITTING	Also Order hose		8
13	78K8	O RING			x
14	15KB0606	FITTING, HYD CONNECTOR			2
14	79K6	O RING 10			x
15	19KB0606	TEE			1
15	79K6	O RING 10			x
16	21KB0606	FTG HYD STRAIGHT TEE			1
16	79K6	O RING 10			x
17	29CM1025	BOLT			1
18	30H46	CLIP			1
19	43DM10	NUT			3
20	51DM12	NUT			4
21	86F5	NUT			2
22		FITTING	See Illustration TRAVEL MOTOR/ NA6099		2
23	29CM1250	BOLT			4

Page 89 - OSS# 2091664 - All rights reserved by Bobcat Company - 08/27/2012 - 11:42:23 - Produced by Ken Cook Co. with media1off

HYDRAULIC CIRCUITRY
(Work Hoses & Control Valve Mounting)

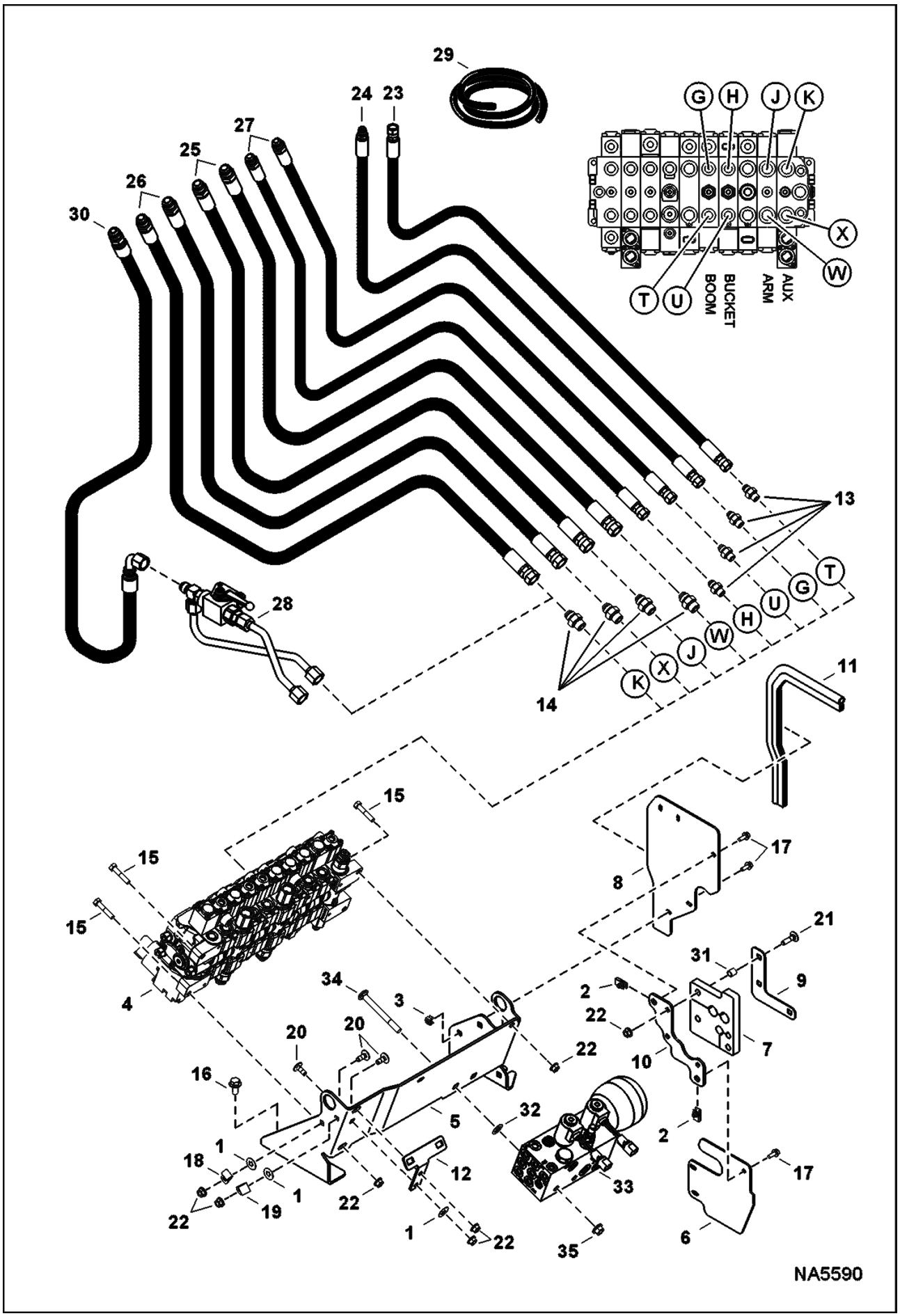

Page 90 - OSS# 2091664 - All rights reserved by Bobcat Company - 08/27/2012 - 11:42:23 - Produced by Ken Cook Co. with mediaioff

HYDRAULIC CIRCUITRY (Cont'd)
(Work Hoses & Control Valve Mounting)

Ref No	Part Number	Description	Remarks	Serial Number	Qty
1	6675859	RETAINER			4
2	6676026	NUT			2
3	7170765	NUT			4
4	7188867	VALVE, CONTROL	See Illustration HYDRAULIC CONTROL VALVE/ NA6140		1
5	7188870	MOUNT, VALVE			1
6	7188871	COVER			1
7	7188872	SEAL, HOSE	W/Ref. 31		1
8	7188873	COVER			1
9	7188874	BRACKET			1
10	7188875	BRACKET			1
11		SEAL, COVER	NAP - 460 mm (18.11") long - Order Ref. 29		1
12	7192355	HOLDER			1
13	15KB0606	FITTING, HYD CONNECTOR			4
13	79K6	O RING 10			x
14	15KB0808	FITTING, HYD CONNECTOR			4
14	79K8	O RING 10			x
15	1CM840	BOLT			3
16	29CM1020	BOLT			4
17	29CM616	BOLT			6
18	30H22	CLIP			1
19	30H30	CLAMP			1
20	33CM820	BOLT			3
21	33CM830	BOLT			3
22	43DM8	NUT			11
23	7160289	HOSE, HYD	from valve boom A to boom cyl rod port		1
24	7160291	HOSE, HYD	from valve boom B to boom cyl base port		1
25	7160294	HOSE, HYD	from valve arm A to arm cyl rod port & from valve arm B to arm cyl base port		2
26	7160712	HOSE, HYD	from valve aux A to female aux port		1
27	7195206	HOSE, HYD	from valve bucket A to bucket cyl rod port & from valve bucket B to bucket cyl base port		2
28		DIRECT TO TANK	See Illustration HYDRAULIC CIRCUITRY/ NA6285 option		1
29	7134803	SEAL, BULK	bulk - sold per foot		x
30	7204137	HOSE, HYD			1
31		BUSHING	NSS - Order Ref. 7		3
32	6674264	RETAINER NUT			2
33	7204476	MANIFOLD, HYD ASSY	See Illustration MANIFOLD ASSY/ NA6098		1
34	28CM10100	BOLT			2
35	43DM10	NUT			2

Page 91 - OSS# 2091664 - All rights reserved by Bobcat Company - 08/27/2012 - 11:42:23 - Produced by Ken Cook Co. with media1off

HYDRAULIC CIRCUITRY
(Cooler/Filter)

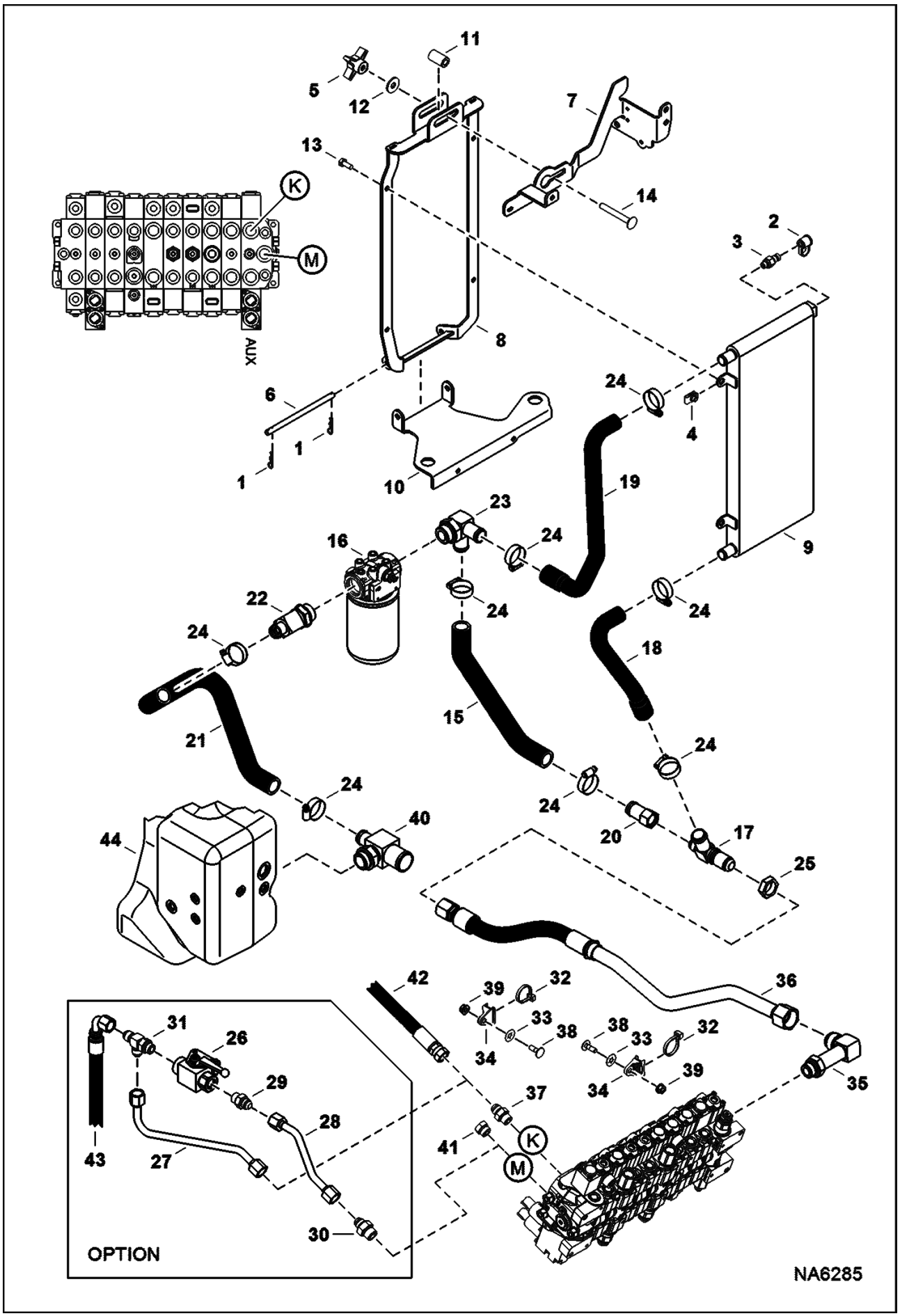

Page 92 - OSS# 2091664 - All rights reserved by Bobcat Company - 08/27/2012 - 11:42:23 - Produced by Ken Cook Co. with mediaioff

HYDRAULIC CIRCUITRY (Cont'd)
(Cooler/Filter)

Ref No	Part Number	Description	Remarks	Serial Number	Qty
1	1306637	CLIP			2
2	6630367	CAP			1
3	6658103	COUPLER			1
4	6676169	NUT			6
5	7167576	NUT, WING			1
6	7174835	PIN			1
7	7189004	MOUNT, RADIATOR			1
8	7190947	MOUNT			1
9	7193014	EXCHANGER, OIL COOLER			1
10	7194800	MOUNT, RADIATOR			1
11	7204016	SPACER			1
12	17EM100	WASHER			1
13	1CM820	BOLT			4
14	33CM1080	BOLT			1
15	7188827	HOSE, HYD FORMED			1
16	7188836	FILTER, OIL HYD ASSY	See Illustration HYDRAULIC OIL FILTER/ NA6101		1
17	7188877	FITTING, HYD CONNECTOR			1
18	7189018	HOSE, HYD FORMED			1
19	7189019	HOSE, HYD FORMED			1
20	7189205	VALVE, BUILDUP			1
21	7191285	HOSE, HYD FORMED			1
22	7193576	FITTING			1
22	79K16	O RING 10			x
23	7193577	FITTING, HYD TEE			1
23	79K16	O RING 10			x
24	42HL150	CLAMP, HOSE			8
25	86F8	NUT 5			1
26	6693507	VALVE, BALL	See Illustration SELECTOR VALVE ASSY/ NA2306		1
27	7189256	TUBELINE, HYD			1
28	7189258	TUBELINE, HYD			1
29	15KB0808	FITTING, HYD CONNECTOR			1
29	79K8	O RING 10			x
30	15KB0810	FITTING, HYD CONNECTOR			1
30	79K10	O RING 10			x
31	21KB0808	FTG HYD STRAIGHT TEE			1
31	79K8	O RING 10			x
32	6624289	STRAP, TIE			2
33	6675859	RETAINER			5
34	6678818	MOUNT			2
35	7194438	FITTING, HYD ELBOW			1
35	79K20	O RING 10			x
36	7194441	TUBELINE, HYD			1
37	15KB0808	FITTING, HYD			1

Page 93 - OSS# 2091664 - All rights reserved by Bobcat Company - 08/27/2012 - 11:42:23 - Produced by Ken Cook Co. with media1off

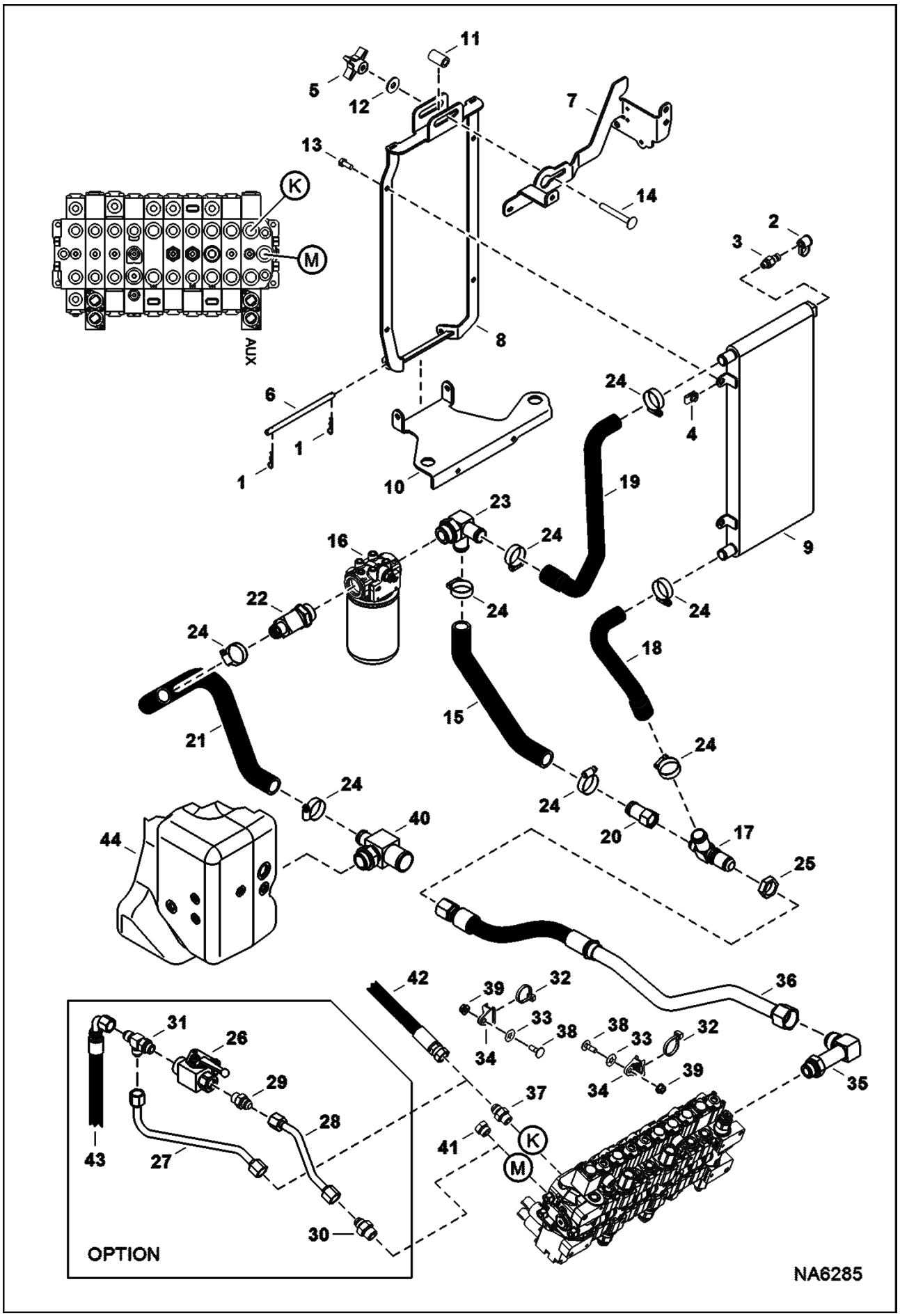

Page 94 - OSS# 2091664 - All rights reserved by Bobcat Company - 08/27/2012 - 11:42:23 - Produced by Ken Cook Co. with mediaioff

Ref No	Part Number	Description	Remarks	Serial Number	Qty
		CONNECTOR			
37	79K8	O RING 10			x
38	33CM825	BOLT			2
39	43DM8	NUT			1
40	7191282	FITTING, HYD TEE			1
40	79K16	O RING 10			x
41	24K6	FITTING			1
41	79K8	O RING 10			x
42		HOSE, HYD	See Illustration HYDRAULIC CIRCUITRY/ NA5590		1
43		HOSE, HYD	See Illustration HYDRAULIC CIRCUITRY/ NA5590		1
44		TANK, HYD	See Illustration HYDRAULIC CIRCUITRY/ NA6286		1

Page 95 - OSS# 2091664 - All rights reserved by Bobcat Company - 08/27/2012 - 11:42:23 - Produced by Ken Cook Co. with media1off

HYDRAULIC CIRCUITRY
(Work Tubelines & Cylinders)

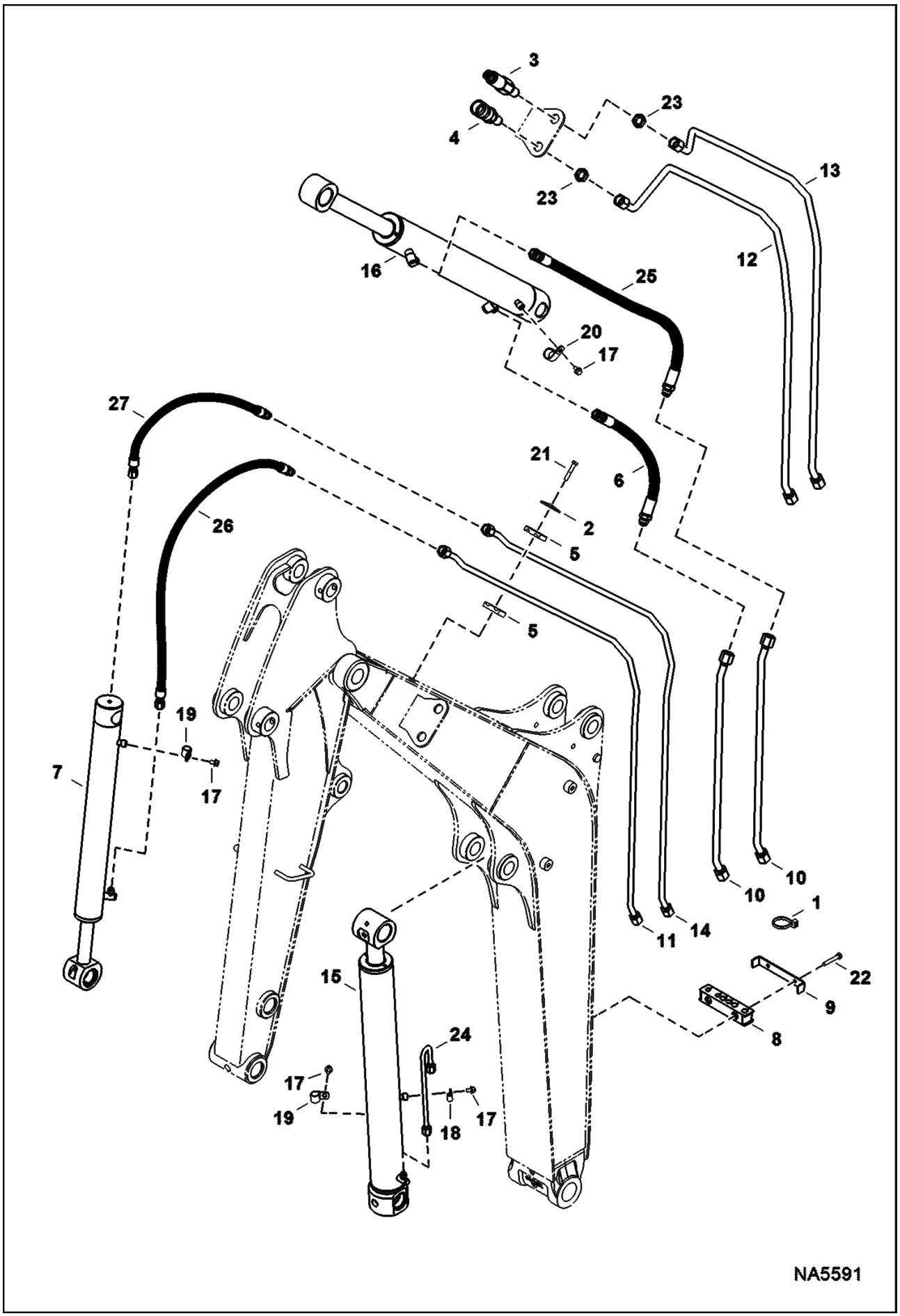

Page 96 - OSS# 2091664 - All rights reserved by Bobcat Company - 08/27/2012 - 11:42:23 - Produced by Ken Cook Co. with mediaioff

Ref No	Part Number	Description	Remarks	Serial Number	Qty
1	6624289	STRAP, TIE			3
2	6652521	PLATE			1
3	6676444	COUPLER			1
4	6676446	COUPLER			1
5	6701892	CLAMP			2
6	7158560	HOSE, HYD			1
7		CYLINDER, BUCKET	See Illustration BUCKET CYLINDER/ NA6021		1
8	7160715	CLAMP, TUBELINE			2
9	7160716	BRACKET			2
10	7160717	TUBELINE, HYD			2
11	7162356	TUBELINE, HYD			1
12	7207341	TUBELINE, HYD			1
13	7207342	TUBELINE, HYD			1
14	7162364	TUBELINE, HYD			1
15		CYLINDER, BOOM	See Illustration BOOM CYLINDER/ NA6019		1
16		CYLINDER, ARM	See Illustration ARM CYLINDER/ NA6017		1
17	29CM812	BOLT			4
18	30H22	CLIP			1
19	30H42	CLAMP			2
20	30H50	CLIP			1
21	53CM845	BOLT			1
22	53CM850	SCREW			4
23	86F7	LOCK NUT			2
24	7160290	TUBELINE, HYD			1
25	7165083	HOSE			1
26	7160713	HOSE, HYD	1020 mm (40.16") long - for std arm		1
26	7165082	HOSE, HYD	1300 mm (51.18") long - for long arm		1
27	7160714	HOSE, HYD	600 mm (23.63") long - for std arm		1
27	7193555	HOSE, HYD	875 mm (34.45") long - for long arm		1

Page 97 - OSS# 2091664 - All rights reserved by Bobcat Company - 08/27/2012 - 11:42:23 - Produced by Ken Cook Co. with media1off

HYDRAULIC CIRCUITRY
(Tank & Pump)

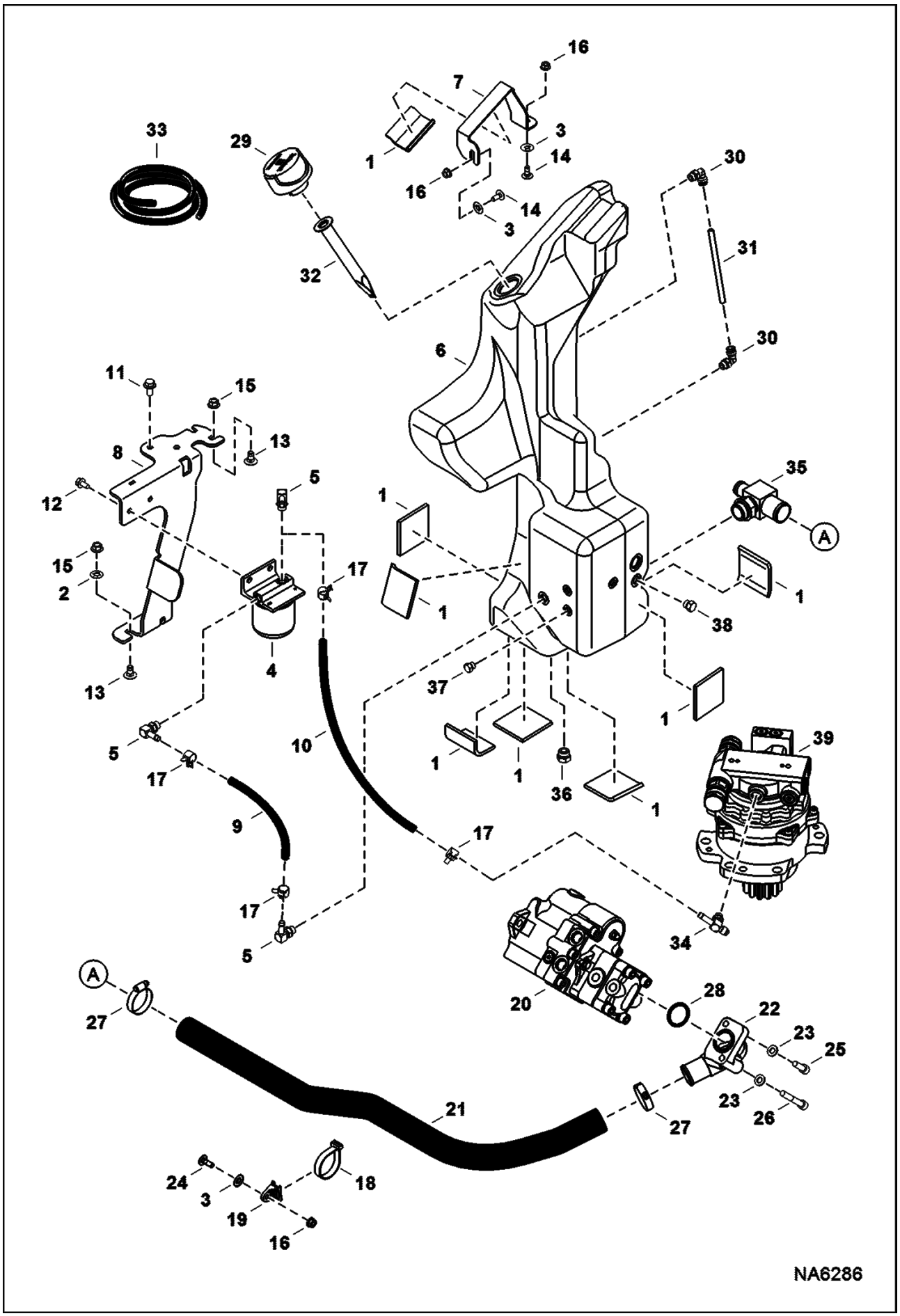

Page 98 - OSS# 2091664 - All rights reserved by Bobcat Company - 08/27/2012 - 11:42:23 - Produced by Ken Cook Co. with media1off

Ref No	Part Number	Description	Remarks	Serial Number	Qty
1	6578278	PAD			8
2	6674264	RETAINER NUT			2
3	6675859	RETAINER			3
4	7008929	FILTER, OIL HYD ASSY			1
4	7009365	FILTER, OIL HYD	replacement filter		x
5	7174807	ELBOW			2
5	79K6	O RING 10			x
6	7191278	TANK, HYD			1
7	7191283	HOLDER			1
8	7191284	BRACKET, FILTER			1
9		HOSE, DRAIN	NAP - 174 mm (6.85") long - Order Ref. 33		1
10		HOSE, DRAIN	NAP - 593 mm (23.35") long - Order Ref. 33		1
11	29CM1020	BOLT			2
12	29CM816	SCREW			2
13	33CM1020	BOLT			4
14	33CM820	BOLT			2
15	43DM10	NUT			4
16	43DM8	NUT			3
17	5HM16	CLAMP			4
18	6678669	STRAP			1
19	6678818	MOUNT			1
20	7209326	PUMP, HYD PISTON	See Illustration HYDRAULIC PISTON PUMP/ NA6276		1
21	7175673	HOSE, HYD FORMED			1
22	7188917	INLET, PUMP			1
23	1EM100	WASHER			2
24	33CM825	BOLT			1
25	3GM1030	SCREW			1
26	3GM1070	BOLT			1
27	42HL200	CLAMP, HOSE			2
28	58K222	O-RING			1
29	6692836	CAP, HYDRAULIC TANK			1
29	79K20	O RING 10			x
30	7013179	FITTING			2
30	79K6	O RING 10			x
31	7013180	TUBE			1
32	7128723	SCREEN			1
33	6586251	HOSE	bulk - sold per foot		x
34	7174613	TEE			1
35	7191282	FITTING, HYD TEE			1
35	79K16	O RING 10	See Illustration HYDRAULIC CIRCUITRY/ NA6285		x
36	24K6	FITTING			1
36	79K8	O RING 10			x
37	24K3	PLUG			1
37	79K4	O RING 10			x
38	24K5	PLUG			1
38	79K6	O RING 10			x
39	7008800	MOTOR, HYD SLEW	See Illustration SLEW MOTOR/ NA6100		1

Page 99 - OSS# 2091664 - All rights reserved by Bobcat Company - 08/27/2012 - 11:42:23 - Produced by Ken Cook Co. with media1off

HYDRAULIC CIRCUITRY
(Pilot W/O JPS)

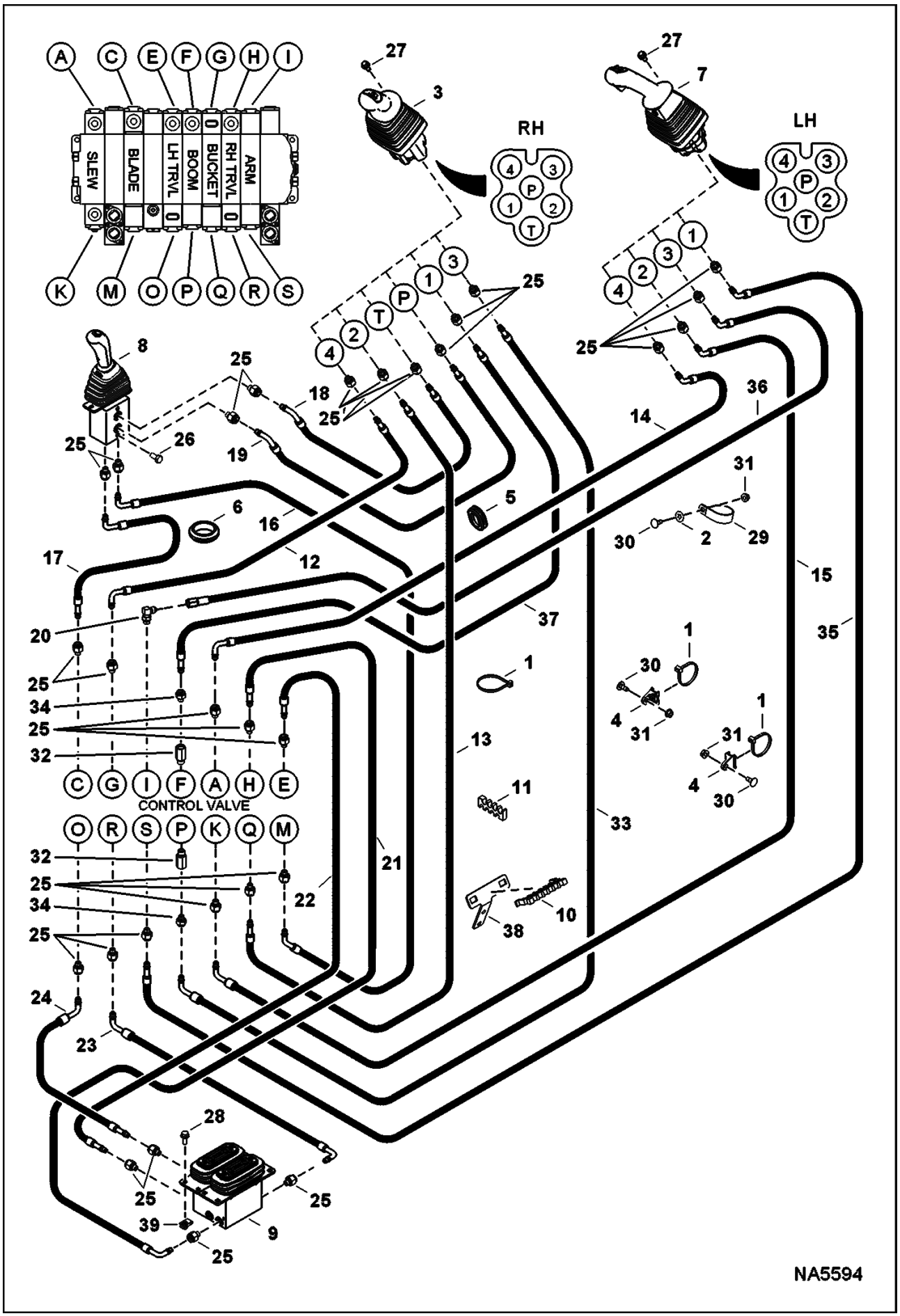

Page 100 - OSS# 2091664 - All rights reserved by Bobcat Company - 08/27/2012 - 11:42:23 - Produced by Ken Cook Co. with mediaioff

HYDRAULIC CIRCUITRY (Cont'd)
(Pilot W/O JPS)

Ref No	Part Number	Description	Remarks	Serial Number	Qty
1	6624289	STRAP, TIE			5
2	6675859	RETAINER			1
3	6677895	JOYSTICK	See Illustration RH JOYSTICK/ MS1352		1
4	6678818	MOUNT			2
5	6681886	GROMMET			1
6	6806443	GROMMET			1
7	7008320	LEVER, JOYSTICK W/PWM	See Illustration LH JOYSTICK/ NA2224		1
8	7008581	JOYSTICK, BLADE	See Illustration BLADE JOYSTICK/ NA2308		1
9	7180565	VALVE, PEDAL DUAL	See Illustration TRAVEL CONTROLLER/ NA2979		1
10	7188861	CLIP, HOSE			1
11	7188862	CLIP, HOSE			1
12	7196565	HOSE, HYD			1
13	7196568	HOSE, HYD			1
14	7196574	HOSE, HYD			1
15	7196578	HOSE, HYD			1
16	7196583	HOSE, HYD			1
17	7196584	HOSE, HYD			1
18	7196585	HOSE, HYD			1
19	7196586	HOSE, HYD			1
20	17KB0404	FTG HYD ELBOW 90			1
20	79K4	O RING 10			x
21	7202312	HOSE, HYD			1
22	7202313	HOSE, HYD			1
23	7202314	HOSE, HYD			1
24	7202315	HOSE, HYD			1
25	10L0604	FITTING, HYD CONNECTOR			24
25	78K4	O'RING			x
25	7011053	CLIP			x
26	1CM816	BOLT			2
27	26GM8020	SCREW			8
28	29CM820	SCREW			4
29	30H85	CLAMP			1
30	33CM820	BOLT			3
31	43DM8	NUT			3
32	7012494	ORIFICE			2
32	79K6	O RING 10			x
33	7204093	HOSE, HYD			1
34	10L0606	FITTING, HYD CONNECTOR			2
34	78K6	O'RING			x
34	7011053	CLIP			x
35	7196575	HOSE, HYD			1
36	7198629	HOSE, HYD			1
37	7204089	HOSE, HYD			1
38	7192355	HOLDER	See Illustration HYDRAULIC CIRCUITRY/ NA5590		1
39	6676169	NUT			4

Page 101 - OSS# 2091664 - All rights reserved by Bobcat Company - 08/27/2012 - 11:42:23 - Produced by Ken Cook Co. with mediaioff

HYDRAULIC CIRCUITRY
(Pilot W/ JPS)

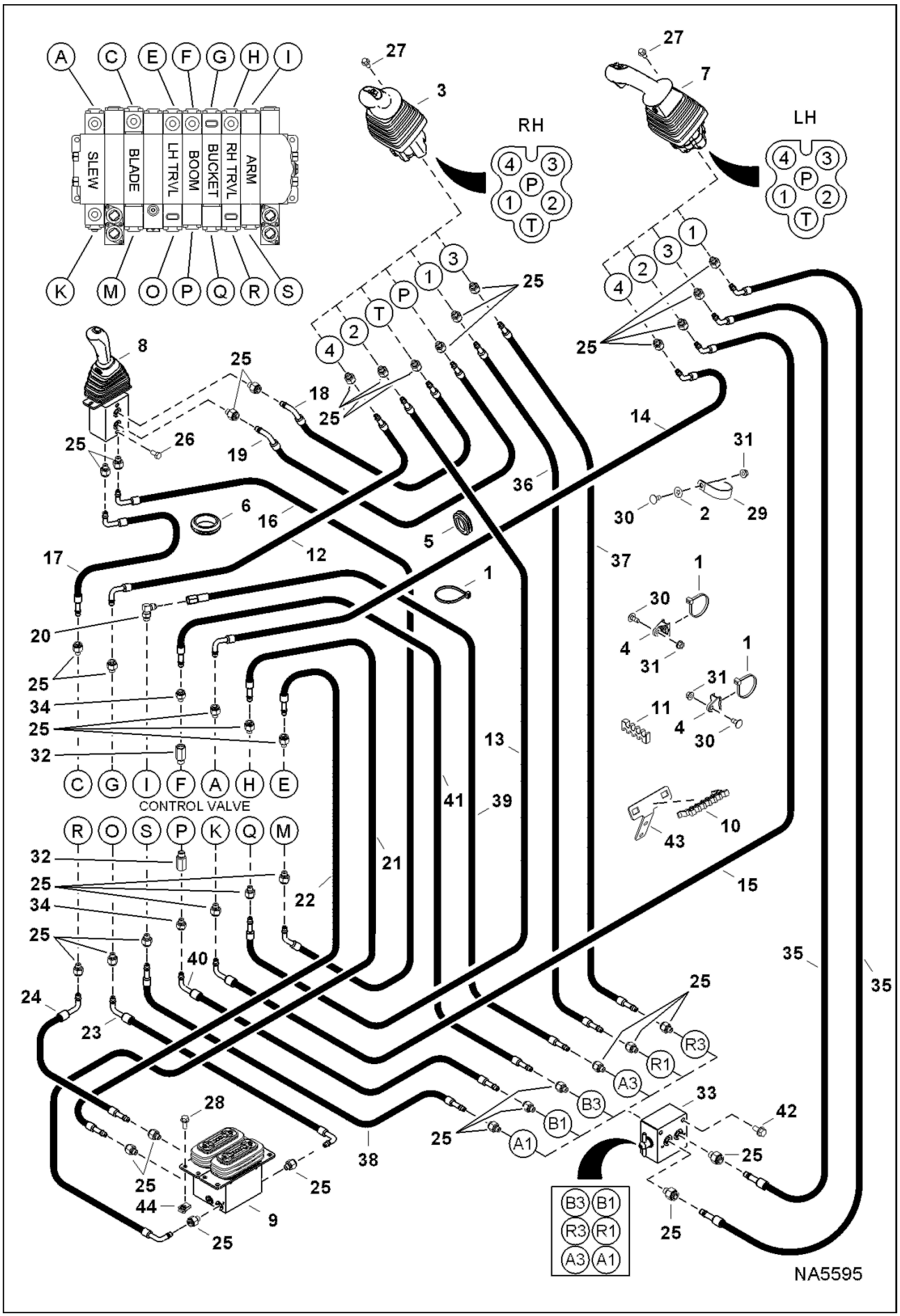

Page 102 - OSS# 2091664 - All rights reserved by Bobcat Company - 08/27/2012 - 11:42:23 - Produced by Ken Cook Co. with mediaIoff

HYDRAULIC CIRCUITRY (Cont'd)
(Pilot W/ JPS)

Ref No	Part Number	Description	Remarks	Serial Number	Qty
1	6624289	STRAP, TIE			5
2	6675859	RETAINER			1
3	6677895	JOYSTICK	See Illustration RH JOYSTICK/ MS1352		1
4	6678818	MOUNT			2
5	6681886	GROMMET			1
6	6806443	GROMMET			1
7	7008320	LEVER, JOYSTICK W/PWM	See Illustration LH JOYSTICK/ NA2224		1
8	7008581	JOYSTICK, BLADE	See Illustration BLADE JOYSTICK/ NA2308		1
9	7180565	VALVE, PEDAL DUAL	See Illustration TRAVEL CONTROLLER/ NA2979		1
10	7188861	CLIP, HOSE			1
11	7188862	CLIP, HOSE			1
12	7196565	HOSE, HYD			1
13	7196568	HOSE, HYD			1
14	7196574	HOSE, HYD			1
15	7196578	HOSE, HYD			1
16	7196583	HOSE, HYD			1
17	7196584	HOSE, HYD			1
18	7196585	HOSE, HYD			1
19	7196586	HOSE, HYD			1
20	17KB0404	FTG HYD ELBOW 90			1
20	79K4	O RING 10			x
21	7202312	HOSE, HYD			1
22	7202313	HOSE, HYD			1
23	7202314	HOSE, HYD			1
24	7202315	HOSE, HYD			1
25	10L0604	FITTING, HYD CONNECTOR			24
25	78K4	O'RING			x
25	7011053	CLIP			x
26	1CM816	BOLT			2
27	26GM8020	SCREW			8
28	29CM820	SCREW			4
29	30H85	CLAMP			1
30	33CM820	BOLT			3
31	43DM8	NUT			3
32	7012494	ORIFICE			2
32	79K6	O RING 10			x
33	7193055	VALVE, JPS	See Illustration SELECTOR VALVE ASSY/ NA2118		1
34	10L0606	FITTING, HYD CONNECTOR			2
34	78K6	O'RING			x
34	7011053	CLIP			x
35	7198641	HOSE, HYD			1
36	7198643	HOSE HYDRAULIC ASSY			1
37	7198644	HOSE, HYD			1
38	7198645	HOSE, HYD			1
39	7198646	HOSE, HYD			1
40	7204094	HOSE, HYD			1
41	7204095	HOSE, HYD			1
42	29CM816	SCREW			2

Page 103 - OSS# 2091664 - All rights reserved by Bobcat Company - 08/27/2012 - 11:42:23 - Produced by Ken Cook Co. with mediaioff

HYDRAULIC CIRCUITRY (Cont'd)
(Pilot W/ JPS)

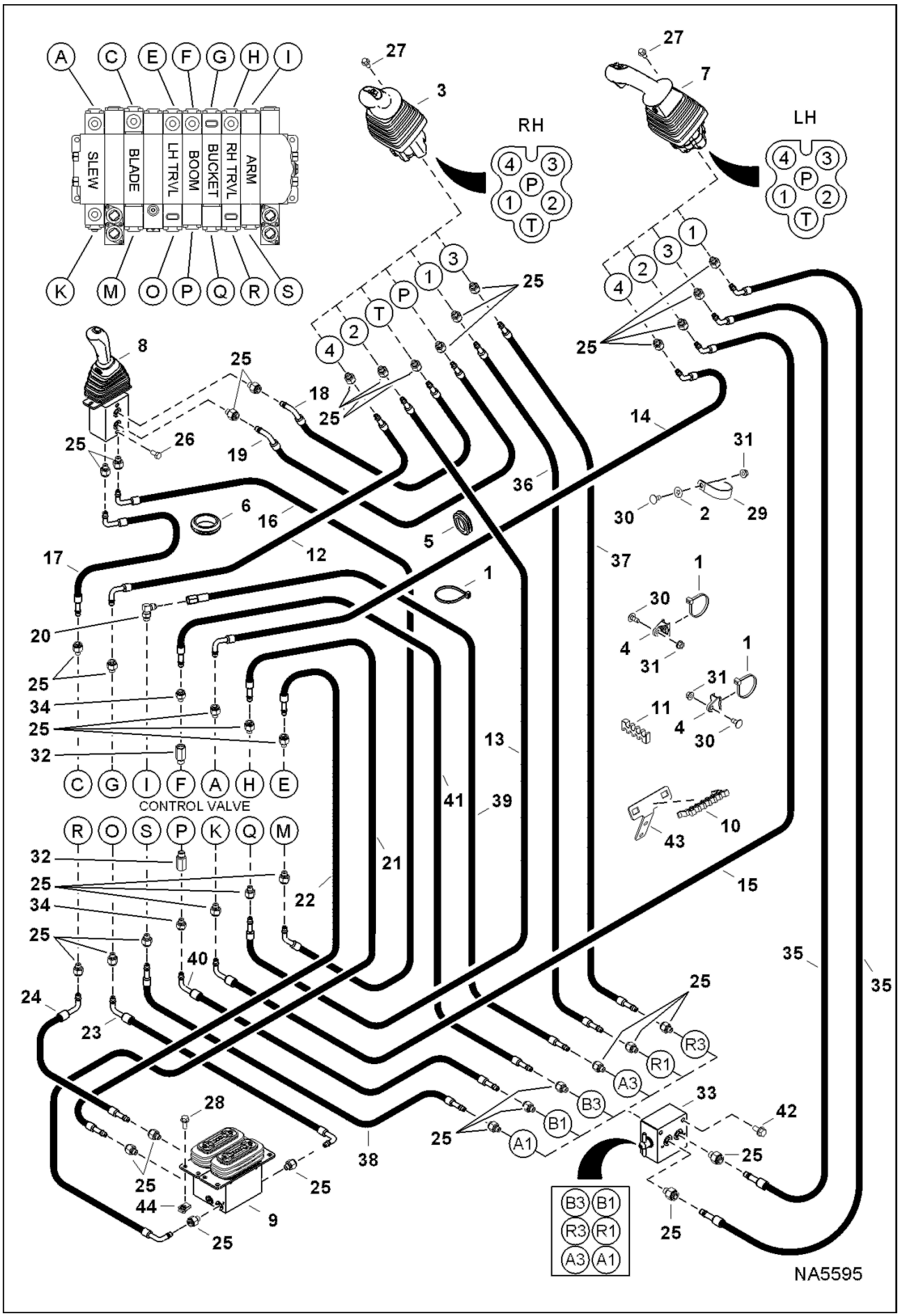

Page 104 - OSS# 2091664 - All rights reserved by Bobcat Company - 08/27/2012 - 11:42:23 - Produced by Ken Cook Co. with mediaioff

Ref No	Part Number	Description	Remarks	Serial Number	Qty
43	7192355	HOLDER	See Illustration HYDRAULIC CIRCUITRY/ NA5590		1
44	6676169	NUT			4

Page 105 - OSS# 2091664 - All rights reserved by Bobcat Company - 08/27/2012 - 11:42:23 - Produced by Ken Cook Co. with mediaioff

HYDRAULIC CIRCUITRY
(Pilot W/O and W/ JPS Cont'd)

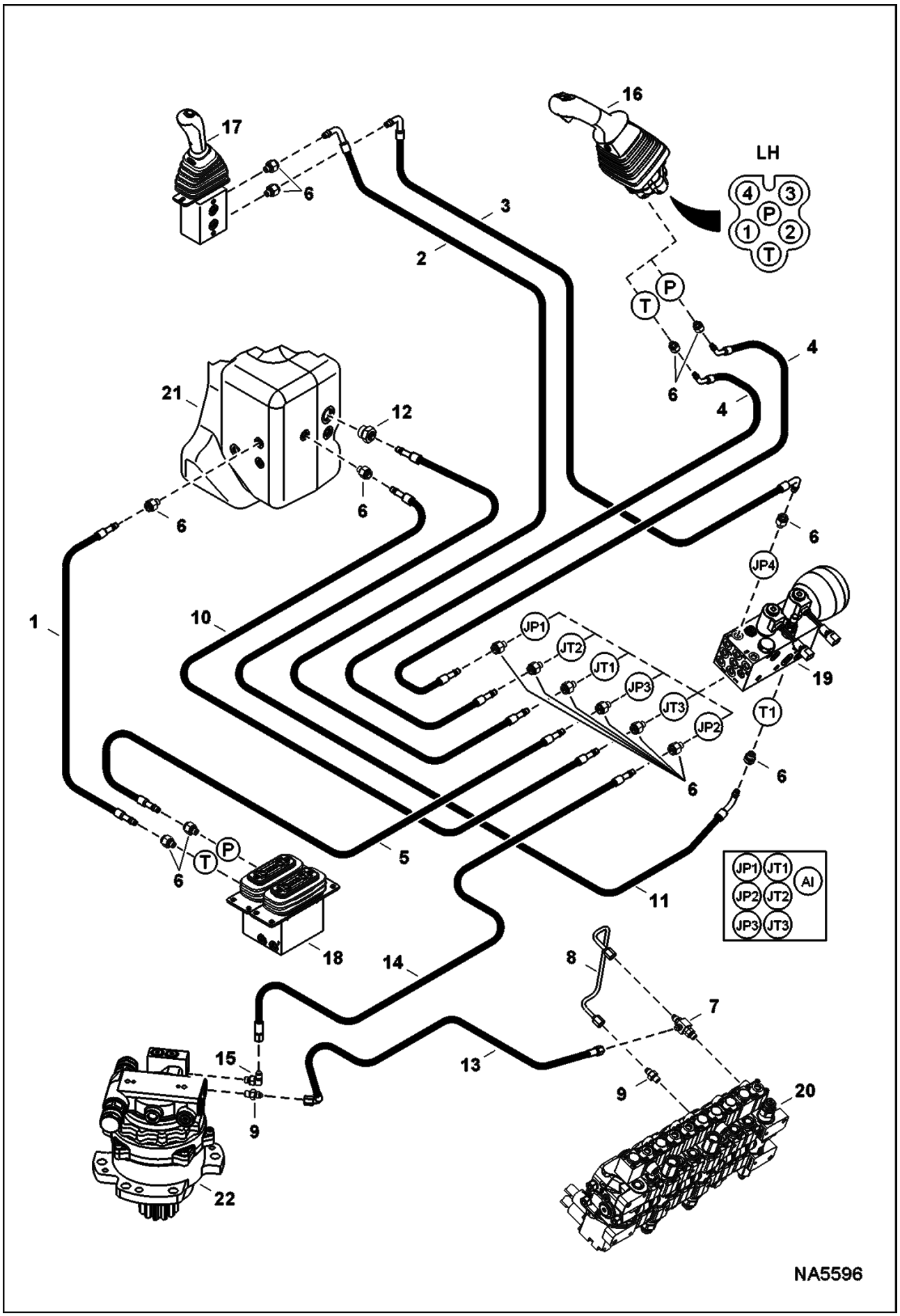

Page 106 - OSS# 2091664 - All rights reserved by Bobcat Company - 08/27/2012 - 11:42:23 - Produced by Ken Cook Co. with mediaioff

Ref No	Part Number	Description	Remarks	Serial Number	Qty
1	7196580	HOSE, HYD			1
2	7196581	HOSE, HYD			1
3	7196582	HOSE, HYD			1
4	7196586	HOSE, HYD			1
5	7202316	HOSE, HYD			1
6	10L0604	FITTING, HYD CONNECTOR			15
6	78K4	O'RING			x
6	7011053	CLIP			x
7	6697919	VALVE, SHUTTLE			1
7	79K4	O RING 10			x
8	7173459	TUBELINE, HYD			1
9	15KB0404	FTG HYD S Connector			1
9	79K4	O RING 10			x
10	7201281	HOSE, HYD			1
11	7201282	HOSE, HYD			1
12	10L0610	FITTING, HYD CONNECTOR			1
12	78K4	O'RING			x
12	7011053	CLIP			x
13	7165866	HOSE, HYD			1
14	7202286	HOSE, HYD			1
15	17KB0404	FTG HYD ELBOW 90			1
15	79K4	O RING 10			x
16	7008320	LEVER, JOYSTICK W/PWM	See Illustration LH JOYSTICK/ NA2224		1
17	7008581	JOYSTICK, BLADE	See Illustration BLADE JOYSTICK/ NA2308		1
18	7180565	VALVE, PEDAL DUAL	See Illustration TRAVEL CONTROLLER/ NA2979		1
19	7204476	MANIFOLD, HYD ASSY	See Illustration MANIFOLD ASSY/ NA6098		1
20	7188867	VALVE, CONTROL	See Illustration HYDRAULIC CONTROL VALVE/ NA6140		1
21		TANK, HYD	See Illustration HYDRAULIC CIRCUITRY/ NA6286		1
22	7008800	MOTOR, HYD SLEW	See Illustration SLEW MOTOR/ NA6100		1

Page 107 - OSS# 2091664 - All rights reserved by Bobcat Company - 08/27/2012 - 11:42:23 - Produced by Ken Cook Co. with mediaioff

HYDRAULIC CIRCUITRY
(Manifold & Pump)

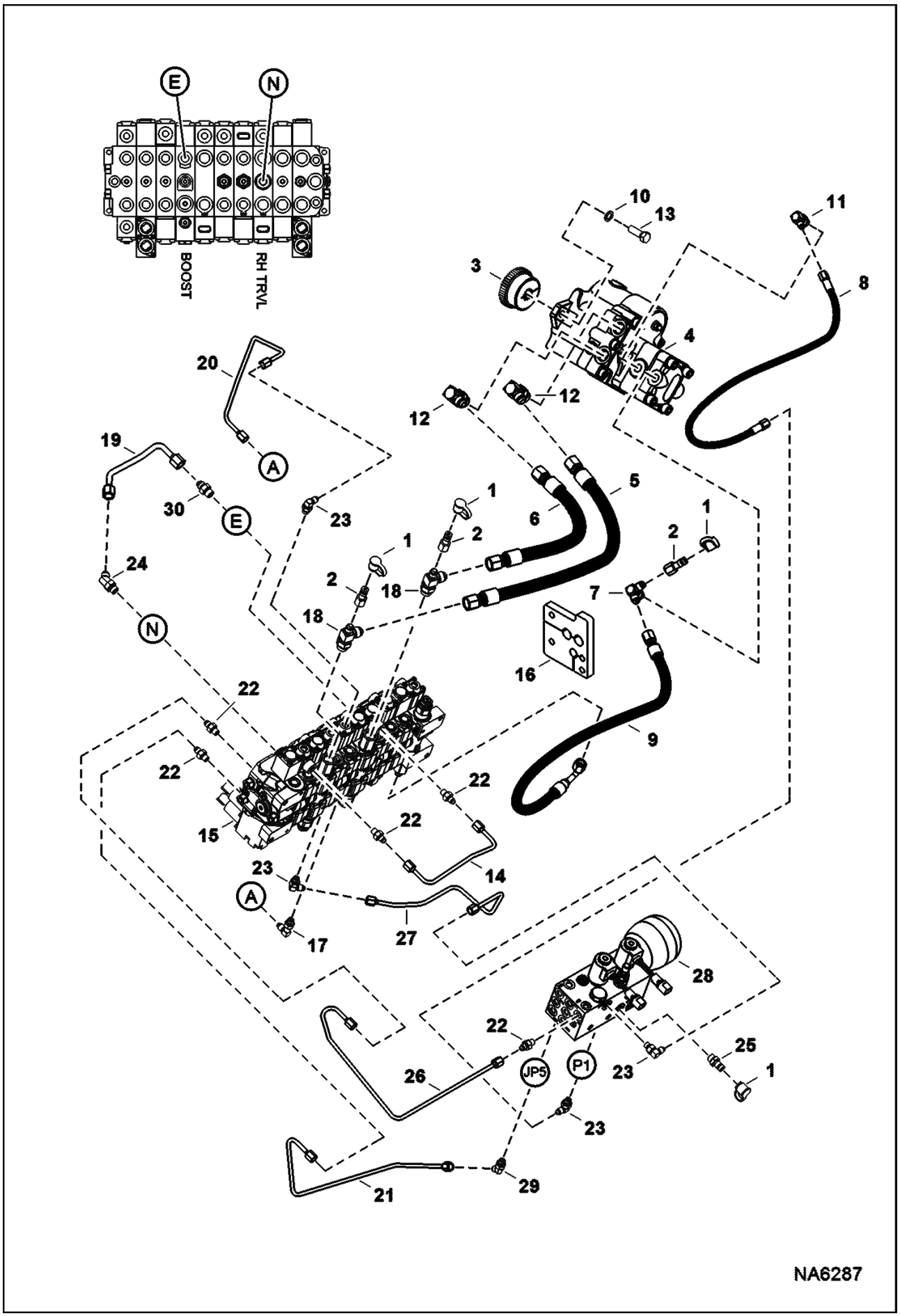

Page 108 - OSS# 2091664 - All rights reserved by Bobcat Company - 08/27/2012 - 11:42:23 - Produced by Ken Cook Co. with mediaioff

Ref No	Part Number	Description	Remarks	Serial Number	Qty
1	6630367	CAP			4
2	6661753	PLUG			4
3	6676535	COUPLER			1
4	7209326	PUMP, HYD PISTON	See Illustration HYDRAULIC PISTON PUMP/ NA6276		1
5	7170641	HOSE, HYD			1
6	7170642	HOSE, HYD			1
7	7192313	FITTING, HYD ELBOW			1
7	79K6	O RING 10			x
8	7188958	HOSE, HYD			1
9	7170643	HOSE, HYD			1
10	15EM120	WASHER			2
11	17KB0406	FITTING, HYD ELBOW			1
11	79K6	O RING 10			x
12	17KB0810	FITTING, HYD ELBOW			2
12	79K10	O RING 10			x
13	55CM1235	BOLT			2
14	7173477	TUBELINE, HYD			1
15	7188867	VALVE, CONTROL	See Illustration HYDRAULIC CONTROL VALVE/ NA6140		1
16	7188872	SEAL, HOSE			1
17	7188886	FITTING, HYD ELBOW			1
17	79K4	O RING 10			x
18	7196932	FITTING, HYD TEE			2
18	79K8	O RING 10			x
19	7204057	TUBELINE, HYD			1
20	7204258	TUBELINE, HYD			1
21	7204767	TUBELINE, HYD			1
22	15KB0404	FTG HYD S Connector			5
22	79K4	O RING 10			x
23	17KB0404	FTG HYD ELBOW 90			4
23	79K4	O RING 10			x
24	18KB0606	FTG HYD Elbow 45			1
24	79K6	O RING 10			x
25	6630168	COUPLER			1
25	79K6	O RING 10			x
26	7188857	TUBELINE, HYD			1
27	7188858	TUBELINE, HYD			1
28	7204476	MANIFOLD, HYD ASSY	See Illustration MANIFOLD ASSY/ NA6098		1
29	18KB0404	FTG HYD ELBOW 45			1
29	79K4	O RING 10			x
30	15KB0606	FITTING, HYD CONNECTOR			1
30	79K6	O RING 10			x

Page 109 - OSS# 2091664 - All rights reserved by Bobcat Company - 08/27/2012 - 11:42:23 - Produced by Ken Cook Co. with mediaioff

HYDRAULIC OIL FILTER

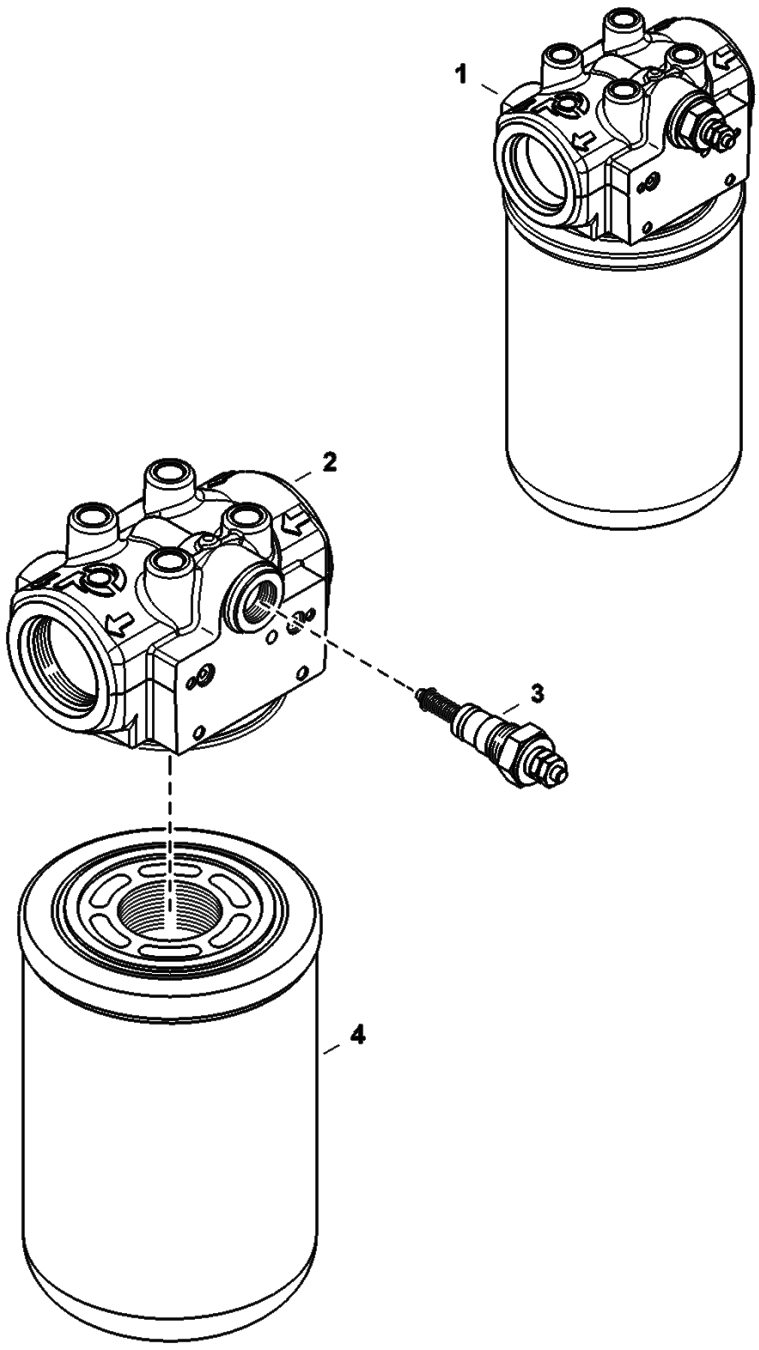

Page 110 - OSS# 2091664 - All rights reserved by Bobcat Company - 08/27/2012 - 11:42:23 - Produced by Ken Cook Co. with mediaIoff

Ref No	Part Number	Description	Remarks	Serial Number	Qty
1	7188836	FILTER, OIL HYD ASSY	Ref. 2-4		1
2		HEAD	NSS - Order Ref. 1		1
3	6660260	SWITCH			1
3	6599365	KIT	nut, washers, and O-rings		1
4	6661248	FILTER, OIL HYD 12	#3 media - 152,4 mm (6") long		1

Page 111 - OSS# 2091664 - All rights reserved by Bobcat Company - 08/27/2012 - 11:42:23 - Produced by Ken Cook Co. with mediaioff

HYDRAULIC PISTON PUMP

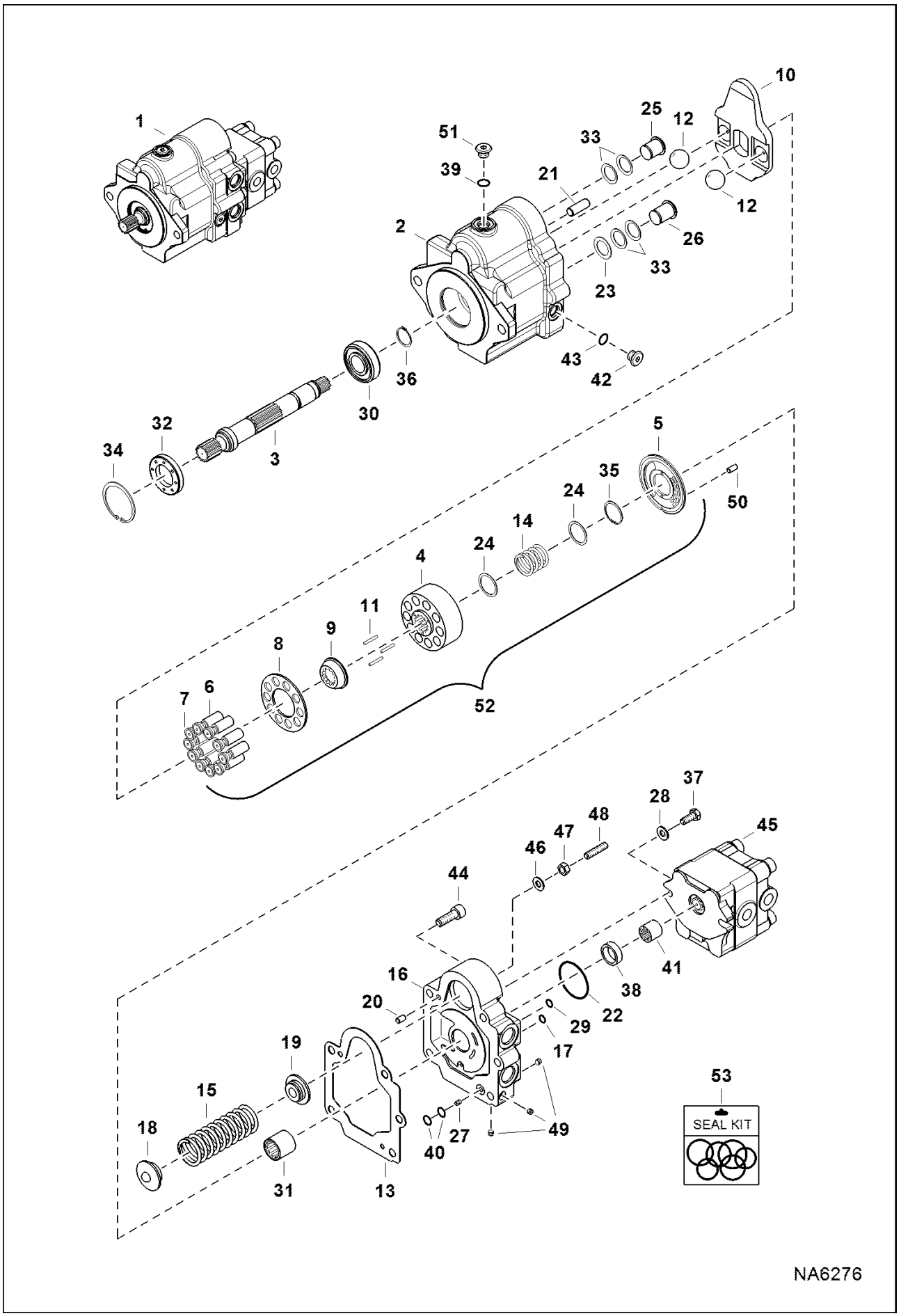

Page 112 - OSS# 2091664 - All rights reserved by Bobcat Company - 08/27/2012 - 11:42:23 - Produced by Ken Cook Co. with mediaioff

Ref No	Part Number	Description	Remarks	Serial Number	Qty
1	7209326	PUMP, HYD PISTON	Ref. 2-51		1
2		HOUSING	NSS		1
3		SHAFT	NSS		1
4		BARREL, CYLINDER	NSS		1
5		PLATE, VALVE	NSS		1
6		PISTON	NSS		10
7		SHOE	NSS		10
8		HOLDER, SHOE	NSS		1
9		HOLDER, BARREL	NSS		1
10		SWASHPLATE	NSS		1
11		NEEDLE	NSS		3
12		BALL	NSS		2
13		GASKET	NSS		1
14		SPRING	NSS		1
15		SPRING	NSS		1
16		HOUSING	NSS		1
17		O-RING	NSS		1
18		HOLDER, SPRING	NSS		1
19		GUIDE, SPRING	NSS		1
20		PIN	NSS		1
21		PIN	NSS		1
22		O-RING	NSS		1
23		WASHER	NSS		1
24		RETAINER	NSS		2
25		PIN, STOPPER	NSS		1
26		PIN, STOPPER	NSS		1
27		PIN	NSS		1
28		WASHER	NSS		2
29		O-RING	NSS		1
30		BEARING, BALL	NSS		1
31		BEARING, NEEDLE	NSS		1
32		SEAL, OIL	NSS		1
33		SPRING, DISH	NSS		4
34		RING, SNAP	NSS		1
35		RING, SNAP	NSS		1
36		RING, SNAP	NSS		1
37		SCREW	NSS		2
38		COLLAR	NSS		1
39		O-RING	NSS		1
40		O-RING	NSS		2
41		COUPLING	NSS		1
42		PLUG	NSS		1
43		O-RING	NSS		1
44		SCREW	NSS		5
45	7023324	PUMP, GEAR			1
46		WASHER	NSS		1
47		NUT	NSS		1
48		SCREW	NSS		1
49		PLUG	NSS		5
50		PIN, SPRING	NSS		1
51		PLUG	NSS		1
52	7023323	KIT, ROTARY			1

Page 113 - OSS# 2091664 - All rights reserved by Bobcat Company - 08/27/2012 - 11:42:23 - Produced by Ken Cook Co. with mediaioff

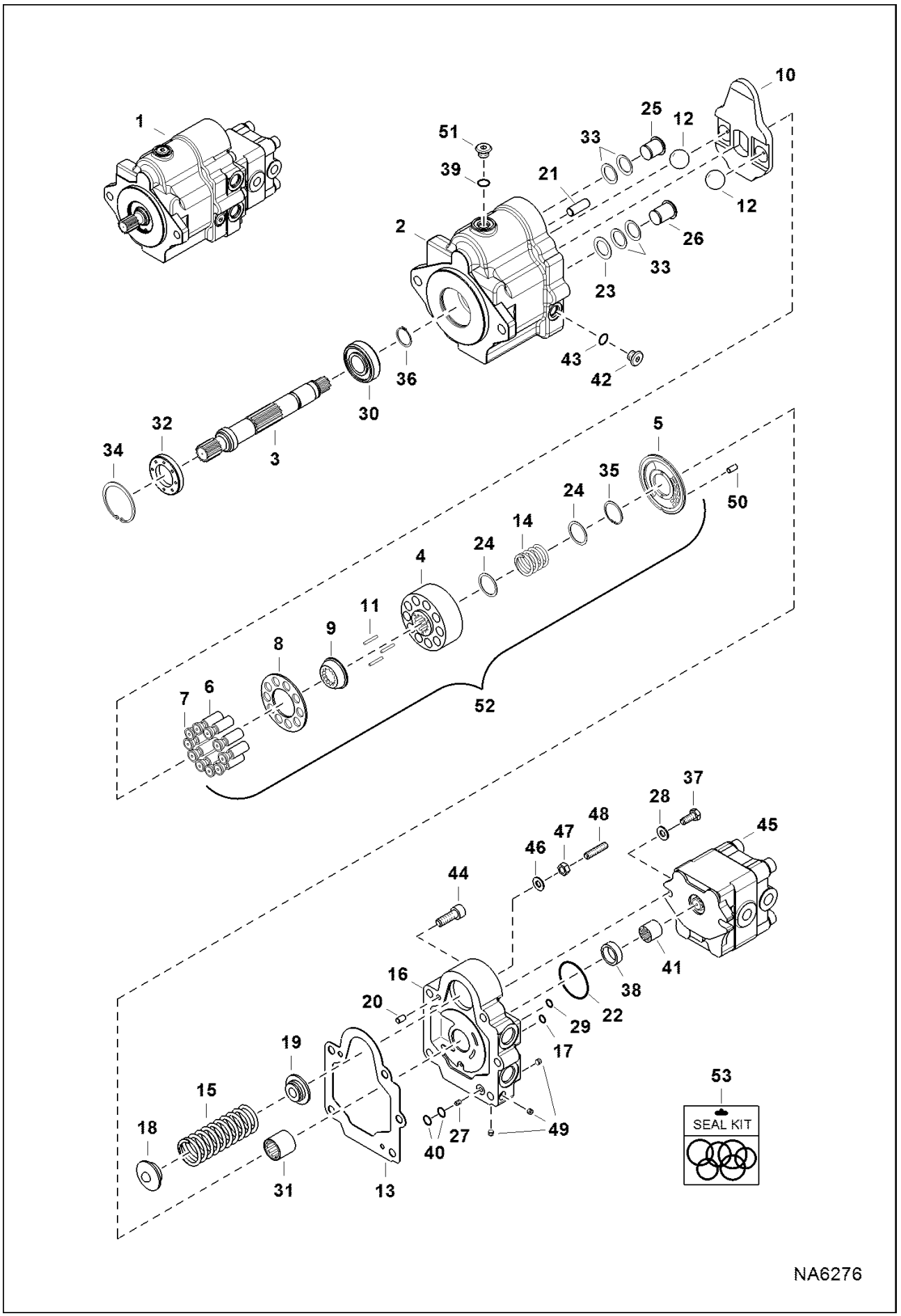

Page 114 - OSS# 2091664 - All rights reserved by Bobcat Company - 08/27/2012 - 11:42:23 - Produced by Ken Cook Co. with mediaioff

Ref No	Part Number	Description	Remarks	Serial Number	Qty
		GRP			
53	6688091	KIT	Ref. 13, 17, 22, 29, 32, 39, 40, 43, 46		1

Page 115 - OSS# 2091664 - All rights reserved by Bobcat Company - 08/27/2012 - 11:42:23 - Produced by Ken Cook Co. with mediaioff

MANIFOLD ASSY

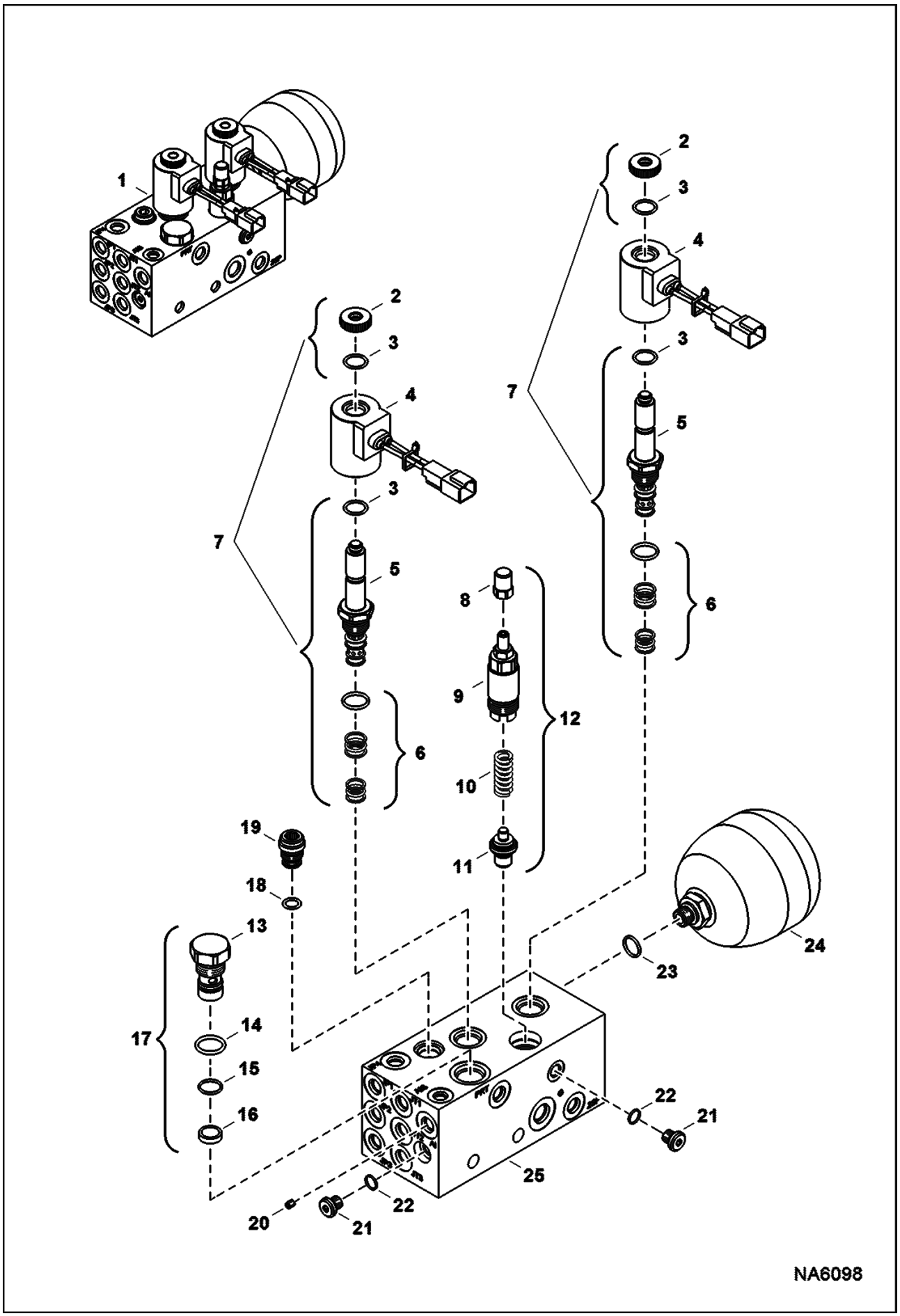

Page 116 - OSS# 2091664 - All rights reserved by Bobcat Company - 08/27/2012 - 11:42:23 - Produced by Ken Cook Co. with mediaioff

Ref No	Part Number	Description	Remarks	Serial Number	Qty
1	7204476	MANIFOLD, HYD ASSY	Ref. 2-25		1
2	6679076	NUT			2
3		SEAL	NAP - Was 6679603		4
4	7010625	COIL, SOLENOID			2
5		STEM	NSS		2
6	6679078	SEAL KIT			2
7	6678988	VALVE	does not include Ref. 4		2
8		NUT	NSS		1
9		VALVE	NSS		1
10		SPRING	NSS		1
11		STEM	NSS		1
12	7010629	VALVE, RELIEF			1
13		PLUG	NSS		1
14		O-RING	NAP - Was 6679693		1
15		SEAL	NAP - Was 6679603		1
16		COLLAR	NSS		1
17	7022942	PLUG			1
18	7010628	O-RING			1
19	6678990	VALVE	W/Ref. 18		1
20	7022943	ORIFICE			1
21	6678993	PLUG	W/Ref. 22		2
22		O-RING	NSS		2
23	79K6	O RING 10			1
24	6669537	ACCUMULATOR			1
25		BLOCK	NSS		1

Page 117 - OSS# 2091664 - All rights reserved by Bobcat Company - 08/27/2012 - 11:42:23 - Produced by Ken Cook Co. with mediaioff

SELECTOR VALVE ASSY
(JPS) (ISO/STD)

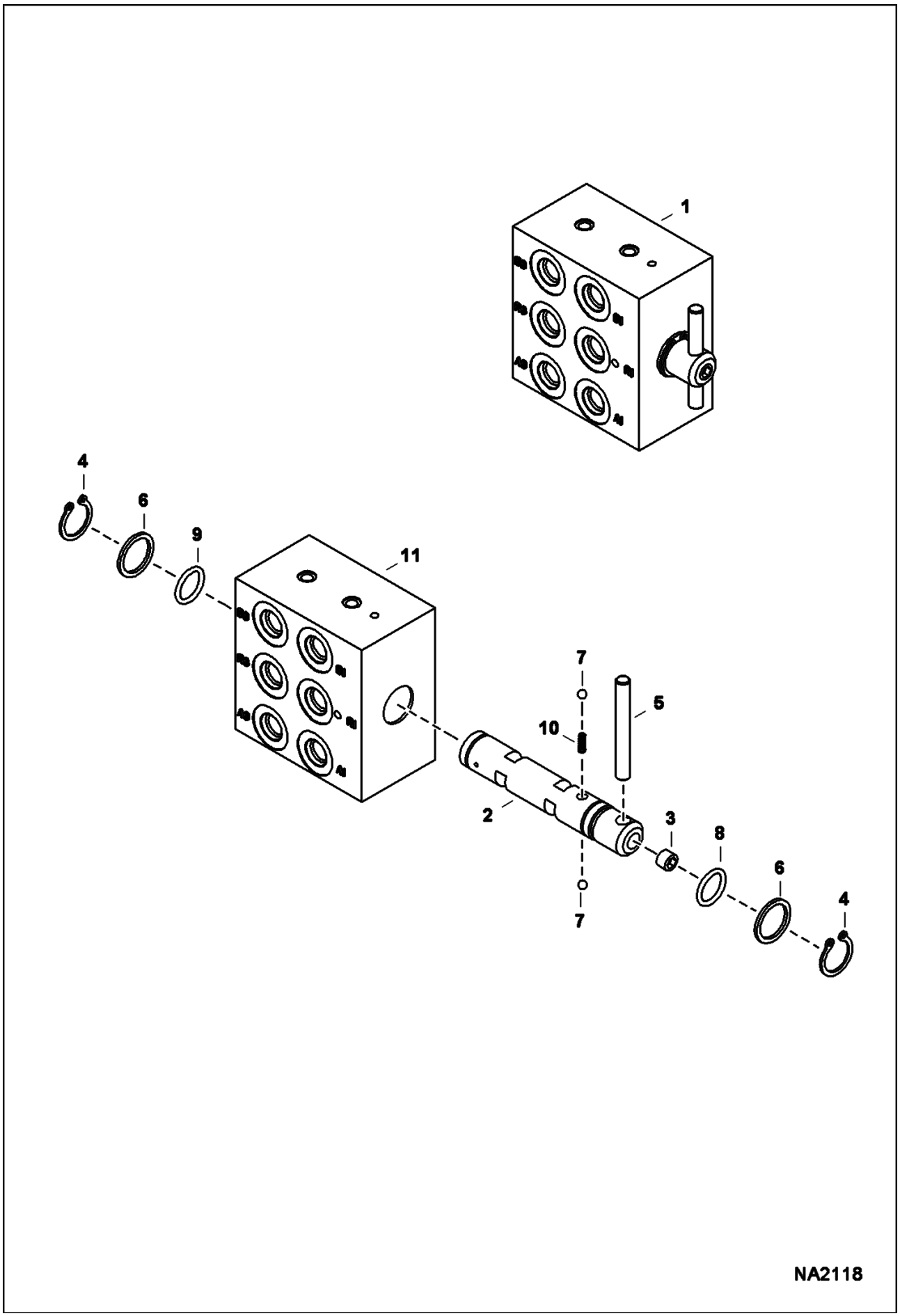

Page 118 - OSS# 2091664 - All rights reserved by Bobcat Company - 08/27/2012 - 11:42:23 - Produced by Ken Cook Co. with mediaioff

SELECTOR VALVE ASSY (Cont'd)
(JPS) (ISO/STD)

Ref No	Part Number	Description	Remarks	Serial Number	Qty
1	7193055	VALVE, JPS	Ref. 2-11		1
2	7022690	SPOOL			1
3	7010037	SCREW			4
4	7009345	RING, SNAP			2
5	7010035	HANDLE			1
6	7010036	WASHER			2
7	7009348	BALL, 3/16 DIA			2
8	7009349	O-RING			1
9	6679499	O-RING			1
10	7009350	SPRING, SPOOL			1
11		BLOCK	NSS - Order Ref. 1		1

Page 119 - OSS# 2091664 - All rights reserved by Bobcat Company - 08/27/2012 - 11:42:23 - Produced by Ken Cook Co. with mediaioff

SELECTOR VALVE ASSY
(Direct to Tank)

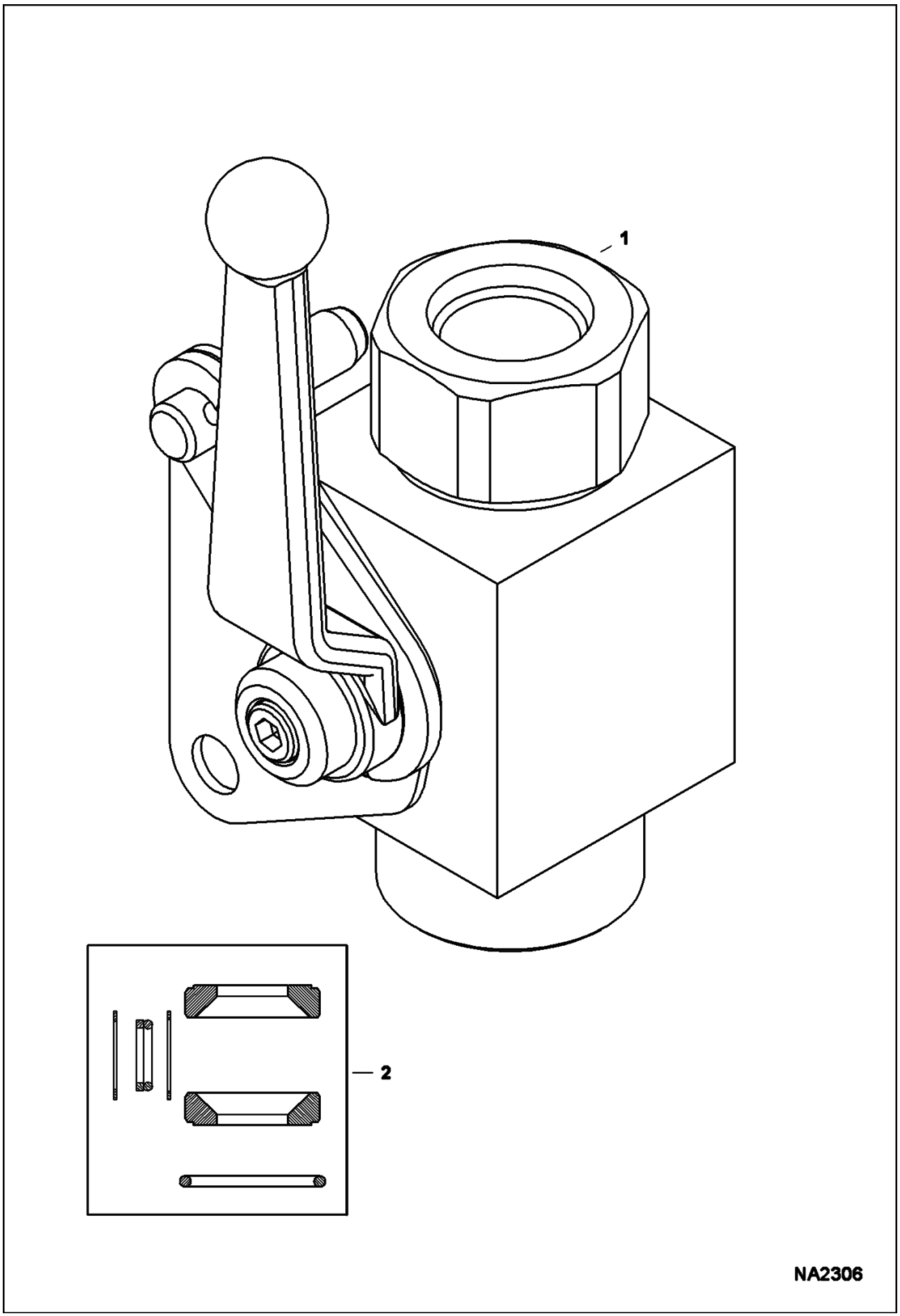

Page 120 - OSS# 2091664 - All rights reserved by Bobcat Company - 08/27/2012 - 11:42:23 - Produced by Ken Cook Co. with mediaioff

SELECTOR VALVE ASSY (Cont'd)
(Direct to Tank)

Ref No	Part Number	Description	Remarks	Serial Number	Qty
1	6693507	VALVE, BALL			1
2	7012201	KIT, SEAL			1

Page 121 - OSS# 2091664 - All rights reserved by Bobcat Company - 08/27/2012 - 11:42:23 - Produced by Ken Cook Co. with mediaioff

LH JOYSTICK

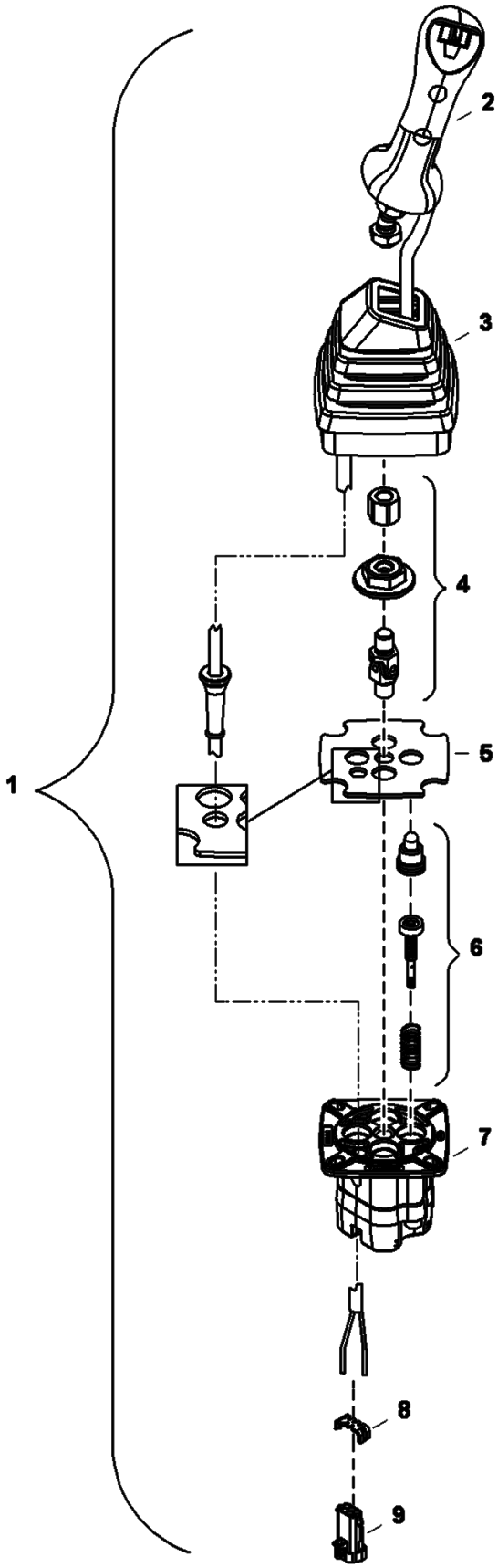

Page 122 - OSS# 2091664 - All rights reserved by Bobcat Company - 08/27/2012 - 11:42:23 - Produced by Ken Cook Co. with mediaioff

Ref No	Part Number	Description	Remarks	Serial Number	Qty
1	7008320	LEVER, JOYSTICK W/PWM	Ref. 2-9		1
2	7010197	HANDLE, JOYSTICK			1
3	6692548	BOOT			1
4	6679956	KIT			1
5		FLANGE	NSS - Order Ref. 7		1
6	6692549	KIT, PLUNGER			1
7	6684714	HOUSING	W/Ref. 5		1
8	6679958	LOCK			1
9	6679960	CONNECTOR			1

Page 123 - OSS# 2091664 - All rights reserved by Bobcat Company - 08/27/2012 - 11:42:23 - Produced by Ken Cook Co. with mediaioff

RH JOYSTICK

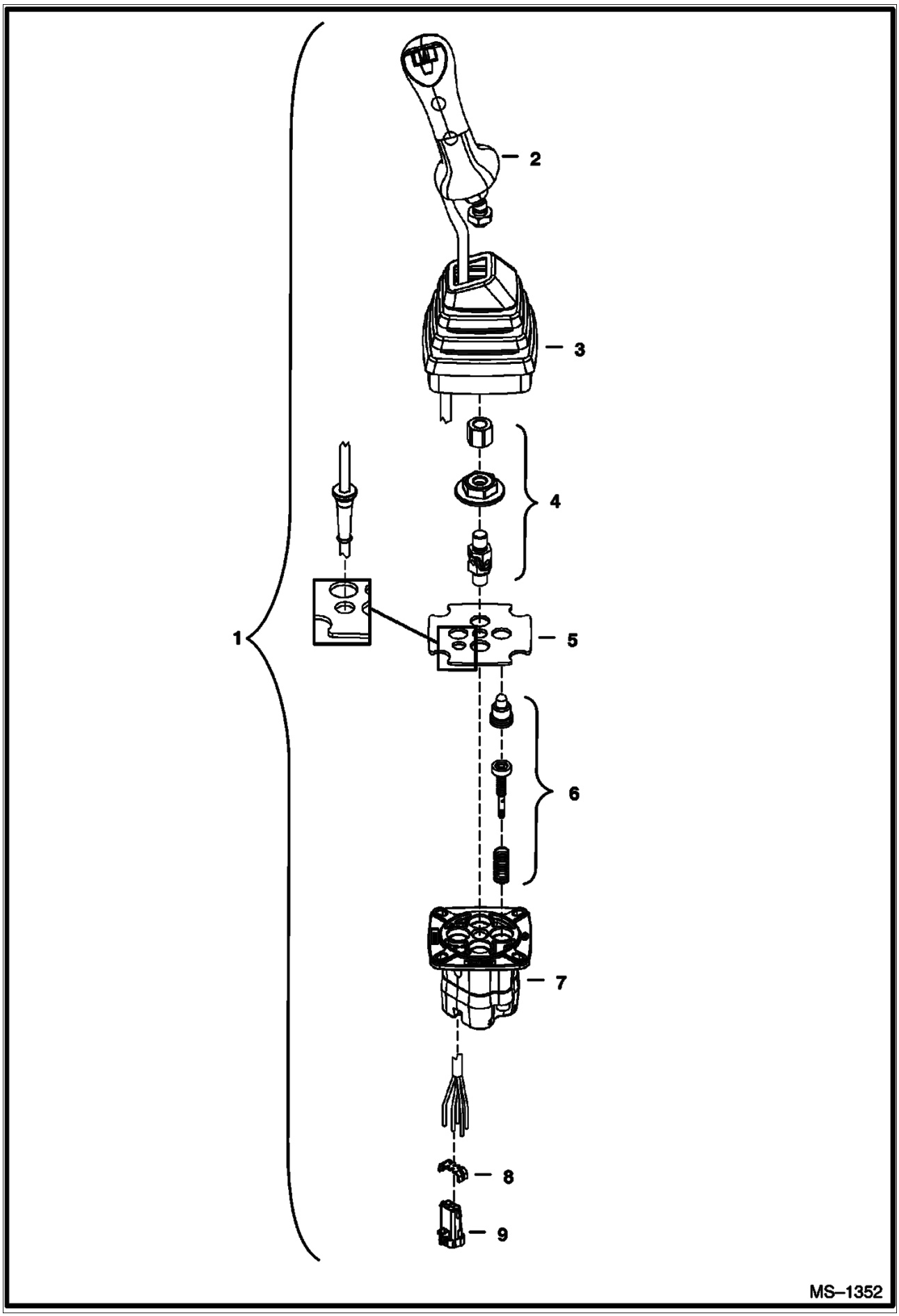

Page 124 - OSS# 2091664 - All rights reserved by Bobcat Company - 08/27/2012 - 11:42:23 - Produced by Ken Cook Co. with mediaioff

Ref No	Part Number	Description	Remarks	Serial Number	Qty
1	6677895	JOYSTICK	RH - Ref. 2-9		1
2	6679953	HANDLE, JOYSTICK			1
3	6692548	BOOT			1
4	6679956	KIT			1
5		FLANGE	NAP - Order Ref. 7 - Was 6679957 [A]		1
6	6692549	KIT, PLUNGER			4
7	6684714	HOUSING	W/Ref. 5		1
8	6679958	LOCK			1
9	6679960	CONNECTOR			1

Page 125 - OSS# 2091664 - All rights reserved by Bobcat Company - 08/27/2012 - 11:42:23 - Produced by Ken Cook Co. with mediaioff

TRAVEL CONTROLLER
(Dual Pedal Valve)

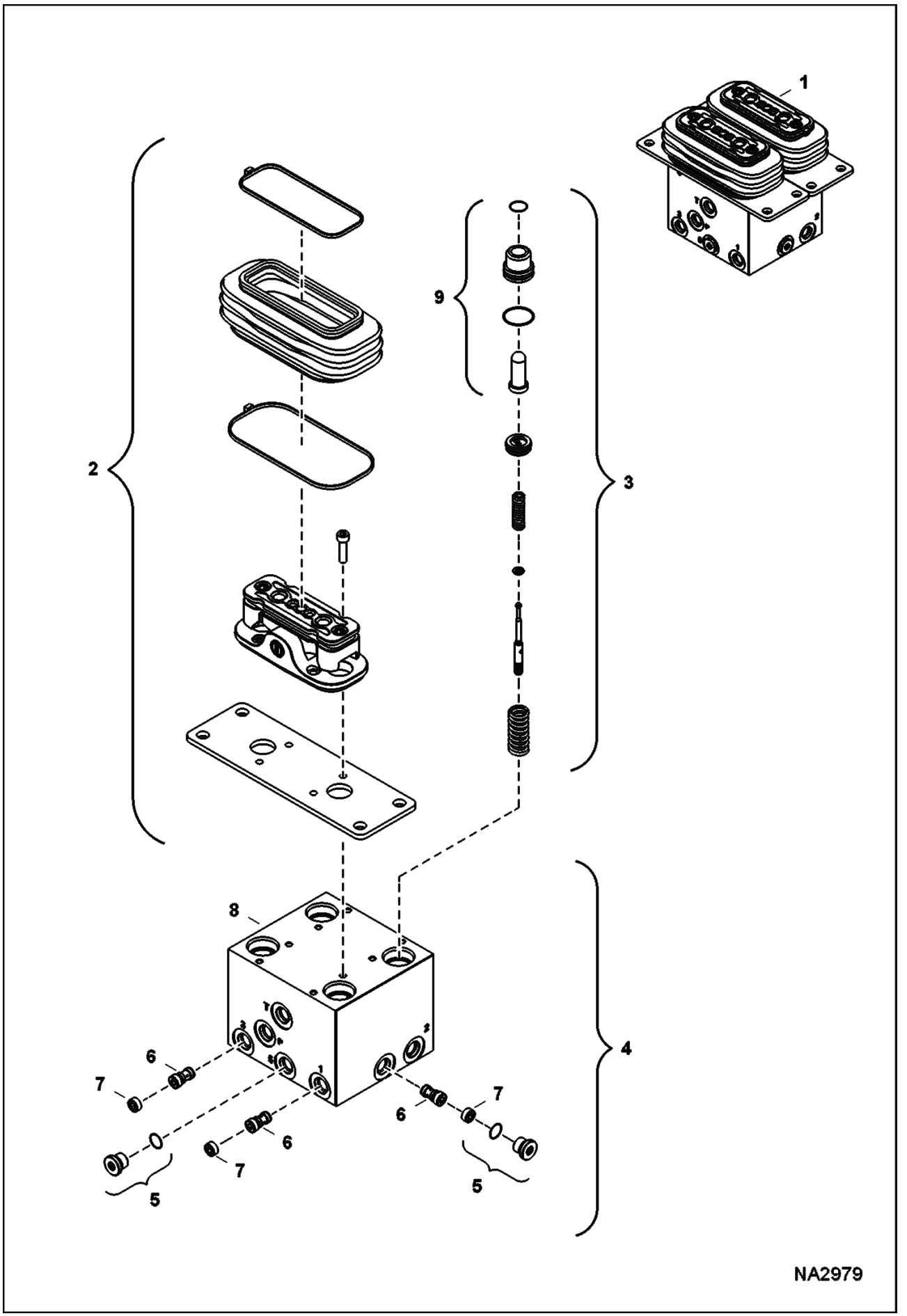

Page 126 - OSS# 2091664 - All rights reserved by Bobcat Company - 08/27/2012 - 11:42:23 - Produced by Ken Cook Co. with mediaioff

TRAVEL CONTROLLER (Cont'd)
(Dual Pedal Valve)

Ref No	Part Number	Description	Remarks	Serial Number	Qty
1	7180565	VALVE, PEDAL DUAL	Ref. 2-9		1
2	7012019	BASE, JOYSTICK			2
3	7012020	SPOOL, ACTUATOR ASSY			4
4		HOUSING, JOYSTICK	NAP - Ref. 5-8 - Order Ref. 1		1
5	6686236	PLUG			2
6	6685332	SPOOL			3
7	7012022	PLUG			3
8		HOUSING	NSS - Order Ref. 1		1
9	7018015	KIT, PLUNGER			4

Page 127 - OSS# 2091664 - All rights reserved by Bobcat Company - 08/27/2012 - 11:42:23 - Produced by Ken Cook Co. with mediaioff

BLADE JOYSTICK

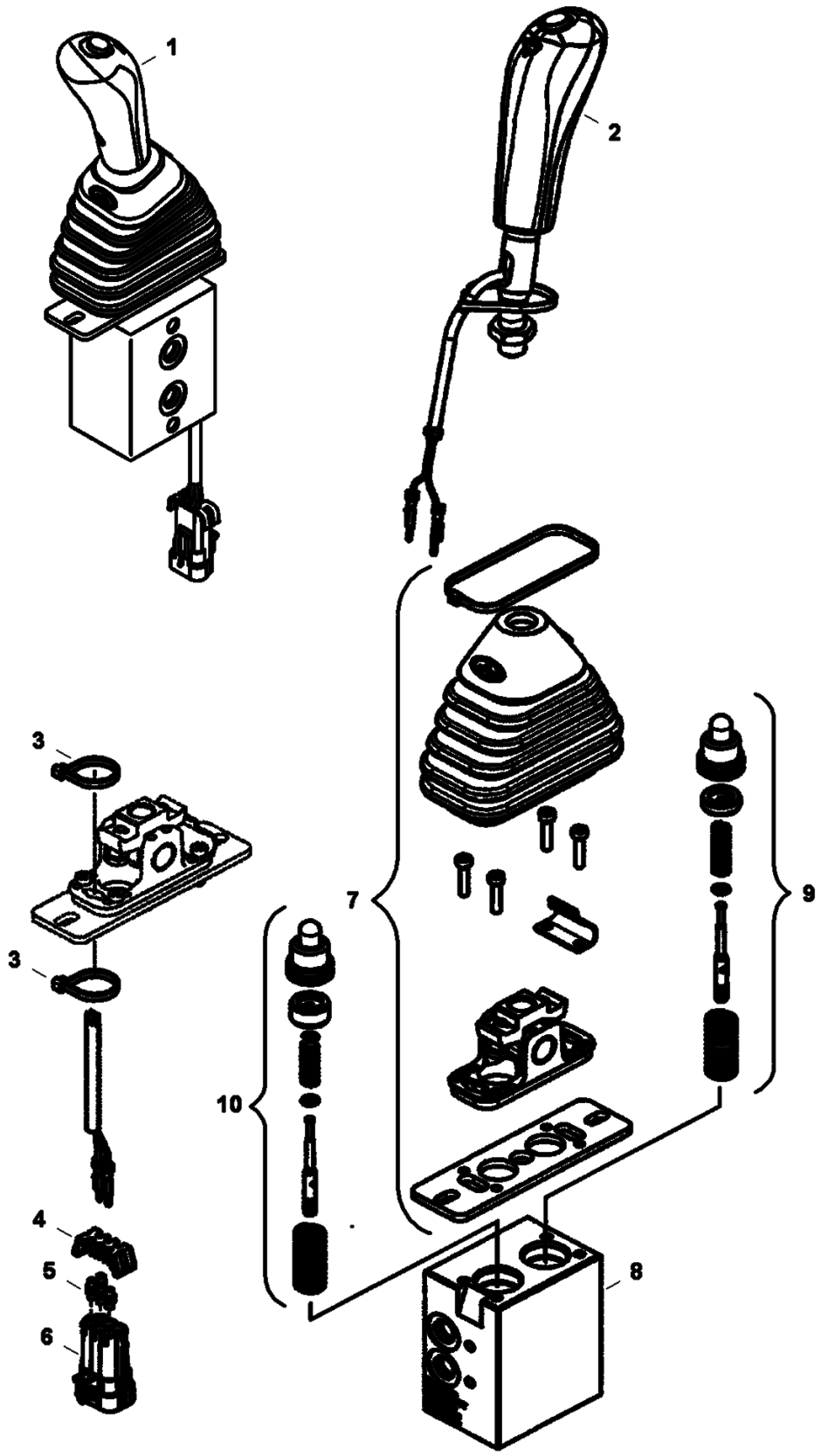

Page 128 - OSS# 2091664 - All rights reserved by Bobcat Company - 08/27/2012 - 11:42:23 - Produced by Ken Cook Co. with mediaioff

Ref No	Part Number	Description	Remarks	Serial Number	Qty
1	7008581	JOYSTICK, BLADE	Ref. 2-10		1
2	7010549	HANDLE, JOYSTICK			1
3	6610510	TIE			3
4	7010550	LOCK			1
5	7010551	PLUG			4
6	7010552	CONNECTOR			1
7	7010553	BASE, JOYSTICK			1
8	7010554	HOUSING, JOYSTICK			1
9	7010555	SPOOL, ACTUATOR ASSY			1
10	7010556	SPOOL, ACTUATOR ASSY			1

Page 129 - OSS# 2091664 - All rights reserved by Bobcat Company - 08/27/2012 - 11:42:23 - Produced by Ken Cook Co. with mediaioff

SWIVEL ASSY

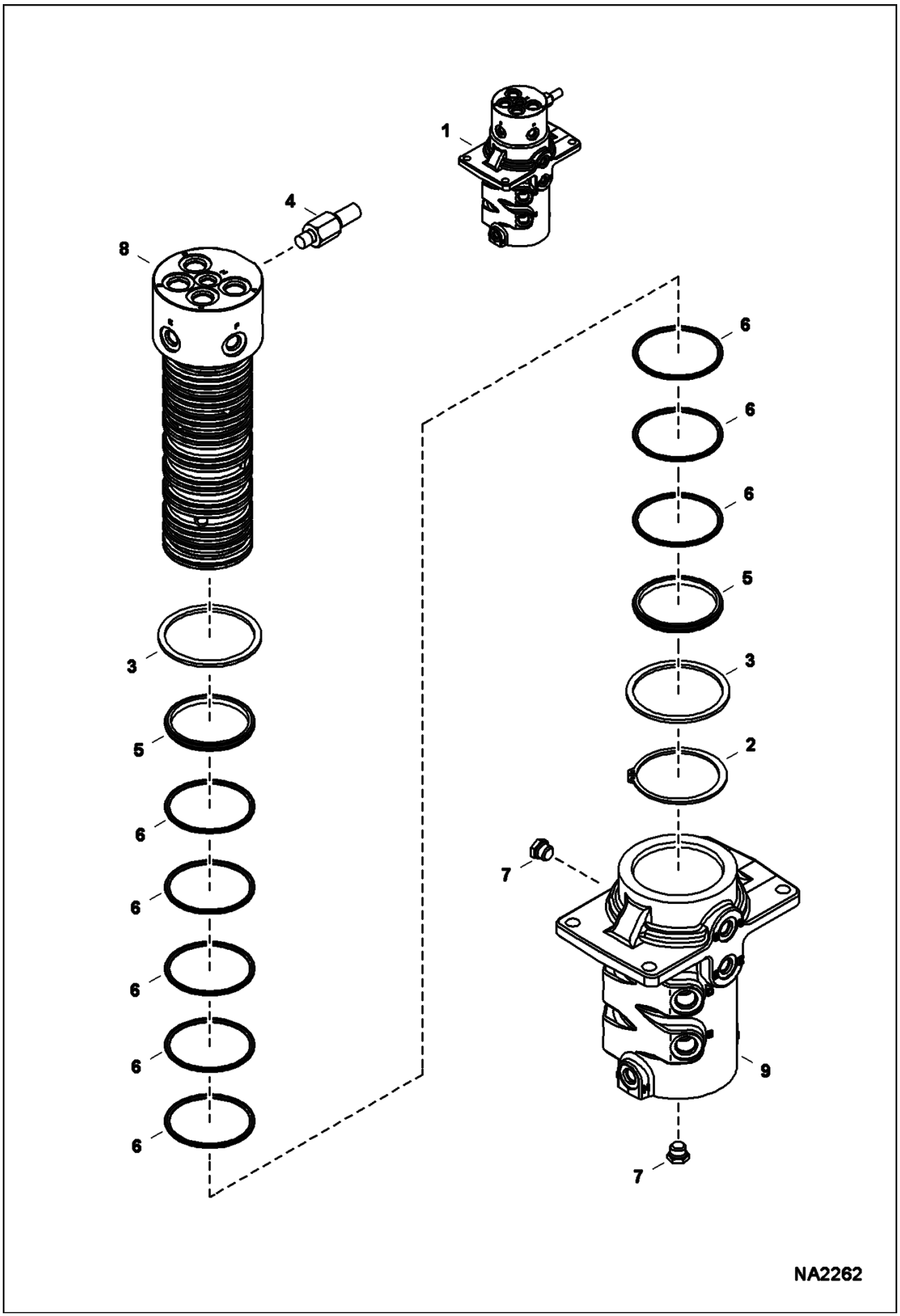

Page 130 - OSS# 2091664 - All rights reserved by Bobcat Company - 08/27/2012 - 11:42:23 - Produced by Ken Cook Co. with mediaioff

Ref No	Part Number	Description	Remarks	Serial Number	Qty
1	7143734	SWIVEL, HYD ASSY	Ref. 2-9		1
2	6662076	RING			1
3	6674221	WASHER			2
4	6810029	STOP			1
5	6810610	SEAL			2
6	6810813	SEAL, OIL	2 pc seal		8
7	6812171	PLUG			4
7	79K6	O RING 10			4
8	7143717	SPOOL, SWIVEL			1
9		BARREL	NAP - Order Ref. 1		1

Page 131 - OSS# 2091664 - All rights reserved by Bobcat Company - 08/27/2012 - 11:42:23 - Produced by Ken Cook Co. with mediaioff

TRAVEL MOTOR
(Assy)

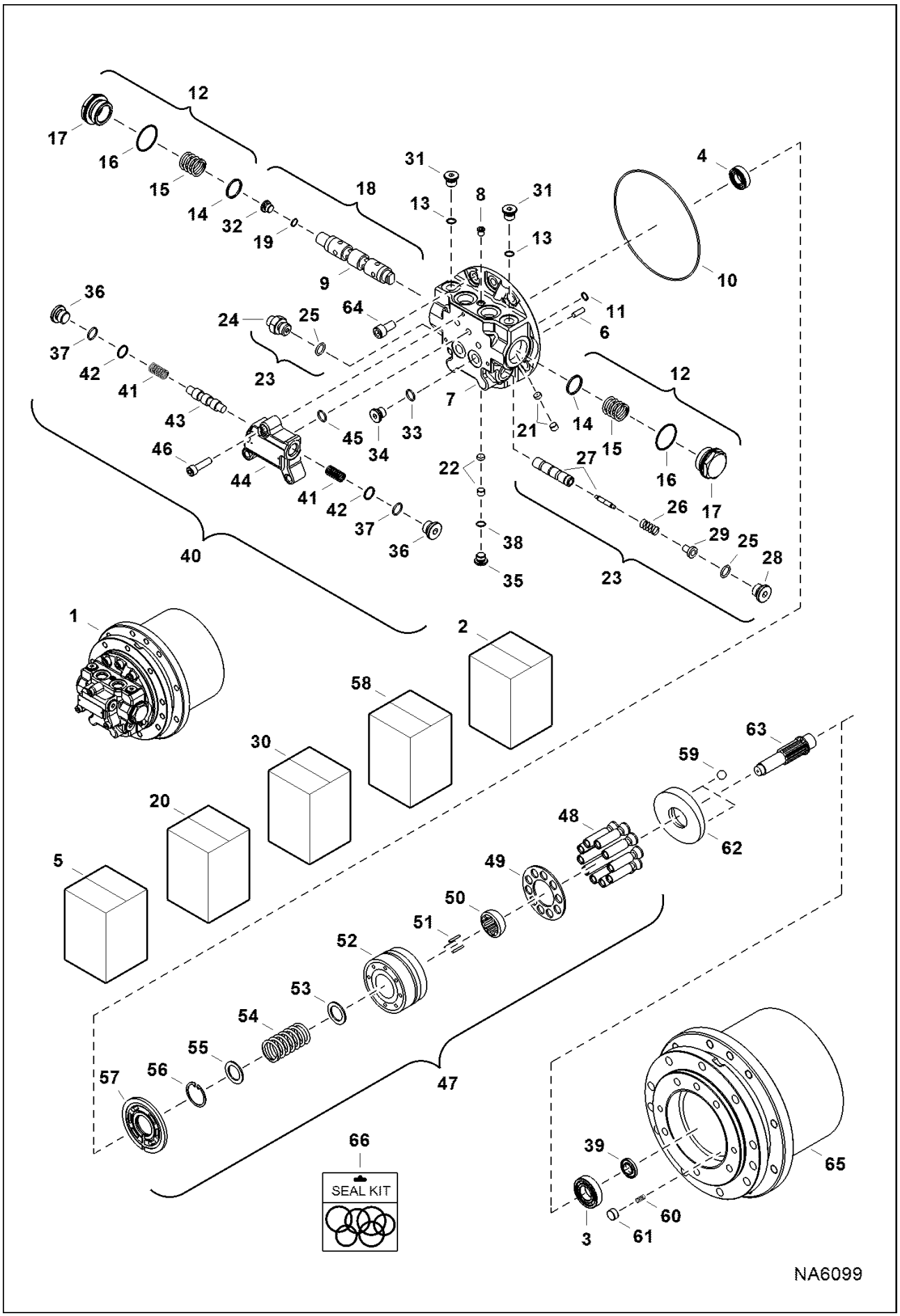

Page 132 - OSS# 2091664 - All rights reserved by Bobcat Company - 08/27/2012 - 11:42:23 - Produced by Ken Cook Co. with mediaioff

TRAVEL MOTOR (Cont'd)
(Assy)

Ref No	Part Number	Description	Remarks	Serial Number	Qty
1	7190517	MOTOR, DRIVE HYD TRAVEL	Ref. 2-66		1
2	7022826	BEARING, MOTOR TRAVEL	Ref. 3 & 4		1
3		BEARING	NSS - Order Ref. 2		1
4		BEARING	NSS - Order Ref. 2		1
5	7022815	HOUSING, ASSY	Ref. 6-8, 12, 20, & 23		1
6		PIN	NSS - Order Ref. 5		2
7		PLATE, BASE	NSS - Order Ref. 5		1
8		PLUG	NSS - Order Ref. 5		1
9		SPOOL	NSS		1
10		O-RING	NSS		1
11		O-RING	NSS		2
12	7022816	VALVE, TRAVEL	Ref. 14-18		1
13		O-RING	NSS - Order Ref. 30		1
14		SEAT, SPRING	NSS - Order Ref. 12		2
15		SPRING	NSS - Order Ref. 12		2
16		O-RING	NSS - Order Ref. 12		2
17		PLUG	NSS - Order Ref. 12		2
18	7022817	PLUNGER			1
19		O-RING	NSS - Order Ref. 18		1
20	7022818	ORIFICE	Ref. 21 & 22		1
21		ORIFICE	NSS - Order Ref. 20		4
22		ORIFICE	NSS - Order Ref. 20		4
23	7022819	KIT, SHIFT 2 SPEED	Ref, 24-29		1
24		PLUG	NSS - Order Ref. 23		1
25		O-RING	NSS - Order Ref. 23		2
26		SPRING	NSS - Order Ref. 23		1
27		SPOOL	NSS - Order Ref. 23		1
28		PLUG	NSS - Order Ref. 23		1
29		SEAT, SPRING	NSS - Order Ref. 23		1
30	7022820	KIT, PLUG	Ref. 13, 31, & 33-38		1
31		PLUG	NSS - Order Ref. 30		1
32		PLUG	NSS - Order Ref. 18		1
33		O-RING	NSS - Order Ref. 30		2
34		PLUG	NSS - Order Ref. 30		2
35		PLUG	NSS - Order Ref. 30		2
36		PLUG	NSS - Order Ref. 30 or 40		2
37		O-RING	NSS - Order Ref. 30 or 40		2
38		O-RING	NSS - Order Ref. 30		2
39	7022825	SEAL, RING			1
40	7022821	VALVE, ANTI-CAV	Ref. 36, 37, & 41-46		1
41		SPRING	NSS - Order Ref. 40		2
42		SEAT, SPRING	NSS - Order Ref. 40		2
43		SPOOL	NSS - Order Ref. 40		1
44		HOUSING	NSS - Order Ref. 40		1
45		O-RING	NSS - Order Ref. 40		3
46		SCREW	NSS - Order Ref. 40		3
47	7022822	KIT, ROTARY GROUP	Ref. 48-57		1
48		PISTON	NSS - Order Ref. 47		9
49		RETAINER	NSS - Order Ref. 47		1
50		BUSHING	NSS - Order Ref. 47		1
51		PIN	NSS - Order Ref. 47		3
52		BLOCK, CYL	NSS - Order Ref. 47		1

Page 133 - OSS# 2091664 - All rights reserved by Bobcat Company - 08/27/2012 - 11:42:23 - Produced by Ken Cook Co. with mediaioff

TRAVEL MOTOR (Cont'd)
(Assy)

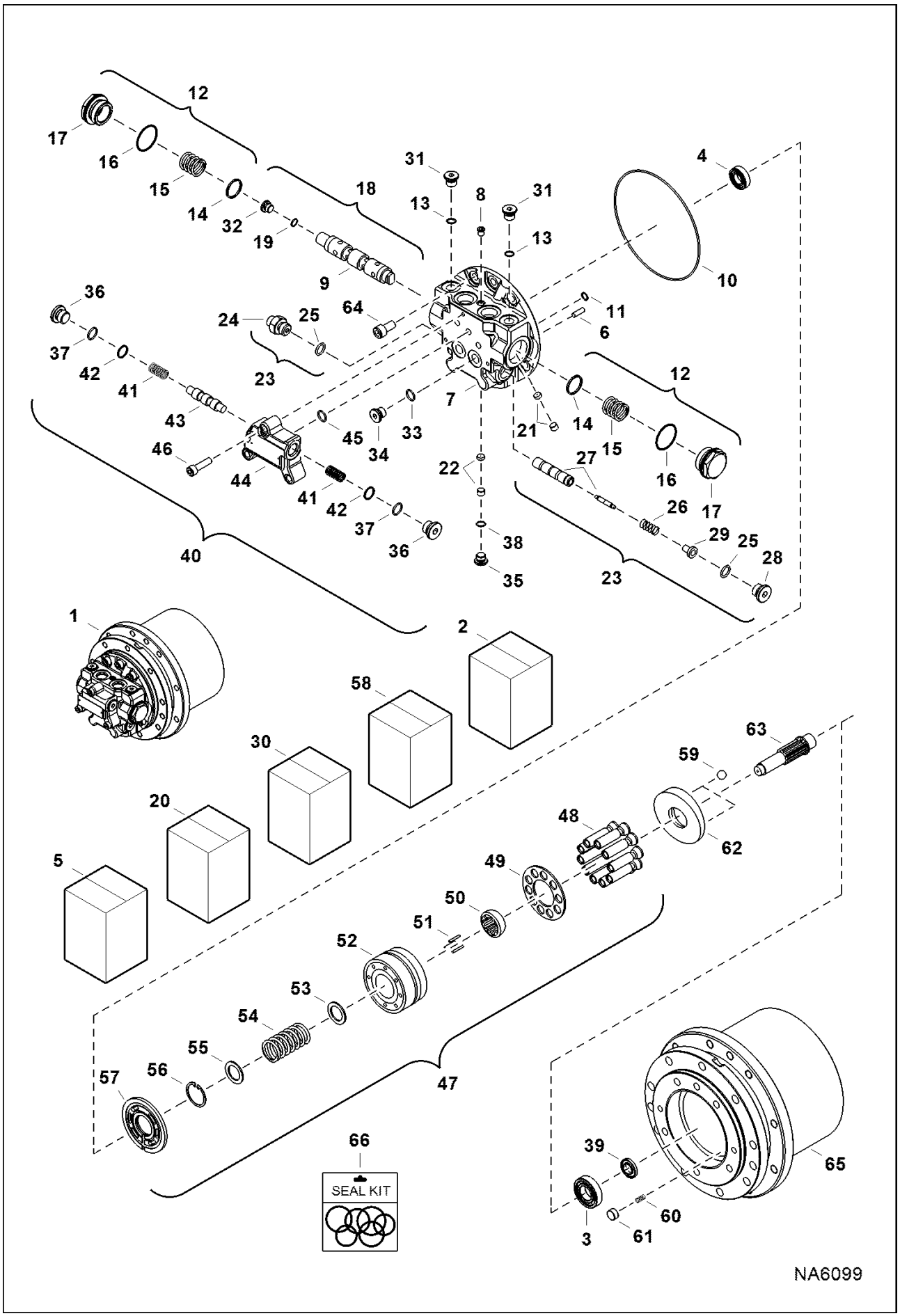

Page 134 - OSS# 2091664 - All rights reserved by Bobcat Company - 08/27/2012 - 11:42:23 - Produced by Ken Cook Co. with mediaioff

TRAVEL MOTOR (Cont'd)
(Assy)

Ref No	Part Number	Description	Remarks	Serial Number	Qty
53		HOLDER, SPRING	NSS - Order Ref. 47		1
54		SPRING	NSS - Order Ref. 47		1
55		WASHER	NSS - Order Ref. 47		1
56		CIRCLIP	NSS - Order Ref. 47		1
57		PLATE, VALVE	NSS - Order Ref. 47		1
58	7022823	SWASHPLATE	Ref. 59-62		1
59		BALL	NSS - Order Ref. 58		2
60		SPRING	NSS - Order Ref. 58		2
61		PISTON	NSS - Order Ref. 58		2
62		SWASHPLATE	NSS - Order Ref. 58		1
63	7022824	SHAFT, MOTOR			1
64	7022814	SCREW			6
65		GEAR BOX	See Illustration TRAVEL MOTOR/ NA5620 NSS		1
66	7022774	KIT, SEAL	Ref. 10, 11, 13, 16, 19, 25, 33, 37, 38, & 45		1

Page 135 - OSS# 2091664 - All rights reserved by Bobcat Company - 08/27/2012 - 11:42:23 - Produced by Ken Cook Co. with mediaioff

TRAVEL MOTOR
(Gear Box)

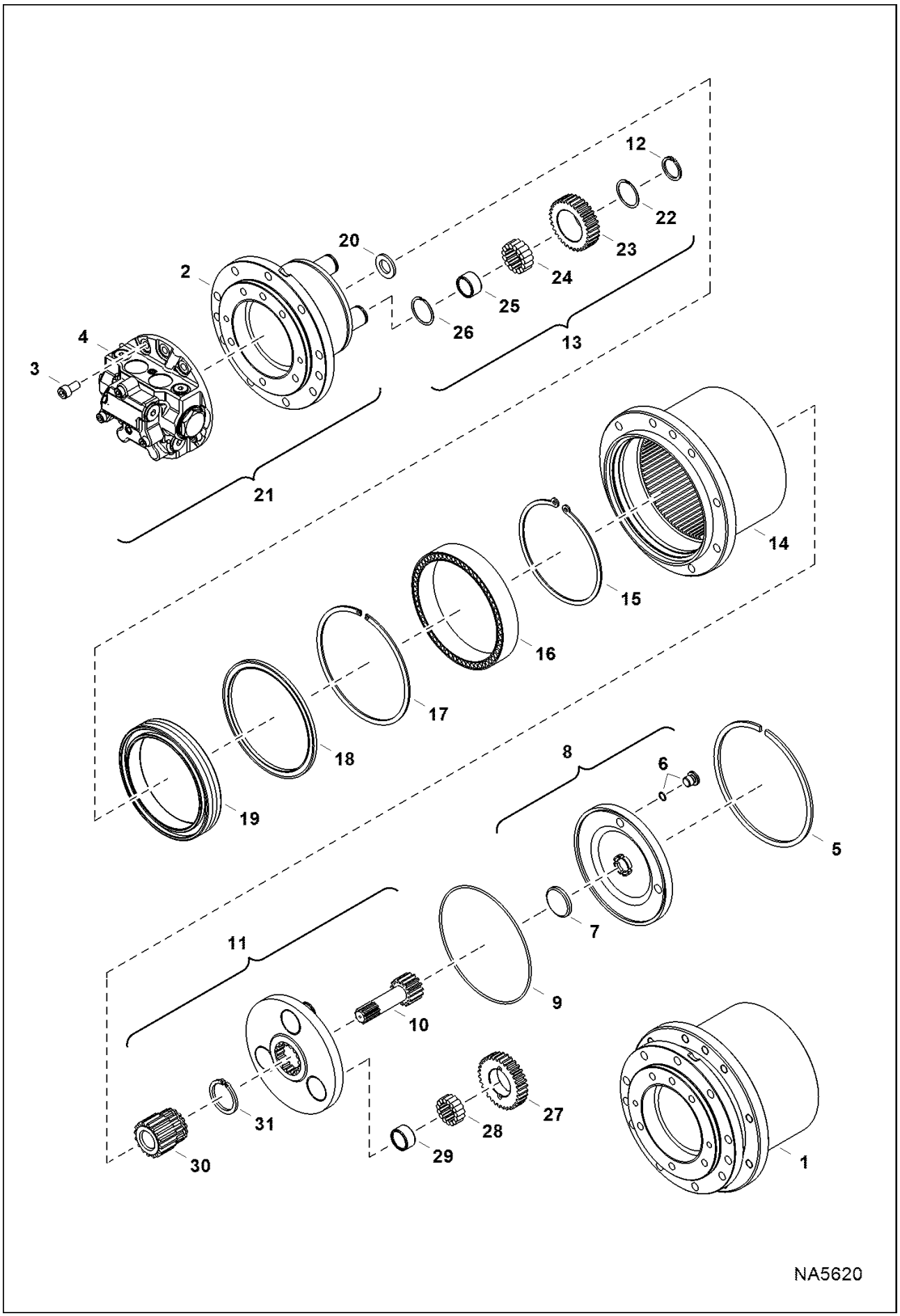

Page 136 - OSS# 2091664 - All rights reserved by Bobcat Company - 08/27/2012 - 11:42:23 - Produced by Ken Cook Co. with mediaioff

TRAVEL MOTOR (Cont'd)
(Gear Box)

Ref No	Part Number	Description	Remarks	Serial Number	Qty
1		GEAR BOX	NSS		1
2		HUB	NSS - Order Ref. 21		1
3	7022814	SCREW			6
4		PLATE, BASE ASSY	NSS - Order Ref. 21		1
5	7022798	CIRCLIP			1
6	7022799	PLUG, MOTOR			2
7	7022800	PAD			1
8	7022801	COVER, ASSY			1
9	7022802	O-RING			1
10	7022803	GEAR			1
11	7022804	GEAR, MOTOR			1
12	7022805	CIRCLIP			3
13	7022806	GEAR, MOTOR			3
14		HOUSING	NSS		1
15	7022807	CIRCLIP			1
16	7022808	BEARING, MOTOR TRAVEL			1
17	7022809	CIRCLIP			1
18	7022810	DISC			1
19	7022811	SEAL, RING			1
20	7022812	RING, SUPPORT			1
21	7022813	MOTOR, TRAVEL	See Illustration TRAVEL MOTOR/ NA6099 Ref. 2-4		1
22		RING	NSS - Order Ref. 13		3
23		GEAR	NSS - Order Ref. 13		3
24		NEEDLE	NSS - Order Ref. 13		x
25		RING	NSS - Order Ref. 13		3
26		RING	NSS - Order Ref. 13		3
27		GEAR	NSS - Order Ref. 11		3
28		NEEDLE	NSS - Order Ref. 11		x
29		RING	NSS - Order Ref. 11		3
30		GEAR	NSS - Order Ref. 11		1
31		CIRCLIP	NSS - Order Ref. 11		1

Page 137 - OSS# 2091664 - All rights reserved by Bobcat Company - 08/27/2012 - 11:42:23 - Produced by Ken Cook Co. with mediaioff

SLEW MOTOR
(Assy)

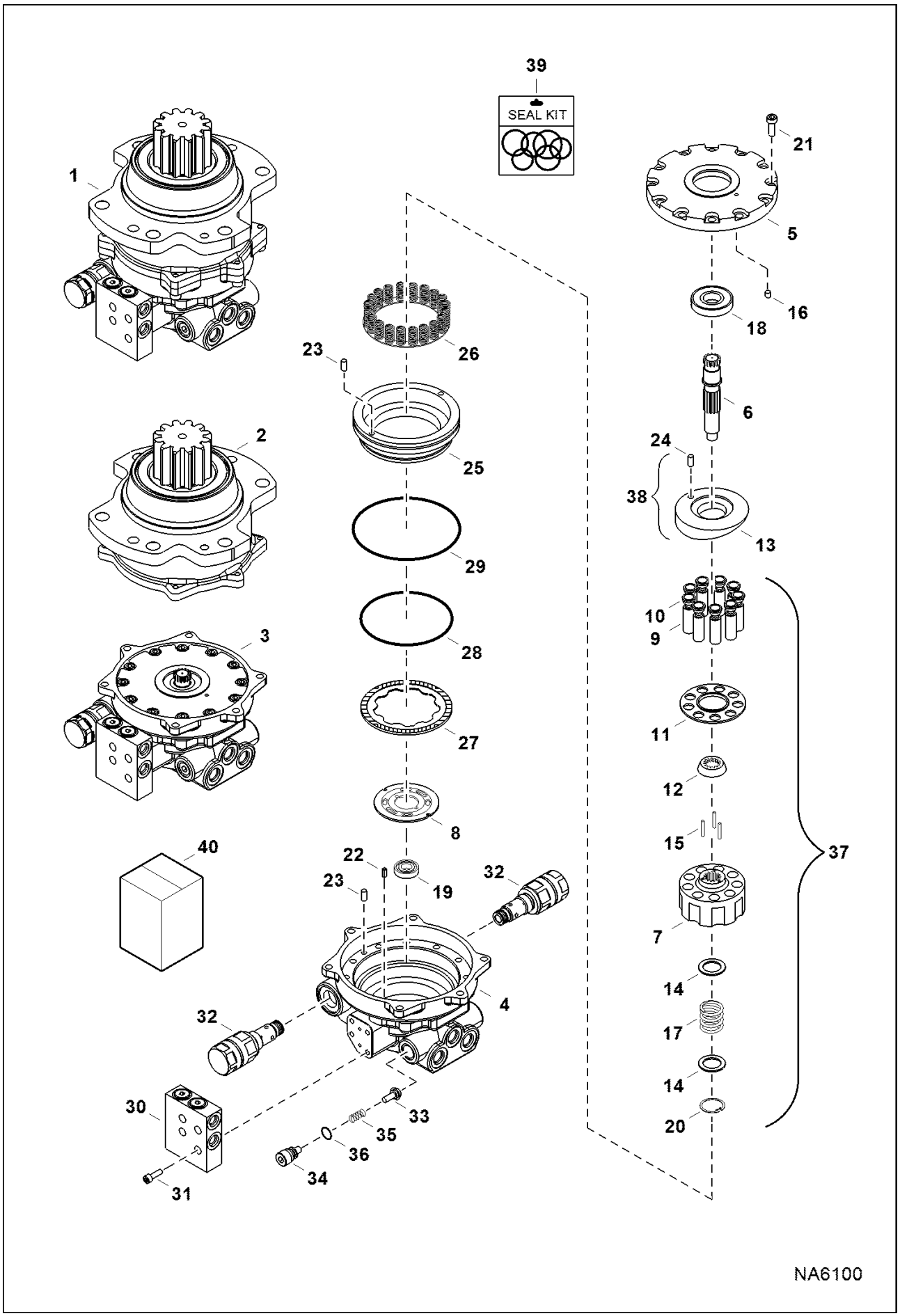

Page 138 - OSS# 2091664 - All rights reserved by Bobcat Company - 08/27/2012 - 11:42:23 - Produced by Ken Cook Co. with mediaioff

SLEW MOTOR (Cont'd)
(Assy)

Ref No	Part Number	Description	Remarks	Serial Number	Qty
1	7008800	MOTOR, HYD SLEW	Ref. 2-36		1
2		CARRIER, ASSY	See Illustration SLEW MOTOR/ NA5630 NSS		1
3		MOTOR, HYD	NSS		1
4		HOUSING	NSS		1
5		COVER, PLATE	NSS		1
6		SHAFT, MOTOR	NSS		1
7		BARREL, CYLINDER	NSS		1
8		PLATE, VALVE	NSS		1
9		PISTON	NSS		9
10		SHOE	NSS		9
11		HOLDER, SHOE	NSS		1
12		HOLDER, BARREL	NSS		1
13		SWASHPLATE	NSS		1
14		RETAINER	NSS		2
15		PIN	NSS		3
16	7010801	SCREEN, DEBRIS			1
17		SPRING	NSS		1
18	7022830	BEARING, MOTOR SLEW			1
19	7010803	BEARING, MOTOR SLEW			1
20	7010804	RING, SNAP			1
21	7010799	SCREW			12
22		PIN, SPRING	NSS		1
23	7010807	PIN			3
24		PIN	NSS		1
25		PISTON, BREAK	NSS		1
26		SPRING, ASSY	NSS		1
27		PLATE, DISK	NSS		1
28	7010808	O-RING			1
29	7010809	O-RING			1
30	7010821	VALVE, COUNTER BALANCE	See Illustration SLEW MOTOR/ NA5631		1
31	7010810	SCREW			4
32	7022836	VALVE, RELIEF	See Illustration SLEW MOTOR/ NA5632		2
33		VALVE, CHECK	NSS		2
34		PLUG	NSS		2
35		SPRING	NSS		2
36	7010811	O-RING			2
37	7022834	KIT, ROTARY GROUP	Ref. 7, 9-12, 14, 15, 17, & 20		1
38	7022835	KIT, SWASHPLATE	Ref. 13 & 24		1
39	7010828	KIT, SEAL	Ref. 28, 29, & 36		1
40	7022833	KIT, HOUSING MOTOR	Ref. 4, 19, 22, & 33-36		1

Page 139 - OSS# 2091664 - All rights reserved by Bobcat Company - 08/27/2012 - 11:42:23 - Produced by Ken Cook Co. with mediaioff

SLEW MOTOR
(Carrier)

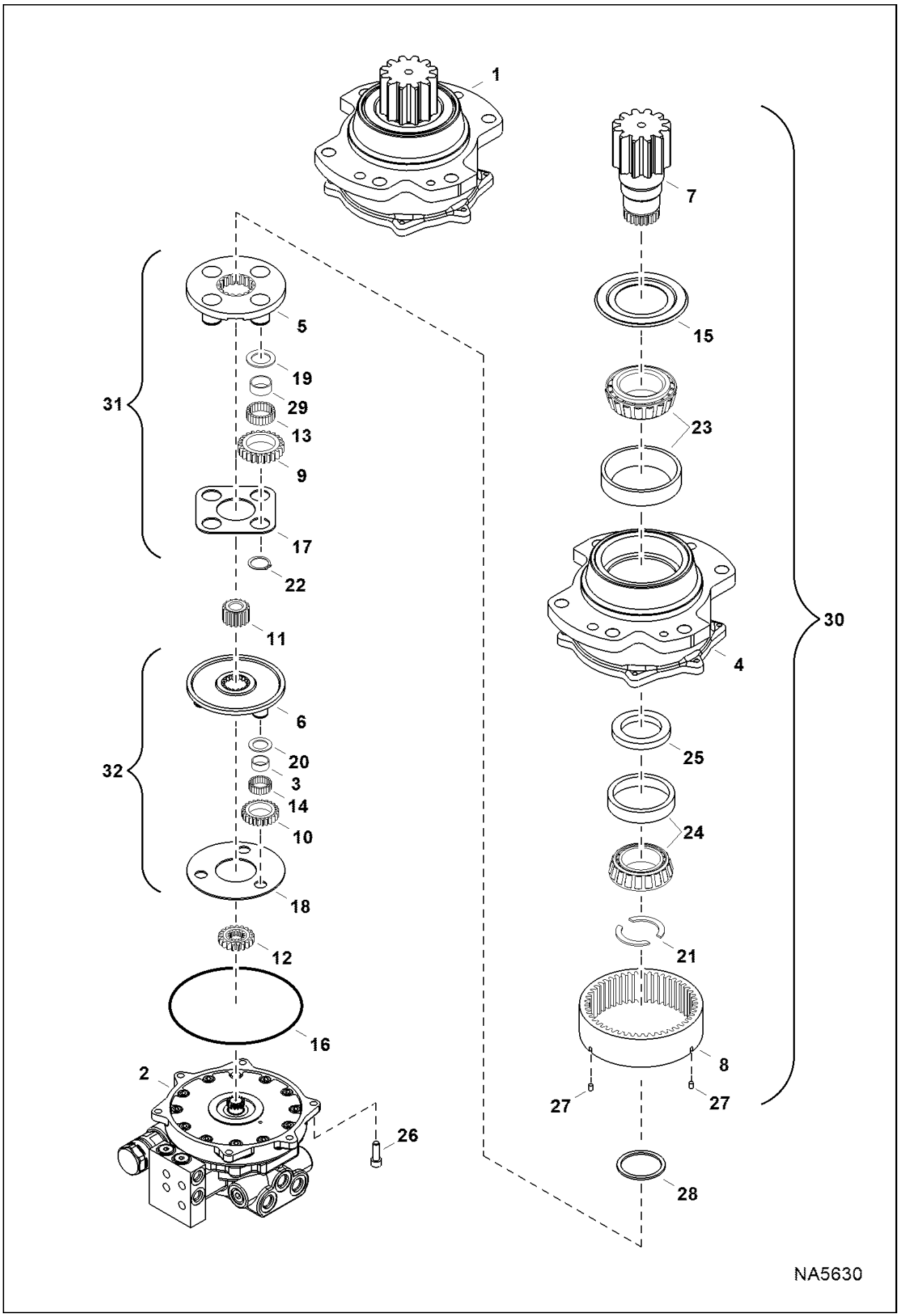

Page 140 - OSS# 2091664 - All rights reserved by Bobcat Company - 08/27/2012 - 11:42:23 - Produced by Ken Cook Co. with mediaioff

SLEW MOTOR (Cont'd)
(Carrier)

Ref No	Part Number	Description	Remarks	Serial Number	Qty
1		CARRIER, ASSY	NSS - Ref. 3-29		1
2		MOTOR, HYD	See Illustration SLEW MOTOR/ NA6100 NSS		1
3		RING	NSS		3
4		HOUSING	NSS		1
5		CARRIER	NSS		1
6		CARRIER	NSS		1
7		SHAFT, PINION	NSS		1
8		GEAR	NSS		1
9		GEAR	NSS		4
10		GEAR	NSS		3
11	7022827	GEAR, MOTOR			1
12	7010796	GEAR, DRIVEN			1
13		NEEDLE	NSS		92
14		NEEDLE	NSS		72
15		SEAL, RING	NSS		1
16	7022828	O-RING			1
17		PLATE, THRUST	NSS		1
18		PLATE, THRUST	NSS		1
19		WASHER, THRUST	NSS		4
20		WASHER, THRUST	NSS		3
21		COLLAR	NSS		2
22	7010798	RING, SNAP			4
23		BEARING	NSS		1
24		BEARING	NSS		1
25		SEAL, OIL	NSS		1
26	7010799	SCREW			6
27		PIN	NSS		2
28	7022829	RING			1
29		RING	NSS		4
30	7022831	KIT, PINION	Ref. 4, 7, 8, 15, 21, 23-25, & 27		1
31	7022832	KIT, CARRIER	Ref. 5, 9, 13, 17, 19, 22, & 29		1
32	7010824	KIT, CARRIER	Ref. 3, 6, 10, 14, 18, & 20		1

Page 141 - OSS# 2091664 - All rights reserved by Bobcat Company - 08/27/2012 - 11:42:23 - Produced by Ken Cook Co. with mediaioff

SLEW MOTOR
(Counter Balance Valve)

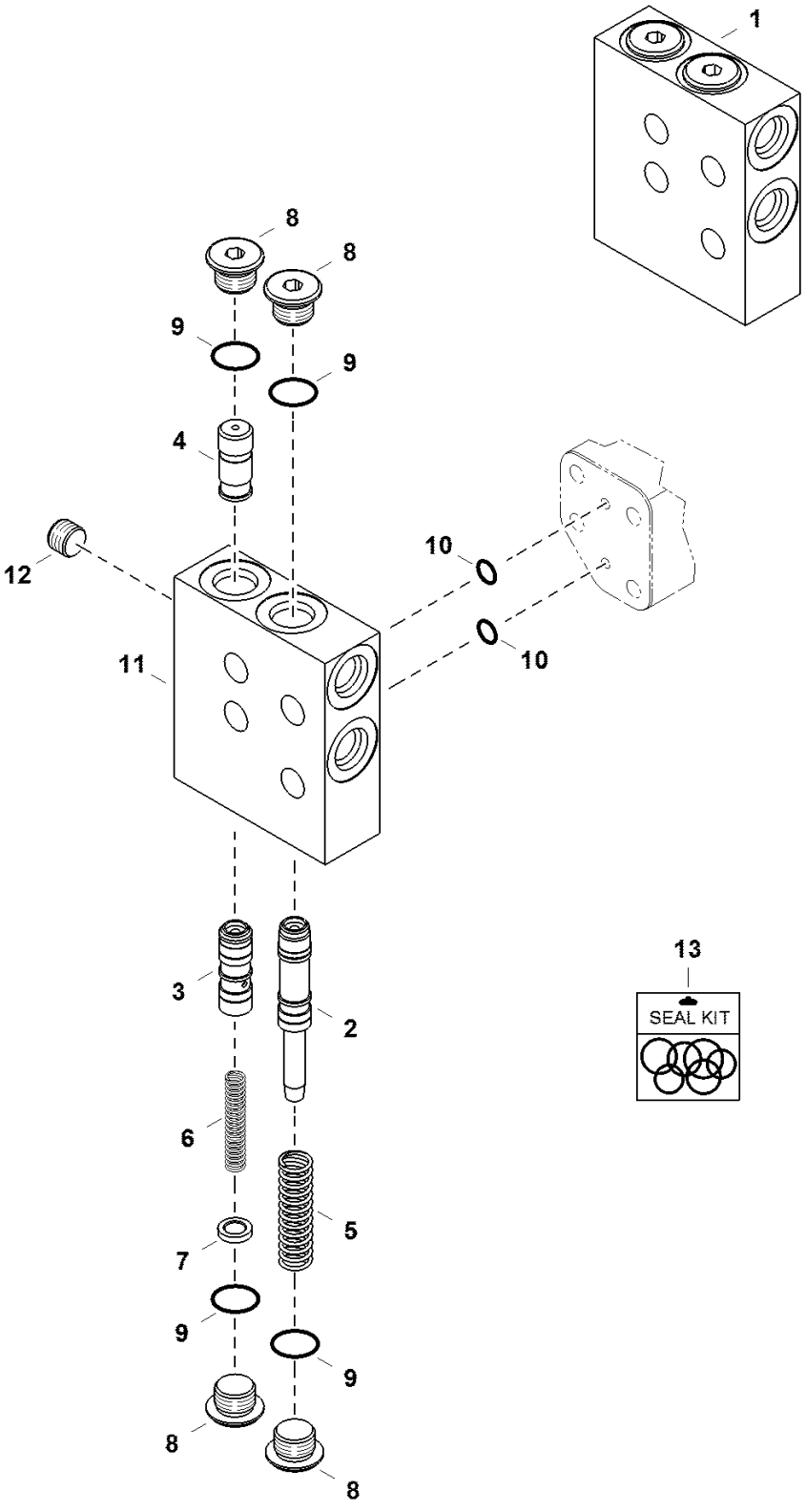

Page 142 - OSS# 2091664 - All rights reserved by Bobcat Company - 08/27/2012 - 11:42:23 - Produced by Ken Cook Co. with mediaioff

SLEW MOTOR (Cont'd)
(Counter Balance Valve)

Ref No	Part Number	Description	Remarks	Serial Number	Qty
1	7010821	VALVE, COUNTER BALANCE	Ref. 2-12		1
2		SPOOL	NSS		1
3		PISTON	NSS		1
4		STOPPER	NSS		1
5		SPRING	NSS		1
6		SPRING	NSS		1
7		HOLDER, SPRING	NSS		1
8	7010817	PLUG			4
9	7010811	O-RING			4
10	6688538	O-RING			2
11		HOUSING	NSS		1
12	7010818	PLUG			1
13	7010830	KIT, SEAL	Ref. 9 & 10		1

Page 143 - OSS# 2091664 - All rights reserved by Bobcat Company - 08/27/2012 - 11:42:23 - Produced by Ken Cook Co. with mediaioff

SLEW MOTOR
(Relief Valve)

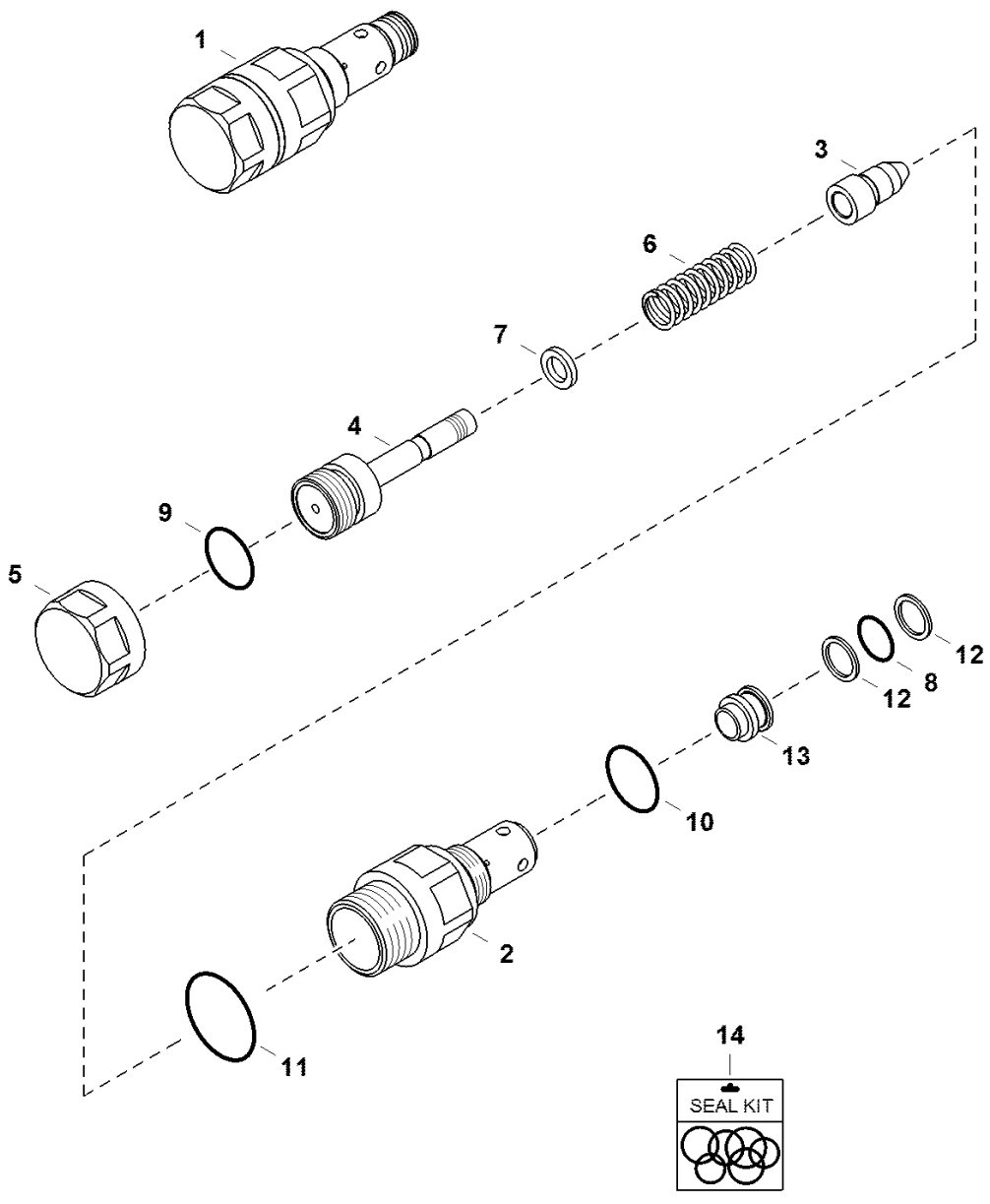

Page 144 - OSS# 2091664 - All rights reserved by Bobcat Company - 08/27/2012 - 11:42:23 - Produced by Ken Cook Co. with mediaioff

SLEW MOTOR (Cont'd)
(Relief Valve)

Ref No	Part Number	Description	Remarks	Serial Number	Qty
1	7022836	VALVE, RELIEF	Ref. 2-13		1
2		RETAINER	NSS		1
3		POPPET	NSS		1
4		PISTON	NSS		1
5		CAP	NSS		1
6		SPRING	NSS		1
7		SPACER	NSS		1
8	7010812	O-RING			1
9	7010813	O-RING			1
10	7010814	O-RING			1
11	7010815	O-RING			1
12	7010816	RING, BACK-UP			2
13		SEAT	NSS		1
14	7010829	KIT, SEAL	Ref. 8-12		1

Page 145 - OSS# 2091664 - All rights reserved by Bobcat Company - 08/27/2012 - 11:42:23 - Produced by Ken Cook Co. with mediaioff

HYDRAULIC CONTROL VALVE
(Assembly)

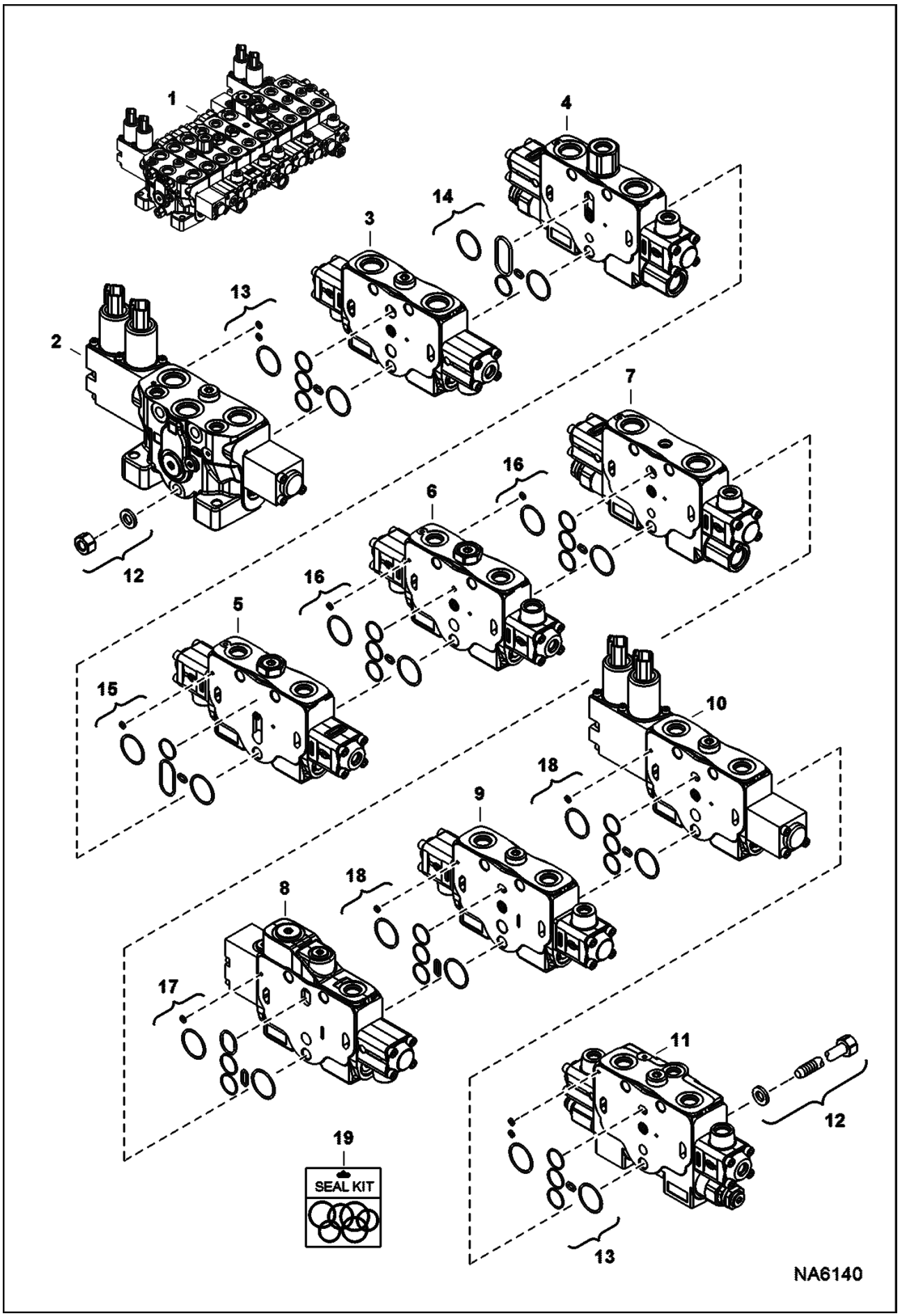

Page 146 - OSS# 2091664 - All rights reserved by Bobcat Company - 08/27/2012 - 11:42:23 - Produced by Ken Cook Co. with mediaioff

HYDRAULIC CONTROL VALVE (Cont'd)
(Assembly)

Ref No	Part Number	Description	Remarks	Serial Number	Qty
1	7188867	VALVE, CONTROL	Ref. 2-18		1
2	7022944	SECTION, VALVE			1
3	7022945	SECTION, VALVE			1
4	7022946	SECTION, VALVE			1
5	7022947	SECTION, VALVE			1
6	7022948	SECTION, VALVE			1
7	7022949	SECTION, VALVE			1
8	7022950	SECTION, VALVE			1
9	7022951	SECTION, VALVE			1
10	7022952	SECTION, VALVE			1
11	7022953	SECTION, VALVE			1
12	7022955	KIT, ROD TIE			1
13		KIT, SEAL	NSS		2
14		KIT, SEAL	NSS		1
15		KIT, SEAL	NSS		1
16		KIT, SEAL	NSS		2
17		KIT, SEAL	NSS		1
18		KIT, SEAL	NSS		2
19	7022982	KIT, SEAL COMPLETE			1

Page 147 - OSS# 2091664 - All rights reserved by Bobcat Company - 08/27/2012 - 11:42:23 - Produced by Ken Cook Co. with mediaioff

HYDRAULIC CONTROL VALVE
(Auxiliary Section)

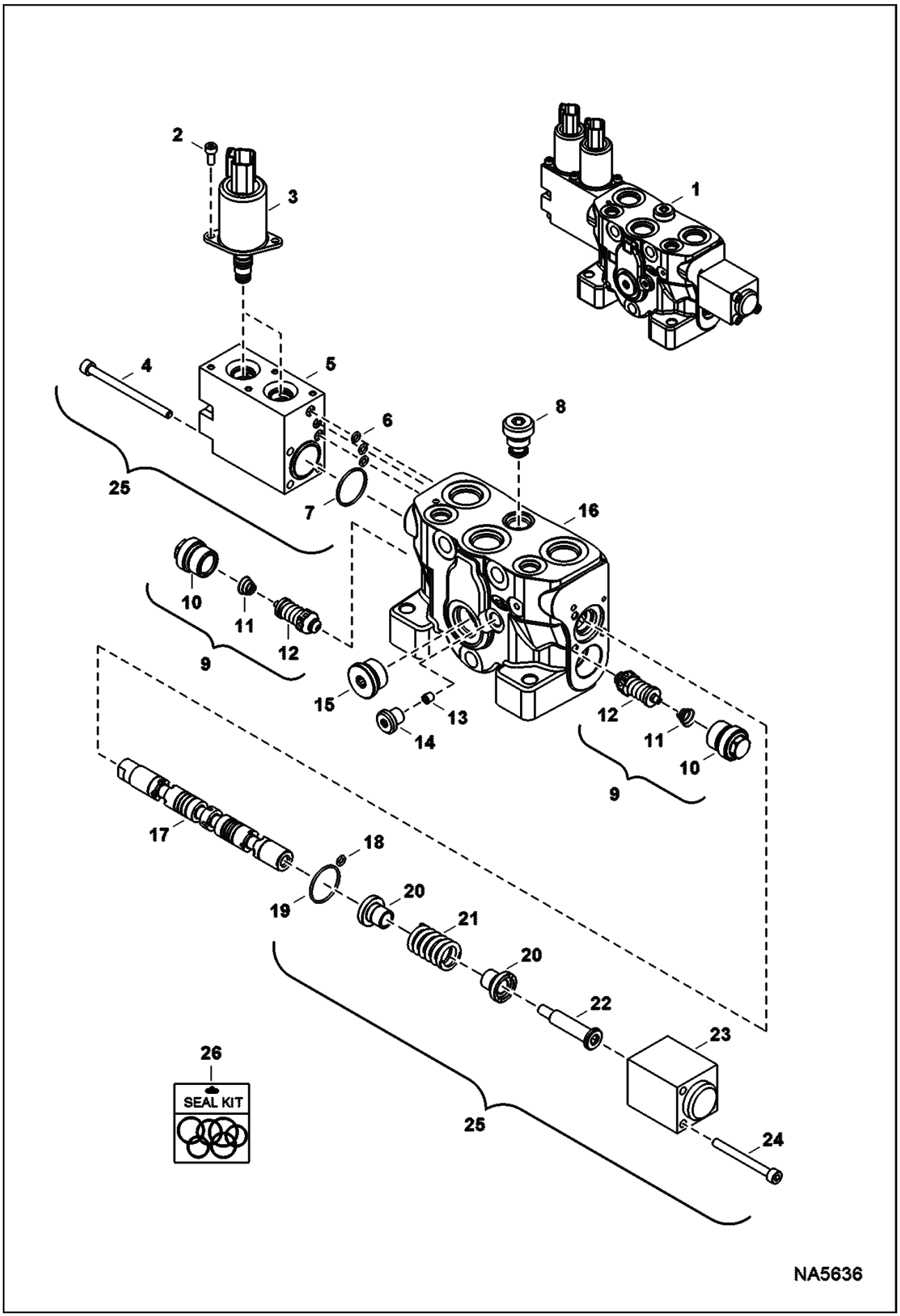

Page 148 - OSS# 2091664 - All rights reserved by Bobcat Company - 08/27/2012 - 11:42:23 - Produced by Ken Cook Co. with mediaioff

HYDRAULIC CONTROL VALVE (Cont'd)
(Auxiliary Section)

Ref No	Part Number	Description	Remarks	Serial Number	Qty
1	7022944	SECTION, VALVE	aux - Ref. 2-25		1
2	6682230	SCREW			4
3	7010626	COIL, SOLENOID			2
4	7022971	BOLT			4
5		BLOCK	NSS		1
6		O-RING	NSS		3
7		O-RING	NSS		1
8	6680092	LOAD CHECK			1
9	6685776	KIT			2
10		CAP	NSS		2
11		SPRING	NSS		2
12		VALVE	NSS		2
13	7022385	PLUG			1
14	6685333	PLUG			1
15	6679600	PLUG			1
16		BLOCK	NSS		1
17		SPOOL	NSS		1
18		O-RING	NSS		1
19		O-RING	NSS		1
20		BUSHING	NSS		2
21		SPRING	NSS		1
22		SCREW	NSS		1
23		BLOCK	NSS		1
24	6682247	BOLT			4
25	7022958	ACTUATOR	Ref. 2-7, & 18-24		1
26	7022972	KIT, SEAL			1

Page 149 - OSS# 2091664 - All rights reserved by Bobcat Company - 08/27/2012 - 11:42:23 - Produced by Ken Cook Co. with mediaioff

HYDRAULIC CONTROL VALVE
(Arm Section)

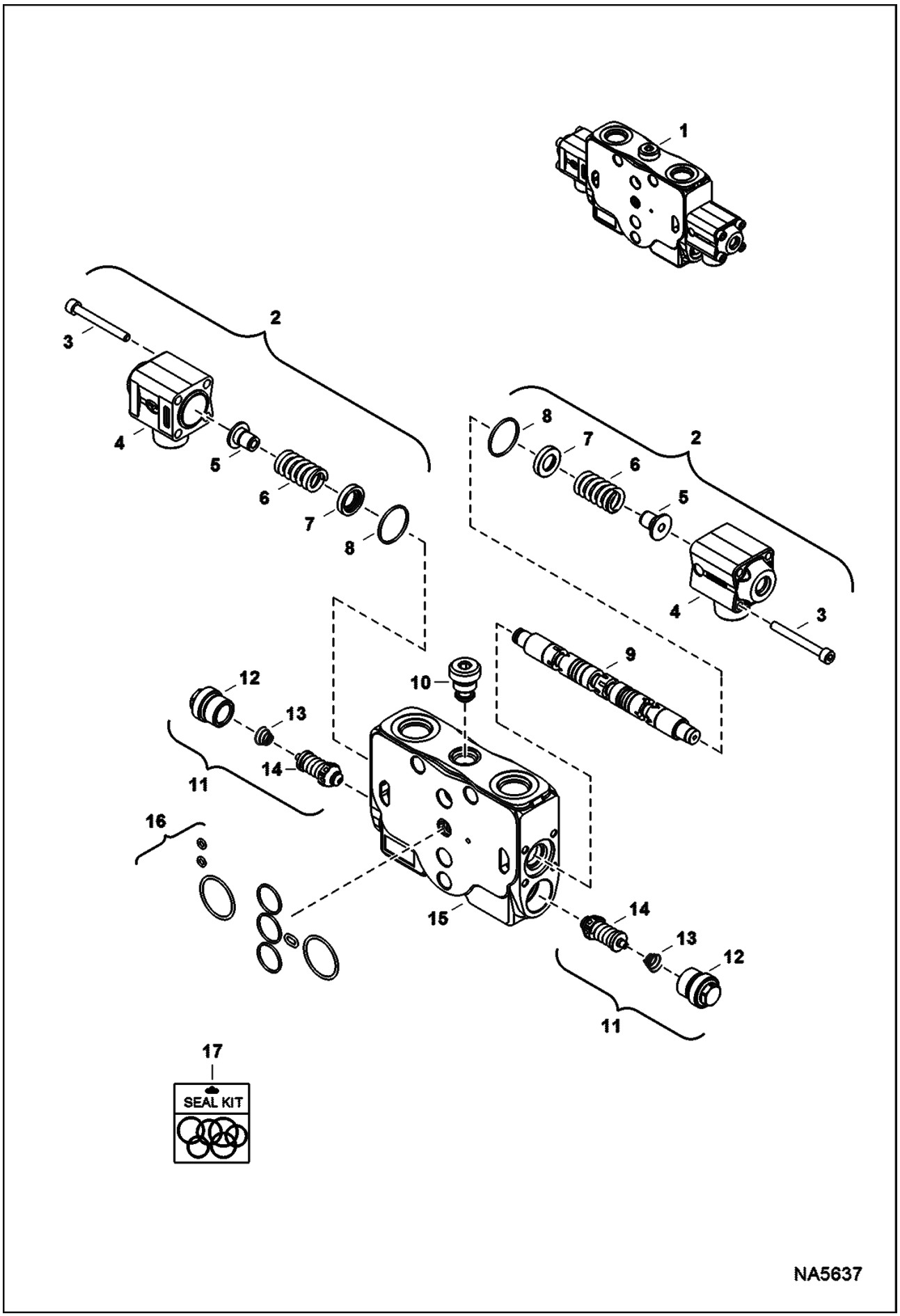

Page 150 - OSS# 2091664 - All rights reserved by Bobcat Company - 08/27/2012 - 11:42:23 - Produced by Ken Cook Co. with mediaioff

HYDRAULIC CONTROL VALVE (Cont'd)
(Arm Section)

Ref No	Part Number	Description	Remarks	Serial Number	Qty
1	7022945	SECTION, VALVE	arm - Ref. 2-16		1
2	7022970	ACTUATOR			1
3	6682248	SCREW			8
4		BLOCK	NSS		2
5		BUSHING	NSS		2
6		SPRING	NSS		2
7		BUSHING	NSS		2
8		O-RING	NSS		2
9		SPOOL	NSS		1
10	6680092	LOAD CHECK			1
11	7022966	PLUG			2
12		CAP	NSS		2
13		SPRING	NSS		2
14		VALVE	NSS		2
15		BLOCK	NSS		1
16		KIT, SEAL	NSS		1
17	7022973	KIT, SEAL			1

Page 151 - OSS# 2091664 - All rights reserved by Bobcat Company - 08/27/2012 - 11:42:23 - Produced by Ken Cook Co. with mediaioff

HYDRAULIC CONTROL VALVE
(Right Travel Section)

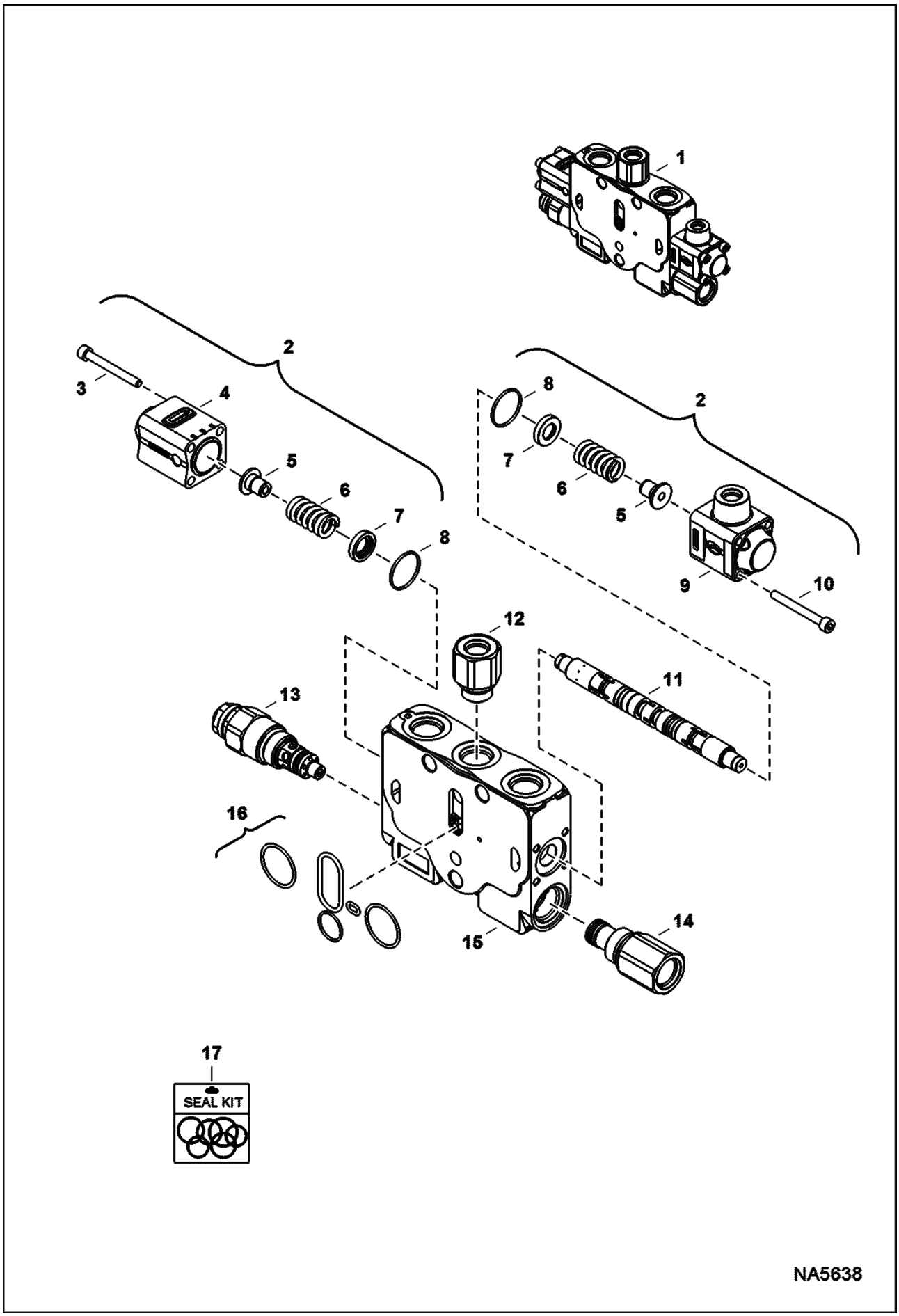

Page 152 - OSS# 2091664 - All rights reserved by Bobcat Company - 08/27/2012 - 11:42:23 - Produced by Ken Cook Co. with mediaioff

HYDRAULIC CONTROL VALVE (Cont'd)
(Right Travel Section)

Ref No	Part Number	Description	Remarks	Serial Number	Qty
1	7022946	SECTION, VALVE	right travel - Ref. 2-16		1
2	7022961	ACTUATOR			1
3	6682247	BOLT			4
4		BLOCK	NSS		1
5		BUSHING	NSS		2
6		SPRING	NSS		2
7		BUSHING	NSS		2
8		O-RING	NSS		2
9		BLOCK	NSS		1
10	6682248	SCREW			4
11		SPOOL	NSS		1
12	7022968	FITTING, HYD CONNECTOR			1
13	7022969	VALVE, RELIEF			1
14	7022962	FITTING, HYD CONNECTOR			1
15		BLOCK	NSS		1
16		KIT, SEAL	NSS		1
17	7022974	KIT, SEAL			1

Page 153 - OSS# 2091664 - All rights reserved by Bobcat Company - 08/27/2012 - 11:42:23 - Produced by Ken Cook Co. with mediaioff

HYDRAULIC CONTROL VALVE
(Bucket Section)

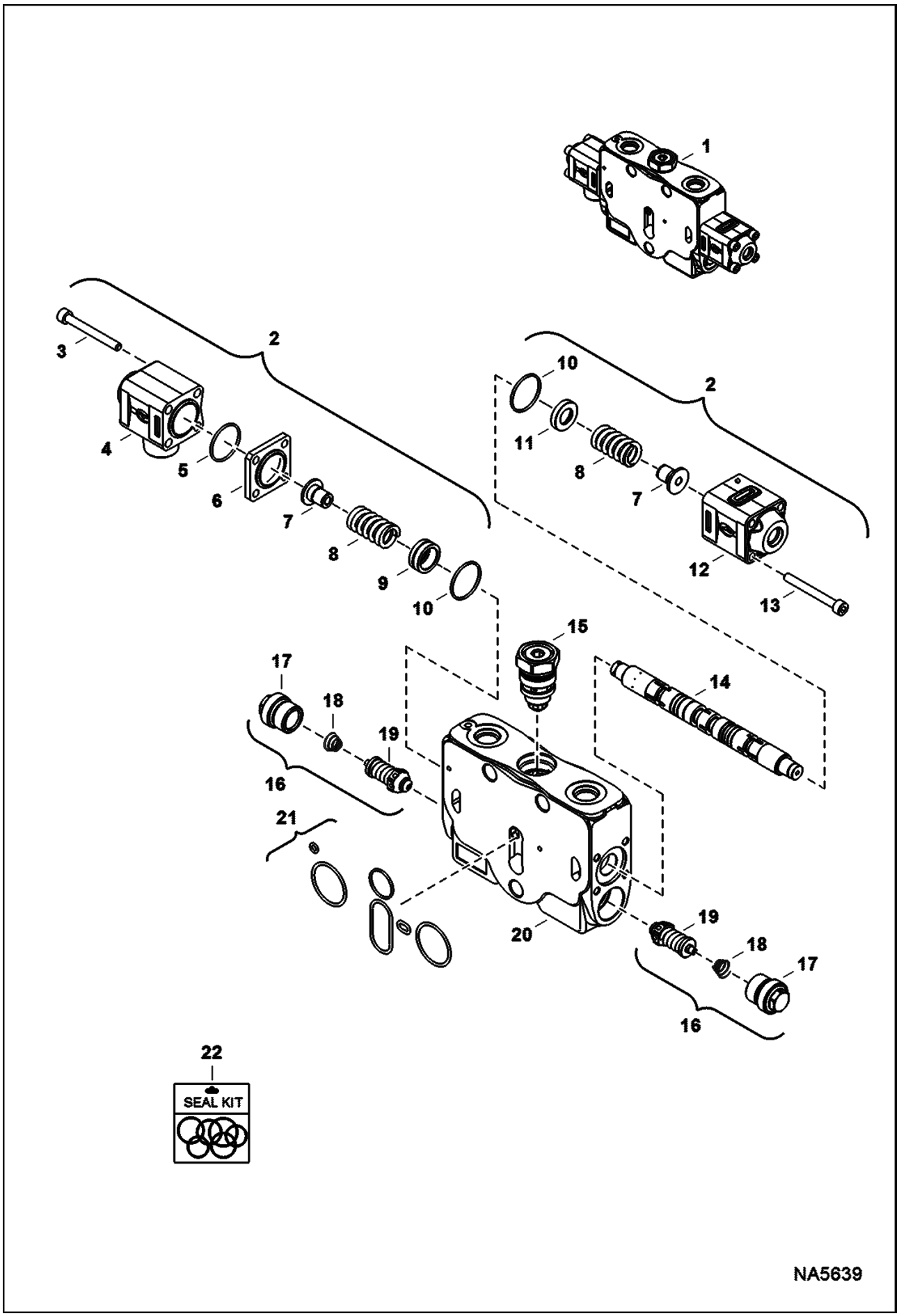

Page 154 - OSS# 2091664 - All rights reserved by Bobcat Company - 08/27/2012 - 11:42:23 - Produced by Ken Cook Co. with mediaioff

HYDRAULIC CONTROL VALVE (Cont'd)
(Bucket Section)

Ref No	Part Number	Description	Remarks	Serial Number	Qty
1	7022947	SECTION, VALVE	bucket - Ref. 2-16		1
2	7022965	ACTUATOR			1
3	6682247	BOLT			4
4		BLOCK	NSS		1
5		O-RING	NSS		1
6		PLATE	NSS		1
7		BUSHING	NSS		2
8		SPRING	NSS		2
9		BUSHING	NSS		1
10		O-RING	NSS		2
11		BUSHING	NSS		1
12		BLOCK	NSS		1
13	6682248	SCREW			4
14		SPOOL	NSS		1
15	7022963	PLUG			1
16	7022967	PLUG			2
17		CAP	NSS		2
18		SPRING	NSS		2
19		VALVE	NSS		2
20		BLOCK	NSS		1
21		KIT, SEAL	NSS		1
22	7022975	KIT, SEAL			1

Page 155 - OSS# 2091664 - All rights reserved by Bobcat Company - 08/27/2012 - 11:42:23 - Produced by Ken Cook Co. with mediaioff

HYDRAULIC CONTROL VALVE
(Boom Section)

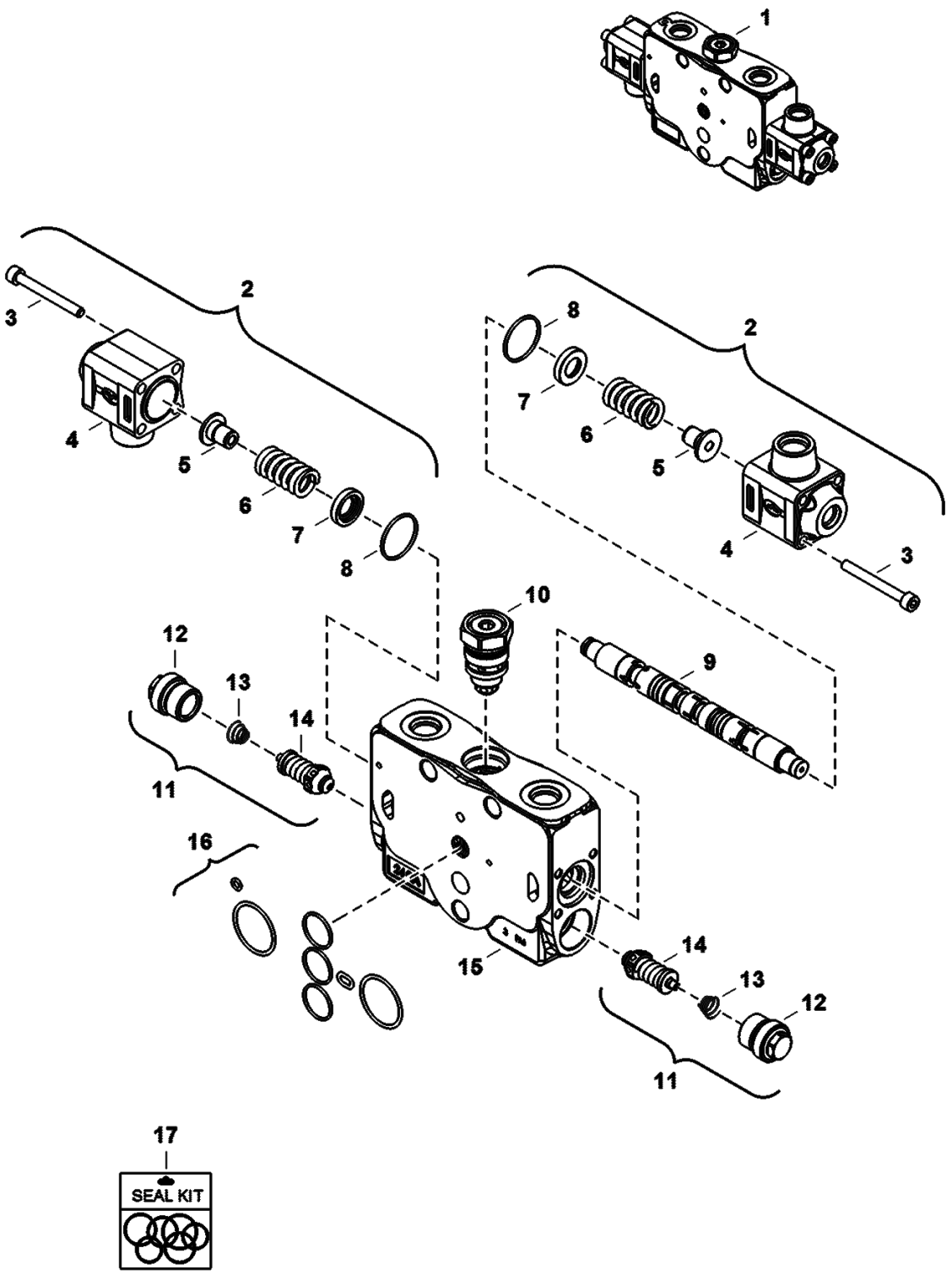

Page 156 - OSS# 2091664 - All rights reserved by Bobcat Company - 08/27/2012 - 11:42:23 - Produced by Ken Cook Co. with mediaioff

HYDRAULIC CONTROL VALVE (Cont'd)
(Boom Section)

Ref No	Part Number	Description	Remarks	Serial Number	Qty
1	7022948	SECTION, VALVE	boom - Ref. 2-16		1
2	7022964	ACTUATOR			1
3	6682248	SCREW			8
4		BLOCK	NSS		2
5		BUSHING	NSS		2
6		SPRING	NSS		2
7		BUSHING	NSS		2
8		O-RING	NSS		2
9		SPOOL	NSS		1
10	7022963	PLUG			1
11	7022966	PLUG			2
12		CAP	NSS		2
13		SPRING	NSS		2
14		VALVE	NSS		2
15		BLOCK	NSS		1
16		KIT, SEAL	NSS		1
17	7022976	KIT, SEAL			1

Page 157 - OSS# 2091664 - All rights reserved by Bobcat Company - 08/27/2012 - 11:42:23 - Produced by Ken Cook Co. with mediaioff

HYDRAULIC CONTROL VALVE
(Left Travel Section)

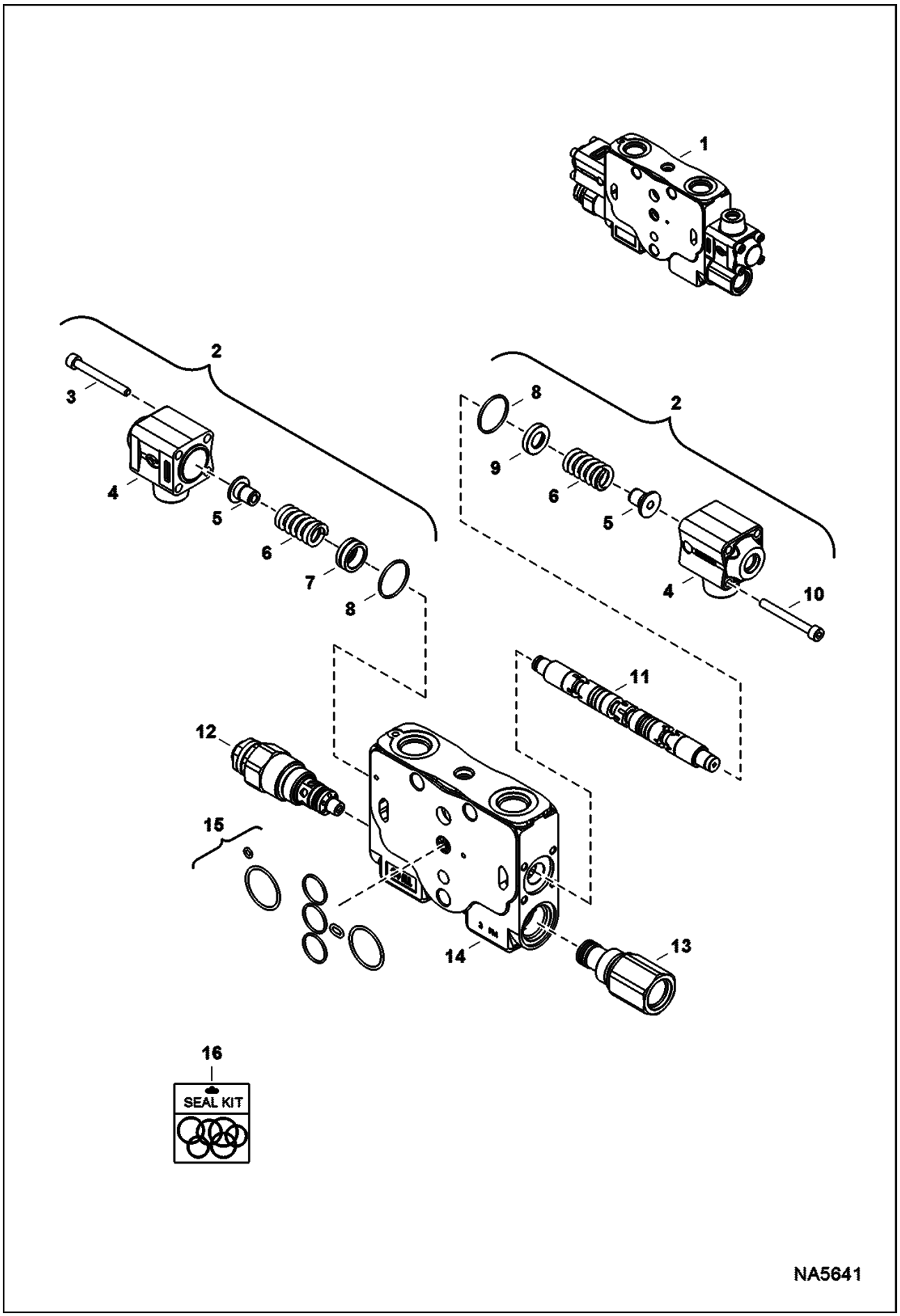

Page 158 - OSS# 2091664 - All rights reserved by Bobcat Company - 08/27/2012 - 11:42:23 - Produced by Ken Cook Co. with mediaioff

HYDRAULIC CONTROL VALVE (Cont'd)
(Left Travel Section)

Ref No	Part Number	Description	Remarks	Serial Number	Qty
1	7022949	SECTION, VALVE	left travel - Ref. 2-15		1
2	7022961	ACTUATOR			1
3	6682247	BOLT			4
4		BLOCK	NSS		2
5		BUSHING	NSS		2
6		SPRING	NSS		2
7		BUSHING	NSS		1
8		O-RING	NSS		2
9		BUSHING	NSS		1
10	6682248	SCREW			4
11		SPOOL	NSS		1
12	7022969	VALVE, RELIEF			1
13	7022962	FITTING, HYD CONNECTOR			1
13	7022962	FITTING, HYD CONNECTOR			1
14		BLOCK	NSS		1
15		KIT, SEAL	NSS		1
16	7022977	KIT, SEAL			1

Page 159 - OSS# 2091664 - All rights reserved by Bobcat Company - 08/27/2012 - 11:42:23 - Produced by Ken Cook Co. with mediaioff

HYDRAULIC CONTROL VALVE
(Boost Section)

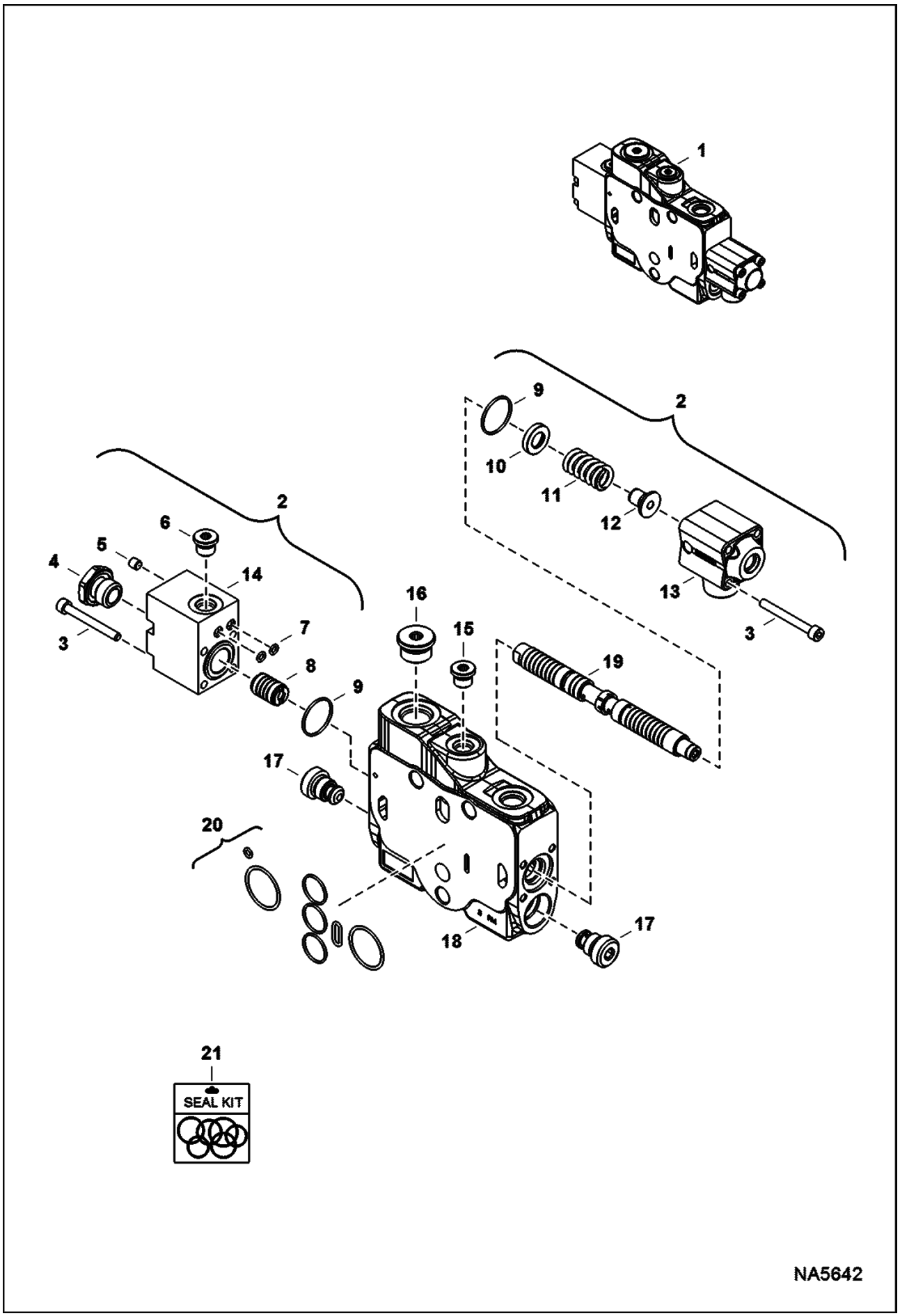

Page 160 - OSS# 2091664 - All rights reserved by Bobcat Company - 08/27/2012 - 11:42:23 - Produced by Ken Cook Co. with mediaioff

HYDRAULIC CONTROL VALVE (Cont'd)
(Boost Section)

Ref No	Part Number	Description	Remarks	Serial Number	Qty
1	7022950	SECTION, VALVE	boost - Ref. 2-20		1
2	7022960	ACTUATOR			1
3	6682248	SCREW			8
4		PLUG	NSS		1
5		ORIFICE	NSS		1
6	6686236	PLUG			1
7		O-RING	NSS		2
8		PISTON	NSS		1
9		O-RING	NSS		2
10		BUSHING	NSS		1
11		SPRING	NSS		1
12		BUSHING	NSS		1
13		BLOCK	NSS		1
14		BLOCK	NSS		1
15	6686236	PLUG			1
16	6679600	PLUG			1
17	6680092	LOAD CHECK			2
18		BLOCK	NSS		1
19		SPOOL	NSS		1
20		KIT, SEAL	NSS		1
21	7022978	KIT, SEAL			1

Page 161 - OSS# 2091664 - All rights reserved by Bobcat Company - 08/27/2012 - 11:42:23 - Produced by Ken Cook Co. with mediaioff

HYDRAULIC CONTROL VALVE
(Blade Section)

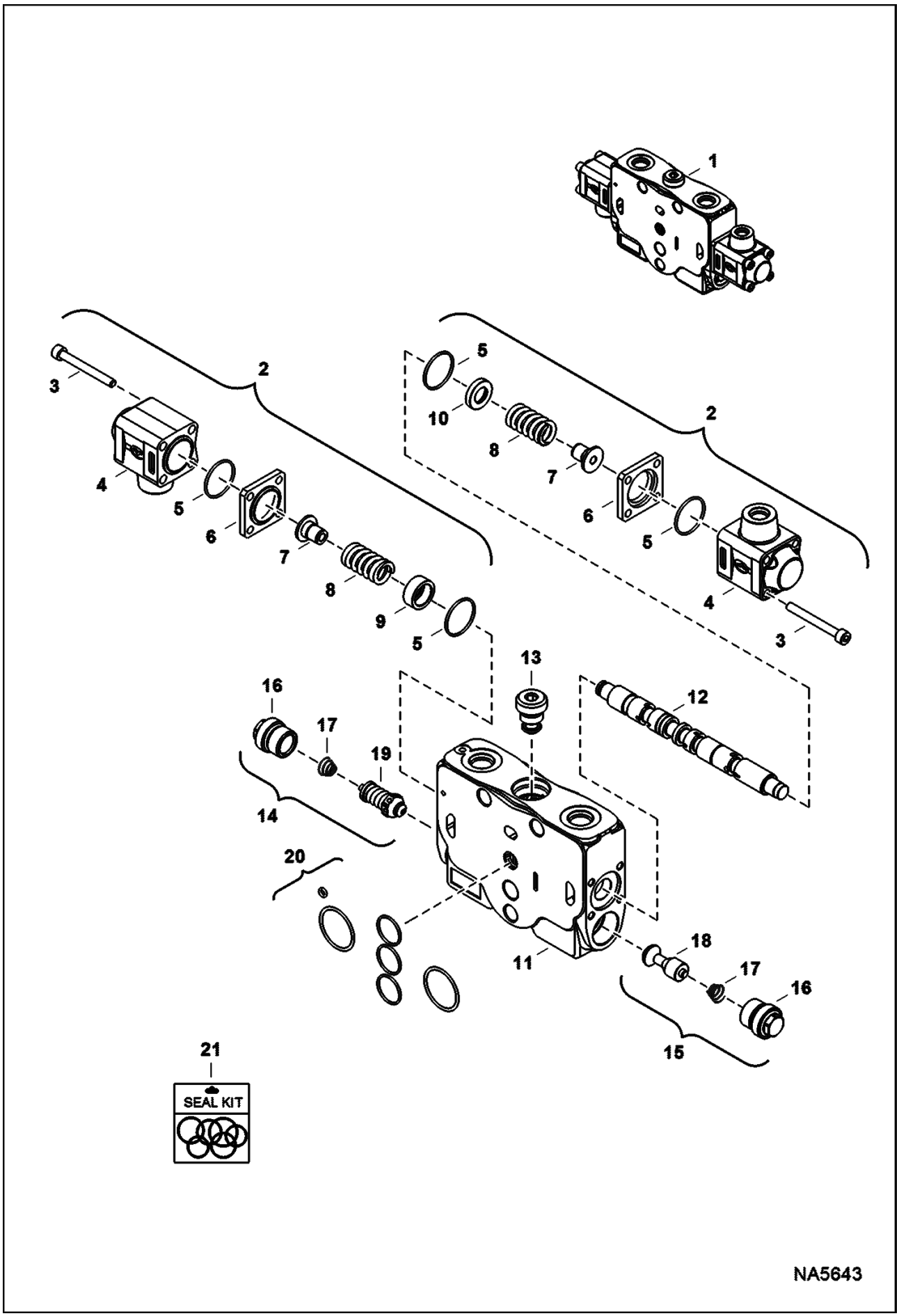

Page 162 - OSS# 2091664 - All rights reserved by Bobcat Company - 08/27/2012 - 11:42:23 - Produced by Ken Cook Co. with mediaioff

HYDRAULIC CONTROL VALVE (Cont'd)
(Blade Section)

Ref No	Part Number	Description	Remarks	Serial Number	Qty
1	7022951	SECTION, VALVE	blade - Ref. 2-20		1
2	7022959	ACTUATOR			1
3	6682247	BOLT			8
4		BLOCK	NSS		2
5		O-RING	NSS		4
6		PLATE	NSS		2
7		BUSHING	NSS		2
8		SPRING	NSS		2
9		BUSHING	NSS		1
10		BUSHING	NSS		1
11		BLOCK	NSS		1
12		SPOOL	NSS		1
13	6680092	LOAD CHECK			1
14	6686073	VALVE			1
15	6680247	VALVE			1
16		CAP	NSS		1
17		SPRING	NSS		1
18		VALVE	NSS		1
19		VALVE	NSS		1
20		KIT, SEAL	NSS		1
21	7022979	KIT, SEAL			1

Page 163 - OSS# 2091664 - All rights reserved by Bobcat Company - 08/27/2012 - 11:42:23 - Produced by Ken Cook Co. with mediaioff

HYDRAULIC CONTROL VALVE
(Boom Swing Section)

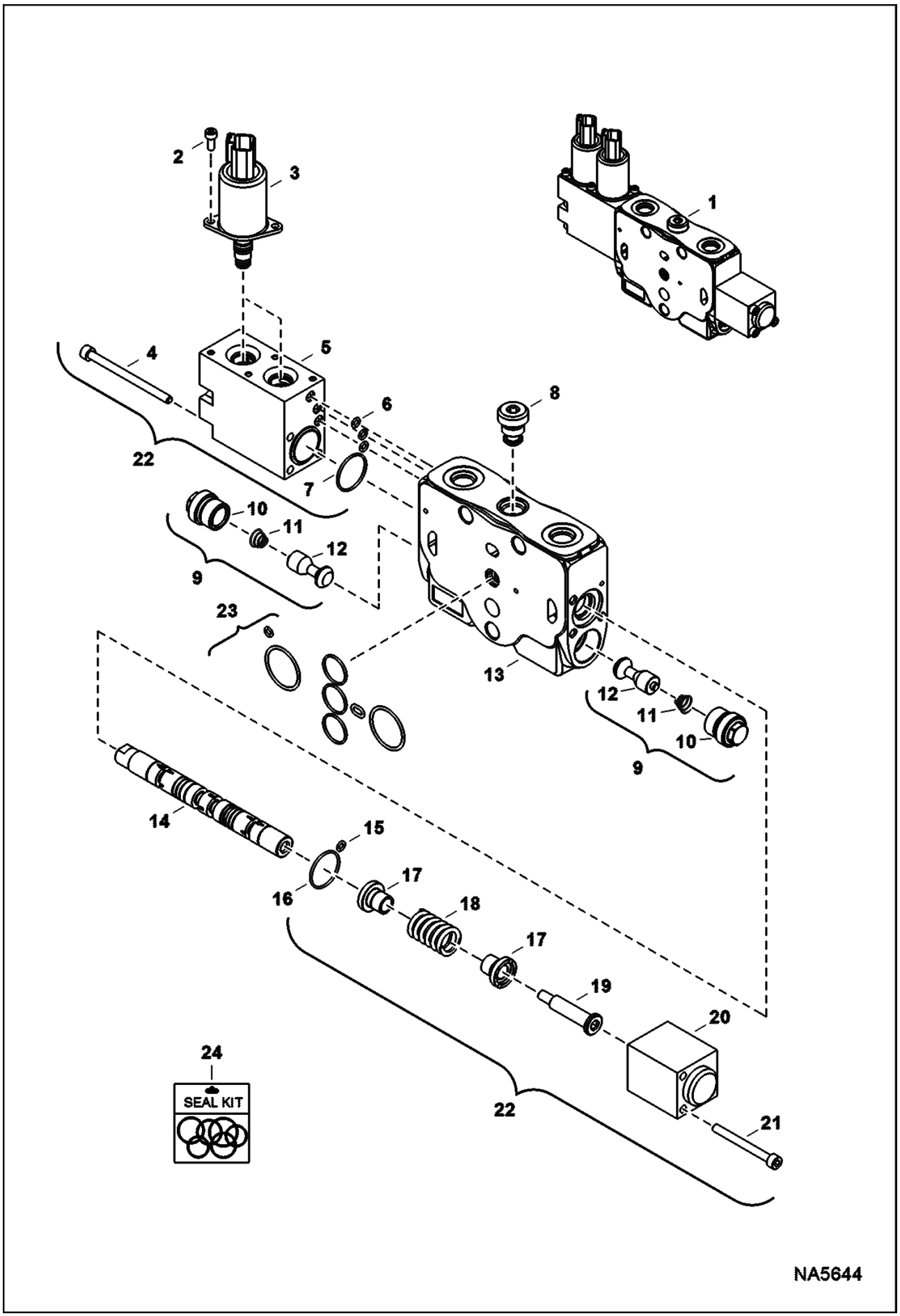

Page 164 - OSS# 2091664 - All rights reserved by Bobcat Company - 08/27/2012 - 11:42:23 - Produced by Ken Cook Co. with mediaioff

HYDRAULIC CONTROL VALVE (Cont'd)
(Boom Swing Section)

Ref No	Part Number	Description	Remarks	Serial Number	Qty
1	7022952	SECTION, VALVE	boom swing - Ref. 2-22		1
2	6682230	SCREW			4
3	7010626	COIL, SOLENOID			2
4	7022971	BOLT			4
5		BLOCK	NSS		1
6		O-RING	NSS		3
7		O-RING	NSS		1
8	6680092	LOAD CHECK			1
9	6680247	VALVE			2
10		CAP	NSS		2
11		SPRING	NSS		2
12		VALVE	NSS		2
13		BLOCK	NSS		1
14		SPOOL	NSS		1
15		O-RING	NSS		1
16		O-RING	NSS		1
17		BUSHING	NSS		2
18		SPRING	NSS		1
19		SCREW	NSS		1
20		BLOCK	NSS		1
21	6682247	BOLT			4
22	7022958	ACTUATOR	Ref. 2-7, & 15-21		1
23		KIT, SEAL	NSS		1
24	7022980	KIT, SEAL			1

Page 165 - OSS# 2091664 - All rights reserved by Bobcat Company - 08/27/2012 - 11:42:23 - Produced by Ken Cook Co. with mediaioff

HYDRAULIC CONTROL VALVE
(Slew Section)

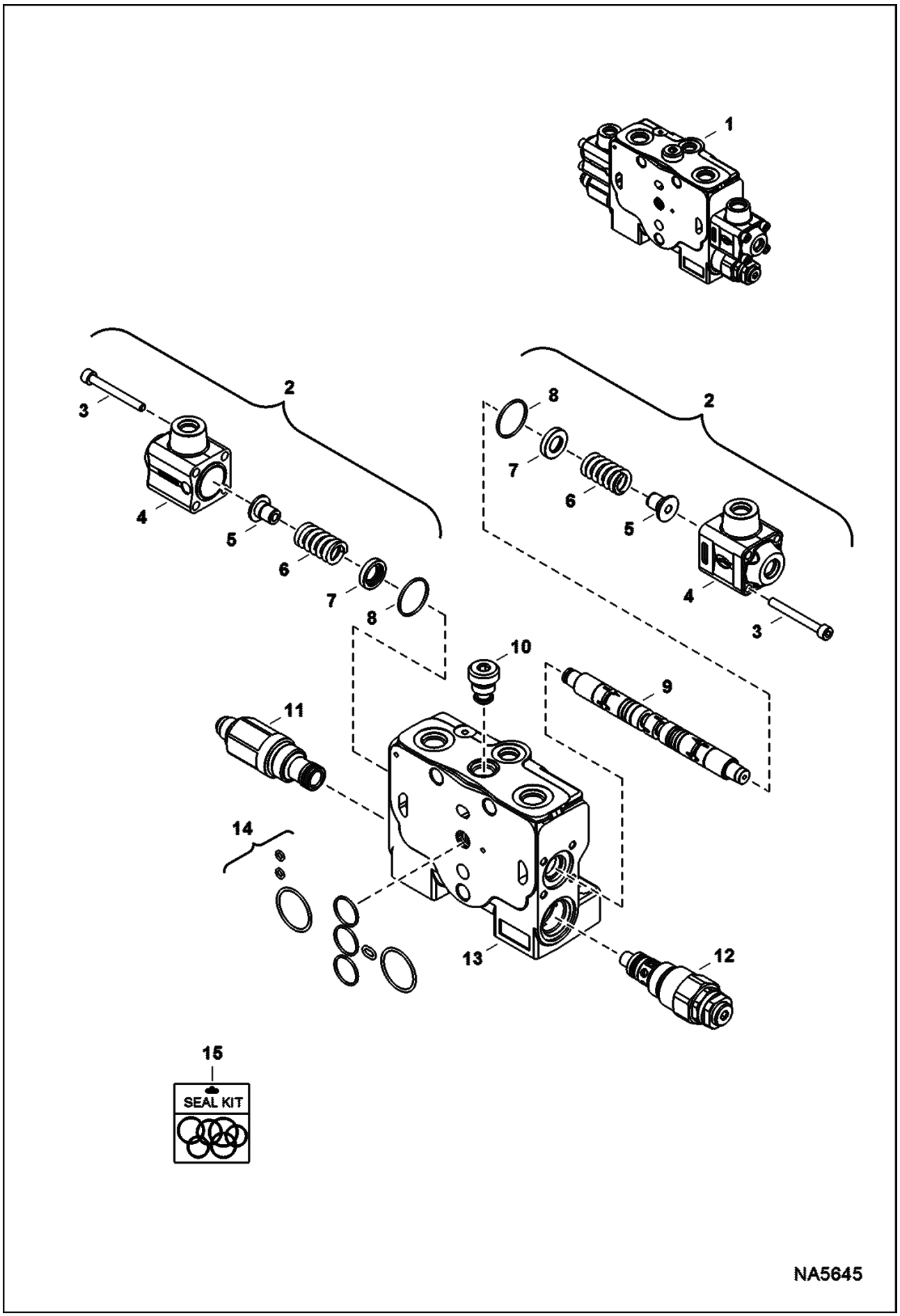

Page 166 - OSS# 2091664 - All rights reserved by Bobcat Company - 08/27/2012 - 11:42:23 - Produced by Ken Cook Co. with mediaioff

HYDRAULIC CONTROL VALVE (Cont'd)
(Slew Section)

Ref No	Part Number	Description	Remarks	Serial Number	Qty
1	7022953	SECTION, VALVE	slew - Ref. 2-14		1
2	7022954	ACTUATOR			1
3	6682248	SCREW			8
4		BLOCK	NSS		2
5		BUSHING	NSS		2
6		SPRING	NSS		2
7		BUSHING	NSS		2
8		O-RING	NSS		2
9		SPOOL	NSS		1
10	6680092	LOAD CHECK			1
11	7022957	VALVE, RELIEF			1
12	7022956	VALVE, RELIEF			1
13		BLOCK	NSS		1
14		KIT, SEAL	NSS		1
15	7022981	KIT, SEAL			1

Page 167 - OSS# 2091664 - All rights reserved by Bobcat Company - 08/27/2012 - 11:42:23 - Produced by Ken Cook Co. with mediaioff

ARM CYLINDER

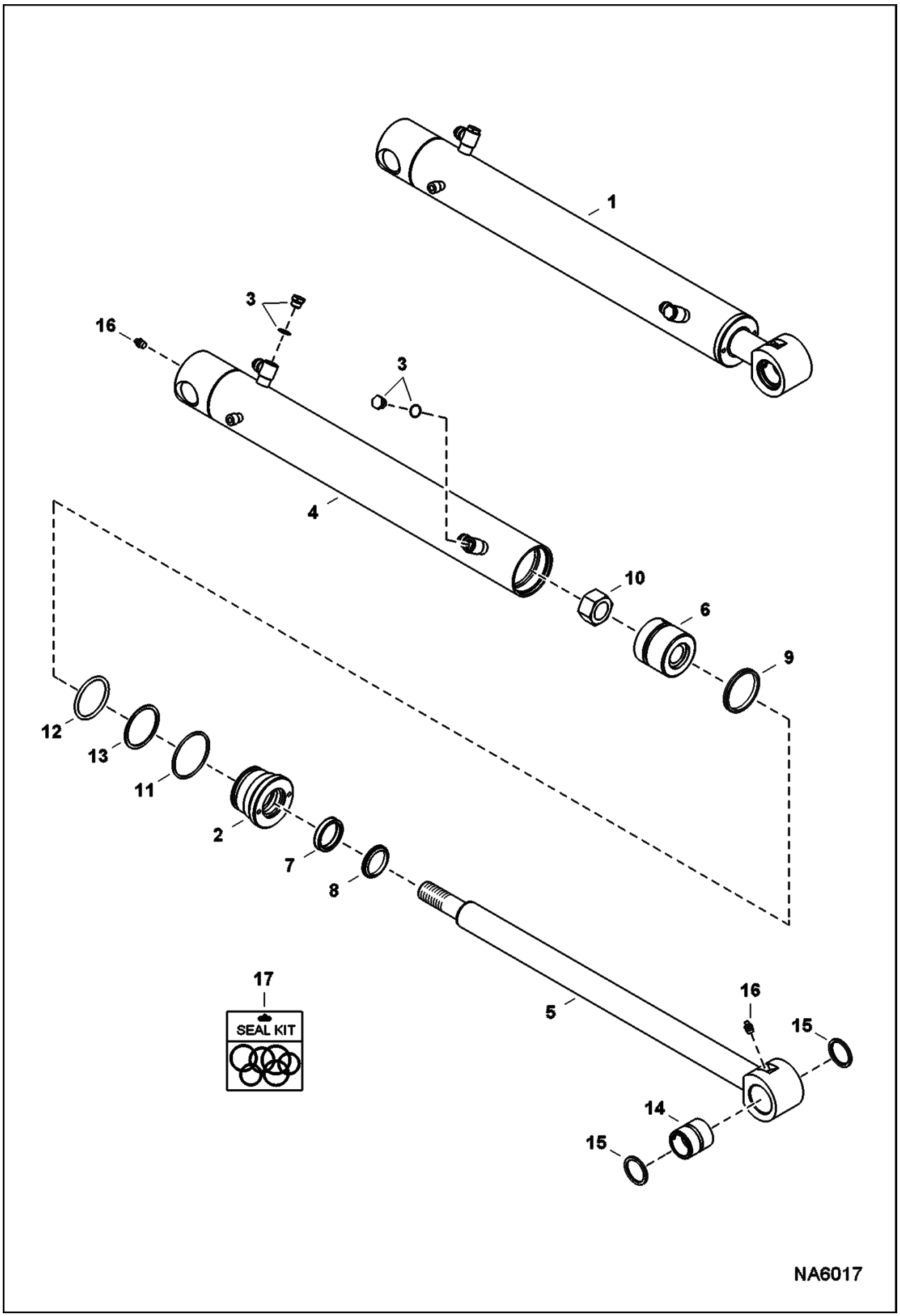

Page 168 - OSS# 2091664 - All rights reserved by Bobcat Company - 08/27/2012 - 11:42:23 - Produced by Ken Cook Co. with mediaioff

Ref No	Part Number	Description	Remarks	Serial Number	Qty
1	7170962	CYLINDER, ARM	Ref. 2-13 - Also Order Ref. 14-16		1
2	6800686	HEAD, CYL TILT			1
3	6812171	PLUG			2
3	75K6	O-RING			x
4	7170966	TUBE, CASE CYL	W/Ref. 3 & 11 - Also Order Ref. 16		1
5	7170965	ROD, CYL	Also Order Ref. 14-16		1
6	7171340	PISTON, CYL			1
7	6669267	SEAL			1
8	6687000	WIPER ROD			1
9	6692805	SEAL, BP			1
10	6810539	NUT			1
11	25K40224	O RING 10			1
12	25K60212	O RING 10			1
13	73K332	RING			1
14	6808246	BUSHING			1
15	6652915	SEAL, OIL			2
16	10H25	FITTING, GREASE 5			2
17	7201446	KIT, SEAL	Ref. 7-13		1

Page 169 - OSS# 2091664 - All rights reserved by Bobcat Company - 08/27/2012 - 11:42:23 - Produced by Ken Cook Co. with mediaioff

BLADE CYLINDER

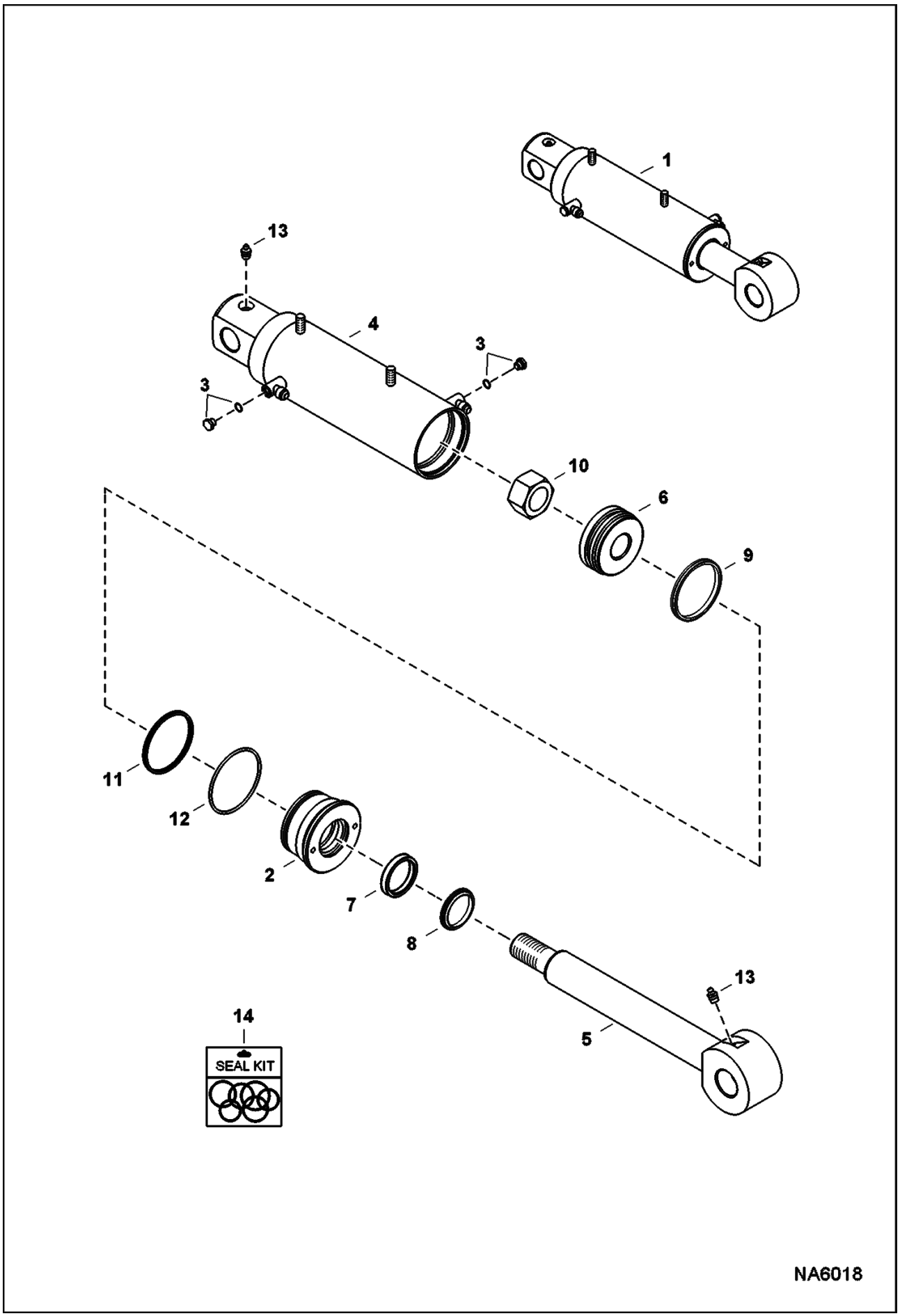

Page 170 - OSS# 2091664 - All rights reserved by Bobcat Company - 08/27/2012 - 11:42:23 - Produced by Ken Cook Co. with mediaioff

Ref No	Part Number	Description	Remarks	Serial Number	Qty
1	7164575	CYLINDER, BLADE	Ref. 2-12 - Also Order Ref. 13		1
2	6586570	HEAD			1
3	6812170	PLUG			2
3	75K3	O-RING			x
4	7164577	TUBE, CASE CYL	W/Ref. 3 & 12 - Also Order Ref. 13		1
5	7164579	ROD, CYL	Also Order Ref. 13		1
6	7166329	PISTON			1
7	6667327	SEAL			1
8	6686999	SEAL			1
9	6692326	SEAL, BP			1
10	6810540	NUT			1
11	7008354	SEAL, QUAD			1
12	82K236	O-RING			1
13	10H25	FITTING, GREASE 5			2
14	7147833	KIT, SEAL CYLINDER	Ref. 7-12		1

Page 171 - OSS# 2091664 - All rights reserved by Bobcat Company - 08/27/2012 - 11:42:23 - Produced by Ken Cook Co. with mediaioff

BOOM CYLINDER

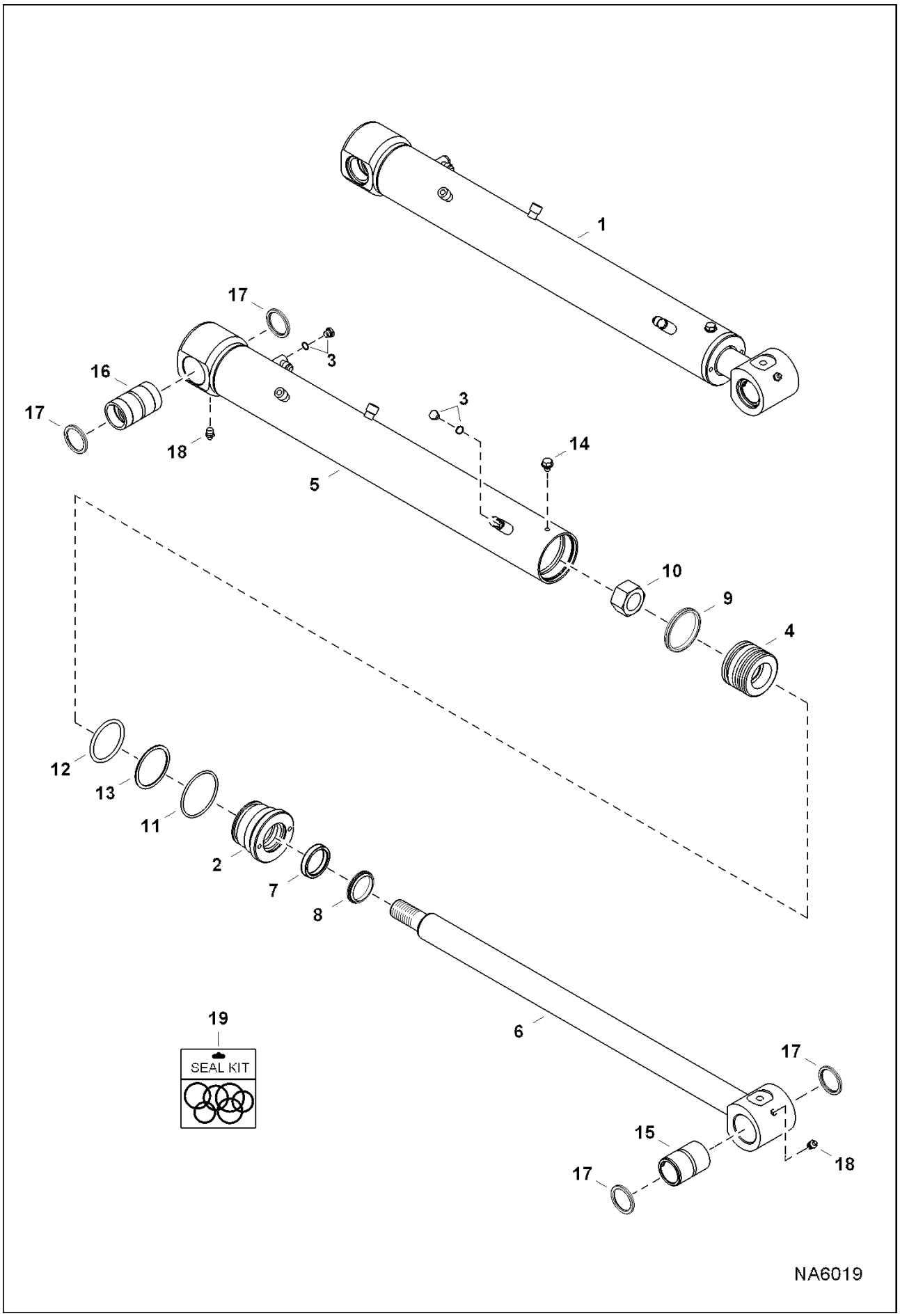

Page 172 - OSS# 2091664 - All rights reserved by Bobcat Company - 08/27/2012 - 11:42:23 - Produced by Ken Cook Co. with mediaioff

Ref No	Part Number	Description	Remarks	Serial Number	Qty
1	7206476	CYLINDER, BOOM	Ref. 2-14 - Also Order Ref. 15-18		1
2	6800686	HEAD, CYL TILT			1
3	6812170	PLUG			2
3	75K3	O-RING			x
4	7170501	PISTON, CYL			1
5	7170503	TUBE, CASE CYL	W/Ref. 3 & 11 - Also Order Ref. 16-18		1
6	7170505	ROD, CYL	Also Order Ref. 15, 17 & 18		1
7	6669267	SEAL			1
8	6687000	WIPER ROD			1
9	6692805	SEAL, BP			1
10	6810539	NUT			1
11	25K40224	O RING 10			1
12	25K60212	O RING 10			1
13	73K332	RING			1
14	7017857	SET SCREW			1
15	6808271	BUSHING			1
16	7164480	BUSHING, WEAR			1
17	6652915	SEAL, OIL			4
18	10H25	FITTING, GREASE 5			2
19	7201446	KIT, SEAL	Ref. 7-13		1

Page 173 - OSS# 2091664 - All rights reserved by Bobcat Company - 08/27/2012 - 11:42:23 - Produced by Ken Cook Co. with mediaioff

BOOM SWING CYLINDER

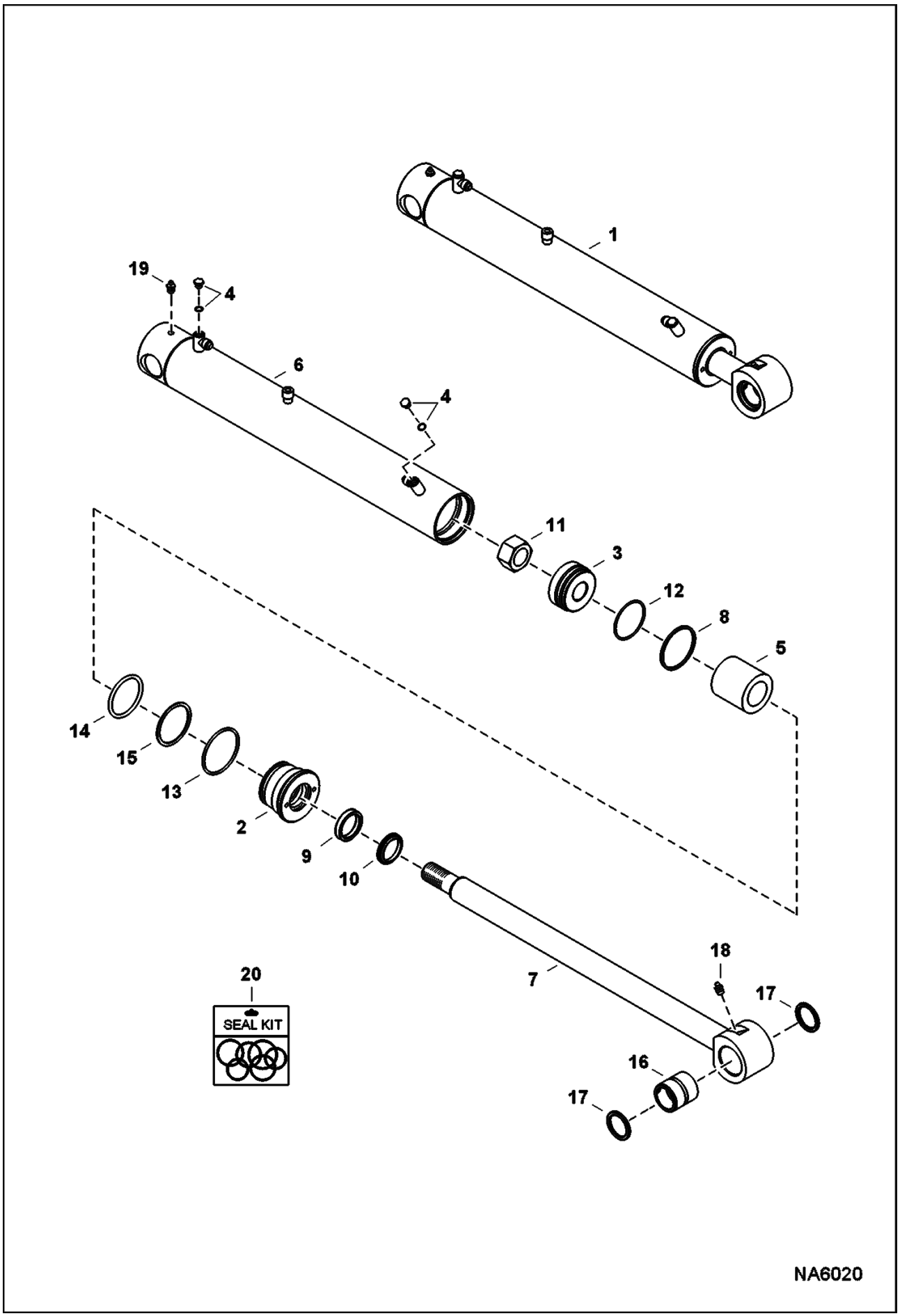

Page 174 - OSS# 2091664 - All rights reserved by Bobcat Company - 08/27/2012 - 11:42:23 - Produced by Ken Cook Co. with mediaioff

Ref No	Part Number	Description	Remarks	Serial Number	Qty
1	7188883	CYLINDER, SWING	Ref. 2-15 - Also Order Ref. 16-19		1
2	6586718	HEAD, CYL TILT			1
3	6588680	PISTON			1
4	6812170	PLUG			1
4	75K3	O-RING			x
5	7152125	SPACER			1
6	7188894	TUBE, CASE CYL	W/Ref. 4 & 13 - Also Order Ref. 19		1
7	7188908	ROD, CYL	Also Order Ref. 16-18		1
8	6516229	PISTON SEAL			1
9	6667326	SEAL			1
10	6690707	SEAL			1
11	6810539	NUT			1
12	25K30210	O-RING			1
13	25K40224	O RING 10			1
14	25K60212	O RING 10			1
15	73K332	RING			1
16	6808246	BUSHING			1
17	6652915	SEAL, OIL			2
18	10H25	FITTING, GREASE 5			1
19	83F3	ELBOW 5			1
20	7199903	KIT, SEAL	Ref. 8-15		1

Page 175 - OSS# 2091664 - All rights reserved by Bobcat Company - 08/27/2012 - 11:42:23 - Produced by Ken Cook Co. with mediaioff

BUCKET CYLINDER

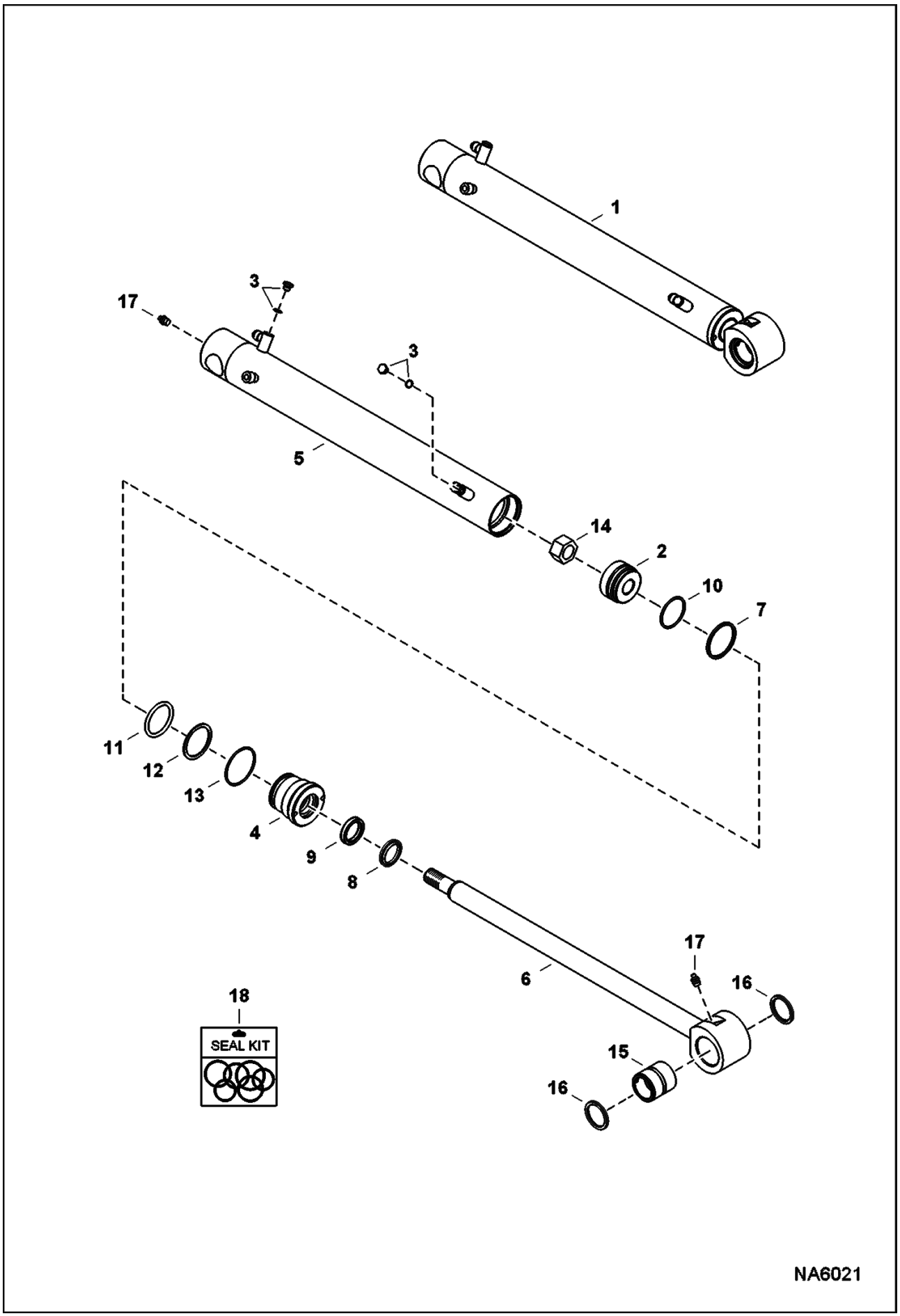

Page 176 - OSS# 2091664 - All rights reserved by Bobcat Company - 08/27/2012 - 11:42:23 - Produced by Ken Cook Co. with mediaioff

Ref No	Part Number	Description	Remarks	Serial Number	Qty
1	7159406	CYLINDER, BUCKET	Ref. 2-14 - Also Order Ref. 15-17		1
2	6808611	PISTON			1
3	6812170	PLUG			2
4	7106798	HEAD			1
5	7159410	TUBE, CASE CYL	W/Ref. 3 & 13 - Also Order Ref. 17		1
6	7159409	ROD, CYL ASSY	Also Order Ref. 15-17		1
7	6519328	SEAL			1
8	6665208	SEAL			1
9	6667324	SEAL			1
10	25K30126	O RING 10			1
11	25K60128	O RING 10			1
12	73K328	RING			1
13	82K140	O-RING			1
14	92D14	NUT			1
15	6808246	BUSHING			1
16	6652915	SEAL, OIL			2
17	10H25	FITTING, GREASE 5			2
18	7137786	SEAL KIT	Ref. 7-14		1

Page 177 - OSS# 2091664 - All rights reserved by Bobcat Company - 08/27/2012 - 11:42:23 - Produced by Ken Cook Co. with mediaioff

CAB ELECTRICAL CIRCUITRY

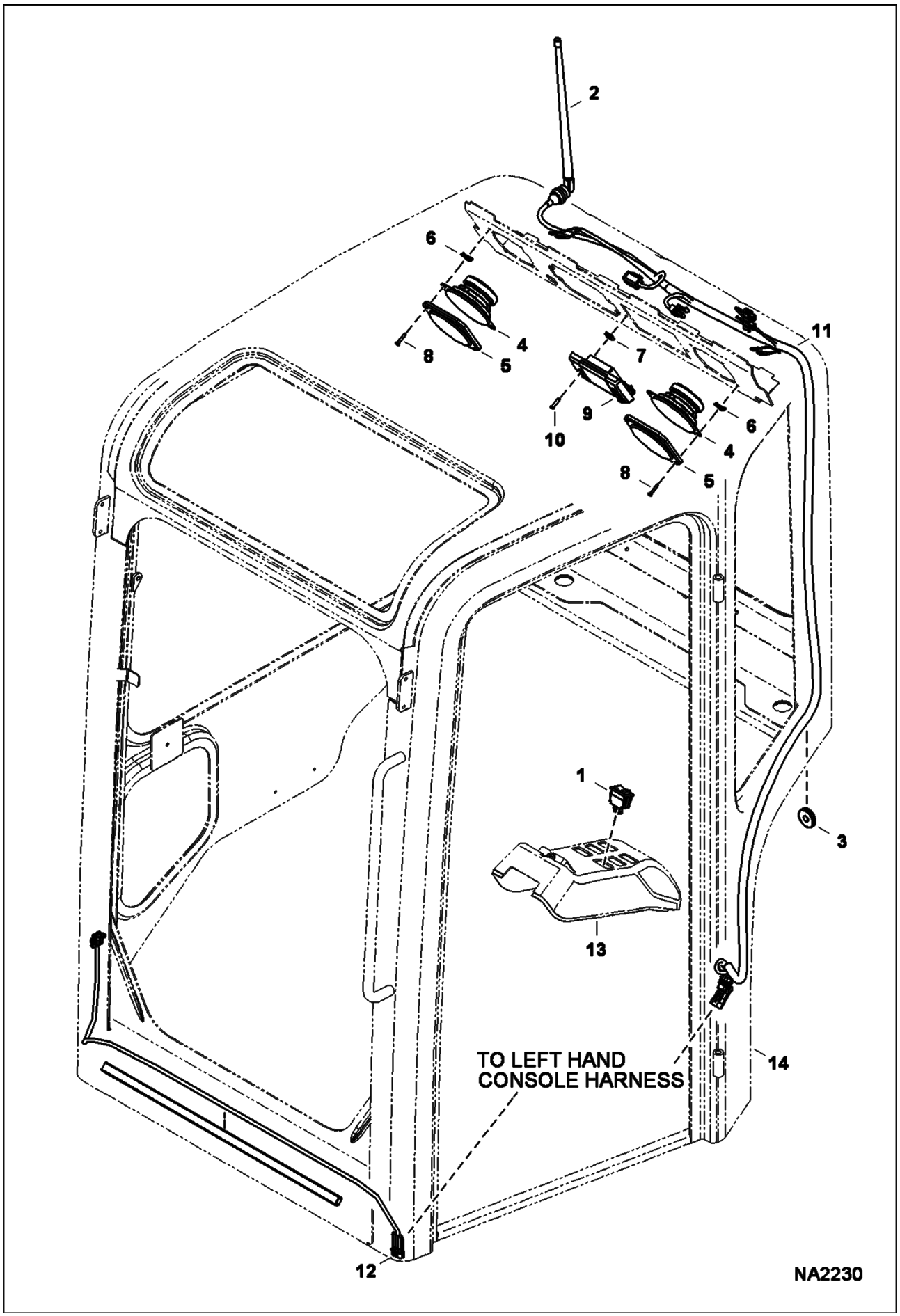

Page 178 - OSS# 2091664 - All rights reserved by Bobcat Company - 08/27/2012 - 11:42:23 - Produced by Ken Cook Co. with mediaioff

Ref No	Part Number	Description	Remarks	Serial Number	Qty
1	6671113	SWITCH			1
2	6676114	ANTENNA, RADIO			1
3	6682697	GROMMET			1
4	6685606	SPEAKER			2
5	6685607	GRILL			2
6	6685744	CLIP			8
7	7142762	CLIP			2
8	7163690	SCREW			8
9	7166629	LIGHT, CAB HEADLINER			1
10	7170114	SCREW			2
11	7171741	HARNESS, CAB			1
12	7171777	HARNESS, WIPER			1
13		COVER, LH	See Illustration CONTROL CONSOLE/ NA6054		1
14		CAB, W/A	See Illustration OPERATOR CAB/ NA6030		1

Page 179 - OSS# 2091664 - All rights reserved by Bobcat Company - 08/27/2012 - 11:42:23 - Produced by Ken Cook Co. with mediaioff

ENGINE ELECTRICAL CIRCUITRY

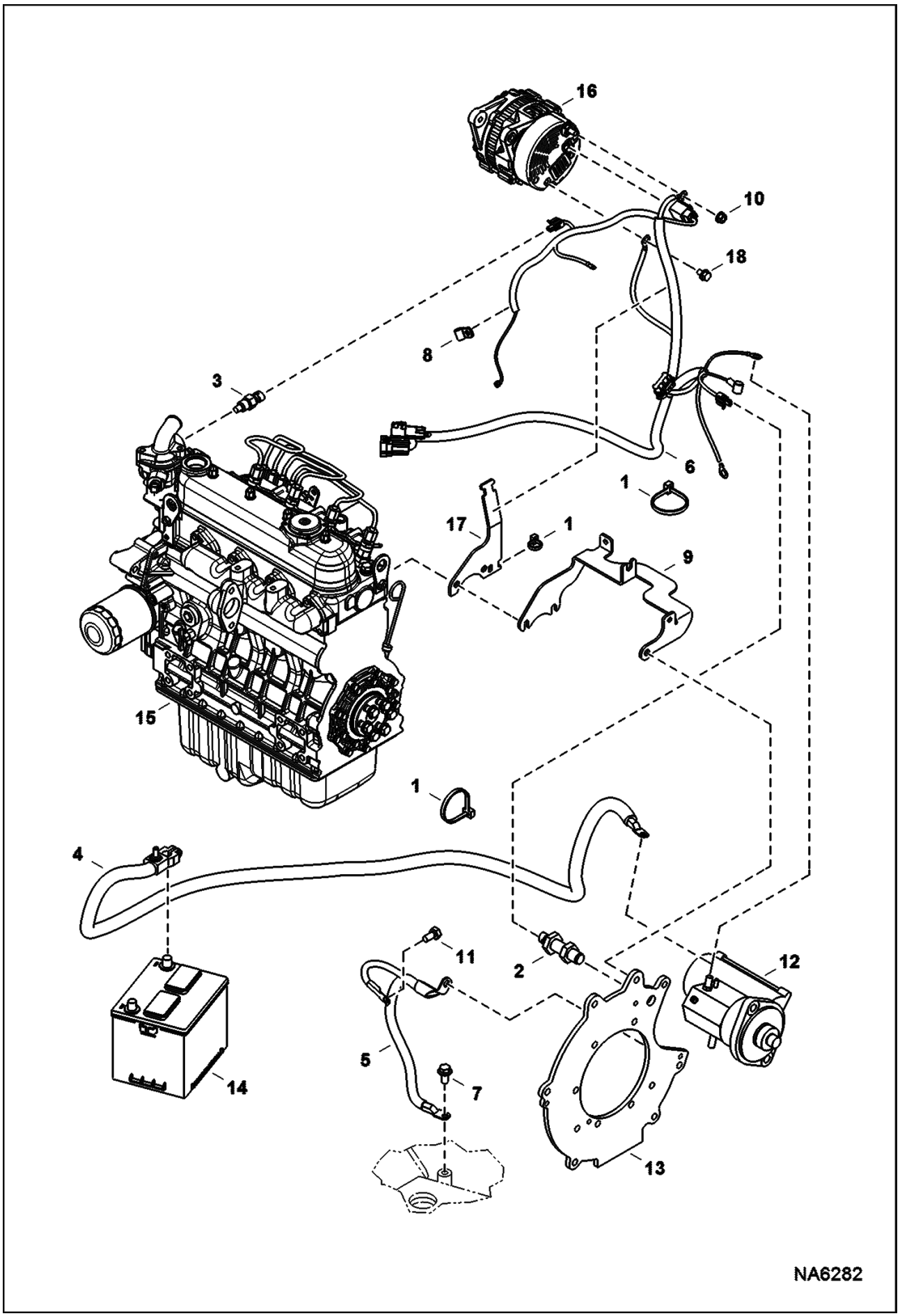

Page 180 - OSS# 2091664 - All rights reserved by Bobcat Company - 08/27/2012 - 11:42:23 - Produced by Ken Cook Co. with mediaioff

Ref No	Part Number	Description	Remarks	Serial Number	Qty
1	6624289	STRAP, TIE			6
2	6693921	SENSOR, RPM			1
3	6718414	SENDER, TEMP ENG			1
4	7192700	CABLE, POSITIVE			1
5	7161922	CABLE, NEGATIVE			1
6	7195839	HARNESS, ENG			1
7	29CM1020	BOLT			1
8	30H22	CLIP			1
9		BRACKET	See Illustration THROTTLE CONTROL/ NA6275		1
10	43DM8	NUT			1
11	5CM1020	SCREW			1
12	6670727	STARTER	See Illustration STARTER/ D2437		1
13		PLATE, FLYWHEEL	See Illustration ENGINE & ATTACHING PARTS/ NA6281		1
14		BATTERY	See Illustration CONTROLS ELECTRICAL/ NA6283		1
15		ENGINE	See Illustration ENGINE & GASKET KITS/ NA6288		1
16	7008772	ALTERNATOR, 90 AMP	See Illustration ALTERNATOR/ NA2234		1
17	7201737	BRACKET, HARNESS			1
18	29CM812	BOLT			1

Page 181 - OSS# 2091664 - All rights reserved by Bobcat Company - 08/27/2012 - 11:42:23 - Produced by Ken Cook Co. with mediaioff

CONTROLS ELECTRICAL
(RH Console)

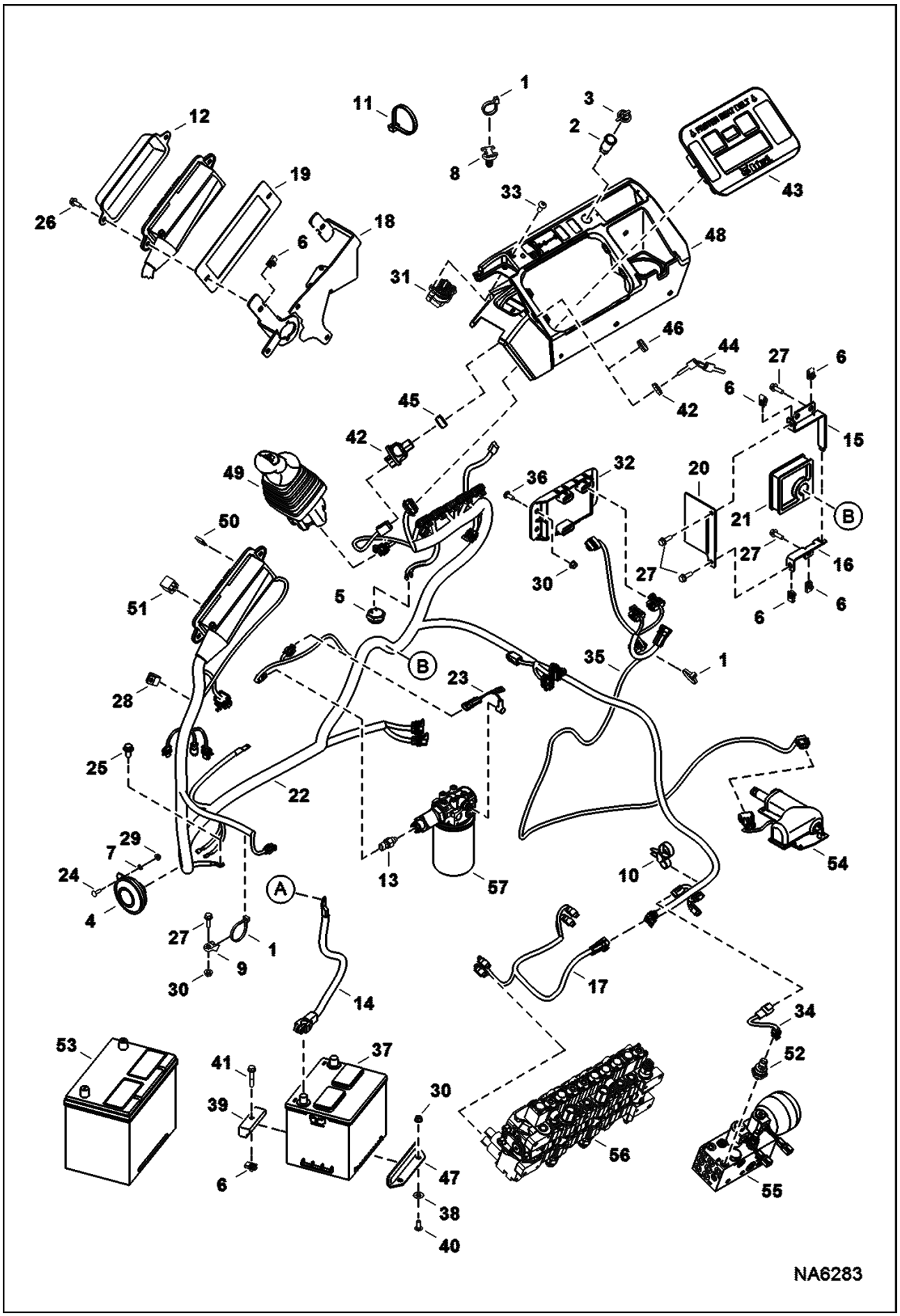

Page 182 - OSS# 2091664 - All rights reserved by Bobcat Company - 08/27/2012 - 11:42:23 - Produced by Ken Cook Co. with mediaioff

CONTROLS ELECTRICAL (Cont'd)
(RH Console)

Ref No	Part Number	Description	Remarks	Serial Number	Qty
1	6624289	STRAP, TIE			13
2	6664223	OUTLET			1
3	6664224	CAP			1
4	6671106	HORN			1
5	6675705	ALARM			1
6	6676169	NUT			8
7	6675212	RETAINER			1
8	7015668	MOUNT FIR TREE			3
9	6678667	MOUNT			1
10	6678668	STRAP, DUAL TIE			1
11	6682345	STRAP, TIE 8			3
12	6716621	COVER			1
13	6727869	SENDER,HYD TEMP			1
14	6807431	CABLE			1
15	7178918	BRACKET			1
16	7178919	BRACKET			1
17	7188078	HARNESS, VALVE			1
18	7187703	BRACKET, RELAY CENTER			1
19	7187704	PLATE, SUPPORT			1
20	7192356	COVER, PLATE			1
21	7192357	GROMMET			1
22	7195840	HARNESS, FRAME			1
23	7198838	HARNESS, SWITCH			1
24	28CM620	BOLT CARRIAGE 8.8			1
25	29CM1020	BOLT			2
26	29CM820	SCREW			2
27	29CM825	BOLT			6
28	30H50	CLIP			1
29	43DM6	NUT			3
30	43DM8	NUT			5
31	6698640	CONTROL, THROTTLE			1
32	7010112	CONTROLLER, THROTTLE AIC			1
33	7135909	SCREW			2
34	7192507	HARNESS, JUMPER			1
35	7201238	HARNESS, AUTO IDLE			1
36	28CM820	BOLT			2
37	6670251	BATTERY, DRY 530 AMP			1
38	6675859	RETAINER			1
39	7120672	TIE DOWN			2
40	28CM820	BOLT			2
41	29CM845	BOLT			1
42	6693245	SWITCH, IGN			1
43	7021081	CONTROLLER,	Was 6698608 [A]		1

Page 183 - OSS# 2091664 - All rights reserved by Bobcat Company - 08/27/2012 - 11:42:23 - Produced by Ken Cook Co. with mediaioff

CONTROLS ELECTRICAL (Cont'd)
(RH Console)

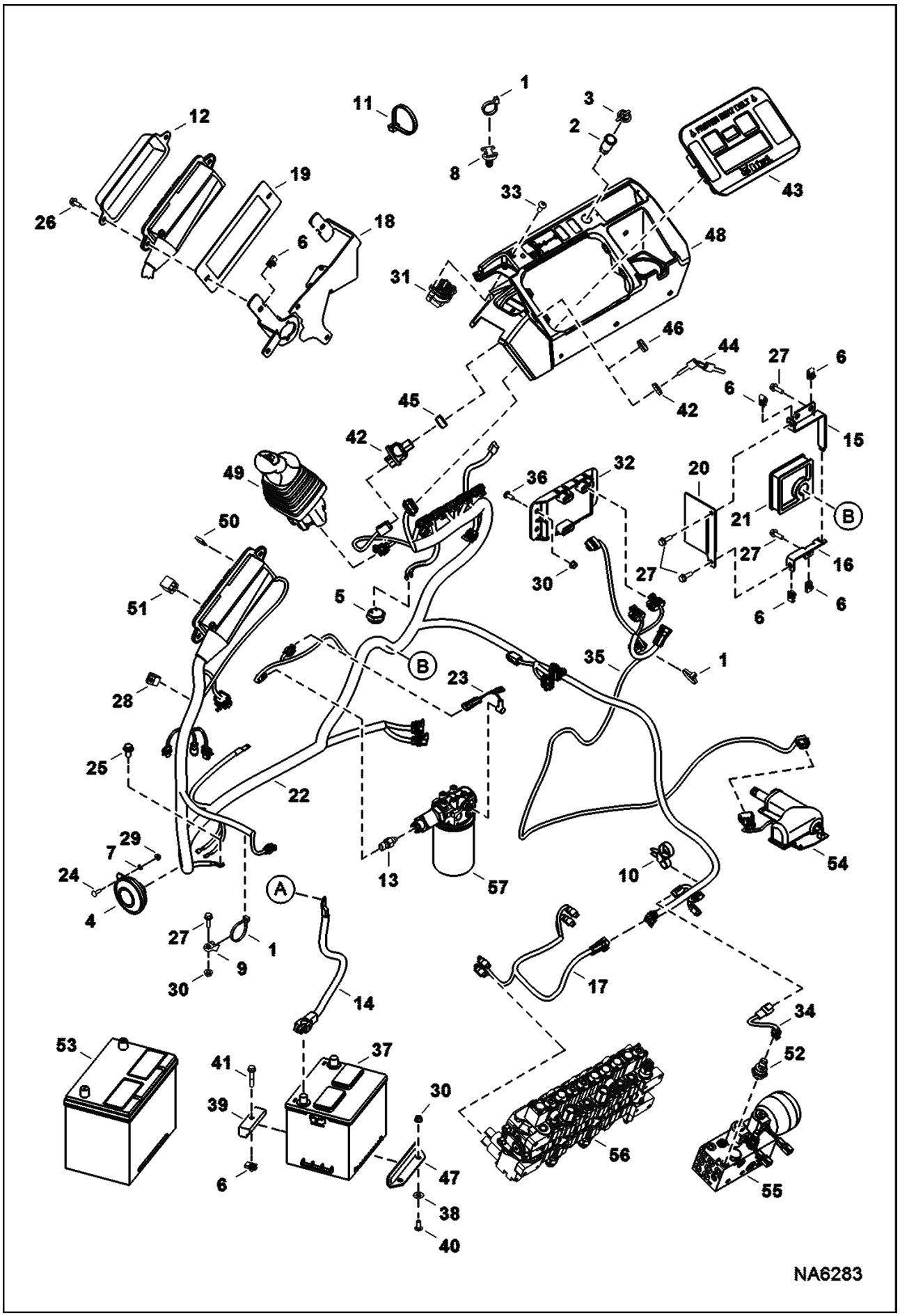

Page 184 - OSS# 2091664 - All rights reserved by Bobcat Company - 08/27/2012 - 11:42:23 - Produced by Ken Cook Co. with mediaioff

Ref No	Part Number	Description	Remarks	Serial Number	Qty
		KEYED PANEL			
43	7021082	CONTROLLER, KEYLESS PANEL	Was 6698609 [A]		1
44	6709527	KEY, IGN 10			1
45	7000328	ADAPTER, SWITCH IGN			1
46	6676922	PLUG			1
47	7135397	CLAMP BATTERY			1
48		COVER, RH	See Illustration CONTROL CONSOLE/ NA6053		1
49	6677895	JOYSTICK	See Illustration RH JOYSTICK/ MS1352		1
50	6663289	FUSE, 5A			x
50	6654805	FUSE 10A			x
50	6654806	FUSE, 15A			x
50	6625575	FUSE, 20A			x
50	6702444	FUSE 25A 5			x
51	6679820	RELAY			x
52	6674316	SWITCH, PRESS OIL HYD			1
52		PLUG	See Illustration THROTTLE CONTROL/ NA6274 W/O auto idle		1
53	6674687	BATTERY, DRY 600 AMP			1
54	6698169	ACTUATOR, THROTTLE	See Illustration THROTTLE CONTROL/ NA6275		1
55	7204476	MANIFOLD, HYD ASSY	See Illustration MANIFOLD ASSY/ NA6098		1
56	7188867	VALVE, CONTROL	See Illustration HYDRAULIC CONTROL VALVE/ NA6140		1
57	7188836	FILTER, OIL HYD ASSY	See Illustration HYDRAULIC OIL FILTER/ NA6101		1

Page 185 - OSS# 2091664 - All rights reserved by Bobcat Company - 08/27/2012 - 11:42:23 - Produced by Ken Cook Co. with mediaioff

CONTROLS ELECTRICAL
(LH Console)

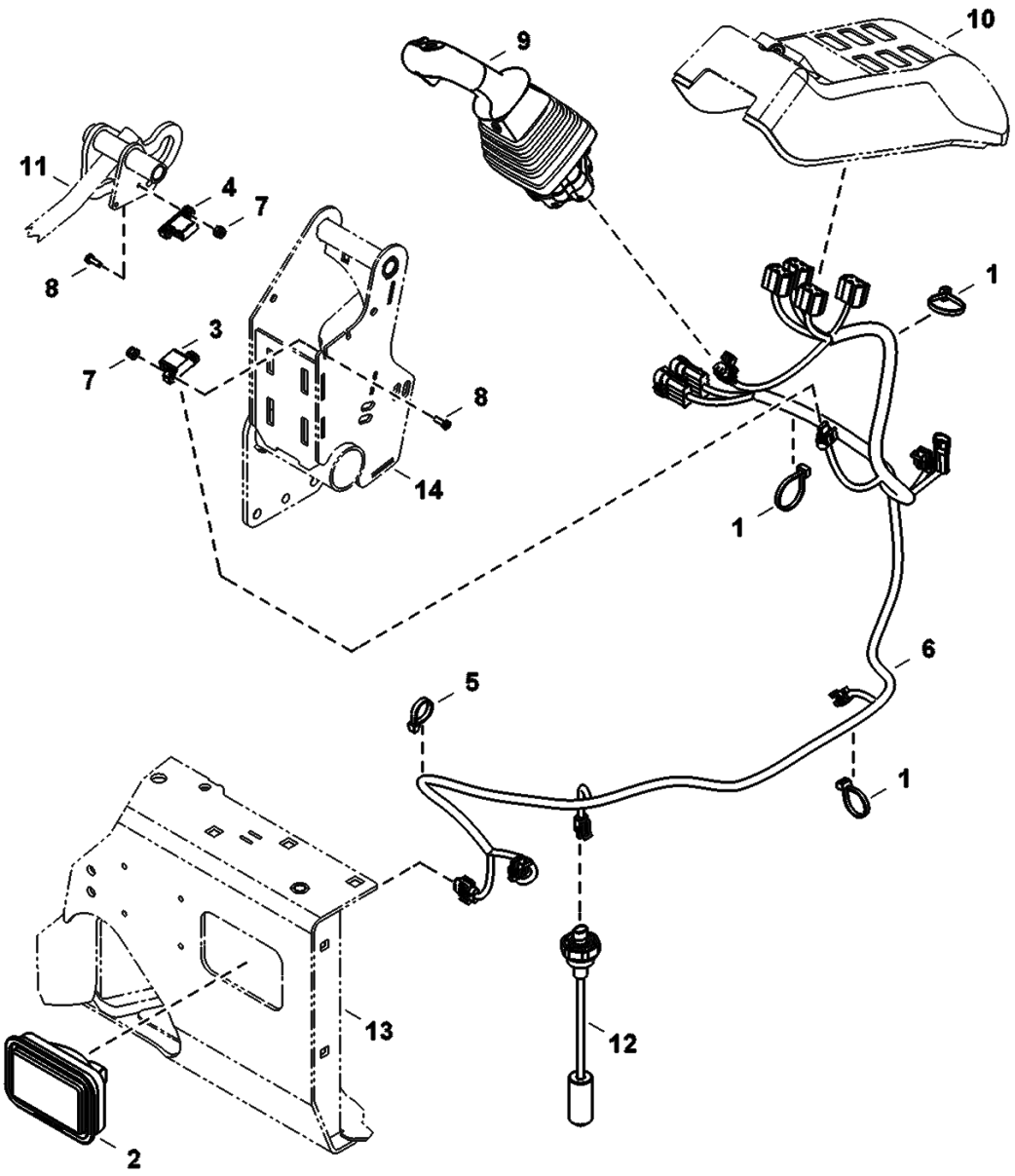

Page 186 - OSS# 2091664 - All rights reserved by Bobcat Company - 08/27/2012 - 11:42:23 - Produced by Ken Cook Co. with mediaioff

Ref No	Part Number	Description	Remarks	Serial Number	Qty
1	6624289	STRAP, TIE			4
2	6676238	LIGHT			1
2	6667934	BULB			1
2	6676725	BEZEL			1
3	6680427	SENSOR			1
4	6680428	SENSOR			1
5	6682345	STRAP, TIE 8			1
6	7161916	HARNESS, CONSOLE LH			1
7	50D8	NUT			4
8	87G808	SCREW			4
9	7008320	LEVER, JOYSTICK W/PWM	See Illustration LH JOYSTICK/ NA2224		1
10		COVER, LH	See Illustration CONTROL CONSOLE/ NA6054		1
11		HANDLE	See Illustration CONTROL CONSOLE/ NA6054		1
12	7179838	SENSOR FUEL	See Illustration CONTROL CONSOLE/ NA6054		1
13		UPPERSTRUCTURE	See Illustration UPPERSTRUCTURE/ NA6291		1
14		CONTROLLER, JOYSTICK ASSY	See Illustration OPERATOR AREA & SEAT/ NA6028		1

Page 187 - OSS# 2091664 - All rights reserved by Bobcat Company - 08/27/2012 - 11:42:23 - Produced by Ken Cook Co. with mediaioff

ALTERNATOR

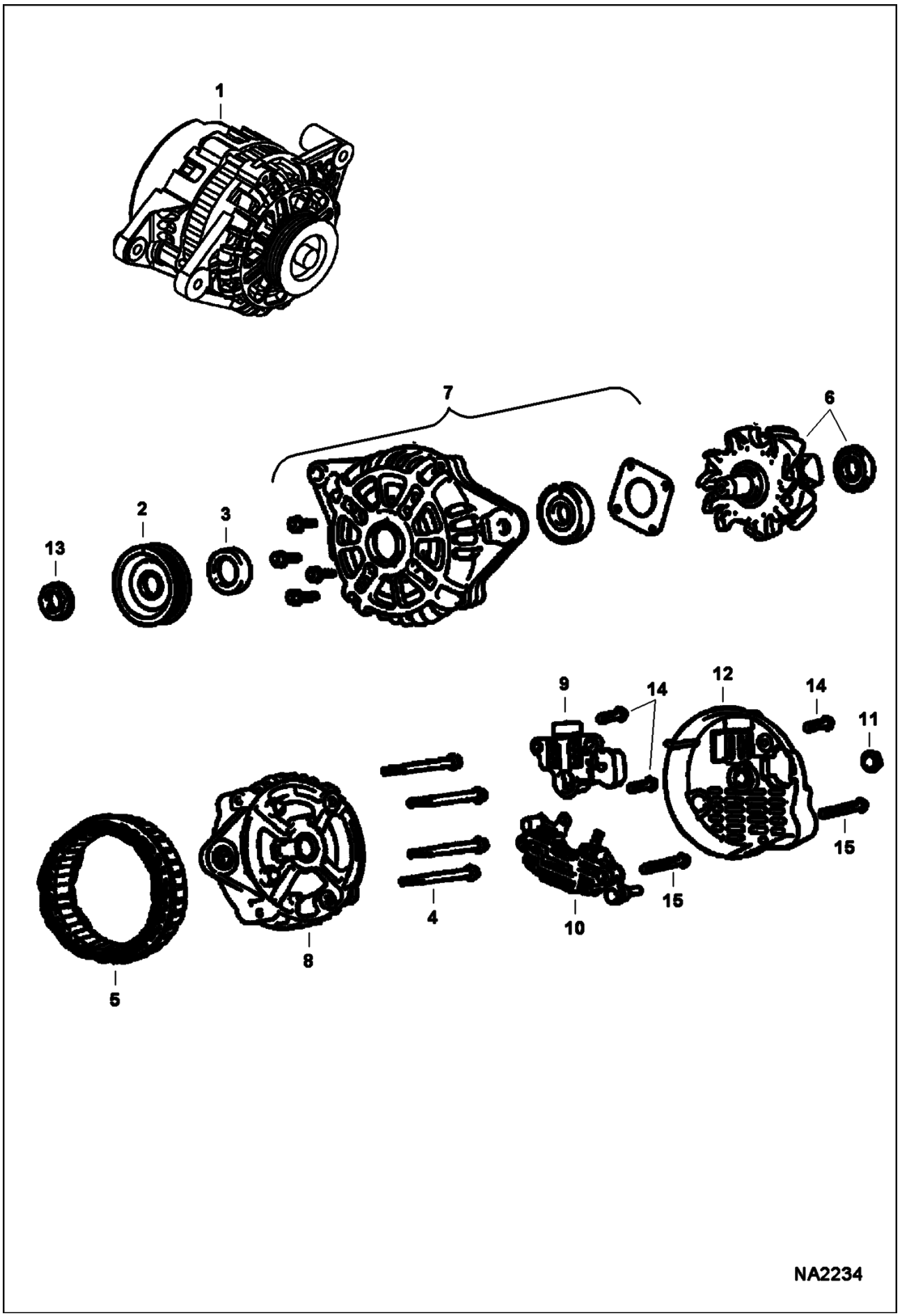

Page 188 - OSS# 2091664 - All rights reserved by Bobcat Company - 08/27/2012 - 11:42:23 - Produced by Ken Cook Co. with mediaioff

Ref No	Part Number	Description	Remarks	Serial Number	Qty
1	7008772	ALTERNATOR, 90 AMP	Ref. 2-15		1
2	7010200	PULLEY, ALT			1
3	6677495	SPACER			1
4	6684397	BOLT			4
5	6677493	STATOR			1
6	6677492	ROTOR	assy		1
7	6677491	BRACKET	assy		1
8	6677490	BRACKET			1
9	6684650	REGULATOR			1
10	6677488	RECTIFIER			1
11	6677486	NUT			1
12	6677487	COVER			1
13	6691539	HEX. NUT			1
14		BOLT	NSS		x
15		BOLT	NSS		x

Page 189 - OSS# 2091664 - All rights reserved by Bobcat Company - 08/27/2012 - 11:42:23 - Produced by Ken Cook Co. with mediaioff

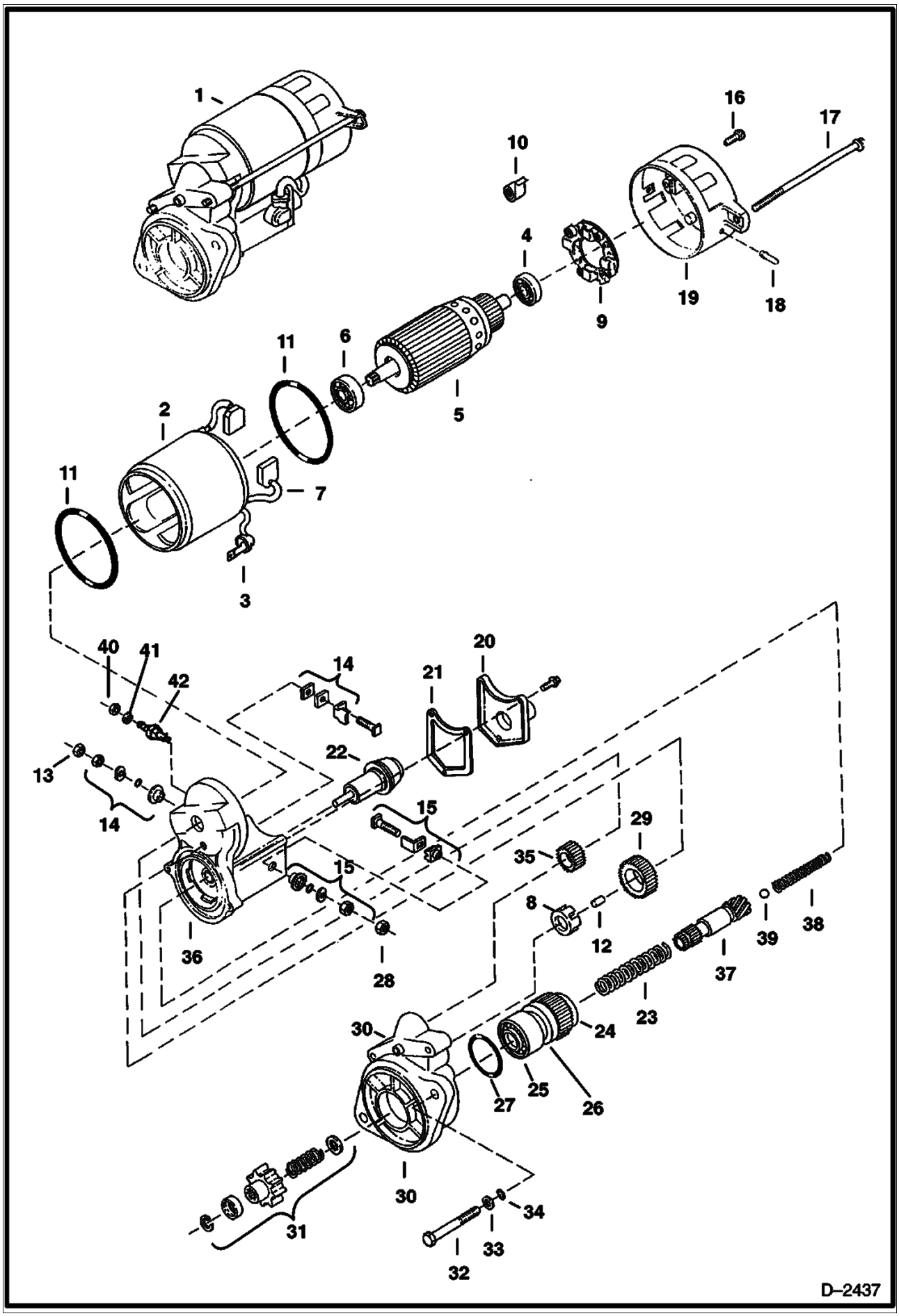

Page 190 - OSS# 2091664 - All rights reserved by Bobcat Company - 08/27/2012 - 11:42:23 - Produced by Ken Cook Co. with mediaioff

Ref No	Part Number	Description	Remarks	Serial Number	Qty
1	6670727	STARTER			1
1	6670727REM	STARTER			1
2		YOKE	NSS - Was 6674817 [A]		2
3	6672178	COVER			1
4		BEARING	NSS - Was 6674819 [A]		1
5	6674818	ARMATURE	W/Ref. 4 & 6		1
6	6671985	BEARING			1
6	6671984	BEARING			1
7		BRUSHES	NSS - Order Ref. 2		2
8	6672000	RETAINER			1
9		HOLDER	NSS - Was 6674836 [A]		1
10		SPRING	NSS - brush		1
11	6671982	O-RING			2
12	6671999	ROLLER			2
13	6672008	NUT			1
14		KIT	NSS - Was 6675109 [A]		1
15		STARTER	NSS - Was 6674826 [A]		1
16		SCREW	NSS - Was 6674834 [A]		2
17		BOLT	NSS - Was 6674833 [A]		2
18	6672007	BUSHING	drain		1
19		FRAME	NSS - Was 6674832 [A]		1
20		COVER	NSS - Was 6674829 [A]		1
21		GASKET	NSS - Was 6674828 [A]		1
22		PLUNGER	NSS - Was 6674827 [A]		1
23	6671991	SPRING	compression		1
24		BEARING	NAP - Order Ref. 26		1
25		BEARING	NAP - Order Ref. 26		1
26	6674821	CLUTCH	W/Ref. 24-25		1
27	6672013	O-RING			1
28	6672006	NUT			1
29	6672001	PINION			1
30		HOUSING	NSS - Was 6674823 [A]		1
31	6672172	KIT	starter		1
32		SCREW	NSS - Was 6674835 [A]		2
33		WASHER	NSS - Was 6666629 [A]		2
34	6666631	WASHER			2
35		PINION	NSS - Was 6674824 [A]		1
36		SWITCH	NSS - Was 6674942 [A]		1
37		SHAFT	NSS - Was 6671992 [A]		1
38	6674831	SPRING	compression oil		1
39		BALL	NSS - Was 6671122 [A]		1
40	6672011	NUT			1
41	6672012	WASHER			1
42	6671997	BOLT			1

Page 191 - OSS# 2091664 - All rights reserved by Bobcat Company - 08/27/2012 - 11:42:23 - Produced by Ken Cook Co. with mediaioff

ENGINE & ATTACHING PARTS
(Radiator Water Exchanger)

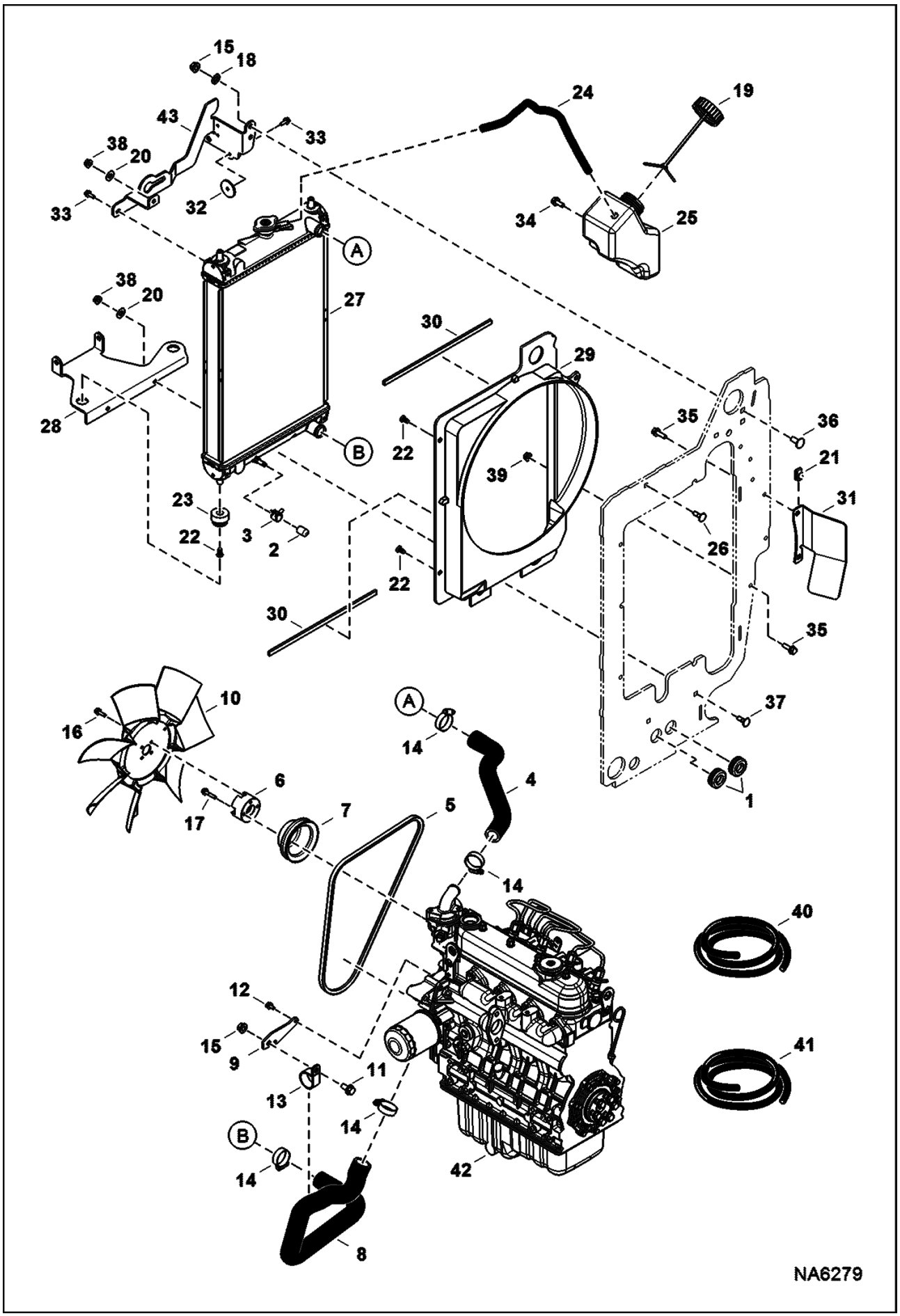

Page 192 - OSS# 2091664 - All rights reserved by Bobcat Company - 08/27/2012 - 11:42:23 - Produced by Ken Cook Co. with mediaIoff

Ref No	Part Number	Description	Remarks	Serial Number	Qty
1	6810133	GROMMET			2
2	7197401	PLUG, RADIATOR			1
3	5HM16	CLAMP			1
4	7159514	HOSE, WATER UPPER			1
5	7198463	BELT, ALT			1
6	7194498	SPACER			1
7	6657585	PULLEY			1
7	6691342	PULLEY	HVAC		1
8	7201735	HOSE, WATER LOWER			1
9	7201736	PLATE, HOLDER			1
10	7203445	FAN			1
11	29CM1020	BOLT			1
12	29CM612	BOLT			2
13	30H60	CLIP			1
14	42HL150	CLAMP, HOSE			4
15	43DM10	NUT			3
16	59CM620	SCREW			4
17	59CM630	SCREW			4
18	6674264	RETAINER NUT			2
19	6675551	CAP			1
20	6675859	RETAINER			3
21	6676169	NUT			6
22	7012810	PLUG			4
23	7139574	MOUNT RUBBER			2
24		HOSE	NAP - 440 mm (17.32") long - Order Ref. 40		1
25	7188966	TANK, WATER COOLANT			1
26	7189004	MOUNT, RADIATOR			1
27	7194799	EXCHANGER, WATER RADIATOR			1
27	7022636	CAP, RADIATOR			1
28	7194800	MOUNT, RADIATOR			1
29	7195526	SHROUD, FAN			1
30		SEAL	NAP - 329 mm (12.95") long - Order Ref. 41		2
31	7199713	GUARD, FAN			1
32	7200226	SPACER			1
33	29CM616	BOLT			2
34	29CM820	SCREW			4
35	29CM825	BOLT			2
36	33CM1025	BOLT			2
37	33CM825	BOLT			3
38	43DM8	NUT			3
39	51DM8	NUT			2
40	6577822	HOSE	bulk - sold per foot		x
41	7135394	SEAL BULK	bulk - sold per foot		x
42	6696963	ENG, KUBOTA V1505	See Illustration ENGINE & GASKET KITS/ NA6288		1
43	7189004	MOUNT, RADIATOR			1

Page 193 - OSS# 2091664 - All rights reserved by Bobcat Company - 08/27/2012 - 11:42:23 - Produced by Ken Cook Co. with mediaioff

ENGINE & ATTACHING PARTS
(Air Cleaner, Muffler)

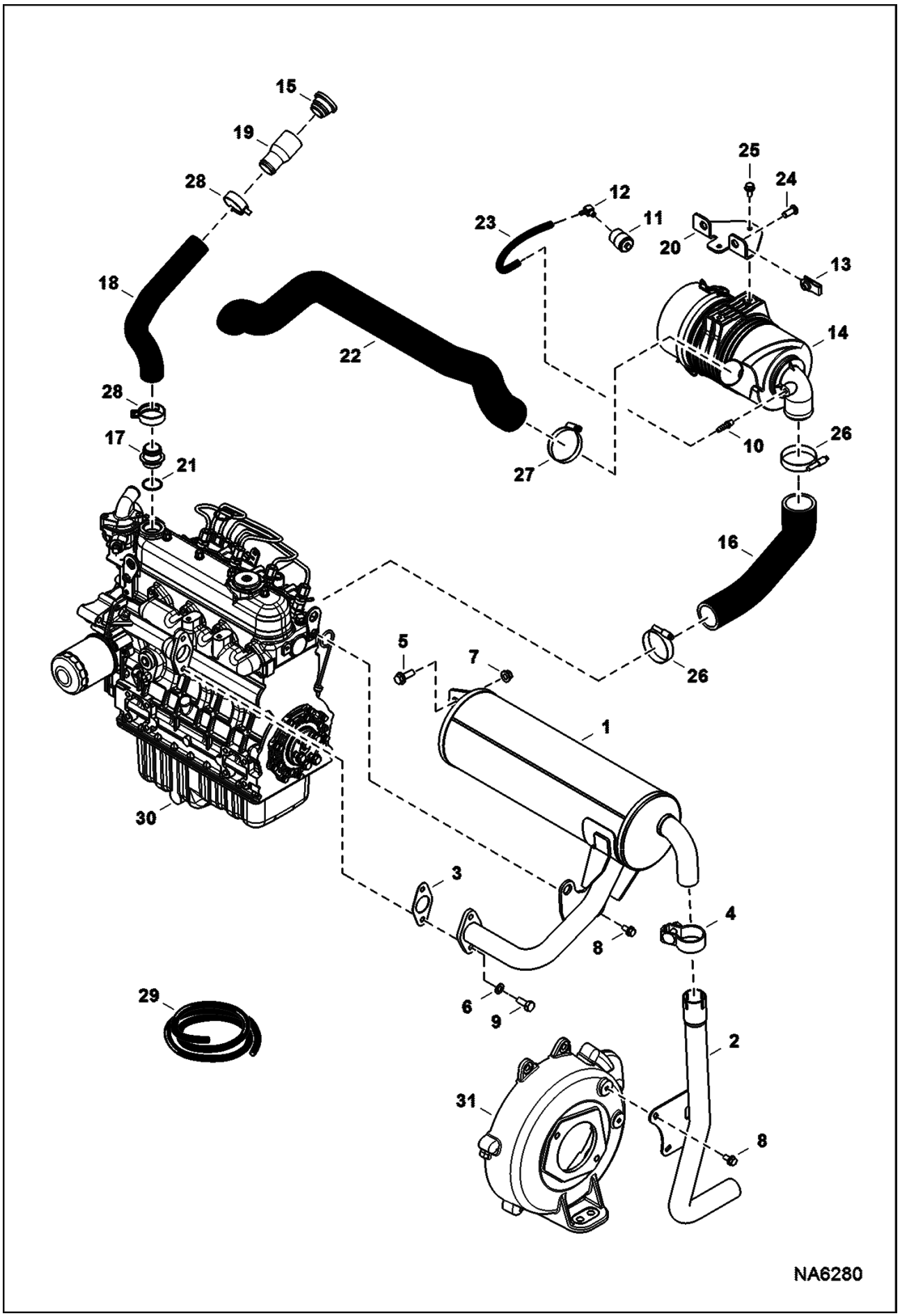

Page 194 - OSS# 2091664 - All rights reserved by Bobcat Company - 08/27/2012 - 11:42:23 - Produced by Ken Cook Co. with mediaioff

Ref No	Part Number	Description	Remarks	Serial Number	Qty
1	7191061	MUFFLER, EXHAUST			1
1	6661062	PLUG			1
2	7191062	TUBE, EXHAUST			1
3	7194159	GASKET			1
4	7200895	CLAMP, PIPE			1
5	29CM1030	BOLT			1
6	29E6	WASHER			2
7	51DM10	NUT			1
8	59CM816	BOLT			4
9	5CM1025	BOLT			2
10	6505813	CONNECTOR			1
11	6515007	GAUGE			1
12	6515156	CONNECTOR			1
13	6675722	NUT			2
14	6693337	FILTER, AIR	See Illustration AIR CLEANER/ PE3875		1
15	6703736	CAP			1
16	7165619	HOSE, AIR INTAKE			1
17	7173947	CONNECTOR			1
18	7173948	HOSE, DRAIN OIL ENG			1
19	7173949	CONNECTOR			1
20	7191067	BRACKET, AIR CLEANER			1
21	7202857	O-RING			1
22	7203416	HOSE, AIR FORMED			1
23		HOSE, AIR	NAP - 196 mm (7.72") long - Order Ref. 29		1
24	27CM1025	BOLT			2
25	29CM816	SCREW			2
26	42HC250	CLAMP			2
27	42HL250	CLAMP			1
28	5HM43	CLAMP			2
29	6557720	HOSE	bulk - sold per foot		x
30	6696963	ENG, KUBOTA V1505	See Illustration ENGINE & GASKET KITS/ NA6288		1
31		HOUSING	See Illustration ENGINE & ATTACHING PARTS/ NA6281		1

Page 195 - OSS# 2091664 - All rights reserved by Bobcat Company - 08/27/2012 - 11:42:23 - Produced by Ken Cook Co. with mediaioff

ENGINE & ATTACHING PARTS
(Engine Mounts)

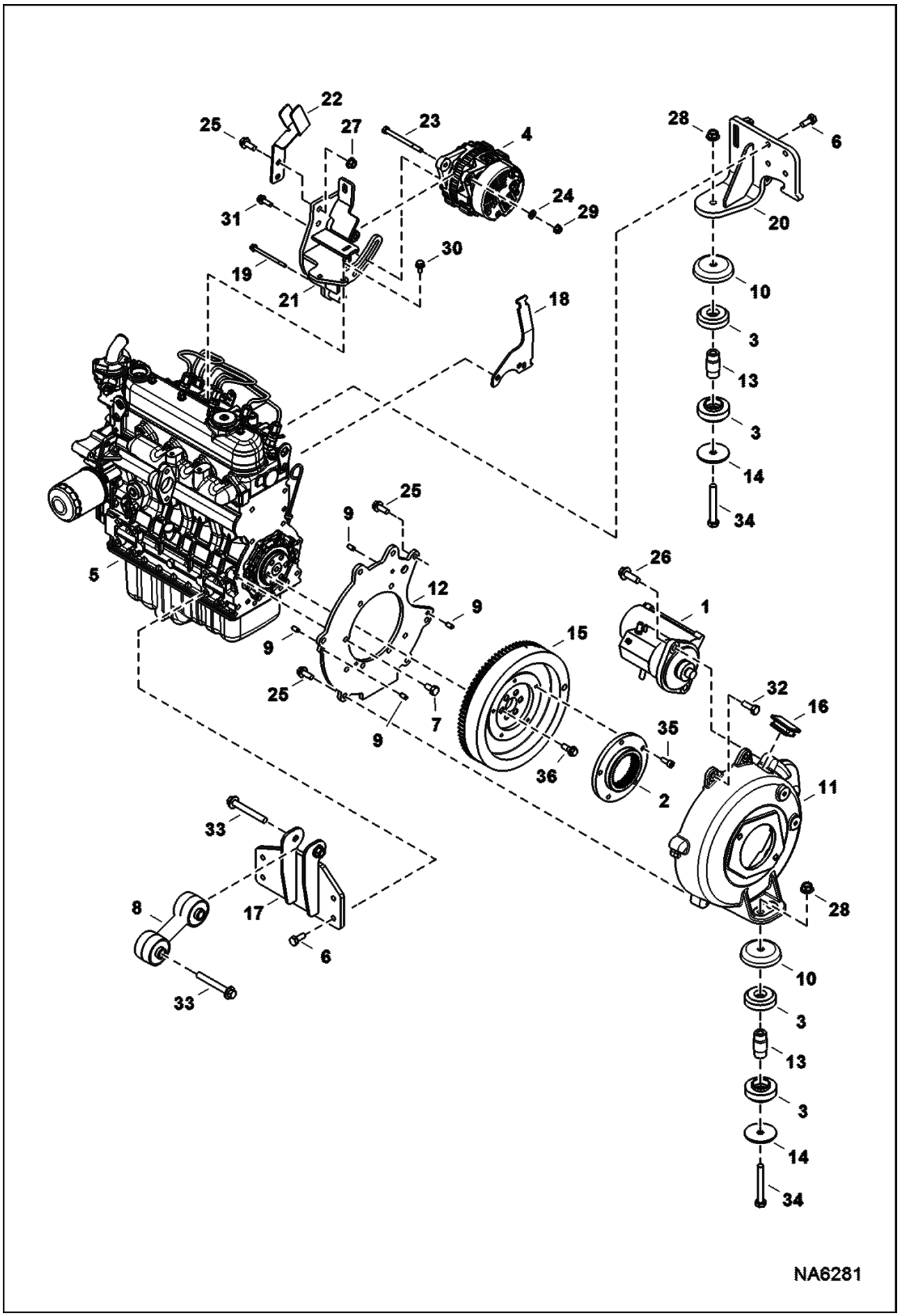

Page 196 - OSS# 2091664 - All rights reserved by Bobcat Company - 08/27/2012 - 11:42:23 - Produced by Ken Cook Co. with mediaioff

ENGINE & ATTACHING PARTS (Cont'd)
(Engine Mounts)

Ref No	Part Number	Description	Remarks	Serial Number	Qty
1	6670727	STARTER	See Illustration STARTER/ D2437		1
2	6670757	COUPLER			1
3	6688994	MOUNT			4
4	6690593	ALTERNATOR 90A	See Illustration ALTERNATOR/ NA2234		1
5	6696963	ENG, KUBOTA V1505	See Illustration ENGINE & GASKET KITS/ NA6288		1
6	6719825	BOLT			8
7	6733378	SCREW			7
8	7021924	MOUNT, ENG			1
9	7101341	PIN			4
10	7116851	CUP			2
11	7159478	HOUSING			1
12	7159480	PLATE, FLYWHEEL			1
13	7165661	SPACER, TUBE			2
14	7165662	WASHER			2
15	7172639	FLYWHEEL, ENG ASSY			1
15	6800424	RING-GEAR			1
16	7193119	PLUG			1
17	7199394	MOUNT, ENG			1
18	7201737	BRACKET, HARNESS			1
19	7201913	BOLT			1
20	7202455	MOUNT, ENG			1
21	7207739	MOUNT, ALT			1
22	7207900	SUPPORT, BRACKET			1
23	1CM8100	SCREW			1
24	25E15	WASHER			1
25	29CM1025	BOLT			7
26	29CM1235	BOLT			2
27	51DM10	NUT			2
28	51DM12	NUT			2
29	51DM8	NUT			1
30	59CM816	BOLT			2
31	59CM825	Screw Hex FLNG W/T8.8			1
32	5CM1030	BOLT			2
33	60CM1290	BOLT			2
34	7CM1290	SCREW			2
35	3GM820	SCREW			5
36	6661636	BOLT			6

Page 197 - OSS# 2091664 - All rights reserved by Bobcat Company - 08/27/2012 - 11:42:23 - Produced by Ken Cook Co. with mediaioff

ENGINE & ATTACHING PARTS
(Fuel System)

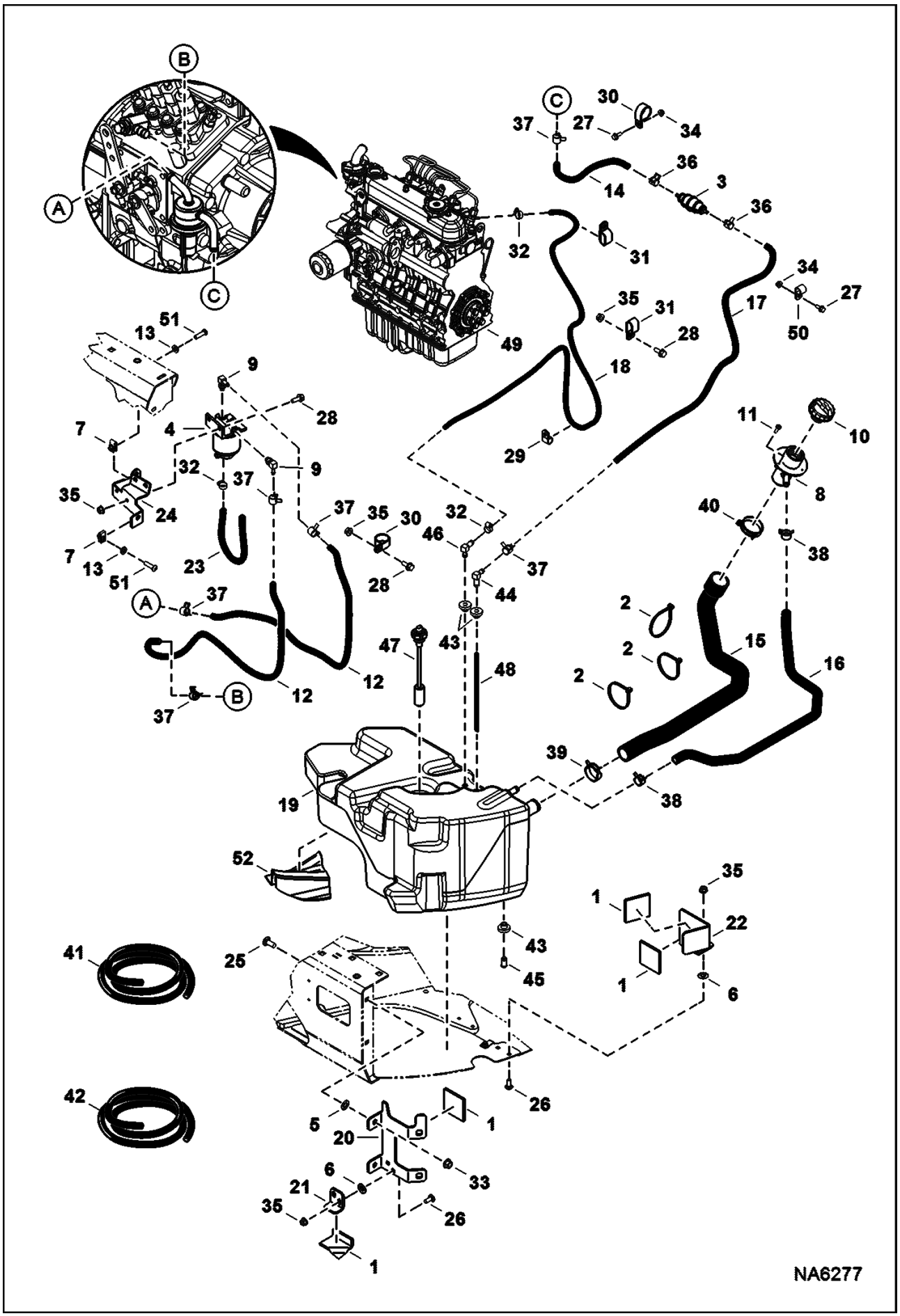

Page 198 - OSS# 2091664 - All rights reserved by Bobcat Company - 08/27/2012 - 11:42:23 - Produced by Ken Cook Co. with mediaioff

Ref No	Part Number	Description	Remarks	Serial Number	Qty
1	6578278	PAD			4
2	6624289	STRAP, TIE			4
3	6657734	PUMP, PRIMER HAND	124 mm (4.88") long		1
4	6667353	FILTER ASSY			1
4	6667352	FILTER, FUEL W/SEPERATOR 12			1
5	6674264	RETAINER NUT			2
6	6675859	RETAINER			4
7	6676169	NUT			3
8	6701449	FILLER TUBE			1
9	6715183	ELBOW			2
10	7019288	CAP, FUEL LOCKING	green		1
10	7121223	CAP. DIESEL LOCKING	black		1
11	7106279	BOLT			3
12		HOSE, FUEL	NAP - 980 mm (38.6") long - Order Ref. 42		1
13	1EM80	WASHER			3
14		HOSE, FUEL	NAP - 390 mm (15.4") long - Order Ref. 42		1
15	7187708	HOSE, FUEL			1
16	7187709	HOSE, FUEL			1
17		HOSE, FUEL	NAP - 1080 mm (42.5") long - Order Ref. 42		1
18		HOSE, FUEL	NAP - 1710 mm (67.3") long - Order Ref. 41		1
19	7187712	TANK, FUEL			1
20	7187744	HOLDER			1
21	7187757	BRACKET, TANK FUEL			1
22	7192117	BRACKET, TANK FUEL			1
23		HOSE, FUEL	NAP - 380 mm (15") long - Order Ref. 42		1
24	7198075	BRACKET, FILTER			1
25	28CM1025	BOLT			2
26	28CM820	BOLT			4
27	29CM616	BOLT			1
28	29CM820	SCREW			4
29	30H30	CLAMP			1
30	30H57	CLAMP			3
31	31H31	CLIP			2
32	42HS04	COLLAR			3
33	43DM10	NUT			2
34	43DM6	NUT			2
35	43DM8	NUT			8
36	5HM13	CLAMP			2
37	5HM14	CLAMP			6
38	5HM23	CLAMP			2
39	5HM43	CLAMP			1
40	5HM55	CLAMP			1
41	6578169	HOSE	bulk - sold per foot - 0.19" ID		x
42	6577822	HOSE	bulk - sold per foot		x
43	6553411	BUSHING			3
44	6553412	ELBOW			1
45	6599645	PLUG, STEEL			1
46	6630041	ELBOW			1
47	7179838	SENSOR FUEL			1

Page 199 - OSS# 2091664 - All rights reserved by Bobcat Company - 08/27/2012 - 11:42:23 - Produced by Ken Cook Co. with mediaioff

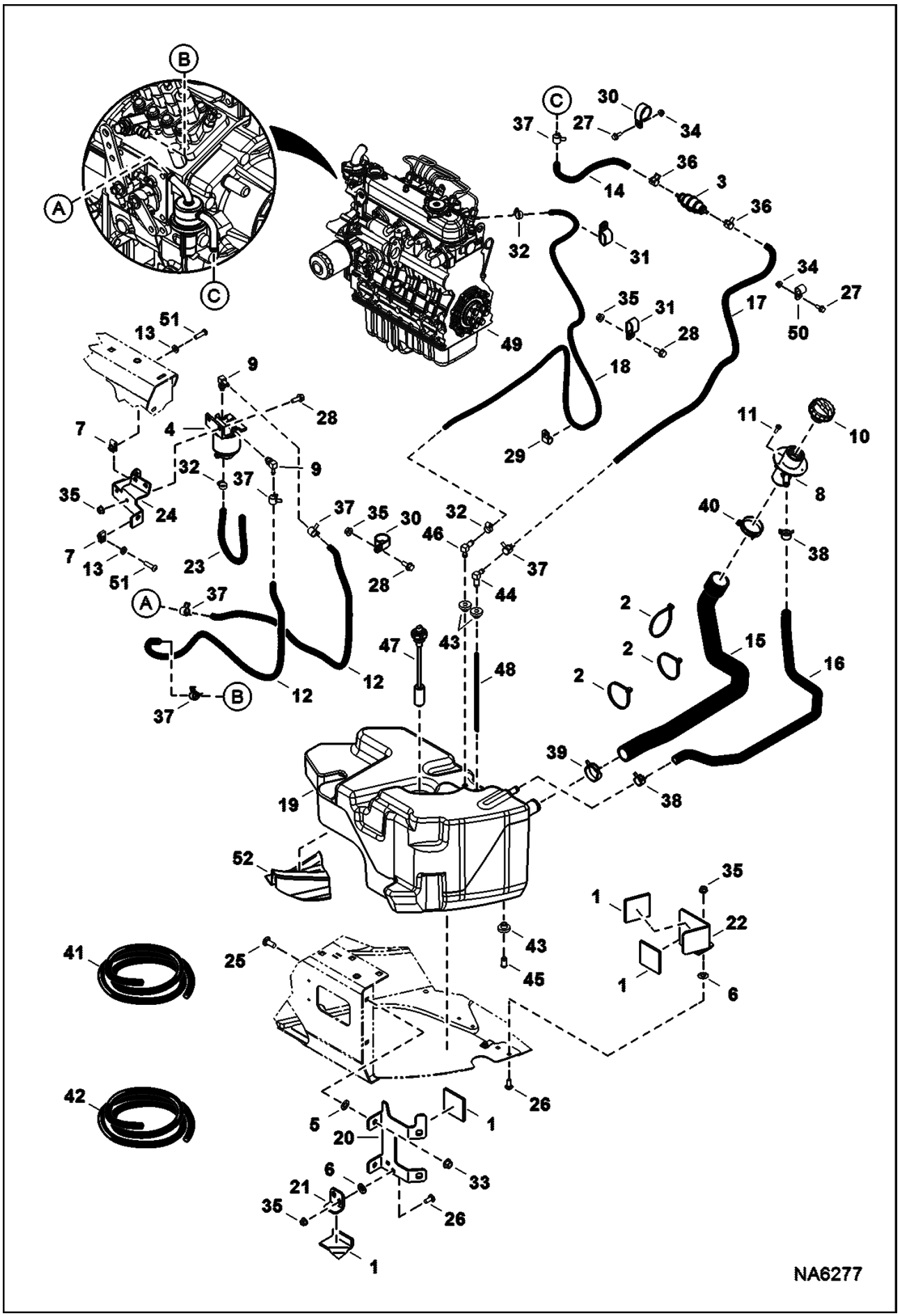

Page 200 - OSS# 2091664 - All rights reserved by Bobcat Company - 08/27/2012 - 11:42:23 - Produced by Ken Cook Co. with mediaioff

Ref No	Part Number	Description	Remarks	Serial Number	Qty
48	7187714	TUBE, FUEL LINE ASSY			1
49	6696963	ENG, KUBOTA V1505	See Illustration ENGINE & GASKET KITS/ NA6288		1
50	30H34	CLAMP			1
51	27CM830	BOLT			3
52	7187758	BUMPER, RUBBER			1

Page 201 - OSS# 2091664 - All rights reserved by Bobcat Company - 08/27/2012 - 11:42:23 - Produced by Ken Cook Co. with mediaioff

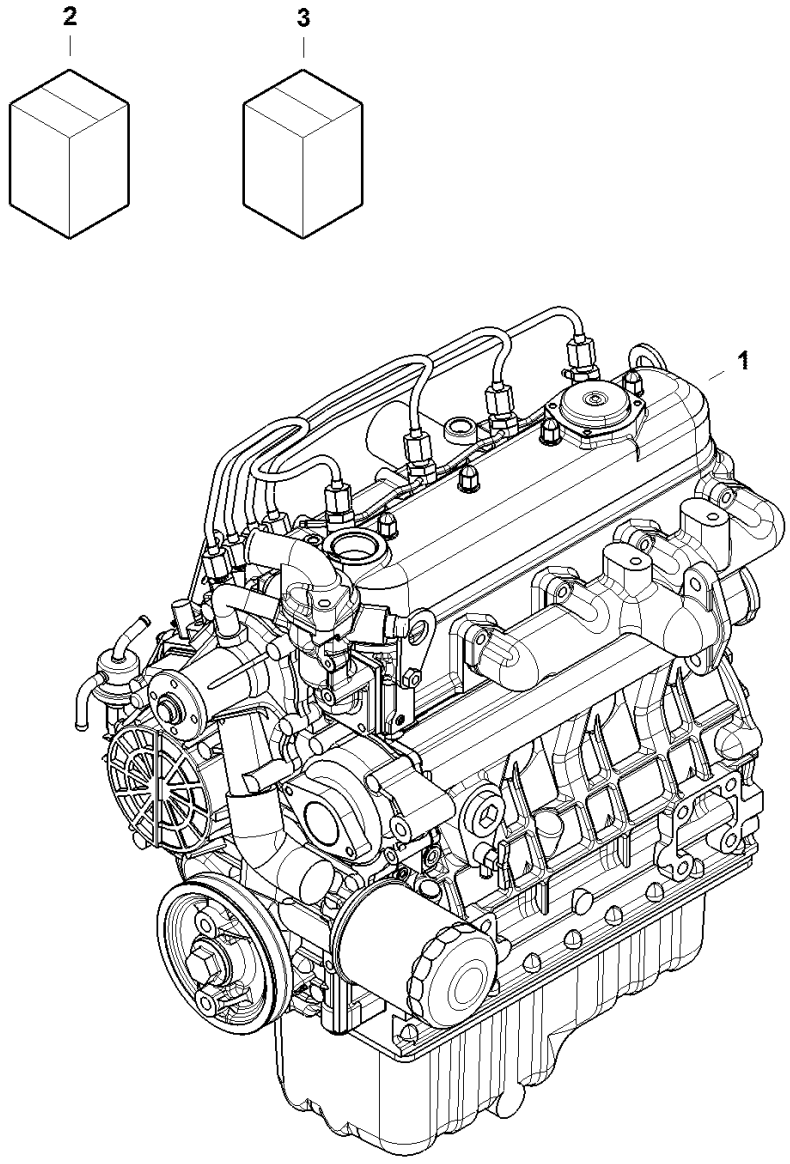

Page 202 - OSS# 2091664 - All rights reserved by Bobcat Company - 08/27/2012 - 11:42:23 - Produced by Ken Cook Co. with mediaioff

Ref No	Part Number	Description	Remarks	Serial Number	Qty
1	6696963	ENG, KUBOTA V1505			1
2	6698619	KIT, GASKET ENG UPPER	See Illustration ENGINE & UPPER GASKET KIT/ NA6298		1
3	6698637	KIT, GASKET ENG LOWER	See Illustration ENGINE & LOWER GASKET KIT/ NA6299		1

Page 203 - OSS# 2091664 - All rights reserved by Bobcat Company - 08/27/2012 - 11:42:23 - Produced by Ken Cook Co. with mediaioff

ENGINE & UPPER GASKET KIT

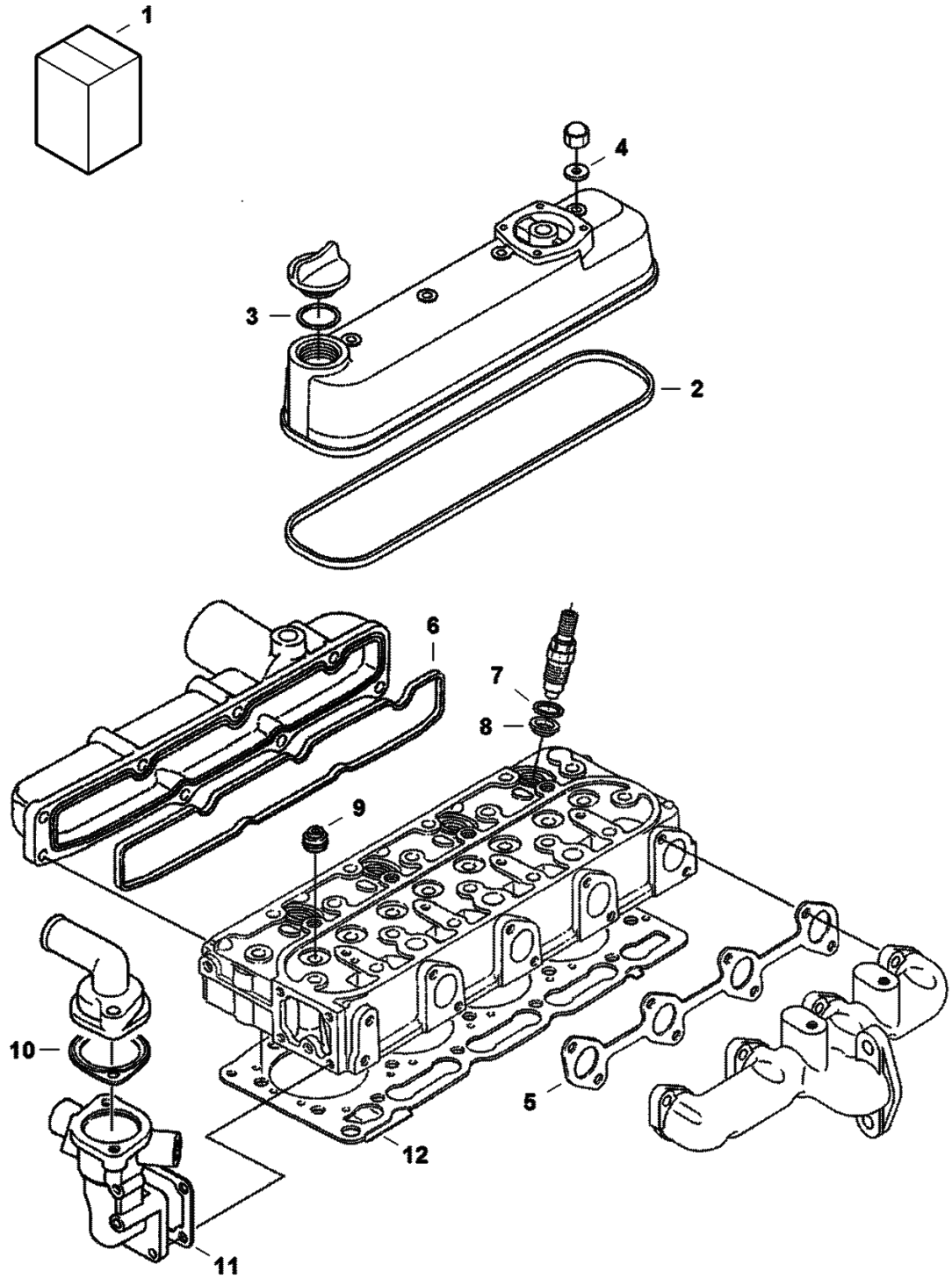

Page 204 - OSS# 2091664 - All rights reserved by Bobcat Company - 08/27/2012 - 11:42:23 - Produced by Ken Cook Co. with mediaioff

Ref No	Part Number	Description	Remarks	Serial Number	Qty
1	6698619	KIT, GASKET ENG UPPER	Ref. 3-14		1
2	6657514	GASKET	See Illustration ROCKER ARM COVER/ B26330 - valve cover		1
3	6683009	O-RING	See Illustration ROCKER ARM COVER/ B26330 - oil filler cap		1
4	6599116	GASKET	See Illustration ROCKER ARM COVER/ B26330 - valve cover nut		4
5	6657494	GASKET	See Illustration MANIFOLDS/ NA6268 - exhaust manifold		1
6	6657493	GASKET	See Illustration MANIFOLDS/ NA6268 - intake manifold		1
7	6655218	GASKET	See Illustration NOZZLE HOLDER & GLOW PLUG/ B26341 - injector nozzle		4
8	6655872	HEAT SEAL	See Illustration NOZZLE HOLDER & GLOW PLUG/ B26341 - injector nozzle		4
9	6672436	SEAL	See Illustration VALVE & ROCKER ARM/ B26351 - valve stem		8
10	6684863	GASKET	See Illustration WATER FLANGE & THERMOSTAT/ B26348 - thermostat		1
11	6657583	GASKET	See Illustration WATER FLANGE & THERMOSTAT/ B26348 - thermostat housing		1
12	6691297	GASKET	See Illustration CYLINDER HEAD/ NA6262 - cylinder head		1

Page 205 - OSS# 2091664 - All rights reserved by Bobcat Company - 08/27/2012 - 11:42:23 - Produced by Ken Cook Co. with mediaioff

ENGINE & LOWER GASKET KIT

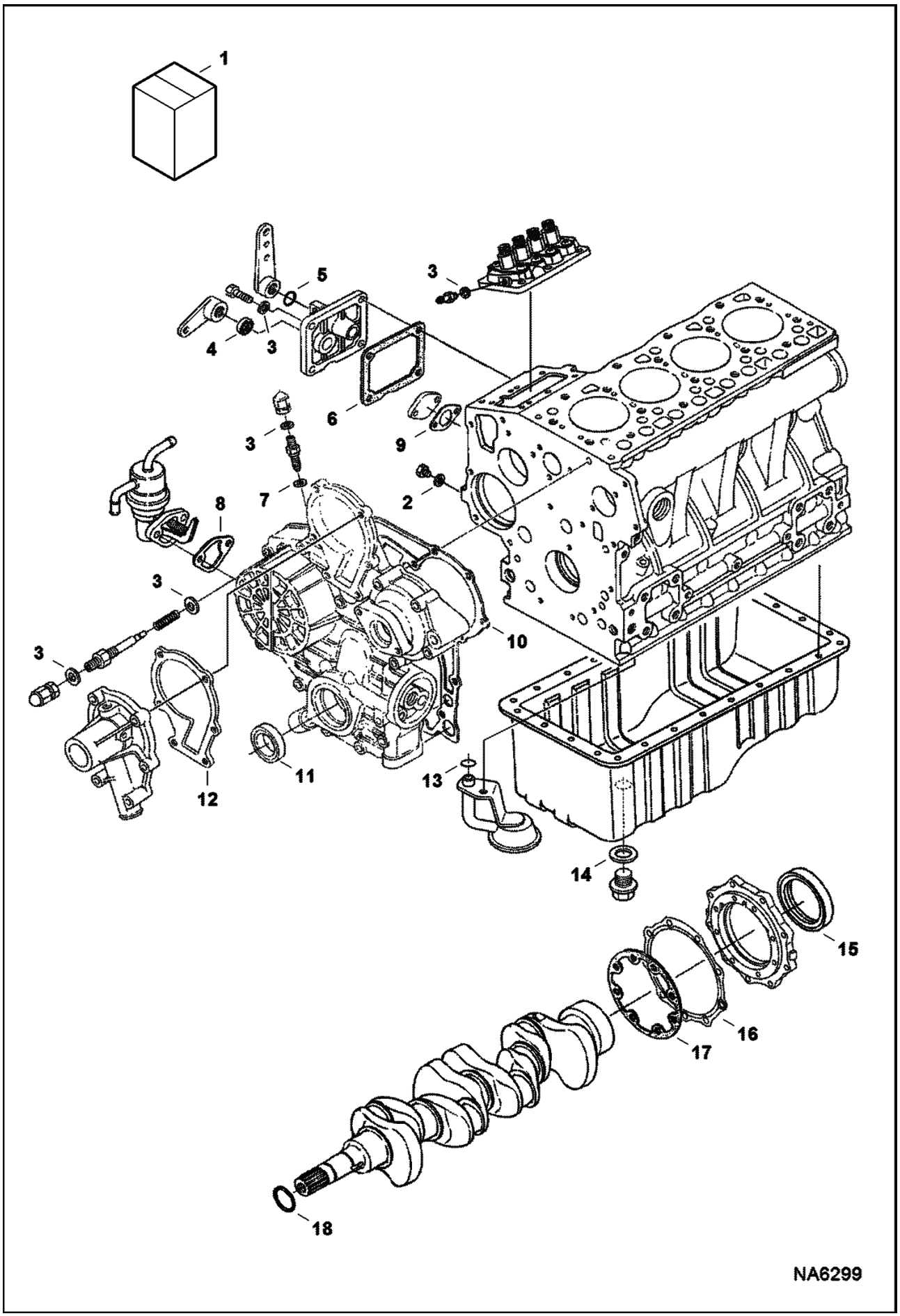

Page 206 - OSS# 2091664 - All rights reserved by Bobcat Company - 08/27/2012 - 11:42:23 - Produced by Ken Cook Co. with mediaioff

Ref No	Part Number	Description	Remarks	Serial Number	Qty
1	6698637	KIT, GASKET ENG LOWER			1
2	3974095	MET-GASK	See Illustration CRANKCASE/ NA6260		1
3	3974972	GASKET	See Illustration IDLE APPARATUS & STOP SOLENOID/ B26337 See Illustration SPEED CONTROL PLATE/ NA6267 See Illustration NOZZLE HOLDER & GLOW PLUG/ B26341		5
4	6598703	SEAL	See Illustration SPEED CONTROL PLATE/ NA6267 - speed control shaft		1
5	6680277	O-RING	See Illustration SPEED CONTROL PLATE/ NA6267 - speed control shaft		1
6	6657578	GASKET	See Illustration SPEED CONTROL PLATE/ NA6267 - speed control plate		1
7	6687687	GASKET	See Illustration IDLE APPARATUS & STOP SOLENOID/ B26337 - idle assy		1
8	7010133	GASKET, PUMP FUEL	See Illustration INJECTION PUMP & FUEL PUMP/ NA6266		1
9	6657574	GASKET	See Illustration GOVERNOR/ B26343 - governor plate		1
10	6657479	GASKET	See Illustration GEARCASE/ NA6263 - gear case		1
11	6657603	SEAL	See Illustration GEARCASE/ NA6263 - front oil		1
12	6657610	GASKET	See Illustration WATER PUMP/ NA6111 - water pump		1
13	6680284	O-RING	See Illustration OIL PAN/ NA6261 - oil screen		1
14	6691295	GASKET	See Illustration OIL PAN/ NA6261 - drain plug		1
15	6657481	SEAL	See Illustration PISTON & CRANKSHAFT/ B26335 - rear crankshaft		1
16	6698617	GASKET, COVER CASE	See Illustration PISTON & CRANKSHAFT/ B26335		1
17	6657480	GASKET	See Illustration PISTON & CRANKSHAFT/ B26335 - bearing case		1
18	6680268	O-RING	See Illustration PISTON & CRANKSHAFT/ B26335 - crankshaft		1

Page 207 - OSS# 2091664 - All rights reserved by Bobcat Company - 08/27/2012 - 11:42:23 - Produced by Ken Cook Co. with mediaioff

CRANKCASE

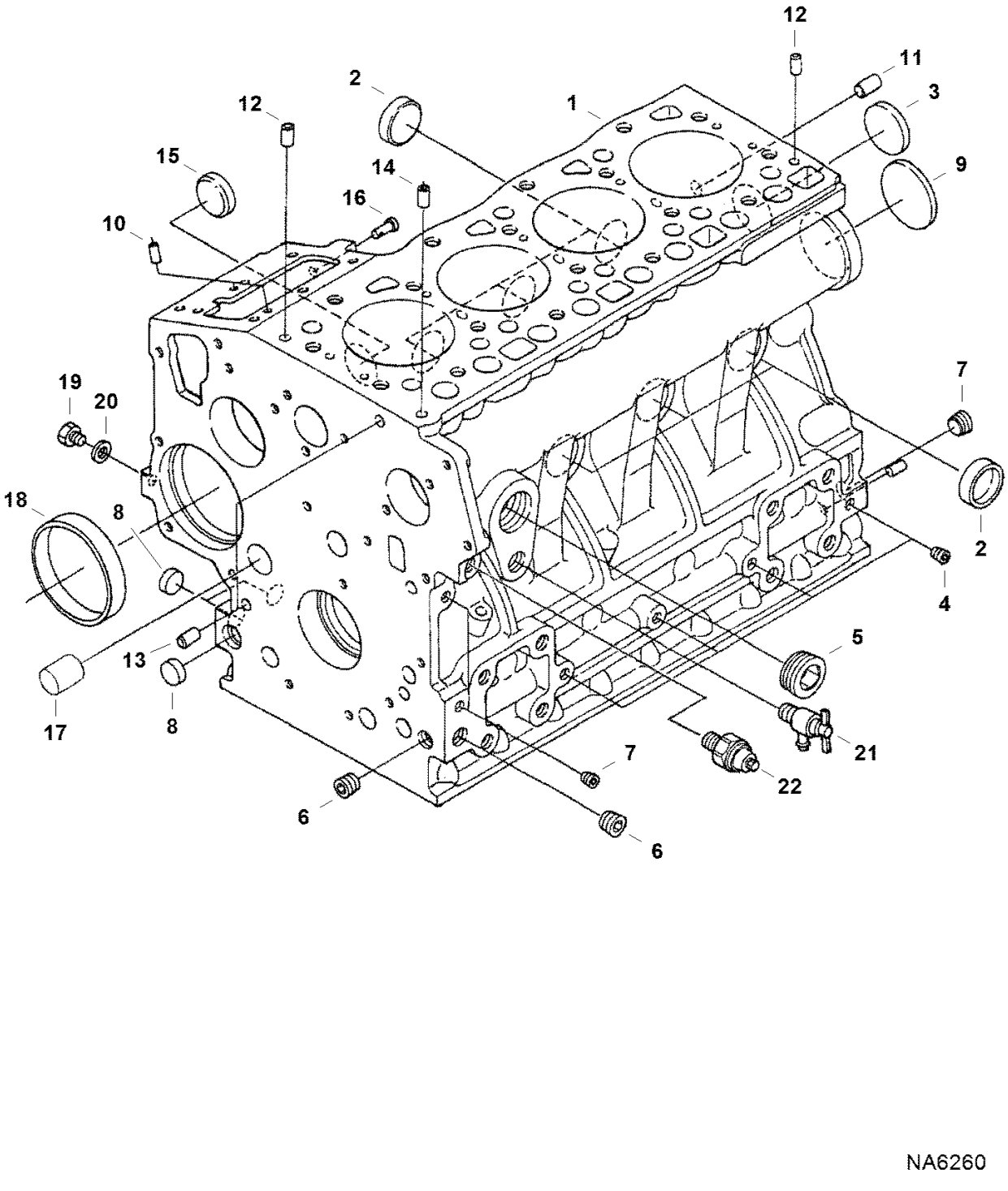

Page 208 - OSS# 2091664 - All rights reserved by Bobcat Company - 08/27/2012 - 11:42:23 - Produced by Ken Cook Co. with mediaioff

Ref No	Part Number	Description	Remarks	Serial Number	Qty
1	6691292	BLOCK, ENG	W/Ref. 2-20		1
2	6657431	CAP			6
3	3974433	PLUG			1
4	6598116	PLUG			4
5	6672354	PLUG			1
6	6657600	PLUG			3
7	6652574	PLUG			2
8	6667418	PLUG			3
9	6657663	PLUG			1
10	6657423	PIN			2
11	21JM814	PIN	dowel		2
12	6657424	PIN			2
13	3974039	PIN			2
14	6657548	PIN			1
15	6657601	PLUG			1
16	6683107	PIN, START SPRING			1
17	6657675	PLUG			1
18	6657647	BUSHING			1
19	7022679	PLUG			1
20	3974095	MET-GASK			1
21	7022680	FITTING, DRAIN			1
22	6969775	SWITCH, OIL PRESSURE			1

Page 209 - OSS# 2091664 - All rights reserved by Bobcat Company - 08/27/2012 - 11:42:23 - Produced by Ken Cook Co. with mediaioff

PISTON & CRANKSHAFT

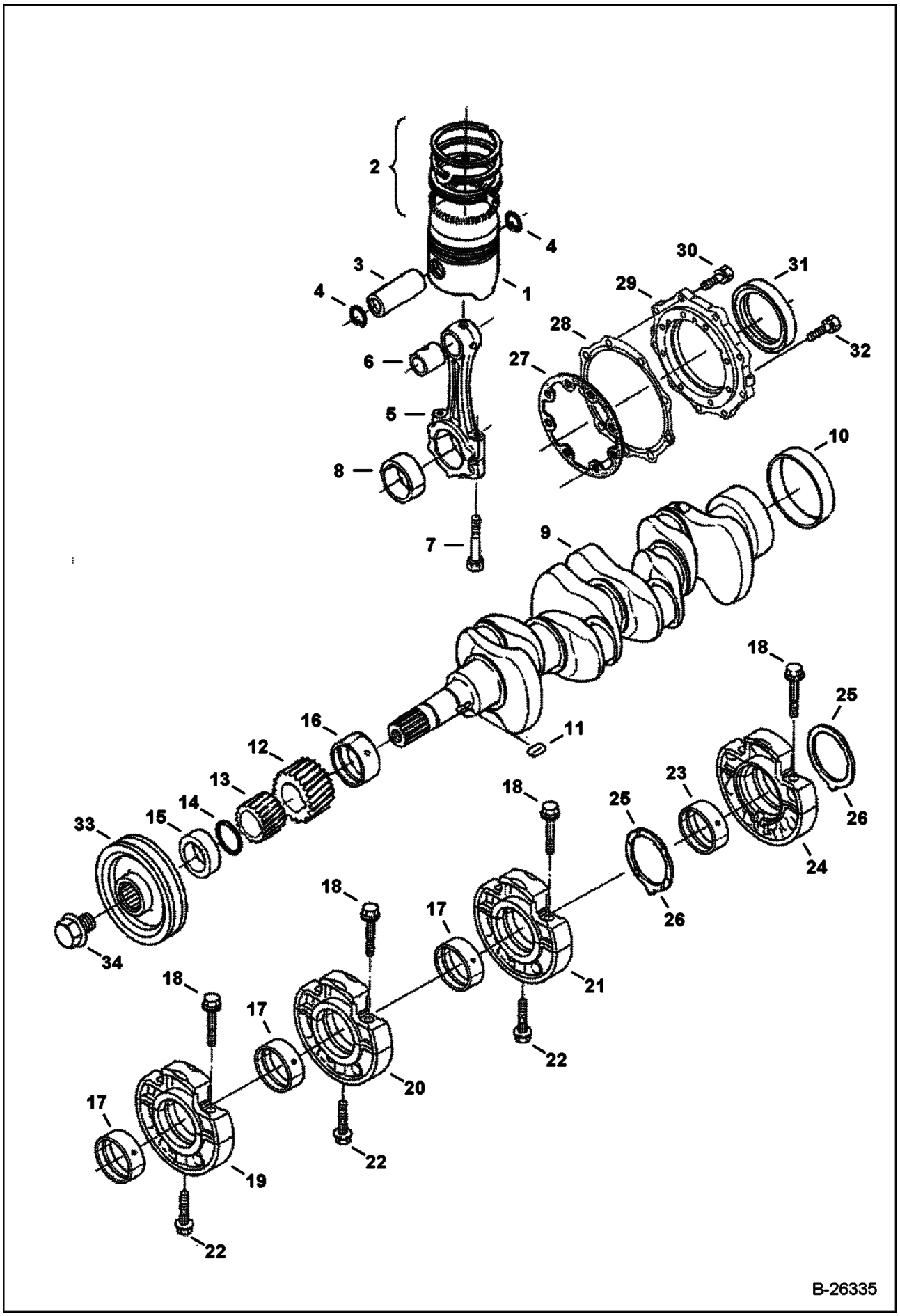

Page 210 - OSS# 2091664 - All rights reserved by Bobcat Company - 08/27/2012 - 11:42:23 - Produced by Ken Cook Co. with mediaioff

Ref No	Part Number	Description	Remarks	Serial Number	Qty
1	6698613	PISTON, ENG	std (16060-2111)		4
1	6689940	PISTON	+0,50 mm (16060-2111 OS50)		4
2	6680494	RING ASSY	std		4
2	6680516	RINGS PISTON	+0,50 mm		4
3	6657521	PIN			4
4	6657522	SNAP RING			8
5	6680495	ROD ASSY	W/Ref. 6-8		4
6	6698624	BUSHING, PIN PISTON			4
7	6657526	BOLT			8
8	6680496	ROD BEARING	std set		8
8	7022770	BEARING, ROD	-0,20 mm		4
8	7022771	BEARING, ROD	-0,40 mm		4
9	7023139	CRANKSHAFT, ENG	assy - W/ Ref 10-15		1
10	6657531	SLEEVE			1
11	6657661	KEY			1
12	6657541	GEAR			1
13	6657552	GEAR			1
14	6680268	O-RING			1
15	6657530	COLLAR			1
16	6680497	BEARING, ENG MAIN	std		1
16	6680519	BEARING, ENG MAIN	-0,20 mm		1
16	7023134	BEARING, ENG MAIN	-0,40 mm		1
17	6680498	BEARING, ENG MAIN	std		3
17	7023135	BEARING, ENG MAIN	-0,20 mm		3
17	7023136	BEARING, ENG MAIN	-0,40 mm		3
18	6657482	BOLT			8
19	6691304	CASE, BEARING	W/Ref. 17 & 18		1
20	6691305	CASE, BEARING	W/Ref. 17 & 18		1
21	7023133	HOUSING, BEARING	W/Ref. 17 & 18		1
22	6657483	BOLT			3
23	6657534	BEARING	std		1
23	6680270	BEARING	-0,20 mm		1
23	6680271	BEARING	-0,40 mm		1
24	6691302	BEARING CASE	W/Ref. 18 & 23		1
25	3974945	WASHER, THRUST	std		2
25	7022767	WASHER, THRUST	+0,20 mm		2
25	7022768	WASHER, THRUST	+0,40 mm		2
26	7023132	WASHER, THRUST	std		2
26	7023137	WASHER, THRUST	+0,20 mm		2
26	7023138	WASHER, THRUST	+0,40 mm		2
27	6657480	GASKET	bearing case		1
28	6698617	GASKET, COVER			1

Page 211 - OSS# 2091664 - All rights reserved by Bobcat Company - 08/27/2012 - 11:42:23 - Produced by Ken Cook Co. with mediaioff

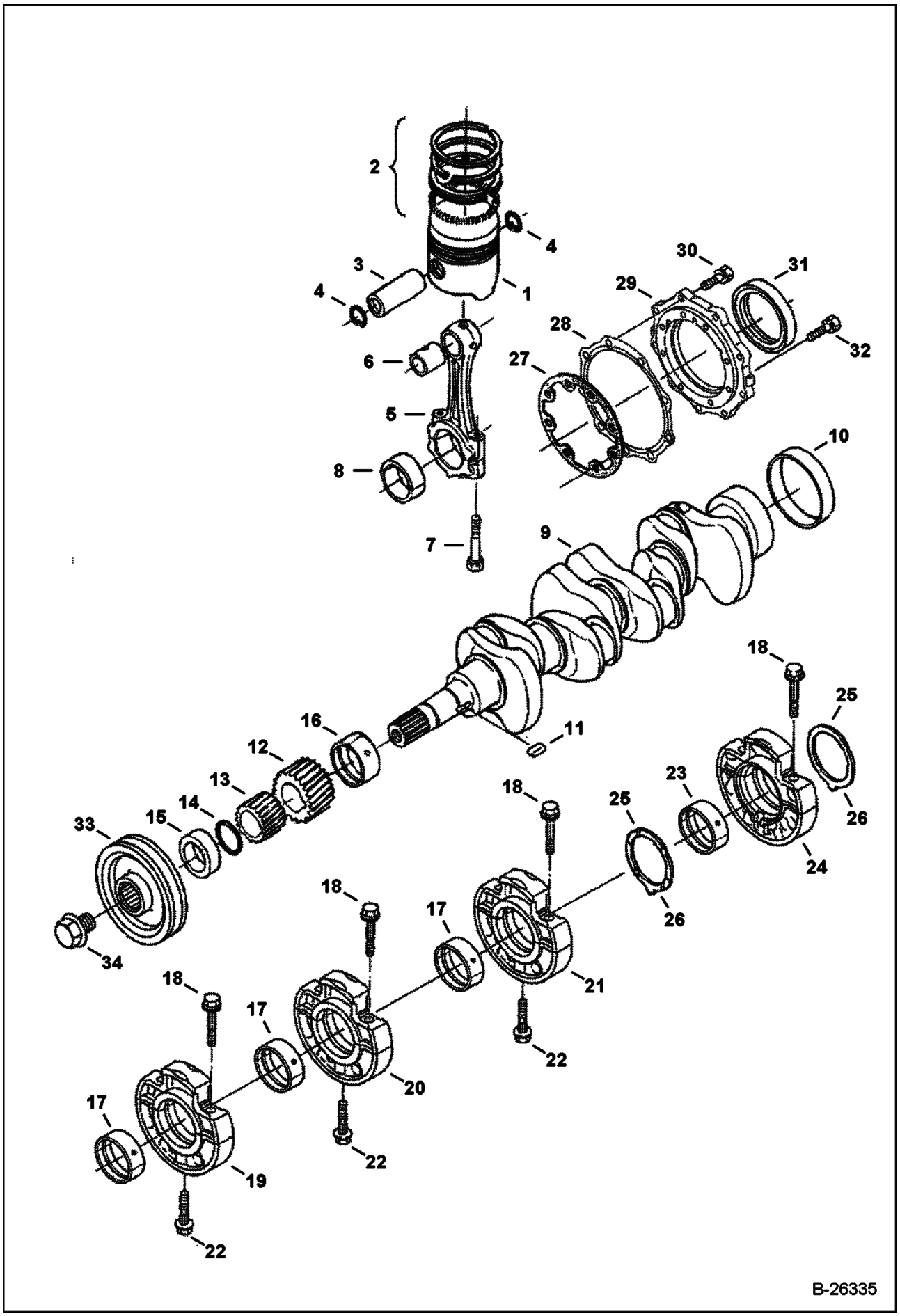

Page 212 - OSS# 2091664 - All rights reserved by Bobcat Company - 08/27/2012 - 11:42:23 - Produced by Ken Cook Co. with mediaioff

Ref No	Part Number	Description	Remarks	Serial Number	Qty
		CASE			
29	6657484	COVER	bearing case		1
30	4CM620	BOLT			9
31	6657481	SEAL			1
32	6969895	BOLT			8
33	7023140	PULLEY, DRIVE FAN	drive		1
34	6680540	BOLT			1

Page 213 - OSS# 2091664 - All rights reserved by Bobcat Company - 08/27/2012 - 11:42:23 - Produced by Ken Cook Co. with mediaioff

CAMSHAFT

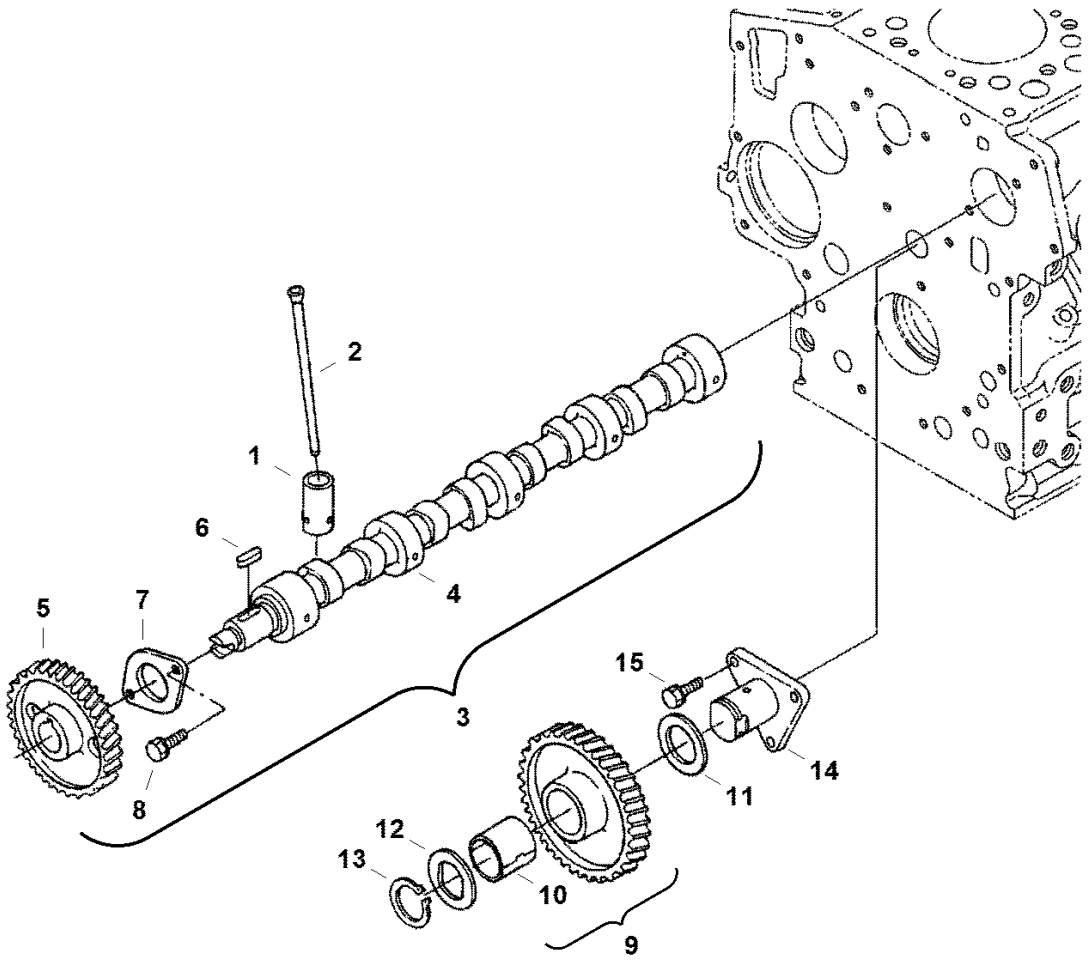

Page 214 - OSS# 2091664 - All rights reserved by Bobcat Company - 08/27/2012 - 11:42:23 - Produced by Ken Cook Co. with mediaioff

Ref No	Part Number	Description	Remarks	Serial Number	Qty
1	6691307	TAPPET			8
2	7023131	ROD, PUSH			8
3	6691308	CAMSHAFT	W/Ref. 4-7		1
4		SHAFT	NSS - Order Ref. 3		1
5	6653841	GEAR			1
6	6653842	KEY			1
7	6657517	STOPPER			1
8	4CM616	BOLT			2
9	6657632	GEAR	assy - W/Ref. 10		1
10	6680618	BUSHING			1
11	6657544	COLLAR			1
12	6657545	COLLAR			1
13	6657543	SNAP RING			1
14	6657542	SHAFT			1
15	4CM616	BOLT			3

Page 215 - OSS# 2091664 - All rights reserved by Bobcat Company - 08/27/2012 - 11:42:23 - Produced by Ken Cook Co. with mediaioff

OIL PAN

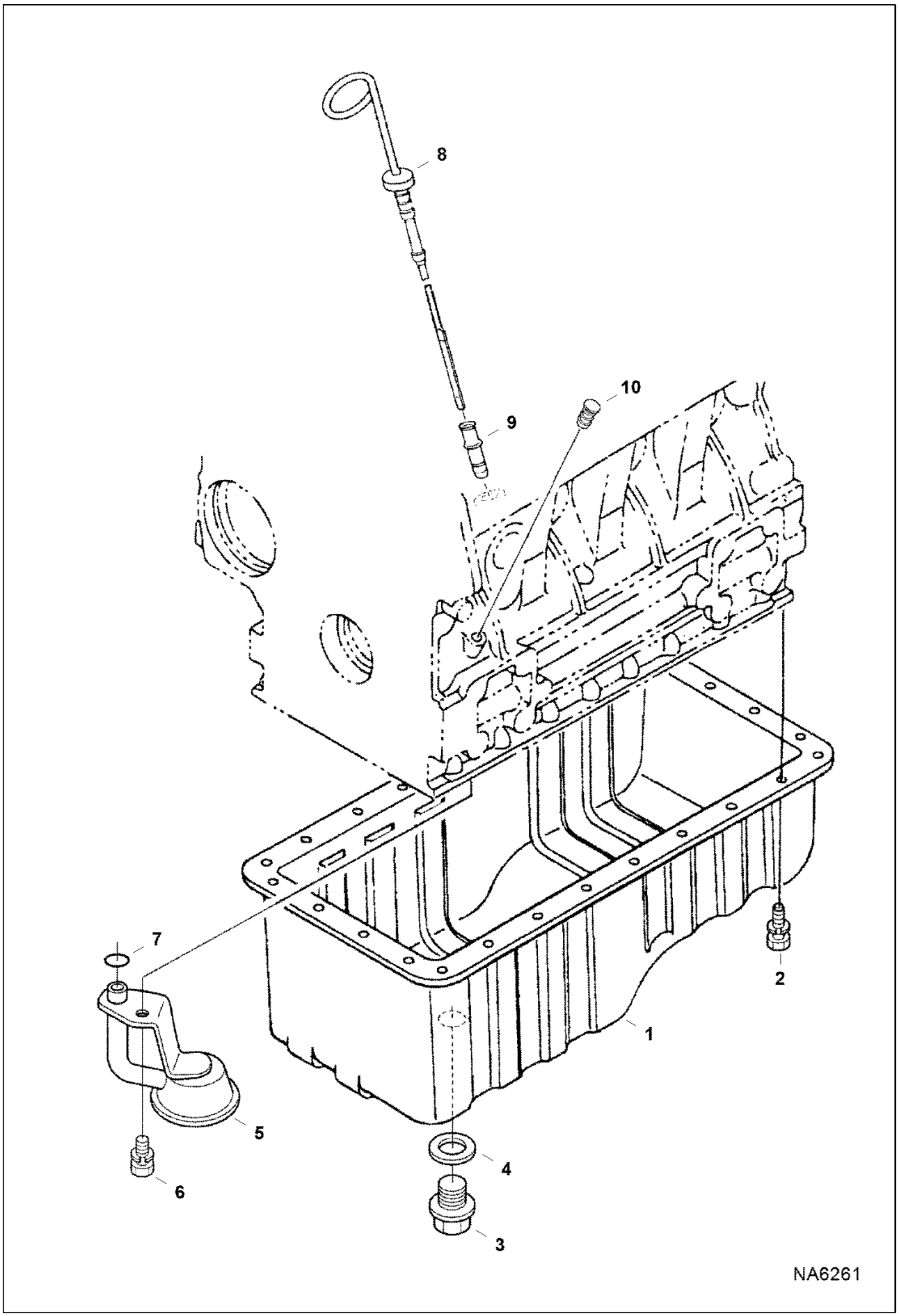

Page 216 - OSS# 2091664 - All rights reserved by Bobcat Company - 08/27/2012 - 11:42:23 - Produced by Ken Cook Co. with mediaIoff

Ref No	Part Number	Description	Remarks	Serial Number	Qty
1	6691293	OIL PAN ASSY	W/Ref. 3 & 4		1
2	4CM614	BOLT			26
3	6691294	PLUG			1
4	6691295	GASKET			1
5	6698636	SCREEN, OIL ENG			1
6	6667421	BOLT			1
7	6680284	O-RING			1
8	7022683	GAUGE, OIL			1
9	6677203	TUBE,DIPSTICK			1
10	6969804	PLUG,OIL GAUGE			1

Page 217 - OSS# 2091664 - All rights reserved by Bobcat Company - 08/27/2012 - 11:42:23 - Produced by Ken Cook Co. with mediaioff

GEARCASE

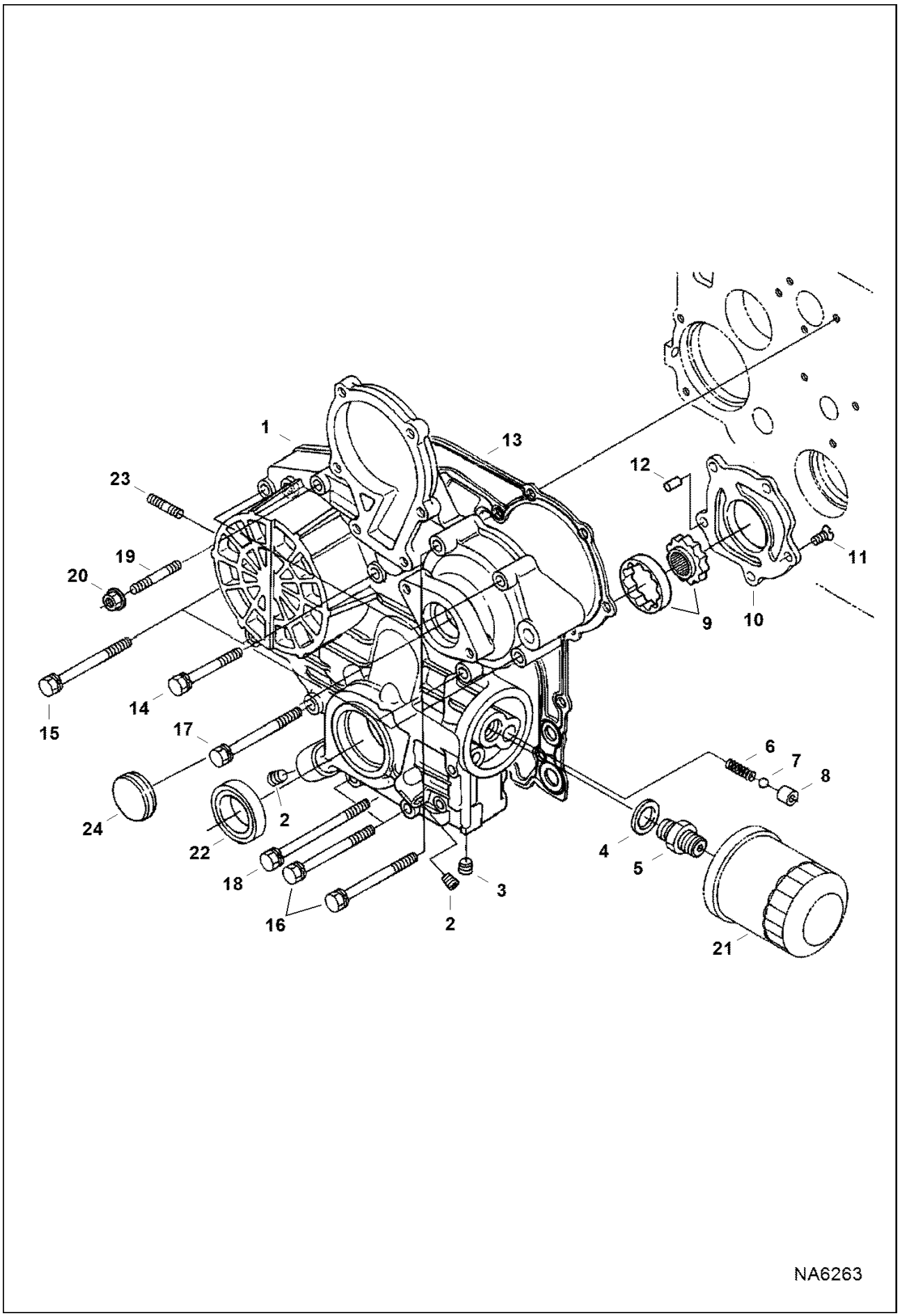

Page 218 - OSS# 2091664 - All rights reserved by Bobcat Company - 08/27/2012 - 11:42:23 - Produced by Ken Cook Co. with mediaioff

Ref No	Part Number	Description	Remarks	Serial Number	Qty
1	6691298	CASE	W/Ref. 2-12		1
2	6672360	PLUG			2
3	6652574	PLUG			1
4	15EM180	WASHER			1
5	6652597	ADAPTER			1
6	6657554	SPRING			1
7	6657426	BALL			1
8	6657553	SEAT			1
9	6657549	ROTOR ASSY			1
10	6686173	COVER			1
11	6680262	BOLT			5
12	6686174	PIN			2
13	6657479	GASKET			1
14	6657412	BOLT			3
15	6670770	BOLT			4
16	6657413	BOLT			4
17	6652594	BOLT			1
18	6657589	BOLT			1
19	6680263	STUD			1
20	6670533	NUT			1
21	6657635	OIL FILTER			1
22	6657603	SEAL			1
23	6680264	STUD			2
24	6681662	COVER			1

Page 219 - OSS# 2091664 - All rights reserved by Bobcat Company - 08/27/2012 - 11:42:23 - Produced by Ken Cook Co. with mediaioff

WATER PUMP

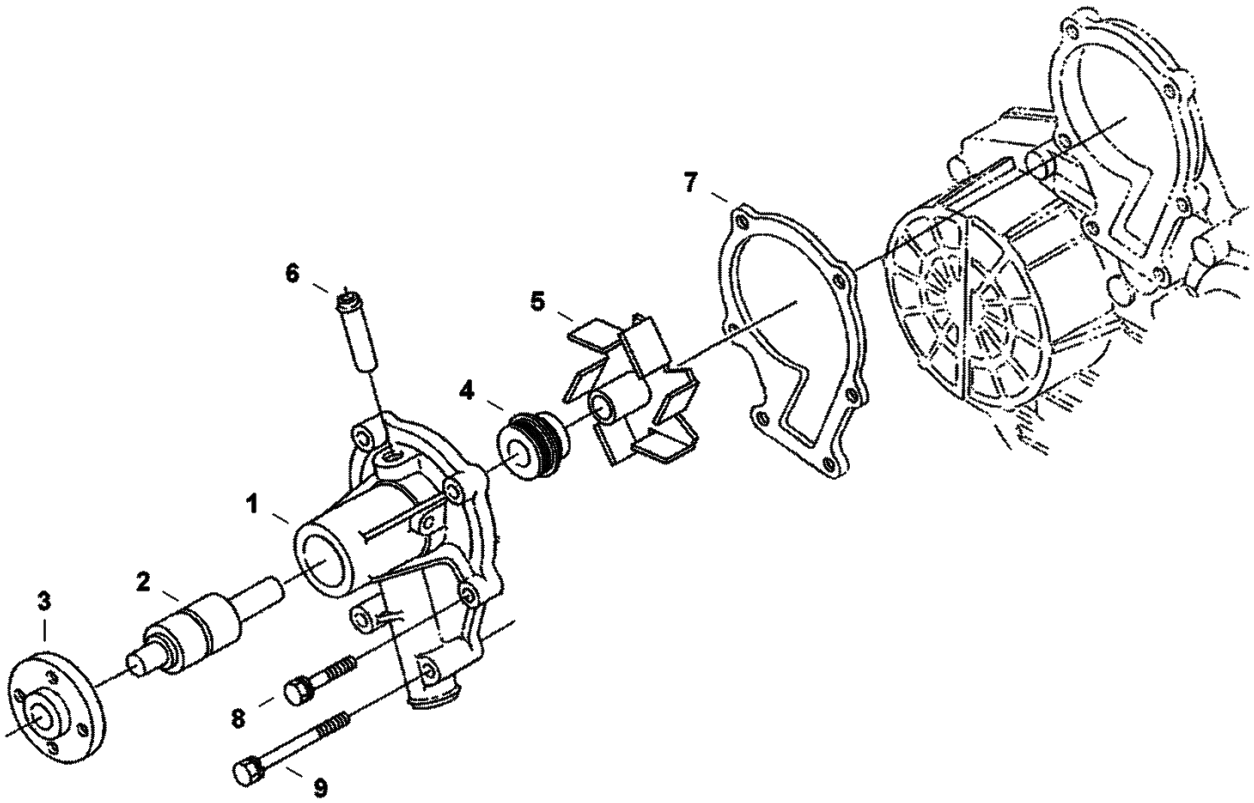

NA6111

Page 220 - OSS# 2091664 - All rights reserved by Bobcat Company - 08/27/2012 - 11:42:23 - Produced by Ken Cook Co. with mediaioff

Ref No	Part Number	Description	Remarks	Serial Number	Qty
1	6680278	WATER PUMP	W/Ref. 2 - 6		1
2	6680279	FLANGE			1
3		BEARING	NSS - Order Ref. 1		1
4	6680280	SEAL			1
5	6657611	IMPELLER			1
6	6652745	PIPE			1
7	6657610	GASKET			1
8	4CM630	BOLT			4
9	6686034	BOLT			2

Page 221 - OSS# 2091664 - All rights reserved by Bobcat Company - 08/27/2012 - 11:42:23 - Produced by Ken Cook Co. with mediaioff

WATER FLANGE & THERMOSTAT

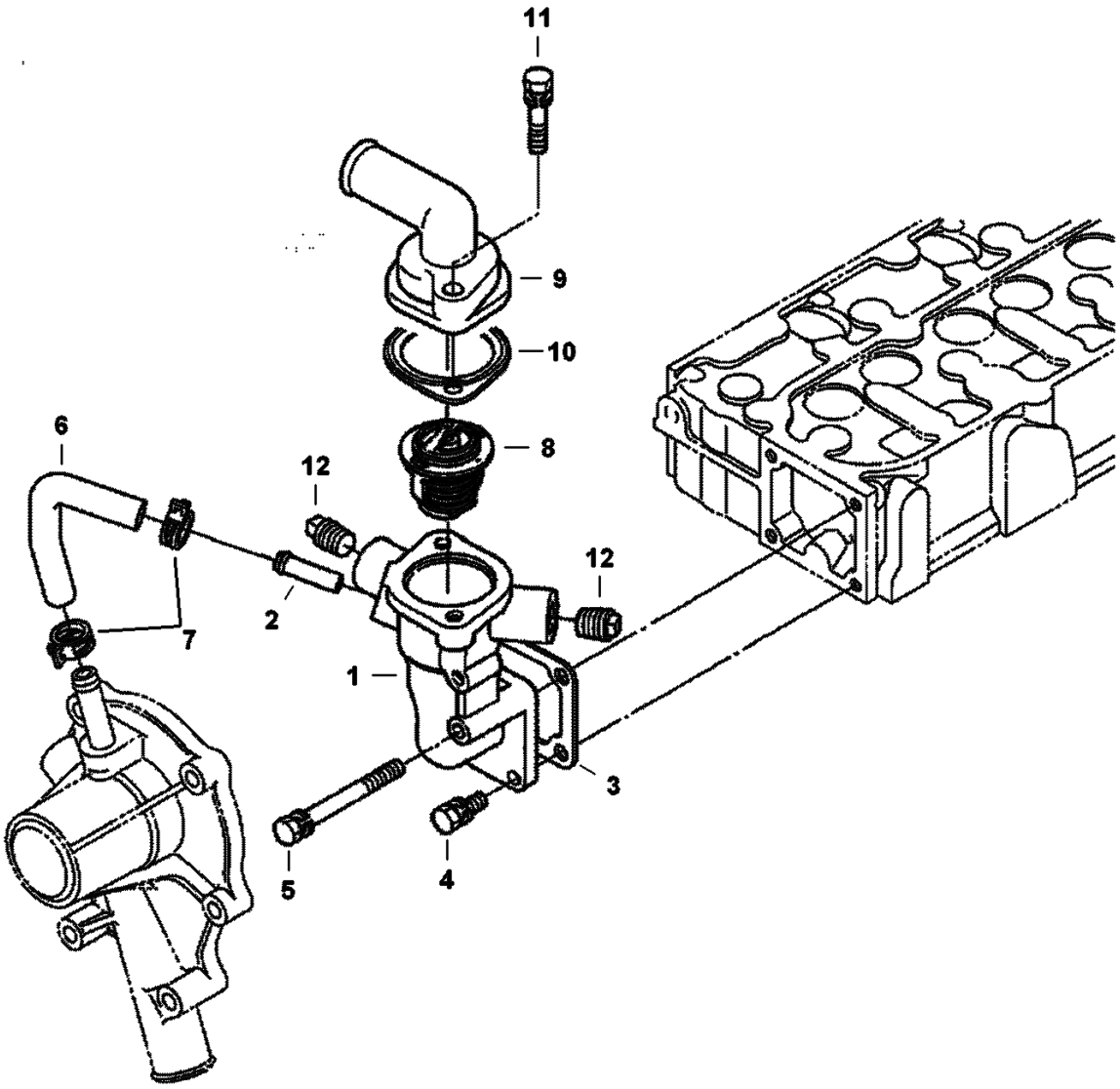

Page 222 - OSS# 2091664 - All rights reserved by Bobcat Company - 08/27/2012 - 11:42:23 - Produced by Ken Cook Co. with mediaIoff

WATER FLANGE & THERMOSTAT (Cont'd)

Ref No	Part Number	Description	Remarks	Serial Number	Qty
1	6672482	FLANGE	W/Ref. 2		1
2	6670785	PIPE			1
3	6657583	GASKET			1
4	4CM616	BOLT			3
5	6670770	BOLT			1
6	6657584	PIPE			1
7	6680580	CLAMP			2
8	6674172	THERMOSTAT			1
9	6691325	COVER			1
10	6684863	GASKET			1
11	1CM835	BOLT			2
12	6684857	PLUG			2

Page 223 - OSS# 2091664 - All rights reserved by Bobcat Company - 08/27/2012 - 11:42:23 - Produced by Ken Cook Co. with mediaioff

CYLINDER HEAD

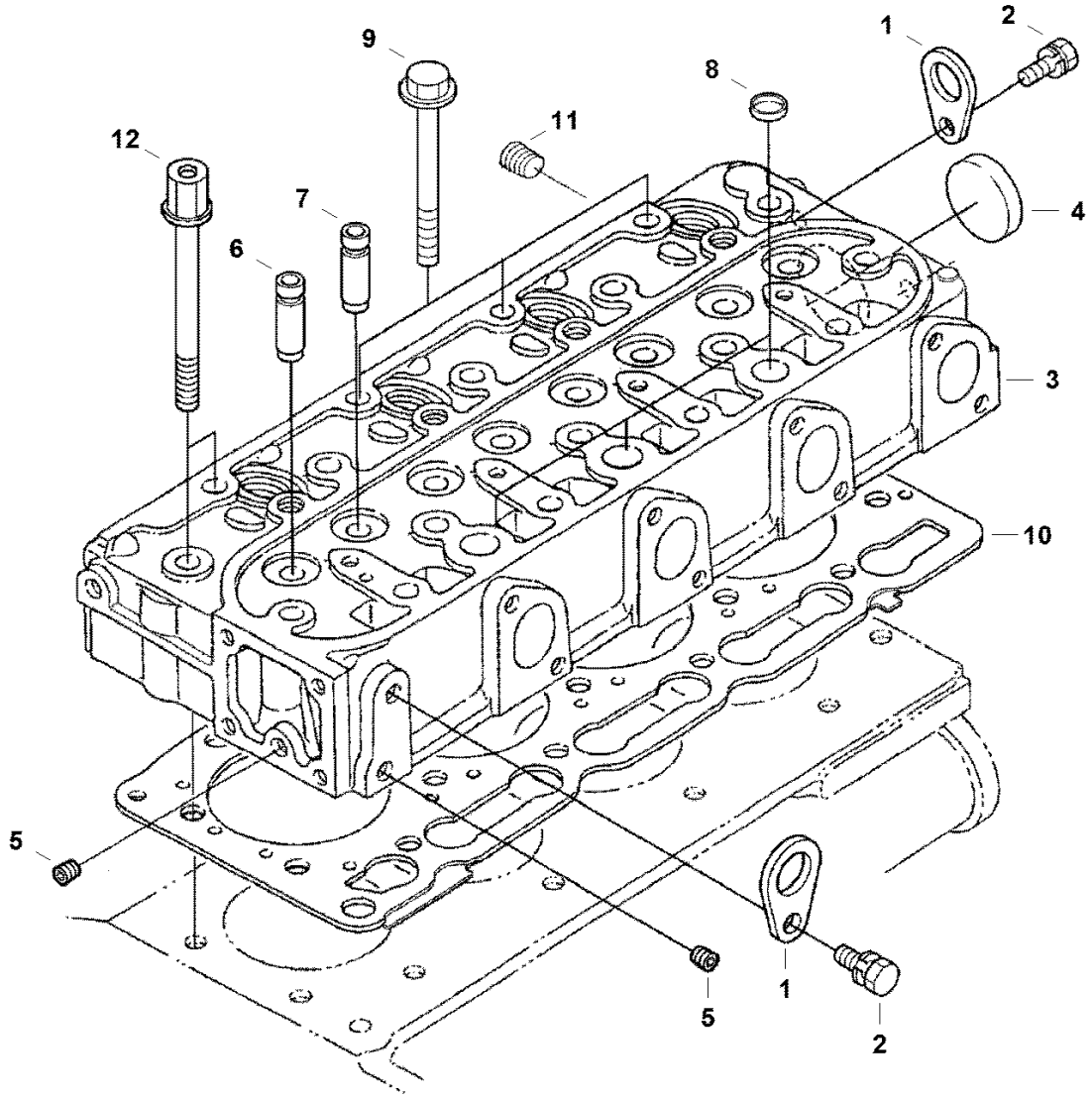

Page 224 - OSS# 2091664 - All rights reserved by Bobcat Company - 08/27/2012 - 11:42:23 - Produced by Ken Cook Co. with mediaIoff

Ref No	Part Number	Description	Remarks	Serial Number	Qty
1	3974882	HOOK			2
2	6667420	BOLT			2
3	6698621	HEAD, CYL ENG	assy - W/Ref. 4-8		1
4	3974033	CAP			1
5	6598116	PLUG			2
6	6680859	GUIDE	inlet valve		4
7	6685958	GUIDE	exhaust valve		4
8	3974056	CAP			3
9	6657478	BOLT			16
10	6691297	GASKET	cylinder head		1
11	6680667	PLUG			1
12	7022682	BOLT			2

Page 225 - OSS# 2091664 - All rights reserved by Bobcat Company - 08/27/2012 - 11:42:23 - Produced by Ken Cook Co. with mediaioff

VALVE & ROCKER ARM

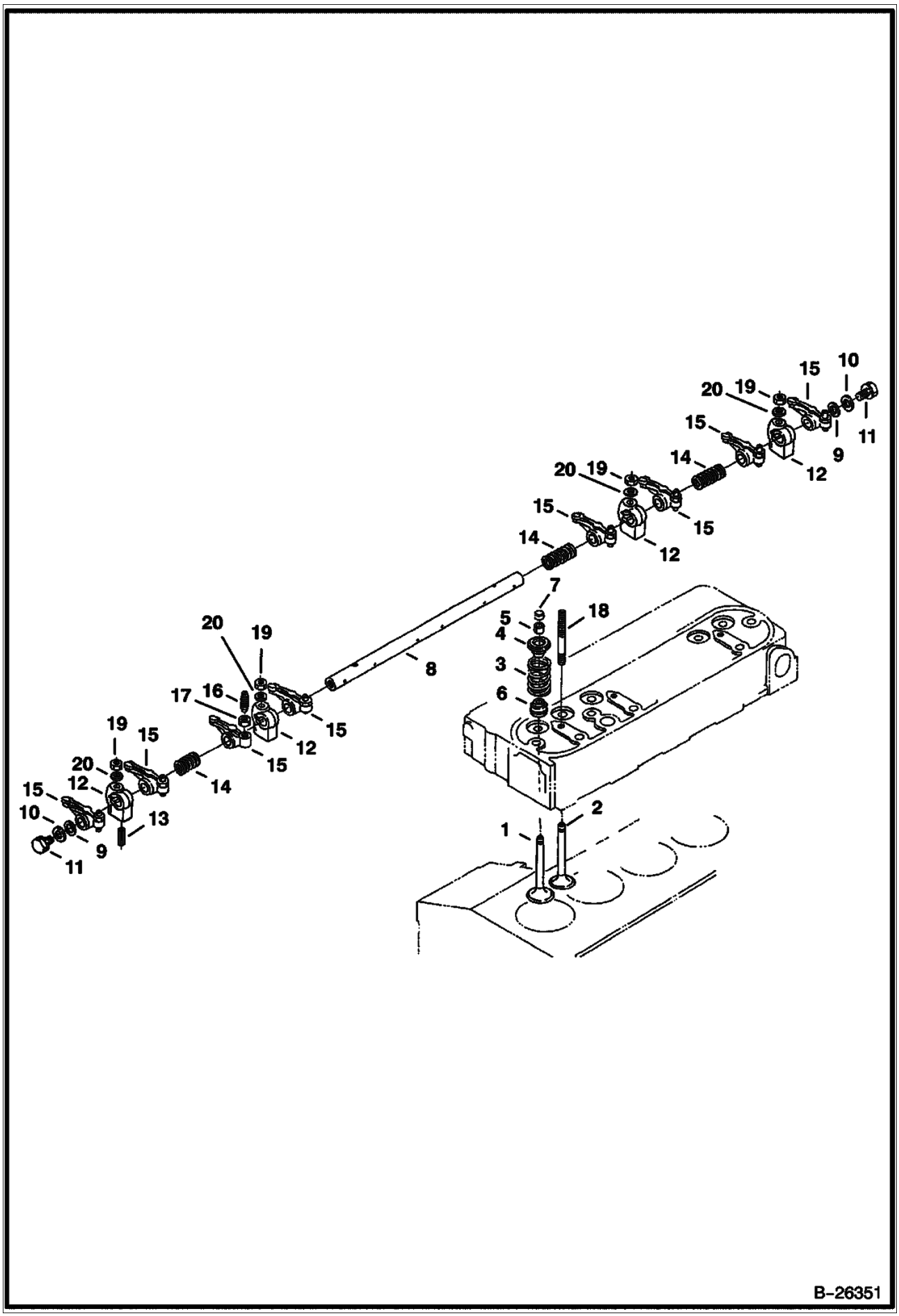

Page 226 - OSS# 2091664 - All rights reserved by Bobcat Company - 08/27/2012 - 11:42:23 - Produced by Ken Cook Co. with mediaioff

Ref No	Part Number	Description	Remarks	Serial Number	Qty
1	6657495	VALVE	intake		4
2	6657496	VALVE	exhaust		4
3	6657630	SPRING			8
4	6685959	RETAINER			8
5	7008389	RETAINER, VALVE SPRING	set of 2		8
6	6672436	SEAL	valve stem		8
7	6672437	CAP			8
8	6691326	SHAFT			1
9	6657511	WASHER			2
10	6670520	WASHER			2
11	6670521	BOLT			2
12	6657509	BRACKET			4
13	6680256	PIN			1
14	6657508	SPRING			3
15	6657502	ROCKER ARM	W/Ref. 16 & 17		8
16	6657506	SCREW			8
17	6680881	NUT			8
18	6657510	STUD			4
19	1DM7	NUT			4
20	2EM7	WASHER			4

Page 227 - OSS# 2091664 - All rights reserved by Bobcat Company - 08/27/2012 - 11:42:23 - Produced by Ken Cook Co. with mediaioff

ROCKER ARM COVER

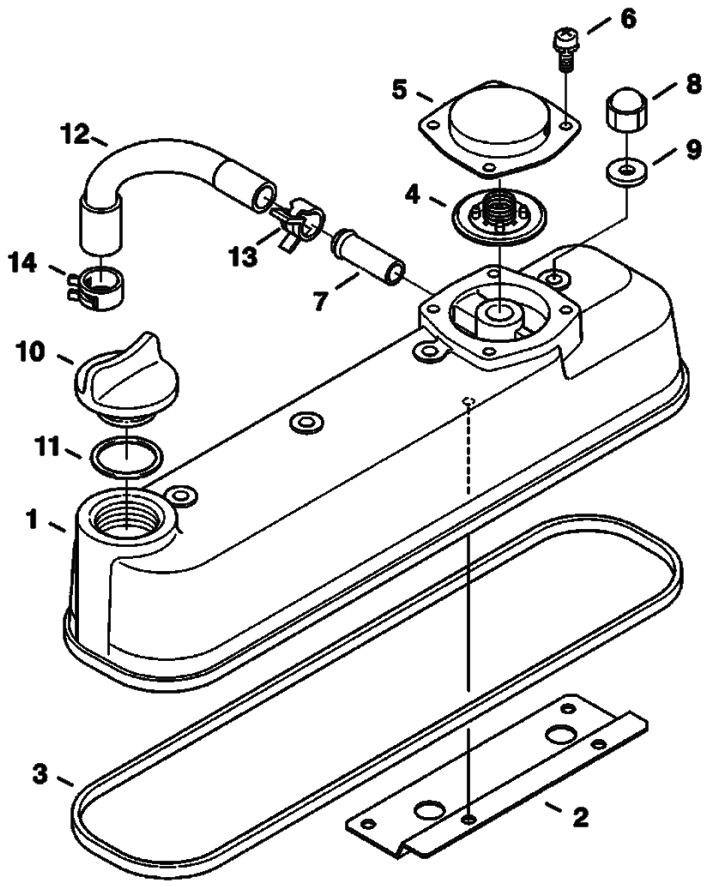

Page 228 - OSS# 2091664 - All rights reserved by Bobcat Company - 08/27/2012 - 11:42:23 - Produced by Ken Cook Co. with mediaioff

Ref No	Part Number	Description	Remarks	Serial Number	Qty
1	6698620	COVER, HEAD CYL ENG	W/Ref. 2-7		1
2		SHIELD	NSS - Order Ref. 1		1
3	6657514	GASKET			1
4	6685087	VALVE			1
5	6969803	COVER, BREATHER			1
6	3975436	SCREW	W/washer		4
7	6655880	PIPE			1
8	6657050	CAP			4
9	6599116	GASKET			4
10	6685924	CAP			1
11	6683009	O-RING			1
12	6686170	TUBE			1
13	6684776	CLAMP			1
14	6686171	CLAMP			1

Page 229 - OSS# 2091664 - All rights reserved by Bobcat Company - 08/27/2012 - 11:42:23 - Produced by Ken Cook Co. with mediaioff

MANIFOLDS

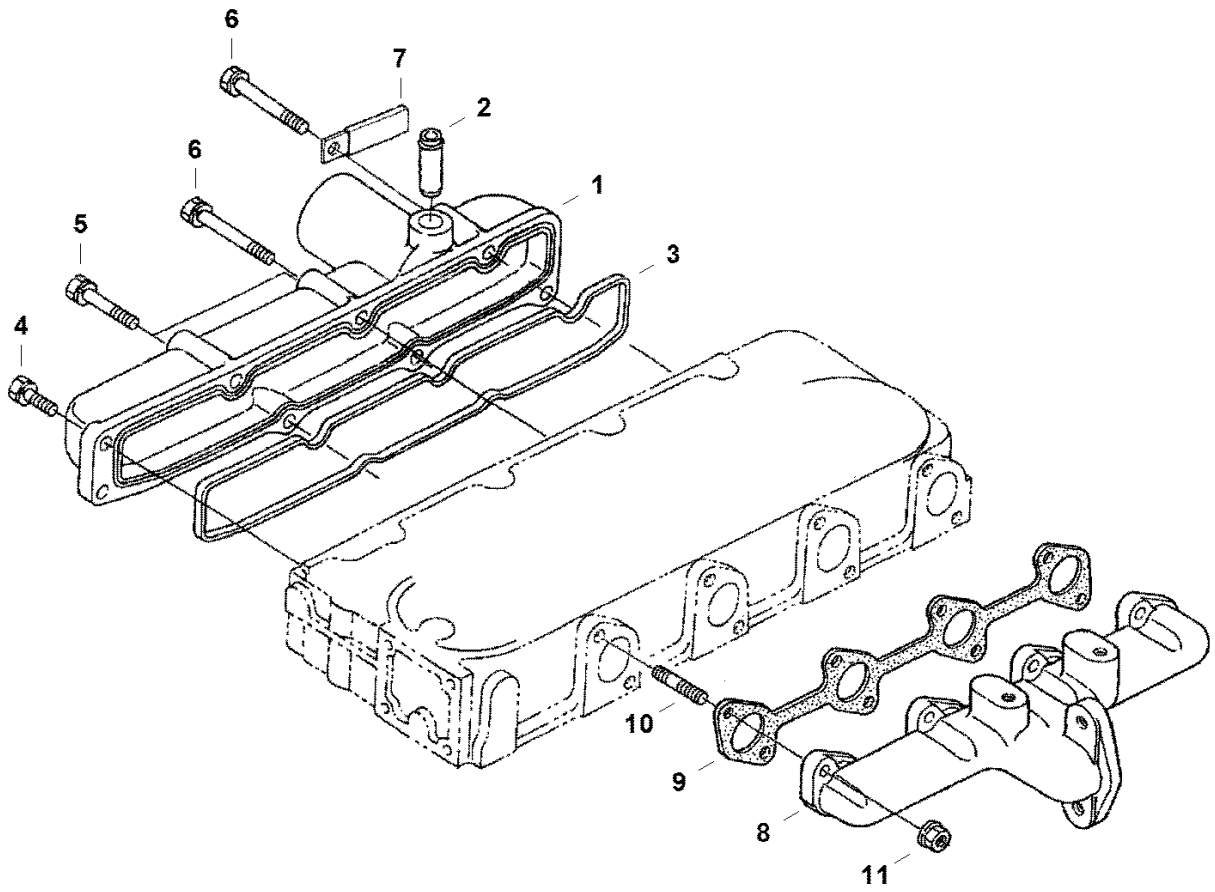

Page 230 - OSS# 2091664 - All rights reserved by Bobcat Company - 08/27/2012 - 11:42:23 - Produced by Ken Cook Co. with mediaioff

Ref No	Part Number	Description	Remarks	Serial Number	Qty
1	7023141	MANIFOLD, INTAKE	W/Ref. 2 & 3		1
2	6680689	ADAPTER			1
3	6657493	GASKET			1
4	6652580	BOLT			3
5	4CM630	BOLT			2
6	6670770	BOLT			3
7	6969973	CLAMP, CORD			1
8	7023142	MANIFOLD, EXHAUST			1
9	6657494	GASKET			1
10	6657590	STUD			8
11	6657591	NUT			8

Page 231 - OSS# 2091664 - All rights reserved by Bobcat Company - 08/27/2012 - 11:42:23 - Produced by Ken Cook Co. with mediaioff

NOZZLE HOLDER & GLOW PLUG

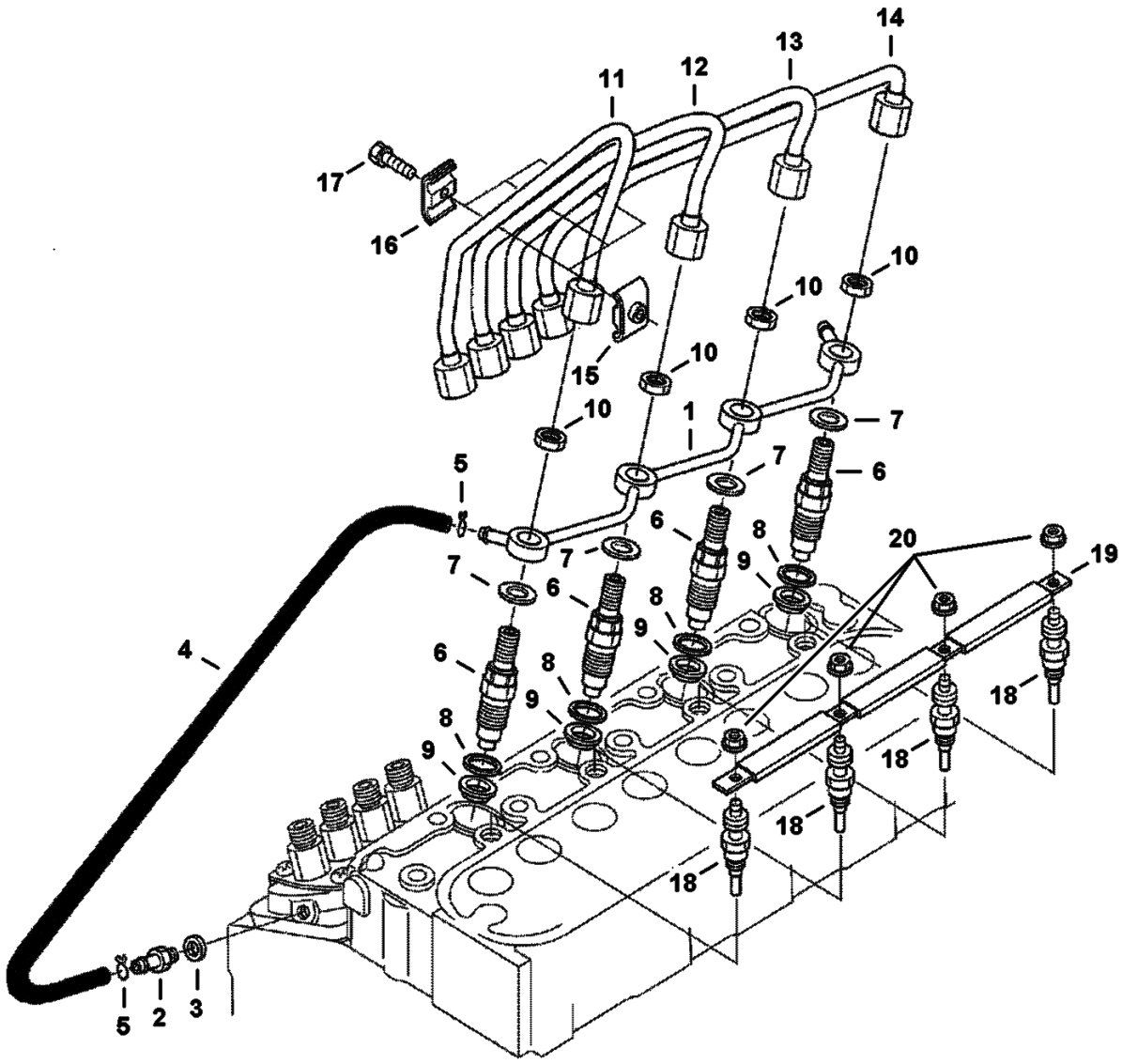

Page 232 - OSS# 2091664 - All rights reserved by Bobcat Company - 08/27/2012 - 11:42:23 - Produced by Ken Cook Co. with mediaioff

Ref No	Part Number	Description	Remarks	Serial Number	Qty
1	6657636	ASSY PIPE			1
2	6657446	SCREW			1
3	3974972	GASKET			1
4	6670464	HOSE	W/Ref. 5		1
5	6654718	CLAMP	pipe		2
6	6698623	INJECTOR, FUEL ASSY	See Illustration NOZZLE HOLDER/ B26342 - kit - W/Ref. 7-10		4
7	6672414	WASHER			4
8	6655218	GASKET			4
9	6655872	HEAT SEAL			4
10	6672408	NUT			4
11	6672406	PIPE			1
12	6657643	PIPE			1
13	6657644	PIPE			1
14	6657645	PIPE, INJECTION			1
15	6652688	CLAMP			3
16	6652689	CLAMP			3
17	3974260	SCREW			3
18	6698618	GLOW PLUG			4
19	6657660	CORD, GLOW PLUG			1
20	6670472	NUT			4

Page 233 - OSS# 2091664 - All rights reserved by Bobcat Company - 08/27/2012 - 11:42:23 - Produced by Ken Cook Co. with mediaioff

NOZZLE HOLDER

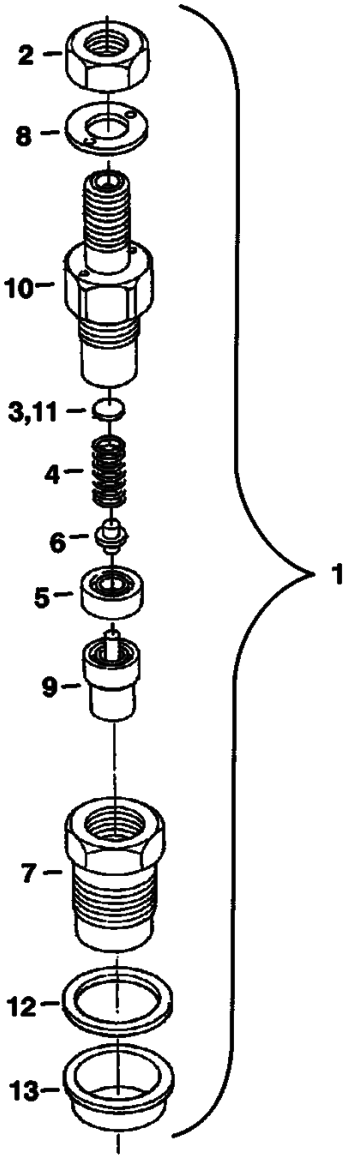

Page 234 - OSS# 2091664 - All rights reserved by Bobcat Company - 08/27/2012 - 11:42:23 - Produced by Ken Cook Co. with mediaioff

Ref No	Part Number	Description	Remarks	Serial Number	Qty
1	6698623	INJECTOR, FUEL ASSY	W/Ref. 2-13		4
2	6672408	NUT			4
3	6672409	WASHER			4
4	6672410	SPRING			4
5	6672411	SPACER			4
6	6672412	PUSH ROD			4
7	6672413	NUT			4
8	6672414	WASHER			4
9	6698622	NOZZLE, INJ FUEL			4
10		HOLDER	NSS - Order Ref. 1		4
11	6672416	WASHER SET			4
11	6672417	WASHER	0.10 mm		4
11	6672418	WASHER	0.20 mm		4
11	6672419	WASHER	0.30 mm		4
11	6672420	WASHER	0.40 mm		4
11	6672421	WASHER	0.50 mm		4
11	6672422	WASHER	0.52 mm		4
11	6672423	WASHER	0.54 mm		4
11	6672424	WASHER	0.56 mm		4
11	6672425	WASHER	0.58 mm		4
11	6672426	WASHER	0.80 mm		4
12	6655218	GASKET			4
13	6655872	HEAT SEAL			4

Page 235 - OSS# 2091664 - All rights reserved by Bobcat Company - 08/27/2012 - 11:42:23 - Produced by Ken Cook Co. with mediaioff

INJECTION PUMP & FUEL PUMP

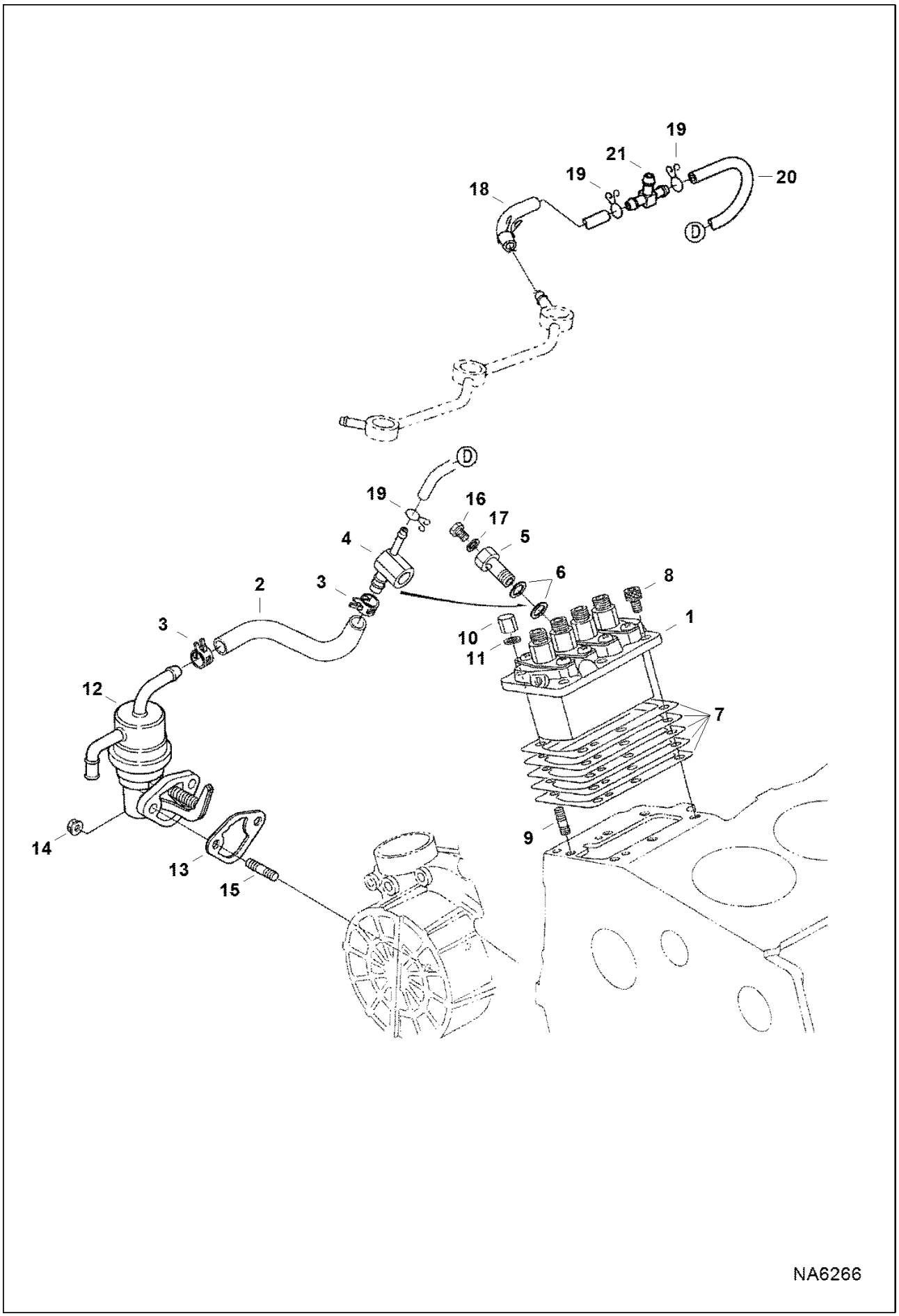

Page 236 - OSS# 2091664 - All rights reserved by Bobcat Company - 08/27/2012 - 11:42:23 - Produced by Ken Cook Co. with mediaioff

Ref No	Part Number	Description	Remarks	Serial Number	Qty
1	6691314	PUMP			1
2	6672388	TUBE			1
3	6680274	CLAMP			2
4	6969904	JOINT, EYE			1
5	6672395	BOLT			1
6	6657466	GASKET			2
7	6698612	SHIM, PUMP INJ	0,175 mm		x
7	6657472	SHIM	0,20 mm		x
7	6691316	SHIM	0,25 mm		x
7	6691317	SHIM	0,30 mm		x
7	6698612	SHIM, PUMP INJ	0,35 mm		x
8	7000503	BOLT	hex soc hd W/washer		2
9	6657458	STUD			2
10	6657461	NUT			2
11	6667419	WASHER			4
12	6672427	FUEL PUMP			1
13	7010133	GASKET, PUMP FUEL			1
14	6670533	NUT			2
15	6680264	STUD			2
16	6657445	SCREW			1
17	6657467	GASKET			1
18	6680624	TUBE			1
19	6680795	CLAMP			4
20	6680627	TUBE			1
21	6680797	TEE			1

Page 237 - OSS# 2091664 - All rights reserved by Bobcat Company - 08/27/2012 - 11:42:23 - Produced by Ken Cook Co. with mediaioff

FUEL CAMSHAFT & GOVERNOR SHAFT

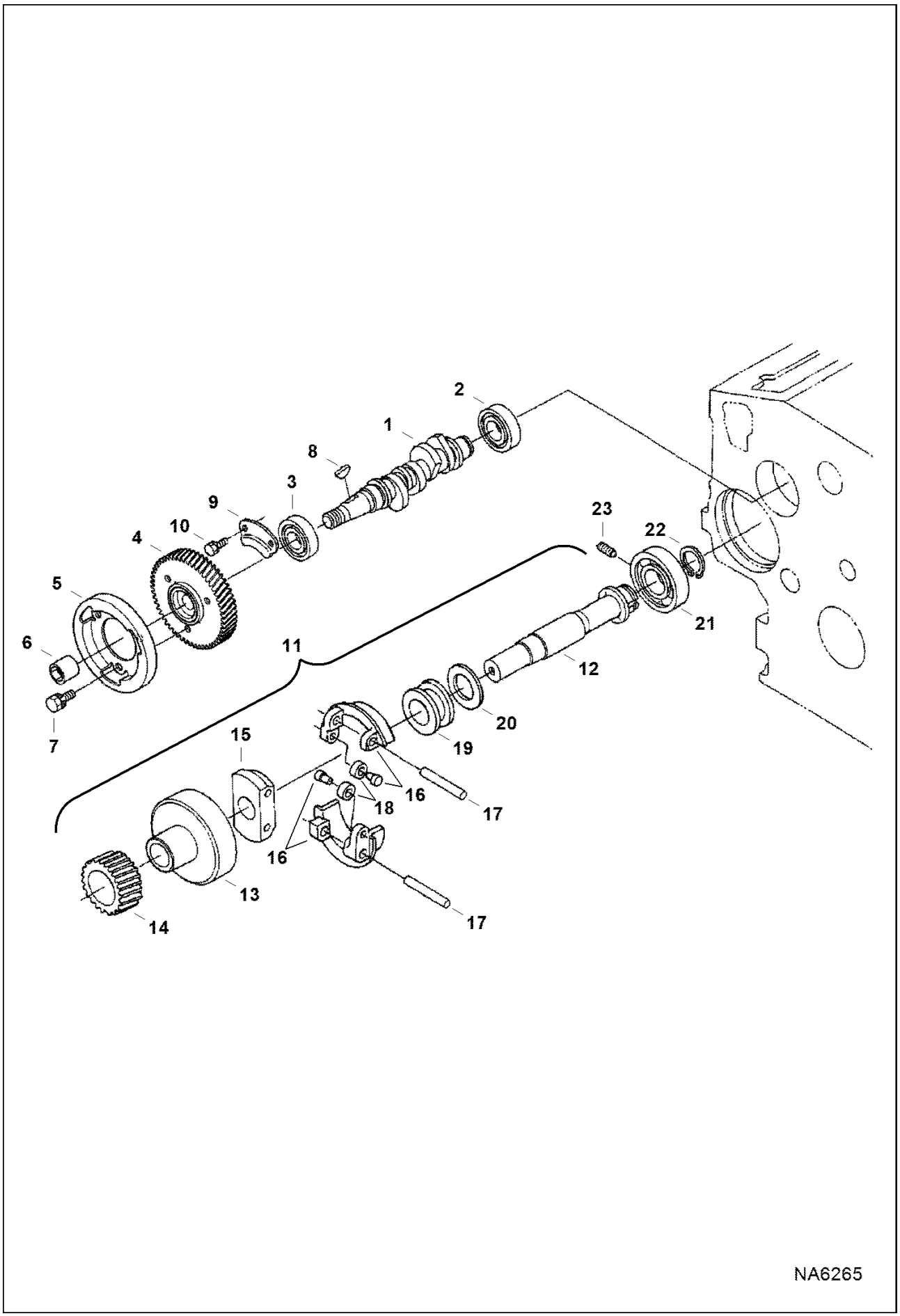

Page 238 - OSS# 2091664 - All rights reserved by Bobcat Company - 08/27/2012 - 11:42:23 - Produced by Ken Cook Co. with mediaioff

Ref No	Part Number	Description	Remarks	Serial Number	Qty
1	6691309	CAMSHAFT			1
2	6686175	BEARING			1
3	6686176	BEARING			1
4	6691310	GEAR			1
5	7022769	CAMSHAFT			1
6	6657593	NUT			1
7	4CM612	BOLT			3
8	6657597	KEY			1
9	6657518	STOPPER			1
10	4CM616	BOLT			2
11	6657670	SHAFT, GOVERNOR	W/Ref. 12-20		1
12	6657646	SHAFT, GOVERNOR			1
13	6698614	HOLDER, GEAR GOV			1
14	6657671	GEAR			1
15	6657564	HOLDER			1
16	6657562	WEIGHT			2
17	6657563	SHAFT			2
18	6657690	ROLLER			2
19	6657566	SLEEVE			1
20	6698615	WASHER, THRUST			1
21	6686178	BEARING			1
22	6657648	SNAP RING			1
23	6657568	SET SCREW			1

Page 239 - OSS# 2091664 - All rights reserved by Bobcat Company - 08/27/2012 - 11:42:23 - Produced by Ken Cook Co. with mediaioff

IDLE APPARATUS & STOP SOLENOID

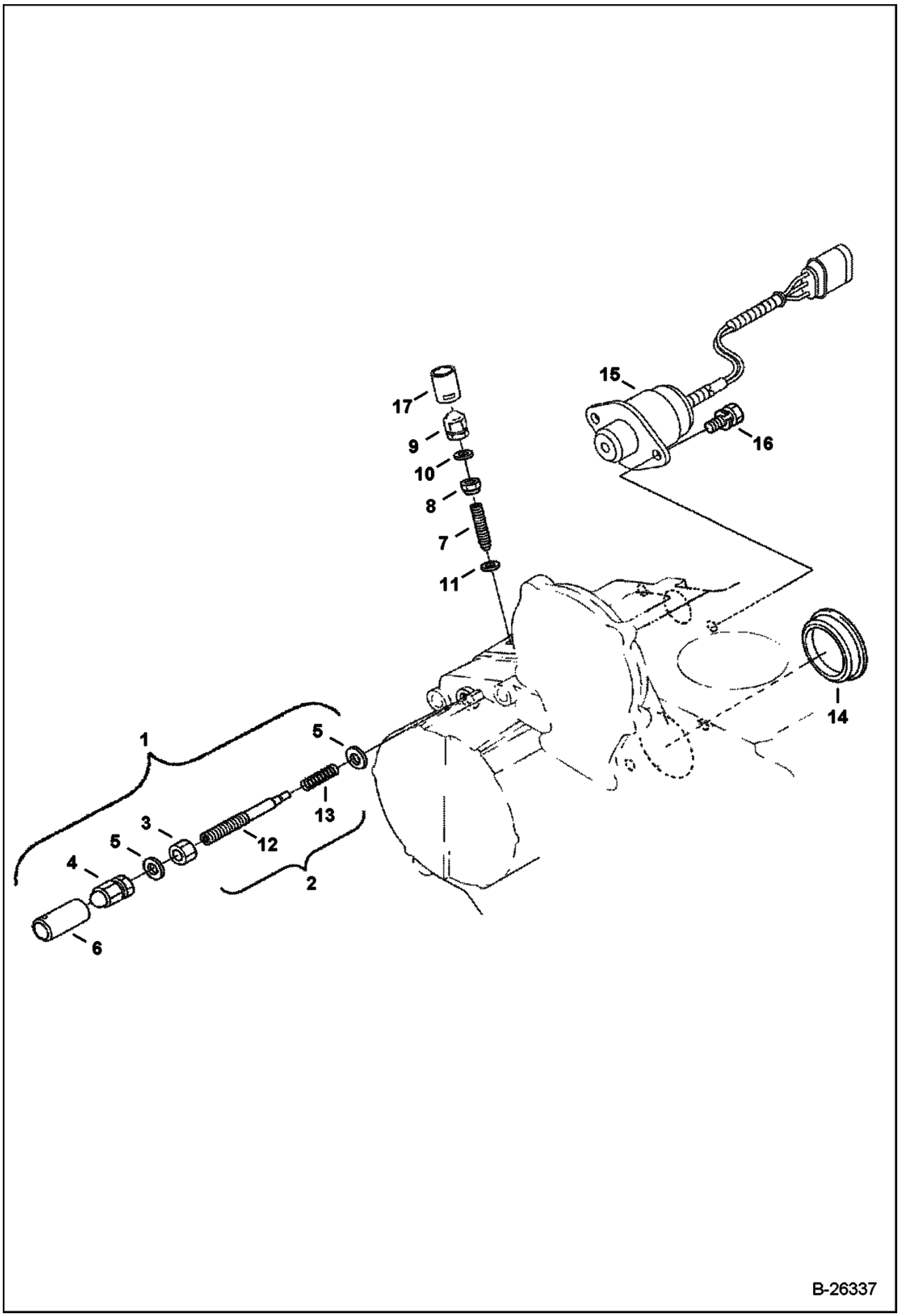

Page 240 - OSS# 2091664 - All rights reserved by Bobcat Company - 08/27/2012 - 11:42:23 - Produced by Ken Cook Co. with mediaioff

Ref No	Part Number	Description	Remarks	Serial Number	Qty
1	6691311	APPARATUS	W/Ref. 2-6		1
2	6691312	BOLT	W/Ref. 3, 12-13		1
3	6657459	NUT			1
4	6657470	NUT			1
5	3974972	GASKET			2
6	6672384	CAP, SECURITY			1
7	6657560	BOLT			1
8	6680272	NUT			1
9	6657470	NUT			1
10	3974972	GASKET			1
11	6687687	GASKET			1
12		STUD	NSS - Order Ref. 2		1
13		SPRING	NSS - Order Ref. 2		1
14	6672387	COVER			1
15	6691313	SOLENOID,STOP			1
16	6698610	BOLT			2
17		CAP, SECURITY	NAP		1

Page 241 - OSS# 2091664 - All rights reserved by Bobcat Company - 08/27/2012 - 11:42:23 - Produced by Ken Cook Co. with mediaioff

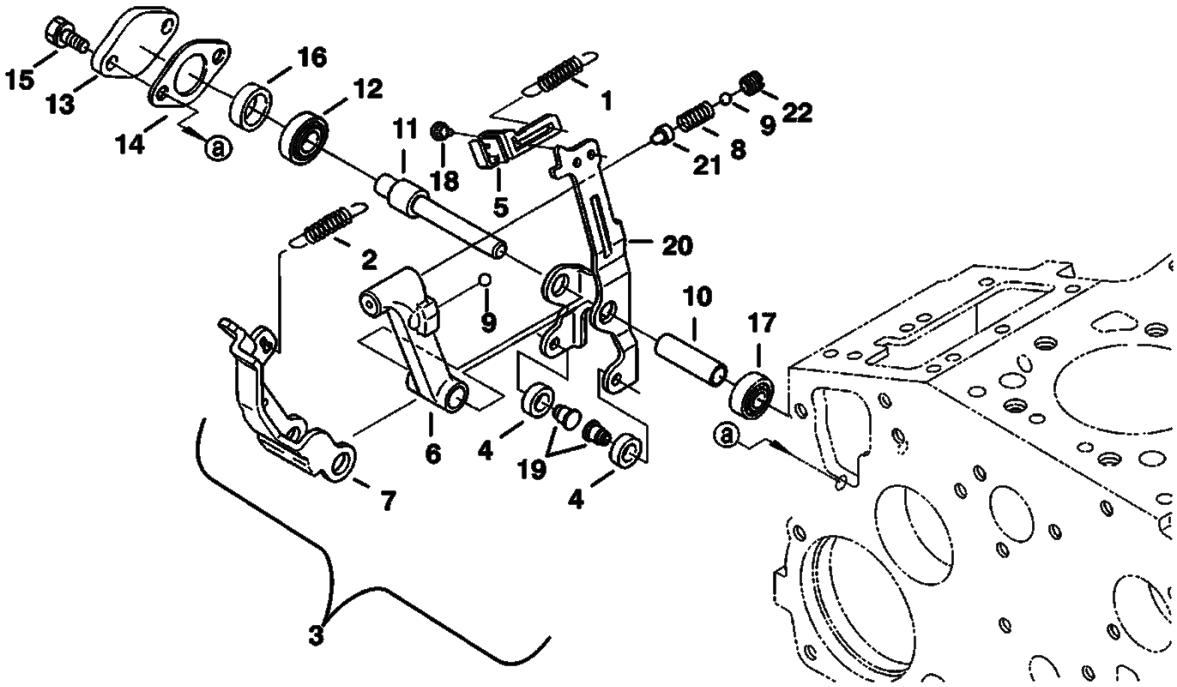

Page 242 - OSS# 2091664 - All rights reserved by Bobcat Company - 08/27/2012 - 11:42:23 - Produced by Ken Cook Co. with mediaIoff

Ref No	Part Number	Description	Remarks	Serial Number	Qty
1	6691318	SPRING			1
2	6691319	SPRING			1
3	6691320	LEVER, ASSY	W/Ref. 4-12 & 18-22		1
4	6657690	ROLLER			2
5	6691321	LEVER, THRUST			1
6		LEVER	NSS - Order Ref. 3		1
7	6686180	LEVER			1
8	6691322	SPRING			1
9	6969817	BALL			2
10	6686181	SHAFT			1
11	6686182	SHAFT			1
12	6657575	BEARING			1
13	6698616	COVER, SHAFT			1
14	6657574	GASKET			1
15	4CM612	BOLT			2
16	6657572	COLLAR			1
17	6657576	BEARING			1
18		SCREW	NSS - Order Ref. 3		1
19		PIN	NSS - Order Ref. 3		2
20		LEVER	NSS - Order Ref. 3		1
21		PIN	NSS - Order Ref. 3		1
22		SCREW	NSS - Order Ref. 3		1

Page 243 - OSS# 2091664 - All rights reserved by Bobcat Company - 08/27/2012 - 11:42:23 - Produced by Ken Cook Co. with mediaioff

SPEED CONTROL PLATE

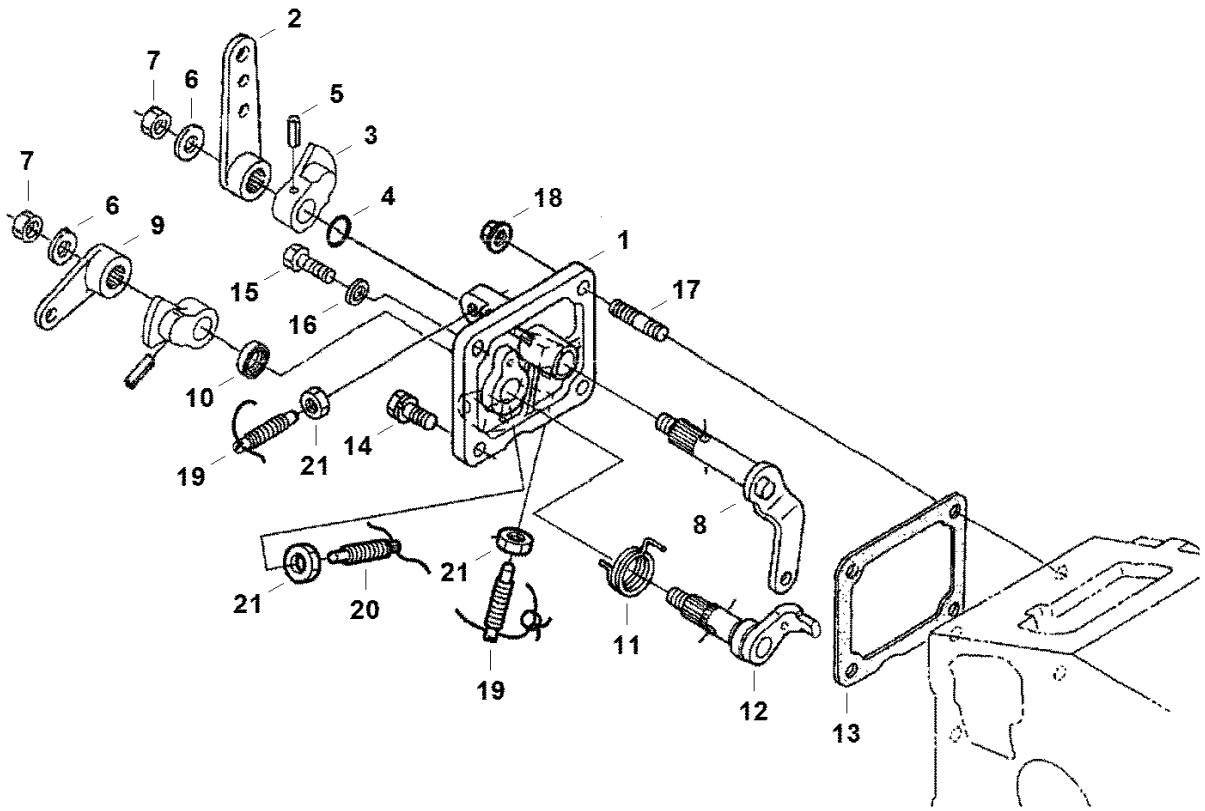

Page 244 - OSS# 2091664 - All rights reserved by Bobcat Company - 08/27/2012 - 11:42:23 - Produced by Ken Cook Co. with mediaioff

SPEED CONTROL PLATE (Cont'd)

Ref No	Part Number	Description	Remarks	Serial Number	Qty
1	6680501	PLATE ASSY	W/Ref. 2-12, 20-22 [A]		1
2	6657655	LEVER			1
3	6657577	LEVER			2
4	6680277	O-RING			1
5	6598098	PIN			2
6	6657596	WASHER			2
7	6657592	NUT			2
8	6657649	LEVER ASSY	Ref. 20-21		1
9	6657656	LEVER			1
10	6598703	SEAL	oil		1
11	6657474	SPRING			1
12	6657657	SHAFT			1
13	6657578	GASKET			1
14	4CM616	BOLT			1
15	4CM618	BOLT			1
16	3974972	GASKET			1
17	6680264	STUD			2
18	6670533	NUT			2
19	7010118	BOLT, ADJUSTING			2
20	7010119	BOLT, ADJUSTING			1
21	1DM6	NUT			3

Page 245 - OSS# 2091664 - All rights reserved by Bobcat Company - 08/27/2012 - 11:42:23 - Produced by Ken Cook Co. with mediaioff

AIR CLEANER

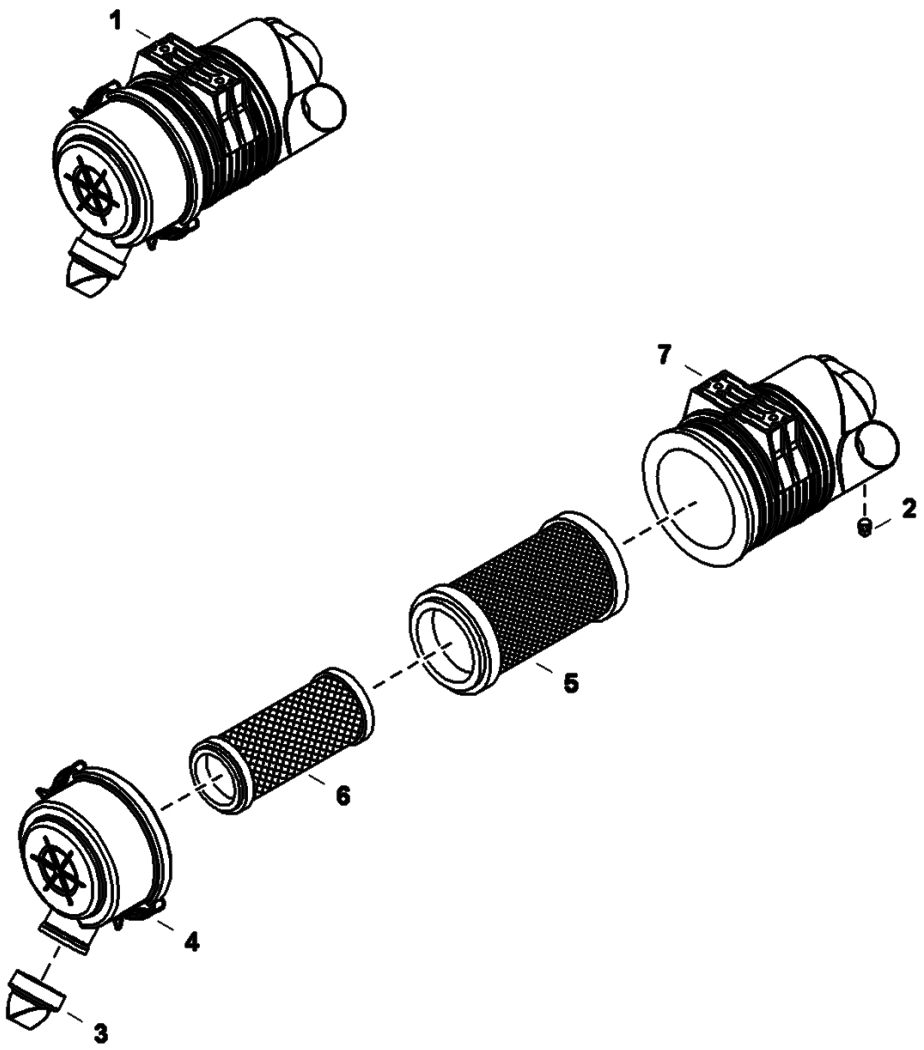

PE-3875

Page 246 - OSS# 2091664 - All rights reserved by Bobcat Company - 08/27/2012 - 11:42:23 - Produced by Ken Cook Co. with mediaioff

Ref No	Part Number	Description	Remarks	Serial Number	Qty
1	6693337	FILTER, AIR	Ref. 2-7		1
2	6675699	PLUG			1
3	6969961	VALVE			1
4	P533761	COVER ASSY			1
5	6672467	FILTER, AIR OUTER	outer		1
6	6672468	FILTER, AIR INNER	inner		1
7		TANK	NAP - Order Ref. 1		1

Page 247 - OSS# 2091664 - All rights reserved by Bobcat Company - 08/27/2012 - 11:42:23 - Produced by Ken Cook Co. with mediaioff

BEACON KIT

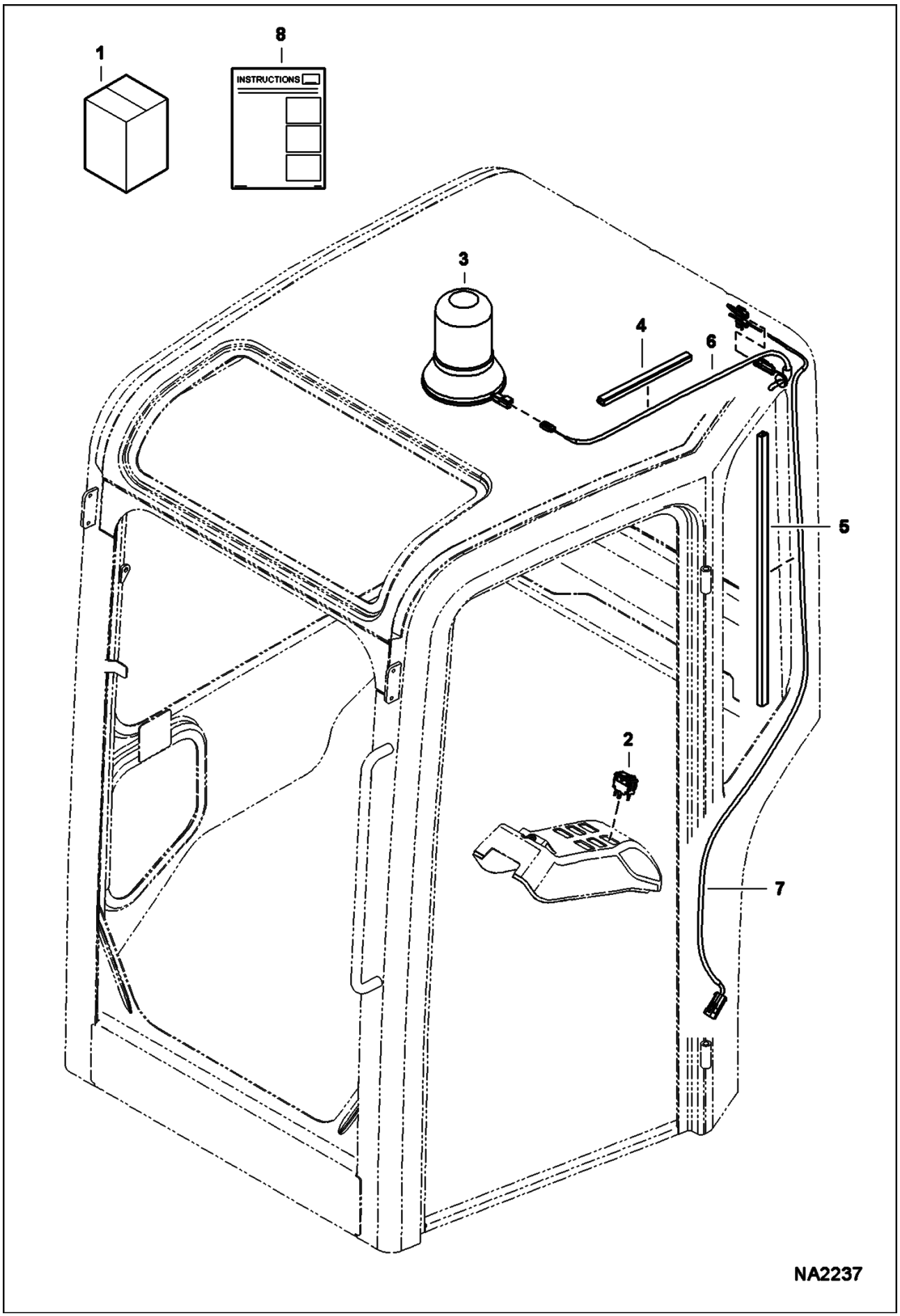

Page 248 - OSS# 2091664 - All rights reserved by Bobcat Company - 08/27/2012 - 11:42:23 - Produced by Ken Cook Co. with mediaioff

Ref No	Part Number	Description	Remarks	Serial Number	Qty
1	7172554	KIT, BEACON LIGHT	Ref. 2-8		1
2	6665317	SWITCH			1
3	6675523	BEACON			1
4	6682740	RETAINER, WIRE			1
5	6682741	RETAINER, WIRE			1
6	7172972	HARNESS, BEACON/STROBE			1
7	7172977	HARNESS, CANOPY			1
8	6987321	INSTRUCTIONS			1

Page 249 - OSS# 2091664 - All rights reserved by Bobcat Company - 08/27/2012 - 11:42:23 - Produced by Ken Cook Co. with mediaioff

BLOCK HEATER

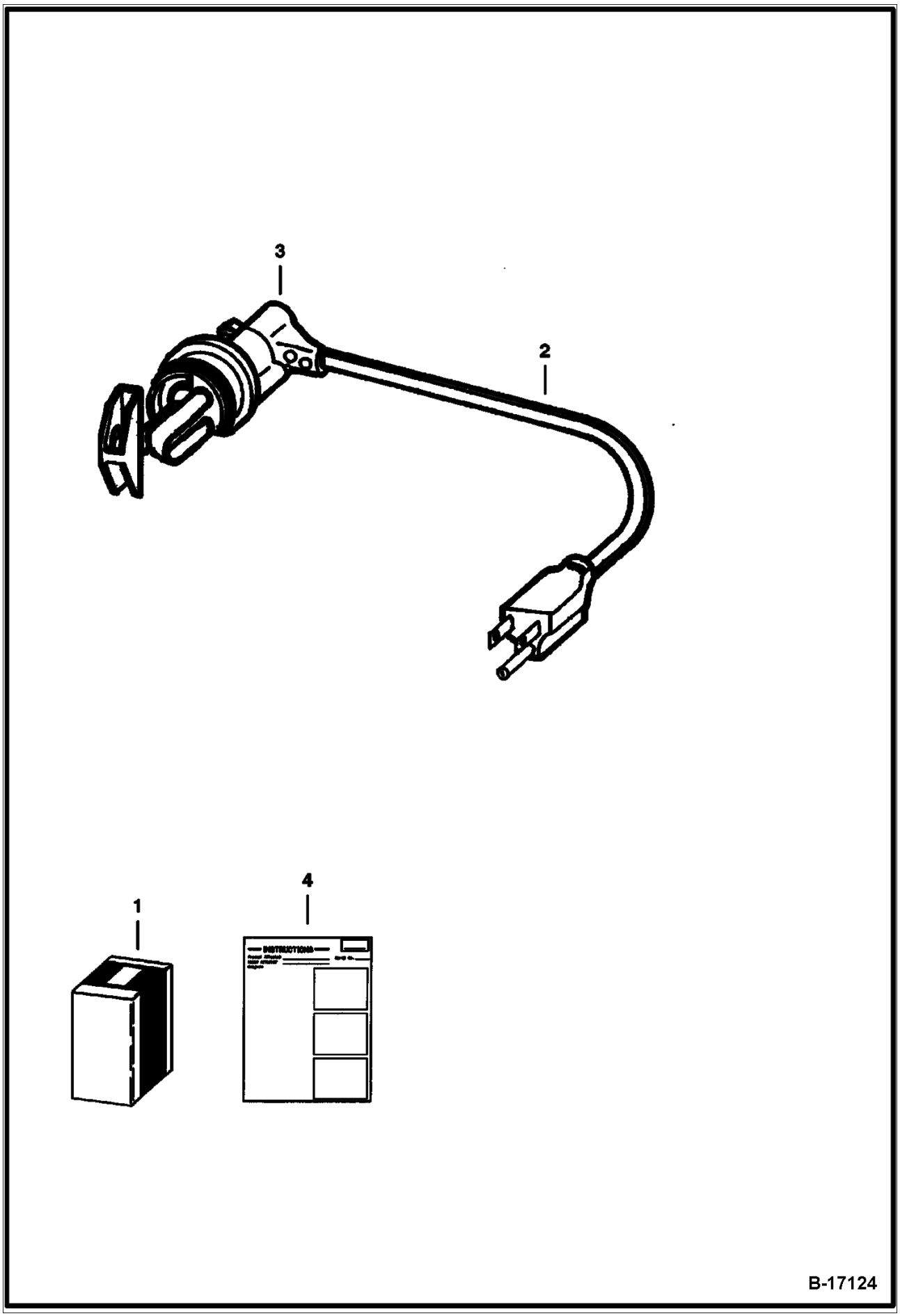

Page 250 - OSS# 2091664 - All rights reserved by Bobcat Company - 08/27/2012 - 11:42:23 - Produced by Ken Cook Co. with mediaioff

Ref No	Part Number	Description	Remarks	Serial Number	Qty
1	6729692	KIT	block heater - W/Ref. 2-4		1
2	6668881	CORD			1
3		BLOCK HEATER	NSS - Order Ref. 1		1
4	6720038	INSTRUCTIONS			1

Page 251 - OSS# 2091664 - All rights reserved by Bobcat Company - 08/27/2012 - 11:42:23 - Produced by Ken Cook Co. with mediaioff

CAB KIT

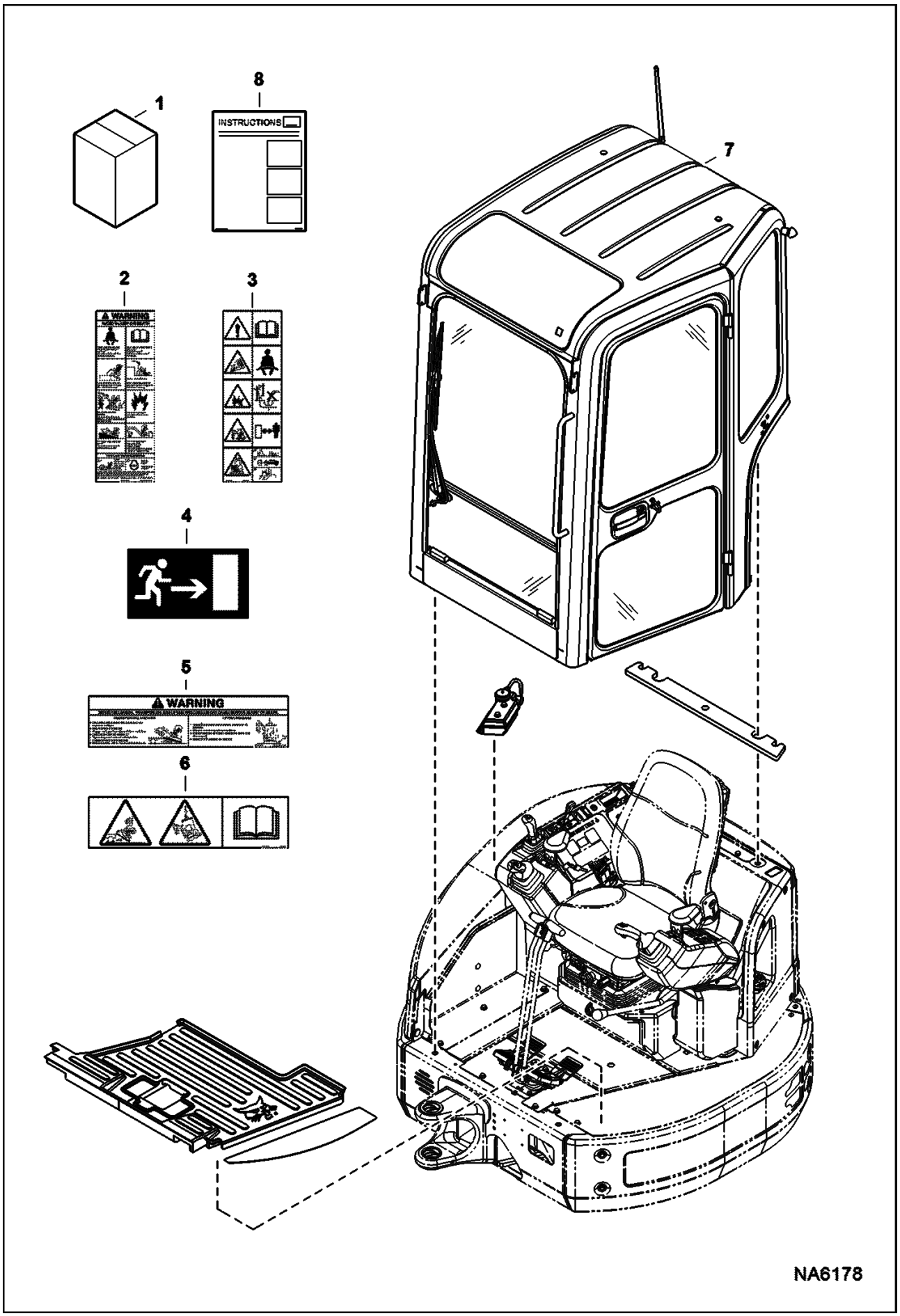

Page 252 - OSS# 2091664 - All rights reserved by Bobcat Company - 08/27/2012 - 11:42:23 - Produced by Ken Cook Co. with mediaIoff

Ref No	Part Number	Description	Remarks	Serial Number	Qty
1	7204078	KIT, CAB	Ref. 2-8		1
2	7148157	DECAL, WARNING			1
3	7148158	DECAL, WARNING			1
4	7169014	DECAL, EXIT			1
5	7178178	DECAL, WARNING			1
6	7178215	DECAL, WARNING			1
7		CAB, ASSY	NSS - Order Ref. 1		1
8	6990168	INSTRUCTIONS			1

Page 253 - OSS# 2091664 - All rights reserved by Bobcat Company - 08/27/2012 - 11:42:23 - Produced by Ken Cook Co. with mediaioff

CANOPY KIT

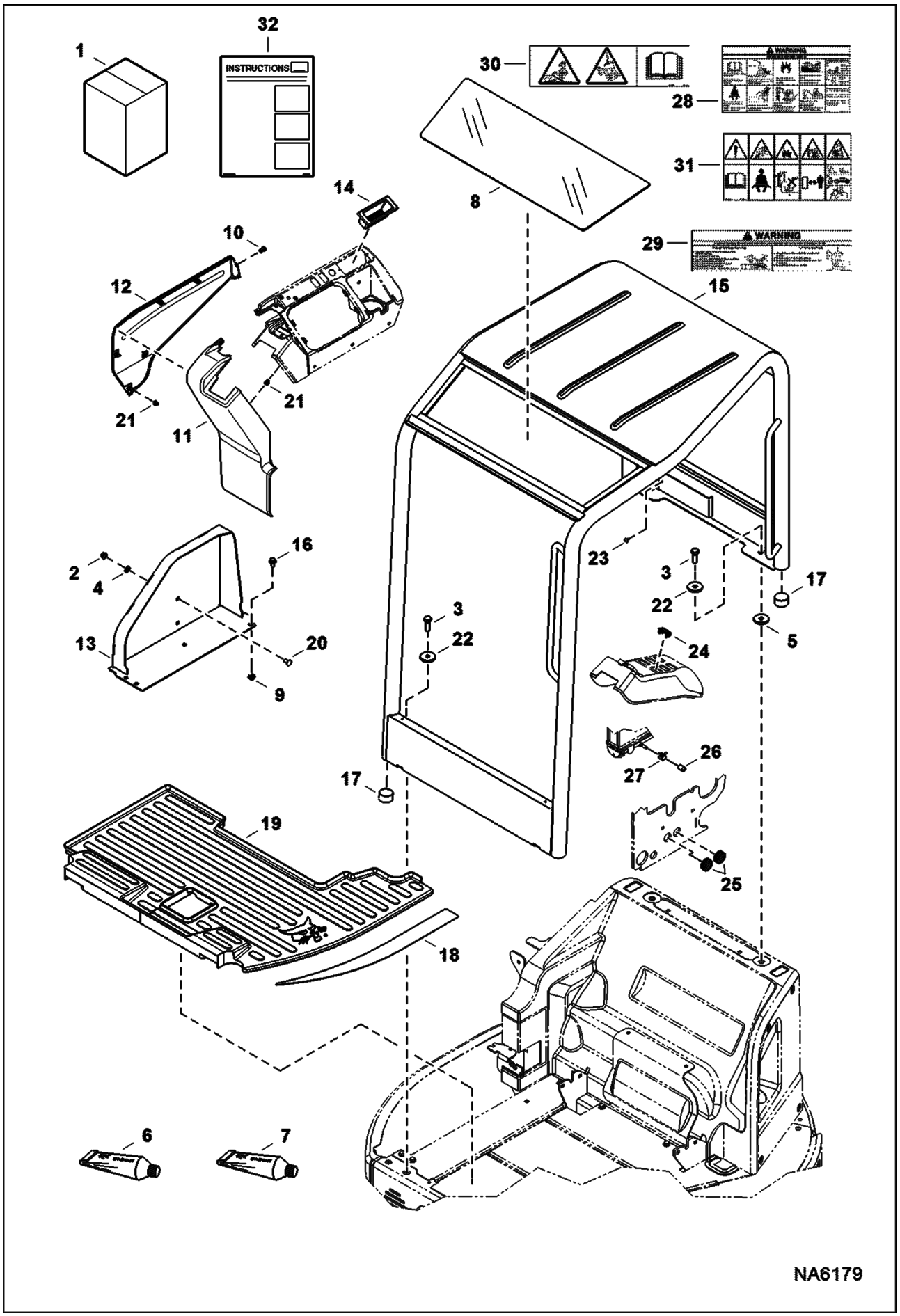

Page 254 - OSS# 2091664 - All rights reserved by Bobcat Company - 08/27/2012 - 11:42:23 - Produced by Ken Cook Co. with mediaioff

Ref No	Part Number	Description	Remarks	Serial Number	Qty
1		KIT, CANOPY	NAP - Order components - Was 7204077		1
2	43DM10	NUT			5
3	7CM1440	BOLT			4
4	6674264	RETAINER NUT			3
5	6805244	WASHER			2
6	6808882	ADHESIVE			x
7	7102268	PRIMER			x
8	7143481	WINDOW, CANOPY TOP			1
9	7155411	NUT			2
10	7160383	RIVET, BIRD CAGE			2
11	7165566	COVER, RH			1
12	7165567	COVER, RH			1
13	7170762	PANEL, RH			1
14	7171397	CONTAINER, STORAGE			1
15	7173146	CANOPY, W/A			1
16	29CM1025	BOLT			2
17	7187736	INSULATION			4
18	7195050	TREAD, SAFETY			1
19	7199174	MAT, FLOOR CANOPY			1
20	28CM1020	BOLT			3
21	7165333	CLIP			8
22	7187755	WASHER			4
23	6589675	SCREW			1
24	6665314	PLUG			1
25	6810133	GROMMET			2
26	7197401	PLUG, RADIATOR			1
27	5HM16	CLAMP			1
28	7178177	DECAL, WARNING			1
29	7178178	DECAL, WARNING			1
30	7178215	DECAL, WARNING			1
31	7178216	DECAL, WARNING			1
32	6990167	INSTRUCTIONS			1

Page 255 - OSS# 2091664 - All rights reserved by Bobcat Company - 08/27/2012 - 11:42:23 - Produced by Ken Cook Co. with mediaioff

COUNTERWEIGHT KIT

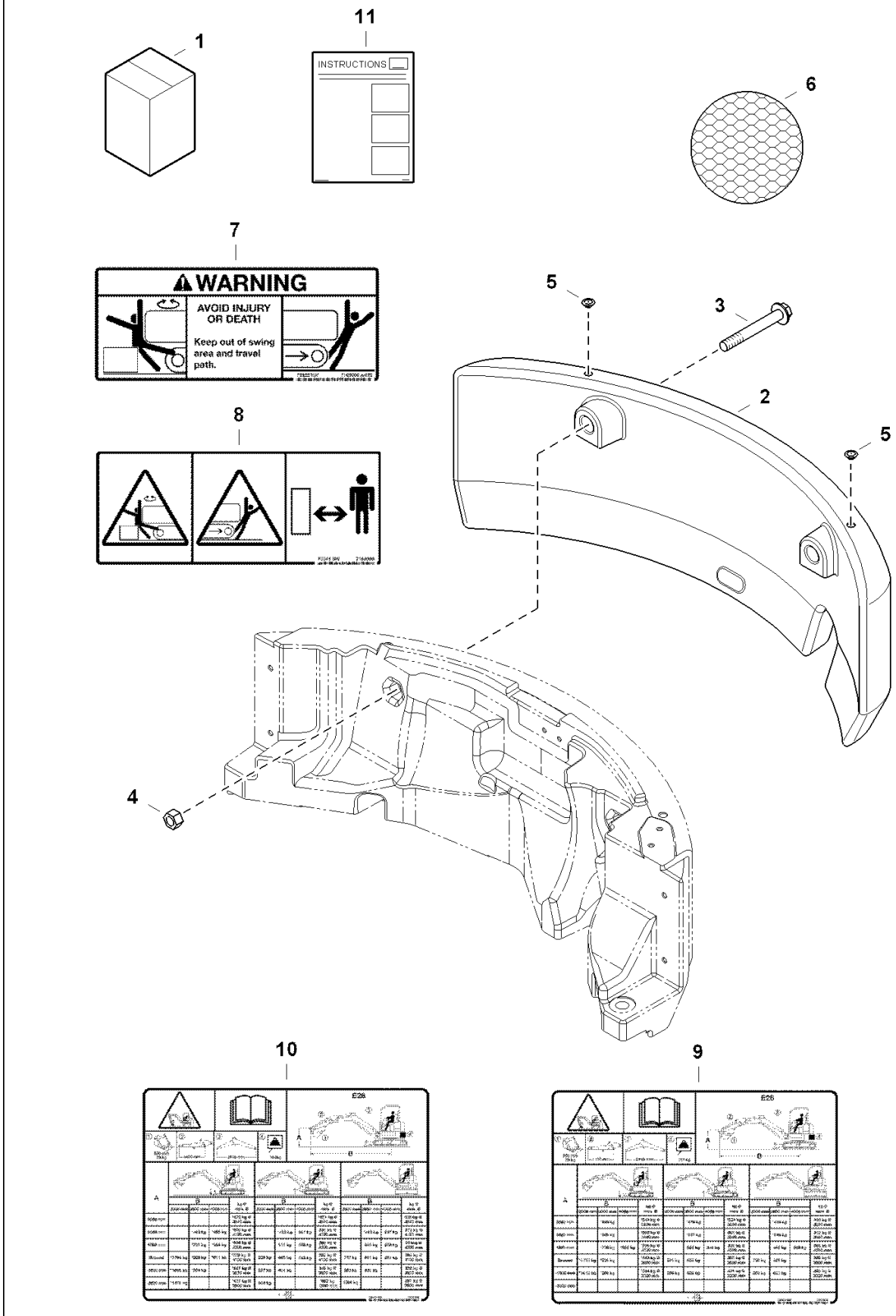

Page 256 - OSS# 2091664 - All rights reserved by Bobcat Company - 08/27/2012 - 11:42:23 - Produced by Ken Cook Co. with mediaioff

Ref No	Part Number	Description	Remarks	Serial Number	Qty
1	7204030	KIT, COUNTERWEIGHT	Ref. 2-11		1
2	7198448	COUNTERWEIGHT			1
3	29CM20150	BOLT			2
4	4DM20	NUT			2
5	7010676	PLUG			2
6	7106627	DECAL	reflective		2
7	7169006	DECAL, STAY CLEAR	text		1
8	7169009	DECAL, STAY CLEAR	no-text		1
9	7183902	DECAL, CAPACITY LIFT	standard arm		1
10	7201622	DECAL, CAPACITY LIFT	long arm		1
11	6990133	INSTRUCTIONS			1

Page 257 - OSS# 2091664 - All rights reserved by Bobcat Company - 08/27/2012 - 11:42:23 - Produced by Ken Cook Co. with mediaioff

DECALS
(Inside)

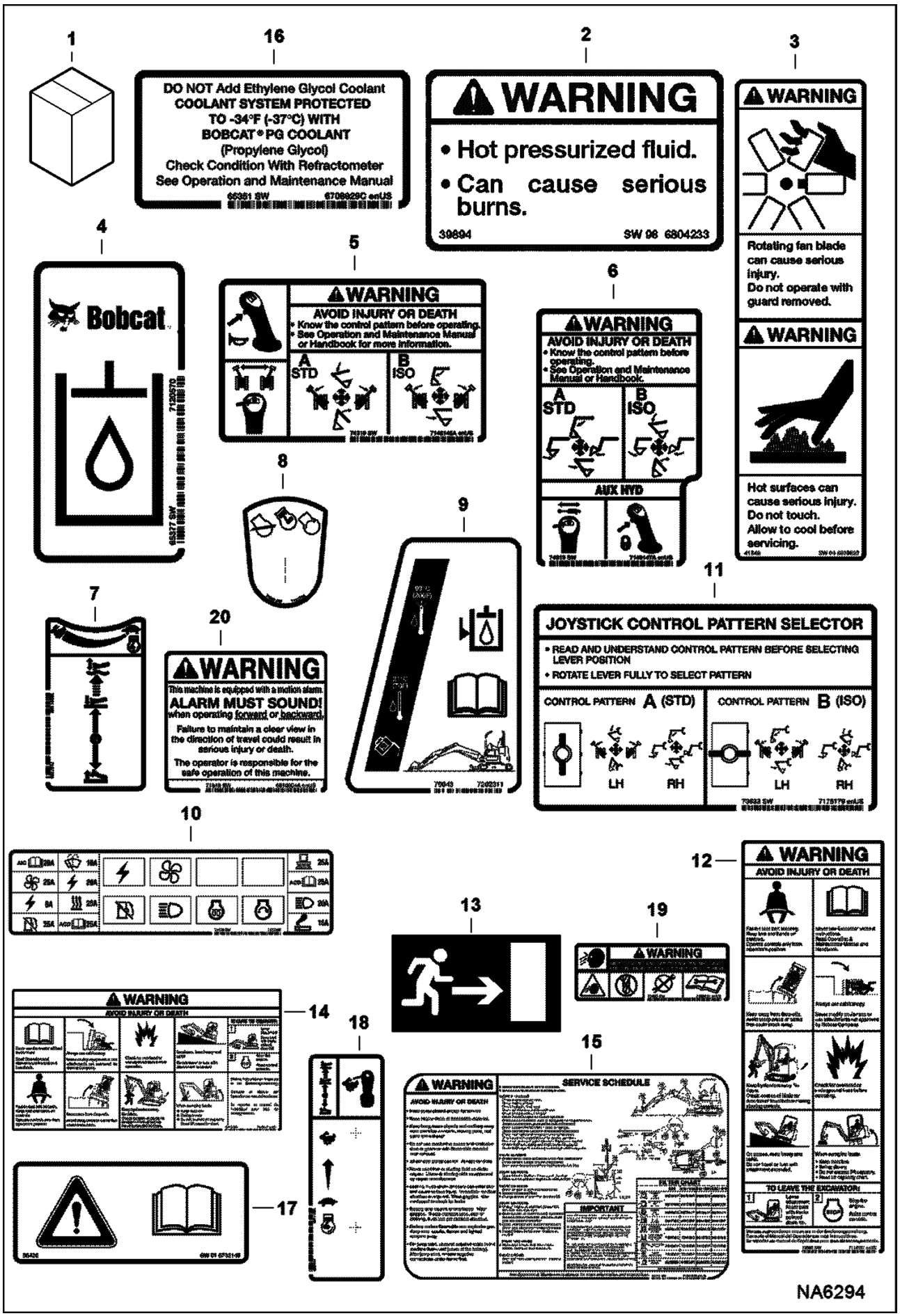

Page 258 - OSS# 2091664 - All rights reserved by Bobcat Company - 08/27/2012 - 11:42:23 - Produced by Ken Cook Co. with mediaIoff

DECALS (Cont'd)
(Inside)

Ref No	Part Number	Description	Remarks	Serial Number	Qty
1		KIT, DECAL	See Illustration DECALS/ NA6295 NAP		1
2	6804233	DECAL	warning		1
3	6809832	DECAL	warning		1
4	7120570	DECAL	hydraulic oil		1
5	7148145	DECAL, LH STD/ISO			1
6	7148147	DECAL, RH STD/ISO			1
7	7187735	DECAL, THROTTLE			1
8	7186708	DECAL, SWITCH IGN			1
9	7202311	DECAL, FILL LINE			1
10	7172409	DECAL, FUSE			1
11	7178179	DECAL, STD/ISO			1
12	7148157	DECAL, WARNING			1
13	7169014	DECAL, EXIT			1
14	7178177	DECAL, WARNING			1
15	7188747	DECAL, SERVICE			1
16	6708929	DECAL, COOLANT	propylene glycol		1
17	6732148	DECAL			1
18	7194620	DECAL, THROTTLE			1
19	7169291	DECAL	gas spring - not in kit		2
20	6810004	DECAL, WARNING	not in kit		1

Page 259 - OSS# 2091664 - All rights reserved by Bobcat Company - 08/27/2012 - 11:42:23 - Produced by Ken Cook Co. with mediaioff

DECALS
(Outside)

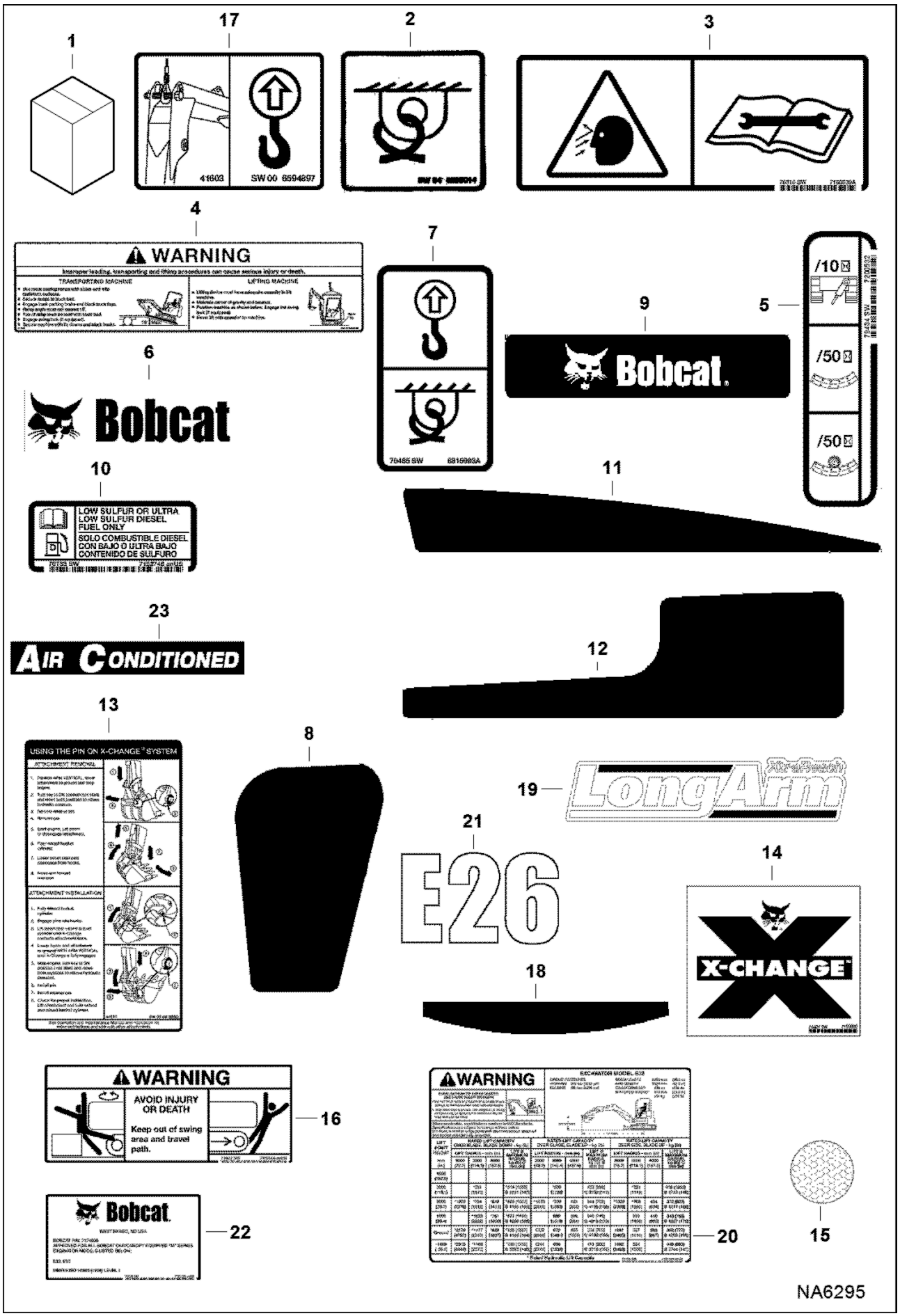

Page 260 - OSS# 2091664 - All rights reserved by Bobcat Company - 08/27/2012 - 11:42:23 - Produced by Ken Cook Co. with mediaIoff

DECALS (Cont'd)
(Outside)

Ref No	Part Number	Description	Remarks	Serial Number	Qty
1		KIT, DECAL	See Illustration DECALS/ NA6294 NAP		1
2	6595014	DECAL	tie down		3
3	7168039	DECAL, WARNING			2
4	7178178	DECAL, WARNING			1
5	7200532	DECAL, GREASE REMOTE			1
6	6815489	DECAL	logo - 402 mm (15.81") long		2
6	7167716	DECAL, LOGO	338 mm (13.32") long		2
6	6731332	DECAL	374 mm (14.7") long		1
7	6815993	DECAL	lift/tie down		2
8	7207597	DECAL, COVER	left		1
9	7200749	DECAL, LOGO BOBCAT	rear door		1
10	7152748	DECAL, FUEL DIESEL			1
11	7200747	DECAL, COVER	right cover		1
12	7156577	DECAL	left cover		1
13	6818059	DECAL	Using Pin-On X-Change		1
14	7160880	DECAL, X-CHANGE	Pin-On		1
15	7106627	DECAL	reflective		2
16	7169006	DECAL, STAY CLEAR			1
17	6594897	DECAL	boom lift		1
18	7194930	TREAD, SAFETY			1
19	7147433	DECAL, ARM LONG	not in kit		1
20	7206148	DECAL, CAPACITY LIFT	standard arm - not in kit		1
20	7206149	DECAL, CAPACITY LIFT	standard arm with counterweight - not in kit		1
20	7206150	DECAL, CAPACITY LIFT	long arm - not in kit		1
21	7200748	DECAL, MODEL	E26 - not in kit		2
22	7181121	DECAL, APPS SPECIAL	not in kit		1
22	7181127	DECAL, GUARD TOP	canopy - not in kit		1
22	7181128	DECAL, GUARD TOP	cab - not in kit		1
23	7166916	DECAL, A/C	not in kit		2

Page 261 - OSS# 2091664 - All rights reserved by Bobcat Company - 08/27/2012 - 11:42:23 - Produced by Ken Cook Co. with mediaioff

DIRECT TO TANK KIT

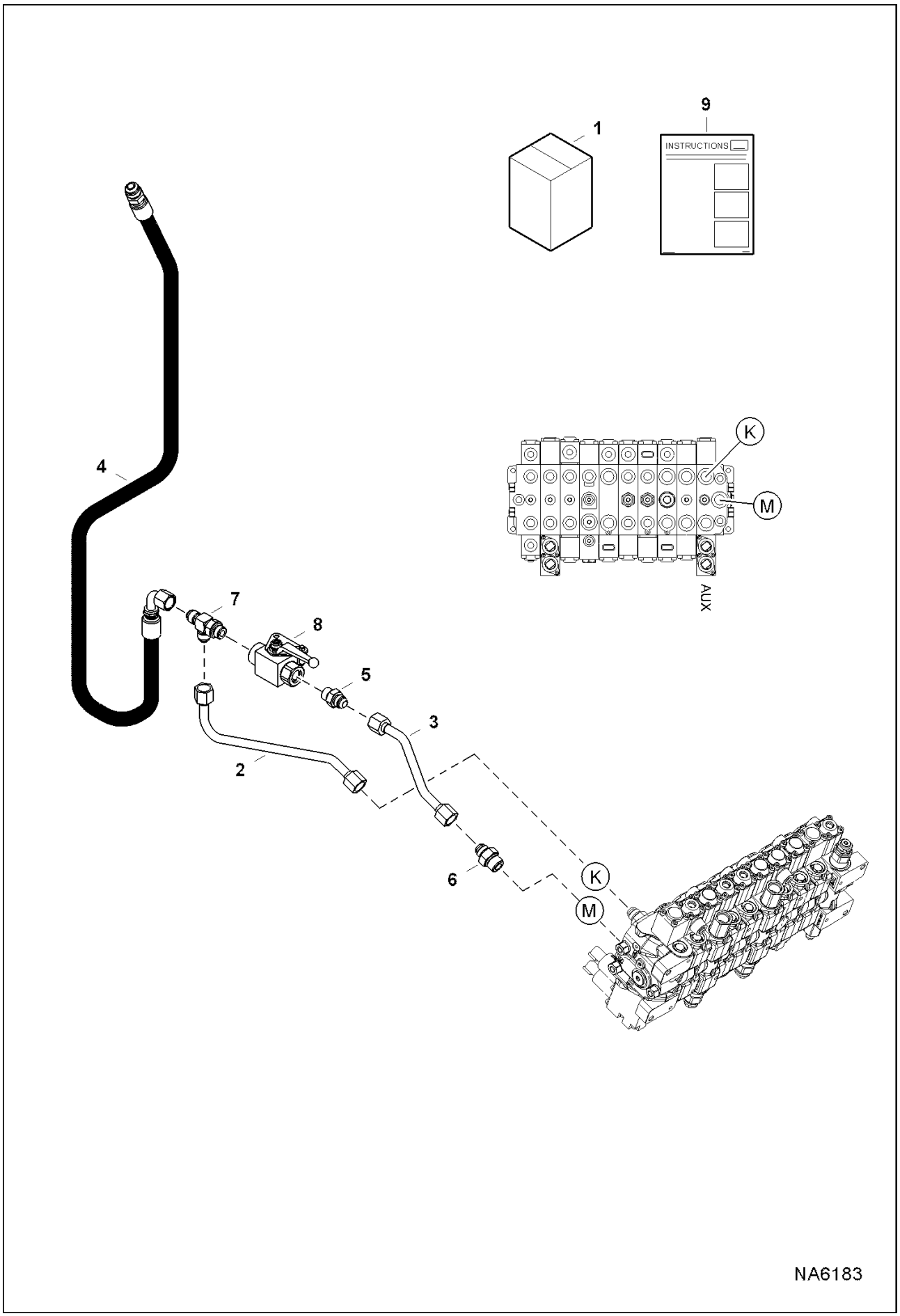

Page 262 - OSS# 2091664 - All rights reserved by Bobcat Company - 08/27/2012 - 11:42:23 - Produced by Ken Cook Co. with mediaioff

Ref No	Part Number	Description	Remarks	Serial Number	Qty
1	7206142	KIT, DIRECT TO TANK	Ref. 2-9		1
2	7189256	TUBELINE, HYD			1
3	7189258	TUBELINE, HYD			1
4	7204137	HOSE, HYD			1
5	15KB0808	FITTING, HYD CONNECTOR			1
5	79K8	O RING 10			x
6	15KB0810	FITTING, HYD CONNECTOR			1
6	79K10	O RING 10			x
7	21KB0808	FTG HYD STRAIGHT TEE			1
7	79K8	O RING 10			x
8	6693507	VALVE, BALL	See Illustration SELECTOR VALVE ASSY/ NA2306		1
9	6990182	INSTRUCTIONS			1

Page 263 - OSS# 2091664 - All rights reserved by Bobcat Company - 08/27/2012 - 11:42:23 - Produced by Ken Cook Co. with mediaioff

FIRE EXTINGUISHER

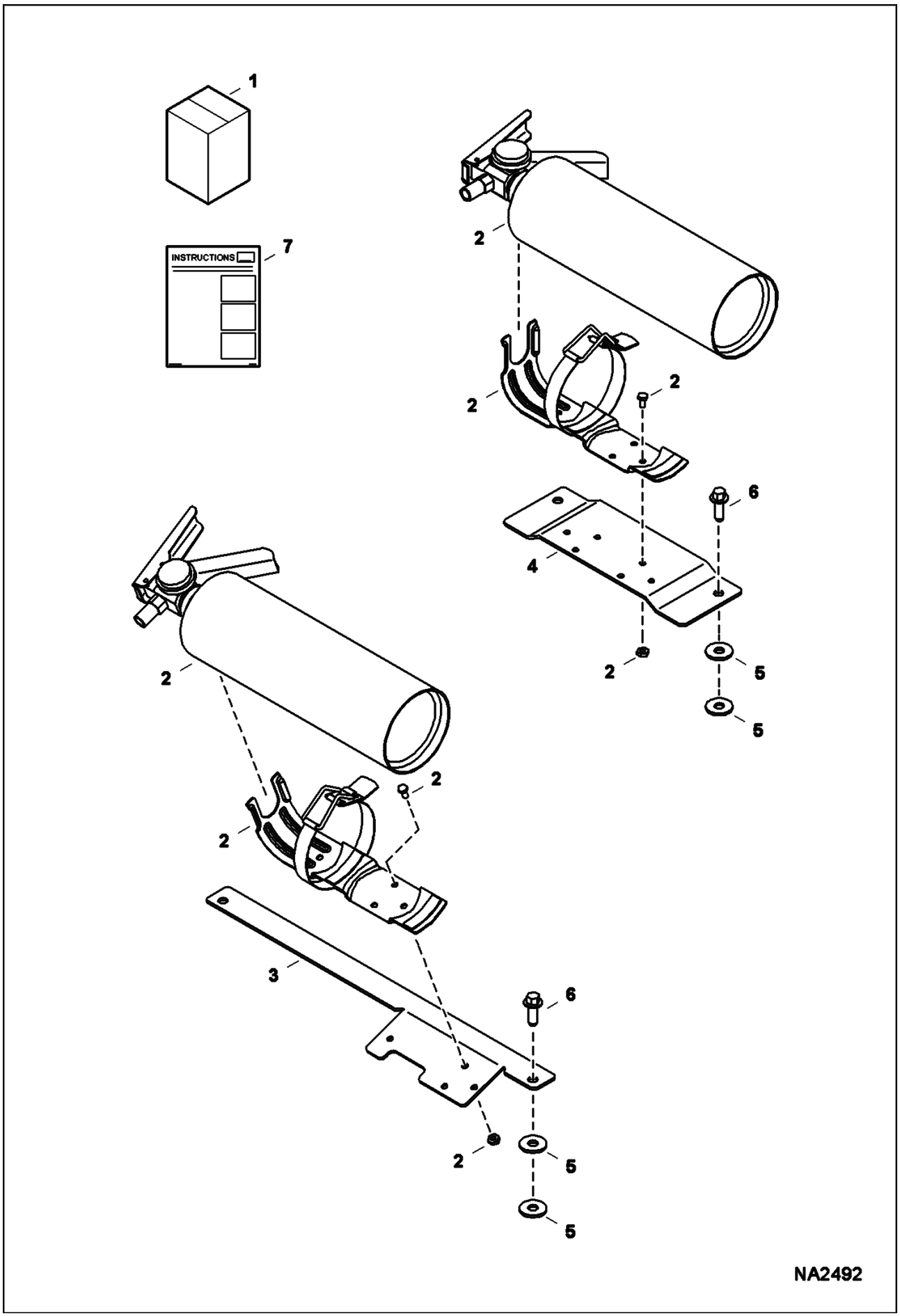

Page 264 - OSS# 2091664 - All rights reserved by Bobcat Company - 08/27/2012 - 11:42:23 - Produced by Ken Cook Co. with mediaioff

Ref No	Part Number	Description	Remarks	Serial Number	Qty
1	7186792	KIT, EXTINGUISHER FIRE	Ref. 2-7		1
2	7168164	EXTINQUISHER,FIRE			1
2		MOUNT	NSS		1
2		BOLT	NSS		4
2		NUT	NSS		4
3	7187101	BRACKET, EXTINGUISHER FIRE	cab		1
4	7187102	BRACKET, EXTINGUISHER FIRE	canopy		1
5	17EM80	WASHER			4
6	26GM8020	SCREW			2
7	6989530	INSTRUCTIONS			1

Page 265 - OSS# 2091664 - All rights reserved by Bobcat Company - 08/27/2012 - 11:42:23 - Produced by Ken Cook Co. with mediaioff

FUEL BOWL KIT

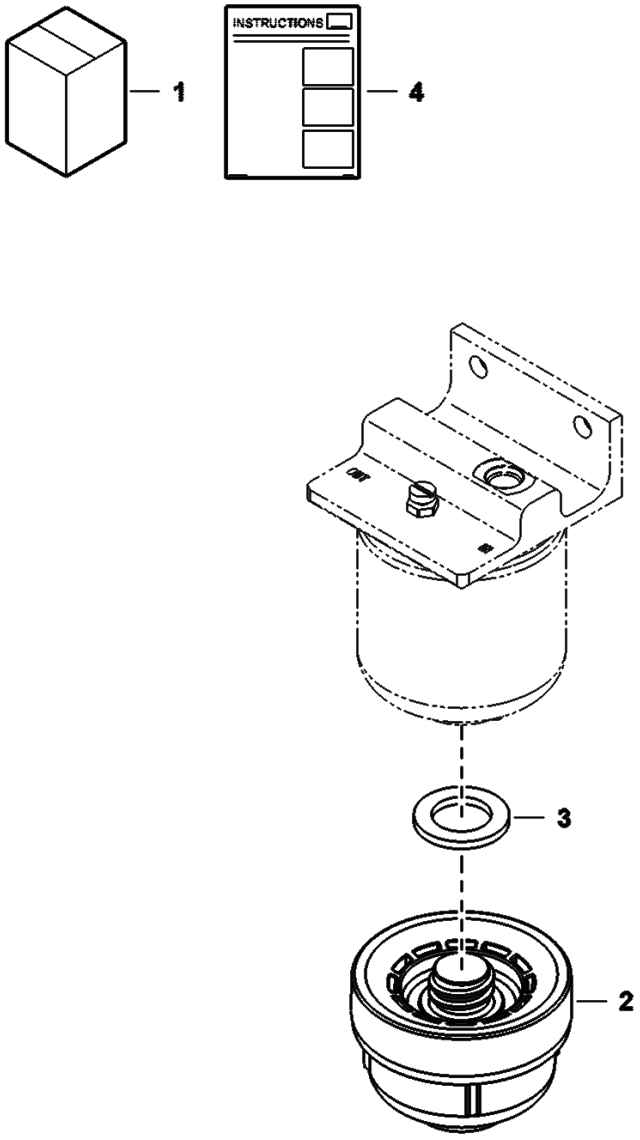

Page 266 - OSS# 2091664 - All rights reserved by Bobcat Company - 08/27/2012 - 11:42:23 - Produced by Ken Cook Co. with mediaioff

Ref No	Part Number	Description	Remarks	Serial Number	Qty
1		KIT, BOWL FUEL	NAP - Order components - Was 7177215 [A]		1
2	7167163	BOWL, FUEL	W/Ref. 3		1
3	7177212	GASKET			1
4	6987336	INSTRUCTIONS			1

Page 267 - OSS# 2091664 - All rights reserved by Bobcat Company - 08/27/2012 - 11:42:23 - Produced by Ken Cook Co. with mediaioff

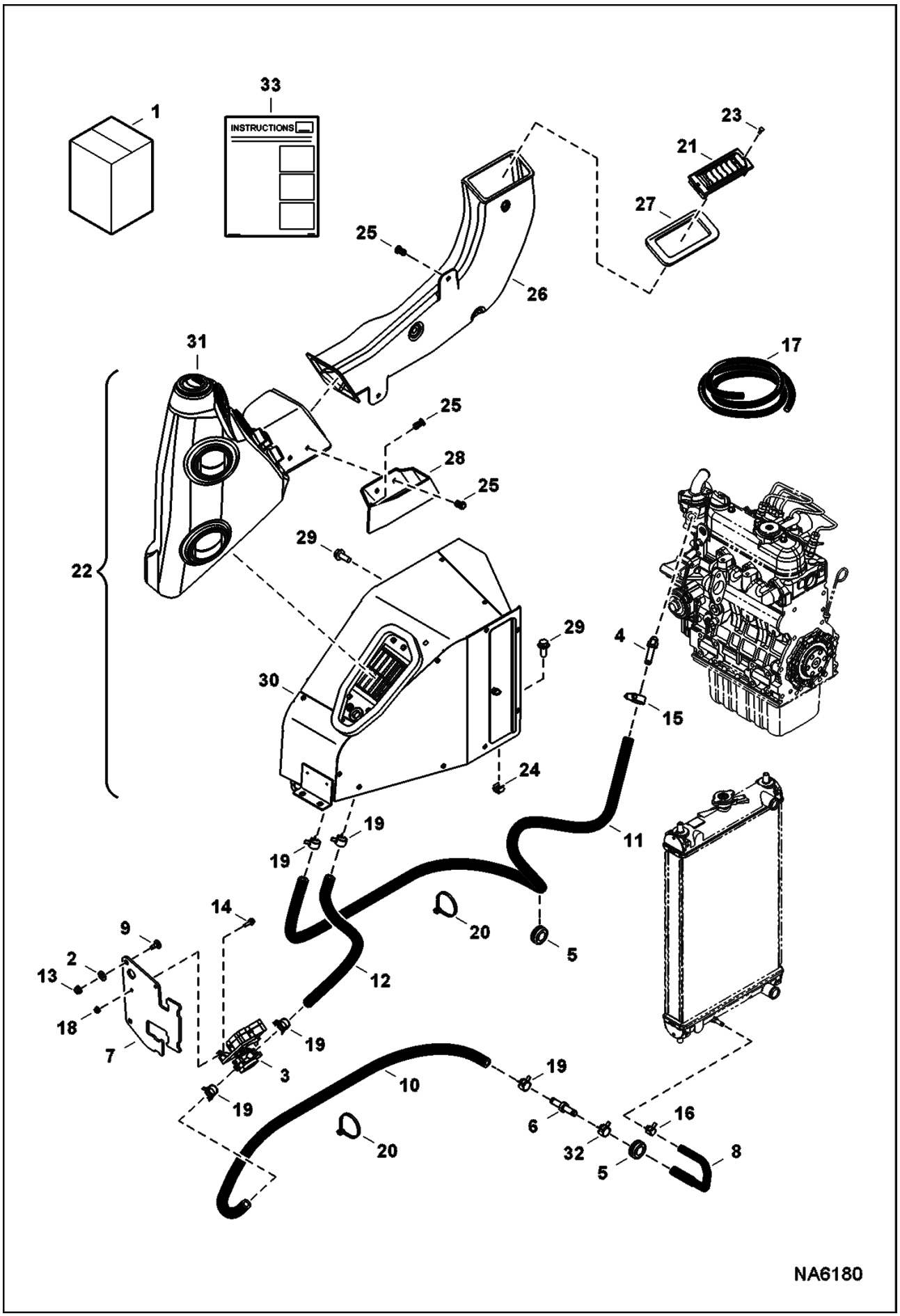

Page 268 - OSS# 2091664 - All rights reserved by Bobcat Company - 08/27/2012 - 11:42:23 - Produced by Ken Cook Co. with mediaIoff

Ref No	Part Number	Description	Remarks	Serial Number	Qty
1	7205739	KIT, HEATER CAB	Ref. 2-33		1
2	6675859	RETAINER			2
3	6693147	VALVE			1
4	6731085	ELBOW			1
5	7136776	GROMMET			2
6	6732023	CONNECTOR			1
7	7187716	HOLDER			1
8	7193565	HOSE HEATER			1
9	33CM820	BOLT			2
10		HOSE, HEATER	NAP - 1100 mm (43.3") long - Order Ref. 17		1
11		HOSE, HEATER	NAP - 1845 mm (72.6") long - Order Ref. 17		1
12		HOSE, HEATER	NAP - 450 mm (17.7") long - Order Ref. 17		1
13	43DM8	NUT			2
14	29CM620	SCREW			2
15	42HL100	CLAMP, HOSE			1
16	5HM14	CLAMP			1
17	6565977	HOSE	bulk - sold per foot		x
18	43DM6	NUT			2
19	5HM20	CLAMP			5
20	6624289	STRAP, TIE			3
21	6676713	LOUVER			1
22		HEATER, CAB	NAP - Order Ref. 30 & 31		1
23	6814024	SCREW			2
24	7155411	NUT			1
25	7160383	RIVET, BIRD CAGE			5
26	7162750	DUCT, AIR			1
27	7171356	SEAL, DUCT			1
28	7174321	CONTAINER, STORAGE			1
29	29CM1025	BOLT			4
30	7018004	HEATER, CAB	See Illustration HEATER & A/C/ NA2792		1
31		DUCT, AIR ASSY	See Illustration HEATER & A/C/ NA2794		1
32	5HM18	CLAMP			1
33	6990178	INSTRUCTIONS			1

Page 269 - OSS# 2091664 - All rights reserved by Bobcat Company - 08/27/2012 - 11:42:23 - Produced by Ken Cook Co. with mediaioff

HEATER & A/C
(Heater Assembly)

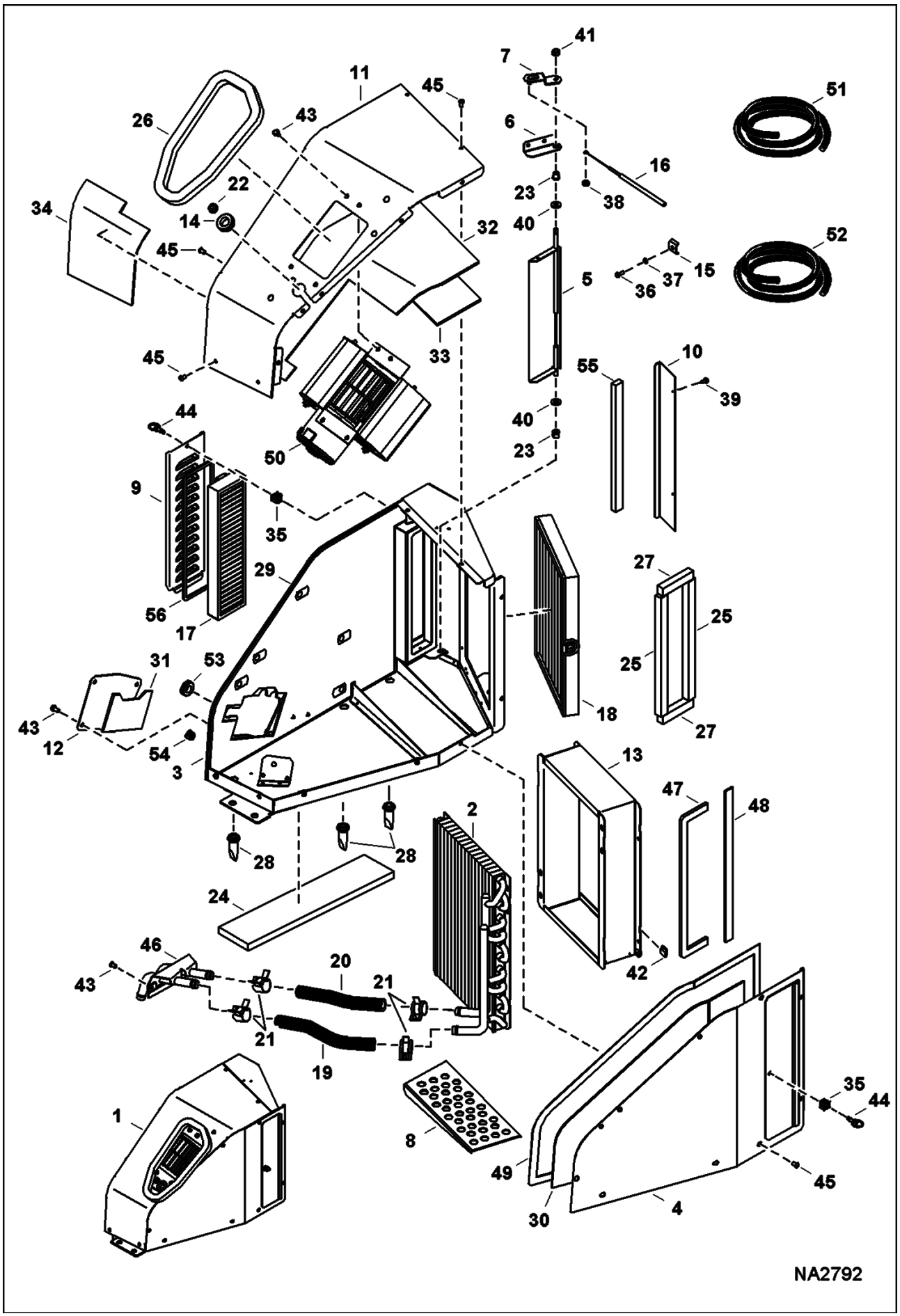

Page 270 - OSS# 2091664 - All rights reserved by Bobcat Company - 08/27/2012 - 11:42:23 - Produced by Ken Cook Co. with mediaioff

Ref No	Part Number	Description	Remarks	Serial Number	Qty
1	7018004	HEATER, CAB	Ref. 2-56		1
2	7011125	COIL, HEATER			1
3	7017997	HOUSING, BASE	Was 7019997 [D]		1
4	7018000	COVER, ASSY			1
5	7011122	DOOR, CONTROL AIR			1
6	7011121	BRACKET			1
7	7011120	LEVER			1
8	7011119	PLATE, SUPPORT			1
9	7011118	LOUVER			1
10	7011117	PLATE			1
11	7017998	COVER			1
12	7017999	PLATE, VALVE			1
13	7011114	PAN, COIL			1
14	7011113	HARNESS, HEATER	harness not shown - grommet included		1
15	7011112	CLAMP, CABLE			1
16	7011111	CABLE, A/C			1
17	7010331	FRESH AIR FILTER			1
18	7010332	FILTER RECIRCULATION			1
19		HOSE, HEATER	NAP - 175 mm (6.9") long - Order Ref. 51		1
20		HOSE, HEATER	NAP - 150 mm (5.9") long - Order Ref. 51		1
21	7003458	CLAMP, HOSE			4
22	6684947	GROMMET			1
23	7011110	BUSHING			2
24	7011109	FOAM			1
25		SEAL, FOAM	NAP - 235 mm (9.25") long - Order Ref. 52		2
26		SEAL, FOAM	NAP - 508 mm (20") long - Order Ref. 52		1
27		SEAL, FOAM	NAP - 70 mm (2.75") long - Order Ref. 52		2
28	7018001	VALVE, DRAIN			3
29	7011108	INSULATION, HEATER			1
30	7011107	INSULATION, HEATER			1
31	7011106	INSULATION, HEATER			1
32	7011105	INSULATION, HEATER			1
33	7011104	INSULATION, HEATER			1
34	7011103	INSULATION, HEATER			1
35	6677555	RECEPTACLE			2
36	7011102	BOLT			1
37	6693223	WASHER			1
38	6679675	NUT			1
39	6677119	SCREW			2
40	7011101	WASHER			2
41	7011100	NUT			1
42	6676539	CLIP			4
43	6677118	SCREW			12
44	7011099	STUD			2
45	7011098	BOLT			18
46	7018002	CONNECTOR			1

Page 271 - OSS# 2091664 - All rights reserved by Bobcat Company - 08/27/2012 - 11:42:23 - Produced by Ken Cook Co. with mediaioff

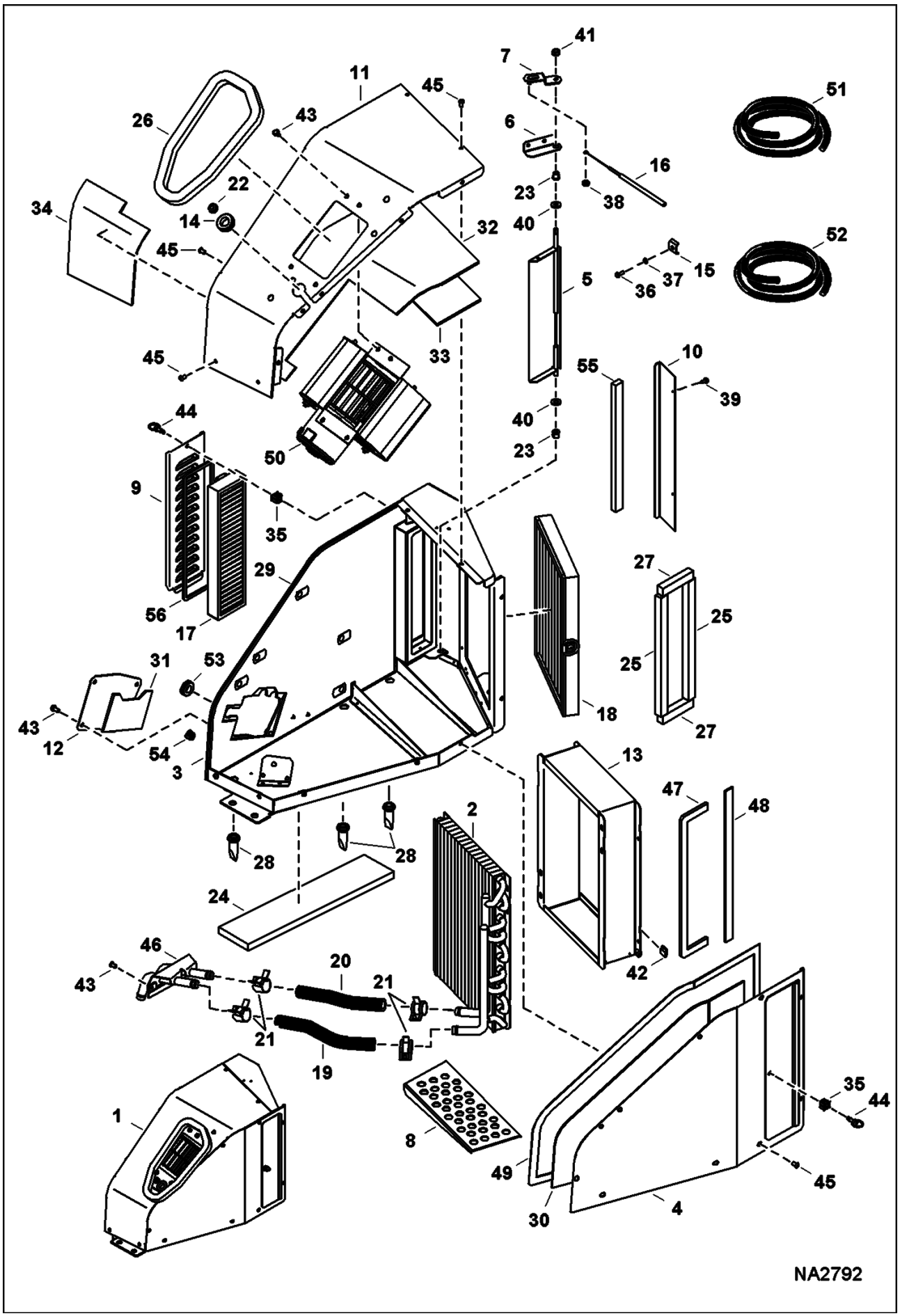

Page 272 - OSS# 2091664 - All rights reserved by Bobcat Company - 08/27/2012 - 11:42:23 - Produced by Ken Cook Co. with mediaIoff

Ref No	Part Number	Description	Remarks	Serial Number	Qty
47	6696953	FOAM			1
48	7011096	FOAM			1
49	6693236	FOAM			1
50	7011131	BLOWER, HEATER & A/C			1
51	7003457	HOSE, HEATER	bulk - sold per foot		x
52	7003460	SEAL, FOAM	bulk - sold per foot		x
53	7003459	GROMMET			1
54	7003511	PLUG			1
55	6693234	FOAM			1
56	7018003	SEAL, FOAM			1

Page 273 - OSS# 2091664 - All rights reserved by Bobcat Company - 08/27/2012 - 11:42:23 - Produced by Ken Cook Co. with mediaioff

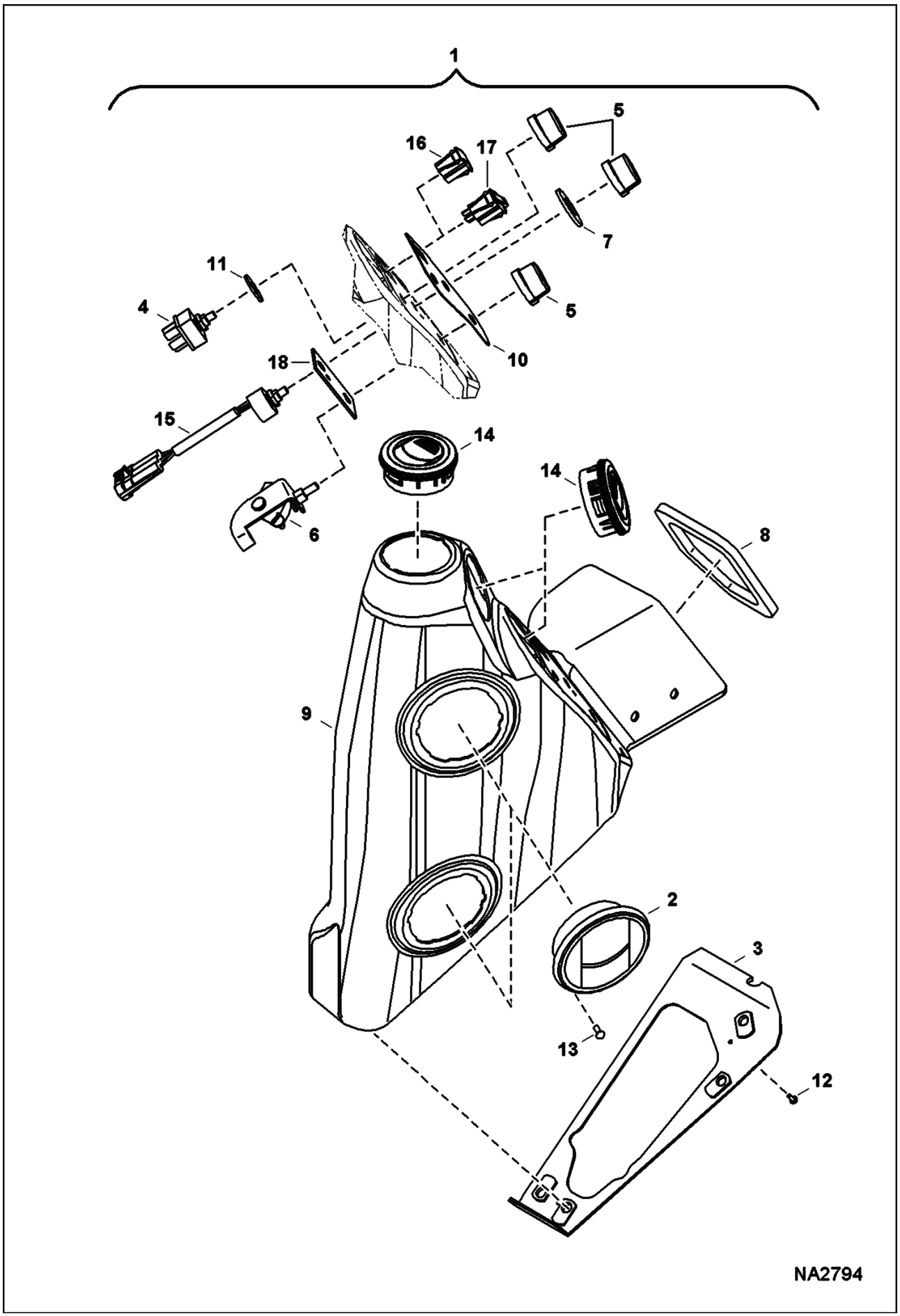

Page 274 - OSS# 2091664 - All rights reserved by Bobcat Company - 08/27/2012 - 11:42:23 - Produced by Ken Cook Co. with mediaioff

Ref No	Part Number	Description	Remarks	Serial Number	Qty
1		DUCT, AIR ASSY	NAP - Order components		1
2	7011094	LOUVER			2
3	7018006	BRACKET			1
4	6675176	SWITCH			1
5	6684940	KNOB			3
6	7018008	CONTROL			1
7	7011092	WASHER, CUSHION			1
8	7003460	SEAL, FOAM			1
9	7011091	DUCT, AIR			1
10	7011090	DECAL			1
11	7018009	WASHER			1
12	7011088	RIVET, POP			2
13	7011086	SCREW, TAPPING			8
14	7011095	LOUVER			3
15	7018010	SWITCH, CONTROL TEMP			1
16	6675181	PLUG			1
17	7169112	SWITCH, ROCKER A/C			1
18	7018007	PLATE			1

Page 275 - OSS# 2091664 - All rights reserved by Bobcat Company - 08/27/2012 - 11:42:23 - Produced by Ken Cook Co. with mediaioff

HEATER & A/C
(HVAC Option)

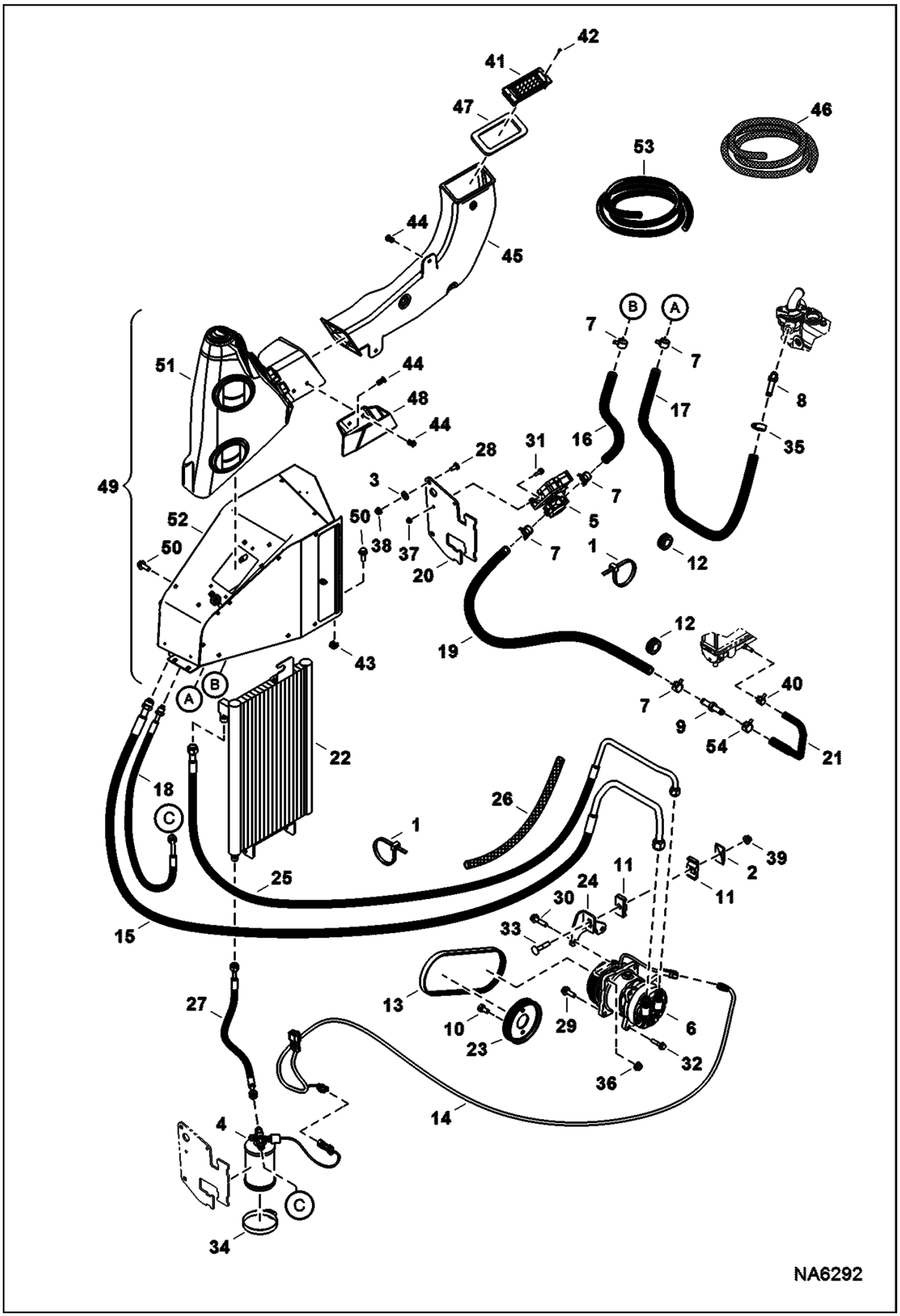

Page 276 - OSS# 2091664 - All rights reserved by Bobcat Company - 08/27/2012 - 11:42:23 - Produced by Ken Cook Co. with mediaioff

Ref No	Part Number	Description	Remarks	Serial Number	Qty
1	6624289	STRAP, TIE			7
2	6652521	PLATE			1
3	6675859	RETAINER			2
4	6680311	RECEIVER			1
5	6693147	VALVE			1
6	6698358	COMPRESSOR, A/C			1
7	5HM20	CLAMP			5
8	6731085	ELBOW			1
9	6732023	CONNECTOR			1
10	6733378	SCREW			2
11	7021798	CLAMP, TUBELINE			2
12	7136776	GROMMET			2
13	7197814	BELT, COMPRESSOR A/C			1
14	7168895	HARNESS, AC CLUTCH			1
15	7209338	HOSE, A/C ASSY			1
16		HOSE, HEATER	NAP - 450 mm (17.7") long - Order Ref. 53		1
17		HOSE, HEATER	NAP - 1845 mm (72.6") long - Order Ref. 53		1
18	7174121	HOSE, A/C ASSY			1
19		HOSE, HEATER	NAP - 1100 mm (43.3") long - Order Ref. 53		1
20	7187716	HOLDER			1
21	7193565	HOSE HEATER			1
22	7194836	CONDENSER, A/C			1
23	7199269	PULLEY			1
24	7209756	BRACKET			1
25	7209339	HOSE, A/C ASSY			1
26		COVER, HOSE	NAP - 320 mm (12.6") long - Order Ref. 46		2
27	7204294	HOSE, A/C ASSY			1
28	28CM820	BOLT			2
29	29CM1030	BOLT			2
30	29CM1040	BOLT			1
31	29CM620	SCREW			2
32	29CM835	BOLT			1
33	33CM1050	BOLT			1
34	42H48	CLAMP 5			2
35	42HL100	CLAMP, HOSE			1
36	43DM10	NUT			2
37	43DM6	NUT			2
38	43DM8	NUT			2
39	51DM10	NUT			1
40	5HM14	CLAMP			1
41	6676713	LOUVER			1
42	6814024	SCREW			2
43	7155411	NUT			1
44	7160383	RIVET, BIRD CAGE			5
45	7162750	DUCT, AIR			1
46	7187433	COVER, HOSE BULK/FT	bulk - sold per foot		x
47	7171356	SEAL, DUCT			1
48	7174321	CONTAINER, STORAGE			1

Page 277 - OSS# 2091664 - All rights reserved by Bobcat Company - 08/27/2012 - 11:42:23 - Produced by Ken Cook Co. with mediaioff

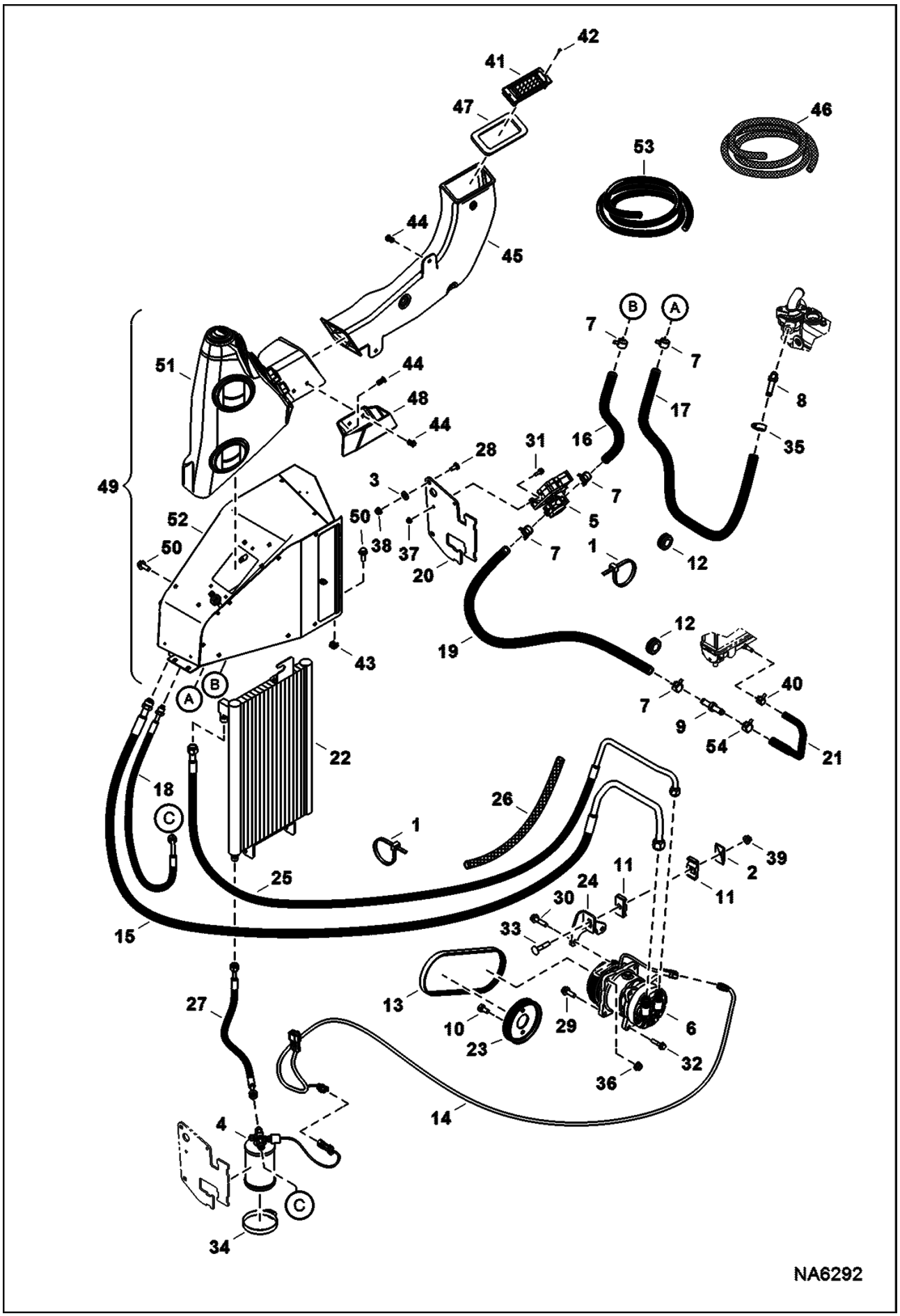

Page 278 - OSS# 2091664 - All rights reserved by Bobcat Company - 08/27/2012 - 11:42:23 - Produced by Ken Cook Co. with mediaioff

Ref No	Part Number	Description	Remarks	Serial Number	Qty
48	7174321	CONTAINER, STORAGE			1
49		HVAC ASSY	NAP - Order Ref. 51 & 52		1
50	29CM1025	BOLT			4
51		DUCT	See Illustration HEATER & A/C/ NA2794		1
52	7018005	HVAC ASSY	See Illustration HEATER & A/C/ NA2793		1
53	6565977	HOSE	bulk - sold per foot		x
54	5HM18	CLAMP			1

Page 279 - OSS# 2091664 - All rights reserved by Bobcat Company - 08/27/2012 - 11:42:23 - Produced by Ken Cook Co. with mediaioff

HEATER & A/C
(HVAC Assembly)

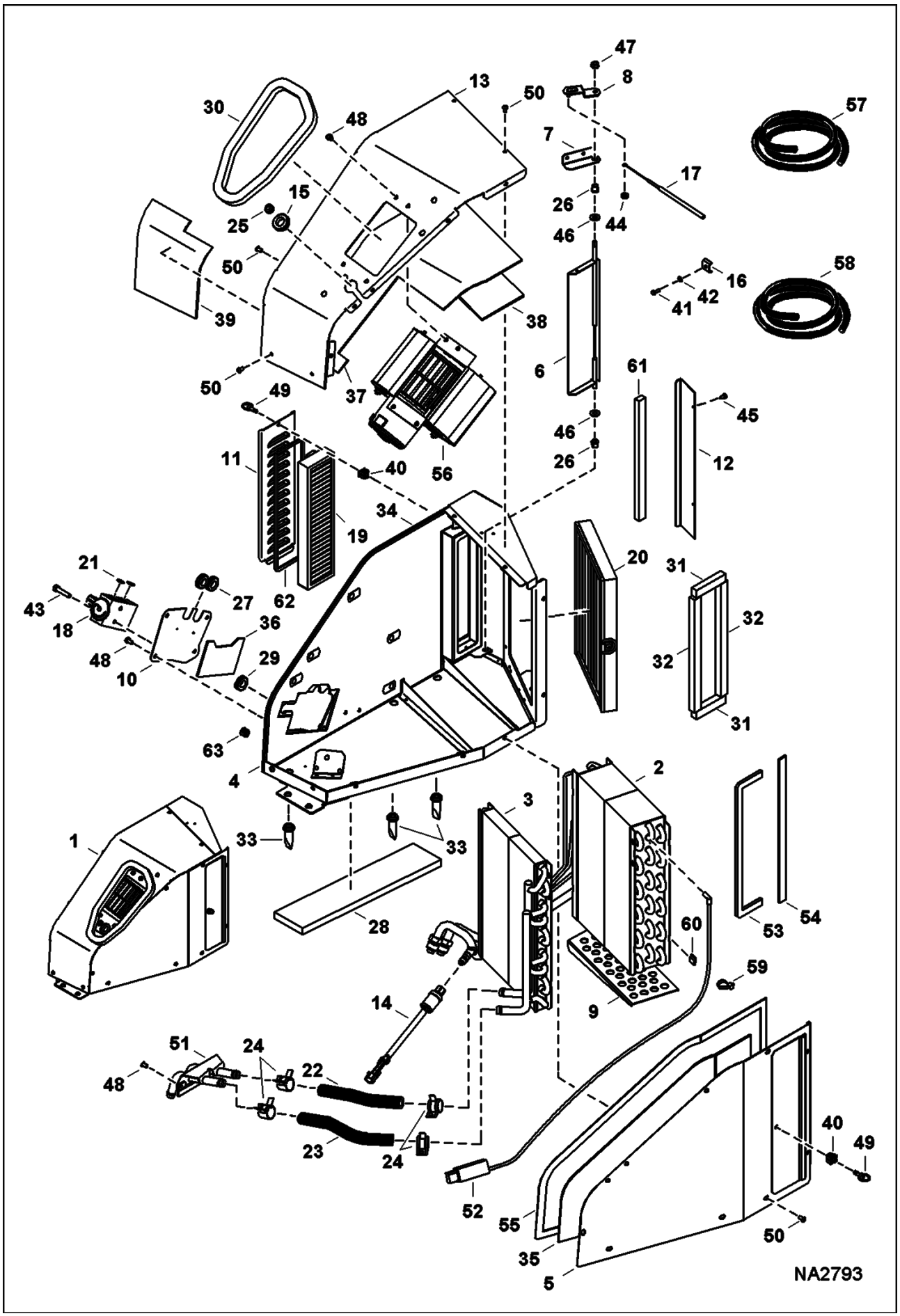

Page 280 - OSS# 2091664 - All rights reserved by Bobcat Company - 08/27/2012 - 11:42:23 - Produced by Ken Cook Co. with mediaioff

Ref No	Part Number	Description	Remarks	Serial Number	Qty
1	7018005	HVAC ASSY	Ref. 2-62		1
2	7017995	EVAPORATOR			1
3	7011125	COIL, HEATER			1
4	7017997	HOUSING, BASE	Was 7019997 [D]		1
5	7018000	COVER, ASSY			1
6	7011122	DOOR, CONTROL AIR			1
7	7011121	BRACKET			1
8	7011120	LEVER			1
9	7011119	PLATE, SUPPORT			1
10	7017996	BRACKET, VALVE			1
11	7011118	LOUVER			1
12	7011117	PLATE			1
13	7017998	COVER	Was 7019998 [D]		1
14	6679085	SWITCH	LPCO - Was 6697954 [A]		1
15	7011128	HARNESS, HVAC	harness not shown - grommet included		1
16	7011112	CLAMP, CABLE			1
17	7011111	CABLE, A/C			1
18	7008034	BLOCK, VALVE A/C			1
19	7010331	FRESH AIR FILTER			1
20	7010332	FILTER RECIRCULATION			1
21	7009977	O-RING	#8 - Was 6675538 [A]		2
22		HOSE	NAP - 5.9" (150 mm) long - Order Ref. 57		1
23		HOSE	NAP - 6.9" (175 mm) long - Order Ref. 57		1
24	7003458	CLAMP, HOSE			4
25	6684947	GROMMET			1
26	7011110	BUSHING			2
27	7003459	GROMMET			2
28	7011109	FOAM			1
29	7003459	GROMMET			1
30		SEAL, FOAM	NAP - 20" (508 mm) long - Order Ref. 58		1
31		SEAL, FOAM	NAP - 2.75" (70 mm) long - Order Ref. 58		2
32		SEAL, FOAM	NAP - 9.25" (235 mm) long - Order Ref. 58		2
33	7018001	VALVE, DRAIN			3
34	7011108	INSULATION, HEATER			1
35	7011107	INSULATION, HEATER			1
36	7011106	INSULATION, HEATER			1
37	7011105	INSULATION, HEATER			1
38	7011104	INSULATION, HEATER			1
39	7011103	INSULATION, HEATER			1
40	6677555	RECEPTACLE			2
41	7011102	BOLT			1
42	6693223	WASHER			1
43	6691534	SCREW			2
44	6679675	NUT			1
45	6677119	SCREW			2

Page 281 - OSS# 2091664 - All rights reserved by Bobcat Company - 08/27/2012 - 11:42:23 - Produced by Ken Cook Co. with mediaioff

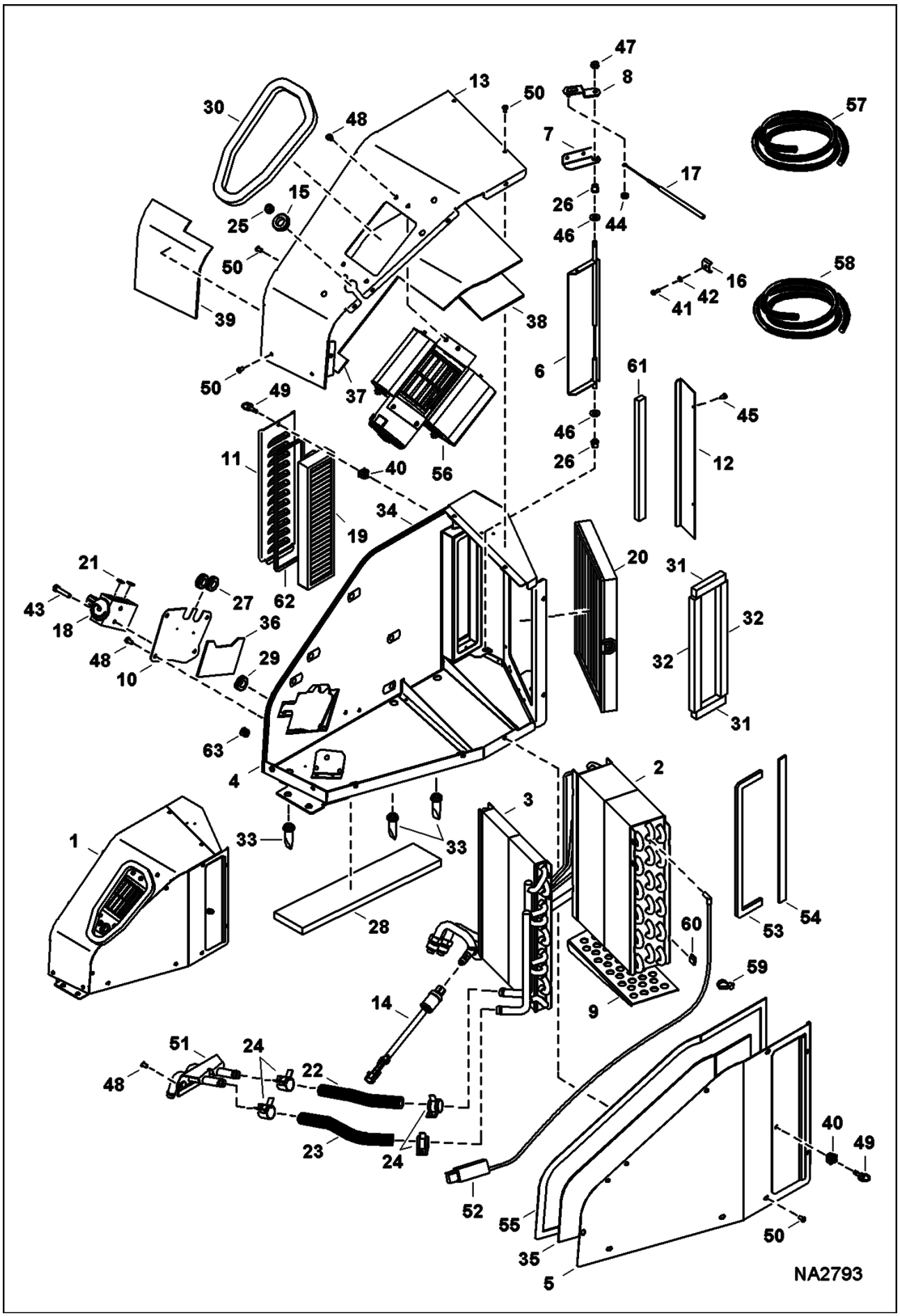

Page 282 - OSS# 2091664 - All rights reserved by Bobcat Company - 08/27/2012 - 11:42:23 - Produced by Ken Cook Co. with mediaioff

Ref No	Part Number	Description	Remarks	Serial Number	Qty
46	7011101	WASHER			2
47	7011100	NUT			1
48	6677118	SCREW			12
49	7011099	STUD			2
50	7011098	BOLT			18
51	7018002	CONNECTOR			1
52	7008040	MODULE, DE-ICER ELECTRONIC			1
53	6696953	FOAM			1
54	7011096	FOAM			1
55	6693236	FOAM			1
56	7011131	BLOWER, HEATER & A/C			1
57	7003457	HOSE, HEATER	bulk - sold per foot		x
58	7003460	SEAL, FOAM			x
59	6684948	STRAP TIE			2
60	6676539	CLIP			6
61	6693234	FOAM			1
62	7018003	SEAL, FOAM			1
63	7003511	PLUG			1

Page 283 - OSS# 2091664 - All rights reserved by Bobcat Company - 08/27/2012 - 11:42:23 - Produced by Ken Cook Co. with mediaioff

HOSE AIR BLEED KIT

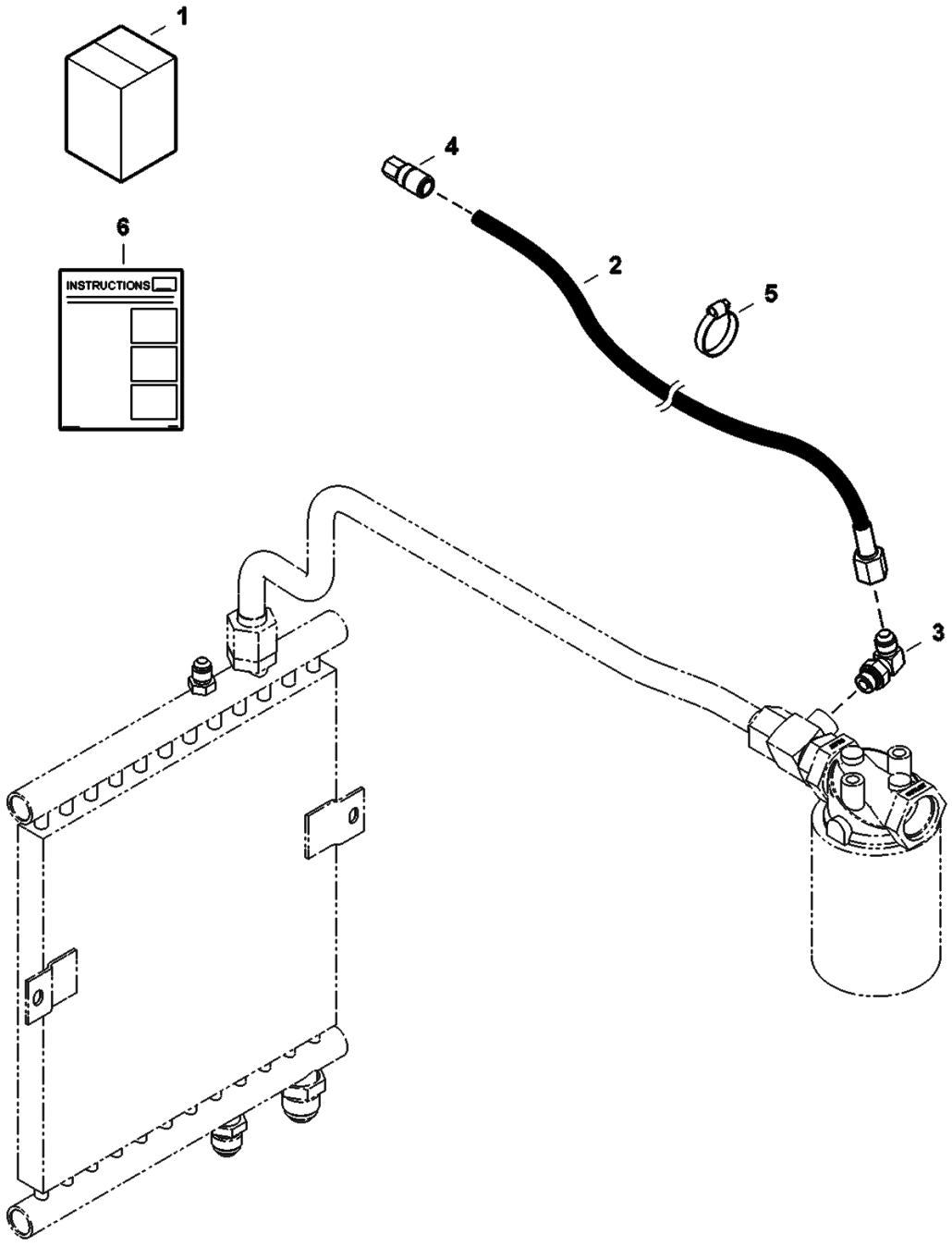

Page 284 - OSS# 2091664 - All rights reserved by Bobcat Company - 08/27/2012 - 11:42:23 - Produced by Ken Cook Co. with mediaioff

Ref No	Part Number	Description	Remarks	Serial Number	Qty
1	7200829	KIT HOSE AIR BLEED	Ref. 2-5		1
2	7201368	HOSE OIL			1
3	17KB0606	FITTING			1
3	79K6	O RING 10			x
4	6689773	COUPLER			1
5	42HS4	CLAMP			1
6	6990161	INSTRUCTIONS			1

Page 285 - OSS# 2091664 - All rights reserved by Bobcat Company - 08/27/2012 - 11:42:23 - Produced by Ken Cook Co. with mediaioff

KEYLESS IGNITION KIT

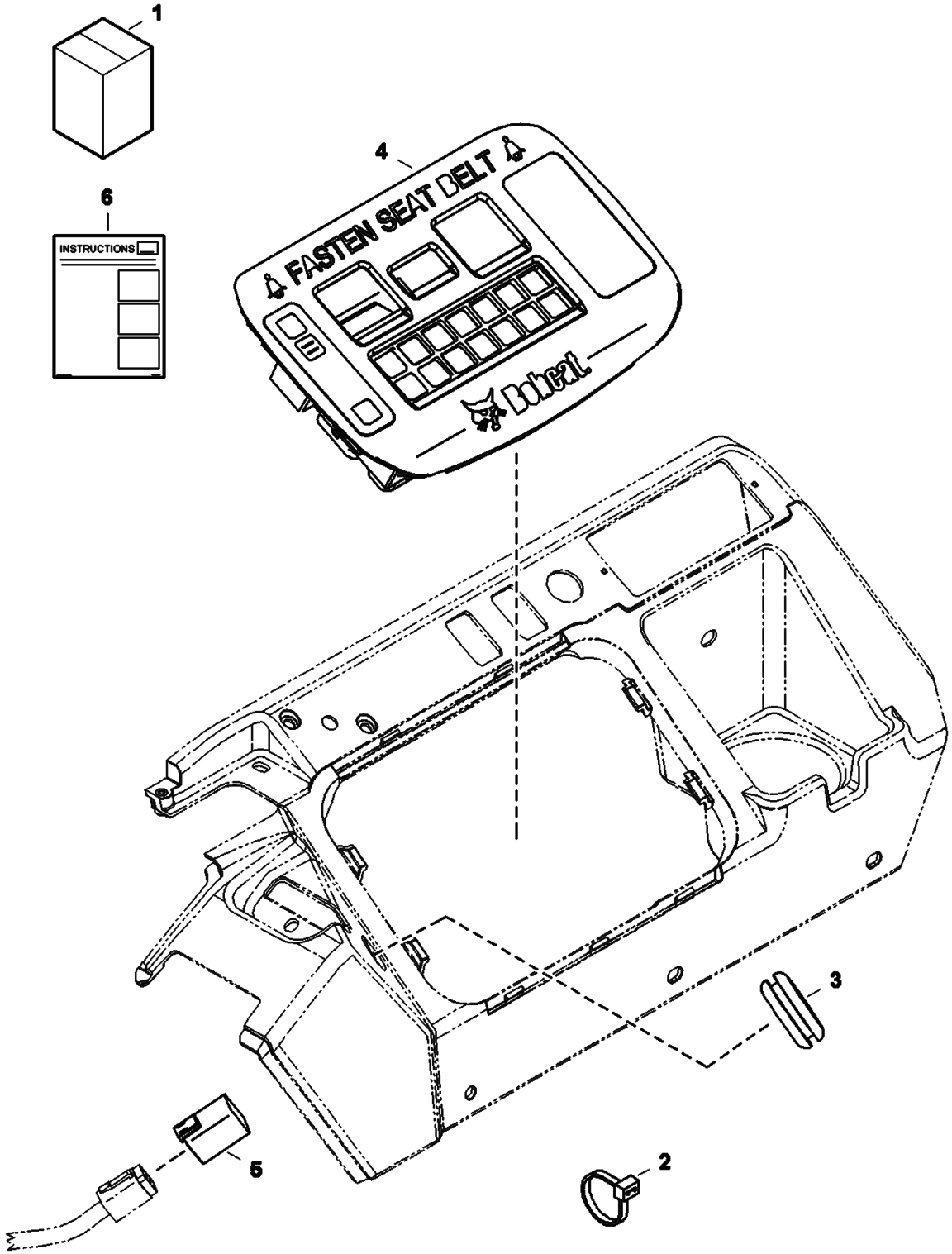

Page 286 - OSS# 2091664 - All rights reserved by Bobcat Company - 08/27/2012 - 11:42:23 - Produced by Ken Cook Co. with mediaioff

Ref No	Part Number	Description	Remarks	Serial Number	Qty
1	7181592	KIT, IGN KEYLESS	Ref. 2-6		1
2	6610510	TIE			1
3	6676922	PLUG			1
4	7021082	CONTROLLER, KEYLESS PANEL			1
5	7010502	CAP, CONNECTOR			1
6	6989410	INSTRUCTIONS			1

Page 287 - OSS# 2091664 - All rights reserved by Bobcat Company - 08/27/2012 - 11:42:23 - Produced by Ken Cook Co. with mediaioff

LOAD HOLD
(Arm Kit)

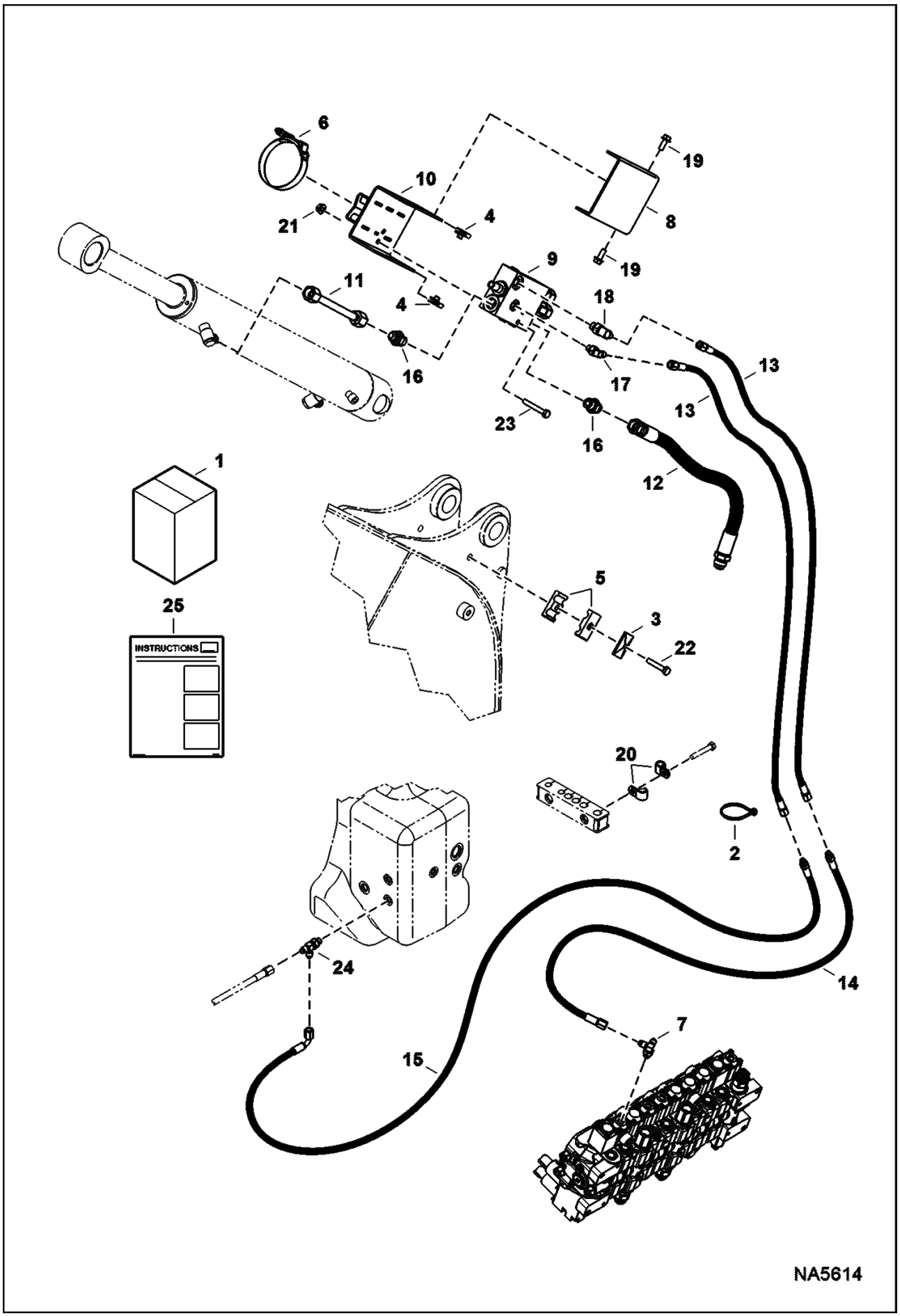

Page 288 - OSS# 2091664 - All rights reserved by Bobcat Company - 08/27/2012 - 11:42:23 - Produced by Ken Cook Co. with mediaioff

Ref No	Part Number	Description	Remarks	Serial Number	Qty
1	7207811	KIT, LOAD HOLD ARM	Ref. 2-25 - must be used with boom load hold kit or option		1
2	6610510	TIE			2
3	6652521	PLATE			1
4	6676169	NUT			4
5	6701892	CLAMP			2
6	7009353	CLAMP, T-BOLT			2
7	7166606	TEE			1
7	79K4	O RING 10			x
8	7174256	BRACKET, VALVE			1
9	7189078	VALVE, LOCK LOAD	See Illustration LOAD HOLD/ NA2293		1
10	7196886	BRACKET, VALVE			1
11	7196921	TUBELINE, HYD			1
12	7196922	HOSE, HYD			1
13	7197125	HOSE, HYD			2
14	7197552	HOSE, HYD			1
15	7197553	HOSE, HYD			1
16	15KB0808	FITTING, HYD CONNECTOR			2
16	79K8	O RING 10			x
17	17KB0404	FTG HYD ELBOW 90			1
17	79K4	O RING 10			x
18	17KB0406	FITTING, HYD ELBOW			1
18	79K6	O RING 10			x
19	29CM820	SCREW			4
20	30H30	CLAMP			2
21	51DM8	NUT			2
22	53CM845	BOLT			1
23	53CM855	SCREW			2
24	21KB0404	FITTING, HYD TEE			1
24	79K4	O RING 10			x
25	6990231	INSTRUCTIONS			1

Page 289 - OSS# 2091664 - All rights reserved by Bobcat Company - 08/27/2012 - 11:42:23 - Produced by Ken Cook Co. with mediaioff

LOAD HOLD
(Boom Kit)

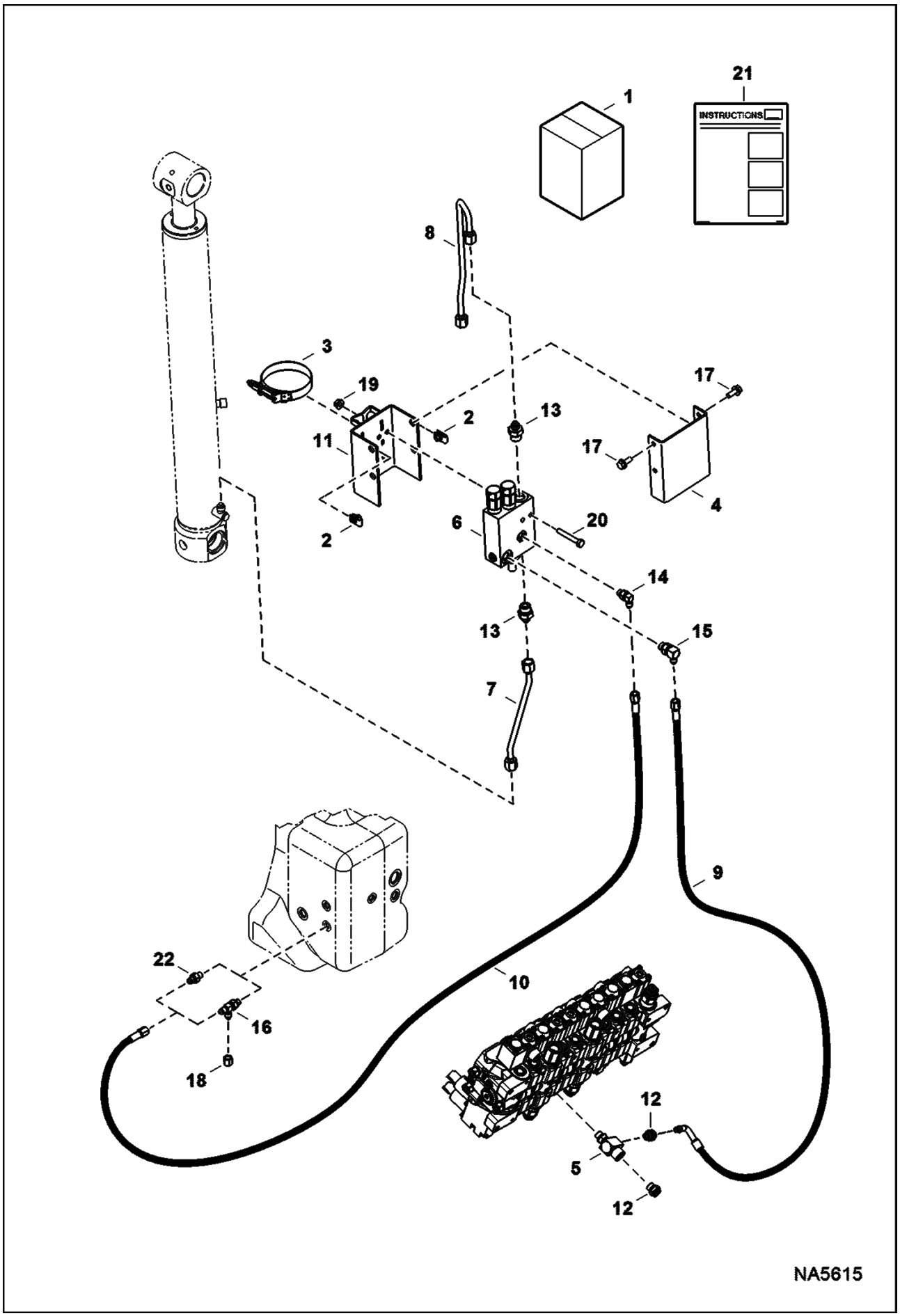

Page 290 - OSS# 2091664 - All rights reserved by Bobcat Company - 08/27/2012 - 11:42:23 - Produced by Ken Cook Co. with mediaioff

Ref No	Part Number	Description	Remarks	Serial Number	Qty
1	7207809	KIT, LOAD HOLD BOOM	Ref. 2-21		1
2	6676169	NUT			4
3	7009353	CLAMP, T-BOLT			2
4	7174256	BRACKET, VALVE			1
5	7185275	FITTING, HYD TEE			1
5	79K6	O RING 10			x
6	7189078	VALVE, LOCK LOAD	See Illustration LOAD HOLD/ NA2293		1
7	7196470	TUBELINE, HYD			1
8	7196618	TUBELINE, HYD			1
9	7196714	HOSE, HYD			1
10	7196820	HOSE, HYD			1
11	7196886	BRACKET, VALVE			1
12	10L0606	FITTING, HYD CONNECTOR			2
12	78K6	O'RING			x
12	7011053	CLIP			x
13	15KB0608	FITTING, HYD CONNECTOR			2
13	79K8	O RING 10			x
14	17KB0404	FTG HYD ELBOW 90			1
14	79K4	O RING 10			x
15	17KB0406	FITTING, HYD ELBOW			1
15	79K6	O RING 10			x
16	21KB0404	FITTING, HYD TEE			1
16	79K4	O RING 10			x
17	29CM820	SCREW			4
18	36K3	CAP			1
19	51DM8	NUT			2
20	53CM855	SCREW			2
21	6990230	INSTRUCTIONS			1
22	15KB0404	FTG HYD S Connector	option		1
22	79K4	O RING 10			x

Page 291 - OSS# 2091664 - All rights reserved by Bobcat Company - 08/27/2012 - 11:42:23 - Produced by Ken Cook Co. with mediaioff

LOAD HOLD
(Valve)

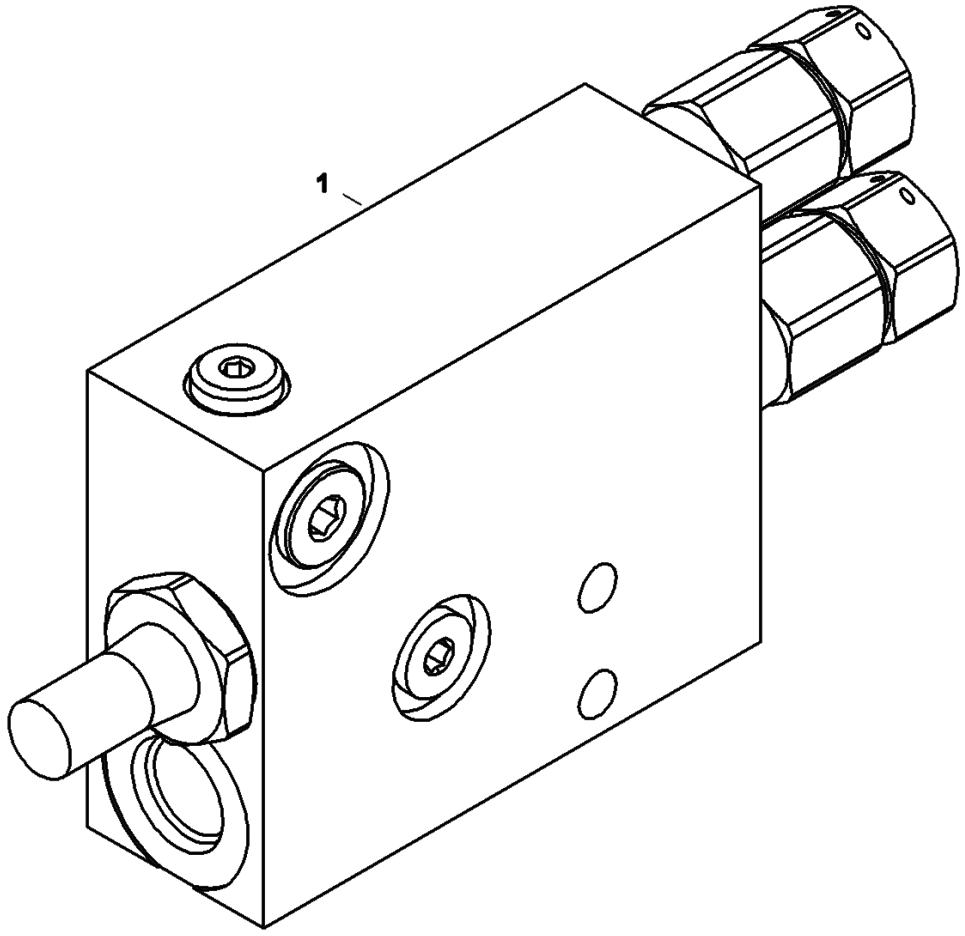

NA2293

Page 292 - OSS# 2091664 - All rights reserved by Bobcat Company - 08/27/2012 - 11:42:23 - Produced by Ken Cook Co. with mediaioff

Ref No	Part Number	Description	Remarks	Serial Number	Qty
1	7189078	VALVE, LOCK LOAD			1

Page 293 - OSS# 2091664 - All rights reserved by Bobcat Company - 08/27/2012 - 11:42:23 - Produced by Ken Cook Co. with mediaioff

LONG ARM KIT

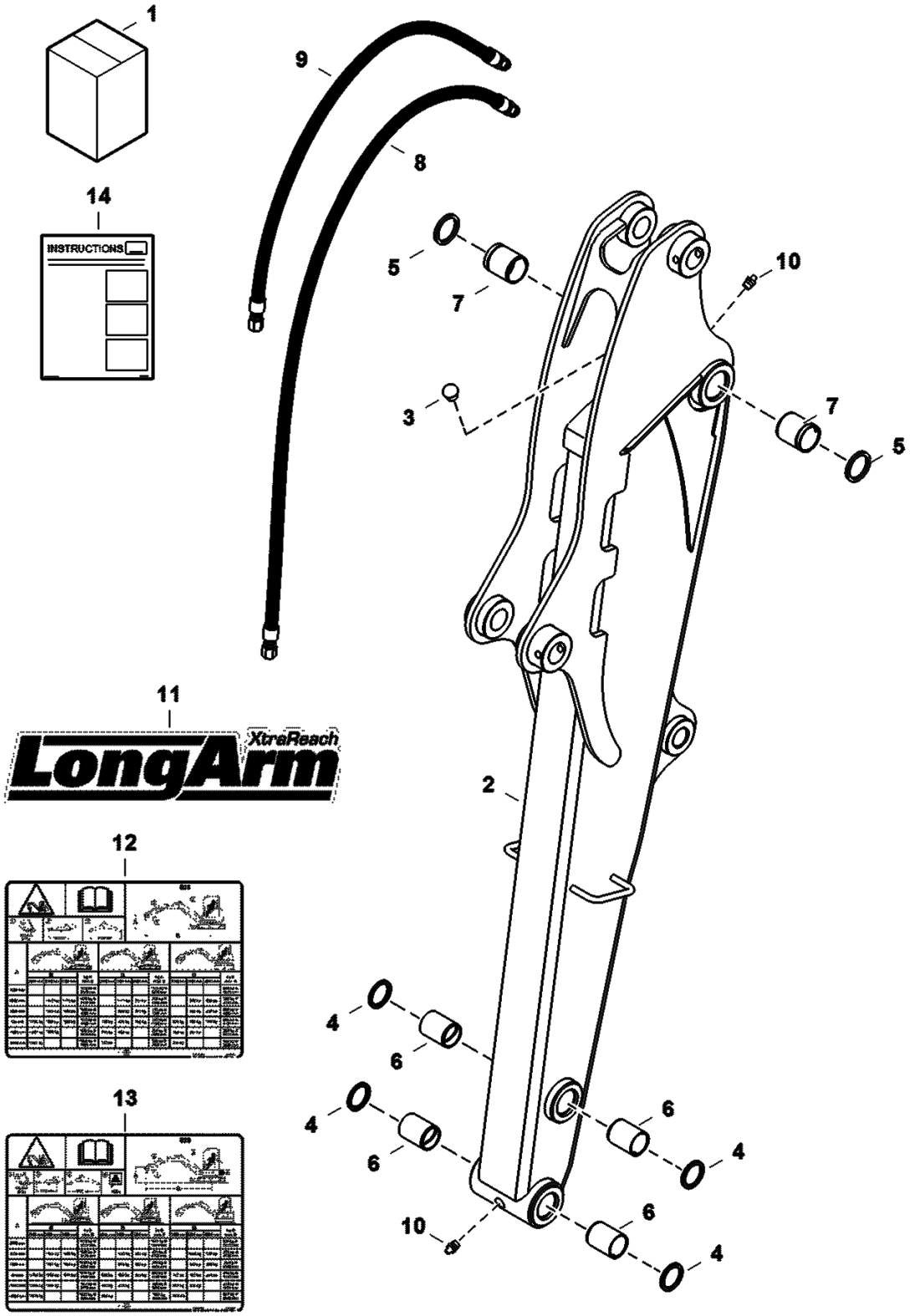

Page 294 - OSS# 2091664 - All rights reserved by Bobcat Company - 08/27/2012 - 11:42:23 - Produced by Ken Cook Co. with mediaioff

Ref No	Part Number	Description	Remarks	Serial Number	Qty
1	7203722	KIT, ARM LONG	Ref. 2-14 - Also Order counterweight kit if not already equipped		1
2	7206870	ARM, DIPPER W/A LONG EXC			1
3	6597572	BUMPER			1
4	6652915	SEAL, OIL			4
5	6660075	SEAL			2
6	6803213	BUSHING, PRESS FIT			4
7	6815277	BUSHING			2
8	7165082	HOSE, HYD			1
9	7193555	HOSE, HYD			1
10	10H25	FITTING, GREASE 5			2
11	7147433	DECAL, ARM LONG			1
12	7183900	DECAL, CAPACITY LIFT			1
13	7201622	DECAL, CAPACITY LIFT	W/additional counterweight		1
14	6990137	INSTRUCTIONS			1

Page 295 - OSS# 2091664 - All rights reserved by Bobcat Company - 08/27/2012 - 11:42:23 - Produced by Ken Cook Co. with mediaioff

MIRROR KIT

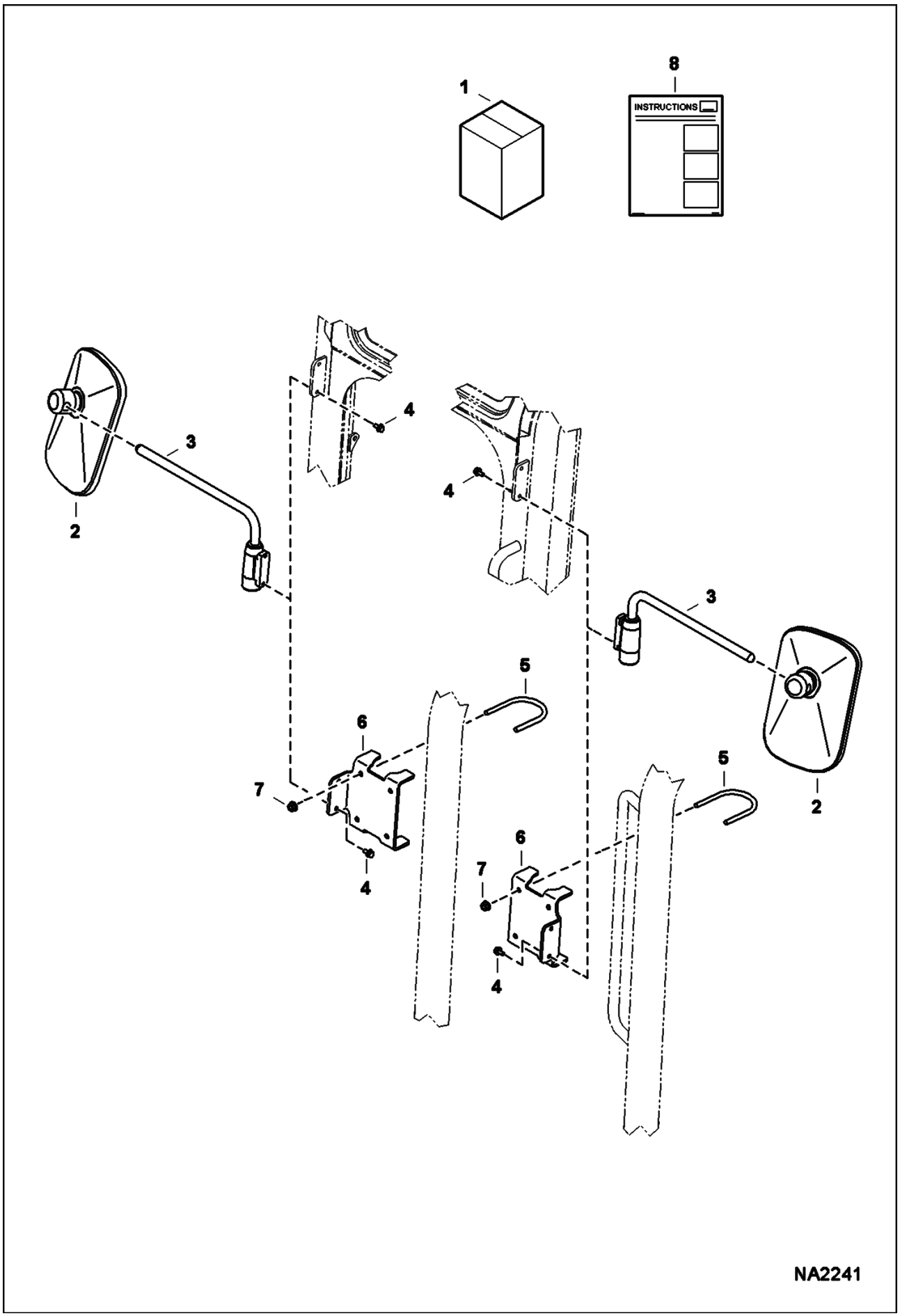

Page 296 - OSS# 2091664 - All rights reserved by Bobcat Company - 08/27/2012 - 11:42:23 - Produced by Ken Cook Co. with mediaIoff

Ref No	Part Number	Description	Remarks	Serial Number	Qty
1	7173148	KIT, MIRROR	Ref. 2-8		1
2	6684564	HEAD			2
3	6684567	ARM			2
4	29CM612	BOLT			4
5	7176604	U-BOLT			4
6	7180021	BRACKET, MIRROR			2
7	43DM8	NUT			8
8	6987412	INSTRUCTIONS			1

Page 297 - OSS# 2091664 - All rights reserved by Bobcat Company - 08/27/2012 - 11:42:23 - Produced by Ken Cook Co. with mediaioff

MOTION ALARM KIT

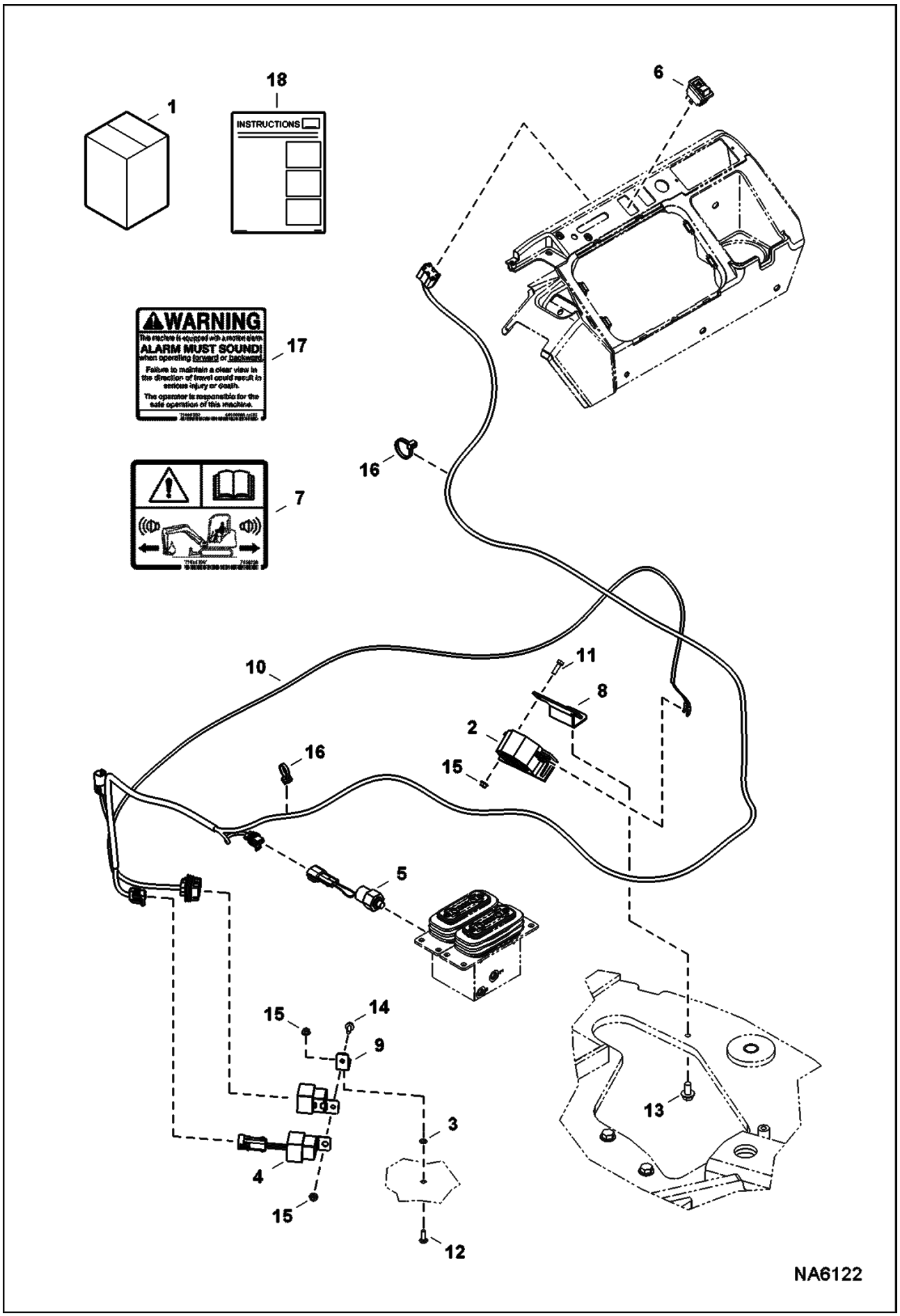

Page 298 - OSS# 2091664 - All rights reserved by Bobcat Company - 08/27/2012 - 11:42:23 - Produced by Ken Cook Co. with mediaioff

Ref No	Part Number	Description	Remarks	Serial Number	Qty
1	7204641	KIT, ALARM MOTION	Ref. 2-18		1
2	6651512	ALARM BACKUP			1
3	6675212	RETAINER			1
4	6675928	RELAY, LATCHING			1
5	7008933	SWITCH, PRESS OIL HYD			1
6	7010298	SWITCH, ALARM MOTION			1
7	7136738	DECAL WARNING			1
8	7168280	BRACKET, ALARM			1
9	7193425	HOLDER, RELAY			1
10	7193556	HARNESS, ALARM MOTION			1
11	1CM620	BOLT			2
12	28CM620	BOLT CARRIAGE 8.8			1
13	29CM1020	BOLT			1
14	29CM616	BOLT			1
15	43DM6	NUT			4
16	6624289	STRAP, TIE			12
17	6810004	DECAL, WARNING			1
18	6990153	INSTRUCTIONS			1

Page 299 - OSS# 2091664 - All rights reserved by Bobcat Company - 08/27/2012 - 11:42:23 - Produced by Ken Cook Co. with mediaioff

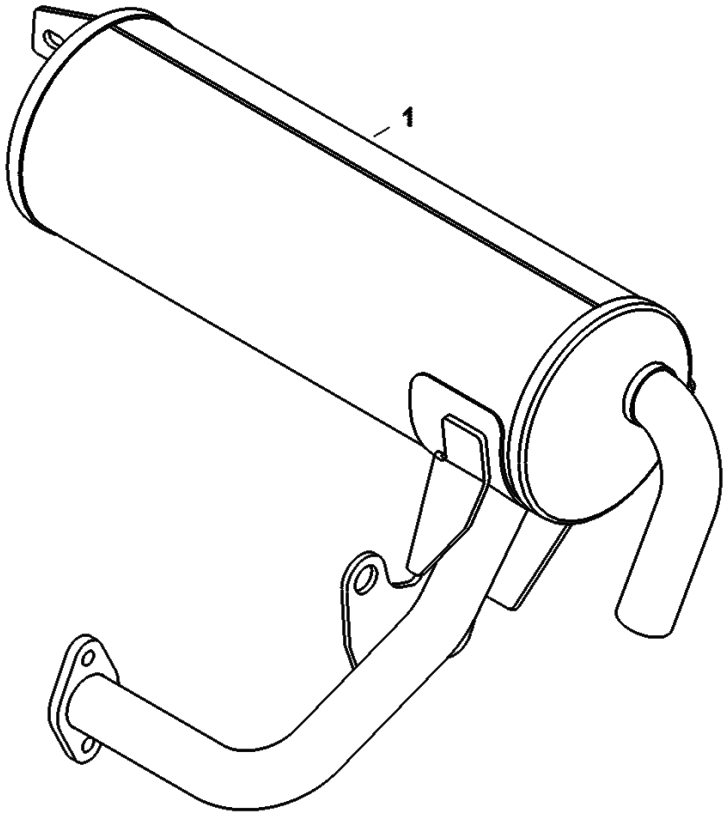

NA6273

Page 300 - OSS# 2091664 - All rights reserved by Bobcat Company - 08/27/2012 - 11:42:23 - Produced by Ken Cook Co. with mediaioff

Ref No	Part Number	Description	Remarks	Serial Number	Qty
1		MUFFLER, PURIFIER	NAP - Was 7207789 [A]		1

Page 301 - OSS# 2091664 - All rights reserved by Bobcat Company - 08/27/2012 - 11:42:23 - Produced by Ken Cook Co. with mediaioff

RADIO KIT

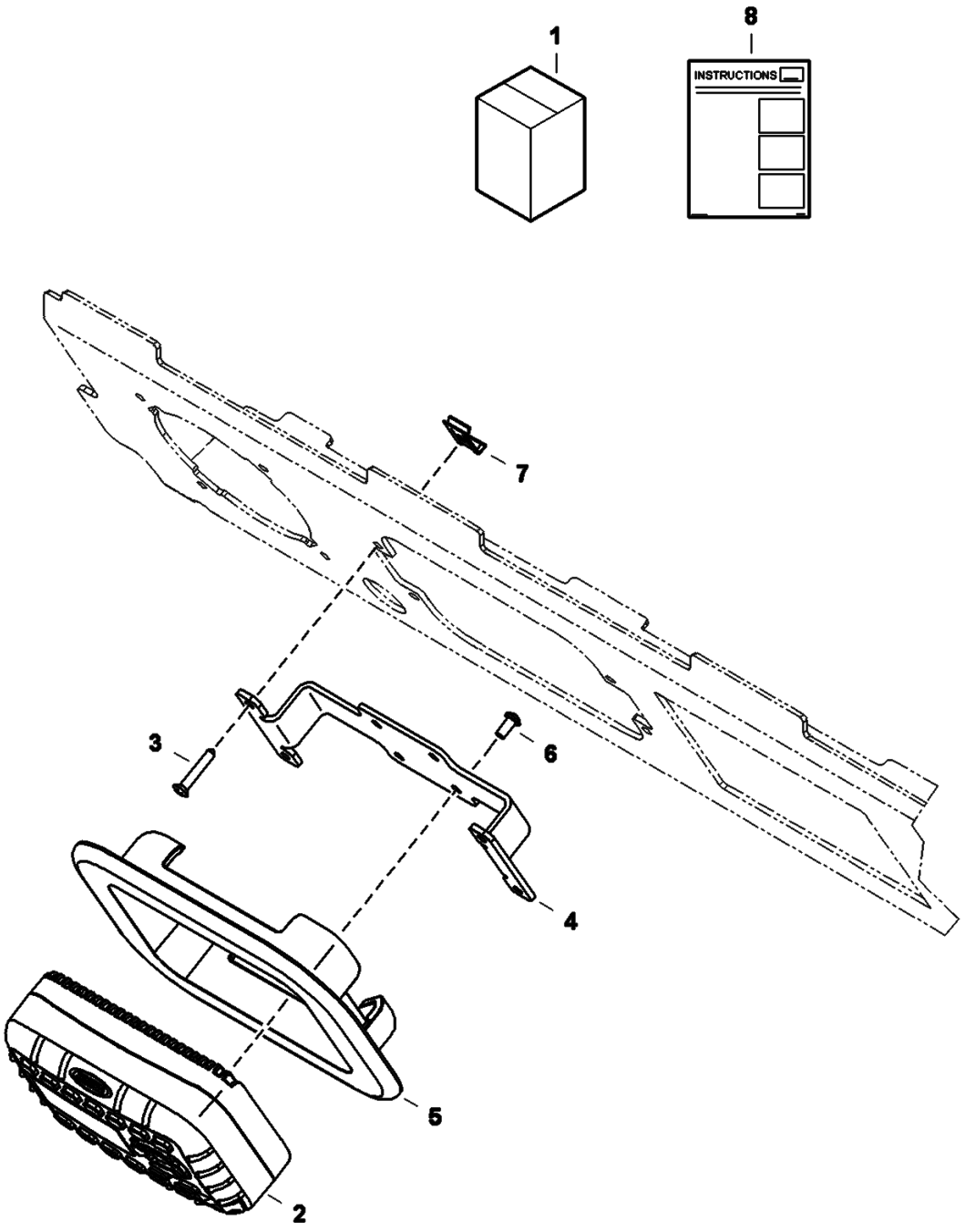

Page 302 - OSS# 2091664 - All rights reserved by Bobcat Company - 08/27/2012 - 11:42:23 - Produced by Ken Cook Co. with mediaioff

Ref No	Part Number	Description	Remarks	Serial Number	Qty
1	6988434	KIT, RADIO M-SERIES EXCAVATORS	Ref. 2-8 - Was 7173285 [A]		1
2	6988336	RADIO, MINI BOBCAT	W/Ref. 6 - Was 7159873 [A]		1
3	7163690	SCREW			4
4	7166859	BRACKET, RADIO			1
5	7173341	GROMMET			1
6		SCREW	NSS		x
7	6685744	CLIP			4
8	6987357	INSTRUCTIONS			1

Page 303 - OSS# 2091664 - All rights reserved by Bobcat Company - 08/27/2012 - 11:42:23 - Produced by Ken Cook Co. with mediaioff

SEAT BELT KIT
(3 Inch)(Suspension Seat)

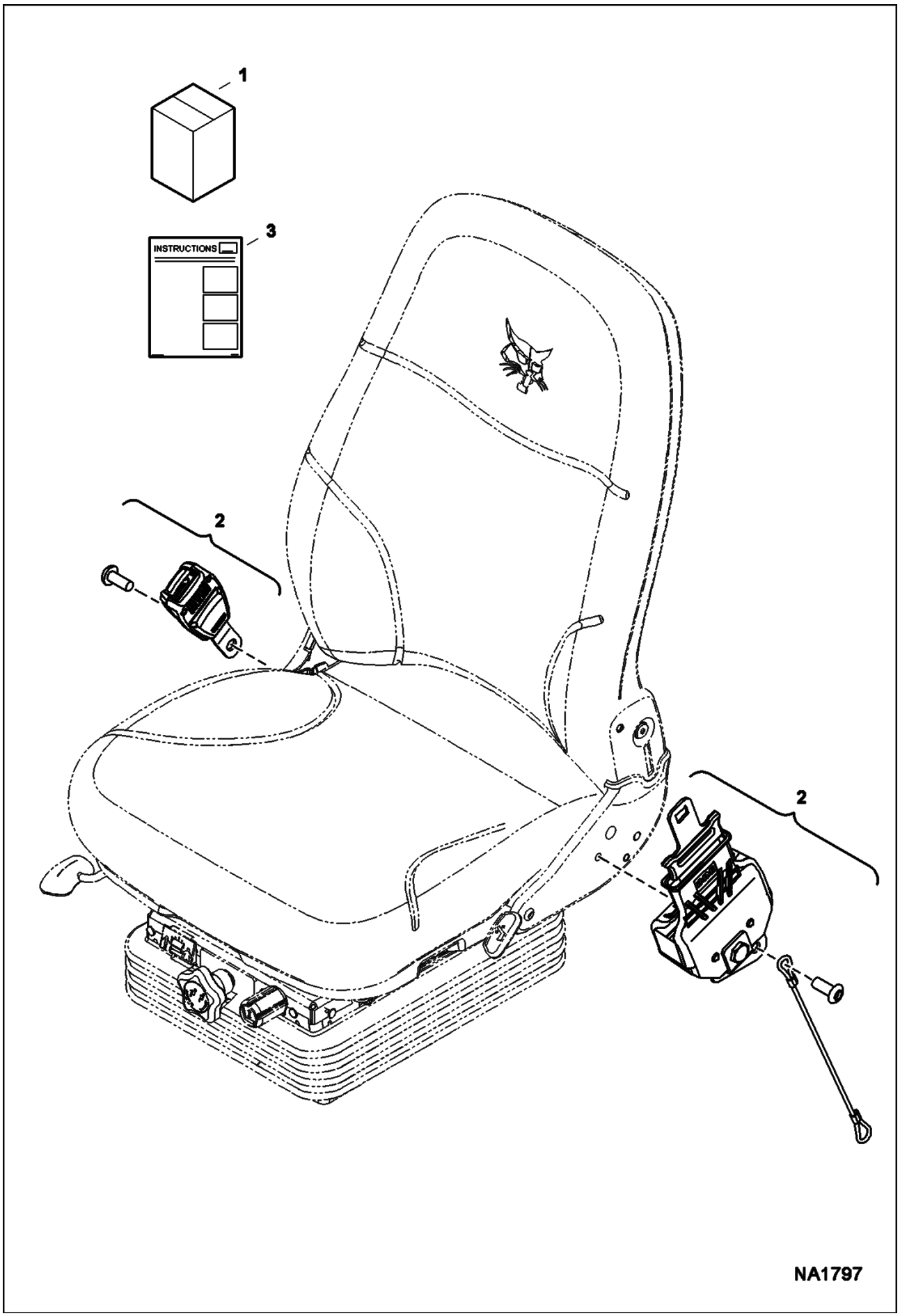

Page 304 - OSS# 2091664 - All rights reserved by Bobcat Company - 08/27/2012 - 11:42:23 - Produced by Ken Cook Co. with mediaioff

SEAT BELT KIT (Cont'd)
(3 Inch)(Suspension Seat)

Ref No	Part Number	Description	Remarks	Serial Number	Qty
1		KIT, SEAT BELT	NAP - Order components - Was 7181615 [D]		1
2	7010428	BELT, SEAT			1
3	6989413	INSTRUCTIONS			1

Page 305 - OSS# 2091664 - All rights reserved by Bobcat Company - 08/27/2012 - 11:42:23 - Produced by Ken Cook Co. with mediaioff

SEAT BELT KIT
(3 Inch)(Static Seat)

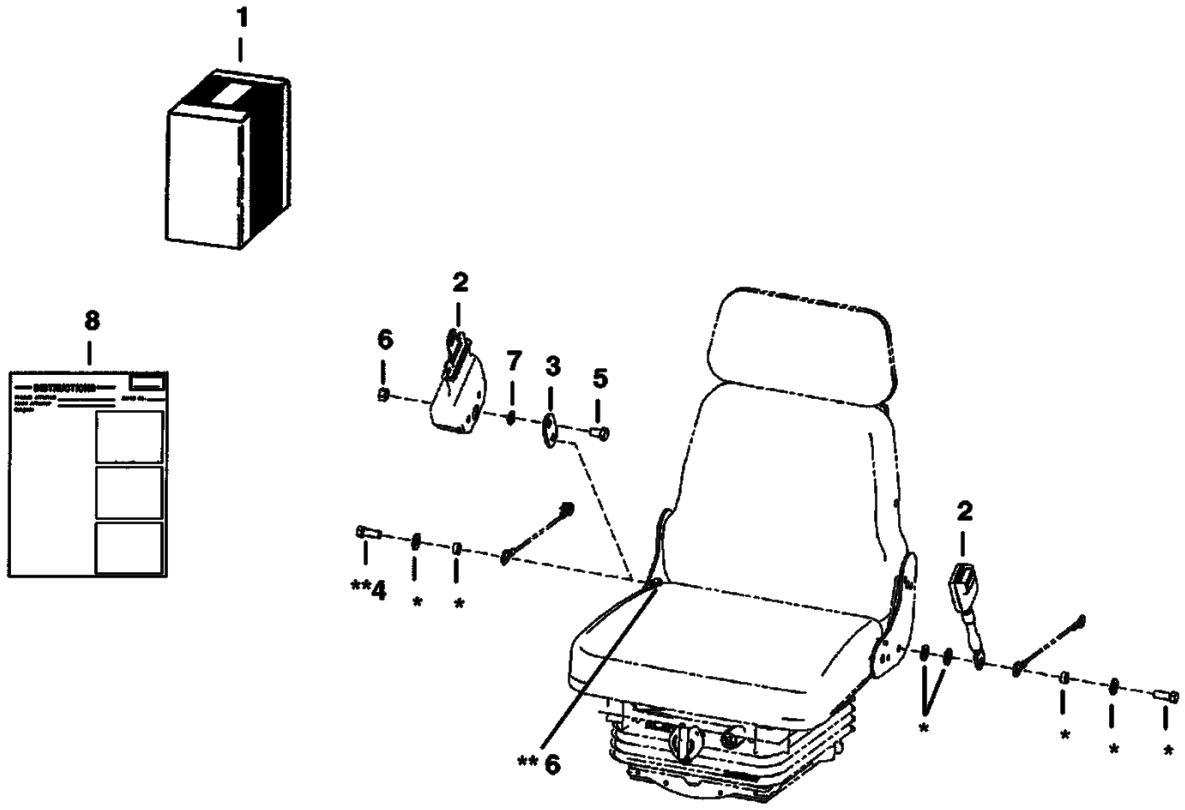

*** Existing Parts**
**** Use with flanged seat frame (otherwise use existing hardware)**

PE–2207

Page 306 - OSS# 2091664 - All rights reserved by Bobcat Company - 08/27/2012 - 11:42:23 - Produced by Ken Cook Co. with mediaioff

SEAT BELT KIT (Cont'd)
(3 Inch)(Static Seat)

Ref No	Part Number	Description	Remarks	Serial Number	Qty
1	7102902	KIT	3" (76,2 mm) seat belt		1
2	6685747	SEAT BELT	3" (76,2 mm)		1
3	7102065	BRACKET			1
4	1CM1250	BOLT			1
5	1CM1220	BOLT			1
6	53DM12	NUT			2
7	1EM120	WASHER			1
8	6902838	INSTRUCTIONS			1

Page 307 - OSS# 2091664 - All rights reserved by Bobcat Company - 08/27/2012 - 11:42:23 - Produced by Ken Cook Co. with mediaioff

SECONDARY AUXILIARY KIT

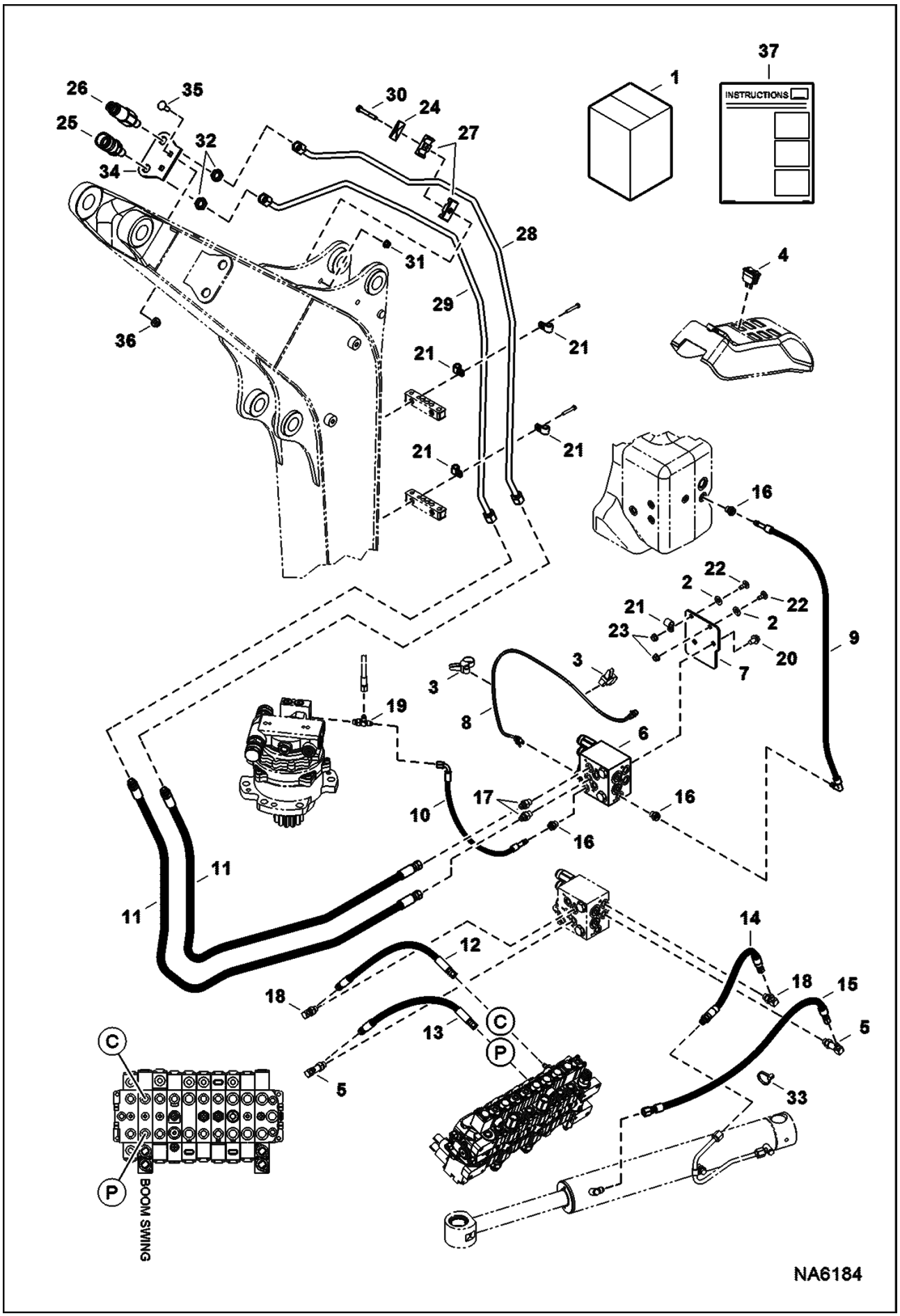

Page 308 - OSS# 2091664 - All rights reserved by Bobcat Company - 08/27/2012 - 11:42:23 - Produced by Ken Cook Co. with mediaioff

Ref No	Part Number	Description	Remarks	Serial Number	Qty
1	7206143	KIT, AUX 2ND	Ref. 2-37		1
2	6675859	RETAINER			2
3	6678668	STRAP, DUAL TIE			2
4	6679906	SWITCH			1
5	6802867	ELBOW			2
5	79K6	O RING 10			x
6	7010128	VALVE, AUX SECONDARY			1
7	7189423	BRACKET			1
8	7193481	HARNESS, AUX SECONDARY			1
9	7200738	HOSE, HYD			1
10	7201280	HOSE, HYD			1
11	7202027	HOSE, HYD			2
12	7204139	HOSE, HYD			1
13	7204140	HOSE, HYD			1
14	7204141	HOSE, HYD			1
15	7204142	HOSE, HYD			1
16	10L0606	FITTING, HYD CONNECTOR			3
16	78K6	O'RING			x
16	7011053	CLIP			x
17	15KB0606	FITTING, HYD CONNECTOR			2
17	79K6	O RING 10			x
18	17KB0406	FITTING, HYD ELBOW			2
18	79K6	O RING 10			x
19	21KB0404	FITTING, HYD TEE			1
19	79K4	O RING 10			x
20	29CM1016	BOLT			2
21	30H30	CLAMP			5
22	33CM820	BOLT			2
23	43DM8	NUT			2
24	6652521	PLATE			1
25	6676559	COUPLER, FF FEMALE			1
26	6676560	COUPLER, FF MALE			1
27	6701892	CLAMP			2
28	7207344	TUBELINE, HYD			1
29	7207345	TUBELINE, HYD			1
30	1CM855	BOLT			1
31	51DM8	NUT			1
32	86F6	NUT			2
33	6624289	STRAP, TIE			1
34	7207343	BRACKET			1
35	28CM1030	BOLT			2
36	51DM10	NUT			2
37	6990183	INSTRUCTIONS			1

Page 309 - OSS# 2091664 - All rights reserved by Bobcat Company - 08/27/2012 - 11:42:23 - Produced by Ken Cook Co. with mediaioff

SECONDARY AUXILARY VALVE

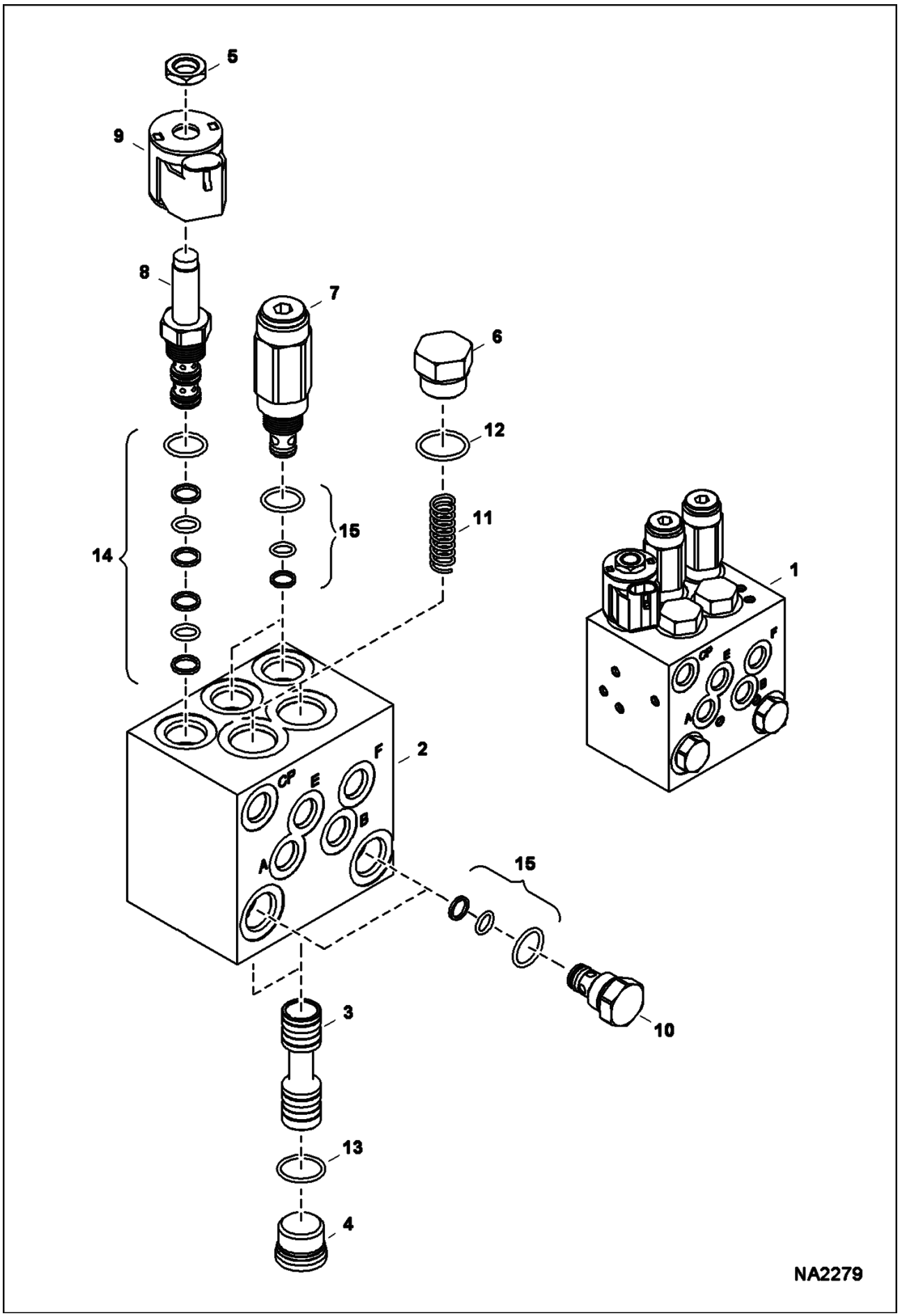

Page 310 - OSS# 2091664 - All rights reserved by Bobcat Company - 08/27/2012 - 11:42:23 - Produced by Ken Cook Co. with mediaIoff

SECONDARY AUXILARY VALVE (Cont'd)

Ref No	Part Number	Description	Remarks	Serial Number	Qty
1	7010128	VALVE, AUX SECONDARY	Ref. 2-15		1
2		BLOCK, MANIFOLD	NSS		1
3	7010297	SPOOL, VALVE			2
4	6678563	PLUG			2
5		NUT	NSS - Order Ref. 8		1
6	7008556	PLUG			2
7	6680956	VALVE			2
8	6680957	VALVE			1
9	6689082	COIL			1
10	6664026	CHECK VALVE			2
11	7010296	SPRING, COMPRESSION			2
12	79K10	O RING 10			2
13		O-RING	NSS - Order Ref. 4		2
14	6669736	SEAL KIT			1
15	6672515	KIT, SEAL			1

Page 311 - OSS# 2091664 - All rights reserved by Bobcat Company - 08/27/2012 - 11:42:23 - Produced by Ken Cook Co. with mediaioff

SPECIAL APPLICATION KIT
(Cab and Canopy)

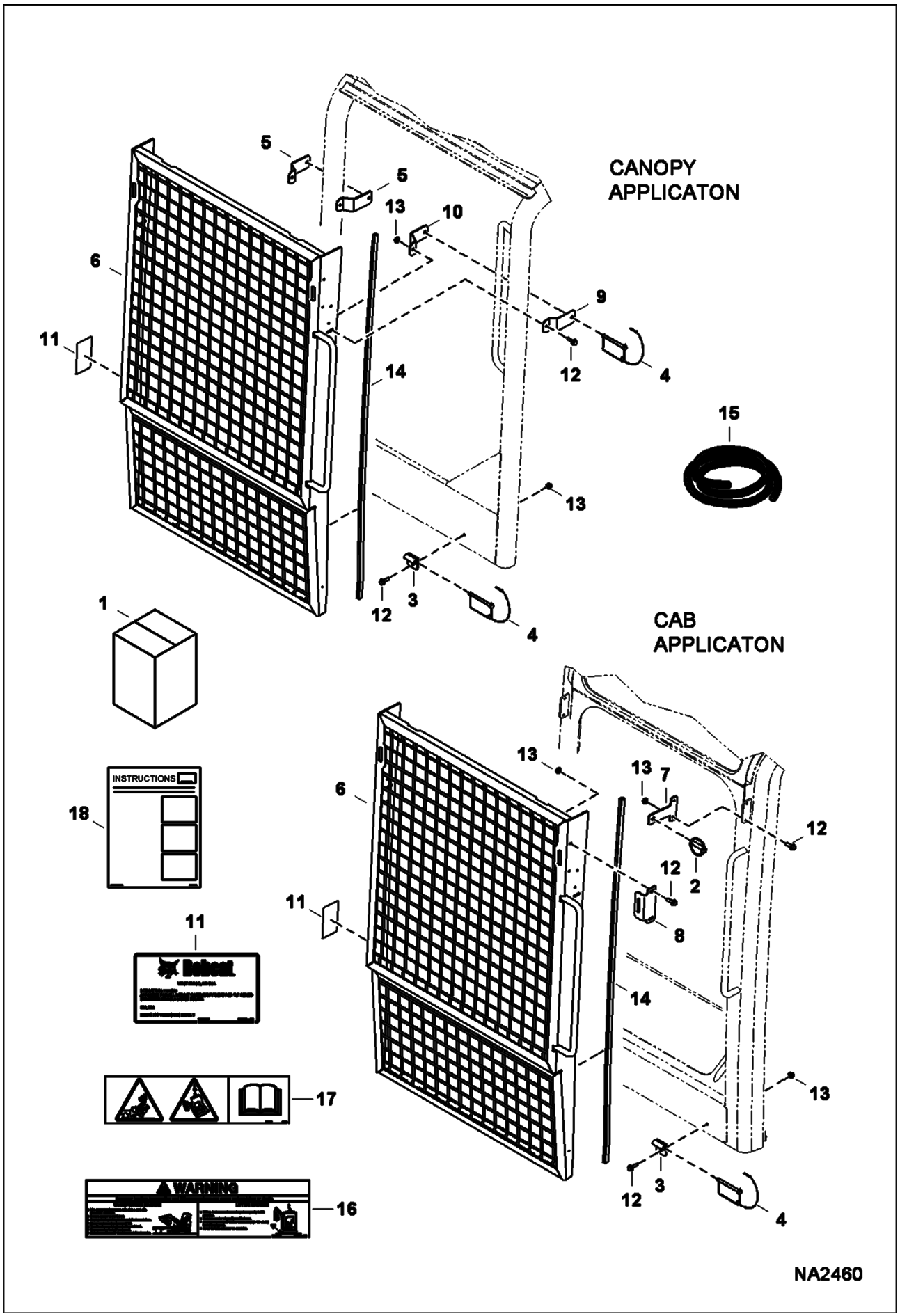

Page 312 - OSS# 2091664 - All rights reserved by Bobcat Company - 08/27/2012 - 11:42:23 - Produced by Ken Cook Co. with mediaioff

SPECIAL APPLICATION KIT (Cont'd)
(Cab and Canopy)

Ref No	Part Number	Description	Remarks	Serial Number	Qty
1	7174035	KIT, APPS SPECIAL	Ref. 2-18		1
2	6668928	LOCK PIN			2
3	6808924	HINGE			2
4	6808926	PIN			4
5	6818017	BRACKET			2
6	7174036	GUARD, CAB			1
7	7174037	PLATE			2
8	7174038	BRACKET			2
9	7181010	BRACKET			1
10	7181011	BRACKET			1
11	7181121	DECAL, APPS SPECIAL			1
12	29CM620	SCREW			12
13	51DM6	NUT			12
14		TRIM	NAP - 1270 mm (50") long - Order Ref. 15		2
15	6682492	TRIM	bulk - sold per foot		x
16	7178178	DECAL, WARNING			1
17	7178215	DECAL, WARNING			1
18	6989510	INSTRUCTIONS			1

Page 313 - OSS# 2091664 - All rights reserved by Bobcat Company - 08/27/2012 - 11:42:23 - Produced by Ken Cook Co. with mediaioff

STROBE KIT

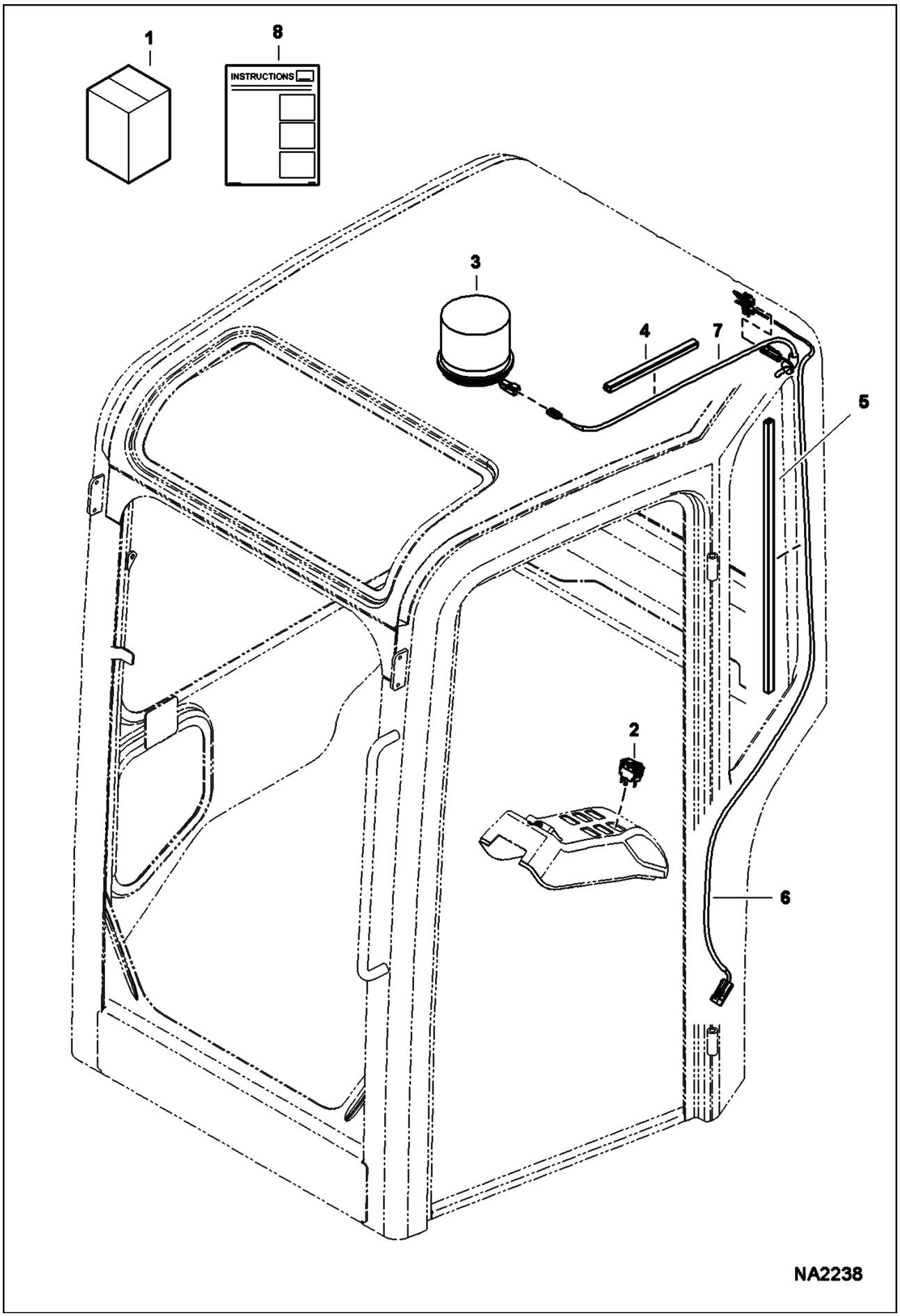

Page 314 - OSS# 2091664 - All rights reserved by Bobcat Company - 08/27/2012 - 11:42:23 - Produced by Ken Cook Co. with mediaioff

Ref No	Part Number	Description	Remarks	Serial Number	Qty
1	7172974	KIT, STROBE LIGHT	Ref. 2-8		1
2	6665317	SWITCH			1
3	6675522	STROBE	4200 series light		1
3	6697796	FLASHTUBE	3-pin rectangular base bulb		1
3	6697797	AMBER LENS			1
4	6682740	RETAINER, WIRE			1
5	6682741	RETAINER, WIRE			1
6	7172972	HARNESS, BEACON/STROBE			1
7	7172977	HARNESS, CANOPY			1
8	6987322	INSTRUCTIONS			1

Page 315 - OSS# 2091664 - All rights reserved by Bobcat Company - 08/27/2012 - 11:42:23 - Produced by Ken Cook Co. with mediaioff

TOP GUARD KIT
(Cab)

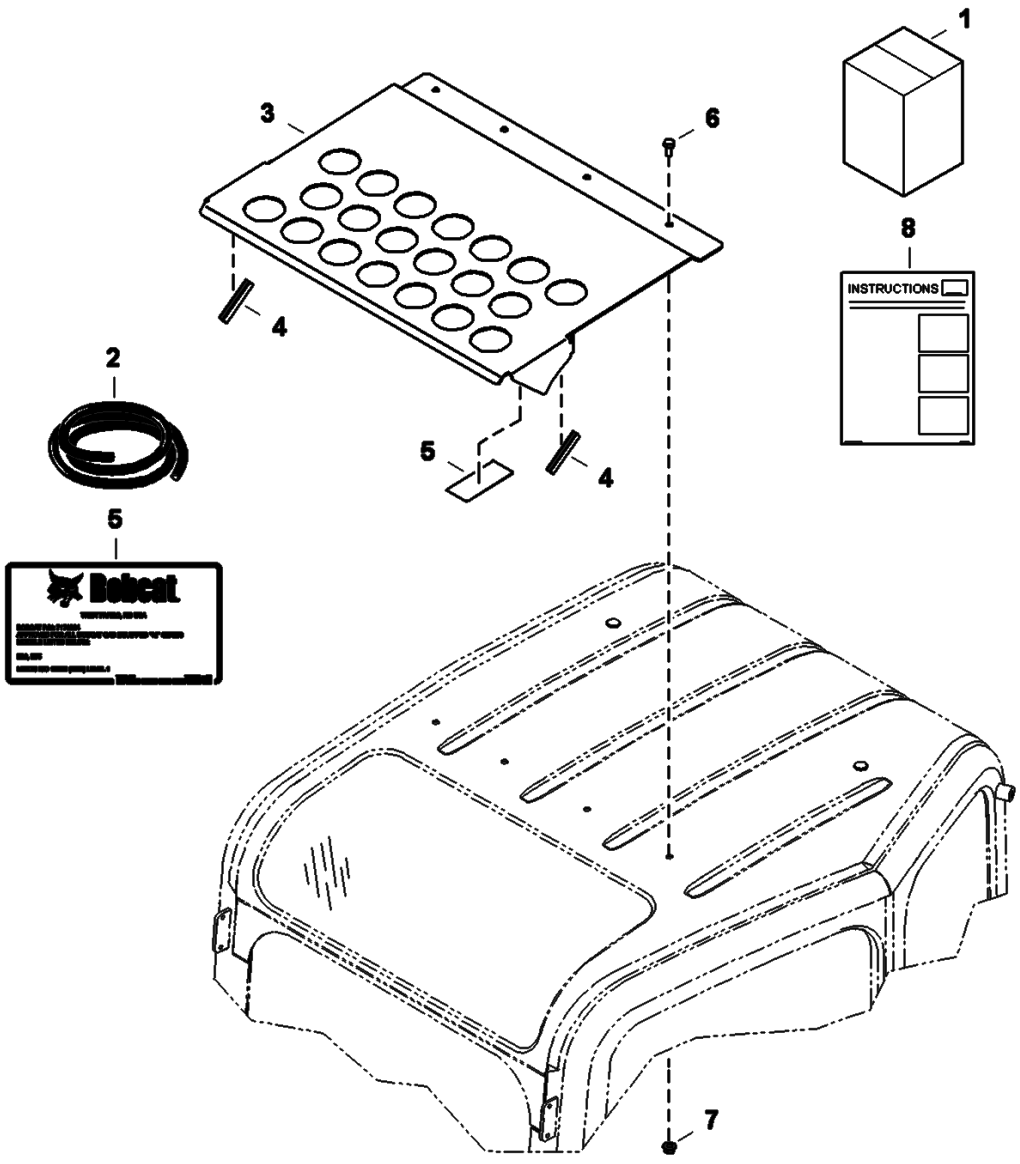

Page 316 - OSS# 2091664 - All rights reserved by Bobcat Company - 08/27/2012 - 11:42:23 - Produced by Ken Cook Co. with mediaioff

TOP GUARD KIT (Cont'd)
(Cab)

Ref No	Part Number	Description	Remarks	Serial Number	Qty
1	7173584	KIT, GUARD CAB	Ref. 2-8		1
2	6682492	TRIM	bulk - sold per foot		x
3	7173484	GUARD, CAB			1
4		TRIM	NAP - 127 mm (5") long - Order Ref. 2		2
5	7181128	DECAL, GUARD TOP			1
6	1CM1012	SCREW			4
7	51DM10	NUT			4
8	6987408	INSTRUCTIONS			1

Page 317 - OSS# 2091664 - All rights reserved by Bobcat Company - 08/27/2012 - 11:42:23 - Produced by Ken Cook Co. with mediaioff

TOP GUARD KIT
(Canopy)

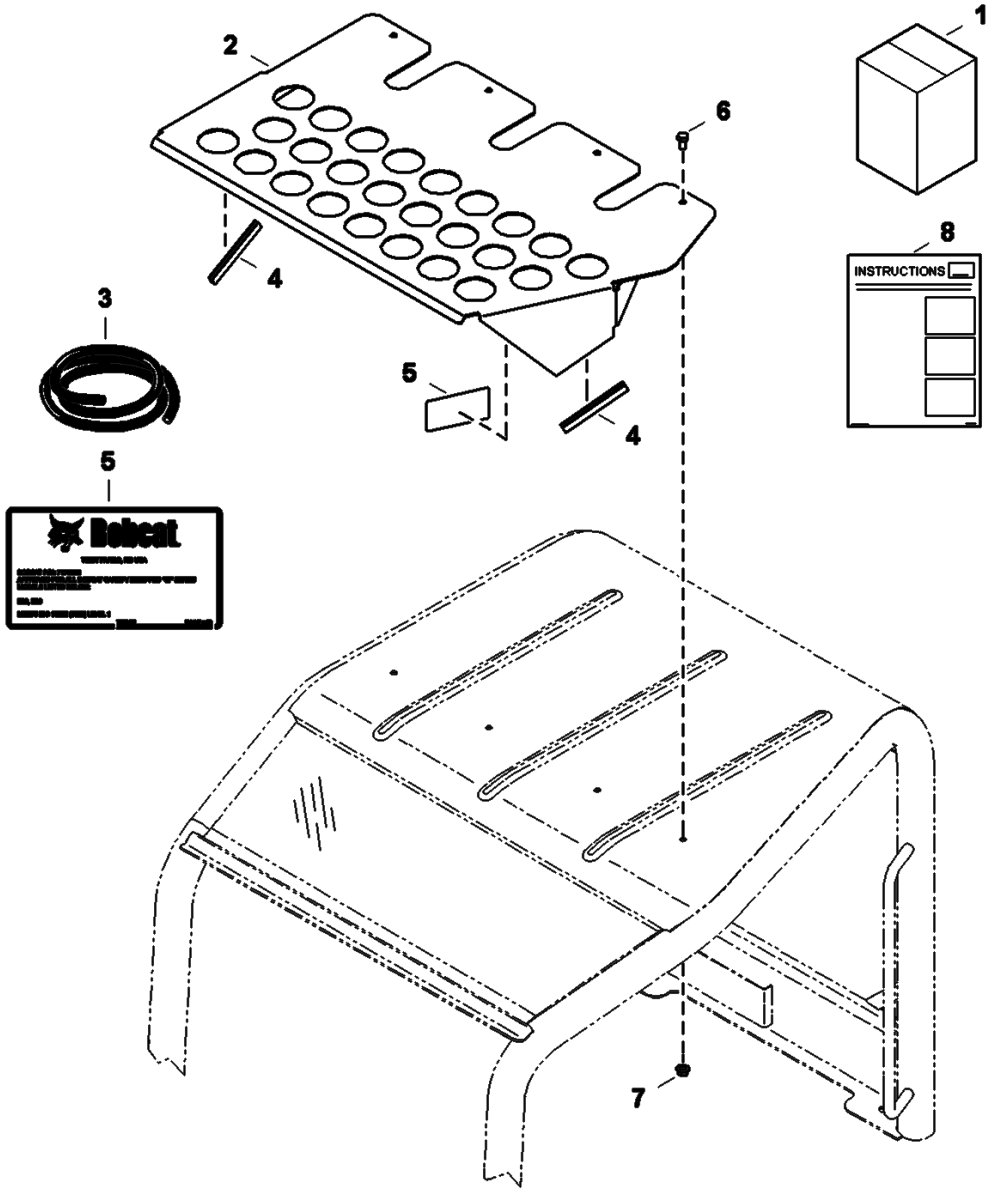

Page 318 - OSS# 2091664 - All rights reserved by Bobcat Company - 08/27/2012 - 11:42:23 - Produced by Ken Cook Co. with mediaioff

TOP GUARD KIT (Cont'd)
(Canopy)

Ref No	Part Number	Description	Remarks	Serial Number	Qty
1	7173308	KIT, GUARD CANOPY	Ref. 2-8		1
2	7173483	GUARD, CANOPY			1
3	6682492	TRIM	bulk - sold per foot		x
4		TRIM	NAP - 127 mm (5") long - Order Ref. 3		1
5	7181127	DECAL, GUARD TOP			1
6	1CM1020	BOLT			4
7	51DM10	NUT			4
8	6987408	INSTRUCTIONS			1

Page 319 - OSS# 2091664 - All rights reserved by Bobcat Company - 08/27/2012 - 11:42:23 - Produced by Ken Cook Co. with mediaioff

TOP GUARD LIGHT KIT

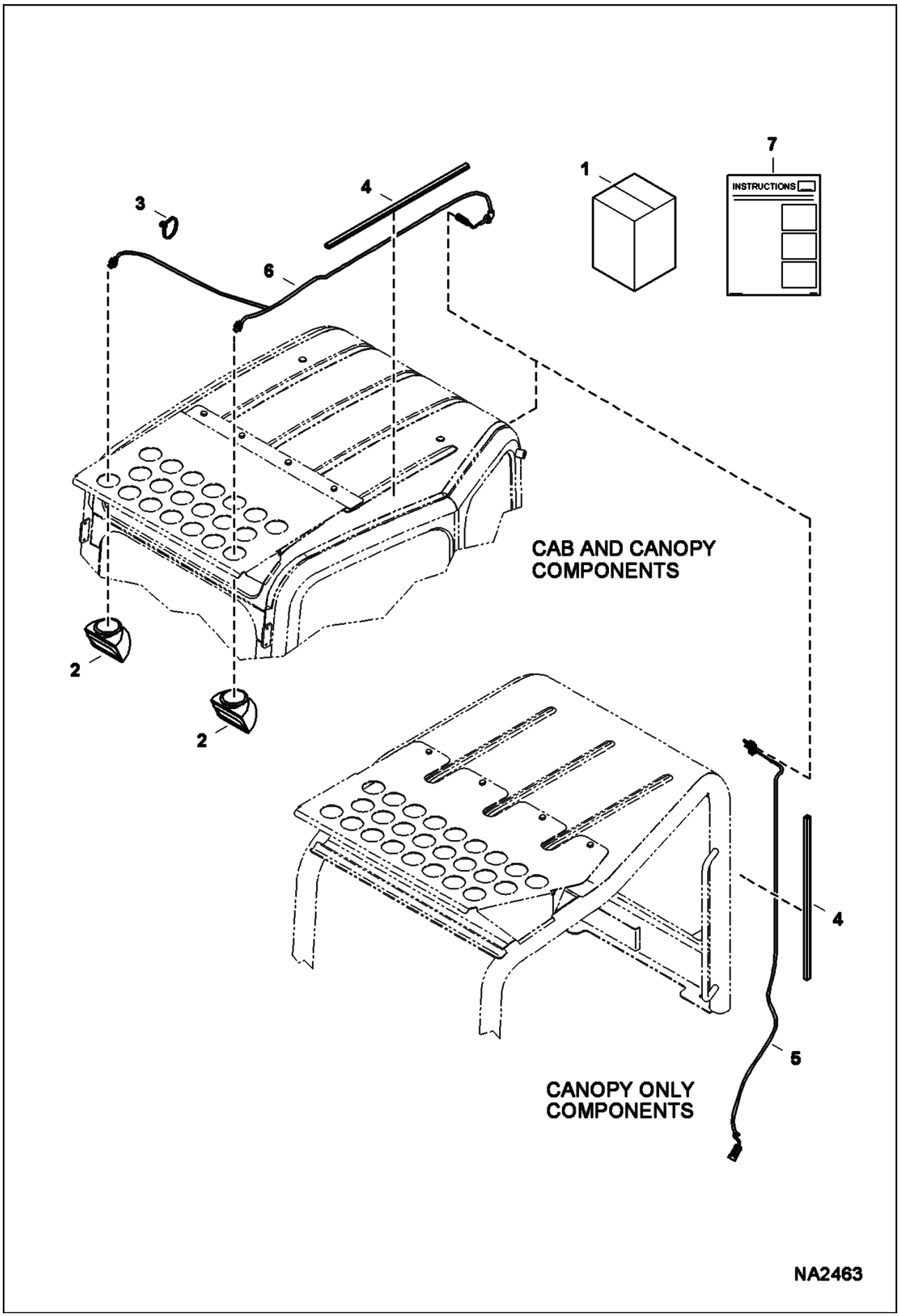

Page 320 - OSS# 2091664 - All rights reserved by Bobcat Company - 08/27/2012 - 11:42:23 - Produced by Ken Cook Co. with mediaioff

Ref No	Part Number	Description	Remarks	Serial Number	Qty
1	7173478	KIT, GUARD LIGHT	Ref. 2-7		1
2	6577801	LIGHT			2
2	6649478	BULB HOUSING			2
2	6578824	HOUSING			2
2	6667934	BULB			2
2	6578528	HARNESS			2
3	6624289	STRAP, TIE			4
4	6682741	RETAINER, WIRE			2
5	7172977	HARNESS, CANOPY			1
6	7173482	HARNESS, LIGHTS			1
7	6987497	INSTRUCTIONS			1

Page 321 - OSS# 2091664 - All rights reserved by Bobcat Company - 08/27/2012 - 11:42:23 - Produced by Ken Cook Co. with mediaioff

TRACK KIT
(Steel)

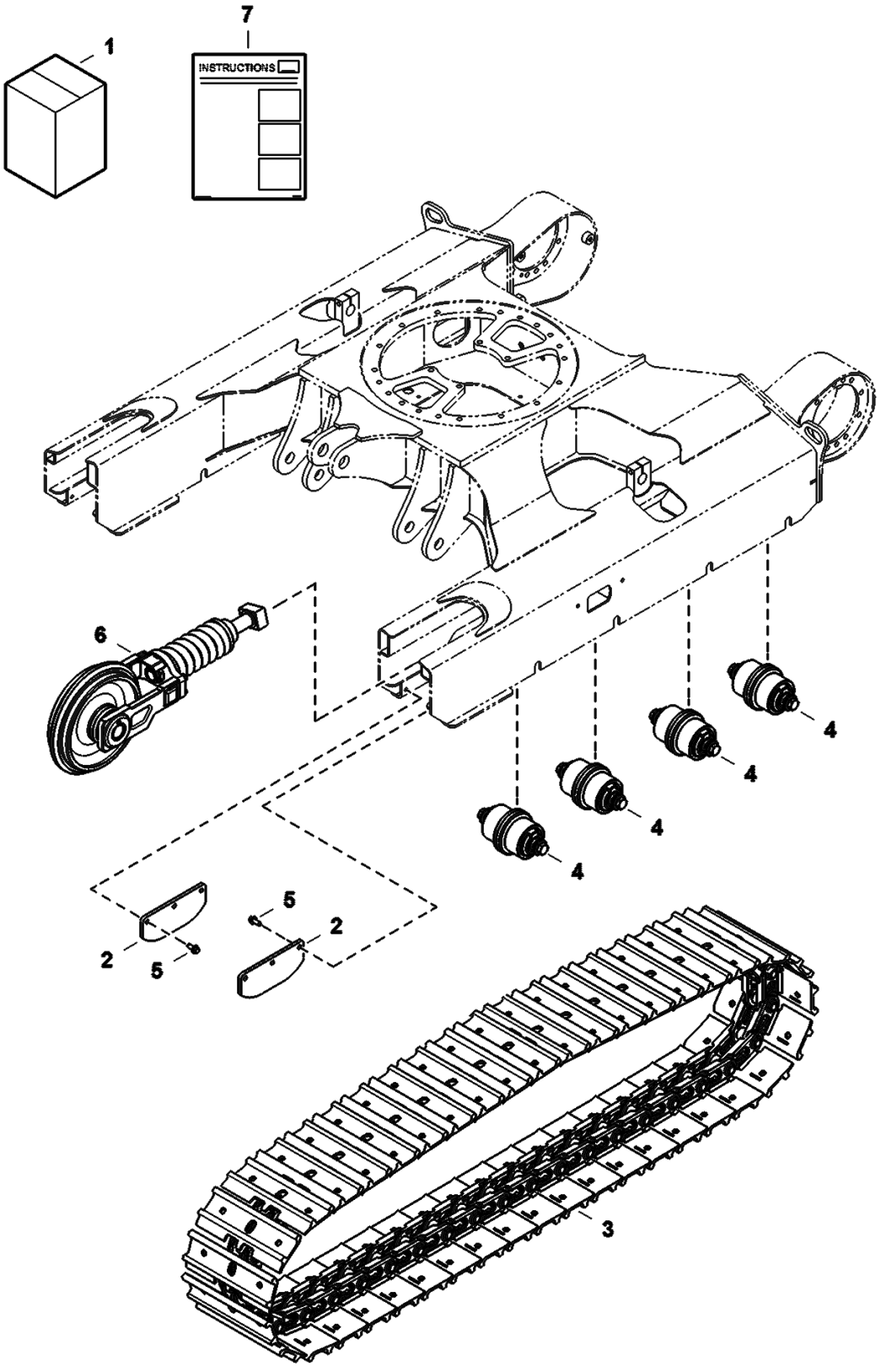

Page 322 - OSS# 2091664 - All rights reserved by Bobcat Company - 08/27/2012 - 11:42:23 - Produced by Ken Cook Co. with mediaioff

TRACK KIT (Cont'd)
(Steel)

Ref No	Part Number	Description	Remarks	Serial Number	Qty
1	7204032	KIT, TRACK STEEL	Ref. 2-7		1
2	6596396	PLATE			4
3	6693493	TRACK, STEEL	See Illustration TRACKS/ NA2026		2
4	7013576	ROLLER, TRACK			8
5	26GM10025	SCREW			12
6	7207538	IDLER, ASSY	See Illustration TRACK TENSIONER & IDLER/ NA6066		2
7	6990140	INSTRUCTIONS			1

Page 323 - OSS# 2091664 - All rights reserved by Bobcat Company - 08/27/2012 - 11:42:23 - Produced by Ken Cook Co. with mediaioff

TRACKS
(Rubber)

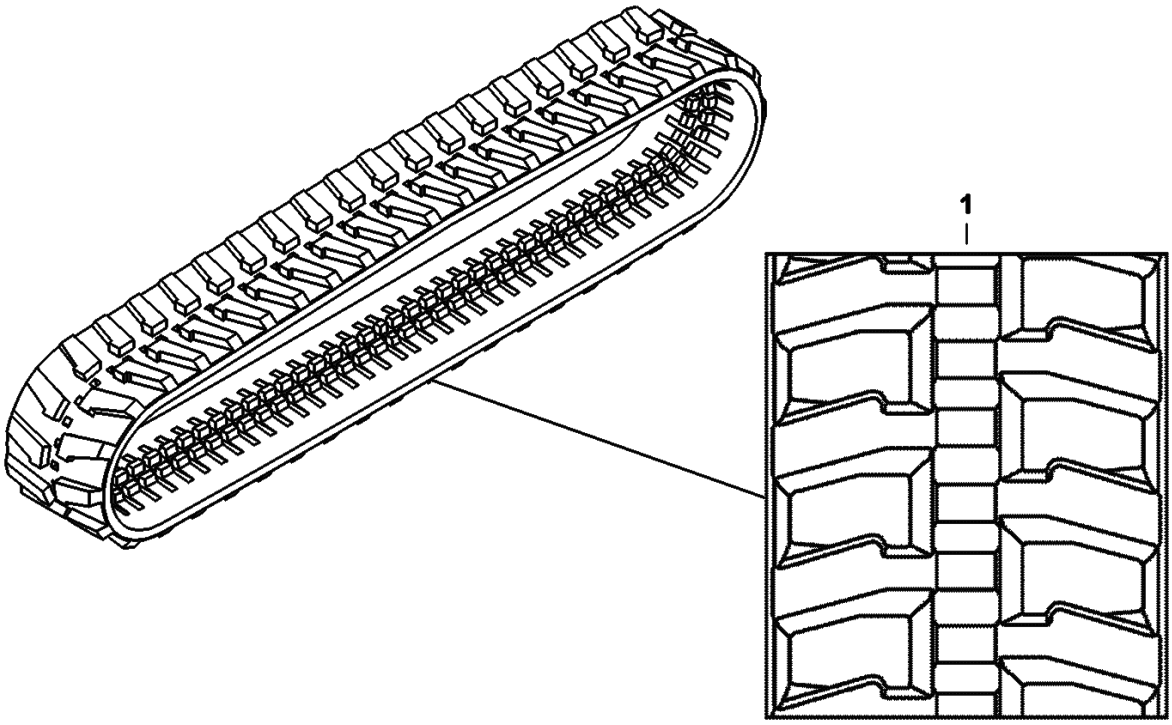

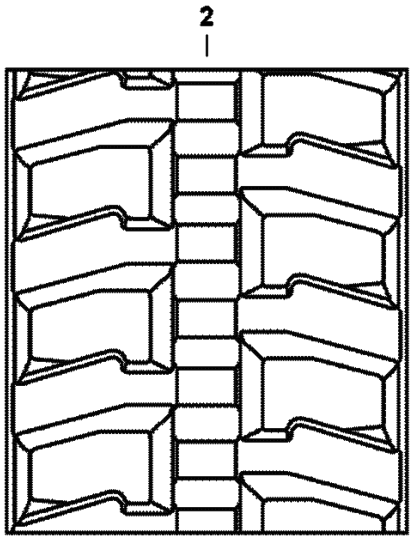

NA6195

Page 324 - OSS# 2091664 - All rights reserved by Bobcat Company - 08/27/2012 - 11:42:23 - Produced by Ken Cook Co. with mediaioff

Ref No	Part Number	Description	Remarks	Serial Number	Qty
1	7165834	TRACK, RUBBER	factory option		2
2	6988831	TRACK, RUBBER (300X80X52.5) 12" EF			2

Page 325 - OSS# 2091664 - All rights reserved by Bobcat Company - 08/27/2012 - 11:42:23 - Produced by Ken Cook Co. with mediaioff

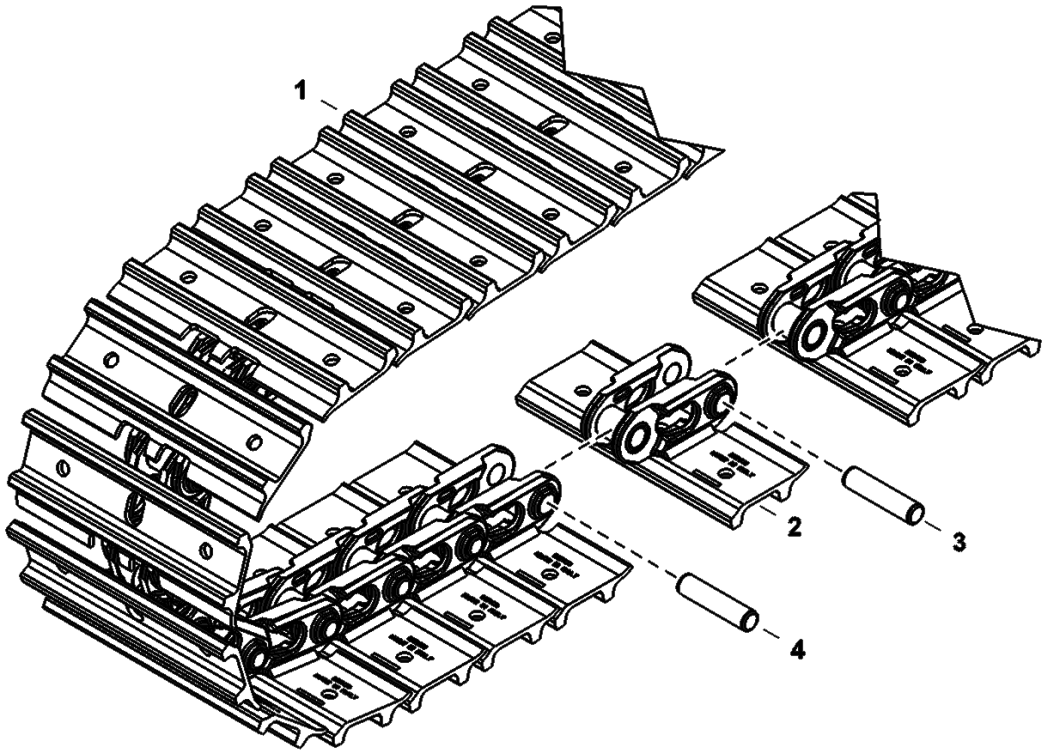

NA2026

Page 326 - OSS# 2091664 - All rights reserved by Bobcat Company - 08/27/2012 - 11:42:23 - Produced by Ken Cook Co. with mediaioff

TRACKS (Cont'd)
(Steel)

Ref No	Part Number	Description	Remarks	Serial Number	Qty
1	6693493	TRACK, STEEL	Ref. 2-4 - P/N is for 1 track		2
2	7008991	PAD	quantity shown for 1 track		41
3	7008992	PIN	quantity shown for 1 track		40
4	7008993	PIN, MASTER	quantity shown for 1 track		1

Page 327 - OSS# 2091664 - All rights reserved by Bobcat Company - 08/27/2012 - 11:42:23 - Produced by Ken Cook Co. with mediaioff

TRACK PAD KIT

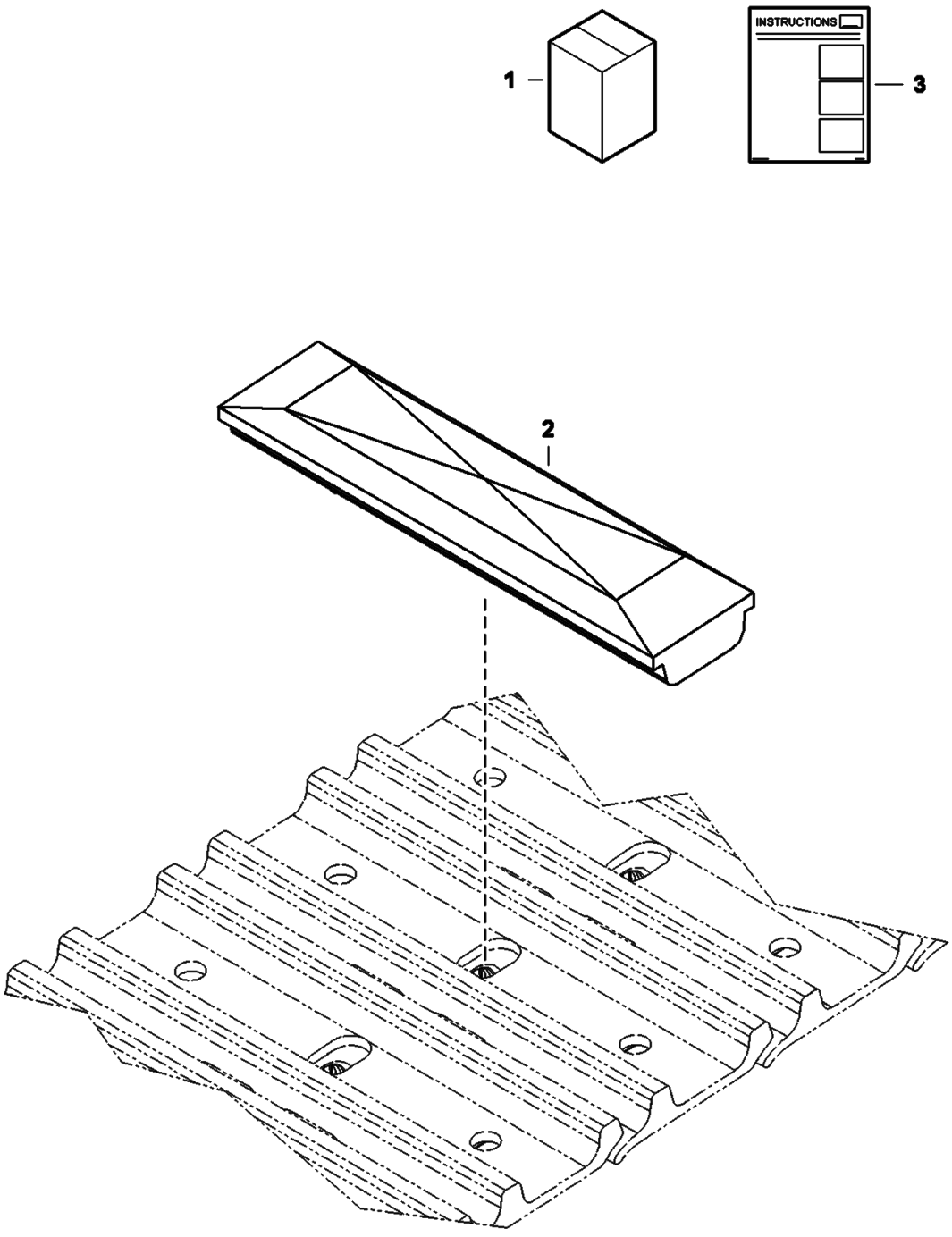

Page 328 - OSS# 2091664 - All rights reserved by Bobcat Company - 08/27/2012 - 11:42:23 - Produced by Ken Cook Co. with mediaioff

Ref No	Part Number	Description	Remarks	Serial Number	Qty
1	7174550	KIT, PAD STREET	Ref. 2-3		1
2	7009265	PAD, STREET ASSY			82
2	1EM120	WASHER			x
2	4DM12	NUT HEX			x
3	6987375	INSTRUCTIONS			1

Page 329 - OSS# 2091664 - All rights reserved by Bobcat Company - 08/27/2012 - 11:42:23 - Produced by Ken Cook Co. with mediaioff

X-CHANGE
(Pin-On)
(Kit)

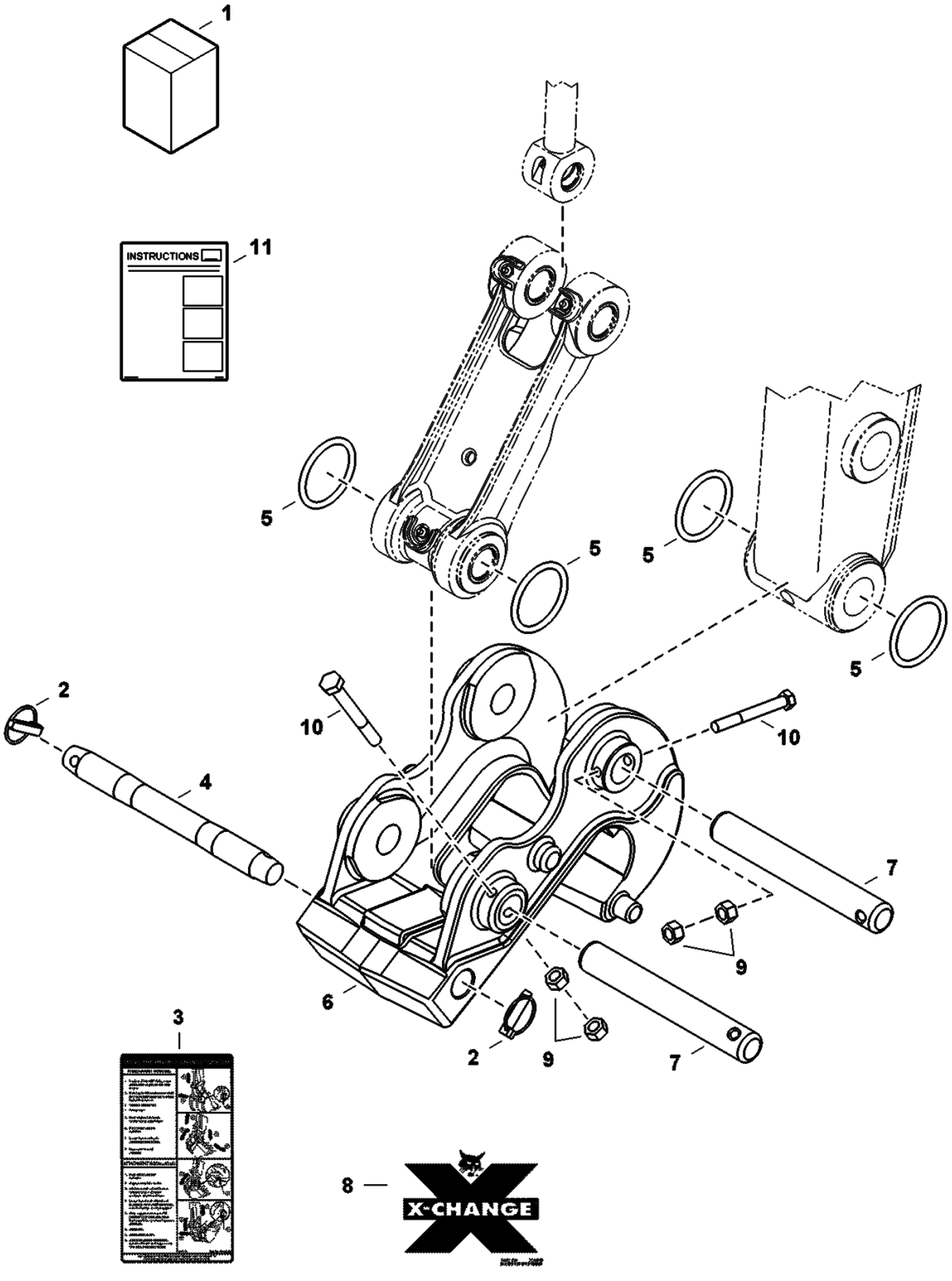

Page 330 - OSS# 2091664 - All rights reserved by Bobcat Company - 08/27/2012 - 11:42:23 - Produced by Ken Cook Co. with mediaioff

X-CHANGE (Cont'd)
(Pin-On)
(Kit)

Ref No	Part Number	Description	Remarks	Serial Number	Qty
1		KIT, X-CHANGE PIN-ON	SALES - Ref. 2-11 - Sales #7178041		1
2	6560382	PIN, LOCK			2
3	6818059	DECAL			1
4	7137214	PIN			1
5	7143562	O-RING			4
6	7150798	X-CHANGE, PIN-ON			1
7	7181216	PIN, PIVOT X-CHANGE			2
8	7160880	DECAL, X-CHANGE			2
9	4DM10	NUT			4
10	7CM1080	BOLT			2
11	6987433	INSTRUCTIONS			1

Page 331 - OSS# 2091664 - All rights reserved by Bobcat Company - 08/27/2012 - 11:42:23 - Produced by Ken Cook Co. with mediaioff

BULK ITEMS

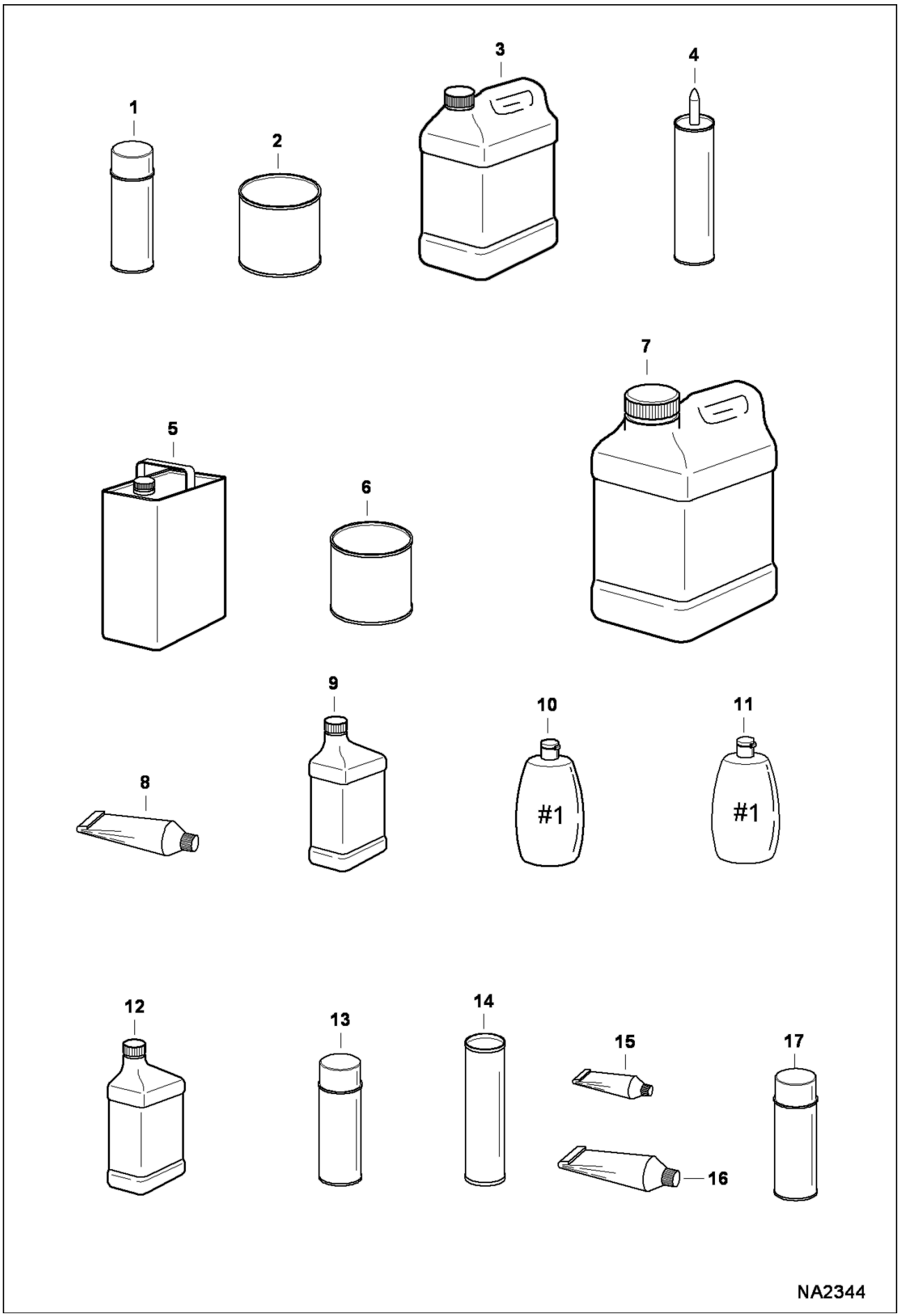

Page 332 - OSS# 2091664 - All rights reserved by Bobcat Company - 08/27/2012 - 11:42:23 - Produced by Ken Cook Co. with mediaIoff

Ref No	Part Number	Description	Remarks	Serial Number	Qty
1	6902228	PAINT, ORANGE SPRAY CAN 6			x
1	6902229	PAINT, CHARCOAL SPRAY CAN 6			x
1	6902230	PAINT, WHITE SPRAY CAN 6			x
2	6902233	PAINT, ORANGE QT 6			x
2	6902234	PAINT, CHARCOAL QT 6			x
2	6902235	PAINT, WHITE QT 6			x
3	6983128	ANTI-FREEZE PG 53/47 PREMIX GAL 6			x
3	6983129	ANTI-FREEZE PG CONCENTRATE 6			x
4	6633583	SEALANT	tube - 300 ml		x
5		REDUCER	NAP - gallon		x
6	6902236	PRIMER QT. 6	quart		x
7	6903117	FLUID, OIL HYD 2.5 GAL 2			x
7	6903118	FLUID, OIL HYD 5 GAL			x
7	6903119	FLUID, OIL HYD 55 GAL			x
8	6599360	SEALANT	electrical - tube - 3 oz		x
8	6685372	SEALANT, GASKET LIQUID	tube - 0.57 kg (20 oz)		x
9	6903121	LUBE, GEAR 12			x
10	6630188	POLISH	window - #1 - 8 oz		x
11	6630189	POLISH	window - scratch remover - #2 - 8 oz		x
12	6903109	OIL 30W QT. 12			x
12	7023076	OIL, 10W30 QT 12	Was 6903107 [A]		x
12	7023080	OIL, 15W40 QT 12	Was 6903105 [A]		x
12	7023077	OIL, 10W30 GAL 6	Was 6903108 [A]		x
12	7023081	OIL, 15W40 GAL 6	Was 6903106 [A]		x
12	6903110	OIL, 30W GAL. 6			x
12	7023082	OIL, 15W40 2.5 GAL 2	Was 6903113 [A]		x
12	7023078	OIL, 10W30 2.5 GAL 2	Was 6903112 [A]		x
12	6903111	OIL 30W 2.5 GAL 2			x
13	6675380	ADHESIVE	insulation - spray can		x
14	6903122	GREASE, MULTI PURPOSE #2 - 10			x
14		GREASE	NAP - 14.5 oz. cartridge - For fan idler bearing & spring loaded drive idler		x
15	6650407	ADHESIVE	tube - 1 oz		x
16	6650388	SEALANT	flange		x

Page 333 - OSS# 2091664 - All rights reserved by Bobcat Company - 08/27/2012 - 11:42:23 - Produced by Ken Cook Co. with mediaioff

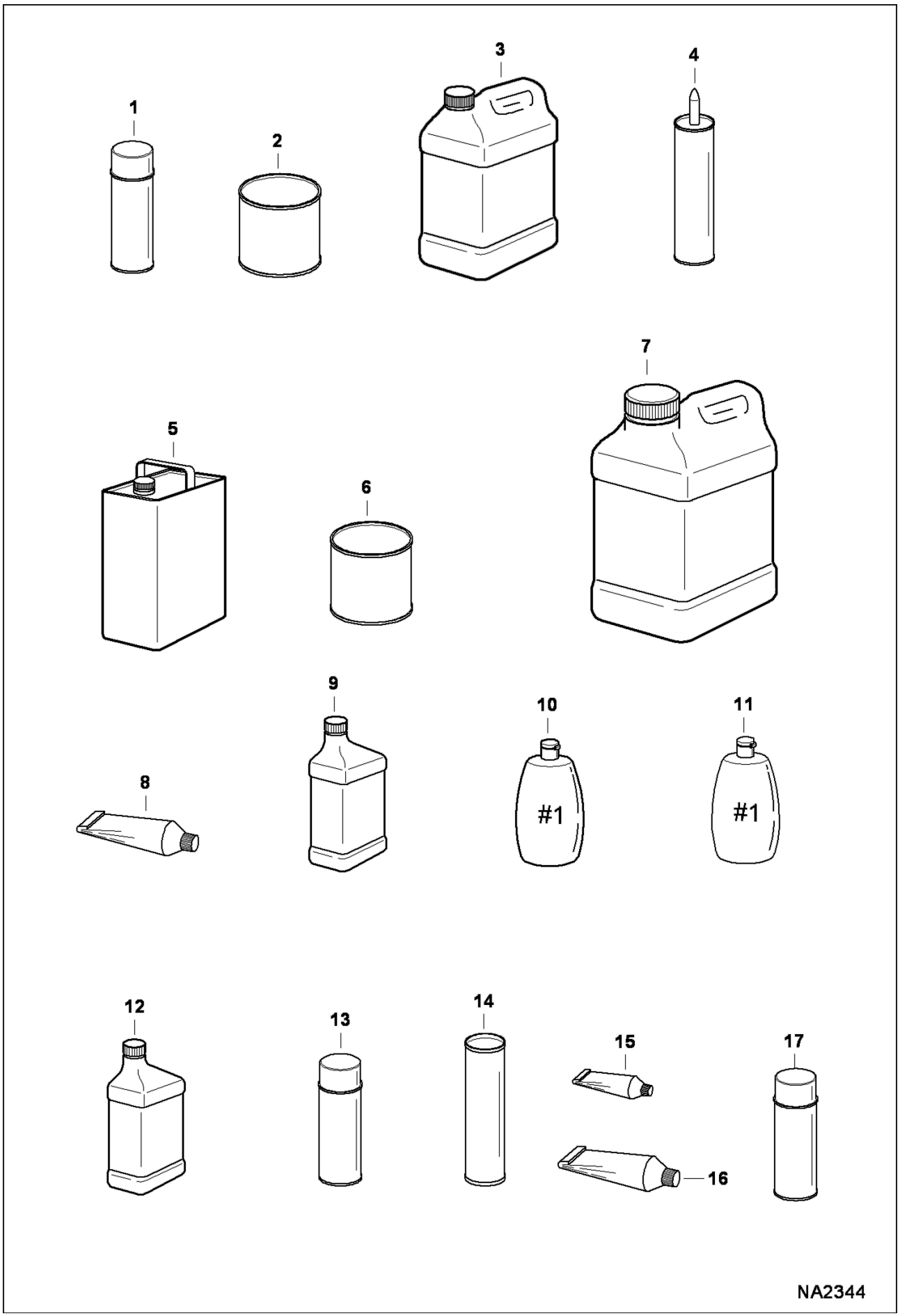

Page 334 - OSS# 2091664 - All rights reserved by Bobcat Company - 08/27/2012 - 11:42:23 - Produced by Ken Cook Co. with mediaioff

Ref No	Part Number	Description	Remarks	Serial Number	Qty
17	6736644	PAINT	orange - spray can - .5 oz		x
17	6736641	PAINT	charcoal - spray can - .5 oz		x
17	6736642	PAINT	white - spray can - .5 oz		x
17	6736645	PAINT	red - spray can - .5 oz		x

Page 335 - OSS# 2091664 - All rights reserved by Bobcat Company - 08/27/2012 - 11:42:23 - Produced by Ken Cook Co. with mediaioff

Page 336 - OSS# 2091664 - All rights reserved by Bobcat Company - 08/27/2012 - 11:42:23 - Produced by Ken Cook Co. with mediaioff

Part No.	Description	Was	Code	Page
10H25	FITTING, GREASE 5			14, 54, 56, 58, 74, 158, 160, 162, 164, 166, 284
10L0604	FITTING, HYD CONNECTOR			74, 90, 92, 96
10L0606	FITTING, HYD CONNECTOR			74, 78, 90, 92, 280, 298
10L0610	FITTING, HYD CONNECTOR			96
12H15	FITTING, GREASE 5			60
1306637	CLIP			81, 82
13JM320	PIN			62
13JM532	PIN, COTTER			42
14D10	NUT			70, 72
14JM12140	PIN, CLEVIS			62
14JM2050	CLEVIS			42
15EM100	WASHER			14, 68
15EM120	WASHER			98
15EM160	WASHERS			66
15EM180	WASHER			208
15EM80	WASHER			44
15HB0808	FITTING			74, 78
15KB0404	FTG HYD S Connector			96, 98, 280
15KB0406	FTG HYD S CONNECTOR			74, 75, 76
15KB0604	FTG HYD S CONNECTOR			76
15KB0606	FITTING, HYD CONNECTOR			74, 78, 80, 98, 298
15KB0608	FITTING, HYD CONNECTOR			280
15KB0808	FITTING, HYD CONNECTOR			76, 80, 82, 83, 84, 252, 278
15KB0810	FITTING, HYD CONNECTOR			82, 252
17EM100	WASHER			82
17EM120	WASHER			58
17EM80	WASHER			254
17KB0404	FTG HYD ELBOW 90			90, 92, 96, 98, 278, 280
17KB0406	FITTING, HYD ELBOW			98, 278, 280, 298
17KB0606	FITTING			74, 274
17KB0810	FITTING, HYD ELBOW			98
18EM1224	WASHER			14
18KB0404	FTG HYD ELBOW 45			98
18KB0606	FTG HYD Elbow 45			98
19KB0606	TEE			78
1CM1012	SCREW			32, 306
1CM1020	BOLT			20, 308
1CM1025	BOLT			14
1CM1220	BOLT			296
1CM1250	BOLT			296
1CM512	BOLT			16
1CM612	BOLT			64, 66

Code for disposition of old part number
A -- Use up
B -- Use on other application (See PNI)
C -- File PDR Report with Bobcat Parts Sales
D -- Part Number Error

Page 337 - OSS# 2091664 - All rights reserved by Bobcat Company - 08/27/2012 - 11:42:23 - Produced by Ken Cook Co. with mediaioff

Part No.	Description	Was	Code	Page
1CM620	BOLT			26, 30, 288
1CM655	SCREW			58
1CM8100	SCREW			186
1CM816	BOLT			90, 92
1CM820	BOLT			82
1CM835	BOLT			212
1CM840	BOLT			80
1CM855	BOLT			298
1DM6	NUT			234
1DM7	NUT			216
1EM100	WASHER			60, 88
1EM120	WASHER			296, 318
1EM80	WASHER			188
21CM616	SCREW			64
21JM814	PIN			198
21KB0404	FITTING, HYD TEE			278, 280, 298
21KB0606	FTG HYD STRAIGHT TEE			78
21KB0808	FTG HYD STRAIGHT TEE			82, 252
22J19	SNAP RING			60
23GM825	SCREW			44
23JM1024	PIN HARDENED PARALLE			14, 74
24K2	PLUG			70
24K3	PLUG			88
24K5	PLUG			88
24K6	FITTING			84, 88
25E13	WASHER 5			26
25E15	WASHER			186
25E16	WSHR			20
25K30126	O RING 10			166
25K30210	O-RING			164
25K40224	O RING 10			158, 162, 164
25K60128	O RING 10			166
25K60212	O RING 10			158, 162, 164
26GM10020	BOLT			46
26GM10025	SCREW			46, 312
26GM8020	SCREW			90, 92, 254
27CM1025	BOLT			184
27CM510	SCREW			20
27CM830	BOLT			190
27CM835	SCREW			66
28CM10100	BOLT			80
28CM1020	BOLT			36, 244
28CM1025	BOLT			20, 188
28CM1030	BOLT			298
28CM620	BOLT CARRIAGE 8.8			172, 288
28CM816	BOLT			32
28CM820	BOLT			32, 64, 66, 70, 172, 188, 266
28CM830	BOLT			70
29CM01235B	BOLT			58
29CM1016	BOLT			16, 58, 68, 298
29CM1020	BOLT			14, 46, 68, 80, 88, 170, 172, 182, 288
29CM1025	BOLT			20, 36, 58, 78, 186, 244, 258, 268

Code for disposition of old part number

A -- Use up
B -- Use on other application (See PNI)
C -- File PDR Report with Bobcat Parts Sales
D -- Part Number Error

Page 338 - OSS# 2091664 - All rights reserved by Bobcat Company - 08/27/2012 - 11:42:23 - Produced by Ken Cook Co. with mediaioff

Part No.	Description	Was	Code	Page
29CM1030	BOLT			14, 184, 266
29CM1040	BOLT			266
29CM1080	SCREW			46
29CM1235	BOLT			186
29CM1250	BOLT			78
29CM20150	BOLT			18, 246
29CM2045	BOLT			18
29CM2080	BOLT			18
29CM612	BOLT			182, 286
29CM616	BOLT			72, 80, 182, 188, 288
29CM620	SCREW			258, 266, 302
29CM812	BOLT			74, 86, 170
29CM816	SCREW			44, 88, 92, 184
29CM820	SCREW			16, 70, 72, 90, 92, 172, 182, 188, 278, 280
29CM825	BOLT			20, 68, 172, 182
29CM835	BOLT			266
29CM845	BOLT			172
29E6	WASHER			184
2EM7	WASHER			216
30H22	CLIP			74, 80, 86, 170
30H30	CLAMP			80, 188, 278, 298
30H34	CLAMP			190
30H42	CLAMP			86
30H46	CLIP			78
30H50	CLIP			86, 172
30H57	CLAMP			188
30H60	CLIP			182
30H85	CLAMP			90, 92
31H31	CLIP			188
33CM1020	BOLT			42, 88
33CM1025	BOLT			14, 16, 44, 182
33CM1050	BOLT			266
33CM1080	BOLT			82
33CM820	BOLT			80, 88, 90, 92, 258, 298
33CM825	BOLT			84, 88, 182
33CM830	BOLT			80
35C408	BOLT			24
36K3	CAP			280
38C608	SCREW			32
38C868	SCREW			66
38CM1212	BOLT, SHOULDER			20
3974033	CAP			214
3974039	PIN			198
3974056	CAP			214
3974095	MET-GASK			196, 198
3974260	SCREW			222
3974433	PLUG			198
3974882	HOOK			213, 214
3974945	WASHER, THRUST			200
3974972	GASKET			196, 222, 230, 234
3975436	SCREW			218
3GM1030	SCREW			88
3GM1070	BOLT			88
3GM820	SCREW			186

Code for disposition of old part number

A -- Use up

B -- Use on other application (See PNI)

C -- File PDR Report with Bobcat Parts Sales

D -- Part Number Error

Page 339 - OSS# 2091664 - All rights reserved by Bobcat Company - 08/27/2012 - 11:42:23 - Produced by Ken Cook Co. with mediaioff

Part No.	Description	Was	Code	Page
42H48	CLAMP 5			266
42HC250	CLAMP			184
42HL100	CLAMP, HOSE			258, 266
42HL150	CLAMP, HOSE			82, 182
42HL200	CLAMP, HOSE			88
42HL250	CLAMP			184
42HS04	COLLAR			188
42HS4	CLAMP			274
43DM10	NUT			14, 16, 20, 36, 42, 44, 60, 78, 80, 88, 182, 188, 244, 266
43DM5	NUT			16
43DM6	NUT			172, 188, 258, 266, 288
43DM8	NUT			44, 80, 84, 88, 90, 92, 170, 172, 182, 188, 258, 266, 286, 298
4CM612	BOLT			228, 232
4CM614	BOLT			206
4CM616	BOLT			204, 212, 228, 234
4CM618	BOLT			234
4CM620	BOLT			202
4CM630	BOLT			210, 220
4CM835	BOLT			68
4DM10	NUT			26, 54, 56, 62, 320
4DM12	NUT HEX			54, 58, 62, 318
4DM20	NUT			18, 246
4DM5	NUT			24
4DM8	NUT			68
50D8	NUT			176
515069	GROMMET			23, 24
51DM10	NUT			46, 58, 184, 186, 266, 298, 306, 308
51DM12	NUT			46, 78, 186
51DM6	NUT			26, 30, 32, 44, 58, 64, 72, 302
51DM8	NUT			20, 32, 64, 66, 182, 186, 278, 280, 298
53CM845	BOLT			86, 278
53CM850	SCREW			86
53CM855	SCREW			278, 280
53D6	NUT			66
53DM10	NUT			20
53DM12	NUT			296
53DM8	NUT			20, 32, 70
55CM1230	SCREW			46
55CM1235	BOLT			98
55CM1250	SCREW			14
55D7	NUT			26
58K222	O-RING			88
59CM620	SCREW			182
59CM630	SCREW			182
59CM812	SCREW HX FLNG W/T8.8			66
59CM816	BOLT			184, 186
59CM825	Screw Hex FLNG W/T8.8			186
5CM1020	SCREW			70, 72, 170
5CM1025	BOLT			184
5CM1030	BOLT			186
5HM13	CLAMP			188

Code for disposition of old part number

A -- Use up
B -- Use on other application (See PNI)
C -- File PDR Report with Bobcat Parts Sales
D -- Part Number Error

Page 340 - OSS# 2091664 - All rights reserved by Bobcat Company - 08/27/2012 - 11:42:23 - Produced by Ken Cook Co. with mediaioff

Part No.	Description	Was	Code	Page
5HM14	CLAMP			188, 258, 266
5HM16	CLAMP			88, 182, 244
5HM18	CLAMP			258, 268
5HM20	CLAMP			258, 266
5HM23	CLAMP			188
5HM43	CLAMP			184, 188
5HM55	CLAMP			188
60CM1290	BOLT			186
60CM1650	SCREW HX FLNGW/T10.9			74
61D5	NUT			70
62D4	NUT			70, 72
6505813	CONNECTOR			184
6515007	GAUGE			184
6515156	CONNECTOR			184
6516229	PISTON SEAL			164
6519328	SEAL			166
6534111	WASHER			53, 54, 55, 56, 57, 58, 59, 60, 61, 62
6534154	RING			54, 56, 58, 60, 62
6536803	WASHER			58
6553411	BUSHING			188
6553412	ELBOW			188
6557720	HOSE			184
6560382	PIN, LOCK			320
6564452	GRIP			69, 70
6565977	HOSE			258, 268
6567962	WASHER			70
6567963	SPACER			70
6577801	LIGHT			310
6577822	HOSE			182, 188
6577961	GROMMET			70
6578169	HOSE			188
6578278	PAD			87, 88, 187, 188
6578528	HARNESS			310
6578824	HOUSING			310
6586251	HOSE			88
6586391	GUIDE			54
6586570	HEAD			160
6586718	HEAD, CYL TILT			164
6587887	GROMMET			24, 70
6588680	PISTON			164
6589675	SCREW			30, 35, 36, 244
6589699	WASHER			60
6592766	U-BOLT			70
6594897	DECAL			250
6595014	DECAL			250
6596396	PLATE			46, 312
6597572	BUMPER			54, 284
6598098	PIN			234
6598116	PLUG			198, 214
6598703	SEAL			196, 234
6599116	GASKET			194, 218
6599360	SEALANT			322
6599365	KIT			100
6599645	PLUG, STEEL			188

Code for disposition of old part number
A -- Use up
B -- Use on other application (See PNI)
C -- File PDR Report with Bobcat Parts Sales
D -- Part Number Error

Page 341 - OSS# 2091664 - All rights reserved by Bobcat Company - 08/27/2012 - 11:42:23 - Produced by Ken Cook Co. with mediaioff

Part No.	Description	Was	Code	Page
6610510	TIE			118, 276, 278
6624289	STRAP, TIE			58, 70, 74, 82, 85, 86, 89, 90, 91, 92, 169, 170, 171, 172, 175, 176, 188, 258, 265, 266, 288, 298, 310
6625575	FUSE, 20A			174
6630041	ELBOW			188
6630168	COUPLER			98
6630188	POLISH			322
6630189	POLISH			322
6630367	CAP			82, 97, 98
6630945	WASHER			70
6633583	SEALANT			322
6644965	BALL JOINT			70, 71, 72
6648416	SEAL			32
6649478	BULB HOUSING			310
6649949	PLUG			25, 26
6650388	SEALANT			322
6650407	ADHESIVE			322
6651512	ALARM BACKUP			288
6652521	PLATE			86, 266, 278, 298
6652574	PLUG			198, 208
6652580	BOLT			220
6652594	BOLT			208
6652597	ADAPTER			208
6652688	CLAMP			222
6652689	CLAMP			222
6652745	PIPE			210
6652915	SEAL, OIL			54, 56, 158, 162, 164, 166, 284
6653841	GEAR			204
6653842	KEY			204
6654718	CLAMP			222
6654805	FUSE 10A			174
6654806	FUSE, 15A			174
6655218	GASKET			194, 222, 224
6655872	HEAT SEAL			194, 222, 224
6655880	PIPE			218
6657050	CAP			218
6657412	BOLT			208
6657413	BOLT			208
6657423	PIN			198
6657424	PIN			198
6657426	BALL			208
6657431	CAP			198
6657445	SCREW			226
6657446	SCREW			222
6657458	STUD			226
6657459	NUT			230
6657461	NUT			226
6657466	GASKET			226
6657467	GASKET			226
6657470	NUT			230
6657472	SHIM			226
6657474	SPRING			234
6657478	BOLT			214
6657479	GASKET			196, 208

Code for disposition of old part number

A -- Use up
B -- Use on other application (See PNI)
C -- File PDR Report with Bobcat Parts Sales
D -- Part Number Error

Page 342 - OSS# 2091664 - All rights reserved by Bobcat Company - 08/27/2012 - 11:42:23 - Produced by Ken Cook Co. with mediaioff

Part No.	Description	Was	Code	Page
6657480	GASKET			196, 200
6657481	SEAL			196, 202
6657482	BOLT			200
6657483	BOLT			200
6657484	COVER			202
6657493	GASKET			194, 220
6657494	GASKET			194, 220
6657495	VALVE			215, 216
6657496	VALVE			216
6657502	ROCKER ARM			216
6657506	SCREW			216
6657508	SPRING			216
6657509	BRACKET			216
6657510	STUD			216
6657511	WASHER			216
6657514	GASKET			194, 218
6657517	STOPPER			204
6657518	STOPPER			228
6657521	PIN			200
6657522	SNAP RING			200
6657526	BOLT			200
6657530	COLLAR			200
6657531	SLEEVE			200
6657534	BEARING			200
6657541	GEAR			200
6657542	SHAFT			204
6657543	SNAP RING			204
6657544	COLLAR			204
6657545	COLLAR			204
6657548	PIN			198
6657549	ROTOR ASSY			208
6657552	GEAR			200
6657553	SEAT			208
6657554	SPRING			208
6657560	BOLT			230
6657562	WEIGHT			228
6657563	SHAFT			228
6657564	HOLDER			228
6657566	SLEEVE			228
6657568	SET SCREW			228
6657572	COLLAR			232
6657574	GASKET			196, 232
6657575	BEARING			232
6657576	BEARING			232
6657577	LEVER			234
6657578	GASKET			196, 234
6657583	GASKET			194, 212
6657584	PIPE			212
6657585	PULLEY			182
6657589	BOLT			208
6657590	STUD			220
6657591	NUT			220
6657592	NUT			234
6657593	NUT			228

Code for disposition of old part number

A -- Use up
B -- Use on other application (See PNI)
C -- File PDR Report with Bobcat Parts Sales
D -- Part Number Error

Page 343 - OSS# 2091664 - All rights reserved by Bobcat Company - 08/27/2012 - 11:42:23 - Produced by Ken Cook Co. with mediaioff

Part No.	Description	Was	Code	Page
6657596	WASHER			234
6657597	KEY			228
6657600	PLUG			198
6657601	PLUG			198
6657603	SEAL			196, 208
6657610	GASKET			196, 210
6657611	IMPELLER			210
6657630	SPRING			216
6657632	GEAR			204
6657635	OIL FILTER			2, 6, 9, 10, 208
6657636	ASSY PIPE			221, 222
6657643	PIPE			222
6657644	PIPE			222
6657645	PIPE, INJECTION			222
6657646	SHAFT, GOVERNOR			228
6657647	BUSHING			198
6657648	SNAP RING			228
6657649	LEVER ASSY			234
6657655	LEVER			234
6657656	LEVER			234
6657657	SHAFT			234
6657660	CORD, GLOW PLUG			222
6657661	KEY			200
6657663	PLUG			198
6657670	SHAFT, GOVERNOR			228
6657671	GEAR			228
6657675	PLUG			198
6657690	ROLLER			228, 232
6657734	PUMP, PRIMER HAND			188
6658103	COUPLER			82
6660075	SEAL			54, 58, 284
6660260	SWITCH			100
6661062	PLUG			184
6661248	FILTER, OIL HYD 12			2, 5, 6, 10, 12, 100
6661636	BOLT			186
6661753	PLUG			98
6662076	RING			120
6663289	FUSE, 5A			174
6664026	CHECK VALVE			300
6664085	BUSHING			24
6664223	OUTLET			172
6664224	CAP			172
6664554	PUMP, WIPER WASHER			24
6665000	CLIP			72
6665208	SEAL			166
6665314	PLUG			63, 64, 65, 66, 244
6665317	SWITCH			238, 304
6666631	WASHER			180
6666766	GROMMET			24
6667324	SEAL			166
6667326	SEAL			164
6667327	SEAL			160

Code for disposition of old part number
A -- Use up
B -- Use on other application (See PNI)
C -- File PDR Report with Bobcat Parts Sales
D -- Part Number Error

Page 344 - OSS# 2091664 - All rights reserved by Bobcat Company - 08/27/2012 - 11:42:23 - Produced by Ken Cook Co. with mediaioff

Part No.	Description	Was	Code	Page
6667352	FILTER, FUEL W/SEPERATOR 12			2, 6, 7, 8, 188
6667353	FILTER ASSY			188
6667418	PLUG			198
6667419	WASHER			226
6667420	BOLT			214
6667421	BOLT			206
6667934	BULB			176, 310
6668881	CORD			240
6668928	LOCK PIN			302
6669267	SEAL			158, 162
6669537	ACCUMULATOR			106
6669736	SEAL KIT			300
6670251	BATTERY, DRY 530 AMP			2, 172
6670464	HOSE			222
6670472	NUT			222
6670520	WASHER			216
6670521	BOLT			216
6670533	NUT			208, 226, 234
6670727	STARTER			170, 179, 180, 185, 186
6670727REM	STARTER			180
6670757	COUPLER			186
6670770	BOLT			208, 212, 220
6670785	PIPE			212
6670865	SEAT BELT			20
6671106	HORN			172
6671113	SWITCH			167, 168
6671982	O-RING			180
6671984	BEARING			180
6671985	BEARING			180
6671991	SPRING			180
6671997	BOLT			180
6671999	ROLLER			180
6672000	RETAINER			180
6672001	PINION			180
6672006	NUT			180
6672007	BUSHING			180
6672008	NUT			180
6672011	NUT			180
6672012	WASHER			180
6672013	O-RING			180
6672172	KIT			180
6672178	COVER			180
6672354	PLUG			198
6672360	PLUG			208
6672384	CAP, SECURITY			230
6672387	COVER			230
6672388	TUBE			226
6672395	BOLT			226
6672406	PIPE			222
6672408	NUT			222, 224
6672409	WASHER			224
6672410	SPRING			224
6672411	SPACER			224

Code for disposition of old part number
A -- Use up
B -- Use on other application (See PNI)
C -- File PDR Report with Bobcat Parts Sales
D -- Part Number Error

Page 345 - OSS# 2091664 - All rights reserved by Bobcat Company - 08/27/2012 - 11:42:23 - Produced by Ken Cook Co. with mediaioff

Part No.	Description	Was	Code	Page
6672412	PUSH ROD			224
6672413	NUT			224
6672414	WASHER			222, 224
6672416	WASHER SET			224
6672417	WASHER			224
6672418	WASHER			224
6672419	WASHER			224
6672420	WASHER			224
6672421	WASHER			224
6672422	WASHER			224
6672423	WASHER			224
6672424	WASHER			224
6672425	WASHER			224
6672426	WASHER			224
6672427	FUEL PUMP			226
6672436	SEAL			194, 216
6672437	CAP			216
6672467	FILTER, AIR OUTER			1, 2, 236
6672468	FILTER, AIR INNER			2, 236
6672482	FLANGE			211, 212
6672515	KIT, SEAL			300
6674172	THERMOSTAT			212
6674221	WASHER			120
6674264	RETAINER NUT			13, 14, 16, 36, 43, 44, 80, 88, 182, 188, 244
6674316	SWITCH, PRESS OIL HYD			174
6674687	BATTERY, DRY 600 AMP			2, 174
6674818	ARMATURE			180
6674821	CLUTCH			180
6674831	SPRING			180
6674993	CAP			24
6675176	SWITCH			264
6675181	PLUG			264
6675212	RETAINER			66, 172, 288
6675380	ADHESIVE			322
6675522	STROBE			304
6675523	BEACON			238
6675551	CAP			182
6675668	CABLE, THROTTLE			70
6675699	PLUG			236
6675705	ALARM			172
6675722	NUT			14, 184
6675859	RETAINER			79, 80, 82, 88, 90, 92, 172, 182, 188, 258, 266, 298
6675928	RELAY, LATCHING			288
6676026	NUT			80
6676114	ANTENNA, RADIO			168
6676169	NUT			16, 20, 82, 90, 94, 172, 182, 188, 278, 280
6676238	LIGHT			176
6676444	COUPLER			86
6676446	COUPLER			86
6676499	GROMMET			24
6676535	COUPLER			98
6676539	CLIP			260, 272

Code for disposition of old part number
A -- Use up
B -- Use on other application (See PNI)
C -- File PDR Report with Bobcat Parts Sales
D -- Part Number Error

Page 346 - OSS# 2091664 - All rights reserved by Bobcat Company - 08/27/2012 - 11:42:23 - Produced by Ken Cook Co. with mediaioff

Part No.	Description	Was	Code	Page
6676559	COUPLER, FF FEMALE			298
6676560	COUPLER, FF MALE			298
6676713	LOUVER			258, 266
6676725	BEZEL			176
6676917	ELBOW			24
6676922	PLUG			174, 276
6677118	SCREW			260, 272
6677119	SCREW			260, 270
6677203	TUBE,DIPSTICK			206
6677486	NUT			178
6677487	COVER			178
6677488	RECTIFIER			178
6677490	BRACKET			178
6677491	BRACKET			178
6677492	ROTOR			178
6677493	STATOR			178
6677495	SPACER			178
6677555	RECEPTACLE			260, 270
6677837	BOLT			24
6677839	GASKET			24
6677842	NUT			24
6677843	NUT			24
6677847	GROMMET			24
6677895	JOYSTICK			90, 92, 113, 114, 174
6678563	PLUG			300
6678667	MOUNT			172
6678668	STRAP, DUAL TIE			172, 298
6678669	STRAP			88
6678818	MOUNT			82, 88, 90, 92
6678988	VALVE			106
6678990	VALVE			106
6678993	PLUG			106
6679076	NUT			106
6679078	SEAL KIT			106
6679085	SWITCH	6697954	A	270
6679499	O-RING			108
6679600	PLUG			138, 150
6679675	NUT			260, 270
6679820	RELAY			174
6679906	SWITCH			298
6679953	HANDLE, JOYSTICK			114
6679956	KIT			112, 114
6679958	LOCK			112, 114
6679960	CONNECTOR			112, 114
6680092	LOAD CHECK			138, 140, 150, 152, 154, 156
6680247	VALVE			152, 154
6680256	PIN			216
6680262	BOLT			208
6680263	STUD			208
6680264	STUD			208, 226, 234
6680268	O-RING			196, 200
6680270	BEARING			200
6680271	BEARING			200
6680272	NUT			230

Code for disposition of old part number

A -- Use up

B -- Use on other application (See PNI)

C -- File PDR Report with Bobcat Parts Sales

D -- Part Number Error

Page 347 - OSS# 2091664 - All rights reserved by Bobcat Company - 08/27/2012 - 11:42:23 - Produced by Ken Cook Co. with mediaioff

Part No.	Description	Was	Code	Page
6680274	CLAMP			226
6680277	O-RING			196, 234
6680278	WATER PUMP			209, 210
6680279	FLANGE			210
6680280	SEAL			210
6680284	O-RING			196, 206
6680311	RECEIVER			266
6680427	SENSOR			176
6680428	SENSOR			176
6680494	RING ASSY			200
6680495	ROD ASSY			200
6680496	ROD BEARING			200
6680497	BEARING, ENG MAIN			200
6680498	BEARING, ENG MAIN			200
6680501	PLATE ASSY		A	233, 234
6680516	RINGS PISTON			200
6680519	BEARING, ENG MAIN			200
6680540	BOLT			202
6680580	CLAMP			212
6680618	BUSHING			204
6680624	TUBE			226
6680627	TUBE			226
6680667	PLUG			214
6680689	ADAPTER			220
6680795	CLAMP			226
6680797	TEE			226
6680859	GUIDE			214
6680881	NUT			216
6680956	VALVE			300
6680957	VALVE			300
6681662	COVER			208
6681886	GROMMET			90, 92
6681911	SCREW			24
6682230	SCREW			138, 154
6682247	BOLT			138, 142, 144, 148, 152, 154
6682248	SCREW			140, 142, 144, 146, 148, 150, 156
6682345	STRAP, TIE 8			172, 176
6682462	VALVE			24
6682492	TRIM			32, 64, 302, 306, 308
6682697	GROMMET			26, 168
6682740	RETAINER, WIRE			238, 304
6682741	RETAINER, WIRE			238, 304, 310
6683009	O-RING			194, 218
6683107	PIN, START SPRING			198
6684397	BOLT			178
6684564	HEAD			286
6684567	ARM			286
6684650	REGULATOR			178
6684714	HOUSING			112, 114
6684776	CLAMP			218
6684857	PLUG			212
6684863	GASKET			194, 212

Code for disposition of old part number
A -- Use up
B -- Use on other application (See PNI)
C -- File PDR Report with Bobcat Parts Sales
D -- Part Number Error

Page 348 - OSS# 2091664 - All rights reserved by Bobcat Company - 08/27/2012 - 11:42:23 - Produced by Ken Cook Co. with mediaioff

Part No.	Description	Was	Code	Page
6684940	KNOB			264
6684947	GROMMET			260, 270
6684948	STRAP TIE			272
6685087	VALVE			218
6685140	COVER			24
6685332	SPOOL			116
6685333	PLUG			138
6685372	SEALANT, GASKET LIQUID			322
6685606	SPEAKER			168
6685607	GRILL			168
6685744	CLIP			26, 168, 292
6685747	SEAT BELT			296
6685776	KIT			138
6685924	CAP			218
6685958	GUIDE			214
6685959	RETAINER			216
6686034	BOLT			210
6686073	VALVE			152
6686170	TUBE			218
6686171	CLAMP			218
6686173	COVER			208
6686174	PIN			208
6686175	BEARING			228
6686176	BEARING			228
6686178	BEARING			228
6686180	LEVER			232
6686181	SHAFT			232
6686182	SHAFT			232
6686236	PLUG			116, 150
6686999	SEAL			160
6687000	WIPER ROD			158, 162
6687687	GASKET			196, 230
6688091	KIT			104
6688538	O-RING			132
6688994	MOUNT			186
6688999	STRIKER GUARD			26
6689007	STRIKER BOLT			26
6689082	COIL			300
6689773	COUPLER			274
6689940	PISTON			200
6690593	ALTERNATOR 90A			186
6690707	SEAL			164
6691059	CORD, BULK CHANNEL LOCKING /FT			14
6691060	CORD, BULK STRIP FILLER /FT			14
6691292	BLOCK, ENG			197, 198
6691293	OIL PAN ASSY			205, 206
6691294	PLUG			206
6691295	GASKET			196, 206
6691297	GASKET			194, 214
6691298	CASE			207, 208
6691302	BEARING CASE			200

Code for disposition of old part number

A -- Use up

B -- Use on other application (See PNI)

C -- File PDR Report with Bobcat Parts Sales

D -- Part Number Error

Page 349 - OS$# 2091664 - All rights reserved by Bobcat Company - 08/27/2012 - 11:42:23 - Produced by Ken Cook Co. with mediaioff

Part No.	Description	Was	Code	Page
6691304	CASE, BEARING			200
6691305	CASE, BEARING			200
6691307	TAPPET			203, 204
6691308	CAMSHAFT			204
6691309	CAMSHAFT			227, 228
6691310	GEAR			228
6691311	APPARATUS			229, 230
6691312	BOLT			230
6691313	SOLENOID,STOP			230
6691314	PUMP			225, 226
6691316	SHIM			226
6691317	SHIM			226
6691318	SPRING			231, 232
6691319	SPRING			232
6691320	LEVER, ASSY			232
6691321	LEVER, THRUST			232
6691322	SPRING			232
6691325	COVER			212
6691326	SHAFT			216
6691342	PULLEY			182
6691534	SCREW			270
6691539	HEX. NUT			178
6692326	SEAL, BP			160
6692400	BULB			58
6692548	BOOT			112, 114
6692549	KIT, PLUNGER			112, 114
6692805	SEAL, BP			158, 162
6692836	CAP, HYDRAULIC TANK			10, 88
6693147	VALVE			258, 266
6693223	WASHER			260, 270
6693234	FOAM			262, 272
6693236	FOAM			262, 272
6693245	SWITCH, IGN			172
6693337	FILTER, AIR			184, 235, 236
6693493	TRACK, STEEL			312, 315, 316
6693507	VALVE, BALL			82, 109, 110, 252
6693921	SENSOR, RPM			170
6696953	FOAM			260, 261, 262, 272
6696963	ENG, KUBOTA V1505			182, 184, 186, 190, 191, 192
6697796	FLASHTUBE			304
6697797	AMBER LENS			304
6697919	VALVE, SHUTTLE			96
6698169	ACTUATOR, THROTTLE			72, 174
6698186	BEARING, CLIP			26
6698358	COMPRESSOR, A/C			266
6698503	LATCH, HOLD OPEN			26
6698504	U-BOLT			30
6698610	BOLT			230
6698612	SHIM, PUMP INJ			226
6698613	PISTON, ENG			199, 200
6698614	HOLDER, GEAR GOV			228

Code for disposition of old part number

A -- Use up
B -- Use on other application (See PNI)
C -- File PDR Report with Bobcat Parts Sales
D -- Part Number Error

Page 350 - OSS# 2091664 - All rights reserved by Bobcat Company - 08/27/2012 - 11:42:23 - Produced by Ken Cook Co. with mediaioff

Part No.	Description	Was	Code	Page
6698615	WASHER, THRUST			228
6698616	COVER, SHAFT			232
6698617	GASKET, COVER CASE			196, 200, 201, 202
6698618	GLOW PLUG			222
6698619	KIT, GASKET ENG UPPER			192, 193, 194
6698620	COVER, HEAD CYL ENG			217, 218
6698621	HEAD, CYL ENG			214
6698622	NOZZLE, INJ FUEL			224
6698623	INJECTOR, FUEL ASSY			222, 223, 224
6698624	BUSHING, PIN PISTON			200
6698636	SCREEN, OIL ENG			206
6698637	KIT, GASKET ENG LOWER			192, 195, 196
6698640	CONTROL, THROTTLE			172
6701449	FILLER TUBE			188
6701892	CLAMP			86, 278, 298
6702444	FUSE 25A 5			174
6703736	CAP			184
6708310	HOSE, BULK 100			24
6708929	DECAL, COOLANT			248
6709527	KEY, IGN 10			174
6715183	ELBOW			188
6716621	COVER			172
6718414	SENDER, TEMP ENG			170
6719341	HINGE			24
6719825	BOLT			186
6720038	INSTRUCTIONS			240
6727869	SENDER,HYD TEMP			172
6729692	KIT			239, 240
6731085	ELBOW			258, 266
6731332	DECAL			250
6732023	CONNECTOR			258, 266
6732148	DECAL			248
6733378	SCREW			186, 266
6736641	PAINT			324
6736642	PAINT			324
6736644	PAINT			322, 323, 324
6736645	PAINT			324
6800424	RING-GEAR			186
6800686	HEAD, CYL TILT			158, 162
6802539	SPACER			19, 20
6802867	ELBOW			298
6803202	SCREW			20, 26, 32, 67, 68
6803213	BUSHING, PRESS FIT			54, 56, 284
6803309	BUSHING, PRESS FIT			56
6804233	DECAL			248
6805244	WASHER			24, 36, 244

Code for disposition of old part number

A -- Use up
B -- Use on other application (See PNI)
C -- File PDR Report with Bobcat Parts Sales
D -- Part Number Error

Page 351 - OSS# 2091664 - All rights reserved by Bobcat Company - 08/27/2012 - 11:42:23 - Produced by Ken Cook Co. with mediaioff

Part No.	Description	Was	Code	Page
6806443	GROMMET			90, 92
6807184	FITTING			73, 74
6807431	CABLE			172
6808246	BUSHING			158, 164, 166
6808271	BUSHING			162
6808424	SCREW			26
6808611	PISTON			166
6808749	BUSHING			66
6808882	ADHESIVE			26, 27, 28, 30, 32, 36, 244
6808924	HINGE			302
6808926	PIN			302
6809832	DECAL			248
6810004	DECAL, WARNING			248, 288
6810029	STOP			120
6810133	GROMMET			181, 182, 244
6810456	BUSHING			66
6810539	NUT			158, 162, 164
6810540	NUT			160
6810610	SEAL			120
6810813	SEAL, OIL			120
6812170	PLUG			160, 162, 164, 166
6812171	PLUG			120, 158
6814024	SCREW			258, 266
6814428	RIVET			72
6815277	BUSHING			54, 284
6815489	DECAL			250
6815939	SEAL			28
6815993	DECAL			250
6816193	SCREW			66
6817769	BOLT			14, 20, 41, 42
6818017	BRACKET			302
6818059	DECAL			250, 320
6901951	MANUAL EMI SAFETY - EXCAVATOR			2
6902228	PAINT, ORANGE SPRAY CAN 6			321, 322
6902229	PAINT, CHARCOAL SPRAY CAN 6			322
6902230	PAINT, WHITE SPRAY CAN 6			322
6902233	PAINT, ORANGE QT 6			322
6902234	PAINT, CHARCOAL QT 6			322
6902235	PAINT, WHITE QT 6			322
6902236	PRIMER QT. 6			322
6902838	INSTRUCTIONS			296
6903109	OIL 30W QT. 12			2, 10, 322
6903110	OIL, 30W GAL. 6			2, 10, 322
6903111	OIL 30W 2.5 GAL 2			2, 10, 322
6903117	FLUID, OIL HYD 2.5 GAL 2			2, 11, 12, 322
6903118	FLUID, OIL HYD 5 GAL			2, 12, 322

Code for disposition of old part number
A -- Use up
B -- Use on other application (See PNI)
C -- File PDR Report with Bobcat Parts Sales
D -- Part Number Error

Page 352 - OSS# 2091664 - All rights reserved by Bobcat Company - 08/27/2012 - 11:42:23 - Produced by Ken Cook Co. with mediaioff

Part No.	Description	Was	Code	Page
6903119	FLUID, OIL HYD 55 GAL			2, 12, 322
6903121	LUBE, GEAR 12			6, 12, 322
6903122	GREASE, MULTI PURPOSE #2 - 10			322
6969775	SWITCH, OIL PRESSURE			198
6969803	COVER, BREATHER			218
6969804	PLUG,OIL GAUGE			206
6969817	BALL			232
6969895	BOLT			202
6969904	JOINT, EYE			226
6969961	VALVE			236
6969973	CLAMP, CORD			220
6983128	ANTI-FREEZE PG 53/47 PREMIX GAL 6			322
6983129	ANTI-FREEZE PG CONCENTRATE 6			322
6987271	HANDBOOK, OPERATION & MAINTENANCE			2, 3, 4
6987321	INSTRUCTIONS			238
6987322	INSTRUCTIONS			304
6987336	INSTRUCTIONS			256
6987357	INSTRUCTIONS			292
6987375	INSTRUCTIONS			318
6987408	INSTRUCTIONS			306, 308
6987412	INSTRUCTIONS			286
6987433	INSTRUCTIONS			320
6987497	INSTRUCTIONS			310
6988336	RADIO, MINI BOBCAT	7159873	A	292
6988434	KIT, RADIO M-SERIES EXCAVATORS	7173285	A	291, 292
6988831	TRACK, RUBBER (300X80X52.5) 12" EF			314
6989410	INSTRUCTIONS			276
6989413	INSTRUCTIONS			294
6989489	INSTRUCTIONS			32
6989510	INSTRUCTIONS			302
6989530	INSTRUCTIONS			254
6990096	MANUAL, OPERATION & MAINTENANCE E26 EXCAVATOR			2
6990096-CD	MANUAL, OPERATION & MAINTENANCE E26 EXCAVATOR CD			2
6990097	MANUAL			2
6990097-CD	MANUAL			2
6990098	MANUAL, PARTS E26 EXCAVATOR			2

Code for disposition of old part number

A -- Use up
B -- Use on other application (See PNI)
C -- File PDR Report with Bobcat Parts Sales
D -- Part Number Error

Page 353 - OSS# 2091664 - All rights reserved by Bobcat Company - 08/27/2012 - 11:42:23 - Produced by Ken Cook Co. with mediaioff

Part No.	Description	Was	Code	Page
6990098-CD	MANUAL, PARTS E26 EXCAVATOR CD			2
6990133	INSTRUCTIONS			246
6990137	INSTRUCTIONS			284
6990140	INSTRUCTIONS			312
6990153	INSTRUCTIONS			288
6990161	INSTRUCTIONS			274
6990167	INSTRUCTIONS			244
6990168	INSTRUCTIONS			242
6990178	INSTRUCTIONS			258
6990182	INSTRUCTIONS			252
6990183	INSTRUCTIONS			298
6990230	INSTRUCTIONS			280
6990231	INSTRUCTIONS			278
7000328	ADAPTER, SWITCH IGN			174
7000503	BOLT			226
7003457	HOSE, HEATER			262, 272
7003458	CLAMP, HOSE			260, 270
7003459	GROMMET			262, 270
7003460	SEAL, FOAM			262, 264, 272
7003497	SPRING, COMPRESSION			66
7003498	BEARING, ROLLER			66
7003499	BUSHING			66
7003511	PLUG			262, 272
7008034	BLOCK, VALVE A/C			270
7008040	MODULE, DE-ICER ELECTRONIC			272
7008320	LEVER, JOYSTICK W/PWM			90, 92, 96, 111, 112, 176
7008354	SEAL, QUAD			160
7008365	HANDLE, DOOR CAB			30
7008366	LATCH, DOOR CAB			30
7008367	CLIP, DOOR CAB			30
7008368	ROD			30
7008389	RETAINER, VALVE SPRING			216
7008556	PLUG			300
7008581	JOYSTICK, BLADE			90, 92, 96, 117, 118
7008772	ALTERNATOR, 90 AMP			170, 177, 178
7008800	MOTOR, HYD SLEW			74, 88, 96, 127, 128
7008929	FILTER, OIL HYD ASSY			88
7008933	SWITCH, PRESS OIL HYD			288
7008934	MOTOR, WIPER			24
7008936	ARM, WIPER			24
7008937	BLADE, WIPER WINDOW			24
7008991	PAD			316
7008992	PIN			316
7008993	PIN, MASTER			316

Code for disposition of old part number

A -- Use up
B -- Use on other application (See PNI)
C -- File PDR Report with Bobcat Parts Sales
D -- Part Number Error

Page 354 - OSS# 2091664 - All rights reserved by Bobcat Company - 08/27/2012 - 11:42:23 - Produced by Ken Cook Co. with mediaioff

Part No.	Description	Was	Code	Page
7009047	PLATE			24
7009265	PAD, STREET ASSY			318
7009345	RING, SNAP			108
7009348	BALL, 3/16 DIA			108
7009349	O-RING			108
7009350	SPRING, SPOOL			108
7009353	CLAMP, T-BOLT			278, 280
7009365	FILTER, OIL HYD			2, 6, 10, 88
7009561	LATCH, LH			32
7009562	LATCH, RH			32
7009798	SCREW			15, 16
7009977	O-RING	6675538	A	270
7010035	HANDLE			108
7010036	WASHER			108
7010037	SCREW			108
7010112	CONTROLLER, THROTTLE AIC			172
7010118	BOLT, ADJUSTING			234
7010119	BOLT, ADJUSTING			234
7010128	VALVE, AUX SECONDARY			298, 299, 300
7010133	GASKET, PUMP FUEL			196, 226
7010197	HANDLE, JOYSTICK			112
7010200	PULLEY, ALT			178
7010296	SPRING, COMPRESSION			300
7010297	SPOOL, VALVE			300
7010298	SWITCH, ALARM MOTION			288
7010331	FRESH AIR FILTER			260, 270
7010332	FILTER RECIRCULATION			260, 270
7010428	BELT, SEAT			294
7010502	CAP, CONNECTOR			276
7010549	HANDLE, JOYSTICK			118
7010550	LOCK			118
7010551	PLUG			118
7010552	CONNECTOR			118
7010553	BASE, JOYSTICK			118
7010554	HOUSING, JOYSTICK			118
7010555	SPOOL, ACTUATOR ASSY			118
7010556	SPOOL, ACTUATOR ASSY			118
7010625	COIL, SOLENOID			106
7010626	COIL, SOLENOID			138, 154
7010628	O-RING			106
7010629	VALVE, RELIEF			106
7010676	PLUG			17, 18, 246
7010796	GEAR, DRIVEN			130
7010798	RING, SNAP			130
7010799	SCREW			128, 130
7010801	SCREEN, DEBRIS			128

Code for disposition of old part number

A -- Use up
B -- Use on other application (See PNI)
C -- File PDR Report with Bobcat Parts Sales
D -- Part Number Error

Page 355 - OS$# 2091664 - All rights reserved by Bobcat Company - 08/27/2012 - 11:42:23 - Produced by Ken Cook Co. with mediaioff

Part No.	Description	Was	Code	Page
7010803	BEARING, MOTOR SLEW			128
7010804	RING, SNAP			128
7010807	PIN			128
7010808	O-RING			128
7010809	O-RING			128
7010810	SCREW			128
7010811	O-RING			128, 132
7010812	O-RING			134
7010813	O-RING			134
7010814	O-RING			134
7010815	O-RING			134
7010816	RING, BACK-UP			134
7010817	PLUG			132
7010818	PLUG			132
7010821	VALVE, COUNTER BALANCE			128, 131, 132
7010824	KIT, CARRIER			130
7010828	KIT, SEAL			128
7010829	KIT, SEAL			134
7010830	KIT, SEAL			132
7011053	CLIP			74, 78, 90, 92, 96, 280, 298
7011086	SCREW, TAPPING			264
7011088	RIVET, POP			264
7011090	DECAL			264
7011091	DUCT, AIR			264
7011092	WASHER, CUSHION			264
7011094	LOUVER			264
7011095	LOUVER			264
7011096	FOAM			262, 272
7011098	BOLT			260, 272
7011099	STUD			260, 272
7011100	NUT			260, 272
7011101	WASHER			260, 270, 271, 272
7011102	BOLT			260, 270
7011103	INSULATION, HEATER			260, 270
7011104	INSULATION, HEATER			260, 270
7011105	INSULATION, HEATER			260, 270
7011106	INSULATION, HEATER			260, 270
7011107	INSULATION, HEATER			260, 270
7011108	INSULATION, HEATER			260, 270
7011109	FOAM			260, 270
7011110	BUSHING			260, 270
7011111	CABLE, A/C			260, 270
7011112	CLAMP, CABLE			260, 270
7011113	HARNESS, HEATER			260
7011114	PAN, COIL			260
7011117	PLATE			260, 270
7011118	LOUVER			260, 270

Code for disposition of old part number
A -- Use up
B -- Use on other application (See PNI)
C -- File PDR Report with Bobcat Parts Sales
D -- Part Number Error

Page 356 - OSS# 2091664 - All rights reserved by Bobcat Company - 08/27/2012 - 11:42:23 - Produced by Ken Cook Co. with mediaioff

Part No.	Description	Was	Code	Page
7011119	PLATE, SUPPORT			260, 270
7011120	LEVER			260, 270
7011121	BRACKET			260, 270
7011122	DOOR, CONTROL AIR			260, 270
7011125	COIL, HEATER			260, 270
7011128	HARNESS, HVAC			270
7011131	BLOWER, HEATER & A/C			262, 272
7011925	BOLT			46, 50
7012019	BASE, JOYSTICK			116
7012020	SPOOL, ACTUATOR ASSY			116
7012022	PLUG			116
7012201	KIT, SEAL			110
7012344	BELT, SEAT			22
7012494	ORIFICE			90, 92
7012620	KIT, SEAT OPERATOR TOP			22
7012621	KIT, SLIDE			22
7012622	KIT, CONTAINER MANUAL			22
7012623	KIT, BACKREST SEAT			22
7012624	KIT, CUSHION SEAT VINYL			22
7012625	KIT, BACKREST SEAT			22
7012626	KIT, CUSHION SEAT			22
7012810	PLUG			30, 182
7013179	FITTING			88
7013180	TUBE			88
7013575	ROLLER, TRACK	6693489	A	49, 50
7013576	ROLLER, TRACK	6693497	A	50, 312
7013576	ROLLER, TRACK			50, 312
7015668	MOUNT FIR TREE			172
7017857	SET SCREW			162
7017995	EVAPORATOR			270
7017996	BRACKET, VALVE			270
7017997	HOUSING, BASE	7019997	D	260, 270
7017998	COVER	7019998	D	260, 270
7017998	COVER			260, 270
7017999	PLATE, VALVE			260
7018000	COVER, ASSY			260, 270
7018001	VALVE, DRAIN			260, 270
7018002	CONNECTOR			260, 272
7018003	SEAL, FOAM			262, 272
7018004	HEATER, CAB			258, 259, 260
7018005	HVAC ASSY			268, 269, 270
7018006	BRACKET			264
7018007	PLATE			264
7018008	CONTROL			264
7018009	WASHER			264
7018010	SWITCH, CONTROL TEMP			264

Code for disposition of old part number

A -- Use up
B -- Use on other application (See PNI)
C -- File PDR Report with Bobcat Parts Sales
D -- Part Number Error

Page 357 - OSS# 2091664 - All rights reserved by Bobcat Company - 08/27/2012 - 11:42:23 - Produced by Ken Cook Co. with mediaioff

Part No.	Description	Was	Code	Page
7018015	KIT, PLUNGER			116
7018038	LIGHT			58
7019288	CAP, FUEL LOCKING			188
7020238	KIT, KNOB			22
7020240	KNOB, ADJUSTMENT WEIGHT			22
7020241	KNOB, ADJUSTMENT HEIGHT			22
7020243	LATCH			16
7020350	KIT, SUSPENSION ASSY	7012627	A	22
7020389	RETAINER			16
7021081	CONTROLLER, KEYED PANEL	6698608	A	172, 173, 174
7021082	CONTROLLER, KEYLESS PANEL	6698609	A	174, 276
7021082	CONTROLLER, KEYLESS PANEL			174, 276
7021798	CLAMP, TUBELINE			266
7021924	MOUNT, ENG			186
7022139	IDLER, TRACK FRONT			48
7022140	BOLT, HEX SOCKET			48
7022141	WASHER			48
7022142	TENSIONER, TRACK ASSY			48
7022143	RING, WEAR			48
7022144	SEAL, WIPER ROD			48
7022145	SHAFT, ROD CYL			48
7022385	PLUG			138
7022636	CAP, RADIATOR			182
7022679	PLUG			198
7022680	FITTING, DRAIN			198
7022682	BOLT			214
7022683	GAUGE, OIL			206
7022690	SPOOL			108
7022730	WINDOW, CAB SLIDING REAR			34
7022731	WINDOW, CAB SLIDING FRONT			34
7022767	WASHER, THRUST			200
7022768	WASHER, THRUST			200
7022769	CAMSHAFT			228
7022770	BEARING, ROD			200
7022771	BEARING, ROD			200
7022774	KIT, SEAL			124
7022798	CIRCLIP			126
7022799	PLUG, MOTOR			126
7022800	PAD			126
7022801	COVER, ASSY			126
7022802	O-RING			126
7022803	GEAR			126

Code for disposition of old part number

A -- Use up
B -- Use on other application (See PNI)
C -- File PDR Report with Bobcat Parts Sales
D -- Part Number Error

Page 358 - OSS# 2091664 - All rights reserved by Bobcat Company - 08/27/2012 - 11:42:23 - Produced by Ken Cook Co. with mediaioff

Part No.	Description	Was	Code	Page
7022804	GEAR, MOTOR			126
7022805	CIRCLIP			126
7022806	GEAR, MOTOR			126
7022807	CIRCLIP			126
7022808	BEARING, MOTOR TRAVEL			126
7022809	CIRCLIP			126
7022810	DISC			126
7022811	SEAL, RING			126
7022812	RING, SUPPORT			126
7022813	MOTOR, TRAVEL			126
7022814	SCREW			124, 126
7022815	HOUSING, ASSY			122
7022816	VALVE, TRAVEL			122
7022817	PLUNGER			122
7022818	ORIFICE			122
7022819	KIT, SHIFT 2 SPEED			122
7022820	KIT, PLUG			122
7022821	VALVE, ANTI-CAV			122
7022822	KIT, ROTARY GROUP			122
7022823	SWASHPLATE			124
7022824	SHAFT, MOTOR			124
7022825	SEAL, RING			122
7022826	BEARING, MOTOR TRAVEL			122
7022827	GEAR, MOTOR			130
7022828	O-RING			130
7022829	RING			130
7022830	BEARING, MOTOR SLEW			128
7022831	KIT, PINION			130
7022832	KIT, CARRIER			130
7022833	KIT, HOUSING MOTOR			128
7022834	KIT, ROTARY GROUP			128
7022835	KIT, SWASHPLATE			128
7022836	VALVE, RELIEF			128, 133, 134
7022942	PLUG			106
7022943	ORIFICE			106
7022944	SECTION, VALVE			136, 137, 138
7022945	SECTION, VALVE			136, 139, 140
7022946	SECTION, VALVE			136, 141, 142
7022947	SECTION, VALVE			136, 143, 144
7022948	SECTION, VALVE			136, 145, 146
7022949	SECTION, VALVE			136, 147, 148
7022950	SECTION, VALVE			136, 149, 150
7022951	SECTION, VALVE			136, 151, 152
7022952	SECTION, VALVE			136, 153, 154
7022953	SECTION, VALVE			136, 155, 156
7022954	ACTUATOR			156
7022955	KIT, ROD TIE			136
7022956	VALVE, RELIEF			156
7022957	VALVE, RELIEF			156

Code for disposition of old part number

A -- Use up
B -- Use on other application (See PNI)
C -- File PDR Report with Bobcat Parts Sales
D -- Part Number Error

Page 359 - OSS# 2091664 - All rights reserved by Bobcat Company - 08/27/2012 - 11:42:23 - Produced by Ken Cook Co. with mediaioff

Part No.	Description	Was	Code	Page
7022958	ACTUATOR			138, 154
7022959	ACTUATOR			152
7022960	ACTUATOR			150
7022961	ACTUATOR			142, 148
7022962	FITTING, HYD CONNECTOR			142, 148
7022963	PLUG			144, 146
7022964	ACTUATOR			146
7022965	ACTUATOR			144
7022966	PLUG			140, 146
7022967	PLUG			144
7022968	FITTING, HYD CONNECTOR			142
7022969	VALVE, RELIEF			142, 148
7022970	ACTUATOR			140
7022971	BOLT			138, 154
7022972	KIT, SEAL			138
7022973	KIT, SEAL			140
7022974	KIT, SEAL			142
7022975	KIT, SEAL			144
7022976	KIT, SEAL			146
7022977	KIT, SEAL			148
7022978	KIT, SEAL			150
7022979	KIT, SEAL			152
7022980	KIT, SEAL			154
7022981	KIT, SEAL			156
7022982	KIT, SEAL COMPLETE			136
7023076	OIL, 10W30 QT 12	6903107	A	2, 10, 322
7023077	OIL, 10W30 GAL 6	6903108	A	2, 10, 322
7023078	OIL, 10W30 2.5 GAL 2	6903112	A	2, 10, 322
7023080	OIL, 15W40 QT 12	6903105	A	2, 10, 322
7023081	OIL, 15W40 GAL 6	6903106	A	2, 10, 322
7023082	OIL, 15W40 2.5 GAL 2	6903113	A	2, 10, 322
7023113	TENSIONER, TRACK ASSY			48
7023131	ROD, PUSH			204
7023132	WASHER, THRUST			200
7023133	HOUSING, BEARING			200
7023134	BEARING, ENG MAIN			200
7023135	BEARING, ENG MAIN			200
7023136	BEARING, ENG MAIN			200
7023137	WASHER, THRUST			200
7023138	WASHER, THRUST			200
7023139	CRANKSHAFT, ENG			200
7023140	PULLEY, DRIVE FAN			202
7023141	MANIFOLD, INTAKE			219, 220
7023142	MANIFOLD, EXHAUST			220
7023323	KIT, ROTARY GRP			102, 103, 104

Code for disposition of old part number

A -- Use up
B -- Use on other application (See PNI)
C -- File PDR Report with Bobcat Parts Sales
D -- Part Number Error

Page 360 - OSS# 2091664 - All rights reserved by Bobcat Company - 08/27/2012 - 11:42:23 - Produced by Ken Cook Co. with mediaioff

Part No.	Description	Was	Code	Page
7023324	PUMP, GEAR			102
7101341	PIN			186
7101512	BUMPER			32
7102065	BRACKET			296
7102268	PRIMER			26, 28, 30, 32, 36, 244
7102902	KIT			295, 296
7106279	BOLT			188
7106627	DECAL			246, 250
7106798	HEAD			166
7110861	CLEANER			32
7114497	WASHER			70
7116851	CUP			186
7120570	DECAL			248
7120672	TIE DOWN			172
7121223	CAP. DIESEL LOCKING			188
7127210	GROMMET			45, 46
7128723	SCREEN			88
7133211	TANK, WASHER			24
7134803	SEAL, BULK			20, 80
7135394	SEAL BULK			40, 182
7135397	CLAMP BATTERY			174
7135895	HARNESS			58
7135909	SCREW			172
7136738	DECAL WARNING			288
7136776	GROMMET			258, 266
7137214	PIN			320
7137786	SEAL KIT			166
7139574	MOUNT RUBBER			182
7142236	COVER, ACCESS			46
7142237	COVER, MOTOR			46
7142762	CLIP			168
7143481	WINDOW, CANOPY TOP			36, 244
7143562	O-RING			320
7143717	SPOOL, SWIVEL			120
7143734	SWIVEL, HYD ASSY			74, 77, 78, 119, 120
7144089	COVER			58
7147433	DECAL, ARM LONG			250, 284
7147833	KIT, SEAL CYLINDER			160
7148145	DECAL, LH STD/ISO			248
7148147	DECAL, RH STD/ISO			248
7148157	DECAL, WARNING			242, 248
7148158	DECAL, WARNING			242
7148574	COVER, LH			14
7150798	X-CHANGE, PIN-ON			320
7152125	SPACER			164
7152748	DECAL, FUEL DIESEL			250
7153297	RING, SLEW			46
7153331	ROLLER, TRACK			46, 51, 52
7154041	KNOB			66
7154369	FRAME, SWING			62
7154460	SPACER			58

Code for disposition of old part number
A -- Use up
B -- Use on other application (See PNI)
C -- File PDR Report with Bobcat Parts Sales
D -- Part Number Error

Page 361 - OSS# 2091664 - All rights reserved by Bobcat Company - 08/27/2012 - 11:42:23 - Produced by Ken Cook Co. with mediaioff

Part No.	Description	Was	Code	Page
7154697	PIN			58
7155411	NUT			14, 20, 36, 244, 258, 266
7155413	NUT			14, 16, 20
7155449	SPACER			26
7155916	WINDOW, CAB FRONT			24, 31, 32
7156353	HOSE, HYD ASSY			78
7156375	SEAL, RH PANEL			37, 38
7156577	DECAL			250
7157151	DOOR, CAB ASSY			24, 29, 30
7157550	SEAT, OPERATOR SUSPENSION VINYL			21, 22
7157643	PIN, PIVOT			62
7157646	PIN, PIVOT			62
7157647	PIN, PIVOT			62
7157649	PIN			54
7157650	PIN			54
7158551	SHIELD			58
7158554	SHIELD, CYL			58
7158560	HOSE, HYD			86
7158972	COVER			14
7158979	PANEL, ACCESS			14
7159406	CYLINDER, BUCKET			165, 166
7159409	ROD, CYL ASSY			166
7159410	TUBE, CASE CYL			166
7159418	PIN			54
7159419	LINK, ASSY			54
7159423	PIN, PIVOT			62
7159425	O-RING			54
7159478	HOUSING			186
7159480	PLATE, FLYWHEEL			186
7159514	HOSE, WATER UPPER			182
7160289	HOSE, HYD			80
7160290	TUBELINE, HYD			86
7160291	HOSE, HYD			80
7160294	HOSE, HYD			80
7160383	RIVET, BIRD CAGE			36, 64, 66, 244, 258, 266
7160712	HOSE, HYD			80
7160713	HOSE, HYD			86
7160714	HOSE, HYD			86
7160715	CLAMP, TUBELINE			86
7160716	BRACKET			86
7160717	TUBELINE, HYD			86
7160786	PLATE, FLOOR			20
7160787	PLATE, FLOOR			20
7160789	PLATE, WASHER			20
7160880	DECAL, X-CHANGE			250, 320
7160901	SEAL, BULK			42, 44
7161099	BOLT			46
7161482	HOSE, HYD			74
7161483	HOSE, HYD			74
7161772	PLATE, FLOOR			20
7161773	PLATE, FLOOR			20
7161774	PLATE, FLOOR			20

Code for disposition of old part number
A -- Use up
B -- Use on other application (See PNI)
C -- File PDR Report with Bobcat Parts Sales
D -- Part Number Error

Page 362 - OSS# 2091664 - All rights reserved by Bobcat Company - 08/27/2012 - 11:42:23 - Produced by Ken Cook Co. with mediaoff

Part No.	Description	Was	Code	Page
7161916	HARNESS, CONSOLE LH			176
7161922	CABLE, NEGATIVE			170
7162236	SCREW			46, 78
7162323	BOOM, ARM DIPPER			58
7162356	TUBELINE, HYD			86
7162364	TUBELINE, HYD			86
7162368	SHIELD			58
7162750	DUCT, AIR			258, 266
7162756	SEAL, CAB			28
7162757	SEAL, BULK			28
7163690	SCREW			26, 168, 292
7163788	HANDLE, LEVER CONTROL			68
7164042	CONSOLE, JOYSTICK			66
7164047	LEVER, CONTROL			68
7164048	LEVER, CONTROL			68
7164061	PIN, HINGE			68
7164261	BUSHING, WEAR			58
7164480	BUSHING, WEAR			162
7164575	CYLINDER, BLADE			78, 159, 160
7164577	TUBE, CASE CYL			160
7164579	ROD, CYL			160
7165082	HOSE, HYD			86, 284
7165083	HOSE			86
7165097	SHAFT			66
7165333	CLIP			26, 36, 66, 244
7165353	UPPERSTRUCTURE			14
7165414	BRACKET			42
7165562	COVER, LH			66
7165563	COVER, LH			66
7165564	COVER, LH			66
7165566	COVER, RH			36, 244
7165567	COVER, RH			36, 244
7165619	HOSE, AIR INTAKE			184
7165661	SPACER, TUBE			186
7165662	WASHER			186
7165834	TRACK, RUBBER			313, 314
7165840	HOSE, HYD			78
7165841	HOSE, HYD			78
7165842	HOSE, HYD			78
7165859	HOSE, HYD			74
7165860	HOSE, HYD			76
7165866	HOSE, HYD			96
7165867	HOSE, HYD			74
7166329	PISTON			160
7166468	WINDOW, CAB SIDE FIXED			28
7166593	SUPPORT, BRACKET			62
7166606	TEE			278
7166629	LIGHT, CAB HEADLINER			168
7166859	BRACKET, RADIO			292

Code for disposition of old part number

A -- Use up
B -- Use on other application (See PNI)
C -- File PDR Report with Bobcat Parts Sales
D -- Part Number Error

Page 363 - OSS# 2091664 - All rights reserved by Bobcat Company - 08/27/2012 - 11:42:23 - Produced by Ken Cook Co. with mediaioff

Part No.	Description	Was	Code	Page
7166867	BRACKET			44
7166916	DECAL, A/C			250
7167095	PANEL, RH			26
7167096	PANEL, RH			26
7167097	PANEL, LH			26
7167098	PANEL, LH			26
7167163	BOWL, FUEL			256
7167166	PEDAL, RH			68
7167167	PEDAL, LH			68
7167168	PEDAL, BACK			68
7167576	NUT, WING			82
7167716	DECAL, LOGO			250
7168039	DECAL, WARNING			250
7168164	EXTINQUISHER,FIRE			254
7168280	BRACKET, ALARM			288
7168404	COVER, RH			26
7168895	HARNESS, AC CLUTCH			266
7168965	COVER, RH			64
7169006	DECAL, STAY CLEAR			246, 250
7169009	DECAL, STAY CLEAR			246
7169014	DECAL, EXIT			242, 248
7169112	SWITCH, ROCKER A/C			264
7169185	IDLER, ASSY			46
7169291	DECAL			248
7169360	SEAT, OPERATOR SUSPENSION CLOTH			22
7169719	SUPPORT			64, 66
7169720	MOUNT, ARMREST			64, 66
7169993	PANEL, REAR			26
7170114	SCREW			168
7170287	WINDOW, CAB SIDE FIXED			28
7170288	WINDOW, CAB REAR			28
7170289	WINDOW, DOOR CAB LOWER			30
7170290	WINDOW, DOOR CAB UPPER			30
7170322	STUD, BALL JOINT			44
7170446	PIN, RETAINER			42
7170488	LEVER			26
7170489	LINK			26
7170493	SEAL, BULK			14
7170501	PISTON, CYL			162
7170503	TUBE, CASE CYL			162
7170505	ROD, CYL			162
7170632	HOOK, COAT			26
7170641	HOSE, HYD			98
7170642	HOSE, HYD			98

Code for disposition of old part number
A -- Use up
B -- Use on other application (See PNI)
C -- File PDR Report with Bobcat Parts Sales
D -- Part Number Error

Page 364 - OSS# 2091664 - All rights reserved by Bobcat Company - 08/27/2012 - 11:42:23 - Produced by Ken Cook Co. with mediaioff

Part No.	Description	Was	Code	Page
7170643	HOSE, HYD			98
7170706	CONTAINER, STORAGE			20
7170708	CONTAINER, STORAGE			20
7170709	HINGE, COVER			20
7170762	PANEL, RH			36, 244
7170765	NUT			20, 80
7170799	SEAL, LATCH			26
7170871	LATCH, DOOR REAR			44
7170872	BRACKET, LATCH			44
7170873	LATCH, HANDLE			44
7170874	NUT			30
7170944	STRIKER, LATCH DOOR			44
7170962	CYLINDER, ARM			157, 158
7170965	ROD, CYL			158
7170966	TUBE, CASE CYL			158
7171264	SPACER, TUBE			66
7171340	PISTON, CYL			158
7171356	SEAL, DUCT			258, 266
7171397	CONTAINER, STORAGE			36, 244
7171741	HARNESS, CAB			168
7171777	HARNESS, WIPER			168
7171866	SEAL, BULK			28
7172409	DECAL, FUSE			248
7172554	KIT, BEACON LIGHT			237, 238
7172639	FLYWHEEL, ENG ASSY			186
7172972	HARNESS, BEACON/STROBE			238, 304
7172974	KIT, STROBE LIGHT			303, 304
7172977	HARNESS, CANOPY			238, 304, 310
7173069	HINGE, COVER			42
7173070	HINGE			42
7173078	LINK			42
7173084	REAR DOOR			44
7173146	CANOPY, W/A			36, 244
7173148	KIT, MIRROR			285, 286
7173287	HOLDER			26
7173308	KIT, GUARD CANOPY			307, 308
7173341	GROMMET			292
7173459	TUBELINE, HYD			96
7173477	TUBELINE, HYD			98
7173478	KIT, GUARD LIGHT			309, 310
7173482	HARNESS, LIGHTS			310
7173483	GUARD, CANOPY			308
7173484	GUARD, CAB			306
7173584	KIT, GUARD CAB			305, 306
7173947	CONNECTOR			184
7173948	HOSE, DRAIN OIL ENG			184

Code for disposition of old part number
A -- Use up
B -- Use on other application (See PNI)
C -- File PDR Report with Bobcat Parts Sales
D -- Part Number Error

Page 365 - OSS# 2091664 - All rights reserved by Bobcat Company - 08/27/2012 - 11:42:23 - Produced by Ken Cook Co. with mediaioff

Part No.	Description	Was	Code	Page
7173949	CONNECTOR			184
7174035	KIT, APPS SPECIAL			301, 302
7174036	GUARD, CAB			302
7174037	PLATE			302
7174038	BRACKET			302
7174043	MOUNT, LOAD ISOLATOR ASSY			24
7174121	HOSE, A/C ASSY			266
7174256	BRACKET, VALVE			278, 280
7174321	CONTAINER, STORAGE			258, 266, 267, 268
7174361	SEAL, BULK			30
7174507	MOUNT, WINDOW			26
7174508	SEAL, BULK/FT			26
7174550	KIT, PAD STREET			317, 318
7174613	TEE			74, 88
7174807	ELBOW			88
7174826	BRACKET			64
7174835	PIN			82
7175504	SEAL, ENG			38
7175673	HOSE, HYD FORMED			88
7175737	TUBELINE, HYD			74
7175738	TUBELINE, HYD			74
7176171	INSULATION, PANEL LH			38
7176501	HOLDER, MANUAL			26
7176604	U-BOLT			286
7177015	SCREW			64
7177212	GASKET			256
7177516	FITTING, GREASE			48
7177735	STUD, BALL JOINT			32, 44
7177852	COVER, RH			42
7177952	SHIELD, CYL			60
7177959	SEAL, BULK			20
7178177	DECAL, WARNING			244, 248
7178178	DECAL, WARNING			242, 244, 250, 302
7178179	DECAL, STD/ISO			248
7178215	DECAL, WARNING			242, 244, 302
7178216	DECAL, WARNING			244
7178637	BOX, MANUAL			20
7178689	ROLLER			32
7178702	BUMPER, RUBBER			26, 32
7178703	BUMPER, RUBBER			26
7178708	COVER, HANDLE			26
7178918	BRACKET			172
7178919	BRACKET			172
7179045	WINDOW, CAB LOWER			32
7179100	HEADLINER			26
7179320	GAS SPRING			32
7179330	PIN			32
7179422	PANEL, ENG			14
7179579	HOSE, HYD			74
7179838	SENSOR FUEL			176, 188

Code for disposition of old part number
A -- Use up
B -- Use on other application (See PNI)
C -- File PDR Report with Bobcat Parts Sales
D -- Part Number Error

Page 366 - OSS# 2091664 - All rights reserved by Bobcat Company - 08/27/2012 - 11:42:23 - Produced by Ken Cook Co. with mediaioff

Part No.	Description	Was	Code	Page
7180021	BRACKET, MIRROR			286
7180305	SEAT ASSY			20
7180309	WINDOW, CAB TOP			28
7180565	VALVE, PEDAL DUAL			90, 92, 96, 115, 116
7180569	INSULATION, PANEL ENG			38
7180570	INSULATION, ENG			38
7180571	INSULATION, UPPERSTRUCTURE			38
7180572	INSULATION, UPPERSTRUCTURE			38
7180573	INSULATION, UPPERSTRUCTURE			38
7180574	INSULATION, UPPERSTRUCTURE			38
7180575	INSULATION, UPPERSTRUCTURE			38
7180576	INSULATION, UPPERSTRUCTURE			38
7180577	INSULATION, UPPERSTRUCTURE			38
7180578	INSULATION, UPPERSTRUCTURE			38
7180579	INSULATION, UPPERSTRUCTURE			38
7181010	BRACKET			302
7181011	BRACKET			302
7181057	GROMMET			68
7181121	DECAL, APPS SPECIAL			250, 302
7181127	DECAL, GUARD TOP			250, 308
7181128	DECAL, GUARD TOP			250, 306
7181142	BRACKET, SUPPORT			64
7181216	PIN, PIVOT X-CHANGE			56, 320
7181465	SEAL, BULK / FT			28
7181541	SEAL	7181540	A	28
7181592	KIT, IGN KEYLESS			275, 276
7181884	INSULATION, BLOCK			38
7182464	CLIP			26
7182732	INSULATION			26
7182841	UNDERCARRIAGE			46
7182957	SPACER			26
7183441	BUSHING, PIVOT			14
7183443	PIN, PIVOT			62
7183687	PIN			58
7183900	DECAL, CAPACITY LIFT			284
7183902	DECAL, CAPACITY LIFT			246
7184811	COUNTERWEIGHT			18

Code for disposition of old part number

A -- Use up
B -- Use on other application (See PNI)
C -- File PDR Report with Bobcat Parts Sales
D -- Part Number Error

Page 367 - OSS# 2091664 - All rights reserved by Bobcat Company - 08/27/2012 - 11:42:23 - Produced by Ken Cook Co. with mediaioff

Part No.	Description	Was	Code	Page
7185152	KIT, WINDOW *SEE NOTE*			32
7185275	FITTING, HYD TEE			280
7185861	BLADE, EXC			60
7185862	EDGE, CUTTING WELD-ON 59"			60
7185878	INSULATION, FLOOR			38
7185879	INSULATION, PANEL ENG			38
7185881	INSULATION, SIDE			38
7185883	INSULATION, RADIATOR			38
7186077	CLIP	7020390	A	16
7186078	WASHER			16
7186570	BRACKET			68
7186572	PLATE			68
7186648	LATCH, HANDLE			20
7186698	PLATE			68
7186708	DECAL, SWITCH IGN			248
7186741	INSERT			68
7186792	KIT, EXTINGUISHER FIRE			253, 254
7187101	BRACKET, EXTINGUISHER FIRE			254
7187102	BRACKET, EXTINGUISHER FIRE			254
7187363	COVER, RH			64
7187433	COVER, HOSE BULK/FT			266
7187703	BRACKET, RELAY CENTER			172
7187704	PLATE, SUPPORT			172
7187708	HOSE, FUEL			188
7187709	HOSE, FUEL			188
7187712	TANK, FUEL			188
7187714	TUBE, FUEL LINE ASSY			188, 189, 190
7187716	HOLDER			258, 266
7187718	CAB, W/A			24, 26, 28
7187733	MOUNT, SEAT			20
7187734	BRACKET, SEAT BELT			20
7187735	DECAL, THROTTLE			248
7187736	INSULATION			36, 244
7187744	HOLDER			16, 188
7187750	LEVER, THROTTLE			70
7187751	BRACKET, LEVER			70
7187755	WASHER			36, 244
7187757	BRACKET, TANK FUEL			188
7187758	BUMPER, RUBBER			190

Code for disposition of old part number
A -- Use up
B -- Use on other application (See PNI)
C -- File PDR Report with Bobcat Parts Sales
D -- Part Number Error

Page 368 - OSS# 2091664 - All rights reserved by Bobcat Company - 08/27/2012 - 11:42:23 - Produced by Ken Cook Co. with mediaioff

Part No.	Description	Was	Code	Page
7187766	BRACKET, SEAT BELT			20
7187777	WINDOW, CAB SLIDING			28, 33, 34
7187799	HOLDER, CABLE			70
7187894	BRACKET, THROTTLE			72
7187896	LINK, THROTTLE			72
7188078	HARNESS, VALVE			172
7188090	DOOR, STORAGE			20
7188747	DECAL, SERVICE			248
7188793	PIN			54
7188827	HOSE, HYD FORMED			82
7188836	FILTER, OIL HYD ASSY			82, 99, 100, 174
7188857	TUBELINE, HYD			98
7188858	TUBELINE, HYD			98
7188861	CLIP, HOSE			90, 92
7188862	CLIP, HOSE			90, 92
7188867	VALVE, CONTROL			74, 80, 96, 98, 135, 136, 174
7188870	MOUNT, VALVE			80
7188871	COVER			80
7188872	SEAL, HOSE			80, 98
7188873	COVER			80
7188874	BRACKET			80
7188875	BRACKET			80
7188877	FITTING, HYD CONNECTOR			82
7188883	CYLINDER, SWING			74, 163, 164
7188886	FITTING, HYD ELBOW			98
7188894	TUBE, CASE CYL			164
7188908	ROD, CYL			164
7188917	INLET, PUMP			88
7188958	HOSE, HYD			98
7188966	TANK, WATER COOLANT			182
7189004	MOUNT, RADIATOR			16, 82, 182
7189018	HOSE, HYD FORMED			82
7189019	HOSE, HYD FORMED			82
7189020	TUBELINE, HYD			74
7189074	BRACKET, COVER			16
7189075	BRACKET, COVER			16
7189078	VALVE, LOCK LOAD			278, 280, 281, 282
7189205	VALVE, BUILDUP			82
7189256	TUBELINE, HYD			82, 252
7189258	TUBELINE, HYD			82, 252
7189423	BRACKET			298
7189449	BRACKET, COVER			14
7189891	COVER, LATCH			30
7190517	MOTOR, DRIVE HYD TRAVEL			78, 121, 122

Code for disposition of old part number
A -- Use up
B -- Use on other application (See PNI)
C -- File PDR Report with Bobcat Parts Sales
D -- Part Number Error

Page 369 - OSS# 2091664 - All rights reserved by Bobcat Company - 08/27/2012 - 11:42:23 - Produced by Ken Cook Co. with mediaioff

Part No.	Description	Was	Code	Page
7190947	MOUNT			82
7191061	MUFFLER, EXHAUST			183, 184
7191062	TUBE, EXHAUST			184
7191067	BRACKET, AIR CLEANER			184
7191278	TANK, HYD			88
7191282	FITTING, HYD TEE			84, 88
7191283	HOLDER			88
7191284	BRACKET, FILTER			88
7191285	HOSE, HYD FORMED			82
7191708	PIN, PIVOT			60
7191709	PIN, PIVOT			60
7191805	BUSHING, PIVOT			14
7192053	BUSHING, WEAR			62
7192117	BRACKET, TANK FUEL			188
7192212	BRACKET, LATCH			32
7192270	HOSE, HYD			74
7192313	FITTING, HYD ELBOW			98
7192355	HOLDER			80, 90, 92, 93, 94
7192356	COVER, PLATE			172
7192357	GROMMET			172
7192417	LINK, ASSY			42
7192507	HARNESS, JUMPER			172
7192700	CABLE, POSITIVE			170
7192877	LINK			54
7193014	EXCHANGER, OIL COOLER			82
7193055	VALVE, JPS			92, 107, 108
7193119	PLUG			186
7193164	SHIM			62
7193425	HOLDER, RELAY			288
7193426	MOUNT, FILTER			14
7193481	HARNESS, AUX SECONDARY			298
7193555	HOSE, HYD			86, 284
7193556	HARNESS, ALARM MOTION			288
7193565	HOSE HEATER			258, 266
7193576	FITTING			82
7193577	FITTING, HYD TEE			82
7194159	GASKET			184
7194325	HOSE, HYD			74
7194326	HOSE, HYD			74
7194327	HOSE, HYD			74
7194328	HOSE, HYD			74
7194438	FITTING, HYD ELBOW			82
7194441	TUBELINE, HYD			82
7194498	SPACER			182
7194620	DECAL, THROTTLE			248
7194706	PLATE, LATCH			32

Code for disposition of old part number
A -- Use up
B -- Use on other application (See PNI)
C -- File PDR Report with Bobcat Parts Sales
D -- Part Number Error

Page 370 - OSS# 2091664 - All rights reserved by Bobcat Company - 08/27/2012 - 11:42:23 - Produced by Ken Cook Co. with mediaIoff

Part No.	Description	Was	Code	Page
7194753	LINK, WINDOW FRONT			32
7194799	EXCHANGER, WATER RADIATOR			182
7194800	MOUNT, RADIATOR			82, 182
7194836	CONDENSER, A/C			266
7194839	SCREEN, DEBRIS			16
7194930	TREAD, SAFETY			24, 250
7194969	BRACKET			16
7195021	BRACKET			16
7195050	TREAD, SAFETY			36, 244
7195206	HOSE, HYD			80
7195369	BRACKET, LIGHT WORKING			58
7195526	SHROUD, FAN			182
7195839	HARNESS, ENG			170
7195840	HARNESS, FRAME			172
7196072	BRACKET, COVER			42
7196470	TUBELINE, HYD			280
7196490	HINGE, DOOR REAR			44
7196521	LINK, ASSY			56
7196565	HOSE, HYD			90, 92
7196568	HOSE, HYD			90, 92
7196574	HOSE, HYD			90, 92
7196575	HOSE, HYD			90
7196578	HOSE, HYD			90, 92
7196580	HOSE, HYD			95, 96
7196581	HOSE, HYD			96
7196582	HOSE, HYD			96
7196583	HOSE, HYD			90, 92
7196584	HOSE, HYD			90, 92
7196585	HOSE, HYD			90, 92
7196586	HOSE, HYD			90, 92, 96
7196591	PLATE, HOLDER			44
7196618	TUBELINE, HYD			280
7196714	HOSE, HYD			280
7196735	HOSE, HYD			78
7196820	HOSE, HYD			280
7196834	BRACKET, COVER			42
7196872	INSULATION, PANEL ENG			38
7196875	INSULATION, COUNTERWEIGHT			38
7196876	INSULATION, UPPERSTRUCTURE			38
7196886	BRACKET, VALVE			278, 280
7196921	TUBELINE, HYD			278
7196922	HOSE, HYD			278
7196932	FITTING, HYD TEE			98
7197125	HOSE, HYD			278
7197401	PLUG, RADIATOR			182, 244
7197552	HOSE, HYD			278
7197553	HOSE, HYD			278
7197772	HINGE, DOOR REAR			44

Code for disposition of old part number

A -- Use up
B -- Use on other application (See PNI)
C -- File PDR Report with Bobcat Parts Sales
D -- Part Number Error

Page 371 - OSS# 2091664 - All rights reserved by Bobcat Company - 08/27/2012 - 11:42:23 - Produced by Ken Cook Co. with mediaioff

Part No.	Description	Was	Code	Page
7197814	BELT, COMPRESSOR A/C			266
7198075	BRACKET, FILTER			188
7198448	COUNTERWEIGHT			18, 246
7198463	BELT, ALT			182
7198629	HOSE, HYD			90
7198641	HOSE, HYD			92
7198643	HOSE HYDRAULIC ASSY			92
7198644	HOSE, HYD			92
7198645	HOSE, HYD			92
7198646	HOSE, HYD			92
7198650	PLATE, BRACE			14
7198838	HARNESS, SWITCH			172
7199006	SPROCKET, MACHINED			46
7199056	HOSE, HYD			78
7199057	HOSE, HYD			78
7199173	MAT, FLOOR			24
7199174	MAT, FLOOR CANOPY			36, 244
7199269	PULLEY			266
7199394	MOUNT, ENG			186
7199664	HANDLE, OPERATING			66
7199673	CONTROLLER, JOYSTICK ASSY			20, 66
7199713	GUARD, FAN			182
7199851	COVER			14
7199903	KIT, SEAL			164
7200226	SPACER			182
7200417	INSULATION, DOOR REAR			38
7200418	INSULATION, DOOR REAR			38, 39, 40
7200419	INSULATION, DOOR REAR			40
7200420	INSULATION, DOOR REAR			40
7200421	INSULATION, COVER RH			40
7200422	INSULATION, COVER RH			40
7200423	INSULATION, COVER RH			40
7200518	INSULATION, COVER RH			40
7200532	DECAL, GREASE REMOTE			250
7200738	HOSE, HYD			298
7200747	DECAL, COVER			250
7200748	DECAL, MODEL			250
7200749	DECAL, LOGO BOBCAT			250

Code for disposition of old part number
A -- Use up
B -- Use on other application (See PNI)
C -- File PDR Report with Bobcat Parts Sales
D -- Part Number Error

Page 372 - OSS# 2091664 - All rights reserved by Bobcat Company - 08/27/2012 - 11:42:23 - Produced by Ken Cook Co. with mediaIoff

Part No.	Description	Was	Code	Page
7200829	KIT HOSE AIR BLEED			273, 274
7200895	CLAMP, PIPE			184
7200900	HOSE, HYD			74
7201238	HARNESS, AUTO IDLE			172
7201280	HOSE, HYD			298
7201281	HOSE, HYD			96
7201282	HOSE, HYD			96
7201368	HOSE OIL			274
7201446	KIT, SEAL			158, 162
7201622	DECAL, CAPACITY LIFT			246, 284
7201735	HOSE, WATER LOWER			182
7201736	PLATE, HOLDER			182
7201737	BRACKET, HARNESS			170, 186
7201816	BRACE			44
7201913	BOLT			186
7201929	COVER			46
7202027	HOSE, HYD			298
7202276	HOSE, HYD			74
7202286	HOSE, HYD			96
7202311	DECAL, FILL LINE			248
7202312	HOSE, HYD			90, 92
7202313	HOSE, HYD			90, 92
7202314	HOSE, HYD			90, 92
7202315	HOSE, HYD			90, 92
7202316	HOSE, HYD			96
7202414	GAS SPRING			44
7202455	MOUNT, ENG			186
7202690	SEAL, FOAM			24
7202857	O-RING			184
7203416	HOSE, AIR FORMED			184
7203445	FAN			182
7203629	COVER, SIDE			16
7203630	COVER, SIDE			16
7203701	COVER, HVAC			14
7203722	KIT, ARM LONG			283, 284
7204016	SPACER			82
7204030	KIT, COUNTERWEIGHT			245, 246
7204032	KIT, TRACK STEEL			311, 312
7204057	TUBELINE, HYD			98
7204078	KIT, CAB			241, 242
7204089	HOSE, HYD			90
7204093	HOSE, HYD			90
7204094	HOSE, HYD			92
7204095	HOSE, HYD			92
7204137	HOSE, HYD			80, 252
7204139	HOSE, HYD			298
7204140	HOSE, HYD			298
7204141	HOSE, HYD			298
7204142	HOSE, HYD			298

Code for disposition of old part number

A -- Use up
B -- Use on other application (See PNI)
C -- File PDR Report with Bobcat Parts Sales
D -- Part Number Error

Page 373 - OSS# 2091664 - All rights reserved by Bobcat Company - 08/27/2012 - 11:42:23 - Produced by Ken Cook Co. with mediaioff

Part No.	Description	Was	Code	Page
7204143	HOSE, HYD			74
7204208	SCREEN			14
7204258	TUBELINE, HYD			98
7204294	HOSE, A/C ASSY			266
7204476	MANIFOLD, HYD ASSY			74, 80, 96, 98, 105, 106, 174
7204641	KIT, ALARM MOTION			287, 288
7204767	TUBELINE, HYD			98
7205558	SEAL, COVER			42
7205739	KIT, HEATER CAB			257, 258
7205956	IDLER, ASSY			47, 48
7206142	KIT, DIRECT TO TANK			251, 252
7206143	KIT, AUX 2ND			297, 298
7206148	DECAL, CAPACITY LIFT			250
7206149	DECAL, CAPACITY LIFT			250
7206150	DECAL, CAPACITY LIFT			250
7206476	CYLINDER, BOOM			161, 162
7206586	INSULATION, SIDE			38
7206870	ARM, DIPPER W/A LONG EXC			54, 284
7206877	ARM, DIPPER W/A EXC			54
7207339	BRACKET			58
7207340	BRACKET			58
7207341	TUBELINE, HYD			86
7207342	TUBELINE, HYD			86
7207343	BRACKET			298
7207344	TUBELINE, HYD			298
7207345	TUBELINE, HYD			298
7207538	IDLER, ASSY			48, 312
7207597	DECAL, COVER			250
7207739	MOUNT, ALT			186
7207809	KIT, LOAD HOLD BOOM			279, 280
7207811	KIT, LOAD HOLD ARM			277, 278
7207900	SUPPORT, BRACKET			186
7208340	SCREW			20
7209326	PUMP, HYD PISTON			88, 98, 101, 102
7209338	HOSE, A/C ASSY			266
7209339	HOSE, A/C ASSY			266
7209756	BRACKET			266
73K328	RING			166
73K332	RING			158, 162, 164
75K3	O-RING			160, 162, 164
75K6	O-RING			158
78K4	O'RING			74, 90, 92, 96
78K6	O'RING			74, 78, 90, 92, 280, 298
78K8	O RING			74, 78

Code for disposition of old part number

A -- Use up
B -- Use on other application (See PNI)
C -- File PDR Report with Bobcat Parts Sales
D -- Part Number Error

Page 374 - OSS# 2091664 - All rights reserved by Bobcat Company - 08/27/2012 - 11:42:23 - Produced by Ken Cook Co. with mediaioff

Part No.	Description	Was	Code	Page
79K10	O RING 10			82, 98, 252, 300
79K16	O RING 10			82, 84, 88
79K20	O RING 10			82, 88
79K3	O RING 10			70
79K4	O RING 10			76, 88, 90, 92, 96, 98, 278, 280, 298
79K6	O RING 10			74, 76, 78, 80, 88, 90, 92, 98, 106, 120, 274, 278, 280, 298
79K8	O RING 10			76, 80, 82, 84, 88, 98, 252, 278, 280
7CM1070	BOLT			62
7CM1080	BOLT			56, 320
7CM1090	Screw Hex HD 10.9			54
7CM12110	BOLT			58
7CM1280	BOLT			54, 62
7CM1290	SCREW			186
7CM1440	BOLT			36, 244
7CM1460	SCREW			24
82K140	O-RING			166
82K236	O-RING			160
83D5	NUT 5			32
83F3	ELBOW 5			74, 164
86F3	LOCKNUT			74
86F5	NUT			78
86F6	NUT			298
86F7	LOCK NUT			86
86F8	NUT 5			82
87G808	SCREW			176
92D14	NUT			166
9JM60	PIN, RETAINER			32, 44
9JM70	RETAINER SHAFT			68
P533761	COVER ASSY			236

Code for disposition of old part number

A -- Use up
B -- Use on other application (See PNI)
C -- File PDR Report with Bobcat Parts Sales
D -- Part Number Error

Page 375 - OSS# 2091664 - All rights reserved by Bobcat Company - 08/27/2012 - 11:42:23 - Produced by Ken Cook Co. with mediaioff