NEW HOLLAND

TABLE OF CONTENTS E385B

0 - FILTERS	00	MAINTENANCE PARTS
0 - VERSION	00	IDENTIFICATION AND VERSION LIST
0.000	01	ENGINE SUSPENSIONS
0.000	02	PIPING - ENGINE OIL
0.000	03	ENGINE - COMPONENTS
0.001	01	AIR CLEANER
0.001	02	AIR CLEANER
0.002	01	MUFFLER
0.003	01	RADIATOR
0.003	02	RADIATOR (WATER)
0.003	03	RADIATOR
0.003	04	RADIATOR - COMPONENTS
0.021	01	ENGINE
0.040	01	CYLINDER BLOCKS 11-00-1 (HINO ENGINE TYPE J08ETM-KSDA)
0.042	01	CYLINDER BLOCKS 11-00-2 (HINO ENGINE TYPE J08ETM-KSDA)
0.043	01	TIMING GEAR COVER & FLY WHEEL HOUSING 11-10 (HINO ENGINE TYPE J08ETM-KSDA)
0.060	01	CYLINDER HEAD 10-00-1 (HINO ENGINE TYPE J08ETM-KSDA)
0.060	02	CYLINDER HEAD 10-00-2 (HINO ENGINE TYPE J08ETM-KSDA)
0.066	01	VALVE SYSTEM 13-10 (HINO ENGINE TYPE J08ETM-KSDA)
0.071	01	AIR INTAKE AND EXHAUST SYSTEM 13-20-1 (HINO ENGINE TYPE J08ETM-KSDA)
0.071	02	AIR INTAKE AND EXHAUST SYSTEM 13-20-2 (HINO ENGINE TYPE J08ETM-KSDA)
0.080	01	MAIN MOVING PARTS 12-00 (HINO ENGINE TYPE J08ETM-KSDA)
0.120	01	CAMSHAFT AND IDLE GEAR 13-00 (HINO ENGINE TYPE J08ETM-KSDA)
0.140	01	FUEL SYSTEM 15-00 (HINO ENGINE TYPE J08ETM-KSDA)
0.149	01	ELECTRICAL PARTS 18-10-3 (HINO ENGINE TYPE J08ETM-KSDA)
0.173	01	ELECTRICAL PARTS 18-10-1 (HINO ENGINE TYPE J08ETM-KSDA)
0.200	01	FUEL FILTER 15-54 (HINO ENGINE TYPE J08ETM-KSDA)
0.240	01	TURBOCHARGER 18-30 (HINO ENGINE TYPE J08ETM-KSDA)
0.300	01	LUBRICATION SYSTEM 14-00 (HINO ENGINE TYPE J08ETM-KSDA)
0.302	01	OIL FILTER 14-51 (HINO ENGINE TYPE J08ETM-KSDA)
0.310	01	OIL COOLER 14-52 (HINO ENGINE TYPE J08ETM-KSDA)
0.320	01	COOLING SYSTEM 16-00 (HINO ENGINE TYPE J08ETM-KSDA)
0.400	01	ELECTRICAL PARTS 18-10-2 (HINO ENGINE TYPE J08ETM-KSDA)
0.400	02	ALTERNATOR 19-04 (HINO ENGINE TYPE J08ETM-KSDA)
0.400	03	STARTER MOTOR 19-05 (HINO ENGINE TYPE J08ETM-KSDA)
0.700	01	GASKET KIT, ENGINE OVERHAUL 19-91 (HINO ENGINE TYPE J08ETM-KSDA)
0.960	01	ENGINE ACCESSORY PARTS 18-40 (HINO ENGINE TYPE J08ETM-KSDA)
1.000	01	UPPER FRAME
1.000	02	UPPER FRAME
1.000	03	UPPER FRAME
1.010	01	FUEL TANK
1.010	02	PIPING FUEL
1.016	01	FUEL TRANSFER PUMP
1.020	01	OIL TANK
1.030	01	HYDRAULIC PUMP
1.030	02	HYDRAULIC PUMP - COMPONENTS
1.030	03	HYDRAULIC PUMP - COMPONENTS
1.030	04	HYDRAULIC PUMP - COMPONENTS
1.030	05	HYDRAULIC PUMP - COMPONENTS
1.030	06	HYDRAULIC PUMP - COMPONENTS

TABLE OF CONTENTS

1.040	01	SWING REDUCTION UNIT
1.040	02	SWING REDUCTION UNIT - COMPONENTS
1.040	03	SWING REDUCTION UNIT - COMPONENTS
1.050	01	HYDRAULIC CONTROL VALVE
1.050	02	PIPING PILOT - DISTRIBUTOR - VERSION (01-02)
1.050	03	PIPING PILOT - DISTRIBUTOR - VERSION (01-02)
1.050	04	PIPING PILOT - DISTRIBUTOR - VERSION (01-02)
1.050	05	HYDRAULIC CONTROL VALVE - COMPONENTS
1.050	06	HYDRAULIC CONTROL VALVE - COMPONENTS
1.050	07	HYDRAULIC CONTROL VALVE - COMPONENTS
1.050	08	HYDRAULIC CONTROL VALVE - COMPONENTS
1.050	09	HYDRAULIC CONTROL VALVE - COMPONENTS
1.050	10	HYDRAULIC CONTROL VALVE - COMPONENTS
1.050	11	HYDRAULIC CONTROL VALVE - COMPONENTS
1.050	12	HYDRAULIC CONTROL VALVE - COMPONENTS
1.050	13	HYDRAULIC CONTROL VALVE - COMPONENTS
1.050	14	HYDRAULIC CONTROL VALVE - COMPONENTS
1.051	01	HYDRAULIC CONTROL VALVE - VERSION (03-04)
1.051	02	HYDRAULIC CONTROL VALVE - COMPONENTS - VERSION (03-04)
1.060	01	HYDRAULIC PUMP PILOT SYSTEM PIPES
1.060	02	HYDRAULIC PUMP PILOT SYSTEM PIPES
1.060	03	HYDRAULIC PUMP PILOT SYSTEM PIPES
1.061	01	OIL RETURN PIPES
1.061	02	OIL RETURN PIPES
1.065	01	HYDRAULIC LINES SWIVEL
1.070	01	CONTROLS
1.070	02	CONTROLS
1.080	01	PILOT PIPING (1)
1.080	02	PILOT PIPING (1)
1.080	03	PILOT PIPING (1) - VERSION (03-04)
1.081	01	PILOT PIPING (2)
1.081	02	PILOT PIPING (2)
1.081	03	PILOT PIPING (2) - COMPONENTS
1.082	01	BLOCK - OPT - VERSION (01-02)
1.082	02	BLOCK - OPT - VERSION (03-04)
1.083	01	PILOT PIPING (3)
1.083	02	PILOT PIPING (3)
1.083	03	PILOT PIPING (3)
1.083	04	PILOT PIPING (3) - VERSION (03-04)
1.085	01	PILOT PIPING (5) - VERSION (03-04)
1.090	01	PILOT PIPING - MANIPULATOR
1.090	02	PILOT PIPING - MANIPULATOR
1.090	03	PILOT VALVE CONTROL MANIPULATOR - COMPONENTS
1.091	01	PILOT PIPING - PEDAL - VERSION (03-04)
1.091	02	PILOT VALVE - COMPONENTS - VERSION (03-04)
1.091	03	PEDAL - VERSION (03-04)
1.092	01	TRAVEL PILOT SYSTEM PIPES
1.092	02	PILOT VALVE - COMPONENTS
1.200	01	DASHBOARD
1.200	02	DASHBOARD
1.200	03	DASHBOARD

TABLE OF CONTENTS

1.220	01	ELECTRIC SYSTEM
1.220	02	ELECTRIC SYSTEM - COMPONENTS
1.220	03	ELECTRIC SYSTEM
1.220	04	ELECTRIC SYSTEM
1.220	05	ELECTRIC SYSTEM
1.220	06	ELECTRIC SYSTEM - FLOODLIGHT
1.220	07	ELECTRIC SYSTEM
1.220	08	ELECTRIC SYSTEM
1.220	09	ELECTRIC SYSTEM
1.220	10	ELECTRICAL SYSTEM
1.220	11	ELECTRIC SYSTEM
1.230	01	WINDOW WASHER
1.250	01	CAB
1.250	02	SEAT BELT
1.250	03	OPERATOR'S SEAT - SUPPORT
1.250	04	ARMREST
1.250	05	CAB - COMPONENTS
1.250	05A	CAB - COMPONENTS
1.250	06	CAB - COMPONENTS
1.250	07	CAB - COMPONENTS
1.250	08	CAB - COMPONENTS
1.250	09	CAB - COMPONENTS
1.250	10	CAB - COMPONENTS
1.250	11	CAB - COMPONENTS
1.250	12	CAB - COMPONENTS
1.250	13	CAB - COMPONENTS
1.250	14	CAB - COMPONENTS
1.250	15	CAB - COMPONENTS
1.250	16	CAB - COMPONENTS
1.250	17	CAB - COMPONENTS
1.250	18	CAB - COMPONENTS
1.270	01	FLOOR-CAB
1.270	02	FLOOR-CAB
1.280	01	RADIO
1.295	01	AIR CONDITIONING
1.295	02	AIR CONDITIONING
1.295	03	AIR CONDITIONING
1.295	04	AIR CONDITIONING
1.295	05	AIR CONDITIONING - COMPONENTS
1.295	06	AIR CONDITIONING - COMPONENTS
1.295	07	AIR CONDITIONING - COMPONENTS
1.300	01	HOODS - GUARDS
1.300	02	HOODS - GUARDS
1.300	03	HOODS - GUARDS
1.300	04	HOODS - GUARDS
1.300	05	HOODS - GUARDS
1.300	06	HOODS - GUARDS
1.300	07	HOODS - GUARDS
1.300	08	HOODS - GUARDS
1.300	09	HOODS - GUARDS
1.300	10	HOODS - GUARDS

TABLE OF CONTENTS

1.300	11	HOODS - GUARDS
2.000	01	MONOBLOC BOOM - VERSION (01-02)
2.000	02	MONOBLOC BOOM - VERSION (01-02)
2.001	01	LIFT BOOM - VERSION (03-04)
2.001	02	LIFT BOOM - VERSION (03-04)
2.002	01	POSITIONER ARM - VERSION (03-04)
2.030	01	BOOM PIPING - VERSION (01-02)
2.030	02	LIFT CYLINDER - COMPONENTS
2.030	03	DIPPER STICK CYLINDER - COMPONENTS
2.030	04	BUCKET CYLINDER - COMPONENTS
2.031	01	BOOM PIPING - VERSION (03-04)
2.031	02	BOOM PIPING - VERSION (03-04)
2.031	03	POSITIONER CYLINDER - COMPONENTS - VERSION (03-04)
2.031	04	POSITIONER SAFETY VALVE - VERSION (03-04)
2.031	05	POSITIONER SAFETY VALVE - VERSION (03-04)
2.031	06	POSITIONER SAFETY VALVE - COMPONENTS - VERSION (03-04)
2.040	01	LUBRIC. FITTING PIPING - VERSION (01-02)
2.041	01	LUBRIC. FITTING PIPING - VERSION (03-04)
2.041	02	LUBRIC. FITTING PIPING - VERSION (03-04)
2.050	01	BUCKET INSTALLATION
3.000	01	LOWER FRAME - VERSION (01-03)
3.000	02	LOWER FRAME
3.000	03	LOWER FRAME
3.001	01	LOWER FRAME - VERSION (02-04)
3.010	01	TRAVEL REDUCTION UNITS
3.010	02	TRAVEL REDUCTION UNITS - COMPONENTS
3.010	03	TRAVEL REDUCTION UNITS - COMPONENTS
3.010	04	TRAVEL REDUCTION UNITS - COMPONENTS
3.020	01	TRACK IDLER
3.020	02	TRACK IDLER - COMPONENTS
3.020	03	TRACK IDLER - COMPONENTS
3.030	01	TRACK CARRIER ROLLER
3.030	02	TRACK CARRIER ROLLER - COMPONENTS
3.040	01	TRACK ROLLER
3.040	02	TRACK ROLLER - COMPONENTS
3.060	01	ROTARY DISTRIBUTOR
3.060	02	ROTARY DISTRIBUTOR - COMPONENTS
3.070	01	TRAVEL PIPING (LOWER)
4.200	01	TOOLS KIT
4.520	01	DECALS
4.520	02	DECALS
4.520	03	DECALS
5.0001	01	TRACK CHAIN (L=600MM) - OPTIONAL CODE 956000217
5.0002	01	TRACK CHAIN (L=700MM) - OPTIONAL CODE 956000317
5.0003	01	TRACK CHAIN (L=800MM) - OPTIONAL CODE 956000517
5.0004	01	TRACK CHAIN (L=900MM) - OPTIONAL CODE 956000717
5.0013	01	DIPPER STICK (L=2.6M) - OPTIONAL CODE 781176148
5.0013	02	DIPPER STICK (L=2.6M) - OPTIONAL CODE 781176148
5.0013	03	DIPPER STICK (L=2.6M) - OPTIONAL CODE 781176148
5.0013	04	DIPPER STICK (L=2.6M) - OPTIONAL CODE 781176148

TABLE OF CONTENTS

5.0020	01	APPLICATION OF HYDRAULIC HAMMER - OPTIONAL CODE 461228008 (01-02) - 461228018 (03-04)
5.0020	02	APPLICATION OF HYDRAULIC HAMMER - OPTIONAL CODE 461228008 (01-02) - 461228018 (03-04)
5.0020	03	APPLICATION OF HYDRAULIC HAMMER - OPTIONAL CODE 461226068 (01-02) - 461226078 (03-04)
5.0020	04	APPLICATION OF HYDRAULIC HAMMER - VERSION (01-02) - OPTIONAL CODE 461228008
5.0020	05	APPLICATION OF HYDRAULIC HAMMER - VERSION (03-04) - OPTIONAL CODE 461228018
5.0020	06	APPLICATION OF HYDRAULIC HAMMER - VERSION (01-02) - OPTIONAL CODE 461228008
5.0020	07	APPLICATION OF HYDRAULIC HAMMER - VERSION (03-04) - OPTIONAL CODE 461228018
5.0020	08	APPLICATION OF HYDRAULIC HAMMER - VERSION (01-02) - OPTIONAL CODE 461228008
5.0020	09	APPLICATION OF HYDRAULIC HAMMER - VERSION (03-04) - OPTIONAL CODE 461228018
5.0020	10	APPLICATION OF HYDRAULIC HAMMER - VERSION (01-02) - OPTIONAL CODE 461228008
5.0020	11	APPLICATION OF HYDRAULIC HAMMER - VERSION (03-04) - OPTIONAL CODE 461228018
5.0020	12	APPLICATION OF HYDRAULIC HAMMER - VERSION (03-04) - OPTIONAL CODE 461228018
5.0020	13	APPLICATION OF HYDRAULIC HAMMER - OPTIONAL CODE 461228008 (01-02) - 461228018 (03-04)
5.0020	14	VALVE - COMPONENTS - OPTIONAL CODE 461228008 (01-02) - 461228018 (03-04)
5.0021	13	APPLICATION OF HYDRAULIC HAMMER - OPTIONAL CODE 461231028 (01-02) - 461231038 (03-04)
5.0022	01	DIPPER STICK (L=2.33M) - OPTIONAL CODE 781682058
5.0022	02	DIPPER STICK (L=2.33M) - OPTIONAL CODE 781682058
5.0022	03	DIPPER STICK (L=2.33M) - OPTIONAL CODE 781682058
5.0022	04	DIPPER STICK (L=2.33M) - OPTIONAL CODE 781682058
5.0023	13	APPLICATION OF HYDRAULIC HAMMER - OPTIONAL CODE 461234008 (01-02) - 461234018 (03-04)
5.0024	13	APPLICATION OF HYDRAULIC HAMMER - OPTIONAL CODE 461238008 (01-02) - 461238018 (03-04)
5.0038	01	DIPPER STICK (L=3.3M) - OPTIONAL CODE 781676018
5.0038	02	DIPPER STICK (L=3.3M) - OPTIONAL CODE 781676018
5.0038	03	DIPPER STICK (L=3.3M) - OPTIONAL CODE 781676018
5.0038	04	DIPPER STICK (L=3.3M) - OPTIONAL CODE 781676018
5.0039	01	DIPPER STICK (L=4.15M) - OPTIONAL CODE 781677018
5.0039	02	DIPPER STICK (L=4.15M) - OPTIONAL CODE 781677018
5.0039	03	DIPPER STICK (L=4.15M) - OPTIONAL CODE 781677018
5.0039	04	DIPPER STICK (L=4.15M) - OPTIONAL CODE 781677018
5.0040	01	MONITOR INSTALLATION - OPTIONAL CODE 461223028
5.0040	02	MONITOR INSTALLATION - OPTIONAL CODE 461223028
5.0040	03	MONITOR INSTALLATION - OPTIONAL CODE 461223008
5.0042	01	LOWER FRAME GUARD - OPTIONAL CODE 781624098
5.0043	01	ARM PROTECTION - OPTIONAL CODE 461220028

TABLE OF CONTENTS

5.0076	01	ROTATION BUCKET PROVISION - OPTIONAL CODE 461243008 (01-02) - 461241078 (03-04)
5.0076	02	ROTATION BUCKET PROVISION - VERSION (01-02) - OPTIONAL CODE 461241068
5.0076	03	ROTATION BUCKET PROVISION - VERSION (03-04) - OPTIONAL CODE 461241078
5.0076	04	ROTATION BUCKET PROVISION - OPTIONAL CODE 461241068 (01-02) - 461241078 (03-04)
5.0076	05	ROTATION BUCKET PROVISION - OPTIONAL CODE 461241068 (01-02) - 461241078 (03-04)
5.0076	06	ROTATION BUCKET PROVISION - OPTIONAL CODE 461241068 (01-02) - 461241078 (03-04)
5.0076	07	ROTATION BUCKET PROVISION - VERSION (01-02) - OPTIONAL CODE 461241068
5.0076	08	ROTATION BUCKET PROVISION - VERSION (03-04) - OPTIONAL CODE 461241078
5.0076	09	ROTATION BUCKET PROVISION - VERSION (03-04) - OPTIONAL CODE 461241078
5.0076	10	ROTATION BUCKET PROVISION - OPTIONAL CODE 461241068 (01-02) - 461241078 (03-04)
5.0076	11	ROTATION BUCKET PROVISION - COMPONENTS - OPTIONAL CODE 461241068 (01-02) - 461241078 (03-04)
5.0077	01	ROTATION BUCKET PROVISION - OPTIONAL CODE 461246028 (01-02) - 461246038 (03-04)
5.0077	02	ROTATION BUCKET PROVISION - VERSION (01-02) - OPTIONAL CODE 461246028
5.0077	03	ROTATION BUCKET PROVISION - VERSION (03-04) - OPTIONAL CODE 461246038
5.0077	04	ROTATION BUCKET PROVISION - OPTIONAL CODE 461246028 (01-02) - 461246038 (03-04)
5.0077	05	ROTATION BUCKET PROVISION - OPTIONAL CODE 461246028 (01-02) - 461246038 (03-04)
5.0077	06	ROTATION BUCKET PROVISION - OPTIONAL CODE 461246028 (01-02) - 461246038 (03-04)
5.0077	07	ROTATION BUCKET PROVISION - VERSION (01-02) - OPTIONAL CODE 461246028
5.0077	08	ROTATION BUCKET PROVISION - VERSION (03-04) - OPTIONAL CODE 461246038
5.0077	09	ROTATION BUCKET PROVISION - VERSION (03-04) - OPTIONAL CODE 461246038
5.0077	10	ROTATION BUCKET PROVISION - OPTIONAL CODE 461246028 (01-02) - 461246038 (03-04)
5.0077	11	ROTATION BUCKET PROVISION - COMPONENTS - OPTIONAL CODE 461246028 (01-02) - 461246038 (03-04)
5.0078	01	ROTATION BUCKET PROVISION - OPTIONAL CODE 461249008 (01-02) - 461249018 (03-04)
5.0078	02	ROTATION BUCKET PROVISION - VERSION (01-02) - OPTIONAL CODE 461249008
5.0078	03	ROTATION BUCKET PROVISION - VERSION (03-04) - OPTIONAL CODE 461249018
5.0078	04	ROTATION BUCKET PROVISION - OPTIONAL CODE 461249008 (01-02) - 461249018 (03-04)
5.0078	05	ROTATION BUCKET PROVISION - OPTIONAL CODE 461249008 (01-02) - 461249018 (03-04)
5.0078	06	ROTATION BUCKET PROVISION - OPTIONAL CODE 461249008 (01-02) - 461249018 (03-04)
5.0078	07	ROTATION BUCKET PROVISION - VERSION (01-02) - OPTIONAL CODE 461249008
5.0078	08	ROTATION BUCKET PROVISION - VERSION (03-04) - OPTIONAL CODE 461249018
5.0078	09	ROTATION BUCKET PROVISION - VERSION (03-04) - OPTIONAL CODE 461249018
5.0078	10	ROTATION BUCKET PROVISION - OPTIONAL CODE 461249008 (01-02) - 461249018 (03-04)
5.0078	11	ROTATION BUCKET PROVISION - COMPONENTS - OPTIONAL CODE 461249008 (01-02) - 461249018 (03-04)

TABLE OF CONTENTS

5.0079	01	ROTATION BUCKET PROVISION - OPTIONAL CODE 461319008 (01-02) - 461319018 (03-04)
5.0079	02	ROTATION BUCKET PROVISION - VERSION (01-02) - OPTIONAL CODE 461319008
5.0079	03	ROTATION BUCKET PROVISION - VERSION (03-04) - OPTIONAL CODE 461319018
5.0079	04	ROTATION BUCKET PROVISION - OPTIONAL CODE 461319008 (01-02) - 461319018 (03-04)
5.0079	05	ROTATION BUCKET PROVISION - OPTIONAL CODE 461319008 (01-02) - 461319018 (03-04)
5.0079	06	ROTATION BUCKET PROVISION - OPTIONAL CODE 461319008 (01-02) - 461319018 (03-04)
5.0079	07	ROTATION BUCKET PROVISION - VERSION (01-02) - OPTIONAL CODE 461319008
5.0079	08	ROTATION BUCKET PROVISION - VERSION (03-04) - OPTIONAL CODE 461319018
5.0079	09	ROTATION BUCKET PROVISION - VERSION (03-04) - OPTIONAL CODE 461319018
5.0079	10	ROTATION BUCKET PROVISION - OPTIONAL CODE 461319008 (01-02) - 461319018 (03-04)
5.0079	11	ROTATION BUCKET PROVISION - COMPONENTS - OPTIONAL CODE 461319008 (01-02) - 461319018 (03-04)
5.0086	01	BOOM/ARM WITHOUT SAFETY VALVE - VERSION (01-02) - OPTIONAL CODE 461134128
5.0086	02	BOOM/ARM WITHOUT SAFETY VALVE - VERSION (01-02) - OPTIONAL CODE 461134128
5.0086	03	BOOM/ARM WITHOUT SAFETY VALVE - VERSION (01-02) - OPTIONAL CODE 461134128
5.0086	04	BOOM/ARM WITHOUT SAFETY VALVE - VERSION (01-02) - OPTIONAL CODE 461134128
5.0088	01	OBJECT HANDLING - VERSION (01-02) - OPTIONAL CODE 781583658
5.0088	02	OBJECT HANDLING - VERSION (01-02) - OPTIONAL CODE 781583568
5.0088	03	OBJECT HANDLING - VERSION (01-02) - OPTIONAL CODE 781583568
5.0088	04	OBJECT HANDLING - VERSION (01-02) - OPTIONAL CODE 781583568
5.0088	05	OBJECT HANDLING - VERSION (01-02) - OPTIONAL CODE 781583568
5.0088	06	OBJECT HANDLING - VERSION (01-02) - OPTIONAL CODE 781583568
5.0088	07	OBJECT HANDLING - VERSION (01-02) - OPTIONAL CODE 781583568
5.0088	08	OBJECT HANDLING - VERSION (01-02) - OPTIONAL CODE 781583568
5.0100	01	BUCKET - (L=1000MM) - OPTIONAL CODE 781107078
5.0101	01	BUCKET - (L=1700MM) - OPTIONAL CODE 781681008
5.0102	01	BUCKET - (L=850MM) - OPTIONAL CODE 781499058
5.0103	01	BUCKET - (L=1350MM) - OPTIONAL CODE 781679008
5.0104	01	BUCKET - (L=1200MM) - OPTIONAL CODE 781110058
5.0108	01	BUCKET - (L=1500MM) - OPTIONAL CODE 781114008
5.0144	01	LINK ROD - OPTIONAL CODE 781479068
5.0148	01	HYDRAULIC QUICK COUPLING - OPTIONAL CODE 781128068
5.0148	02	HYDRAULIC QUICK COUPLING - COMPONENTS - OPTIONAL CODE 781128068
5.0156	01	SEAT AT MECHANICAL SUSPENSION - OPTIONAL CODE 781768058
5.0156	02	SEAT AT MECHANICAL SUSPENSION - COMPONENTS - OPTIONAL CODE 781768058
5.0159	01	PNEUM. CUSHIONING HEATED SEAT - OPTIONAL CODE 781000038
5.0159	02	PNEUM. CUSHIONING HEATED SEAT - COMPONENTS - OPTIONAL CODE 781000038
5.0208	01	CAB GUARD - OPTIONAL CODE 781646098
5.0209	01	CAB GUARD - OPTIONAL CODE 781647098
5.0210	01	CAB GUARD - OPTIONAL CODE 461116028

TABLE OF CONTENTS

5.0210	02	CAB GUARD - OPTIONAL CODE 461116028
5.0580	01	SUN CANOPY - OPTIONAL CODE 461221008
5.0580	02	CAB LIGHTS - OPTIONAL CODE 461221008
5.0581	01	REAR MIRROR - OPTIONAL CODE 46128018

SECTION INDEX
Engine

0 - FILTERS	00	MAINTENANCE PARTS
0 - VERSION	00	IDENTIFICATION AND VERSION LIST
0.000	01	ENGINE SUSPENSIONS
0.000	02	PIPING - ENGINE OIL
0.000	03	ENGINE - COMPONENTS
0.001	01	AIR CLEANER
0.001	02	AIR CLEANER
0.002	01	MUFFLER
0.003	01	RADIATOR
0.003	02	RADIATOR (WATER)
0.003	03	RADIATOR
0.003	04	RADIATOR - COMPONENTS
0.021	01	ENGINE
0.040	01	CYLINDER BLOCKS 11-00-1 (HINO ENGINE TYPE J08ETM-KSDA)
0.042	01	CYLINDER BLOCKS 11-00-2 (HINO ENGINE TYPE J08ETM-KSDA)
0.043	01	TIMING GEAR COVER & FLY WHEEL HOUSING 11-10 (HINO ENGINE TYPE J08ETM-KSDA)
0.060	01	CYLINDER HEAD 10-00-1 (HINO ENGINE TYPE J08ETM-KSDA)
0.060	02	CYLINDER HEAD 10-00-2 (HINO ENGINE TYPE J08ETM-KSDA)
0.066	01	VALVE SYSTEM 13-10 (HINO ENGINE TYPE J08ETM-KSDA)
0.071	01	AIR INTAKE AND EXHAUST SYSTEM 13-20-1 (HINO ENGINE TYPE J08ETM-KSDA)
0.071	02	AIR INTAKE AND EXHAUST SYSTEM 13-20-2 (HINO ENGINE TYPE J08ETM-KSDA)
0.080	01	MAIN MOVING PARTS 12-00 (HINO ENGINE TYPE J08ETM-KSDA)
0.120	01	CAMSHAFT AND IDLE GEAR 13-00 (HINO ENGINE TYPE J08ETM-KSDA)
0.140	01	FUEL SYSTEM 15-00 (HINO ENGINE TYPE J08ETM-KSDA)
0.149	01	ELECTRICAL PARTS 18-10-3 (HINO ENGINE TYPE J08ETM-KSDA)
0.173	01	ELECTRICAL PARTS 18-10-1 (HINO ENGINE TYPE J08ETM-KSDA)
0.200	01	FUEL FILTER 15-54 (HINO ENGINE TYPE J08ETM-KSDA)
0.240	01	TURBOCHARGER 18-30 (HINO ENGINE TYPE J08ETM-KSDA)
0.300	01	LUBRICATION SYSTEM 14-00 (HINO ENGINE TYPE J08ETM-KSDA)
0.302	01	OIL FILTER 14-51 (HINO ENGINE TYPE J08ETM-KSDA)
0.310	01	OIL COOLER 14-52 (HINO ENGINE TYPE J08ETM-KSDA)
0.320	01	COOLING SYSTEM 16-00 (HINO ENGINE TYPE J08ETM-KSDA)
0.400	01	ELECTRICAL PARTS 18-10-2 (HINO ENGINE TYPE J08ETM-KSDA)
0.400	02	ALTERNATOR 19-04 (HINO ENGINE TYPE J08ETM-KSDA)
0.400	03	STARTER MOTOR 19-05 (HINO ENGINE TYPE J08ETM-KSDA)
0.700	01	GASKET KIT, ENGINE OVERHAUL 19-91 (HINO ENGINE TYPE J08ETM-KSDA)
0.960	01	ENGINE ACCESSORY PARTS 18-40 (HINO ENGINE TYPE J08ETM-KSDA)

MAINTENANCE PARTS

1

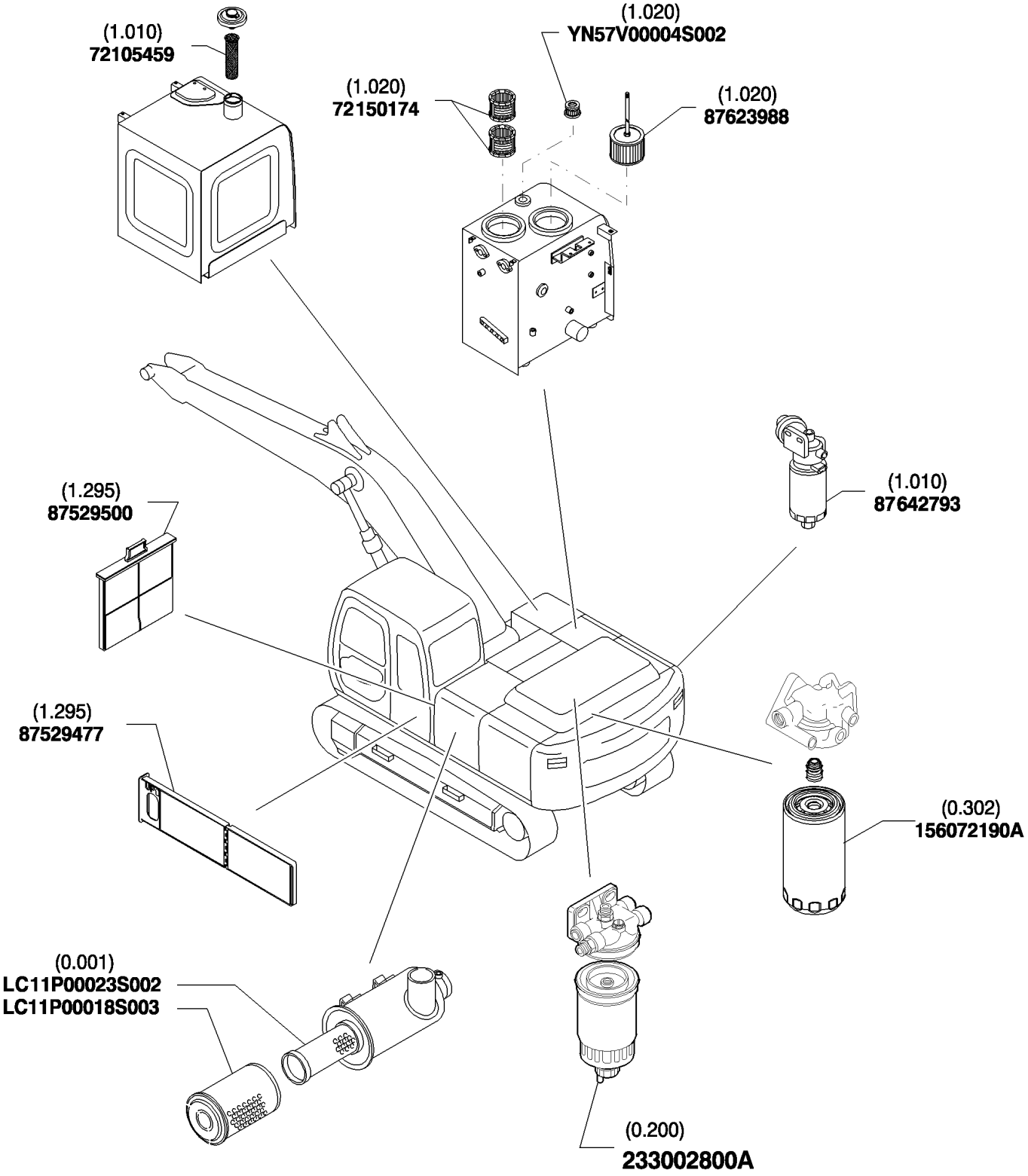

MAINTENANCE PARTS

REF	FN	PART NUMBER	YR/SN	QTY	DESCRIPTION

IDENTIFICATION AND VERSION LIST

1

MODELS MODELLI MODELES MODELLE MODELOS MODELOS MODELLEN MODELLER	ENGINEERING CODE DENOMINAZIONE TECNICA DESIGNATION TECNIQUE TECHNISCHE BEZEICHNUNG DESIGNACION TECNICA DENOMINAÇÃO TÉCNICA TECNISCHE BENAMING TEKNISCH BENÆVNELSE	ENGINE MODEL MODELLO DEL MOTORE MODELE DU MOTEUR MOTORBAUMUSTER MODELO DEL MOTOR MODELO DO MOTOR MODEL VAN MOTOR MOTOR-MODEL	VERSION CODE CODICE VERSIONE CODE VERSION CODE VERSION CODIGO VERSION CÓDIGO VERSÃO CODE VERSIE VERSIONS-KODE
E385BLC **E385BEL** **E385BLCT** **E385BELT**	**540805512** **540805513** **540805532** **540805533**	**HINO MOTORS** **EB-J08E-TM**	**01** **02** **03** **04**

MODELS MODELLI MODELES MODELLE MODELOS MODELOS MODELLEN MODELLER	MACHINE SERIAL NUMBER – NUMERO DI MATRICOLA DELLA MACCHINA NUMERO DE SERIE DE LA MACHINE – SERIENNUMMER DER MASCHINE NUMERO DE SERIE DE LA MAQUINA – MATRÍCULA DA MÁQUINA SERIENUMMER VAN DE MACHINE – MASKINENS MATRIKEL
E385BLC **E385BEL** **E385BLCT** **E385BELT**	**ZEF132ML** N0LA00000 ← (*) **ZEF132MN** N0LA00000 ← (*) **ZEF132TL** N0LA00000 ← (*) **ZEF132TN** N0LA00000 ← (*)

(*) Machine identification code, useful in case of Dealer assistance.
(*) Codice identificativo specifico della macchina, da riportare nelle comunicazioni con la Rete Assistenziale.
(*) Code d'identification spécifique du véhicule, à reporter dans les communications avec le Réseau d'Assistance.
(*) Spezifischer Kenn-Code der Maschine, der in den Mitteilungen an das Kundendienstnetz anzugeben ist.
(*) Código de identificación específico de la máquina, a incluir en las comunicaciones con la Red Asistencial.
(*) Código identificativo especifico da maquina, que deve ser indicado nas comunicações com a Rede de Assistência.
(*) Specifieke identificatiecode van de machine, te vermelden bij communicatie met het Servicenetwerk.
(*) Specifik identifikations-kode for maskinen som skal anføres i kommunikationerne med Service-nettet.

RECORD YOUR SERIAL NUMBERS BELOW – REGISTRATE I VOSTRI NUMERI DI MATRICOLA QUI SOTTO
ENREGISTREZ VOS NUMEROS DE SERIE CI-DESSOUS – UNTEN SERIENNUMMER VIERMERKEN
ANOTE AQUI LOS NUMEROS DE SERIE – REGISTRAR OS NÚMEROS DE MATRÍCULA ABAIXO
NOTEER HIERONDER DE SERIENUMMERS – REGISTRER DERES MATRIKEL-NUMRE FOR NEDEN

MACHINE SERIAL NUMBER - NUMERO DI MATRICOLA DELLA MACCHINA NUMERO DE SERIE DE LA MACHINE - SERIENNUMMER DER MASCHINE NUMERO DE SERIE DE LA MAQUINA - MATRÍCULA DA MÁQUINA SERIENUMMER VAN DE MACHINE - MASKINENS MATRIKEL	ENGINE SERIAL NUMBER - MATRICOLA DEL MOTORE NUMERO DE SERIE DU MOTEUR - SERIENNUMMER DES MOTORS NUMERO DE SERIE DEL MOTOR - MATRÍCULA DO MOTOR SERIENUMMER VAN DE MOTOR - MOTORENS MATRIKEL
_____	_____

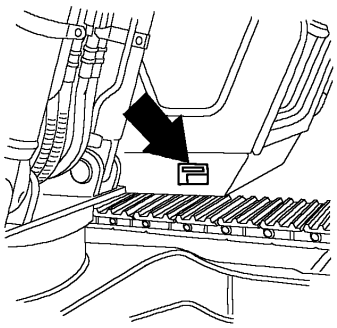

MACHINE SERIAL NUMBER LOCATION
POSIZIONE DEL NUMERO DI MATRICOLA DELLA MACCHINA
EMPLACEMENT DU NUMERO DE SERIE DE LA MACHINE
ORT DER SERIENNUMMER DER MASCHINE
UBICACION NUMERO DE SERIE DE LA MAQUINA
POSIÇÃO DO NÚMERO DE MATRÍCULA DA MÁQUINA
POSITIE VAN SERIENUMMER VAN DE MACHINE
POSITION PÅ MASKINENS MATRIKEL-NUMMER

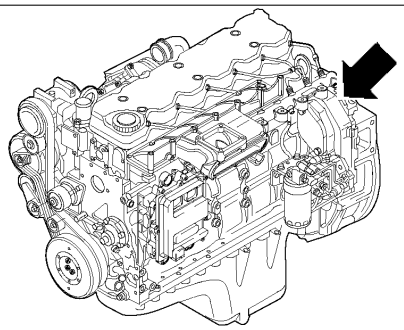

ENGINE SERIAL NUMBER LOCATION
POSIZIONE DEL NUMERO DI MATRICOLA DEL MOTORE
EMPLACEMENT DU NUMERO DE SERIE DU MOTEUR
ORT DER SERIENNUMMER DES MOTORS
UBICACION DEL NUMERO DE SERIE DEL MOTOR
POSIÇÃO DO NÚMERO DE MATRÍCULA DO MOTOR
POSITIE VAN SERIENUMMER VAN DE MOTOR
POSITION PÅ MOTORENS MATRIKEL-NUMMER

IDENTIFICATION AND VERSION LIST

REF	FN	PART NUMBER	YR/SN	QTY	DESCRIPTION

0.000	01	p1	04/08

ENGINE SUSPENSIONS

1

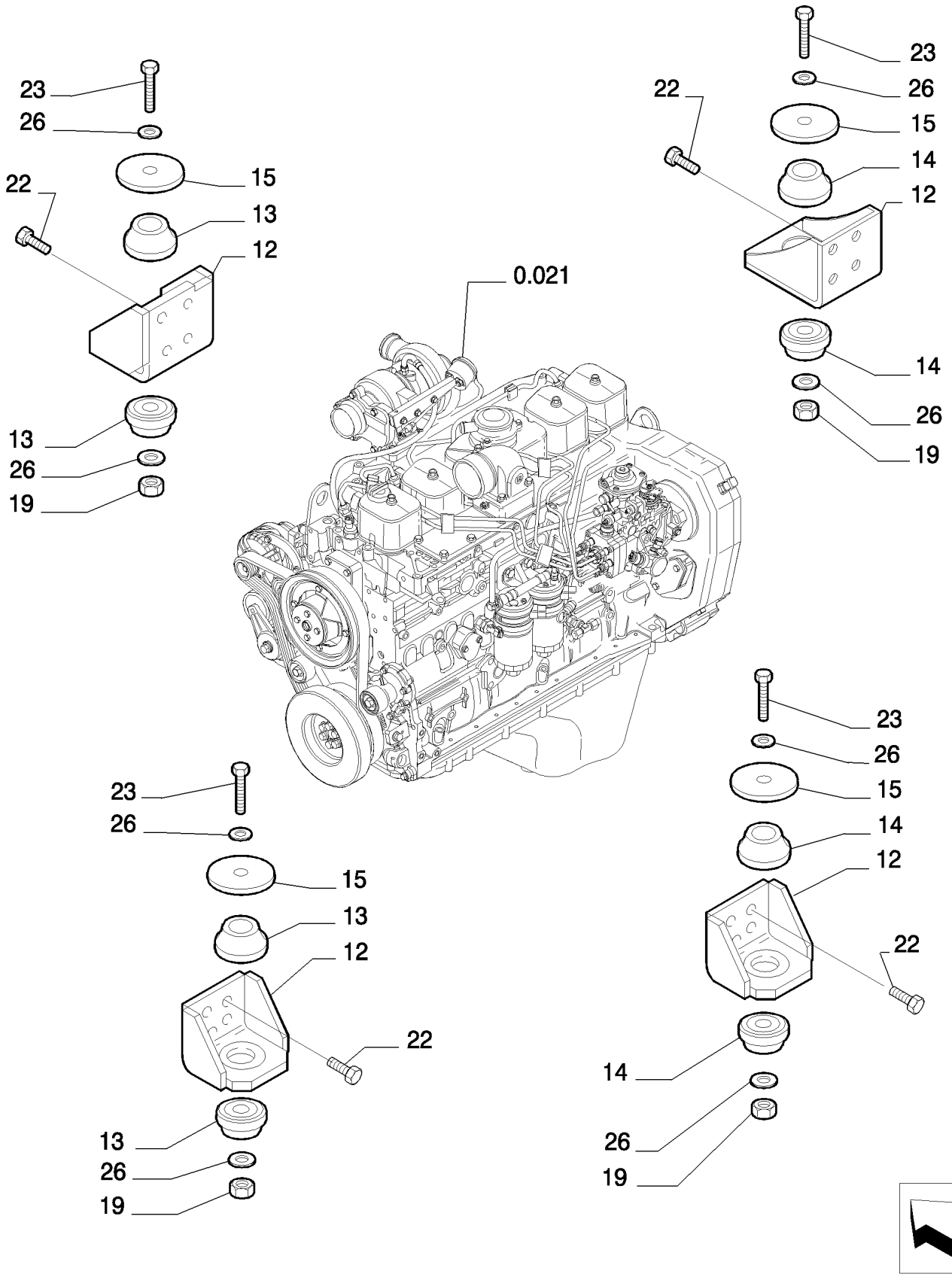

ENGINE SUSPENSIONS

REF	FN	PART NUMBER	YR/SN	QTY	DESCRIPTION
12		{87594874}		4	
13		{87594878}		4	
14		87594879		4	CUNHA ELÁSTICA
15		87594880		4	PLACA
19		11703221		4	PORCA
22		11112434		16	PARAFUSO, Hex, M12 x 30, 10.9, Full Thd
23		15203234		4	PARAFUSO
26		71415218		8	ARRUELA PLANA

0.000	02	p1	04/08

PIPING - ENGINE OIL

1

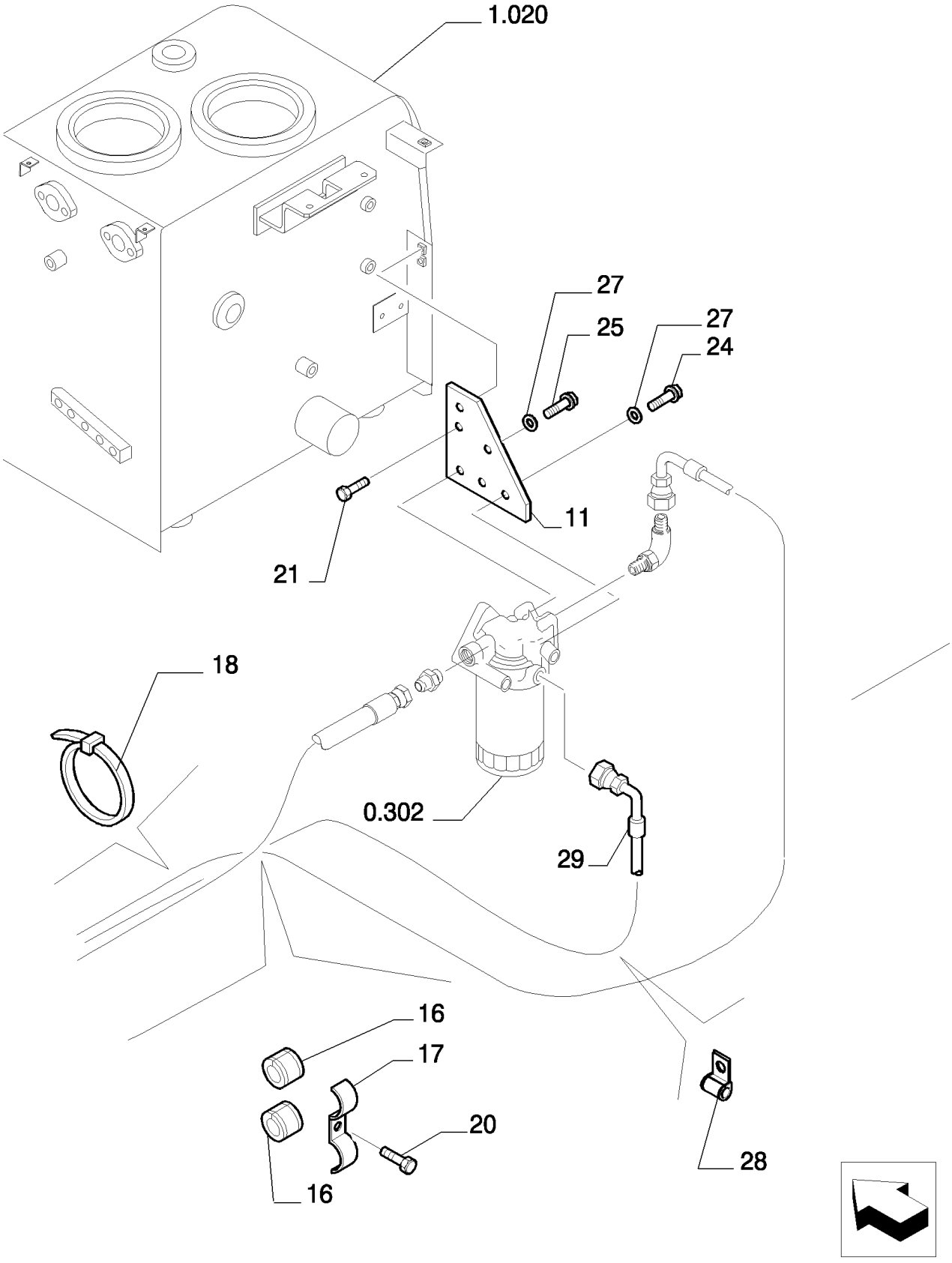

PIPING - ENGINE OIL

REF	FN	PART NUMBER	YR/SN	QTY	DESCRIPTION
11		{87594873}		1	
16		87594881		2	BUCHA
17		87594882		1	SUPORTE, 90°
18		71405770		1	PRENDEDOR
20		11107534		2	PARAFUSO
21		11106634		1	PARAFUSO, Hex, M10 x 35, 10.9, Full Thd
24		{11109034}		2	
25		11106834		1	PARAFUSO
27		14496631		6	ARRUELA PLANA, M10 x 21 x 2
28		4982514		2	TIRA DE CABO
29		{87594884}		1	
40		14496531		16	ARRUELA PLANA, M8 x 17 x 1.6
41		10516874		1	ARRUELA-TRAVA

0.000	03	p1	11/07

ENGINE - COMPONENTS

1

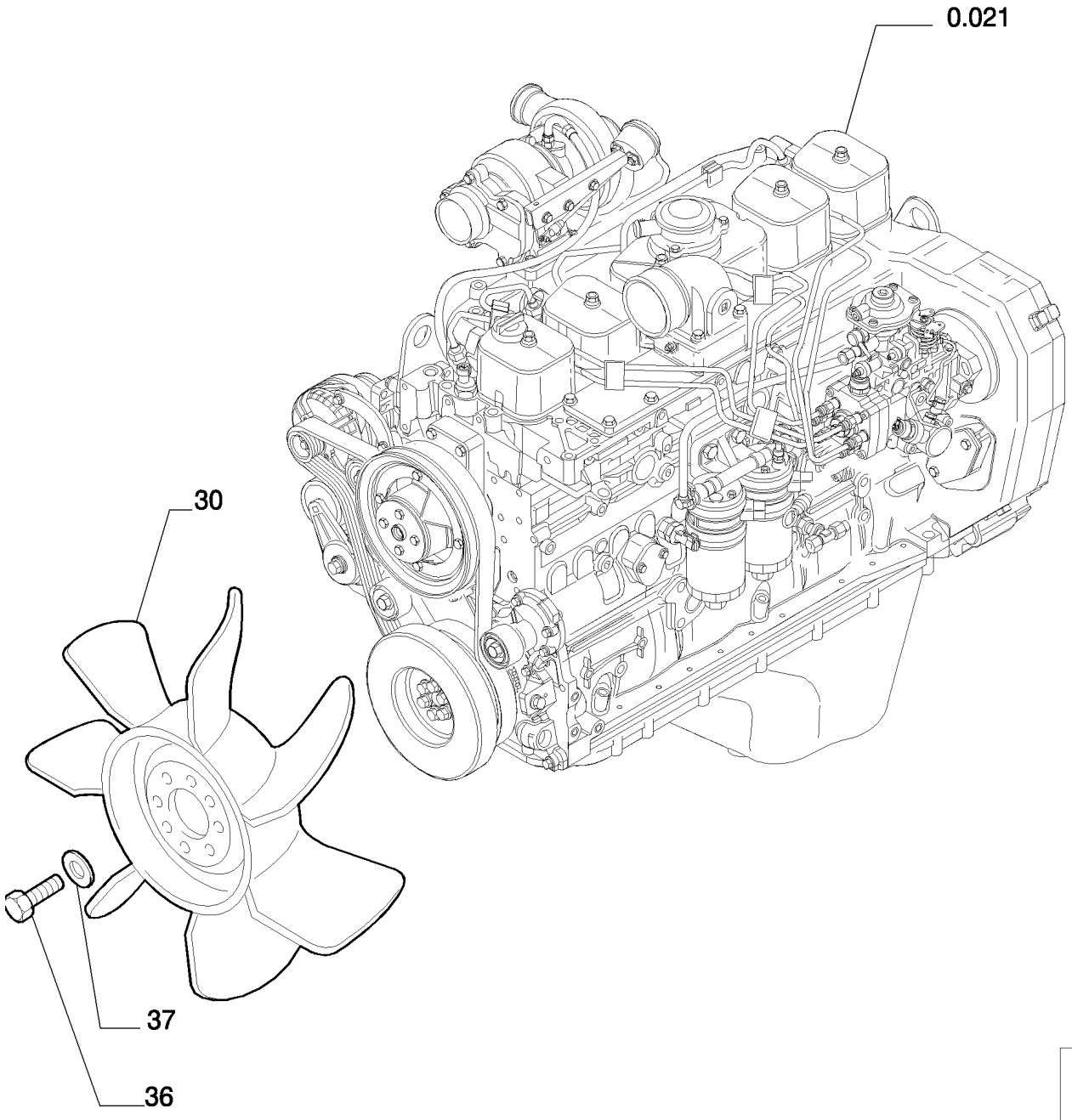

ENGINE - COMPONENTS

REF	FN	PART NUMBER	YR/SN	QTY	DESCRIPTION
35		{87594886}		1	
36		10790121		6	PORCA
37		14496631		6	ARRUELA PLANA, M10 x 21 x 2

0.001	01	p1	11/07

AIR CLEANER

1

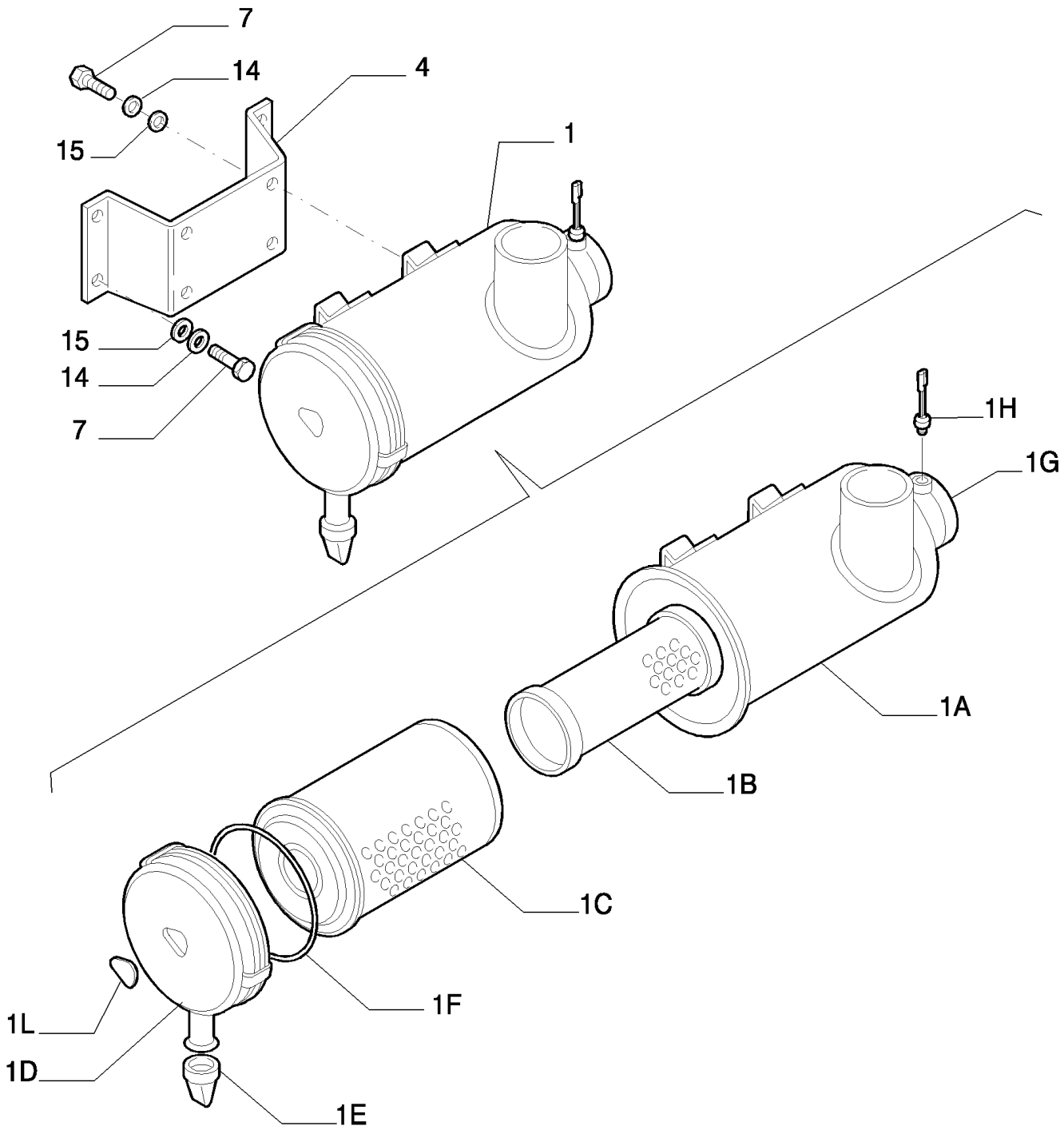

AIR CLEANER

REF	FN	PART NUMBER	YR/SN	QTY	DESCRIPTION
1		{87611986}		1	- ASSY
1A		{LC11P00018S001}		1	
1B		LC11P00018S002		1	FILTRO DE AR, - SAFETY
1C		LC11P00018S003		1	FILTRO DE AR, - MAIN
1D		{EB11P00001S004}		1	
1E		{EB11P00001S004}		1	
1F		EB11P00001S003		1	ANEL "O"
1G		EB11P00001S006		1	ADAPTADOR
1H		72211062		1	SENSOR
1L		{72219820}		1	
4		{87611989}		1	
7		11106234		8	PARAFUSO, Hex, M10 x 25, 10.9, Full Thd
14		14496621		8	ARRUELA PLANA, M10 x 21 x 2
15		10571879		8	ARRUELA-TRAVA, M10

0.001	02	p1	11/07

AIR CLEANER

1

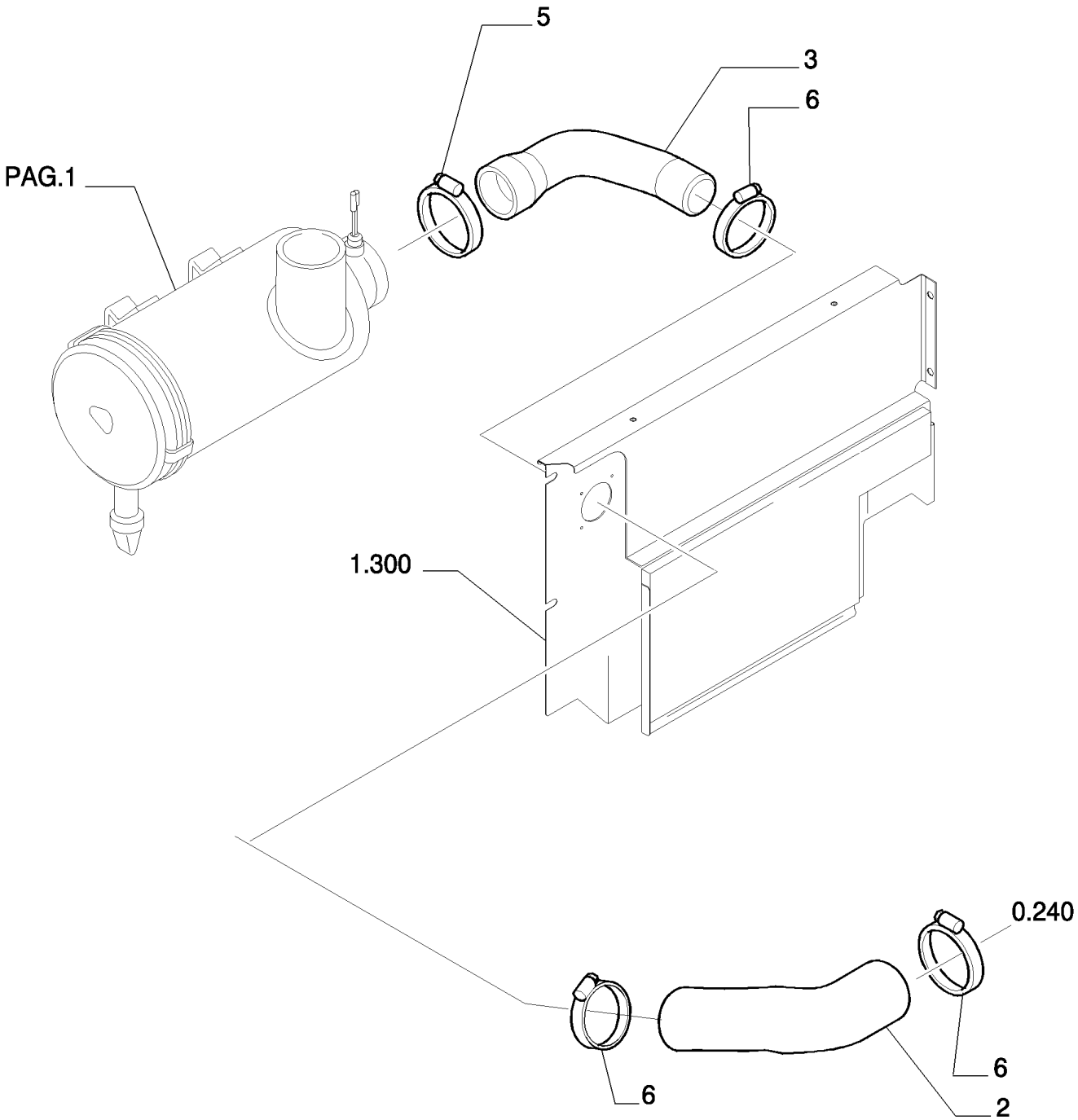

AIR CLEANER

REF	FN	PART NUMBER	YR/SN	QTY	DESCRIPTION
2		{87728788}		1	
3		{87611988}		1	
5		71421021		1	BRAÇADEIRA
6		71421022		3	BRACADEIRA MANGUEIRA

0.002	01	p1	11/07

MUFFLER

1

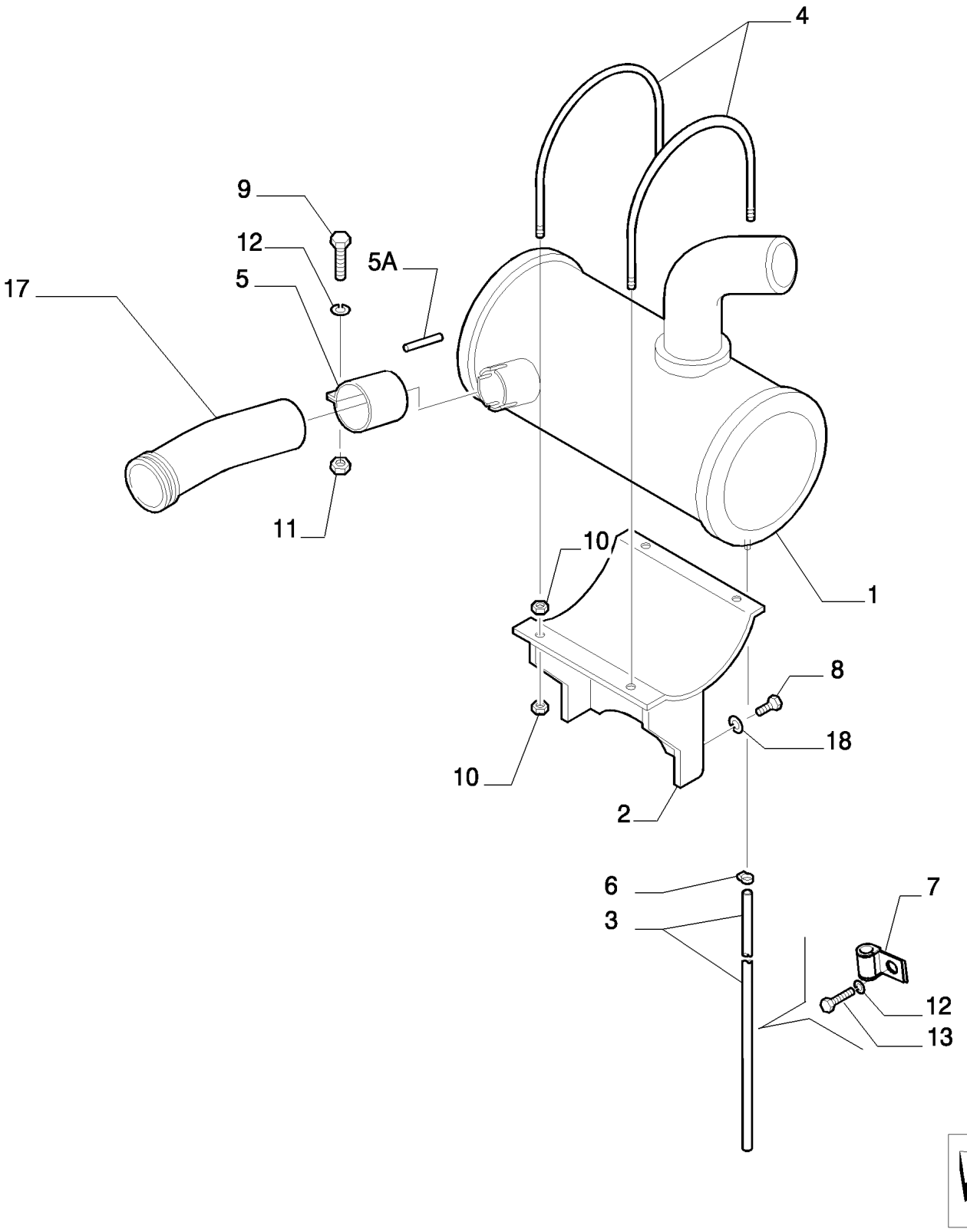

MUFFLER

REF	FN	PART NUMBER	YR/SN	QTY	DESCRIPTION
1		{87593151}		1	
2		{87593130}		1	
3		{87634409}		1	
4		87534202		2	MOLA-TRAVA
5		87332895		1	PRENDEDOR, - ASSY
5A		72219489		1	JUNTA
6		{42041100}		1	
7		87536553		1	FIXADOR
8		11112234		5	PARAFUSO, Hex, M12 x 25, 10.9, Full Thd
9		11106634		2	PARAFUSO, Hex, M10 x 35, 10.9, Full Thd
10		16100821		8	PORCA, M8, Cl 10
11		11701721		2	PORCA, M10, Cl 10
12		14496731		3	ARRUELA PLANA
13		11106034		1	PARAFUSO, Hex, M10 x 20, 10.9, Full Thd
17		{87574226}		1	
18		14496731		5	ARRUELA PLANA

0.003	01	p1	02/08

RADIATOR

1

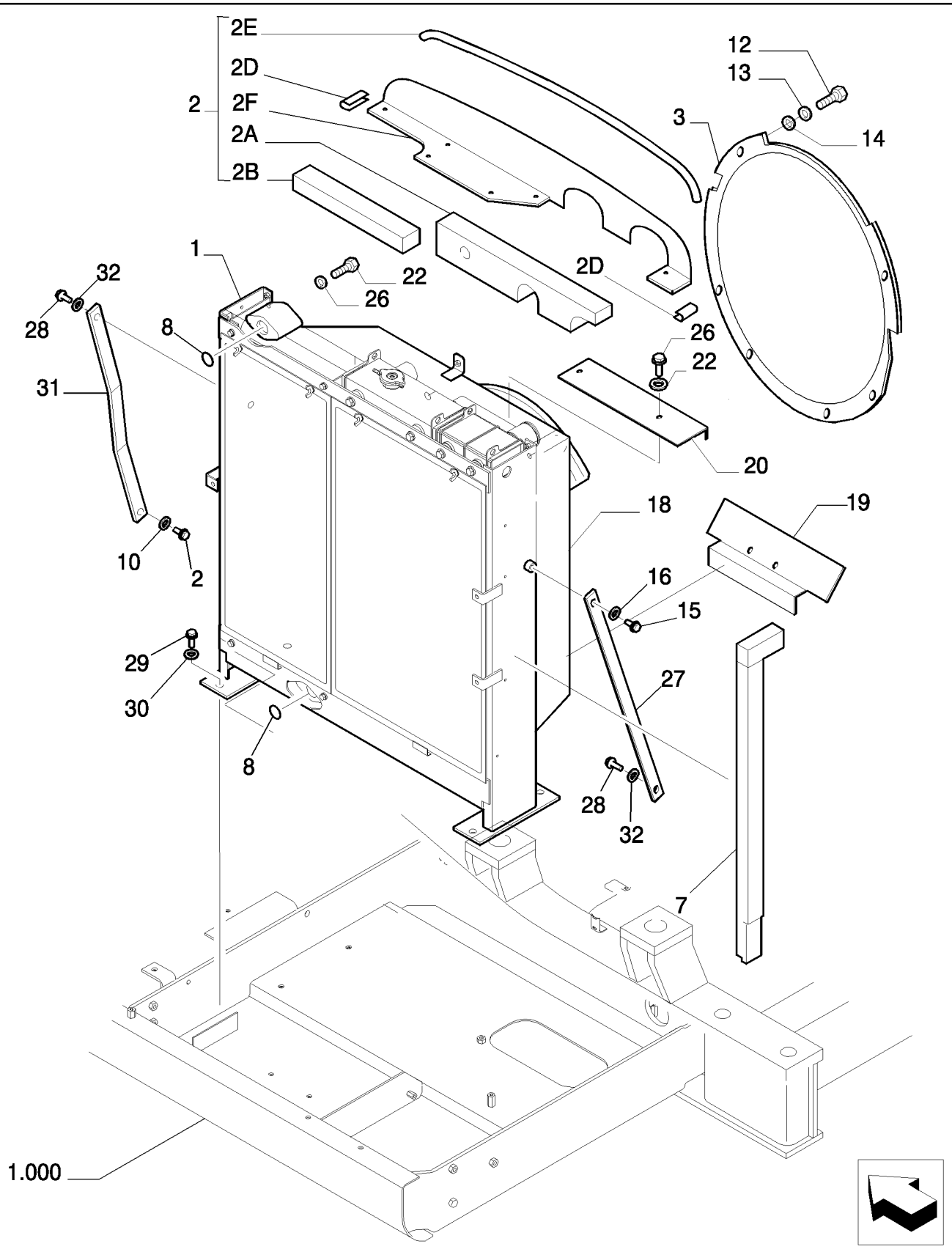

RADIATOR

REF	FN	PART NUMBER	YR/SN	QTY	DESCRIPTION
1	1	{87612575}		1	
2		{87613579}		1	- ASSY
2A		{87616596}		1	
2B		{87616597}		1	
2C		{87616690}		1	
2D		72285674		2	REVESTIMENTO
2E		72205402		1	ISOLANTE
3		{87612576}		1	- ASSY
7		{87612577}		1	- ASSY
8		87640507		2	TUBO RÍGIDO
12		11106034		7	PARAFUSO, Hex, M10 x 20, 10.9, Full Thd
13		72201224		7	ARRUELA PLANA
14		10516874		7	ARRUELA-TRAVA
18		{87612578}		1	
19		{87612579}		1	
20		{87613578}		1	
22		11106034		20	PARAFUSO, Hex, M10 x 20, 10.9, Full Thd
26		14496631		20	ARRUELA PLANA, M10 x 21 x 2

(1) ASSY SEE PAGE 4

RADIATOR (WATER)

1

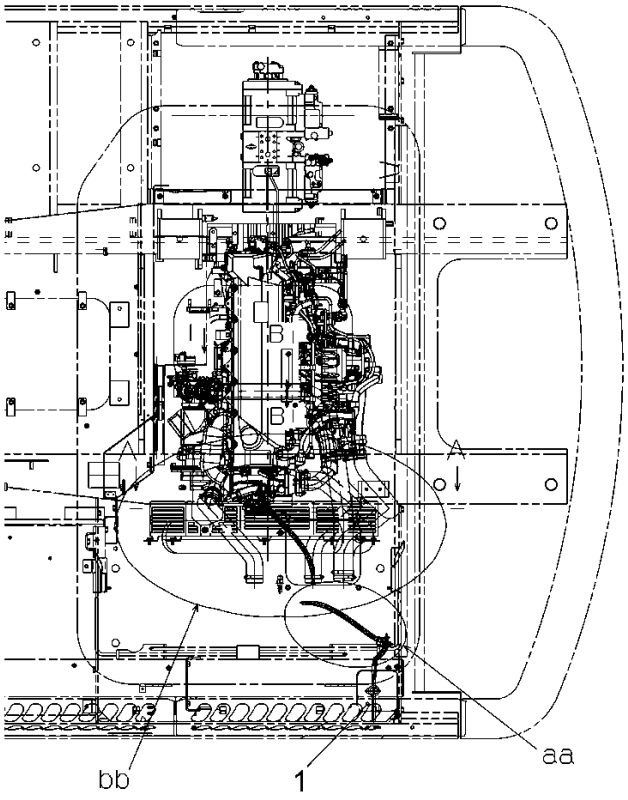

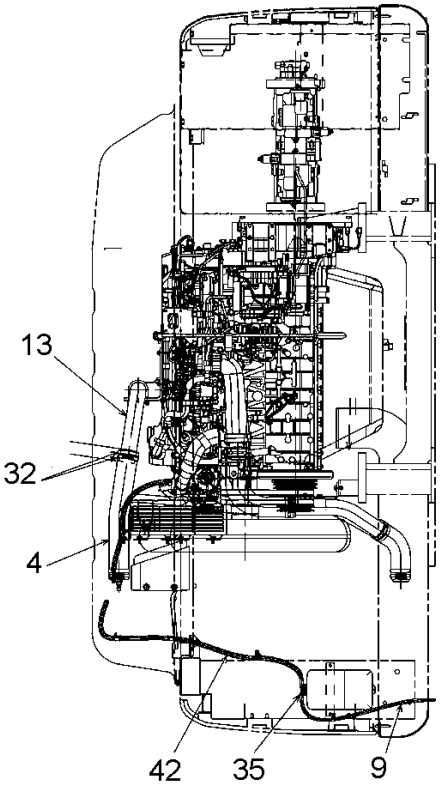

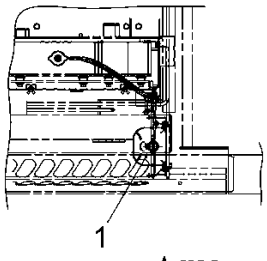

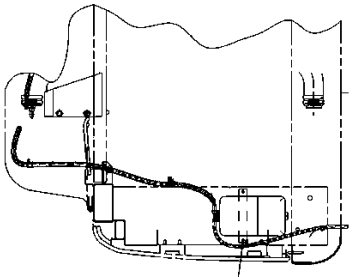

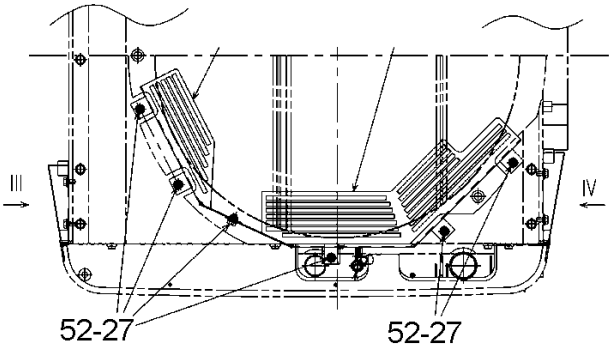

SECTION A-A

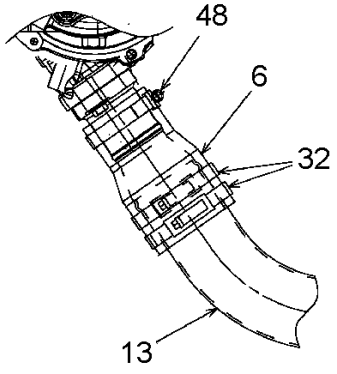

VIEW I

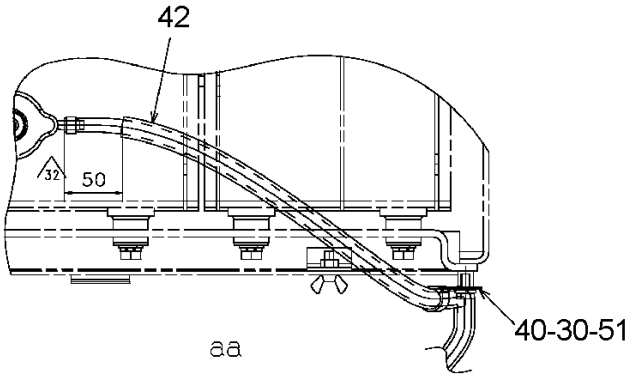

RADIATOR (WATER)

REF	FN	PART NUMBER	YR/SN	QTY	DESCRIPTION
1		87697748		1	TANQUE PEQUENO
4		{87625770}		1	
6		{87625772}		1	
9		87557648		1	TUBO FLEXÍVEL
13		{87625794}		1	
27		11106034		10	PARAFUSO, Hex, M10 x 20, 10.9, Full Thd
30		16043234		1	PARAFUSO, Hex, M8 x 16, 10.9, Full Thd
32		71431617		12	PRENDEDOR, #60, 2.75"-3.06", T-Bolt
35		{420411000}		3	
37		16043634		2	PARAFUSO, Hex, M8 x 25, 10.9, Full Thd
40		71405745		1	FIXADOR
48		71406248		1	PRENDEDOR, #40, 2.12"-2.44", T-Bolt
51		14496531		8	ARRUELA PLANA, M8 x 17 x 1.6
52		14496631		14	ARRUELA PLANA, M10 x 21 x 2

RADIATOR

1

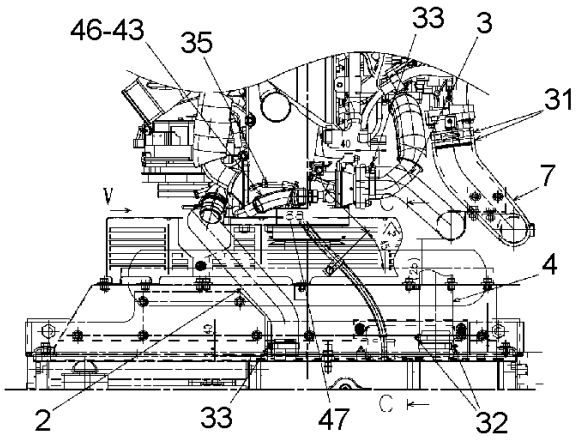

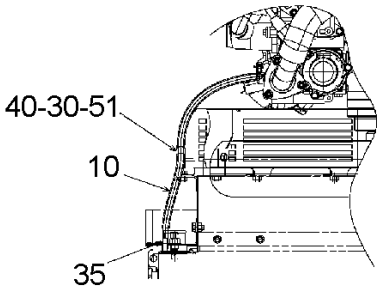

SECTION C-C

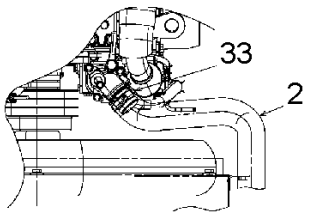

VIEW V

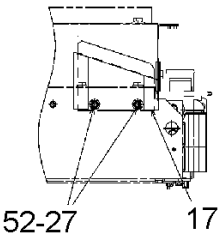

VIEW III

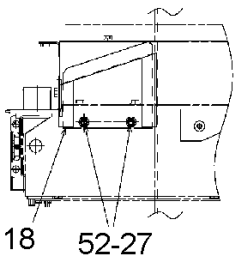

VIEW IV

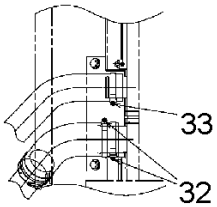

VIEW VI

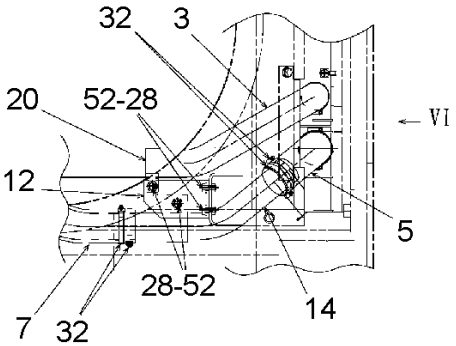

VIEW II

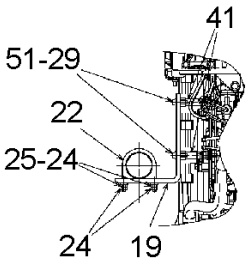

SECTION B-B

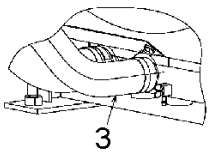

DETAIL LOWER SIDE

RADIATOR

REF	FN	PART NUMBER	YR/SN	QTY	DESCRIPTION
2		{87625767}		1	
3		{87625768}		1	
5		{87625771}		1	
7		{87694691}		1	
10		{87636321}		1	
12		{87625783}		1	
14		{87625795}		1	
15		{87625804}		1	
16		{87625806}		1	
17		{87625829}		1	
18		{87634993}		1	
19		{87694690}		1	
20		71425615		1	FIXADOR
22		72201251		1	MOLA-TRAVA
24		16100821		4	PORCA, M8, Cl 10
25		14496531		2	ARRUELA PLANA, M8 x 17 x 1.6
28		11106234		4	PARAFUSO, Hex, M10 x 25, 10.9, Full Thd
29		16043834		2	PARAFUSO, Hex, M8 x 30, 10.9, Full Thd
30		16043234		1	PARAFUSO, Hex, M8 x 16, 10.9, Full Thd
31		71404505		2	PRENDEDOR, #92, 3.75"-4.06", T-Bolt
32		71431617		6	PRENDEDOR, #60, 2.75"-3.06", T-Bolt
33		71464956		4	COLAR
40		71405745		1	FIXADOR
42		{87636314}		1	
43		{87636318}		1	
46		4982514		4	TIRA DE CABO
51		14496631		3	ARRUELA PLANA, M10 x 21 x 2
52		14496631		14	ARRUELA PLANA, M10 x 21 x 2

0.003	04	p1	11/07

RADIATOR - COMPONENTS

1

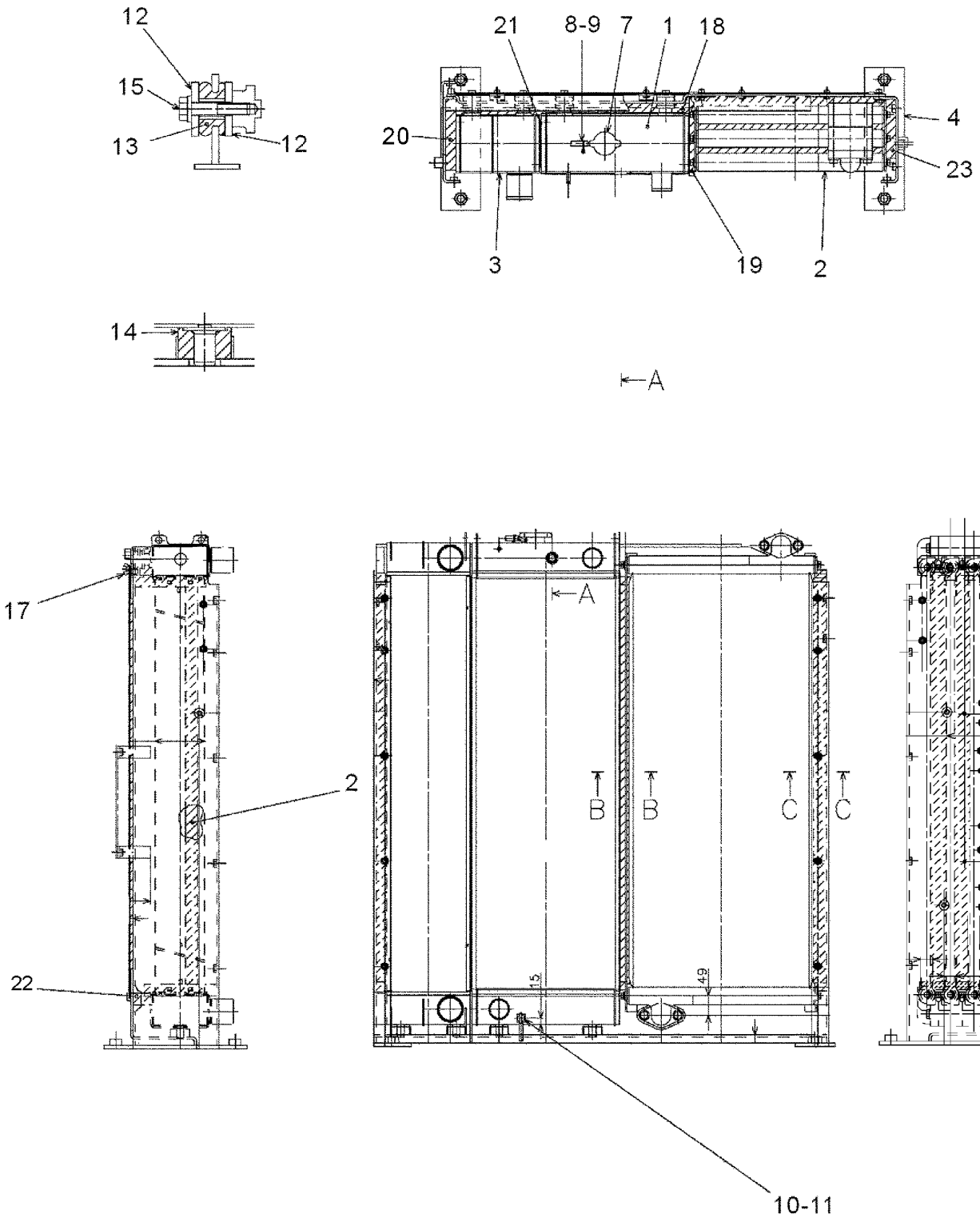

RADIATOR - COMPONENTS

REF	FN	PART NUMBER	YR/SN	QTY	DESCRIPTION
1		LC05P00043S001		1	RADIADOR ARREFECIMENTO
2		LC05P00043S002		1	ARREFECEDOR
3		LC05P00043S003		1	RADIADOR
4		LC05P00043S004		1	SUPORTE
5		LC05P00043S005		1	PROTEÇÃO
6		LC05P00043S006		2	PROTEÇÃO
7		72953999		1	GUARDA-PÓ
8		72213767		1	MANGUEIRA
9		72213766		2	FIXADOR
10		72215424		1	TUBO RÍGIDO
11		72210208		1	TUBO FLEXÍVEL
12		LC05P00043S012		4	ARRUELA PLANA
13		{LC05P00043S013}		4	
14		YN05P00058S014		1	SUPORTE DO MOTOR
15		LC05P00043S015		1	PARAFUSO
16		87353624		1	PARAFUSO
17		72210213		4	PARAFUSO
18		{LC05P00043S018}		1	
19		{LC05P00043S019}		2	
20		{LC05P00043S020}		2	
21		{LC05P00043S021}		2	
22		{LC05P00043S022}		1	
23		{LC05P00043S023}		1	
24		{LC05P00043S024}		1	
25		{LC05P00043S025}		1	
26		{LC05P00043S026}		2	
27		LC05P00043S027		1	ISOLANTE
28		LC05P00043S028		2	ISOLANTE

RADIATOR ASSY P/N 87730561

ENGINE

1

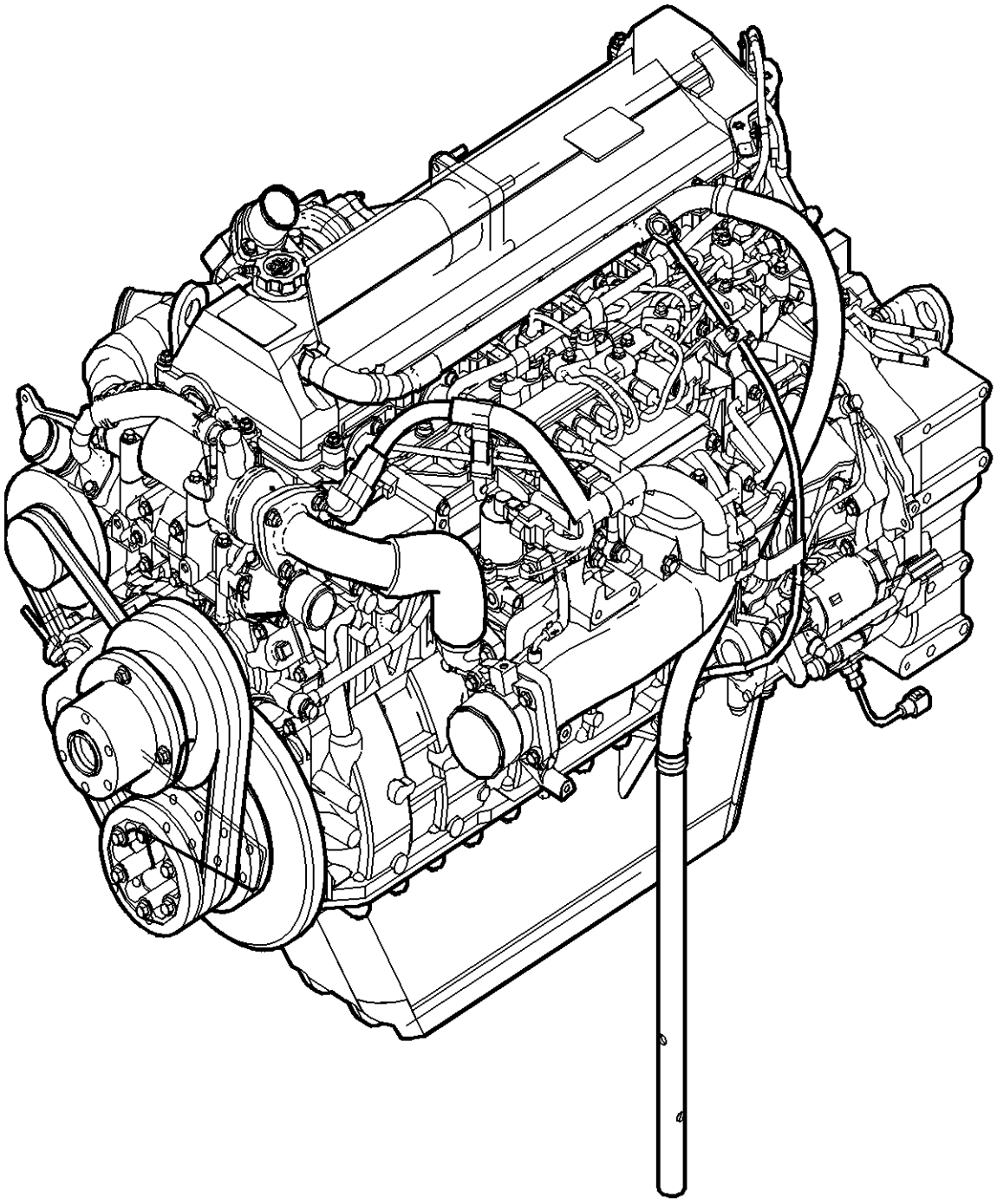

ENGINE

REF	FN	PART NUMBER	YR/SN	QTY	DESCRIPTION
1		{87684502□□}		1	- ASSY (F4HE9684C*J100)

CYLINDER BLOCKS 11-00-1 (HINO ENGINE TYPE J08ETM-KSDA)

1

11-00

CYLINDER BLOCK (No.1)

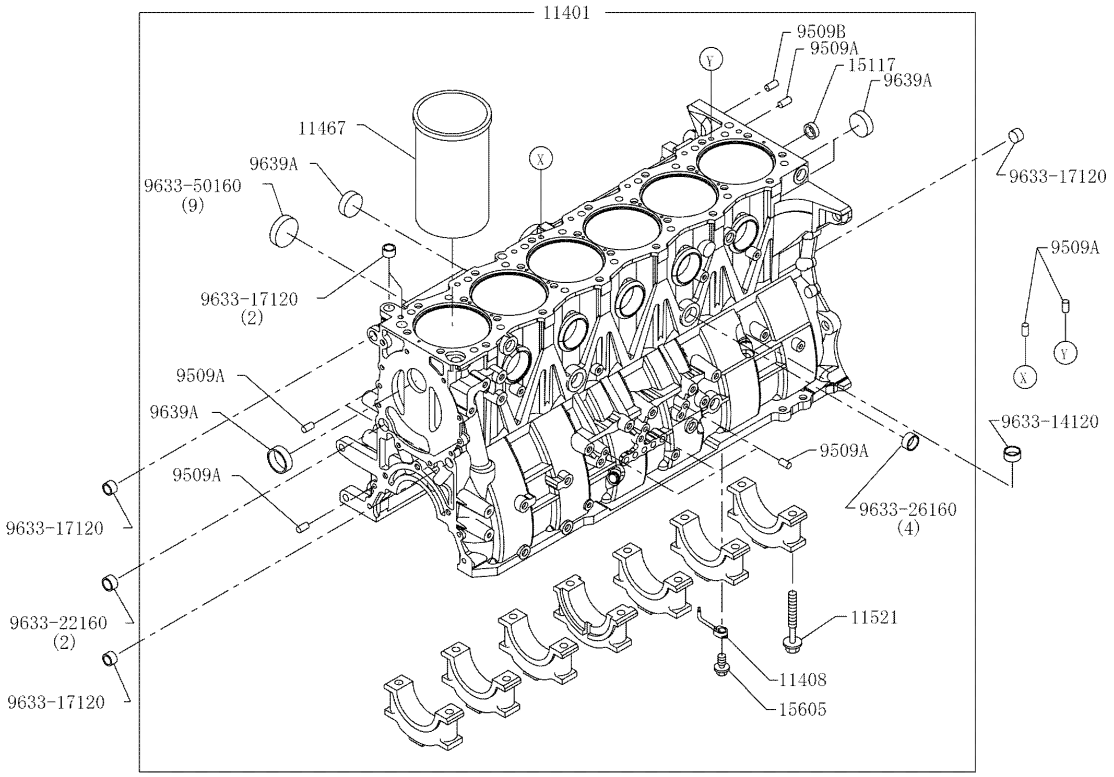

CYLINDER BLOCKS 11-00-1 (HINO ENGINE TYPE J08ETM-KSDA)

REF	FN	PART NUMBER	YR/SN	QTY	DESCRIPTION
					CYLINDER BLOCK
11401		{114016091A}		1	“BLOCK SUB ASSY,CYL
11408		{114081400A}		6	“PIPE SUB ASSY,OIL JET”
11467		{114673200A}		6	“LINER,CYL,S/S A”
11467		{114673210A}		6	“LINER,CYL,S/S B”
11467		{114673220A}		6	“LINER,CYL,S/S C”
11521		{115211261A}		14	“BOLT,BEARING CAP”
12102		{121024230A}		1	“GUIDE SUB ASSY,LEVEL GAGE”
12111		{121114880A}		1	“PAN,OIL”
12149		{121491030B}		1	“VALVE,OIL DRAIN”
12151		{121512611A}		1	“GASKET,OIL PAN”
15117		{151171170A}		1	“BUSHING,BODY OIL PUMP”
15301		{15301E0020}		1	“GAGE SUB-ASSY, OIL LEVEL”
15448		{154481170A}		1	“BRACKET,OIL PIPE”
15605		{156051250B}		6	“VALVE SUB ASSY,OIL CHECK”
79904		{799042180A}		2	CLIP SUB ASSY
9068-08160		{906808160A}		1	“BOLT,FLANGE”
9068-10180		{906810180A}		1	“BOLT,FLANGE”
9199A		{919908230B}		34	BOLT
9240-08087		{924008087A}		1	NUT
9509A		{950908122A}		12	PIN
9509B		{950908123A}		2	PIN
9600-14090		{960014090A}		1	PLUG
9633-14120		{963314120A}		1	“PLUG,SEALING”
9633-17120		{963317120A}		5	“PLUG,SEALING”
9633-22160		{963322160A}		2	“PLUG,SEALING”
9633-26160		{963326160A}		4	“PLUG,SEALING”
9633-50160		{963350160A}		9	“PLUG,SEALING”
9639A		{963942104A}		4	“PLUG,EXPANSION”
9659A		{965918105C}		1	“WASHER,SOFT”
9659B		{965914104B}		1	“WASHER,SOFT”
9851A		{985110138A}		1	O-RING

11-00

CYLINDER BLOCK (No.2)

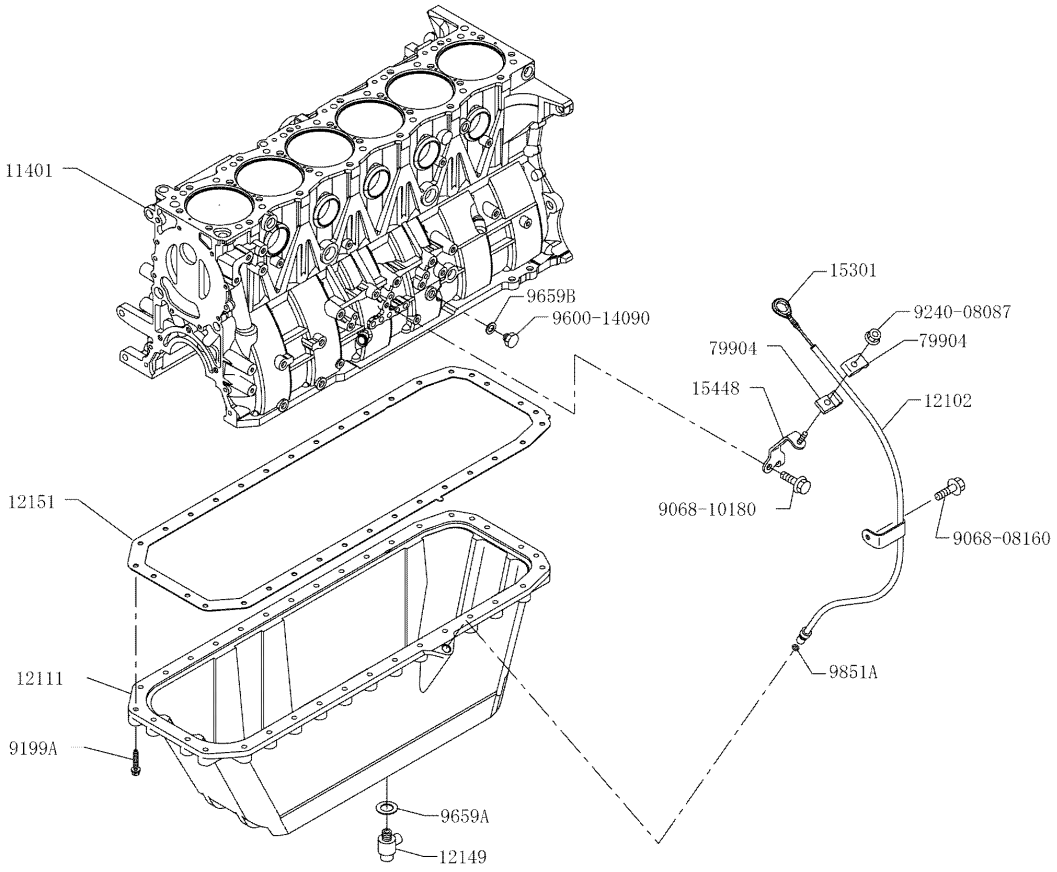

CYLINDER BLOCKS 11-00-2 (HINO ENGINE TYPE J08ETM-KSDA)

REF	FN	PART NUMBER	YR/SN	QTY	DESCRIPTION
					CYLINDER BLOCK
11401		{114016091A}		1	“BLOCK SUB ASSY,CYL
11408		{114081400A}		6	“PIPE SUB ASSY,OIL JET”
11467		{114673200A}		6	“LINER,CYL,S/S A”
11467		{114673210A}		6	“LINER,CYL,S/S B”
11467		{114673220A}		6	“LINER,CYL,S/S C”
11521		{115211261A}		14	“BOLT,BEARING CAP”
12102		{121024230A}		1	“GUIDE SUB ASSY,LEVEL GAGE”
12111		{121114880A}		1	“PAN,OIL”
12149		{121491030B}		1	“VALVE,OIL DRAIN”
12151		{121512611A}		1	“GASKET,OIL PAN”
15117		{151171170A}		1	“BUSHING,BODY OIL PUMP”
15301		{15301E0020}		1	“GAGE SUB-ASSY, OIL LEVEL”
15448		{154481170A}		1	“BRACKET,OIL PIPE”
15605		{156051250B}		6	“VALVE SUB ASSY,OIL CHECK”
79904		{799042180A}		2	CLIP SUB ASSY
9068-08160		{906808160A}		1	“BOLT,FLANGE”
9068-10180		{906810180A}		1	“BOLT,FLANGE”
9199A		{919908230B}		34	BOLT
9240-08087		{924008087A}		1	NUT
9509A		{950908122A}		12	PIN
9509B		{950908123A}		2	PIN
9600-14090		{960014090A}		1	PLUG
9633-14120		{963314120A}		1	“PLUG,SEALING”
9633-17120		{963317120A}		5	“PLUG,SEALING”
9633-22160		{963322160A}		2	“PLUG,SEALING”
9633-26160		{963326160A}		4	“PLUG,SEALING”
9633-50160		{963350160A}		9	“PLUG,SEALING”
9639A		{963942104A}		4	“PLUG,EXPANSION”
9659A		{965918105C}		1	“WASHER,SOFT”
9659B		{965914104B}		1	“WASHER,SOFT”
9851A		{985110138A}		1	O-RING

TIMING GEAR COVER & FLY WHEEL HOUSING 11-10 (HINO ENGINE TYPE J08ETM-KSDA)

1

11-10

TIMING GEAR COVER AND FLYWHEEL HOUSING

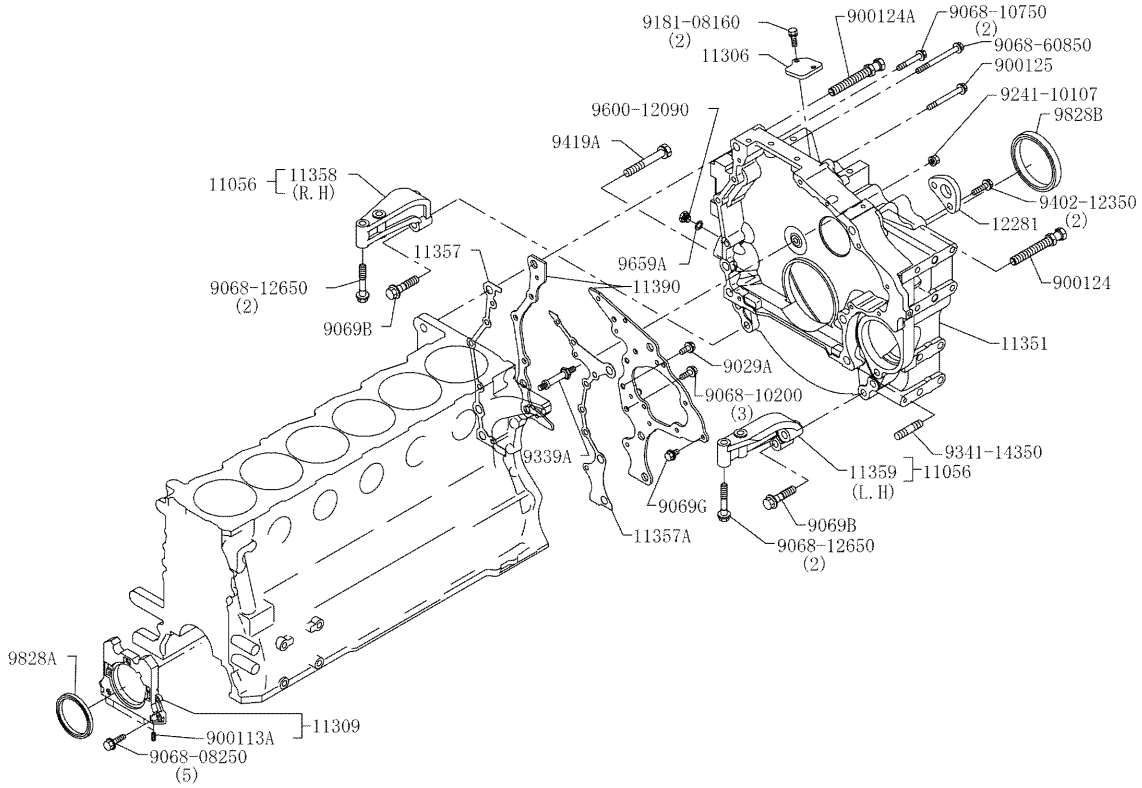

TIMING GEAR COVER & FLY WHEEL HOUSING 11-10 (HINO ENGINE TYPE J08ETM-KSDA)

REF	FN	PART NUMBER	YR/SN	QTY	DESCRIPTION
					TIMING GEAR COVER AND FLYWHEEL HOUSING
11056				1	“STAY SET,F/H”
11306		{113061480A}		1	“COVER SUB ASSY,F/H DUST”
11309		{113091060C}		1	“RETAINER SUB ASSY,OIL SEAL”
11351		{113517921A}		1	“HOUSING,FLYWHEEL”
11357		{113571022A}		1	“GASKET,RR END PLATE”
11357A		{113571062A}		1	“GASKET,RR END PLATE”
11358		{113581011A}		1	“STAY,F/H,RH”
11359				1	“STAY,F/H,LH”
11390		{113901050A}		1	“PLATE,RR END”
12281		{122811901A}		1	“HANGER,ENG”
900113A		{900113120A}		4	HELISERT
900124		{900124540B}		1	BOLT
900124A		{900124541B}		1	BOLT
900125		{900125237A}		1	BOLT
9029A		{902910281A}		2	BOLT
9068-08250		{906808250A}		5	“BOLT,FLANGE”
9068-10200		{906810200A}		3	“BOLT,FLANGE”
9068-10750		{906810750A}		2	“BOLT,FLANGE”
9068-12650		{906812650A}		4	“BOLT,FLANGE”
9068-60850		{906860850A}		1	“BOLT,FLANGE”
9069B		{906914108B}		4	“BOLT,FLANGE”
9069G		{906908149A}		2	“BOLT,FLANGE”
9181-08160		{918108160A}		2	BOLT
9241-10107		{924110107A}		1	NUT
9339A		{933910115B}		1	STUD
9341-14350		{934114350A}		1	STUD
9402-12350		{940212350A}		2	“BOLT,W/WASHER”
9419A		{941916101A}		4	BOLT
9600-12090		{960012090A}		1	PLUG
9659A		{965912111B}		1	“WASHER,SOFT”
9828A		{982879103A}		1	“SEAL,OIL”
9828B		{982801228A}		1	“SEAL,OIL”

CYLINDER HEAD 10-00-1 (HINO ENGINE TYPE J08ETM-KSDA)

1

10-00

CYLINDER HEAD (No.1)

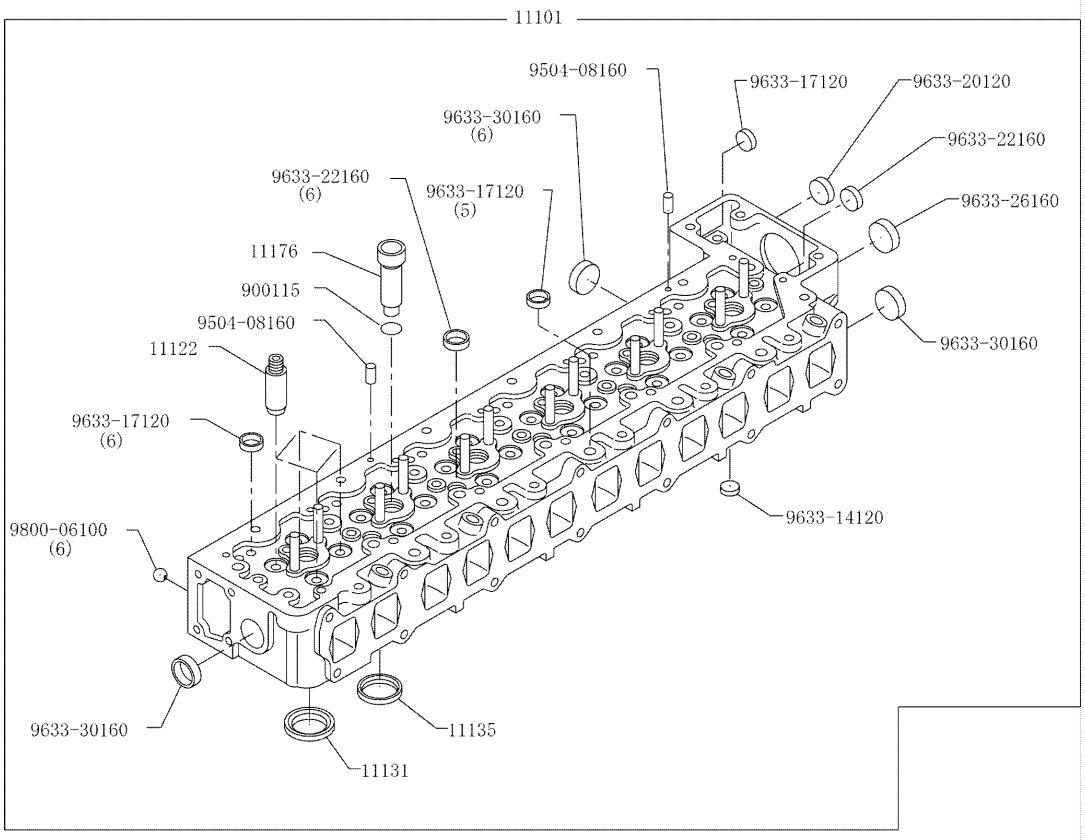

CYLINDER HEAD 10-00-1 (HINO ENGINE TYPE J08ETM-KSDA)

REF FN	PART NUMBER	YR/SN	QTY	DESCRIPTION
11101	{111014830C}		1	“HEAD SUB ASSY,CYL”
11103	{111031380B}		1	“HOUSING SUB ASSY,CAMSHAFT”
11115	{111152870A}		1	“GASKET,CYL HEAD”
11118	{111181011B}		1	“GASKET,CAMSHAFT HOUGING”
11122	{111221220A}		24	“BUSHING,VALVE GUIDE“ “INTAKE,REPAIR STD”
11131	{111311480B}		12	“SEAT,VALVE INTAKE”
11135	{111351720B}		12	“SEAT,VALVE EXH”
11176	{111761190A}		6	“SEAT,INJ NOZZLE”
11185	{111852261C}		26	“BOLT,CYL HEAD”
11188	{111881080A}		1	“PLUG,CAMSHAFT HOUSING”
11188A	{111881070A}		1	“PLUG,CAMSHAFT HOUSING”
11201	{112012011B}		1	“COVER SUB ASSY,CYL HEAD”
11213	{112131880A}		1	“GASKET,CYL HEAD COVER”
11901	{119011030A}		1	“BEARING SET,CAMSHAFT”
12108	{121081100A}		1	“CAP SUB ASSY,OIL FILLER”
12201	{122012230A}		1	“PIPE SUB ASSY,VENT”
12505	{125051181A}		18	SILENT BLOCK SUB ASSY
15492	{154928940A}		1	“HOLDER,CLIP”
23745	{237451020A}		6	“SEAL,INJ PIPE OIL”
76589	{765894090C}		1	“PLATE,CAUTION ENG”
76589A	{765896350A}		1	“PLATE,CAUTION ENG”
900115	{900115214B}		6	GASKET
900218	{900218116A}		6	FLANGE
900236	{900236322B}		1	“HOSE,VENT”
9062-08001	{906208001A}		5	BOLT
9062-08551	{906208551A}		5	BOLT
9062-10850	{906210850A}		3	BOLT
9068-08160	{906808160A}		3	“BOLT,FLANGE”
9069B	{906908131A}		2	“BOLT,FLANGE”
9069C	{906908124A}		13	“BOLT,FLANGE”
9069D	{906908132A}		3	“BOLT,FLANGE”
9069E	{906908180A}		18	“BOLT,FLANGE”
9069G	{906908149A}		12	“BOLT,FLANGE”
9085-06200	{908506200A}		2	“BOLT,TORX”

CYLINDER HEAD 10-00-1 (HINO ENGINE TYPE J08ETM-KSDA)

1

10-00

CYLINDER HEAD (No.1)

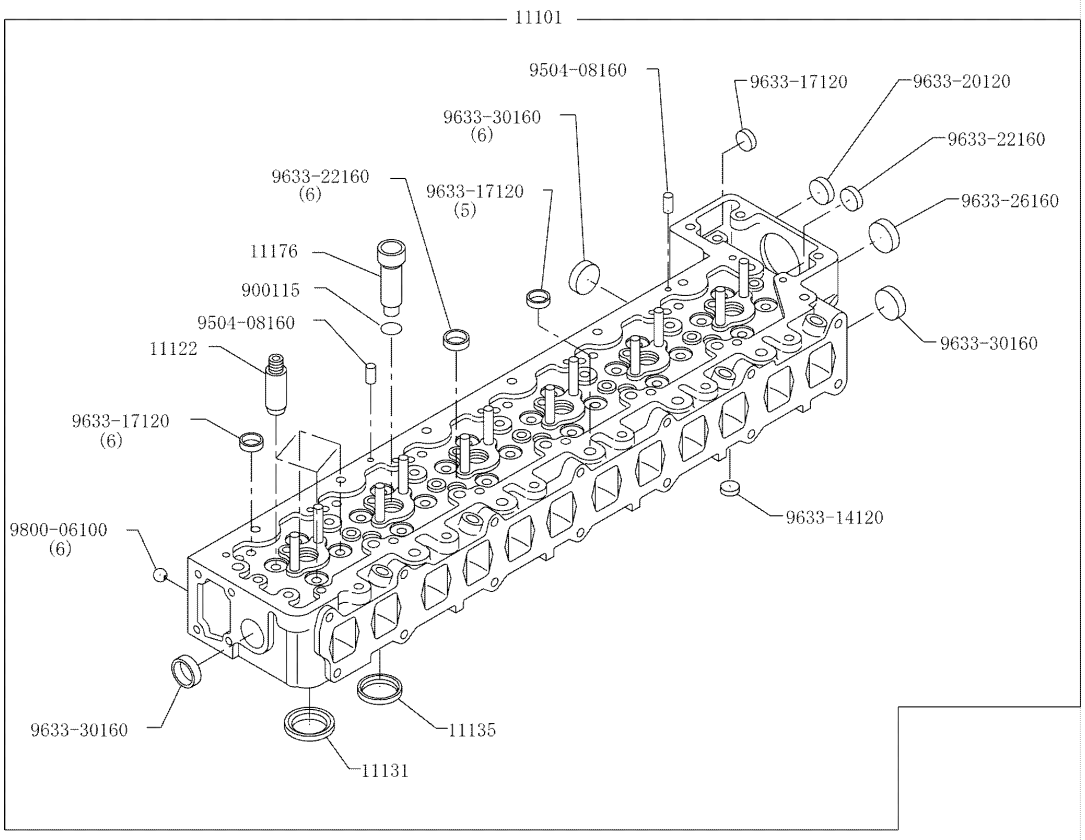

CYLINDER HEAD 10-00-1 (HINO ENGINE TYPE J08ETM-KSDA)

REF FN	PART NUMBER	YR/SN	QTY	DESCRIPTION
9085-06400	{908506400A}		2	“BOLT,TORX”
9321-08220	{932108220A}		4	STUD
9369A	{936910150A}		18	STUD
9504-04080	{950404080A}		10	“PIN,STRAIGHT”
9504-08160	{950408160A}		2	“PIN,STRAIGHT”
9633-14120	{963314120A}		1	“PLUG,SEALING”
9633-17120	{963317120A}		12	“PLUG,SEALING”
9633-20120	{963320120A}		1	“PLUG,SEALING”
9633-22160	{963322160A}		7	“PLUG,SEALING”
9633-26160	{963326160A}		1	“PLUG,SEALING”
9633-30160	{963330160A}		8	“PLUG,SEALING”
9800-06100	{980006100A}		6	“BALL,STEEL”
9854A	{985428101A}		2	CLIP

CYLINDER HEAD 10-00-2 (HINO ENGINE TYPE J08ETM-KSDA)

1

10-00

CYLINDER HEAD (No.2)

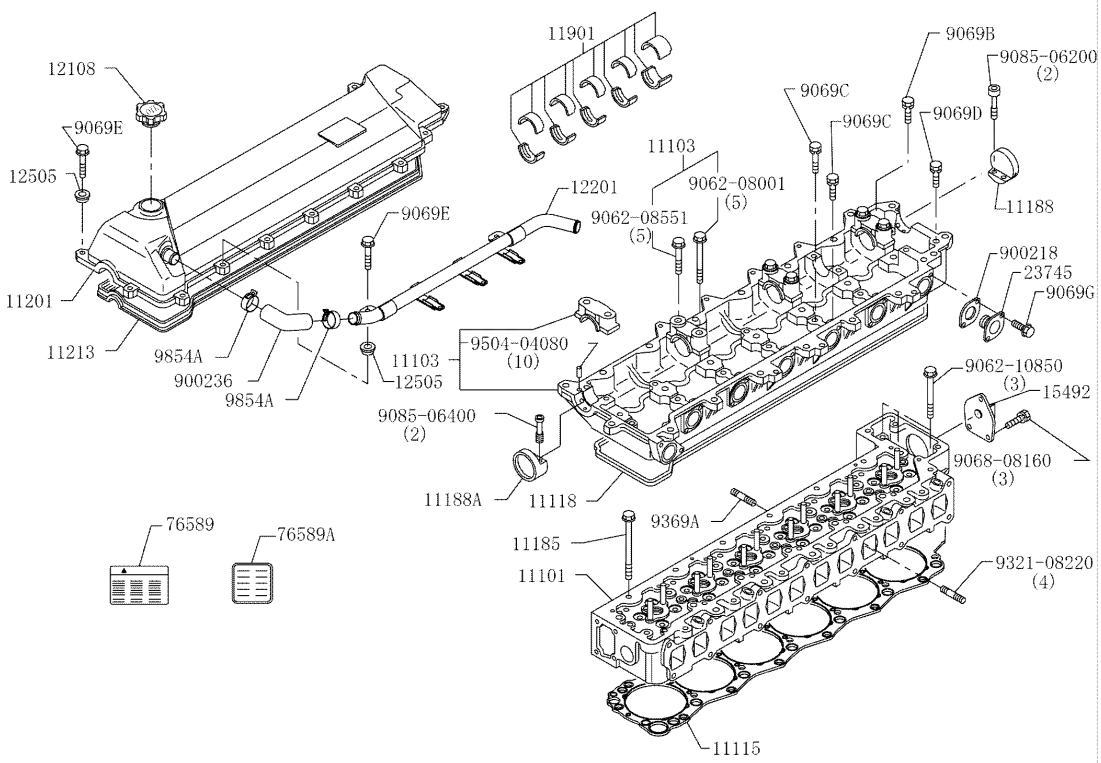

CYLINDER HEAD 10-00-2 (HINO ENGINE TYPE J08ETM-KSDA)

REF	FN	PART NUMBER	YR/SN	QTY	DESCRIPTION
11101		{111014830C}		1	“HEAD SUB ASSY,CYL”
11103		{111031380B}		1	“HOUSING SUB ASSY,CAMSHAFT”
11115		{111152870A}		1	“GASKET,CYL HEAD”
11118		{111181011B}		1	“GASKET,CAMSHAFT HOUGING”
11122		{111221220A}		24	“BUSHING,VALVE GUIDE“ “INTAKE,REPAIR STD”
11131		{111311480B}		12	“SEAT,VALVE INTAKE”
11135		{111351720B}		12	“SEAT,VALVE EXH”
11176		{111761190A}		6	“SEAT,INJ NOZZLE”
11185		{111852261C}		26	“BOLT,CYL HEAD”
11188		{111881080A}		1	“PLUG,CAMSHAFT HOUSING”
11188A		{111881070A}		1	“PLUG,CAMSHAFT HOUSING”
11201		{112012011B}		1	“COVER SUB ASSY,CYL HEAD”
11213		{112131880A}		1	“GASKET,CYL HEAD COVER”
11901		{119011030A}		1	“BEARING SET,CAMSHAFT”
12108		{121081100A}		1	“CAP SUB ASSY,OIL FILLER”
12201		{122012230A}		1	“PIPE SUB ASSY,VENT”
12505		{125051181A}		18	SILENT BLOCK SUB ASSY
15492		{154928940A}		1	“HOLDER,CLIP”
23745		{237451020A}		6	“SEAL,INJ PIPE OIL”
76589		{765894090C}		1	“PLATE,CAUTION ENG”
76589A		{765896350A}		1	“PLATE,CAUTION ENG”
900115		{900115214B}		6	GASKET
900218		{900218116A}		6	FLANGE
900236		{900236322B}		1	“HOSE,VENT”
9062-08001		{906208001A}		5	BOLT
9062-08551		{906208551A}		5	BOLT
9062-10850		{906210850A}		3	BOLT
9068-08160		{906808160A}		3	“BOLT,FLANGE”
9069B		{906908131A}		2	“BOLT,FLANGE”
9069C		{906908124A}		13	“BOLT,FLANGE”
9069D		{906908132A}		3	“BOLT,FLANGE”
9069E		{906908180A}		18	“BOLT,FLANGE”
9069G		{906908149A}		12	“BOLT,FLANGE”
9085-06200		{908506200A}		2	“BOLT,TORX”

CYLINDER HEAD 10-00-2 (HINO ENGINE TYPE J08ETM-KSDA)

10-00

CYLINDER HEAD (No.2)

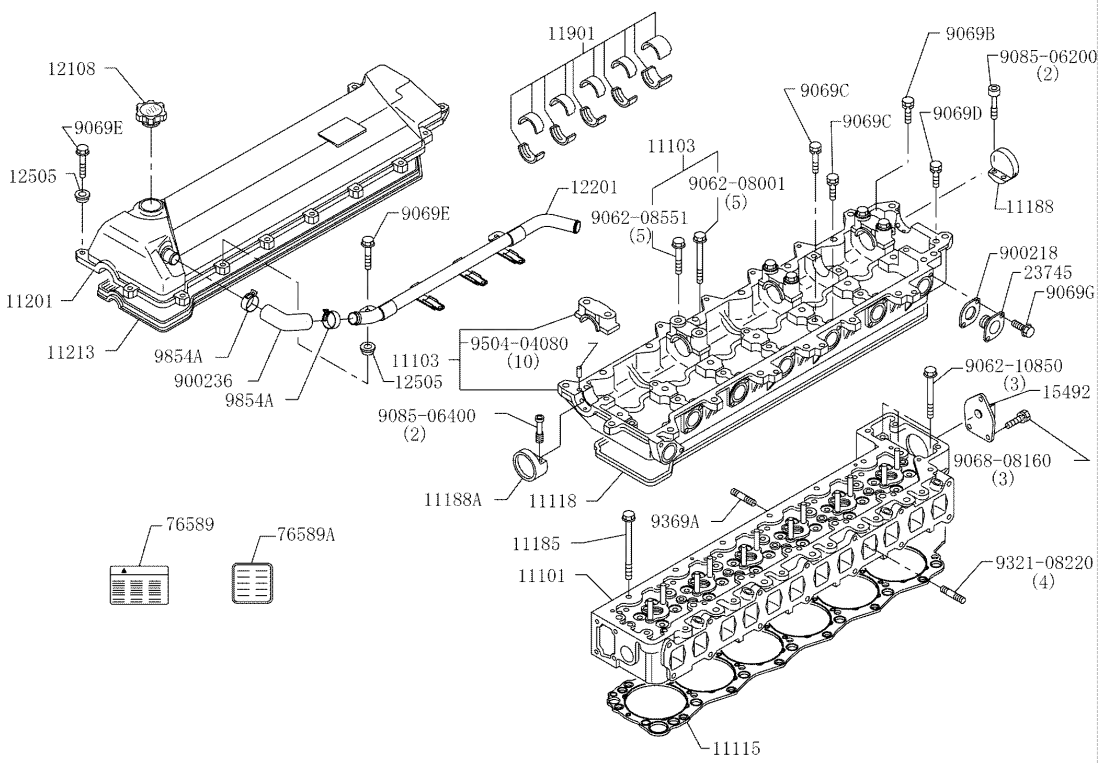

CYLINDER HEAD 10-00-2 (HINO ENGINE TYPE J08ETM-KSDA)

REF FN	PART NUMBER	YR/SN	QTY	DESCRIPTION
9085-06400	{908506400A}		2	“BOLT,TORX”
9321-08220	{932108220A}		4	STUD
9369A	{936910150A}		18	STUD
9504-04080	{950404080A}		10	“PIN,STRAIGHT”
9504-08160	{950408160A}		2	“PIN,STRAIGHT”
9633-14120	{963314120A}		1	“PLUG,SEALING”
9633-17120	{963317120A}		12	“PLUG,SEALING”
9633-20120	{963320120A}		1	“PLUG,SEALING”
9633-22160	{963322160A}		7	“PLUG,SEALING”
9633-26160	{963326160A}		1	“PLUG,SEALING”
9633-30160	{963330160A}		8	“PLUG,SEALING”
9800-06100	{980006100A}		6	“BALL,STEEL”
9854A	{985428101A}		2	CLIP

VALVE SYSTEM 13-10 (HINO ENGINE TYPE J08ETM-KSDA)

1

13-10

VALVE SYSTEM

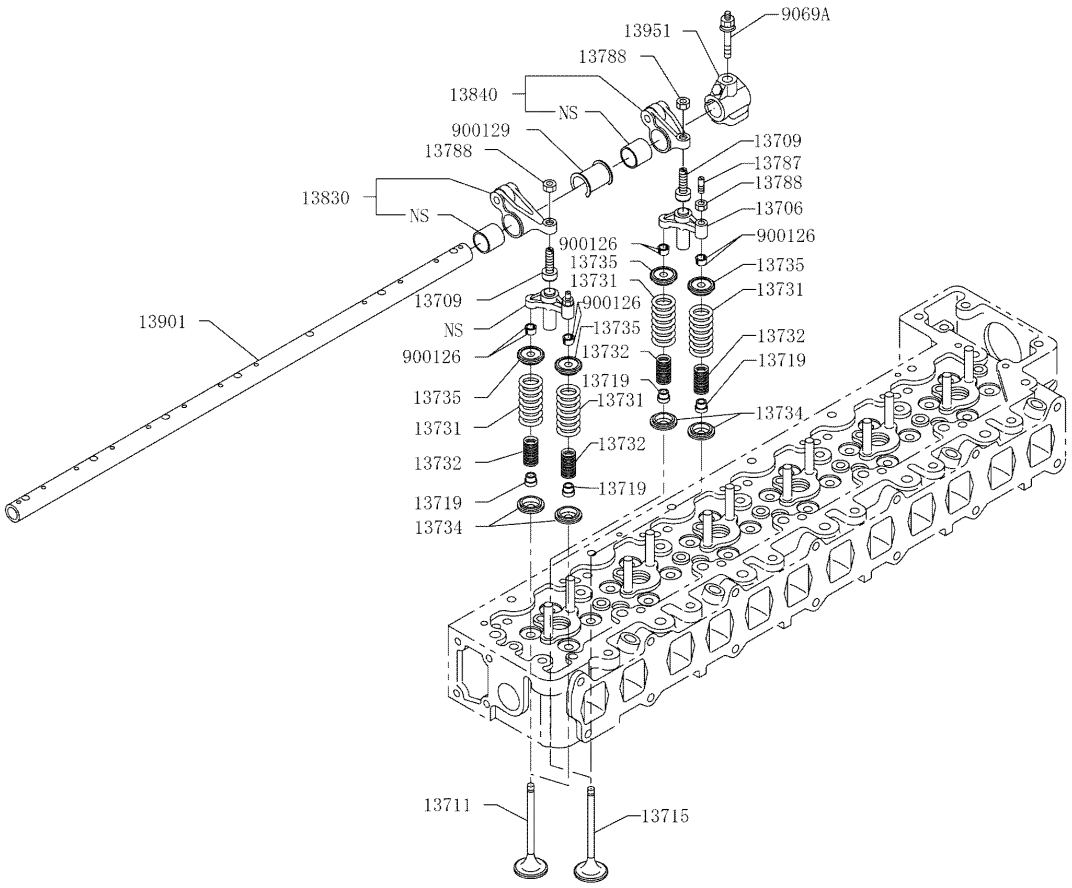

VALVE SYSTEM 13-10 (HINO ENGINE TYPE J08ETM-KSDA)

REF	FN	PART NUMBER	YR/SN	QTY	DESCRIPTION
					VALVE SYSTEM
13706		{137061080A}		12	CROSSHEAD SUB ASSY
13709		{137091030A}		12	“SCREW SUB ASSY,VALVE ADJ”
13711		{137111632A}		12	“VALVE,INTAKE,STD”
13715		{137151733A}		12	“VALVE,EXH,STD”
13719		{137191470A}		24	“SEAL,VALVE STEM OIL”
13731		{137311610B}		24	“SPRING,VALVE,OUTER”
13732		{137321500B}		24	“SPRING,VALVE,INNER”
13734		{137341280A}		24	“SEAT,VALVE SPG,LWR”
13735		{137351470A}		24	“SEAT,VALVE SPG,UPR”
13787		{137871210D}		12	“SCREW,VALVE ADJ”
13788		{137881030A}		24	“NUT,VALVE ADJ SCREW”
13830		{138301560A}		6	“ARM ASSY,VALVE ROCKER”
13840		{138401430A}		6	“ARM ASSY,VALVE ROCKER EXH”
13901		{139011390C}		1	“SHAFT SUB ASSY,VALVE ROCKER”
13951		{139511880B}		7	“SUPPORT,VALVE ROCKER”
900126		{900126122A}		48	“LOCK,VALVE SPG RETAINER”
900129		{900129267A}		6	COLLAR
9069A		{906910136B}		7	“BOLT,FLANGE”

13-20

INTAKE AND EXHAUST SYSTEM (No. 1)

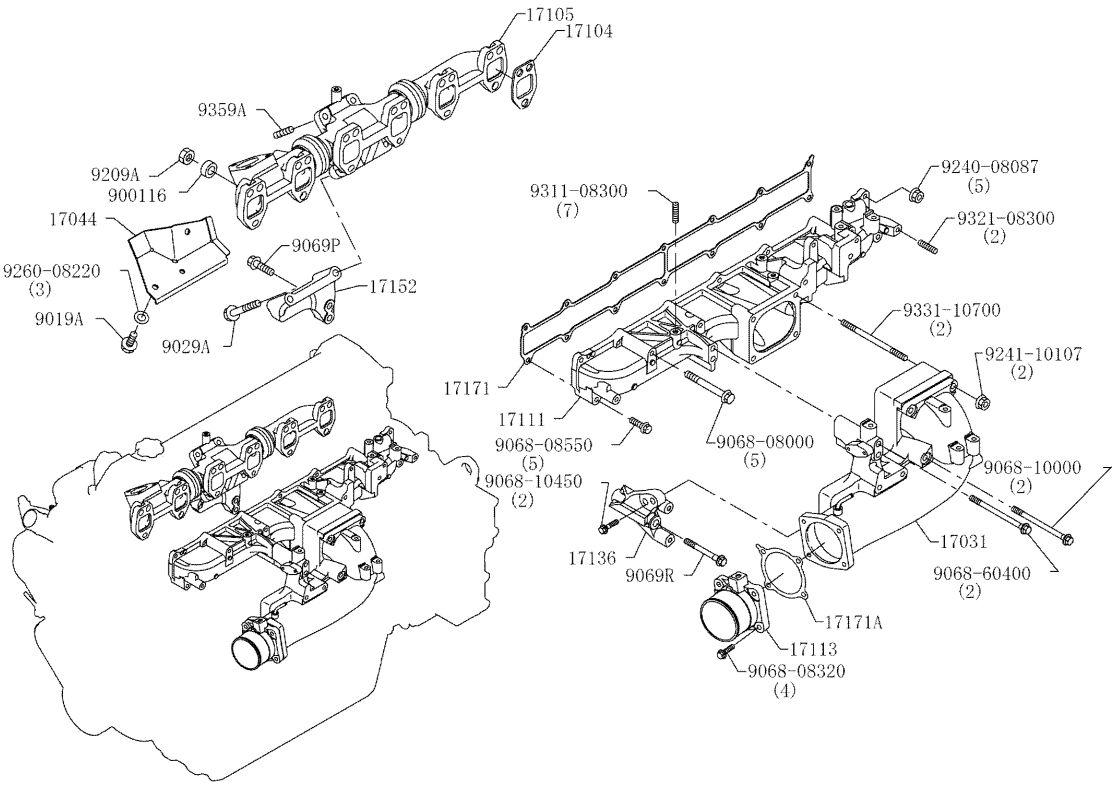

AIR INTAKE AND EXHAUST SYSTEM 13-20-1 (HINO ENGINE TYPE J08ETM-KSDA)

REF	FN	PART NUMBER	YR/SN	QTY	DESCRIPTION
					AIR INTAKE AND EXHAUST SYSTEM
11104		{111041101A}		1	“PIPE SUB ASSY,WATER”
11104A		{111041110B}		1	“PIPE SUB ASSY,WATER”
12281		{122812251B}		1	“HANGER,ENG”
15492		{154929400A}		1	“HOLDER,CLIP”
16205		{162051330B}		1	“PIPE SUB ASSY,AIR ESCAPE”
16305		{163051050B}		1	“PIPE SUB ASSY,COOLANT”
16506		{165061561A}		1	“HOSE SUB ASSY, RAD”
16691		{166913322A}		1	“PIPE,COOLANT”
16691A		{166913750A}		1	“PIPE,COOLANT”
17031		{170318024A}		1	“PIPE SUB ASSY,INTAKE”
17044		{170444610A}		1	“INSULATOR SUB ASSY,EXH”
17104		{171041610A}		6	“GASKET,SUB ASSY,EXH MFLD”
17104A		{171041990A}		2	“GASKET,SUB ASSY,EXH MFLD”
17104B		{171042000A}		1	“GASKET,SUB ASSY,EXH MFLD”
17105		{171051150A}		1	“MANIFOLD SUB ASSY, EXHAUST”
17111		{171114632A}		1	“MANIFOLD,INTAKE”
17113		{171138490A}		1	“PIPE,INTAKE”
17136		{171365492A}		1	“BRACKET,INTAKE PIPE”
17152		{171522580A}		1	“BRACKET,EXH MFLD”
17171		{171712200A}		1	“GASKET,INTAKE MFLD”
17171A		{171712310A}		1	“GASKET,INTAKE MFLD”
17173		{171731860B}		1	“GASKET,EXH MFLD”
17308		{173081310A}		1	“PIPE SUB ASSY,EGR”
17309		{173091090C}		1	“COOR SUB ASSY,EGR”
17350		{173501250A}		1	“VALVE ASSY,EGR”
79904		{799042180A}		4	CLIP SUB ASSY
87341		{873411421A}		1	“INSULATOR,WATER HOSE”
900115		{900115342A}		1	GASKET
900116		{900116442A}		18	SPACER
900234		{900234543A}		1	“HOSE,WATER”
900234A		{900234544A}		1	“HOSE,WATER”
900234B		{900234545A}		2	“HOSE,WATER”
900234D		{900234547A}		1	“HOSE,WATER”
9019A		{901908216A}		3	BOLT

13-20

INTAKE AND EXHAUST SYSTEM (No. 1)

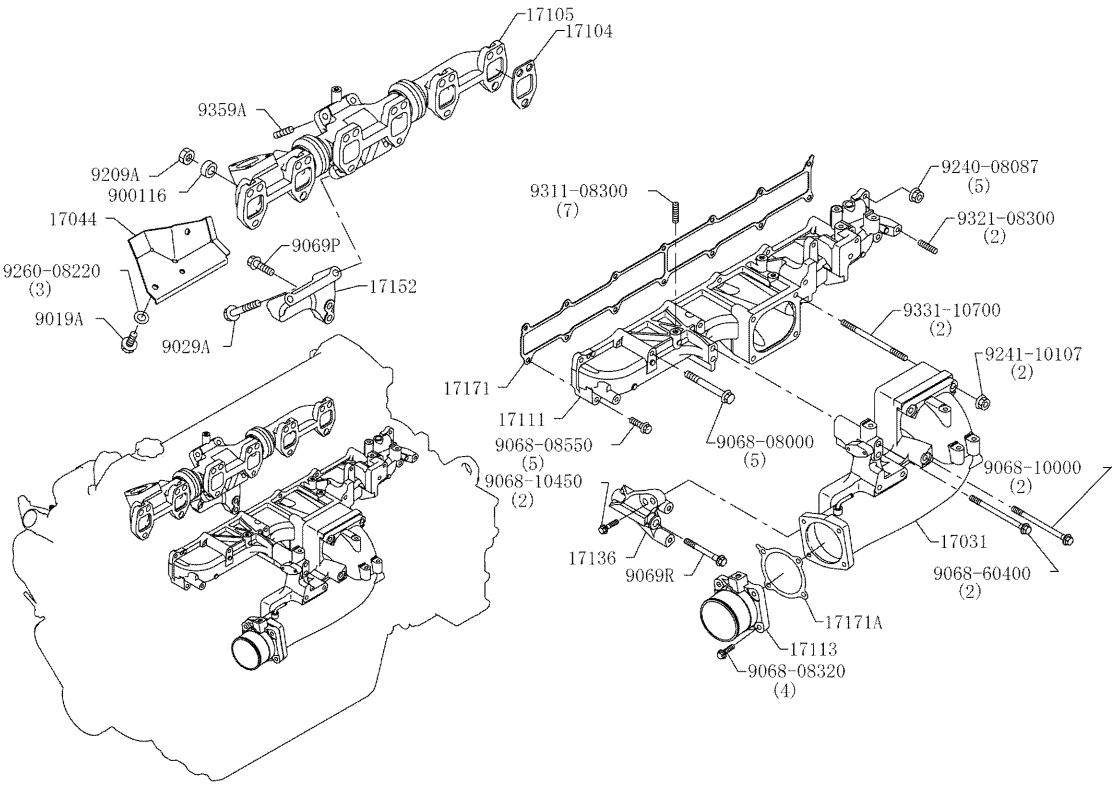

AIR INTAKE AND EXHAUST SYSTEM 13-20-1 (HINO ENGINE TYPE J08ETM-KSDA)

REF	FN	PART NUMBER	YR/SN	QTY	DESCRIPTION
9019C		{901916340A}		4	BOLT
9029A		{902910199B}		2	BOLT
9068-08000		{906808000A}		5	“BOLT,FLANGE”
9068-08160		{906808160A}		2	“BOLT,FLANGE”
9068-08320		{906808320A}		4	“BOLT,FLANGE”
9068-08320		{906808320A}		2	“BOLT,FLANGE”
9068-08550		{906808550A}		5	“BOLT,FLANGE”
9068-10000		{906810000A}		2	“BOLT,FLANGE”
9068-10180		{906810180A}		1	“BOLT,FLANGE”
9068-10350		{906810350A}		2	“BOLT,FLANGE”
9068-10450		{906810450A}		2	“BOLT,FLANGE”
9068-60150		{906860150A}		4	“BOLT,FLANGE”
9068-60400		{906860400A}		2	“BOLT,FLANGE”
9069J		{906908132A}		4	“BOLT,FLANGE”
9069L		{906910175A}		9	“BOLT,FLANGE”
9069M		{906912122A}		2	“BOLT,FLANGE”
9069P		{906910117A}		2	“BOLT,FLANGE”
9069R		{906910176A}		2	“BOLT,FLANGE”
9209A		{920910141A}		18	NUT
9240-08087		{924008087A}		5	NUT
9240-08087		{924008087A}		2	NUT
9241-10107		{924110107A}		2	NUT
9260-08220		{926008220A}		3	“WASHER,PLAIN”
9311-08300		{931108300A}		7	STUD
9321-08300		{932108300A}		2	STUD
9331-10700		{933110700A}		2	STUD
9359A		{935910127A}		2	STUD
9402-12300		{940212300A}		2	“BOLT,W/WASHER”
9644A		{964402135A}		1	O-RING
9659A		{965916105B}		8	“WASHER,SOFT”
9854A		{985426103A}		6	CLIP
9854B		{985413112A}		4	CLIP

13-20

INTAKE AND EXHAUST SYSTEM (No. 2)

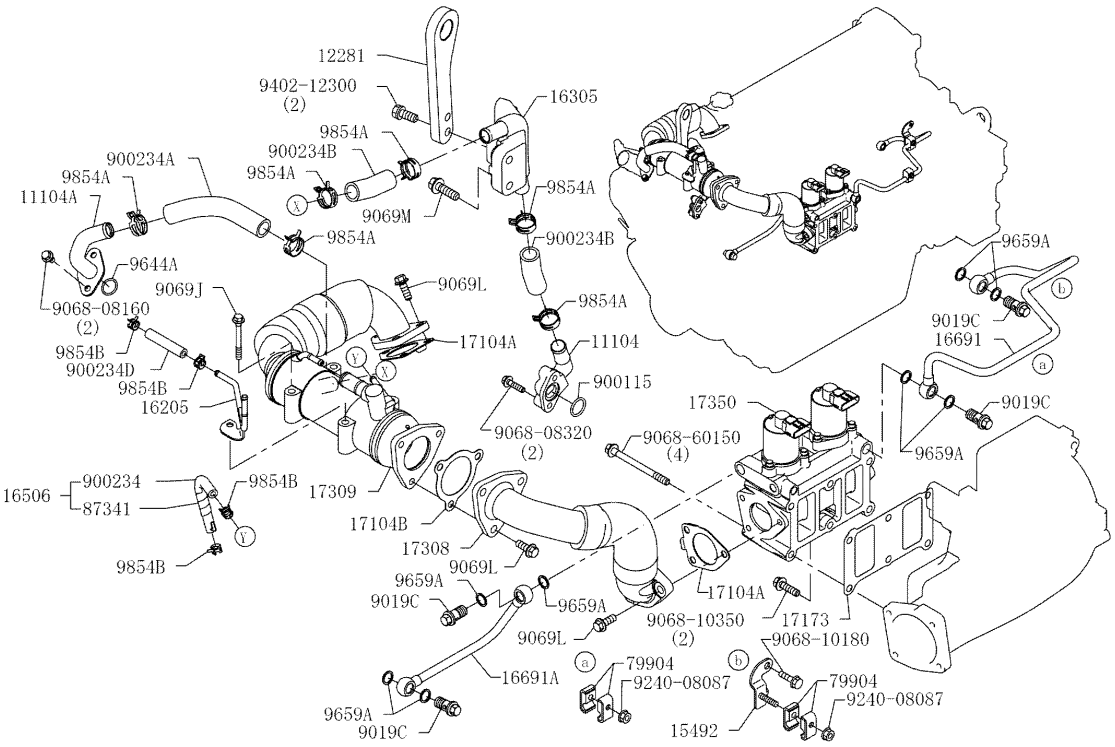

AIR INTAKE AND EXHAUST SYSTEM 13-20-2 (HINO ENGINE TYPE J08ETM-KSDA)

REF	FN	PART NUMBER	YR/SN	QTY	DESCRIPTION
					AIR INTAKE AND EXHAUST SYSTEM
11104		{111041101A}		1	“PIPE SUB ASSY,WATER”
11104A		{111041110B}		1	“PIPE SUB ASSY,WATER”
12281		{122812251B}		1	“HANGER,ENG”
15492		{154929400A}		1	“HOLDER,CLIP”
16205		{162051330B}		1	“PIPE SUB ASSY,AIR ESCAPE”
16305		{163051050B}		1	“PIPE SUB ASSY,COOLANT”
16506		{165061561A}		1	“HOSE SUB ASSY, RAD”
16691		{166913322A}		1	“PIPE,COOLANT”
16691A		{166913750A}		1	“PIPE,COOLANT”
17031		{170318024A}		1	“PIPE SUB ASSY,INTAKE”
17044		{170444610A}		1	“INSULATOR SUB ASSY,EXH”
17104		{171041610A}		6	“GASKET,SUB ASSY,EXH MFLD”
17104A		{171041990A}		2	“GASKET,SUB ASSY,EXH MFLD”
17104B		{171042000A}		1	“GASKET,SUB ASSY,EXH MFLD”
17105		{171051150A}		1	“MANIFOLD SUB ASSY, EXHAUST”
17111		{171114632A}		1	“MANIFOLD,INTAKE”
17113		{171138490A}		1	“PIPE,INTAKE”
17136		{171365492A}		1	“BRACKET,INTAKE PIPE”
17152		{171522580A}		1	“BRACKET,EXH MFLD”
17171		{171712200A}		1	“GASKET,INTAKE MFLD”
17171A		{171712310A}		1	“GASKET,INTAKE MFLD”
17173		{171731860B}		1	“GASKET,EXH MFLD”
17308		{173081310A}		1	“PIPE SUB ASSY,EGR”
17309		{173091090C}		1	“COOLER SUB ASSY,EGR”
17350		{173501250A}		1	“VALVE ASSY,EGR”
79904		{799042180A}		4	CLIP SUB ASSY
87341		{873411421A}		1	“INSULATOR,WATER HOSE”
900115		{900115342A}		1	GASKET
900116		{900116442A}		18	SPACER
900234		{900234543A}		1	“HOSE,WATER”
900234A		{900234544A}		1	“HOSE,WATER”
900234B		{900234545A}		2	“HOSE,WATER”
900234D		{900234547A}		1	“HOSE,WATER”
9019A		{901908216A}		3	BOLT

13-20

INTAKE AND EXHAUST SYSTEM (No. 2)

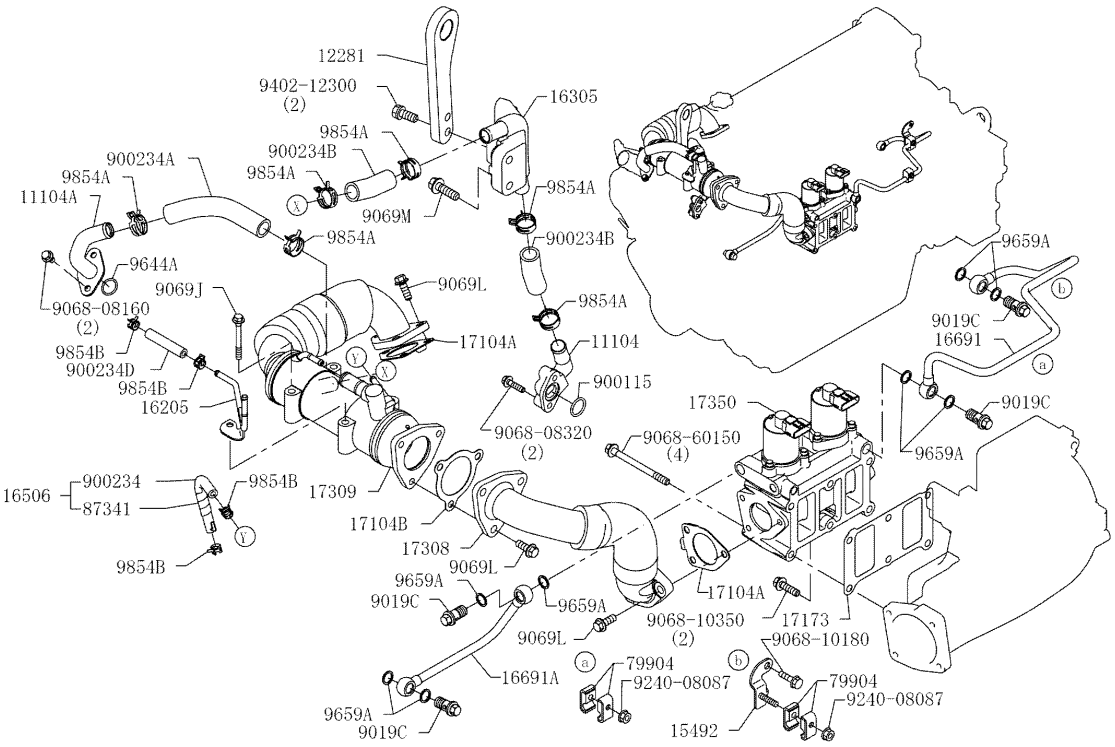

AIR INTAKE AND EXHAUST SYSTEM 13-20-2 (HINO ENGINE TYPE J08ETM-KSDA)

REF	FN	PART NUMBER	YR/SN	QTY	DESCRIPTION
9019C		{901916340A}		4	BOLT
9029A		{902910199B}		2	BOLT
9068-08000		{906808000A}		5	“BOLT,FLANGE”
9068-08160		{906808160A}		2	“BOLT,FLANGE”
9068-08320		{906808320A}		4	“BOLT,FLANGE”
9068-08320		{906808320A}		2	“BOLT,FLANGE”
9068-08550		{906808550A}		5	“BOLT,FLANGE”
9068-10000		{906810000A}		2	“BOLT,FLANGE”
9068-10180		{906810180A}		1	“BOLT,FLANGE”
9068-10350		{906810350A}		2	“BOLT,FLANGE”
9068-10450		{906810450A}		2	“BOLT,FLANGE”
9068-60150		{906860150A}		4	“BOLT,FLANGE”
9068-60400		{906860400A}		2	“BOLT,FLANGE”
9069J		{906908132A}		4	“BOLT,FLANGE”
9069L		{906910175A}		9	“BOLT,FLANGE”
9069M		{906912122A}		2	“BOLT,FLANGE”
9069P		{906910117A}		2	“BOLT,FLANGE”
9069R		{906910176A}		2	“BOLT,FLANGE”
9209A		{920910141A}		18	NUT
9240-08087		{924008087A}		5	NUT
9240-08087		{924008087A}		2	NUT
9241-10107		{924110107A}		2	NUT
9260-08220		{926008220A}		3	“WASHER,PLAIN”
9311-08300		{931108300A}		7	STUD
9321-08300		{932108300A}		2	STUD
9331-10700		{933110700A}		2	STUD
9359A		{935910127A}		2	STUD
9402-12300		{940212300A}		2	“BOLT,W/WASHER”
9644A		{964402135A}		1	O-RING
9659A		{965916105B}		8	“WASHER,SOFT”
9854A		{985426103A}		6	CLIP
9854B		{985413112A}		4	CLIP

MAIN MOVING PARTS 12-00 (HINO ENGINE TYPE J08ETM-KSDA)

1

12-00

MAIN MOVING PARTS

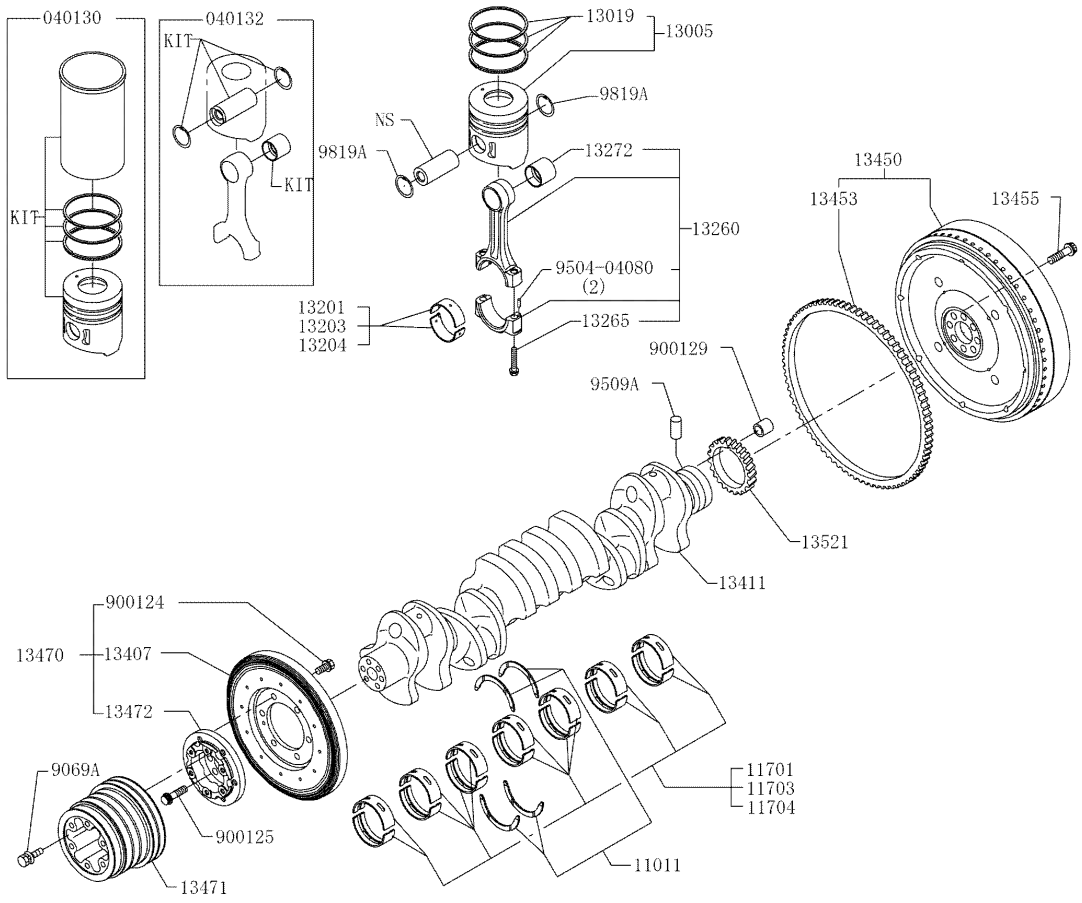

MAIN MOVING PARTS 12-00 (HINO ENGINE TYPE J08ETM-KSDA)

REF	FN	PART NUMBER	YR/SN	QTY	DESCRIPTION
					MAIN MOVING PARTS
040130		{VH040130244A}		1	PISTON AND RING AND LINER KIT A
040130		{VH040130245A}		1	PISTON AND RING AND LINER KIT B
040130		VH040130246A		1	PISTÃO, PISTON AND RING AND LINER KIT C
040132		VH040132122A		1	PINO DE PISTÃO, “PIN KIT,PISTON”
11011		VH110111380A		1	ARRUELA PLANA, “WASHER SET,CRANKSHAFT THRUST,STD TAIHO”
11701		VH117012140A		1	CASQUILHO VIRABREQUI, “BEARING SET, CRANKSHAFT TAIHO”
11703		VH117032000A		1	JOGO DE ROLAMENTOS, “BEARING SET, CRANKSHAFT,U/S 0.25 TAIHO”
11704		VH117042030A		1	JOGO DE ROLAMENTOS, “BEARING SET, CRANKSHAFT,U/S 0.50 TAIHO”
13005		{VH130051270A}		6	PISTON & PISTON RING SET
13019		{VH130191120A}		6	“RING SUB SET,PISTON”
13201		VH132012100A		1	JOGO DE ROLAMENTOS, “BEARING SET, CONROD,STD”
13203		VH132031930A		1	JOGO DE ROLAMENTOS, “BEARING SET, CONROD, U/S 0.25”
13204		VH132041900A		1	JOGO DE ROLAMENTOS, “BEARING SET, CONROD,U/S 0.50”
13260		VH132601790A		6	HASTE, “ROD ASSY,CONNECTING”
13265		VH132651620A		12	PARAFUSO, “BOLT,CONROD”
13272		VH132721460A		6	BUCHA, “BUSHING,CONROD,REPAIR STD”
13407		VH134072013B		1	AMORTECEDOR DE VIBAÇÃO, “DAMPER SUB ASSY,CRANKSHAFT”
13411		VH134112410A		1	EIXO EXCÊNTRICO, CRANKSHAFT
13450		VH134504200A		1	VOLANTE, FLYWHEEL ASSY
13453		VH134531310B		1	ENGRENAGEM, “GEAR,FLYWHEEL RING TEETH=129”
13455		VH134551550A		8	PARAFUSO, “BOLT,FLYWHEEL”
13470		VH134703312B		1	POLIA, “PULLEY ASSY,CRANKSHAFT”
13471		VH134715511A		1	POLIA, “PULLEY,CRANKSHAFT”
13472		VH134721651B		1	EIXO EXCÊNTRICO, “CENTER,CRANKSHAFT PULLEY”

MAIN MOVING PARTS 12-00 (HINO ENGINE TYPE J08ETM-KSDA)

1

12-00

MAIN MOVING PARTS

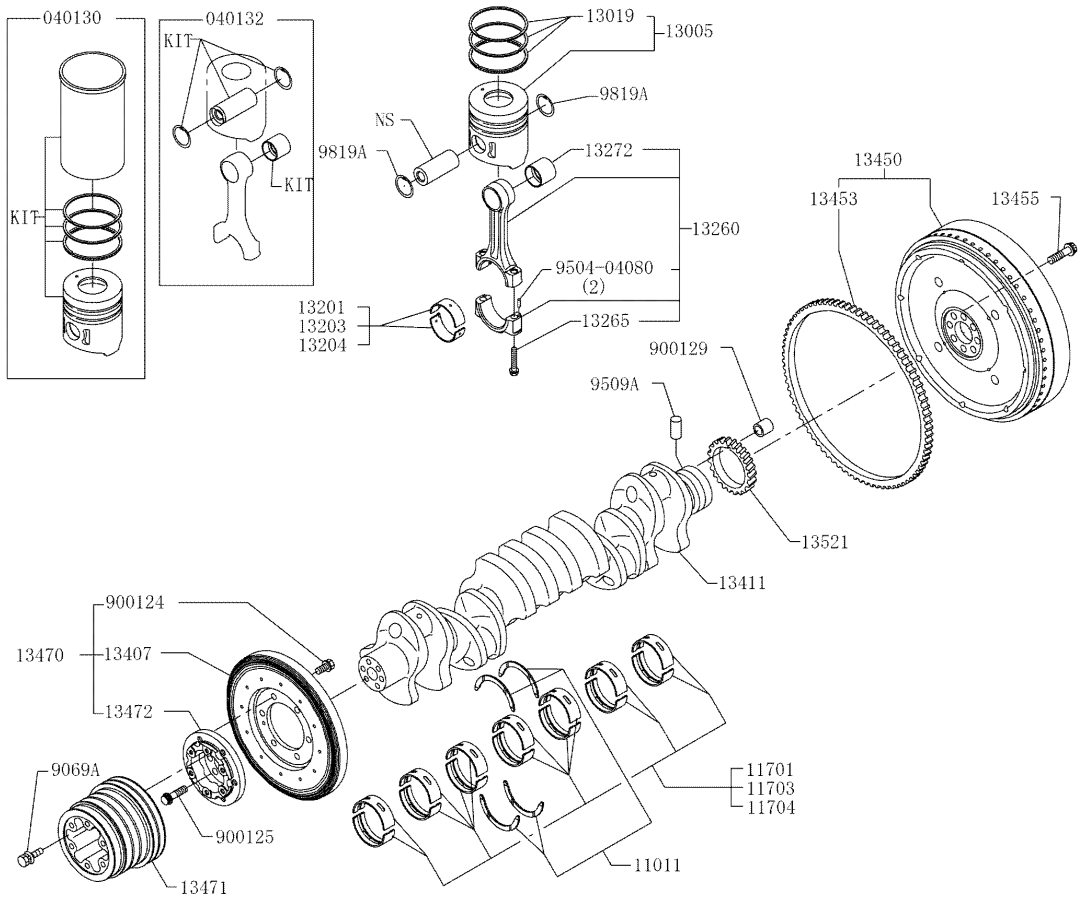

MAIN MOVING PARTS 12-00 (HINO ENGINE TYPE J08ETM-KSDA)

REF	FN	PART NUMBER	YR/SN	QTY	DESCRIPTION
13521		{VH135211442A}		1	"GEAR,CRANKSHAFT"
900124		VH900124203A		6	PARAFUSO, BOLT
900125		VH900125116B		6	PARAFUSO, BOLT
900129		VH900129119B		1	BRAÇADEIRA, COLLAR
9069A		VH906910202A		6	PARAFUSO, "BOLT,FLANGE"
9504-04080		VH950404080A		12	PINO, "PIN,STRAIGHT"
9509A		{VH950906124A}		1	PIN
9819A		VH981937102B		12	ANEL, "RING, RETAINER T=1.2"

CAMSHAFT AND IDLE GEAR 13-00 (HINO ENGINE TYPE J08ETM-KSDA)

1

13-00

CAMSHAFT AND IDLE GEAR

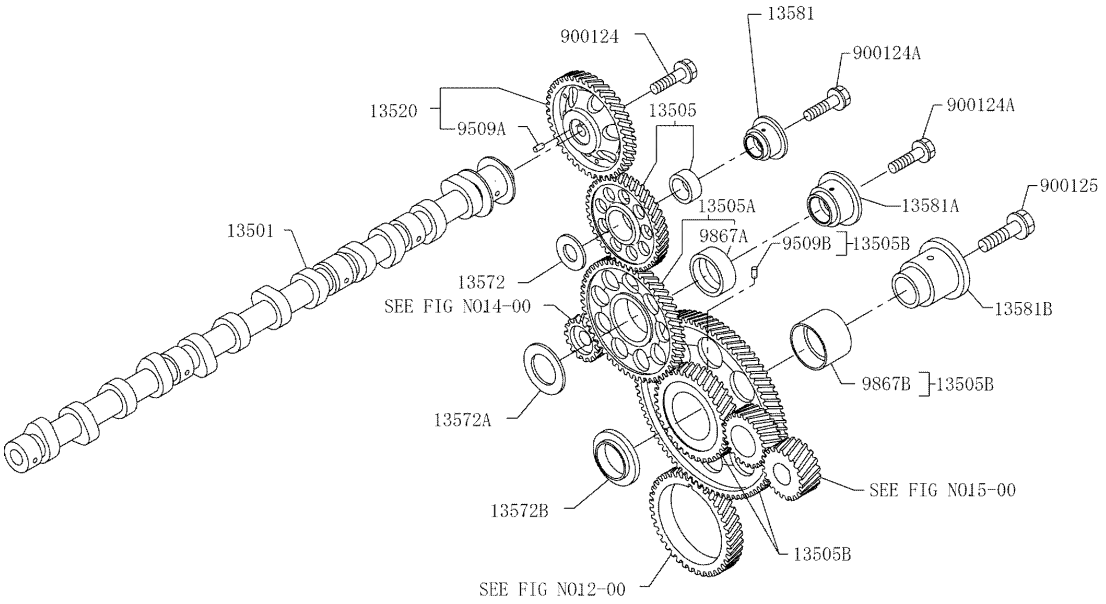

CAMSHAFT AND IDLE GEAR 13-00 (HINO ENGINE TYPE J08ETM-KSDA)

REF	FN	PART NUMBER	YR/SN	QTY	DESCRIPTION
					CAMSHAFT AND IDLE GEAR
13501		VH135011620B		1	EIXO EXCÊNTRICO, CAMSHAFT SUB ASSY
13505		VH135052302A		1	ENGRENAGEM, “GEAR SUB ASSY,IDLE”
13505A		VH135052292A		1	ENGRENAGEM, “GEAR SUB ASSY,IDLE”
13505B		VH135052521B		1	ENGRENAGEM, “GEAR SUB ASSY,IDLE”
13520		VH135201100A		1	ENGRENAGEM, “GEAR ASSY,CAMSHAFT”
13572		VH135721250B		1	PLACA, “PLATE,IDLE GEAR THRUST”
13572A		{VH135721230A}		1	“PLATE,IDLE GEAR THRUST”
13572B		{VH135721271A}		1	“PLATE,IDLE GEAR THRUST”
13581		{VH135811711A}		1	“SHAFT,IDLE GEAR”
13581A		VH135811530B		1	EIXO, “SHAFT,IDLE GEAR”
13581B		VH135811440D		1	EIXO, “SHAFT,IDLE GEAR”
900124		{VH900124503A}		1	BOLT
900124A		{VH900124502A}		2	BOLT
900125		{VH900125101A}		1	BOLT
9509A		{VH950906123A}		1	PIN
9509B		{VH950906124A}		1	PIN
9867A		{VH986750134A}		1	BUSHING
9867B		VH986757106A		1	BUCHA, BUSHING

15-00

FUEL SYSTEM

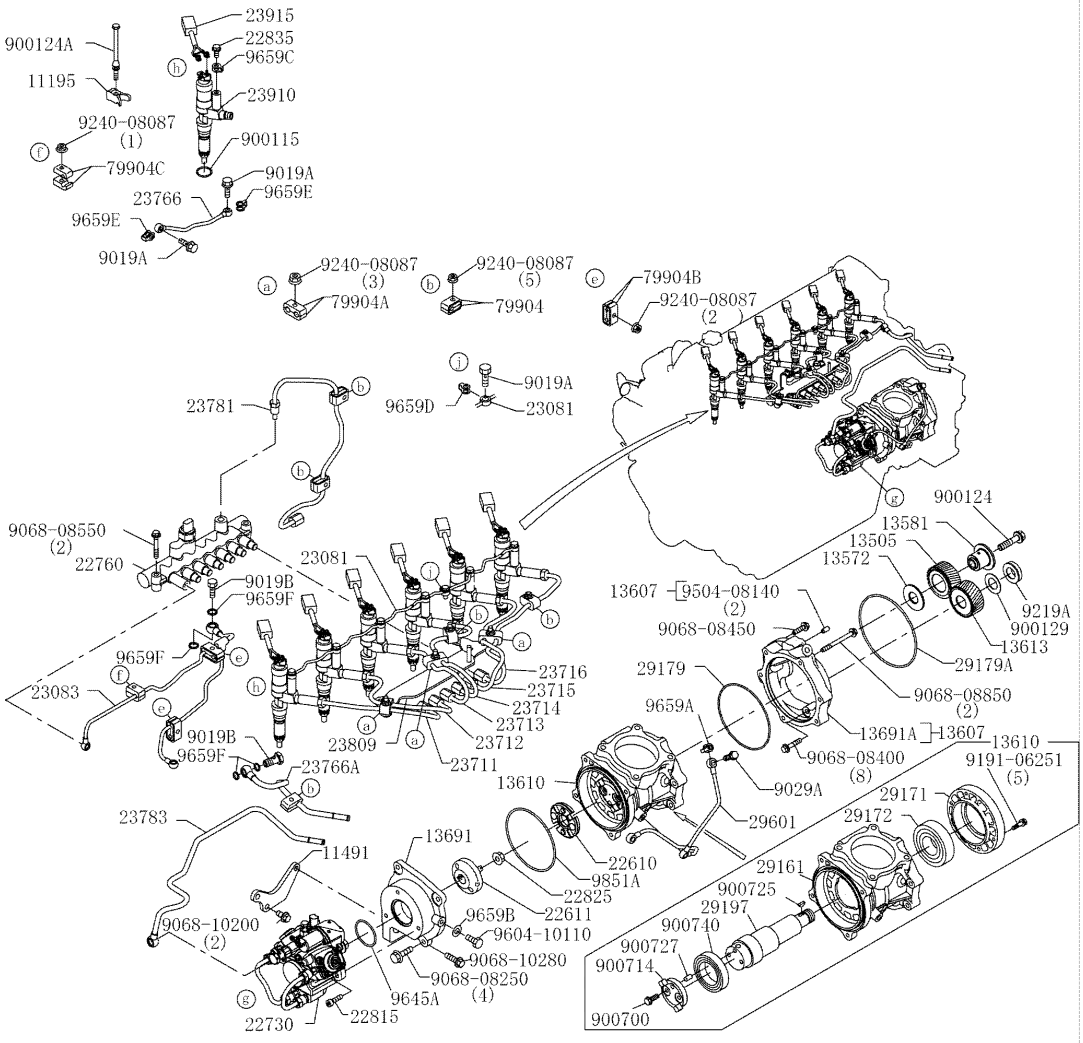

FUEL SYSTEM 15-00 (HINO ENGINE TYPE J08ETM-KSDA)

REF	FN	PART NUMBER	YR/SN	QTY	DESCRIPTION
					FUEL SYSTEM
11195		VH111951180C		6	PRENDEDOR, “CLAMP, NOZZLE HOLDER”
11491		VH114912570A		1	SUPORTE, “BRACKET,INJ. PUMP”
13505		VH135052552A		1	ENGRENAGEM, “GEAR SUB ASSY,IDLE”
13572		VH135721490A		1	PLACA, “PLATE,IDLE GEAR THRUST”
13581		VH135811702A		1	EIXO, “SHAFT,IDLE GEAR”
13607		VH136071020A		1	ESTOJO, “CASE SUB ASSY,BRG HOLDER”
13610		VH136102260A		1	EIXO, “SHAFT ASSY,INJ PUMP”
13613		VH136132241A		1	ENGRENAGEM, “GEAR,INJ PUMP DRIVE”
13691		VH136911810E		1	ESTOJO, “CASE,BRG HOLDER”
13691A		VH136911830A		1	ESTOJO, “CASE,BRG HOLDER”
22610		VH226101910B		1	ACOPLAMENTO, COUPLING ASSY
22611		VH226112421B		1	FLANGE, “FLANGE,COUPLING”
22730		VH227301340A		1	BOMBA, “PUMP ASSY,COMMON-RAIL”
22760		VH227601241A		1	TRAVESSA, COMMON-RAIL ASSY
22815		VH228153740A		3	PARAFUSO, BOLT
22825		{VH228252570A}		1	NUT
22835		{VH228351570A}		6	“BOLT,JOINT”
23081		VH230812640A		1	TUBO DE INTRODUÇÃO, “PIPE SUB ASSY, NOZZLE “ LEAKAGE
23083		VH230832332A		1	TUBO DE INTRODUÇÃO, “PIPE SUB ASSY, THROUGH FEED”
23711		VH237112660A		1	TUBO DE INTRODUÇÃO, “PIPE,INJ,NO1”
23712		VH237122630A		1	TUBO DE INTRODUÇÃO, “PIPE,INJ,NO2”
23713		VH237132560A		1	TUBO DE INTRODUÇÃO, “PIPE,INJ,NO3”
23714		VH237142580A		1	TUBO DE INTRODUÇÃO, “PIPE,INJ,NO4”
23715		VH237152390A		1	TUBO DE INTRODUÇÃO, “PIPE,INJ,NO5”
23716		VH237162390A		1	TUBO DE INTRODUÇÃO, “PIPE,INJ,NO6”
23766		VH237662860A		1	TUBO DE INTRODUÇÃO, “PIPE,THROUGH FEED”
23766A		VH237663410A		1	TUBO DE INTRODUÇÃO, “PIPE,THROUGH FEED”
23781		VH237815990A		1	TUBO DE INTRODUÇÃO, “PIPE,FUEL”
23783		VH237832720A		1	TUBO DE INTRODUÇÃO, “PIPE,FUEL”
23809		VH238091794A		1	SUPORTE, “BRACKET SUB ASSY,FUEL PIPE”
23910		VH239101430A		6	INJETOR, “INJECTOR ASSY,COMMON-RAIL”

15-00

FUEL SYSTEM

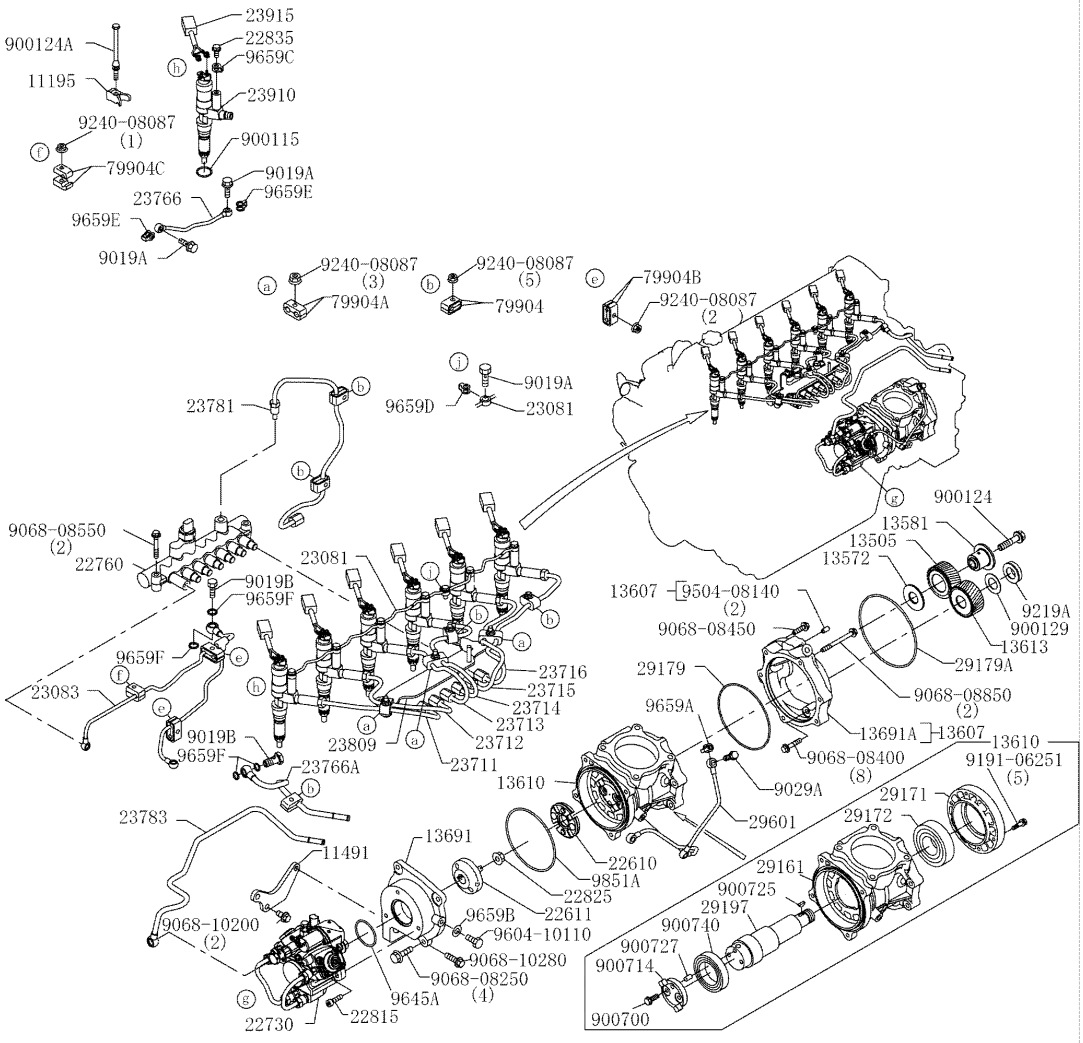

FUEL SYSTEM 15-00 (HINO ENGINE TYPE J08ETM-KSDA)

REF	FN	PART NUMBER	YR/SN	QTY	DESCRIPTION
23915		VH239151180A		6	CHICOTE, “HARNESS,INJECTOR”
29161		VH291611490A		1	BLOCO, “BLOCK,CYL”
29171		VH291711360A		1	ROLAMENTO, “BEARING,HOLDER”
29172		VH291721220A		1	ROLAMENTO, BEARING
29179		VH291791150A		1	ANEL "O", O-RING
29179A		VH291791160A		1	ANEL "O", O-RING
29197		VH291971570A		1	EIXO EXCÊNTRICO, CRANKSHAFT
29601		VH296012151A		1	TUBO DE INTRODUÇÃO, “PIPE SUB ASSY,OIL”
79904		{VH799043860A}		10	CLIP SUB ASSY
79904A		{VH799043870A}		6	CLIP SUB ASSY
79904B		VH799043390A		4	FIXADOR, CLIP SUB ASSY
79904C		VH799041240A		2	FIXADOR, CLIP SUB ASSY
900129		VH900129160A		1	BRAÇADEIRA, COLLAR
900700		VH900700327A		2	PARAFUSO, BOLT
900714		VH900714113A		1	BRAÇADEIRA, COLLAR
900725		VH900725103A		1	CHAVETA, KEY
900727		VH900727136A		1	PINO, PIN
900740		VH900740116A		1	ROLAMENTO, “BEARING,BALL”
9019A		{VH901908316A}		3	BOLT
9019B		VH901914184E		2	PARAFUSO, BOLT
9029A		VH902910261A		3	PARAFUSO, BOLT
9068-08250		{VH906808250A}		4	“BOLT,FLANGE”
9068-08400		VH906808400A		8	PARAFUSO, “BOLT,FLANGE”
9068-08450		VH906808450A		1	PARAFUSO, “BOLT,FLANGE”
9068-08550		VH906808550A		2	PARAFUSO, “BOLT,FLANGE”
9068-08850		VH906808850A		2	PARAFUSO, “BOLT,FLANGE”
9068-10200		{VH906810200A}		2	“BOLT,FLANGE”
9068-10280		{VH906810280A}		1	“BOLT,FLANGE”
9191-06251		VH919106251A		5	PARAFUSO, “BOLT,FLANGE”
9219A		VH921924129A		1	PORCA, NUT
9240-08087		{VH924008087A}		3	NUT
9240-08087		{VH924008087A}		5	NUT
9240-08087		{VH924008087A}		2	NUT
9240-08087		{VH924008087A}		1	NUT
9504-08140		VH950408140A		2	PINO, “PIN,STRAIGHT”

15-00

FUEL SYSTEM

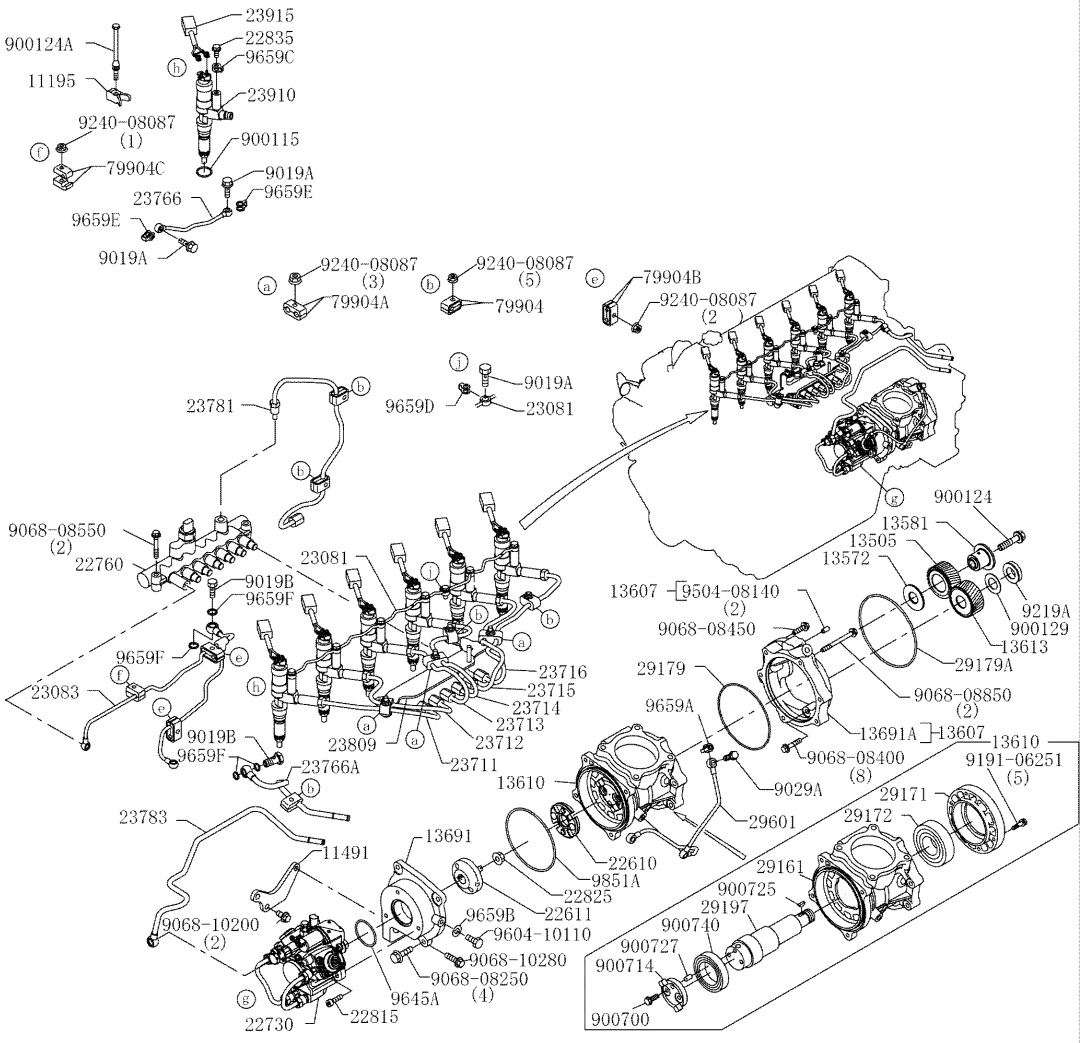

FUEL SYSTEM 15-00 (HINO ENGINE TYPE J08ETM-KSDA)

REF	FN	PART NUMBER	YR/SN	QTY	DESCRIPTION
9604-10110		VH960410110A		1	BUJÃO, PLUG
9645A		{VH964504935A}		1	O-RING
9659A		VH965910119B		3	ARRUELA PLANA, “WASHER,SOFT”
9659B		VH965910105B		1	ARRUELA PLANA, “WASHER,SOFT”
9659C		VH965908120B		6	ARRUELA PLANA, “WASHER,SOFT”
9659D		VH965908118B		1	ARRUELA PLANA, “WASHER,SOFT”
9659E		VH965908119B		2	ARRUELA PLANA, “WASHER,SOFT”
9659F		VH965914104B		4	ARRUELA PLANA, “WASHER,SOFT”
9851A		{VH985101197A}		1	O-RING

18-10

ELECTRICAL PARTS (ENGINE) (No.3)

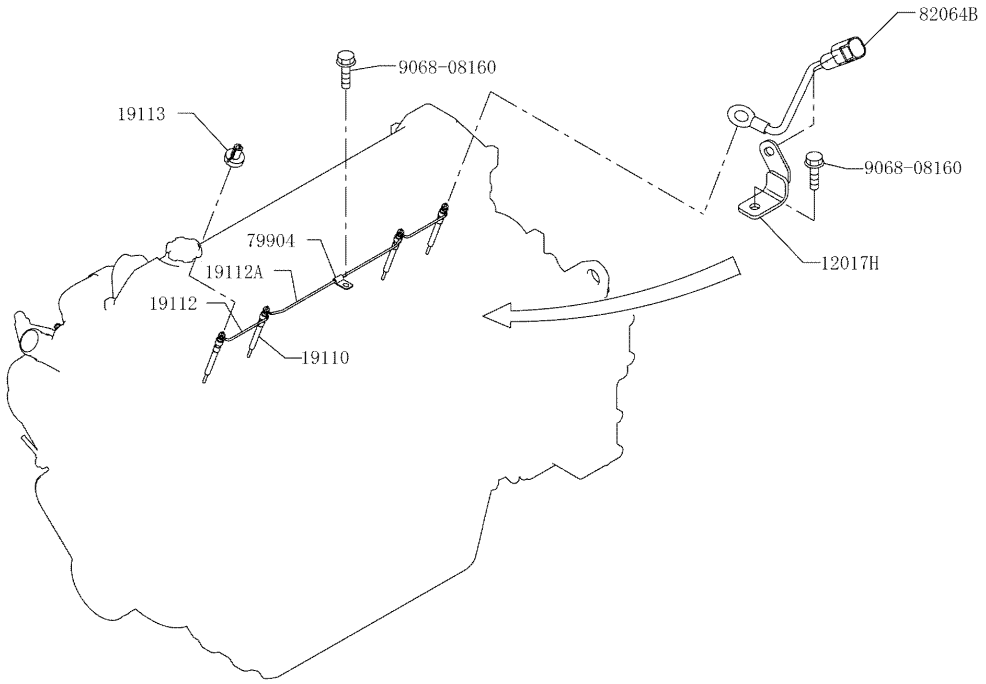

ELECTRICAL PARTS 18-10-3 (HINO ENGINE TYPE J08ETM-KSDA)

REF	FN	PART NUMBER	YR/SN	QTY	DESCRIPTION
					ELECTRICAL PARTS (ENGINE)
12017		VH120172082A		1	SUPORTE, BRACKET SUB ASSY
12017A		VH120172171A		1	SUPORTE, BRACKET SUB ASSY
12017B		VH120172872A		1	SUPORTE, BRACKET SUB ASSY
12017C		VH120173220A		1	SUPORTE, BRACKET SUB ASSY
12017D		VH120173600A		1	SUPORTE, BRACKET SUB ASSY
12017F		VH120173560A		1	SUPORTE, BRACKET SUB ASSY
12017G		VH120172600A		1	SUPORTE, BRACKET SUB ASSY
12017H		VH120172040A		1	SUPORTE, BRACKET SUB ASSY
12509		VH125092040A		1	SUPORTE, “BRACE SUB ASSY,GEN”
12511		VH125114330A		1	SUPORTE, “BRACKET,GEN”
12511A		VH125114170A		1	SUPORTE, “BRACKET,GEN”
13694		VH136941180A		1	ADAPTADOR, “ADAPTER,TACH GEN”
19110		{VH191101261A}		4	“PLUG ASSY,GLOW”
19112		VH191121201A		2	ARAME DE AÇO, “WIRE,GLOW PLUG GROUND”
19112A		VH191121210A		1	ARAME DE AÇO, “WIRE,GLOW PLUG GROUND”
19113		{VH191131050A}		4	INSULATOR GLOW PLUG
27040		VH270402500A		1	ALTERNADOR, “ALTERNATOR ASSY,W/REG 24V-60A See Fig.19-04”
28100		{VH281002894A}		1	STARTER ASSY 24V-5KW See Fig.19-05
79904		VH799042230A		1	FIXADOR, CLIP SUB ASSY
82030		VH820306450C		1	CHICOTE, HARNESS ASSY
82064		{VH820642530A}		1	“HARNESS SUB ASSY,ENG”
82064A		VH820649551A		1	CHICOTE, “HARNESS SUB ASSY,ENG”
82064B		VH820646621A		1	CHICOTE, “HARNESS SUB ASSY,ENG”
82560		VH825601200A		1	CONECTOR, CONNECTOR ASSY
83420		VH834201250A		1	MANOMETRO, “GAGE ASSY,WATER TEMP “
83530		VH835301471D		1	INTERRUPTOR INTERMITENTE, “SWITCH ASSY, OIL PRESS”
89390		{VH893901080A}		1	“SENSOR ASSY,PRESSURE”
89410		VH894101590A		1	SENSOR, “SENSOR ASSY,SPEED”
89410A		{VH894101290A}		1	“SENSOR ASSY,SPEED”
89411		{VH894111280A}		1	“SENSOR ASSY,SPEED”
900124		VH900124171A		1	PARAFUSO, BOLT
900149		VH900149377A		1	CORREIAS, V-BELT SET

18-10

ELECTRICAL PARTS (ENGINE) (No.3)

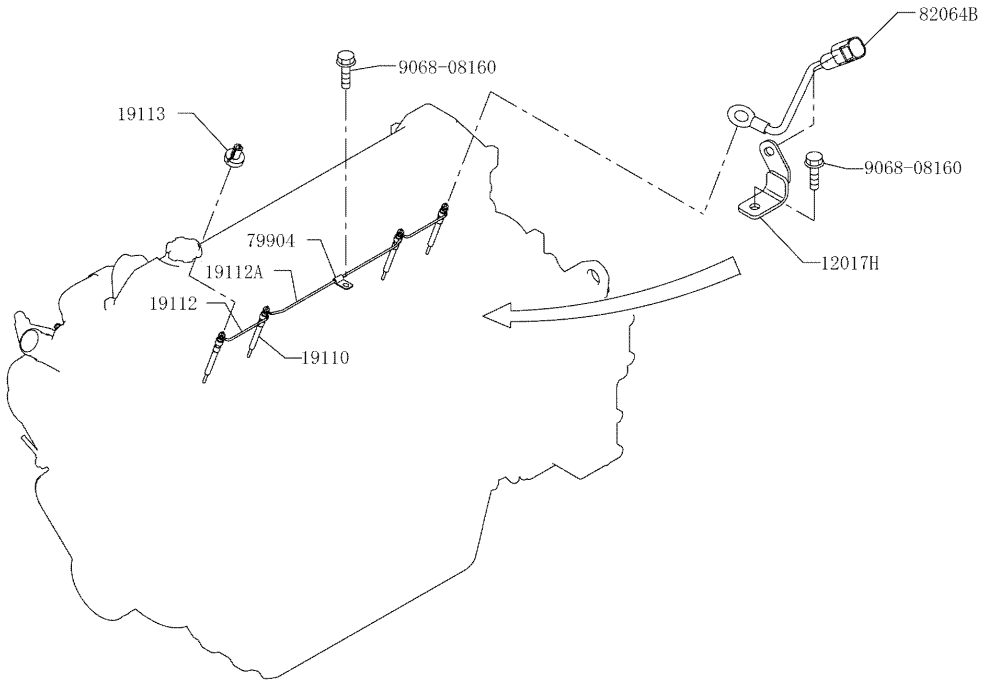

ELECTRICAL PARTS 18-10-3 (HINO ENGINE TYPE J08ETM-KSDA)

REF	FN	PART NUMBER	YR/SN	QTY	DESCRIPTION
900239C		VH900239739A		1	MANGUEIRA, “HOSE, AIR”
900807		VH900807101A		3	CABO, “CABLE,BAND”
9011-64401		{VH901164401A}		1	BOLT
9061-06140		VH906106140A		4	PARAFUSO, BOLT
9068-08160		{VH906808160A}		2	“BOLT,FLANGE”
9068-08160		{VH906808160A}		5	“BOLT,FLANGE”
9068-08200		{VH906808200A}		2	“BOLT,FLANGE”
9068-10650		VH906810650A		1	PARAFUSO, “BOLT,FLANGE”
9068-60150		VH906860150A		2	PARAFUSO, “BOLT,FLANGE”
9069D		VH906914127A		1	PARAFUSO, “BOLT,FLANGE”
9189A		{VH918908135A}		1	BOLT
9240-08087		{VH924008087A}		7	NUT
9241-10107		{VH924110107A}		1	NUT
9241-14147		VH924114147A		1	PORCA, NUT
9260-14270		VH926014270A		2	ARRUELA PLANA, “WASHER,PLAIN”
9262-10360		VH926210360A		1	ARRUELA PLANA, “WASHER,PLAIN”
9280-14350		{VH928014350A}		1	LOCKWASHER
9412-10252		{VH941210252A}		1	“BOLT,W/WASHER”
9644A		{VH964403136A}		1	O-RING
9659A		{VH965914103A}		1	“WASHER,SOFT”
9659B		{VH965910111A}		1	“WASHER,SOFT”
9854A		{VH985412101A}		2	CLIP

18-10

ELECTRICAL PARTS (ENGINE) (No. 1)

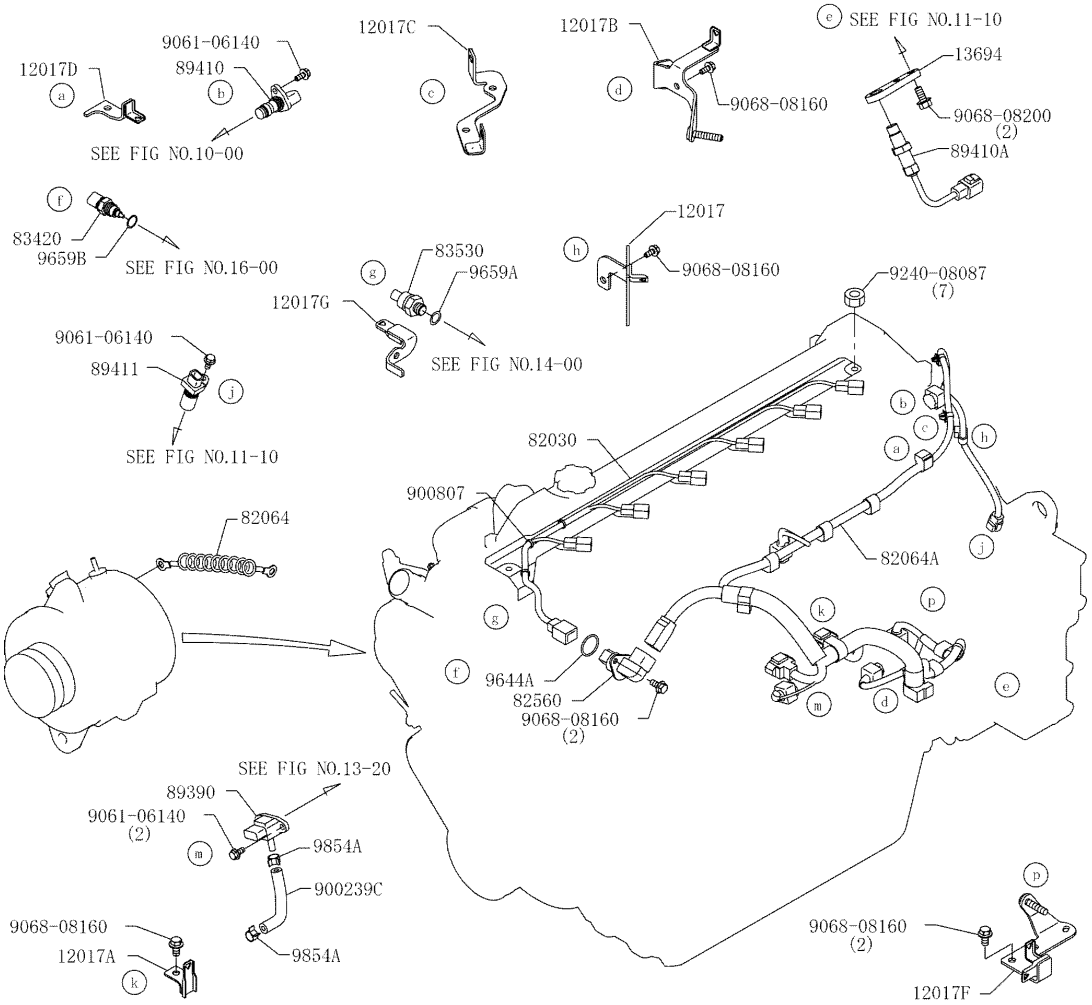

ELECTRICAL PARTS 18-10-1 (HINO ENGINE TYPE J08ETM-KSDA)

REF	FN	PART NUMBER	YR/SN	QTY	DESCRIPTION
					ELECTRICAL PARTS (ENGINE)
12017		VH120172082A		1	SUPORTE, BRACKET SUB ASSY
12017A		VH120172171A		1	SUPORTE, BRACKET SUB ASSY
12017B		VH120172872A		1	SUPORTE, BRACKET SUB ASSY
12017C		VH120173220A		1	SUPORTE, BRACKET SUB ASSY
12017D		VH120173600A		1	SUPORTE, BRACKET SUB ASSY
12017F		VH120173560A		1	SUPORTE, BRACKET SUB ASSY
12017G		VH120172600A		1	SUPORTE, BRACKET SUB ASSY
12017H		VH120172040A		1	SUPORTE, BRACKET SUB ASSY
12509		VH125092040A		1	SUPORTE, “BRACE SUB ASSY,GEN”
12511		VH125114330A		1	SUPORTE, “BRACKET,GEN”
12511A		VH125114170A		1	SUPORTE, “BRACKET,GEN”
13694		VH136941180A		1	ADAPTADOR, “ADAPTER,TACH GEN”
19110		{VH191101261A}		4	“PLUG ASSY,GLOW”
19112		VH191121201A		2	ARAME DE AÇO, “WIRE,GLOW PLUG GROUND”
19112A		VH191121210A		1	ARAME DE AÇO, “WIRE,GLOW PLUG GROUND”
19113		{VH191131050A}		4	INSULATOR GLOW PLUG
27040		VH270402500A		1	ALTERNADOR, “ALTERNATOR ASSY,W/REG 24V-60A See Fig.19-04”
28100		{VH281002894A}		1	STARTER ASSY 24V-5KW See Fig.19-05
79904		VH799042230A		1	FIXADOR, CLIP SUB ASSY
82030		VH820306450C		1	CHICOTE, HARNESS ASSY
82064		{VH820642530A}		1	“HARNESS SUB ASSY,ENG”
82064A		VH820649551A		1	CHICOTE, “HARNESS SUB ASSY,ENG”
82064B		VH820646621A		1	CHICOTE, “HARNESS SUB ASSY,ENG”
82560		VH825601200A		1	CONECTOR, CONNECTOR ASSY
83420		VH834201250A		1	MANOMETRO, “GAGE ASSY,WATER TEMP “
83530		VH835301471D		1	INTERRUPTOR INTERMITENTE, “SWITCH ASSY, OIL PRESS”
89390		{VH893901080A}		1	“SENSOR ASSY,PRESSURE”
89410		VH894101590A		1	SENSOR, “SENSOR ASSY,SPEED”
89410A		{VH894101290A}		1	“SENSOR ASSY,SPEED”
89411		{VH894111280A}		1	“SENSOR ASSY,SPEED”
900124		VH900124171A		1	PARAFUSO, BOLT
900149		VH900149377A		1	CORREIAS, V-BELT SET

18-10

ELECTRICAL PARTS (ENGINE) (No. 1)

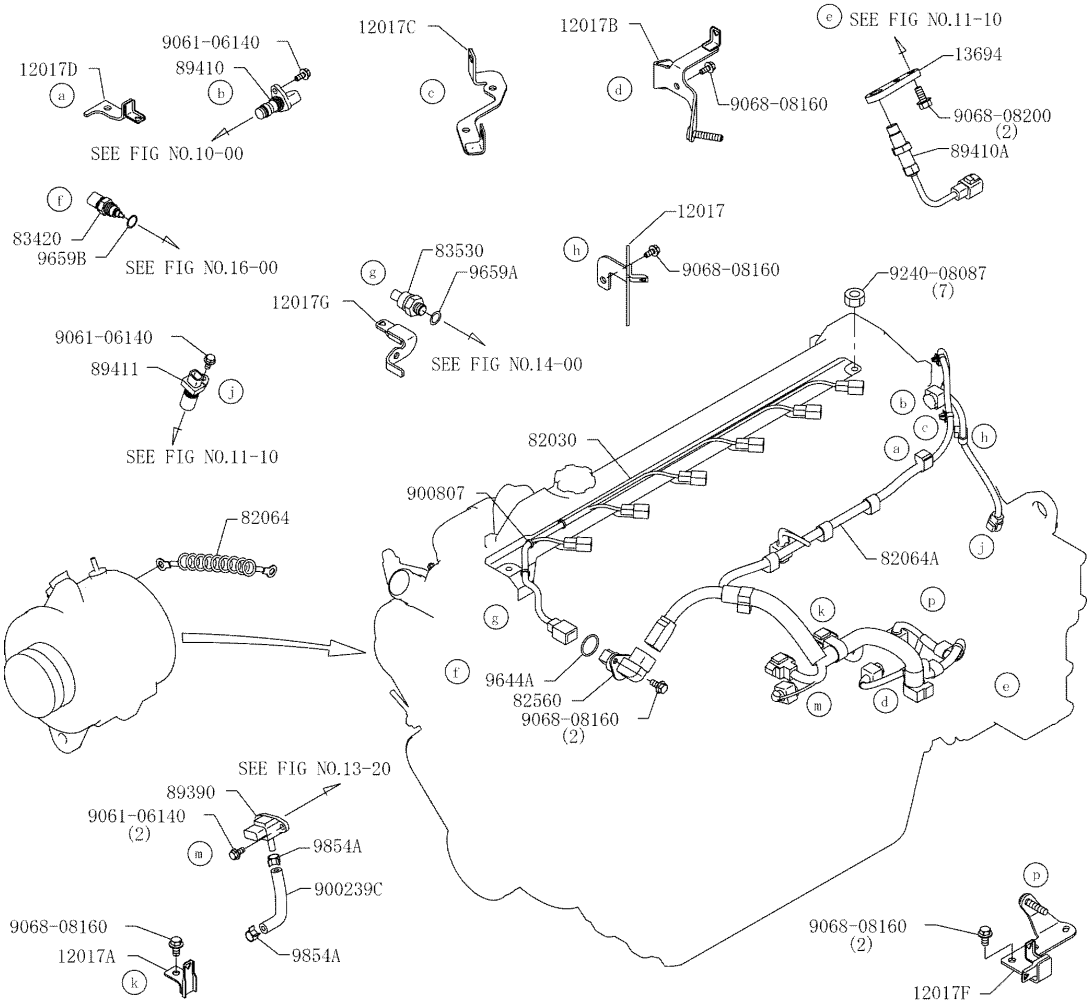

ELECTRICAL PARTS 18-10-1 (HINO ENGINE TYPE J08ETM-KSDA)

REF	FN	PART NUMBER	YR/SN	QTY	DESCRIPTION
900239C		VH900239739A		1	MANGUEIRA, “HOSE, AIR”
900807		VH900807101A		3	CABO, “CABLE,BAND”
9011-64401		{VH901164401A}		1	BOLT
9061-06140		VH906106140A		4	PARAFUSO, BOLT
9068-08160		{VH906808160A}		2	“BOLT,FLANGE”
9068-08160		{VH906808160A}		5	“BOLT,FLANGE”
9068-08200		{VH906808200A}		2	“BOLT,FLANGE”
9068-10650		VH906810650A		1	PARAFUSO, “BOLT,FLANGE”
9068-60150		VH906860150A		2	PARAFUSO, “BOLT,FLANGE”
9069D		VH906914127A		1	PARAFUSO, “BOLT,FLANGE”
9189A		{VH918908135A}		1	BOLT
9240-08087		{VH924008087A}		7	NUT
9241-10107		{VH924110107A}		1	NUT
9241-14147		VH924114147A		1	PORCA, NUT
9260-14270		VH926014270A		2	ARRUELA PLANA, “WASHER,PLAIN”
9262-10360		VH926210360A		1	ARRUELA PLANA, “WASHER,PLAIN”
9280-14350		{VH928014350A}		1	LOCKWASHER
9412-10252		{VH941210252A}		1	“BOLT,W/WASHER”
9644A		{VH964403136A}		1	O-RING
9659A		{VH965914103A}		1	“WASHER,SOFT”
9659B		{VH965910111A}		1	“WASHER,SOFT”
9854A		{VH985412101A}		2	CLIP

FUEL FILTER 15-54 (HINO ENGINE TYPE J08ETM-KSDA)

1

15-54

FUEL FILTER

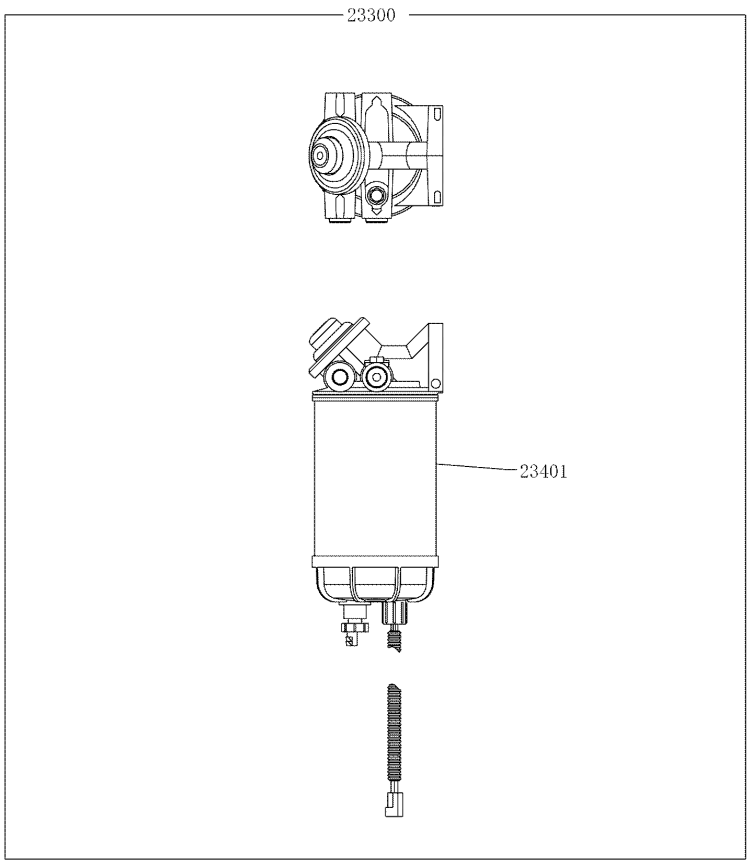

FUEL FILTER 15-54 (HINO ENGINE TYPE J08ETM-KSDA)

REF	FN	PART NUMBER	YR/SN	QTY	DESCRIPTION
					FUEL FILTER
23300		{VH233002800A}		1	FILTER ASSY, FUEL
23401		VH23390E0010		1	ELEMENTO, ELEMENT ASSY, FUEL FILTER

TURBOCHARGER 18-30 (HINO ENGINE TYPE J08ETM-KSDA)

1

18-30

TURBOCHARGER

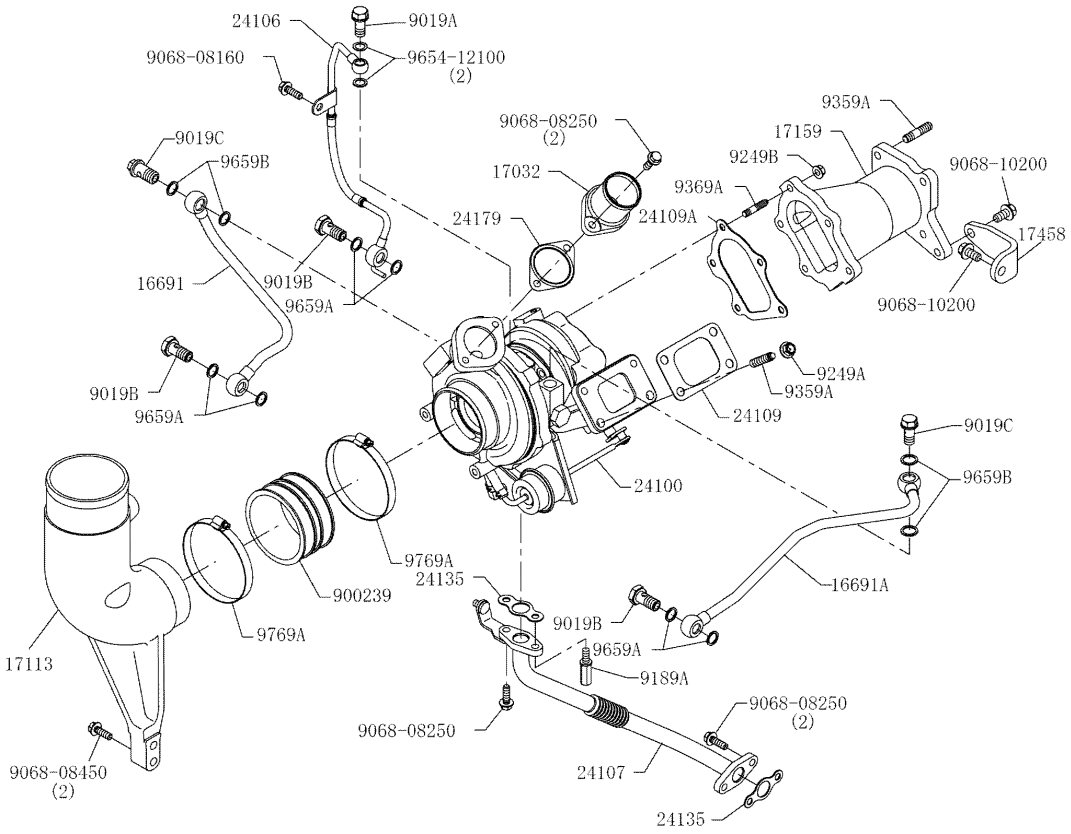

TURBOCHARGER 18-30 (HINO ENGINE TYPE J08ETM-KSDA)

REF	FN	PART NUMBER	YR/SN	QTY	DESCRIPTION
					TURBOCHARGER
16691		VH166913760A		1	TUBO DE INTRODUÇÃO, “PIPE,COOLANT”
16691A		VH166913770A		1	TUBO DE INTRODUÇÃO, “PIPE,COOLANT”
17032		VH170321290B		1	TUBO DE INTRODUÇÃO, “PIPE SUB ASSY, INTAKE”
17113		VH171139591A		1	TUBO DE INTRODUÇÃO, “PIPE,INTAKE”
17159		VH171592720A		1	CONEXÃO, “CONNECTOR,EXH MFLD”
17458		VH174582960A		1	SUPORTE, “BRACKET,EXH PIPE”
24100		VH241004640A		1	TURBOCOMPRESSOR, TURBOCHARGER ASSY
24106		VH241061440A		1	TUBO DE INTRODUÇÃO, “PIPE SUB ASSY,OIL INLET”
24107		VH241072150A		1	TUBO DE INTRODUÇÃO, “PIPE SUB ASSY,OIL OUTLET”
24109		VH241091650A		1	JUNTA, “GASKET,SUB ASSY”
24109A		VH241091850A		1	JUNTA, “GASKET,SUB ASSY”
24135		VH241351121A		2	JUNTA, “GASKET,OIL,OUTLET”
24179		VH241791430B		1	JUNTA, GASKET
900239		VH900239697A		1	MANGUEIRA, “HOSE, AIR”
9019A		VH901912108C		1	PARAFUSO, BOLT
9019B		VH901914184E		3	PARAFUSO, BOLT
9019C		VH901916340A		2	PARAFUSO, BOLT
9068-08160		{VH906808160A}		1	“BOLT,FLANGE”
9068-08250		{VH906808250A}		5	“BOLT,FLANGE”
9068-08450		VH906808450A		2	PARAFUSO, “BOLT,FLANGE”
9068-10200		{VH906810200A}		2	“BOLT,FLANGE”
9189A		{VH918908151A}		1	BOLT
9249A		VH924910102A		4	PORCA, “NUT,FLANGE”
9249B		VH924908102A		5	PORCA, “NUT,FLANGE”
9359A		VH935910127A		6	PRISIONEIRO, STUD
9369A		VH936908109B		5	PRISIONEIRO, STUD
9654-12100		{VH965412100A}		2	“WASHER,SOFT”
9659A		VH965914104B		6	ARRUELA PLANA, “WASHER,SOFT”
9659B		VH965916105B		4	ARRUELA PLANA, “WASHER,SOFT”
9769A		VH976900101A		2	PRENDEDOR, CLAMP

LUBRICATION SYSTEM 14-00 (HINO ENGINE TYPE J08ETM-KSDA)

1

14-00

LUBRICATION

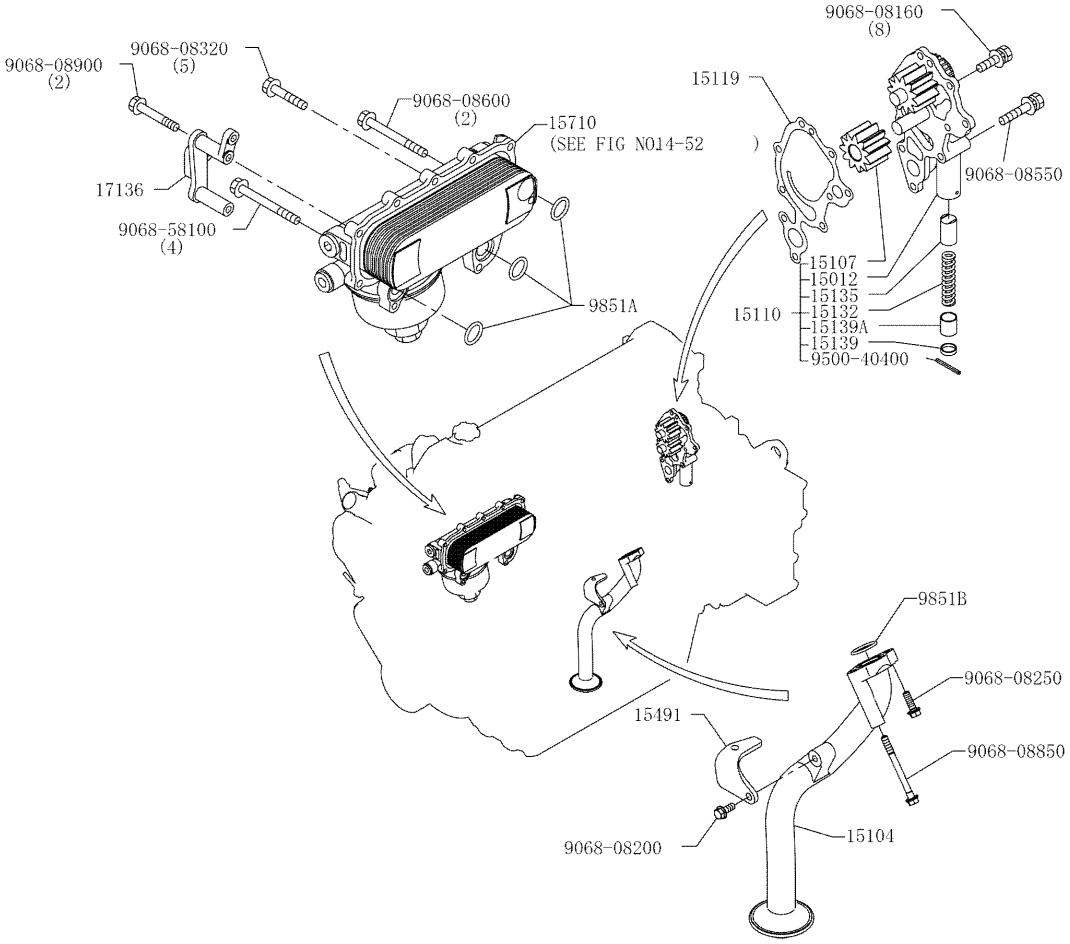

LUBRICATION SYSTEM 14-00 (HINO ENGINE TYPE J08ETM-KSDA)

REF	FN	PART NUMBER	YR/SN	QTY	DESCRIPTION
					LUBRICATION SYSTEM
15012		VH150121450B		1	TAMPA, “COVER SUB ASSY,OIL PUMP”
15104		VH151041960A		1	REDE PARA FILTROS, “STRAINER SUB ASSY,OIL”
15107		VH151071540A		1	ENGRENAGEM, “GEAR SUB ASSY,OIL PUMP”
15110		VH151102150C		1	BOMBA, “PUMP ASSY,OIL L/STNR”
15119		VH151191134B		1	JUNTA, “GASKET,OIL PUMP COVER”
15132		{VH151321070A}		1	“SPRING,OIL PUMP RELIEF “
15135		VH151351100A		1	VALVULA, “VALVE,OIL PUMP SAFETY”
15139		{VH151391110A}		1	“SEAT,SPG OIL PUMP”
15139A		VH151391120A		1	ASSENTO, “SEAT,SPG OIL PUMP”
15491		VH154918981A		1	SUPORTE, “BRACKET,PIPE”
15710		VH157102550C		1	ARREFECEDOR, “COOLER ASSY,OIL”
17136		VH171365570B		1	SUPORTE, “BRACKET,INTAKE PIPE See Fig.14-52”
9068-08160		{VH906808160A}		8	“BOLT,FLANGE”
9068-08200		{VH906808200A}		2	“BOLT,FLANGE”
9068-08250		{VH906808250A}		1	“BOLT,FLANGE”
9068-08320		{VH906808320A}		5	“BOLT,FLANGE”
9068-08550		VH906808550A		1	PARAFUSO, “BOLT,FLANGE”
9068-08600		VH906808600A		2	PARAFUSO, “BOLT,FLANGE”
9068-08850		VH906808850A		1	PARAFUSO, “BOLT,FLANGE”
9068-08900		VH906808900A		2	PARAFUSO, “BOLT,FLANGE”
9068-58100		{VH906858100A}		4	“BOLT,FLANGE”
9500-40400		{VH950040400A}		1	“PIN,COTTER”
9851A		VH985125106B		3	ANEL "O", O-RING
9851B		VH985129105B		1	ANEL "O", O-RING

OIL FILTER 14-51 (HINO ENGINE TYPE J08ETM-KSDA)

1

14-51

OIL FILTER

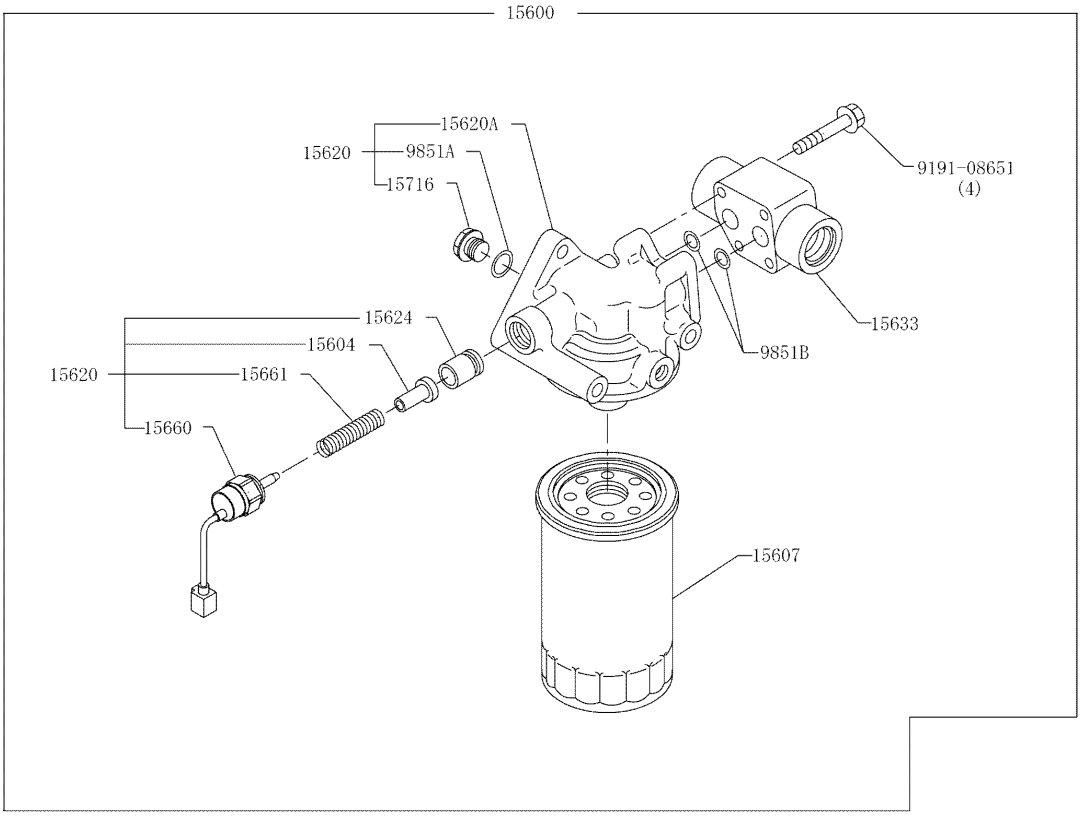

OIL FILTER 14-51 (HINO ENGINE TYPE J08ETM-KSDA)

REF	FN	PART NUMBER	YR/SN	QTY	DESCRIPTION
					OIL FILTER
15600		VH156004110C		1	FILTRO, “FILTER ASSY,OIL”
15604		{VH156041100A}		1	“VALVE SUB ASSY,OIL SAFETY”
15607		VH156072190A		1	ELEMENTO, “ELEMENT SET,OIL FILTER”
15620		VH156203810B		1	TAMPA DO RESERVATÓRIO, “CAP ASSY,OIL FILTER”
15620A		VH156203820B		1	TAMPA DO RESERVATÓRIO, “CAP ASSY,OIL FILTER”
15624		{VH156241230A}		1	“VALVE,FILTER SAFETY”
15633		VH156331070B		1	ADAPTADOR, “ADAPTOR,OIL FILTER”
15660		{VH156601090A}		1	“PLUG ASSY,OIL”
15661		{VH156611320A}		1	“SPRING,OIL VALVE”
15716		{VH157161070A}		1	“PLUG,VALVE SPG”
9191-08651		VH919108651A		4	PARAFUSO, BOLT
9851A		VH985115101B		1	ANEL "O", O-RING
9851B		{VH985120102A}		2	O-RING

OIL COOLER 14-52 (HINO ENGINE TYPE J08ETM-KSDA)

1

14-52

OIL COOLER

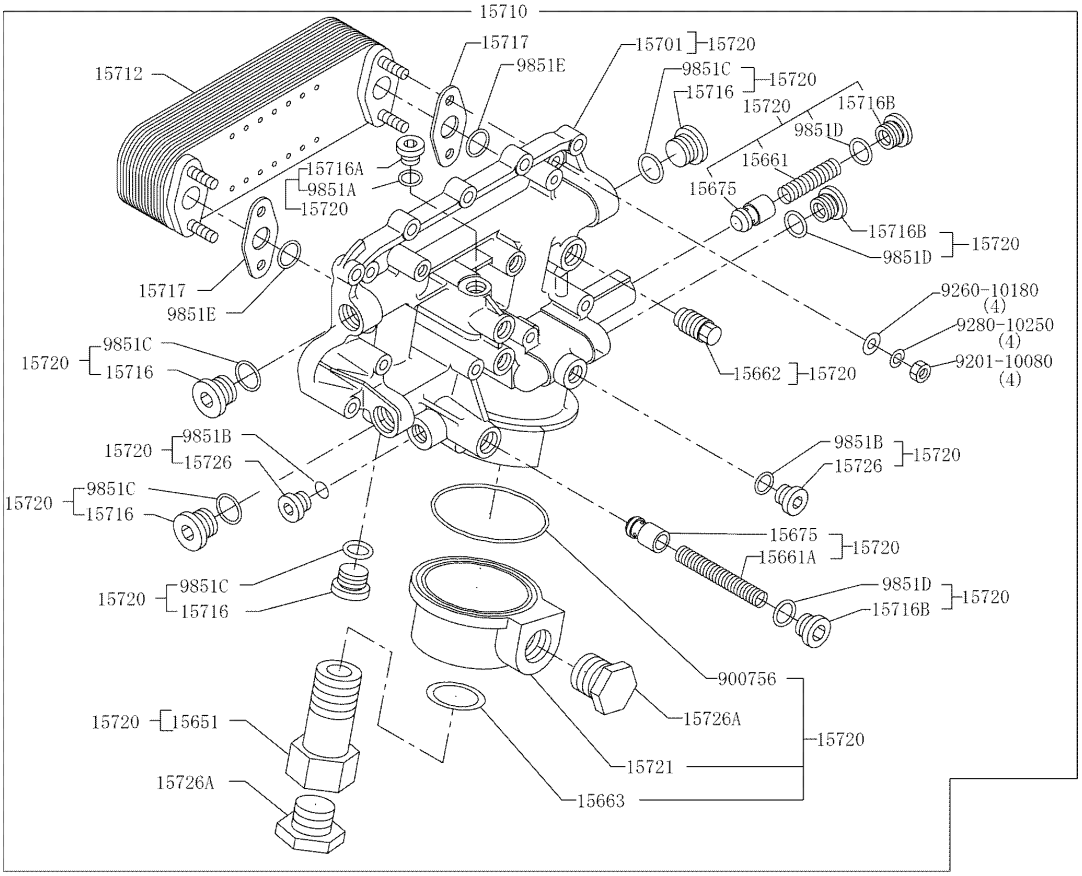

OIL COOLER 14-52 (HINO ENGINE TYPE J08ETM-KSDA)

REF	FN	PART NUMBER	YR/SN	QTY	DESCRIPTION
					OIL COOLER
15651		VH156511780A		1	PARAFUSO, BOLT
15661		{VH156611450A}		1	“SPRING,OIL VALVE”
15661A		{VH156611510A}		1	“SPRING,OIL VALVE”
15662		{VH156621320A}		1	“PLUG,OIL VALVE”
15663		{VH156631120A}		1	“GASKET,OIL PLUG”
15675		{VH156751020A}		2	“VALVE,OIL RELIEF”
15701		VH157012350B		1	ESTOJO, “CASE SUB ASSY,OIL COOLER”
15710		VH157102550C		1	ARREFECEDOR, “COOLER ASSY,OIL”
15712		VH157121960B		1	ELEMENTO, “ELEMENT,OIL COOLER”
15716		{VH157161100A}		4	“PLUG,VALVE SPG”
15716A		{VH157161130A}		1	“PLUG,VALVE SPG”
15716B		{VH157161150A}		3	“PLUG,VALVE SPG”
15717		{VH157171320A}		2	“GASKET,OIL COOLER ELEMENT”
15720		VH157201540C		1	ESTOJO, “CASE ASSY, OIL COOLER”
15721		VH157211170A		1	TAMPA, “COVER,OIL COOLER”
15726		VH157261110A		2	BUJÃO, “PLUG,BLIND”
15726A		VH157261300A		2	BUJÃO, “PLUG,BLIND”
900756		VH900756246A		1	ANEL "O", O-RING
9201-10080		VH920110080A		4	PORCA, NUT
9260-10180		{VH926010180A}		4	“WASHER, PLAIN”
9280-10250		{VH928010250A}		4	LOCK WASHER
9851A		{VH985112112A}		1	O-RING
9851B		{VH985118120A}		2	O-RING
9851C		{VH985121118A}		4	O-RING
9851D		{VH985120107A}		3	O-RING

16-00

COOLING SYSTEM

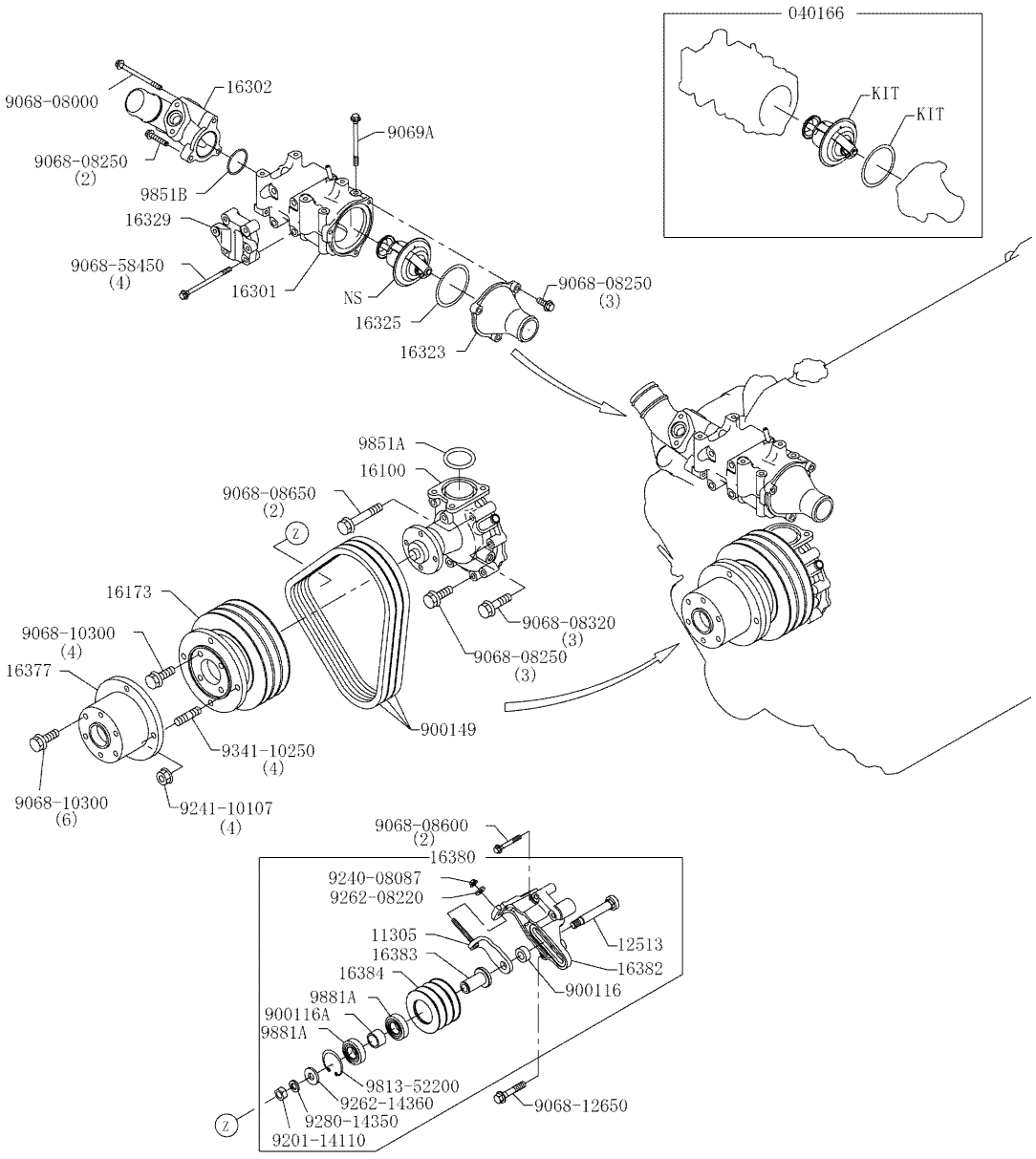

COOLING SYSTEM 16-00 (HINO ENGINE TYPE J08ETM-KSDA)

REF	FN	PART NUMBER	YR/SN	QTY	DESCRIPTION
					COOLING SYSTEM
040166		VH040166107A		1	TERMOSTATO, THERMOSTAT KIT
11305		VH113051230A		1	SUPORTE, BRACKET SUB ASSY
12513		VH125131250A		1	EIXO, “SHAFT,GEN BKT”
16100		VH161004290A		1	BOMBA, “PUMP ASSY,COOLANT”
16173		VH161733321A		1	POLIA, “PULLEY,COOLANT PUMP”
16301		VH163011850B		1	ESTOJO, “CASE SUB ASSY,THERMOSTAT”
16302		VH163021220A		1	TAMPA, “COVER SUB ASSY,THERMOSTAT “ CASE
16323		VH163231751A		1	TAMPA, “COVER,THERMOSTAT CASE”
16325		VH163251400A		1	JUNTA, “GASKET,THERMOSTAT”
16329		VH163291461A		1	SUPORTE, BRACKET
16377		VH163772780A		1	ESPAÇADOR, “SPACER,FAN PULLEY”
16380		VH163802760A		1	POLIA, “PULLEY ASSY,BELT TENSION”
16382		VH163821740A		1	SUPORTE, “BRACKET,TENSION PULLEY”
16383		VH163831300A		1	EIXO, “SHAFT,TENSION PULLEY”
16384		VH163841490A		1	POLIA, “PULLEY,TENSION”
900116		VH900116187A		1	ESPAÇADOR, SPACER
900116A		VH900116566A		1	ESPAÇADOR, SPACER
900149		VH900149376A		1	CORREIAS, V-BELT SET
9068-08000		{VH906808000A}		1	“BOLT,FLANGE”
9068-08250		{VH906808250A}		3	“BOLT,FLANGE”
9068-08250		{VH906808250A}		5	“BOLT,FLANGE”
9068-08320		{VH906808320A}		3	“BOLT,FLANGE”
9068-08600		VH906808600A		2	PARAFUSO, “BOLT,FLANGE”
9068-08650		{VH906808650A}		2	“BOLT,FLANGE”
9068-10300		{VH906810300A}		4	“BOLT,FLANGE”
9068-10300		{VH906810300A}		6	“BOLT,FLANGE”
9068-12650		VH906812650A		1	PARAFUSO, “BOLT,FLANGE”
9068-58450		VH906858450A		4	PARAFUSO, “BOLT,FLANGE L=145”
9069A		VH906908108A		3	PARAFUSO, “BOLT,FLANGE”
9201-14110		VH920114110A		1	PORCA, NUT
9240-08087		{VH924008087A}		1	NUT
9241-10107		{VH924110107A}		4	NUT
9262-08220		VH926208220A		1	ARRUELA PLANA, “WASHER,PLAIN”

16-00

COOLING SYSTEM

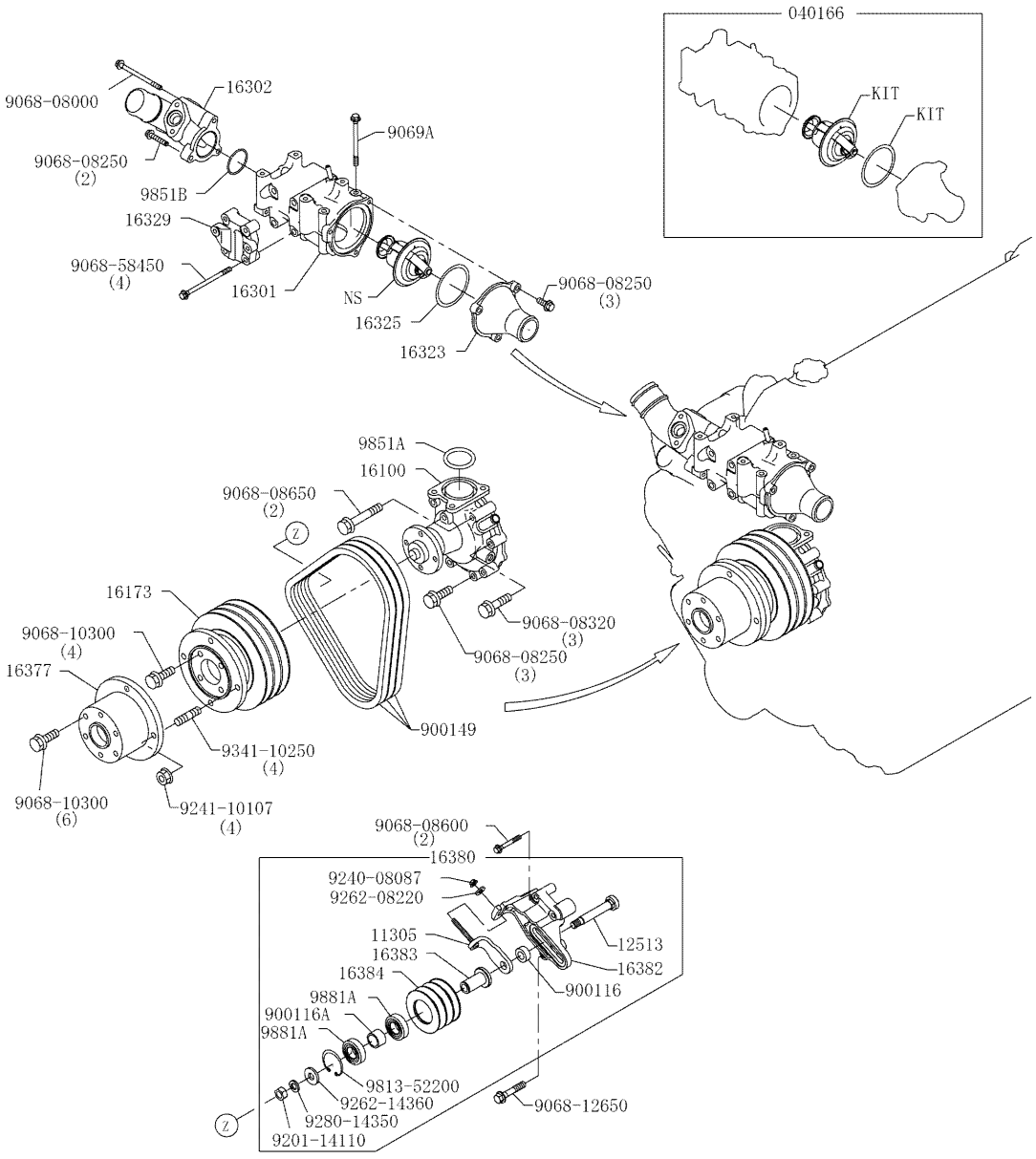

COOLING SYSTEM 16-00 (HINO ENGINE TYPE J08ETM-KSDA)

REF FN	PART NUMBER	YR/SN	QTY	DESCRIPTION
9262-14360	VH926214360A		1	ARRUELA PLANA, “WASHER,PLAIN”
9280-14350	{VH928014350A}		1	LOCKWASHER
9341-10250	VH934110250A		4	PRISIONEIRO, STUD
9813-52200	VH981352200A		1	ANEL, “RING,RETAINER”
9851A	VH985160110A		1	ANEL "O", O-RING
9851B	VH985153107A		1	ANEL "O", O-RING
9881A	VH988125117A		2	ROLAMENTO, “BEARING,BALL”

18-10

ELECTRICAL PARTS (ENGINE) (No. 2)

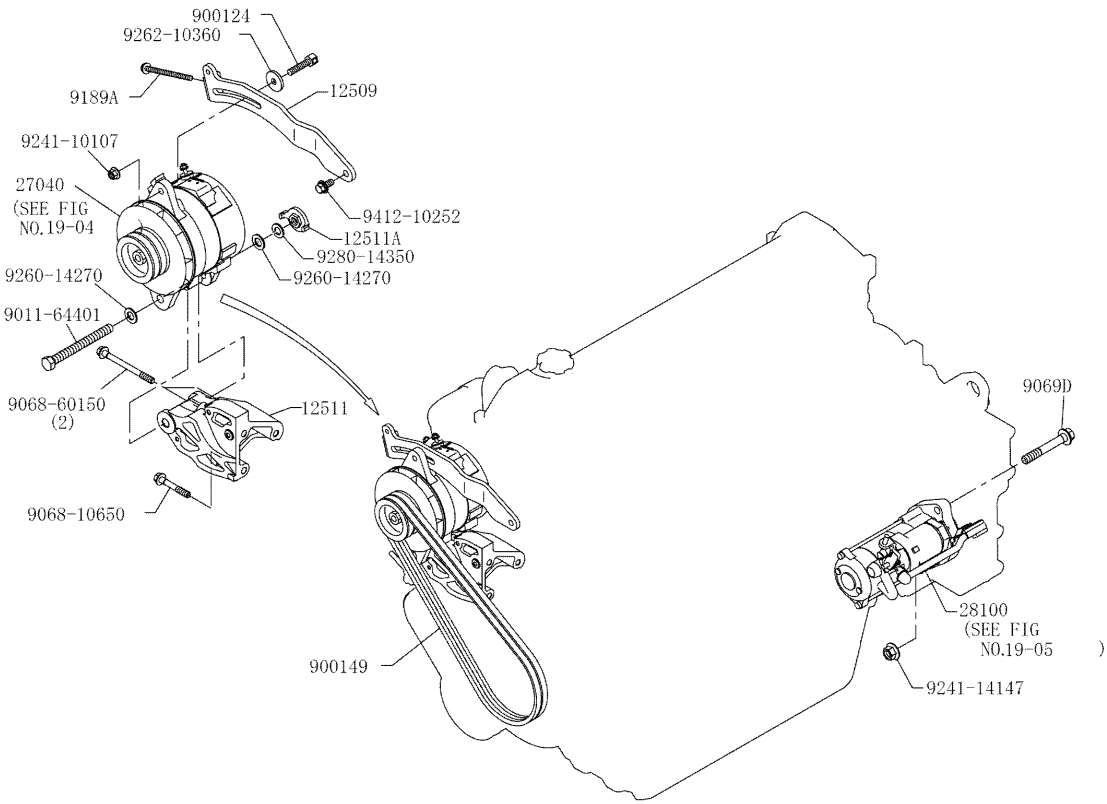

ELECTRICAL PARTS 18-10-2 (HINO ENGINE TYPE J08ETM-KSDA)

REF	FN	PART NUMBER	YR/SN	QTY	DESCRIPTION
					ELECTRICAL PARTS (ENGINE)
12017		VH120172082A		1	SUPORTE, BRACKET SUB ASSY
12017A		VH120172171A		1	SUPORTE, BRACKET SUB ASSY
12017B		VH120172872A		1	SUPORTE, BRACKET SUB ASSY
12017C		VH120173220A		1	SUPORTE, BRACKET SUB ASSY
12017D		VH120173600A		1	SUPORTE, BRACKET SUB ASSY
12017F		VH120173560A		1	SUPORTE, BRACKET SUB ASSY
12017G		VH120172600A		1	SUPORTE, BRACKET SUB ASSY
12017H		VH120172040A		1	SUPORTE, BRACKET SUB ASSY
12509		VH125092040A		1	SUPORTE, “BRACE SUB ASSY,GEN”
12511		VH125114330A		1	SUPORTE, “BRACKET,GEN”
12511A		VH125114170A		1	SUPORTE, “BRACKET,GEN”
13694		VH136941180A		1	ADAPTADOR, “ADAPTER,TACH GEN”
19110		{VH191101261A}		4	“PLUG ASSY,GLOW”
19112		VH191121201A		2	ARAME DE AÇO, “WIRE,GLOW PLUG GROUND”
19112A		VH191121210A		1	ARAME DE AÇO, “WIRE,GLOW PLUG GROUND”
19113		{VH191131050A}		4	INSULATOR GLOW PLUG
27040		VH270402500A		1	ALTERNADOR, “ALTERNATOR ASSY,W/REG 24V-60A See Fig.19-04”
28100		{VH281002894A}		1	STARTER ASSY 24V-5KW See Fig.19-05
79904		VH799042230A		1	FIXADOR, CLIP SUB ASSY
82030		VH820306450C		1	CHICOTE, HARNESS ASSY
82064		{VH820642530A}		1	“HARNESS SUB ASSY,ENG”
82064A		VH820649551A		1	CHICOTE, “HARNESS SUB ASSY,ENG”
82064B		VH820646621A		1	CHICOTE, “HARNESS SUB ASSY,ENG”
82560		VH825601200A		1	CONECTOR, CONNECTOR ASSY
83420		VH834201250A		1	MANOMETRO, “GAGE ASSY,WATER TEMP “
83530		VH835301471D		1	INTERRUPTOR INTERMITENTE, “SWITCH ASSY, OIL PRESS”
89390		{VH893901080A}		1	“SENSOR ASSY,PRESSURE”
89410		VH894101590A		1	SENSOR, “SENSOR ASSY,SPEED”
89410A		{VH894101290A}		1	“SENSOR ASSY,SPEED”
89411		{VH894111280A}		1	“SENSOR ASSY,SPEED”
900124		VH900124171A		1	PARAFUSO, BOLT
900149		VH900149377A		1	CORREIAS, V-BELT SET

18-10

ELECTRICAL PARTS (ENGINE) (No. 2)

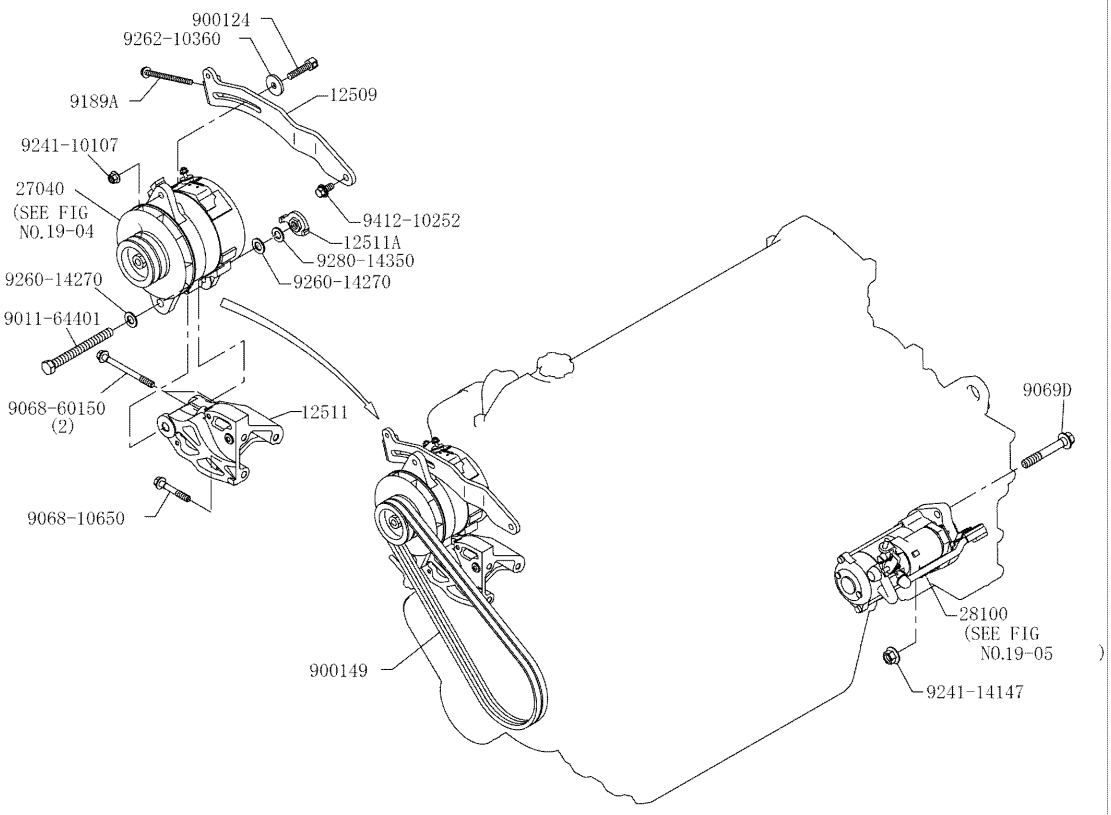

ELECTRICAL PARTS 18-10-2 (HINO ENGINE TYPE J08ETM-KSDA)

REF	FN	PART NUMBER	YR/SN	QTY	DESCRIPTION
900239C		VH900239739A		1	MANGUEIRA, “HOSE, AIR”
900807		VH900807101A		3	CABO, “CABLE,BAND”
9011-64401		{VH901164401A}		1	BOLT
9061-06140		VH906106140A		4	PARAFUSO, BOLT
9068-08160		{VH906808160A}		2	“BOLT,FLANGE”
9068-08160		{VH906808160A}		5	“BOLT,FLANGE”
9068-08200		{VH906808200A}		2	“BOLT,FLANGE”
9068-10650		VH906810650A		1	PARAFUSO, “BOLT,FLANGE”
9068-60150		VH906860150A		2	PARAFUSO, “BOLT,FLANGE”
9069D		VH906914127A		1	PARAFUSO, “BOLT,FLANGE”
9189A		{VH918908135A}		1	BOLT
9240-08087		{VH924008087A}		7	NUT
9241-10107		{VH924110107A}		1	NUT
9241-14147		VH924114147A		1	PORCA, NUT
9260-14270		VH926014270A		2	ARRUELA PLANA, “WASHER,PLAIN”
9262-10360		VH926210360A		1	ARRUELA PLANA, “WASHER,PLAIN”
9280-14350		{VH928014350A}		1	LOCKWASHER
9412-10252		{VH941210252A}		1	“BOLT,W/WASHER”
9644A		{VH964403136A}		1	O-RING
9659A		{VH965914103A}		1	“WASHER,SOFT”
9659B		{VH965910111A}		1	“WASHER,SOFT”
9854A		{VH985412101A}		2	CLIP

ALTERNATOR 19-04 (HINO ENGINE TYPE J08ETM-KSDA)

1

19-04

ALTERNATOR

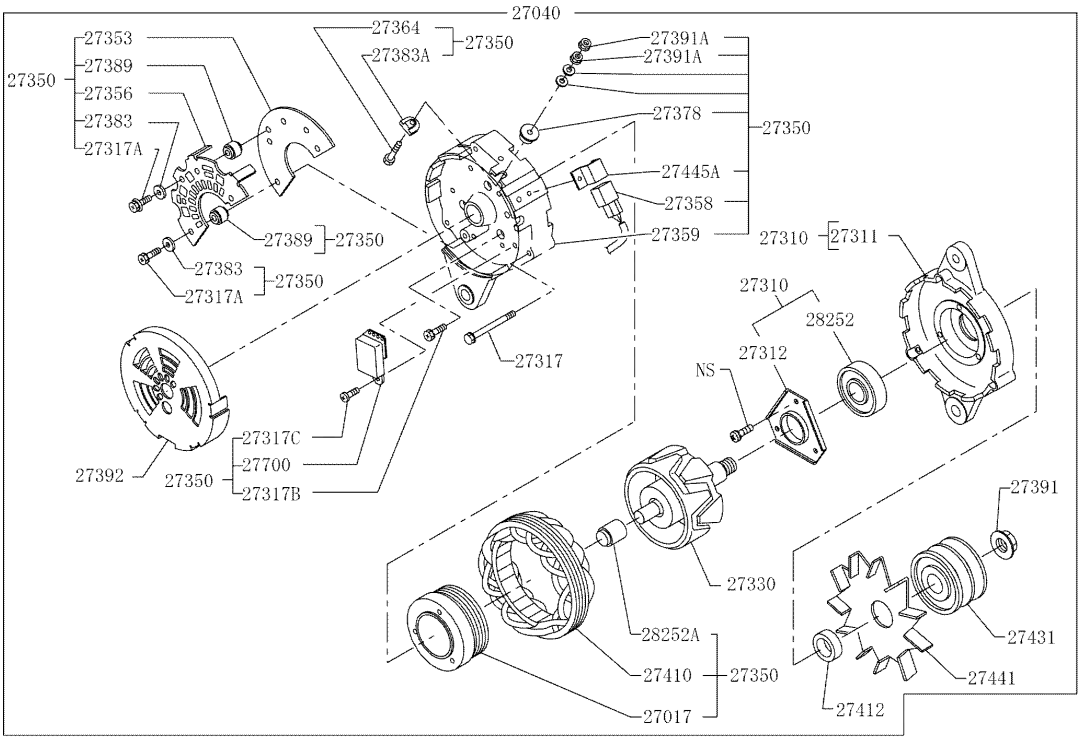

ALTERNATOR 19-04 (HINO ENGINE TYPE J08ETM-KSDA)

REF	FN	PART NUMBER	YR/SN	QTY	DESCRIPTION
					ALTERNATOR
27017		{270171250A}		1	"COIL SUB ASSY,GEN FIELD"
27040		{270402500A}		1	"ALTERNATOR ASSY,W/REG 24V-60A"
27310		{273102050A}		1	"FRAME ASSY,ALTERNATOR "
					DRIVE SIDE
27311		{273111710A}		1	"FRAME,DRIVE END"
27312		{273121590A}		1	"PLATE,RETAINER"
27317		{273171610A}		3	"BOLT,THROUGH"
27317A		{273171650A}		4	"BOLT,THROUGH"
27317B		{273171660A}		3	"BOLT,THROUGH"
27317C		{273171850A}		1	"BOLT,THROUGH"
27330		{273302030A}		1	"ROTOR ASSY,ALTERNATOR"
27350		{273503070A}		1	"HOUSING ASSY,ALTERNATOR "
					END FRAME
27353		{273531790A}		1	HOLDER
27356		{273561490A}		1	"HOLDER,W/RECTIFIER"
27358		{273581780A}		1	"CONNECTOR,W/LEAD WIRE"
27359		{273592480A}		1	"FRAME,RECTIFIER END"
27364		{273641380A}		1	"BOLT,TERMINAL"
27378		{273781760A}		1	"INSULATOR,TERMINAL"
27383		{273831520A}		4	"INSULATOR,HOLDER BRUSH"
27383A		{273831510A}		1	"INSULATOR,HOLDER BRUSH"
27389		{273891340A}		4	"INSULATOR,TERMINAL"
27391		{273911080A}		1	NUT
27391A		{273911090A}		2	NUT
27392		{273921500A}		1	COVER
27410		{274102080A}		1	STATOR ASSY
27412		{274121220A}		1	"COLLAR,SPACE"
27431		{274311880A}		1	"PULLEY,ALTERNATOR"
27441		{274411240A}		1	"FAN,ALTERNATOR"
27445A		{274451310A}		1	CLAMP
27700		{277001810A}		1	"REGULATOR ASSY,GEN"
28252		{282522150A}		1	BEARING
28252A		{282522130A}		1	BEARING

19-05

STARTING MOTOR

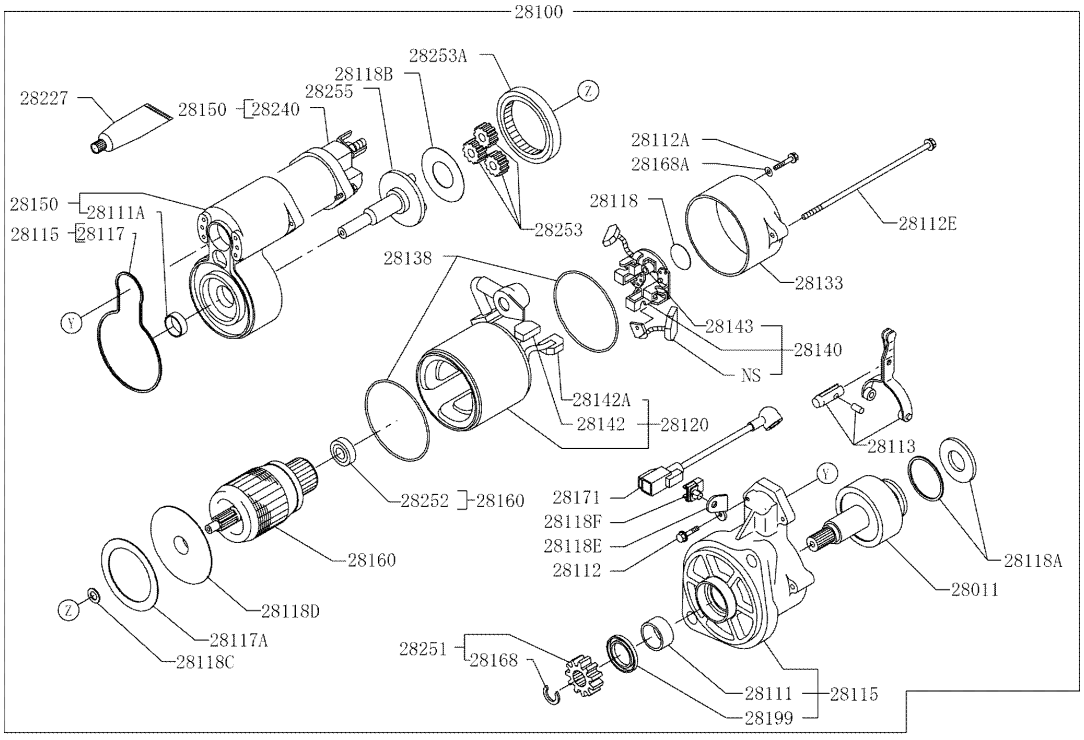

STARTER MOTOR 19-05 (HINO ENGINE TYPE J08ETM-KSDA)

REF	FN	PART NUMBER	YR/SN	QTY	DESCRIPTION
					STARTING MOTOR
28011		{280111640A}		1	"CLUTCH SUB ASSY,START"
28100		{281002894A}		1	STARTER ASSY 24V-5KW
28111		{281111470A}		1	"BOSH,DRIVE HOUSING"
28111A		{281111480A}		1	"BOSH,DRIVE HOUSING"
28112		{281122620A}		2	"BOLT,HOUSING SET"
28112A		{281122000A}		2	"BOLT,HOUSING SET"
28112E		{281122610A}		2	"BOLT,HOUSING SET"
28113		{281131360A}		1	"LEVER,PINION DRIVE"
28115		{281152231A}		1	"HOUSING,START DRIVE"
28117		{281171300A}		1	PACKING
28117A		{281171310A}		1	PACKING
28118		{281181450A}		1	PLATE
28118A		{281181520A}		1	PLATE
28118B		{281181530B}		1	PLATE
28118C		{281181540A}		1	PLATE
28118D		{281181550A}		1	PLATE
28118E		{281181561A}		1	PLATE
28118F		{281181570A}		1	PLATE
28120		{281201900B}		1	"YOKE ASSY, START"
28133		{281332400A}		1	"FRAME,COMMUTATOR END"
28138		{281381370A}		2	PACKING
28140		{281401680A}		1	"HOLDER ASSY,START BRUSH"
28142		{281421530A}		1	"BRUSH,START"
28142A		{281421540A}		1	"BRUSH,START"
28143		{281431200A}		4	"SPRING,START BRUSH"
28150		{281502554A}		1	"SWITCH ASSY,START MAGNET"
28160		{281601760A}		1	"ARMATURE ASSY,START"
28168		{281681400A}		1	RING RETAINER
28168A		{281681370A}		2	RING RETAINER
28171		{281711210A}		1	"CONNECTOR,W/LEAD WIRE"
28199		{281991100A}		1	"PROTECTOR,DUST START"
28227		{282271010A}		AR	"GREASE,STARTER REPAIR PYRONOC NO.2"
					SERVICE
28227		{282271020A}		AR	"GREASE,STARTER REPAIR MULTEMP AC-N"

19-05

STARTING MOTOR

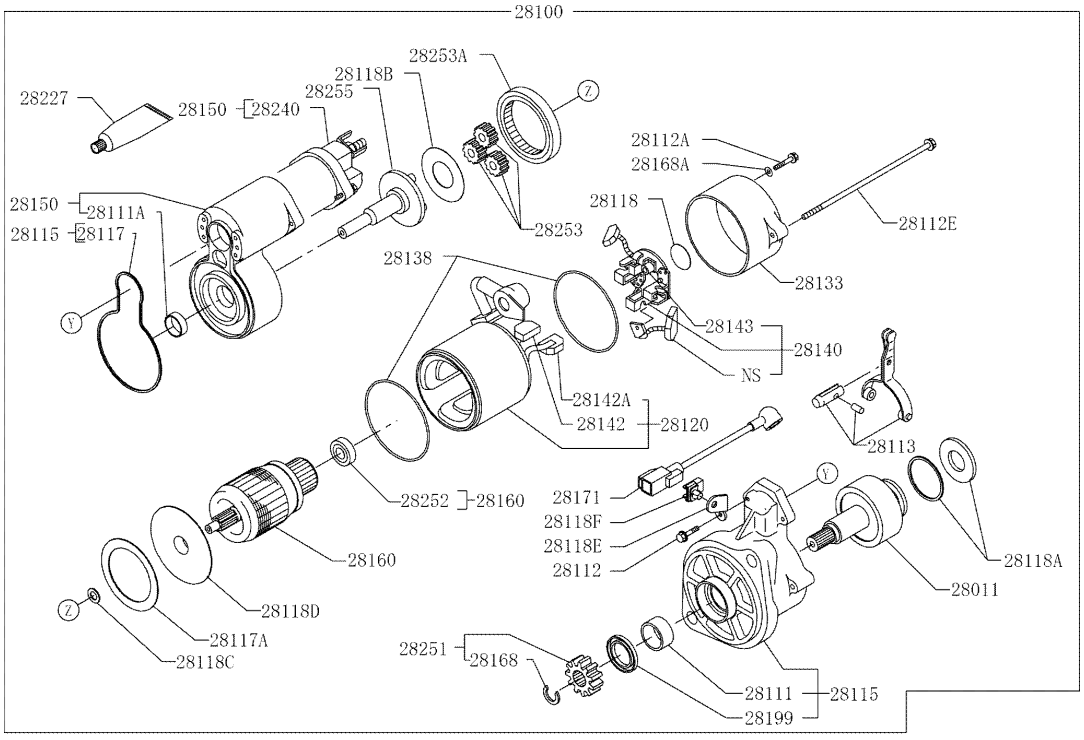

STARTER MOTOR 19-05 (HINO ENGINE TYPE J08ETM-KSDA)

REF	FN	PART NUMBER	YR/SN	QTY	DESCRIPTION
					SERVICE
28240		{282401680A}		1	“COVER ASSY,CONTACTOR “ W/TERMINAL
28251		{282511090A}		1	“PINION,START”
28252		{282521880A}		1	BEARING
28253		{282531070A}		3	GEAR
28253A		{282531080A}		1	GEAR
28255		{282551040A}		1	“SHAFT ASSY,START”

GASKET KIT, ENGINE OVERHAUL 19-91 (HINO ENGINE TYPE J08ETM-KSDA)

1

19-91

GASKET KIT (ENGINE OVERHAUL)

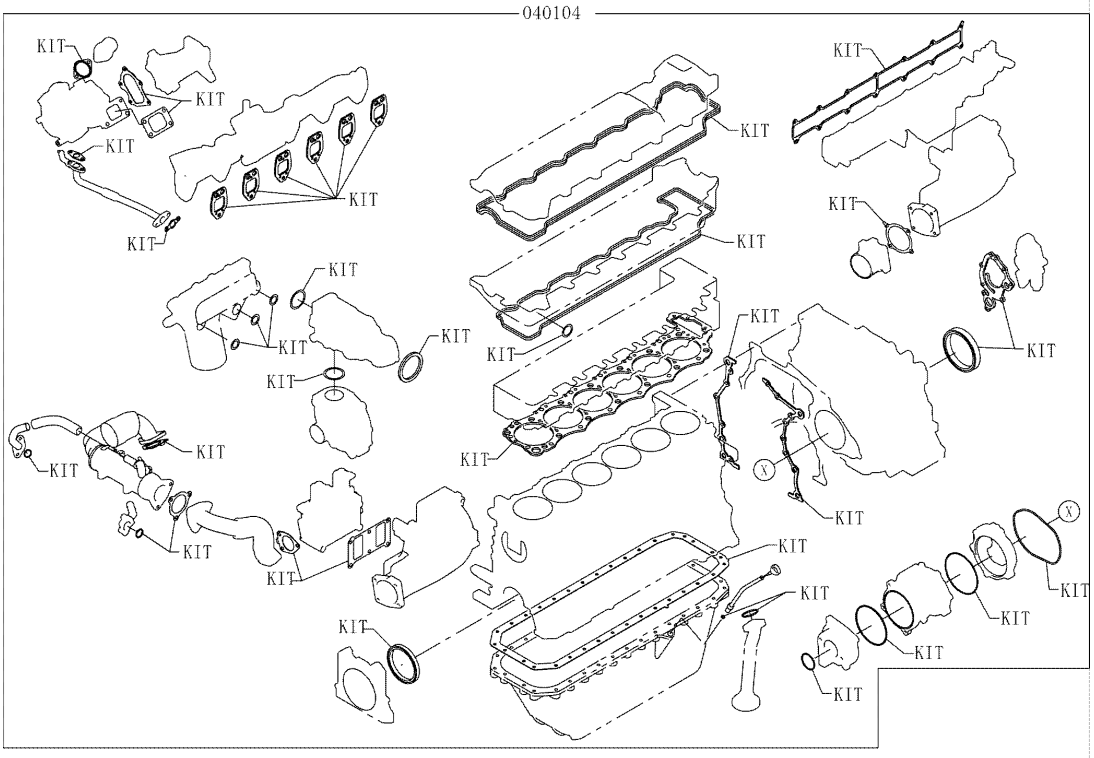

GASKET KIT, ENGINE OVERHAUL 19-91 (HINO ENGINE TYPE J08ETM-KSDA)

REF	FN	PART NUMBER	YR/SN	QTY	DESCRIPTION
					GASKET KIT ENGINE OVERHAUL)
040104		VH040104187A		1	JUNTA, “GASKET KIT,ENGINE OVERHAUL”

18-40

ENGINE ACCESSORY PARTS

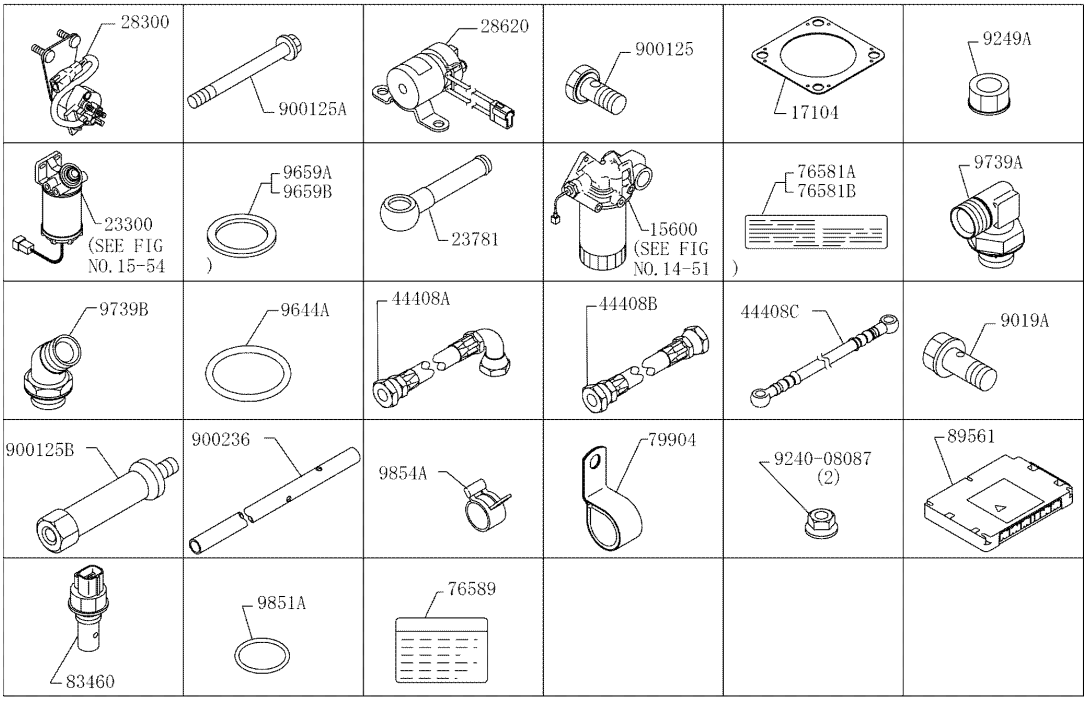

ENGINE ACCESSORY PARTS 18-40 (HINO ENGINE TYPE J08ETM-KSDA)

REF	FN	PART NUMBER	YR/SN	QTY	DESCRIPTION
					ENGINE ACCESSORY PARTS
15600		VH156004110C		1	FILTRO, “FILTER ASSY,OIL See Fig.14-51”
17104		VH171042100A		1	JUNTA, “GASKET,SUB ASSY,EXH MFLD”
23300		{VH233002800A}		1	“FILTER ASSY,FUEL See Fig.15-54”
23781		VH237811620B		2	TUBO DE INTRODUÇÃO, “PIPE,FUEL”
28300		VH283001271A		1	CONECTADOR, “RELAY ASSY,START”
28620		VH286201420A		1	CONECTADOR, “RELAY ASSY,INTAKE “
					AIR HEATER
44408A		VH444082150A		1	MANGUEIRA, “HOSE SUB ASSY,OIL”
44408B		VH444082160A		1	MANGUEIRA, “HOSE SUB ASSY,OIL”
44408C		VH444082170A		1	MANGUEIRA, “HOSE SUB ASSY,OIL”
76581A		{VH765818980A}		1	“PLATE,CAUTION COMPLETE ESP CHN”
76581B		{VH765818990A}		1	“PLATE,CAUTION COMPLETE FRA ARB”
76589		VH765894090C		1	PLACA, “PLATE,CAUTION ENG JAPANESE”
79904		VH799041570A		2	FIXADOR, CLIP SUB ASSY
83460		{VH834601510A}		1	“SWITCH ASSY,LEVEL WARNING”
89561		{VH895611160A}		1	“COMPUTER,FUEL INJ”
900125		{VH900125233A}		2	BOLT
900125A		VH900125223A		2	PARAFUSO, BOLT
900125B		VH900125202B		2	PARAFUSO, BOLT
900236		VH900236445A		1	MANGUEIRA, “HOSE,VENT”
9019A		VH901912108C		2	PARAFUSO, BOLT
9240-08087		{VH924008087A}		2	NUT
9249A		VH924910102A		4	PORCA, “NUT,FLANGE”
9644A		{VH964402835A}		4	O-RING
9659A		VH965914104B		4	ARRUELA PLANA, “WASHER,SOFT”
9659B		VH965912111B		4	ARRUELA PLANA, “WASHER,SOFT”
9739A		{VH973925105A}		3	ELBOW
9739B		VH973925106A		1	COTOVELO, ELBOW
9851A		{VH985119116A}		1	O-RING
9854A		{VH985428101A}		1	CLIP

SECTION INDEX
Superstructure

1.000	01	UPPER FRAME
1.000	02	UPPER FRAME
1.000	03	UPPER FRAME
1.010	01	FUEL TANK
1.010	02	PIPING FUEL
1.016	01	FUEL TRANSFER PUMP
1.020	01	OIL TANK
1.030	01	HYDRAULIC PUMP
1.030	02	HYDRAULIC PUMP - COMPONENTS
1.030	03	HYDRAULIC PUMP - COMPONENTS
1.030	04	HYDRAULIC PUMP - COMPONENTS
1.030	05	HYDRAULIC PUMP - COMPONENTS
1.030	06	HYDRAULIC PUMP - COMPONENTS
1.040	01	SWING REDUCTION UNIT
1.040	02	SWING REDUCTION UNIT - COMPONENTS
1.040	03	SWING REDUCTION UNIT - COMPONENTS
1.050	01	HYDRAULIC CONTROL VALVE
1.050	02	PIPING PILOT - DISTRIBUTOR - VERSION (01-02)
1.050	03	PIPING PILOT - DISTRIBUTOR - VERSION (01-02)
1.050	04	PIPING PILOT - DISTRIBUTOR - VERSION (01-02)
1.050	05	HYDRAULIC CONTROL VALVE - COMPONENTS
1.050	06	HYDRAULIC CONTROL VALVE - COMPONENTS
1.050	07	HYDRAULIC CONTROL VALVE - COMPONENTS
1.050	08	HYDRAULIC CONTROL VALVE - COMPONENTS
1.050	09	HYDRAULIC CONTROL VALVE - COMPONENTS
1.050	10	HYDRAULIC CONTROL VALVE - COMPONENTS
1.050	11	HYDRAULIC CONTROL VALVE - COMPONENTS
1.050	12	HYDRAULIC CONTROL VALVE - COMPONENTS
1.050	13	HYDRAULIC CONTROL VALVE - COMPONENTS
1.050	14	HYDRAULIC CONTROL VALVE - COMPONENTS
1.051	01	HYDRAULIC CONTROL VALVE - VERSION (03-04)
1.051	02	HYDRAULIC CONTROL VALVE - COMPONENTS - VERSION (03-04)
1.060	01	HYDRAULIC PUMP PILOT SYSTEM PIPES
1.060	02	HYDRAULIC PUMP PILOT SYSTEM PIPES
1.060	03	HYDRAULIC PUMP PILOT SYSTEM PIPES
1.061	01	OIL RETURN PIPES
1.061	02	OIL RETURN PIPES
1.065	01	HYDRAULIC LINES SWIVEL
1.070	01	CONTROLS
1.070	02	CONTROLS
1.080	01	PILOT PIPING (1)
1.080	02	PILOT PIPING (1)
1.080	03	PILOT PIPING (1) - VERSION (03-04)
1.081	01	PILOT PIPING (2)
1.081	02	PILOT PIPING (2)
1.081	03	PILOT PIPING (2) - COMPONENTS
1.082	01	BLOCK - OPT - VERSION (01-02)
1.082	02	BLOCK - OPT - VERSION (03-04)
1.083	01	PILOT PIPING (3)
1.083	02	PILOT PIPING (3)
1.083	03	PILOT PIPING (3)

SECTION INDEX
Superstructure

1.083	04	PILOT PIPING (3) - VERSION (03-04)
1.085	01	PILOT PIPING (5) - VERSION (03-04)
1.090	01	PILOT PIPING - MANIPULATOR
1.090	02	PILOT PIPING - MANIPULATOR
1.090	03	PILOT VALVE CONTROL MANIPULATOR - COMPONENTS
1.091	01	PILOT PIPING - PEDAL - VERSION (03-04)
1.091	02	PILOT VALVE - COMPONENTS - VERSION (03-04)
1.091	03	PEDAL - VERSION (03-04)
1.092	01	TRAVEL PILOT SYSTEM PIPES
1.092	02	PILOT VALVE - COMPONENTS
1.200	01	DASHBOARD
1.200	02	DASHBOARD
1.200	03	DASHBOARD
1.220	01	ELECTRIC SYSTEM
1.220	02	ELECTRIC SYSTEM - COMPONENTS
1.220	03	ELECTRIC SYSTEM
1.220	04	ELECTRIC SYSTEM
1.220	05	ELECTRIC SYSTEM
1.220	06	ELECTRIC SYSTEM - FLOODLIGHT
1.220	07	ELECTRIC SYSTEM
1.220	08	ELECTRIC SYSTEM
1.220	09	ELECTRIC SYSTEM
1.220	10	ELECTRICAL SYSTEM
1.220	11	ELECTRIC SYSTEM
1.230	01	WINDOW WASHER
1.250	01	CAB
1.250	02	SEAT BELT
1.250	03	OPERATOR'S SEAT - SUPPORT
1.250	04	ARMREST
1.250	05	CAB - COMPONENTS
1.250	05A	CAB - COMPONENTS
1.250	06	CAB - COMPONENTS
1.250	07	CAB - COMPONENTS
1.250	08	CAB - COMPONENTS
1.250	09	CAB - COMPONENTS
1.250	10	CAB - COMPONENTS
1.250	11	CAB - COMPONENTS
1.250	12	CAB - COMPONENTS
1.250	13	CAB - COMPONENTS
1.250	14	CAB - COMPONENTS
1.250	15	CAB - COMPONENTS
1.250	16	CAB - COMPONENTS
1.250	17	CAB - COMPONENTS
1.250	18	CAB - COMPONENTS
1.270	01	FLOOR-CAB
1.270	02	FLOOR-CAB
1.280	01	RADIO
1.295	01	AIR CONDITIONING
1.295	02	AIR CONDITIONING
1.295	03	AIR CONDITIONING
1.295	04	AIR CONDITIONING

SECTION INDEX
Superstructure

1.295	05	AIR CONDITIONING - COMPONENTS
1.295	06	AIR CONDITIONING - COMPONENTS
1.295	07	AIR CONDITIONING - COMPONENTS
1.300	01	HOODS - GUARDS
1.300	02	HOODS - GUARDS
1.300	03	HOODS - GUARDS
1.300	04	HOODS - GUARDS
1.300	05	HOODS - GUARDS
1.300	06	HOODS - GUARDS
1.300	07	HOODS - GUARDS
1.300	08	HOODS - GUARDS
1.300	09	HOODS - GUARDS
1.300	10	HOODS - GUARDS
1.300	11	HOODS - GUARDS

1.000	01	p1	11/07

UPPER FRAME

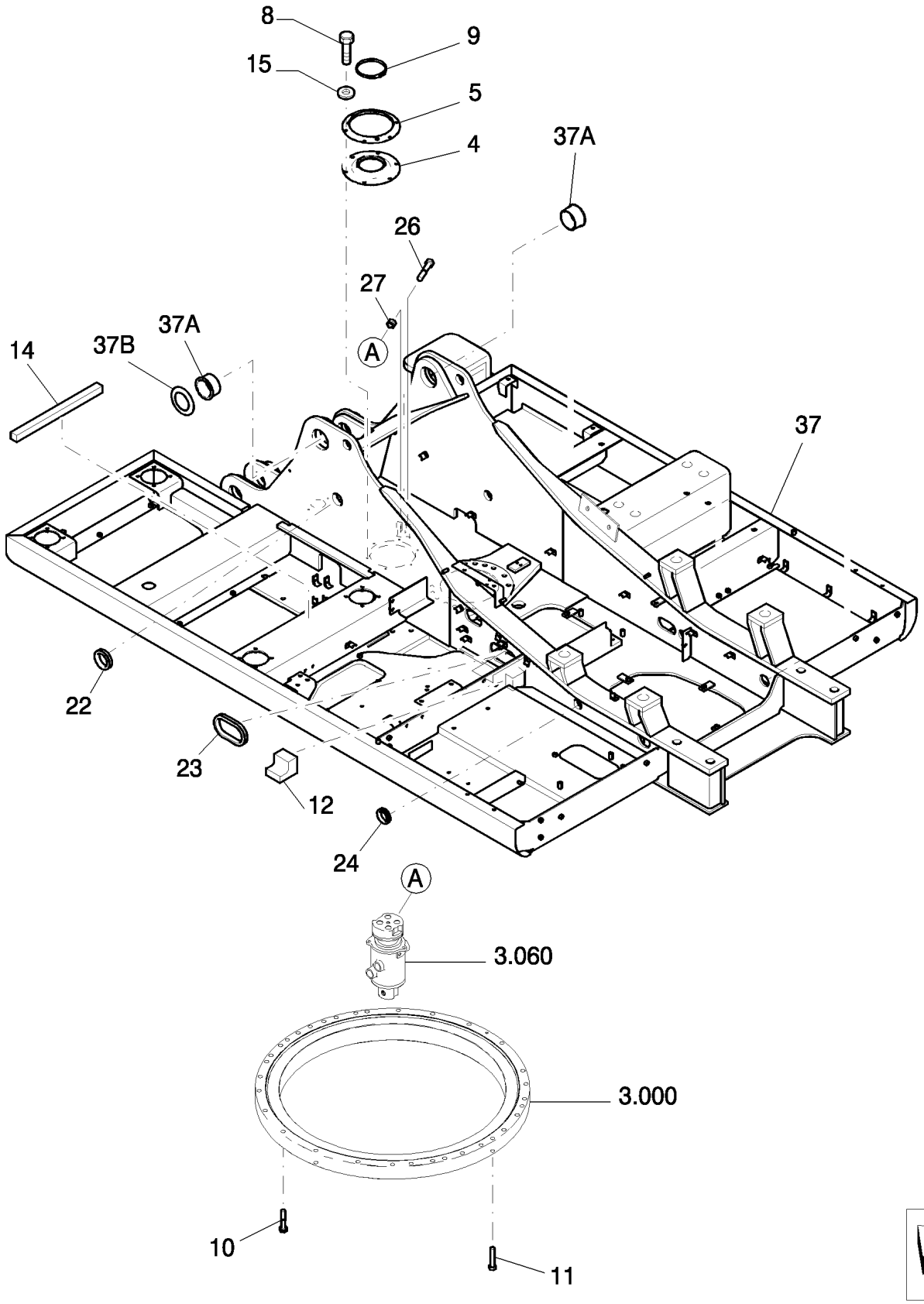

UPPER FRAME

REF	FN	PART NUMBER	YR/SN	QTY	DESCRIPTION
4		{87640219}		1	
5		72956312		1	PLACA
8		11106234		6	PARAFUSO, Hex, M10 x 25, 10.9, Full Thd
9		{87640220}		1	
10		{87640218}		34	
11		{87651705}		1	
12		{87639676}		1	
14		{87639678}		1	
15		14496631		6	ARRUELA PLANA, M10 x 21 x 2
22		72954148		1	CASQUILHO ISOLADOR
23		87549843		1	JUNTA
24		72284148		1	TAMPA
26		15246234		1	PARAFUSO
27		12164521		1	PORCA, M24 x 2, Cl 10
37		{87679989}		1	- ASSY
37A		87332802		2	BUCHA
37B		72208693		1	PROTEÇÃO

1.000	02	p1	11/07

UPPER FRAME

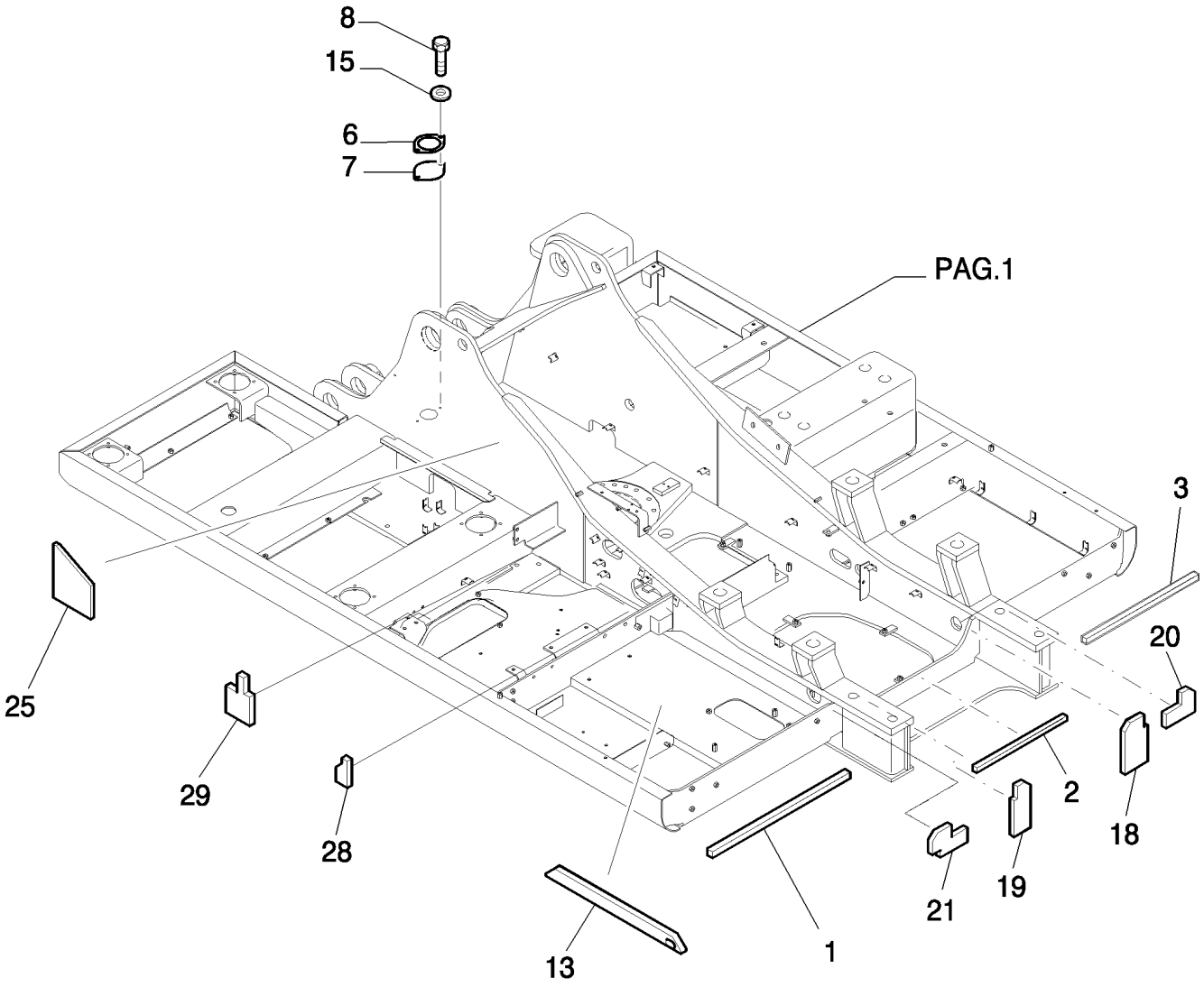

UPPER FRAME

REF	FN	PART NUMBER	YR/SN	QTY	DESCRIPTION
1		{87639673}		1	
2		{87639674}		1	
3		{87639675}		1	
6		71442115		1	FLANGE
7		71442116		1	JUNTA
8		11106234		2	PARAFUSO, Hex, M10 x 25, 10.9, Full Thd
13		{87639677}		1	
15		14496631		2	ARRUELA PLANA, M10 x 21 x 2
18		{87639680}		1	
19		{87639681}		1	
20		{87639682}		1	
21		{87639683}		1	
24		72284184		1	CASQUILHO ISOLADOR
25		87537860		1	ISOLANTE
28		{87639686}		1	
29		87549840		1	ISOLANTE

1.000	03	p1	11/07

UPPER FRAME

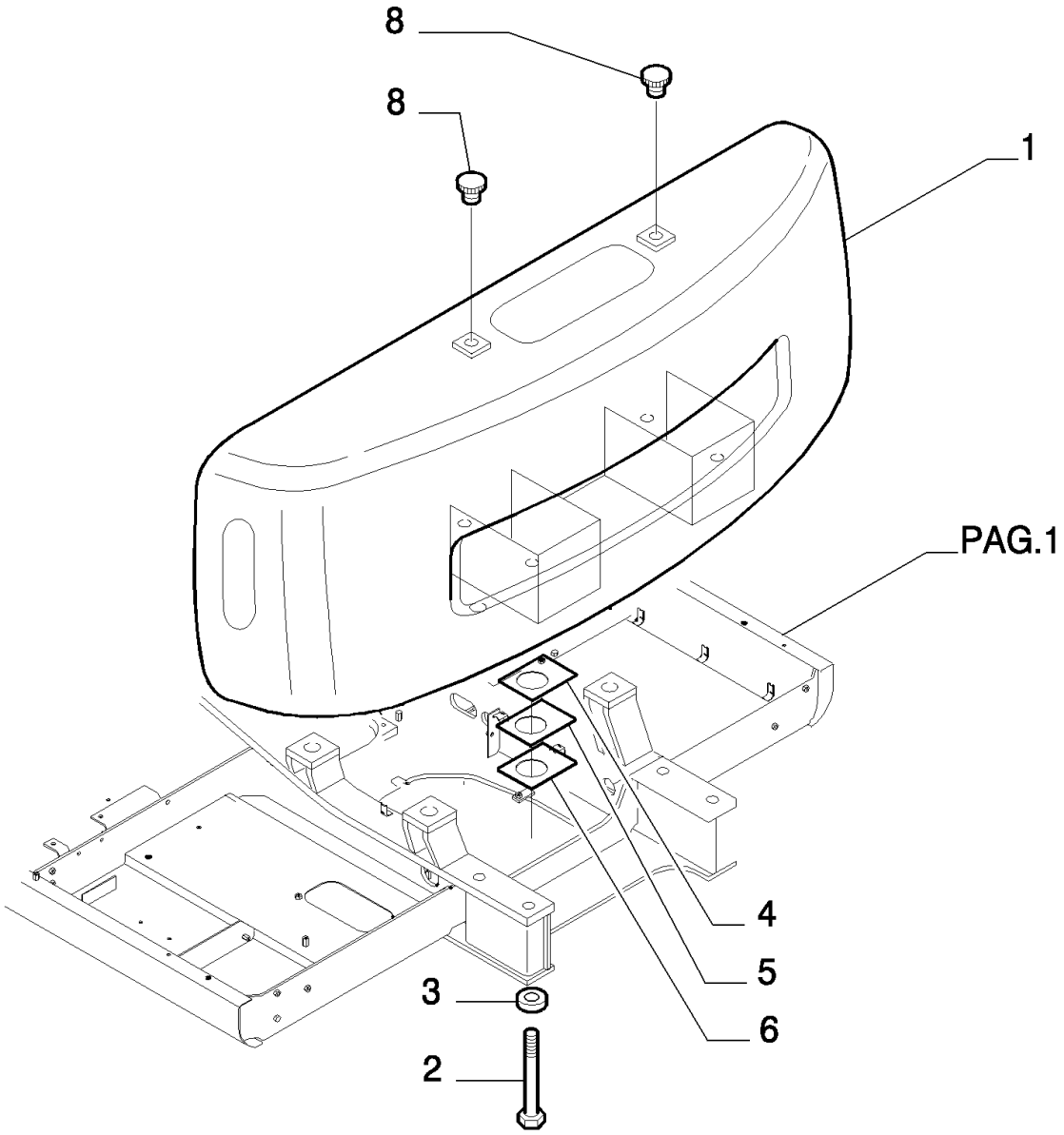

UPPER FRAME

REF	FN	PART NUMBER	YR/SN	QTY	DESCRIPTION
1		{87675787}		1	
2		{87605930}		4	
3		{87605931}		4	
4		87605964		3	CALCO DE AFINACAO
5		87605965		3	CALCO DE AFINACAO
6		87605966		4	CALCO DE AFINACAO
8		72208721		2	BUJÃO

1.010	01	p1	11/07

FUEL TANK

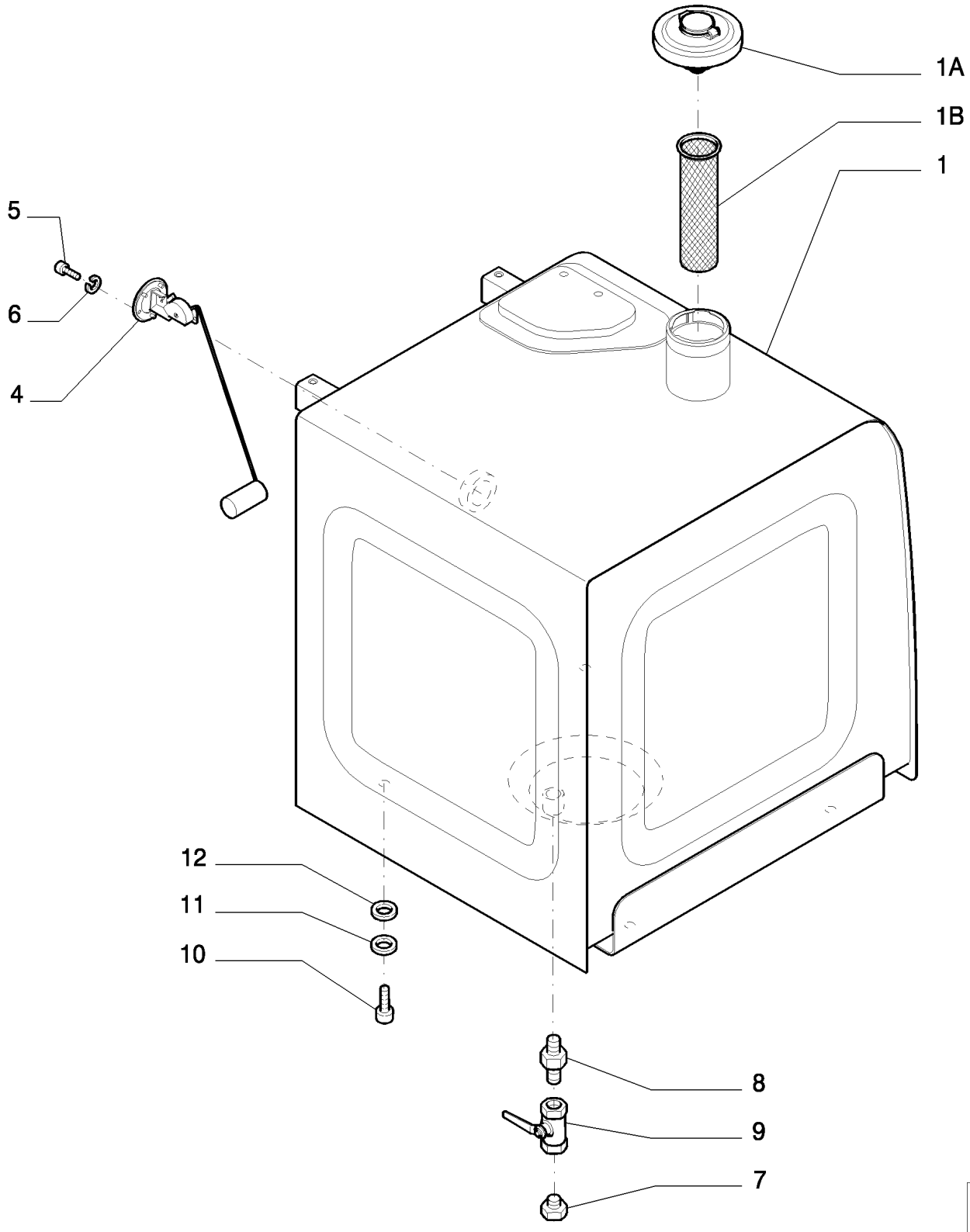

FUEL TANK

REF	FN	PART NUMBER	YR/SN	QTY	DESCRIPTION
1		{87677373}		1	- ASSY
1A		72207029		1	BUJÃO
1B		72105459		1	FILTRO
4		87539072		1	SENSOR
5		13274024		5	PARAFUSO
6		10571479		5	ARRUELA-TRAVA, M5
7		4976587		1	BUJÃO
8		71405229		1	CONEXÃO
9		71405228		1	TORNEIRA
10		11118734		6	PARAFUSO
11		71405003		6	ARRUELA PLANA
12		72202973		5	CALCO DE AFINACAO, 1mm Thk

1.010	02	p1	06/08

PIPING FUEL

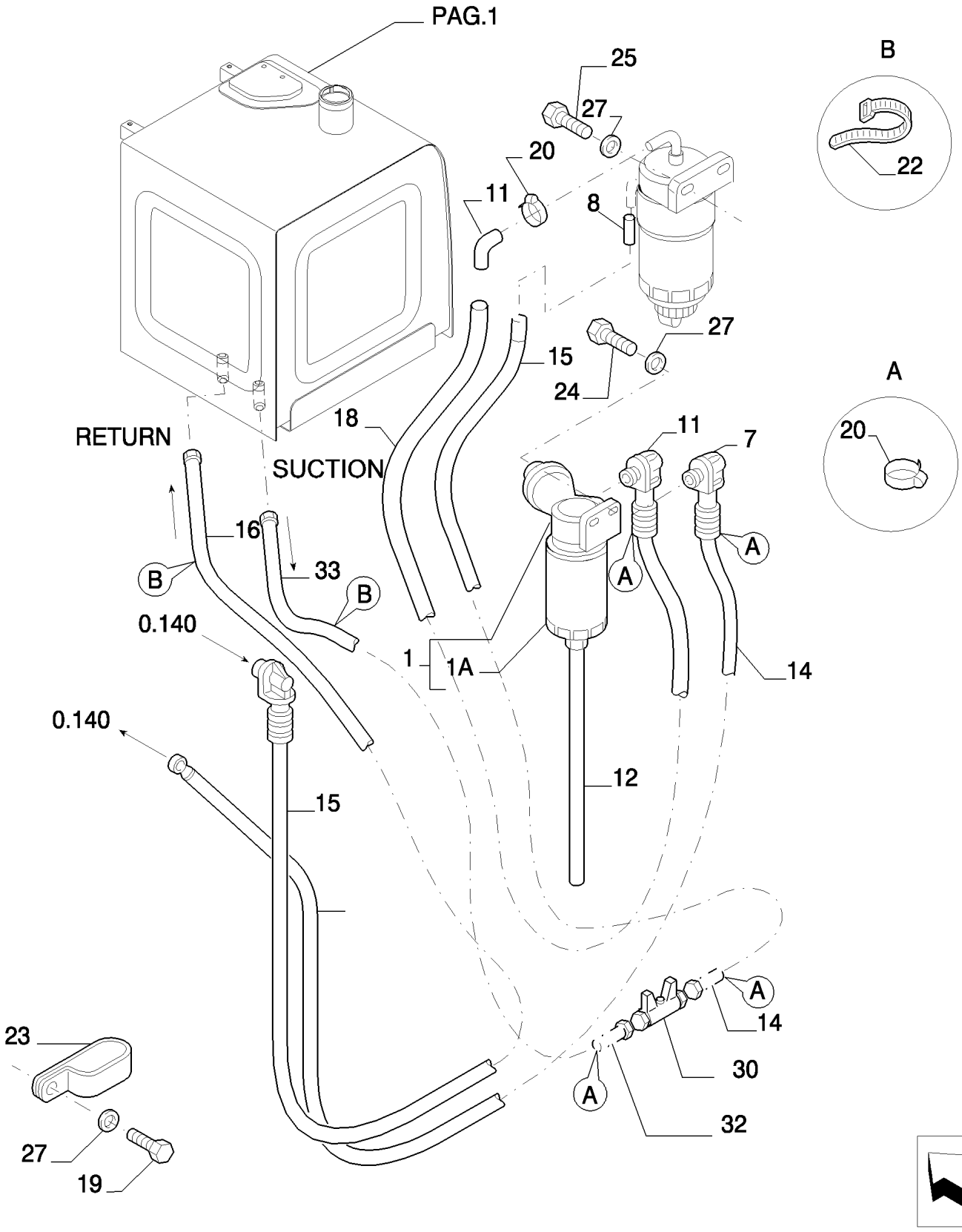

PIPING FUEL

REF	FN	PART NUMBER	YR/SN	QTY	DESCRIPTION
1		{87642793}		1	- ASSY
1A		{LS21P01013S002}		1	
7		{87642794}		1	
8		{87640339}		1	
9		{87640335}		1	
11		{87640340}		1	
12		72954207		2	MANGUEIRA
14		{87640349}		1	
15		{87640350}		1	
16		{87640351}		1	
18		87361190		1	TUBO PLASTICO
19		11106034		3	PARAFUSO, Hex, M10 x 20, 10.9, Full Thd
20		{420411000}		12	
22		4982514		12	TIRA DE CABO
23		71415385		1	FIXADOR
24		11106434		2	PARAFUSO, Hex, M10 x 30, 10.9, Full Thd
25		11106834		2	PARAFUSO
27		14496631		7	ARRUELA PLANA, M10 x 21 x 2
30		{87642796}		1	
31		71405745		2	FIXADOR
32		{87640341}		1	
33		{87640352}		1	

1.016	01	p1	10/07

FUEL TRANSFER PUMP

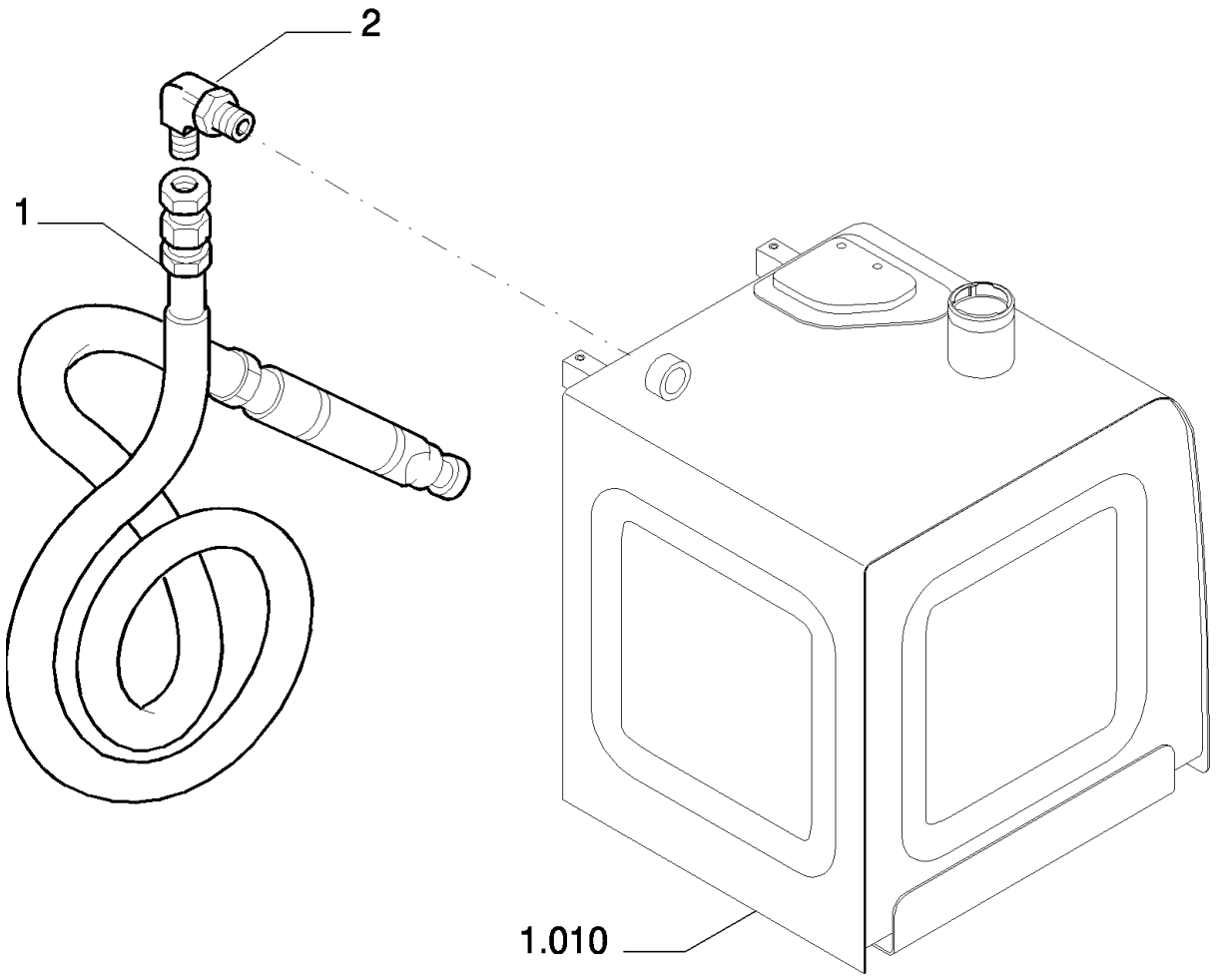

FUEL TRANSFER PUMP

REF	FN	PART NUMBER	YR/SN	QTY	DESCRIPTION
1		87579591		1	BOMBA DE ALIMENTAÇÃO
2		87579592		1	CONEXÃO

1.020	01	p1	11/07

OIL TANK

2

PARTS MARKED ● ARE NOT SUPPLIED AS SPARES
I PARTICOLARI CONTRASSEGNATI CON ● NON VENGONO FORNITI DI RICAMBIO

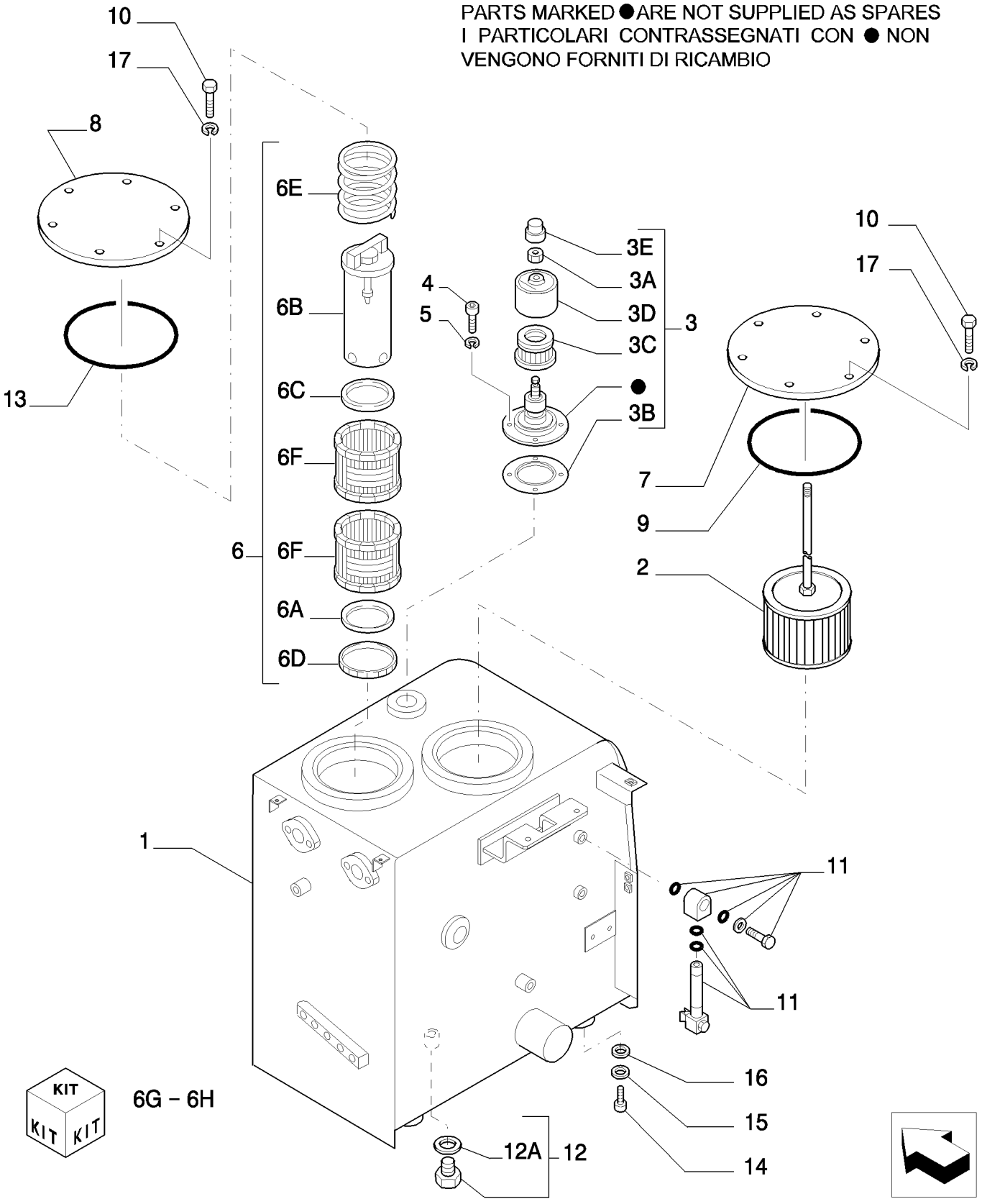

OIL TANK

REF	FN	PART NUMBER	YR/SN	QTY	DESCRIPTION
1		{87619566}		1	
2		{87623988}		1	
3		87623989		1	BUJÃO, - ASSY
3A		YN57V00004S002		1	ELEMENTO
3B		72958082		1	EMBALAGEM
3C		2446U260S10		1	PORCA
4		14305234		4	PARAFUSO, 6X16
5		10516474		4	ARRUELA-TRAVA, 6
6		{87623990}		1	- ASSY
6A		72150709		1	PLACA
6B		LC21V00014P1		1	VÁLVULA HIDRAULICA
6C	1	72957828		1	ANEL "O"
6D	1	72150175		1	EMBALAGEM
6E		72962321		1	MOLA
6F	1	72150174		2	ELEMENTO FILTRANTE
6G		LS52V01001R200		1	KIT DE REPARO
7		{87619567}		1	
8		87619568		1	TAMPA
9		72219360		1	JUNTA, 5.33X177.2
10		11106234		12	PARAFUSO, Hex, M10 x 25, 10.9, Full Thd
11		87524750		1	INDICADOR DE NÍVEL
12		71406271		1	BUJÃO, - ASSY
12A		71404162		1	ANEL "O"
13		14496634		12	ARRUELA PLANA, 10
14		11124534		4	PARAFUSO
15		14497131		4	ARRUELA PLANA, 17
16		87332947		3	CALCO DE AFINACAO
17		87619569		1	ANEL "O"

(1) KIT - LS52V01001R200

1.030	01	p1	11/07

HYDRAULIC PUMP

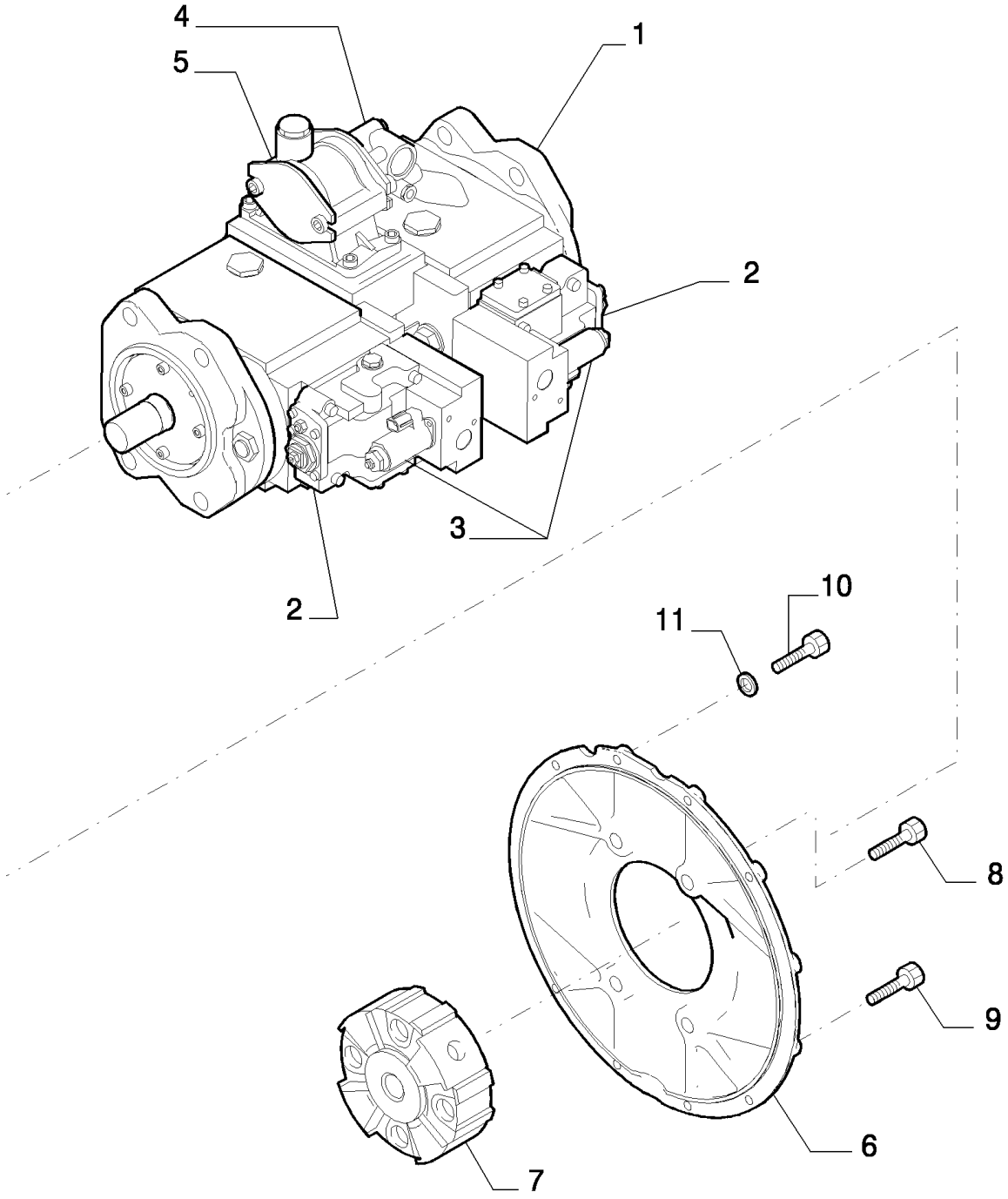

HYDRAULIC PUMP

REF	FN	PART NUMBER	YR/SN	QTY	DESCRIPTION
1-5		{87659454}		1	- ASSY
1	1	{LC10V00020F1}		1	
2	2	LC10V01005F1		2	REGULADOR
3	3	YN35V00052F1		2	VALVULA
4	4	YN10V00014F3		1	BOMBA
5	5	87362960		1	CAIXA/CARCAÇA
6		87528089		1	SUPORTE
7		{87571046}		1	ACOPLAMENTO
8		71456596		4	PARAFUSO
9		11106634		8	PARAFUSO, Hex, M10 x 35, 10.9, Full Thd

(1) ASSY SEE PAGE 2
(2) ASSY SEE PAGE 3
(3) ASSY SEE PAGE 4
(4) ASSY SEE PAGE 5
(5) ASSY SEE PAGE 6

1.030	02	p1	11/07

HYDRAULIC PUMP - COMPONENTS

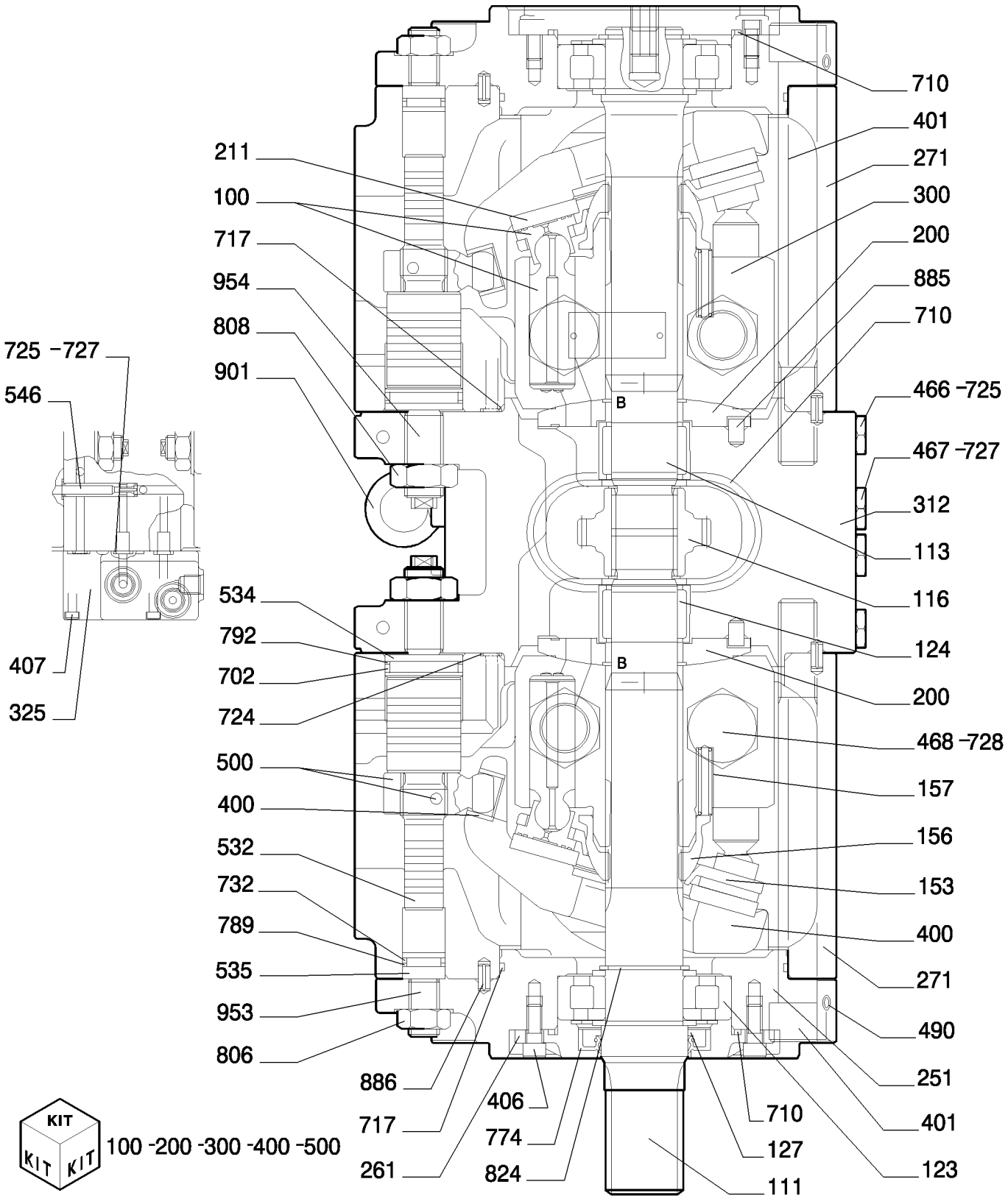

HYDRAULIC PUMP - COMPONENTS

REF	FN	PART NUMBER	YR/SN	QTY	DESCRIPTION
111		LC10V00010S111		1	EIXO
113		LC10V00010S113		1	EIXO
116		LC10V00010S116		1	ENGRENAGEM
123		{LC10V00010S123}		2	
124		LC10V00010S124		2	ROLAMENTO
127		72962215		4	ESPAÇADOR
153		LC10V00010S153		2	PLACA
156		72963962		2	BUCHA
157		LC10V00010S157		18	MOLA
211		72962208		2	PLACA
251		LC10V00010S018		2	SUPORTE
261		LC10V00010S261		1	TAMPA
271		YN10V00043S271		2	CAIXA/CARCAÇA
312		LC10V00010S312		1	BLOCO
325		YN10V00043S325		1	TAMPA
401		87333069		8	PARAFUSO
406		14306370		4	PARAFUSO
407		14304870		3	PARAFUSO
466		72209813		2	BUJÃO
467		2441U549S464		2	BUJÃO
468		72209878		4	BUJÃO
490		72209815		32	BUJÃO
534		87333071		2	BATENTE
535		72962150		2	BATENTE
546		YN10V00043S546		2	ESPAÇADOR
702		72215461		2	JUNTA
710		72217471		2	JUNTA
717		72217374		4	JUNTA
724		72215395		16	JUNTA
725		72215387		9	JUNTA
727		72217475		3	JUNTA
728		72217375		4	JUNTA
732		72215463		2	JUNTA
774		72220080		1	JUNTA
789		72964469		2	ANEL

PUMP ASSY P/N YN10V00043F1

E385B

HYDRAULIC PUMP - COMPONENTS

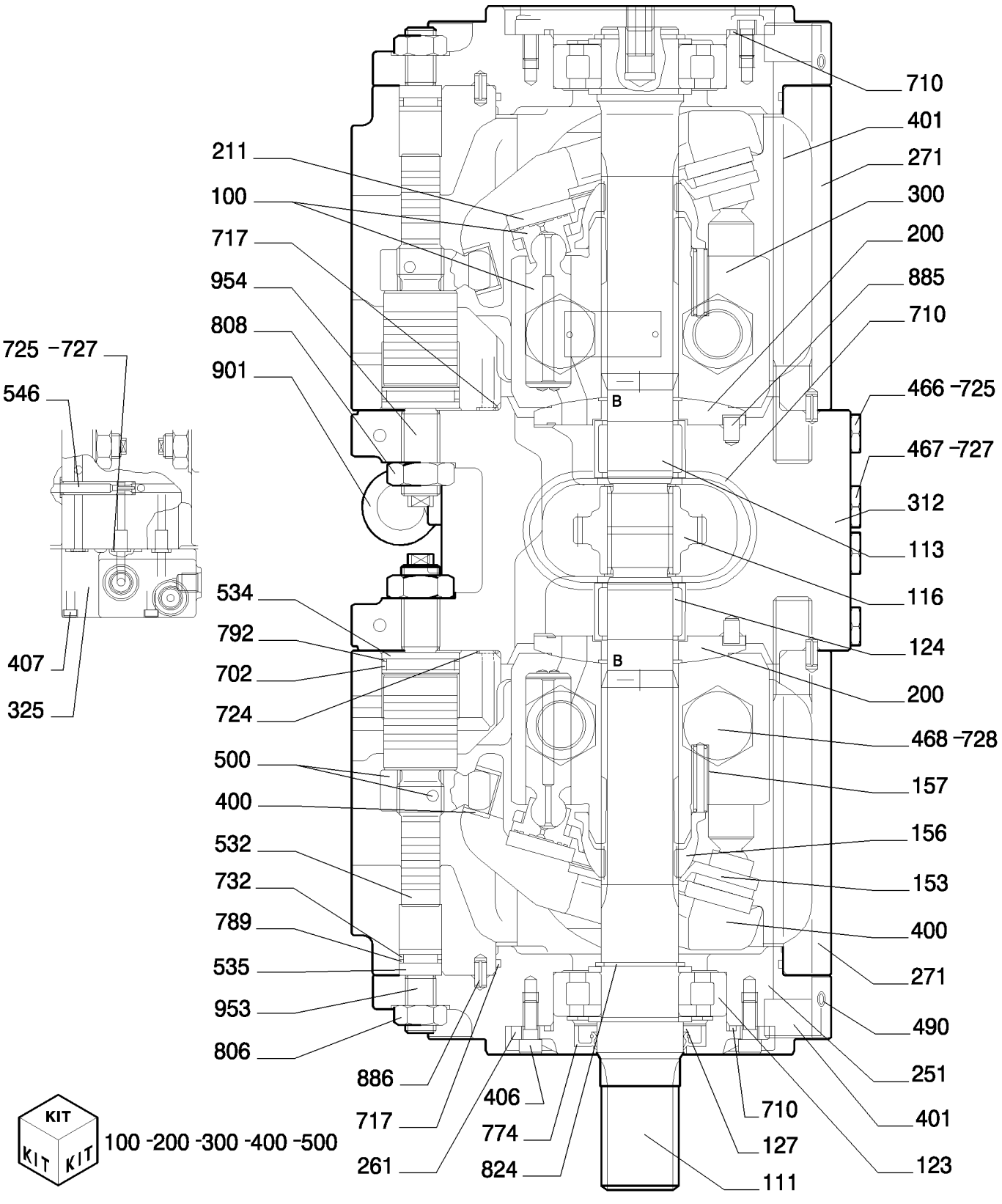

HYDRAULIC PUMP - COMPONENTS

REF	FN	PART NUMBER	YR/SN	QTY	DESCRIPTION
792		72211285		2	ANEL
806		72964485		2	PORCA
808		ZN18C20012		2	PORCA
824		72211282		2	ANEL "O"
885		72962216		2	PINO
886		72958881		4	PINO
901		72958882		2	PARAFUSO
953		72215465		2	PARAFUSO
954		72209802		2	KIT
100		72215466		1	KIT, REPAIR KIT CONSISTS OF ITEM 151X9, 152X9
200		LC10V00020R100		1	KIT DE REPARO, REPAIR KIT CONSISTS OF ITEM 141X1, 313X1
300		LC10V00020R200		1	KIT DE REPARO, REPAIR KIT CONSISTS OF ITEM 141X1, 314X1
400		72220081		1	KIT, REPAIR KIT CONSISTS OF ITEM 212X1, 214X1
500		72215470		1	KIT, REPAIR KIT CONSISTS OF ITEM 531X1, 548X1

PUMP ASSY P/N YN10V00043F1

1.030	03	p1	11/07

HYDRAULIC PUMP - COMPONENTS

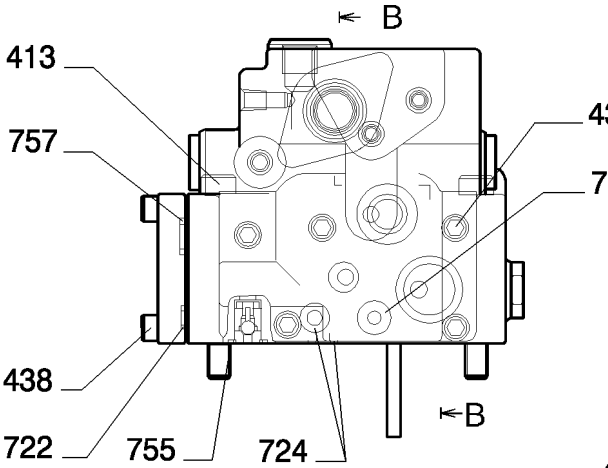

VIEW C

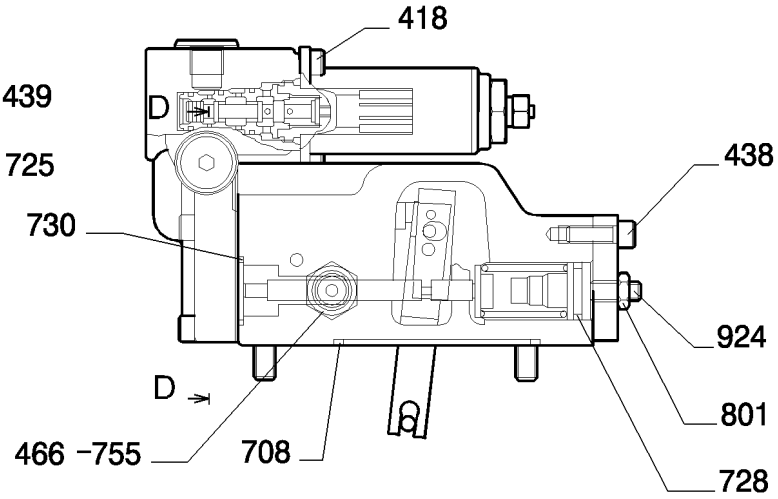

B-B

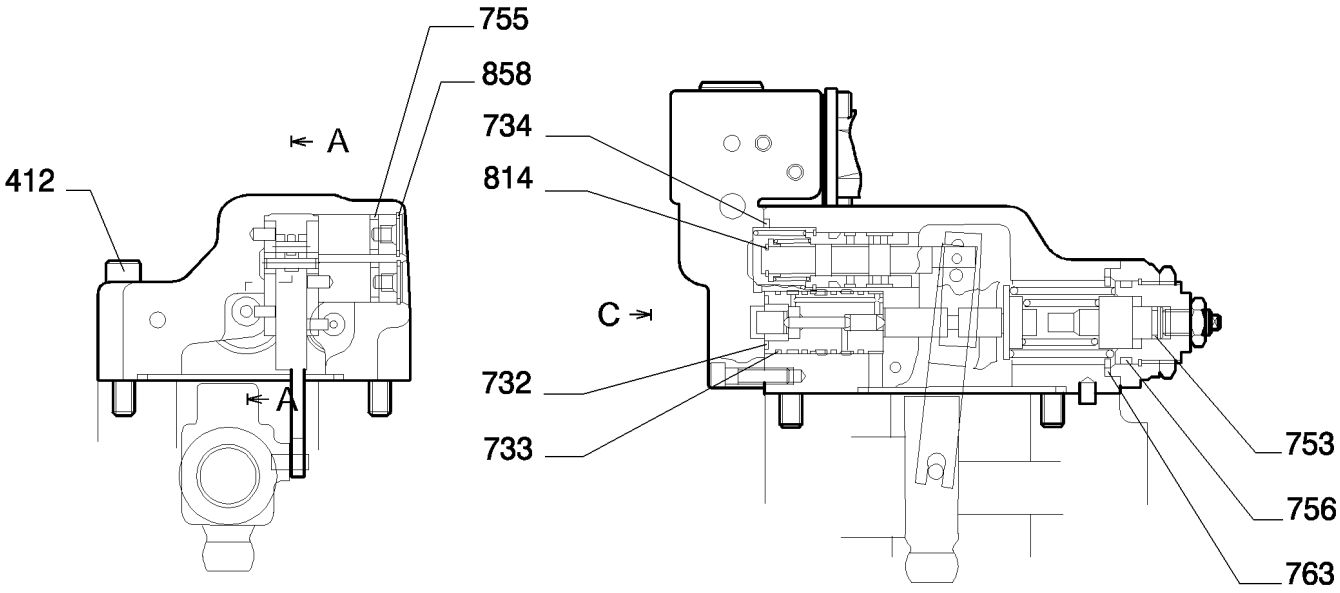

A-A

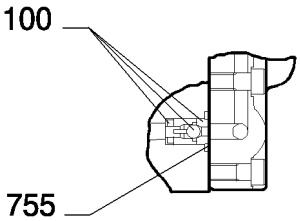

E-E

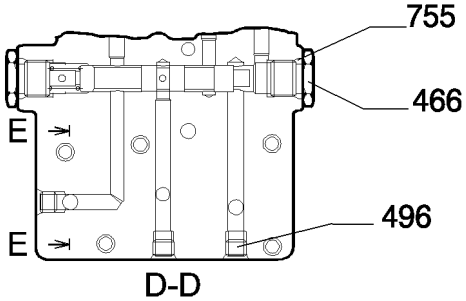

D-D



100

HYDRAULIC PUMP - COMPONENTS

REF	FN	PART NUMBER	YR/SN	QTY	DESCRIPTION
412		14306970		2	PARAFUSO
413		14309070		2	PARAFUSO
418		72209810		2	PARAFUSO
438		14305334		8	PARAFUSO, Hex Soc Hd, M6 x 20, 10.9
439		14305470		5	PARAFUSO
466		72209813		3	BUJÃO
496		72209815		17	BUJÃO
708		72215396		1	JUNTA
722		72217377		3	JUNTA
724		72215395		8	JUNTA
725		72217378		1	JUNTA
728		72215463		1	JUNTA
730		72215357		1	JUNTA
732		72217476		1	JUNTA
733		72217379		1	JUNTA
734		72217380		1	JUNTA
753		72217381		1	JUNTA
755		72215387		7	JUNTA
756		72217382		1	JUNTA
757		72215386		1	JUNTA
763		72215461		1	JUNTA
801		72215471		1	PORCA
814		72219119		1	JUNTA
858		72209831		2	ANEL
924		72209832		1	KIT
100		72962151		1	KIT DE REPARO

PUMP ASSY P/N YN10V01009F1

E385B

HYDRAULIC PUMP - COMPONENTS

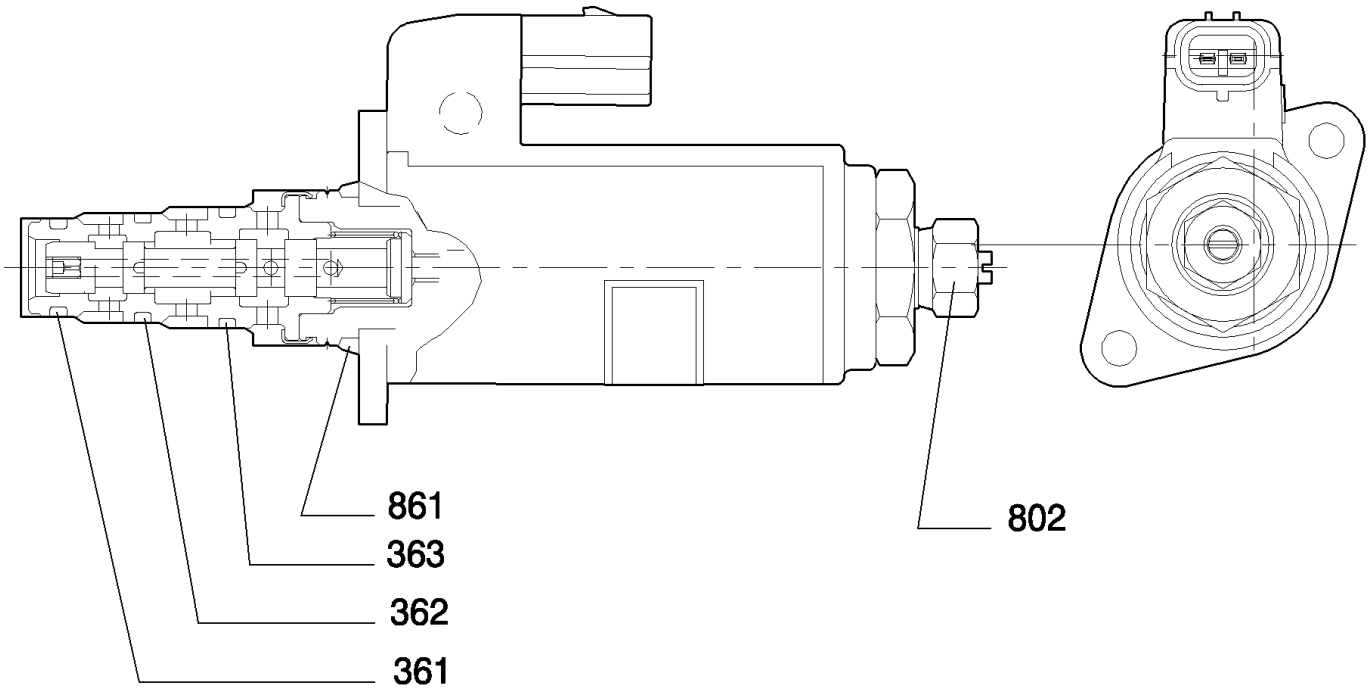

HYDRAULIC PUMP - COMPONENTS

REF	FN	PART NUMBER	YR/SN	QTY	DESCRIPTION
361		YN35V00004S361		1	ANEL "O"
362		YN35V00004S362		1	ANEL "O"
363		YN35V00004S363		1	ANEL "O"
802		YN35V00018S802		1	PORCA
861		ZD12P02000		1	ANEL "O"

VALVE ASSY P/N YN35V00052F1

1.030	05	p1	11/07

HYDRAULIC PUMP - COMPONENTS

2

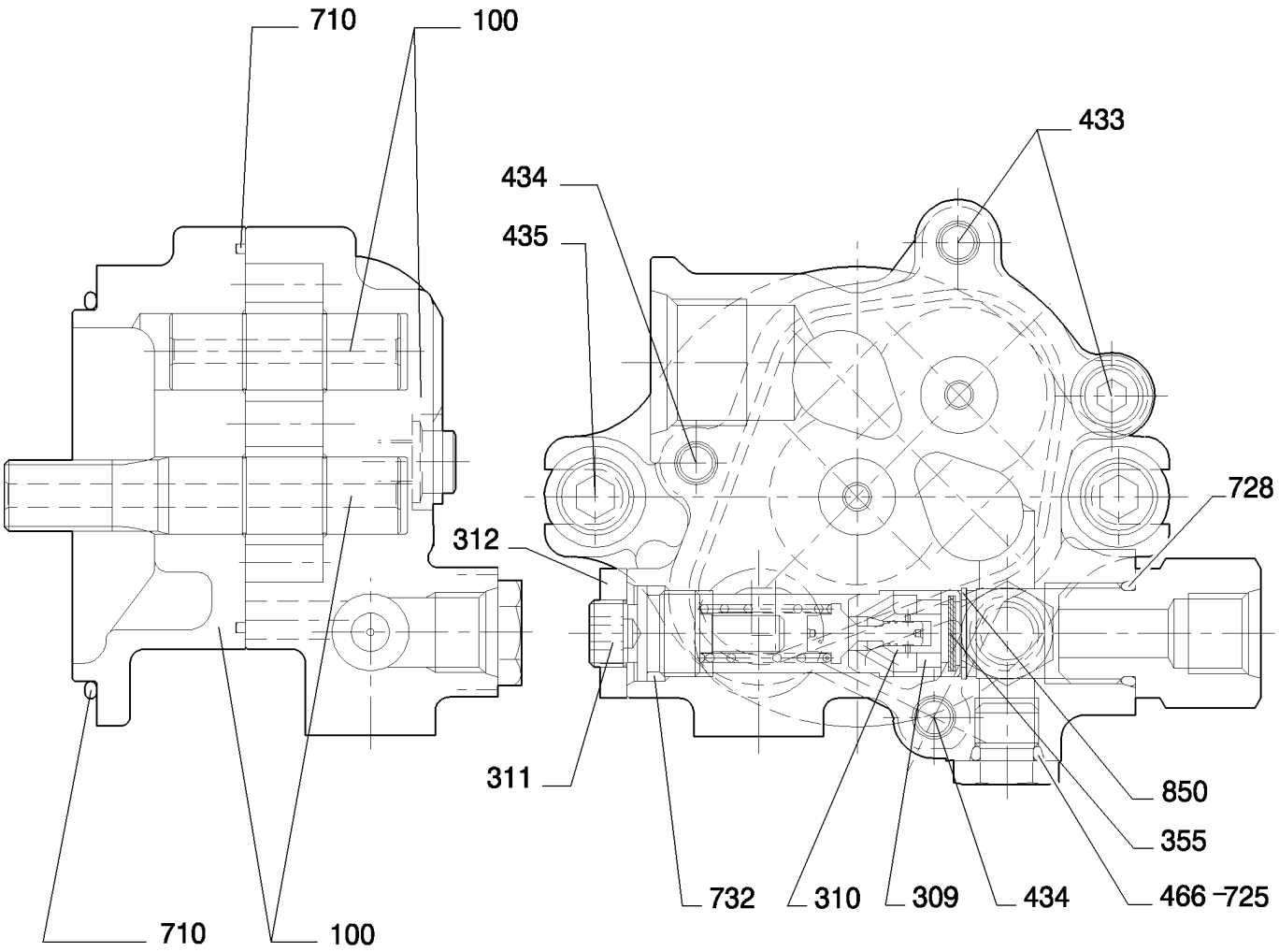

KIT 100

HYDRAULIC PUMP - COMPONENTS

REF	FN	PART NUMBER	YR/SN	QTY	DESCRIPTION
100		87336189		1	KIT DE REPARO
309		72963995		1	ANEL
310		72963996		1	MOLA
311		72963997		1	PARAFUSO DE REGULAGEM
312		72960479		1	PORCA
355		72963968		1	FILTRO
433		72963969		2	PARAFUSO
434		72963970		2	PARAFUSO
435		87333055		2	PARAFUSO
466		72209813		2	BUJÃO
700		72963972		1	ANEL
710		72214677		1	JUNTA
725		72209827		2	ANEL "O"
728		71404166		1	ANEL "O"
732		72209823		1	ANEL "O"
850		72964498		1	ANEL

PUMP ASSY P/N YN10V00033F2

E385B

HYDRAULIC PUMP - COMPONENTS

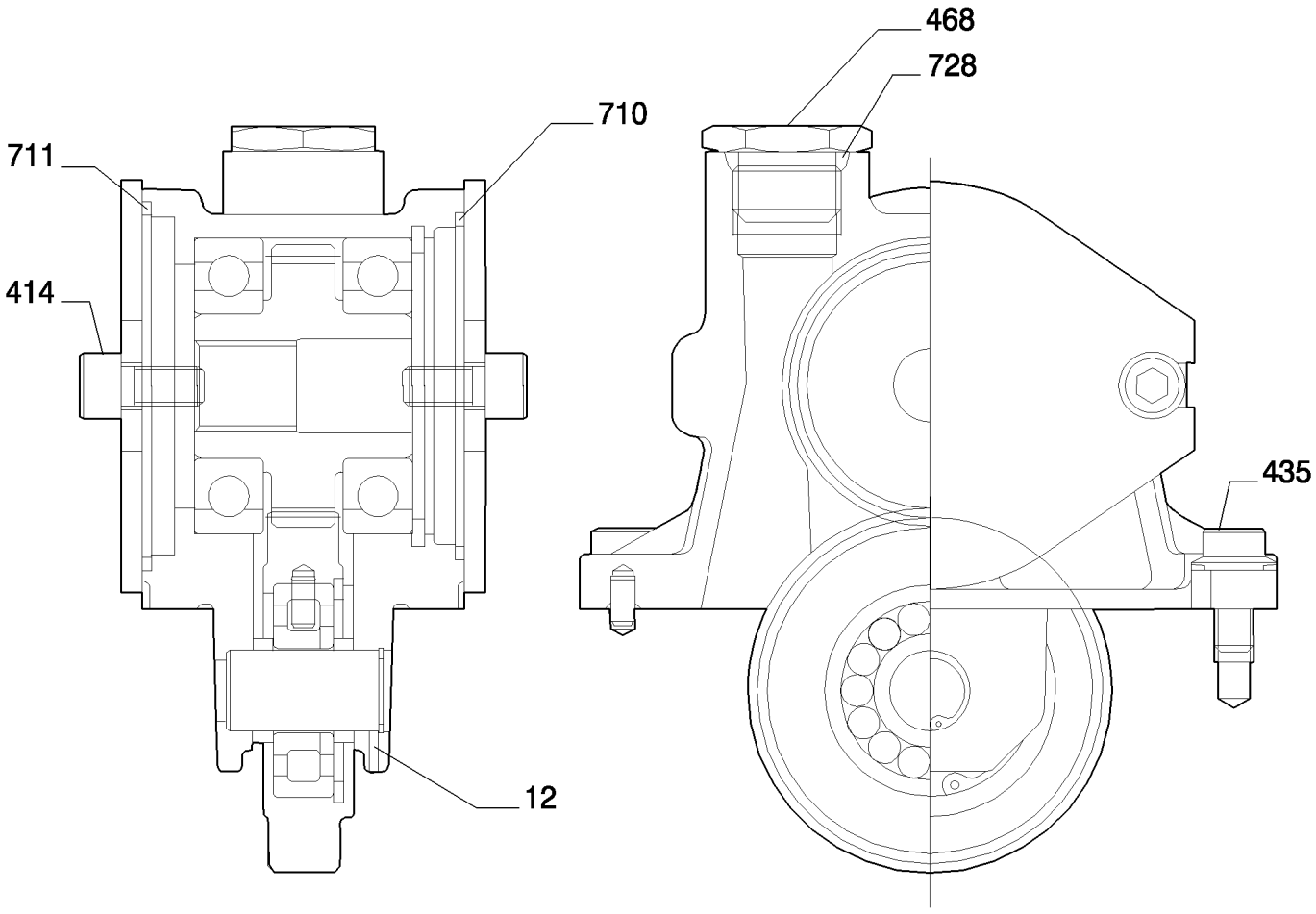

HYDRAULIC PUMP - COMPONENTS

REF	FN	PART NUMBER	YR/SN	QTY	DESCRIPTION
12		87363966		1	PINO
414		72209876		4	PARAFUSO
435		72209877		4	PARAFUSO
468		72209878		1	BUJÃO
710		72209836		1	ANEL "O"
711		72209879		1	ANEL "O"
728		72209838		1	ANEL "O"

SWING REDUCTION UNIT

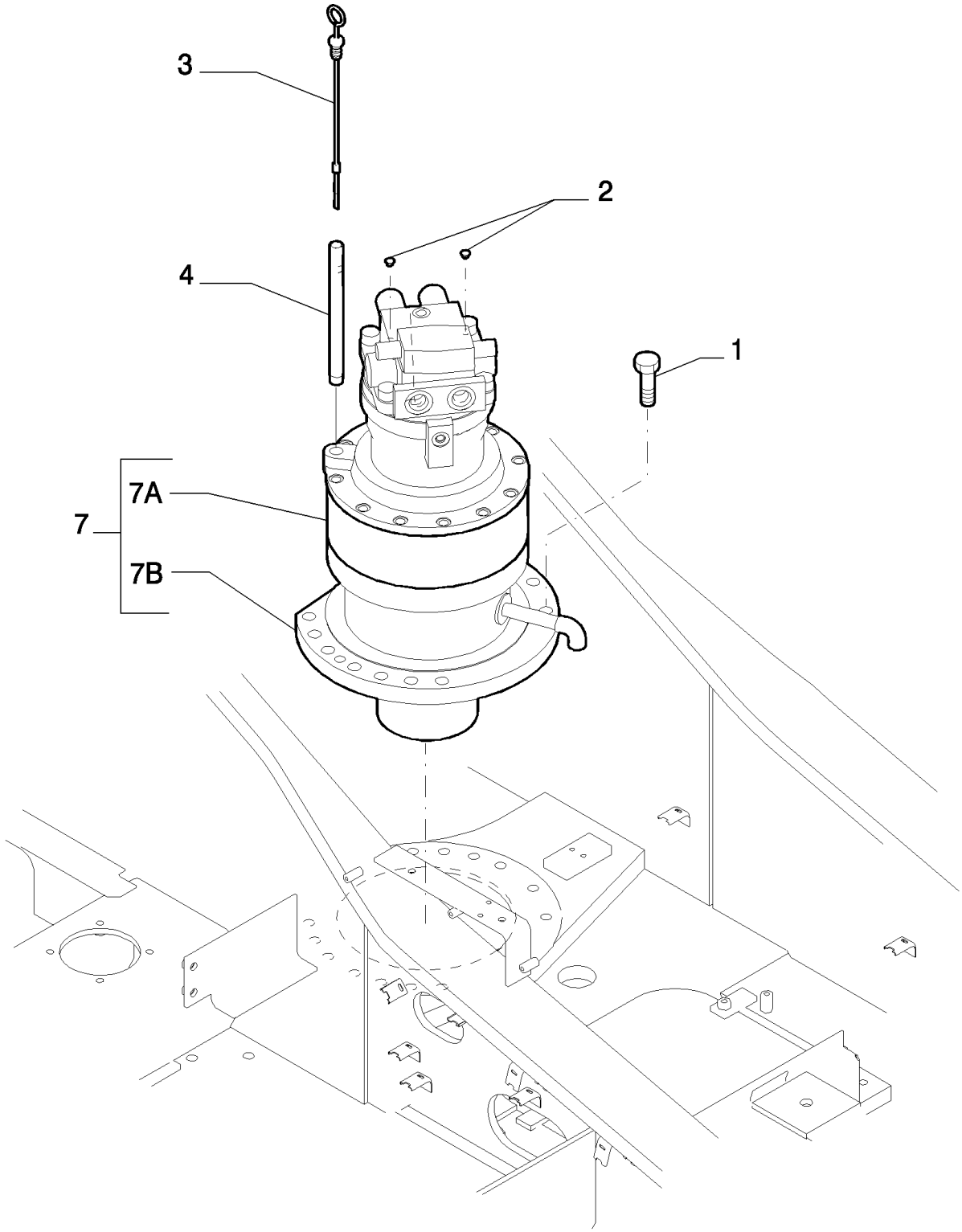

SWING REDUCTION UNIT

REF	FN	PART NUMBER	YR/SN	QTY	DESCRIPTION
1		72208951		14	PARAFUSO
2		72171471		2	TAMPA DO RESERVATÓRIO
3		87568020		1	HASTE DE NÍVEL
4		87635045		1	TUBO RÍGIDO
7		{87568024}		1	- ASSY
7A	1	87568028		1	MOTOR HIDRÁULICO
7B	2	{87568031}		1	

(1) ASSY SEE PAGE 2
(2) ASSY SEE PAGE 3

GRAFICA DA DEFINIRE
DRAWING TO BE DEFINED

SWING REDUCTION UNIT - COMPONENTS

REF	FN	PART NUMBER	YR/SN	QTY	DESCRIPTION
3		72215431		1	EIXO
4		72215432		1	CILINDRO
5		72215433		1	MOLA
6		72215434		1	PLACA
7		72215775		1	PLACA
8		72215776		1	PLACA
9		LC15V00022S301		1	ESTOJO
11		72215437		2	HASTE
12		72215438		2	MOLA
15		72209984		4	PARAFUSO
16		72215439		1	ROLAMENTO
17		72215779		1	ROLAMENTO
19		72215441		2	BUJÃO
20		72217498		1	JUNTA
21		72215443		2	JUNTA
22		LC15V00022S491		1	JUNTA
23		72215445		1	PISTOLA DE AR
24		72215446		1	JUNTA
25		72215447		1	JUNTA
26		72215448		14	MOLA
27		72215449		3	PLACA
28		72215450		4	PLACA
29		LC15V00022S984		1	BUJÃO
30		72215451		1	BUJÃO
31		YN15V00035S980		1	BUJÃO
32		72210001		1	BUJÃO
33		{YN22V00014FB}		2	
34		72210003		1	VÁLVULA HIDRAULICA
100		72215453		1	KIT
200		LV15V00002R200		1	KIT DE REPARO
300		{LC15V00022R100}		1	

HYDRAULIC MOTOR ASSY P/N 87568028

SWING REDUCTION UNIT - COMPONENTS

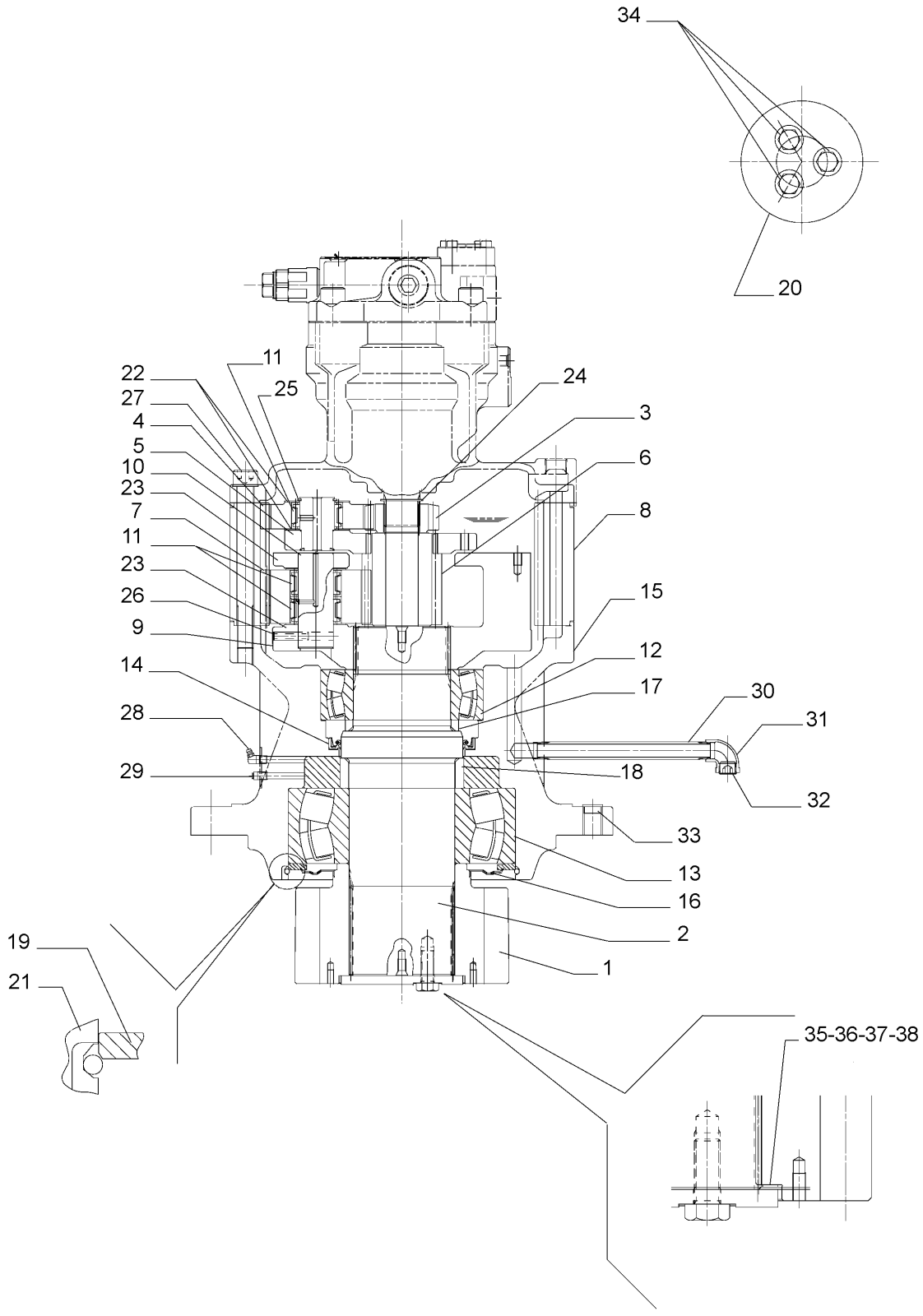

SWING REDUCTION UNIT - COMPONENTS

REF	FN	PART NUMBER	YR/SN	QTY	DESCRIPTION
1		LC32W01027P1		1	PINHAO
2		LC32W01060P1		1	EIXO
3		LC32W01006P1		1	ENGRENAGEM SOLAR
4		LC32W01021P1		3	PINHAO
5		LC32W01017F1		1	CRUZETA CONJUNTO
6		LC32W01008P1		1	ENGRENAGEM SOLAR
7		LC32W01024P1		4	PINHAO
8		LC32W01009P1		1	COROA DENTADA
9		LC32W01023P1		1	CRUZETA
10		LC32W01025P1		4	EIXO
11		LC32W01036P1		11	ROLAMENTO
12		LC32W01030P1		1	ROLAMENTO
13		LC32W01031P1		1	ROLAMENTO
14		LC32W01032P1		1	VEDADOR DE OLEO
15		LC32W01010P1		1	ALOJAMENTO
16		LC32W01033P1		1	VEDADOR DE OLEO
17		LC32W01011P1		1	BUCHA
18		LC32W01012P1		1	BUCHA
19		LC32W01013P1		1	PLACA
20		{LC32W01061P1}		1	
21		LC32W01014P1		1	ANEL
22		LC32W01022P1		6	ANEL DE ENCOSTO
23		LC32W01026P1		8	ANEL DE ENCOSTO
24		72216032		1	ANEL
25		ZR16X04200		3	ANEL
26		ZP26D10040		4	PINO-ELÁSTICO
27		ZS23C20200		12	PARAFUSO
28		72283072		1	GRAXEIRA
29		72960350		1	VALVULA
30		YN32W01080D2		1	TUBO
31		{ZG1U8000}		1	
32		72210000		1	BUJÃO
33		PV02B01073DE		2	TAMPA DO RESERVATÓRIO
34		{LC32W01062P1}		3	
35		LC32W01018D1		1	FREIO

REDUCTION SWING ASSY P/N 87568031

E385B

SWING REDUCTION UNIT - COMPONENTS

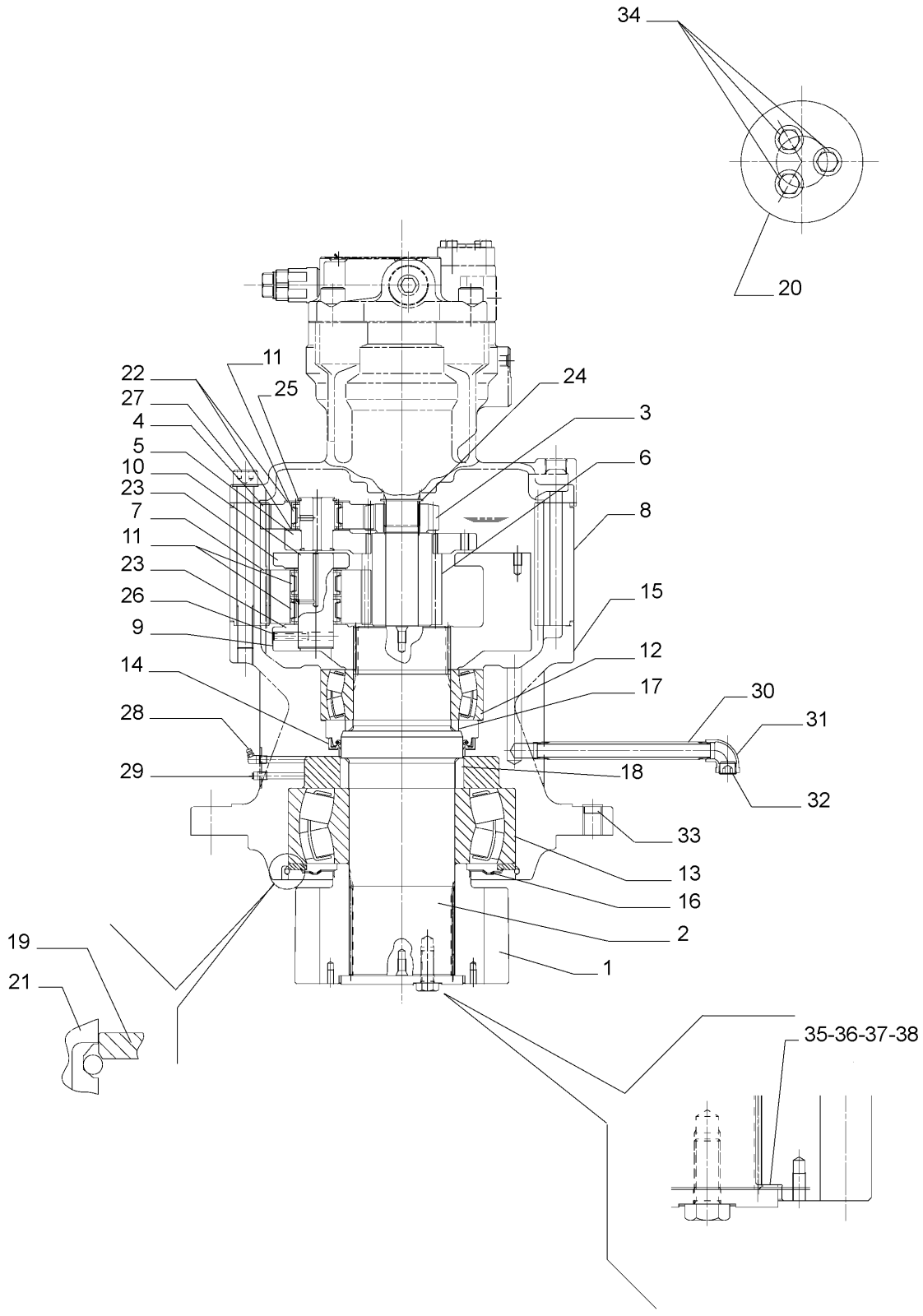

SWING REDUCTION UNIT - COMPONENTS

REF	FN	PART NUMBER	YR/SN	QTY	DESCRIPTION
36		LC32W01018D2		1	FREIO
37		LC32W01018D3		1	FREIO
38		LC32W01018D4		1	FREIO

1.050	01	p1	06/08

HYDRAULIC CONTROL VALVE

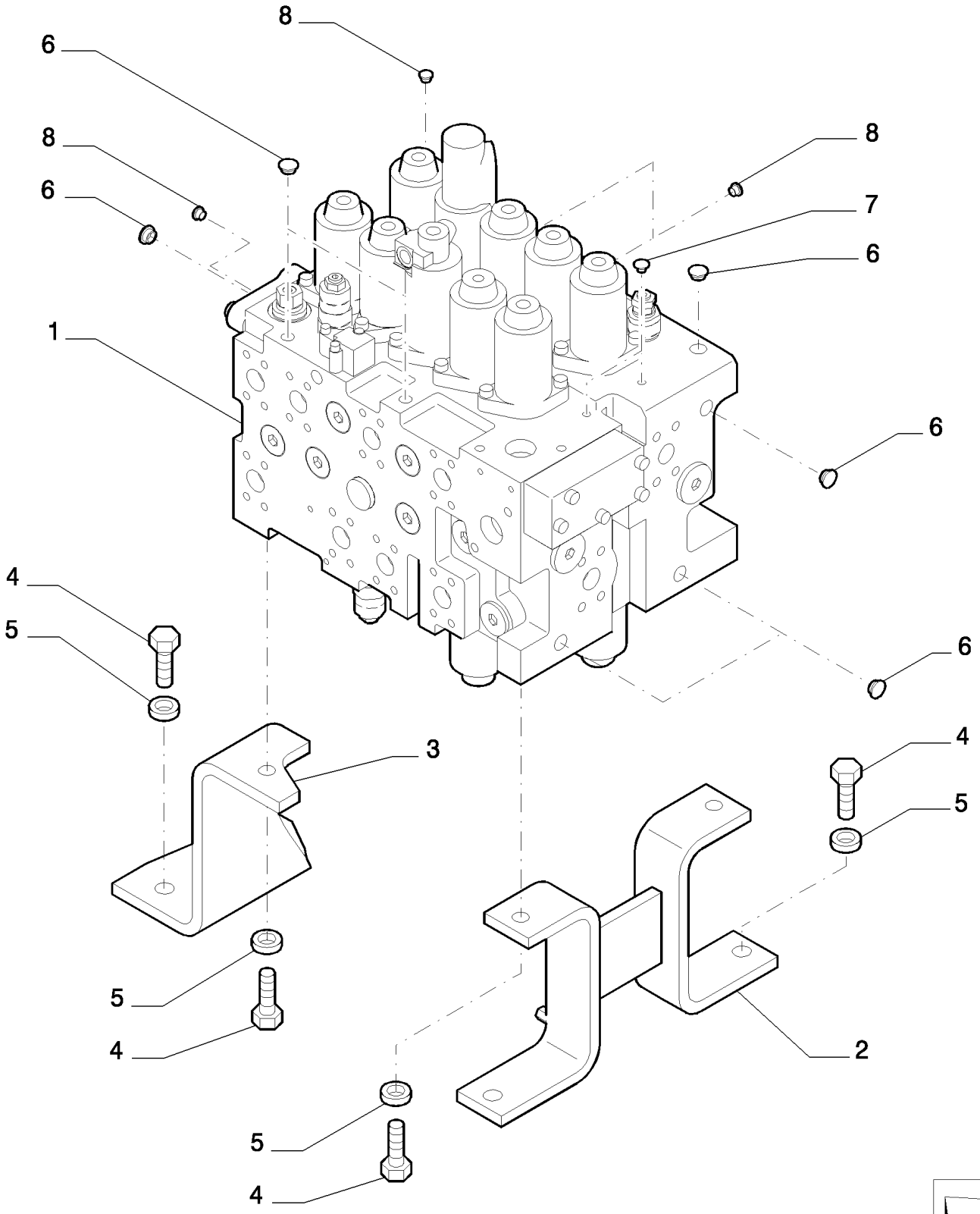

HYDRAULIC CONTROL VALVE

REF	FN	PART NUMBER	YR/SN	QTY	DESCRIPTION
1	1	87570557		1	VÁLVULA HIDRAULICA
2		{87570559}		1	
3		{87570558}		1	
4		11118734		7	PARAFUSO
5		14496931		7	ARRUELA PLANA, M16 x 30 x 3
6		87596024		7	BUJÃO
7		87596018		4	BUJÃO
8		87596014		4	BUJÃO

(1) ASSY SEE PAGE 5÷14

1.050	02	p1	11/07

PIPING PILOT - DISTRIBUTOR - VERSION (01-02)

2

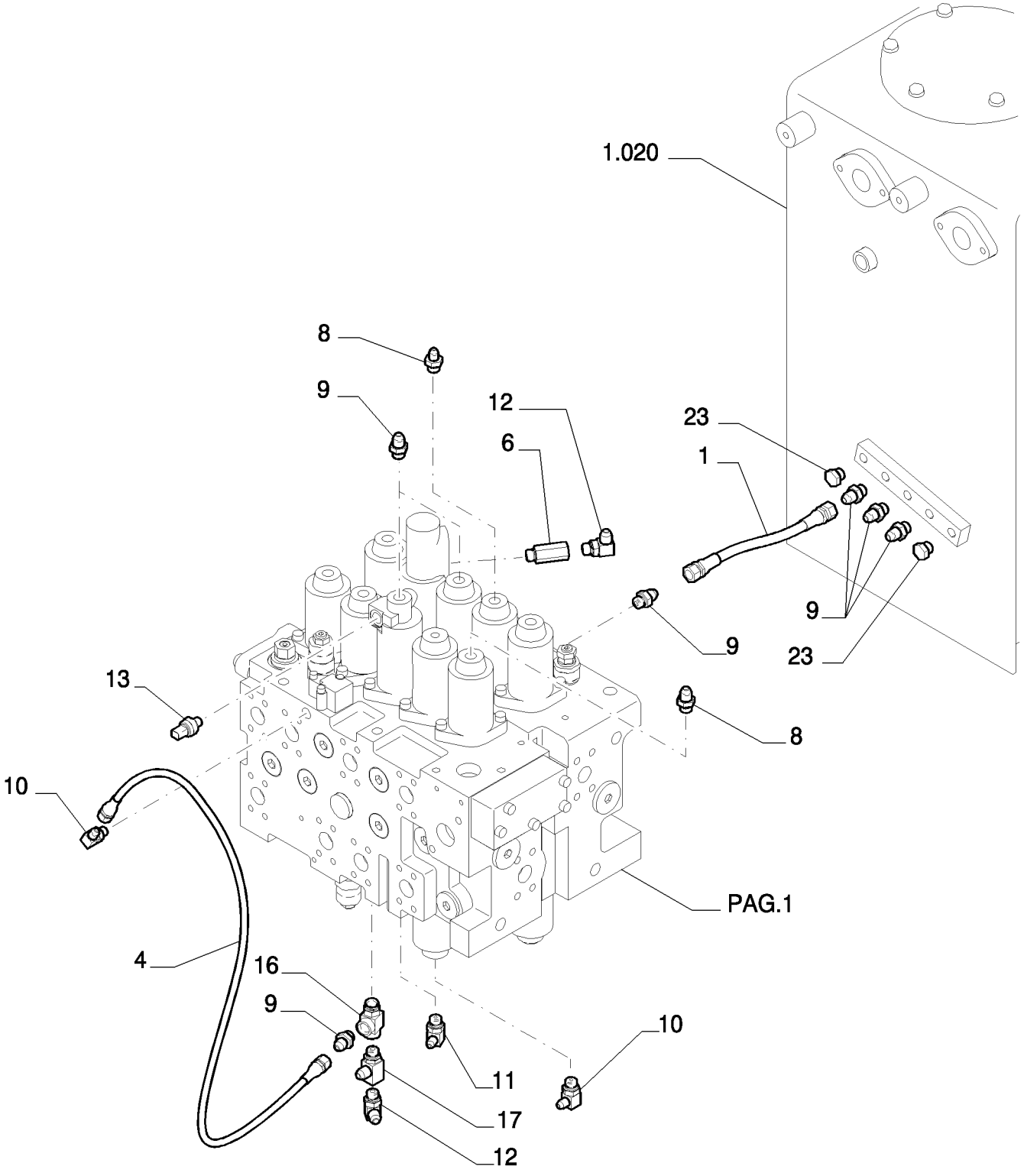

PIPING PILOT - DISTRIBUTOR - VERSION (01-02)

REF	FN	PART NUMBER	YR/SN	QTY	DESCRIPTION
1		{87573160}		1	
4		87397568		1	TUBO FLEXÍVEL
6		72284849		1	CONEXÃO
8		72214522		1	CONEXÃO
9		72214523		1	CONEXÃO
10		72214524		3	CONEXÃO
11		72214525		3	CONEXÃO
12		72214526		2	CONEXÃO
16		{87338401}		1	

1.050	03	p1	11/07

PIPING PILOT - DISTRIBUTOR - VERSION (01-02)

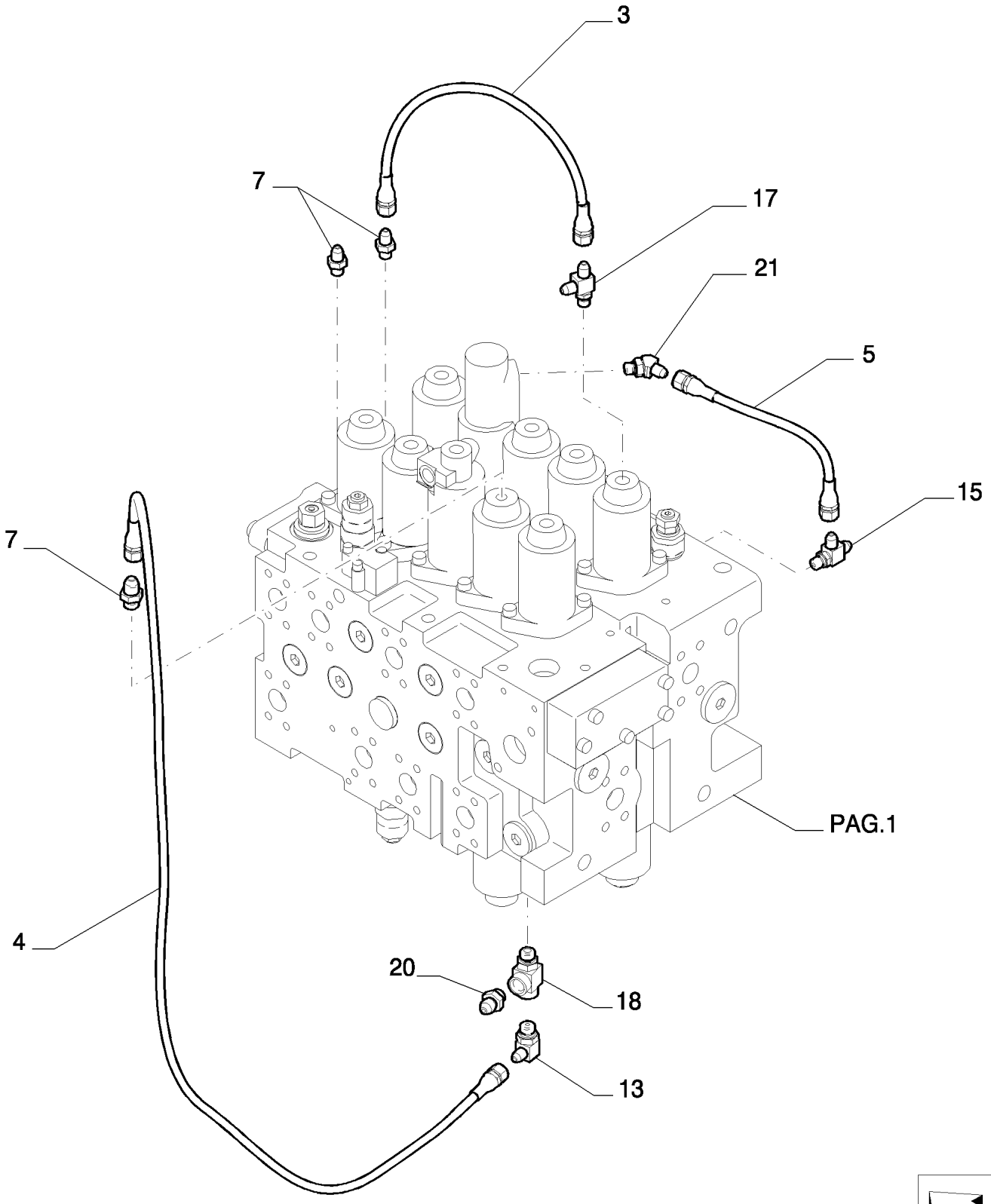

PIPING PILOT - DISTRIBUTOR - VERSION (01-02)

REF	FN	PART NUMBER	YR/SN	QTY	DESCRIPTION
3		72214535		1	TUBO FLEXÍVEL
4		87397568		1	TUBO FLEXÍVEL
5		87397448		1	TUBO FLEXÍVEL
7		72214744		1	CONEXÃO
13		87608371		1	SENSOR
15		72214527		2	CONEXÃO
17		72960345		1	TEE
18		72214541		1	CONEXÃO
20		72209013		1	VÁLVULA HIDRAULICA
21		87397451		1	CONEXÃO

1.050	04	p1	11/07

PIPING PILOT - DISTRIBUTOR - VERSION (01-02)

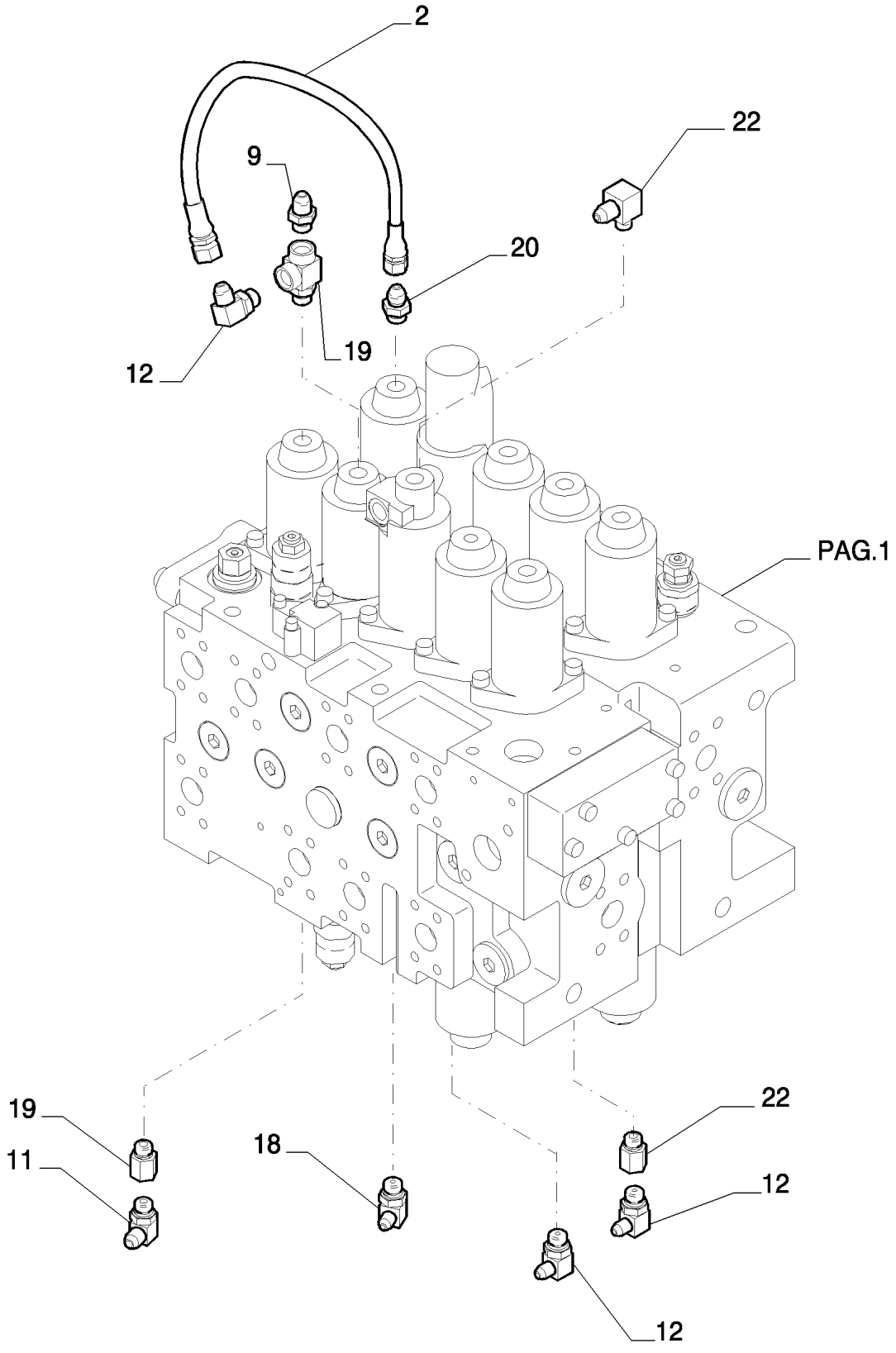

PIPING PILOT - DISTRIBUTOR - VERSION (01-02)

REF	FN	PART NUMBER	YR/SN	QTY	DESCRIPTION
2		87397449		1	TUBO FLEXÍVEL
12		72214526		1	CONEXÃO
19		72283559		2	TEE
20		72209013		1	VÁLVULA HIDRAULICA
22		72214521		1	CONEXÃO

HYDRAULIC CONTROL VALVE - COMPONENTS

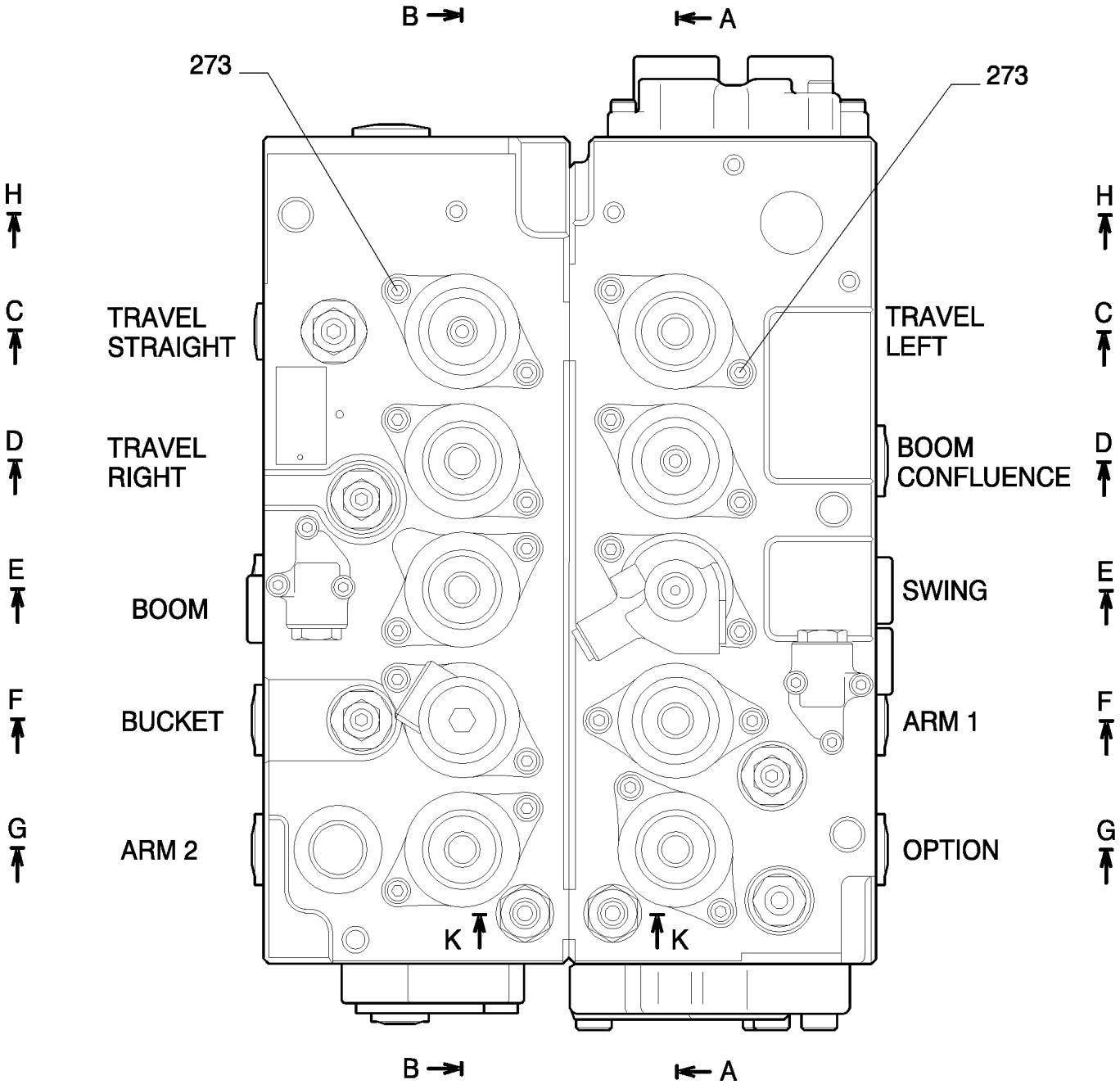

HYDRAULIC CONTROL VALVE - COMPONENTS

REF	FN	PART NUMBER	YR/SN	QTY	DESCRIPTION
273		14306470		20	PARAFUSO, Hex Soc Hd, M8 x 25, 12.9

HYDRAULIC CONTROL VALVE - COMPONENTS

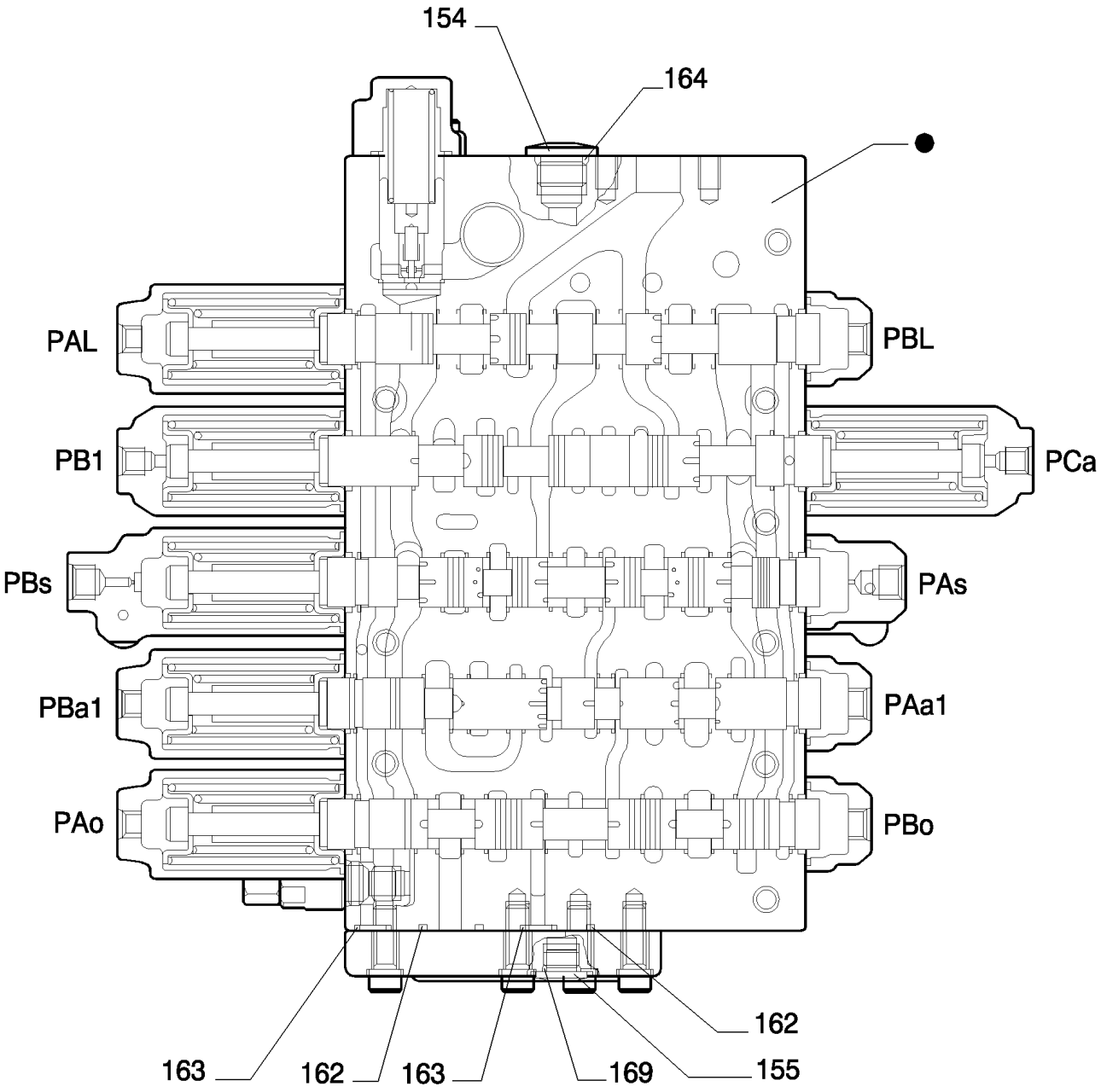

SECTION A-A

PARTS MARKED ● ARE NOT SUPPLIED AS SPARES
I PARTICOLARI CONTRASSEGNATI CON ● NON VENGONO FORNITI DI RICAMBIO

HYDRAULIC CONTROL VALVE - COMPONENTS

REF	FN	PART NUMBER	YR/SN	QTY	DESCRIPTION
154		72210072		1	BUJÃO
155		72210073		1	BUJÃO
162		72209839		2	ANEL "O"
163		72210077		2	ANEL "O"
164		72209838		1	ANEL "O"
169		72209821		1	ANEL "O"

HYDRAULIC CONTROL VALVE - COMPONENTS

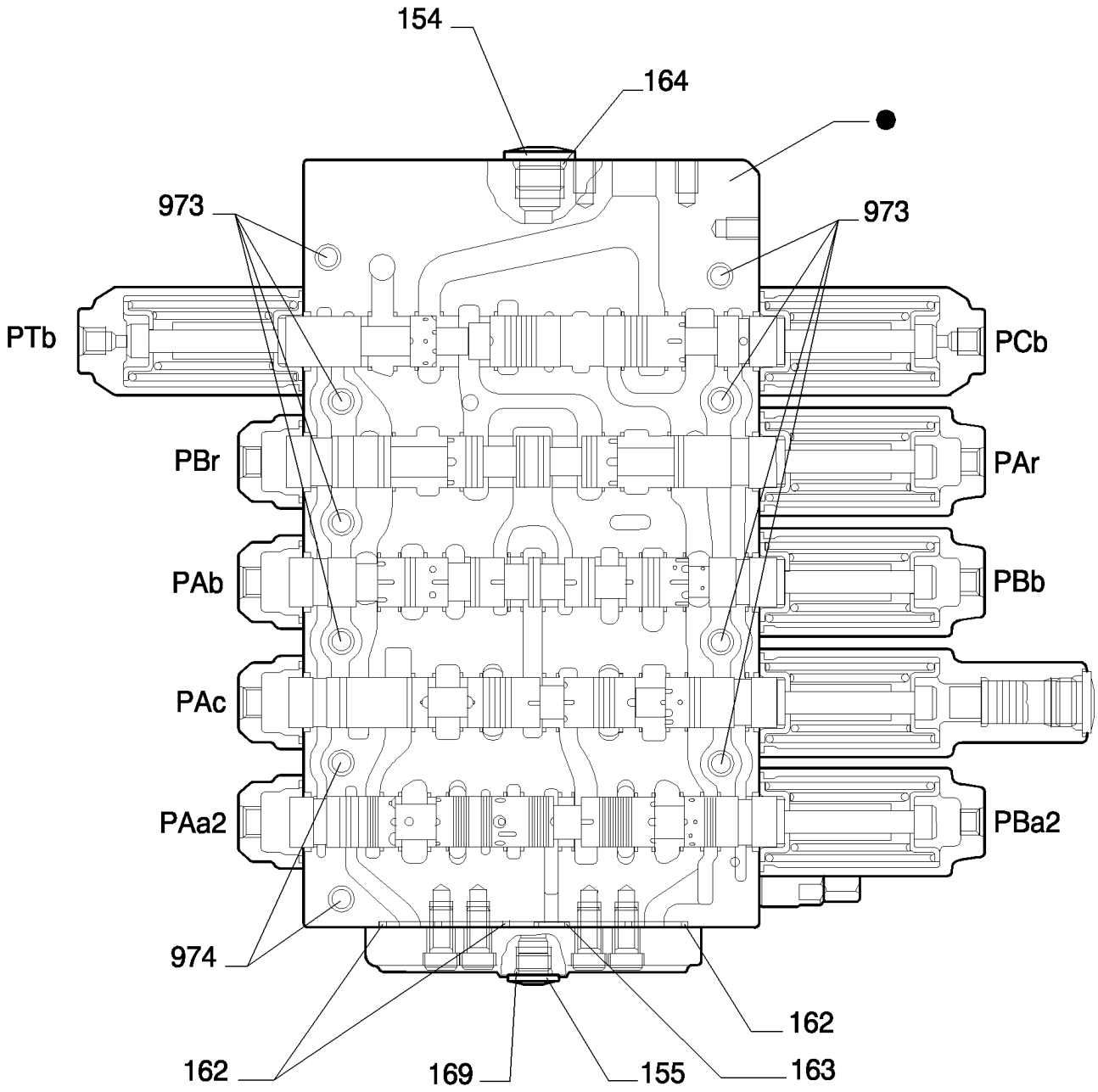

SECTION B-B

PARTS MARKED ● ARE NOT SUPPLIED AS SPARES
I PARTICOLARI CONTRASSEGNATI CON ● NON VENGONO FORNITI DI RICAMBIO

HYDRAULIC CONTROL VALVE - COMPONENTS

REF	FN	PART NUMBER	YR/SN	QTY	DESCRIPTION
154		72210072		1	BUJÃO
155		72210073		1	BUJÃO
162		72209839		3	ANEL "O"
163		72210077		1	ANEL "O"
164		72209838		1	ANEL "O"
169		71404166		1	ANEL "O"
973		ZS23C14160		8	TAMPA DO RESERVATÓRIO
974		14425470		2	PARAFUSO

HYDRAULIC CONTROL VALVE - COMPONENTS

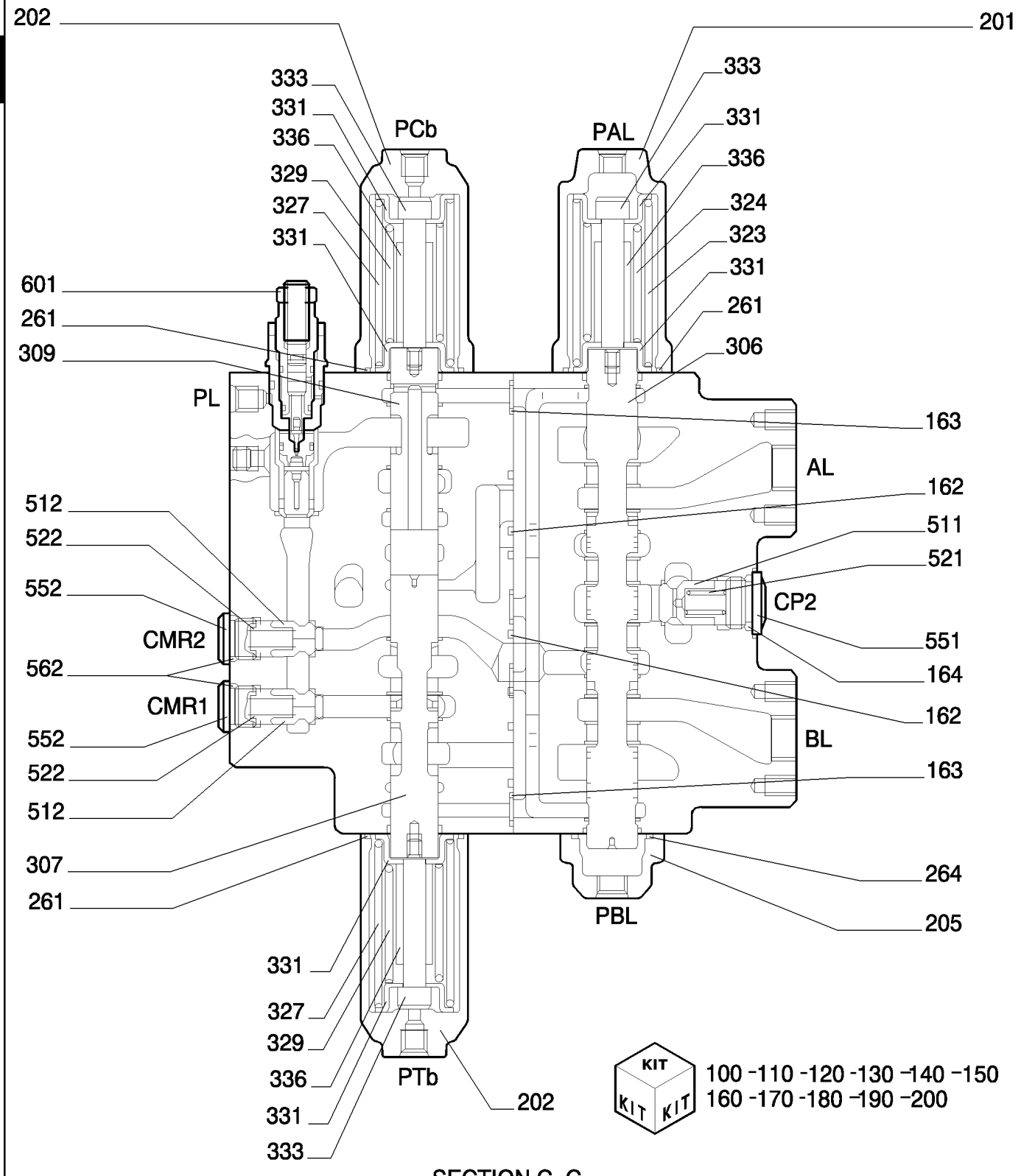

SECTION C-C

HYDRAULIC CONTROL VALVE - COMPONENTS

REF	FN	PART NUMBER	YR/SN	QTY	DESCRIPTION
100		LC30V00028R100		1	KIT DE REPARO
110		LC30V00028R110		1	KIT DE REPARO
120		LC30V00028R120		1	KIT DE REPARO
130		LC30V00028R130		1	KIT DE REPARO
140		YN30V00101R140		1	KIT DE REPARO
150		YN30V00116R150		1	KIT DE REPARO
160		{LC30V00034R160}		1	
162		72209839		2	ANEL "O"
163		72210077		2	ANEL "O"
164		72209838		1	ANEL "O"
170		{LC30V00034R170}		1	
180		{LC30V00034R190}		1	
190		YN30V00101R200		1	KIT DE REPARO
200		YN30V00101R210		1	KIT DE REPARO
201		YN30V00101S201		1	PROTEÇÃO
202		YN30V00101S202		2	PROTEÇÃO
205		YN30V00101S205		1	PROTEÇÃO
261		72950285		3	ANEL "O"
264		71404168		1	ANEL "O"
306	1	YN30V00101S306		1	KIT DE REPARO
307	2	YN30V00116S307		1	CARRETO
309	3	YN30V00101S309		1	CARRETO
323	4	72210124		1	MOLA
324	5	87333132		1	MOLA
327	6	YN30V00101S327		2	MOLA
329	7	YN30V00101S329		2	MOLA
331	8	72210127		6	SEDE/ALOJAMENTO

(1) KIT - ITEM 150
(2) KIT - ITEM 160
(3) KIT - ITEM 180
(4) KIT - ITEM 150,200
(5) KIT - ITEM 150,200
(6) KIT - ITEM 160,180,190
(7) KIT - ITEM 160,180,190
(8) KIT - ITEM 100,110,120,130,140,150,160,170,180,190,200

CONTROL VALVE ASSY P/N 87524899

E385B

HYDRAULIC CONTROL VALVE - COMPONENTS

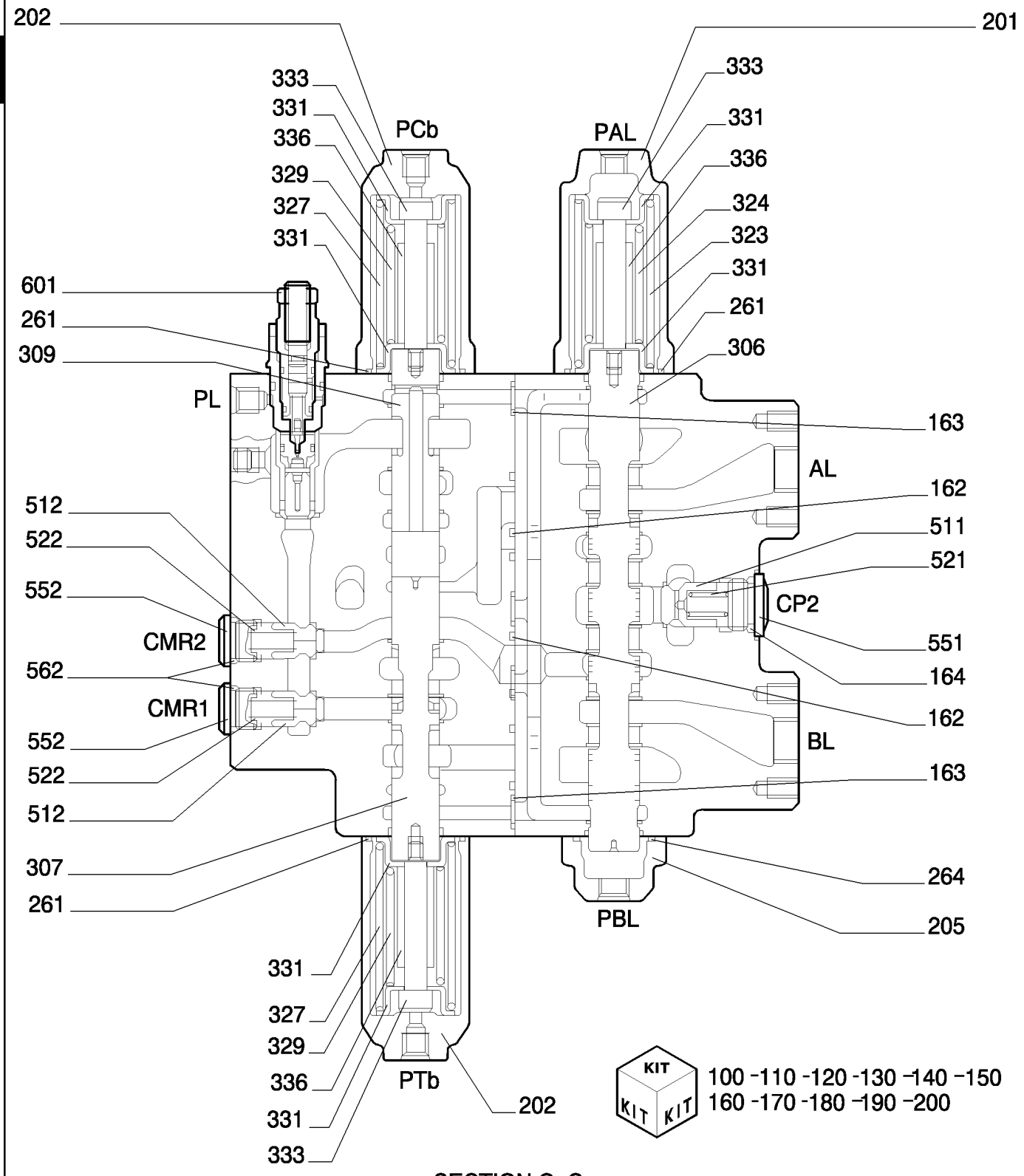

SECTION C-C

HYDRAULIC CONTROL VALVE - COMPONENTS

REF	FN	PART NUMBER	YR/SN	QTY	DESCRIPTION
333	1	72210126		3	PARAFUSO
336	2	72210125		3	BATENTE
511		YN30V00101S341		1	VÁLVULA HIDRAULICA
512		72958811		2	POPPET
521		72210091		1	MOLA
522		YN30V00101S522		2	MOLA
551		YN30V00001S551		1	BUJÃO
552		72211160		2	BUJÃO
562		72209824		2	ANEL "O"
601		{LC22V00011F1}		1	

(1) KIT - ITEM 100,110,120,130,140,150,160,170,180,190,200
(2) KIT - ITEM 100,110,120,130,150,160,180,190,200

HYDRAULIC CONTROL VALVE - COMPONENTS

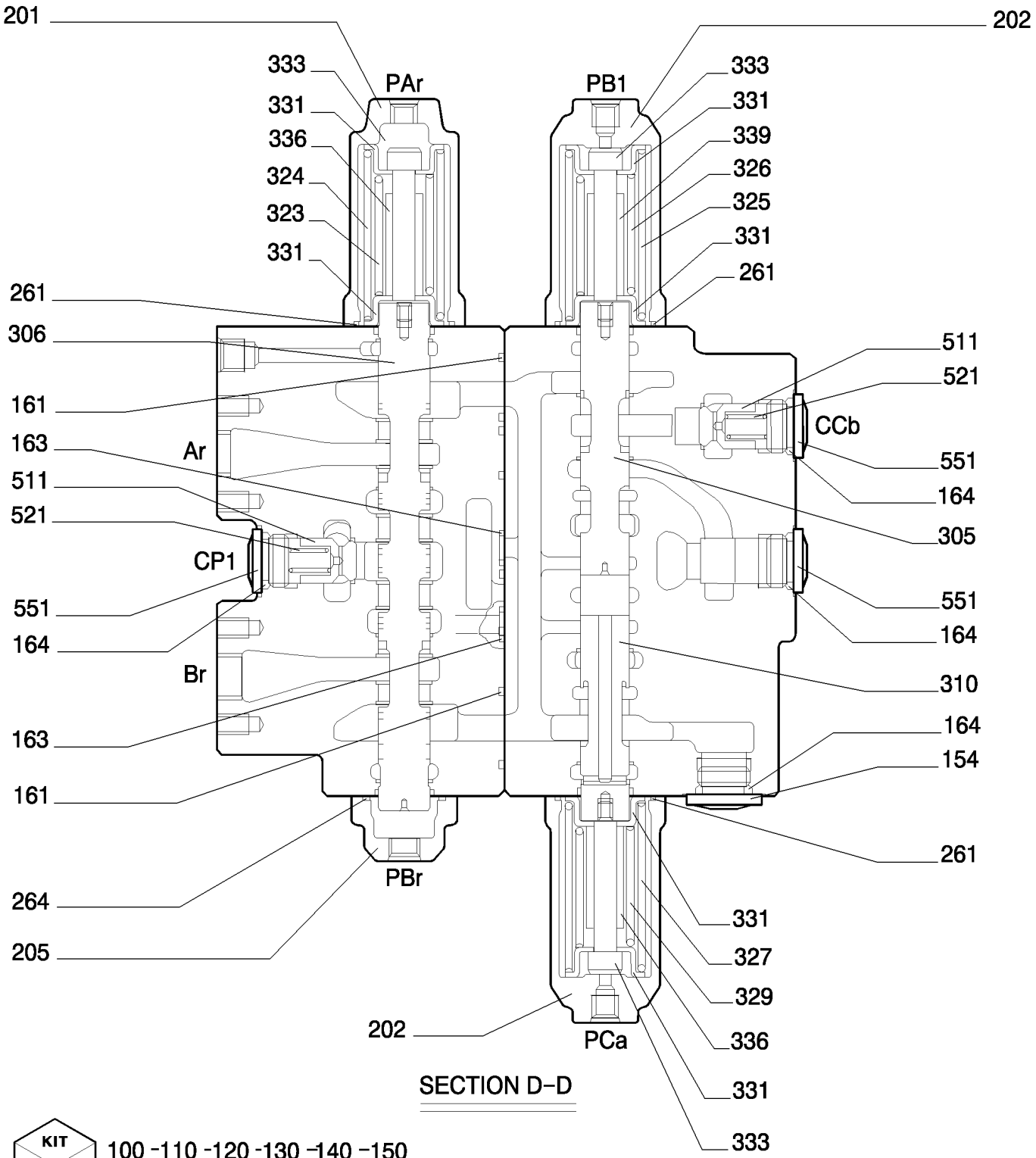

KIT KIT KIT

100 -110 -120 -130 -140 -150
160 -170 -180 -190 -200

HYDRAULIC CONTROL VALVE - COMPONENTS

REF	FN	PART NUMBER	YR/SN	QTY	DESCRIPTION
100		LC30V00028R100		1	KIT DE REPARO
110		LC30V00028R110		1	KIT DE REPARO
120		LC30V00028R120		1	KIT DE REPARO
130		LC30V00028R130		1	KIT DE REPARO
140		YN30V00101R140		1	KIT DE REPARO
150		YN30V00116R150		1	KIT DE REPARO
154		72210072		1	BUJÃO
160		{LC30V00034R160}		1	
161		71444332		2	ANEL "O"
163		72210077		2	ANEL "O"
164		72209838		4	ANEL "O"
170		{LC30V00034R170}		1	
180		{LC30V00034R190}		1	
190		YN30V00101R200		1	KIT DE REPARO
200		YN30V00101R210		1	KIT DE REPARO
201		YN30V00101S201		1	PROTEÇÃO
202		YN30V00101S202		2	PROTEÇÃO
205		YN30V00101S205		1	PROTEÇÃO
261		72950285		3	ANEL "O"
264		72210088		1	ANEL "O"
305	1	YN30V00101S305		1	CARRETO
306	2	YN30V00101S306		1	KIT DE REPARO
310	3	YN30V00101S310		1	CARRETO
323	4	72210124		1	MOLA
324	5	87333132		1	MOLA
325	6	72964212		1	MOLA
326	7	YN30V00101S326		1	MOLA

(1) KIT - ITEM 140
(2) KIT - ITEM 150
(3) KIT - ITEM 190
(4) KIT - ITEM 150,200
(5) KIT - ITEM 150,200
(6) KIT - ITEM 140
(7) KIT - ITEM 140

CONTROL VALVE ASSY P/N 87524899

E385B

HYDRAULIC CONTROL VALVE - COMPONENTS

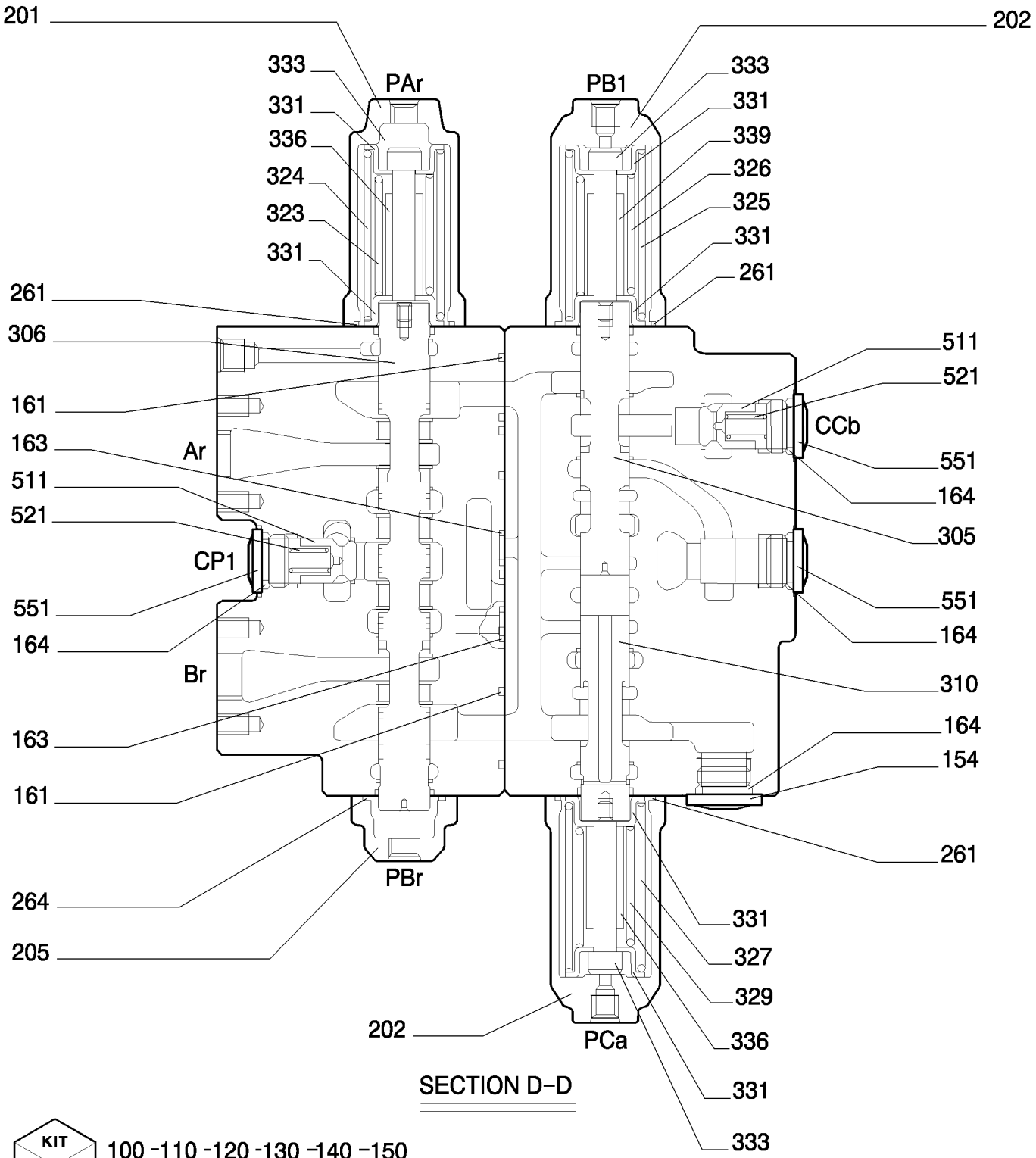

KIT KIT KIT

100 -110 -120 -130 -140 -150
160 -170 -180 -190 -200

HYDRAULIC CONTROL VALVE - COMPONENTS

REF	FN	PART NUMBER	YR/SN	QTY	DESCRIPTION
327	1	YN30V00101S327		1	MOLA
329	2	YN30V00101S329		1	MOLA
331	3	72210127		6	SEDE/ALOJAMENTO
333	4	72210126		3	PARAFUSO
336	5	72210125		2	BATENTE
339	6	YN30V00001S339		1	BATENTE
511		YN30V00101S341		2	VÁLVULA HIDRAULICA
521		72210091		2	MOLA
551		YN30V00001S551		3	BUJÃO

(1) KIT - ITEM 160,180,190
(2) KIT - ITEM 160,180,190
(3) KIT - ITEM 100,110,120,130,140,150,160,170,180,190,200
(4) KIT - ITEM 100,110,120,130,140,150,160,170,180,190,200
(5) KIT - ITEM 100,110,120,130,150,160,180,190,200
(6) KIT - ITEM 140

2

HYDRAULIC CONTROL VALVE - COMPONENTS

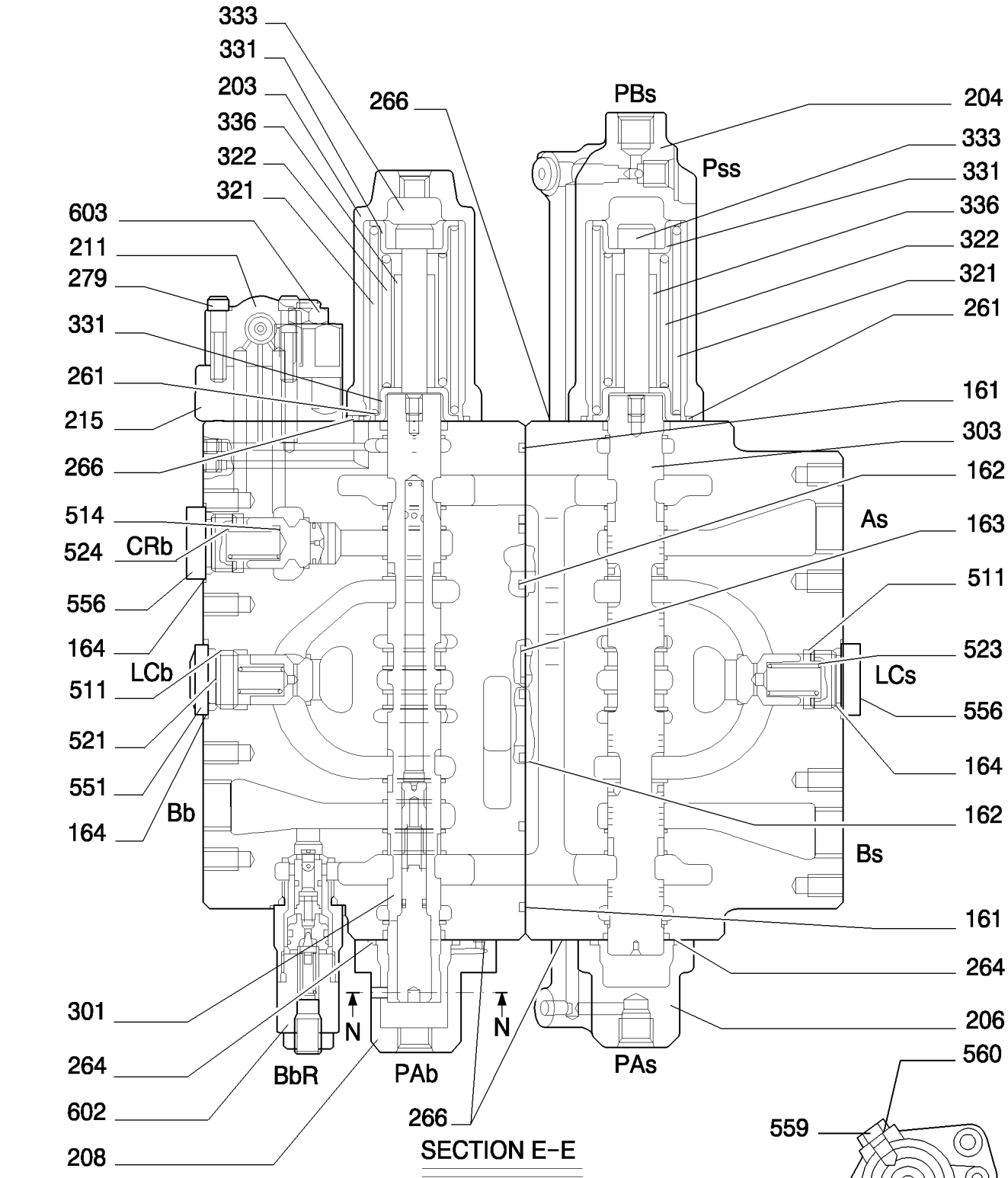

KIT KIT KIT 100 -110 -120 -130 -140 -150
160 -170 -180 -190 -200

HYDRAULIC CONTROL VALVE - COMPONENTS

REF	FN	PART NUMBER	YR/SN	QTY	DESCRIPTION
100		LC30V00028R100		1	KIT DE REPARO
110		LC30V00028R110		1	KIT DE REPARO
120		LC30V00028R120		1	KIT DE REPARO
130		LC30V00028R130		1	KIT DE REPARO
140		YN30V00101R140		1	KIT DE REPARO
150		YN30V00116R150		1	KIT DE REPARO
160		{LC30V00034R160}		1	
161		72210076		2	ANEL "O"
162		72209839		2	ANEL "O"
163		72210077		1	ANEL "O"
164		72209838		3	ANEL "O"
170		{LC30V00034R170}		1	
180		{LC30V00034R190}		1	
190		YN30V00101R200		1	KIT DE REPARO
200		YN30V00101R210		1	KIT DE REPARO
203		YN30V00101S203		1	PROTEÇÃO
204		YN30V00101S204		1	PROTEÇÃO
206		YN30V00101S206		1	PROTEÇÃO
208		LC30V00028S208		1	TAMPA
211		YN30V00119F1		1	VALVULA
215		YN30V00116S215		1	VÁLVULA HIDRAULICA
261		72950285		2	ANEL "O"
264		72210088		2	ANEL "O"
266		72215593		3	KIT
279		14309270		3	PARAFUSO
301	1	LC30V00028S301		1	KIT DE REPARO
303	2	YN30V00101S303		1	CARRETO
321	3	72964210		2	MOLA
322	4	72964211		2	MOLA
331	5	72210127		4	SEDE/ALOJAMENTO

(1) KIT - ITEM 100
(2) KIT - ITEM 120
(3) KIT - ITEM 100,110,120,130,170
(4) KIT - ITEM 100,110,120,130
(5) KIT - ITEM 100,110,120,130,140,150,160,170,180,190,200

CONTROL VALVE ASSY P/N 87524899

E385B

2

HYDRAULIC CONTROL VALVE - COMPONENTS

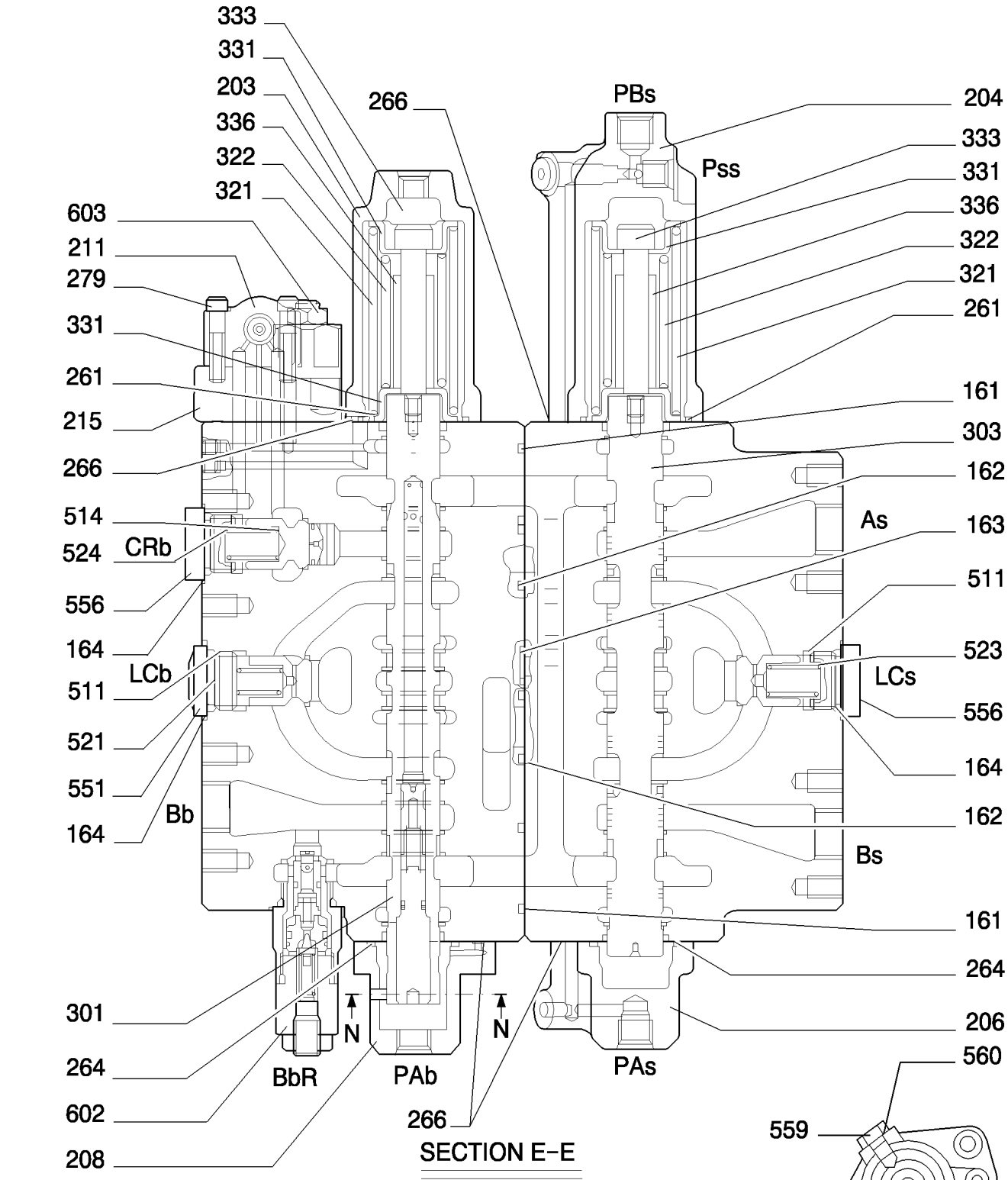

KIT KIT KIT

100 -110 -120 -130 -140 -150
160 -170 -180 -190 -200

HYDRAULIC CONTROL VALVE - COMPONENTS

REF	FN	PART NUMBER	YR/SN	QTY	DESCRIPTION
333	1	72210126		2	PARAFUSO
336	2	72210125		2	BATENTE
511		YN30V00101S341		2	VÁLVULA HIDRAULICA
514		YN30V00101S514		1	VÁLVULA HIDRAULICA
521		72210091		1	MOLA
523		72210093		1	MOLA
524		72210094		1	MOLA
551		YN30V00001S551		1	BUJÃO
556		72209841		2	BUJÃO
559		LC30V00028S559		1	BUJÃO
560		LC30V00028S560		1	ANEL "O"
602		72210098		1	VÁLVULA HIDRAULICA
603		72210099		1	VÁLVULA HIDRAULICA

(1) KIT - ITEM 100,110,120,130,140,150,160,170,180,190,200
(2) KIT - ITEM 100,110,120,130,150,160,180,190,200

CONTROL VALVE ASSY P/N 87524899

1.050	11	p1	11/07

HYDRAULIC CONTROL VALVE - COMPONENTS

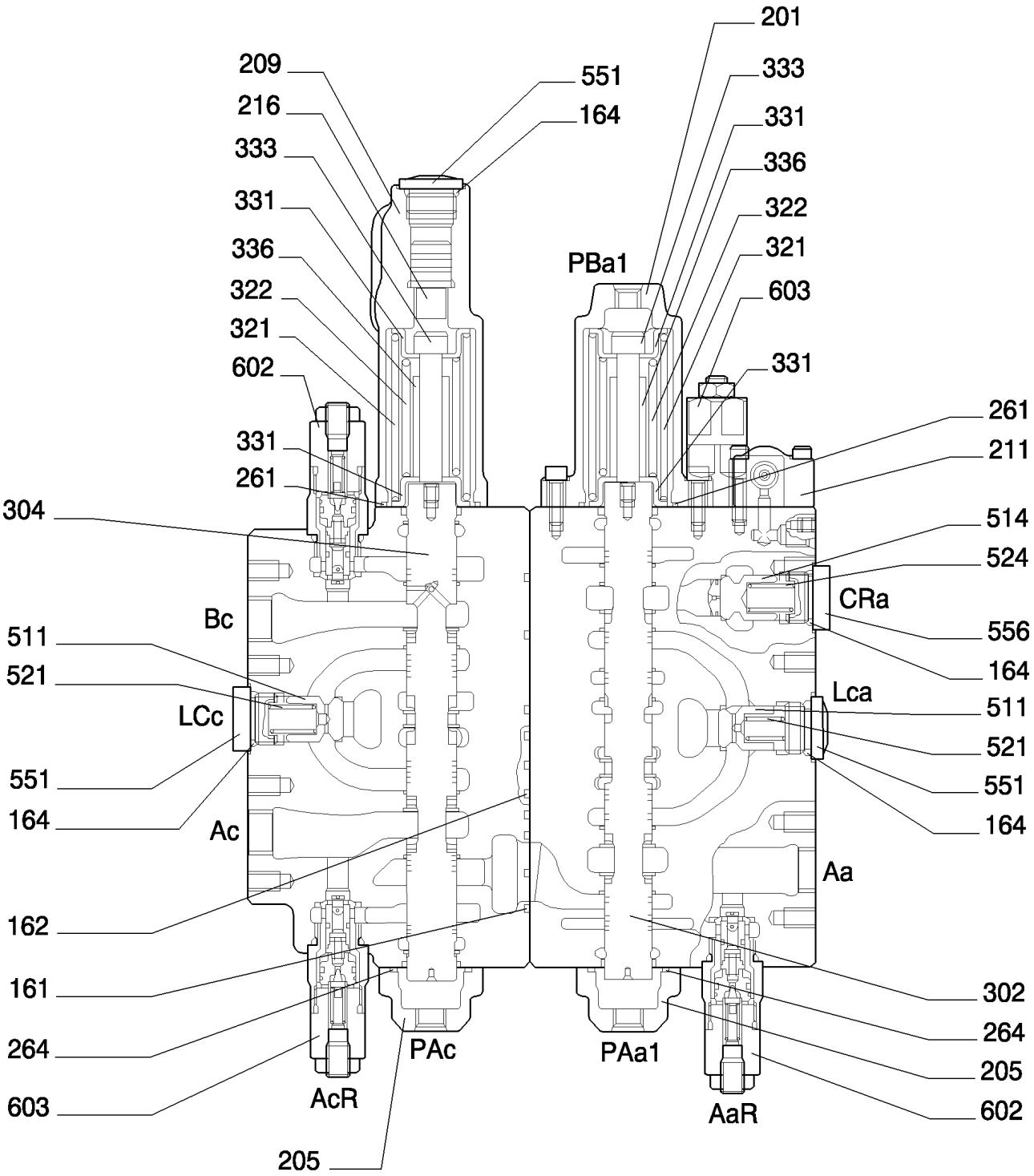

SECTION F–F

KIT KIT KIT 100 -110 -120 -130 -140 -150
160 -170 -180 -190 -200

HYDRAULIC CONTROL VALVE - COMPONENTS

REF	FN	PART NUMBER	YR/SN	QTY	DESCRIPTION
100		LC30V00028R100		1	KIT DE REPARO
110		LC30V00028R110		1	KIT DE REPARO
120		LC30V00028R120		1	KIT DE REPARO
130		LC30V00028R130		1	KIT DE REPARO
140		YN30V00101R140		1	KIT DE REPARO
150		YN30V00116R150		1	KIT DE REPARO
160		{LC30V00034R160}		1	
161		72210076		1	ANEL "O"
162		72209839		1	ANEL "O"
164		72209838		4	ANEL "O"
170		{LC30V00034R170}		1	
180		{LC30V00034R190}		1	
190		YN30V00101R200		1	KIT DE REPARO
200		YN30V00101R210		1	KIT DE REPARO
201		YN30V00101S201		1	PROTEÇÃO
205		YN30V00101S205		2	PROTEÇÃO
209		YN30V00101S209		1	PROTEÇÃO
211		YN30V00119F1		1	VALVULA
216		YN30V00116S216		1	PISTÃO
261		72950285		2	ANEL "O"
264		71404168		2	ANEL "O"
302	1	LC30V00028S302		1	KIT DE REPARO
304	2	LC30V00028S304		1	KIT DE REPARO
322	3	72964211		2	MOLA
331	4	72210127		4	SEDE/ALOJAMENTO
333	5	72210126		2	PARAFUSO
336	6	72210125		2	BATENTE
511		YN30V00101S341		2	VÁLVULA HIDRAULICA
514		YN30V00101S514		1	VÁLVULA HIDRAULICA

(1) KIT - ITEM 110
(2) KIT - ITEM 130
(3) KIT - ITEM 100,110,120,130
(4) KIT - ITEM 100,110,120,130,140,150,160,170,180,190,200
(5) KIT - ITEM 100,110,120,130,140,150,160,170,180,190,200
(6) KIT - ITEM 100,110,120,130,150,160,180,190,200

CONTROL VALVE ASSY P/N 87524899

E385B

HYDRAULIC CONTROL VALVE - COMPONENTS

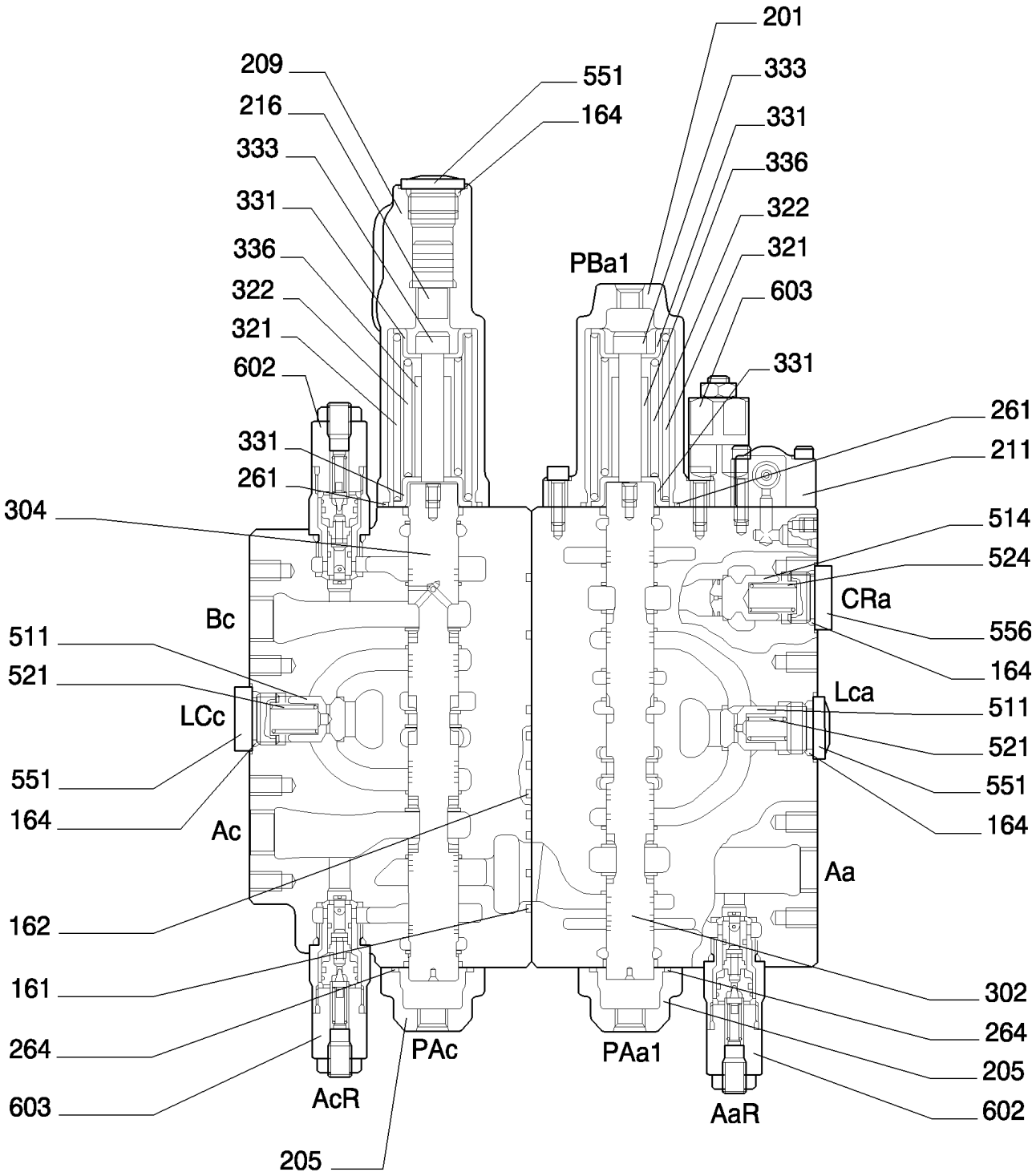

SECTION F–F

KIT KIT KIT 100 -110 -120 -130 -140 -150
160 -170 -180 -190 -200

HYDRAULIC CONTROL VALVE - COMPONENTS

REF	FN	PART NUMBER	YR/SN	QTY	DESCRIPTION
521		72210091		2	MOLA
524		72210094		1	MOLA
551		YN30V00001S551		3	BUJÃO
556		72209841		1	BUJÃO
602		72210098		1	VÁLVULA HIDRAULICA
603		72210099		2	VÁLVULA HIDRAULICA

HYDRAULIC CONTROL VALVE - COMPONENTS

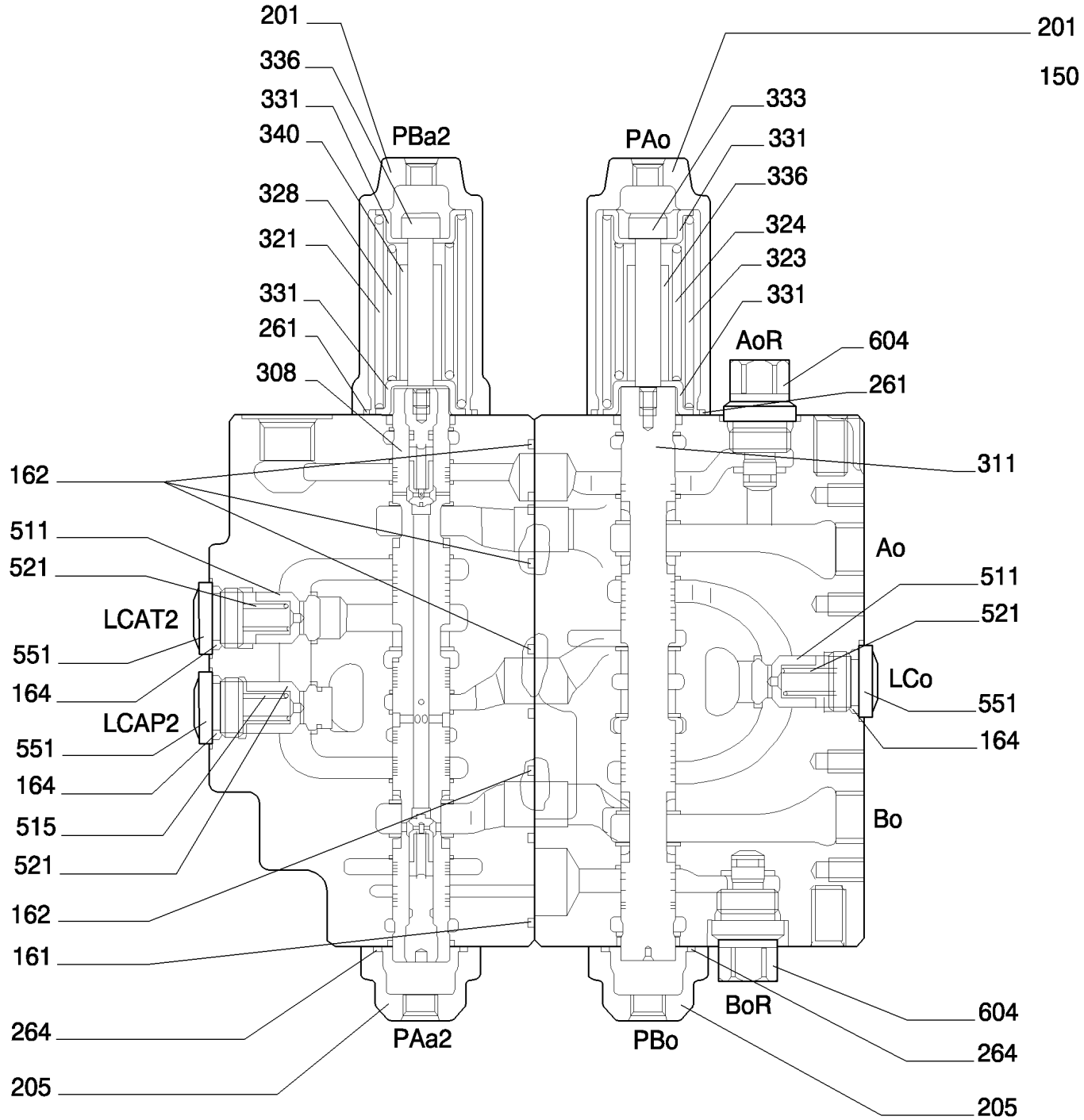

SECTION G-G

KIT KIT KIT

100 -110 -120 -130 -140 -150
160 -170 -180 -190 -200

HYDRAULIC CONTROL VALVE - COMPONENTS

REF	FN	PART NUMBER	YR/SN	QTY	DESCRIPTION
100		LC30V00028R100		1	KIT DE REPARO
110		LC30V00028R110		1	KIT DE REPARO
120		LC30V00028R120		1	KIT DE REPARO
130		LC30V00028R130		1	KIT DE REPARO
140		YN30V00101R140		1	KIT DE REPARO
150		YN30V00116R150		1	KIT DE REPARO
160		{LC30V00034R160}		1	
161		72210076		1	ANEL "O"
162		72209839		4	ANEL "O"
164		72209838		3	ANEL "O"
170		{LC30V00034R170}		1	
180		{LC30V00034R190}		1	
190		YN30V00101R200		1	KIT DE REPARO
200		YN30V00101R210		1	KIT DE REPARO
201		YN30V00101S201		2	PROTEÇÃO
205		YN30V00101S205		2	PROTEÇÃO
261		72950285		2	ANEL "O"
264		72210088		2	ANEL "O"
308	1	LC30V00028S308		1	KIT DE REPARO
311	2	YN30V00101S311		1	CARRETO
321	3	72964210		1	MOLA
323	4	72210124		1	MOLA
324	5	87333132		1	MOLA
328	6	YN30V00101S328		1	MOLA
331	7	72210127		4	SEDE/ALOJAMENTO
333	8	72210126		2	PARAFUSO

(1) KIT - ITEM 170
(2) KIT - ITEM 200
(3) KIT - ITEM 100,110,120,130,170
(4) KIT - ITEM 150,200
(5) KIT - ITEM 150,200
(6) KIT - ITEM 170
(7) KIT - ITEM 100,110,120,130,140,150,160,170,180,190,200
(8) KIT - ITEM 100,110,120,130,140,150,160,170,180,190,200

CONTROL VALVE ASSY P/N 87524899

E385B

HYDRAULIC CONTROL VALVE - COMPONENTS

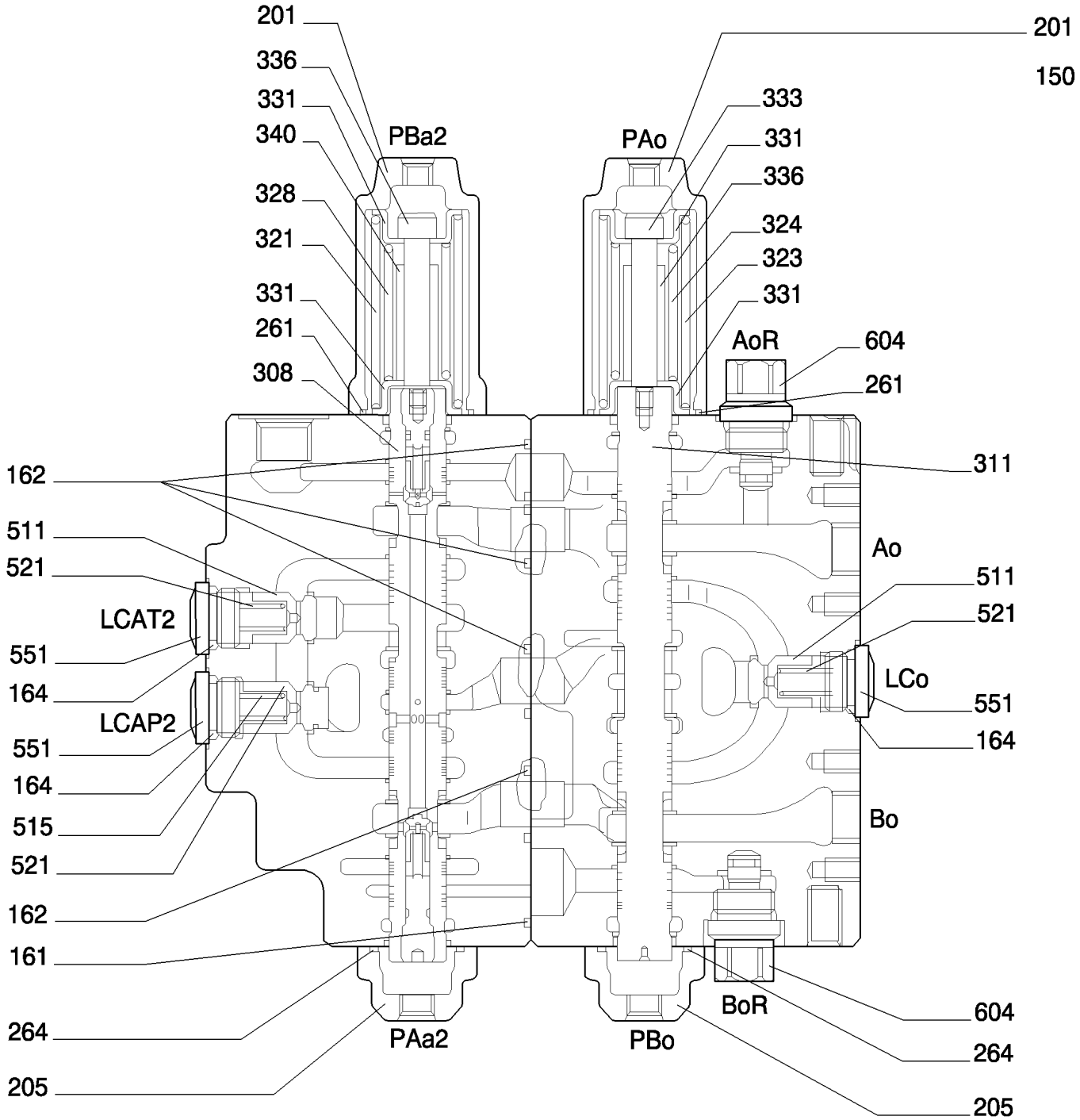

SECTION G-G

KIT KIT KIT 100 -110 -120 -130 -140 -150
160 -170 -180 -190 -200

HYDRAULIC CONTROL VALVE - COMPONENTS

REF	FN	PART NUMBER	YR/SN	QTY	DESCRIPTION
336	1	72210125		1	BATENTE
340	2	YN30V00101S340		1	FIXADOR
511		YN30V00101S341		2	VÁLVULA HIDRAULICA
515		2436U1231S513		1	POPPET
521		72210091		3	MOLA
551		YN30V00001S551		3	BUJÃO
604		YN30V01062P1		2	BUJÃO

(1) KIT - ITEM 100,110,120,130,150,160,180,190,200
(2) KIT - ITEM 170

HYDRAULIC CONTROL VALVE - COMPONENTS

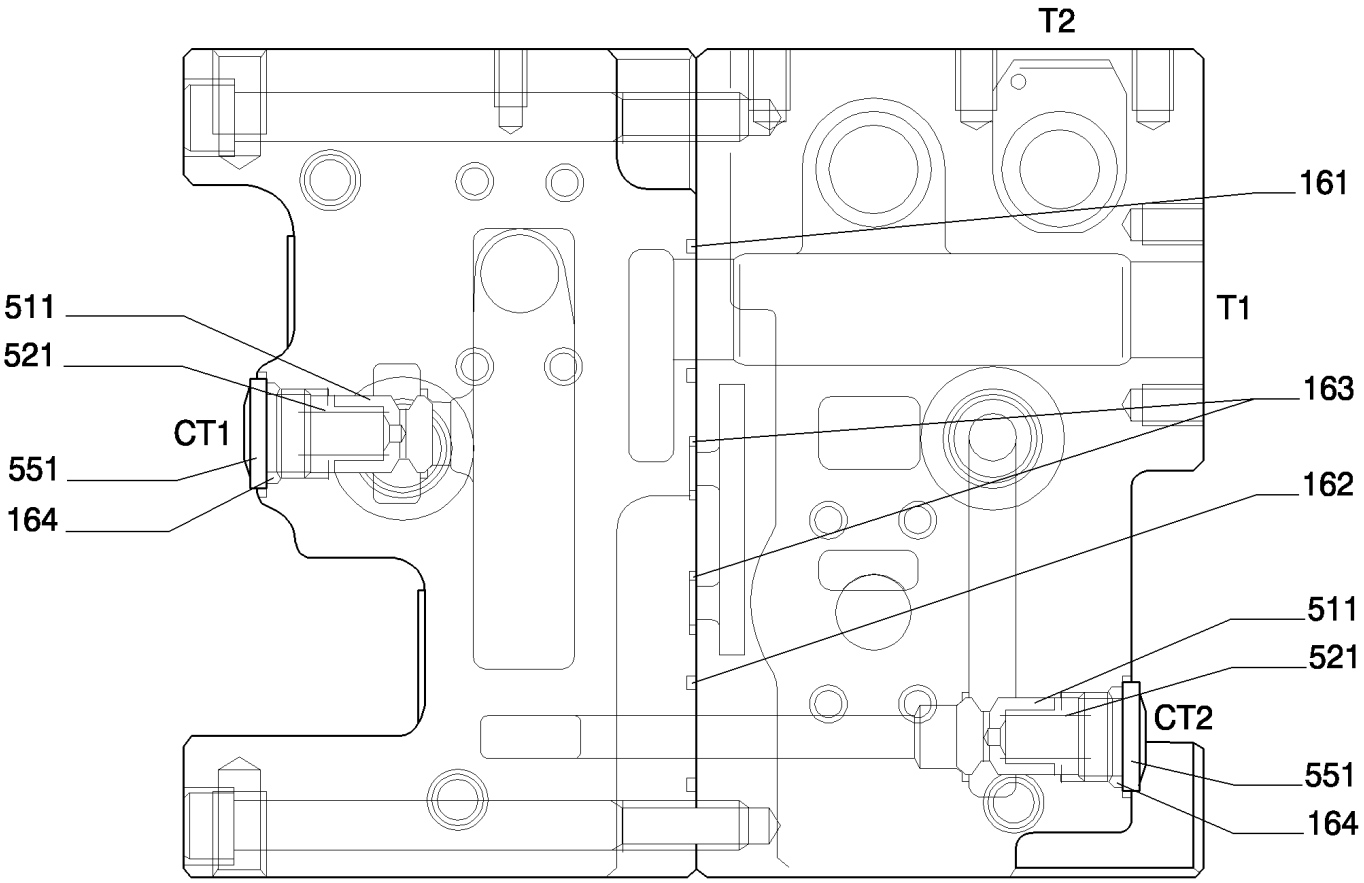

SECTION H–H

HYDRAULIC CONTROL VALVE - COMPONENTS

REF	FN	PART NUMBER	YR/SN	QTY	DESCRIPTION
161		72210076		1	ANEL "O"
162		72209839		1	ANEL "O"
163		72210077		2	ANEL "O"
164		72209838		2	ANEL "O"
511		YN30V00101S341		2	VÁLVULA HIDRAULICA
521		72210091		2	MOLA
551		YN30V00001S551		2	BUJÃO

CONTROL VALVE ASSY P/N 87524899

HYDRAULIC CONTROL VALVE - COMPONENTS

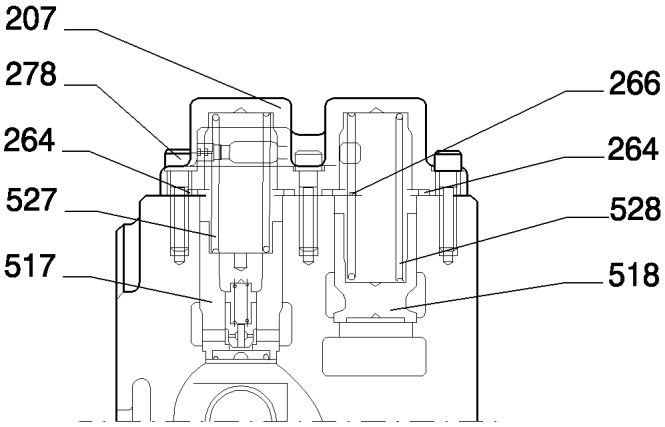

SECTION J–J

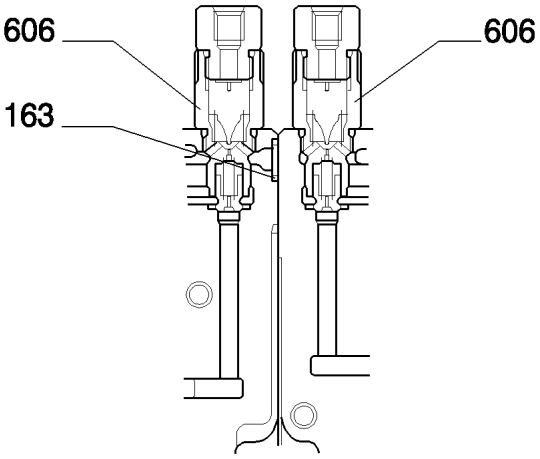

SECTION K–K

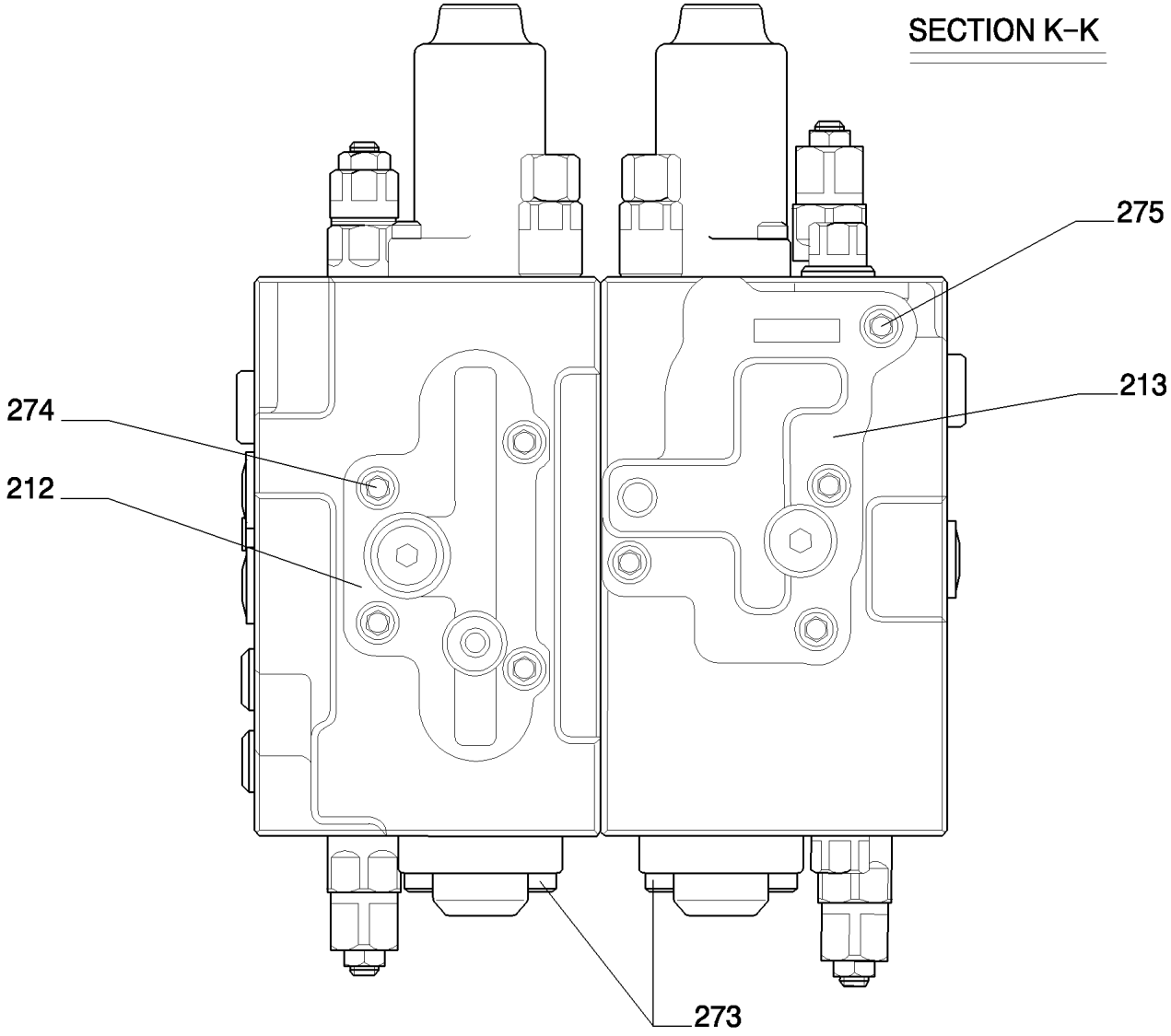

HYDRAULIC CONTROL VALVE - COMPONENTS

REF	FN	PART NUMBER	YR/SN	QTY	DESCRIPTION
163		72210077		1	ANEL "O"
207		YN30V00101S207		1	PROTEÇÃO
212		72964201		1	PLACA
213		YN30V00116S213		1	PLACA
264		72210088		2	ANEL "O"
266		72215596		1	JUNTA
273		14306470		20	PARAFUSO, Hex Soc Hd, M8 x 25, 12.9
274		14311070		4	PARAFUSO
275		14422170		4	PARAFUSO
278		14306670		5	PARAFUSO
517		YN30V00101S517		1	VÁLVULA HIDRAULICA
518		YN30V00101S518		1	VÁLVULA HIDRAULICA
527		YN30V00101S527		1	MOLA
528		YN30V00101S528		1	MOLA
606		YN30V00120F2		2	VALVULA

CONTROL VALVE ASSY P/N 87524899

1.051	01	p1	11/07

HYDRAULIC CONTROL VALVE - VERSION (03-04)

2

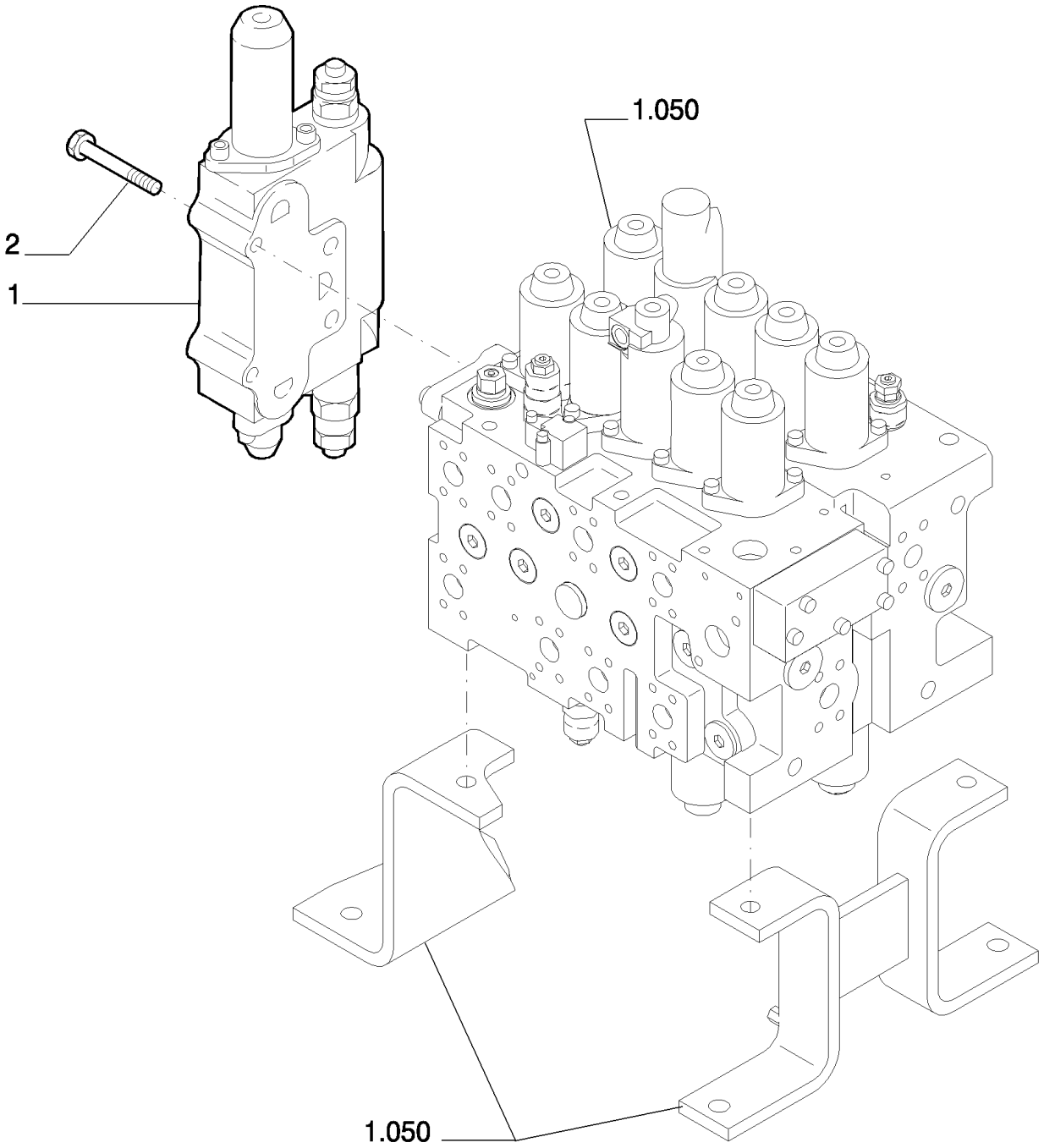

HYDRAULIC CONTROL VALVE - VERSION (03-04)

REF	FN	PART NUMBER	YR/SN	QTY	DESCRIPTION
1	1	87586053		1	VÁLVULA HIDRAULICA
2		14423234		4	PARAFUSO

(1) ASSY SEE PAGE 2

HYDRAULIC CONTROL VALVE - COMPONENTS - VERSION (03-04)

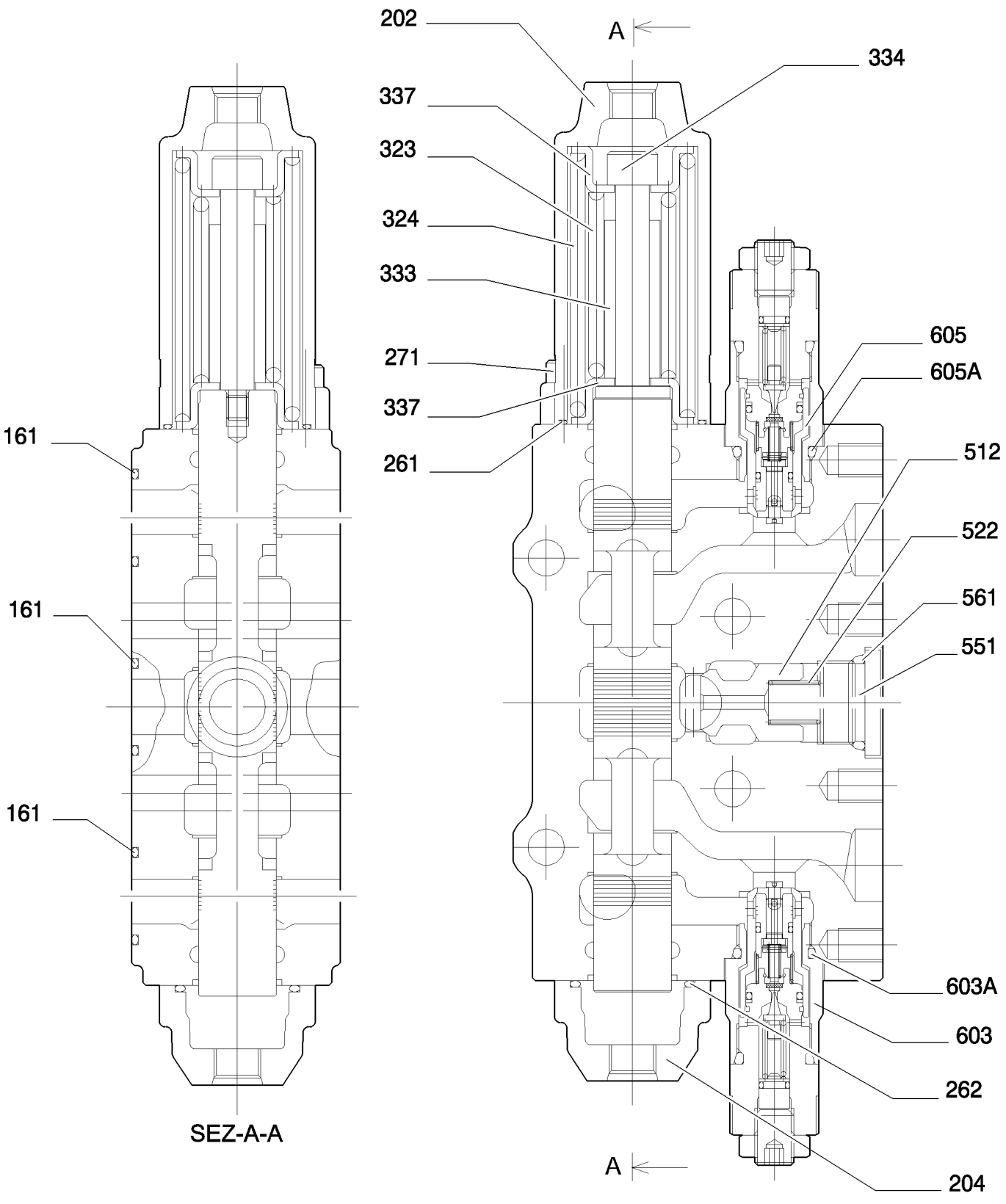

HYDRAULIC CONTROL VALVE - COMPONENTS - VERSION (03-04)

REF	FN	PART NUMBER	YR/SN	QTY	DESCRIPTION
161		72209839		3	ANEL "O"
202		72210080		1	TAMPA
204		72210435		1	TAMPA
261		72210087		1	ANEL "O"
262		72209830		1	ANEL "O"
271		72210011		4	PARAFUSO
323		72210436		1	MOLA
324		72210437		1	MOLA
333		72210438		1	FIXADOR
334		72210439		1	PARAFUSO
337		72210440		2	SEDE/ALOJAMENTO
512		72210441		1	VÁLVULA HIDRAULICA
522		72210442		1	MOLA
551		72210443		1	BUJÃO
561		72209822		1	ANEL "O"
603		72210098		1	VÁLVULA HIDRAULICA, - ASSY
603A		72209838		1	ANEL "O"
605		72215841		1	VÁLVULA HIDRAULICA, - ASSY
605A		72209838		1	ANEL "O"

CONTROL VALVE ASSY P/N 72215601

1.060	01	p1	11/07

HYDRAULIC PUMP PILOT SYSTEM PIPES

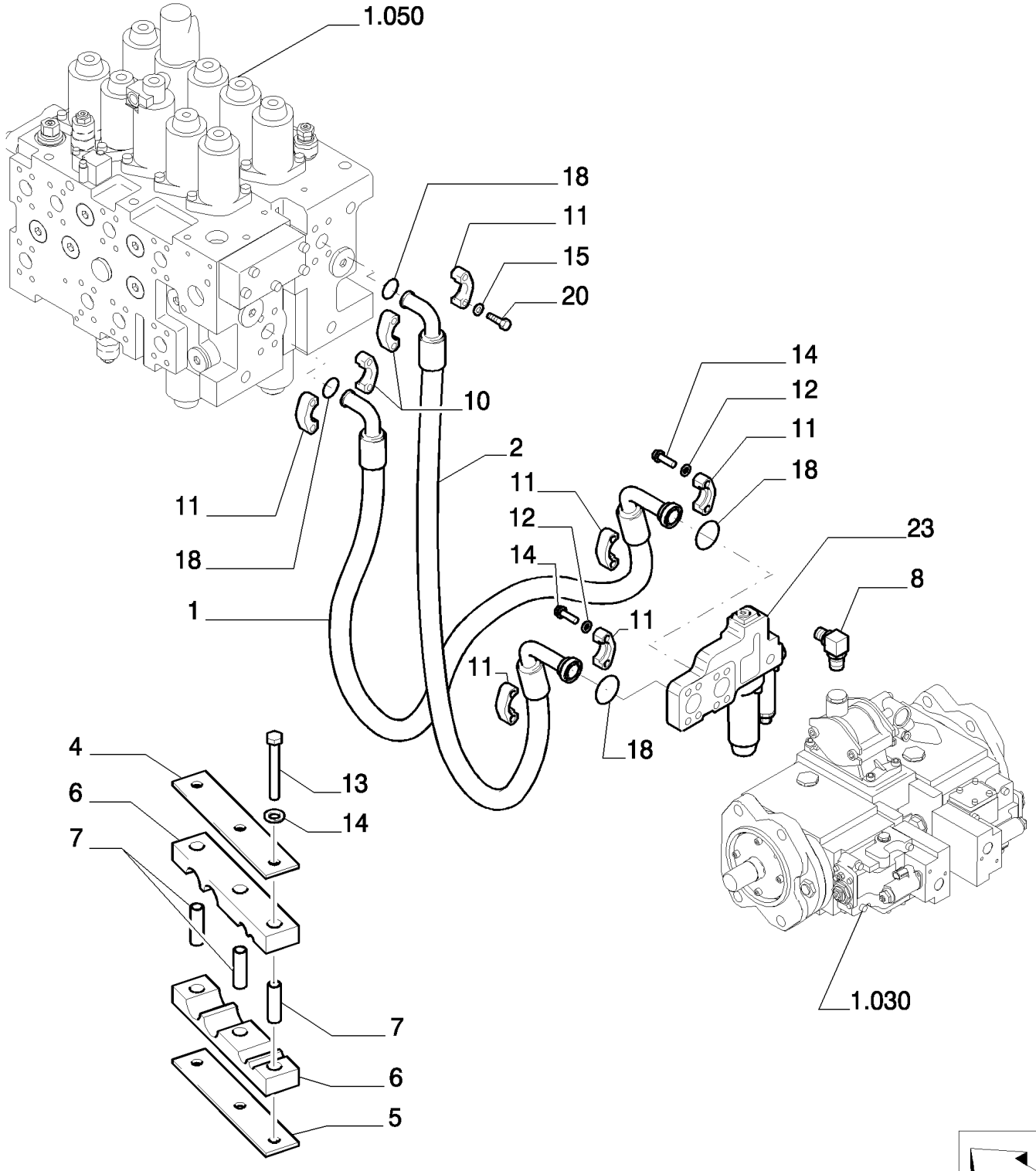

HYDRAULIC PUMP PILOT SYSTEM PIPES

REF	FN	PART NUMBER	YR/SN	QTY	DESCRIPTION
1		{87607328}		1	
2		{87607329}		1	
4		87524905		1	PLACA
5		{87338541}		1	
6		{87607331}		2	
7		{87338503}		3	
8		72214734		1	CONEXÃO
11		71404313		8	SEMI- FLANGE
12		11112834		8	PARAFUSO, Hex, M12 x 40, 10.9, Full Thd
13		11114034		3	PARAFUSO, Hex, M12 x 90, 10.9, Full Thd
14		14496731		7	ARRUELA PLANA
15		10517074		8	ARRUELA-TRAVA
18		72215443		4	JUNTA
20		14423234		8	PARAFUSO
23		{87607332}		1	

1.060	02	p1	06/08

HYDRAULIC PUMP PILOT SYSTEM PIPES

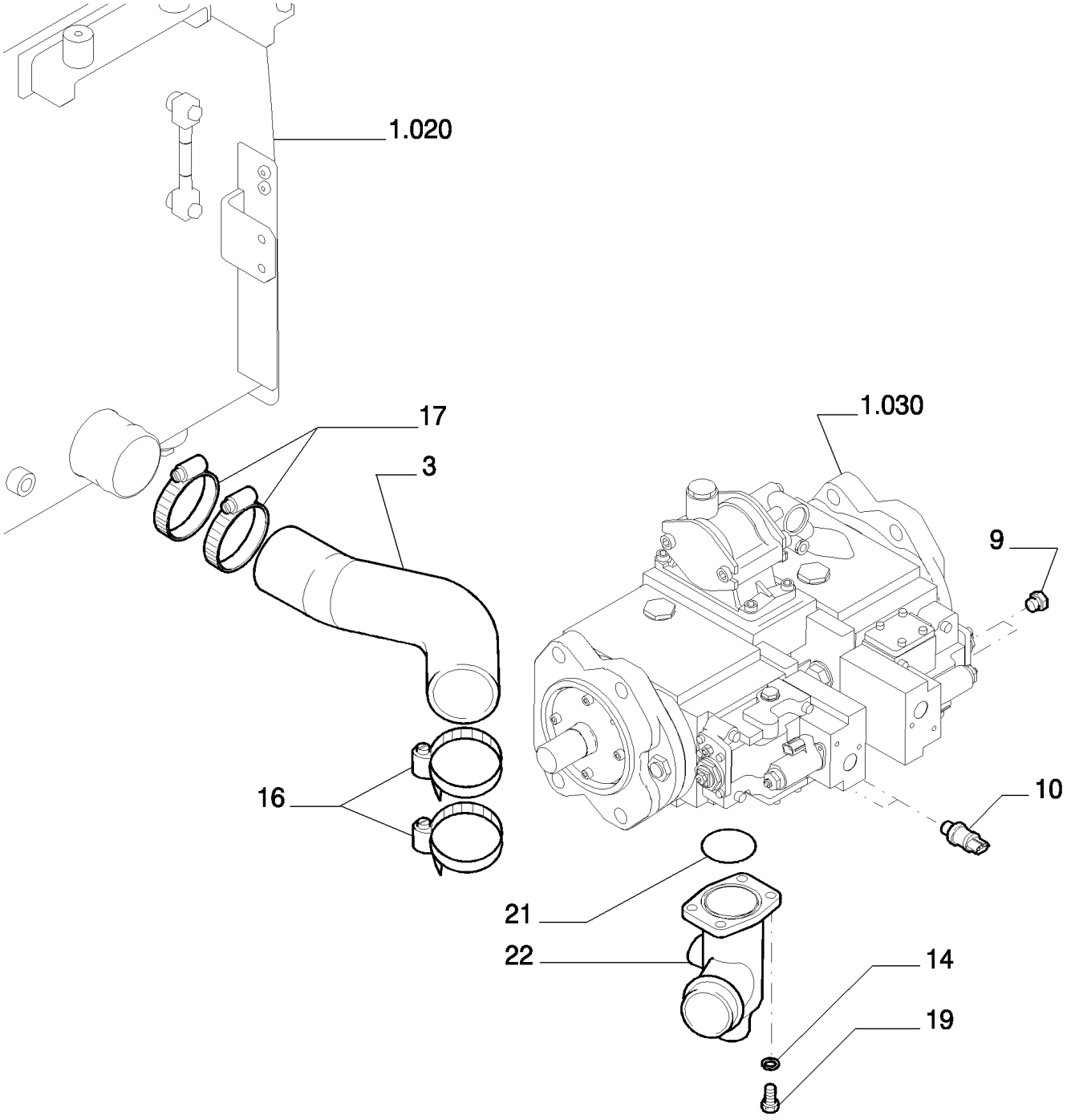

HYDRAULIC PUMP PILOT SYSTEM PIPES

REF	FN	PART NUMBER	YR/SN	QTY	DESCRIPTION
3		{87607330}		1	
9		72214663		2	BUJÃO
10		87700941		2	SENSOR
14		14496731		4	ARRUELA PLANA
16		71406250		2	BRAÇADEIRA
17		71482200		2	BRAÇADEIRA
19		14422034		4	PARAFUSO, Hex Soc Hd, M12 x 30, 10.9
21		87530582		1	COTOVELO
22		87397561		1	ANEL "O"

HYDRAULIC PUMP PILOT SYSTEM PIPES

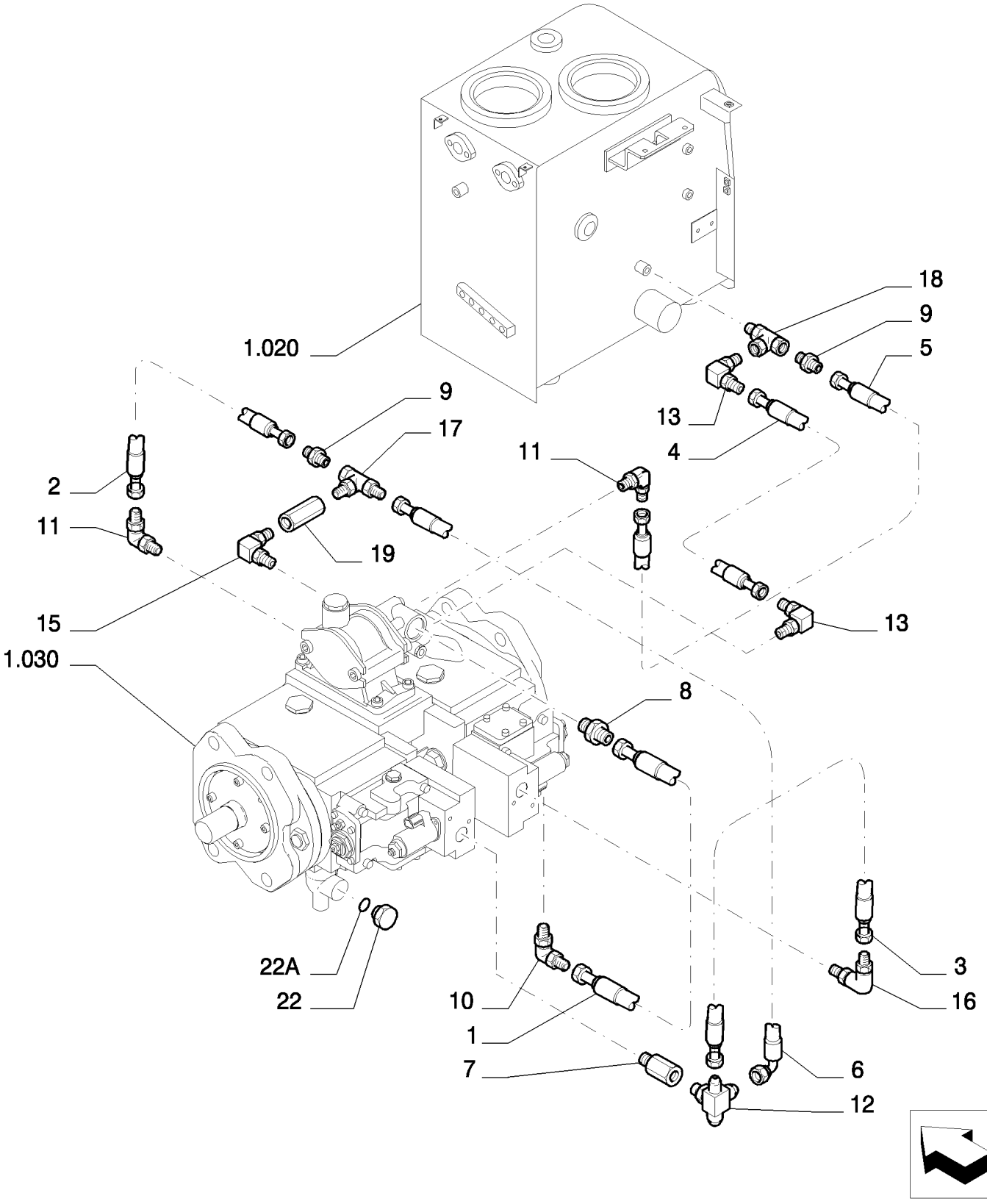

HYDRAULIC PUMP PILOT SYSTEM PIPES

REF	FN	PART NUMBER	YR/SN	QTY	DESCRIPTION
1		{87573116}		1	
2		{87594009}		1	
3		72214533		1	TUBO FLEXÍVEL
4		72959581		1	MANGUEIRA
5		72202341		1	TUBO FLEXÍVEL
6		{87594131}		1	
7		72217409		1	CONEXÃO
8		72214717		1	CONEXÃO
9		72214523		1	CONEXÃO
10		72214734		1	CONEXÃO
11		72214524		2	CONEXÃO
12		87532893		1	CONEXÃO
13		72214561		1	CONEXÃO
14		72214541		1	CONEXÃO
15		87532891		1	CONEXÃO
16		72214735		1	CONEXÃO
17		{87338581}		1	
18		72283559		1	TEE
19		87338500		1	VÁLVULA HIDRAULICA
22		{87606907}		1	- ASSY
22A		71444332		1	ANEL "O"

1.061	01	p1	11/07

OIL RETURN PIPES

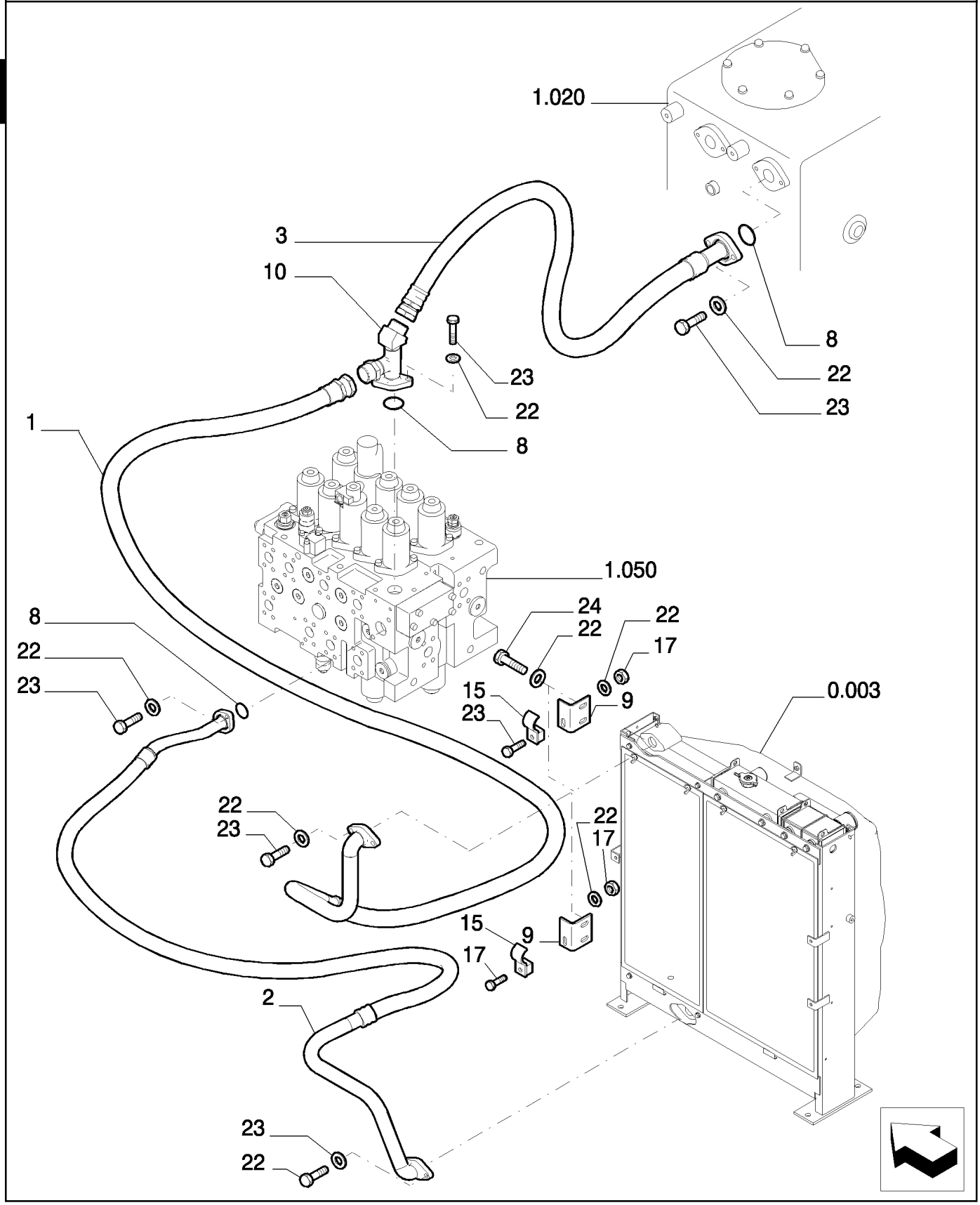

OIL RETURN PIPES

REF	FN	PART NUMBER	YR/SN	QTY	DESCRIPTION
1		{87573165}		1	
2		{87573163}		1	
3		{87572130}		1	
8		87397569		3	ANEL "O"
9		87533907		2	PLACA
10		87533854		1	CONEXÃO
15		72204335		2	SUPORTE
17		72280507		2	PORCA
21		11113334		2	PARAFUSO
22		13550521		16	ARRUELA-TRAVA
23		11112634		10	PARAFUSO
24		11112434		4	PARAFUSO, Hex, M12 x 30, 10.9, Full Thd

1.061	02	p1	11/07

OIL RETURN PIPES

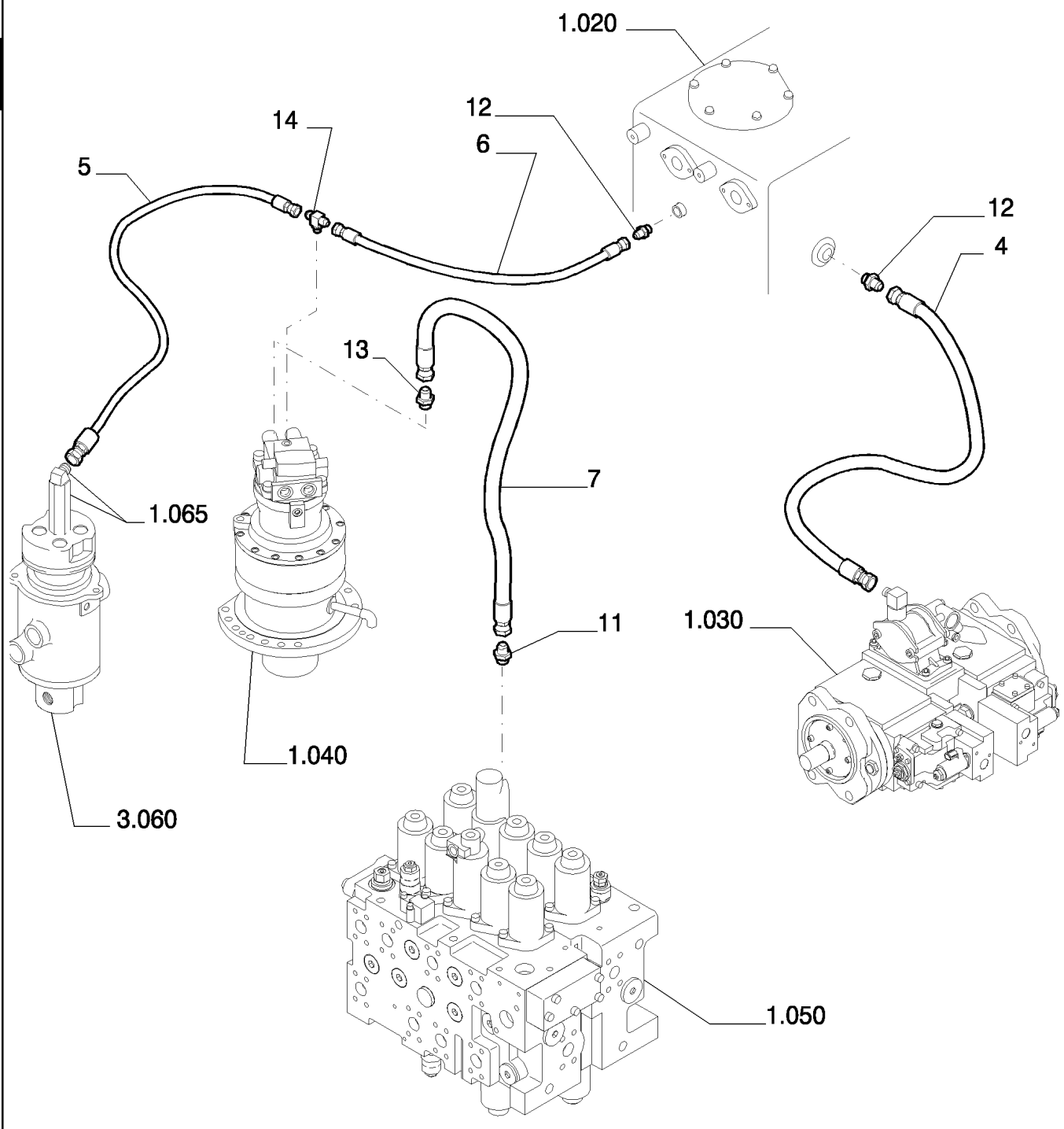

OIL RETURN PIPES

REF	FN	PART NUMBER	YR/SN	QTY	DESCRIPTION
4		{87573167}		1	
5		87532949		1	TUBO FLEXÍVEL
6		72214753		1	TUBO FLEXÍVEL
7		{87573168}		1	
11		72214795		1	CONEXÃO
12		72214717		2	CONEXÃO
13		72214796		1	CONEXÃO
14		87333017		1	TEE

1.065	01	p1	11/07

HYDRAULIC LINES SWIVEL

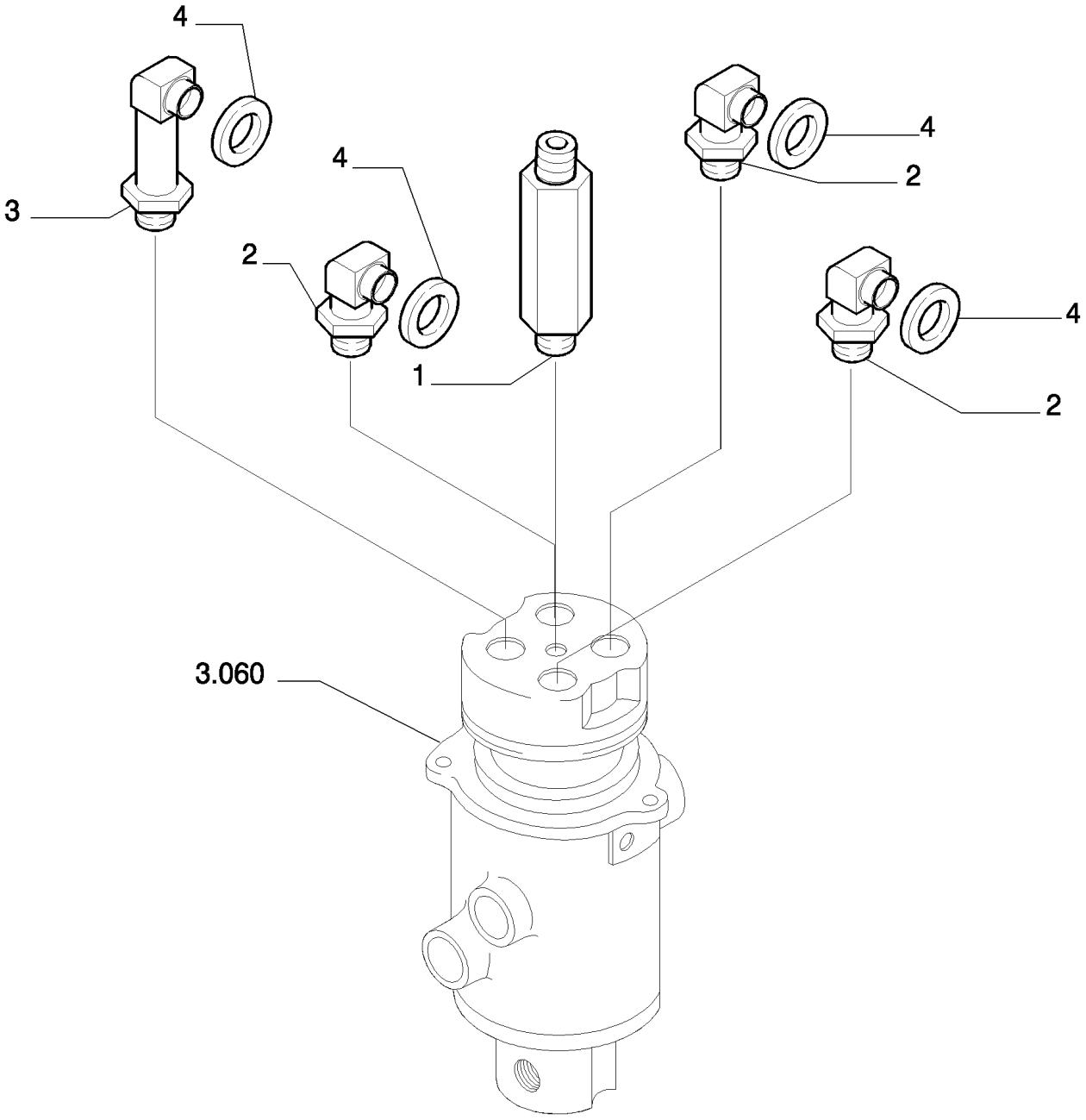

HYDRAULIC LINES SWIVEL

REF	FN	PART NUMBER	YR/SN	QTY	DESCRIPTION
1		72214762		1	CONEXÃO
2		72214711		3	CONEXÃO
3		{87338432}		1	
4		70923843		4	ANEL

1.070	01	p1	10/07

CONTROLS

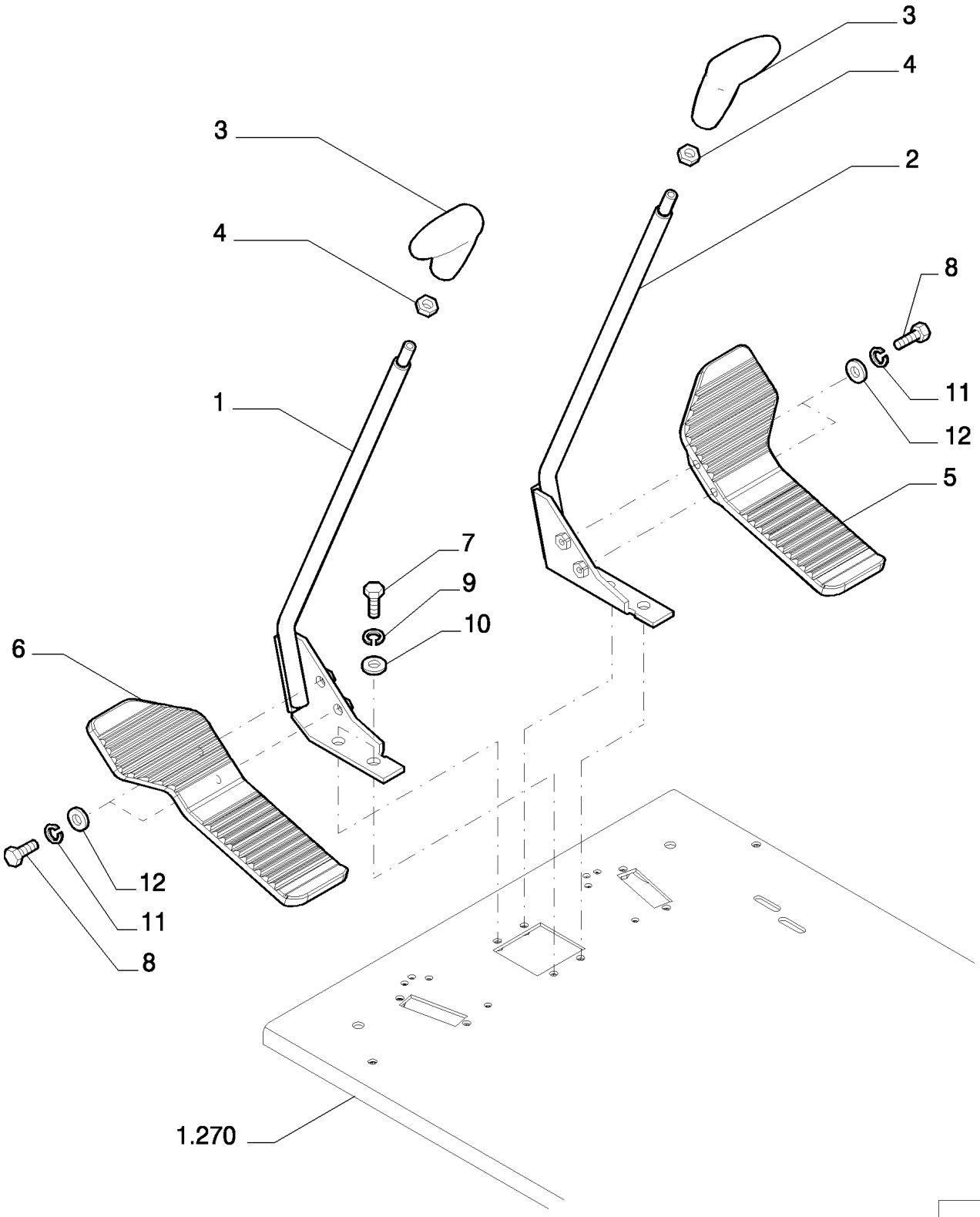

CONTROLS

REF	FN	PART NUMBER	YR/SN	QTY	DESCRIPTION
1		87524864		1	ALAVANCA
2		87524865		1	ALAVANCA
3		72203856		2	EMPUNHADURA
4		16101521		2	PORCA, M12 x 1.25, Cl 10
5		87524873		1	PEDAL
6		87524874		1	PEDAL
7		11106034		4	PARAFUSO, Hex, M10 x 20, 10.9, Full Thd
8		16043634		4	PARAFUSO, Hex, M8 x 25, 10.9, Full Thd
9		14496631		4	ARRUELA PLANA, M10 x 21 x 2
10		10516874		4	ARRUELA-TRAVA
11		14496531		4	ARRUELA PLANA, M8 x 17 x 1.6
12		10516674		4	ARRUELA-TRAVA, 5/16"

CONTROLS

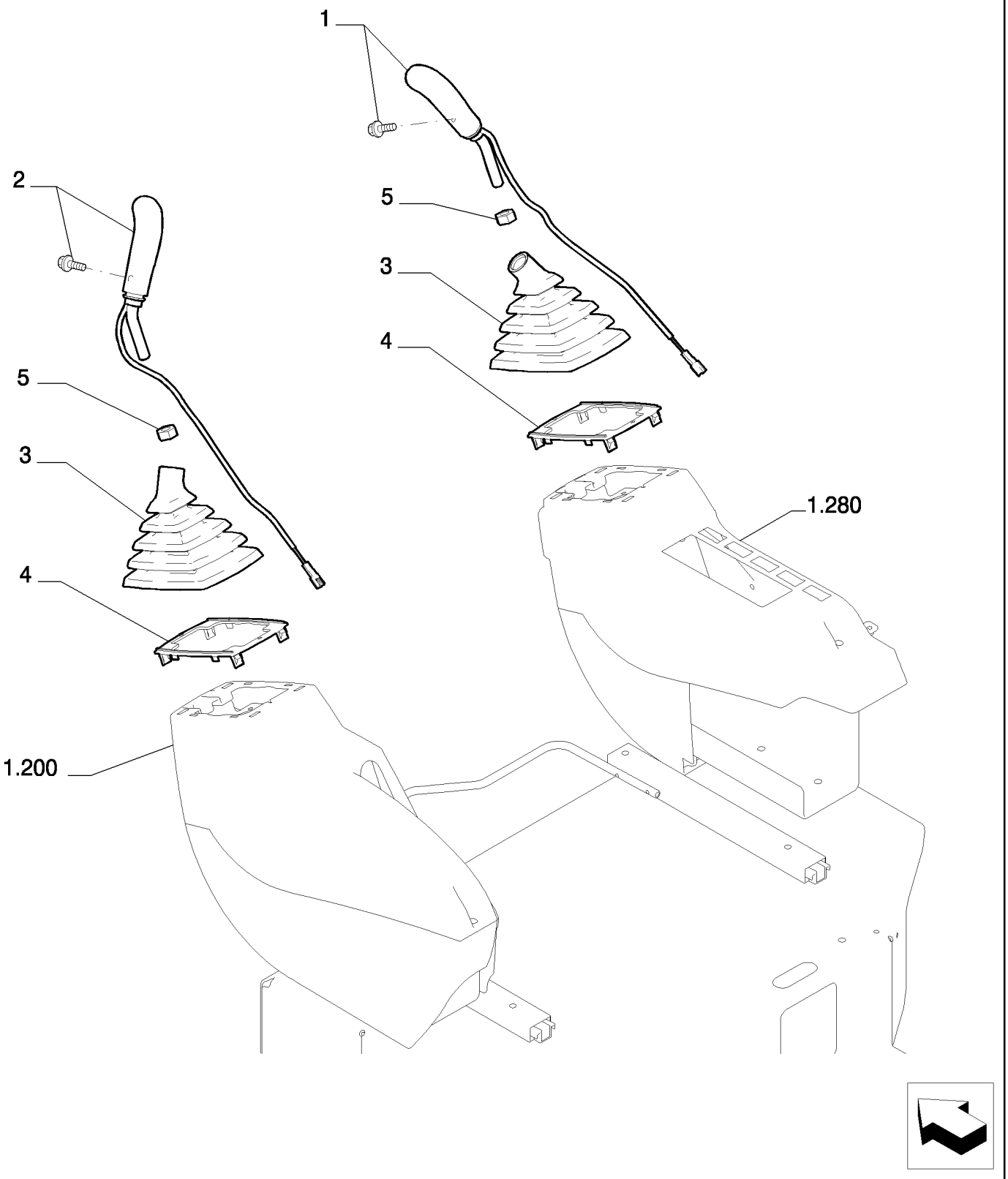

CONTROLS

REF	FN	PART NUMBER	YR/SN	QTY	DESCRIPTION
1		87522669		1	EMPUNHADURA
2		87522673		1	EMPUNHADURA
3		87522674		2	FOLE
4		72203567		2	PLACA
5		12163224		2	PORCA

1.080	01	p1	04/08

PILOT PIPING (1)

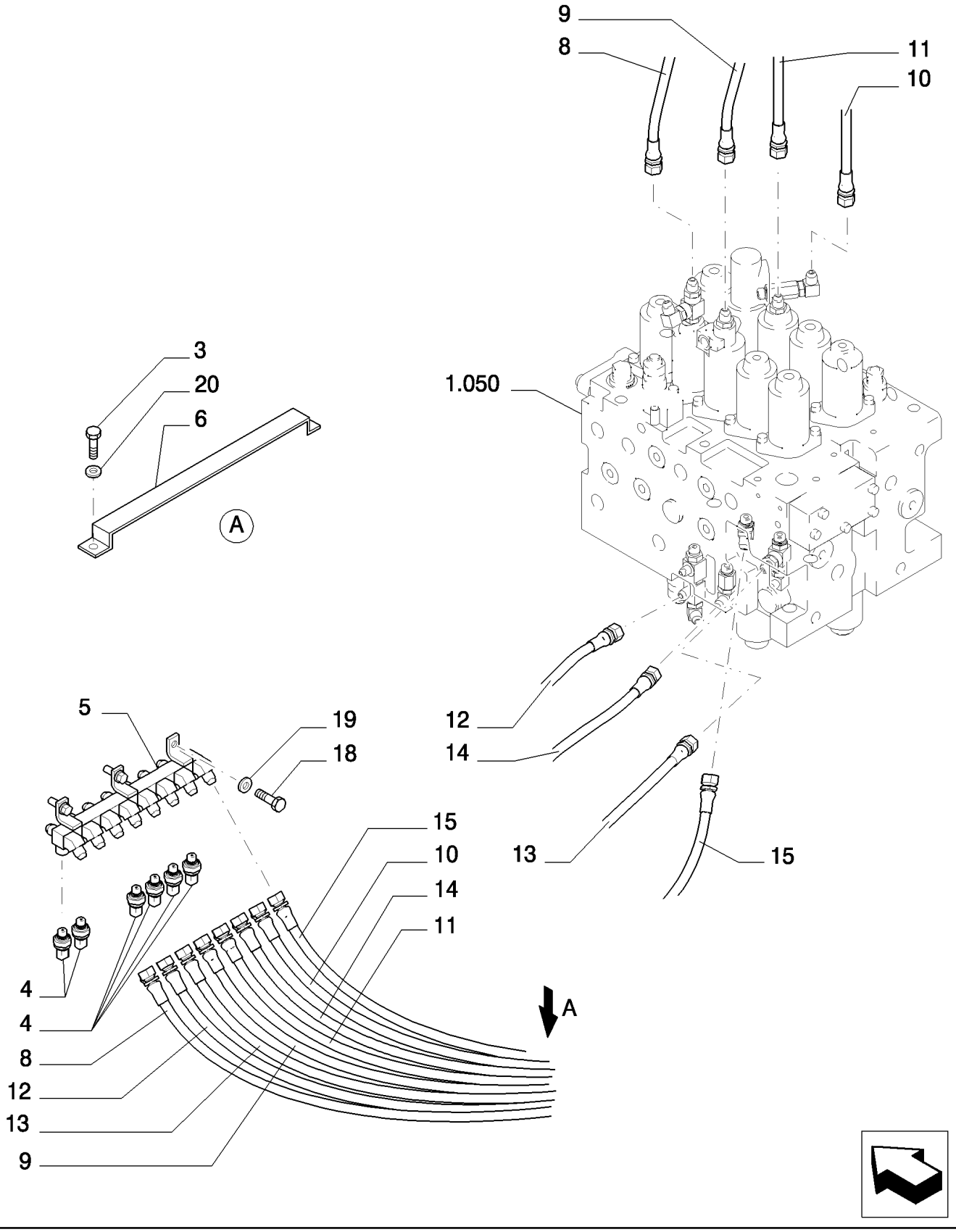

PILOT PIPING (1)

REF	FN	PART NUMBER	YR/SN	QTY	DESCRIPTION
3		11106034		2	PARAFUSO, Hex, M10 x 20, 10.9, Full Thd
4		87608371		6	SENSOR
6		87338540		1	SUPORTE
8		87597038		1	TUBO FLEXÍVEL
9		{87597084}		1	
10		{87597040}		1	
11		{87597080}		1	
12		{87597039}		1	
13		{87597032}		1	
14		87597036		1	TUBO FLEXÍVEL
15		{87594883}		1	
16		11106434		3	PARAFUSO, Hex, M10 x 30, 10.9, Full Thd
20		10516874		3	ARRUELA-TRAVA

1.080	02	p1	11/07

PILOT PIPING (1)

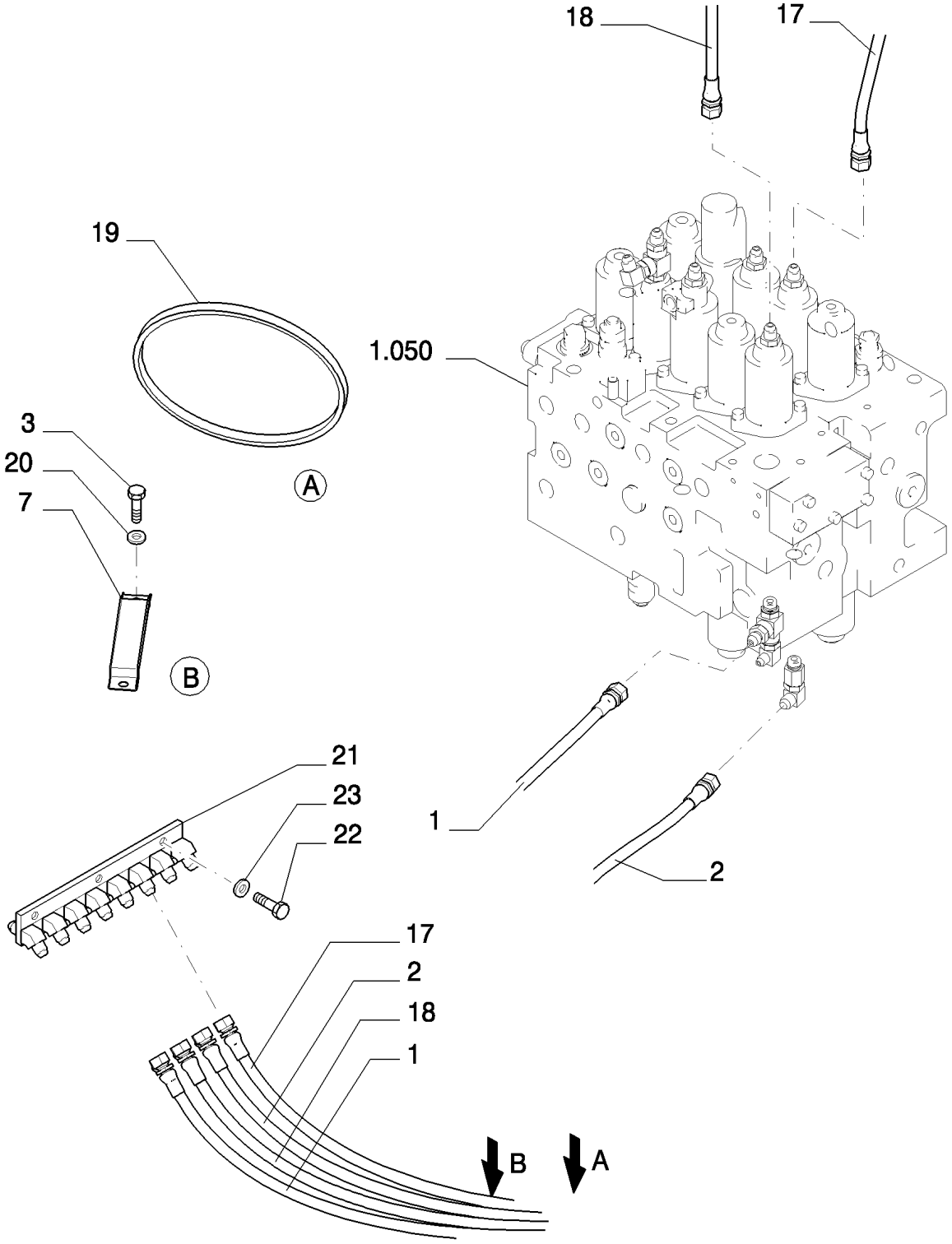

PILOT PIPING (1)

REF	FN	PART NUMBER	YR/SN	QTY	DESCRIPTION
1		72214553		1	TUBO FLEXÍVEL
2		{87597202}		1	
7		87531053		1	SUPORTE
17		72961042		1	MANGUEIRA
18		87536897		1	TUBO FLEXÍVEL
19		72951499		1	FIXADOR
21		87338570		1	BLOCO
22		11106434		3	PARAFUSO, Hex, M10 x 30, 10.9, Full Thd
23		14496631		3	ARRUELA PLANA, M10 x 21 x 2

1.080	03	p1	11/07

PILOT PIPING (1) - VERSION (03-04)

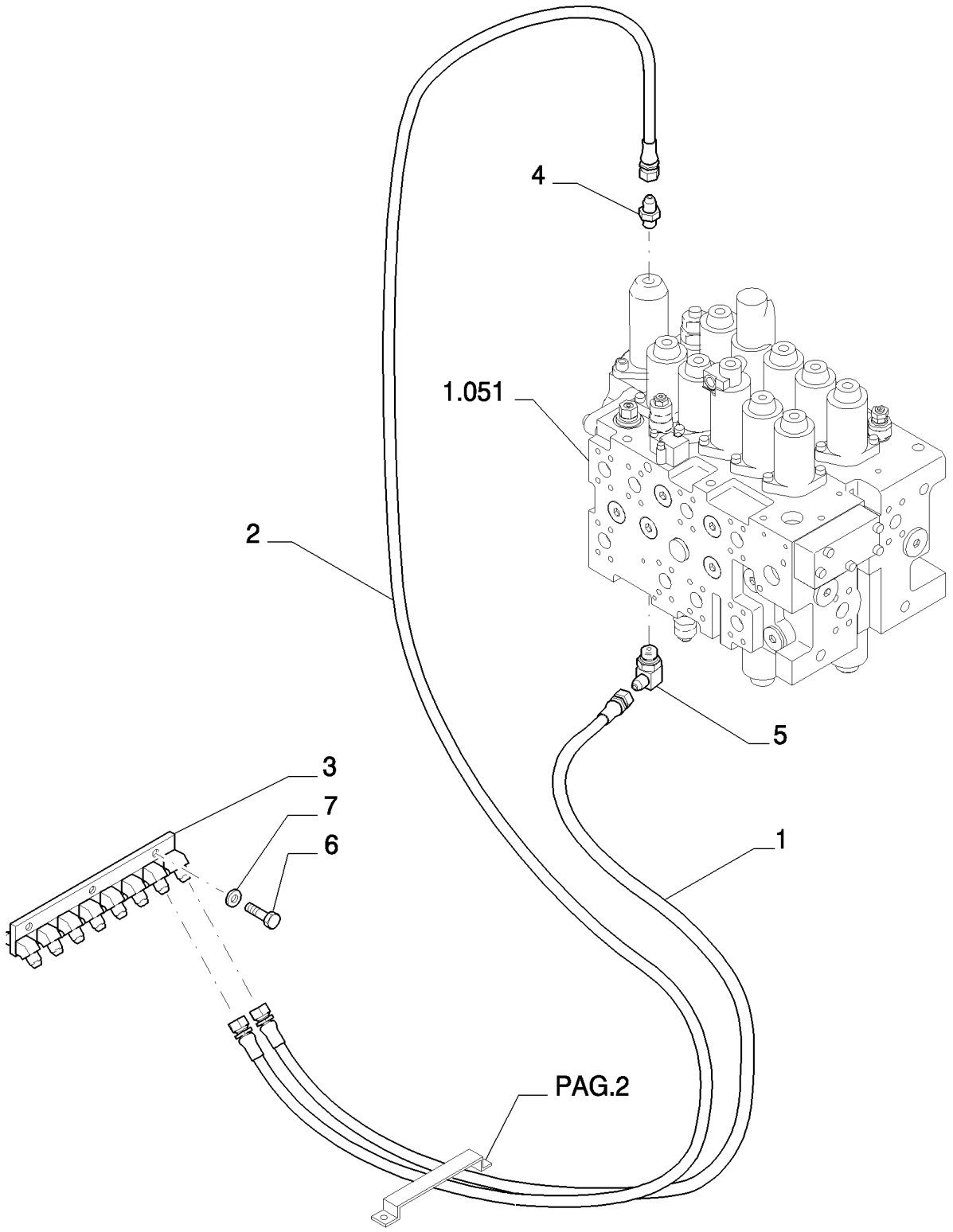

PILOT PIPING (1) - VERSION (03-04)

REF	FN	PART NUMBER	YR/SN	QTY	DESCRIPTION
1		{87653168}		1	
2		72214557		1	TUBO FLEXÍVEL
3		87338570		1	BLOCO
4		72214522		1	CONEXÃO
5		72214561		1	CONEXÃO
6		11106434		3	PARAFUSO, Hex, M10 x 30, 10.9, Full Thd
7		14496631		3	ARRUELA PLANA, M10 x 21 x 2

1.081	01	p1	06/08

PILOT PIPING (2)

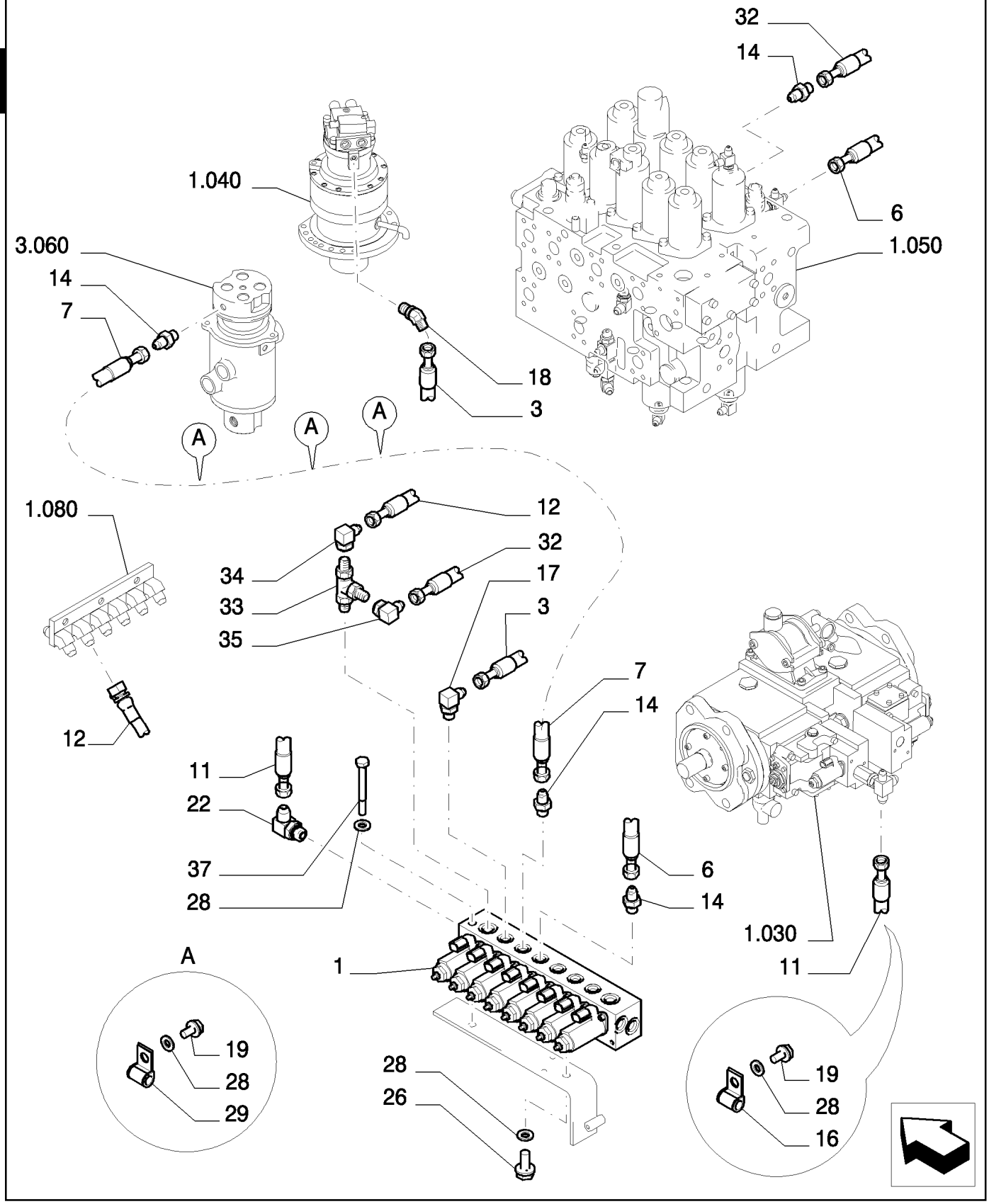

PILOT PIPING (2)

REF	FN	PART NUMBER	YR/SN	QTY	DESCRIPTION
1	1	87338533		1	VÁLVULA HIDRAULICA
3		{87574221}		1	
6		87531052		1	TUBO FLEXÍVEL
7		72954136		1	MANGUEIRA
11		87574218		1	TUBO FLEXÍVEL
12		72214551		1	TUBO FLEXÍVEL
14		72214744		4	CONEXÃO
16		71405745		1	FIXADOR
17		72214524		1	CONEXÃO
18		72214542		1	CONEXÃO
19		11106434		6	PARAFUSO, Hex, M10 x 30, 10.9, Full Thd
22		72214548		1	CONEXÃO
24		16043834		2	PARAFUSO, Hex, M8 x 30, 10.9, Full Thd
28		14496631		4	ARRUELA PLANA, M10 x 21 x 2
29		71416130		3	PRENDEDOR
32		87536897		1	TUBO FLEXÍVEL
33		{87338532}		1	
34		87529939		1	CONEXÃO
35		{72954172}		1	
37		11108034		1	PARAFUSO

(1) ASSY SEE PAGE 3

1.081	02	p1	06/08

PILOT PIPING (2)

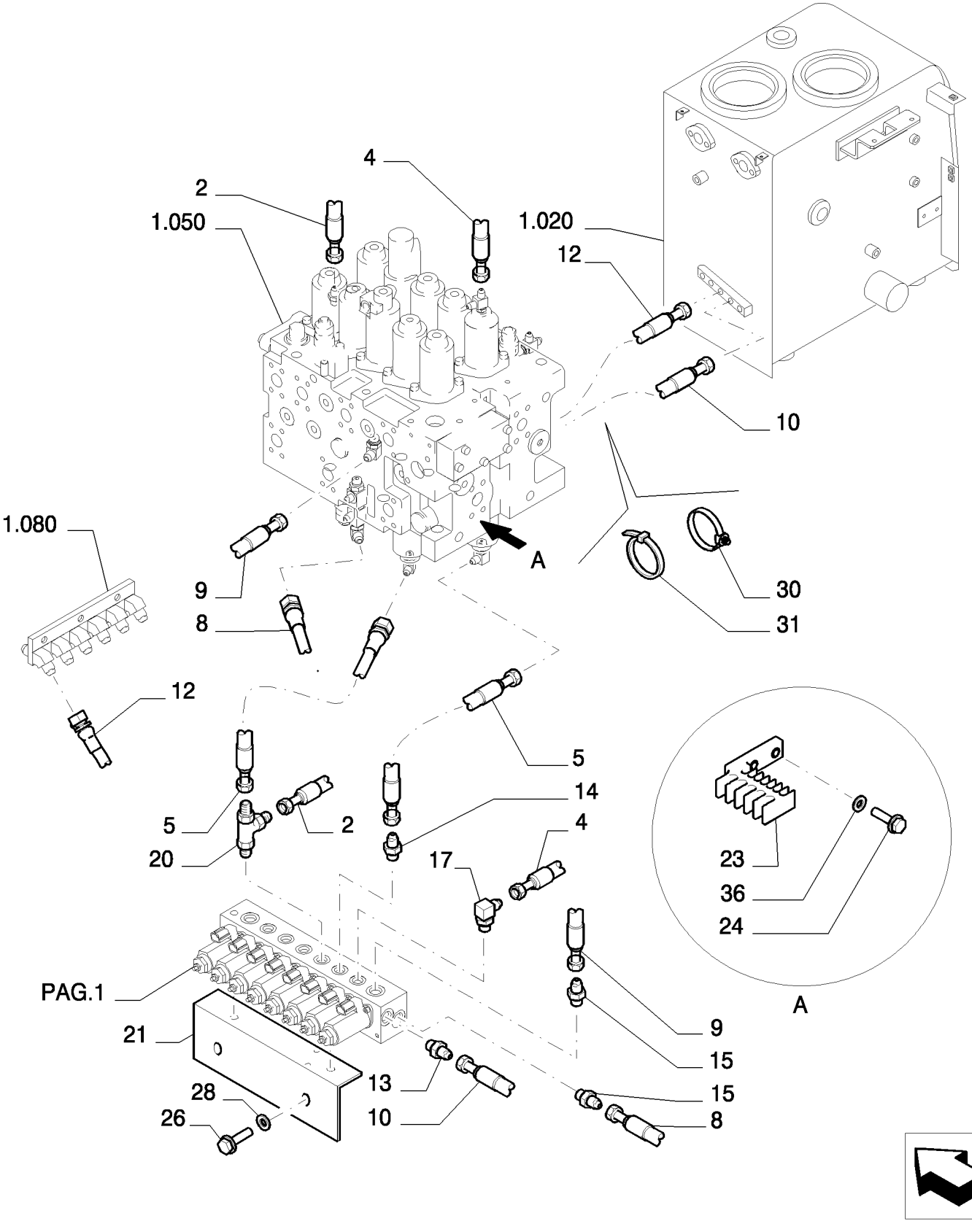

PILOT PIPING (2)

REF	FN	PART NUMBER	YR/SN	QTY	DESCRIPTION
2		72214740		1	TUBO FLEXÍVEL
4		87574225		1	TUBO FLEXÍVEL
5		72214543		1	TUBO FLEXÍVEL
8		72953856		1	TUBO FLEXÍVEL
9		87544489		1	TUBO FLEXÍVEL
10		{87572576}		1	
12		72214551		1	TUBO FLEXÍVEL
13		87634952		1	CONEXÃO
14		72214744		1	CONEXÃO
15		72214523		2	CONEXÃO
17		72214524		1	CONEXÃO
20		72214527		1	CONEXÃO
21		{87573463}		1	
23		87338536		1	BRAÇADEIRA
26		11106234		1	PARAFUSO, Hex, M10 x 25, 10.9, Full Thd
28		14496631		4	ARRUELA PLANA, M10 x 21 x 2
30		87526680		3	ESTRIBO DE FIXAÇÃO
31		4982514		4	TIRA DE CABO
36		14496531		2	ARRUELA PLANA, M8 x 17 x 1.6

1.081	03	p1	11/07

PILOT PIPING (2) - COMPONENTS

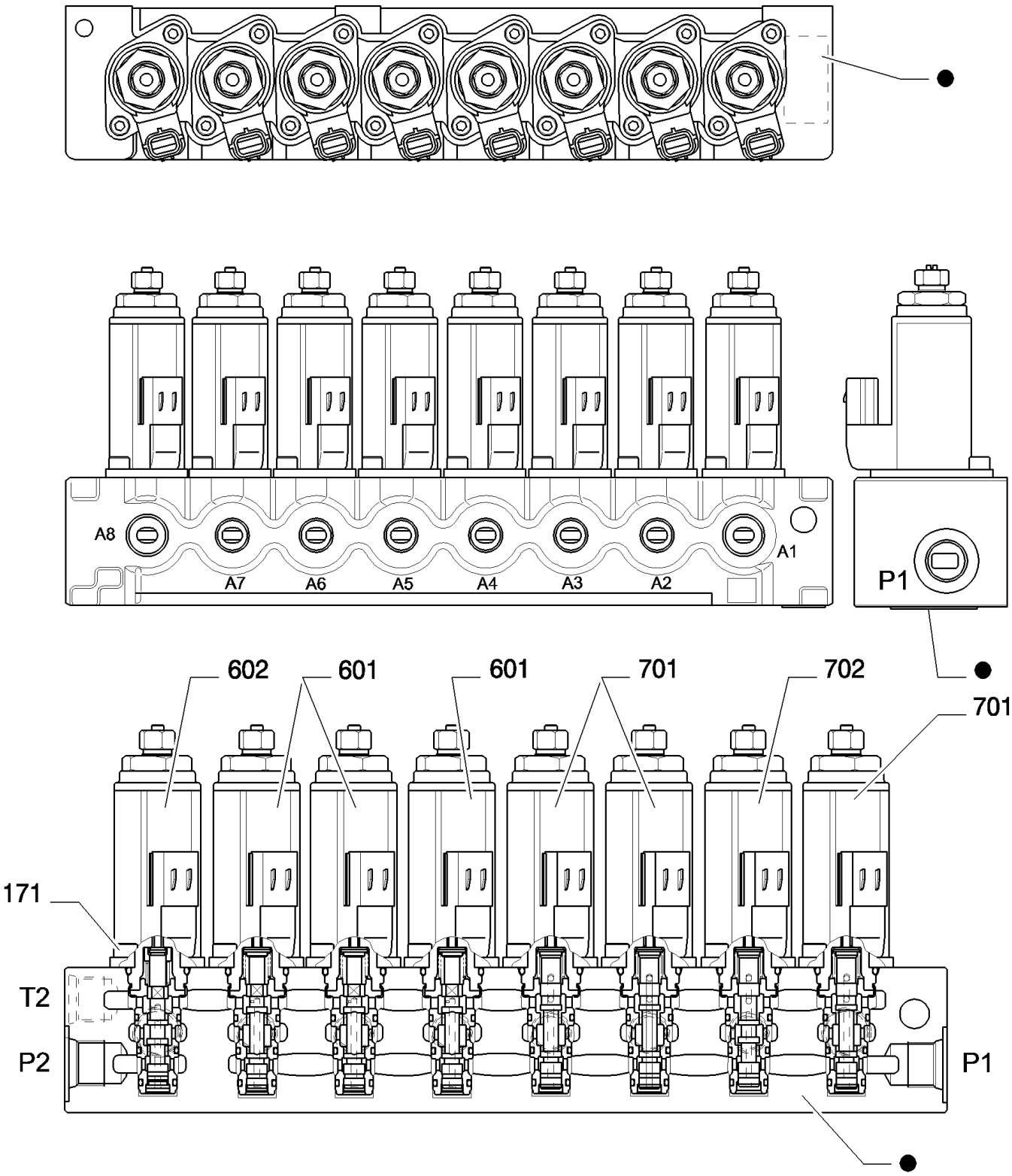

PARTS MARKED ● ARE NOT SUPPLIED AS SPARES
I PARTICOLARI CONTRASSEGNATI CON ● NON VENGONO FORNITI DI RICAMBIO

PILOT PIPING (2) - COMPONENTS

REF	FN	PART NUMBER	YR/SN	QTY	DESCRIPTION
171		72209810		16	PARAFUSO
601		YN35V00048F1		3	VALVULA
602		YN35V00049F1		1	VALVULA
701		YN35V00050F1		3	VALVULA
702		YN35V00051F1		1	VALVULA

1.082	01	p1	10/07

BLOCK - OPT - VERSION (01-02)

2

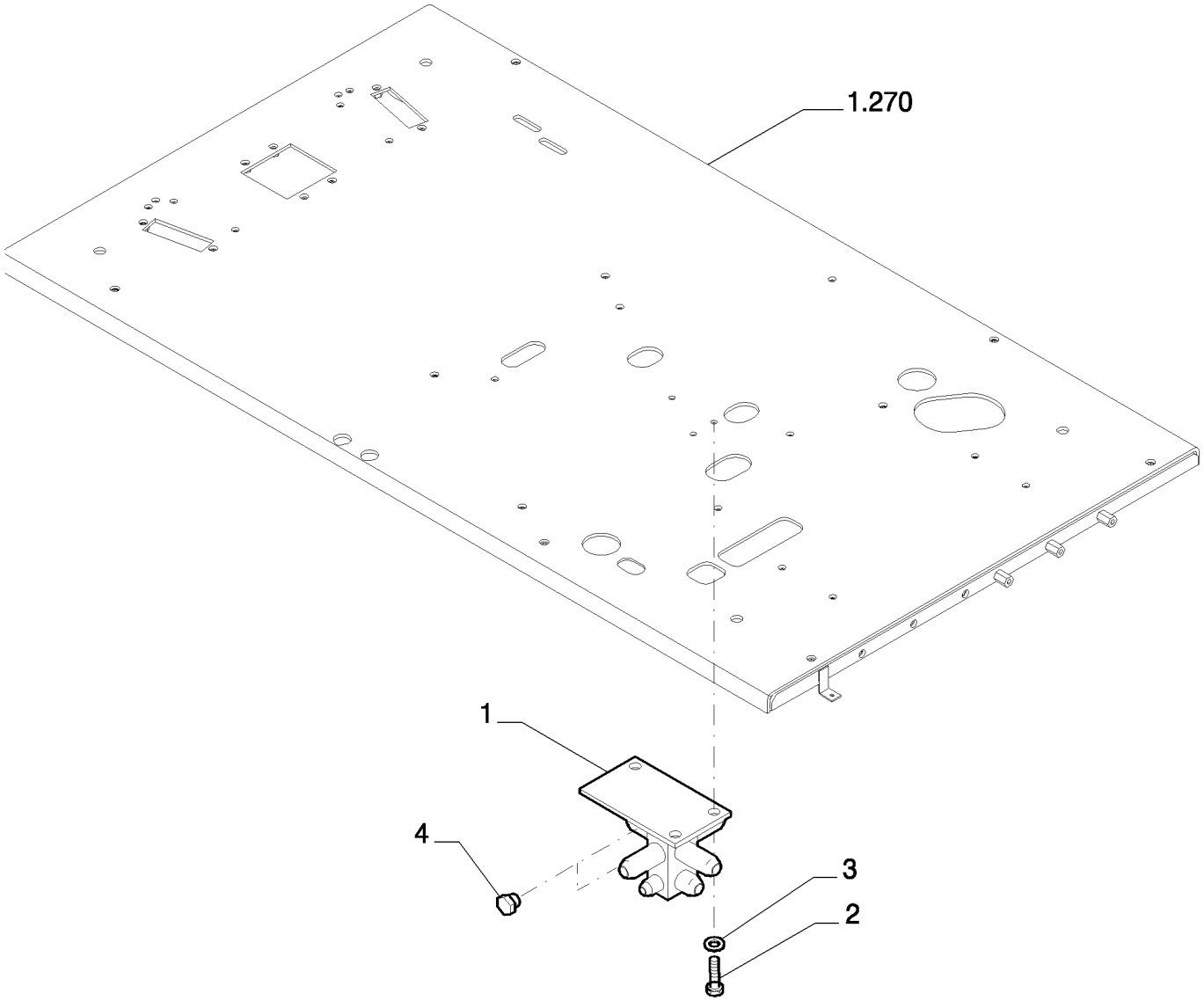

BLOCK - OPT - VERSION (01-02)

REF	FN	PART NUMBER	YR/SN	QTY	DESCRIPTION
1		87519949		1	BLOCO
2		16043434		3	PARAFUSO, Hex, M8 x 20, 10.9, Full Thd
3		14496531		3	ARRUELA PLANA, M8 x 17 x 1.6
4		72214546		2	BUJÃO

1.082	02	p1	10/07

BLOCK - OPT - VERSION (03-04)

2

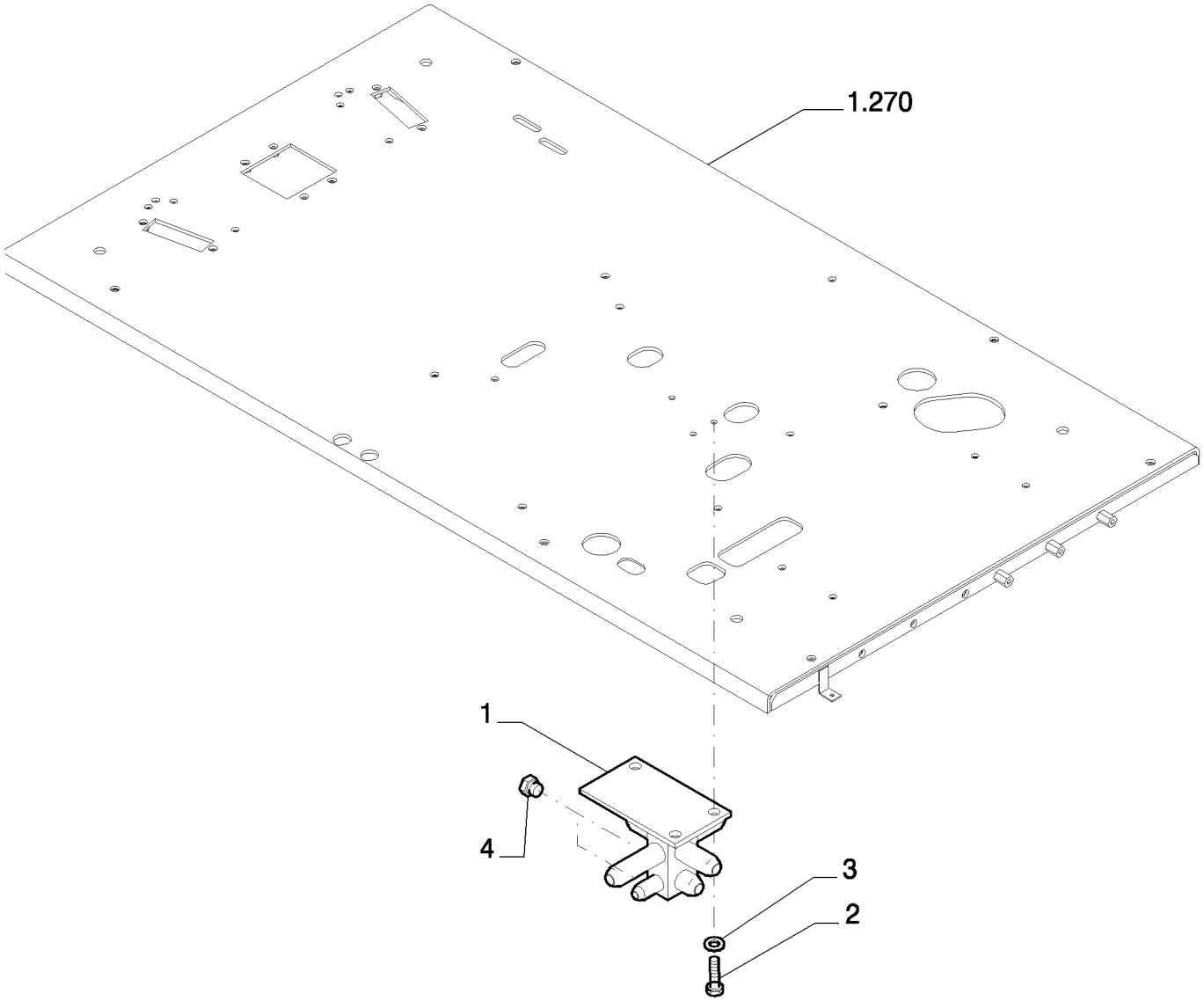

BLOCK - OPT - VERSION (03-04)

REF	FN	PART NUMBER	YR/SN	QTY	DESCRIPTION
1		87519950		1	BLOCO
2		16043434		3	PARAFUSO, Hex, M8 x 20, 10.9, Full Thd
3		14496531		3	ARRUELA PLANA, M8 x 17 x 1.6
4		72214546		2	BUJÃO

1.083	01	p1	11/07

PILOT PIPING (3)

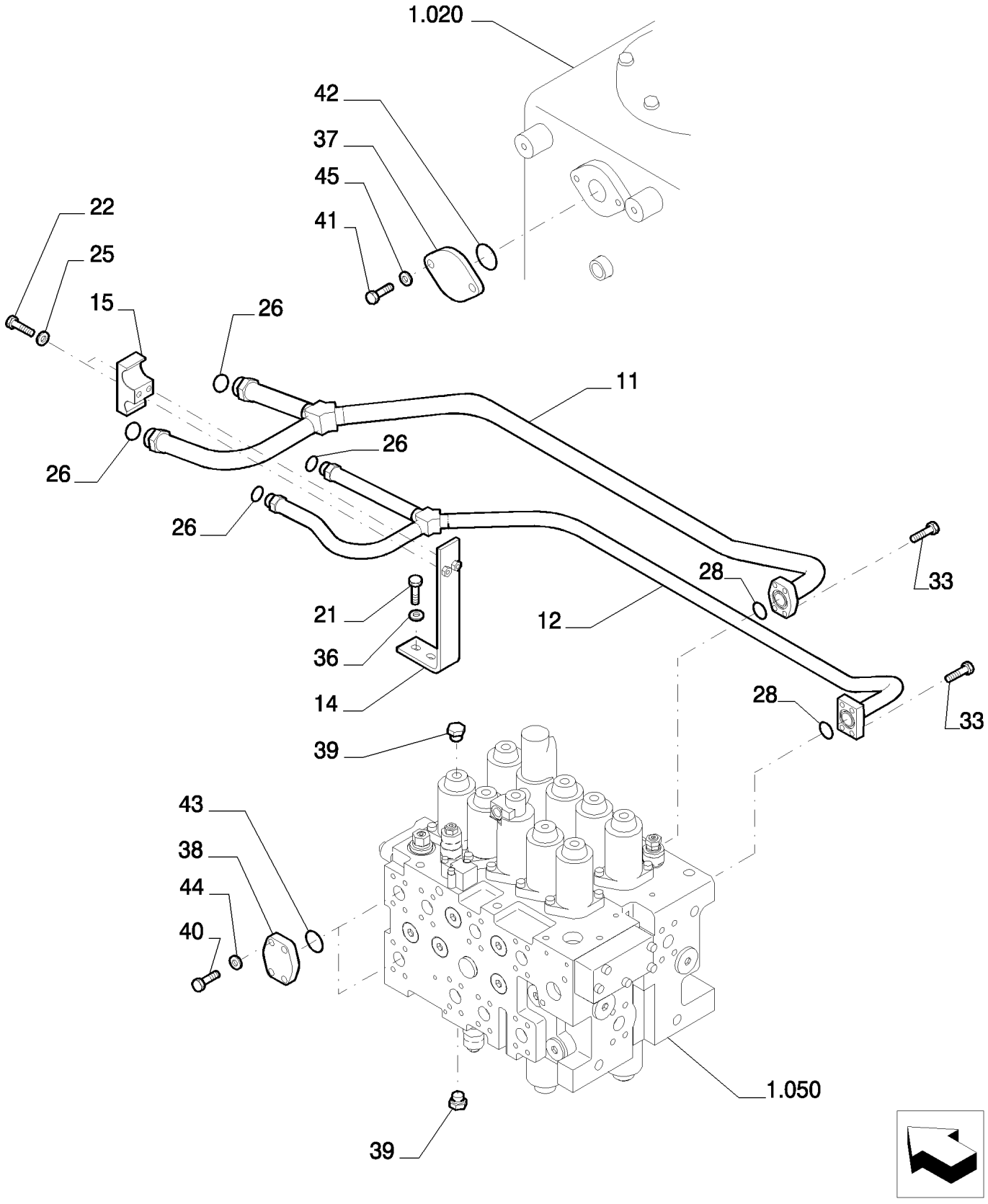

PILOT PIPING (3)

REF	FN	PART NUMBER	YR/SN	QTY	DESCRIPTION
11		{87612536}		1	
12		{87612537}		1	
14		{87612548}		1	
15		{87612549}		1	
21		11112634		2	PARAFUSO
22		11107734		2	PARAFUSO
25		14496631		2	ARRUELA PLANA, M10 x 21 x 2
26		70931640		4	JUNTA
28		72215443		2	JUNTA
33		14420234		8	PARAFUSO
36		14496731		2	ARRUELA PLANA
37		87397565		1	BUJÃO
38		87397570		2	BUJÃO
39		72214558		2	BUJÃO
40		11106434		8	PARAFUSO, Hex, M10 x 30, 10.9, Full Thd
41		11112434		2	PARAFUSO, Hex, M12 x 30, 10.9, Full Thd
42		87397569		1	ANEL "O"
43		72215443		2	JUNTA
44		14496631		8	ARRUELA PLANA, M10 x 21 x 2
45		14496731		2	ARRUELA PLANA

1.083	02	p1	11/07

PILOT PIPING (3)

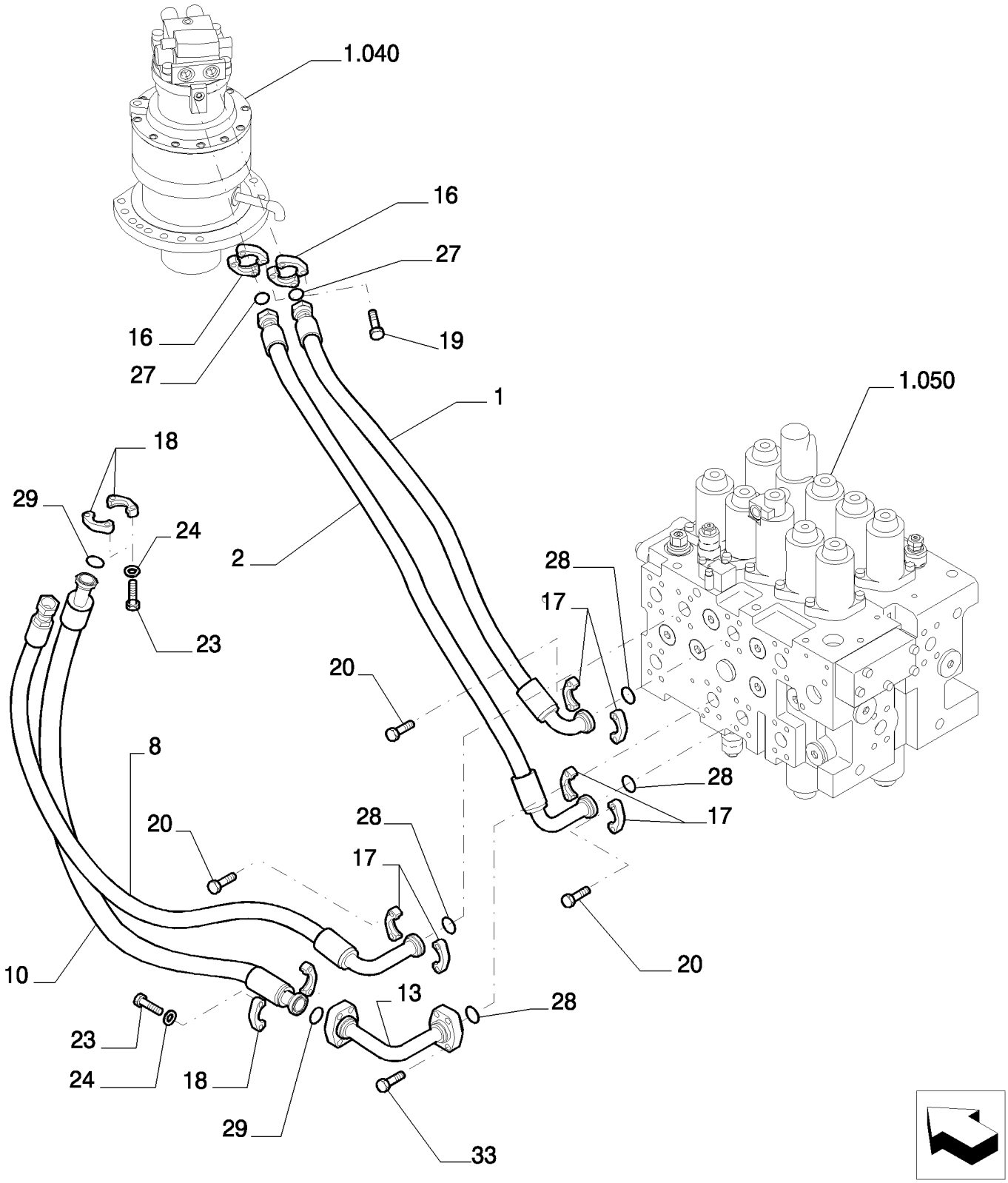

PILOT PIPING (3)

REF	FN	PART NUMBER	YR/SN	QTY	DESCRIPTION
1		{87612527}		1	
2		{87612528}		1	
8		{87612534}		1	
10		72215057		1	TUBO FLEXÍVEL
13		{87612547}		1	
16		71404407		4	SEMI- FLANGE
17		71404311		6	SEMI- FLANGE
18		71444029		4	SEMI- FLANGE
19		{87721974}		8	
20		87612011		12	PARAFUSO
23		14424534		8	PARAFUSO
24		10572079		8	ARRUELA-TRAVA, M14
27		70924110		2	ANEL "O"
29		72210076		2	ANEL "O"

1.083	03	p1	11/07

PILOT PIPING (3)

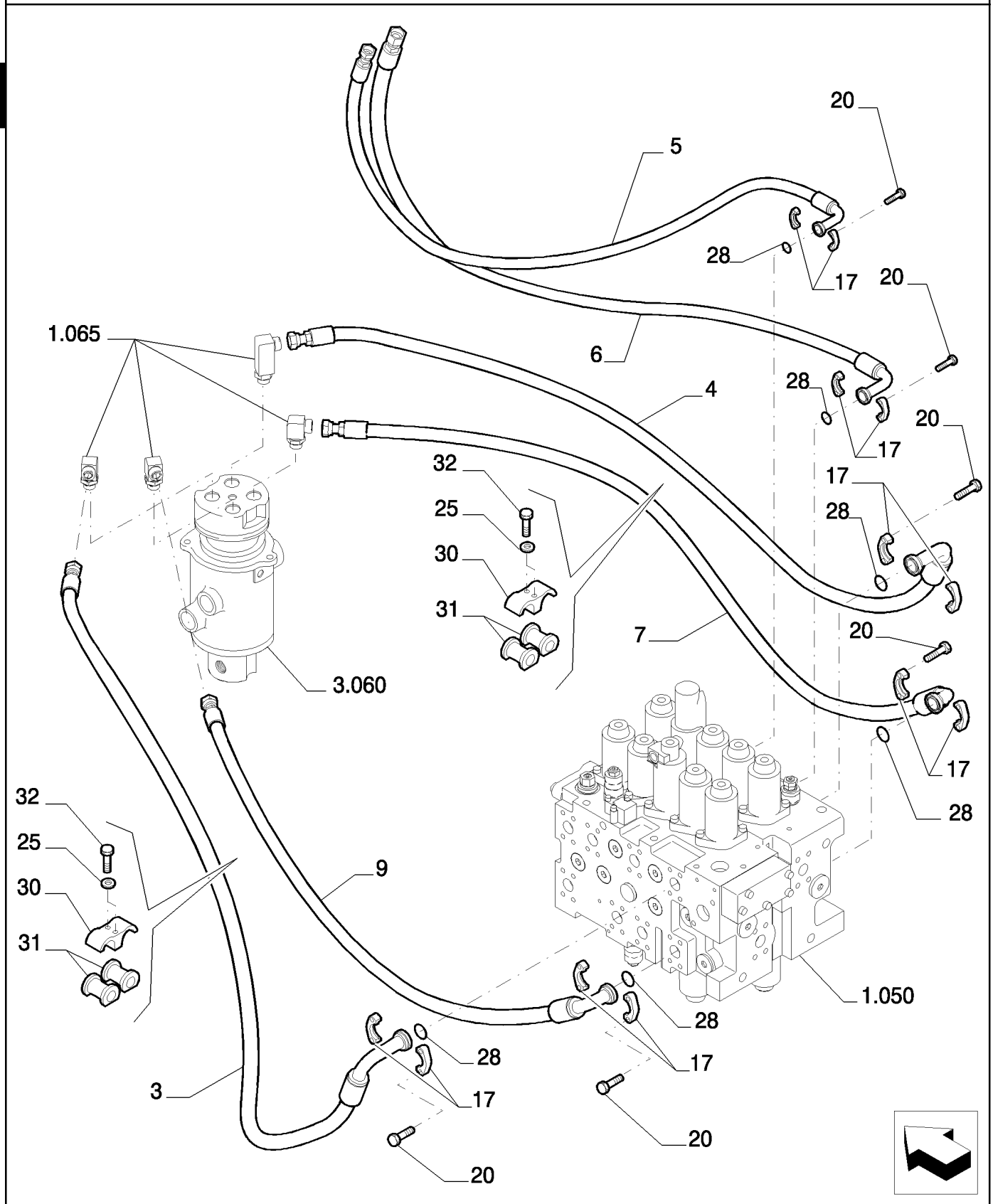

PILOT PIPING (3)

REF	FN	PART NUMBER	YR/SN	QTY	DESCRIPTION
3		{87612529}		1	
4		{87612530}		1	
5		{87612531}		1	
6		{87612532}		1	
7		{87612533}		1	
9		{87612535}		1	
17		71404311		12	SEMI- FLANGE
20		87612011		24	PARAFUSO
25		14496631		4	ARRUELA PLANA, M10 x 21 x 2
30		72204618		2	ESTRIBO DE FIXAÇÃO
31		72204607		4	BUCHA
32		11107434		4	PARAFUSO

1.083	04	p1	11/07

PILOT PIPING (3) - VERSION (03-04)

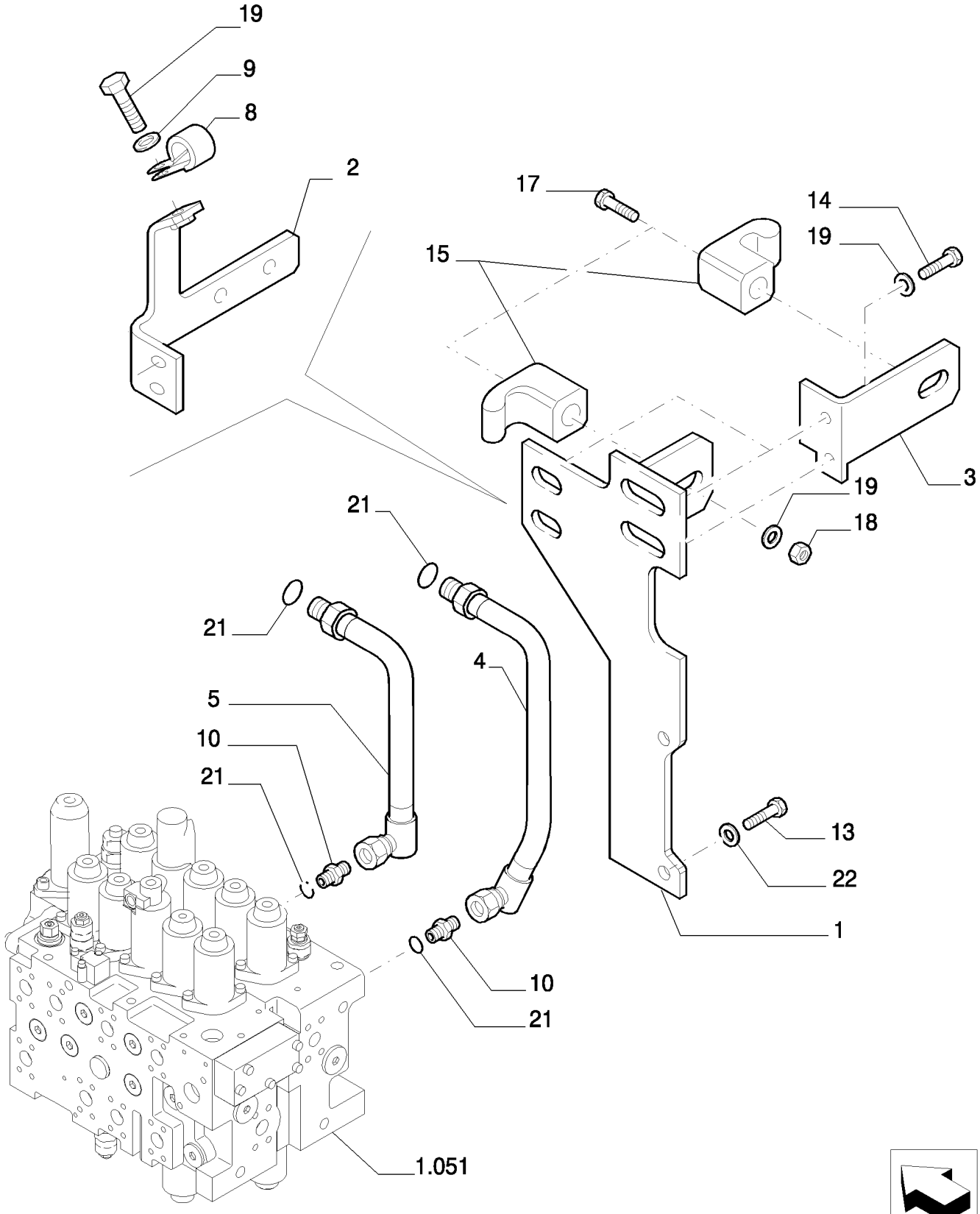

PILOT PIPING (3) - VERSION (03-04)

REF	FN	PART NUMBER	YR/SN	QTY	DESCRIPTION
1		{87653466}		1	
2		{87653467}		1	
3		{87653468}		1	
4		{87653495}		1	
5		{87653498}		1	
8		71403661		1	FIXADOR
9		11106234		1	PARAFUSO, Hex, M10 x 25, 10.9, Full Thd
10		72204354		2	CONEXÃO
13		11112234		2	PARAFUSO, Hex, M12 x 25, 10.9, Full Thd
14		11106434		6	PARAFUSO, Hex, M10 x 30, 10.9, Full Thd
15		72960053		2	PRENDEDOR
17		11107434		2	PARAFUSO
18		11701721		2	PORCA, M10, Cl 10
19		14496631		6	ARRUELA PLANA, M10 x 21 x 2
21		70923843		5	ANEL
22		14496731		2	ARRUELA PLANA

1.085	01	p1	11/07

PILOT PIPING (5) - VERSION (03-04)

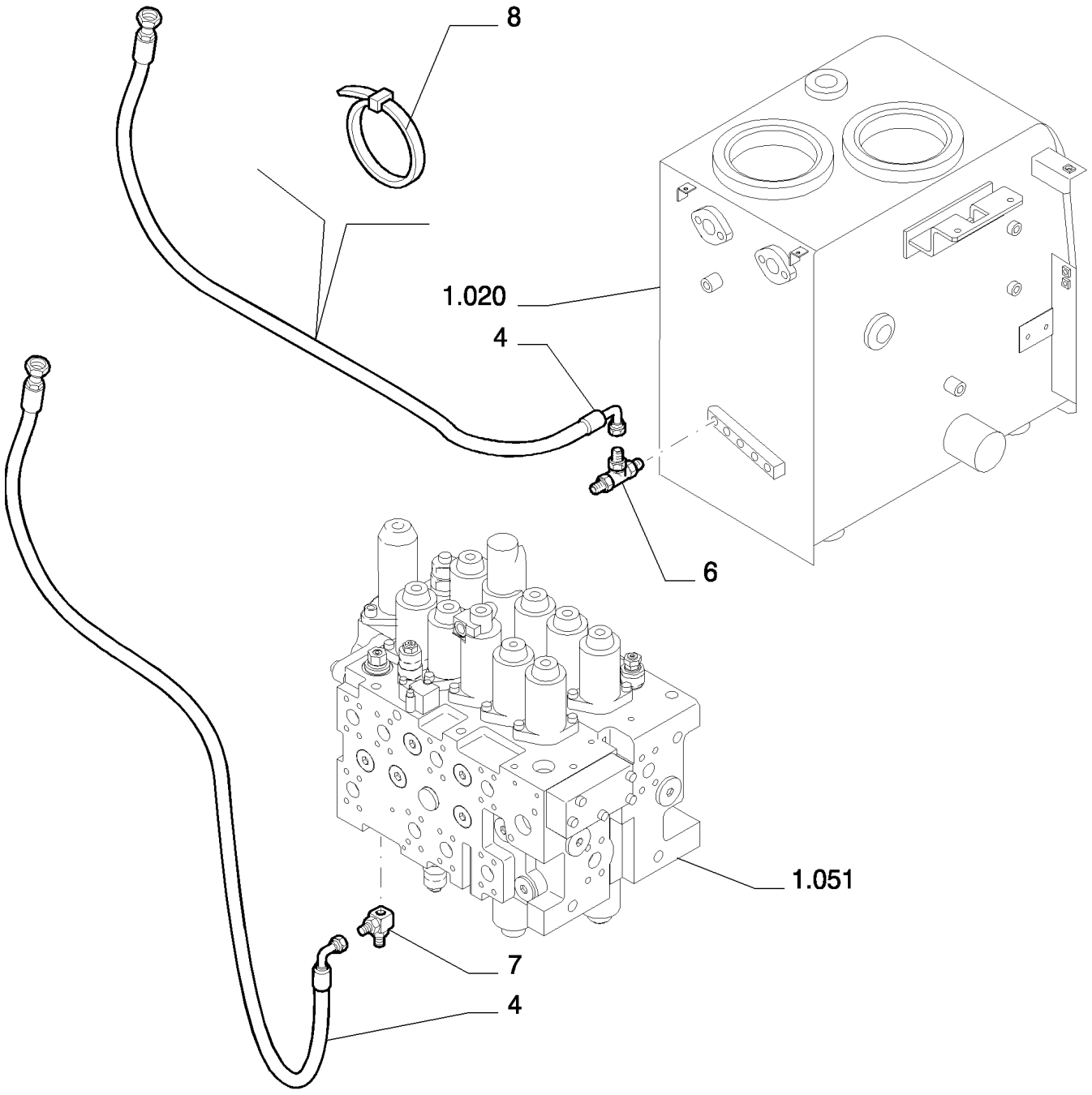

PILOT PIPING (5) - VERSION (03-04)

REF	FN	PART NUMBER	YR/SN	QTY	DESCRIPTION
4		{87663850}		2	
6		72954985		1	TEE
7		72960345		1	TEE
8		4982514		10	TIRA DE CABO

1.090	01	p1	04/08

PILOT PIPING - MANIPULATOR

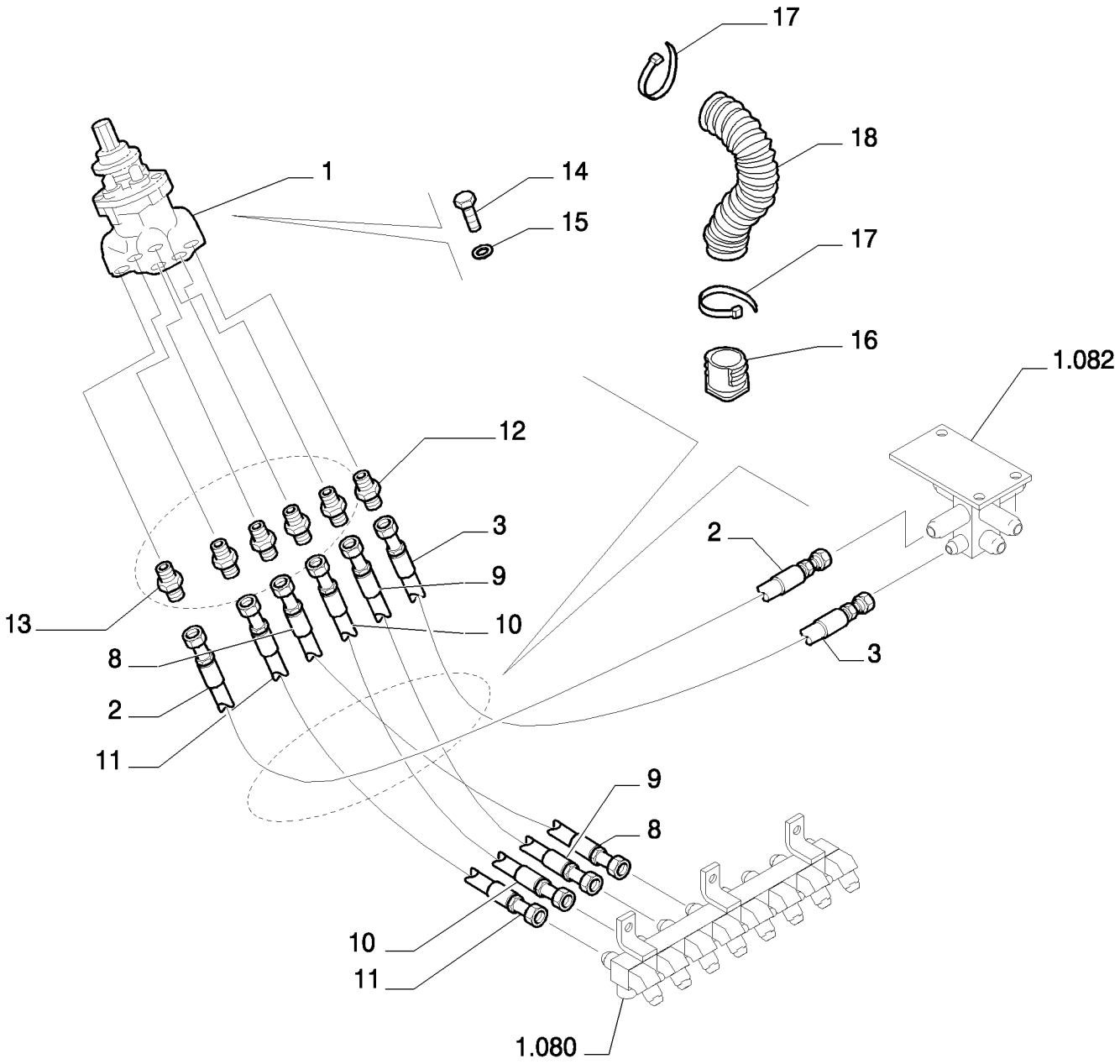

PILOT PIPING - MANIPULATOR

REF	FN	PART NUMBER	YR/SN	QTY	DESCRIPTION
1	1	87532882		1	VÁLVULA HIDRAULICA
2		72215273		1	TUBO FLEXÍVEL
3		72214555		1	TUBO FLEXÍVEL
8		87533427		1	TUBO FLEXÍVEL
9		87531068		1	TUBO FLEXÍVEL
10		87533429		1	TUBO FLEXÍVEL
11		87338408		1	TUBO FLEXÍVEL
12		87522432		1	CONEXÃO
13		72214523		5	CONEXÃO
14		14305434		4	PARAFUSO
15		14496431		4	ARRUELA PLANA
16		72202453		1	MANGUEIRA
17		72951499		2	FIXADOR
18		87527359		1	PROTEÇÃO

(1) ASSY SEE PAGE 3

1.090	02	p1	10/07

PILOT PIPING - MANIPULATOR

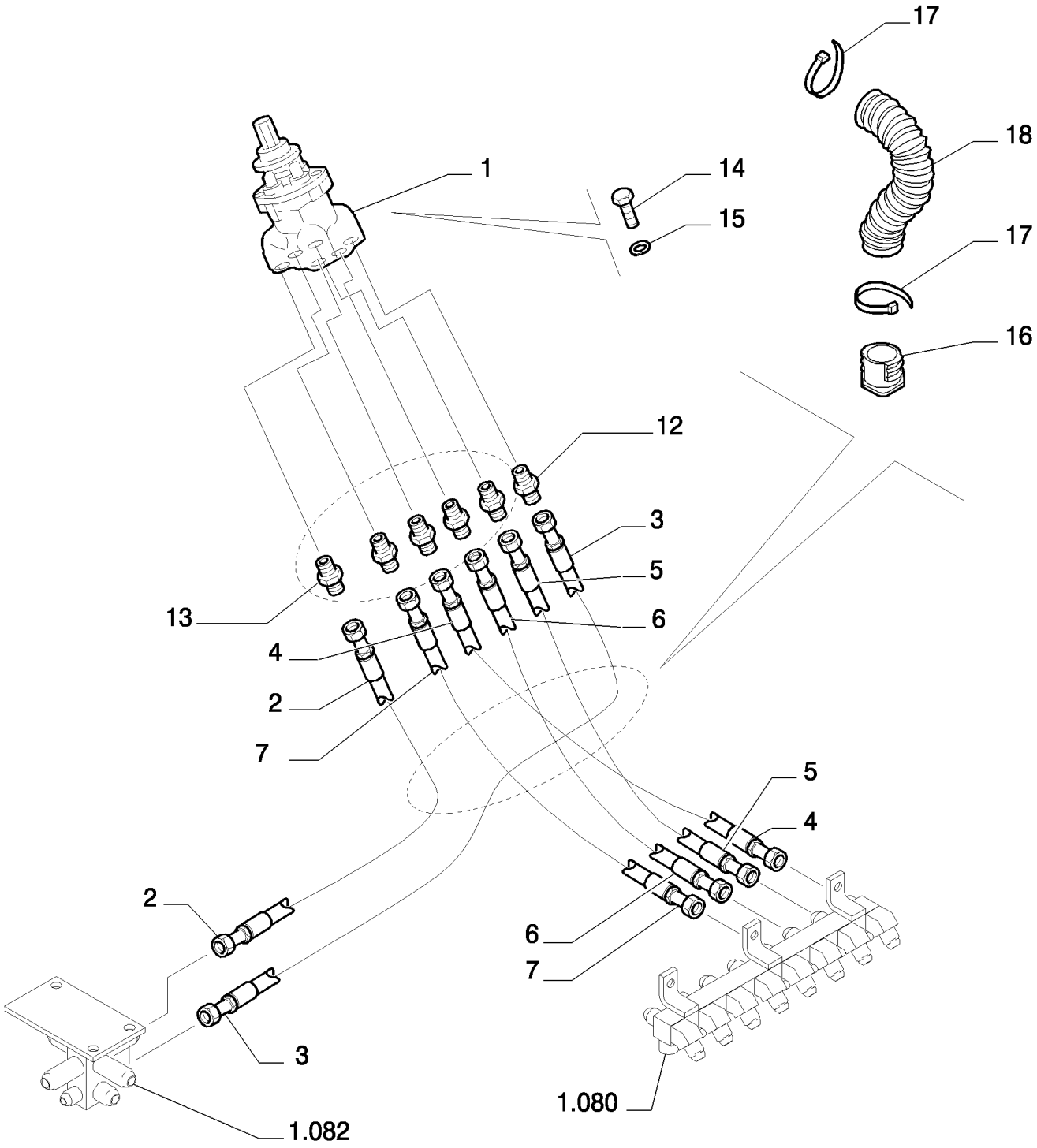

PILOT PIPING - MANIPULATOR

REF	FN	PART NUMBER	YR/SN	QTY	DESCRIPTION
1	1	87532882		1	VÁLVULA HIDRAULICA
2		72215273		1	TUBO FLEXÍVEL
3		72214555		1	TUBO FLEXÍVEL
4		87533430		1	TUBO FLEXÍVEL
5		87533428		1	TUBO FLEXÍVEL
6		87533431		1	TUBO FLEXÍVEL
7		87533426		1	TUBO FLEXÍVEL
12		87522432		1	CONEXÃO
13		72214523		5	CONEXÃO
14		14305434		4	PARAFUSO
15		14496431		4	ARRUELA PLANA
16		72202453		1	MANGUEIRA
17		72951499		2	FIXADOR
18		87527359		1	PROTEÇÃO

(1) ASSY SEE PAGE 3

PILOT VALVE CONTROL MANIPULATOR - COMPONENTS

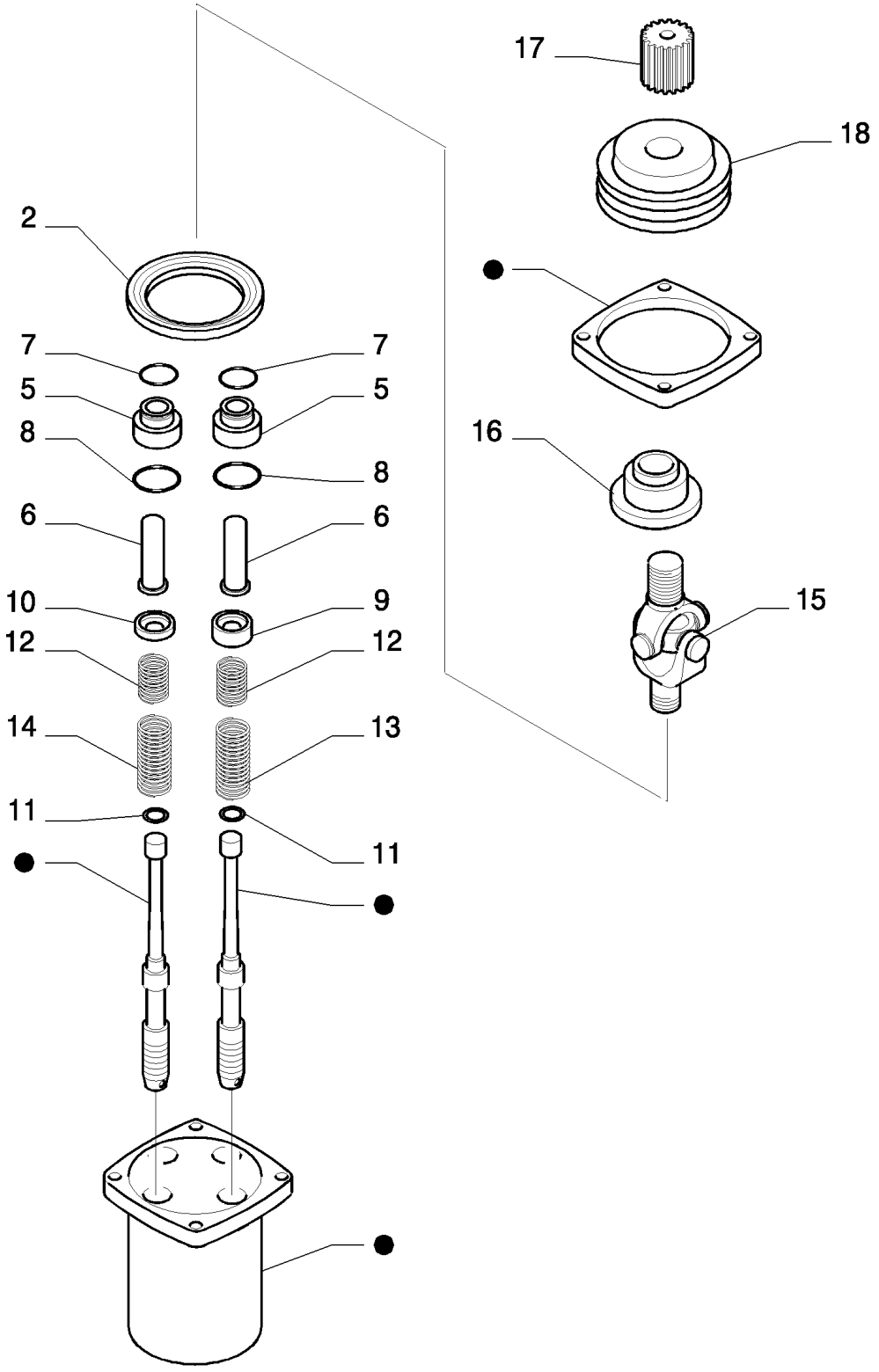

PARTS MARKED ● ARE NOT SUPPLIED AS SPARES
I PARTICOLARI CONTRASSEGNATI CON ● NON VENGONO FORNITI DI RICAMBIO

PILOT VALVE CONTROL MANIPULATOR - COMPONENTS

REF	FN	PART NUMBER	YR/SN	QTY	DESCRIPTION
2		72209857		1	PLACA
5		72209858		4	BUJÃO
6		72209859		4	HASTE
7		72209860		4	JUNTA
8		72209824		4	ANEL "O"
9		72209861		2	SEDE/ALOJAMENTO
10		72209863		2	SEDE/ALOJAMENTO
11		72209862		4	ARRUELA PLANA
12		72280271		4	MOLA
13		72209865		2	MOLA
14		72209866		2	MOLA
15		72209867		1	JUNTA UNIVERSAL
16		72209868		1	PLACA
17		72209869		1	PORCA
18		72209870		1	CAPA

PILOT VALVE ASSY P/N 87532882

1.091	01	p1	04/08

PILOT PIPING - PEDAL - VERSION (03-04)

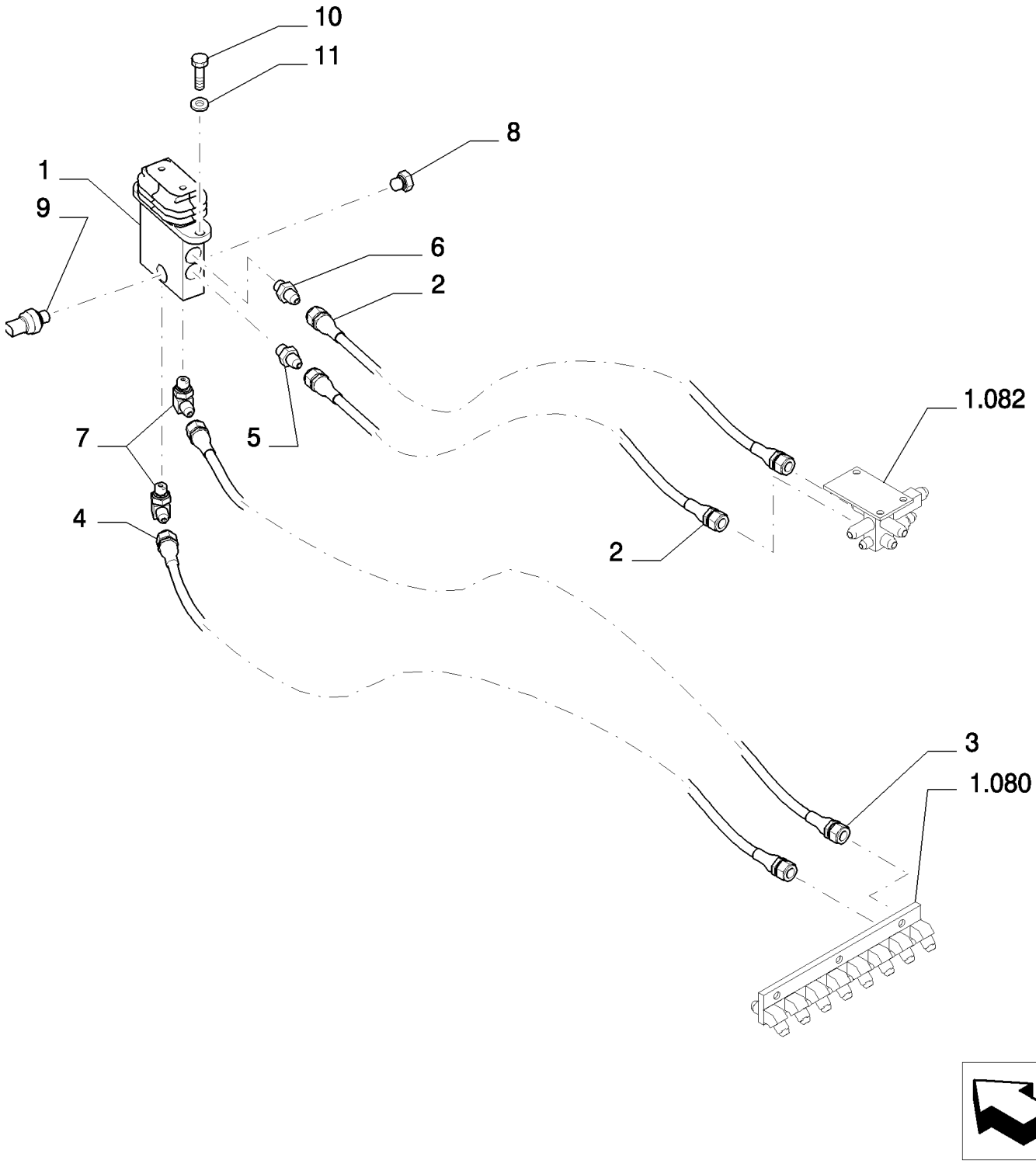

PILOT PIPING - PEDAL - VERSION (03-04)

REF	FN	PART NUMBER	YR/SN	QTY	DESCRIPTION
1	1	72204155		1	VÁLVULA HIDRAULICA
2		87338415		2	TUBO FLEXÍVEL
3		87533077		1	TUBO FLEXÍVEL
4		87533078		1	TUBO FLEXÍVEL
5		87522432		1	CONEXÃO
6		72214744		1	CONEXÃO
7		72214524		2	CONEXÃO
8		72214663		1	BUJÃO
9		87608371		1	SENSOR
10		11106434		2	PARAFUSO, Hex, M10 x 30, 10.9, Full Thd
11		12641031		2	ARRUELA-TRAVA

(1) ASSY SEE PAGE 2

PILOT VALVE - COMPONENTS - VERSION (03-04)

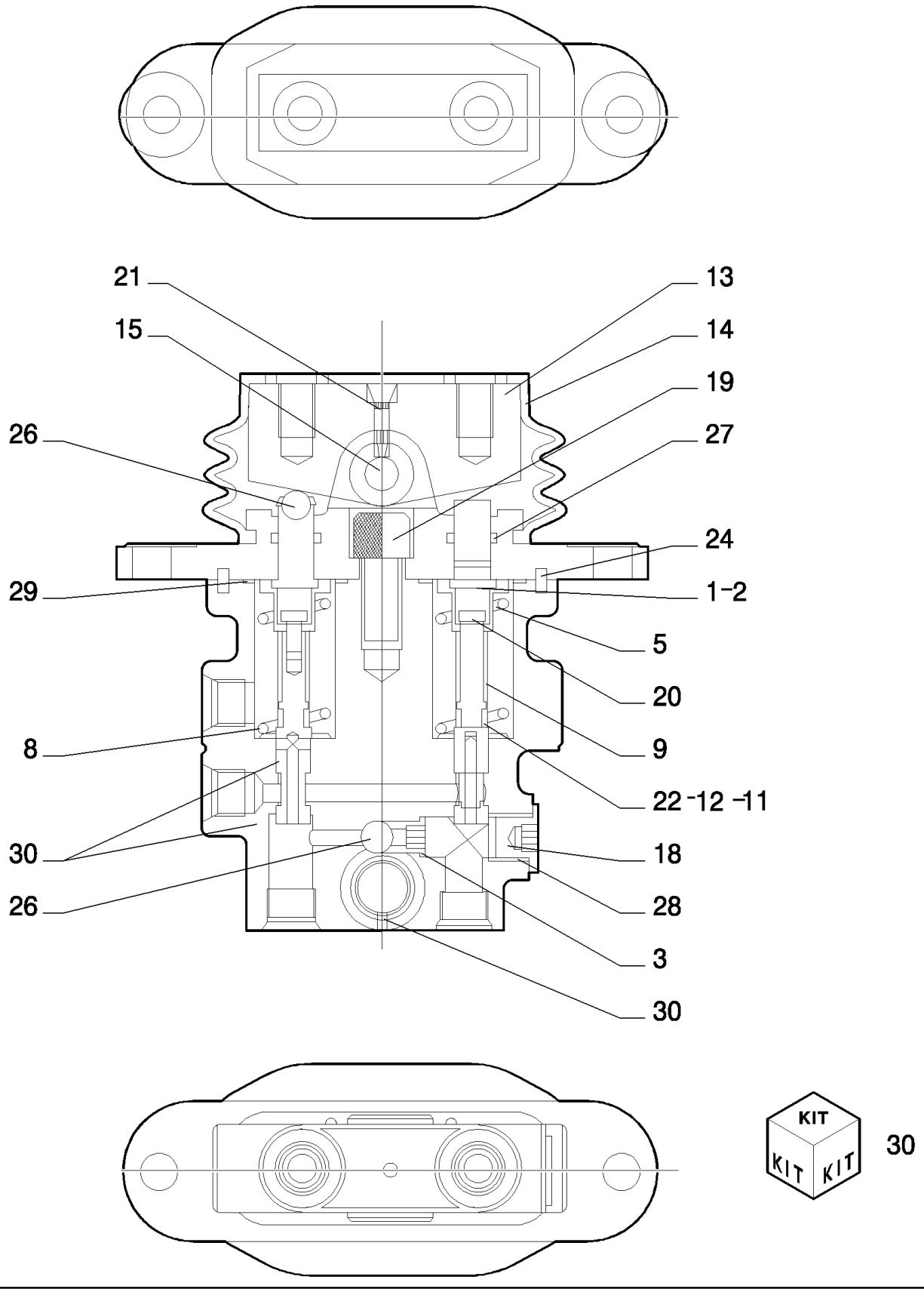

PILOT VALVE - COMPONENTS - VERSION (03-04)

REF	FN	PART NUMBER	YR/SN	QTY	DESCRIPTION
1		72210484		2	CALCO DE AFINACAO
2		72210485		2	CALCO DE AFINACAO
3		72210219		1	SEDE/ALOJAMENTO
5		72210483		2	LUVA DE ACOPLAMENTO
8		72210486		1	MOLA
9		72210223		2	MOLA
11		72210487		2	CALCO DE AFINACAO
12		72210488		1	CALCO DE AFINACAO
13		72210489		1	CAME
14		72210225		1	CAPA
15		72210226		1	PINO
18		72210230		1	BUJÃO
19		72210490		1	PARAFUSO
20		72210232		2	PARAFUSO
21		72210233		2	KIT
22		72210234		2	ARRUELA PLANA
24		72210492		2	PINO
26		72210237		3	ESFERA
27		72210491		2	ANEL "O"
28		72209827		1	ANEL "O"
29		72210493		2	ANEL "O"
30		72210494		1	KIT

VALVE ASSY P/N 72204155

E385B

1.091	03	p1	11/07

PEDAL - VERSION (03-04)

2

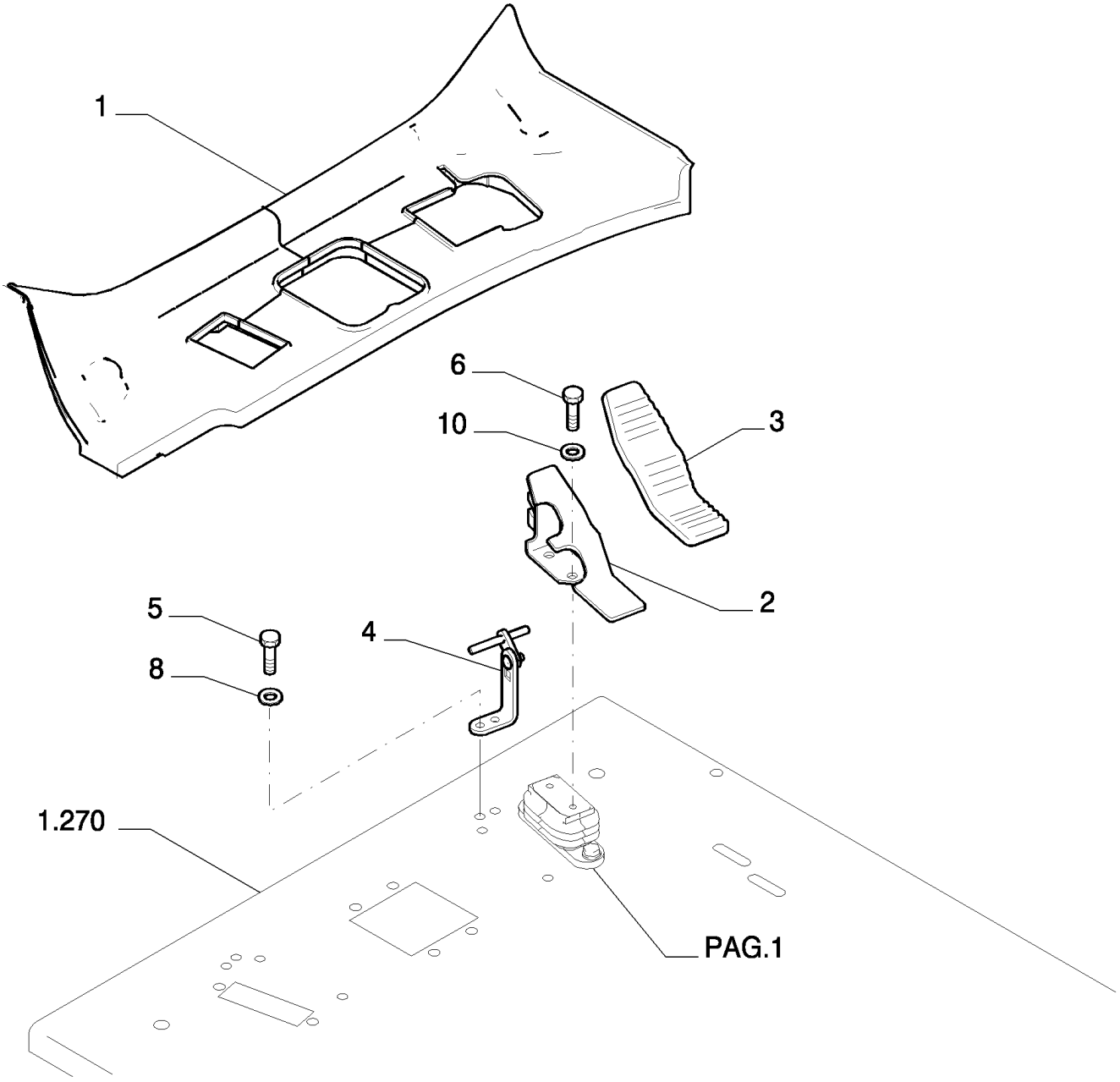

PEDAL - VERSION (03-04)

REF	FN	PART NUMBER	YR/SN	QTY	DESCRIPTION
1		87539506		1	ESTRIBO
2		87539195		1	PEDAL
3		87539205		1	COBERTURA BORRACHA PEDAL
4		87539206		1	SUPORTE
5		16043434		2	PARAFUSO, Hex, M8 x 20, 10.9, Full Thd
6		11106034		2	PARAFUSO, Hex, M10 x 20, 10.9, Full Thd
8		14496531		2	ARRUELA PLANA, M8 x 17 x 1.6
10		14496631		2	ARRUELA PLANA, M10 x 21 x 2

1.092	01	p1	04/08

TRAVEL PILOT SYSTEM PIPES

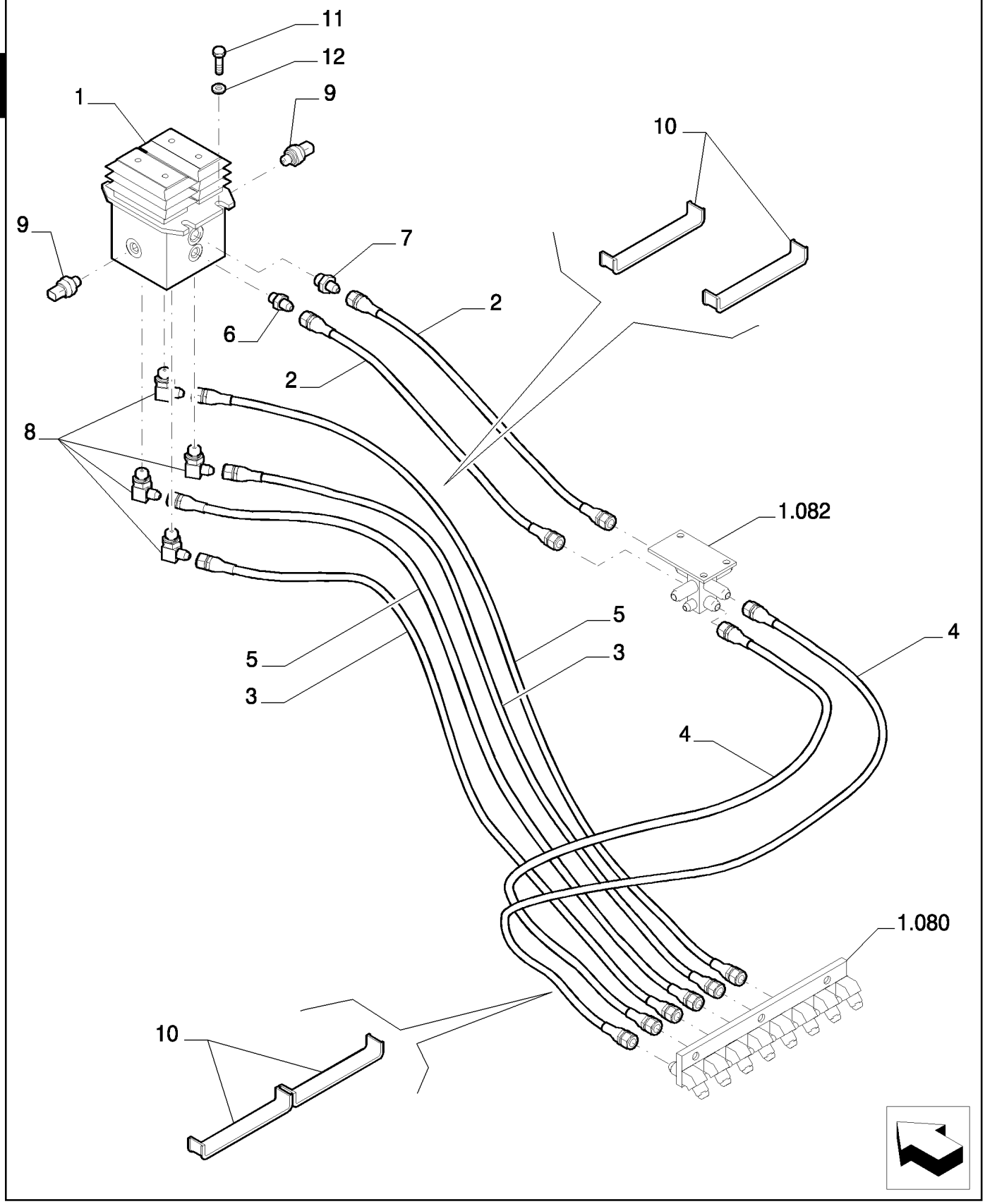

TRAVEL PILOT SYSTEM PIPES

REF	FN	PART NUMBER	YR/SN	QTY	DESCRIPTION
1	1	87529503		1	VÁLVULA HIDRAULICA
2		87533076		2	TUBO FLEXÍVEL
3		87533077		2	TUBO FLEXÍVEL
4		87338416		2	TUBO FLEXÍVEL
5		87533078		2	TUBO FLEXÍVEL
6		87522432		1	CONEXÃO
7		72214522		1	CONEXÃO
8		72214525		4	CONEXÃO
9		87608371		2	SENSOR
10		87533102		4	JUNTA
11		11106434		4	PARAFUSO, Hex, M10 x 30, 10.9, Full Thd
12		14496631		4	ARRUELA PLANA, M10 x 21 x 2

(1) ASSY SEE PAGE 2

1.092	02	p1	10/07

PILOT VALVE - COMPONENTS

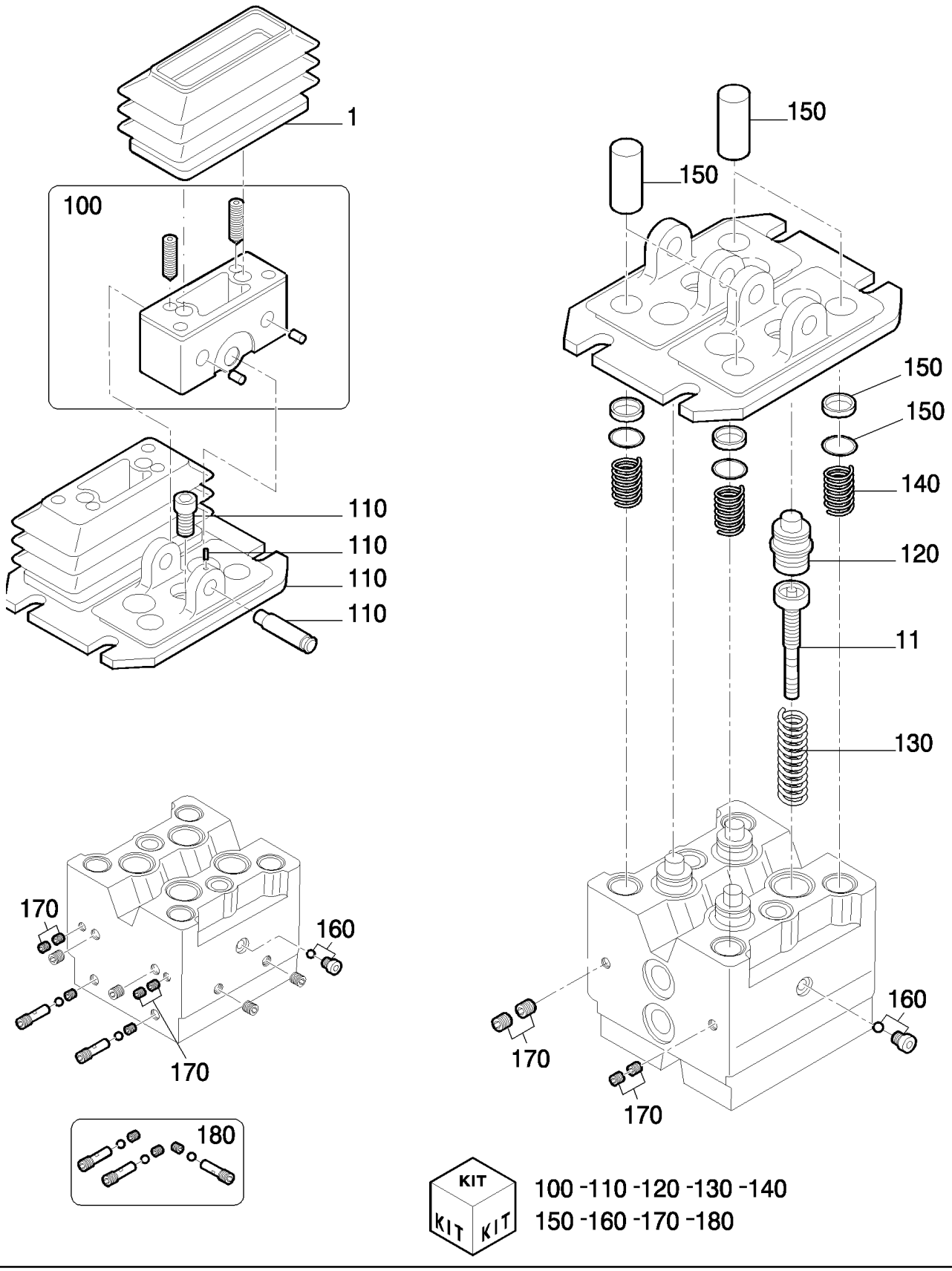

PILOT VALVE - COMPONENTS

REF	FN	PART NUMBER	YR/SN	QTY	DESCRIPTION
1		YN30V00105S005		2	TAMPA
11		YN30V00105S010		4	HASTE
100		YN30V00105R100		1	KIT
110		YN30V00105R110		1	KIT
120		YN30V00105R120		1	KIT
130		YN30V00105R130		1	KIT
140		YN30V00105R140		1	KIT
150		YN30V00105R150		1	KIT
160		YN30V00105R160		1	KIT
170		YN30V00105R170		1	KIT
180		YN30V00105R180		1	KIT

VALVE ASSY P/N 87529503

E385B

1.200	01	p1	10/07

DASHBOARD

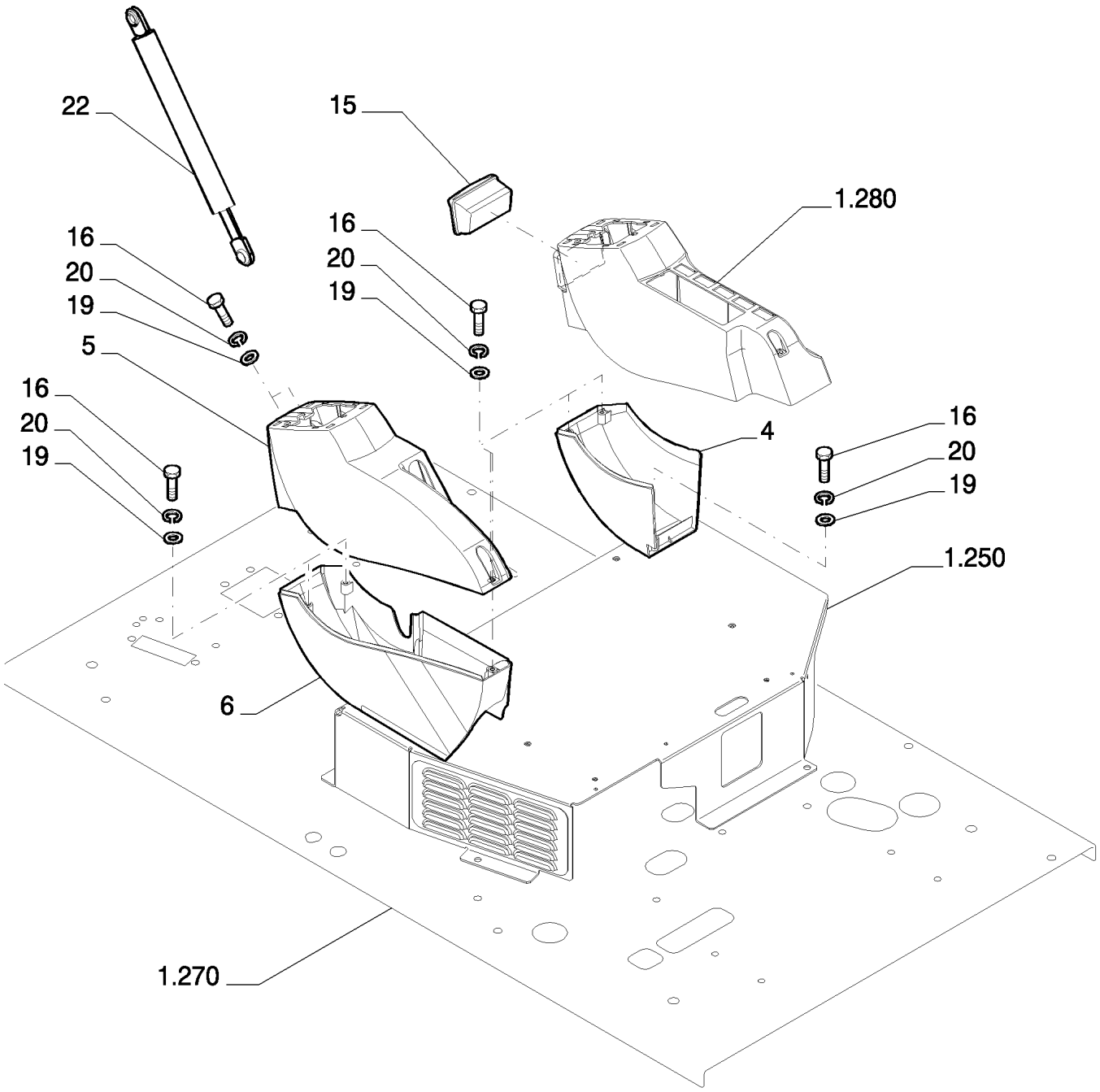

DASHBOARD

REF	FN	PART NUMBER	YR/SN	QTY	DESCRIPTION
4		87521858		1	PROTEÇÃO
5		87521861		1	PROTEÇÃO
6		87521863		1	PROTEÇÃO
15		72203953		1	CINZEIRO
16		10902234		9	PARAFUSO, Hex, M6 x 16, 10.9, Full Thd
19		14496431		9	ARRUELA PLANA
20		10516474		9	ARRUELA-TRAVA
22		87556097		1	MOLA

1.200	02	p1	10/07

DASHBOARD

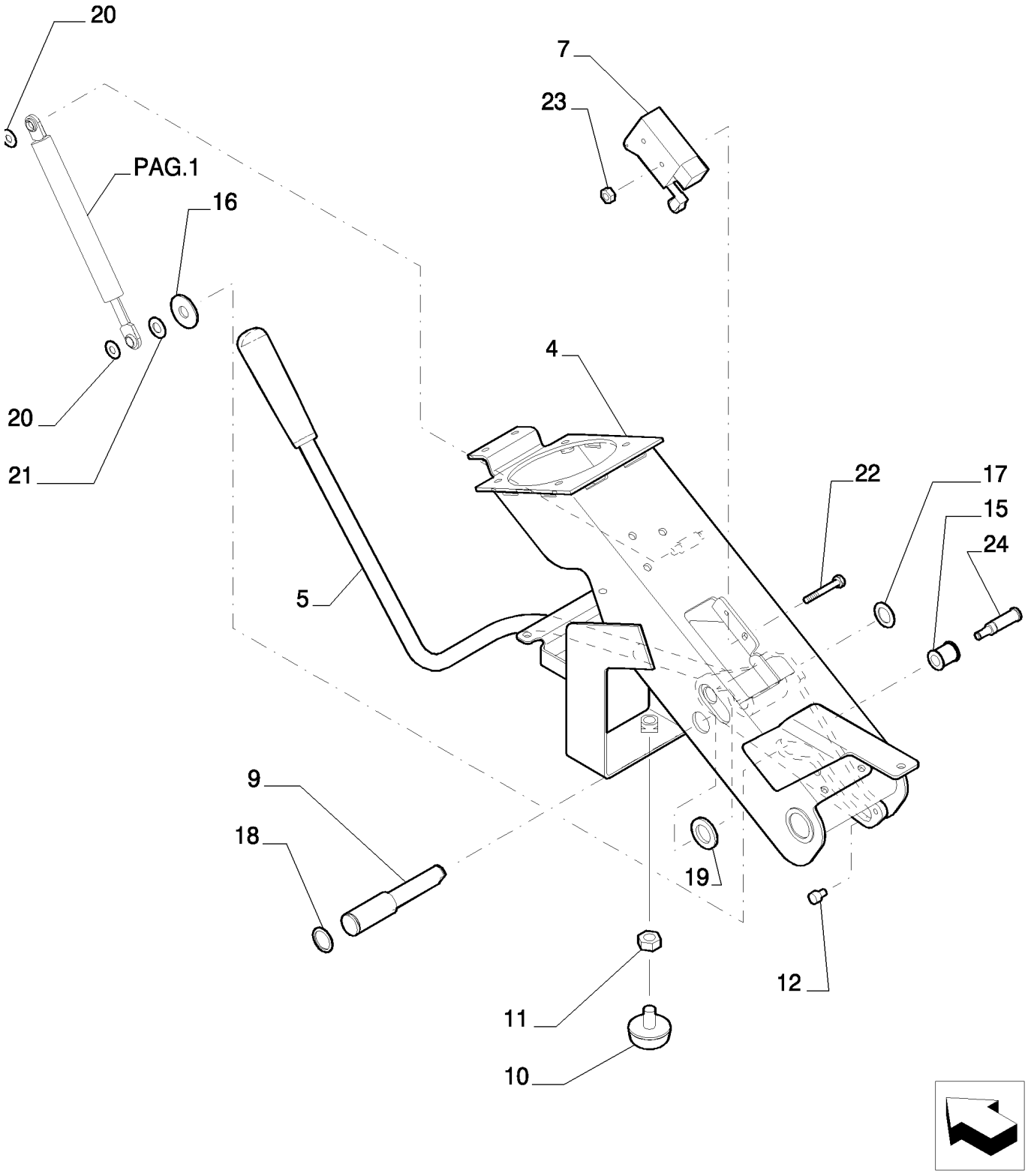

DASHBOARD

REF	FN	PART NUMBER	YR/SN	QTY	DESCRIPTION
4		87556091		1	SUPORTE
5		87556093		1	ALAVANCA
7		87556100		1	INTERRUPTOR
9		87556105		1	EIXO
10		87556106		1	LIMITADOR
11		87556108		1	PORCA
12		87586017		1	PARAFUSO
15		87556112		1	BUCHA
16		87556113		1	ARRUELA PLANA
17		87556114		1	ANEL
18		87556115		1	ANEL
19		87556116		1	ARRUELA PLANA
20		87556117		2	ANEL
21		87556118		1	ANEL
22		87556120		2	PARAFUSO
23		87556121		2	PORCA
24		87556122		1	EIXO

1.200	03	p1	10/07

DASHBOARD

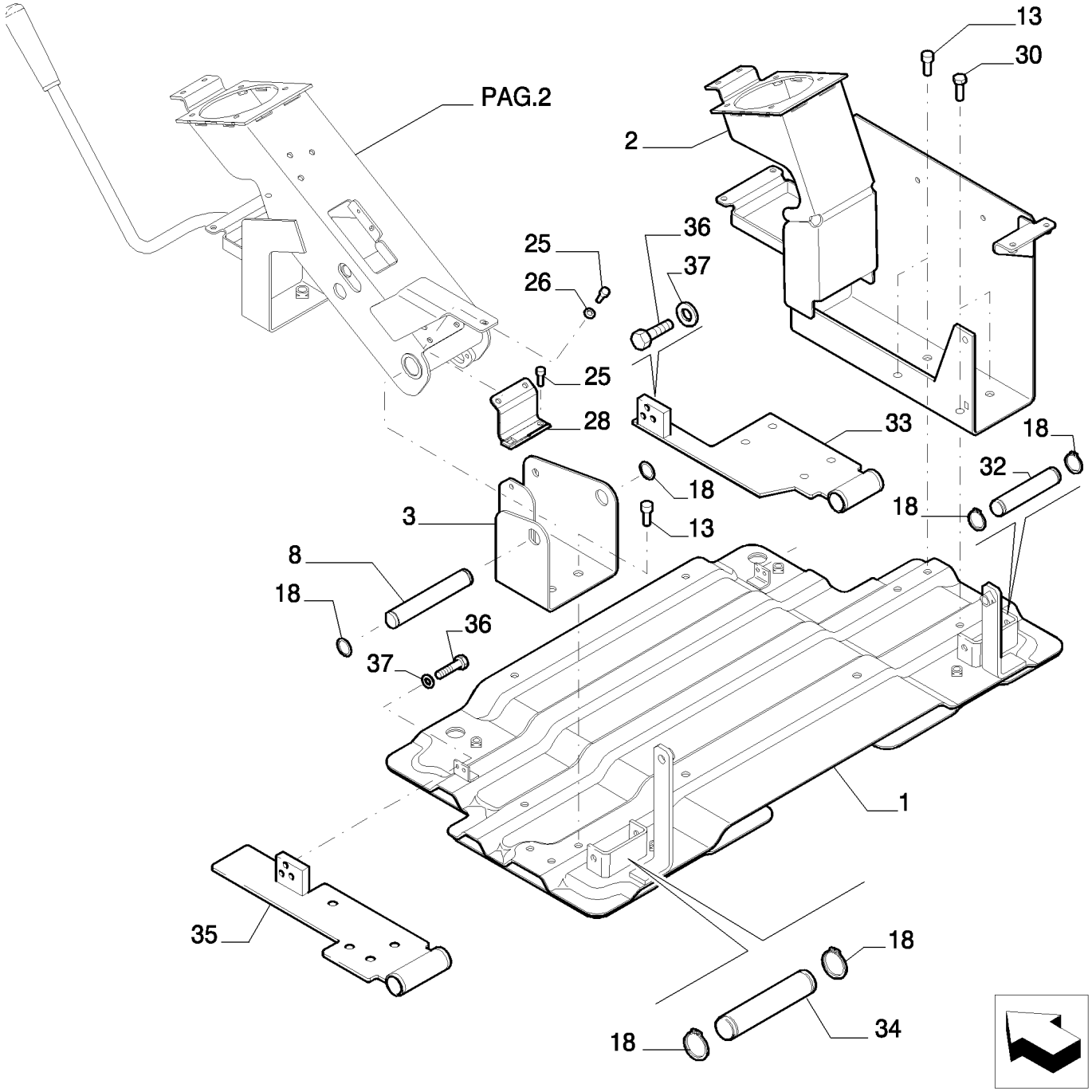

DASHBOARD

REF	FN	PART NUMBER	YR/SN	QTY	DESCRIPTION
1		87596888		1	SUPORTE
2		87556086		1	SUPORTE
3		87556089		1	SUPORTE
8		87556102		1	EIXO
13		87586030		1	PARAFUSO
18		87556115		6	ANEL
25		87556123		2	PARAFUSO
26		87556124		2	ARRUELA PLANA
28		87556125		1	PLACA
30		87586031		2	PARAFUSO
32		87556137		1	EIXO
33		87586018		1	COLUNA
34		87556146		1	EIXO
35		87586019		1	COLUNA
36		87586020		2	PARAFUSO
37		87556154		2	ARRUELA PLANA

1.220	01	p1	04/08

ELECTRIC SYSTEM

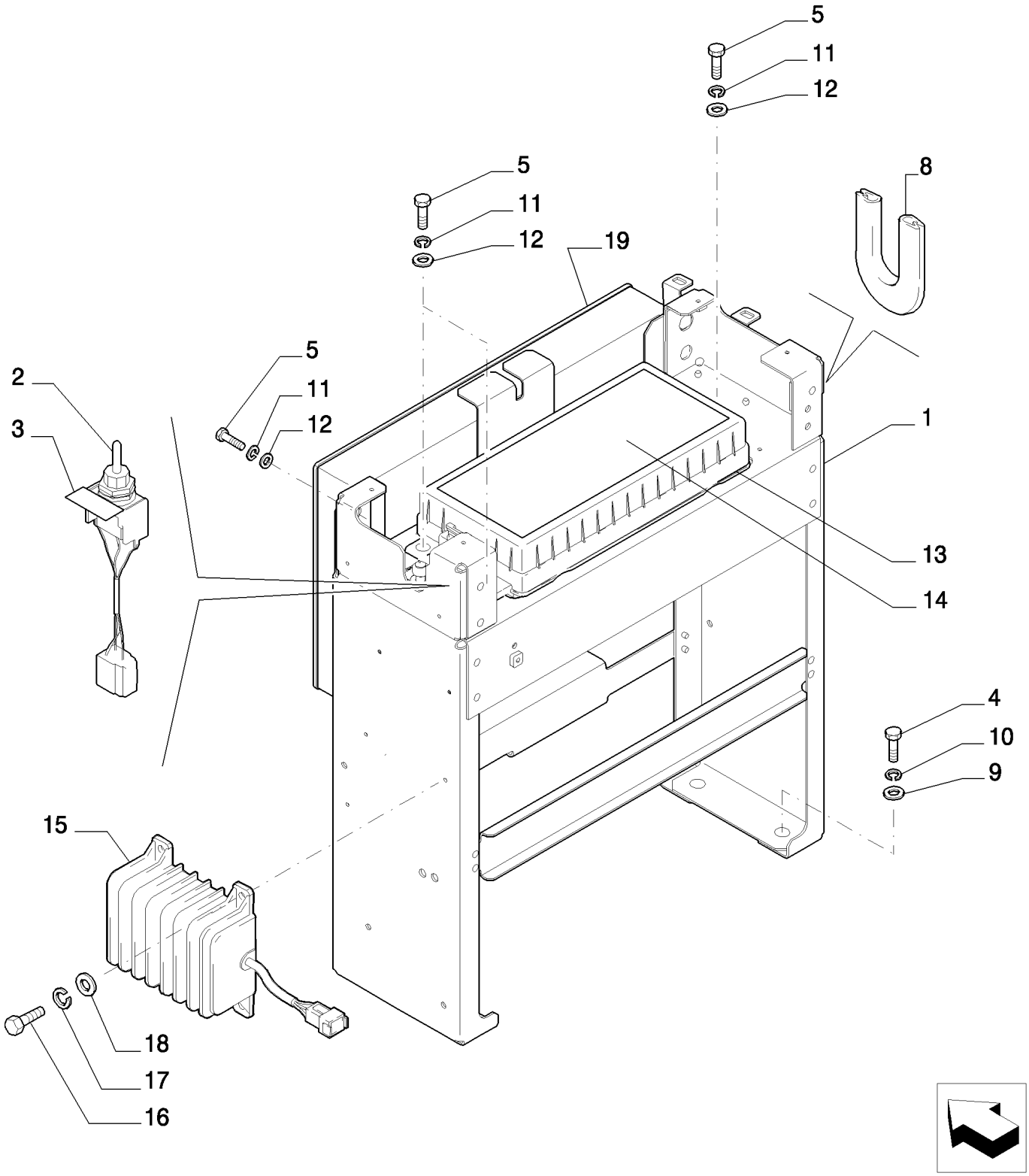

ELECTRIC SYSTEM

REF	FN	PART NUMBER	YR/SN	QTY	DESCRIPTION
1		87647850		1	SUPORTE
2		87584110		1	INTERRUPTOR
3		72203539		1	PLAQUETA
4		16043434		4	PARAFUSO, Hex, M8 x 20, 10.9, Full Thd
5		10902634		7	PARAFUSO
6		87526093		1	PLAQUETA
7		87526094		4	POTENCIÔMETRO
8		87590506		4	JUNTA
9		14496531		7	ARRUELA PLANA, M8 x 17 x 1.6
10		10516674		7	ARRUELA-TRAVA, 5/16"
11		14496431		7	ARRUELA PLANA
12		10516474		7	ARRUELA-TRAVA
13	1	87557543		1	CAIXA/CARCAÇA
14		{87645095}		1	
15		76068649		1	REGULADOR
16		13274411		4	PARAFUSO, Cross Pan Hd, M5 x 20
17		11195474		4	ARRUELA-TRAVA
18		14496331		4	ARRUELA PLANA
19		{87645076}		1	

(1) ASSY SEE PAGE 2

ELECTRIC SYSTEM - COMPONENTS

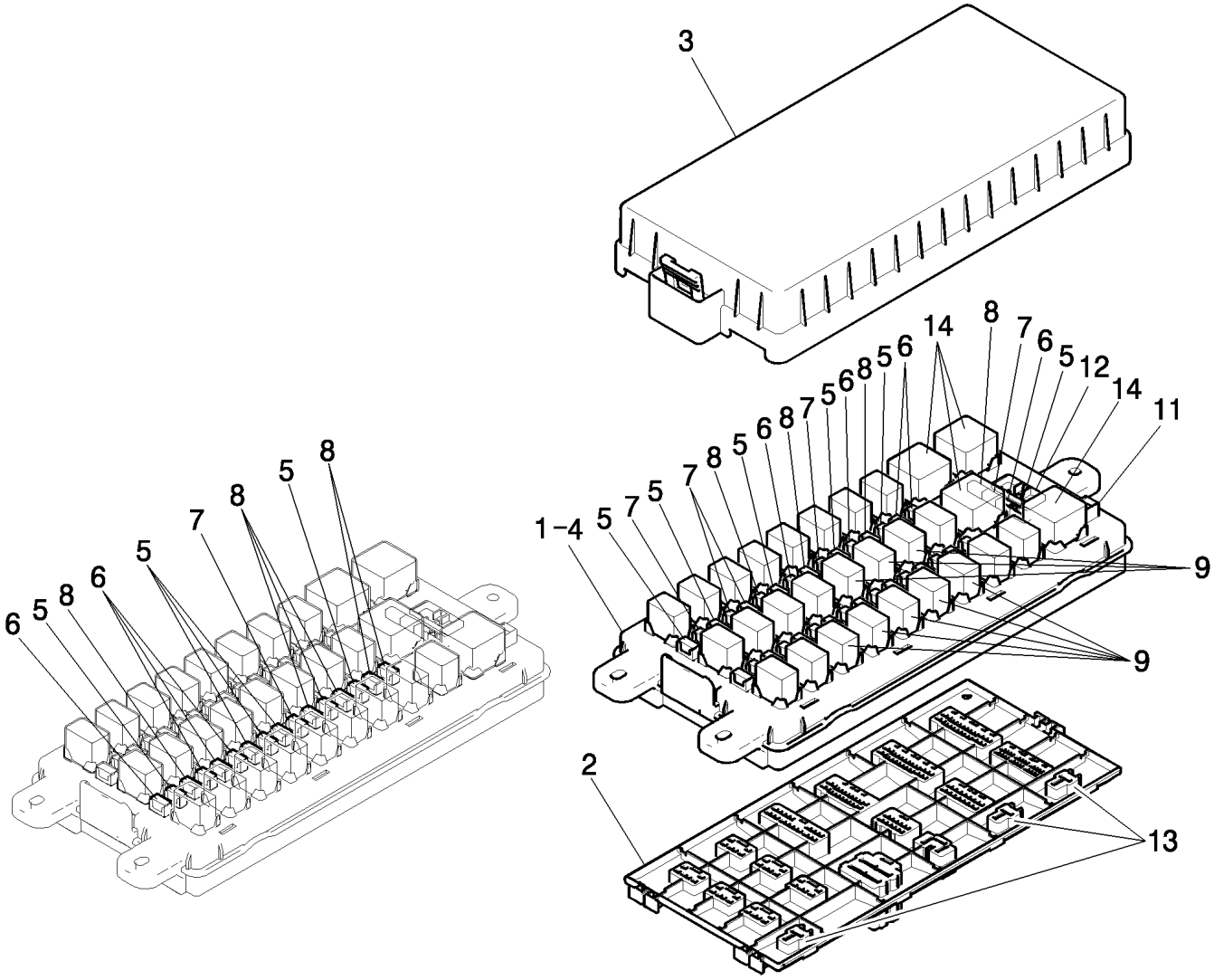

ELECTRIC SYSTEM - COMPONENTS

REF	FN	PART NUMBER	YR/SN	QTY	DESCRIPTION
1		YN24E00016S001		1	CAIXA/CARCAÇA
2		YN24E00016S002		1	CAIXA/CARCAÇA
3		YN24E00016S003		1	PROTEÇÃO
4		YN24E00016S004		1	CIRCUITO ELECTRICO
5		YN24E00016S005		11	FUSÍVEL
6		YN24E00016S006		9	FUSÍVEL
7		YN24E00016S007		6	FUSÍVEL
8		YN24E00016S008		10	FUSÍVEL
9		87559156		8	CONECTADOR
11		{YN24E00016S0011}		1	
12		{YN24E00016S0012}		1	
13		{YN24E00016S0013}		3	
14		87611990		4	CONECTADOR

RELAY BOX ASSY P/N 87557543

1.220	03	p1	06/08

ELECTRIC SYSTEM

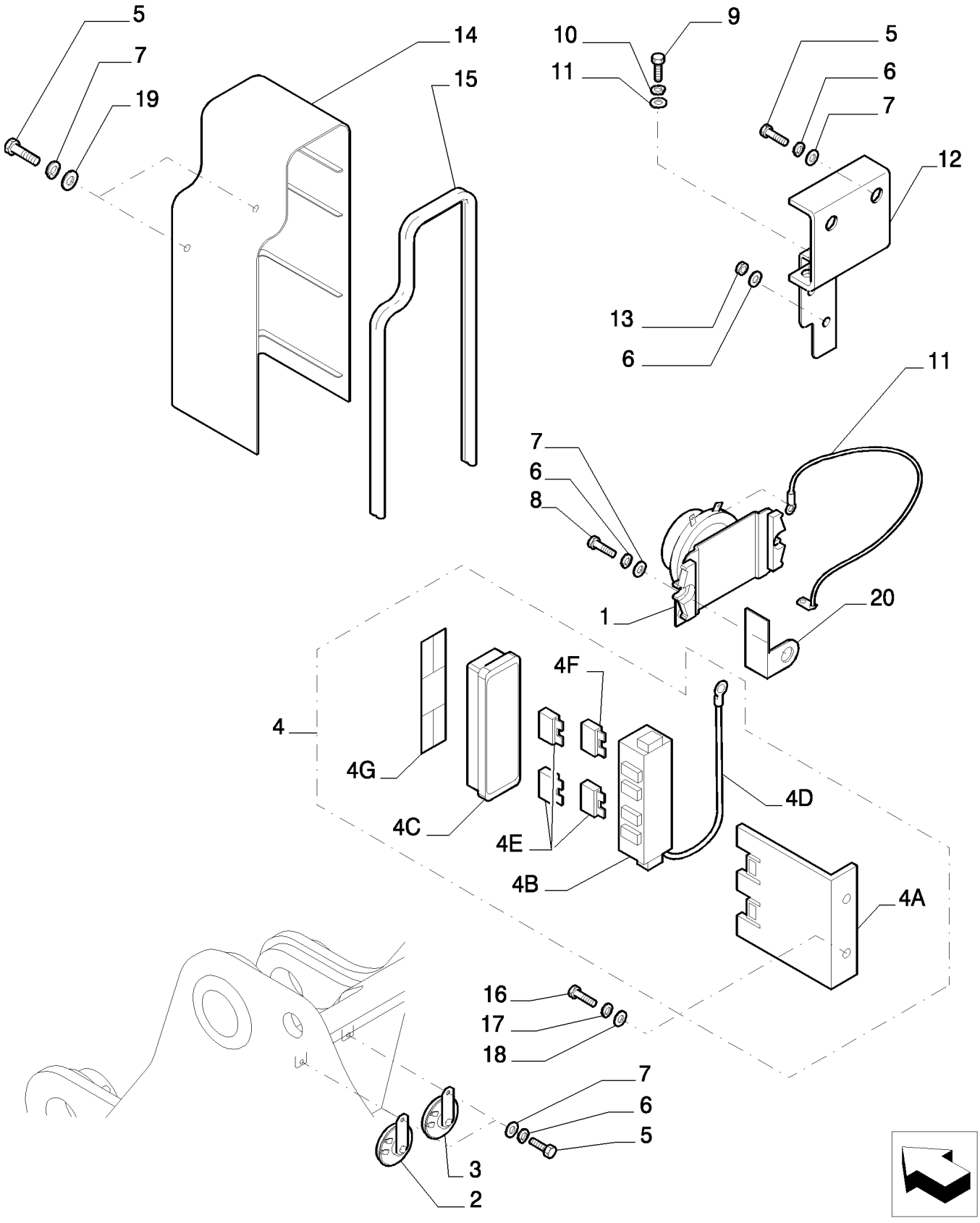

ELECTRIC SYSTEM

REF	FN	PART NUMBER	YR/SN	QTY	DESCRIPTION
1		87559395		1	CONECTADOR
2		87657734		1	CILINDRO HIDRÁULICO
3		87565344		1	BUZINA
4		87565331		1	FUSÍVEL, - ASSY
4A		87565332		1	SUPORTE
4B		87565334		1	CAIXA/CARCAÇA
4C		{87565335}		1	
4D		87565336		1	CHICOTE
4E		11055690		3	FUSÍVEL
4F		87559396		1	FUSÍVEL
4G		87565339		1	DECALCOMANIA
5		16043434		6	PARAFUSO, Hex, M8 x 20, 10.9, Full Thd
6		14496531		8	ARRUELA PLANA, M8 x 17 x 1.6
7		10516674		8	ARRUELA-TRAVA, 5/16"
8		16043634		2	PARAFUSO, Hex, M8 x 25, 10.9, Full Thd
9		14305234		2	PARAFUSO
10		14496431		2	ARRUELA PLANA
11		10516474		2	ARRUELA-TRAVA
12		{87666327}		1	
13		16100821		2	PORCA, M8, Cl 10
14		87565340		1	TAMPA
15		87565337		1	JUNTA
16		10977834		2	PARAFUSO, Hex, M5 x 16, 10.9, Full Thd
17		14496321		2	ARRUELA PLANA
18		11195474		2	ARRUELA-TRAVA
19		12642021		2	ARRUELA PLANA
20		87565341		1	SUPORTE

1.220	04	p1	12/07

ELECTRIC SYSTEM

2

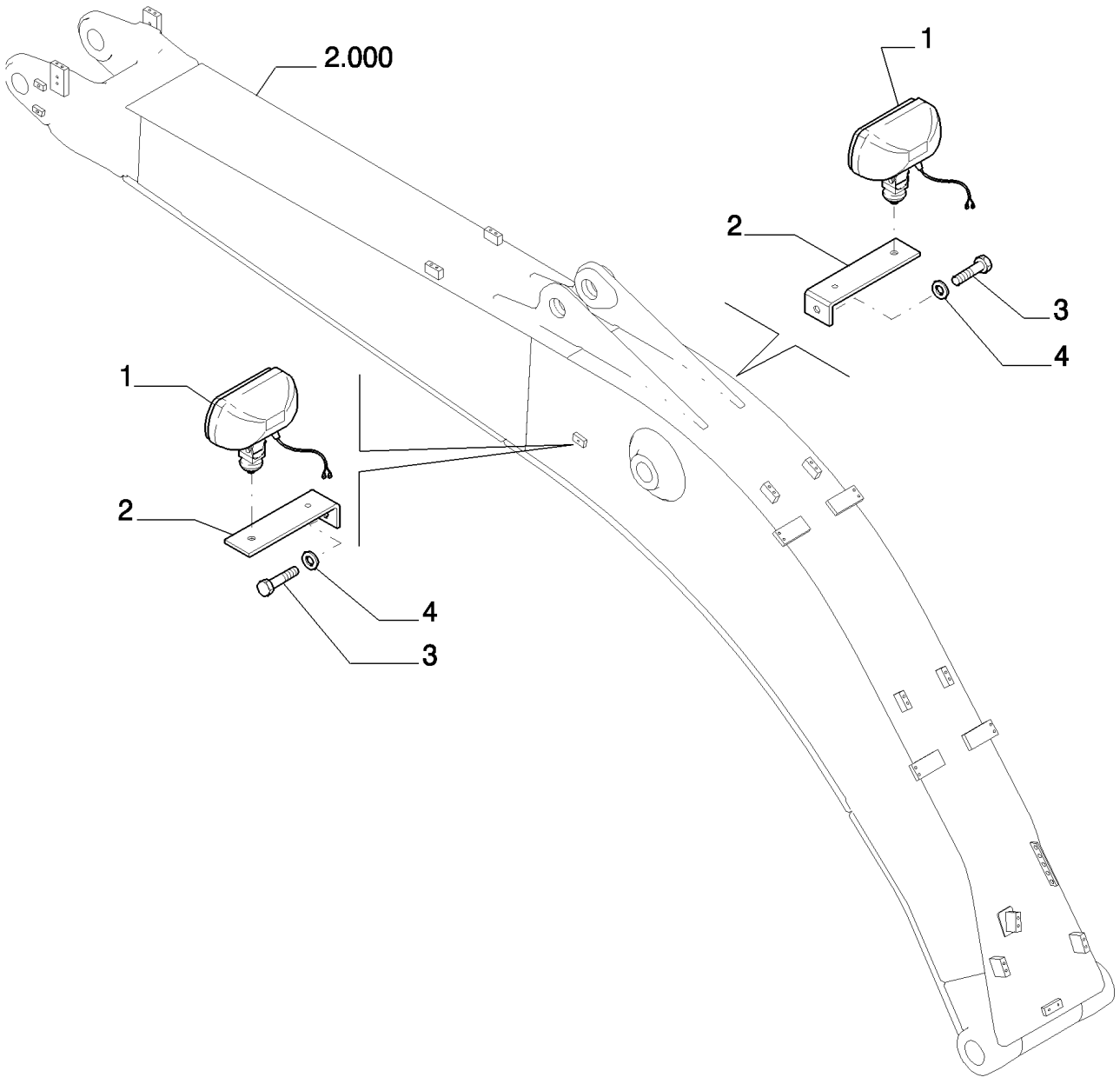

ELECTRIC SYSTEM

REF	FN	PART NUMBER	YR/SN	QTY	DESCRIPTION
1		87555081		2	PROJETOR
2		87559668		2	SUPORTE
3		11115334		2	PARAFUSO, Hex, M14 x 25, 10.9, Full Thd
4		10517174		2	ARRUELA-TRAVA

1.220	05	p1	10/07

ELECTRIC SYSTEM

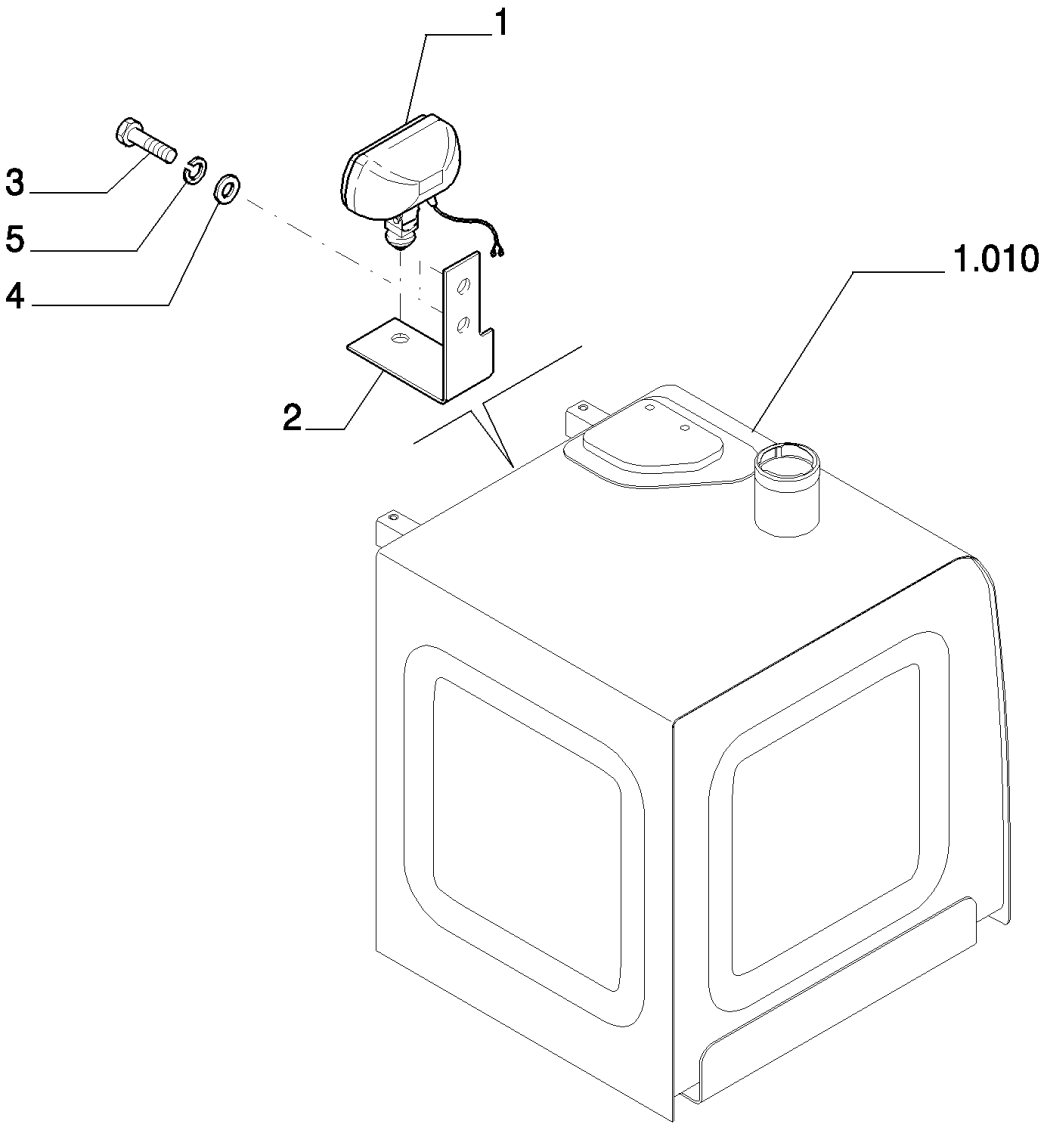

ELECTRIC SYSTEM

REF	FN	PART NUMBER	YR/SN	QTY	DESCRIPTION
1		87555081		1	PROJETOR
2		87559666		1	SUPORTE
3		11106234		2	PARAFUSO, Hex, M10 x 25, 10.9, Full Thd
4		14496631		2	ARRUELA PLANA, M10 x 21 x 2
5		10516874		2	ARRUELA-TRAVA

1.220	06	p1	12/07

ELECTRIC SYSTEM - FLOODLIGHT

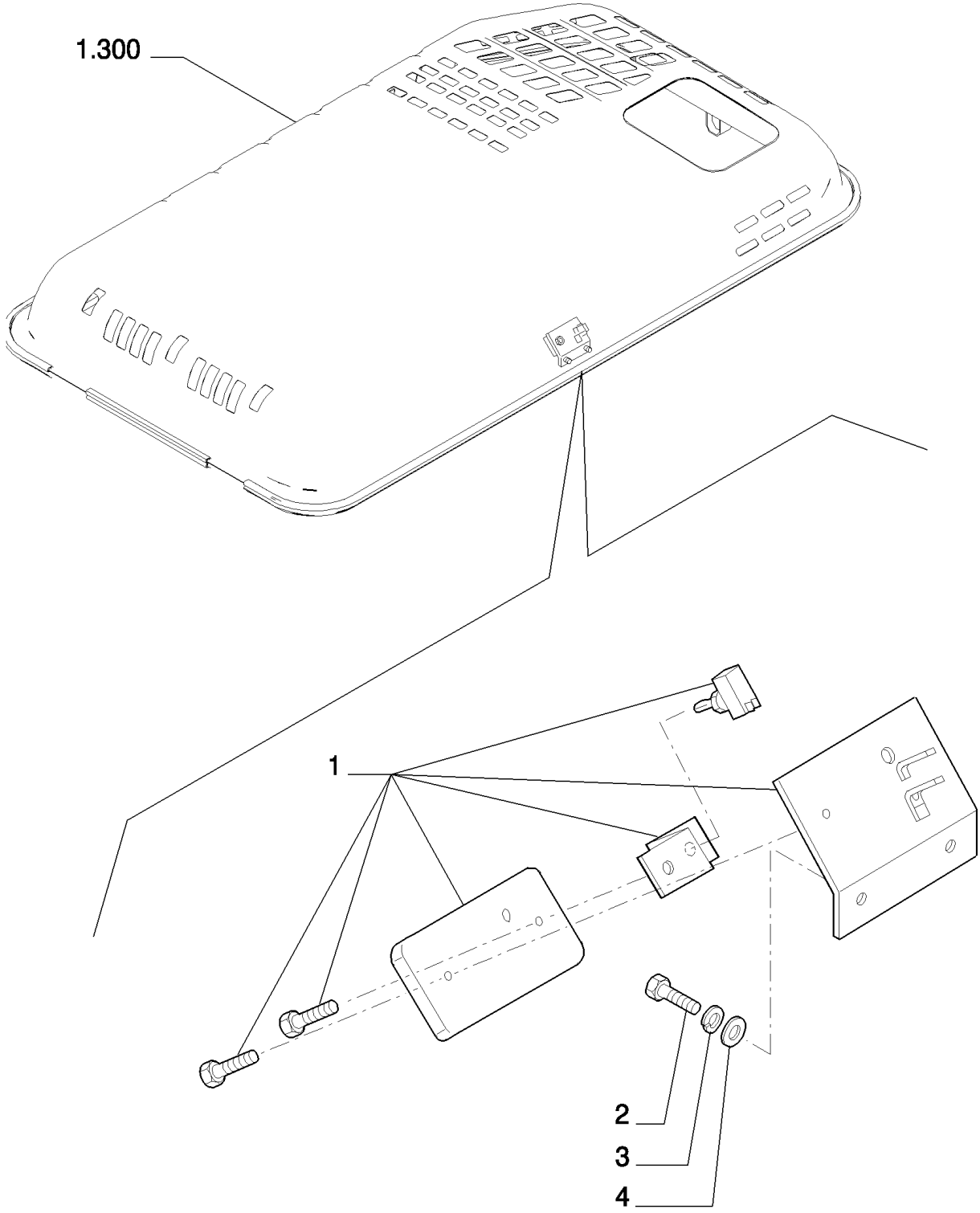

ELECTRIC SYSTEM - FLOODLIGHT

REF	FN	PART NUMBER	YR/SN	QTY	DESCRIPTION
1		71451946		1	FORRO
2		10902434		2	PARAFUSO, Hex, M6 x 20, 10.9, Full Thd
3		14496431		2	ARRUELA PLANA
4		10516474		2	ARRUELA-TRAVA

1.220	07	p1	10/07

ELECTRIC SYSTEM

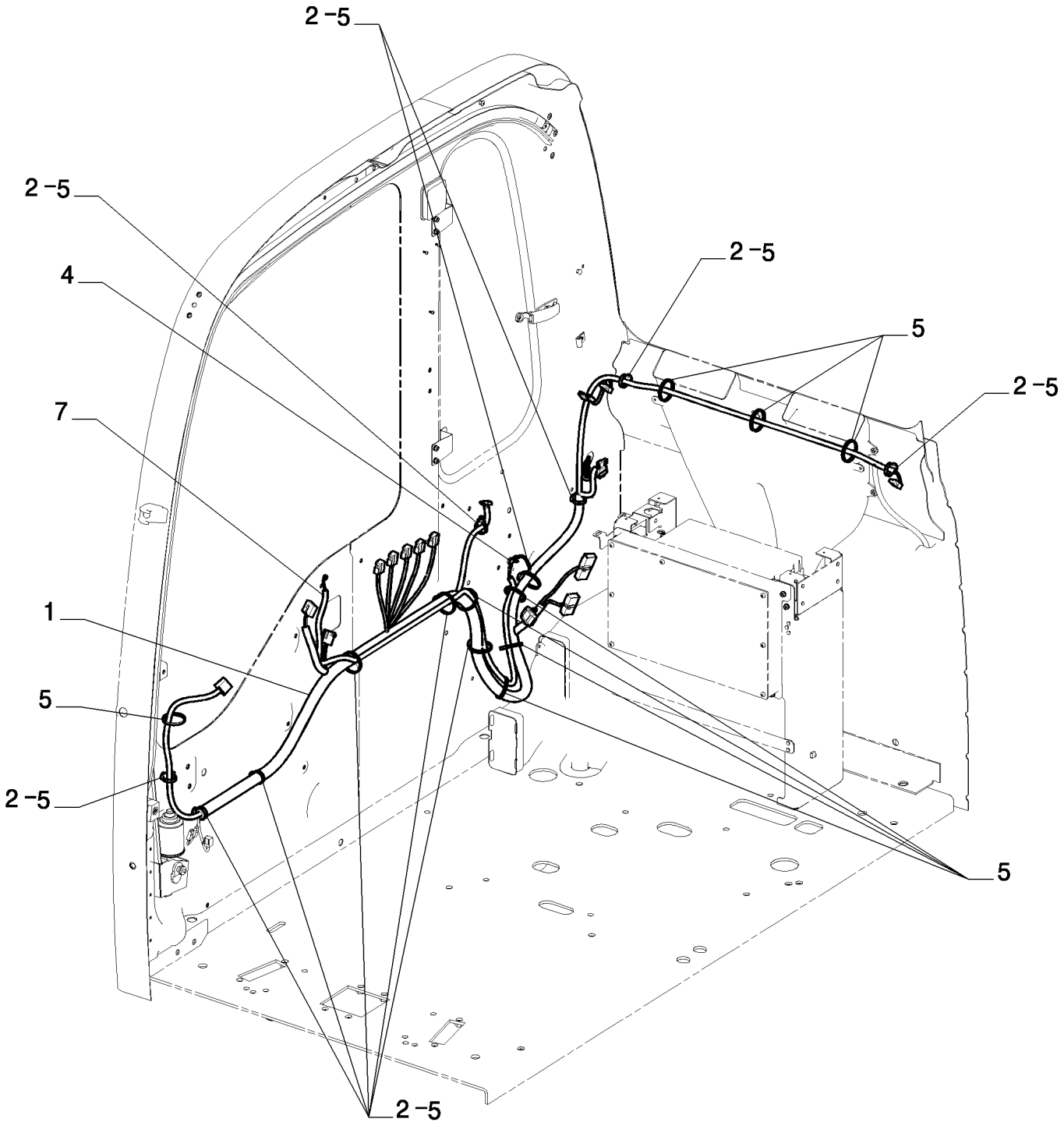

ELECTRIC SYSTEM

REF	FN	PART NUMBER	YR/SN	QTY	DESCRIPTION
1		87551050		1	CABO ELÉTRICO
2		87526680		11	ESTRIBO DE FIXAÇÃO
4		10902234		1	PARAFUSO, Hex, M6 x 16, 10.9, Full Thd
5		72951499		19	FIXADOR
6		14496431		1	ARRUELA PLANA
7		87632674		1	CABO ELÉTRICO

ELECTRIC SYSTEM

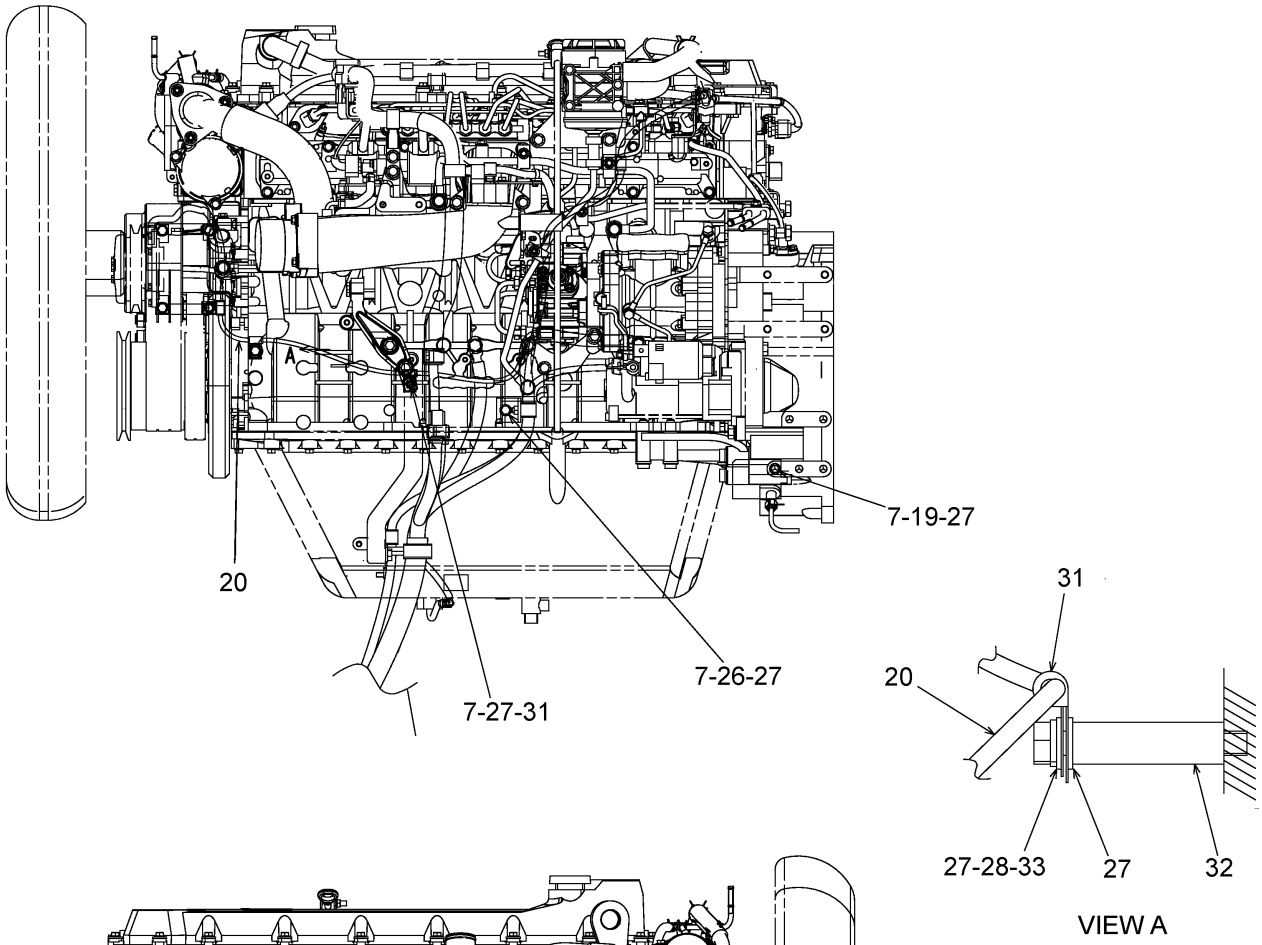

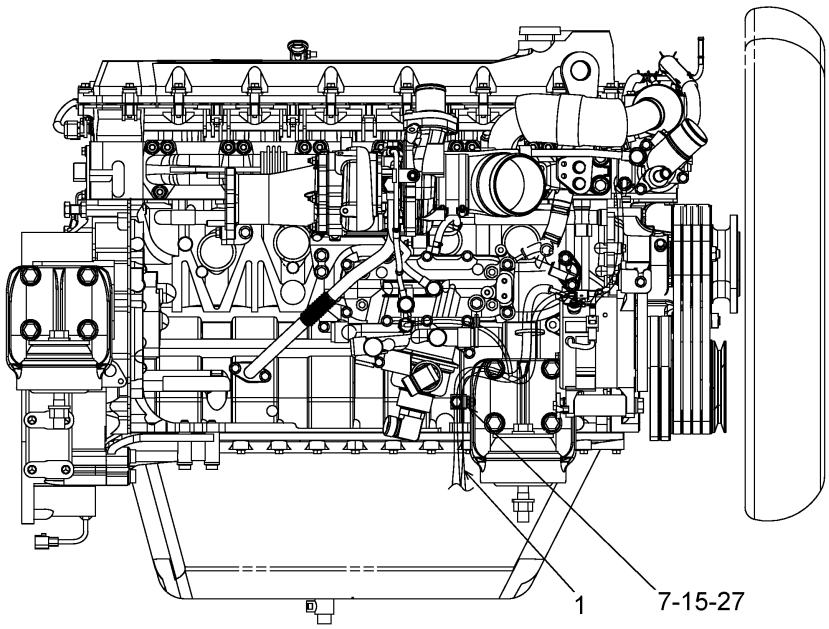

ELECTRIC SYSTEM

REF	FN	PART NUMBER	YR/SN	QTY	DESCRIPTION
1		{87662517}		1	
7		16043434		4	PARAFUSO, Hex, M8 x 20, 10.9, Full Thd
15		{87662518}		1	
19		87662519		1	SUPORTE
20		{87662522}		1	
26		87662523		1	PLACA
27		14496531		6	ARRUELA PLANA, M8 x 17 x 1.6
28		10516674		1	ARRUELA-TRAVA, 5/16"
31		87660037		2	BRAÇADEIRA
32		13606611		1	ESPAÇADOR
33		16044534		1	PARAFUSO, Hex, M8 x 65, 10.9

ELECTRIC SYSTEM

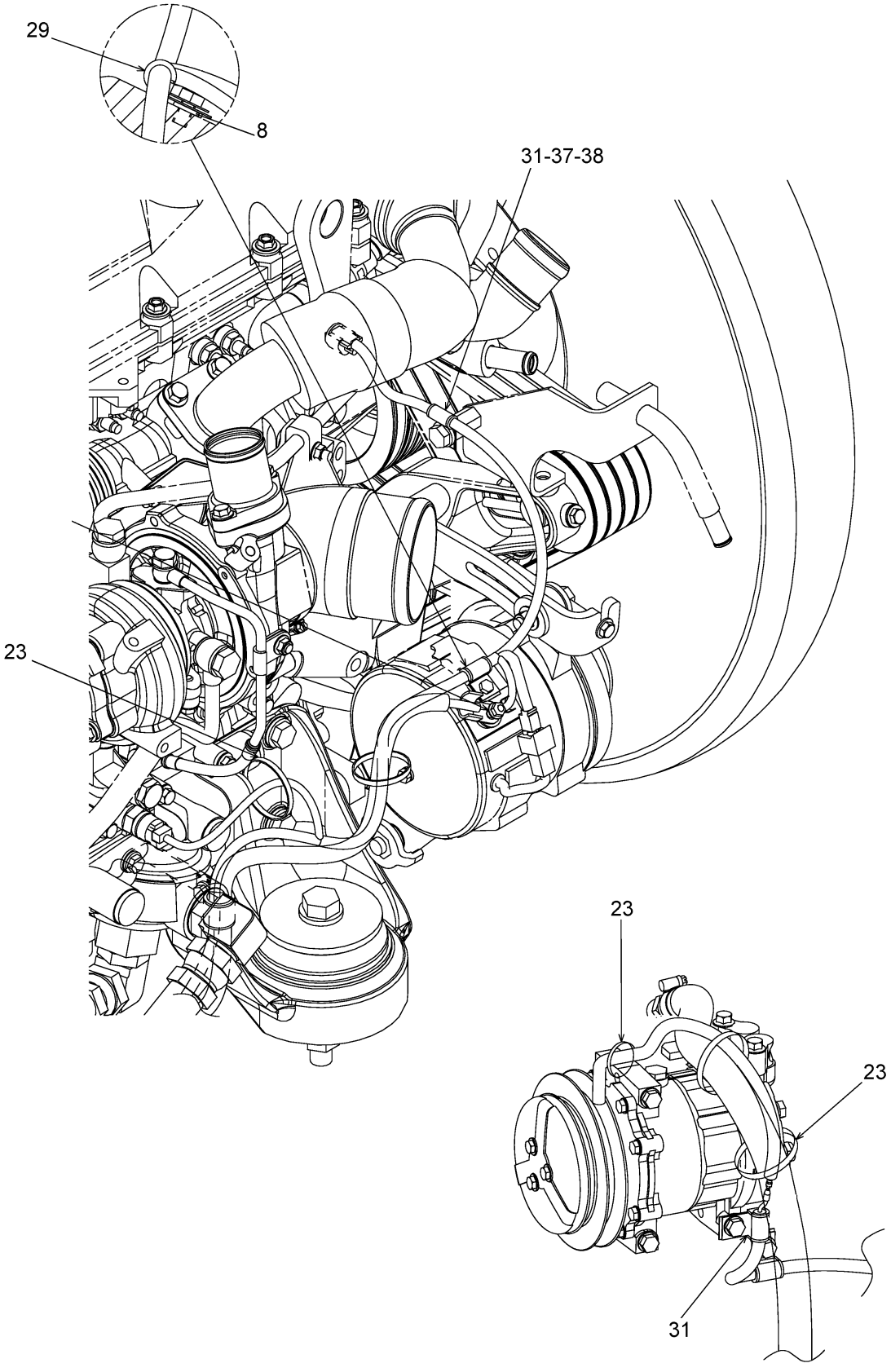

ELECTRIC SYSTEM

REF	FN	PART NUMBER	YR/SN	QTY	DESCRIPTION
8		14496431		1	ARRUELA PLANA
23		72951499		3	FIXADOR
29		10441190		1	PRENDEDOR
31		87660037		2	BRAÇADEIRA
37		11106034		1	PARAFUSO, Hex, M10 x 20, 10.9, Full Thd
38		14496631		1	ARRUELA PLANA, M10 x 21 x 2

ELECTRICAL SYSTEM

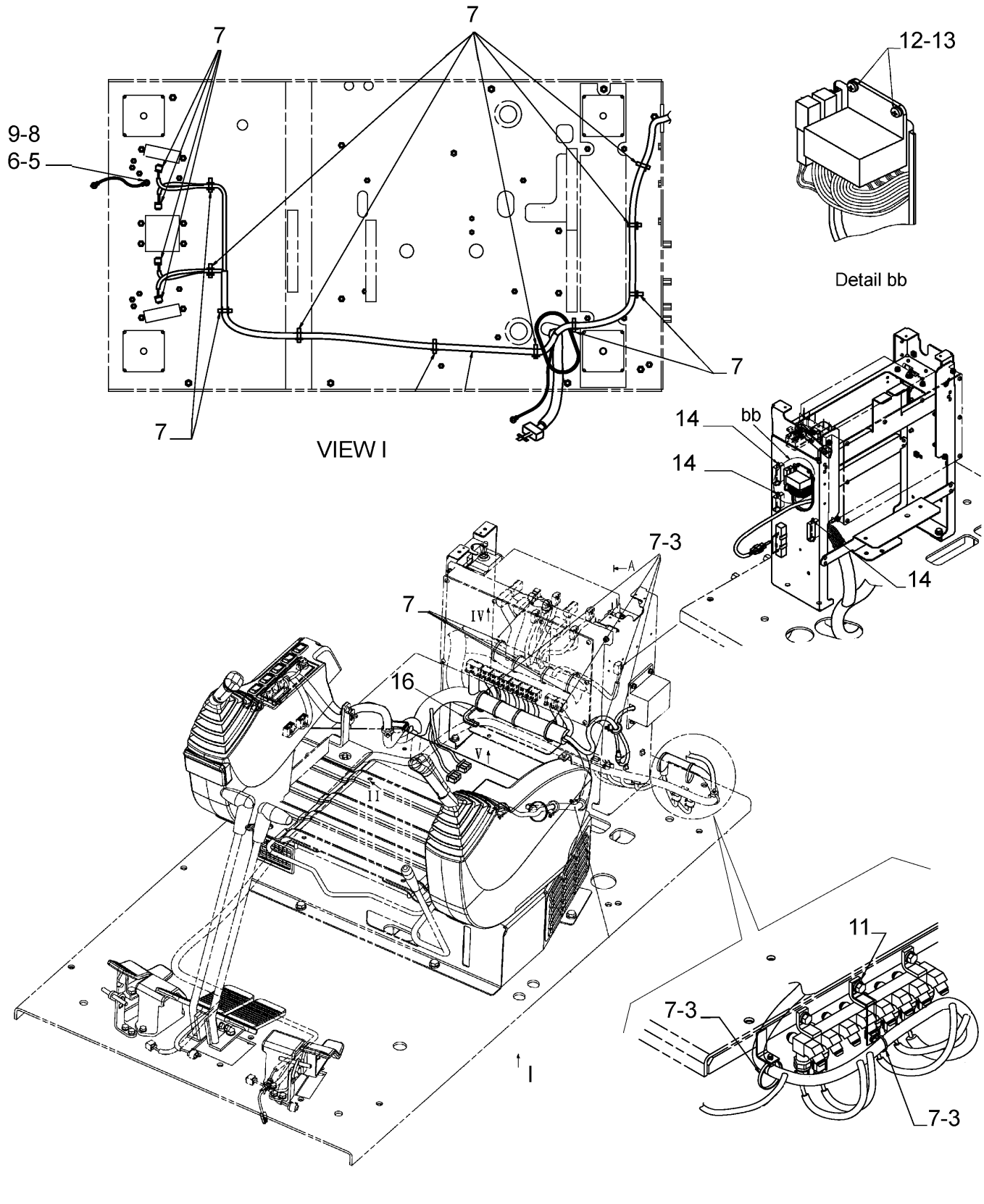

ELECTRICAL SYSTEM

REF	FN	PART NUMBER	YR/SN	QTY	DESCRIPTION
1		87723470		1	CABO ELÉTRICO
3		87526680		14	ESTRIBO DE FIXAÇÃO
5		10516674		1	ARRUELA-TRAVA, 5/16"
6		16100821		1	PORCA, M8, Cl 10
7		72951499		36	FIXADOR
8		87564296		1	CABO ELÉTRICO
9		14496531		1	ARRUELA PLANA, M8 x 17 x 1.6
11		87565338		1	SUPORTE
12		13276421		2	PARAFUSO, Pan Hd, M6 x 20, 8.8
13		14496431		2	ARRUELA PLANA
14		13272014		6	PARAFUSO, Pan Hd, M4 x 12
15		72214220		1	ANEL DE VEDACAO

GRAFICA DA DEFINIRE
DRAWING TO BE DEFINED

ELECTRIC SYSTEM

REF	FN	PART NUMBER	YR/SN	QTY	DESCRIPTION
1		{87660227}		1	
2		71450316		1	CABO ELÉTRICO
3		87571059		1	CABO ELÉTRICO
4		71450318		1	CABO ELÉTRICO
5		87699344		1	CABO ELÉTRICO
6		{87672950}		1	
7		71450342		1	CABO ELÉTRICO
8		87526680		1	ESTRIBO DE FIXAÇÃO
9		72951499		101	FIXADOR
10		71416130		4	PRENDEDOR
11		71415899		3	ESTRIBO DE FIXAÇÃO
12		14496631		6	ARRUELA PLANA, M10 x 21 x 2
13		71420700		1	ESTRIBO DE FIXAÇÃO
14		71403661		1	FIXADOR
15		87672942		1	SUPORTE
16		{87672944}		1	
18		{87672967}		1	
19		{87672951}		1	
20		87672949		1	JUNTA
23		71438664		5	FIXADOR
24		10517074		9	ARRUELA-TRAVA
25		16043234		2	PARAFUSO, Hex, M8 x 16, 10.9, Full Thd
26		16043434		13	PARAFUSO, Hex, M8 x 20, 10.9, Full Thd
27		14496531		20	ARRUELA PLANA, M8 x 17 x 1.6
28		10516674		19	ARRUELA-TRAVA, 5/16"
29		16100821		7	PORCA, M8, Cl 10
30		11106034		6	PARAFUSO, Hex, M10 x 20, 10.9, Full Thd
31		14496631		6	ARRUELA PLANA, M10 x 21 x 2
32		10516874		6	ARRUELA-TRAVA
33		11112234		1	PARAFUSO, Hex, M12 x 25, 10.9, Full Thd
35		14496731		7	ARRUELA PLANA
36		11112434		5	PARAFUSO, Hex, M12 x 30, 10.9, Full Thd
37		11112634		1	PARAFUSO
38		11702921		1	PORCA, M12, Cl 10

1.230	01	p1	10/07

WINDOW WASHER

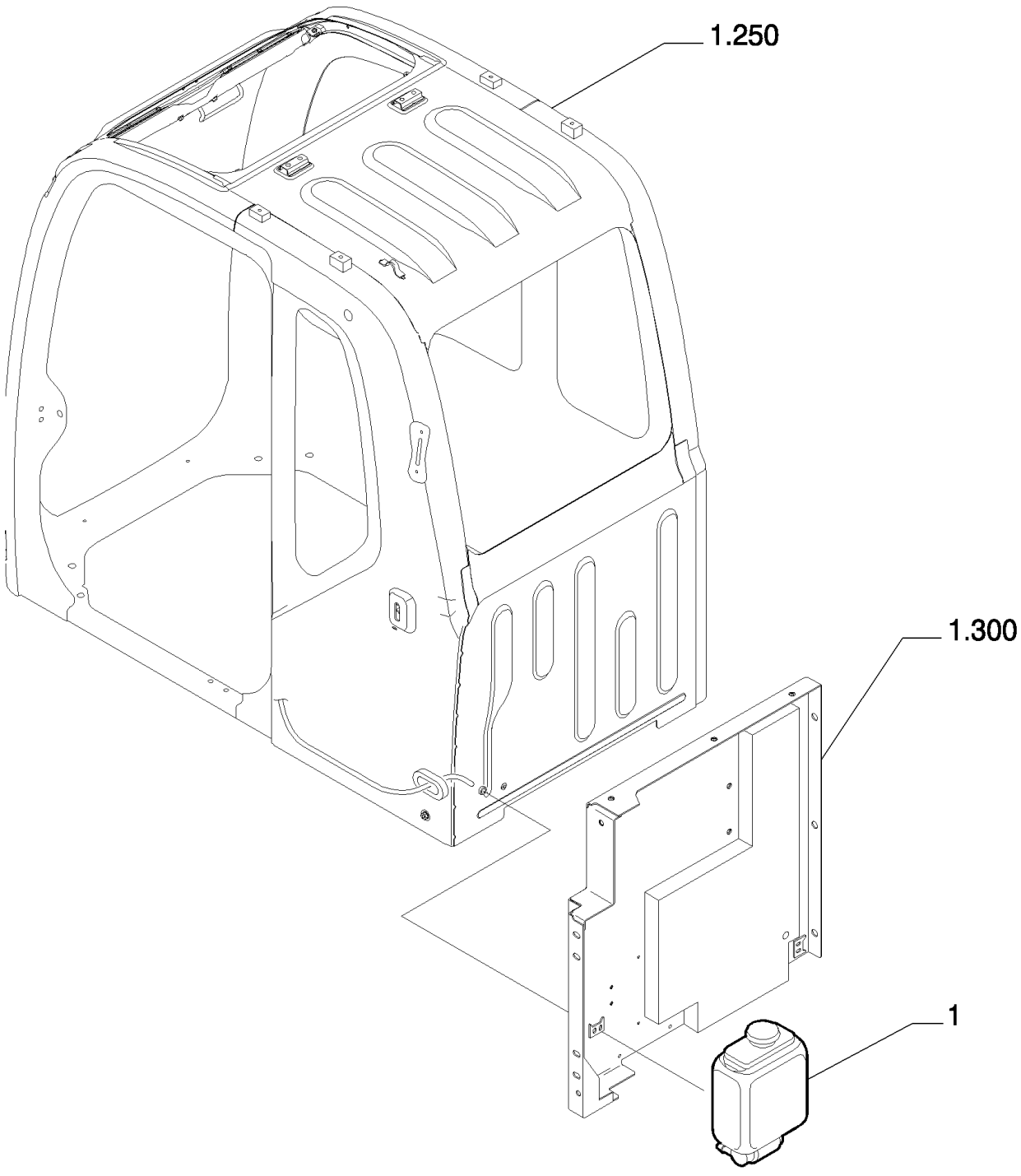

WINDOW WASHER

REF	FN	PART NUMBER	YR/SN	QTY	DESCRIPTION
1		154227028		1	RECIPIENTE PLÁSTICO

1.250	01	p1	10/07

CAB

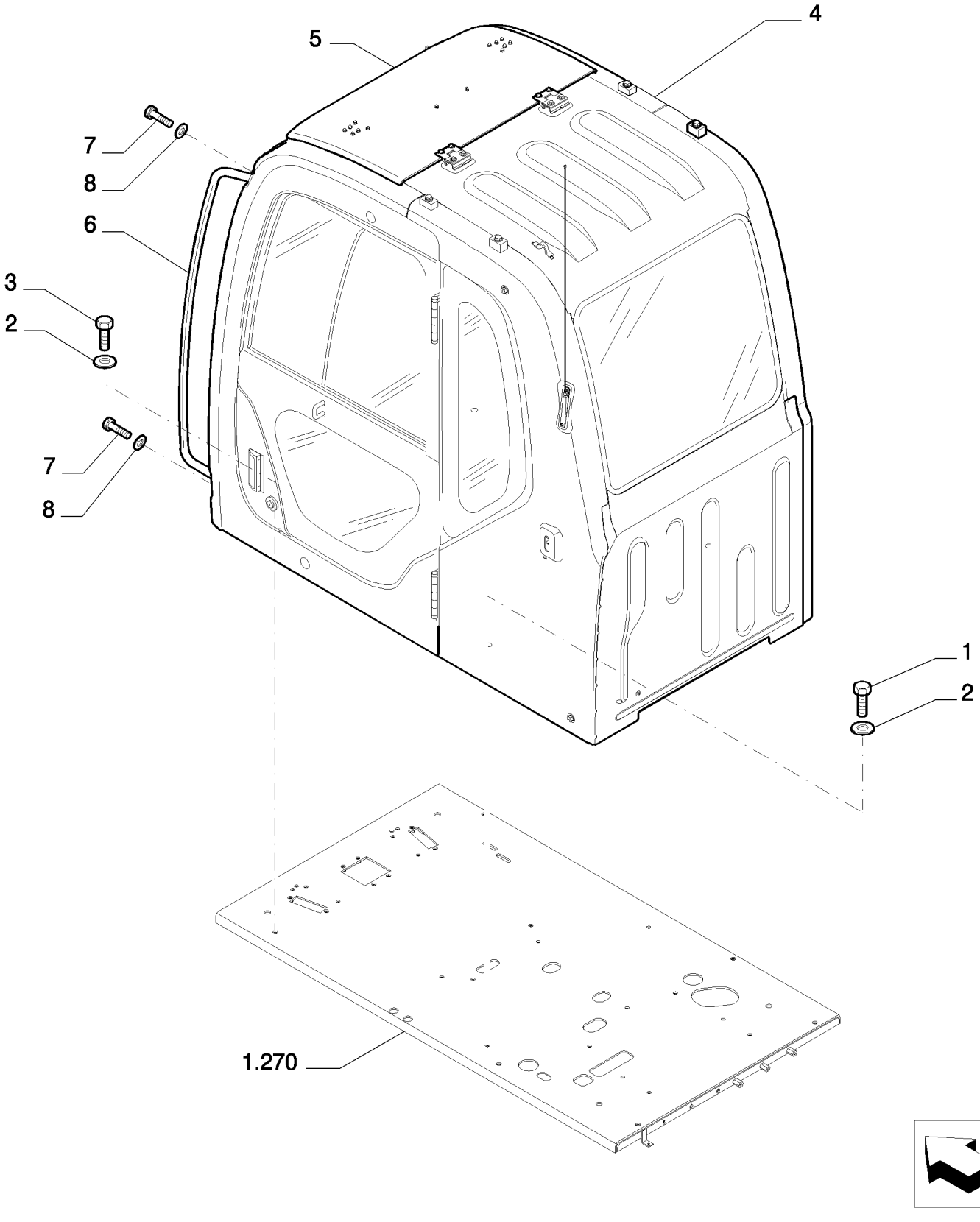

CAB

REF	FN	PART NUMBER	YR/SN	QTY	DESCRIPTION
1		11113534		5	PARAFUSO, Hex, M12 x 65, 10.9, Full Thd
2		72201225		6	ARRUELA PLANA
3		11112434		1	PARAFUSO, Hex, M12 x 30, 10.9, Full Thd
4	1	87578736		1	CABINE
5	2	87578750		1	TETO RÍGIDO
6		87538372		1	COLUNA
7		72171602		2	PARAFUSO
8		12626231		2	ARRUELA PLANA

(1) ASSY SEE PAGE 10÷14
(2) ASSY SEE PAGE 18

1.250	02	p1	10/07

SEAT BELT

2

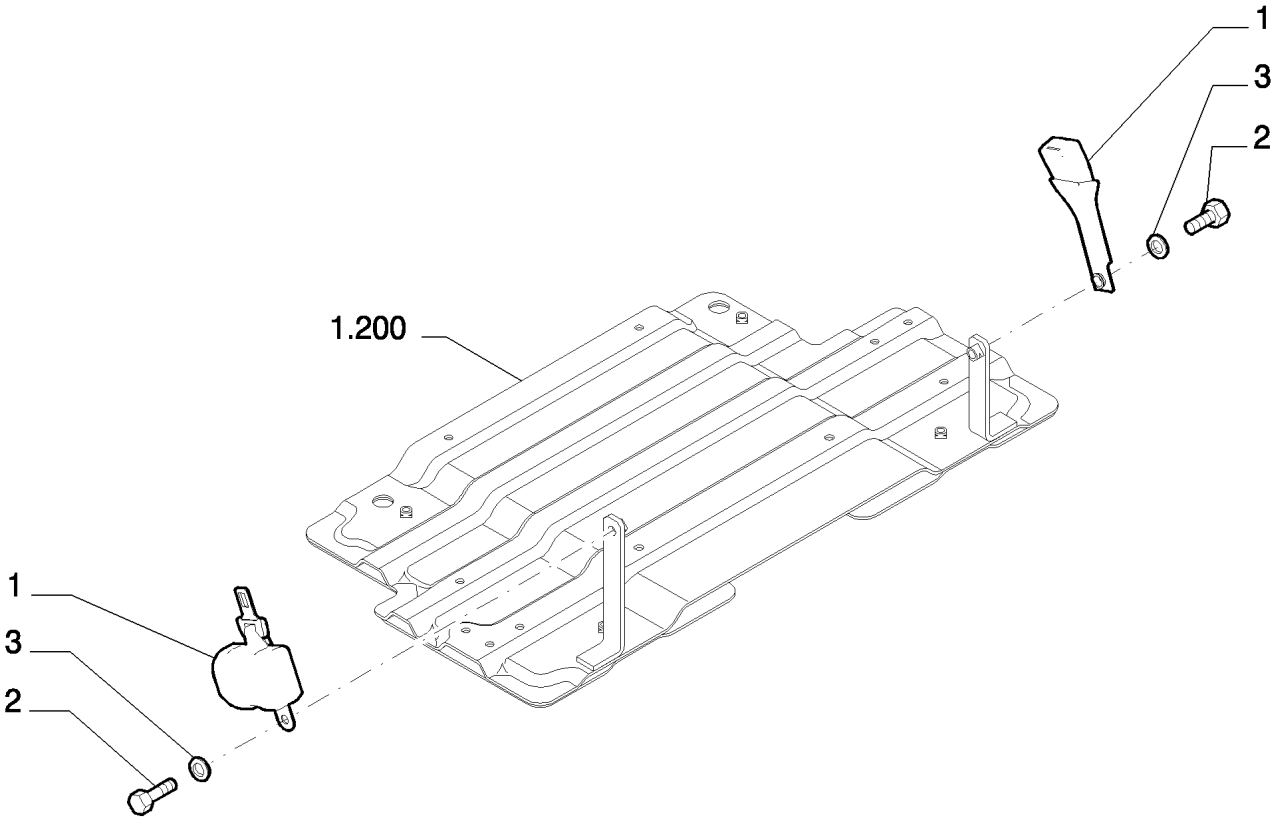

SEAT BELT

REF	FN	PART NUMBER	YR/SN	QTY	DESCRIPTION
1		72280893		1	CINTO DE SEGURANÇA
2		11106234		2	PARAFUSO, Hex, M10 x 25, 10.9, Full Thd
3		14496631		2	ARRUELA PLANA, M10 x 21 x 2

1.250	03	p1	10/07

OPERATOR'S SEAT - SUPPORT

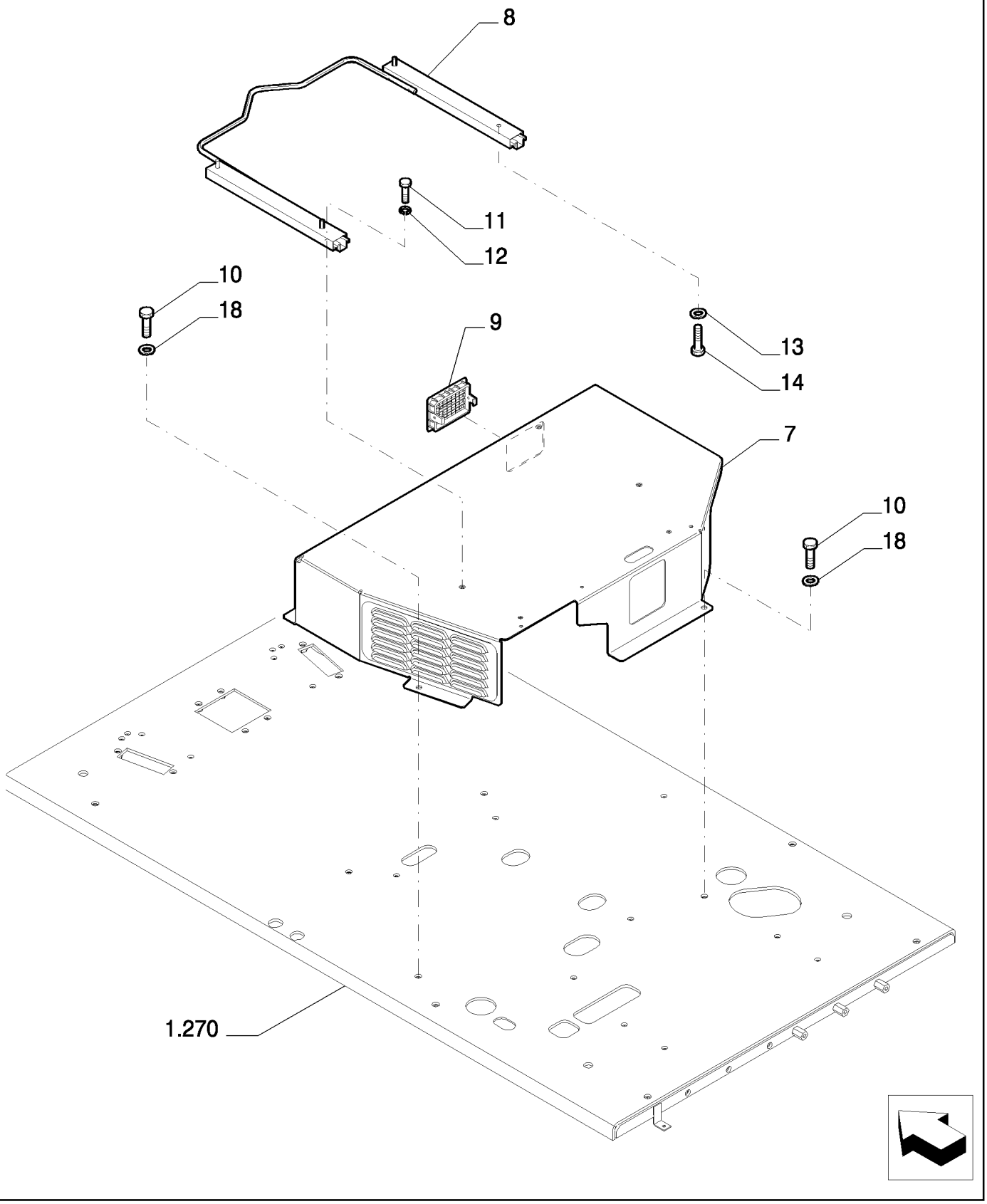

OPERATOR'S SEAT - SUPPORT

REF	FN	PART NUMBER	YR/SN	QTY	DESCRIPTION
7		87521865		1	SUPORTE
8		87521874		1	GUIA
9		72203954		1	DIFUSOR
10		11106234		4	PARAFUSO, Hex, M10 x 25, 10.9, Full Thd
11		14306234		4	PARAFUSO, Hex Soc Hd, M8 x 16, 10.9
12		10516674		4	ARRUELA-TRAVA, 5/16"
13		14496531		4	ARRUELA PLANA, M8 x 17 x 1.6
14		14306334		4	PARAFUSO
18		14496631		4	ARRUELA PLANA, M10 x 21 x 2

1.250	04	p1	10/07

ARMREST

2

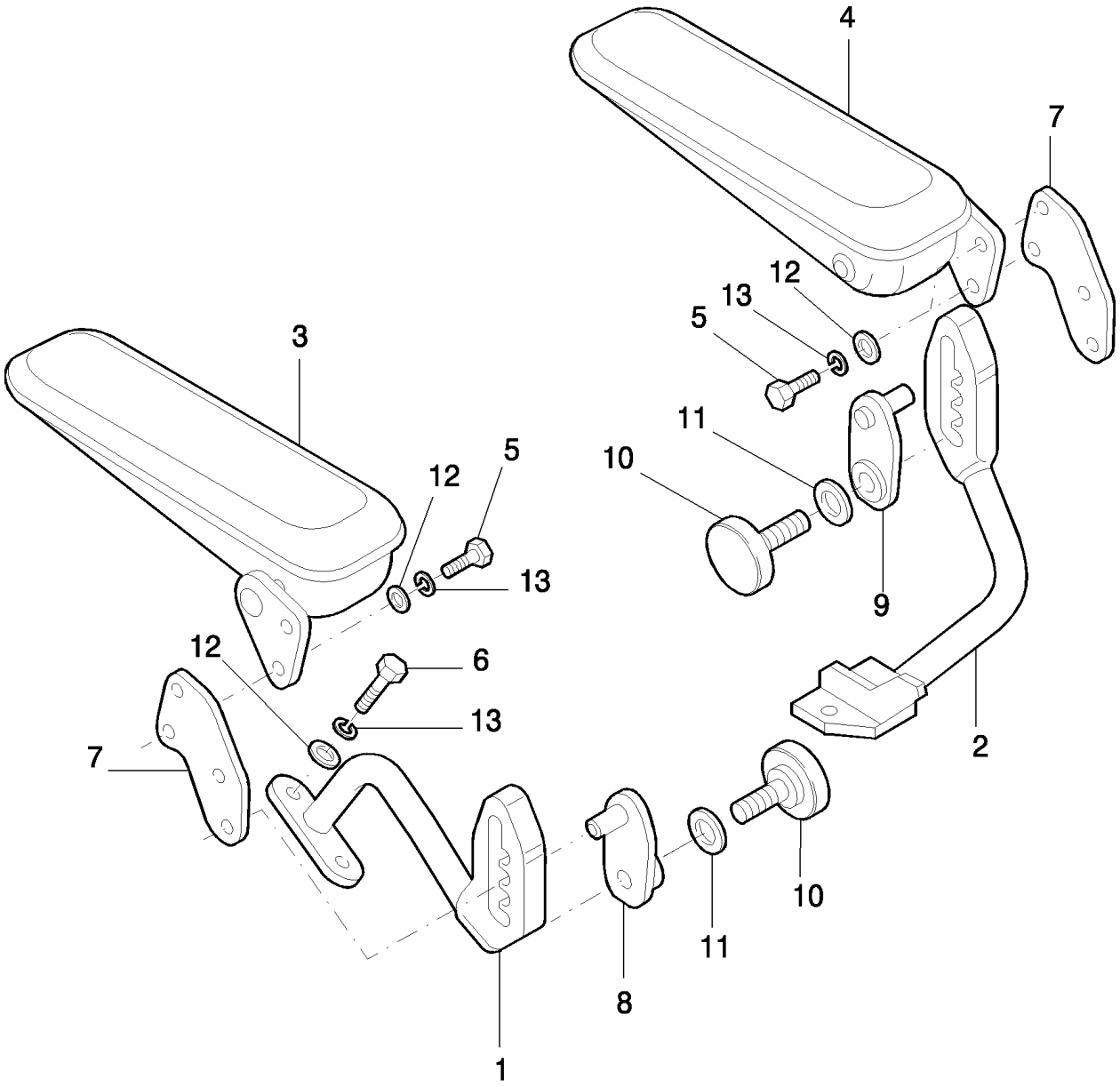

ARMREST

REF	FN	PART NUMBER	YR/SN	QTY	DESCRIPTION
1		87570958		1	SUPORTE
2		87570962		1	SUPORTE
3		87570965		1	APOIA-BRAÇO
4		87570967		1	APOIA-BRAÇO
5		87571538		4	PARAFUSO
6		16043434		2	PARAFUSO, Hex, M8 x 20, 10.9, Full Thd
7		87570968		2	PLACA
8		87570969		1	PLACA
9		87570978		1	PLACA
10		87550853		2	EMPUNHADURA
11		14496631		2	ARRUELA PLANA, M10 x 21 x 2
12		14496531		6	ARRUELA PLANA, M8 x 17 x 1.6
13		10516674		6	ARRUELA-TRAVA, 5/16"

1.250	05	p1	10/07

CAB - COMPONENTS

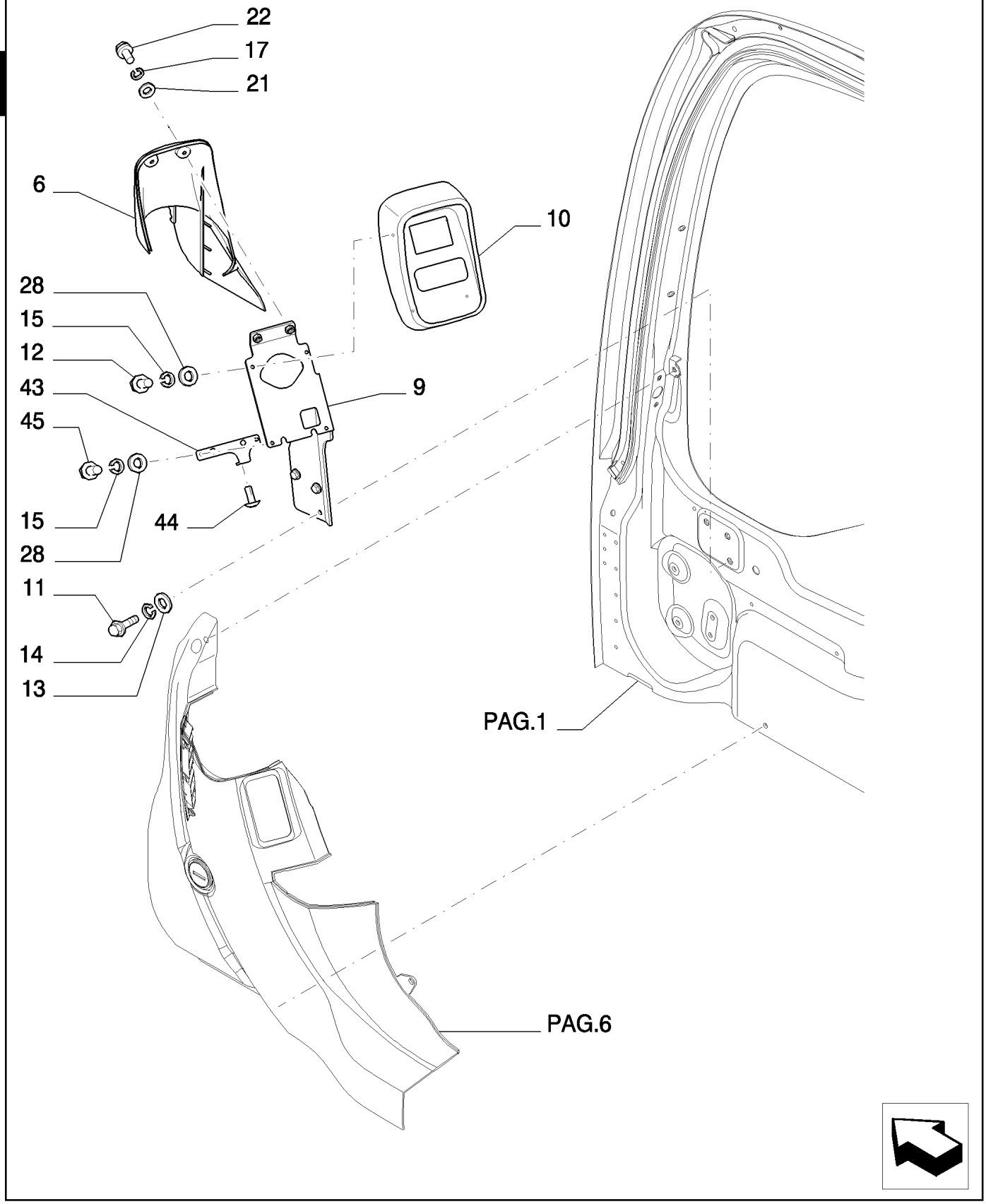

CAB - COMPONENTS

REF	FN	PART NUMBER	YR/SN	QTY	DESCRIPTION
6		87524798		1	PROTEÇÃO
9		87524802		1	SUPORTE
10	1	87614166		1	MONITOR
11		16043434		3	PARAFUSO, Hex, M8 x 20, 10.9, Full Thd
12		10977634		2	PARAFUSO
13		14496531		3	ARRUELA PLANA, M8 x 17 x 1.6
14		10516674		3	ARRUELA-TRAVA, 5/16"
15		11195474		4	ARRUELA-TRAVA
17		14496431		2	ARRUELA PLANA
21		10516474		2	ARRUELA-TRAVA
22		10902234		2	PARAFUSO, Hex, M6 x 16, 10.9, Full Thd
28		10519301		4	ARRUELA PLANA, M5 x 9.55 x 1
43		87527036		1	SUPORTE
44		87527038		1	PARAFUSO
45		10977834		2	PARAFUSO, Hex, M5 x 16, 10.9, Full Thd

(1) ASSY SEE PAGE 5A

CAB - COMPONENTS

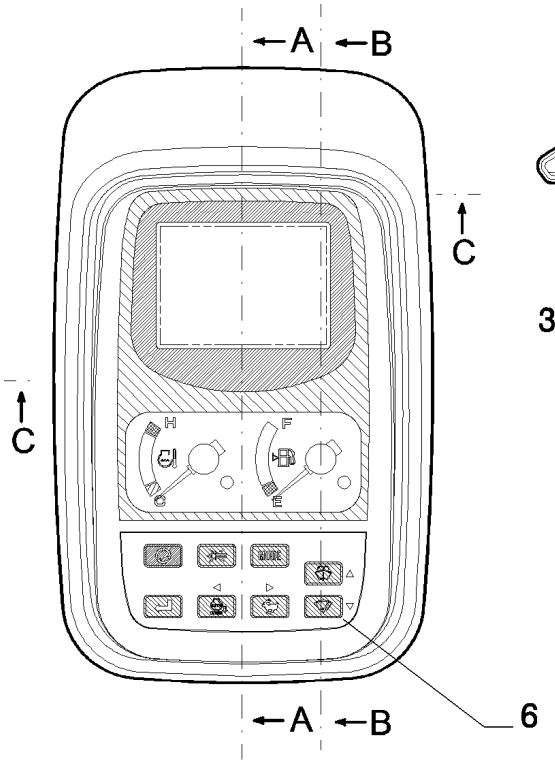

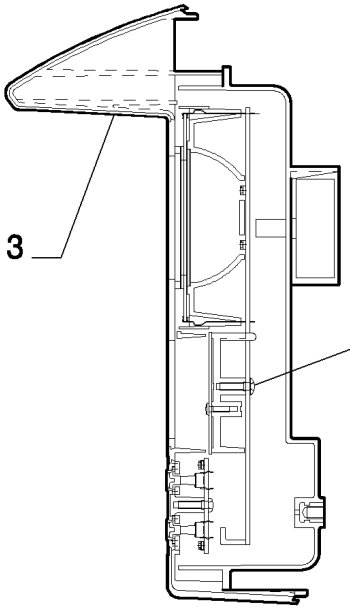

Section A-A

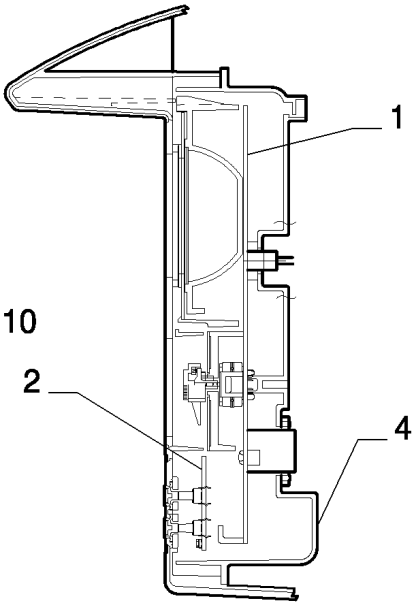

Section B-B

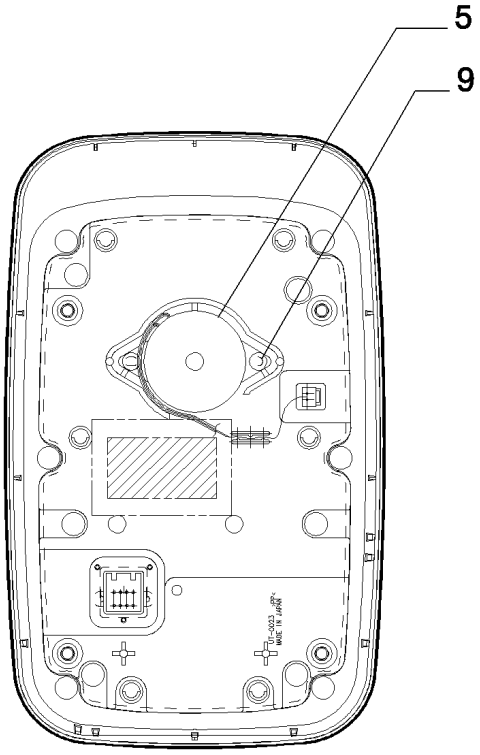

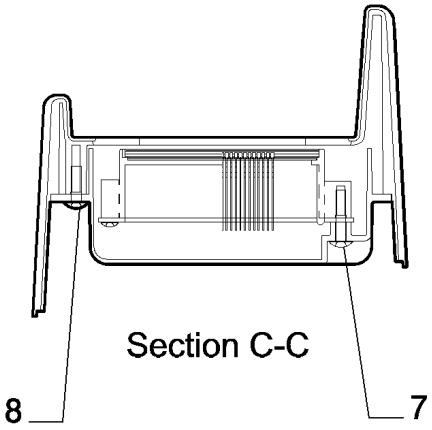

Section C-C

CAB - COMPONENTS

REF	FN	PART NUMBER	YR/SN	QTY	DESCRIPTION
1		YN59S00021S001		1	MONITOR
2		YN59S00021S002		1	CIRCUITO ELECTRICO
3		YN59S00021S003		1	TAMPA
4		YN59S00021S004		1	TAMPA
5		YN59S00021S005		1	BUZINA VIBRATÓRIA
6		YN59S00021S006		1	PAINEL
7		YN59S00021S007		6	PARAFUSO
8		YN59S00021S008		6	PARAFUSO
9		YN59S00021S009		2	PARAFUSO
10		YN59S00021S010		7	PARAFUSO

GAUGE, CLUSTER ASSY P/N 87614166

CAB - COMPONENTS

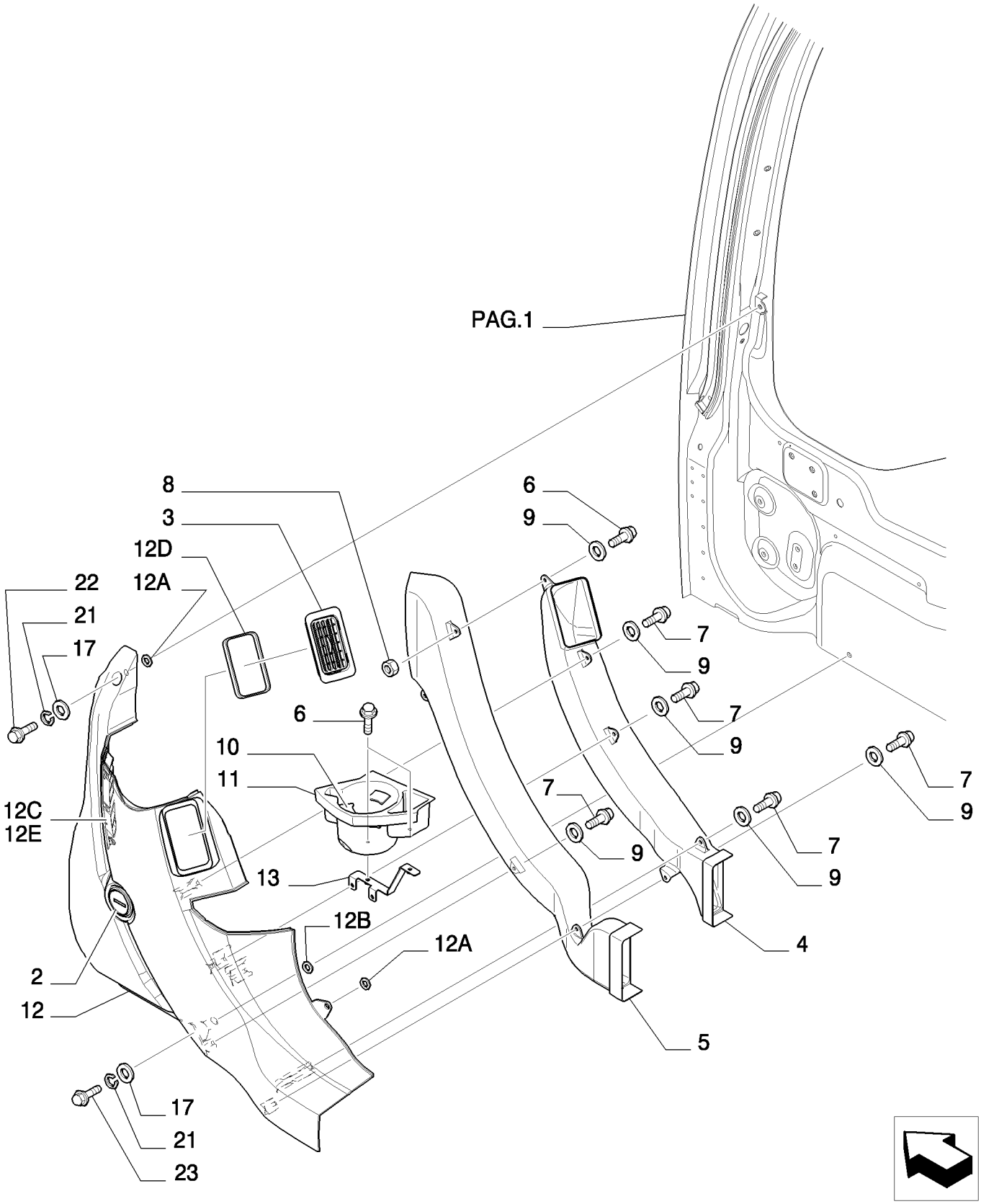

CAB - COMPONENTS

REF	FN	PART NUMBER	YR/SN	QTY	DESCRIPTION
2		72203956		1	HORÍMETRO
3		72273823		1	RESPIRO
4		87527472		1	CONDUTO
5		87527477		1	CONDUTO
6		87527490		3	PARAFUSO
7		87527383		7	PARAFUSO
8		87527492		1	PORCA
9		87527384		8	ARRUELA PLANA
10		{87527493}		3	
11		87527411		1	PLACA
12		87527463		1	PROTEÇÃO, - ASSY
12A		87527325		2	BRAÇADEIRA
12B		87527466		1	BRAÇADEIRA
12C		87527468		1	GRELHA
12D		{87527469}		1	
12E		{87527470}		1	
13		87527471		1	SUPORTE
17		14496431		2	ARRUELA PLANA
21		10516474		2	ARRUELA-TRAVA
22		10902234		1	PARAFUSO, Hex, M6 x 16, 10.9, Full Thd
23		10903434		1	PARAFUSO, Hex, M6 x 45, 10.9

1.250	07	p1	06/08

CAB - COMPONENTS

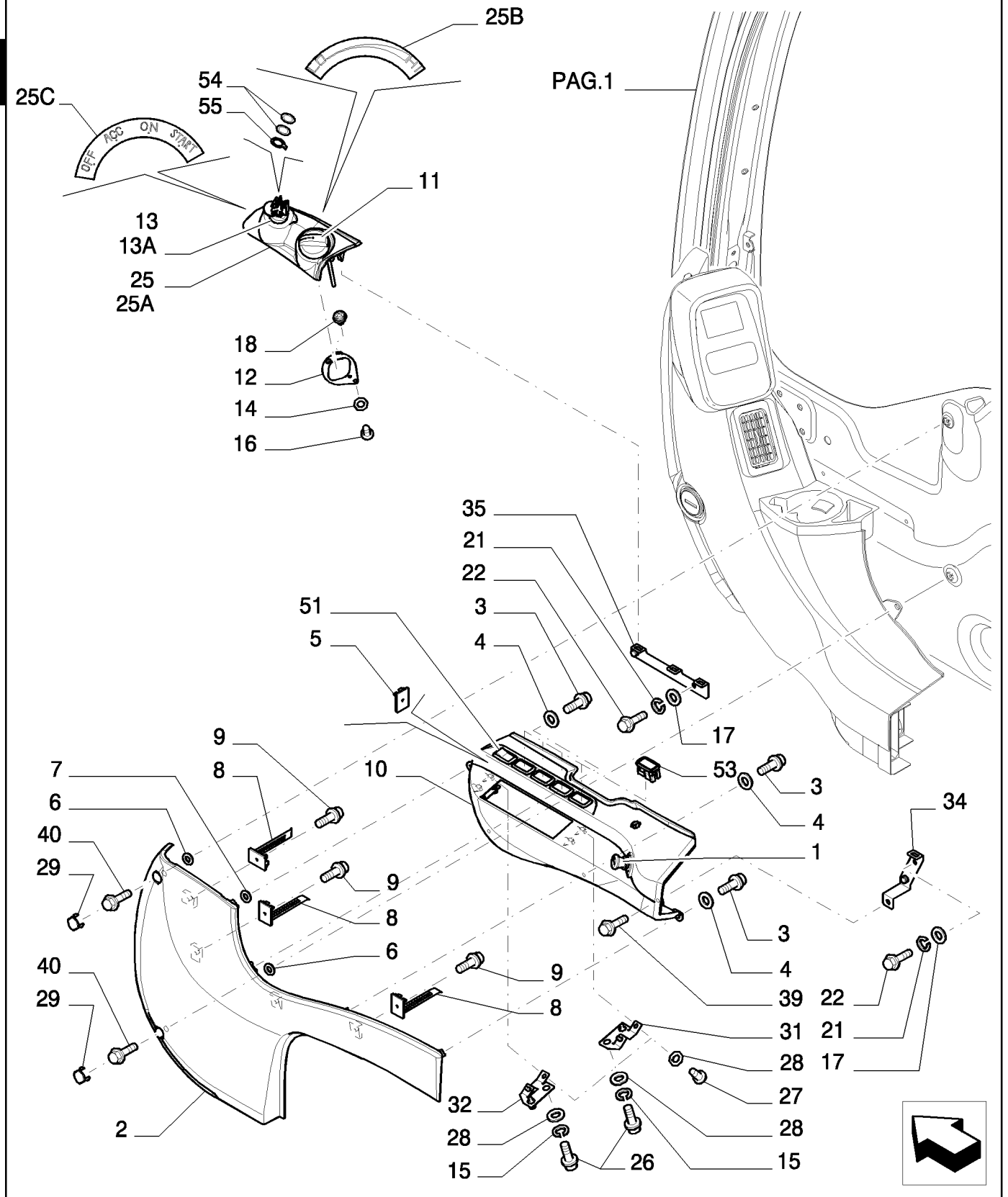

CAB - COMPONENTS

REF	FN	PART NUMBER	YR/SN	QTY	DESCRIPTION
1		87527396		1	ACENDEDOR DE CIGARROS
2		{87527376}		1	
3		87527383		4	PARAFUSO
4		87527384		4	ARRUELA PLANA
5		87527336		2	GRAMPO
6		87527385		2	BRAÇADEIRA
7		87527325		1	BRAÇADEIRA
8		87527387		3	GRAMPO
9		87527395		3	PARAFUSO
10		87527372		1	TAMPA
11		72204033		1	POTENCIÔMETRO
12		87527349		1	SUPORTE
13		72953349		1	COMUTADOR, - ASSY
13A		72951984		R	CHAVE DE PARTIDA
14		72203938		2	ARRUELA PLANA
15		11195474		4	ARRUELA-TRAVA
16		87524808		2	PARAFUSO
17		14496431		4	ARRUELA PLANA
18		72951642		2	PARAFUSO
21		10516474		2	ARRUELA-TRAVA
22		10902234		4	PARAFUSO, Hex, M6 x 16, 10.9, Full Thd
25		87527344		1	PROTEÇÃO, - ASSY
25A		87527336		2	GRAMPO
25B		87527347		1	PLAQUETA
25C		87527348		1	PLAQUETA
26		13272014		4	PARAFUSO, Pan Hd, M4 x 12
27		87524808		4	PARAFUSO
28		10519301		8	ARRUELA PLANA, M5 x 9.55 x 1
29		87524809		2	BUJÃO
31		87524813		1	SUPORTE
32		87524814		1	SUPORTE
34		87524816		1	SUPORTE
35		87524817		1	SUPORTE
39		87524822		1	PARAFUSO
40		87524823		2	PARAFUSO

CAB - COMPONENTS

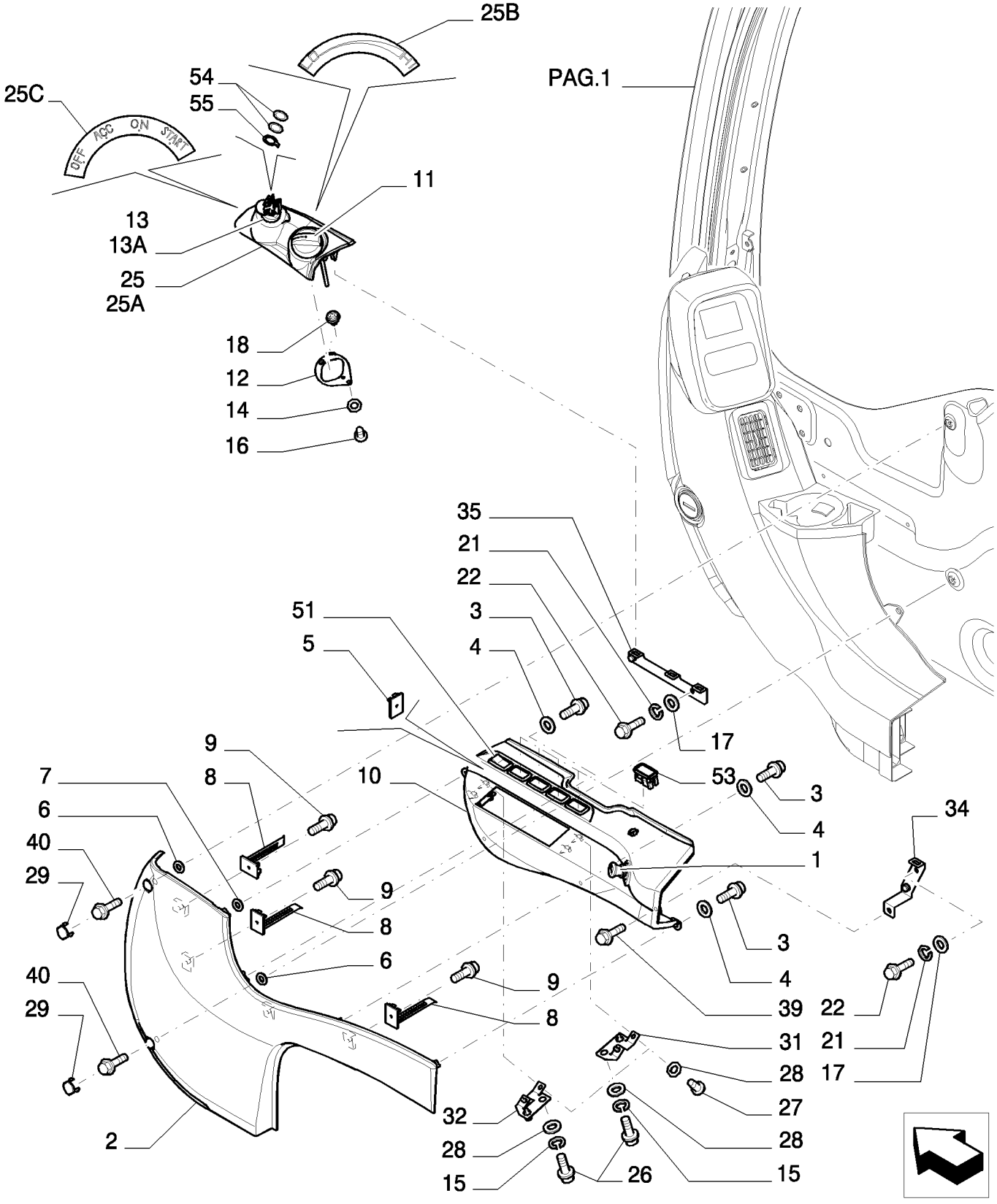

CAB - COMPONENTS

REF	FN	PART NUMBER	YR/SN	QTY	DESCRIPTION
51		87527530		1	INTERRUPTOR
53		87527533		4	BUJÃO
54		87623250		2	ARRUELA PLANA
55		87623251		1	TERMINAL

1.250	08	p1	06/08

CAB - COMPONENTS

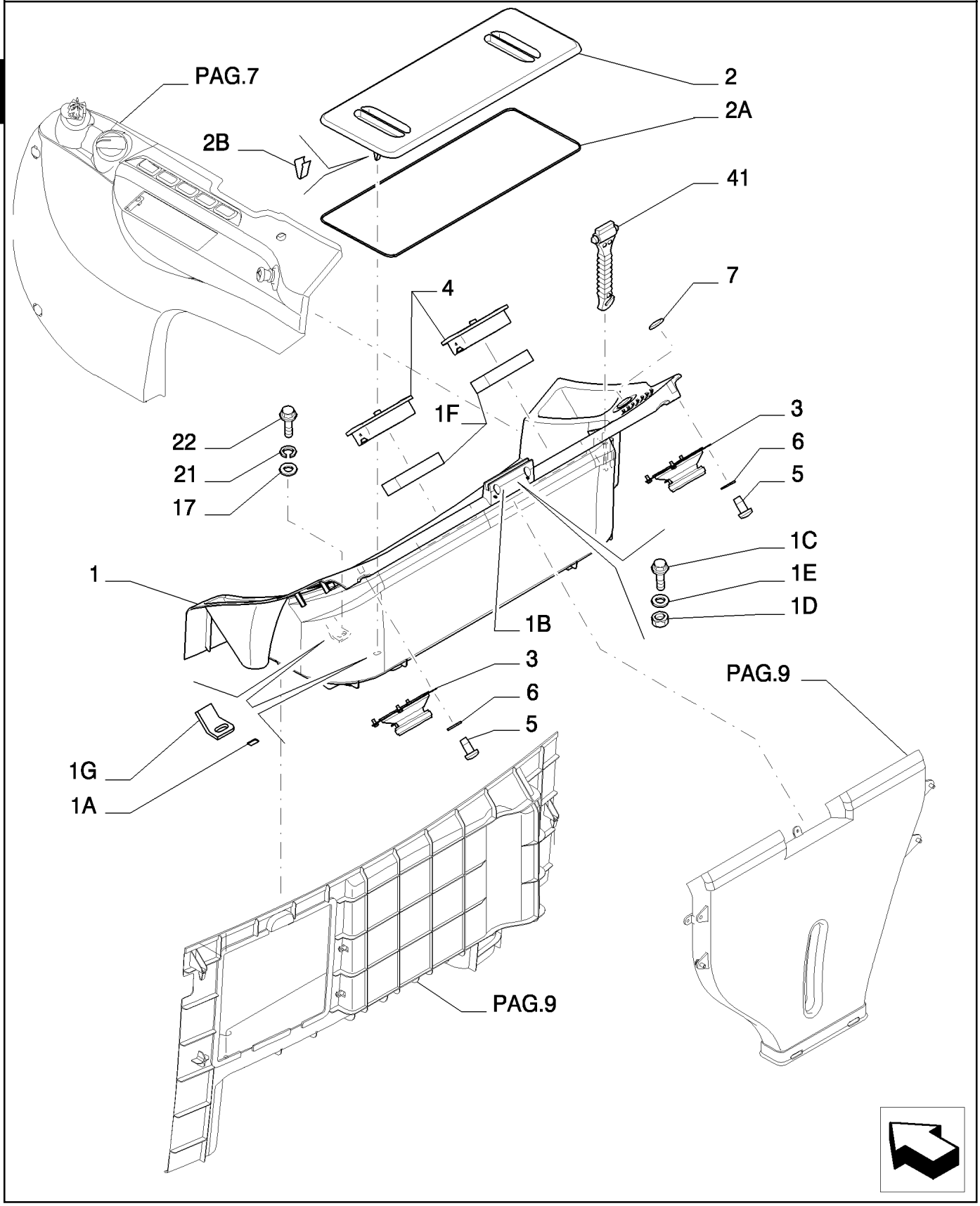

CAB - COMPONENTS

REF	FN	PART NUMBER	YR/SN	QTY	DESCRIPTION
1		87524788		1	PROTEÇÃO, - ASSY
1A		87527307		4	BRAÇADEIRA
1B		87527308		1	JUNTA
1C		87527309		2	PARAFUSO
1D		87527310		2	PORCA
1E		87527311		2	ESPAÇADOR
1F		{87527312}		2	
1G		87527313		2	SUPORTE
2		87524799		1	PROTEÇÃO, - ASSY
2A		{87527496}		1	
2B		87527336		2	GRAMPO
3		72954772		2	ALTO-FALANTE
4		87524804		2	GRELHA
5		87524808		8	PARAFUSO
6		10519301		8	ARRUELA PLANA, M5 x 9.55 x 1
7		87524810		1	SEDE/ALOJAMENTO
17		14496431		4	ARRUELA PLANA
21		10516474		4	ARRUELA-TRAVA
22		10902234		4	PARAFUSO, Hex, M6 x 16, 10.9, Full Thd
41		87527034		1	MARTELO

1.250	09	p1	06/08

CAB - COMPONENTS

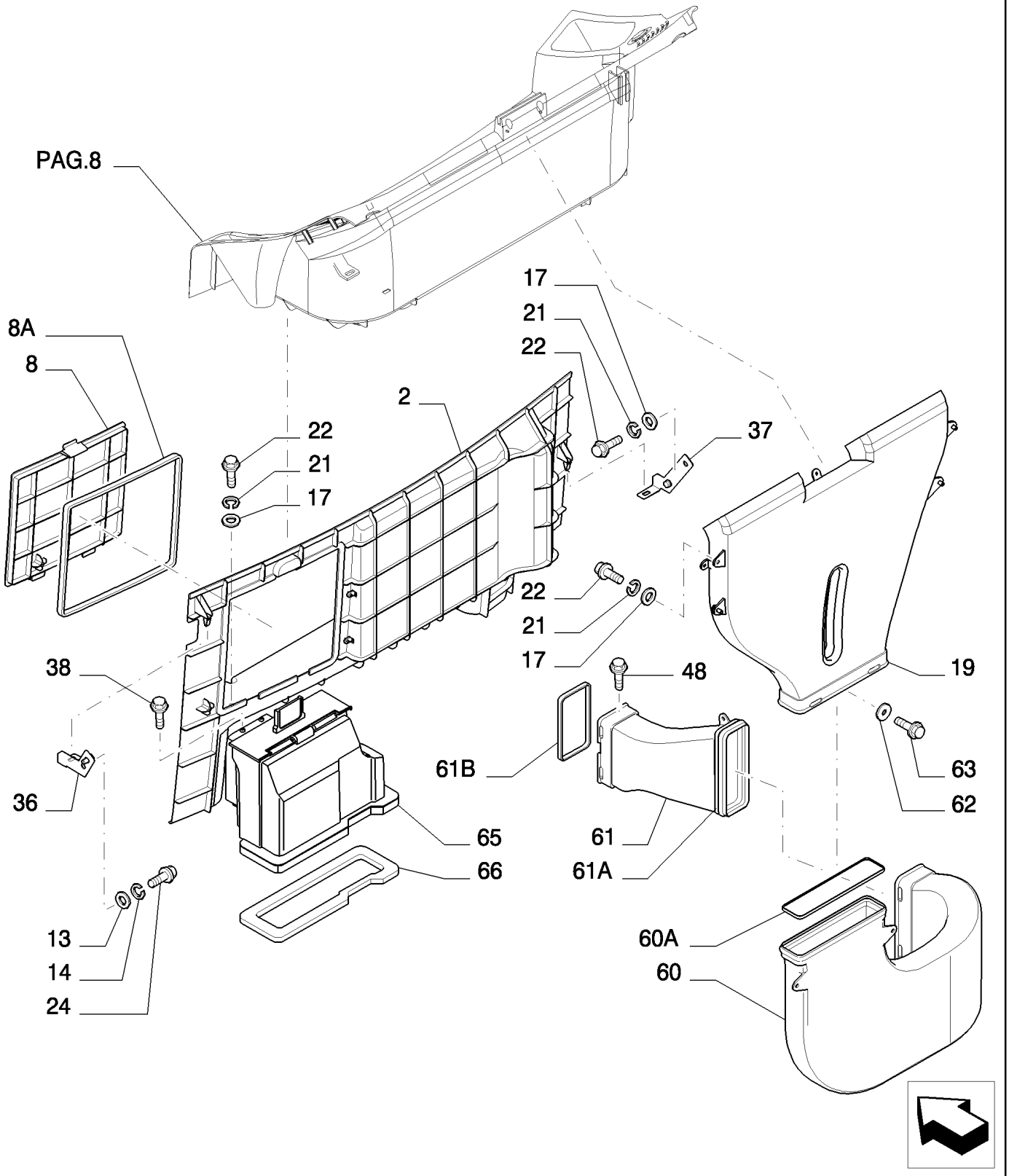

CAB - COMPONENTS

REF	FN	PART NUMBER	YR/SN	QTY	DESCRIPTION
2		87524789		1	PROTEÇÃO
8		87524800		1	PROTEÇÃO, - ASSY
8A		{87527498}		1	
13		14496531		2	ARRUELA PLANA, M8 x 17 x 1.6
14		10516674		2	ARRUELA-TRAVA, 5/16"
17		14496431		8	ARRUELA PLANA
19		87527503		1	TUBO
21		10516474		8	ARRUELA-TRAVA
22		10902234		8	PARAFUSO, Hex, M6 x 16, 10.9, Full Thd
24		16043234		2	PARAFUSO, Hex, M8 x 16, 10.9, Full Thd
36		87524819		1	SUPORTE
37		87524821		1	SUPORTE
38		15903804		2	PARAFUSO, Cross Pan Hd, M4.8 x 13
48		15687907		1	PARAFUSO
60		87527504		1	TUBO, - ASSY
60A		{87527506}		1	
61		{87527507}		1	- ASSY
61A		{87527509}		1	
61B		{87527511}		1	
62		{87596367}		2	
63		87596368		2	PARAFUSO
65		{87527514}		1	
66		{87527517}		1	

1.250	10	p1	03/08

CAB - COMPONENTS

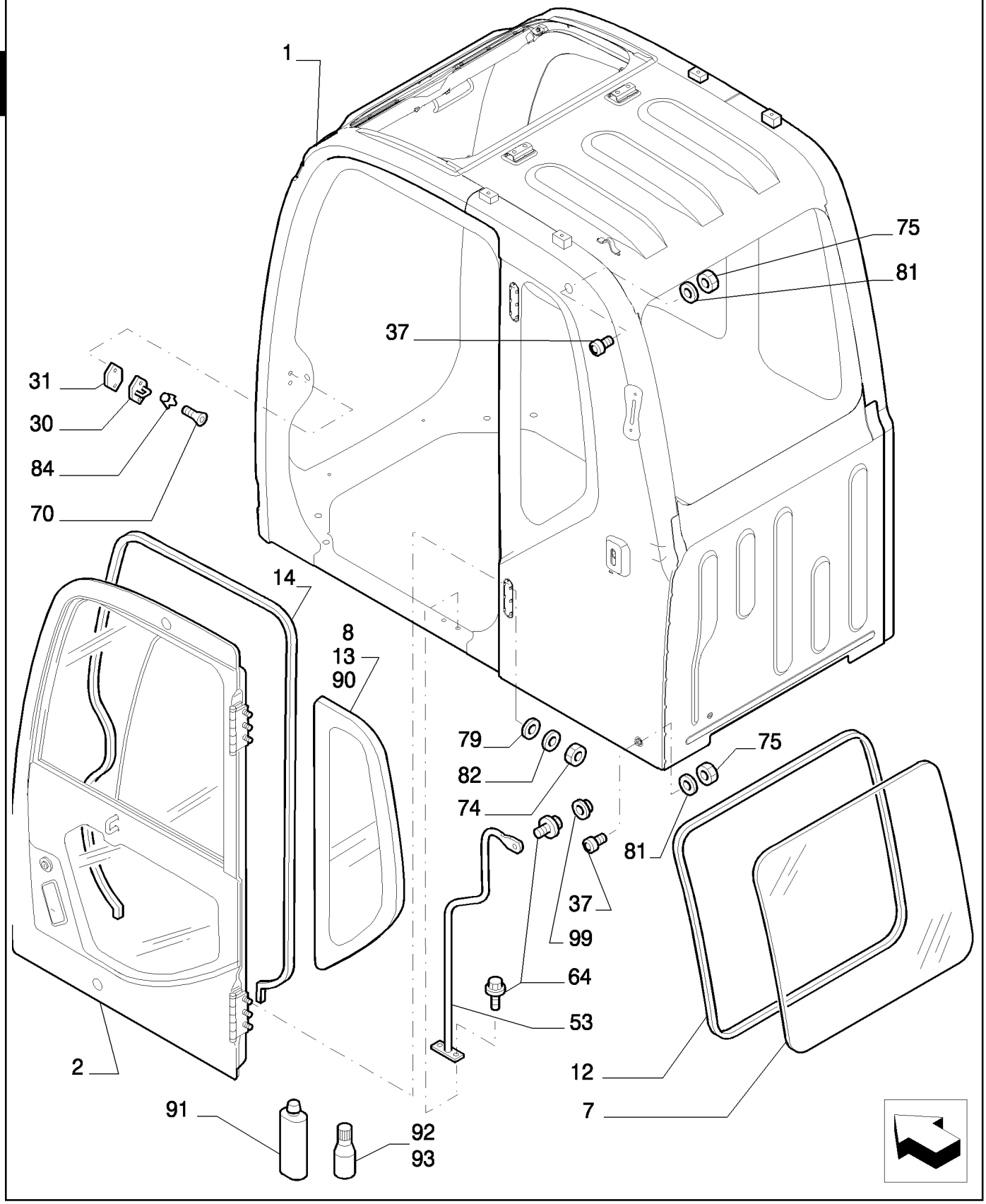

CAB - COMPONENTS

REF	FN	PART NUMBER	YR/SN	QTY	DESCRIPTION
1		87579080		1	CHASSI
2	1	87333284		1	PORTA
7		87333297		1	VIDRO
8		87333298		1	VIDRO
12		87333303		1	PERFILADO DE BORRACHA
13		87538371		1	JUNTA
14		87333304		1	PERFILADO DE BORRACHA
30		72206136		1	GANCHO
31		72951580		1	ASSENTO ESFÉRICO
37		87333291		2	BATENTE
53		YN02C03321P1		1	MANILHA
64		72954860		3	PARAFUSO
70		72954902		2	PARAFUSO
74		72954869		6	PORCA
75		72951660		2	PORCA
79		72954903		6	ARRUELA PLANA
81		72951753		2	ARRUELA PLANA
82		72954906		6	ARRUELA-TRAVA
84		72954371		2	ARRUELA PLANA
90		72958217		1	ANEL DE VEDACAO
91		72958218		1	KIT
92		72958200		1	VERNIZ
93		72958201		1	VERNIZ
99		72954373		1	TAMPA DO RESERVATÓRIO

(1) ASSY SEE PAGE 16-17

CAB ASSY P/N 87578749

E385B

1.250	11	p1	10/07

CAB - COMPONENTS

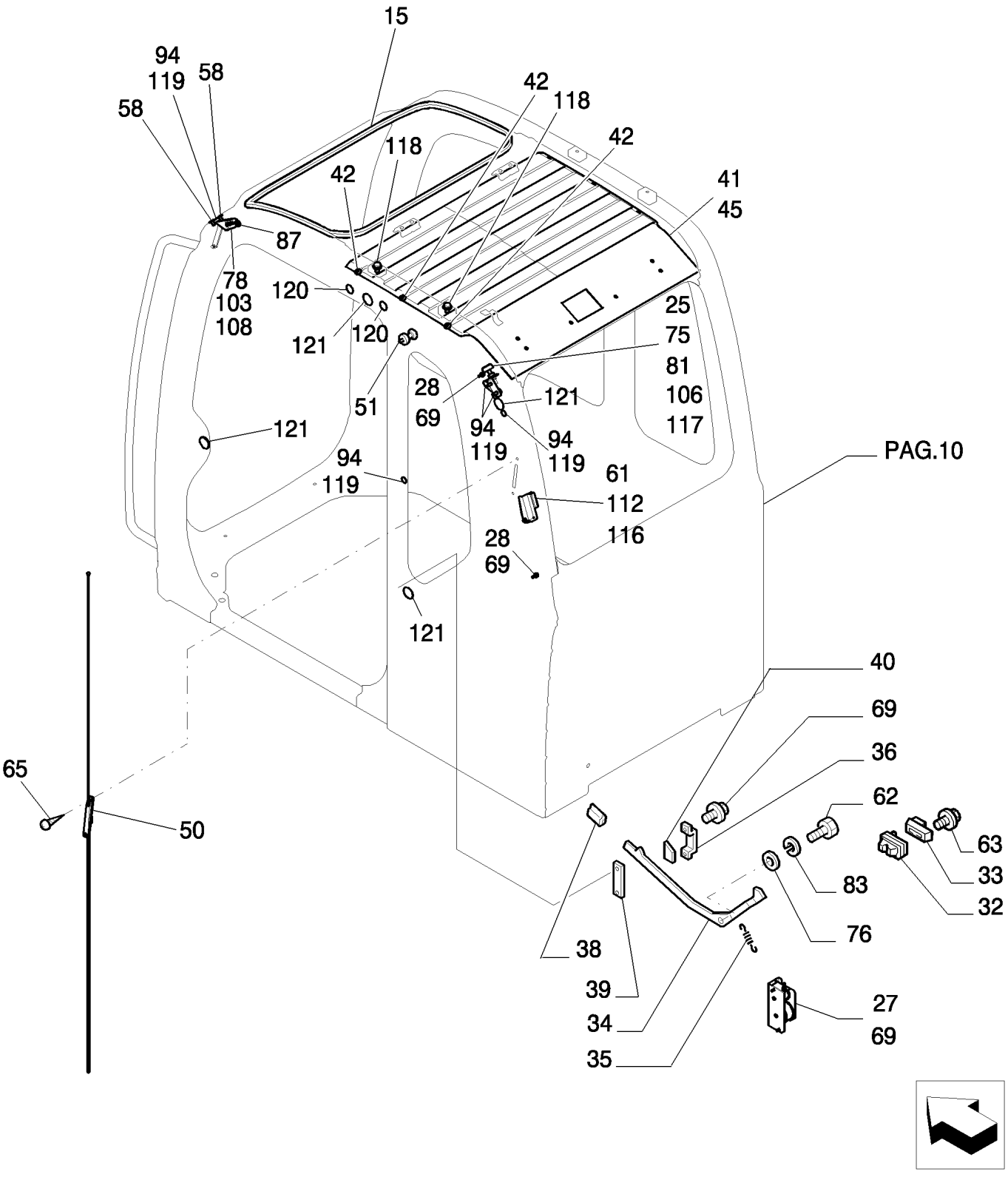

CAB - COMPONENTS

REF	FN	PART NUMBER	YR/SN	QTY	DESCRIPTION
15		YN02C03669P2		1	JUNTA
25		72951573		1	BATENTE
27		YN02C02970F1		1	CABO
28		72958503		2	PRENDEDOR
32		72950134		1	FECHADURA
33		72954362		1	TAMPA
34		87333321		1	ALAVANCA
35		72954370		1	MOLA
36		72954388		1	TAMPA
38		72954386		1	TAMPA
39		72954389		1	ESPAÇADOR
40		72954387		1	ETIQUETA
41		YN02C02941P2		1	CUNHA
42		87333325		3	FIXADOR
45		87333354		6	FIXADOR
50		72150022		1	ANTENA ELÉTRICA
51		72954366		1	GANCHO
58		72954269		2	BUJÃO
61		87333311		1	PARAFUSO
62		72953334		1	PARAFUSO
63		72951633		4	PARAFUSO
65		72954897		2	PARAFUSO
69		72209121		6	PARAFUSO
75		72951660		1	PORCA
76		72950361		1	ARRUELA PLANA
78		72209123		2	ARRUELA PLANA
81		72951753		1	ARRUELA PLANA
83		12581579		1	ARRUELA PLANA, Wave, M7.4
87		87333355		1	CASQUILHO ISOLADOR
94		72151891		5	PLACA
103		YN02C03095P2		1	BATENTE
106		YN02C03075P1		1	PLACA
108		87333574		2	PARAFUSO
112		YN02C03048P2		1	SUPORTE
116		HY25X09017G1		1	ARRUELA PLANA

CAB ASSY P/N 87578749

E385B

1.250	11	p2	10/07

CAB - COMPONENTS

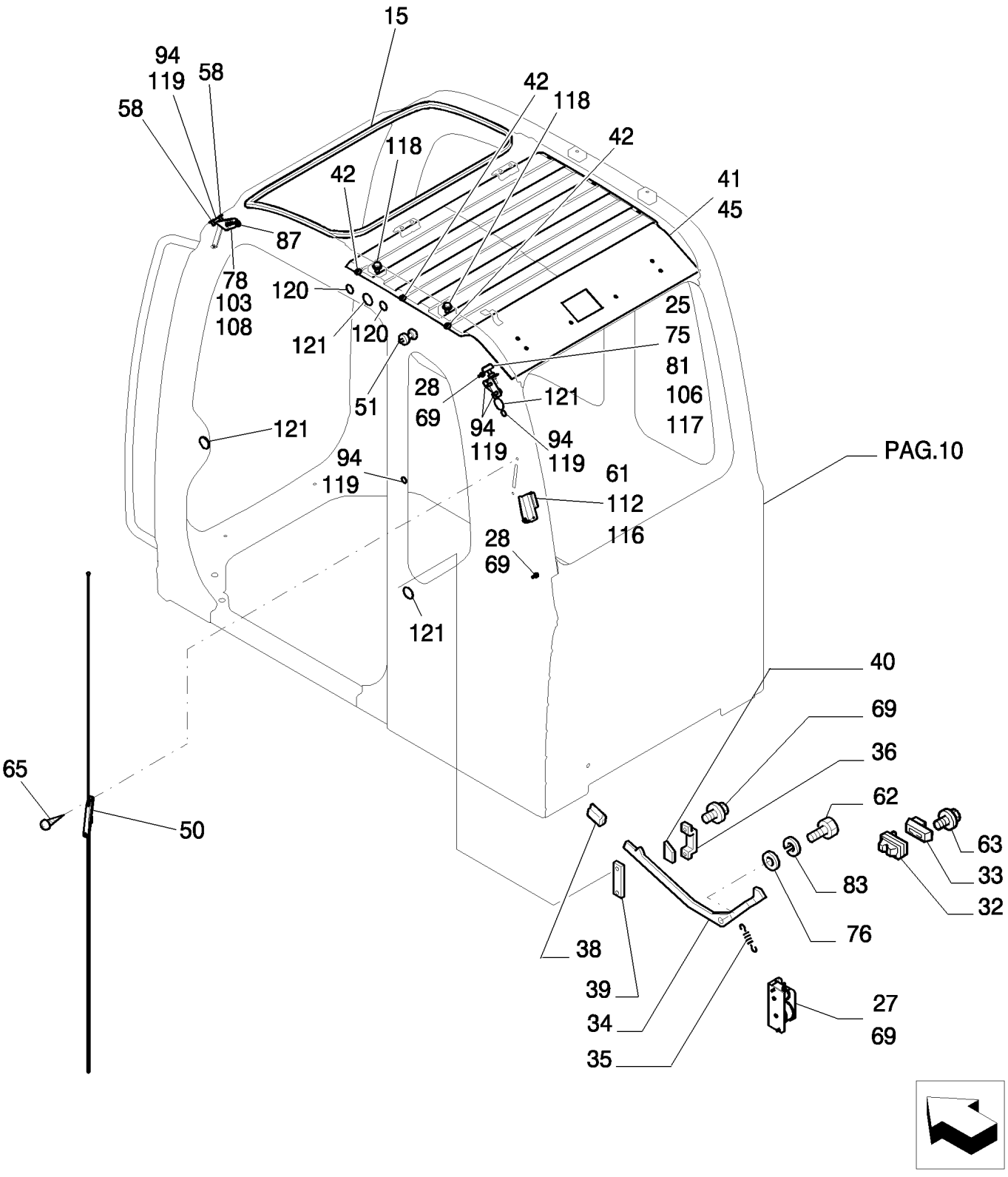

CAB - COMPONENTS

REF	FN	PART NUMBER	YR/SN	QTY	DESCRIPTION
117		ZM27C08025		2	PARAFUSO
118		ZM73C12020		2	PARAFUSO
119		72954380		5	PLACA
120		72954381		2	PLACA
121		72954382		6	PLACA

CAB ASSY P/N 87578749

E385B

1.250	12	p1	10/07

CAB - COMPONENTS

2

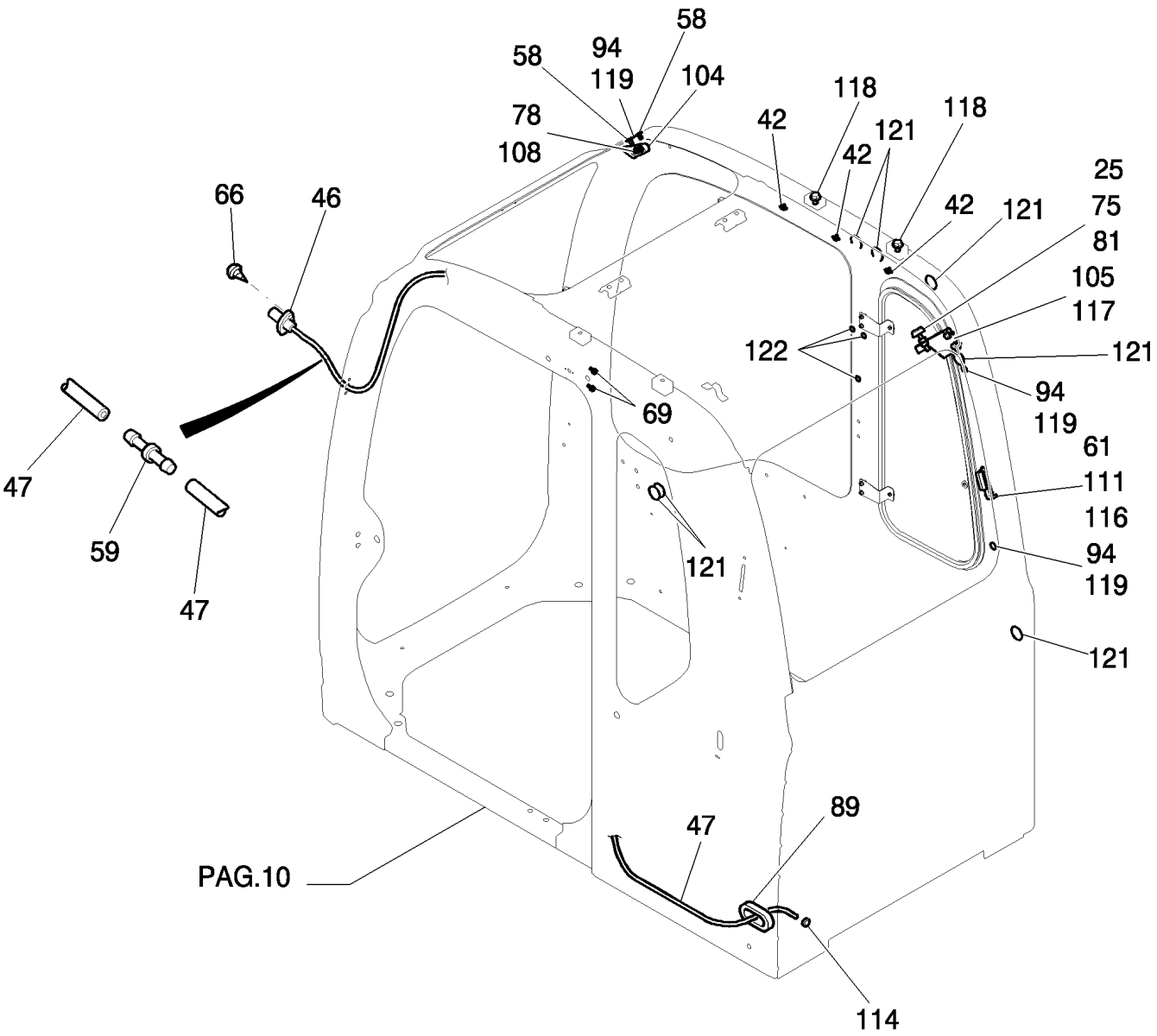

CAB - COMPONENTS

REF	FN	PART NUMBER	YR/SN	QTY	DESCRIPTION
25		72951573		1	BATENTE
42		87333325		3	FIXADOR
46		72206130		1	ARRUELA PLANA
47		72951575		1	MANGUEIRA
58		72954269		2	BUJÃO
59		87333352		1	VALVULA CHECAGEM
61		87333311		1	PARAFUSO
66		72954900		2	PARAFUSO
69		72209121		2	PARAFUSO
75		72951660		1	PORCA
78		72209123		2	ARRUELA PLANA
81		72951753		1	ARRUELA PLANA
89		72954375		1	CASQUILHO ISOLADOR
94		72151891		5	PLACA
104		YN02C03094P2		1	BATENTE
105		YN02C03077P1		1	PLACA
108		87333574		2	PARAFUSO
111		YN02C03047P2		1	SUPORTE
114		YN02C03147P1		1	CINTA DE BORRACHA
116		HY25X09017G1		1	ARRUELA PLANA
117		ZM27C08025		2	PARAFUSO
118		ZM73C12020		2	PARAFUSO
119		72954380		5	PLACA
121		72954382		7	PLACA
122		87333382		3	PLACA

CAB ASSY P/N 87578749

E385B

1.250	13	p1	10/07

CAB - COMPONENTS

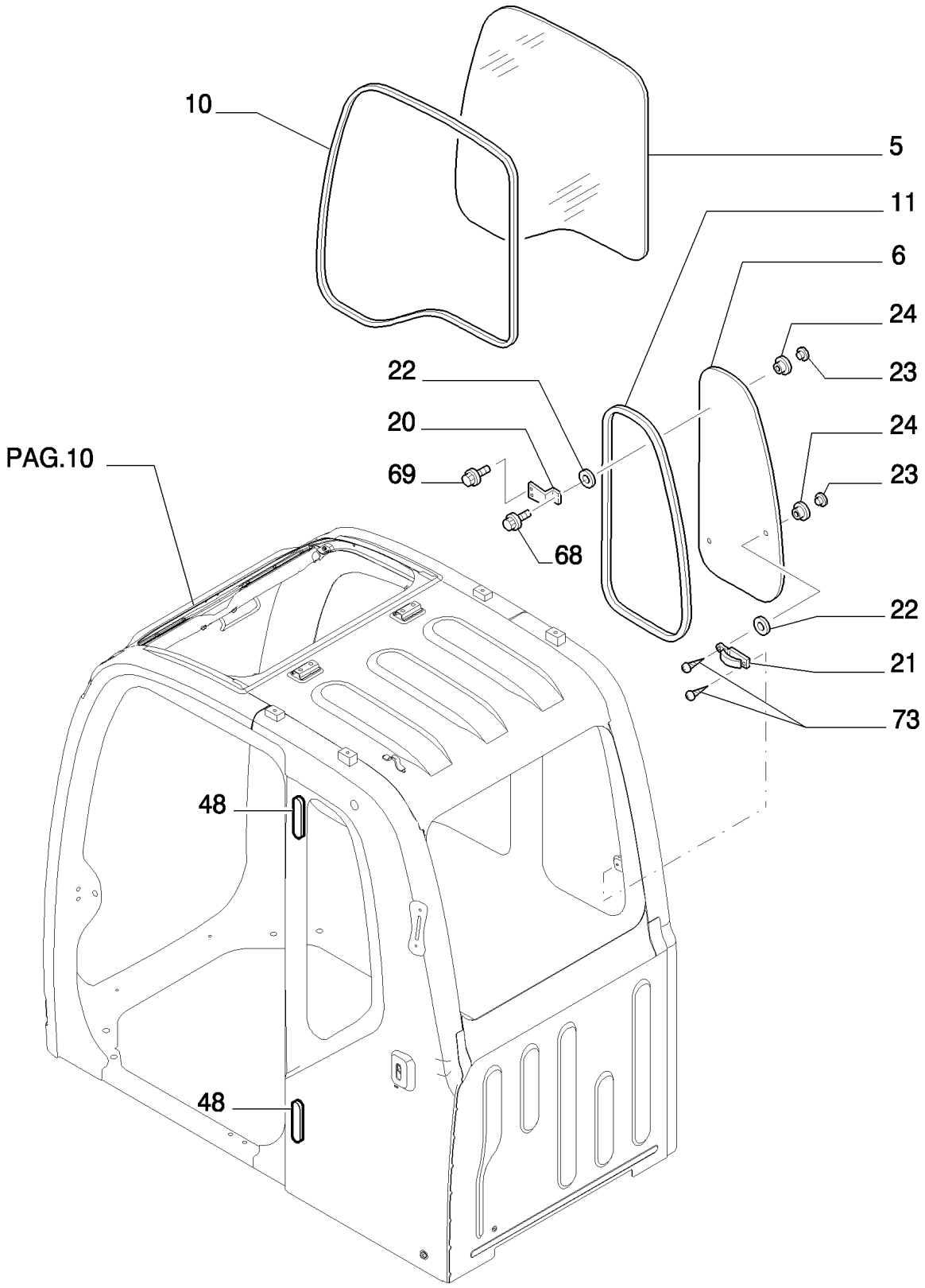

CAB - COMPONENTS

REF	FN	PART NUMBER	YR/SN	QTY	DESCRIPTION
5		87333300		1	VIDRO
6		87333296		1	VIDRO
10		87333305		1	PERFILADO DE BORRACHA
11		87333308		1	ANEL DE VEDACAO
20		87333292		2	PLACA
21		72206126		1	MANILHA
22		87333301		3	ESPAÇADOR
23		72161758		3	PRENDEDOR
24		72161759		3	EMBALAGEM
48		72954365		2	TAMPA
68		87333294		2	PARAFUSO
69		72209121		4	PARAFUSO
73		72954277		3	PARAFUSO

CAB ASSY P/N 87578749

E385B

1.250	14	p1	10/07

CAB - COMPONENTS

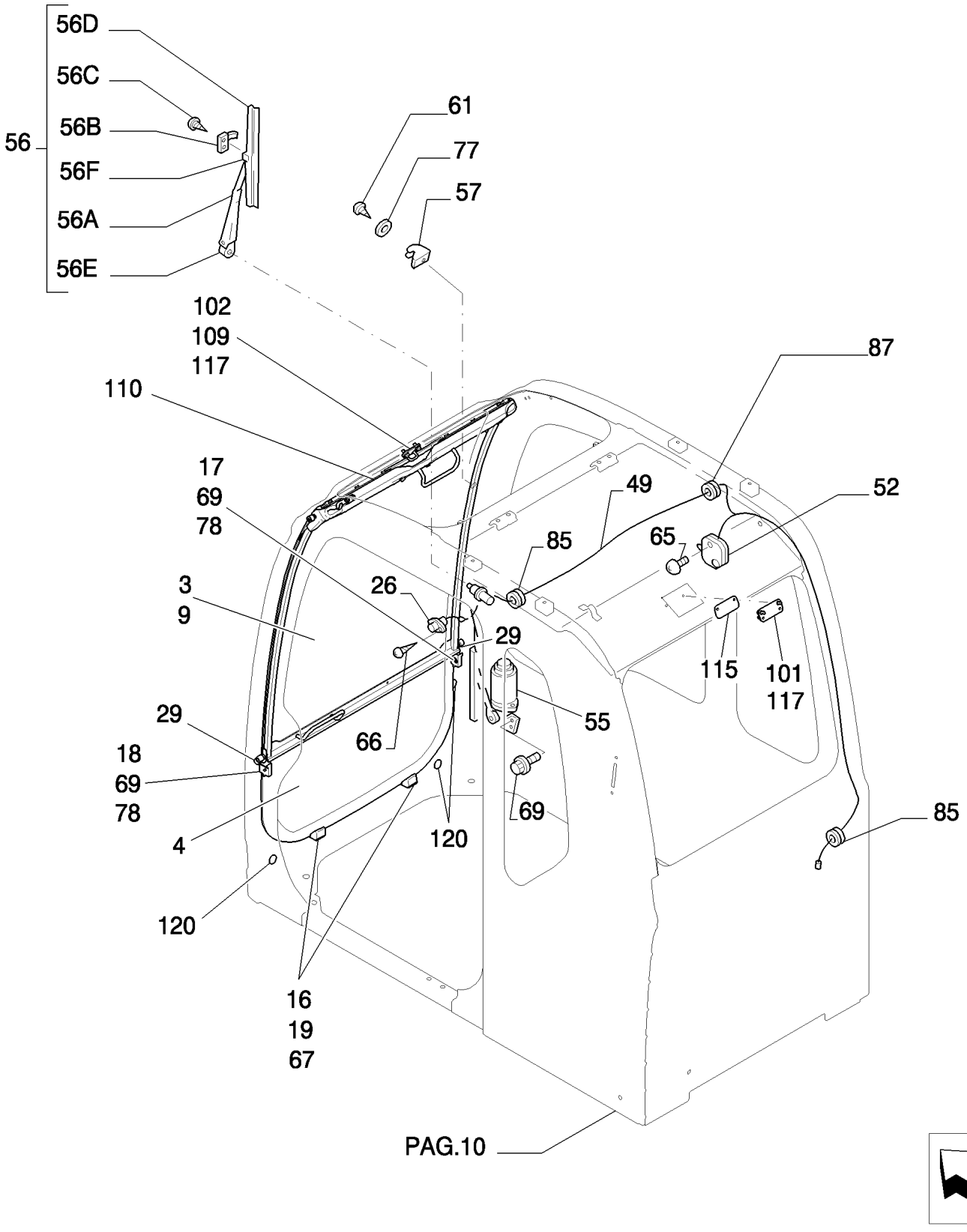

CAB - COMPONENTS

REF	FN	PART NUMBER	YR/SN	QTY	DESCRIPTION
3	1	87579010		1	PORTA
4		YN02C03160P1		1	VIDRO
9		YN02C03006P2		1	JUNTA
16		YN02C03887P1		2	BATENTE
17		YN02C02747P1		1	GUIA
18		YN02C02746P1		1	GUIA
19		YN02C03005P1		4	ESPAÇADOR
26		72950231		1	INTERRUPTOR
29		87333307		2	BATENTE
49		YN02C03098P1		1	CHICOTE
52		72206141		1	LÂMPADA
55		YN53C00012F2		1	LIMPADOR
56		72206129		1	ALAVANCA, - ASSY
56A		72209635		1	BRAÇO LIMP. PÁRA-BRISA
56B		72209636		1	FIXADOR
56C		72209637		2	PARAFUSO
56D		72209638		1	ESCOVA
56E		72219439		1	TAMPA
56F		72219440		1	BLOCO
57		72958501		1	BATENTE
61		87333311		1	PARAFUSO
65		72954897		2	PARAFUSO
66		72954900		2	PARAFUSO
67		ZS41C06020		2	PARAFUSO
69		72209121		6	PARAFUSO
77		87333312		1	ARRUELA PLANA
78		72209123		2	ARRUELA PLANA
85		72954140		2	CASQUILHO ISOLADOR
87		87333355		1	CASQUILHO ISOLADOR
101		YN02C03056P1		1	RESINA
102		YN02C03055P1		1	RESINA
109		YN02C03039P1		1	ESPAÇADOR
110		2420R327D7		1	ANEL
115		YN02C03040P1		1	ESPAÇADOR

(1) ASSY SEE PAGE 15

CAB ASSY P/N 87578749

E385B

CAB - COMPONENTS

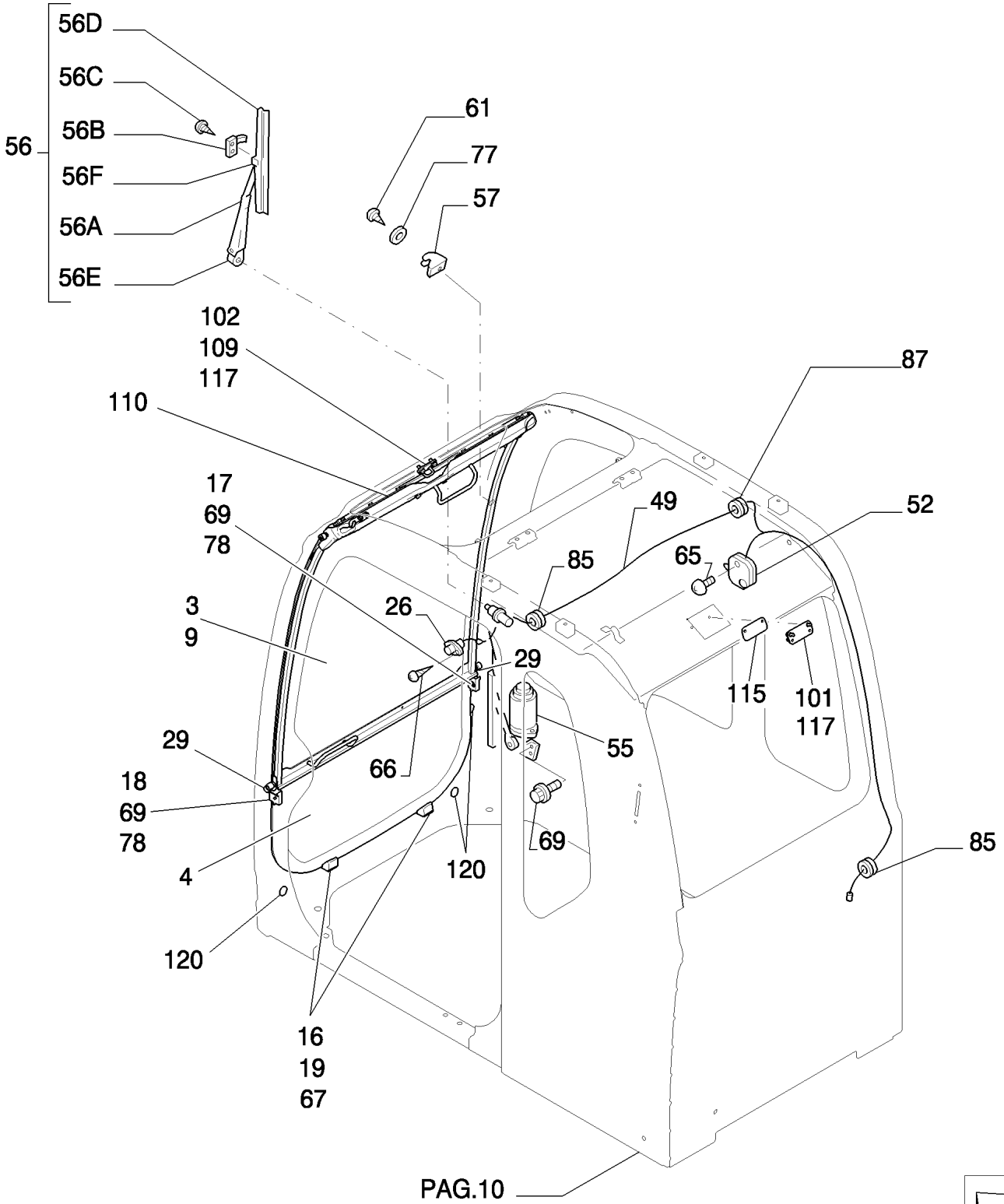

CAB - COMPONENTS

REF	FN	PART NUMBER	YR/SN	QTY	DESCRIPTION
117		ZM27C08025		4	PARAFUSO
120		72954381		6	PLACA

1.250	15	p1	10/07

CAB - COMPONENTS

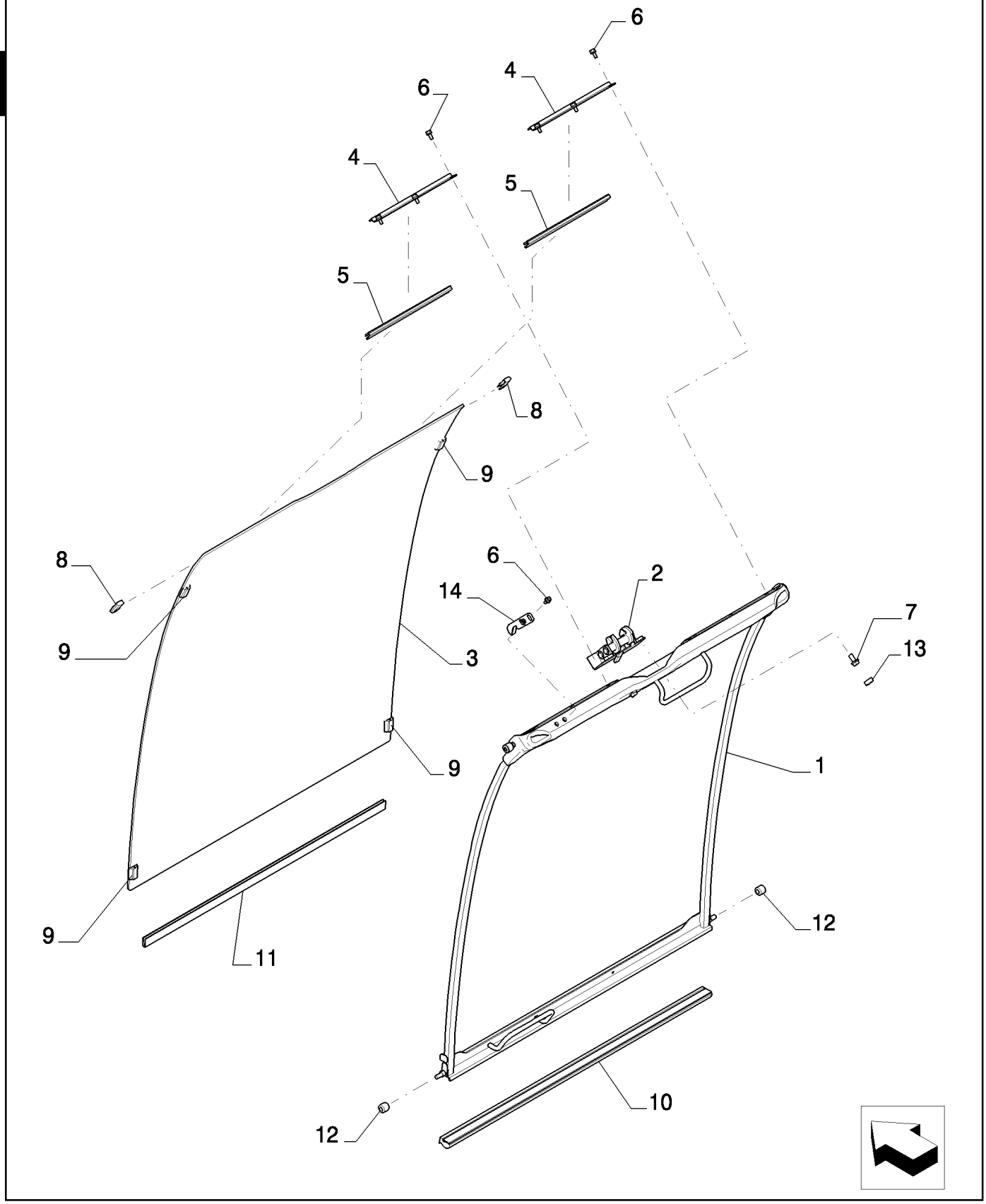

CAB - COMPONENTS

REF	FN	PART NUMBER	YR/SN	QTY	DESCRIPTION
1		YN50C01209P1		1	CHASSI
2		YN50C01189P1		1	FECHADURA
3		YN50C01173P1		1	VIDRO
4		YN50C01170P1		2	PLACA
5		YN50C01171P1		2	CINTA DE BORRACHA
6		72209121		8	PARAFUSO
7		ZM73C08020		2	PARAFUSO
8		YN50C01172P1		2	CINTA DE BORRACHA
9		72209112		4	JUNTA
10		YN50C01194P1		1	ANEL DE VEDACAO
11		72209111		1	JUNTA
12		YT50C01012P1		4	ROLO
13		72950352		2	TAMPA DO RESERVATÓRIO
14		YN50C01207P1		1	PLACA

WINDOW ASSY P/N 87579010

CAB - COMPONENTS

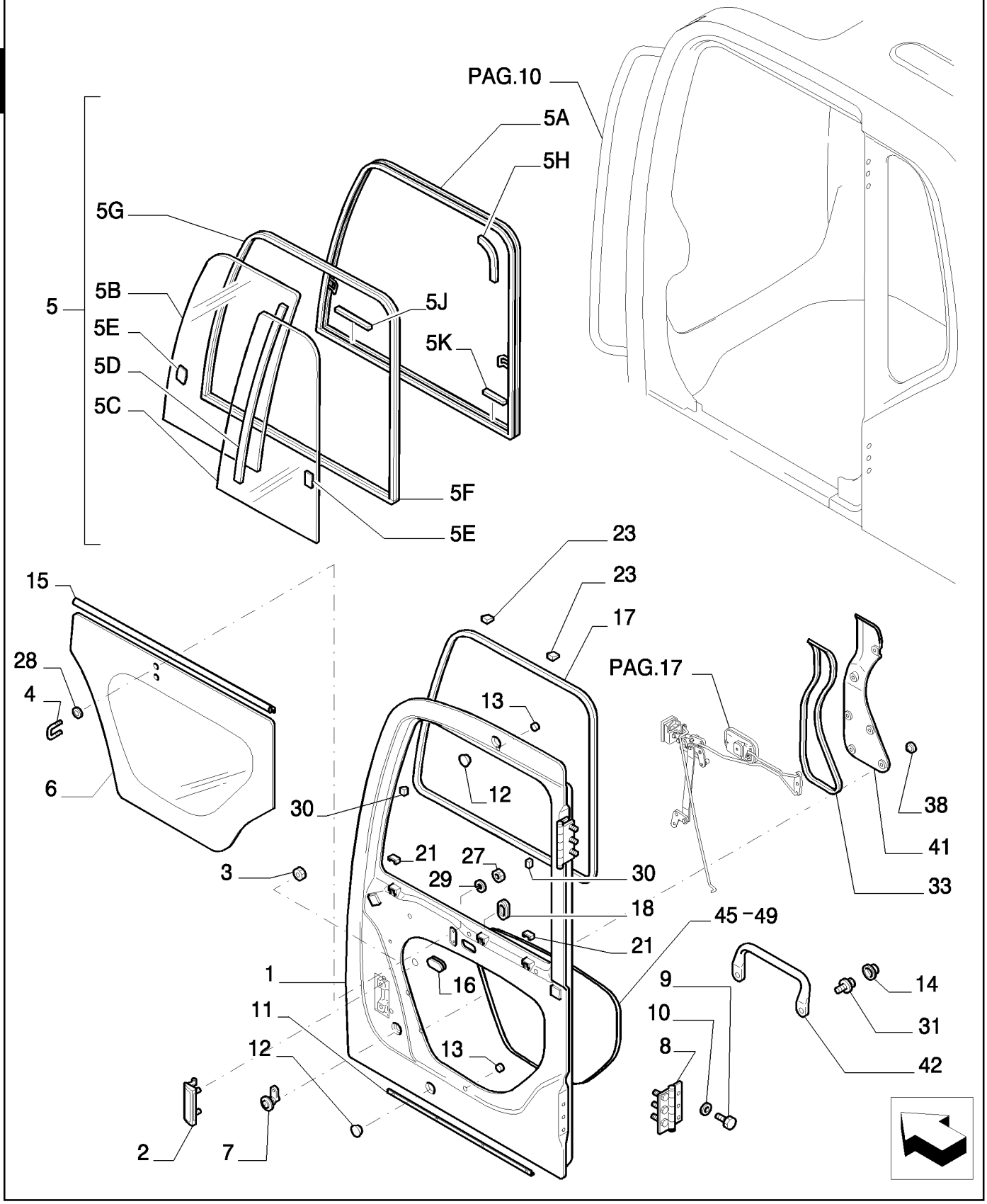

CAB - COMPONENTS

REF	FN	PART NUMBER	YR/SN	QTY	DESCRIPTION
1		87333364		1	PAINEL
2		72206122		1	MANILHA
3		72954200		2	PORCA
4		87333365		1	GANCHO
5		87333366		1	JOGO DE PEÇAS, - ASSY
5A		87333367		1	CHASSI
5B		87333368		1	VIDRO
5C		87333369		1	VIDRO
5D		87333370		1	ANEL DE VEDACAO
5E		87333371		2	FECHADURA
5F		87333372		1	ANEL DE VEDACAO
5G		87333373		1	ANEL DE VEDACAO
5H		87333374		1	BATENTE
5J		87333375		1	BATENTE
5K		87333376		1	BATENTE
6		87333378		1	VIDRO
7		87577977		1	FECHADURA
8		87333380		2	DOBRADIÇA
9		72954875		6	PARAFUSO
10		72954903		6	ARRUELA PLANA
11		87333381		1	ANEL DE VEDACAO
12		72954726		2	PLACA
13		87333382		2	PLACA
14		72954373		2	TAMPA DO RESERVATÓRIO
15		87333383		1	REVESTIMENTO
16		72280882		1	PLACA
17		72206139		1	JUNTA
18		72954719		1	CASQUILHO ISOLADOR
21		87333384		2	PERFILADO DE BORRACHA
23		87333385		2	PERFILADO DE BORRACHA
27		72210038		2	PORCA
28		72954727		2	ARRUELA PLANA
29		12581579		2	ARRUELA PLANA, Wave, M7.4
30		87333386		2	PERFILADO DE BORRACHA
31		72954860		2	PARAFUSO

DOOR ASSY P/N 87333284

E385B

CAB - COMPONENTS

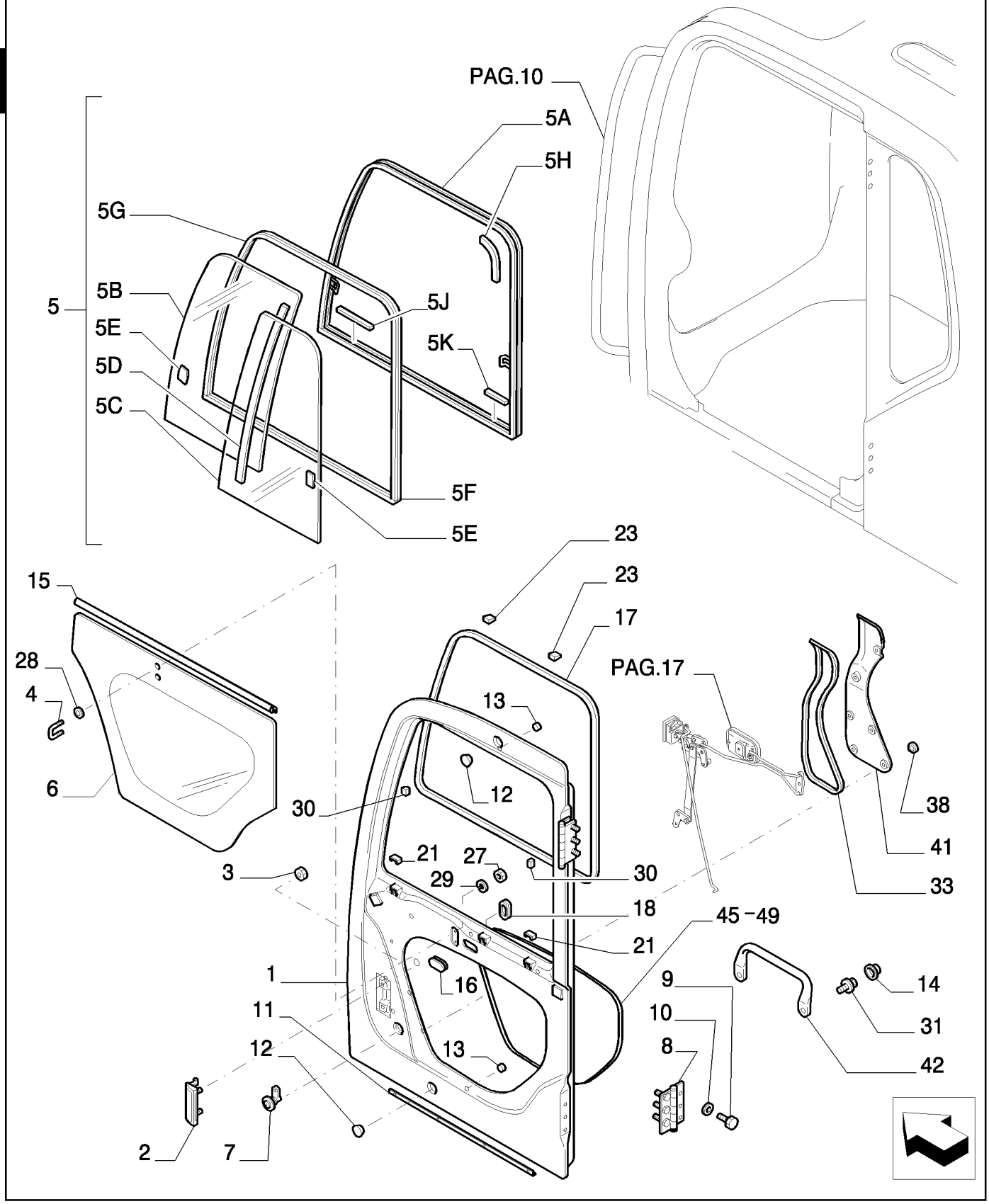

CAB - COMPONENTS

REF	FN	PART NUMBER	YR/SN	QTY	DESCRIPTION
33		87333387		1	PERFILADO DE BORRACHA
38		72954391		6	REBITE
41		87333388		1	TAMPA
42		87333389		1	MANILHA
45		87333390		1	ANEL DE VEDACAO
49		87333391		1	REVESTIMENTO

1.250	17	p1	10/07

CAB - COMPONENTS

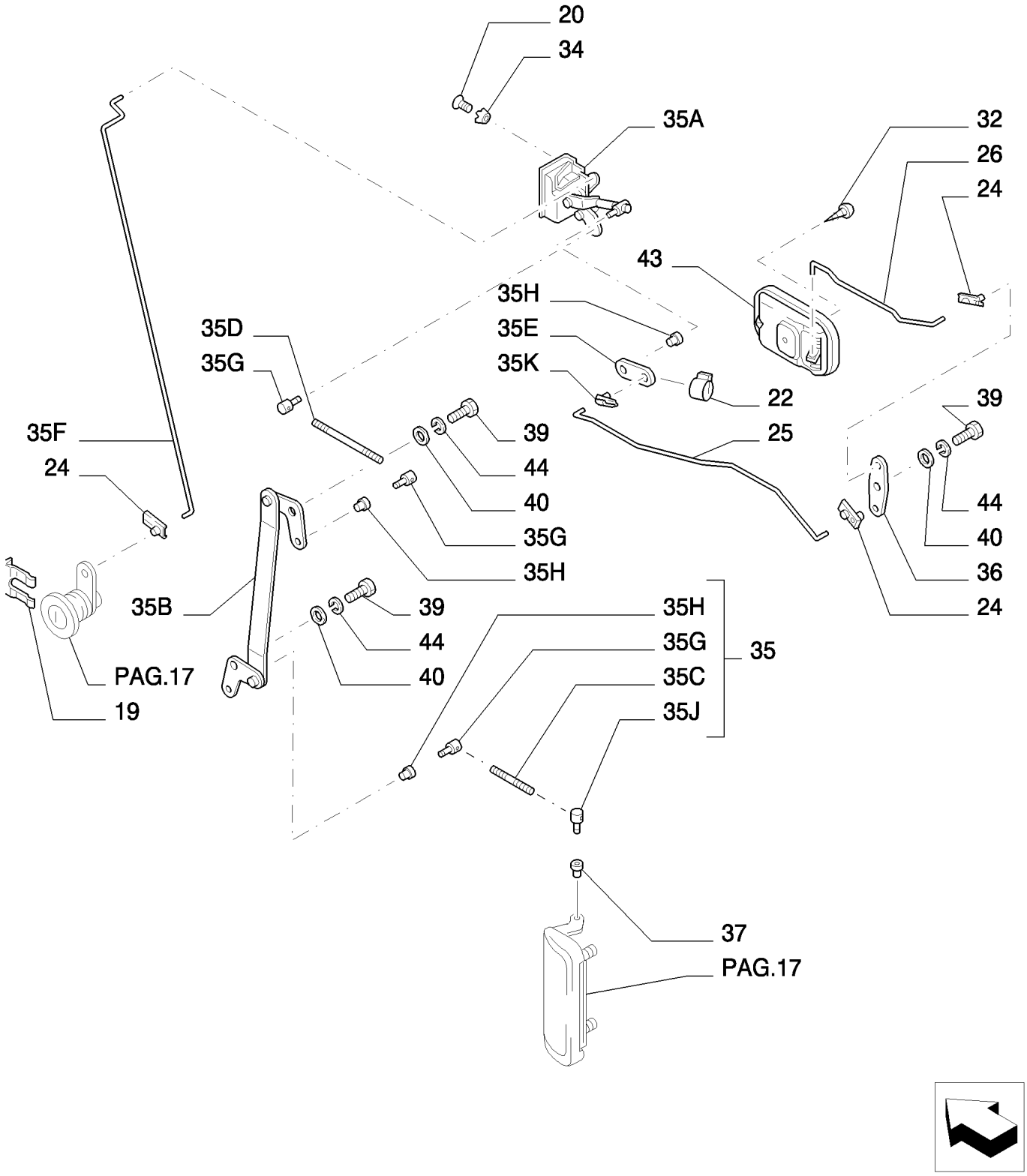

CAB - COMPONENTS

REF	FN	PART NUMBER	YR/SN	QTY	DESCRIPTION
19		72206140		1	FIXADOR
20		72954901		3	PARAFUSO
22		87333392		2	PERFILADO DE BORRACHA
24		87333393		3	SUPORTE
25		87333394		1	HASTE
26		87333395		1	HASTE
32		72954277		1	PARAFUSO
34		72954372		3	ARRUELA PLANA
35		87333396		1	ELO, - ASSY
35A		72206397		1	FIXADOR
35B		87333397		1	ELO
35C		87333398		1	HASTE
35D		87333399		1	HASTE
35E		87333400		1	PLACA
35F		87333401		1	HASTE
35G		72958211		3	PINO
35H		87333402		3	SUPORTE
35J		72958213		1	PINO
35K		87333393		1	SUPORTE
36		87333403		1	PLACA
37		72954715		1	SUPORTE
39		72209120		3	PARAFUSO
40		87333404		3	ARRUELA PLANA
43		72206125		1	MANILHA
44		14447124		3	ARRUELA PLANA

DOOR ASSY P/N 87333284

1.250	18	p1	10/07

CAB - COMPONENTS

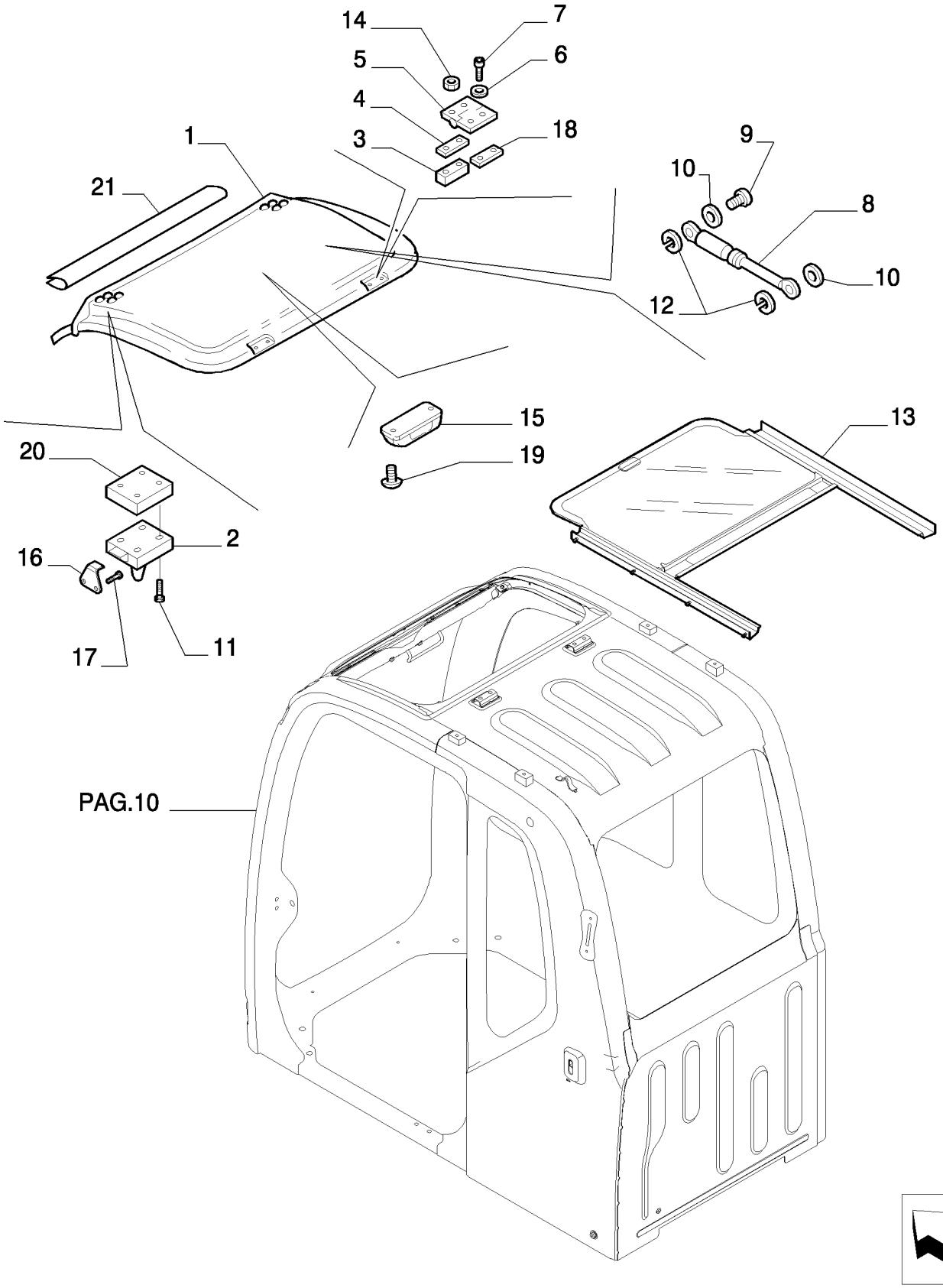

CAB - COMPONENTS

REF	FN	PART NUMBER	YR/SN	QTY	DESCRIPTION
1		YN02C03650P1		1	TETO RÍGIDO
2		YN02C03810F1		2	FECHADURA
3		YN02C02705P1		2	PLACA
4		87333293		2	PERFILADO DE BORRACHA
5		YN02C03194P1		2	DOBRADIÇA
6		72209113		4	ARRUELA PLANA
7		72951685		4	PARAFUSO
8		72950131		2	MOLA
9		87336573		2	PINO
10		72954404		4	ARRUELA PLANA
11		YN02C03767P1		8	BUJÃO
12		72209644		4	ANEL "O"
13		87579027		1	PÁRA-SOL
14		ZM73C08025		4	PARAFUSO
15		YN02C02967P1		1	MANILHA
16		YN02C03187P2		2	PLACA
17		ZM73C06016		4	PARAFUSO
18		YN02C03641P1		2	PLACA
19		YN02C03766P1		2	BUJÃO
20		YN02C03656P1		2	ESPAÇADOR

ROOF WINDOW ASSY P/N 87578750

1.270	01	p1	06/08

FLOOR-CAB

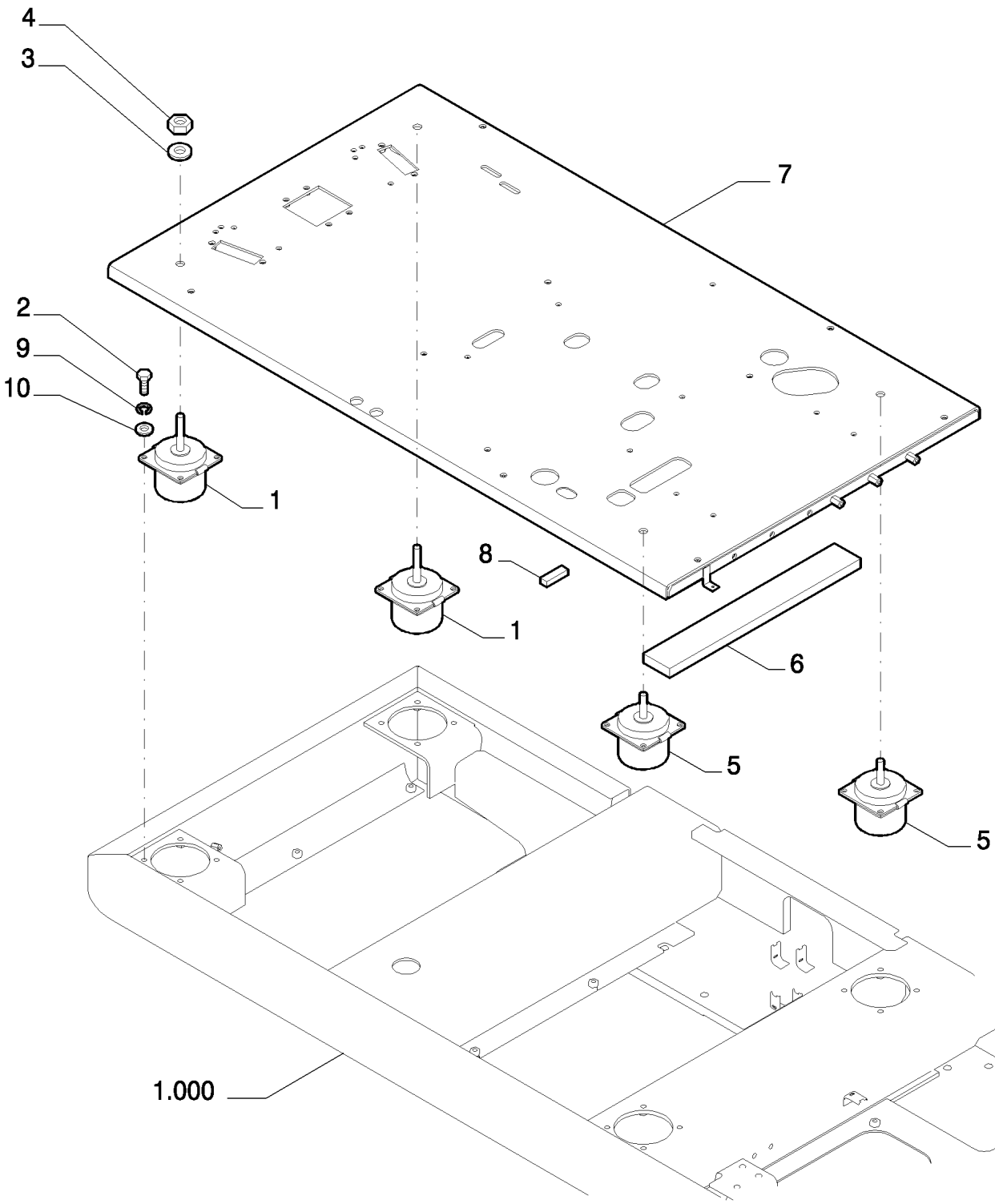

FLOOR-CAB

REF	FN	PART NUMBER	YR/SN	QTY	DESCRIPTION
1		87520306		2	FIXADOR
2		11106634		16	PARAFUSO, Hex, M10 x 35, 10.9, Full Thd
3		71405003		4	ARRUELA PLANA
4		12163321		4	PORCA, M16, Cl 10
5		{87520307}		2	
6		{87520314}		1	
7		87524752		1	PLATAFORMA
8		{87520418}		1	
9		10516874		16	ARRUELA-TRAVA
10		14496631		16	ARRUELA PLANA, M10 x 21 x 2

1.270	02	p1	10/07

FLOOR-CAB

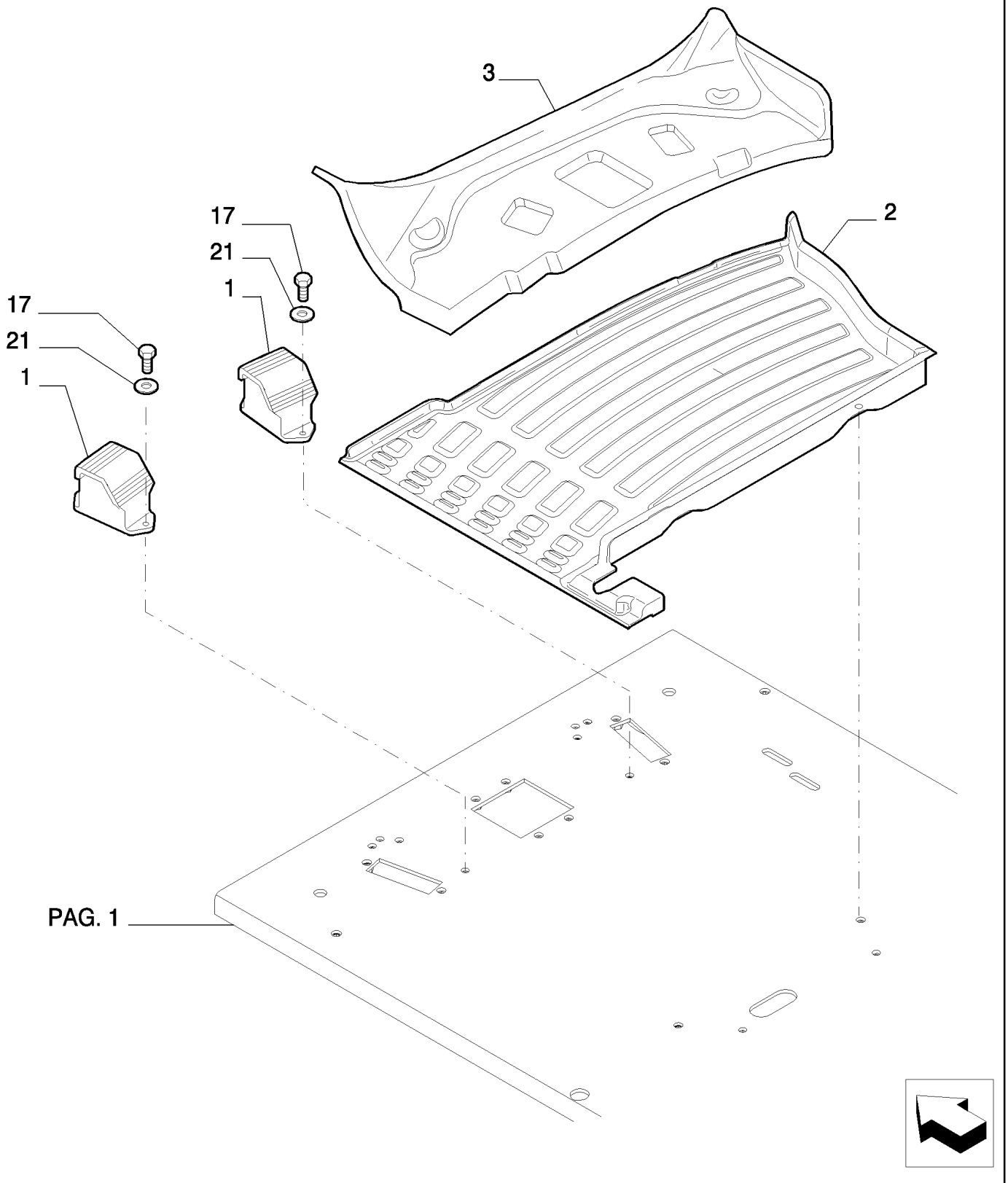

FLOOR-CAB

REF	FN	PART NUMBER	YR/SN	QTY	DESCRIPTION
1		87521852		2	SUPORTE
2		87521854		1	ESTRIBO
3		87524286		1	ESTRIBO
17		16043634		4	PARAFUSO, Hex, M8 x 25, 10.9, Full Thd
21		14496531		4	ARRUELA PLANA, M8 x 17 x 1.6

1.280	01	p1	10/07

RADIO

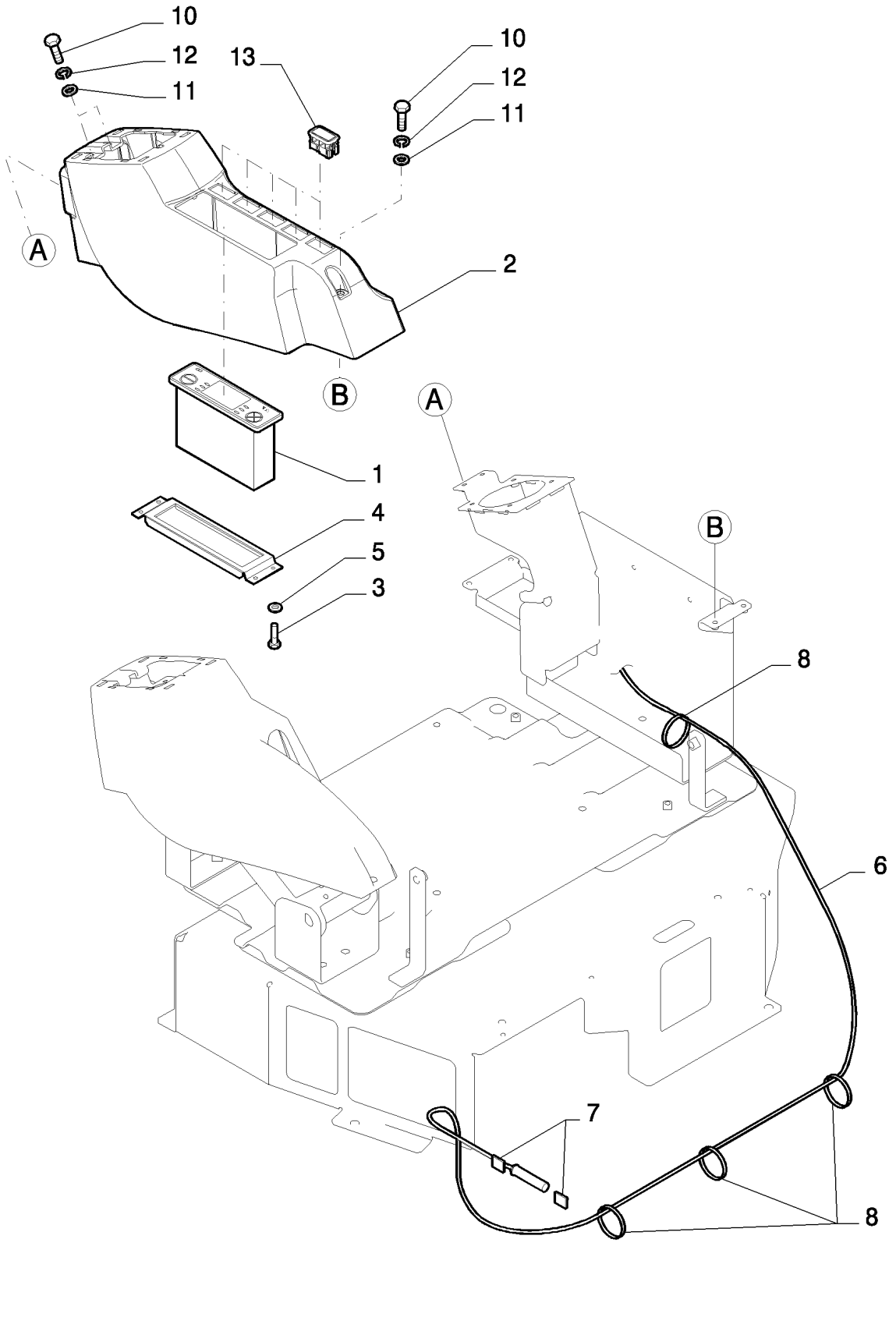

RADIO

REF	FN	PART NUMBER	YR/SN	QTY	DESCRIPTION
1		72116142		1	RÁDIO
2		87521855		1	PROTEÇÃO
3		87524808		4	PARAFUSO
4		87525185		1	SUPORTE
5		10519301		4	ARRUELA PLANA, M5 x 9.55 x 1
6		72203961		1	CABO ELÉTRICO
7		71451259		2	ESTRIBO DE FIXAÇÃO
8		4982514		4	TIRA DE CABO
10		10902234		3	PARAFUSO, Hex, M6 x 16, 10.9, Full Thd
11		14496431		3	ARRUELA PLANA
12		10516474		3	ARRUELA-TRAVA
13		87527533		5	BUJÃO

1.295	01	p1	12/07

AIR CONDITIONING

2

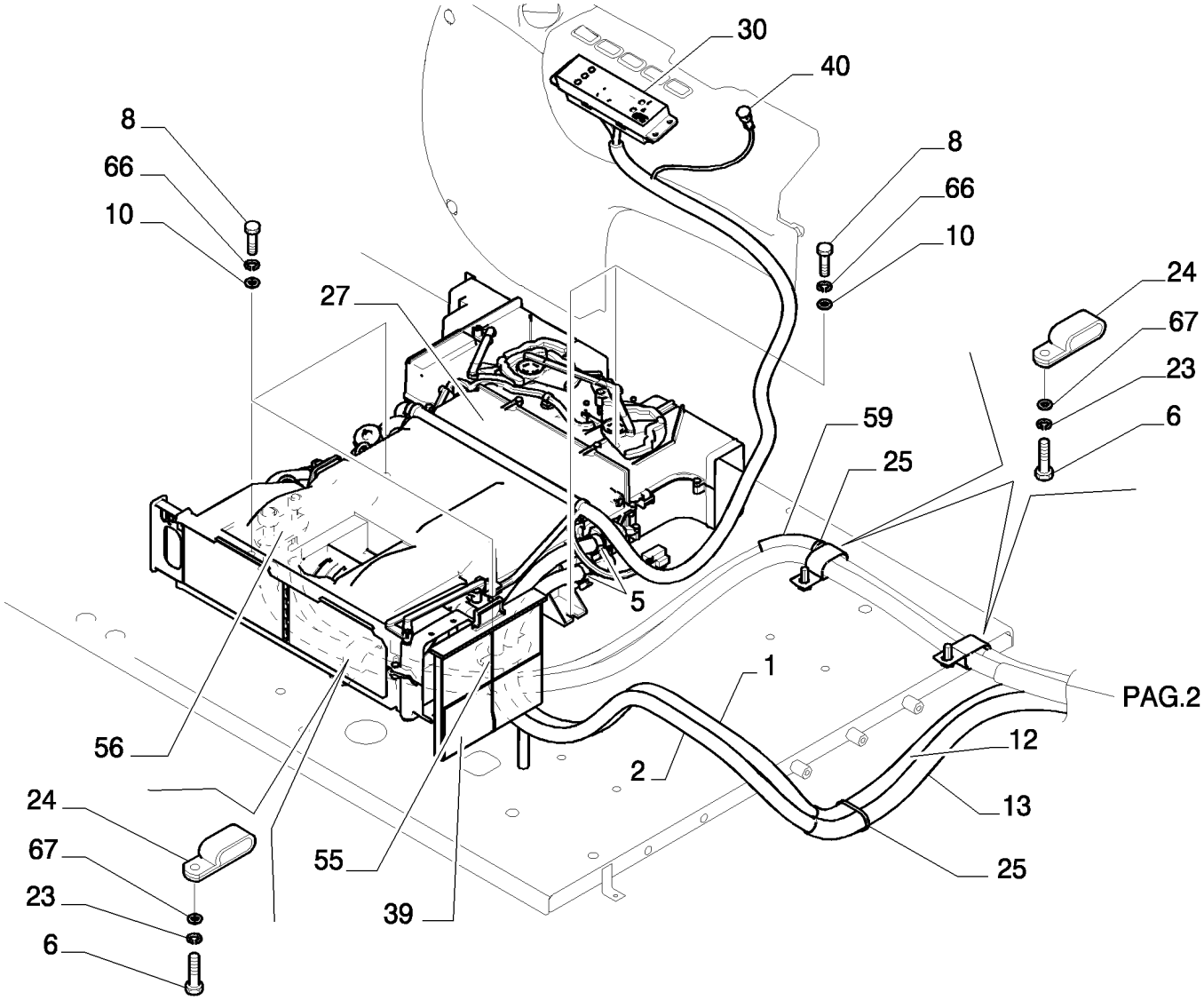

AIR CONDITIONING

REF	FN	PART NUMBER	YR/SN	QTY	DESCRIPTION
1		72953923		1	TUBO FLEXÍVEL
2		72214363		1	TUBO FLEXÍVEL
5		422050500		4	PRENDEDOR
6		11106234		7	PARAFUSO, Hex, M10 x 25, 10.9, Full Thd
8		16043434		5	PARAFUSO, Hex, M8 x 20, 10.9, Full Thd
10		14496531		5	ARRUELA PLANA, M8 x 17 x 1.6
12		{87602457}		1	
13		72954127		1	TUBO
24		71415385		3	FIXADOR
25		4982514		2	TIRA DE CABO
27	1	{87704715}		1	
30		87700637		1	PAINEL
39		87529500		1	FILTRO, CABINA
40		87529502		1	SENSOR
55		87529504		1	JUNTA
56		87575957		1	JUNTA
59		87529521		1	TUBO FLEXÍVEL

(1) ASSY SEE PAGE 4

1.295	02	p1	12/07

AIR CONDITIONING

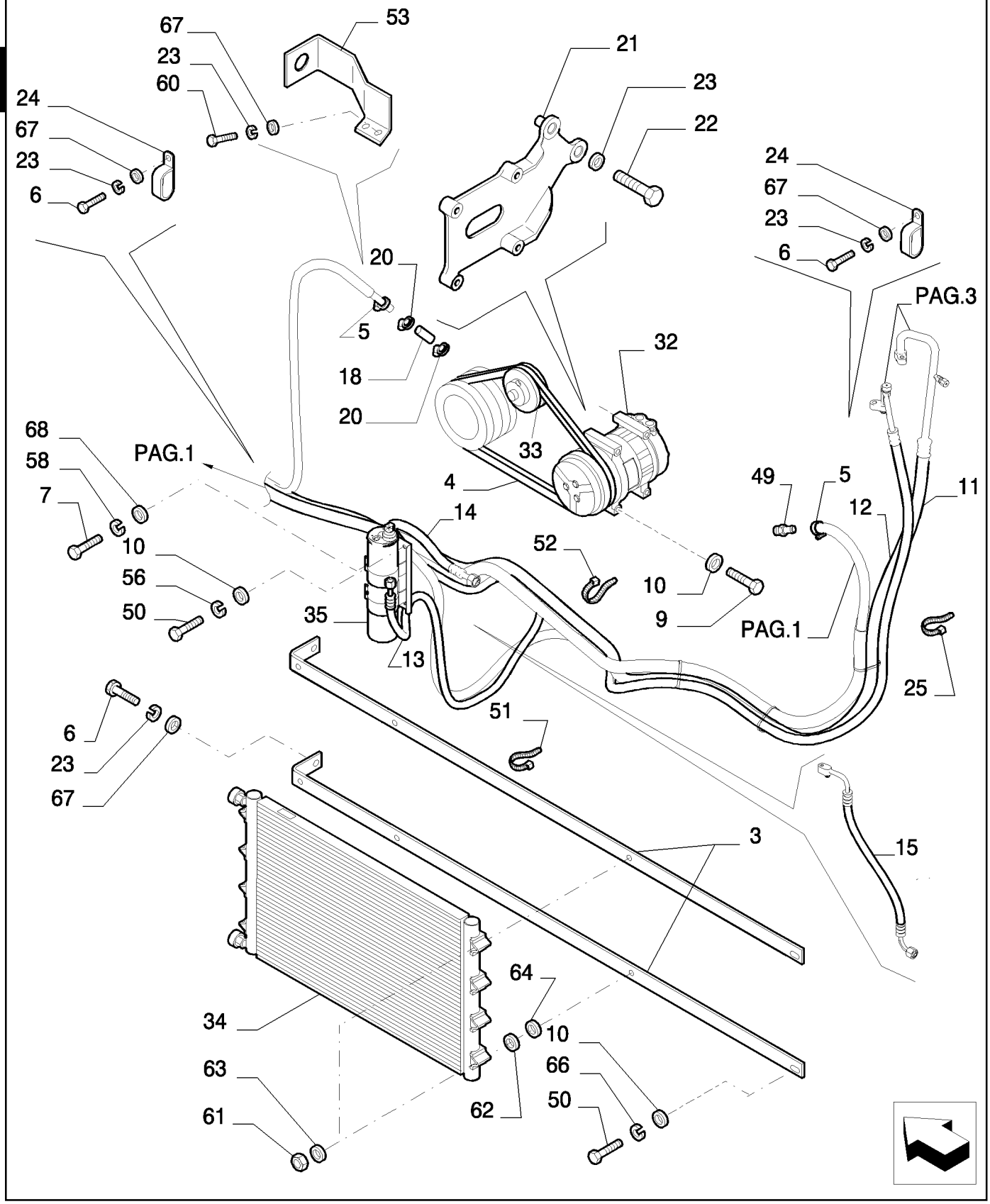

AIR CONDITIONING

REF	FN	PART NUMBER	YR/SN	QTY	DESCRIPTION
3		{87736583}		2	
4		{87602335}		1	
5		422050500		2	PRENDEDOR
6		11106234		4	PARAFUSO, Hex, M10 x 25, 10.9, Full Thd
7		10902434		2	PARAFUSO, Hex, M6 x 20, 10.9, Full Thd
8		16043434		3	PARAFUSO, Hex, M8 x 20, 10.9, Full Thd
9		16046134		4	PARAFUSO, Hex, M8 x 100, 10.9
10		14496531		9	ARRUELA PLANA, M8 x 17 x 1.6
11		72964098		1	TUBO
14		72206993		1	CAPA FLEXÍVEL
15		87529445		1	TUBO FLEXÍVEL
18		{87602538}		1	
20		{42205500}		2	
21		{87602541}		1	
23		72951499		12	FIXADOR
25		4982514		12	TIRA DE CABO
32		72203934		1	COMPRESSOR DE AR
33		{87699954}		1	
34		87575958		1	CONDENSADOR
35	1	{87602762}		1	
49		{87602773}		1	
50		16043634		4	PARAFUSO, Hex, M8 x 25, 10.9, Full Thd
51		87526680		1	ESTRIBO DE FIXAÇÃO
52		71425615		2	FIXADOR
53		{87602815}		1	
58		14496431		2	ARRUELA PLANA
60		11106034		2	PARAFUSO, Hex, M10 x 20, 10.9, Full Thd
61		15896221		4	PORCA, M6, Cl 10
62		12647004		4	ARRUELA PLANA, M8 x 25 x 2.5
63		10523404		4	ARRUELA PLANA, M6 x 18 x 2
64		{87720558}		4	
66		10516674		9	ARRUELA-TRAVA, 5/16"
67		10516874		9	ARRUELA-TRAVA
68		10516474		2	ARRUELA-TRAVA

(1) ASSY SEE PAGE 3

AIR CONDITIONING

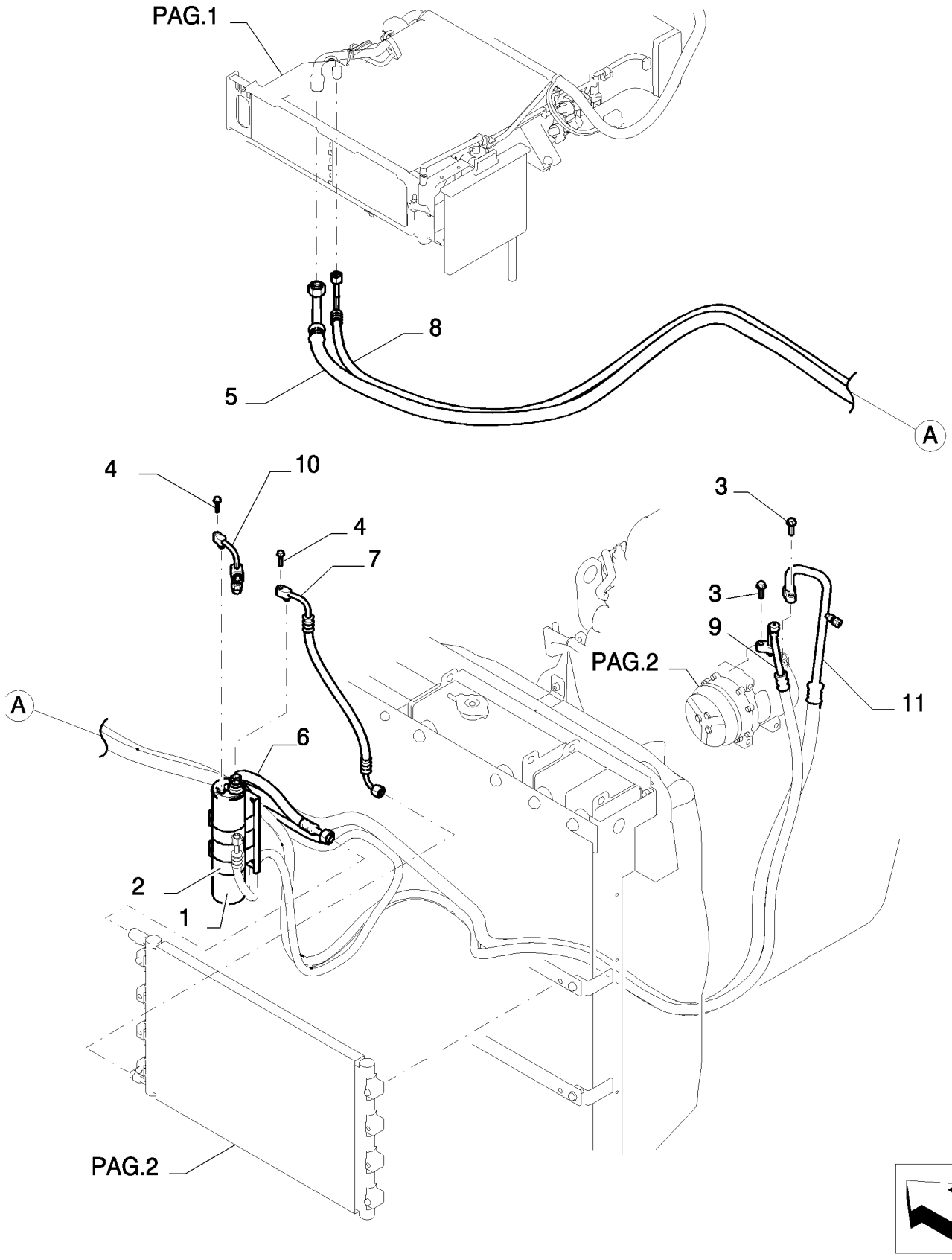

AIR CONDITIONING

REF	FN	PART NUMBER	YR/SN	QTY	DESCRIPTION
1		87529489		1	DESIDRATADOR
2		87529490		1	SUPORTE
3		72203915		2	PARAFUSO
4		72203912		2	PARAFUSO
5		{87602763}		1	
6		{87602764}		1	
7		{87602765}		1	
8		{87602766}		1	
9		87602767		1	TUBO RÍGIDO
10		87532858		1	TUBO RÍGIDO
11		{87602768}		1	

AIR CONDITIONING

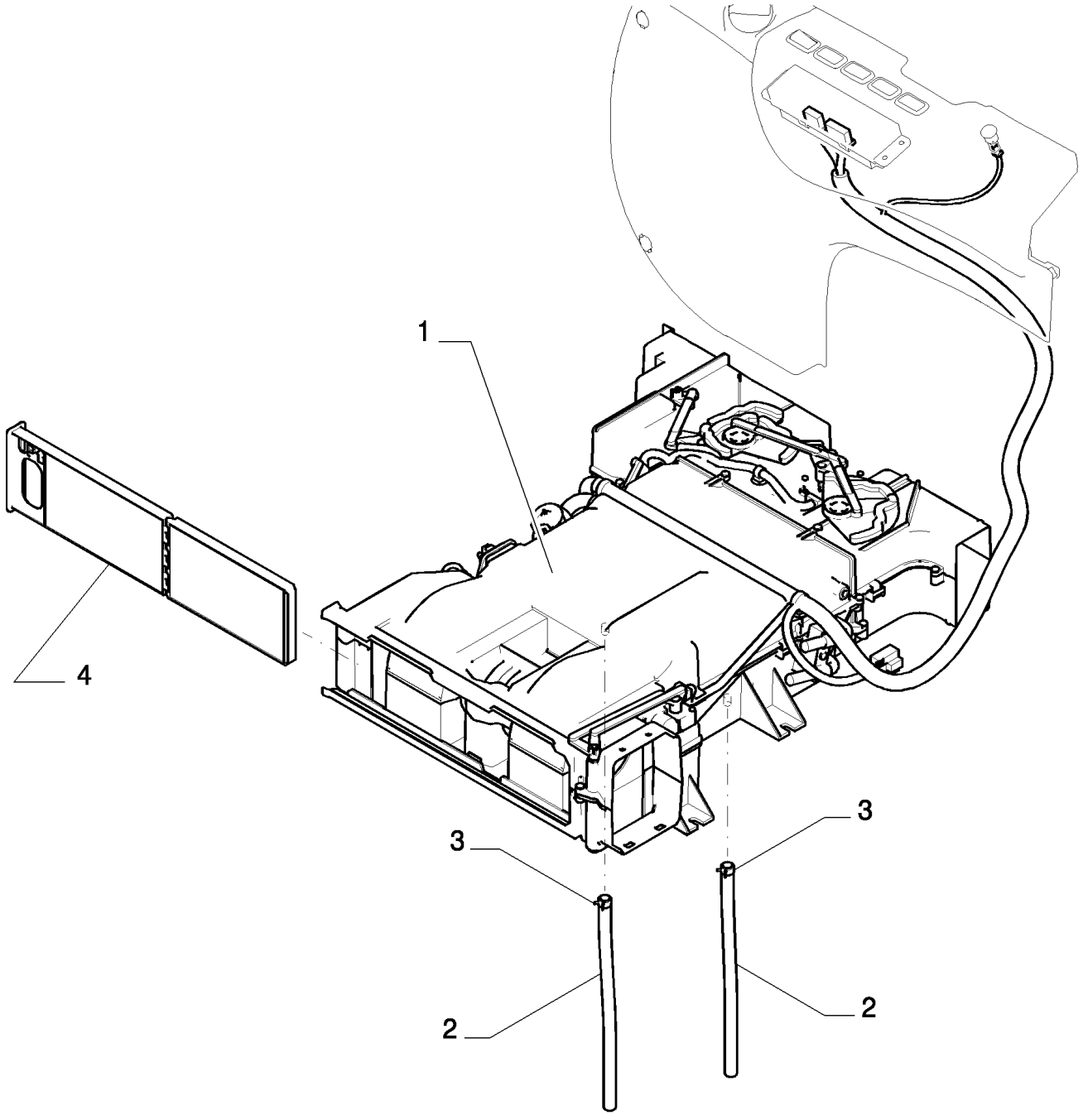

AIR CONDITIONING

REF	FN	PART NUMBER	YR/SN	QTY	DESCRIPTION
1	1	87704716		1	AR CONDICIONADO
2		87529476		1	TUBO FLEXÍVEL
3		72204768		2	BRAÇADEIRA
4		87529477		2	FILTRO, CABINA

(1) ASSY SEE PAGE 5-6-7

AIR CONDITIONING - COMPONENTS

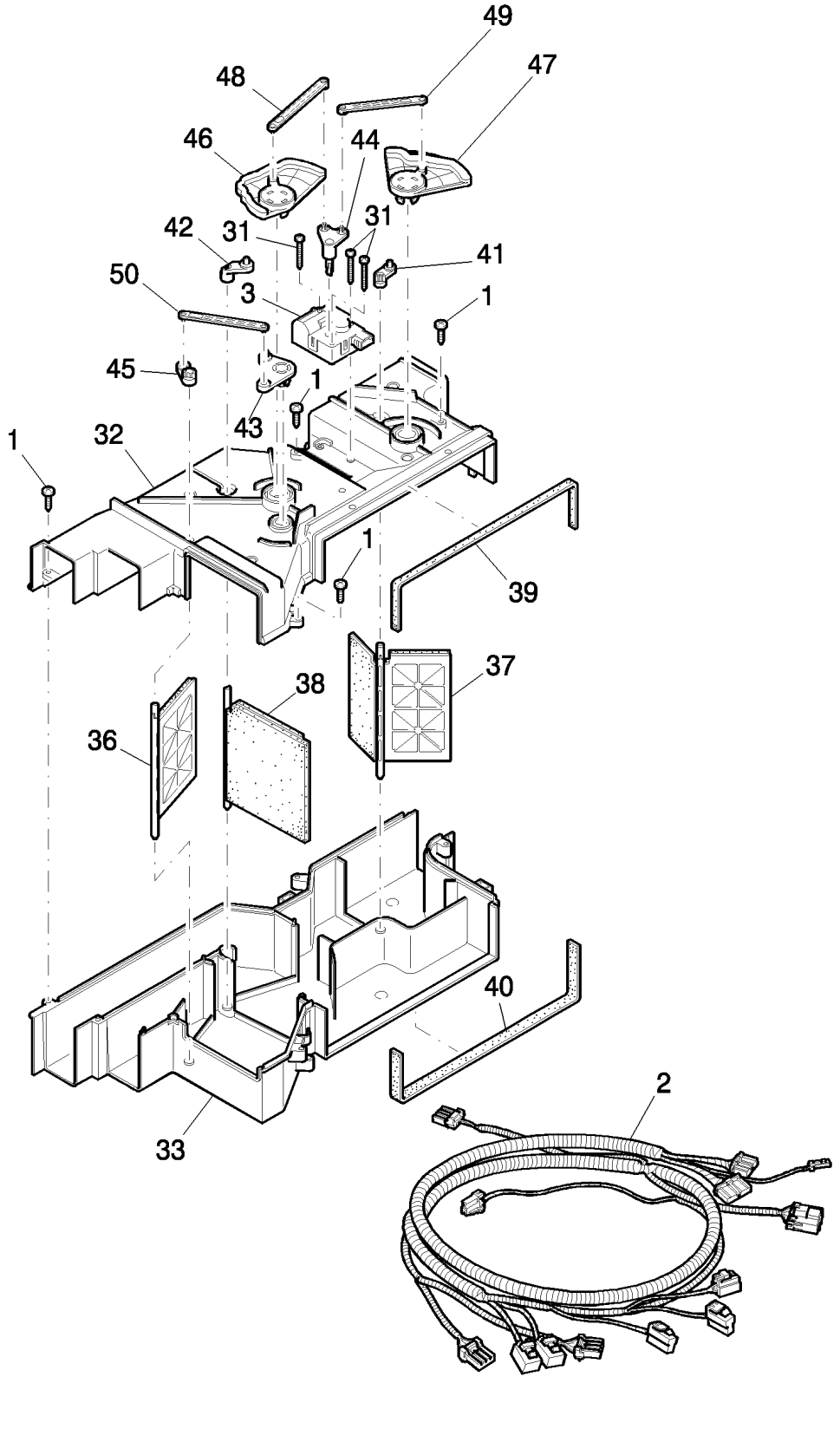

AIR CONDITIONING - COMPONENTS

REF	FN	PART NUMBER	YR/SN	QTY	DESCRIPTION
1		YN20M00107S001		7	PARAFUSO
2		YN20M00107S002		1	CHICOTE
3		YN20M00107S003		1	ATUADOR
31		YN20M00107S031		3	PARAFUSO
36		YN20M00107S036		1	PROTEÇÃO
37		YN20M00107S037		1	PROTEÇÃO
38		YN20M00107S038		1	PROTEÇÃO
39		YN20M00107S039		1	JUNTA
40		YN20M00107S040		1	JUNTA
41		YN20M00107S041		1	ALAVANCA
42		YN20M00107S042		1	ALAVANCA
43		YN20M00107S043		1	ALAVANCA
45		YN20M00107S045		1	ALAVANCA
49		YN20M00107S049		1	HASTE
50		YN20M00107S050		1	HASTE
86		YN20M00107S086		1	CAIXA/CARCAÇA
87		YN20M00107S087		1	CAIXA/CARCAÇA
88		YN20M00107S088		1	ALAVANCA
89		YN20M00107S089		1	ALAVANCA
90		YN20M00107S090		1	ALAVANCA
91		YN20M00107S091		1	HASTE
92		YN20M00107S092		1	PLACA

AIR CONDITIONER ASSY P/N 87575841

AIR CONDITIONING - COMPONENTS

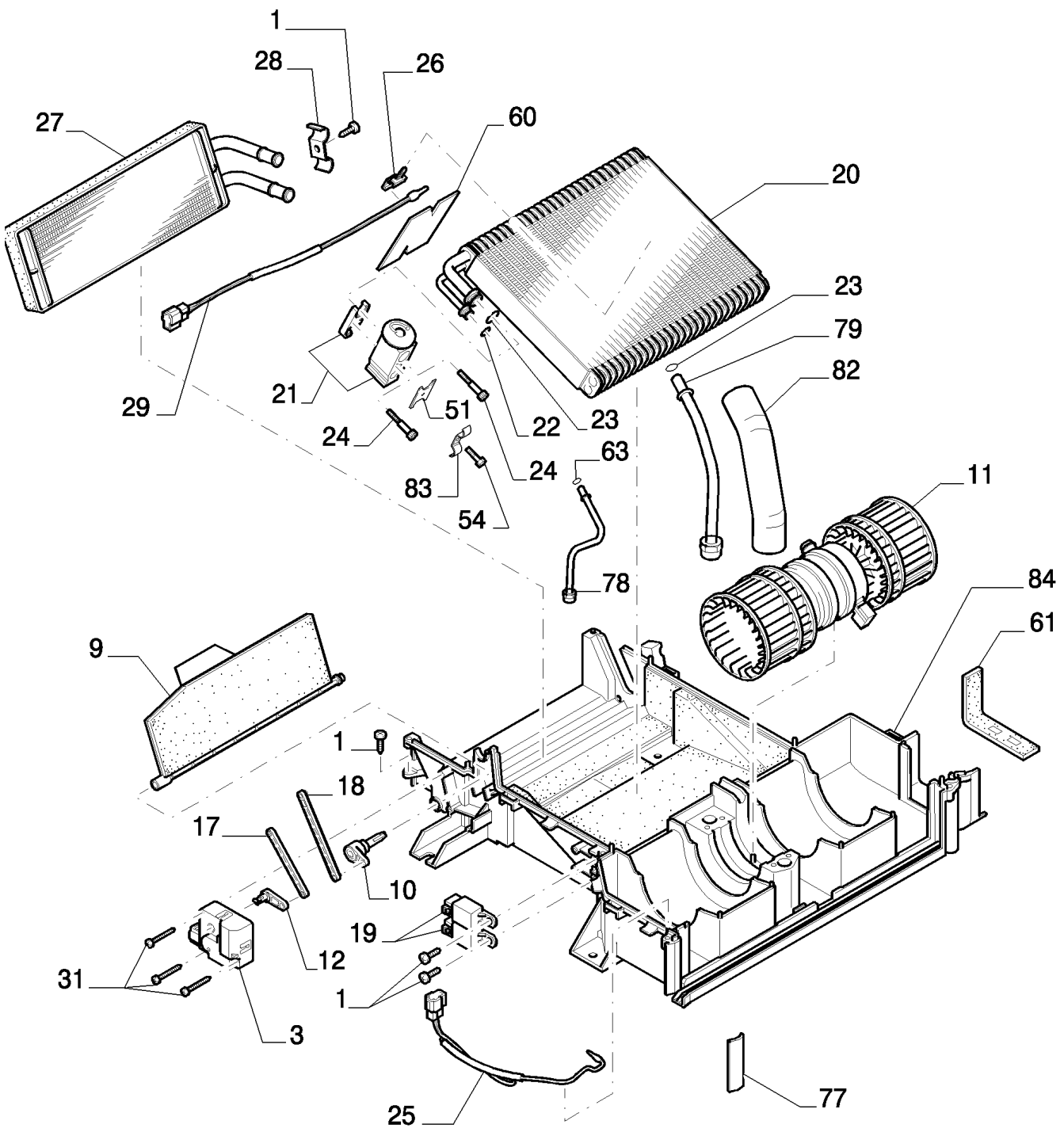

AIR CONDITIONING - COMPONENTS

REF	FN	PART NUMBER	YR/SN	QTY	DESCRIPTION
1		YN20M00107S001		4	PARAFUSO
3		YN20M00107S003		1	ATUADOR
9		YN20M00107S009		1	AMORTECEDOR DE VIBAÇÃO
10		YN20M00107S010		1	ALAVANCA
11		YN20M00107S011		1	VENTILADOR
12		YN20M00107S012		1	ALAVANCA
17		YN20M00107S017		1	HASTE
18		YN20M00107S018		1	HASTE
19		YN20M00107S019		2	CONECTADOR
20		YN20M00107S020		1	EVAPORADOR
21		YN20M00107S021		1	VALVULA
22		72958305		1	ANEL "O"
23		72958307		2	ANEL "O"
24		YN20M00107S024		2	PARAFUSO
25		YN20M00107S025		1	TERMOSTATO
26		YN20M00107S026		1	SUPORTE
27		YN20M00107S027		1	MASSA RADIANTE
28		YN20M00107S028		1	SUPORTE
31		YN20M00107S031		3	PARAFUSO
51		YN20M00107S051		1	PLACA
54		YN20M00107S054		1	PARAFUSO
60		YN20M00107S060		1	EMBALAGEM
61		YN20M00107S061		1	EMBALAGEM
63		YN20M00107S062		1	EMBALAGEM
77		YN20M00107S077		1	JUNTA
78		YN20M00107S078		1	TUBO RÍGIDO
79		YN20M00107S079		1	TUBO RÍGIDO
82		YN20M00107S082		1	TUBO RÍGIDO
83		YN20M00107S083		1	SUPORTE
84		YN20M00107S084		1	CAIXA/CARCAÇA
85		YN20M00107S085		1	SENSOR

AIR CONDITIONER ASSY P/N 87575841

E385B

AIR CONDITIONING - COMPONENTS

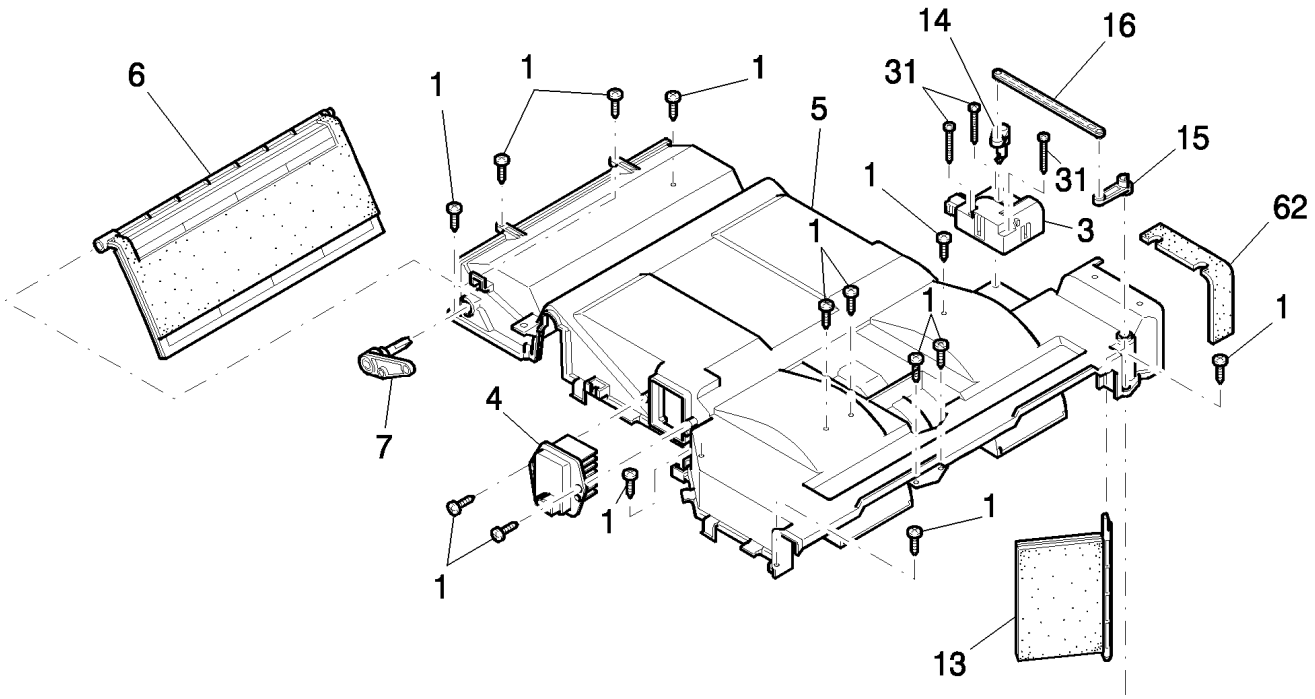

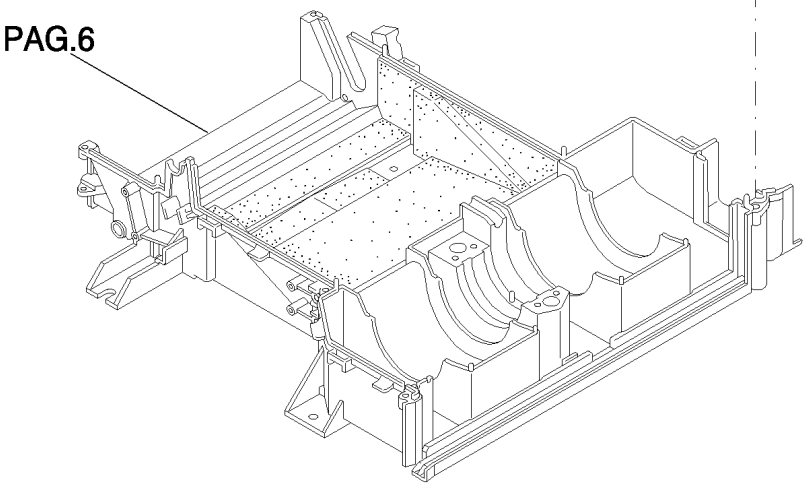

AIR CONDITIONING - COMPONENTS

REF	FN	PART NUMBER	YR/SN	QTY	DESCRIPTION
1		YN20M00107S001		12	PARAFUSO
3		YN20M00107S003		1	ATUADOR
4		YN20M00107S004		1	RESISTÊNCIA
5		YN20M00107S005		1	ESTOJO
6		YN20M00107S006		1	AMORTECEDOR DE VIBAÇÃO
7		YN20M00107S007		1	ALAVANCA
13		YN20M00107S013		1	AMORTECEDOR DE VIBAÇÃO
14		YN20M00107S014		1	ALAVANCA
15		YN20M00107S015		1	ALAVANCA
16		YN20M00107S016		1	HASTE
31		YN20M00107S031		3	PARAFUSO
62		YN20M00107S062		1	EMBALAGEM

AIR CONDITIONER ASSY P/N 87575841

E385B

1.300	01	p1	12/07

HOODS - GUARDS

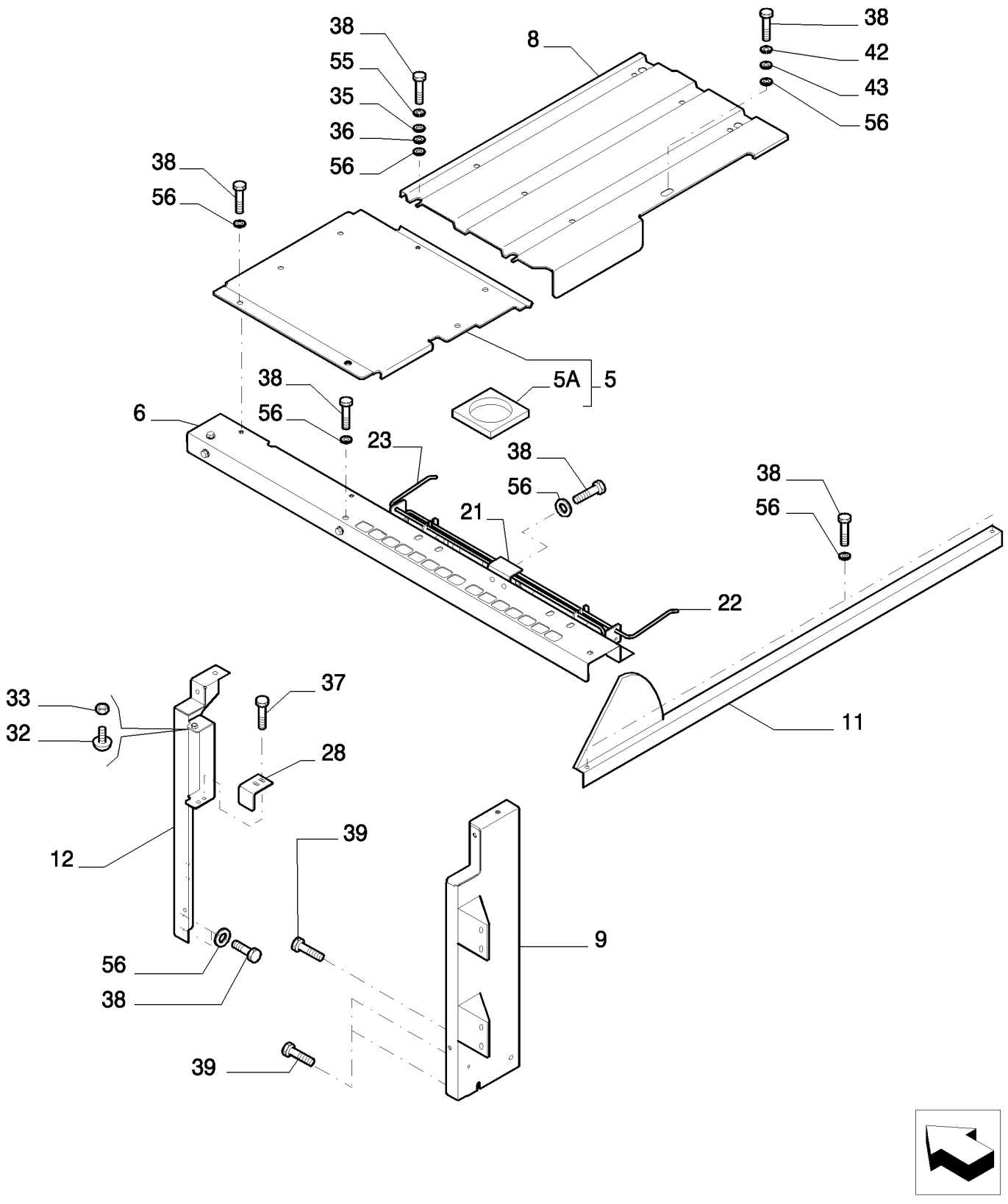

HOODS - GUARDS

REF	FN	PART NUMBER	YR/SN	QTY	DESCRIPTION
5		{87594561}		1	- ASSY
5A		{87594562}		1	
6		{87594570}		1	
8		{87594538}		1	
9		{87739117}		1	
11		{87594537}		1	
12		{87595128}		1	
21		72212948		1	SUPORTE
22		{87594536}		1	
23		{87594535}		1	
28		87579589		1	PLACA
32		72201210		1	PÁRA-CHOQUE DE BORRACHA
33		12164721		1	PORCA, M10 x 1.25, Cl 10
35		72206258		4	ARRUELA PLANA
36		72201227		4	ARRUELA PLANA
37		72964141		2	ARRUELA PLANA
38		11112234		23	PARAFUSO, Hex, M12 x 25, 10.9, Full Thd
39		11112434		3	PARAFUSO, Hex, M12 x 30, 10.9, Full Thd
42		72964141		1	ARRUELA PLANA
43		72964142		1	ARRUELA PLANA
55		10517074		4	ARRUELA-TRAVA
56		14496731		23	ARRUELA PLANA

1.300	02	p1	06/08

HOODS - GUARDS

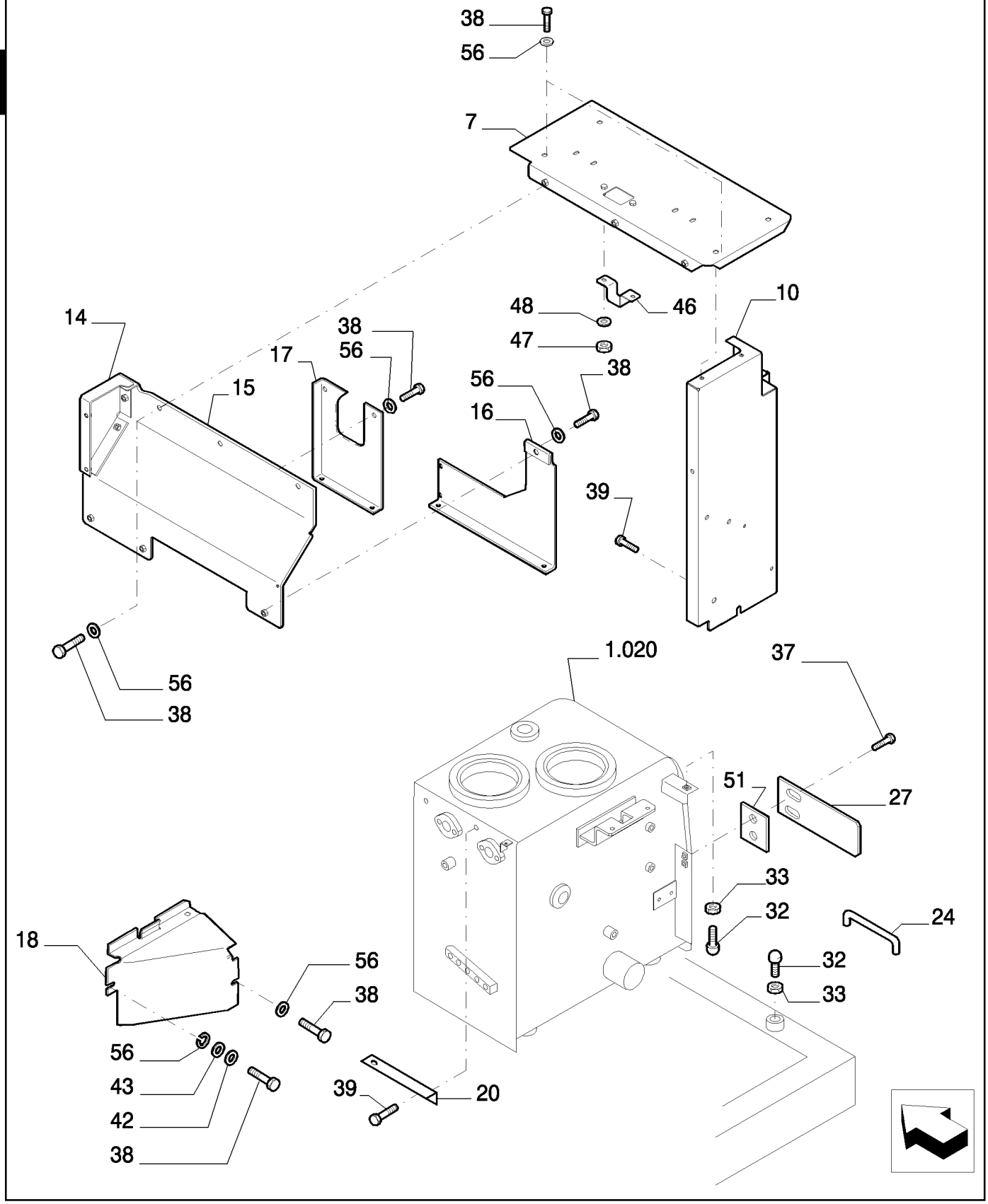

HOODS - GUARDS

REF	FN	PART NUMBER	YR/SN	QTY	DESCRIPTION
7		{87687296}		1	
10		{87687297}		1	
14		{87594515}		1	
15		{87594551}		1	
16		{87594553}		1	
17		{87594486}		1	
18		{87594489}		1	
20		{87594547}		1	
24		87595906		1	HASTE
27		87579588		1	PLACA
32		72201210		2	PÁRA-CHOQUE DE BORRACHA
33		12164721		2	PORCA, M10 x 1.25, Cl 10
37		16043434		2	PARAFUSO, Hex, M8 x 20, 10.9, Full Thd
38		11112234		17	PARAFUSO, Hex, M12 x 25, 10.9, Full Thd
39		11112434		6	PARAFUSO, Hex, M12 x 30, 10.9, Full Thd
41		4952483		1	ARRUELA PLANA
42		72964141		1	ARRUELA PLANA
43		72964142		1	ARRUELA PLANA
46		87531555		1	PLACA
47		11701721		2	PORCA, M10, Cl 10
48		14496631		2	ARRUELA PLANA, M10 x 21 x 2
51		87579587		1	CALCO DE AFINACAO
56		14496731		17	ARRUELA PLANA

HOODS - GUARDS

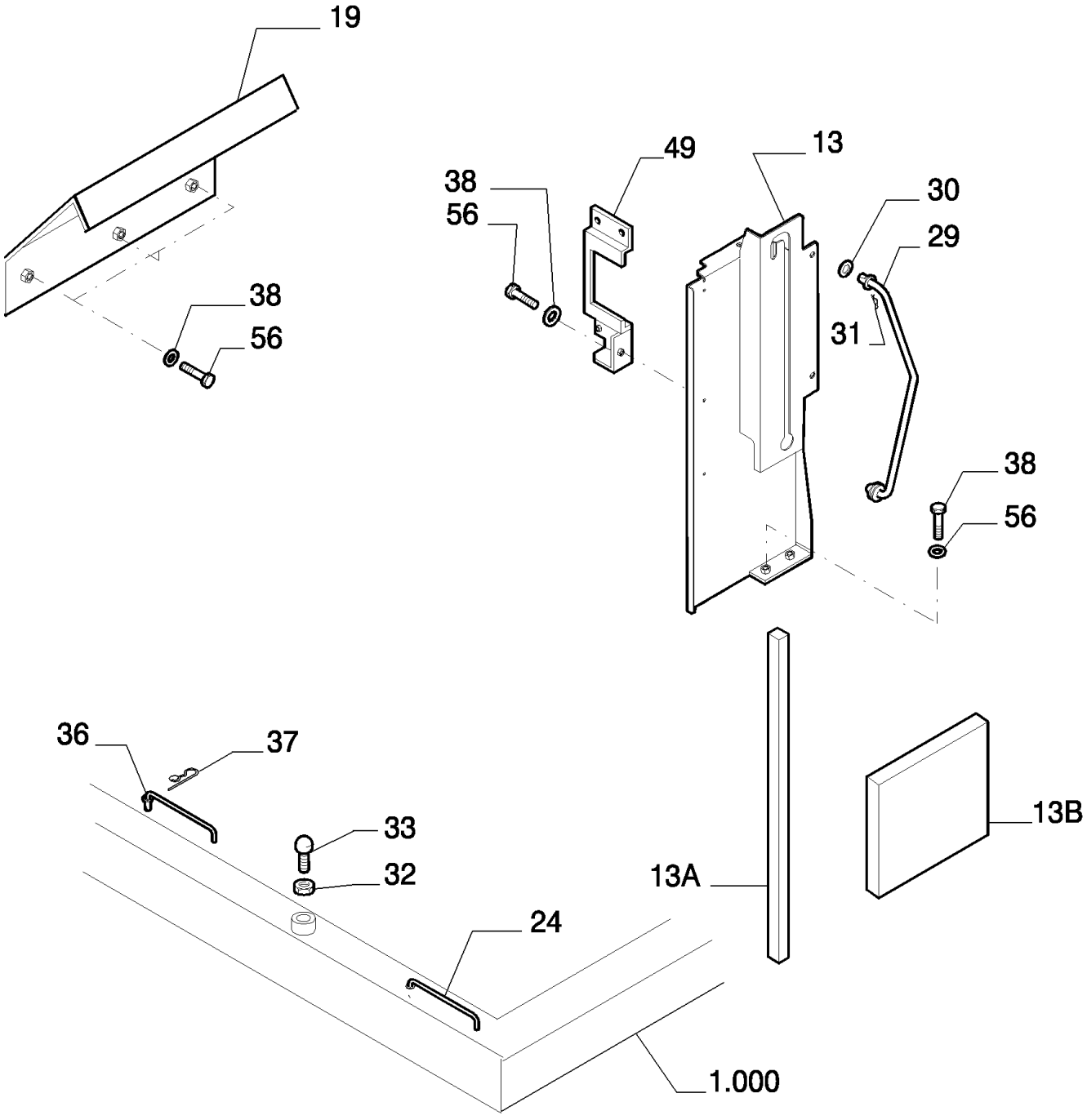

HOODS - GUARDS

REF	FN	PART NUMBER	YR/SN	QTY	DESCRIPTION
13		{87594492}		1	- ASSY
13A		{87594494}		1	
13B		{87594512}		1	
19		{87687309}		1	
24		{87595912}		1	
25		{87595912}		1	
26		72275189		1	GRAMPO
29		{87594549}		1	
30		87361706		1	GRAMPO
31		71405003		1	ARRUELA PLANA
32		72201210		1	PÁRA-CHOQUE DE BORRACHA
33		12164721		1	PORCA, M10 x 1.25, Cl 10
38		11112234		9	PARAFUSO, Hex, M12 x 25, 10.9, Full Thd
49		{87594534}		1	
56		14496731		9	ARRUELA PLANA

1.300	04	p1	12/07

HOODS - GUARDS

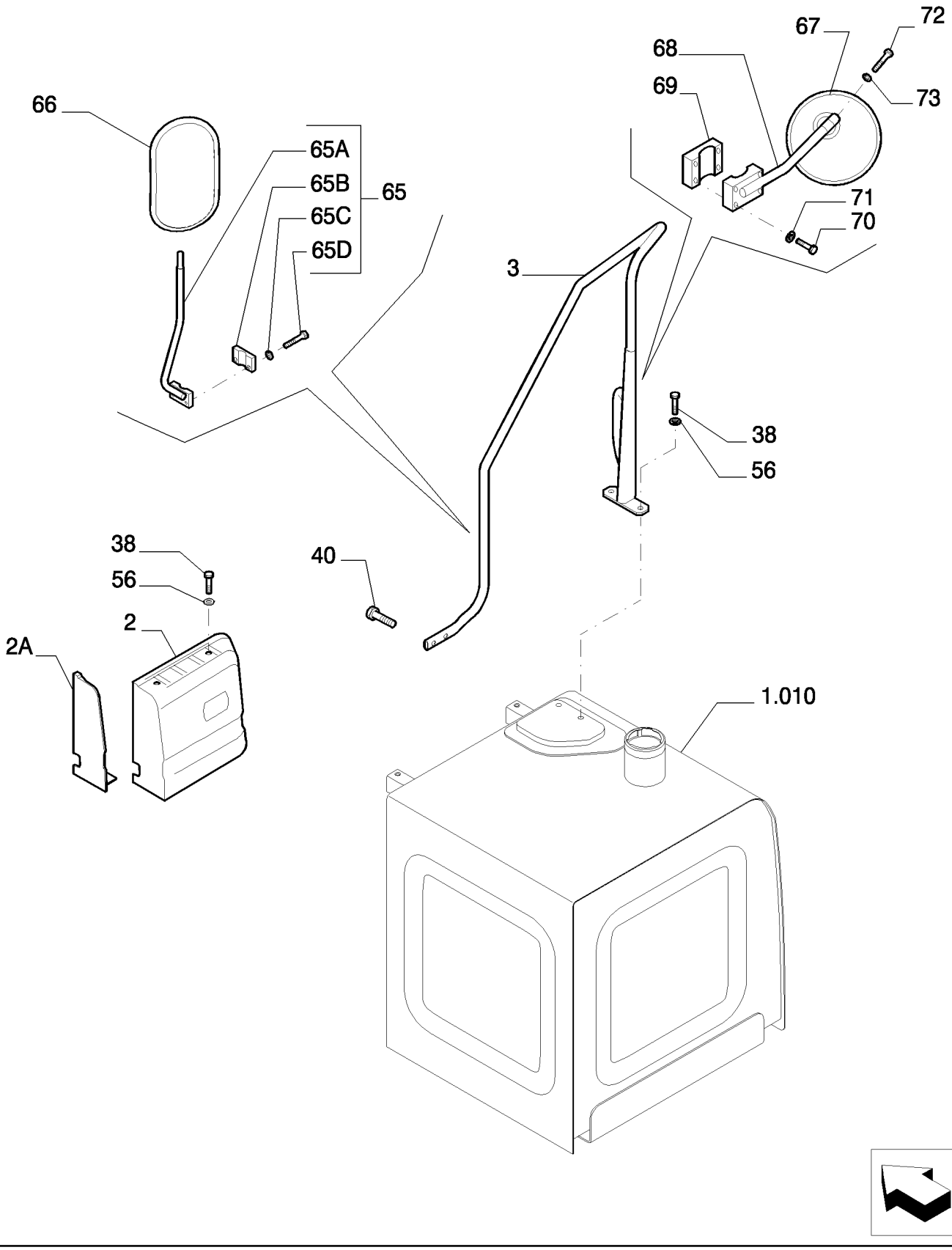

HOODS - GUARDS

REF	FN	PART NUMBER	YR/SN	QTY	DESCRIPTION
2		{87601875}		1	
2A		{87623866}		1	
3		87696768		1	MANILHA
38		11112234		2	PARAFUSO, Hex, M12 x 25, 10.9, Full Thd
40		11112834		2	PARAFUSO, Hex, M12 x 40, 10.9, Full Thd
56		14496731		2	ARRUELA PLANA
65		{87726021}		1	
65A		87333253		1	
65B		87616672		1	BLOCO
65C		16044134		2	PARAFUSO, Hex, M8 x 45, 10.9
65D		10516674		2	ARRUELA-TRAVA, 5/16"
66		87333251		1	ESPELHO
67		72950241		1	ESPELHO
68		87718026		1	COLUNA
69		87616672		1	BLOCO
70		16044234		2	PARAFUSO, Hex, M8 x 50
71		10516674		2	ARRUELA-TRAVA, 5/16"
72		16043234		1	PARAFUSO, Hex, M8 x 16, 10.9, Full Thd
73		14496531		1	ARRUELA PLANA, M8 x 17 x 1.6

1.300	05	p1	06/08

HOODS - GUARDS

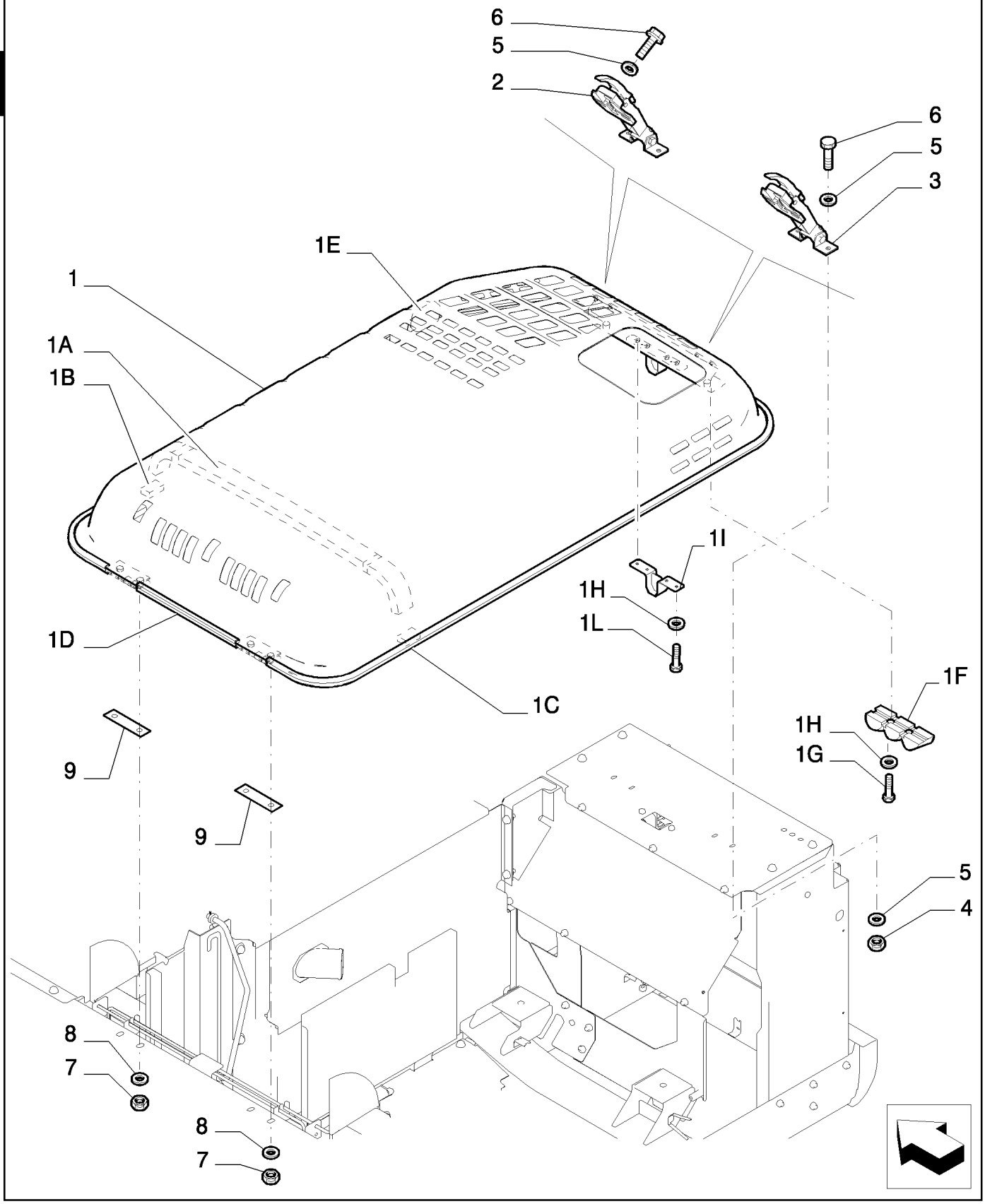

HOODS - GUARDS

REF	FN	PART NUMBER	YR/SN	QTY	DESCRIPTION
1		{87594136}		1	- ASSY
1A		{87594159}		1	
1B		{87594160}		1	
1C		{87594154}		1	
1D		72964119		1	PERFILADO DE BORRACHA
1E		87356683		1	MANILHA
1F		87594161		1	JUNTA
1G		16043634		1	PARAFUSO, Hex, M8 x 25, 10.9, Full Thd
1H		14496531		1	ARRUELA PLANA, M8 x 17 x 1.6
1I		87533365		4	PLACA
1L		16043434		2	PARAFUSO, Hex, M8 x 20, 10.9, Full Thd
2		87579057		1	MANILHA
3		87579056		1	MANILHA
4		16100821		4	PORCA, M8, Cl 10
5		14496531		12	ARRUELA PLANA, M8 x 17 x 1.6
6		16043434		8	PARAFUSO, Hex, M8 x 20, 10.9, Full Thd
7		11702921		4	PORCA, M12, Cl 10
8		14496731		4	ARRUELA PLANA
9		87572226		2	CALCO DE AFINACAO

1.300	06	p1	12/07

HOODS - GUARDS

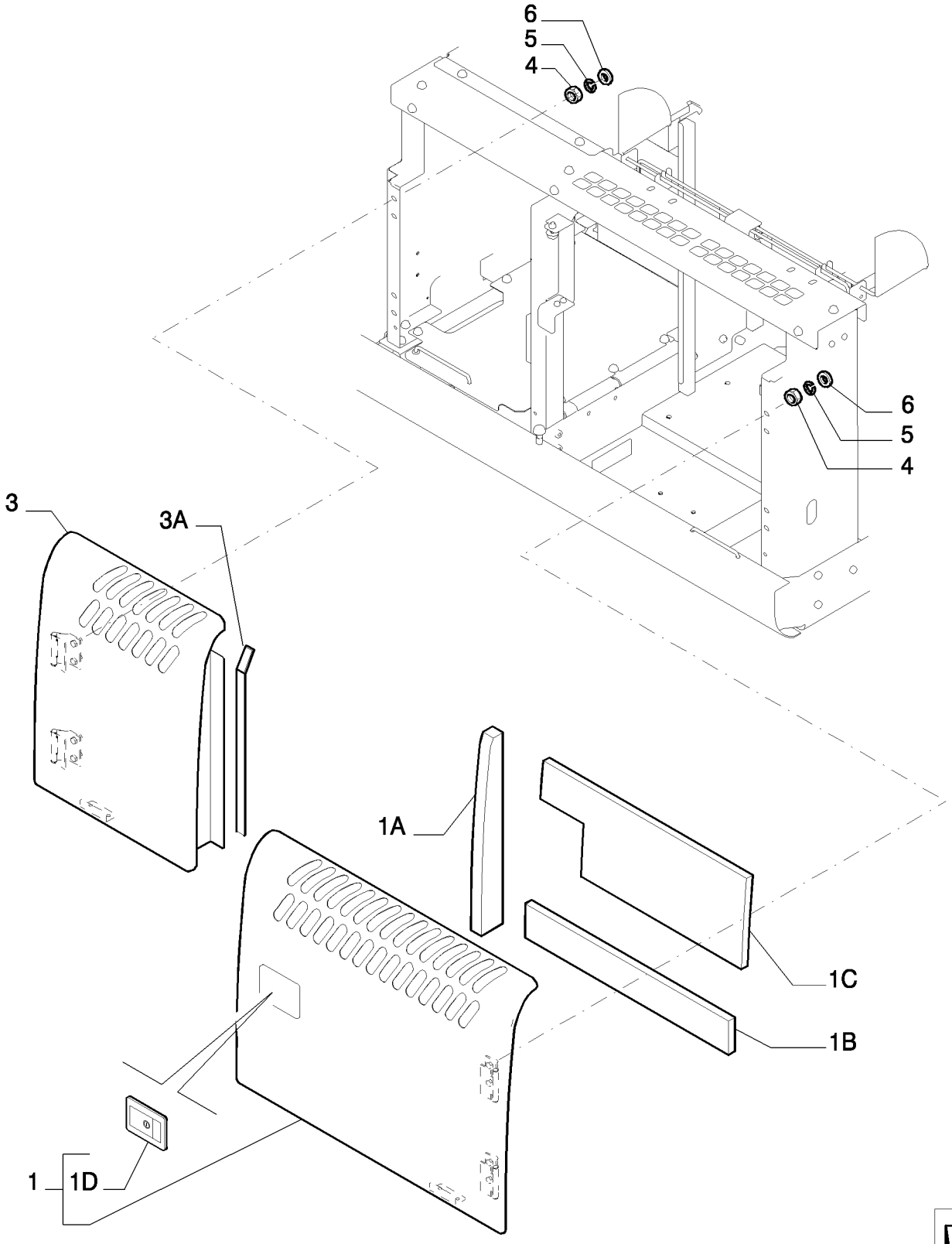

HOODS - GUARDS

REF	FN	PART NUMBER	YR/SN	QTY	DESCRIPTION
1		{87594006}		1	- ASSY
1A		{87594016}		1	
1B		{87594017}		1	
1C		{87594018}		1	
1D		87533035		1	FECHADURA
3		{87594011}		1	- ASSY
3A		{87594109}		1	
4		11701721		8	PORCA, M10, Cl 10
5		10516874		8	ARRUELA-TRAVA
6		14496631		8	ARRUELA PLANA, M10 x 21 x 2

HOODS - GUARDS

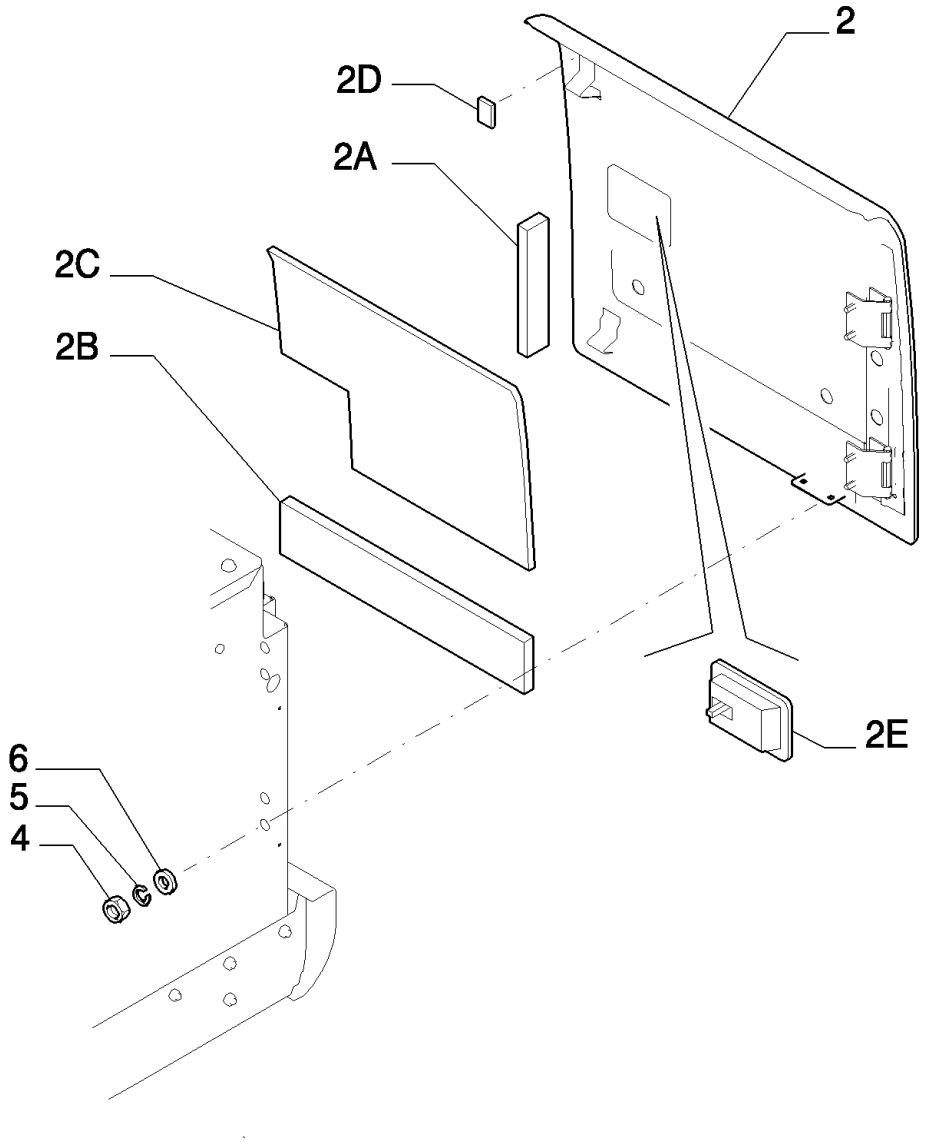

HOODS - GUARDS

REF	FN	PART NUMBER	YR/SN	QTY	DESCRIPTION
2		{87686846}		1	- ASSY
2A		{87531528}		1	
2B		{87686875}		1	
2C		{87686876}		1	
2D		{72210559}		1	
2E		87533035		1	FECHADURA
4		11701721		4	PORCA, M10, CI 10
5		10516874		4	ARRUELA-TRAVA
6		72201224		4	ARRUELA PLANA

1.300	08	p1	12/07

HOODS - GUARDS

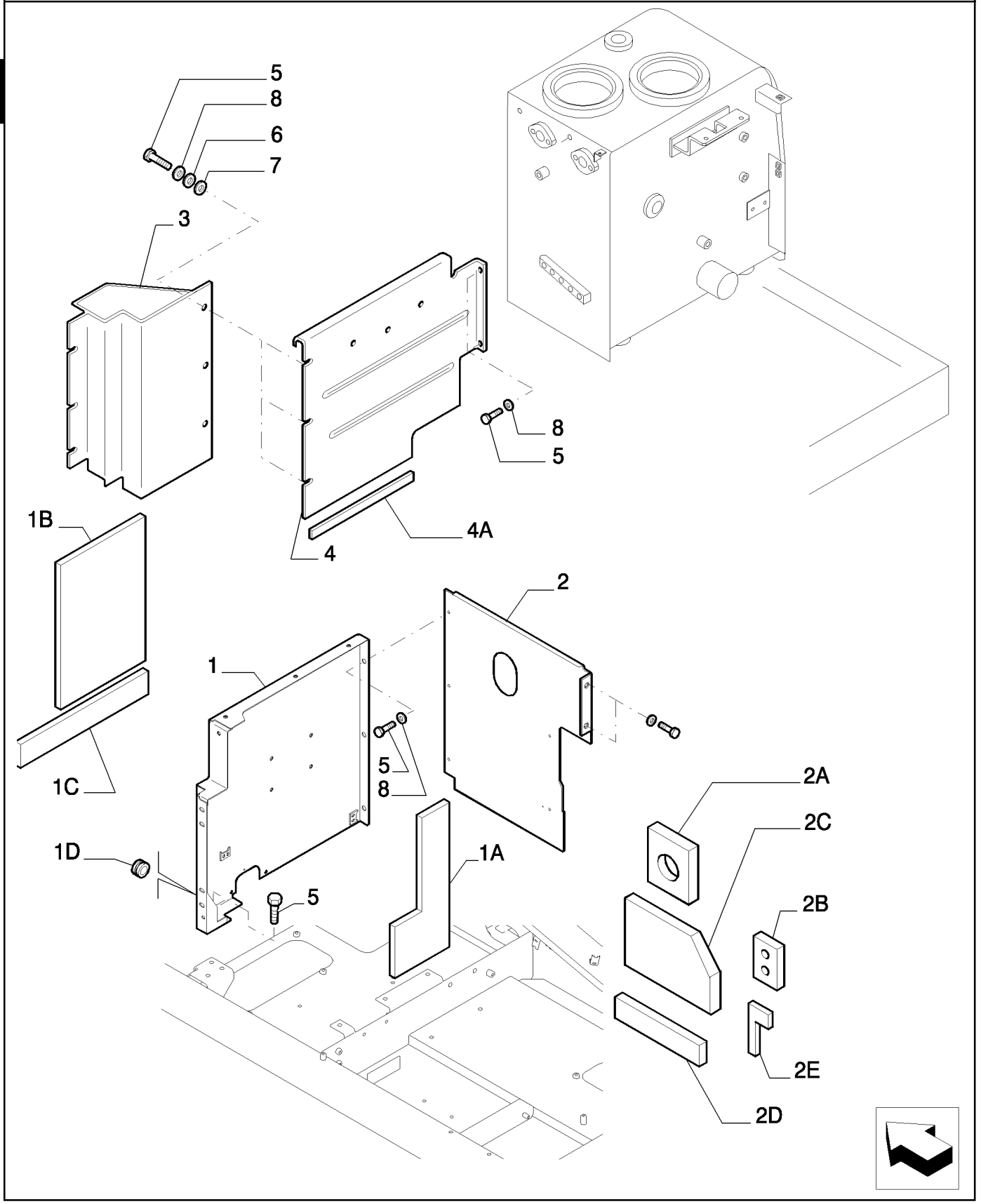

HOODS - GUARDS

REF	FN	PART NUMBER	YR/SN	QTY	DESCRIPTION
1		{87632677}		1	- ASSY
1A		{87593591}		1	
1B		{87531517}		1	
1C		{87547544}		1	
1D		71425116		1	BUCHA DE BORRACHA
2		{87593557}		1	- ASSY
2A		{87593623}		1	
2B		{87593624}		1	
2C		{87593625}		1	
2D		{87593626}		1	
2E		{87593627}		1	
3		{87593558}		1	
4		{87593559}		1	- ASSY
4A		{87595564}		1	
5		11112234		20	PARAFUSO, Hex, M12 x 25, 10.9, Full Thd
6		72964141		3	ARRUELA PLANA
7		72964142		3	ARRUELA PLANA
8		14496731		15	ARRUELA PLANA

1.300	09	p1	12/07

HOODS - GUARDS

2

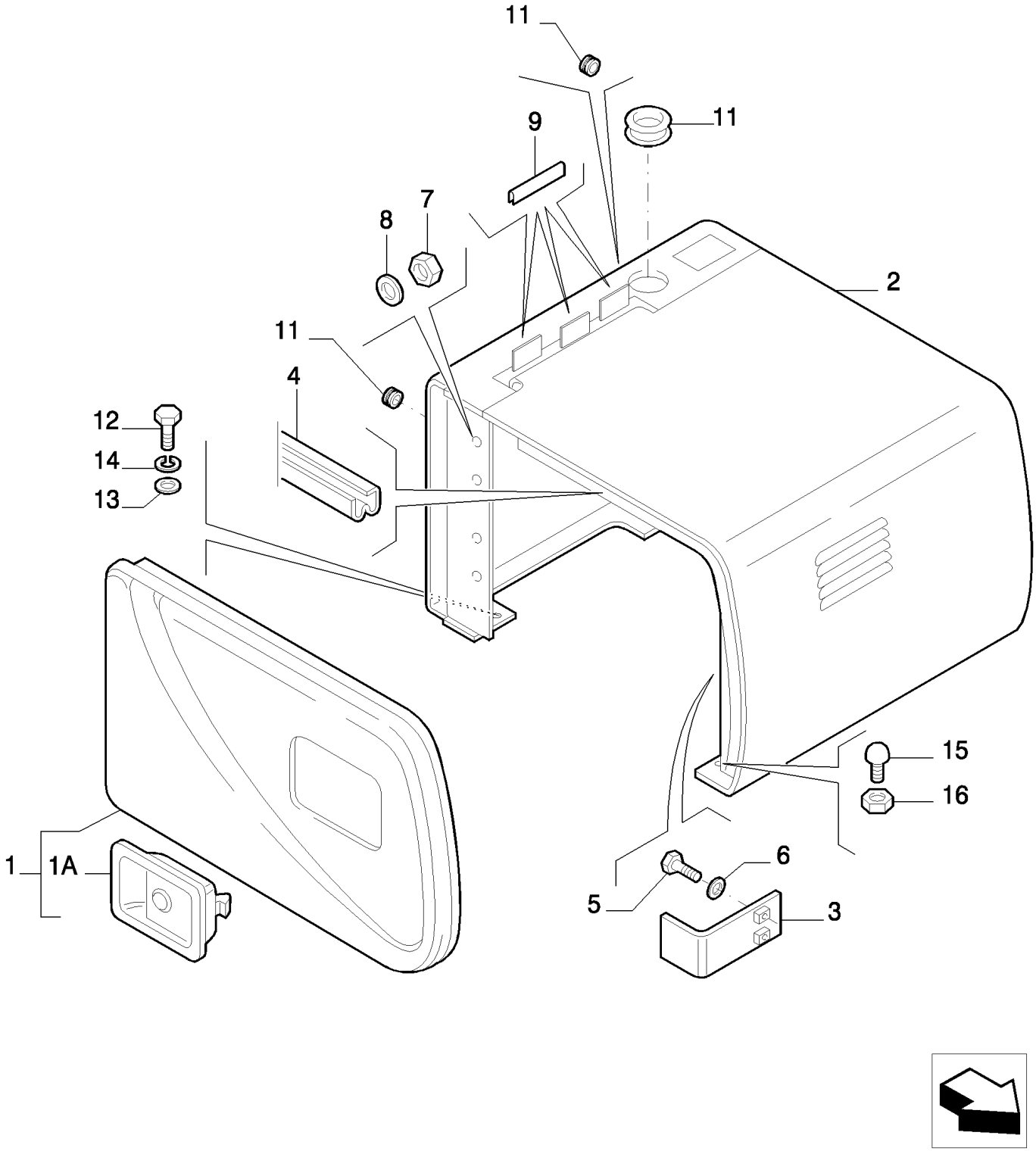

HOODS - GUARDS

REF	FN	PART NUMBER	YR/SN	QTY	DESCRIPTION
1		87619048		1	JANELA (TAMPA), - ASSY
1A		87533035		1	FECHADURA
2		{87632807}		1	
3		87560621		1	SUPORTE
4		87560623		1	JUNTA
5		11106234		1	PARAFUSO, Hex, M10 x 25, 10.9, Full Thd
6		14496631		2	ARRUELA PLANA, M10 x 21 x 2
7		11701721		4	PORCA, M10, Cl 10
8		72201224		4	ARRUELA PLANA
9		72963810		3	PERFILADO DE BORRACHA
10		72207066		1	ISOLANTE
11		71425116		2	BUCHA DE BORRACHA
12		11112434		4	PARAFUSO, Hex, M12 x 30, 10.9, Full Thd
13		14496731		8	ARRUELA PLANA
14		10517074		4	ARRUELA-TRAVA
15		72201210		1	PÁRA-CHOQUE DE BORRACHA
16		12164721		1	PORCA, M10 x 1.25, Cl 10

1.300	10	p1	12/07

HOODS - GUARDS

2

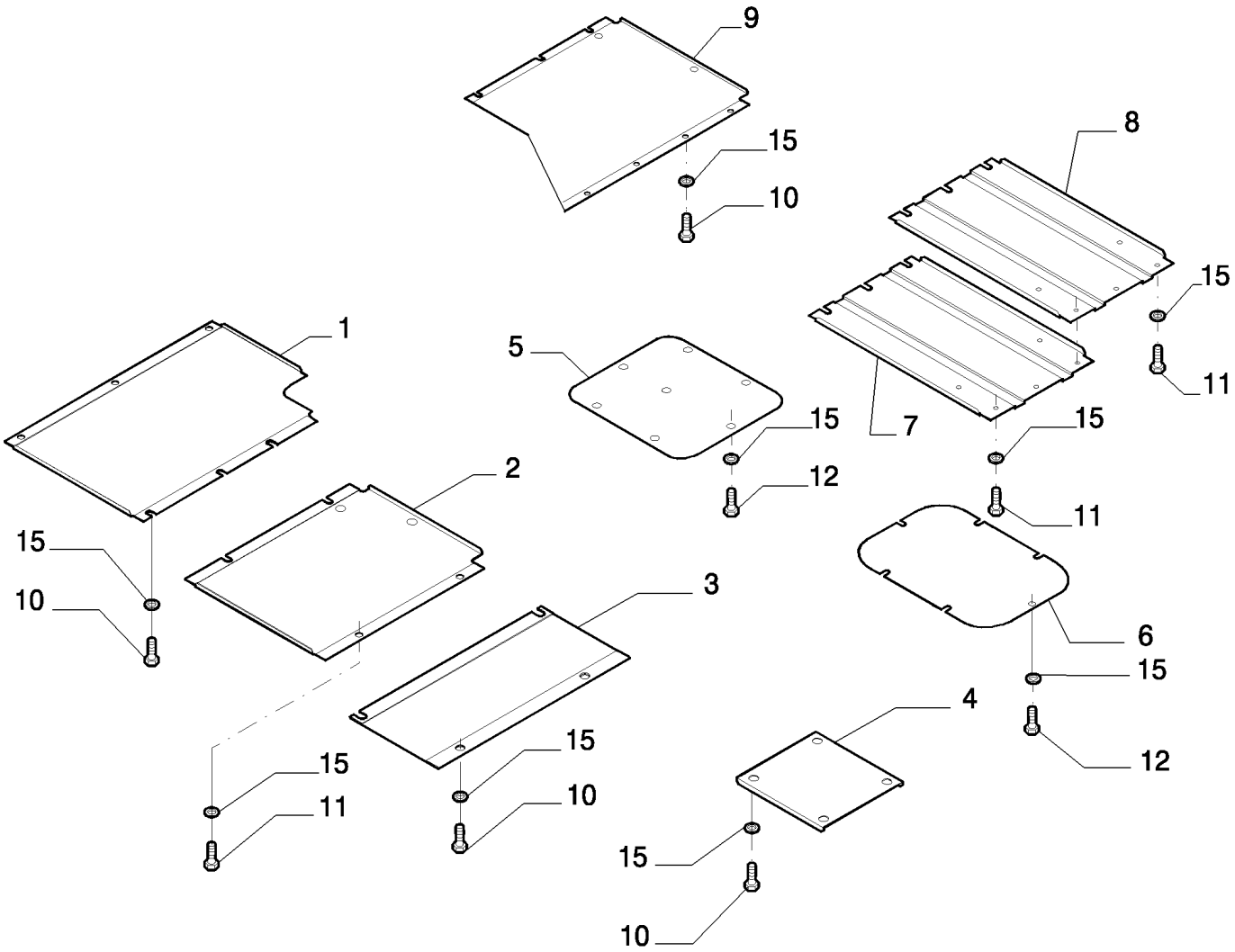

HOODS - GUARDS

REF	FN	PART NUMBER	YR/SN	QTY	DESCRIPTION
1		{87593501}		1	
2		{87593503}		1	
3		87531040		1	PROTEÇÃO
4		{87593504}		1	
5		{87676791}		1	
6		{87676792}		1	
7		{87593507}		1	
8		{87593508}		1	
9		{87593509}		1	
10		11112234		20	PARAFUSO, Hex, M12 x 25, 10.9, Full Thd
11		11112434		14	PARAFUSO, Hex, M12 x 30, 10.9, Full Thd
12		11112634		12	PARAFUSO
15		14496731		46	ARRUELA PLANA

1.300	11	p1	12/07

HOODS - GUARDS

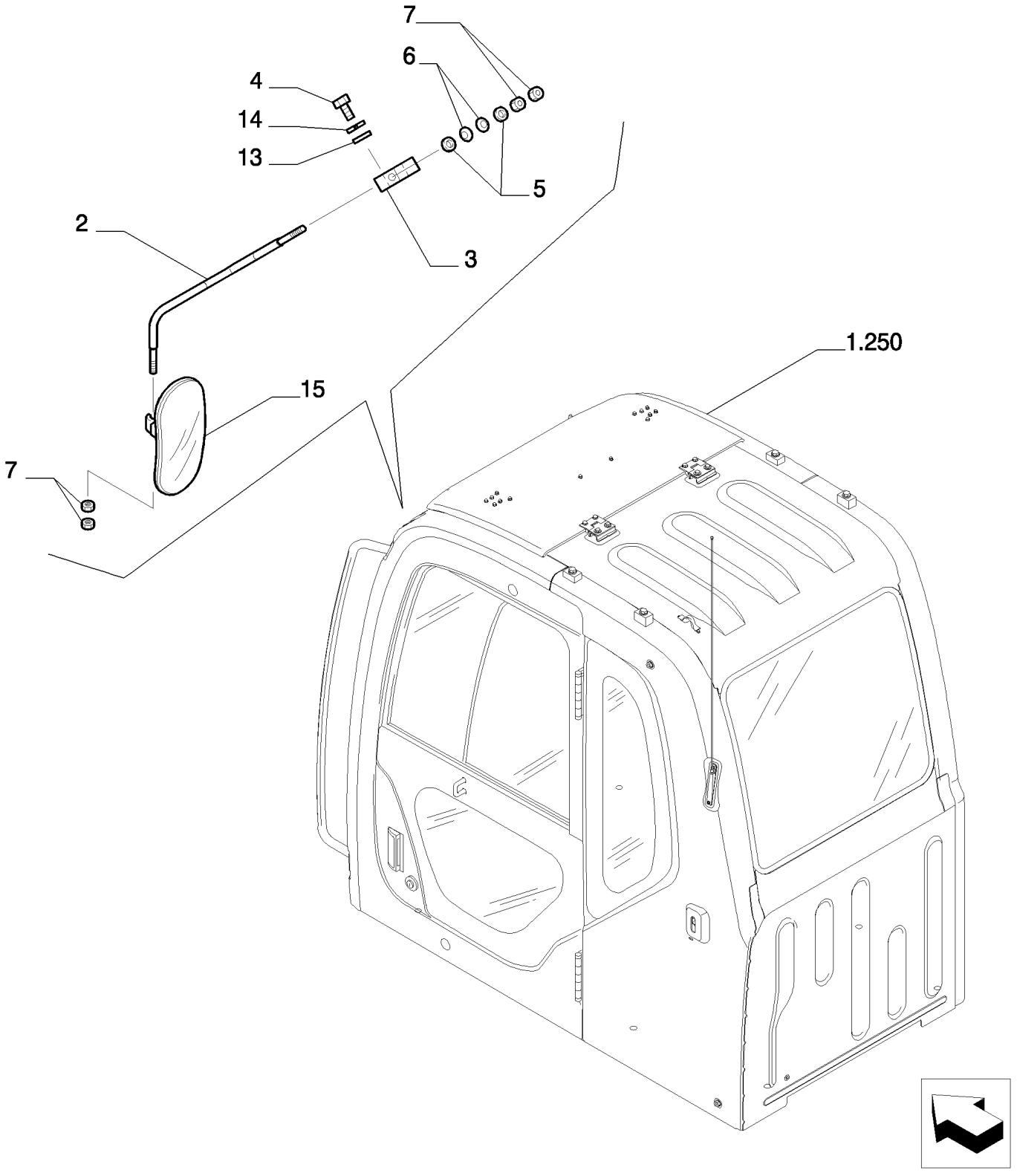

HOODS - GUARDS

REF	FN	PART NUMBER	YR/SN	QTY	DESCRIPTION
2		87334508		1	
3		87334509		1	SUPORTE
4		11107434		2	PARAFUSO
5		14496731		2	ARRUELA PLANA
6		72954251		2	ARRUELA PLANA
7		11702921		4	PORCA, M12, Cl 10
13		14496631		2	ARRUELA PLANA, M10 x 21 x 2
14		10516874		2	ARRUELA-TRAVA
15		87612553		1	ESPELHO RETROVISOR

SECTION INDEX
Front-End Attachments

2.000	01	MONOBLOC BOOM - VERSION (01-02)
2.000	02	MONOBLOC BOOM - VERSION (01-02)
2.001	01	LIFT BOOM - VERSION (03-04)
2.001	02	LIFT BOOM - VERSION (03-04)
2.002	01	POSITIONER ARM - VERSION (03-04)
2.030	01	BOOM PIPING - VERSION (01-02)
2.030	02	LIFT CYLINDER - COMPONENTS
2.030	03	DIPPER STICK CYLINDER - COMPONENTS
2.030	04	BUCKET CYLINDER - COMPONENTS
2.031	01	BOOM PIPING - VERSION (03-04)
2.031	02	BOOM PIPING - VERSION (03-04)
2.031	03	POSITIONER CYLINDER - COMPONENTS - VERSION (03-04)
2.031	04	POSITIONER SAFETY VALVE - VERSION (03-04)
2.031	05	POSITIONER SAFETY VALVE - VERSION (03-04)
2.031	06	POSITIONER SAFETY VALVE - COMPONENTS - VERSION (03-04)
2.040	01	LUBRIC. FITTING PIPING - VERSION (01-02)
2.041	01	LUBRIC. FITTING PIPING - VERSION (03-04)
2.041	02	LUBRIC. FITTING PIPING - VERSION (03-04)
2.050	01	BUCKET INSTALLATION

2.000	01	p1	12/07

MONOBLOC BOOM - VERSION (01-02)

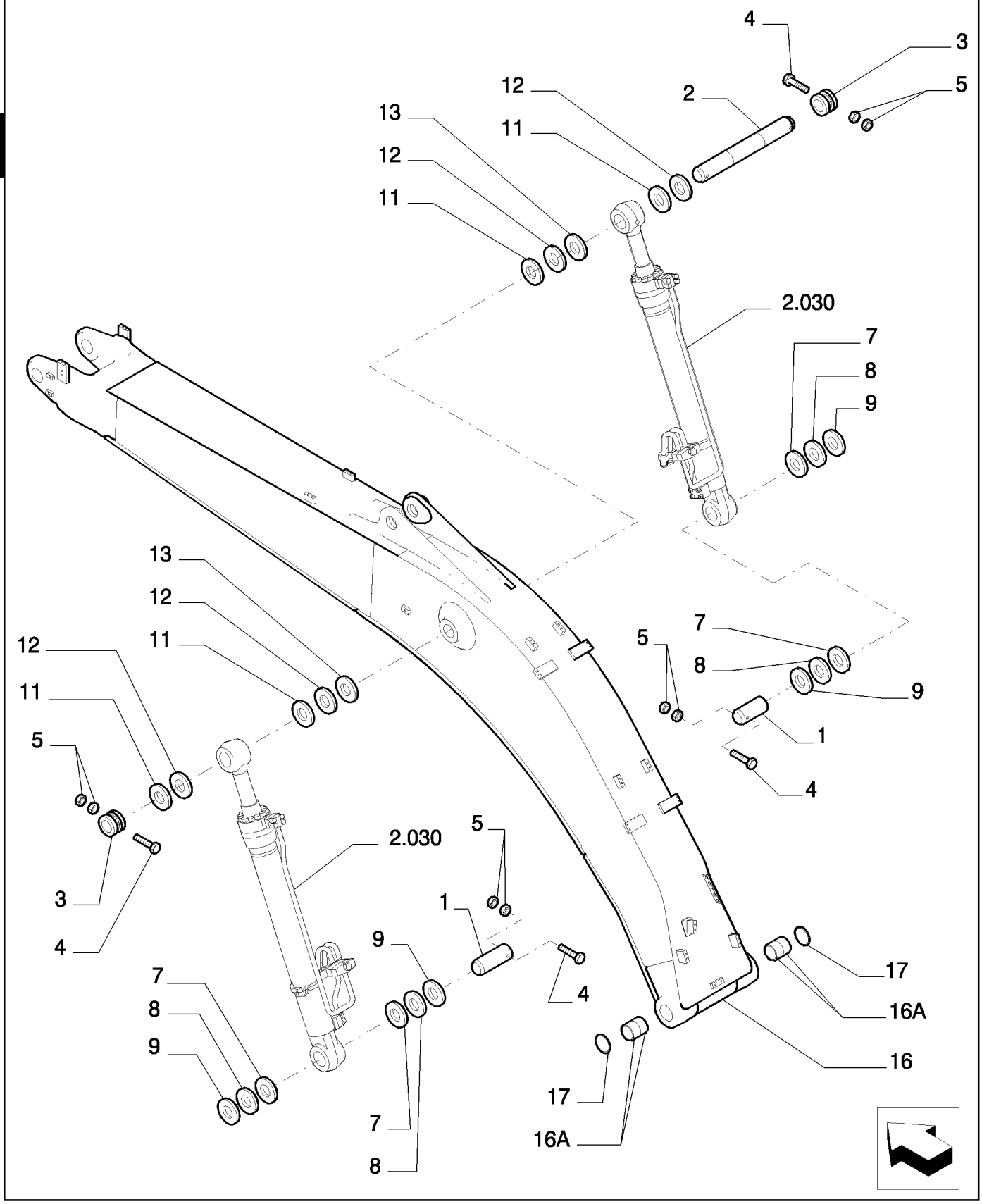

MONOBLOC BOOM - VERSION (01-02)

REF	FN	PART NUMBER	YR/SN	QTY	DESCRIPTION
1		{87644108}		2	
2		{87644109}		1	
3		72208175		2	LUBRIFICADOR
4		15204134		4	PARAFUSO, Hex, M20 x 190, 10.9
5		12163321		8	PORCA, M16, Cl 10
7		72208177		1	CALCO DE AFINACAO, 0.9mm Thk
8		72208179		1	CALCO DE AFINACAO, 1.6mm Thk
9		72211496		4	CALCO DE AFINACAO, 2mm Thk
11		72208164		1	CALCO DE AFINACAO, 0.9mm Thk
12		72208162		1	CALCO DE AFINACAO, 1.6mm Thk
13		72208165		2	CALCO DE AFINACAO, 2mm Thk
16		{87616804}		1	- ASSY
16A		{87617256}		4	
17		{87617249}		2	

2.000	02	p1	12/07

MONOBLOC BOOM - VERSION (01-02)

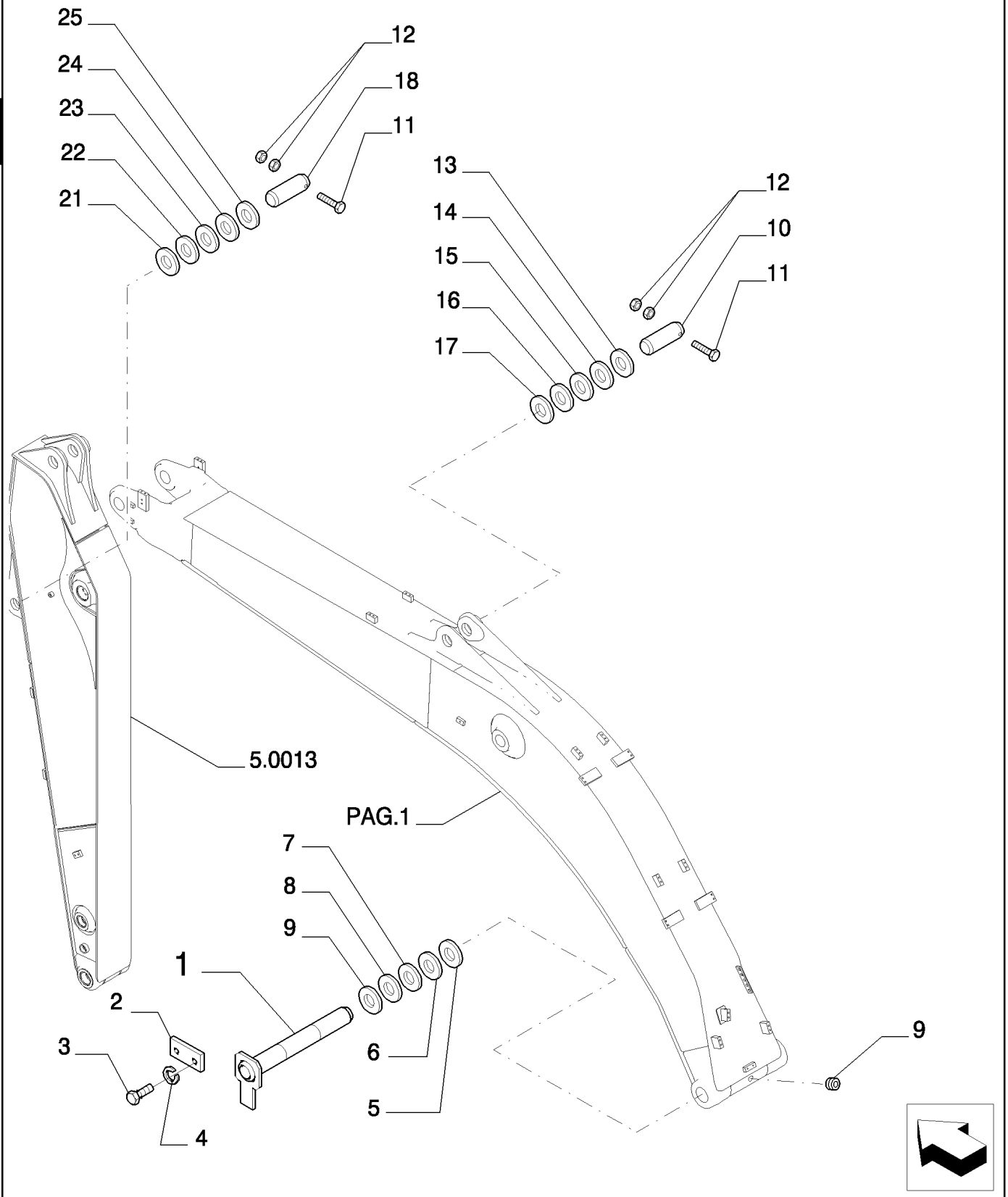

MONOBLOC BOOM - VERSION (01-02)

REF	FN	PART NUMBER	YR/SN	QTY	DESCRIPTION
1		{87614252}		1	
2		72208151		1	PLACA
3		11124934		2	PARAFUSO, Hex, M20 x 60, 10.9, Full Thd
4		71415214		1	ARRUELA PLANA
5		72208152		1	CALCO DE AFINACAO, 0.9mm Thk
6		72208153		1	CALCO DE AFINACAO
7		{72208154}		1	
8		72208155		2	CALCO DE AFINACAO
9		72208156		1	CALCO DE AFINACAO, 2mm Thk
10		{87637608}		1	
11		15204034		2	PARAFUSO
12		12163521		4	PORCA, M20, Cl 10
13		72208164		1	CALCO DE AFINACAO, 0.9mm Thk
14		72208161		1	CALCO DE AFINACAO, 1.2mm Thk
15		72208162		1	CALCO DE AFINACAO, 1.6mm Thk
16		72208163		1	CALCO DE AFINACAO, 2.3mm Thk
17		72208165		2	CALCO DE AFINACAO, 2mm Thk
18		{87659217}		1	
21		72203141		1	CALCO DE AFINACAO, 0.9mm Thk
22		72211371		1	CALCO DE AFINACAO, 1.2mm Thk
23		72203157		1	CALCO DE AFINACAO, 1.6mm Thk
24		72211372		1	CALCO DE AFINACAO, 2.3mm Thk
25		72203145		2	CALCO DE AFINACAO, 2mm Thk

2.001	01	p1	12/07

LIFT BOOM - VERSION (03-04)

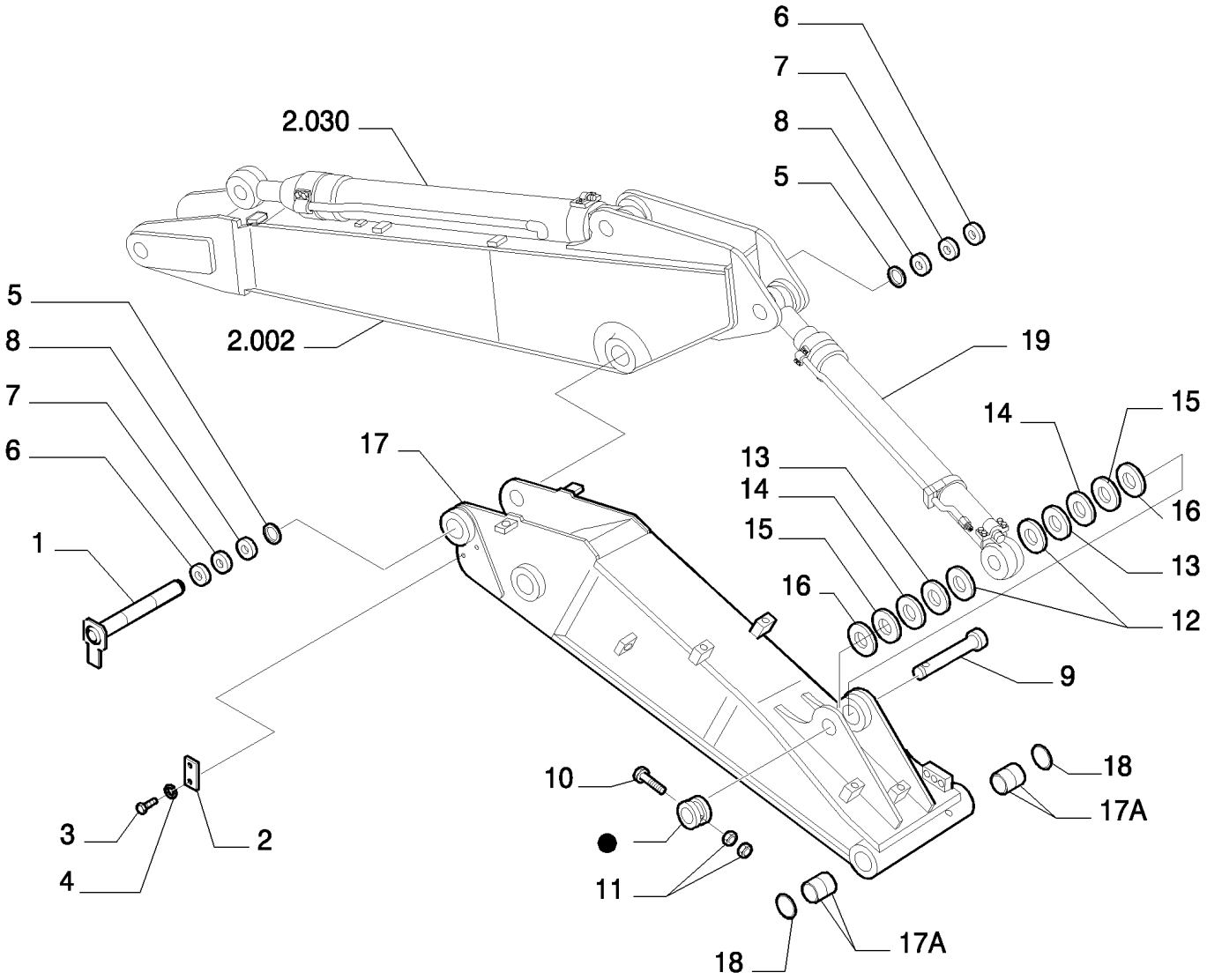

PARTS MARKED ● ARE NOT SUPPLIED AS SPARES
I PARTICOLARI CONTRASSEGNATI CON ● NON VENGONO FORNITI DI RICAMBIO

LIFT BOOM - VERSION (03-04)

REF	FN	PART NUMBER	YR/SN	QTY	DESCRIPTION
1		{87637611}		1	
2		{87637658}		1	
3		11127534		2	PARAFUSO
4		71405003		2	ARRUELA PLANA
5		72208166		2	CALCO DE AFINACAO, 0.9mm Thk
6		72208167		2	CALCO DE AFINACAO, 1.2mm Thk
7		72208168		2	CALCO DE AFINACAO, 1.6mm Thk
8		72208169		2	CALCO DE AFINACAO, 2mm Thk
9		{87662137}		1	
10		87334724		1	PARAFUSO
11		12163521		2	PORCA, M20, Cl 10
12		72208164		2	CALCO DE AFINACAO, 0.9mm Thk
13		72208161		2	CALCO DE AFINACAO, 1.2mm Thk
14		72208162		2	CALCO DE AFINACAO, 1.6mm Thk
15		72208163		2	CALCO DE AFINACAO, 2.3mm Thk
16		72208165		2	CALCO DE AFINACAO, 2mm Thk
17		{87590541}		1	- ASSY
17A	1	{87617256}		4	
18		{87617249}		2	
19		{87661722}		1	

(1) ASSY SEE SGR. 2.031 PAGE 3

2.001	02	p1	12/07

LIFT BOOM - VERSION (03-04)

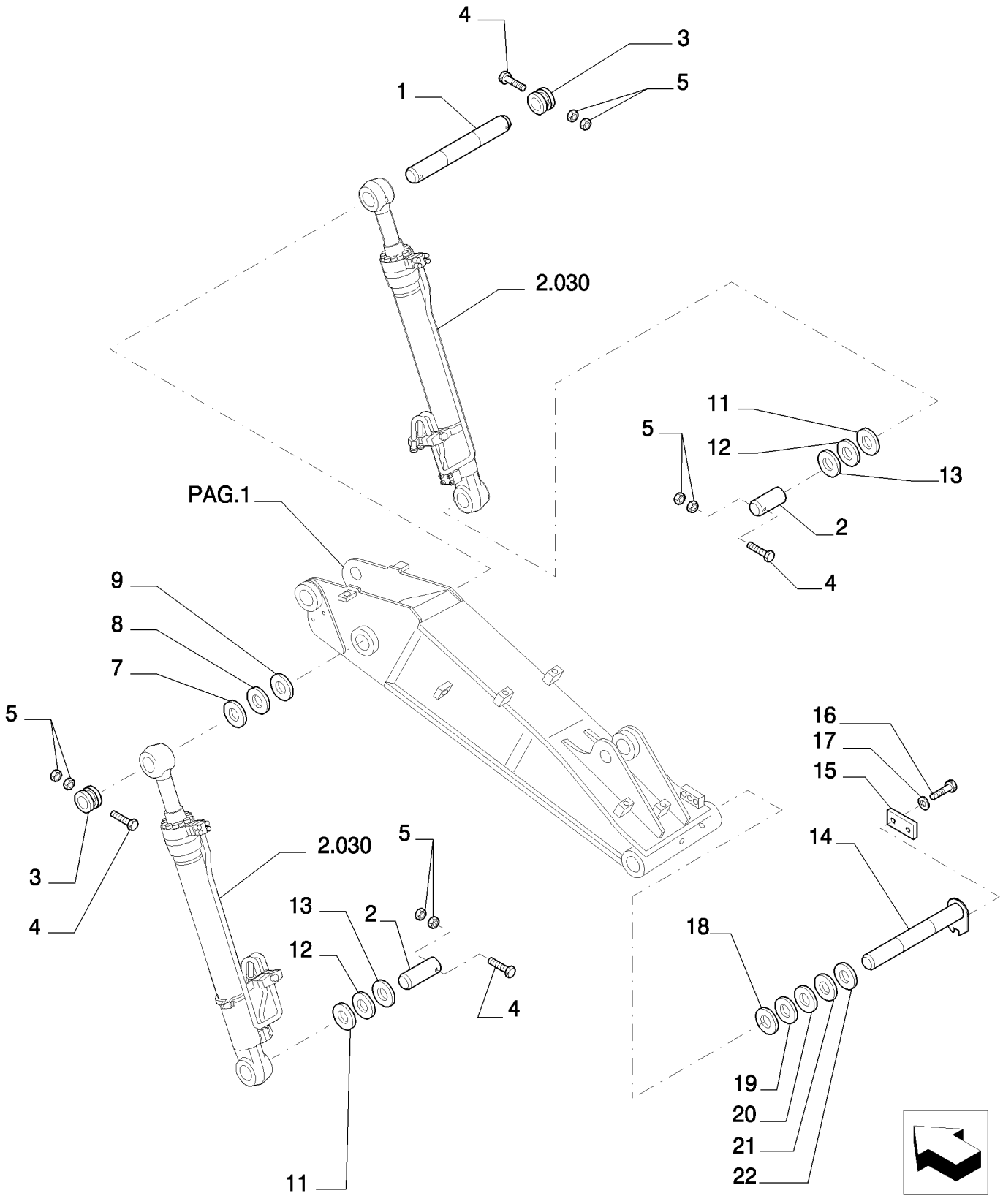

LIFT BOOM - VERSION (03-04)

REF	FN	PART NUMBER	YR/SN	QTY	DESCRIPTION
1		{87644109}		1	
2		{87644108}		2	
3		72208175		2	LUBRIFICADOR
4		15204134		4	PARAFUSO, Hex, M20 x 190, 10.9
5		12163521		8	PORCA, M20, Cl 10
7		72208177		1	CALCO DE AFINACAO, 0.9mm Thk
8		72208179		1	CALCO DE AFINACAO, 1.6mm Thk
9		72211496		4	CALCO DE AFINACAO, 2mm Thk
11		72208164		1	CALCO DE AFINACAO, 0.9mm Thk
12		72208162		1	CALCO DE AFINACAO, 1.6mm Thk
13		72208165		2	CALCO DE AFINACAO, 2mm Thk
14		{87614252}		1	
15		72208151		1	PLACA
16		11124934		2	PARAFUSO, Hex, M20 x 60, 10.9, Full Thd
17		71415214		2	ARRUELA PLANA
18		72208152		2	CALCO DE AFINACAO, 0.9mm Thk
19		72208153		2	CALCO DE AFINACAO
20		{72208154}		1	
21		72208155		1	CALCO DE AFINACAO
22		72208156		2	CALCO DE AFINACAO, 2mm Thk

2.002	01	p1	12/07

POSITIONER ARM - VERSION (03-04)

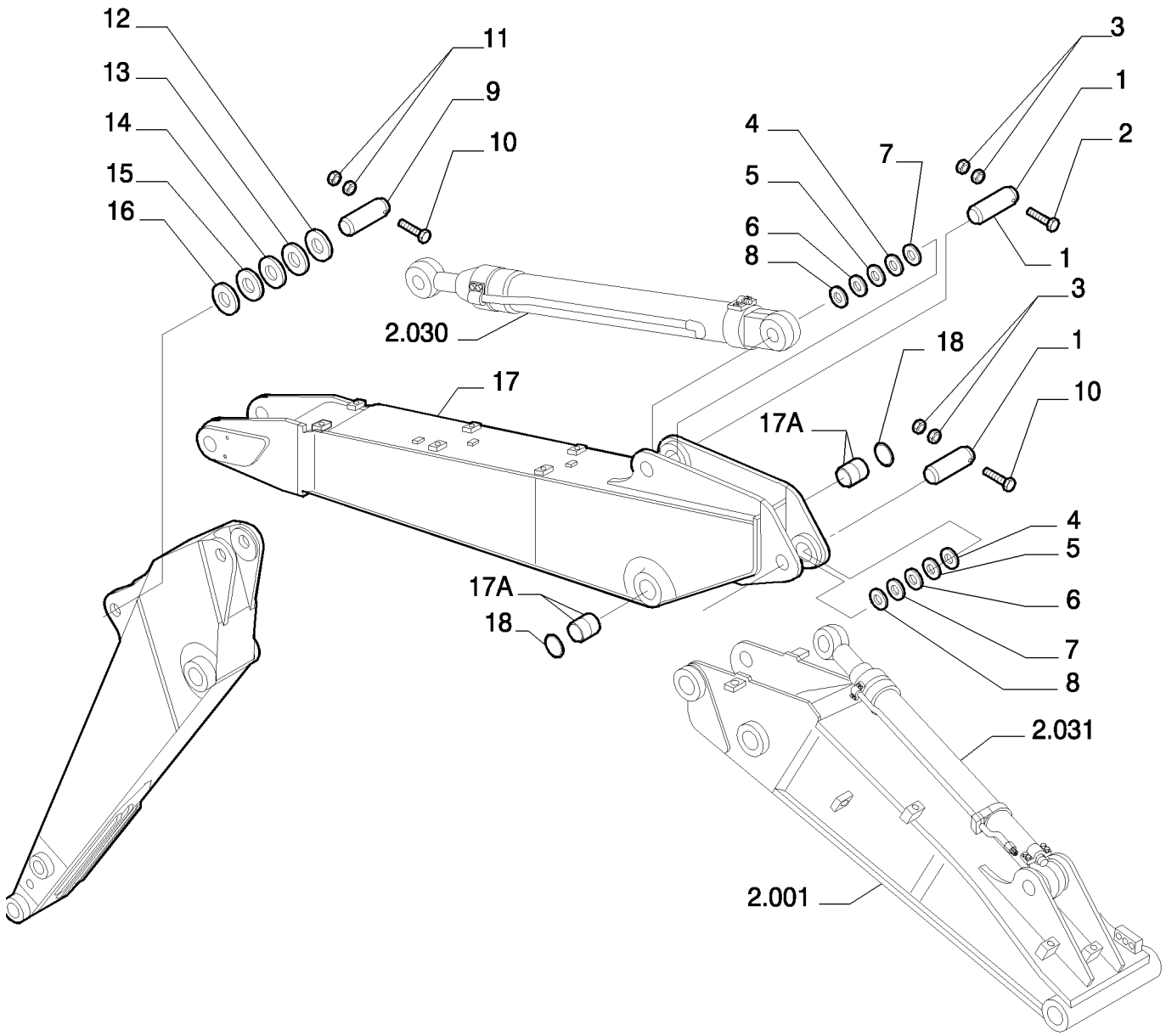

POSITIONER ARM - VERSION (03-04)

REF	FN	PART NUMBER	YR/SN	QTY	DESCRIPTION
1		{87637608}		2	
2		15204034		2	PARAFUSO
3		12163521		6	PORCA, M20, Cl 10
4		72208164		2	CALCO DE AFINACAO, 0.9mm Thk
5		72208161		2	CALCO DE AFINACAO, 1.2mm Thk
6		72208162		2	CALCO DE AFINACAO, 1.6mm Thk
7		72208163		2	CALCO DE AFINACAO, 2.3mm Thk
8		72208165		2	CALCO DE AFINACAO, 2mm Thk
9		{87659217}		1	
10		87334724		1	PARAFUSO
12		72203141		1	CALCO DE AFINACAO, 0.9mm Thk
13		72211371		1	CALCO DE AFINACAO, 1.2mm Thk
14		72203157		1	CALCO DE AFINACAO, 1.6mm Thk
15		72211372		1	CALCO DE AFINACAO, 2.3mm Thk
16		72203145		2	CALCO DE AFINACAO, 2mm Thk
17		{87594872}		1	- ASSY
17A		72212069		1	BUCHA
18		71430067		1	ANEL VEDADOR

2.030	01	p1	12/07

BOOM PIPING - VERSION (01-02)

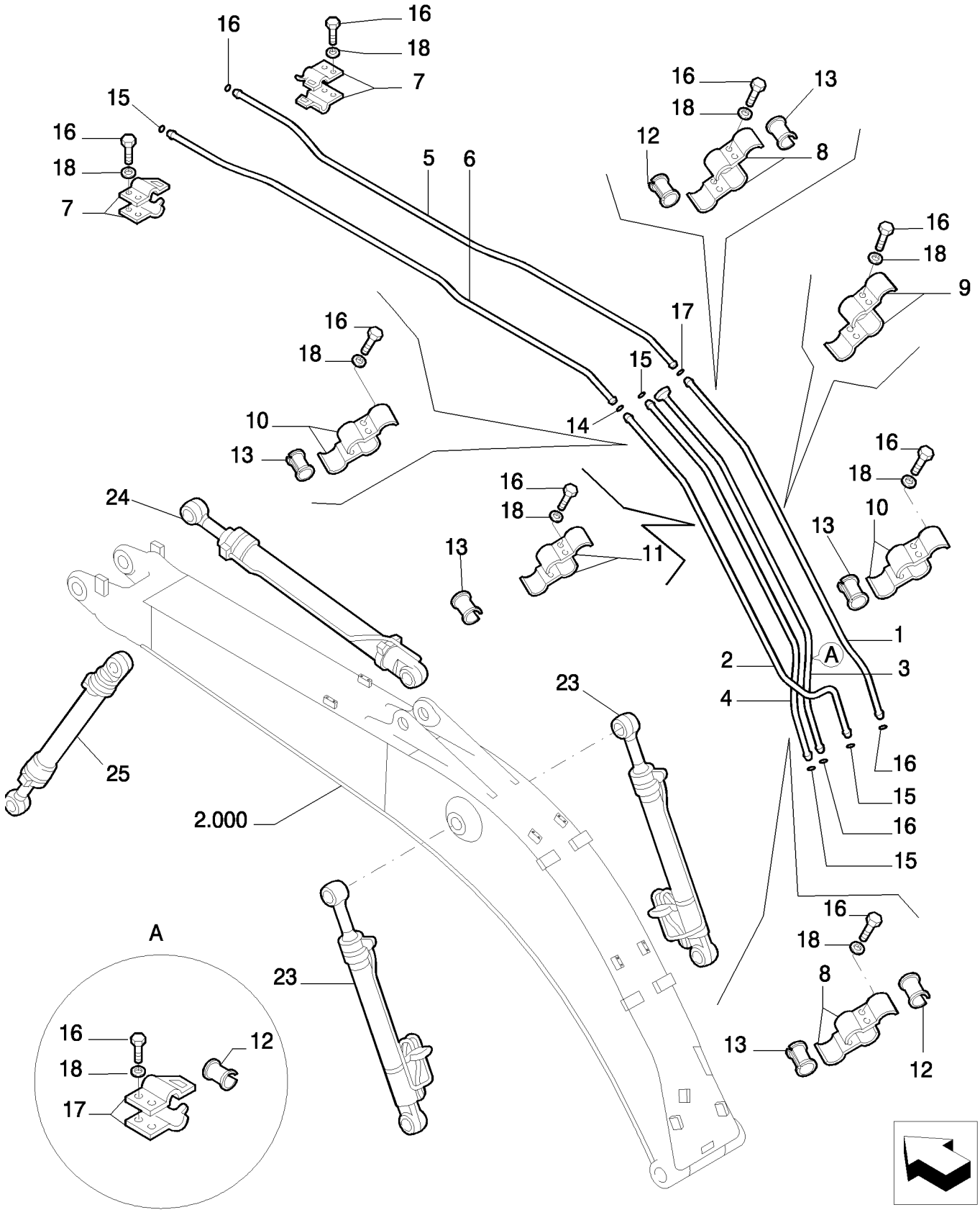

BOOM PIPING - VERSION (01-02)

REF	FN	PART NUMBER	YR/SN	QTY	DESCRIPTION
1		{87652639}		1	
2		{87652643}		1	
3		{87643345}		1	
4		{87652647}		1	
5		{87652653}		1	
6		{87652663}		1	
7		87343093		4	SUPORTE
8		87349655		4	SUPORTE
9		87343330		2	SUPORTE
10		87343337		4	SUPORTE
11		87343335		2	SUPORTE
12		87349642		3	BUCHA
13		72151580		6	BUCHA
14		71404460		2	ANEL "O"
15		70931640		6	JUNTA
16		11112634		16	PARAFUSO
17		87349673		2	SUPORTE
18		14496731		16	ARRUELA PLANA
19		11112634		10	PARAFUSO
20		14496731		10	ARRUELA PLANA
21		87349673		8	SUPORTE
23	1	{87576751}		2	
24	2	{87631724}		1	
25	3	72113900		1	CILINDRO

(1) ASSY SEE PAGE 2
(2) ASSY SEE PAGE 3
(3) ASSY SEE PAGE 4

2.030	02	p1	12/07

LIFT CYLINDER - COMPONENTS LEVANTAMENTO

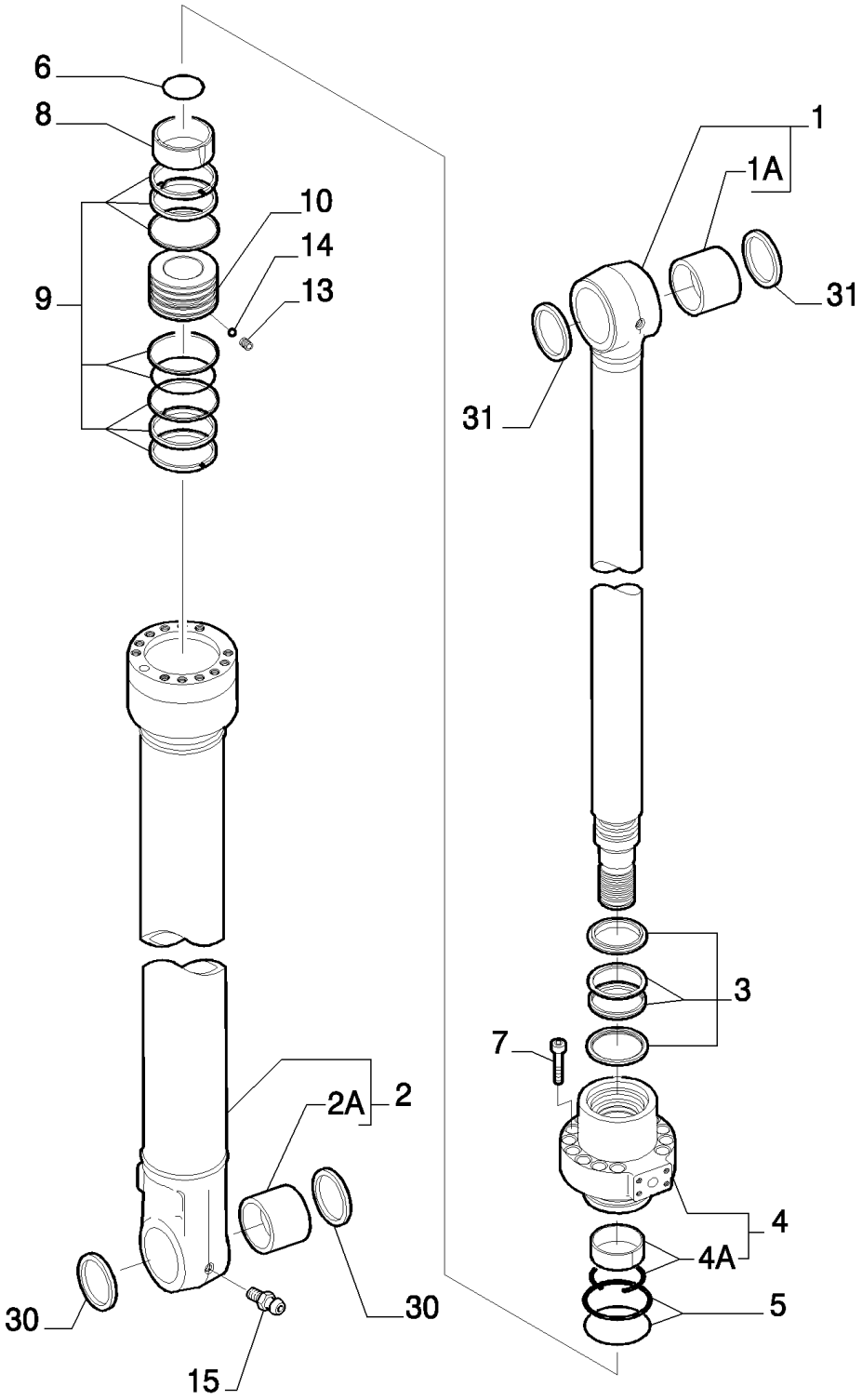

KIT 3-5-9

LIFT CYLINDER - COMPONENTS LEVANTAMENTO

REF	FN	PART NUMBER		YR/SN	QTY	DESCRIPTION
1		{87576752}			1	- ASSY
1A		{72114781}			1	
2		{87576757}			1	- ASSY
2A		72212882			1	BUCHA
3		72104648	X		1	JOGO DE JUNTAS
4		72113825			1	PLACA DE FUNDO, - ASSY
4A		71447902	X		1	KIT
5		72111863	X		1	KIT
6		71465032			1	JUNTA
7		14426774			12	PARAFUSO
8		72114638			1	BUCHA
9		72111860	X		1	KIT
10		{87661723}			1	
13		71445657			1	GUIA
14		71445658			1	ESFERA
15		13407211			2	GRAXEIRA, M10 x 1
30		71420005			2	VEDADOR CILINDRO, 85X100X5
31		71452582			2	ANEL VEDADOR

87575485/REP REP,.DE LEVANTAMENTO COMPLETO (INCLUI ITENS COM X)

LIFT CYLINDER ASSY P/N 87575485

E385B

2.030	03	p1	12/07

DIPPER STICK CYLINDER - COMPONENTS PENETRAÇÃO

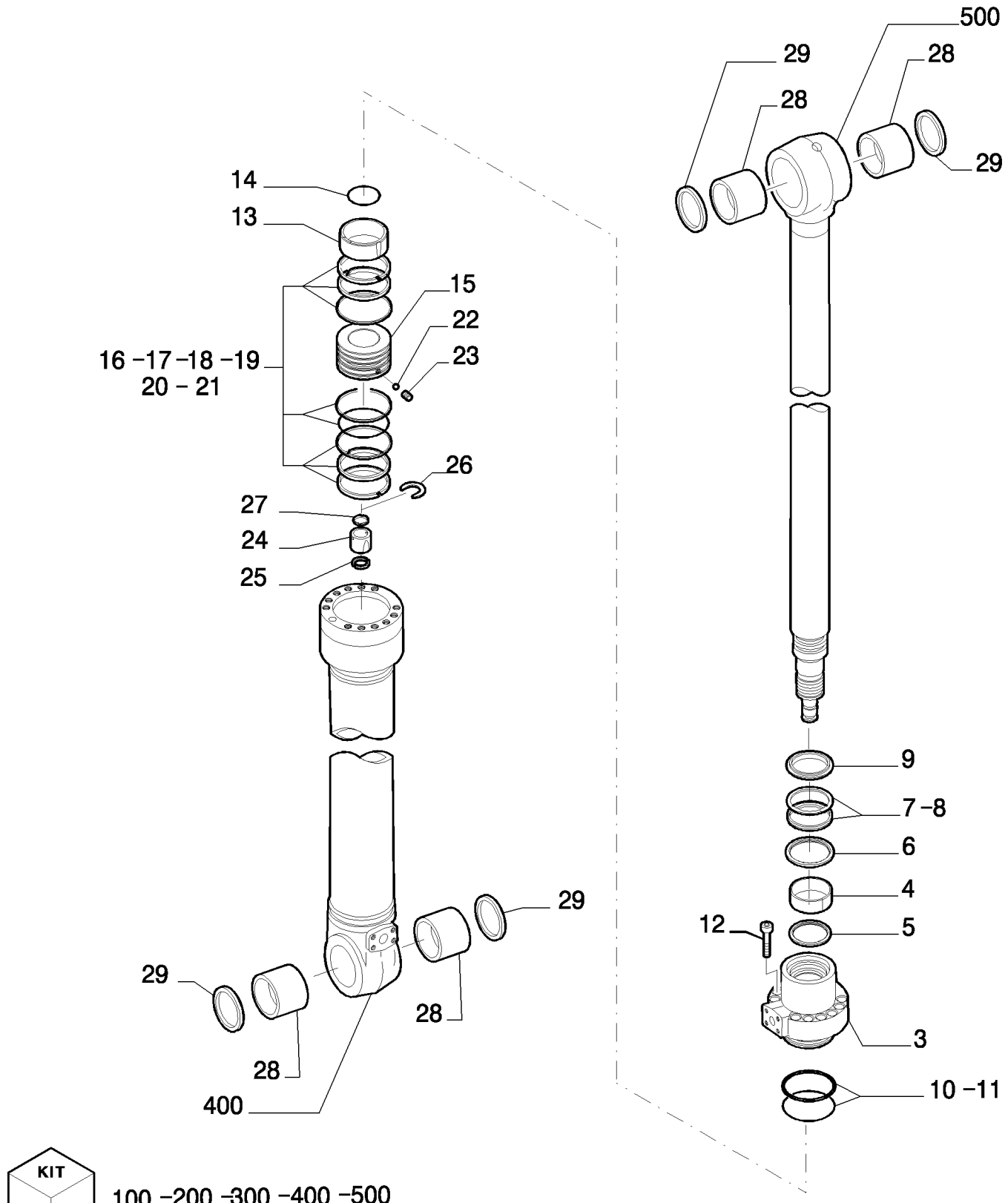

KIT KIT KIT 100 -200 -300 -400 -500

DIPPER STICK CYLINDER - COMPONENTS PENETRAÇÃO

REF	FN	PART NUMBER	YR/SN	QTY	DESCRIPTION
3		{87661702}		1	
4		87333493		1	BUCHA
5		87333494		1	PRENDEDOR
6	1	{87661703}		1	
7	1	{87661704}		1	
8	1	{87661705}		1	
9	1	87333499		1	JUNTA
10	1	87333500		1	ANEL "O"
11	1	87333501		1	VEDADOR ESPECIAL
12		87333502		12	PARAFUSO
13		{87661706}		1	
14	2	{87661707}		1	
15		{87661708}		1	
16	2	87333507		1	ANEL
17	2	87333509		1	VEDADOR ESPECIAL
18	2	{87661709}		1	
19	2	87333511		1	ANEL
20		87333512		1	CALCO DE AFINACAO
21		{87661710}		1	
22		87333514		1	PARAFUSO
23		87333515		1	ESFERA
24		{87661711}		1	
25	2	87333517		1	ANEL DE VEDACAO
26		87333518		2	BATENTE
27		87333519		1	PRENDEDOR
28		{87661712}		1	
29		87333481		1	PALHETA LIMP. PÁRA-BRISA
100		{87661713}		1	
200		{87661714}		1	
300		{87661715}		1	
400		{87661716}		1	
500		{87661717}		1	

(1) KIT - 87661713 X
(2) KIT - 87661714 X

87622683/REP REP.DE PENETRAÇÃO COMPLETO (INCLUI 1 E 2)

DIPPER STICK CYLINDER ASSY P/N 87622683

E385B

2.030	04	p1	12/07

BUCKET CYLINDER - COMPONENTS CAÇAMBA

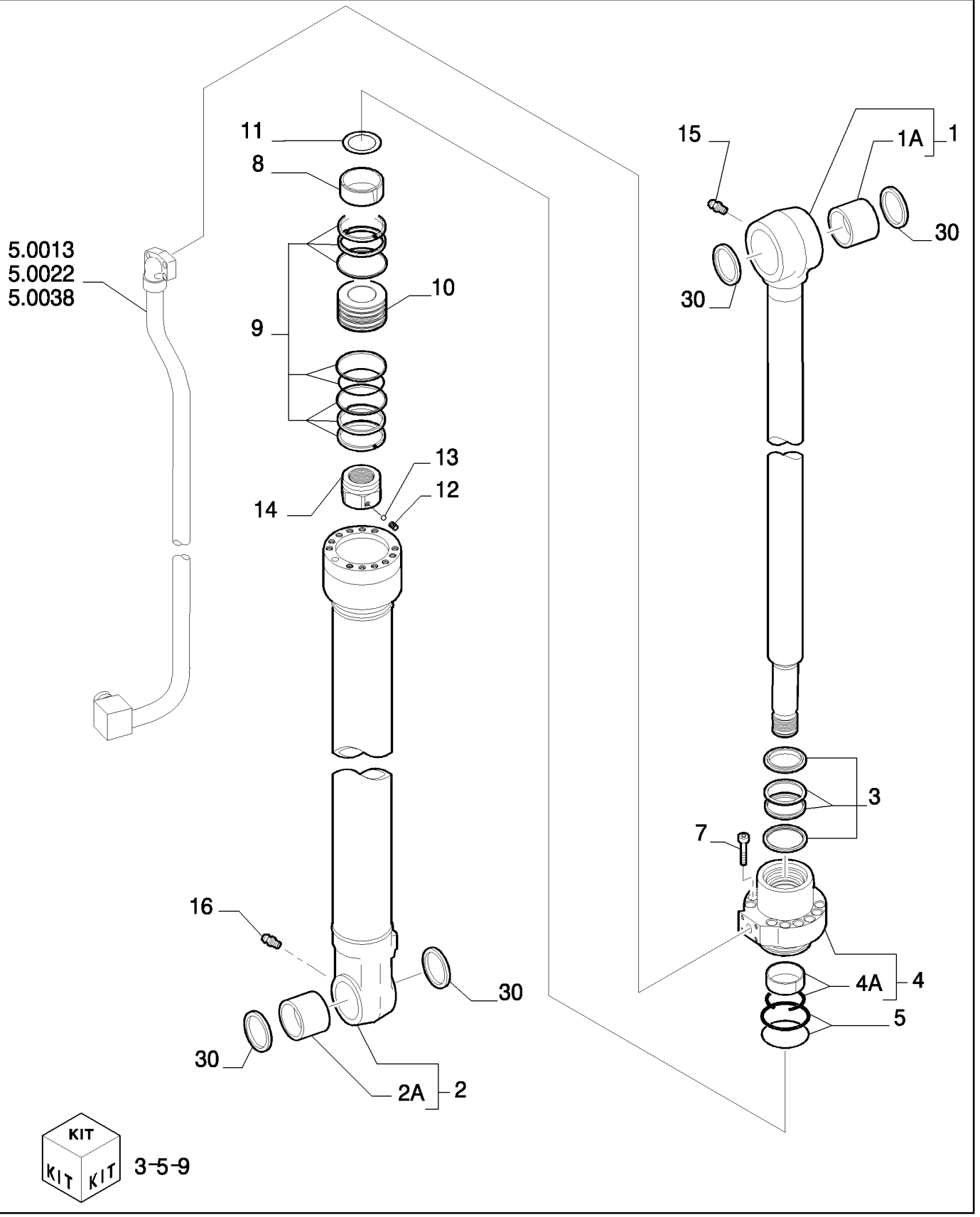

BUCKET CYLINDER - COMPONENTS CAÇAMBA

REF	FN	PART NUMBER	YR/SN	QTY	DESCRIPTION
1-30		72113900		1	CILINDRO, - ASSY
1		72113901		1	HASTE, - ASSY
1A		72212884		1	BUCHA
2		72113905		1	CORPO DO CILINDRO, - ASSY
2A		72212884		1	BUCHA
3		72104633 X		1	KIT
4		71471307		1	CABEÇOTE, - ASSY
4A		71447621 X		1	KIT
5		71418539 X		1	KIT
7		14432774		10	PARAFUSO, 20X2.5X80
8		71471309		1	BUCHA
9		71418542 X		1	JOGO DE JUNTAS
10		71418545		1	PISTÃO
11		71445656		1	ARRUELA PLANA
12		71445657		1	GUIA
13		71445658		1	ESFERA
14		72113929		1	PORCA
15		13407211		1	GRAXEIRA, M10 x 1
16		71433287		1	GRAXEIRA
30		71415090		4	VEDADOR CILINDRO

72113900/REP. ,REP.DE BASCULAMENTO COMPLETO (INCLUI 3, 4A, 5, 9)

2.031	01	p1	12/07

BOOM PIPING - VERSION (03-04)

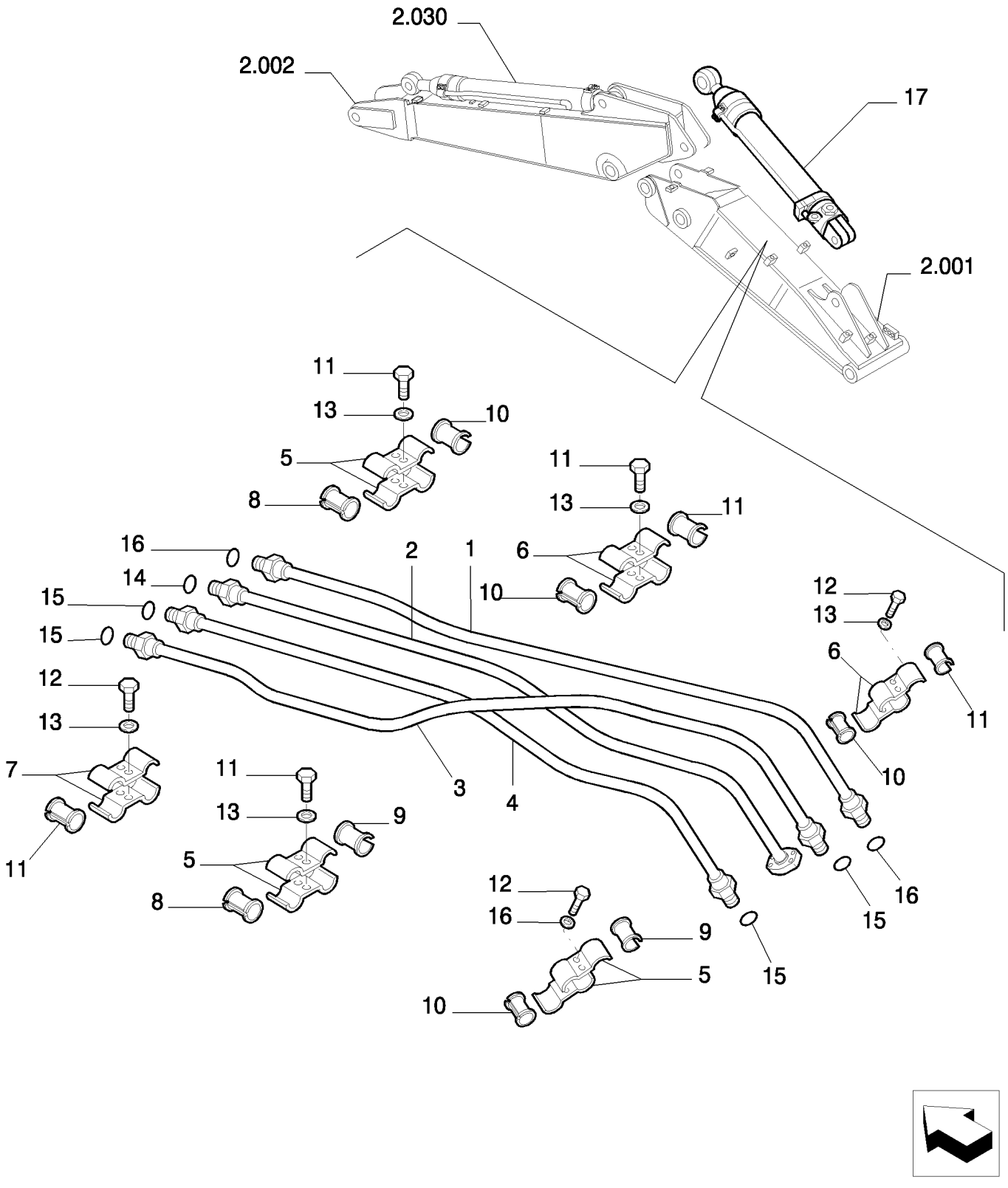

BOOM PIPING - VERSION (03-04)

REF	FN	PART NUMBER	YR/SN	QTY	DESCRIPTION
1		{87662126}		1	
2		{87662124}		1	
3		{87632074}		1	
4		{87662122}		1	
5		87349655		6	SUPORTE
6		87343337		6	SUPORTE
7		11112634		12	PARAFUSO
8		87349642		3	BUCHA
9		14496731		12	ARRUELA PLANA
10		72151580		9	BUCHA
11		70931640		6	JUNTA
12		71404460		1	ANEL "O"
17	1	{87694241}		1	

(1) ASSY SEE PAGE 3

2.031	02	p1	12/07

BOOM PIPING - VERSION (03-04)

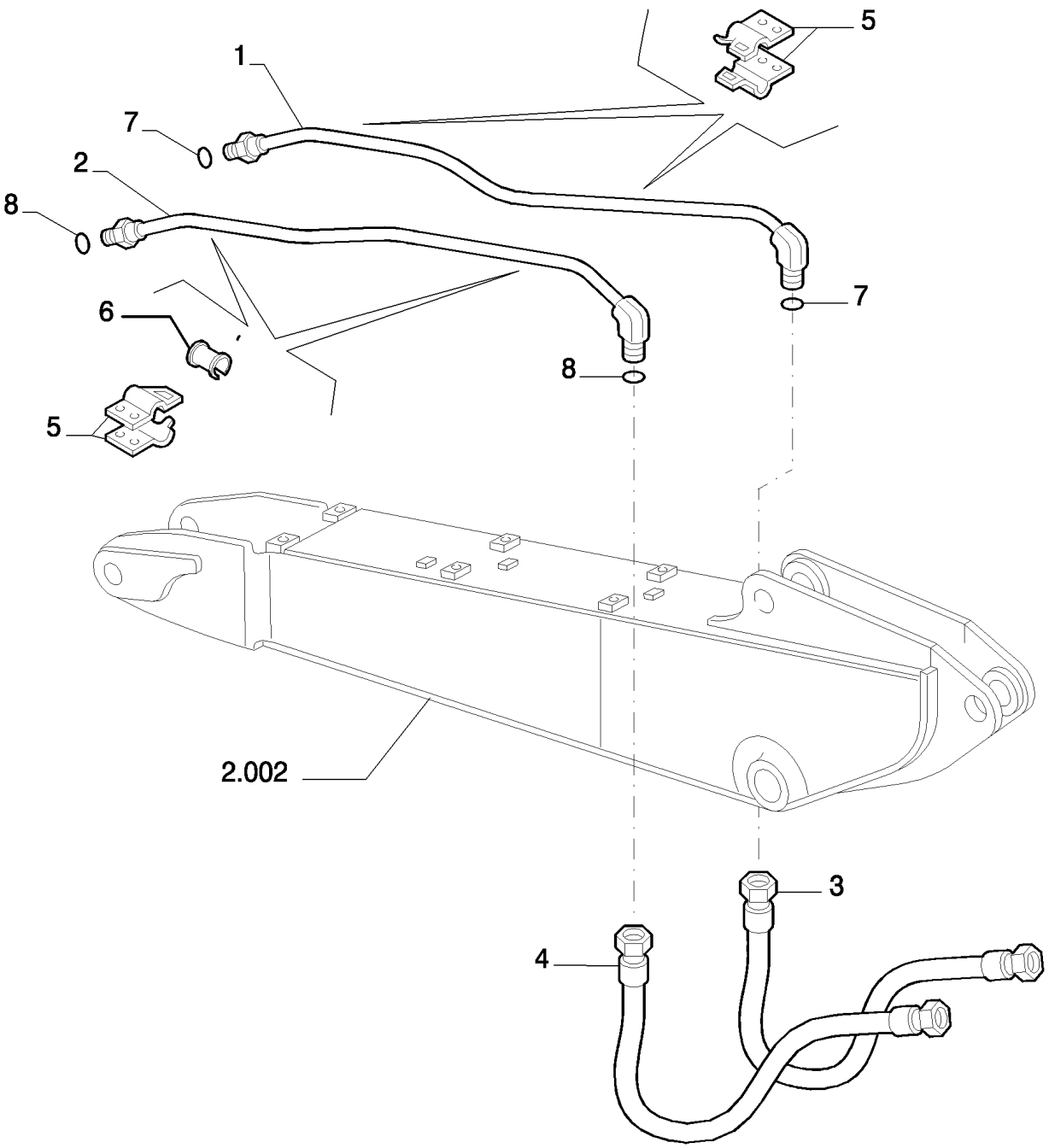

BOOM PIPING - VERSION (03-04)

REF	FN	PART NUMBER	YR/SN	QTY	DESCRIPTION
1		{87662144}		1	
2		{87662146}		1	
3		{87662148}		1	
4		87349692		12	SUPORTE
5		70931640		4	JUNTA
6		72151580		6	BUCHA
7		11112634		12	PARAFUSO
8		14496731		12	ARRUELA PLANA

2.031	03	p1	12/07

POSITIONER CYLINDER - COMPONENTS - VERSION (03-04) POSICIONAMENTO

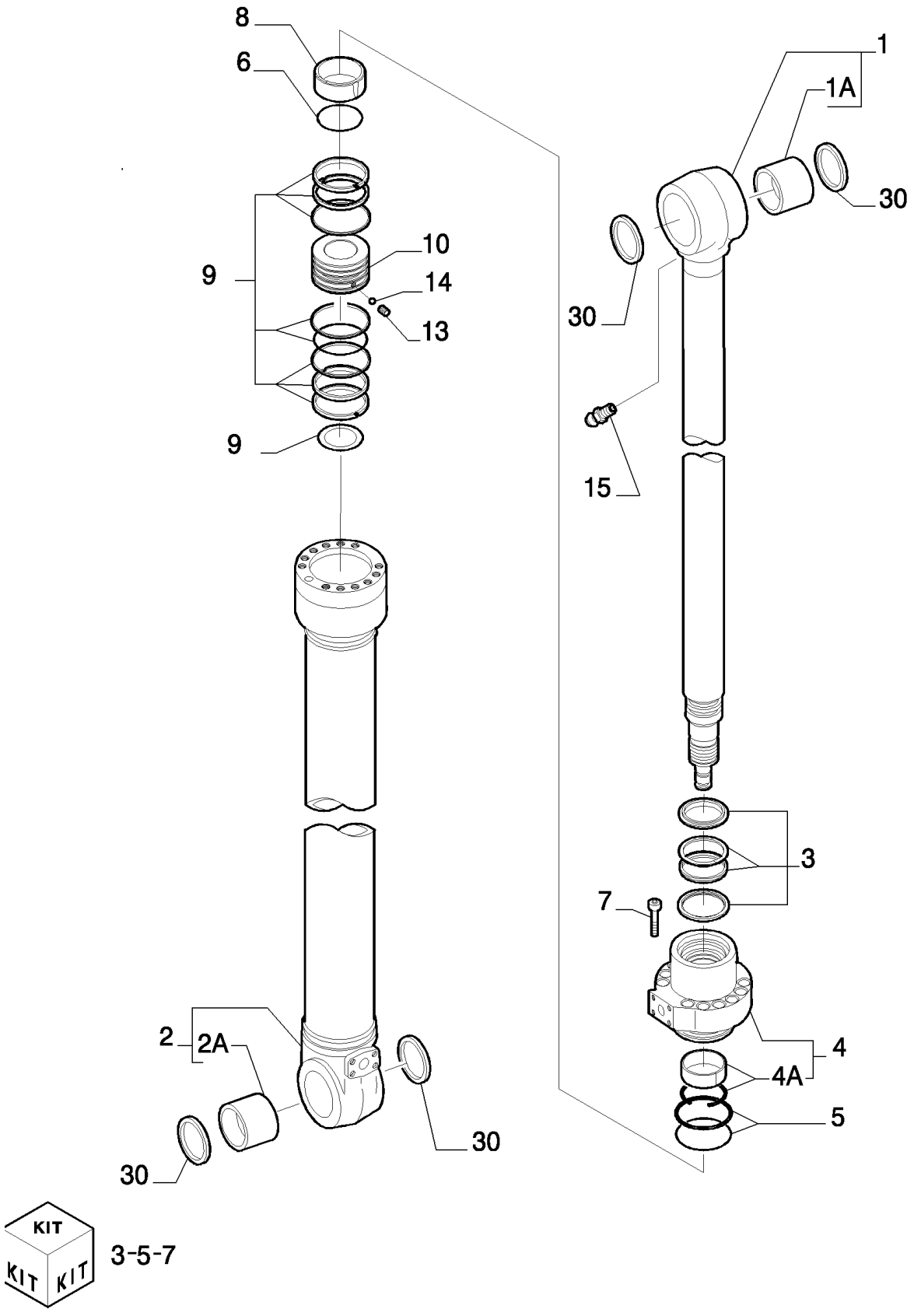

KIT 3-5-7

POSITIONER CYLINDER - COMPONENTS - VERSION (03-04) POSICIONAMENTO

REF	FN	PART NUMBER		YR/SN	QTY	DESCRIPTION
1		72114441			1	HASTE, - ASSY
1A		{72214442}			1	
2		72114445			1	CORPO DO CILINDRO, - ASSY
2A		72212881			1	BUCHA
3		72114473	X		1	KIT
4		72114452			1	PLACA DE FUNDO, - ASSY
4A		71447903	X		1	KIT
5		71452214	X		1	ANEL DE VEDACAO
6		71470956			12	PARAFUSO
7		71470405			1	JOGO DE JUNTAS
8		72114456			1	ÊMBOLO
9		72114457	X		1	PORCA
10		71470401			1	ESPAÇADOR
11		71470954			1	PRISIONEIRO
12		71470955			1	ESFERA
30		71415282			4	ELEMENTO FILTRANTE

87378500/REP REP.DE POSICIONAMENTO COMPLETO INCLUI (3, 4A, 5, 9

POSITIONER CYLINDER ASSY P/N 87378500

E385B

2.031	04	p1	12/07

POSITIONER SAFETY VALVE - VERSION (03-04)

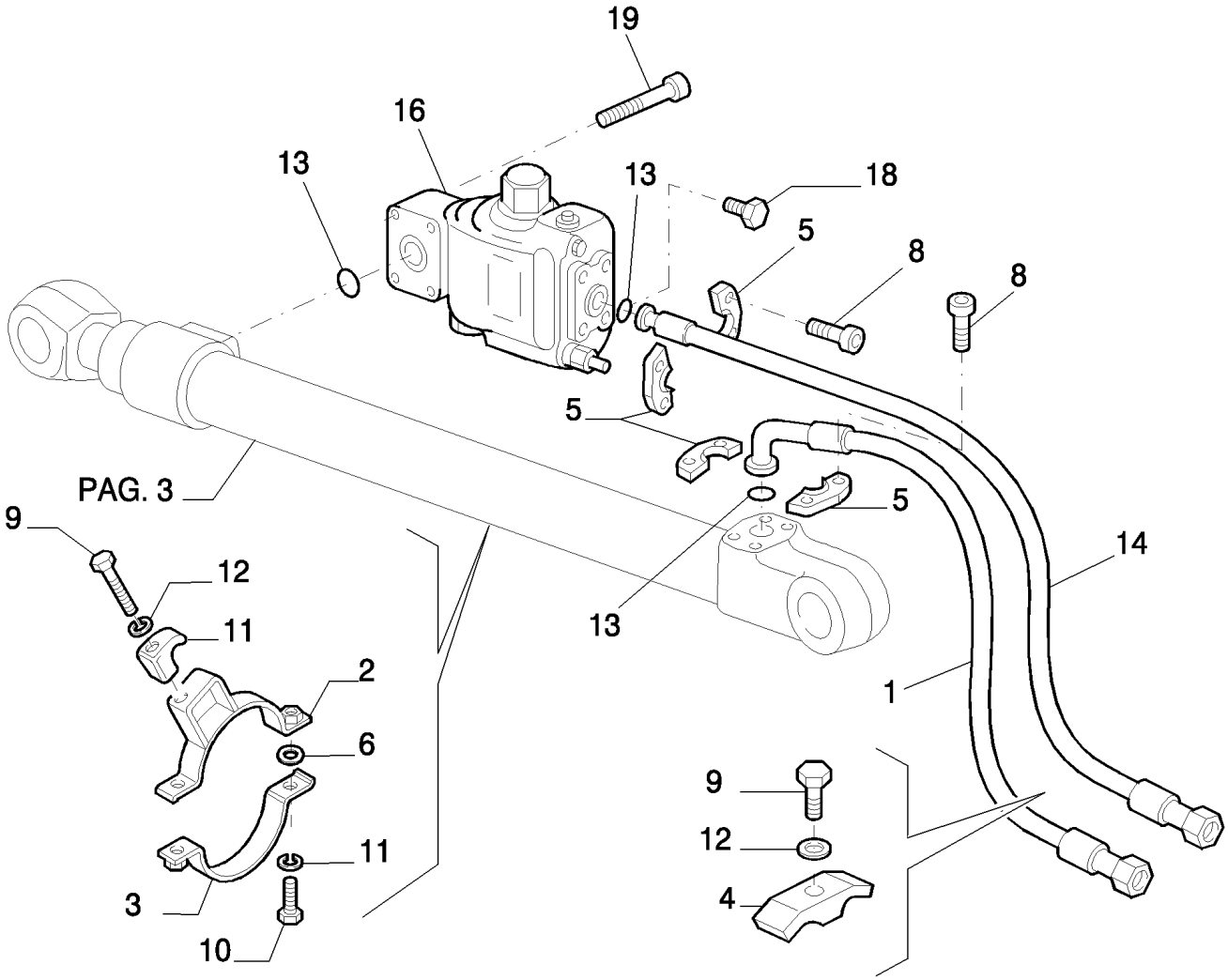

POSITIONER SAFETY VALVE - VERSION (03-04)

REF	FN	PART NUMBER	YR/SN	QTY	DESCRIPTION
1		{87662133}		1	
2		{87632069}		1	
3		{87632065}		1	
4		87396733		1	SUPORTE
5		71404313		4	SEMI- FLANGE
6		72205175		2	ESPAÇADOR
7		11106634		2	PARAFUSO, Hex, M10 x 35, 10.9, Full Thd
8		14422234		8	PARAFUSO
9		{1113734}		2	
10		10516874		2	ARRUELA-TRAVA
11		87396734		1	SUPORTE
12		10517074		1	ARRUELA-TRAVA
13		71404169		3	ANEL "O"
14		{87662134}		1	
15		{87662132}		1	
16	1	87353360		1	VÁLVULA HIDRAULICA
18		72214663		1	BUJÃO
19		14422934		4	PARAFUSO

(1) ASSY SEE PAGE 6

2.031	05	p1	12/07

POSITIONER SAFETY VALVE - VERSION (03-04)

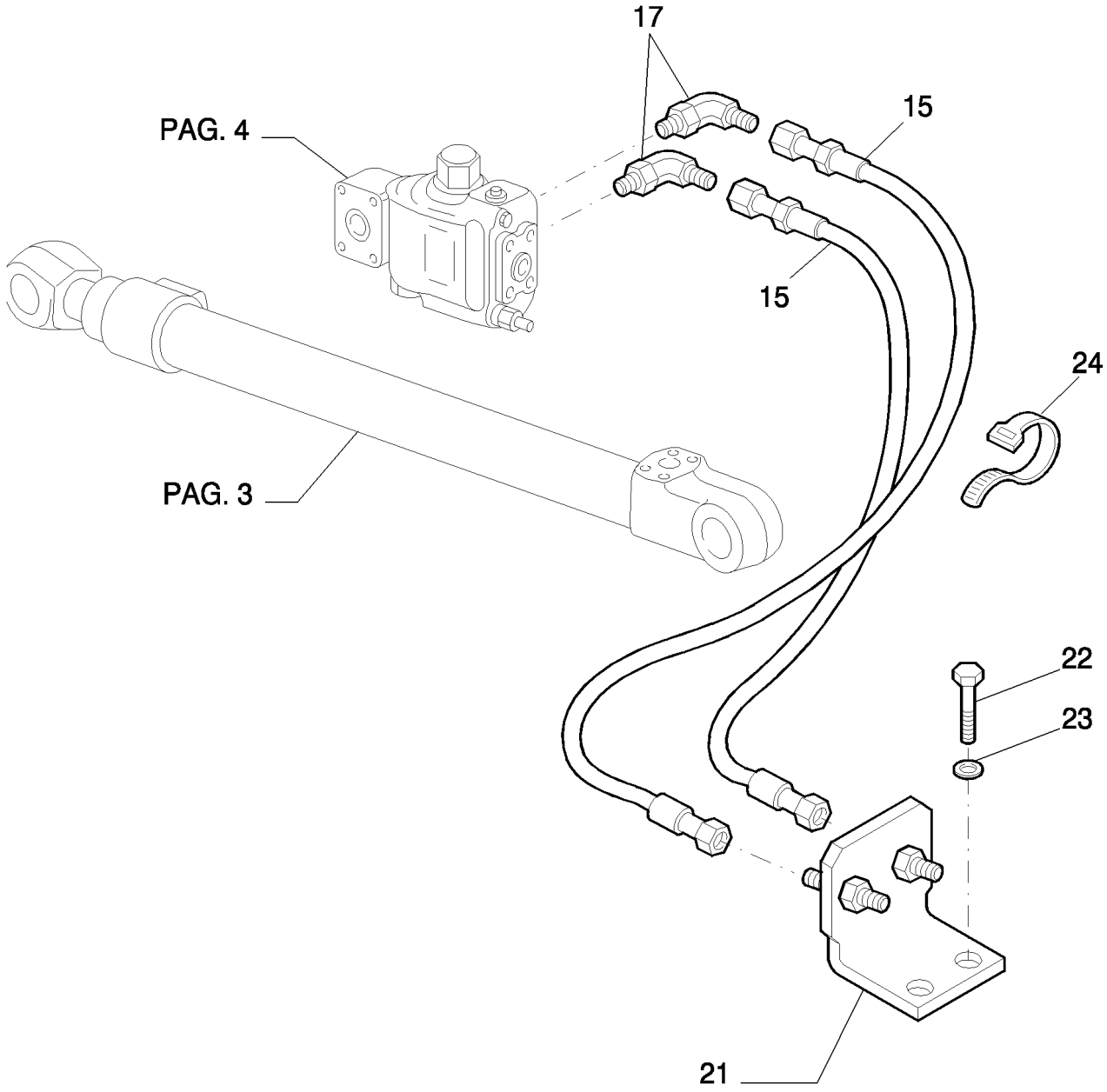

POSITIONER SAFETY VALVE - VERSION (03-04)

REF	FN	PART NUMBER	YR/SN	QTY	DESCRIPTION
15		{87662132}		2	
17		72214548		2	CONEXÃO
21		87632055		1	SUPORTE
22		11106234		2	PARAFUSO, Hex, M10 x 25, 10.9, Full Thd
23		14496631		2	ARRUELA PLANA, M10 x 21 x 2
24		72951499		7	FIXADOR

POSITIONER SAFETY VALVE - COMPONENTS - VERSION (03-04)

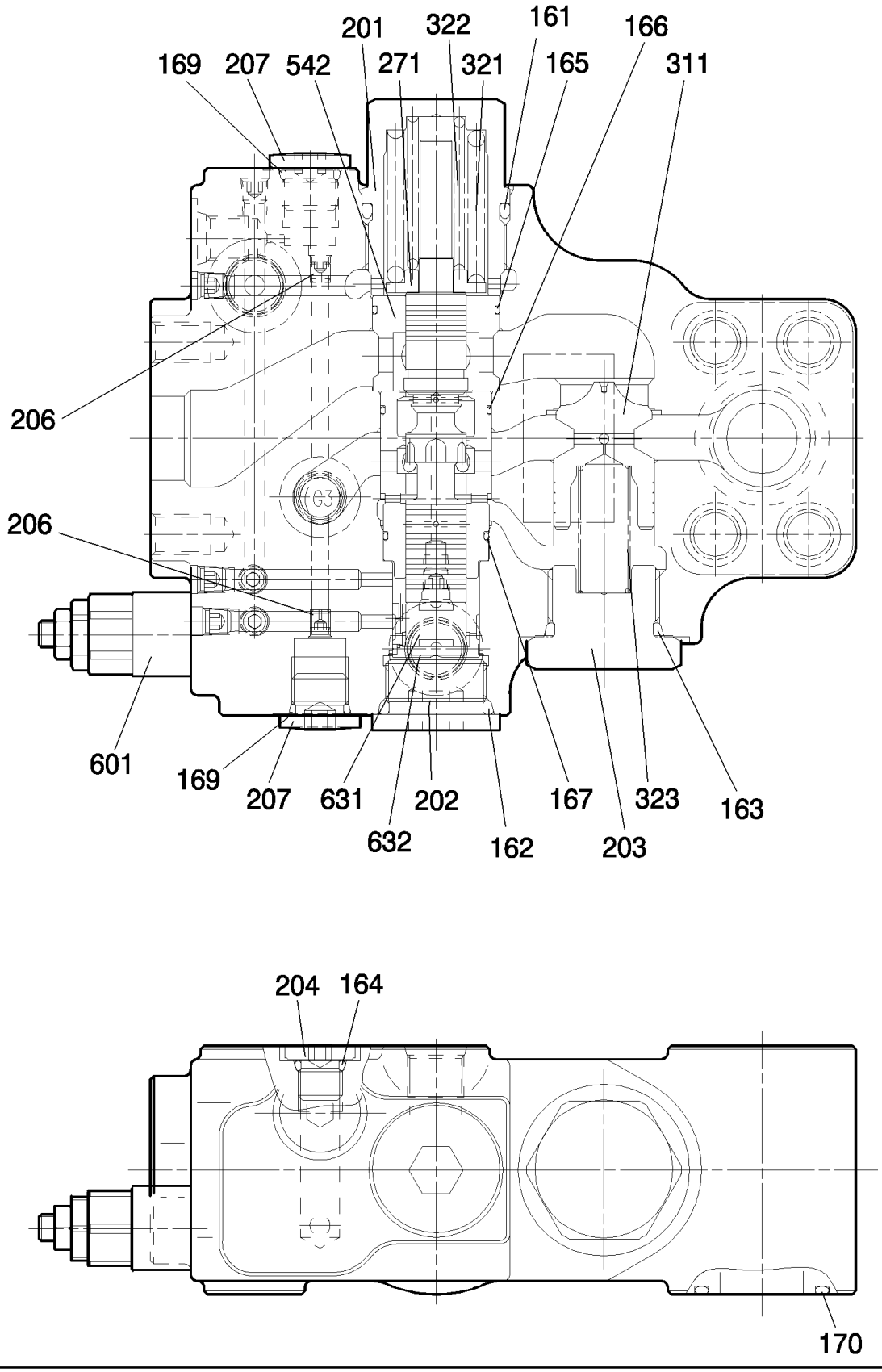

POSITIONER SAFETY VALVE - COMPONENTS - VERSION (03-04)

REF	FN	PART NUMBER	YR/SN	QTY	DESCRIPTION
161		71444332		1	ANEL "O"
162		72209989		1	ANEL "O"
163		72210050		1	ANEL "O"
164		72209827		1	ANEL "O"
165		YN28V00019S165		1	ANEL "O"
166		72957825		1	ANEL "O"
167		YN28V00019S167		1	ANEL "O"
169		72209820		2	ANEL "O"
170		72209830		1	ANEL "O"
201		YN28V00019S201		1	BUJÃO
202		2436U1198S551		1	BUJÃO
203		YN28V00019S203		1	BUJÃO
204		72209843		1	BUJÃO
206		YN28V00019S206		2	ANEL
207		72210074		2	BUJÃO
271		YN28V00019S271		1	SEDE/ALOJAMENTO
311		YN28V00019S311		1	SUPORTE
321		YN28V00019S321		1	MOLA
322		YN28V00019S322		1	MOLA
323		YN28V00019S323		1	MOLA
542		YN28V00019S542		1	BUCHA
601		YN22V00037F1		1	VÁLVULA HIDRAULICA
631		YN28V00019S631		1	PISTÃO
632		YN28V00019S632		1	PISTÃO

VALVE ASSY P/N 87353360

2.040	01	p1	12/07

LUBRIC. FITTING PIPING - VERSION (01-02)

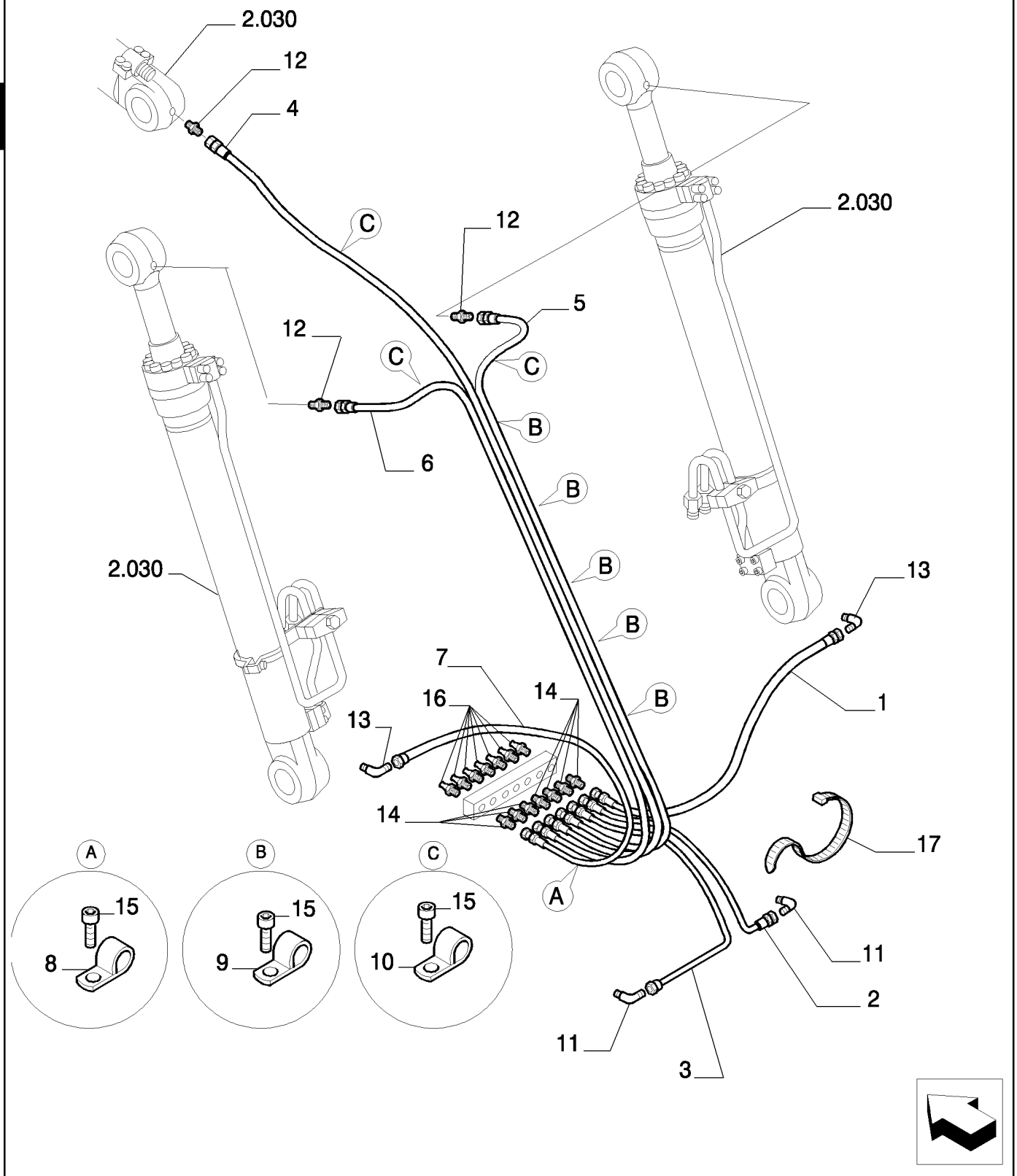

LUBRIC. FITTING PIPING - VERSION (01-02)

REF	FN	PART NUMBER	YR/SN	QTY	DESCRIPTION
1		{87693942}		1	
2		{87693944}		1	
3		{87693945}		1	
4		{87693946}		1	
5		{87693947}		1	
6		{87693948}		1	
7		{87693949}		1	
8		72220290		1	BRACADEIRA
9		10441690		2	BRAÇADEIRA
10		72219899		3	SUPORTE
11		87557723		2	CONEXÃO
12		87557724		3	CONEXÃO
13		87557774		2	CONEXÃO
14		87557773		7	CONEXÃO
15		14305134		7	PARAFUSO
16		13407211		7	GRAXEIRA, M10 x 1
17		4982514		R	TIRA DE CABO

2.041	01	p1	12/07

LUBRIC. FITTING PIPING - VERSION (03-04)

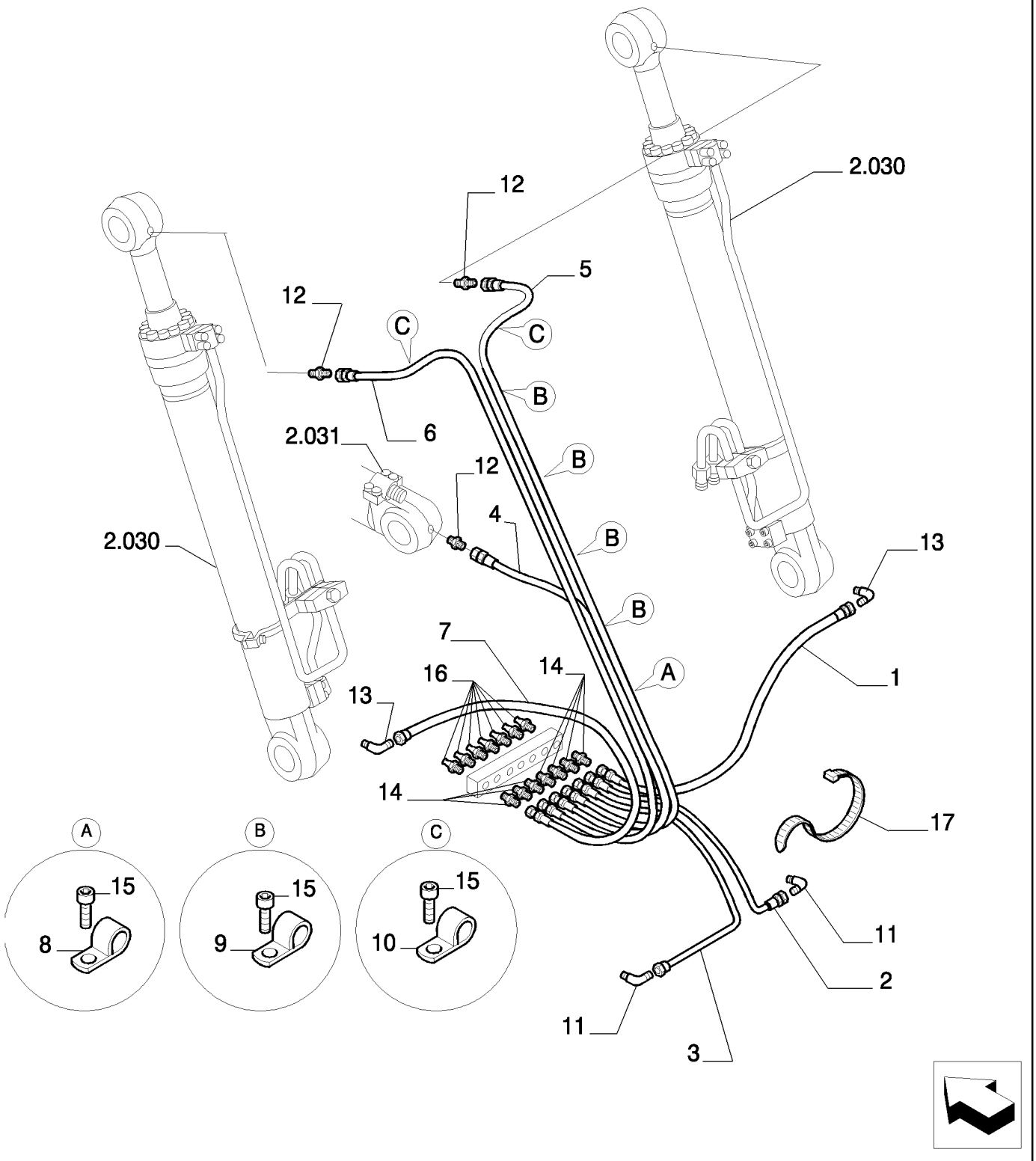

LUBRIC. FITTING PIPING - VERSION (03-04)

REF	FN	PART NUMBER	YR/SN	QTY	DESCRIPTION
1		{87694241}		1	
2		{87694242}		1	
3		{87694243}		1	
4		{87694244}		1	
5		{87694245}		1	
6		{87694246}		1	
7		{87694247}		1	
8		10441690		1	BRAÇADEIRA
9		72219901		4	PRENDEDOR
10		72219899		2	SUPORTE
11		87557723		2	CONEXÃO
12		87557724		3	CONEXÃO
13		87557774		2	CONEXÃO
14		87557773		7	CONEXÃO
15		14305134		7	PARAFUSO
16		13407211		7	GRAXEIRA, M10 x 1
17		4982514		R	TIRA DE CABO

2.041	02	p1	12/07

LUBRIC. FITTING PIPING - VERSION (03-04)

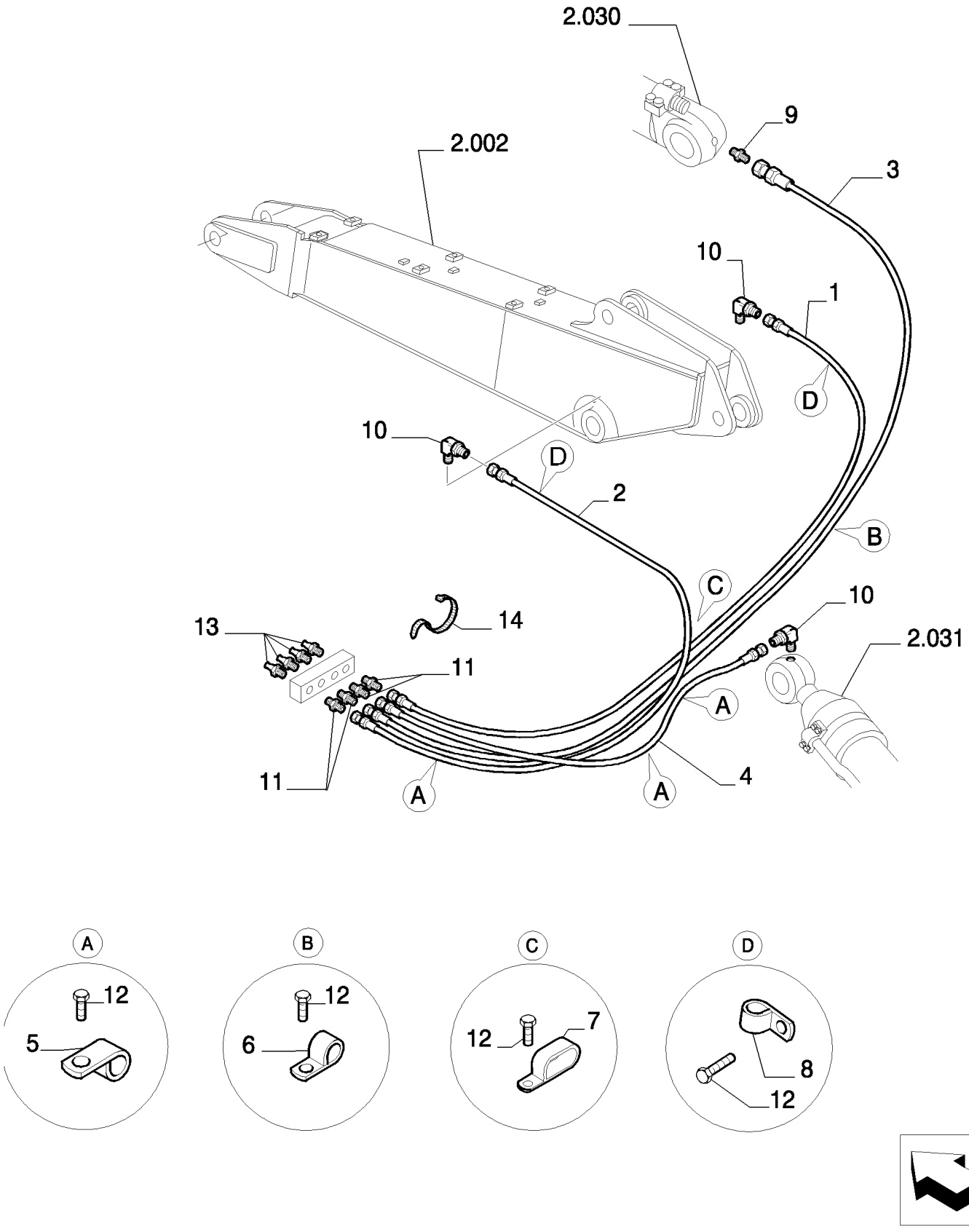

LUBRIC. FITTING PIPING - VERSION (03-04)

REF	FN	PART NUMBER	YR/SN	QTY	DESCRIPTION
1		{87693756}		1	
2		{87693757}		1	
3		{87693758}		1	
4		{87694687}		1	
5		87356265		3	PRENDEDOR
6		10441690		1	BRAÇADEIRA
7		72219901		1	PRENDEDOR
8		72219899		2	SUPORTE
9		87557724		1	CONEXÃO
10		87557774		3	CONEXÃO
11		87557773		4	CONEXÃO
12		14305134		7	PARAFUSO
13		13407211		4	GRAXEIRA, M10 x 1
14		4982514		R	TIRA DE CABO

2.050	01	p1	12/07

BUCKET INSTALLATION

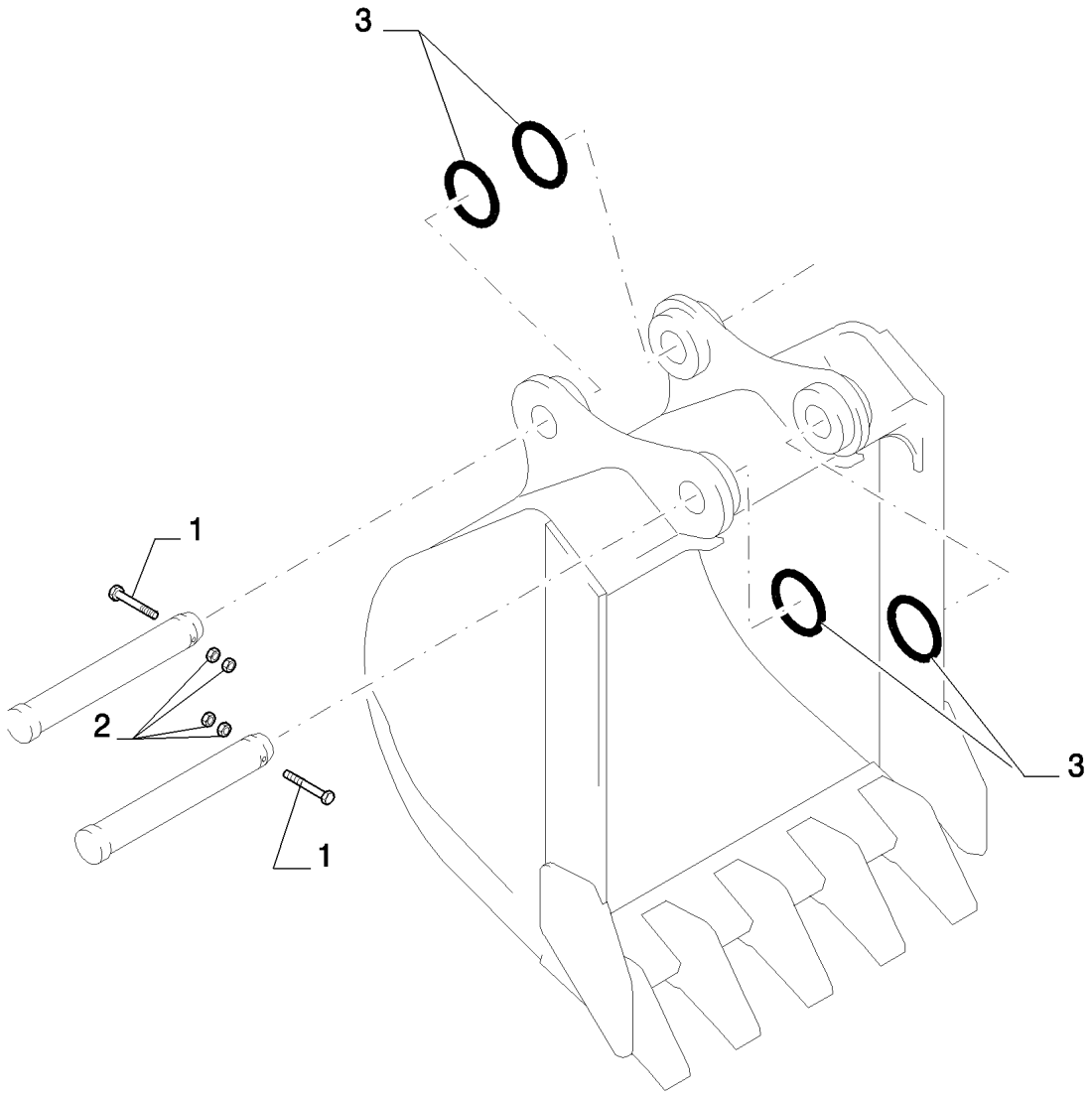

BUCKET INSTALLATION

REF	FN	PART NUMBER	YR/SN	QTY	DESCRIPTION
1		15204034		2	PARAFUSO
2		12163521		4	PORCA, M20, Cl 10
3		{87658895}		4	

SECTION INDEX
Undercarriage

3.000	01	LOWER FRAME - VERSION (01-03)
3.000	02	LOWER FRAME
3.000	03	LOWER FRAME
3.001	01	LOWER FRAME - VERSION (02-04)
3.010	01	TRAVEL REDUCTION UNITS
3.010	02	TRAVEL REDUCTION UNITS - COMPONENTS
3.010	03	TRAVEL REDUCTION UNITS - COMPONENTS
3.010	04	TRAVEL REDUCTION UNITS - COMPONENTS
3.020	01	TRACK IDLER
3.020	02	TRACK IDLER - COMPONENTS
3.020	03	TRACK IDLER - COMPONENTS
3.030	01	TRACK CARRIER ROLLER
3.030	02	TRACK CARRIER ROLLER - COMPONENTS
3.040	01	TRACK ROLLER
3.040	02	TRACK ROLLER - COMPONENTS
3.060	01	ROTARY DISTRIBUTOR
3.060	02	ROTARY DISTRIBUTOR - COMPONENTS
3.070	01	TRAVEL PIPING (LOWER)

3.000	01	p1	12/07

LOWER FRAME - VERSION (01-03)

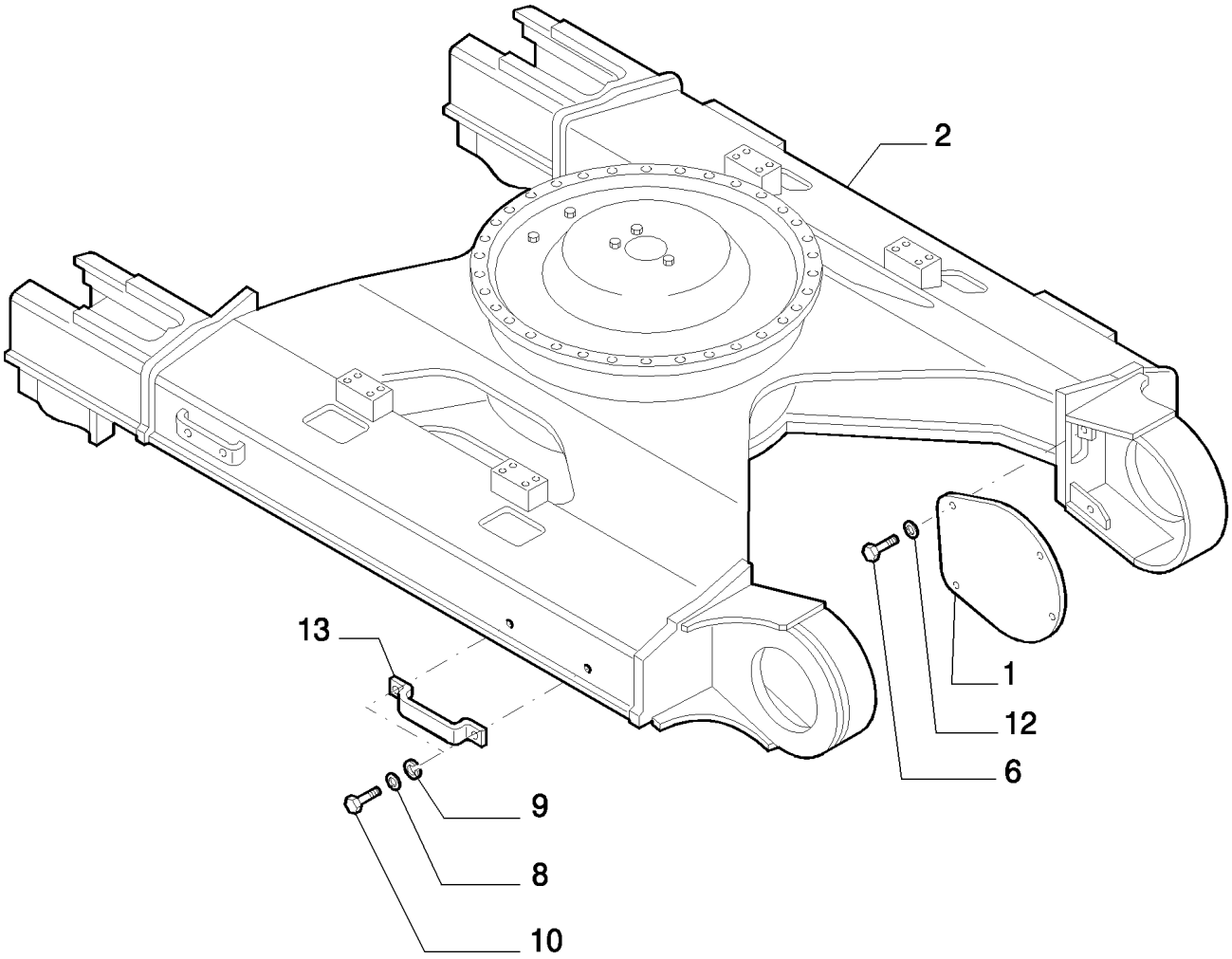

LOWER FRAME - VERSION (01-03)

REF	FN	PART NUMBER	YR/SN	QTY	DESCRIPTION
1		{87597812}		1	
2		{87595569}		1	
6		11112234		8	PARAFUSO, Hex, M12 x 25, 10.9, Full Thd
8		11118734		16	PARAFUSO, 12
9		10517274		16	ARRUELA-TRAVA, 12X24
10		71405003		16	ARRUELA PLANA
12		14496731		8	ARRUELA PLANA
13		71467046		4	PRATELEIRA

3.000	02	p1	12/07

LOWER FRAME

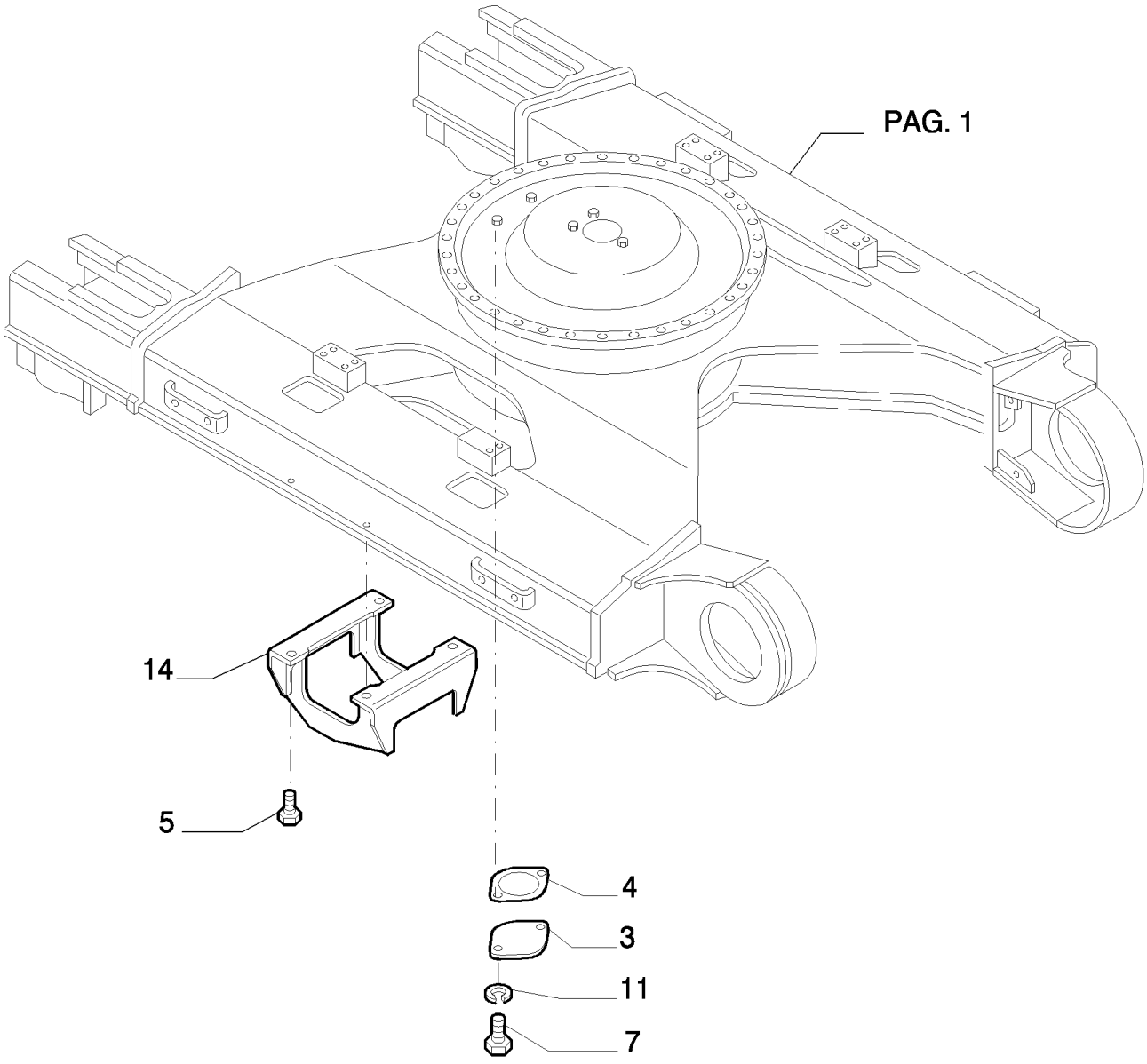

LOWER FRAME

REF	FN	PART NUMBER	YR/SN	QTY	DESCRIPTION
3		71442021		1	FLANGE
4		71442022		1	JUNTA
5		{87614185}		8	
7		11106034		2	PARAFUSO, Hex, M10 x 20, 10.9, Full Thd
11		14496631		2	ARRUELA PLANA, M10 x 21 x 2
14		{87597813}		2	

3.000	03	p1	12/07

LOWER FRAME

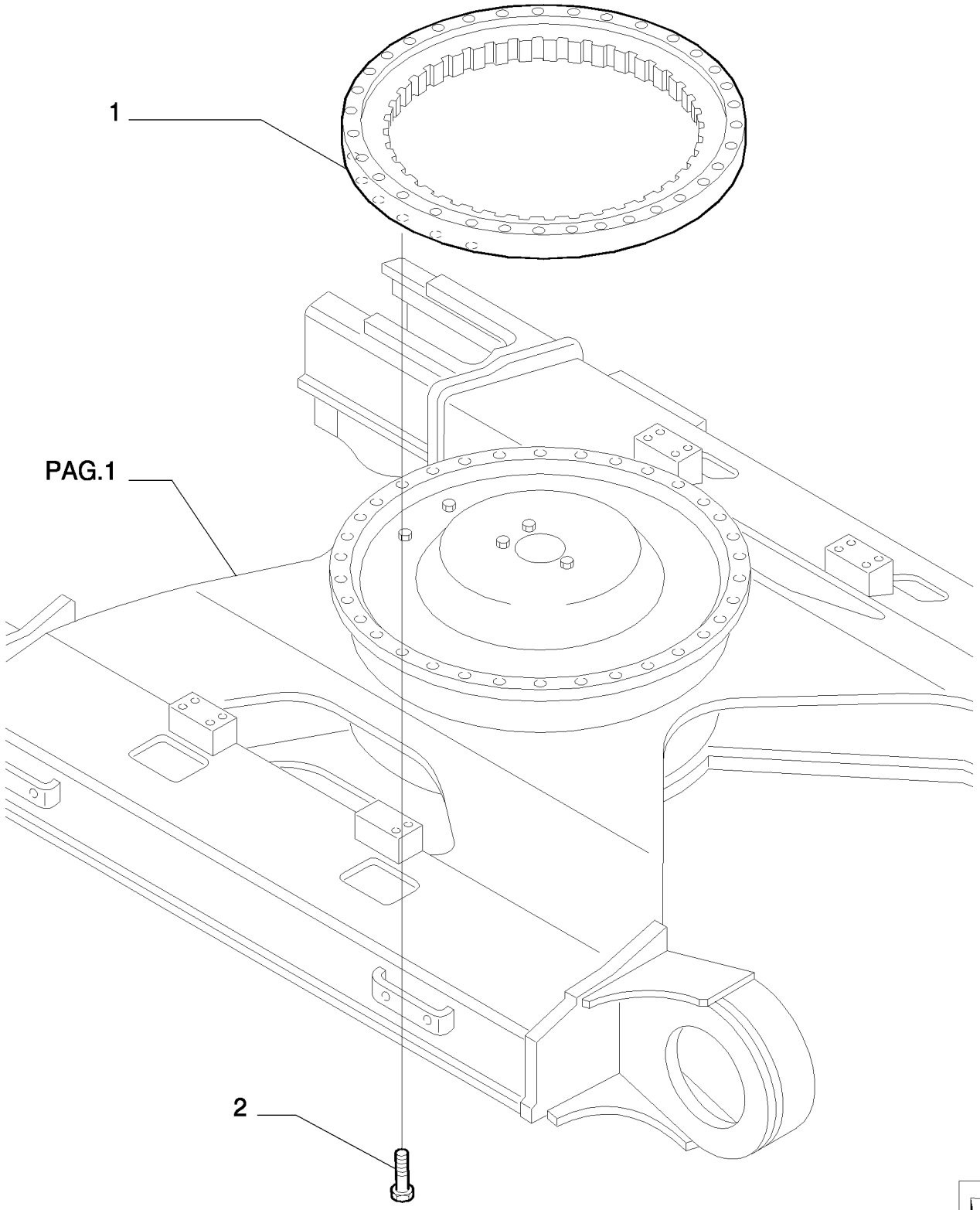

LOWER FRAME

REF	FN	PART NUMBER	YR/SN	QTY	DESCRIPTION
1		{87571491}		1	
2		{87571493}		36	

3.001	01	p1	12/07

LOWER FRAME - VERSION (02-04)

4

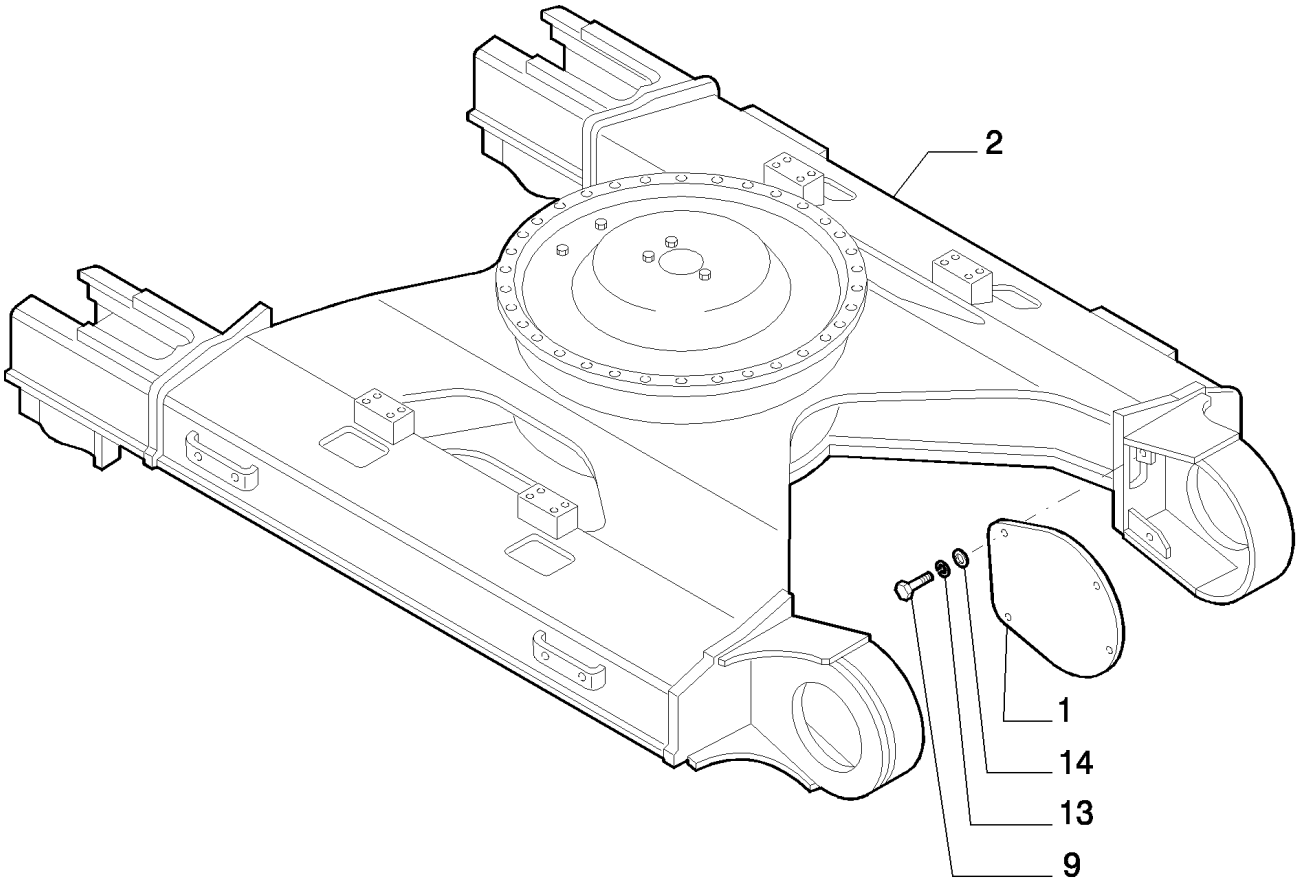

LOWER FRAME - VERSION (02-04)

REF	FN	PART NUMBER	YR/SN	QTY	DESCRIPTION
1		{87570324}		1	
2		{87597034}		1	
9		11112234		8	PARAFUSO, Hex, M12 x 25, 10.9, Full Thd
13		10517074		8	ARRUELA-TRAVA, 12
14		14496731		8	ARRUELA PLANA, 12X24

TRAVEL REDUCTION UNITS

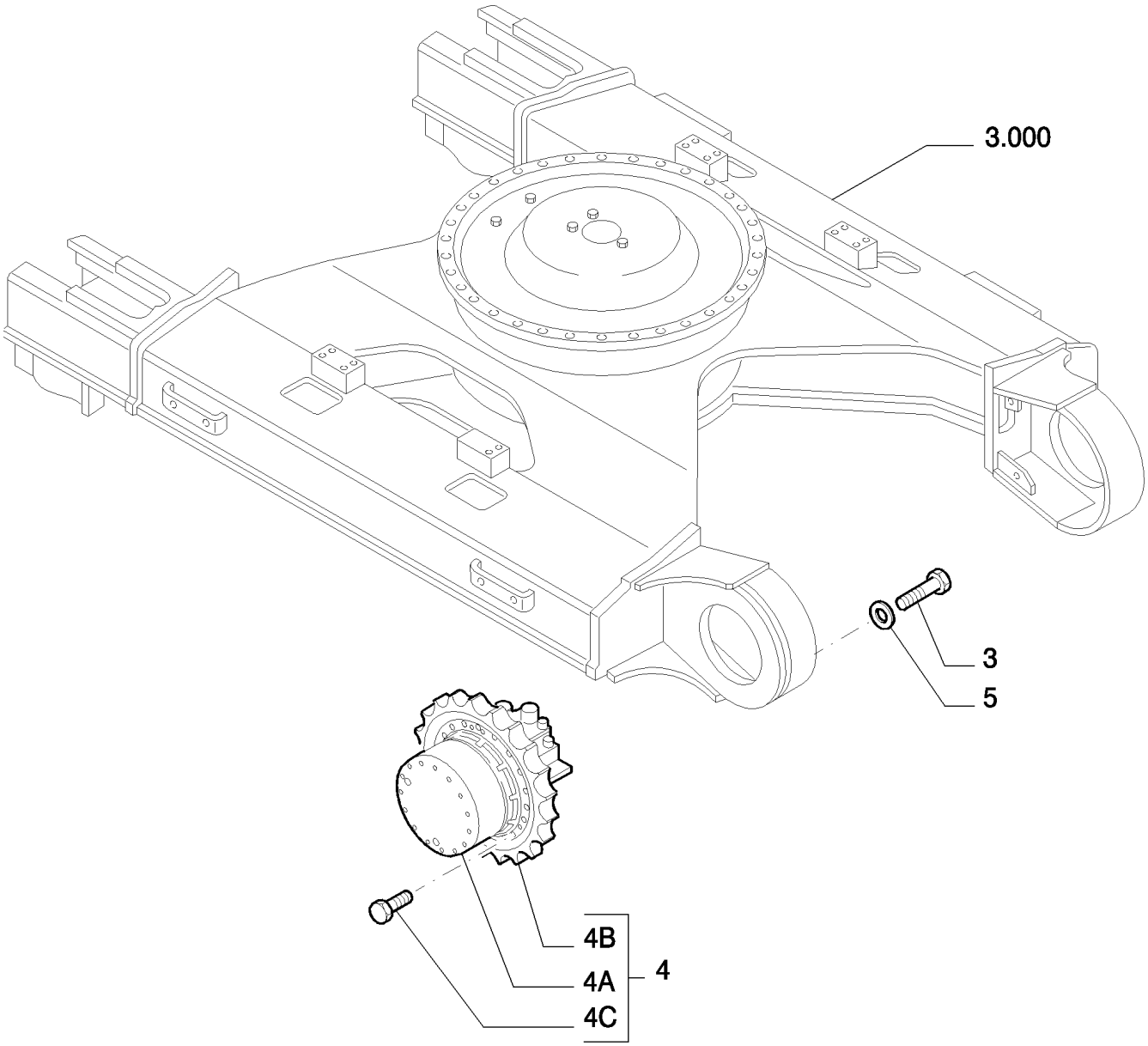

TRAVEL REDUCTION UNITS

REF	FN	PART NUMBER	YR/SN	QTY	DESCRIPTION
3		72208940		36	PARAFUSO
4		{87572072}		2	- ASSY
4A	1	{87572073}		1	
4B		{87572074}		1	
4C		11124874		26	PARAFUSO

(1) ASSY SEE PAGE 2-3-4

TRAVEL REDUCTION UNITS - COMPONENTS

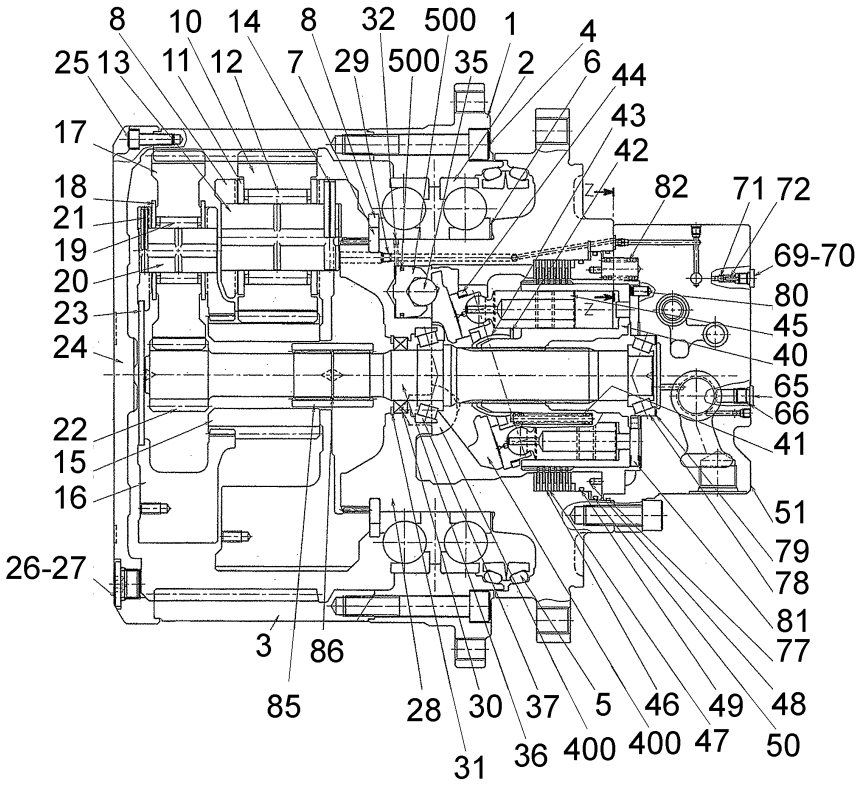

KIT 100-200-300-400-500

TRAVEL REDUCTION UNITS - COMPONENTS

REF	FN	PART NUMBER	YR/SN	QTY	DESCRIPTION
1		LC53D00007S018		1	ALOJAMENTO
2		72215552		2	ROLAMENTO
3		72215550		1	ENGRENAGEM
4		72215764		25	PARAFUSO
5		72215555		1	JUNTA
6	1	87333445		1	CALCO DE AFINACAO
7		72215553		2	ANEL
8		72215554		1	ANEL
9		72215545		1	EIXO
10		LC15V00023S010		3	PLANETÁRIO
11		72215549		6	ANEL
12		LC15V00023S012		3	ROLAMENTO
13		72215546		3	EIXO
14		72215762		3	PINO
15		LC15V00023S015		1	ENGRENAGEM
16		72215537		1	EIXO
17		LC15V00023S017		3	PLANETÁRIO
18		72215540		6	ANEL
19		LC15V00023S019		3	ROLAMENTO
20		72215538		3	EIXO
21		72215761		3	PINO
22		LC15V00023S022		1	ENGRENAGEM
23		72215542		1	PLACA
24		LC15V00023S024		1	TAMPA
25		14420234		18	PARAFUSO
26		72960515		2	BUJÃO
27		72209838		2	ANEL "O"
28		LC15V00023S028		1	ESTOJO
29		LC15V00023S029		1	BUJÃO
30		72215576		1	JUNTA
31		72215571		1	ANEL
32		72215591		1	BUJÃO
35		LC15V00023S035		1	ESFERA
36		72218952		1	EIXO

(1) KIT - LC53D00007R100

MOTOR TRAVEL ASSY P/N 87570331

E385B

TRAVEL REDUCTION UNITS - COMPONENTS

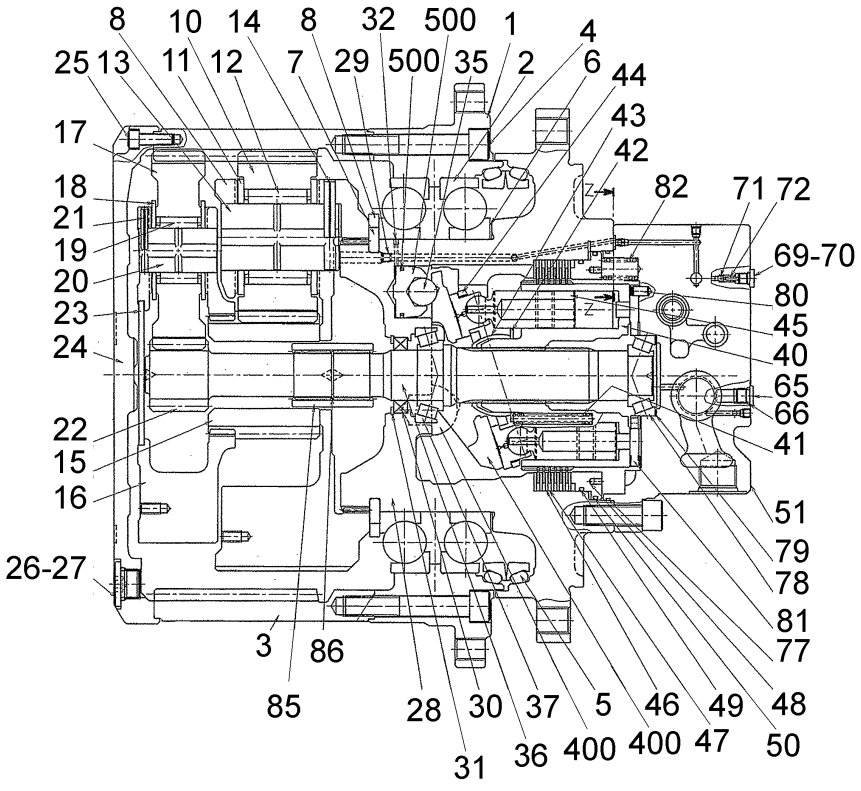

KIT 100-200-300-400-500

TRAVEL REDUCTION UNITS - COMPONENTS

REF	FN	PART NUMBER	YR/SN	QTY	DESCRIPTION
37		72215080		1	TUBO RÍGIDO
40		LC15V00023S040		1	BLOCO
41		2441U1030S29		9	MOLA
42		LC15V00023S042		1	ASSENTO MOLA
43		72215573		1	JUNTA ESFÉRICA
44		72215559		1	ANEL
45	1	GK15V00003S014		9	PISTÃO
46	1	72218950		7	PLACA
47		72215560		6	PARAFUSO
48		72218949		1	ÊMBOLO
49		87333455		1	ANEL "O"
50		87333456		1	ANEL "O"
51		LC15V00023S051		1	TAMPA
66		72209827		2	ANEL "O"
67		LC15V00023S067		2	BRACO DE APOIO
68		LC15V00023S068		2	MOLA
69		72964087		2	BUJÃO
71		72964078		3	VALVULA CHECAGEM
70		72209818		2	ANEL "O"
72		72964081		3	MOLA
77		72215585		1	JUNTA
78		72215581		1	ROLAMENTO
79		LS15V00014S033		1	CALCO DE AFINACAO
80		72215583		1	PINO
81		72215563		1	PLACA
82		87333454		10	MOLA
85		72215565		1	EQUIPAMENTO DE PARTIDA
88		72209821		2	ANEL "O"
100		{LC15V00023R100}		1	
200		{LC15V00023R200}		1	
300		{LC53D00007R100}		1	
400		72215594		1	KIT
500		{LC15V00023R300}		1	

(1) KIT - LC15V00023R100

TRAVEL REDUCTION UNITS - COMPONENTS

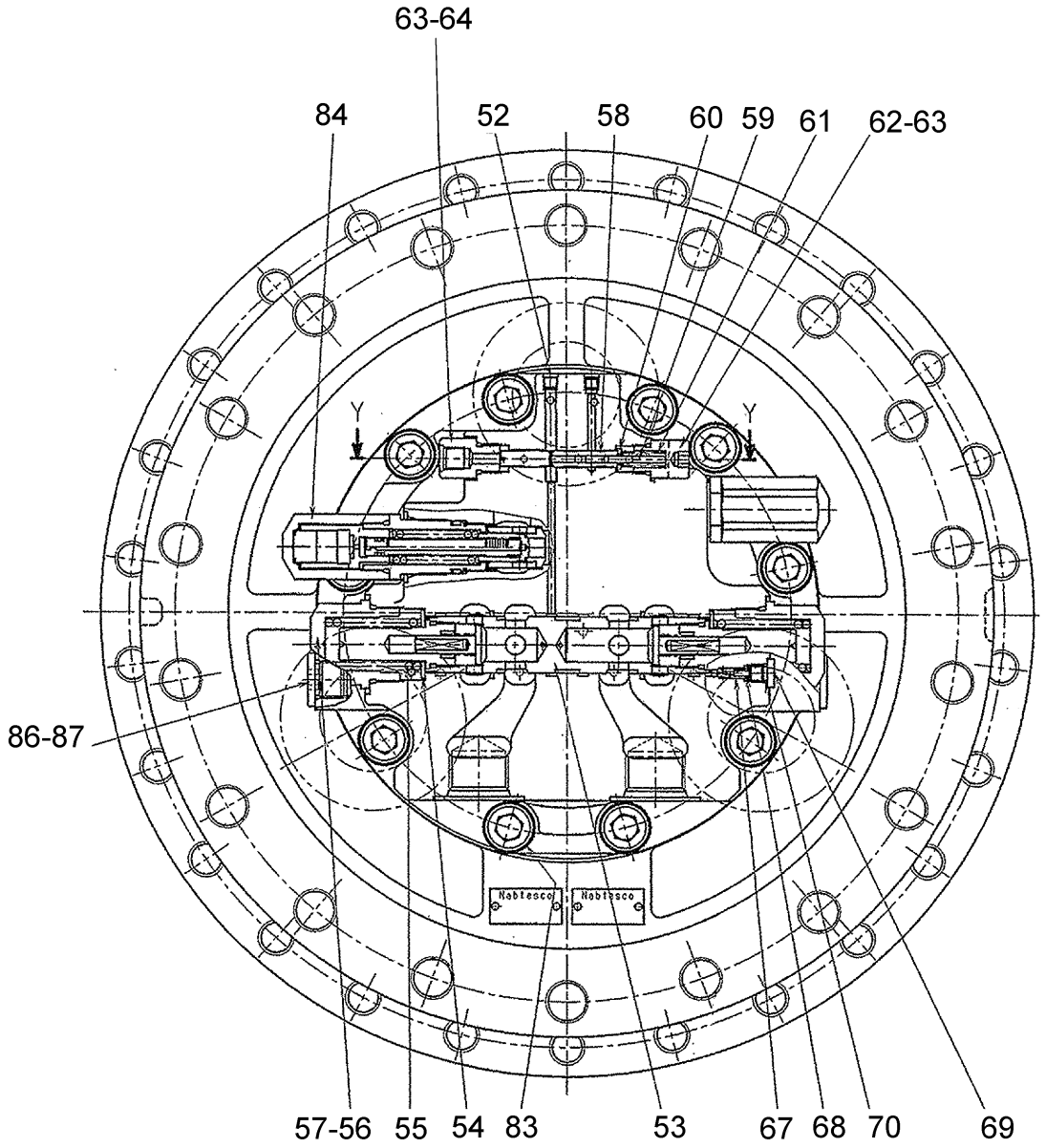

KIT 100-200-300-400-500

TRAVEL REDUCTION UNITS - COMPONENTS

REF	FN	PART NUMBER	YR/SN	QTY	DESCRIPTION
52		72215590		14	BUJÃO
53		LC15V00023S053		1	CARRETO
54		LC15V00023S054		2	ASSENTO MOLA
55		72964092		2	MOLA
56		LC15V00023S056		2	TAMPA
57		72210088		2	ANEL "O"
58		LC15V00023S058		1	CARRETO
59		72962106		1	PINO
60		72962105		1	SEDE/ALOJAMENTO
61		72962107		1	MOLA
62		LC15V00023S062		1	BUJÃO
63		72209820		2	ANEL "O"
64		72962104		1	CONEXÃO
65		72215763		2	BUJÃO
69		72964087		3	BUJÃO
70		72209818		3	ANEL "O"
83		{14428070}		10	
84		72215586		2	VÁLVULA HIDRAULICA
86		72215570		1	ANEL
87		72284476		2	BUJÃO

TRAVEL REDUCTION UNITS - COMPONENTS

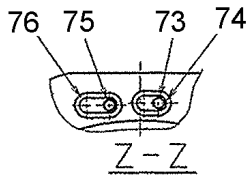

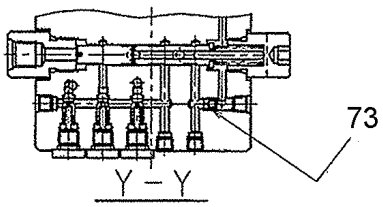

TRAVEL REDUCTION UNITS - COMPONENTS

REF	FN	PART NUMBER	YR/SN	QTY	DESCRIPTION
73		YN15V00037S376		2	ORIFICIO
74		72211309		1	ANEL "O"
75		{LC15V00023S075}		1	
76		72210077		1	ANEL "O"

3.020	01	p1	12/07

TRACK IDLER

4

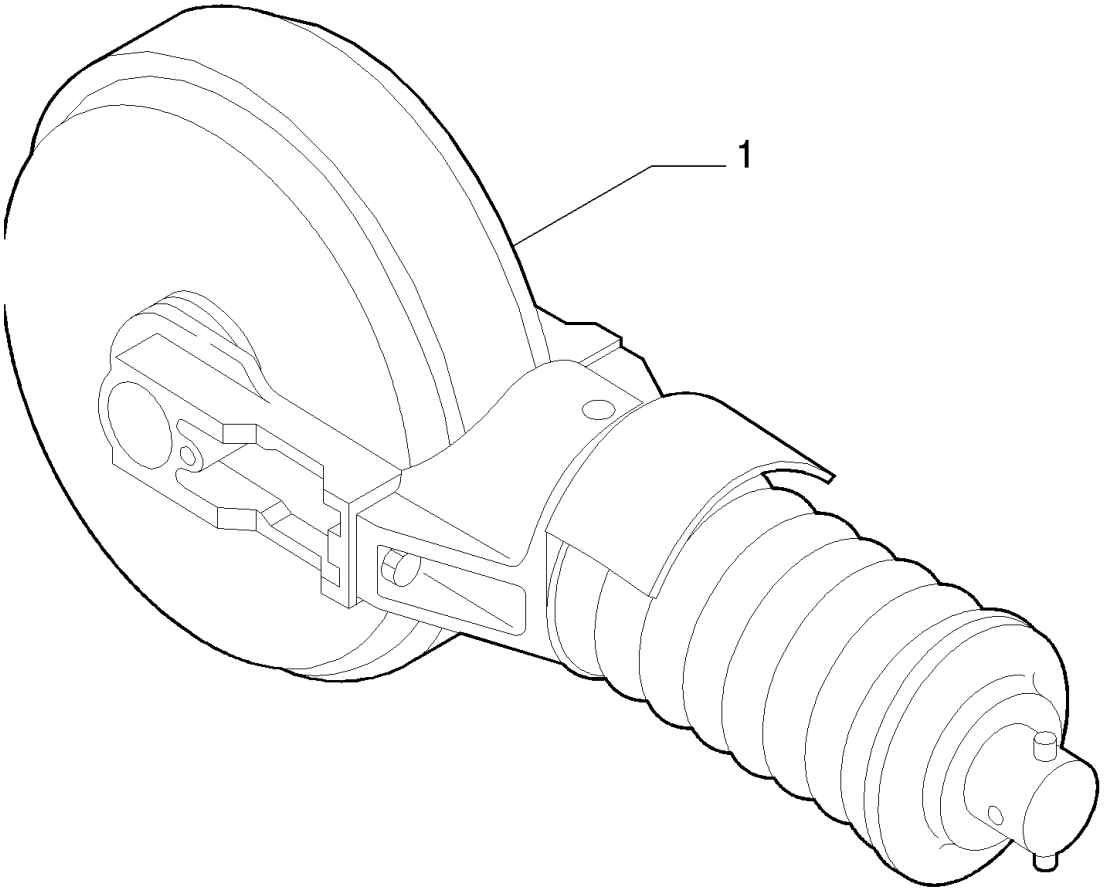

TRACK IDLER

REF	FN	PART NUMBER	YR/SN	QTY	DESCRIPTION
1	1	{87722763}		2	

(1) ASSY SEE PAGE 2-3

TRACK IDLER - COMPONENTS

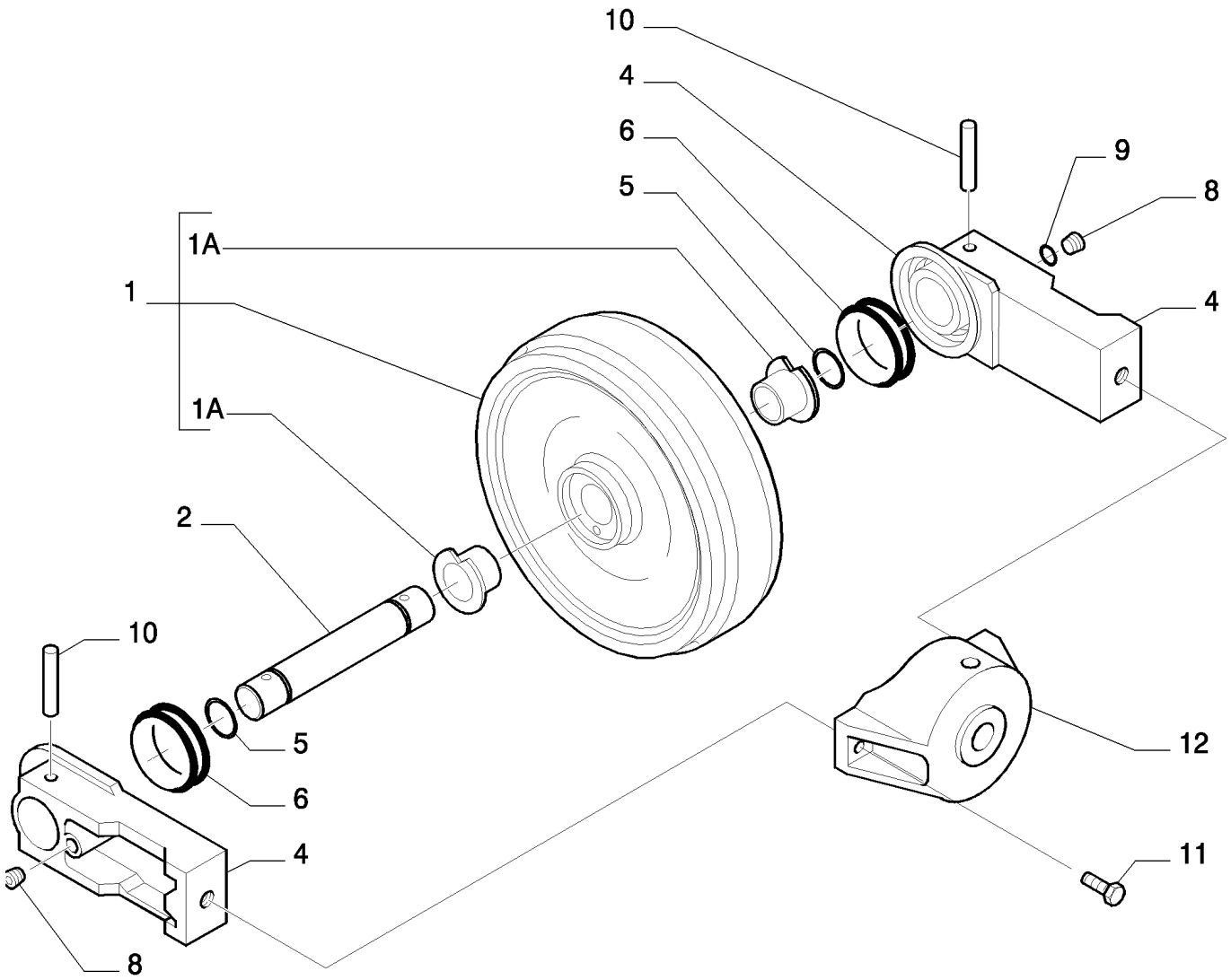

TRACK IDLER - COMPONENTS

REF	FN	PART NUMBER	YR/SN	QTY	DESCRIPTION
1		{72212412}		1	
1A		71401325		2	BUCHA
2		72212082		1	EIXO
4		72212083		2	SUPORTE
5		72219143		2	ANEL "O"
6		72212415		2	KIT
8		{220607600}		1	
9		{220607500}		2	
10		79083942		2	PINO-ELÁSTICO
11		72212087		2	PARAFUSO
12		{87733089}		1	

TRACK IDLER ASSY P/N 87614578

TRACK IDLER - COMPONENTS

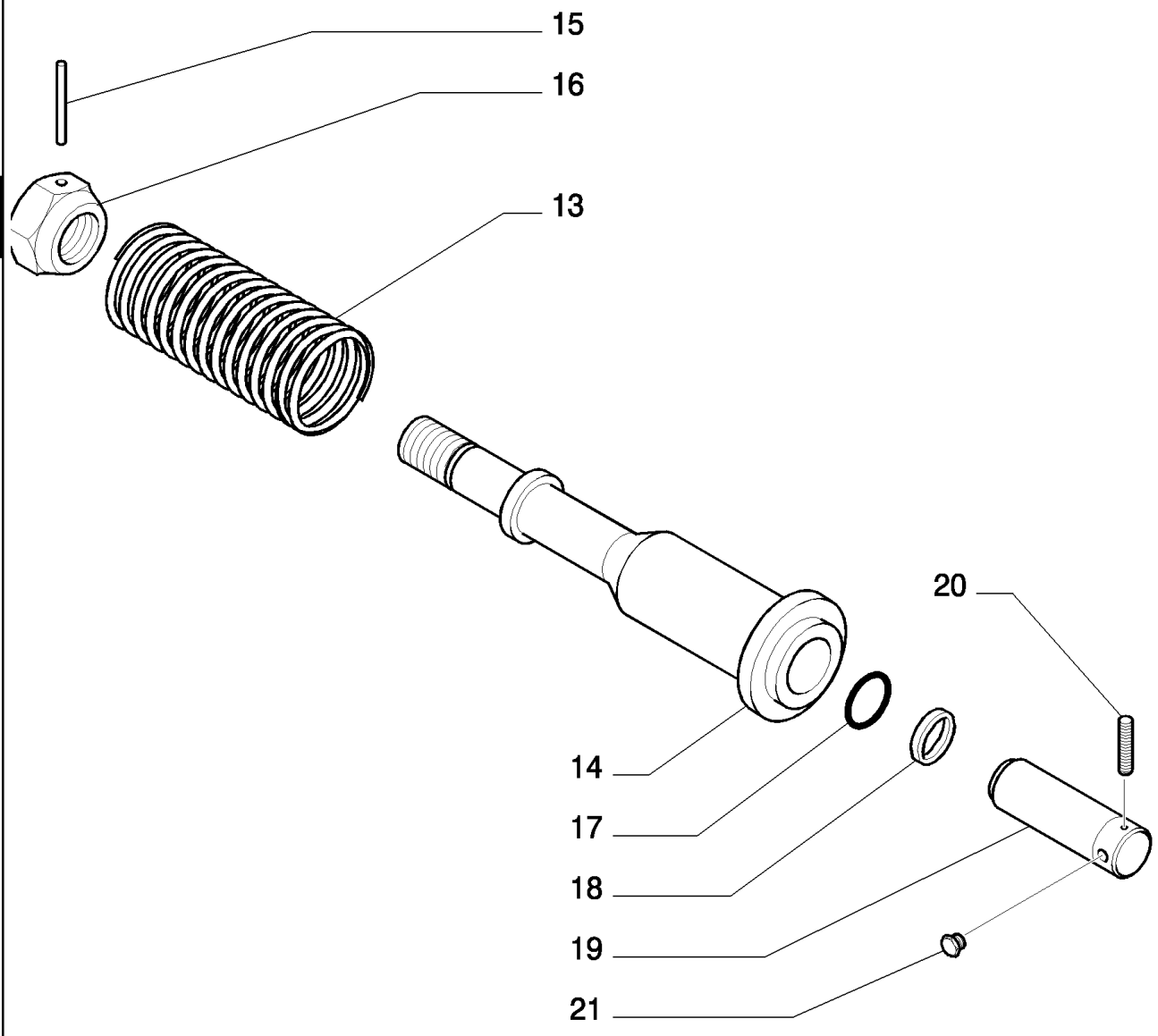

TRACK IDLER - COMPONENTS

REF	FN	PART NUMBER	YR/SN	QTY	DESCRIPTION
13		{87733088}		1	
14		{87731750}		1	
15		72212407		1	PINO-ELÁSTICO
16		72212408		1	PORCA
17		72212409		1	JUNTA
18		72212410		1	ANEL
19		72212411		1	ÊMBOLO
20		72210181		2	PINO-ELÁSTICO
21		71400902		1	BUJÃO

TRACK IDLER ASSY P/N 87614578

E385B

3.030	01	p1	12/07

TRACK CARRIER ROLLER

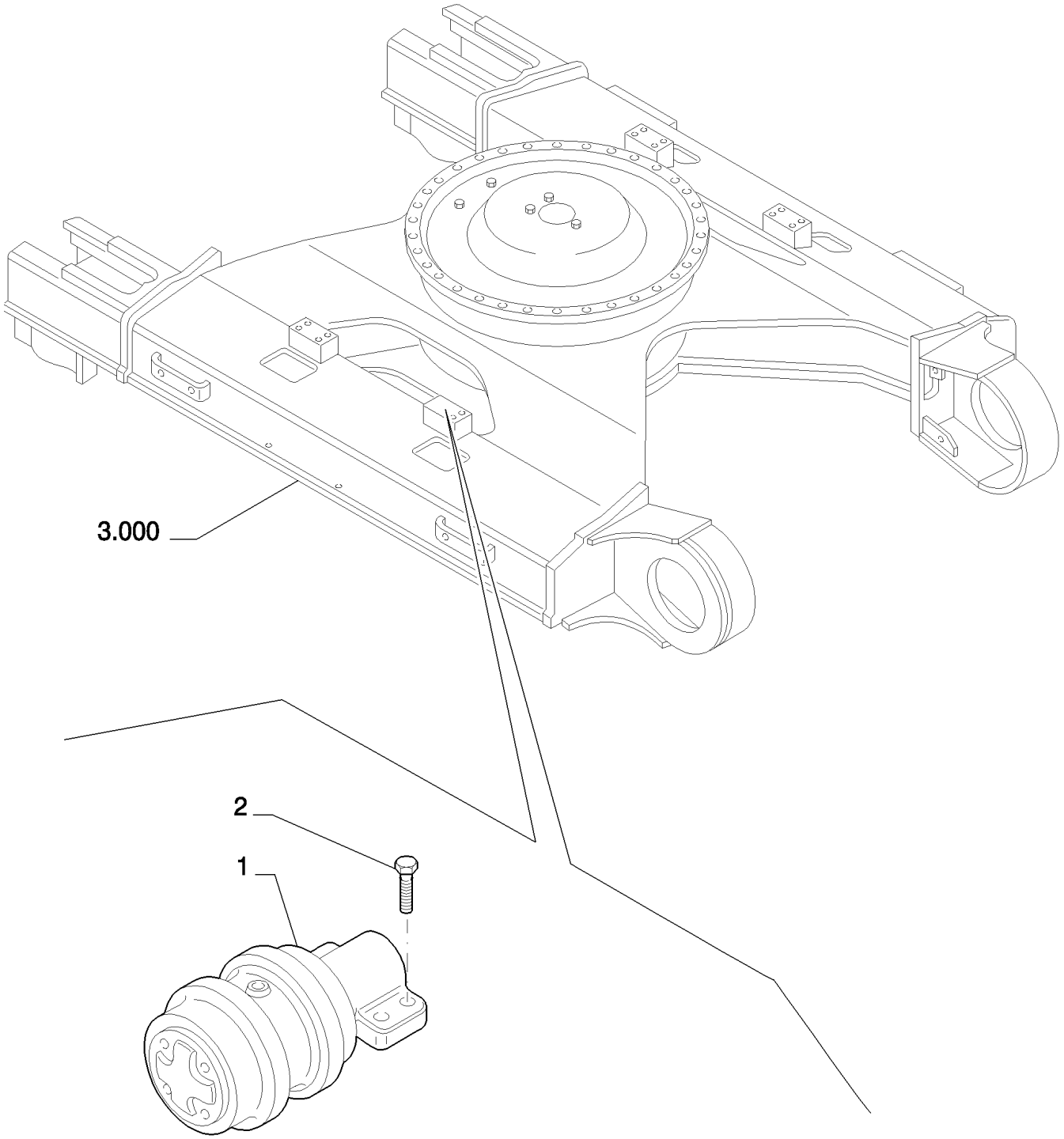

TRACK CARRIER ROLLER

REF	FN	PART NUMBER	YR/SN	QTY	DESCRIPTION
1	1	72208802		4	ROLETE PARA ESTEIRA
2		11126734		16	PARAFUSO, Hex, M20 x 150, 10.9
3		12163521		4	PORCA, M20, Cl 10
4		71415214		8	ARRUELA PLANA

(1) ASSY SEE PAGE 2

TRACK CARRIER ROLLER - COMPONENTS

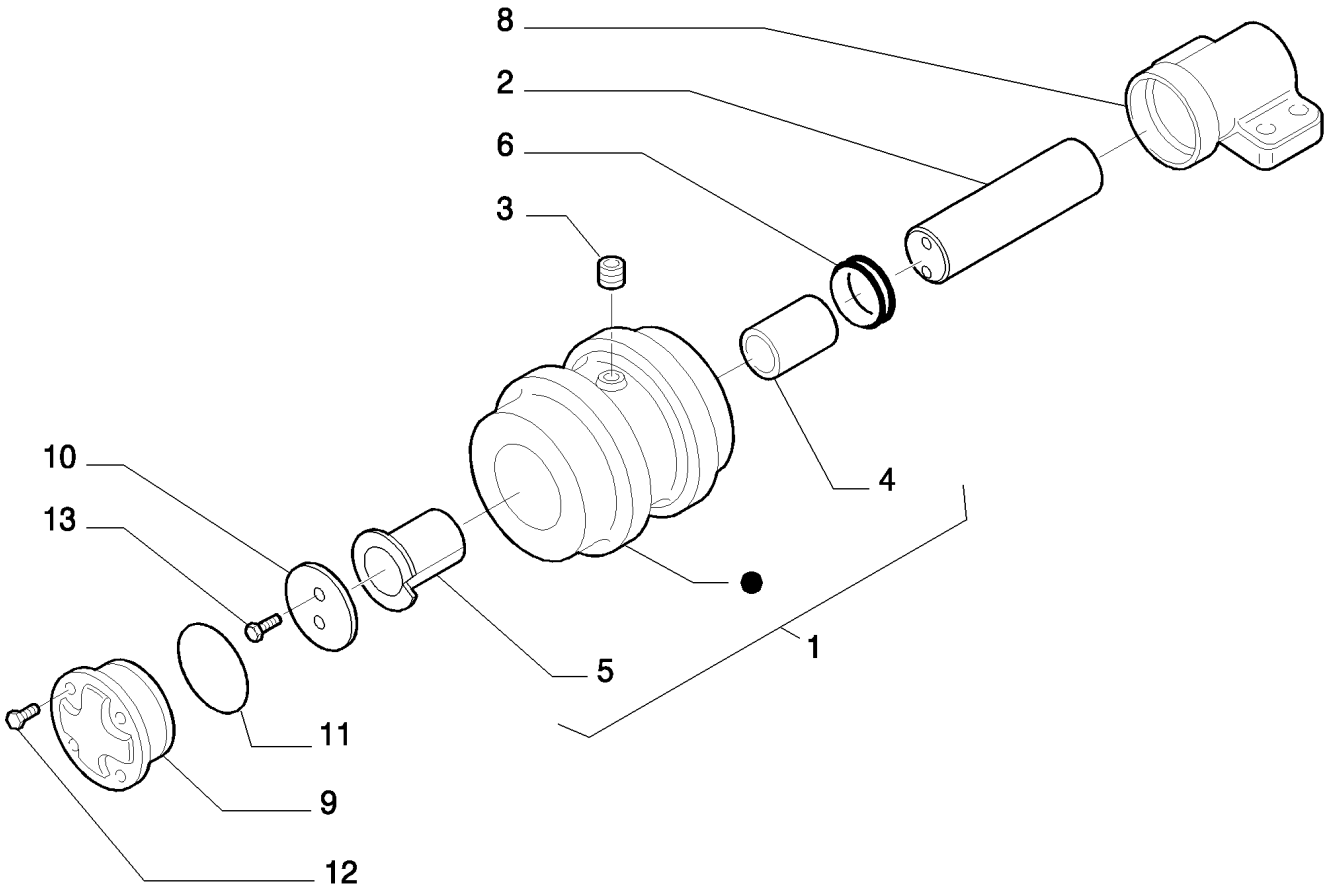

PARTS MARKED ● ARE NOT SUPPLIED AS SPARES
I PARTICOLARI CONTRASSEGNATI CON ● NON VENGONO FORNITI DI RICAMBIO

TRACK CARRIER ROLLER - COMPONENTS

REF	FN	PART NUMBER	YR/SN	QTY	DESCRIPTION
1		72212081		1	ROLETE PARA ESTEIRA, - ASSY
2		72212070		1	EIXO
3		71401086		1	BUJÃO
4		72212071		1	BUCHA
5		72212072		1	BUCHA
6		72212080		1	KIT
8		72212075		1	CAIXA/CARCAÇA
9		72212076		1	TAMPA
10		72212077		1	ARRUELA PLANA
11		72212078		1	JUNTA
12		72212079		5	PARAFUSO

TRACK ROLLER

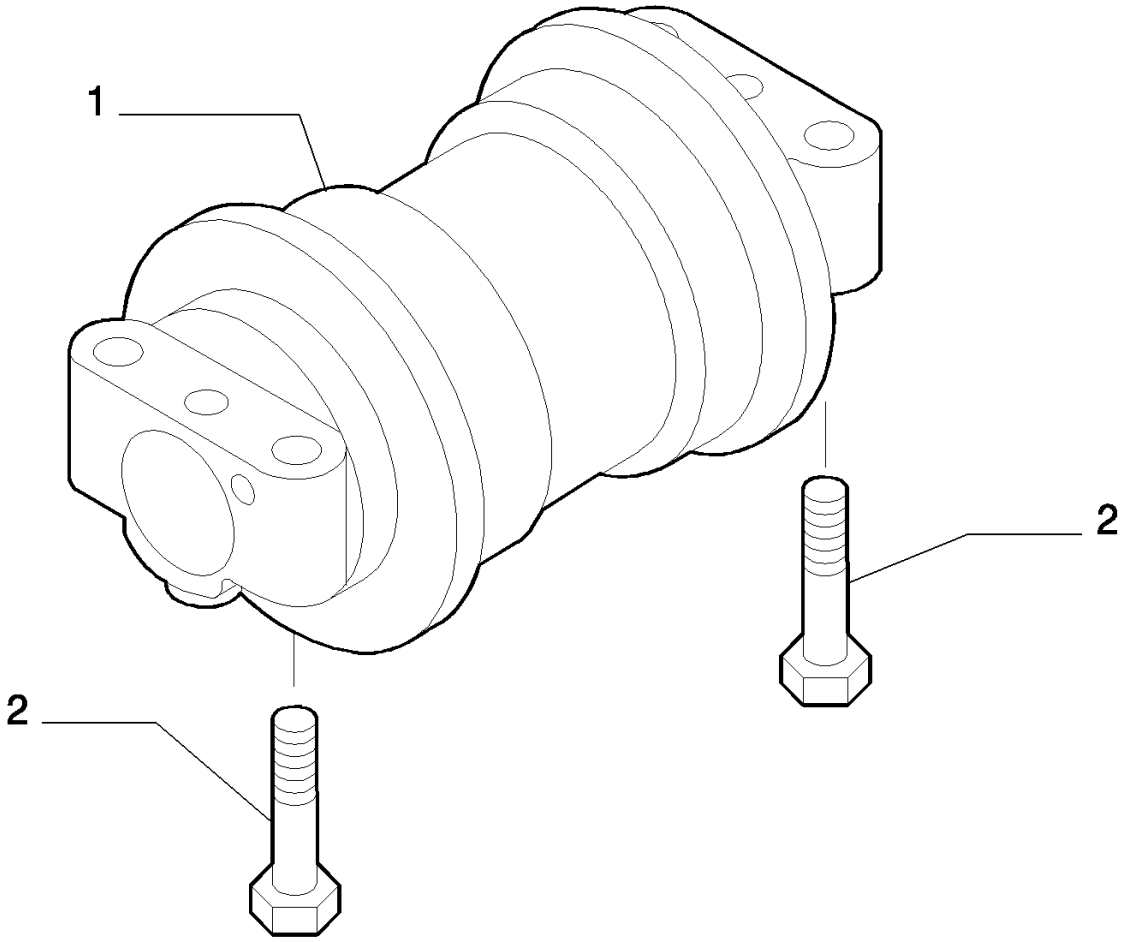

TRACK ROLLER

REF	FN	PART NUMBER	YR/SN	QTY	DESCRIPTION
1	1	72203513		18	ROLETE PARA ESTEIRA
2		15984874		72	PARAFUSO

(1) ASSY SEE PAGE 2

TRACK ROLLER - COMPONENTS

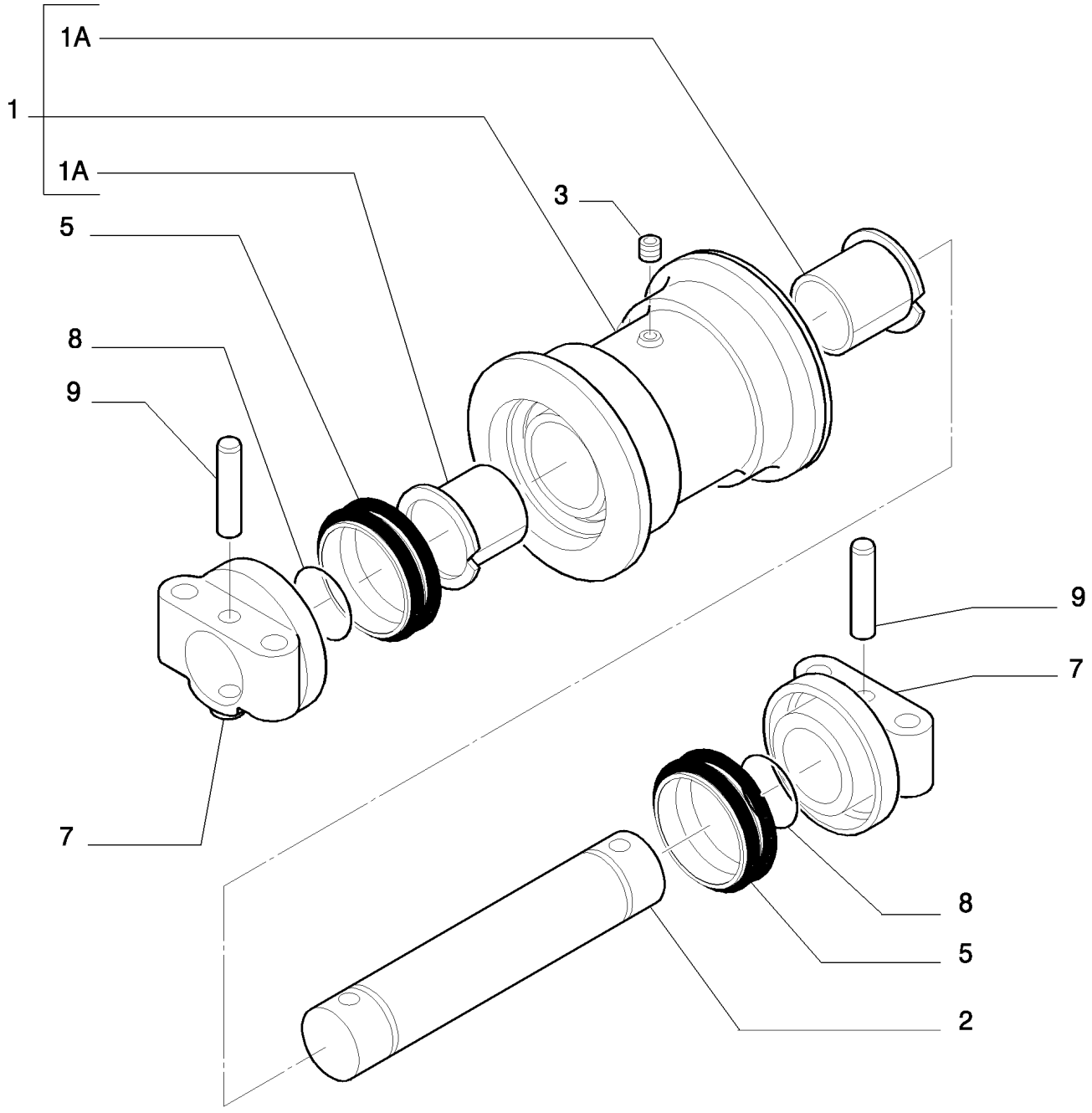

TRACK ROLLER - COMPONENTS

REF	FN	PART NUMBER	YR/SN	QTY	DESCRIPTION
1		72212067		1	ROLETE PARA ESTEIRA, - ASSY
1A		72212062		2	BUCHA
2		72212061		1	EIXO
3		{220607600}		1	
5		72212068		4	KIT
7		72212065		2	SUPORTE
8		{7092381}		2	
9		72212066		2	PINO-ELÁSTICO
10		{220607500}		2	

3.060	01	p1	12/07

ROTARY DISTRIBUTOR

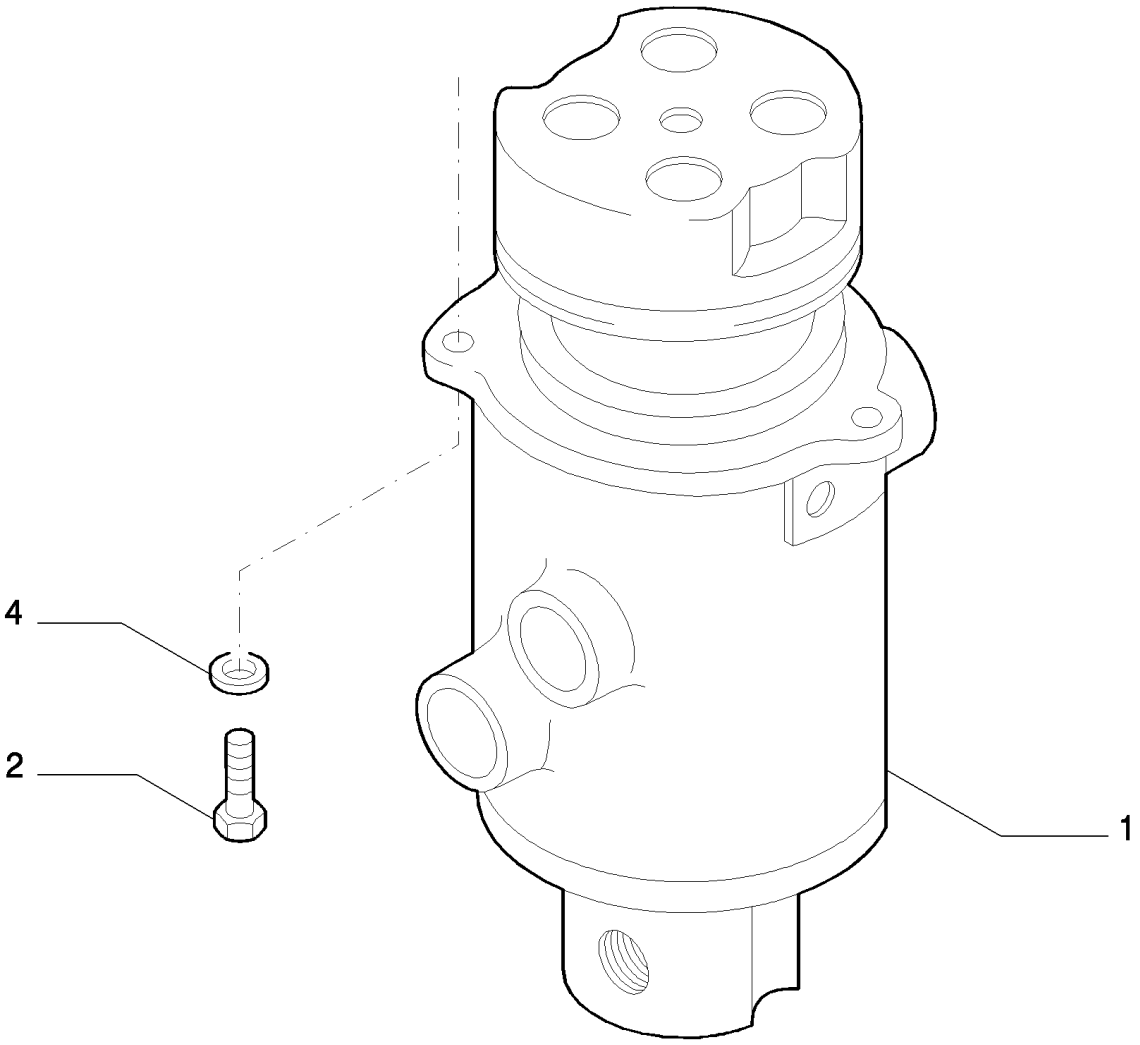

ROTARY DISTRIBUTOR

REF	FN	PART NUMBER	YR/SN	QTY	DESCRIPTION
1	1	87532117		1	CONECTOR MULTIPOLAR
2		11112834		3	PARAFUSO, Hex, M12 x 40, 10.9, Full Thd
3		14496731		3	ARRUELA PLANA

(1) ASSY SEE PAGE 2

ROTARY DISTRIBUTOR - COMPONENTS

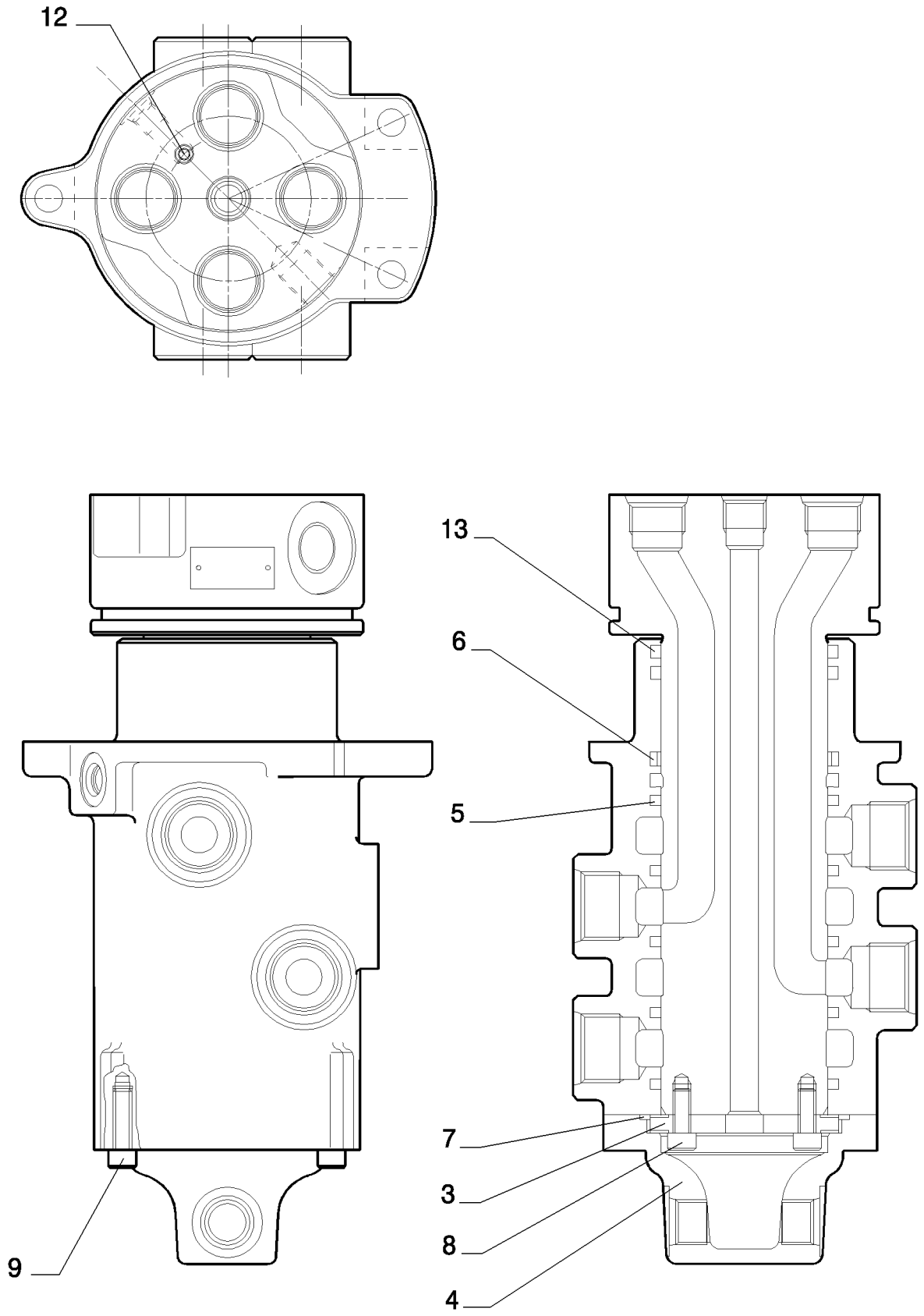

ROTARY DISTRIBUTOR - COMPONENTS

REF	FN	PART NUMBER	YR/SN	QTY	DESCRIPTION
3		72210243		1	PLACA
4		YN55V01062P1		1	PROTEÇÃO
5		72960147		5	ANEL DE VEDACAO
6		72210246		1	JUNTA
7		72210247		1	ANEL "O"
8		72210248		2	PARAFUSO
9		72210249		3	PARAFUSO
12		72210250		1	BUJÃO
13		2445R152D1		2	ANEL "O"

TRAVEL PIPING (LOWER)

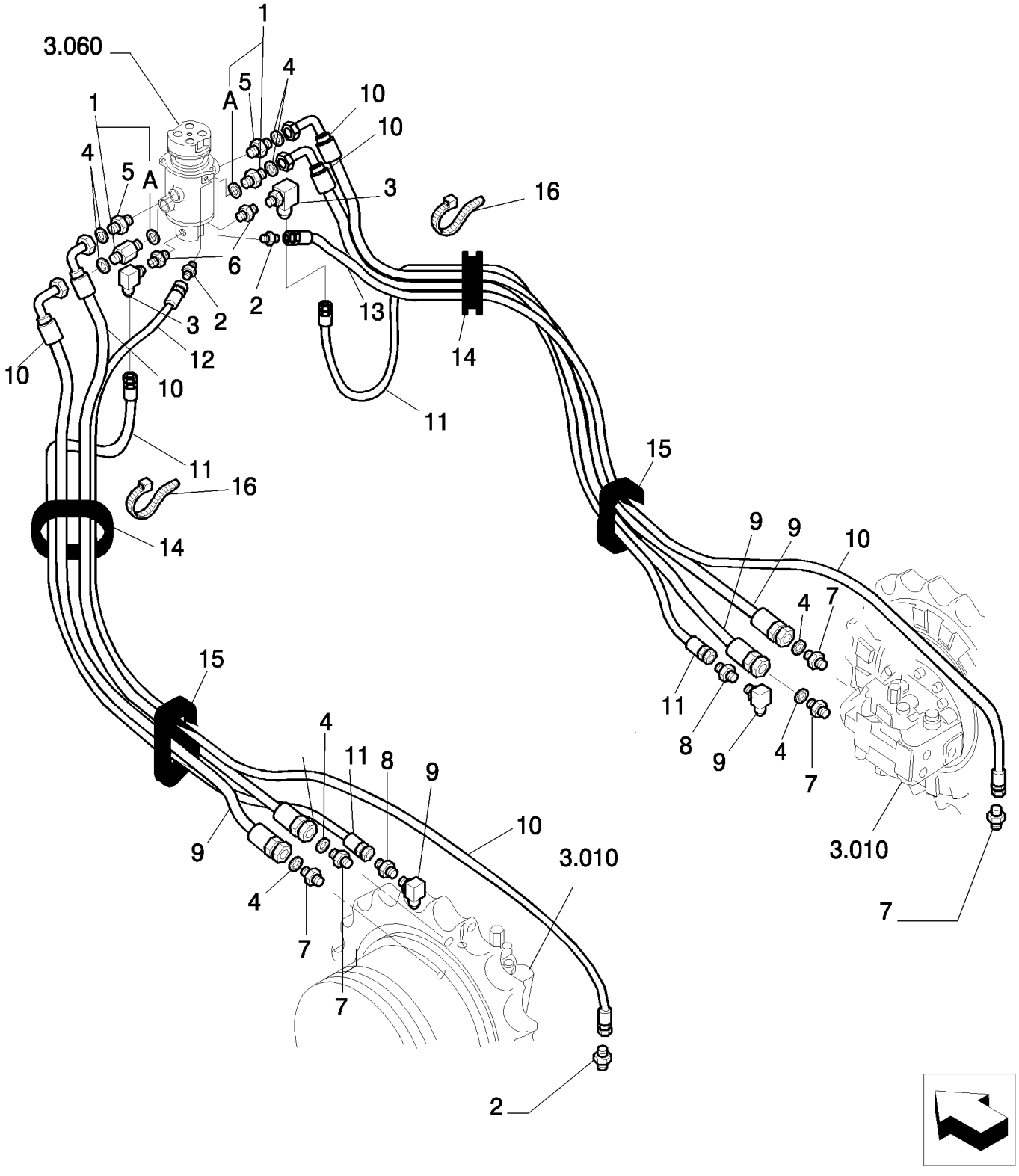

TRAVEL PIPING (LOWER)

REF	FN	PART NUMBER	YR/SN	QTY	DESCRIPTION
1		72204615		2	CONEXÃO, - ASSY
1A		71404161		1	ANEL "O"
2		72214744		4	CONEXÃO
3		72962254		2	COTOVELO
4		70931640		8	JUNTA
5		87332986		2	CONEXÃO
6		72952773		2	CONEXÃO
7		87332986		4	CONEXÃO
8		72283074		2	CONEXÃO
9		72954991		2	CONEXÃO
10		{87604438}		4	
11		{87604439}		2	
12		{87604444}		1	
13		72216579		1	TUBO FLEXÍVEL
14		71469556		2	CASQUILHO ISOLADOR
15		{87604465}		2	
16		{87604475}		6	

SECTION INDEX
Tool Kits-Decals

4.200	01	TOOLS KIT
4.520	01	DECALS
4.520	02	DECALS
4.520	03	DECALS

4.200	01	p1	12/07

TOOLS KIT

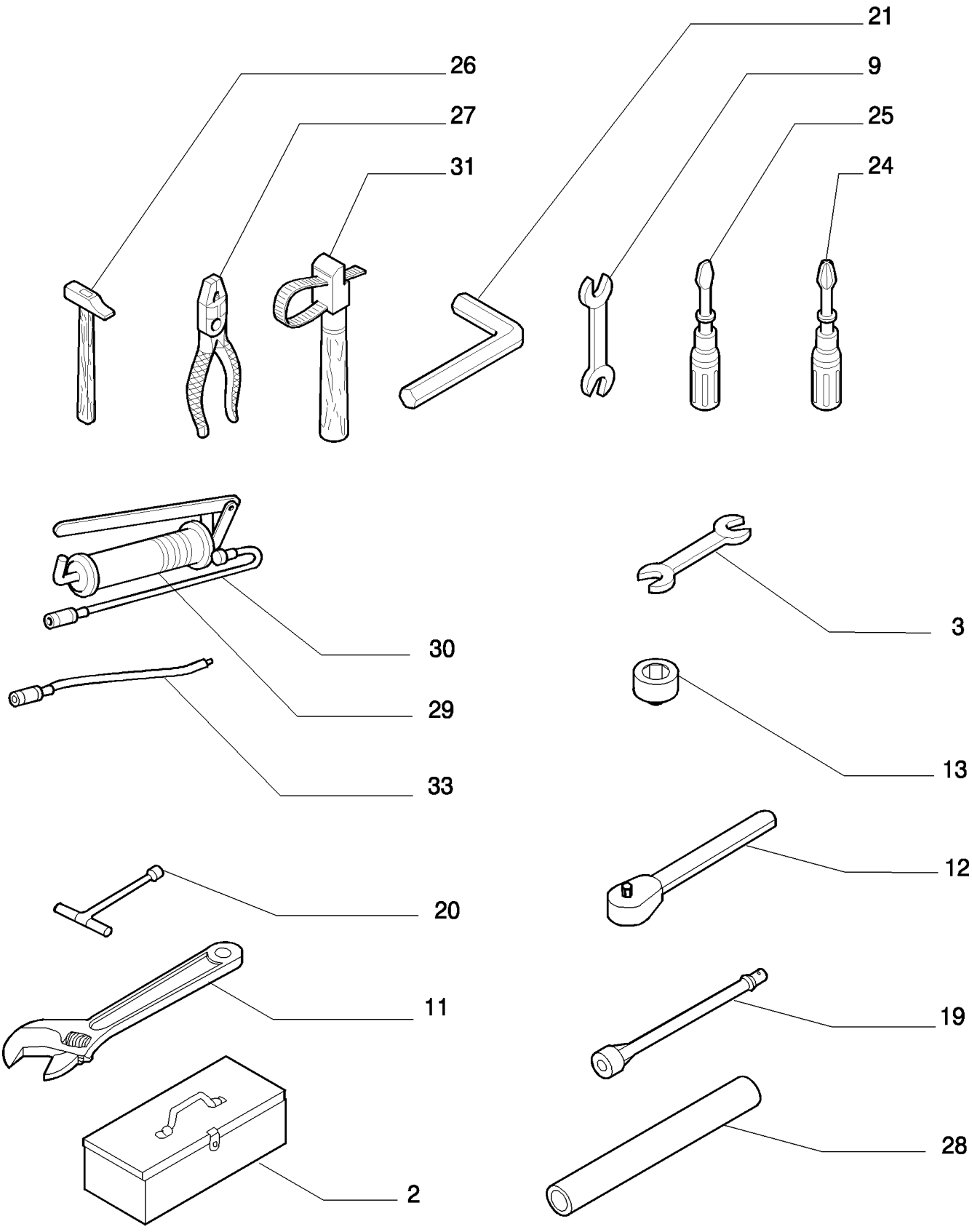

TOOLS KIT

REF	FN	PART NUMBER	YR/SN	QTY	DESCRIPTION
2		71405981		1	CAIXA PARA FERRAMENTAS
3		14549879		1	CHAVE PLANA, 19X22
3		14522421		1	CHAVE PLANA, 13X17
3		14549579		1	CHAVE PLANA, 12X14
3		14525021		1	CHAVE PLANA, 8X10
3		14550079		1	CHAVE PLANA, 24X27
9		71405982		1	CHAVE, 30X32
9		71405983		1	CHAVE, 36X41
11		71405985		1	CHAVE
12		71405986		1	CHAVE, 1/2"
13		71405987		1	CHAVETA, 17
13		71405988		1	CHAVE, 19
13		71405989		1	CHAVE, 22
13		71405990		1	CHAVETA, 24
13		71405991		1	CHAVETA, 27
13		71405992		1	CHAVE, 30
19		71405993		1	FERRAMENTA ESPECIAL
20		71407471		1	CHAVE, 11
21		14534079		1	CHAVE, 4
21		14534279		1	CHAVE, 6
21		14534379		1	CHAVE, 8
21		14534479		1	CHAVETA, 10
21		14534579		1	CHAVE ESPECIAL, 12
24		14626090		1	CHAVE DE FENDA, 4.5X177
25		14626290		1	CHAVE DE FENDA, 6.5X303
26		14582790		1	MARTELO
27		14626671		1	ALICATE
28		71405995		1	TUBO RÍGIDO
29		71406374		1	BOMBA HIDRÁULICA
30		79028981		1	TUBO FLEXÍVEL, For greasing
31		71491520		1	CHAVE ESPECIAL
33		72209585		1	EXTENSÃO

4.520	01	p1	12/07

DECALS

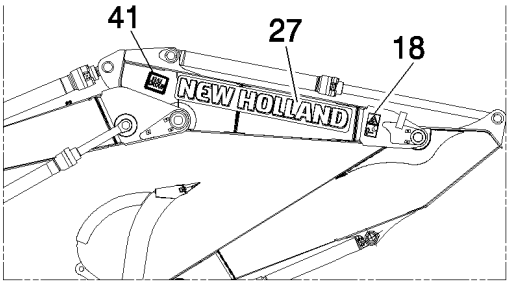

VERSION 03-04

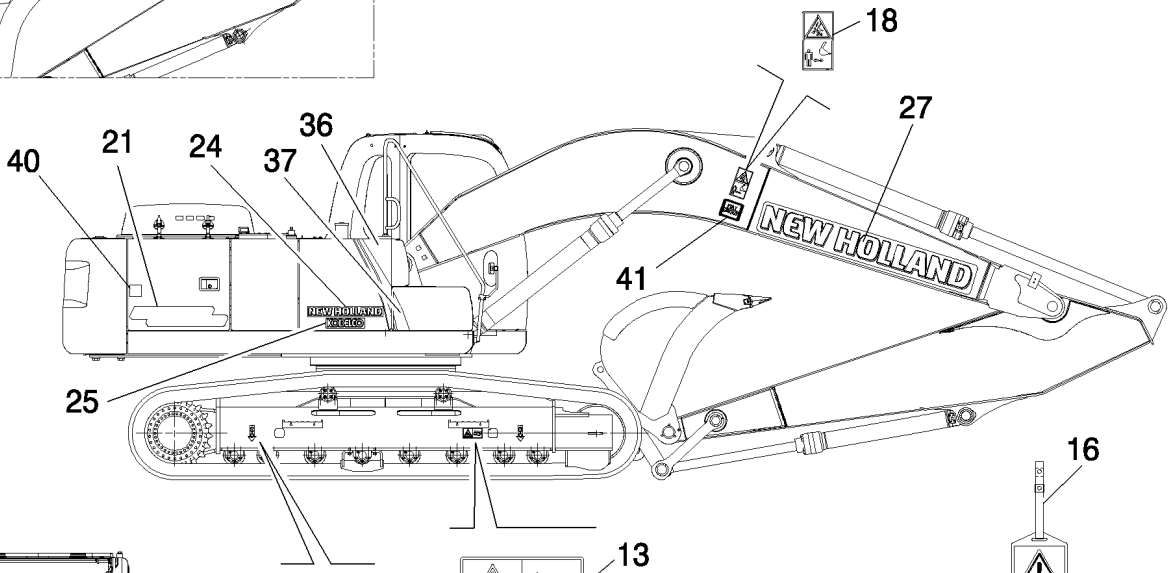

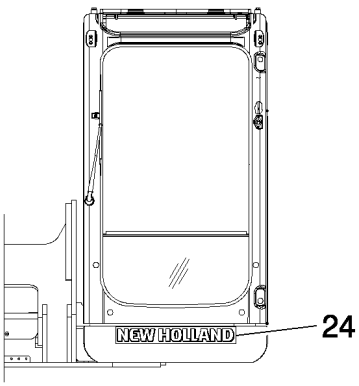

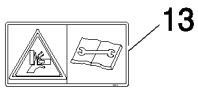

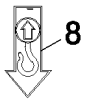

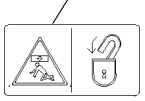

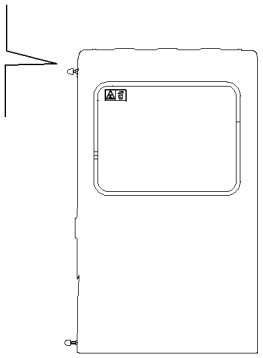

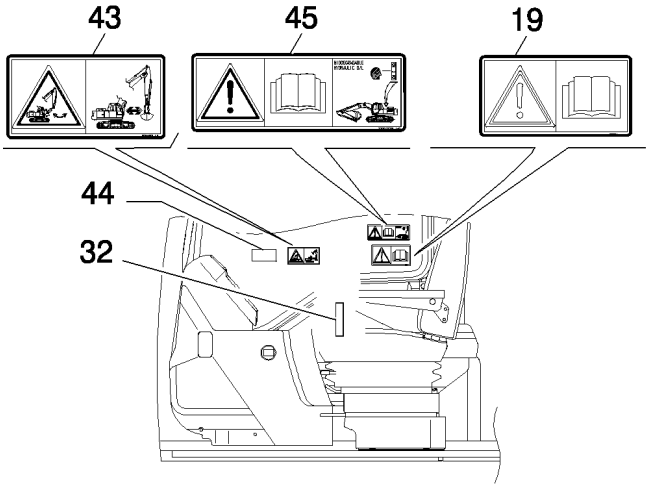

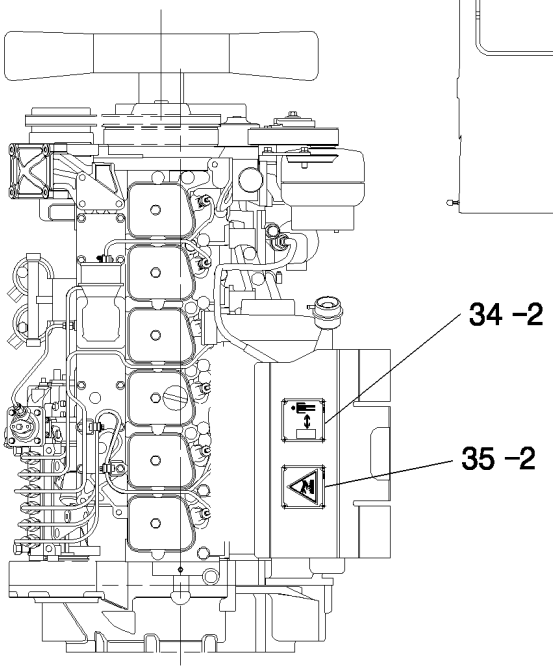

DECALS

REF	FN	PART NUMBER	YR/SN	QTY	DESCRIPTION
2		13683701		8	REBITE
8		71433093		2	DECALCOMANIA
13		71433088		1	IDIOGRAMA
16		71433086		1	ETIQUETA
18		71433122		1	IDIOGRAMA
19		71433123		1	DECALCOMANIA
20		71433079		1	IDIOGRAMA
21		{87669519}		1	
24		72130429		2	DECALCOMANIA
25		72130465		1	DECALCOMANIA
27		72130467		1	DECALCOMANIA
32		71406009		1	PLAQUETA
34		71468528		1	PLAQUETA
35		71468529		1	PLAQUETA
36		87597939		1	DECALCOMANIA
37		87597940		1	DECALCOMANIA
41		87702830		1	DECALCOMANIA
43		71415031		1	IDIOGRAMA
44		87616673		1	DECALCOMANIA
45		{781489098}		1	- BIODEGRADABLE OIL

DECALS

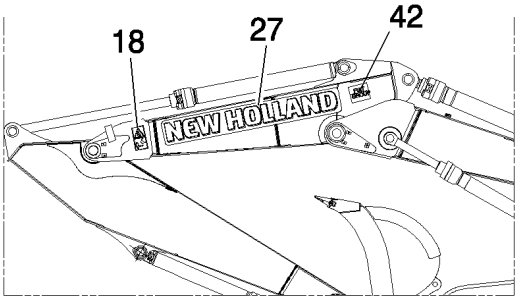

VERSION 03 – 04

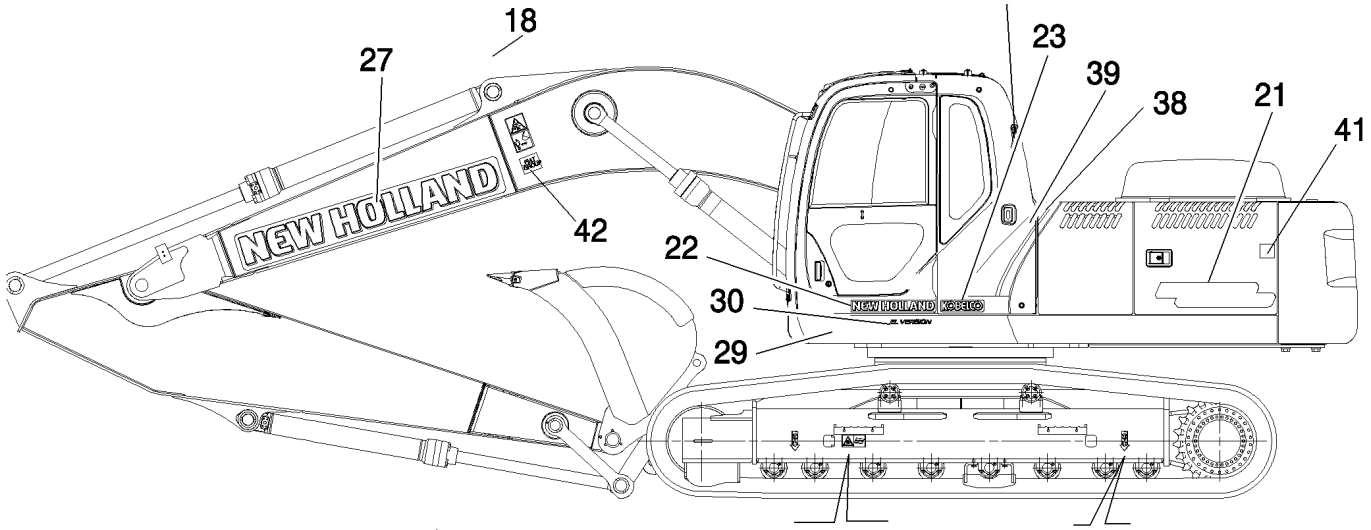

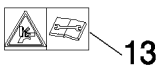



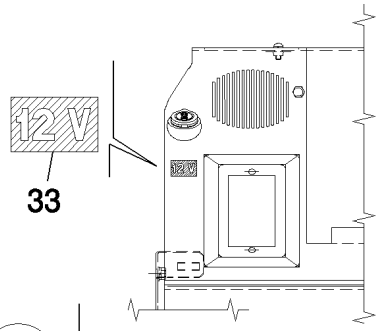

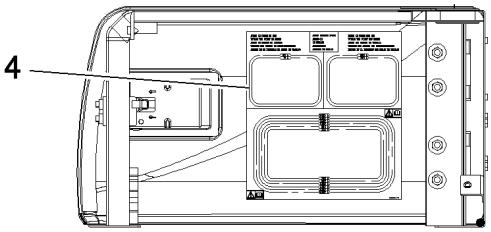

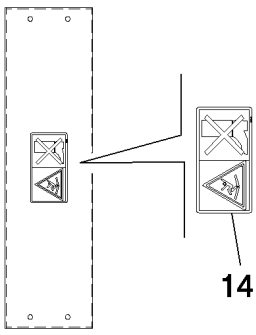

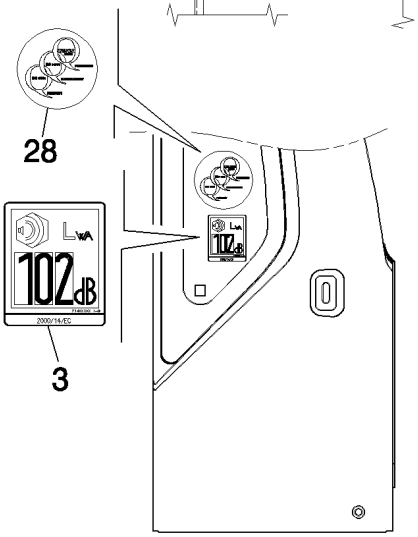

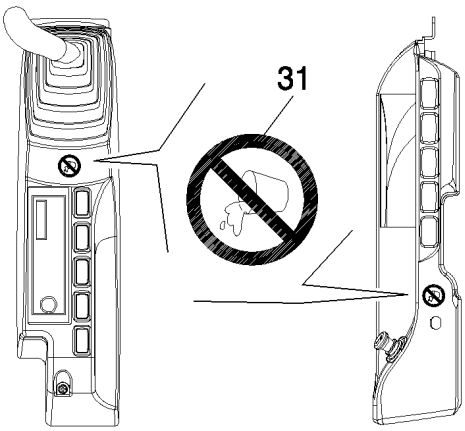

DECALS

REF	FN	PART NUMBER	YR/SN	QTY	DESCRIPTION
3		71477097		1	DECALCOMANIA
4		{87737414}		1	
8		71433093		2	DECALCOMANIA
13		71433088		1	IDIOGRAMA
14		71437694		1	PLAQUETA
18		71433122		1	IDIOGRAMA
21		{87669519}		1	
22		72130406		1	DECALCOMANIA
23		72130407		1	DECALCOMANIA
27		72130467		1	DECALCOMANIA
28		72211238		1	DECALCOMANIA
29		87597937		1	DECALCOMANIA
30	1	87600093		1	DECALCOMANIA
30	2	87597938		1	DECALCOMANIA
31		72116240		2	DECALCOMANIA
33		72211750		1	DECALCOMANIA
38		87597941		1	DECALCOMANIA
39		87597942		1	DECALCOMANIA

(1) FOR VERSION 01-03
(2) FOR VERSION 02-04

DECALS

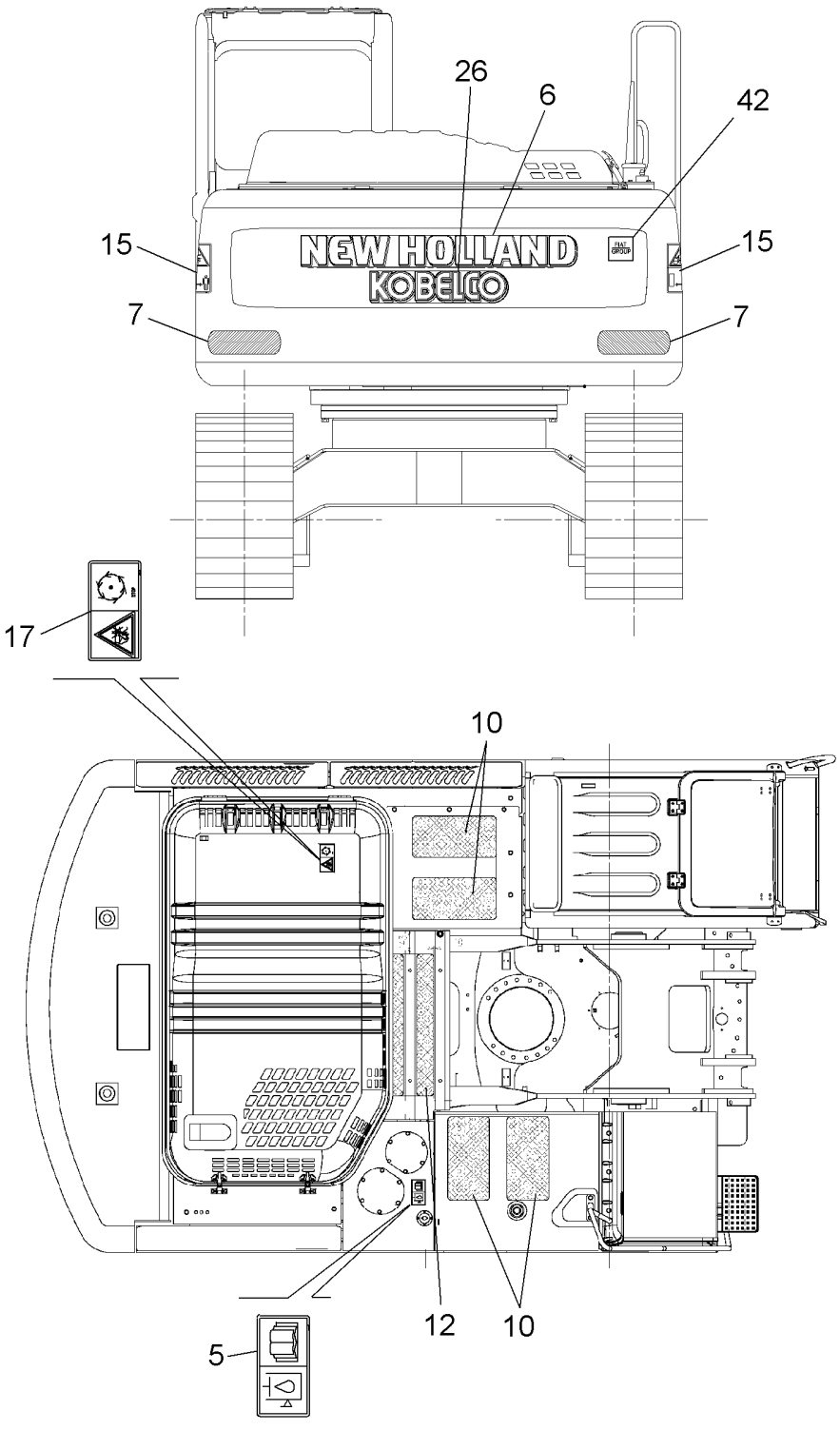

DECALS

REF	FN	PART NUMBER	YR/SN	QTY	DESCRIPTION
5		71468156		1	PLAQUETA
6		87597934		1	DECALCOMANIA
7		72209583		2	REFLETOR
10		71468153		4	FAIXA ANTI-DERRAPANTE
12		71469305		1	DECALCOMANIA
15		71433121		2	IDIOGRAMA
17		71433096		1	DECALCOMANIA
26		87597936		1	DECALCOMANIA
42		87691652		1	DECALCOMANIA

SECTION INDEX
Optionals

5.0001	01	TRACK CHAIN (L=600MM) - OPTIONAL CODE 956000217
5.0002	01	TRACK CHAIN (L=700MM) - OPTIONAL CODE 956000317
5.0003	01	TRACK CHAIN (L=800MM) - OPTIONAL CODE 956000517
5.0004	01	TRACK CHAIN (L=900MM) - OPTIONAL CODE 956000717
5.0013	01	DIPPER STICK (L=2.6M) - OPTIONAL CODE 781176148
5.0013	02	DIPPER STICK (L=2.6M) - OPTIONAL CODE 781176148
5.0013	03	DIPPER STICK (L=2.6M) - OPTIONAL CODE 781176148
5.0013	04	DIPPER STICK (L=2.6M) - OPTIONAL CODE 781176148
5.0020	01	APPLICATION OF HYDRAULIC HAMMER - OPTIONAL CODE 461228008 (01-02) - 461228018 (03-04)
5.0020	02	APPLICATION OF HYDRAULIC HAMMER - OPTIONAL CODE 461228008 (01-02) - 461228018 (03-04)
5.0020	03	APPLICATION OF HYDRAULIC HAMMER - OPTIONAL CODE 461226068 (01-02) - 461226078 (03-04)
5.0020	04	APPLICATION OF HYDRAULIC HAMMER - VERSION (01-02) - OPTIONAL CODE 461228008
5.0020	05	APPLICATION OF HYDRAULIC HAMMER - VERSION (03-04) - OPTIONAL CODE 461228018
5.0020	06	APPLICATION OF HYDRAULIC HAMMER - VERSION (01-02) - OPTIONAL CODE 461228008
5.0020	07	APPLICATION OF HYDRAULIC HAMMER - VERSION (03-04) - OPTIONAL CODE 461228018
5.0020	08	APPLICATION OF HYDRAULIC HAMMER - VERSION (01-02) - OPTIONAL CODE 461228008
5.0020	09	APPLICATION OF HYDRAULIC HAMMER - VERSION (03-04) - OPTIONAL CODE 461228018
5.0020	10	APPLICATION OF HYDRAULIC HAMMER - VERSION (01-02) - OPTIONAL CODE 461228008
5.0020	11	APPLICATION OF HYDRAULIC HAMMER - VERSION (03-04) - OPTIONAL CODE 461228018
5.0020	12	APPLICATION OF HYDRAULIC HAMMER - VERSION (03-04) - OPTIONAL CODE 461228018
5.0020	13	APPLICATION OF HYDRAULIC HAMMER - OPTIONAL CODE 461228008 (01-02) - 461228018 (03-04)
5.0020	14	VALVE - COMPONENTS - OPTIONAL CODE 461228008 (01-02) - 461228018 (03-04)
5.0021	13	APPLICATION OF HYDRAULIC HAMMER - OPTIONAL CODE 461231028 (01-02) - 461231038 (03-04)
5.0022	01	DIPPER STICK (L=2.33M) - OPTIONAL CODE 781682058
5.0022	02	DIPPER STICK (L=2.33M) - OPTIONAL CODE 781682058
5.0022	03	DIPPER STICK (L=2.33M) - OPTIONAL CODE 781682058
5.0022	04	DIPPER STICK (L=2.33M) - OPTIONAL CODE 781682058
5.0023	13	APPLICATION OF HYDRAULIC HAMMER - OPTIONAL CODE 461234008 (01-02) - 461234018 (03-04)
5.0024	13	APPLICATION OF HYDRAULIC HAMMER - OPTIONAL CODE 461238008 (01-02) - 461238018 (03-04)
5.0038	01	DIPPER STICK (L=3.3M) - OPTIONAL CODE 781676018
5.0038	02	DIPPER STICK (L=3.3M) - OPTIONAL CODE 781676018
5.0038	03	DIPPER STICK (L=3.3M) - OPTIONAL CODE 781676018
5.0038	04	DIPPER STICK (L=3.3M) - OPTIONAL CODE 781676018
5.0039	01	DIPPER STICK (L=4.15M) - OPTIONAL CODE 781677018
5.0039	02	DIPPER STICK (L=4.15M) - OPTIONAL CODE 781677018

SECTION INDEX
Optionals

5.0039	03	DIPPER STICK (L=4.15M) - OPTIONAL CODE 781677018
5.0039	04	DIPPER STICK (L=4.15M) - OPTIONAL CODE 781677018
5.0040	01	MONITOR INSTALLATION - OPTIONAL CODE 461223028
5.0040	02	MONITOR INSTALLATION - OPTIONAL CODE 461223028
5.0040	03	MONITOR INSTALLATION - OPTIONAL CODE 461223008
5.0042	01	LOWER FRAME GUARD - OPTIONAL CODE 781624098
5.0043	01	ARM PROTECTION - OPTIONAL CODE 461220028
5.0076	01	ROTATION BUCKET PROVISION - OPTIONAL CODE 461243008 (01-02) - 461241078 (03-04)
5.0076	02	ROTATION BUCKET PROVISION - VERSION (01-02) - OPTIONAL CODE 461241068
5.0076	03	ROTATION BUCKET PROVISION - VERSION (03-04) - OPTIONAL CODE 461241078
5.0076	04	ROTATION BUCKET PROVISION - OPTIONAL CODE 461241068 (01-02) - 461241078 (03-04)
5.0076	05	ROTATION BUCKET PROVISION - OPTIONAL CODE 461241068 (01-02) - 461241078 (03-04)
5.0076	06	ROTATION BUCKET PROVISION - OPTIONAL CODE 461241068 (01-02) - 461241078 (03-04)
5.0076	07	ROTATION BUCKET PROVISION - VERSION (01-02) - OPTIONAL CODE 461241068
5.0076	08	ROTATION BUCKET PROVISION - VERSION (03-04) - OPTIONAL CODE 461241078
5.0076	09	ROTATION BUCKET PROVISION - VERSION (03-04) - OPTIONAL CODE 461241078
5.0076	10	ROTATION BUCKET PROVISION - OPTIONAL CODE 461241068 (01-02) - 461241078 (03-04)
5.0076	11	ROTATION BUCKET PROVISION - COMPONENTS - OPTIONAL CODE 461241068 (01-02) - 461241078 (03-04)
5.0077	01	ROTATION BUCKET PROVISION - OPTIONAL CODE 461246028 (01-02) - 461246038 (03-04)
5.0077	02	ROTATION BUCKET PROVISION - VERSION (01-02) - OPTIONAL CODE 461246028
5.0077	03	ROTATION BUCKET PROVISION - VERSION (03-04) - OPTIONAL CODE 461246038
5.0077	04	ROTATION BUCKET PROVISION - OPTIONAL CODE 461246028 (01-02) - 461246038 (03-04)
5.0077	05	ROTATION BUCKET PROVISION - OPTIONAL CODE 461246028 (01-02) - 461246038 (03-04)
5.0077	06	ROTATION BUCKET PROVISION - OPTIONAL CODE 461246028 (01-02) - 461246038 (03-04)
5.0077	07	ROTATION BUCKET PROVISION - VERSION (01-02) - OPTIONAL CODE 461246028
5.0077	08	ROTATION BUCKET PROVISION - VERSION (03-04) - OPTIONAL CODE 461246038
5.0077	09	ROTATION BUCKET PROVISION - VERSION (03-04) - OPTIONAL CODE 461246038
5.0077	10	ROTATION BUCKET PROVISION - OPTIONAL CODE 461246028 (01-02) - 461246038 (03-04)
5.0077	11	ROTATION BUCKET PROVISION - COMPONENTS - OPTIONAL CODE 461246028 (01-02) - 461246038 (03-04)
5.0078	01	ROTATION BUCKET PROVISION - OPTIONAL CODE 461249008 (01-02) - 461249018 (03-04)
5.0078	02	ROTATION BUCKET PROVISION - VERSION (01-02) - OPTIONAL CODE 461249008
5.0078	03	ROTATION BUCKET PROVISION - VERSION (03-04) - OPTIONAL CODE 461249018
5.0078	04	ROTATION BUCKET PROVISION - OPTIONAL CODE 461249008 (01-02) - 461249018 (03-04)
5.0078	05	ROTATION BUCKET PROVISION - OPTIONAL CODE 461249008 (01-02) - 461249018 (03-04)
5.0078	06	ROTATION BUCKET PROVISION - OPTIONAL CODE 461249008 (01-02) - 461249018 (03-04)

5.0078	07	ROTATION BUCKET PROVISION - VERSION (01-02) - OPTIONAL CODE 461249008
5.0078	08	ROTATION BUCKET PROVISION - VERSION (03-04) - OPTIONAL CODE 461249018
5.0078	09	ROTATION BUCKET PROVISION - VERSION (03-04) - OPTIONAL CODE 461249018
5.0078	10	ROTATION BUCKET PROVISION - OPTIONAL CODE 461249008 (01-02) - 461249018 (03-04)
5.0078	11	ROTATION BUCKET PROVISION - COMPONENTS - OPTIONAL CODE 461249008 (01-02) - 461249018 (03-04)
5.0079	01	ROTATION BUCKET PROVISION - OPTIONAL CODE 461319008 (01-02) - 461319018 (03-04)
5.0079	02	ROTATION BUCKET PROVISION - VERSION (01-02) - OPTIONAL CODE 461319008
5.0079	03	ROTATION BUCKET PROVISION - VERSION (03-04) - OPTIONAL CODE 461319018
5.0079	04	ROTATION BUCKET PROVISION - OPTIONAL CODE 461319008 (01-02) - 461319018 (03-04)
5.0079	05	ROTATION BUCKET PROVISION - OPTIONAL CODE 461319008 (01-02) - 461319018 (03-04)
5.0079	06	ROTATION BUCKET PROVISION - OPTIONAL CODE 461319008 (01-02) - 461319018 (03-04)
5.0079	07	ROTATION BUCKET PROVISION - VERSION (01-02) - OPTIONAL CODE 461319008
5.0079	08	ROTATION BUCKET PROVISION - VERSION (03-04) - OPTIONAL CODE 461319018
5.0079	09	ROTATION BUCKET PROVISION - VERSION (03-04) - OPTIONAL CODE 461319018
5.0079	10	ROTATION BUCKET PROVISION - OPTIONAL CODE 461319008 (01-02) - 461319018 (03-04)
5.0079	11	ROTATION BUCKET PROVISION - COMPONENTS - OPTIONAL CODE 461319008 (01-02) - 461319018 (03-04)
5.0086	01	BOOM/ARM WITHOUT SAFETY VALVE - VERSION (01-02) - OPTIONAL CODE 461134128
5.0086	02	BOOM/ARM WITHOUT SAFETY VALVE - VERSION (01-02) - OPTIONAL CODE 461134128
5.0086	03	BOOM/ARM WITHOUT SAFETY VALVE - VERSION (01-02) - OPTIONAL CODE 461134128
5.0086	04	BOOM/ARM WITHOUT SAFETY VALVE - VERSION (01-02) - OPTIONAL CODE 461134128
5.0088	01	OBJECT HANDLING - VERSION (01-02) - OPTIONAL CODE 781583658
5.0088	02	OBJECT HANDLING - VERSION (01-02) - OPTIONAL CODE 781583568
5.0088	03	OBJECT HANDLING - VERSION (01-02) - OPTIONAL CODE 781583568
5.0088	04	OBJECT HANDLING - VERSION (01-02) - OPTIONAL CODE 781583568
5.0088	05	OBJECT HANDLING - VERSION (01-02) - OPTIONAL CODE 781583568
5.0088	06	OBJECT HANDLING - VERSION (01-02) - OPTIONAL CODE 781583568
5.0088	07	OBJECT HANDLING - VERSION (01-02) - OPTIONAL CODE 781583568
5.0088	08	OBJECT HANDLING - VERSION (01-02) - OPTIONAL CODE 781583568
5.0100	01	BUCKET - (L=1000MM) - OPTIONAL CODE 781107078
5.0101	01	BUCKET - (L=1700MM) - OPTIONAL CODE 781681008
5.0102	01	BUCKET - (L=850MM) - OPTIONAL CODE 781499058
5.0103	01	BUCKET - (L=1350MM) - OPTIONAL CODE 781679008
5.0104	01	BUCKET - (L=1200MM) - OPTIONAL CODE 781110058
5.0108	01	BUCKET - (L=1500MM) - OPTIONAL CODE 781114008
5.0144	01	LINK ROD - OPTIONAL CODE 781479068
5.0148	01	HYDRAULIC QUICK COUPLING - OPTIONAL CODE 781128068
5.0148	02	HYDRAULIC QUICK COUPLING - COMPONENTS - OPTIONAL CODE 781128068
5.0156	01	SEAT AT MECHANICAL SUSPENSION - OPTIONAL CODE 781768058

SECTION INDEX
Optionals

5.0156	02	SEAT AT MECHANICAL SUSPENSION - COMPONENTS - OPTIONAL CODE 781768058
5.0159	01	PNEUM. CUSHIONING HEATED SEAT - OPTIONAL CODE 781000038
5.0159	02	PNEUM. CUSHIONING HEATED SEAT - COMPONENTS - OPTIONAL CODE 781000038
5.0208	01	CAB GUARD - OPTIONAL CODE 781646098
5.0209	01	CAB GUARD - OPTIONAL CODE 781647098
5.0210	01	CAB GUARD - OPTIONAL CODE 461116028
5.0210	02	CAB GUARD - OPTIONAL CODE 461116028
5.0580	01	SUN CANOPY - OPTIONAL CODE 461221008
5.0580	02	CAB LIGHTS - OPTIONAL CODE 461221008
5.0581	01	REAR MIRROR - OPTIONAL CODE 46128018

5.0001	01	p1	10/07

TRACK CHAIN (L=600MM) - OPTIONAL CODE 956000217

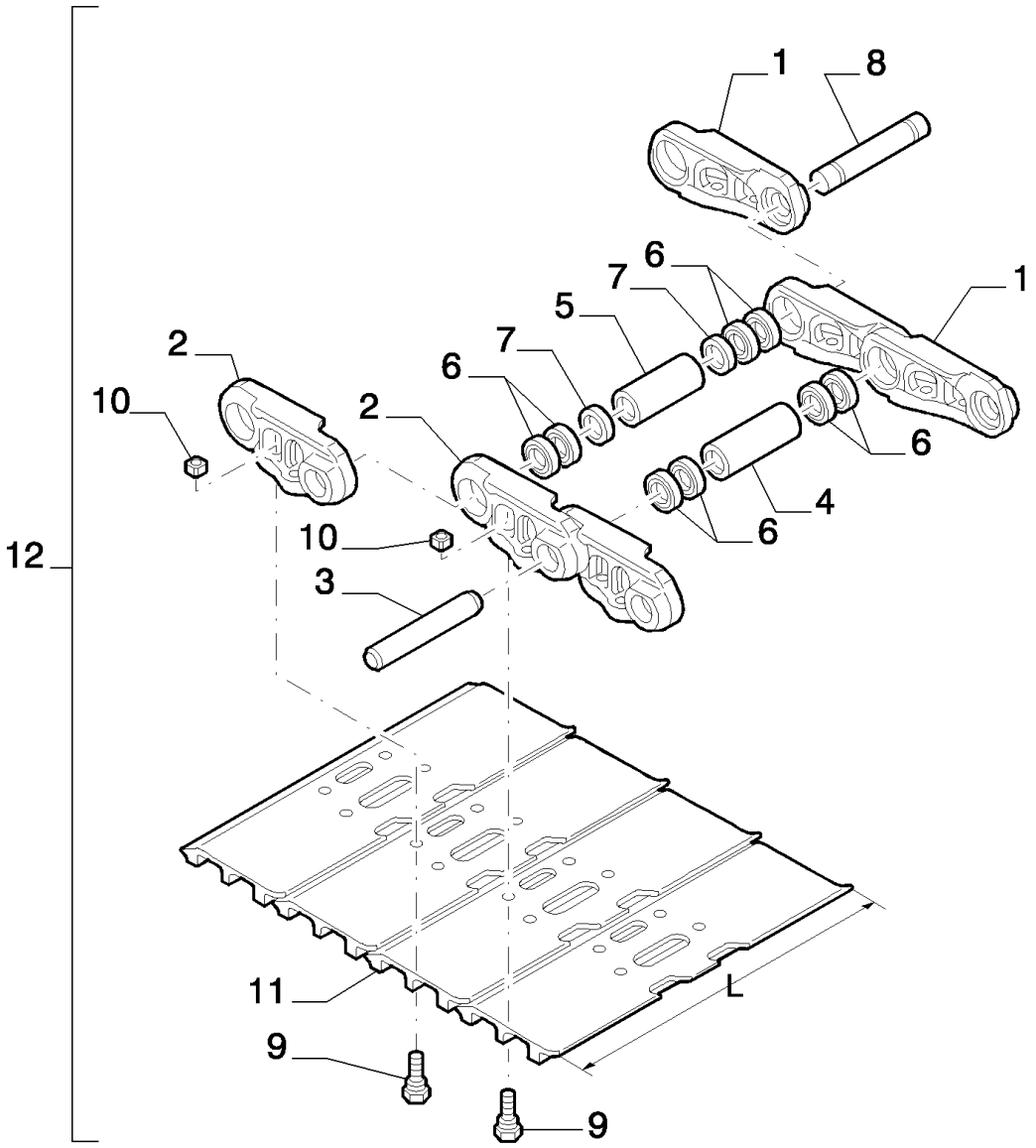

TRACK CHAIN (L=600MM) - OPTIONAL CODE 956000217

REF	FN	PART NUMBER	YR/SN	QTY	DESCRIPTION
1-8		87719135		1	CORRENTE, - ASSY
1		72212362		48	ELO DE ESTEIRA, - RIGHT
2		72212363		48	ELO DE ESTEIRA, - LEFT
3		87718553		47	BUCHA
4		72212365		47	PINO
5		87718552		1	BUCHA
6		72212366		94	ANEL DE VEDACAO
7		72212369		2	ESPAÇADOR
8		72212368		1	PINO
9		72212370		192	PARAFUSO
10		72212371		192	PORCA
11		72212373		48	SAPATA DE ESTEIRA, 600mm
12		87718551		1	CATENÁRIA, - WITH 600mm SHOES - ASSY

5.0002	01	p1	10/07

TRACK CHAIN (L=700MM) - OPTIONAL CODE 956000317

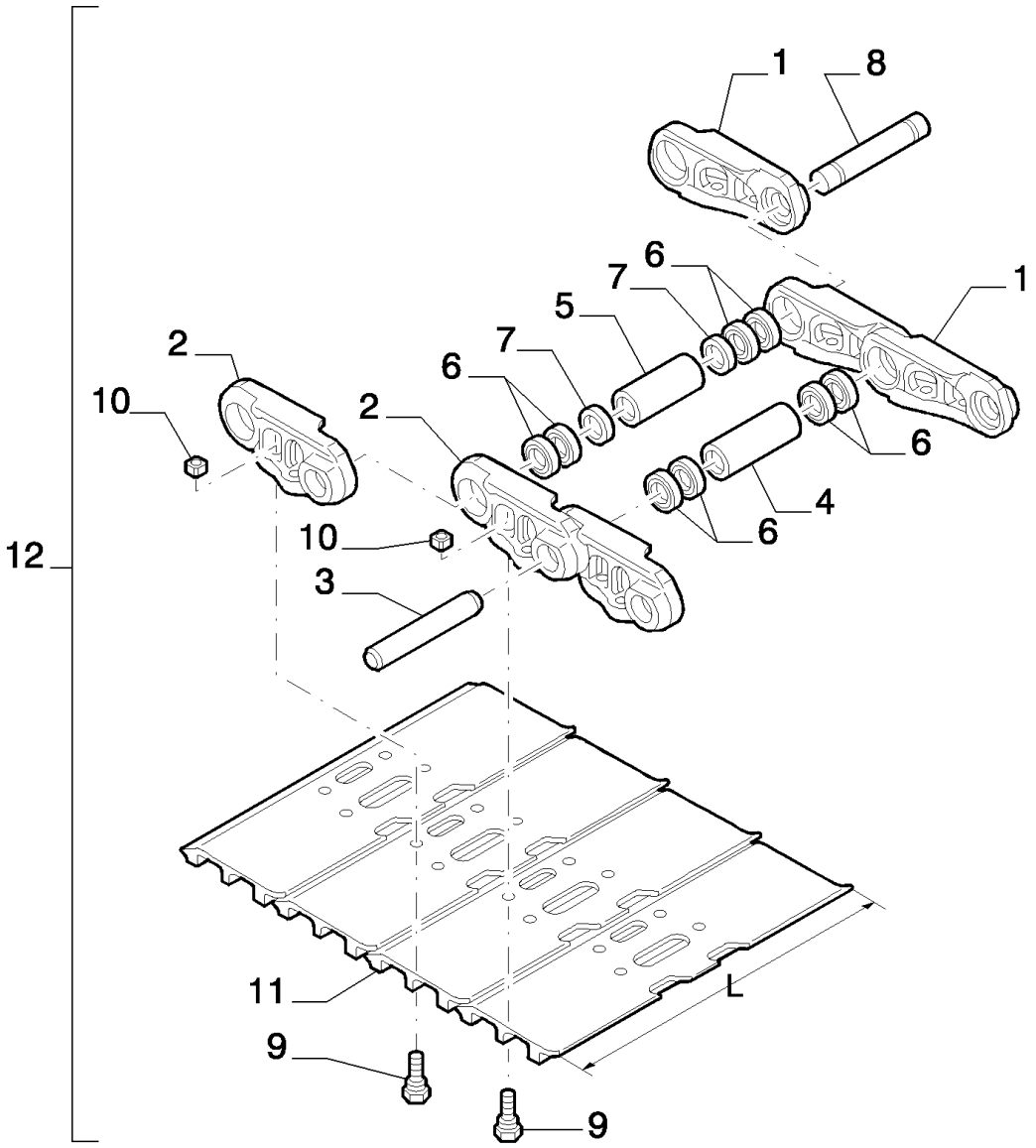

TRACK CHAIN (L=700MM) - OPTIONAL CODE 956000317

REF	FN	PART NUMBER	YR/SN	QTY	DESCRIPTION
1-8		87719135		1	CORRENTE, - ASSY
1		72212362		48	ELO DE ESTEIRA, - RIGHT
2		72212363		48	ELO DE ESTEIRA, - LEFT
3		87718553		47	BUCHA
4		72212365		47	PINO
5		87718552		1	BUCHA
6		72212366		94	ANEL DE VEDACAO
7		72212369		2	ESPAÇADOR
8		72212368		1	PINO
9		72212370		192	PARAFUSO
10		72212371		192	PORCA
11		72212373		48	SAPATA DE ESTEIRA, 600mm
12		{87719146}		1	- WITH 700mm SHOES - ASSY
13		71473483		4	ESPAÇADOR
14		11118734		16	PARAFUSO
15		10517274		16	ARRUELA-TRAVA
16		14496931		16	ARRUELA PLANA, M16 x 30 x 3

5.0003	01	p1	10/07

TRACK CHAIN (L=800MM) - OPTIONAL CODE 956000517

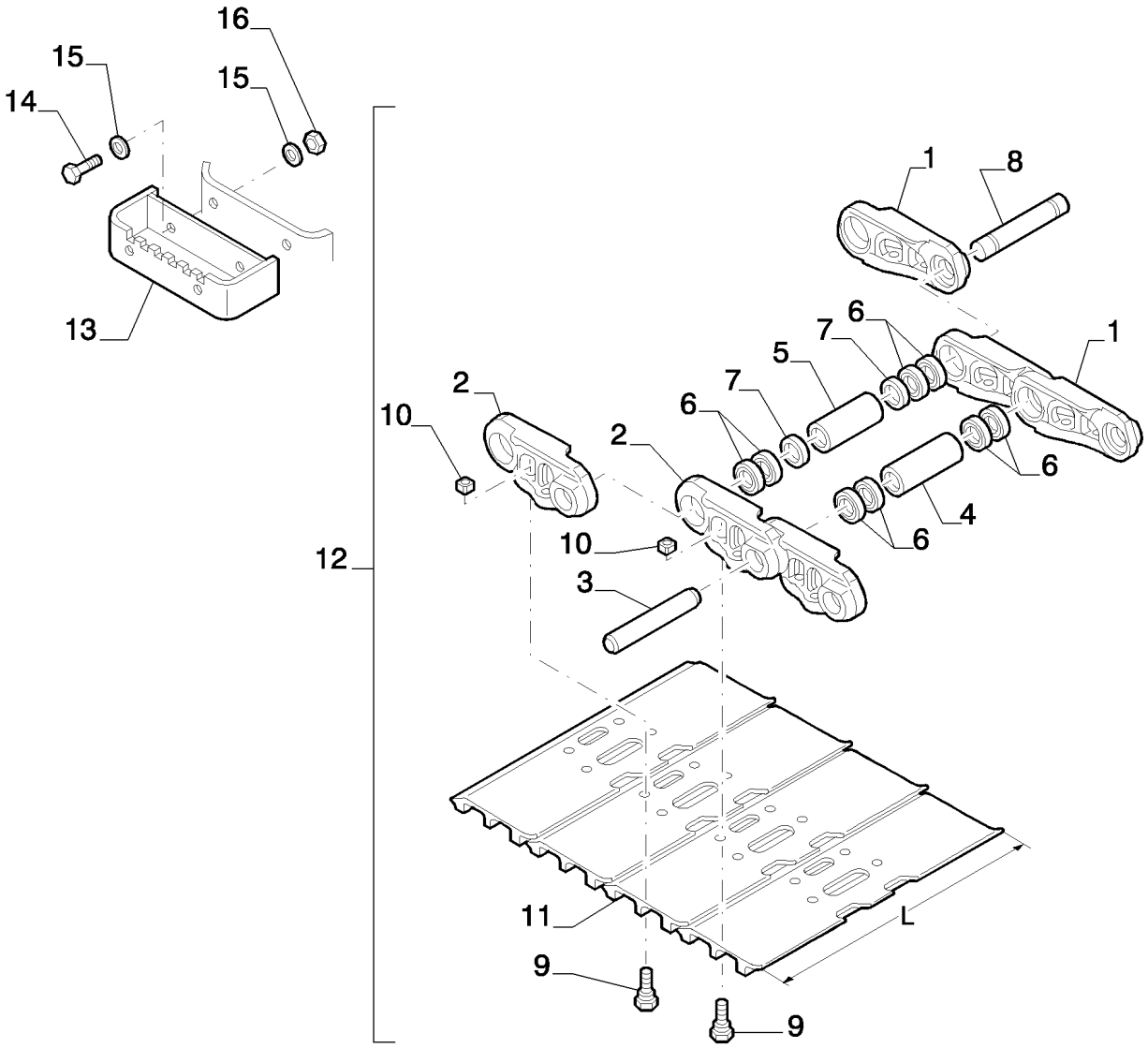

6

TRACK CHAIN (L=800MM) - OPTIONAL CODE 956000517

REF	FN	PART NUMBER	YR/SN	QTY	DESCRIPTION
1-8		87719135		1	CORRENTE, - ASSY
1		72212362		48	ELO DE ESTEIRA, - RIGHT
2		72212363		48	ELO DE ESTEIRA, - LEFT
3		87718553		47	BUCHA
4		72212365		47	PINO
5		87718552		1	BUCHA
6		72212366		94	ANEL DE VEDACAO
7		72212369		2	ESPAÇADOR
8		72212368		1	PINO
9		72212370		192	PARAFUSO
10		72212371		192	PORCA
11		72212373		48	SAPATA DE ESTEIRA, 600mm
12		{87719145}		1	- WITH 700mm SHOES - ASSY
13		71473483		4	ESPAÇADOR
14		11118734		16	PARAFUSO
15		10517274		16	ARRUELA-TRAVA
16		14496931		16	ARRUELA PLANA, M16 x 30 x 3

5.0004	01	p1	10/07

TRACK CHAIN (L=900MM) - OPTIONAL CODE 956000717

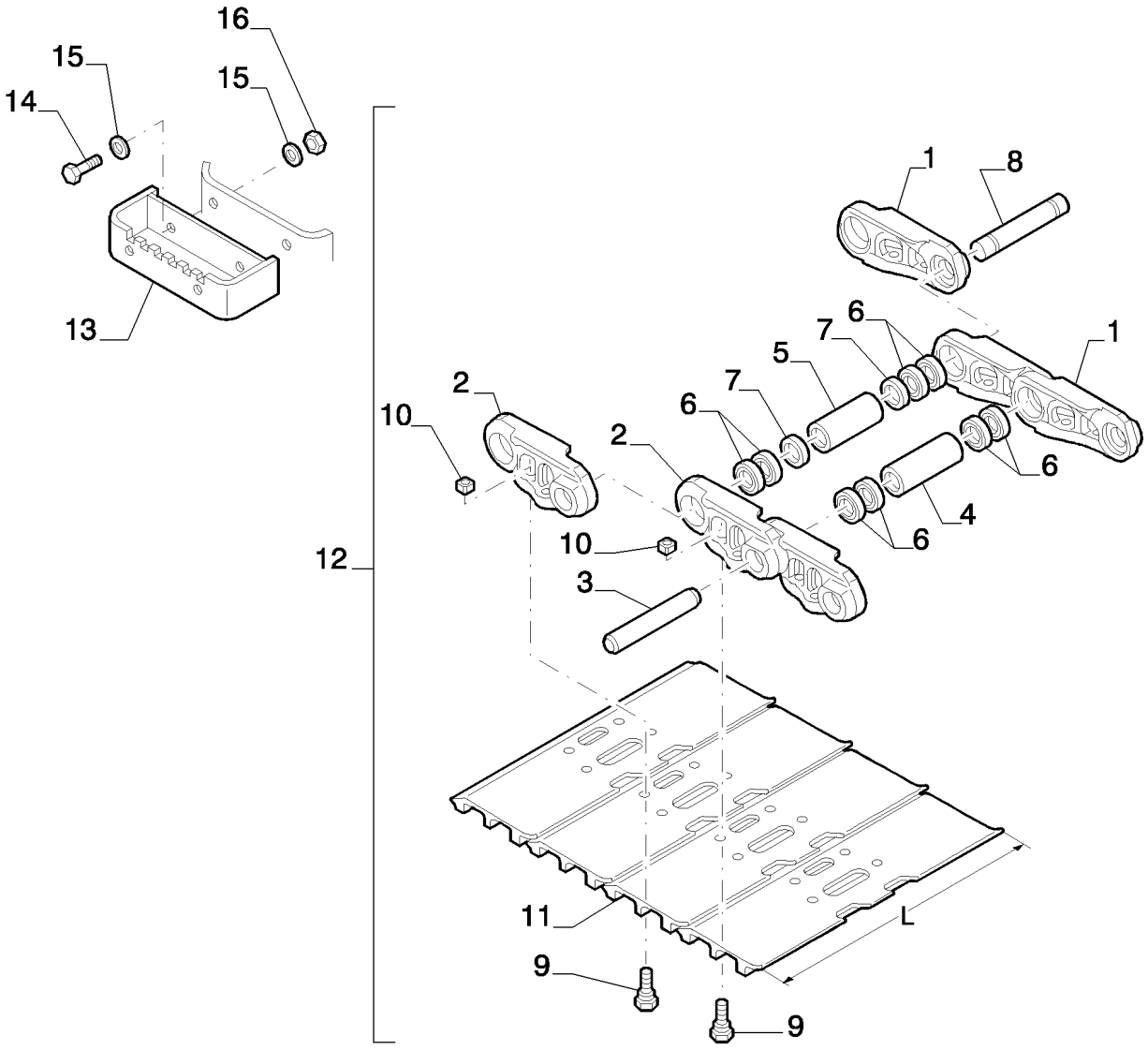

6

TRACK CHAIN (L=900MM) - OPTIONAL CODE 956000717

REF	FN	PART NUMBER	YR/SN	QTY	DESCRIPTION
1-8		87719135		1	CORRENTE, - ASSY
1		72212362		48	ELO DE ESTEIRA, - RIGHT
2		72212363		48	ELO DE ESTEIRA, - LEFT
3		87718553		47	BUCHA
4		72212365		47	PINO
5		87718552		1	BUCHA
6		72212366		94	ANEL DE VEDACAO
7		72212369		2	ESPAÇADOR
8		72212368		1	PINO
9		72212370		192	PARAFUSO
10		72212371		192	PORCA
11		72212373		48	SAPATA DE ESTEIRA, 600mm
12		{87719143}		1	- WITH 700mm SHOES - ASSY
13		71473483		4	ESPAÇADOR
14		11118734		16	PARAFUSO
15		10517274		16	ARRUELA-TRAVA
16		14496931		16	ARRUELA PLANA, M16 x 30 x 3

5.0013	01	p1	11/07

DIPPER STICK (L=2.6M) - OPTIONAL CODE 781176148

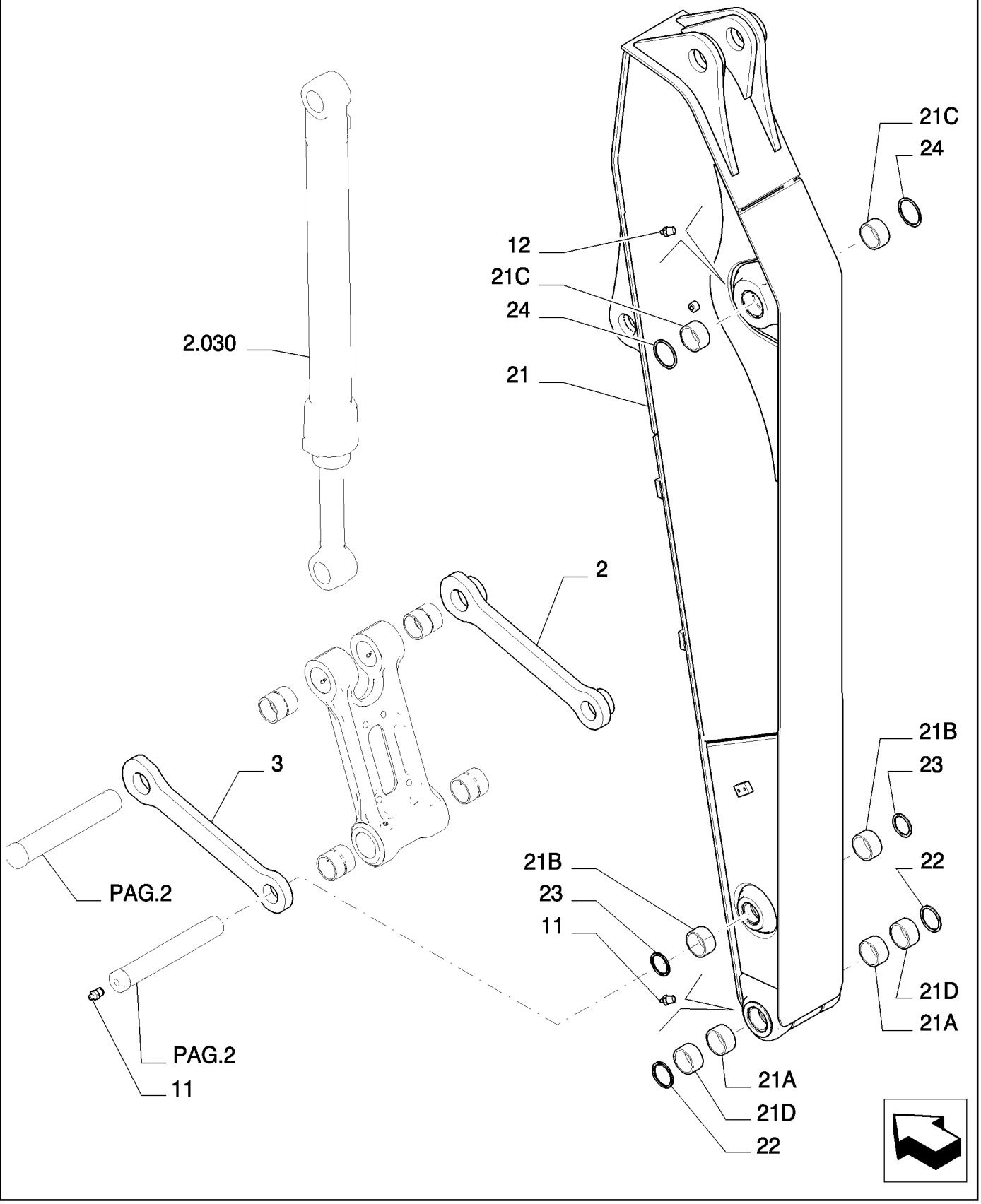

DIPPER STICK (L=2.6M) - OPTIONAL CODE 781176148

REF	FN	PART NUMBER	YR/SN	QTY	DESCRIPTION
2		{87635467}		1	
3		{87635469}		1	
13		72283478		2	GRAXEIRA
14		71433287		1	GRAXEIRA
21		{87633055}		1	- ASSY
21A		{87619716}		2	
21B		87543300		2	BUCHA
21C		{87619712}		2	
21D		{87619714}		2	
22		{87619706}		2	
23		87540083		2	JUNTA
24		{87617249}		2	

5.0013	02	p1	11/07

DIPPER STICK (L=2.6M) - OPTIONAL CODE 781176148

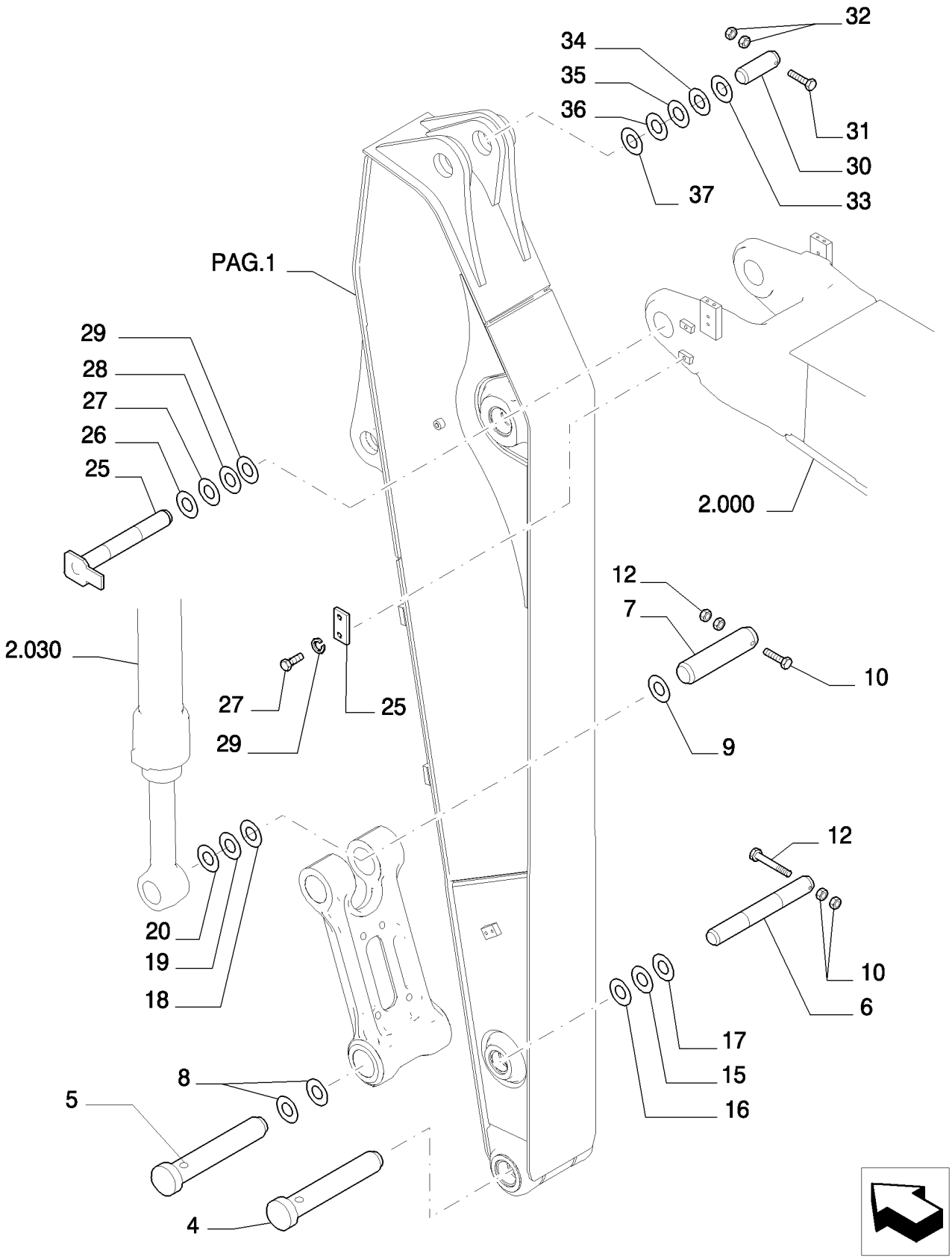

DIPPER STICK (L=2.6M) - OPTIONAL CODE 781176148

REF	FN	PART NUMBER	YR/SN	QTY	DESCRIPTION
4		{87635470}		1	
5		{87635471}		1	
6		{87635476}		1	
7		{87635477}		1	
8		{87620255}		2	
9		{72160584}		4	
10		11126734		1	PARAFUSO, Hex, M20 x 150, 10.9
11		16039634		1	PARAFUSO, Hex, M20 x 160, 10.9
12		12163521		4	PORCA, M20, Cl 10
15		72203347		1	CALCO DE AFINACAO, 0.9mm Thk
16		72203348		1	CALCO DE AFINACAO, 1.6mm Thk
17		72202203		2	CALCO DE AFINACAO, 2mm Thk
18		72203141		2	CALCO DE AFINACAO, 0.9mm Thk
19		72203157		2	CALCO DE AFINACAO, 1.6mm Thk
20		72203145		4	CALCO DE AFINACAO, 2mm Thk
30		{87637608}		1	
31		15204034		1	PARAFUSO
32		12163521		2	PORCA, M20, Cl 10
33		72208164		1	CALCO DE AFINACAO, 0.9mm Thk
34		72208161		1	CALCO DE AFINACAO, 1.2mm Thk
35		72208162		1	CALCO DE AFINACAO, 1.6mm Thk
36		72208163		1	CALCO DE AFINACAO, 2.3mm Thk
37		72208165		2	CALCO DE AFINACAO, 2mm Thk

5.0013	03	p1	11/07

DIPPER STICK (L=2.6M) - OPTIONAL CODE 781176148

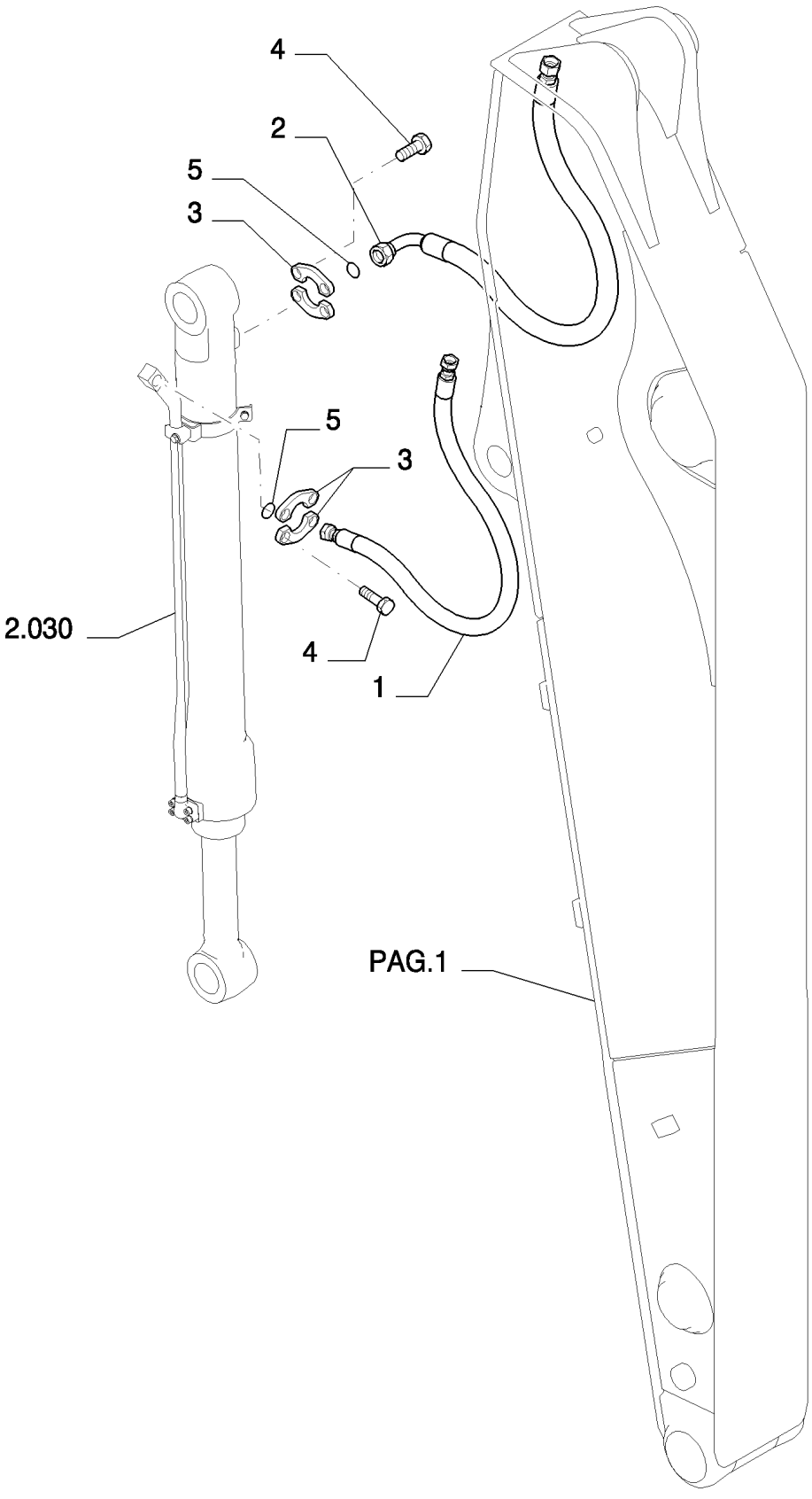

6

DIPPER STICK (L=2.6M) - OPTIONAL CODE 781176148

REF	FN	PART NUMBER	YR/SN	QTY	DESCRIPTION
1		{87683186}		1	
2		{87683177}		1	
3		71404313		4	SEMI- FLANGE
4		72215443		2	JUNTA
5		11112834		8	PARAFUSO, Hex, M12 x 40, 10.9, Full Thd
6		14496731		8	ARRUELA PLANA

5.0013	04	p1	11/07

DIPPER STICK (L=2.6M) - OPTIONAL CODE 781176148

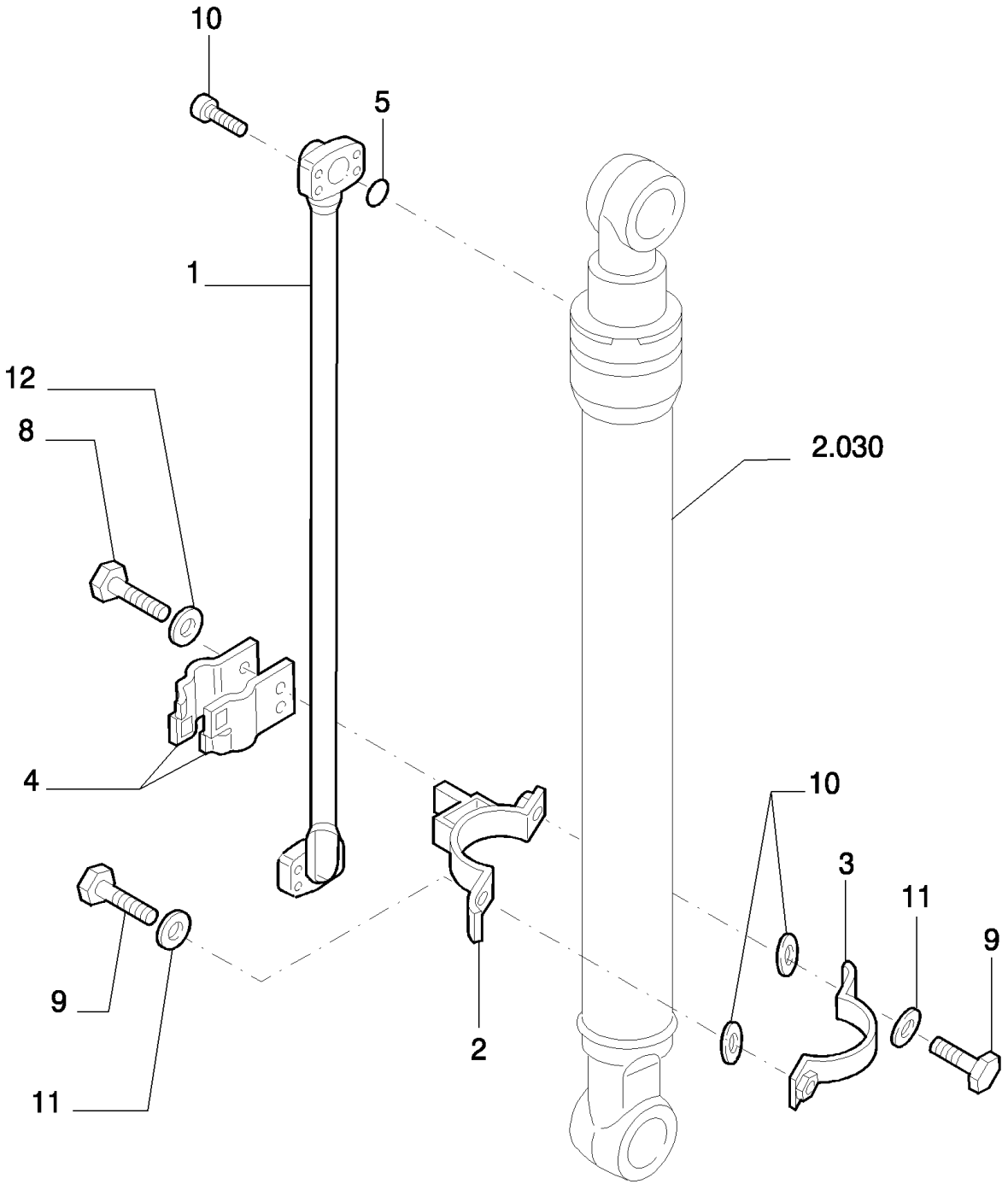

6

DIPPER STICK (L=2.6M) - OPTIONAL CODE 781176148

REF	FN	PART NUMBER	YR/SN	QTY	DESCRIPTION
1		{87651738}		1	
2		{87659456}		1	
3		{87659457}		1	
4		87343093		2	SUPORTE
5		72215443		1	JUNTA
8		11112634		2	PARAFUSO
9		11106434		2	PARAFUSO, Hex, M10 x 30, 10.9, Full Thd
10		14422234		4	PARAFUSO
11		10516874		2	ARRUELA-TRAVA
13		14496731		2	ARRUELA PLANA

5.0020	01	p1	10/07

APPLICATION OF HYDRAULIC HAMMER - OPTIONAL CODE 461228008 (01-02) - 461228018 (03-04)

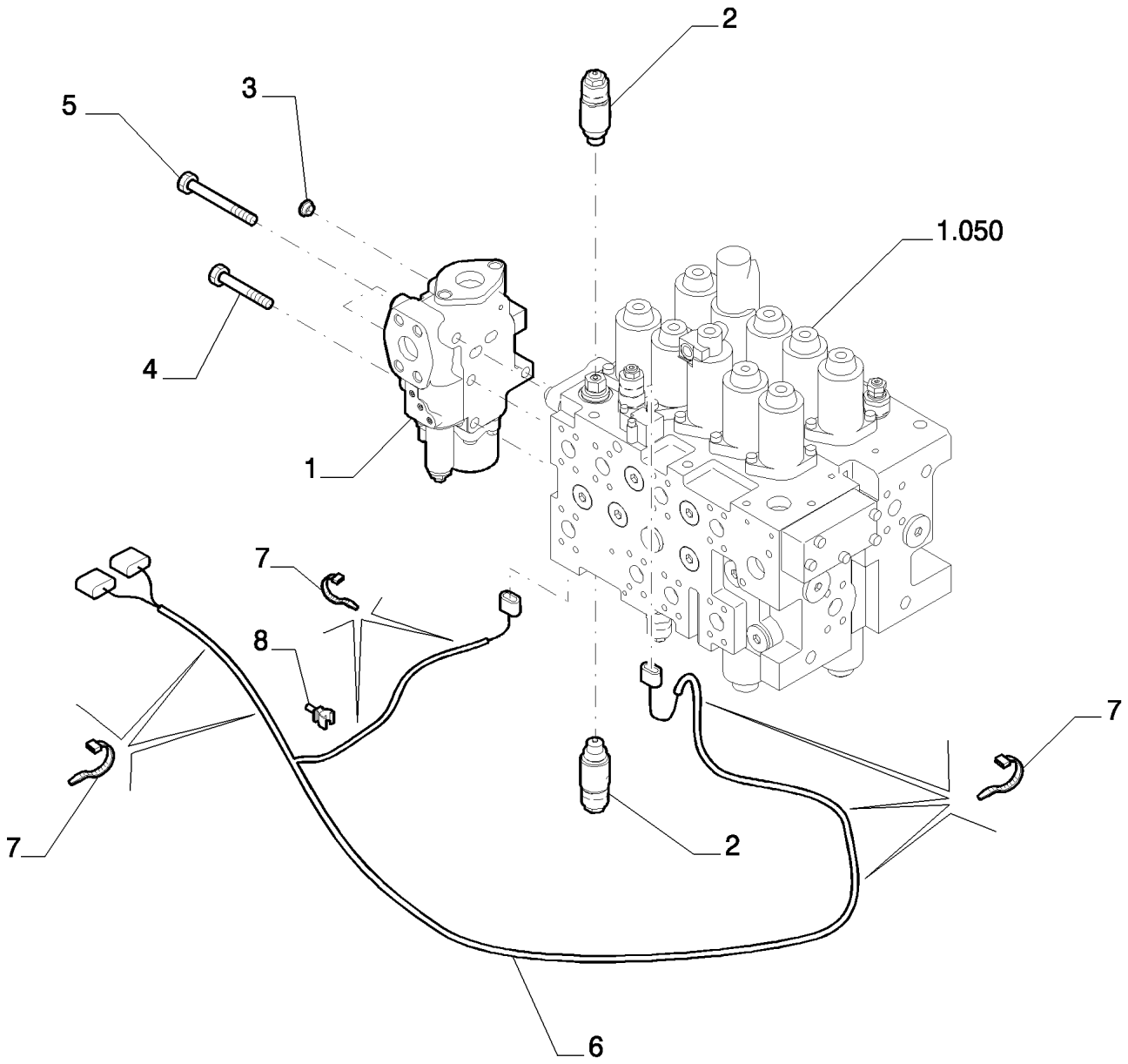

APPLICATION OF HYDRAULIC HAMMER - OPTIONAL CODE 461228008 (01-02) - 461228018 (03-04)

REF	FN	PART NUMBER	YR/SN	QTY	DESCRIPTION
1		87520007		1	VÁLVULA HIDRAULICA
2		87579594		2	VÁLVULA HIDRAULICA
3		87643223		1	BUJÃO
4		14423034		1	PARAFUSO
5		87609321		3	PARAFUSO
6		87599406		1	CABO ELÉTRICO
7		4982514		7	TIRA DE CABO
8		87526680		1	ESTRIBO DE FIXAÇÃO

5.0020	02	p1	10/07

APPLICATION OF HYDRAULIC HAMMER - OPTIONAL CODE 461228008 (01-02) - 461228018 (03-04)

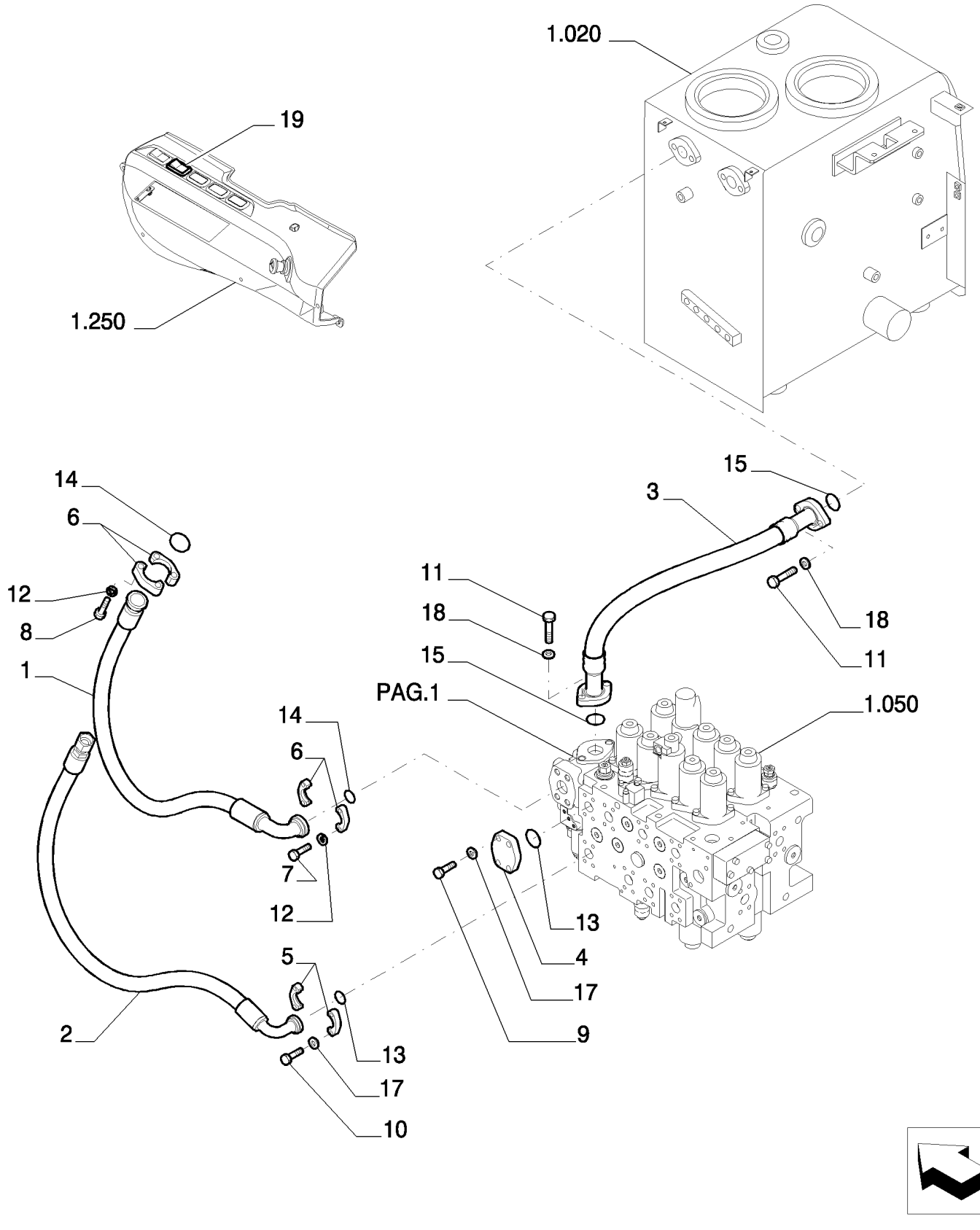

APPLICATION OF HYDRAULIC HAMMER - OPTIONAL CODE 461228008 (01-02) - 461228018 (03-04)

REF	FN	PART NUMBER	YR/SN	QTY	DESCRIPTION
1		{87653228}		1	
2		{87653229}		1	
3		{87653244}		1	
4		87397570		1	BUJÃO
5		71404311		2	SEMI- FLANGE
6		71444029		6	SEMI- FLANGE
7		11116034		4	PARAFUSO
8		14424534		4	PARAFUSO
9		11106434		4	PARAFUSO, Hex, M10 x 30, 10.9, Full Thd
10		11106634		4	PARAFUSO, Hex, M10 x 35, 10.9, Full Thd
11		11112634		4	PARAFUSO
12		10517174		12	ARRUELA-TRAVA
13		72215443		2	JUNTA
14		72210076		2	ANEL "O"
15		87397569		2	ANEL "O"
17		10516874		8	ARRUELA-TRAVA
18		10517074		4	ARRUELA-TRAVA
19		87527531		1	INTERRUPTOR

5.0020	03	p1	10/07

APPLICATION OF HYDRAULIC HAMMER - OPTIONAL CODE 461226068 (01-02) - 461226078 (03-04)

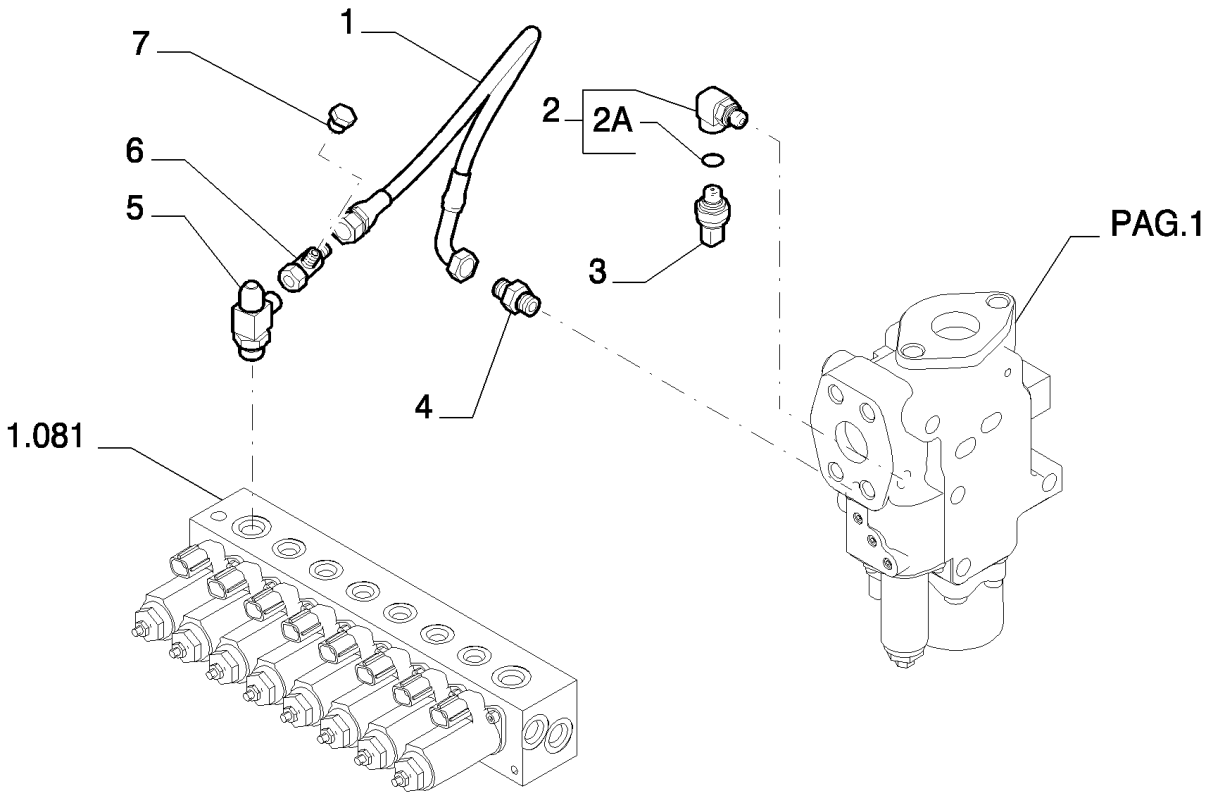

APPLICATION OF HYDRAULIC HAMMER - OPTIONAL CODE 461226068 (01-02) - 461226078 (03-04)

REF	FN	PART NUMBER	YR/SN	QTY	DESCRIPTION
1		{87657147}		1	
2		87522432		1	CONEXÃO
3		72215288		1	CONEXÃO, - ASSY
3A		72209827		1	ANEL "O"
4		87608371		1	SENSOR
5		{87338401}		1	
6		72954988		1	TEE
7		72214546		1	BUJÃO

APPLICATION OF HYDRAULIC HAMMER - VERSION (01-02) - OPTIONAL CODE 461228008

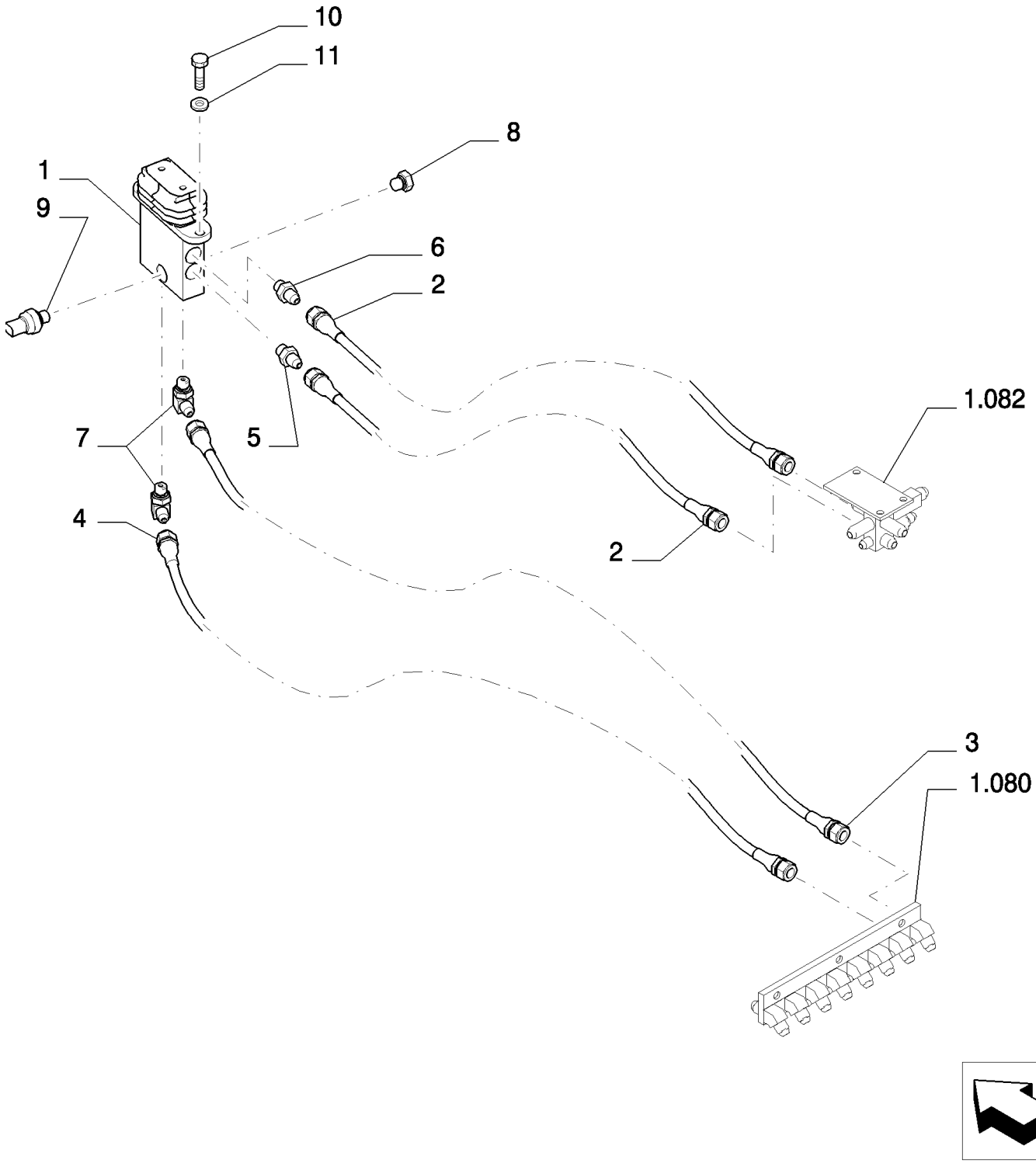

APPLICATION OF HYDRAULIC HAMMER - VERSION (01-02) - OPTIONAL CODE 461228008

REF	FN	PART NUMBER	YR/SN	QTY	DESCRIPTION
1	1	72204155		1	VÁLVULA HIDRAULICA
2		87338415		2	TUBO FLEXÍVEL
3		87533077		1	TUBO FLEXÍVEL
4		87533078		1	TUBO FLEXÍVEL
5		87522432		1	CONEXÃO
6		72214744		1	CONEXÃO
7		72214524		2	CONEXÃO
8		72214663		1	BUJÃO
9		87608371		1	SENSOR
10		11106434		2	PARAFUSO, Hex, M10 x 30, 10.9, Full Thd
11		12641031		2	ARRUELA-TRAVA

(1) ASSY SEE SGR. 1.091 PAGE 2

5.0020	05	p1	04/08

APPLICATION OF HYDRAULIC HAMMER - VERSION (03-04) - OPTIONAL CODE 461228018

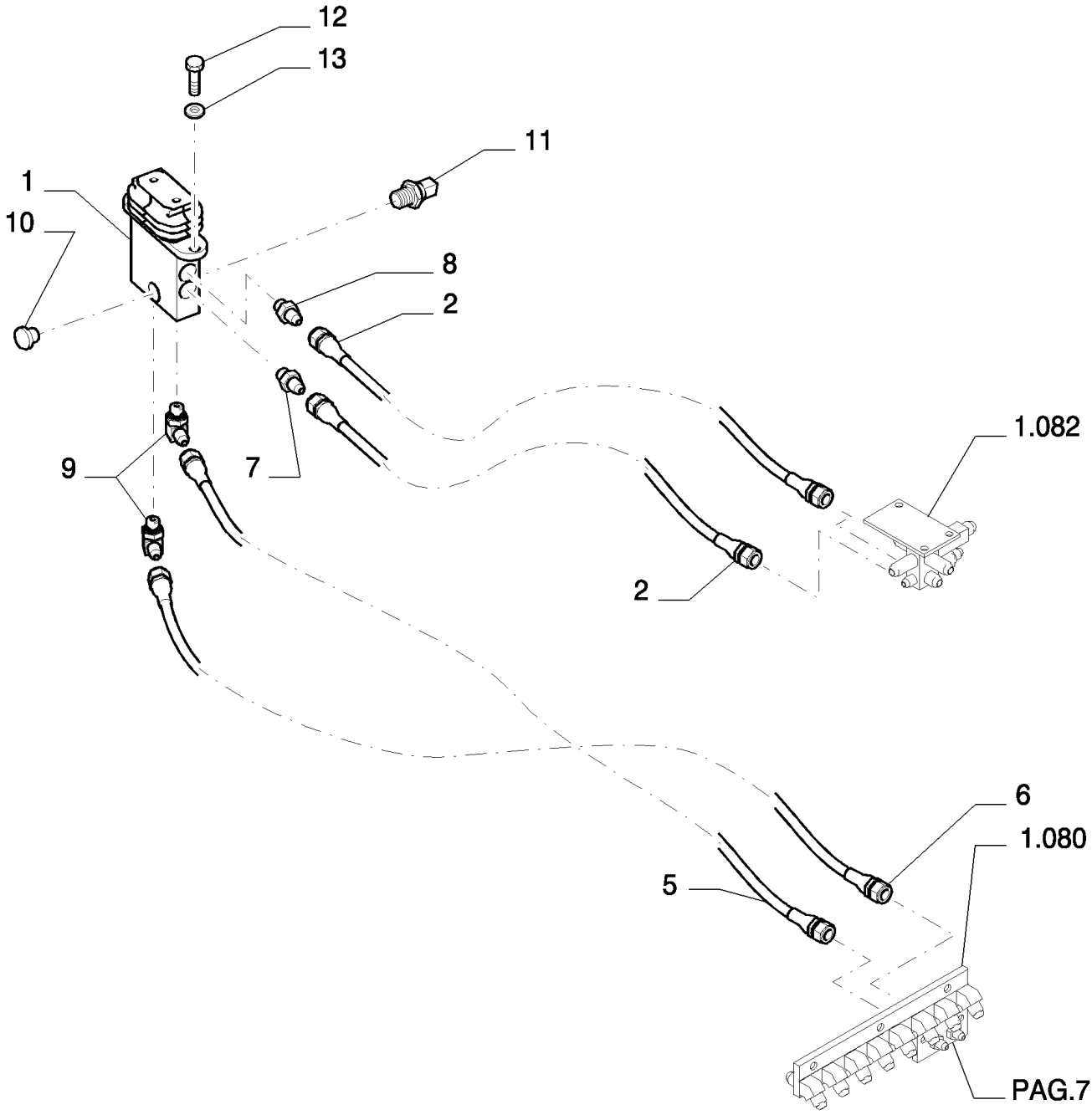

6

APPLICATION OF HYDRAULIC HAMMER - VERSION (03-04) - OPTIONAL CODE 461228018

REF	FN	PART NUMBER	YR/SN	QTY	DESCRIPTION
1	1	72204155		1	VÁLVULA HIDRAULICA
2		87338415		2	TUBO FLEXÍVEL
5		87537460		1	TUBO FLEXÍVEL
6		{72214738}		1	
7		87522432		1	CONEXÃO
8		72214744		1	CONEXÃO
9		72214524		2	CONEXÃO
10		72214663		1	BUJÃO
11		87608371		1	SENSOR
12		11106434		2	PARAFUSO, Hex, M10 x 30, 10.9, Full Thd
13		12641031		2	ARRUELA-TRAVA

(1) ASSY SEE SGR. 1.091 PAGE 2

APPLICATION OF HYDRAULIC HAMMER - VERSION (01-02) - OPTIONAL CODE 461228008

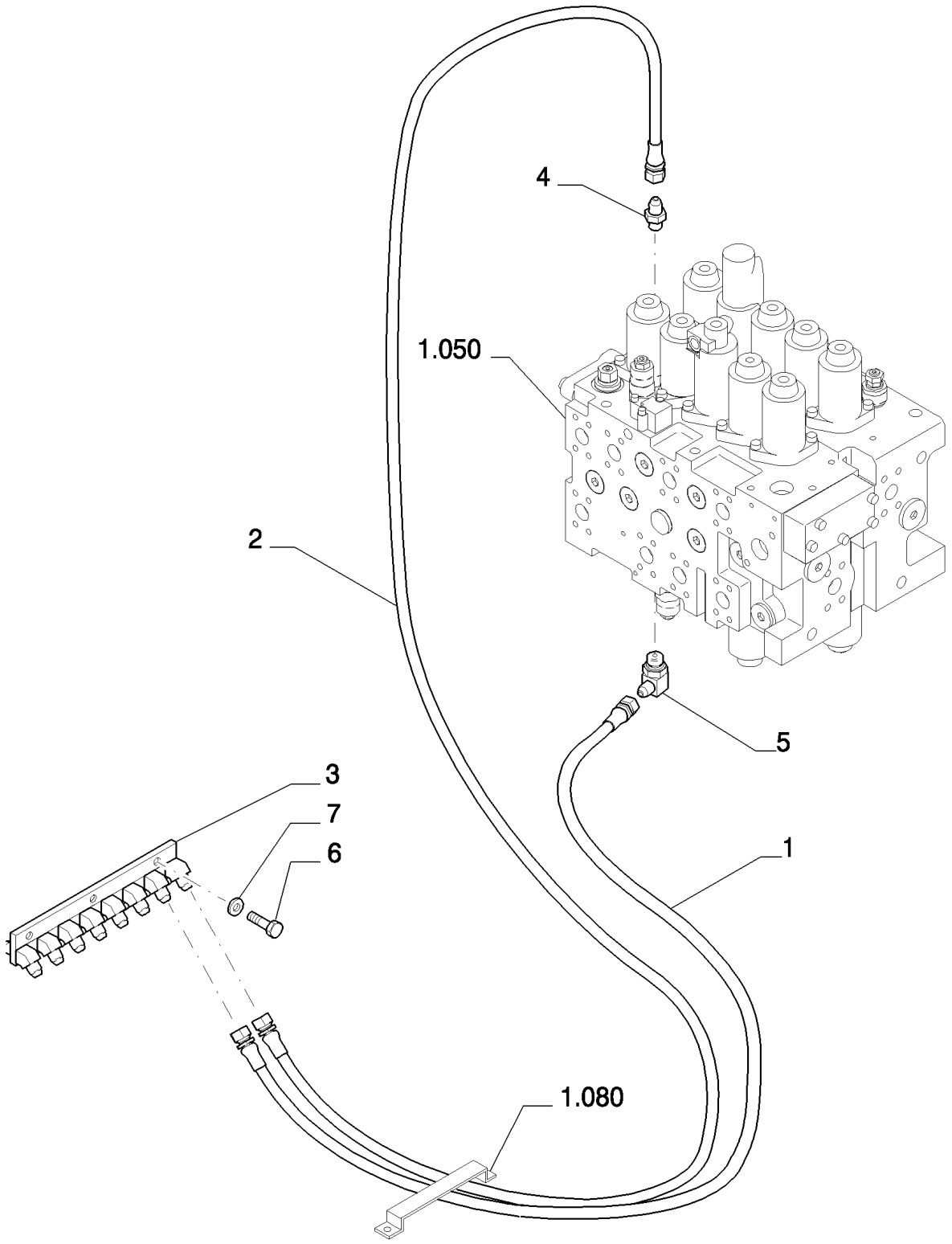

APPLICATION OF HYDRAULIC HAMMER - VERSION (01-02) - OPTIONAL CODE 461228008

REF	FN	PART NUMBER	YR/SN	QTY	DESCRIPTION
1		72214547		1	TUBO FLEXÍVEL
2		72214775		1	TUBO FLEXÍVEL
3		87537888		1	BLOCO
4		72214522		1	CONEXÃO
5		72214561		1	CONEXÃO
6		11106434		3	PARAFUSO, Hex, M10 x 30, 10.9, Full Thd
7		14496631		3	ARRUELA PLANA, M10 x 21 x 2

5.0020	07	p1	11/07

APPLICATION OF HYDRAULIC HAMMER - VERSION (03-04) - OPTIONAL CODE 461228018

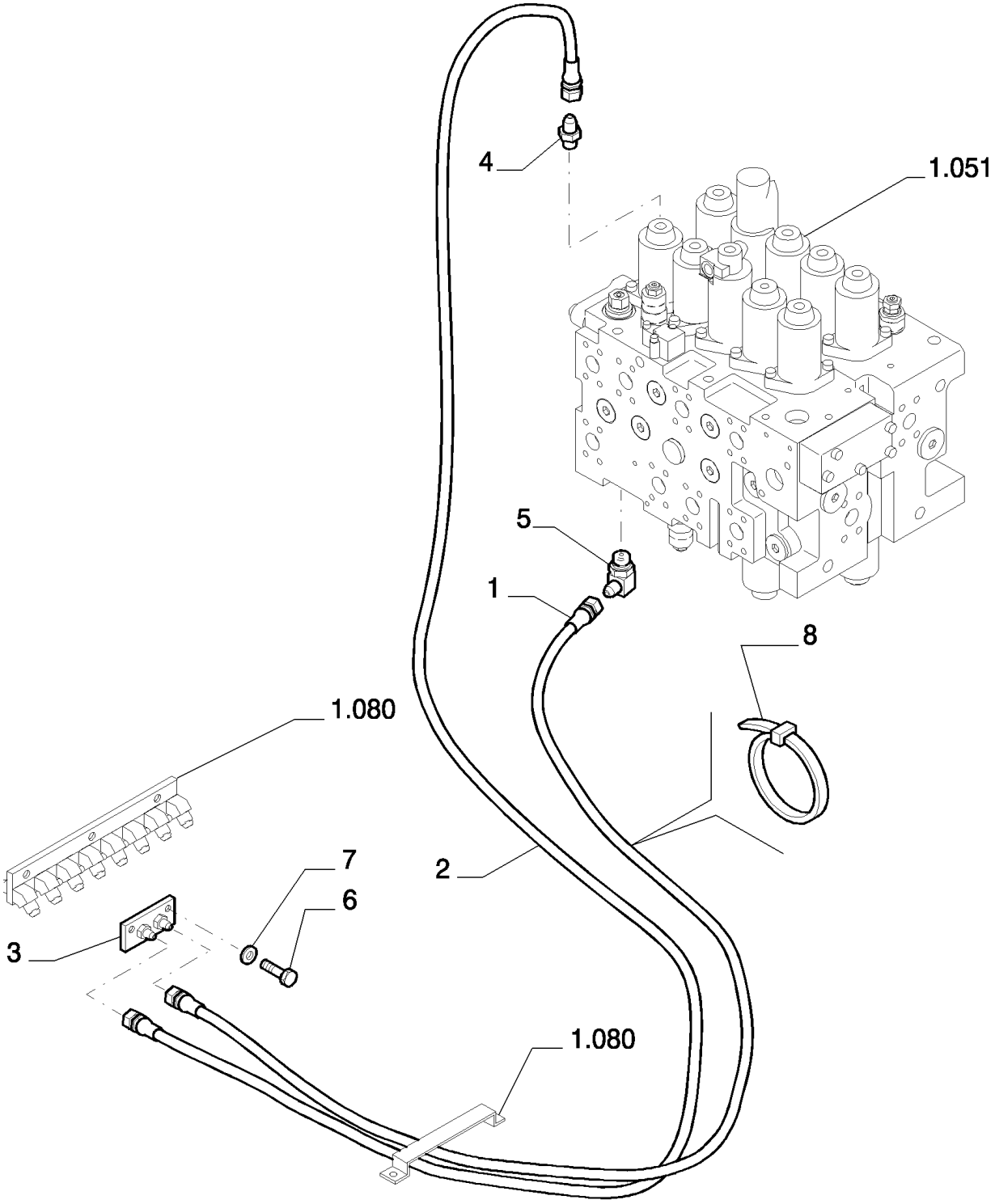

6

APPLICATION OF HYDRAULIC HAMMER - VERSION (03-04) - OPTIONAL CODE 461228018

REF	FN	PART NUMBER	YR/SN	QTY	DESCRIPTION
1		72214782		1	TUBO FLEXÍVEL
2		72214547		1	TUBO FLEXÍVEL
3		87579546		1	BLOCO
4		72214522		1	CONEXÃO
5		72214561		1	CONEXÃO
6		14306234		2	PARAFUSO, Hex Soc Hd, M8 x 16, 10.9
7		10516674		2	ARRUELA-TRAVA, 5/16"
8		4982514		1	TIRA DE CABO

5.0020	08	p1	11/07

APPLICATION OF HYDRAULIC HAMMER - VERSION (01-02) - OPTIONAL CODE 461228008

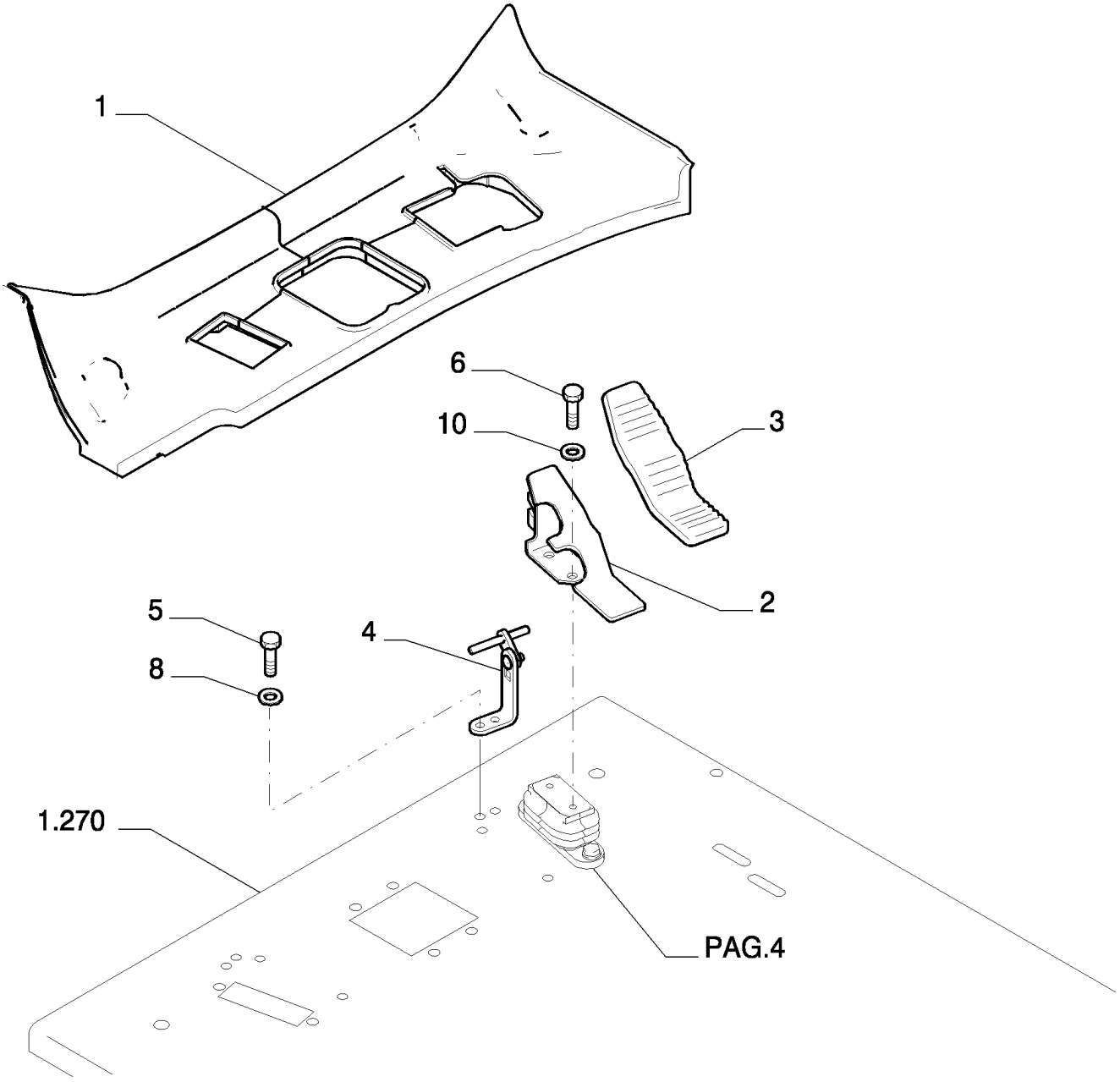

APPLICATION OF HYDRAULIC HAMMER - VERSION (01-02) - OPTIONAL CODE 461228008

REF	FN	PART NUMBER	YR/SN	QTY	DESCRIPTION
1		87539506		1	ESTRIBO
2		87539195		1	PEDAL
3		87539205		1	COBERTURA BORRACHA PEDAL
4		87539206		1	SUPORTE
5		16043434		2	PARAFUSO, Hex, M8 x 20, 10.9, Full Thd
6		11106034		2	PARAFUSO, Hex, M10 x 20, 10.9, Full Thd
8		14496531		2	ARRUELA PLANA, M8 x 17 x 1.6
10		14496631		2	ARRUELA PLANA, M10 x 21 x 2

5.0020	09	p1	11/07

APPLICATION OF HYDRAULIC HAMMER - VERSION (03-04) - OPTIONAL CODE 461228018

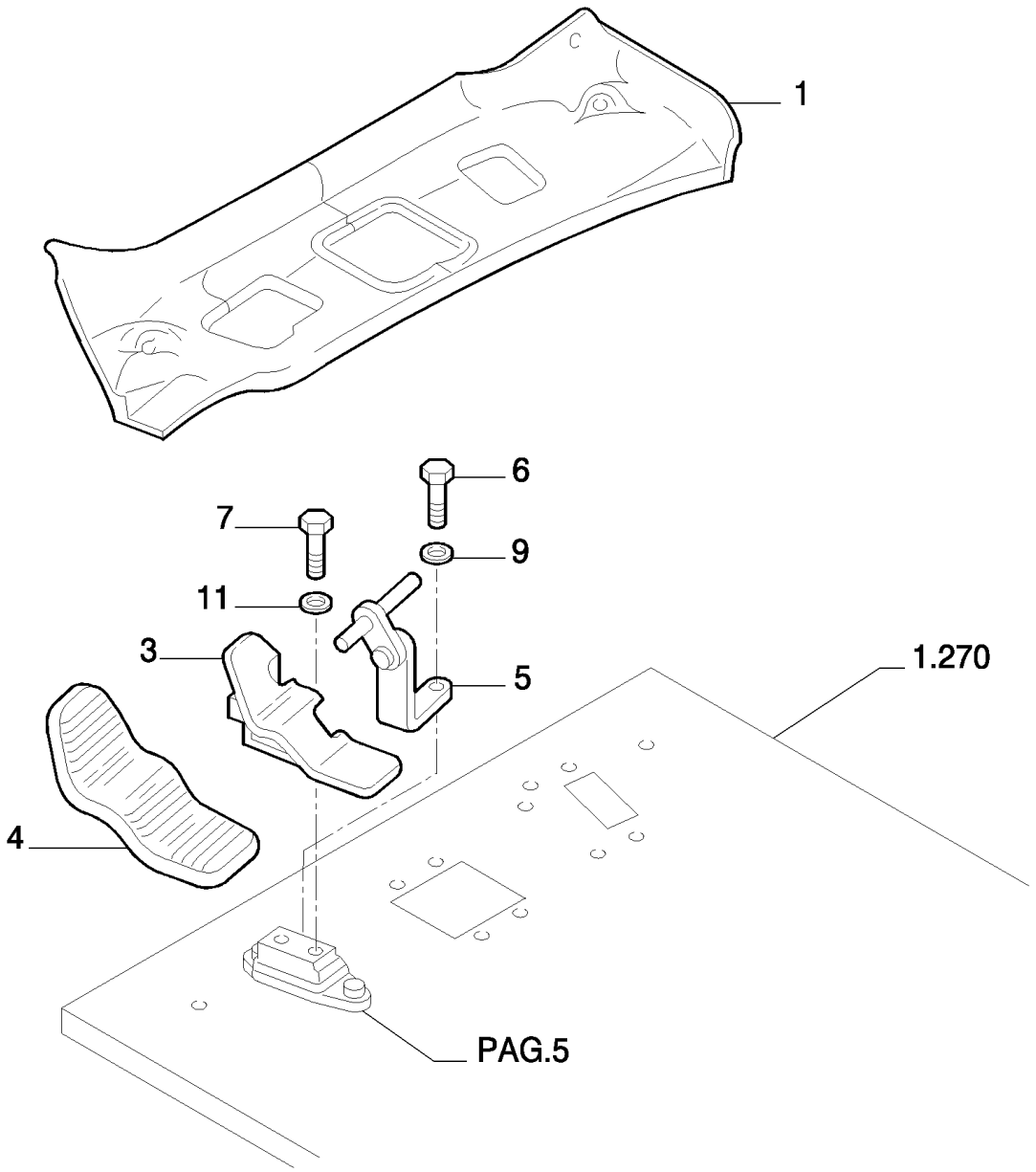

APPLICATION OF HYDRAULIC HAMMER - VERSION (03-04) - OPTIONAL CODE 461228018

REF	FN	PART NUMBER	YR/SN	QTY	DESCRIPTION
1		87539194		1	ESTRIBO
3		87539200		1	PEDAL
4		87539205		1	COBERTURA BORRACHA PEDAL
5		87539206		1	SUPORTE
6		16043434		2	PARAFUSO, Hex, M8 x 20, 10.9, Full Thd
7		11106034		2	PARAFUSO, Hex, M10 x 20, 10.9, Full Thd
9		14496531		2	ARRUELA PLANA, M8 x 17 x 1.6
11		14496631		2	ARRUELA PLANA, M10 x 21 x 2

5.0020	10	p1	11/07

APPLICATION OF HYDRAULIC HAMMER - VERSION (01-02) - OPTIONAL CODE 461228008

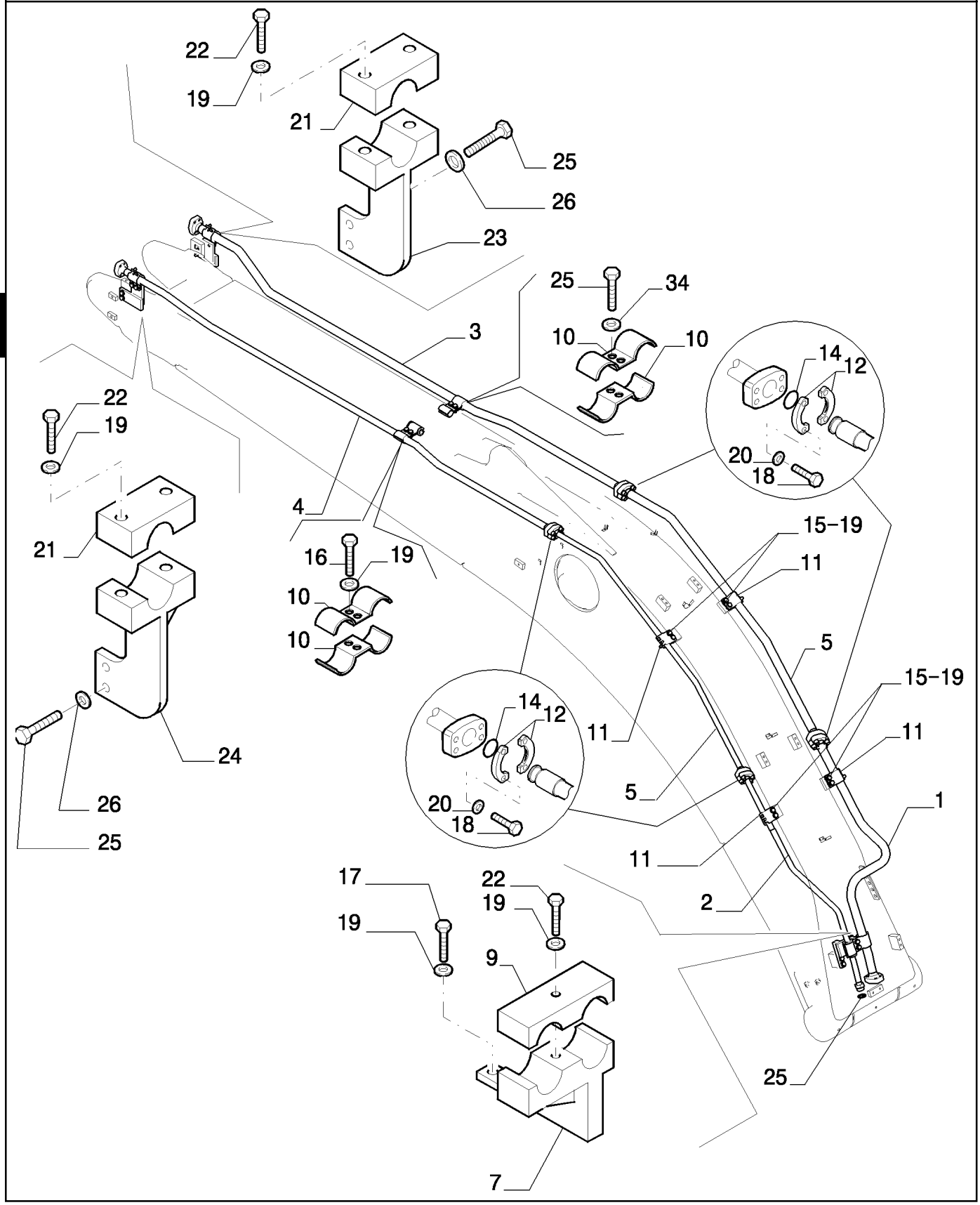

6

APPLICATION OF HYDRAULIC HAMMER - VERSION (01-02) - OPTIONAL CODE 461228008

REF	FN	PART NUMBER	YR/SN	QTY	DESCRIPTION
1		{87634948}		1	
2		{87644443}		1	
3		{87644445}		1	
4		{87644447}		1	
5		{87644529}		2	
7		{87634938}		1	
9		{87634923}		1	
10		{87349330}		8	
11		71444029		12	SEMI- FLANGE
14		72210076		4	ANEL "O"
15		11112434		12	PARAFUSO, Hex, M12 x 30, 10.9, Full Thd
16		11112634		8	PARAFUSO
17		11113234		2	PARAFUSO, Hex, M12 x 50, 10.9
18		14424534		16	PARAFUSO
19		14496731		28	ARRUELA PLANA
20		10572079		16	ARRUELA-TRAVA, M14
21		72204490		2	SUPORTE
22		11113534		6	PARAFUSO, Hex, M12 x 65, 10.9, Full Thd
23		{87644877}		1	
24		{87644878}		1	
25		11112834		4	PARAFUSO, Hex, M12 x 40, 10.9, Full Thd
26		14496731		4	ARRUELA PLANA

5.0020	11	p1	11/07

APPLICATION OF HYDRAULIC HAMMER - VERSION (03-04) - OPTIONAL CODE 461228018

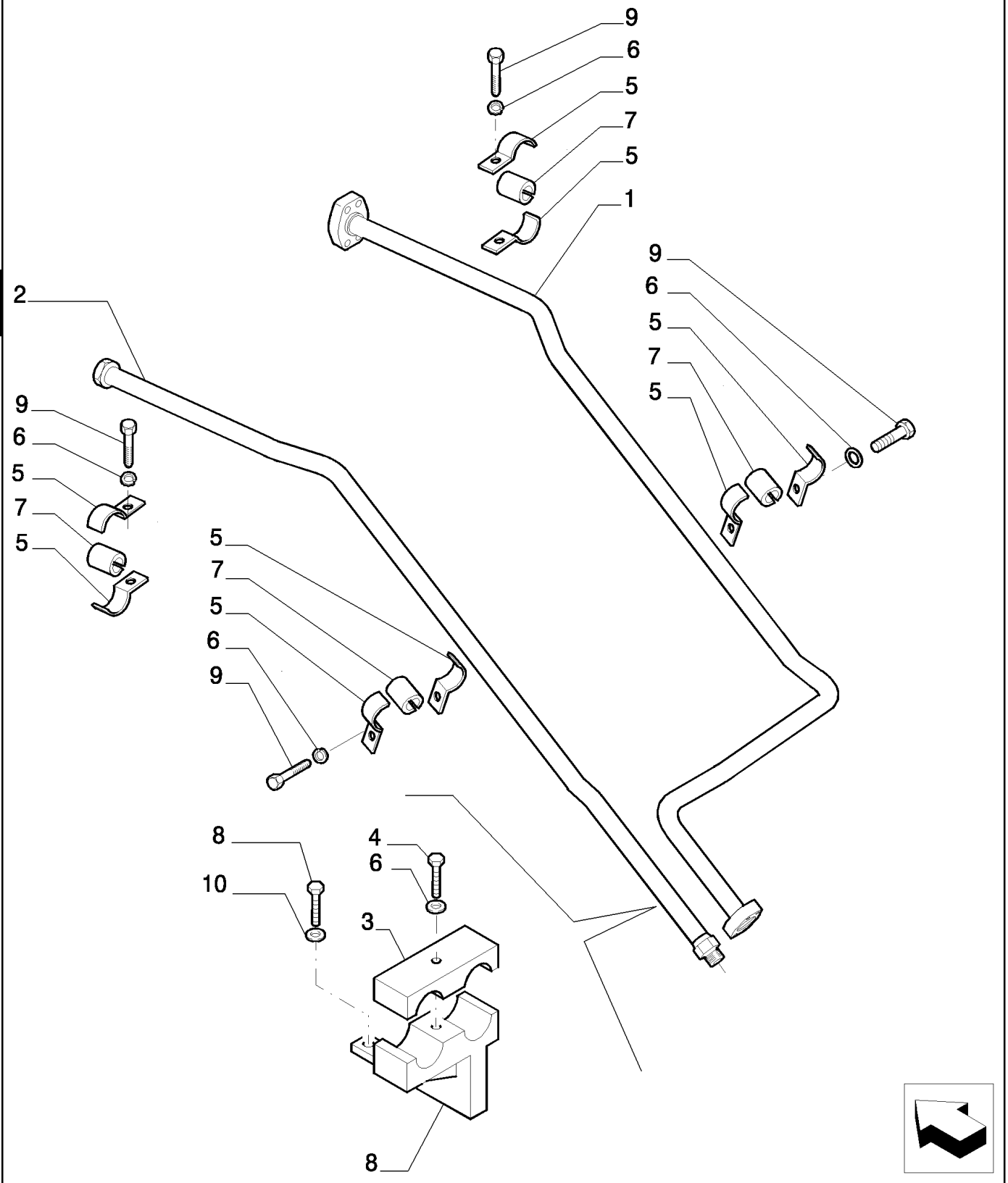

6

APPLICATION OF HYDRAULIC HAMMER - VERSION (03-04) - OPTIONAL CODE 461228018

REF	FN	PART NUMBER	YR/SN	QTY	DESCRIPTION
1		{87662130}		1	
2		{87662128}		1	
3		{87634923}		1	
4		11113534		2	PARAFUSO, Hex, M12 x 65, 10.9, Full Thd
5		87349673		8	SUPORTE
6		14496731		12	ARRUELA PLANA
7		87349642		4	BUCHA
8		{87634938}		1	
9		11112634		8	PARAFUSO
10		11113234		2	PARAFUSO, Hex, M12 x 50, 10.9

5.0020	12	p1	11/07

APPLICATION OF HYDRAULIC HAMMER - VERSION (03-04) - OPTIONAL CODE 461228018

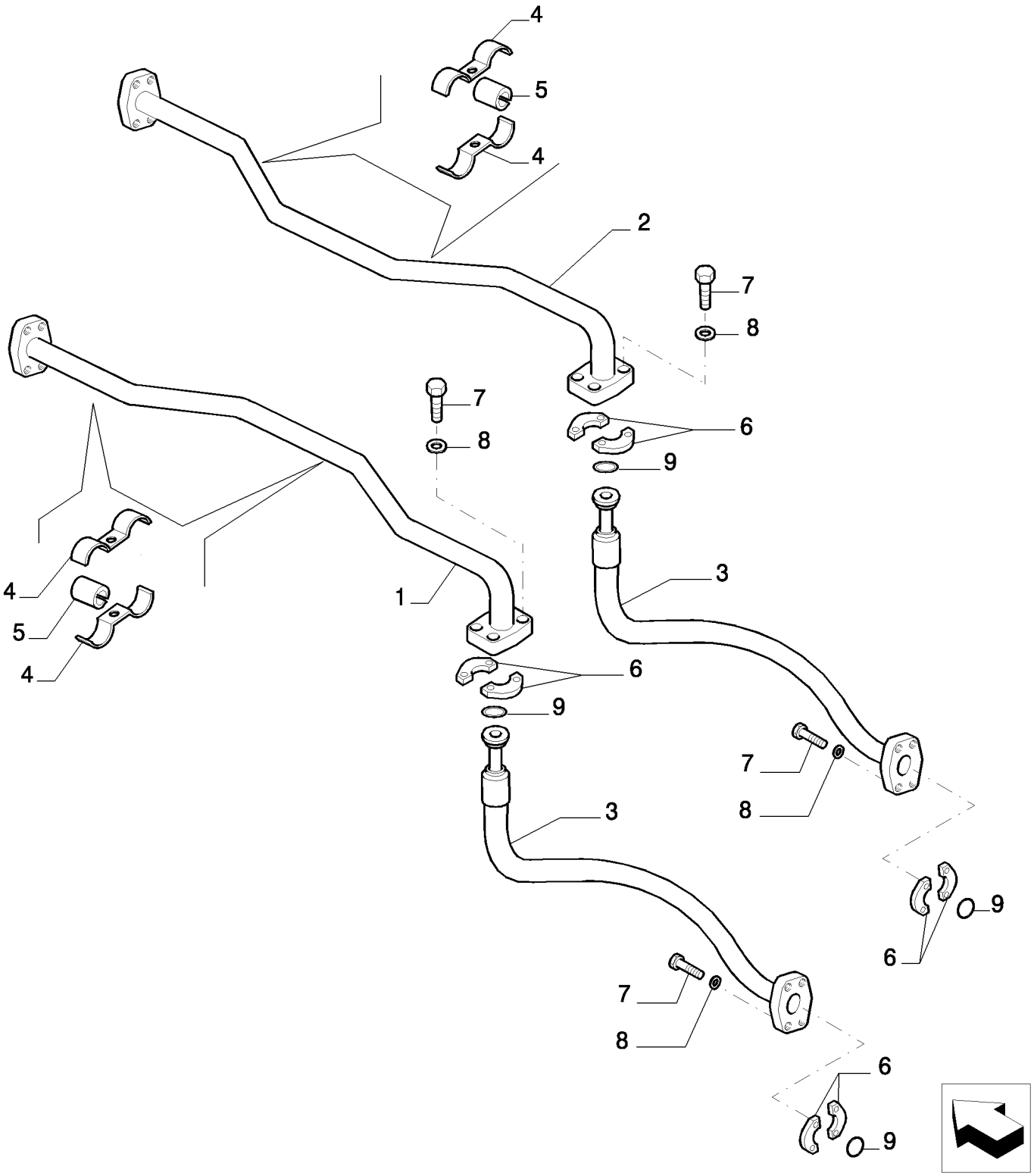

APPLICATION OF HYDRAULIC HAMMER - VERSION (03-04) - OPTIONAL CODE 461228018

REF	FN	PART NUMBER	YR/SN	QTY	DESCRIPTION
1		{87662172}		1	
2		{87662174}		1	
3		{87670489}		2	
4		87349655		12	SUPORTE
5		87349642		6	BUCHA
6		71444029		8	SEMI- FLANGE
7		14424534		16	PARAFUSO
8		14496831		16	ARRUELA PLANA
9		72210076		4	ANEL "O"

5.0020	13	p1	11/07

APPLICATION OF HYDRAULIC HAMMER - OPTIONAL CODE 461228008 (01-02) - 461228018 (03-04)

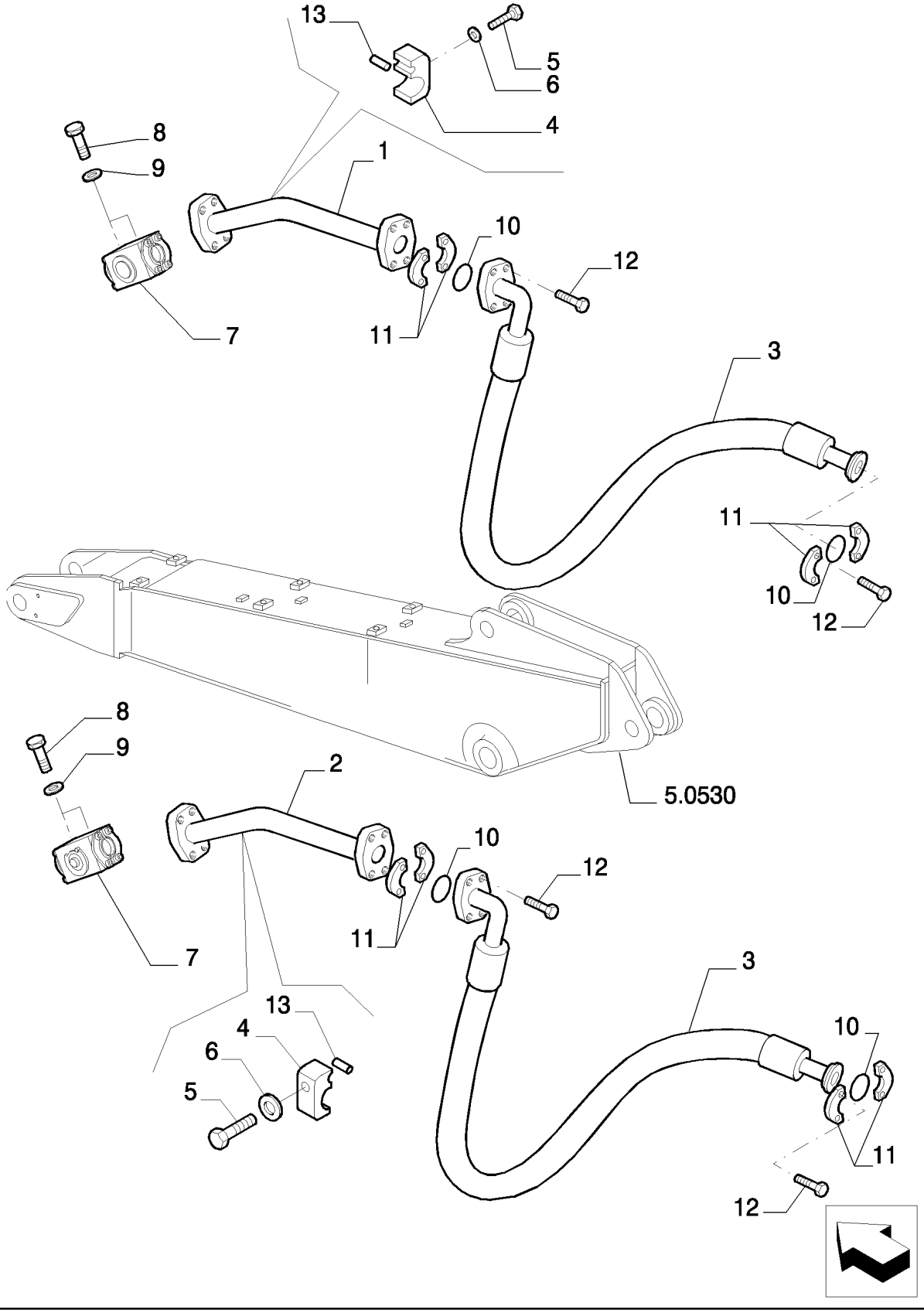

APPLICATION OF HYDRAULIC HAMMER - OPTIONAL CODE 461228008 (01-02) - 461228018 (03-04)

REF	FN	PART NUMBER	YR/SN	QTY	DESCRIPTION
1		{87669769}		1	
2		{87669770}		1	
3		87556738		2	TUBO FLEXÍVEL
4		71466019		2	SUPORTE
5		11113834		2	PARAFUSO, Hex, M12 x 80, 10.9, Full Thd
6		10517074		2	ARRUELA-TRAVA
7	1	72215205		2	VÁLVULA HIDRAULICA
8		11106434		4	PARAFUSO, Hex, M10 x 30, 10.9, Full Thd
9		10516874		4	ARRUELA-TRAVA
10		72210076		6	ANEL "O"
11		71444029		8	SEMI- FLANGE
12		14424534		16	PARAFUSO
13		72219245		2	TUBO RÍGIDO

(1) ASSY SEE PAGE 14

VALVE - COMPONENTS - OPTIONAL CODE 461228008 (01-02) - 461228018 (03-04)

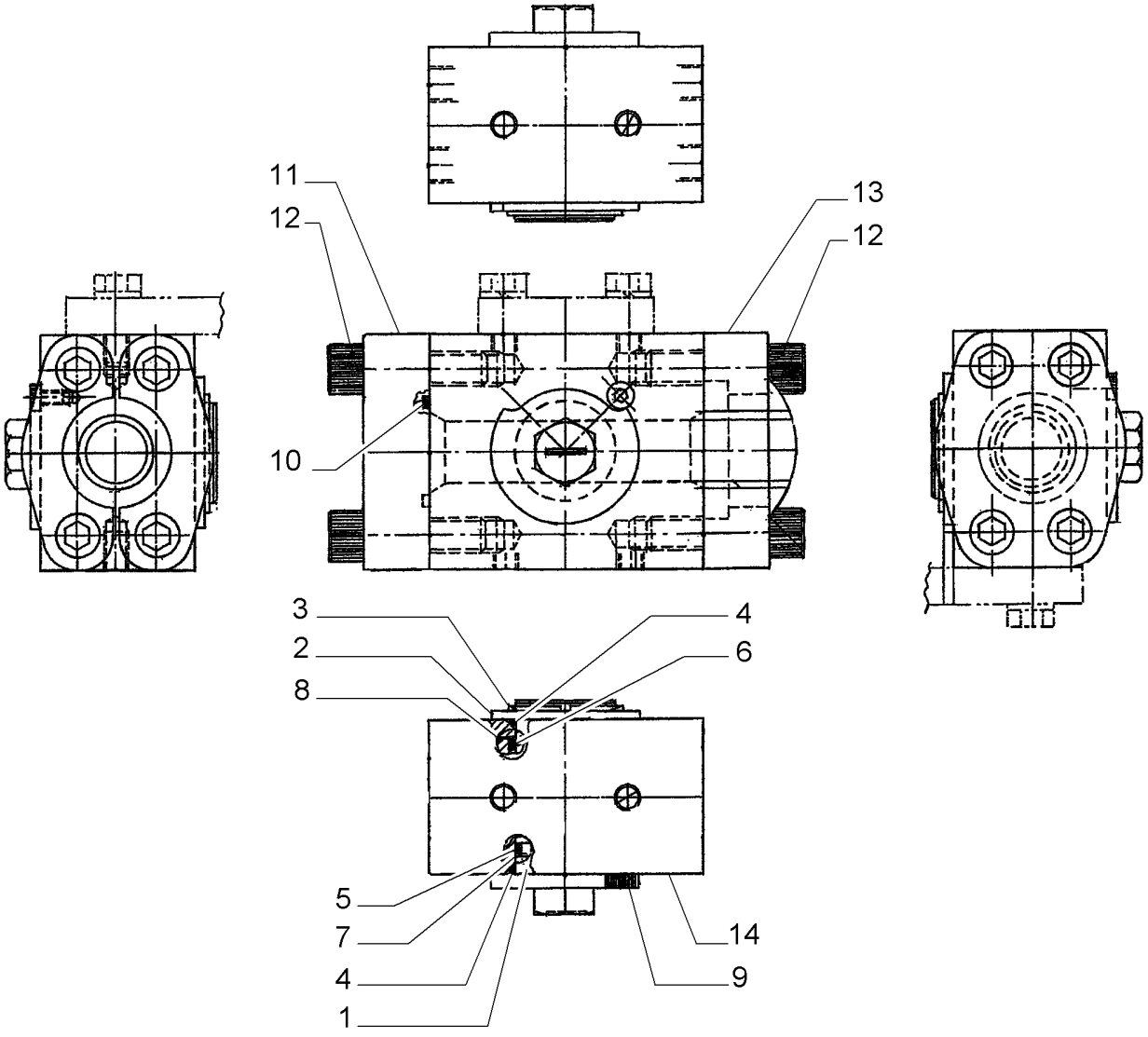

VALVE - COMPONENTS - OPTIONAL CODE 461228008 (01-02) - 461228018 (03-04)

REF	FN	PART NUMBER	YR/SN	QTY	DESCRIPTION
1		72219279		1	PINO
2		72219249		1	ESPAÇADOR
3		72219250		1	ANEL
4		72219252		2	JUNTA
5		72219255		1	JUNTA
6		72219253		1	JUNTA
7		72219256		1	ANEL
8		72219254		1	ANEL
9		72219251		1	PARAFUSO, 6X8
10		72219287		1	JUNTA
11		72219288		1	FLANGE
12		72219289		8	PARAFUSO, 14X50
13		72219290		2	SEMI- FLANGE
14		72219278		1	CORPO

5.0021	13	p1	11/07

APPLICATION OF HYDRAULIC HAMMER - OPTIONAL CODE 461231028 (01-02) - 461231038 (03-04)

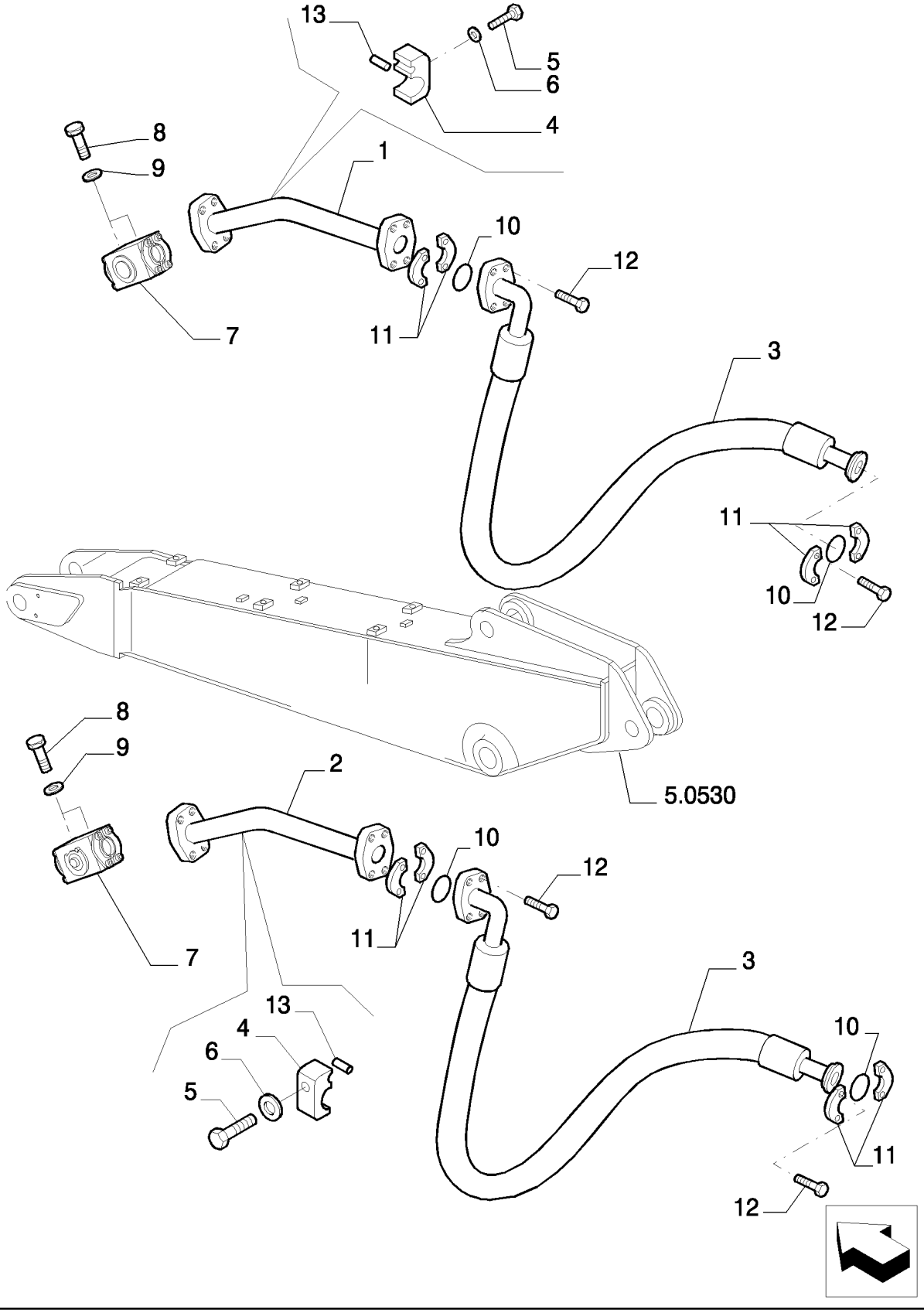

APPLICATION OF HYDRAULIC HAMMER - OPTIONAL CODE 461231028 (01-02) - 461231038 (03-04)

REF	FN	PART NUMBER	YR/SN	QTY	DESCRIPTION
1		{87669728}		1	
2		{87669730}		1	
3		72212169		2	TUBO FLEXÍVEL
4		71466019		2	SUPORTE
5		11113834		2	PARAFUSO, Hex, M12 x 80, 10.9, Full Thd
6		10517074		2	ARRUELA-TRAVA
7	1	72215205		2	VÁLVULA HIDRAULICA
8		11106434		4	PARAFUSO, Hex, M10 x 30, 10.9, Full Thd
9		10516874		4	ARRUELA-TRAVA
10		72210076		6	ANEL "O"
11		71444029		8	SEMI- FLANGE
12		14424534		16	PARAFUSO
13		72219245		2	TUBO RÍGIDO

(1) ASSY SEE SGR. 5.0020 PAGE 14

5.0022	01	p1	11/07

DIPPER STICK (L=2.33M) - OPTIONAL CODE 781682058

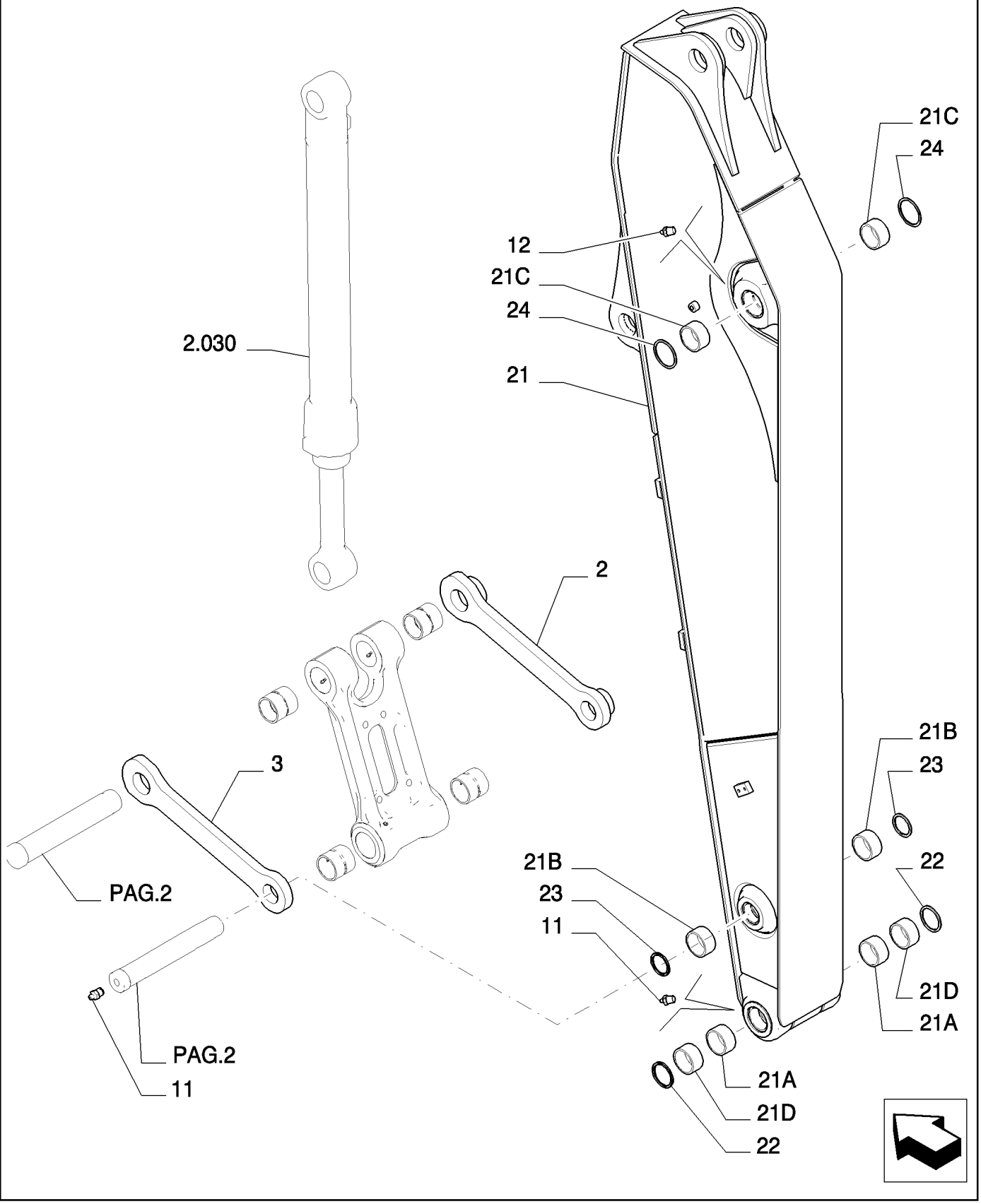

DIPPER STICK (L=2.33M) - OPTIONAL CODE 781682058

REF	FN	PART NUMBER	YR/SN	QTY	DESCRIPTION
2		{87635467}		1	
3		{87635469}		1	
13		72283478		2	GRAXEIRA
14		71433287		1	GRAXEIRA
21		{87633055}		1	- ASSY
21A		{87619716}		2	
21B		87543300		2	BUCHA
21C		{87619712}		2	
21D		{87619714}		2	
22		{87619706}		2	
23		87540083		2	JUNTA
24		{87617249}		2	

5.0022	02	p1	11/07

DIPPER STICK (L=2.33M) - OPTIONAL CODE 781682058

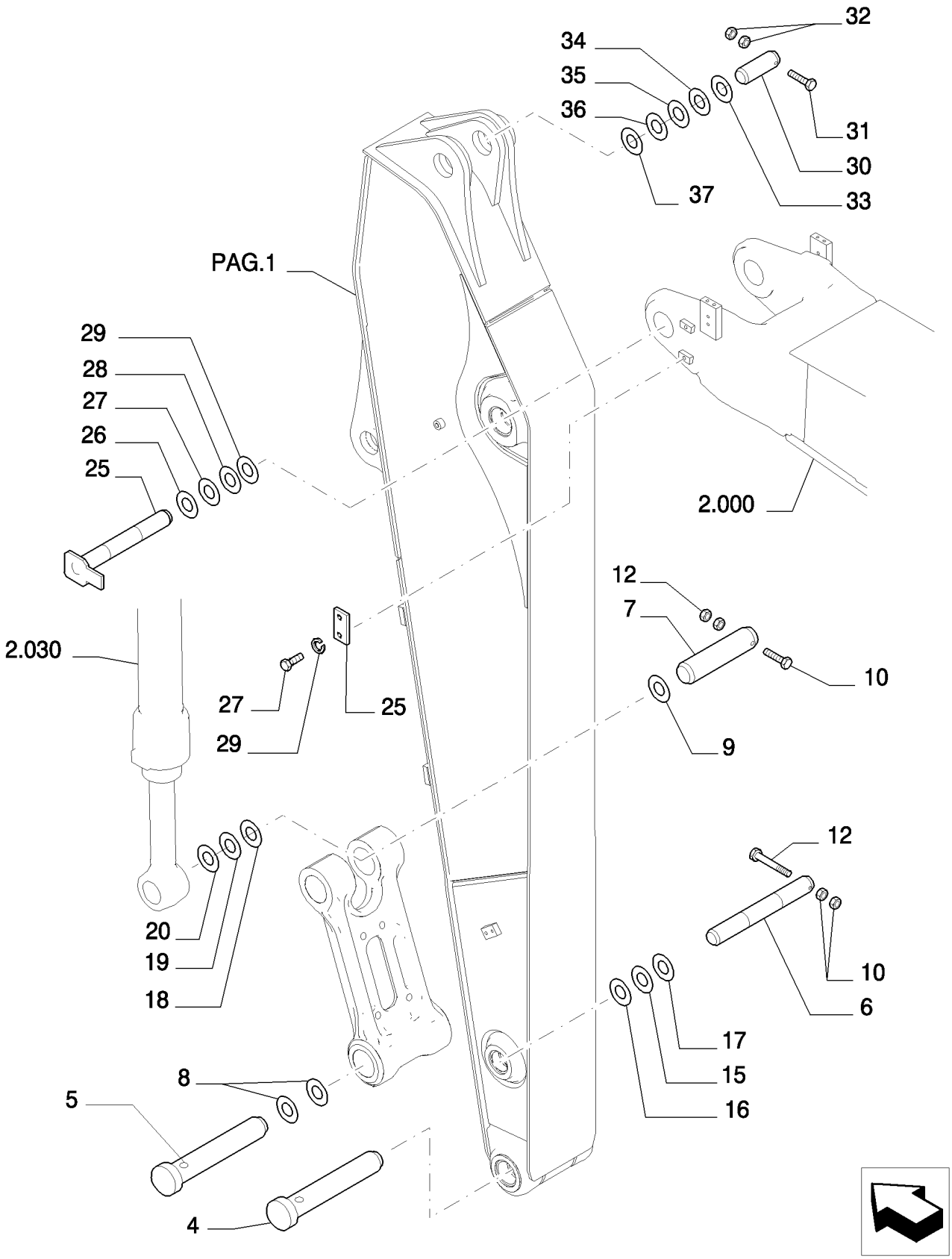

DIPPER STICK (L=2.33M) - OPTIONAL CODE 781682058

REF	FN	PART NUMBER	YR/SN	QTY	DESCRIPTION
4		{87635470}		1	
5		{87635471}		1	
6		{87635476}		1	
7		{87635477}		1	
8		{87620255}		2	
9		{72160584}		4	
10		11126734		1	PARAFUSO, Hex, M20 x 150, 10.9
11		16039634		1	PARAFUSO, Hex, M20 x 160, 10.9
12		12163521		4	PORCA, M20, Cl 10
15		72203347		1	CALCO DE AFINACAO, 0.9mm Thk
16		72203348		1	CALCO DE AFINACAO, 1.6mm Thk
17		72202203		2	CALCO DE AFINACAO, 2mm Thk
18		72203141		2	CALCO DE AFINACAO, 0.9mm Thk
19		72203157		2	CALCO DE AFINACAO, 1.6mm Thk
20		72203145		4	CALCO DE AFINACAO, 2mm Thk
30		{87637608}		1	
31		15204034		1	PARAFUSO
32		12163521		2	PORCA, M20, Cl 10
33		72208164		1	CALCO DE AFINACAO, 0.9mm Thk
34		72208161		1	CALCO DE AFINACAO, 1.2mm Thk
35		72208162		1	CALCO DE AFINACAO, 1.6mm Thk
36		72208163		1	CALCO DE AFINACAO, 2.3mm Thk
37		72208165		2	CALCO DE AFINACAO, 2mm Thk

5.0022	03	p1	11/07

DIPPER STICK (L=2.33M) - OPTIONAL CODE 781682058

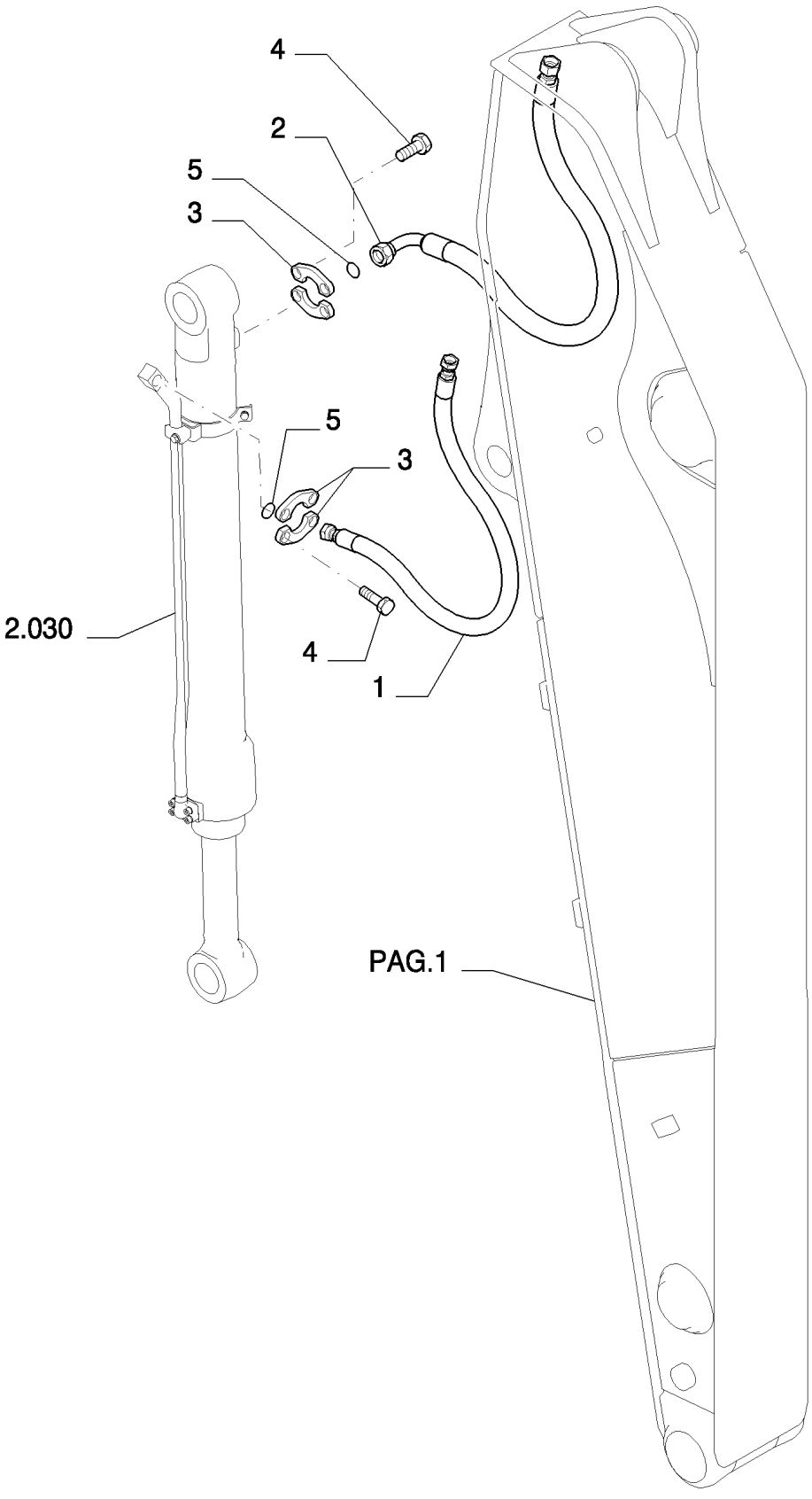

6

DIPPER STICK (L=2.33M) - OPTIONAL CODE 781682058

REF	FN	PART NUMBER	YR/SN	QTY	DESCRIPTION
1		{87683182}		1	
2		{87683174}		1	
3		71404313		4	SEMI- FLANGE
4		72215443		2	JUNTA
5		11112834		8	PARAFUSO, Hex, M12 x 40, 10.9, Full Thd
6		14496731		8	ARRUELA PLANA

5.0022	04	p1	11/07

DIPPER STICK (L=2.33M) - OPTIONAL CODE 781682058

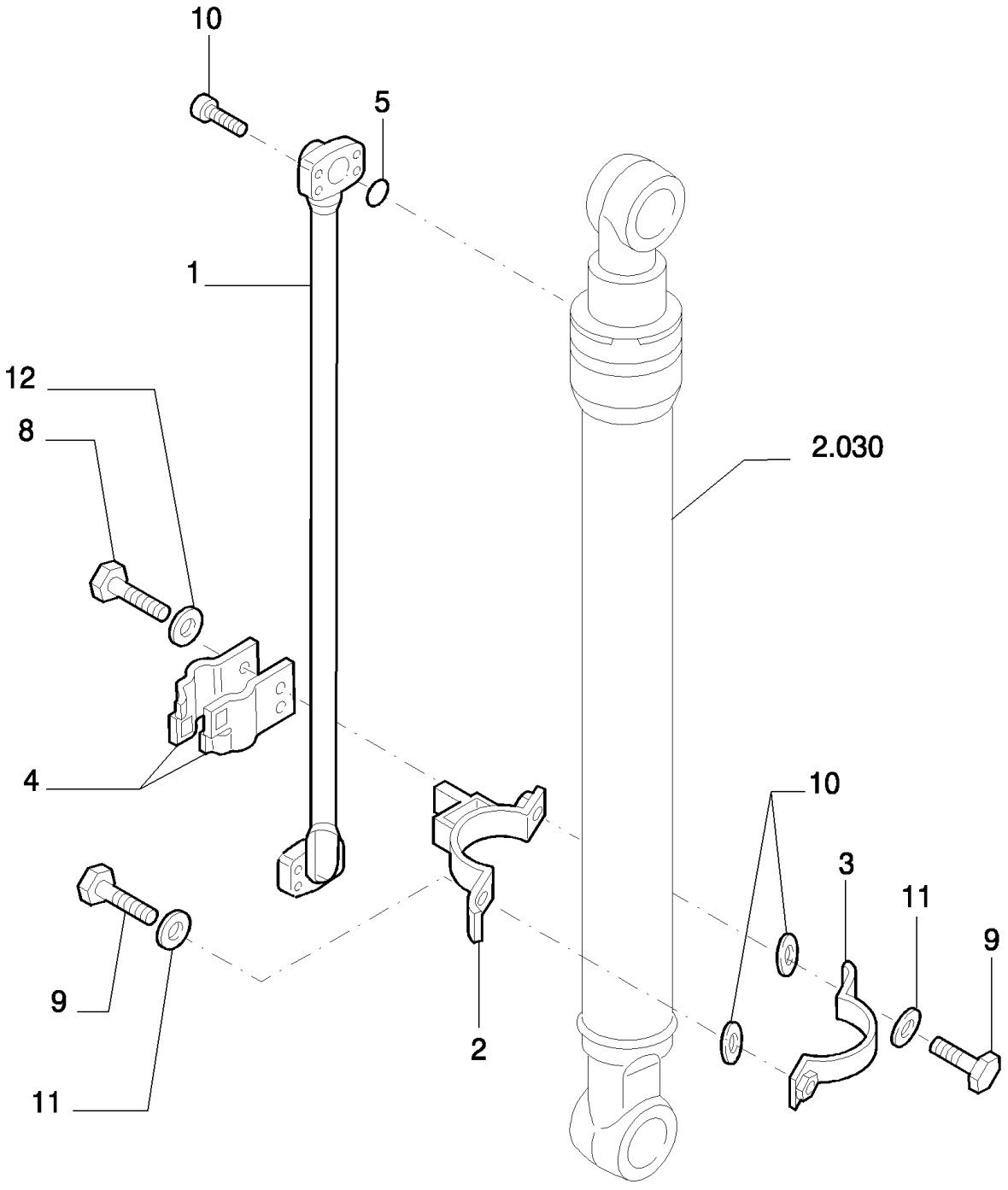

6

DIPPER STICK (L=2.33M) - OPTIONAL CODE 781682058

REF	FN	PART NUMBER	YR/SN	QTY	DESCRIPTION
1		{87651738}		1	
2		{87659456}		1	
3		{87659457}		1	
4		87343093		2	SUPORTE
5		72215443		1	JUNTA
8		11112634		2	PARAFUSO
9		11106434		2	PARAFUSO, Hex, M10 x 30, 10.9, Full Thd
10		14422234		4	PARAFUSO
11		10516874		2	ARRUELA-TRAVA
13		14496731		2	ARRUELA PLANA

5.0023	13	p1	11/07

APPLICATION OF HYDRAULIC HAMMER - OPTIONAL CODE 461234008 (01-02) - 461234018 (03-04)

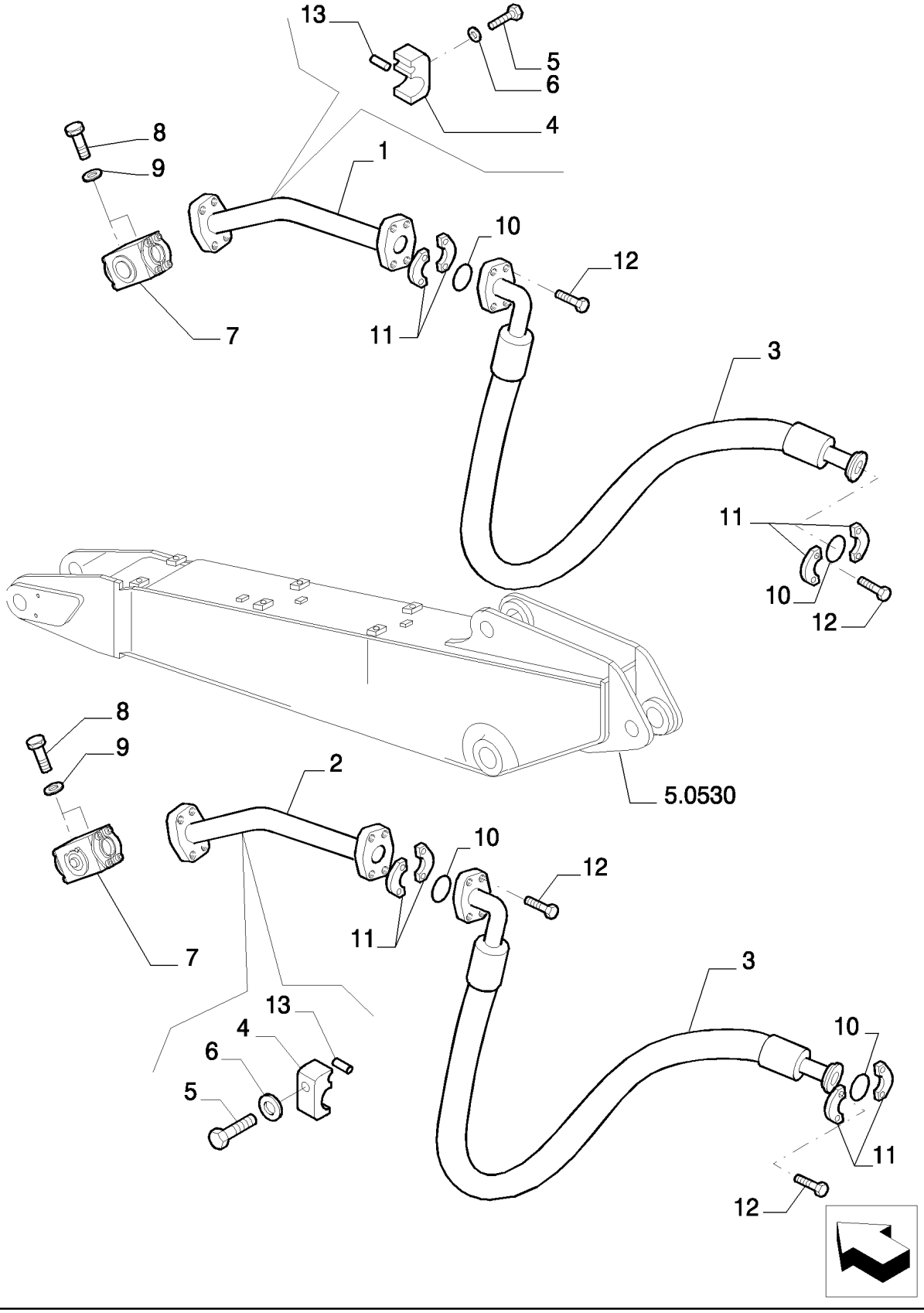

6

APPLICATION OF HYDRAULIC HAMMER - OPTIONAL CODE 461234008 (01-02) - 461234018 (03-04)

REF	FN	PART NUMBER	YR/SN	QTY	DESCRIPTION
1		{87669742}		1	
2		{87669743}		1	
3		87396760		2	TUBO FLEXÍVEL
4		71466019		4	SUPORTE
5		11113834		4	PARAFUSO, Hex, M12 x 80, 10.9, Full Thd
6		10517074		4	ARRUELA-TRAVA
7	1	72215205		2	VÁLVULA HIDRAULICA
8		11106434		4	PARAFUSO, Hex, M10 x 30, 10.9, Full Thd
9		10516874		4	ARRUELA-TRAVA
10		72210076		6	ANEL "O"
11		71444029		8	SEMI- FLANGE
12		14424534		16	PARAFUSO
13		72219245		4	TUBO RÍGIDO

(1) ASSY SEE SGR. 5.0020 PAGE 14

5.0024	13	p1	11/07

APPLICATION OF HYDRAULIC HAMMER - OPTIONAL CODE 461238008 (01-02) - 461238018 (03-04)

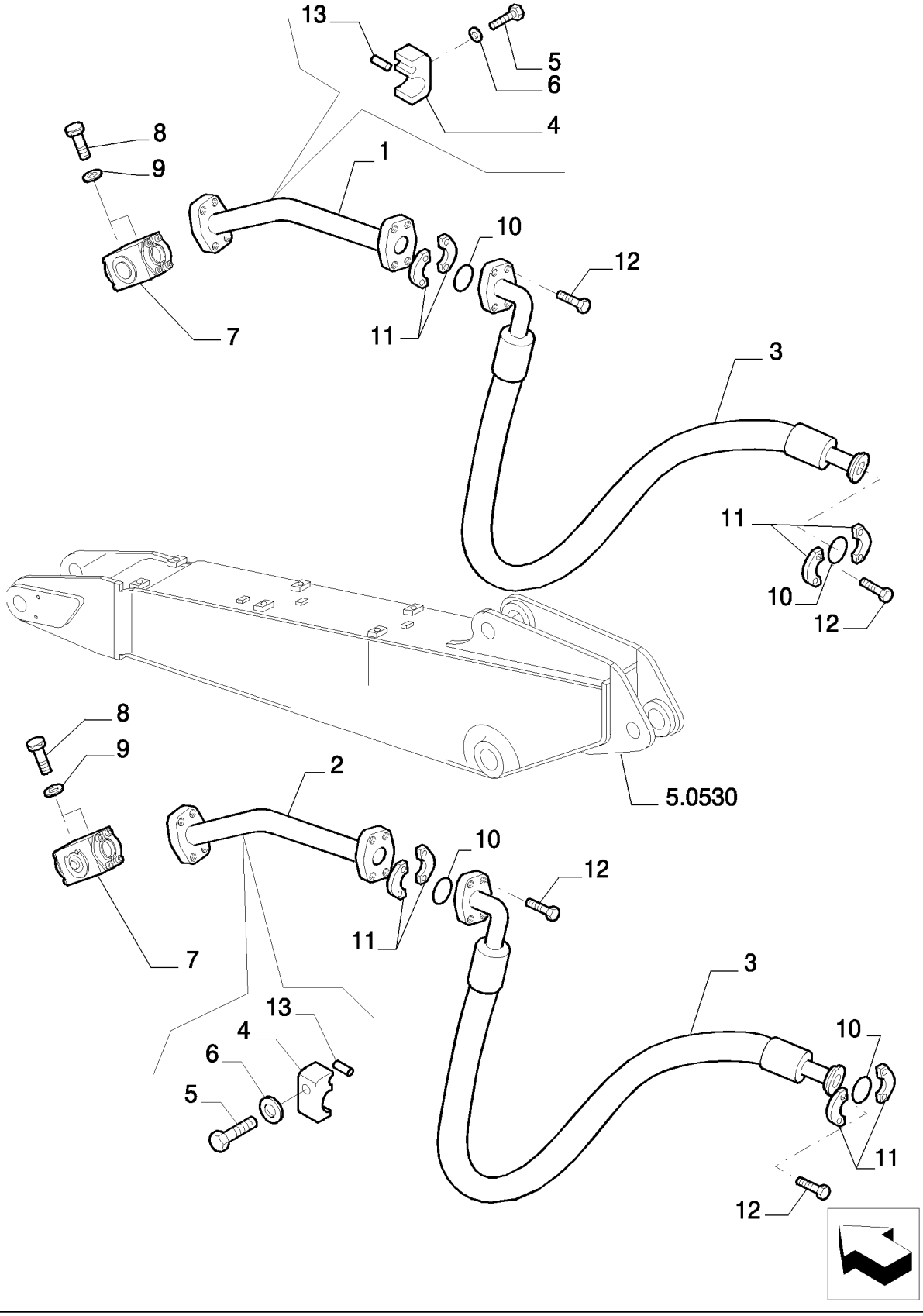

APPLICATION OF HYDRAULIC HAMMER - OPTIONAL CODE 461238008 (01-02) - 461238018 (03-04)

REF	FN	PART NUMBER	YR/SN	QTY	DESCRIPTION
1		{87684453}		1	
2		{87684455}		1	
3		{87685036}		2	
4		71466019		4	SUPORTE
5		11113834		4	PARAFUSO, Hex, M12 x 80, 10.9, Full Thd
6		10517074		2	ARRUELA-TRAVA
7	1	72215205		2	VÁLVULA HIDRAULICA
8		11106434		4	PARAFUSO, Hex, M10 x 30, 10.9, Full Thd
9		10516874		4	ARRUELA-TRAVA
10		72210076		6	ANEL "O"
11		71444029		8	SEMI- FLANGE
12		14424534		16	PARAFUSO
13		72219245		4	TUBO RÍGIDO

(1) ASSY SEE SGR. 5.0020 PAGE 14

5.0038	01	p1	11/07

DIPPER STICK (L=3.3M) - OPTIONAL CODE 781676018

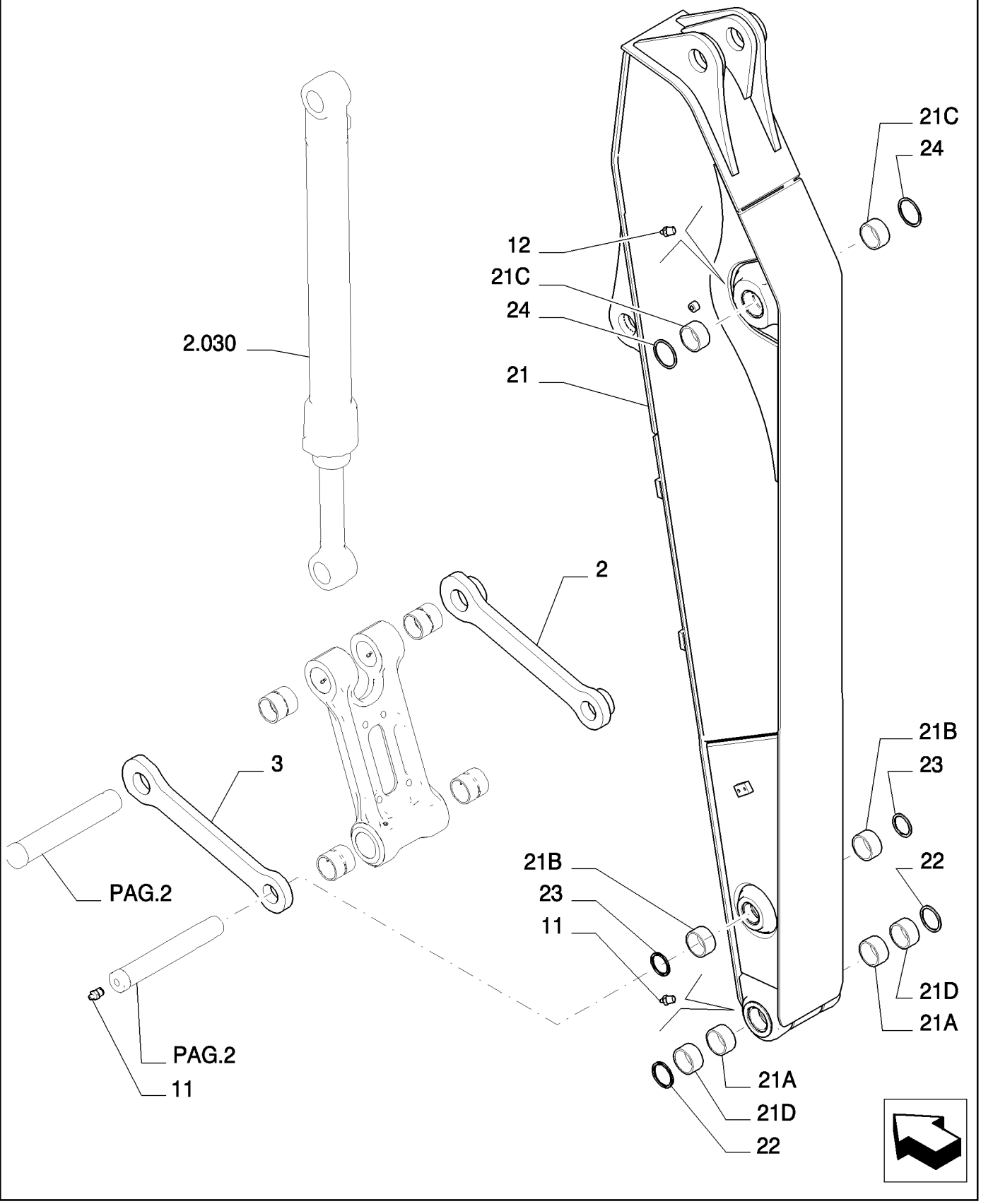

DIPPER STICK (L=3.3M) - OPTIONAL CODE 781676018

REF	FN	PART NUMBER	YR/SN	QTY	DESCRIPTION
2		{87635467}		1	
3		{87635469}		1	
13		72283478		2	GRAXEIRA
14		71433287		1	GRAXEIRA
21		{87633055}		1	- ASSY
21A		{87619716}		2	
21B		87543300		2	BUCHA
21C		{87619712}		2	
21D		{87619714}		2	
22		{87619706}		2	
23		87540083		2	JUNTA
24		{87617249}		2	

5.0038	02	p1	11/07

DIPPER STICK (L=3.3M) - OPTIONAL CODE 781676018

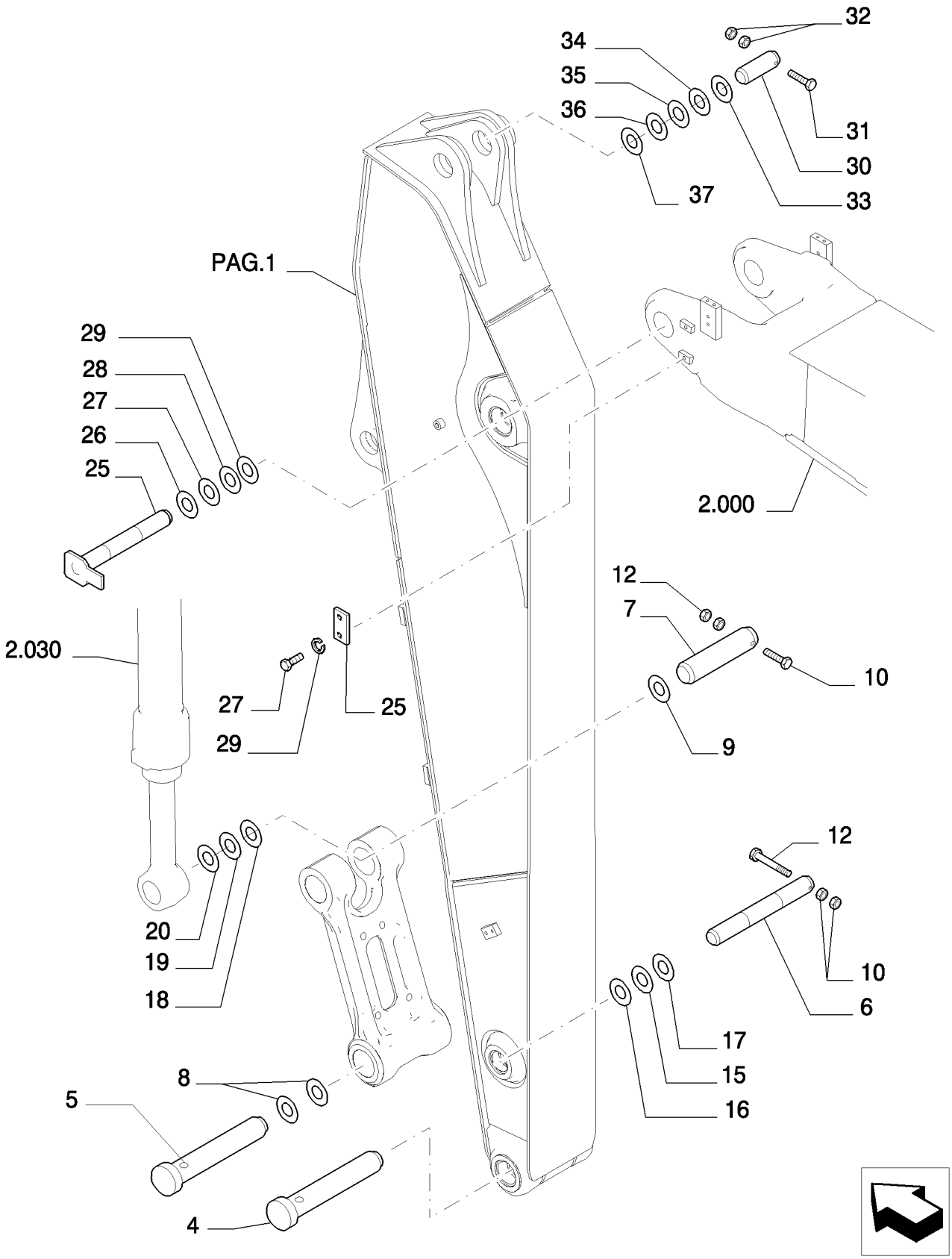

DIPPER STICK (L=3.3M) - OPTIONAL CODE 781676018

REF	FN	PART NUMBER	YR/SN	QTY	DESCRIPTION
4		{87635470}		1	
5		{87635471}		1	
6		{87635476}		1	
7		{87635477}		1	
8		{87620255}		2	
9		{72160584}		4	
10		11126734		1	PARAFUSO, Hex, M20 x 150, 10.9
11		16039634		1	PARAFUSO, Hex, M20 x 160, 10.9
12		12163521		4	PORCA, M20, Cl 10
15		72203347		1	CALCO DE AFINACAO, 0.9mm Thk
16		72203348		1	CALCO DE AFINACAO, 1.6mm Thk
17		72202203		2	CALCO DE AFINACAO, 2mm Thk
18		72203141		2	CALCO DE AFINACAO, 0.9mm Thk
19		72203157		2	CALCO DE AFINACAO, 1.6mm Thk
20		72203145		4	CALCO DE AFINACAO, 2mm Thk
30		{87637608}		1	
31		15204034		1	PARAFUSO
32		12163521		2	PORCA, M20, Cl 10
33		72208164		1	CALCO DE AFINACAO, 0.9mm Thk
34		72208161		1	CALCO DE AFINACAO, 1.2mm Thk
35		72208162		1	CALCO DE AFINACAO, 1.6mm Thk
36		72208163		1	CALCO DE AFINACAO, 2.3mm Thk
37		72208165		2	CALCO DE AFINACAO, 2mm Thk

5.0038	03	p1	11/07

DIPPER STICK (L=3.3M) - OPTIONAL CODE 781676018

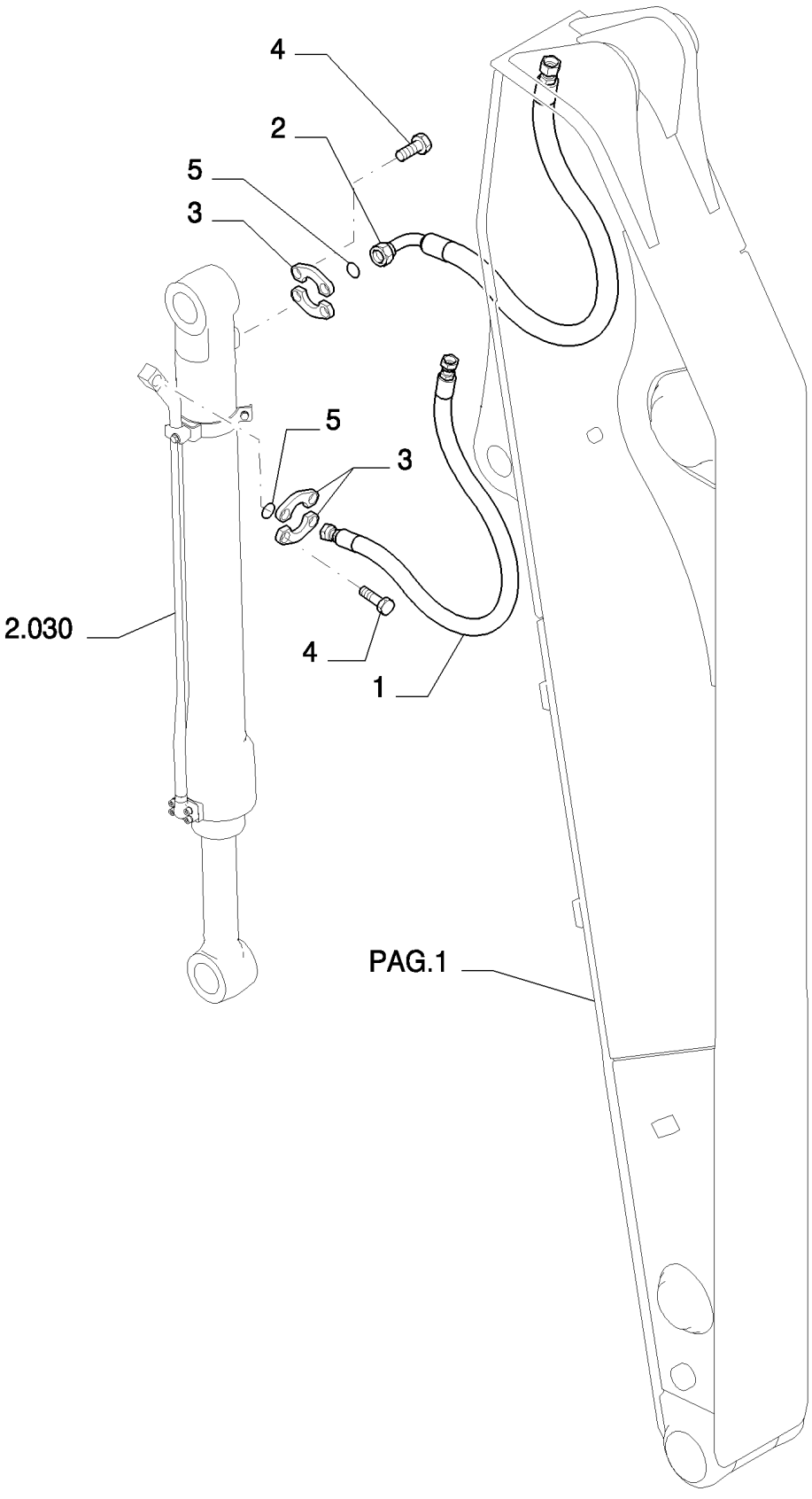

6

DIPPER STICK (L=3.3M) - OPTIONAL CODE 781676018

REF	FN	PART NUMBER	YR/SN	QTY	DESCRIPTION
1		{87675637}		1	
2		{87675641}		1	
3		71404313		4	SEMI- FLANGE
4		72215443		2	JUNTA
5		11112834		8	PARAFUSO, Hex, M12 x 40, 10.9, Full Thd
6		14496731		8	ARRUELA PLANA

5.0038	04	p1	11/07

DIPPER STICK (L=3.3M) - OPTIONAL CODE 781676018

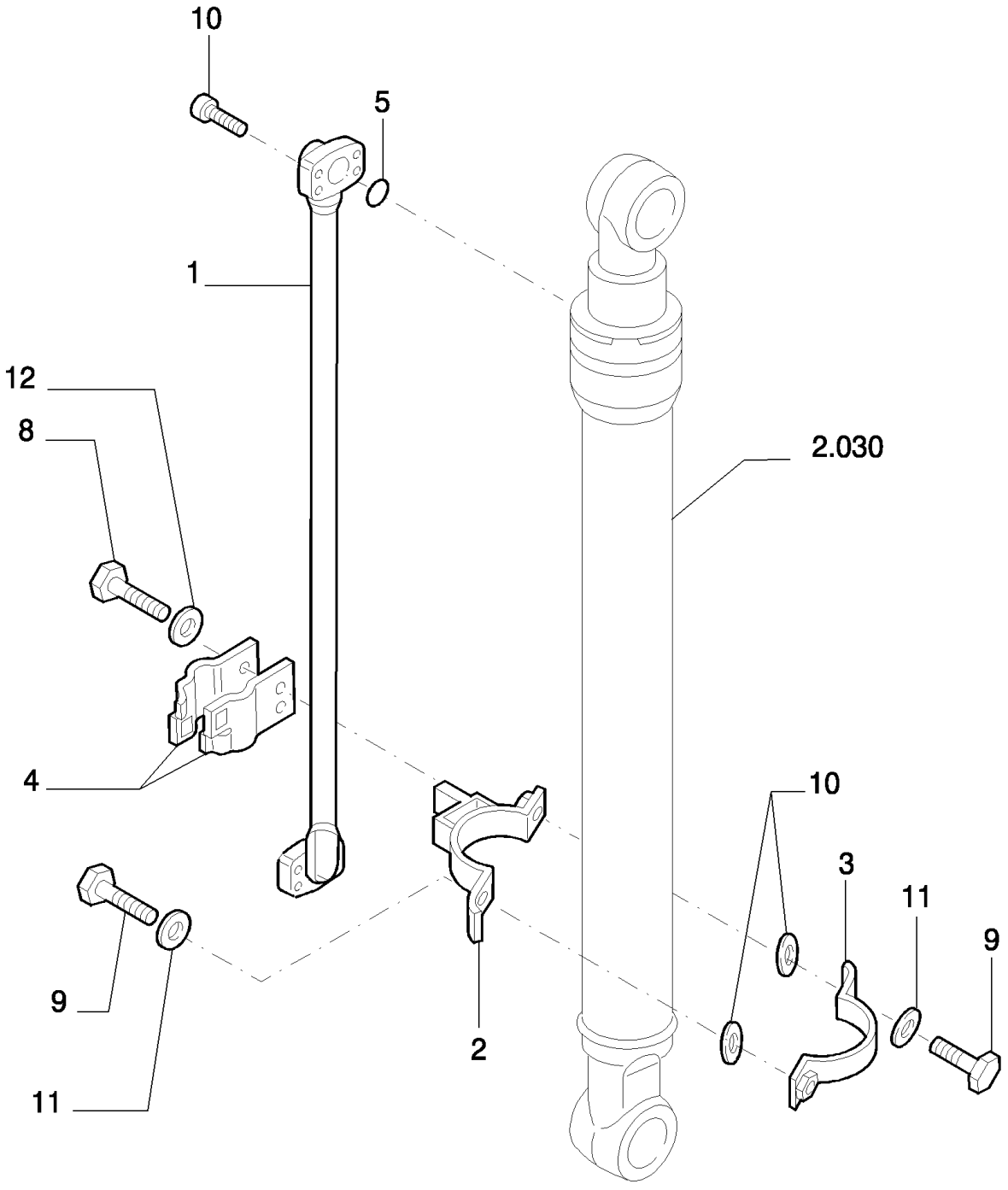

6

DIPPER STICK (L=3.3M) - OPTIONAL CODE 781676018

REF	FN	PART NUMBER	YR/SN	QTY	DESCRIPTION
1		{87651738}		1	
2		{87659456}		1	
3		{87659457}		1	
4		87343093		2	SUPORTE
5		72215443		1	JUNTA
8		11112634		2	PARAFUSO
9		11106434		2	PARAFUSO, Hex, M10 x 30, 10.9, Full Thd
10		14422234		4	PARAFUSO
11		10516874		2	ARRUELA-TRAVA
13		14496731		2	ARRUELA PLANA

5.0039	01	p1	11/07

DIPPER STICK (L=4.15M) - OPTIONAL CODE 781677018

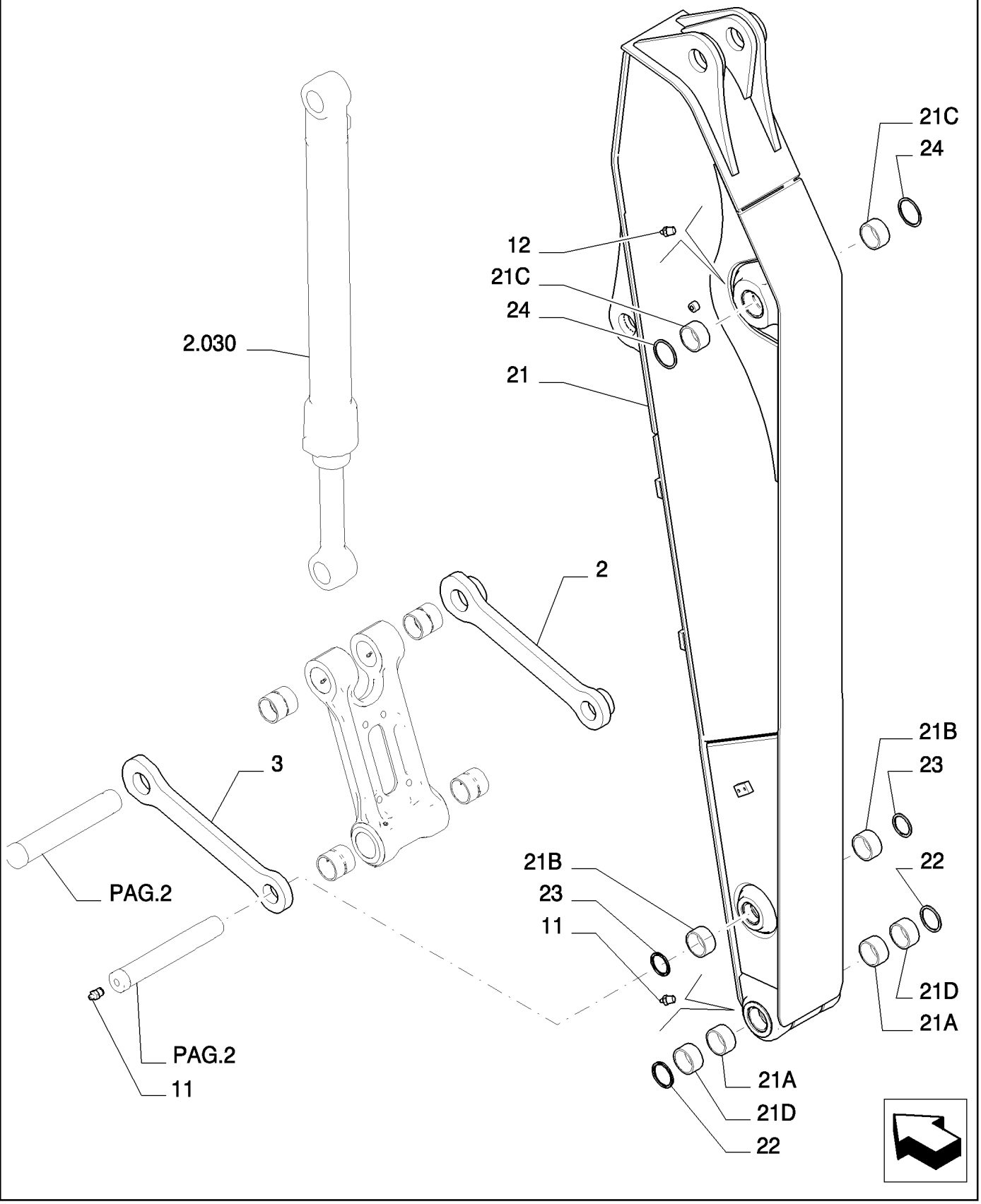

DIPPER STICK (L=4.15M) - OPTIONAL CODE 781677018

REF	FN	PART NUMBER	YR/SN	QTY	DESCRIPTION
2		{87635467}		1	
3		{87635469}		1	
13		72283478		2	GRAXEIRA
14		71433287		1	GRAXEIRA
21		{87633055}		1	- ASSY
21A		{87619716}		2	
21B		87543300		2	BUCHA
21C		{87619712}		2	
21D		{87619714}		2	
22		{87619706}		2	
23		87540083		2	JUNTA
24		{87617249}		2	

5.0039	02	p1	11/07

DIPPER STICK (L=4.15M) - OPTIONAL CODE 781677018

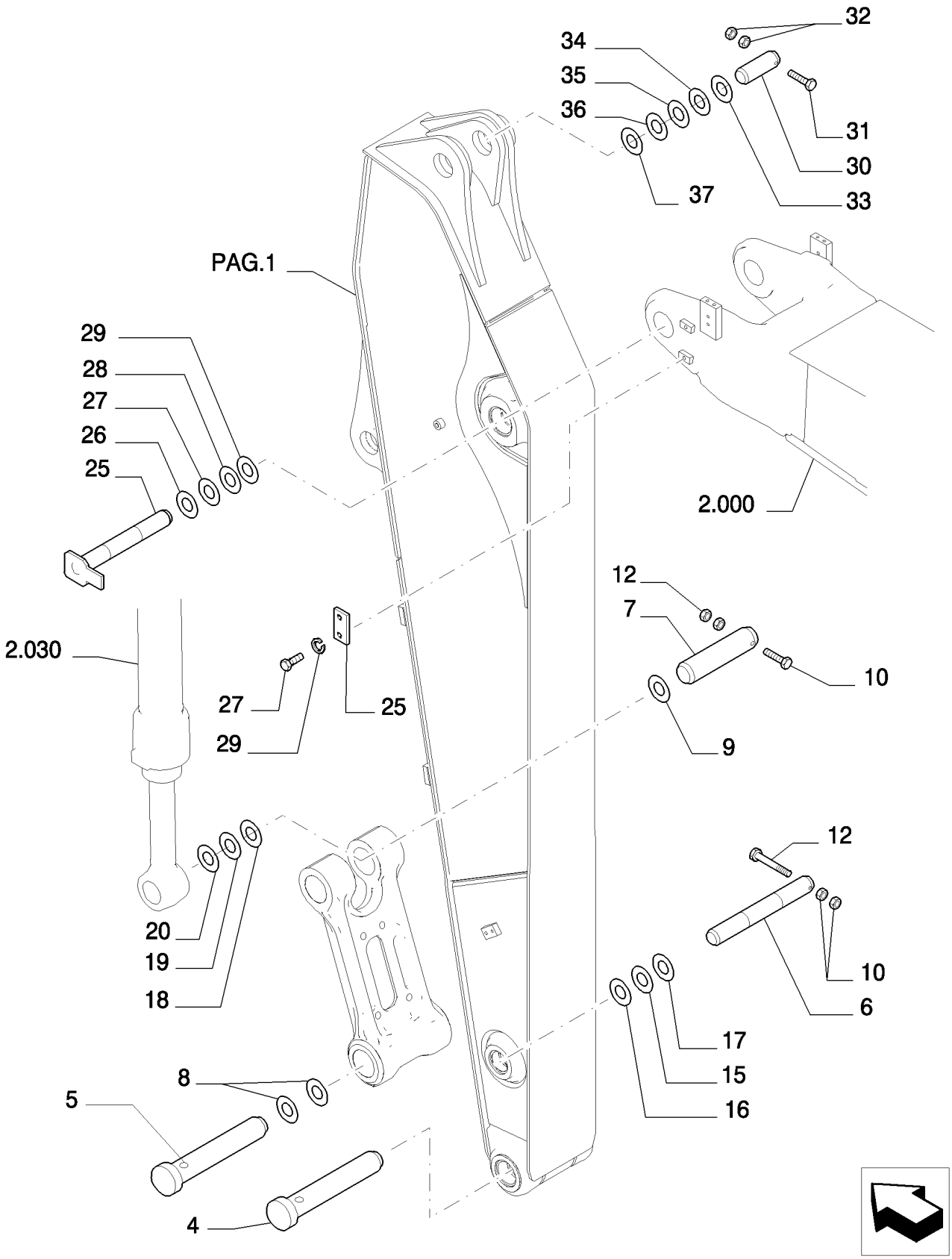

DIPPER STICK (L=4.15M) - OPTIONAL CODE 781677018

REF	FN	PART NUMBER	YR/SN	QTY	DESCRIPTION
4		{87635470}		1	
5		{87635471}		1	
6		{87635476}		1	
7		{87635477}		1	
8		{87620255}		2	
9		{72160584}		4	
10		11126734		1	PARAFUSO, Hex, M20 x 150, 10.9
11		16039634		1	PARAFUSO, Hex, M20 x 160, 10.9
12		12163521		4	PORCA, M20, Cl 10
15		72203347		1	CALCO DE AFINACAO, 0.9mm Thk
16		72203348		1	CALCO DE AFINACAO, 1.6mm Thk
17		72202203		2	CALCO DE AFINACAO, 2mm Thk
18		72203141		2	CALCO DE AFINACAO, 0.9mm Thk
19		72203157		2	CALCO DE AFINACAO, 1.6mm Thk
20		72203145		4	CALCO DE AFINACAO, 2mm Thk
30		{87637608}		1	
31		15204034		1	PARAFUSO
32		12163521		2	PORCA, M20, Cl 10
33		72208164		1	CALCO DE AFINACAO, 0.9mm Thk
34		72208161		1	CALCO DE AFINACAO, 1.2mm Thk
35		72208162		1	CALCO DE AFINACAO, 1.6mm Thk
36		72208163		1	CALCO DE AFINACAO, 2.3mm Thk
37		72208165		2	CALCO DE AFINACAO, 2mm Thk

5.0039	03	p1	11/07

DIPPER STICK (L=4.15M) - OPTIONAL CODE 781677018

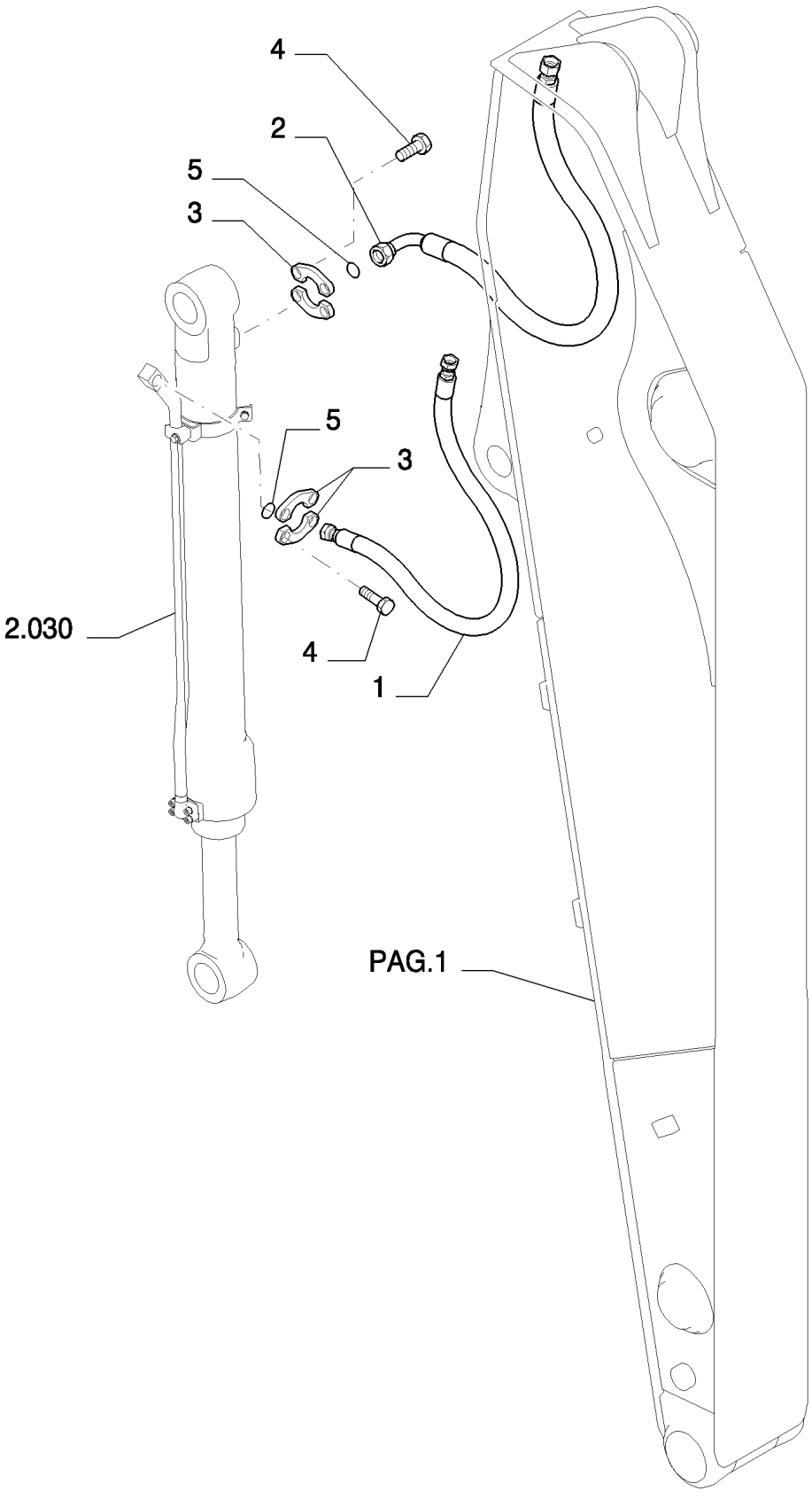

6

DIPPER STICK (L=4.15M) - OPTIONAL CODE 781677018

REF	FN	PART NUMBER	YR/SN	QTY	DESCRIPTION
1		{87683181}		1	
2		{87683180}		1	
3		71404313		4	SEMI- FLANGE
4		72215443		2	JUNTA
5		11112834		8	PARAFUSO, Hex, M12 x 40, 10.9, Full Thd
6		14496731		8	ARRUELA PLANA

5.0039	04	p1	11/07

DIPPER STICK (L=4.15M) - OPTIONAL CODE 781677018

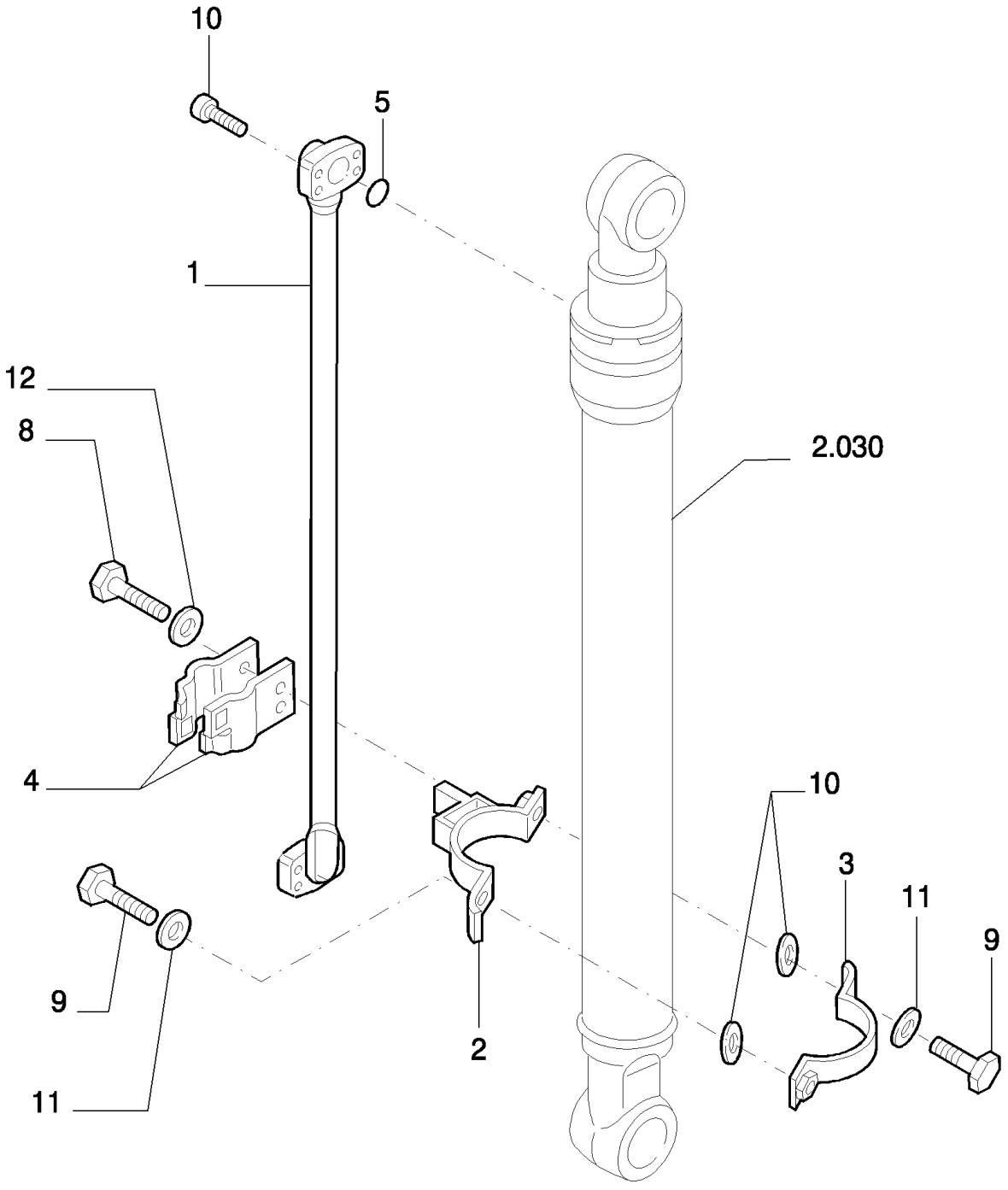

6

DIPPER STICK (L=4.15M) - OPTIONAL CODE 781677018

REF	FN	PART NUMBER	YR/SN	QTY	DESCRIPTION
1		{87651738}		1	
2		{87659456}		1	
3		{87659457}		1	
4		87343093		2	SUPORTE
5		72215443		1	JUNTA
8		11112634		2	PARAFUSO
9		11106434		2	PARAFUSO, Hex, M10 x 30, 10.9, Full Thd
10		14422234		4	PARAFUSO
11		10516874		2	ARRUELA-TRAVA
13		14496731		2	ARRUELA PLANA

5.0040	01	p1	06/08

MONITOR INSTALLATION - OPTIONAL CODE 461223028

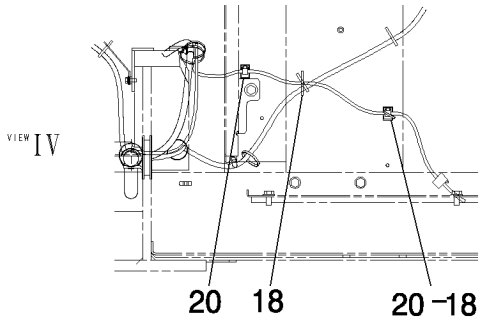

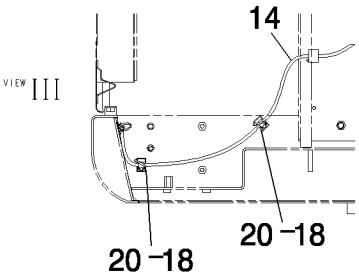

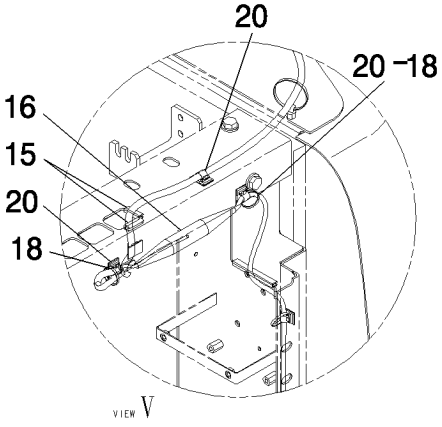

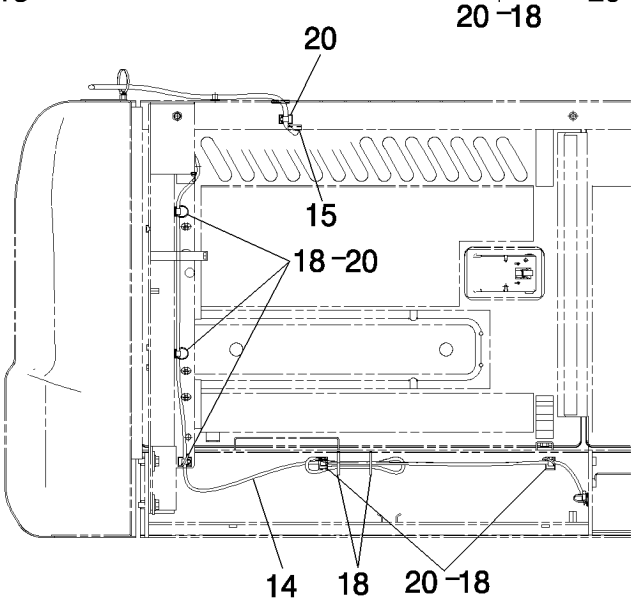

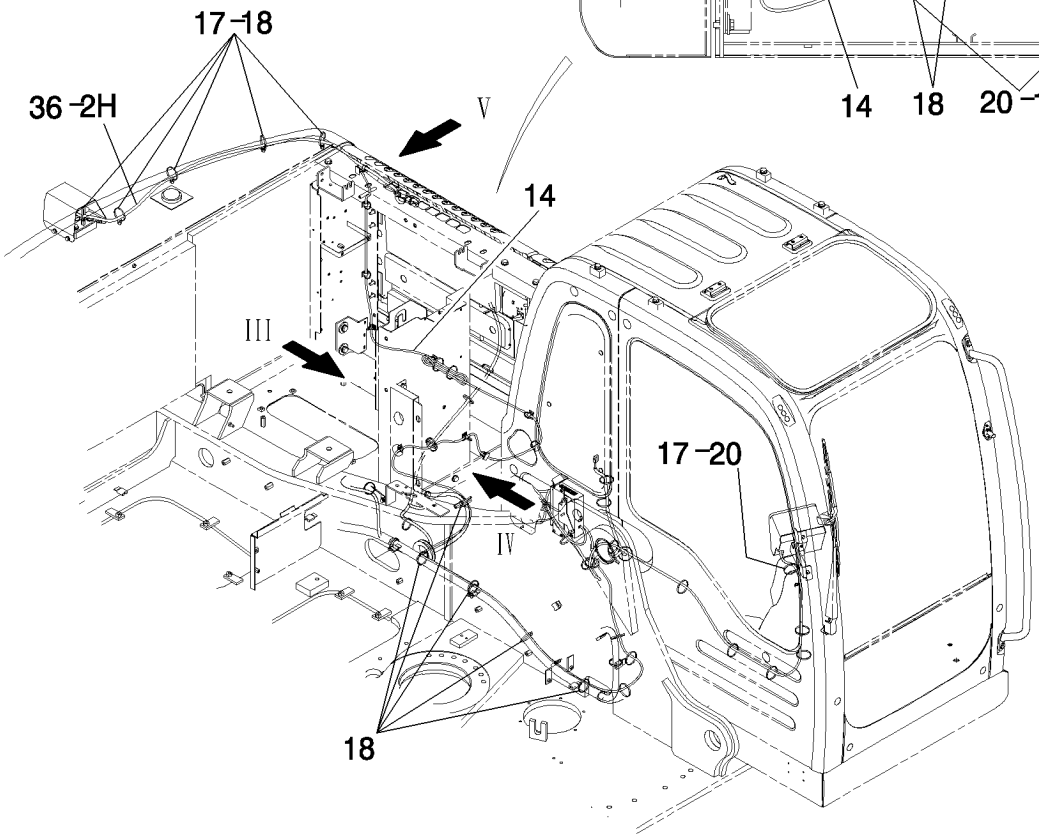

MONITOR INSTALLATION - OPTIONAL CODE 461223028

REF	FN	PART NUMBER	YR/SN	QTY	DESCRIPTION
2	1	87657720		1	MONITOR, - ASSY
2H		{EZ55S00023S010}		1	
14		87657732		1	CABO
15		{87692485}		3	
16		87662922		1	PROTEÇÃO
17		87526680		6	ESTRIBO DE FIXAÇÃO
18		72951499		23	FIXADOR
20		87662794		14	BRAÇADEIRA
36		87657411		1	TUBO RÍGIDO

(1) NOT ILLUSTRATED

5.0040	02	p1	06/08

MONITOR INSTALLATION - OPTIONAL CODE 461223028

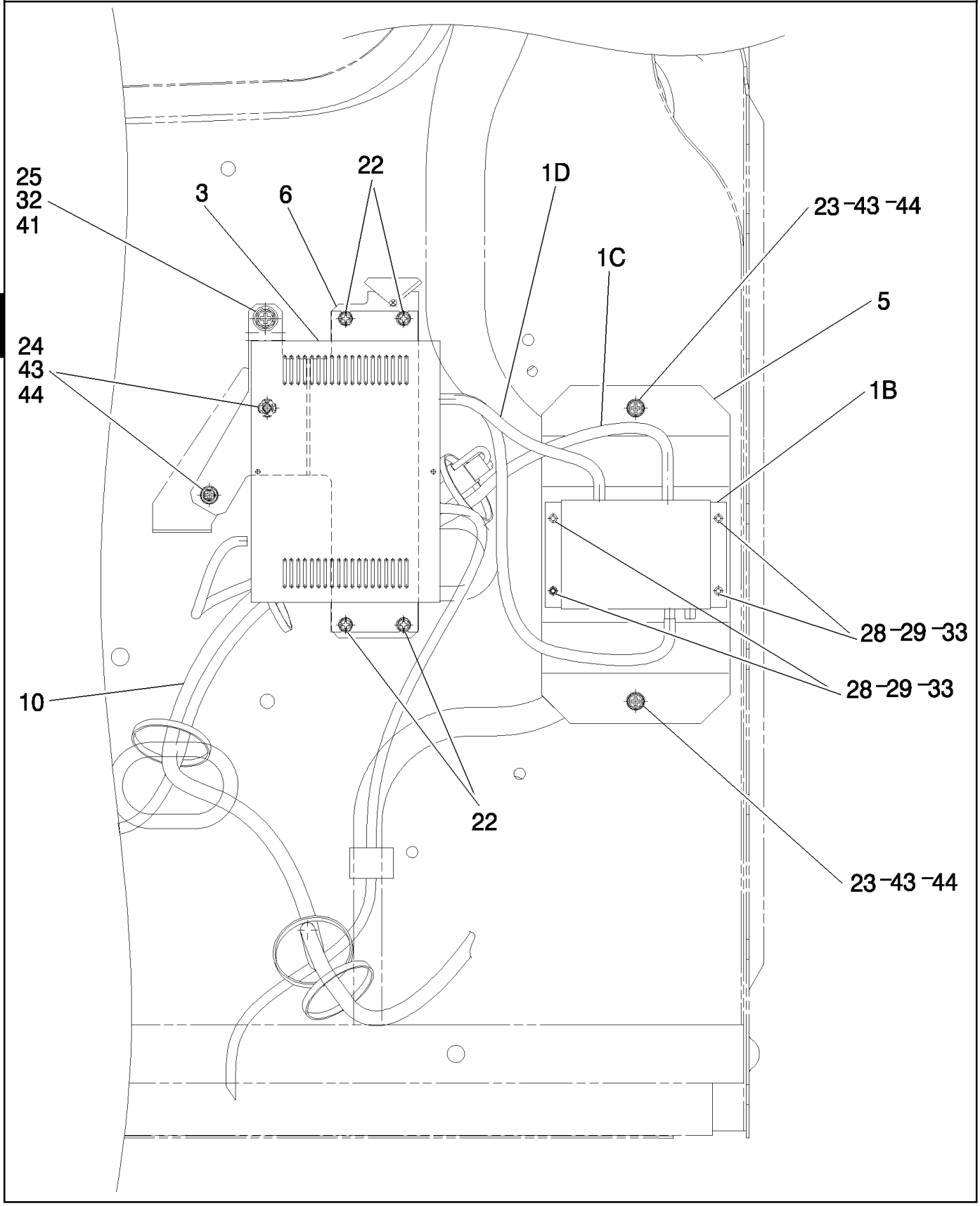

MONITOR INSTALLATION - OPTIONAL CODE 461223028

REF	FN	PART NUMBER	YR/SN	QTY	DESCRIPTION
1	1	87657719		1	MONITOR, - ASSY
1B		{EZ22E00064F1}		1	
1C		{YN55S01001P1}		1	
1D		{EZ55S01002P1}		1	
3		87662793		1	CAIXA/CARCAÇA
5		87657722		1	SUPORTE
6		87657723		1	SUPORTE
10		87657727		1	CABO ELÉTRICO
22		87333294		4	PARAFUSO
23		10902234		2	PARAFUSO, Hex, M6 x 16, 10.9, Full Thd
24		10902434		2	PARAFUSO, Hex, M6 x 20, 10.9, Full Thd
25		16043234		1	PARAFUSO, Hex, M8 x 16, 10.9, Full Thd
28		13270411		4	PARAFUSO, Cross Pan Hd, M3 x 8
29		16101721		4	PORCA, M3, Cl 10
32		14496531		1	ARRUELA PLANA, M8 x 17 x 1.6
33		14496101		4	ARRUELA PLANA
41		10516674		1	ARRUELA-TRAVA, 5/16"
43		14496431		4	ARRUELA PLANA
44		10516474		4	ARRUELA-TRAVA

(1) NOT ILLUSTRATED

MONITOR INSTALLATION - OPTIONAL CODE 461223008

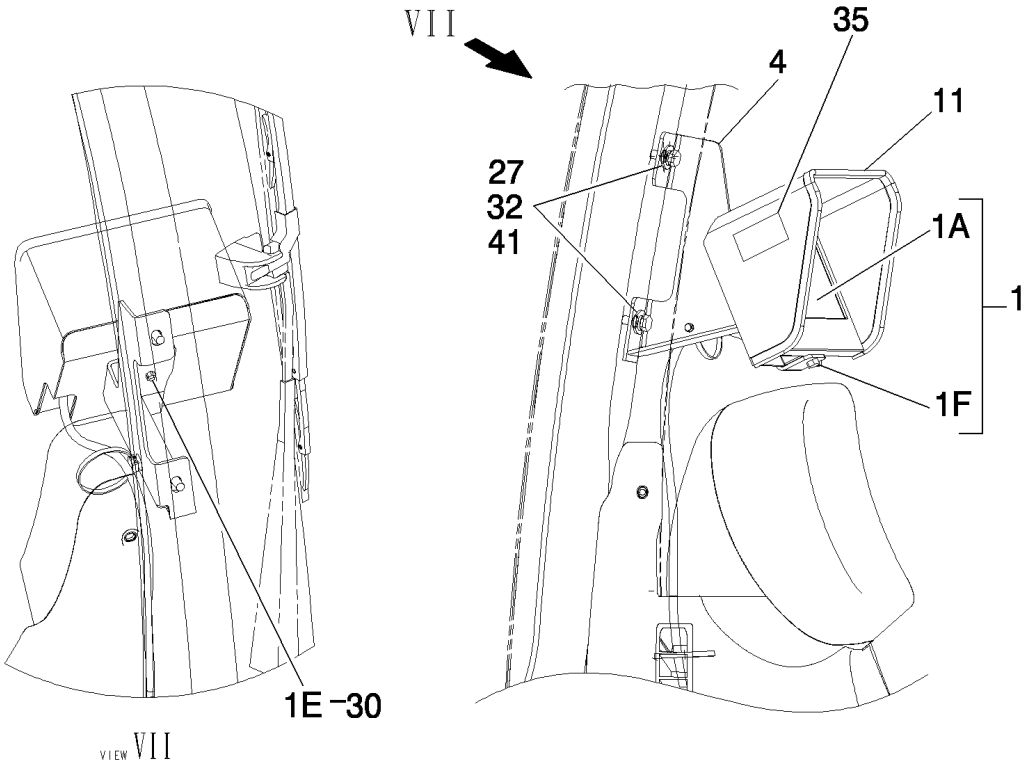

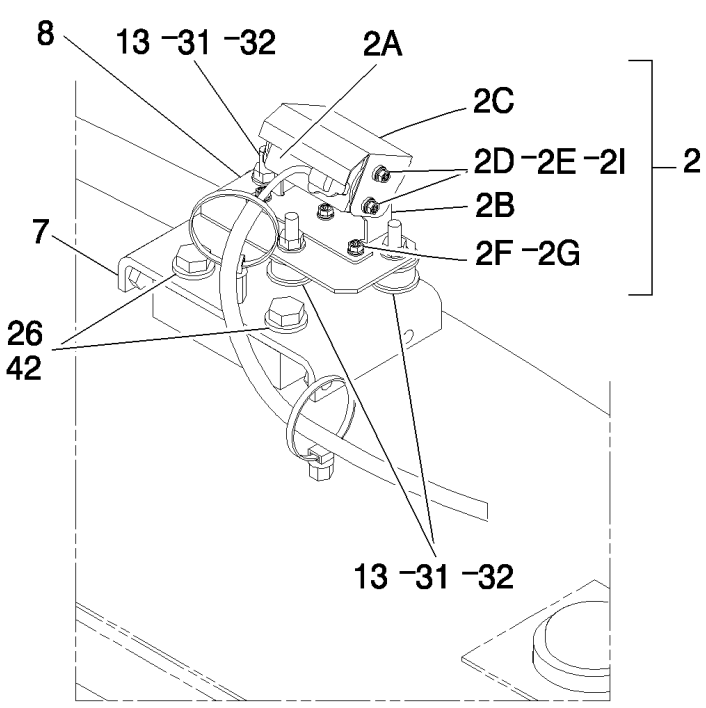

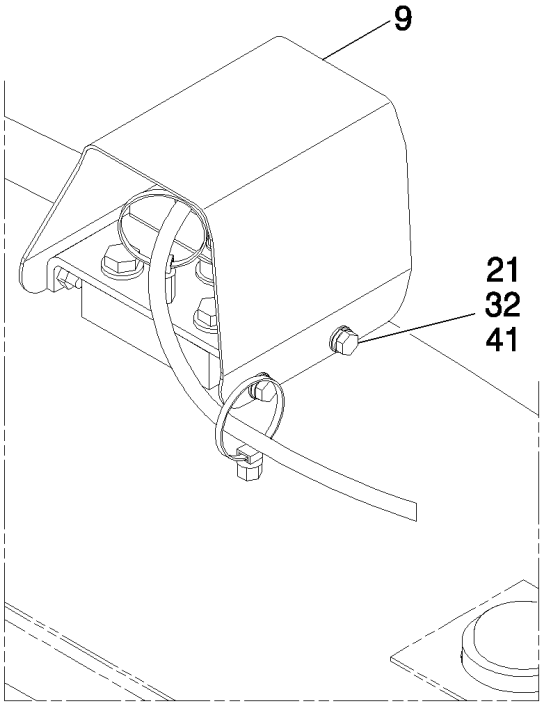

MONITOR INSTALLATION - OPTIONAL CODE 461223008

REF	FN	PART NUMBER	YR/SN	QTY	DESCRIPTION
1		87657719		1	MONITOR, - ASSY
1A		{EZ55S01003F1}		1	
1E		{EZ55S01004P1}		1	
1F		{EZ55S01005P1}		1	
2		87657720		1	MONITOR, - ASSY
2A		{EZ55S00023S001}		1	
2B		EZ55S00023S003		1	SUPORTE
2C		EZ55S00023S004		1	TAMPA
2D		{EZ55S00023S005}		4	
2E		{EZ55S00023S006}		4	
2F		{EZ55S00023S007}		3	
2G		{EZ55S00023S008}		3	
2I		{EZ55S00023S011}		4	
4		87657721		1	SUPORTE
7		87657724		1	SUPORTE
8		87657725		1	PLACA
9		87657726		1	PROTEÇÃO
11		87657728		1	PROTEÇÃO
13		87657729		3	CUNHA ELÁSTICA
21		16043634		4	PARAFUSO, Hex, M8 x 25, 10.9, Full Thd
26		11112434		2	PARAFUSO, Hex, M12 x 30, 10.9, Full Thd
27		16043434		2	PARAFUSO, Hex, M8 x 20, 10.9, Full Thd
30		15896421		1	PORCA, M5, Cl 10
31		16100821		4	PORCA, M8, Cl 10
32		14496531		10	ARRUELA PLANA, M8 x 17 x 1.6
35		87676786		1	PLAQUETA
41		10516674		6	ARRUELA-TRAVA, 5/16"
42		14496731		2	ARRUELA PLANA

5.0042	01	p1	05/08

LOWER FRAME GUARD - OPTIONAL CODE 781624098

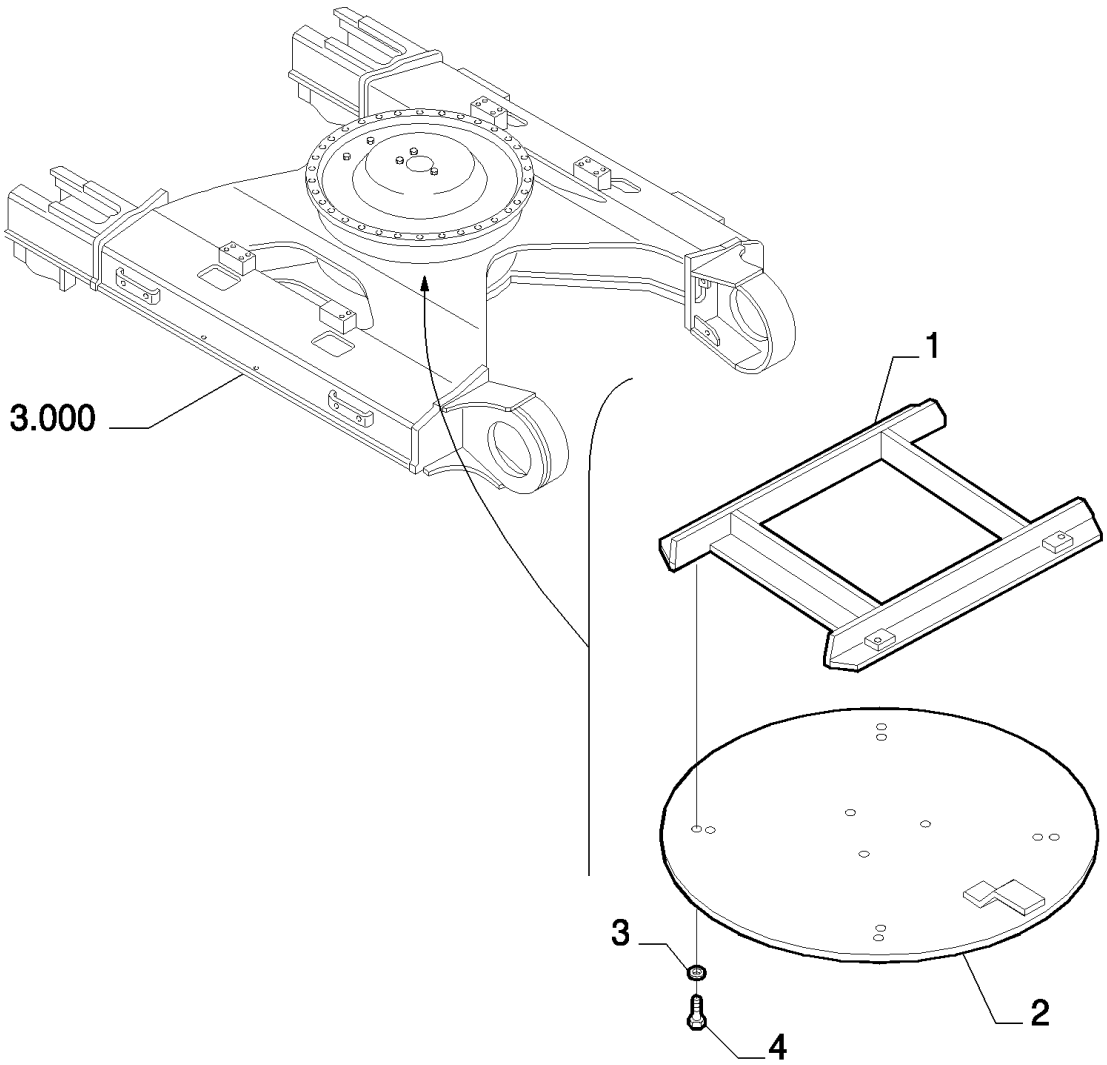

LOWER FRAME GUARD - OPTIONAL CODE 781624098

REF	FN	PART NUMBER	YR/SN	QTY	DESCRIPTION
1		87382416		1	SUPORTE
2		71406454		1	PROTEÇÃO
3		71405003		4	ARRUELA PLANA, 17X32X4
4		11119134		4	PARAFUSO, 16X55

5.0043	01	p1	11/07

ARM PROTECTION - OPTIONAL CODE 461220028

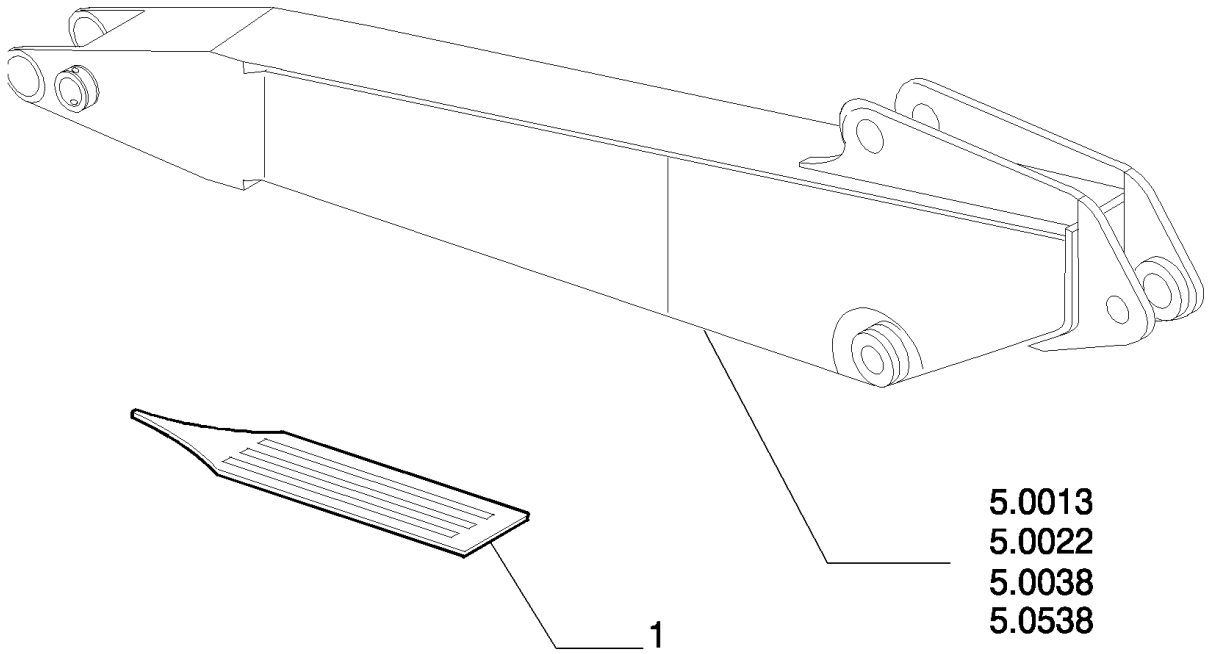

ARM PROTECTION - OPTIONAL CODE 461220028

REF	FN	PART NUMBER	YR/SN	QTY	DESCRIPTION
1		{87630749}		1	

ROTATION BUCKET PROVISION - OPTIONAL CODE 461243008 (01-02) - 461241078 (03-04)

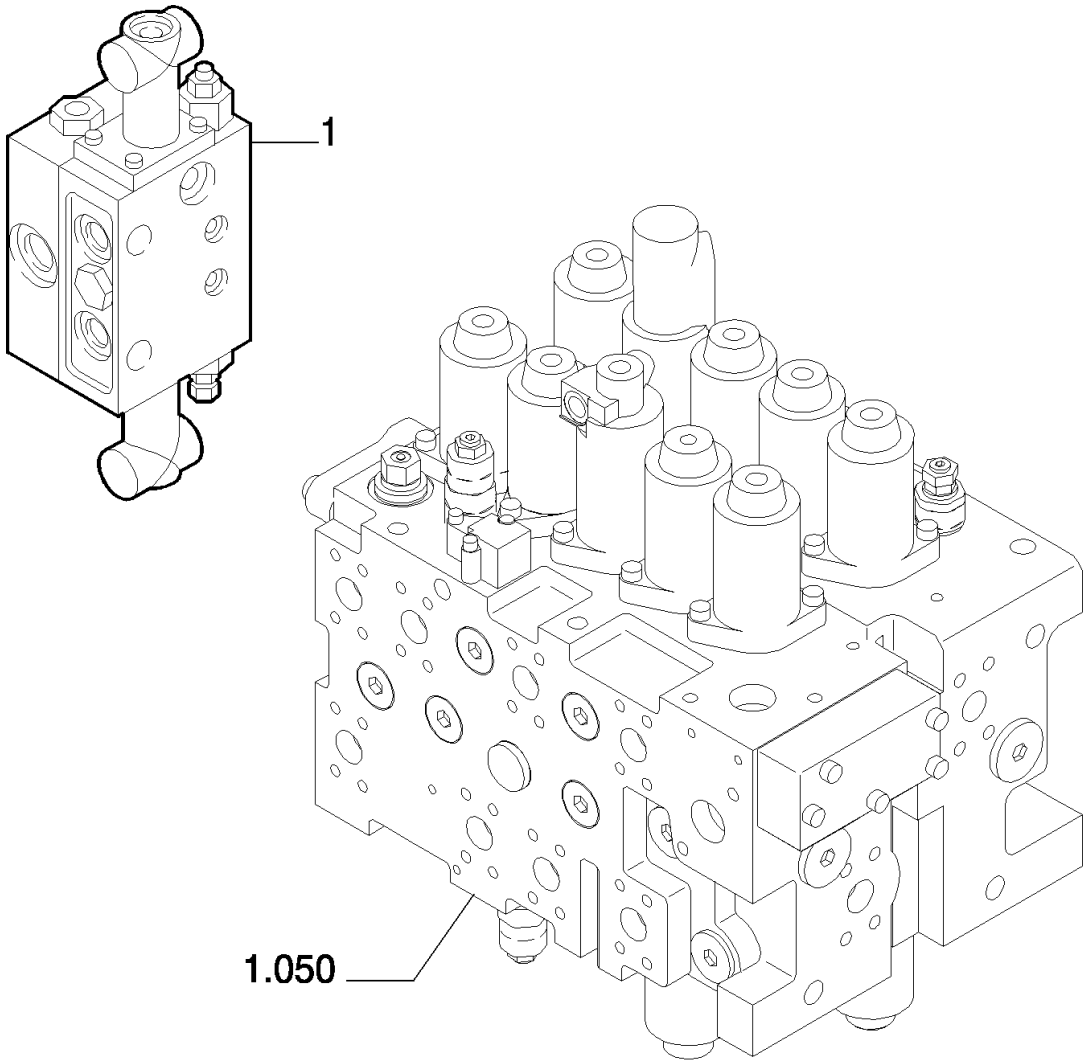

ROTATION BUCKET PROVISION - OPTIONAL CODE 461243008 (01-02) - 461241078 (03-04)

REF	FN	PART NUMBER	YR/SN	QTY	DESCRIPTION
1		87530588		1	VÁLVULA HIDRAULICA

5.0076	02	p1	10/07

ROTATION BUCKET PROVISION - VERSION (01-02) - OPTIONAL CODE 461241068

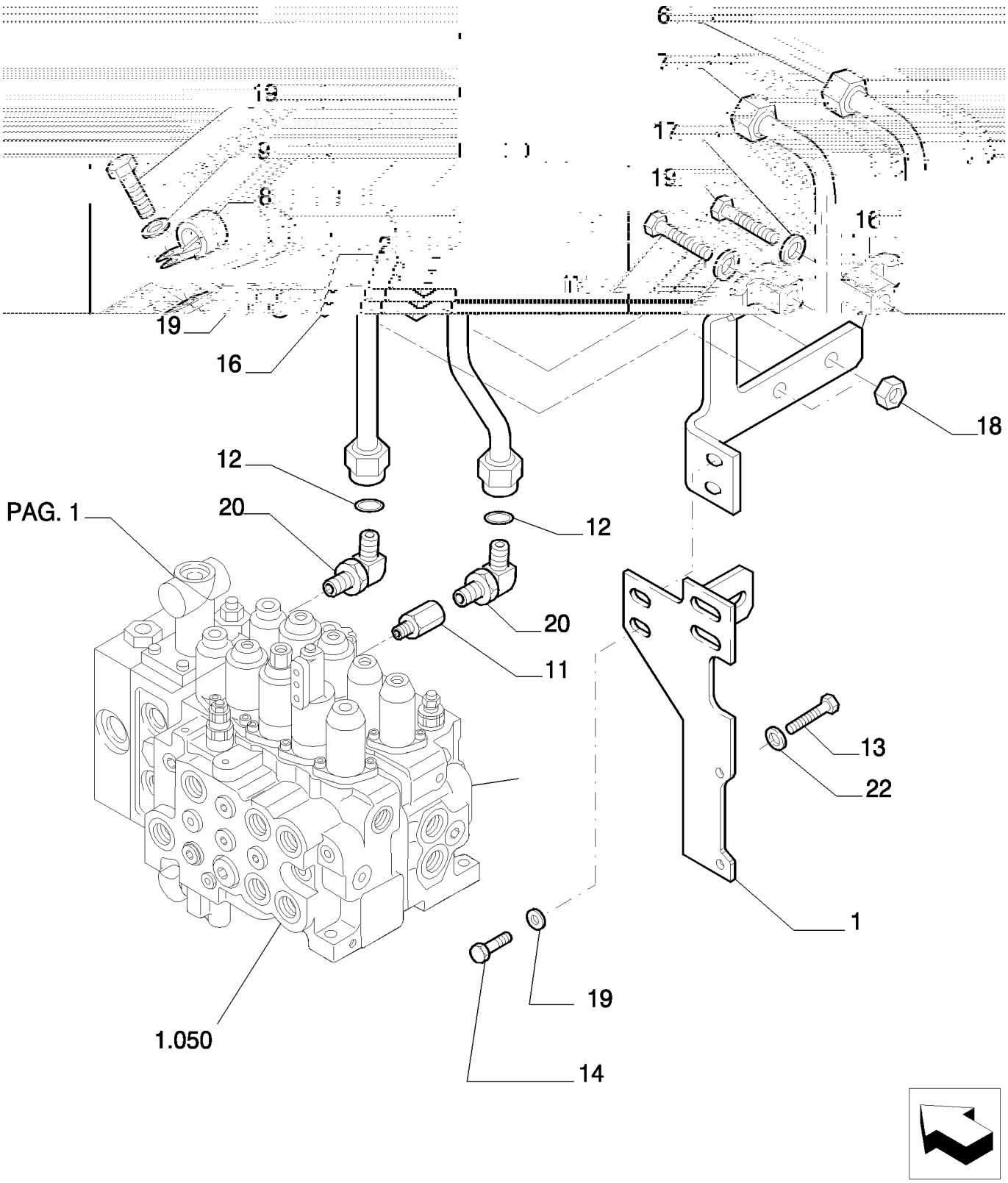

6

ROTATION BUCKET PROVISION - VERSION (01-02) - OPTIONAL CODE 461241068

REF	FN	PART NUMBER	YR/SN	QTY	DESCRIPTION
1		{87653466}		1	
2		{87653467}		1	
6		{87653499}		1	
7		{87653500}		1	
8		71403661		1	FIXADOR
9		11106234		1	PARAFUSO, Hex, M10 x 25, 10.9, Full Thd
11		72214808		1	CONEXÃO
12		87532105		2	CONEXÃO
13		11112234		2	PARAFUSO, Hex, M12 x 25, 10.9, Full Thd
14		11106434		2	PARAFUSO, Hex, M10 x 30, 10.9, Full Thd
16		72954322		2	PRENDEDOR
17		11107434		2	PARAFUSO
18		11701721		2	PORCA, M10, Cl 10
19		14496631		2	ARRUELA PLANA, M10 x 21 x 2
20		71404166		3	ANEL "O"
22		14496731		2	ARRUELA PLANA

5.0076	03	p1	10/07

ROTATION BUCKET PROVISION - VERSION (03-04) - OPTIONAL CODE 461241078

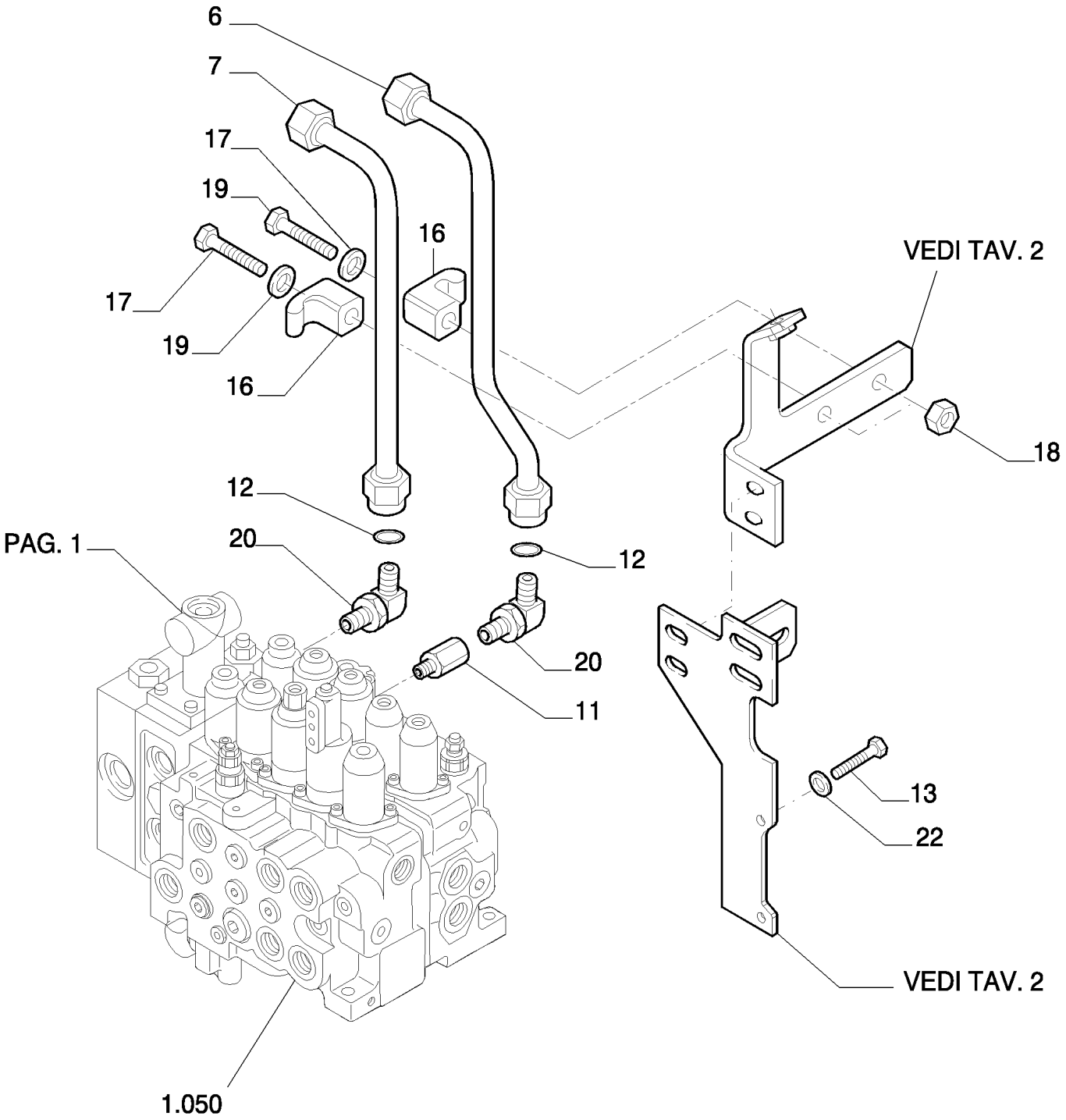

ROTATION BUCKET PROVISION - VERSION (03-04) - OPTIONAL CODE 461241078

REF	FN	PART NUMBER	YR/SN	QTY	DESCRIPTION
6		{87653499}		1	
7		{87653500}		1	
11		72214808		1	CONEXÃO
12		87532105		2	CONEXÃO
13		11112234		2	PARAFUSO, Hex, M12 x 25, 10.9, Full Thd
16		72954322		2	PRENDEDOR
17		11107434		2	PARAFUSO
18		11701721		2	PORCA, M10, Cl 10
19		14496631		4	ARRUELA PLANA, M10 x 21 x 2
20		71404166		2	ANEL "O"
22		14496731		2	ARRUELA PLANA

5.0076	04	p1	10/07

ROTATION BUCKET PROVISION - OPTIONAL CODE 461241068 (01-02) - 461241078 (03-04)

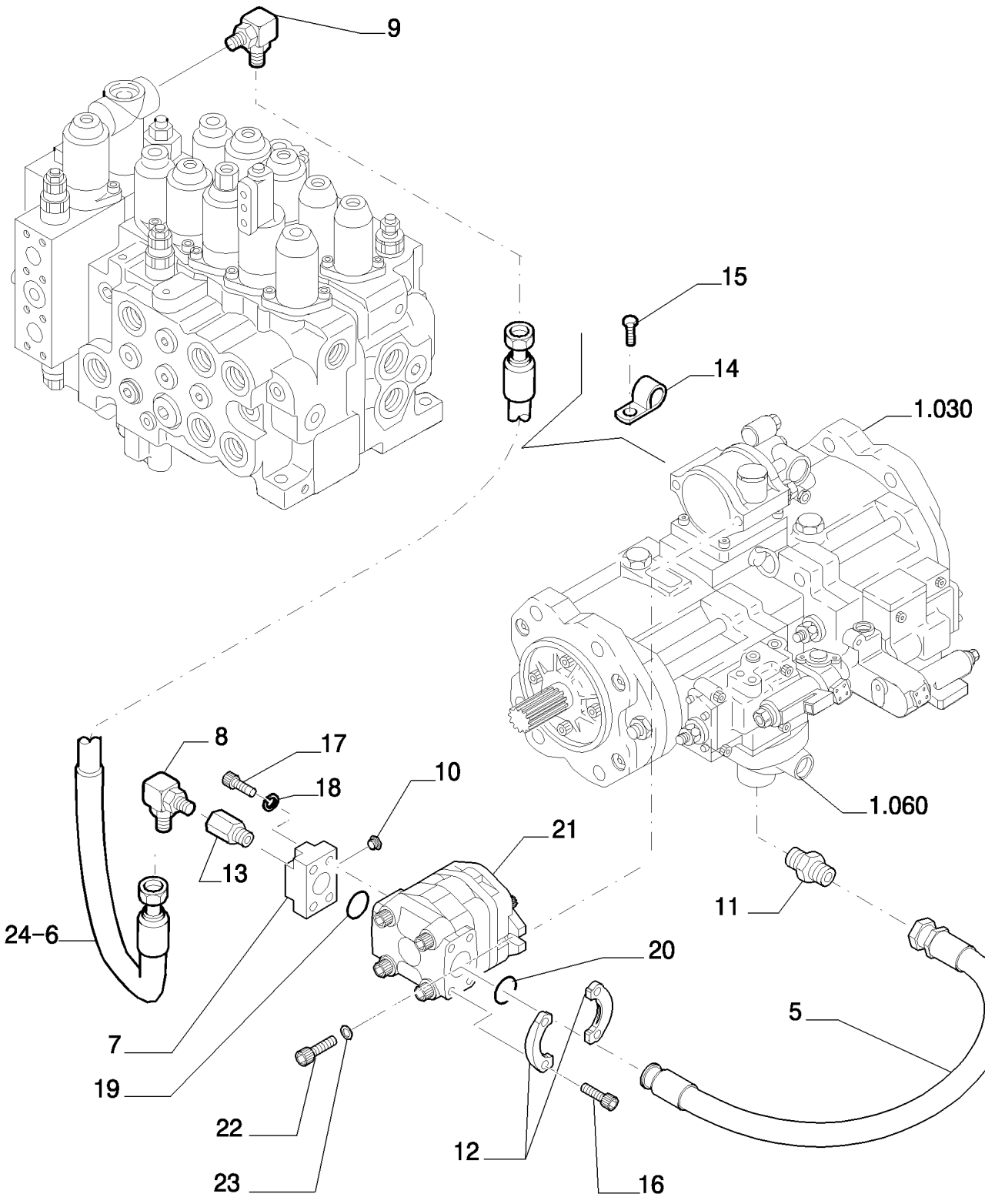

ROTATION BUCKET PROVISION - OPTIONAL CODE 461241068 (01-02) - 461241078 (03-04)

REF	FN	PART NUMBER	YR/SN	QTY	DESCRIPTION
1		72214728		1	CONEXÃO
2	1	72210694		1	BOMBA HIDRÁULICA
3		72214663		1	BUJÃO
4		72210076		1	ANEL "O"
5		14496631		8	ARRUELA PLANA, M10 x 21 x 2
6		87530584		1	CONEXÃO
7		{87661015}		1	
8		87528092		1	TUBO FLEXÍVEL
9		72214763		1	CONEXÃO
10		72214669		1	CONEXÃO
11		72204754		1	FLANGE
12		71404909		2	FLANGE
13		11106434		2	PARAFUSO, Hex, M10 x 30, 10.9, Full Thd
14		11106634		4	PARAFUSO, Hex, M10 x 35, 10.9, Full Thd
15		71405770		2	PRENDEDOR
16		14420234		2	PARAFUSO
17		14420534		4	PARAFUSO
18		10571879		4	ARRUELA-TRAVA, M10
19		72215443		1	JUNTA

(1) ASSY SEE PAGE 11

5.0076	05	p1	04/08

ROTATION BUCKET PROVISION - OPTIONAL CODE 461241068 (01-02) - 461241078 (03-04)

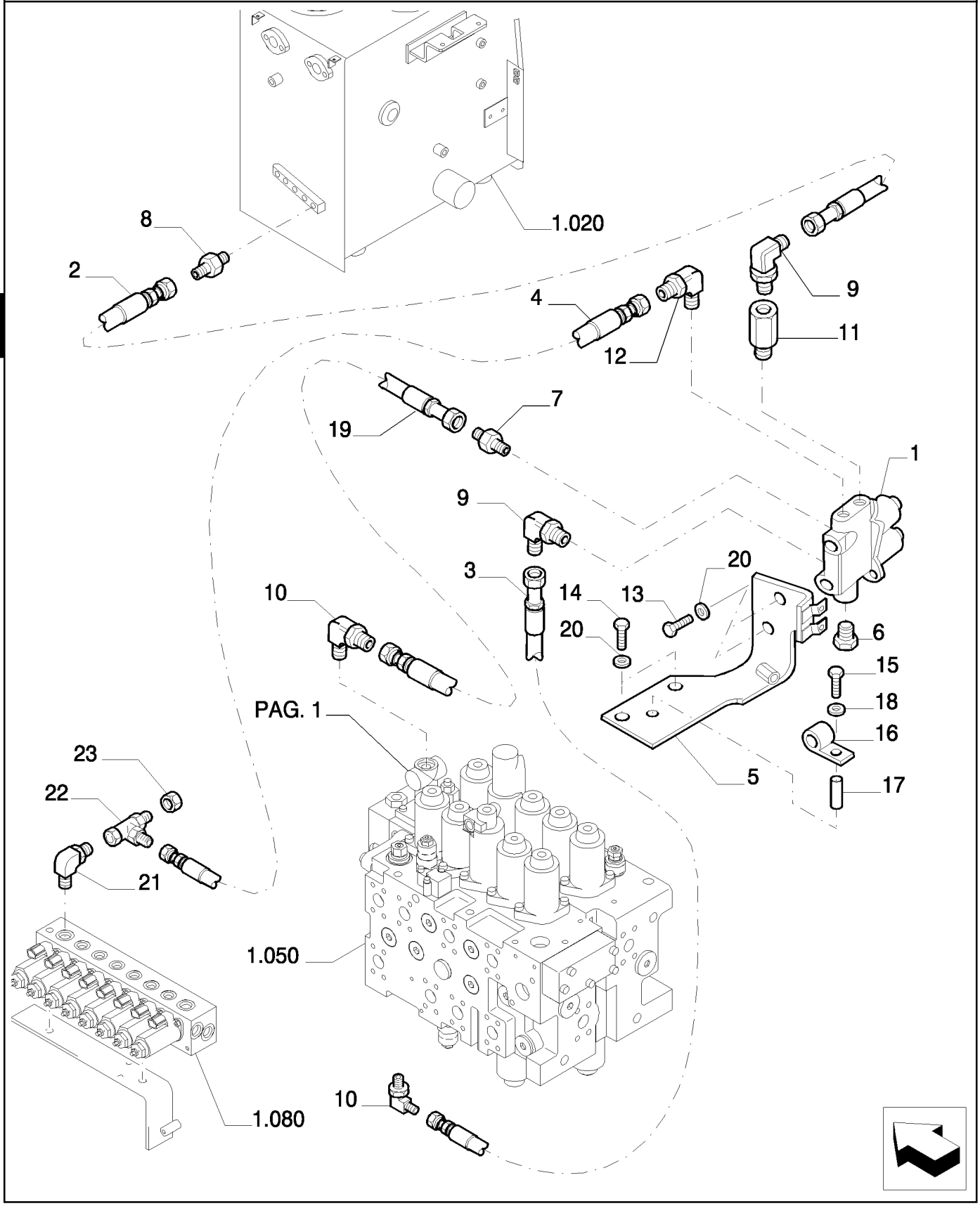

ROTATION BUCKET PROVISION - OPTIONAL CODE 461241068 (01-02) - 461241078 (03-04)

REF	FN	PART NUMBER	YR/SN	QTY	DESCRIPTION
1		87531523		1	VÁLVULA HIDRAULICA
2		72214740		1	TUBO FLEXÍVEL
3		72214539		1	TUBO FLEXÍVEL
4		87338415		1	TUBO FLEXÍVEL
5		87557644		1	SUPORTE
6		72214663		1	BUJÃO
7		72214744		1	CONEXÃO
8		72214522		1	CONEXÃO
9		72214524		2	CONEXÃO
10		72214542		2	CONEXÃO
11		72217408		1	CONEXÃO
12		72214735		1	CONEXÃO
13		11106034		2	PARAFUSO, Hex, M10 x 20, 10.9, Full Thd
14		11106234		2	PARAFUSO, Hex, M10 x 25, 10.9, Full Thd
15		10903634		2	PARAFUSO
16		10441290		1	BRAÇADEIRA
17		87557646		1	ESPAÇADOR
18		14496431		1	ARRUELA PLANA
19		72214535		1	TUBO FLEXÍVEL
20		14496631		4	ARRUELA PLANA, M10 x 21 x 2
21		{87338401}		1	
22		72954988		1	TEE
23		72214546		1	BUJÃO

5.0076	06	p1	10/07

ROTATION BUCKET PROVISION - OPTIONAL CODE 461241068 (01-02) - 461241078 (03-04)

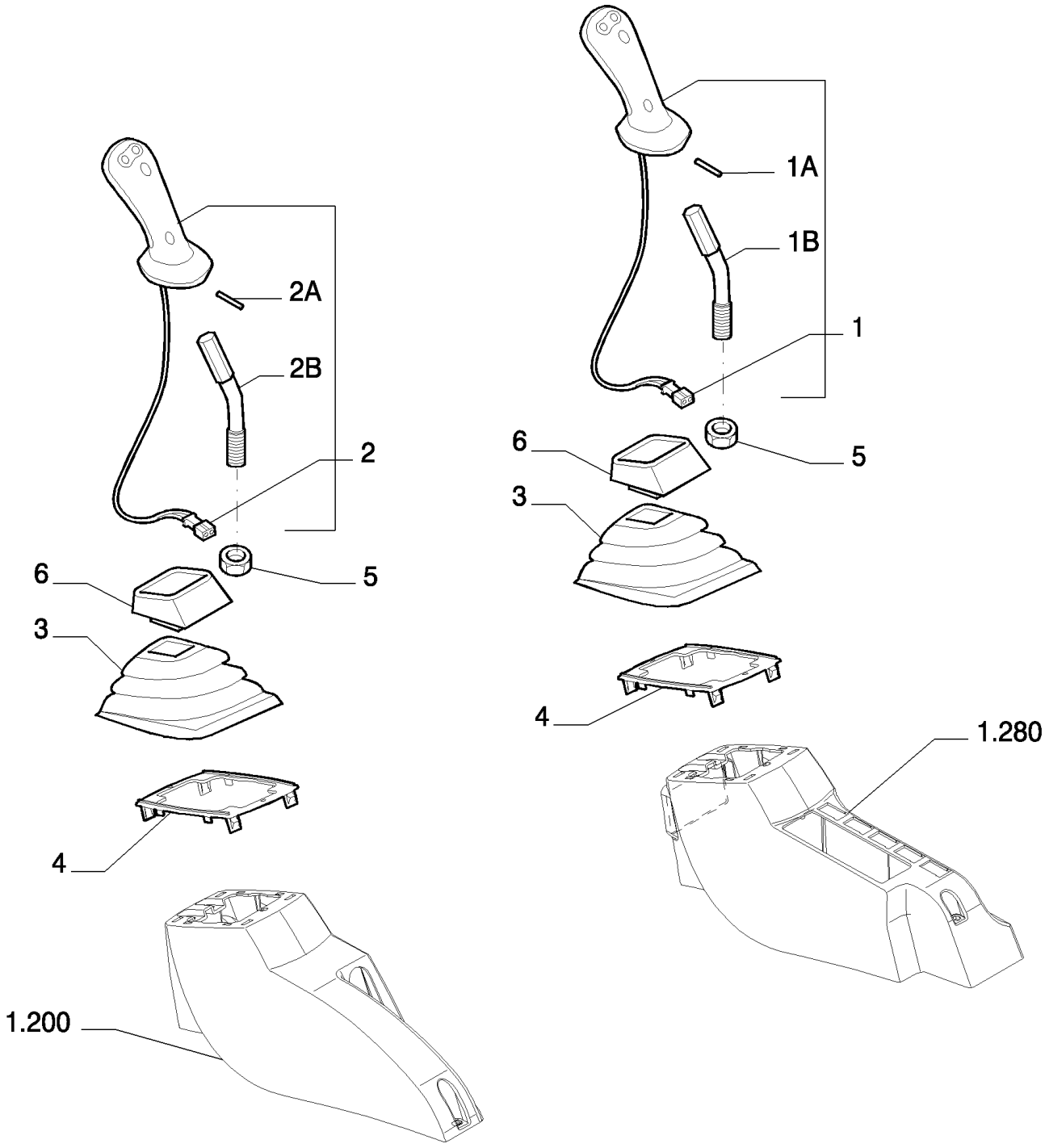

ROTATION BUCKET PROVISION - OPTIONAL CODE 461241068 (01-02) - 461241078 (03-04)

REF	FN	PART NUMBER	YR/SN	QTY	DESCRIPTION
1		72203569		1	EMPUNHADURA, RIGHT - ASSY
1A		14601371		1	PINO-ELÁSTICO
1B		72203871		1	ALAVANCA
2		72203570		1	EMPUNHADURA, LEFT - ASSY
2A		14601371		1	PINO-ELÁSTICO
2B		72203871		1	ALAVANCA
3		72220390		2	CAPA
4		72203567		2	PLACA
5		12163224		2	PORCA
6		72220391		2	CAPA

5.0076	07	p1	10/07

ROTATION BUCKET PROVISION - VERSION (01-02) - OPTIONAL CODE 461241068

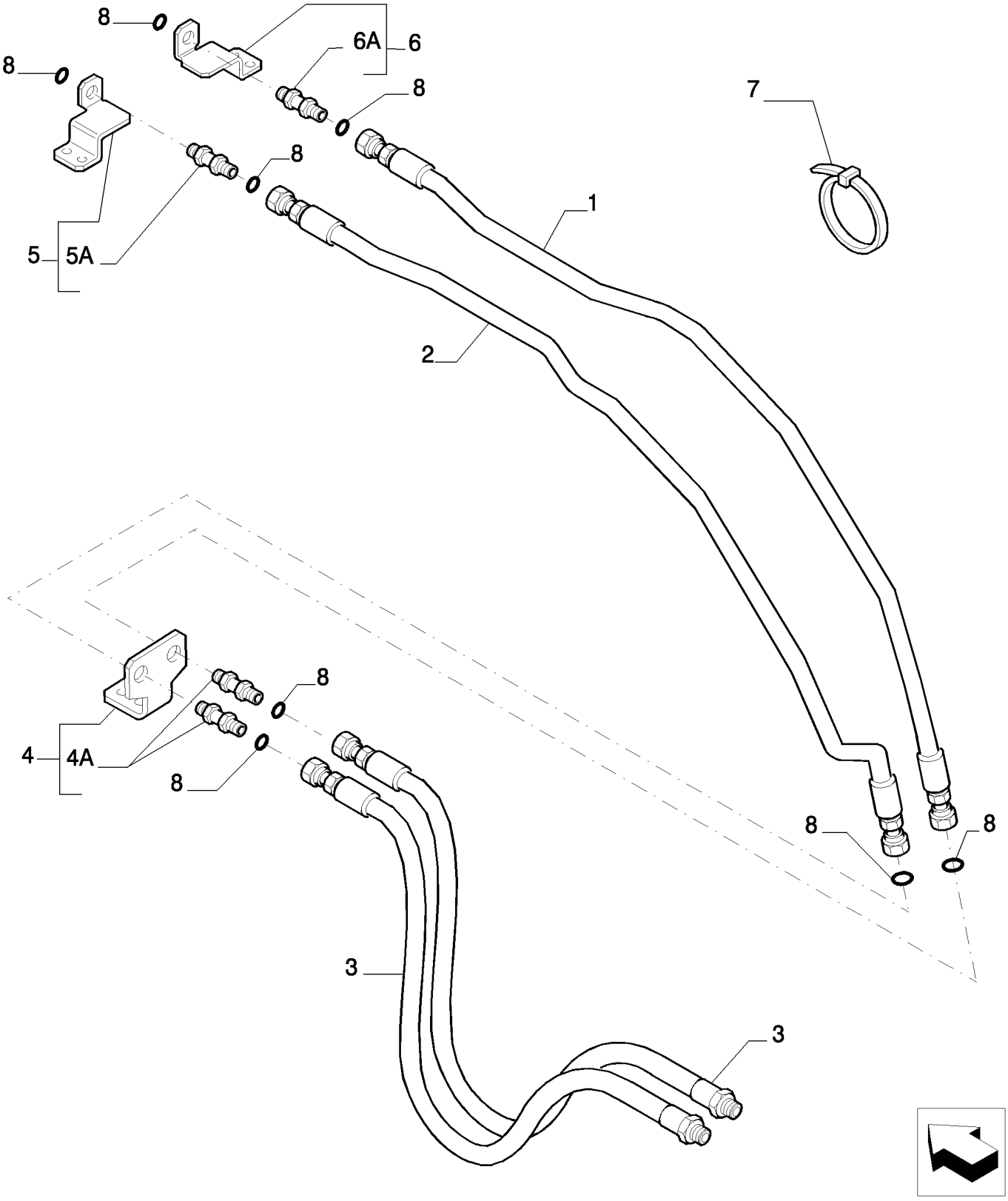

6

ROTATION BUCKET PROVISION - VERSION (01-02) - OPTIONAL CODE 461241068

REF	FN	PART NUMBER	YR/SN	QTY	DESCRIPTION
1		{87732974}		1	
2		{87732975}		1	
3		{87662097}		2	
4		87396715		1	SUPORTE, - ASSY
4A		72204201		2	CONEXÃO
5		87396711		1	SUPORTE, - ASSY
5A		72204201		1	CONEXÃO
6		87396713		1	SUPORTE, - ASSY
6A		72204201		1	CONEXÃO
7		4982514		57	TIRA DE CABO
8		70923841		8	ANEL "O"

5.0076	08	p1	10/07

ROTATION BUCKET PROVISION - VERSION (03-04) - OPTIONAL CODE 461241078

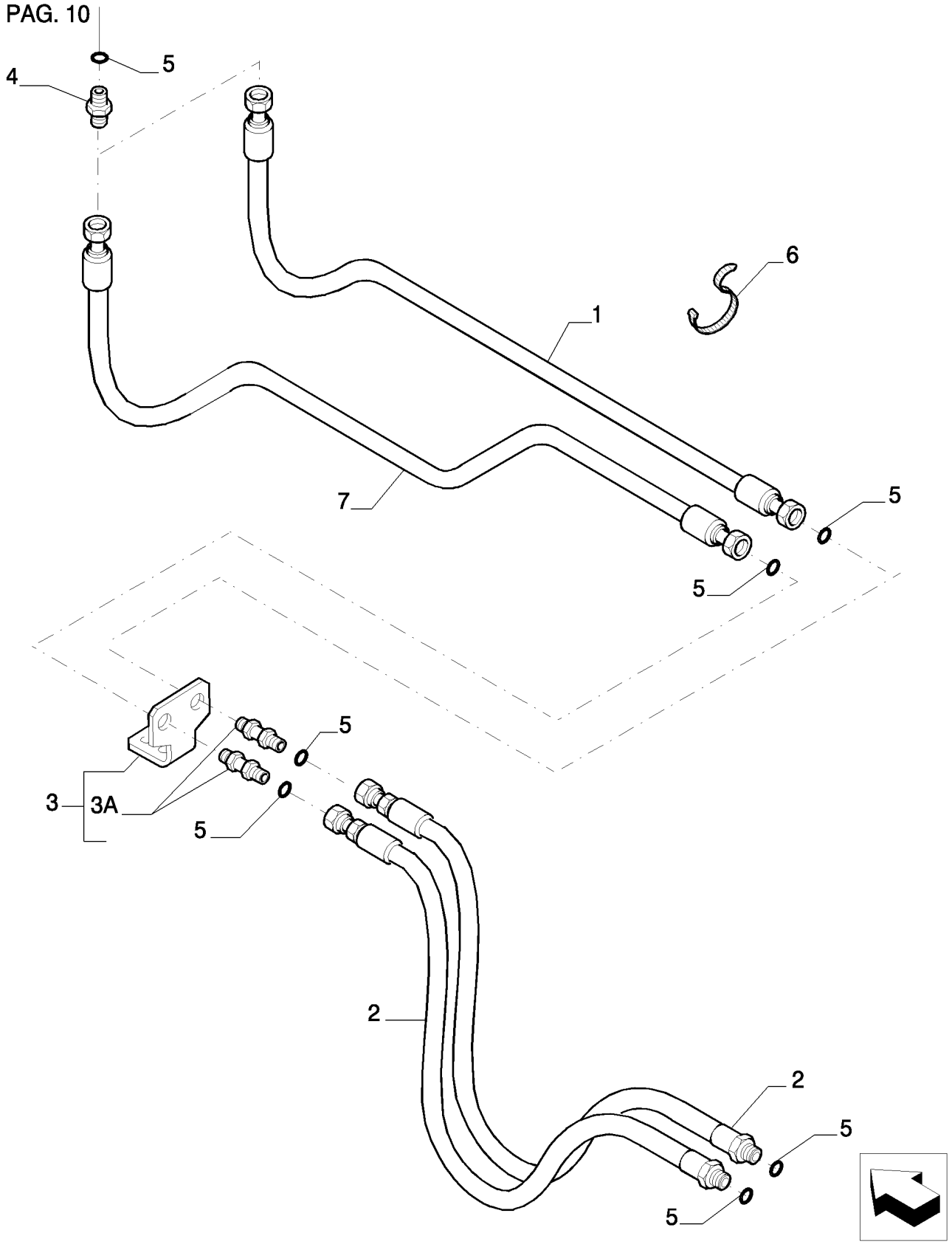

ROTATION BUCKET PROVISION - VERSION (03-04) - OPTIONAL CODE 461241078

REF	FN	PART NUMBER	YR/SN	QTY	DESCRIPTION
1		{87662194}		1	
2		{87662097}		2	
3		{87396684}		1	- ASSY
3A		72204201		2	CONEXÃO
4		87556832		2	CONEXÃO
5		70923841		8	ANEL "O"
6		4982514		25	TIRA DE CABO
7		{87662195}		1	

5.0076	09	p1	10/07

ROTATION BUCKET PROVISION - VERSION (03-04) - OPTIONAL CODE 461241078

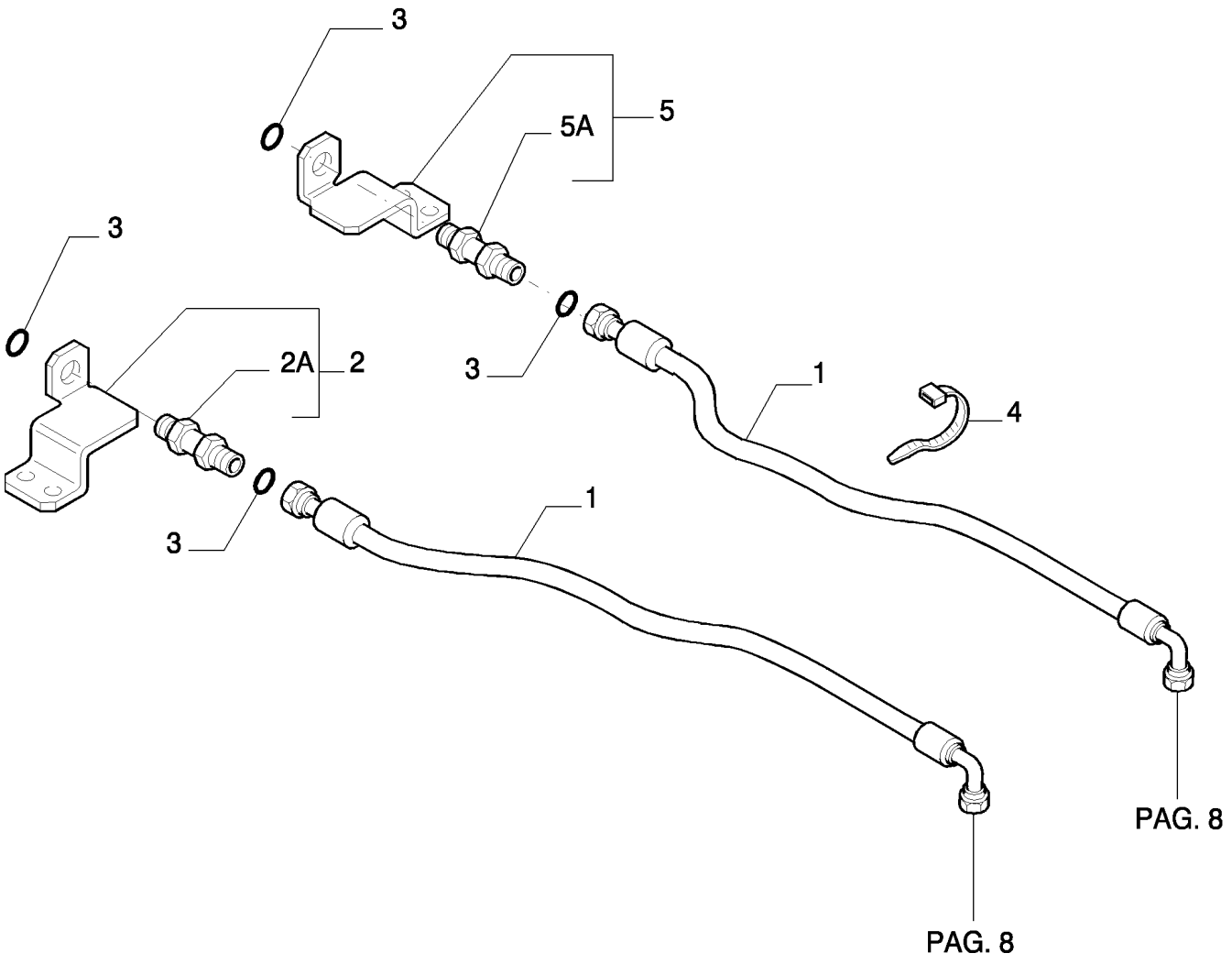

6

ROTATION BUCKET PROVISION - VERSION (03-04) - OPTIONAL CODE 461241078

REF	FN	PART NUMBER	YR/SN	QTY	DESCRIPTION
1		{87670472}		2	
2		87396711		1	SUPORTE, - ASSY
2A		72204201		1	CONEXÃO
3		70923841		4	ANEL "O"
4		4982514		14	TIRA DE CABO
5		87396713		1	SUPORTE
5A		72204201		1	CONEXÃO

5.0076	10	p1	10/07

ROTATION BUCKET PROVISION - OPTIONAL CODE 461241068 (01-02) - 461241078 (03-04)

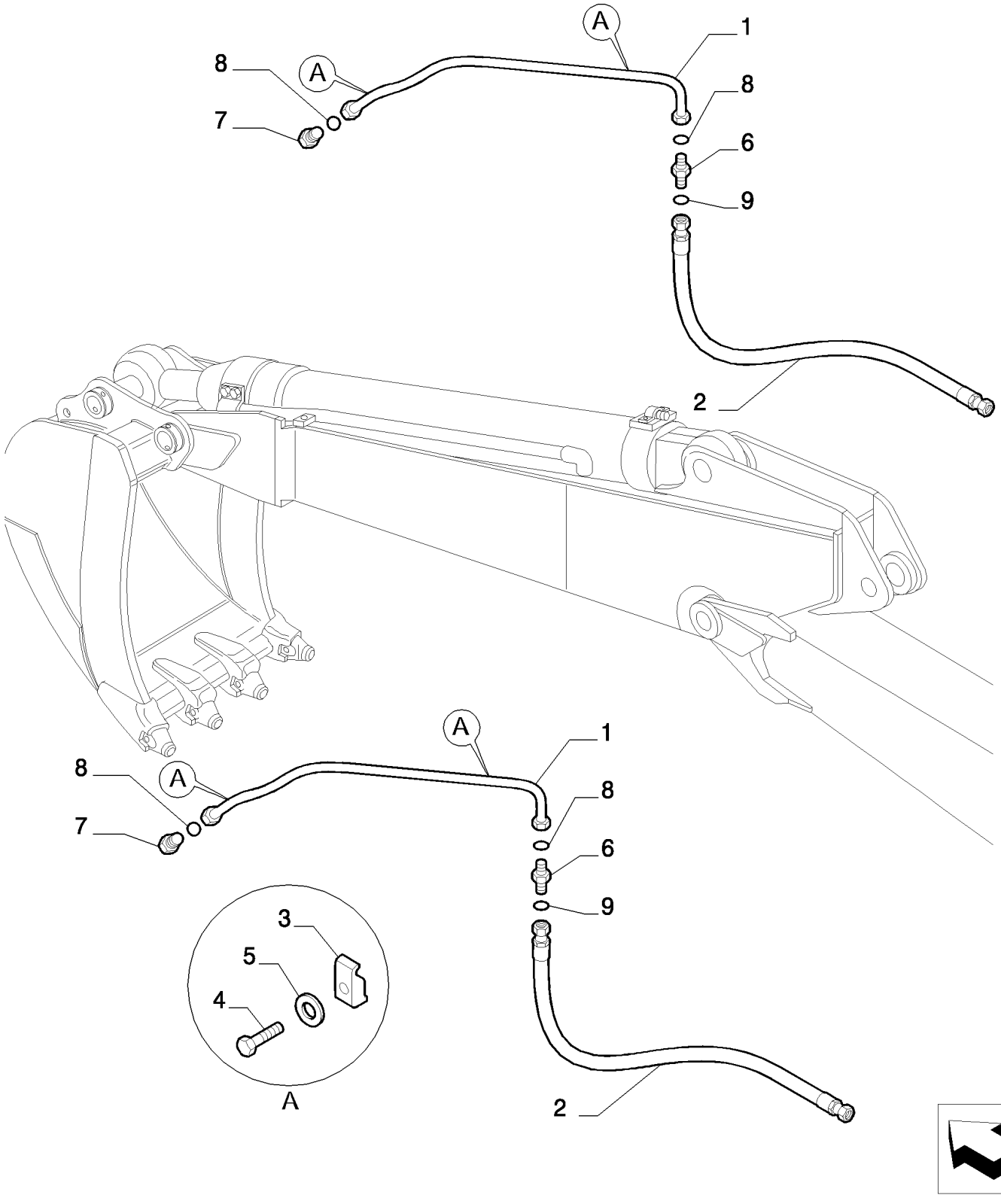

ROTATION BUCKET PROVISION - OPTIONAL CODE 461241068 (01-02) - 461241078 (03-04)

REF	FN	PART NUMBER	YR/SN	QTY	DESCRIPTION
1		72219557		2	TUBO RÍGIDO
2		72213353		2	TUBO FLEXÍVEL
3		71466172		6	SUPORTE
4		11113234		6	PARAFUSO, Hex, M12 x 50, 10.9
5		10517074		6	ARRUELA-TRAVA
6		72204293		2	CONEXÃO
7		72204294		2	CONEXÃO
8		71484462		4	ANEL "O"
9		70923841		2	ANEL "O"

5.0076	11	p1	10/07

ROTATION BUCKET PROVISION - COMPONENTS - OPTIONAL CODE 461241068 (01-02) - 461241078 (03-04)

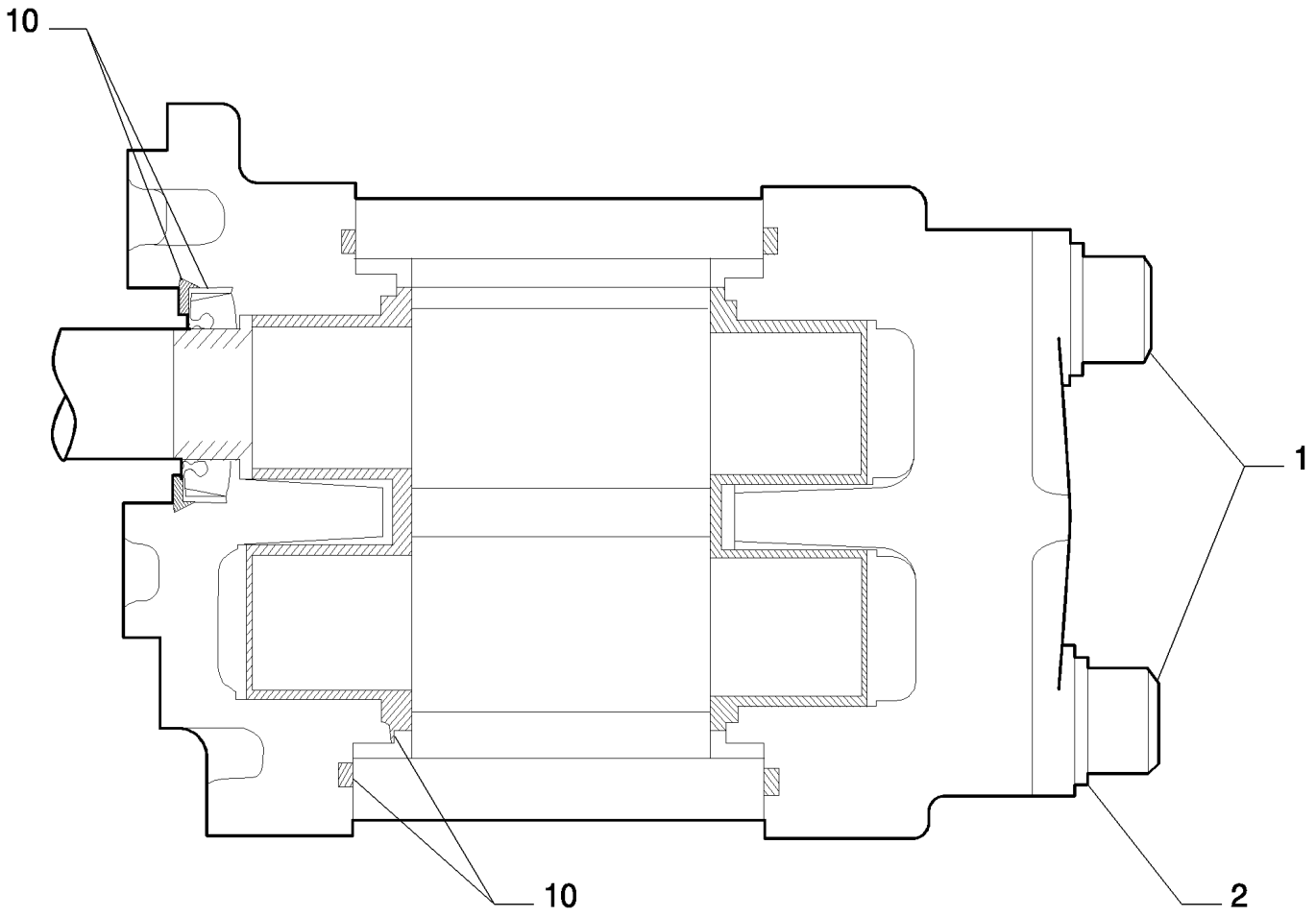

KIT KIT KIT 10

ROTATION BUCKET PROVISION - COMPONENTS - OPTIONAL CODE 461241068 (01-02) - 461241078 (03-04)

REF	FN	PART NUMBER	YR/SN	QTY	DESCRIPTION
1		72217399		1	PARAFUSO
2		72210445		1	ARRUELA PLANA
10		72217400		1	KIT

ROTATION BUCKET PROVISION - OPTIONAL CODE 461246028 (01-02) - 461246038 (03-04)

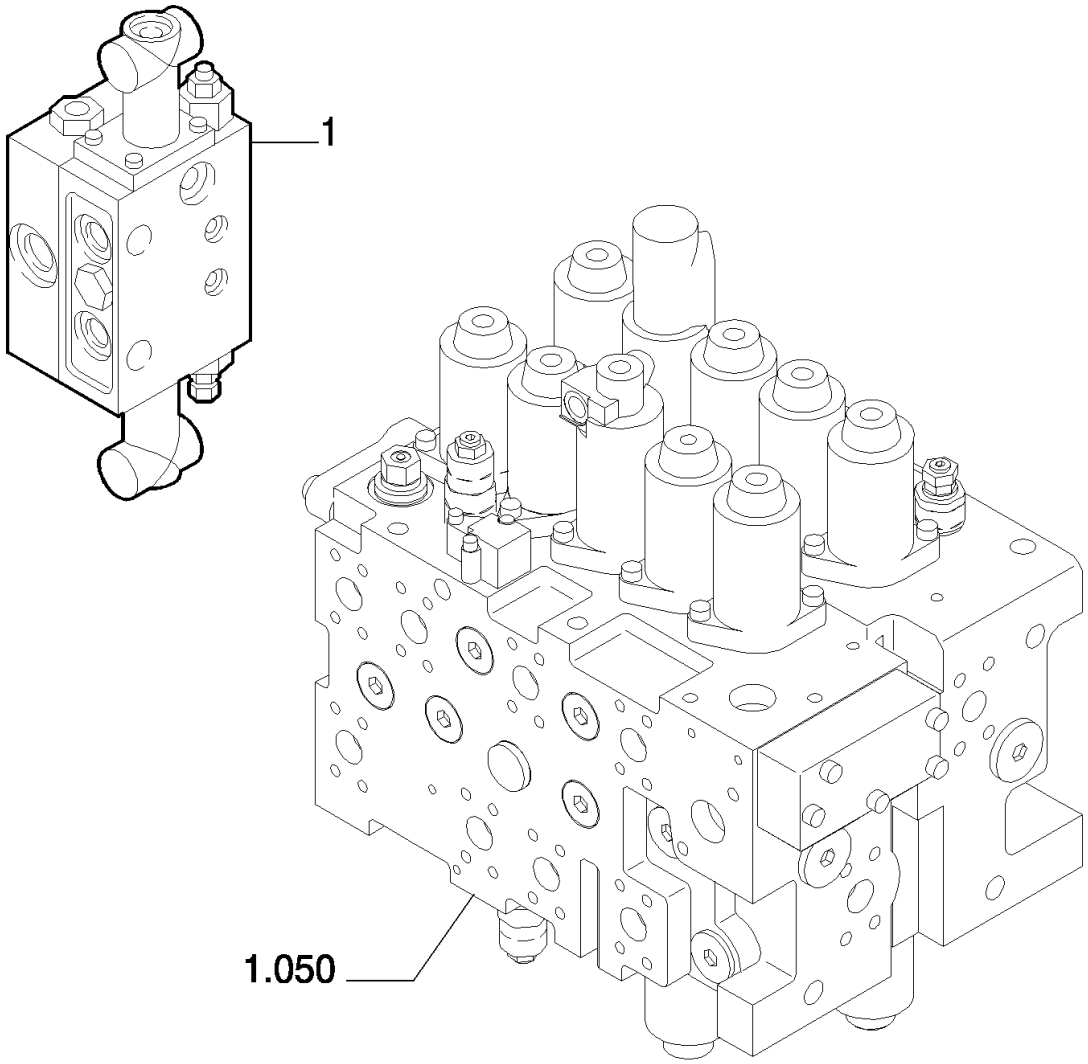

ROTATION BUCKET PROVISION - OPTIONAL CODE 461246028 (01-02) - 461246038 (03-04)

REF	FN	PART NUMBER	YR/SN	QTY	DESCRIPTION
1		87530588		1	VÁLVULA HIDRAULICA

5.0077	02	p1	10/07

ROTATION BUCKET PROVISION - VERSION (01-02) - OPTIONAL CODE 461246028

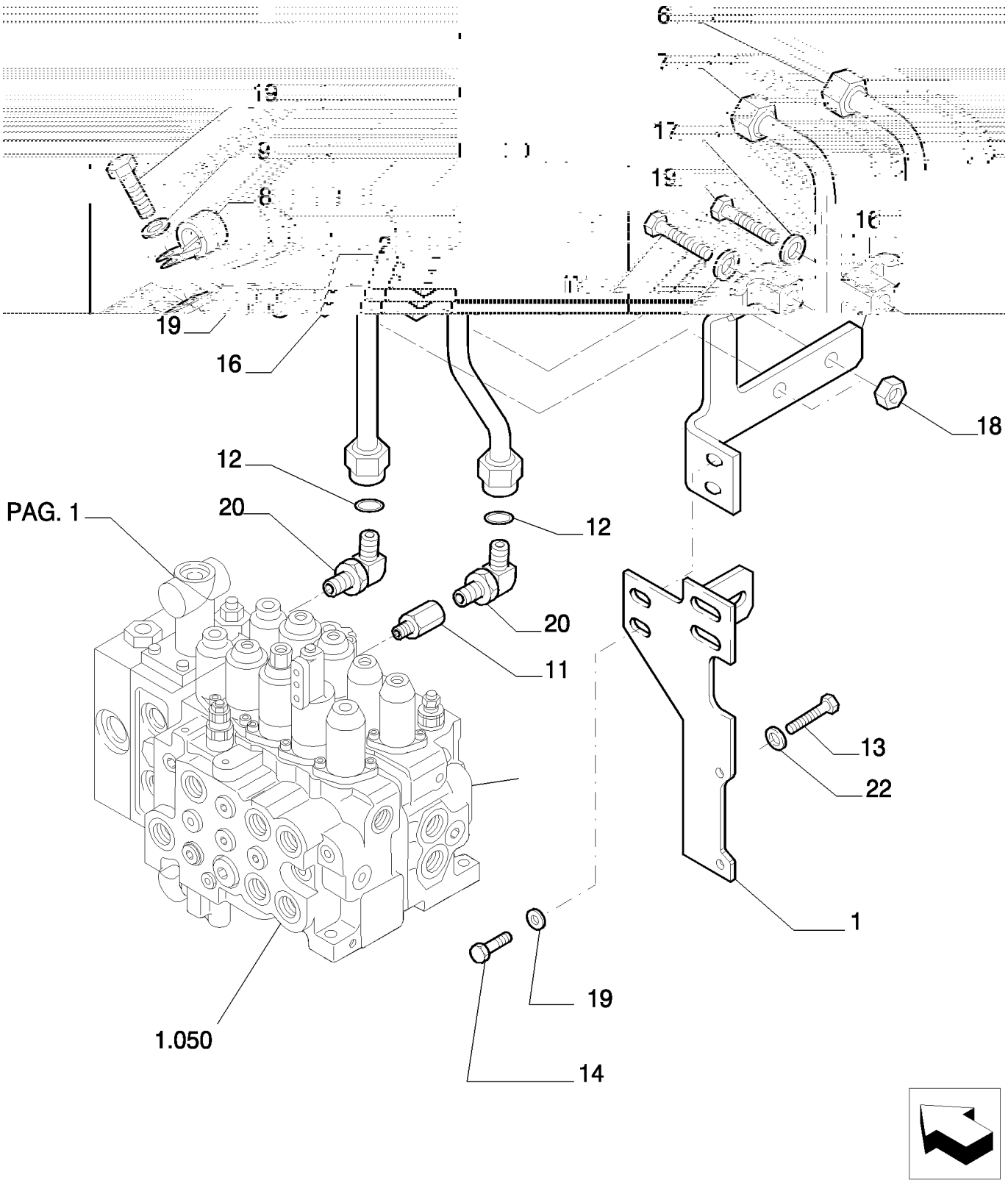

6

ROTATION BUCKET PROVISION - VERSION (01-02) - OPTIONAL CODE 461246028

REF	FN	PART NUMBER	YR/SN	QTY	DESCRIPTION
1		{87653466}		1	
2		{87653467}		1	
6		{87653499}		1	
7		{87653500}		1	
8		71403661		1	FIXADOR
9		11106234		1	PARAFUSO, Hex, M10 x 25, 10.9, Full Thd
11		72214808		1	CONEXÃO
12		87532105		2	CONEXÃO
13		11112234		2	PARAFUSO, Hex, M12 x 25, 10.9, Full Thd
14		11106434		2	PARAFUSO, Hex, M10 x 30, 10.9, Full Thd
16		72954322		2	PRENDEDOR
17		11107434		2	PARAFUSO
18		11701721		2	PORCA, M10, Cl 10
19		14496631		2	ARRUELA PLANA, M10 x 21 x 2
20		71404166		3	ANEL "O"
22		14496731		2	ARRUELA PLANA

5.0077	03	p1	10/07

ROTATION BUCKET PROVISION - VERSION (03-04) - OPTIONAL CODE 461246038

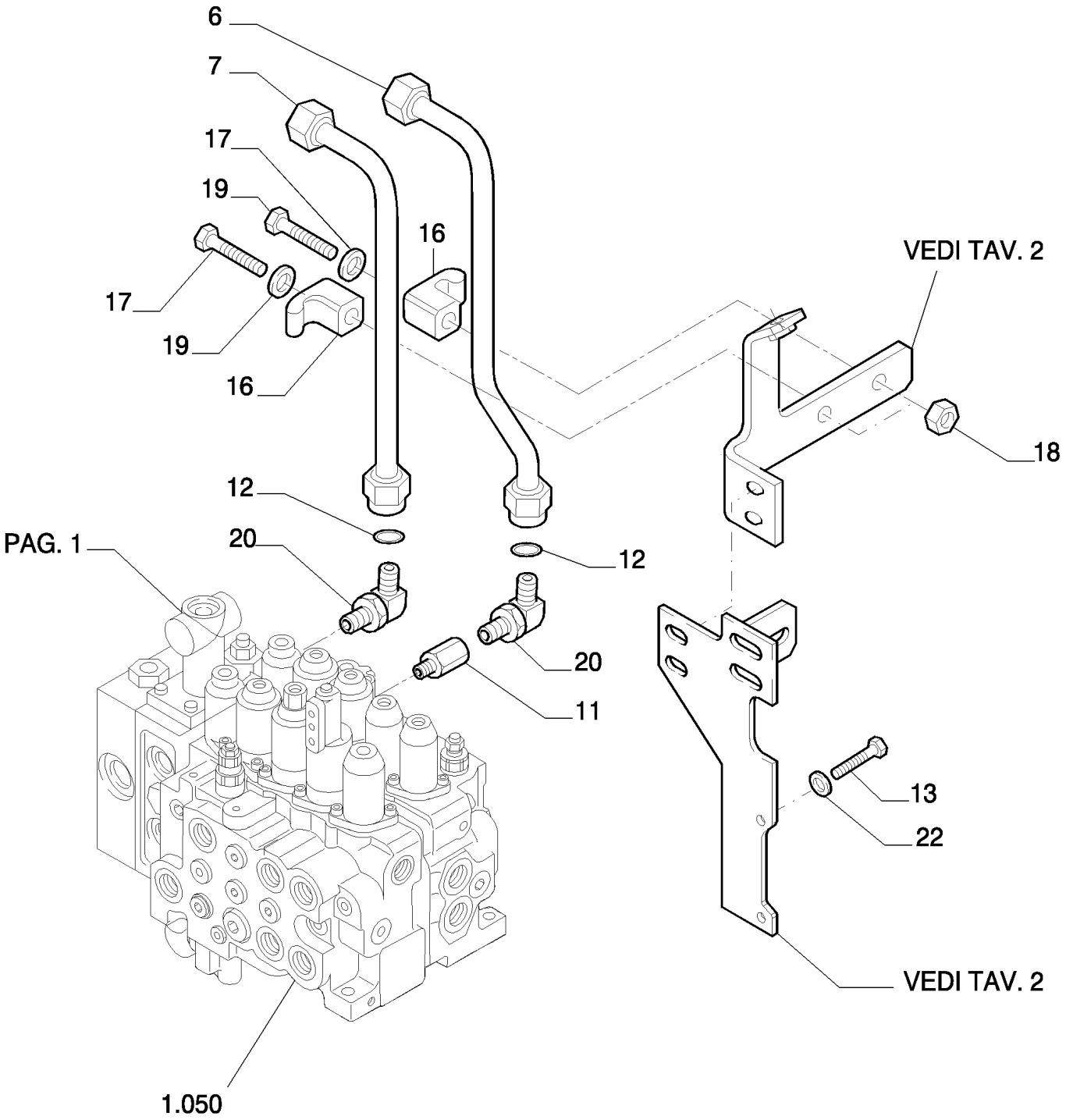

ROTATION BUCKET PROVISION - VERSION (03-04) - OPTIONAL CODE 461246038

REF	FN	PART NUMBER	YR/SN	QTY	DESCRIPTION
6		{87653499}		1	
7		{87653500}		1	
11		72214808		1	CONEXÃO
12		87532105		2	CONEXÃO
13		11112234		2	PARAFUSO, Hex, M12 x 25, 10.9, Full Thd
16		72954322		2	PRENDEDOR
17		11107434		2	PARAFUSO
18		11701721		2	PORCA, M10, Cl 10
19		14496631		4	ARRUELA PLANA, M10 x 21 x 2
20		71404166		2	ANEL "O"
22		14496731		2	ARRUELA PLANA

5.0077	04	p1	10/07

ROTATION BUCKET PROVISION - OPTIONAL CODE 461246028 (01-02) - 461246038 (03-04)

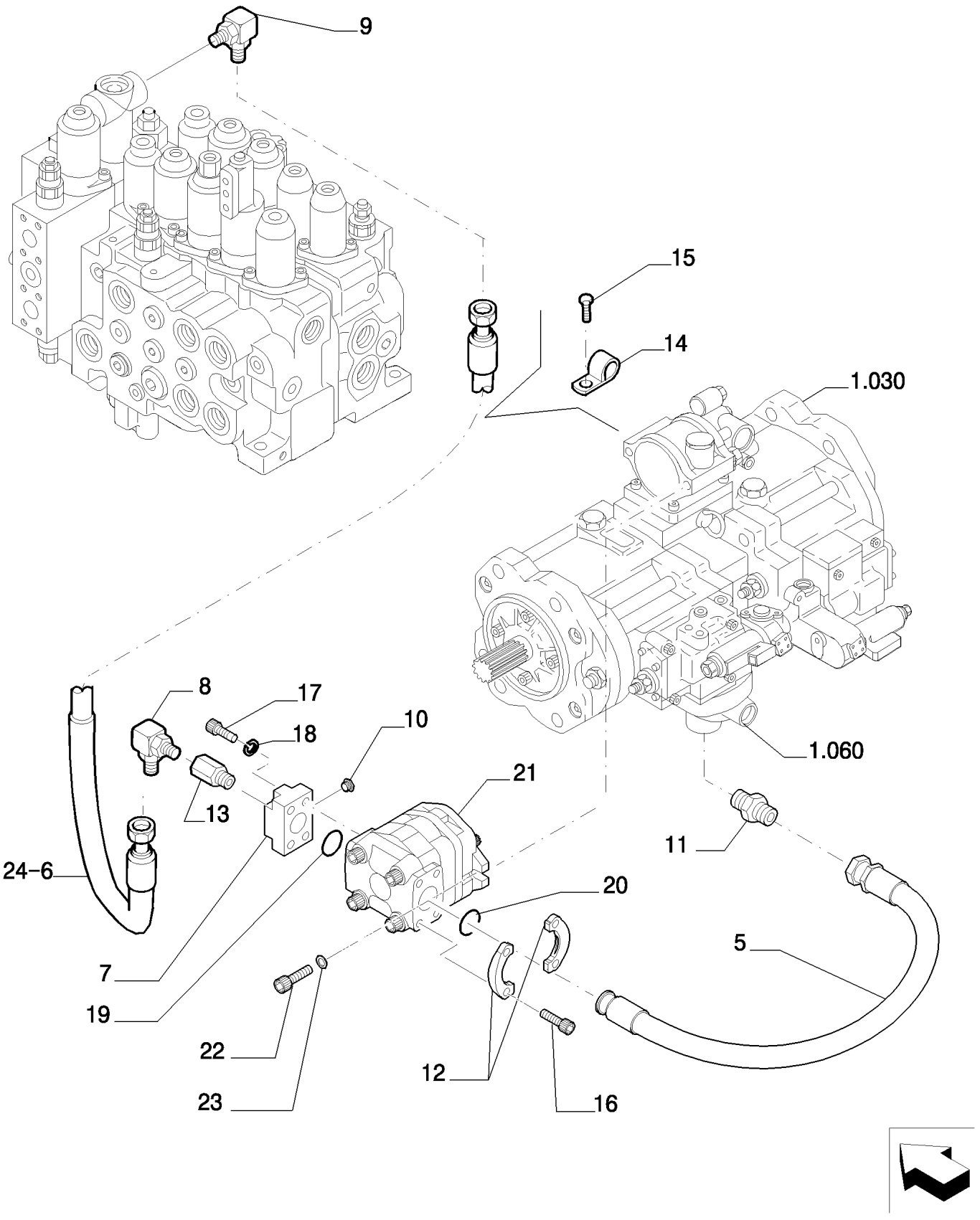

ROTATION BUCKET PROVISION - OPTIONAL CODE 461246028 (01-02) - 461246038 (03-04)

REF	FN	PART NUMBER	YR/SN	QTY	DESCRIPTION
1		72214728		1	CONEXÃO
2	1	72210694		1	BOMBA HIDRÁULICA
3		72214663		1	BUJÃO
4		72210076		1	ANEL "O"
5		14496631		8	ARRUELA PLANA, M10 x 21 x 2
6		87530584		1	CONEXÃO
7		{87661015}		1	
8		87528092		1	TUBO FLEXÍVEL
9		72214763		1	CONEXÃO
10		72214669		1	CONEXÃO
11		72204754		1	FLANGE
12		71404909		2	FLANGE
13		11106434		2	PARAFUSO, Hex, M10 x 30, 10.9, Full Thd
14		11106634		4	PARAFUSO, Hex, M10 x 35, 10.9, Full Thd
15		71405770		2	PRENDEDOR
16		14420234		2	PARAFUSO
17		14420534		4	PARAFUSO
18		10571879		4	ARRUELA-TRAVA, M10
19		72215443		1	JUNTA

(1) ASSY SEE PAGE 11

5.0077	05	p1	04/08

ROTATION BUCKET PROVISION - OPTIONAL CODE 461246028 (01-02) - 461246038 (03-04)

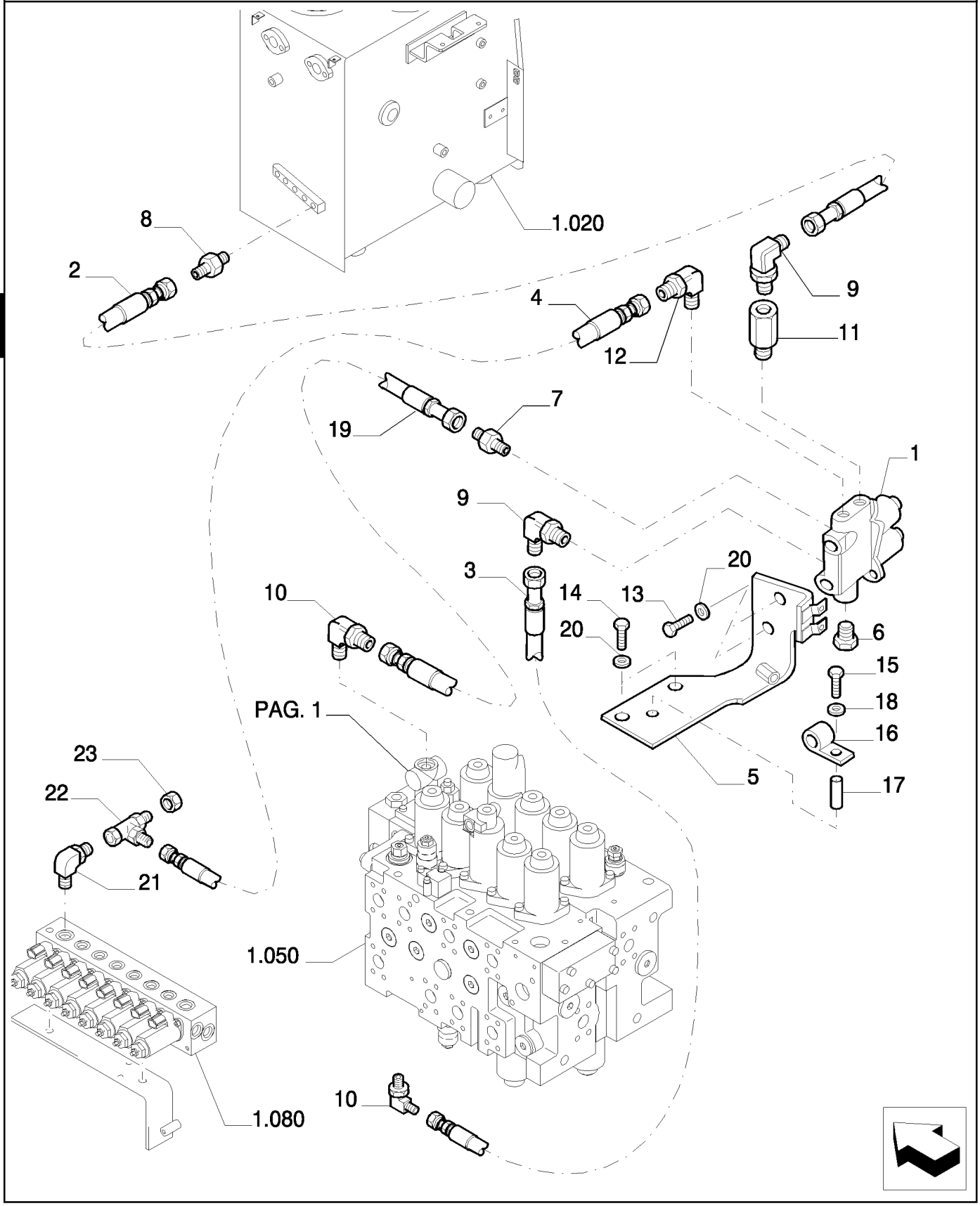

ROTATION BUCKET PROVISION - OPTIONAL CODE 461246028 (01-02) - 461246038 (03-04)

REF	FN	PART NUMBER	YR/SN	QTY	DESCRIPTION
1		87531523		1	VÁLVULA HIDRAULICA
2		72214740		1	TUBO FLEXÍVEL
3		72214539		1	TUBO FLEXÍVEL
4		87338415		1	TUBO FLEXÍVEL
5		87557644		1	SUPORTE
6		72214663		1	BUJÃO
7		72214744		1	CONEXÃO
8		72214522		1	CONEXÃO
9		72214524		2	CONEXÃO
10		72214542		2	CONEXÃO
11		72217408		1	CONEXÃO
12		72214735		1	CONEXÃO
13		11106034		2	PARAFUSO, Hex, M10 x 20, 10.9, Full Thd
14		11106234		2	PARAFUSO, Hex, M10 x 25, 10.9, Full Thd
15		10903634		2	PARAFUSO
16		10441290		1	BRAÇADEIRA
17		87557646		1	ESPAÇADOR
18		14496431		1	ARRUELA PLANA
19		72214535		1	TUBO FLEXÍVEL
20		14496631		4	ARRUELA PLANA, M10 x 21 x 2
21		{87338401}		1	
22		72954988		1	TEE
23		72214546		1	BUJÃO

5.0077	06	p1	10/07

ROTATION BUCKET PROVISION - OPTIONAL CODE 461246028 (01-02) - 461246038 (03-04)

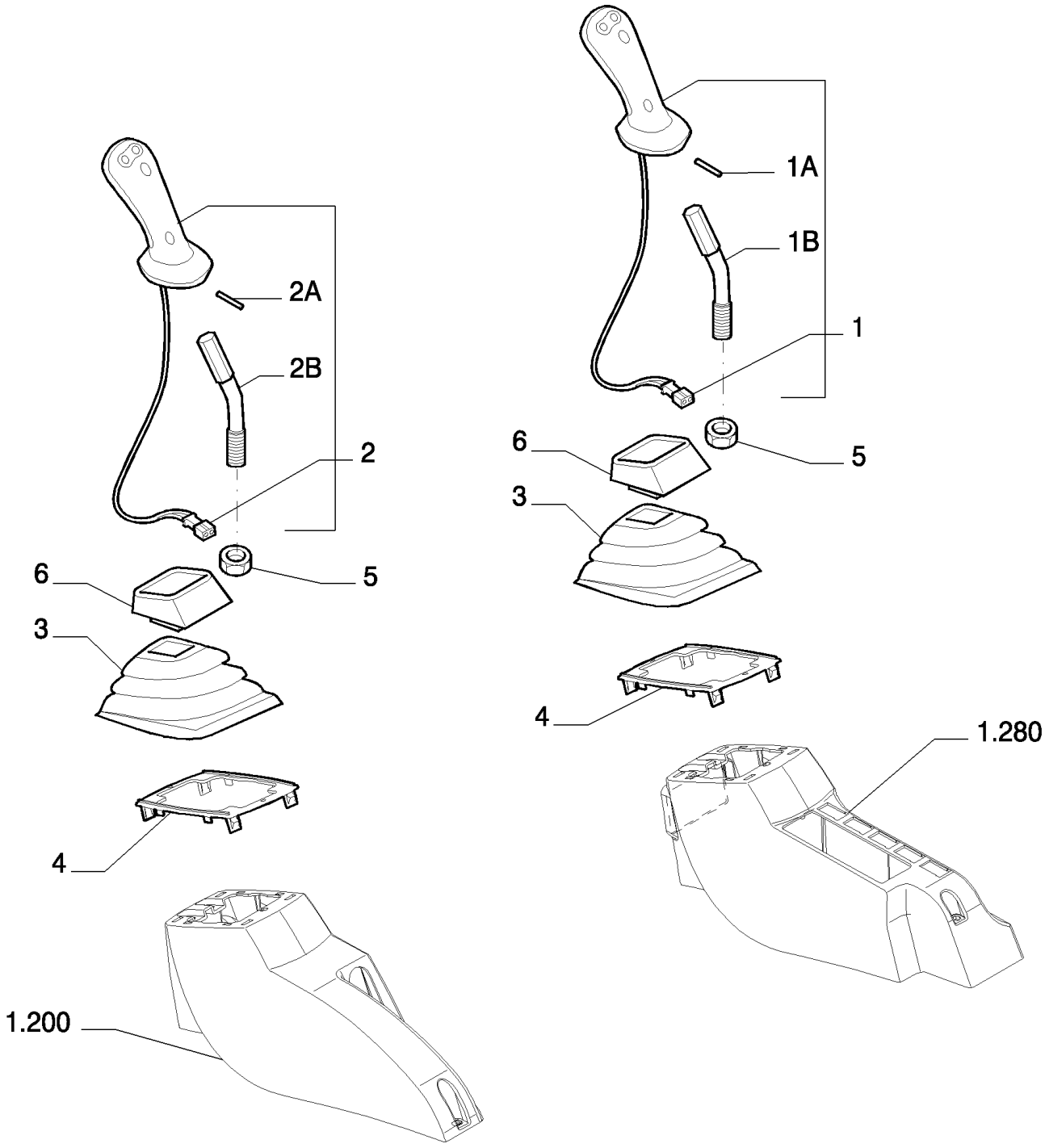

ROTATION BUCKET PROVISION - OPTIONAL CODE 461246028 (01-02) - 461246038 (03-04)

REF	FN	PART NUMBER	YR/SN	QTY	DESCRIPTION
1		72203569		1	EMPUNHADURA, RIGHT - ASSY
1A		14601371		1	PINO-ELÁSTICO
1B		72203871		1	ALAVANCA
2		72203570		1	EMPUNHADURA, LEFT - ASSY
2A		14601371		1	PINO-ELÁSTICO
2B		72203871		1	ALAVANCA
3		72220390		2	CAPA
4		72203567		2	PLACA
5		12163224		2	PORCA
6		72220391		2	CAPA

5.0077	07	p1	10/07

ROTATION BUCKET PROVISION - VERSION (01-02) - OPTIONAL CODE 461246028

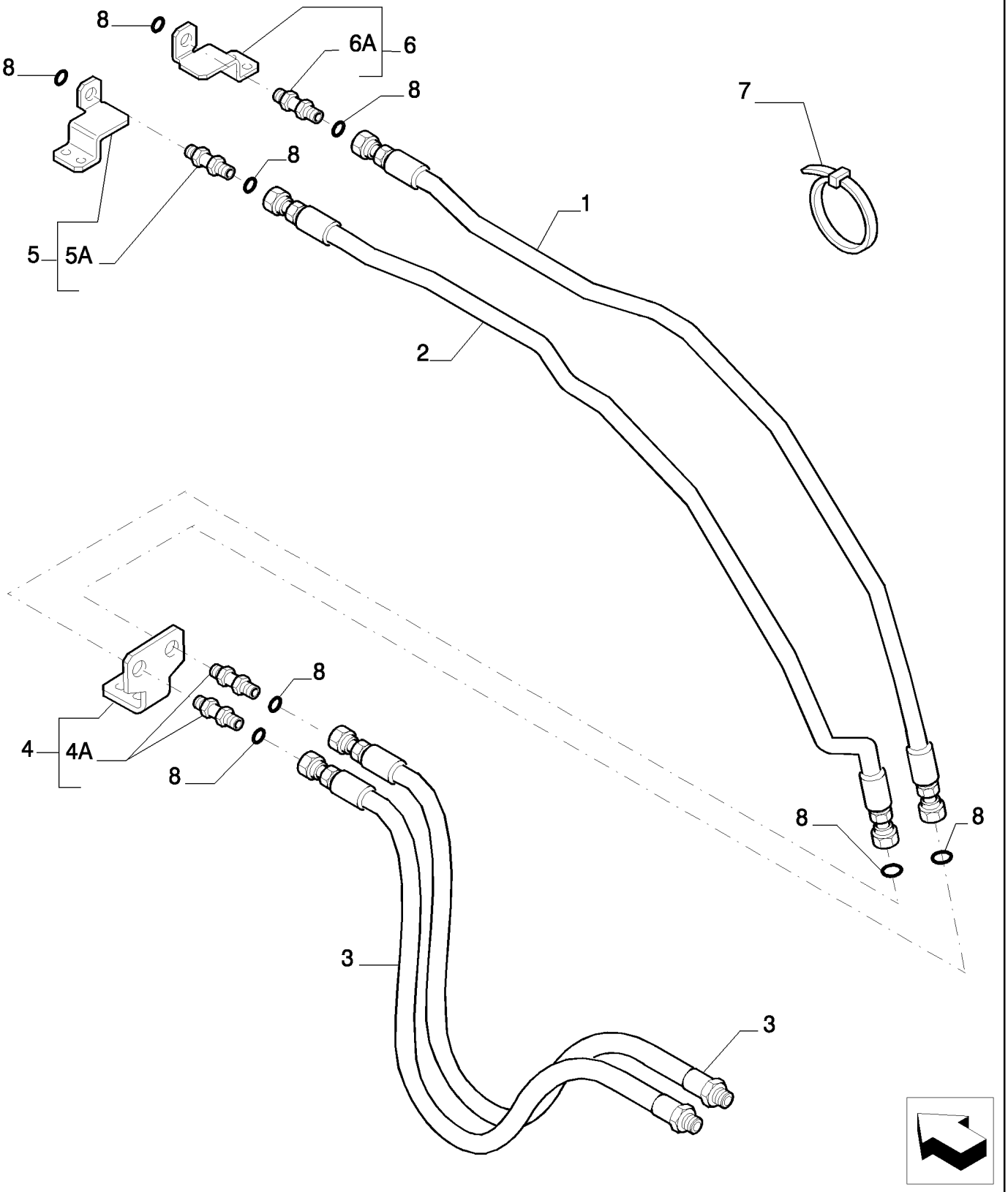

ROTATION BUCKET PROVISION - VERSION (01-02) - OPTIONAL CODE 461246028

REF	FN	PART NUMBER	YR/SN	QTY	DESCRIPTION
1		{87732974}		1	
2		{87732975}		1	
3		{87662097}		2	
4		87396715		1	SUPORTE, - ASSY
4A		72204201		2	CONEXÃO
5		87396711		1	SUPORTE, - ASSY
5A		72204201		1	CONEXÃO
6		87396713		1	SUPORTE, - ASSY
6A		72204201		1	CONEXÃO
7		4982514		57	TIRA DE CABO
8		70923841		8	ANEL "O"

5.0077	08	p1	10/07

ROTATION BUCKET PROVISION - VERSION (03-04) - OPTIONAL CODE 461246038

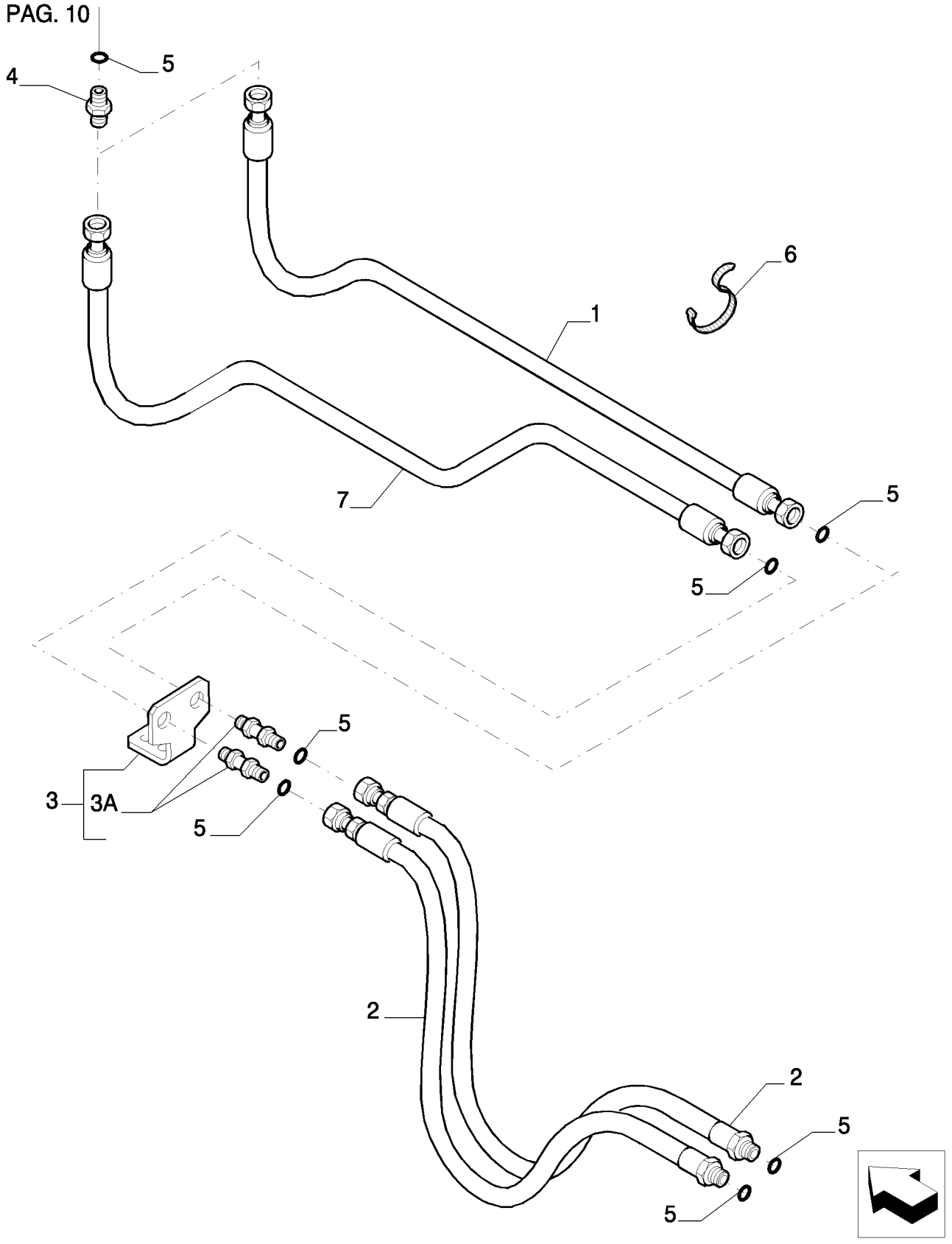

ROTATION BUCKET PROVISION - VERSION (03-04) - OPTIONAL CODE 461246038

REF	FN	PART NUMBER	YR/SN	QTY	DESCRIPTION
1		{87662194}		1	
2		{87662097}		2	
3		{87396684}		1	- ASSY
3A		72204201		2	CONEXÃO
4		87556832		2	CONEXÃO
5		70923841		8	ANEL "O"
6		4982514		25	TIRA DE CABO
7		{87662195}		1	

5.0077	09	p1	10/07

ROTATION BUCKET PROVISION - VERSION (03-04) - OPTIONAL CODE 461246038

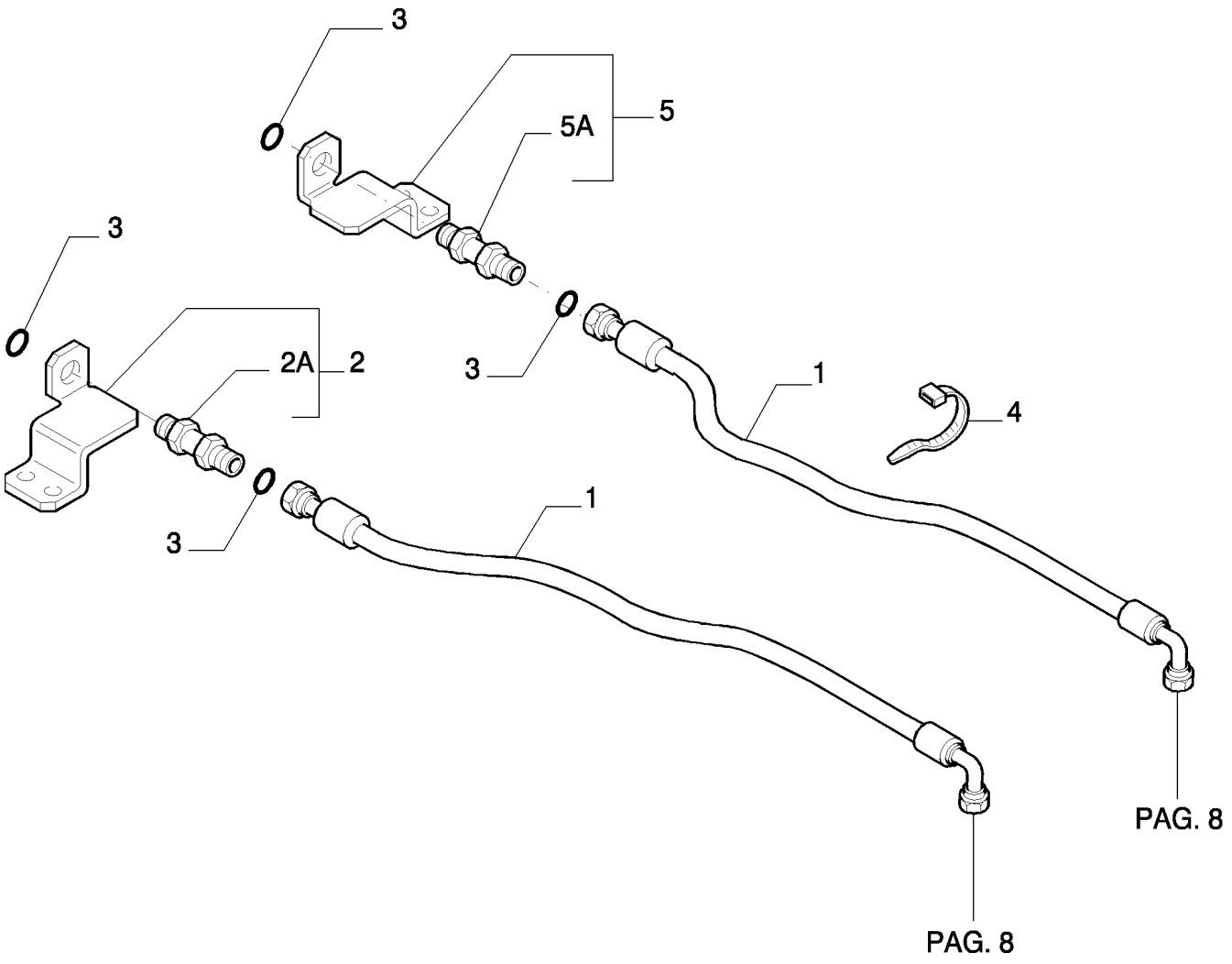

6

ROTATION BUCKET PROVISION - VERSION (03-04) - OPTIONAL CODE 461246038

REF	FN	PART NUMBER	YR/SN	QTY	DESCRIPTION
1		{87670472}		2	
2		87396711		1	SUPORTE, - ASSY
2A		72204201		1	CONEXÃO
3		70923841		4	ANEL "O"
4		4982514		14	TIRA DE CABO
5		87396713		1	SUPORTE
5A		72204201		1	CONEXÃO

5.0077	10	p1	10/07

ROTATION BUCKET PROVISION - OPTIONAL CODE 461246028 (01-02) - 461246038 (03-04)

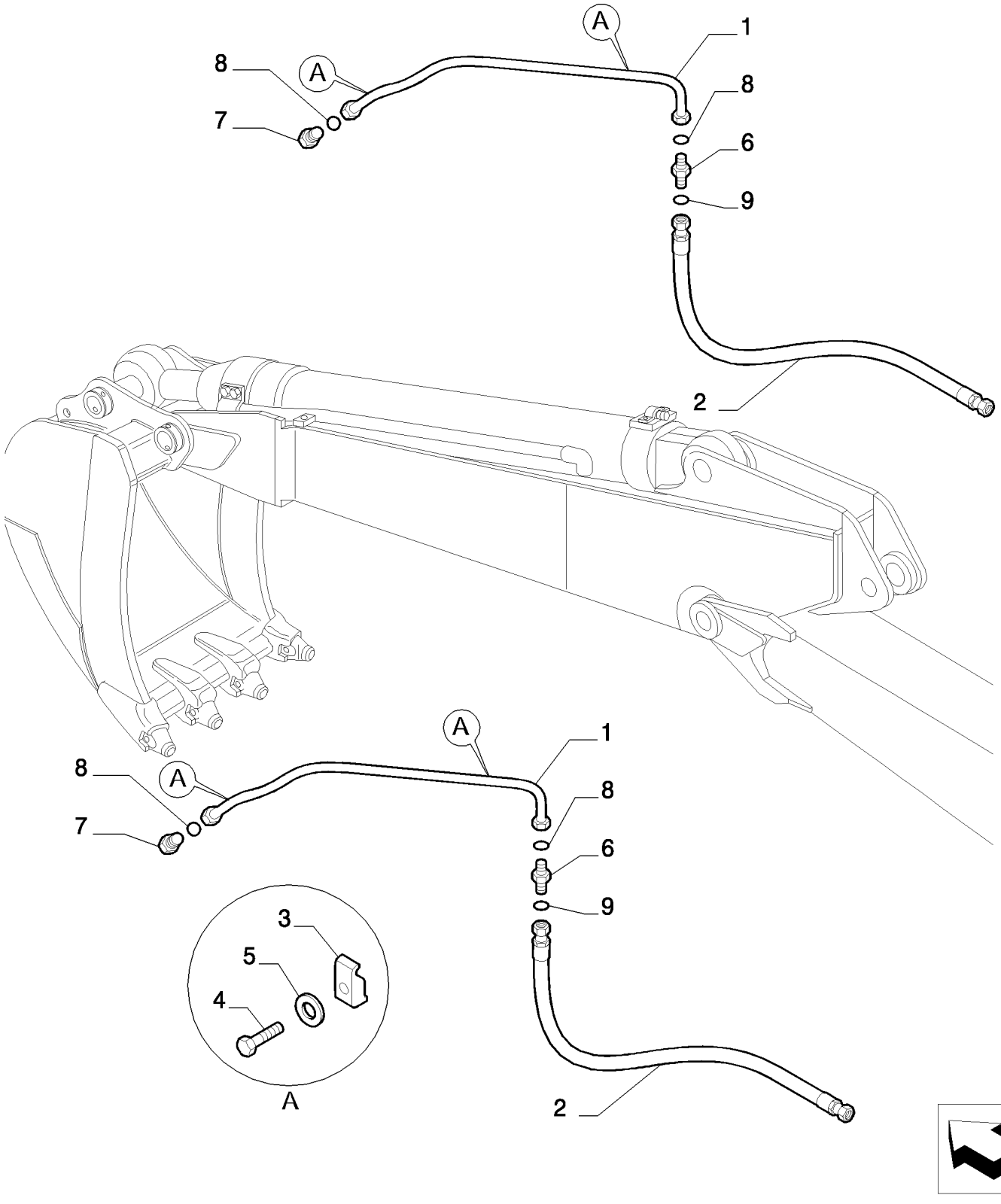

ROTATION BUCKET PROVISION - OPTIONAL CODE 461246028 (01-02) - 461246038 (03-04)

REF	FN	PART NUMBER	YR/SN	QTY	DESCRIPTION
1		{87669732}		2	
2		72212176		2	TUBO FLEXÍVEL
3		71466172		6	SUPORTE
4		11113234		6	PARAFUSO, Hex, M12 x 50, 10.9
5		10517074		6	ARRUELA-TRAVA
6		72204293		2	CONEXÃO
7		72204294		2	CONEXÃO
8		71484462		4	ANEL "O"
9		70923841		2	ANEL "O"

ROTATION BUCKET PROVISION - COMPONENTS - OPTIONAL CODE 461246028 (01-02) - 461246038 (03-04)

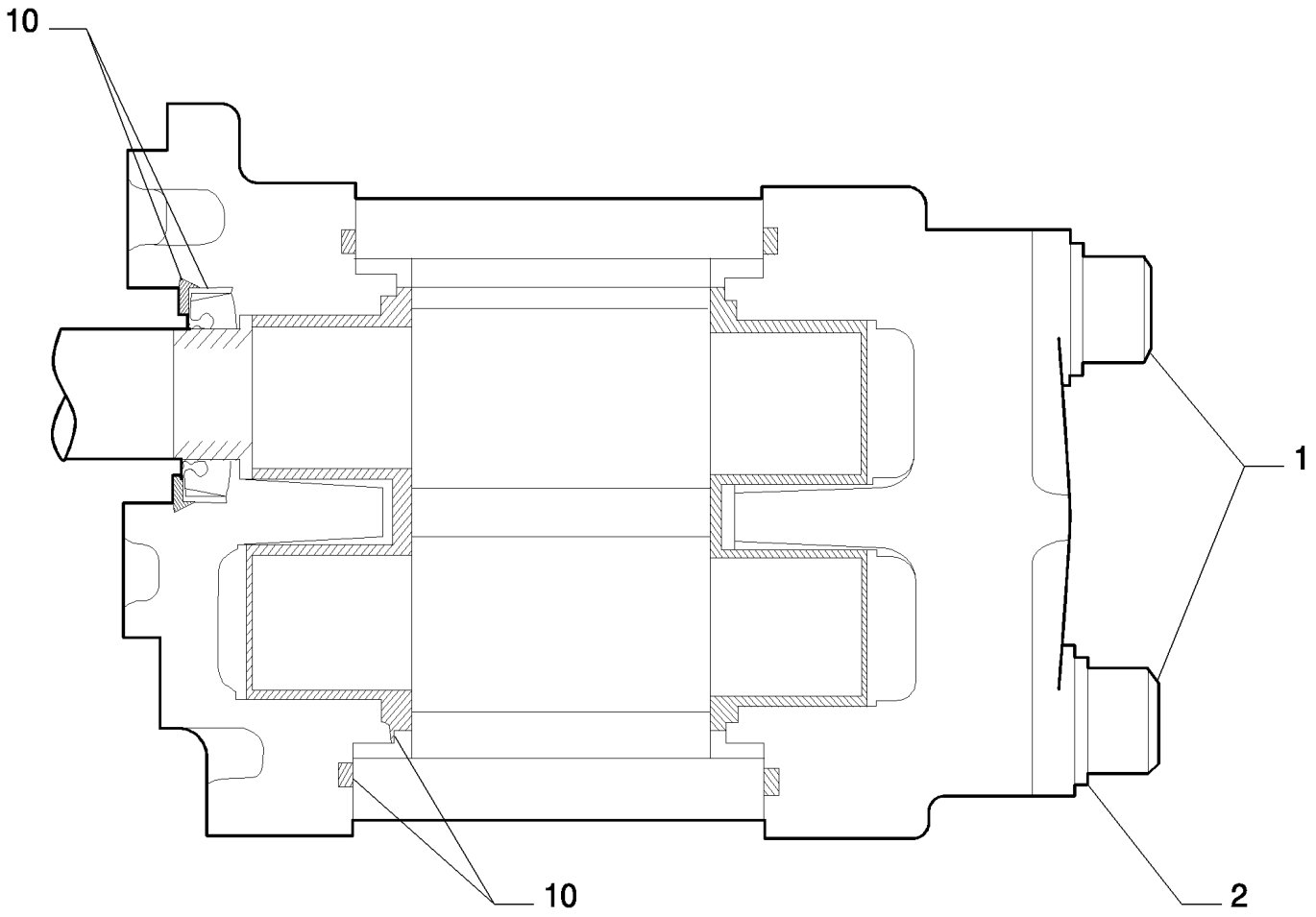

KIT KIT KIT 10

ROTATION BUCKET PROVISION - COMPONENTS - OPTIONAL CODE 461246028 (01-02) - 461246038 (03-04)

REF	FN	PART NUMBER	YR/SN	QTY	DESCRIPTION
1		72217399		1	PARAFUSO
2		72210445		1	ARRUELA PLANA
10		72217400		1	KIT

ROTATION BUCKET PROVISION - OPTIONAL CODE 461249008 (01-02) - 461249018 (03-04)

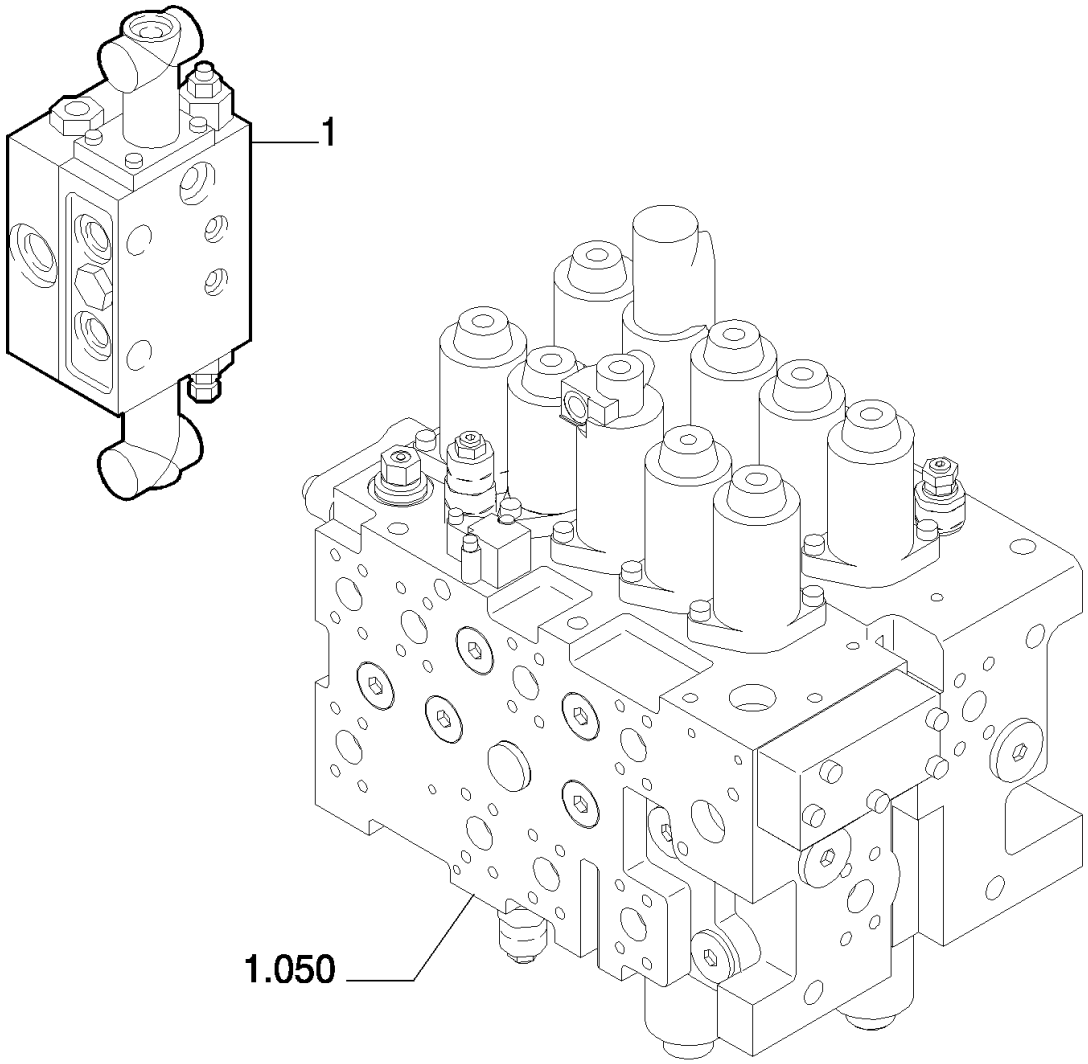

ROTATION BUCKET PROVISION - OPTIONAL CODE 461249008 (01-02) - 461249018 (03-04)

REF	FN	PART NUMBER	YR/SN	QTY	DESCRIPTION
1		87530588		1	VÁLVULA HIDRAULICA

5.0078	02	p1	10/07

ROTATION BUCKET PROVISION - VERSION (01-02) - OPTIONAL CODE 461249008

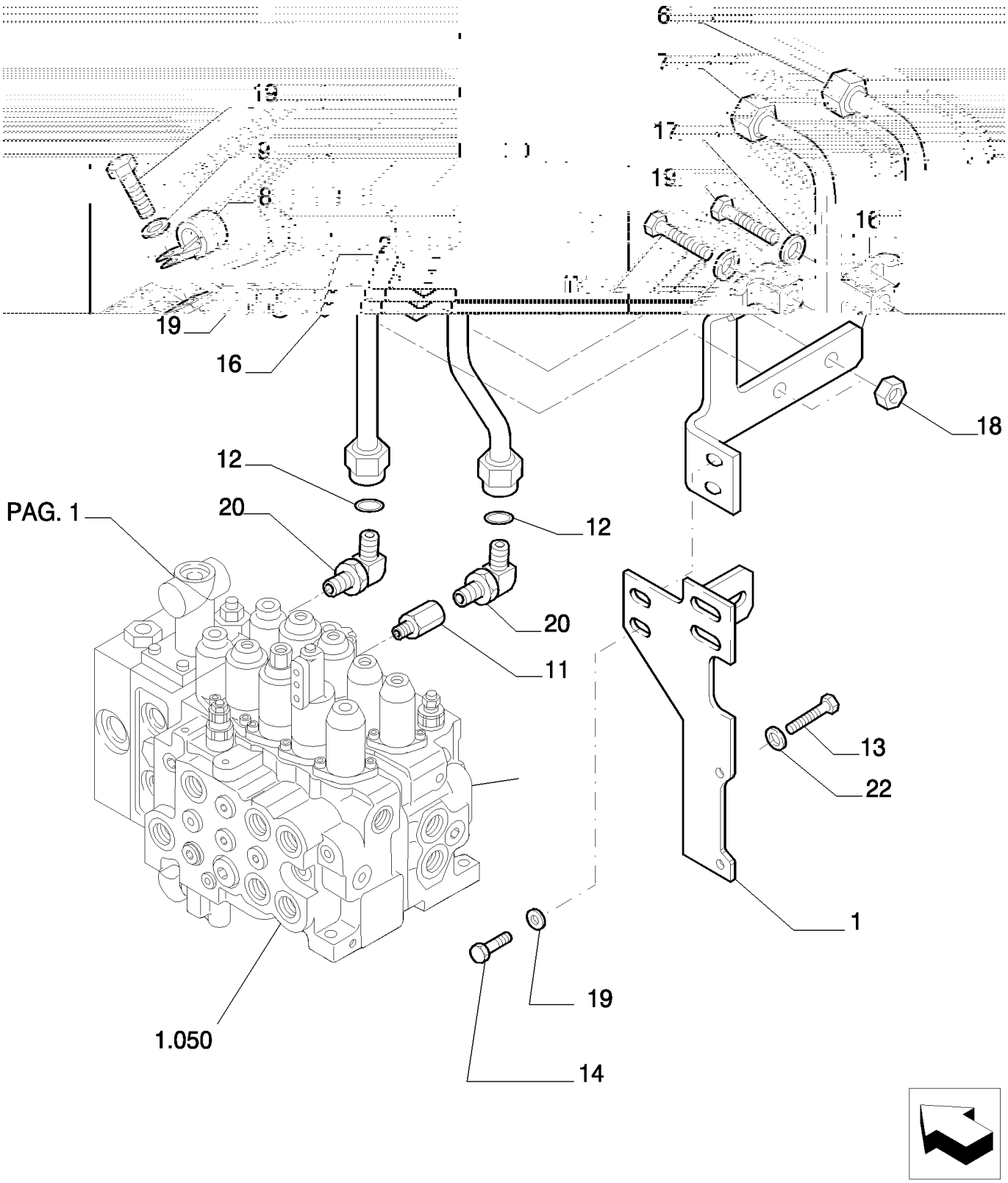

6

ROTATION BUCKET PROVISION - VERSION (01-02) - OPTIONAL CODE 461249008

REF	FN	PART NUMBER	YR/SN	QTY	DESCRIPTION
1		{87653466}		1	
2		{87653467}		1	
6		{87653499}		1	
7		{87653500}		1	
8		71403661		1	FIXADOR
9		11106234		1	PARAFUSO, Hex, M10 x 25, 10.9, Full Thd
11		72214808		1	CONEXÃO
12		87532105		2	CONEXÃO
13		11112234		2	PARAFUSO, Hex, M12 x 25, 10.9, Full Thd
14		11106434		2	PARAFUSO, Hex, M10 x 30, 10.9, Full Thd
16		72954322		2	PRENDEDOR
17		11107434		2	PARAFUSO
18		11701721		2	PORCA, M10, Cl 10
19		14496631		2	ARRUELA PLANA, M10 x 21 x 2
20		71404166		3	ANEL "O"
22		14496731		2	ARRUELA PLANA

5.0078	03	p1	10/07

ROTATION BUCKET PROVISION - VERSION (03-04) - OPTIONAL CODE 461249018

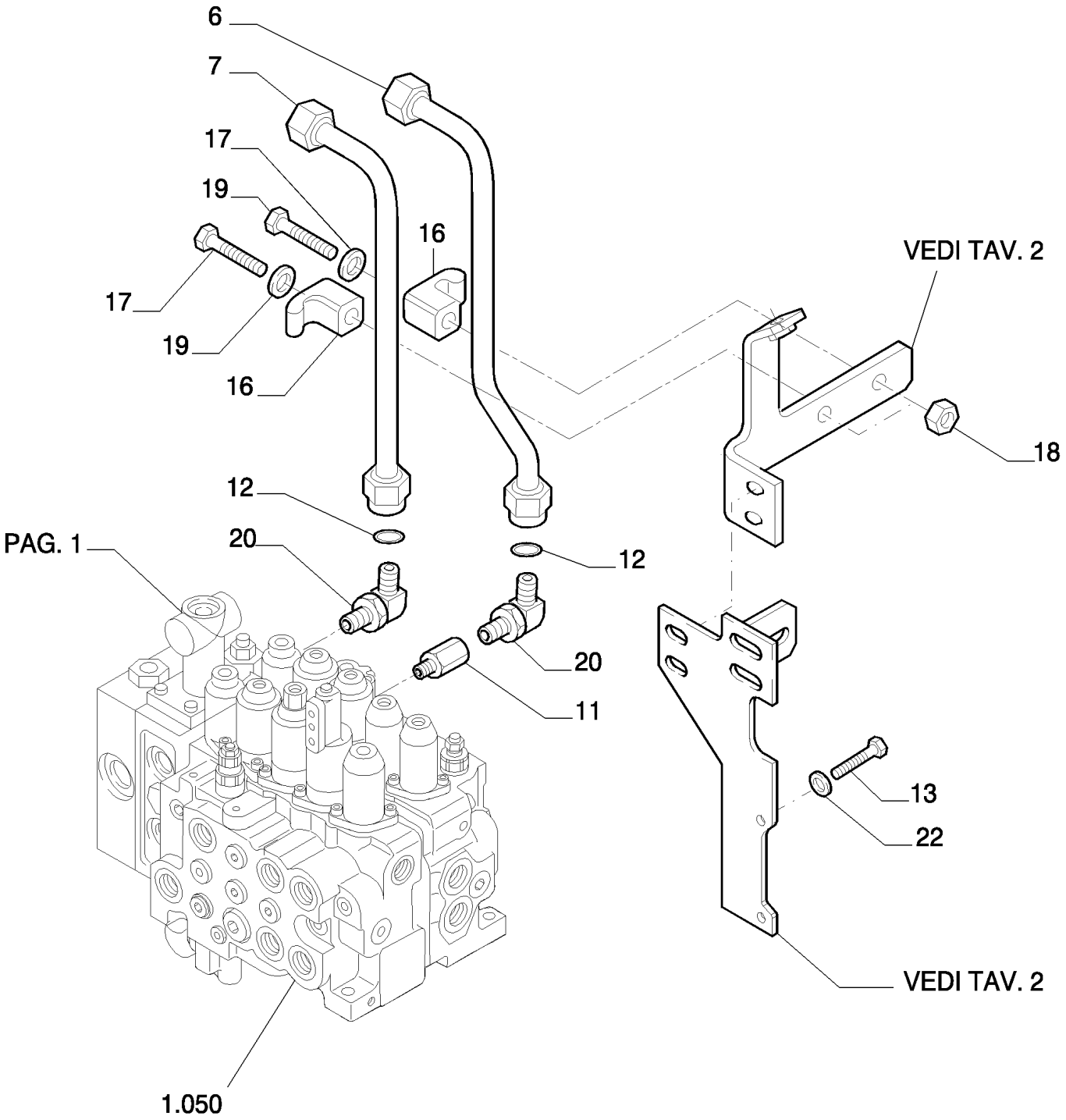

ROTATION BUCKET PROVISION - VERSION (03-04) - OPTIONAL CODE 461249018

REF	FN	PART NUMBER	YR/SN	QTY	DESCRIPTION
6		{87653499}		1	
7		{87653500}		1	
11		72214808		1	CONEXÃO
12		87532105		2	CONEXÃO
13		11112234		2	PARAFUSO, Hex, M12 x 25, 10.9, Full Thd
16		72954322		2	PRENDEDOR
17		11107434		2	PARAFUSO
18		11701721		2	PORCA, M10, Cl 10
19		14496631		4	ARRUELA PLANA, M10 x 21 x 2
20		71404166		2	ANEL "O"
22		14496731		2	ARRUELA PLANA

5.0078	04	p1	10/07

ROTATION BUCKET PROVISION - OPTIONAL CODE 461249008 (01-02) - 461249018 (03-04)

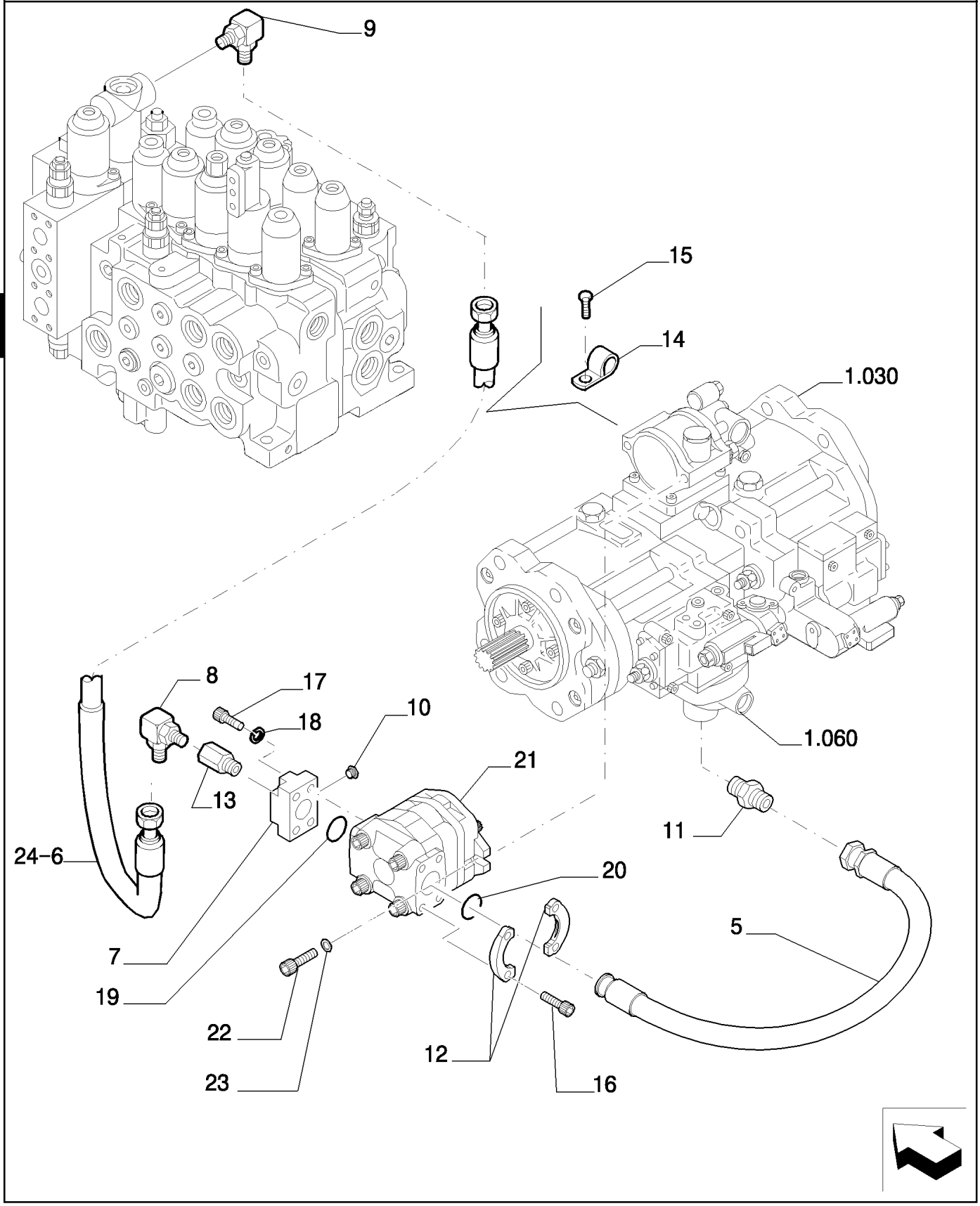

ROTATION BUCKET PROVISION - OPTIONAL CODE 461249008 (01-02) - 461249018 (03-04)

REF	FN	PART NUMBER	YR/SN	QTY	DESCRIPTION
1		72214728		1	CONEXÃO
2	1	72210694		1	BOMBA HIDRÁULICA
3		72214663		1	BUJÃO
4		72210076		1	ANEL "O"
5		14496631		8	ARRUELA PLANA, M10 x 21 x 2
6		87530584		1	CONEXÃO
7		{87661015}		1	
8		87528092		1	TUBO FLEXÍVEL
9		72214763		1	CONEXÃO
10		72214669		1	CONEXÃO
11		72204754		1	FLANGE
12		71404909		2	FLANGE
13		11106434		2	PARAFUSO, Hex, M10 x 30, 10.9, Full Thd
14		11106634		4	PARAFUSO, Hex, M10 x 35, 10.9, Full Thd
15		71405770		2	PRENDEDOR
16		14420234		2	PARAFUSO
17		14420534		4	PARAFUSO
18		10571879		4	ARRUELA-TRAVA, M10
19		72215443		1	JUNTA

(1) ASSY SEE PAGE 11

5.0078	05	p1	04/08

ROTATION BUCKET PROVISION - OPTIONAL CODE 461249008 (01-02) - 461249018 (03-04)

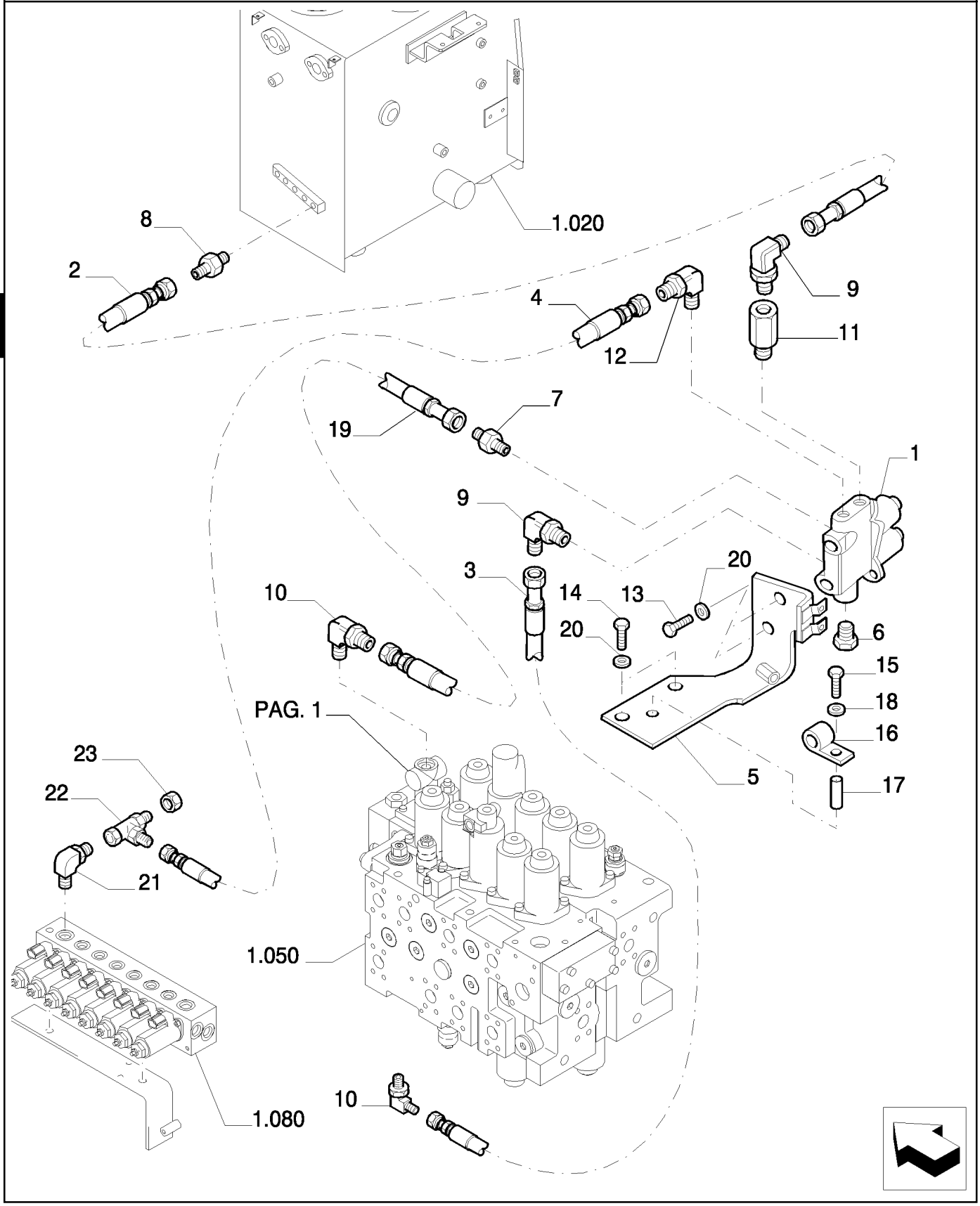

ROTATION BUCKET PROVISION - OPTIONAL CODE 461249008 (01-02) - 461249018 (03-04)

REF	FN	PART NUMBER	YR/SN	QTY	DESCRIPTION
1		87531523		1	VÁLVULA HIDRAULICA
2		72214740		1	TUBO FLEXÍVEL
3		72214539		1	TUBO FLEXÍVEL
4		87338415		1	TUBO FLEXÍVEL
5		87557644		1	SUPORTE
6		72214663		1	BUJÃO
7		72214744		1	CONEXÃO
8		72214522		1	CONEXÃO
9		72214524		2	CONEXÃO
10		72214542		2	CONEXÃO
11		72217408		1	CONEXÃO
12		72214735		1	CONEXÃO
13		11106034		2	PARAFUSO, Hex, M10 x 20, 10.9, Full Thd
14		11106234		2	PARAFUSO, Hex, M10 x 25, 10.9, Full Thd
15		10903634		2	PARAFUSO
16		10441290		1	BRAÇADEIRA
17		87557646		1	ESPAÇADOR
18		14496431		1	ARRUELA PLANA
19		72214535		1	TUBO FLEXÍVEL
20		14496631		4	ARRUELA PLANA, M10 x 21 x 2
21		{87338401}		1	
22		72954988		1	TEE
23		72214546		1	BUJÃO

5.0078	06	p1	10/07

ROTATION BUCKET PROVISION - OPTIONAL CODE 461249008 (01-02) - 461249018 (03-04)

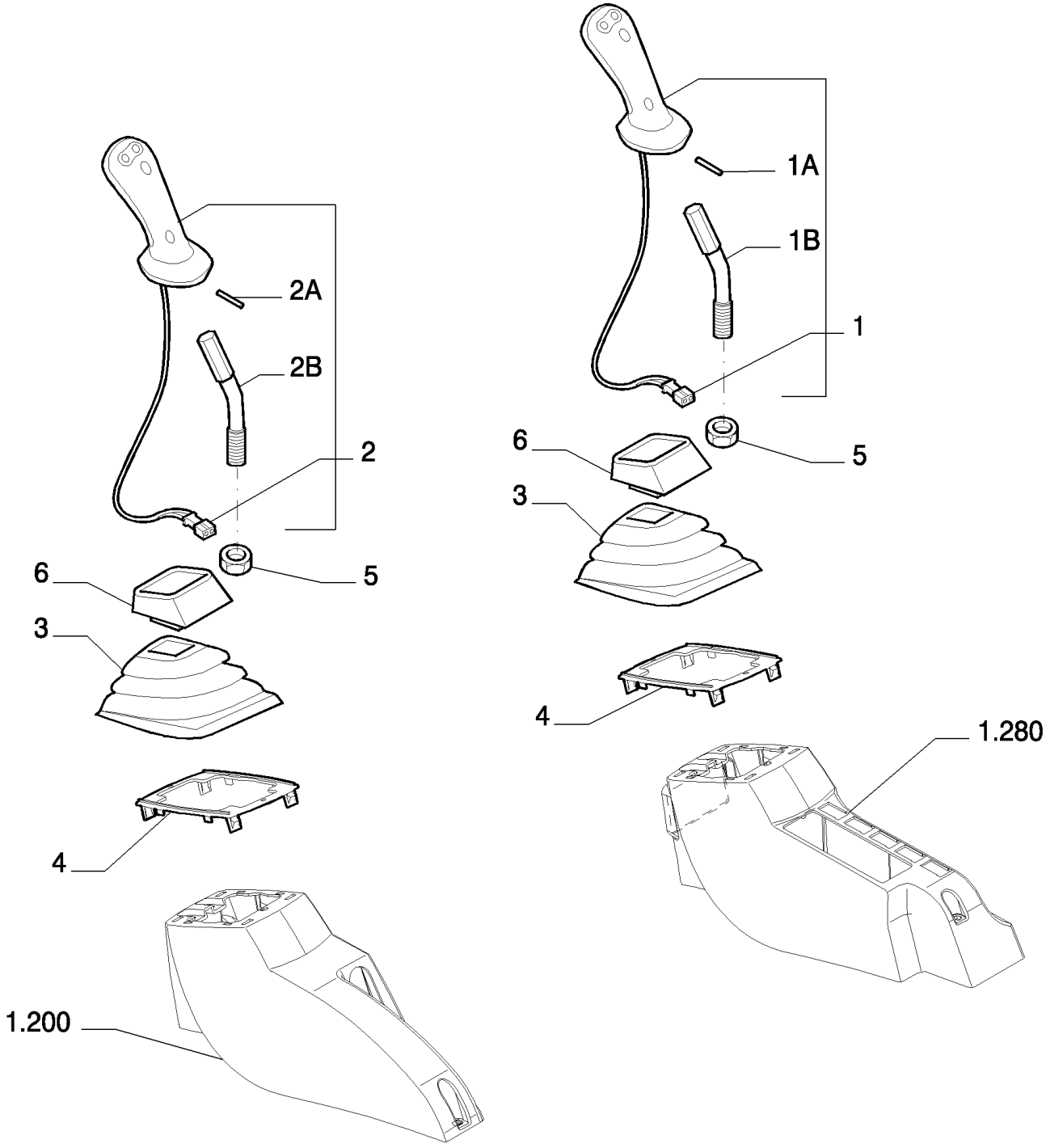

ROTATION BUCKET PROVISION - OPTIONAL CODE 461249008 (01-02) - 461249018 (03-04)

REF	FN	PART NUMBER	YR/SN	QTY	DESCRIPTION
1		72203569		1	EMPUNHADURA, RIGHT - ASSY
1A		14601371		1	PINO-ELÁSTICO
1B		72203871		1	ALAVANCA
2		72203570		1	EMPUNHADURA, LEFT - ASSY
2A		14601371		1	PINO-ELÁSTICO
2B		72203871		1	ALAVANCA
3		72220390		2	CAPA
4		72203567		2	PLACA
5		12163224		2	PORCA
6		72220391		2	CAPA

5.0078	07	p1	10/07

ROTATION BUCKET PROVISION - VERSION (01-02) - OPTIONAL CODE 461249008

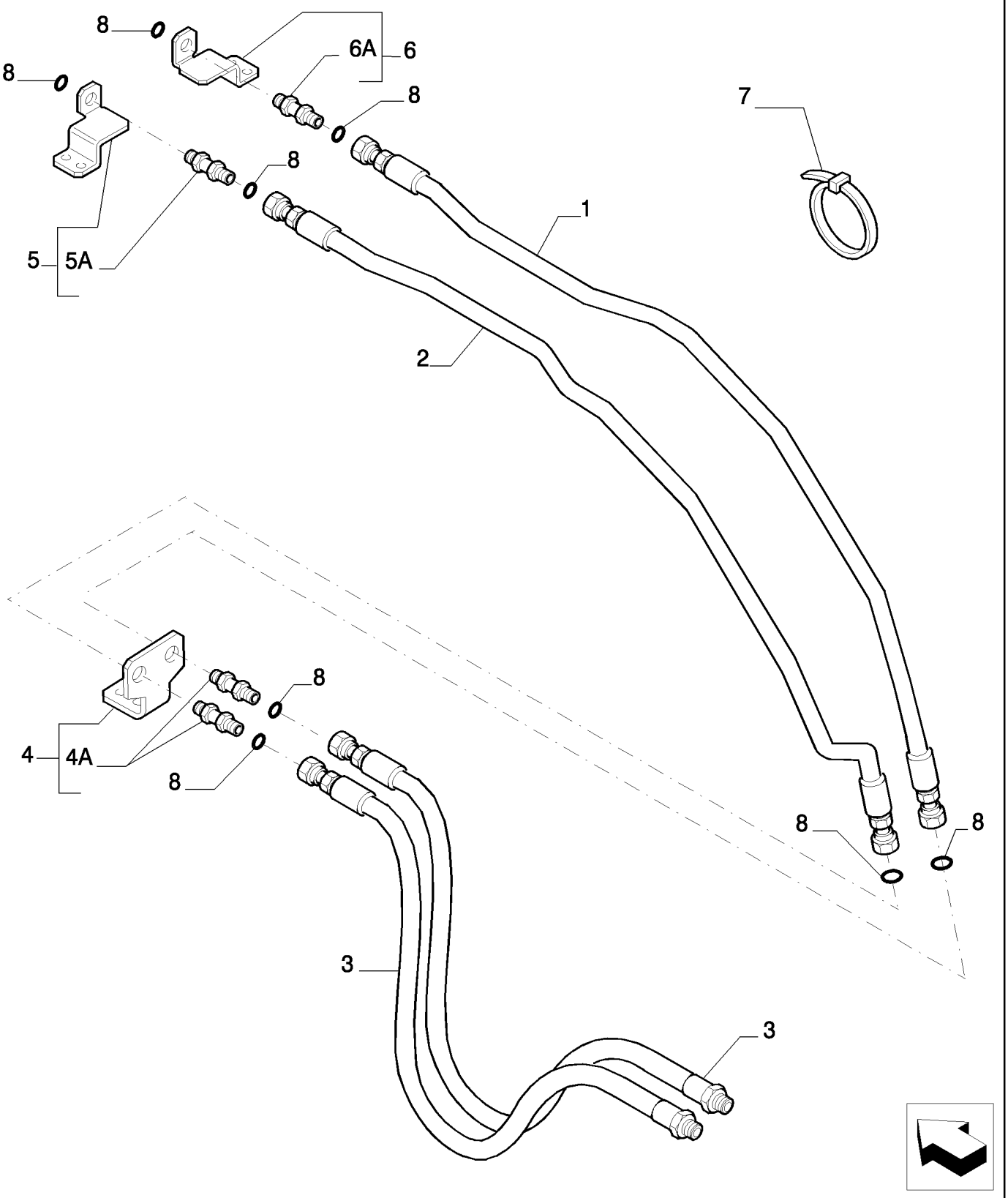

6

ROTATION BUCKET PROVISION - VERSION (01-02) - OPTIONAL CODE 461249008

REF	FN	PART NUMBER	YR/SN	QTY	DESCRIPTION
1		{87732974}		1	
2		{87732975}		1	
3		{87662097}		2	
4		87396715		1	SUPORTE, - ASSY
4A		72204201		2	CONEXÃO
5		87396711		1	SUPORTE, - ASSY
5A		72204201		1	CONEXÃO
6		87396713		1	SUPORTE, - ASSY
6A		72204201		1	CONEXÃO
7		4982514		57	TIRA DE CABO
8		70923841		8	ANEL "O"

5.0078	08	p1	10/07

ROTATION BUCKET PROVISION - VERSION (03-04) - OPTIONAL CODE 461249018

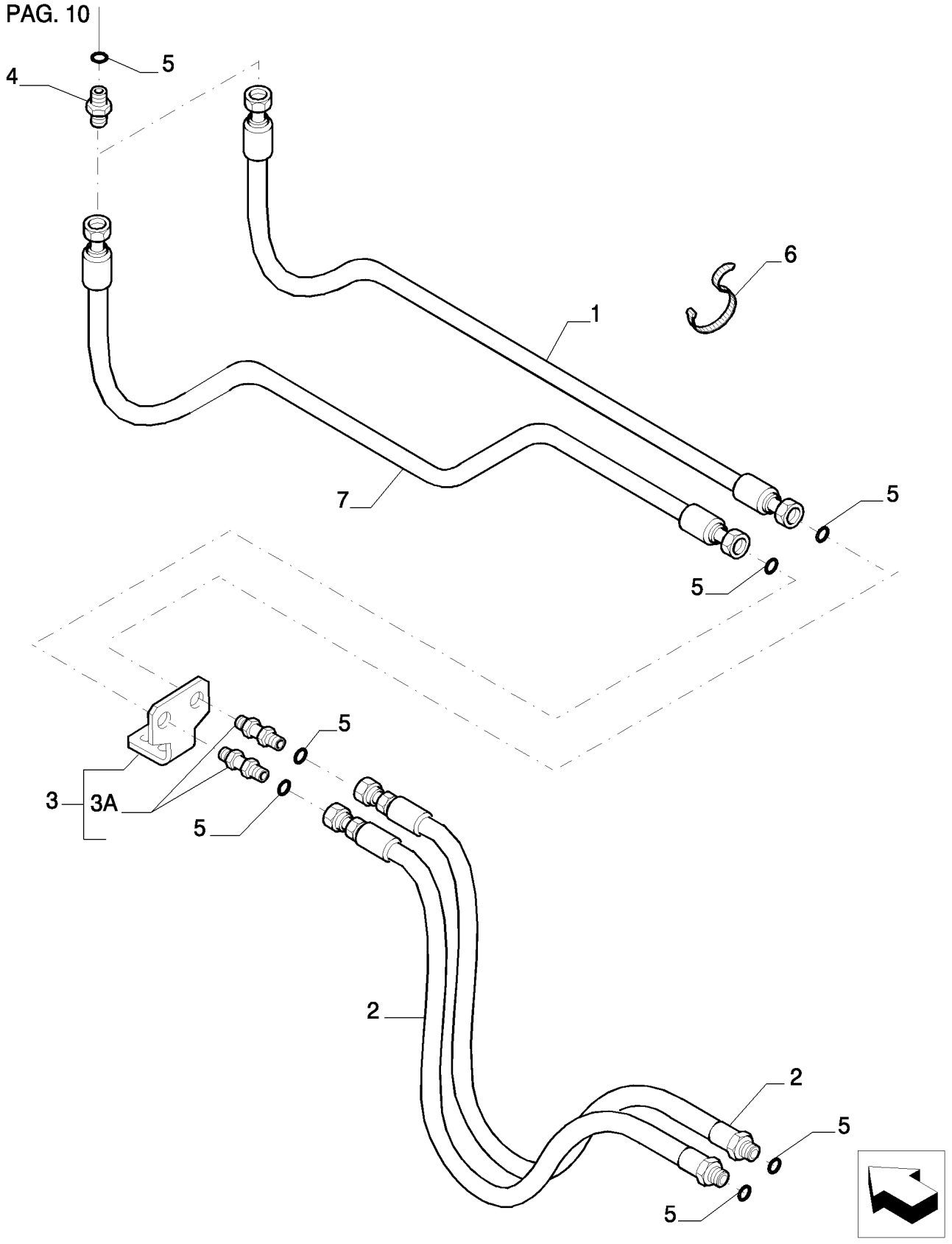

ROTATION BUCKET PROVISION - VERSION (03-04) - OPTIONAL CODE 461249018

REF	FN	PART NUMBER	YR/SN	QTY	DESCRIPTION
1		{87662194}		1	
2		{87662097}		2	
3		{87396684}		1	- ASSY
3A		72204201		2	CONEXÃO
4		87556832		2	CONEXÃO
5		70923841		8	ANEL "O"
6		4982514		25	TIRA DE CABO
7		{87662195}		1	

5.0078	09	p1	10/07

ROTATION BUCKET PROVISION - VERSION (03-04) - OPTIONAL CODE 461249018

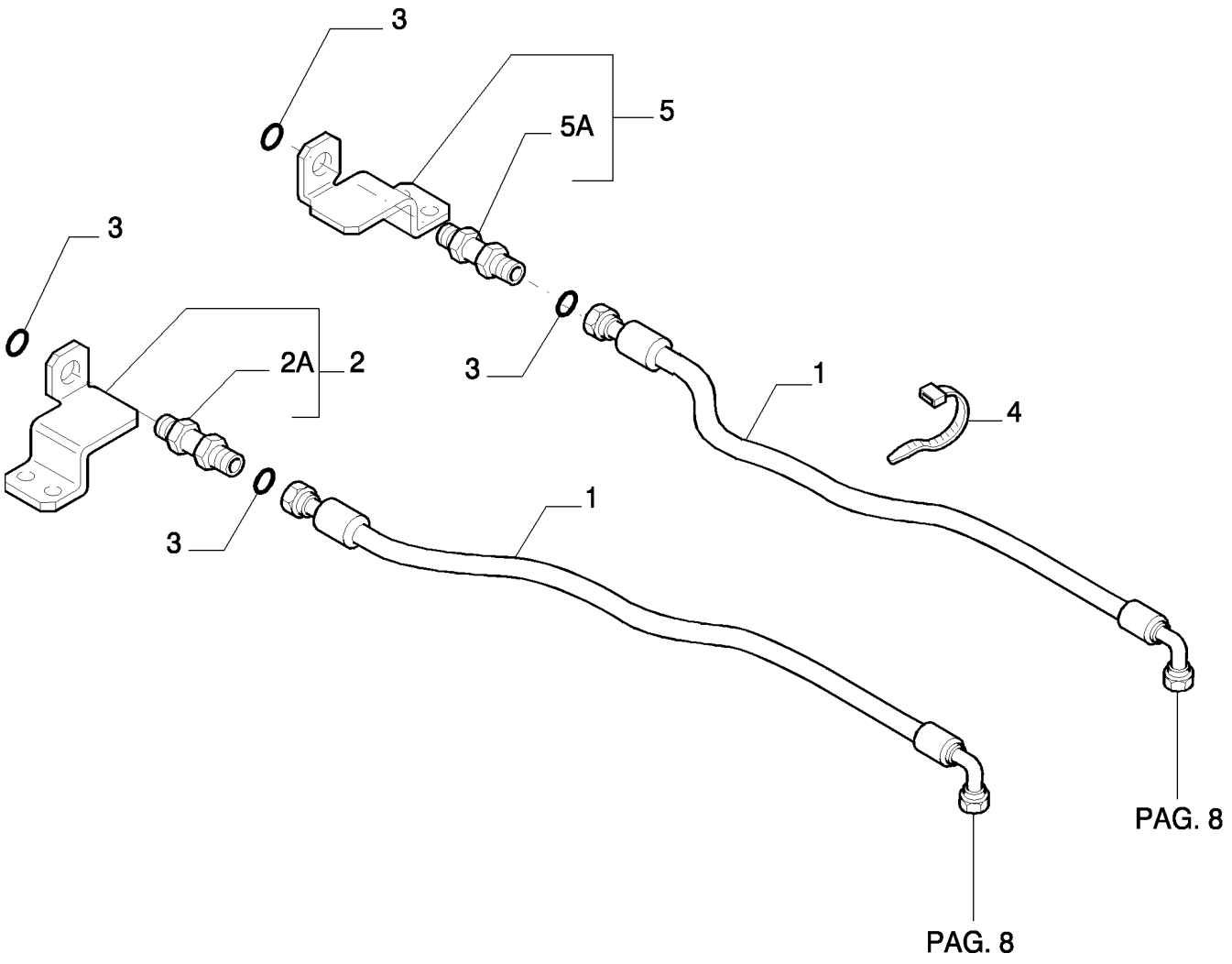

6

ROTATION BUCKET PROVISION - VERSION (03-04) - OPTIONAL CODE 461249018

REF	FN	PART NUMBER	YR/SN	QTY	DESCRIPTION
1		{87670472}		2	
2		87396711		1	SUPORTE, - ASSY
2A		72204201		1	CONEXÃO
3		70923841		4	ANEL "O"
4		4982514		14	TIRA DE CABO
5		87396713		1	SUPORTE
5A		72204201		1	CONEXÃO

5.0078	10	p1	10/07

ROTATION BUCKET PROVISION - OPTIONAL CODE 461249008 (01-02) - 461249018 (03-04)

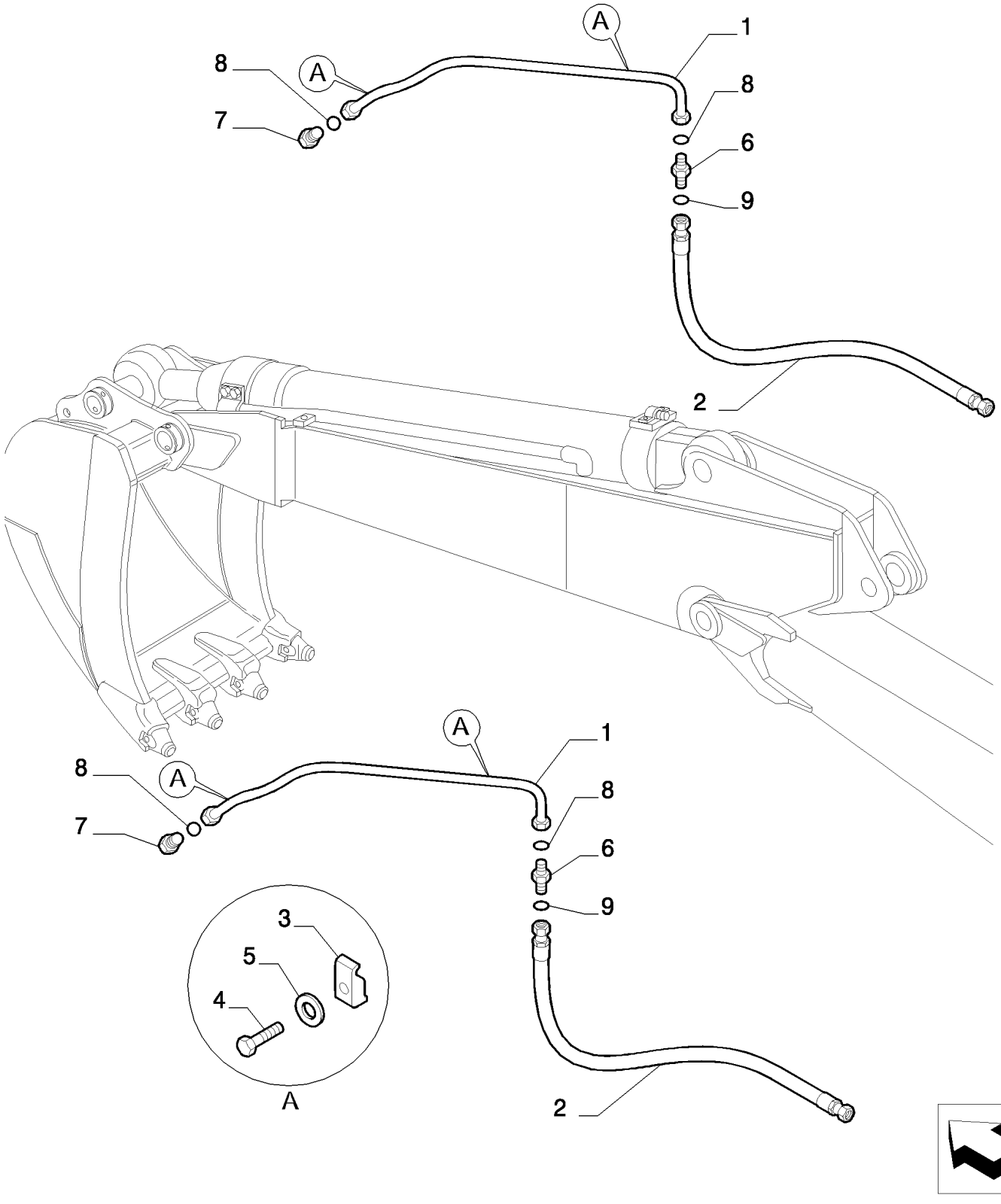

ROTATION BUCKET PROVISION - OPTIONAL CODE 461249008 (01-02) - 461249018 (03-04)

REF	FN	PART NUMBER	YR/SN	QTY	DESCRIPTION
1		{87669744}		2	
2		72213277		2	TUBO FLEXÍVEL
3		71466172		8	SUPORTE
4		11113234		8	PARAFUSO, Hex, M12 x 50, 10.9
5		10517074		8	ARRUELA-TRAVA
6		72204293		2	CONEXÃO
7		72204294		2	CONEXÃO
8		71484462		4	ANEL "O"
9		70923841		2	ANEL "O"

5.0078	11	p1	10/07

ROTATION BUCKET PROVISION - COMPONENTS - OPTIONAL CODE 461249008 (01-02) - 461249018 (03-04)

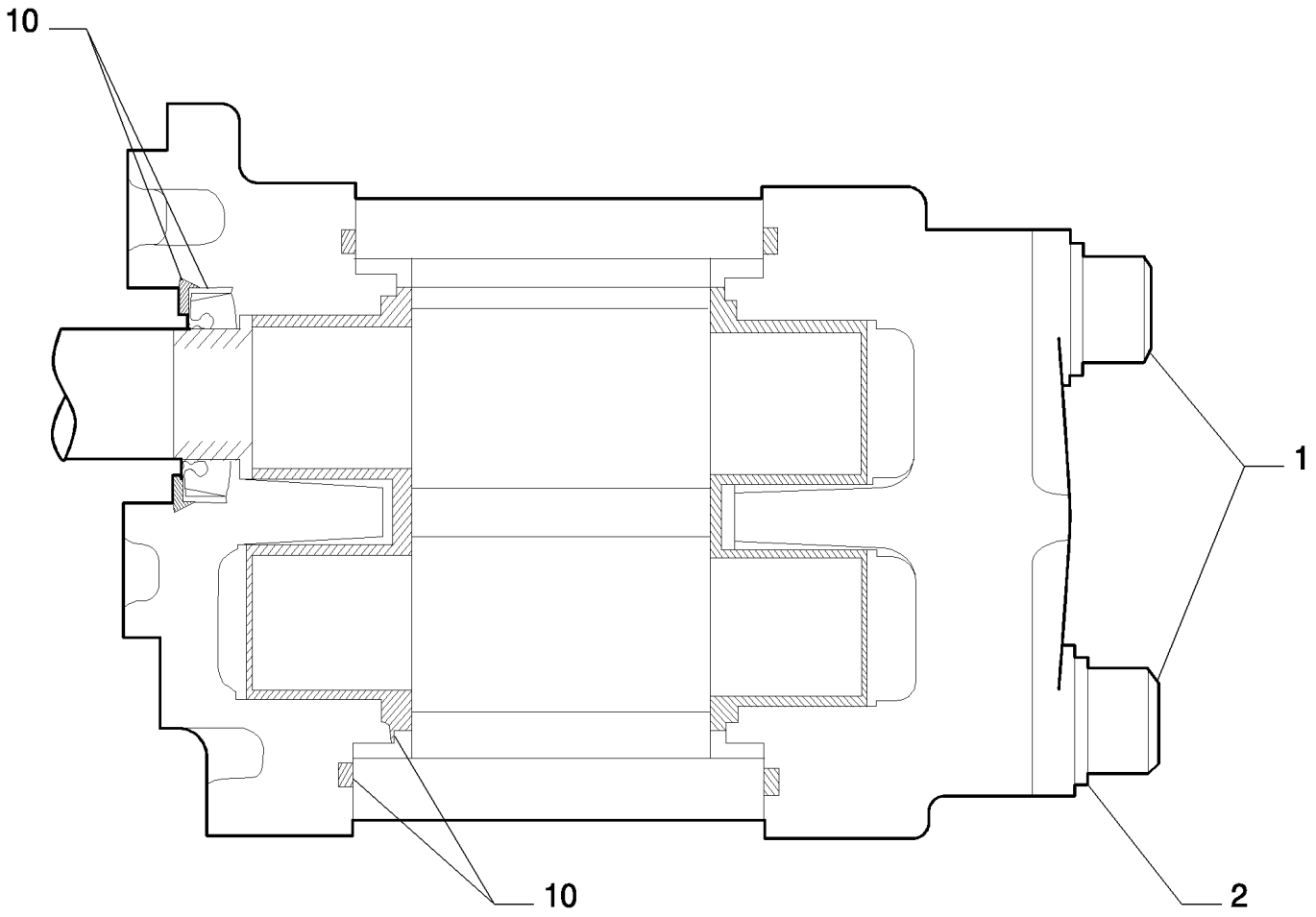

KIT KIT KIT 10

ROTATION BUCKET PROVISION - COMPONENTS - OPTIONAL CODE 461249008 (01-02) - 461249018 (03-04)

REF	FN	PART NUMBER	YR/SN	QTY	DESCRIPTION
1		72217399		1	PARAFUSO
2		72210445		1	ARRUELA PLANA
10		72217400		1	KIT

ROTATION BUCKET PROVISION - OPTIONAL CODE 461319008 (01-02) - 461319018 (03-04)

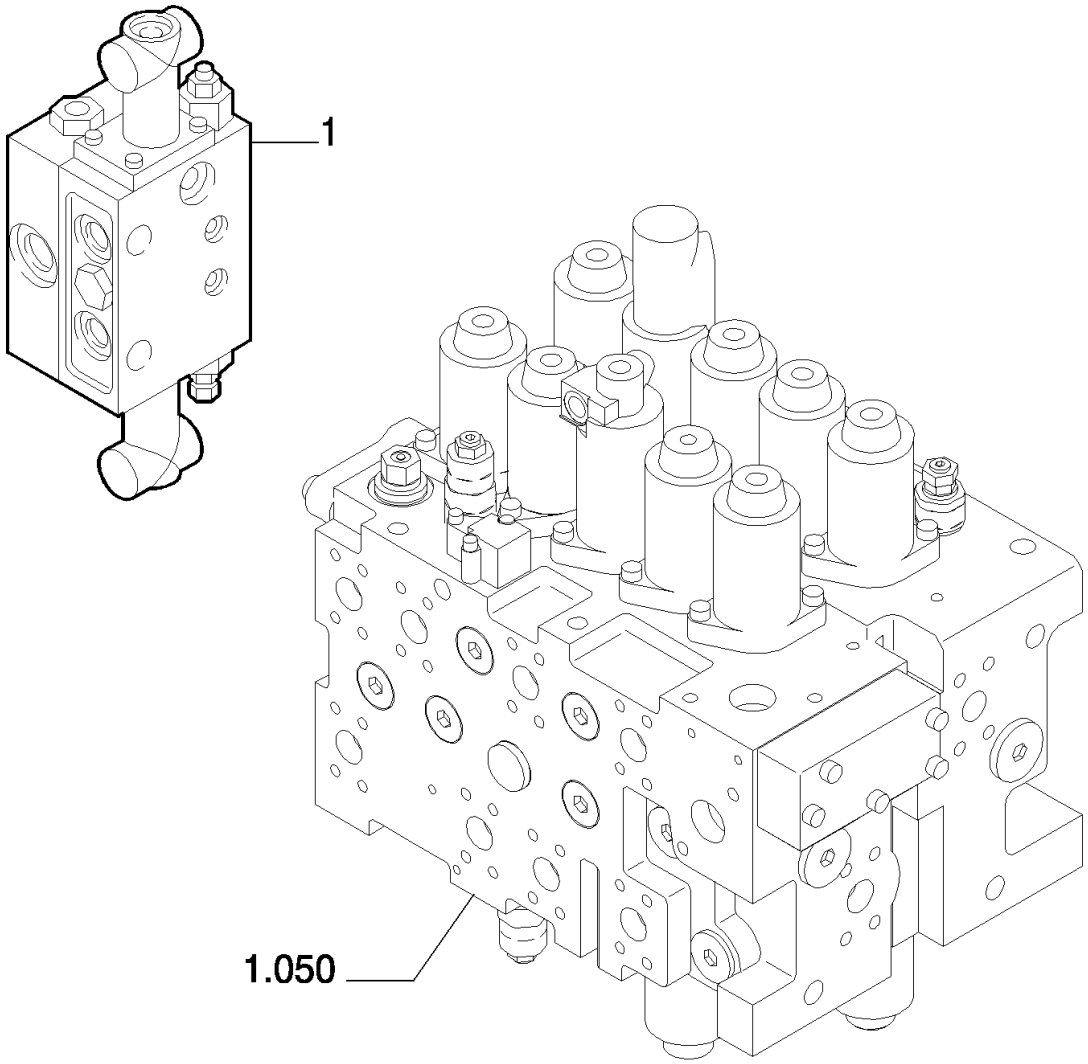

ROTATION BUCKET PROVISION - OPTIONAL CODE 461319008 (01-02) - 461319018 (03-04)

REF	FN	PART NUMBER	YR/SN	QTY	DESCRIPTION
1		87530588		1	VÁLVULA HIDRAULICA

5.0079	02	p1	10/07

ROTATION BUCKET PROVISION - VERSION (01-02) - OPTIONAL CODE 461319008

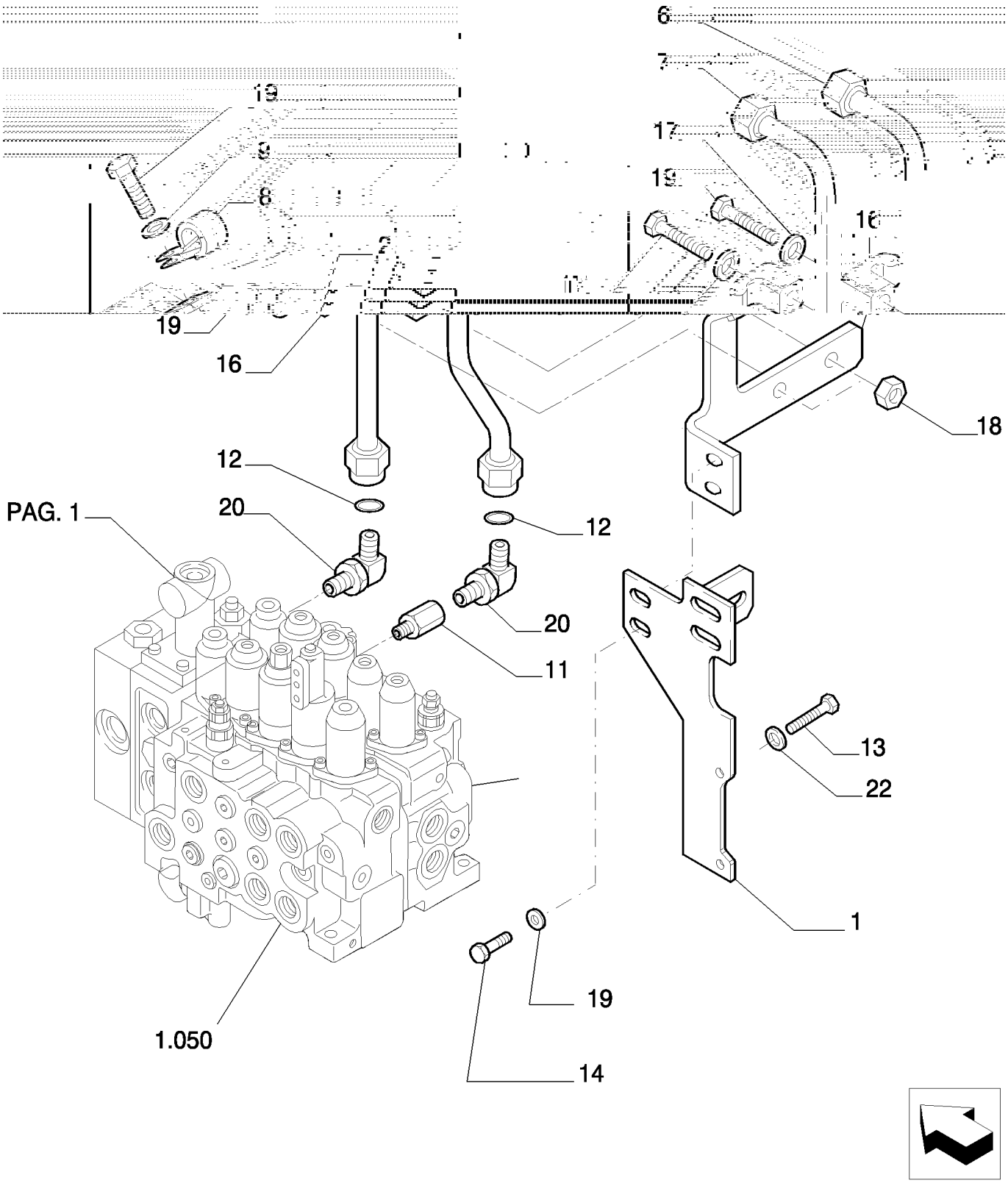

6

ROTATION BUCKET PROVISION - VERSION (01-02) - OPTIONAL CODE 461319008

REF	FN	PART NUMBER	YR/SN	QTY	DESCRIPTION
1		{87653466}		1	
2		{87653467}		1	
6		{87653499}		1	
7		{87653500}		1	
8		71403661		1	FIXADOR
9		11106234		1	PARAFUSO, Hex, M10 x 25, 10.9, Full Thd
11		72214808		1	CONEXÃO
12		87532105		2	CONEXÃO
13		11112234		2	PARAFUSO, Hex, M12 x 25, 10.9, Full Thd
14		11106434		2	PARAFUSO, Hex, M10 x 30, 10.9, Full Thd
16		72954322		2	PRENDEDOR
17		11107434		2	PARAFUSO
18		11701721		2	PORCA, M10, Cl 10
19		14496631		2	ARRUELA PLANA, M10 x 21 x 2
20		71404166		3	ANEL "O"
22		14496731		2	ARRUELA PLANA

5.0079	03	p1	10/07

ROTATION BUCKET PROVISION - VERSION (03-04) - OPTIONAL CODE 461319018

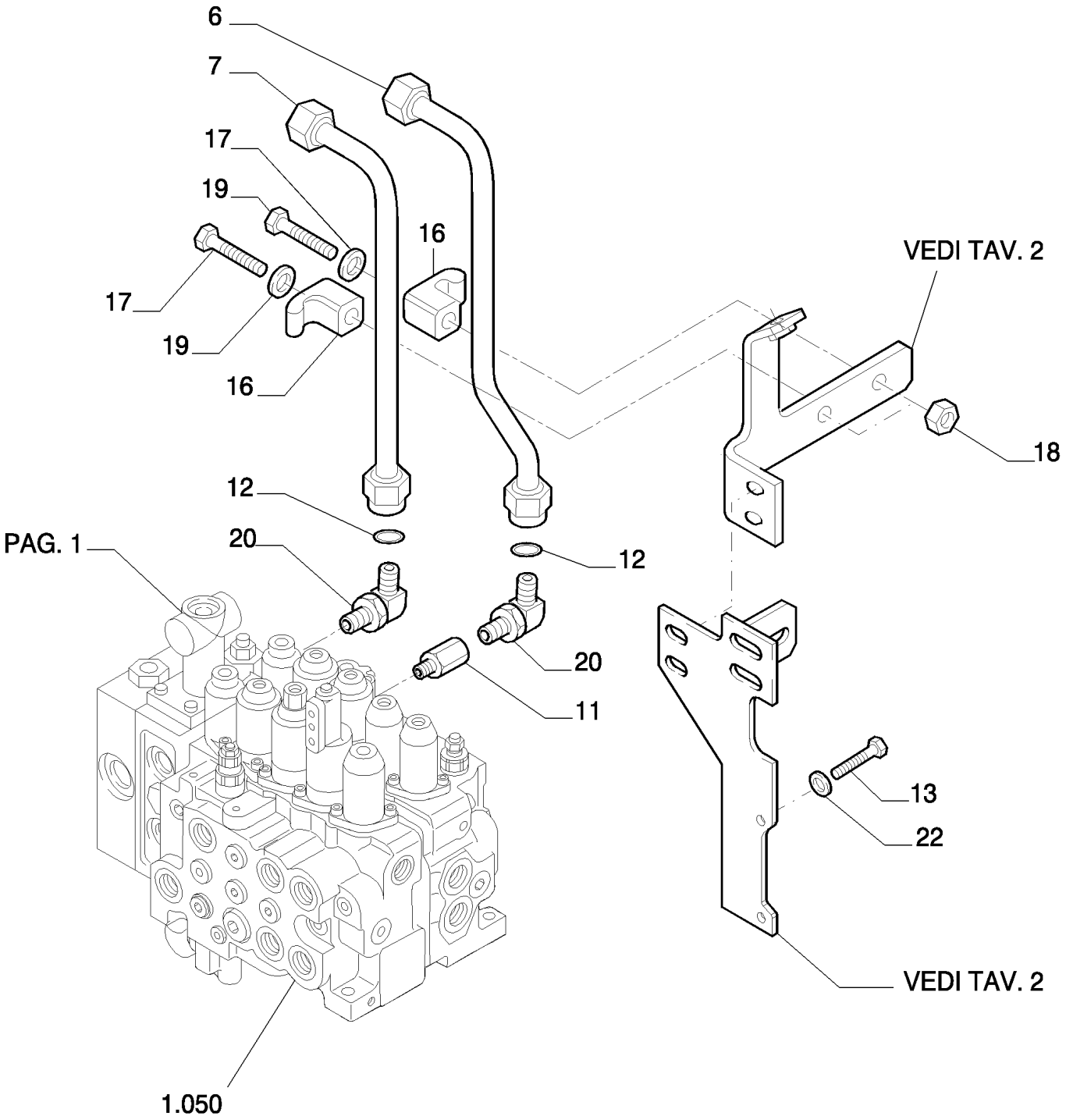

ROTATION BUCKET PROVISION - VERSION (03-04) - OPTIONAL CODE 461319018

REF	FN	PART NUMBER	YR/SN	QTY	DESCRIPTION
6		{87653499}		1	
7		{87653500}		1	
11		72214808		1	CONEXÃO
12		87532105		2	CONEXÃO
13		11112234		2	PARAFUSO, Hex, M12 x 25, 10.9, Full Thd
16		72954322		2	PRENDEDOR
17		11107434		2	PARAFUSO
18		11701721		2	PORCA, M10, Cl 10
19		14496631		4	ARRUELA PLANA, M10 x 21 x 2
20		71404166		2	ANEL "O"
22		14496731		2	ARRUELA PLANA

5.0079	04	p1	10/07

ROTATION BUCKET PROVISION - OPTIONAL CODE 461319008 (01-02) - 461319018 (03-04)

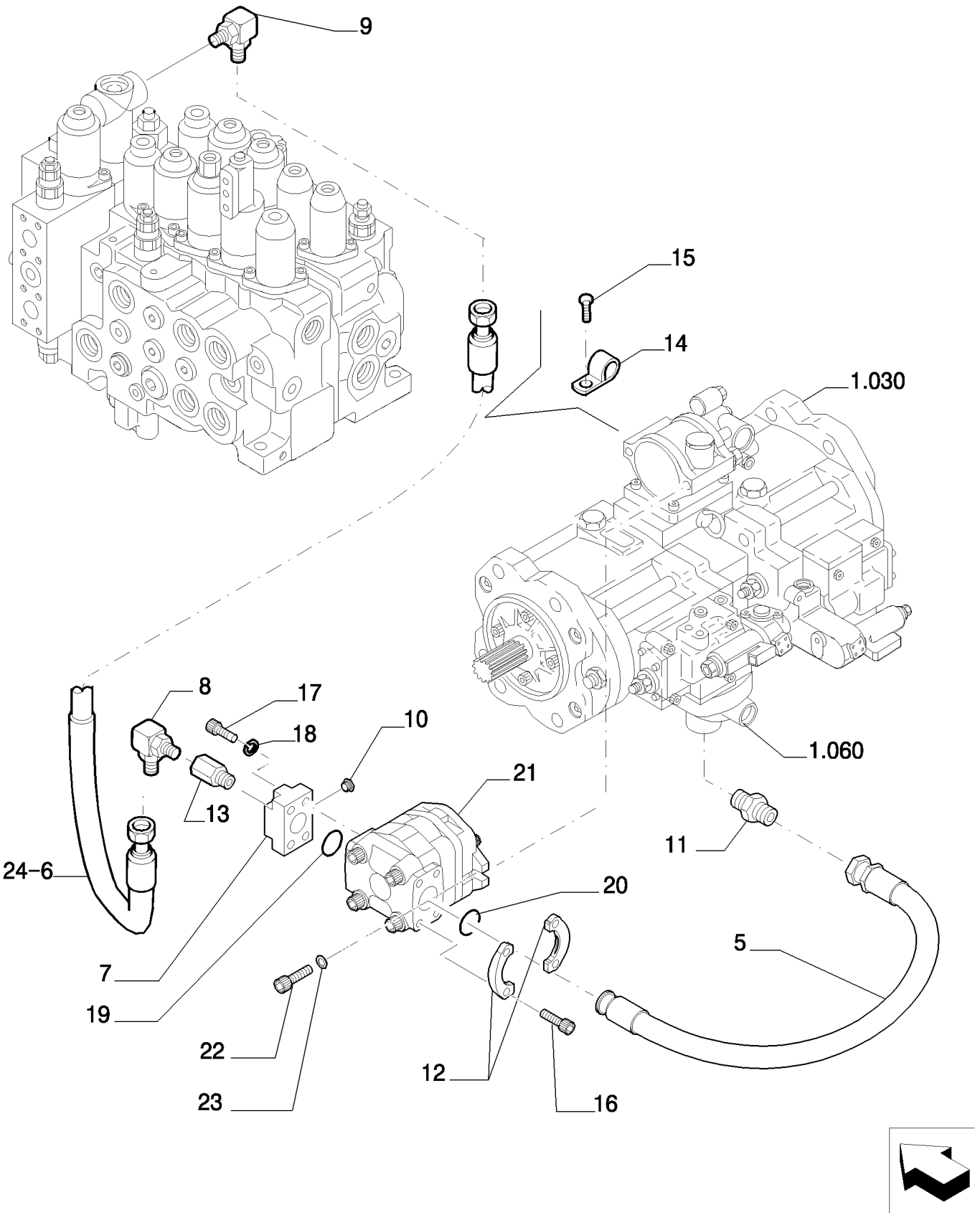

ROTATION BUCKET PROVISION - OPTIONAL CODE 461319008 (01-02) - 461319018 (03-04)

REF	FN	PART NUMBER	YR/SN	QTY	DESCRIPTION
1		72214728		1	CONEXÃO
2	1	72210694		1	BOMBA HIDRÁULICA
3		72214663		1	BUJÃO
4		72210076		1	ANEL "O"
5		14496631		8	ARRUELA PLANA, M10 x 21 x 2
6		87530584		1	CONEXÃO
7		{87661015}		1	
8		87528092		1	TUBO FLEXÍVEL
9		72214763		1	CONEXÃO
10		72214669		1	CONEXÃO
11		72204754		1	FLANGE
12		71404909		2	FLANGE
13		11106434		2	PARAFUSO, Hex, M10 x 30, 10.9, Full Thd
14		11106634		4	PARAFUSO, Hex, M10 x 35, 10.9, Full Thd
15		71405770		2	PRENDEDOR
16		14420234		2	PARAFUSO
17		14420534		4	PARAFUSO
18		10571879		4	ARRUELA-TRAVA, M10
19		72215443		1	JUNTA

(1) ASSY SEE PAGE 11

5.0079	05	p1	04/08

ROTATION BUCKET PROVISION - OPTIONAL CODE 461319008 (01-02) - 461319018 (03-04)

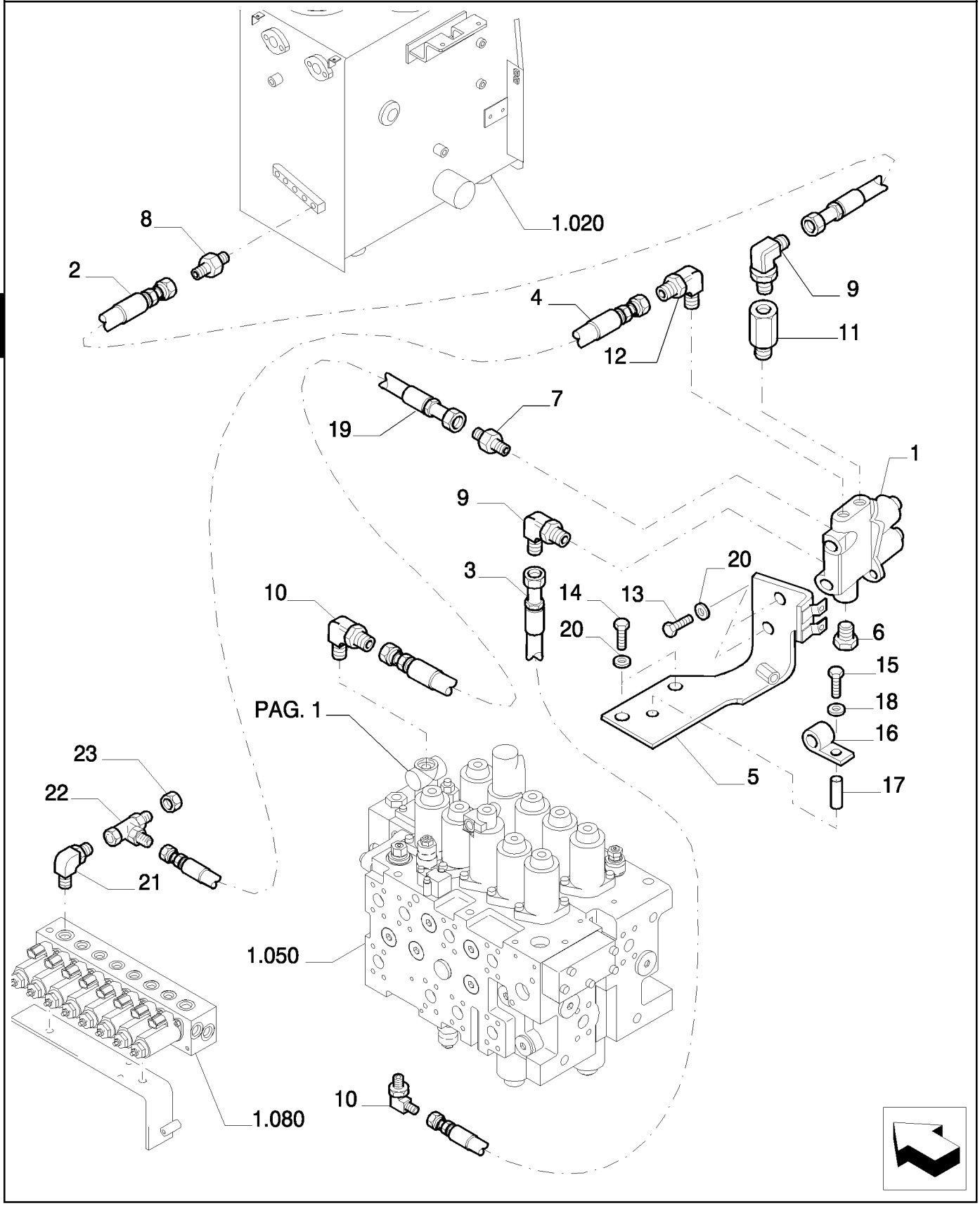

ROTATION BUCKET PROVISION - OPTIONAL CODE 461319008 (01-02) - 461319018 (03-04)

REF	FN	PART NUMBER	YR/SN	QTY	DESCRIPTION
1		87531523		1	VÁLVULA HIDRAULICA
2		72214740		1	TUBO FLEXÍVEL
3		72214539		1	TUBO FLEXÍVEL
4		87338415		1	TUBO FLEXÍVEL
5		87557644		1	SUPORTE
6		72214663		1	BUJÃO
7		72214744		1	CONEXÃO
8		72214522		1	CONEXÃO
9		72214524		2	CONEXÃO
10		72214542		2	CONEXÃO
11		72217408		1	CONEXÃO
12		72214735		1	CONEXÃO
13		11106034		2	PARAFUSO, Hex, M10 x 20, 10.9, Full Thd
14		11106234		2	PARAFUSO, Hex, M10 x 25, 10.9, Full Thd
15		10903634		2	PARAFUSO
16		10441290		1	BRAÇADEIRA
17		87557646		1	ESPAÇADOR
18		14496431		1	ARRUELA PLANA
19		72214535		1	TUBO FLEXÍVEL
20		14496631		4	ARRUELA PLANA, M10 x 21 x 2
21		{87338401}		1	
22		72954988		1	TEE
23		72214546		1	BUJÃO

5.0079	06	p1	10/07

ROTATION BUCKET PROVISION - OPTIONAL CODE 461319008 (01-02) - 461319018 (03-04)

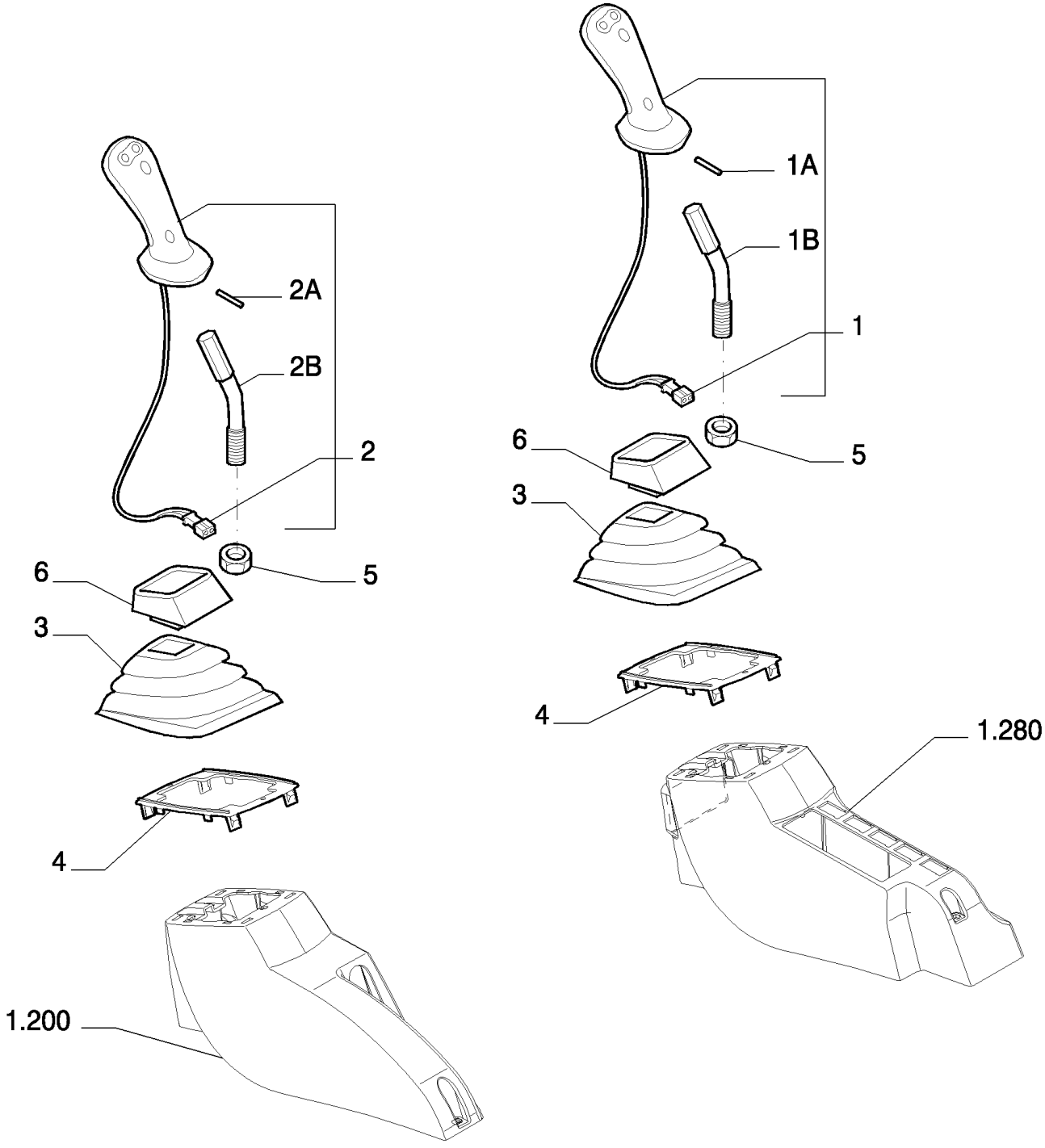

ROTATION BUCKET PROVISION - OPTIONAL CODE 461319008 (01-02) - 461319018 (03-04)

REF	FN	PART NUMBER	YR/SN	QTY	DESCRIPTION
1		72203569		1	EMPUNHADURA, RIGHT - ASSY
1A		14601371		1	PINO-ELÁSTICO
1B		72203871		1	ALAVANCA
2		72203570		1	EMPUNHADURA, LEFT - ASSY
2A		14601371		1	PINO-ELÁSTICO
2B		72203871		1	ALAVANCA
3		72220390		2	CAPA
4		72203567		2	PLACA
5		12163224		2	PORCA
6		72220391		2	CAPA

5.0079	07	p1	10/07

ROTATION BUCKET PROVISION - VERSION (01-02) - OPTIONAL CODE 461319008

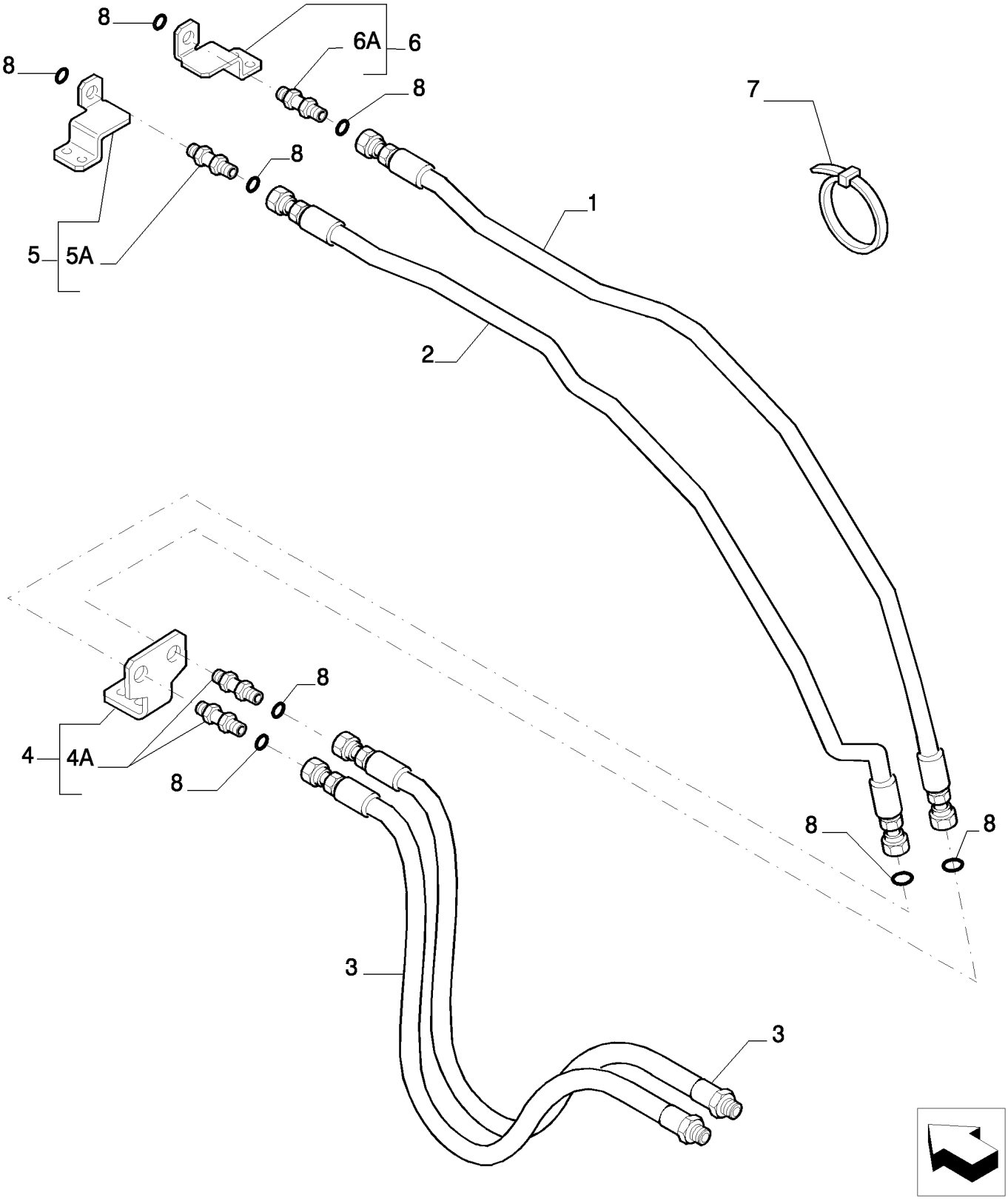

6

ROTATION BUCKET PROVISION - VERSION (01-02) - OPTIONAL CODE 461319008

REF	FN	PART NUMBER	YR/SN	QTY	DESCRIPTION
1		{87732974}		1	
2		{87732975}		1	
3		{87662097}		2	
4		87396715		1	SUPORTE, - ASSY
4A		72204201		2	CONEXÃO
5		87396711		1	SUPORTE, - ASSY
5A		72204201		1	CONEXÃO
6		87396713		1	SUPORTE, - ASSY
6A		72204201		1	CONEXÃO
7		4982514		57	TIRA DE CABO
8		70923841		8	ANEL "O"

5.0079	08	p1	10/07

ROTATION BUCKET PROVISION - VERSION (03-04) - OPTIONAL CODE 461319018

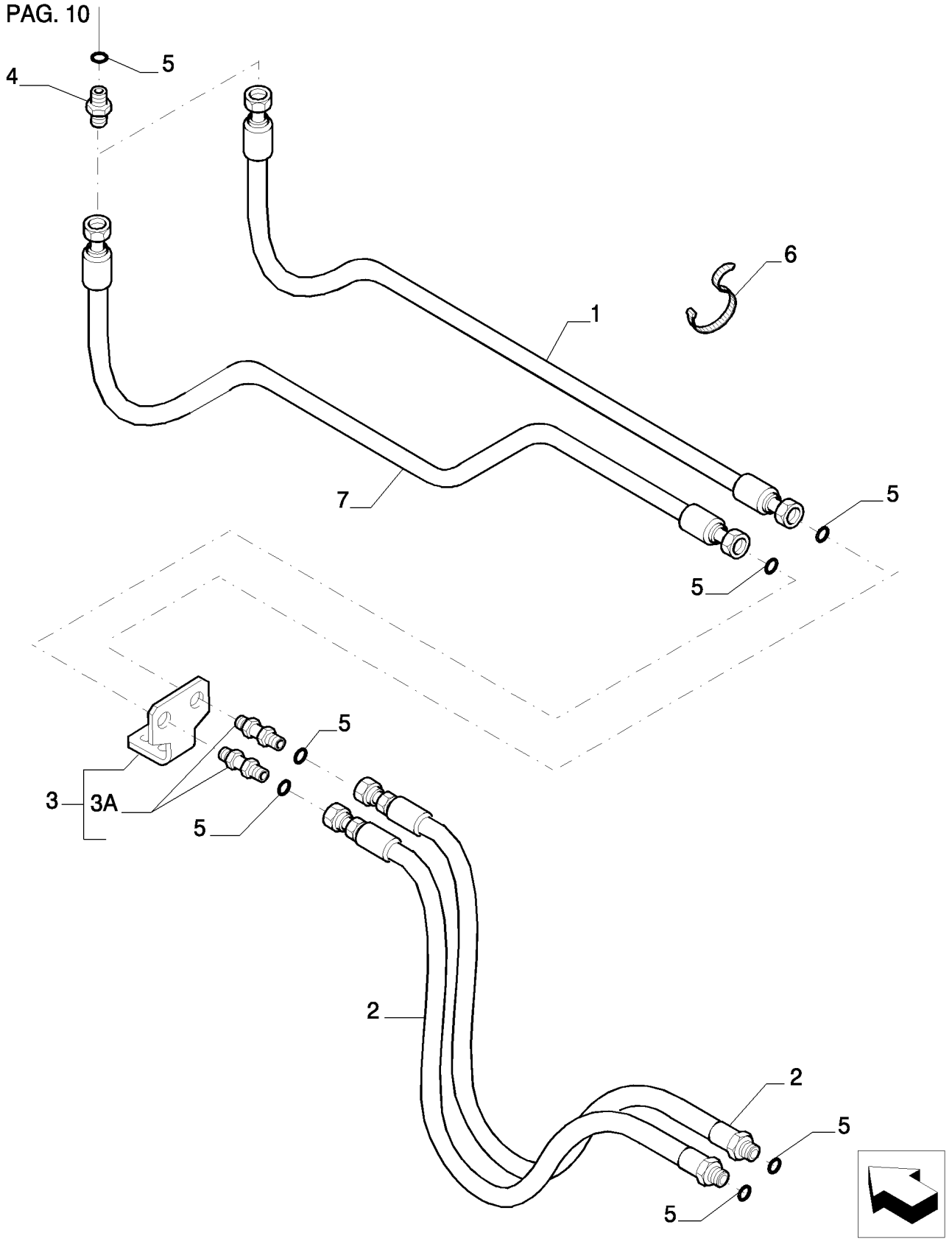

ROTATION BUCKET PROVISION - VERSION (03-04) - OPTIONAL CODE 461319018

REF	FN	PART NUMBER	YR/SN	QTY	DESCRIPTION
1		{87662194}		1	
2		{87662097}		2	
3		{87396684}		1	- ASSY
3A		72204201		2	CONEXÃO
4		87556832		2	CONEXÃO
5		70923841		8	ANEL "O"
6		4982514		25	TIRA DE CABO
7		{87662195}		1	

5.0079	09	p1	10/07

ROTATION BUCKET PROVISION - VERSION (03-04) - OPTIONAL CODE 461319018

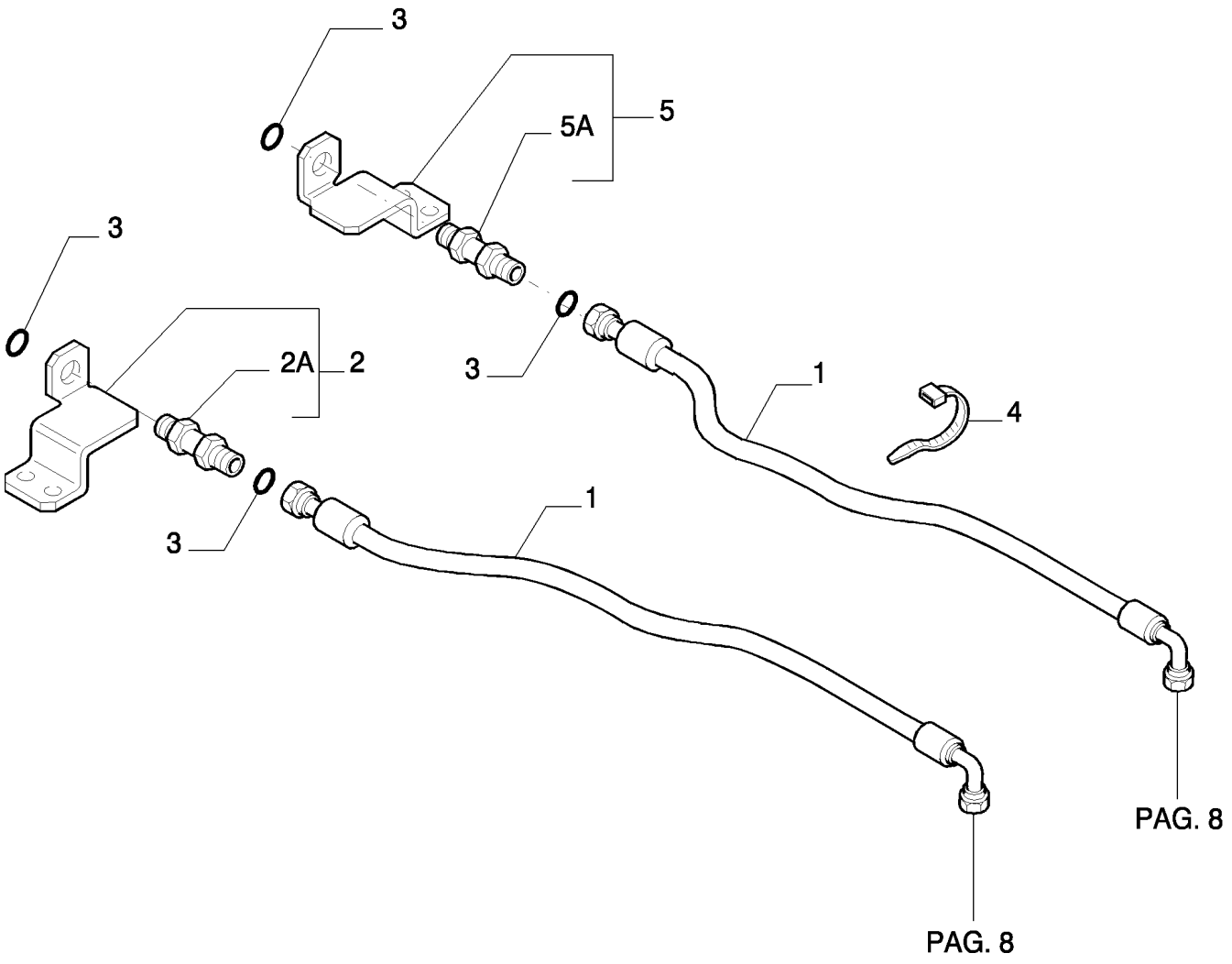

6

ROTATION BUCKET PROVISION - VERSION (03-04) - OPTIONAL CODE 461319018

REF	FN	PART NUMBER	YR/SN	QTY	DESCRIPTION
1		{87670472}		2	
2		87396711		1	SUPORTE, - ASSY
2A		72204201		1	CONEXÃO
3		70923841		4	ANEL "O"
4		4982514		14	TIRA DE CABO
5		87396713		1	SUPORTE
5A		72204201		1	CONEXÃO

5.0079	10	p1	10/07

ROTATION BUCKET PROVISION - OPTIONAL CODE 461319008 (01-02) - 461319018 (03-04)

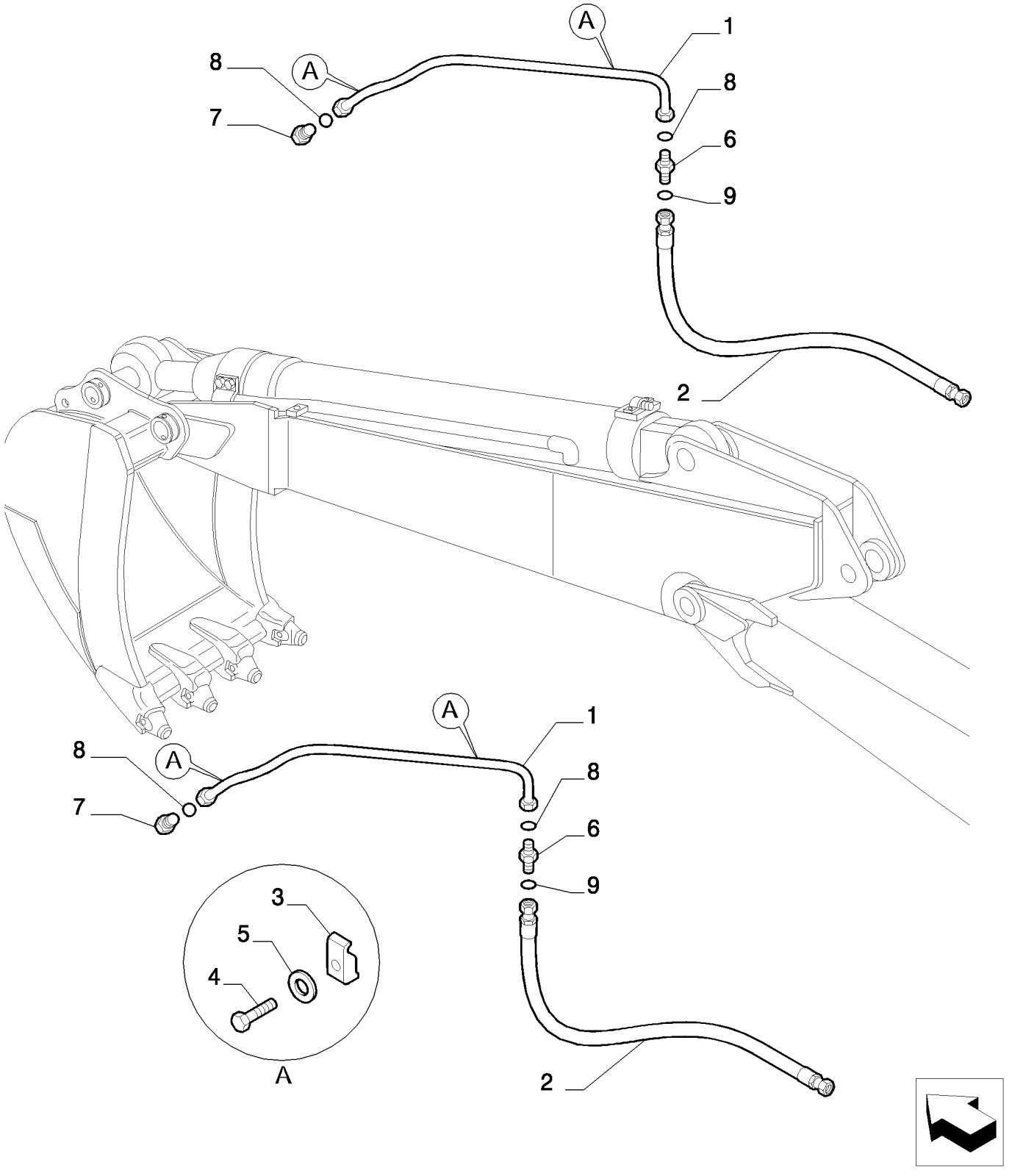

ROTATION BUCKET PROVISION - OPTIONAL CODE 461319008 (01-02) - 461319018 (03-04)

REF	FN	PART NUMBER	YR/SN	QTY	DESCRIPTION
1		{87684457}		2	
2		72214926		2	TUBO FLEXÍVEL
3		71466172		8	SUPORTE
4		11113234		8	PARAFUSO, Hex, M12 x 50, 10.9
5		10517074		8	ARRUELA-TRAVA
6		72204293		2	CONEXÃO
7		72204294		2	CONEXÃO
8		71484462		4	ANEL "O"
9		70923841		2	ANEL "O"

5.0079	11	p1	10/07

ROTATION BUCKET PROVISION - COMPONENTS - OPTIONAL CODE 461319008 (01-02) - 461319018 (03-04)

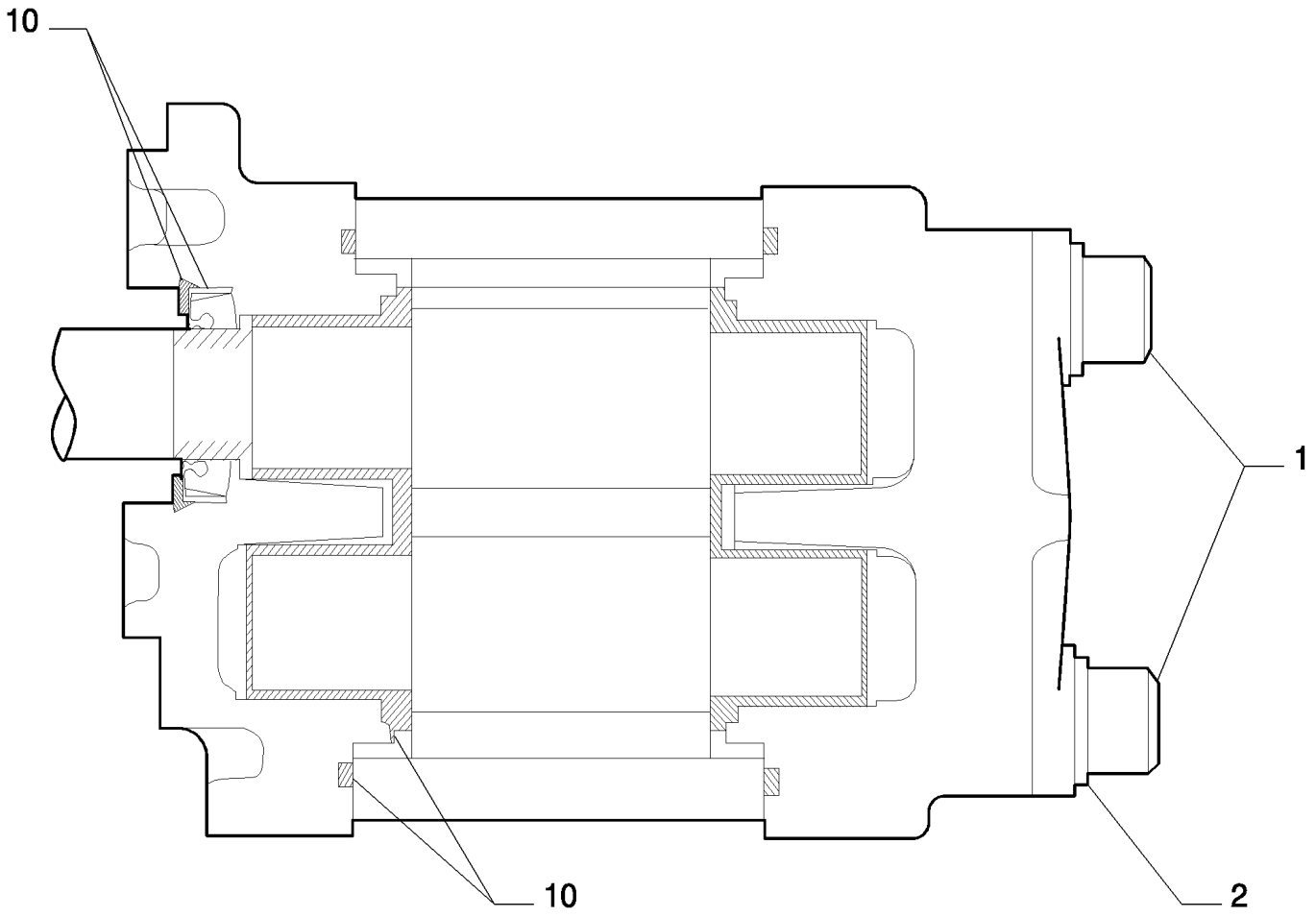

KIT KIT KIT 10

ROTATION BUCKET PROVISION - COMPONENTS - OPTIONAL CODE 461319008 (01-02) - 461319018 (03-04)

REF	FN	PART NUMBER	YR/SN	QTY	DESCRIPTION
1		72217399		1	PARAFUSO
2		72210445		1	ARRUELA PLANA
10		72217400		1	KIT

5.0086	01	p1	02/08

BOOM/ARM WITHOUT SAFETY VALVE - VERSION (01-02) - OPTIONAL CODE 461134128

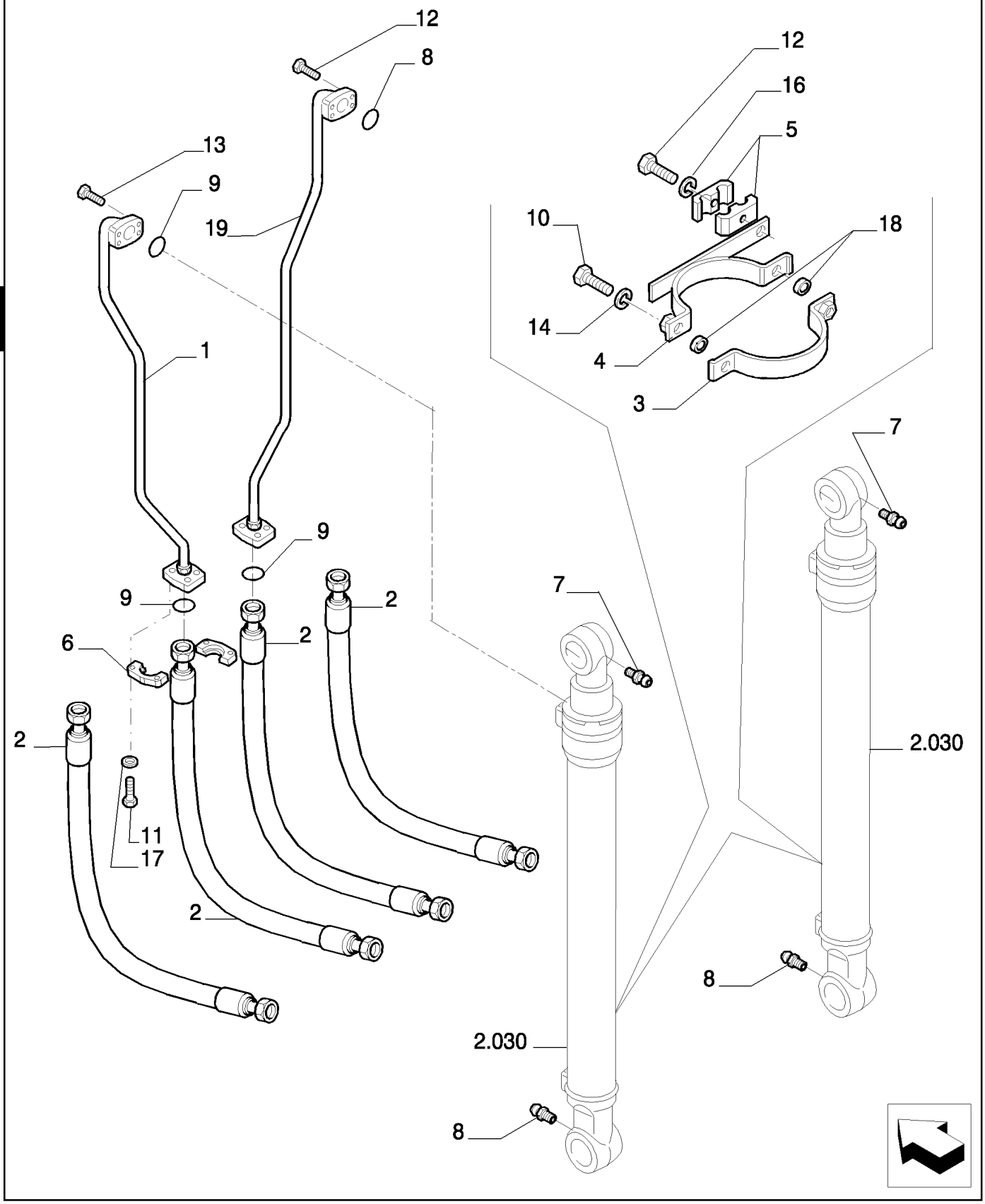

6

BOOM/ARM WITHOUT SAFETY VALVE - VERSION (01-02) - OPTIONAL CODE 461134128

REF	FN	PART NUMBER	YR/SN	QTY	DESCRIPTION
1		{87646564}		1	
2		{87646661}		4	
3		{87646676}		2	
4		72210824		2	TIRA
5		87334742		4	PRENDEDOR
6		71404311		2	SEMI- FLANGE
7		72160573		2	PINO
8		72283478		2	GRAXEIRA
9		72215443		6	JUNTA
10		11106634		4	PARAFUSO, Hex, M10 x 35, 10.9, Full Thd
11		14420334		16	PARAFUSO
12		11116734		2	PARAFUSO
13		14422234		8	PARAFUSO
14		10571879		4	ARRUELA-TRAVA, M10
16		10520121		2	ARRUELA PLANA
17		10571879		16	ARRUELA-TRAVA, M10
18		71420545		4	ESPAÇADOR
19		{87646686}		1	

5.0086	02	p1	10/07

BOOM/ARM WITHOUT SAFETY VALVE - VERSION (01-02) - OPTIONAL CODE 461134128

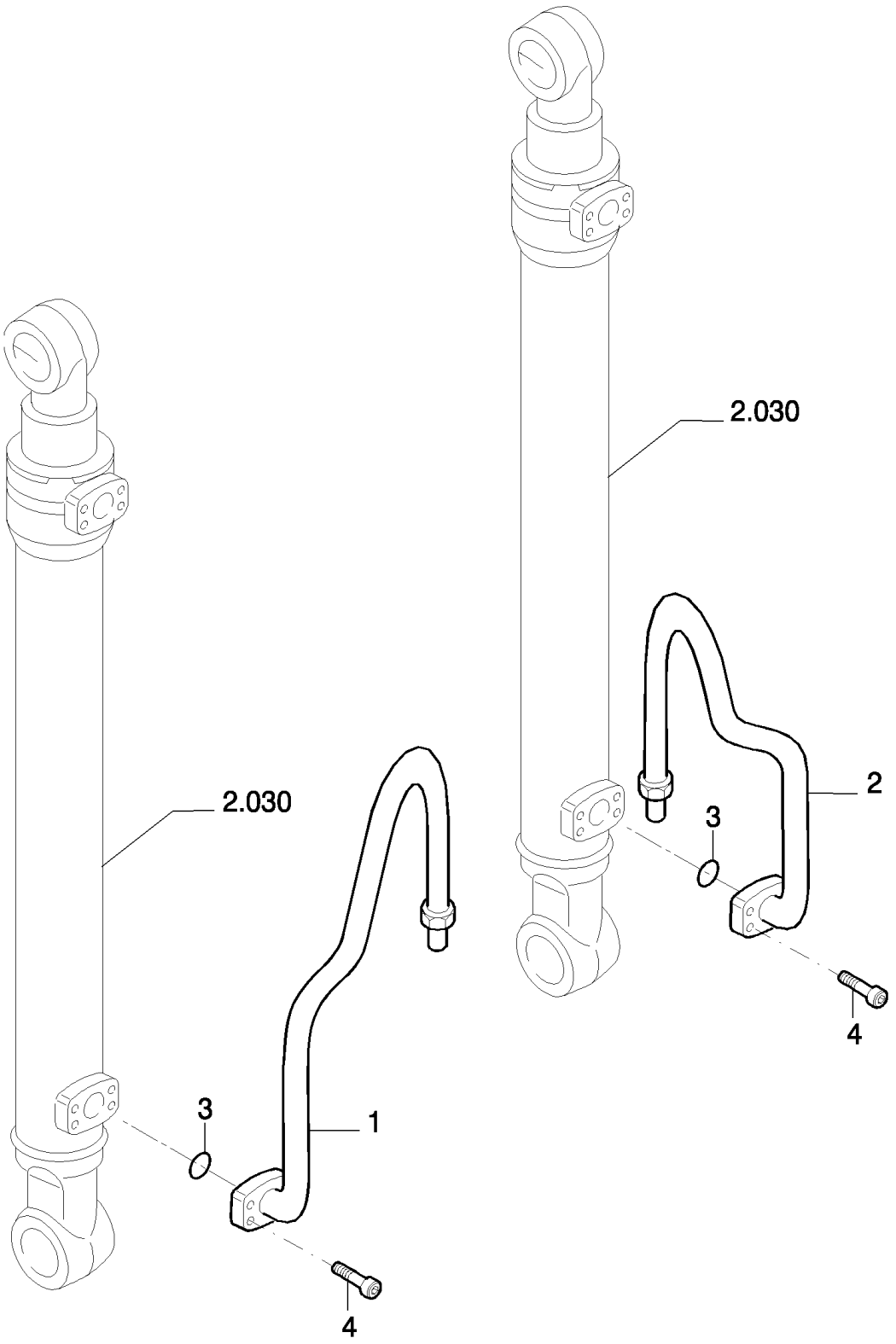

BOOM/ARM WITHOUT SAFETY VALVE - VERSION (01-02) - OPTIONAL CODE 461134128

REF	FN	PART NUMBER	YR/SN	QTY	DESCRIPTION
1		{87647244}		1	
2		{87647245}		1	
3		72215443		2	JUNTA
4		14422234		8	PARAFUSO

5.0086	03	p1	06/08

BOOM/ARM WITHOUT SAFETY VALVE - VERSION (01-02) - OPTIONAL CODE 461134128

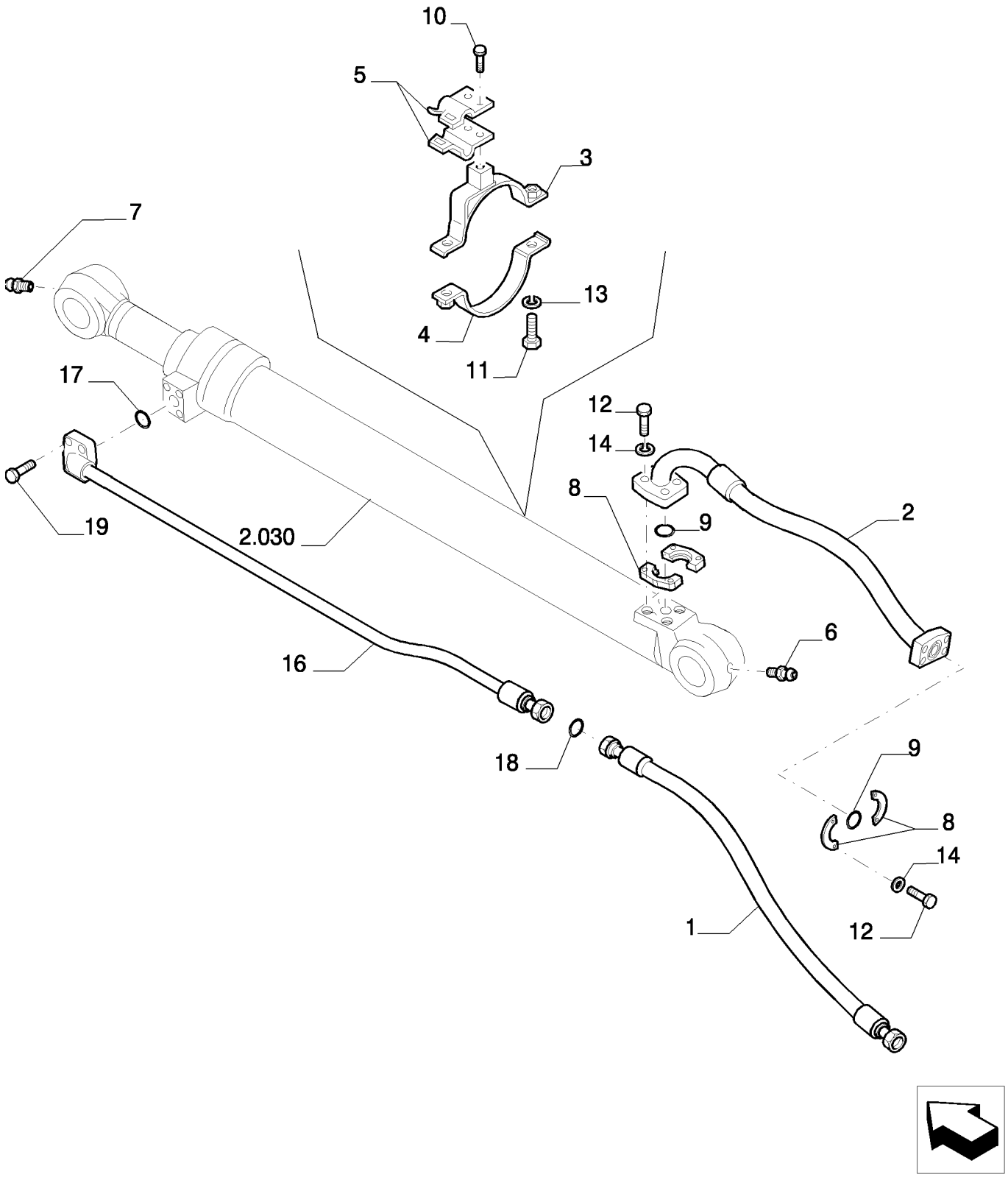

BOOM/ARM WITHOUT SAFETY VALVE - VERSION (01-02) - OPTIONAL CODE 461134128

REF	FN	PART NUMBER	YR/SN	QTY	DESCRIPTION
1		87343364		1	MANGUEIRA CONJUNTO
2		87646154		1	TUBO FLEXÍVEL
3		{87646155}		1	
4		{87646156}		1	
5		87343093		2	SUPORTE
6		72160573		1	PINO
7		72283072		1	GRAXEIRA
8		71444029		4	SEMI- FLANGE
9		72210076		2	ANEL "O"
10		11112634		2	PARAFUSO
11		11106434		2	PARAFUSO, Hex, M10 x 30, 10.9, Full Thd
12		14424534		8	PARAFUSO
13		10516874		2	ARRUELA-TRAVA
14		10517174		8	ARRUELA-TRAVA
15		14496731		2	ARRUELA PLANA
16		{87647242}		1	
17		72215443		2	JUNTA
18		70931640		1	JUNTA
19		14422234		4	PARAFUSO

BOOM/ARM WITHOUT SAFETY VALVE - VERSION (01-02) - OPTIONAL CODE 461134128

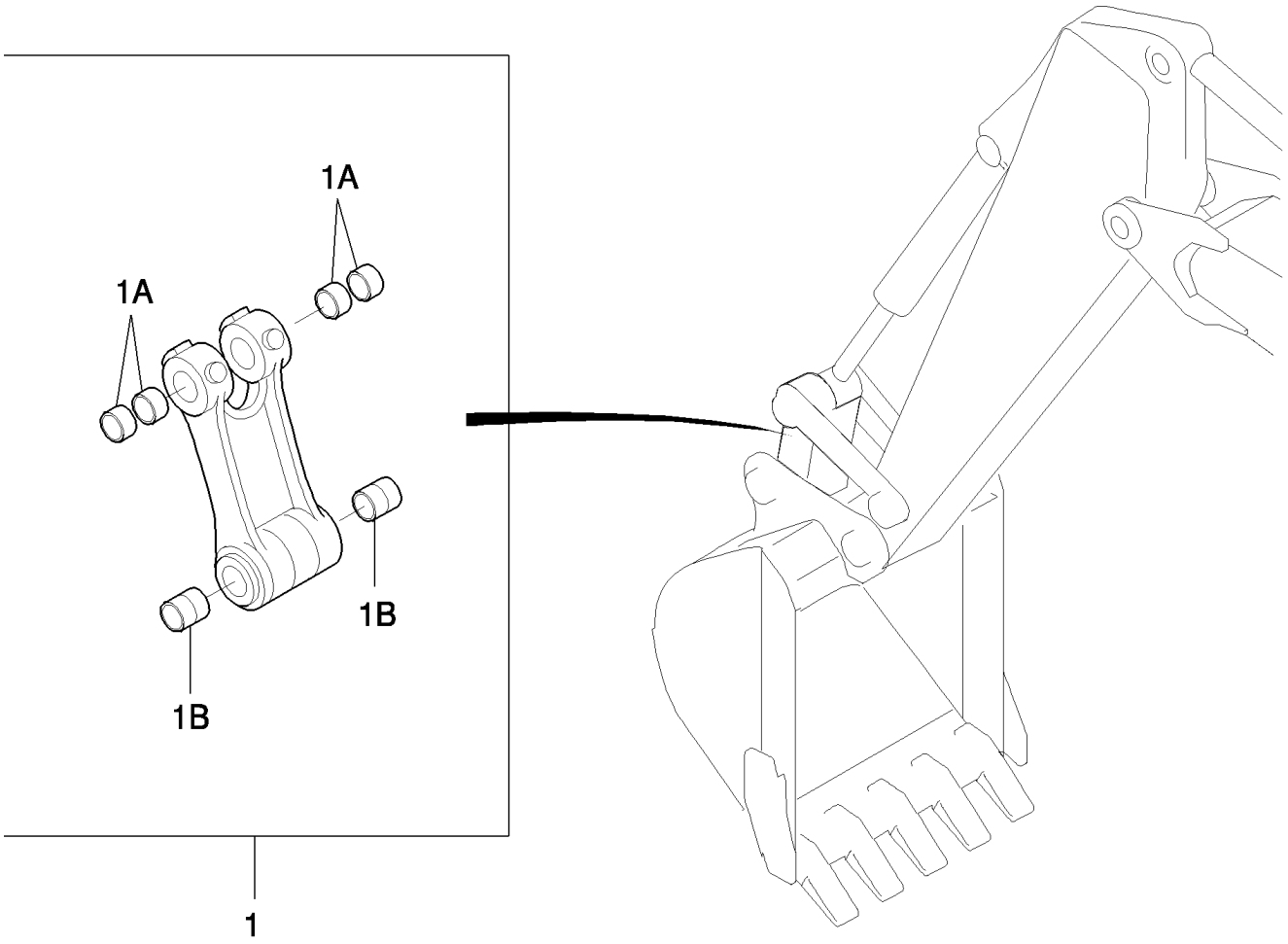

BOOM/ARM WITHOUT SAFETY VALVE - VERSION (01-02) - OPTIONAL CODE 461134128

REF	FN	PART NUMBER	YR/SN	QTY	DESCRIPTION
1		{87647420}		1	- ASSY
1A		87588861		4	BUCHA
1B		72212450		2	BUCHA

5.0088	01	p1	10/07

OBJECT HANDLING - VERSION (01-02) - OPTIONAL CODE 781583658

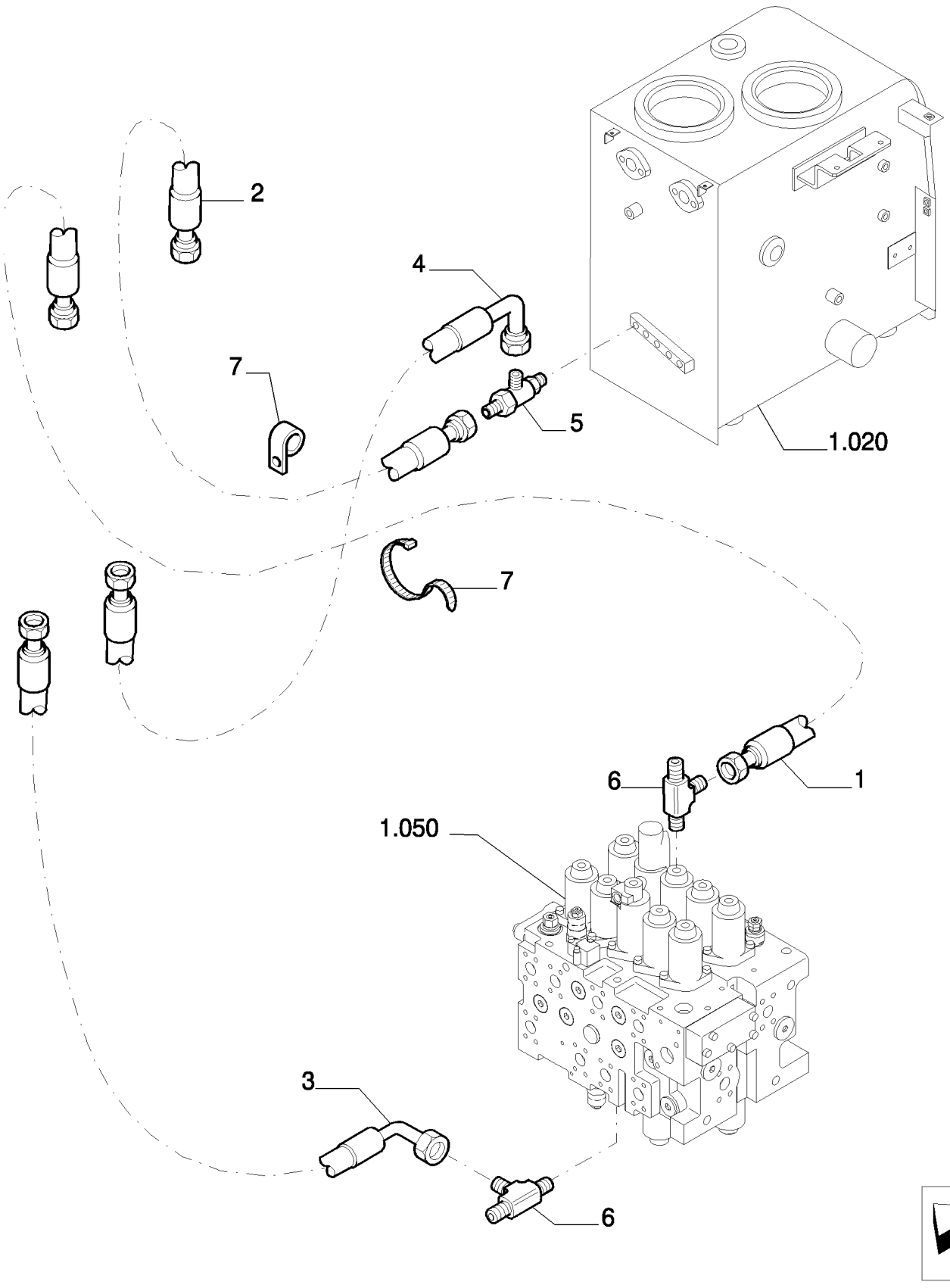

OBJECT HANDLING - VERSION (01-02) - OPTIONAL CODE 781583658

REF	FN	PART NUMBER	YR/SN	QTY	DESCRIPTION
1		{87663864}		1	
2		{87663865}		1	
3		87557387		1	TUBO FLEXÍVEL
4		{87663850}		1	
5		72954985		1	TEE
6		87333054		2	TEE
7		4982514		14	TIRA DE CABO

5.0088	02	p1	02/08

OBJECT HANDLING - VERSION (01-02) - OPTIONAL CODE 781583568

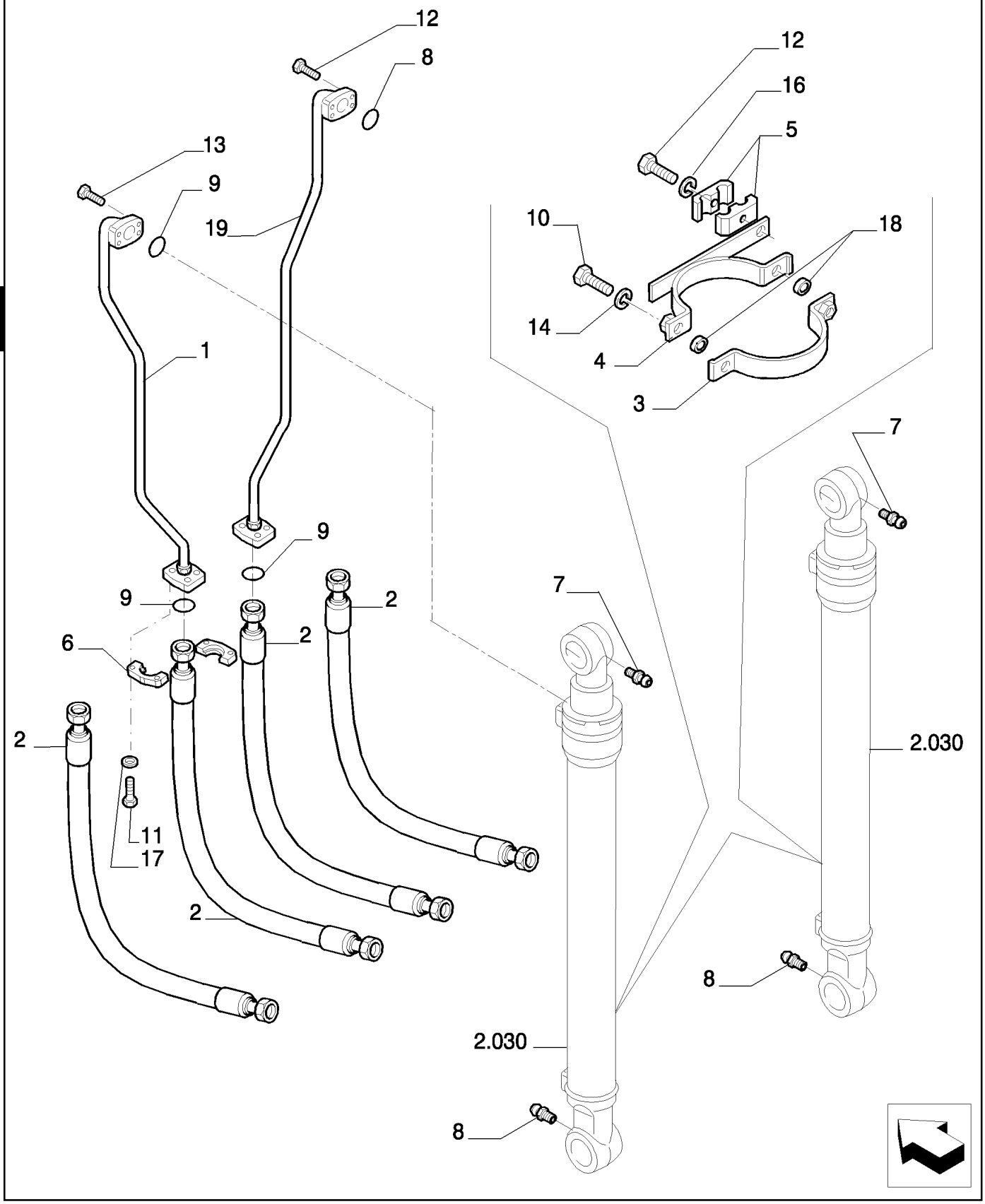

OBJECT HANDLING - VERSION (01-02) - OPTIONAL CODE 781583568

REF	FN	PART NUMBER	YR/SN	QTY	DESCRIPTION
1		{87646564}		1	
2		{87646661}		4	
3		{87646676}		2	
4		72210824		2	TIRA
5		87334742		4	PRENDEDOR
6		71404311		2	SEMI- FLANGE
7		72160573		2	PINO
8		72283478		2	GRAXEIRA
9		72215443		6	JUNTA
10		11106634		4	PARAFUSO, Hex, M10 x 35, 10.9, Full Thd
11		14420334		16	PARAFUSO
12		11116734		2	PARAFUSO
13		14422234		8	PARAFUSO
14		10571879		4	ARRUELA-TRAVA, M10
16		10520121		2	ARRUELA PLANA
17		10571879		16	ARRUELA-TRAVA, M10
18		71420545		4	ESPAÇADOR
19		{87646686}		1	

5.0088	03	p1	10/07

OBJECT HANDLING - VERSION (01-02) - OPTIONAL CODE 781583568

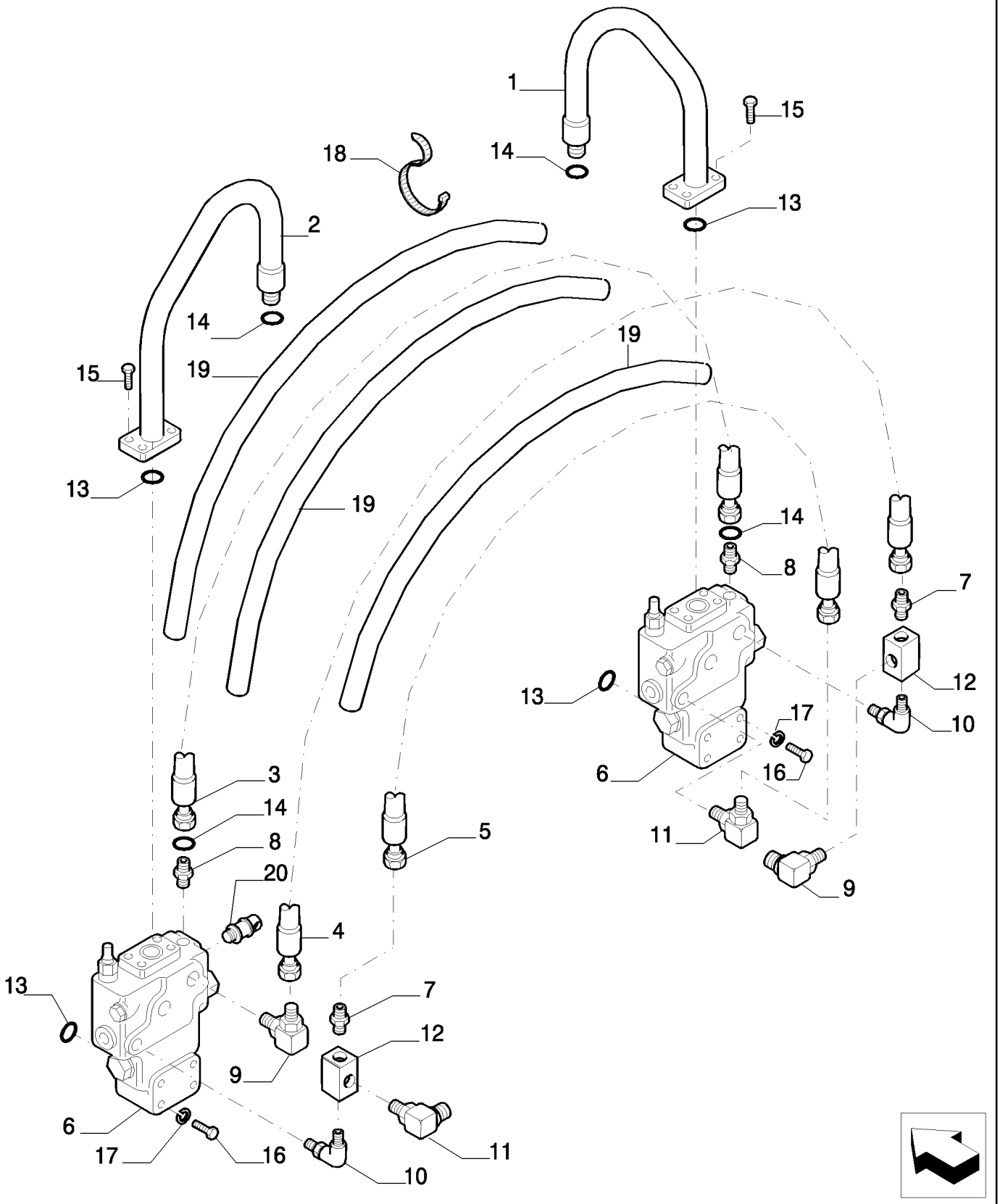

OBJECT HANDLING - VERSION (01-02) - OPTIONAL CODE 781583568

REF	FN	PART NUMBER	YR/SN	QTY	DESCRIPTION
1		{87647510}		1	
2		{87647509}		1	
3		{87647176}		1	
4		{87647146}		1	
5		87544489		1	TUBO FLEXÍVEL
6		87353449		2	VÁLVULA HIDRAULICA
7		72214523		2	CONEXÃO
8		72216769		2	CONEXÃO
9		72214526		2	CONEXÃO
10		72214540		2	COTOVELO
11		72214548		2	CONEXÃO
12		72201053		2	CONEXÃO
13		72215443		4	JUNTA
14		72206112		2	ANEL "O"
15		14422234		8	PARAFUSO
16		14422934		8	PARAFUSO
17		10517979		8	ARRUELA PLANA
18		4982514		10	TIRA DE CABO
19		72150751		3	TUBO DE INTRODUÇÃO
20		87524903		1	SENSOR

5.0088	04	p1	06/08

OBJECT HANDLING - VERSION (01-02) - OPTIONAL CODE 781583568

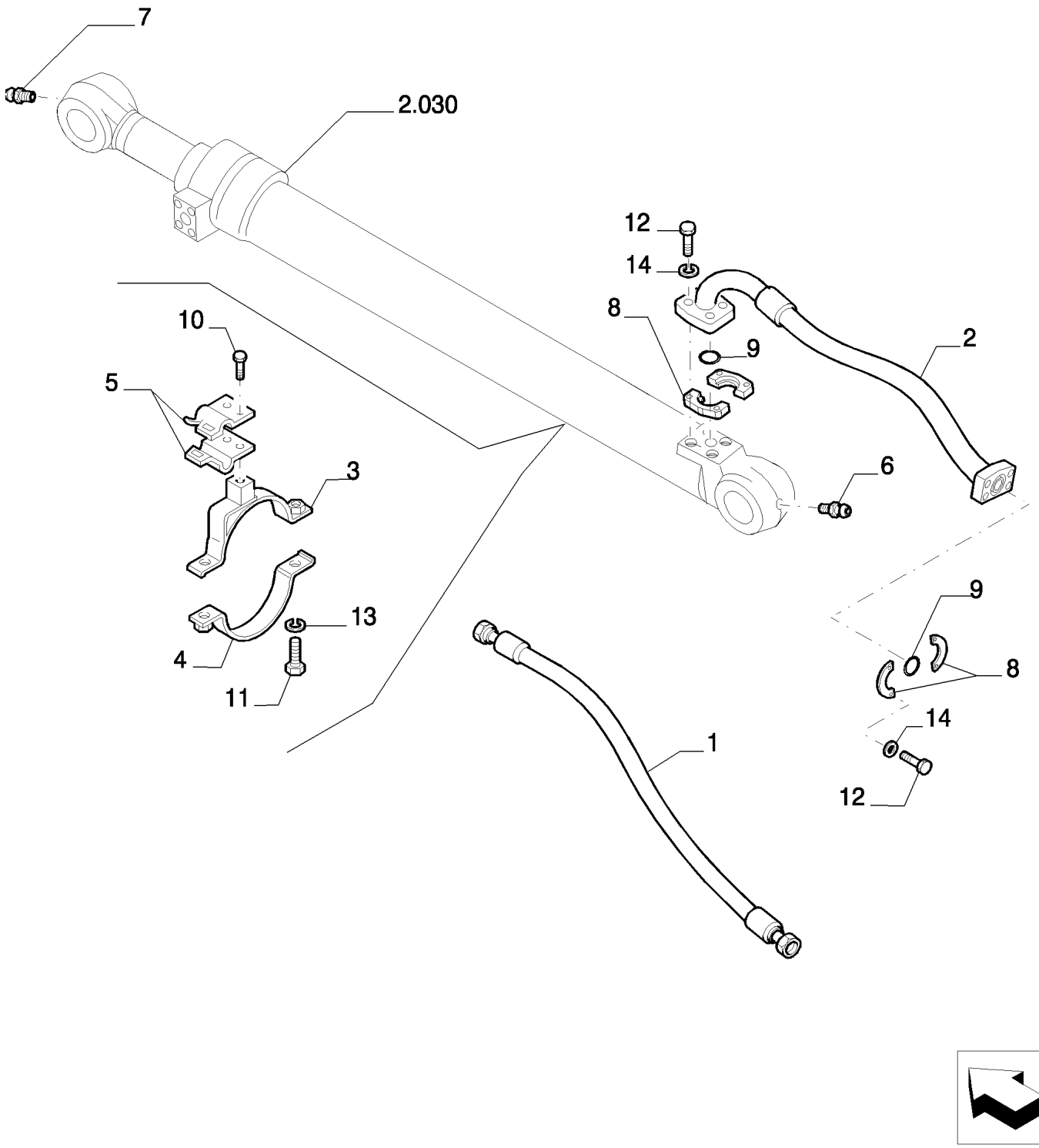

6

OBJECT HANDLING - VERSION (01-02) - OPTIONAL CODE 781583568

REF	FN	PART NUMBER	YR/SN	QTY	DESCRIPTION
1		87343364		1	MANGUEIRA CONJUNTO
2		87646154		1	TUBO FLEXÍVEL
3		{87646155}		1	
4		{87646156}		1	
5		87343093		2	SUPORTE
6		72160573		1	PINO
7		72283072		1	GRAXEIRA
8		71444029		4	SEMI- FLANGE
9		72210076		2	ANEL "O"
10		11112634		2	PARAFUSO
11		11106434		2	PARAFUSO, Hex, M10 x 30, 10.9, Full Thd
12		14424534		8	PARAFUSO
13		10516874		2	ARRUELA-TRAVA
14		10517174		8	ARRUELA-TRAVA
15		14496731		2	ARRUELA PLANA

5.0088	05	p1	10/07

OBJECT HANDLING - VERSION (01-02) - OPTIONAL CODE 781583568

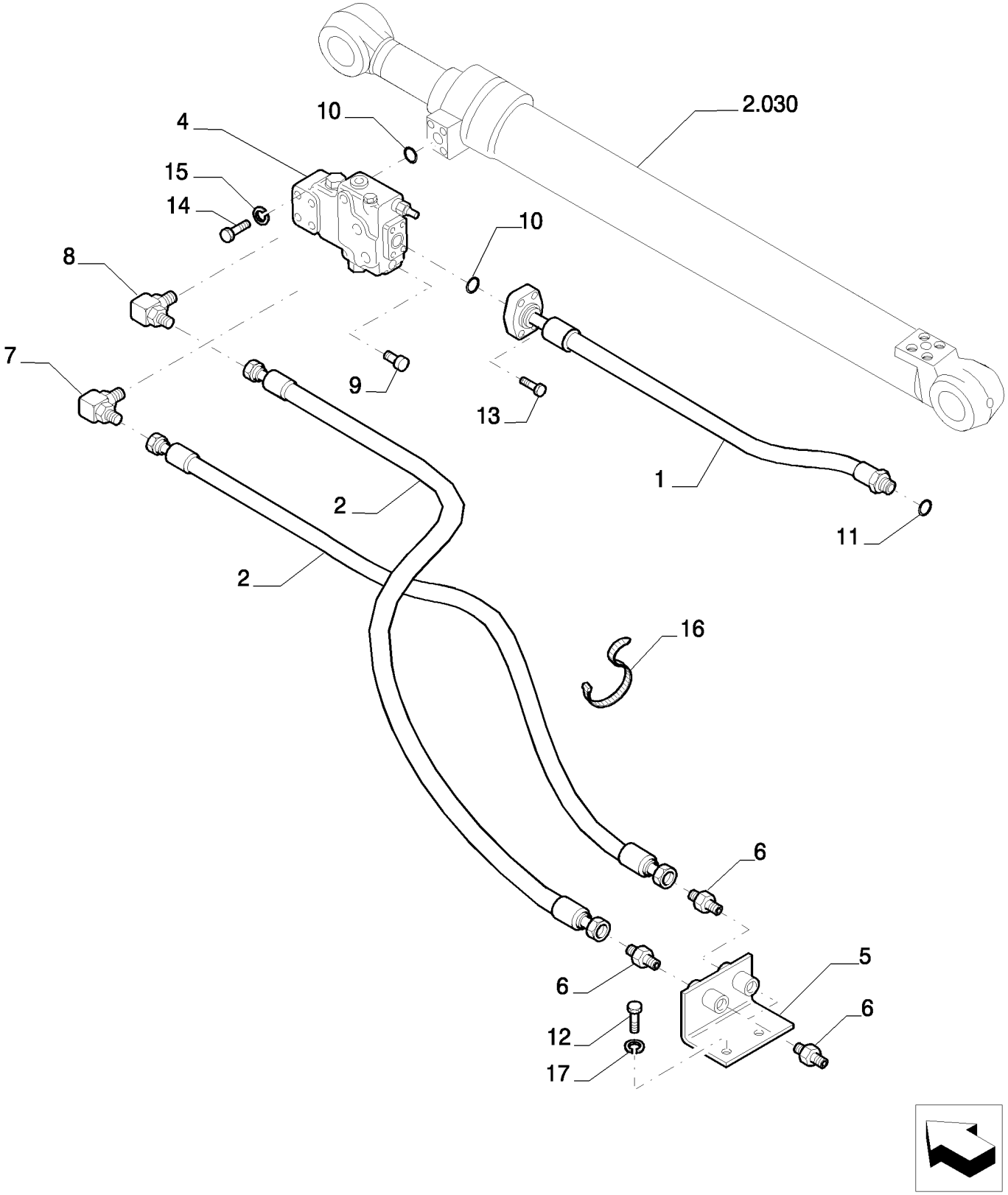

OBJECT HANDLING - VERSION (01-02) - OPTIONAL CODE 781583568

REF	FN	PART NUMBER	YR/SN	QTY	DESCRIPTION
1		{87647902}		1	
2		72214878		2	TUBO FLEXÍVEL
4		87353360		1	VÁLVULA HIDRAULICA
5		72955500		1	SUPORTE
6		72214523		4	CONEXÃO
7		72214526		1	CONEXÃO
8		72214548		1	CONEXÃO
9		72214663		1	BUJÃO
10		72215443		2	JUNTA
11		70931640		1	JUNTA
12		11106234		2	PARAFUSO, Hex, M10 x 25, 10.9, Full Thd
13		14422234		4	PARAFUSO
14		14422934		4	PARAFUSO
15		10571979		4	ARRUELA-TRAVA, M12
16		4982514		17	TIRA DE CABO
17		14496631		2	ARRUELA PLANA, M10 x 21 x 2

OBJECT HANDLING - VERSION (01-02) - OPTIONAL CODE 781583568

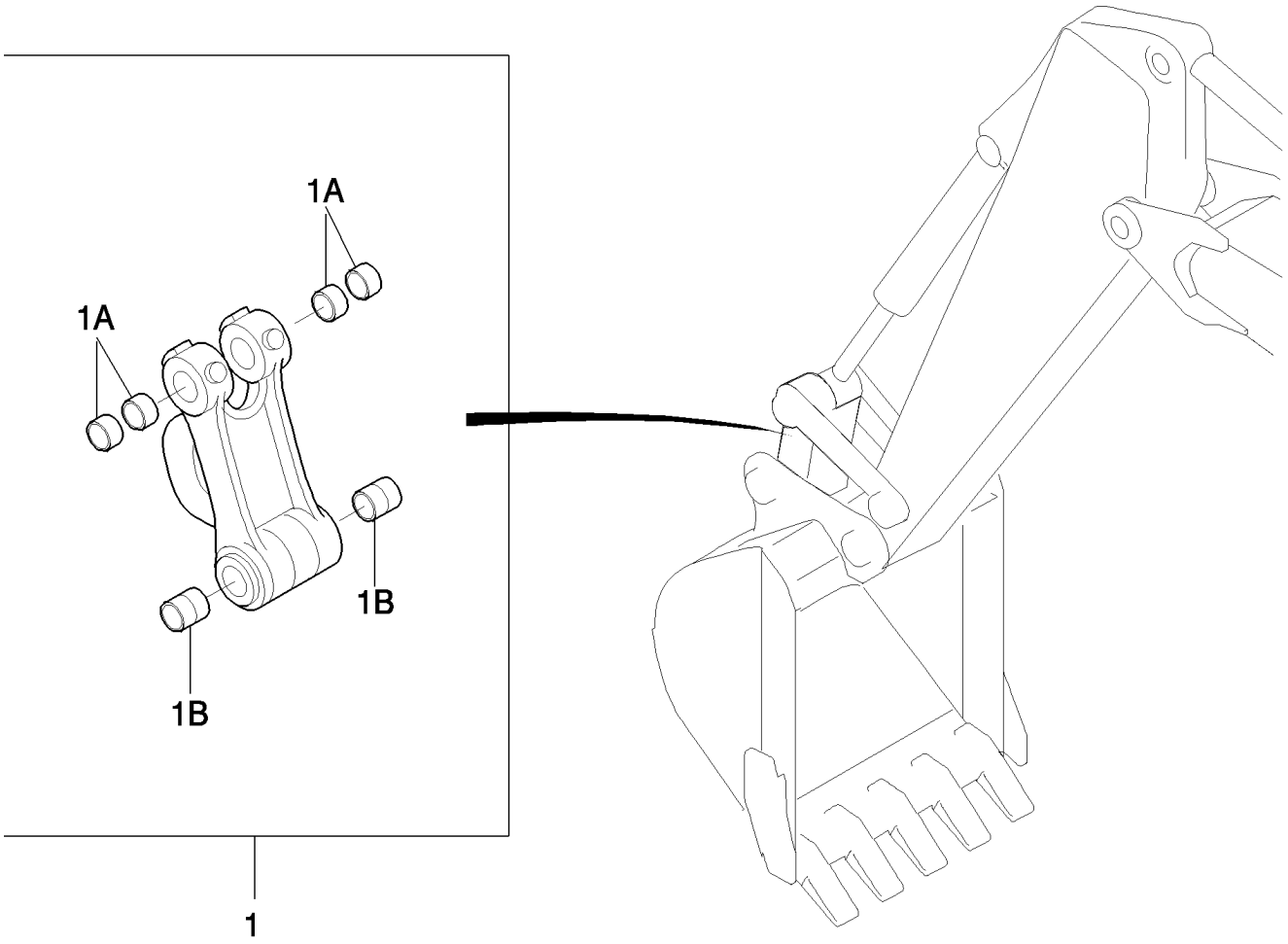

OBJECT HANDLING - VERSION (01-02) - OPTIONAL CODE 781583568

REF	FN	PART NUMBER	YR/SN	QTY	DESCRIPTION
1		{87674047}		1	- ASSY
1A		87588861		4	BUCHA
1B		72212450		2	BUCHA

5.0088	07	p1	10/07

OBJECT HANDLING - VERSION (01-02) - OPTIONAL CODE 781583568

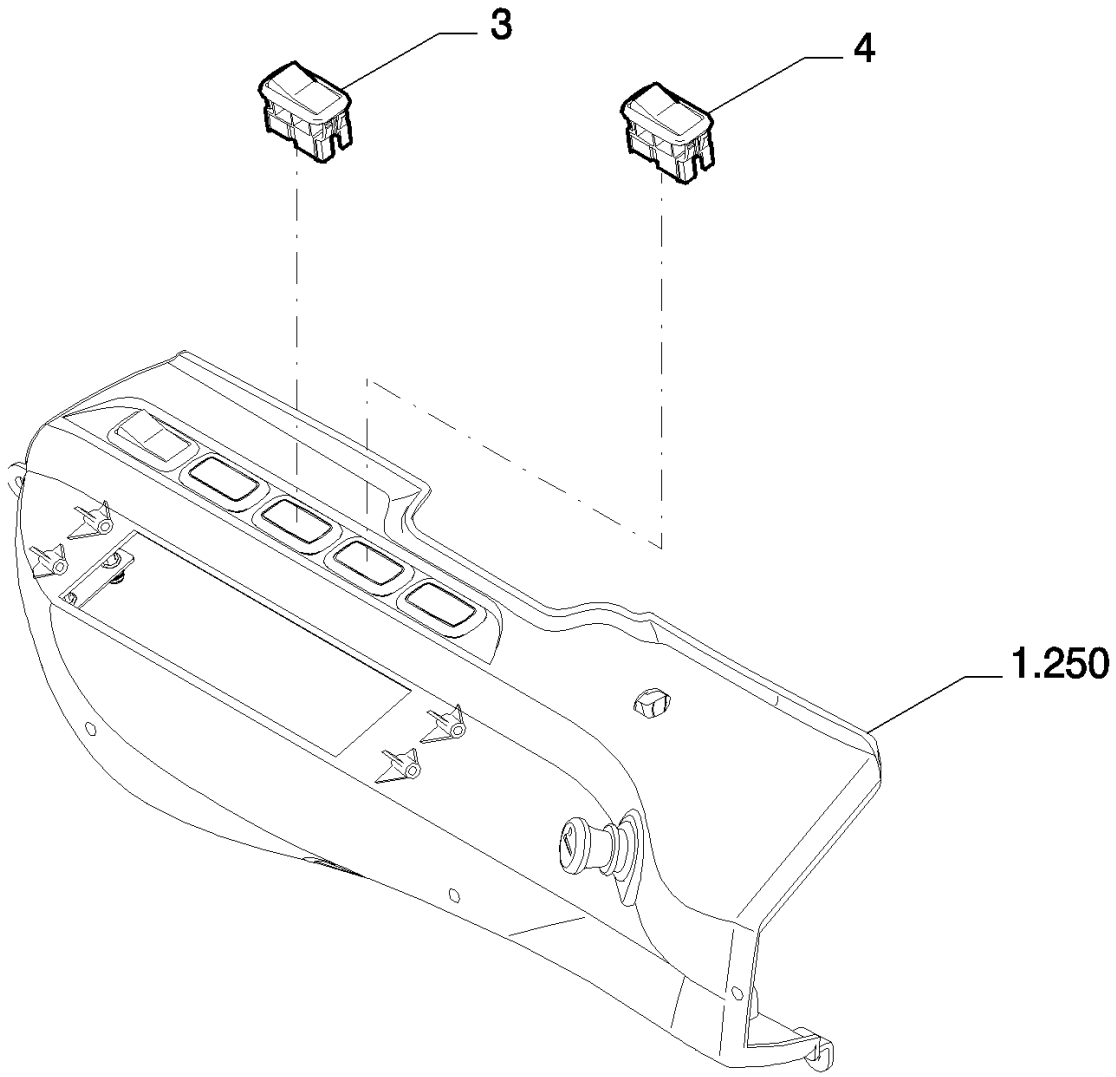

6

OBJECT HANDLING - VERSION (01-02) - OPTIONAL CODE 781583568

REF	FN	PART NUMBER	YR/SN	QTY	DESCRIPTION
3		87540814		1	INTERRUPTOR
4		87528778		1	INTERRUPTOR

5.0088	08	p1	10/07

OBJECT HANDLING - VERSION (01-02) - OPTIONAL CODE 781583568

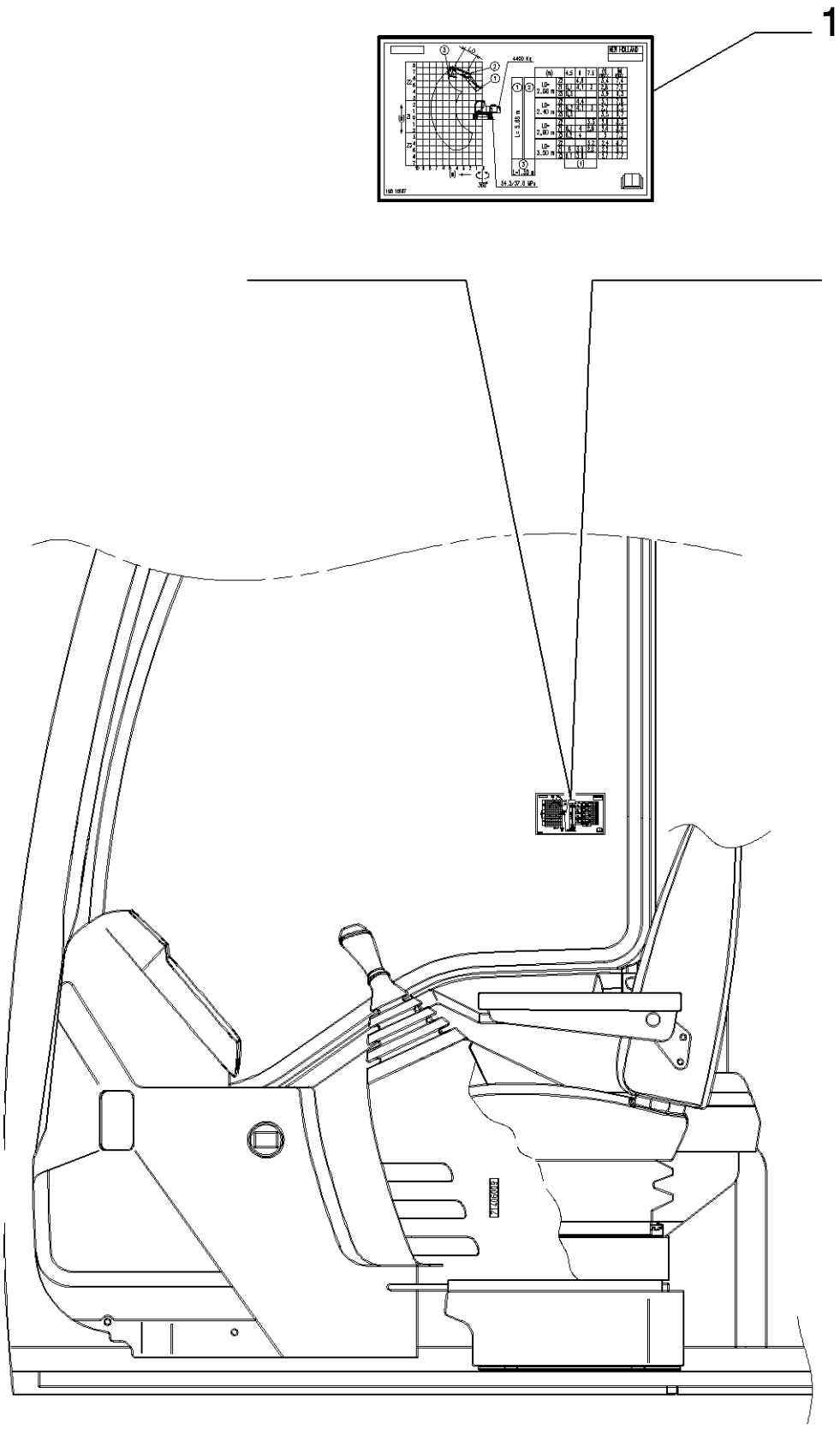

OBJECT HANDLING - VERSION (01-02) - OPTIONAL CODE 781583568

REF	FN	PART NUMBER	YR/SN	QTY	DESCRIPTION
1		{87730147}		1	- IN ALTERNATIVE
1		{87730148}		1	- IN ALTERNATIVE

5.0100	01	p1	11/07

BUCKET - (L=1000MM) - OPTIONAL CODE 781107078

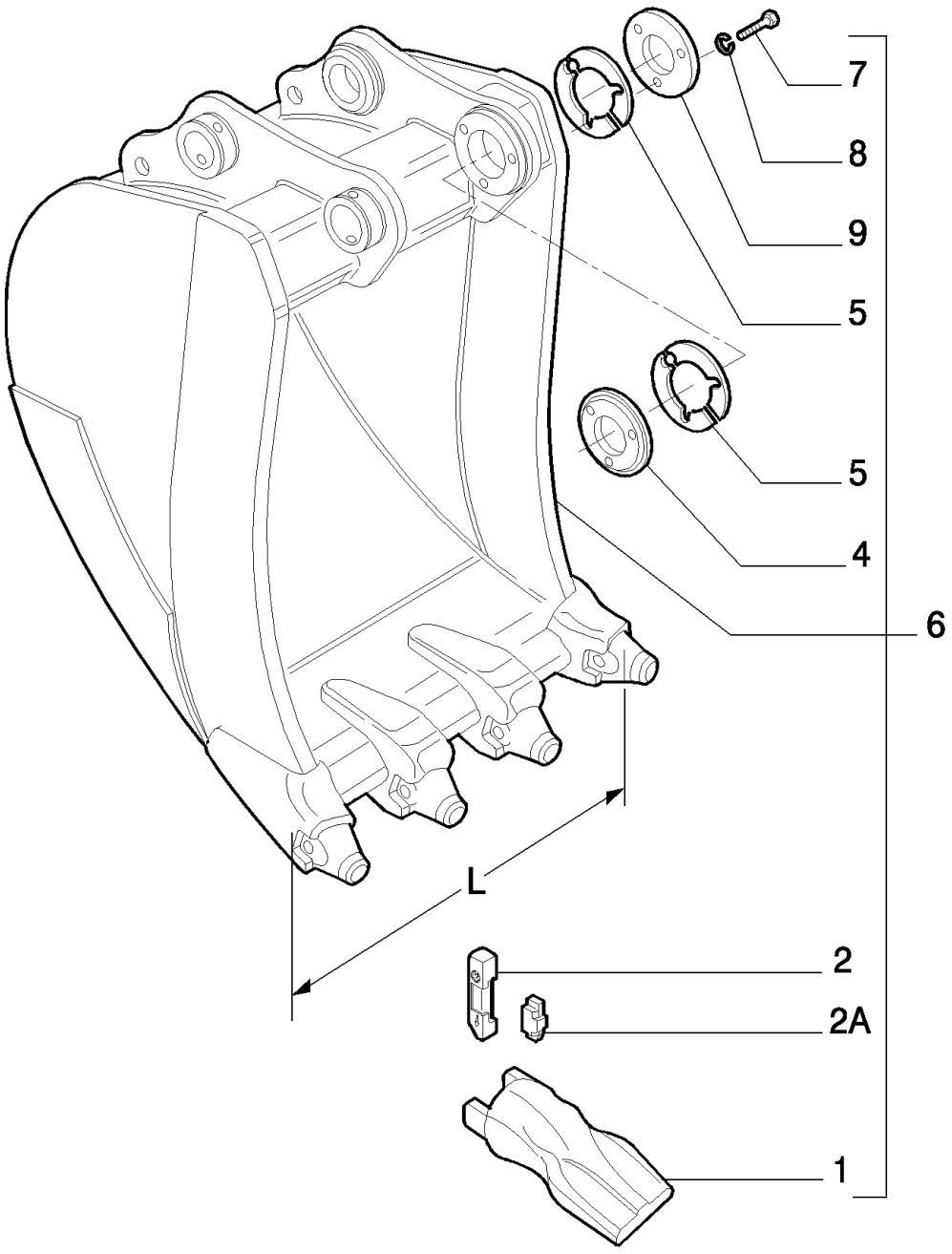

6

BUCKET - (L=1000MM) - OPTIONAL CODE 781107078

REF	FN	PART NUMBER	YR/SN	QTY	DESCRIPTION
1		72204487		4	PONTA DENTE DE CAÇAMBA
2		72204486		4	PINO-ELÁSTICO, - ASSY
2A		72206731		1	PRENDEDOR
4		71470195		1	CUBO
5		71470194		12	CALCO DE AFINACAO, 1mm Thk
6		{72210924}		1	- ASSY
7		11117134		3	PARAFUSO, 14X2X80
8		10572074		3	ARRUELA-TRAVA, 14
9		71470196		1	PLACA

5.0101	01	p1	11/07

BUCKET - (L=1700MM) - OPTIONAL CODE 781681008

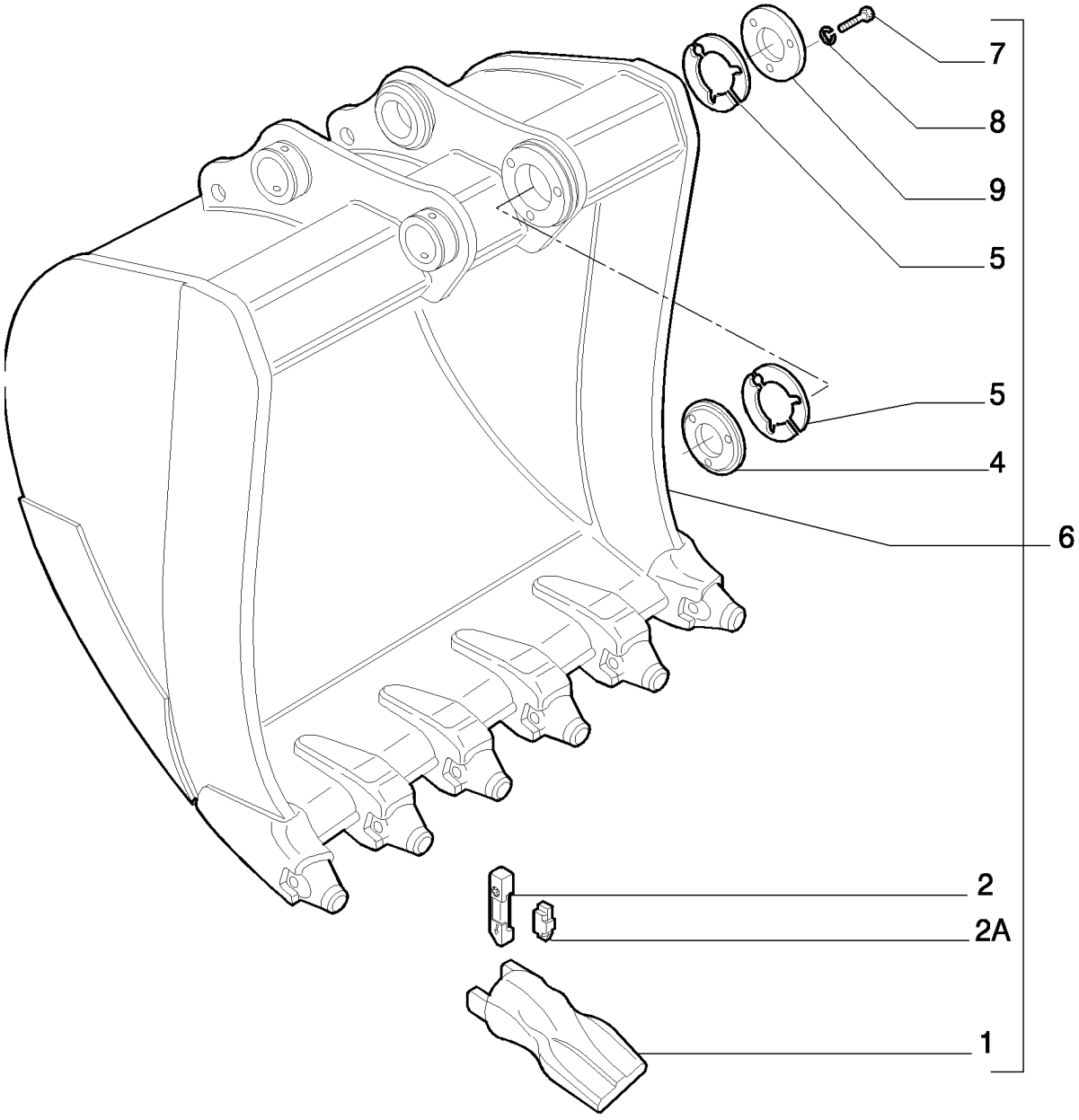

BUCKET - (L=1700MM) - OPTIONAL CODE 781681008

REF	FN	PART NUMBER	YR/SN	QTY	DESCRIPTION
1		72204487		6	PONTA DENTE DE CAÇAMBA
2		72204486		6	PINO-ELÁSTICO, - ASSY
2A		72206731		1	PRENDEDOR
4		71470195		1	CUBO
5		71470194		12	CALCO DE AFINACAO, 1mm Thk
6		{72210932}		1	- ASSY
7		11116934		3	PARAFUSO, M14 x 85, 10.9, 14X2X80
8		10572074		3	ARRUELA-TRAVA, 14
9		71470196		1	PLACA

5.0102	01	p1	11/07

BUCKET - (L=850MM) - OPTIONAL CODE 781499058

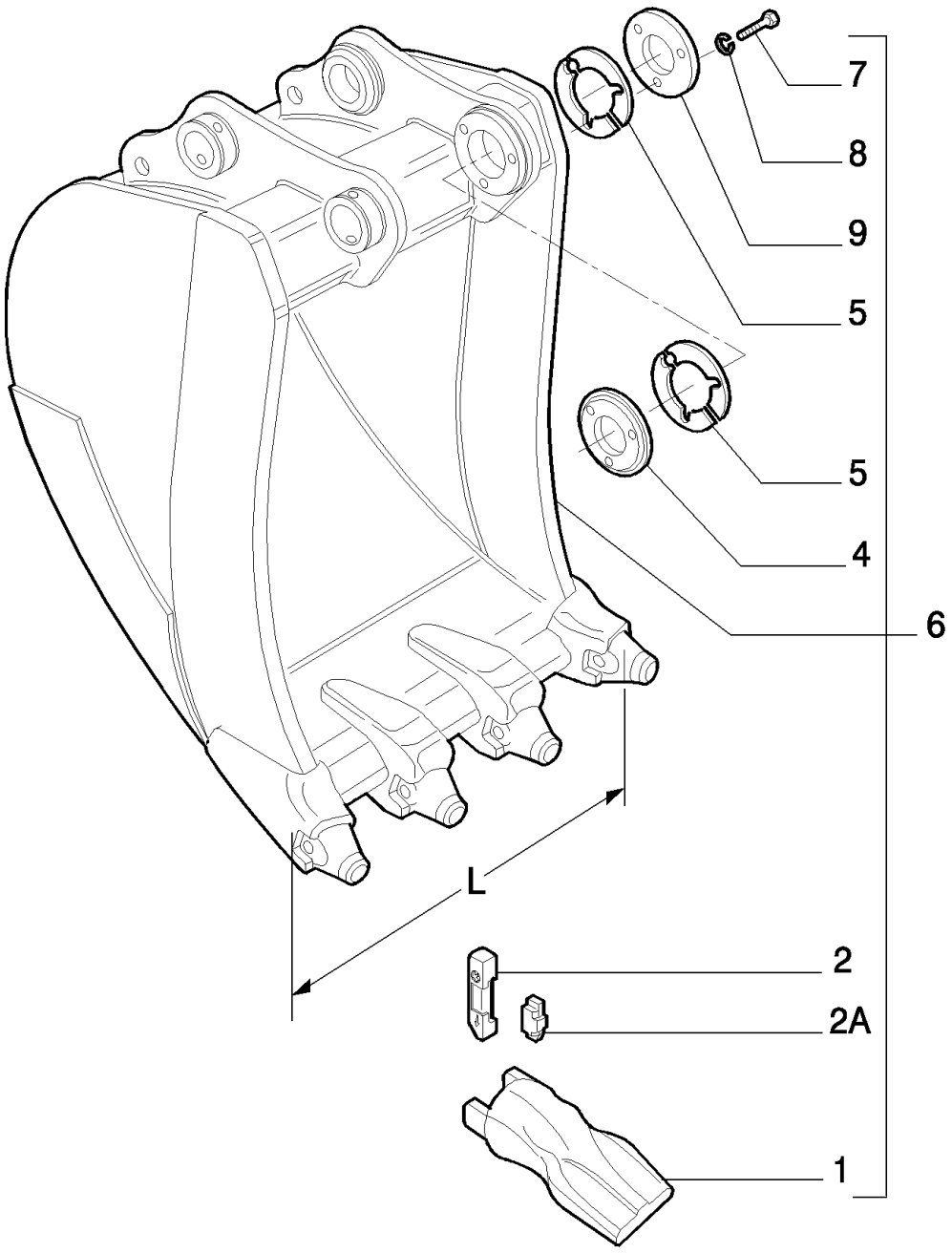

6

BUCKET - (L=850MM) - OPTIONAL CODE 781499058

REF	FN	PART NUMBER	YR/SN	QTY	DESCRIPTION
1		72204487		3	PONTA DENTE DE CAÇAMBA
2		72204486		3	PINO-ELÁSTICO, - ASSY
2A		72206731		1	PRENDEDOR
4		71470195		1	CUBO
5		71470194		12	CALCO DE AFINACAO, 1mm Thk
6		{72210922}		1	- ASSY
7		11117134		3	PARAFUSO, 14X2X80
8		10572074		3	ARRUELA-TRAVA, 14
9		71470196		1	PLACA

5.0103	01	p1	11/07

BUCKET - (L=1350MM) - OPTIONAL CODE 781679008

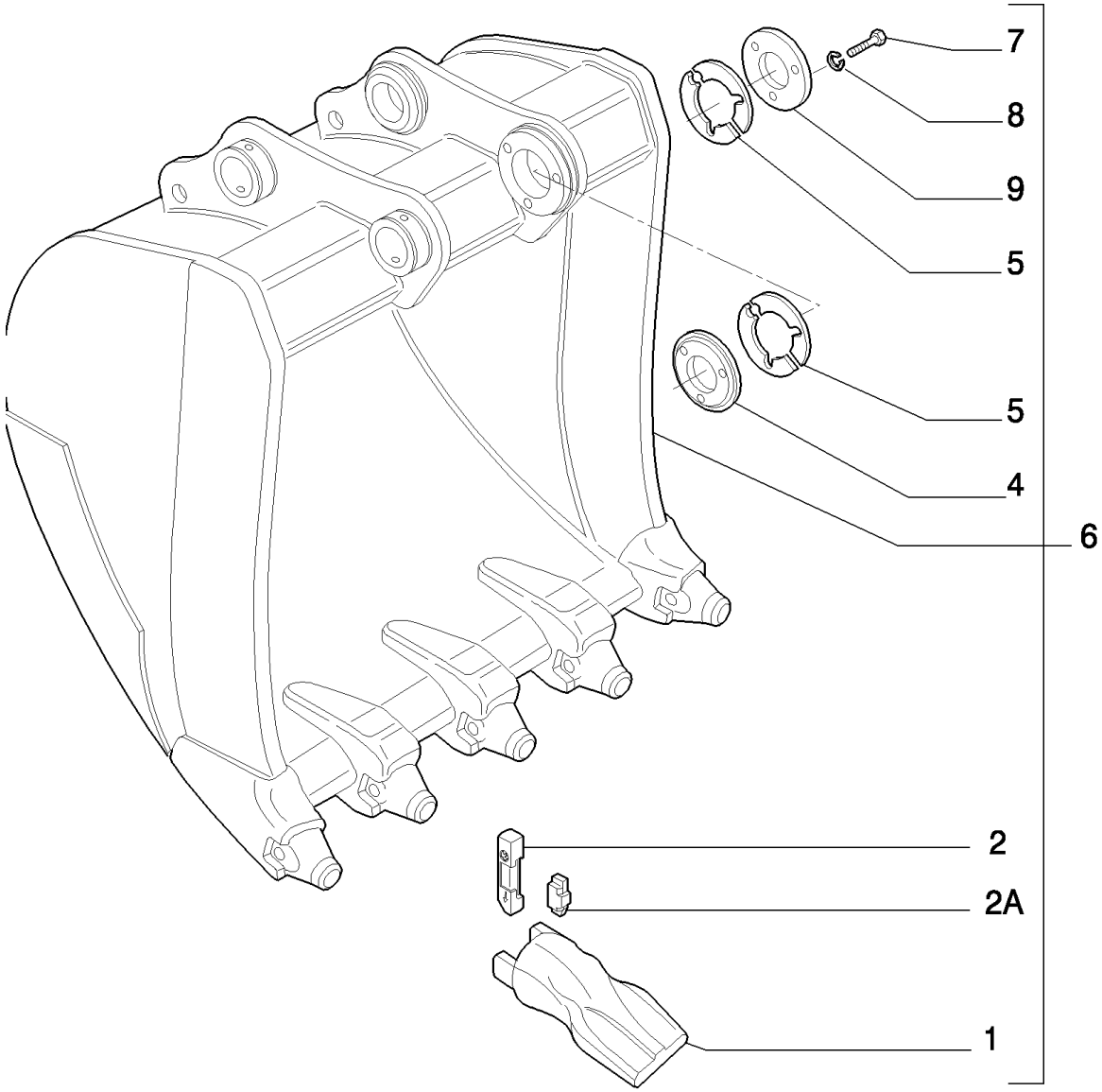

BUCKET - (L=1350MM) - OPTIONAL CODE 781679008

REF	FN	PART NUMBER	YR/SN	QTY	DESCRIPTION
1		72204487		5	PONTA DENTE DE CAÇAMBA
2		72204486		5	PINO-ELÁSTICO, - ASSY
2A		72206731		1	PRENDEDOR
4		71470195		1	CUBO
5		71470194		12	CALCO DE AFINACAO, 1mm Thk
6		{72210928}		1	- ASSY
7		11116934		3	PARAFUSO, M14 x 85, 10.9, 14X2X80
8		10572074		3	ARRUELA-TRAVA, 14
9		71470195		1	CUBO

5.0104	01	p1	11/07

BUCKET - (L=1200MM) - OPTIONAL CODE 781110058

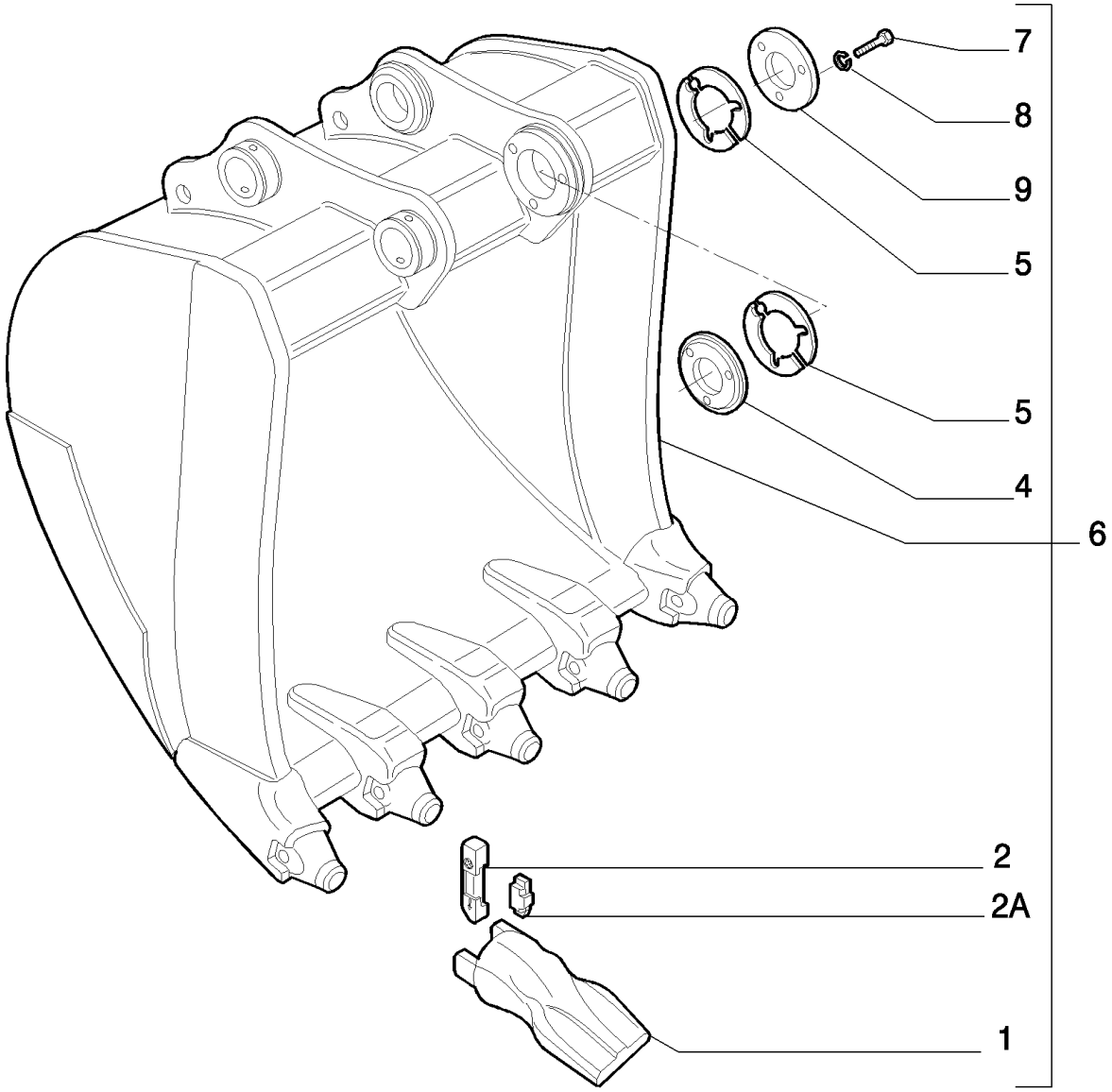

BUCKET - (L=1200MM) - OPTIONAL CODE 781110058

REF	FN	PART NUMBER	YR/SN	QTY	DESCRIPTION
1		72204487		5	PONTA DENTE DE CAÇAMBA
2		72204486		5	PINO-ELÁSTICO, - ASSY
2A		72206731		1	PRENDEDOR
4		71470195		1	CUBO
5		71470194		12	CALCO DE AFINACAO, 1mm Thk
6		{72210926}		1	- ASSY
7		11117134		3	PARAFUSO, 14X2X80
8		10572074		3	ARRUELA-TRAVA, 14
9		71470196		1	PLACA

5.0108	01	p1	11/07

BUCKET - (L=1500MM) - OPTIONAL CODE 781114008

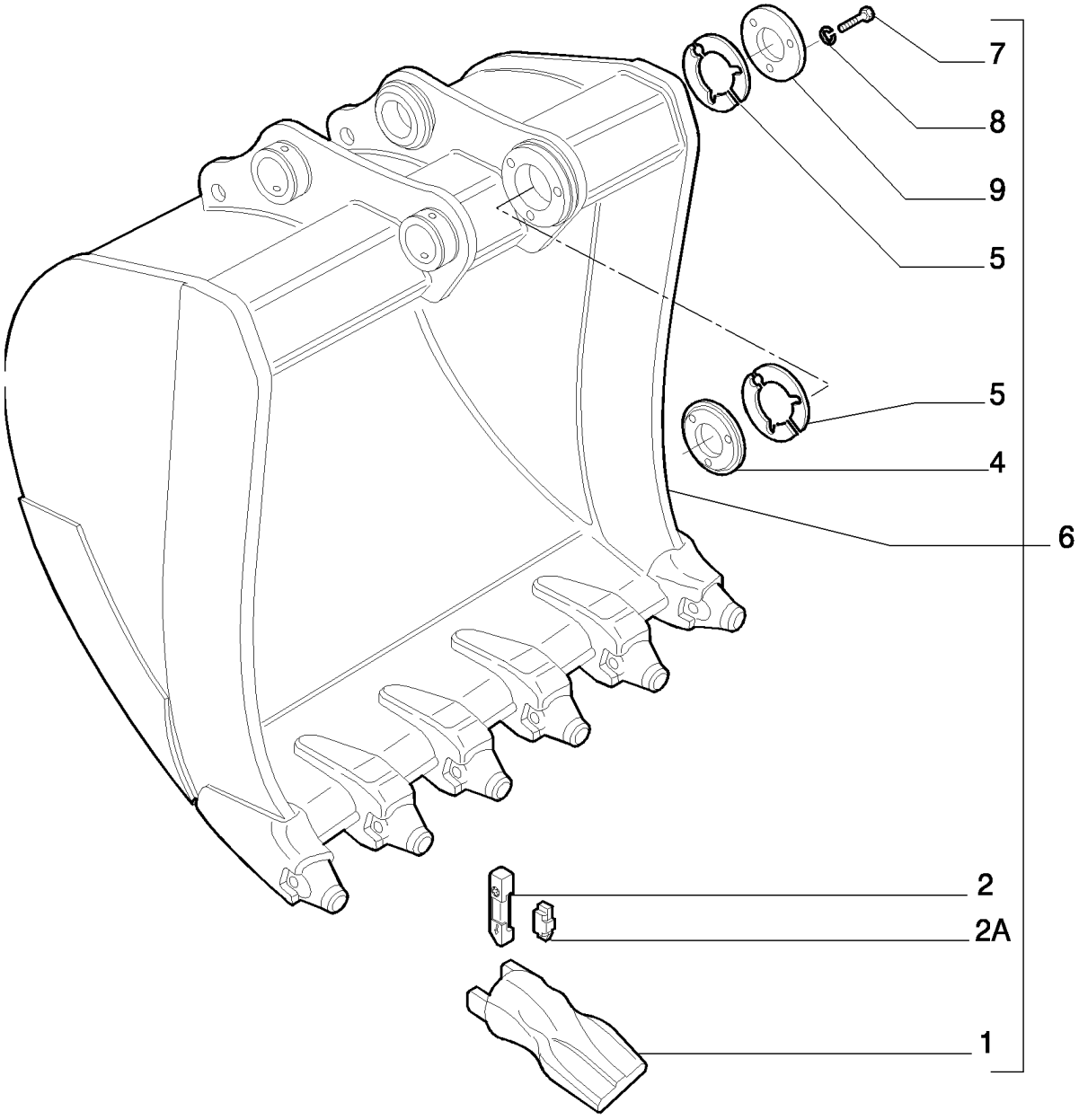

BUCKET - (L=1500MM) - OPTIONAL CODE 781114008

REF	FN	PART NUMBER	YR/SN	QTY	DESCRIPTION
1		72204487		6	PONTA DENTE DE CAÇAMBA
2		72204486		6	PINO-ELÁSTICO, - ASSY
2A		72206731		1	PRENDEDOR
4		71470195		1	CUBO
5		71470194		14	CALCO DE AFINACAO, 1mm Thk
6		{72210930}		1	- ASSY
7		11116934		3	PARAFUSO, M14 x 85, 10.9, 14X2X80
8		10572074		3	ARRUELA-TRAVA, 14
9		71470196		1	PLACA

5.0144	01	p1	11/07

LINK ROD - OPTIONAL CODE 781479068

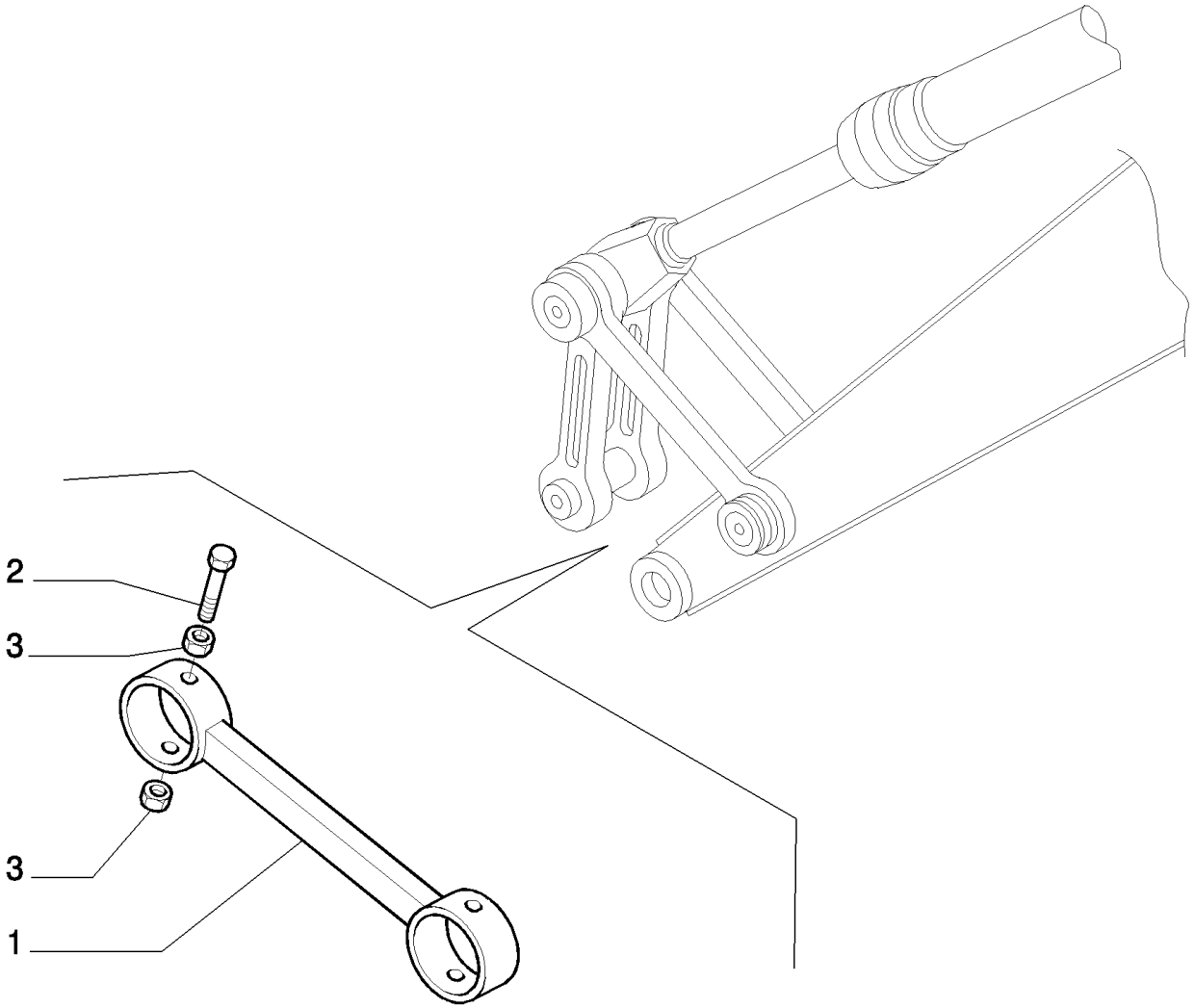

LINK ROD - OPTIONAL CODE 781479068

REF	FN	PART NUMBER	YR/SN	QTY	DESCRIPTION
1		71425839		1	BIELA
2		15990121		2	PARAFUSO, Hex, M20 x 1.5 x 150, 8.8
3		12164321		4	PORCA, M20 x 1.5, Cl 10, 16

5.0148	01	p1	10/07

HYDRAULIC QUICK COUPLING - OPTIONAL CODE 781128068

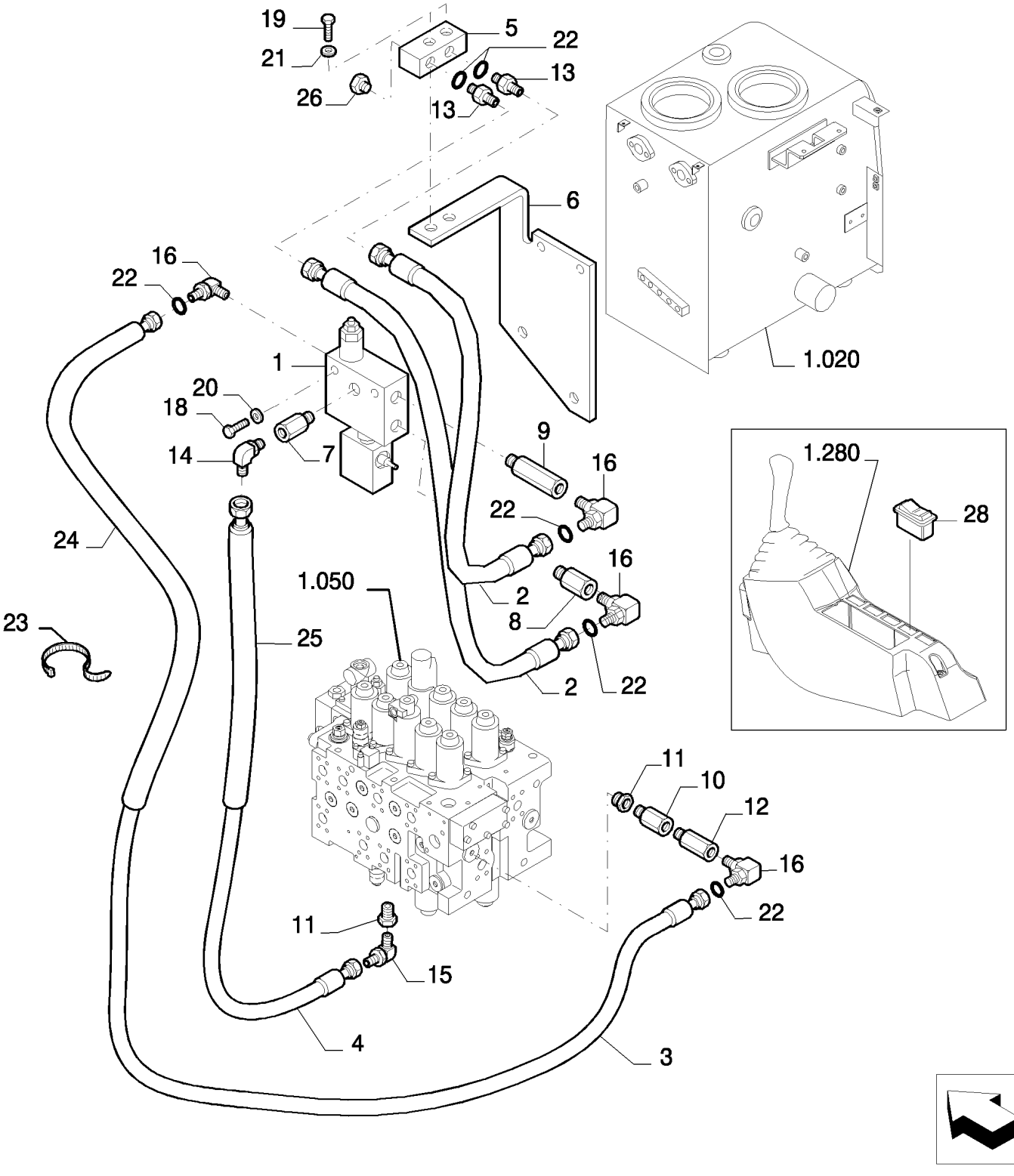

HYDRAULIC QUICK COUPLING - OPTIONAL CODE 781128068

REF	FN	PART NUMBER	YR/SN	QTY	DESCRIPTION
1	1	72112166		1	VÁLVULA HIDRAULICA
2		87579050		2	TUBO FLEXÍVEL
3		87682597		1	TUBO FLEXÍVEL
4		{87597202}		1	
5		87579052		1	BLOCO
6		87682601		1	SUPORTE
7		72217408		1	CONEXÃO
8		72283610		1	CONEXÃO
9		87682648		1	BRAÇADEIRA
10		87579055		1	CONEXÃO
11		72214718		2	CONEXÃO
12		72952762		1	CONEXÃO
13		72216769		2	CONEXÃO
14		72214524		1	CONEXÃO
15		72214525		1	CONEXÃO
16		72217176		4	CONEXÃO
17		11112634		2	PARAFUSO
18		16044534		2	PARAFUSO, Hex, M8 x 65, 10.9
19		11107234		2	PARAFUSO, Hex, M10 x 50, 10.9
20		14496531		2	ARRUELA PLANA, M8 x 17 x 1.6
21		14496631		2	ARRUELA PLANA, M10 x 21 x 2
22		72206112		6	ANEL "O"
23		4982514		4	TIRA DE CABO
24		{72206996}		1	
25		72271490		1	MANGUEIRA
26		72214663		2	BUJÃO
27		11112234		1	PARAFUSO, Hex, M12 x 25, 10.9, Full Thd
28		87682647		1	BUCHA
29		72214808		1	CONEXÃO
30		14496731		2	ARRUELA PLANA
31		87665404		1	INTERRUPTOR

(1) ASSY SEE PAGE 2

HYDRAULIC QUICK COUPLING - COMPONENTS - OPTIONAL CODE 781128068

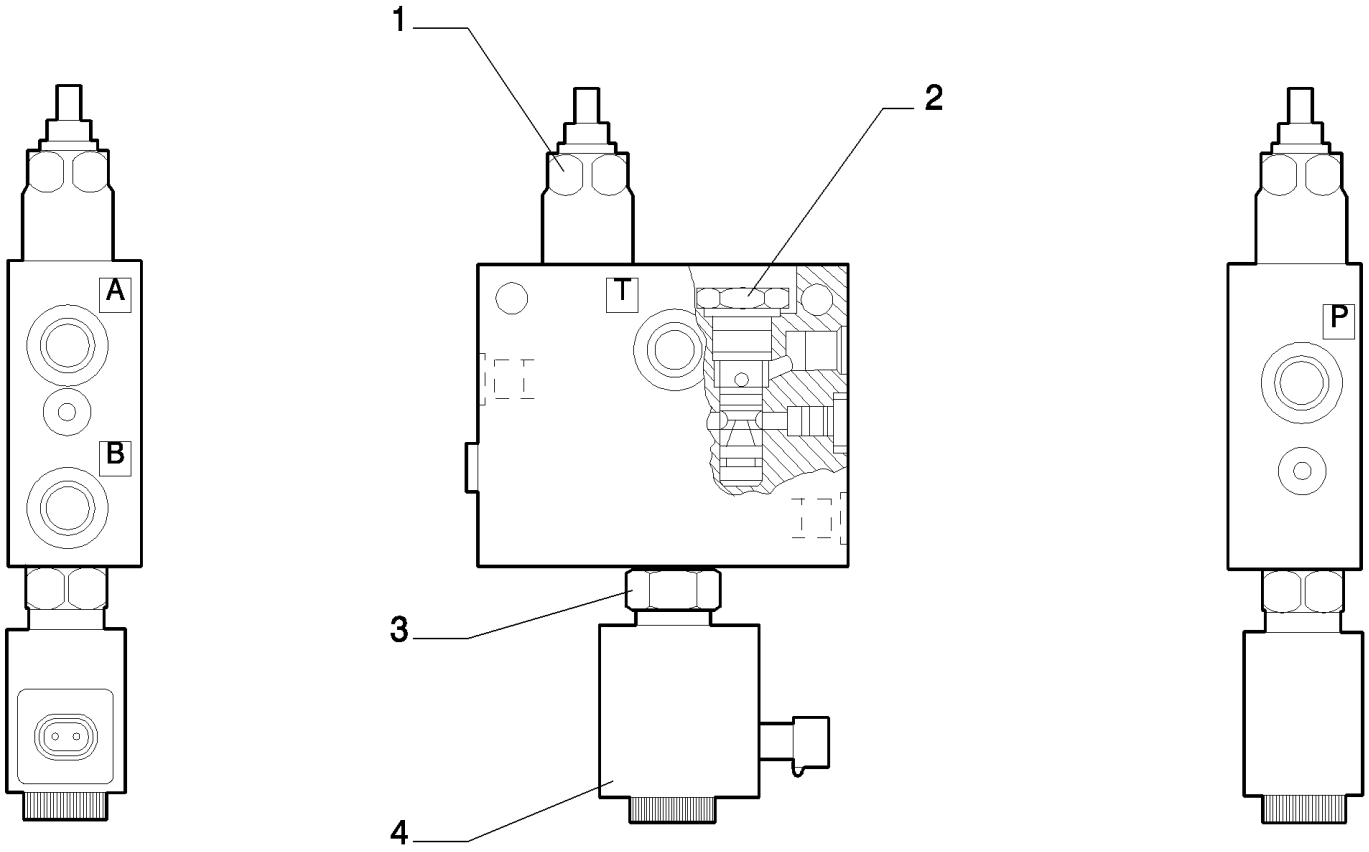

HYDRAULIC QUICK COUPLING - COMPONENTS - OPTIONAL CODE 781128068

REF	FN	PART NUMBER	YR/SN	QTY	DESCRIPTION
1		72210495		1	VÁLVULA HIDRAULICA
2		72210496		1	VÁLVULA HIDRAULICA
3		72210497		1	VÁLVULA HIDRAULICA
4		72210498		1	BOBINA

VALVE ASSY P/N 72112166

5.0156	01	p1	10/07

SEAT AT MECHANICAL SUSPENSION - OPTIONAL CODE 781768058

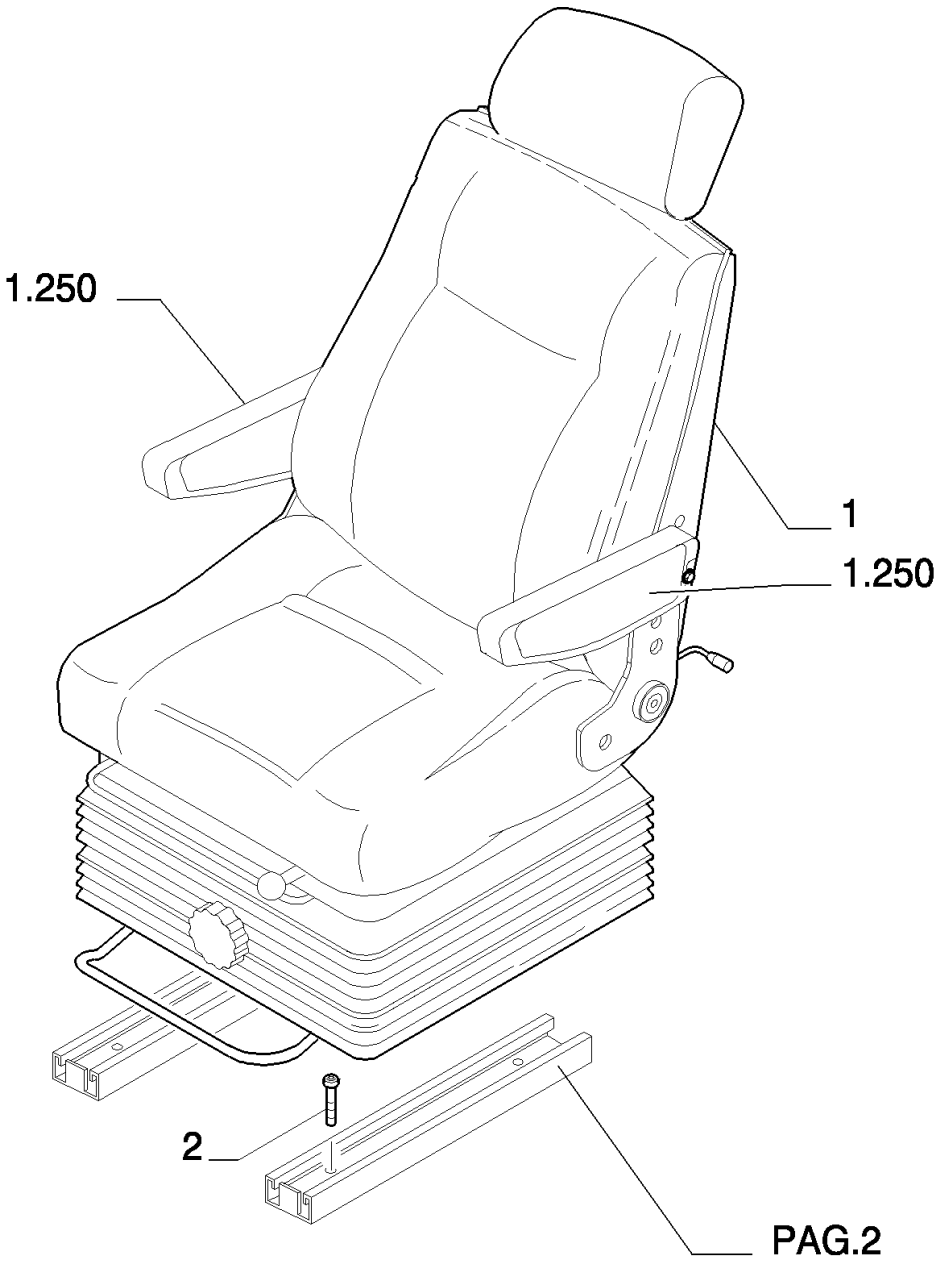

6

SEAT AT MECHANICAL SUSPENSION - OPTIONAL CODE 781768058

REF	FN	PART NUMBER	YR/SN	QTY	DESCRIPTION
1	1	87515608		1	ASSENTO/POLTRONA
2		14306334		4	PARAFUSO

(1) ASSY SEE PAGE 2

5.0156	02	p1	10/07

SEAT AT MECHANICAL SUSPENSION - COMPONENTS - OPTIONAL CODE 781768058

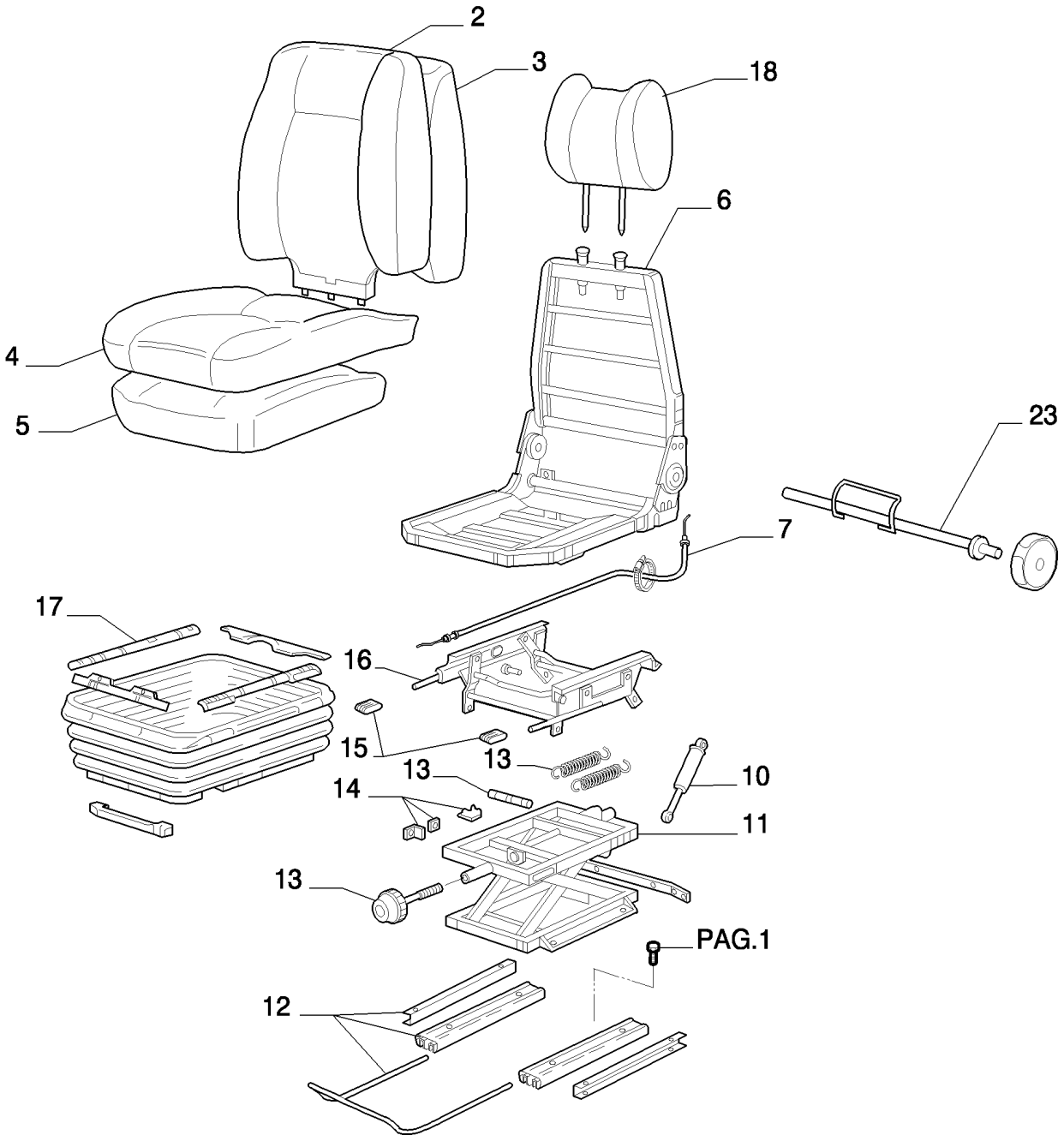

SEAT AT MECHANICAL SUSPENSION - COMPONENTS - OPTIONAL CODE 781768058

REF	FN	PART NUMBER	YR/SN	QTY	DESCRIPTION
2		87583756		1	KIT, - SEAT BACK COVERING
3		87583758		1	KIT, - SEAT BACK
4		87379464		1	KIT, - CUSHION COVERING
5		72116117		1	KIT, - CUSHION
6		87583759		1	KIT, - FRAME
7		71456224		1	CABO, - REGULATING CABLE
10		71468299		1	AMORTECEDOR, - SPRINGS
11		87583765		1	KIT, - SUSPENSION
12		87583766		1	KIT, - GUIDE
13		71468302		1	KIT, - WEIGHT REGULATING SYSTEM
14		71468303		1	KIT, - STOP BLOCK
15		71468304		1	KIT, - HANDGRIP
16		87583767		1	KIT, - HEIGHT REGULATING SYSTEM
17		72116133		1	KIT, - BELLOWS
18		87379467		1	KIT, - HEAD REST
23		87583764		1	KIT, - LUMBAR

5.0159	01	p1	10/07

PNEUM. CUSHIONING HEATED SEAT - OPTIONAL CODE 781000038

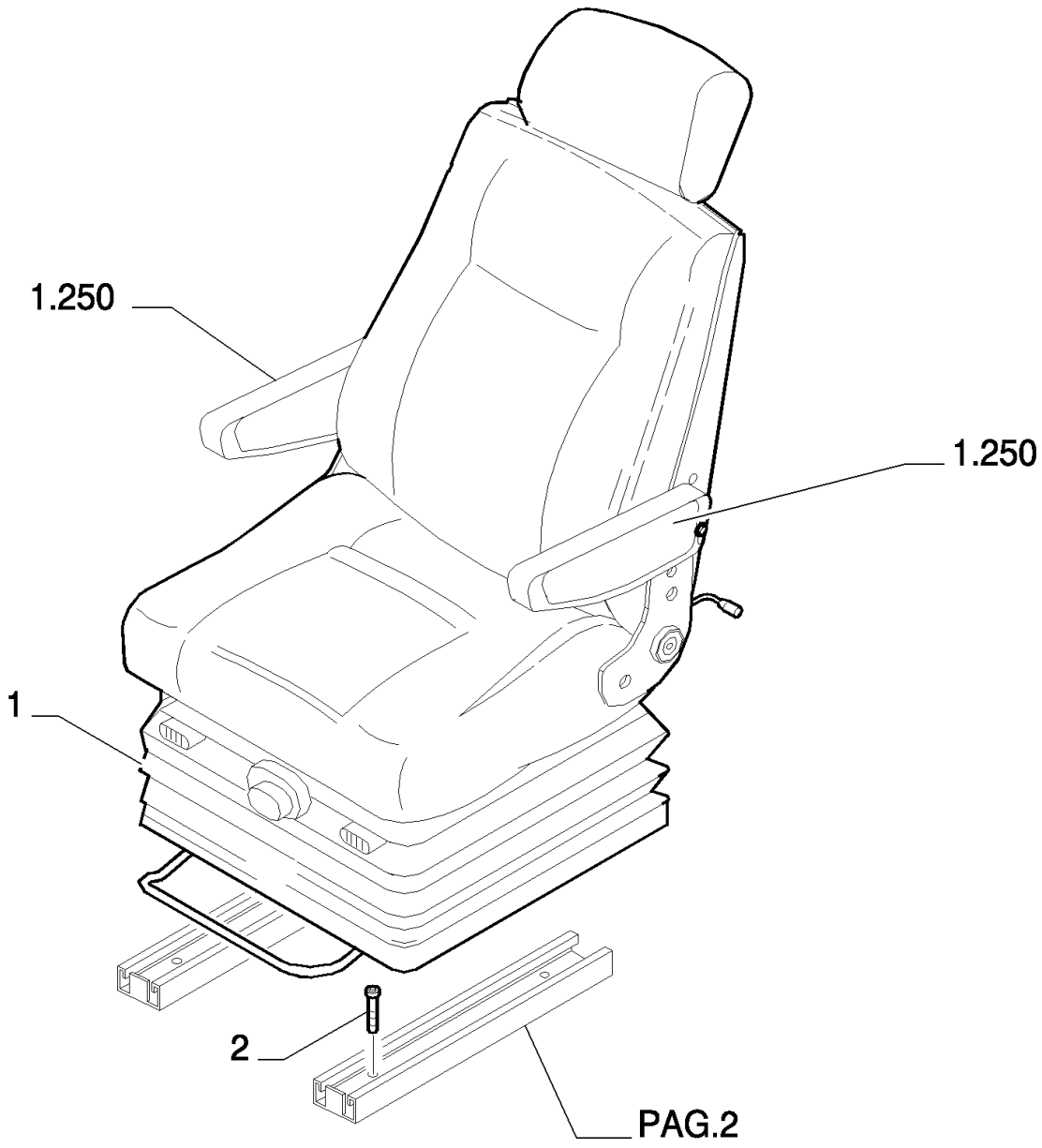

6

PNEUM. CUSHIONING HEATED SEAT - OPTIONAL CODE 781000038

REF	FN	PART NUMBER	YR/SN	QTY	DESCRIPTION
1	1	87516076		1	ASSENTO/POLTRONA
2		14306334		4	PARAFUSO

(1) ASSY SEE PAGE 2

5.0159	02	p1	03/08

PNEUM. CUSHIONING HEATED SEAT - COMPONENTS - OPTIONAL CODE 781000038

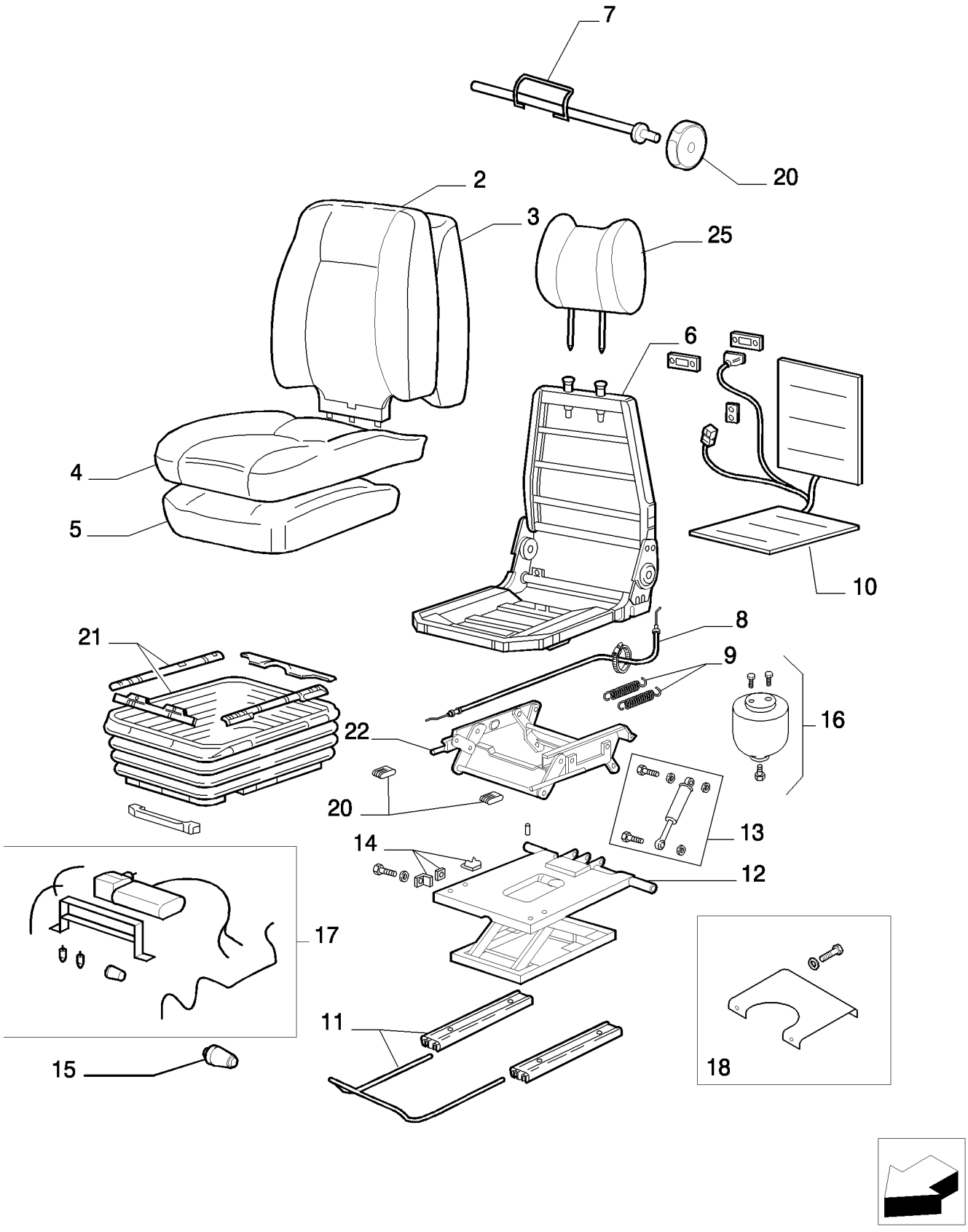

PNEUM. CUSHIONING HEATED SEAT - COMPONENTS - OPTIONAL CODE 781000038

REF	FN	PART NUMBER	YR/SN	QTY	DESCRIPTION
2		87583756		1	KIT, - SEAT BACK COVERING
3		72116115		1	KIT, - SEAT BACK
4		87596492		1	KIT, - CUSHION COVERING
5		87596495		1	COXIM, - CUSHION
6		87583759		1	KIT, - FRAME
7		87583764		1	KIT, - LUMBAR
8		71456224		1	CABO, - REGULATING CABLE
9		87596954		1	KIT, - SEAT SPRINGS
10		72116120		1	KIT, - HEATER
11		87596957		1	KIT, - GUIDE
12		87596968		1	KIT, - SUSPENSION
13		71412020		1	KIT, - SPRINGS
14		71412023		1	KIT, - STOP BLOCK
15		72116123		1	TORNEIRA VÁLV PNEUMÁTICA, - VALVE
16		87596972		1	KIT, - COMPRESSOR 24V
17		87596986		1	KIT, - AIR PIPES
18		87596987		1	KIT, - STOP LIMITER
20		72116127		1	KIT, - HANDGRIP
21		72116128		1	KIT, - SUSPENSION COVER
22		71412018		1	KIT, - HEIGHT REGULATING SYSTEM
25		87379467		1	KIT, - HEAD REST

5.0208	01	p1	10/07

CAB GUARD - OPTIONAL CODE 781646098

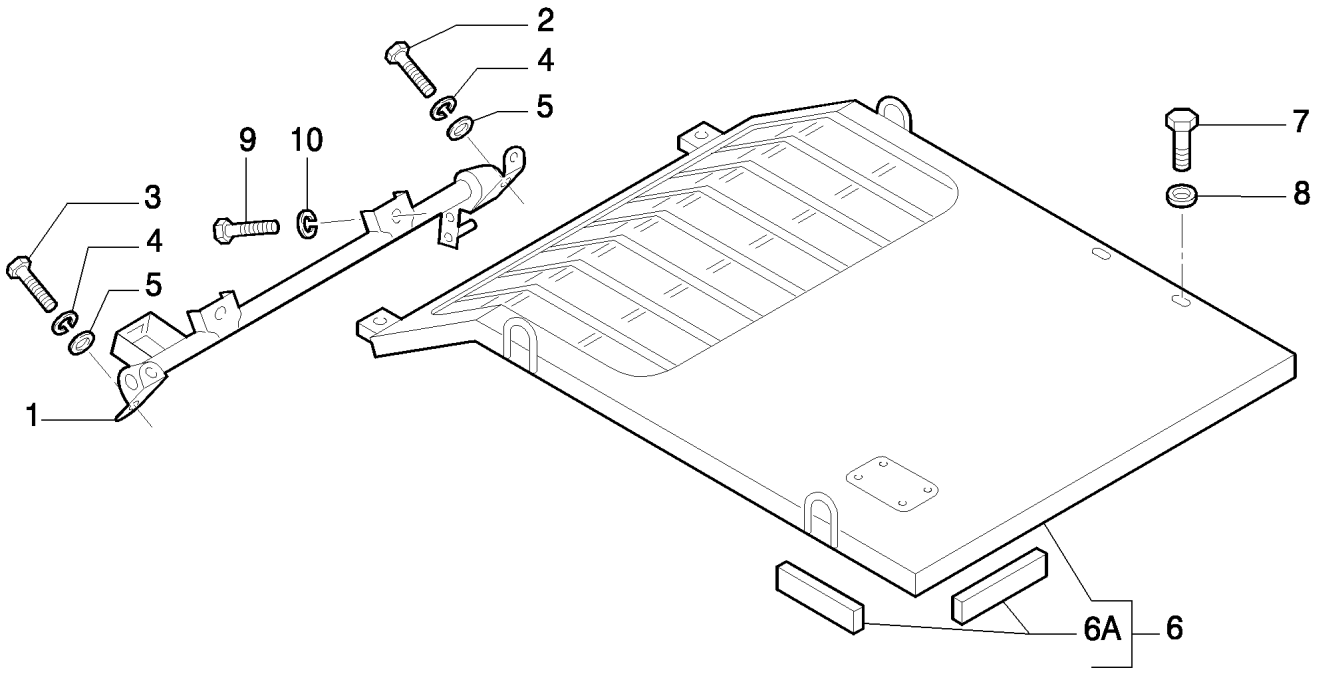

6

CAB GUARD - OPTIONAL CODE 781646098

REF	FN	PART NUMBER	YR/SN	QTY	DESCRIPTION
1		87606411		1	SUPORTE
2		11106434		2	PARAFUSO, Hex, M10 x 30, 10.9, Full Thd
3		11107434		2	PARAFUSO
4		10571879		4	ARRUELA-TRAVA, M10
5		14496631		4	ARRUELA PLANA, M10 x 21 x 2
6		87606859		1	PROTEÇÃO
7		11113834		4	PARAFUSO, Hex, M12 x 80, 10.9, Full Thd
8		13550521		4	ARRUELA-TRAVA
9		11112234		2	PARAFUSO, Hex, M12 x 25, 10.9, Full Thd
10		14496731		2	ARRUELA PLANA

5.0209	01	p1	10/07

CAB GUARD - OPTIONAL CODE 781647098

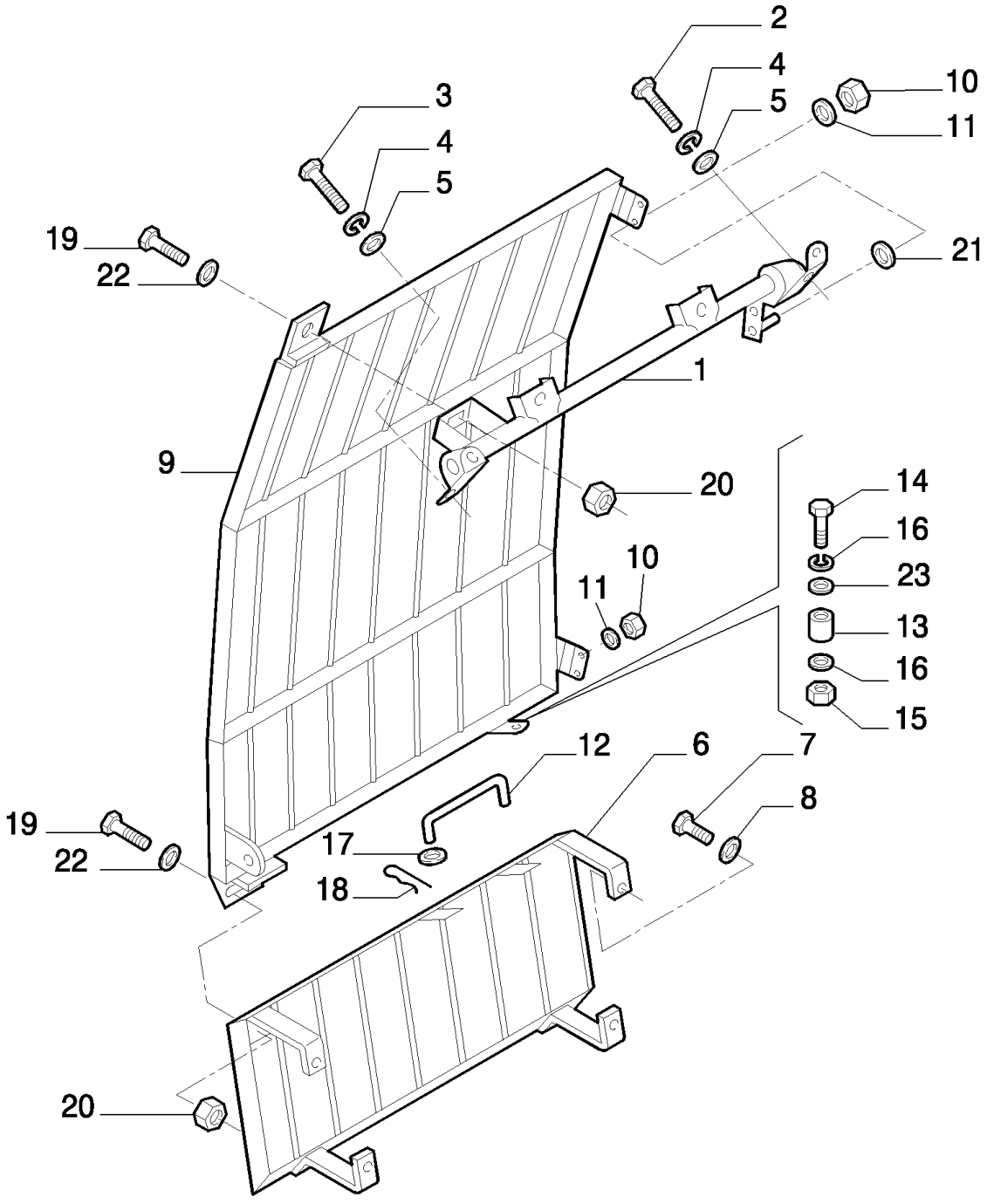

6

CAB GUARD - OPTIONAL CODE 781647098

REF	FN	PART NUMBER	YR/SN	QTY	DESCRIPTION
1		87606411		1	SUPORTE
2		11106434		2	PARAFUSO, Hex, M10 x 30, 10.9, Full Thd
3		11107434		2	PARAFUSO
4		10571879		4	ARRUELA-TRAVA, M10
5		14496631		4	ARRUELA PLANA, M10 x 21 x 2
6		87606476		1	PROTEÇÃO
7		11112434		4	PARAFUSO, Hex, M12 x 30, 10.9, Full Thd
8		14496731		4	ARRUELA PLANA
9		87606717		1	PROTEÇÃO
10		11701721		4	PORCA, M10, Cl 10
11		14496631		4	ARRUELA PLANA, M10 x 21 x 2
12		87606746		1	HASTE
13		87606856		1	BRAÇADEIRA
14		10444634		1	PARAFUSO
15		10721911		1	PORCA
16		14497731		2	ARRUELA PLANA
17		72954209		1	ARRUELA PLANA
18		72275189		1	GRAMPO
19		11112434		2	PARAFUSO, Hex, M12 x 30, 10.9, Full Thd
20		87606857		2	PLACA
21		87606858		2	CALCO DE AFINACAO
22		14496731		2	ARRUELA PLANA
23		11195374		1	ARRUELA-TRAVA

5.0210	01	p1	10/07

CAB GUARD - OPTIONAL CODE 461116028

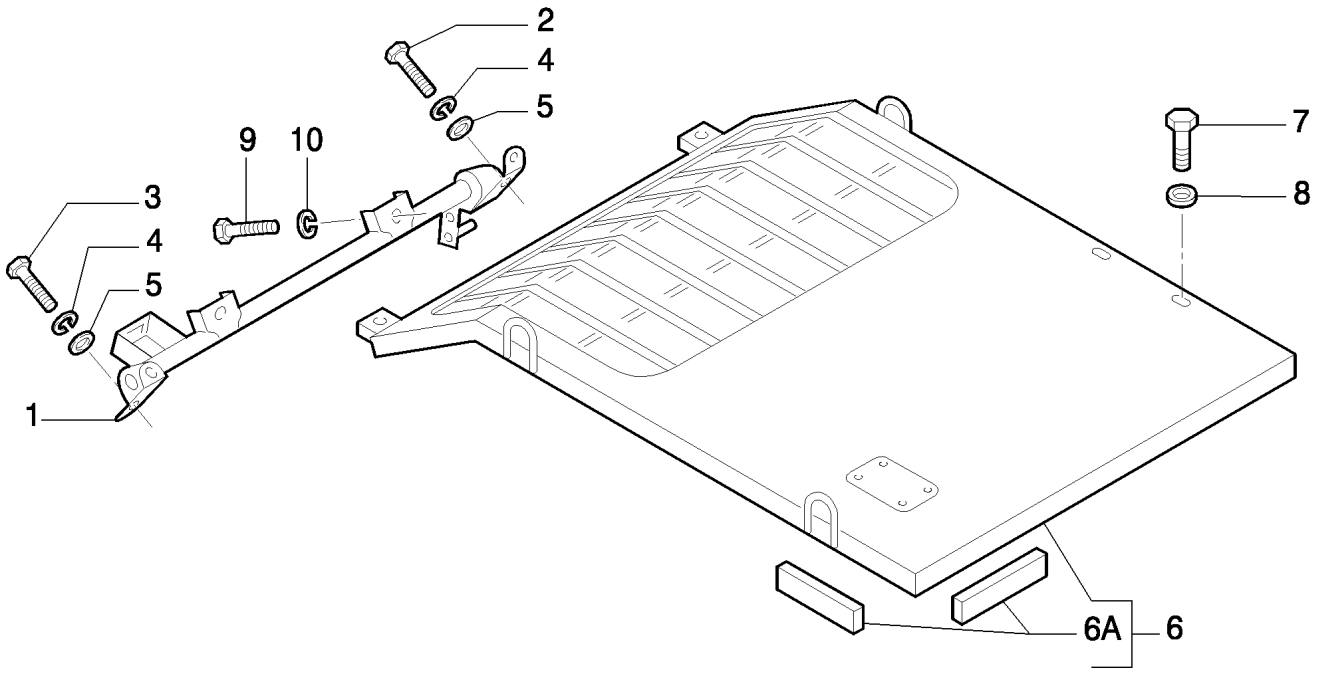

6

CAB GUARD - OPTIONAL CODE 461116028

REF	FN	PART NUMBER	YR/SN	QTY	DESCRIPTION
1		87606411		1	SUPORTE
2		11106434		2	PARAFUSO, Hex, M10 x 30, 10.9, Full Thd
3		11107434		2	PARAFUSO
4		10571879		4	ARRUELA-TRAVA, M10
5		14496631		4	ARRUELA PLANA, M10 x 21 x 2
6		87606859		1	PROTEÇÃO
7		11113834		4	PARAFUSO, Hex, M12 x 80, 10.9, Full Thd
8		13550521		4	ARRUELA-TRAVA
9		11112234		2	PARAFUSO, Hex, M12 x 25, 10.9, Full Thd
10		14496731		2	ARRUELA PLANA

5.0210	02	p1	10/07

CAB GUARD - OPTIONAL CODE 461116028

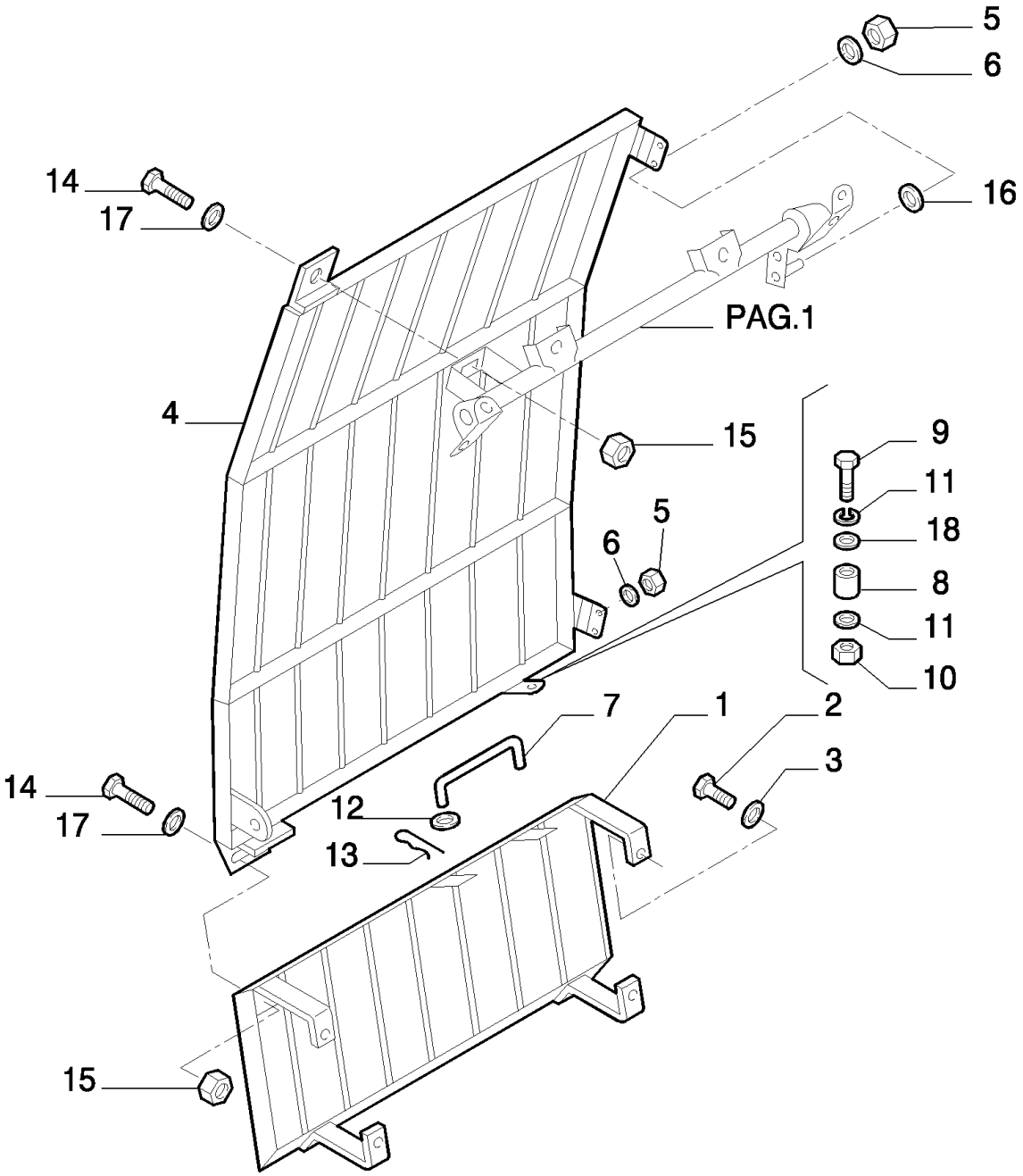

CAB GUARD - OPTIONAL CODE 461116028

REF	FN	PART NUMBER	YR/SN	QTY	DESCRIPTION
1		87606476		1	PROTEÇÃO
2		11112434		4	PARAFUSO, Hex, M12 x 30, 10.9, Full Thd
3		14496731		4	ARRUELA PLANA
4		87606717		1	PROTEÇÃO
5		11701721		4	PORCA, M10, Cl 10
6		14496631		4	ARRUELA PLANA, M10 x 21 x 2
7		87606746		1	HASTE
8		87606856		1	BRAÇADEIRA
9		10444634		1	PARAFUSO
10		10721911		1	PORCA
11		14497731		2	ARRUELA PLANA
12		72954209		1	ARRUELA PLANA
13		72275189		1	GRAMPO
14		11112434		2	PARAFUSO, Hex, M12 x 30, 10.9, Full Thd
15		87606857		2	PLACA
16		87606858		2	CALCO DE AFINACAO
17		14496731		2	ARRUELA PLANA
18		11195374		1	ARRUELA-TRAVA

5.0580	01	p1	10/07

SUN CANOPY - OPTIONAL CODE 461221008

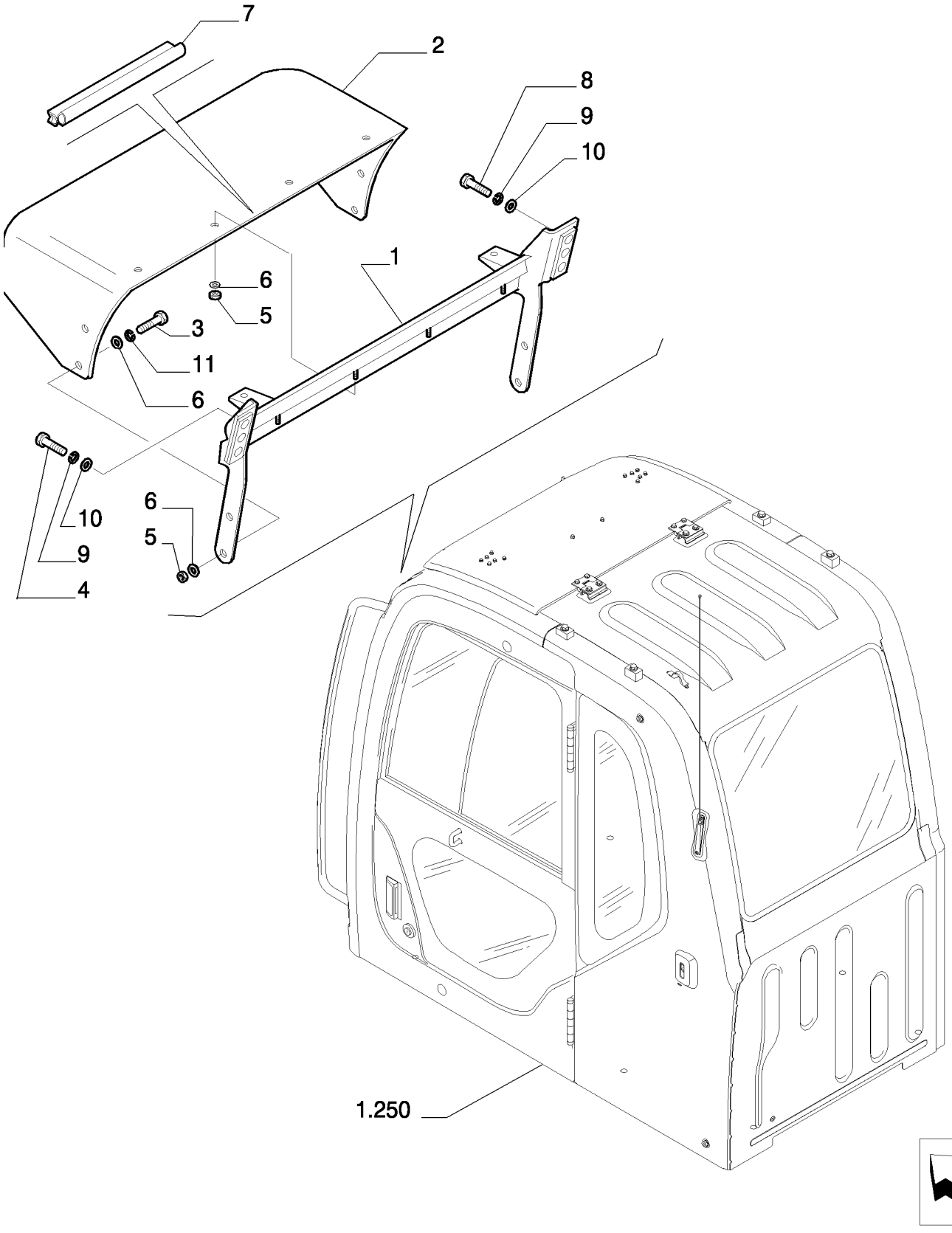

SUN CANOPY - OPTIONAL CODE 461221008

REF	FN	PART NUMBER	YR/SN	QTY	DESCRIPTION
1		87630348		1	SUPORTE
2		87630358		1	PROTEÇÃO
3		16043634		4	PARAFUSO, Hex, M8 x 25, 10.9, Full Thd
4		11106434		2	PARAFUSO, Hex, M10 x 30, 10.9, Full Thd
5		16100824		8	PORCA, M8, Cl 10
6		14496531		12	ARRUELA PLANA, M8 x 17 x 1.6
7		87630362		1	JUNTA
8		11107434		2	PARAFUSO
9		10516874		4	ARRUELA-TRAVA
10		14496631		4	ARRUELA PLANA, M10 x 21 x 2
11		10516674		4	ARRUELA-TRAVA, 5/16"

5.0580	02	p1	10/07

CAB LIGHTS - OPTIONAL CODE 461221008

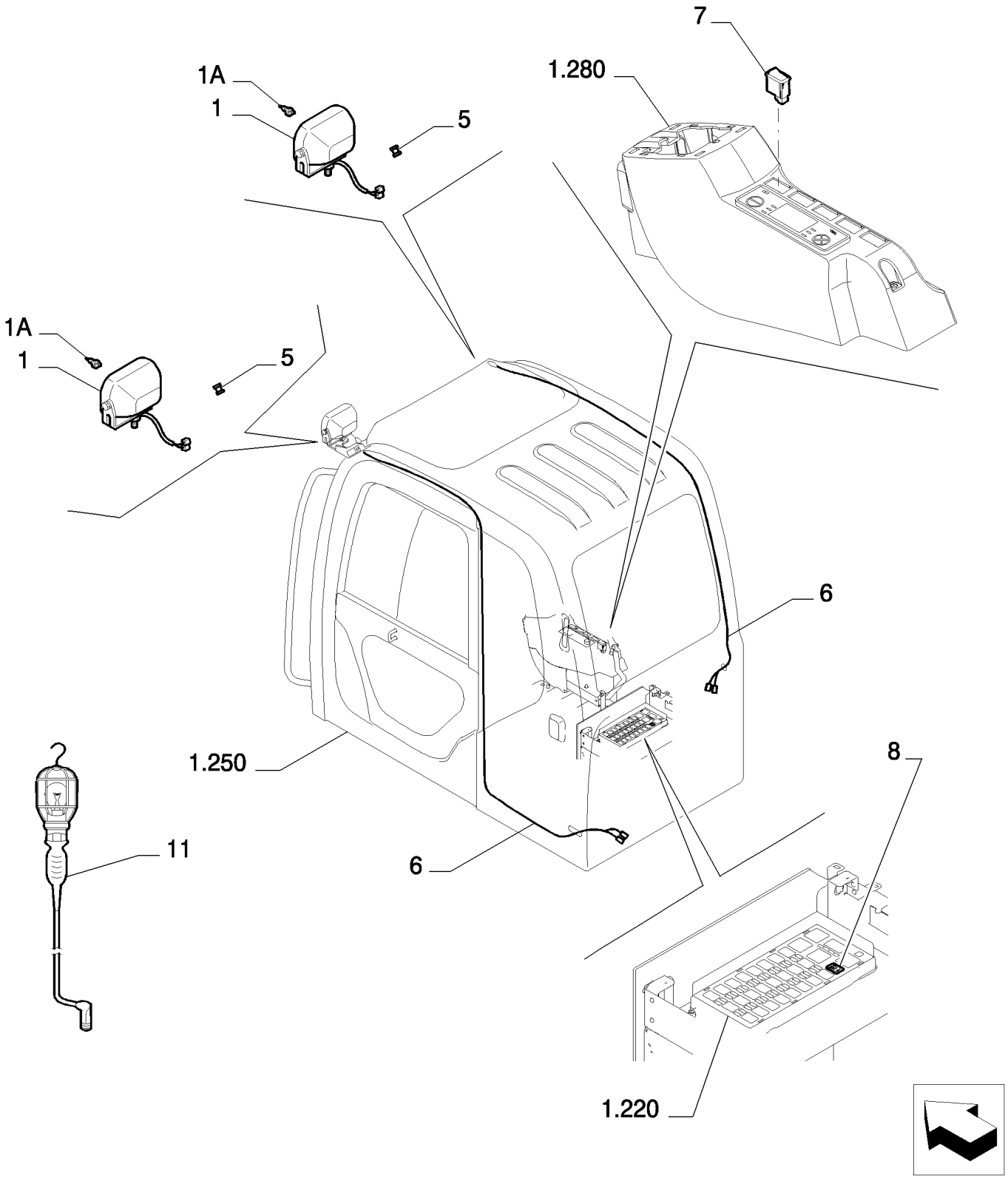

CAB LIGHTS - OPTIONAL CODE 461221008

REF	FN	PART NUMBER	YR/SN	QTY	DESCRIPTION
1		87555081		2	PROJETOR
1A		79069460		1	LÂMPADA
5		72203027		2	JUNTAS
6		87559228		2	CABO ELÉTRICO
7		87559198		1	INTERRUPTOR
8		87559156		1	CONECTADOR
11		71450974		1	LÂMPADA

5.0581	01	p1	05/08

REAR MIRROR - OPTIONAL CODE 46128018

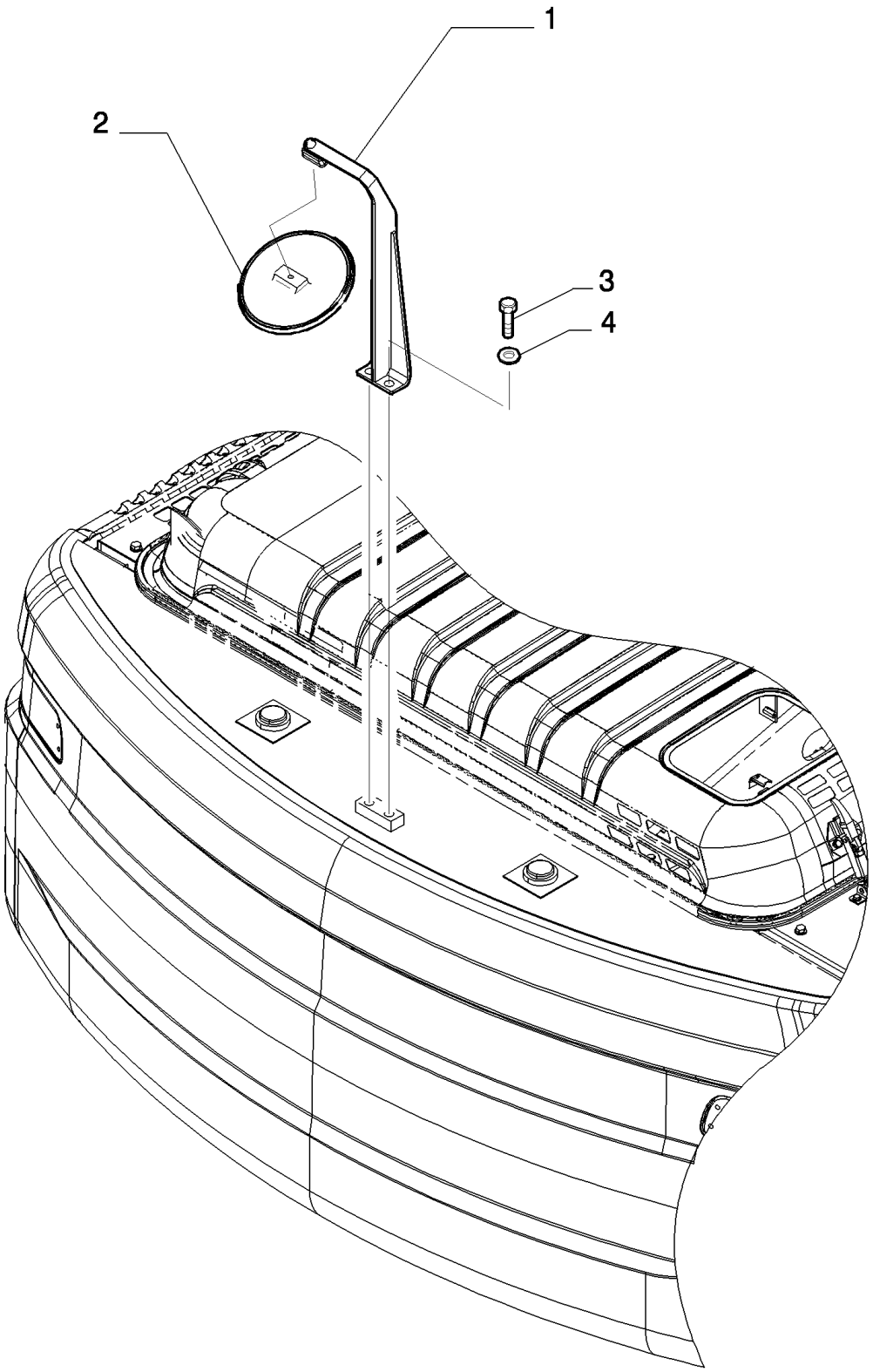

6

REAR MIRROR - OPTIONAL CODE 46128018

REF	FN	PART NUMBER	YR/SN	QTY	DESCRIPTION
1		87641272		1	TIRANTE
2		87641273		1	ESPELHO RETROVISOR
3		11112434		2	PARAFUSO, Hex, M12 x 30, 10.9, Full Thd
4		14496731		2	ARRUELA PLANA

Number	Figure	Sequence	Ref.	Number	Figure	Sequence	Ref.
{111014830C}	0.060	01	11101	{137351470A}	0.066	01	13735
	0.060	02	11101	{137871210D}	0.066	01	13787
{111031380B}	0.060	01	11103	{137881030A}	0.066	01	13788
	0.060	02	11103	{138301560A}	0.066	01	13830
{111041101A}	0.071	01	11104	{138401430A}	0.066	01	13840
	0.071	02	11104	{139011390C}	0.066	01	13901
{111041110B}	0.071	01	11104A	{139511880B}	0.066	01	13951
	0.071	02	11104A	{14428070}	3.010	03	83
{11109034}	0.000	02	24	{151171170A}	0.040	01	15117
{111152870A}	0.060	01	11115		0.042	01	15117
	0.060	02	11115	{15301E0020}	0.040	01	15301
{111181011B}	0.060	01	11118		0.042	01	15301
	0.060	02	11118	{154481170A}	0.040	01	15448
{111221220A}	0.060	01	11122		0.042	01	15448
	0.060	02	11122	{154928940A}	0.060	01	15492
{111311480B}	0.060	01	11131		0.060	02	15492
	0.060	02	11131	{154929400A}	0.071	01	15492
{111351720B}	0.060	01	11135		0.071	02	15492
	0.060	02	11135	{156051250B}	0.040	01	15605
{11137341}	2.031	04	9		0.042	01	15605
{111761190A}	0.060	01	11176	{162051330B}	0.071	01	16205
	0.060	02	11176		0.071	02	16205
{111852261C}	0.060	01	11185	{163051050B}	0.071	01	16305
	0.060	02	11185		0.071	02	16305
{111881070A}	0.060	01	11188A	{165061561A}	0.071	01	16506
	0.060	02	11188A		0.071	02	16506
{111881080A}	0.060	01	11188	{166913322A}	0.071	01	16691
	0.060	02	11188		0.071	02	16691
{112012011B}	0.060	01	11201	{166913750A}	0.071	01	16691A
	0.060	02	11201		0.071	02	16691A
{112131880A}	0.060	01	11213	{170318024A}	0.071	01	17031
	0.060	02	11213		0.071	02	17031
{113061480A}	0.043	01	11306	{170444610A}	0.071	01	17044
{113091060C}	0.043	01	11309		0.071	02	17044
{113517921A}	0.043	01	11351	{171041610A}	0.071	01	17104
{113571022A}	0.043	01	11357		0.071	02	17104
{113571062A}	0.043	01	11357A	{171041990A}	0.071	01	17104A
{113581011A}	0.043	01	11358		0.071	02	17104A
{113901050A}	0.043	01	11390	{171042000A}	0.071	01	17104B
{114016091A}	0.040	01	11401		0.071	02	17104B
	0.042	01	11401	{171051150A}	0.071	01	17105
{114081400A}	0.040	01	11408		0.071	02	17105
	0.042	01	11408	{171114632A}	0.071	01	17111
{114673200A}	0.040	01	11467		0.071	02	17111
	0.042	01	11467	{171138490A}	0.071	01	17113
{114673210A}	0.040	01	11467		0.071	02	17113
	0.042	01	11467	{171365492A}	0.071	01	17136
{114673220A}	0.040	01	11467		0.071	02	17136
	0.042	01	11467	{171522580A}	0.071	01	17152
{115211261A}	0.040	01	11521		0.071	02	17152
	0.042	01	11521	{171712200A}	0.071	01	17171
{119011030A}	0.060	01	11901		0.071	02	17171
	0.060	02	11901	{171712310A}	0.071	01	17171A
{121024230A}	0.040	01	12102		0.071	02	17171A
	0.042	01	12102	{171731860B}	0.071	01	17173
{121081100A}	0.060	01	12108		0.071	02	17173
	0.060	02	12108	{173081310A}	0.071	01	17308
{121114880A}	0.040	01	12111		0.071	02	17308
	0.042	01	12111	{173091090C}	0.071	01	17309
{121491030B}	0.040	01	12149		0.071	02	17309
	0.042	01	12149	{173501250A}	0.071	01	17350
{121512611A}	0.040	01	12151		0.071	02	17350
	0.042	01	12151	{220607500}	3.020	02	9
{122012230A}	0.060	01	12201		3.040	02	10
	0.060	02	12201	{220607600}	3.020	02	8
{122811901A}	0.043	01	12281		3.040	02	3
{122812251B}	0.071	01	12281	{237451020A}	0.060	01	23745
	0.071	02	12281		0.060	02	23745
{125051181A}	0.060	01	12505	{270171250A}	0.400	02	27017
	0.060	02	12505	{270402500A}	0.400	02	27040
{137061080A}	0.066	01	13706	{273102050A}	0.400	02	27310
{137091030A}	0.066	01	13709	{273111710A}	0.400	02	27311
{137111632A}	0.066	01	13711	{273121590A}	0.400	02	27312
{137151733A}	0.066	01	13715	{273171610A}	0.400	02	27317
{137191470A}	0.066	01	13719	{273171650A}	0.400	02	27317A
{137311610B}	0.066	01	13731	{273171660A}	0.400	02	27317B
{137321500B}	0.066	01	13732	{273171850A}	0.400	02	27317C
{137341280A}	0.066	01	13734	{273302030A}	0.400	02	27330

Number	Figure	Sequence	Ref.	Number	Figure	Sequence	Ref.
{273503070A}	0.400	02	27350	{72210930}	5.0108	01	6
{273531790A}	0.400	02	27353	{72210932}	5.0101	01	6
{273561490A}	0.400	02	27356	{72212412}	3.020	02	1
{273581780A}	0.400	02	27358	{72214442}	2.031	03	1A
{273592480A}	0.400	02	27359	{72214738}	5.0020	05	6
{273641380A}	0.400	02	27364	{72219820}	0.001	01	1L
{273781760A}	0.400	02	27378	{72954172}	1.081	01	35
{273831510A}	0.400	02	27383A	{765894090C}	0.060	01	76589
{273831520A}	0.400	02	27383		0.060	02	76589
{273891340A}	0.400	02	27389	{765896350A}	0.060	01	76589A
{273911080A}	0.400	02	27391		0.060	02	76589A
{273911090A}	0.400	02	27391A	{781489098}	4.520	01	45
{273921500A}	0.400	02	27392	{799042180A}	0.040	01	79904
{274102080A}	0.400	02	27410		0.042	01	79904
{274121220A}	0.400	02	27412		0.071	01	79904
{274311880A}	0.400	02	27431		0.071	02	79904
{274411240A}	0.400	02	27441	{87338401}	1.050	02	16
{274451310A}	0.400	02	27445A		5.0020	03	5
{277001810A}	0.400	02	27700		5.0076	05	21
{280111640A}	0.400	03	28011		5.0077	05	21
{281002894A}	0.400	03	28100		5.0078	05	21
{281111470A}	0.400	03	28111		5.0079	05	21
{281111480A}	0.400	03	28111A	{87338432}	1.065	01	3
{281122000A}	0.400	03	28112A	{87338503}	1.060	01	7
{281122610A}	0.400	03	28112E	{87338532}	1.081	01	33
{281122620A}	0.400	03	28112	{87338541}	1.060	01	5
{281131360A}	0.400	03	28113	{87338581}	1.060	03	17
{281152231A}	0.400	03	28115	{873411421A}	0.071	01	87341
{281171300A}	0.400	03	28117		0.071	02	87341
{281171310A}	0.400	03	28117A	{87349330}	5.0020	10	10
{281181450A}	0.400	03	28118	{87396684}	5.0076	08	3
{281181520A}	0.400	03	28118A		5.0077	08	3
{281181530B}	0.400	03	28118B		5.0078	08	3
{281181540A}	0.400	03	28118C		5.0079	08	3
{281181550A}	0.400	03	28118D	{87520307}	1.270	01	5
{281181561A}	0.400	03	28118E	{87520314}	1.270	01	6
{281181570A}	0.400	03	28118F	{87520418}	1.270	01	8
{281201900B}	0.400	03	28120	{87527312}	1.250	08	1F
{281332400A}	0.400	03	28133	{87527376}	1.250	07	2
{281381370A}	0.400	03	28138	{87527469}	1.250	06	12D
{281401680A}	0.400	03	28140	{87527470}	1.250	06	12E
{281421530A}	0.400	03	28142	{87527493}	1.250	06	10
{281421540A}	0.400	03	28142A	{87527496}	1.250	08	2A
{281431200A}	0.400	03	28143	{87527498}	1.250	09	8A
{281502554A}	0.400	03	28150	{87527506}	1.250	09	60A
{281601760A}	0.400	03	28160	{87527507}	1.250	09	61
{281681370A}	0.400	03	28168A	{87527509}	1.250	09	61A
{281681400A}	0.400	03	28168	{87527511}	1.250	09	61B
{281711210A}	0.400	03	28171	{87527514}	1.250	09	65
{281991100A}	0.400	03	28199	{87527517}	1.250	09	66
{282271010A}	0.400	03	28227	{87531517}	1.300	08	1B
{282271020A}	0.400	03	28227	{87531528}	1.300	07	2A
{282401680A}	0.400	03	28240	{87547544}	1.300	08	1C
{282511090A}	0.400	03	28251	{87565335}	1.220	03	4C
{282521880A}	0.400	03	28252	{87568024}	1.040	01	7
{282522130A}	0.400	02	28252A	{87568031}	1.040	01	7B
{282522150A}	0.400	02	28252	{87570324}	3.001	01	1
{282531070A}	0.400	03	28253	{87570558}	1.050	01	3
{282531080A}	0.400	03	28253A	{87570559}	1.050	01	2
{282551040A}	0.400	03	28255	{87571046}	1.030	01	7
{42041100}	0.002	01	6	{87571491}	3.000	03	1
{420411000}	0.003	02	35	{87571493}	3.000	03	2
	1.010	02	20	{87572072}	3.010	01	4
{42205500}	1.295	02	20	{87572073}	3.010	01	4A
{7092381}	3.040	02	8	{87572074}	3.010	01	4B
{72114781}	2.030	02	1A	{87572130}	1.061	01	3
{72160584}	5.0013	02	9	{87572576}	1.081	02	10
	5.0022	02	9	{87573116}	1.060	03	1
	5.0038	02	9	{87573160}	1.050	02	1
	5.0039	02	9	{87573163}	1.061	01	2
{72206996}	5.0148	01	24	{87573165}	1.061	01	1
{72208154}	2.000	02	7	{87573167}	1.061	02	4
	2.001	02	20	{87573168}	1.061	02	7
{72210559}	1.300	07	2D	{87573463}	1.081	02	21
{72210922}	5.0102	01	6	{87574221}	1.081	01	3
{72210924}	5.0100	01	6	{87574226}	0.002	01	17
{72210926}	5.0104	01	6	{87576751}	2.030	01	23
{72210928}	5.0103	01	6	{87576752}	2.030	02	1

Number	Figure	Sequence	Ref.	Number	Figure	Sequence	Ref.
{87576757}	2.030	02	2	{87602763}	1.295	03	5
{87590541}	2.001	01	17	{87602764}	1.295	03	6
{87593130}	0.002	01	2	{87602765}	1.295	03	7
{87593151}	0.002	01	1	{87602766}	1.295	03	8
{87593501}	1.300	10	1	{87602768}	1.295	03	11
{87593503}	1.300	10	2	{87602773}	1.295	02	49
{87593504}	1.300	10	4	{87602815}	1.295	02	53
{87593507}	1.300	10	7	{87604438}	3.070	01	10
{87593508}	1.300	10	8	{87604439}	3.070	01	11
{87593509}	1.300	10	9	{87604444}	3.070	01	12
{87593557}	1.300	08	2	{87604465}	3.070	01	15
{87593558}	1.300	08	3	{87604475}	3.070	01	16
{87593559}	1.300	08	4	{87605930}	1.000	03	2
{87593591}	1.300	08	1A	{87605931}	1.000	03	3
{87593623}	1.300	08	2A	{87606907}	1.060	03	22
{87593624}	1.300	08	2B	{87607328}	1.060	01	1
{87593625}	1.300	08	2C	{87607329}	1.060	01	2
{87593626}	1.300	08	2D	{87607330}	1.060	02	3
{87593627}	1.300	08	2E	{87607331}	1.060	01	6
{87594006}	1.300	06	1	{87607332}	1.060	01	23
{87594009}	1.060	03	2	{87611986}	0.001	01	1
{87594011}	1.300	06	3	{87611988}	0.001	02	3
{87594016}	1.300	06	1A	{87611989}	0.001	01	4
{87594017}	1.300	06	1B	{87612527}	1.083	02	1
{87594018}	1.300	06	1C	{87612528}	1.083	02	2
{87594109}	1.300	06	3A	{87612529}	1.083	03	3
{87594131}	1.060	03	6	{87612530}	1.083	03	4
{87594136}	1.300	05	1	{87612531}	1.083	03	5
{87594154}	1.300	05	1C	{87612532}	1.083	03	6
{87594159}	1.300	05	1A	{87612533}	1.083	03	7
{87594160}	1.300	05	1B	{87612534}	1.083	02	8
{87594486}	1.300	02	17	{87612535}	1.083	03	9
{87594489}	1.300	02	18	{87612536}	1.083	01	11
{87594492}	1.300	03	13	{87612537}	1.083	01	12
{87594494}	1.300	03	13A	{87612547}	1.083	02	13
{87594512}	1.300	03	13B	{87612548}	1.083	01	14
{87594515}	1.300	02	14	{87612549}	1.083	01	15
{87594534}	1.300	03	49	{87612575}	0.003	01	1
{87594535}	1.300	01	23	{87612576}	0.003	01	3
{87594536}	1.300	01	22	{87612577}	0.003	01	7
{87594537}	1.300	01	11	{87612578}	0.003	01	18
{87594538}	1.300	01	8	{87612579}	0.003	01	19
{87594547}	1.300	02	20	{87613578}	0.003	01	20
{87594549}	1.300	03	29	{87613579}	0.003	01	2
{87594551}	1.300	02	15	{87614185}	3.000	02	5
{87594553}	1.300	02	16	{87614252}	2.000	02	1
{87594561}	1.300	01	5		2.001	02	14
{87594562}	1.300	01	5A	{87616596}	0.003	01	2A
{87594570}	1.300	01	6	{87616597}	0.003	01	2B
{87594872}	2.002	01	17	{87616690}	0.003	01	2C
{87594873}	0.000	02	11	{87616804}	2.000	01	16
{87594874}	0.000	01	12	{87617249}	2.000	01	17
{87594878}	0.000	01	13		2.001	01	18
{87594883}	1.080	01	15		5.0013	01	24
{87594884}	0.000	02	29		5.0022	01	24
{87594886}	0.000	03	35		5.0038	01	24
{87595128}	1.300	01	12		5.0039	01	24
{87595564}	1.300	08	4A	{87617256}	2.000	01	16A
{87595569}	3.000	01	2		2.001	01	17A
{87595912}	1.300	03	24	{87619566}	1.020	01	1
	1.300	03	25	{87619567}	1.020	01	7
{87596367}	1.250	09	62	{87619706}	5.0013	01	22
{87597032}	1.080	01	13		5.0022	01	22
{87597034}	3.001	01	2		5.0038	01	22
{87597039}	1.080	01	12		5.0039	01	22
{87597040}	1.080	01	10	{87619712}	5.0013	01	21C
{87597080}	1.080	01	11		5.0022	01	21C
{87597084}	1.080	01	9		5.0038	01	21C
{87597202}	1.080	02	2		5.0039	01	21C
	5.0148	01	4	{87619714}	5.0013	01	21D
{87597812}	3.000	01	1		5.0022	01	21D
{87597813}	3.000	02	14		5.0038	01	21D
{87601875}	1.300	04	2		5.0039	01	21D
{87602335}	1.295	02	4	{87619716}	5.0013	01	21A
{87602457}	1.295	01	12		5.0022	01	21A
{87602538}	1.295	02	18		5.0038	01	21A
{87602541}	1.295	02	21		5.0039	01	21A
{87602762}	1.295	02	35	{87620255}	5.0013	02	8

Number	Figure	Sequence	Ref.	Number	Figure	Sequence	Ref.
{87620255}	5.0022	02	8	{87639682}	1.000	02	20
	5.0038	02	8	{87639683}	1.000	02	21
	5.0039	02	8	{87639686}	1.000	02	28
{87623866}	1.300	04	2A	{87640218}	1.000	01	10
{87623988}	1.020	01	2	{87640219}	1.000	01	4
{87623990}	1.020	01	6	{87640220}	1.000	01	9
{87625767}	0.003	03	2	{87640335}	1.010	02	9
{87625768}	0.003	03	3	{87640339}	1.010	02	8
{87625770}	0.003	02	4	{87640340}	1.010	02	11
{87625771}	0.003	03	5	{87640341}	1.010	02	32
{87625772}	0.003	02	6	{87640349}	1.010	02	14
{87625783}	0.003	03	12	{87640350}	1.010	02	15
{87625794}	0.003	02	13	{87640351}	1.010	02	16
{87625795}	0.003	03	14	{87640352}	1.010	02	33
{87625804}	0.003	03	15	{87642793}	1.010	02	1
{87625806}	0.003	03	16	{87642794}	1.010	02	7
{87625829}	0.003	03	17	{87642796}	1.010	02	30
{87630749}	5.0043	01	1	{87643345}	2.030	01	3
{87631724}	2.030	01	24	{87644108}	2.000	01	1
{87632065}	2.031	04	3		2.001	02	2
{87632069}	2.031	04	2	{87644109}	2.000	01	2
{87632074}	2.031	01	3		2.001	02	1
{87632677}	1.300	08	1	{87644443}	5.0020	10	2
{87632807}	1.300	09	2	{87644445}	5.0020	10	3
{87633055}	5.0013	01	21	{87644447}	5.0020	10	4
	5.0022	01	21	{87644529}	5.0020	10	5
	5.0038	01	21	{87644877}	5.0020	10	23
	5.0039	01	21	{87644878}	5.0020	10	24
{87634409}	0.002	01	3	{87645076}	1.220	01	19
{87634923}	5.0020	10	9	{87645095}	1.220	01	14
	5.0020	11	3	{87646155}	5.0086	03	3
{87634938}	5.0020	10	7		5.0088	04	3
	5.0020	11	8	{87646156}	5.0086	03	4
{87634948}	5.0020	10	1		5.0088	04	4
{87634993}	0.003	03	18	{87646564}	5.0086	01	1
{87635467}	5.0013	01	2		5.0088	02	1
	5.0022	01	2	{87646661}	5.0086	01	2
	5.0038	01	2		5.0088	02	2
	5.0039	01	2	{87646676}	5.0086	01	3
{87635469}	5.0013	01	3		5.0088	02	3
	5.0022	01	3	{87646686}	5.0086	01	19
	5.0038	01	3		5.0088	02	19
	5.0039	01	3	{87647146}	5.0088	03	4
{87635470}	5.0013	02	4	{87647176}	5.0088	03	3
	5.0022	02	4	{87647242}	5.0086	03	16
	5.0038	02	4	{87647244}	5.0086	02	1
	5.0039	02	4	{87647245}	5.0086	02	2
{87635471}	5.0013	02	5	{87647420}	5.0086	04	1
	5.0022	02	5	{87647509}	5.0088	03	2
	5.0038	02	5	{87647510}	5.0088	03	1
	5.0039	02	5	{87647902}	5.0088	05	1
{87635476}	5.0013	02	6	{87651705}	1.000	01	11
	5.0022	02	6	{87651738}	5.0013	04	1
	5.0038	02	6		5.0022	04	1
	5.0039	02	6		5.0038	04	1
{87635477}	5.0013	02	7		5.0039	04	1
	5.0022	02	7	{87652639}	2.030	01	1
	5.0038	02	7	{87652643}	2.030	01	2
	5.0039	02	7	{87652647}	2.030	01	4
{87636314}	0.003	03	42	{87652653}	2.030	01	5
{87636318}	0.003	03	43	{87652663}	2.030	01	6
{87636321}	0.003	03	10	{87653168}	1.080	03	1
{87637608}	2.000	02	10	{87653228}	5.0020	02	1
	2.002	01	1	{87653229}	5.0020	02	2
	5.0013	02	30	{87653244}	5.0020	02	3
	5.0022	02	30	{87653466}	1.083	04	1
	5.0038	02	30		5.0076	02	1
	5.0039	02	30		5.0077	02	1
{87637611}	2.001	01	1		5.0078	02	1
{87637658}	2.001	01	2		5.0079	02	1
{87639673}	1.000	02	1	{87653467}	1.083	04	2
{87639674}	1.000	02	2		5.0076	02	2
{87639675}	1.000	02	3		5.0077	02	2
{87639676}	1.000	01	12		5.0078	02	2
{87639677}	1.000	02	13		5.0079	02	2
{87639678}	1.000	01	14	{87653468}	1.083	04	3
{87639680}	1.000	02	18	{87653495}	1.083	04	4
{87639681}	1.000	02	19	{87653498}	1.083	04	5

Number	Figure	Sequence	Ref.	Number	Figure	Sequence	Ref.
{87653499}	5.0076	02	6	{87662194}	5.0079	08	1
	5.0076	03	6	{87662195}	5.0076	08	7
	5.0077	02	6		5.0077	08	7
	5.0077	03	6		5.0078	08	7
	5.0078	02	6		5.0079	08	7
	5.0078	03	6	{87662517}	1.220	08	1
	5.0079	02	6	{87662518}	1.220	08	15
	5.0079	03	6	{87662522}	1.220	08	20
{87653500}	5.0076	02	7	{87663850}	1.085	01	4
	5.0076	03	7		5.0088	01	4
	5.0077	02	7	{87663864}	5.0088	01	1
	5.0077	03	7	{87663865}	5.0088	01	2
	5.0078	02	7	{87666327}	1.220	03	12
	5.0078	03	7	{87669519}	4.520	01	21
	5.0079	02	7		4.520	02	21
	5.0079	03	7	{87669728}	5.0021	13	1
{87657147}	5.0020	03	1	{87669730}	5.0021	13	2
{87658895}	2.050	01	3	{87669732}	5.0077	10	1
{87659217}	2.000	02	18	{87669742}	5.0023	13	1
	2.002	01	9	{87669743}	5.0023	13	2
{87659454}	1.030	01	1-5	{87669744}	5.0078	10	1
{87659456}	5.0013	04	2	{87669769}	5.0020	13	1
	5.0022	04	2	{87669770}	5.0020	13	2
	5.0038	04	2	{87670472}	5.0076	09	1
	5.0039	04	2		5.0077	09	1
{87659457}	5.0013	04	3		5.0078	09	1
	5.0022	04	3		5.0079	09	1
	5.0038	04	3	{87670489}	5.0020	12	3
	5.0039	04	3	{87672944}	1.220	11	16
{87660227}	1.220	11	1	{87672950}	1.220	11	6
{87661015}	5.0076	04	7	{87672951}	1.220	11	19
	5.0077	04	7	{87672967}	1.220	11	18
	5.0078	04	7	{87674047}	5.0088	06	1
	5.0079	04	7	{87675637}	5.0038	03	1
{87661702}	2.030	03	3	{87675641}	5.0038	03	2
{87661703}	2.030	03	6	{87675787}	1.000	03	1
{87661704}	2.030	03	7	{87676791}	1.300	10	5
{87661705}	2.030	03	8	{87676792}	1.300	10	6
{87661706}	2.030	03	13	{87677373}	1.010	01	1
{87661707}	2.030	03	14	{87679989}	1.000	01	37
{87661708}	2.030	03	15	{87683174}	5.0022	03	2
{87661709}	2.030	03	18	{87683177}	5.0013	03	2
{87661710}	2.030	03	21	{87683180}	5.0039	03	2
{87661711}	2.030	03	24	{87683181}	5.0039	03	1
{87661712}	2.030	03	28	{87683182}	5.0022	03	1
{87661713}	2.030	03	100	{87683186}	5.0013	03	1
{87661714}	2.030	03	200	{87684453}	5.0024	13	1
{87661715}	2.030	03	300	{87684455}	5.0024	13	2
{87661716}	2.030	03	400	{87684457}	5.0079	10	1
{87661717}	2.030	03	500	{87684502□□}	0.021	01	1
{87661722}	2.001	01	19	{87685036}	5.0024	13	3
{87661723}	2.030	02	10	{87686846}	1.300	07	2
{87662097}	5.0076	07	3	{87686875}	1.300	07	2B
	5.0076	08	2	{87686876}	1.300	07	2C
	5.0077	07	3	{87687296}	1.300	02	7
	5.0077	08	2	{87687297}	1.300	02	10
	5.0078	07	3	{87687309}	1.300	03	19
	5.0078	08	2	{87692485}	5.0040	01	15
	5.0079	07	3	{87693756}	2.041	02	1
	5.0079	08	2	{87693757}	2.041	02	2
{87662122}	2.031	01	4	{87693758}	2.041	02	3
{87662124}	2.031	01	2	{87693942}	2.040	01	1
{87662126}	2.031	01	1	{87693944}	2.040	01	2
{87662128}	5.0020	11	2	{87693945}	2.040	01	3
{87662130}	5.0020	11	1	{87693946}	2.040	01	4
{87662132}	2.031	04	15	{87693947}	2.040	01	5
	2.031	05	15	{87693948}	2.040	01	6
{87662133}	2.031	04	1	{87693949}	2.040	01	7
{87662134}	2.031	04	14	{87694241}	2.031	01	17
{87662137}	2.001	01	9		2.041	01	1
{87662144}	2.031	02	1	{87694242}	2.041	01	2
{87662146}	2.031	02	2	{87694243}	2.041	01	3
{87662148}	2.031	02	3	{87694244}	2.041	01	4
{87662172}	5.0020	12	1	{87694245}	2.041	01	5
{87662174}	5.0020	12	2	{87694246}	2.041	01	6
{87662194}	5.0076	08	1	{87694247}	2.041	01	7
	5.0077	08	1	{87694687}	2.041	02	4
	5.0078	08	1	{87694690}	0.003	03	19

Number	Figure	Sequence	Ref.	Number	Figure	Sequence	Ref.
{87694691}	0.003	03	7	{906808550A}	0.071	02	9068-08550
{87699954}	1.295	02	33	{906810000A}	0.071	01	9068-10000
{87704715}	1.295	01	27		0.071	02	9068-10000
{87719143}	5.0004	01	12	{906810180A}	0.040	01	9068-10180
{87719145}	5.0003	01	12		0.042	01	9068-10180
{87719146}	5.0002	01	12		0.071	01	9068-10180
{87720558}	1.295	02	64		0.071	02	9068-10180
{87721974}	1.083	02	19	{906810200A}	0.043	01	9068-10200
{87722763}	3.020	01	1	{906810350A}	0.071	01	9068-10350
{87726021}	1.300	04	65		0.071	02	9068-10350
{87728788}	0.001	02	2	{906810450A}	0.071	01	9068-10450
{87730147}	5.0088	08	1		0.071	02	9068-10450
{87730148}	5.0088	08	1	{906810750A}	0.043	01	9068-10750
{87731750}	3.020	03	14	{906812650A}	0.043	01	9068-12650
{87732974}	5.0076	07	1	{906860150A}	0.071	01	9068-60150
	5.0077	07	1		0.071	02	9068-60150
	5.0078	07	1	{906860400A}	0.071	01	9068-60400
	5.0079	07	1		0.071	02	9068-60400
{87732975}	5.0076	07	2	{906860850A}	0.043	01	9068-60850
	5.0077	07	2	{906908124A}	0.060	01	9069C
	5.0078	07	2		0.060	02	9069C
	5.0079	07	2	{906908131A}	0.060	01	9069B
{87733088}	3.020	03	13		0.060	02	9069B
{87733089}	3.020	02	12	{906908132A}	0.060	01	9069D
{87736583}	1.295	02	3		0.060	02	9069D
{87737414}	4.520	02	4		0.071	01	9069J
{87739117}	1.300	01	9		0.071	02	9069J
{900113120A}	0.043	01	900113A	{906908149A}	0.043	01	9069G
{900115214B}	0.060	01	900115		0.060	01	9069G
	0.060	02	900115		0.060	02	9069G
{900115342A}	0.071	01	900115	{906908180A}	0.060	01	9069E
	0.071	02	900115		0.060	02	9069E
{900116442A}	0.071	01	900116	{906910117A}	0.071	01	9069P
	0.071	02	900116		0.071	02	9069P
{900124540B}	0.043	01	900124	{906910136B}	0.066	01	9069A
{900124541B}	0.043	01	900124A	{906910175A}	0.071	01	9069L
{900125237A}	0.043	01	900125		0.071	02	9069L
{900126122A}	0.066	01	900126	{906910176A}	0.071	01	9069R
{900129267A}	0.066	01	900129		0.071	02	9069R
{900218116A}	0.060	01	900218	{906912122A}	0.071	01	9069M
	0.060	02	900218		0.071	02	9069M
{900234543A}	0.071	01	900234	{906914108B}	0.043	01	9069B
	0.071	02	900234	{908506200A}	0.060	01	9085-06200
{900234544A}	0.071	01	900234A		0.060	02	9085-06200
	0.071	02	900234A	{908506400A}	0.060	01	9085-06400
{900234545A}	0.071	01	900234B		0.060	02	9085-06400
	0.071	02	900234B	{918108160A}	0.043	01	9181-08160
{900234547A}	0.071	01	900234D	{919908230B}	0.040	01	9199A
	0.071	02	900234D		0.042	01	9199A
{900236322B}	0.060	01	900236	{920910141A}	0.071	01	9209A
	0.060	02	900236		0.071	02	9209A
{901908216A}	0.071	01	9019A	{924008087A}	0.040	01	9240-08087
	0.071	02	9019A		0.042	01	9240-08087
{901916340A}	0.071	01	9019C		0.071	01	9240-08087
	0.071	02	9019C		0.071	01	9240-08087
{902910199B}	0.071	01	9029A		0.071	02	9240-08087
	0.071	02	9029A		0.071	02	9240-08087
{902910281A}	0.043	01	9029A	{924110107A}	0.043	01	9241-10107
{906208001A}	0.060	01	9062-08001		0.071	01	9241-10107
	0.060	02	9062-08001		0.071	02	9241-10107
{906208551A}	0.060	01	9062-08551	{926008220A}	0.071	01	9260-08220
	0.060	02	9062-08551		0.071	02	9260-08220
{906210850A}	0.060	01	9062-10850	{931108300A}	0.071	01	9311-08300
	0.060	02	9062-10850		0.071	02	9311-08300
{906808000A}	0.071	01	9068-08000	{932108220A}	0.060	01	9321-08220
	0.071	02	9068-08000		0.060	02	9321-08220
{906808160A}	0.040	01	9068-08160	{932108300A}	0.071	01	9321-08300
	0.042	01	9068-08160		0.071	02	9321-08300
	0.060	01	9068-08160	{933110700A}	0.071	01	9331-10700
	0.060	02	9068-08160		0.071	02	9331-10700
	0.071	01	9068-08160	{933910115B}	0.043	01	9339A
	0.071	02	9068-08160	{934114350A}	0.043	01	9341-14350
{906808250A}	0.043	01	9068-08250	{935910127A}	0.071	01	9359A
{906808320A}	0.071	01	9068-08320		0.071	02	9359A
	0.071	01	9068-08320	{936910150A}	0.060	01	9369A
	0.071	02	9068-08320		0.060	02	9369A
	0.071	02	9068-08320	{940212300A}	0.071	01	9402-12300
{906808550A}	0.071	01	9068-08550		0.071	02	9402-12300

Number	Figure	Sequence	Ref.	Number	Figure	Sequence	Ref.
{940212350A}	0.043	01	9402-12350	{LC05P00043S023}	0.003	04	23
{941916101A}	0.043	01	9419A	{LC05P00043S024}	0.003	04	24
{950404080A}	0.060	01	9504-04080	{LC05P00043S025}	0.003	04	25
	0.060	02	9504-04080	{LC05P00043S026}	0.003	04	26
{950408160A}	0.060	01	9504-08160	{LC10V00010S123}	1.030	02	123
	0.060	02	9504-08160	{LC10V00020F1}	1.030	01	1
{950908122A}	0.040	01	9509A	{LC11P00018S001}	0.001	01	1A
	0.042	01	9509A	{LC15V00022R100}	1.040	02	300
{950908123A}	0.040	01	9509B	{LC15V00023R100}	3.010	02	100
	0.042	01	9509B	{LC15V00023R200}	3.010	02	200
{960012090A}	0.043	01	9600-12090	{LC15V00023R300}	3.010	02	500
{960014090A}	0.040	01	9600-14090	{LC15V00023S075}	3.010	04	75
	0.042	01	9600-14090	{LC22V00011F1}	1.050	08	601
{963314120A}	0.040	01	9633-14120	{LC30V00034R160}	1.050	08	160
	0.042	01	9633-14120		1.050	09	160
	0.060	01	9633-14120		1.050	10	160
	0.060	02	9633-14120		1.050	11	160
{963317120A}	0.040	01	9633-17120		1.050	12	160
	0.042	01	9633-17120	{LC30V00034R170}	1.050	08	170
	0.060	01	9633-17120		1.050	09	170
	0.060	02	9633-17120		1.050	10	170
{963320120A}	0.060	01	9633-20120		1.050	11	170
	0.060	02	9633-20120		1.050	12	170
{963322160A}	0.040	01	9633-22160	{LC30V00034R190}	1.050	08	180
	0.042	01	9633-22160		1.050	09	180
	0.060	01	9633-22160		1.050	10	180
	0.060	02	9633-22160		1.050	11	180
{963326160A}	0.040	01	9633-26160		1.050	12	180
	0.042	01	9633-26160	{LC32W01061P1}	1.040	03	20
	0.060	01	9633-26160	{LC32W01062P1}	1.040	03	34
	0.060	02	9633-26160	{LC53D00007R100}	3.010	02	300
{963330160A}	0.060	01	9633-30160	{LS21P01013S002}	1.010	02	1A
	0.060	02	9633-30160	{VH040130244A}	0.080	01	040130
{963350160A}	0.040	01	9633-50160	{VH040130245A}	0.080	01	040130
	0.042	01	9633-50160	{VH130051270A}	0.080	01	13005
{963942104A}	0.040	01	9639A	{VH130191120A}	0.080	01	13019
	0.042	01	9639A	{VH135211442A}	0.080	01	13521
{964402135A}	0.071	01	9644A	{VH135721230A}	0.120	01	13572A
	0.071	02	9644A	{VH135721271A}	0.120	01	13572B
{965912111B}	0.043	01	9659A	{VH135811711A}	0.120	01	13581
{965914104B}	0.040	01	9659B	{VH151321070A}	0.300	01	15132
	0.042	01	9659B	{VH151391110A}	0.300	01	15139
{965916105B}	0.071	01	9659A	{VH156041100A}	0.302	01	15604
	0.071	02	9659A	{VH156241230A}	0.302	01	15624
{965918105C}	0.040	01	9659A	{VH156601090A}	0.302	01	15660
	0.042	01	9659A	{VH156611320A}	0.302	01	15661
{980006100A}	0.060	01	9800-06100	{VH156611450A}	0.310	01	15661
	0.060	02	9800-06100	{VH156611510A}	0.310	01	15661A
{982801228A}	0.043	01	9828B	{VH156621320A}	0.310	01	15662
{982879103A}	0.043	01	9828A	{VH156631120A}	0.310	01	15663
{985110138A}	0.040	01	9851A	{VH156751020A}	0.310	01	15675
	0.042	01	9851A	{VH157161070A}	0.302	01	15716
{985413112A}	0.071	01	9854B	{VH157161100A}	0.310	01	15716
	0.071	02	9854B	{VH157161130A}	0.310	01	15716A
{985426103A}	0.071	01	9854A	{VH157161150A}	0.310	01	15716B
	0.071	02	9854A	{VH157171320A}	0.310	01	15717
{985428101A}	0.060	01	9854A	{VH191101261A}	0.149	01	19110
	0.060	02	9854A		0.173	01	19110
{EB11P00001S004}	0.001	01	1D		0.400	01	19110
	0.001	01	1E	{VH191131050A}	0.149	01	19113
{EZ22E00064F1}	5.0040	02	1B		0.173	01	19113
{EZ55S00023S001}	5.0040	03	2A		0.400	01	19113
{EZ55S00023S005}	5.0040	03	2D	{VH228252570A}	0.140	01	22825
{EZ55S00023S006}	5.0040	03	2E	{VH228351570A}	0.140	01	22835
{EZ55S00023S007}	5.0040	03	2F	{VH233002800A}	0.200	01	23300
{EZ55S00023S008}	5.0040	03	2G		0.960	01	23300
{EZ55S00023S010}	5.0040	01	2H	{VH281002894A}	0.149	01	28100
{EZ55S00023S011}	5.0040	03	2I		0.173	01	28100
{EZ55S01002P1}	5.0040	02	1D		0.400	01	28100
{EZ55S01003F1}	5.0040	03	1A	{VH765818980A}	0.960	01	76581A
{EZ55S01004P1}	5.0040	03	1E	{VH765818990A}	0.960	01	76581B
{EZ55S01005P1}	5.0040	03	1F	{VH799043860A}	0.140	01	79904
{LC05P00043S013}	0.003	04	13	{VH799043870A}	0.140	01	79904A
{LC05P00043S018}	0.003	04	18	{VH820642530A}	0.149	01	82064
{LC05P00043S019}	0.003	04	19		0.173	01	82064
{LC05P00043S020}	0.003	04	20		0.400	01	82064
{LC05P00043S021}	0.003	04	21	{VH834601510A}	0.960	01	83460
{LC05P00043S022}	0.003	04	22	{VH893901080A}	0.149	01	89390

Number	Figure	Sequence	Ref.	Number	Figure	Sequence	Ref.
{VH893901080A}	0.173	01	89390	{VH964504935A}	0.140	01	9645A
	0.400	01	89390	{VH965412100A}	0.240	01	9654-12100
{VH894101290A}	0.149	01	89410A	{VH965910111A}	0.149	01	9659B
	0.173	01	89410A		0.173	01	9659B
	0.400	01	89410A		0.400	01	9659B
{VH894111280A}	0.149	01	89411	{VH965914103A}	0.149	01	9659A
	0.173	01	89411		0.173	01	9659A
	0.400	01	89411		0.400	01	9659A
{VH895611160A}	0.960	01	89561	{VH973925105A}	0.960	01	9739A
{VH900124502A}	0.120	01	900124A	{VH985101197A}	0.140	01	9851A
{VH900124503A}	0.120	01	900124	{VH985112112A}	0.310	01	9851A
{VH900125101A}	0.120	01	900125	{VH985118120A}	0.310	01	9851B
{VH900125233A}	0.960	01	900125	{VH985119116A}	0.960	01	9851A
{VH901164401A}	0.149	01	9011-64401	{VH985120102A}	0.302	01	9851B
	0.173	01	9011-64401	{VH985120107A}	0.310	01	9851D
	0.400	01	9011-64401	{VH985121118A}	0.310	01	9851C
{VH901908316A}	0.140	01	9019A	{VH985412101A}	0.149	01	9854A
{VH906808000A}	0.320	01	9068-08000		0.173	01	9854A
{VH906808160A}	0.149	01	9068-08160		0.400	01	9854A
	0.149	01	9068-08160	{VH985428101A}	0.960	01	9854A
	0.173	01	9068-08160	{VH986750134A}	0.120	01	9867A
	0.173	01	9068-08160	{YN22V00014FB}	1.040	02	33
	0.240	01	9068-08160	{YN24E00016S0011}	1.220	02	11
	0.300	01	9068-08160	{YN24E00016S0012}	1.220	02	12
	0.400	01	9068-08160	{YN24E00016S0013}	1.220	02	13
	0.400	01	9068-08160	{YN55S01001P1}	5.0040	02	1C
{VH906808200A}	0.149	01	9068-08200	{ZG1U8000}	1.040	03	31
	0.173	01	9068-08200	10441190	1.220	09	29
	0.300	01	9068-08200	10441290	5.0076	05	16
	0.400	01	9068-08200		5.0077	05	16
{VH906808250A}	0.140	01	9068-08250		5.0078	05	16
	0.240	01	9068-08250		5.0079	05	16
	0.300	01	9068-08250	10441690	2.040	01	9
	0.320	01	9068-08250		2.041	01	8
	0.320	01	9068-08250		2.041	02	6
{VH906808320A}	0.300	01	9068-08320	10444634	5.0209	01	14
	0.320	01	9068-08320		5.0210	02	9
{VH906808650A}	0.320	01	9068-08650	10516474	1.020	01	5
{VH906810200A}	0.140	01	9068-10200		1.200	01	20
	0.240	01	9068-10200		1.220	01	12
{VH906810280A}	0.140	01	9068-10280		1.220	03	11
{VH906810300A}	0.320	01	9068-10300		1.220	06	4
	0.320	01	9068-10300		1.250	05	21
{VH906858100A}	0.300	01	9068-58100		1.250	06	21
{VH918908135A}	0.149	01	9189A		1.250	07	21
	0.173	01	9189A		1.250	08	21
	0.400	01	9189A		1.250	09	21
{VH918908151A}	0.240	01	9189A		1.280	01	12
{VH924008087A}	0.140	01	9240-08087		1.295	02	68
	0.140	01	9240-08087		5.0040	02	44
	0.140	01	9240-08087	10516674	1.070	01	12
	0.140	01	9240-08087		1.220	01	10
	0.149	01	9240-08087		1.220	03	7
	0.173	01	9240-08087		1.220	08	28
	0.320	01	9240-08087		1.220	10	5
	0.400	01	9240-08087		1.220	11	28
	0.960	01	9240-08087		1.250	03	12
{VH924110107A}	0.149	01	9241-10107		1.250	04	13
	0.173	01	9241-10107		1.250	05	14
	0.320	01	9241-10107		1.250	09	14
	0.400	01	9241-10107		1.295	02	66
{VH926010180A}	0.310	01	9260-10180		1.300	04	65D
{VH928010250A}	0.310	01	9280-10250		1.300	04	71
{VH928014350A}	0.149	01	9280-14350		5.0020	07	7
	0.173	01	9280-14350		5.0040	02	41
	0.320	01	9280-14350		5.0040	03	41
	0.400	01	9280-14350		5.0580	01	11
{VH941210252A}	0.149	01	9412-10252	10516874	0.000	02	41
	0.173	01	9412-10252		0.003	01	14
	0.400	01	9412-10252		1.070	01	10
{VH950040400A}	0.300	01	9500-40400		1.080	01	20
{VH950906123A}	0.120	01	9509A		1.220	05	5
{VH950906124A}	0.080	01	9509A		1.220	11	32
	0.120	01	9509B		1.270	01	9
{VH964402835A}	0.960	01	9644A		1.295	02	67
{VH964403136A}	0.149	01	9644A		1.300	06	5
	0.173	01	9644A		1.300	07	5
	0.400	01	9644A		1.300	11	14

Number	Figure	Sequence	Ref.	Number	Figure	Sequence	Ref.
10516874	2.031	04	10	10902434	1.220	06	2
	5.0013	04	11		1.295	02	7
	5.0020	02	17		5.0040	02	24
	5.0020	13	9	10902634	1.220	01	5
	5.0021	13	9	10903434	1.250	06	23
	5.0022	04	11	10903634	5.0076	05	15
	5.0023	13	9		5.0077	05	15
	5.0024	13	9		5.0078	05	15
	5.0038	04	11		5.0079	05	15
	5.0039	04	11	10977634	1.250	05	12
	5.0086	03	13	10977834	1.220	03	16
	5.0088	04	13		1.250	05	45
	5.0580	01	9	11055690	1.220	03	4E
10517074	1.060	01	15	11106034	0.002	01	13
	1.220	11	24		0.003	01	12
	1.300	01	55		0.003	01	22
	1.300	09	14		0.003	02	27
	2.031	04	12		1.010	02	19
	3.001	01	13		1.070	01	7
	5.0020	02	18		1.080	01	3
	5.0020	13	6		1.091	03	6
	5.0021	13	6		1.220	09	37
	5.0023	13	6		1.220	11	30
	5.0024	13	6		1.295	02	60
	5.0076	10	5		3.000	02	7
	5.0077	10	5		5.0020	08	6
	5.0078	10	5		5.0020	09	7
	5.0079	10	5		5.0076	05	13
10517174	1.220	04	4		5.0077	05	13
	5.0020	02	12		5.0078	05	13
	5.0086	03	14		5.0079	05	13
	5.0088	04	14	11106234	0.001	01	7
10517274	3.000	01	9		0.003	03	28
	5.0002	01	15		1.000	01	8
	5.0003	01	15		1.000	02	8
	5.0004	01	15		1.020	01	10
10517979	5.0088	03	17		1.081	02	26
10519301	1.250	05	28		1.083	04	9
	1.250	07	28		1.220	05	3
	1.250	08	6		1.250	02	2
	1.280	01	5		1.250	03	10
10520121	5.0086	01	16		1.295	01	6
	5.0088	02	16		1.295	02	6
10523404	1.295	02	63		1.300	09	5
10571479	1.010	01	6		2.031	05	22
10571879	0.001	01	15		5.0076	02	9
	5.0076	04	18		5.0076	05	14
	5.0077	04	18		5.0077	02	9
	5.0078	04	18		5.0077	05	14
	5.0079	04	18		5.0078	02	9
	5.0086	01	14		5.0078	05	14
	5.0086	01	17		5.0079	02	9
	5.0088	02	14		5.0079	05	14
	5.0088	02	17		5.0088	05	12
	5.0208	01	4	11106434	1.010	02	24
	5.0209	01	4		1.080	01	16
	5.0210	01	4		1.080	02	22
10571979	5.0088	05	15		1.080	03	6
10572074	5.0100	01	8		1.081	01	19
	5.0101	01	8		1.083	01	40
	5.0102	01	8		1.083	04	14
	5.0103	01	8		1.091	01	10
	5.0104	01	8		1.092	01	11
	5.0108	01	8		5.0013	04	9
10572079	1.083	02	24		5.0020	02	9
	5.0020	10	20		5.0020	04	10
10721911	5.0209	01	15		5.0020	05	12
	5.0210	02	10		5.0020	06	6
10790121	0.000	03	36		5.0020	13	8
10902234	1.200	01	16		5.0021	13	8
	1.220	07	4		5.0022	04	9
	1.250	05	22		5.0023	13	8
	1.250	06	22		5.0024	13	8
	1.250	07	22		5.0038	04	9
	1.250	08	22		5.0039	04	9
	1.250	09	22		5.0076	02	14
	1.280	01	10		5.0076	04	13
	5.0040	02	23		5.0077	02	14

Number	Figure	Sequence	Ref.	Number	Figure	Sequence	Ref.
11106434	5.0077	04	13	11112434	5.0209	01	7
	5.0078	02	14		5.0210	02	14
	5.0078	04	13		5.0210	02	2
	5.0079	02	14		5.0581	01	3
	5.0079	04	13	11112634	1.061	01	23
	5.0086	03	11		1.083	01	21
	5.0088	04	11		1.220	11	37
	5.0208	01	2		1.300	10	12
	5.0209	01	2		2.030	01	16
	5.0210	01	2		2.030	01	19
	5.0580	01	4		2.031	01	7
11106634	0.000	02	21		2.031	02	7
	0.002	01	9		5.0013	04	8
	1.030	01	9		5.0020	02	11
	1.270	01	2		5.0020	10	16
	2.031	04	7		5.0020	11	9
	5.0020	02	10		5.0022	04	8
	5.0076	04	14		5.0038	04	8
	5.0077	04	14		5.0039	04	8
	5.0078	04	14		5.0086	03	10
	5.0079	04	14		5.0088	04	10
	5.0086	01	10		5.0148	01	17
	5.0088	02	10	11112834	1.060	01	12
11106834	0.000	02	25		1.300	04	40
	1.010	02	25		3.060	01	2
11107234	5.0148	01	19		5.0013	03	5
11107434	1.083	03	32		5.0020	10	25
	1.083	04	17		5.0022	03	5
	1.300	11	4		5.0038	03	5
	5.0076	02	17		5.0039	03	5
	5.0076	03	17	11113234	5.0020	10	17
	5.0077	02	17		5.0020	11	10
	5.0077	03	17		5.0076	10	4
	5.0078	02	17		5.0077	10	4
	5.0078	03	17		5.0078	10	4
	5.0079	02	17		5.0079	10	4
	5.0079	03	17	11113334	1.061	01	21
	5.0208	01	3	11113534	1.250	01	1
	5.0209	01	3		5.0020	10	22
	5.0210	01	3		5.0020	11	4
	5.0580	01	8	11113834	5.0020	13	5
11107534	0.000	02	20		5.0021	13	5
11107734	1.083	01	22		5.0023	13	5
11108034	1.081	01	37		5.0024	13	5
11112234	0.002	01	8		5.0208	01	7
	1.083	04	13		5.0210	01	7
	1.220	11	33	11114034	1.060	01	13
	1.300	01	38	11115334	1.220	04	3
	1.300	02	38	11116034	5.0020	02	7
	1.300	03	38	11116734	5.0086	01	12
	1.300	04	38		5.0088	02	12
	1.300	08	5	11116934	5.0101	01	7
	1.300	10	10		5.0103	01	7
	3.000	01	6		5.0108	01	7
	3.001	01	9	11117134	5.0100	01	7
	5.0076	02	13		5.0102	01	7
	5.0076	03	13		5.0104	01	7
	5.0077	02	13	11118734	1.010	01	10
	5.0077	03	13		1.050	01	4
	5.0078	02	13		3.000	01	8
	5.0078	03	13		5.0002	01	14
	5.0079	02	13		5.0003	01	14
	5.0079	03	13		5.0004	01	14
	5.0148	01	27	11119134	5.0042	01	4
	5.0208	01	9	11124534	1.020	01	14
	5.0210	01	9	11124874	3.010	01	4C
11112434	0.000	01	22	11124934	2.000	02	3
	1.061	01	24		2.001	02	16
	1.083	01	41	11126734	3.030	01	2
	1.220	11	36		5.0013	02	10
	1.250	01	3		5.0022	02	10
	1.300	01	39		5.0038	02	10
	1.300	02	39		5.0039	02	10
	1.300	09	12	11127534	2.001	01	3
	1.300	10	11	11195374	5.0209	01	23
	5.0020	10	15		5.0210	02	18
	5.0040	03	26	11195474	1.220	01	17
	5.0209	01	19		1.220	03	18

Number	Figure	Sequence	Ref.	Number	Figure	Sequence	Ref.
11195474	1.250	05	15	14305234	1.220	03	9
	1.250	07	15	14305334	1.030	03	438
11701721	0.002	01	11	14305434	1.090	01	14
	1.083	04	18		1.090	02	14
	1.300	02	47	14305470	1.030	03	439
	1.300	06	4	14306234	1.250	03	11
	1.300	07	4		5.0020	07	6
	1.300	09	7	14306334	1.250	03	14
	5.0076	02	18		5.0156	01	2
	5.0076	03	18		5.0159	01	2
	5.0077	02	18	14306370	1.030	02	406
	5.0077	03	18	14306470	1.050	05	273
	5.0078	02	18		1.050	14	273
	5.0078	03	18	14306670	1.050	14	278
	5.0079	02	18	14306970	1.030	03	412
	5.0079	03	18	14309070	1.030	03	413
	5.0209	01	10	14309270	1.050	10	279
	5.0210	02	5	14311070	1.050	14	274
11702921	1.220	11	38	14420234	1.083	01	33
	1.300	05	7		3.010	02	25
	1.300	11	7		5.0076	04	16
11703221	0.000	01	19		5.0077	04	16
12163224	1.070	02	5		5.0078	04	16
	5.0076	06	5		5.0079	04	16
	5.0077	06	5	14420334	5.0086	01	11
	5.0078	06	5		5.0088	02	11
	5.0079	06	5	14420534	5.0076	04	17
12163321	1.270	01	4		5.0077	04	17
	2.000	01	5		5.0078	04	17
12163521	2.000	02	12		5.0079	04	17
	2.001	01	11	14422034	1.060	02	19
	2.001	02	5	14422170	1.050	14	275
	2.002	01	3	14422234	2.031	04	8
	2.050	01	2		5.0013	04	10
	3.030	01	3		5.0022	04	10
	5.0013	02	12		5.0038	04	10
	5.0013	02	32		5.0039	04	10
	5.0022	02	12		5.0086	01	13
	5.0022	02	32		5.0086	02	4
	5.0038	02	12		5.0086	03	19
	5.0038	02	32		5.0088	02	13
	5.0039	02	12		5.0088	03	15
	5.0039	02	32		5.0088	05	13
12164321	5.0144	01	3	14422934	2.031	04	19
12164521	1.000	01	27		5.0088	03	16
12164721	1.300	01	33		5.0088	05	14
	1.300	02	33	14423034	5.0020	01	4
	1.300	03	33	14423234	1.051	01	2
	1.300	09	16		1.060	01	20
12581579	1.250	11	83	14424534	1.083	02	23
	1.250	16	29		5.0020	02	8
12626231	1.250	01	8		5.0020	10	18
12641031	1.091	01	11		5.0020	12	7
	5.0020	04	11		5.0020	13	12
	5.0020	05	13		5.0021	13	12
12642021	1.220	03	19		5.0023	13	12
12647004	1.295	02	62		5.0024	13	12
13270411	5.0040	02	28		5.0086	03	12
13272014	1.220	10	14		5.0088	04	12
	1.250	07	26	14425470	1.050	07	974
13274024	1.010	01	5	14426774	2.030	02	7
13274411	1.220	01	16	14432774	2.030	04	7
13276421	1.220	10	12	14447124	1.250	17	44
13407211	2.030	02	15	14496101	5.0040	02	33
	2.030	04	15	14496321	1.220	03	17
	2.040	01	16	14496331	1.220	01	18
	2.041	01	16	14496431	1.090	01	15
	2.041	02	13		1.090	02	15
13550521	1.061	01	22		1.200	01	19
	5.0208	01	8		1.220	01	11
	5.0210	01	8		1.220	03	10
13606611	1.220	08	32		1.220	06	3
13683701	4.520	01	2		1.220	07	6
14304870	1.030	02	407		1.220	09	8
14305134	2.040	01	15		1.220	10	13
	2.041	01	15		1.250	05	17
	2.041	02	12		1.250	06	17
14305234	1.020	01	4		1.250	07	17

Number	Figure	Sequence	Ref.	Number	Figure	Sequence	Ref.
14496431	1.250	08	17	14496631	5.0076	04	5
	1.250	09	17		5.0076	05	20
	1.280	01	11		5.0077	02	19
	1.295	02	58		5.0077	03	19
	5.0040	02	43		5.0077	04	5
	5.0076	05	18		5.0077	05	20
	5.0077	05	18		5.0078	02	19
	5.0078	05	18		5.0078	03	19
	5.0079	05	18		5.0078	04	5
14496531	0.000	02	40		5.0078	05	20
	0.003	02	51		5.0079	02	19
	0.003	03	25		5.0079	03	19
	1.070	01	11		5.0079	04	5
	1.081	02	36		5.0079	05	20
	1.082	01	3		5.0088	05	17
	1.082	02	3		5.0148	01	21
	1.091	03	8		5.0208	01	5
	1.220	01	9		5.0209	01	11
	1.220	03	6		5.0209	01	5
	1.220	08	27		5.0210	01	5
	1.220	10	9		5.0210	02	6
	1.220	11	27		5.0580	01	10
	1.250	03	13	14496634	1.020	01	13
	1.250	04	12	14496731	0.002	01	12
	1.250	05	13		0.002	01	18
	1.250	09	13		1.060	01	14
	1.270	02	21		1.060	02	14
	1.295	01	10		1.083	01	36
	1.295	02	10		1.083	01	45
	1.300	04	73		1.083	04	22
	1.300	05	1H		1.220	11	35
	1.300	05	5		1.300	01	56
	5.0020	08	8		1.300	02	56
	5.0020	09	9		1.300	03	56
	5.0040	02	32		1.300	04	56
	5.0040	03	32		1.300	05	8
	5.0148	01	20		1.300	08	8
	5.0580	01	6		1.300	09	13
14496621	0.001	01	14		1.300	10	15
14496631	0.000	02	27		1.300	11	5
	0.000	03	37		2.030	01	18
	0.003	01	26		2.030	01	20
	0.003	02	52		2.031	01	9
	0.003	03	51		2.031	02	8
	0.003	03	52		3.000	01	12
	1.000	01	15		3.001	01	14
	1.000	02	15		3.060	01	3
	1.010	02	27		5.0013	03	6
	1.070	01	9		5.0013	04	13
	1.080	02	23		5.0020	10	19
	1.080	03	7		5.0020	10	26
	1.081	01	28		5.0020	11	6
	1.081	02	28		5.0022	03	6
	1.083	01	25		5.0022	04	13
	1.083	01	44		5.0038	03	6
	1.083	03	25		5.0038	04	13
	1.083	04	19		5.0039	03	6
	1.091	03	10		5.0039	04	13
	1.092	01	12		5.0040	03	42
	1.220	05	4		5.0076	02	22
	1.220	09	38		5.0076	03	22
	1.220	11	12		5.0077	02	22
	1.220	11	31		5.0077	03	22
	1.250	02	3		5.0078	02	22
	1.250	03	18		5.0078	03	22
	1.250	04	11		5.0079	02	22
	1.270	01	10		5.0079	03	22
	1.300	02	48		5.0086	03	15
	1.300	06	6		5.0088	04	15
	1.300	09	6		5.0148	01	30
	1.300	11	13		5.0208	01	10
	2.031	05	23		5.0209	01	22
	3.000	02	11		5.0209	01	8
	5.0020	06	7		5.0210	01	10
	5.0020	08	10		5.0210	02	17
	5.0020	09	11		5.0210	02	3
	5.0076	02	19		5.0581	01	4
	5.0076	03	19	14496831	5.0020	12	8

Number	Figure	Sequence	Ref.	Number	Figure	Sequence	Ref.
14496931	1.050	01	5	16043634	1.295	02	50
	5.0002	01	16		1.300	05	1G
	5.0003	01	16		5.0040	03	21
	5.0004	01	16		5.0580	01	3
14497131	1.020	01	15	16043834	0.003	03	29
14497731	5.0209	01	16		1.081	01	24
	5.0210	02	11	16044134	1.300	04	65C
14522421	4.200	01	3	16044234	1.300	04	70
14525021	4.200	01	3	16044534	1.220	08	33
14534079	4.200	01	21		5.0148	01	18
14534279	4.200	01	21	16046134	1.295	02	9
14534379	4.200	01	21	16100821	0.002	01	10
14534479	4.200	01	21		0.003	03	24
14534579	4.200	01	21		1.220	03	13
14549579	4.200	01	3		1.220	10	6
14549879	4.200	01	3		1.220	11	29
14550079	4.200	01	3		1.300	05	4
14582790	4.200	01	26		5.0040	03	31
14601371	5.0076	06	1A	16100824	5.0580	01	5
	5.0076	06	2A	16101521	1.070	01	4
	5.0077	06	1A	16101721	5.0040	02	29
	5.0077	06	2A	2420R327D7	1.250	14	110
	5.0078	06	1A	2436U1198S551	2.031	06	202
	5.0078	06	2A	2436U1231S513	1.050	12	515
	5.0079	06	1A	2441U1030S29	3.010	02	41
	5.0079	06	2A	2441U549S464	1.030	02	467
14626090	4.200	01	24	2445R152D1	3.060	02	13
14626290	4.200	01	25	2446U260S10	1.020	01	3C
14626671	4.200	01	27	422050500	1.295	01	5
15203234	0.000	01	23		1.295	02	5
15204034	2.000	02	11	4952483	1.300	02	41
	2.002	01	2	4976587	1.010	01	7
	2.050	01	1	4982514	0.000	02	28
	5.0013	02	31		0.003	03	46
	5.0022	02	31		1.010	02	22
	5.0038	02	31		1.081	02	31
	5.0039	02	31		1.085	01	8
15204134	2.000	01	4		1.280	01	8
	2.001	02	4		1.295	01	25
15246234	1.000	01	26		1.295	02	25
154227028	1.230	01	1		2.040	01	17
15687907	1.250	09	48		2.041	01	17
15896221	1.295	02	61		2.041	02	14
15896421	5.0040	03	30		5.0020	01	7
15903804	1.250	09	38		5.0020	07	8
15984874	3.040	01	2		5.0076	07	7
15990121	5.0144	01	2		5.0076	08	6
16039634	5.0013	02	11		5.0076	09	4
	5.0022	02	11		5.0077	07	7
	5.0038	02	11		5.0077	08	6
	5.0039	02	11		5.0077	09	4
16043234	0.003	02	30		5.0078	07	7
	0.003	03	30		5.0078	08	6
	1.220	11	25		5.0078	09	4
	1.250	09	24		5.0079	07	7
	1.300	04	72		5.0079	08	6
	5.0040	02	25		5.0079	09	4
16043434	1.082	01	2		5.0088	01	7
	1.082	02	2		5.0088	03	18
	1.091	03	5		5.0088	05	16
	1.220	01	4		5.0148	01	23
	1.220	03	5	70923841	5.0076	07	8
	1.220	08	7		5.0076	08	5
	1.220	11	26		5.0076	09	3
	1.250	04	6		5.0076	10	9
	1.250	05	11		5.0077	07	8
	1.295	01	8		5.0077	08	5
	1.295	02	8		5.0077	09	3
	1.300	02	37		5.0077	10	9
	1.300	05	1L		5.0078	07	8
	1.300	05	6		5.0078	08	5
	5.0020	08	5		5.0078	09	3
	5.0020	09	6		5.0078	10	9
	5.0040	03	27		5.0079	07	8
16043634	0.003	02	37		5.0079	08	5
	1.070	01	8		5.0079	09	3
	1.220	03	8		5.0079	10	9
	1.270	02	17	70923843	1.065	01	4

Number	Figure	Sequence	Ref.	Number	Figure	Sequence	Ref.
70923843	1.083	04	21	71405991	4.200	01	13
70924110	1.083	02	27	71405992	4.200	01	13
70931640	1.083	01	26	71405993	4.200	01	19
	2.030	01	15	71405995	4.200	01	28
	2.031	01	11	71406009	4.520	01	32
	2.031	02	5	71406248	0.003	02	48
	3.070	01	4	71406250	1.060	02	16
	5.0086	03	18	71406271	1.020	01	12
	5.0088	05	11	71406374	4.200	01	29
71400902	3.020	03	21	71406454	5.0042	01	2
71401086	3.030	02	3	71407471	4.200	01	20
71401325	3.020	02	1A	71412018	5.0159	02	22
71403661	1.083	04	8	71412020	5.0159	02	13
	1.220	11	14	71412023	5.0159	02	14
	5.0076	02	8	71415031	4.520	01	43
	5.0077	02	8	71415090	2.030	04	30
	5.0078	02	8	71415214	2.000	02	4
	5.0079	02	8		2.001	02	17
71404161	3.070	01	1A		3.030	01	4
71404162	1.020	01	12A	71415218	0.000	01	26
71404166	1.030	05	728	71415282	2.031	03	30
	1.050	07	169	71415385	1.010	02	23
	5.0076	02	20		1.295	01	24
	5.0076	03	20	71415899	1.220	11	11
	5.0077	02	20	71416130	1.081	01	29
	5.0077	03	20		1.220	11	10
	5.0078	02	20	71418539	2.030	04	5
	5.0078	03	20	71418542	2.030	04	9
	5.0079	02	20	71418545	2.030	04	10
	5.0079	03	20	71420005	2.030	02	30
71404168	1.050	08	264	71420545	5.0086	01	18
	1.050	11	264		5.0088	02	18
71404169	2.031	04	13	71420700	1.220	11	13
71404311	1.083	02	17	71421021	0.001	02	5
	1.083	03	17	71421022	0.001	02	6
	5.0020	02	5	71425116	1.300	08	1D
	5.0086	01	6		1.300	09	11
	5.0088	02	6	71425615	0.003	03	20
71404313	1.060	01	11		1.295	02	52
	2.031	04	5	71425839	5.0144	01	1
	5.0013	03	3	71430067	2.002	01	18
	5.0022	03	3	71431617	0.003	02	32
	5.0038	03	3		0.003	03	32
	5.0039	03	3	71433079	4.520	01	20
71404407	1.083	02	16	71433086	4.520	01	16
71404460	2.030	01	14	71433088	4.520	01	13
	2.031	01	12		4.520	02	13
71404505	0.003	03	31	71433093	4.520	01	8
71404909	5.0076	04	12		4.520	02	8
	5.0077	04	12	71433096	4.520	03	17
	5.0078	04	12	71433121	4.520	03	15
	5.0079	04	12	71433122	4.520	01	18
71405003	1.010	01	11		4.520	02	18
	1.270	01	3	71433123	4.520	01	19
	1.300	03	31	71433287	2.030	04	16
	2.001	01	4		5.0013	01	14
	3.000	01	10		5.0022	01	14
	5.0042	01	3		5.0038	01	14
71405228	1.010	01	9		5.0039	01	14
71405229	1.010	01	8	71437694	4.520	02	14
71405745	0.003	02	40	71438664	1.220	11	23
	0.003	03	40	71442021	3.000	02	3
	1.010	02	31	71442022	3.000	02	4
	1.081	01	16	71442115	1.000	02	6
71405770	0.000	02	18	71442116	1.000	02	7
	5.0076	04	15	71444029	1.083	02	18
	5.0077	04	15		5.0020	02	6
	5.0078	04	15		5.0020	10	11
	5.0079	04	15		5.0020	12	6
71405981	4.200	01	2		5.0020	13	11
71405982	4.200	01	9		5.0021	13	11
71405983	4.200	01	9		5.0023	13	11
71405985	4.200	01	11		5.0024	13	11
71405986	4.200	01	12		5.0086	03	8
71405987	4.200	01	13		5.0088	04	8
71405988	4.200	01	13	71444332	1.050	09	161
71405989	4.200	01	13		1.060	03	22A
71405990	4.200	01	13		2.031	06	161

Number	Figure	Sequence	Ref.	Number	Figure	Sequence	Ref.
71445656	2.030	04	11	72111860	2.030	02	9
71445657	2.030	02	13	72111863	2.030	02	5
	2.030	04	12	72112166	5.0148	01	1
71445658	2.030	02	14	72113825	2.030	02	4
	2.030	04	13	72113900	2.030	01	25
71447621	2.030	04	4A		2.030	04	1-30
71447902	2.030	02	4A	72113901	2.030	04	1
71447903	2.031	03	4A	72113905	2.030	04	2
71450316	1.220	11	2	72113929	2.030	04	14
71450318	1.220	11	4	72114441	2.031	03	1
71450342	1.220	11	7	72114445	2.031	03	2
71450974	5.0580	02	11	72114452	2.031	03	4
71451259	1.280	01	7	72114456	2.031	03	8
71451946	1.220	06	1	72114457	2.031	03	9
71452214	2.031	03	5	72114473	2.031	03	3
71452582	2.030	02	31	72114638	2.030	02	8
71456224	5.0156	02	7	72116115	5.0159	02	3
	5.0159	02	8	72116117	5.0156	02	5
71456596	1.030	01	8	72116120	5.0159	02	10
71464956	0.003	03	33	72116123	5.0159	02	15
71465032	2.030	02	6	72116127	5.0159	02	20
71466019	5.0020	13	4	72116128	5.0159	02	21
	5.0021	13	4	72116133	5.0156	02	17
	5.0023	13	4	72116142	1.280	01	1
	5.0024	13	4	72116240	4.520	02	31
71466172	5.0076	10	3	72130406	4.520	02	22
	5.0077	10	3	72130407	4.520	02	23
	5.0078	10	3	72130429	4.520	01	24
	5.0079	10	3	72130465	4.520	01	25
71467046	3.000	01	13	72130467	4.520	01	27
71468153	4.520	03	10		4.520	02	27
71468156	4.520	03	5	72150022	1.250	11	50
71468299	5.0156	02	10	72150174	1.020	01	6F
71468302	5.0156	02	13	72150175	1.020	01	6D
71468303	5.0156	02	14	72150709	1.020	01	6A
71468304	5.0156	02	15	72150751	5.0088	03	19
71468528	4.520	01	34	72151580	2.030	01	13
71468529	4.520	01	35		2.031	01	10
71469305	4.520	03	12		2.031	02	6
71469556	3.070	01	14	72151891	1.250	11	94
71470194	5.0100	01	5		1.250	12	94
	5.0101	01	5	72160573	5.0086	01	7
	5.0102	01	5		5.0086	03	6
	5.0103	01	5		5.0088	02	7
	5.0104	01	5		5.0088	04	6
	5.0108	01	5	72161758	1.250	13	23
71470195	5.0100	01	4	72161759	1.250	13	24
	5.0101	01	4	72171471	1.040	01	2
	5.0102	01	4	72171602	1.250	01	7
	5.0103	01	4	72201053	5.0088	03	12
	5.0103	01	9	72201210	1.300	01	32
	5.0104	01	4		1.300	02	32
	5.0108	01	4		1.300	03	32
71470196	5.0100	01	9		1.300	09	15
	5.0101	01	9	72201224	0.003	01	13
	5.0102	01	9		1.300	07	6
	5.0104	01	9		1.300	09	8
	5.0108	01	9	72201225	1.250	01	2
71470401	2.031	03	10	72201227	1.300	01	36
71470405	2.031	03	7	72201251	0.003	03	22
71470954	2.031	03	11	72202203	5.0013	02	17
71470955	2.031	03	12		5.0022	02	17
71470956	2.031	03	6		5.0038	02	17
71471307	2.030	04	4		5.0039	02	17
71471309	2.030	04	8	72202341	1.060	03	5
71473483	5.0002	01	13	72202453	1.090	01	16
	5.0003	01	13		1.090	02	16
	5.0004	01	13	72202973	1.010	01	12
71477097	4.520	02	3	72203027	5.0580	02	5
71482200	1.060	02	17	72203141	2.000	02	21
71484462	5.0076	10	8		2.002	01	12
	5.0077	10	8		5.0013	02	18
	5.0078	10	8		5.0022	02	18
	5.0079	10	8		5.0038	02	18
71491520	4.200	01	31		5.0039	02	18
72104633	2.030	04	3	72203145	2.000	02	25
72104648	2.030	02	3		2.002	01	16
72105459	1.010	01	1B		5.0013	02	20

Number	Figure	Sequence	Ref.	Number	Figure	Sequence	Ref.
72203145	5.0022	02	20	72204293	5.0077	10	6
	5.0038	02	20		5.0078	10	6
	5.0039	02	20		5.0079	10	6
72203157	2.000	02	23	72204294	5.0076	10	7
	2.002	01	14		5.0077	10	7
	5.0013	02	19		5.0078	10	7
	5.0022	02	19		5.0079	10	7
	5.0038	02	19	72204335	1.061	01	15
	5.0039	02	19	72204354	1.083	04	10
72203347	5.0013	02	15	72204486	5.0100	01	2
	5.0022	02	15		5.0101	01	2
	5.0038	02	15		5.0102	01	2
	5.0039	02	15		5.0103	01	2
72203348	5.0013	02	16		5.0104	01	2
	5.0022	02	16		5.0108	01	2
	5.0038	02	16	72204487	5.0100	01	1
	5.0039	02	16		5.0101	01	1
72203513	3.040	01	1		5.0102	01	1
72203539	1.220	01	3		5.0103	01	1
72203567	1.070	02	4		5.0104	01	1
	5.0076	06	4		5.0108	01	1
	5.0077	06	4	72204490	5.0020	10	21
	5.0078	06	4	72204607	1.083	03	31
	5.0079	06	4	72204615	3.070	01	1
72203569	5.0076	06	1	72204618	1.083	03	30
	5.0077	06	1	72204754	5.0076	04	11
	5.0078	06	1		5.0077	04	11
	5.0079	06	1		5.0078	04	11
72203570	5.0076	06	2		5.0079	04	11
	5.0077	06	2	72204768	1.295	04	3
	5.0078	06	2	72205175	2.031	04	6
	5.0079	06	2	72205402	0.003	01	2E
72203856	1.070	01	3	72206112	5.0088	03	14
72203871	5.0076	06	1B		5.0148	01	22
	5.0076	06	2B	72206122	1.250	16	2
	5.0077	06	1B	72206125	1.250	17	43
	5.0077	06	2B	72206126	1.250	13	21
	5.0078	06	1B	72206129	1.250	14	56
	5.0078	06	2B	72206130	1.250	12	46
	5.0079	06	1B	72206136	1.250	10	30
	5.0079	06	2B	72206139	1.250	16	17
72203912	1.295	03	4	72206140	1.250	17	19
72203915	1.295	03	3	72206141	1.250	14	52
72203934	1.295	02	32	72206258	1.300	01	35
72203938	1.250	07	14	72206397	1.250	17	35A
72203953	1.200	01	15	72206731	5.0100	01	2A
72203954	1.250	03	9		5.0101	01	2A
72203956	1.250	06	2		5.0102	01	2A
72203961	1.280	01	6		5.0103	01	2A
72204033	1.250	07	11		5.0104	01	2A
72204155	1.091	01	1		5.0108	01	2A
	5.0020	04	1	72206993	1.295	02	14
	5.0020	05	1	72207029	1.010	01	1A
72204201	5.0076	07	4A	72207066	1.300	09	10
	5.0076	07	5A	72208151	2.000	02	2
	5.0076	07	6A		2.001	02	15
	5.0076	08	3A	72208152	2.000	02	5
	5.0076	09	2A		2.001	02	18
	5.0076	09	5A	72208153	2.000	02	6
	5.0077	07	4A		2.001	02	19
	5.0077	07	5A	72208155	2.000	02	8
	5.0077	07	6A		2.001	02	21
	5.0077	08	3A	72208156	2.000	02	9
	5.0077	09	2A		2.001	02	22
	5.0077	09	5A	72208161	2.000	02	14
	5.0078	07	4A		2.001	01	13
	5.0078	07	5A		2.002	01	5
	5.0078	07	6A		5.0013	02	34
	5.0078	08	3A		5.0022	02	34
	5.0078	09	2A		5.0038	02	34
	5.0078	09	5A		5.0039	02	34
	5.0079	07	4A	72208162	2.000	01	12
	5.0079	07	5A		2.000	02	15
	5.0079	07	6A		2.001	01	14
	5.0079	08	3A		2.001	02	12
	5.0079	09	2A		2.002	01	6
	5.0079	09	5A		5.0013	02	35
72204293	5.0076	10	6		5.0022	02	35

Number	Figure	Sequence	Ref.
72208162	5.0038	02	35
	5.0039	02	35
72208163	2.000	02	16
	2.001	01	15
	2.002	01	7
	5.0013	02	36
	5.0022	02	36
	5.0038	02	36
	5.0039	02	36
72208164	2.000	01	11
	2.000	02	13
	2.001	01	12
	2.001	02	11
	2.002	01	4
	5.0013	02	33
	5.0022	02	33
	5.0038	02	33
	5.0039	02	33
72208165	2.000	01	13
	2.000	02	17
	2.001	01	16
	2.001	02	13
	2.002	01	8
	5.0013	02	37
	5.0022	02	37
	5.0038	02	37
	5.0039	02	37
72208166	2.001	01	5
72208167	2.001	01	6
72208168	2.001	01	7
72208169	2.001	01	8
72208175	2.000	01	3
	2.001	02	3
72208177	2.000	01	7
	2.001	02	7
72208179	2.000	01	8
	2.001	02	8
72208693	1.000	01	37B
72208721	1.000	03	8
72208802	3.030	01	1
72208940	3.010	01	3
72208951	1.040	01	1
72209013	1.050	03	20
	1.050	04	20
72209111	1.250	15	11
72209112	1.250	15	9
72209113	1.250	18	6
72209120	1.250	17	39
72209121	1.250	11	69
	1.250	12	69
	1.250	13	69
	1.250	14	69
	1.250	15	6
72209123	1.250	11	78
	1.250	12	78
	1.250	14	78
72209583	4.520	03	7
72209585	4.200	01	33
72209635	1.250	14	56A
72209636	1.250	14	56B
72209637	1.250	14	56C
72209638	1.250	14	56D
72209644	1.250	18	12
72209802	1.030	02	954
72209810	1.030	03	418
	1.081	03	171
72209813	1.030	02	466
	1.030	03	466
	1.030	05	466
72209815	1.030	02	490
	1.030	03	496
72209818	3.010	02	70
	3.010	03	70
72209820	2.031	06	169
	3.010	03	63
72209821	1.050	06	169
	3.010	02	88
72209822	1.051	02	561
72209823	1.030	05	732
72209824	1.050	08	562
	1.090	03	8
72209827	1.030	05	725
	1.091	02	28
	2.031	06	164
	3.010	02	66
	5.0020	03	3A
72209830	1.051	02	262
	2.031	06	170
72209831	1.030	03	858
72209832	1.030	03	924
72209836	1.030	06	710
72209838	1.030	06	728
	1.050	06	164
	1.050	07	164
	1.050	08	164
	1.050	09	164
	1.050	10	164
	1.050	11	164
	1.050	12	164
	1.050	13	164
	1.051	02	603A
	1.051	02	605A
	3.010	02	27
72209839	1.050	06	162
	1.050	07	162
	1.050	08	162
	1.050	10	162
	1.050	11	162
	1.050	12	162
	1.050	13	162
	1.051	02	161
72209841	1.050	10	556
	1.050	11	556
72209843	2.031	06	204
72209857	1.090	03	2
72209858	1.090	03	5
72209859	1.090	03	6
72209860	1.090	03	7
72209861	1.090	03	9
72209862	1.090	03	11
72209863	1.090	03	10
72209865	1.090	03	13
72209866	1.090	03	14
72209867	1.090	03	15
72209868	1.090	03	16
72209869	1.090	03	17
72209870	1.090	03	18
72209876	1.030	06	414
72209877	1.030	06	435
72209878	1.030	02	468
	1.030	06	468
72209879	1.030	06	711
72209984	1.040	02	15
72209989	2.031	06	162
72210000	1.040	03	32
72210001	1.040	02	32
72210003	1.040	02	34
72210011	1.051	02	271
72210038	1.250	16	27
72210050	2.031	06	163
72210072	1.050	06	154
	1.050	07	154
	1.050	09	154
72210073	1.050	06	155
	1.050	07	155
72210074	2.031	06	207
72210076	1.050	10	161
	1.050	11	161
	1.050	12	161
	1.050	13	161
	1.083	02	29
	5.0020	02	14
	5.0020	10	14
	5.0020	12	9
	5.0020	13	10
	5.0021	13	10

Number	Figure	Sequence	Ref.	Number	Figure	Sequence	Ref.
72210076	5.0023	13	10	72210440	1.051	02	337
	5.0024	13	10	72210441	1.051	02	512
	5.0076	04	4	72210442	1.051	02	522
	5.0077	04	4	72210443	1.051	02	551
	5.0078	04	4	72210445	5.0076	11	2
	5.0079	04	4		5.0077	11	2
	5.0086	03	9		5.0078	11	2
	5.0088	04	9		5.0079	11	2
72210077	1.050	06	163	72210483	1.091	02	5
	1.050	07	163	72210484	1.091	02	1
	1.050	08	163	72210485	1.091	02	2
	1.050	09	163	72210486	1.091	02	8
	1.050	10	163	72210487	1.091	02	11
	1.050	13	163	72210488	1.091	02	12
	1.050	14	163	72210489	1.091	02	13
	3.010	04	76	72210490	1.091	02	19
72210080	1.051	02	202	72210491	1.091	02	27
72210087	1.051	02	261	72210492	1.091	02	24
72210088	1.050	09	264	72210493	1.091	02	29
	1.050	10	264	72210494	1.091	02	30
	1.050	12	264	72210495	5.0148	02	1
	1.050	14	264	72210496	5.0148	02	2
	3.010	03	57	72210497	5.0148	02	3
72210091	1.050	08	521	72210498	5.0148	02	4
	1.050	09	521	72210694	5.0076	04	2
	1.050	10	521		5.0077	04	2
	1.050	11	521		5.0078	04	2
	1.050	12	521		5.0079	04	2
	1.050	13	521	72210824	5.0086	01	4
72210093	1.050	10	523		5.0088	02	4
72210094	1.050	10	524	72211062	0.001	01	1H
	1.050	11	524	72211160	1.050	08	552
72210098	1.050	10	602	72211238	4.520	02	28
	1.050	11	602	72211282	1.030	02	824
	1.051	02	603	72211285	1.030	02	792
72210099	1.050	10	603	72211309	3.010	04	74
	1.050	11	603	72211371	2.000	02	22
72210124	1.050	08	323		2.002	01	13
	1.050	09	323	72211372	2.000	02	24
	1.050	12	323		2.002	01	15
72210125	1.050	08	336	72211496	2.000	01	9
	1.050	09	336		2.001	02	9
	1.050	10	336	72211750	4.520	02	33
	1.050	11	336	72212061	3.040	02	2
	1.050	12	336	72212062	3.040	02	1A
72210126	1.050	08	333	72212065	3.040	02	7
	1.050	09	333	72212066	3.040	02	9
	1.050	10	333	72212067	3.040	02	1
	1.050	11	333	72212068	3.040	02	5
	1.050	12	333	72212069	2.002	01	17A
72210127	1.050	08	331	72212070	3.030	02	2
	1.050	09	331	72212071	3.030	02	4
	1.050	10	331	72212072	3.030	02	5
	1.050	11	331	72212075	3.030	02	8
	1.050	12	331	72212076	3.030	02	9
72210181	3.020	03	20	72212077	3.030	02	10
72210208	0.003	04	11	72212078	3.030	02	11
72210213	0.003	04	17	72212079	3.030	02	12
72210219	1.091	02	3	72212080	3.030	02	6
72210223	1.091	02	9	72212081	3.030	02	1
72210225	1.091	02	14	72212082	3.020	02	2
72210226	1.091	02	15	72212083	3.020	02	4
72210230	1.091	02	18	72212087	3.020	02	11
72210232	1.091	02	20	72212169	5.0021	13	3
72210233	1.091	02	21	72212176	5.0077	10	2
72210234	1.091	02	22	72212362	5.0001	01	1
72210237	1.091	02	26		5.0002	01	1
72210243	3.060	02	3		5.0003	01	1
72210246	3.060	02	6		5.0004	01	1
72210247	3.060	02	7	72212363	5.0001	01	2
72210248	3.060	02	8		5.0002	01	2
72210249	3.060	02	9		5.0003	01	2
72210250	3.060	02	12		5.0004	01	2
72210435	1.051	02	204	72212365	5.0001	01	4
72210436	1.051	02	323		5.0002	01	4
72210437	1.051	02	324		5.0003	01	4
72210438	1.051	02	333		5.0004	01	4
72210439	1.051	02	334	72212366	5.0001	01	6

Number	Figure	Sequence	Ref.	Number	Figure	Sequence	Ref.
72212366	5.0002	01	6	72214527	1.050	03	15
	5.0003	01	6		1.081	02	20
	5.0004	01	6	72214533	1.060	03	3
72212368	5.0001	01	8	72214535	1.050	03	3
	5.0002	01	8		5.0076	05	19
	5.0003	01	8		5.0077	05	19
	5.0004	01	8		5.0078	05	19
72212369	5.0001	01	7		5.0079	05	19
	5.0002	01	7	72214539	5.0076	05	3
	5.0003	01	7		5.0077	05	3
	5.0004	01	7		5.0078	05	3
72212370	5.0001	01	9		5.0079	05	3
	5.0002	01	9	72214540	5.0088	03	10
	5.0003	01	9	72214541	1.050	03	18
	5.0004	01	9		1.060	03	14
72212371	5.0001	01	10	72214542	1.081	01	18
	5.0002	01	10		5.0076	05	10
	5.0003	01	10		5.0077	05	10
	5.0004	01	10		5.0078	05	10
72212373	5.0001	01	11		5.0079	05	10
	5.0002	01	11	72214543	1.081	02	5
	5.0003	01	11	72214546	1.082	01	4
	5.0004	01	11		1.082	02	4
72212407	3.020	03	15		5.0020	03	7
72212408	3.020	03	16		5.0076	05	23
72212409	3.020	03	17		5.0077	05	23
72212410	3.020	03	18		5.0078	05	23
72212411	3.020	03	19		5.0079	05	23
72212415	3.020	02	6	72214547	5.0020	06	1
72212450	5.0086	04	1B		5.0020	07	2
	5.0088	06	1B	72214548	1.081	01	22
72212881	2.031	03	2A		2.031	05	17
72212882	2.030	02	2A		5.0088	03	11
72212884	2.030	04	1A		5.0088	05	8
	2.030	04	2A	72214551	1.081	01	12
72212948	1.300	01	21		1.081	02	12
72213277	5.0078	10	2	72214553	1.080	02	1
72213353	5.0076	10	2	72214555	1.090	01	3
72213766	0.003	04	9		1.090	02	3
72213767	0.003	04	8	72214557	1.080	03	2
72214220	1.220	10	15	72214558	1.083	01	39
72214363	1.295	01	2	72214561	1.060	03	13
72214521	1.050	04	22		1.080	03	5
72214522	1.050	02	8		5.0020	06	5
	1.080	03	4		5.0020	07	5
	1.092	01	7	72214663	1.060	02	9
	5.0020	06	4		1.091	01	8
	5.0020	07	4		2.031	04	18
	5.0076	05	8		5.0020	04	8
	5.0077	05	8		5.0020	05	10
	5.0078	05	8		5.0076	04	3
	5.0079	05	8		5.0076	05	6
72214523	1.050	02	9		5.0077	04	3
	1.060	03	9		5.0077	05	6
	1.081	02	15		5.0078	04	3
	1.090	01	13		5.0078	05	6
	1.090	02	13		5.0079	04	3
	5.0088	03	7		5.0079	05	6
	5.0088	05	6		5.0088	05	9
72214524	1.050	02	10		5.0148	01	26
	1.060	03	11	72214669	5.0076	04	10
	1.081	01	17		5.0077	04	10
	1.081	02	17		5.0078	04	10
	1.091	01	7		5.0079	04	10
	5.0020	04	7	72214677	1.030	05	710
	5.0020	05	9	72214711	1.065	01	2
	5.0076	05	9	72214717	1.060	03	8
	5.0077	05	9		1.061	02	12
	5.0078	05	9	72214718	5.0148	01	11
	5.0079	05	9	72214728	5.0076	04	1
	5.0148	01	14		5.0077	04	1
72214525	1.050	02	11		5.0078	04	1
	1.092	01	8		5.0079	04	1
	5.0148	01	15	72214734	1.060	01	8
72214526	1.050	02	12		1.060	03	10
	1.050	04	12	72214735	1.060	03	16
	5.0088	03	9		5.0076	05	12
	5.0088	05	7		5.0077	05	12

Number	Figure	Sequence	Ref.	Number	Figure	Sequence	Ref.
72214735	5.0078	05	12	72215443	5.0077	04	19
	5.0079	05	12		5.0078	04	19
72214740	1.081	02	2		5.0079	04	19
	5.0076	05	2		5.0086	01	9
	5.0077	05	2		5.0086	02	3
	5.0078	05	2		5.0086	03	17
	5.0079	05	2		5.0088	02	9
72214744	1.050	03	7		5.0088	03	13
	1.081	01	14		5.0088	05	10
	1.081	02	14	72215445	1.040	02	23
	1.091	01	6	72215446	1.040	02	24
	3.070	01	2	72215447	1.040	02	25
	5.0020	04	6	72215448	1.040	02	26
	5.0020	05	8	72215449	1.040	02	27
	5.0076	05	7	72215450	1.040	02	28
	5.0077	05	7	72215451	1.040	02	30
	5.0078	05	7	72215453	1.040	02	100
	5.0079	05	7	72215461	1.030	02	702
72214753	1.061	02	6		1.030	03	763
72214762	1.065	01	1	72215463	1.030	02	732
72214763	5.0076	04	9		1.030	03	728
	5.0077	04	9	72215465	1.030	02	953
	5.0078	04	9	72215466	1.030	02	100
	5.0079	04	9	72215470	1.030	02	500
72214775	5.0020	06	2	72215471	1.030	03	801
72214782	5.0020	07	1	72215537	3.010	02	16
72214795	1.061	02	11	72215538	3.010	02	20
72214796	1.061	02	13	72215540	3.010	02	18
72214808	5.0076	02	11	72215542	3.010	02	23
	5.0076	03	11	72215545	3.010	02	9
	5.0077	02	11	72215546	3.010	02	13
	5.0077	03	11	72215549	3.010	02	11
	5.0078	02	11	72215550	3.010	02	3
	5.0078	03	11	72215552	3.010	02	2
	5.0079	02	11	72215553	3.010	02	7
	5.0079	03	11	72215554	3.010	02	8
	5.0148	01	29	72215555	3.010	02	5
72214878	5.0088	05	2	72215559	3.010	02	44
72214926	5.0079	10	2	72215560	3.010	02	47
72215057	1.083	02	10	72215563	3.010	02	81
72215080	3.010	02	37	72215565	3.010	02	85
72215205	5.0020	13	7	72215570	3.010	03	86
	5.0021	13	7	72215571	3.010	02	31
	5.0023	13	7	72215573	3.010	02	43
	5.0024	13	7	72215576	3.010	02	30
72215273	1.090	01	2	72215581	3.010	02	78
	1.090	02	2	72215583	3.010	02	80
72215288	5.0020	03	3	72215585	3.010	02	77
72215357	1.030	03	730	72215586	3.010	03	84
72215386	1.030	03	757	72215590	3.010	03	52
72215387	1.030	02	725	72215591	3.010	02	32
	1.030	03	755	72215593	1.050	10	266
72215395	1.030	02	724	72215594	3.010	02	400
	1.030	03	724	72215596	1.050	14	266
72215396	1.030	03	708	72215761	3.010	02	21
72215424	0.003	04	10	72215762	3.010	02	14
72215431	1.040	02	3	72215763	3.010	03	65
72215432	1.040	02	4	72215764	3.010	02	4
72215433	1.040	02	5	72215775	1.040	02	7
72215434	1.040	02	6	72215776	1.040	02	8
72215437	1.040	02	11	72215779	1.040	02	17
72215438	1.040	02	12	72215841	1.051	02	605
72215439	1.040	02	16	72216032	1.040	03	24
72215441	1.040	02	19	72216579	3.070	01	13
72215443	1.040	02	21	72216769	5.0088	03	8
	1.060	01	18		5.0148	01	13
	1.083	01	28	72217176	5.0148	01	16
	1.083	01	43	72217374	1.030	02	717
	5.0013	03	4	72217375	1.030	02	728
	5.0013	04	5	72217377	1.030	03	722
	5.0020	02	13	72217378	1.030	03	725
	5.0022	03	4	72217379	1.030	03	733
	5.0022	04	5	72217380	1.030	03	734
	5.0038	03	4	72217381	1.030	03	753
	5.0038	04	5	72217382	1.030	03	756
	5.0039	03	4	72217399	5.0076	11	1
	5.0039	04	5		5.0077	11	1
	5.0076	04	19		5.0078	11	1

Number	Figure	Sequence	Ref.	Number	Figure	Sequence	Ref.
72217399	5.0079	11	1	72283559	1.050	04	19
72217400	5.0076	11	10		1.060	03	18
	5.0077	11	10	72283610	5.0148	01	8
	5.0078	11	10	72284148	1.000	01	24
	5.0079	11	10	72284184	1.000	02	24
72217408	5.0076	05	11	72284476	3.010	03	87
	5.0077	05	11	72284849	1.050	02	6
	5.0078	05	11	72285674	0.003	01	2D
	5.0079	05	11	72950131	1.250	18	8
	5.0148	01	7	72950134	1.250	11	32
72217409	1.060	03	7	72950231	1.250	14	26
72217471	1.030	02	710	72950241	1.300	04	67
72217475	1.030	02	727	72950285	1.050	08	261
72217476	1.030	03	732		1.050	09	261
72217498	1.040	02	20		1.050	10	261
72218949	3.010	02	48		1.050	11	261
72218950	3.010	02	46		1.050	12	261
72218952	3.010	02	36	72950352	1.250	15	13
72219119	1.030	03	814	72950361	1.250	11	76
72219143	3.020	02	5	72951499	1.080	02	19
72219245	5.0020	13	13		1.090	01	17
	5.0021	13	13		1.090	02	17
	5.0023	13	13		1.220	07	5
	5.0024	13	13		1.220	09	23
72219249	5.0020	14	2		1.220	10	7
72219250	5.0020	14	3		1.220	11	9
72219251	5.0020	14	9		1.295	02	23
72219252	5.0020	14	4		2.031	05	24
72219253	5.0020	14	6		5.0040	01	18
72219254	5.0020	14	8	72951573	1.250	11	25
72219255	5.0020	14	5		1.250	12	25
72219256	5.0020	14	7	72951575	1.250	12	47
72219278	5.0020	14	14	72951580	1.250	10	31
72219279	5.0020	14	1	72951633	1.250	11	63
72219287	5.0020	14	10	72951642	1.250	07	18
72219288	5.0020	14	11	72951660	1.250	10	75
72219289	5.0020	14	12		1.250	11	75
72219290	5.0020	14	13		1.250	12	75
72219360	1.020	01	9	72951685	1.250	18	7
72219439	1.250	14	56E	72951753	1.250	10	81
72219440	1.250	14	56F		1.250	11	81
72219489	0.002	01	5A		1.250	12	81
72219557	5.0076	10	1	72951984	1.250	07	13A
72219899	2.040	01	10	72952762	5.0148	01	12
	2.041	01	10	72952773	3.070	01	6
	2.041	02	8	72953334	1.250	11	62
72219901	2.041	01	9	72953349	1.250	07	13
	2.041	02	7	72953856	1.081	02	8
72220080	1.030	02	774	72953923	1.295	01	1
72220081	1.030	02	400	72953999	0.003	04	7
72220290	2.040	01	8	72954127	1.295	01	13
72220390	5.0076	06	3	72954136	1.081	01	7
	5.0077	06	3	72954140	1.250	14	85
	5.0078	06	3	72954148	1.000	01	22
	5.0079	06	3	72954200	1.250	16	3
72220391	5.0076	06	6	72954207	1.010	02	12
	5.0077	06	6	72954209	5.0209	01	17
	5.0078	06	6		5.0210	02	12
	5.0079	06	6	72954251	1.300	11	6
72271490	5.0148	01	25	72954269	1.250	11	58
72273823	1.250	06	3		1.250	12	58
72275189	1.300	03	26	72954277	1.250	13	73
	5.0209	01	18		1.250	17	32
	5.0210	02	13	72954322	5.0076	02	16
72280271	1.090	03	12		5.0076	03	16
72280507	1.061	01	17		5.0077	02	16
72280882	1.250	16	16		5.0077	03	16
72280893	1.250	02	1		5.0078	02	16
72283072	1.040	03	28		5.0078	03	16
	5.0086	03	7		5.0079	02	16
	5.0088	04	7		5.0079	03	16
72283074	3.070	01	8	72954362	1.250	11	33
72283478	5.0013	01	13	72954365	1.250	13	48
	5.0022	01	13	72954366	1.250	11	51
	5.0038	01	13	72954370	1.250	11	35
	5.0039	01	13	72954371	1.250	10	84
	5.0086	01	8	72954372	1.250	17	34
	5.0088	02	8	72954373	1.250	10	99

Number	Figure	Sequence	Ref.	Number	Figure	Sequence	Ref.
72954373	1.250	16	14	72963810	1.300	09	9
72954375	1.250	12	89	72963962	1.030	02	156
72954380	1.250	11	119	72963968	1.030	05	355
	1.250	12	119	72963969	1.030	05	433
72954381	1.250	11	120	72963970	1.030	05	434
	1.250	14	120	72963972	1.030	05	700
72954382	1.250	11	121	72963995	1.030	05	309
	1.250	12	121	72963996	1.030	05	310
72954386	1.250	11	38	72963997	1.030	05	311
72954387	1.250	11	40	72964078	3.010	02	71
72954388	1.250	11	36	72964081	3.010	02	72
72954389	1.250	11	39	72964087	3.010	02	69
72954391	1.250	16	38		3.010	03	69
72954404	1.250	18	10	72964092	3.010	03	55
72954715	1.250	17	37	72964098	1.295	02	11
72954719	1.250	16	18	72964119	1.300	05	1D
72954726	1.250	16	12	72964141	1.300	01	37
72954727	1.250	16	28		1.300	01	42
72954772	1.250	08	3		1.300	02	42
72954860	1.250	10	64		1.300	08	6
	1.250	16	31	72964142	1.300	01	43
72954869	1.250	10	74		1.300	02	43
72954875	1.250	16	9		1.300	08	7
72954897	1.250	11	65	72964201	1.050	14	212
	1.250	14	65	72964210	1.050	10	321
72954900	1.250	12	66		1.050	12	321
	1.250	14	66	72964211	1.050	10	322
72954901	1.250	17	20		1.050	11	322
72954902	1.250	10	70	72964212	1.050	09	325
72954903	1.250	10	79	72964469	1.030	02	789
	1.250	16	10	72964485	1.030	02	806
72954906	1.250	10	82	72964498	1.030	05	850
72954985	1.085	01	6	76068649	1.220	01	15
	5.0088	01	5	79028981	4.200	01	30
72954988	5.0020	03	6	79069460	5.0580	02	1A
	5.0076	05	22	79083942	3.020	02	10
	5.0077	05	22	87332802	1.000	01	37A
	5.0078	05	22	87332895	0.002	01	5
	5.0079	05	22	87332947	1.020	01	16
72954991	3.070	01	9	87332986	3.070	01	5
72955500	5.0088	05	5		3.070	01	7
72956312	1.000	01	5	87333017	1.061	02	14
72957825	2.031	06	166	87333054	5.0088	01	6
72957828	1.020	01	6C	87333055	1.030	05	435
72958082	1.020	01	3B	87333069	1.030	02	401
72958200	1.250	10	92	87333071	1.030	02	534
72958201	1.250	10	93	87333132	1.050	08	324
72958211	1.250	17	35G		1.050	09	324
72958213	1.250	17	35J		1.050	12	324
72958217	1.250	10	90	87333251	1.300	04	66
72958218	1.250	10	91	87333253	1.300	04	65A
72958305	1.295	06	22	87333284	1.250	10	2
72958307	1.295	06	23	87333291	1.250	10	37
72958501	1.250	14	57	87333292	1.250	13	20
72958503	1.250	11	28	87333293	1.250	18	4
72958811	1.050	08	512	87333294	1.250	13	68
72958881	1.030	02	886		5.0040	02	22
72958882	1.030	02	901	87333296	1.250	13	6
72959581	1.060	03	4	87333297	1.250	10	7
72960053	1.083	04	15	87333298	1.250	10	8
72960147	3.060	02	5	87333300	1.250	13	5
72960345	1.050	03	17	87333301	1.250	13	22
	1.085	01	7	87333303	1.250	10	12
72960350	1.040	03	29	87333304	1.250	10	14
72960479	1.030	05	312	87333305	1.250	13	10
72960515	3.010	02	26	87333307	1.250	14	29
72961042	1.080	02	17	87333308	1.250	13	11
72962104	3.010	03	64	87333311	1.250	11	61
72962105	3.010	03	60		1.250	12	61
72962106	3.010	03	59		1.250	14	61
72962107	3.010	03	61	87333312	1.250	14	77
72962150	1.030	02	535	87333321	1.250	11	34
72962151	1.030	03	100	87333325	1.250	11	42
72962208	1.030	02	211		1.250	12	42
72962215	1.030	02	127	87333352	1.250	12	59
72962216	1.030	02	885	87333354	1.250	11	45
72962254	3.070	01	3	87333355	1.250	11	87
72962321	1.020	01	6E		1.250	14	87

Number	Figure	Sequence	Ref.	Number	Figure	Sequence	Ref.
87333364	1.250	16	1	87338415	5.0079	05	4
87333365	1.250	16	4	87338416	1.092	01	4
87333366	1.250	16	5	87338500	1.060	03	19
87333367	1.250	16	5A	87338533	1.081	01	1
87333368	1.250	16	5B	87338536	1.081	02	23
87333369	1.250	16	5C	87338540	1.080	01	6
87333370	1.250	16	5D	87338570	1.080	02	21
87333371	1.250	16	5E		1.080	03	3
87333372	1.250	16	5F	87343093	2.030	01	7
87333373	1.250	16	5G		5.0013	04	4
87333374	1.250	16	5H		5.0022	04	4
87333375	1.250	16	5J		5.0038	04	4
87333376	1.250	16	5K		5.0039	04	4
87333378	1.250	16	6		5.0086	03	5
87333380	1.250	16	8		5.0088	04	5
87333381	1.250	16	11	87343330	2.030	01	9
87333382	1.250	12	122	87343335	2.030	01	11
	1.250	16	13	87343337	2.030	01	10
87333383	1.250	16	15		2.031	01	6
87333384	1.250	16	21	87343364	5.0086	03	1
87333385	1.250	16	23		5.0088	04	1
87333386	1.250	16	30	87349642	2.030	01	12
87333387	1.250	16	33		2.031	01	8
87333388	1.250	16	41		5.0020	11	7
87333389	1.250	16	42		5.0020	12	5
87333390	1.250	16	45	87349655	2.030	01	8
87333391	1.250	16	49		2.031	01	5
87333392	1.250	17	22		5.0020	12	4
87333393	1.250	17	24	87349673	2.030	01	17
	1.250	17	35K		2.030	01	21
87333394	1.250	17	25		5.0020	11	5
87333395	1.250	17	26	87349692	2.031	02	4
87333396	1.250	17	35	87353360	2.031	04	16
87333397	1.250	17	35B		5.0088	05	4
87333398	1.250	17	35C	87353449	5.0088	03	6
87333399	1.250	17	35D	87353624	0.003	04	16
87333400	1.250	17	35E	87356265	2.041	02	5
87333401	1.250	17	35F	87356683	1.300	05	1E
87333402	1.250	17	35H	87361190	1.010	02	18
87333403	1.250	17	36	87361706	1.300	03	30
87333404	1.250	17	40	87362960	1.030	01	5
87333445	3.010	02	6	87363966	1.030	06	12
87333454	3.010	02	82	87379464	5.0156	02	4
87333455	3.010	02	49	87379467	5.0156	02	18
87333456	3.010	02	50		5.0159	02	25
87333481	2.030	03	29	87382416	5.0042	01	1
87333493	2.030	03	4	87396711	5.0076	07	5
87333494	2.030	03	5		5.0076	09	2
87333499	2.030	03	9		5.0077	07	5
87333500	2.030	03	10		5.0077	09	2
87333501	2.030	03	11		5.0078	07	5
87333502	2.030	03	12		5.0078	09	2
87333507	2.030	03	16		5.0079	07	5
87333509	2.030	03	17		5.0079	09	2
87333511	2.030	03	19	87396713	5.0076	07	6
87333512	2.030	03	20		5.0076	09	5
87333514	2.030	03	22		5.0077	07	6
87333515	2.030	03	23		5.0077	09	5
87333517	2.030	03	25		5.0078	07	6
87333518	2.030	03	26		5.0078	09	5
87333519	2.030	03	27		5.0079	07	6
87333574	1.250	11	108		5.0079	09	5
	1.250	12	108	87396715	5.0076	07	4
87334508	1.300	11	2		5.0077	07	4
87334509	1.300	11	3		5.0078	07	4
87334724	2.001	01	10		5.0079	07	4
	2.002	01	10	87396733	2.031	04	4
87334742	5.0086	01	5	87396734	2.031	04	11
	5.0088	02	5	87396760	5.0023	13	3
87336189	1.030	05	100	87397448	1.050	03	5
87336573	1.250	18	9	87397449	1.050	04	2
87338408	1.090	01	11	87397451	1.050	03	21
87338415	1.091	01	2	87397561	1.060	02	22
	5.0020	04	2	87397565	1.083	01	37
	5.0020	05	2	87397568	1.050	02	4
	5.0076	05	4		1.050	03	4
	5.0077	05	4	87397569	1.061	01	8
	5.0078	05	4		1.083	01	42

Number	Figure	Sequence	Ref.	Number	Figure	Sequence	Ref.
87397569	5.0020	02	15	87527336	1.250	07	25A
87397570	1.083	01	38		1.250	07	5
	5.0020	02	4		1.250	08	2B
87515608	5.0156	01	1	87527344	1.250	07	25
87516076	5.0159	01	1	87527347	1.250	07	25B
87519949	1.082	01	1	87527348	1.250	07	25C
87519950	1.082	02	1	87527349	1.250	07	12
87520007	5.0020	01	1	87527359	1.090	01	18
87520306	1.270	01	1		1.090	02	18
87521852	1.270	02	1	87527372	1.250	07	10
87521854	1.270	02	2	87527383	1.250	06	7
87521855	1.280	01	2		1.250	07	3
87521858	1.200	01	4	87527384	1.250	06	9
87521861	1.200	01	5		1.250	07	4
87521863	1.200	01	6	87527385	1.250	07	6
87521865	1.250	03	7	87527387	1.250	07	8
87521874	1.250	03	8	87527395	1.250	07	9
87522432	1.090	01	12	87527396	1.250	07	1
	1.090	02	12	87527411	1.250	06	11
	1.091	01	5	87527463	1.250	06	12
	1.092	01	6	87527466	1.250	06	12B
	5.0020	03	2	87527468	1.250	06	12C
	5.0020	04	5	87527471	1.250	06	13
	5.0020	05	7	87527472	1.250	06	4
87522669	1.070	02	1	87527477	1.250	06	5
87522673	1.070	02	2	87527490	1.250	06	6
87522674	1.070	02	3	87527492	1.250	06	8
87524286	1.270	02	3	87527503	1.250	09	19
87524750	1.020	01	11	87527504	1.250	09	60
87524752	1.270	01	7	87527530	1.250	07	51
87524788	1.250	08	1	87527531	5.0020	02	19
87524789	1.250	09	2	87527533	1.250	07	53
87524798	1.250	05	6		1.280	01	13
87524799	1.250	08	2	87528089	1.030	01	6
87524800	1.250	09	8	87528092	5.0076	04	8
87524802	1.250	05	9		5.0077	04	8
87524804	1.250	08	4		5.0078	04	8
87524808	1.250	07	16		5.0079	04	8
	1.250	07	27	87528778	5.0088	07	4
	1.250	08	5	87529445	1.295	02	15
	1.280	01	3	87529476	1.295	04	2
87524809	1.250	07	29	87529477	1.295	04	4
87524810	1.250	08	7	87529489	1.295	03	1
87524813	1.250	07	31	87529490	1.295	03	2
87524814	1.250	07	32	87529500	1.295	01	39
87524816	1.250	07	34	87529502	1.295	01	40
87524817	1.250	07	35	87529503	1.092	01	1
87524819	1.250	09	36	87529504	1.295	01	55
87524821	1.250	09	37	87529521	1.295	01	59
87524822	1.250	07	39	87529939	1.081	01	34
87524823	1.250	07	40	87530582	1.060	02	21
87524864	1.070	01	1	87530584	5.0076	04	6
87524865	1.070	01	2		5.0077	04	6
87524873	1.070	01	5		5.0078	04	6
87524874	1.070	01	6		5.0079	04	6
87524903	5.0088	03	20	87530588	5.0076	01	1
87524905	1.060	01	4		5.0077	01	1
87525185	1.280	01	4		5.0078	01	1
87526093	1.220	01	6		5.0079	01	1
87526094	1.220	01	7	87531040	1.300	10	3
87526680	1.081	02	30	87531052	1.081	01	6
	1.220	07	2	87531053	1.080	02	7
	1.220	10	3	87531068	1.090	01	9
	1.220	11	8	87531523	5.0076	05	1
	1.295	02	51		5.0077	05	1
	5.0020	01	8		5.0078	05	1
	5.0040	01	17		5.0079	05	1
87527034	1.250	08	41	87531555	1.300	02	46
87527036	1.250	05	43	87532105	5.0076	02	12
87527038	1.250	05	44		5.0076	03	12
87527307	1.250	08	1A		5.0077	02	12
87527308	1.250	08	1B		5.0077	03	12
87527309	1.250	08	1C		5.0078	02	12
87527310	1.250	08	1D		5.0078	03	12
87527311	1.250	08	1E		5.0079	02	12
87527313	1.250	08	1G		5.0079	03	12
87527325	1.250	06	12A	87532117	3.060	01	1
	1.250	07	7	87532858	1.295	03	10

Number	Figure	Sequence	Ref.	Number	Figure	Sequence	Ref.
87532882	1.090	01	1	87556115	1.200	02	18
	1.090	02	1		1.200	03	18
87532891	1.060	03	15	87556116	1.200	02	19
87532893	1.060	03	12	87556117	1.200	02	20
87532949	1.061	02	5	87556118	1.200	02	21
87533035	1.300	06	1D	87556120	1.200	02	22
	1.300	07	2E	87556121	1.200	02	23
	1.300	09	1A	87556122	1.200	02	24
87533076	1.092	01	2	87556123	1.200	03	25
87533077	1.091	01	3	87556124	1.200	03	26
	1.092	01	3	87556125	1.200	03	28
	5.0020	04	3	87556137	1.200	03	32
87533078	1.091	01	4	87556146	1.200	03	34
	1.092	01	5	87556154	1.200	03	37
	5.0020	04	4	87556738	5.0020	13	3
87533102	1.092	01	10	87556832	5.0076	08	4
87533365	1.300	05	1I		5.0077	08	4
87533426	1.090	02	7		5.0078	08	4
87533427	1.090	01	8		5.0079	08	4
87533428	1.090	02	5	87557387	5.0088	01	3
87533429	1.090	01	10	87557543	1.220	01	13
87533430	1.090	02	4	87557644	5.0076	05	5
87533431	1.090	02	6		5.0077	05	5
87533854	1.061	01	10		5.0078	05	5
87533907	1.061	01	9		5.0079	05	5
87534202	0.002	01	4	87557646	5.0076	05	17
87536553	0.002	01	7		5.0077	05	17
87536897	1.080	02	18		5.0078	05	17
	1.081	01	32		5.0079	05	17
87537460	5.0020	05	5	87557648	0.003	02	9
87537860	1.000	02	25	87557723	2.040	01	11
87537888	5.0020	06	3		2.041	01	11
87538371	1.250	10	13	87557724	2.040	01	12
87538372	1.250	01	6		2.041	01	12
87539072	1.010	01	4		2.041	02	9
87539194	5.0020	09	1	87557773	2.040	01	14
87539195	1.091	03	2		2.041	01	14
	5.0020	08	2		2.041	02	11
87539200	5.0020	09	3	87557774	2.040	01	13
87539205	1.091	03	3		2.041	01	13
	5.0020	08	3		2.041	02	10
	5.0020	09	4	87559156	1.220	02	9
87539206	1.091	03	4		5.0580	02	8
	5.0020	08	4	87559198	5.0580	02	7
	5.0020	09	5	87559228	5.0580	02	6
87539506	1.091	03	1	87559395	1.220	03	1
	5.0020	08	1	87559396	1.220	03	4F
87540083	5.0013	01	23	87559666	1.220	05	2
	5.0022	01	23	87559668	1.220	04	2
	5.0038	01	23	87560621	1.300	09	3
	5.0039	01	23	87560623	1.300	09	4
87540814	5.0088	07	3	87564296	1.220	10	8
87543300	5.0013	01	21B	87565331	1.220	03	4
	5.0022	01	21B	87565332	1.220	03	4A
	5.0038	01	21B	87565334	1.220	03	4B
	5.0039	01	21B	87565336	1.220	03	4D
87544489	1.081	02	9	87565337	1.220	03	15
	5.0088	03	5	87565338	1.220	10	11
87549840	1.000	02	29	87565339	1.220	03	4G
87549843	1.000	01	23	87565340	1.220	03	14
87550853	1.250	04	10	87565341	1.220	03	20
87551050	1.220	07	1	87565344	1.220	03	3
87555081	1.220	04	1	87568020	1.040	01	3
	1.220	05	1	87568028	1.040	01	7A
	5.0580	02	1	87570557	1.050	01	1
87556086	1.200	03	2	87570958	1.250	04	1
87556089	1.200	03	3	87570962	1.250	04	2
87556091	1.200	02	4	87570965	1.250	04	3
87556093	1.200	02	5	87570967	1.250	04	4
87556097	1.200	01	22	87570968	1.250	04	7
87556100	1.200	02	7	87570969	1.250	04	8
87556102	1.200	03	8	87570978	1.250	04	9
87556105	1.200	02	9	87571059	1.220	11	3
87556106	1.200	02	10	87571538	1.250	04	5
87556108	1.200	02	11	87572226	1.300	05	9
87556112	1.200	02	15	87574218	1.081	01	11
87556113	1.200	02	16	87574225	1.081	02	4
87556114	1.200	02	17	87575957	1.295	01	56

Number	Figure	Sequence	Ref.	Number	Figure	Sequence	Ref.
87575958	1.295	02	34	87606476	5.0209	01	6
87577977	1.250	16	7		5.0210	02	1
87578736	1.250	01	4	87606717	5.0209	01	9
87578750	1.250	01	5		5.0210	02	4
87579010	1.250	14	3	87606746	5.0209	01	12
87579027	1.250	18	13		5.0210	02	7
87579050	5.0148	01	2	87606856	5.0209	01	13
87579052	5.0148	01	5		5.0210	02	8
87579055	5.0148	01	10	87606857	5.0209	01	20
87579056	1.300	05	3		5.0210	02	15
87579057	1.300	05	2	87606858	5.0209	01	21
87579080	1.250	10	1		5.0210	02	16
87579546	5.0020	07	3	87606859	5.0208	01	6
87579587	1.300	02	51		5.0210	01	6
87579588	1.300	02	27	87608371	1.050	03	13
87579589	1.300	01	28		1.080	01	4
87579591	1.016	01	1		1.091	01	9
87579592	1.016	01	2		1.092	01	9
87579594	5.0020	01	2		5.0020	03	4
87583756	5.0156	02	2		5.0020	04	9
	5.0159	02	2		5.0020	05	11
87583758	5.0156	02	3	87609321	5.0020	01	5
87583759	5.0156	02	6	87611990	1.220	02	14
	5.0159	02	6	87612011	1.083	02	20
87583764	5.0156	02	23		1.083	03	20
	5.0159	02	7	87612553	1.300	11	15
87583765	5.0156	02	11	87614166	1.250	05	10
87583766	5.0156	02	12	87616672	1.300	04	65B
87583767	5.0156	02	16		1.300	04	69
87584110	1.220	01	2	87616673	4.520	01	44
87586017	1.200	02	12	87619048	1.300	09	1
87586018	1.200	03	33	87619568	1.020	01	8
87586019	1.200	03	35	87619569	1.020	01	17
87586020	1.200	03	36	87623250	1.250	07	54
87586030	1.200	03	13	87623251	1.250	07	55
87586031	1.200	03	30	87623989	1.020	01	3
87586053	1.051	01	1	87630348	5.0580	01	1
87588861	5.0086	04	1A	87630358	5.0580	01	2
	5.0088	06	1A	87630362	5.0580	01	7
87590506	1.220	01	8	87632055	2.031	05	21
87594161	1.300	05	1F	87632674	1.220	07	7
87594879	0.000	01	14	87634952	1.081	02	13
87594880	0.000	01	15	87635045	1.040	01	4
87594881	0.000	02	16	87640507	0.003	01	8
87594882	0.000	02	17	87641272	5.0581	01	1
87595906	1.300	02	24	87641273	5.0581	01	2
87596014	1.050	01	8	87643223	5.0020	01	3
87596018	1.050	01	7	87646154	5.0086	03	2
87596024	1.050	01	6		5.0088	04	2
87596368	1.250	09	63	87647850	1.220	01	1
87596492	5.0159	02	4	87657411	5.0040	01	36
87596495	5.0159	02	5	87657719	5.0040	02	1
87596888	1.200	03	1		5.0040	03	1
87596954	5.0159	02	9	87657720	5.0040	01	2
87596957	5.0159	02	11		5.0040	03	2
87596968	5.0159	02	12	87657721	5.0040	03	4
87596972	5.0159	02	16	87657722	5.0040	02	5
87596986	5.0159	02	17	87657723	5.0040	02	6
87596987	5.0159	02	18	87657724	5.0040	03	7
87597036	1.080	01	14	87657725	5.0040	03	8
87597038	1.080	01	8	87657726	5.0040	03	9
87597934	4.520	03	6	87657727	5.0040	02	10
87597936	4.520	03	26	87657728	5.0040	03	11
87597937	4.520	02	29	87657729	5.0040	03	13
87597938	4.520	02	30	87657732	5.0040	01	14
87597939	4.520	01	36	87657734	1.220	03	2
87597940	4.520	01	37	87660037	1.220	08	31
87597941	4.520	02	38		1.220	09	31
87597942	4.520	02	39	87662519	1.220	08	19
87599406	5.0020	01	6	87662523	1.220	08	26
87600093	4.520	02	30	87662793	5.0040	02	3
87602767	1.295	03	9	87662794	5.0040	01	20
87605964	1.000	03	4	87662922	5.0040	01	16
87605965	1.000	03	5	87665404	5.0148	01	31
87605966	1.000	03	6	87672942	1.220	11	15
87606411	5.0208	01	1	87672949	1.220	11	20
	5.0209	01	1	87676786	5.0040	03	35
	5.0210	01	1	87682597	5.0148	01	3

Number	Figure	Sequence	Ref.	Number	Figure	Sequence	Ref.
87682601	5.0148	01	6	LC15V00023S067	3.010	02	67
87682647	5.0148	01	28	LC15V00023S068	3.010	02	68
87682648	5.0148	01	9	LC21V00014P1	1.020	01	6B
87691652	4.520	03	42	LC30V00028R100	1.050	08	100
87696768	1.300	04	3		1.050	09	100
87697748	0.003	02	1		1.050	10	100
87699344	1.220	11	5		1.050	11	100
87700637	1.295	01	30		1.050	12	100
87700941	1.060	02	10	LC30V00028R110	1.050	08	110
87702830	4.520	01	41		1.050	09	110
87704716	1.295	04	1		1.050	10	110
87718026	1.300	04	68		1.050	11	110
87718551	5.0001	01	12		1.050	12	110
87718552	5.0001	01	5	LC30V00028R120	1.050	08	120
	5.0002	01	5		1.050	09	120
	5.0003	01	5		1.050	10	120
	5.0004	01	5		1.050	11	120
87718553	5.0001	01	3		1.050	12	120
	5.0002	01	3	LC30V00028R130	1.050	08	130
	5.0003	01	3		1.050	09	130
	5.0004	01	3		1.050	10	130
87719135	5.0001	01	1-8		1.050	11	130
	5.0002	01	1-8		1.050	12	130
	5.0003	01	1-8	LC30V00028S208	1.050	10	208
	5.0004	01	1-8	LC30V00028S301	1.050	10	301
87723470	1.220	10	1	LC30V00028S302	1.050	11	302
EB11P00001S003	0.001	01	1F	LC30V00028S304	1.050	11	304
EB11P00001S006	0.001	01	1G	LC30V00028S308	1.050	12	308
EZ55S00023S003	5.0040	03	2B	LC30V00028S559	1.050	10	559
EZ55S00023S004	5.0040	03	2C	LC30V00028S560	1.050	10	560
GK15V00003S014	3.010	02	45	LC32W01006P1	1.040	03	3
HY25X09017G1	1.250	11	116	LC32W01008P1	1.040	03	6
	1.250	12	116	LC32W01009P1	1.040	03	8
LC05P00043S001	0.003	04	1	LC32W01010P1	1.040	03	15
LC05P00043S002	0.003	04	2	LC32W01011P1	1.040	03	17
LC05P00043S003	0.003	04	3	LC32W01012P1	1.040	03	18
LC05P00043S004	0.003	04	4	LC32W01013P1	1.040	03	19
LC05P00043S005	0.003	04	5	LC32W01014P1	1.040	03	21
LC05P00043S006	0.003	04	6	LC32W01017F1	1.040	03	5
LC05P00043S012	0.003	04	12	LC32W01018D1	1.040	03	35
LC05P00043S015	0.003	04	15	LC32W01018D2	1.040	03	36
LC05P00043S027	0.003	04	27	LC32W01018D3	1.040	03	37
LC05P00043S028	0.003	04	28	LC32W01018D4	1.040	03	38
LC10V00010S018	1.030	02	251	LC32W01021P1	1.040	03	4
LC10V00010S111	1.030	02	111	LC32W01022P1	1.040	03	22
LC10V00010S113	1.030	02	113	LC32W01023P1	1.040	03	9
LC10V00010S116	1.030	02	116	LC32W01024P1	1.040	03	7
LC10V00010S124	1.030	02	124	LC32W01025P1	1.040	03	10
LC10V00010S153	1.030	02	153	LC32W01026P1	1.040	03	23
LC10V00010S157	1.030	02	157	LC32W01027P1	1.040	03	1
LC10V00010S261	1.030	02	261	LC32W01030P1	1.040	03	12
LC10V00010S312	1.030	02	312	LC32W01031P1	1.040	03	13
LC10V00020R100	1.030	02	200	LC32W01032P1	1.040	03	14
LC10V00020R200	1.030	02	300	LC32W01033P1	1.040	03	16
LC10V01005F1	1.030	01	2	LC32W01036P1	1.040	03	11
LC11P00018S002	0.001	01	1B	LC32W01060P1	1.040	03	2
LC11P00018S003	0.001	01	1C	LC53D00007S018	3.010	02	1
LC15V00022S301	1.040	02	9	LS15V00014S033	3.010	02	79
LC15V00022S491	1.040	02	22	LS52V01001R200	1.020	01	6G
LC15V00022S984	1.040	02	29	LV15V00002R200	1.040	02	200
LC15V00023S010	3.010	02	10	PV02B01073DE	1.040	03	33
LC15V00023S012	3.010	02	12	VH040104187A	0.700	01	040104
LC15V00023S015	3.010	02	15	VH040130246A	0.080	01	040130
LC15V00023S017	3.010	02	17	VH040132122A	0.080	01	040132
LC15V00023S019	3.010	02	19	VH040166107A	0.320	01	040166
LC15V00023S022	3.010	02	22	VH110111380A	0.080	01	11011
LC15V00023S024	3.010	02	24	VH111951180C	0.140	01	11195
LC15V00023S028	3.010	02	28	VH113051230A	0.320	01	11305
LC15V00023S029	3.010	02	29	VH114912570A	0.140	01	11491
LC15V00023S035	3.010	02	35	VH117012140A	0.080	01	11701
LC15V00023S040	3.010	02	40	VH117032000A	0.080	01	11703
LC15V00023S042	3.010	02	42	VH117042030A	0.080	01	11704
LC15V00023S051	3.010	02	51	VH120172040A	0.149	01	12017H
LC15V00023S053	3.010	03	53		0.173	01	12017H
LC15V00023S054	3.010	03	54		0.400	01	12017H
LC15V00023S056	3.010	03	56	VH120172082A	0.149	01	12017
LC15V00023S058	3.010	03	58		0.173	01	12017
LC15V00023S062	3.010	03	62		0.400	01	12017

Number	Figure	Sequence	Ref.	Number	Figure	Sequence	Ref.
VH120172171A	0.149	01	12017A	VH157102550C	0.310	01	15710
	0.173	01	12017A	VH157121960B	0.310	01	15712
	0.400	01	12017A	VH157201540C	0.310	01	15720
VH120172600A	0.149	01	12017G	VH157211170A	0.310	01	15721
	0.173	01	12017G	VH157261110A	0.310	01	15726
	0.400	01	12017G	VH157261300A	0.310	01	15726A
VH120172872A	0.149	01	12017B	VH161004290A	0.320	01	16100
	0.173	01	12017B	VH161733321A	0.320	01	16173
	0.400	01	12017B	VH163011850B	0.320	01	16301
VH120173220A	0.149	01	12017C	VH163021220A	0.320	01	16302
	0.173	01	12017C	VH163231751A	0.320	01	16323
	0.400	01	12017C	VH163251400A	0.320	01	16325
VH120173560A	0.149	01	12017F	VH163291461A	0.320	01	16329
	0.173	01	12017F	VH163772780A	0.320	01	16377
	0.400	01	12017F	VH163802760A	0.320	01	16380
VH120173600A	0.149	01	12017D	VH163821740A	0.320	01	16382
	0.173	01	12017D	VH163831300A	0.320	01	16383
	0.400	01	12017D	VH163841490A	0.320	01	16384
VH125092040A	0.149	01	12509	VH166913760A	0.240	01	16691
	0.173	01	12509	VH166913770A	0.240	01	16691A
	0.400	01	12509	VH170321290B	0.240	01	17032
VH125114170A	0.149	01	12511A	VH171042100A	0.960	01	17104
	0.173	01	12511A	VH171139591A	0.240	01	17113
	0.400	01	12511A	VH171365570B	0.300	01	17136
VH125114330A	0.149	01	12511	VH171592720A	0.240	01	17159
	0.173	01	12511	VH174582960A	0.240	01	17458
	0.400	01	12511	VH191121201A	0.149	01	19112
VH125131250A	0.320	01	12513		0.173	01	19112
VH132012100A	0.080	01	13201		0.400	01	19112
VH132031930A	0.080	01	13203	VH191121210A	0.149	01	19112A
VH132041900A	0.080	01	13204		0.173	01	19112A
VH132601790A	0.080	01	13260		0.400	01	19112A
VH132651620A	0.080	01	13265	VH226101910B	0.140	01	22610
VH132721460A	0.080	01	13272	VH226112421B	0.140	01	22611
VH134072013B	0.080	01	13407	VH227301340A	0.140	01	22730
VH134112410A	0.080	01	13411	VH227601241A	0.140	01	22760
VH134504200A	0.080	01	13450	VH228153740A	0.140	01	22815
VH134531310B	0.080	01	13453	VH230812640A	0.140	01	23081
VH134551550A	0.080	01	13455	VH230832332A	0.140	01	23083
VH134703312B	0.080	01	13470	VH23390E0010	0.200	01	23401
VH134715511A	0.080	01	13471	VH237112660A	0.140	01	23711
VH134721651B	0.080	01	13472	VH237122630A	0.140	01	23712
VH135011620B	0.120	01	13501	VH237132560A	0.140	01	23713
VH135052292A	0.120	01	13505A	VH237142580A	0.140	01	23714
VH135052302A	0.120	01	13505	VH237152390A	0.140	01	23715
VH135052521B	0.120	01	13505B	VH237162390A	0.140	01	23716
VH135052552A	0.140	01	13505	VH237662860A	0.140	01	23766
VH135201100A	0.120	01	13520	VH237663410A	0.140	01	23766A
VH135721250B	0.120	01	13572	VH237811620B	0.960	01	23781
VH135721490A	0.140	01	13572	VH237815990A	0.140	01	23781
VH135811440D	0.120	01	13581B	VH237832720A	0.140	01	23783
VH135811530B	0.120	01	13581A	VH238091794A	0.140	01	23809
VH135811702A	0.140	01	13581	VH239101430A	0.140	01	23910
VH136071020A	0.140	01	13607	VH239151180A	0.140	01	23915
VH136102260A	0.140	01	13610	VH241004640A	0.240	01	24100
VH136132241A	0.140	01	13613	VH241061440A	0.240	01	24106
VH136911810E	0.140	01	13691	VH241072150A	0.240	01	24107
VH136911830A	0.140	01	13691A	VH241091650A	0.240	01	24109
VH136941180A	0.149	01	13694	VH241091850A	0.240	01	24109A
	0.173	01	13694	VH241351121A	0.240	01	24135
	0.400	01	13694	VH241791430B	0.240	01	24179
VH150121450B	0.300	01	15012	VH270402500A	0.149	01	27040
VH151041960A	0.300	01	15104		0.173	01	27040
VH151071540A	0.300	01	15107		0.400	01	27040
VH151102150C	0.300	01	15110	VH283001271A	0.960	01	28300
VH151191134B	0.300	01	15119	VH286201420A	0.960	01	28620
VH151351100A	0.300	01	15135	VH291611490A	0.140	01	29161
VH151391120A	0.300	01	15139A	VH291711360A	0.140	01	29171
VH154918981A	0.300	01	15491	VH291721220A	0.140	01	29172
VH156004110C	0.302	01	15600	VH291791150A	0.140	01	29179
	0.960	01	15600	VH291791160A	0.140	01	29179A
VH156072190A	0.302	01	15607	VH291971570A	0.140	01	29197
VH156203810B	0.302	01	15620	VH296012151A	0.140	01	29601
VH156203820B	0.302	01	15620A	VH444082150A	0.960	01	44408A
VH156331070B	0.302	01	15633	VH444082160A	0.960	01	44408B
VH156511780A	0.310	01	15651	VH444082170A	0.960	01	44408C
VH157012350B	0.310	01	15701	VH765894090C	0.960	01	76589
VH157102550C	0.300	01	15710	VH799041240A	0.140	01	79904C

Number	Figure	Sequence	Ref.	Number	Figure	Sequence	Ref.
VH799041570A	0.960	01	79904	VH906858450A	0.320	01	9068-58450
VH799042230A	0.149	01	79904	VH906860150A	0.149	01	9068-60150
	0.173	01	79904		0.173	01	9068-60150
	0.400	01	79904		0.400	01	9068-60150
VH799043390A	0.140	01	79904B	VH906908108A	0.320	01	9069A
VH820306450C	0.149	01	82030	VH906910202A	0.080	01	9069A
	0.173	01	82030	VH906914127A	0.149	01	9069D
	0.400	01	82030		0.173	01	9069D
VH820646621A	0.149	01	82064B		0.400	01	9069D
	0.173	01	82064B	VH919106251A	0.140	01	9191-06251
	0.400	01	82064B	VH919108651A	0.302	01	9191-08651
VH820649551A	0.149	01	82064A	VH920110080A	0.310	01	9201-10080
	0.173	01	82064A	VH920114110A	0.320	01	9201-14110
	0.400	01	82064A	VH921924129A	0.140	01	9219A
VH825601200A	0.149	01	82560	VH924114147A	0.149	01	9241-14147
	0.173	01	82560		0.173	01	9241-14147
	0.400	01	82560		0.400	01	9241-14147
VH834201250A	0.149	01	83420	VH924908102A	0.240	01	9249B
	0.173	01	83420	VH924910102A	0.240	01	9249A
	0.400	01	83420		0.960	01	9249A
VH835301471D	0.149	01	83530	VH926014270A	0.149	01	9260-14270
	0.173	01	83530		0.173	01	9260-14270
	0.400	01	83530		0.400	01	9260-14270
VH894101590A	0.149	01	89410	VH926208220A	0.320	01	9262-08220
	0.173	01	89410	VH926210360A	0.149	01	9262-10360
	0.400	01	89410		0.173	01	9262-10360
VH900116187A	0.320	01	900116		0.400	01	9262-10360
VH900116566A	0.320	01	900116A	VH926214360A	0.320	01	9262-14360
VH900124171A	0.149	01	900124	VH934110250A	0.320	01	9341-10250
	0.173	01	900124	VH935910127A	0.240	01	9359A
	0.400	01	900124	VH936908109B	0.240	01	9369A
VH900124203A	0.080	01	900124	VH950404080A	0.080	01	9504-04080
VH900125116B	0.080	01	900125	VH950408140A	0.140	01	9504-08140
VH900125202B	0.960	01	900125B	VH960410110A	0.140	01	9604-10110
VH900125223A	0.960	01	900125A	VH965908118B	0.140	01	9659D
VH900129119B	0.080	01	900129	VH965908119B	0.140	01	9659E
VH900129160A	0.140	01	900129	VH965908120B	0.140	01	9659C
VH900149376A	0.320	01	900149	VH965910105B	0.140	01	9659B
VH900149377A	0.149	01	900149	VH965910119B	0.140	01	9659A
	0.173	01	900149	VH965912111B	0.960	01	9659B
	0.400	01	900149	VH965914104B	0.140	01	9659F
VH900236445A	0.960	01	900236		0.240	01	9659A
VH900239697A	0.240	01	900239		0.960	01	9659A
VH900239739A	0.149	01	900239C	VH965916105B	0.240	01	9659B
	0.173	01	900239C	VH973925106A	0.960	01	9739B
	0.400	01	900239C	VH976900101A	0.240	01	9769A
VH900700327A	0.140	01	900700	VH981352200A	0.320	01	9813-52200
VH900714113A	0.140	01	900714	VH981937102B	0.080	01	9819A
VH900725103A	0.140	01	900725	VH985115101B	0.302	01	9851A
VH900727136A	0.140	01	900727	VH985125106B	0.300	01	9851A
VH900740116A	0.140	01	900740	VH985129105B	0.300	01	9851B
VH900756246A	0.310	01	900756	VH985153107A	0.320	01	9851B
VH900807101A	0.149	01	900807	VH985160110A	0.320	01	9851A
	0.173	01	900807	VH986757106A	0.120	01	9867B
	0.400	01	900807	VH988125117A	0.320	01	9881A
VH901912108C	0.240	01	9019A	YN02C02705P1	1.250	18	3
	0.960	01	9019A	YN02C02746P1	1.250	14	18
VH901914184E	0.140	01	9019B	YN02C02747P1	1.250	14	17
	0.240	01	9019B	YN02C02941P2	1.250	11	41
VH901916340A	0.240	01	9019C	YN02C02967P1	1.250	18	15
VH902910261A	0.140	01	9029A	YN02C02970F1	1.250	11	27
VH906106140A	0.149	01	9061-06140	YN02C03005P1	1.250	14	19
	0.173	01	9061-06140	YN02C03006P2	1.250	14	9
	0.400	01	9061-06140	YN02C03039P1	1.250	14	109
VH906808400A	0.140	01	9068-08400	YN02C03040P1	1.250	14	115
VH906808450A	0.140	01	9068-08450	YN02C03047P2	1.250	12	111
	0.240	01	9068-08450	YN02C03048P2	1.250	11	112
VH906808550A	0.140	01	9068-08550	YN02C03055P1	1.250	14	102
	0.300	01	9068-08550	YN02C03056P1	1.250	14	101
VH906808600A	0.300	01	9068-08600	YN02C03075P1	1.250	11	106
	0.320	01	9068-08600	YN02C03077P1	1.250	12	105
VH906808850A	0.140	01	9068-08850	YN02C03094P2	1.250	12	104
	0.300	01	9068-08850	YN02C03095P2	1.250	11	103
VH906808900A	0.300	01	9068-08900	YN02C03098P1	1.250	14	49
VH906810650A	0.149	01	9068-10650	YN02C03147P1	1.250	12	114
	0.173	01	9068-10650	YN02C03160P1	1.250	14	4
	0.400	01	9068-10650	YN02C03187P2	1.250	18	16
VH906812650A	0.320	01	9068-12650	YN02C03194P1	1.250	18	5

Number	Figure	Sequence	Ref.
YN02C03321P1	1.250	10	53
YN02C03641P1	1.250	18	18
YN02C03650P1	1.250	18	1
YN02C03656P1	1.250	18	20
YN02C03669P2	1.250	11	15
YN02C03766P1	1.250	18	19
YN02C03767P1	1.250	18	11
YN02C03810F1	1.250	18	2
YN02C03887P1	1.250	14	16
YN05P00058S014	0.003	04	14
YN10V00014F3	1.030	01	4
YN10V00043S271	1.030	02	271
YN10V00043S325	1.030	02	325
YN10V00043S546	1.030	02	546
YN15V00035S980	1.040	02	31
YN15V00037S376	3.010	04	73
YN20M00107S001	1.295	05	1
	1.295	06	1
	1.295	07	1
YN20M00107S002	1.295	05	2
YN20M00107S003	1.295	05	3
	1.295	06	3
	1.295	07	3
YN20M00107S004	1.295	07	4
YN20M00107S005	1.295	07	5
YN20M00107S006	1.295	07	6
YN20M00107S007	1.295	07	7
YN20M00107S009	1.295	06	9
YN20M00107S010	1.295	06	10
YN20M00107S011	1.295	06	11
YN20M00107S012	1.295	06	12
YN20M00107S013	1.295	07	13
YN20M00107S014	1.295	07	14
YN20M00107S015	1.295	07	15
YN20M00107S016	1.295	07	16
YN20M00107S017	1.295	06	17
YN20M00107S018	1.295	06	18
YN20M00107S019	1.295	06	19
YN20M00107S020	1.295	06	20
YN20M00107S021	1.295	06	21
YN20M00107S024	1.295	06	24
YN20M00107S025	1.295	06	25
YN20M00107S026	1.295	06	26
YN20M00107S027	1.295	06	27
YN20M00107S028	1.295	06	28
YN20M00107S031	1.295	05	31
	1.295	06	31
	1.295	07	31
YN20M00107S036	1.295	05	36
YN20M00107S037	1.295	05	37
YN20M00107S038	1.295	05	38
YN20M00107S039	1.295	05	39
YN20M00107S040	1.295	05	40
YN20M00107S041	1.295	05	41
YN20M00107S042	1.295	05	42
YN20M00107S043	1.295	05	43
YN20M00107S045	1.295	05	45
YN20M00107S049	1.295	05	49
YN20M00107S050	1.295	05	50
YN20M00107S051	1.295	06	51
YN20M00107S054	1.295	06	54
YN20M00107S060	1.295	06	60
YN20M00107S061	1.295	06	61
YN20M00107S062	1.295	06	63
	1.295	07	62
YN20M00107S077	1.295	06	77
YN20M00107S078	1.295	06	78
YN20M00107S079	1.295	06	79
YN20M00107S082	1.295	06	82
YN20M00107S083	1.295	06	83
YN20M00107S084	1.295	06	84
YN20M00107S085	1.295	06	85
YN20M00107S086	1.295	05	86
YN20M00107S087	1.295	05	87
YN20M00107S088	1.295	05	88
YN20M00107S089	1.295	05	89
YN20M00107S090	1.295	05	90
YN20M00107S091	1.295	05	91
YN20M00107S092	1.295	05	92
YN22V00037F1	2.031	06	601
YN24E00016S001	1.220	02	1
YN24E00016S002	1.220	02	2
YN24E00016S003	1.220	02	3
YN24E00016S004	1.220	02	4
YN24E00016S005	1.220	02	5
YN24E00016S006	1.220	02	6
YN24E00016S007	1.220	02	7
YN24E00016S008	1.220	02	8
YN28V00019S165	2.031	06	165
YN28V00019S167	2.031	06	167
YN28V00019S201	2.031	06	201
YN28V00019S203	2.031	06	203
YN28V00019S206	2.031	06	206
YN28V00019S271	2.031	06	271
YN28V00019S311	2.031	06	311
YN28V00019S321	2.031	06	321
YN28V00019S322	2.031	06	322
YN28V00019S323	2.031	06	323
YN28V00019S542	2.031	06	542
YN28V00019S631	2.031	06	631
YN28V00019S632	2.031	06	632
YN30V00001S339	1.050	09	339
YN30V00001S551	1.050	08	551
	1.050	09	551
	1.050	10	551
	1.050	11	551
	1.050	12	551
	1.050	13	551
YN30V00101R140	1.050	08	140
	1.050	09	140
	1.050	10	140
	1.050	11	140
	1.050	12	140
YN30V00101R200	1.050	08	190
	1.050	09	190
	1.050	10	190
	1.050	11	190
	1.050	12	190
YN30V00101R210	1.050	08	200
	1.050	09	200
	1.050	10	200
	1.050	11	200
	1.050	12	200
YN30V00101S201	1.050	08	201
	1.050	09	201
	1.050	11	201
	1.050	12	201
YN30V00101S202	1.050	08	202
	1.050	09	202
YN30V00101S203	1.050	10	203
YN30V00101S204	1.050	10	204
YN30V00101S205	1.050	08	205
	1.050	09	205
	1.050	11	205
	1.050	12	205
YN30V00101S206	1.050	10	206
YN30V00101S207	1.050	14	207
YN30V00101S209	1.050	11	209
YN30V00101S303	1.050	10	303
YN30V00101S305	1.050	09	305
YN30V00101S306	1.050	08	306
	1.050	09	306
YN30V00101S309	1.050	08	309
YN30V00101S310	1.050	09	310
YN30V00101S311	1.050	12	311
YN30V00101S326	1.050	09	326
YN30V00101S327	1.050	08	327
	1.050	09	327
YN30V00101S328	1.050	12	328
YN30V00101S329	1.050	08	329
	1.050	09	329
YN30V00101S340	1.050	12	340
YN30V00101S341	1.050	08	511
	1.050	09	511
	1.050	10	511
	1.050	11	511

Number	Figure	Sequence	Ref.	Number	Figure	Sequence	Ref.
YN30V00101S341	1.050	12	511	ZS23C20200	1.040	03	27
	1.050	13	511	ZS41C06020	1.250	14	67
YN30V00101S514	1.050	10	514				
	1.050	11	514				
YN30V00101S517	1.050	14	517				
YN30V00101S518	1.050	14	518				
YN30V00101S522	1.050	08	522				
YN30V00101S527	1.050	14	527				
YN30V00101S528	1.050	14	528				
YN30V00105R100	1.092	02	100				
YN30V00105R110	1.092	02	110				
YN30V00105R120	1.092	02	120				
YN30V00105R130	1.092	02	130				
YN30V00105R140	1.092	02	140				
YN30V00105R150	1.092	02	150				
YN30V00105R160	1.092	02	160				
YN30V00105R170	1.092	02	170				
YN30V00105R180	1.092	02	180				
YN30V00105S005	1.092	02	1				
YN30V00105S010	1.092	02	11				
YN30V00116R150	1.050	08	150				
	1.050	09	150				
	1.050	10	150				
	1.050	11	150				
	1.050	12	150				
YN30V00116S213	1.050	14	213				
YN30V00116S215	1.050	10	215				
YN30V00116S216	1.050	11	216				
YN30V00116S307	1.050	08	307				
YN30V00119F1	1.050	10	211				
	1.050	11	211				
YN30V00120F2	1.050	14	606				
YN30V01062P1	1.050	12	604				
YN32W01080D2	1.040	03	30				
YN35V00004S361	1.030	04	361				
YN35V00004S362	1.030	04	362				
YN35V00004S363	1.030	04	363				
YN35V00018S802	1.030	04	802				
YN35V00048F1	1.081	03	601				
YN35V00049F1	1.081	03	602				
YN35V00050F1	1.081	03	701				
YN35V00051F1	1.081	03	702				
YN35V00052F1	1.030	01	3				
YN50C01170P1	1.250	15	4				
YN50C01171P1	1.250	15	5				
YN50C01172P1	1.250	15	8				
YN50C01173P1	1.250	15	3				
YN50C01189P1	1.250	15	2				
YN50C01194P1	1.250	15	10				
YN50C01207P1	1.250	15	14				
YN50C01209P1	1.250	15	1				
YN53C00012F2	1.250	14	55				
YN55V01062P1	3.060	02	4				
YN57V00004S002	1.020	01	3A				
YN59S00021S001	1.250	05A	1				
YN59S00021S002	1.250	05A	2				
YN59S00021S003	1.250	05A	3				
YN59S00021S004	1.250	05A	4				
YN59S00021S005	1.250	05A	5				
YN59S00021S006	1.250	05A	6				
YN59S00021S007	1.250	05A	7				
YN59S00021S008	1.250	05A	8				
YN59S00021S009	1.250	05A	9				
YN59S00021S010	1.250	05A	10				
YT50C01012P1	1.250	15	12				
ZD12P02000	1.030	04	861				
ZM27C08025	1.250	11	117				
	1.250	12	117				
	1.250	14	117				
ZM73C06016	1.250	18	17				
ZM73C08020	1.250	15	7				
ZM73C08025	1.250	18	14				
ZM73C12020	1.250	11	118				
	1.250	12	118				
ZN18C20012	1.030	02	808				
ZP26D10040	1.040	03	26				
ZR16X04200	1.040	03	25				
ZS23C14160	1.050	07	973				