RUTHZIL TRATOR COMERCIAL DE PEÇAS LTDA 11 97083-6812 ROLANDO CITRANGULO

PARTS MANUAL

OUTUBRO 2007

E40Z E45Z E55Z E60Z E65Z HYSTER

E40-65Z (G108)

CUSTOMER EDITION

HYSTER

1551316
10/2007

©2007 Hyster Company

SECTIONS

1 FRAME
2 ELECTRICAL SYSTEM
3 DRIVE UNIT
4 STEERING SYSTEM
5 BRAKE/ACCELERATOR SYSTEM
6 HYDRAULIC SYSTEM
7 MAST-TWO STAGE LIMITED FREE-LIFT
8 MAST-THREE STAGE FULL FREE-LIFT
9 MAST-TWO STAGE FULL FREE-LIFT
10 MAST-FOUR STAGE FULL FREE-LIFT
11 OPTIONS
12 FIELD CONVERSION KITS
13 NUMERICAL INDEX

This Parts Manual is divided into 13 major sections which are listed above. Quick reference to these sections can be made by placing the right thumb on the tab of the desired section, bending the book back and thumbing the pages to the corresponding tab.

TABLE OF CONTENTS

DESCRIPTION **PAGE**

A

ACCELERATOR 5-26
ACCELERATOR PEDAL 5-28
AUXILARY TUBE EXTENSION KIT
  FOUR STAGE FULL FREE-LIFT 11-20
  TWO AND THREE STAGE FULL FREE-LIFT 11-16
  TWO STAGE LIMITED FREE-LIFT 11-14
AUXILARY TUBE EXTENSION KIT FOUR STAGE FULL FREE-LIFT 12-4
AUXILARY TUBE EXTENSION KIT TWO AND THREE STAGE FULL FREE-LIFT 12-4
AUXILARY TUBE EXTENSION KIT TWO STAGE LIMITED FREE-LIFT 12-3
AUXILIARY SECTION
  HIGH FLOW
    ELECTRONIC HYDRAULIC CONTROL VALVE
      S/N G108N02840C⇒ 6-54
  STANDARD FLOW
    ELECTRONIC HYDRAULIC CONTROL VALVE
      S/N G108N02840C⇒ 6-52
AUXILIARY TUBES
  FOUR STAGE FULL FREE-LIFT
    FOUR FUNCTION GROUP WITH INTERGRAL SIDE-SHIFT 11-24
  TWO AND THREE STAGE FULL FREE-LIFT
    FOUR FUNCTION GROUP WITH INTERGRAL SIDE-SHIFT 11-22

B

BACK-UP ALARM 11-40
BATTERY ROLLER TRAY, SLIDES, AND SPACERS 11-26
BRAKE
  ⇒S/N G108N04450D 5-6
  S/N G108N04451D⇒ 5-8
BRAKE AND BACK-UP LIGHTS 11-30
BRAKE PEDAL LINKAGE 5-2
BRAKE SWITCH HARNESS 5-30

C

CARRIAGE
  FOUR STAGE FULL FREE-LIFT 10-26
  HEAVY DUTY
    THREE STAGE FULL FREE-LIFT 8-36
  SIX ROLLER
    THREE STAGE FULL FREE-LIFT 8-34
    TWO STAGE FULL FREE-LIFT 9-22
    TWO STAGE LIMITED FREE-LIFT 7-20
CARRIAGE ASSEMBLY
  HEAVY DUTY
    FOUR STAGE FULL FREE-LIFT 10-28
    TWO STAGE FULL FREE-LIFT 9-24
CONTACTOR
  LINE 2-18
  POWER STEERING 2-20
CONTACTOR PANEL
  CONTACTOR (LINE AND POWER STEERING) 2-16

©2007 HYSTER COMPANY

TABLE OF CONTENTS (Continued)

DESCRIPTION **PAGE**

C (continued)

CONTACTOR HYDRAULIC 2-22
CONTROL PANEL
CONTACTOR HYDRAULIC 2-12
TRACTION AND PUMP CONTROLLER 2-10
CONTROL VALVE 12-2
CONTROL VALVES CONVERSION KITS ELECTRONIC HYDRAULICS 12-12
COUNTERWEIGHT 1-24
COVERS 1-6
COWL AND FLOOR PLATES 1-2

D

DASH DISPLAY 2-8
DC TO DC CONVERTER
36/48 VOLT TO 12 VOLT 11-39
DIRECTIONAL CONTROL CONVERSION 12-3
DRIVE AND REAR LIGHTS 11-34
DRIVE AXLE 3-2
DRIVE UNIT INSTALLATION
E/EE/ES AND CRE/FRE 3-10

E

ELECTRICAL CONVERSIONS 12-2
ELECTRICAL SYSTEM 2-2
ELECTRONIC HYDRAULICS
S/N G108N02840C⇒ 2-6
ELECTRONIC CONTROL LEVERS
MINI-LEVER MODULES
FOUR FUNCTION
PENDING PER ECN 104977⇒ 2-30
⇒PENDING PER ECN 104977 2-26
THREE FUNCTION
PENDING PER ECN 104799⇒ 2-28
ELECTRONIC HYDRAULIC CONTROL VALVE ASSEMBLY
S/N G108N02840C⇒ 6-48
ELECTRONIC HYDRAULIC CONTROL VALVE ATTACHING PARTS
S/N G108N02840C⇒ 6-46

F

FENDER KITS 12-3
FORKS 1-62
OPTIONAL 1-64
FREE-LIFT
E45-55Z
TWO STAGE FULL FREE-LIFT 9-8
E60-65Z
TWO STAGE FULL FREE-LIFT 9-10
FOUR STAGE FULL FREE-LIFT 10-14
THREE STAGE FULL FREE-LIFT 8-18
FREE-LIFT CYLINDER

©2007 HYSTER COMPANY

TABLE OF CONTENTS (Continued)

DESCRIPTION **PAGE**

F (continued)

FOUR STAGE FULL FREE-LIFT 10-24
THREE STAGE FULL FREE-LIFT 8-30
TWO STAGE FULL FREE-LIFT 9-18
FULL SUSPENSION SEAT
MANUAL HYDRAULICS
D/B 07/2005⇔D/B 03/2006 1-44
SHEET 1 OF 2
⇒D/B 07/2005 1-38
SHEET 2 OF 2
⇒D/B 07/2005 1-42
WITH AND WITHOUT ELECTRONIC CONTROLS
D/B 04/2006⇒ 1-46
WITH ELECTRONIC CONTROLS
S/N G108N02840C⇒ D/B 03/2005 1-45
FULL SUSPENSION SWIVEL SEAT
ELECTRONIC HYDRAULICS
D/B 03/2006⇒ 1-50
S/N G108N02840C⇒ D/B 03/2006 1-48

G

GEAR PUMP 4-12

H

HEADER HOSE
FOUR STAGE FULL FREE-LIFT 10-30
THREE STAGE FULL FREE-LIFT 8-38
TWO STAGE FULL FREE-LIFT 9-26
TWO STAGE LIMITED FREE-LIFT 7-22
HEADER HOSE CONVERSION KITS FOUR STAGE FULL FREE-LIFT 12-12
HEADER HOSE CONVERSION KITS THREE STAGE FULL FREE-LIFT E45-55Z 12-9
HEADER HOSE CONVERSION KITS THREE STAGE FULL FREE-LIFT E60-65Z 12-10
HEADER HOSE CONVERSION KITS TWO STAGE FULL FREE-LIFT E45-55Z 12-7
HEADER HOSE CONVERSION KITS TWO STAGE FULL FREE-LIFT E60-65Z 12-8
HEADER HOSE CONVERSION KITS TWO STAGE LIMITED FREE-LIFT E45-55Z 12-5
HEADER HOSE CONVERSION KITS TWO STAGE LIMITED FREE-LIFT E60-65Z 12-6
HOOD
ELECTRONIC HYDRAULICS
S/N G108N02840C⇒ 1-18
MANUAL HYDRAULICS
⇒S/N G108N02839C 1-10
S/N G108N02840C⇒ 1-14
HYDRAULIC CONTROL VALVE
FOUR FUNCTION
MANUAL HYDRAULICS 6-42
THREE FUNCTION
MANUAL HYDRAULICS 6-38
HYDRAULIC CONTROL VALVE AND ATTACHING PARTS
MANUAL HYDRAULICS
SHEET 1 OF 2 6-32

©2007 HYSTER COMPANY

TABLE OF CONTENTS (Continued)

DESCRIPTION **PAGE**

H (continued)

SHEET 2 OF 2 6-36
HYDRAULIC FILTER
S/N G108N02840C⇒ 6-60
HYDRAULIC GEAR PUMP
19 CC
S/N G108N02840C⇒ 6-18
HYDRAULIC HAND LEVERS
MANUAL HYDRAULICS 6-28
HYDRAULIC PUMP
12 CC 6-15
19 CC
⇒S/N G108N02839C 6-16
HYDRAULIC PUMP MOTOR 6-20
CLOSED CONSTRUCTION
WITH BWI AND TEMPERATURE SENSOR 6-24
OPEN CONSTRUCTION
WITH BWI AND TEMPERATURE SENSOR 6-22
HYDRAULIC PUMP MOTOR MOUNT 6-26
HYDRAULIC SUPPLY AND RETURN
ELECTRONIC HYDRAULICS
S/N G108N02840C⇒ 6-12
MANUAL HYDRAULICS
⇒S/N G108N02839C 6-4
S/N G108N02840C⇒ 6-8
HYDRAULIC TANK AND ATTACHING PARTS
⇒S/N G108N02839C 6-56
S/N G108N02840C⇒ 6-58

I

INNER MAST
FOUR STAGE FULL FREE-LIFT 10-10
THREE STAGE FULL FREE-LIFT 8-10
TWO STAGE FULL FREE-LIFT 9-4
TWO STAGE LIMITED FREE-LIFT 7-6
INTEGRAL SIDE-SHIFT
CARRIAGE
THREE STAGE FULL FREE-LIFT 11-4
TWO AND FOUR STAGE FULL FREE-LIFT 11-6
TWO STAGE LIMITED FREE-LIFT 11-2
HYDRAULIC HOSES
THREE STAGE FULL FREE-LIFT 11-11
TWO AND FOUR STAGE FULL FREE-LIFT 11-12
TWO STAGE LIMITED FREE-LIFT 11-10
INTEGRAL SIDE-SHIFT CYLINDER 11-8
INTERMEDIATE 2 MAST
FOUR STAGE FULL FREE-LIFT 10-4
INTERMEDIATE 3 MAST
FOUR STAGE FULL FREE-LIFT 10-8
INTERMEDIATE MAST

©2007 HYSTER COMPANY

TABLE OF CONTENTS (Continued)

DESCRIPTION **PAGE**

I (continued)

THREE STAGE FULL FREE-LIFT 8-6

J

JOYSTICK
S/N G108N02840C⇒ 2-24
JOYSTICK LABELS
S/N G108N02840C⇒ 1-56

L

LABELS 1-53
LIFT
TWO STAGE LIMITED FREE-LIFT 7-10
LIFT CYLINDER
E45-55Z
TWO STAGE LIMITED FREE-LIFT 7-13
E60-65Z
TWO STAGE LIMITED FREE-LIFT 7-16
LIGHTS, LED BACK-UP AND BRAKE
D/B 04/2004⇒ 11-32
LOAD BACKREST EXTENSION 1-60

M

MAIN CYLINDER
LEFT HAND
FOUR STAGE FULL FREE-LIFT 10-18
RIGHT HAND
FOUR STAGE FULL FREE-LIFT 10-22
THREE STAGE FULL FREE LIFT
LEFT HAND 8-25
THREE STAGE FULL FREE-LIFT
RIGHT HAND 8-21
MAIN LIFT
FOUR STAGE FULL FREE-LIFT 10-12
THREE STAGE FULL FREE-LIFT 8-14
TWO STAGE FULL FREE-LIFT 9-6
MAIN LIFT CYLINDER
LEFT HAND
TWO STAGE FULL FREE-LIFT 9-13
RIGHT HAND
TWO STAGE FULL FREE-LIFT 9-15
MAIN SECTION
ELECTRONIC HYDRAULIC CONTROL VALVE
S/N G108N02840C⇒ 6-50
MAST INSTALLATION 6-62
MAST TILT CONVERSION KITS 12-2
MASTER CYLINDER 5-4
MINI LEVER LABELS
S/N G108N02840C⇒ 1-58

©2007 HYSTER COMPANY

TABLE OF CONTENTS (Continued)

DESCRIPTION	PAGE
N	
NON SUSPENSION SEAT	
D/B 03/2006⇒	1-30
NON-SUSPENSION SEAT	
⇒D/B 07/2005	1-26
MANUAL HYDRAULICS	
D/B 07/2005⇔D/B 03/2006	1-28
O	
OUTER MAST	
FOUR STAGE FULL FREE-LIFT	10-2
THREE STAGE FULL FREE-LIFT	8-2
TWO STAGE FULL FREE-LIFT	9-2
TWO STAGE LIMITED FREE-LIFT	7-2
OVERHEAD GUARD	1-22
P	
PARK BRAKE	
SEAT ACTUATED	5-24
PARK BRAKE LINKAGE	
LEVER ACTUATED	5-10
SEAT ACTUATED	
S/N G108N05936E⇒	5-20
⇒S/N G108V03421C	5-14
S/N G108V03422C⇔S/N G108N05935E	5-16
S	
SEMI-SUSPENSION SEAT	
ELECTRONIC HYDRAULICS	
S/N G108N02840C⇒ D/B 04/2006	1-35
MANUAL HYDRAULICS	
D/B 07/2005⇔D/B 03/2006	1-34
WITH AND WITHOUT ELECTRONIC CONTROLS	
D/B 04/2006⇒	1-36
SHIFT LEVER	4-4
SPOTLIGHT	11-38
STEERING AXLE	4-16
OPTIONAL	4-18
STEERING CONTROL UNIT	4-6
STEERING CYLINDER	4-10
STEERING HYDRAULICS	4-8
STEERING MOTOR	4-14
STEERING POD	4-2
STROBE LIGHT	11-36
SUSPENSION SEAT	
⇒D/B 07/2005	1-32
T	
TILT CYLINDERS	6-64
TIRES AND WHEELS	
DRIVE WHEELS	3-14

©2007 HYSTER COMPANY

TABLE OF CONTENTS (Continued)

DESCRIPTION **PAGE**

T (continued)

STEER WHEELS 4-20
TRACTION MOTOR
11.0-INCH 3-12
TRANSMISSION AND DIFFERENTIAL 3-6

W

WIDE TREAD KITS 12-3
WIRE HARNESS
ELECTRONIC HYDRAULIC CONTROL VALVES
S/N G108N02840C⇒ 2-40
HOOD
S/N G108N02840C⇒ 2-46
JOYSTICK
S/N G108N02840C⇒ 2-47
LIGHT 2-42
MAIN
⇒S/N G108V03421C 2-32
WITH ELECTRONIC HYDRAULICS
S/N G108N02840C⇒ 2-36
WITHOUT ELECTRONIC HYDRAULICS
S/N G108V03422C⇒ 2-34
OPERATOR PRESENCE
SHEET 1 OF 2 2-48
SHEET 2 OF 2 2-52
PRESSURE SWITCH
D/B 04/2004⇒ 2-44
REAR LIGHTS 11-42
SWITCH 11-43
TRACTION CUT-OUT
⇒S/N G108N03309D 11-44
S/N G108N03310D⇒ 11-46

©2007 HYSTER COMPANY

ABBREVIATIONS QUICK REFERENCE SHEET

Listed below are abbreviations used in parts manuals to denote the following expressions:

TERM	DEFINITION
Amp	Amperes
AR	As Required
BDI	Battery Discharge Indicators
BWI	Brush Wear Indicator
CE	Communicator End
CRE	Corrosive Environment
D/B	Date Break
dbA	Decibel "A" Scale
DE	Drive End
ECH	Empty Container Handler
ECH-3	Empty Container Handler - 3 High Stacking
ECH-4	Empty Container Handler - 4 High Stacking
ECH-5	Empty Container Handler - 5 High Stacking
ECH-6	Empty Container Handler - 6 High Stacking
ECH-7	Empty Container Handler - 7 High Stacking
ECM	Electronic Control Module
ECN	Engineering Change Notice
EEPROM	Electrically Erasable Programmable Read Only Memory
EPA	US Environmental Protection Agency
EPROM	Electrically Programmable Read Only Memory

TERM	DEFINITION
FRE	Freezer Environment
in.	inches
LPG	Liquefied Petroleum Gas
MAP	Manifold Absolute Pressure
mm	millimeters
MSTS	Microprocessor Spark Timing System
NPT	National Pipe Threads
O/S	Oversize
PTO	Power Take Off
RPM	Revolutions per Minute
S/N	Serial Number
TMM	Truck Management Module
UL Type D	Diesel-Powered Safety Rating
UL Type DS	Diesel-Powered Safety Rating
UL Type E	Battery-Powered Safety Rating
UL Type EE	Battery-Powered Safety Rating
UL Type ES	Battery-Powered Safety Rating
UL Type G	Gasoline-Powered Safety Rating
UL Type GS	Gasoline-Powered Safety Rating
UL Type LP	Gas-Powered Safety Rating
UL Type LPS	LP Gas-Powered Safety Rating
U/S	Undersize
UL	Underwriters Laboratory
V	Volts

©2007 HYSTER COMPANY

HOW TO USE THE ILLUSTRATED PARTS MANUAL

This parts manual describes and illustrates assemblies, subassemblies, and detail parts needed for service replacement.

The different constructions are indicated by keys and footnotes. The callouts correspond to descriptions found on the next page.

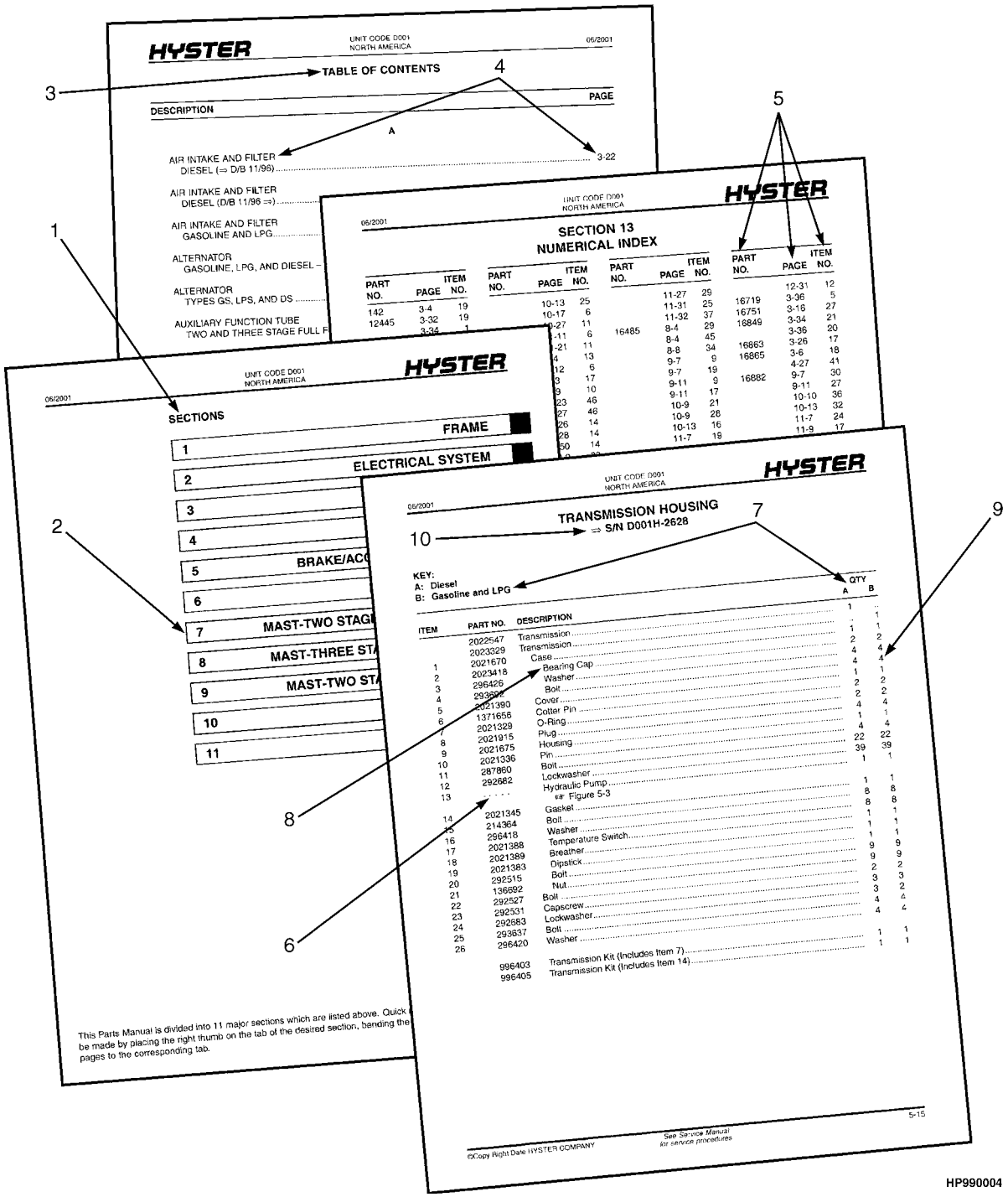

HOW TO FIND THE DESIRED PART NUMBER

WHEN THE PART NUMBER AND THE NEXT HIGHER ASSEMBLY IS NOT KNOWN:

1. Determine the function and application of the part required. Turn to the Sections Page. Choose the general area of reference most likely to include the part.

2. Turn to the section you chose. Use the Section Table of Contents to determine the assembly which would normally contain the part required. Then locate the part on the assembly breakdown page.

WHEN THE PART NUMBER IS NOT KNOWN AND THE NEXT HIGHER ASSEMBLY IS KNOWN:

3. Determine the assembly the required part is used on. Turn to the Table of Contents on Page i.

4. Locate the assembly the required part is used on and turn to the page indicated for that assembly. Then locate the part on the assembly breakdown page.

WHEN THE PART NUMBER IS KNOWN:

5. Use the Numerical Index on Page 13-1 to find the part number. Turn to the page listed and locate the part as indicated by the item number.

GENERAL:

The assembly breakdowns include part numbers, descriptions, quantities required, keys and footnotes to help in selecting correct parts.

6. Five periods in the PART NO. column (. . . . .) indicate that the part is either *Not Serviced Separately* or there is a reference to another figure. A figure reference is denoted by a pointing hand followed by a figure number in the DESCRIPTION column (☞Figure 10)

7. Keys are used to show two or more similar assemblies, RH and LH assembly parts, etc. Select the appropriate key, "A", "B", "C", "D", or "E" and the corresponding quantity column to find the required parts. Two periods in the QTY column (..) indicate that the part is not used for that assembly.

8. Indented descriptions under the DESCRIPTION column are used to indicate assemblies and subparts of assemblies. In the example on the previous page, *BEARING CAP* (Item 2) is a subpart of the major assembly *CASE*.

9. Quantities shown are for one assembly. The quantities of the subpart *BEARING CAP* are indicated as two and two. This means two per *CASE* assembly.

10. Serial number breaks identify the most current parts information and are shown as follows:
    ⇒ S/N D001H-2628
    Indicates last serial number affected.
    S/N D001H-2629 ⇒
    Indicates the first serial number affected.
    S/N D001H-1553 ⇔ S/N D001H-3291
    Indicates a range of serial numbers affected.

    ECN numbers for pending serial numbers are shown to allow for the inclusion of the most current parts information and are identified as follows:
    ⇒ S/N Pending Per ECN 63243
    Indicates a pending serial number for last unit affected.
    S/N Pending Per ECN 63243 ⇒
    Indicates a pending serial number for first unit affected.

    Date breaks are used to indicate when a change occurred but a subsequent serial number break was not recorded. This is an arbitrary date usually based on the ECN release and are identified as follows:
    ⇒ D/B 3/00
    Indicates that a change occurred sometime within that month for the item affected.
    D/B 3/00 ⇒
    Indicates that a change occurred sometime within that month for the item affected.
    D/B 3/00 ⇔ D/B 4/00
    Indicates a range of production dates of the item affected.

    Contact your local dealer for Hyster lift trucks for serial number information for items with a ECN or a date break.

ORDERING PARTS:

When ordering replacement parts, give the unit serial number, part number, name of part and quantity required.

For any further information on parts, service, or ordering, consult your local dealer for Hyster lift trucks.

©2007 HYSTER COMPANY

IDENTIFICATION OF TRUCK SERIAL NUMBERS

X	OOO	X	OOOO	X
(1)	(2)	(3)	(4)	(5)

(1) and (2) The first letter and three numbers indicate the truck unit code.

(3) The second letter indicates the plant of manufacture.

(4) The four or five digit number indicates the production sequence number of the truck.

(5) The final letter indicates the year of manufacture starting with "A" in 1957, 1980, and 2003. The letters "I", "O", and "Q" will not be used.

For pending serial numbers contact your local dealer for Hyster lift trucks.

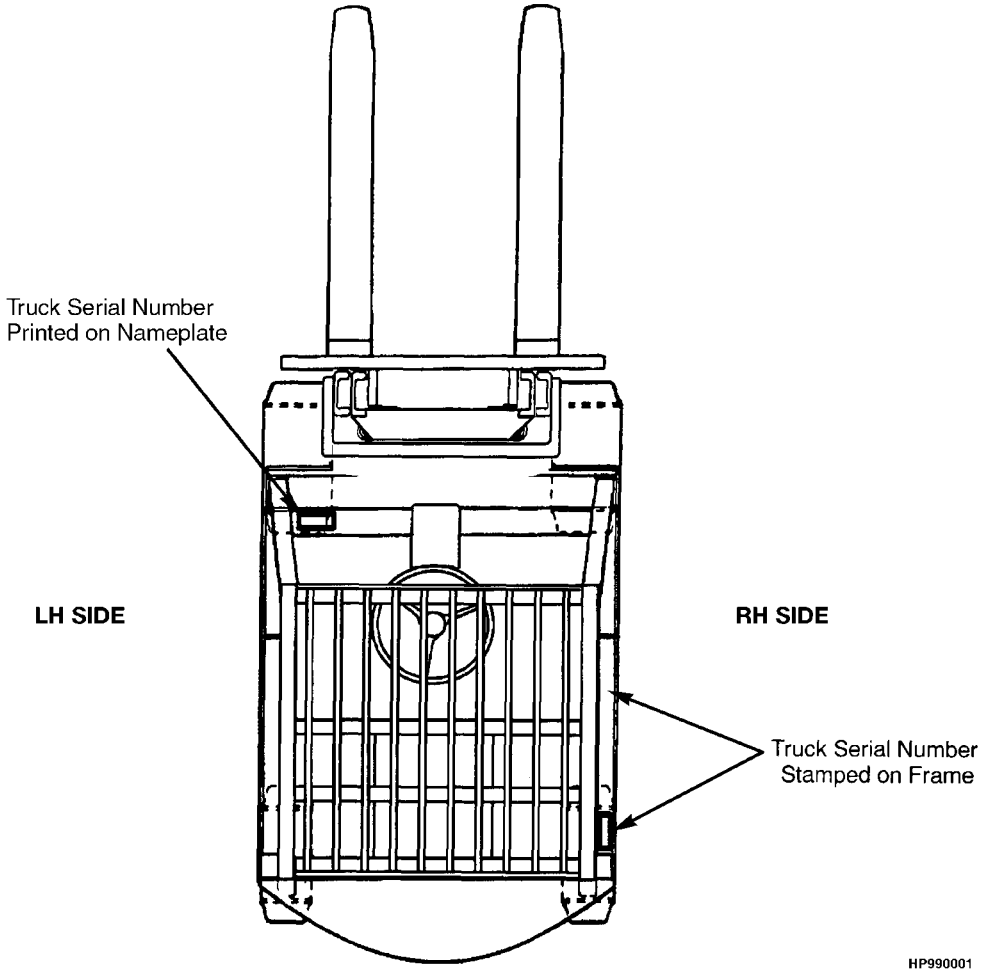

Parts referred to in this book as right or left hand parts are in accordance with the illustration above.

IDENTIFICATION OF MAST SERIAL NUMBERS

X OOO X OOOO
(1) (2) (3) (4)
OOOO
(5)

(1) and (2) The first letter and number indicates the mast unit code.

(3) The second letter indicates the plant of manufacture.

(4) The four or five digit number indicates the production sequence number of the mast.

(5) Carriage travel in millimeters stamped just below the serial number.

Mast Group identification consists of mast unit code (1) and (2) plus carriage travel (5).

For pending production sequence numbers contact your local dealer for Hyster lift trucks.

LIFT EQUIPMENT IDENTIFICATION

1. Fork part number, capacity rating, plant code letter, and date of manufacture are stamped approximately six inches below the top of most forks.

2. The carriage group number is stamped on the right hand side of the top crossmember (pin type) or on the back of the right hand end of the bottom crossmember (hook type). A date code has two letters in line with or below the carriage group number.

3. The mast identification number has a unit code, a letter indicating the plant of manufacture, and a serial number. Underneath the production sequence number is a four digit number that indicates the carriage travel in millimeters.

4. Tilt and lift cylinder group numbers are stamped on the cylinder shell.

   Always refer to the group, serial, or part number when ordering service parts.

   Modification of masts and carriages by SPED (Special Products Engineering Department) are identified by a model prefix code beginning with the letter "S". contact your dealer for Hyster lift trucks for information on these assemblies.

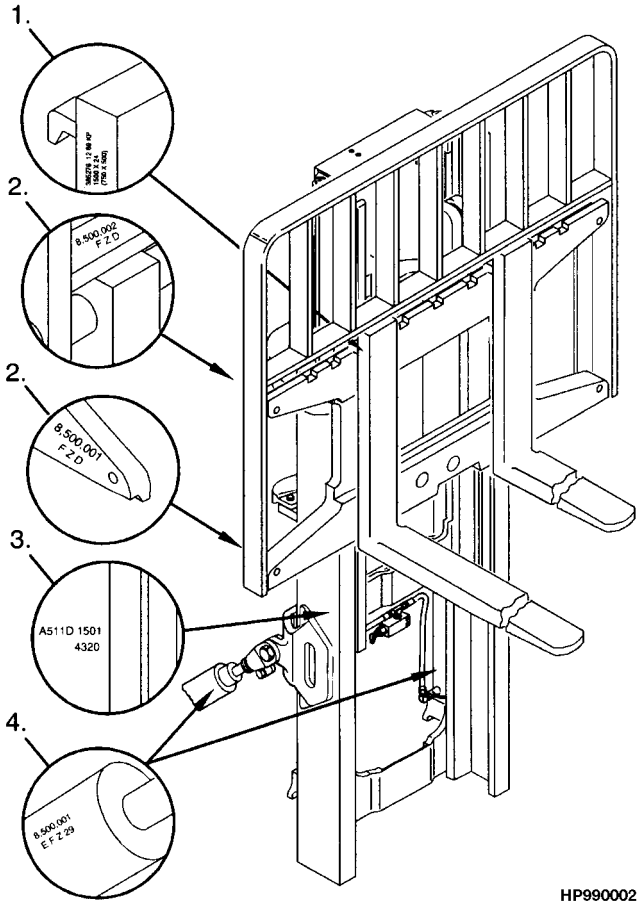

©2007 HYSTER COMPANY

IDENTIFICATION OF ATTACHMENT AND SIDE-SHIFT CARRIAGE SERIAL NUMBERS

X OOO X OOOO

(1) (2) (3) (4)

(1) and (2) The first letter and three numbers indicate the attachment unit code.

(3) The second letter indicates the plant of manufacture.

(4) The four or five digit number indicates the production sequence number.

For pending production sequence numbers contact your local dealer for Hyster lift trucks.

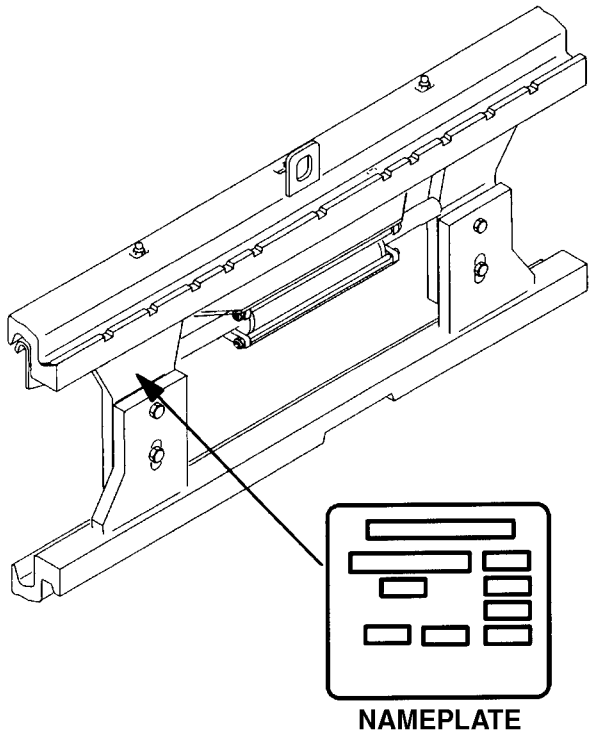

Side-shift carriages and attachments have nameplates. Use the serial number found on the nameplate to identify the attachment.

Always refer to the group, serial, or part number when ordering service parts.

Modifications of attachments and side-shift carriages by SPED (Special Products Engineering Department) are identified by a model prefix code beginning with the letter "S". Contact your dealer for Hyster lift trucks for information on these assemblies.

©2007 HYSTER COMPANY

PUBLICATIONS

Every new lift truck is provided with an OPERATING MANUAL. This manual has information that the operator must know for inspection and operation of the lift truck.

SERVICE MAINTENANCE MANUALS, which provide service and overhaul procedures, and PARTS MANUALS with complete replacement part identification, are available at a nominal fee from your Hyster dealer to assist users in effectively maintaining Hyster lift trucks in a safe, useful condition. See the list below for information on ordering specific publications for this model lift truck.

PUBLICATION	HYSTER PART NUMBER
Operating Manual	1534729
Service Manual (Complete)	1551322
Parts Manual	1551316

©2007 HYSTER COMPANY

1 FRAME

SECTION 1
FRAME

DESCRIPTION	PAGE
COUNTERWEIGHT	1-24
COVERS	1-6
COWL AND FLOOR PLATES	1-2
FORKS	1-62
OPTIONAL	1-64
FULL SUSPENSION SEAT	
MANUAL HYDRAULICS	
D/B 07/2005⇔D/B 03/2006	1-44
SHEET 1 OF 2	
⇒D/B 07/2005	1-38
SHEET 2 OF 2	
⇒D/B 07/2005	1-42
WITH AND WITHOUT ELECTRONIC CONTROLS	
D/B 04/2006⇒	1-46
WITH ELECTRONIC CONTROLS	
S/N G108N02840C⇒ D/B 03/2005	1-45
FULL SUSPENSION SWIVEL SEAT	
ELECTRONIC HYDRAULICS	
D/B 03/2006⇒	1-50
S/N G108N02840C⇒ D/B 03/2006	1-48
HOOD	
ELECTRONIC HYDRAULICS	
S/N G108N02840C⇒	1-18
MANUAL HYDRAULICS	
⇒S/N G108N02839C	1-10
S/N G108N02840C⇒	1-14
JOYSTICK LABELS	
S/N G108N02840C⇒	1-56
LABELS	1-53
LOAD BACKREST EXTENSION	1-60
MINI LEVER LABELS	
S/N G108N02840C⇒	1-58
NON SUSPENSION SEAT	
D/B 03/2006⇒	1-30
NON-SUSPENSION SEAT	
⇒D/B 07/2005	1-26
MANUAL HYDRAULICS	
D/B 07/2005⇔D/B 03/2006	1-28
OVERHEAD GUARD	1-22
SEMI-SUSPENSION SEAT	
ELECTRONIC HYDRAULICS	
S/N G108N02840C⇒ D/B 04/2006	1-35
MANUAL HYDRAULICS	
D/B 07/2005⇔D/B 03/2006	1-34
WITH AND WITHOUT ELECTRONIC CONTROLS	
D/B 04/2006⇒	1-36
SUSPENSION SEAT	
⇒D/B 07/2005	1-32

©2007 HYSTER COMPANY

COWL AND FLOOR PLATES (Figure 1-1)

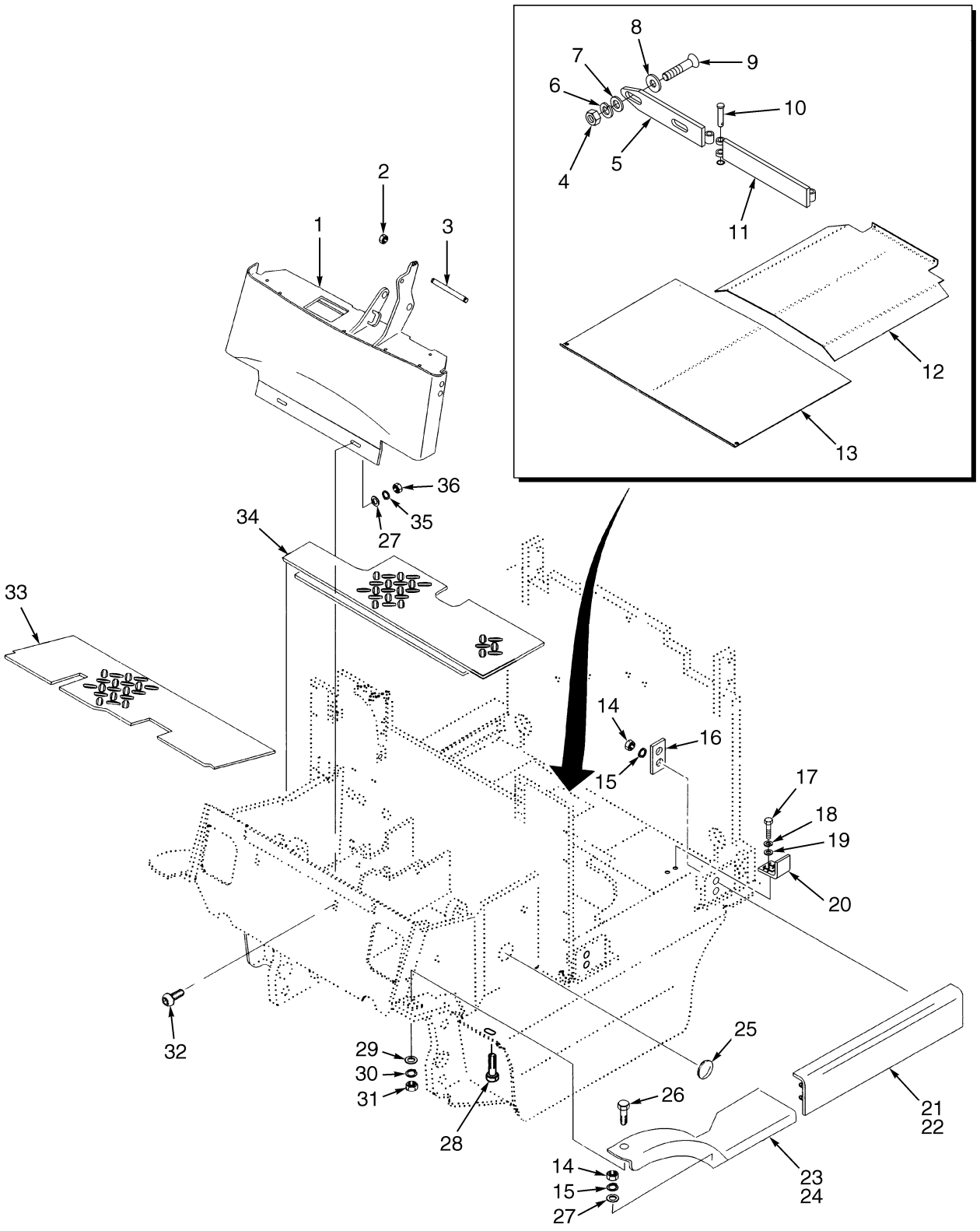

©2007 HYSTER COMPANY

COWL AND FLOOR PLATES

KEY:
A: 27.50 in. Battery Compartment
B: 33.35 in. Battery Compartment
C: 39.97 in. Battery Compartment

ITEM		PART NO.	DESCRIPTION	QTY A	QTY B	QTY C
1		1465530	Cowl	1	1	1
2		169874	Nut	1	1	1
3		18494	Capscrew	1	1	1
4	**c**	136692	Nut	2	2	2
5		1618938	Spacer Plate	1	1	1
6	**c**	292682	Lockwasher	2	2	2
7		296421	Washer	2	2	2
8	**c**	361973	Spacer	16	16	16
9		296249	Capscrew	2	2	2
10		1509942	Pin	2	2	2
11		1493957	Spacer Plate	1	1	1
12		325521	Cover	1	1	1
13		1340222	Cover	..	1	..
13		1340224	Cover	..	..	1
13		2023868	Cover	1	..	..
14	**c**	136692	Nut	6	6	6
15	**c**	292682	Lockwasher	6	6	6
16	**c**	1397924	Plate	4	4	4
17	**b**	136681	Capscrew	4	4	4
18	**b**	320158	Washer	4	4	4
19	**b**	292681	Lockwasher	4	4	4
20	**b**	1483375	Spacer	2	2	2
21		1397885	Side Cover (LH)	1	..	..
21		1397886	Side Cover (LH)	..	1	..
21		1397887	Side Cover (LH)	..	..	1
22		1397893	Side Cover (RH)	1	..	..
22		1397894	Side Cover (RH)	..	1	..
22		1397895	Side Cover (RH)	..	..	1
23		1397909	Fender (With Step) (LH)	1	1	1
23	**a**	1397910	Fender (With Step) (LH)	1	1	1
24		1397926	Fender (With Step) (RH)	1	1	1
24	**ab**	1397927	Fender (With Step) (RH)	1	1	1
25		1356377	Plug	2	2	2
26		292529	Capscrew	2	2	2
27		15176	Washer	8	8	8
28		136985	Capscrew	2	2	2
29		320162	Washer	2	2	2
30		292683	Lockwasher	2	2	2
31		216877	Nut	2	2	2
32		17105	Bolt	2	2	2
33		1457089	Floorplate	1	1	1
34	**d**	1563358	Floorplate	1	1	1
34	**e**	1593839	Floorplate	1	1	1

©2007 HYSTER COMPANY

COWL AND FLOOR PLATES

ITEM	PART NO.	DESCRIPTION	QTY A	QTY B	QTY C
35	15156	Lockwasher	2	2	2
36	15056	Nut	2	2	2

FOOTNOTES:

a Wide Tread
b With Battery Rollers Or Slides
c Without Battery Rollers Or Slides
d ⇒ S/N G108N02839C
e S/N G108N02840C ⇒

©2007 HYSTER COMPANY

NOTES

COVERS (Figure 1-2)

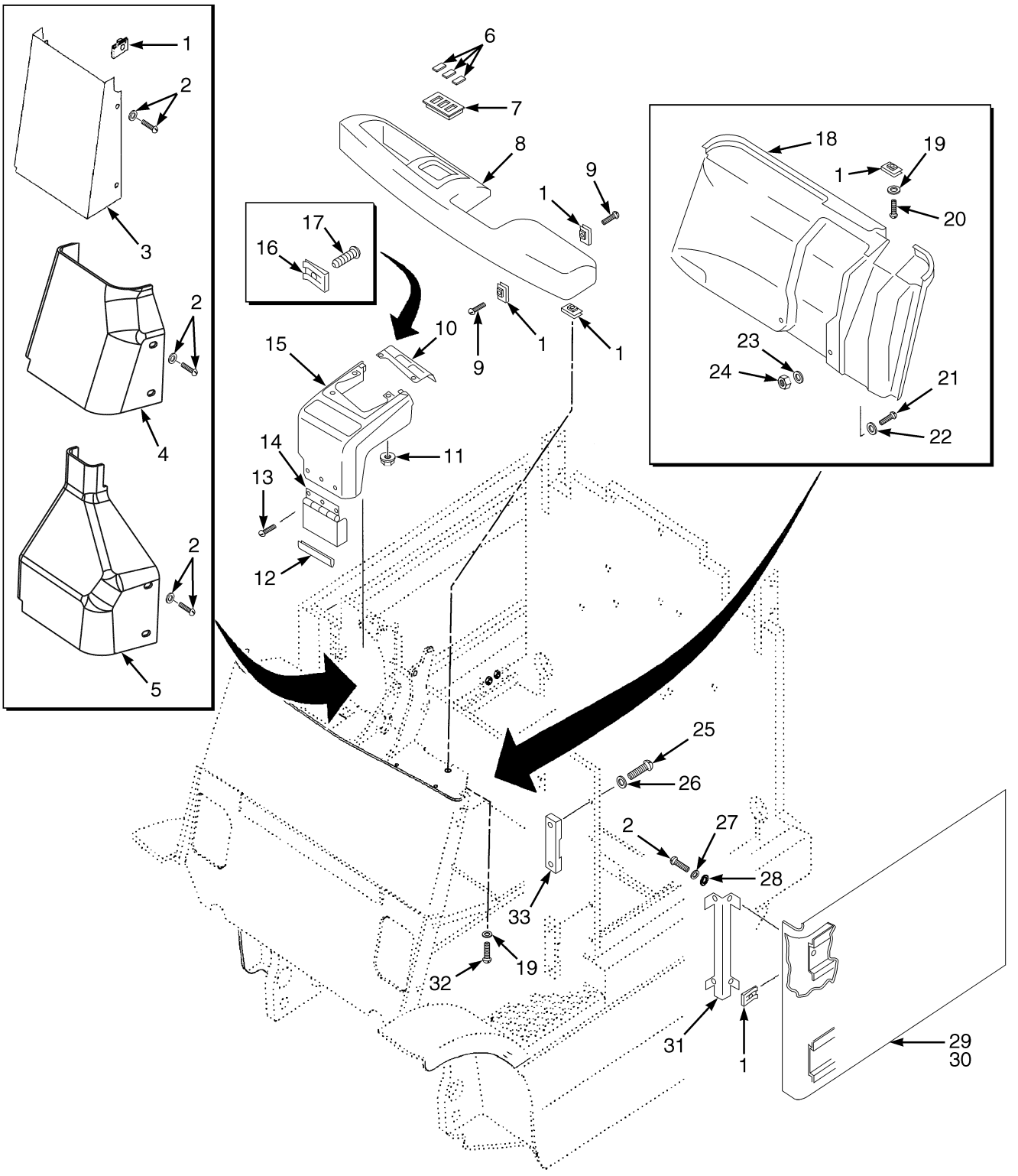

©2007 HYSTER COMPANY

COVERS

KEY:
A: 27.50 in. Battery Compartment
B: 33.38 in. Battery Compartment
C: 39.97 in. Battery Compartment

ITEM		PART NO.	DESCRIPTION	QTY A	QTY B	QTY C
1		1354323	Nut (Foldover)	22	22	22
2		296160	Capscrew	3	3	3
2		320156	Washer	3	3	3
3	**ad**	1388315	Cover (Manual Hydraulics)	1	1	1
3	**bd**	1388314	Cover (Manual Hydraulics)	1	1	1
4	**ae**	1606265	Cover (Manual Hydraulics)	1	1	1
4	**be**	1606261	Cover (Manual Hydraulics)	1	1	1
5	**ac**	1605994	Cover (Electronic Hydraulics)	1	1	1
5	**bc**	1606260	Cover (Electronic Hydraulics)	1	1	1
6		1382313	Mounting Panel (With Lights)	2	2	2
6		1382313	Mounting Panel (Without Lights)	3	3	3
7		1382311	Mounting Panel (End) (End)	2	2	2
7		1382312	Mounting Panel (Center) (Center)	1	1	1
8		1465533	Dash	1	1	1
9		353144	Capscrew	7	7	7
10		1381910	Cover	1	1	1
11		169874	Nut	4	4	4
12		1376812	Trim	1	1	1
13		1364399	Screw	3	3	3
14		1364395	Cover	1	1	1
15		1381909	Cover	1	1	1
16		1381918	Nut (Foldover)	2	2	2
17		1381919	Screw	2	2	2
18		1460397	Liner	1	1	1
19		15127	Washer	4	4	4
20		296161	Capscrew	3	3	3
21		296167	Capscrew	4	4	4
22		320158	Washer	2	2	2
23		292681	Lockwasher	4	4	4
24		239503	Nut	2	2	2
25		296166	Capscrew	8	8	8
26		296360	Washer	8	8	8
27		292680	Lockwasher	8	8	8
28		197068	Washer	8	8	8
29		1494924	Cover (LH)	1	..	..
29		1494925	Cover (LH)	..	1	..
29		1494926	Cover (LH)	..	..	1
30		1494920	Cover (RH)	1	..	..
30		1494921	Cover (RH)	..	1	..
30		1494922	Cover (RH)	..	..	1
31		2023903	Plate	4	4	4

©2007 HYSTER COMPANY

COVERS

ITEM	PART NO.	DESCRIPTION	QTY A	QTY B	QTY C
32	296161	Capscrew	1	1	1
33	2023901	Catch	4	4	4

FOOTNOTES:

a With Battery Rollers Or Slides
b Without Battery Rollers Or Slides
c S/N G108N02840C ⇒
d ⇒ D/B 07/2005
e D/B 07/2005 ⇒

©2007 HYSTER COMPANY

NOTES

HOOD (Figure 1-3)
MANUAL HYDRAULICS
(⇒S/N G108N02839C)

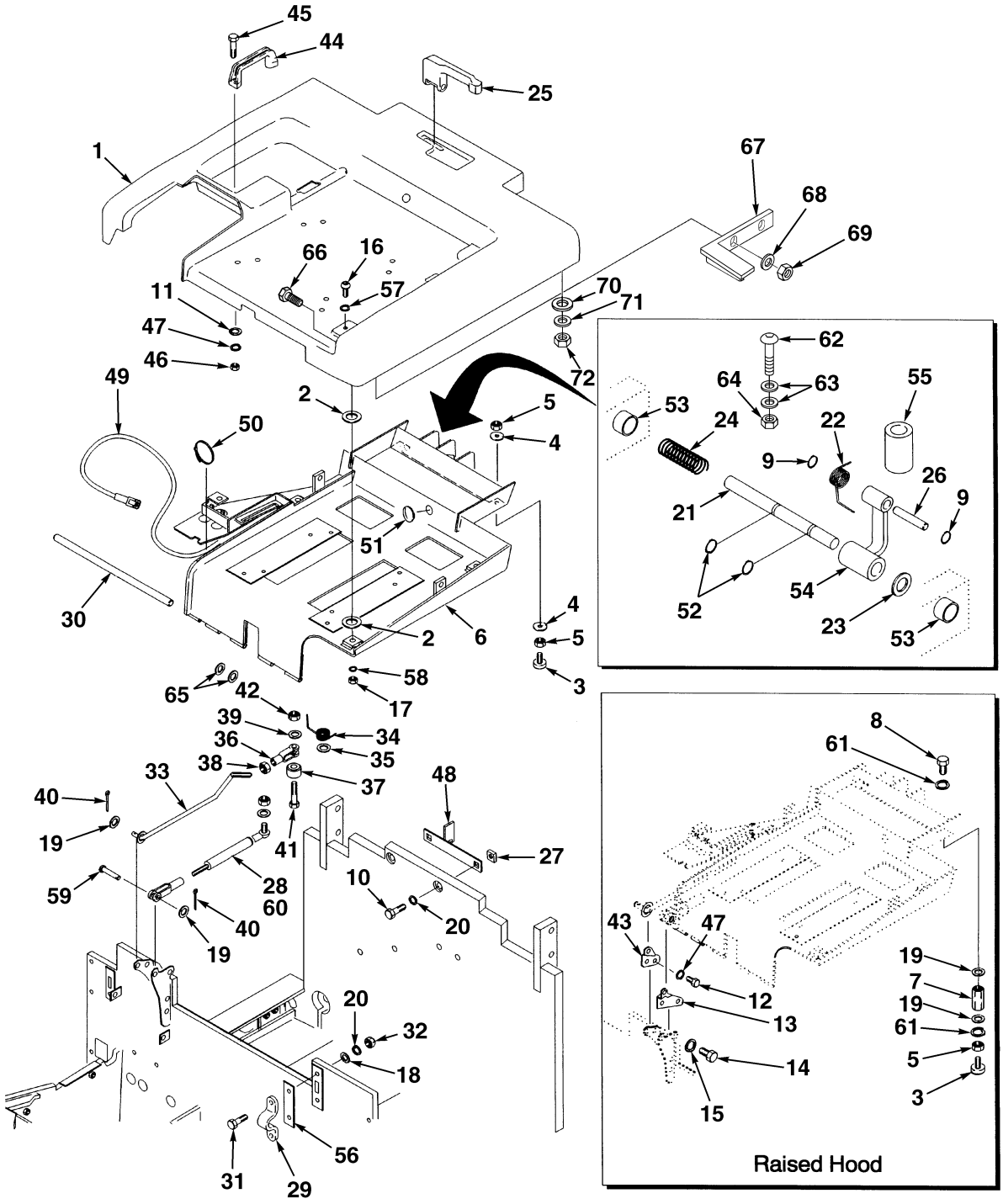

HP120705

©2007 HYSTER COMPANY

HOOD
MANUAL HYDRAULICS
(⇒S/N G108N02839C)

KEY:
A: 27.55 in. Battery Compartment
B: 33.38 in. Battery Compartment
C: 39.96 in. Battery Compartment

ITEM		PART NO.	DESCRIPTION	QTY A	QTY B	QTY C
1		1564274	Hood	1	..	..
1	**a**	1564275	Hood	1	..	..
1		1564276	Hood	..	1	..
1	**a**	1564277	Hood	..	1	..
1		1564278	Hood	..	..	1
1	**a**	1564279	Hood	..	..	1
2		1383680	Spacer	4	4	4
3	**b**	1347088	Stop Screw	2	2	2
3	**c**	367251	Stop Screw	2	2	2
4		15155	Lockwasher	4	4	4
5	**b**	15055	Nut	2	2	2
5	**c**	15055	Nut	4	4	4
6		1538410	Frame	1	..	..
6		1538412	Frame	..	1	..
6		1538414	Frame	..	..	1
7	**b**	1364729	Spacer	2	2	2
8	**b**	16394	Capscrew	2	2	2
9		12892	Snap Ring	2	2	2
10		292515	Capscrew	2	2	2
11		2034906	Washer	2	2	2
12	**b**	293601	Capscrew	2	2	2
13	**b**	1377378	Bracket	1	1	1
14	**b**	293613	Capscrew	2	2	2
15	**b**	292681	Lockwasher	2	2	2
16		296173	Capscrew	4	4	4
17		316826	Nut	4	4	4
18		320159	Washer	2	2	2
19		18515	Washer	6	6	6
20		292682	Lockwasher	4	4	4
21		1538963	Shaft	1	1	1
22		1377670	Spring	1	1	1
23		15125	Washer	1	1	1
24		1364538	Spring	1	1	1
25		1544196	Handle	1	1	1
26		1378975	Pin	1	1	1
27		1364537	Plate	2	2	2
28		1385758	Gas Spring	1	..	..
28		1385759	Gas Spring	..	1	..
28		1385760	Gas Spring	..	..	1
29		355374	Clamp	1	1	1
30		1468405	Bar	1	1	1
31		287854	Capscrew	2	2	2
31		136985	Capscrew (Optional)	2	2	2
32		136692	Nut	2	2	2

©2007 HYSTER COMPANY

HOOD
MANUAL HYDRAULICS
(⇒S/N G108N02839C)

ITEM		PART NO.	DESCRIPTION	QTY A	QTY B	QTY C
33		1385761	Rod	1	1	1
34		1340866	Spring	1	1	1
35		1340867	Spacer	1	1	1
36		1364096	Clevis	1	1	1
37		1364243	Knob	1	1	1
38		15025	Nut	1	1	1
39		221763	Washer	2	2	2
40		15212	Cotter Pin	2	2	2
41		293799	Capscrew	1	1	1
42		313805	Nut	1	1	1
43	**b**	1340743	Bracket	1	1	1
44		362030	Handle	1	1	1
45		287816	Capscrew	2	2	2
46		136687	Nut	2	2	2
47	**c**	292680	Lockwasher	2	2	2
47	**b**	292680	Lockwasher	4	4	4
48	**c**	1556488	Latch	1	1	1
48	**b**	1556669	Latch	1	1	1
49	**d**	1340531	Wire Harness	1	1	1
50	**d**	114312	Strap Clamp	5	5	5
51	**d**	1359587	Grommet	1	1	1
52		353569	Retaining Ring	2	2	2
53		368618	Bushing	2	2	2
54		1378900	Link	1	1	1
55		1378902	Collar	1	1	1
56		325616	Spacer	AR	AR	AR
57		320160	Washer	4	4	4
58		15177	Washer	4	4	4
59		139	Rod End Pin	1	1	1
60		251099	Adhesive	2	2	2
61	**b**	15155	Lockwasher	4	4	4
62		296161	Capscrew	1	1	1
63		320156	Washer	2	2	2
64		313805	Nut	1	1	1
65		15135	Washer	AR	AR	AR
66		296174	Capscrew	2	2	2
67		1535169	Bracket	1	1	1
68		320160	Washer	2	2	2
69		316826	Nut	2	2	2
70		1471535	Washer	2	2	2
71		1383680	Spacer	2	2	2
72		316835	Nut	2	2	2

FOOTNOTES:
a Optional, Without Side Flange
b With Raised Hood
c Without Raised Hood
d Without Seat Brake

©2007 HYSTER COMPANY

NOTES

HOOD (Figure 1-4)
MANUAL HYDRAULICS
(S/N G108N02840C⇒)

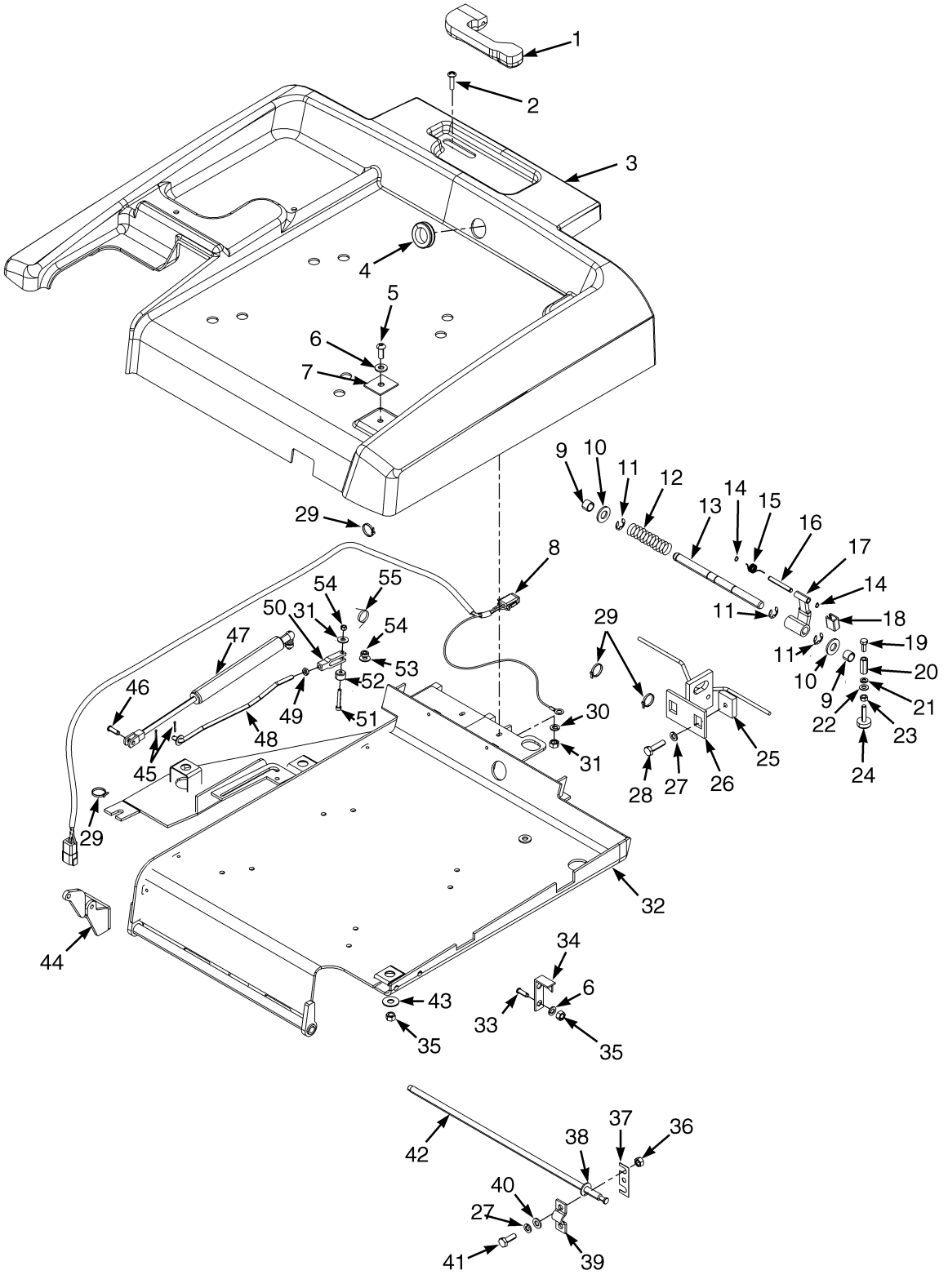

©2007 HYSTER COMPANY

HOOD
MANUAL HYDRAULICS
(S/N G108N02840C⇒)

KEY:
A: 27.55 in. Battery Compartment
B: 33.38 in. Battery Compartment
C: 39.96 in. Battery Compartment

ITEM		PART NO.	DESCRIPTION	QTY A	QTY B	QTY C
1		1544196	Handle	1	1	1
2		296161	Capscrew	1	1	1
3		1599702	Hood	1	..	..
3	**b**	1599703	Hood	1	..	..
3		1599704	Hood	..	1	..
3	**b**	1599705	Hood	..	1	..
3		1599706	Hood	..	..	1
3	**b**	1599707	Hood	..	..	1
4		187791	Grommet	1	1	1
5		296173	Capscrew	4	4	4
6		320160	Washer	4	4	4
7		1383680	Spacer	4	4	4
8		2079477	Wire Harness (Hood) (☞ Figure 2-20)	1	1	1
9		368618	Bushing	2	2	2
10		15125	Washer	2	2	2
11		353569	Retaining Ring	3	3	3
12		1364538	Spring	1	1	1
13		1538963	Shaft	1	1	1
14		12892	Snap Ring	2	2	2
15		1377670	Spring	1	1	1
16		1378975	Pin	1	1	1
17		1378900	Link	1	1	1
18		1378902	Collar	1	1	1
19	**c**	16836	Capscrew	2	2	2
20		1364729	Spacer	1	1	1
21		18515	Washer	6	6	6
22		15155	Lockwasher	4	4	4
23		15055	Nut	4	4	4
24	**d**	367251	Stop Screw	2	2	2
24	**c**	1347088	Stop Screw	2	2	2
25		1364537	Plate	2	2	2
26	**d**	1556488	Latch	1	1	1
26	**c**	1556669	Latch	1	1	1
27		292682	Lockwasher	4	4	4
28		292515	Capscrew	2	2	2
29		114312	Strap Clamp	5	5	5
30		320156	Washer	1	1	1
31		313805	Nut	2	2	2
32		1605785	Frame	1	..	..
32		1605786	Frame	..	1	..
32		1605784	Frame	..	..	1
33		296174	Capscrew	2	2	2
34		1535169	Bracket	4	4	4
35		316826	Nut	4	4	4

©2007 HYSTER COMPANY

HOOD
MANUAL HYDRAULICS
(S/N G108N02840C⇒)

ITEM		PART NO.	DESCRIPTION	QTY A	QTY B	QTY C
36		136692	Nut	2	2	2
37		325616	Spacer	AR	AR	AR
38		15135	Washer	AR	AR	AR
39		355374	Clamp	1	1	1
40		320159	Washer	2	2	2
41		287854	Capscrew	2	2	2
42		1468405	Bar	1	1	1
43		15177	Washer	4	4	4
44	**d**	1601245	Bracket	1	1	1
44	**c**	1601262	Bracket	1	1	1
45		15212	Cotter Pin	2	2	2
46		139	Rod End Pin	1	1	1
47	**e**	1385758	Gas Spring	1	..	..
47	**f**	1665174	Gas Spring (With Spacer)	1	..	..
47	**e**	1385759	Gas Spring	..	1	..
47	**f**	1665175	Gas Spring (With Spacer)	..	1	..
47	**e**	1385760	Gas Spring	..	..	1
47	**f**	1665176	Gas Spring (With Spacer)	..	..	1
47		251099	Adhesive	AR	AR	AR
48		1385761	Rod	1	1	1
49		15025	Nut	1	1	1
50		1364096	Clevis	1	1	1
51		293799	Capscrew	1	1	1
52		1364243	Knob	1	1	1
53		296419	Washer	2	2	2
54		1340867	Spacer	1	1	1
55		1340866	Spring	1	1	1
	a	2027694	Clip (Memo Clip)	1	1	1
	a	222024	Rivet (Memo Clip)	2	2	2
	a	197066	Washer (Memo Clip)	2	2	2

FOOTNOTES:
- **a** Not Illustrated
- **b** Optional, Without Side Flange
- **c** With Raised Hood
- **d** Without Raised Hood
- **e** ⇒ PENDING PER ECN 103236
- **f** PENDING PER ECN 103236 ⇒

©2007 HYSTER COMPANY

NOTES

HOOD (Figure 1-5)
ELECTRONIC HYDRAULICS
(S/N G108N02840C⇒)

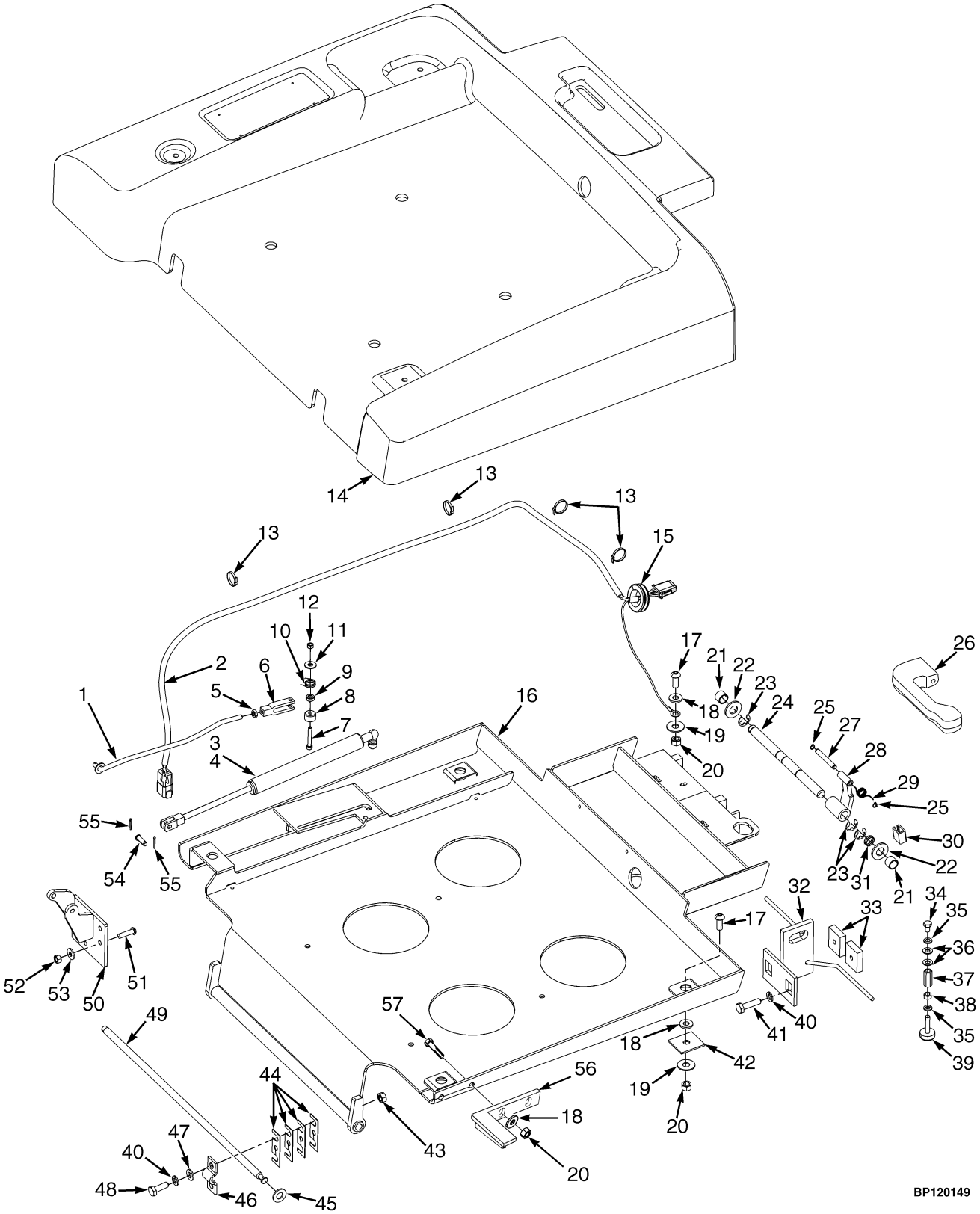

©2007 HYSTER COMPANY

HOOD
ELECTRONIC HYDRAULICS
(S/N G108N02840C⇒)

KEY:
A: 27.55 in. Battery Compartment
B: 33.35 in. Battery Compartment
C: 39.97 in. Battery Compartment

ITEM	PART NO.	DESCRIPTION	QTY A	QTY B	QTY C
1	1385761	Rod	1	1	1
2	2079477	Wire Harness (Hood) (☞ Figure 2-20)	1	1	1
3	1385758	Gas Spring	1	..	..
3	1665174	Gas Spring (With Spacer)	1	..	..
3	1385759	Gas Spring	..	1	..
3	1665175	Gas Spring (With Spacer)	..	1	..
3	1385760	Gas Spring	..	..	1
3	1665176	Gas Spring (With Spacer)	..	..	1
4	251099	Adhesive	AR	AR	AR
5	15025	Nut	1	1	1
6	1364096	Clevis	1	1	1
7	293799	Capscrew	1	1	1
8	1364243	Knob	1	1	1
9	1340867	Spacer	1	1	1
10	1340866	Spring	1	1	1
11	221763	Washer	2	2	2
12	313805	Nut	1	1	1
13	114312	Strap Clamp	4	4	4
14	1600556	Hood	1	..	..
14	1600557	Hood	..	1	..
14	1600558	Hood	..	..	1
15	187791	Grommet	1	1	1
16	1601252	Frame	1	..	..
16	1601254	Frame	..	1	..
16	1601251	Frame	..	..	1
17	296173	Capscrew	4	4	4
18	320160	Washer	4	4	4
19	15177	Washer	4	4	4
20	316826	Nut	4	4	4
21	368618	Bushing	2	2	2
22	15125	Washer	2	2	2
23	353569	Retaining Ring	3	3	3
24	1538963	Shaft	1	1	1
25	12892	Snap Ring	2	2	2
26	1544196	Handle	1	1	1
27	1378975	Pin	1	1	14
28	1378900	Link	1	1	1
29	1377670	Spring	1	1	1
30	1378902	Collar	1	1	1
31	1364538	Spring	1	1	1
32	1556488	Latch (Without Battery Rollers Or Slide)	1	1	1
32	1556669	Latch (With Battery Rollers Or Slide)	1	1	1
33	1364537	Plate	2	2	2
34	16394	Capscrew (With Battery Rollers Or Slide)	2	2	2

©2007 HYSTER COMPANY

HOOD
ELECTRONIC HYDRAULICS
(S/N G108N02840C⇒)

ITEM	PART NO.	DESCRIPTION	QTY A	QTY B	QTY C
35	15155	Lockwasher	4	4	4
36	18515	Washer	6	6	6
37	1364729	Spacer (With Battery Rollers Or Slide)	2	2	2
38	15055	Nut (Without Battery Rollers Or Slide)	2	2	2
39	367251	Stop Screw (Without Battery Rollers Or Slide)	2	2	2
39	1347088	Stop Screw (With Battery Rollers Or Slide)	2	2	2
40	292682	Lockwasher	4	4	4
41	292515	Capscrew	2	2	2
42	1383680	Spacer	4	4	4
43	136692	Nut	2	2	2
44	325616	Spacer	AR	AR	AR
45	15135	Washer	AR	AR	AR
46	355374	Clamp	1	1	1
47	320159	Washer	2	2	2
48	287854	Capscrew	2	2	2
49	1468405	Bar	1	1	1
50	1601264	Bracket	1	1	1
51	296167	Capscrew	3	3	3
52	239503	Nut	3	3	3
53	320158	Washer	3	3	3
54	139	Rod End Pin	1	1	1
55	15212	Cotter Pin	2	2	2
a	1535169	Bracket	2	2	2
a	296174	Capscrew	2	2	2

FOOTNOTES:
a Not Illustrated

©2007 HYSTER COMPANY

NOTES

OVERHEAD GUARD (Figure 1-6)

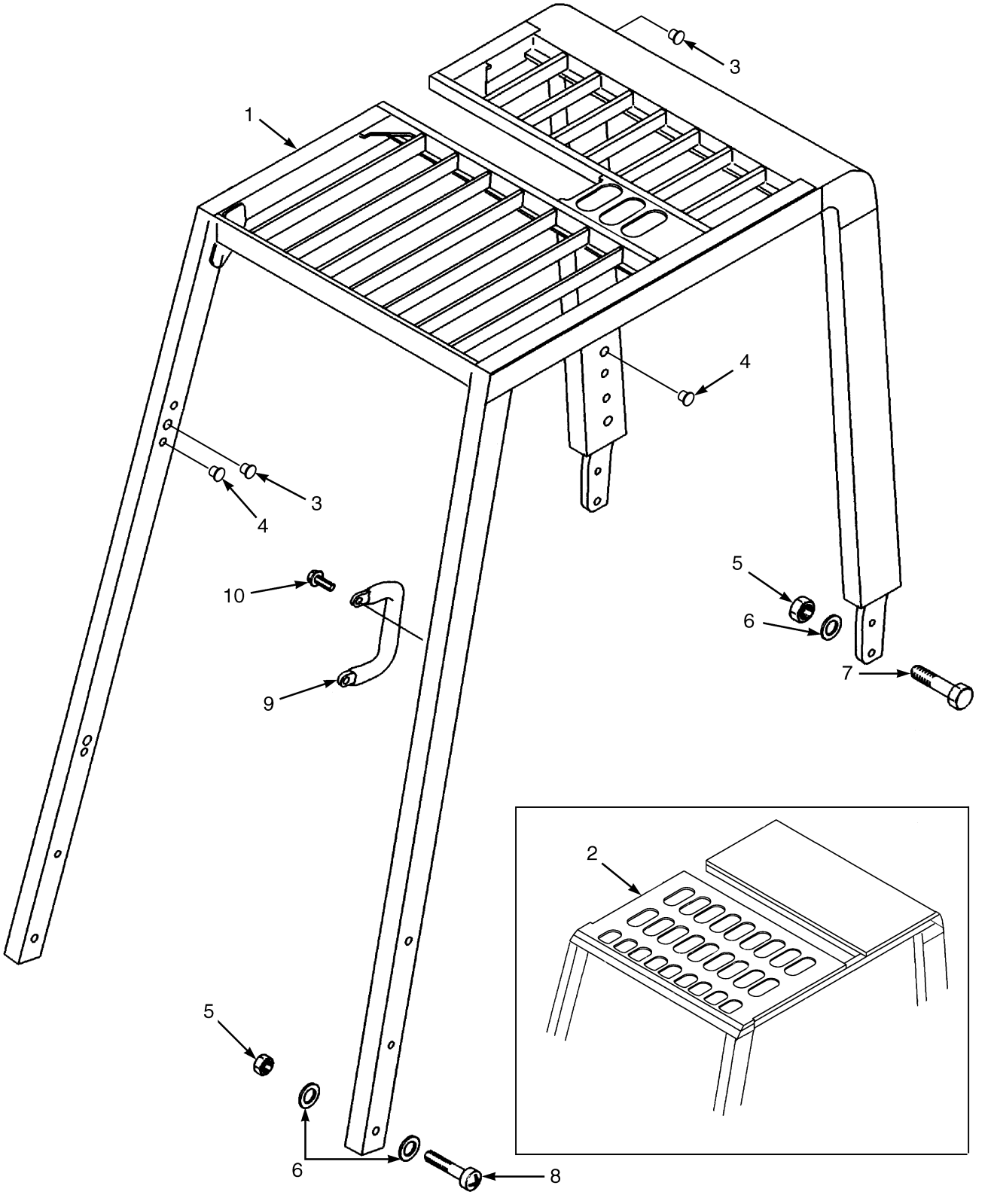

©2007 HYSTER COMPANY

OVERHEAD GUARD

KEY:
A: 27.55 in. Battery Compartment
B: 33.38 in. Battery Compartment
C: 39.96 in. Battery Compartment

ITEM		PART NO.	DESCRIPTION	QTY A	QTY B	QTY C
1		1386696	Overhead Guard (86.0 in. Overall Height)	1	..	..
1		1386697	Overhead Guard (86.0 in. Overall Height)	..	1	..
1		1386698	Overhead Guard (86.0 in. Overall Height)	..	..	1
1		1386699	Overhead Guard (88.4 in. Overall Height)	1	..	..
1		1386700	Overhead Guard (88.4 in. Overall Height)	..	1	..
1		1386701	Overhead Guard (88.4 in. Overall Height)	..	..	1
1		1489179	Overhead Guard (90.5 in. Overall Height)	1	..	..
1		1489180	Overhead Guard (90.5 in. Overall Height)	..	1	..
1		1489181	Overhead Guard (90.5 in. Overall Height)	..	..	1
2	**a**	1452953	Overhead Guard	1	..	..
2	**a**	1452954	Overhead Guard	..	1	..
2	**a**	1452955	Overhead Guard	..	..	1
3		1363917	Plug	4	4	4
4		1363916	Plug	12	12	12
5		1390182	Nut	10	10	10
6		320161	Washer	16	16	16
7		293651	Capscrew	4	4	4
8		1343990	Capscrew	6	6	6
9		1536813	Handle (Grab)	1	1	1
10		329067	Screw	2	2	2

FOOTNOTES:
a (Plate Type Without Operator Compartment Light)

©2007 HYSTER COMPANY

COUNTERWEIGHT (Figure 1-7)

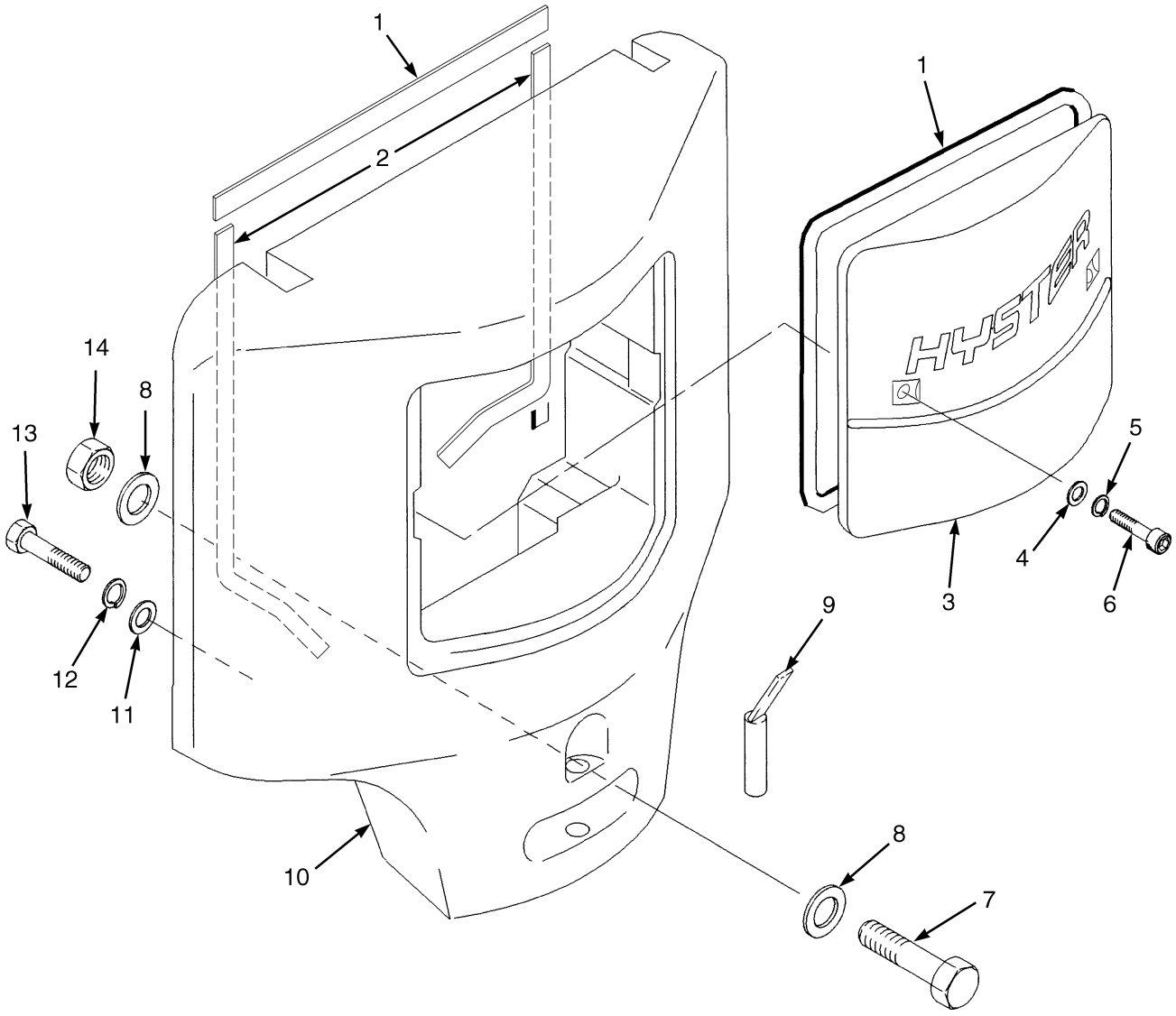

HP120899

©2007 HYSTER COMPANY

COUNTERWEIGHT

KEY:
A: 27.50 in. Battery Compartment
B: 33.38 in. Battery Compartment
C: 39.97 in. Battery Compartment

ITEM	PART NO.	DESCRIPTION	QTY A	QTY B	QTY C
1	326003	Tape	AR	AR	AR
2	1546460	Tape	AR	AR	AR
3	1340460	Cover	1	1	1
4	15134	Washer	2	2	2
5	15156	Lockwasher	2	2	2
6	46698	Capscrew	2	2	2
7	292537	Capscrew	2	2	2
8	296423	Washer	4	4	4
9	326347	Tow Pin	1	1	1
10	1537991	Counterweight (E45, E50)	..	1	..
10	1537992	Counterweight (E45, E55, E65)	1	1	1
10	1537993	Counterweight (E50, E60)	1	1	..
11	221777	Washer	2	2	2
12	15162	Lockwasher	2	2	2
13	168054	Capscrew	2	2	2
14	300937	Locknut	2	2	2
a	2311349	Shim	AR	AR	AR

FOOTNOTES:
a Not Illustrated

NON-SUSPENSION SEAT (Figure 1-8)
(⇒D/B 07/2005)

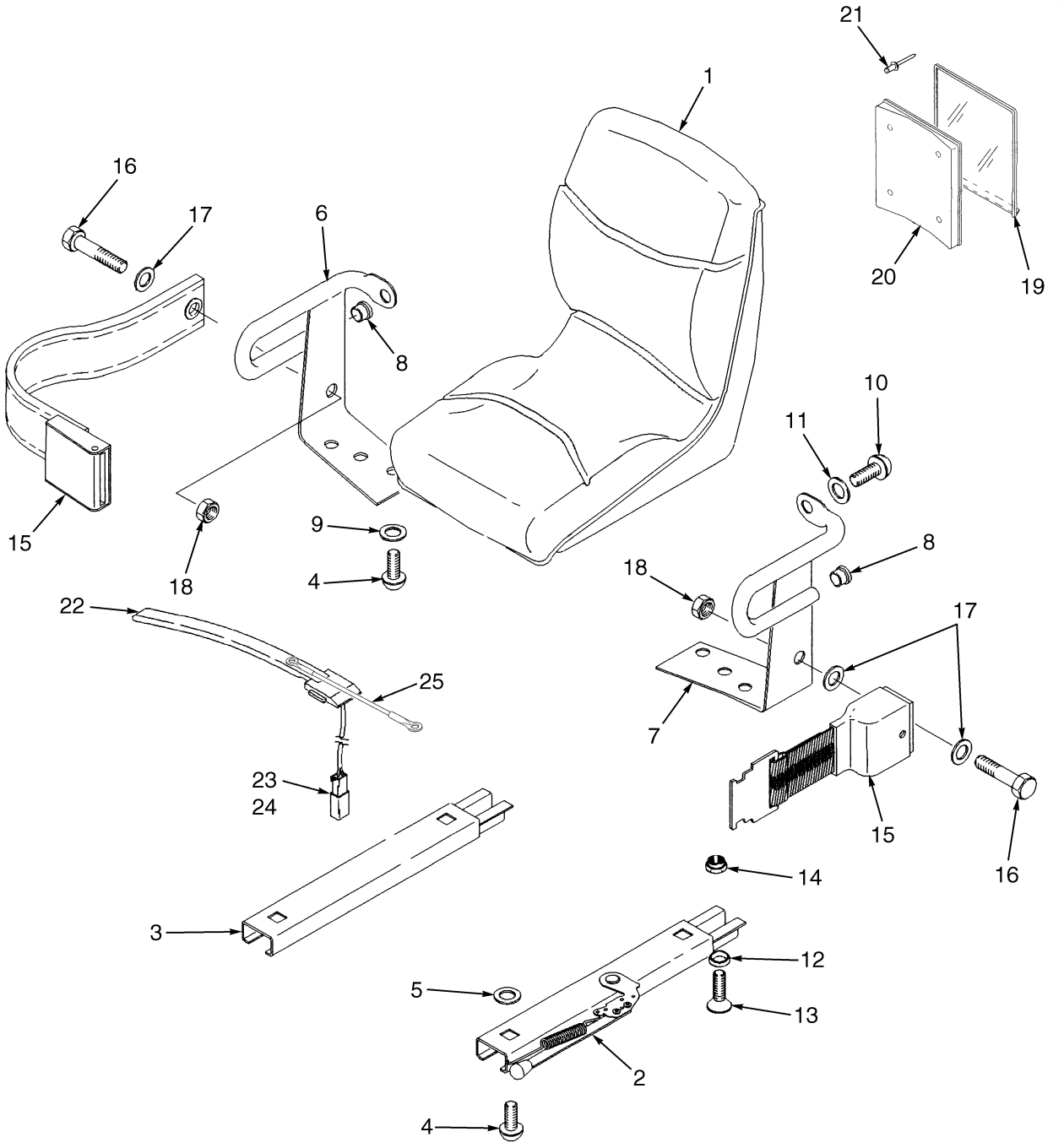

HP120687

©2007 HYSTER COMPANY

NON-SUSPENSION SEAT
(⇒D/B 07/2005)

ITEM	PART NO.	DESCRIPTION	QTY
	1364379	Seat Assembly	1
1	1351473	Seat	1
2	269448	Seat Rail (LH)	1
3	269449	Seat Rail (RH)	1
4	18727	Capscrew	8
5	221733	Washer	6
6	1306585	Hip Restraint (RH)	1
7	1306588	Hip Restraint (LH)	1
8	364854	Plug	2
9	18515	Washer	4
10	379197	Capscrew	2
11	379198	Washer	2
12	878236	Spacer	4
12	1375848	Spacer (Optional)	4
13	18731	Capscrew	4
14	222665	Nut	4
15	1374750	Seat Belt	1
16	379199	Capscrew	2
17	379697	Washer	3
18	379698	Nut	2
19	335991	Cover	1
20	335988	Base	1
21	222029	Rivet	4
22	1354140	Switch Assembly	1
23	1330409	Connector	1
24	1330414	Secondary Lock	1
25	1330433	Pin	1

©2007 HYSTER COMPANY

NON-SUSPENSION SEAT (Figure 1-9)
MANUAL HYDRAULICS
(D/B 07/2005⇔D/B 03/2006)

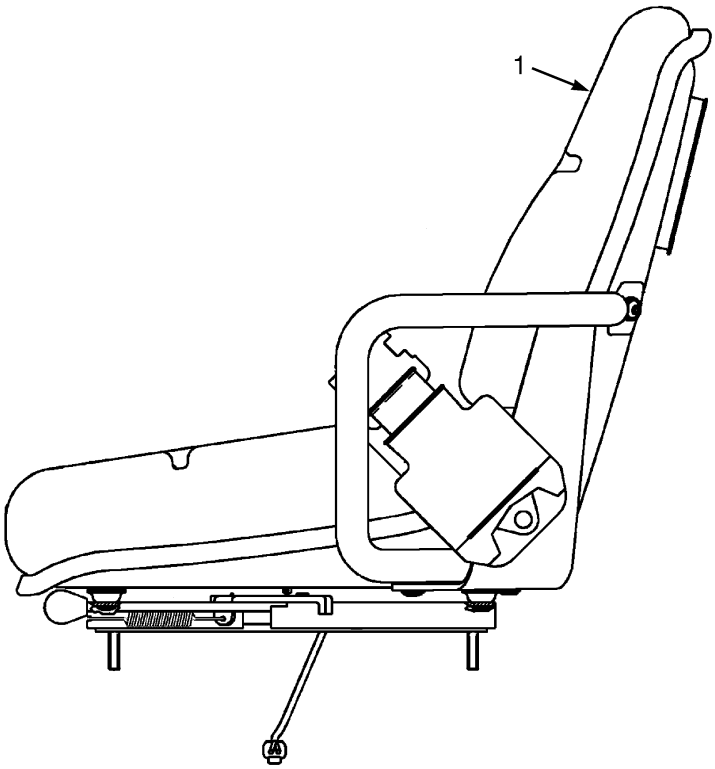

HP120929

ITEM	PART NO.	DESCRIPTION	QTY
1	1603739	Seat Assembly (Vinyl)	1
1	1603740	Seat Assembly (Fabric)	1
a	878236	Spacer	4
a	15175	Washer	4
a	145639	Nut	4

FOOTNOTES:
a Not Illustrated

©2007 HYSTER COMPANY

NOTES

NON SUSPENSION SEAT (Figure 1-10)
(D/B 03/2006⇒)

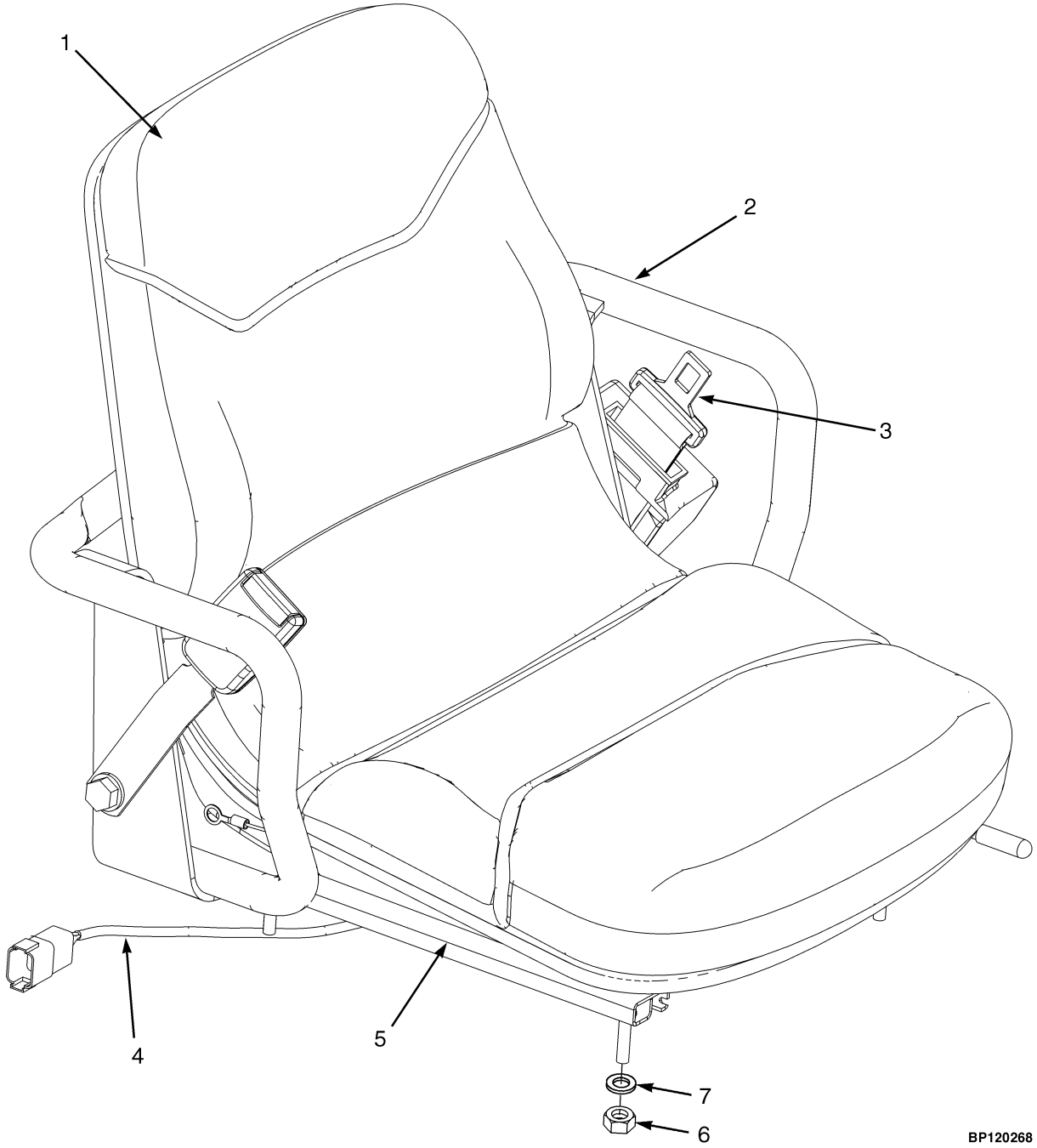

©2007 HYSTER COMPANY

NON SUSPENSION SEAT
(D/B 03/2006⇒)

ITEM	PART NO.	DESCRIPTION	QTY
	2087663	Seat Assembly (Vinyl)	1
	2087664	Seat Assembly (Cloth)	1
1	1563351	Both Cushions (Vinyl) (Vinyl)	1
1	1563222	Both Cushions (Cloth) (Cloth)	1
1	1354140	Switch Assembly	1
2	1563217	Hip Restraint (RH)	1
2	1563216	Hip Restraint (LH)	1
3	1598504	Seat Belt Kit	1
4	1591652	Harness Kit	1
5	1459112	Slide Rail Kit	1
6	15114	Nut	4
7	15175	Washer	4
a	392238	Grommet	1

FOOTNOTES:
a Not Illustrated

SUSPENSION SEAT (Figure 1-11)
(⇒D/B 07/2005)

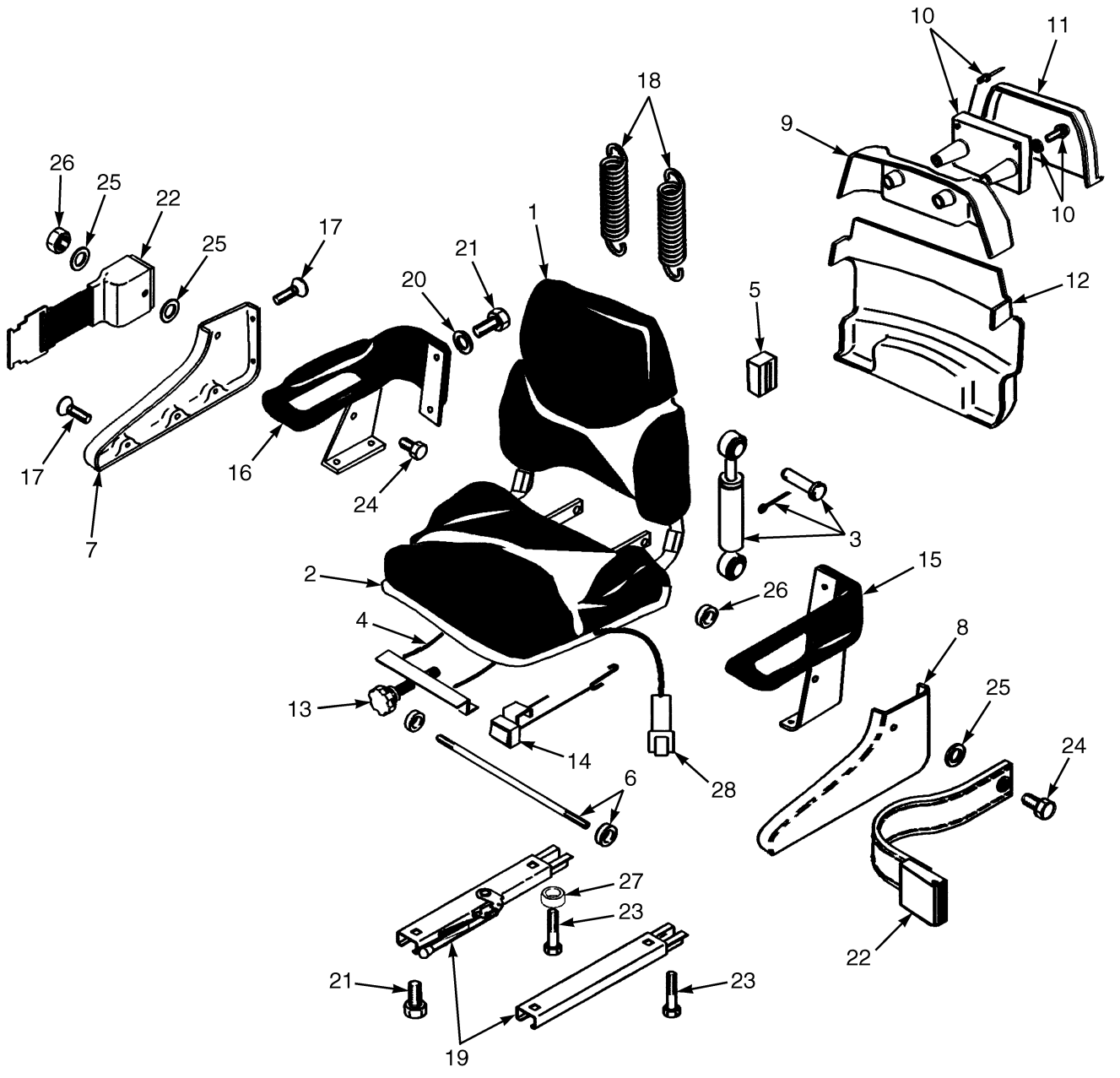

HP120688

©2007 HYSTER COMPANY

SUSPENSION SEAT
(⇒D/B 07/2005)

ITEM		PART NO.	DESCRIPTION	QTY
	b	1376679	Seat Assembly	1
	a	1376680	Seat Assembly	1
1	**a**	1382113	Back Cushion	1
1	**b**	1382111	Back Cushion	1
2	**a**	1382114	Seat Cushion	1
2	**b**	1382112	Seat Cushion	1
3		1362049	Shock Absorber Kit	1
4		1378307	Suspension Cable Kit	1
5		1362052	Block	2
6		1362053	Shaft and Bearing Kit	1
7		1650385	Cover (RH) (RH)	1
8		1392495	Cover (LH)	1
9		1374188	Cover	1
10		1362058	Manual Holder Kit	1
11		1374190	Cover	1
12		1360872	Cover	1
13		1362061	Knob Kit	1
14		1362062	Tape Kit	1
15		1362063	Hip Restraint (LH)	1
16		1362064	Hip Restraint (RH)	1
17		1362065	Hardware Kit	1
18		1367137	Suspension Spring Kit	1
19		1459114	Seat Rail Kit	1
20		. . . . .	Washer	8
21		. . . . .	Bolt	8
22		1374750	Seat Belt	1
23		18731	Capscrew	4
24		379199	Capscrew	2
25		379697	Washer	3
26		379698	Nut	2
27		878236	Spacer	..
27		1375848	Spacer (Optional)	..
28		2037311	Switch Assembly	1
28		1330409	Connector	1
28		1330414	Secondary Lock	1
28		1330433	Pin	1
		893818	Ground Wire (Not Illustrated)	1

FOOTNOTES:
a Fabric
b Vinyl

©2007 HYSTER COMPANY

SEMI-SUSPENSION SEAT (Figure 1-12)
MANUAL HYDRAULICS
(D/B 07/2005⇔D/B 03/2006)

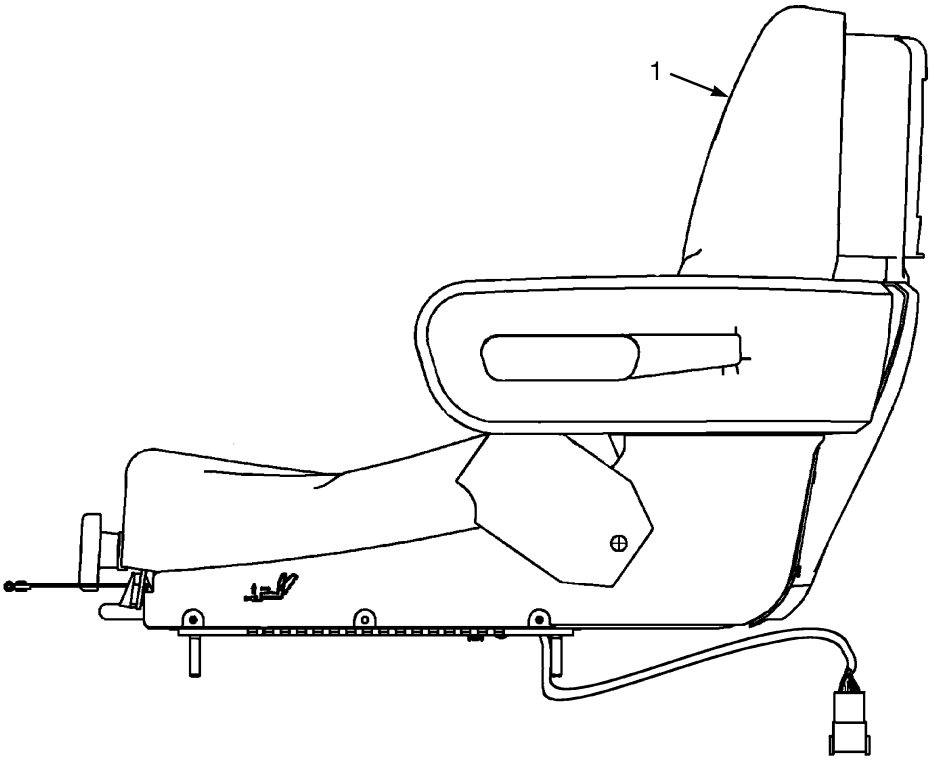

HP120928

ITEM		PART NO.	DESCRIPTION	QTY
1		1603742	Seat Assembly (Vinyl)	1
1		1603743	Seat Assembly (Fabric)	1
	a	878236	Spacer	4
	a	15175	Washer	4
	a	145639	Nut	1

FOOTNOTES:
a Not Illustrated

©2007 HYSTER COMPANY

SEMI-SUSPENSION SEAT (Figure 1-13)
ELECTRONIC HYDRAULICS
(S/N G108N02840C⇒ D/B 04/2006)

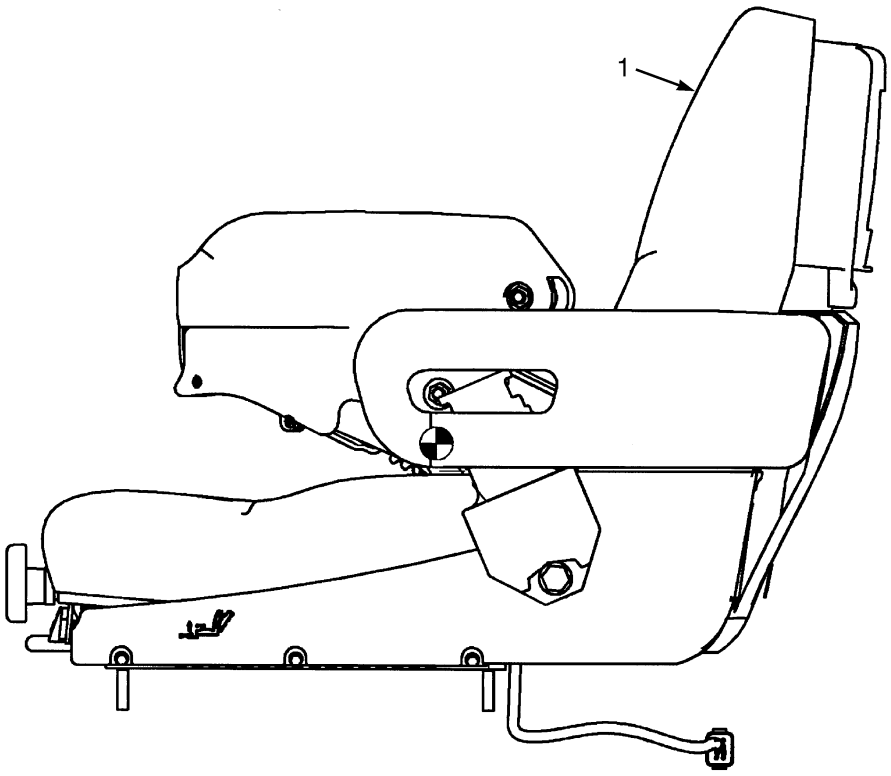

HP120927

ITEM	PART NO.	DESCRIPTION	QTY
1	1603757	Seat Assembly (Vinyl)	1
1	1603758	Seat Assembly (Fabric)	1
a	878236	Spacer	4
a	15175	Washer	4
a	145639	Nut	4

FOOTNOTES:
a Not Illustrated

SEMI-SUSPENSION SEAT (Figure 1-14)
WITH AND WITHOUT ELECTRONIC CONTROLS
(D/B 04/2006⇒)

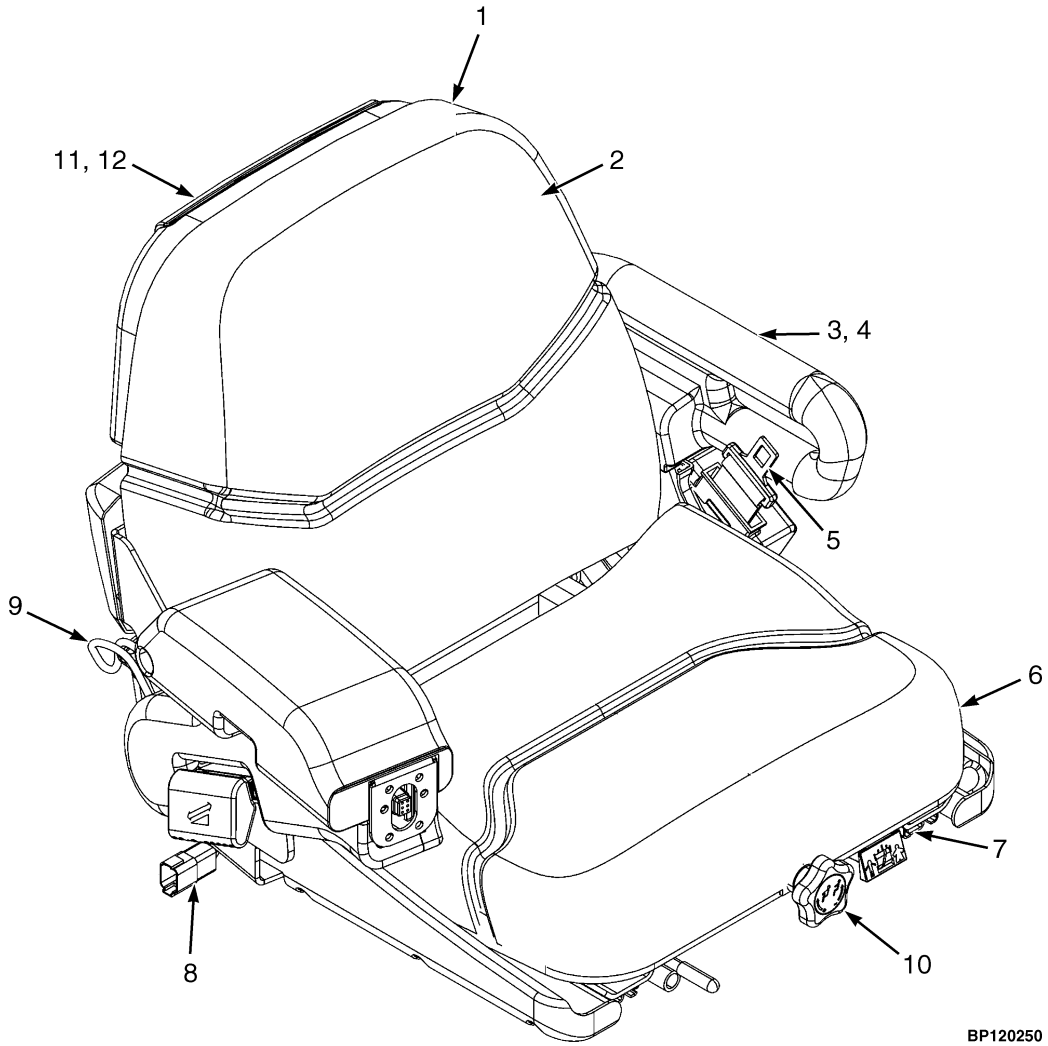

©2007 HYSTER COMPANY

SEMI-SUSPENSION SEAT
WITH AND WITHOUT ELECTRONIC CONTROLS
(D/B 04/2006⇒)

KEY:
A: Cloth
B: Vinyl

ITEM	PART NO.	DESCRIPTION	QTY A	QTY B
1	2087152	Seat Assembly (Vinyl) (With E-Hydraulic Arm)	..	1
1	2087153	Seat Assembly (Cloth) (With E-Hydraulic Arm)	1	..
1	2087665	Seat Assembly (Vinyl) (With Left and Right Hip Restraints)	..	1
1	2087666	Seat Assembly (Cloth) (With Left and Right Hip Restraints)	1	..
1	1362049	Shock Absorber Kit	1	1
1	1367137	Suspension Spring Kit	1	1
2	1374179	Back Cushion (Cloth)	1	..
2	1362047	Back Cushion (Vinyl)	..	1
3	1563224	Hip Restraint (LH)	1	1
4	1563225	Hip Restraint (RH)	1	1
5	1598504	Seat Belt Kit	1	1
6	1584051	Seat Cushion (Cloth)	1	..
6	1584116	Seat Cushion (Vinyl)	..	1
7	1459112	Slide Rail Kit	1	1
8	1354140	Switch Assembly	1	1
8	1330409	Connector	1	1
8	1330414	Secondary Lock	1	1
8	1330433	Pin	2	1
8	1493458	E-Ring	1	1
9	1654891	Wire Harness (With E-Hydraulic Arm)	1	1
9	1591652	Harness Kit (With Left and Right Hip Restraints)	1	1
10	1563227	Weight Adjust Knob	1	1
11	1374190	Cover	1	1
12	1362058	Manual Holder Kit	1	1
	1647532	Foam Cap (Not Illustrated)	1	1

©2007 HYSTER COMPANY

FULL SUSPENSION SEAT (Figure 1-15)

SHEET 1 OF 2

(⇒D/B 07/2005)

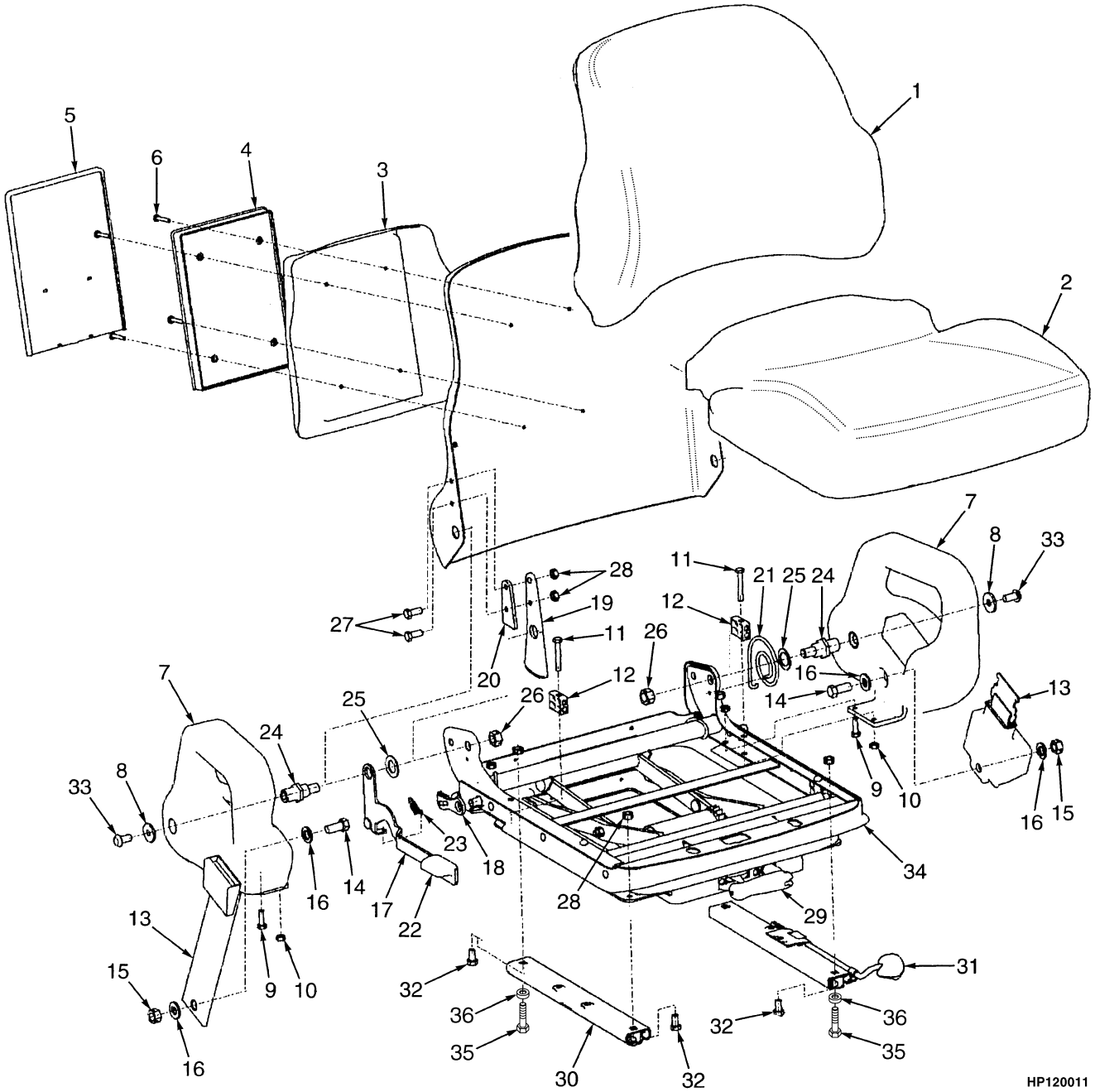

©2007 HYSTER COMPANY

FULL SUSPENSION SEAT
SHEET 1 OF 2
(⇒D/B 07/2005)

ITEM	PART NO.	DESCRIPTION	QTY
	1489167	Seat Assembly (Fabric)	1
	1489166	Seat Assembly (Vinyl)	1
1	1470153	Back Cushion (Cloth)	1
1	1470152	Back Cushion (Vinyl)	1
2	1494077	Seat Cushion (Cloth)	1
2	1494076	Seat Cushion (Vinyl)	1
2	1467514	Switch (Seat)	1
2	1467515	Wire Harness	1
2	1637285	Spring	2
3	. . . . .	Riser	1
4	. . . . .	Box	1
5	. . . . .	Cover	1
6	. . . . .	Screw	4
7	. . . . .	Hip Restraint (RH)	1
7	. . . . .	Hip Restraint (LH)	1
8	. . . . .	Washer	2
9	. . . . .	Bolt	2
10	. . . . .	Nut	4
11	. . . . .	Bolt	2
12	. . . . .	Block	2
13	. . . . .	Seat Belt	1
14	. . . . .	Bolt	2
15	. . . . .	Nut	2
16	. . . . .	Washer	4
17	. . . . .	Handle	1
18	. . . . .	Latch	1
19	. . . . .	Bracket	1
20	. . . . .	Spacer	1
21	. . . . .	Spring	1
22	. . . . .	Knob	1
23	. . . . .	Spring Extension	1
24	. . . . .	Pivot	2
25	. . . . .	Washer	2
26	. . . . .	Nut	2
27	. . . . .	Bolt	2
28	. . . . .	Nut	6
29	1470163	Weight Adjuster Kit	1
30	. . . . .	Slide (RH)	1
31	. . . . .	Slide (LH)	1
32	. . . . .	Bolt	4
33	. . . . .	Screw	2
34	1470159	Suspension Kit	1
35	18731	Capscrew	4
36	1375848	Spacer	4
	1470155	Manual Holder Kit (Includes Items 3-6)	1
	1470156	Hip Restraint Kit (RH) (Includes Items 7-12, 33)	1
	1470157	Hip Restraint Kit (LH) (Includes Items 7-12, 33)	1
	1470158	Seat Belt Kit (Includes Items 13-16)	1
	1470164	Recliner Kit (Includes Items 17-28)	1

©2007 HYSTER COMPANY

FULL SUSPENSION SEAT
SHEET 1 OF 2
(⇒D/B 07/2005)

ITEM	PART NO.	DESCRIPTION	QTY
	1489696	Slide Kit (Includes Items 30-32)	1
a	1546689	Release Lever	1

FOOTNOTES:
a Not Illustrated

©2007 HYSTER COMPANY

NOTES

FULL SUSPENSION SEAT (Figure 1-16)
SHEET 2 OF 2
(⇒D/B 07/2005)

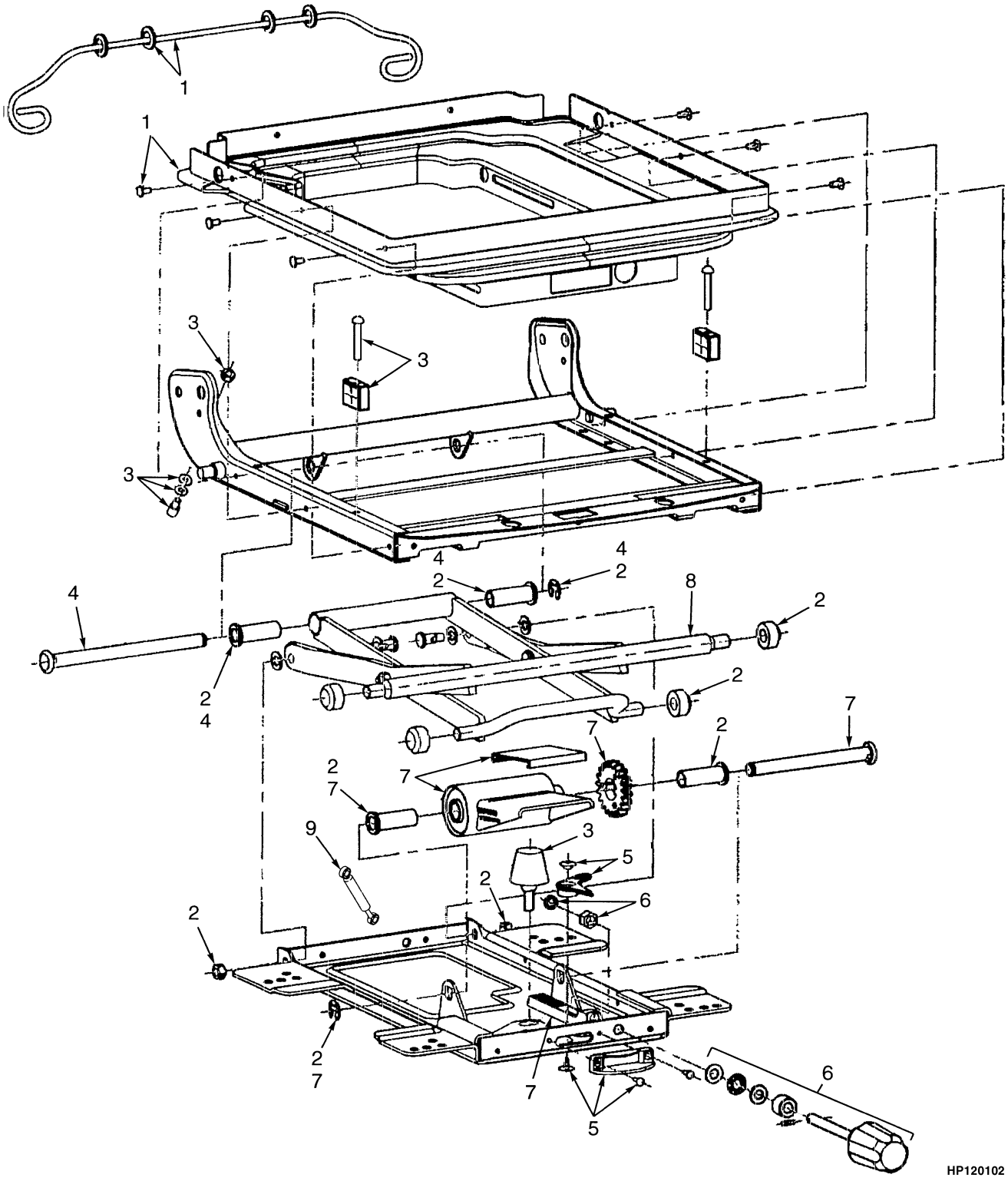

©2007 HYSTER COMPANY

FULL SUSPENSION SEAT
SHEET 2 OF 2
(⇒D/B 07/2005)

ITEM	PART NO.	DESCRIPTION	QTY
	1489167	Seat Assembly (Fabric)	1
	1489166	Seat Assembly (Vinyl)	1
1	1467523	Boot Kit	1
2	1467524	Roller and Bearing Kit	1
3	1467525	Bumper and Stop Kit	1
4	1467526	Bearing Shaft Kit	1
5	1467527	Weight Adjuster Indicator Kit	1
6	1467531	Recliner Knob	1
7	1467529	Suspension Spring Kit	1
8	1470160	Scissor Assembly	1
9	1483828	Shock Kit	1
a	1546689	Release Lever	1

FOOTNOTES:
a Not Illustrated

FULL SUSPENSION SEAT (Figure 1-17)
MANUAL HYDRAULICS
(D/B 07/2005⇔D/B 03/2006)

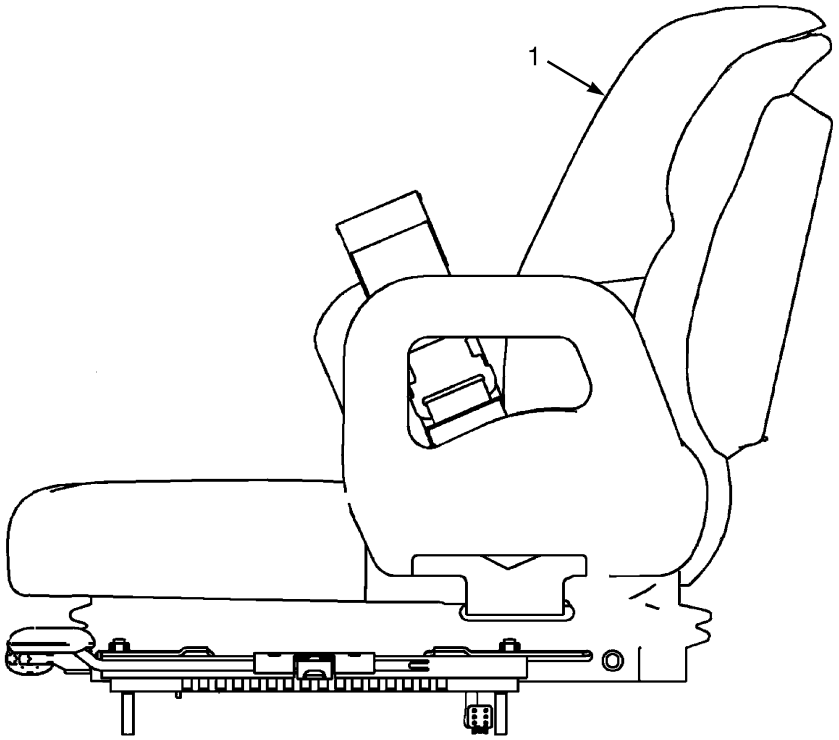

HP120926

ITEM	PART NO.	DESCRIPTION	QTY
1	1603745	Seat Assembly (Vinyl)	1
1	1603746	Seat Assembly (Fabric)	1
a	878236	Spacer	4
a	15175	Washer	4
a	145639	Nut	4

FOOTNOTES:
a Not Illustrated

©2007 HYSTER COMPANY

FULL SUSPENSION SEAT (Figure 1-18)
WITH ELECTRONIC CONTROLS
(S/N G108N02840C⇒ D/B 03/2005)

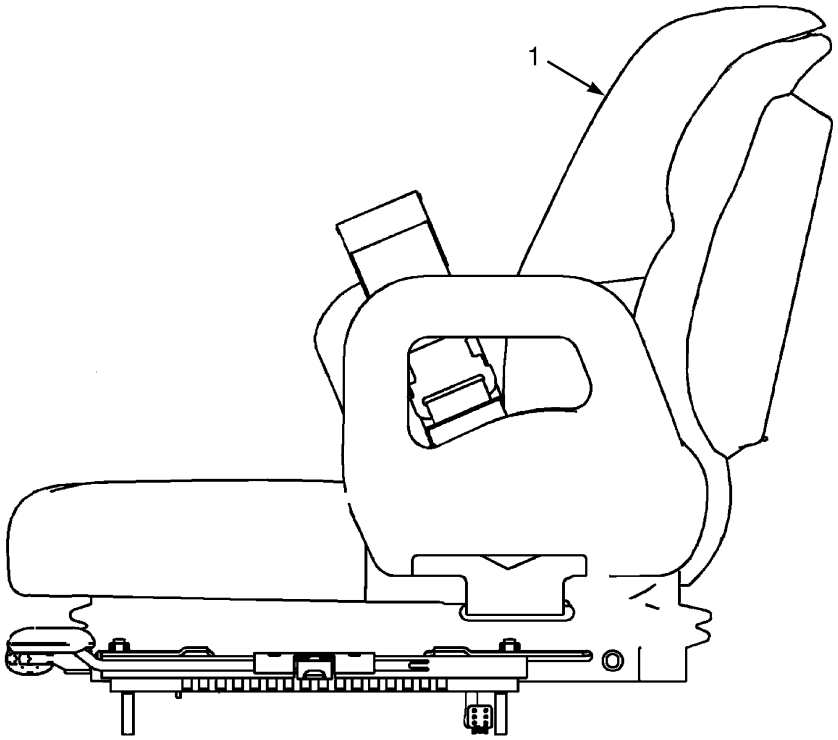

HP120926

ITEM	PART NO.	DESCRIPTION	QTY
1	1603760	Seat Assembly (Vinyl)	1
1	1603761	Seat Assembly (Fabric)	1
a	878236	Spacer	4
a	15175	Washer	4
a	145639	Nut	4

FOOTNOTES:
a Not Illustrated

FULL SUSPENSION SEAT (Figure 1-19)
WITH AND WITHOUT ELECTRONIC CONTROLS
(D/B 04/2006⇒)

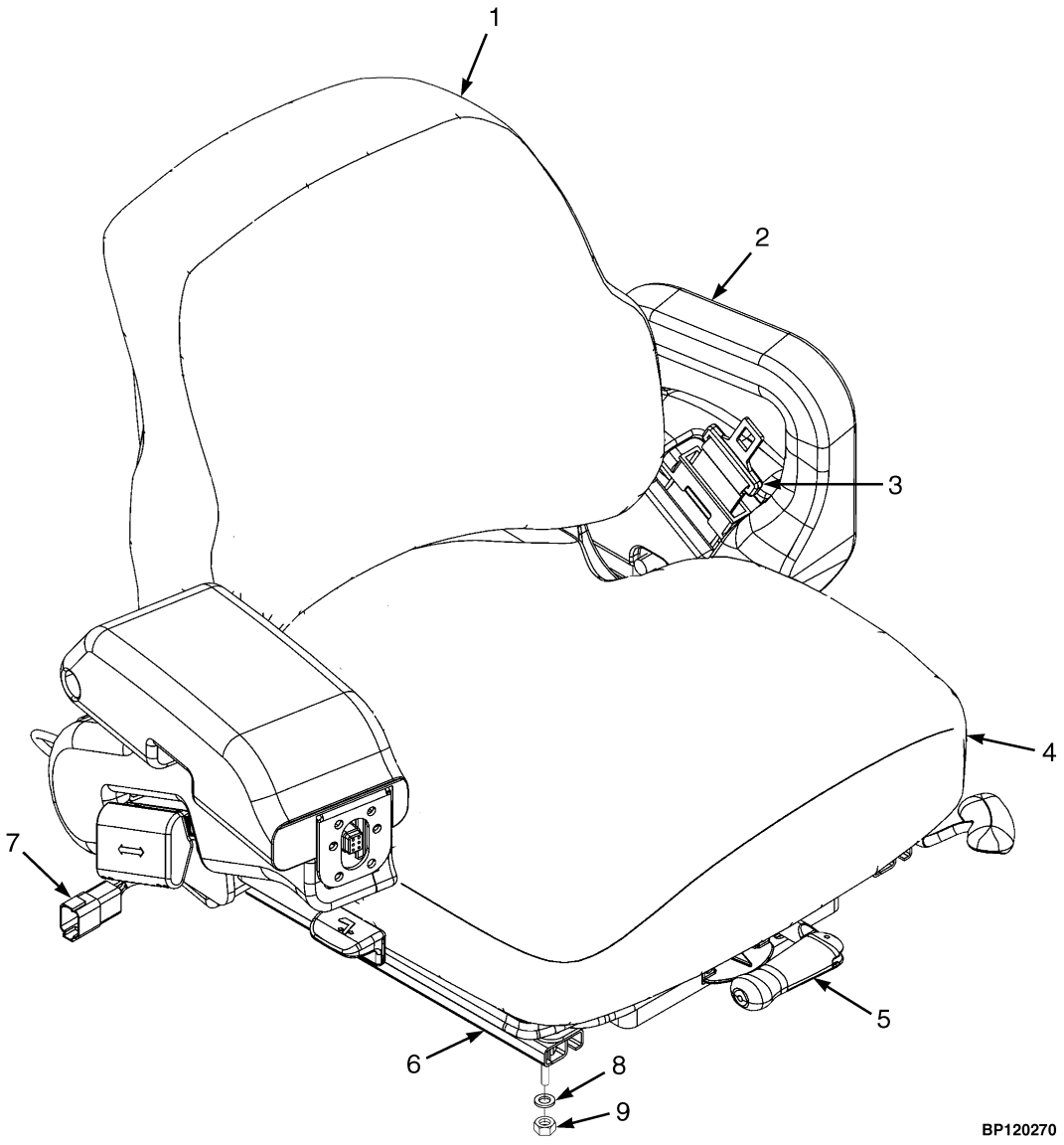

©2007 HYSTER COMPANY

FULL SUSPENSION SEAT
WITH AND WITHOUT ELECTRONIC CONTROLS
(D/B 04/2006⇒)

KEY:
A: Vinyl with Hip Restraints Only
B: Cloth with Hip Restraints Only
C: Vinyl with E-Hydraulic Arm
D: Cloth with E-Hydraulic Arm

ITEM	PART NO.	DESCRIPTION	QTY A	B	C	D
	2087667	Seat Assembly (Vinyl)	1	..	..	..
	2087668	Seat Assembly (Cloth)	..	1	..	..
	2087154	Seat Assembly (Vinyl)	..	..	1	..
	2087155	Seat Assembly (Cloth)	..	..	..	1
1	1470152	Back Cushion (Vinyl)	1	..	1	..
1	1470153	Back Cushion (Cloth)	..	1	..	1
2	1470157	Hip Restraint Kit (LH)	1	1	1	1
2	1470156	Hip Restraint Kit (RH)	1	1	..	..
3	1598504	Seat Belt Kit	1	1	1	1
4	1494076	Seat Cushion (Vinyl)	1	..	1	..
4	1494077	Seat Cushion (Cloth)	..	1	..	1
4	1591553	Sensor (Operator Presence)	1	1	1	1
4	1467514	Switch (Seat)	1	1	1	1
4	1467515	Wire Harness	1	1	1	1
4	1637285	Spring	1	1	1	1
5	1470163	Weight Adjuster Kit	1	1	1	1
6	1489696	Slide Kit	1	1	1	1
7	1654891	Wire Harness	..	..	1	1
7	1591652	Harness Kit	1	1	..	..
8	15114	Nut	4	4	4	4
9	15175	Washer	4	4	4	4
a	1647532	Foam Cap	1	1	1	1
a	1563211	Knobs (Electronic Control Arm)	1	1	1	1
a	1470155	Manual Holder Kit	1	1	1	1
a	392238	Grommet	1	1	1	1
a	1467529	Suspension Spring Kit	1	1	1	1
a	1627639	Weight Adjust Rack	1	1	1	1
a	1467525	Bumper and Stop Kit	1	1	1	1
a	1467523	Boot Kit	1	1	1	1
a	1467526	Bearing Shaft Kit	1	1	1	1
a	1467524	Roller and Bearing Kit	1	1	1	1
a	1467527	Weight Adjuster Indicator Kit	1	1	1	1
a	1584631	Weight Adjust Knob	1	1	1	1
a	1600126	Handle	1	1	1	1

FOOTNOTES:
a Not Illustrated

©2007 HYSTER COMPANY

FULL SUSPENSION SWIVEL SEAT (Figure 1-20)
ELECTRONIC HYDRAULICS
(S/N G108N02840C⇒ D/B 03/2006)

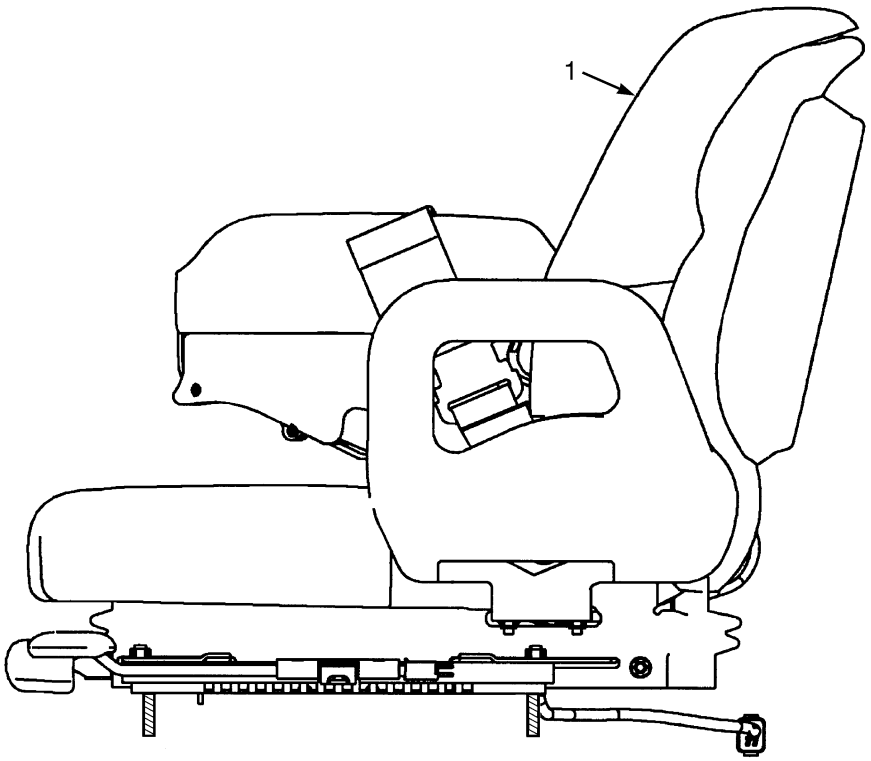

HP120925

ITEM	PART NO.	DESCRIPTION	QTY
1	1586964	Seat Assembly (Vinyl) (Vinyl)	1
1	1586965	Seat Assembly (Cloth) (Fabric)	1
a	878236	Spacer	4
a	15175	Washer	4
a	145639	Nut	4

FOOTNOTES:
a Not Illustrated

©2007 HYSTER COMPANY

NOTES

FULL SUSPENSION SWIVEL SEAT (Figure 1-21)
ELECTRONIC HYDRAULICS
(D/B 03/2006⇒)

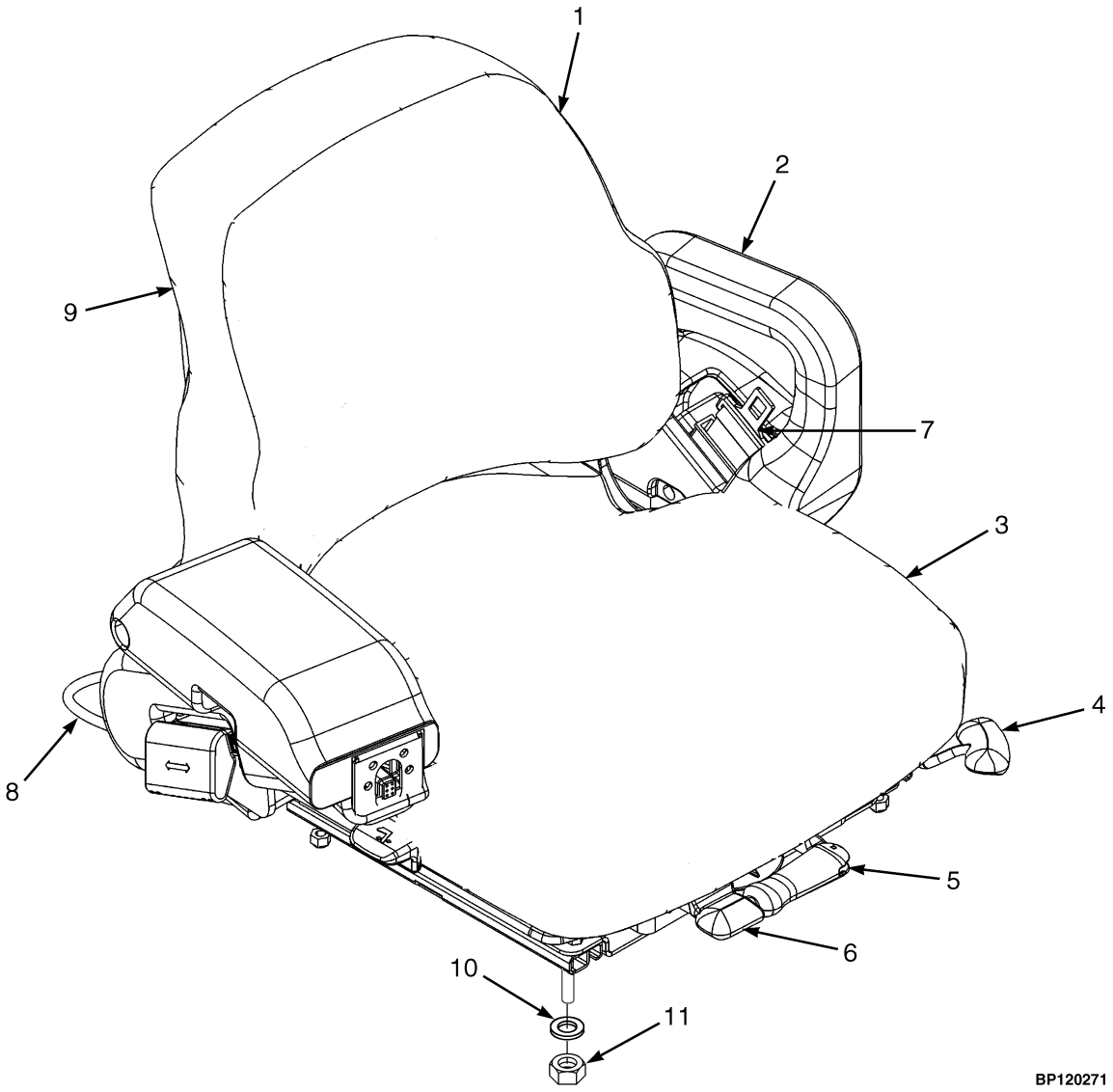

©2007 HYSTER COMPANY

FULL SUSPENSION SWIVEL SEAT
ELECTRONIC HYDRAULICS
(D/B 03/2006⇒)

ITEM	PART NO.	DESCRIPTION	QTY
	2087158	Seat Assembly (Vinyl)	1
	2087159	Seat Assembly (Cloth)	1
1	1470152	Back Cushion (Vinyl)	1
1	1470153	Back Cushion (Cloth)	1
2	1470157	Hip Restraint Kit (LH)	1
3	1494076	Seat Cushion (Vinyl)	1
3	1494077	Seat Cushion (Cloth)	1
3	1467514	Switch (Seat)	1
3	1467515	Wire Harness	1
3	1637285	Spring	2
3	1591553	Sensor (Operator Presence)	1
4	1489696	Slide Kit	1
5	1470163	Weight Adjuster Kit	1
6	1563211	Knobs (Electronic Control Arm)	1
7	1598504	Seat Belt Kit	1
8	1654891	Wire Harness	1
9	1470155	Manual Holder Kit	1
10	15175	Washer	4
11	15114	Nut	4
a	392238	Grommet	1
a	1647532	Foam Cap	1
a	1546689	Release Lever	1
a	1467529	Suspension Spring Kit	1
a	1627639	Weight Adjust Rack	1
a	1467525	Bumper and Stop Kit	1
a	1467523	Boot Kit	1
a	1467526	Bearing Shaft Kit	1
a	1467524	Roller and Bearing Kit	1
a	1467527	Weight Adjuster Indicator Kit	1
a	1584631	Weight Adjust Knob	1
a	1600126	Handle	1

FOOTNOTES:
a Not Illustrated

©2007 HYSTER COMPANY

LABELS (Figure 1-22)

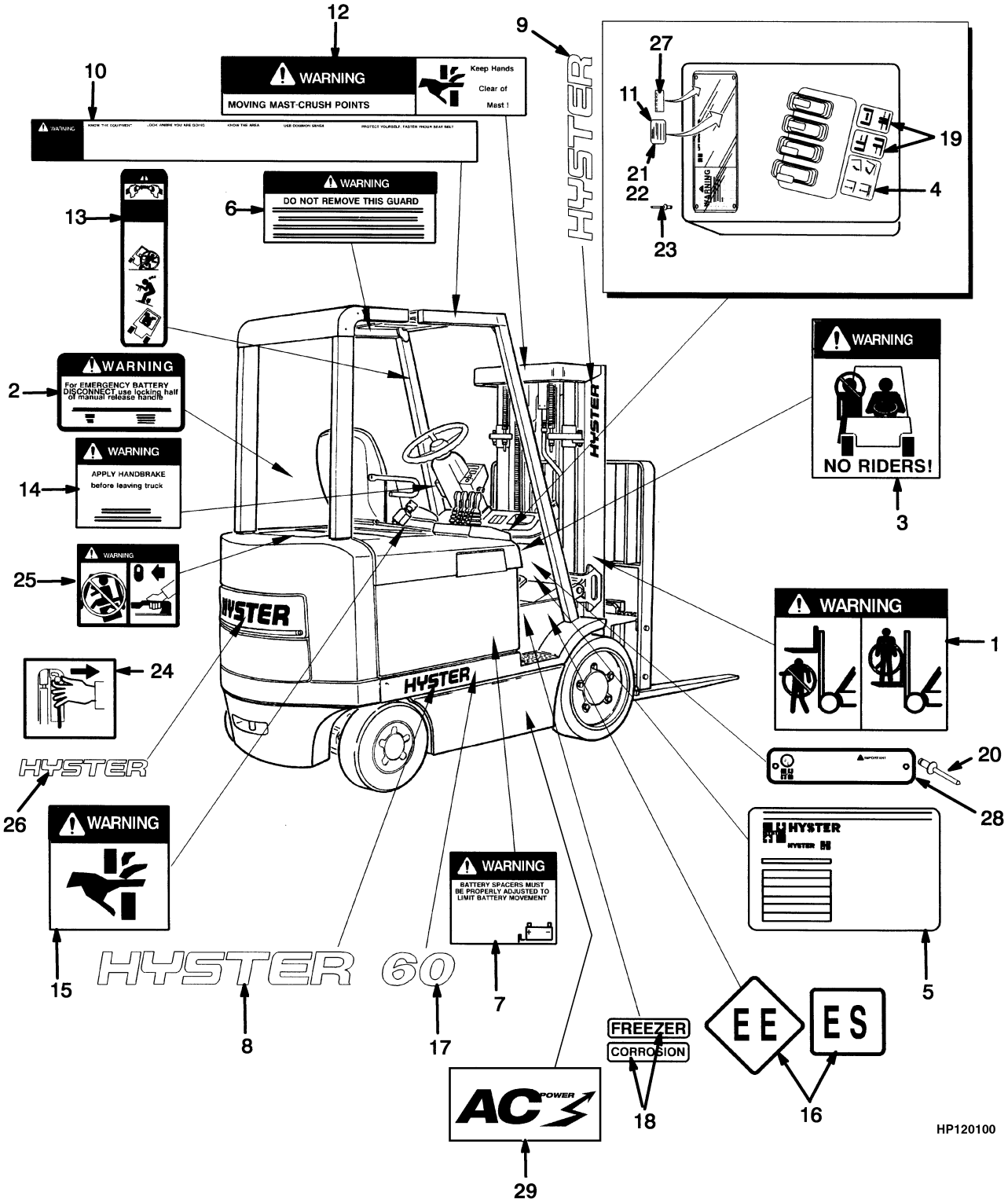

©2007 HYSTER COMPANY

LABELS

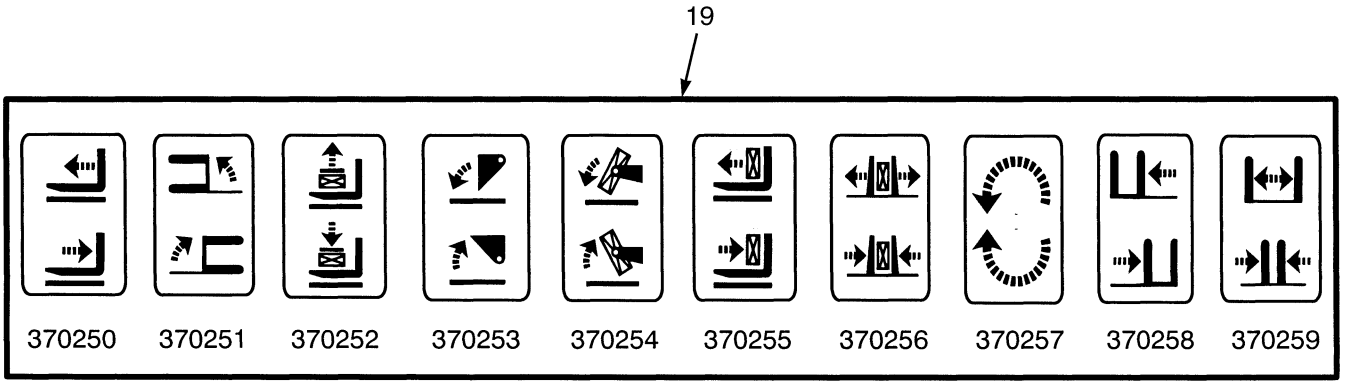

HP120101

ITEM		PART NO.	DESCRIPTION	QTY
1		2075656	Label (Mast Warning)	2
2		1364045	Label (Battery Disconnect)	1
3		1330920	Label (No Riders)	2
4		369573	Label (Lift/Tilt)	1
5		1534660	Label (Patents and Trademarks)	1
6		1335147	Label (Overhead Guard)	1
7		1330924	Label (Battery Spacer)	1
8		1339674	Label (Hyster)	2
9		1339672	Label (Hyster)	2
10		1335142	Label (Operator Warning)	1
11	**a**	. . . . .	Nameplate	1
12		1330919	Label (Mast Warning)	1
13		1330917	Label (Operator Restraint)	2
14	**d**	2306476	Label (Parking Brake)	1
14	**e**	2309799	Label (Parking Brake)	1
15	**e**	1335129	Label (Pinch Point)	3
15	**d**	1335129	Label (Pinch Point)	4
16		196927	Label (UL Type EE) (NFPA Type)	2
16		311498	Label (UL Type EE) (NFPA Type)	2
17		1354342	Label (Model 40) (Model 40)	2
17		1354153	Label (Model 45)	2
17		1354155	Label (Model 50)	2
17		1354157	Label (Model 55)	2
17		1354159	Label (Model 60)	2
17		1354343	Label (Model 65)	2
18		1467511	Label (Freezer)	2
18		1467512	Label (Corrosion)	2
19		370250	Label (Auxiliary Function - Reach)	1
19		370251	Label (Auxiliary Function - Swing)	1
19		370252	Label (Auxiliary Function - Stabilizer)	1
19		370253	Label (Auxiliary Function - Dump/Scoop)	1
19		370254	Label (Auxiliary Function - Upender)	1
19		370255	Label (Auxiliary Function - Push/Pull)	1
19		370256	Label (Auxiliary Function, Clamp)	1
19		370257	Label (Auxiliary Function, Rotate)	1
19		370258	Label (Auxiliary Function, Side-Shift)	1
19		370259	Label (Auxiliary Function - Fork Spreader)	1
20		2308673	Rivet	2
20		170658	Rivet	4

©2007 HYSTER COMPANY

LABELS

ITEM		PART NO.	DESCRIPTION	QTY
21	**a**	. . . . .	Nameplate (Incomplete)	1
22		389687	Nameplate Cover	1
22		389688	Cover	1
23		1380584	Rivet	4
23	**c**	2307400	Rivet	4
24		1379443	Label (Prop Rod)	1
25		1379807	Label (Hood Latch)	1
25	**c**	1379808	Label (Hood Latch)	1
26	**c**	893523	Label (Hyster)	1
27		1335411	Label (UL Information)	1
28		325956	UL Inspection Plate (Type EE)	1
28		325957	UL Inspection Plate (Type ES)	1
28		325958	UL Inspection Plate (Type E)	1
29		1548187	Label (AC)	1
30	**b**	1526709	Label (Hyster) (Counterweight)	1
	b	1534660	Label (Patents and Trademarks)	1

FOOTNOTES:
a Contact Your Local Hyster Dealer
b Not Illustrated
c Optional
d With Seat Brake Switch
e Without Seat Brake Switch

©2007 HYSTER COMPANY

NOTES

JOYSTICK LABELS (Figure 1-23)
(S/N G108N02840C⇒)

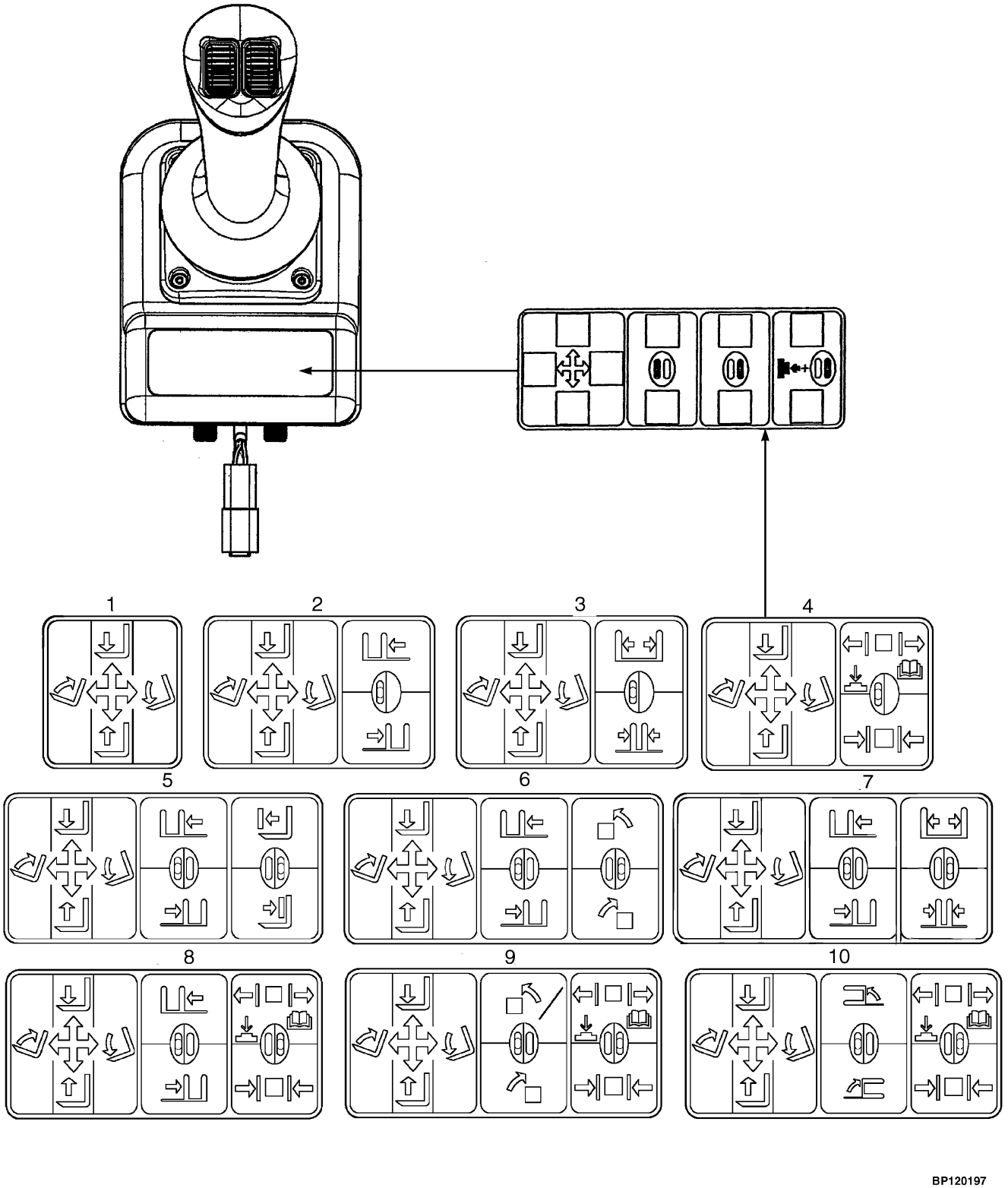

©2007 HYSTER COMPANY

JOYSTICK LABELS
(S/N G108N02840C⇒)

ITEM	PART NO.	DESCRIPTION	QTY
1	2086556	Label (Hoist and Tilt)	1
2	2086557	Label (Hoist and Tilt, Side-Shift)	1
3	2086558	Label (Hoist and Tilt, Fork Spread)	1
4	2085878	Label (Hoist and Tilt, Clamp)	1
5	2086560	Label (Hoist and Tilt, Side-Shift, Push/Pull)	1
6	2086561	Label (Hoist and Tilt, Side-Shift, Rotate)	1
7	2086559	Label (Hoist and Tilt, Side-Shift, Fork Spread)	1
8	2085879	Label (Hoist and Tilt, Side-Shift, Clamp)	1
9	2085880	Label (Hoist and Tilt, Rotate, Clamp)	1
10	2085881	Label (Hoist and Tilt, Swing, Clamp)	1

©2007 HYSTER COMPANY

MINI LEVER LABELS (Figure 1-24)
(S/N G108N02840C⇒)

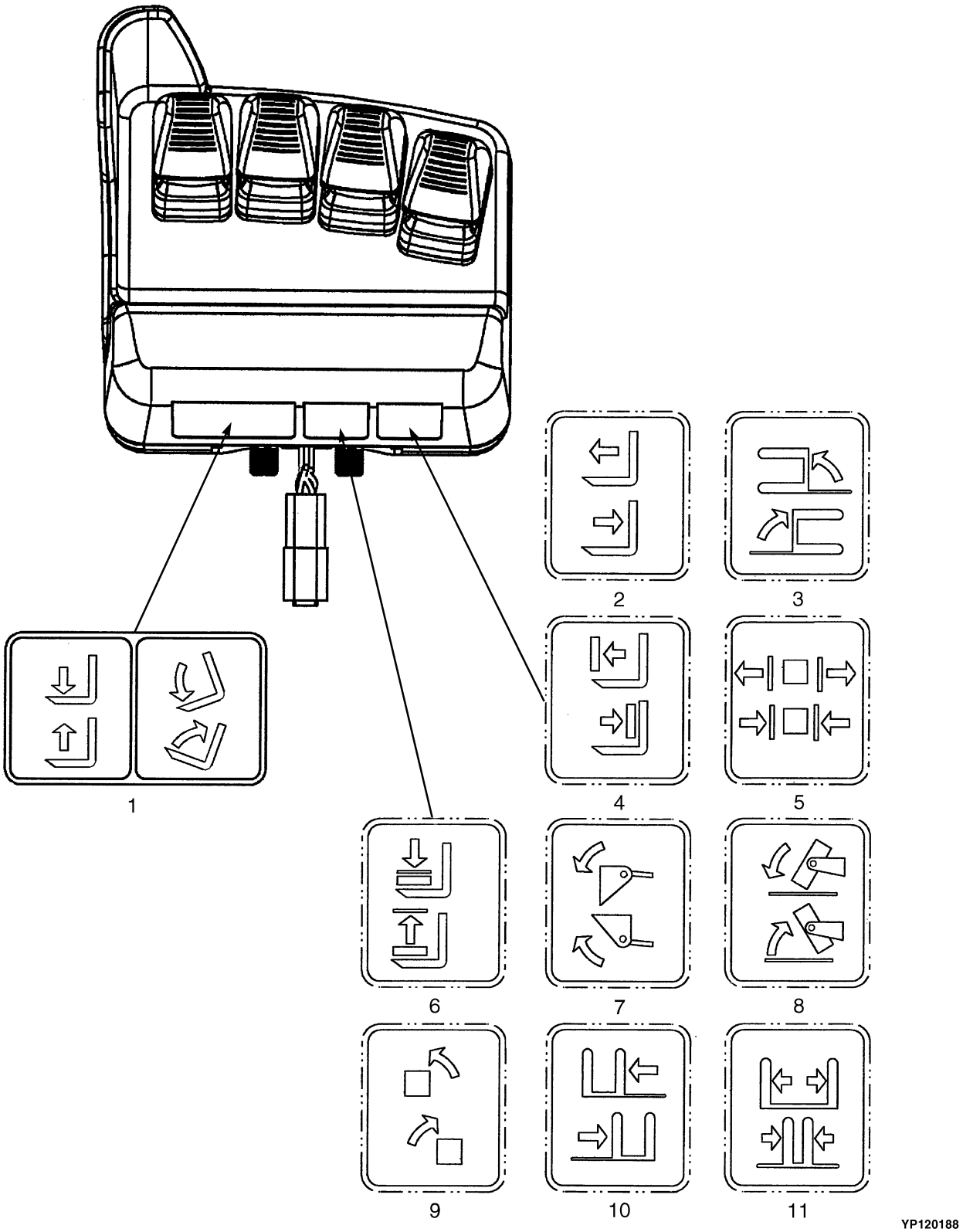

©2007 HYSTER COMPANY

MINI LEVER LABELS
(S/N G108N02840C⇒)

ITEM	PART NO.	DESCRIPTION	QTY
1	2093047	Label (Hoist and Tilt)	1
2	2073115	Label (Reach)	1
3	2073114	Label (Swing)	1
4	2073118	Label (Push/Pull)	1
5	2085877	Label (Clamp)	1
6	2073116	Label (Load Stabilizer)	1
7	2073117	Label (Scoop)	1
8	2073119	Label (Upender)	1
9	2073121	Label (Rotate)	1
10	2073122	Label (Side-Shift)	1
11	2073123	Label (Fork Spread)	1
	2090160	Label (Caution E-Hydraulics) (Not Illustrated)	1

©2007 HYSTER COMPANY

LOAD BACKREST EXTENSION (Figure 1-25)

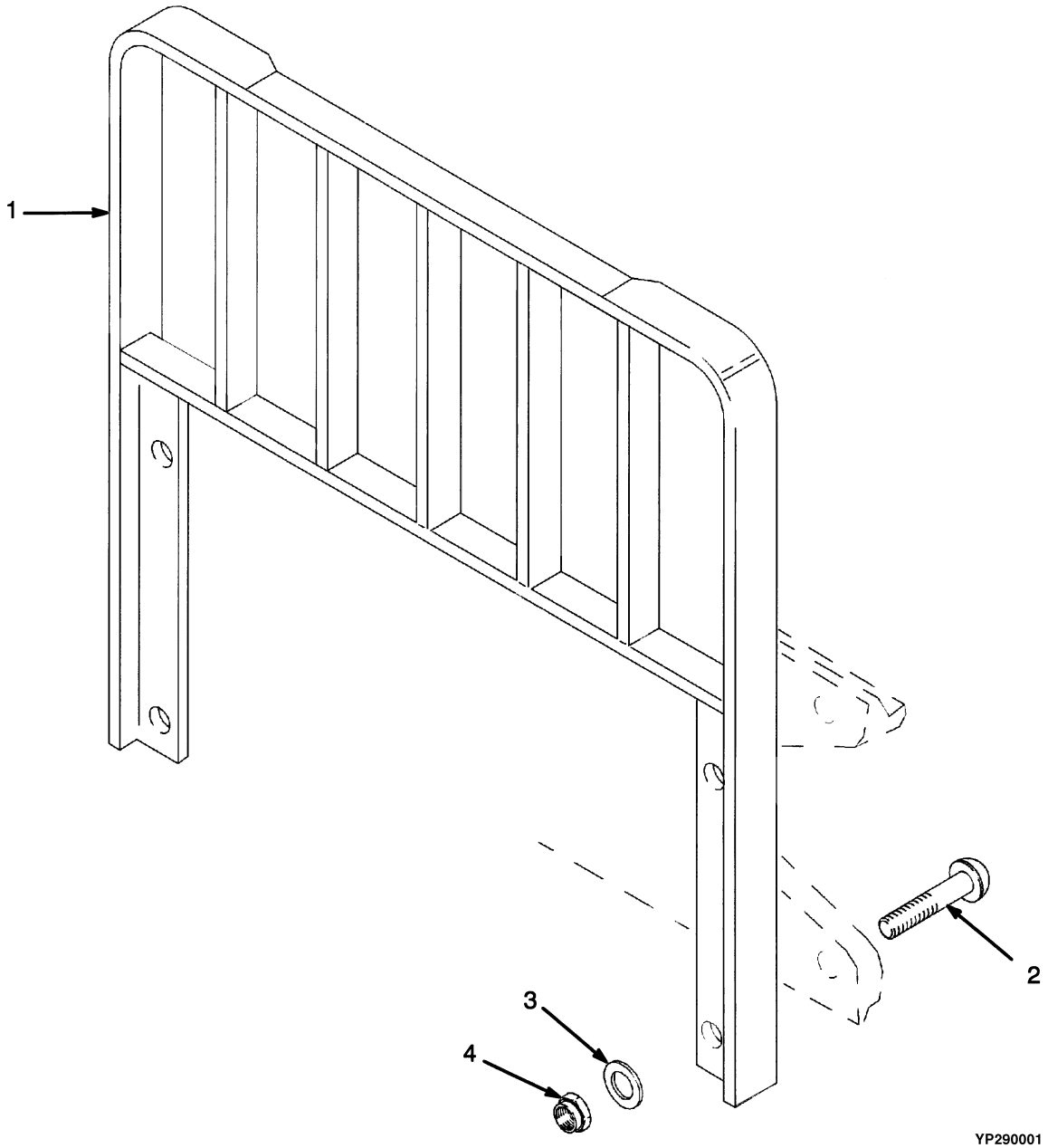

©2007 HYSTER COMPANY

LOAD BACKREST EXTENSION

KEY:
A: E45-55Z
B: E60-65Z

ITEM		PART NO.	DESCRIPTION	QTY A	QTY B
1		1349446	Load Backrest Extension (38.5 in.)	1	..
1		1363816	Load Backrest Extension (38 in.)	..	1
1	**a**	1363817	Load Backrest Extension (38 in.)	..	1
2		1343990	Capscrew	4	4
3		221771	Washer	4	4
3		296423	Washer (Optional)	4	4
4		300937	Locknut	4	4

FOOTNOTES:
a For Polished Forks with Full Bottom Taper

©2007 HYSTER COMPANY

FORKS (Figure 1-26)

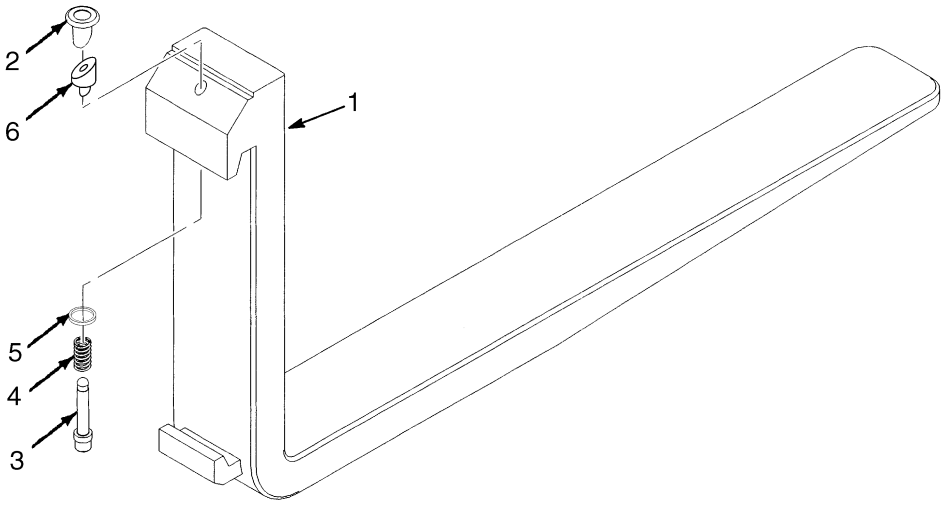

BP290003

KEY:
A: E45-55Z Standard Taper
B: E45-55Z Full Bottom Taper
C: E60-65Z Standard Taper
D: E60-65Z Full Bottom Taper

ITEM		PART NO.	DESCRIPTION	QTY A	B	C	D
1	**a**	384211	Fork (36 in.)	2	..	..	..
1	**a**	384213	Fork (42 in.)	2	..	..	..
1	**a**	384214	Fork (48 in.)	2	..	..	..
1	**a**	384215	Fork (54 in.)	2	..	..	..
1	**a**	384216	Fork (60 in.)	2	..	..	..
1	**b**	1338087	Fork (36 in.)	..	2	..	..
1	**b**	1338088	Fork (42 in.)	..	2	..	..
1	**b**	1338089	Fork (48 in.)	..	2	..	..
1	**c**	367419	Fork (36 in.)	..	..	2	..
1	**c**	367420	Fork (42 in.)	..	..	2	..
1	**c**	367421	Fork (48 in.)	..	..	2	..
1	**c**	367422	Fork (54 in.)	..	..	2	..
1	**c**	367423	Fork (60 in.)	..	..	2	..
1	**c**	367424	Fork (72 in.)	..	..	2	..
1	**d**	1338097	Fork (42 in.)	..	..	..	2
1	**d**	1338098	Fork (47.5 in.)	..	..	..	2
1	**d**	1332745	Fork (54 in.)	..	..	..	2
2		1523732	Knob	1	1	1	1
3		1523733	Pin	1	1	..	..
3		1523737	Pin	..	..	1	1
4		1500782	Spring	1	1	..	..
4		1500784	Spring	..	..	1	1
5		1477166	Washer	1	1	1	1
6		1477167	Wedge	1	1	..	..

©2007 HYSTER COMPANY

FORKS

ITEM	PART NO.	DESCRIPTION	QTY A	QTY B	QTY C	QTY D
6	1477237	Wedge	..	..	1	1
7	1523734	Retainer Pin (Not Illustrated)	1	1	1	1
	1523735	Latch Kit (Class II) (Includes Items 2-7)	2	2	..	..
	1523739	Latch Kit (Class III) (Includes Items 2-7)	..	..	2	2

FOOTNOTES:

a 100 mm x 40 mm
b 125 mm x 40 mm
c 125 mm x 50 mm
d 180 mm x 45 mm

©2007 HYSTER COMPANY

FORKS (Figure 1-27)
OPTIONAL

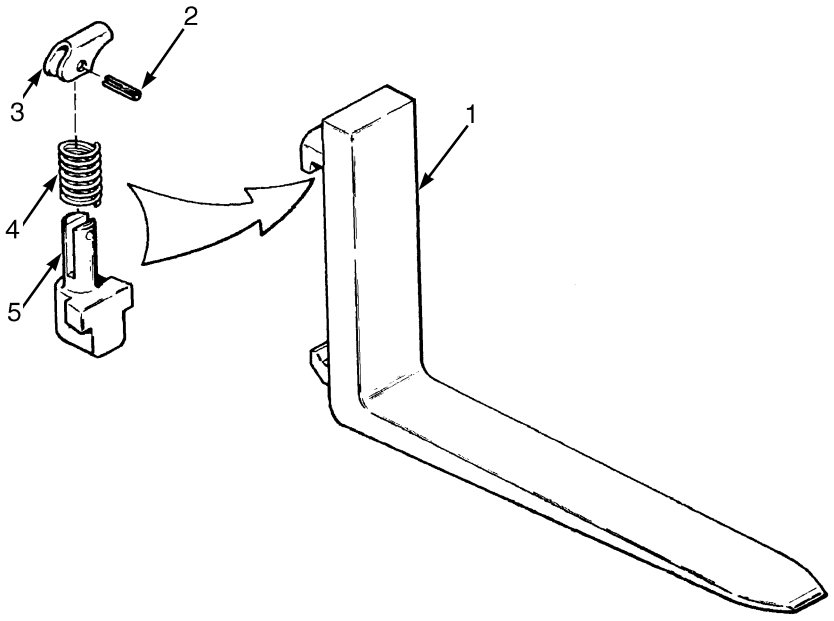

HP120793

KEY:
A: Standard, Class II (100 mm x 40 mm)
B: Polished Full Bottom Taper, Class II (125 mm x 40 mm)
C: Standard, Class III (125 mm x 50 mm)
D: Polished Full Bottom Taper, Class III (180 mm x 45 mm)

ITEM	PART NO.	DESCRIPTION	QTY A	B	C	D
1	1378786	Fork (36 in.)	2	..	..	..
1	1378788	Fork (42 in.)	2	..	..	..
1	1378789	Fork (48 in.)	2	..	..	..
1	1378790	Fork (54 in.)	2	..	..	..
1	1378791	Fork (60 in.)	2	..	..	..
1	1378807	Fork (36 in.)	..	2	..	..
1	1378808	Fork (42 in.)	..	2	..	..
1	1378809	Fork (48 in.)	..	2	..	..
1	1378732	Fork (36 in.)	..	..	2	..
1	1378733	Fork (42 in.)	..	..	2	..
1	1378734	Fork (48 in.)	..	..	2	..
1	1378735	Fork (54 in.)	..	..	2	..
1	1378736	Fork (60 in.)	..	..	2	..
1	1378737	Fork (72 in.)	..	..	2	..
1	1381816	Fork (42 in.)	..	..	..	2
1	1381817	Fork (47.5 in.)	..	..	..	2
1	1550764	Fork (54 in.)	..	..	..	2
2	302450	Pin	1	1	1	1
3	1378763	Latch	1	1	1	1
4	1378762	Spring	1	1	1	1
5	1378760	Pin	1	1	..	..
5	1378761	Pin	..	..	1	1

©2007 HYSTER COMPANY

FORKS
OPTIONAL

ITEM	PART NO.	DESCRIPTION	QTY A	QTY B	QTY C	QTY D
	1378765	Latch Kit (Class II) (Includes Item 5)	1	1	..	..
	1378766	Latch Kit (Class III And IV) (Includes Items 2-5).....	..	..	1	1

©2007 HYSTER COMPANY

NOTES

2 ELECTRICAL SYSTEM

SECTION 2
ELECTRICAL SYSTEM

DESCRIPTION	PAGE
CONTACTOR	
LINE	2-18
POWER STEERING	2-20
CONTACTOR PANEL	
CONTACTOR (LINE AND POWER STEERING)	2-16
CONTACTOR HYDRAULIC	2-22
CONTROL PANEL	
CONTACTOR HYDRAULIC	2-12
TRACTION AND PUMP CONTROLLER	2-10
DASH DISPLAY	2-8
ELECTRICAL SYSTEM	2-2
ELECTRONIC HYDRAULICS	
S/N G108N02840C⇒	2-6
ELECTRONIC CONTROL LEVERS	
MINI-LEVER MODULES	
FOUR FUNCTION	
PENDING PER ECN 104977⇒	2-30
⇒PENDING PER ECN 104977	2-26
THREE FUNCTION	
PENDING PER ECN 104799⇒	2-28
JOYSTICK	
S/N G108N02840C⇒	2-24
WIRE HARNESS	
ELECTRONIC HYDRAULIC CONTROL VALVES	
S/N G108N02840C⇒	2-40
HOOD	
S/N G108N02840C⇒	2-46
JOYSTICK	
S/N G108N02840C⇒	2-47
LIGHT	2-42
MAIN	
⇒S/N G108V03421C	2-32
WITH ELECTRONIC HYDRAULICS	
S/N G108N02840C⇒	2-36
WITHOUT ELECTRONIC HYDRAULICS	
S/N G108V03422C⇒	2-34
OPERATOR PRESENCE	
SHEET 1 OF 2	2-48
SHEET 2 OF 2	2-52
PRESSURE SWITCH	
D/B 04/2004⇒	2-44

©2007 HYSTER COMPANY

ELECTRICAL SYSTEM (Figure 2-1)

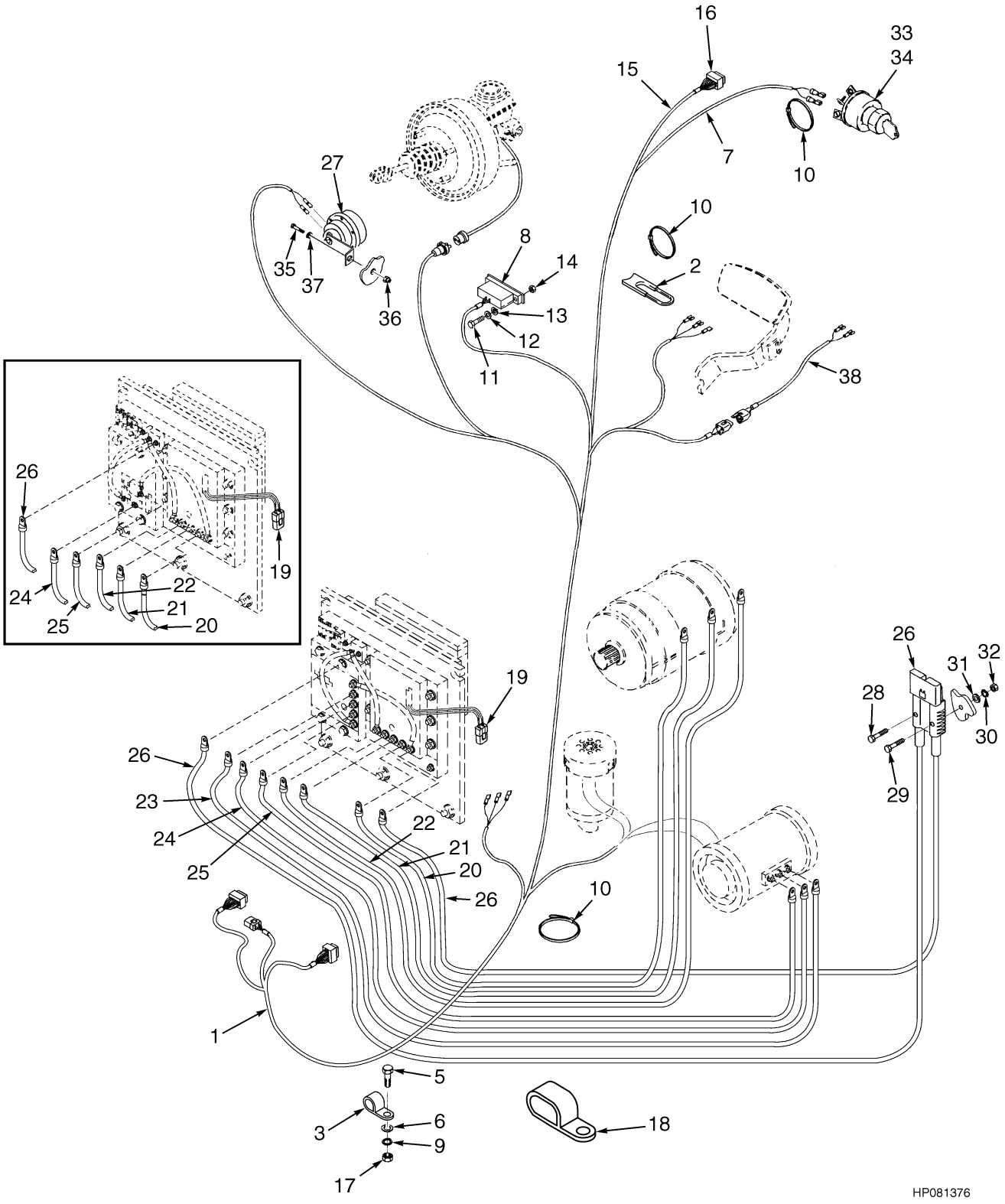

©2007 HYSTER COMPANY

ELECTRICAL SYSTEM

ITEM		PART NO.	DESCRIPTION	QTY
1	**d**	2060547	Wire Harness (Main) (☞ Figure 2-14)	1
1	**e**	2074151	Wire Harness (Main) (☞ Figure 2-15)	1
1	**f**	2075998	Wire Harness (Main) (☞ Figure 2-16)	1
2		1350914	Strap	1
3		153667	Clamp	1
4		136681	Capscrew (Not Illustrated)	5
5		136749	Capscrew	2
6		320157	Washer	3
7		1340796	Wire Harness (Dash)	1
8		1364633	Terminal Block	2
9		292681	Lockwasher	6
10		2004005	Strap Clamp	AR
11		302233	Capscrew	2
12		1377379	Washer	2
13		292676	Lockwasher	2
14		292665	Nut	2
15		2046671	Wire Harness (Control Valve Switch) (Hydraulic Levers)	1
16		1351682	Connector (End Cap)	1
17		239503	Nut	1
18		1309280	Clamp	2
19		1547847	Resistor	2
20	**a**	1548319	Power Cable (UT) (A/C or D/C)	2
20	**c**	1548327	Power Cable (UT) (A/C or D/C)	2
20	**b**	1548335	Power Cable (UT) (A/C or D/C)	2
21	**a**	1548320	Power Cable (VT) (A/C or D/C)	2
21	**c**	1548328	Power Cable (VT) (A/C or D/C)	2
21	**b**	1548336	Power Cable (VT) (A/C or D/C)	2
22	**a**	1548321	Power Cable (WT) (A/C or D/C)	2
22	**c**	1548329	Power Cable (WT) (A/C or D/C)	2
22	**b**	1548337	Power Cable (WT) (A/C or D/C)	2
23	**a**	1548322	Power Cable (UP) (A/C or D/C)	1
23	**c**	1548330	Power Cable (UP) (A/C)	1
23	**b**	1548338	Power Cable (UP) (A/C)	1
24	**a**	1548323	Power Cable (VP) (A/C)	1
24	**a**	1548325	Power Cable (PM2) (D/C)	1
24	**c**	1548331	Power Cable (PM2) (A/C)	1
24	**b**	1548339	Power Cable (PM2) (A/C)	1
24	**c**	1548333	Power Cable (PM2) (D/C)	1
25	**a**	1548324	Power Cable (WP) (A/C)	1
25	**c**	1548332	Power Cable (PM1) (A/C)	1
25	**b**	1548342	Power Cable (PM2) (D/C)	1
25	**b**	1548340	Power Cable (PM1) (A/C)	1
25	**a**	1548326	Power Cable (PM1) (D/C)	1
25	**c**	1548334	Power Cable (PM1) (D/C)	1
25	**b**	1548344	Power Cable (PM1) (D/C)	1
26		1548040	Battery Connector and Cable Assembly (48 Volt)	1
26		195296	Battery Connector	1
26		190811	Cable	AR
26		1357263	Cable	AR
26		203694	Terminal Ring	1
26		1547837	Terminal	1

©2007 HYSTER COMPANY

ELECTRICAL SYSTEM

ITEM		PART NO.	DESCRIPTION	QTY
26		1548041	Battery Connector Assembly (36 Volt)	1
26		195293	Battery Connector (Gray)	1
26		190811	Cable	AR
26		1357263	Cable	AR
26		203694	Terminal Ring	1
26		1547837	Terminal	1
27	**d**	1483660	Horn (36/48 Volt)	1
27	**e**	1524525	Horn	1
28		292504	Capscrew	2
29		292507	Capscrew	2
30		292680	Lockwasher	2
31		320156	Washer	6
32		136687	Nut	2
33		379902	Ignition Switch	1
34		1337197	Key Set	1
35		176640	Capscrew	1
36		313828	Nut	1
37		320158	Washer	1
38		2060877	Wire Harness (Light) (☞ Figure 2-18)	1

FOOTNOTES:
a 1015/933 Wheel Base
b 700 Wheel Base
c 847/786 Wheel Base
d ⇒ S/N G108V03421C
e S/N G108V03422C ⇒ D/B 07/2005
f D/B 07/2005 ⇒

©2007 HYSTER COMPANY

NOTES

ELECTRICAL SYSTEM (Figure 2-2)
ELECTRONIC HYDRAULICS
(S/N G108N02840C⇒)

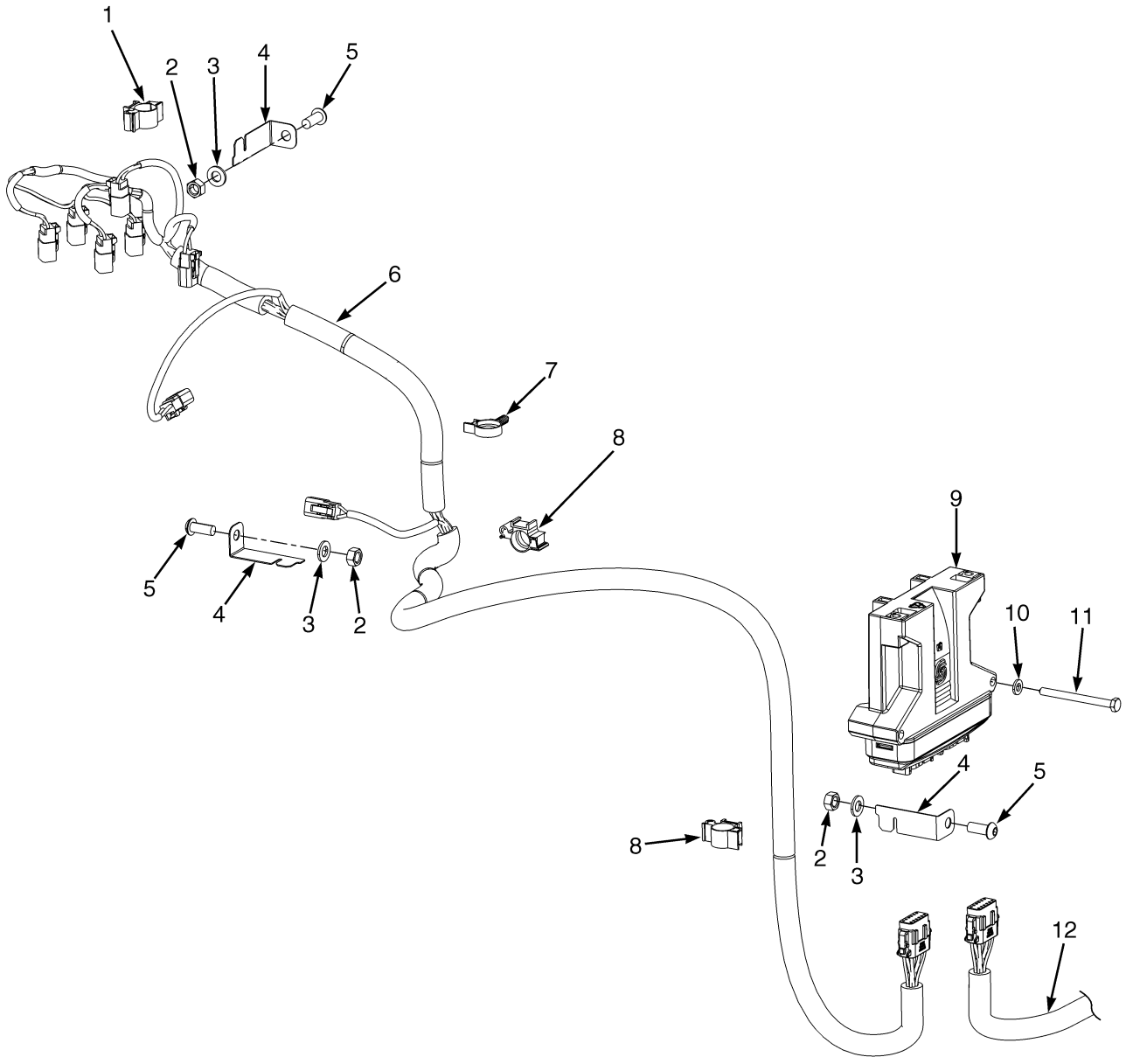

BP080411

©2007 HYSTER COMPANY

ELECTRICAL SYSTEM
ELECTRONIC HYDRAULICS
(S/N G108N02840C⇒)

ITEM		PART NO.	DESCRIPTION	QTY
1		1532775	Clip	1
2		239503	Nut	3
3		296416	Washer	3
4		1532762	Bracket	3
5		296166	Capscrew	3
6		2077826	Wire Harness (Electronic Hydraulic Control Valves) (☞ Figure 2-17)	1
7		1509890	Clip	1
8		1532776	Clip	2
9	**a**	2077802	Controller	1
9	**b**	2096515	Controller	1
10		296417	Lockwasher	2
11		292507	Capscrew	2
12		2075998	Wire Harness (Main) (☞ Figure 2-16)	1

FOOTNOTES:
a ⇒ S/N G108N05377D
b S/N G108N05378D ⇒

DASH DISPLAY (Figure 2-3)

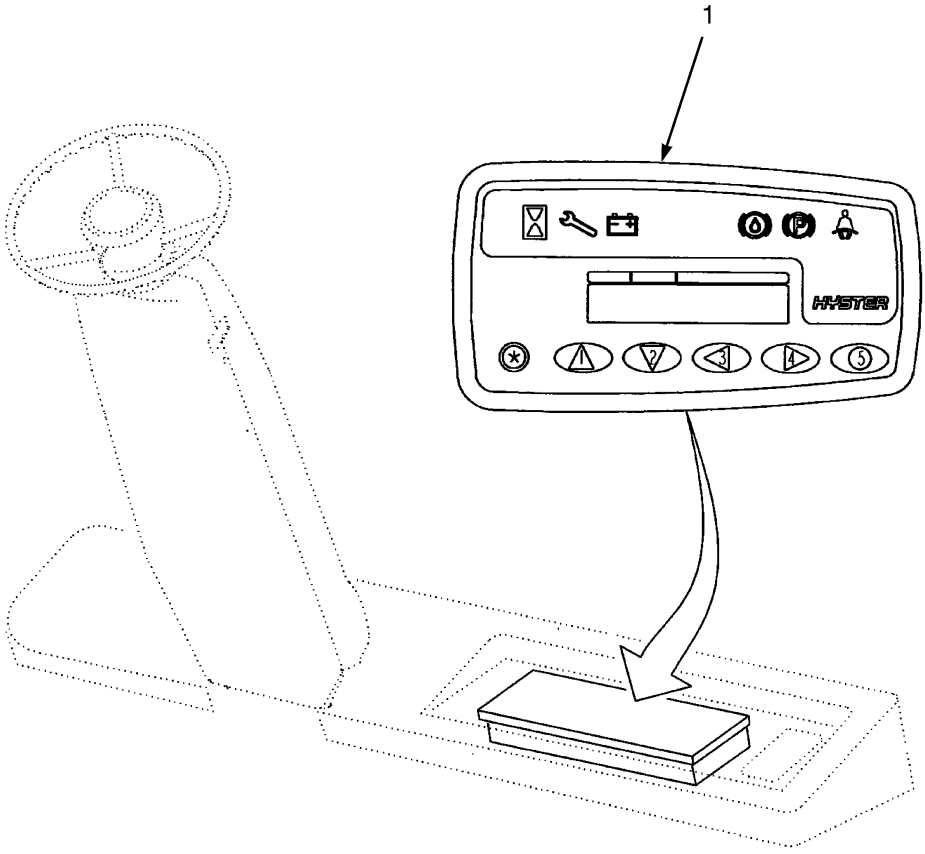

HP081337

©2007 HYSTER COMPANY

DASH DISPLAY

ITEM		PART NO.	DESCRIPTION	QTY
1	**a**	1525718	Dash Display (Standard)	1
1	**a**	1516977	Dash Display (Premium)	1
1	**b**	1632493	Dash Display (Standard)	1
1	**b**	1632494	Dash Display (Premium)	1

FOOTNOTES:

a ⇒ S/N G108N04915D

b S/N G108N04916D ⇒

CONTROL PANEL (Figure 2-4)
TRACTION AND PUMP CONTROLLER

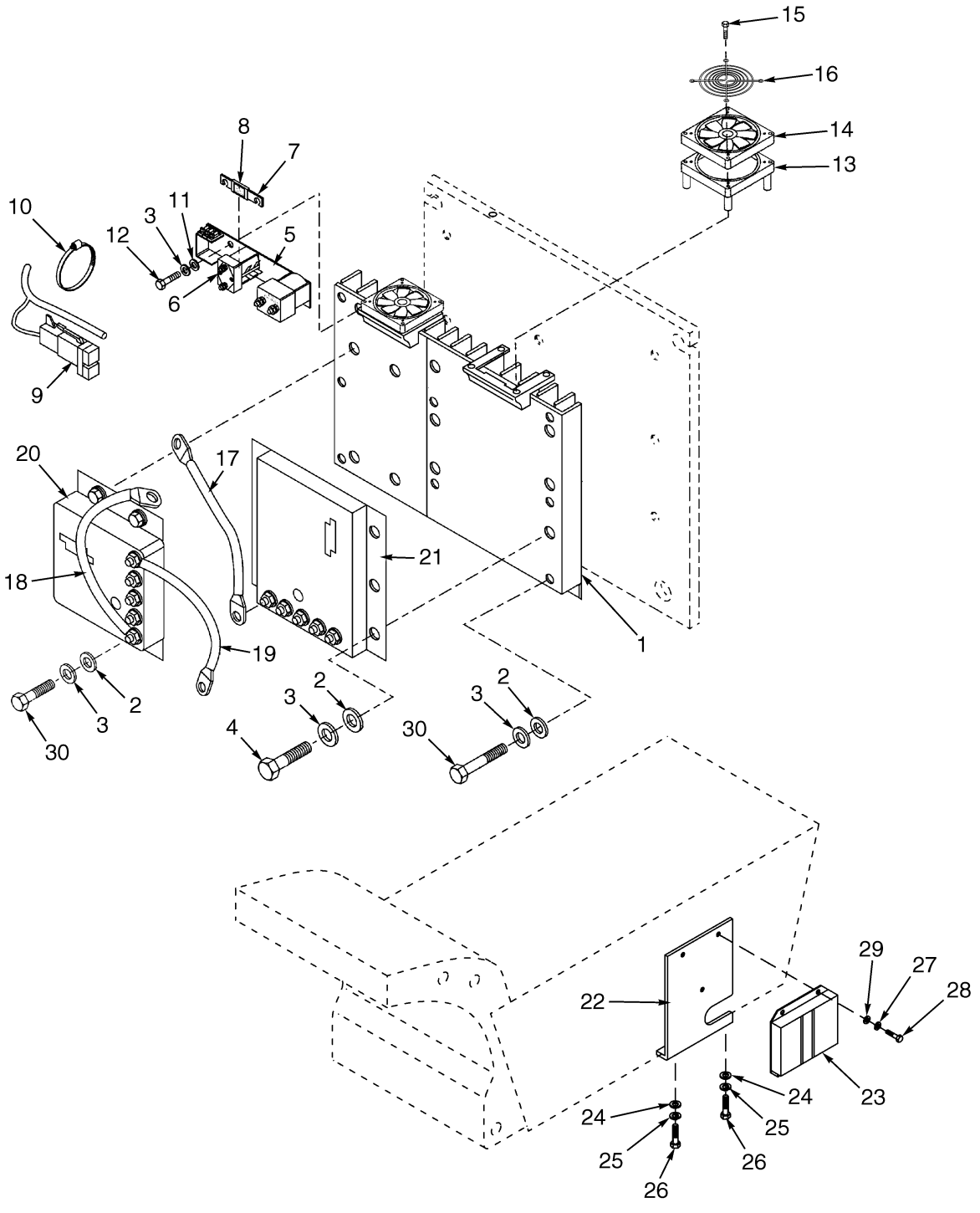

BP080251

©2007 HYSTER COMPANY

CONTROL PANEL
TRACTION AND PUMP CONTROLLER

KEY:
A: Traction Controller
B: Pump Controller

ITEM		PART NO.	DESCRIPTION	QTY A	QTY B
1		1535303	Heat Sink	1	1
2		320157	Washer	16	14
3		292681	Lockwasher	16	14
4		296011	Capscrew	8	8
5		1542433	Contactor Panel	1	1
6		198956	Washer (Copper)	2	2
7		1364262	Fuse (40 Amp)	1	1
8		1364270	Label (Fuse, 40 Amp)	1	1
9		1520933	Suppression Module	1	1
10		114312	Strap Clamp	1	1
11		292681	Lockwasher	2	2
12		136681	Capscrew	2	2
13		1537132	Spacer	2	2
14		1556484	Fan	2	2
15		227145	Screw	8	8
16		1565693	Guard	2	2
17		1514074	Power Cable	..	1
18		1554510	Power Cable	..	1
19		1563368	Power Cable	1	..
20		1533592	AC Controller (Pump)	..	1
21		1586786	AC Controller	1	..
22		1643631	Bracket	1	1
23	**d**	1512410	Controller (Master)	1	1
23	**c**	1549407	Controller (Master)	1	1
23	**a**	1579267	Controller (Master)	1	1
23	**be**	2095551	Controller (Master)	1	1
23	**f**	2100181	Controller (Master)	1	1
24		320158	Washer	2	2
25		292681	Lockwasher	2	2
26		176640	Capscrew	2	2
27		292680	Lockwasher	3	3
28		292501	Capscrew	3	3
29		320156	Washer	3	3
		1198757	Silicon Grease	AR	AR
30		296014	Capscrew	6	4

FOOTNOTES:
a S/N G108N02056C⇔S/N G108N05140D
b S/N G108N05141D ⇒
c S/N G108V02184B⇔S/N G108N02055C
d ⇒ S/N G108V02483B
e ⇒ PENDING PER ECN 105096
f PENDING PER ECN 105096 ⇒

©2007 HYSTER COMPANY

CONTROL PANEL (Figure 2-5)
CONTACTOR HYDRAULIC

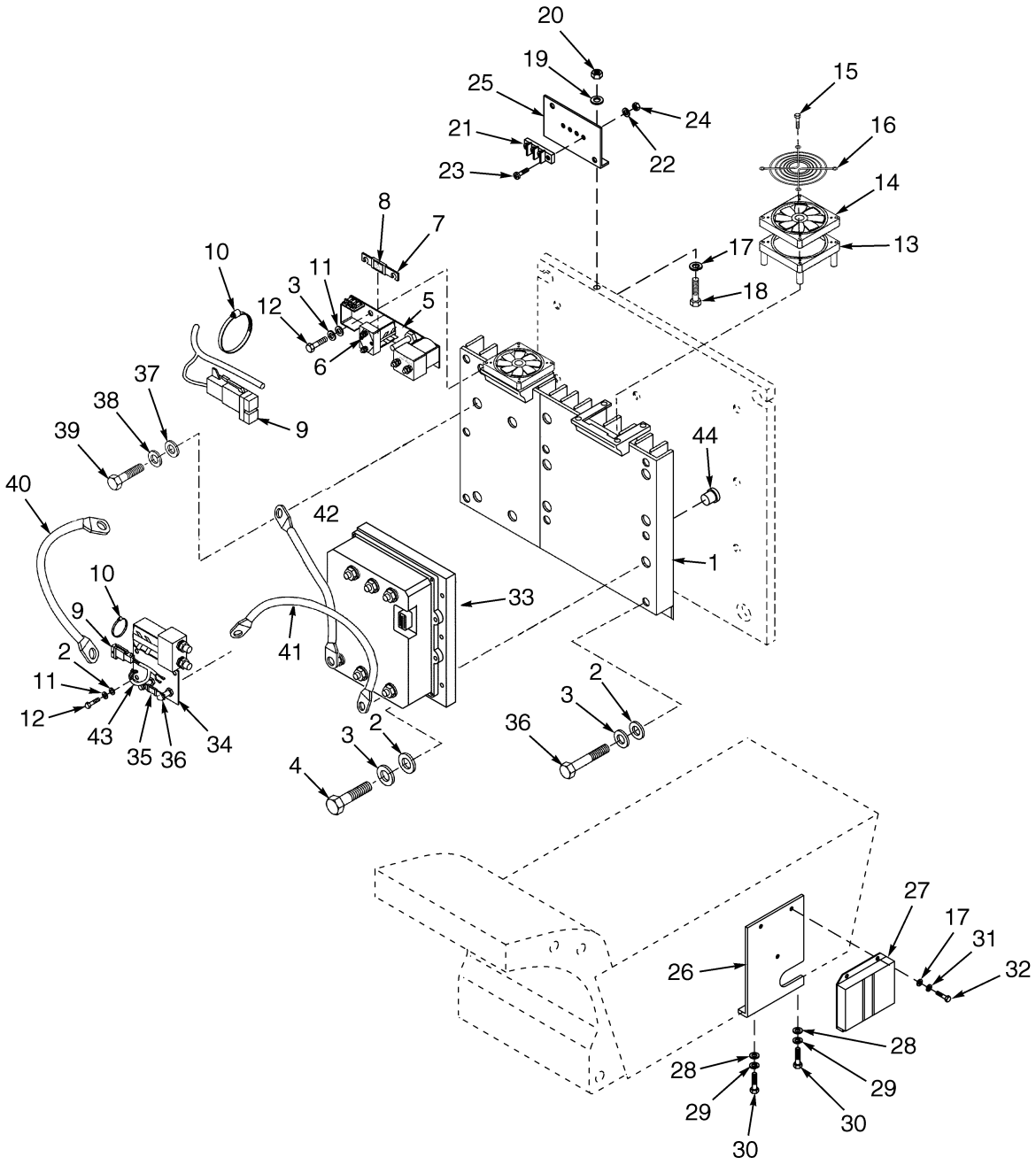

HP081368

©2007 HYSTER COMPANY

CONTROL PANEL
CONTACTOR HYDRAULIC

ITEM		PART NO.	DESCRIPTION	QTY
1		1535303	Heat Sink	1
2		320157	Washer	12
3		292681	Lockwasher	8
4		296011	Capscrew	8
5		1542433	Contactor Panel	1
6		198956	Washer (Copper)	2
7		1364262	Fuse (40 Amp)	1
8		1364270	Label (Fuse, 40 Amp)	1
9		1520933	Suppression Module	2
10		114312	Strap Clamp	2
11		292681	Lockwasher	4
12		136681	Capscrew	4
13		1537132	Spacer	2
14		1556484	Fan	2
15		227145	Screw	8
16		1565693	Guard	2
17	**i**	320156	Washer	7
18	**i**	293796	Capscrew	2
19	**i**	293779	Lockwasher	2
20	**i**	1383681	Nut	2
21	**i**	2066260	Terminal Block	1
22	**i**	320154	Washer	2
23	**i**	302024	Screw	2
24	**i**	292667	Nut	2
25	**i**	1541956	Bracket	1
26		1643631	Bracket	1
27	**c**	1512410	Controller (Master)	1
27	**d**	1549407	Controller (Master)	1
27	**a**	1579267	Controller (Master)	1
27	**bg**	2095551	Controller (Master)	1
27	**h**	2100181	Controller (Master)	1
28		320158	Washer	2
29		292681	Lockwasher	2
30		176640	Capscrew	2
31		292680	Lockwasher	3
32		292501	Capscrew	3
33		1586786	AC Controller	1
34		1540668	Contactor Panel	1
35		325809	Fuse (325 Amp)	1
36		359819	Label (Fuse, 325 Amp)	1
37		320159	Washer	4
38		292682	Lockwasher	4
39		292513	Capscrew	1
40	**e**	1514072	Power Cable	1
40	**f**	1580889	Power Cable	1
41		1514076	Power Cable	1
42		1563368	Power Cable	1

©2007 HYSTER COMPANY

CONTROL PANEL
CONTACTOR HYDRAULIC

ITEM	PART NO.	DESCRIPTION	QTY
43	2056631	Wire Harness	1
44	1540667	Plug	2

FOOTNOTES:

a S/N G108N02056C⇔S/N G108N05140D
b S/N G108N05141D ⇒
c ⇒ S/N G108V02483B
d S/N G108V02484B⇔S/N G108N02055C
e ⇒ S/N G108V02603B
f S/N G108V02604B ⇒
g ⇒ PENDING PER ECN 105096
h PENDING PER ECN 105096 ⇒
i ⇒ D/B 11/2003

©2007 HYSTER COMPANY

NOTES

CONTACTOR PANEL (Figure 2-6)
CONTACTOR (LINE AND POWER STEERING)

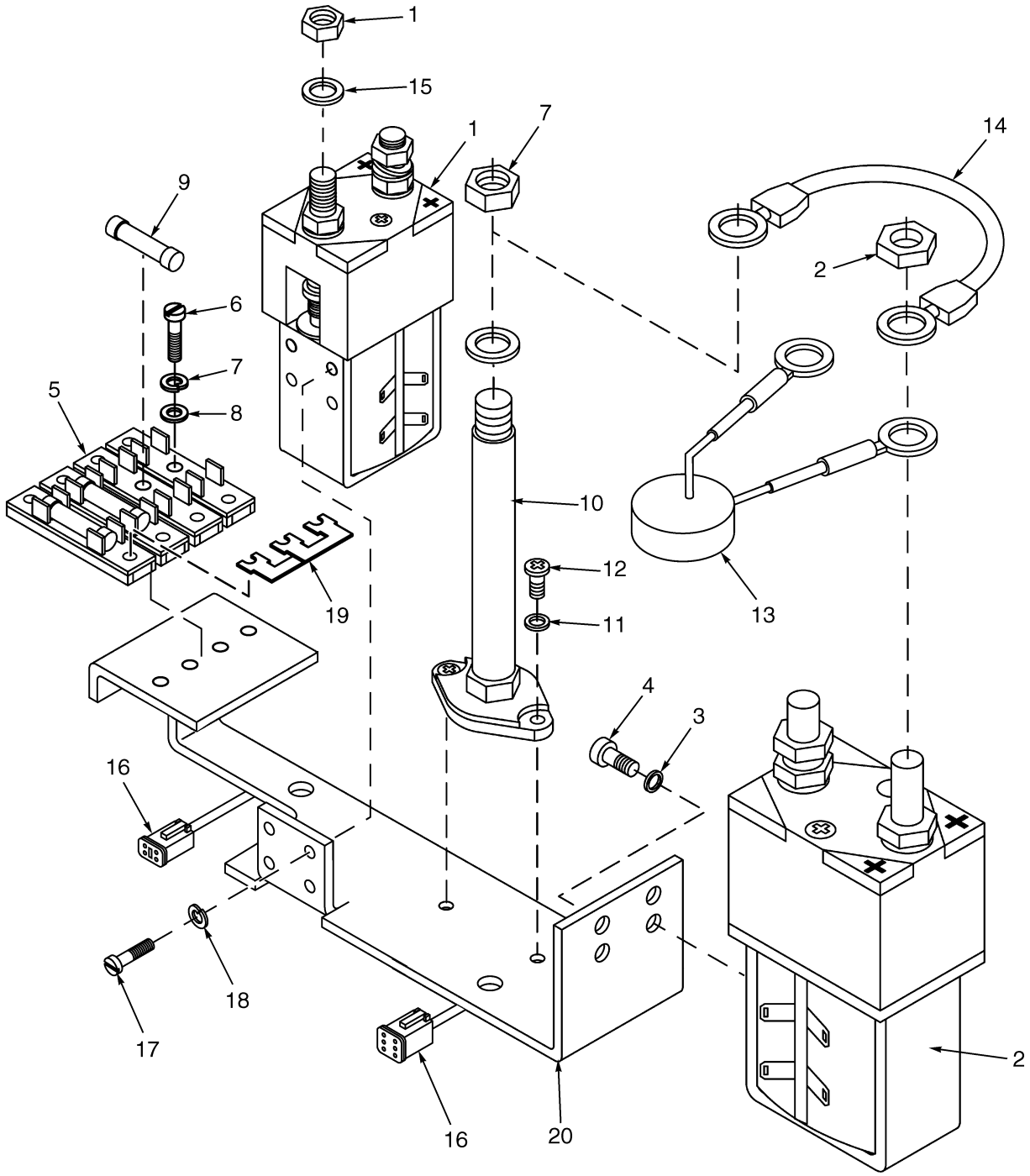

HP081371

©2007 HYSTER COMPANY

CONTACTOR PANEL
CONTACTOR (LINE AND POWER STEERING)

ITEM	PART NO.	DESCRIPTION	QTY
	1542433	Contactor Panel	1
1	1330938	Contactor (Power Steering) (☞ Figure 2-8)	1
2	1553414	Contactor (Line) (☞ Figure 2-7)	1
3	2304170	Washer	2
4	2303821	Screw	2
5	1356217	Fuse Holder (2-Way)	2
6	2302461	Screw	4
7	1356209	Washer	4
8	2307803	Washer	4
9	314878	Fuse (15 Amp)	2
9	350996	Fuse (5 Amp)	1
9	338075	Fuse (20 Amp) (20 Amp Slow-Blow)	1
10	1528992	Terminal (Post)	1
11	1545111	Washer	2
12	302020	Screw	2
13	1525921	Thermistor	1
14	1528991	Wire Assembly	1
15	1356211	Washer	1
16	1553416	Wire Harness	1
17	2303801	Screw	2
18	2303249	Lockwasher	2
19	1553417	Fuse Connector	1
20	. . . . .	Bracket	1

©2007 HYSTER COMPANY

CONTACTOR (Figure 2-7)
LINE

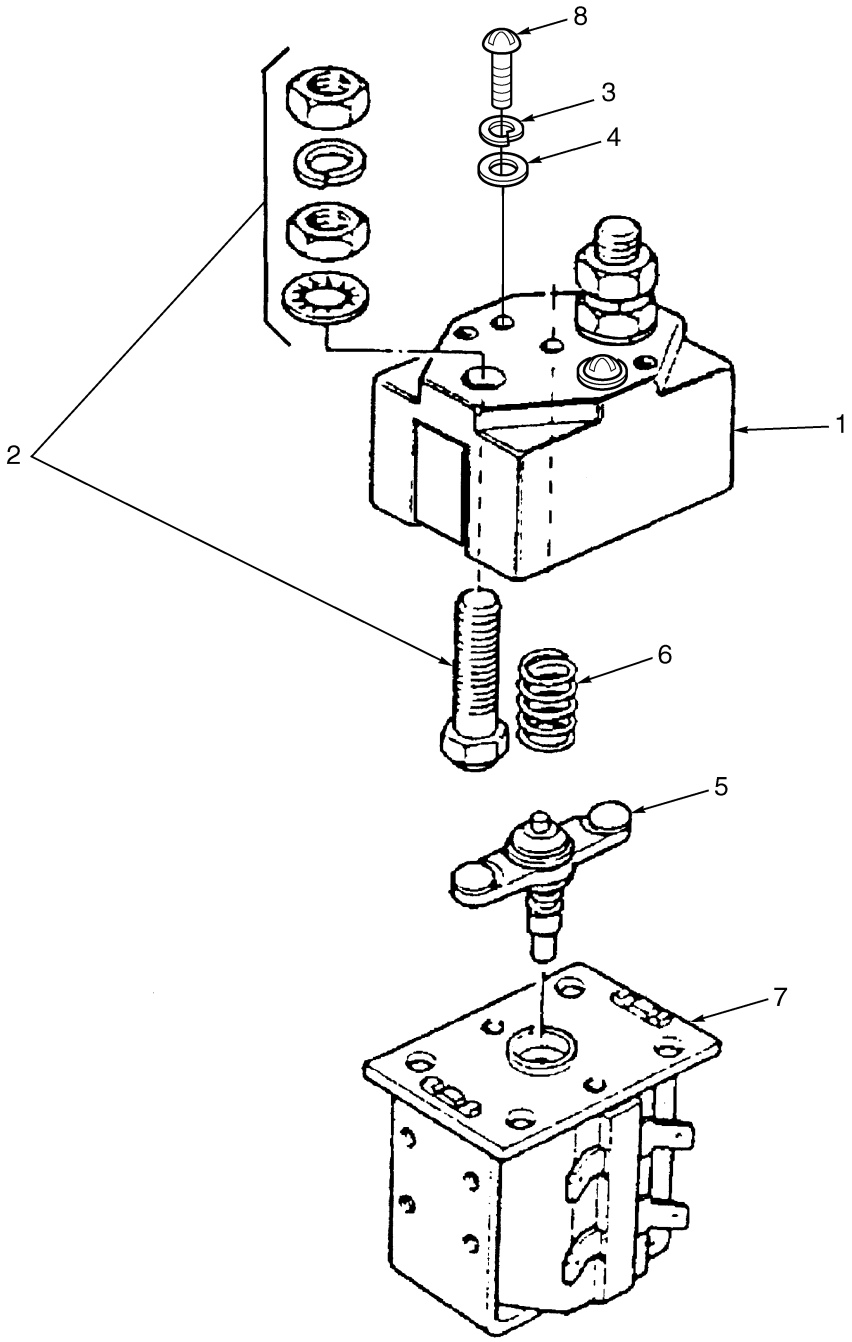

BP080143

©2007 HYSTER COMPANY

CONTACTOR
LINE

ITEM	PART NO.	DESCRIPTION	QTY
	1553414	Contactor	1
1	383978	Cover	2
2	1553429	Contact (Fixed)	2
3	275672	Washer	2
4	2304572	Washer	2
5	1532765	Moving Contact	1
6	1495699	Return Spring	1
7	1553427	Coil	1
7	1454122	End Cap	1
8	302040	Screw	2
	1553428	Contactor Kit (Includes Items 2, 5-6)	1

©2007 HYSTER COMPANY

CONTACTOR (Figure 2-8)
POWER STEERING

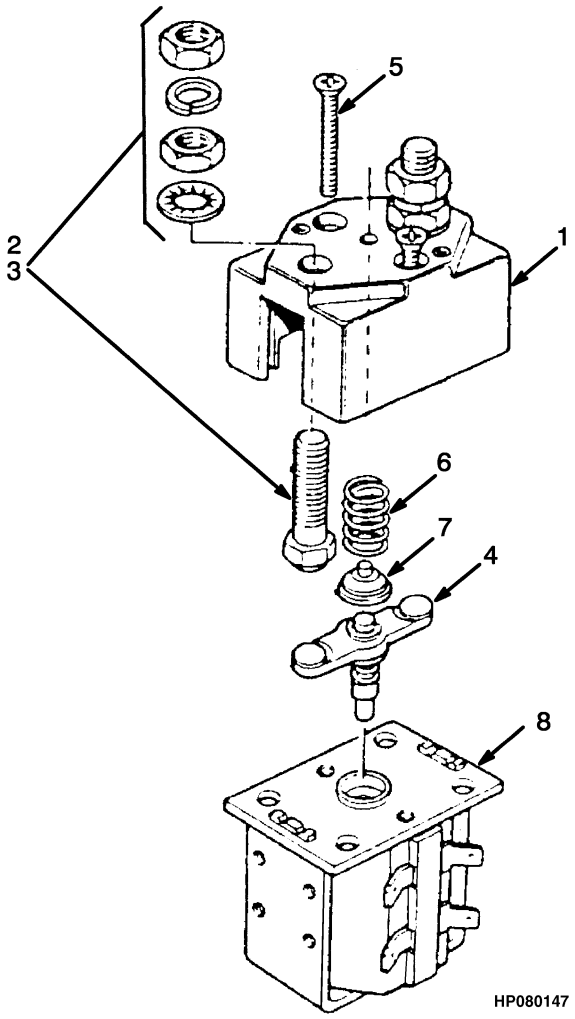

ITEM	PART NO.	DESCRIPTION	QTY
	1330938	Contactor	1
1	384398	Cover (Top)	1
2	1345908	Contactor Kit	1
3	378547	Contact (Fixed)	1
4	383984	Contact (Moving)	1
5	379522	Screw	2
6	1345909	Spring	1
7	379524	Insulator	1
8	1335620	Frame and Coil	1

©2007 HYSTER COMPANY

NOTES

CONTACTOR PANEL (Figure 2-9)
CONTACTOR HYDRAULIC

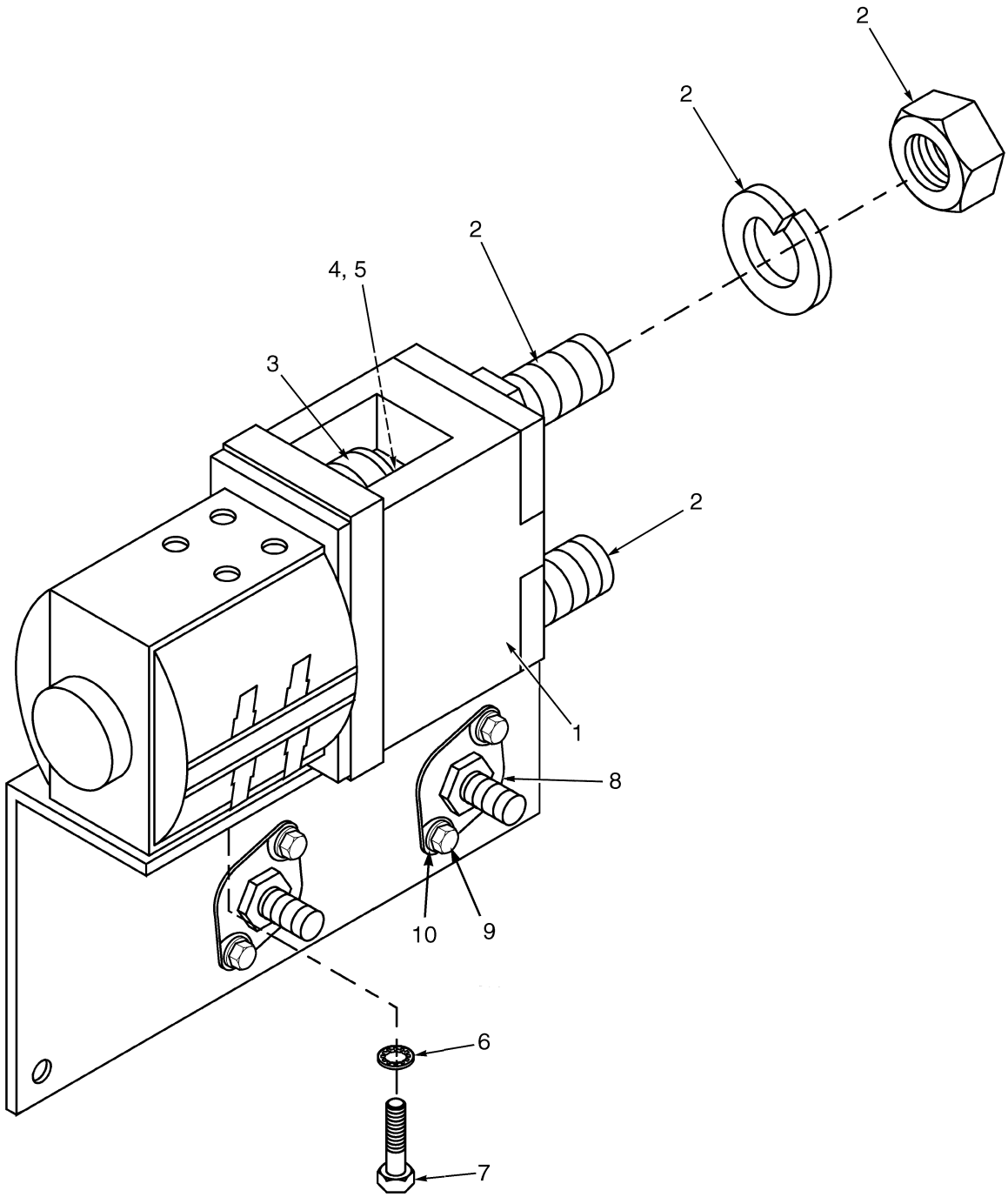

BP080153

©2007 HYSTER COMPANY

CONTACTOR PANEL
CONTACTOR HYDRAULIC

ITEM	PART NO.	DESCRIPTION	QTY
	1540668	Contactor Panel	1
1	1553441	Contactor (Hydraulic)	1
2	2034484	Contactor (Fixed)	2
3	2035396	Contactor (Moving)	1
4	383979	Plunger	1
5	1528998	Spring	1
6	2304170	Washer	2
7	2303821	Screw	2
8	1454478	Terminal Post	1
9	1545111	Washer	2
10	302020	Screw	2
	1600092	Contactor Kit (Includes Items 2-5)	1

©2007 HYSTER COMPANY

JOYSTICK (Figure 2-10)
(S/N G108N02840C⇒)

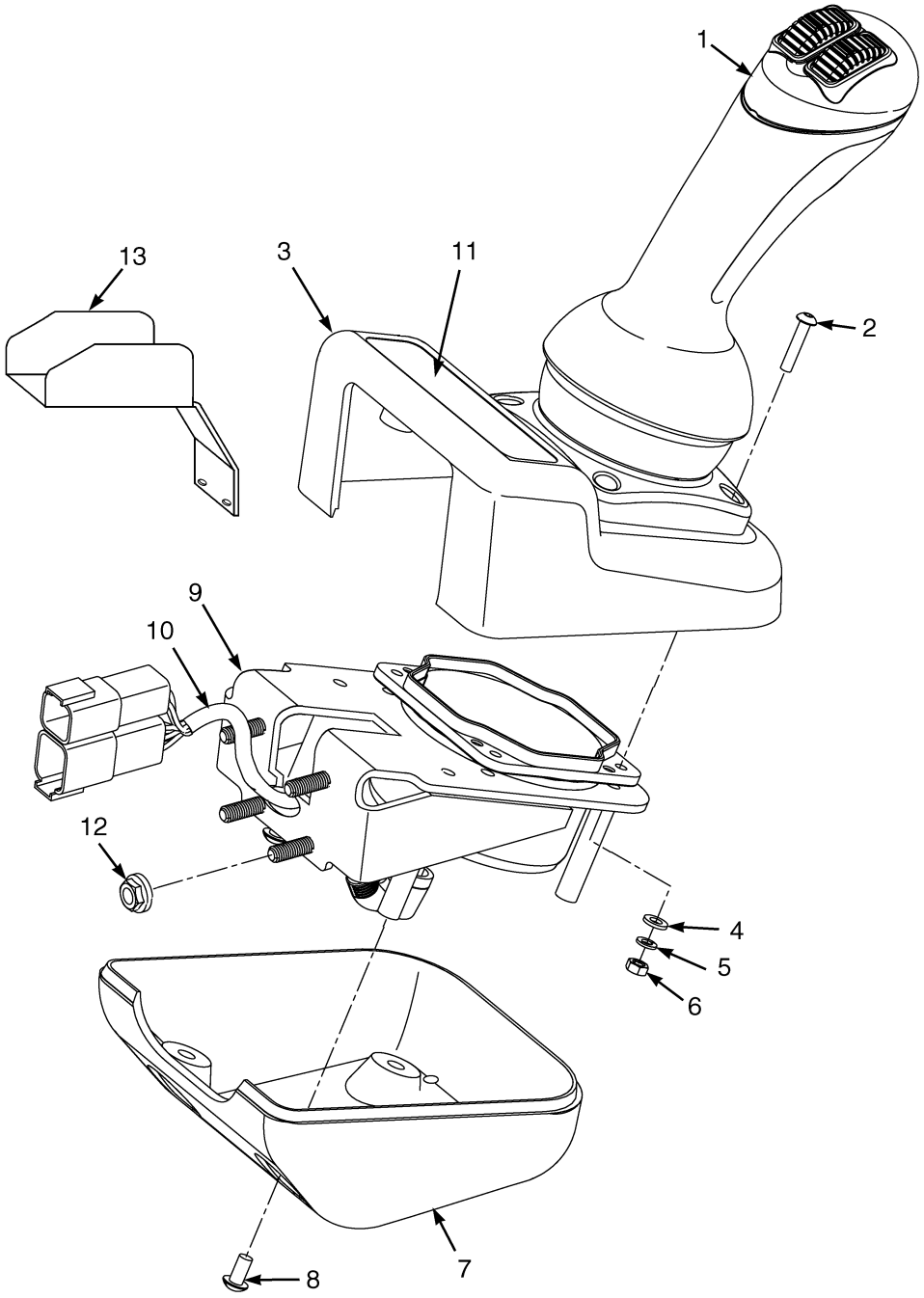

BP150080

©2007 HYSTER COMPANY

JOYSTICK
(S/N G108N02840C⇒)

ITEM		PART NO.	DESCRIPTION	QTY
	a	2085181	Joystick Control (Three Function) (Without Interlock)	1
	b	2093806	Joystick Control (Three Function) (Without Interlock)	1
	a	2085173	Joystick Control (Three Function) (With Interlock)	1
	b	2093808	Joystick Control (Three Function) (With Interlock)	1
	a	2085182	Joystick Control (Four Function) (Without Interlock)	1
	b	2093807	Joystick Control (Four Function) (Without Interlock)	1
	a	2085174	Joystick Control (Four Function) (With Interlock)	1
	b	2093809	Joystick Control (Four Function) (With Interlock)	1
1	**a**	2085177	Joystick (Three Function Hydraulic) (Without Interlock)	1
1	**b**	893955	Joystick Control (Three Function Hydraulic) (Without Interlock)	1
1	**a**	2085169	Joystick (Three Function Hydraulic) (With Interlock)	1
1	**b**	893959	Joystick Control (Three Function Hydraulic) (With Interlock)	1
1	**a**	2085178	Joystick (Four Function Hydraulic) (Without Interlock)	1
1	**b**	893958	Joystick Control (Four Function Hydraulic) (Without Interlock)	1
1	**a**	2085170	Joystick (Four Function Hydraulic) (With Interlock)	1
1	**b**	893962	Joystick Control (Four Function Hydraulic) (With Interlock)	1
2		1598283	Screw	4
3		1550647	Housing (Upper)	1
4		320154	Washer	4
5		292678	Lockwasher	4
6		292667	Nut	4
7		1550646	Housing (Lower)	1
8		2062718	Capscrew	6
9		1552107	Bracket	1
10		2084703	Wire Harness (Joystick)	1
11		. . . . .	Label	1
12		1514429	Nut	4
13		1579847	Bracket	1

FOOTNOTES:

a ⇒ PENDING PER ECN 94107

b PENDING PER ECN 94107 ⇒

ELECTRONIC CONTROL LEVERS (Figure 2-11)
MINI-LEVER MODULES
(⇒PENDING PER ECN 104977)

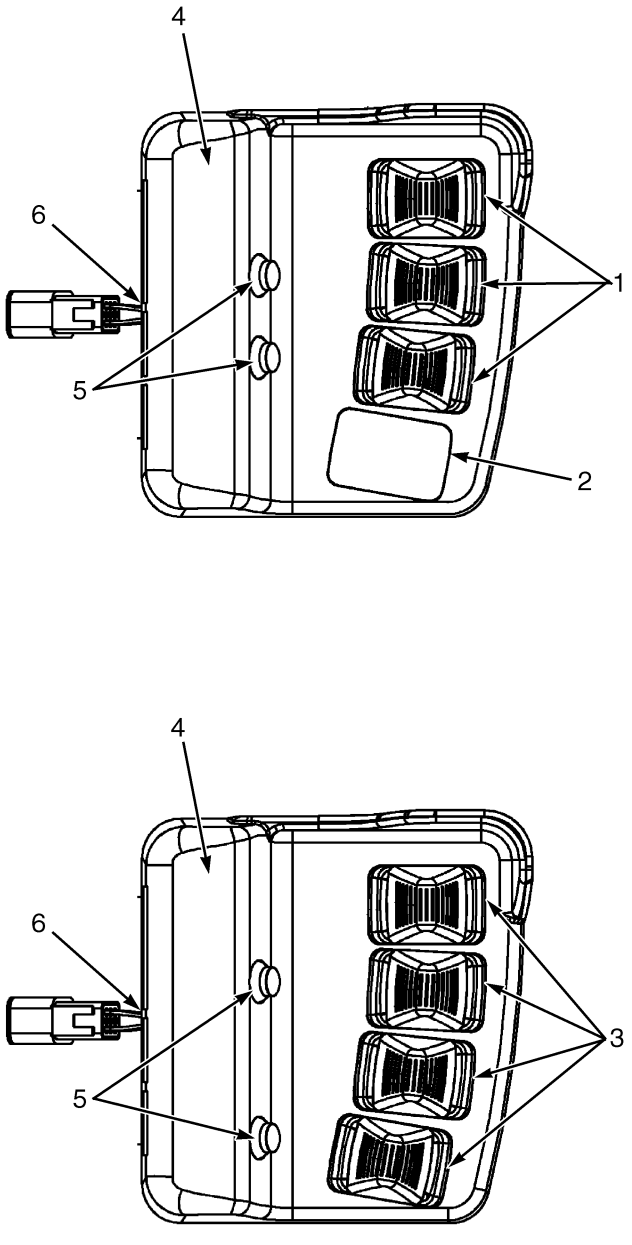

©2007 HYSTER COMPANY

ELECTRONIC CONTROL LEVERS
MINI-LEVER MODULES
(⇒PENDING PER ECN 104977)

KEY:
A: Three Function
B: Four Function

ITEM	PART NO.	DESCRIPTION	QTY A	QTY B
1	2076567	Mini-Lever Module (Plain, 8529258) (Without Clamping)	1	..
1	2076569	Mini-Lever Module (Clamping 8529260) (With Clamping)	1	..
1	1555731	Kit (Plain Mini-Lever)	AR	..
1	1591185	Kit (Interlock Mini-Lever)	AR	..
1	1658063	Handle (Mini-Lever)	1	1
2	1598222	Kit (Mini-Lever Plug)	1	..
3	2076568	Mini-Lever Module (Plain, 8529259) (Without Clamping)	..	1
3	2076570	Mini-Lever Module (Clamping 8529261) (With Clamping)	..	1
3	1555731	Kit (Plain Mini-Lever)	..	AR
3	1591185	Kit (Interlock Mini-Lever)	..	AR
3	1658063	Handle (Mini-Lever)	1	1
4	. . . . .	Label (☞ Figure 1-24)	1	1
5	1598221	Kit (Interlock Switch)	AR	AR
5	1598223	Kit (Interlock Switch Plug)	AR	AR
6	1514429	Nut	4	4

©2007 HYSTER COMPANY

ELECTRONIC CONTROL LEVERS (Figure 2-12)

MINI-LEVER MODULES
THREE FUNCTION
(PENDING PER ECN 104799⇒)

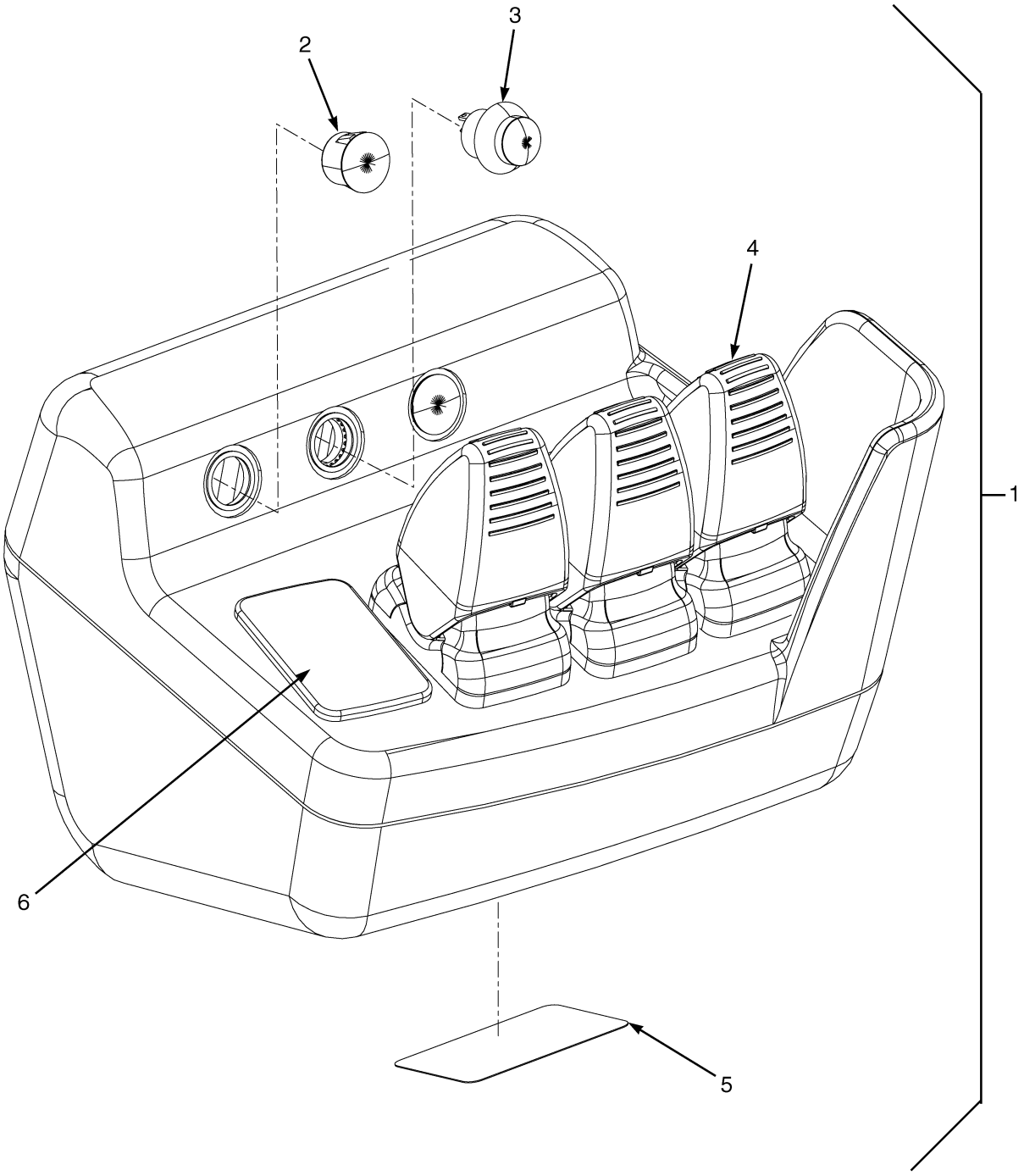

©2007 HYSTER COMPANY

ELECTRONIC CONTROL LEVERS
MINI-LEVER MODULES
THREE FUNCTION
(PENDING PER ECN 104799⇒)

ITEM		PART NO.	DESCRIPTION	QTY
1		2099222	Mini-Lever Module (Plain, 8542296)	1
	b	1598222	Kit (Mini-Lever Plug)	3
	c	1598223	Kit (Interlock Switch Plug)	3
1		2099226	Mini-Lever Module (Clamping, 8542300)	1
	a	1591185	Kit (Interlock Mini-Lever)	1
	d	1598221	Kit (Interlock Switch)	1
	b	1598222	Kit (Mini-Lever Plug)	1
	c	1598223	Kit (Interlock Switch Plug)	2
2		. . . . .	Plug (Momentary Switch)	AR
3		. . . . .	Momentary Switch	AR
4		. . . . .	Mini-Lever	AR
4		1658063	Handle (Mini-Lever)	1
5		. . . . .	Label (Shows Production Part Number)	1
6		1598224	Plug (Mini-Lever)	1

FOOTNOTES:

a Kit Includes: 1 Interlock Rocker (must be used in combination with a Momentary Interlock Switch), 1 Gasket, 4 Screws (parts are NSS)

b Kit Includes: 1 Mini-Lever Plug, 1 Gasket (parts are NSS)

c Kit Includes: 1 Momentary Interlock Switch Plug, 1 Gasket (parts are NSS)

d Kit Includes: 1 Momentary Switch, 1 Lockwasher, 1 Gasket, 1 Nut (parts are NSS)

©2007 HYSTER COMPANY

ELECTRONIC CONTROL LEVERS (Figure 2-13)
MINI-LEVER MODULES
FOUR FUNCTION
(PENDING PER ECN 104977⇒)

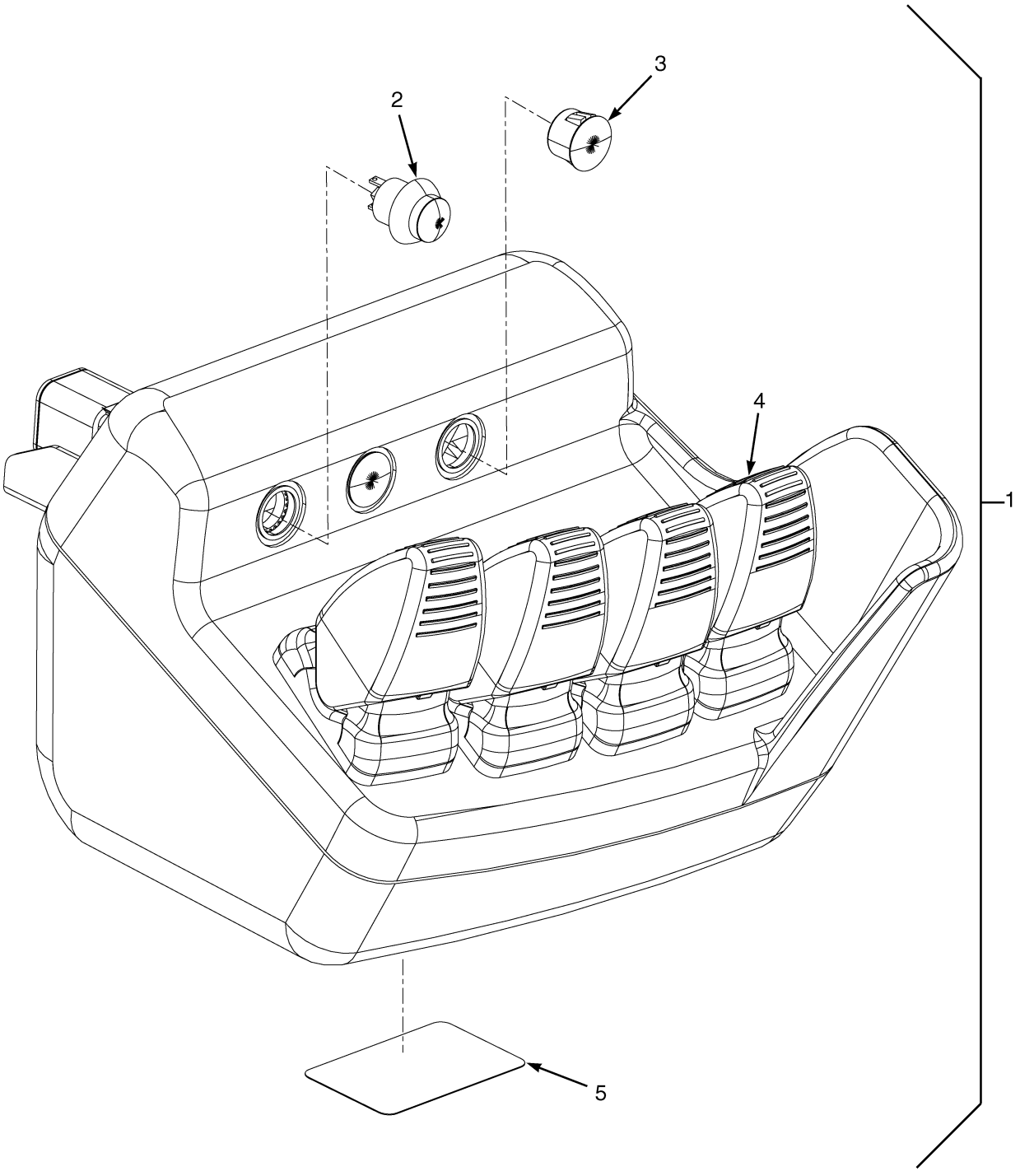

BP080624

©2007 HYSTER COMPANY

ELECTRONIC CONTROL LEVERS
MINI-LEVER MODULES
FOUR FUNCTION
(PENDING PER ECN 104977⇒)

ITEM		PART NO.	DESCRIPTION	QTY
1		2099223	Mini-Lever Module (Plain, 8542297)	1
	d	1555731	Kit (Plain Mini-Lever)	3
	b	1598223	Kit (Interlock Switch Plug)	3
1		2099227	Mini-Lever Module (Clamping, 8542301)	1
	d	1555731	Kit (Plain Mini-Lever)	2
	a	1591185	Kit (Interlock Mini-Lever)	1
	c	1598221	Kit (Interlock Switch)	1
	b	1598223	Kit (Interlock Switch Plug)	2
2		. . . . .	Momentary Switch	AR
3		. . . . .	Plug (Momentary Switch)	AR
4		. . . . .	Mini-Lever	AR
4		1658063	Handle (Mini-Lever)	1
5		. . . . .	Label (Shows Production Part Number)	1

FOOTNOTES:

a Kit Includes: 1 Interlock Mini-Lever (must be used in combination with a Momentary Interlock Switch), 1 Gasket, 4 Screws (parts are NSS)

b Kit Includes: 1 Momentary Switch Hole Plug, 1 Gasket (parts are NSS)

c Kit Includes: 1 Momentary Switch, 1 Lockwasher, 1 Gasket, 1 Nut (parts are NSS)

d Kit Includes: 1 Plain Mini-Lever, 1 Gasket, 4 Screws (parts are NSS)

©2007 HYSTER COMPANY

WIRE HARNESS (Figure 2-14)

MAIN

(⇒S/N G108V03421C)

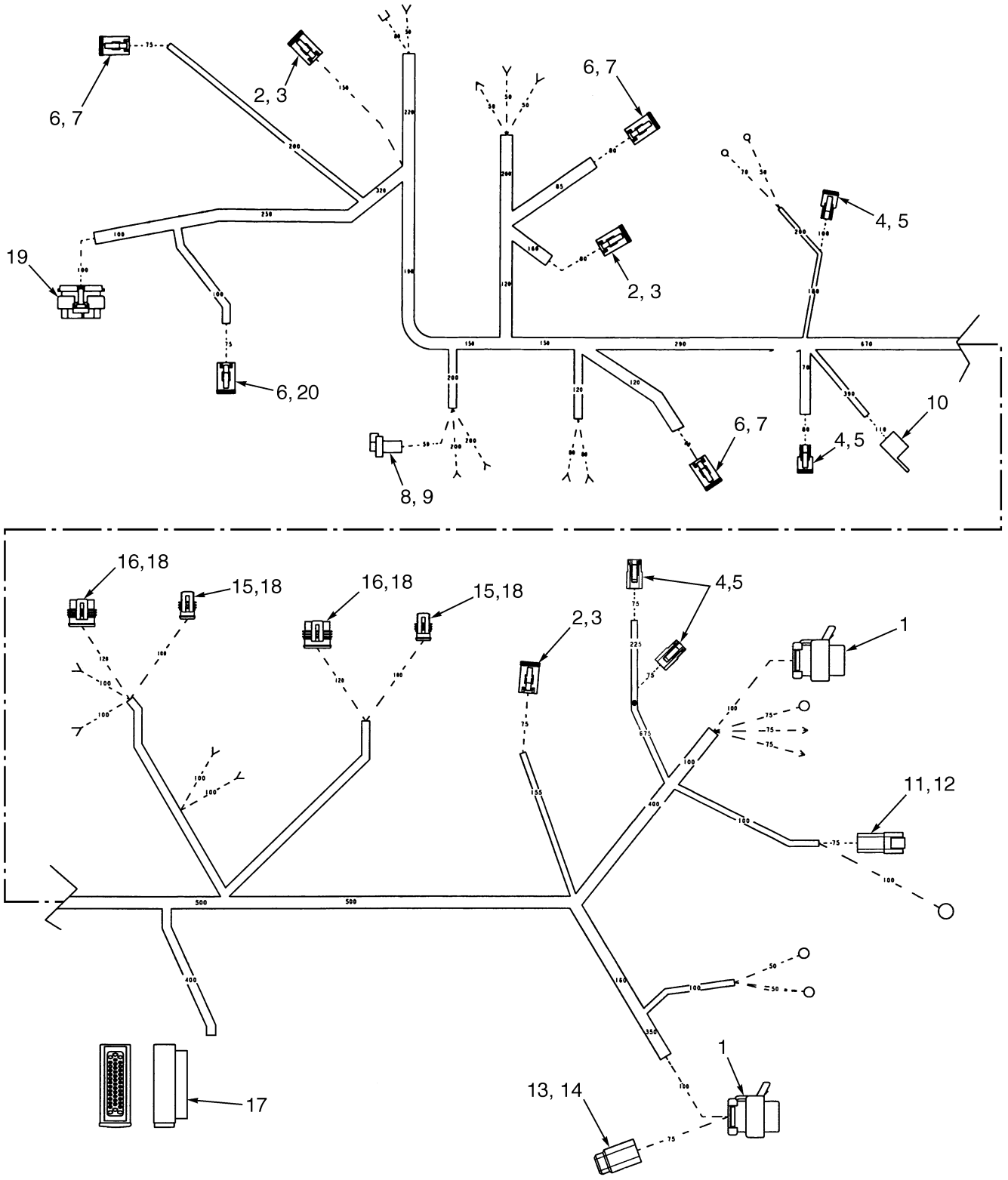

HP081372

©2007 HYSTER COMPANY

WIRE HARNESS
MAIN
(⇒S/N G108V03421C)

ITEM	PART NO.	DESCRIPTION	QTY
	2060547	Wire Harness (Main)	1
1	2035275	Plug	2
2	1330421	Connector	3
3	1330427	Secondary Lock	3
4	1330419	Connector	4
5	1330424	Secondary Lock	4
6	1330420	Connector	4
7	1330426	Secondary Lock	3
8	1351070	Connector	1
9	1351076	Seal	1
10	1498185	Connector	1
11	1330412	Connector	1
12	1330417	Secondary Lock	1
13	1484557	Connector	1
14	1484558	Secondary Lock	1
15	1508206	Connector (2 Way)	2
16	1508211	Connector	2
17	1508212	Connector	1
18	1508233	Seal	12
19	2046547	Plug	1
20	1532664	Secondary Lock	1

©2007 HYSTER COMPANY

WIRE HARNESS (Figure 2-15)
MAIN
WITHOUT ELECTRONIC HYDRAULICS
(S/N G108V03422C⇒)

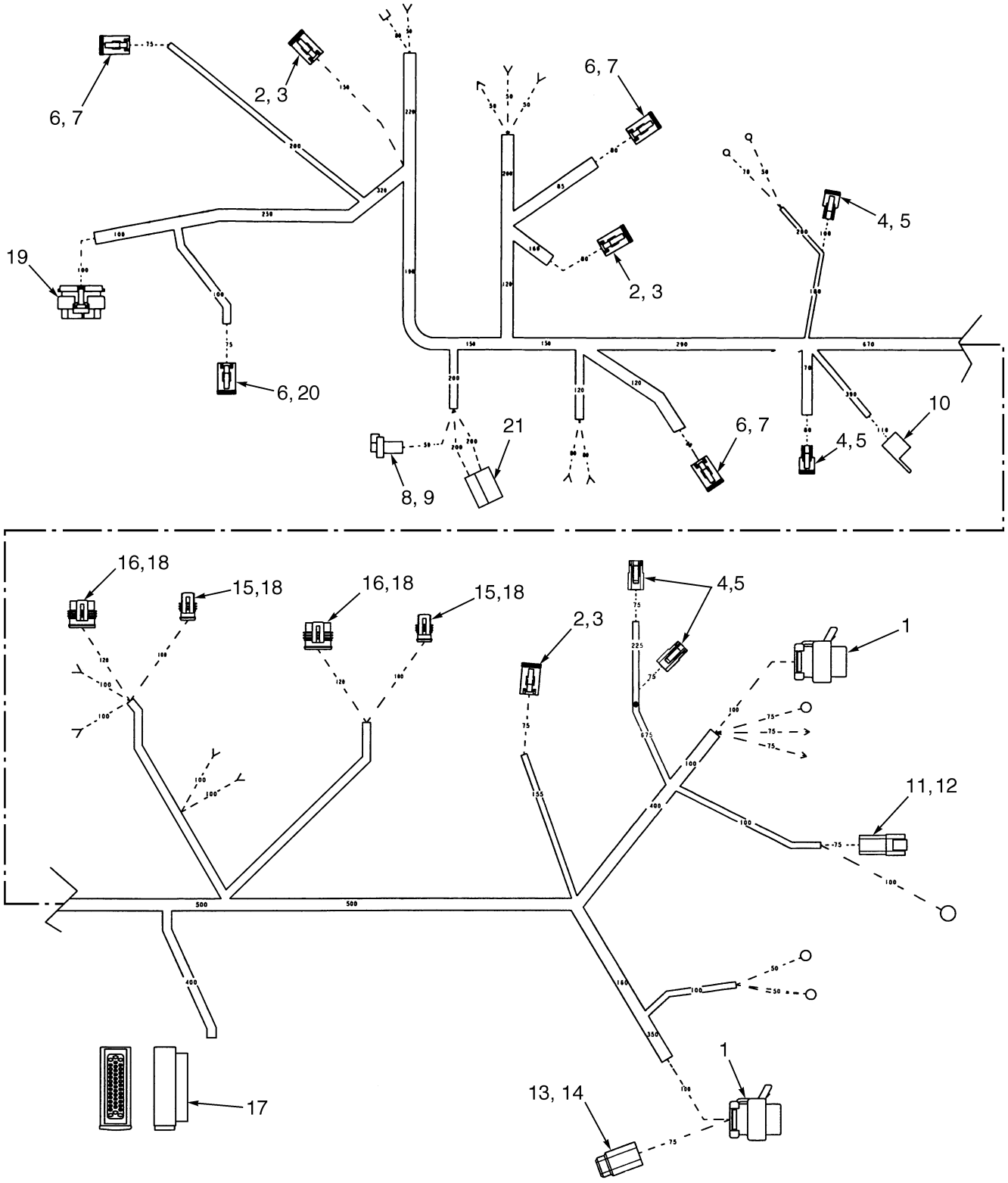

HP081372

©2007 HYSTER COMPANY

WIRE HARNESS
MAIN
WITHOUT ELECTRONIC HYDRAULICS
(S/N G108V03422C⇒)

ITEM		PART NO.	DESCRIPTION	QTY
		2074151	Wire Harness (Main)	1
1		2035275	Plug	2
2		1330421	Connector	3
3		1330427	Secondary Lock	3
4		1330419	Connector	4
5		1330424	Secondary Lock	4
6		1330420	Connector	4
7		1330426	Secondary Lock	3
8		1351070	Connector	1
9		1351076	Seal	1
10		1498185	Connector	1
11		1330412	Connector	1
12		1330417	Secondary Lock	1
13		1484557	Connector	1
14		1484558	Secondary Lock	1
15		1508206	Connector (2 Way)	2
16		1508211	Connector	2
17		1508212	Connector	1
18		1508233	Seal	12
19		2046547	Plug	1
20		1532664	Secondary Lock	1
21		1537135	Connector	1
21	**a**	1331233	Blade	2
21	**b**	233141	Terminal	2

FOOTNOTES:

a ⇒ S/N G108V03421C

b S/N G108V03422C ⇒

WIRE HARNESS (Figure 2-16)
MAIN
WITH ELECTRONIC HYDRAULICS
(S/N G108N02840C⇒)

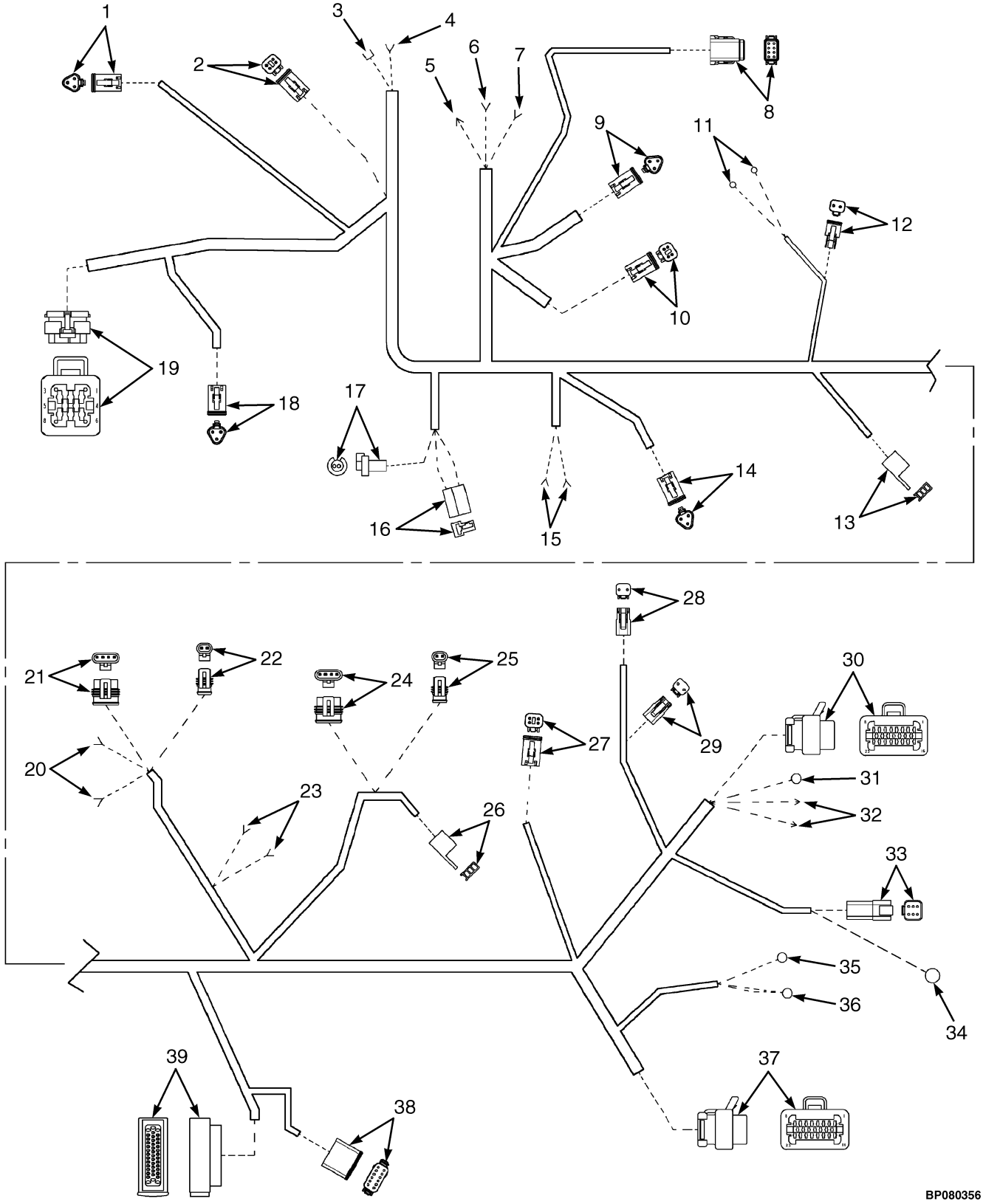

©2007 HYSTER COMPANY

WIRE HARNESS
MAIN
WITH ELECTRONIC HYDRAULICS
(S/N G108N02840C⇒)

ITEM	PART NO.	DESCRIPTION	QTY
	2075998	Wire Harness (Main)	1
1	. . . . .	Connector Assembly (Power Steering Sensor)	1
1	1330420	Connector	1
1	1330426	Secondary Lock	1
1	1330438	Terminal (Socket)	3
2	. . . . .	Connector Assembly (Dash)	1
2	1330421	Connector	1
2	1330427	Secondary Lock	1
2	1330438	Terminal (Socket)	4
3	2007554	Terminal (Accelerator Start Switch)	1
4	. . . . .	Connector Assembly (Accelerator Start Switch)	1
4	2035275	Plug	1
4	222523	Heat Shrink Tube	1
5	1306271	Connector (Forward/Reverse Switch)	1
6	1306270	Connector (Forward/Reverse Switch)	1
7	1306270	Connector (Forward/Reverse Switch)	1
8	. . . . .	Connector Assembly (Seat Harness)	1
8	1541991	Connector	1
8	1541992	Secondary Lock	1
8	1463139	Terminal	7
8	1330439	Terminal (Plug)	1
9	. . . . .	Connector Assembly (Accelerator Potentiometer)	1
9	1330420	Connector	1
9	1330426	Secondary Lock	1
9	1330438	Terminal (Socket)	3
10	. . . . .	Connector Assembly (Hoist/Tilt Switch)	1
10	1330421	Connector	1
10	1330427	Secondary Lock	1
10	1330438	Terminal (Socket)	4
11	. . . . .	Connector (Power Steering Motor)	23
12	. . . . .	Connector Assembly (Power Steering Motor)	1
12	1330419	Connector	1
12	1330424	Secondary Lock	1
12	1330438	Terminal (Socket)	3
13	. . . . .	Connector Assembly (Park Brake Switch)	1
13	1498185	Connector	1
13	1352564	Terminal	2
14	. . . . .	Connector Assembly (Seat Brake Controller)	1
14	1330420	Connector	1
14	1330426	Secondary Lock	1
14	1330438	Terminal (Socket)	3
15	248196	Connector (Terminal Strip)	2
16	. . . . .	Connector Assembly (Horn)	1
16	1537135	Connector	1
16	233141	Terminal	2
17	. . . . .	Connector Assembly (Brake Fluid Switch)	1
17	1351070	Connector	1
17	1351076	Seal	1
17	2045134	Connector	2

©2007 HYSTER COMPANY

WIRE HARNESS
MAIN
WITH ELECTRONIC HYDRAULICS
(S/N G108N02840C⇒)

ITEM	PART NO.	DESCRIPTION	QTY
18	. . . . .	Connector Assembly (Diagnostic)	1
18	1330420	Connector	1
18	1532664	Secondary Lock	1
18	1330438	Terminal (Socket)	3
19	. . . . .	Connector Assembly (Dash)	1
19	2046547	Plug	1
19	2035276	Contact	6
20	. . . . .	Connector Assembly (DC Pump Motor Temperature)	2
20	248196	Connector	1
20	222523	Heat Shrink Tube	1
21	. . . . .	Connector Assembly (Pump Bearing Sensor)	1
21	1508211	Connector	1
21	1508233	Seal	1
21	1508232	Terminal	4
22	. . . . .	Connector Assembly (Pump Temperature)	1
22	1508206	Connector (2 Way)	1
22	1508233	Seal	1
22	1508232	Terminal	2
23	. . . . .	Connector Assembly (DC Pump Motor BWI)	2
23	248196	Connector	1
23	222523	Heat Shrink Tube	1
24	. . . . .	Connector Assembly (Traction Motor Bearing Sensor)	1
24	1508211	Connector	1
24	1508233	Seal	1
24	1508232	Terminal	4
25	. . . . .	Connector Assembly (Traction Motor Temperature)	1
25	1508206	Connector (2 Way)	1
25	1508233	Seal	1
25	1508232	Terminal	2
26	. . . . .	Connector Assembly (Park Brake Switch)	1
26	1498185	Connector	1
26	1352564	Terminal	2
27	. . . . .	Connector Assembly (Main Accessory Wire Harness)	1
27	1330421	Connector	1
27	1330427	Secondary Lock	1
27	1330438	Terminal (Socket)	4
28	. . . . .	Connector Assembly (Fan)	1
28	1330419	Connector	1
28	1330424	Secondary Lock	1
28	1330438	Terminal (Socket)	2
29	. . . . .	Connector Assembly (Fan)	1
29	1330419	Connector	1
29	1330424	Secondary Lock	1
29	1330438	Terminal (Socket)	2
30	. . . . .	Connector Assembly (Pump Controller)	1
30	2035275	Plug	1
30	2035276	Contact	10
31	1525920	Terminal (DC Pump Motor Contactor)	1
32	1306271	Connector (DC Pump Motor Contactor)	2

©2007 HYSTER COMPANY

WIRE HARNESS
MAIN
WITH ELECTRONIC HYDRAULICS
(S/N G108N02840C⇒)

ITEM	PART NO.	DESCRIPTION	QTY
33	. . . . .	Connector Assembly (Contactor Panel)	1
33	1330412	Connector	1
33	1330417	Secondary Lock	1
33	1330437	Terminal (Pin)	5
33	1330439	Terminal (Plug)	1
34	148611	Terminal (Power Steering Contactor)	1
35	148611	Terminal (Traction Controller Negative)	1
36	148606	Terminal (Traction Controller Negative)	1
37	. . . . .	Connector Assembly (Traction Controller)	1
37	2035275	Plug	1
37	2035276	Contact	14
38	. . . . .	Connector Assembly (Electronic Hydraulics Controller)	1
38	1525567	Connector	1
38	1529046	Secondary Lock	1
38	1484377	Terminal (Plug)	5
38	1463139	Terminal	7
39	. . . . .	Connector Assembly (Vehicle Master Controller)	1
39	1508212	Connector	1
39	1508240	Terminal	26
39	2041472	Contact	1

©2007 HYSTER COMPANY

WIRE HARNESS (Figure 2-17)
ELECTRONIC HYDRAULIC CONTROL VALVES
(S/N G108N02840C⇒)

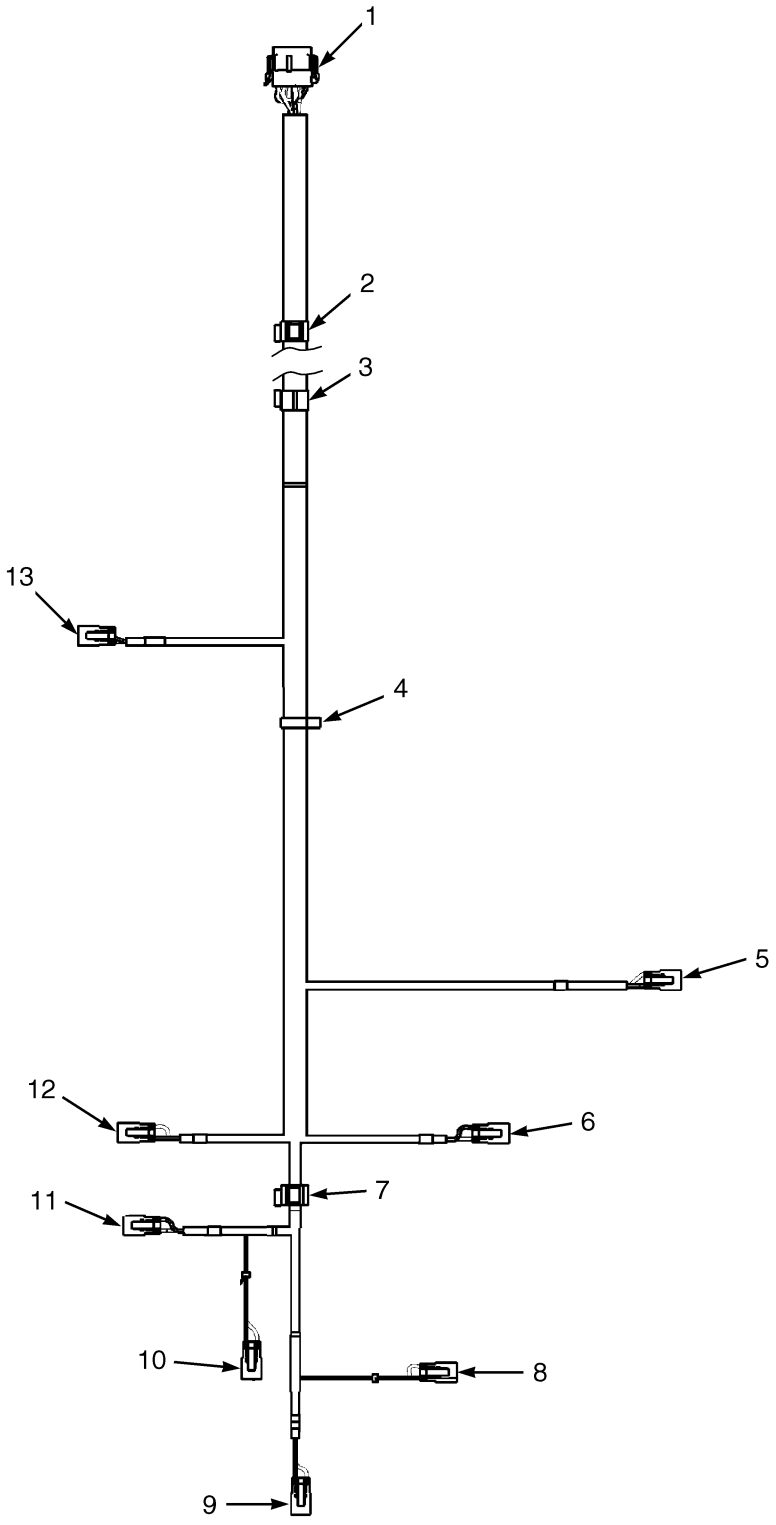

BP080412

©2007 HYSTER COMPANY

WIRE HARNESS
ELECTRONIC HYDRAULIC CONTROL VALVES
(S/N G108N02840C⇒)

ITEM	PART NO.	DESCRIPTION	QTY
	2077826	Wire Harness (Electronic Hydraulic Control Valves)	1
1	. . . . .	Connector Assembly (Hydraulic Valve Controller)	1
1	1525568	Connector	1
1	1529046	Secondary Lock	1
1	1463139	Terminal	12
2	1532776	Clip	1
3	1532776	Clip	1
4	1509890	Clip	1
5	. . . . .	Connector Assembly (1B Lift Solenoid)	1
5	1484361	Housing (Socket)	1
5	1490243	Secondary Lock	1
5	1330438	Terminal (Socket)	2
6	. . . . .	Connector Assembly (2B Tilt Solenoid)	1
6	1484361	Housing (Socket)	1
6	1490243	Secondary Lock	1
6	1330438	Terminal (Socket)	2
7	1532775	Clip	1
8	. . . . .	Connector Assembly (4A Auxiliary 2 Solenoid)	1
8	1484361	Housing (Socket)	1
8	1490243	Secondary Lock	1
8	1330438	Terminal (Socket)	2
9	. . . . .	Connector Assembly (4B Auxiliary 2 Solenoid)	1
9	1484361	Housing (Socket)	1
9	1490243	Secondary Lock	1
9	1330438	Terminal (Socket)	2
10	. . . . .	Connector Assembly (3A Auxiliary 1 Solenoid)	1
10	1484361	Housing (Socket)	1
10	1490243	Secondary Lock	1
10	1330438	Terminal (Socket)	2
11	. . . . .	Connector Assembly (3B Auxiliary 1 Solenoid)	1
11	1484361	Housing (Socket)	1
11	1490243	Secondary Lock	1
11	1330438	Terminal (Socket)	2
12	. . . . .	Connector Assembly (2A Tilt Solenoid)	1
12	1484361	Housing (Socket)	1
12	1490243	Secondary Lock	1
12	1330438	Terminal (Socket)	2
13	. . . . .	Connector Assembly (1A Lower Solenoid)	1
13	1484361	Housing (Socket)	1
13	1490243	Secondary Lock	1
13	1330438	Terminal (Socket)	2

©2007 HYSTER COMPANY

WIRE HARNESS (Figure 2-18)
LIGHT

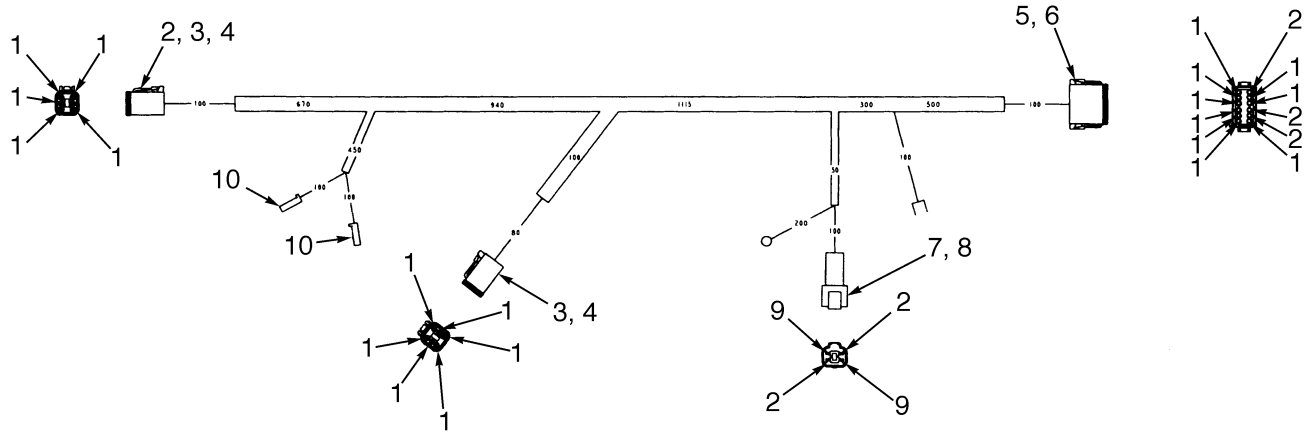

HP081377

©2007 HYSTER COMPANY

WIRE HARNESS
LIGHT

ITEM	PART NO.	DESCRIPTION	QTY
	2060877	Wire Harness (Light)	1
1	1330438	Terminal (Socket)	20
2	1330439	Terminal (Plug)	6
3	1330422	Connector	2
4	1330428	Secondary Lock	2
5	1351068	Connector	1
6	1351069	Lock	1
7	1330411	Connector	1
8	1330416	Secondary Lock	1
9	1330437	Terminal (Pin)	4
10	181046	Connector	2

©2007 HYSTER COMPANY

WIRE HARNESS (Figure 2-19)
PRESSURE SWITCH
(D/B 04/2004⇒)

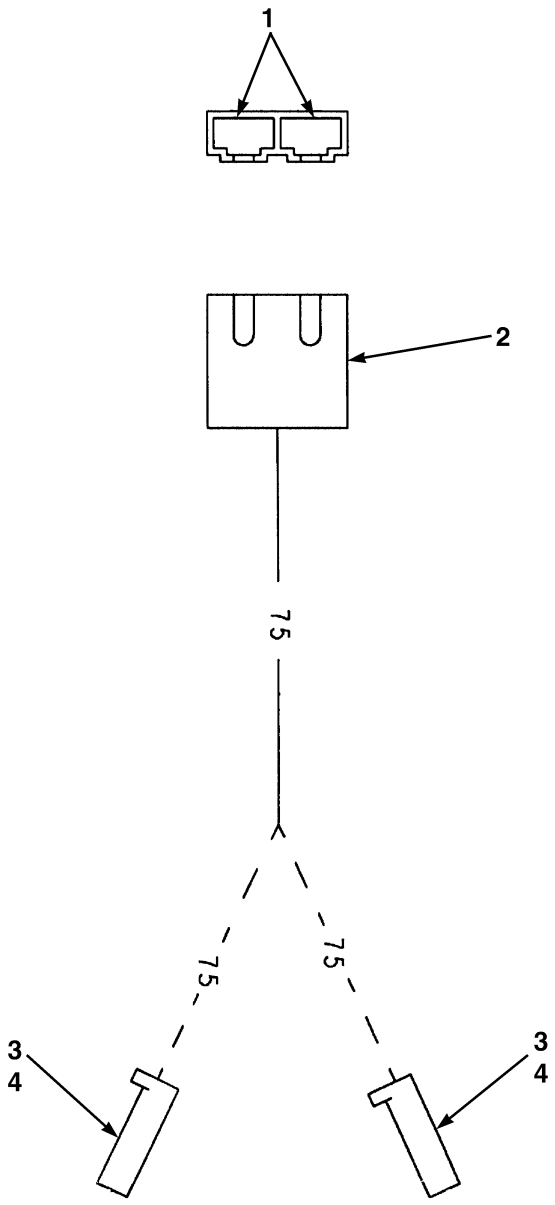

BP000228

©2007 HYSTER COMPANY

WIRE HARNESS
PRESSURE SWITCH
(D/B 04/2004⇒)

ITEM	PART NO.	DESCRIPTION	QTY
	2070134	Wire Harness (Pressure Switch)	1
1	370730	Blade	2
2	346330	Connector Body	1
3	181045	Connector	2
4	134810	Terminal	2

©2007 HYSTER COMPANY

WIRE HARNESS (Figure 2-20)
HOOD
(S/N G108N02840C⇒)

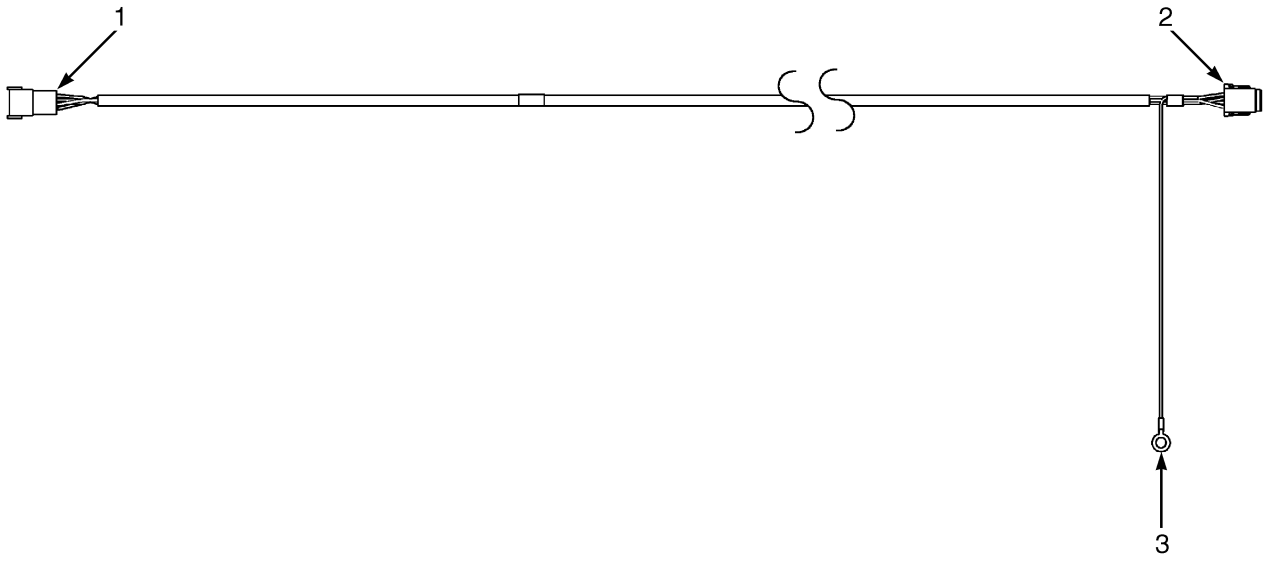

BP080375

ITEM	PART NO.	DESCRIPTION	QTY
	2079477	Wire Harness (Hood)	1
1	. . . . .	Connector Assembly (Main Harness)	1
1	1541988	Connector	1
1	1541989	Secondary Lock	1
1	1463138	Pin	6
1	1484377	Terminal (Plug)	2
2	. . . . .	Connector Assembly (Seat)	1
2	1541991	Connector	1
2	1541992	Secondary Lock	1
2	1463139	Terminal	7
2	1484377	Terminal (Plug)	1
3	1525920	Terminal (Ground)	1

©2007 HYSTER COMPANY

WIRE HARNESS (Figure 2-21)
JOYSTICK
(S/N G108N02840C⇒)

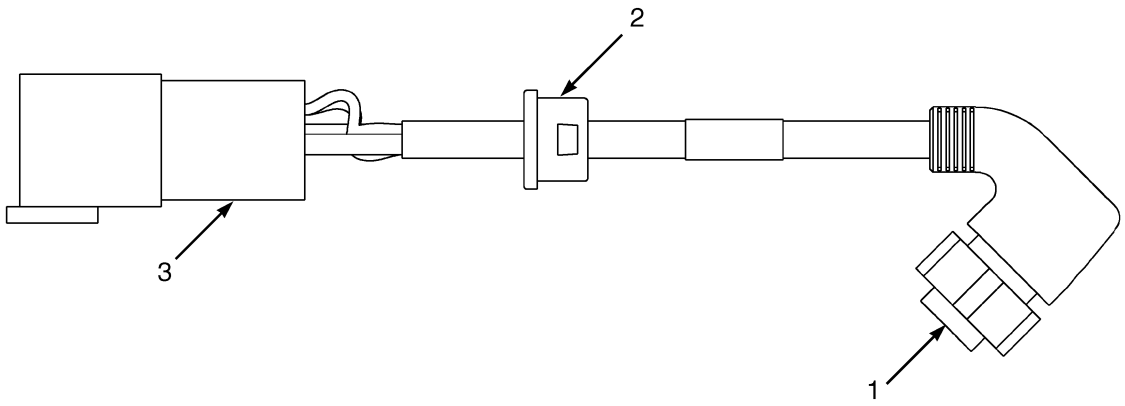

BP080452

ITEM	PART NO.	DESCRIPTION	QTY
	2084703	Wire Harness (Joystick)	1
1	. . . . .	Connector Assembly (To Joystick)	1
1	1616384	Connector	2
1	1616386	Terminal (Socket)	6
1	1616388	Collar (Joystick)	1
1	1616390	O-Ring	1
2	1569995	Bushing	1
3	. . . . .	Connector Assembly (To Seat Harness)	1
3	1530960	Connector	1
3	1530961	Secondary Lock	1
3	1463140	Terminal (Pin)	6

©2007 HYSTER COMPANY

WIRE HARNESS (Figure 2-22)
OPERATOR PRESENCE
SHEET 1 OF 2

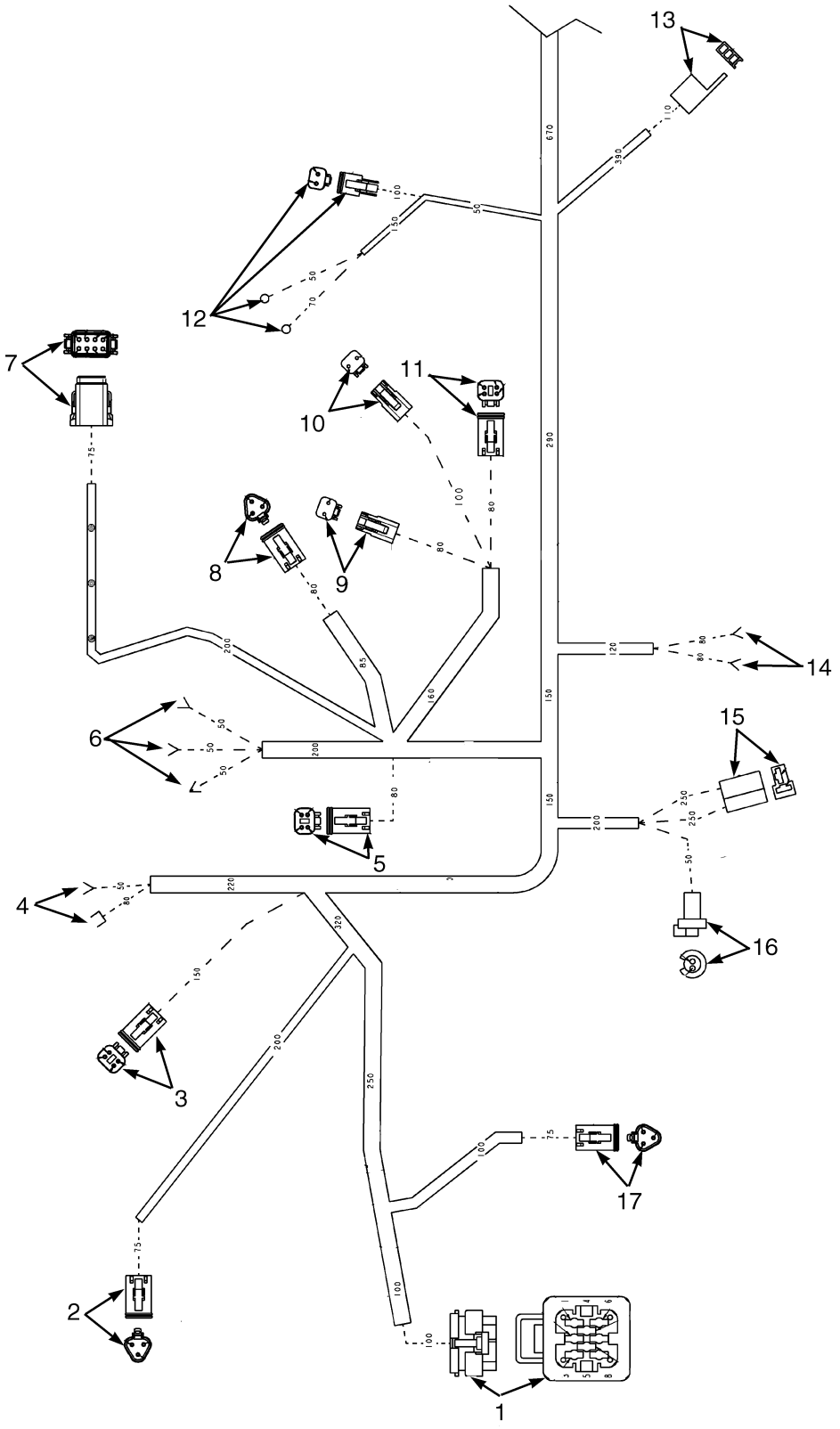

©2007 HYSTER COMPANY

WIRE HARNESS
OPERATOR PRESENCE
SHEET 1 OF 2

ITEM	PART NO.	DESCRIPTION	QTY
	2095342	Wire Harness (Operator Presence)	1
1	. . . . .	Connector Assembly (Display)	1
1	2035276	Contact	6
1	2046547	Plug	1
2	. . . . .	Connector Assembly (Power Steering Sensor)	1
2	1330438	Terminal (Socket)	1
2	1330420	Connector	3
2	1330426	Secondary Lock	1
3	. . . . .	Connector Assembly (Dash)	1
3	1330438	Terminal (Socket)	4
3	1330421	Connector	1
3	1330427	Secondary Lock	1
4	. . . . .	Connector Assembly (Accelerator Start Switch)	1
4	2007554	Terminal	1
4	248196	Connector	1
5	. . . . .	Connector Assembly (Suppression Module)	1
5	1330438	Terminal (Socket)	3
5	1330439	Terminal (Plug)	1
5	1330421	Connector	1
5	1330427	Secondary Lock	1
6	. . . . .	Connector Assembly (Forward/Reverse Switch)	1
6	1306271	Connector	1
6	1306270	Connector	2
7	. . . . .	Connector Assembly (Seat Harness)	1
7	1541991	Connector	1
7	1463139	Terminal	7
7	1541992	Secondary Lock	1
7	1484377	Terminal (Plug)	1
8	. . . . .	Connector Assembly (Accelerator Potentiometer)	1
8	1330438	Terminal (Socket)	3
8	1330420	Connector	1
8	1330426	Secondary Lock	1
9	. . . . .	Connector Assembly (Operator Presence)	1
9	1330438	Terminal (Socket)	2
9	1330419	Connector	1
9	1330424	Secondary Lock	1
10	. . . . .	Connector Assembly (Operator Presence)	1
10	1330438	Terminal (Socket)	2
10	1330419	Connector	1
10	1330424	Secondary Lock	1
11	. . . . .	Connector Assembly (Hoist/Tilt Switch)	1
11	1330438	Terminal (Socket)	4
11	1330421	Connector	1
11	1330427	Secondary Lock	2
12	. . . . .	Connector Assembly (Power Steering Motor)	1
12	129888	Terminal	2
12	1330438	Terminal (Socket)	2
12	1330419	Connector	1
12	1330424	Secondary Lock	1
13	. . . . .	Connector Assembly (Park Brake Switch)	1

©2007 HYSTER COMPANY

WIRE HARNESS
OPERATOR PRESENCE
SHEET 1 OF 2

ITEM	PART NO.	DESCRIPTION	QTY
13	1498185	Connector	1
13	1352564	Terminal	2
14	. . . . .	Connector Assembly (Terminal Strip)	1
14	248196	Connector	2
15	. . . . .	Connector Assembly (Horn)	1
15	1537135	Connector	1
15	233141	Terminal	2
16	. . . . .	Connector Assembly (Brake Fluid Switch)	1
16	1351070	Connector	1
16	1351076	Seal	1
16	2045134	Connector	2
17	. . . . .	Connector Assembly (Diagnostic)	1
17	1330420	Connector	1
17	1330438	Terminal (Socket)	3
17	1532664	Secondary Lock	1

©2007 HYSTER COMPANY

NOTES

WIRE HARNESS (Figure 2-23)
OPERATOR PRESENCE
SHEET 2 OF 2

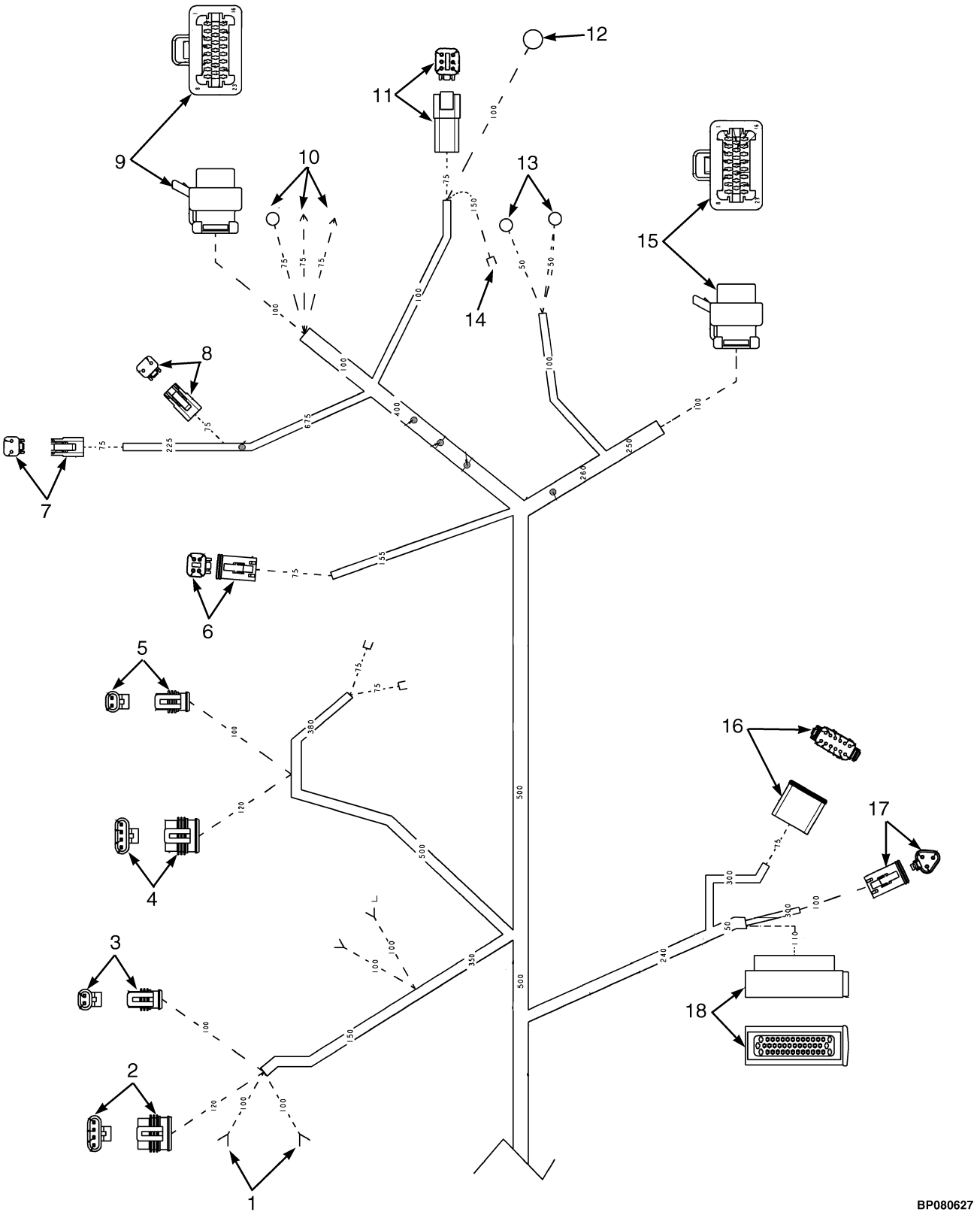

©2007 HYSTER COMPANY

WIRE HARNESS
OPERATOR PRESENCE
SHEET 2 OF 2

ITEM	PART NO.	DESCRIPTION	QTY
	2095342	Wire Harness (Operator Presence)	1
1	. . . . .	Connector Assembly (DC Pump Temperature)	1
1	248196	Connector	2
2	. . . . .	Connector Assembly (Pump Bearing Sensor)	1
2	1508232	Terminal	4
2	1508211	Connector	1
2	1508233	Seal	1
3	. . . . .	Connector Assembly (Pump Temperature)	1
3	1508232	Terminal	2
3	1508206	Connector (2 Way)	1
3	1508233	Seal	1
4	. . . . .	Connector Assembly (Traction Bearing Sensor)	1
4	1508232	Terminal	4
4	1508211	Connector	1
4	1508233	Seal	1
5	. . . . .	Connector Assembly (Traction Temperature)	1
5	1508206	Connector (2 Way)	1
5	1508233	Seal	1
5	1508232	Terminal	2
6	. . . . .	Connector Assembly (Main Accessory Harness)	1
6	1330438	Terminal (Socket)	4
6	1330421	Connector	1
6	1330427	Secondary Lock	1
7	. . . . .	Connector Assembly (Fan)	1
7	1330438	Terminal (Socket)	2
7	1330419	Connector	1
7	1330424	Secondary Lock	1
8	. . . . .	Connector Assembly (Fan)	1
8	1330438	Terminal (Socket)	2
8	1330419	Connector	1
8	1330424	Secondary Lock	1
9	. . . . .	Connector Assembly (Pump Controller)	1
9	2035275	Plug	1
9	2035276	Contact	10
10	. . . . .	Connector Assembly (DC Pump Contactor)	1
10	1525920	Terminal	1
10	1306271	Connector	2
11	. . . . .	Connector Assembly (Contactor Panel)	1
11	1330437	Terminal (Pin)	5
11	1330417	Secondary Lock	1
11	1330412	Connector	1
11	1330439	Terminal (Plug)	1
12	. . . . .	Connector Assembly (Power Steering Contactor)	1
12	148611	Terminal	1
13	. . . . .	Connector Assembly (Negative Stud Traction Controller)	1
13	148611	Terminal	1
13	148606	Terminal	1
14	2007554	Terminal	1
15	. . . . .	Connector Assembly (Traction Controller)	1
15	2035275	Plug	1

©2007 HYSTER COMPANY

WIRE HARNESS
OPERATOR PRESENCE
SHEET 2 OF 2

ITEM	PART NO.	DESCRIPTION	QTY
15	2035276	Contact	16
16	. . . . .	Connector Assembly (Electronic Hydraulics Controller)	1
16	1525567	Connector	1
16	1529046	Secondary Lock	1
16	1484377	Terminal (Plug)	4
16	1463139	Terminal	8
17	. . . . .	Connector Assembly (Seat Brake Controller)	1
17	1330438	Terminal (Socket)	3
17	1330420	Connector	1
17	1330426	Secondary Lock	1
18	. . . . .	Connector Assembly	1
18	2041472	Contact	5
18	1508240	Terminal	27
18	1508212	Connector	1

©2007 HYSTER COMPANY

3 DRIVE UNIT

SECTION 3
DRIVE UNIT

DESCRIPTION **PAGE**

DRIVE AXLE 3-2
DRIVE UNIT INSTALLATION
E/EE/ES AND CRE/FRE..... 3-10
TIRES AND WHEELS
DRIVE WHEELS..... 3-14
TRACTION MOTOR
11.0-INCH..... 3-12
TRANSMISSION AND DIFFERENTIAL..... 3-6

©2007 HYSTER COMPANY

DRIVE AXLE (Figure 3-1)

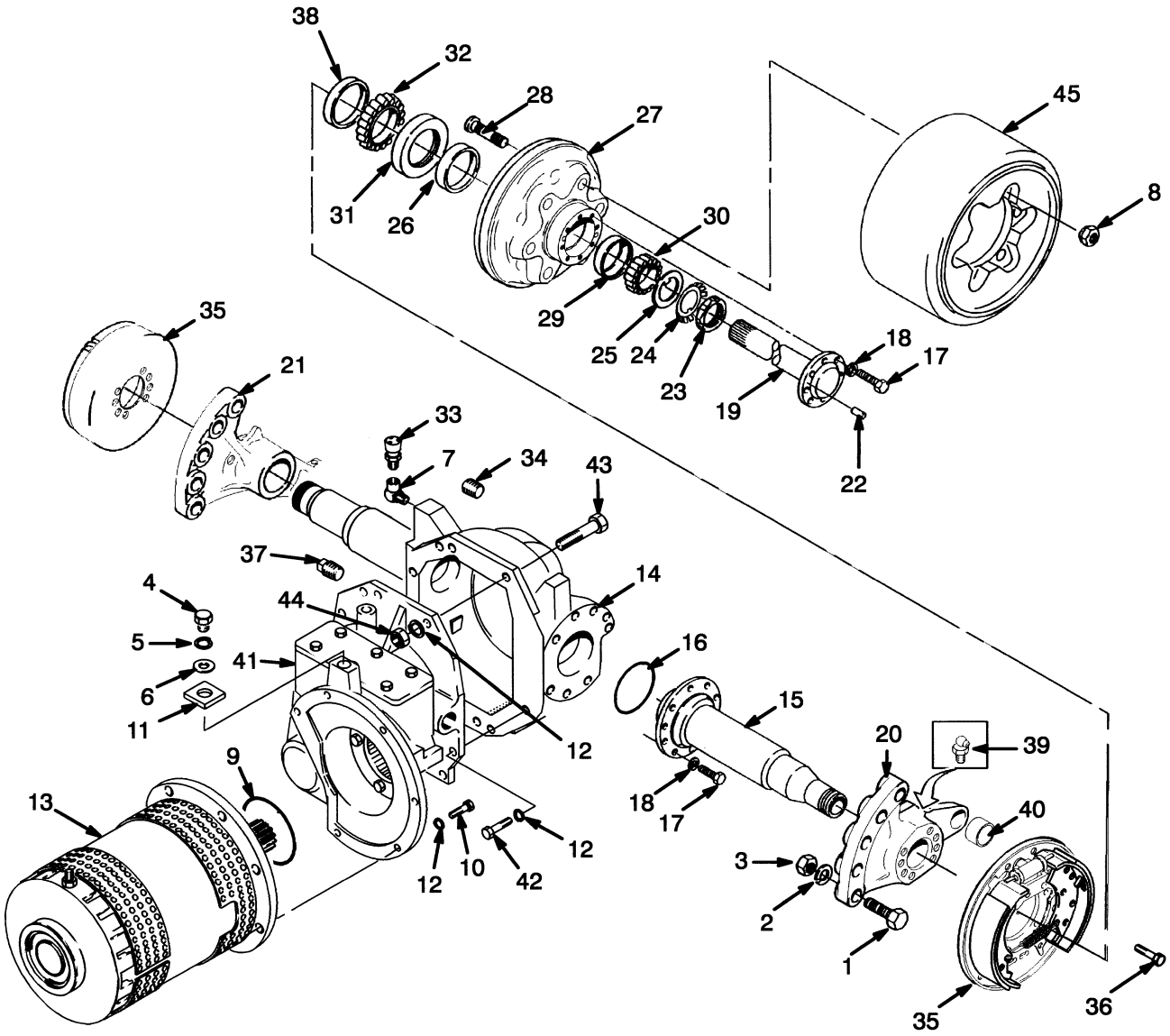

HP160012

©2007 HYSTER COMPANY

DRIVE AXLE

ITEM		PART NO.	DESCRIPTION	QTY
1		221680	Capscrew	8
2		366713	Washer	16
3		366715	Nut	8
4		293708	Capscrew	1
5		292687	Lockwasher	1
6		296431	Washer	1
7		16151	Fitting	1
8		60949	Lug Nut	12
9		57597	O-Ring	1
10		287860	Capscrew	7
11		1380316	Plate	1
12		292682	Lockwasher	15
13		2063266	Traction Motor (36/48 Volt) (☞ Figure 3-4)	1
14		1351926	Axle Housing	1
15		1351927	Spindle	2
16		39714	O-Ring	2
17		293646	Capscrew	32
18		292683	Lockwasher	32
19	**a**	324863	Axle Shaft	2
20	**b**	1351930	Bracket (RH)	1
21	**b**	1351935	Bracket (LH)	1
22		305769	Dowel Pin	4
23		33657	Locknut	2
24		145978	Lockwasher	2
25		85885	Washer	2
26		325568	Oil Seal	2
27		1375752	Brake Drum	2
28		118714	Stud	12
29		264893	Bearing Cup	2
30		264892	Bearing Cone	2
31		30076	Bearing Cup	2
32		230443	Bearing Cone	2
33		21420	Breather	1
34	**a**	15315	Fitting	1
35	**c**	1504042	Brake Assembly (RH) (☞ Figure 5-3)	1
35	**d**	1628070	Brake Assembly (☞ Figure 5-4)	1
35	**c**	1504041	Brake Assembly (LH) (☞ Figure 5-3)	1
35	**d**	1628069	Brake Assembly (☞ Figure 5-4)	1
36		1327246	Lock Bolt	16
37	**a**	35502	Fitting	1
38		1354997	Oil Seal	2
39		16001	Lube Fitting	2
40		1333385	Bushing	2
41		1457128	Transmission Assembly (☞ Figure 3-2)	1
42		136985	Capscrew	6
43		292515	Capscrew	2

©2007 HYSTER COMPANY

DRIVE AXLE

ITEM	PART NO.	DESCRIPTION	QTY
44	136692	Nut	2
45	. . . . .	Tire Assembly (☞ Figure 3-5)	2

FOOTNOTES:
a Use Adhesive 264159 As Required
b Use Lubricant 251979 As Required
c ⇒ S/N G108N04450D
d S/N G108N04451D ⇒

©2007 HYSTER COMPANY

NOTES

TRANSMISSION AND DIFFERENTIAL (Figure 3-2)

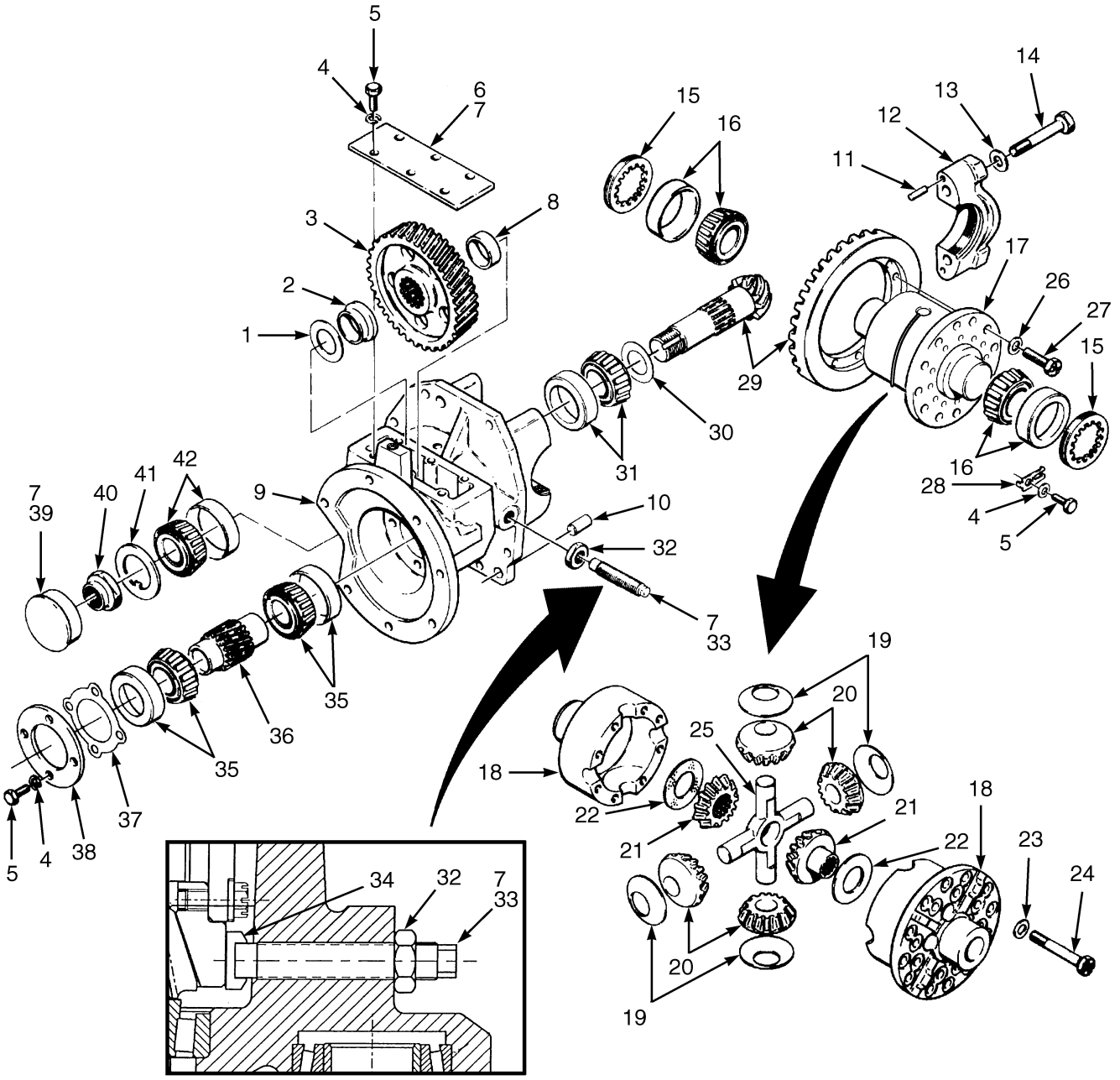

BP240067

©2007 HYSTER COMPANY

TRANSMISSION AND DIFFERENTIAL

ITEM		PART NO.	DESCRIPTION	QTY
		1457128	Transmission Assembly	1
1		325549	Shim (0.020 in.)	AR
1		325550	Shim (0.005 in.)	AR
1		325551	Shim (0.007 in.)	AR
2		324875	Spacer	1
3		1351949	Gear	1
4		292681	Lockwasher	12
5		136749	Capscrew	12
6		1457856	Cover	1
7		264159	Adhesive	AR
8		325552	Spacer	1
9		1457127	Housing Assembly	1
9		1457126	Housing	1
10		334481	Dowel Pin	2
11		234038	Dowel Pin	4
12		334418	Bearing Cap	2
13		193164	Washer	4
14		221588	Capscrew	4
15		334456	Nut	2
16		1338730	Bearing Set	2
17		1383475	Differential	1
18		1383476	Housing (Flange Half)	1
18		1383478	Housing	1
19		1383482	Washer	4
20		1383481	Pinion Gear	4
21		1383480	Side Gear	2
22		1383457	Washer	2
23		261379	Washer	8
24		221521	Capscrew	8
25		1383483	Spider	2
26		334580	Washer	12
27		92942	Bolt	12
28		334447	Lock Plate	2
29		1483410	Gear and Pinion Set	1
30		346842	Shim (0.014 in.)	AR
30		346843	Shim (0.015 in.)	AR
30		346844	Shim (0.016 in.)	AR
30		346845	Shim (0.020 in.)	AR
30		346846	Shim (0.022 in.)	AR
30		346847	Shim (0.025 in.)	AR
31		1338729	Bearing Set	1
32		15032	Nut	1
33	**a**	334571	Screw	1
33	**b**	1616225	Screw	1
34	**b**	1612589	Thrust Button	1
35		1374846	Bearing Set	2
36		1354975	Gear	1
37		110922	Shim (0.005 in.)	AR
37		110923	Shim (0.007 in.)	AR
37		110924	Shim (0.020 in.)	AR
38		324871	Retainer	1

©2007 HYSTER COMPANY

TRANSMISSION AND DIFFERENTIAL

ITEM	PART NO.	DESCRIPTION	QTY
39	69029	Hub Cap	1
40	324872	Nut	1
41	325697	Washer	1
42	1338728	Bearing Set	1

FOOTNOTES:
a ⇒ S/N T056M064524
b S/N T056M064525 ⇒

©2007 HYSTER COMPANY

NOTES

DRIVE UNIT INSTALLATION (Figure 3-3)
E/EE/ES AND CRE/FRE

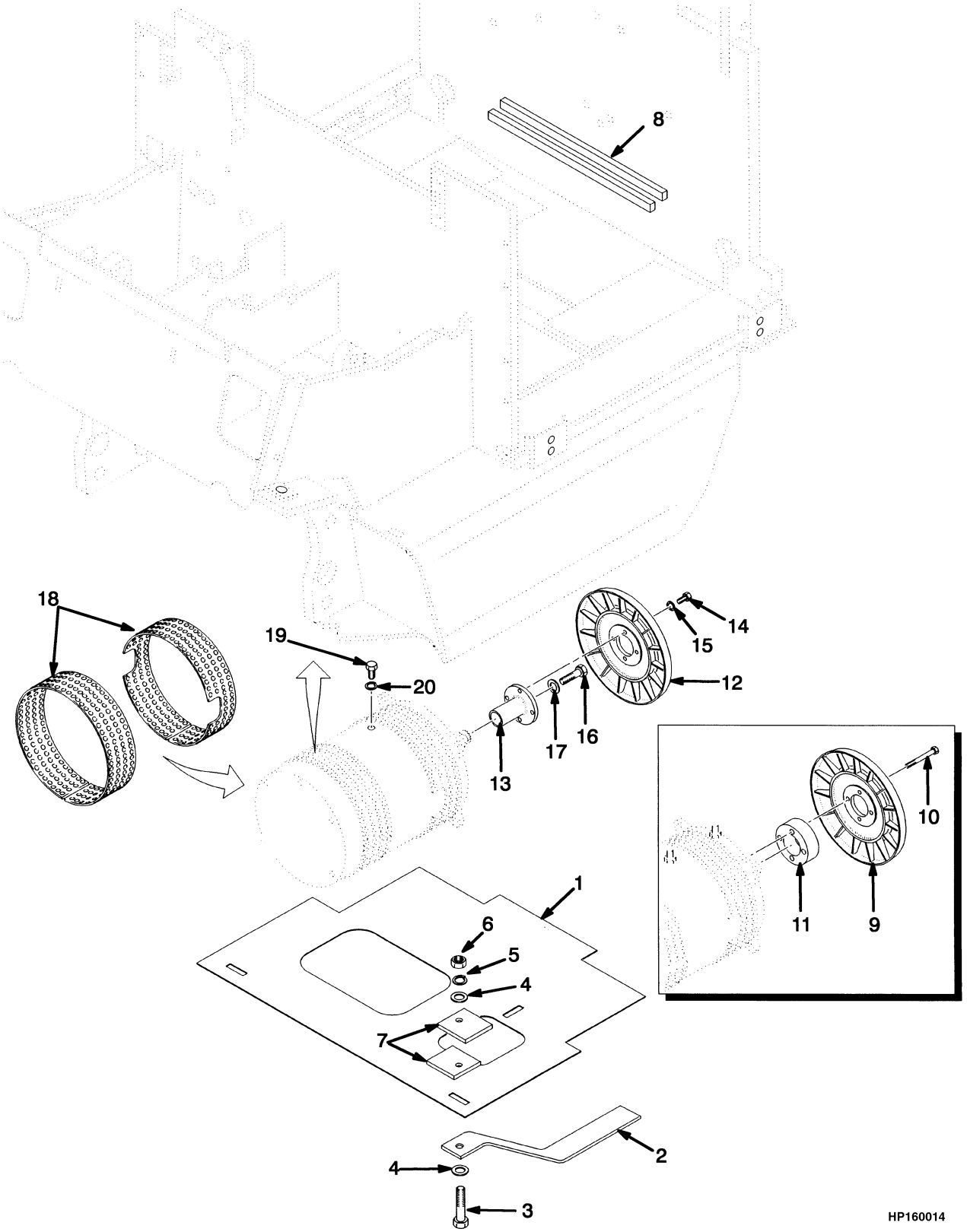

©2007 HYSTER COMPANY

DRIVE UNIT INSTALLATION
E/EE/ES AND CRE/FRE

ITEM		PART NO.	DESCRIPTION	QTY
1		1364803	Plate (27.55 in. Battery Compartment)	1
1		1364804	Plate (33.38 in. Battery Compartment)	1
1		1364806	Plate (39.96 in. Battery Compartment)	1
2	**a**	216895	Static Strap	2
3	**a**	176640	Capscrew	3
4	**a**	320158	Washer	6
5	**a**	292681	Lockwasher	3
6	**a**	239503	Nut	3
7	**a**	1364824	Plate	4
8	**a**	361988	Tape	AR
9	**bd**	. . . . .	Fan	1
10	**bd**	. . . . .	Capscrew	4
11	**bd**	. . . . .	Spacer	1
11	**be**	. . . . .	Spacer	1
12	**be**	. . . . .	Fan	1
13	**be**	. . . . .	Hub	1
14	**be**	. . . . .	Capscrew	4
15	**be**	. . . . .	Lockwasher	4
16	**be**	. . . . .	Capscrew	1
17	**be**	. . . . .	Washer	1
18	**ac**	1564986	Enclosure Bands Kit (Traction Motor)	1
18	**ac**	1564987	Enclosure Bands Kit (Pump Motor)	1
19		. . . . .	Capscrew	1
20		. . . . .	Lockwasher	1

FOOTNOTES:
a Type EE
b Type EE, Closed Motor, CRE/FRE
c Type ES
d With Seat Brake
e Without Seat Brake

©2007 HYSTER COMPANY

TRACTION MOTOR (Figure 3-4)
11.0-INCH

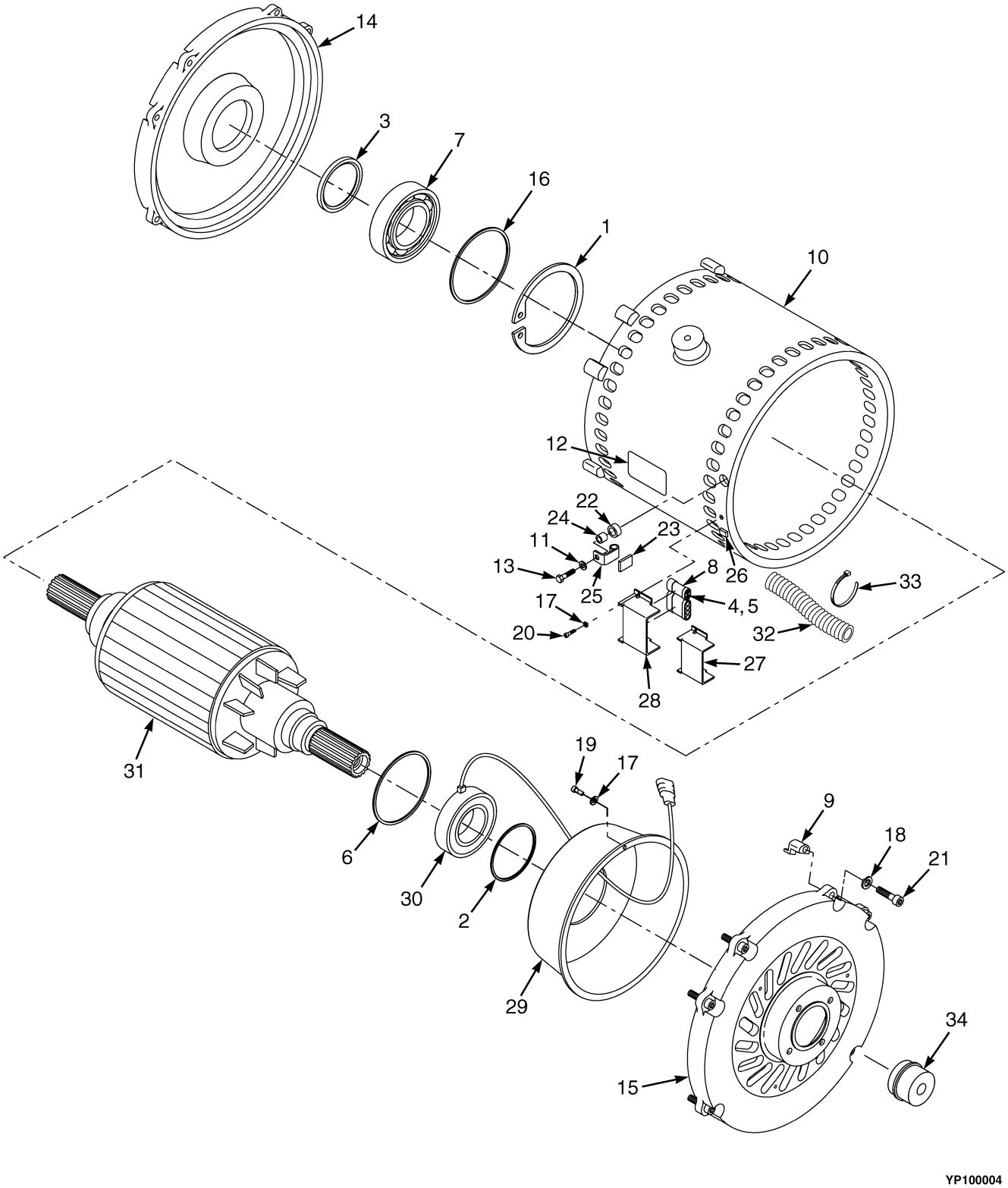

©2007 HYSTER COMPANY

TRACTION MOTOR
11.0-INCH

ITEM	PART NO.	DESCRIPTION	QTY
	2063266	Traction Motor (36/48 Volt)	1
1	1555873	Retaining Ring	1
2	1555874	Spring	1
3	1555875	Shaft Seal	1
4	1600038	Tab Contact	2
5	1600037	Wire Seal	2
6	1555878	O-Ring	1
7	1555879	Bearing	1
8	1600035	Seal	1
9	1555881	Nut	12
10	1555882	Housing	1
11	296395	Washer	3
12	. . . . .	Nameplate	1
13	293613	Capscrew	3
14	1555883	End Bell, DE	1
15	1555884	End Bell, NDE	1
16	1555885	O-Ring	1
17	292678	Lockwasher	5
18	292681	Lockwasher	12
19	292669	Capscrew	3
20	292670	Capscrew	2
21	296014	Capscrew	12
22	. . . . .	Terminal Block	3
23	. . . . .	Cover	3
24	1555891	Nut	3
25	. . . . .	Terminal Flag	3
26	1555892	Sensor Cable Outlet	1
27	1600020	Bracket	1
28	1555894	Bracket	1
29	1555895	Air Guide	1
30	1555896	Bearing	1
31	1555897	Rotor	1
32	1555888	Tube	AR
33	1600031	Cable	AR
34	1670767	Cap (Grease)	1
	1600030	Sleeving	AR
	1564986	Enclosure Bands Kit (Type ES, EE) (☞ Figure 3-3)	1
	1648202	Terminal Block Kit (Includes Items 22-23)	1

©2007 HYSTER COMPANY

TIRES AND WHEELS (Figure 3-5)
DRIVE WHEELS

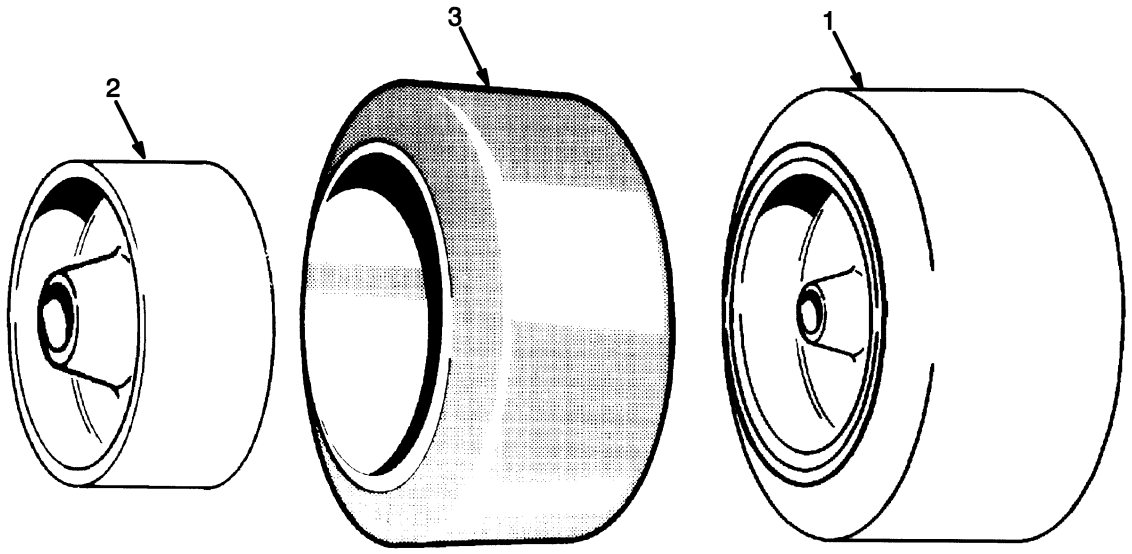

HP000154

KEY:
A: E45-55Z (21 x 7 x 15)
B: E60-65Z (21 x 8 x 15)
C: E45-55Z (21 x 7 x 15 Wide)
D: E60-65Z (21 x 8 x 15 Wide)
E: E45-65Z

ITEM		PART NO.	DESCRIPTION	QTY A	B	C	D	E
1	**b**	1379528	Tire and Wheel	2	..	..	..	..
1	**b**	1379529	Tire and Wheel	..	2	..	..	..
1	**b**	1379530	Tire and Wheel	..	..	2	..	..
1	**b**	1379531	Tire and Wheel	..	..	..	2	..
1	**c**	1375771	Tire and Wheel	2	..	..	..	..
1	**c**	1375772	Tire and Wheel	..	2	..	..	..
1	**c**	1375773	Tire and Wheel	..	..	2	..	..
1	**c**	1375774	Tire and Wheel	..	..	..	2	..
1	**d**	1379532	Tire and Wheel (21 x 7 x 15)	..	..	..	..	2
1	**d**	1379534	Tire and Wheel (21 x 7 x 15 Wide)	..	..	..	..	2
1	**a**	1379536	Tire and Wheel	2	..	..	..	..
1	**a**	1379537	Tire and Wheel	..	2	..	..	..
1	**a**	1379538	Tire and Wheel	..	..	2	..	..
1	**a**	1379539	Tire and Wheel	..	..	..	2	..
2		1375754	Wheel	2	..	..	..	2
2		1375756	Wheel	..	2	..	..	..
2		1375758	Wheel	..	..	2	2	2
3	**b**	1339093	Tire	2	..	2	..	..
3	**b**	1339094	Tire	..	2	..	2	..
3	**c**	1339097	Tire	2	..	2	..	..
3	**c**	237213	Tire	..	2	..	2	..
3	**d**	1339098	Tire (21 x 7 x 15 Standard and Wide)	..	..	..	..	2

©2007 HYSTER COMPANY

TIRES AND WHEELS
DRIVE WHEELS

ITEM		PART NO.	DESCRIPTION	QTY A	B	C	D	E
3	**a**	1339095	Tire	2	..	2	..	..
3	**a**	1339096	Tire	..	2	..	2	..

FOOTNOTES:
a Electric Compound, Lugged Tread
b Electric Compound, Smooth Tread
c Non-Marking Compound, Smooth Tread
d Polyurethane Compound, Smooth Tread

©2007 HYSTER COMPANY

NOTES

4 STEERING SYSTEM

SECTION 4
STEERING SYSTEM

DESCRIPTION	PAGE
GEAR PUMP	4-12
SHIFT LEVER	4-4
STEERING AXLE	4-16
OPTIONAL	4-18
STEERING CONTROL UNIT	4-6
STEERING CYLINDER	4-10
STEERING HYDRAULICS	4-8
STEERING MOTOR	4-14
STEERING POD	4-2
TIRES AND WHEELS	
STEER WHEELS	4-20

©2007 HYSTER COMPANY

STEERING POD (Figure 4-1)

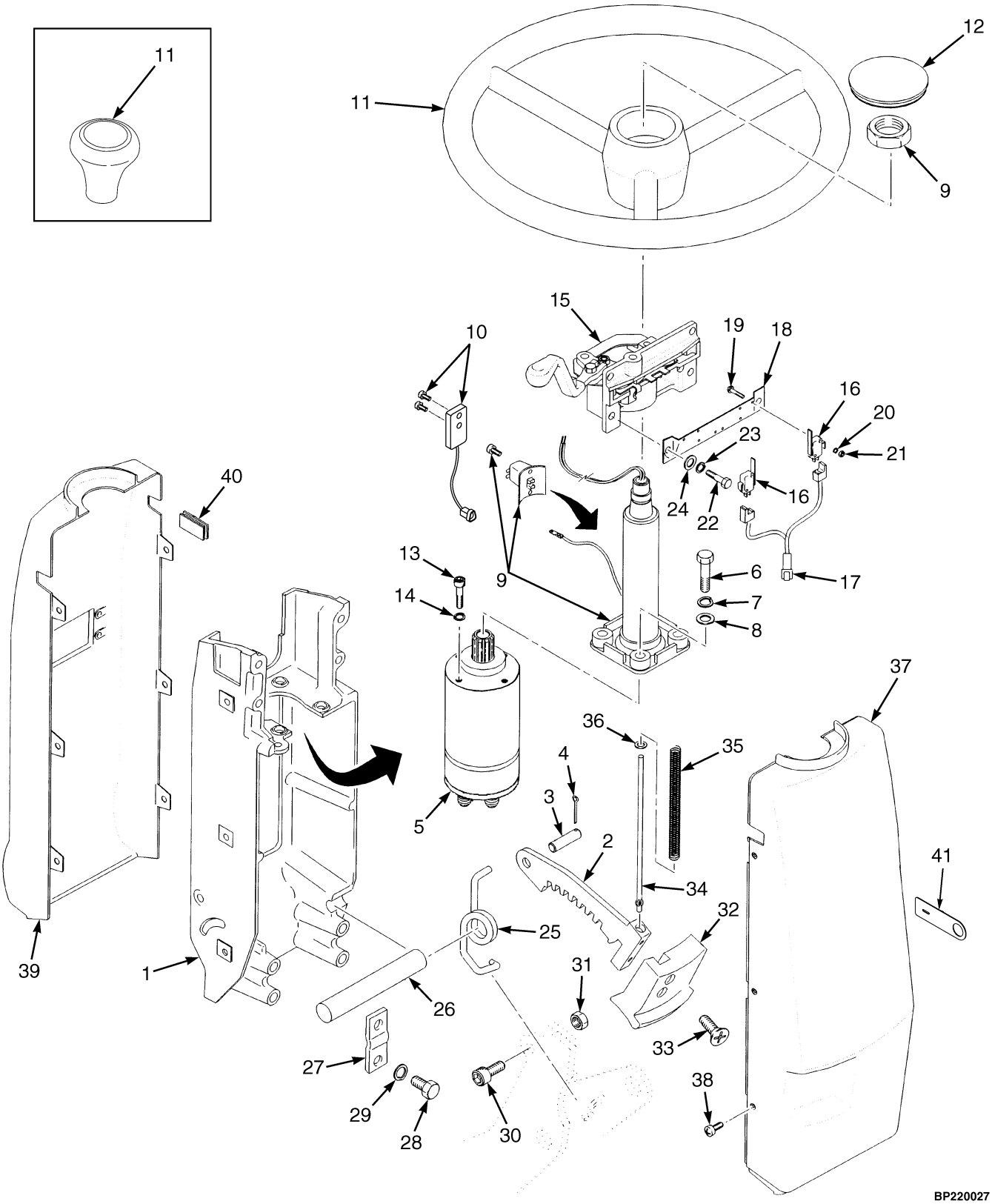

©2007 HYSTER COMPANY

STEERING POD

ITEM		PART NO.	DESCRIPTION	QTY
1		1343573	Bracket	1
2		1364271	Latch	1
3		1343607	Pin	1
4		15212	Cotter Pin	1
5		1453180	Steering Pump (☞ Figure 4-3)	1
6		16815	Capscrew	4
7		15156	Lockwasher	4
8		15134	Washer	4
9		2045129	Steering Column	1
9		1391205	Horn Contact Kit	1
9		1391206	Screw	2
9		345423	Nut	1
10		1504125	Sensor	1
11		1329250	Steering Wheel	1
12	**a**	1450503	Horn Button	1
13		293762	Capscrew	4
14		293779	Lockwasher	4
15		1347004	Shift Lever Assembly (Forward/Reverse) (☞ Figure 4-2)	1
16		1498406	Switch (Forward/Reverse)	2
17		2046756	Wire Harness (Shift Lever) (Forward/Reverse)	1
17		1352563	Connector	2
17		381919	Bulk Braiding	AR
18		1343595	Plate (Forward/Reverse)	1
19		220426	Screw (Forward/Reverse)	4
20		53162	Lockwasher (Forward/Reverse)	8
21		16865	Nut (Forward/Reverse)	4
22		292501	Capscrew (Forward/Reverse)	4
23		292680	Lockwasher (Forward/Reverse)	4
24		320156	Washer (Forward/Reverse)	4
25		1378600	Spring	1
26		1335987	Shaft	1
27		1335967	Plate	2
28		136749	Capscrew	4
29		292681	Lockwasher	4
30		296010	Capscrew	1
31		302400	Locknut	1
32		1343574	Tilt Control Lever (Latch)	1
33		296215	Capscrew	2
34		1343572	Rod	1
35		1343537	Spring	1
36		320155	Washer	1
37		1397864	Cover (Lower)	1
38		1337196	Screw	6
39		1397863	Cover (Upper)	1
40		1376743	Plug (Without Turn Signal)	1
41		1520609	Static Ground Patch	1

FOOTNOTES:

a Service with Horn Replacement Kit 1642089

©2007 HYSTER COMPANY

SHIFT LEVER (Figure 4-2)

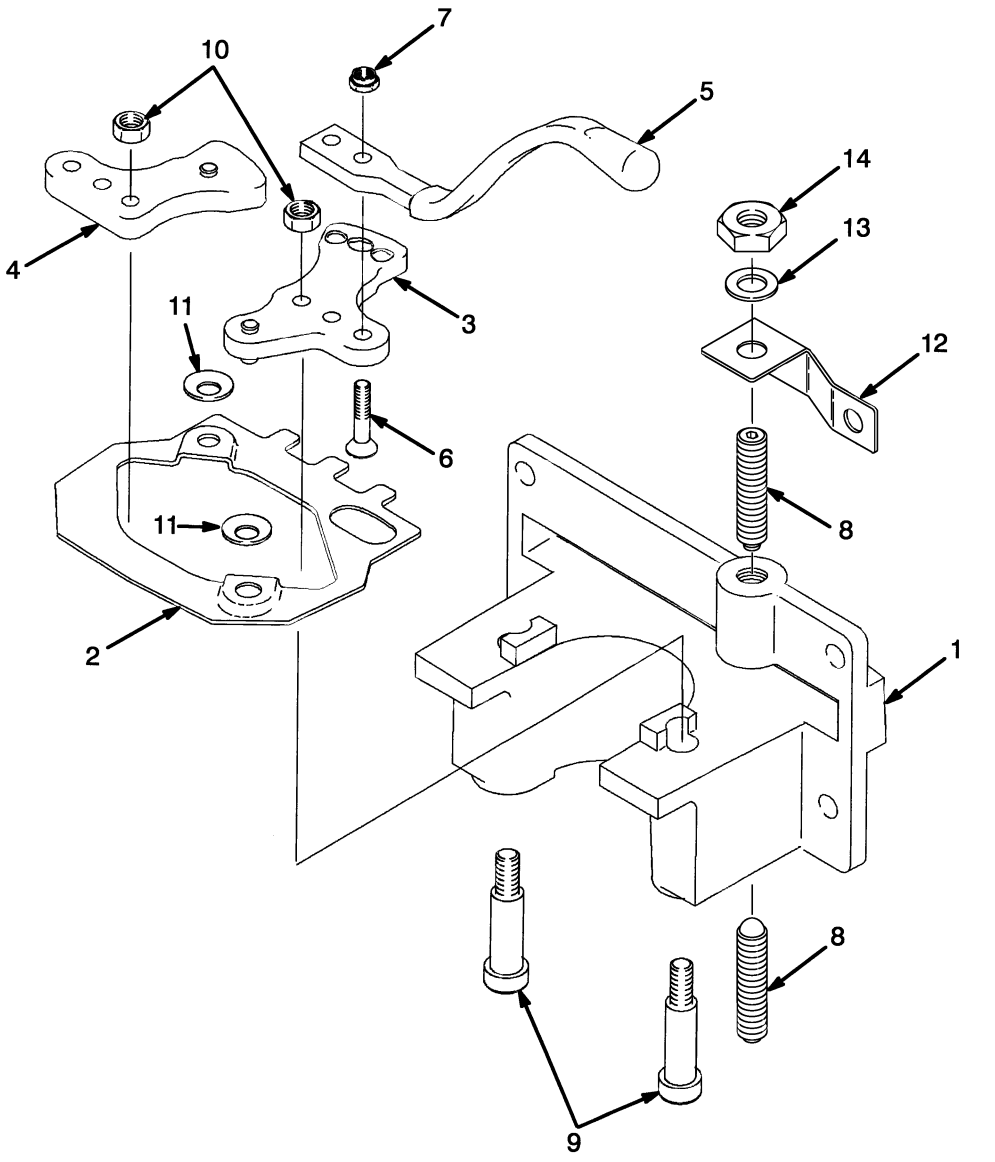

©2007 HYSTER COMPANY

SHIFT LEVER

ITEM	PART NO.	DESCRIPTION	QTY
	1347004	Shift Lever Assembly	1
1	1343577	Base	1
2	1343578	Link	1
3	1343579	Crank	1
4	1343598	Crank	1
5	1343593	Shift Lever	1
6	296205	Capscrew	2
7	302398	Nut	2
8	1491830	Spring Plunger	2
9	1343594	Bolt	2
10	136687	Nut	2
11	1354300	Washer	4
12	1573121	Bracket	1
13	15156	Lockwasher	1
14	15086	Nut	1

©2007 HYSTER COMPANY

STEERING CONTROL UNIT (Figure 4-3)

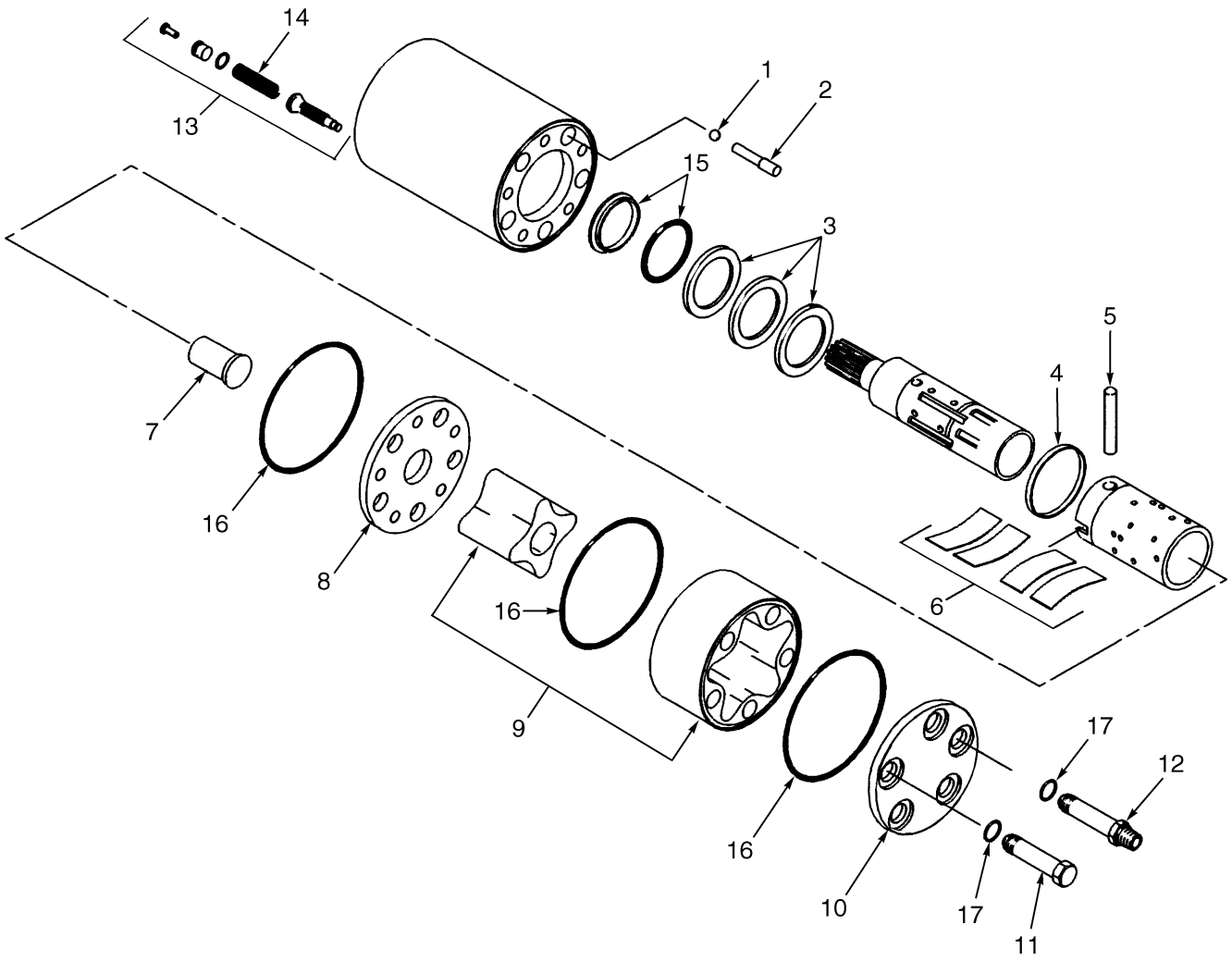

BP220023

©2007 HYSTER COMPANY

STEERING CONTROL UNIT

ITEM	PART NO.	DESCRIPTION	QTY
	1453180	Steering Pump	1
1	1355335	Ball	1
2	1455769	Ball Stop	1
3	1451697	Bearing	1
4	1455770	Ring	1
5	1451698	Pin (Cross)	1
6	1455771	Spring Set	1
7	. . . . .	Spacer	1
8	1451703	Distributor Plate	1
9	. . . . .	Gear Set	1
10	1455773	Cover	1
11	1455780	Screw	1
12	1451712	Screw	4
13	1455776	Relief Valve	1
14	1455779	Spring	1
15	. . . . .	Dust Seal	1
16	. . . . .	O-Ring	3
17	. . . . .	O-Ring	5
	1467430	Seal Kit (Includes Items 15-17)	1

©2007 HYSTER COMPANY

STEERING HYDRAULICS (Figure 4-4)

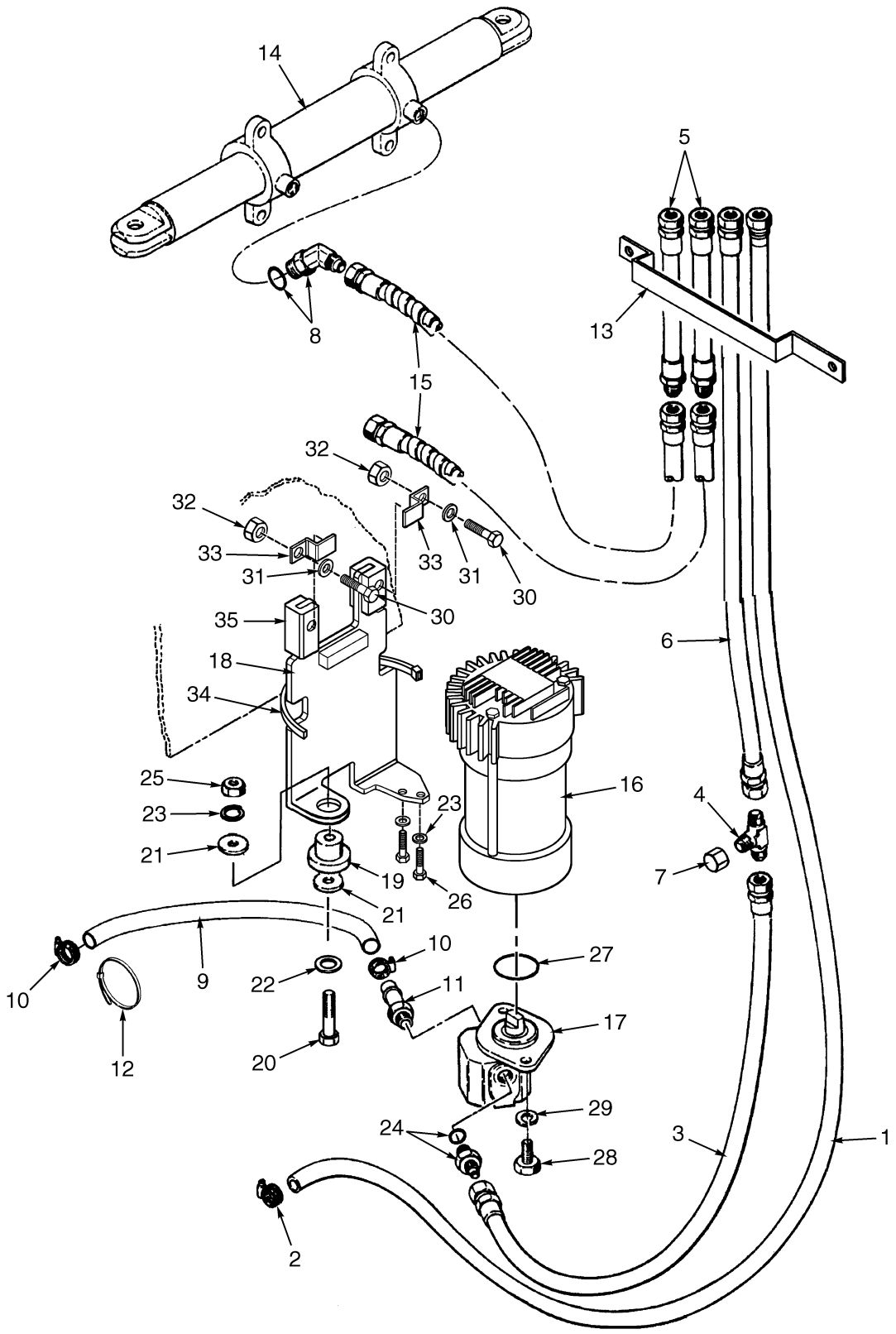

©2007 HYSTER COMPANY

STEERING HYDRAULICS

ITEM	PART NO.	DESCRIPTION	QTY
1	121085	Hose	1
2	166857	Clamp	1
3	105817	Hose	1
4	14560	Fitting	1
5	878111	Hose	2
6	117095	Hose	1
7	16693	Fitting	1
8	16567	Fitting	2
8	16483	O-Ring	1
9	85550	Hose	1
10	130845	Clamp	2
11	186227	Fitting	1
11	16485	O-Ring	1
12	129563	Strap Clamp	2
13	1364274	Bracket	1
14	. . . . .	Steering Cylinder (☞ Figure 4-5)	1
15	2026017	Hose (27.55 in., 30.94 in., 33.38 in. Battery Compartment)	2
15	1364267	Hose (39.36 in. Battery Compartment)	2
16	2063379	Steering Motor (36/48V) (☞ Figure 4-7)	1
17	2033614	Gear Pump Assembly (☞ Figure 4-6)	1
18	1544944	Bracket	1
19	317594	Mount	1
20	292509	Capscrew	1
21	1356113	Washer	2
22	320158	Washer	2
23	292681	Lockwasher	2
24	17196	Fitting	1
24	16484	O-Ring	1
25	239503	Nut	1
26	136681	Capscrew	2
27	39362	O-Ring	1
28	18535	Capscrew	2
29	15156	Lockwasher	2
30	296174	Capscrew	2
31	292682	Lockwasher	2
32	136692	Nut	2
33	324972	Bracket	2
34	227221	Clamp	1
35	325056	Channel (Rubber)	2

©2007 HYSTER COMPANY

STEERING CYLINDER (Figure 4-5)

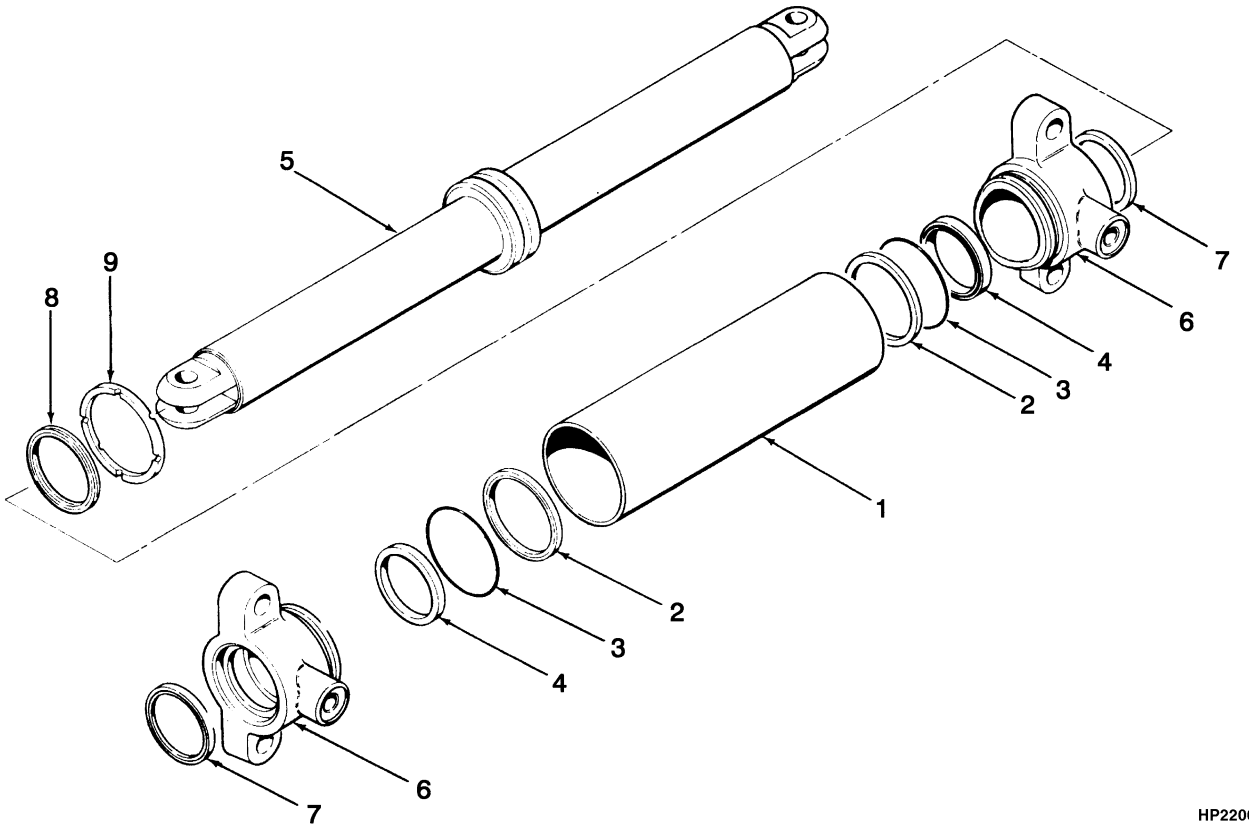

HP220095

ITEM		PART NO.	DESCRIPTION	QTY
	a	329222	Steering Cylinder Assembly	1
	b	1593351	Steering Cylinder Assembly	1
1		329218	Shell	1
2		1310391	Back-Up Ring	2
3		1310389	O-Ring	2
4		2032490	Rod Seal	2
5	**a**	329221	Piston Rod	1
5	**b**	1591967	Piston and Rod Assembly	1
6	**a**	1310393	End Cap	2
6	**b**	1591667	End Cap	2
7	**a**	203071	Rod Wiper	2
7	**b**	2071094	Rod Wiper	2
8		14191	O-Ring	2
9		2044370	Piston Seal	1
	a	1501412	Seal Kit (Includes Items 2-4, 7-9)	1
	b	1593352	Seal Kit (Includes Items 2-4, 7-9)	1

FOOTNOTES:

a ⇒ S/N G108N02992D

b S/N G108N02993D ⇒

©2007 HYSTER COMPANY

NOTES

GEAR PUMP (Figure 4-6)

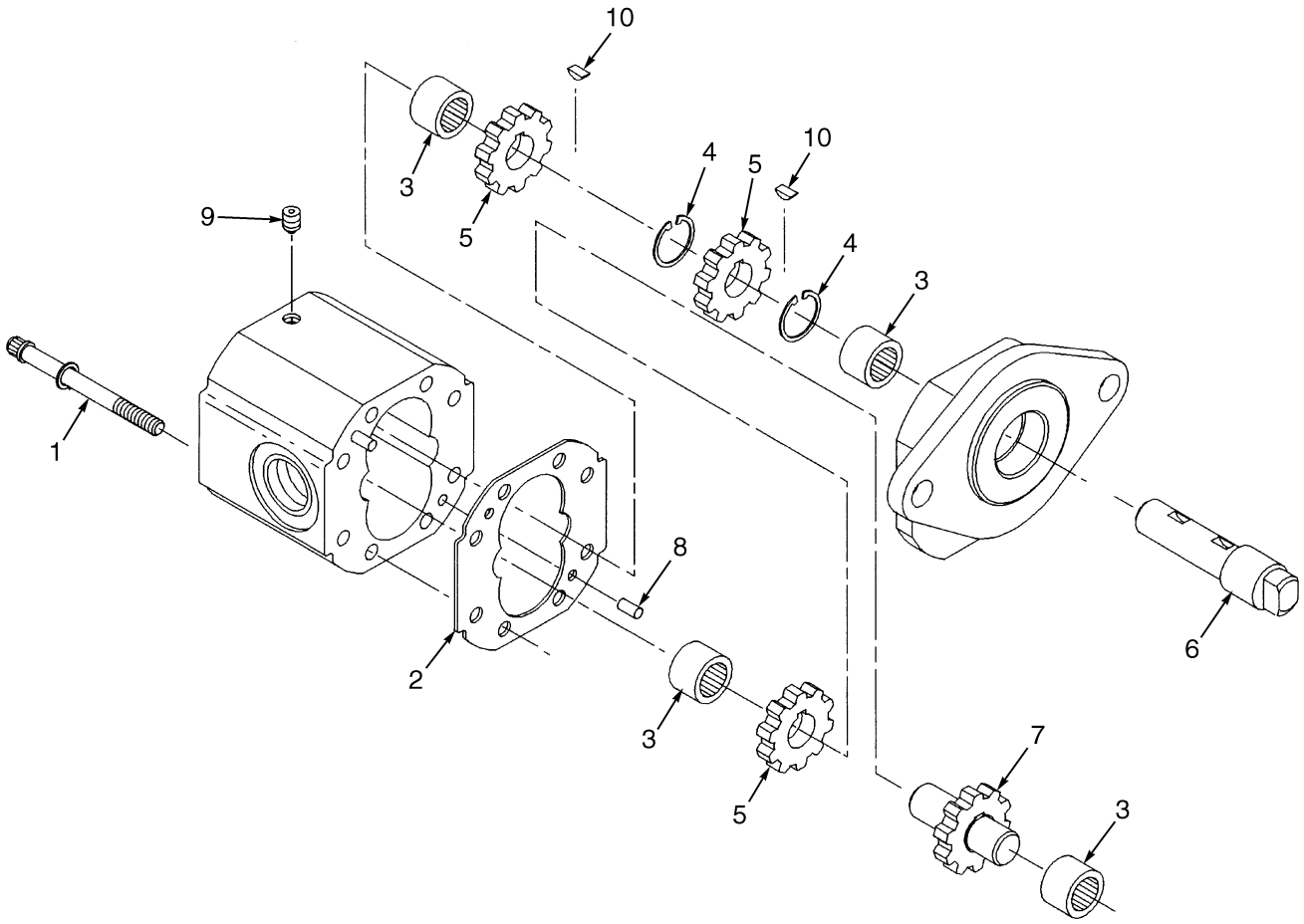

BP220030

©2007 HYSTER COMPANY

GEAR PUMP

ITEM	PART NO.	DESCRIPTION	QTY
	2033614	Gear Pump Assembly	1
1	1452459	Screw	8
2	2034266	Gasket Set	1
3	354669	Needle Bearing	4
4	358072	Snap Ring	2
5	358069	Gear	3
6	1309877	Drive Shaft	1
7	2034265	Idler Shaft	1
8	354671	Pin	2
9	358076	Plug	1
10	358073	Key	2

©2007 HYSTER COMPANY

STEERING MOTOR (Figure 4-7)

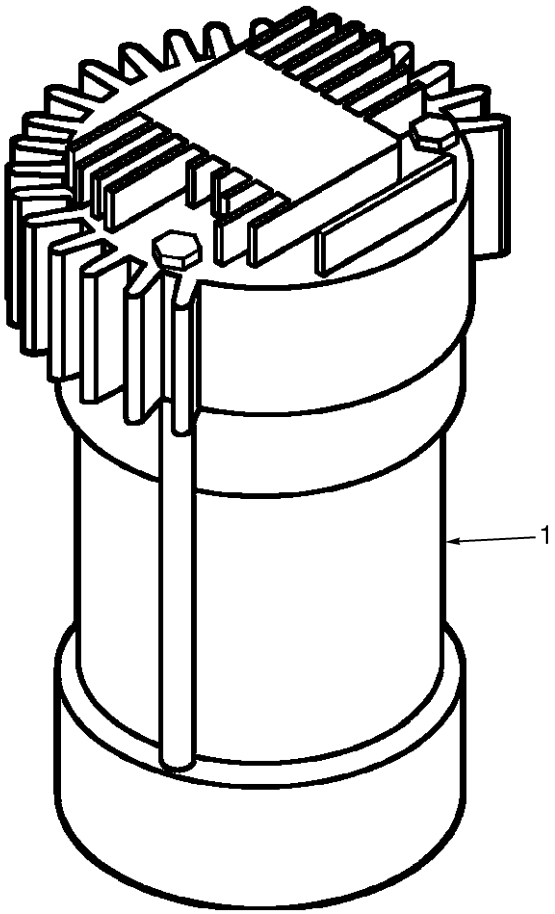

HP220310

©2007 HYSTER COMPANY

STEERING MOTOR

ITEM	PART NO.	DESCRIPTION	QTY
1	2063379	Steering Motor	1

©2007 HYSTER COMPANY

STEERING AXLE (Figure 4-8)

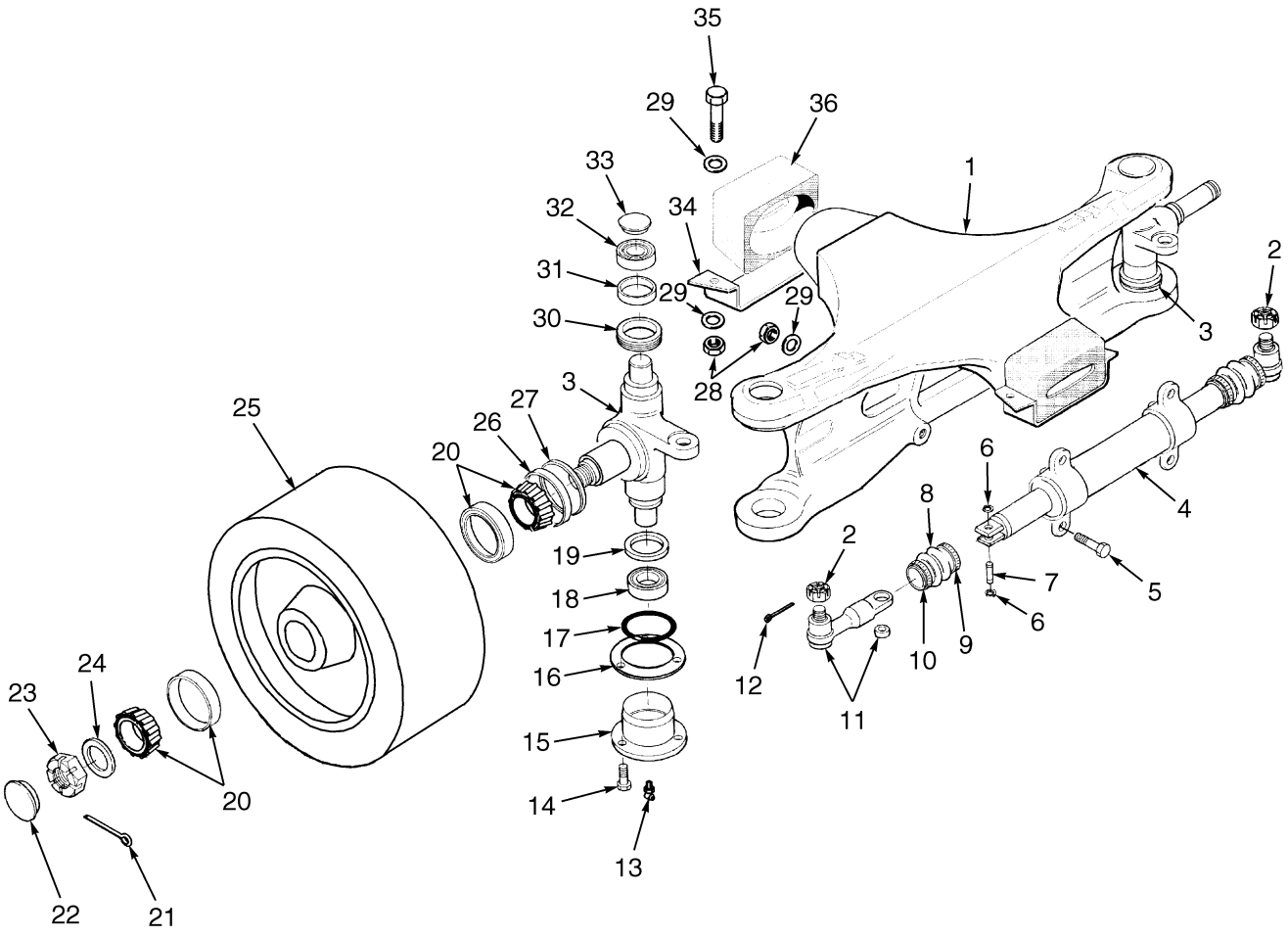

HP220300

©2007 HYSTER COMPANY

STEERING AXLE

ITEM	PART NO.	DESCRIPTION	QTY
1	324802	Steering Axle Frame (Frame)	1
2	21189	Nut	2
3	1464149	Spindle (RH)	1
3	1464150	Spindle (LH)	1
4	. . . . .	Steering Cylinder (☞ Figure 4-5)	1
5	293686	Capscrew	4
6	58903	Snap Ring	4
7	1568271	Pin	2
8	185869	Boot	2
9	119236	Clamp	2
10	127045	Clamp (Hose)	2
11	185870	Tie Rod Assembly	2
11	185872	Bushing	1
12	15225	Cotter Pin	2
13	13963	Lube Fitting	2
14	293628	Capscrew	6
15	369812	Bearing Cap	2
16	185856	Shim (0.005 in.)	AR
16	185857	Shim (0.007 in.)	AR
16	185858	Shim (0.020 in.)	AR
17	39678	O-Ring	2
18	135657	Bearing Cone	2
18	135658	Bearing Cup	2
19	266733	Seal	2
20	183614	Bearing Cup	2
20	183615	Bearing Cone	2
21	15227	Cotter Pin	2
22	69029	Hub Cap	2
23	1461672	Nut	2
24	1461671	Washer	2
25	. . . . .	Tire Assembly (☞ Figure 4-10)	2
26	164639	Wear Sleeve	2
27	44542	Oil Seal	2
28	300937	Locknut	4
29	320161	Washer	8
30	153716	Seal	2
31	153717	Wear Sleeve	2
32	156194	Bearing Cup	2
32	156195	Bearing Cone	2
33	185860	Plug	2
34	324858	Plate	2
35	293648	Capscrew	4
36	324864	Mount	2

©2007 HYSTER COMPANY

STEERING AXLE (Figure 4-9)
OPTIONAL

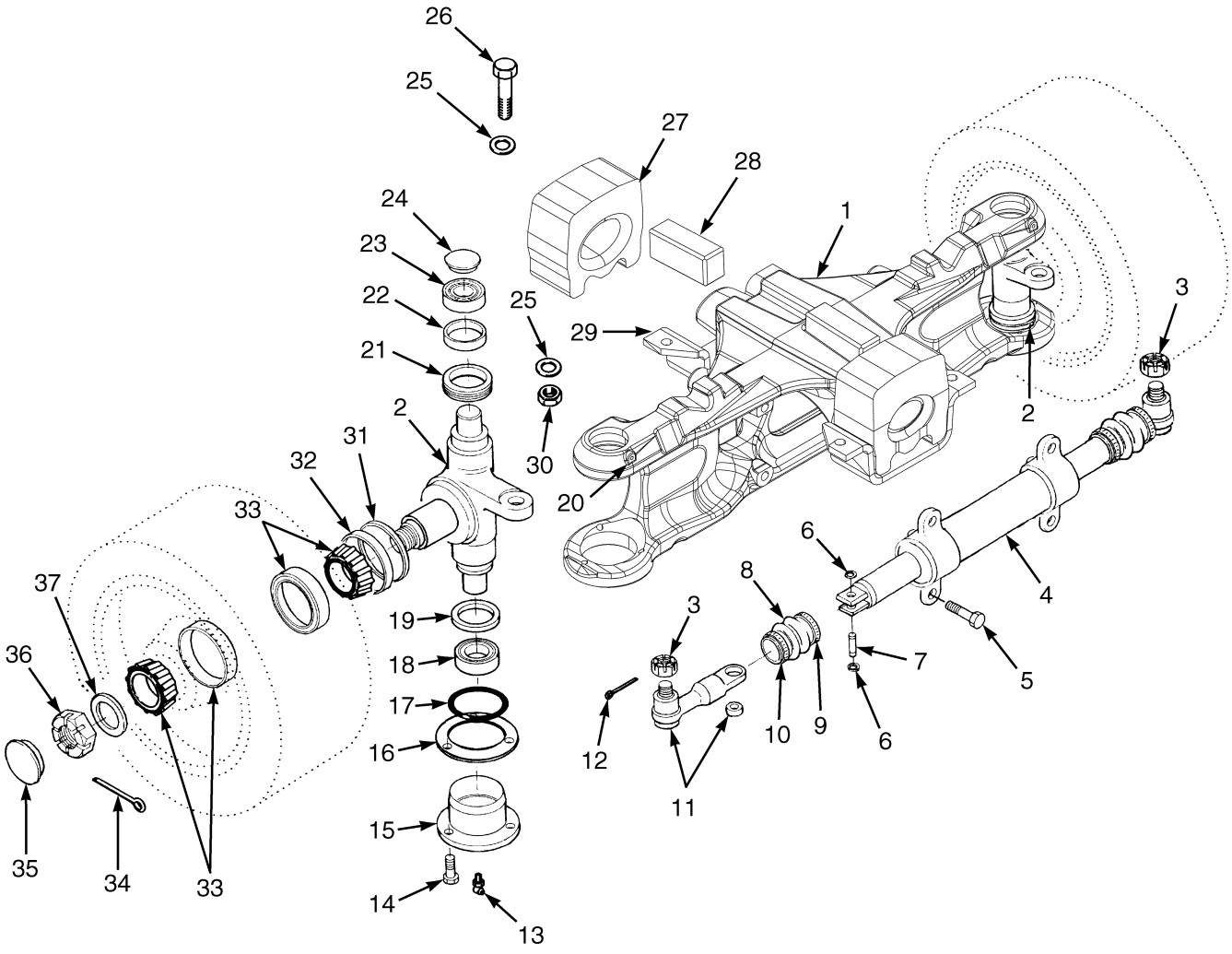

HP220461

©2007 HYSTER COMPANY

STEERING AXLE
OPTIONAL

ITEM	PART NO.	DESCRIPTION	QTY
	1534420	Steer Axle Assembly	1
1	1534418	Steer Axle Frame	1
2	1464149	Spindle (RH)	1
2	1464150	Spindle (LH)	1
3	21189	Nut	2
4	1593351	Steering Cylinder Assembly	1
5	293686	Capscrew	4
6	58903	Snap Ring	4
7	1568271	Pin	2
8	185869	Boot	2
9	119236	Clamp	2
10	127045	Clamp (Hose)	2
11	185870	Tie Rod Assembly	2
11	185872	Bushing	1
12	13957	Lube Fitting	2
13	13963	Lube Fitting	2
14	293628	Capscrew	6
15	369812	Bearing Cap	2
16	185856	Shim (0.005 in.)	AR
16	185857	Shim (0.007 in.)	AR
16	185858	Shim (0.020 in.)	AR
17	39678	O-Ring	2
18	135657	Bearing Cone	1
18	135658	Bearing Cup	1
19	266733	Seal	2
20	13957	Lube Fitting	2
21	153716	Seal	2
22	153717	Wear Sleeve	2
23	156194	Bearing Cup	1
23	156195	Bearing Cone	1
24	185860	Plug	2
25	320161	Washer	8
26	293648	Capscrew	4
27	1525354	Mount	2
28	1388838	Mount	2
29	1543254	Plate	2
30	300937	Locknut	4
31	44542	Oil Seal	2
32	164639	Wear Sleeve	2
33	183614	Bearing Cup	1
33	183615	Bearing Cone	1
34	15227	Cotter Pin	2
35	69029	Hub Cap	2
36	1461672	Nut	2
37	1461671	Washer	2

©2007 HYSTER COMPANY

TIRES AND WHEELS (Figure 4-10)
STEER WHEELS

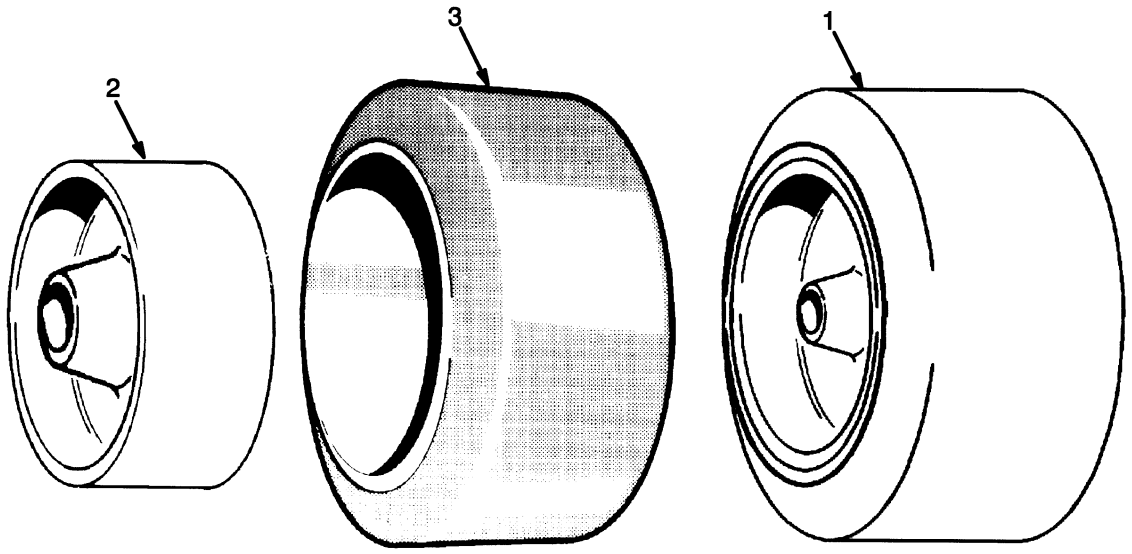

HP000154

KEY:
A: E45Z (16 x 5 x 10.5)
B: E45-65Z (16 x 6 x 10.5)

ITEM		PART NO.	DESCRIPTION	QTY A	QTY B
1	**b**	1462172	Tire and Wheel	2	..
1	**b**	1462173	Tire and Wheel	..	2
1	**c**	1462171	Tire and Wheel	..	2
1	**c**	1656201	Tire and Wheel	2	..
1	**d**	1462176	Tire and Wheel	..	2
1	**a**	1462174	Tire and Wheel	2	..
1	**a**	1462175	Tire and Wheel	..	2
2		1461669	Wheel	2	2
3	**b**	259781	Tire	2	..
3	**b**	259782	Tire	..	2
3	**c**	237208	Tire	..	2
3	**c**	1655319	Solid Tire	2	..
3	**d**	237192	Tire	..	2
3	**a**	806974	Tire	2	..
3	**a**	806975	Tire	..	2

FOOTNOTES:
a Electric Compound, Lugged Tread
b Electric Compound, Smooth Tread
c Non-Marking Compound, Smooth Tread
d Polyurethane Compound, Smooth Tread

©2007 HYSTER COMPANY

5 BRAKE/ACCELERATOR SYSTEM

SECTION 5
BRAKE/ACCELERATOR SYSTEM

DESCRIPTION	PAGE
ACCELERATOR	5-26
ACCELERATOR PEDAL	5-28
BRAKE	
⇒S/N G108N04450D	5-6
S/N G108N04451D⇒	5-8
BRAKE PEDAL LINKAGE	5-2
BRAKE SWITCH HARNESS	5-30
MASTER CYLINDER	5-4
PARK BRAKE	
SEAT ACTUATED	5-24
PARK BRAKE LINKAGE	
LEVER ACTUATED	5-10
SEAT ACTUATED	
S/N G108N05936E⇒	5-20
⇒S/N G108V03421C	5-14
S/N G108V03422C⇔S/N G108N05935E	5-16

BRAKE PEDAL LINKAGE (Figure 5-1)

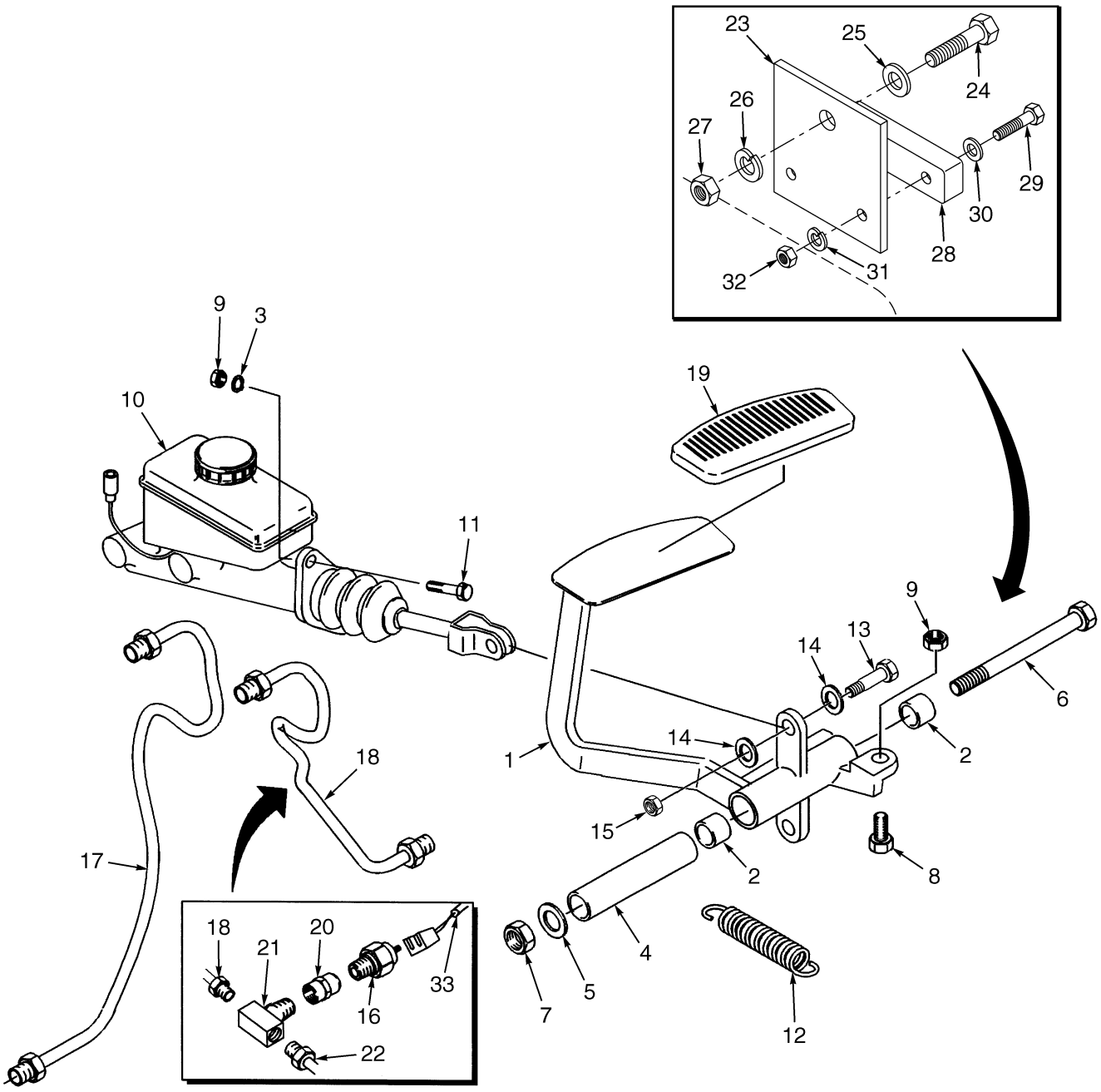

BP040040

©2007 HYSTER COMPANY

BRAKE PEDAL LINKAGE

ITEM		PART NO.	DESCRIPTION	QTY
1		1389330	Brake Pedal Assembly	1
2		66359	Bushing	2
3		292680	Lockwasher	2
4		1340979	Tube	1
5		15180	Washer	1
6		292576	Capscrew	1
7		316828	Nut	1
8		136985	Capscrew	1
9		136692	Nut	3
10		1347048	Master Cylinder (☞ Figure 5-2)	1
11		287860	Capscrew	2
12		1340998	Spring	1
13		1398007	Bolt	1
14		320159	Washer	4
15		302400	Locknut	1
16		387867	Pressure Switch	1
17		1340902	Tube	1
18		878833	Tube	1
18	**a**	1618102	Tube	1
19	**b**	1343630	Pad	1
20		16168	Fitting	1
21		14899	Fitting	1
22		878834	Tube	1
22	**a**	1618101	Tube	1
23	**b**	1518372	Bracket (Relay)	1
24		287816	Capscrew	1
25		1476421	Washer	2
26		292680	Lockwasher	1
27		136687	Nut	1
28		1460442	Relay (12 Volt)	1
29		220289	Screw	2
30		197065	Washer	2
31		15151	Lockwasher	2
32		15049	Nut	2
33		2004005	Strap Clamp	4
34		1308349	Electrical Connector	1
35		222523	Heat Shrink Tube	1
36		2067821	Wire Harness (☞ Figure 5-12)	1

FOOTNOTES:
a ⇒ D/B 07/2005
b D/B 07/2005 ⇒

©2007 HYSTER COMPANY

MASTER CYLINDER (Figure 5-2)

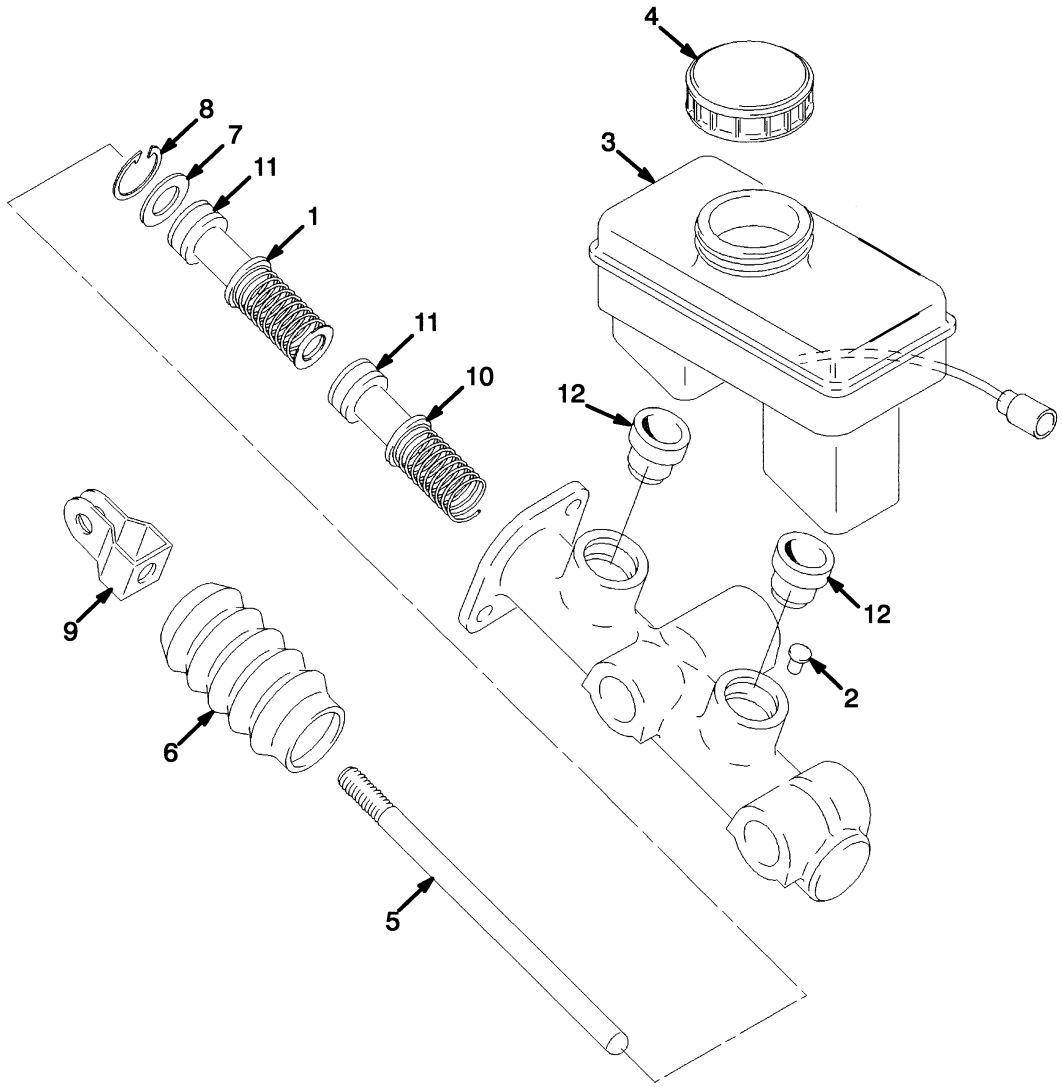

©2007 HYSTER COMPANY

MASTER CYLINDER

ITEM	PART NO.	DESCRIPTION	QTY
	1347048	Master Cylinder	1
1	1357197	Piston	1
2	1324029	Pin	1
3	1357199	Reservoir	1
4	1324048	Cap	1
5	1357201	Rod	1
6	1324040	Cover	1
7	1324041	Washer	1
8	1324042	Snap Ring	1
9	1324035	Clevis	1
10	1357196	Piston	1
11	. . . . .	Seal	2
12	. . . . .	Seal	2
	1355305	Seal Kit (Includes Items 11-12)	1

©2007 HYSTER COMPANY

BRAKE (Figure 5-3)
(⇒S/N G108N04450D)

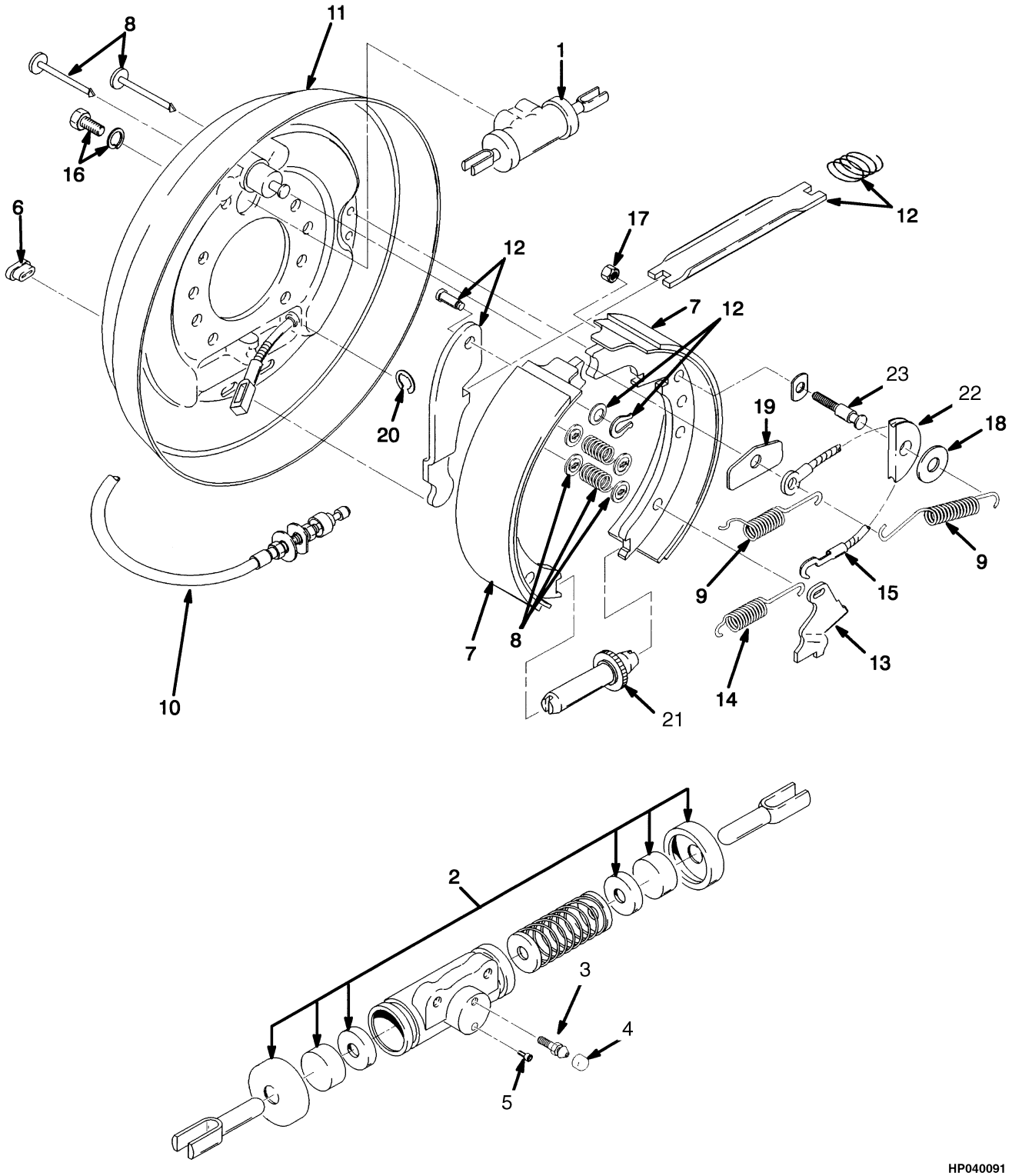

©2007 HYSTER COMPANY

BRAKE
(⇒S/N G108N04450D)

KEY:
A: Right Hand
B: Left Hand

ITEM	PART NO.	DESCRIPTION	QTY A	QTY B
	1504042	Brake Assembly (RH)	1	..
	1504041	Brake Assembly (LH)	..	1
1	1334648	Wheel Cylinder	1	1
2	1334647	Repair Kit	1	1
2	2040959	Cup and Boot Kit	1	1
3	1361503	Bleeder Screw	1	1
4	1361504	Bleeder Cap	1	1
5	. . . . .	Plug	1	1
6	1334642	Cover	1	1
7	1591665	Shoe and Lining Kit (RH)	1	..
7	1591664	Shoe and Lining Kit (LH)	..	1
8	1334639	Shoe Hold Down Kit	1	1
9	1334638	Spring Kit	2	2
10	1375022	Cable (LH)	..	1
10	1375024	Cable (RH)	1	..
11	1508081	Backing Plate (RH)	1	..
11	1508079	Backing Plate (LH)	..	1
12	1375048	Parking Brake Kit (LH)	..	1
12	1375049	Parking Brake Kit (RH)	1	..
12	1360796	Strut (RH)	1	..
12	1361507	Strut (LH)	..	1
13	1360794	Lever (RH)	1	..
13	1361505	Lever (LH)	..	1
14	1360793	Spring	1	1
15	1360792	Cable Assembly	1	1
16	1360798	Bolt	2	2
17	. . . . .	Nut	1	1
18	. . . . .	Washer	1	1
19	1361501	Guide	1	1
20	1361502	Snap Ring	1	1
21	1334645	Adjuster	1	..
21	1334646	Adjuster (LH)	..	1
22	. . . . .	Sheave	1	1
23	. . . . .	Pin	1	1
	1379758	Sheave Kit (Includes Items 17-18, 22-23)	1	1

©2007 HYSTER COMPANY

BRAKE (Figure 5-4)
(S/N G108N04451D⇒)

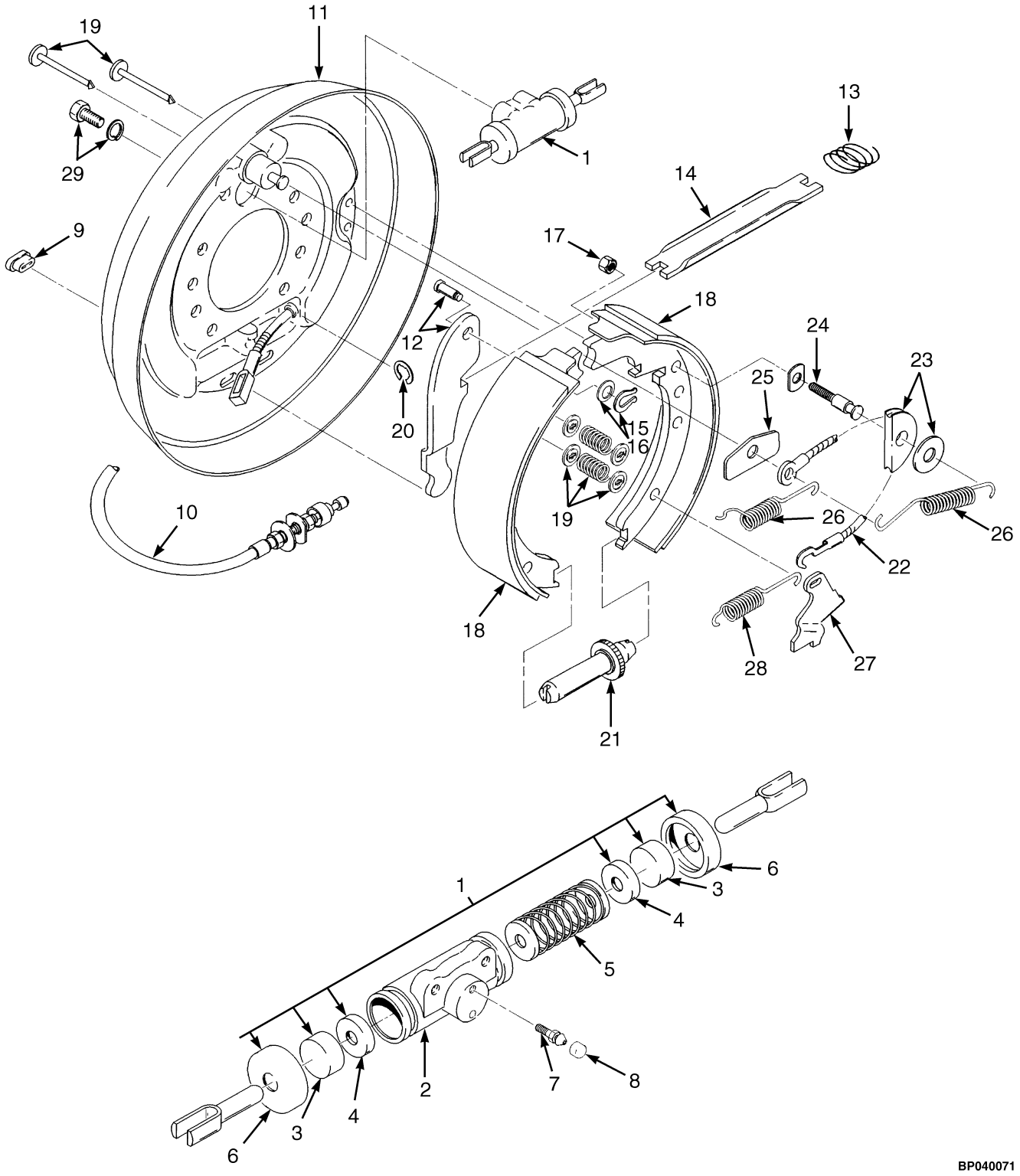

©2007 HYSTER COMPANY

BRAKE
(S/N G108N04451D⇒)

KEY:
A: Right Hand
B: Left Hand

ITEM	PART NO.	DESCRIPTION	QTY A	QTY B
	1628070	Brake Assembly (RH)	1	..
	1628069	Brake Assembly (LH)	..	1
1	2027398	Wheel Cylinder	1	1
2	1637986	Body	1	1
3	. . . . .	Piston	2	2
4	. . . . .	Cup	2	2
5	. . . . .	Spring	1	1
6	. . . . .	Boot	2	2
7	1361503	Bleeder Screw	1	1
8	1361504	Bleeder Cap	1	1
9	1334642	Cover	1	1
10	1375022	Cable (LH)	..	1
10	1375024	Cable (RH)	1	..
11	1508081	Backing Plate (RH)	1	..
11	1508079	Backing Plate (LH)	..	1
12	1360795	Parking Lever Assembly (RH)	1	..
12	1361506	Parking Lever Assembly (LH)	..	1
13	1360797	Spring	1	1
14	1360796	Strut (RH)	1	..
14	1361507	Strut (LH)	..	1
15	1338917	Washer	1	1
16	1338916	Retainer	1	1
17	. . . . .	Nut	1	1
18	1591665	Shoe and Lining Kit (RH)	1	..
18	1591664	Shoe and Lining Kit (LH)	..	1
19	1334639	Shoe Hold Down Kit	1	1
20	1361502	Snap Ring	1	1
21	1334645	Adjuster (RH)	1	..
21	1334646	Adjuster (LH)	..	1
22	1360792	Cable Assembly	1	1
23	1379758	Sheave Kit	1	1
23	1334644	Sheave	1	1
23	1361500	Washer	1	1
24	. . . . .	Pin	1	1
25	1361501	Guide	1	1
26	1334638	Spring Kit	2	2
27	1360794	Lever (RH)	1	..
27	1361505	Lever (LH)	..	1
28	1360793	Spring	1	1
29	1360798	Bolt	2	2
	1375048	Parking Brake Kit (LH) (Includes Items 12-14)	..	1
	1375049	Parking Brake Kit (RH) (Includes Items 12-16)	1	..
	2027720	Auto Adjust Kit (LH) (Includes Items 22, 27-28)	..	1
	2027721	Auto Adjust Kit (RH) (Includes Items 22, 27-28)	1	..

©2007 HYSTER COMPANY

PARK BRAKE LINKAGE (Figure 5-5)
LEVER ACTUATED

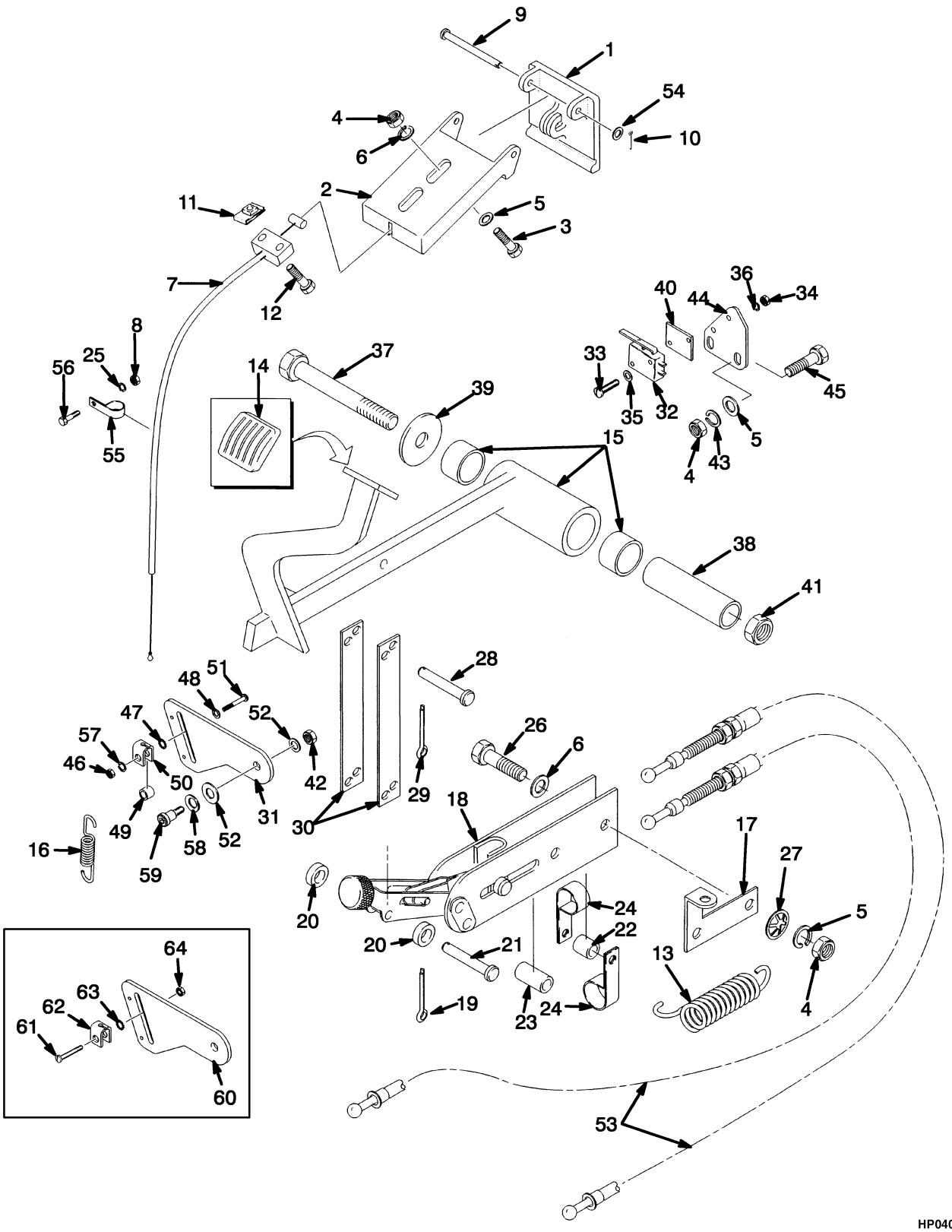

©2007 HYSTER COMPANY

PARK BRAKE LINKAGE
LEVER ACTUATED

ITEM		PART NO.	DESCRIPTION	QTY
1		1531210	Handle	1
2		1531211	Bracket	1
3		296168	Capscrew	2
4		239503	Nut	6
5		320157	Washer	4
6		292681	Lockwasher	6
7		1462535	Park Brake Cable	1
8		15039	Nut	1
9		1462909	Rod End Pin	1
10		15200	Cotter Pin	1
11		1354323	Nut (Foldover)	2
12		292502	Capscrew	2
13		1383178	Spring	1
14		182115	Pad	1
15		1390302	Brake Pedal Assembly	1
15		66359	Bushing	2
16		1340685	Spring	1
17		1383179	Bracket	1
18		1383192	Park Brake Lever Assembly	1
19		15211	Cotter Pin	1
20		1375036	Spacer	2
21		1333572	Pin	1
22		1330998	Spacer	1
23		1330999	Spacer	1
24		1331002	Clamp	2
25		15163	Lockwasher	1
26		136704	Capscrew	2
27		1337017	Retainer	2
28		1340687	Chain Anchor Pin	2
29		15212	Cotter Pin	2
30		1377661	Bar	2
31	**a**	1462389	Plate	1
32		1498407	Switch	1
33		220428	Capscrew	2
34		16865	Nut	2
35		197064	Washer	2
36		53162	Lockwasher	2
37		292577	Capscrew	1
38		1340493	Tube	1
39		15180	Washer	1
40		374160	Insulator	1
41		316828	Nut	1
42		230885	Nut	2
43		320158	Washer	2
44		1383180	Plate	1
45		136749	Capscrew	2
46	**a**	145639	Nut	1
47	**a**	296379	Washer	1
48	**a**	320156	Washer	1
49	**a**	1464875	Spacer	1
50	**a**	1462463	Bracket	1

©2007 HYSTER COMPANY

PARK BRAKE LINKAGE
LEVER ACTUATED

ITEM		PART NO.	DESCRIPTION	QTY
51	**a**	1393738	Capscrew	1
52		15134	Washer	2
53		1375022	Cable (LH)	1
53		1375024	Cable (RH)	1
54		15172	Washer	1
55		1470687	Clamp	1
56		18697	Capscrew	1
57	**a**	292680	Lockwasher	1
58		375984	Washer	1
59		1477079	Screw	1
60	**b**	1627418	Plate	1
61	**b**	391665	Shoulder Bolt	1
62	**b**	1462463	Bracket	1
63	**b**	320158	Washer	1
64	**b**	145639	Nut	1

FOOTNOTES:
a ⇒ S/N G108N04112D
b S/N G108N04113D ⇒

©2007 HYSTER COMPANY

NOTES

PARK BRAKE LINKAGE (Figure 5-6)
SEAT ACTUATED
(⇒S/N G108V03421C)

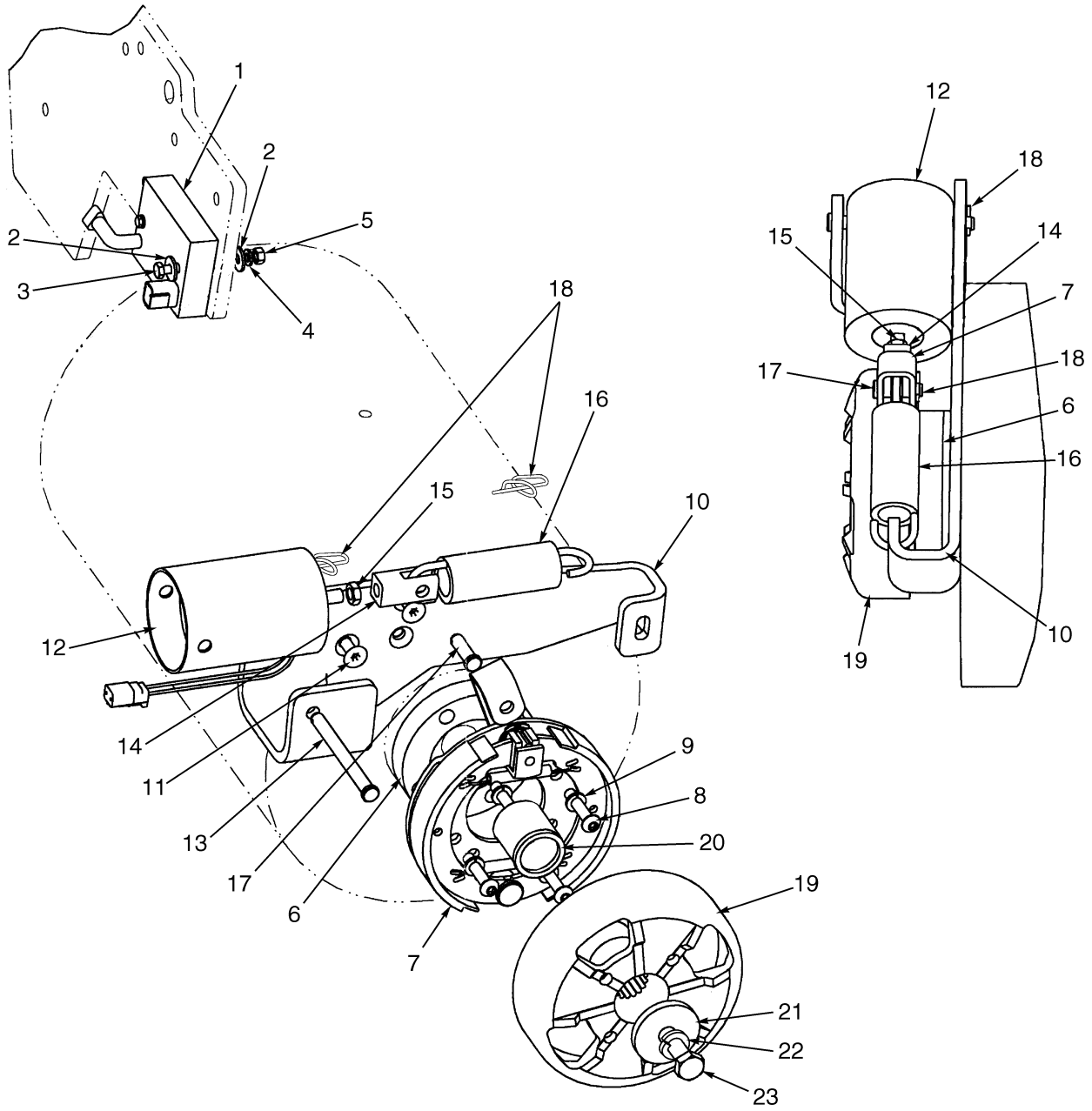

HP040385

©2007 HYSTER COMPANY

PARK BRAKE LINKAGE
SEAT ACTUATED
(⇒S/N G108V03421C)

ITEM	PART NO.	DESCRIPTION	QTY
1	2063917	Controller	1
1	1599401	Bracket (Controller) (Not Illustrated)	1
2	320154	Washer	4
3	2065849	Capscrew	2
4	292678	Lockwasher	2
5	1463912	Nut	2
6	1512081	Spacer (9 in. Traction Motor)	1
6	1498063	Spacer (11 in. Traction Motor)	1
7	1498965	Brake Assembly (☞ Figure 5-9)	1
8	296010	Capscrew	8
9	292681	Lockwasher	4
10	1495956	Bracket	1
11	296226	Capscrew	2
12	1495980	Solenoid	1
13	1499243	Pin	1
14	1499327	Clevis	1
15	15086	Nut	1
16	1340147	Spring	1
17	1318690	Pin	1
18	1351689	Cotter Pin	2
19	1495967	Brake Drum	1
20	1566614	Spacer	1
21	1510876	Washer	1
22	292683	Lockwasher	1
23	246001	Capscrew	1

©2007 HYSTER COMPANY

PARK BRAKE LINKAGE (Figure 5-7)
SEAT ACTUATED
(S/N G108V03422C⇔S/N G108N05935E)

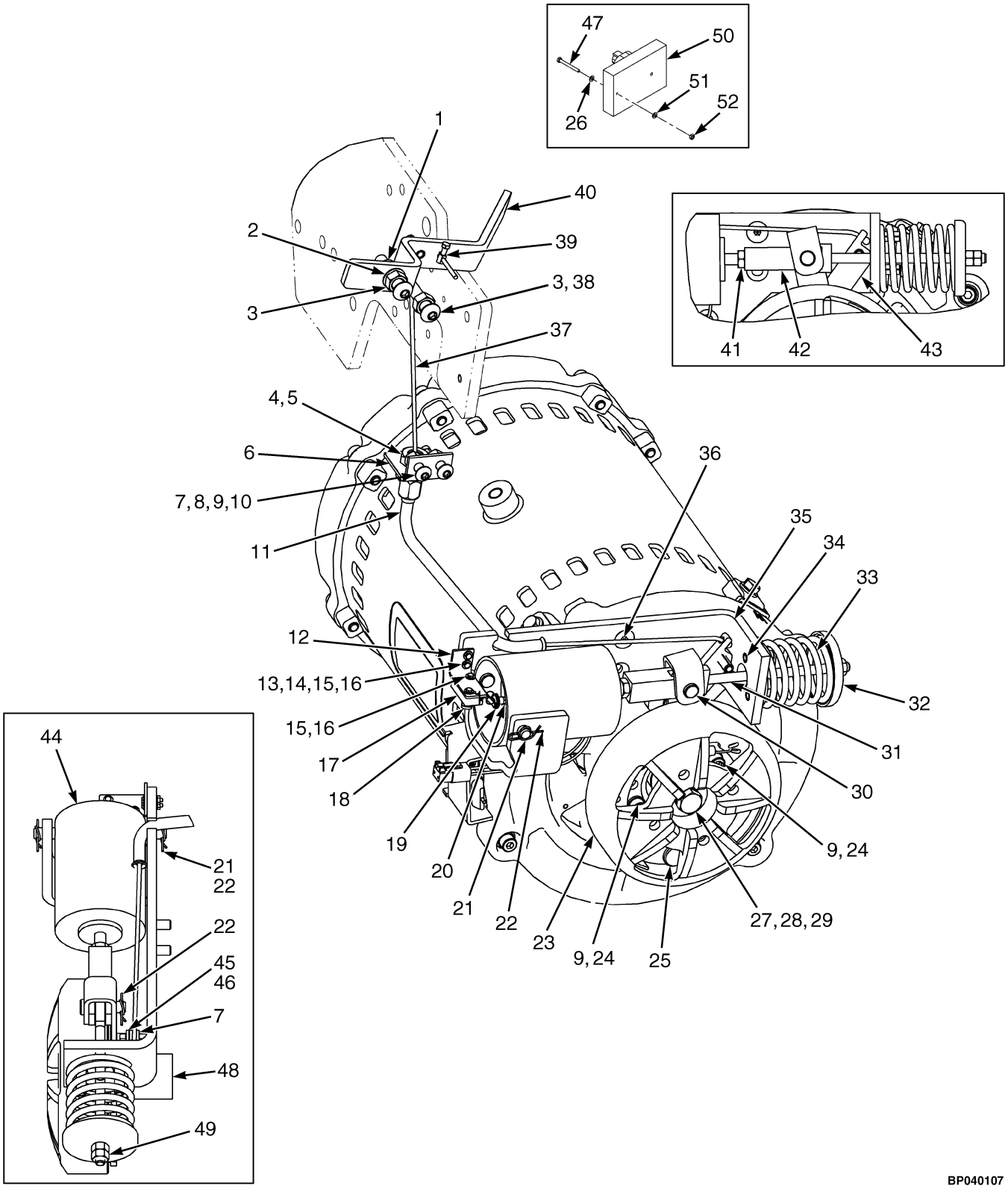

©2007 HYSTER COMPANY

PARK BRAKE LINKAGE
SEAT ACTUATED
(S/N G108V03422C⇔S/N G108N05935E)

ITEM	PART NO.	DESCRIPTION	QTY
1	316836	Nut	1
2	1581747	Disc Spring	2
3	136692	Nut	2
4	15029	Nut	1
5	16540	Fitting	1
5	16483	O-Ring	1
6	1568341	Bracket	1
7	239503	Nut	3
8	320157	Washer	2
9	292681	Lockwasher	6
10	296167	Capscrew	2
11	1568335	Pipe Guide	1
12	1568342	Bracket	1
13	16865	Nut	2
14	18419	Lockwasher	2
15	220426	Screw	4
16	197064	Washer	4
17	1498408	Switch	1
18	1593347	Plate	1
19	1637806	Thumb Nut	2
20	2074859	Nut	1
21	1378435	Rod End Pin	2
22	1351689	Cotter Pin	3
23	1495967	Brake Drum	1
24	296010	Capscrew	4
25	1498965	Brake Assembly	1
26	320154	Washer	4
27	300932	Washer	1
28	292683	Lockwasher	1
29	246001	Capscrew	1
30	1318690	Pin	1
31	1568334	Stud	1
32	325599	Cup	1
33	1568332	Compression Spring	1
34	19923	Pin	5
35	1568333	Bracket	1
36	296226	Capscrew	2
37	1568346	Cable (Brake)	1
38	1364272	Capscrew	2
39	1572664	Wire Stop	1
40	1622569	Handle	1
41	15086	Nut	1
42	1568343	Clevis	1
43	1568336	Cable Link	1
44	1568344	Solenoid	1
45	136749	Capscrew	1
46	320158	Washer	1
47	2086421	Capscrew	2
48	1566614	Spacer	1
49	15055	Nut	2

©2007 HYSTER COMPANY

PARK BRAKE LINKAGE
SEAT ACTUATED
(S/N G108V03422C⇔S/N G108N05935E)

ITEM	PART NO.	DESCRIPTION	QTY
50	2063917	Controller	1
50	1330410	Connector	1
50	1330427	Secondary Lock	1
51	292678	Lockwasher	2
52	1463912	Nut	2
a	1584806	Service Kit (Manual Brake Release) (Includes Items 1-6, 8, 10-12, 15-17, 19, 21-22, 30, 32-40, 42, 44-46, 49)	1

FOOTNOTES:
a Not Illustrated

©2007 HYSTER COMPANY

NOTES

PARK BRAKE LINKAGE (Figure 5-8)
SEAT ACTUATED
(S/N G108N05936E⇒)

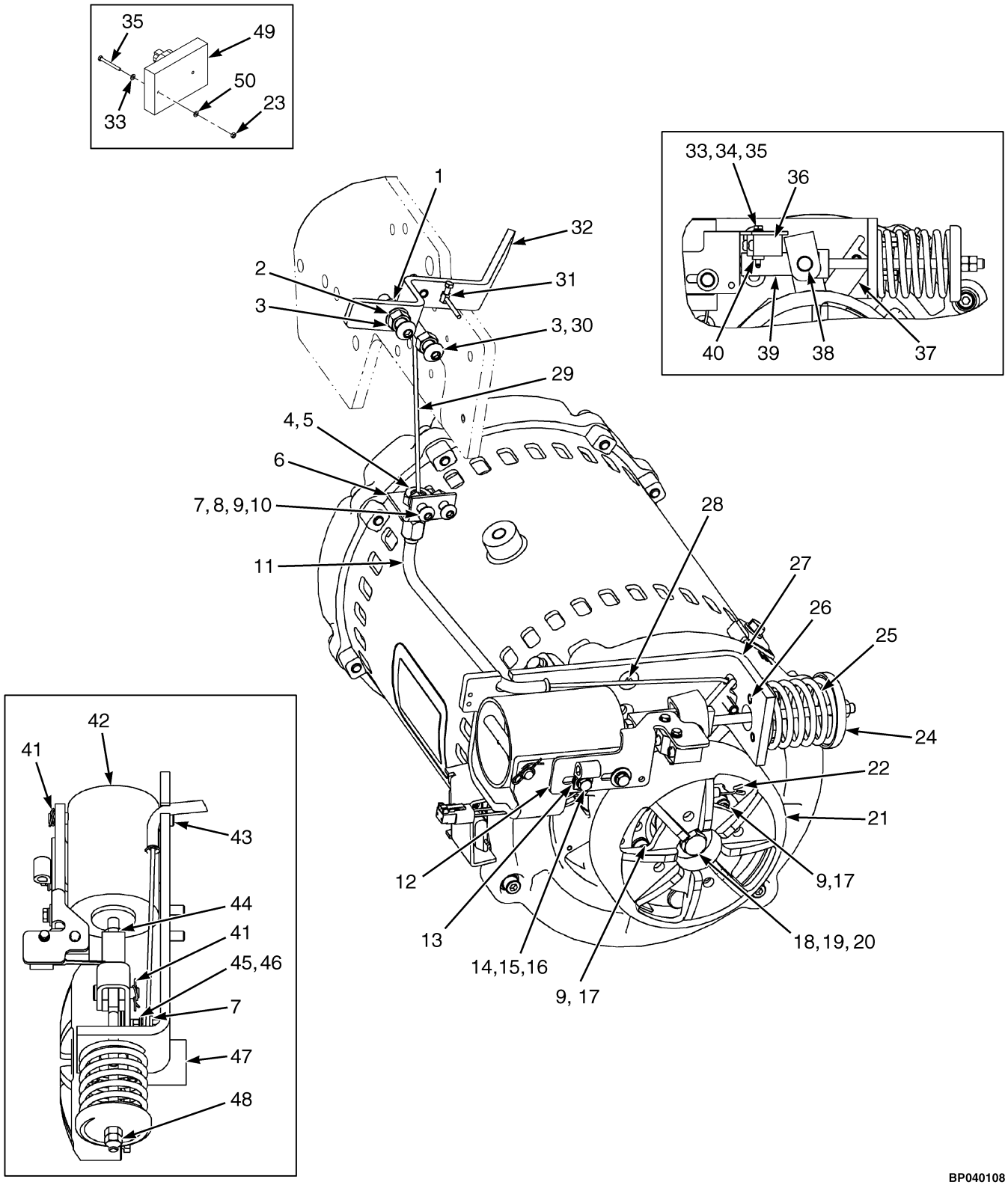

©2007 HYSTER COMPANY

PARK BRAKE LINKAGE
SEAT ACTUATED
(S/N G108N05936E⇒)

ITEM	PART NO.	DESCRIPTION	QTY
1	316836	Nut	1
2	1581747	Disc Spring	2
3	136692	Nut	2
4	15029	Nut	1
5	16540	Fitting	1
5	16483	O-Ring	1
6	1568341	Bracket	1
7	239503	Nut	3
8	320157	Washer	2
9	292681	Lockwasher	6
10	296167	Capscrew	2
11	1568335	Pipe Guide	1
12	1651234	Bracket	1
13	1486566	Clamp	1
14	1476241	Washer	2
15	292680	Lockwasher	2
16	292500	Capscrew	2
17	296010	Capscrew	4
18	300932	Washer	1
19	292683	Lockwasher	1
20	246001	Capscrew	1
21	1495967	Brake Drum	1
22	1498965	Brake Assembly	1
23	1463912	Nut	2
24	325599	Cup	1
25	1568332	Compression Spring	1
26	19923	Pin	5
27	1568333	Bracket	1
28	296226	Capscrew	2
29	1568346	Cable (Brake)	1
30	1364272	Capscrew	2
31	1572664	Wire Stop	1
32	1622569	Handle	1
33	320154	Washer	4
34	292678	Lockwasher	2
35	2086421	Capscrew	2
36	1628739	Switch	1
37	1568336	Cable Link	1
38	1318690	Pin	1
39	1568343	Clevis	1
40	1659462	Plate (Tapped)	1
41	1351689	Cotter Pin	3
42	1568344	Solenoid	1
43	1499243	Pin	1
44	15086	Nut	1
45	136749	Capscrew	1
46	320158	Washer	1
47	1566614	Spacer	1
48	15055	Nut	2
49	2063917	Controller	1

©2007 HYSTER COMPANY

PARK BRAKE LINKAGE
SEAT ACTUATED
(S/N G108N05936E⇒)

ITEM	PART NO.	DESCRIPTION	QTY
49	1330410	Connector	1
49	1330427	Secondary Lock	1
50	292678	Lockwasher	2
a	1584806	Service Kit (Manual Brake Release) (Includes Items 1-6, 8, 10-12, 15-17, 19, 21-22, 30, 32-40, 42, 44-46, 48)	1

FOOTNOTES:
a Not Illustrated

©2007 HYSTER COMPANY

NOTES

PARK BRAKE (Figure 5-9)
SEAT ACTUATED

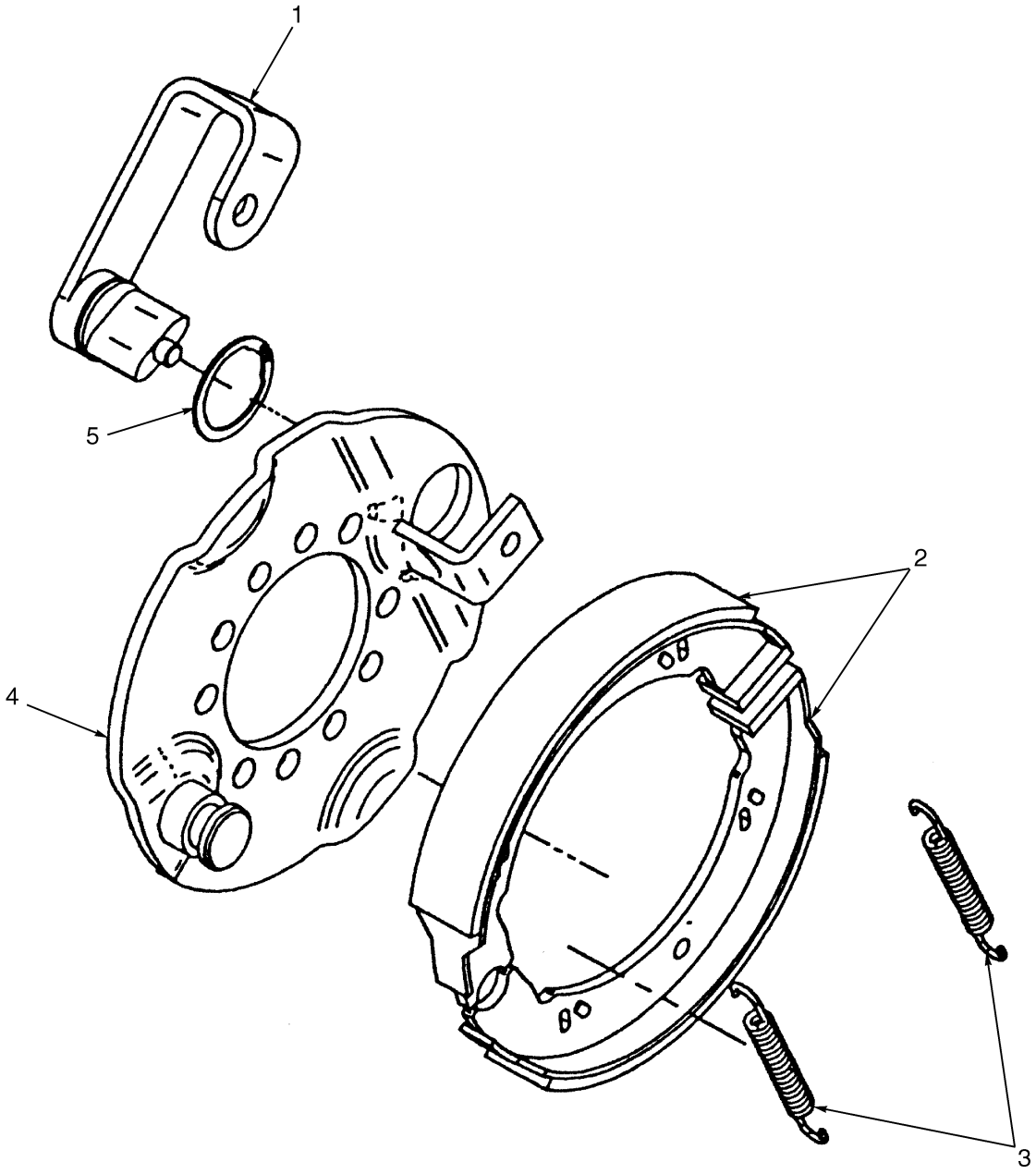

HP040387

©2007 HYSTER COMPANY

PARK BRAKE
SEAT ACTUATED

ITEM	PART NO.	DESCRIPTION	QTY
	1498965	Brake Assembly	1
1	1547471	Lever	1
2	1327196	Shoe and Lining	2
3	1547472	Spring	2
4	1547469	Plate	1
5	1547470	Ring	1

©2007 HYSTER COMPANY

ACCELERATOR (Figure 5-10)

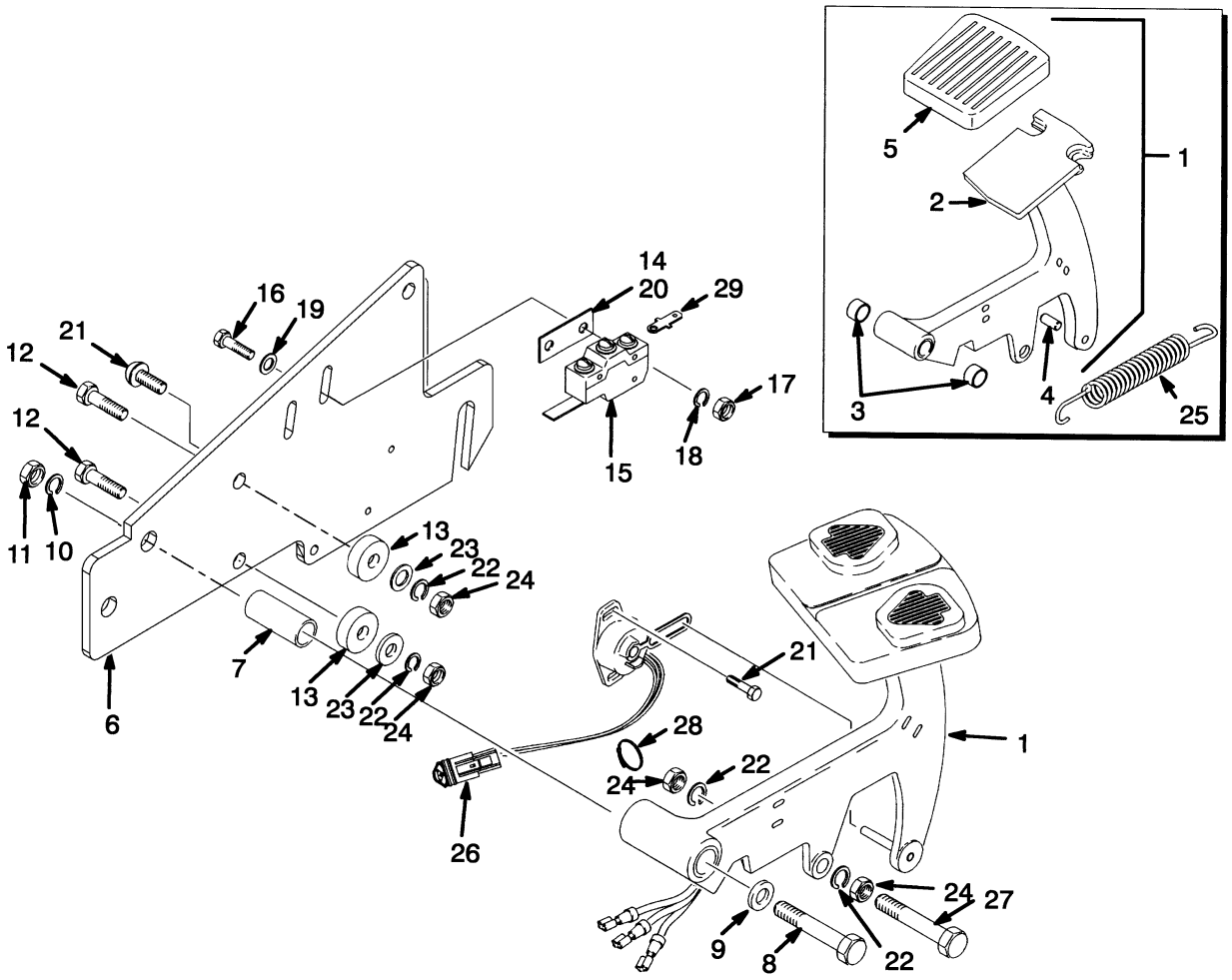

BP040066

©2007 HYSTER COMPANY

ACCELERATOR

ITEM		PART NO.	DESCRIPTION	QTY
1	**b**	1377414	Accelerator Pedal Assembly	1
1	**a**	1340988	Accelerator Pedal Assembly	1
2	**a**	1340976	Pedal	1
3	**a**	368618	Bushing	2
4	**a**	310436	Pin	1
5	**a**	352885	Pad	1
6		1592658	Bracket	1
7		1340985	Tube	1
8		292521	Capscrew	1
9		320159	Washer	2
10		292682	Lockwasher	2
11		136692	Nut	2
12		176640	Capscrew	2
13		1580129	Stop	2
14		251099	Adhesive	AR
15		1335110	Switch (Accelerator Control)	1
16		220312	Screw	2
17		15039	Nut	2
18		15163	Lockwasher	2
19		197066	Washer	4
20		915474	Insulator	1
21		302026	Screw	2
22		292681	Lockwasher	3
23		320157	Washer	2
24		239503	Nut	4
25		1340989	Spring	1
26		1354990	Throttle Position Sensor	1
27		214364	Capscrew	1
28		114312	Strap Clamp	1
29		325799	Connector	1
	c	296415	Washer	1
	c	815597	Nut	1

FOOTNOTES:
a Forward and Reverse Lever
b Monotrol Pedal
c Not Illustrated

©2007 HYSTER COMPANY

ACCELERATOR PEDAL (Figure 5-11)

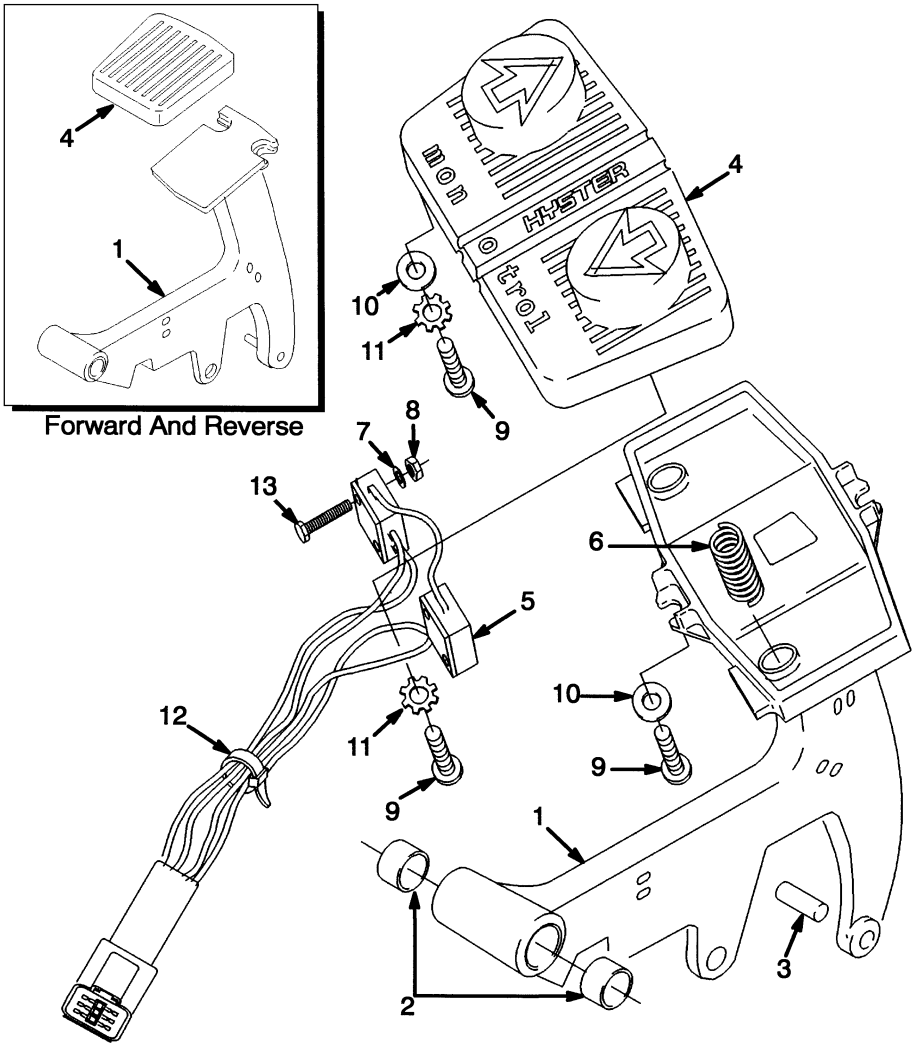

HP040388

©2007 HYSTER COMPANY

ACCELERATOR PEDAL

KEY:
A: Monotrol Pedal
B: Forward/Reverse

ITEM	PART NO.	DESCRIPTION	QTY A	QTY B
	1340988	Accelerator Pedal Assembly	..	1
	1377414	Accelerator Pedal Assembly	1	..
1	1340975	Pedal	1	..
1	1340976	Pedal	..	1
2	368618	Bushing	2	2
3	310436	Pin	1	1
4	1340470	Pad	1	..
4	352885	Pad	..	1
5	1475250	Switch Assembly	1	..
5	1468471	Switch (Forward)	1	..
5	1475249	Switch (Reverse)	1	..
6	325699	Spring	2	..
7	53162	Lockwasher	4	..
8	16865	Nut	4	..
9	16708	Screw	4	..
10	362036	Washer	2	..
11	15931	Lockwasher	4	..
12	114312	Strap Clamp	3	..
13	220428	Capscrew	4	..

©2007 HYSTER COMPANY

BRAKE SWITCH HARNESS (Figure 5-12)

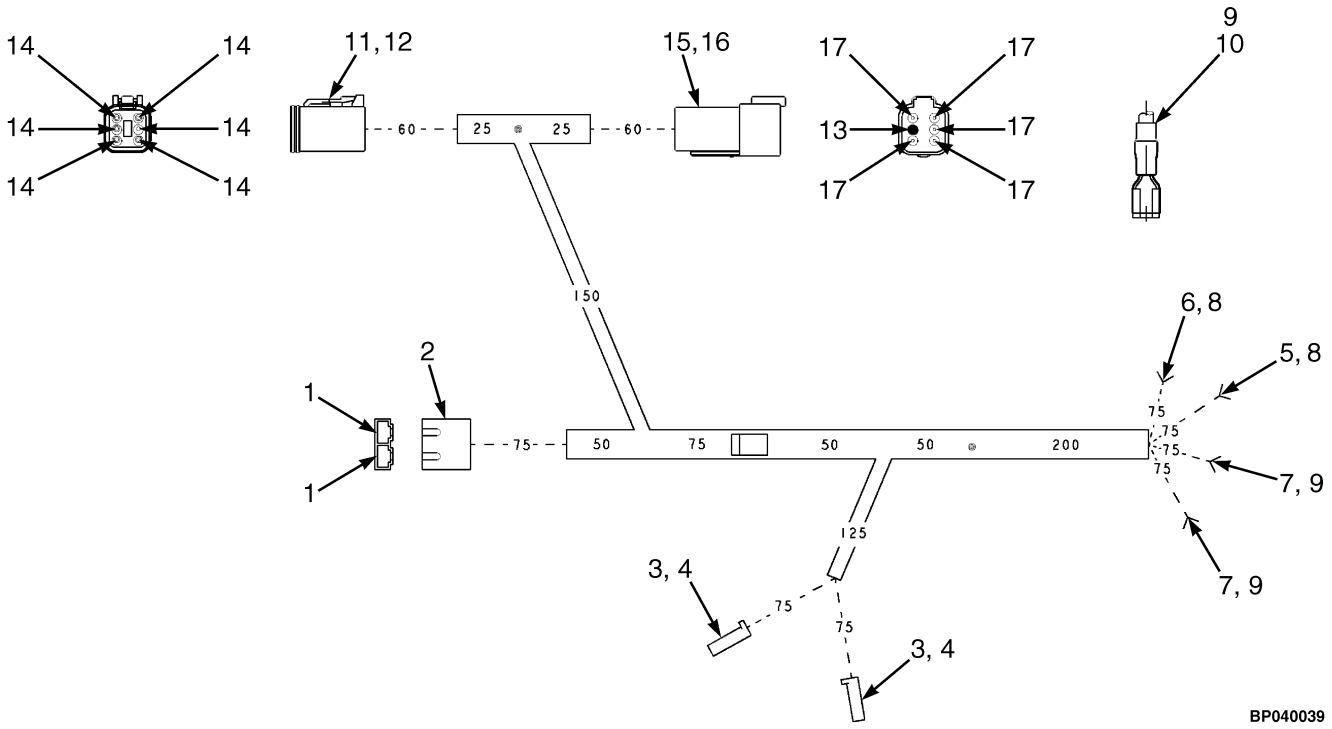

©2007 HYSTER COMPANY

BRAKE SWITCH HARNESS

ITEM	PART NO.	DESCRIPTION	QTY
	2067821	Wire Harness	1
1	370730	Blade	2
2	346330	Connector Body	1
3	181045	Connector	2
4	134810	Terminal	2
5	1352565	Connector	1
6	236901	Terminal	2
7	148648	Connector	1
8	175944	Heat Shrink Tube	1
9	222523	Heat Shrink Tube	2
10	303294	Rectifier	2
11	1330422	Connector	1
12	1330428	Secondary Lock	1
13	1330439	Terminal (Plug)	2
14	1330438	Terminal (Socket)	5
15	1330412	Connector	1
16	1330417	Secondary Lock	1
17	1330437	Terminal (Pin)	5

©2007 HYSTER COMPANY

NOTES

6 HYDRAULIC SYSTEM

SECTION 6
HYDRAULIC SYSTEM

DESCRIPTION **PAGE**

AUXILIARY SECTION
HIGH FLOW
ELECTRONIC HYDRAULIC CONTROL VALVE
S/N G108N02840C⇒ 6-54
STANDARD FLOW
ELECTRONIC HYDRAULIC CONTROL VALVE
S/N G108N02840C⇒ 6-52
ELECTRONIC HYDRAULIC CONTROL VALVE ASSEMBLY
S/N G108N02840C⇒ 6-48
ELECTRONIC HYDRAULIC CONTROL VALVE ATTACHING PARTS
S/N G108N02840C⇒ 6-46
HYDRAULIC CONTROL VALVE
FOUR FUNCTION
MANUAL HYDRAULICS 6-42
THREE FUNCTION
MANUAL HYDRAULICS 6-38
HYDRAULIC CONTROL VALVE AND ATTACHING PARTS
MANUAL HYDRAULICS
SHEET 1 OF 2 6-32
SHEET 2 OF 2 6-36
HYDRAULIC FILTER
S/N G108N02840C⇒ 6-60
HYDRAULIC GEAR PUMP
19 CC
S/N G108N02840C⇒ 6-18
HYDRAULIC HAND LEVERS
MANUAL HYDRAULICS 6-28
HYDRAULIC PUMP
12 CC 6-15
19 CC
⇒S/N G108N02839C 6-16
HYDRAULIC PUMP MOTOR 6-20
CLOSED CONSTRUCTION
WITH BWI AND TEMPERATURE SENSOR 6-24
OPEN CONSTRUCTION
WITH BWI AND TEMPERATURE SENSOR 6-22
HYDRAULIC PUMP MOTOR MOUNT 6-26
HYDRAULIC SUPPLY AND RETURN
ELECTRONIC HYDRAULICS
S/N G108N02840C⇒ 6-12
MANUAL HYDRAULICS
⇒S/N G108N02839C 6-4
S/N G108N02840C⇒ 6-8
HYDRAULIC TANK AND ATTACHING PARTS
⇒S/N G108N02839C 6-56
S/N G108N02840C⇒ 6-58
MAIN SECTION
ELECTRONIC HYDRAULIC CONTROL VALVE
S/N G108N02840C⇒ 6-50
MAST INSTALLATION 6-62

©2007 HYSTER COMPANY

SECTION 6
HYDRAULIC SYSTEM (Continued)

DESCRIPTION	PAGE
TILT CYLINDERS	6-64

©2007 HYSTER COMPANY

NOTES

HYDRAULIC SUPPLY AND RETURN (Figure 6-1)
MANUAL HYDRAULICS
(⇒S/N G108N02839C)

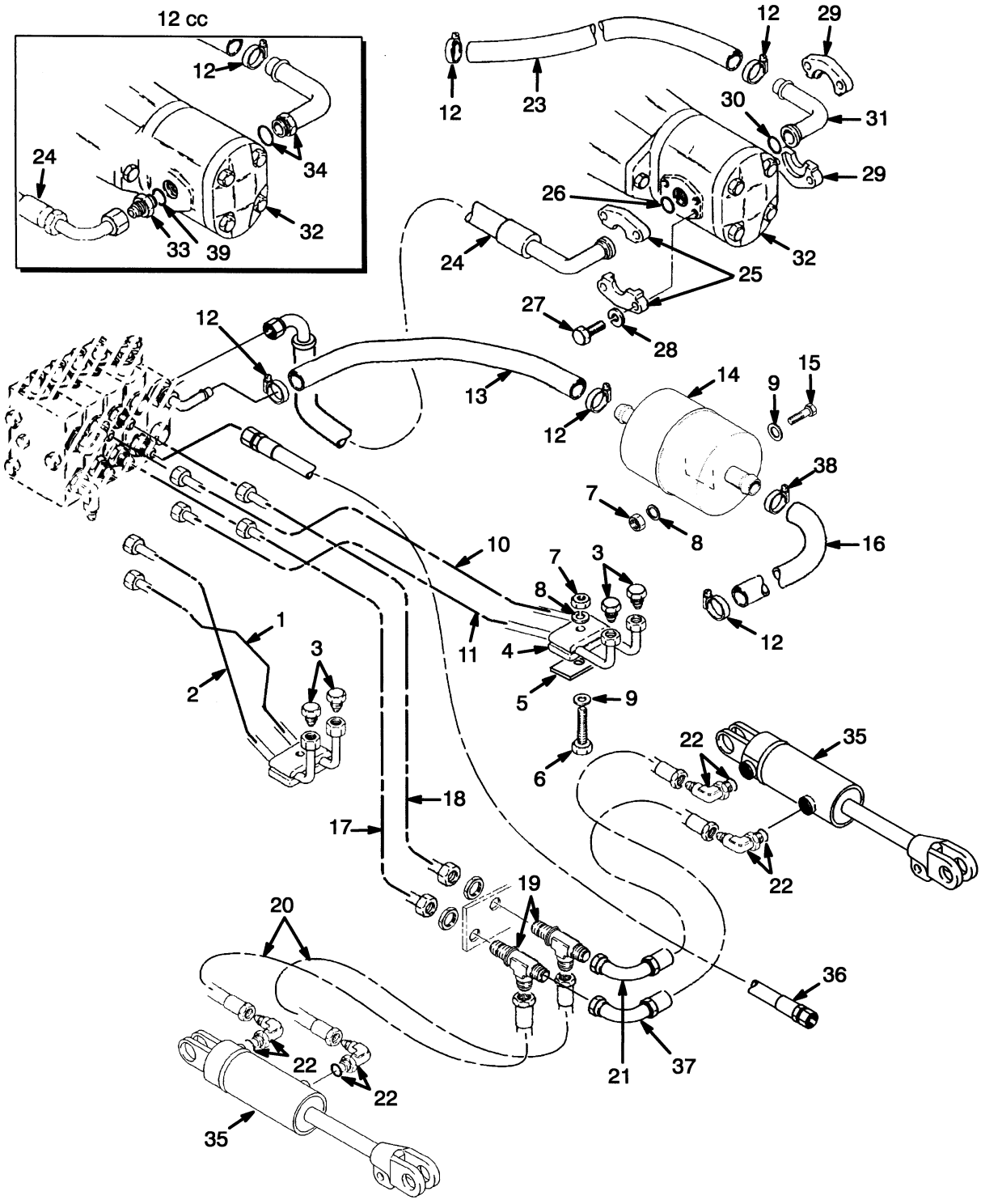

©2007 HYSTER COMPANY

HYDRAULIC SUPPLY AND RETURN
MANUAL HYDRAULICS
(⇒S/N G108N02839C)

ITEM		PART NO.	DESCRIPTION	QTY
1	**e**	1340901	Tube	1
2	**e**	1340900	Tube	1
3	**e**	17321	Fitting	2
3	**c**	17321	Fitting	4
4	**e**	1359620	Clamp	2
4	**c**	1359620	Clamp	4
5	**e**	1361142	Plate	1
5	**c**	1361142	Plate	1
6	**e**	214364	Capscrew	1
6	**c**	214364	Capscrew	2
7	**e**	239503	Nut	1
7	**c**	239503	Nut	2
8	**e**	292681	Lockwasher	1
8	**c**	292681	Lockwasher	2
9	**e**	320157	Washer	1
9	**c**	320157	Washer	2
10	**c**	1340697	Tube	1
11	**c**	1340698	Tube	1
12		127045	Clamp (Hose)	4
13		1340905	Hose	1
14		1337159	Filter	1
15		136749	Capscrew	1
16		1340904	Hose	1
17		354077	Hose	1
18		361984	Hose	1
19		188227	Fitting	2
20		361984	Hose	2
21		1364258	Hose	1
22		239784	Fitting	4
22		16481	O-Ring	1
23		1650564	Hose	1
24	**b**	1340659	Hose	1
24	**a**	1364671	Hose	1
25	**b**	160266	Flange (Split Half)	2
26	**b**	61056	O-Ring	1
27	**b**	136985	Capscrew	8
28	**b**	292682	Lockwasher	8
29	**b**	190757	Flange (Split Half)	2
30	**b**	15866	O-Ring	1
31	**b**	222584	Elbow	1
31	**b**	1321928	Fitting (90 ° Optional)	1
32	**a**	1455066	Hydraulic Pump (☞ Figure 6-4)	1
32	**b**	2036668	Hydraulic Pump (Low Noise)	1
32	**b**	1343827	Hydraulic Pump (☞ Figure 6-5)	1
33	**a**	16542	Fitting	1
33		16485	O-Ring	1
34	**a**	362034	Fitting	1
34	**a**	1321929	Fitting (90° Optional)	1
34		16486	O-Ring	1
35		1366081	Tilt Cylinder (☞ Figure 6-25)	2

©2007 HYSTER COMPANY

HYDRAULIC SUPPLY AND RETURN
MANUAL HYDRAULICS
(⇒S/N G108N02839C)

ITEM		PART NO.	DESCRIPTION	QTY
35		1366085	Tilt Cylinder (☞ Figure 6-25)	2
36		1340637	Hose	1
37		1382674	Hose	1
38		369804	Clamp	2
39	**a**	16486	O-Ring	1
40	**d**	1510058	Key	2

FOOTNOTES:
a 12 cc
b 19 cc and Low Noise
c Four Function
d Not Illustrated
e Three Function

©2007 HYSTER COMPANY

NOTES

HYDRAULIC SUPPLY AND RETURN (Figure 6-2)
MANUAL HYDRAULICS
(S/N G108N02840C⇒)

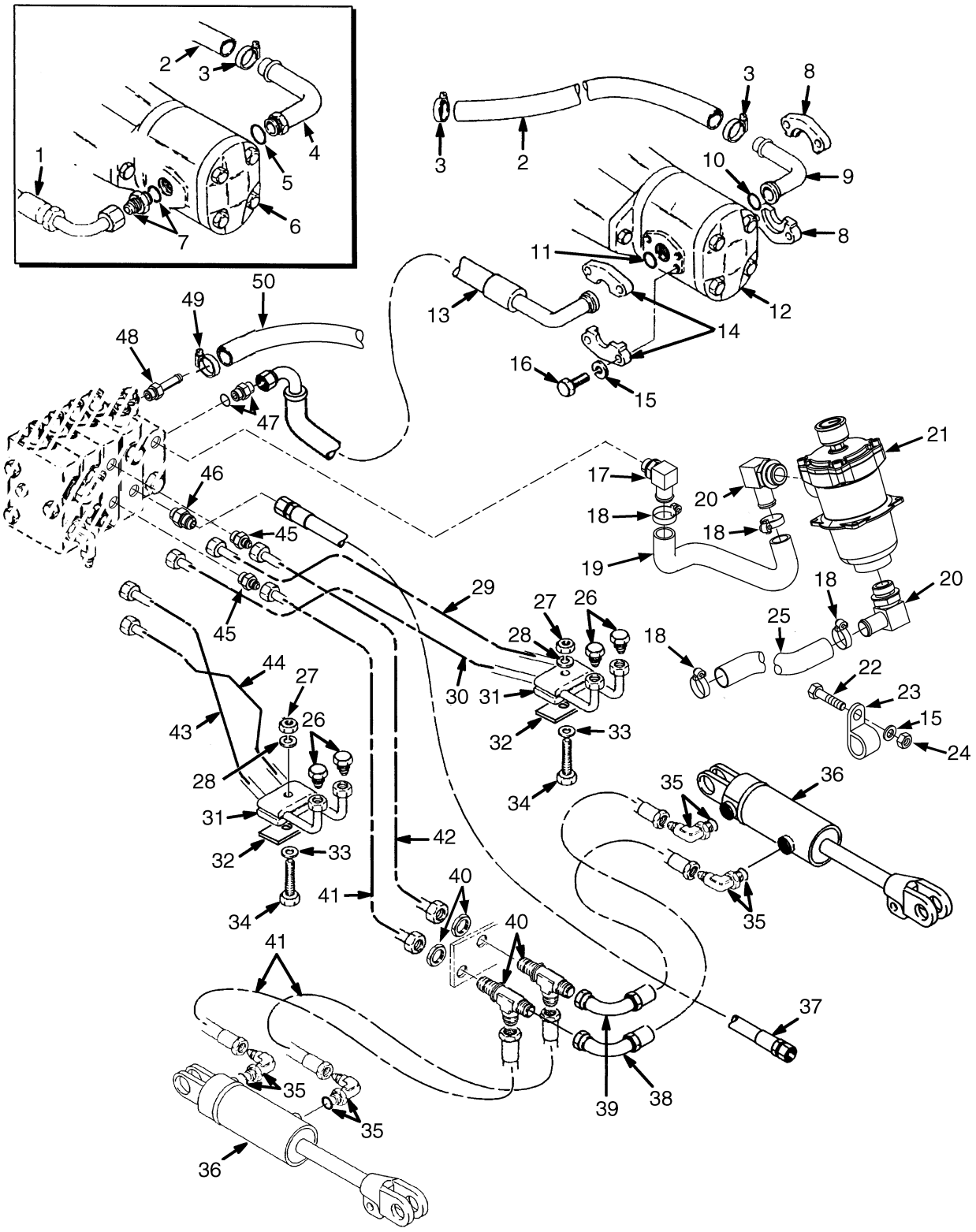

BP150123

©2007 HYSTER COMPANY

HYDRAULIC SUPPLY AND RETURN
MANUAL HYDRAULICS
(S/N G108N02840C⇒)

KEY:
A: Three Function
B: Four Function

ITEM	PART NO.	DESCRIPTION	QTY A	QTY B
1	1364671	Hose (12 cc)	1	1
2	1650564	Hose	1	1
3	369804	Clamp	2	2
4	362034	Fitting (12 cc)	1	1
5	16486	O-Ring (12 cc)	1	1
6	1455066	Hydraulic Pump (12 cc) (☞ Figure 6-4)	1	1
7	16542	Fitting (12 cc)	1	1
7	16485	O-Ring	1	1
8	190757	Flange (Split Half) (19 cc)	2	2
9	222584	Elbow (19 cc)	1	1
10	15866	O-Ring (19 cc)	1	1
11	61056	O-Ring (19 cc)	1	1
12	2076074	Hydraulic Gear Pump Assembly (19 cc) (☞ Figure 6-6)	1	1
13	1340659	Hose (19 cc)	1	1
14	160266	Flange (Split Half) (19 cc)	2	2
15	292682	Lockwasher (19 cc)	8	8
16	136985	Capscrew (19 cc)	8	8
17	1343452	Fitting	1	1
18	127045	Clamp (Hose)	4	4
19	1596466	Hose	1	1
20	201781	Fitting	1	1
21	1589499	Hydraulic Filter (☞ Figure 6-22)	1	1
22	287860	Capscrew	1	1
23	258590	Clamp	1	1
24	136692	Nut	1	1
25	1596467	Hose	1	1
26	17321	Fitting	2	4
27	239503	Nut	1	2
28	292681	Lockwasher	1	2
29	1340697	Tube	..	1
30	1340698	Tube	..	1
31	1359620	Clamp	2	4
32	1361142	Plate	1	1
33	320157	Washer	1	2
34	214364	Capscrew	1	2
35	239784	Fitting	4	4
35	16481	O-Ring	1	1
36	. . . . .	Tilt Cylinders (☞ Figure 6-25)	2	2
37	1340637	Hose	1	1
38	1382674	Hose	1	1
39	1364258	Hose	1	1
40	188227	Fitting	2	2
40	. . . . .	Nut	1	1
41	361984	Hose	3	3
42	354077	Hose	1	1

©2007 HYSTER COMPANY

HYDRAULIC SUPPLY AND RETURN
MANUAL HYDRAULICS
(S/N G108N02840C⇒)

ITEM	PART NO.	DESCRIPTION	QTY A	QTY B
43	1340900	Tube	1	..
44	1340901	Tube	1	..
45	16745	Fitting	2	2
46	206150	Fitting	1	1
47	16542	Fitting	1	1
47	16485	O-Ring	1	1
48	222492	Fitting	1	1
49	166857	Clamp	1	1
50	121085	Hose	1	1

©2007 HYSTER COMPANY

NOTES

HYDRAULIC SUPPLY AND RETURN (Figure 6-3)
ELECTRONIC HYDRAULICS
(S/N G108N02840C⇒)

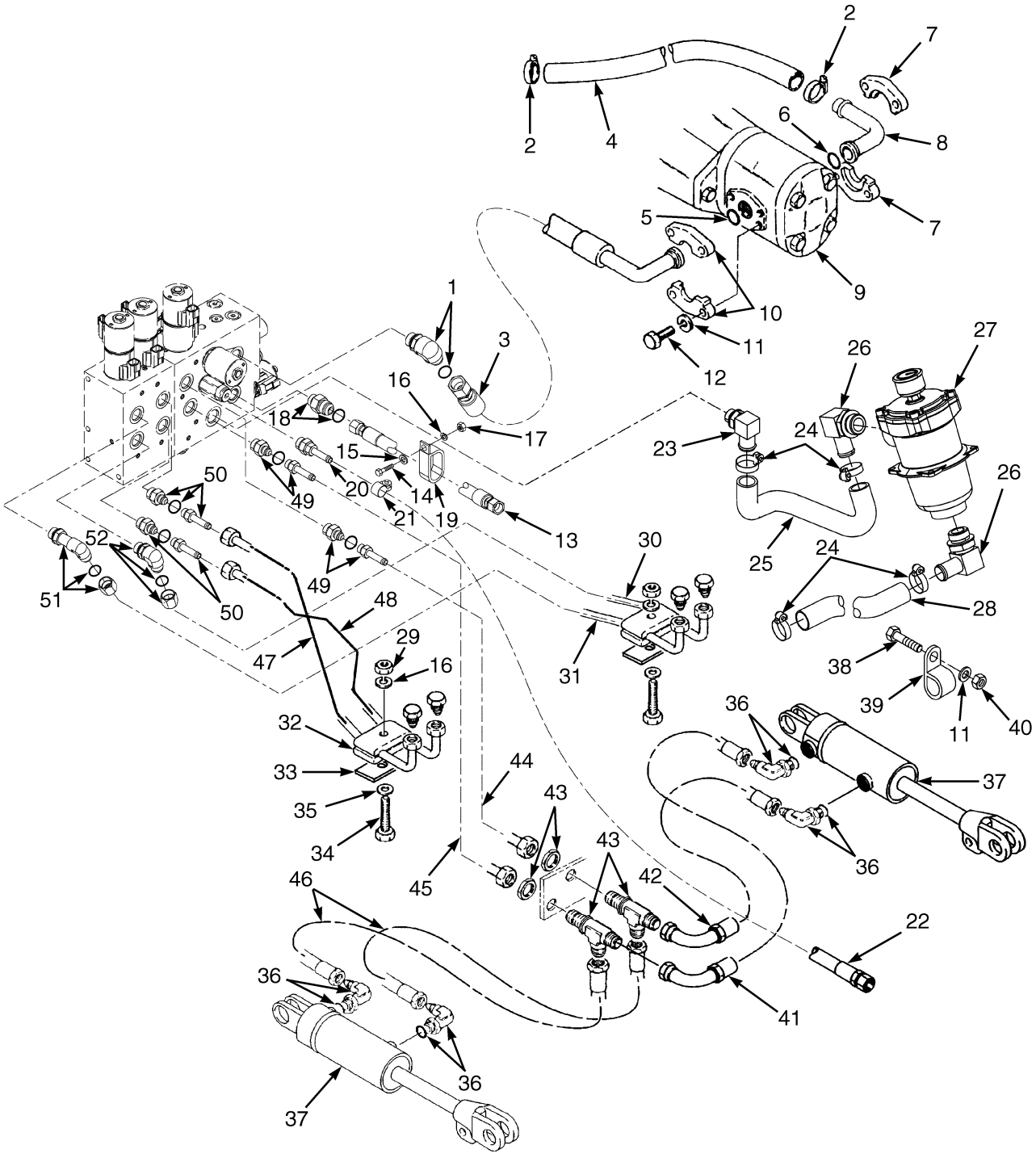

BP150131

©2007 HYSTER COMPANY

HYDRAULIC SUPPLY AND RETURN
ELECTRONIC HYDRAULICS
(S/N G108N02840C⇒)

KEY:
A: Three Function
B: Four Function

ITEM	PART NO.	DESCRIPTION	QTY A	QTY B
1	16560	Fitting	1	1
1	16485	O-Ring	1	1
2	369804	Clamp	2	2
3	2078787	Hose	1	1
4	1650564	Hose	1	1
5	61056	O-Ring	1	1
6	15866	O-Ring	1	1
7	190757	Flange (Split Half)	2	2
8	222584	Elbow	1	1
9	2076074	Hydraulic Gear Pump Assembly (☞ Figure 6-6)	1	1
10	160266	Flange (Split Half)	2	2
11	292682	Lockwasher	9	9
12	136985	Capscrew	8	8
13	1340637	Hose	1	1
14	132861	Capscrew	1	1
15	296418	Washer	1	1
16	292681	Lockwasher	1	1
17	303117	Nut	1	1
18	206150	Fitting	1	1
18	16484	O-Ring	1	1
19	255578	Clamp	1	1
20	222492	Fitting	1	1
21	166857	Clamp	1	1
22	2078784	Hose	1	1
23	1343452	Fitting	1	1
24	127045	Clamp (Hose)	4	4
25	1589493	Hose	1	1
26	201781	Fitting	2	2
27	1589499	Hydraulic Filter (☞ Figure 6-23)	1	1
28	1596467	Hose	1	1
29	239503	Nut	1	1
30	1601999	Tube	..	1
30	17321	Fitting	..	1
31	1602000	Tube	..	1
31	17321	Fitting	..	1
32	1359620	Clamp	2	2
33	1361142	Plate	1	1
34	214364	Capscrew	1	1
35	320157	Washer	1	1
36	239784	Fitting	4	4
36	16481	O-Ring	1	1
37	. . . . .	Tilt Cylinders (☞ Figure 6-25)	2	2
38	287860	Capscrew	1	1
39	258590	Clamp	1	1
40	136692	Nut	1	1

©2007 HYSTER COMPANY

HYDRAULIC SUPPLY AND RETURN
ELECTRONIC HYDRAULICS
(S/N G108N02840C⇒)

ITEM	PART NO.	DESCRIPTION	QTY A	QTY B
41	1364258	Hose	1	1
42	1382674	Hose	1	1
43	188227	Fitting	2	2
43	. . . . .	Nut	1	1
44	2078814	Hose	1	1
45	2078813	Hose	1	1
46	361984	Hose	2	2
47	1602002	Tube	1	..
47	17321	Fitting	1	..
48	1602001	Tube	1	..
48	17321	Fitting	1	..
49	16745	Fitting	..	1
49	16484	O-Ring	..	1
50	16541	Fitting	2	..
50	16484	O-Ring	1	..
51	169592	Fitting	..	1
51	16484	O-Ring	..	1
52	16559	Fitting	..	1
52	16484	O-Ring	..	1

©2007 HYSTER COMPANY

HYDRAULIC PUMP (Figure 6-4)
12 CC

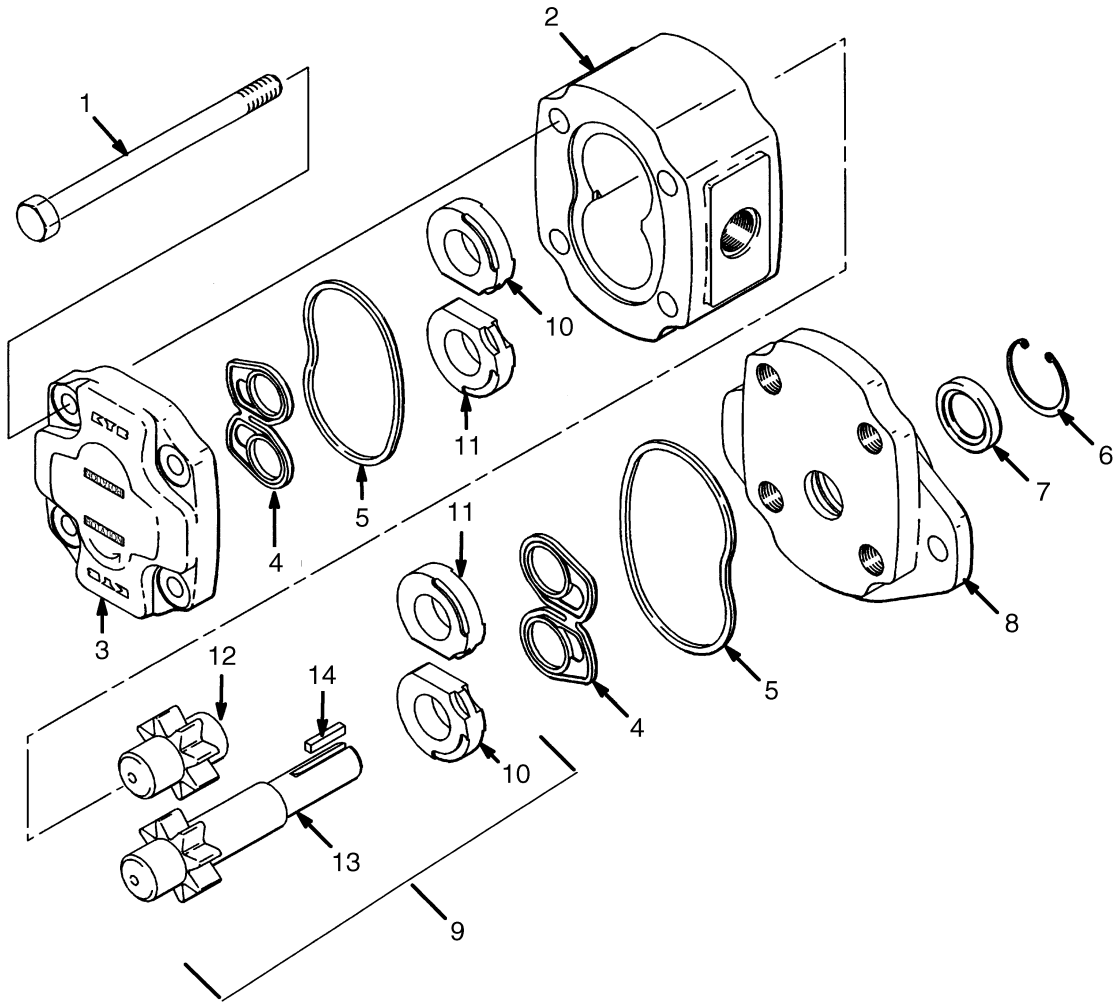

ITEM	PART NO.	DESCRIPTION	QTY
	1455066	Hydraulic Pump	1
1	1459371	Bolt	4
2	. . . . .	Body	1
3	1459239	Cover	1
4	. . . . .	Seal (Bushing)	2
5	. . . . .	Seal (Body)	2
6	. . . . .	Snap Ring	1
7	. . . . .	Oil Seal	1
8	1459240	Mounting Flange	1
9	1459372	Gear Set	1
10	. . . . .	Bushing	2
11	. . . . .	Bushing	2
12	. . . . .	Driven Gear	1
13	. . . . .	Drive Gear	1
14	26617	Key	1
	1459238	Seal Kit (Includes Items 1, 4-7)	1

HYDRAULIC PUMP (Figure 6-5)
19 CC
(⇒S/N G108N02839C)

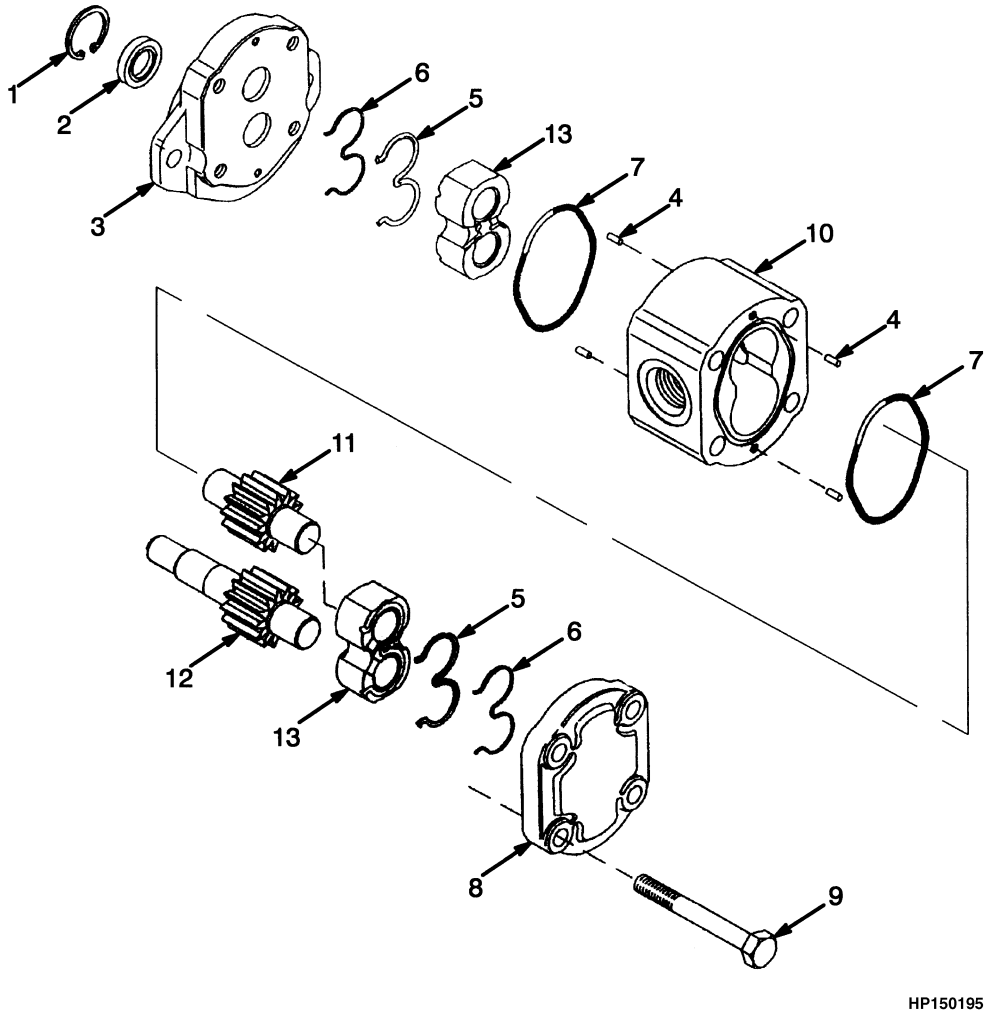

©2007 HYSTER COMPANY

HYDRAULIC PUMP
19 CC
(⇒S/N G108N02839C)

ITEM		PART NO.	DESCRIPTION	QTY
		1343827	Hydraulic Pump	1
1		2303239	Retaining Ring	1
2		. . . . .	Seal	2
3		1377253	Flange	1
4		2309481	Pin	4
5		. . . . .	Seal	2
6		. . . . .	Back-Up Ring	2
7		. . . . .	O-Ring	2
8		1376425	Cover	1
9		1377254	Bolt	4
10		. . . . .	Housing	1
11		. . . . .	Idler Gear	1
12		. . . . .	Drive Gear	1
13		. . . . .	Bearing Block	2
14	**a**	1510058	Key	1
		1376427	Flange Kit (Includes Items 1-2, 4)	1
		1377252	Flange Kit (Includes Items 1-4)	1
		1371746	Seal Kit (Includes Items 2, 5-7)	1

FOOTNOTES:
a Not Illustrated

HYDRAULIC GEAR PUMP (Figure 6-6)
19 CC
(S/N G108N02840C⇒)

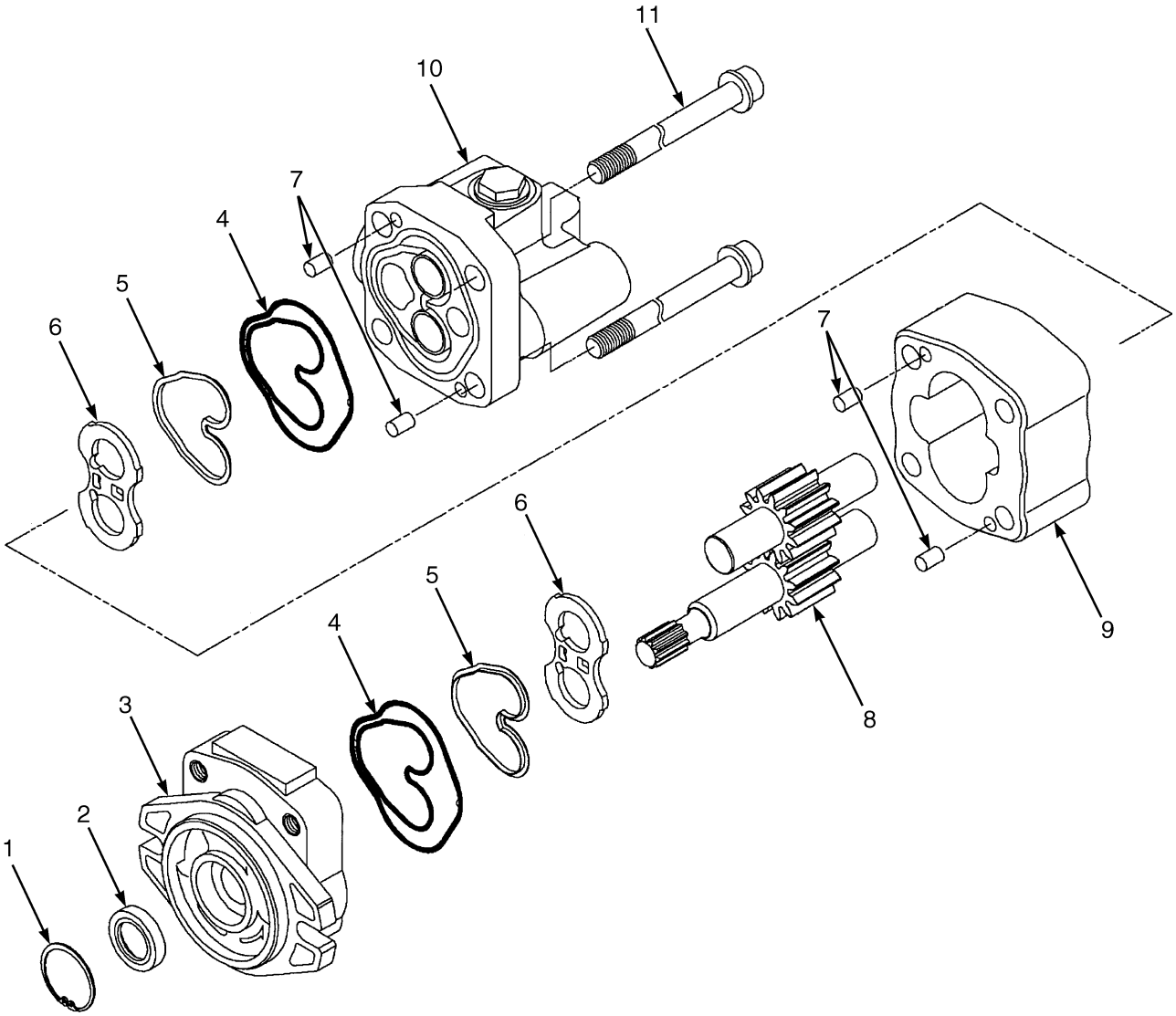

BP150098

©2007 HYSTER COMPANY

HYDRAULIC GEAR PUMP
19 CC
(S/N G108N02840C⇒)

ITEM	PART NO.	DESCRIPTION	QTY
	2076074	Hydraulic Gear Pump Assembly	1
1	. . . . .	Snap Ring	1
2	. . . . .	Oil Seal	1
3	1622213	Flange Mounting	1
4	. . . . .	Back-Up Seal	2
5	. . . . .	Plate Seal	2
6	1622215	Side Plate	2
7	1578672	Dowel Pin	4
8	1622217	Gear Set	1
8	. . . . .	Drive Gear	1
8	. . . . .	Driven Gear	1
9	. . . . .	Gear Plate	1
10	1622214	Cover	1
11	1622216	Screw	4
a	26617	Key	1
	1465140	Seal Kit (Includes Items 1-2, 4-5)	1

FOOTNOTES:
a Not Illustrated

HYDRAULIC PUMP MOTOR (Figure 6-7)

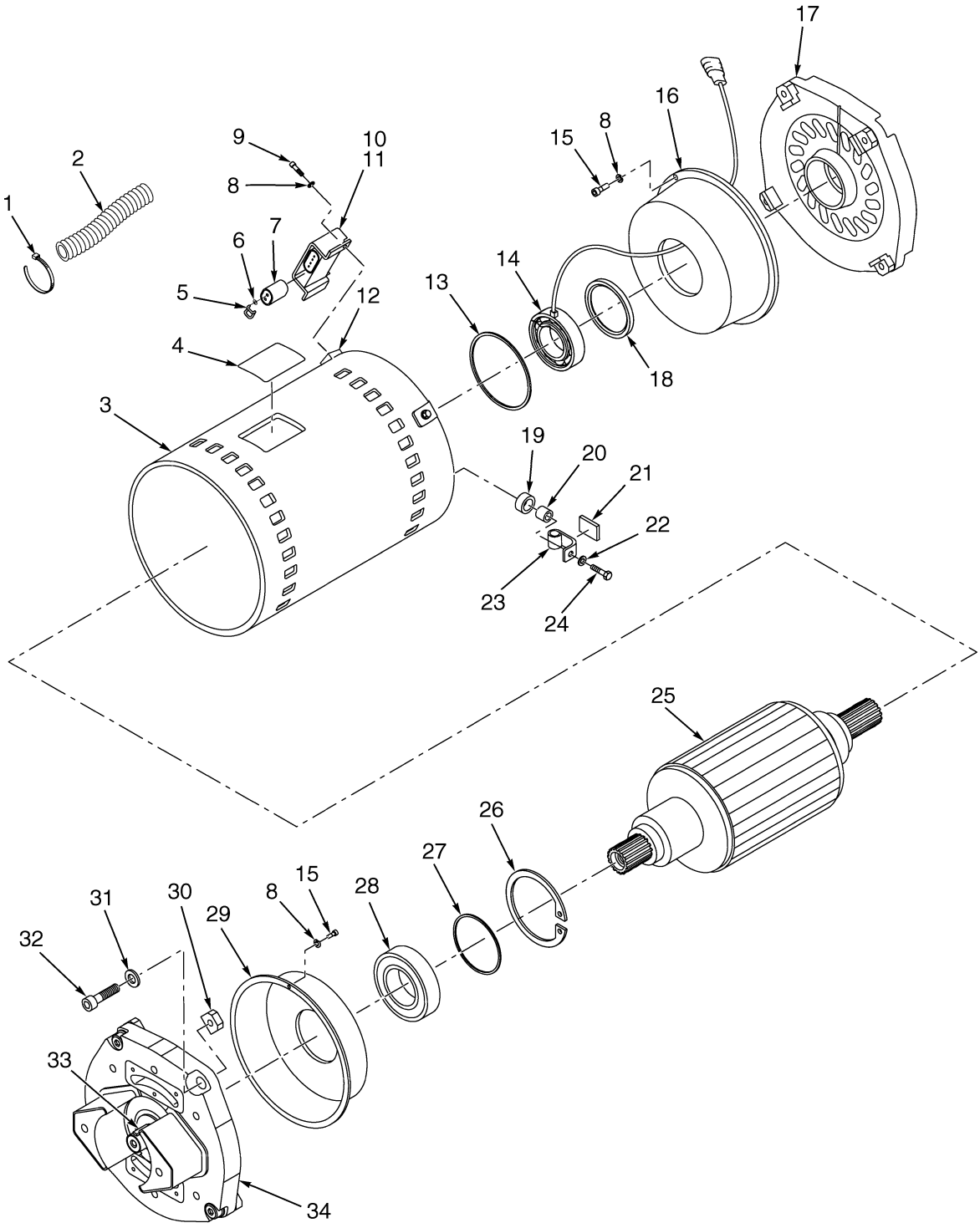

BP150125

©2007 HYSTER COMPANY

HYDRAULIC PUMP MOTOR

ITEM	PART NO.	DESCRIPTION	QTY
	2063339	Hydraulic Pump Motor	1
1	. . . . .	Cable Tie	AR
2	. . . . .	Tube	AR
3	. . . . .	Housing	1
4	. . . . .	Nameplate	1
5	. . . . .	Pin	2
6	. . . . .	Seal	2
7	. . . . .	Connector	1
8	. . . . .	Lockwasher	8
9	. . . . .	Capscrew	2
10	. . . . .	Bracket	1
11	1555894	Bracket	1
12	1555892	Sensor Cable Outlet	1
13	1555903	O-Ring	1
14	1555908	Bearing and Sensor Assembly	1
15	. . . . .	Capscrew	6
16	. . . . .	Air Guide	1
17	. . . . .	End Bell	1
18	1555902	Bearing Spring	1
19	. . . . .	Terminal Block	3
20	1555891	Nut	3
21	. . . . .	Cover	3
22	. . . . .	Washer	3
23	. . . . .	Terminal Flag	3
24	. . . . .	Capscrew	3
25	. . . . .	Rotor	1
26	. . . . .	Retaining Ring	1
27	. . . . .	O-Ring	1
28	1555907	Bearing	1
29	. . . . .	Air Guide	1
30	1555881	Nut	8
31	. . . . .	Lockwasher	8
32	. . . . .	Capscrew	8
33	. . . . .	Key	1
34	. . . . .	End Bell	1
	. . . . .	Sleeving (Not Illustrated)	AR
	1648202	Terminal Block Kit (Includes Items 19, 21)	1

©2007 HYSTER COMPANY

HYDRAULIC PUMP MOTOR (Figure 6-8)
OPEN CONSTRUCTION
WITH BWI AND TEMPERATURE SENSOR

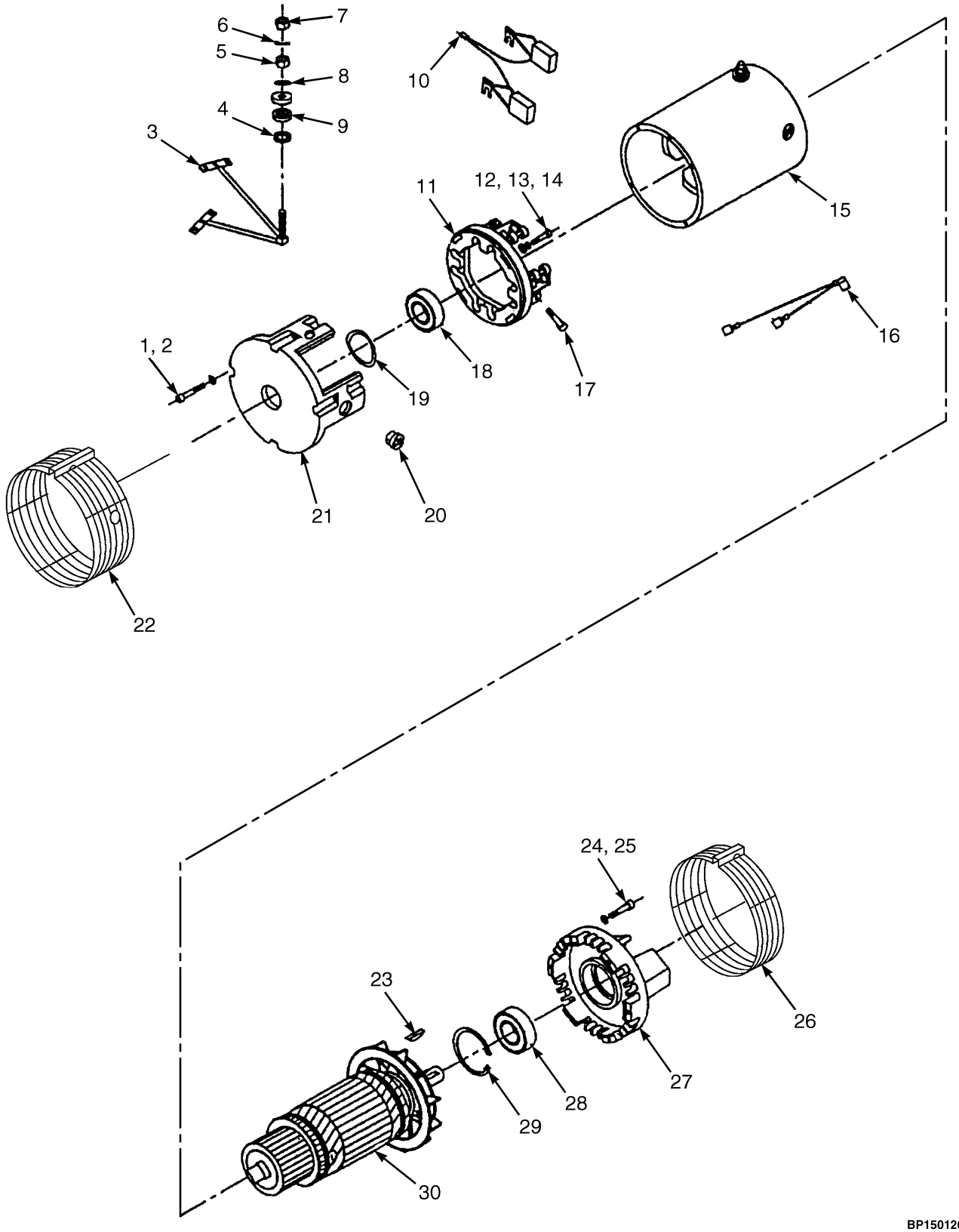

BP150126

©2007 HYSTER COMPANY

HYDRAULIC PUMP MOTOR
OPEN CONSTRUCTION
WITH BWI AND TEMPERATURE SENSOR

ITEM	PART NO.	DESCRIPTION	QTY
	2045529	Hydraulic Pump Motor	1
1	1502111	Screw	4
2	1502095	Spring Washer	10
3	1502120	Brush Connection	1
4	1502105	Washer (Tooth Spring)	1
5	292654	Nut	1
6	1502106	Spring Washer	1
7	1494610	Nut	1
8	1502108	Spring Disc	1
9	1502104	Bushing	2
10	1507462	Brush	8
11	1502097	Brush Holder	1
12	1502099	Screw	4
13	1502100	Washer	4
14	1502101	Lockwasher	4
15	1507426	Frame	1
16	1507461	Connector	1
17	1502098	Screw	8
18	1471800	Ball Bearing	1
19	1502110	Washer (Wave Spring)	1
20	1507430	Housing	1
21	1507429	Shield	1
22	1502114	Cover Band	1
23	1507463	Key (Woodruff)	1
24	1502094	Screw	6
25	1502095	Spring Washer	6
26	1502115	Spring for Cover Band	2
27	1507427	Shield	1
28	1502092	Ball Bearing	1
29	1502093	Lockring	1
30	1507425	Armature (With Fan)	1
30	1565025	Fan	1
	1564987	Enclosure Bands Kit (Type EE, ES) (☞ Figure 3-3)	1
ab	1618982	Retaining Bushing	1

FOOTNOTES:
a Not Illustrated
b Optional

HYDRAULIC PUMP MOTOR (Figure 6-9)
CLOSED CONSTRUCTION
WITH BWI AND TEMPERATURE SENSOR

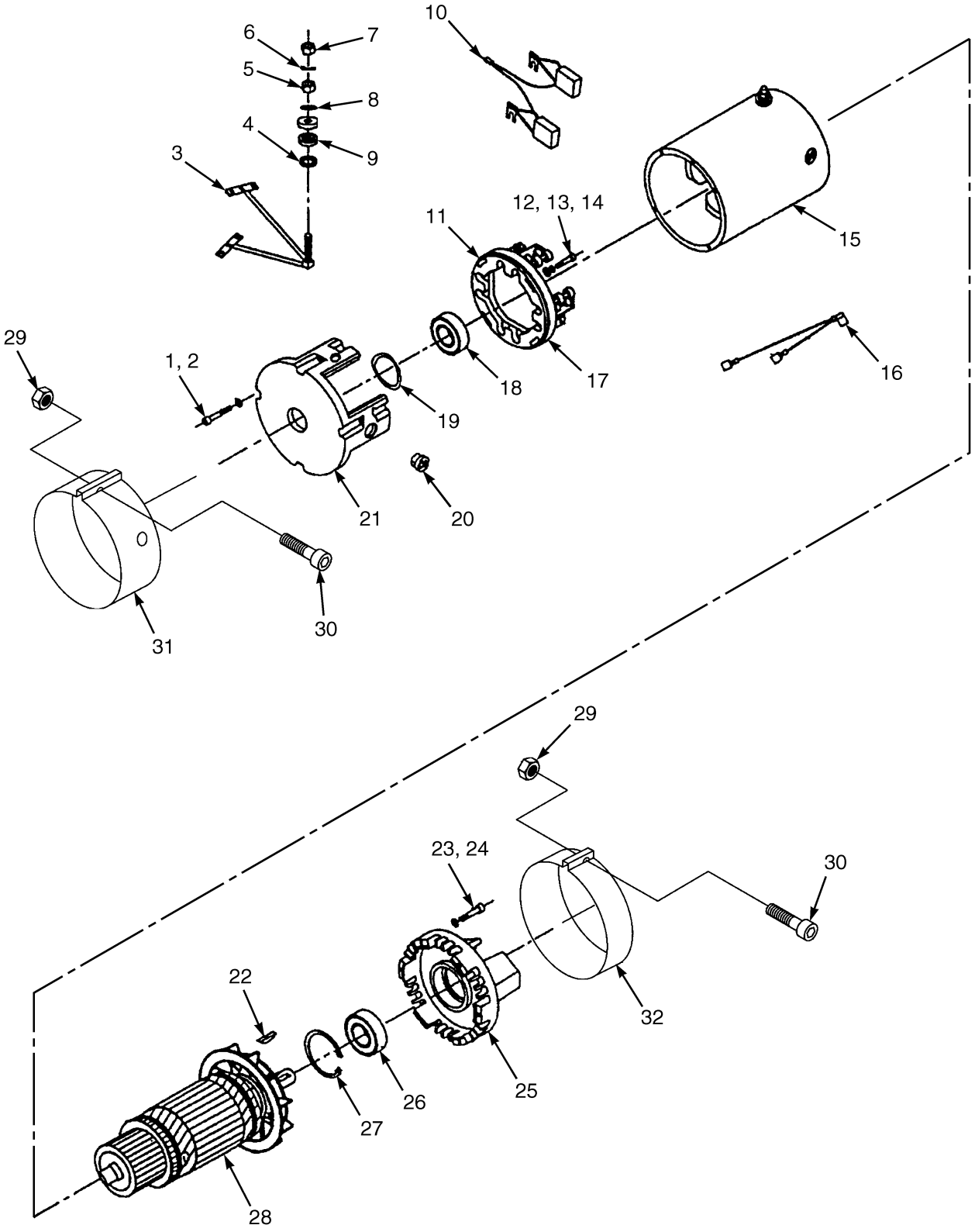

BP150127

©2007 HYSTER COMPANY

HYDRAULIC PUMP MOTOR
CLOSED CONSTRUCTION
WITH BWI AND TEMPERATURE SENSOR

ITEM	PART NO.	DESCRIPTION	QTY
	1504374	Hydraulic Pump Motor Assembly	1
	2045529	Hydraulic Pump Motor	1
1	1502111	Screw	4
2	1502095	Spring Washer	10
3	1502120	Brush Connection	1
4	1502105	Washer (Tooth Spring)	1
5	292654	Nut	1
6	1502106	Spring Washer	1
7	1494610	Nut	1
8	1502108	Spring Disc	1
9	1502104	Bushing	2
10	1507462	Brush	4
11	1502097	Brush Holder	1
12	1502099	Screw	4
13	1502100	Washer	4
14	1502101	Lockwasher	4
15	1507426	Frame	1
16	1507461	Connector	1
17	1502098	Screw	8
18	1471800	Ball Bearing	1
19	1502110	Washer (Wave Spring)	1
20	1507430	Housing	1
21	1507429	Shield	1
22	1507463	Key (Woodruff)	1
23	1502094	Screw	6
24	1502095	Spring Washer	6
25	1507427	Shield	1
26	1502092	Ball Bearing	1
27	1502093	Lockring	1
28	1507425	Armature (With Fan)	1
28	1565025	Fan	1
29	2303700	Nut	2
30	220361	Screw	2
31	1504450	Cover (Commutator End)	1
32	1504529	Cover (Drive End)	1
ab	1618982	Retaining Bushing	1

FOOTNOTES:
a Not Illustrated
b Optional

HYDRAULIC PUMP MOTOR MOUNT (Figure 6-10)

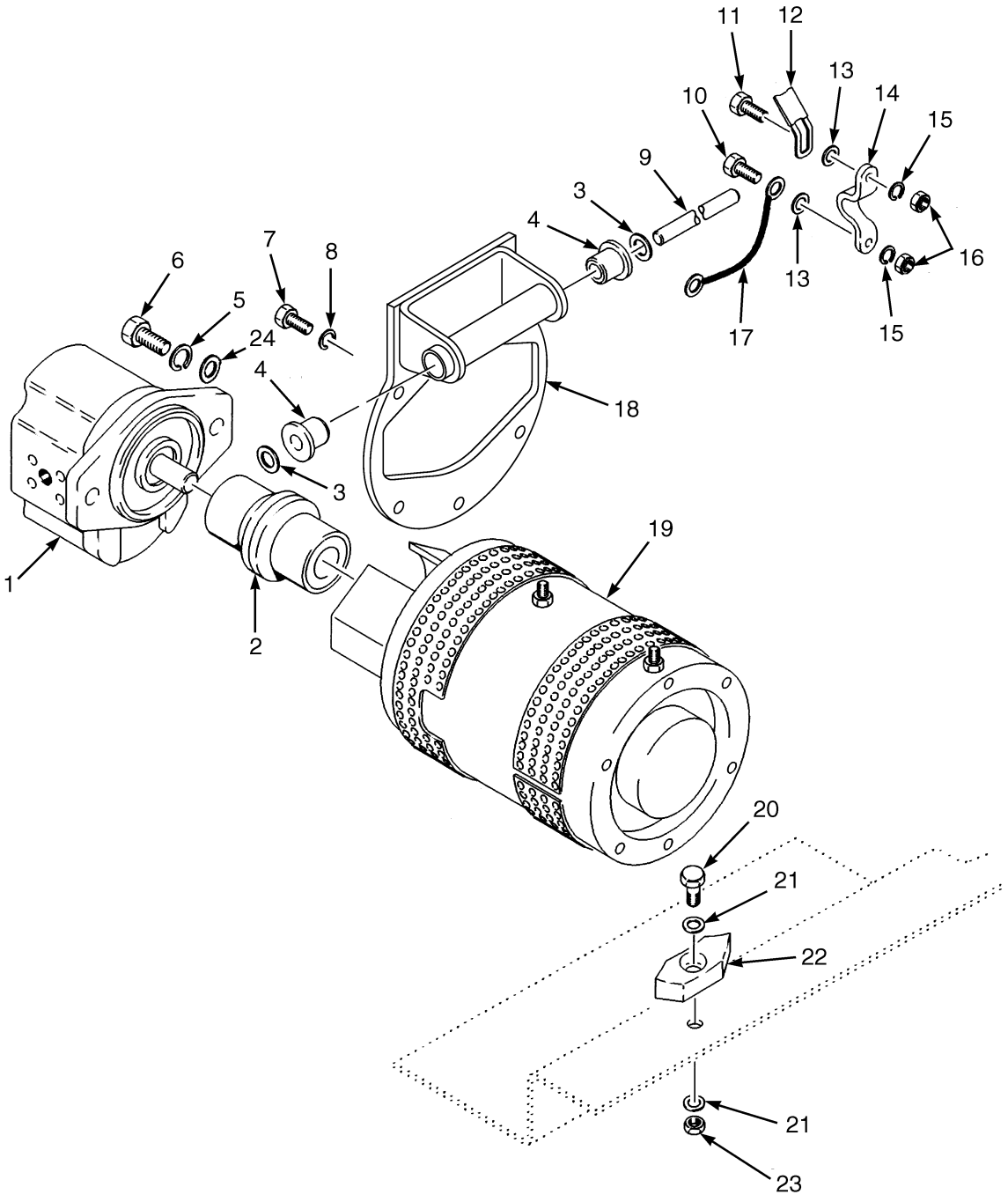

©2007 HYSTER COMPANY

HYDRAULIC PUMP MOTOR MOUNT

ITEM		PART NO.	DESCRIPTION	QTY
1		1455066	Hydraulic Pump (12 cc) (☞ Figure 6-4)	1
1	**d**	2036668	Hydraulic Pump (Low Noise) (19 cc)	1
1	**e**	2076074	Hydraulic Gear Pump Assembly (19 cc) (☞ Figure 6-6)	1
1	**d**	1343827	Hydraulic Pump (19 cc) (☞ Figure 6-5)	1
2		1453260	Coupling	1
3		15178	Washer	2
4		373875	Grommet	2
5		15156	Lockwasher	2
6		16828	Capscrew	2
7		293613	Capscrew	6
8		292681	Lockwasher	6
9		325058	Rod	1
10		136749	Capscrew	3
11		176640	Capscrew	1
12		1362277	Strap	1
13		320158	Washer	4
14		355374	Clamp	2
15		292681	Lockwasher	4
16		239503	Nut	4
17		1351150	Wire Harness	1
18		1518932	Bracket	1
19		2063339	Hydraulic Pump Motor (AC 36/48 V) (☞ Figure 6-7)	1
19	**c**	2045529	Hydraulic Pump Motor (DC 36/48 V) (☞ Figure 6-8)	1
19	**a**	1504374	Hydraulic Pump Motor Assembly (DC 36/48 V) (☞ Figure 6-9)	1
20		176640	Capscrew	1
21		320157	Washer	2
22		355327	Bumper	1
23		316835	Nut	1
24		15134	Washer	2
	b	1510058	Key	2

FOOTNOTES:

a Closed with BWI and Temperature Sensor
b Not Illustrated
c Open with BWI and Temperature Sensor
d ⇒ D/B 07/2005
e D/B 07/2005 ⇒

©2007 HYSTER COMPANY

HYDRAULIC HAND LEVERS (Figure 6-11)
MANUAL HYDRAULICS

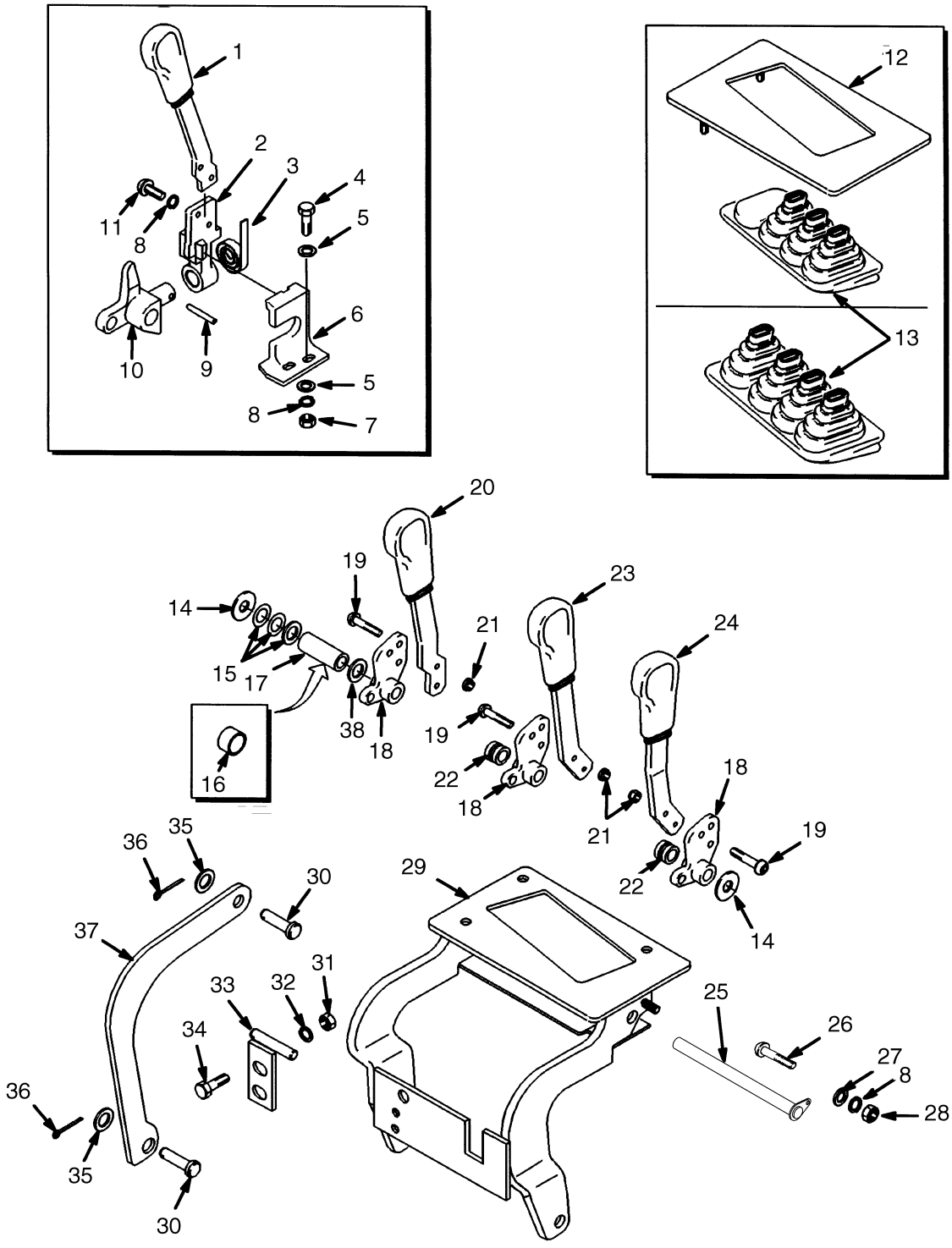

BP150121

©2007 HYSTER COMPANY

HYDRAULIC HAND LEVERS
MANUAL HYDRAULICS

KEY:
A: Three Function (Without Detent Levers)
B: Three Function (With Detent Levers)
C: Four Function (With Detent Levers)

ITEM		PART NO.	DESCRIPTION	QTY A	QTY B	QTY C
1		1340655	Hand Lever (4th Function)	..	1	1
1		2068027	Label (Auxiliary Function - Fork Spreader)	..	1	1
2		1340364	Lever	..	1	1
3		175861	Spring	..	1	1
4		292501	Capscrew	..	2	2
5		320156	Washer	..	4	4
6		1370728	Bracket (Locking)	..	1	1
6		1450092	Bracket (Non-Locking)	..	1	1
7		136687	Nut	..	2	2
8		292680	Lockwasher	7	7	7
9		19979	Pin	..	1	1
10		1340422	Crank	..	1	1
11		296158	Capscrew	..	2	2
12		1362184	Plate	1	1	1
13		1339636	Boot	..	..	1
13		1339799	Boot	1	1	..
14		15135	Washer	2	2	2
15		1516800	Shim (0.060 in.)	AR	AR	AR
15		1516799	Shim (0.031 in.)	AR	AR	AR
15		1516801	Shim (0.010 in.)	AR	AR	AR
16	**a**	1340742	Spacer	..	..	1
16	**b**	1635431	Spacer	..	..	1
17		1503379	Spacer	1	1	..
18		1340366	Crank	3	2	3
19		292500	Capscrew	6	4	6
20		1340654	Hand Lever (3rd Function)	1	..	1
20		2068026	Label (Auxiliary Function - Side-Shift)	1	..	1
21		313805	Nut	6	4	6
22		1503378	Spacer	2	2	2
23		1340653	Hand Lever	1	1	1
23		2083747	Label (Tilt Handle)	1	1	1
24		1340652	Hand Lever	1	1	1
24		2083746	Label (Hoist Handle)	1	1	1
25		1509882	Pin Weldment	1	1	1
26		287816	Capscrew	1	1	1
27		320157	Washer	2	2	2
28		313805	Nut	1	1	1
29		1468409	Support	1	1	1
30		1340702	Anchor Pin	6	6	8
31		136692	Nut	2	2	2
32		292682	Lockwasher	2	2	2
33		1468408	Pin (With Battery Rollers Or Slides)	1	1	1
33		1468404	Pin (Without Battery Rollers Or Slides)	1	1	1
34		136985	Capscrew	2	2	2
35		320159	Washer	8	8	10
36		15222	Cotter Pin	6	6	8

©2007 HYSTER COMPANY

HYDRAULIC HAND LEVERS
MANUAL HYDRAULICS

ITEM		PART NO.	DESCRIPTION	QTY A	QTY B	QTY C
37		1609624	Link (Upper)	3	3	4
38	**b**	361973	Spacer	..	..	1

FOOTNOTES:
a ⇒ S/N G108N03812D
b S/N G108N03813D ⇒

©2007 HYSTER COMPANY

NOTES

HYDRAULIC CONTROL VALVE AND ATTACHING PARTS (Figure 6-12)
MANUAL HYDRAULICS
SHEET 1 OF 2

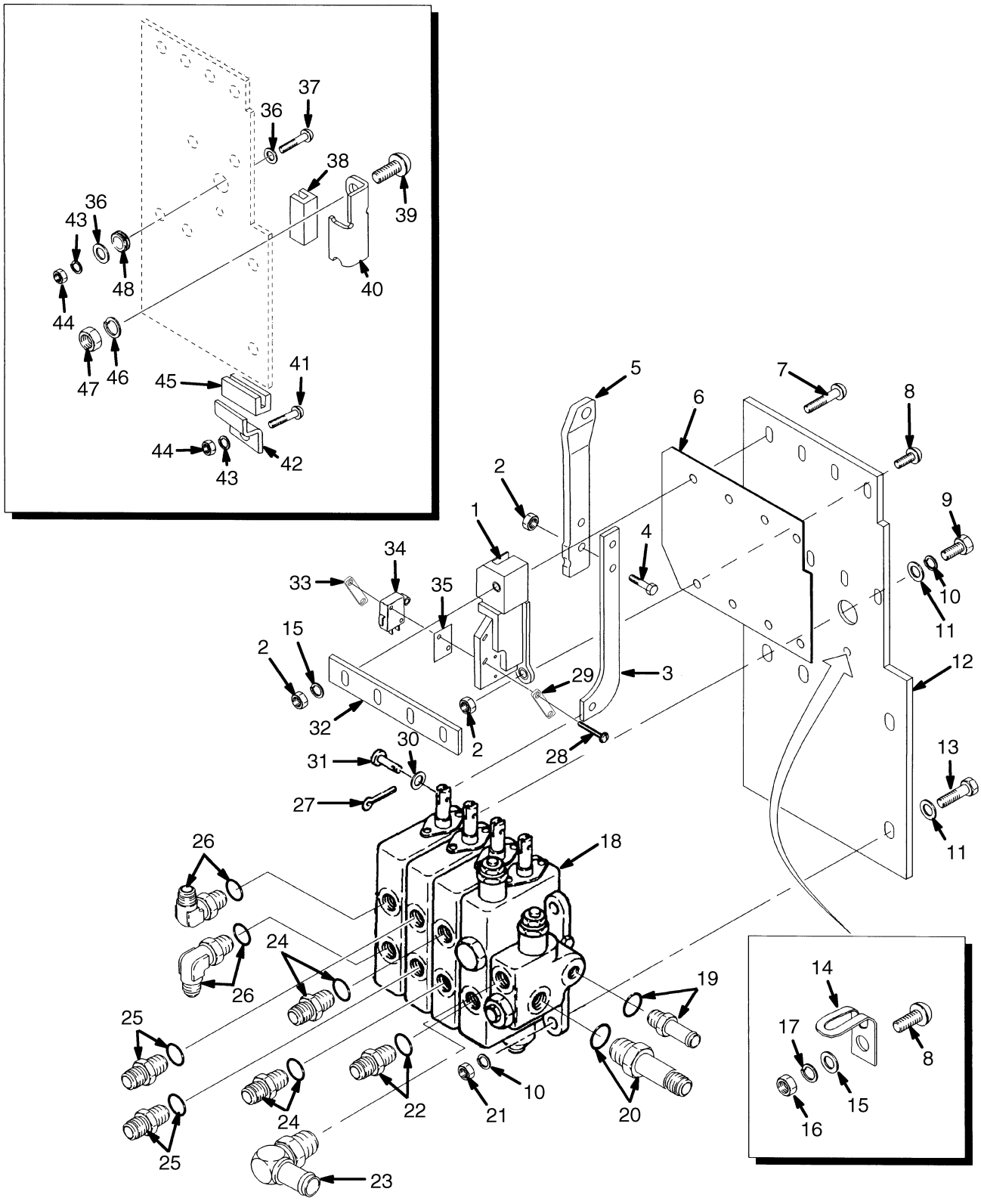

BP140066

©2007 HYSTER COMPANY

HYDRAULIC CONTROL VALVE AND ATTACHING PARTS
MANUAL HYDRAULICS
SHEET 1 OF 2

KEY:
A: Three Function
B: Four Function

ITEM	PART NO.	DESCRIPTION	QTY A	QTY B
1	1362274	Guide	3	4
2	221341	Nut	12	16
3	1340745	Link (With Battery Rollers Or Slides)	3	4
3	1340504	Link (Without Battery Rollers Or Slides)	3	4
4	18460	Capscrew	6	8
5	1362273	Link	3	4
6	1362279	Pad	1	1
7	220003	Capscrew	3	4
8	220000	Bolt	5	6
9	136681	Capscrew	1	1
10	292681	Lockwasher	3	3
11	320157	Washer	3	3
12	1468406	Plate (With Battery Rollers Or Slides)	1	1
12	1468398	Plate (Without Battery Rollers Or Slides)	1	1
13	176640	Capscrew	2	2
14	1362277	Strap	2	2
15	197068	Washer	5	6
16	15054	Nut	2	2
17	15915	Lockwasher	2	2
18	1340672	Hydraulic Control Valve (☞ Figure 6-14)	1	..
18	1340673	Hydraulic Control Valve (☞ Figure 6-15)	..	1
19	222492	Fitting	1	1
19	16483	O-Ring	1	1
20	16542	Fitting	1	1
20	16485	O-Ring	1	1
21	239503	Nut	2	2
22	16745	Fitting	1	1
22	16484	O-Ring	1	1
23	1343452	Fitting	1	1
24	16745	Fitting	2	2
24	16484	O-Ring	1	1
25	16541	Fitting	2	2
25	16484	O-Ring	1	1
26	16559	Fitting	2	2
26	16484	O-Ring	1	1
27	15211	Cotter Pin	3	4
28	220430	Screw	6	8
29	1593346	Plate	6	8
30	15172	Washer	3	4
31	1340703	Pin	3	4
32	1340869	Clamp	1	1
33	1593347	Plate (Tapped)	6	8
34	2046035	Switch	3	4
35	374160	Insulator	3	4
36	1356113	Washer	4	4

©2007 HYSTER COMPANY

HYDRAULIC CONTROL VALVE AND ATTACHING PARTS
MANUAL HYDRAULICS
SHEET 1 OF 2

ITEM	PART NO.	DESCRIPTION	QTY A	QTY B
37	1364272	Capscrew	2	2
38	2026802	Isolator	2	2
39	296166	Capscrew	2	2
40	2036180	Bracket	2	2
41	296174	Capscrew	4	4
42	324972	Bracket	1	1
42	1641885	Bracket	1	1
43	292682	Lockwasher	6	6
44	136692	Nut	6	6
45	1388309	Isolator	2	2
46	292681	Lockwasher	2	2
47	239503	Nut	2	2
48	317594	Mount	2	2

©2007 HYSTER COMPANY

NOTES

HYDRAULIC CONTROL VALVE AND ATTACHING PARTS (Figure 6-13)
MANUAL HYDRAULICS
SHEET 2 OF 2

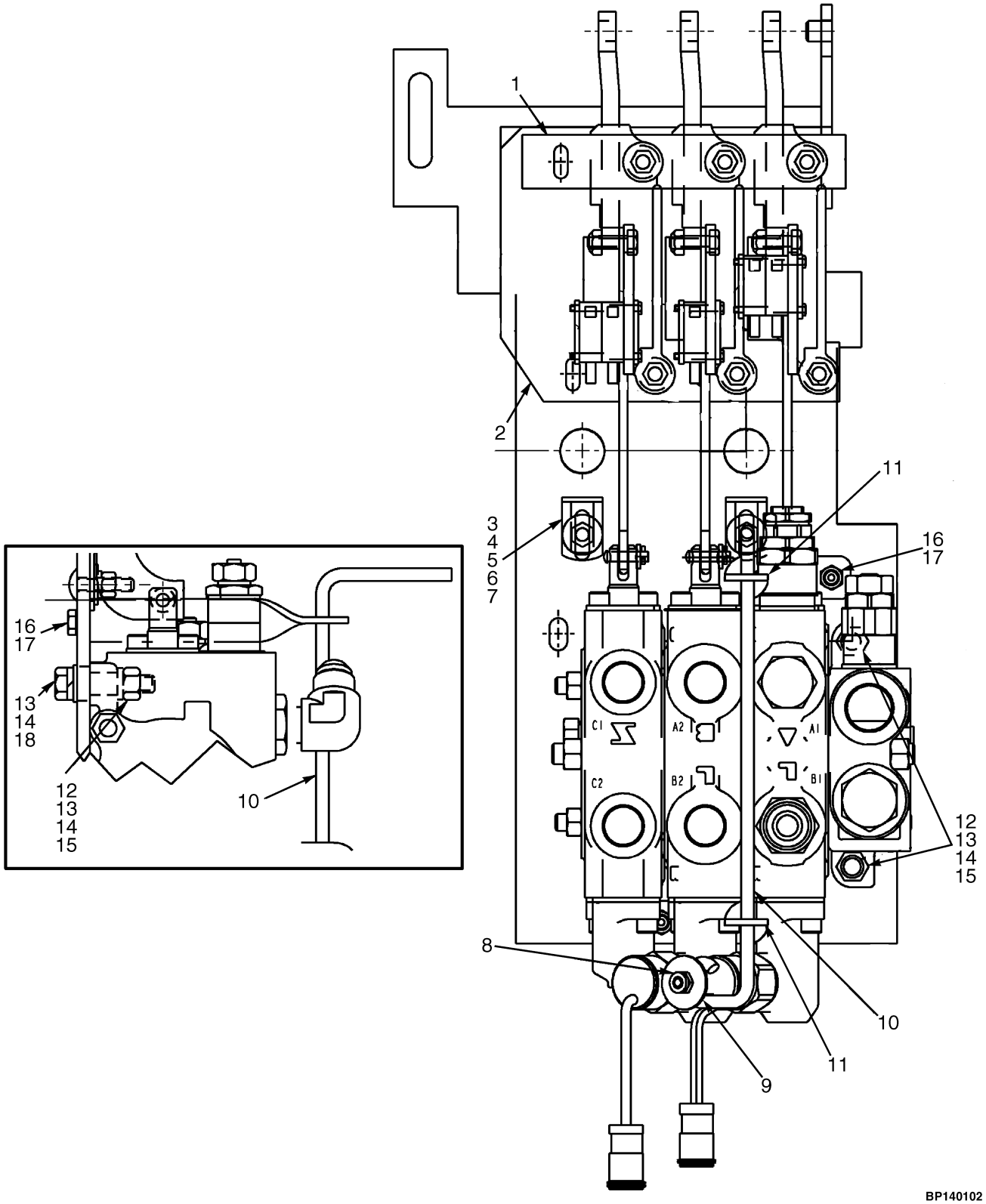

©2007 HYSTER COMPANY

HYDRAULIC CONTROL VALVE AND ATTACHING PARTS
MANUAL HYDRAULICS
SHEET 2 OF 2

ITEM		PART NO.	DESCRIPTION	QTY
	a	1340672	Hydraulic Control Valve (Three Function)	1
	b	1340673	Hydraulic Control Valve (Four Function)	1
1		1340869	Clamp	1
2		1362279	Pad	1
3		1362277	Strap	2
4		220000	Bolt	2
5		197068	Washer	2
6		15915	Lockwasher	2
7		15054	Nut	2
8	**c**	132401	Nut	1
9	**c**	1641884	Washer	1
10		1641881	Rod (Solenoid)	1
11		1660759	Bracket (Solenoid)	2
12		176640	Capscrew	2
13		292681	Lockwasher	3
14		320157	Washer	3
15		239503	Nut	2
16		292500	Capscrew	4
17		136687	Nut	4
18		136681	Capscrew	1

FOOTNOTES:
a Illustrated
b Not Illustrated
c Operator Presence System

©2007 HYSTER COMPANY

HYDRAULIC CONTROL VALVE (Figure 6-14)
THREE FUNCTION
MANUAL HYDRAULICS

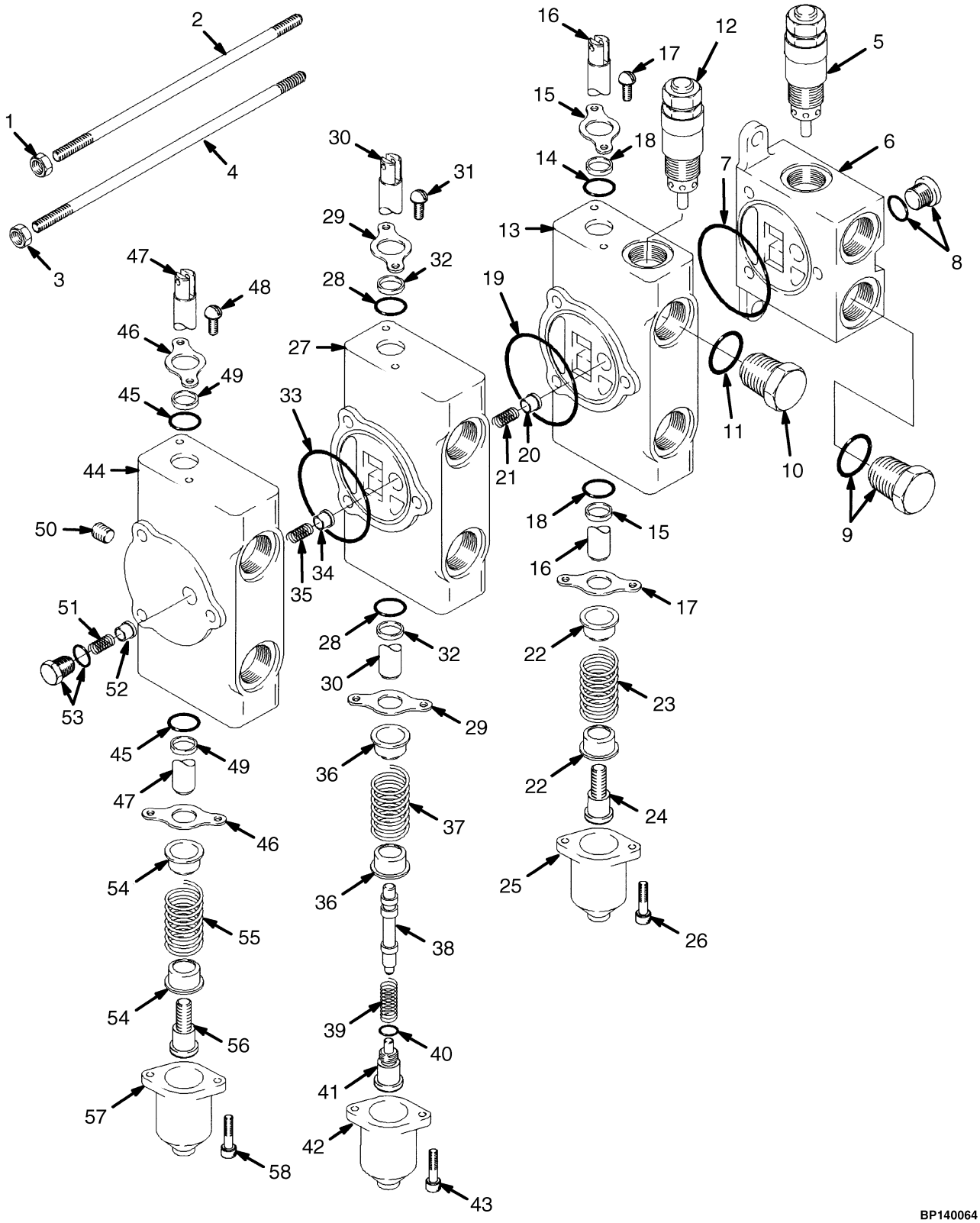

BP140064

©2007 HYSTER COMPANY

HYDRAULIC CONTROL VALVE
THREE FUNCTION
MANUAL HYDRAULICS

ITEM	PART NO.	DESCRIPTION	QTY
	1340672	Hydraulic Control Valve	1
1	15055	Nut	4
2	1374142	Tie Rod	2
3	188534	Nut	2
4	1374141	Tie Rod	1
5	378424	Relief Valve	1
5	1309419	Seal and Spring Kit	1
6	353883	Inlet Section	1
7	57664	O-Ring	1
8	14591	Plug Assembly	1
8	16481	O-Ring	1
9	188486	Plug	1
9	16485	O-Ring	1
10	199524	Plug	1
11	16484	O-Ring	1
12	1583835	Relief Valve	1
13	1374135	Spool Section (Lift)	1
14	1357361	O-Ring	2
15	205121	Seal Plate	2
16	. . . . .	Spool	1
17	16706	Screw	2
18	205122	Wiper	2
19	57664	O-Ring	1
20	205120	Poppet	1
21	205123	Spring	1
22	188516	Spring Seat	2
23	385855	Spring	1
24	188518	Spool End	1
25	188519	Cap	1
26	12949	Capscrew	2
27	1374136	Spool Section (Tilt)	1
28	1357361	O-Ring	2
29	205121	Seal Plate	2
30	. . . . .	Spool	1
31	16706	Screw	2
32	205122	Wiper	2
33	57664	O-Ring	1
34	205120	Poppet	1
35	205123	Spring	1
36	320289	Spring Seat	2
37	385855	Spring	1
38	352055	Piston	1
39	341462	Spring	1
40	16480	O-Ring	1
41	320291	Spool End	1
42	188519	Cap	1
43	12949	Capscrew	2
44	1374138	Spool Section	1
45	1357361	O-Ring	2
46	205121	Seal Plate	2

©2007 HYSTER COMPANY

HYDRAULIC CONTROL VALVE
THREE FUNCTION
MANUAL HYDRAULICS

ITEM	PART NO.	DESCRIPTION	QTY
47	. . . . .	Spool	1
48	16706	Screw	2
49	205122	Wiper	2
50	15483	Fitting	1
51	1309422	Spring	1
52	1309420	Poppet	1
53	1669381	Plug Assembly	1
53	1309875	O-Ring	1
54	188516	Spring Seat	2
55	385855	Spring	1
56	188518	Spool End	1
57	188519	Cap	1
58	12949	Capscrew	2
	1374144	Tie Rod Kit (Includes Items 1, 3-4)	1

©2007 HYSTER COMPANY

NOTES

HYDRAULIC CONTROL VALVE (Figure 6-15)
FOUR FUNCTION
MANUAL HYDRAULICS

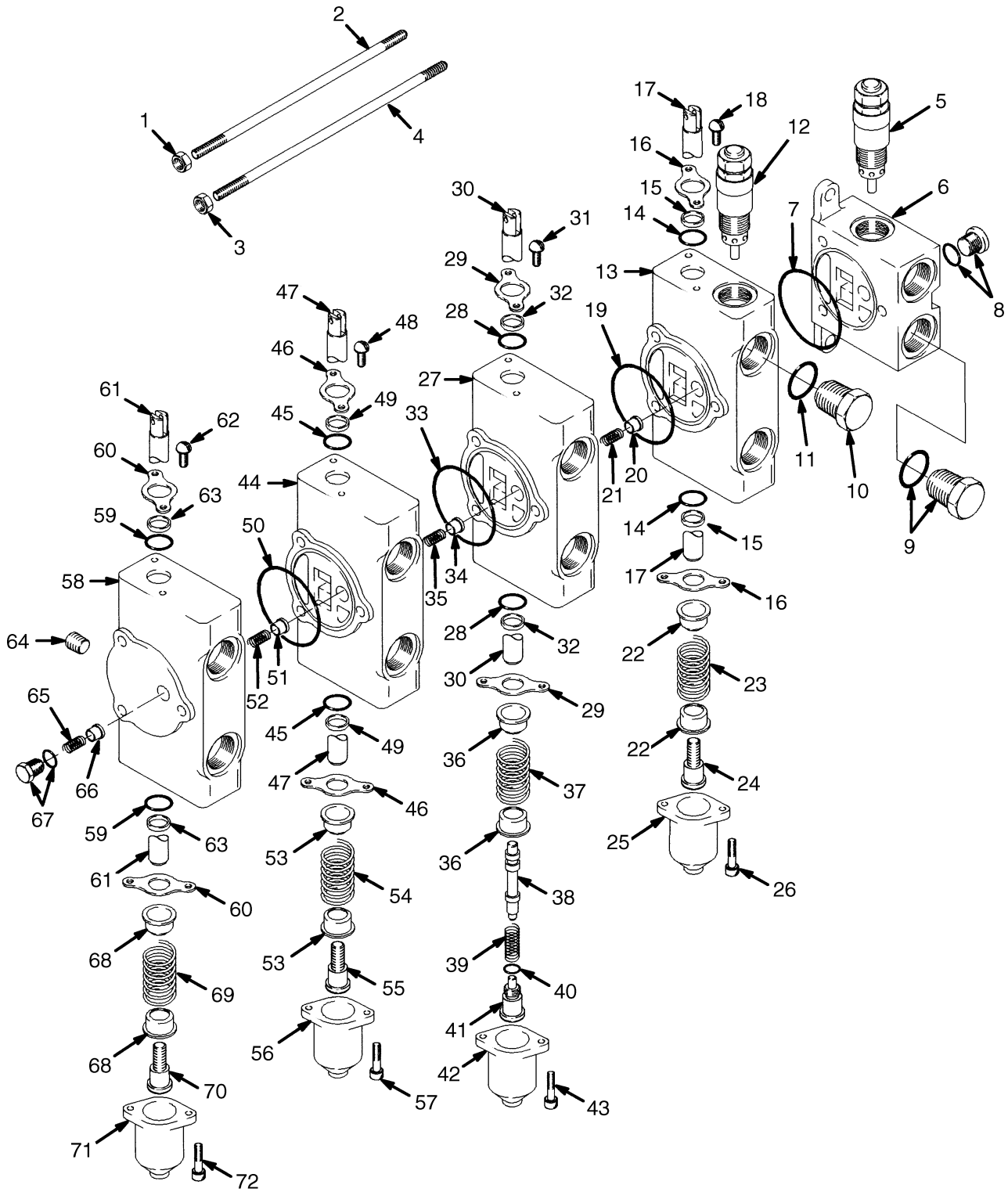

©2007 HYSTER COMPANY

HYDRAULIC CONTROL VALVE
FOUR FUNCTION
MANUAL HYDRAULICS

ITEM	PART NO.	DESCRIPTION	QTY
	1340673	Hydraulic Control Valve	1
1	15055	Nut	4
2	1374148	Tie Rod	2
3	188534	Nut	2
4	1461719	Tie Rod	1
5	378424	Relief Valve	2
5	1309419	Seal and Spring Kit	1
6	353883	Inlet Section	1
7	57664	O-Ring	1
8	14591	Plug Assembly	1
8	16481	O-Ring	1
9	188486	Plug	1
9	16485	O-Ring	1
10	199524	Plug	1
11	16484	O-Ring	1
12	1583835	Relief Valve	1
13	1374135	Spool Section (Lift)	1
14	1357361	O-Ring	2
15	205122	Wiper	2
16	205121	Seal Plate	2
17	. . . . .	Spool	1
18	16706	Screw	2
19	57664	O-Ring	1
20	205120	Poppet	1
21	205123	Spring	1
22	188516	Spring Seat	2
23	385855	Spring	1
24	188518	Spool End	1
25	188519	Cap	1
26	12949	Capscrew	2
27	1374136	Spool Section (Tilt)	1
28	1357361	O-Ring	2
29	205121	Seal Plate	2
30	. . . . .	Spool	1
31	16706	Screw	2
32	205122	Wiper	2
33	57664	O-Ring	1
34	205120	Poppet	1
35	205123	Spring	1
36	320289	Spring Seat	2
37	385855	Spring	1
38	352055	Piston	1
39	341462	Spring	1
40	16480	O-Ring	1
41	320291	Spool End	1
42	188519	Cap	1
43	12949	Capscrew	2
44	1374145	Spool Section	1
45	1357361	O-Ring	2
46	205121	Seal Plate	2

©2007 HYSTER COMPANY

HYDRAULIC CONTROL VALVE
FOUR FUNCTION
MANUAL HYDRAULICS

ITEM	PART NO.	DESCRIPTION	QTY
47	. . . . .	Spool	1
48	16706	Screw	2
49	205122	Wiper	2
50	57664	O-Ring	1
51	205120	Poppet	1
52	205123	Spring	1
53	188516	Spring Seat	2
54	385855	Spring	1
55	188518	Spool End	1
56	188519	Cap	1
57	12949	Capscrew	2
58	1374138	Spool Section	1
59	1357361	O-Ring	2
60	205121	Seal Plate	2
61	. . . . .	Spool	1
62	16706	Screw	2
63	205122	Wiper	2
64	15483	Fitting	1
65	1309422	Spring	1
66	1309420	Poppet	1
67	1669381	Plug Assembly	1
67	1309875	O-Ring	1
68	188516	Spring Seat	2
69	385855	Spring	1
70	188518	Spool End	1
71	188519	Cap	1
72	12949	Capscrew	2
	1374147	Tie Rod Kit (Includes Items 1-4)	1

©2007 HYSTER COMPANY

NOTES

ELECTRONIC HYDRAULIC CONTROL VALVE ATTACHING PARTS
(Figure 6-16)
(S/N G108N02840C⇒)

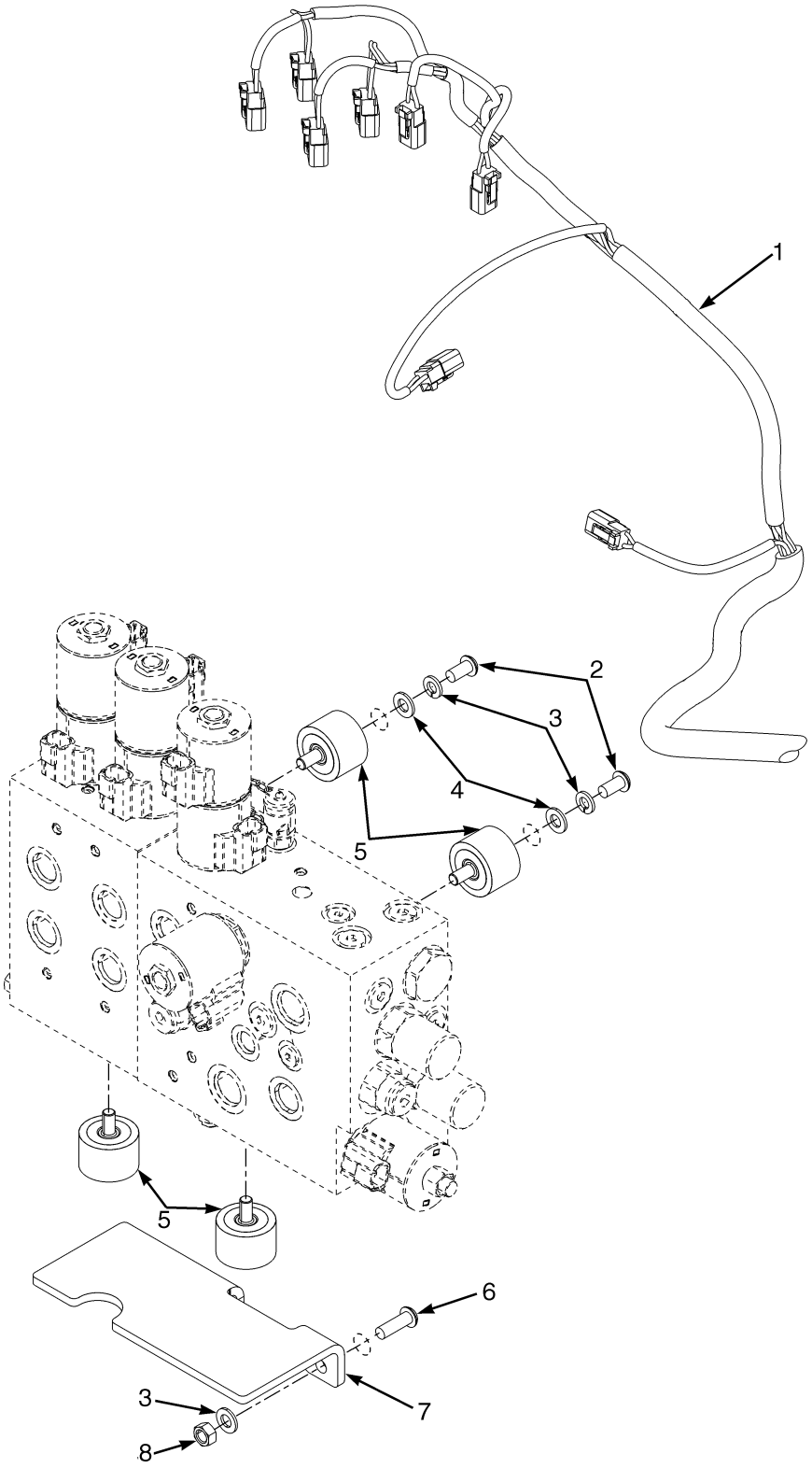

©2007 HYSTER COMPANY

ELECTRONIC HYDRAULIC CONTROL VALVE ATTACHING PARTS
(S/N G108N02840C⇒)

KEY:
A: Standard Flow (Three And Four Function)
B: High Flow (Four Function)

ITEM	PART NO.	DESCRIPTION	QTY A	QTY B
1	2077826	Wire Harness (Electronic Hydraulic Control Valves) (☞ Figure 2-17)	1	1
2	296165	Capscrew	2	3
3	296418	Washer	4	5
4	292681	Lockwasher	2	3
5	2077768	Mount	4	5
6	296167	Capscrew	2	2
7	1605989	Bracket	1	1
8	239503	Nut	2	2

©2007 HYSTER COMPANY

ELECTRONIC HYDRAULIC CONTROL VALVE ASSEMBLY (Figure 6-17)
(S/N G108N02840C⇒)

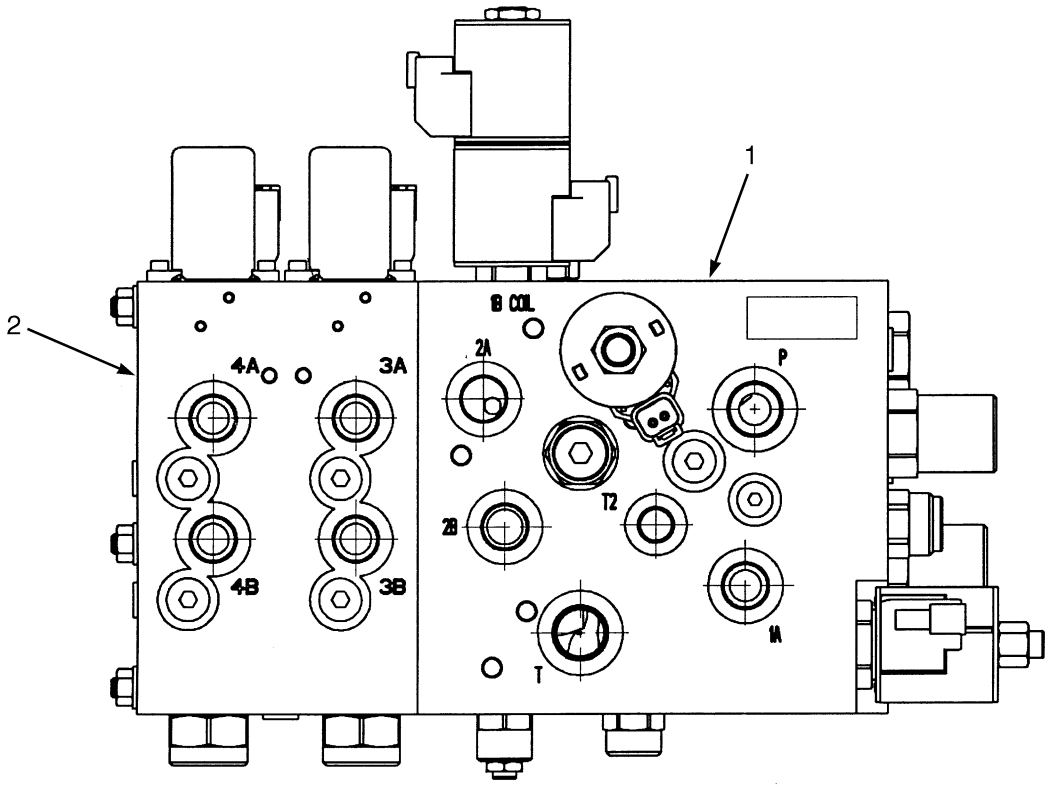

ITEM	PART NO.	DESCRIPTION	QTY
	2078742	Control Valve (Three Function, Standard Flow)	2
	2078740	Control Valve (Four Function, Standard Flow)	1
	2078738	Control Valve (Four Function, High Flow)	2
1	2078736	Main Valve Section (☞ Figure 6-18)	1
2	2078735	Auxiliary Valve Section (Three Function, Standard Flow) (☞ Figure 6-19)	1
2	2078733	Auxiliary Valve Section (Four Function, Standard Flow) (☞ Figure 6-19)	1
2	2078734	Auxiliary Valve Section (Four Function, High Flow) (☞ Figure 6-20)	1

©2007 HYSTER COMPANY

NOTES

MAIN SECTION (Figure 6-18)
ELECTRONIC HYDRAULIC CONTROL VALVE
(S/N G108N02840C⇒)

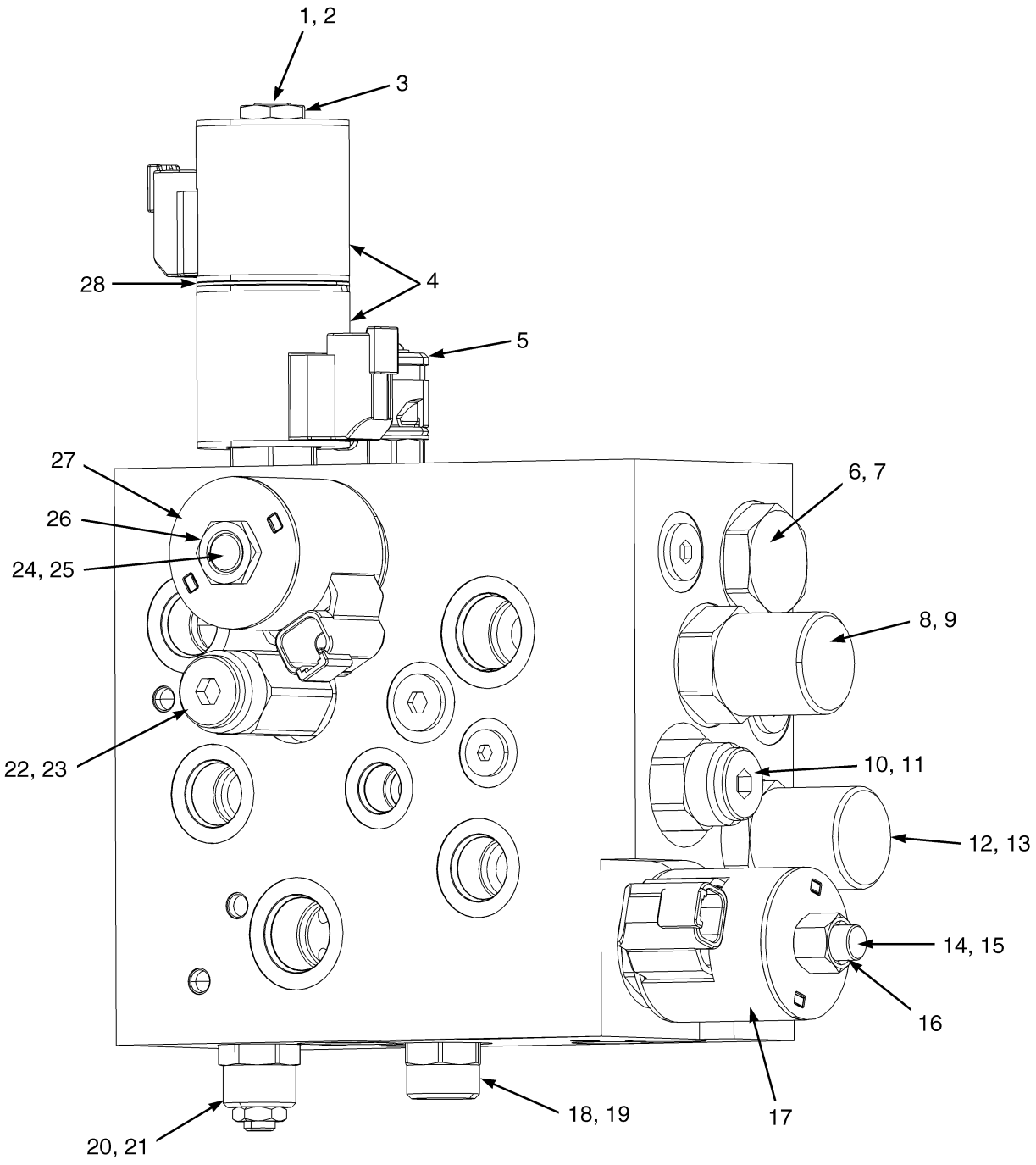

HP140020

©2007 HYSTER COMPANY

MAIN SECTION
ELECTRONIC HYDRAULIC CONTROL VALVE
(S/N G108N02840C⇒)

ITEM	PART NO.	DESCRIPTION	QTY
	2078736	Main Valve Section	1
1	1614936	Proportional Solenoid Valve	1
2	. . . . .	O-Ring	4
3	1615769	Nut	1
4	1612113	Coil	2
5	1614941	Diagnostic Coupling	1
6	1524195	Check Valve	1
7	. . . . .	O-Ring	2
7	. . . . .	Back-Up Ring	1
8	1614940	Pressure Compensator	1
9	. . . . .	O-Ring	2
10	1614934	Regulator Valve	1
11	. . . . .	O-Ring	2
11	. . . . .	Back-Up Ring	1
12	1614939	Pressure Compensator	1
13	. . . . .	O-Ring	2
14	1635587	Proportional Solenoid Valve (Lowering)	1
15	. . . . .	O-Ring	2
15	. . . . .	Back-Up Ring	1
16	1612110	Nut	1
17	1612113	Coil	1
18	1614942	Flow Regulator Valve	1
19	. . . . .	O-Ring	2
19	. . . . .	Back-Up Ring	2
20	1614935	Counterbalance Valve	1
21	. . . . .	O-Ring	3
21	. . . . .	Back-Up Ring	3
22	1614933	Regulator Valve	1
23	. . . . .	O-Ring	2
23	. . . . .	Back-Up Ring	1
24	1635588	Proportional Solenoid Valve (Lifting)	1
25	. . . . .	O-Ring	2
25	. . . . .	Back-Up Ring	1
26	1615769	Nut	1
27	1612113	Coil	4
28	1612111	Spacer	1
	1517905	Seal Kit (Includes Items 11, 23)	1
	1614944	Seal Kit (Includes Item 21)	1
	1612112	Seal Kit (Includes Item 2)	1
	1614945	Seal Kit (Includes Items 7, 15, 25)	1
	1614946	Seal Kit (Includes Item 13)	1
	1614947	Seal Kit (Includes Item 9)	1
	1614948	Seal Kit (Includes Item 19)	1

©2007 HYSTER COMPANY

AUXILIARY SECTION (Figure 6-19)
STANDARD FLOW
ELECTRONIC HYDRAULIC CONTROL VALVE
(S/N G108N02840C⇒)

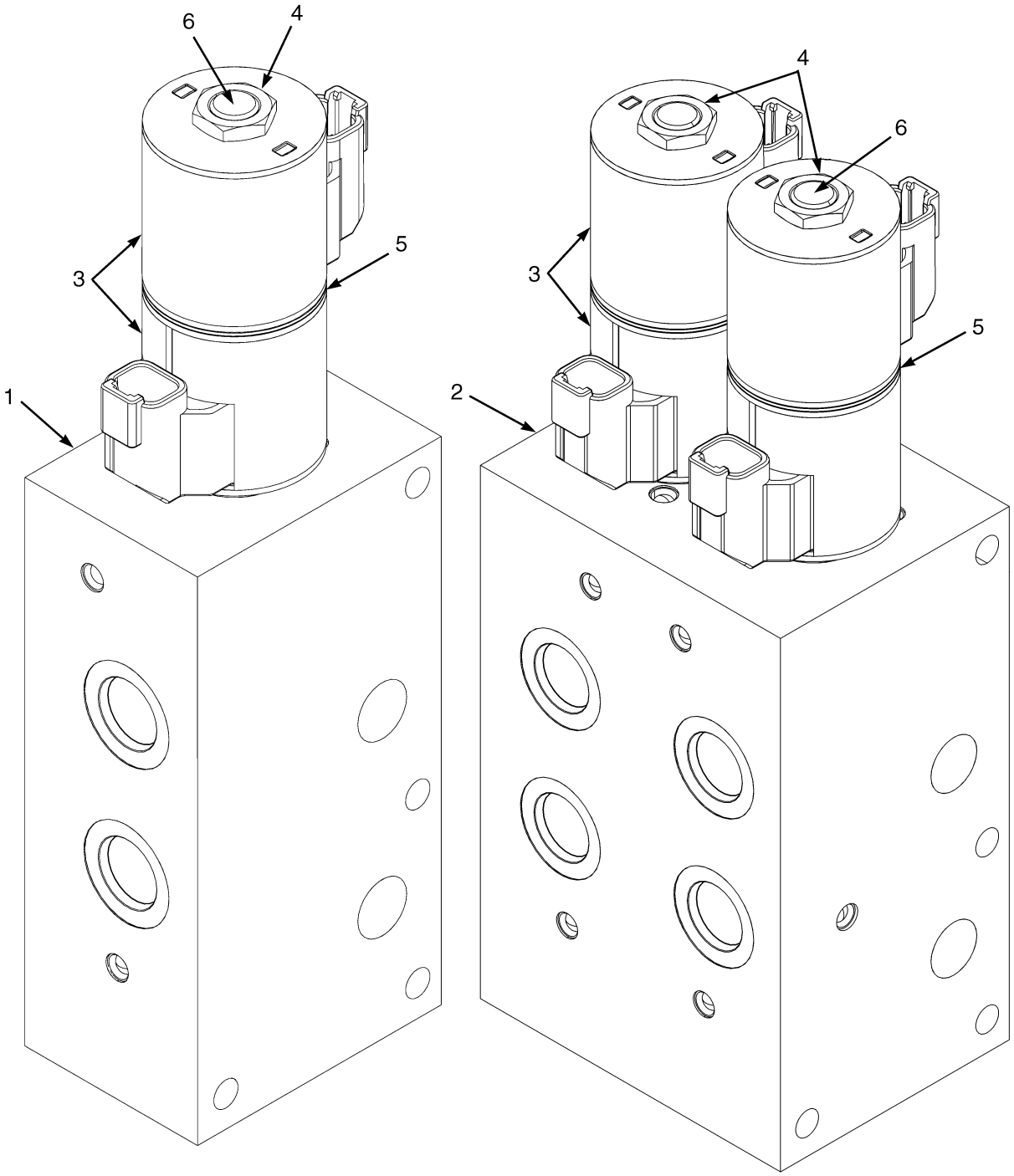

HP140021

©2007 HYSTER COMPANY

AUXILIARY SECTION
STANDARD FLOW
ELECTRONIC HYDRAULIC CONTROL VALVE
(S/N G108N02840C⇒)

KEY:
A: Three Function
B: Four Function

ITEM	PART NO.	DESCRIPTION	QTY A	QTY B
	2078735	Auxiliary Valve Section (Three Function, Standard Flow)	1	..
2	2078733	Auxiliary Valve Section (Four Function, Standard Flow)	..	1
3	1612113	Coil	2	2
4	1612110	Nut	1	2
5	1612111	Spacer	1	2
6	1614936	Proportional Solenoid Valve	1	2
6	1612112	Seal Kit	1	2

©2007 HYSTER COMPANY

AUXILIARY SECTION (Figure 6-20)
HIGH FLOW
ELECTRONIC HYDRAULIC CONTROL VALVE
(S/N G108N02840C⇒)

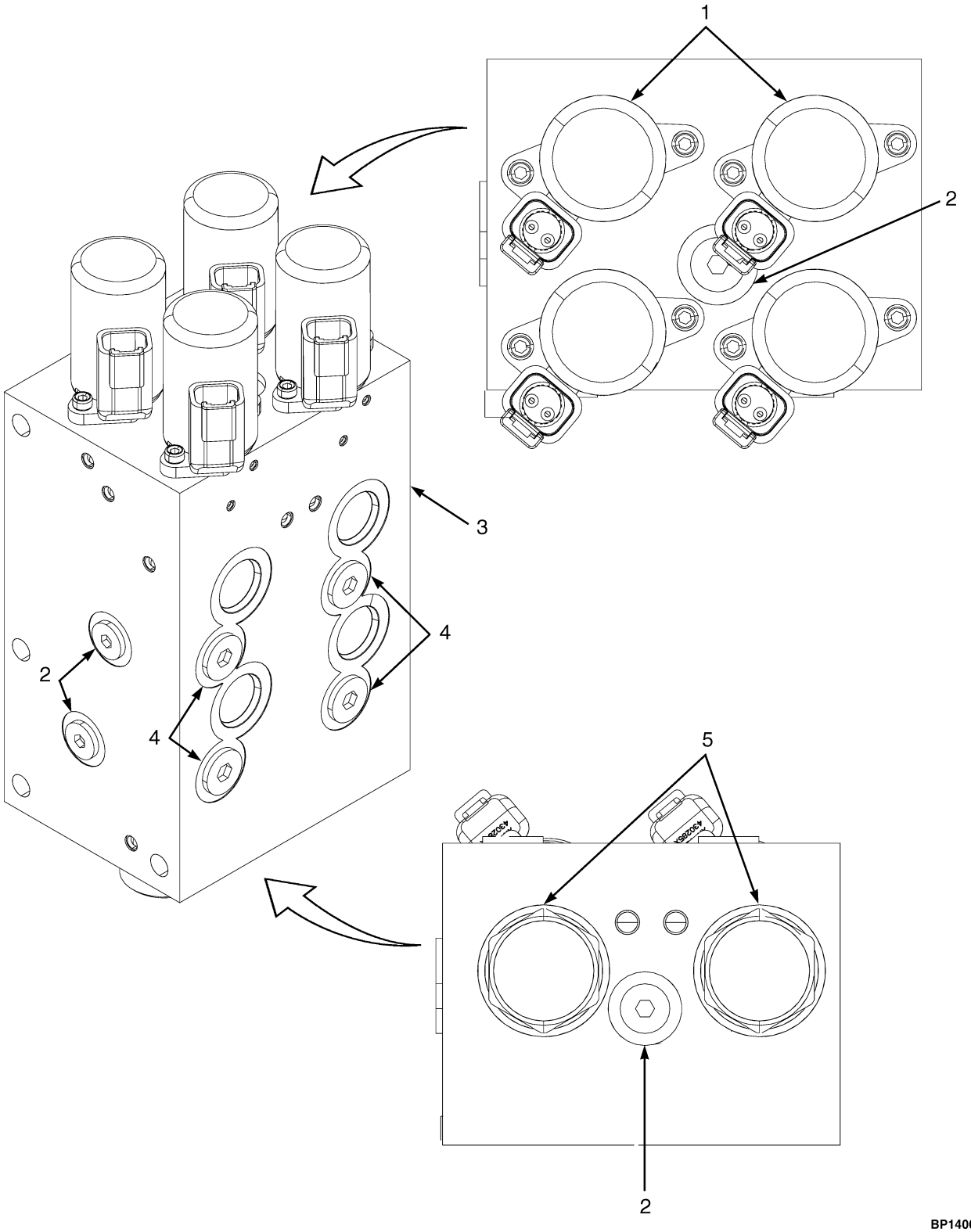

©2007 HYSTER COMPANY

AUXILIARY SECTION
HIGH FLOW
ELECTRONIC HYDRAULIC CONTROL VALVE
(S/N G108N02840C⇒)

ITEM	PART NO.	DESCRIPTION	QTY
	2078734	Auxiliary Valve Section (Four Function, High Flow)	1
1	1612120	Solenoid Valve	4
1	292670	Capscrew	8
1	1612107	Seal Kit	1
2	1335546	Plug	4
2	1612108	O-Ring	1
3	. . . . .	Body	1
4	1335547	Plug	4
4	16481	O-Ring	1
5	1612119	Cartridge	2
5	1612106	Seal Kit	1

©2007 HYSTER COMPANY

HYDRAULIC TANK AND ATTACHING PARTS (Figure 6-21)
(⇒S/N G108N02839C)

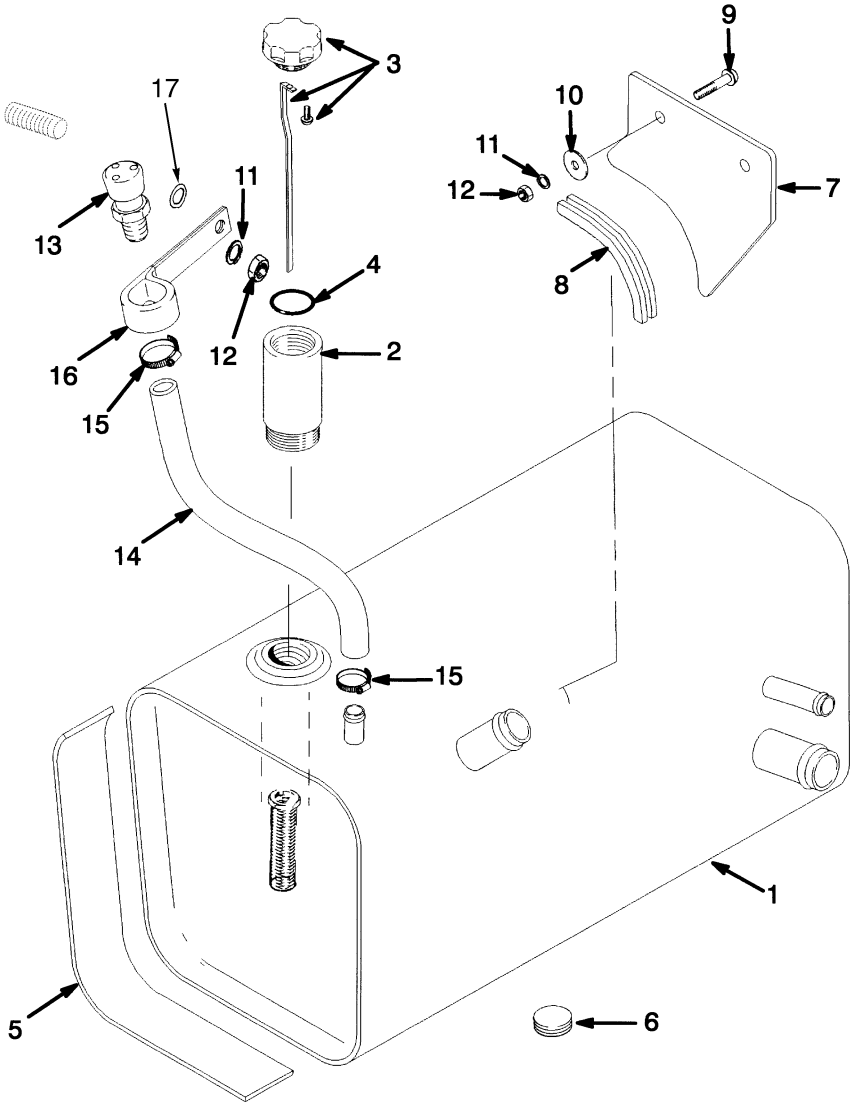

HP150206

©2007 HYSTER COMPANY

HYDRAULIC TANK AND ATTACHING PARTS
(⇒S/N G108N02839C)

ITEM	PART NO.	DESCRIPTION	QTY
1	1475444	Tank	1
1	1624333	Screen	1
2	2037318	Adapter	1
3	2037319	Dipstick	1
3	218612	Cap	1
4	16487	O-Ring	1
5	261157	Tape	AR
6	246869	Plug (Magnetic)	1
7	1660080	Plate	1
8	1364280	Channel	1
9	296174	Capscrew	2
10	1356113	Washer	2
11	292682	Lockwasher	3
12	136692	Nut	3
13	1302665	Breather (Optional)	1
13	1364709	Breather	1
14	78562	Hose	1
15	166857	Clamp	2
16	1364263	Clamp	1
17	15134	Washer	1

©2007 HYSTER COMPANY

HYDRAULIC TANK AND ATTACHING PARTS (Figure 6-22)
(S/N G108N02840C⇒)

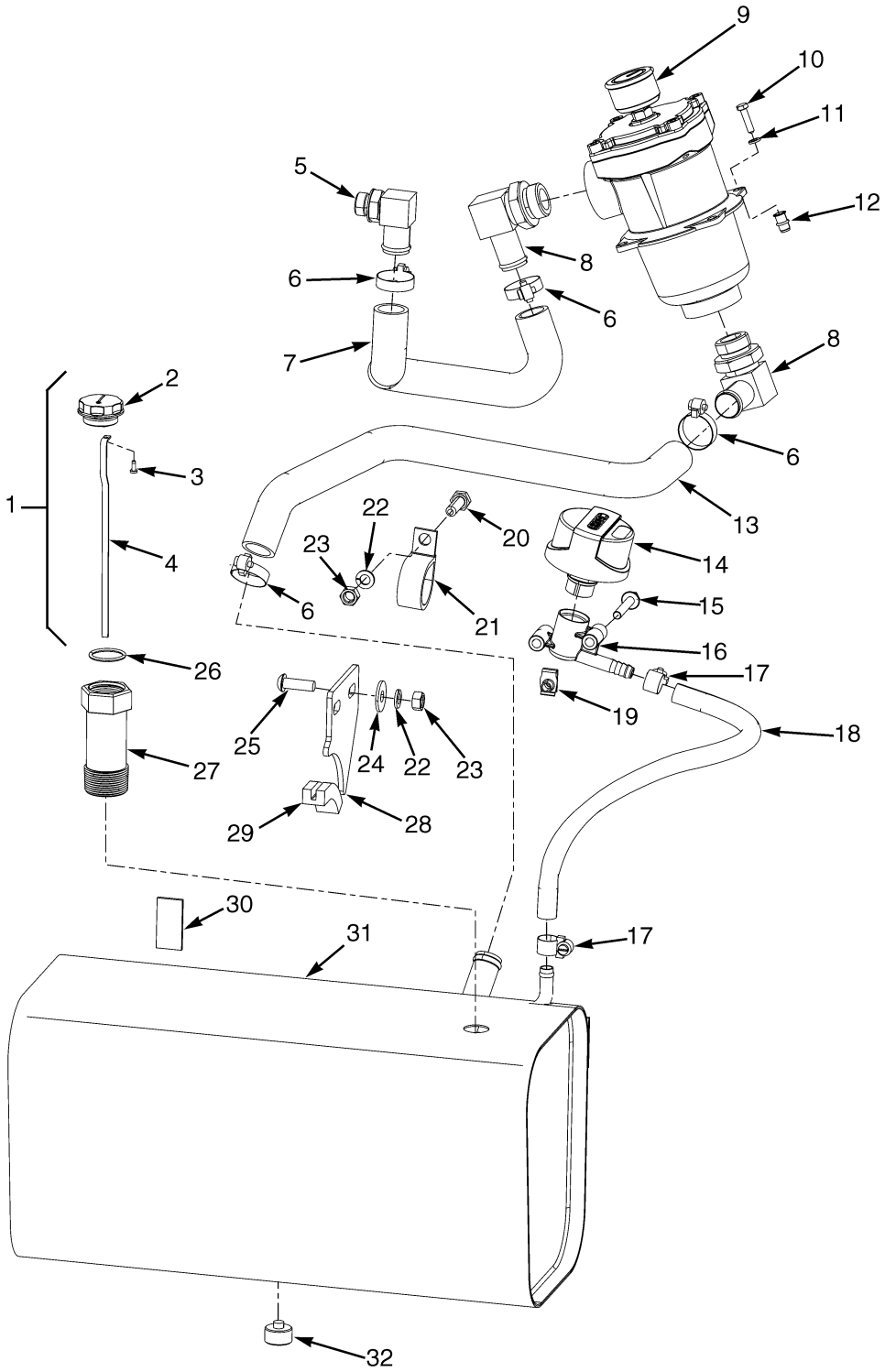

BP150122

©2007 HYSTER COMPANY

HYDRAULIC TANK AND ATTACHING PARTS
(S/N G108N02840C⇒)

ITEM	PART NO.	DESCRIPTION	QTY
1	2037319	Dipstick	1
2	218612	Cap	1
3	244272	Screw	1
4	2071079	Blade	1
5	1343452	Fitting	1
6	127045	Clamp (Hose)	4
7	1596466	Hose	1
8	201781	Fitting	2
9	1589499	Hydraulic Filter (☞ Figure 6-23)	1
10	287816	Capscrew	4
11	292680	Lockwasher	4
12	1531001	Insert	4
13	1596467	Hose	1
14	1582161	Breather	1
15	1510115	Capscrew	2
16	1582160	Adapter	1
17	166857	Clamp	2
18	2078785	Hose	1
19	1385535	Clip Nut	2
20	287860	Capscrew	1
21	258590	Clamp	1
22	292682	Lockwasher	1
23	136692	Nut	3
24	1356113	Washer	2
25	296174	Capscrew	2
26	16487	O-Ring	1
27	2037318	Adapter	1
28	1660080	Plate	1
29	1364280	Channel	1
30	261157	Tape	1
31	1616081	Hydraulic Tank	1
31	1624333	Screen	1
32	246869	Plug (Magnetic)	1

©2007 HYSTER COMPANY

HYDRAULIC FILTER (Figure 6-23)
(S/N G108N02840C⇒)

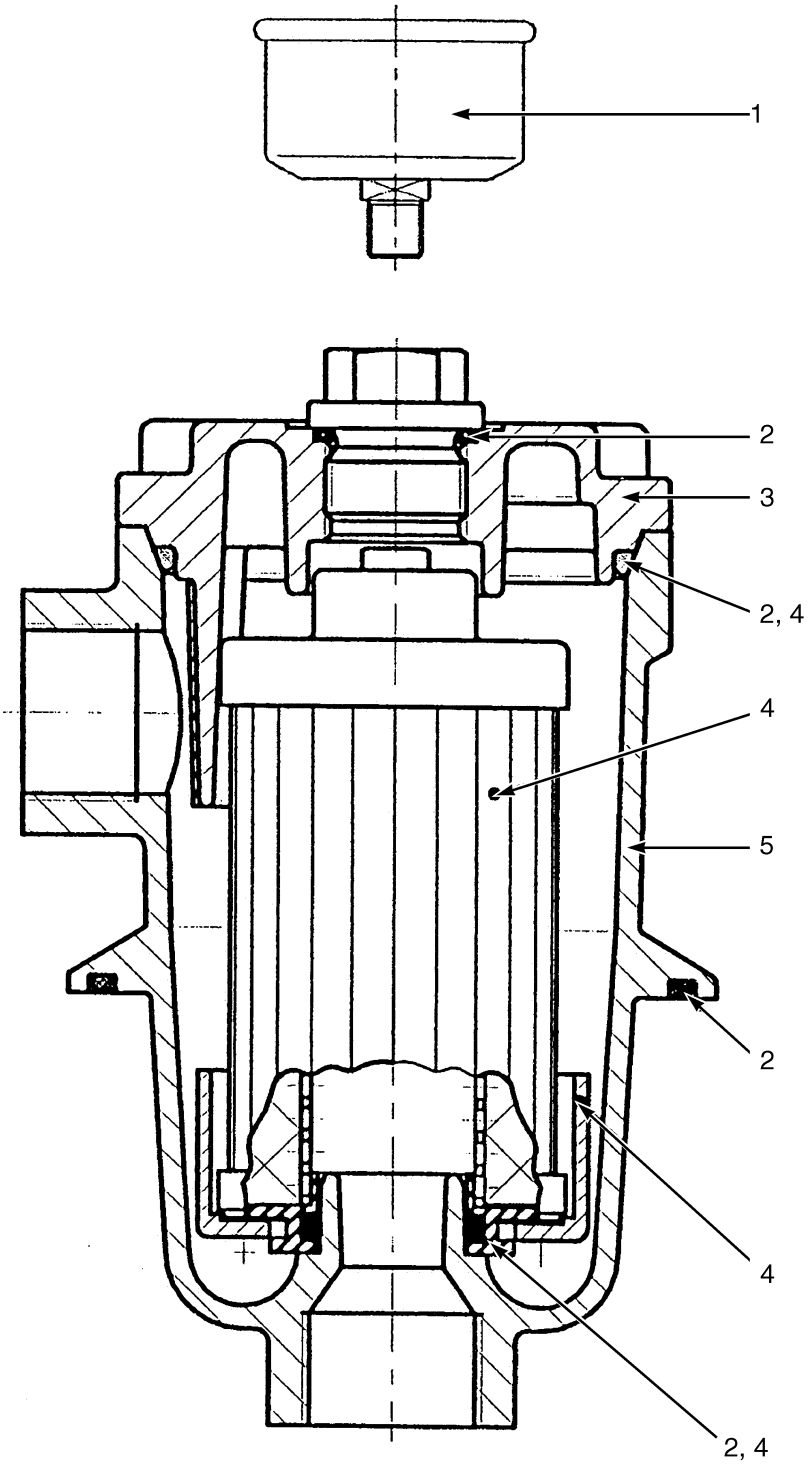

BP150132

©2007 HYSTER COMPANY

HYDRAULIC FILTER
(S/N G108N02840C⇒)

ITEM	PART NO.	DESCRIPTION	QTY
	1589499	Hydraulic Filter	1
1	1611583	Restriction Indicator	1
2	1611586	Seal Kit	1
2	. . . . .	O-Ring	1
2	. . . . .	O-Ring (Cover)	1
2	. . . . .	O-Ring (Tank Seal)	1
2	. . . . .	O-Ring (Element)	1
3	. . . . .	Cover	1
4	1611582	Filter Element Assembly	1
4	. . . . .	O-Ring (Cover)	1
4	. . . . .	Element	1
4	. . . . .	O-Ring (Element)	1
4	. . . . .	Retainer (Contamination)	1
5	. . . . .	Housing	1
	16337	Capscrew (Lid) (Not Illustrated)	4

©2007 HYSTER COMPANY

MAST INSTALLATION (Figure 6-24)

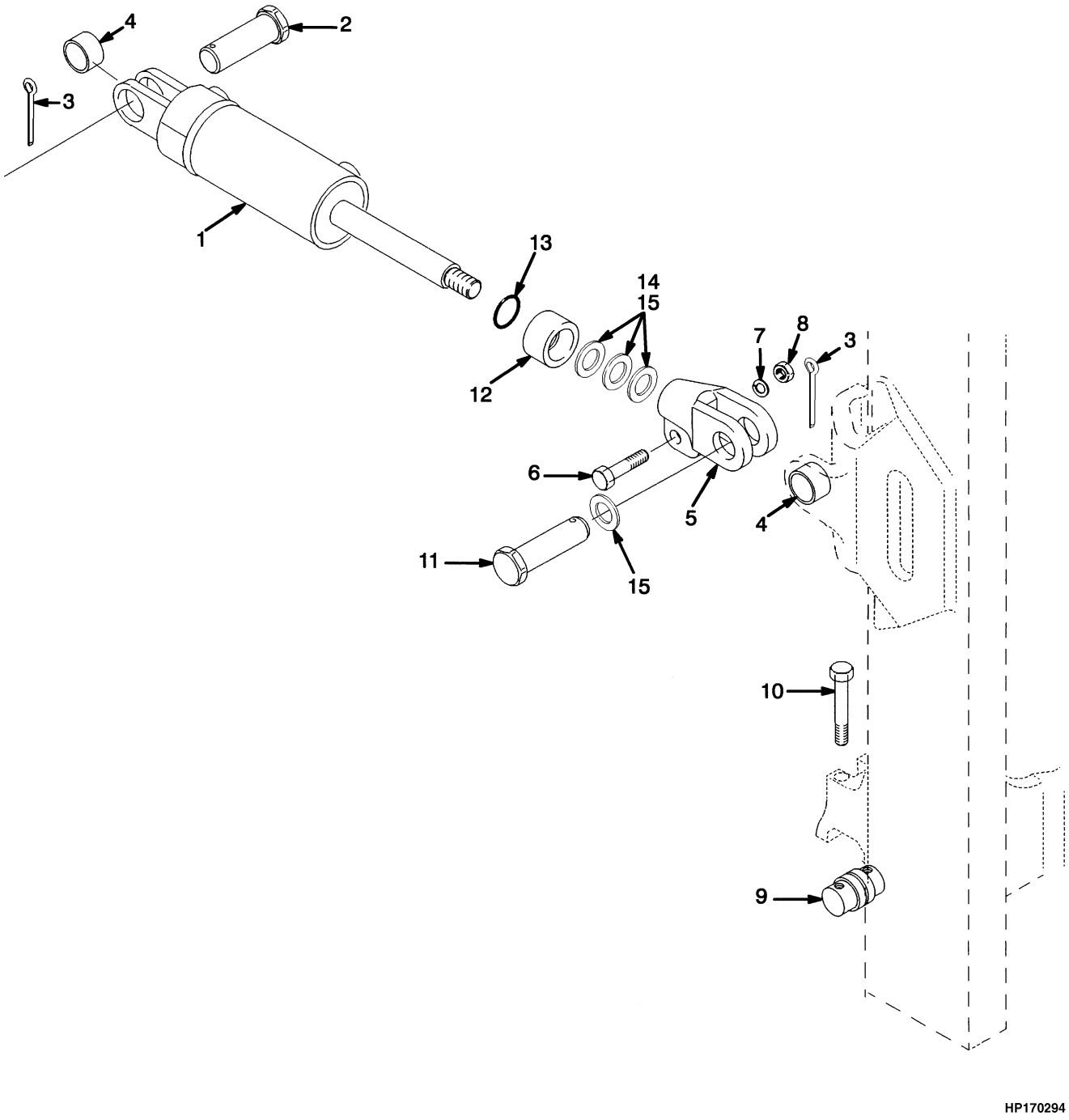

©2007 HYSTER COMPANY

MAST INSTALLATION

ITEM		PART NO.	DESCRIPTION	QTY
1	**cd**	1366081	Tilt Cylinder (☞ Figure 6-25)	2
1	**a**	1366085	Tilt Cylinder (☞ Figure 6-25)	2
2		308117	Rod End Pin	2
3		15236	Cotter Pin	4
4		300982	Bushing	4
5		1340891	Rod End	2
6		293650	Capscrew	2
7		292683	Lockwasher	2
8		292656	Nut	2
9		1376424	Pin	2
10		1376423	Capscrew	4
10		1486836	Capscrew (12 Point Head) (Optional)	4
11		1345354	Rod End Pin	2
12	**c**	1375580	Spacer	2
12	**b**	1372341	Spacer	2
13	**c**	55434	O-Ring	2
14	**c**	1325119	Shim	AR
14	**c**	134675	Shim	AR
15		1495881	Washer	4

FOOTNOTES:

a 10° Forward/5° Back
b 5° Forward/4° Back
c 5° Forward/5° Back
d 5° Forward/8° Back

©2007 HYSTER COMPANY

TILT CYLINDERS (Figure 6-25)

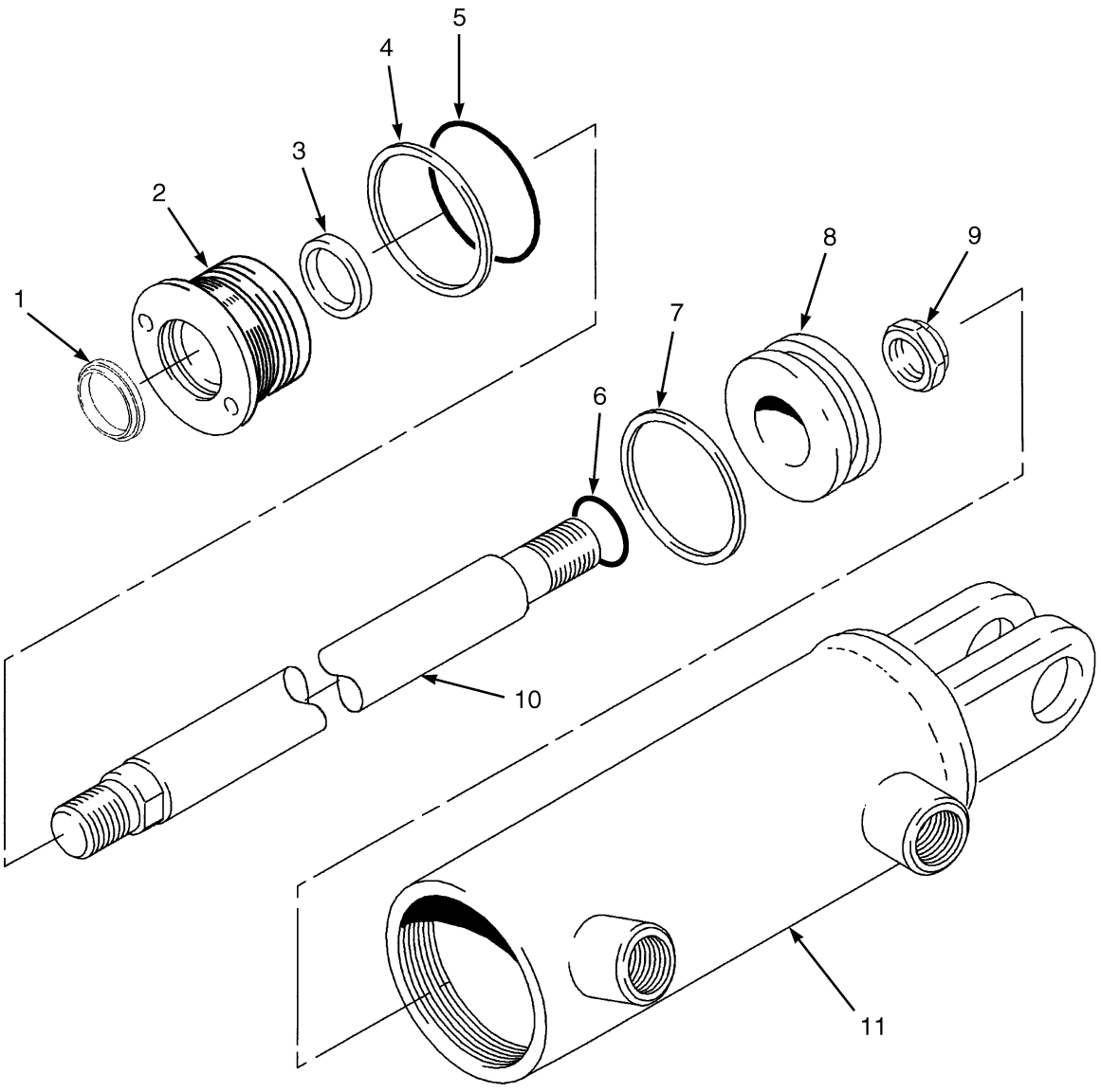

BP150124

©2007 HYSTER COMPANY

TILT CYLINDERS

KEY:
A: 5° Forward
B: 10° Forward

ITEM	PART NO.	DESCRIPTION	QTY A	QTY B
	1366081	Tilt Cylinder	2	..
	1366085	Tilt Cylinder	..	2
1	1383062	Wiper Ring	1	1
2	1338744	Gland	1	1
3	1381082	Rod Seal	1	1
4	154375	Back-Up Ring	1	1
5	46388	O-Ring	1	1
6	39374	O-Ring	1	1
7	2044370	Piston Seal	1	1
8	1338741	Piston	1	1
9	2302899	Nut	1	1
10	1366082	Rod	1	..
10	1338740	Rod	..	1
11	1366083	Tube	1	..
11	1366086	Tube	..	1
	1492644	Seal Kit (Includes Items 1, 3-7)	1	1

©2007 HYSTER COMPANY

NOTES

7 MAST-TWO STAGE LIMITED FREE-LIFT

SECTION 7
MAST-TWO STAGE LIMITED FREE-LIFT

DESCRIPTION **PAGE**

CARRIAGE
SIX ROLLER
TWO STAGE LIMITED FREE-LIFT 7-20
HEADER HOSE
TWO STAGE LIMITED FREE-LIFT 7-22
INNER MAST
TWO STAGE LIMITED FREE-LIFT 7-6
LIFT
TWO STAGE LIMITED FREE-LIFT 7-10
LIFT CYLINDER
E45-55Z
TWO STAGE LIMITED FREE-LIFT 7-13
E60-65Z
TWO STAGE LIMITED FREE-LIFT 7-16
OUTER MAST
TWO STAGE LIMITED FREE-LIFT 7-2

©2007 HYSTER COMPANY

OUTER MAST (Figure 7-1)
TWO STAGE LIMITED FREE-LIFT

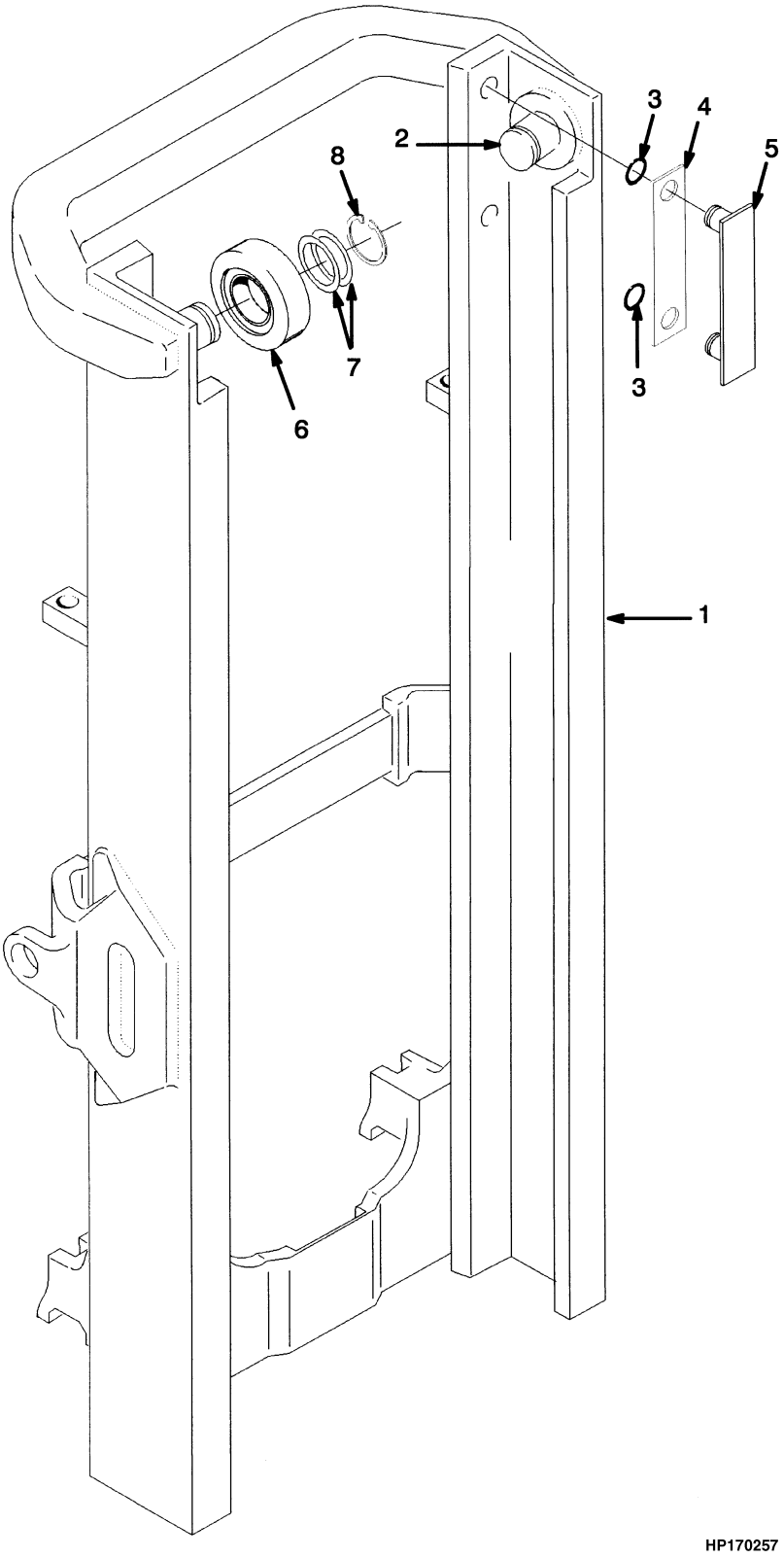

©2007 HYSTER COMPANY

OUTER MAST
TWO STAGE LIMITED FREE-LIFT

E45-55Z

ITEM	DESCRIPTION 1 2 3 4	LIFT HEIGHT TO BOTTOM OF FORKS			
		2093 mm (82.4 in.)	2992 mm (117.8 in.)	3292 mm (129.6 in.)	3392 mm (133.5 in.)
	Mast Group Number	B507 2093	B507 2992	B507 3292	B507 3392
	Mast Assembly	2048106	2048113	2048116	2048117
1	Outer Mast	1379289	1341005	1341008	1341009

E45-55Z (CONT.)

ITEM	DESCRIPTION 1 2 3 4	LIFT HEIGHT TO BOTTOM OF FORKS			
		3492 mm (137.5 in.)	3792 mm (149.3 in.)	4092 mm (161.1 in.)	4292 mm (169.0 in.)
	Mast Group Number	B507 3492	B507 3792	B507 4092	B507 4292
	Mast Assembly	2048118	2048121	2048125	2048128
1	Outer Mast	1341010	1341013	1341017	1341019

E60-65Z

ITEM	DESCRIPTION 1 2 3 4	LIFT HEIGHT TO BOTTOM OF FORKS				
		2559 mm (100.7 in.)	2759 mm (108.6 in.)	2859 mm (112.6 in.)	2959 mm (116.5 in.)	3059 mm (120.4 in.)
	Mast Group Number	B562 2559	B562 2759	B562 2859	B562 2959	B562 3059
	Mast Assembly	2048149	2048151	2048152	2048153	2048154
1	Outer Mast	1341002	1341004	1341005	1341006	1341007

E60-65Z (CONT.)

ITEM	DESCRIPTION 1 2 3 4	LIFT HEIGHT TO BOTTOM OF FORKS			
		3159 mm (124.4 in.)	3259 mm (128.3 in.)	3359 mm (132.2 in.)	3459 mm (136.2 in.)
	Mast Group Number	B562 3159	B562 3259	B562 3359	B562 3459
	Mast Assembly	2048155	2048156	2048157	2048158
1	Outer Mast	1341008	1341009	1341010	1341011

©2007 HYSTER COMPANY

OUTER MAST
TWO STAGE LIMITED FREE-LIFT

E60-65Z (CONT.)

ITEM	DESCRIPTION 1 2 3 4	LIFT HEIGHT TO BOTTOM OF FORKS			
		3659 mm (144.1 in.)	3859 mm (151.9 in.)	3959 mm (155.9 in.)	4059 mm (159.8 in.)
	Mast Group Number	B562 3659	B562 3859	B562 3959	B562 4059
	Mast Assembly	2048160	2048162	2048163	2048164
1	Outer Mast	1341013	1341016	1341017	1341018

ITEM		PART NO.	DESCRIPTION	QTY
	a	. . . . .	Mast Assembly	1
1	**a**	. . . . .	Outer Mast	1
2		1345216	Stubshaft	2
3		104506	O-Ring	4
4		131716	Shim (0.020 in.)	4
5		215211	Bearing Strip	2
6		1333396	Load Roller	2
7		129387	Shim (0.020 in.)	AR
8		58901	Snap Ring	2

FOOTNOTES:
a Refer to Table

©2007 HYSTER COMPANY

NOTES

INNER MAST (Figure 7-2)
TWO STAGE LIMITED FREE-LIFT

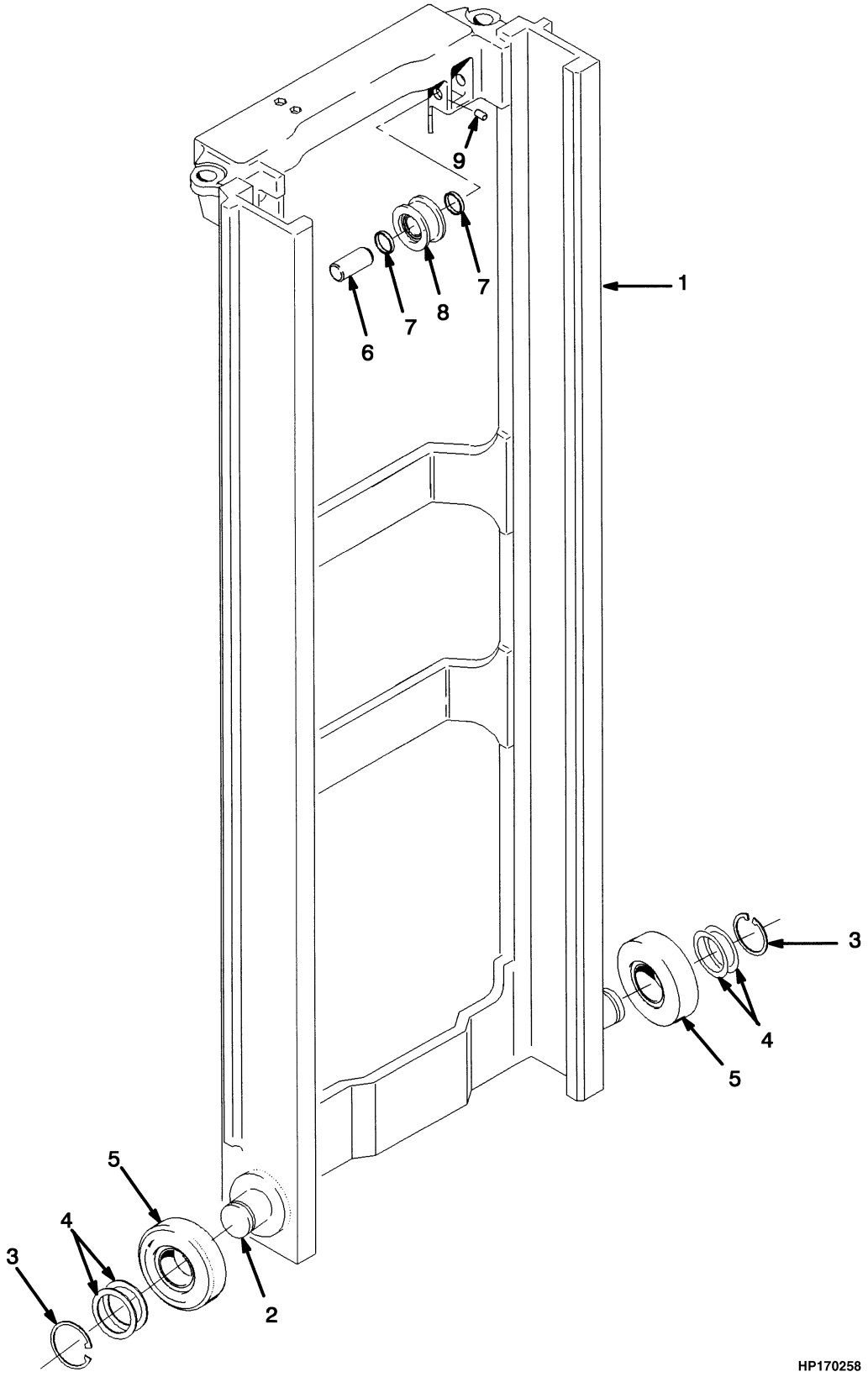

©2007 HYSTER COMPANY

INNER MAST
TWO STAGE LIMITED FREE-LIFT

E45-55Z

ITEM	DESCRIPTION 1 2 3 4	LIFT HEIGHT TO BOTTOM OF FORKS			
		2093 mm (82.4 in.)	2992 mm (117.8 in.)	3292 mm (129.6 in.)	3392 mm (133.5 in.)
	Mast Group Number	B507 2093	B507 2992	B507 3292	B507 3392
	Mast Assembly	2048106	2048113	2048116	2048117
1	Inner Mast	1379283	1341210	1341213	1341214

E45-55Z (CONT.)

ITEM	DESCRIPTION 1 2 3 4	LIFT HEIGHT TO BOTTOM OF FORKS			
		3492 mm (137.5 in.)	3792 mm (149.3 in.)	4092 mm (161.1 in.)	4292 mm (169.0 in.)
	Mast Group Number	B507 3492	B507 3792	B507 4092	B507 4292
	Mast Assembly	2048118	2048121	2048125	2048128
1	Inner Mast	1341215	1341218	1341221	1341223

E60-65Z

ITEM	DESCRIPTION 1 2 3 4	LIFT HEIGHT TO BOTTOM OF FORKS				
		2559 mm (100.7 in.)	2759 mm (108.6 in.)	2859 mm (112.6 in.)	2959 mm (116.5 in.)	3059 mm (120.4 in.)
	Mast Group Number	B562 2559	B562 2759	B562 2859	B562 2959	B562 3059
	Mast Assembly	2048149	2048151	2048152	2048153	2048154
1	Inner Mast	1341207	1341209	1341210	1341211	1341212

E60-65Z (CONT.)

ITEM	DESCRIPTION 1 2 3 4	LIFT HEIGHT TO BOTTOM OF FORKS			
		3159 mm (124.4 in.)	3259 mm (128.3 in.)	3359 mm (132.2 in.)	3459 mm (136.2 in.)
	Mast Group Number	B562 3159	B562 3259	B562 3359	B562 3459
	Mast Assembly	2048155	2048156	2048157	2048158
1	Inner Mast	1341213	1341214	1341215	1341216

©2007 HYSTER COMPANY

INNER MAST
TWO STAGE LIMITED FREE-LIFT

E60-65Z (CONT.)

ITEM	DESCRIPTION 1 2 3 4	LIFT HEIGHT TO BOTTOM OF FORKS			
		3659 mm (144.1 in.)	3859 mm (151.9 in.)	3959 mm (155.9 in.)	4059 mm (159.8 in.)
	Mast Group Number	B562 3659	B562 3859	B562 3959	B562 4059
	Mast Assembly	2048160	2048162	2048163	2048164
1	Inner Mast	1341218	1341220	1341221	1341222

ITEM		PART NO.	DESCRIPTION	QTY
	a	. . . . .	Mast Assembly	1
1	**a**	. . . . .	Inner Mast	1
2		1345216	Stubshaft	2
3		58901	Snap Ring	2
4		129387	Shim (0.020 in.)	AR
5		1333396	Load Roller	2
6		1368656	Pin	2
7		1378691	Spacer	4
8		1379685	Chain Sheave Assembly (E45-55Z)	2
8		1378698	Chain Sheave	1
8		37752	Snap Ring	1
8		1378699	Bearing	1
8		1379684	Chain Sheave Assembly (E60-65Z)	2
8		1378694	Chain Sheave	1
8		37752	Snap Ring	1
8		1378699	Bearing	1
9		302462	Pin	2

FOOTNOTES:
a Refer to Table

©2007 HYSTER COMPANY

NOTES

LIFT (Figure 7-3)
TWO STAGE LIMITED FREE-LIFT

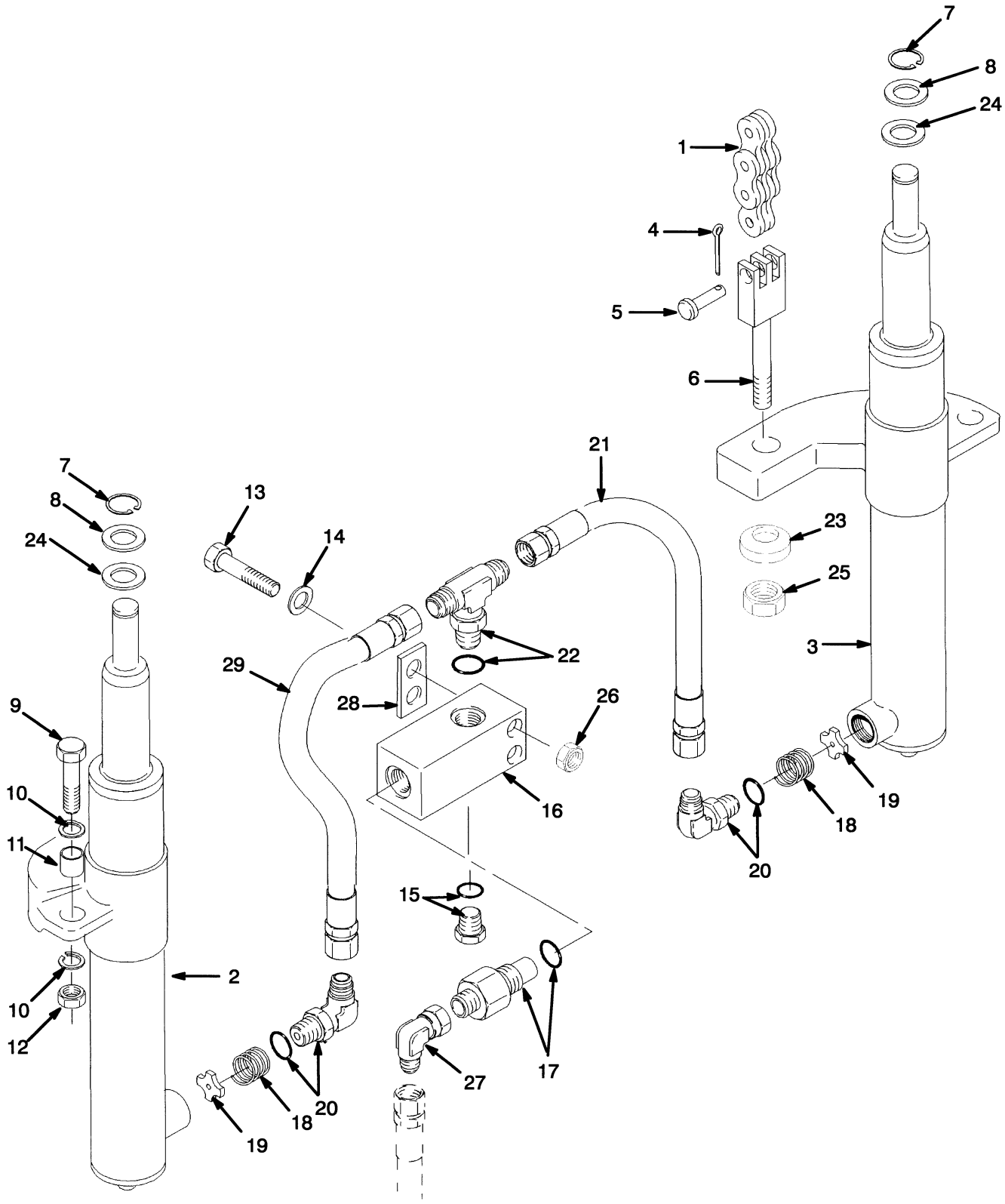

©2007 HYSTER COMPANY

LIFT
TWO STAGE LIMITED FREE-LIFT

E45-55Z

ITEM	DESCRIPTION 1 2 3 4	LIFT HEIGHT TO BOTTOM OF FORKS			
		2093 mm (82.4 in.)	2992 mm (117.8 in.)	3292 mm (129.6 in.)	3392 mm (133.5 in.)
	Mast Group Number	B507 2093	B507 2992	B507 3292	B507 3392
1	Chain	197345	180057	223389	129361

E45-55Z (CONT.)

ITEM	DESCRIPTION 1 2 3 4	LIFT HEIGHT TO BOTTOM OF FORKS			
		3492 mm (137.5 in.)	3792 mm (149.3 in.)	4092 mm (161.1 in.)	4292 mm (169.0 in.)
	Mast Group Number	B507 3492	B507 3792	B507 4092	B507 4292
1	Chain	986599	1301870	1342079	246994

E60-65Z

ITEM	DESCRIPTION 1 2 3 4	LIFT HEIGHT TO BOTTOM OF FORKS				
		2559 mm (100.7 in.)	2759 mm (108.6 in.)	2859 mm (112.6 in.)	2959 mm (116.5 in.)	3059 mm (120.4 in.)
	Mast Group Number	B562 2559	B562 2759	B562 2859	B562 2959	B562 3059
1	Chain	1342380	1342381	1342121	1342382	1342123

E60-65Z (CONT.)

ITEM	DESCRIPTION 1 2 3 4	LIFT HEIGHT TO BOTTOM OF FORKS			
		3159 mm (124.4 in.)	3259 mm (128.3 in.)	3359 mm (132.2 in.)	3459 mm (136.2 in.)
	Mast Group Number	B562 3159	B562 3259	B562 3359	B562 3459
1	Chain	1342383	1342384	1342126	1342385

©2007 HYSTER COMPANY

LIFT
TWO STAGE LIMITED FREE-LIFT

E60-65Z (CONT.)

ITEM	DESCRIPTION 1 2 3 4	LIFT HEIGHT TO BOTTOM OF FORKS			
		3659 mm (144.1 in.)	3859 mm (151.9 in.)	3959 mm (155.9 in.)	4059 mm (159.8 in.)
	Mast Group Number	B562 3659	B562 3859	B562 3959	B562 4059
1	Chain	1342393	1342388	1342133	1342389

ITEM		PART NO.	DESCRIPTION	QTY
1	**a**	. . . . .	Chain	2
2		. . . . .	Cylinder (RH) (☞ Figure 7-4, ☞ Figure 7-5)	1
3		. . . . .	Cylinder (LH) (☞ Figure 7-4, ☞ Figure 7-5)	1
4		15211	Cotter Pin	2
5		1514866	Pin	2
6		1369357	Chain Anchor (E45-55Z)	2
6		1369356	Chain Anchor (E60-65Z)	2
7		131358	Snap Ring	2
8		1333382	Washer (0.060 in.) (0.060 in.)	2
9		292532	Capscrew	2
10		296422	Washer	4
11		323090	Spacer	2
12		300937	Locknut	2
13		136704	Capscrew	2
14		320157	Washer	2
15		14603	Fitting	1
15		16486	O-Ring	1
16		1379687	Housing (Lowering Control)	1
16		1333392	Housing (Optional)	1
17		2309766	Control Valve (Lowering)	1
17		316306	Control Valve (Lowering) (Optional)	1
17		16982	O-Ring	1
18		337179	Spring	2
19		357749	Washer	2
20		189595	Fitting	2
20		16485	O-Ring	1
21		1345403	Hose	1
22		16578	Fitting	1
22		16485	O-Ring	1
23		296426	Washer (Hardened)	2
24	**b**	1354915	Washer (0.010 in.)	AR
24	**b**	1354916	Washer (0.030 in.)	AR
24	**b**	1354917	Washer (0.060 in.)	AR
25		161003	Nut	2
26		313828	Nut	2
27		16882	Fitting	1
28		1354913	Spacer	1
29		1462551	Hose	1

FOOTNOTES:
a Refer to Table
b Use with Item 8 Between Cylinder Rod and Inner Mast as Required

©2007 HYSTER COMPANY

LIFT CYLINDER (Figure 7-4)
E45-55Z
TWO STAGE LIMITED FREE-LIFT

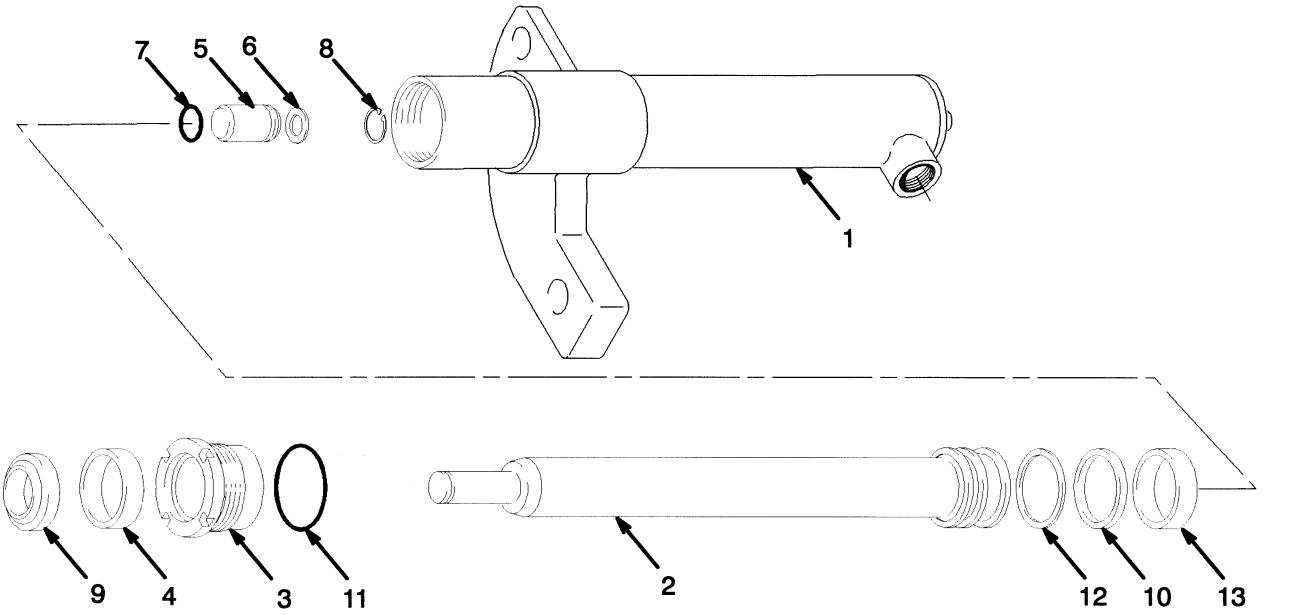

HP170260

LEFT HAND

ITEM	DESCRIPTION 1 2 3 4	LIFT HEIGHT TO BOTTOM OF FORKS			
		2093 mm (82.4 in.)	2992 mm (117.8 in.)	3292 mm (129.6 in.)	3392 mm (133.5 in.)
	Mast Group Number	**B507 2093**	**B507 2992**	**B507 3292**	**B507 3392**
	Cylinder Group Number	**8600027**	**8600006**	**8600009**	**8600010**
	Lift Cylinder	1383686	1341432	1341435	1341436
1	Shell	1383689	1355145	1355157	1355161
2	Rod	1383688	1355146	1355158	1355162

LIFT CYLINDER
E45-55Z
TWO STAGE LIMITED FREE-LIFT

LEFT HAND (CONT.)

ITEM	DESCRIPTION 1 2 3 4	LIFT HEIGHT TO BOTTOM OF FORKS			
		3492 mm (137.5 in.)	3792 mm (149.3 in.)	4092 mm (161.1 in.)	4292 mm (169.0 in.)
	Mast Group Number	**B507 3492**	**B507 3792**	**B507 4092**	**B507 4292**
	Cylinder Group Number	**8600011**	**8600014**	**8600017**	**8600020**
	Lift Cylinder	1341437	1341440	1341443	1341445
1	Shell	1355165	1355177	1355190	1355198
2	Rod	1355166	1355178	1355191	1355199

RIGHT HAND

ITEM	DESCRIPTION 1 2 3 4	LIFT HEIGHT TO BOTTOM OF FORKS			
		2093 mm (82.4 in.)	2992 mm (117.8 in.)	3292 mm (129.6 in.)	3392 mm (133.5 in.)
	Mast Group Number	**B507 2093**	**B507 2992**	**B507 3292**	**B507 3392**
	Cylinder Group Number	**8600077**	**8600056**	**8600059**	**8600060**
	Lift Cylinder	1383687	1341395	1341398	1341399
1	Shell	1383690	1355148	1355160	1355164
2	Rod	1383688	1355146	1355158	1355162

RIGHT HAND (CONT.)

ITEM	DESCRIPTION 1 2 3 4	LIFT HEIGHT TO BOTTOM OF FORKS			
		3492 mm (137.5 in.)	3792 mm (149.3 in.)	4092 mm (161.1 in.)	4292 mm (169.0 in.)
	Mast Group Number	**B507 3492**	**B507 3792**	**B507 4092**	**B507 4292**
	Cylinder Group Number	**8600061**	**8600064**	**8600067**	**8600070**
	Lift Cylinder	1341400	1341403	1341406	1341408
1	Shell	1355168	1355180	1355193	1355200
2	Rod	1355166	1355178	1355191	1355199

ITEM	PART NO.	DESCRIPTION	QTY
	a	Lift Cylinder	1
1	**a**	Shell	1
2	**a**	Rod	1
3	1355127	Gland	1
4	1356749	Rod Seal	1
5	257913	Check Valve	1
6	297531	Washer	1
7	39348	O-Ring	1

See Service Manual for service procedures.
©2007 HYSTER COMPANY

LIFT CYLINDER
E45-55Z
TWO STAGE LIMITED FREE-LIFT

ITEM	PART NO.	DESCRIPTION	QTY
8	187388	Snap Ring	1
9	1319668	Wiper Ring	1
10	2013075	Seal	1
11	92861	O-Ring	1
12	638246	Back-Up Ring	1
13	1356750	Wear Ring	1
	1355276	Seal Kit (Includes Items 4, 7, 9-13)	1

FOOTNOTES:
a Refer to Table

©2007 HYSTER COMPANY

LIFT CYLINDER (Figure 7-5)
E60-65Z
TWO STAGE LIMITED FREE-LIFT

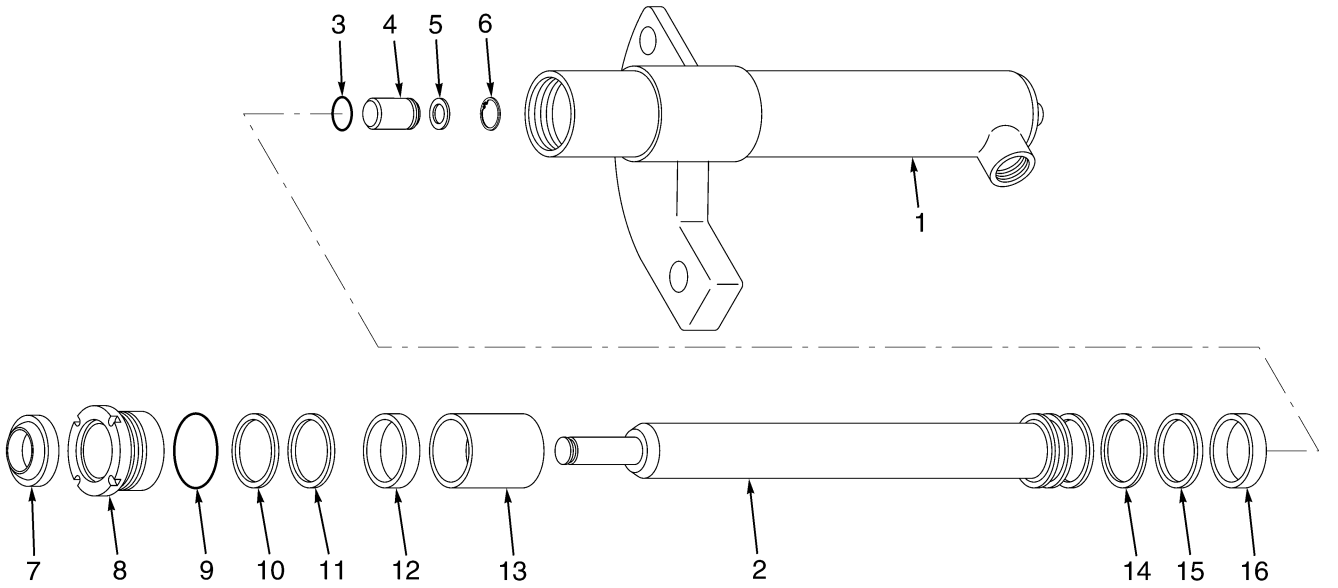

BP170002

LEFT HAND

ITEM	DESCRIPTION 1 2 3 4	LIFT HEIGHT TO BOTTOM OF FORKS				
		2559 mm (100.7 in.)	2759 mm (108.6 in.)	2859 mm (112.6 in.)	2959 mm (116.5 in.)	3059 mm (120.4 in.)
	Mast Group Number	B562 2559	B562 2759	B562 2859	B562 2959	B562 3059
	Cylinder Group Number	8510403	8510405	8510406	8510407	8510408
	Lift Cylinder	2046985	2047207	2047208	2046772	2046173
1	Shell	1355292	1355350	1355354	1355358	1355362
2	Rod	1355293	1355351	1355355	1355359	1355363

©2007 HYSTER COMPANY

LIFT CYLINDER
E60-65Z
TWO STAGE LIMITED FREE-LIFT

LEFT HAND (CONT.)

ITEM	DESCRIPTION 1 2 3 4	LIFT HEIGHT TO BOTTOM OF FORKS			
		3159 mm (124.4 in.)	3259 mm (128.3 in.)	3359 mm (132.2 in.)	3459 mm (136.2 in.)
	Mast Group Number	**B562 3159**	**B562 3259**	**B562 3359**	**B562 3459**
	Cylinder Group Number	**8510409**	**8510410**	**8510411**	**8510412**
	Lift Cylinder	2046174	2046175	2046176	2046177
1	Shell	1355366	1355370	1355374	1355378
2	Rod	1355367	1355371	1355375	1355379

LEFT HAND (CONT.)

ITEM	DESCRIPTION 1 2 3 4	LIFT HEIGHT TO BOTTOM OF FORKS			
		3659 mm (144.1 in.)	3859 mm (151.9 in.)	3959 mm (155.9 in.)	4059 mm (159.8 in.)
	Mast Group Number	**B562 3659**	**B562 3859**	**B562 3959**	**B562 4059**
	Cylinder Group Number	**8510414**	**8510416**	**8510417**	**8600301**
	Lift Cylinder	2046179	2046181	2046182	1341518
1	Shell	1355390	1355398	1355402	1355406
2	Rod	1355391	1355399	1355403	1355407

RIGHT HAND

ITEM	DESCRIPTION 1 2 3 4	LIFT HEIGHT TO BOTTOM OF FORKS				
		2559 mm (100.7 in.)	70079 mm (2759 in.)	2859 mm (112.6 in.)	2959 mm (116.5 in.)	3059 mm (120.4 in.)
	Mast Group Number	**B562 2559**	**B562 2759**	**B562 2859**	**B562 2959**	**B562 3059**
	Cylinder Group Number	**8510453**	**8510455**	**8510456**	**8510457**	**8510458**
	Lift Cylinder	2046188	2046189	2046190	2046191	2046192
1	Shell	1355295	1355353	1355357	1355287	1355365
2	Rod	1355293	1355351	1355281	1355359	1355363

©2007 HYSTER COMPANY

LIFT CYLINDER
E60-65Z
TWO STAGE LIMITED FREE-LIFT

RIGHT HAND (CONT.)

ITEM	DESCRIPTION 1 2 3 4	LIFT HEIGHT TO BOTTOM OF FORKS			
		3159 mm (124.4 in.)	3259 mm (128.3 in.)	3359 mm (132.2 in.)	3459 mm (136.2 in.)
	Mast Group Number	B562 3159	B562 3259	B562 3359	B562 3459
	Cylinder Group Number	8510459	8510460	8510461	8510462
	Lift Cylinder	2046193	2046194	2046195	2046196
1	Shell	1355369	1355373	1355377	1355381
2	Rod	1355367	1355371	1355375	1355379

RIGHT HAND (CONT.)

ITEM	DESCRIPTION 1 2 3 4	LIFT HEIGHT TO BOTTOM OF FORKS			
		3659 mm (144.1 in.)	3859 mm (151.9 in.)	3959 mm (155.9 in.)	4059 mm (159.8 in.)
	Mast Group Number	B562 3659	B562 3859	B562 3959	B562 4059
	Cylinder Group Number	8510464	8510466	8510467	8600351
	Lift Cylinder	2046198	2046200	2046201	1341481
1	Shell	1355393	1355401	1355405	1355412
2	Rod	1355391	1355399	1355403	1355407

ITEM		PART NO.	DESCRIPTION	QTY
	a	. . . . .	Lift Cylinder	1
1	**a**	. . . . .	Shell	1
2	**a**	. . . . .	Rod	1
3		39348	O-Ring	1
4		257913	Check Valve	1
5		297531	Washer	1
5		637635	Washer (Optional)	1
6		187388	Snap Ring	1
7		1319668	Wiper Ring	1
8		1380879	Gland	1
8		1355127	Gland (4059 mm)	1
9		59229	O-Ring	1
9		92861	O-Ring (4059 mm)	1
10		322824	Back-Up Ring	1
11		1356749	Rod Seal	1
11		1356749	Rod Seal (4059 mm)	1
12		322902	Wear Ring	1
13		2046163	Spacer	1
14		335012	Back-Up Ring	1
14		638246	Back-Up Ring (4059 mm)	1
15		334156	Seal	1
15		2013075	Seal (4059 mm)	1

©2007 HYSTER COMPANY

LIFT CYLINDER
E60-65Z
TWO STAGE LIMITED FREE-LIFT

ITEM	PART NO.	DESCRIPTION	QTY
16	1356751	Wear Ring	1
16	1356750	Wear Ring (4059 mm)	1
	1499111	Seal Kit (Includes Items 3, 7, 9-12, 14-16)	1
	1355276	Seal Kit (4059 mm) (Includes Items 3, 7, 9, 11, 14-16)	1

FOOTNOTES:
a Refer to Table

CARRIAGE (Figure 7-6)
SIX ROLLER
TWO STAGE LIMITED FREE-LIFT

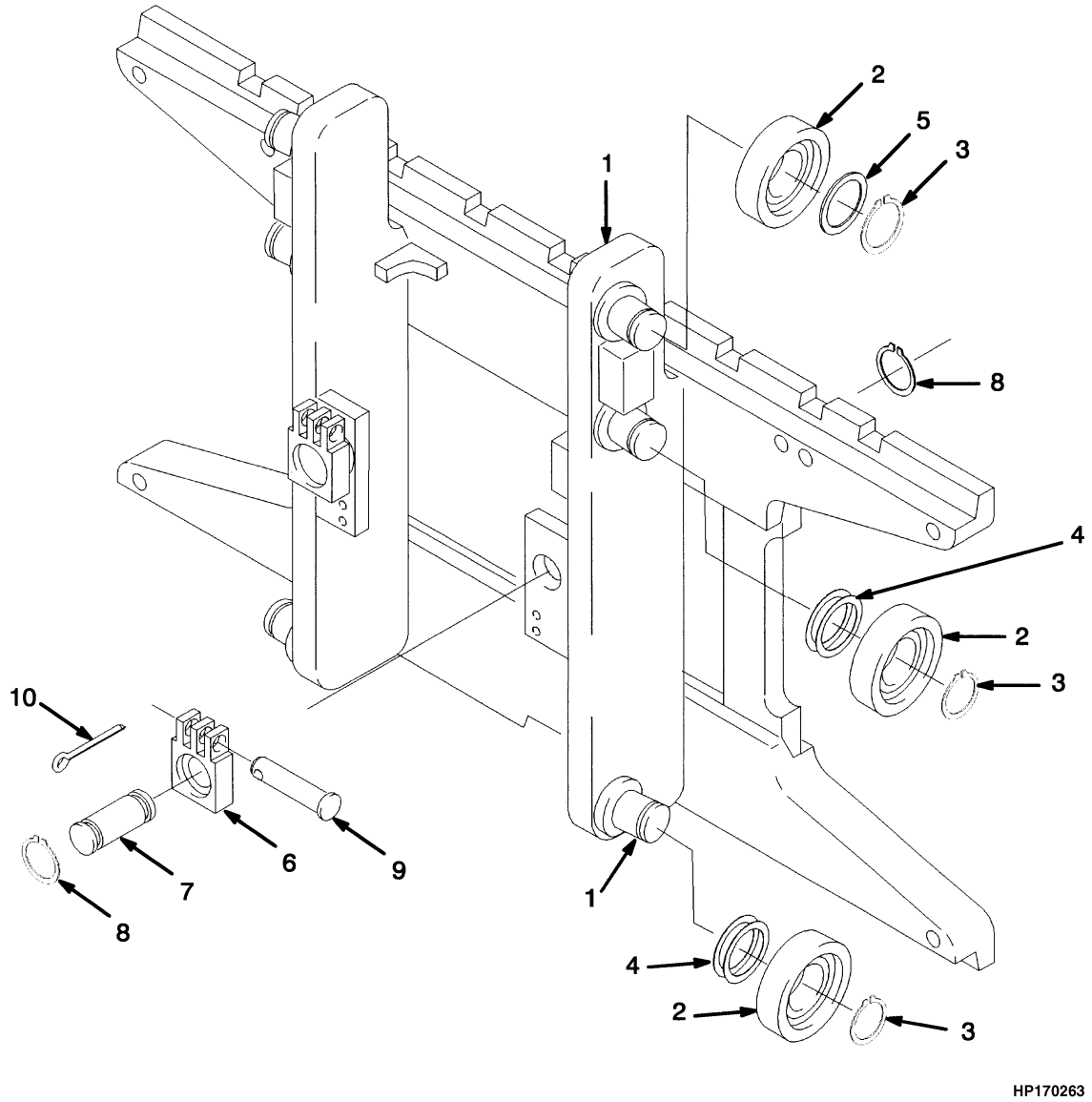

©2007 HYSTER COMPANY

CARRIAGE
SIX ROLLER
TWO STAGE LIMITED FREE-LIFT

KEY:
A: E45-55Z
B: E60-65Z

ITEM	PART NO.	DESCRIPTION	QTY A	QTY B
	1371662	Carriage Assembly (38.5 in.)	1	..
	1371663	Carriage Assembly (38.5 in.)	..	1
1	1359325	Frame	1	..
1	1359326	Frame	..	1
1	1345264	Stubshaft	6	6
2	1345219	Load Roller	6	6
3	12891	Snap Ring	6	6
4	1345263	Shim (0.020 in.)	AR	AR
5	366116	Spacer	2	2
6	1369345	Chain Anchor (Dual Hole)	2	..
6	1504010	Chain Anchor (Single Hole)	2	..
6	1369344	Chain Anchor (Dual Hole)	..	2
6	1504011	Chain Anchor (Single Hole)	..	2
7	1353408	Pin	2	2
8	131358	Snap Ring	4	4
9	1514866	Pin	2	2
10	15211	Cotter Pin	2	2

©2007 HYSTER COMPANY

HEADER HOSE (Figure 7-7)
TWO STAGE LIMITED FREE-LIFT

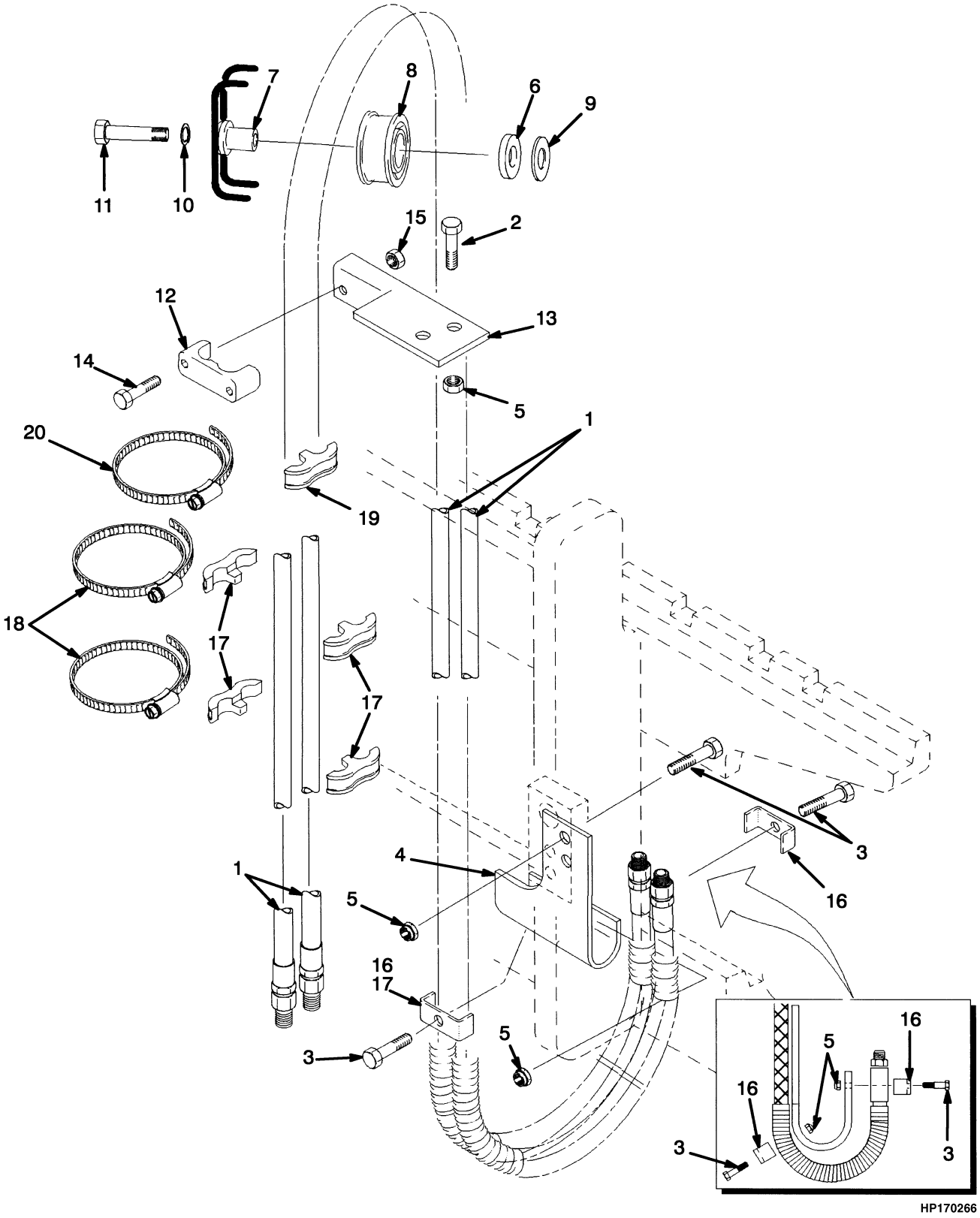

©2007 HYSTER COMPANY

HEADER HOSE
TWO STAGE LIMITED FREE-LIFT

E45-55Z

ITEM	DESCRIPTION 1 2 3 4	LIFT HEIGHT TO BOTTOM OF FORKS			
		2093 mm (82.4 in.)	2992 mm (117.8 in.)	3292 mm (129.6 in.)	3392 mm (133.5 in.)
	Mast Group Number	B507 2093	B507 2992	B507 3292	B507 3392
1	Hose	1398476	1368312	1369605	1369606
19	Clamp	----	----	----	----
20	Clamp	----	----	----	----

E45-55Z (CONT.)

ITEM	DESCRIPTION 1 2 3 4	LIFT HEIGHT TO BOTTOM OF FORKS			
		3492 mm (137.5 in.)	3792 mm (149.3 in.)	4092 mm (161.1 in.)	4292 mm (169.0 in.)
	Mast Group Number	B507 3492	B507 3792	B507 4092	B507 4292
1	Hose	1369607	1398509	1368323	1369614
19	Clamp	----	1353530	1353530	1353530
20	Clamp	----	1360507	1360507	1360507

E60-65Z

ITEM	DESCRIPTION 1 2 3 4	LIFT HEIGHT TO BOTTOM OF FORKS				
		2559 mm (100.7 in.)	2759 mm (108.6 in.)	2859 mm (112.6 in.)	2959 mm (116.5 in.)	3059 mm (120.4 in.)
	Mast Group Number	B562 2559	B562 2759	B562 2859	B562 2959	B562 3059
1	Hose	1369602	1368311	1368312	1368313	1366146
19	Clamp	----	----	----	----	----
20	Clamp	----	----	----	----	----

E60-65Z (CONT.)

ITEM	DESCRIPTION 1 2 3 4	LIFT HEIGHT TO BOTTOM OF FORKS			
		3159 mm (124.4 in.)	3259 mm (128.3 in.)	3359 mm (132.2 in.)	3459 mm (136.2 in.)
	Mast Group Number	B562 3159	B562 3259	B562 3359	B562 3459
1	Hose	1369605	1369606	1369607	1369608
19	Clamp	----	----	----	----
20	Clamp	----	----	----	----

©2007 HYSTER COMPANY

HEADER HOSE
TWO STAGE LIMITED FREE-LIFT

E60-65Z (CONT.)

ITEM	DESCRIPTION 1 2 3 4	LIFT HEIGHT TO BOTTOM OF FORKS			
		3659 mm (144.1 in.)	3859 mm (151.9 in.)	3959 mm (155.9 in.)	4059 mm (159.8 in.)
	Mast Group Number	B562 3659	B562 3859	B562 3959	B562 4059
1	Hose	1398509	1368322	1368323	1398644
19	Clamp	1353530	1353530	1353530	1353530
20	Clamp	1360507	1360507	1360507	1360507

KEY:
A: Three Function
B: Four Function

ITEM		PART NO.	DESCRIPTION	QTY A	QTY B
1	**a**	. . . . .	Hose	2	4
2		136704	Capscrew	2	4
3		292508	Capscrew	4	8
4		1345412	Bracket (RH)	1	1
4		1345413	Bracket (LH)	..	1
5		313828	Nut	6	12
6		1360549	Spacer	1	2
7		1360548	Stubshaft	1	2
8		1494017	Sheave	1	2
9		1345190	Washer	1	2
10		292683	Lockwasher	1	2
11		292533	Capscrew	1	2
12		1360386	Clamp	1	2
13		1354919	Bracket (RH)	1	1
13		1354921	Bracket (LH)	..	1
14		292502	Capscrew	2	4
15		313805	Nut	2	4
16		1345348	Clamp	2	4
17		1353530	Clamp	4	8
18		1360507	Clamp	2	4
19	**a**	. . . . .	Clamp	1	2
20	**a**	. . . . .	Clamp	1	2

FOOTNOTES:
a Refer to Table

©2007 HYSTER COMPANY

8 MAST-THREE STAGE FULL FREE-LIFT

SECTION 8
MAST-THREE STAGE FULL FREE-LIFT

DESCRIPTION **PAGE**

CARRIAGE
HEAVY DUTY
THREE STAGE FULL FREE-LIFT 8-36
SIX ROLLER
THREE STAGE FULL FREE-LIFT 8-34
FREE-LIFT
THREE STAGE FULL FREE-LIFT 8-18
FREE-LIFT CYLINDER
THREE STAGE FULL FREE-LIFT 8-30
HEADER HOSE
THREE STAGE FULL FREE-LIFT 8-38
INNER MAST
THREE STAGE FULL FREE-LIFT 8-10
INTERMEDIATE MAST
THREE STAGE FULL FREE-LIFT 8-6
MAIN CYLINDER
THREE STAGE FULL FREE LIFT
LEFT HAND 8-25
THREE STAGE FULL FREE-LIFT
RIGHT HAND 8-21
MAIN LIFT
THREE STAGE FULL FREE-LIFT 8-14
OUTER MAST
THREE STAGE FULL FREE-LIFT 8-2

©2007 HYSTER COMPANY

OUTER MAST (Figure 8-1)
THREE STAGE FULL FREE-LIFT

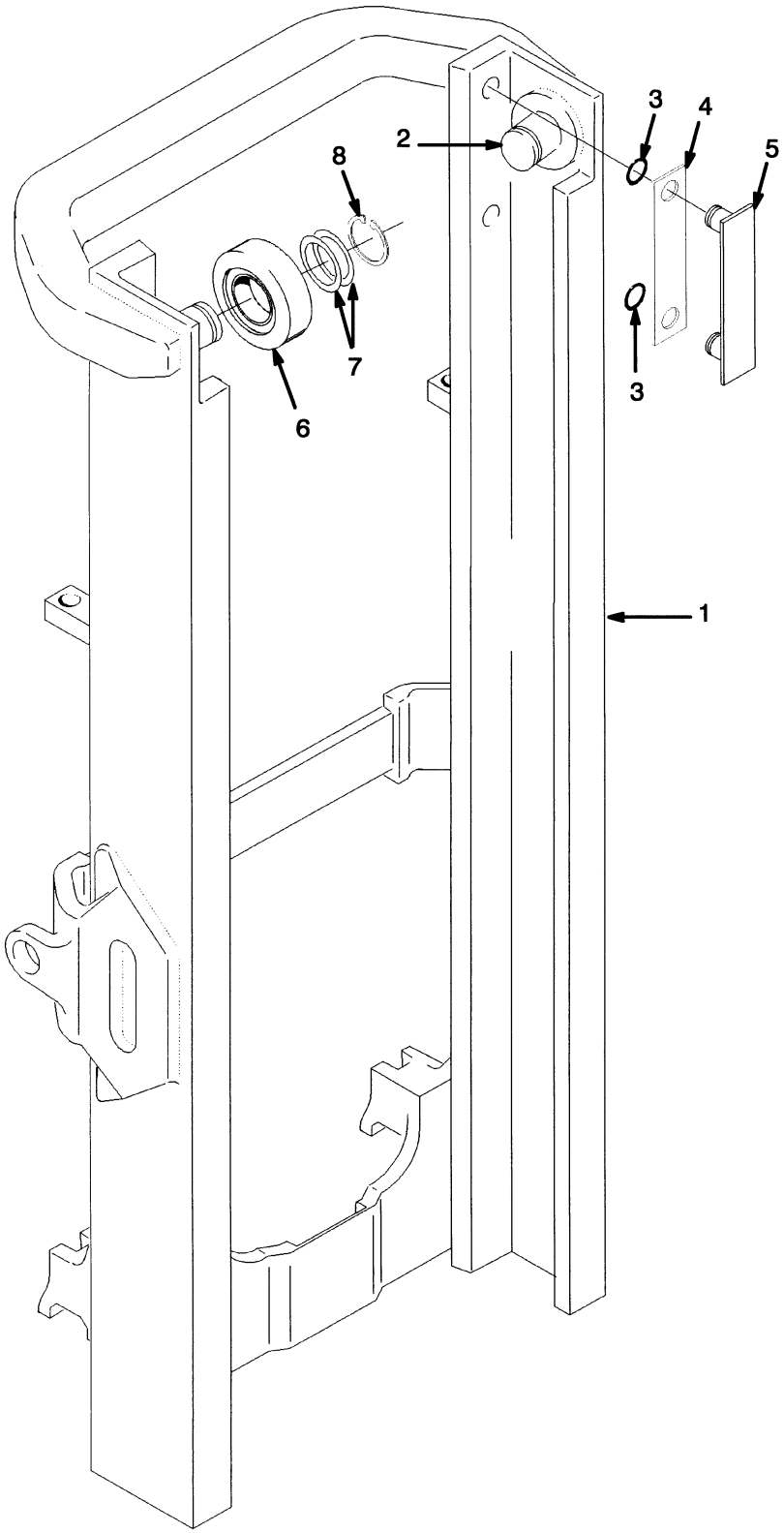

©2007 HYSTER COMPANY

OUTER MASS
THREE STAGE FULL FREE-LIFT

E45-55Z

ITEM	DESCRIPTION 1 2 3 4	LIFT HEIGHT TO BOTTOM OF FORKS					
		4310 mm (169.7 in.)	4460 mm (175.6 in.)	4610 mm (181.5 in.)	4760 mm (187.4 in.)	4910 mm (193.3 in.)	5060 mm (199.2 in.)
	Mast Group Number	B508 4310	B508 4460	B508 4610	B508 4760	B508 4910	B508 5060
	Mast Assembly	2048227	2048228	2048229	2048230	2048231	2048232
1	Outer Mast	1341004	1341005	1341006	1341007	1341008	1341010

E45-55Z (CONT.)

ITEM	DESCRIPTION 1 2 3 4	LIFT HEIGHT TO BOTTOM OF FORKS					
		5210 mm (205.1 in.)	5360 mm (211.0 in.)	5510 mm (216.9 in.)	5660 mm (222.8 in.)	5810 mm (228.7 in.)	5960 mm (234.6 in.)
	Mast Group Number	B508 5210	B508 5360	B508 5510	B508 5660	B508 5810	B508 5960
	Mast Assembly	2048233	2048234	2048235	2048236	2048204	2048237
1	Outer Mast	1341011	1341012	1341013	1341014	1341015	1341016

E45-55Z (CONT.)

ITEM	DESCRIPTION 1 2 3 4	LIFT HEIGHT TO BOTTOM OF FORKS					
		6110 mm (240.6 in.)	6260 mm (246.5 in.)	6410 mm (252.4 in.)	6560 mm (258.3 in.)	6710 mm (264.2 in.)	6860 mm (270.1 in.)
	Mast Group Number	B508 6110	B508 6260	B508 6410	B508 6560	B508 6710	B508 6860
	Mast Assembly	2048238	2048239	2048240	2048241	2048242	2048243
1	Outer Mast	1341017	1341019	1341020	1341021	1341022	1341024

E60-65Z

ITEM	DESCRIPTION 1 2 3 4	LIFT HEIGHT TO BOTTOM OF FORKS					
		4118 mm (162.1 in.)	4268 mm (168.0 in.)	4418 mm (173.9 in.)	4568 mm (179.8 in.)	4718 mm (185.7 in.)	4868 mm (191.7 in.)
	Mast Group Number	B563 4118	B563 4268	B563 4418	B563 4568	B563 4718	B563 4868
	Mast Assembly	2048282	2048284	2048285	2048287	2048289	2048291
1	Outer Mast	1341004	1341005	1341006	1341007	1341008	1341010

©2007 HYSTER COMPANY

OUTER MAST
THREE STAGE FULL FREE-LIFT

E60-65Z (CONT.)

ITEM	DESCRIPTION 1 2 3 4	LIFT HEIGHT TO BOTTOM OF FORKS					
		5018 mm (197.6 in.)	5168 mm (203.5 in.)	5318 mm (209.4 in.)	5468 mm (215.3 in.)	5618 mm (221.2 in.)	5768 mm (227.1 in.)
	Mast Group Number	B563 5018	B563 5168	B563 5318	B563 5468	B563 5618	B563 5768
	Mast Assembly	2048292	2048294	2048296	2048298	2048300	2048302
1	Outer Mast	1341011	1341012	1341013	1341014	1341015	1341016

ITEM		PART NO.	DESCRIPTION	QTY
	a	. . . . .	Mast Assembly	1
1	**a**	. . . . .	Outer Mast	1
2		1345216	Stubshaft	2
3		104506	O-Ring	4
4		131716	Shim (0.020 in.)	4
5		215211	Bearing Strip	2
6		1333396	Load Roller	2
7		129387	Shim (0.020 in.)	AR
8		58901	Snap Ring	2

FOOTNOTES:
a Refer to Table

©2007 HYSTER COMPANY

NOTES

INTERMEDIATE MAST (Figure 8-2)
THREE STAGE FULL FREE-LIFT

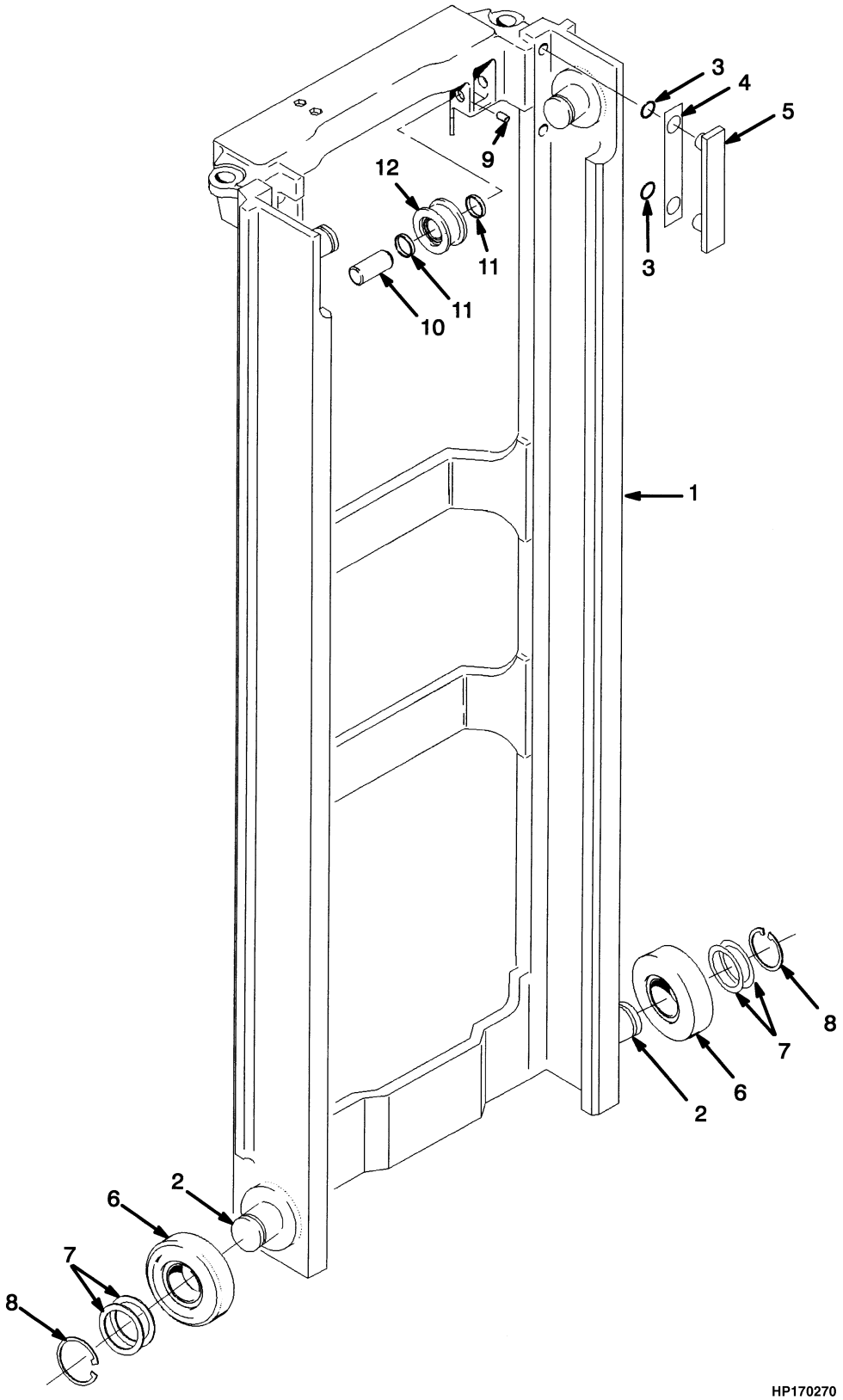

©2007 HYSTER COMPANY

INTERMEDIATE MAST
THREE STAGE FULL FREE-LIFT

E45-55Z

ITEM	DESCRIPTION 1 2 3 4	LIFT HEIGHT TO BOTTOM OF FORKS					
		4310 mm (169.7 in.)	4460 mm (175.6 in.)	4610 mm (181.5 in.)	4760 mm (187.4 in.)	4910 mm (193.3 in.)	5060 mm (199.2 in.)
	Mast Group Number	B508 4310	B508 4460	B508 4610	B508 4760	B508 4910	B508 5060
	Mast Assembly	2048227	2048228	2048229	2048230	2048231	2048232
1	Intermediate Mast	1341714	1341715	1341716	1341717	1341718	1341719

E45-55Z (CONT.)

ITEM	DESCRIPTION 1 2 3 4	LIFT HEIGHT TO BOTTOM OF FORKS					
		5210 mm (205.1 in.)	5360 mm (211.0 in.)	5510 mm (216.9 in.)	5660 mm (222.8 in.)	5810 mm (228.7 in.)	5960 mm (234.6 in.)
	Mast Group Number	B508 5210	B508 5360	B508 5510	B508 5660	B508 5810	B508 5960
	Mast Assembly	2048233	2048234	2048235	2048236	2048204	2048237
1	Intermediate Mast	1341720	1341721	1341722	1341723	1341724	1341725

E45-55Z (CONT.)

ITEM	DESCRIPTION 1 2 3 4	LIFT HEIGHT TO BOTTOM OF FORKS					
		6110 mm (240.6 in.)	6260 mm (246.5 in.)	6410 mm (252.4 in.)	6560 mm (258.3 in.)	6710 mm (264.2 in.)	6860 mm (270.1 in.)
	Mast Group Number	B508 6110	B508 6260	B508 6410	B508 6560	B508 6710	B508 6860
	Mast Assembly	2048238	2048239	2048240	2048241	2048242	2048243
1	Intermediate Mast	1341726	1341727	1341728	1341729	1341730	1341731

E60-65Z

ITEM	DESCRIPTION 1 2 3 4	LIFT HEIGHT TO BOTTOM OF FORKS					
		4118 mm (162.1 in.)	4268 mm (168.0 in.)	4418 mm (173.9 in.)	4568 mm (179.8 in.)	4718 mm (185.7 in.)	4868 mm (191.7 in.)
	Mast Group Number	B563 4118	B563 4268	B563 4418	B563 4568	B563 4718	B563 4868
	Mast Assembly	2048282	2048284	2048285	2048287	2048289	2048291
1	Intermediate Mast	1341714	1341715	1341716	1341717	1341718	1341719

©2007 HYSTER COMPANY

INTERMEDIATE MAST
THREE STAGE FULL FREE-LIFT

E60-65Z (CONT.)

ITEM	DESCRIPTION 1 2 3 4	LIFT HEIGHT TO BOTTOM OF FORKS					
		5018 mm (197.6 in.)	5168 mm (203.5 in.)	5318 mm (209.4 in.)	5468 mm (215.3 in.)	5618 mm (221.2 in.)	5768 mm (227.1 in.)
	Mast Group Number	B563 5018	B563 5168	B563 5318	B563 5468	B563 5618	B563 5768
	Mast Assembly	2048292	2048294	2048296	2048298	2048300	2048302
1	Intermediate Mast	1341720	1341721	1341722	1341723	1341724	1341725

ITEM	PART NO.	DESCRIPTION	QTY
	a	Mast Assembly	1
1	**a**	Intermediate Mast	1
2	1345216	Stubshaft	4
3	104506	O-Ring	4
4	131716	Shim (0.020 in.)	4
5	215211	Bearing Strip	2
6	1333396	Load Roller	4
7	129387	Shim (0.020 in.)	AR
8	58901	Snap Ring	4
9	302462	Pin	2
10	1368656	Pin	2
11	1378691	Spacer	4
12	1379685	Chain Sheave Assembly (E45-55Z)	2
12	1378698	Chain Sheave	2
12	37752	Snap Ring	1
12	1378699	Bearing	1
12	1379684	Chain Sheave Assembly (E60-65Z)	2
12	1378694	Chain Sheave	1
12	37752	Snap Ring	1
12	1378699	Bearing	1

FOOTNOTES:
a Refer to Table

©2007 HYSTER COMPANY

NOTES

INNER MAST (Figure 8-3)
THREE STAGE FULL FREE-LIFT

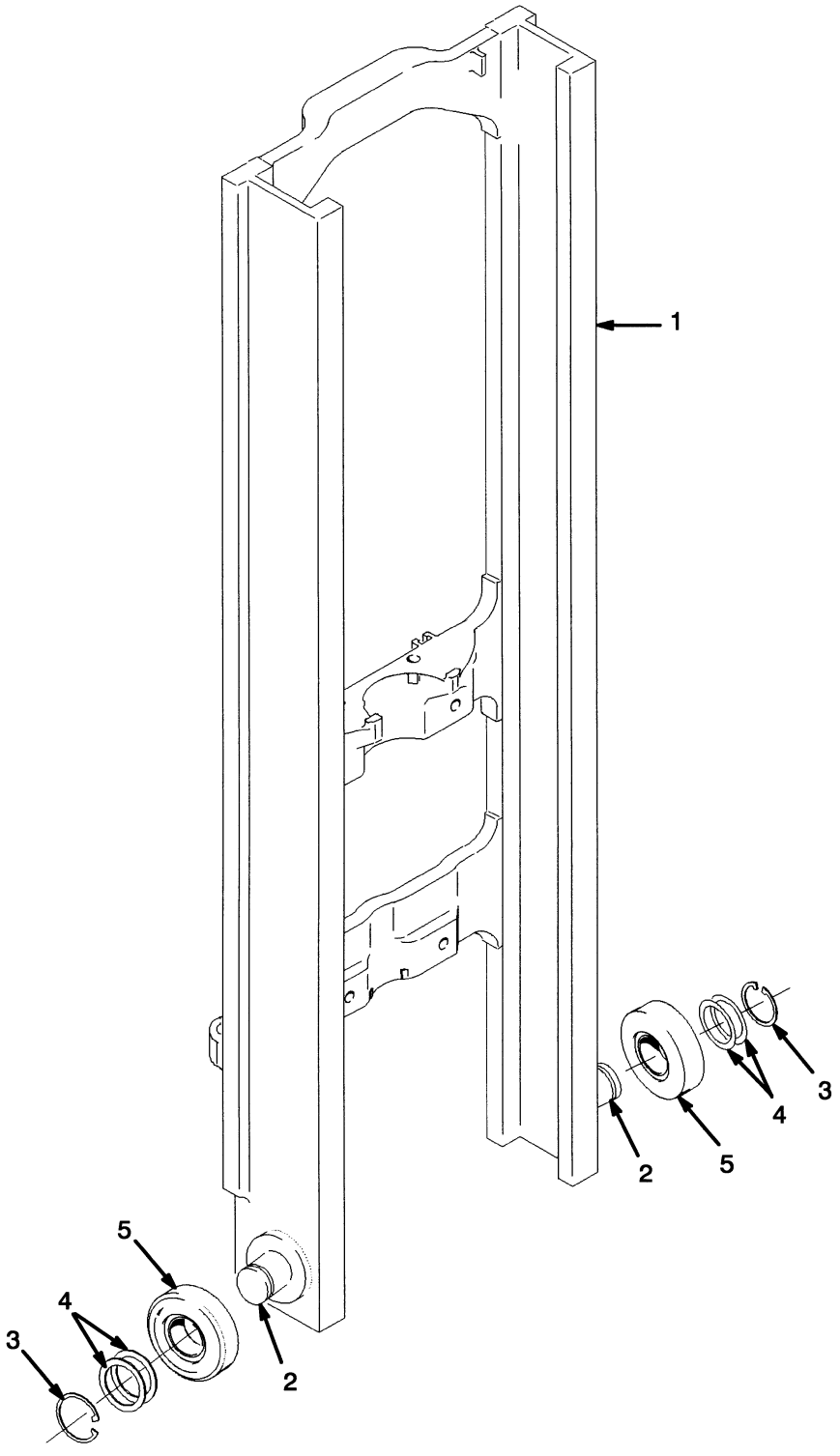

©2007 HYSTER COMPANY

INNER MAST
THREE STAGE FULL FREE-LIFT

E45-55Z

ITEM	DESCRIPTION 1 2 3 4	LIFT HEIGHT TO BOTTOM OF FORKS					
		4310 mm (169.7 in.)	4460 mm (175.6 in.)	4610 mm (181.5 in.)	4760 mm (187.4 in.)	4910 mm (193.3 in.)	5060 mm (199.2 in.)
	Mast Group Number	B508 4310	B508 4460	B508 4610	B508 4760	B508 4910	B508 5060
	Mast Assembly	2048227	2048228	2048229	2048230	2048231	2048232
1	Inner Mast	1381354	1381355	1381356	1381357	1381358	1381359

E45-55Z (CONT.)

ITEM	DESCRIPTION 1 2 3 4	LIFT HEIGHT TO BOTTOM OF FORKS					
		5210 mm (205.1 in.)	5360 mm (211.0 in.)	5510 mm (216.9 in.)	5660 mm (222.8 in.)	5810 mm (228.7 in.)	5960 mm (234.6 in.)
	Mast Group Number	B508 5210	B508 5360	B508 5510	B508 5660	B508 5810	B508 5960
	Mast Assembly	2048233	2048234	2048235	2048236	2048204	2048237
1	Inner Mast	1381360	1381361	1381362	1381363	1381364	1381365

E45-55Z (CONT.)

ITEM	DESCRIPTION 1 2 3 4	LIFT HEIGHT TO BOTTOM OF FORKS					
		6110 mm (240.6 in.)	6260 mm (246.5 in.)	6410 mm (252.4 in.)	6560 mm (258.3 in.)	6710 mm (264.2 in.)	6860 mm (270.1 in.)
	Mast Group Number	B508 6110	B508 6260	B508 6410	B508 6560	B508 6710	B508 6860
	Mast Assembly	2048238	2048239	2048240	2048241	2048242	2048243
1	Inner Mast	1381366	1381367	1381368	1381369	1381370	1381371

E60-65Z

ITEM	DESCRIPTION 1 2 3 4	LIFT HEIGHT TO BOTTOM OF FORKS					
		4118 mm (162.1 in.)	4268 mm (168.0 in.)	4418 mm (173.9 in.)	4568 mm (179.8 in.)	4718 mm (185.7 in.)	4868 mm (191.7 in.)
	Mast Group Number	B563 4118	B563 4268	B563 4418	B563 4568	B563 4718	B563 4868
	Mast Assembly	2048282	2048284	2048285	2048287	2048289	2048291
1	Inner Mast	1381354	1381355	1381356	1381357	1381358	1381359

©2007 HYSTER COMPANY

INNER MAST
THREE STAGE FULL FREE-LIFT

E60-65Z (CONT.)

ITEM	DESCRIPTION 1 2 3 4	LIFT HEIGHT TO BOTTOM OF FORKS					
		5018 mm (197.6 in.)	5168 mm (203.5 in.)	5318 mm (209.4 in.)	5468 mm (215.3 in.)	5618 mm (221.2 in.)	5768 mm (227.1 in.)
	Mast Group Number	B563 5018	B563 5168	B563 5318	B563 5468	B563 5618	B563 5768
	Mast Assembly	2048292	2048294	2048296	2048298	2048300	2048302
1	Inner Mast	1381360	1381361	1381362	1381363	1381364	1381365

ITEM		PART NO.	DESCRIPTION	QTY
	a	. . . . .	Mast Assembly	1
1	**a**	. . . . .	Inner Mast	1
2		1345216	Stubshaft	2
3		58901	Snap Ring	2
4		129387	Shim (0.020 in.)	AR
5		1333396	Load Roller	2

FOOTNOTES:
a Refer to Table

©2007 HYSTER COMPANY

NOTES

MAIN LIFT (Figure 8-4)
THREE STAGE FULL FREE-LIFT

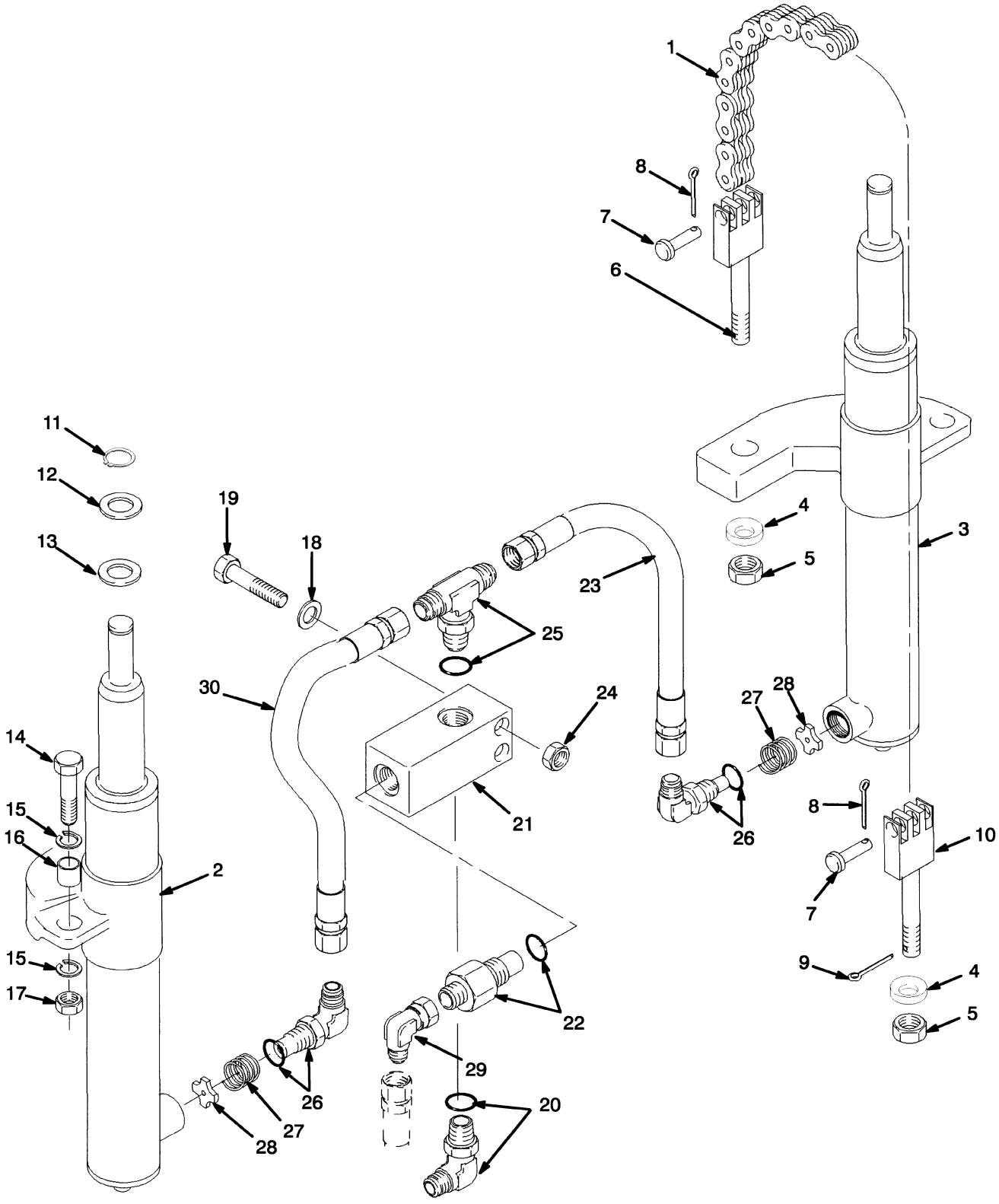

©2007 HYSTER COMPANY

MAIN LIFT
THREE STAGE FULL FREE-LIFT

E45-55Z

ITEM	DESCRIPTION 1 2 3 4	LIFT HEIGHT TO BOTTOM OF FORKS					
		4310 mm (169.7 in.)	4460 mm (175.6 in.)	4610 mm (181.5 in.)	4760 mm (187.4 in.)	4910 mm (193.3 in.)	5060 mm (199.2 in.)
	Mast Group Number	B508 4310	B508 4460	B508 4610	B508 4760	B508 4910	B508 5060
1	Chain	182343	180057	986559	135634	337174	986599

E45-55Z (CONT.)

ITEM	DESCRIPTION 1 2 3 4	LIFT HEIGHT TO BOTTOM OF FORKS					
		5210 mm (205.1 in.)	5360 mm (211.0 in.)	5510 mm (216.9 in.)	5660 mm (222.8 in.)	5810 mm (228.7 in.)	5960 mm (234.6 in.)
	Mast Group Number	B508 5210	B508 5360	B508 5510	B508 5660	B508 5810	B508 5960
1	Chain	320076	177352	135588	180176	304200	335041

E45-55Z (CONT.)

ITEM	DESCRIPTION 1 2 3 4	LIFT HEIGHT TO BOTTOM OF FORKS					
		6110 mm (240.6 in.)	6260 mm (246.5 in.)	6410 mm (252.4 in.)	6560 mm (258.3 in.)	6710 mm (264.2 in.)	6860 mm (270.1 in.)
	Mast Group Number	B508 6110	B508 6260	B508 6410	B508 6560	B508 6710	B508 6860
1	Chain	986601	214444	262319	197327	164474	88441

E60-65Z

ITEM	DESCRIPTION 1 2 3 4	LIFT HEIGHT TO BOTTOM OF FORKS					
		4118 mm (162.1 in.)	4268 mm (168.0 in.)	4418 mm (173.9 in.)	4568 mm (179.8 in.)	4718 mm (185.7 in.)	4868 mm (191.7 in.)
	Mast Group Number	B563 4118	B563 4268	B563 4418	B563 4568	B563 4718	B563 4868
1	Chain	1342120	1342121	1342122	1342123	1342124	1342126

©2007 HYSTER COMPANY

MAIN LIFT
THREE STAGE FULL FREE-LIFT

E60-65Z (CONT.)

ITEM	DESCRIPTION 1 2 3 4	LIFT HEIGHT TO BOTTOM OF FORKS					
		5018 mm (197.6 in.)	5168 mm (203.5 in.)	5318 mm (209.4 in.)	5468 mm (215.3 in.)	5618 mm (221.2 in.)	5768 mm (227.1 in.)
	Mast Group Number	B563 5018	B563 5168	B563 5318	B563 5468	B563 5618	B563 5768
1	Chain	1342127	1342128	1342129	1342387	1342130	1342388

ITEM		PART NO.	DESCRIPTION	QTY
1	**a**	. . . . .	Chain	2
2		. . . . .	Cylinder (RH) (☞ Figure 8-6)	1
3		. . . . .	Cylinder (LH) (☞ Figure 8-6)	1
4		296426	Washer (Hardened)	4
5		161003	Nut	4
6		1369357	Chain Anchor (E45-55Z)	2
6		1369356	Chain Anchor (E60-65Z)	2
7		1514866	Pin	4
8		15211	Cotter Pin	4
9		15223	Cotter Pin	2
10		1365140	Chain Anchor (E45-55Z)	2
10		1333329	Chain Anchor (E60-65Z)	2
11		131358	Snap Ring	2
12		1333382	Washer (0.060 in.)	2
13		1354915	Washer (0.010 in.)	AR
13		1354916	Washer (0.030 in.)	AR
13		1354917	Washer (0.060 in.)	AR
14		292532	Capscrew	2
15		296422	Washer	4
16		323090	Spacer	2
17		300937	Locknut	2
18		320157	Washer	2
19		214364	Capscrew	2
20		184761	Fitting	1
20		16486	O-Ring	1
21		1333392	Housing	1
22		316306	Control Valve (Lowering) (E60-65Z)	1
22		2309766	Control Valve (Lowering) (E45-55Z)	1
22		16982	O-Ring	1
23		1345403	Hose	1
24		313828	Nut	2
25		16578	Fitting	1
25		16485	O-Ring	1
26		189595	Fitting	2
26		16485	O-Ring	1
27		337179	Spring	2
28		357749	Washer	2
29		16882	Fitting	1
30		1462551	Hose	1

FOOTNOTES:
a Refer to Table

©2007 HYSTER COMPANY

NOTES

FREE-LIFT (Figure 8-5)
THREE STAGE FULL FREE-LIFT

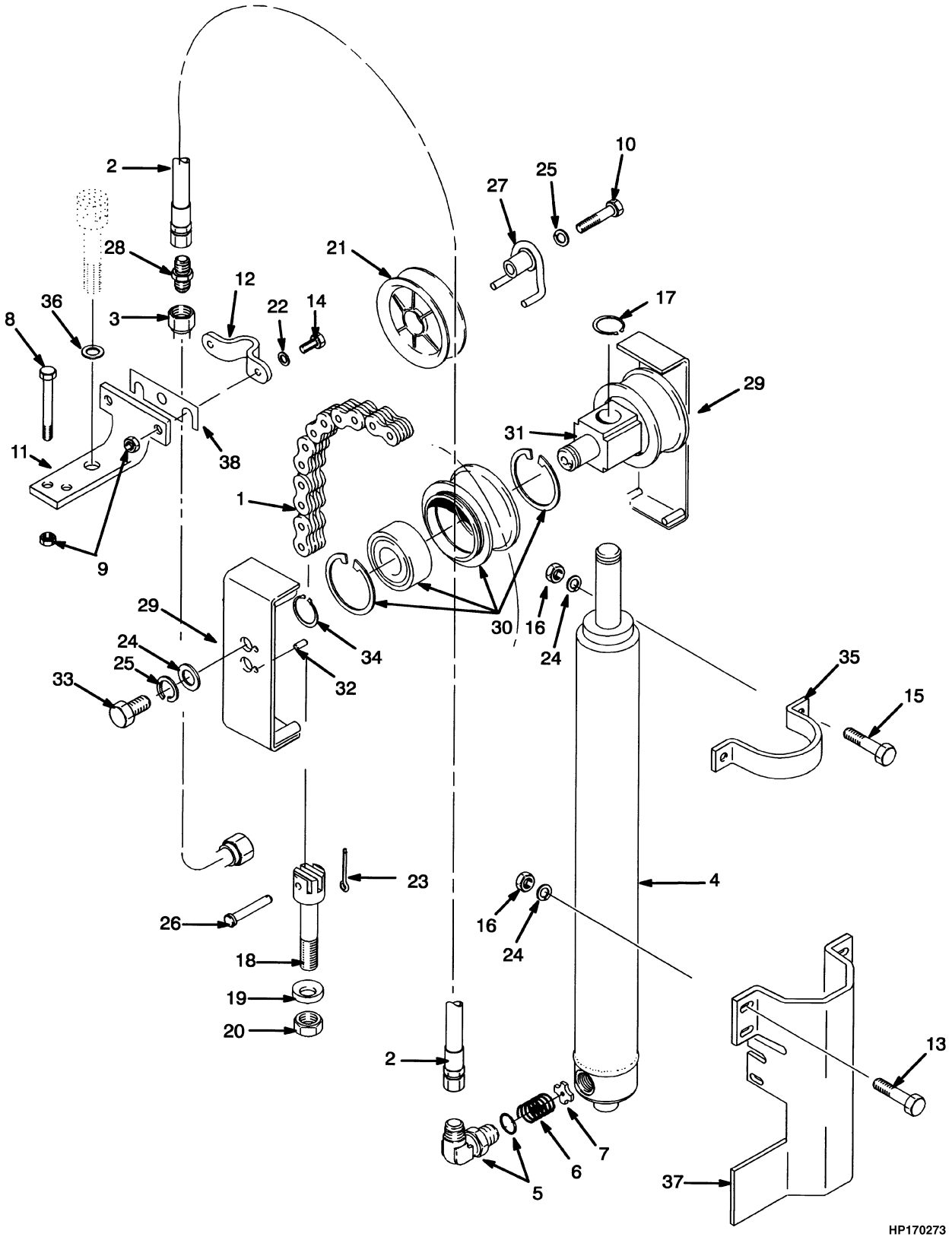

©2007 HYSTER COMPANY

FREE-LIFT
THREE STAGE FULL FREE-LIFT

E60-65Z

ITEM	DESCRIPTION 1 2 3 4	LIFT HEIGHT TO BOTTOM OF FORKS					
		4118 mm (162.1 in.)	4268 mm (168.0 in.)	4418 mm (173.9 in.)	4568 mm (179.8 in.)	4718 mm (185.7 in.)	4868 mm (191.7 in.)
	Mast Group Number	B563 4118	B563 4268	B563 4418	B563 4568	B563 4718	B563 4868
1	Chain	1342391	1342375	1342376	1342377	1342378	1342379
2	Hose	1342407	1342408	1342409	1342410	1342411	1342412
3	Tube	1345359	1345360	1345361	1345362	1345363	1345364

E60-65Z (CONT.)

ITEM	DESCRIPTION 1 2 3 4	LIFT HEIGHT TO BOTTOM OF FORKS					
		5018 mm (197.6 in.)	5168 mm (203.5 in.)	5318 mm (209.4 in.)	5468 mm (215.3 in.)	5618 mm (221.2 in.)	5768 mm (227.1 in.)
	Mast Group Number	B563 5018	B563 5168	B563 5318	B563 5468	B563 5618	B563 5768
1	Chain	1342380	1342119	1342381	1342382	1342123	1342383
2	Hose	1342413	1342414	1342415	1342416	1342417	1342418
3	Tube	1345365	1345366	1345367	1345368	1345369	1345370

ITEM		PART NO.	DESCRIPTION	QTY
1	**c**	. . . . .	Chain	2
2	**c**	. . . . .	Hose	1
3	**c**	. . . . .	Tube	1
4		. . . . .	Free-Lift Cylinder (☞ Figure 8-8)	1
5		238637	Fitting	1
5		16485	O-Ring	1
6		154355	Spring	1
7		356505	Washer	1
8		136704	Capscrew	2
9		313828	Nut	3
10		292532	Capscrew	1
11		1362390	Bracket	1
12		1345401	Clamp	1
13		287837	Capscrew	4
14		136749	Capscrew	1
15	**a**	292529	Capscrew	2
15	**b**	292530	Capscrew	2
16		300937	Locknut	6
17		131358	Snap Ring	1
18	**a**	1369357	Chain Anchor	2
18	**b**	1369356	Chain Anchor	2
19		296426	Washer (Hardened)	2
20		161003	Nut	2
21		1343989	Hose Sheave	1
22	**b**	1354903	Spacer	2
23		15211	Cotter Pin	2

©2007 HYSTER COMPANY

FREE-LIFT
THREE STAGE FULL FREE-LIFT

ITEM		PART NO.	DESCRIPTION	QTY
24		320161	Washer	8
25		292683	Lockwasher	3
26		1514866	Pin	2
27		1360534	Stubshaft	1
28		17635	Fitting	1
29		1395285	Chain Guard	2
30	**a**	1379682	Chain Sheave Assembly	2
30	**b**	1379683	Chain Sheave Assembly	2
30	**a**	1378692	Sheave	1
30	**b**	1378693	Sheave	1
30		37752	Snap Ring	2
30		1378699	Bearing	1
31		1378690	Crosshead	1
32		302461	Pin	2
33		132860	Capscrew	2
34		304526	Snap Ring	2
35		1465504	Clamp	1
36	**b**	1354902	Spacer	2
37		1354962	Bracket	1
38		325616	Spacer	AR

FOOTNOTES:
a E45-55Z
b E60-65Z
c Refer to Table

©2007 HYSTER COMPANY

MAIN CYLINDER (Figure 8-6)
THREE STAGE FULL FREE-LIFT
RIGHT HAND

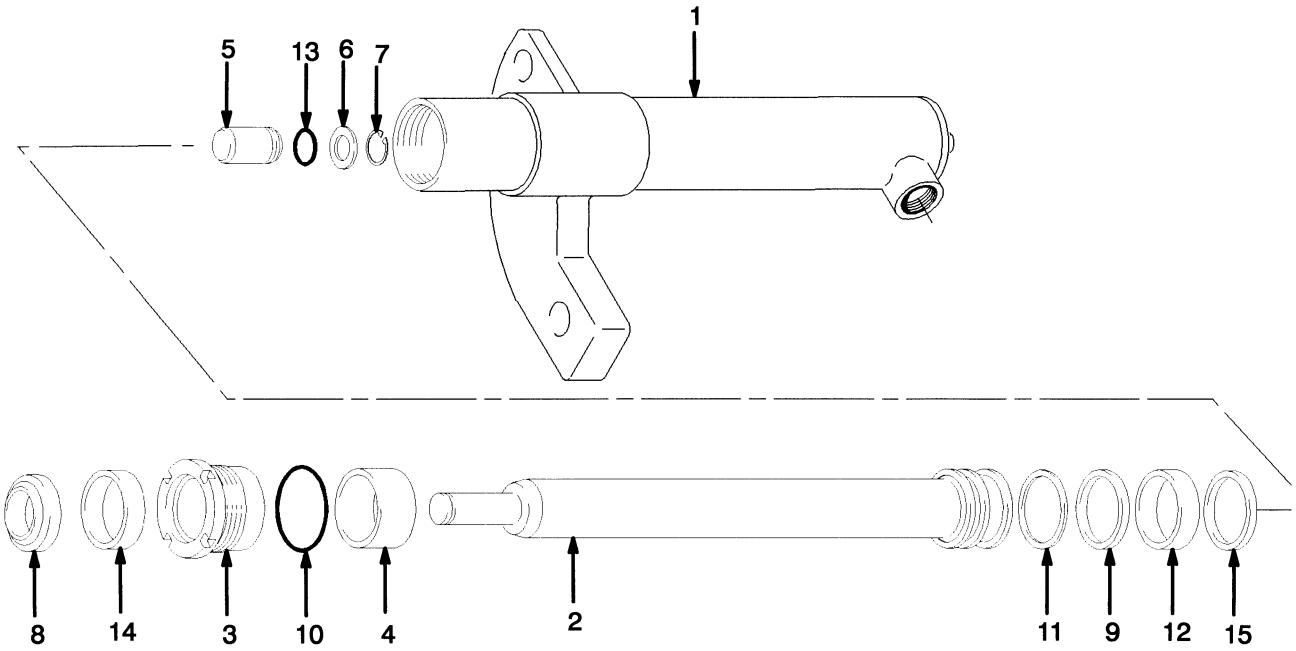

HP170275

E45-55Z

ITEM	DESCRIPTION 1 2 3 4	LIFT HEIGHT TO BOTTOM OF FORKS					
		4310 mm (169.7 in.)	4460 mm (175.6 in.)	4610 mm (181.5 in.)	4760 mm (187.4 in.)	4910 mm (193.3 in.)	5060 mm (199.2 in.)
	Mast Group Number	B508 4310	B508 4460	B508 4610	B508 4760	B508 4910	B508 5060
	Cylinder Group Number	8600455	8600456	8600457	8600458	8600459	8600460
	Lift Cylinder	1341542	1341543	1341544	1341545	1341546	1341547
1	Shell	1355589	1355593	1355597	1355601	1355605	1355609
2	Rod	1355587	1355591	1355595	1355599	1355603	1355607

MAIN CYLINDER
THREE STAGE FULL FREE-LIFT
RIGHT HAND

E45-55Z (CONT.)

ITEM	DESCRIPTION 1 2 3 4	LIFT HEIGHT TO BOTTOM OF FORKS					
		5210 mm (205.1 in.)	5360 mm (211.0 in.)	5510 mm (216.9 in.)	5660 mm (222.8 in.)	5810 mm (228.7 in.)	5960 mm (234.6 in.)
	Mast Group Number	**B508 5210**	**B508 5360**	**B508 5510**	**B508 5660**	**B508 5810**	**B508 5960**
	Cylinder Group Number	**8600461**	**8600462**	**8600463**	**8600464**	**8600465**	**8600466**
	Lift Cylinder	1341548	1341549	1341550	1341551	1341552	1341553
1	Shell	1355614	1355618	1355622	1355627	1355631	1355635
2	Rod	1355612	1355616	1355620	1355624	1355629	1355633

E45-55Z (CONT.)

ITEM	DESCRIPTION 1 2 3 4	LIFT HEIGHT TO BOTTOM OF FORKS					
		6110 mm (240.6 in.)	6260 mm (246.5 in.)	6410 mm (252.4 in.)	6560 mm (258.3 in.)	6710 mm (264.2 in.)	6860 mm (270.1 in.)
	Mast Group Number	**B508 6110**	**B508 6260**	**B508 6410**	**B508 6560**	**B508 6710**	**B508 6860**
	Cylinder Group Number	**8600467**	**8600468**	**8600469**	**8600470**	**8600471**	**8600472**
	Lift Cylinder	1341554	1341555	1341556	1341557	1341558	1341559
1	Shell	1355639	1355644	1355648	1355652	1355656	1355707
2	Rod	1355637	1355641	1355646	1355650	1355654	1355705

E60-65Z

ITEM	DESCRIPTION 1 2 3 4	LIFT HEIGHT TO BOTTOM OF FORKS					
		4118 mm (162.1 in.)	4268 mm (168.0 in.)	4418 mm (173.9 in.)	4568 mm (179.8 in.)	4718 mm (185.7 in.)	4868 mm (191.7 in.)
	Mast Group Number	**B563 4118**	**B563 4268**	**B563 4418**	**B563 4568**	**B563 4718**	**B563 4868**
	Cylinder Group Number	**8600555**	**8600556**	**8600557**	**8600558**	**8600559**	**8600560**
	Lift Cylinder	1341608	1341609	1341610	1341611	1341612	1341613
1	Shell	1355731	1355735	1355739	1355743	1355747	1355752
2	Rod	1355729	1355733	1355737	1355741	1355745	1355749

©2007 HYSTER COMPANY

MAIN CYLINDER
THREE STAGE FULL FREE-LIFT
RIGHT HAND

E60-65Z (CONT.)

ITEM	DESCRIPTION 1 2 3 4	LIFT HEIGHT TO BOTTOM OF FORKS					
		5018 mm (197.6 in.)	5168 mm (203.5 in.)	5318 mm (209.4 in.)	5468 mm (215.3 in.)	5618 mm (221.2 in.)	5768 mm (227.1 in.)
	Mast Group Number	B563 5018	B563 5168	B563 5318	B563 5468	B563 5618	B563 5768
	Cylinder Group Number	8600561	8600562	8600563	8600564	8600565	8600566
	Lift Cylinder	1341614	1341615	1341616	1341617	1341618	1341619
1	Shell	1355722	1355756	1355760	1355764	1355769	1355773
2	Rod	1355710	1355754	1355758	1355767	1355762	1355771

KEY:
A: E45-55Z
B: E60-65Z

ITEM		PART NO.	DESCRIPTION	QTY A	QTY B
	h	. . . . .	Lift Cylinder	1	1
1	**h**	. . . . .	Shell	1	1
2	**h**	. . . . .	Rod	1	1
3		1355496	Gland	1	..
3		1355713	Gland	..	1
4	**a**	1355711	Spacer	..	1
4	**b**	1355751	Spacer	..	1
4	**d**	1355765	Spacer	..	1
4	**c**	1355610	Spacer	1	..
4	**e**	1355626	Spacer	1	..
4	**f**	1355643	Spacer	1	..
4	**g**	1355660	Spacer	1	..
5		257913	Check Valve	1	1
6		297531	Washer	1	1
7		187388	Snap Ring	1	1
8		1319668	Wiper Ring	1	1
9		2013075	Seal	1	..
9		334156	Seal	..	1
10		92861	O-Ring	1	..
10		59229	O-Ring	..	1
11		638246	Back-Up Ring	1	..
11		335012	Back-Up Ring	..	1
12		1356750	Wear Ring	1	..
12		1356751	Wear Ring	..	1
13		39348	O-Ring	1	1
14		1356749	Rod Seal	1	1
15		1360127	Piston Ring	1	..
15		1356748	Piston Ring	..	1

©2007 HYSTER COMPANY

MAIN CYLINDER
THREE STAGE FULL FREE-LIFT
RIGHT HAND

ITEM	PART NO.	DESCRIPTION	QTY A	QTY B
	1355497	Seal Kit (Includes Items 8-15)	1	..
	1355714	Seal Kit (Includes Items 8-15)	..	1

FOOTNOTES:

a 4118 mm (162.1 in.) thru 4568 mm (179.8 in.) Lift Heights
b 4868 mm (191.7 in.) thru 5318 mm (209.4 in.) Lift Heights
c 5060 mm (199.2 in.) thru 5510 mm (216.9 in.) Lift Heights
d 5468 mm (215.3 in.) thru 5768 mm (227.1 in.) Lift Heights
e 5660 mm (222.8 in.) thru 6110 mm (240.6 in.) Lift Heights
f 6260 mm (246.5 in.) thru 6710 mm (264.2 in.) Lift Heights
g 6860 mm (270.1in.) Lift Height
h Refer to Table

©2007 HYSTER COMPANY

MAIN CYLINDER (Figure 8-7)
THREE STAGE FULL FREE LIFT
LEFT HAND

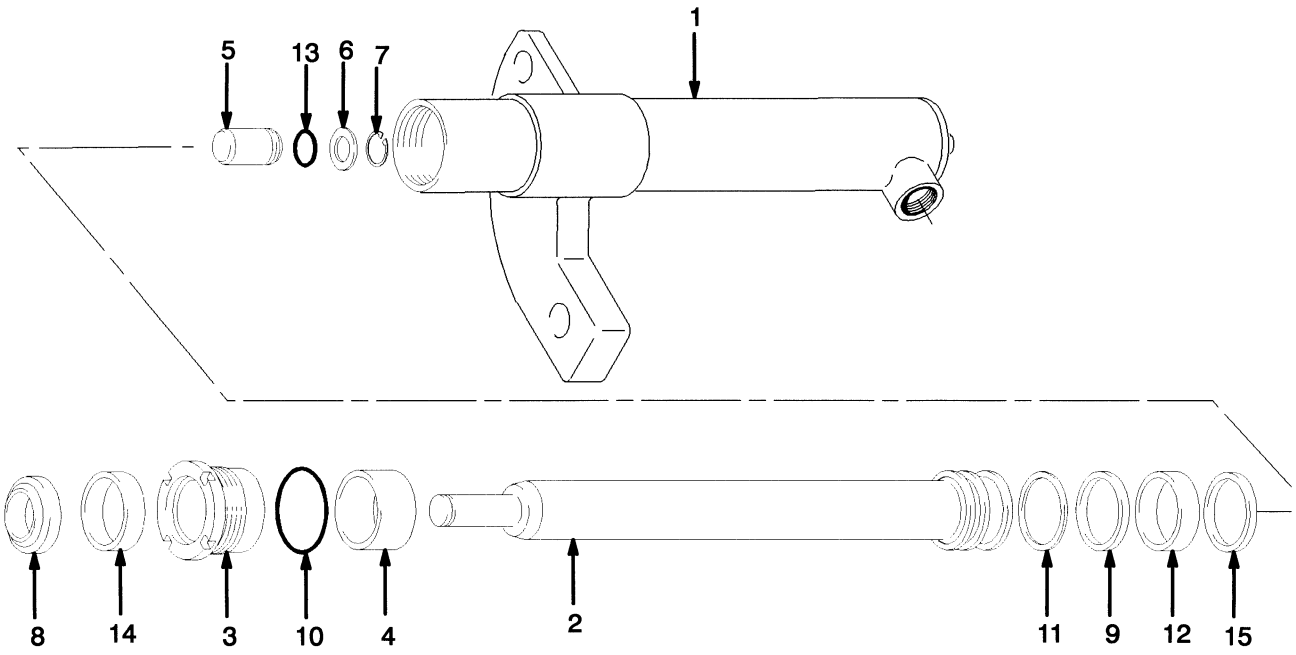

HP170275

E45-55Z

ITEM	DESCRIPTION 1 2 3 4	LIFT HEIGHT TO BOTTOM OF FORKS					
		4310 mm (169.7 in.)	4460 mm (175.6 in.)	4610 mm (181.5 in.)	4760 mm (187.4 in.)	4910 mm (193.3 in.)	5060 mm (199.2 in.)
	Mast Group Number	B508 4310	B508 4460	B508 4610	B508 4760	B508 4910	B508 5060
	Cylinder Group Number	8600405	8600406	8600407	8600408	8600409	8600410
	Lift Cylinder	1341575	1341576	1341577	1341578	1341579	1341580
1	Shell	1358973	1355590	1355594	1355598	1355602	1355606
2	Rod	1355587	1355591	1355595	1355599	1355603	1355607

MAIN CYLINDER
THREE STAGE FULL FREE LIFT
LEFT HAND

E45-55Z (CONT.)

ITEM	DESCRIPTION 1 2 3 4	LIFT HEIGHT TO BOTTOM OF FORKS					
		5210 mm (205.1 in.)	5360 mm (211.0 in.)	5510 mm (216.9 in.)	5660 mm (222.8 in.)	5810 mm (228.7 in.)	5960 mm (234.6 in.)
	Mast Group Number	**B508 5210**	**B508 5360**	**B508 5510**	**B508 5660**	**B508 5810**	**B508 5960**
	Cylinder Group Number	**8600411**	**8600412**	**8600413**	**8600414**	**8600415**	**8600416**
	Lift Cylinder	1341581	1341582	1341583	1341584	1341585	1341586
1	Shell	1355611	1355615	1355619	1355623	1355628	1355632
2	Rod	1355612	1355616	1355620	1355624	1355629	1355633

E45-55Z (CONT.)

ITEM	DESCRIPTION 1 2 3 4	LIFT HEIGHT TO BOTTOM OF FORKS					
		6110 mm (240.6 in.)	6260 mm (246.5 in.)	6410 mm (252.4 in.)	6560 mm (258.3 in.)	6710 mm (264.2 in.)	6860 mm (270.1 in.)
	Mast Group Number	**B508 6110**	**B508 6260**	**B508 6410**	**B508 6560**	**B508 6710**	**B508 6860**
	Cylinder Group Number	**8600417**	**8600418**	**8600419**	**8600420**	**8600421**	**8600422**
	Lift Cylinder	1341587	1341588	1341589	1341590	1341591	1341592
1	Shell	1355636	1355640	1355645	1355649	1355653	1355704
2	Rod	1355637	1355641	1355646	1355650	1355654	1355705

E60-65Z

ITEM	DESCRIPTION 1 2 3 4	LIFT HEIGHT TO BOTTOM OF FORKS					
		4118 mm (162.1 in.)	4268 mm (168.0 in.)	4418 mm (173.9 in.)	4568 mm (179.8 in.)	4718 mm (185.7 in.)	4868 mm (191.7 in.)
	Mast Group Number	**B563 4118**	**B563 4268**	**B563 4418**	**B563 4568**	**B563 4718**	**B563 4868**
	Cylinder Group Number	**8600505**	**8600506**	**8600507**	**8600508**	**8600509**	**8600510**
	Lift Cylinder	1341641	1341642	1341643	1341644	1341645	1341646
1	Shell	1355728	1355732	1355736	1355740	1355744	1355748
2	Rod	1355729	1355733	1355737	1355741	1355745	1355749

©2007 HYSTER COMPANY

MAIN CYLINDER
THREE STAGE FULL FREE LIFT
LEFT HAND

E60-65Z (CONT.)

ITEM	DESCRIPTION 1 2 3 4	LIFT HEIGHT TO BOTTOM OF FORKS					
		5018 mm (197.6 in.)	5168 mm (203.5 in.)	5318 mm (209.4 in.)	5468 mm (215.3 in.)	5618 mm (221.2 in.)	5768 mm (227.1 in.)
	Mast Group Number	B563 5018	B563 5168	B563 5318	B563 5468	B563 5618	B563 5768
	Cylinder Group Number	8600511	8600512	8600513	8600514	8600515	8600516
	Lift Cylinder	1341647	1341648	1341649	1341650	1341651	1341652
1	Shell	1355718	1355753	1355757	1355761	1355766	1355770
2	Rod	1355710	1355754	1355758	1355762	1355767	1355771

KEY:
A: E45-55Z
B: E60-65Z

ITEM		PART NO.	DESCRIPTION	QTY A	QTY B
	h	. . . . .	Lift Cylinder	1	1
1	**h**	. . . . .	Shell	1	1
2	**h**	. . . . .	Rod	1	1
3		1355496	Gland	1	..
3		1355713	Gland	..	1
4	**a**	1355711	Spacer	..	1
4	**b**	1355751	Spacer	..	1
4	**d**	1355765	Spacer	..	1
4	**c**	1355610	Spacer	1	..
4	**e**	1355626	Spacer	1	..
4	**f**	1355643	Spacer	1	..
4	**g**	1355660	Spacer	1	..
5		257913	Check Valve	1	1
6		297531	Washer	1	1
7		187388	Snap Ring	1	1
8		1319668	Wiper Ring	1	1
9		2013075	Seal	1	..
9		334156	Seal	..	1
10		92861	O-Ring	1	..
10		59229	O-Ring	..	1
11		638246	Back-Up Ring	1	..
11		335012	Back-Up Ring	..	1
12		1356750	Wear Ring	1	..
12		1356751	Wear Ring	..	1
13		39348	O-Ring	1	1
14		1356749	Rod Seal	1	1
15		1360127	Piston Ring	1	..
15		1356748	Piston Ring	..	1

©2007 HYSTER COMPANY

MAIN CYLINDER
THREE STAGE FULL FREE LIFT
LEFT HAND

ITEM	PART NO.	DESCRIPTION	QTY A	QTY B
	1355497	Seal Kit (Includes Items 8-15)	1	..
	1355714	Seal Kit (Includes Items 8-15)	..	1

FOOTNOTES:

a 4118 mm (162.1 in.) thru 4568 mm (179.8 in.) Lift Heights
b 4868 mm (191.7 in.) thru 5318 mm (209.4 in.) Lift Heights
c 5060 mm (199.2 in.) thru 5510 mm (216.9 in.) Lift Heights
d 5468 mm (215.3 in.) thru 5768 mm (227.1 in.) Lift Heights
e 5660 mm (222.8 in.) thru 6110 mm (240.6 in.) Lift Heights
f 6260 mm (246.5 in.) thru 6710 mm (264.2 in.) Lift Heights
g 6860 mm (270.1in.) Lift Height
h Refer to Table

©2007 HYSTER COMPANY

NOTES

FREE-LIFT CYLINDER (Figure 8-8)
THREE STAGE FULL FREE-LIFT

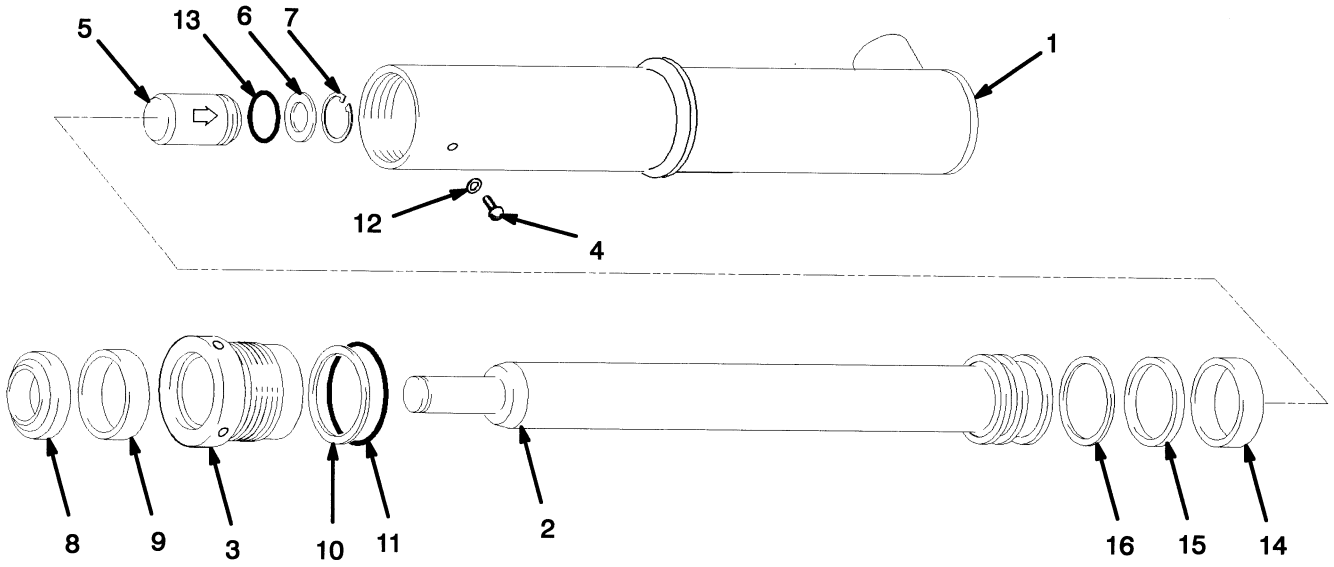

HP170168

©2007 HYSTER COMPANY

FREE-LIFT CYLINDER
THREE STAGE FULL FREE-LIFT

E45-55Z

ITEM	DESCRIPTION 1 2 3 4	LIFT HEIGHT TO BOTTOM OF FORKS					
		4310 mm (169.7 in.)	4460 mm (175.6 in.)	4610 mm (181.5 in.)	4760 mm (187.4 in.)	4910 mm (193.3 in.)	5060 mm (199.2 in.)
	Mast Group Number	**B508 4310**	**B508 4460**	**B508 4610**	**B508 4760**	**B508 4910**	**B508 5060**
	Cylinder Group Number	**8514556**	**8514557**	**8514558**	**8514559**	**8514560**	**8514562**
	Free-Lift Cylinder	2053795	2058120	2058121	2053796	2053797	2053798
1	Shell	2058210	2058211	2058212	2058213	2058214	2310036
2	Rod	1356560	1356563	1356566	1356569	1356572	1356578

E45-55Z (CONT.)

ITEM	DESCRIPTION 1 2 3 4	LIFT HEIGHT TO BOTTOM OF FORKS					
		5210 mm (205.1 in.)	5360 mm (211.0 in.)	5510 mm (216.9 in.)	5660 mm (222.8 in.)	5810 mm (228.7 in.)	5960 mm (234.6 in.)
	Mast Group Number	**B508 5210**	**B508 5360**	**B508 5510**	**B508 5660**	**B508 5810**	**B508 5960**
	Cylinder Group Number	**8514563**	**8514564**	**8514565**	**8514566**	**8514567**	**8514568**
	Free-Lift Cylinder	2058123	2058124	2053799	2058125	2058193	2058126
1	Shell	2058217	2058218	2058219	2058220	2304931	2058222
2	Rod	1356581	1356584	1356587	1356590	1356593	1356596

E45-55Z (CONT.)

ITEM	DESCRIPTION 1 2 3 4	LIFT HEIGHT TO BOTTOM OF FORKS					
		6110 mm (240.6 in.)	6260 mm (246.5 in.)	6410 mm (252.4 in.)	6560 mm (258.3 in.)	6710 mm (264.2 in.)	6860 mm (270.1 in.)
	Mast Group Number	**B508 6110**	**B508 6260**	**B508 6410**	**B508 6560**	**B508 6710**	**B508 6860**
	Cylinder Group Number	**8514569**	**8514571**	**8514572**	**8514573**	**8514574**	**8514576**
	Free-Lift Cylinder	2058118	2053800	2058128	2058129	2058130	2058132
1	Shell	2058223	2058225	2058226	2058227	2058228	2058230
2	Rod	1356599	1356605	1356608	1356611	1356614	1356620

©2007 HYSTER COMPANY

FREE-LIFT CYLINDER
THREE STAGE FULL FREE-LIFT

E60-65Z

ITEM	DESCRIPTION 1 2 3 4	LIFT HEIGHT TO BOTTOM OF FORKS					
		4118 mm (162.1 in.)	4268 mm (168.0 in.)	4418 mm (173.9 in.)	4568 mm (179.8 in.)	4718 mm (185.7 in.)	4868 mm (191.7 in.)
	Mast Group Number	B563 4118	B563 4268	B563 4418	B563 4568	B563 4718	B563 4868
	Cylinder Group Number	8514507	8514508	8514509	8514510	8514511	8514513
	Free-Lift Cylinder	2053770	2061867	2061868	2053771	2053772	2053773
1	Shell	2063690	2058252	2058253	2063691	2063645	2063692
2	Rod	1356682	1356697	1356688	1356691	1356694	1356065

E60-65Z (CONT.)

ITEM	DESCRIPTION 1 2 3 4	LIFT HEIGHT TO BOTTOM OF FORKS					
		5018 mm (197.6 in.)	5168 mm (203.5 in.)	5318 mm (209.4 in.)	5468 mm (215.3 in.)	5618 mm (221.2 in.)	5768 mm (227.1 in.)
	Mast Group Number	B563 5018	B563 5168	B563 5318	B563 5468	B563 5618	B563 5768
	Cylinder Group Number	8514514	8514515	8514516	8514518	8514519	8514520
	Free-Lift Cylinder	2061870	2053774	2053775	2061872	2061874	2053829
1	Shell	2058255	2064754	2063693	2058257	2058258	2064753
2	Rod	1356068	1356071	1356074	1356080	1356083	1356086

KEY:
A: E45-55Z
B: E60-65Z

ITEM		PART NO.	DESCRIPTION	QTY A	QTY B
	a	. . . . .	Free-Lift Cylinder	1	1
1	**a**	. . . . .	Shell	1	1
2	**a**	. . . . .	Rod	1	1
3		1356292	Gland	1	..
3		1356661	Gland	..	1
4		1361302	Screw	1	1
5		257913	Check Valve	1	1
6		297531	Washer	1	1
7		187388	Snap Ring	1	1
8		2013099	Wiper Ring	1	1
9		1358970	Seal	1	1
10		147973	Back-Up Ring	1	..
10		164840	Back-Up Ring	..	1
11		90263	O-Ring	1	..
11		15880	O-Ring	..	1
12		190887	Seal	1	1
13		39348	O-Ring	1	1
14		1358972	Wear Ring	1	..
14		636941	Wear Ring	..	1

©2007 HYSTER COMPANY

FREE-LIFT CYLINDER
THREE STAGE FULL FREE-LIFT

ITEM	PART NO.	DESCRIPTION	QTY A	QTY B
15	2013088	Seal	1	..
15	309062	Seal	..	1
16	2013089	Back-Up Ring	1	..
16	637565	Back-Up Ring	..	1
	1358969	Seal Kit (Includes Items 8-16)	1	..
	1356662	Seal Kit (Includes Items 8-16)	..	1

FOOTNOTES:
a Refer to Table

©2007 HYSTER COMPANY

CARRIAGE (Figure 8-9)
SIX ROLLER
THREE STAGE FULL FREE-LIFT

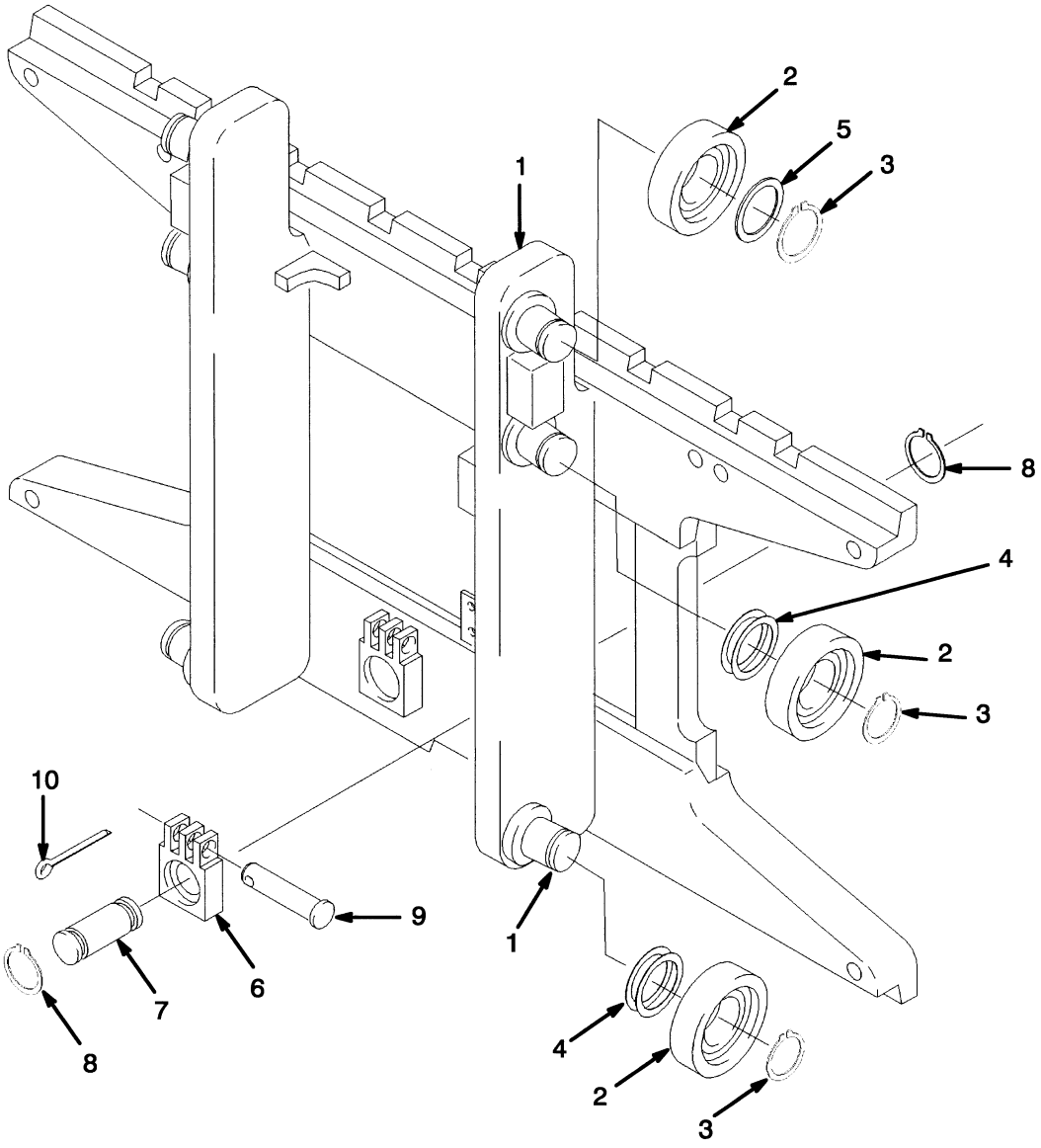

©2007 HYSTER COMPANY

CARRIAGE
SIX ROLLER
THREE STAGE FULL FREE-LIFT

KEY:
A: E45-55Z
B: E60-65Z

ITEM	PART NO.	DESCRIPTION	QTY A	QTY B
	1379461	Carriage Assembly (38.5 in.)	1	..
	1379462	Carriage Assembly (38.5 in.)	..	1
1	1381562	Frame	1	..
1	1381563	Frame	..	1
1	1345216	Stubshaft	6	6
2	1333399	Load Roller	6	6
3	58901	Snap Ring	6	6
4	129387	Shim (0.020 in.)	AR	AR
5	366115	Spacer	2	2
6	1369345	Chain Anchor (Dual Hole)	2	..
6	1504010	Chain Anchor (Single Hole) (Optional)	2	..
6	1369344	Chain Anchor (Dual Hole)	..	2
6	1504012	Chain Anchor (Single Hole) (Optional)	..	2
7	317735	Pin	2	2
8	131358	Snap Ring	4	4
9	1514866	Pin	2	2
10	15211	Cotter Pin	2	2

©2007 HYSTER COMPANY

CARRIAGE (Figure 8-10)
HEAVY DUTY
THREE STAGE FULL FREE-LIFT

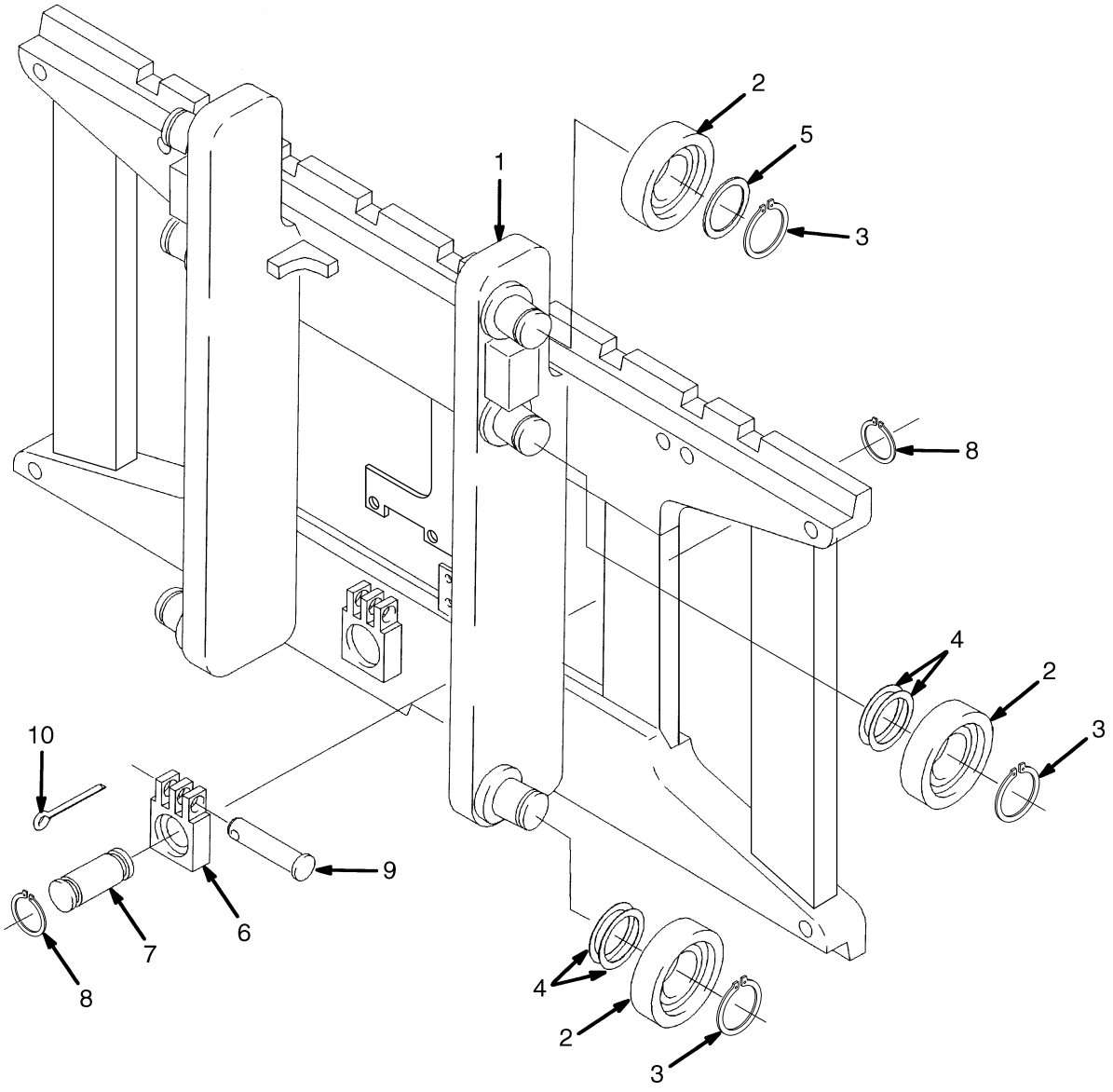

BP170310

©2007 HYSTER COMPANY

CARRIAGE
HEAVY DUTY
THREE STAGE FULL FREE-LIFT

KEY:
A: E45-55Z
B: E60-65Z

ITEM	PART NO.	DESCRIPTION	QTY A	QTY B
	2070776	Carriage Assembly (Group No. 8526354)	1	..
	2070777	Carriage Assembly (Group No. 8526355)	..	1
1	1566791	Frame	1	..
1	1345216	Stubshaft	6	..
1	1566736	Frame	..	1
1	1345216	Stubshaft	..	6
2	1333399	Load Roller	6	6
3	58901	Snap Ring	6	6
4	129387	Shim (0.020 in.)	AR	AR
5	366115	Spacer	2	2
6	1369345	Chain Anchor (Dual Hole)	2	..
6	1504010	Chain Anchor (Single Hole) (Optional)	2	..
6	1369344	Chain Anchor (Dual Hole)	..	2
6	1504012	Chain Anchor (Single Hole) (Optional)	..	2
7	317735	Pin	2	2
8	131358	Snap Ring	4	4
9	1514866	Pin (Chain Anchor)	2	2
10	15211	Cotter Pin	2	2

©2007 HYSTER COMPANY

HEADER HOSE (Figure 8-11)
THREE STAGE FULL FREE-LIFT

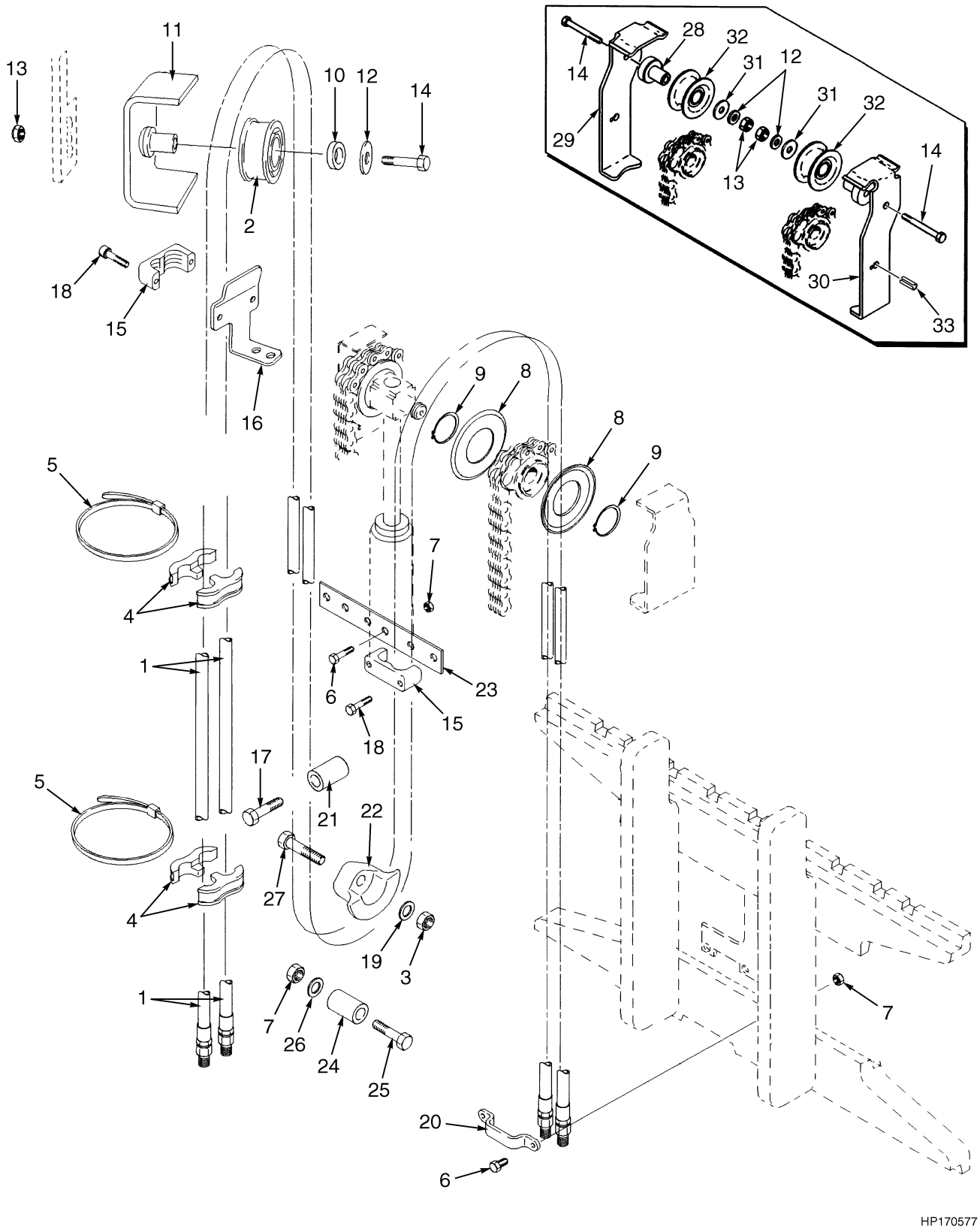

©2007 HYSTER COMPANY

HEADER HOSE
THREE STAGE FULL FREE-LIFT

E45-55Z

ITEM	DESCRIPTION 1 2 3 4	LIFT HEIGHT TO BOTTOM OF FORKS					
		4310 mm (169.7 in.)	4460 mm (175.6 in.)	4610 mm (181.5 in.)	4760 mm (187.4 in.)	4910 mm (193.3 in.)	5060 mm (199.2 in.)
	Mast Group Number	B508 4310	B508 4460	B508 4610	B508 4760	B508 4910	B508 5060
1	Hose	1376127	1368411	1368412	1345581	1376131	1368446

E45-55Z (CONT.)

ITEM	DESCRIPTION 1 2 3 4	LIFT HEIGHT TO BOTTOM OF FORKS					
		5210 mm (205.1 in.)	5360 mm (211.0 in.)	5510 mm (216.9 in.)	5660 mm (222.8 in.)	5810 mm (228.7 in.)	5960 mm (234.6 in.)
	Mast Group Number	B508 5210	B508 5360	B508 5510	B508 5660	B508 5810	B508 5960
1	Hose	1376161	1376162	1376163	1376165	1376166	1398954

E45-55Z (CONT.)

ITEM	DESCRIPTION 1 2 3 4	LIFT HEIGHT TO BOTTOM OF FORKS					
		6110 mm (240.6 in.)	6260 mm (246.5 in.)	6410 mm (252.4 in.)	6560 mm (258.3 in.)	6710 mm (264.2 in.)	6860 mm (270.1 in.)
	Mast Group Number	B508 6110	B508 6260	B508 6410	B508 6560	B508 6710	B508 6860
1	Hose	1368421	1376168	1376169	1376170	1376171	1398958

E60-65Z

ITEM	DESCRIPTION 1 2 3 4	LIFT HEIGHT TO BOTTOM OF FORKS					
		4118 mm (162.1 in.)	4268 mm (168.0 in.)	4418 mm (173.9 in.)	4568 mm (179.8 in.)	4718 mm (185.7 in.)	4868 mm (191.7 in.)
	Mast Group Number	B563 4118	B563 4268	B563 4418	B563 4568	B563 4718	B563 4868
1	Hose	1376127	1368411	1368412	1345581	1376131	1368446

©2007 HYSTER COMPANY

HEADER HOSE
THREE STAGE FULL FREE-LIFT

E60-65Z (CONT.)

ITEM	DESCRIPTION 1 2 3 4	LIFT HEIGHT TO BOTTOM OF FORKS					
		5018 mm (197.6 in.)	5168 mm (203.5 in.)	5318 mm (209.4 in.)	5468 mm (215.3 in.)	5618 mm (221.2 in.)	5768 mm (227.1 in.)
	Mast Group Number	B563 5018	B563 5168	B563 5318	B563 5468	B563 5618	B563 5768
1	Hose	1376161	1376162	1376163	1376165	1376166	1398954

KEY:
A: Three Function
B: Four Function

ITEM		PART NO.	DESCRIPTION	QTY A	QTY B
1	a	. . . . .	Hose	2	4
2		1494017	Sheave	1	2
3		316826	Nut	1	2
4		1353530	Clamp	4	8
5		1360507	Clamp	2	4
6		136749	Capscrew	8	10
7		313828	Nut	9	12
8		1345199	Hose Guide	2	4
9		1345204	Snap Ring	2	4
10		1360549	Spacer	1	2
11		1362387	Stubshaft	1	2
12		1345190	Washer	1	2
13		1390182	Nut	1	2
14		292533	Capscrew	1	2
15		1360386	Clamp	2	2
16		1354906	Bracket (RH)	1	1
16		1354907	Bracket (LH)	1	1
17		292534	Capscrew	1	2
18		293795	Capscrew	4	8
19		320160	Washer	1	2
20		1643405	Hose Clamp	1	2
21		1360538	Tube	1	2
22		1348246	Hose Guide (RH)	1	1
22		1348247	Hose Guide (LH)	..	1
23		1353464	Plate	1	1
24		1354961	Hose Restraint	1	2
25		214364	Capscrew	1	2
26		320158	Washer	1	2
27		287860	Capscrew	1	2
28		1396406	Stubshaft	1	2
29		1395291	Bracket (RH)	1	1
30		1395292	Bracket (LH)	..	1
31		320171	Washer	1	2

©2007 HYSTER COMPANY

HEADER HOSE
THREE STAGE FULL FREE-LIFT

ITEM	PART NO.	DESCRIPTION	QTY A	QTY B
32	1494017	Sheave	2	2
33	1566564	Cap (Not Illustrated)	1	1

FOOTNOTES:
a Refer to Table

NOTES

9 MAST-TWO STAGE FULL FREE-LIFT

SECTION 9
MAST-TWO STAGE FULL FREE-LIFT

DESCRIPTION	PAGE
CARRIAGE	
SIX ROLLER	
TWO STAGE FULL FREE-LIFT	9-22
CARRIAGE ASSEMBLY	
HEAVY DUTY	
TWO STAGE FULL FREE-LIFT	9-24
FREE-LIFT	
E45-55Z	
TWO STAGE FULL FREE-LIFT	9-8
E60-65Z	
TWO STAGE FULL FREE-LIFT	9-10
FREE-LIFT CYLINDER	
TWO STAGE FULL FREE-LIFT	9-18
HEADER HOSE	
TWO STAGE FULL FREE-LIFT	9-26
INNER MAST	
TWO STAGE FULL FREE-LIFT	9-4
MAIN LIFT	
TWO STAGE FULL FREE-LIFT	9-6
MAIN LIFT CYLINDER	
LEFT HAND	
TWO STAGE FULL FREE-LIFT	9-13
RIGHT HAND	
TWO STAGE FULL FREE-LIFT	9-15
OUTER MAST	
TWO STAGE FULL FREE-LIFT	9-2

©2007 HYSTER COMPANY

OUTER MAST (Figure 9-1)
TWO STAGE FULL FREE-LIFT

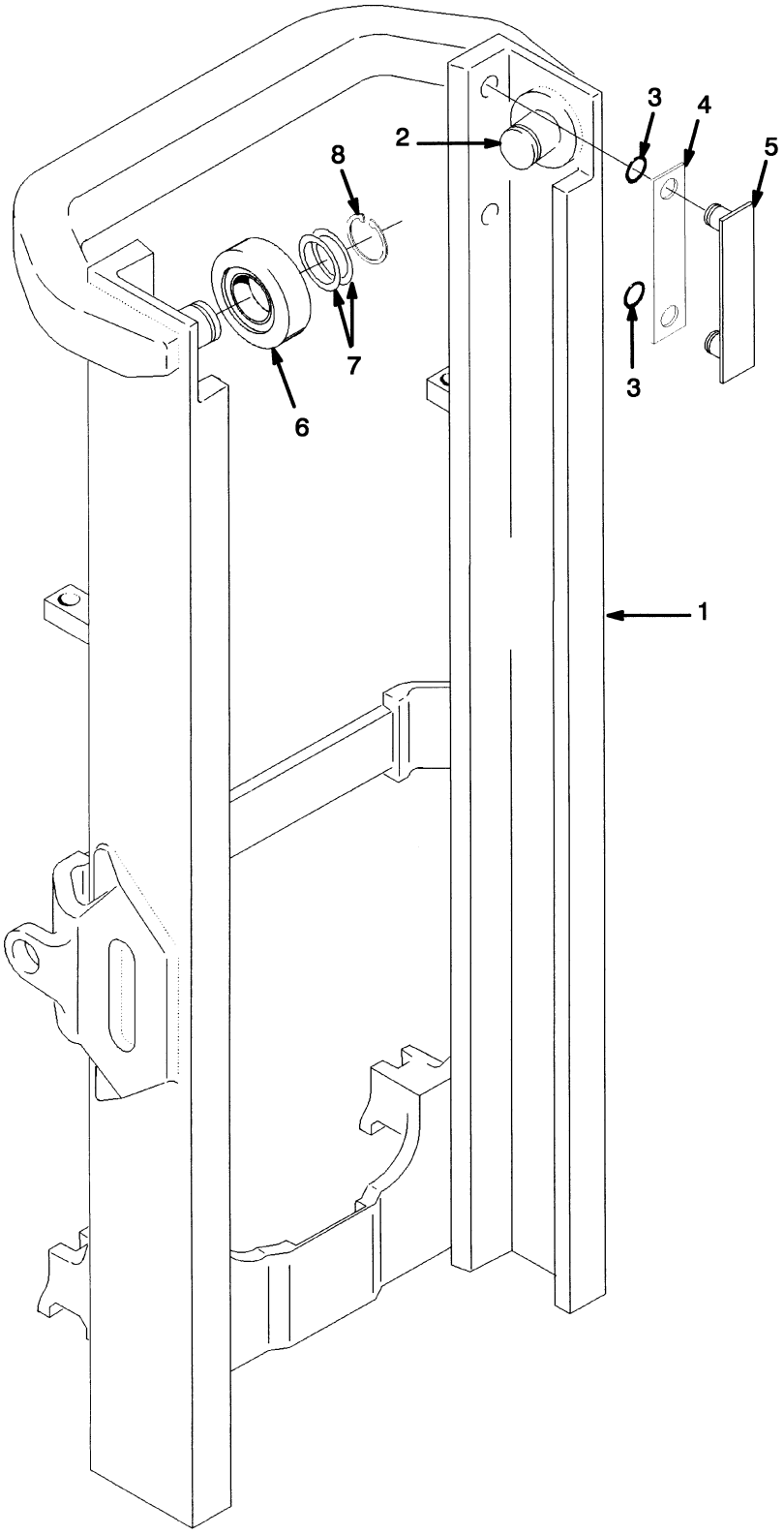

©2007 HYSTER COMPANY

OUTER MAST
TWO STAGE FULL FREE-LIFT

E45-55Z

ITEM	DESCRIPTION 1 2 3 4	LIFT HEIGHT TO BOTTOM OF FORKS		
		2562 mm (100.9 in.)	3262 mm (128.4 in.)	3662 mm (144.2 in.)
	Mast Group Number	B509 2962	B509 3262	B509 3662
	Mast Assembly	2048392	2048400	2048409
1	Outer Mast	1341005	1341008	1341012

E60-65Z

ITEM	DESCRIPTION 1 2 3 4	LIFT HEIGHT TO BOTTOM OF FORKS				
		2560 mm (100.8 in.)	2660 mm (104.7 in.)	2760 mm (108.7 in.)	3060 mm (120.5 in.)	3160 mm (124.4 in.)
	Mast Group Number	B564 2560	B564 2660	B564 2760	B564 3060	B564 3160
	Mast Assembly	2048463	2048466	2048468	2048475	2048478
1	Outer Mast	1341002	1341003	1341004	1341007	1341008

E60-65Z (CONT.)

ITEM	DESCRIPTION 1 2 3 4	LIFT HEIGHT TO BOTTOM OF FORKS				
		3260 mm (128.3 in.)	3360 mm (132.3 in.)	3460 mm (136.2 in.)	3560 mm (140.2 in.)	3660 mm (144.1 in.)
	Mast Group Number	B564 3260	B564 3360	B564 3460	B564 3560	B564 3660
	Mast Assembly	2048480	2048483	2048485	2048488	2048489
1	Outer Mast	1341009	1341010	1341011	1341012	1341013

ITEM	PART NO.	DESCRIPTION	QTY
	a	Mast Assembly	1
1	**a**	Outer Mast	1
2	1345216	Stubshaft	2
3	104506	O-Ring	4
4	131716	Shim (0.020 in.)	4
5	215211	Bearing Strip	2
6	1333396	Load Roller (2.9 in.) (0,76 mm)	2
7	129387	Shim (0.020 in.)	AR
8	58901	Snap Ring	2

FOOTNOTES:
a Refer to Table

INNER MAST (Figure 9-2)
TWO STAGE FULL FREE-LIFT

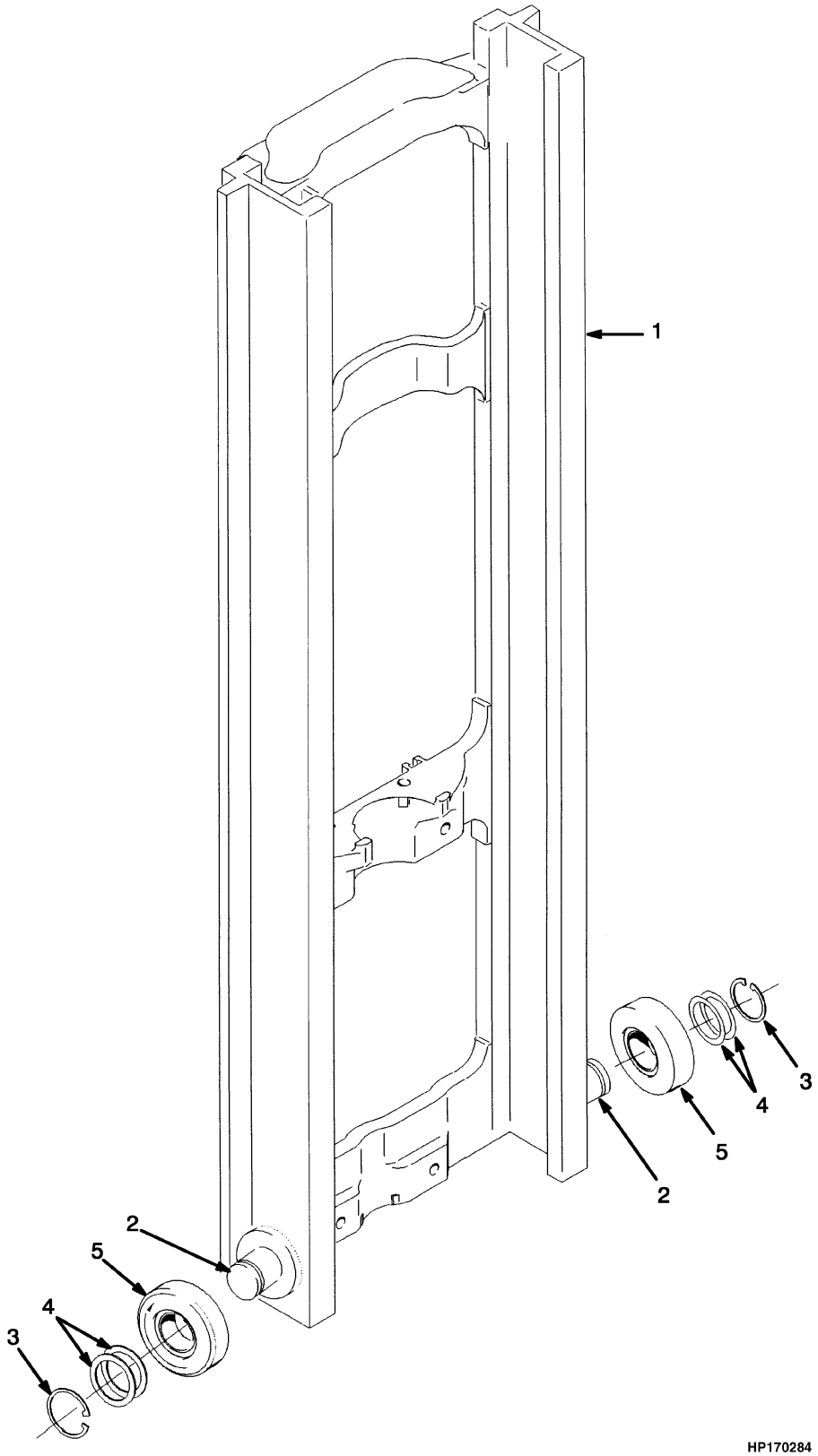

©2007 HYSTER COMPANY

INNER MAST
TWO STAGE FULL FREE-LIFT

E45-55Z

ITEM	DESCRIPTION 1 2 3 4	LIFT HEIGHT TO BOTTOM OF FORKS		
		2562 mm (100.9 in.)	3262 mm (128.4 in.)	3662 mm (144.2 in.)
	Mast Group Number	B509 2962	B509 3262	B509 3662
	Mast Assembly	2048392	2048400	2048409
1	Inner Mast	1342474	1342477	1342481

E60-65Z

ITEM	DESCRIPTION 1 2 3 4	LIFT HEIGHT TO BOTTOM OF FORKS				
		2560 mm (100.8 in.)	2660 mm (104.7 in.)	2760 mm (108.7 in.)	3060 mm (120.5 in.)	3160 mm (124.4 in.)
	Mast Group Number	B564 2560	B564 2660	B564 2760	B564 3060	B564 3160
	Mast Assembly	2048463	2048466	2048468	2048475	2048478
1	Inner Mast	1342471	1342472	1342473	1342476	1342477

E60-65Z (CONT.)

ITEM	DESCRIPTION 1 2 3 4	LIFT HEIGHT TO BOTTOM OF FORKS				
		3260 mm (128.3 in.)	3360 mm (132.3 in.)	3460 mm (136.2 in.)	3560 mm (140.2 in.)	3660 mm (144.1 in.)
	Mast Group Number	B564 3260	B564 3360	B564 3460	B564 3560	B564 3660
	Mast Assembly	2048480	2048483	2048485	2048488	2048489
1	Inner Mast	1342478	1342479	1342480	1342481	1342482

ITEM	PART NO.	DESCRIPTION	QTY
	a	Mast Assembly	1
1	**a**	Inner Mast	1
2	1345216	Stubshaft	2
3	58901	Snap Ring	2
4	129387	Shim (0.020 in.)	AR
5	1333396	Load Roller (2.9 in.) (0,76 mm)	2

FOOTNOTES:
a Refer to Table

MAIN LIFT (Figure 9-3)
TWO STAGE FULL FREE-LIFT

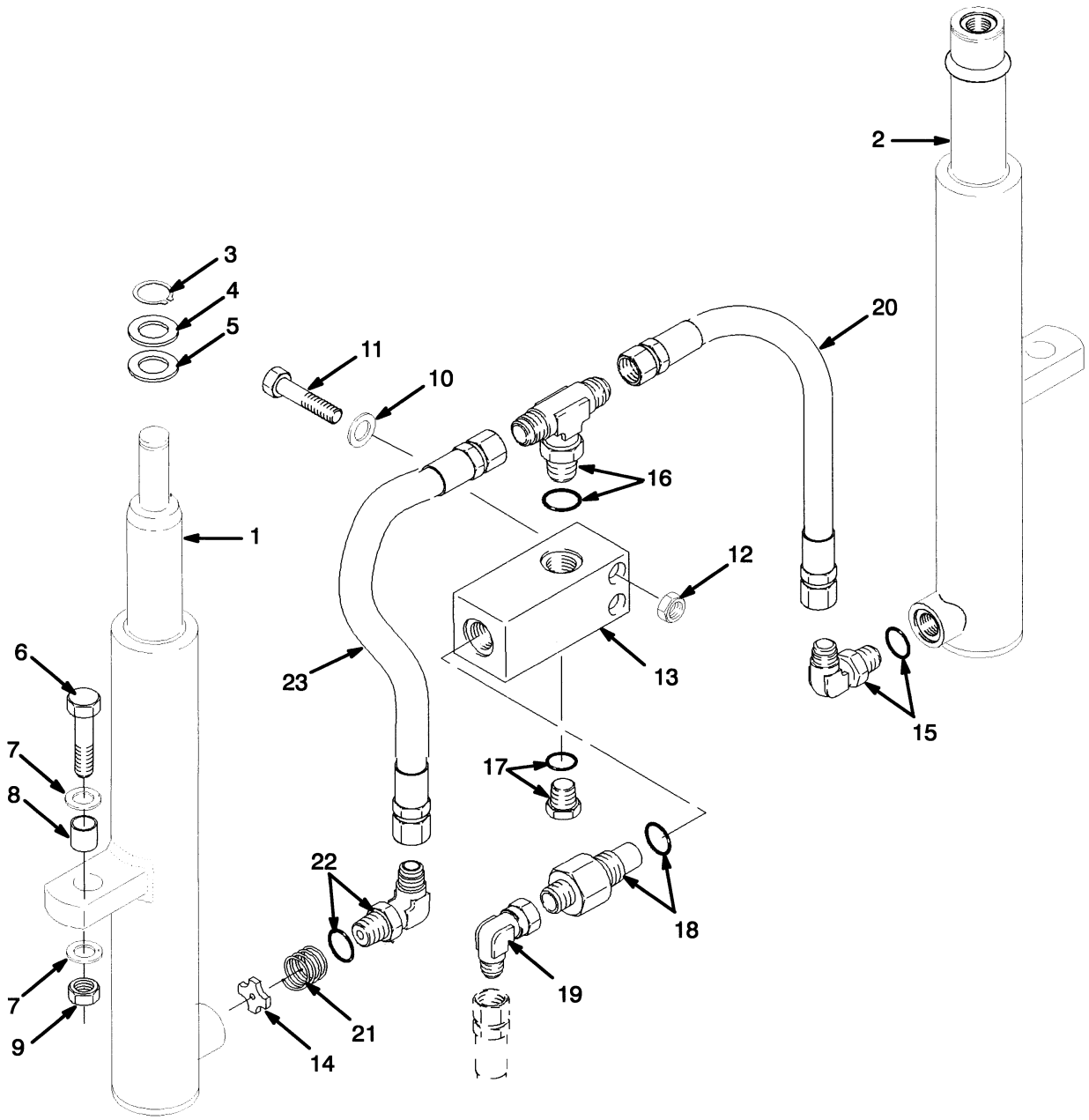

©2007 HYSTER COMPANY

MAIN LIFT
TWO STAGE FULL FREE-LIFT

ITEM	PART NO.	DESCRIPTION	QTY
1	. . . . .	Cylinder (RH) (☞ Figure 9-7)	1
2	. . . . .	Cylinder (LH) (☞ Figure 9-6)	1
3	131358	Snap Ring	1
4	1333382	Washer (0.060 in.)	1
5	1354915	Washer (0.010 in.)	AR
5	1354916	Washer (0.030 in.)	AR
5	1354917	Washer (0.060 in.)	AR
6	292532	Capscrew	2
7	296422	Washer	4
8	323090	Spacer	2
9	300937	Locknut	2
10	320157	Washer	2
11	214364	Capscrew	2
12	313828	Nut	2
13	1333392	Housing	1
14	356505	Washer	1
15	16560	Fitting	1
15	16485	O-Ring	1
16	16578	Fitting	1
16	16485	O-Ring	1
17	14603	Fitting	1
17	16486	O-Ring	1
18	2309766	Control Valve (Lowering) (E45-55Z)	1
18	316306	Control Valve (Lowering) (E60-65Z)	1
18	16982	O-Ring	1
19	16882	Fitting	1
20	1345403	Hose	1
21	337179	Spring	1
22	189595	Fitting	1
22	16485	O-Ring	1
23	1462551	Hose	1

©2007 HYSTER COMPANY

FREE-LIFT (Figure 9-4)
E45-55Z
TWO STAGE FULL FREE-LIFT

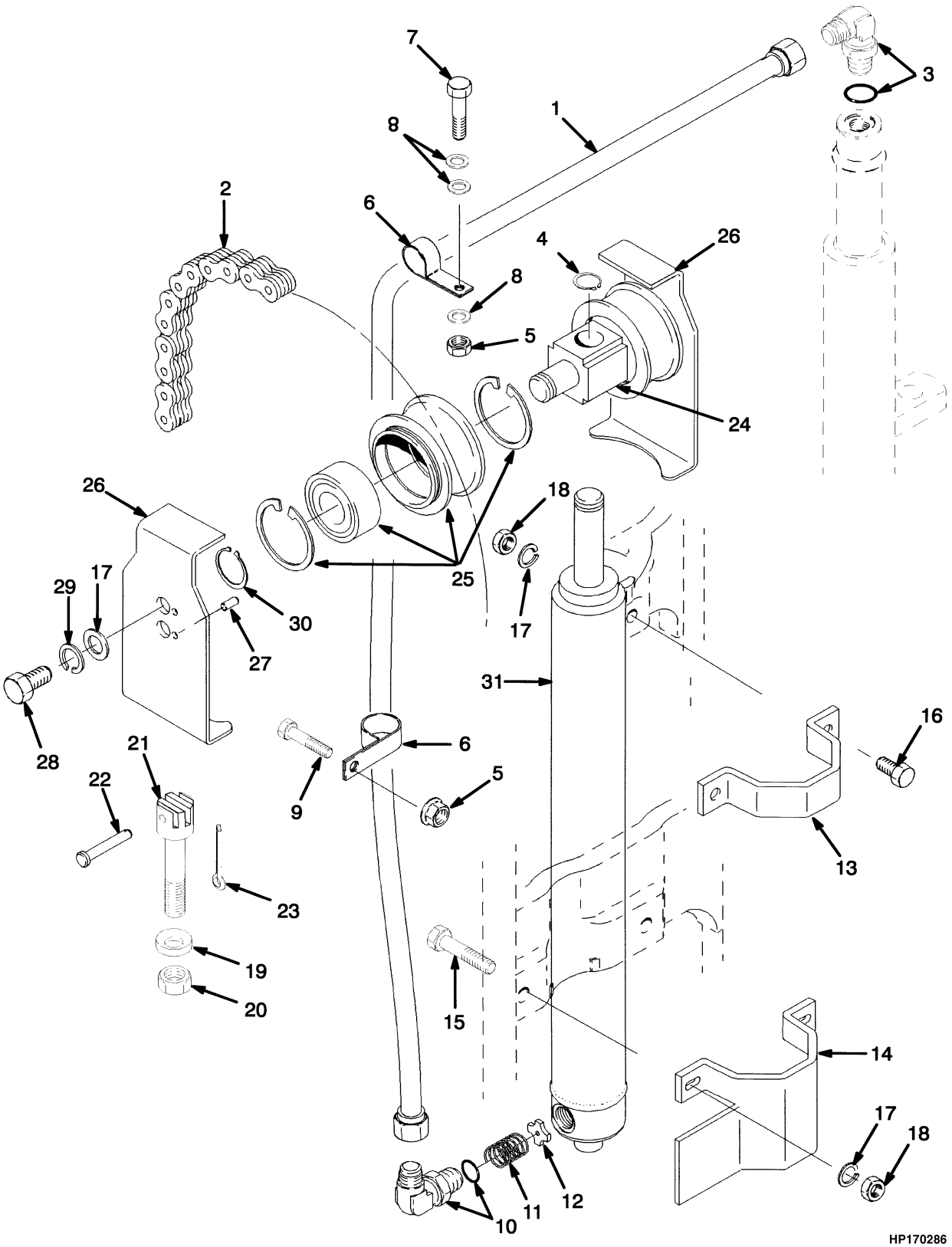

©2007 HYSTER COMPANY

FREE-LIFT
E45-55Z
TWO STAGE FULL FREE-LIFT

ITEM	DESCRIPTION 1 2 3 4	LIFT HEIGHT TO BOTTOM OF FORKS	
		2562 mm (100.9 in.)	3262 mm (128.4 in.)
	Mast Group Number	B509 2962	B509 3262
1	Tube	1345311	1345314
2	Chain	197345	231084

ITEM		PART NO.	DESCRIPTION	QTY
1	**a**	. . . . .	Tube	1
2	**a**	. . . . .	Chain	2
3		177459	Fitting	1
3		16485	O-Ring	1
4		131358	Snap Ring	1
5		316826	Nut	2
6		178119	Clamp	2
7		296028	Capscrew	1
8		320159	Washer	3
9		136985	Capscrew	1
10		1354956	Fitting	1
10		16485	O-Ring	1
11		154355	Spring	1
12		356505	Washer	1
13		1360387	Clamp	1
14		1354967	Bracket	1
15		287837	Capscrew	2
16		292529	Capscrew	2
17		320161	Washer	6
18		300937	Locknut	4
19		296426	Washer (Hardened)	2
20		161003	Nut	2
21		1369357	Chain Anchor	2
22		1514866	Pin	2
23		15211	Cotter Pin	2
24		1378690	Crosshead	1
25		1379682	Chain Sheave Assembly	2
25		1378692	Sheave	1
25		37752	Snap Ring	1
25		1378699	Bearing	1
26		1395285	Chain Guard	2
27		302461	Pin	2
28		132860	Capscrew	2
29		292683	Lockwasher	2
30		304526	Snap Ring	3
31		. . . . .	Free-Lift Cylinder (☞ Figure 9-8)	1

FOOTNOTES:
a Refer to Table

FREE-LIFT (Figure 9-5)
E60-65Z
TWO STAGE FULL FREE-LIFT

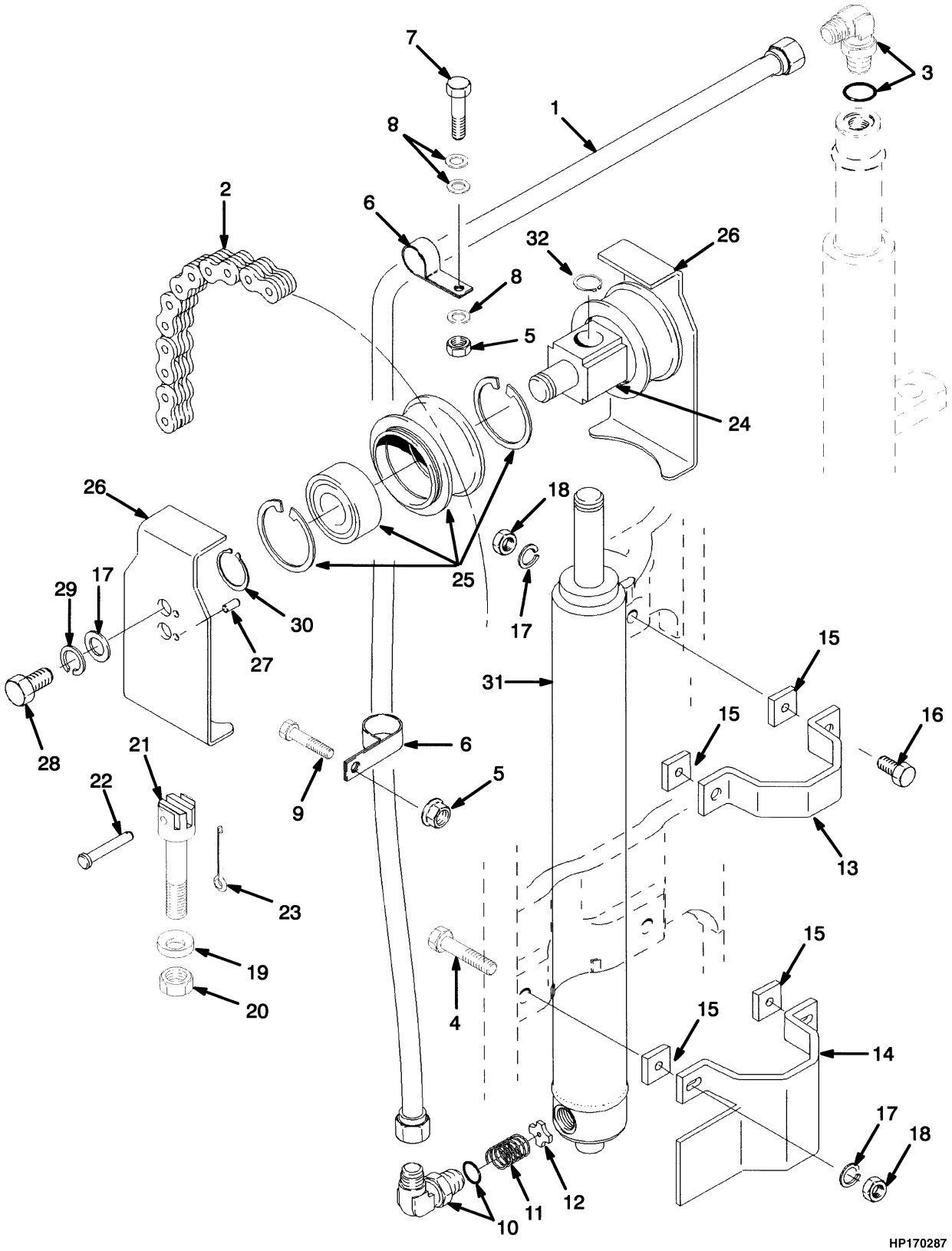

©2007 HYSTER COMPANY

FREE-LIFT
E60-65Z
TWO STAGE FULL FREE-LIFT

ITEM	DESCRIPTION 1 2 3 4	LIFT HEIGHT TO BOTTOM OF FORKS				
		2560 mm (100.8 in.)	2660 mm (104.7 in.)	2760 mm (108.7 in.)	3060 mm (120.5 in.)	3160 mm (124.4 in.)
	Mast Group Number	B564 2560	B564 2660	B564 2760	B564 3060	B564 3160
1	Tube	1345308	1345309	1345310	1345313	1345314
2	Chain	1342370	1369326	1342373	1342376	1342377

ITEM	DESCRIPTION 1 2 3 4	LIFT HEIGHT TO BOTTOM OF FORKS				
		3260 mm (128.3 in.)	3360 mm (132.3 in.)	3460 mm (136.2 in.)	3560 mm (140.2 in.)	3660 mm (144.1 in.)
	Mast Group Number	B564 3260	B564 3360	B564 3460	B564 3560	B564 3660
1	Tube	1345315	1345316	1345317	1345318	1345319
2	Chain	1342377	1342378	1342116	1342379	1342380

ITEM		PART NO.	DESCRIPTION	QTY
1	**a**	. . . . .	Tube	1
2	**a**	. . . . .	Chain	2
3		1380036	Fitting	1
3		16485	O-Ring	1
4		287837	Capscrew	2
5		316826	Nut	2
6		178119	Clamp	2
7		296028	Capscrew	1
8		320159	Washer	3
9		136985	Capscrew	1
10		1354956	Fitting	1
10		16485	O-Ring	1
11		154355	Spring	1
12		356505	Washer	1
13		1360387	Clamp	1
14		1354967	Bracket	1
15		1354902	Spacer	4
16		292530	Capscrew	2
17		320161	Washer	6
18		300937	Locknut	4
19		296426	Washer (Hardened)	2
20		161003	Nut	2
21		1369356	Chain Anchor	2
22		1514866	Pin	2
23		15211	Cotter Pin	2
24		1378690	Crosshead	1
25		1379683	Chain Sheave Assembly	2
25		1378693	Sheave	1
25		37752	Snap Ring	1
25		1378699	Bearing	1
26		1360544	Chain Guard	2

©2007 HYSTER COMPANY

FREE-LIFT
E60-65Z
TWO STAGE FULL FREE-LIFT

ITEM	PART NO.	DESCRIPTION	QTY
27	302461	Pin	2
28	132860	Capscrew	2
29	292683	Lockwasher	2
30	304526	Snap Ring	3
31	. . . . .	Free-Lift Cylinder (☞ Figure 9-8)	1
32	131358	Snap Ring	1

FOOTNOTES:
a Refer to Table

©2007 HYSTER COMPANY

MAIN LIFT CYLINDER (Figure 9-6)
LEFT HAND
TWO STAGE FULL FREE-LIFT

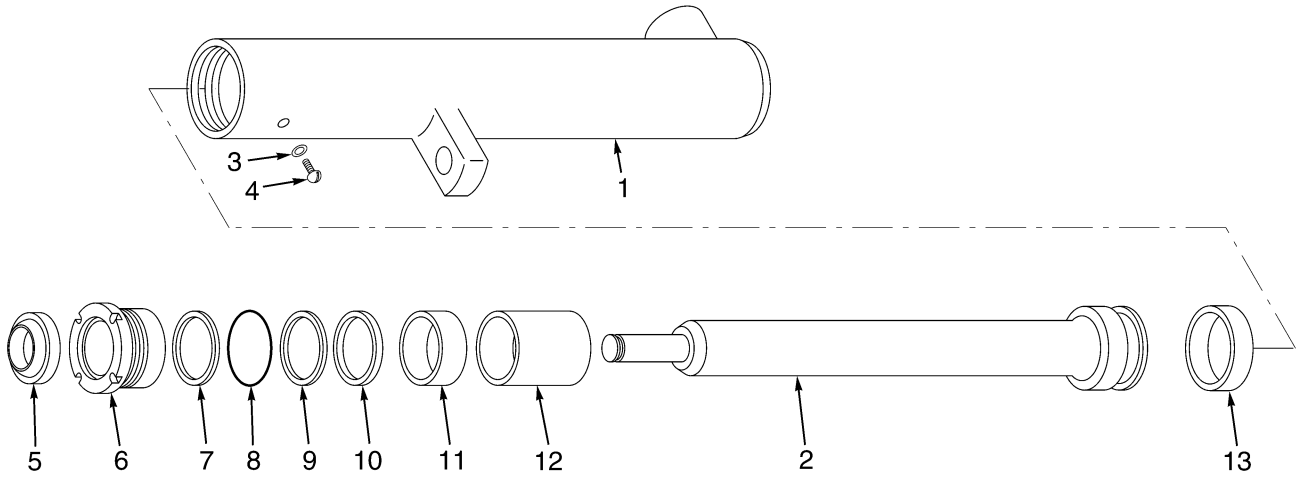

E45-55Z

ITEM	DESCRIPTION 1 2 3 4	LIFT HEIGHT TO BOTTOM OF FORKS		
		2962 mm (116.6 in.)	3262 mm (128.4 in.)	
	Mast Group Number	B509 2962	B509 3262	B509 3662
	Cylinder Group Number	8509506	8509509	8509513
	Main Lift Cylinder	2045776	2045705	2045708
1	Shell	1355910	1355928	1355952
2	Rod and Piston Assembly	1355911	1355929	1355953

E60-65Z

ITEM	DESCRIPTION 1 2 3 4	LIFT HEIGHT TO BOTTOM OF FORKS				
		2560 mm (100.8 in.)	2660 mm (104.7 in.)	2760 mm (108.7 in.)	3060 mm (120.5 in.)	3160 mm (124.4 in.)
	Mast Group Number	B564 2560	B564 2660	B564 2760	B564 3060	B564 3160
	Cylinder Group Number	8509553	8509554	8509555	8509558	8509559
	Main Lift Cylinder	2045744	2045745	2045746	2045749	2045750
1	Shell	1355892	1355900	1355904	1355922	1355928
2	Rod	1355893	1355898	1355905	1355923	1355929

MAIN LIFT CYLINDER
LEFT HAND
TWO STAGE FULL FREE-LIFT

E60-65Z (CONT.)

ITEM	DESCRIPTION 1 2 3 4	LIFT HEIGHT TO BOTTOM OF FORKS				
		3260 mm (128.3 in.)	3360 mm (132.3 in.)	3460 mm (136.2 in.)	3560 mm (140.2 in.)	3660 mm (144.1 in.)
	Mast Group Number	B564 3260	B564 3360	B564 3460	B564 3560	B564 3660
	Cylinder Group Number	8509560	8509561	8509562	8509563	8509564
	Main Lift Cylinder	2045751	2045752	2045753	2045754	2045755
1	Shell	1355934	1355940	1355946	1355952	1355958
2	Rod	1355935	1355941	1355947	1355953	1355959

KEY:
A: E45-55Z
B: E60-65Z

ITEM		PART NO.	DESCRIPTION	QTY A	QTY B
	a	. . . . .	Main Lift Cylinder	1	1
1	**a**	. . . . .	Shell	1	1
2	**a**	. . . . .	Rod and Piston Assembly	1	1
3		190887	Seal	1	1
4		295649	Screw	1	1
5		1319668	Wiper Ring	1	1
6	**b**	1380879	Gland	1	1
6	**c**	1380976	Gland	1	1
7		147972	Back-Up Ring	1	1
8		59229	O-Ring	1	1
9	**b**	322824	Back-Up Ring	1	1
10		1356749	Rod Seal	1	1
11	**b**	322902	Wear Ring	1	1
12		2046715	Spacer	..	1
13		1356747	Wear Ring	1	1
		1496922	Seal Kit (Includes Items 3, 5, 7-11, 13)	1	1

FOOTNOTES:
a Refer to Table
b ⇒ D/B 02/2004
c D/B 02/2004 ⇒

©2007 HYSTER COMPANY

MAIN LIFT CYLINDER (Figure 9-7)
RIGHT HAND
TWO STAGE FULL FREE-LIFT

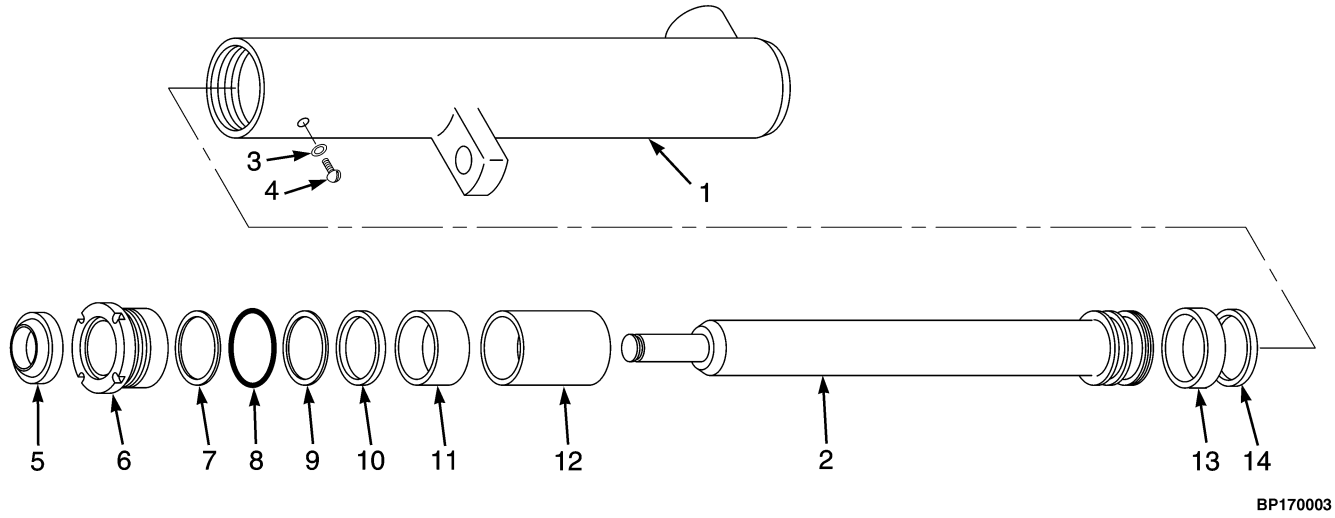

E45-55Z

ITEM	DESCRIPTION 1 2 3 4	LIFT HEIGHT TO BOTTOM OF FORKS		
		2962 mm (116.6 in.)	3262 mm (128.4 in.)	
	Mast Group Number	B509 2962	B509 3262	B509 3662
	Cylinder Group Number	8509606	8509609	8509613
	Main Lift Cylinder	2045869	2045795	2045799
1	Shell	1356783	1356786	1356790
2	Rod	1358937	1358940	1358944

E60-65Z

ITEM	DESCRIPTION 1 2 3 4	LIFT HEIGHT TO BOTTOM OF FORKS				
		2560 mm (100.8 in.)	2660 mm (104.7 in.)	2760 mm (108.7 in.)	3060 mm (120.5 in.)	3160 mm (124.4 in.)
	Mast Group Number	B564 2560	B564 2660	B564 2760	B564 3060	B564 3160
	Cylinder Group Number	8509553	8509654	8509655	8509658	8509659
	Main Lift Cylinder	2045838	2045839	2045840	2045843	2045844
1	Shell	1356780	1356781	1356782	1356785	1356786
2	Rod	1358934	1358935	1358936	1358939	1358940

MAIN LIFT CYLINDER
RIGHT HAND
TWO STAGE FULL FREE-LIFT

E60-65Z (CONT.)

ITEM	DESCRIPTION 1 2 3 4	LIFT HEIGHT TO BOTTOM OF FORKS				
		3260 mm (128.3 in.)	3360 mm (132.3 in.)	3460 mm (136.2 in.)	3560 mm (140.2 in.)	3660 mm (144.1 in.)
	Mast Group Number	B564 3260	B564 3360	B564 3460	B564 3560	B564 3660
	Cylinder Group Number	8509660	8509661	8509662	8509663	8509664
	Main Lift Cylinder	2045845	2045846	2045871	2045847	2045848
1	Shell	1356787	1356788	1356789	1356790	1356791
2	Rod	1358941	1358942	1358943	1358944	1358945

KEY:
A: E45-55Z
B: E60-65Z

ITEM		PART NO.	DESCRIPTION	QTY A	QTY B
	a	. . . . .	Main Lift Cylinder	1	1
1	**a**	. . . . .	Shell	1	1
2	**a**	. . . . .	Rod	1	1
3		190887	Seal	1	1
4		295649	Screw	1	1
5		1319668	Wiper Ring	1	1
6	**b**	1380879	Gland	1	1
6	**c**	1380976	Gland	1	1
7		147972	Back-Up Ring	1	1
8		59229	O-Ring	1	1
9	**b**	322824	Back-Up Ring	1	1
10		1356749	Rod Seal	1	1
11	**b**	322902	Wear Ring	1	1
12		2046715	Spacer	..	1
13		1356747	Wear Ring	1	1
14		1356748	Piston Ring	1	1
		1496922	Seal Kit (Includes Items 3, 5, 7-11, 13)	1	1

FOOTNOTES:
a Refer to Table
b ⇒ D/B 02/2004
c D/B 02/2004 ⇒

©2007 HYSTER COMPANY

NOTES

FREE-LIFT CYLINDER (Figure 9-8)
TWO STAGE FULL FREE-LIFT

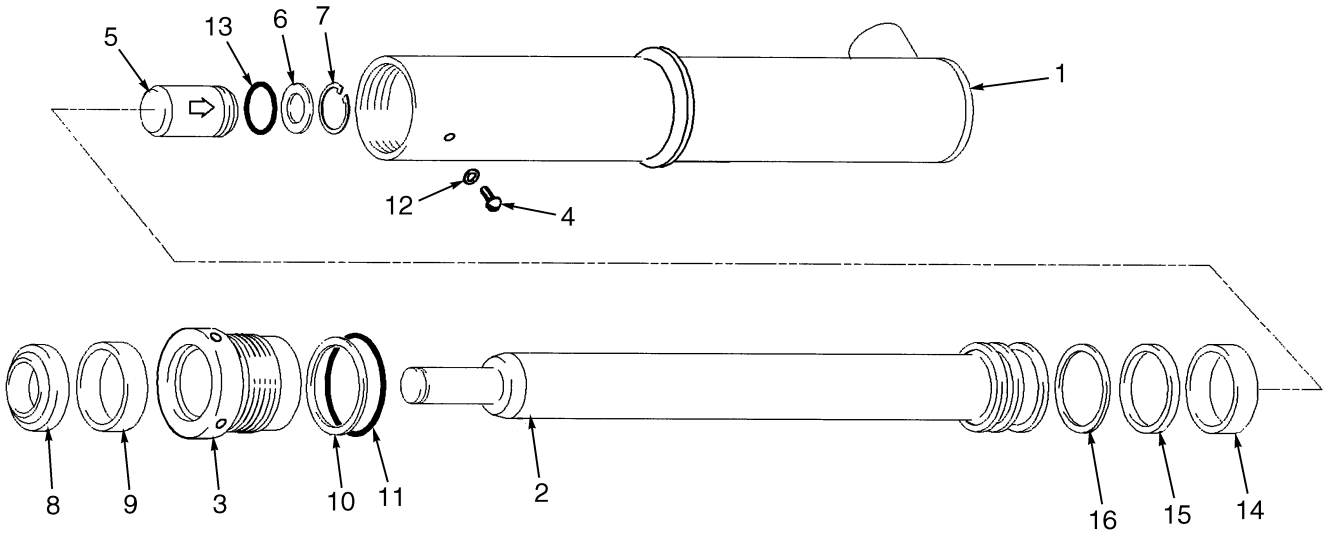

HP170290

©2007 HYSTER COMPANY

FREE-LIFT CYLINDER
TWO STAGE FULL FREE-LIFT

E45-55Z

ITEM	DESCRIPTION 1 2 3 4	LIFT HEIGHT TO BOTTOM OF FORKS		
		2962 mm (116.6 in.)	3262 mm (128.4 in.)	3662 mm (144.2 in.)
	Mast Group Number	**B509 2962**	**B509 3262**	**B509 3662**
	Cylinder Group Number	**8514556**	**8514559**	**8514563**
	Free-Lift Cylinder	2053795	2053796	2058123
1	Shell	2058210	2058213	2058217
2	Rod	1356560	1356569	1356581

E60-65Z

ITEM	DESCRIPTION 1 2 3 4	LIFT HEIGHT TO BOTTOM OF FORKS				
		2560 mm (100.8 in.)	2660 mm (104.7 in.)	2760 mm (108.7 in.)	3060 mm (120.5 in.)	3160 mm (124.4 in.)
	Mast Group Number	**B564 2560**	**B564 2660**	**B564 2760**	**B564 3060**	**B564 3160**
	Cylinder Group Number	**8514503**	**8541504**	**8514505**	**8514508**	**8514509**
	Free-Lift Cylinder	2061863	2064843	2061865	2061867	2061868
1	Shell	2058249	2064782	2058250	2058252	2058253
2	Rod	1356670	1356673	1356676	1356697	1356688

E60-65Z (CONT.)

ITEM	DESCRIPTION 1 2 3 4	LIFT HEIGHT TO BOTTOM OF FORKS				
		3260 mm (128.3 in.)	3360 mm (132.3 in.)	3460 mm (136.2 in.)	3560 mm (140.2 in.)	3660 mm (144.1 in.)
	Mast Group Number	**B564 3260**	**B564 3360**	**B564 3460**	**B564 3560**	**B564 3660**
	Cylinder Group Number	**8514510**	**8514511**	**8514512**	**8514513**	**8514514**
	Free-Lift Cylinder	2053771	2053772	2061869	2053773	2061870
1	Shell	2063691	2063645	2058254	2063692	2058255
2	Rod	1356691	1356694	1356062	1356065	1356068

©2007 HYSTER COMPANY

FREE-LIFT CYLINDER
TWO STAGE FULL FREE-LIFT

KEY:
A: E45-55Z
B: E60-65Z

ITEM		PART NO.	DESCRIPTION	QTY A	QTY B
	a	. . . . .	Free-Lift Cylinder	1	1
1	**a**	. . . . .	Shell	1	1
2	**a**	. . . . .	Rod	1	1
3		1356292	Gland	1	..
3		1356661	Gland	..	1
4		1361302	Screw	1	1
5		257913	Check Valve	1	1
6		297531	Washer	1	1
7		187388	Snap Ring	1	1
8		2013099	Wiper Ring	1	1
9		1358970	Seal	1	1
10		147973	Back-Up Ring	1	..
10		164840	Back-Up Ring	..	1
11		90263	O-Ring	1	..
11		15880	O-Ring	..	1
12		190887	Seal	1	1
13		39348	O-Ring	1	1
14		1358972	Wear Ring	1	..
14		636941	Wear Ring	..	1
15		2013088	Seal	1	..
15		309062	Seal	..	1
16		2013089	Back-Up Ring	1	..
16		637565	Back-Up Ring	..	1
		1358969	Seal Kit (Includes Items 8-16)	1	..
		1356662	Seal Kit (Includes Items 8-16)	..	1

FOOTNOTES:
a Refer to Table

©2007 HYSTER COMPANY

NOTES

CARRIAGE (Figure 9-9)
SIX ROLLER
TWO STAGE FULL FREE-LIFT

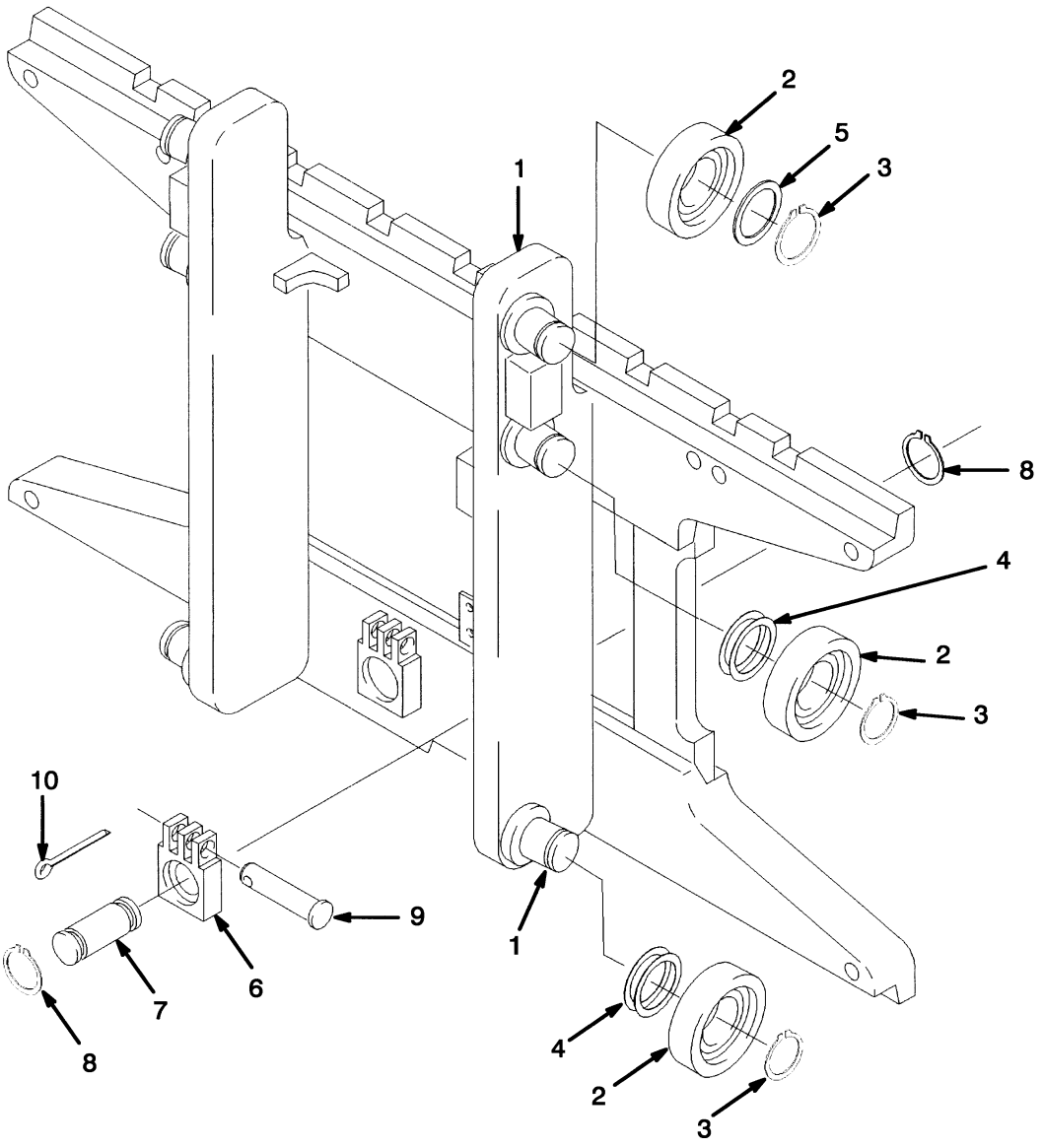

©2007 HYSTER COMPANY

CARRIAGE
SIX ROLLER
TWO STAGE FULL FREE-LIFT

KEY:
A: E45-55Z
B: E60-65Z

ITEM	PART NO.	DESCRIPTION	QTY A	QTY B
	1371660	Carriage Assembly	1	..
	1371661	Carriage Assembly	..	1
1	1359245	Frame	1	..
1	1359246	Frame	..	1
1	1345264	Stubshaft	6	6
2	1345219	Load Roller	6	6
3	12891	Snap Ring	6	6
4	1345263	Shim (0.020 in.)	AR	AR
5	366116	Spacer	2	2
6	1369345	Chain Anchor (Dual Hole)	2	..
6	1504010	Chain Anchor (Single Hole) (Optional)	2	..
6	1369344	Chain Anchor (Dual Hole)	..	2
6	1504012	Chain Anchor (Single Hole) (Optional)	..	2
7	317735	Pin	2	2
8	131358	Snap Ring	4	4
9	1514866	Pin	2	2
10	15211	Cotter Pin	2	2

©2007 HYSTER COMPANY

CARRIAGE ASSEMBLY (Figure 9-10)
HEAVY DUTY
TWO STAGE FULL FREE-LIFT

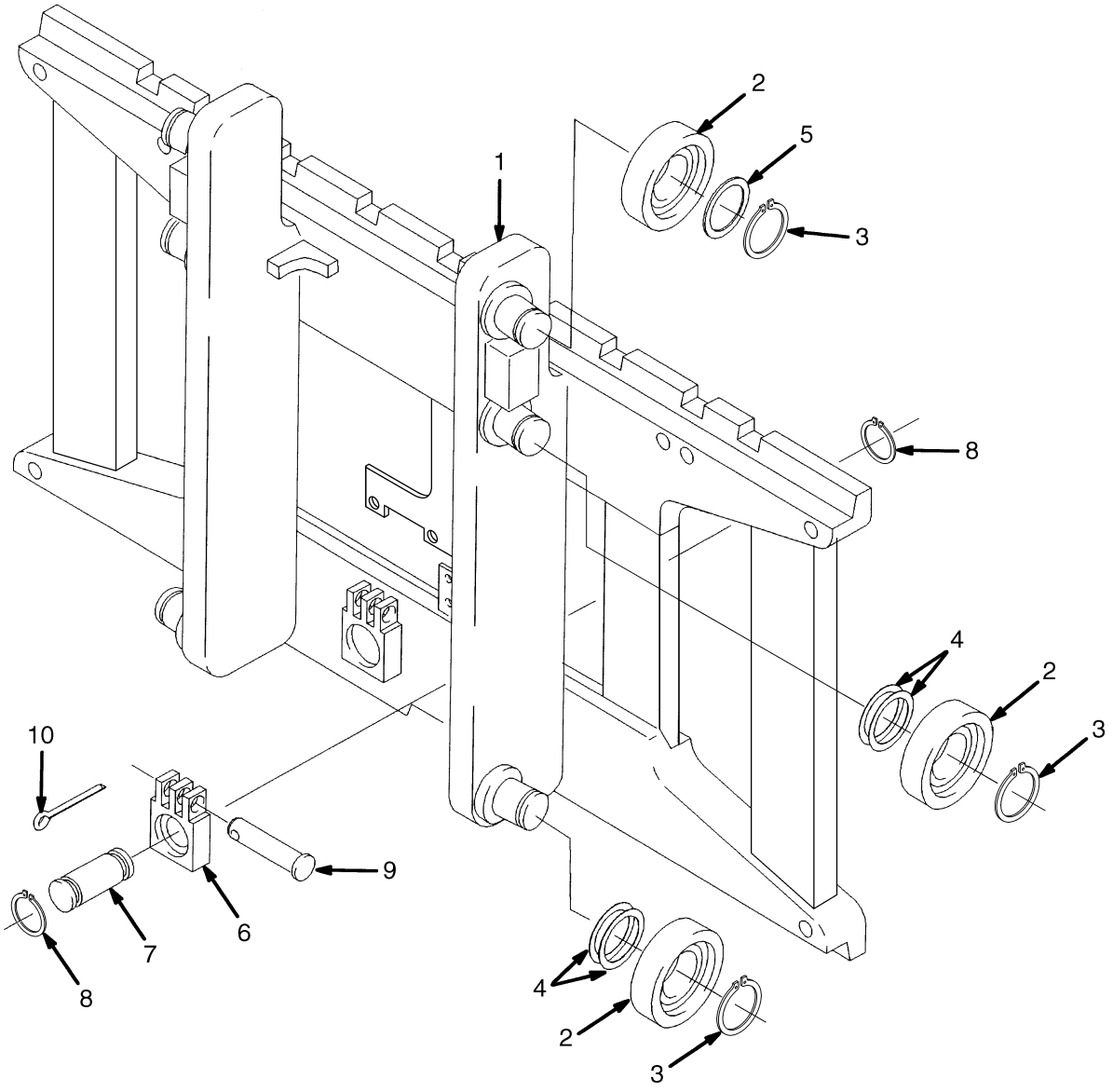

©2007 HYSTER COMPANY

CARRIAGE ASSEMBLY
HEAVY DUTY
TWO STAGE FULL FREE-LIFT

KEY:
A: E45-55Z
B: E60-65Z

ITEM	PART NO.	DESCRIPTION	QTY A	QTY B
	2070778	Carriage Assembly	1	..
	2070779	Carriage Assembly	..	1
1	1566778	Frame	1	..
1	1345264	Stubshaft	6	..
1	1566769	Frame	..	1
1	1345264	Stubshaft	..	6
2	1345219	Load Roller	6	6
3	12891	Snap Ring	6	6
4	1345263	Shim (0.020 in.)	AR	AR
5	366116	Spacer	2	2
6	1369345	Chain Anchor (Dual Hole)	2	..
6	1504010	Chain Anchor (Single Hole) (Optional)	2	..
6	1369344	Chain Anchor (Dual Hole)	..	2
6	1504012	Chain Anchor (Single Hole) (Optional)	..	2
7	317735	Pin	2	2
8	131358	Snap Ring	4	4
9	1514866	Pin	2	2
10	15211	Cotter Pin	2	2

©2007 HYSTER COMPANY

HEADER HOSE (Figure 9-11)
TWO STAGE FULL FREE-LIFT

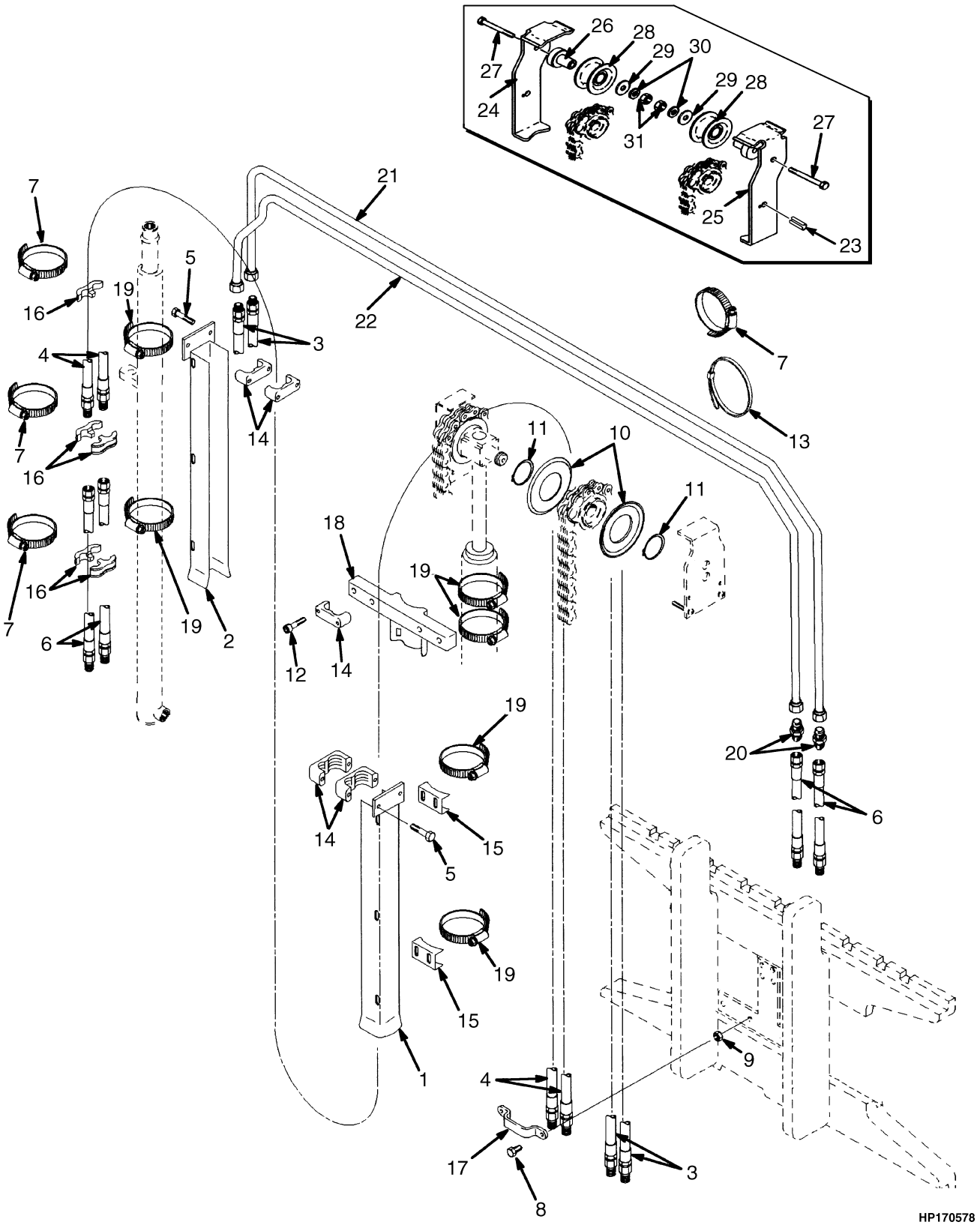

©2007 HYSTER COMPANY

HEADER HOSE
TWO STAGE FULL FREE-LIFT

E45-55Z

ITEM	DESCRIPTION 1 2 3 4	LIFT HEIGHT TO BOTTOM OF FORKS		
		2562 mm (100.9 in.)	3262 mm (128.4 in.)	3662 mm (144.2 in.)
	Mast Group Number	B509 2962	B509 3262	B509 3662
1	Channel	1365500	1365502	1354561
2	Channel	1365514	1365517	1365522
3	Hose	1345571	1368400	1390416
4	Hose	1368442	1376120	1376126
21	Tube	1360331	1360334	1360338
22	Tube	1360361	1360364	1360368

E60-65Z

ITEM	DESCRIPTION 1 2 3 4	LIFT HEIGHT TO BOTTOM OF FORKS				
		2560 mm (100.8 in.)	2660 mm (104.7 in.)	2760 mm (108.7 in.)	3060 mm (120.5 in.)	3160 mm (124.4 in.)
	Mast Group Number	B564 2560	B564 2660	B564 2760	B564 3060	B564 3160
1	Channel	1365500	1365500	1365500	1365502	1365502
2	Channel	1365508	1365510	1365512	1365516	1365517
3	Hose	1345568	1345569	1390426	1398698	1368400
4	Hose	1368441	1376117	1345574	1368442	1376120
21	Tube	1360328	1360329	1360330	1360333	1360334
22	Tube	1360358	1360359	1360360	1360363	1360364

E60-65Z (CONT.)

ITEM	DESCRIPTION 1 2 3 4	LIFT HEIGHT TO BOTTOM OF FORKS				
		3260 mm (128.3 in.)	3360 mm (132.3 in.)	3460 mm (136.2 in.)	3560 mm (140.2 in.)	3660 mm (144.1 in.)
	Mast Group Number	B564 3260	B564 3360	B564 3460	B564 3560	B564 3660
1	Channel	1365502	1365502	1365502	1365503	1365504
2	Channel	1365518	1365520	1365521	1365522	1365523
3	Hose	1345573	1390429	1368402	1390416	1390417
4	Hose	1398950	1369639	1368352	1376126	1369640
21	Tube	1360335	1360336	1360337	1360338	1360339
22	Tube	1360365	1360366	1360367	1360368	1360369

©2007 HYSTER COMPANY

HEADER HOSE
TWO STAGE FULL FREE-LIFT

KEY:
A: Three Function
B: Four Function

ITEM		PART NO.	DESCRIPTION	QTY A	QTY B
1	**a**	. . . . .	Channel	1	1
2	**a**	. . . . .	Channel	1	1
3	**a**	. . . . .	Hose	2	2
4	**a**	. . . . .	Hose	..	2
5		293795	Capscrew	4	..
5		296000	Capscrew	..	4
6		1354904	Hose	..	2
7		1360507	Clamp	3	6
8		136749	Capscrew	2	4
9		313828	Nut	2	4
10		1345199	Hose Guide	2	4
11		1345204	Snap Ring	2	4
12		293796	Capscrew	2	4
13		137852	Strap Clamp	1	1
14		1360386	Clamp	3	6
15		1345423	Clamp	2	2
16		1353530	Clamp	5	10
17		1643405	Hose Clamp	1	2
18		1354918	Bracket	1	1
19		1360507	Clamp	6	6
20		14692	Fitting	2	2
21	**a**	. . . . .	Tube	1	1
22	**a**	. . . . .	Tube	1	1
23		302461	Pin	2	2
24		1395291	Bracket (RH)	1	1
25		1395292	Bracket (LH)	..	1
26		1396406	Stubshaft	1	2
27		292533	Capscrew	1	2
28		1494017	Sheave	1	2
29		1345190	Washer	1	2
30		320171	Washer	1	2
31		300937	Locknut	1	2

FOOTNOTES:
a Refer to Table

©2007 HYSTER COMPANY

10 MAST-FOUR STAGE FULL FREE-LIFT

SECTION 10
MAST-FOUR STAGE FULL FREE-LIFT

DESCRIPTION	PAGE
CARRIAGE	
FOUR STAGE FULL FREE-LIFT	10-26
CARRIAGE ASSEMBLY	
HEAVY DUTY	
FOUR STAGE FULL FREE-LIFT	10-28
FREE-LIFT	
FOUR STAGE FULL FREE-LIFT	10-14
FREE-LIFT CYLINDER	
FOUR STAGE FULL FREE-LIFT	10-24
HEADER HOSE	
FOUR STAGE FULL FREE-LIFT	10-30
INNER MAST	
FOUR STAGE FULL FREE-LIFT	10-10
INTERMEDIATE 2 MAST	
FOUR STAGE FULL FREE-LIFT	10-4
INTERMEDIATE 3 MAST	
FOUR STAGE FULL FREE-LIFT	10-8
MAIN CYLINDER	
LEFT HAND	
FOUR STAGE FULL FREE-LIFT	10-18
RIGHT HAND	
FOUR STAGE FULL FREE-LIFT	10-22
MAIN LIFT	
FOUR STAGE FULL FREE-LIFT	10-12
OUTER MAST	
FOUR STAGE FULL FREE-LIFT	10-2

©2007 HYSTER COMPANY

OUTER MAST (Figure 10-1)
FOUR STAGE FULL FREE-LIFT

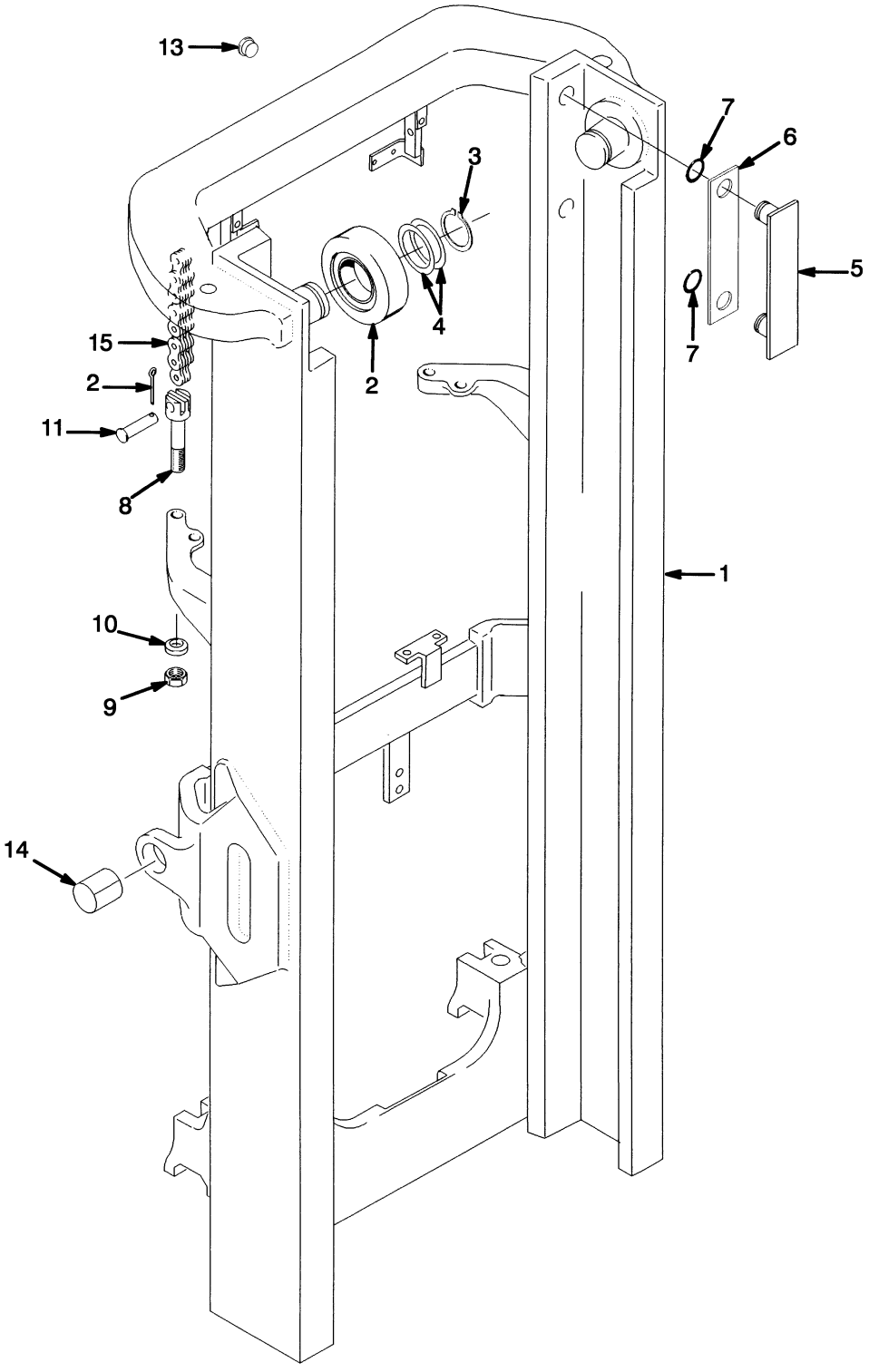

HP170592

©2007 HYSTER COMPANY

OUTER MAST
FOUR STAGE FULL FREE-LIFT

E45-65Z

ITEM	DESCRIPTION 1 2 3 4	LIFT HEIGHT TO BOTTOM OF FORKS				
		5450 mm (214.6 in.)	5754 mm (226.5 in.)	6058 mm (238.5 in.)	6364 mm (250.6 in.)	6670 mm (262.6 in.)
	Mast Group Number	C515 5450	C515 5754	C515 6058	C515 6364	C515 6670
	Mast Assembly	2048577	2048578	2048579	2048580	2048581
1	Outer Mast	1370203	1370204	1370205	1370206	1370207
15	Chain	182342	351693	182342	194607	191085

E45-65Z (CONT.)

ITEM	DESCRIPTION 1 2 3 4	LIFT HEIGHT TO BOTTOM OF FORKS			
		6977 mm (274.7 in.)	7274 mm (286.4 in.)	7583 mm (298.5 in.)	7886 mm (310.5 in.)
	Mast Group Number	C515 6977	C515 7274	C515 7583	C515 7886
	Mast Assembly	2048582	2048583	2048584	2048585
1	Outer Mast	1370208	1370209	1370210	1370211
15	Chain	191072	191089	206749	191076

ITEM	PART NO.	DESCRIPTION	QTY
	a	Mast Assembly	1
1	**a**	Outer Mast	1
1	1345216	Stubshaft	2
2	1333396	Load Roller	2
3	58901	Snap Ring	2
4	129387	Shim (0.020 in.)	AR
5	215212	Bearing Strip (2.9 in.) (0,76 mm)	2
6	131716	Shim (0.020 in.)	AR
7	104506	O-Ring	4
8	351666	Chain Anchor	2
9	182377	Nut	2
10	182376	Base Ring	2
11	129339	Pin	2
12	15222	Cotter Pin	2
13	1375595	Plug	2
14	300982	Bushing	2
15	**a**	Chain	2

FOOTNOTES:
a Refer to Table

©2007 HYSTER COMPANY

INTERMEDIATE 2 MAST (Figure 10-2)
FOUR STAGE FULL FREE-LIFT

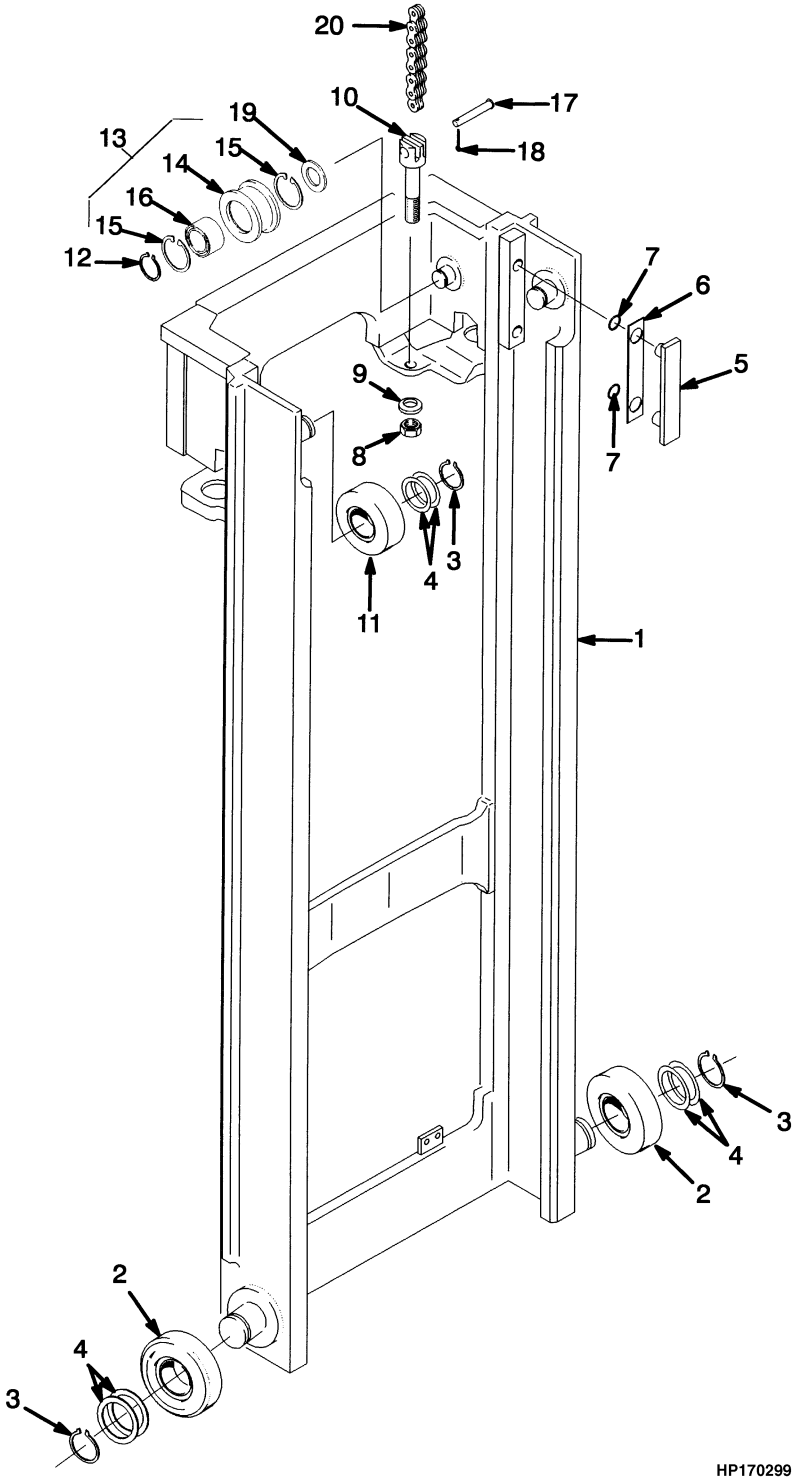

©2007 HYSTER COMPANY

INTERMEDIATE 2 MAST
FOUR STAGE FULL FREE-LIFT

E45-65Z

ITEM	DESCRIPTION 1 2 3 4	LIFT HEIGHT TO BOTTOM OF FORKS				
		5450 mm (214.6 in.)	5754 mm (226.5 in.)	6058 mm (238.5 in.)	6364 mm (250.6 in.)	6670 mm (262.6 in.)
	Mast Group Number	C515 5450	C515 5754	C515 6058	C515 6364	C515 6670
	Mast Assembly	2048577	2048578	2048579	2048580	2048581
1	Intermediate No. 2 Mast	1370223	1370224	1370225	1370226	1370227
20	Chain	135619	88436	164474	88441	223389

E45-65Z (CONT.)

ITEM	DESCRIPTION 1 2 3 4	LIFT HEIGHT TO BOTTOM OF FORKS			
		6977 mm (274.7 in.)	7274 mm (286.4 in.)	7583 mm (298.5 in.)	7886 mm (310.5 in.)
	Mast Group Number	C515 6977	C515 7274	C515 7583	C515 7886
	Mast Assembly	2048582	2048583	2048584	2048585
1	Intermediate No. 2 Mast	1370228	1370229	1370230	1370231
20	Chain	320076	135588	180176	344150

ITEM	PART NO.	DESCRIPTION	QTY
	a	Mast Assembly	1
1	**a**	Intermediate No. 2 Mast	1
1	1345216	Stubshaft	2
2	1333396	Load Roller	2
3	58901	Snap Ring	4
4	129387	Shim (0.020 in.)	AR
5	215212	Bearing Strip	2
6	131716	Shim (0.020 in.)	AR
7	104506	O-Ring	4
8	161003	Nut	2
9	297649	Base Ring	2
10	1369357	Chain Anchor	2
11	1333399	Load Roller	2
12	304526	Snap Ring	2
13	1370187	Chain Sheave Assembly	2
14	1370191	Sheave	1
15	37752	Snap Ring	2
16	231020	Bearing	1
17	1514866	Pin	2
18	15211	Cotter Pin	2

©2007 HYSTER COMPANY

INTERMEDIATE 2 MAST
FOUR STAGE FULL FREE-LIFT

ITEM		PART NO.	DESCRIPTION	QTY
19		335661	Spacer	2
20	**a**	. . . . .	Chain	2

FOOTNOTES:
a Refer to Table

©2007 HYSTER COMPANY

NOTES

INTERMEDIATE 3 MAST (Figure 10-3)
FOUR STAGE FULL FREE-LIFT

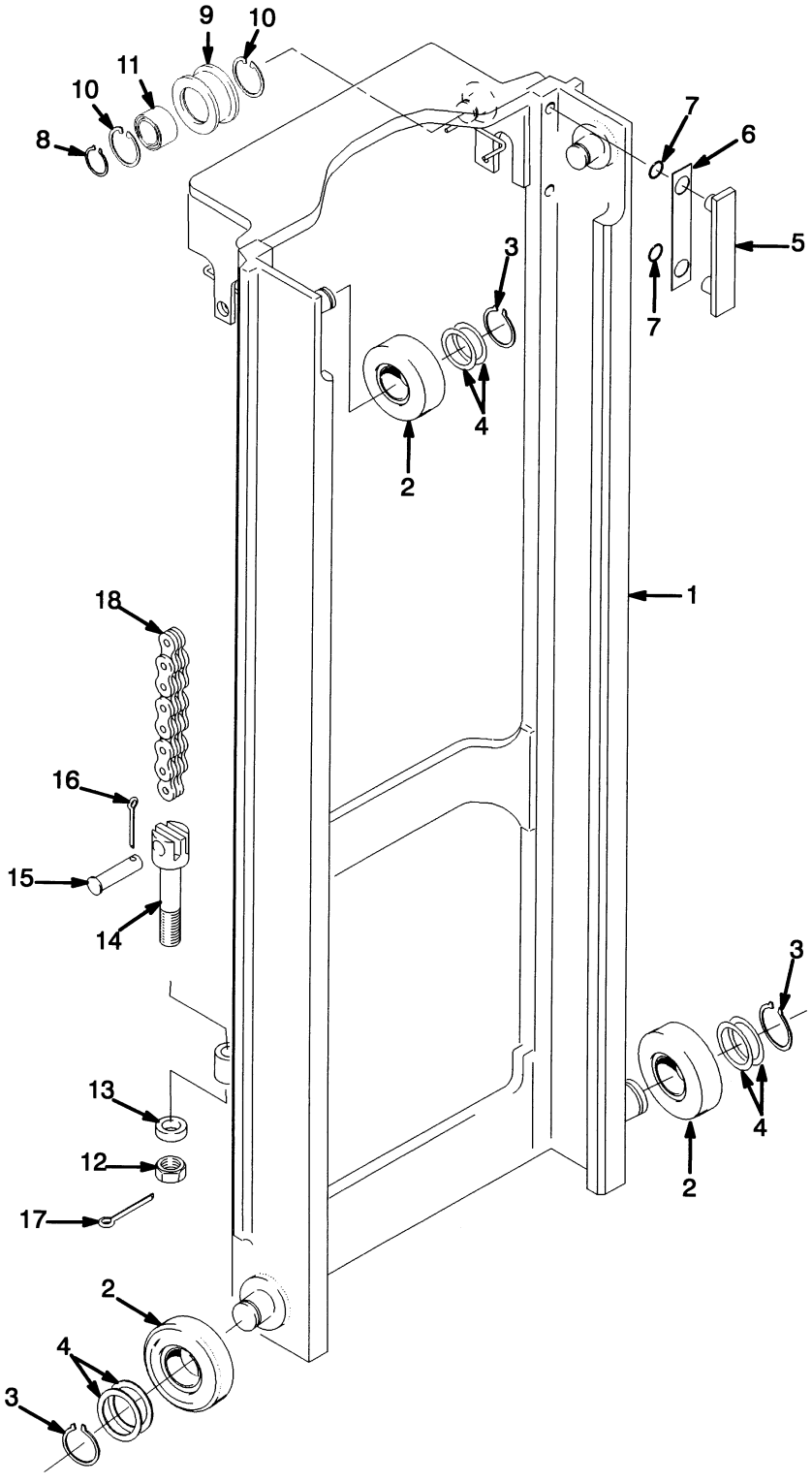

©2007 HYSTER COMPANY

INTERMEDIATE 3 MAST
FOUR STAGE FULL FREE-LIFT

E45-65Z

ITEM	DESCRIPTION 1 2 3 4	LIFT HEIGHT TO BOTTOM OF FORKS				
		5450 mm (214.6 in.)	5754 mm (226.5 in.)	6058 mm (238.5 in.)	6364 mm (250.6 in.)	6670 mm (262.6 in.)
	Mast Group Number	C515 5450	C515 5754	C515 6058	C515 6364	C515 6670
	Mast Assembly	2048577	2048578	2048579	2048580	2048581
1	Intermediate No. 3 Mast	1370243	1370244	1370245	1370246	1370247
18	Chain	135619	88436	164474	88441	223389

E45-65Z (CONT.)

ITEM	DESCRIPTION 1 2 3 4	LIFT HEIGHT TO BOTTOM OF FORKS			
		6977 mm (274.7 in.)	7274 mm (286.4 in.)	7583 mm (298.5 in.)	7886 mm (310.5 in.)
	Mast Group Number	C515 6977	C515 7274	C515 7583	C515 7886
	Mast Assembly	2048582	2048583	2048584	2048585
1	Intermediate No. 3 Mast	1370248	1370249	1370250	1370251
18	Chain	320076	135588	180176	344150

ITEM	PART NO.	DESCRIPTION	QTY
	a	Mast Assembly	1
1	**a**	Intermediate No. 3 Mast	1
1	1345216	Stubshaft	2
2	1333396	Load Roller	4
3	58901	Snap Ring	4
4	129387	Shim (0.020 in.)	AR
5	215212	Bearing Strip	2
6	131716	Shim (0.020 in.)	AR
7	104506	O-Ring	4
8	304526	Snap Ring	2
9	1381917	Chain Sheave Assembly	2
9	1381913	Sheave	1
10	37752	Snap Ring	2
11	1378699	Bearing	1
12	182377	Nut	2
13	182376	Base Ring	2
14	356556	Chain Anchor	2
15	129339	Pin	2
16	15222	Cotter Pin	2
17	15223	Cotter Pin	2
18	**a**	Chain	2

FOOTNOTES:
a Refer to Table

©2007 HYSTER COMPANY

INNER MAST (Figure 10-4)
FOUR STAGE FULL FREE-LIFT

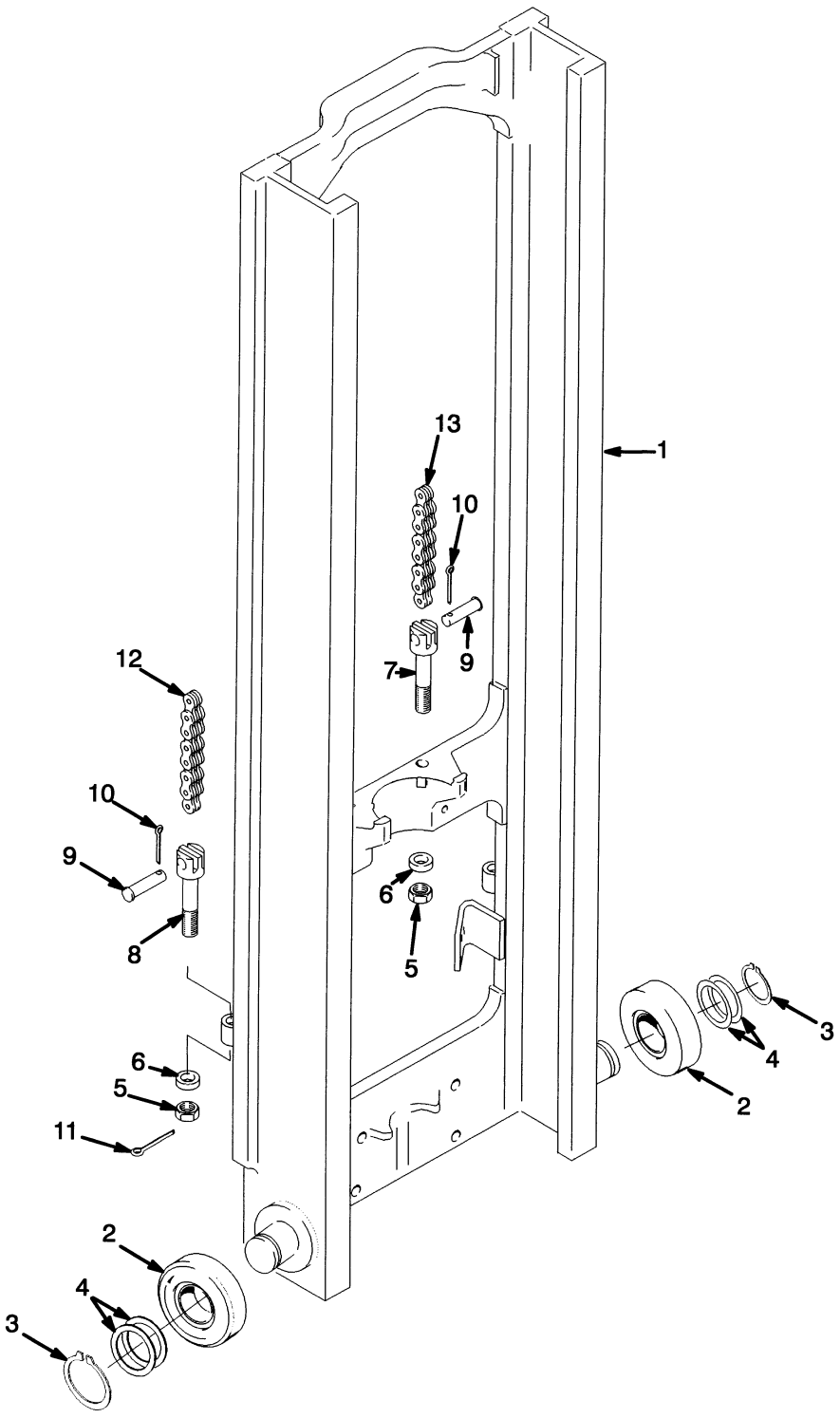

©2007 HYSTER COMPANY

INNER MAST
FOUR STAGE FULL FREE-LIFT

E45-65Z

ITEM	DESCRIPTION 1 2 3 4	LIFT HEIGHT TO BOTTOM OF FORKS				
		5450 mm (214.6 in.)	5754 mm (226.5 in.)	6058 mm (238.5 in.)	6364 mm (250.6 in.)	6670 mm (262.6 in.)
	Mast Group Number	C515 5450	C515 5754	C515 6058	C515 6364	C515 6670
	Mast Assembly	2048577	2048578	2048579	2048580	2048581
1	Inner Mast	1381387	1381388	1381389	1381390	1381391
12	Chain	135619	88436	164474	88441	223389
13	Chain	161059	180177	182332	180217	164474

E45-65Z (CONT.)

ITEM	DESCRIPTION 1 2 3 4	LIFT HEIGHT TO BOTTOM OF FORKS			
		6977 mm (274.7 in.)	7274 mm (286.4 in.)	7583 mm (298.5 in.)	7886 mm (310.5 in.)
	Mast Group Number	C515 6977	C515 7274	C515 7583	C515 7886
	Mast Assembly	2048582	2048583	2048584	2048585
1	Inner Mast	1381392	1381393	1381394	1381395
12	Chain	320076	135588	180176	344150
13	Chain	88441	180137	320076	135588

ITEM	PART NO.	DESCRIPTION	QTY
	a	Mast Assembly	1
1	**a**	Inner Mast	1
1	1345216	Stubshaft	2
2	1333396	Load Roller	2
3	58901	Snap Ring	2
4	129387	Shim (0.020 in.)	AR
5	161003	Nut	4
6	296426	Washer (Hardened)	4
7	1369357	Chain Anchor	2
8	1365140	Chain Anchor	2
9	1514866	Pin	4
10	15211	Cotter Pin	4
11	15223	Cotter Pin	2
12	**a**	Chain	2
13	**a**	Chain	2

FOOTNOTES:
a Refer to Table

©2007 HYSTER COMPANY

MAIN LIFT (Figure 10-5)
FOUR STAGE FULL FREE-LIFT

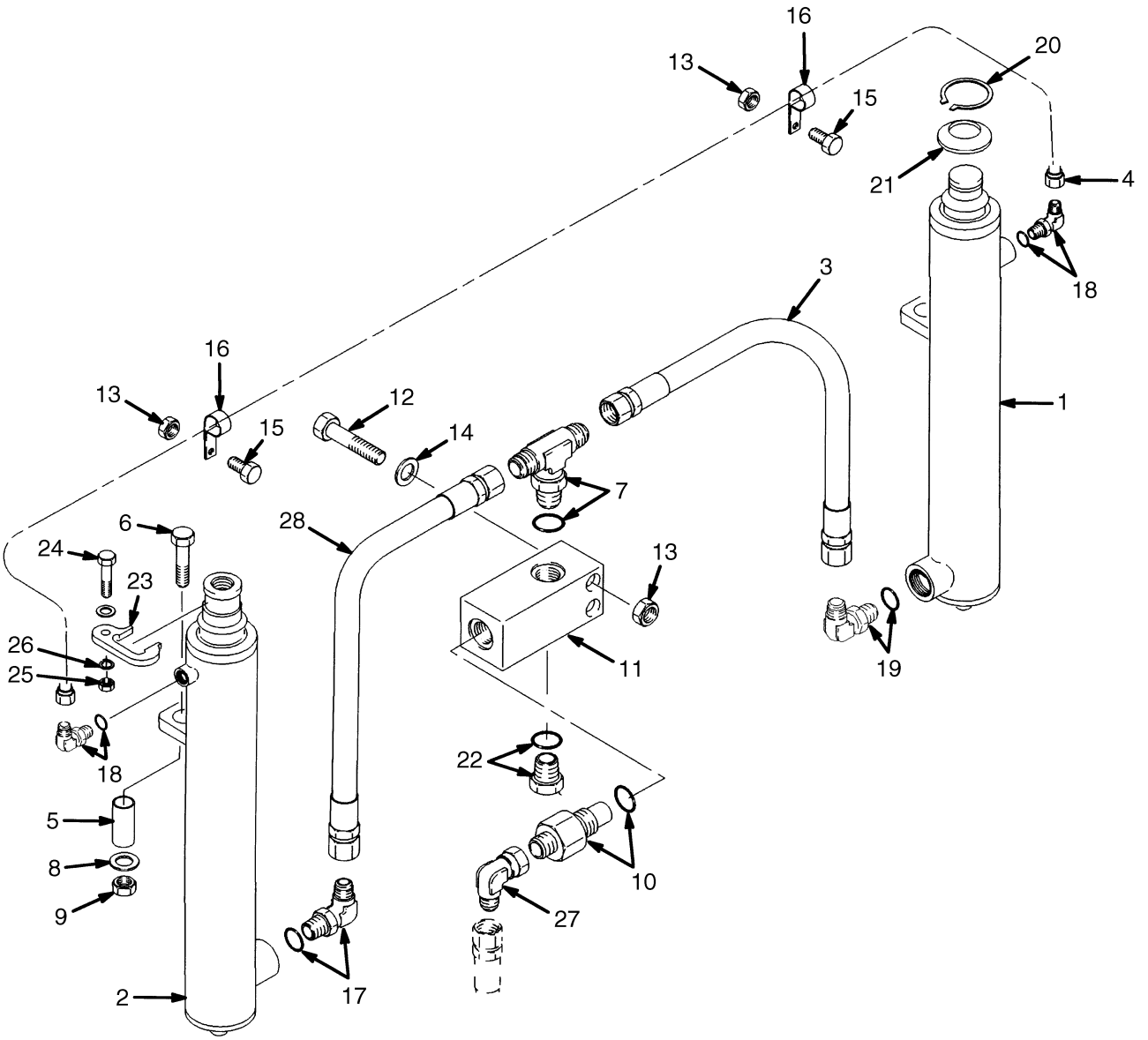

HP170302

©2007 HYSTER COMPANY

MAIN LIFT
FOUR STAGE FULL FREE-LIFT

ITEM	PART NO.	DESCRIPTION	QTY
1	. . . . .	Lift Cylinder (RH) (☞ Figure 10-8)	1
2	. . . . .	Lift Cylinder (LH) (☞ Figure 10-7)	1
3	1345403	Hose	1
4	1370517	Tube	1
5	323090	Spacer	2
6	292531	Capscrew	2
7	16578	Fitting	1
7	16485	O-Ring	1
8	320161	Washer	2
9	300937	Locknut	2
10	323061	Control Valve (Lowering)	1
10	16982	O-Ring	1
11	1333392	Housing	1
12	214364	Capscrew	2
13	313828	Nut	4
14	320157	Washer	2
15	136749	Capscrew	2
16	124359	Clamp	2
17	16560	Fitting	1
17	16485	O-Ring	1
18	201766	Fitting	2
18	16483	O-Ring	1
19	1379489	Flow Valve	1
19	16485	O-Ring	1
20	194705	Snap Ring	1
21	1370257	Shim (0.010 in.)	AR
21	1370258	Shim (0.030 in.)	AR
21	1370259	Shim (0.060 in.)	AR
22	14603	Fitting	1
22	16486	O-Ring	1
23	1370420	Keeper	1
24	292517	Capscrew	1
25	316826	Nut	1
26	320159	Washer	1
27	16882	Fitting	1
28	1462551	Hose	1

©2007 HYSTER COMPANY

FREE-LIFT (Figure 10-6)
FOUR STAGE FULL FREE-LIFT

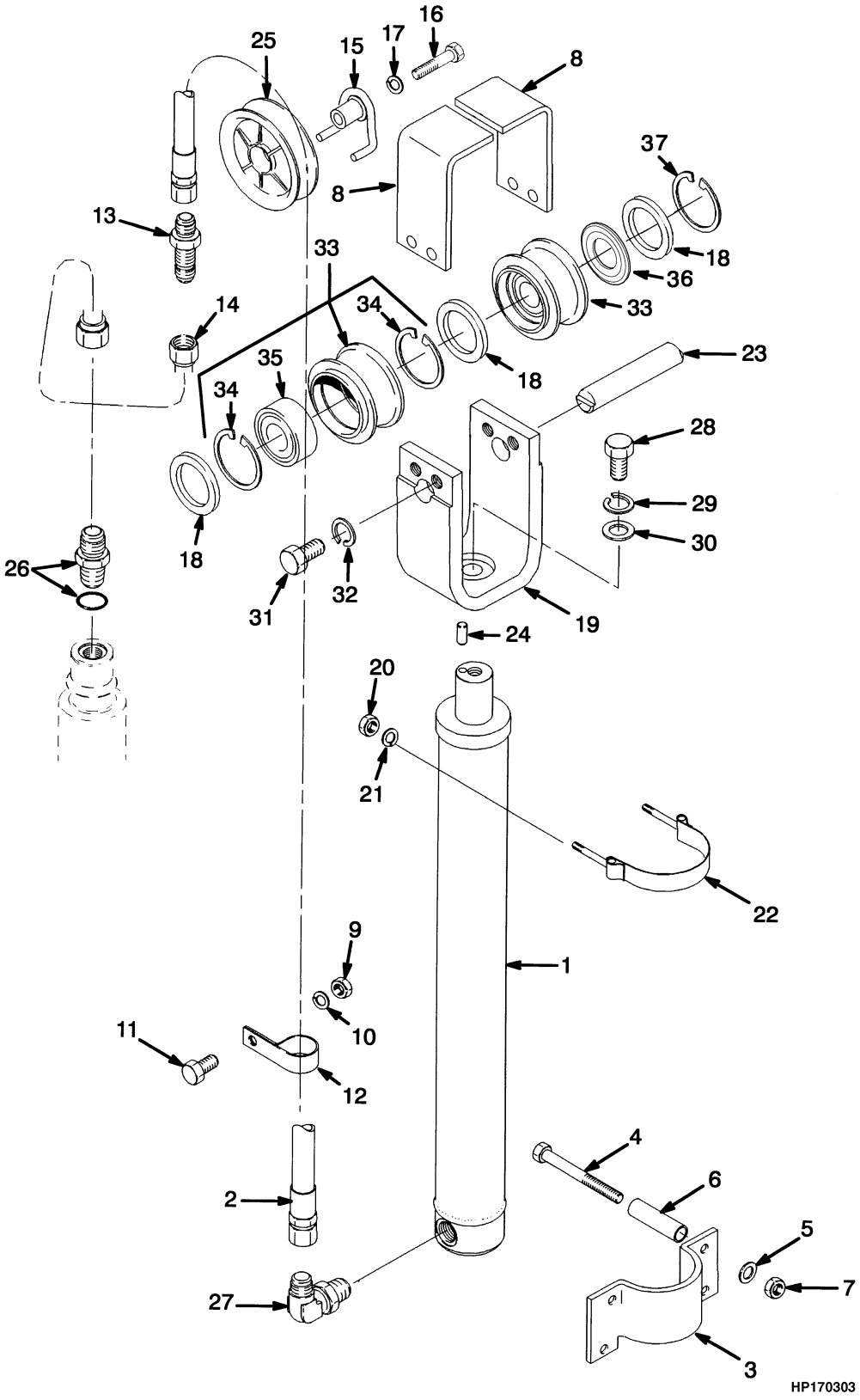

©2007 HYSTER COMPANY

FREE-LIFT
FOUR STAGE FULL FREE-LIFT

E45-65Z

ITEM	DESCRIPTION 1 2 3 4	LIFT HEIGHT TO BOTTOM OF FORKS				
		5450 mm (214.6 in.)	5754 mm (226.5 in.)	6058 mm (238.5 in.)	6364 mm (250.6 in.)	6670 mm (262.6 in.)
	Mast Group Number	C515 5450	C515 5754	C515 6058	C515 6364	C515 6670
2	Hose	1370553	1370554	1370555	1370556	1370557

E45-65Z (CONT.)

ITEM	DESCRIPTION 1 2 3 4	LIFT HEIGHT TO BOTTOM OF FORKS			
		6977 mm (274.7 in.)	7274 mm (286.4 in.)	7583 mm (298.5 in.)	7886 mm (310.5 in.)
	Mast Group Number	C515 6977	C515 7274	C515 7583	C515 7886
2	Hose	1370558	1370559	1370560	1370561

ITEM		PART NO.	DESCRIPTION	QTY
1		. . . . .	Lift Cylinder (☞ Figure 10-9)	1
2	**a**	. . . . .	Hose	1
3		1370576	Clamp	1
4		292535	Capscrew	4
5		320161	Washer	4
6		1370521	Spacer	4
7		300937	Locknut	4
8		1474912	Chain Guard	1
9		313828	Nut	1
10		320157	Washer	1
11		136749	Capscrew	1
12		178119	Clamp	1
13		16450	Fitting	1
14		1370518	Tube	1
15		1370360	Stubshaft	1
16		292531	Capscrew	1
17		292683	Lockwasher	1
18		1381914	Washer (Nylon)	2
19		1370119	Crosshead	1
20		145641	Nut	2
21		320159	Washer	2
22		1370194	Strap Clamp	1
23		1370516	Pin	1
24		310549	Pin	1
25		309007	Hose Sheave	1
26		16543	Fitting	1
26		16486	O-Ring	1
27		1379489	Flow Valve	1
27		16485	O-Ring	1
28		293706	Capscrew	1
29		292687	Lockwasher	1

©2007 HYSTER COMPANY

FREE-LIFT
FOUR STAGE FULL FREE-LIFT

ITEM	PART NO.	DESCRIPTION	QTY
30	320169	Washer	1
31	296237	Capscrew	2
32	292682	Lockwasher	2
33	1381916	Chain Sheave Assembly	2
34	37752	Snap Ring	2
35	1378699	Bearing	1
36	1370524	Hose Guide	4
37	1345204	Snap Ring	4

FOOTNOTES:
a Refer to Table

©2007 HYSTER COMPANY

NOTES

MAIN CYLINDER (Figure 10-7)
LEFT HAND
FOUR STAGE FULL FREE-LIFT

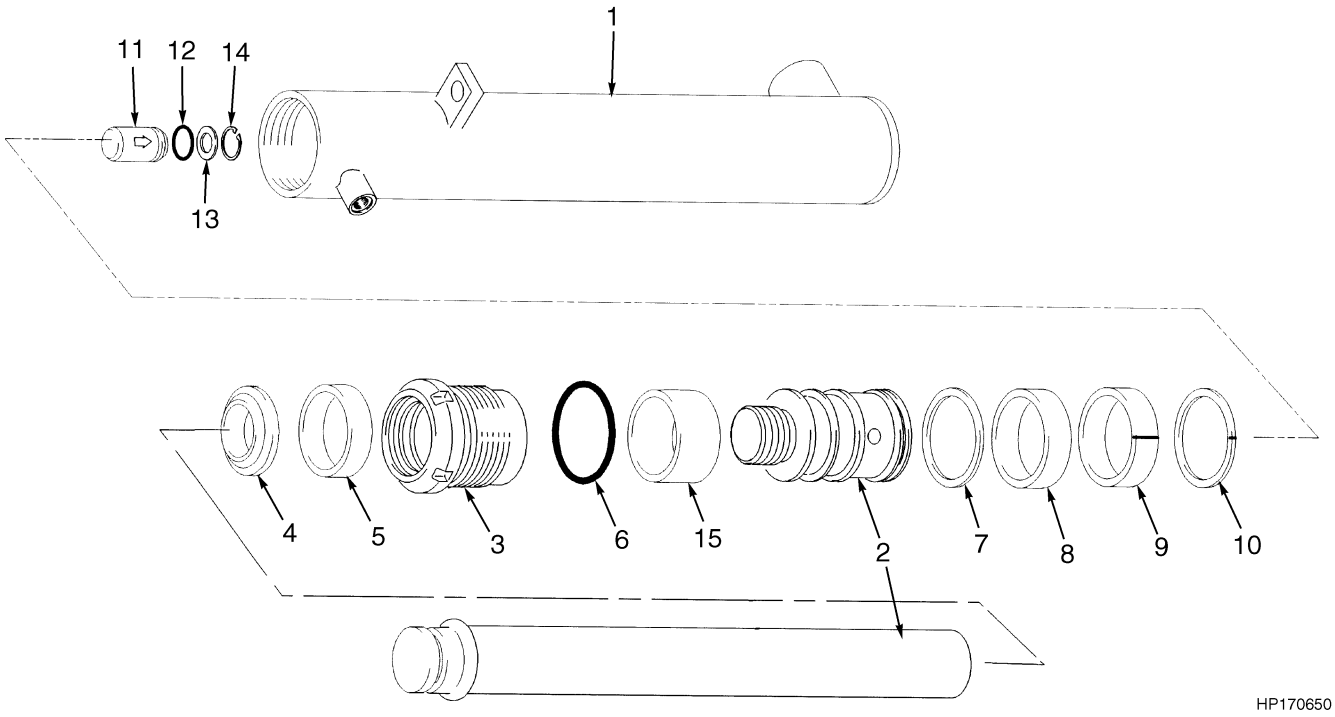

©2007 HYSTER COMPANY

MAIN CYLINDER
LEFT HAND
FOUR STAGE FULL FREE-LIFT

E45-65Z

ITEM	DESCRIPTION 1 2 3 4	LIFT HEIGHT TO BOTTOM OF FORKS				
		5450 mm (214.6 in.)	5754 mm (226.5 in.)	6058 mm (238.5 in.)	6364 mm (250.6 in.)	6670 mm (262.6 in.)
	Mast Group Number	C515 5450	C515 5754	C515 6058	C515 6364	C515 6670
	Cylinder Group Number	8602703	8602704	8602705	8602706	8602707
	Main Lift Cylinder	2308869	2307263	2308031	2304616	2311126
1	Tube	1379003	1379004	1379005	1379006	1379007
2	Rod	1379033	1379034	1379035	1379036	1379037
15	Spacer	----	----	----	2065130	2065131

E45-65Z (CONT.)

ITEM	DESCRIPTION 1 2 3 4	LIFT HEIGHT TO BOTTOM OF FORKS			
		6977 mm (274.7 in.)	7274 mm (286.4 in.)	7583 mm (298.5 in.)	7886 mm (310.5 in.)
	Mast Group Number	C515 6977	C515 7274	C515 7583	C515 7886
	Cylinder Group Number	8602708	8602709	8602710	8602711
	Main Lift Cylinder	2310412	2302405	2304354	2309065
1	Tube	1379008	1379009	1379010	1379011
2	Rod	1379038	1379039	1379040	1379041
15	Spacer	2065132	386851	2065133	2038847

ITEM	PART NO.	DESCRIPTION	QTY
	a	Main Lift Cylinder	1
1	**a**	Tube	1
2	**a**	Rod	1
3	1379062	Gland	1
4	2013099	Wiper Ring	1
5	1358970	Seal	1
6	57664	O-Ring	1
7	638249	Back-Up Ring	1
8	270077	Rod Seal	1
9	1379064	Wear Ring	1
10	1379063	Piston Ring	1
11	257913	Check Valve	1
12	237812	O-Ring	1
13	297531	Washer	1
14	187388	Snap Ring	1

©2007 HYSTER COMPANY

MAIN CYLINDER
LEFT HAND
FOUR STAGE FULL FREE-LIFT

ITEM		PART NO.	DESCRIPTION	QTY
15	**a**	. . . . .	Spacer	1
		1378724	Seal Kit (Includes Items 4-10, 12)	1

FOOTNOTES:
a Refer to Table

©2007 HYSTER COMPANY

NOTES

MAIN CYLINDER (Figure 10-8)
RIGHT HAND
FOUR STAGE FULL FREE-LIFT

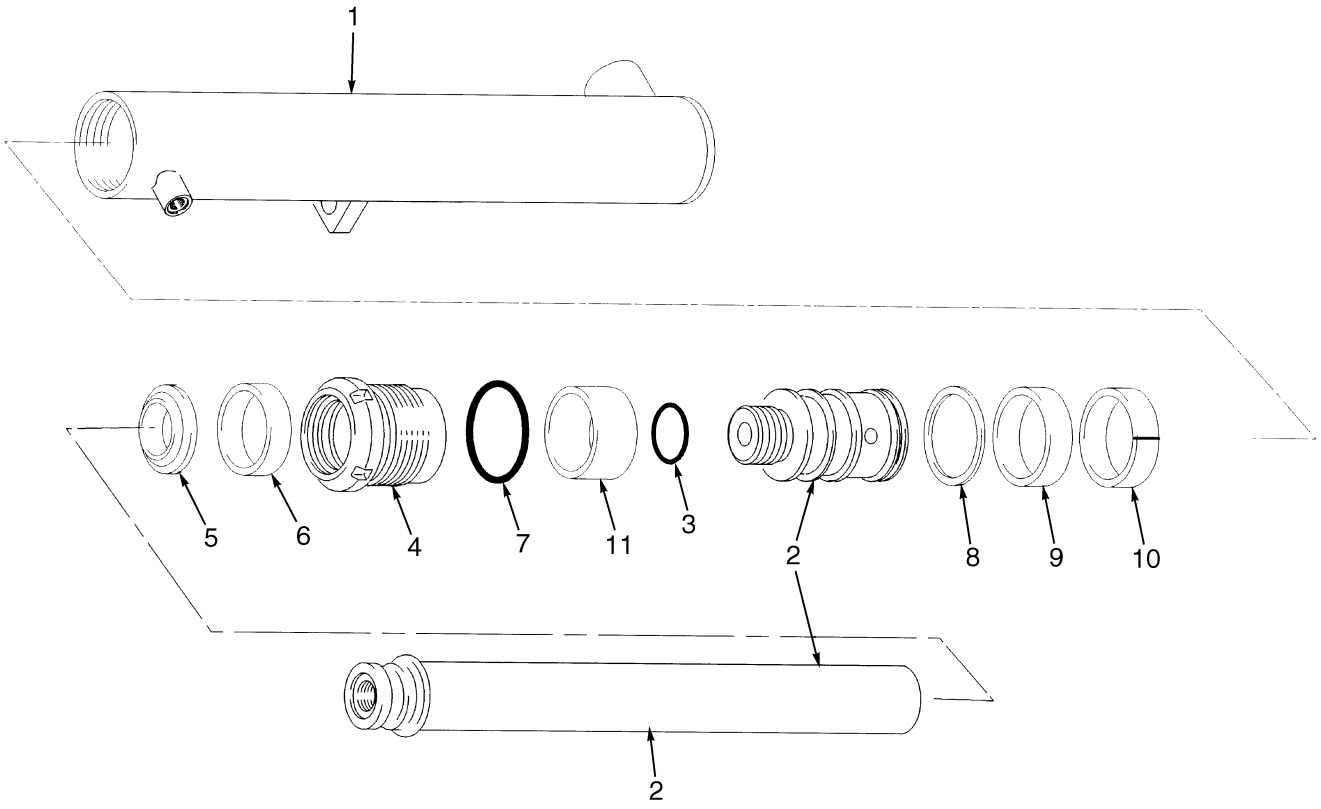

YP170096

©2007 HYSTER COMPANY

MAIN CYLINDER
RIGHT HAND
FOUR STAGE FULL FREE-LIFT

E45-65Z

ITEM	DESCRIPTION 1 2 3 4	LIFT HEIGHT TO BOTTOM OF FORKS				
		5450 mm (214.6 in.)	5754 mm (226.5 in.)	6058 mm (238.5 in.)	6364 mm (250.6 in.)	6670 mm (262.6 in.)
	Mast Group Number	C515 5450	C515 5754	C515 6058	C515 6364	C515 6670
	Cylinder Group Number	8602753	8602754	8602755	8602756	8602757
	Main Lift Cylinder	2306260	2302821	2303152	2310629	2307276
1	Tube	1379018	1379019	1379020	1379021	1379022
2	Rod	1379048	1379049	1379050	1379051	1379052
11	Spacer	----	----	----	2065130	2065131

E45-65Z (CONT.)

ITEM	DESCRIPTION 1 2 3 4	LIFT HEIGHT TO BOTTOM OF FORKS			
		6977 mm (274.7 in.)	7274 mm (286.4 in.)	7583 mm (298.5 in.)	7886 mm (310.5 in.)
	Mast Group Number	C515 6977	C515 7274	C515 7583	C515 7886
	Cylinder Group Number	8602758	8602759	8602760	8602761
	Main Lift Cylinder	2310086	2302313	2308424	2306675
1	Tube	1379023	1379024	1379025	1379026
2	Rod	1379053	1379054	1379055	1379056
11	Spacer	2065132	386851	2065133	2038847

ITEM	PART NO.	DESCRIPTION	QTY
	a	Main Lift Cylinder	1
1	**a**	Tube	1
2	**a**	Rod	1
3	39348	O-Ring	1
4	1379062	Gland	1
5	2013099	Wiper Ring	1
6	1358970	Seal	1
7	57664	O-Ring	1
8	638249	Back-Up Ring	1
9	270077	Rod Seal	1
10	1379064	Wear Ring	1
11	**a**	Spacer	1
	2304661	Seal Kit (Includes Items 5-10)	1

FOOTNOTES:
a Refer to Table

©2007 HYSTER COMPANY

FREE-LIFT CYLINDER (Figure 10-9)
FOUR STAGE FULL FREE-LIFT

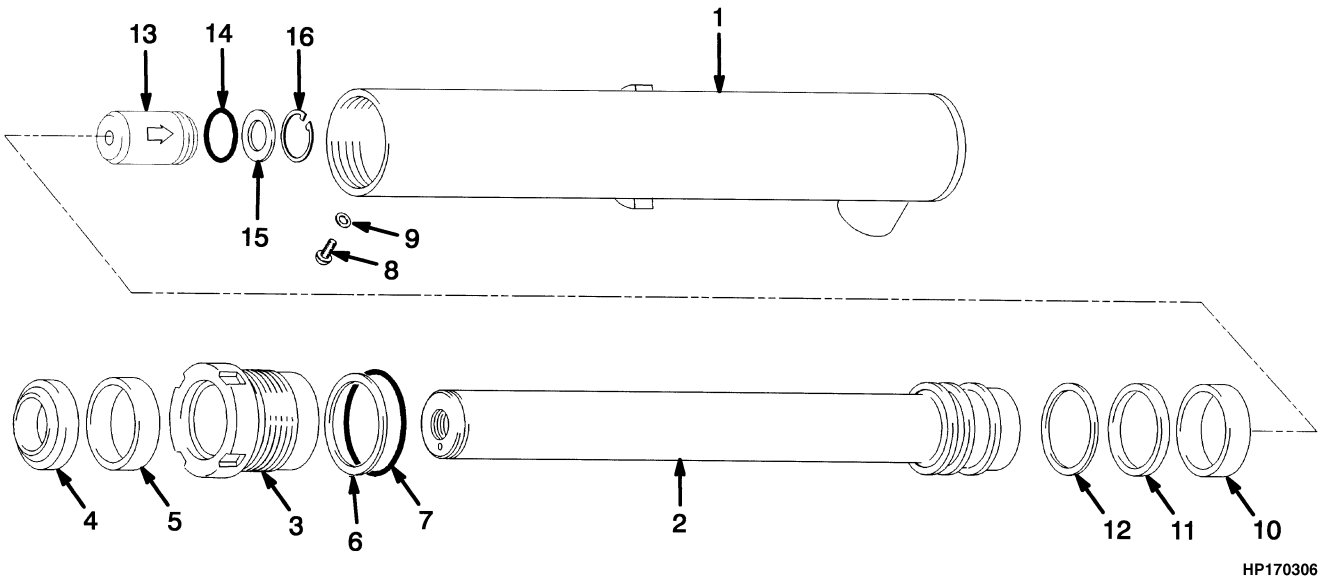

E45-65Z

ITEM	DESCRIPTION 1 2 3 4	LIFT HEIGHT TO BOTTOM OF FORKS				
		5450 mm (214.6 in.)	5754 mm (226.5 in.)	6058 mm (238.5 in.)	6364 mm (250.6 in.)	6670 mm (262.6 in.)
	Mast Group Number	**C515 5450**	**C515 5754**	**C515 6058**	**C515 6364**	**C515 6670**
	Cylinder Group Number	**8602653**	**8602654**	**8602655**	**8602656**	**8602657**
	Free-Lift Cylinder	2303932	2302701	2308770	2306897	2308828
1	Tube	1379356	1379357	1379358	1379359	1379360
2	Rod	1379371	1379372	1379373	1379374	1379375

©2007 HYSTER COMPANY

FREE-LIFT CYLINDER
FOUR STAGE FULL FREE-LIFT

E45-65Z (CONT.)

ITEM	DESCRIPTION 1 2 3 4	LIFT HEIGHT TO BOTTOM OF FORKS			
		6977 mm (274.7 in.)	7274 mm (286.4 in.)	7583 mm (298.5 in.)	7886 mm (310.5 in.)
	Mast Group Number	**C515 6977**	**C515 7274**	**C515 7583**	**C515 7886**
	Cylinder Group Number	**8602658**	**8602659**	**8602660**	**8602661**
	Free-Lift Cylinder	2304574	2306932	2303108	2309637
1	Tube	1379361	1379362	1379363	1379364
2	Rod	1379376	1379377	1379378	1379379

ITEM	PART NO.	DESCRIPTION	QTY
	a	Free-Lift Cylinder	1
1	**a**	Tube	1
2	**a**	Rod	1
3	1362880	Gland	1
4	2013099	Wiper Ring	1
5	1358970	Seal	1
6	615135	Back-Up Ring	1
7	55146	O-Ring	1
8	1361302	Screw	1
9	190887	Seal	1
10	1362881	Wear Ring	1
11	201829	Rod Seal	1
12	638250	Back-Up Ring	1
13	257913	Check Valve	1
14	190580	O-Ring	1
15	297531	Washer	1
16	187388	Snap Ring	1
	1360141	Seal Kit (Includes Items 4-7, 9-12, 14)	1

FOOTNOTES:
a Refer to Table

CARRIAGE (Figure 10-10)
FOUR STAGE FULL FREE-LIFT

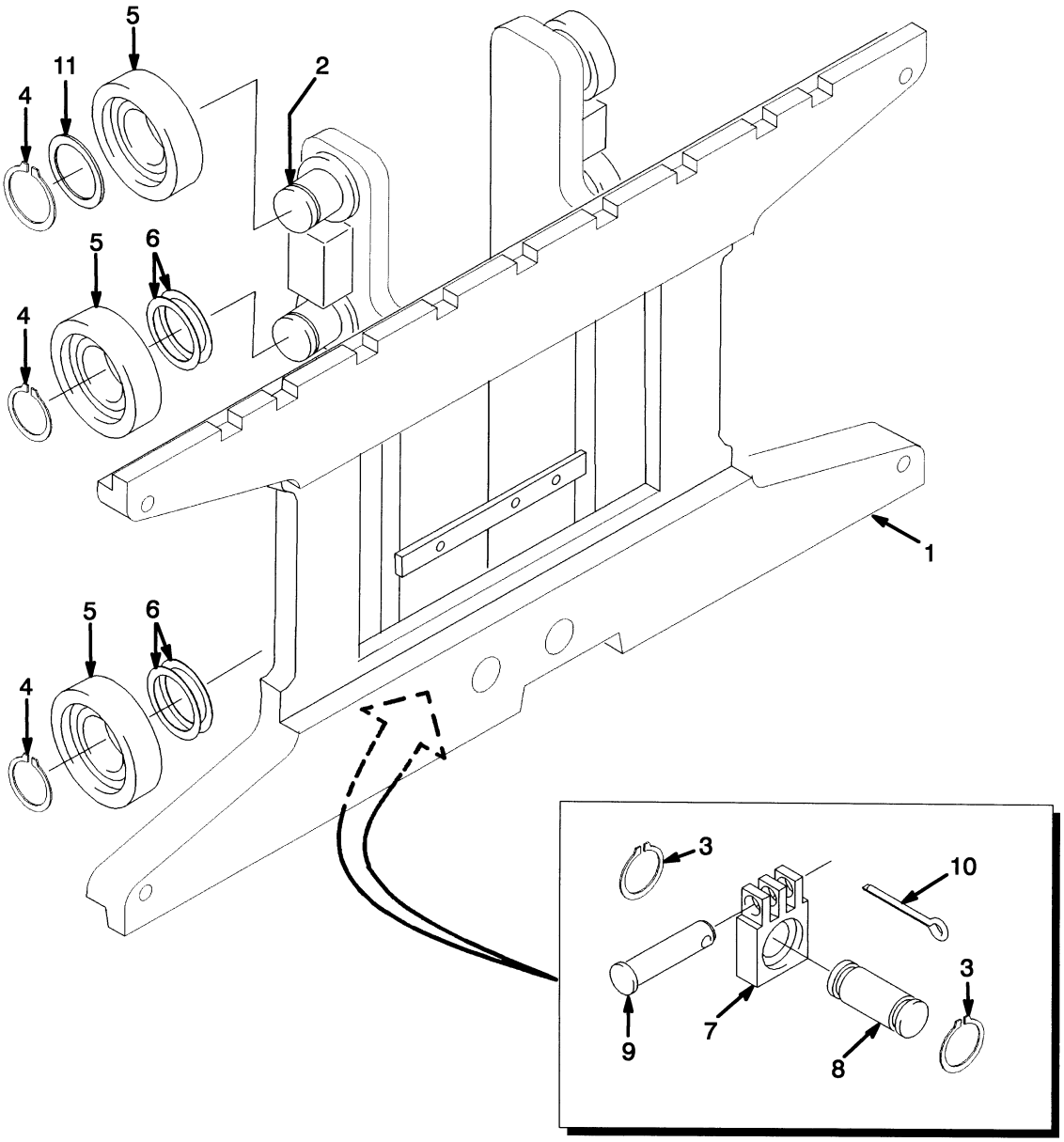

HP170307

©2007 HYSTER COMPANY

CARRIAGE
FOUR STAGE FULL FREE-LIFT

ITEM	PART NO.	DESCRIPTION	QTY
	1379467	Carriage Assembly	1
1	1381570	Frame	1
2	1345216	Stubshaft	6
3	131358	Snap Ring	4
4	58901	Snap Ring	6
5	1333399	Load Roller	6
6	129387	Shim (0.020 in.)	AR
7	1369345	Chain Anchor (Dual Hole)	2
8	317735	Pin	2
9	1514866	Pin	2
10	15211	Cotter Pin	2
11	366115	Spacer	2

©2007 HYSTER COMPANY

CARRIAGE ASSEMBLY (Figure 10-11)
HEAVY DUTY
FOUR STAGE FULL FREE-LIFT

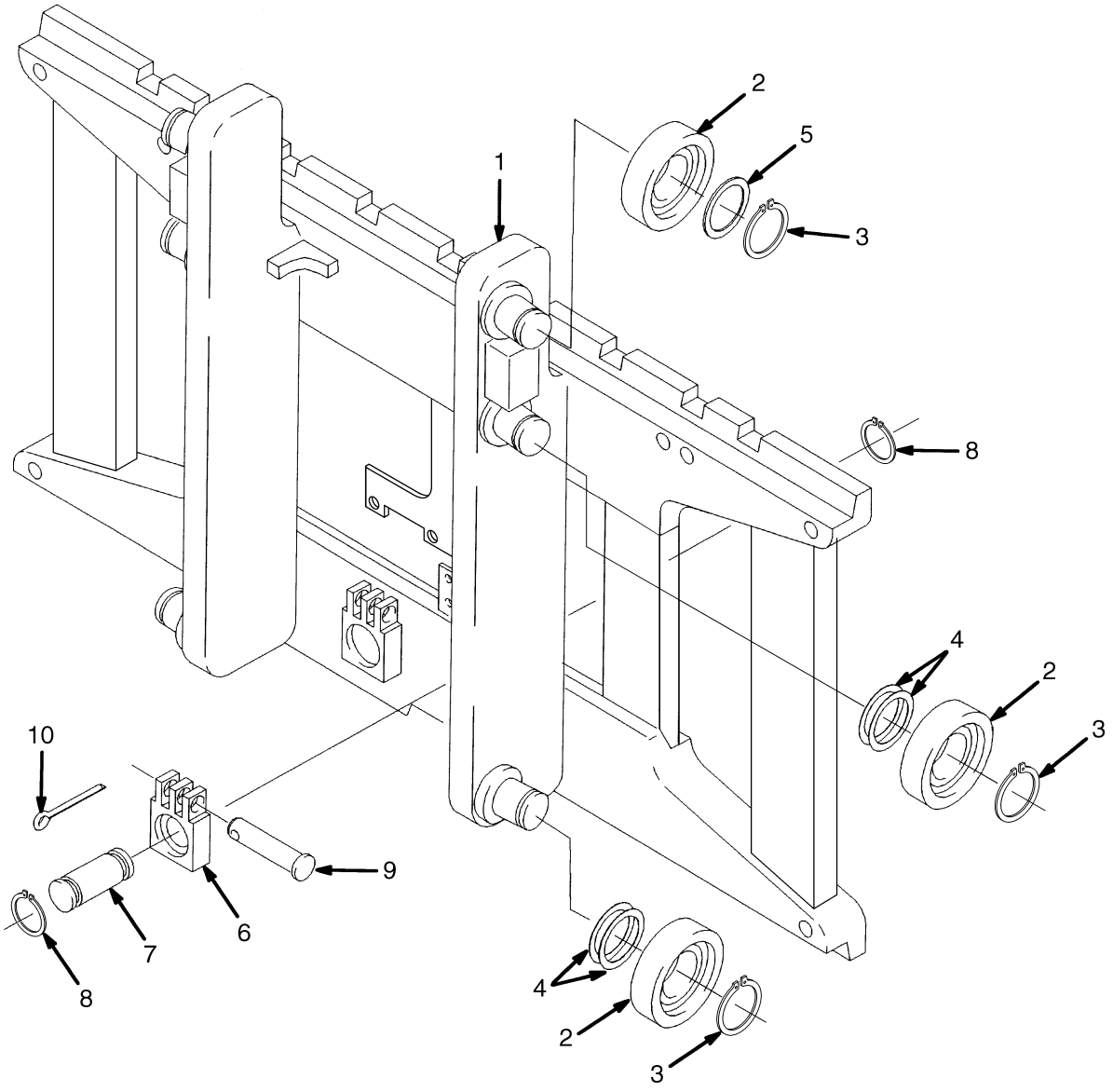

©2007 HYSTER COMPANY

CARRIAGE ASSEMBLY
HEAVY DUTY
FOUR STAGE FULL FREE-LIFT

ITEM	PART NO.	DESCRIPTION	QTY
	2070780	Carriage Assembly	1
1	1566773	Frame	1
1	1345264	Stubshaft	6
2	1333399	Load Roller	6
3	58901	Snap Ring	6
4	129387	Shim (0.020 in.)	AR
5	366115	Spacer	2
6	1369345	Chain Anchor (Dual Hole)	2
7	317735	Pin	2
8	131358	Snap Ring	4
9	1514866	Pin	2
10	15211	Cotter Pin	2

©2007 HYSTER COMPANY

HEADER HOSE (Figure 10-12)
FOUR STAGE FULL FREE-LIFT

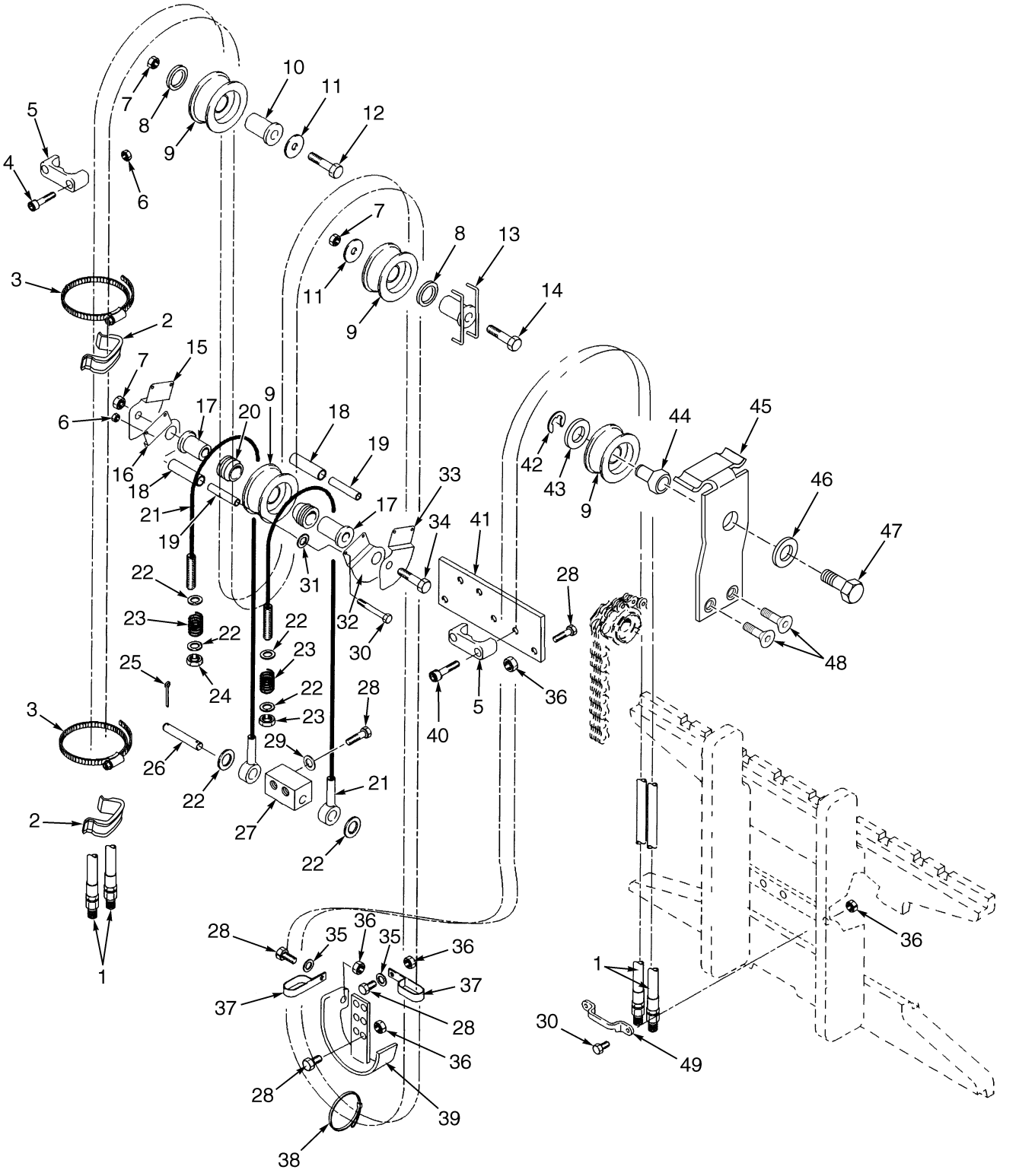

©2007 HYSTER COMPANY

HEADER HOSE
FOUR STAGE FULL FREE-LIFT

40-65Z

ITEM	DESCRIPTION 1 2 3 4	LIFT HEIGHT TO BOTTOM OF FORKS				
		5450 mm (214.6 in.)	5754 mm (226.5 in.)	6058 mm (238.5 in.)	6364 mm (250.6 in.)	6670 mm (262.6 in.)
	Mast Group Number	C515 5450	C515 5754	C515 6058	C515 6364	C515 6670
1	Hose	1479233	1479234	1479235	1479236	1479237
21	Cable	1372063	1372064	1372065	1372066	1372067

40-65Z (CONT.)

ITEM	DESCRIPTION 1 2 3 4	LIFT HEIGHT TO BOTTOM OF FORKS			
		6977 mm (274.7 in.)	7274 mm (286.4 in.)	7583 mm (298.5 in.)	7886 mm (310.5 in.)
	Mast Group Number	C515 6977	C515 7274	C515 7583	C515 7886
1	Hose	1479238	1479239	1479240	1479241
21	Cable	1372068	1372069	1372070	1372071

E45-65Z

ITEM	DESCRIPTION 1 2 3 4	LIFT HEIGHT TO BOTTOM OF FORKS				
		5450 mm (214.6 in.)	5754 mm (226.5 in.)	6058 mm (238.5 in.)	6364 mm (250.6 in.)	6670 mm (262.6 in.)
	Mast Group Number	C515 5450	C515 5754	C515 6058	C515 6364	C515 6670
1	Hose	1479233	1479234	1479235	1479236	1479237
21	Cable	1372063	1372064	1372065	1372066	1372067

E45-65Z (CONT.)

ITEM	DESCRIPTION 1 2 3 4	LIFT HEIGHT TO BOTTOM OF FORKS			
		6977 mm (274.7 in.)	7274 mm (286.4 in.)	7583 mm (298.5 in.)	7886 mm (310.5 in.)
	Mast Group Number	C515 6977	C515 7274	C515 7583	C515 7886
1	Hose	1479238	1479239	1479240	1479241
21	Cable	1372068	1372069	1372070	1372071

©2007 HYSTER COMPANY

HEADER HOSE
FOUR STAGE FULL FREE-LIFT

KEY:
A: Three Function
B: Four Function

ITEM		PART NO.	DESCRIPTION	QTY A	QTY B
1	**a**	. . . . .	Hose	1	2
2		1353530	Clamp	2	4
3		1360507	Clamp	2	4
4		292502	Capscrew	2	4
5		1360386	Clamp	2	4
6		313805	Nut	6	12
7		300937	Locknut	3	6
8		1360549	Spacer	2	4
9		1494017	Sheave	4	8
10		1370508	Stubshaft	1	2
11		1345190	Washer	2	4
12		292535	Capscrew	1	2
13		1360548	Stubshaft	1	2
14		1343990	Capscrew	1	2
15		1370319	Hose Guard (LH) (Outer)	1	2
16		1370379	Hose Guard (LH) (Inner)	1	2
17		1370579	Stubshaft	2	4
18		1370377	Roller	4	8
19		1370376	Spacer	4	8
20		1370158	Idler	2	4
21	**a**	. . . . .	Cable	2	4
22		15127	Washer	6	12
23		1370580	Spring	2	4
24		221341	Nut	2	4
25		15200	Cotter Pin	2	4
26		1370357	Pin	1	2
27		1371944	Block	1	2
28		136681	Capscrew	9	15
29		292681	Lockwasher	2	4
30		292507	Capscrew	4	8
31		320160	Washer	2	4
32		1370378	Hose Guard (RH Inner)	1	2
33		1370318	Hose Guard (RH Outer)	1	2
34		292537	Capscrew	1	2
35		320157	Washer	2	4
36		313828	Nut	7	11
37		110322	Clamp	2	4
38		273775	Clamp (Strap)	2	4
39		1371947	Bracket	1	2
40		293795	Capscrew	2	4
41		1370469	Plate	1	1
42		58902	Snap Ring	1	2
43		320171	Washer	1	2
44		1474913	Stubshaft	1	2
45		1482726	Guard (RH)	1	..
45		1482729	Guard (LH)	..	1
46		293782	Washer	1	2

See Service Manual for service procedures.
©2007 HYSTER COMPANY

HEADER HOSE
FOUR STAGE FULL FREE-LIFT

ITEM	PART NO.	DESCRIPTION	QTY A	QTY B
47	246001	Capscrew	1	2
48	296237	Capscrew	2	4
49	1643405	Hose Clamp	3	..
49	1370470	Clamp	..	1

FOOTNOTES:
a Refer to Table

NOTES

11 OPTIONS

SECTION 11
OPTIONS

DESCRIPTION	PAGE
AUXILARY TUBE EXTENSION KIT	
FOUR STAGE FULL FREE-LIFT	11-20
TWO AND THREE STAGE FULL FREE-LIFT	11-16
TWO STAGE LIMITED FREE-LIFT	11-14
AUXILIARY TUBES	
FOUR STAGE FULL FREE-LIFT	
FOUR FUNCTION GROUP WITH INTERGRAL SIDE-SHIFT	11-24
TWO AND THREE STAGE FULL FREE-LIFT	
FOUR FUNCTION GROUP WITH INTERGRAL SIDE-SHIFT	11-22
BACK-UP ALARM	11-40
BATTERY ROLLER TRAY, SLIDES, AND SPACERS	11-26
BRAKE AND BACK-UP LIGHTS	11-30
DC TO DC CONVERTER	
36/48 VOLT TO 12 VOLT	11-39
DRIVE AND REAR LIGHTS	11-34
INTEGRAL SIDE-SHIFT	
CARRIAGE	
THREE STAGE FULL FREE-LIFT	11-4
TWO AND FOUR STAGE FULL FREE-LIFT	11-6
TWO STAGE LIMITED FREE-LIFT	11-2
HYDRAULIC HOSES	
THREE STAGE FULL FREE-LIFT	11-11
TWO AND FOUR STAGE FULL FREE-LIFT	11-12
TWO STAGE LIMITED FREE-LIFT	11-10
INTEGRAL SIDE-SHIFT CYLINDER	11-8
LIGHTS, LED BACK-UP AND BRAKE	
D/B 04/2004⇒	11-32
SPOTLIGHT	11-38
STROBE LIGHT	11-36
WIRE HARNESS	
REAR LIGHTS	11-42
SWITCH	11-43
TRACTION CUT-OUT	
⇒S/N G108N03309D	11-44
S/N G108N03310D⇒	11-46

INTEGRAL SIDE-SHIFT (Figure 11-1)
CARRIAGE
TWO STAGE LIMITED FREE-LIFT

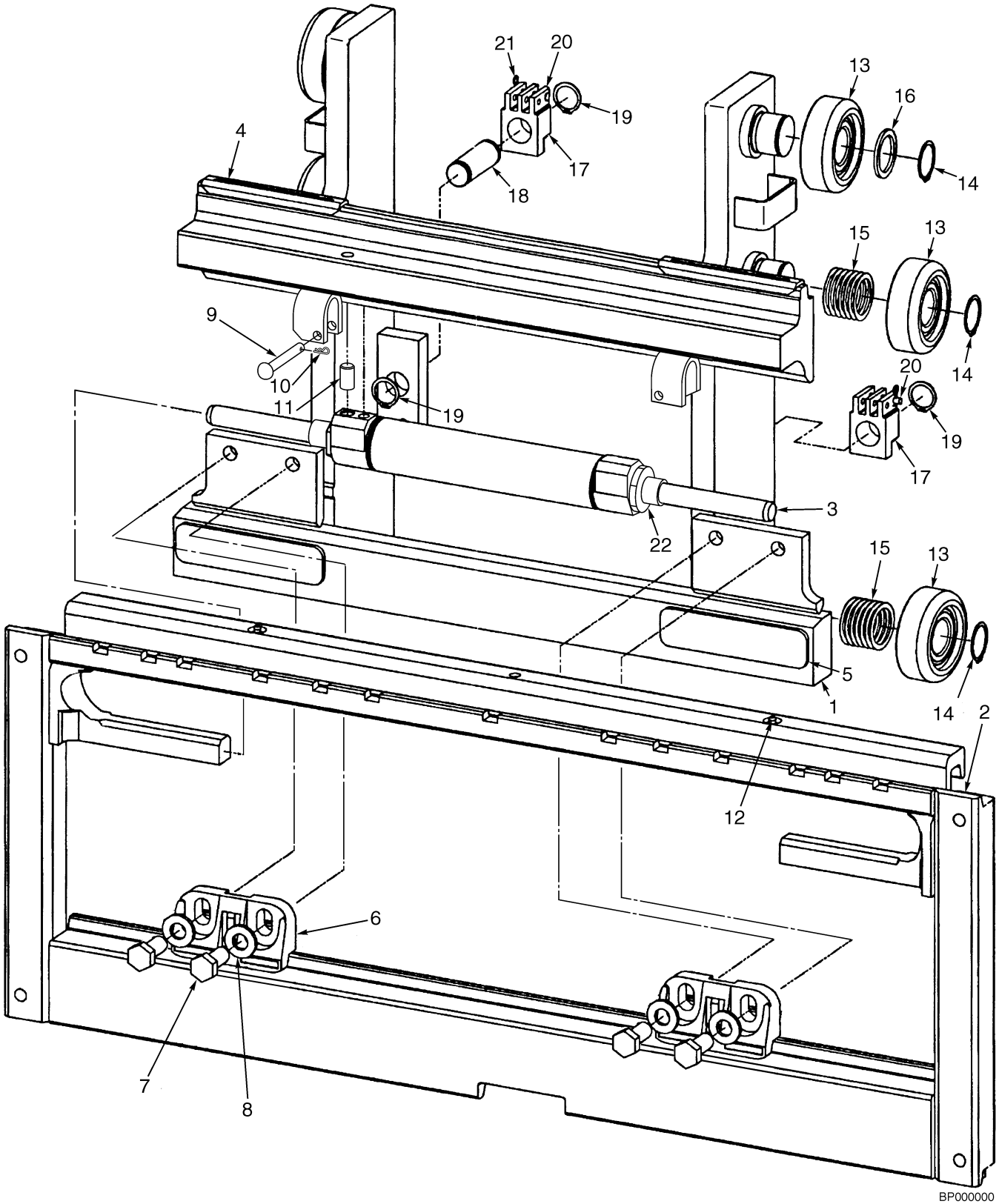

©2007 HYSTER COMPANY

INTEGRAL SIDE-SHIFT
CARRIAGE
TWO STAGE LIMITED FREE-LIFT

KEY:
A: E45-55Z (B507)
B: E60-65Z (B562)

ITEM	PART NO.	DESCRIPTION	QTY A	QTY B
	1486178	Side-Shift Carriage Assembly (38.5 in.)	1	..
	1486188	Side-Shift Carriage Assembly (38.5 in.)	..	1
1	1488998	Frame (38.5 in.) (Inner)	1	..
1	1488918	Frame (38.5 in.) (Inner)	..	1
2	1489010	Frame (38.5 in.) (Outer)	1	..
2	1488974	Frame (38.5 in.) (Outer)	..	1
3	2043528	Cylinder Assembly (☞ Figure 11-4)	1	..
3	2043529	Cylinder Assembly (☞ Figure 11-4)	..	1
4	2043531	Bearing (Upper) (38 in.)	2	..
4	2043532	Bearing (Upper) (38 in.)	..	2
5	2043533	Bearing (Lower) (38 in.)	2	..
5	2043534	Bearing (Lower) (38 in.)	..	2
6	2043530	Hook (Lower)	2	2
7	226458	Capscrew	4	4
8	296426	Washer (Hardened)	4	4
9	1401746	Pin	2	2
10	18832	Cotter Pin	2	2
11	302487	Pin	1	1
12	16041	Lube Fitting	2	2
13	1345219	Load Roller	6	6
14	12891	Snap Ring	6	6
15	1345263	Shim (0.020 in.)	28	28
16	366116	Spacer	6	6
17	1369345	Chain Anchor (Dual Hole)	2	..
17	1504010	Chain Anchor (Single Hole)	2	..
17	1504010	Chain Anchor (Single Hole)	2	..
17	1369344	Chain Anchor (Dual Hole)	..	2
17	1504012	Chain Anchor (Single Hole)	..	2
18	1353408	Pin	2	2
19	131358	Snap Ring	4	4
20	1514866	Pin	2	2
21	15211	Cotter Pin	2	2
22	1498326	Shim	AR	AR

©2007 HYSTER COMPANY

INTEGRAL SIDE-SHIFT (Figure 11-2)
CARRIAGE
THREE STAGE FULL FREE-LIFT

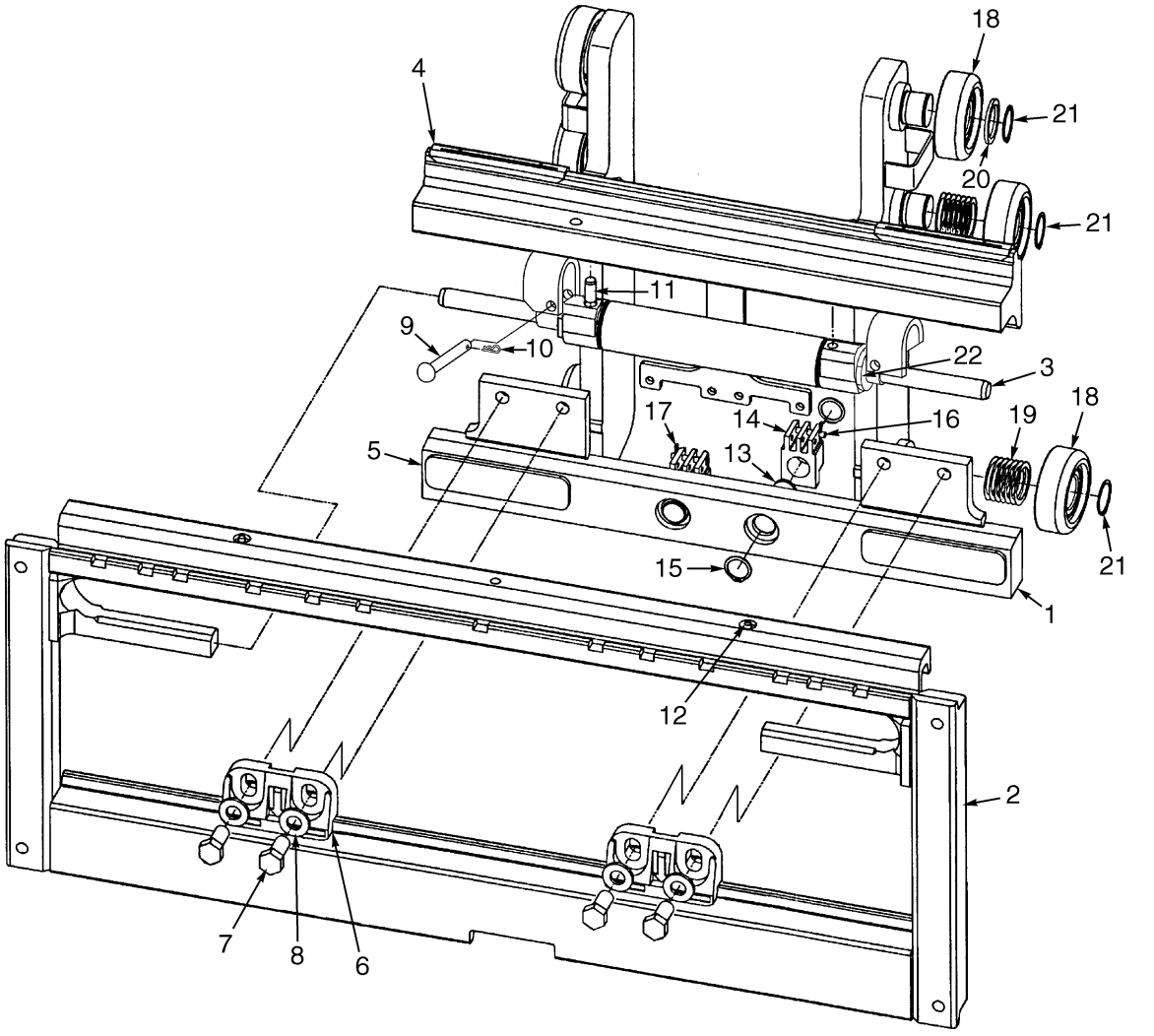

BP000001

©2007 HYSTER COMPANY

INTEGRAL SIDE-SHIFT
CARRIAGE
THREE STAGE FULL FREE-LIFT

KEY:
A: E45-55Z (B508)
B: E60-65Z (B563)

ITEM	PART NO.	DESCRIPTION	QTY A	QTY B
	1486180	Side-Shift Carriage (38.5 in.)	1	..
	1486190	Side-Shift Carriage (38.5 in.)	..	1
1	1489000	Frame (38.5 in.) (Inner)	1	..
1	1488966	Frame (38.5 in.) (Inner)	..	1
2	1489010	Frame (38.5 in.) (Outer)	1	..
2	1488974	Frame (38.5 in.) (Outer)	..	1
3	2043528	Cylinder Assembly (☞ Figure 11-4)	1	..
3	2043529	Cylinder Assembly (☞ Figure 11-4)	..	1
4	2043531	Bearing (Upper) (38 in.)	2	..
4	2043532	Bearing (Upper) (38 in.)	..	2
5	2043533	Bearing (Lower) (38 in.)	2	..
5	2043534	Bearing (Lower) (38 in.)	..	2
6	2043530	Hook (Lower)	2	2
7	1581833	Capscrew	4	4
8	1581854	Washer	4	4
9	1401746	Pin	2	2
10	18832	Cotter Pin	2	2
11	302487	Pin	1	1
12	16041	Lube Fitting	2	2
13	317735	Pin	2	2
14	1369345	Chain Anchor (Dual Hole)	2	..
14	1504010	Chain Anchor (Single Hole)	2	..
14	1369344	Chain Anchor (Dual Hole)	..	2
14	1504012	Chain Anchor (Single Hole)	..	2
15	131358	Snap Ring	4	4
16	1514866	Pin	2	2
17	15211	Cotter Pin	2	2
18	1333399	Load Roller	6	6
19	129387	Shim (0.020 in.)	28	28
20	366115	Spacer	6	6
21	58901	Snap Ring	6	6
22	1498326	Shim	AR	AR

©2007 HYSTER COMPANY

INTEGRAL SIDE-SHIFT (Figure 11-3)
CARRIAGE
TWO AND FOUR STAGE FULL FREE-LIFT

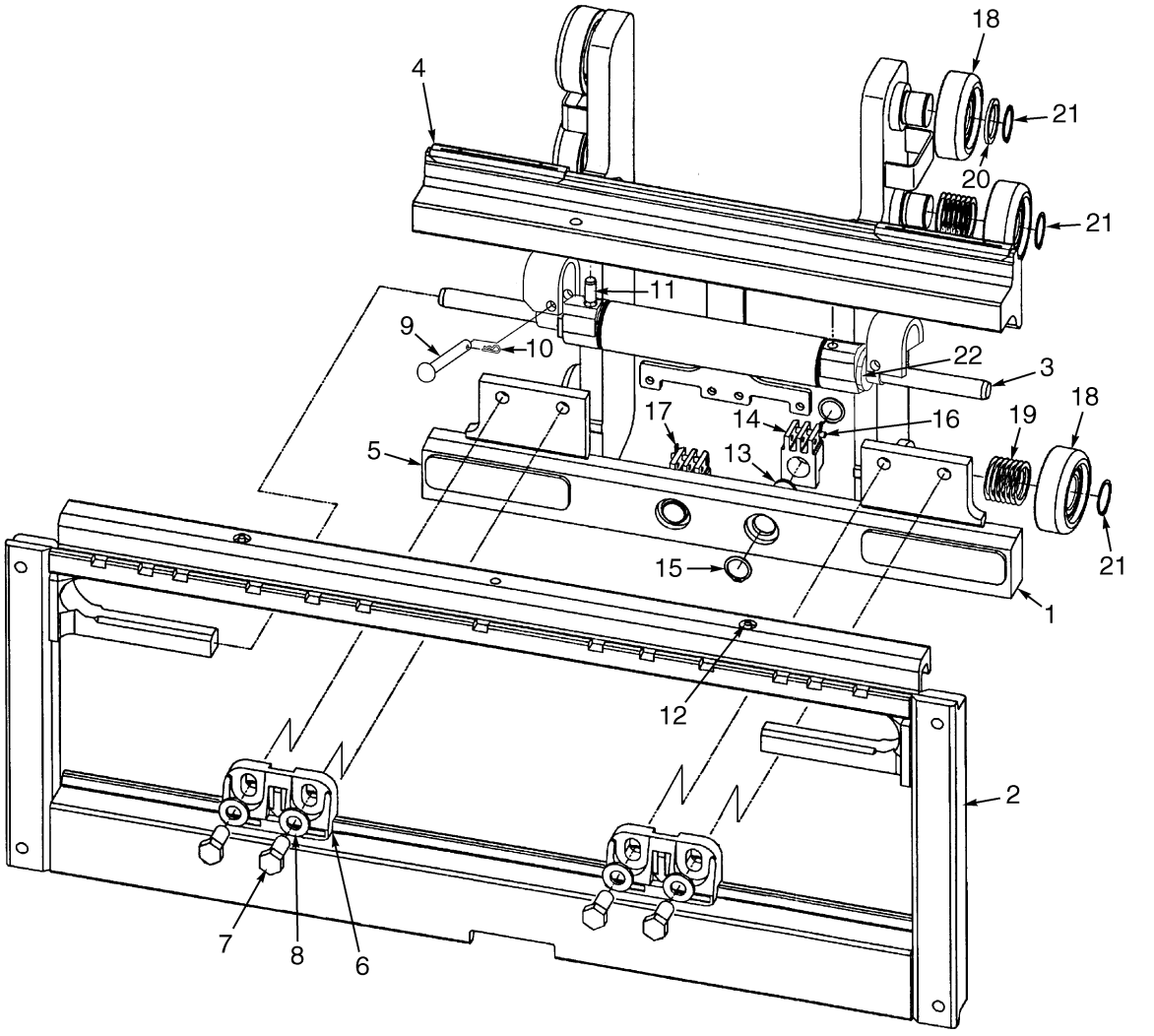

BP000001

©2007 HYSTER COMPANY

INTEGRAL SIDE-SHIFT
CARRIAGE
TWO AND FOUR STAGE FULL FREE-LIFT

KEY:
A: E45-55Z (B509) Two Stage Full Free-Lift
B: E60-65Z (B564) Two Stage Full Free-Lift
C: E45-55Z (C515) Four Stage Full Free-Lift

ITEM	PART NO.	DESCRIPTION	QTY A	QTY B	QTY C
	1486179	Side-Shift Carriage (38.5 in.)	1	..	..
	1486189	Side-Shift Carriage (38.5 in.)	..	1	..
	1486181	Side-Shift Carriage (38.5 in.)	..	..	1
1	1488999	Frame (38.5 in.) (Inner)	1	..	..
1	1488965	Frame (38.5 in.) (Inner)	..	1	..
1	1489001	Frame (38.5 in.) (Inner)	..	..	1
2	1489010	Frame (38.5 in.) (Outer)	1	..	1
2	1488974	Frame (38.5 in.) (Outer)	..	1	..
3	2043528	Cylinder Assembly (☞ Figure 11-4)	1	..	1
3	2043529	Cylinder Assembly (☞ Figure 11-4)	..	1	..
4	2043531	Bearing (Upper) (38 in.)	2	..	2
4	2046243	Bearing (Upper) (Bronze) (Service Option)	2	..	2
4	2043532	Bearing (Upper) (38 in.)	..	2	..
4	2046245	Bearing (Upper) (Bronze) (Service Option)	..	2	..
5	2043533	Bearing (Lower) (38 in.)	2	..	2
5	2046244	Bearing (Lower) (Bronze) (Service Option)	2	..	2
5	2043534	Bearing (Lower) (38 in.)	..	2	..
5	2046246	Bearing (Lower) (Bronze) (Service Option)	..	2	..
6	2043530	Hook (Lower)	2	2	2
7	1581833	Capscrew	4	4	4
8	1581854	Washer	4	4	4
9	1401746	Pin	2	2	2
10	18832	Cotter Pin	2	2	2
11	302487	Pin	1	1	1
12	16041	Lube Fitting	2	2	2
13	317735	Pin	2	2	2
14	1369345	Chain Anchor (Dual Hole)	2	..	2
14	1504010	Chain Anchor (Single Hole)	2	..	2
14	1369344	Chain Anchor (Dual Hole)	..	2	..
14	1504012	Chain Anchor (Single Hole)	..	2	..
15	131358	Snap Ring	4	4	4
16	1514866	Pin	2	2	2
17	15211	Cotter Pin	2	2	2
18	1345219	Load Roller	6	6	..
18	1333399	Load Roller	..	..	6
19	1345263	Shim (0.020 in.)	28	28	..
19	129387	Shim (0.020 in.)	..	..	28
20	366116	Spacer	6	6	..
20	366115	Spacer	..	..	6
21	12891	Snap Ring	6	6	..
21	58901	Snap Ring	..	..	6
22	1498326	Shim	AR	AR	AR

©2007 HYSTER COMPANY

INTEGRAL SIDE-SHIFT CYLINDER (Figure 11-4)

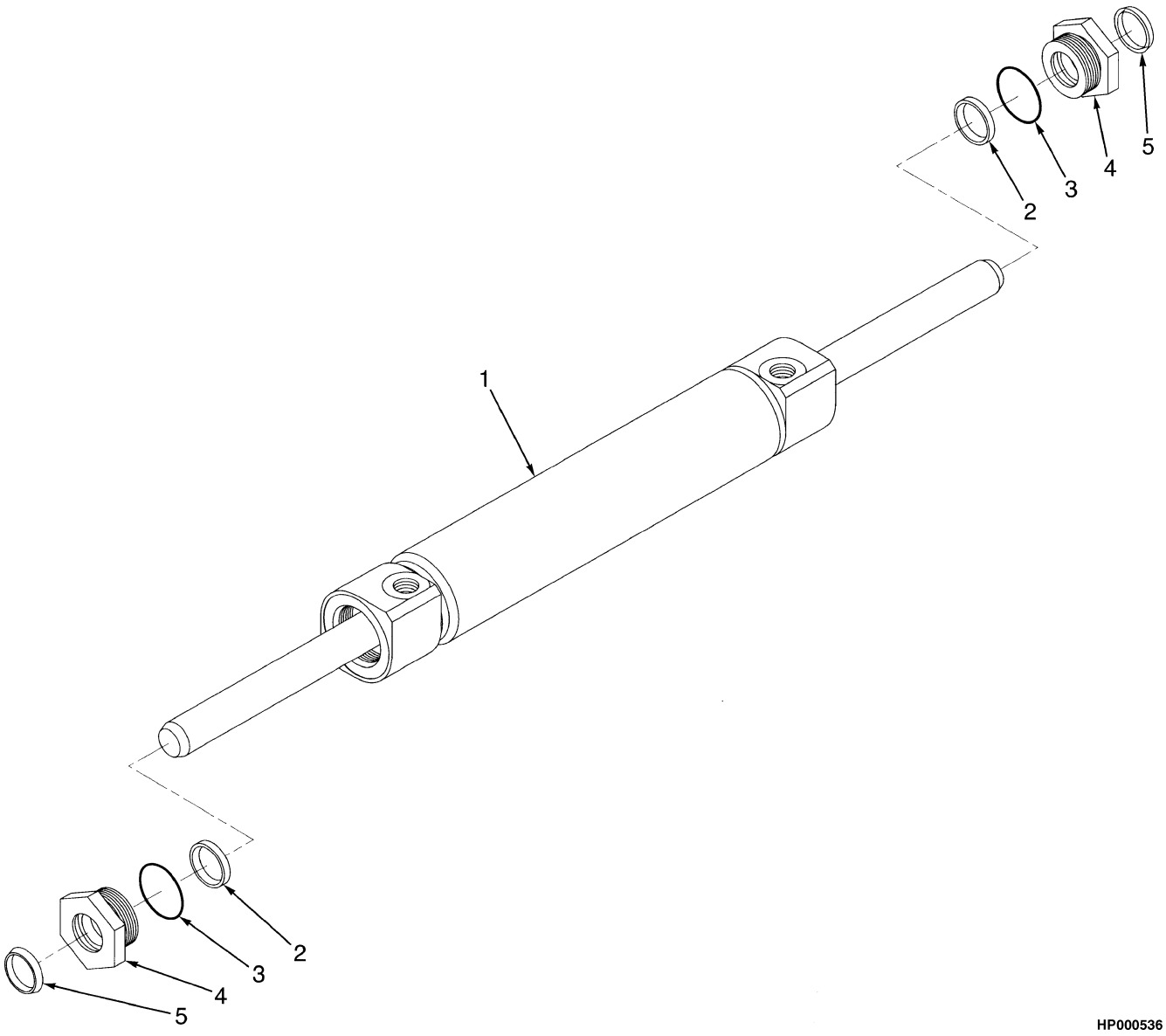

©2007 HYSTER COMPANY

INTEGRAL SIDE-SHIFT CYLINDER

KEY:
A: E45-55Z (B507, B508, B509)
B: E60-65Z (B562, B563, B564, C515)

ITEM	PART NO.	DESCRIPTION	QTY A	QTY B
	2043528	Cylinder Assembly	1	..
	2043529	Cylinder Assembly	..	1
1	1489016	Cylinder Shell	1	..
1	1489017	Cylinder Shell	..	1
2	1489037	Rod Seal	2	2
3	1489035	O-Ring	2	2
4	1498325	Retainer	2	2
5	1489039	Rod Wiper	2	2
	1503096	Seal Kit (Includes Items 2-5)	1	1

©2007 HYSTER COMPANY

INTEGRAL SIDE-SHIFT (Figure 11-5)
HYDRAULIC HOSES
TWO STAGE LIMITED FREE-LIFT

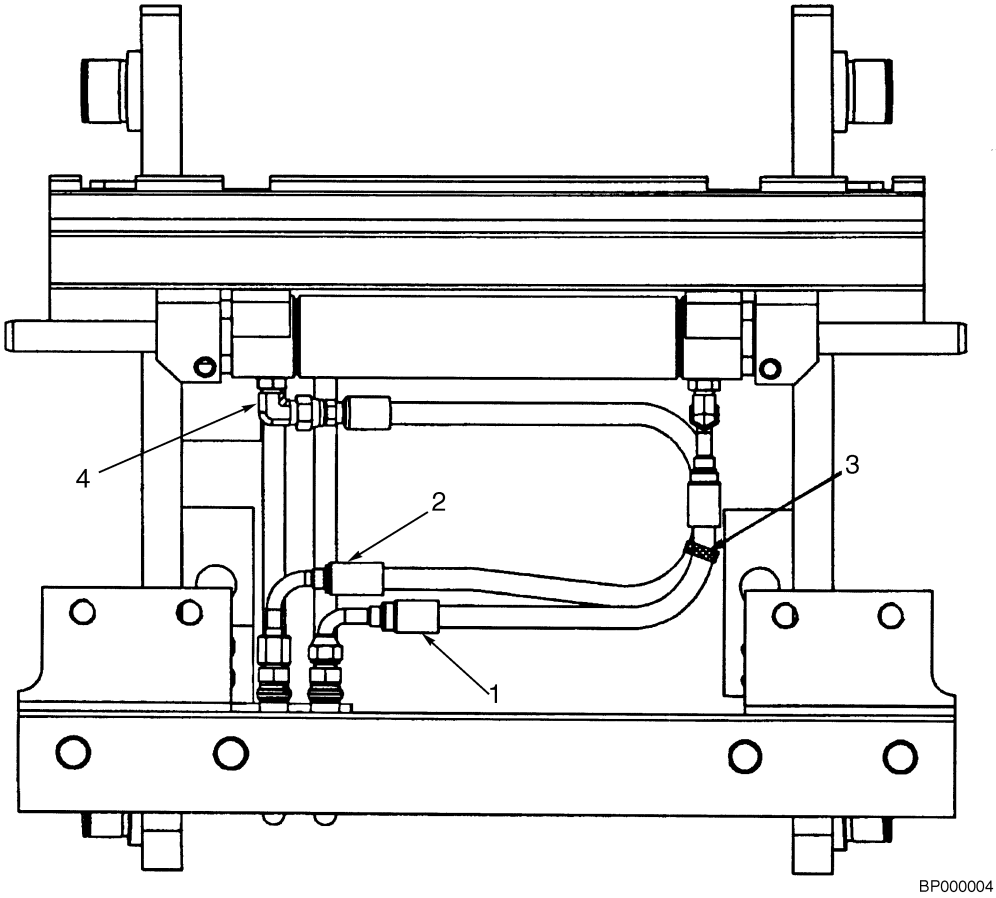

KEY:
A: E45-55Z (B507)
B: E60-65Z (B562)

ITEM	PART NO.	DESCRIPTION	QTY A	QTY B
1	1503478	Hose	1	..
1	1503479	Hose	..	1
2	1503476	Hose	1	..
2	1489034	Hose	..	1
3	114312	Strap Clamp	1	1
4	16558	Fitting	2	2
4	16483	O-Ring	1	1

©2007 HYSTER COMPANY

INTEGRAL SIDE-SHIFT (Figure 11-6)
HYDRAULIC HOSES
THREE STAGE FULL FREE-LIFT

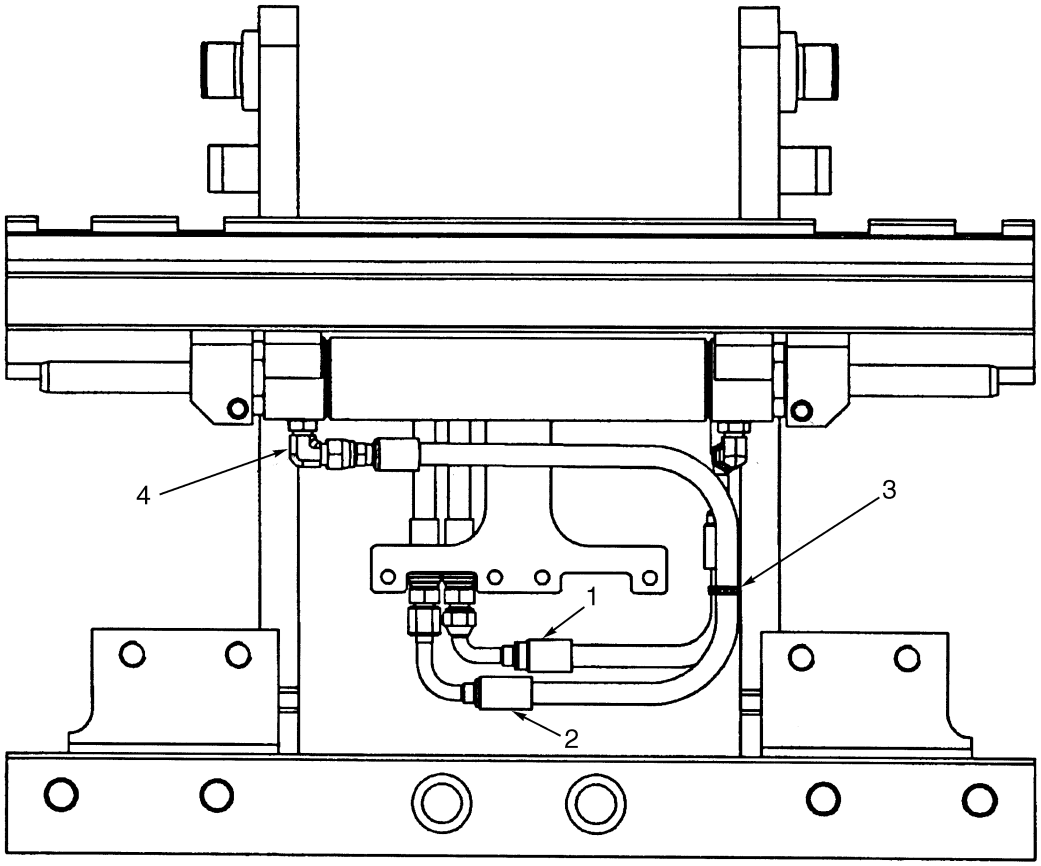

KEY:
A: E45-55Z (B508)
B: E60-65Z (B563)

ITEM	PART NO.	DESCRIPTION	QTY A	QTY B
1	1503481	Hose	1	..
1	1503482	Hose	..	1
2	1489050	Hose	1	..
2	1503476	Hose	..	1
3	114312	Strap Clamp	1	1
4	16558	Fitting	2	2
4	16483	O-Ring	1	1

INTEGRAL SIDE-SHIFT (Figure 11-7)
HYDRAULIC HOSES
TWO AND FOUR STAGE FULL FREE-LIFT

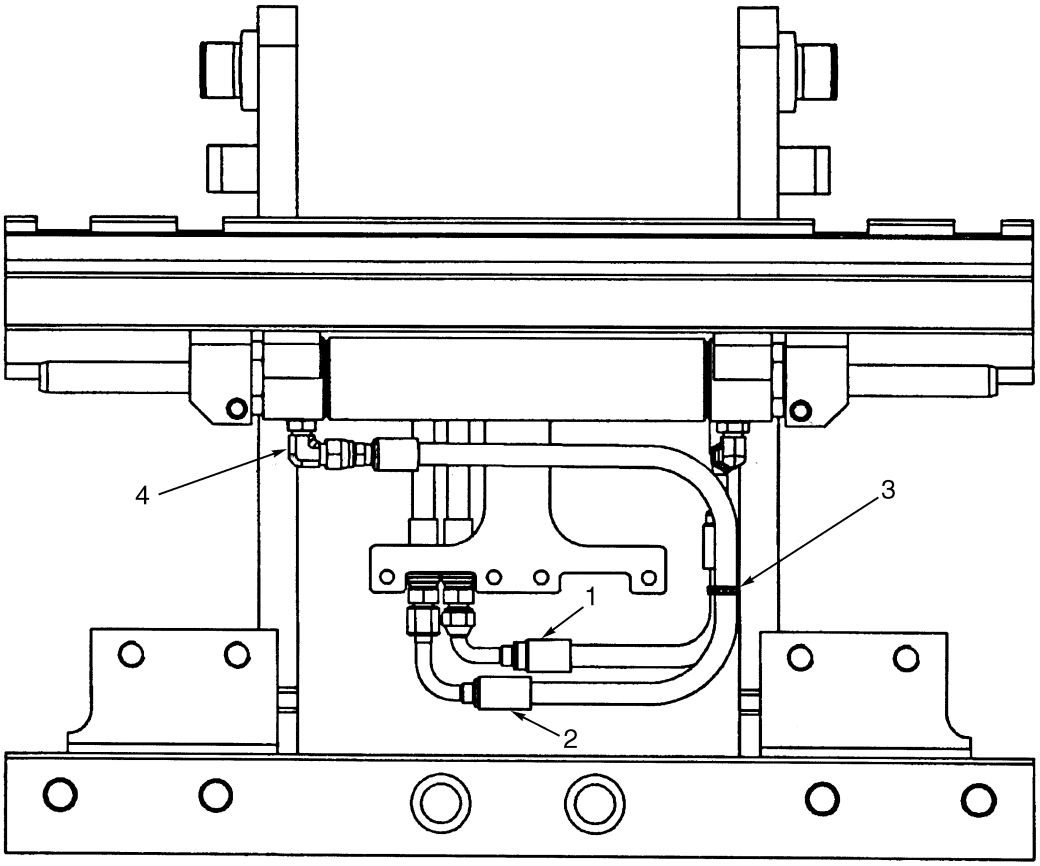

KEY:
A: E45-55Z (B509)
B: E60-65Z (B564)
C: E60-65Z (C515)

ITEM	PART NO.	DESCRIPTION	QTY A	QTY B	QTY C
1	1503481	Hose	1	..	..
1	1503482	Hose	..	1	..
1	1503483	Hose (Four Stage Full Free-Lift)	..	..	1
2	1489050	Hose	1	..	..
2	1503476	Hose	..	1	..
2	1503475	Hose (Four Stage Full Free-Lift)	..	..	1
3	114312	Strap Clamp	1	1	1
4	16558	Fitting	2	2	2
4	16483	O-Ring	1	1	1

©2007 HYSTER COMPANY

NOTES

AUXILARY TUBE EXTENSION KIT (Figure 11-8)
TWO STAGE LIMITED FREE-LIFT

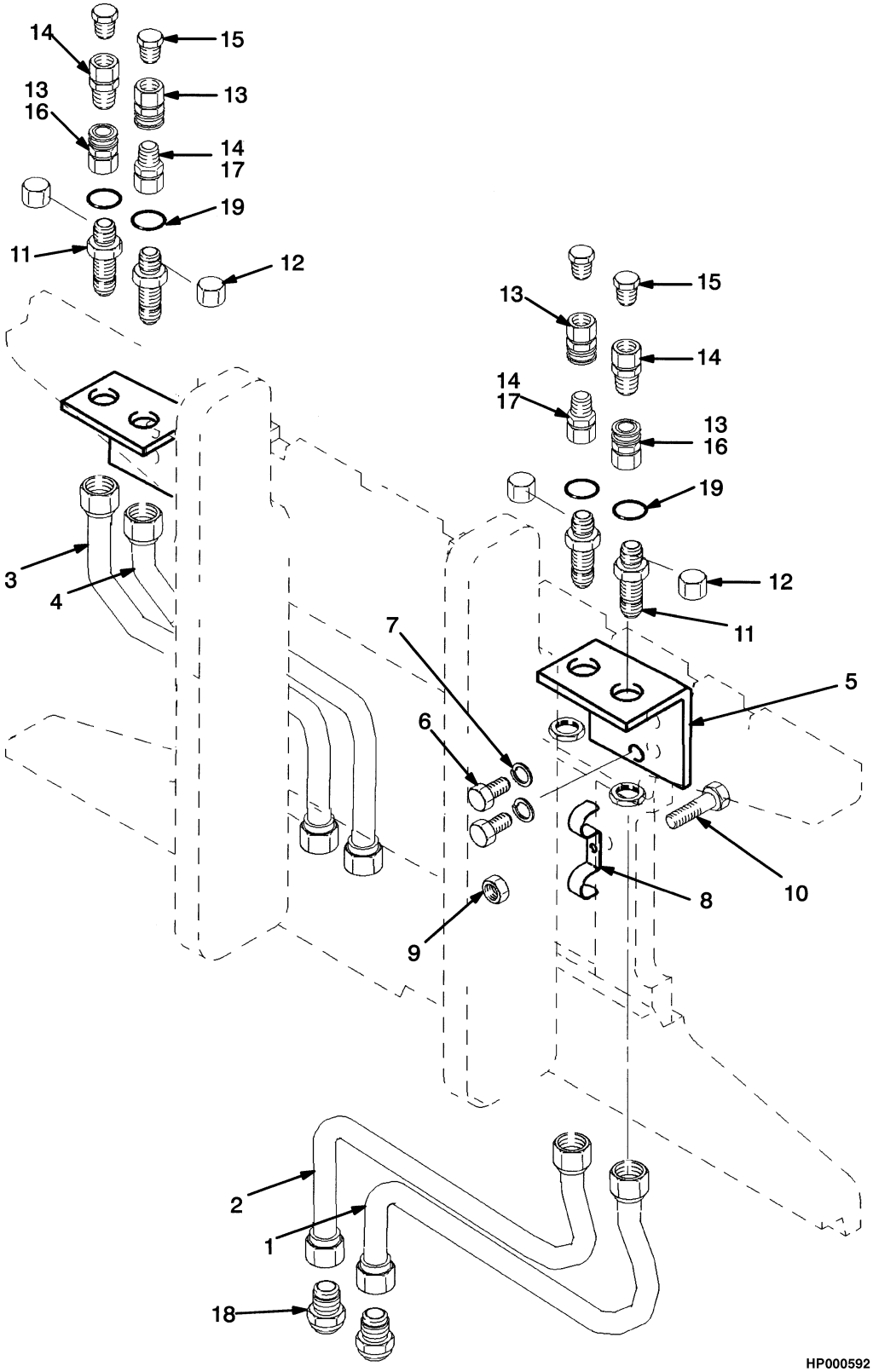

©2007 HYSTER COMPANY

AUXILARY TUBE EXTENSION KIT
TWO STAGE LIMITED FREE-LIFT

ITEM		PART NO.	DESCRIPTION	QTY
	b	1362412	Tube Extension Kit	1
	be	1377957	Tube Kit	1
	a	1362413	Tube Kit	1
	d	1362414	Tube Kit	1
	de	1377958	Tube Kit	1
	c	1362415	Tube Kit	1
1	**b**	1362403	Tube	1
1	**be**	1377931	Tube	1
1	**d**	1370493	Tube	1
1	**de**	1377933	Tube	1
2	**b**	1362402	Tube	1
2	**be**	1377932	Tube	1
2	**d**	1370492	Tube	1
2	**de**	1377934	Tube	1
3	**a**	1362404	Tube	1
3	**c**	1362401	Tube	1
4	**a**	1362405	Tube	1
4	**c**	1362432	Tube	1
5		1370479	Bracket	1
5	**e**	1377925	Bracket	1
6		136681	Capscrew	2
7		292681	Lockwasher	2
8		114369	Clamp	1
8	**e**	1377928	Clamp	1
9		313828	Nut	1
10		296484	Screw	1
11		16447	Fitting	2
11	**e**	16448	Fitting	2
12		16693	Fitting	2
12	**e**	16925	Fitting	2
13		1362422	Socket	2
14		1362423	Nipple	2
15		16933	Fitting	2
16		229348	Cap	1
17		229349	Plug	1
18		1377945	Fitting	2
19		16483	O-Ring	2

FOOTNOTES:
a B507 Series Mast with Fourth Function
b B507 Series Mast with Third Function
c B562 Series Mast with Fouth Function
d B562 Series Mast with Third Function
e With Rotator

©2007 HYSTER COMPANY

AUXILARY TUBE EXTENSION KIT (Figure 11-9)
TWO AND THREE STAGE FULL FREE-LIFT

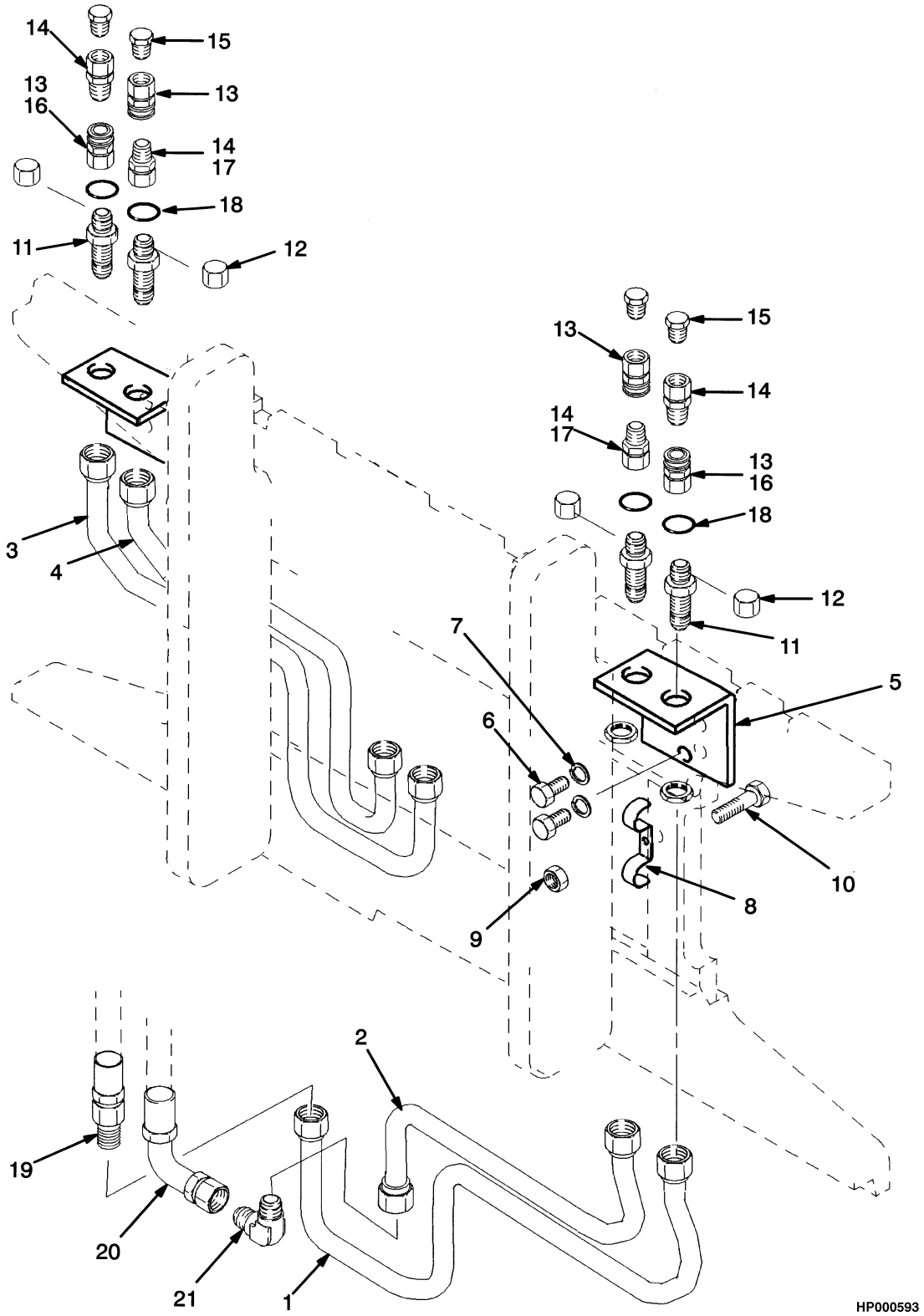

©2007 HYSTER COMPANY

AUXILARY TUBE EXTENSION KIT
TWO AND THREE STAGE FULL FREE-LIFT

ITEM		PART NO.	DESCRIPTION	QTY
	b	1362406	Tube Kit	1
	bg	1377955	Tube Kit	1
	a	1362407	Tube Kit	1
	d	1362408	Tube Kit	1
	dg	1377956	Tube Kit	1
	c	1362409	Tube Kit	1
1	**b**	1370483	Tube	1
1	**bg**	1377926	Tube	1
1	**d**	1370486	Tube	1
1	**dg**	1377927	Tube	1
2	**b**	1370482	Tube	1
2	**bg**	1377929	Tube	1
2	**d**	1370484	Tube	1
2	**dg**	1377930	Tube	1
3	**a**	1370481	Tube	1
3	**c**	1370487	Tube	1
4	**a**	1370480	Tube	1
4	**c**	1370485	Tube	1
5		1370479	Bracket	1
5	**g**	1377925	Bracket	1
6		136681	Capscrew	2
7		292681	Lockwasher	2
8		114369	Clamp	1
8	**g**	1377928	Clamp	1
9		313828	Nut	1
10		296484	Screw	1
11		16447	Fitting	2
11	**g**	16448	Fitting	2
12		16933	Fitting	2
12	**g**	16925	Fitting	2
13		1362422	Socket	2
14		1362423	Nipple	2
15		16933	Fitting	2
16		229348	Cap	1
17		229349	Plug	1
18		16483	O-Ring	2
19	**fg**	3009159	Fitting	1
19	**gh**	316879	Fitting	1
20	**fg**	1377949	Fitting	1
20	**gh**	1377948	Fitting	1
21	**fg**	14480	Fitting	1
	e	1362426	Disconnect Kit (Includes Items 13-17)	1

FOOTNOTES:
- **a** B508 and B509 with Fourth Function
- **b** B508 and B509 with Third Function
- **c** B563 and B564 with Fourth Function
- **d** B563 and B564 with Third Function
- **e** One Kit For Each Function Required
- **f** With Parker Hose

©2007 HYSTER COMPANY

AUXILARY TUBE EXTENSION KIT
TWO AND THREE STAGE FULL FREE-LIFT

g With Rotator
h With Synflex Hose

©2007 HYSTER COMPANY

NOTES

AUXILARY TUBE EXTENSION KIT (Figure 11-10)
FOUR STAGE FULL FREE-LIFT

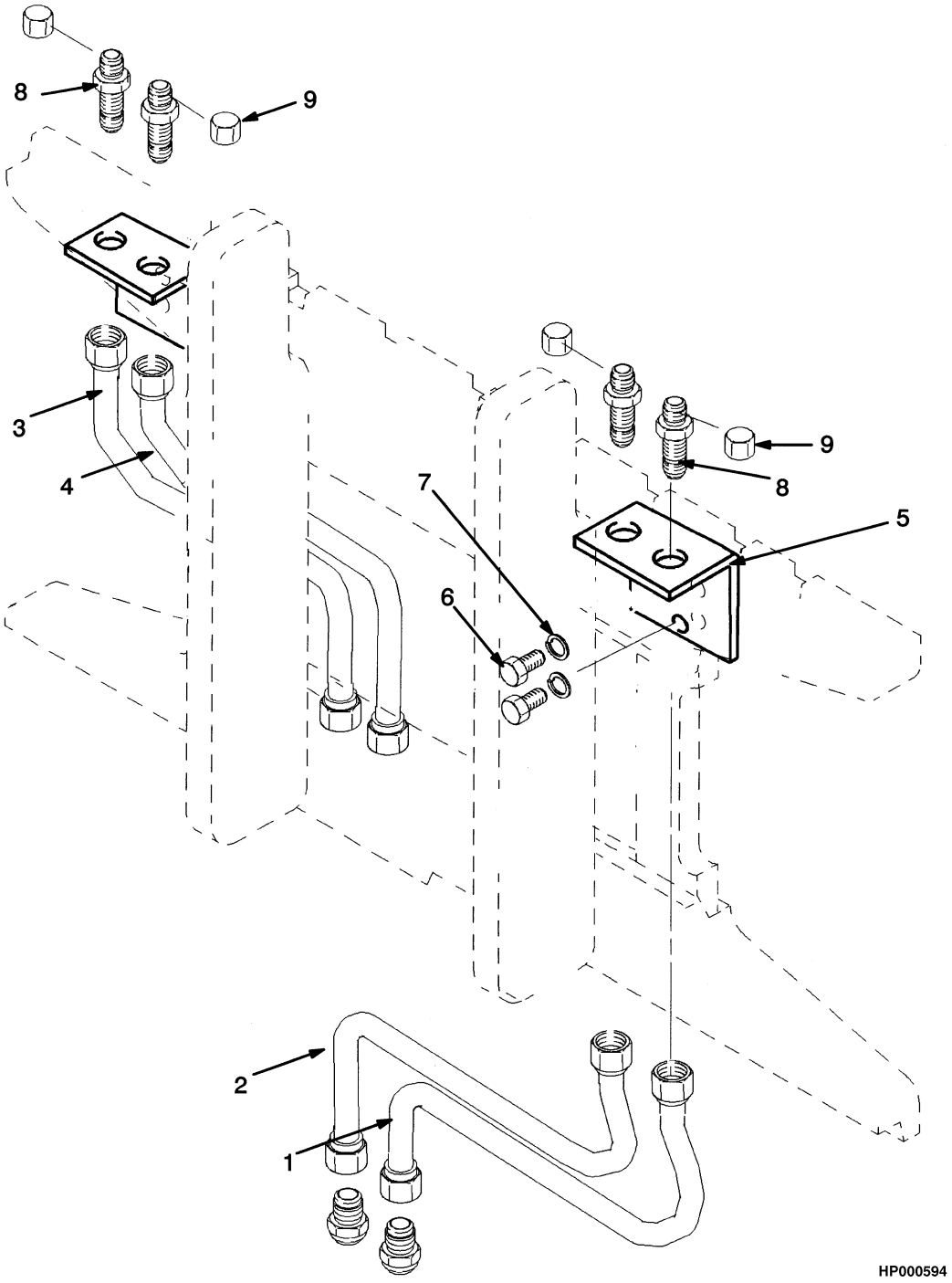

©2007 HYSTER COMPANY

AUXILARY TUBE EXTENSION KIT
FOUR STAGE FULL FREE-LIFT

ITEM		PART NO.	DESCRIPTION	QTY
	b	1370398	Tube Kit	1
	a	1370399	Tube Kit	1
1	**b**	1371808	Tube	1
2	**b**	1371806	Tube	1
3	**a**	1371805	Tube	1
4	**a**	1371807	Tube	1
5		1370479	Bracket	1
6		136681	Capscrew	2
7		292681	Lockwasher	2
8		16447	Fitting	2
9		16693	Fitting	2

FOOTNOTES:
a C515 with Fourth Function
b C515 with Three Functions

©2007 HYSTER COMPANY

AUXILIARY TUBES (Figure 11-11)
TWO AND THREE STAGE FULL FREE-LIFT
FOUR FUNCTION GROUP WITH INTERGRAL SIDE-SHIFT

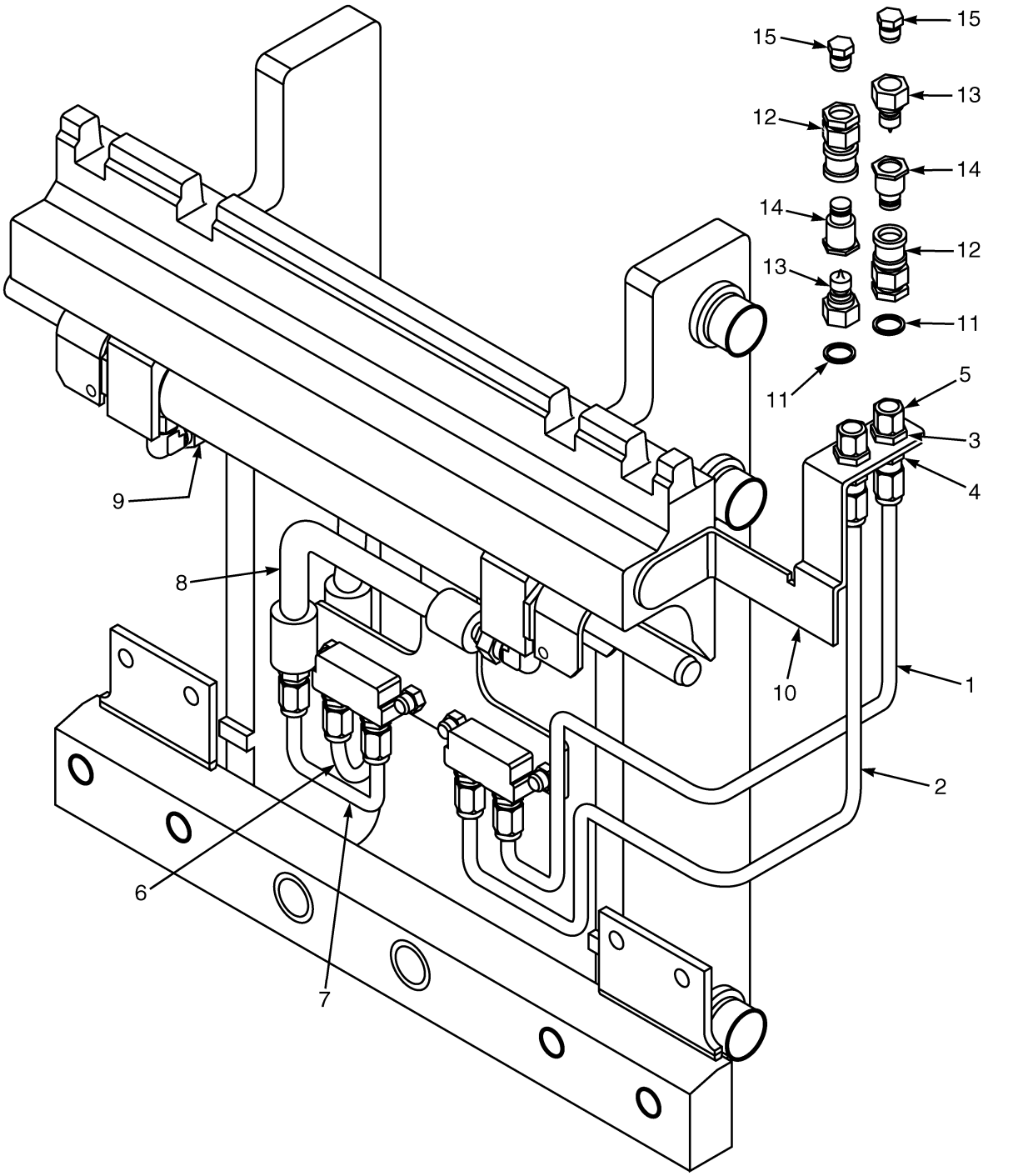

BP000076

©2007 HYSTER COMPANY

AUXILIARY TUBES
TWO AND THREE STAGE FULL FREE-LIFT
FOUR FUNCTION GROUP WITH INTERGRAL SIDE-SHIFT

KEY:
A: Two Stage Full Free-Lift
B: Three Stage Full Free-Lift

ITEM	PART NO.	DESCRIPTION	QTY A	QTY B
	1518233	Auxiliary Tube Kit (38 in.) (Class II) (Auxiliary Tube Extension)	1	..
	1518234	Auxiliary Tube Kit (38 in.) (Class II) (Auxiliary Tube Extension)	..	1
	1518236	Auxiliary Tube Kit (42 in.) (Class II) (Auxiliary Tube Extension)	1	..
	1518237	Auxiliary Tube Kit (42 in.) (Class II) (Auxiliary Tube Extension)	..	1
	1518238	Auxiliary Tube Kit (42 in.) (Class III) (Auxiliary Tube Extension)	1	..
	1518239	Auxiliary Tube Kit (48 in.) (Class III) (Auxiliary Tube Extension)	..	1
	1518240	Auxiliary Tube Kit (38 in) (Class III) (Auxiliary Tube Extension)	1	..
	1518241	Auxiliary Tube Kit (38 in.) (Class III) (Auxiliary Tube Extension)	..	1
	1518991	Auxiliary Tube Kit (54 in.) (Class III) (Auxiliary Tube Extension)	1	..
	1518992	Auxiliary Tube Kit (54 in.) (Class III) (Auxiliary Tube Extension)	..	1
1	1517448	Tube Assembly (Class II) (38 in.)	1	1
1	1518249	Tube Assembly (Class III) (42 and 48 in.)	1	1
1	1518251	Tube Assembly (Class III) (38 in.)	1	1
1	1518253	Tube Assembly (Class III) (54 in.)	1	1
1	1517452	Tube Assembly (Class II) (42 in.)	1	1
2	1517449	Tube Assembly (Class II) (38 in.)	1	1
2	1518250	Tube Assembly (Class III) (42 and 48 in.)	1	1
2	1518252	Tube Assembly (Class III) (38 in.)	1	1
2	1518254	Tube Assembly (Class III) (54 in.)	1	1
2	1517453	Tube Assembly (Class II) (42 in.)	1	1
3	16447	Fitting	2	2
4	14760	Fitting	2	2
5	16693	Fitting	2	2
6	1381765	Tube Assembly	1	1
7	1381766	Tube Assembly	1	1
8	1390365	Hose	1	1
9	1390366	Hose	2	1
10	1517441	Tube Extension Bracket	1	1
11	16483	O-Ring	2	2
12	1483663	Quick Disconnect Socket	2	2
13	1483664	Quick Disconnect Nipple	2	2
14	1483661	Dust Cap	2	2
15	16933	Fitting	2	2
	1518219	Quick Disconnect Kit (Includes Items 11-15)	2	2

©2007 HYSTER COMPANY

AUXILIARY TUBES (Figure 11-12)
FOUR STAGE FULL FREE-LIFT
FOUR FUNCTION GROUP WITH INTERGRAL SIDE-SHIFT

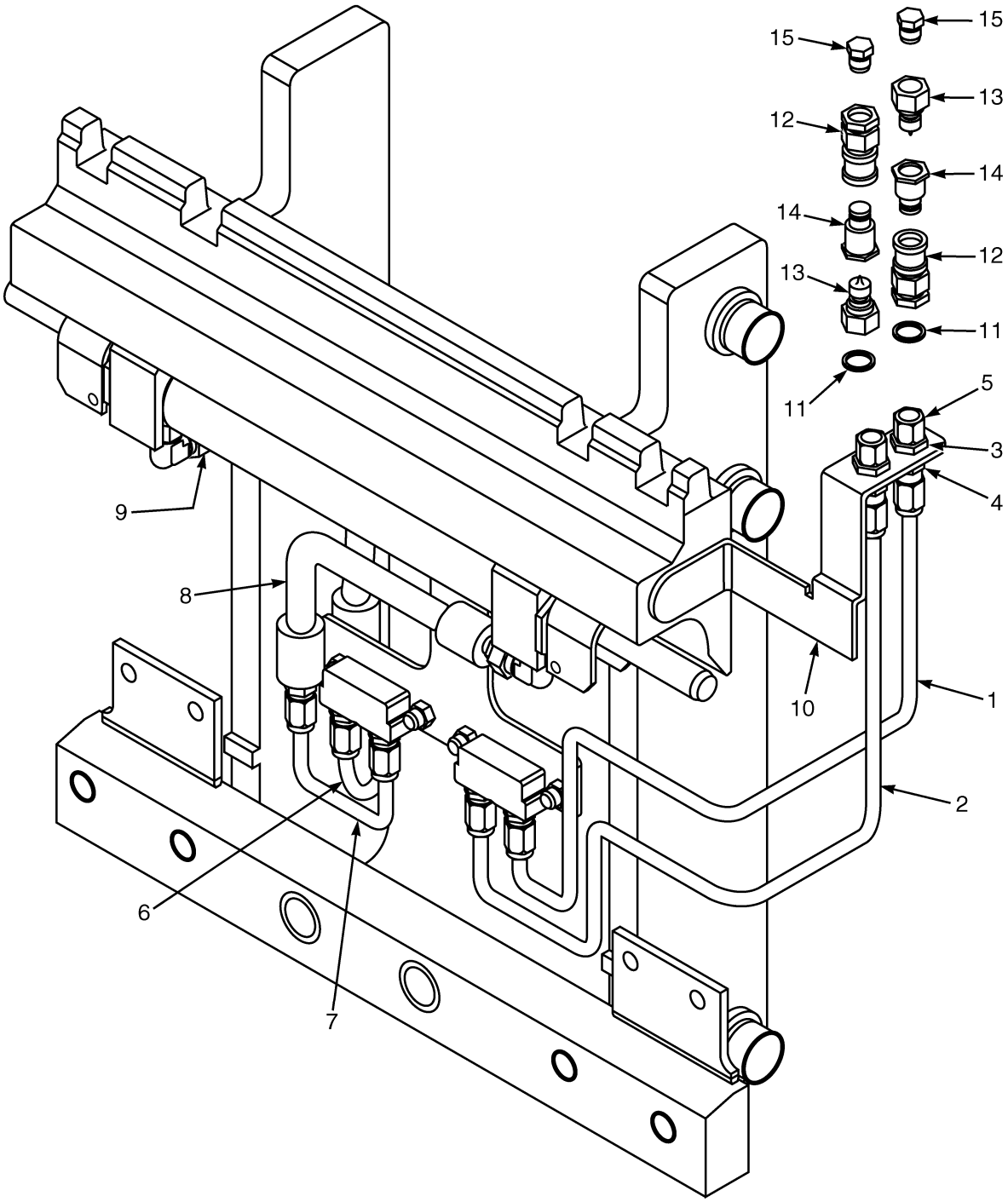

BP000076

©2007 HYSTER COMPANY

AUXILIARY TUBES
FOUR STAGE FULL FREE-LIFT
FOUR FUNCTION GROUP WITH INTERGRAL SIDE-SHIFT

ITEM	PART NO.	DESCRIPTION	QTY
	1518235	Auxiliary Tube Kit (Auxiliary Tube Extension)	1
1	1517450	Tube Assembly	1
2	1517451	Tube Assembly	1
3	16447	Fitting	2
4	14760	Fitting	2
5	16693	Fitting	2
6	1381765	Tube Assembly	1
7	1381766	Tube Assembly	1
8	1390365	Hose	1
9	1390366	Hose	2
10	1517441	Tube Extension Bracket	1
11	16483	O-Ring	2
12	1483663	Quick Disconnect Socket	2
13	1483664	Quick Disconnect Nipple	2
14	1483661	Dust Cap	2
15	16933	Fitting	2
	1518219	Quick Disconnect Kit (Includes Items 11-15)	2

©2007 HYSTER COMPANY

BATTERY ROLLER TRAY, SLIDES, AND SPACERS (Figure 11-13)

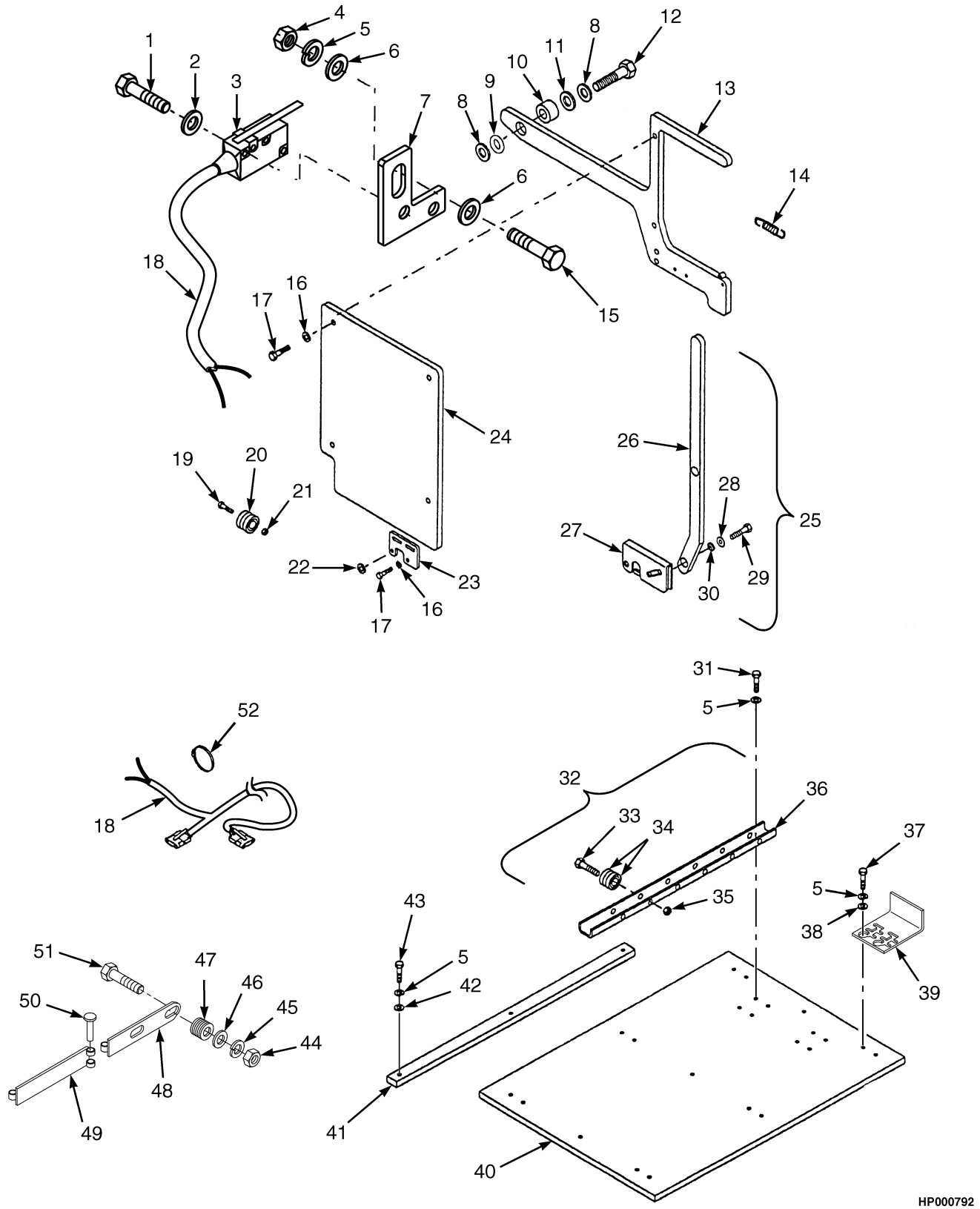

©2007 HYSTER COMPANY

BATTERY ROLLER TRAY, SLIDES, AND SPACERS

ITEM		PART NO.	DESCRIPTION	QTY
1		220426	Screw	2
2		53162	Lockwasher	2
3		1498406	Switch	1
4		239503	Nut	1
5		292681	Lockwasher	10
6		320157	Washer	2
7		1535249	Plate	1
8		221780	Washer	2
9		1325119	Shim	1
10		210229	Bushing	1
11		1360904	Washer (Spring)	1
12		1509943	Capscrew	1
12		264134	Sealant	AR
13		1526118	Battery Gate	1
14		1494198	Spring	1
15		296168	Capscrew	1
16		15154	Lockwasher	8
17		18720	Capscrew	8
18	**a**	2060358	Wire Harness (Traction Cut-Out) (☞ Figure 11-23)	1
18	**b**	2088742	Wire Harness (Traction Cut-Out) (☞ Figure 11-24)	1
19		1486245	Screw	3
20		1376437	Cam Roller	6
21		230882	Nut	3
22		320156	Washer	2
23		1479104	Plate (Latch)	1
24		1518159	Backing Plate	1
25		1494199	Latch Assembly	1
26		1495405	Handle	1
27		1495370	Latch	1
28		15923	Lockwasher	1
29		18720	Capscrew	1
30		1495369	Spacer	1
31		287851	Capscrew	6
32		1483414	Roller Strip Assembly	3
33		221476	Capscrew	5
34		1497566	Cam Roller	10
35		15114	Nut	5
36		1497568	Channel	3
37		136681	Capscrew	9
38		320158	Washer	4
39		1483375	Spacer	2
40		1485690	Plate (27.50 in. Battery Compartment)	1
40		1485692	Plate (33.38 in. Battery Compartment)	1
40		1485694	Plate (39.96 in. Battery Compartment)	1
41	**e**	1483415	Battery Slide Strip	3
41	**f**	1651426	Battery Slide Strip	3
42		320158	Washer	9
43		136681	Capscrew	4
44		136692	Nut	2
45		292682	Lockwasher	2
46		296421	Washer	2

©2007 HYSTER COMPANY

BATTERY ROLLER TRAY, SLIDES, AND SPACERS

ITEM		PART NO.	DESCRIPTION	QTY
47		361973	Spacer	16
48		1618938	Spacer Plate	1
49	**c**	1493957	Spacer Plate	1
49	**d**	1643266	Spacer Plate	1
50		1509942	Pin	1
51		296249	Capscrew	2
52		129563	Strap Clamp	1

FOOTNOTES:

a ⇒ S/N G108N03309D
b S/N G108N03310D ⇒
c ⇒ S/N G108N04317D
d S/N G108N04318D ⇒
e ⇒ PENDING PER ECN 103014
f PENDING PER ECN 103014 ⇒

©2007 HYSTER COMPANY

NOTES

BRAKE AND BACK-UP LIGHTS (Figure 11-14)

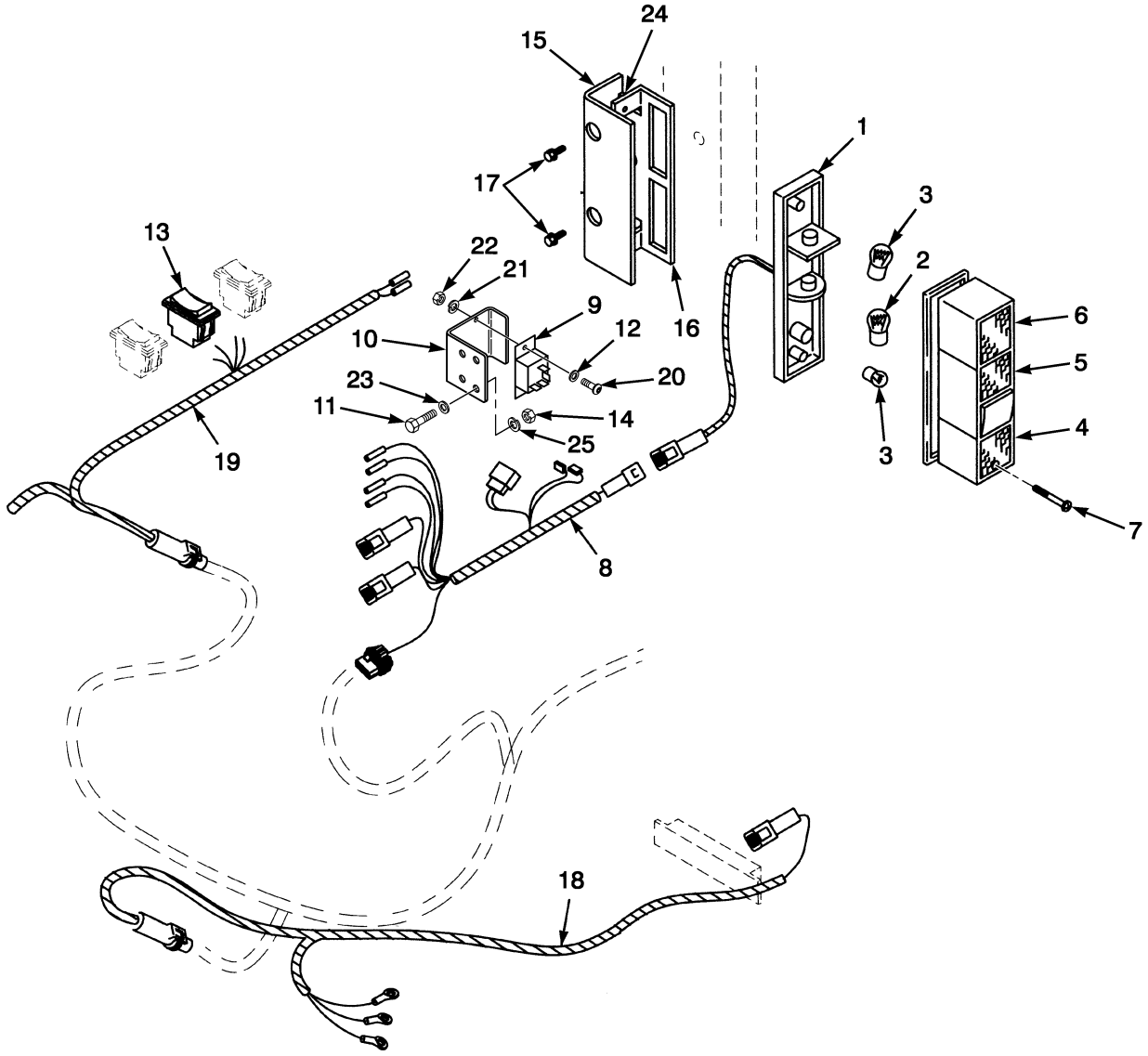

HP000796

©2007 HYSTER COMPANY

BRAKE AND BACK-UP LIGHTS

ITEM	PART NO.	DESCRIPTION	QTY
1	1364541	Brake and Back-Up Light	2
2	264007	Bulb	1
3	1302258	Bulb	2
4	1376439	Lens (Clear) (Bottom)	1
5	1376440	Lens (Red) (Center)	1
6	1376441	Lens (Red) (Top)	1
7	1376446	Screw	2
8	2060876	Wire Harness (☞ Figure 11-21)	1
9	1525827	Relay (24 Volt)	1
10	1556487	Bracket	1
11	293796	Capscrew	2
12	197065	Washer	2
13	1382302	Switch (Rear Light)	1
14	1383681	Nut	2
15	1364264	Plate	2
16	1364265	Plate	2
17	316678	Screw	4
18	2036351	Wire Harness	1
19	1380550	Wire Harness (Switch) (☞ Figure 11-22)	1
20	220289	Screw	2
21	15151	Lockwasher	2
22	15049	Nut	2
23	320156	Washer	4
24	1364542	Clip Nut	4
25	293779	Lockwasher	2

©2007 HYSTER COMPANY

LIGHTS, LED BACK-UP AND BRAKE (Figure 11-15)
(D/B 04/2004⇒)

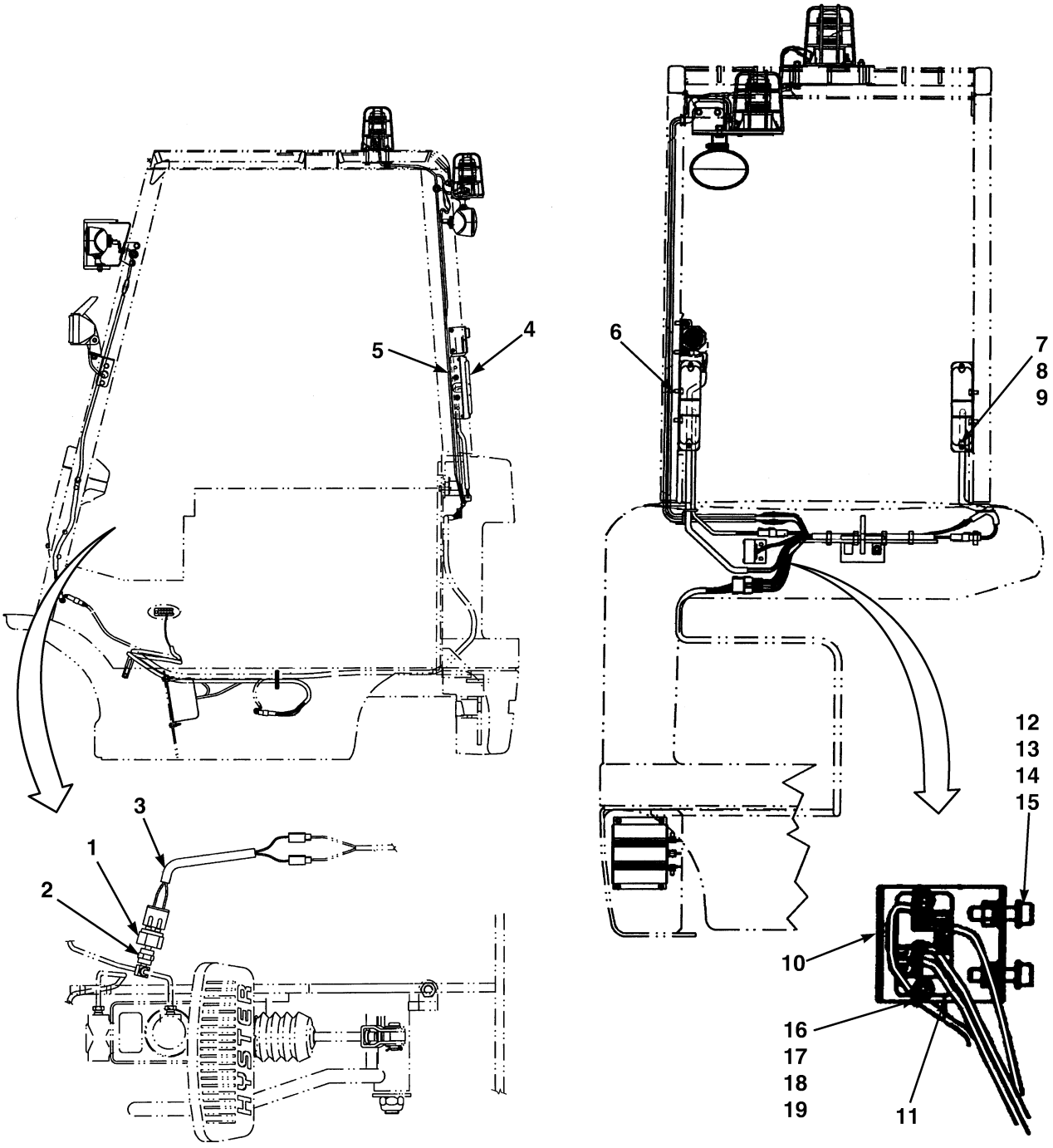

BP000231

©2007 HYSTER COMPANY

LIGHTS, LED BACK-UP AND BRAKE
(D/B 04/2004⇒)

ITEM	PART NO.	DESCRIPTION	QTY
1	387867	Pressure Switch	1
2	16168	Fitting	1
3	2070134	Wire Harness (Pressure Switch)	1
4	1556324	Brake and Back-Up Light (LED)	2
5	1555680	Bracket (LED Light)	2
6	316678	Screw	4
7	302036	Screw	4
8	292679	Lockwasher	4
9	292668	Nut	4
10	1556487	Bracket (Relay)	1
11	1525827	Relay (24 Volt)	1
12	320156	Washer	4
13	293779	Lockwasher	2
14	293796	Capscrew	2
15	1383681	Nut	2
16	220289	Screw	2
17	197065	Washer	2
18	15151	Lockwasher	2
19	15049	Nut	2

©2007 HYSTER COMPANY

DRIVE AND REAR LIGHTS (Figure 11-16)

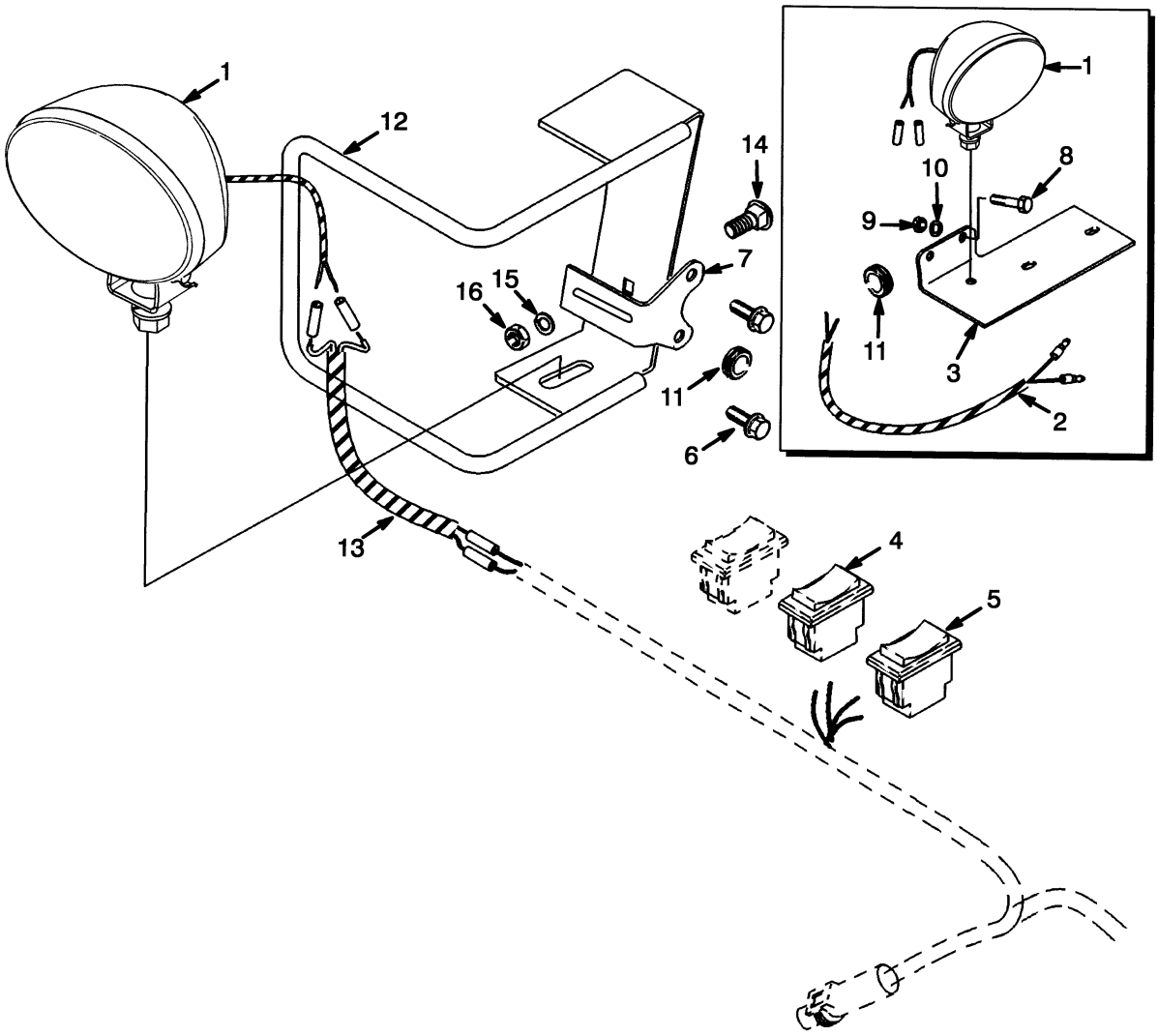

HP000797

©2007 HYSTER COMPANY

DRIVE AND REAR LIGHTS

ITEM	PART NO.	DESCRIPTION	QTY
1	1531984	Work Light Assembly (12 Volt)	3
1	1544764	Bulb	1
1	1565840	Wire Harness	1
2	2047825	Wire Harness (Rear Light)	1
3	1537683	Plate	1
4	1382303	Switch Assembly (Rear)	1
5	1382302	Switch (Front)	1
6	316678	Screw	4
7	878185	Plate	2
8	136749	Capscrew	2
9	239503	Nut	2
10	292681	Lockwasher	2
11	1367645	Grommet	3
12	1375172	Bracket (LH)	1
12	1375171	Bracket (RH)	1
13	1380825	Wire Harness (Headlight)	1
14	1375168	Bolt	2
15	296418	Washer	2
16	316835	Nut	2

©2007 HYSTER COMPANY

STROBE LIGHT (Figure 11-17)

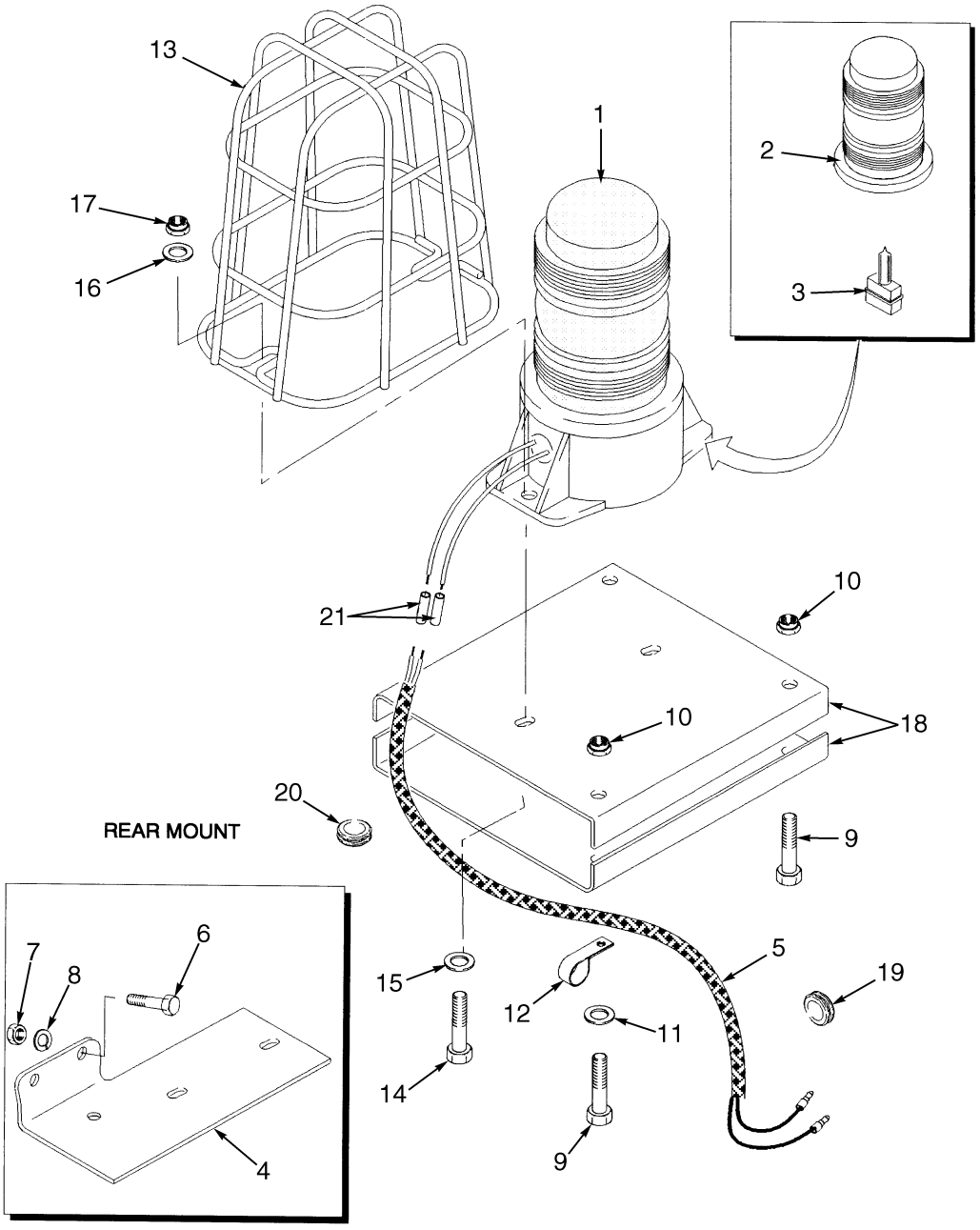

HP000407

©2007 HYSTER COMPANY

STROBE LIGHT

KEY:
A: Rear Mount
B: Top Mount

ITEM		PART NO.	DESCRIPTION	QTY A	QTY B
1	**b**	1652290	Strobe Light (LED)	1	1
1	**a**	1382130	Strobe Light	1	1
2	**a**	1526082	Lens (Amber)	1	1
3	**a**	1309775	Bulb	1	1
4		1537683	Plate	1	..
5		2073093	Wire Harness	1	1
6		136749	Capscrew	2	..
7		239503	Nut	2	..
8		292681	Lockwasher	2	..
9		136704	Capscrew	..	4
10		313828	Nut	..	4
11		320157	Washer	..	1
12		164488	Clamp	..	1
13		1302024	Guard	1	1
14		220504	Screw	2	2
15		197067	Washer	4	4
16		15152	Lockwasher	2	2
17		15052	Nut	2	2
18		1364548	Bracket	..	2
19		1367645	Grommet	1	1
20		1305382	Grommet (Plate Type Overhead Guard)	..	1
21		1306271	Connector	2	2

FOOTNOTES:
a ⇒ PENDING PER ECN 10298203
b PENDING PER ECN 10298203 ⇒

©2007 HYSTER COMPANY

SPOTLIGHT (Figure 11-18)

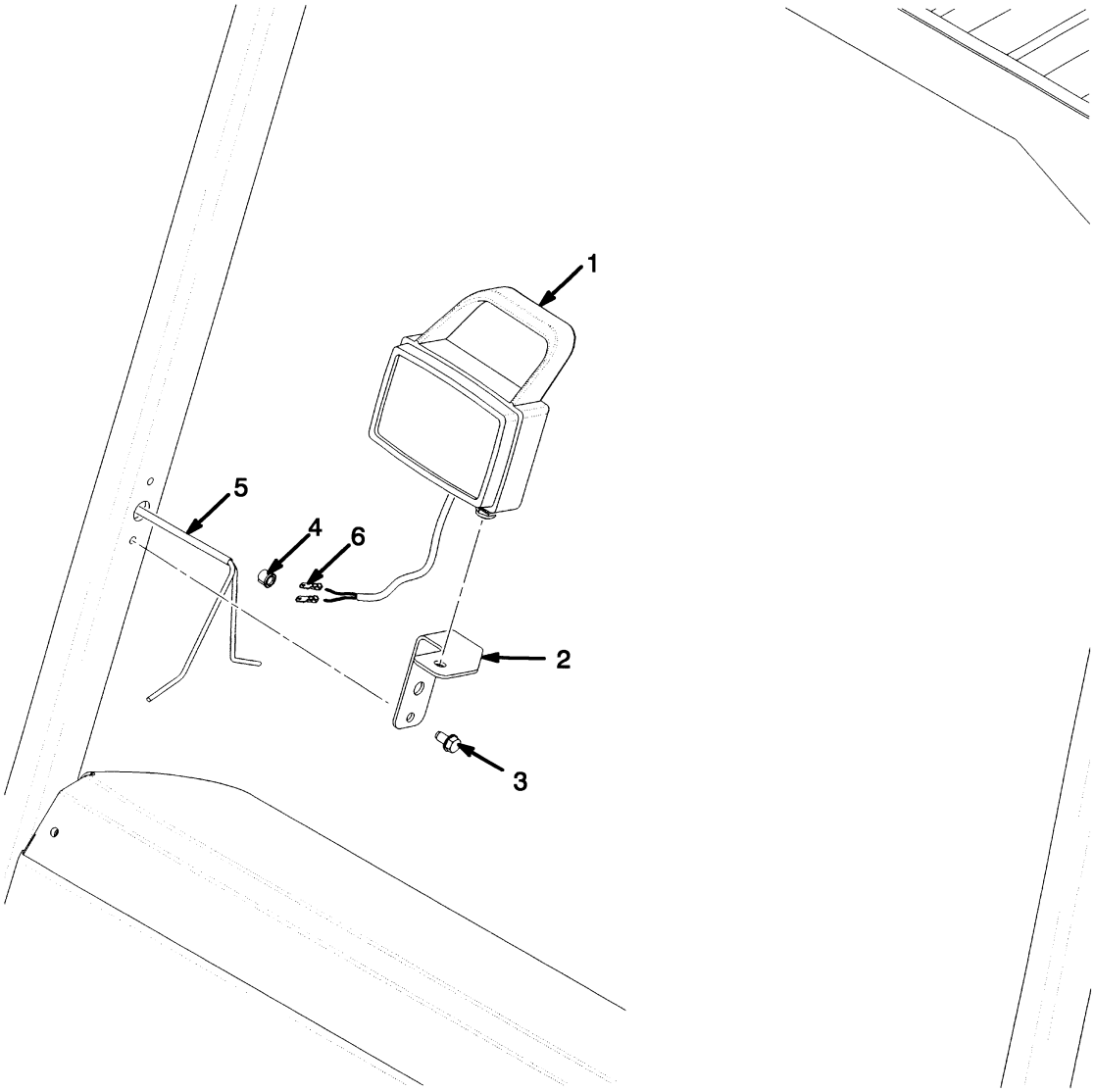

HP000162

ITEM	PART NO.	DESCRIPTION	QTY
1	1356350	Spotlight	1
1	1362043	Light	1
1	1662409	Bulb	1
1	1362044	Switch	1
2	1356352	Bracket	1
3	316678	Screw	2
4	1356354	Bushing	1
5	1377399	Wire Harness	1
6	1306271	Connector	2

©2007 HYSTER COMPANY

DC TO DC CONVERTER (Figure 11-19)
36/48 VOLT TO 12 VOLT

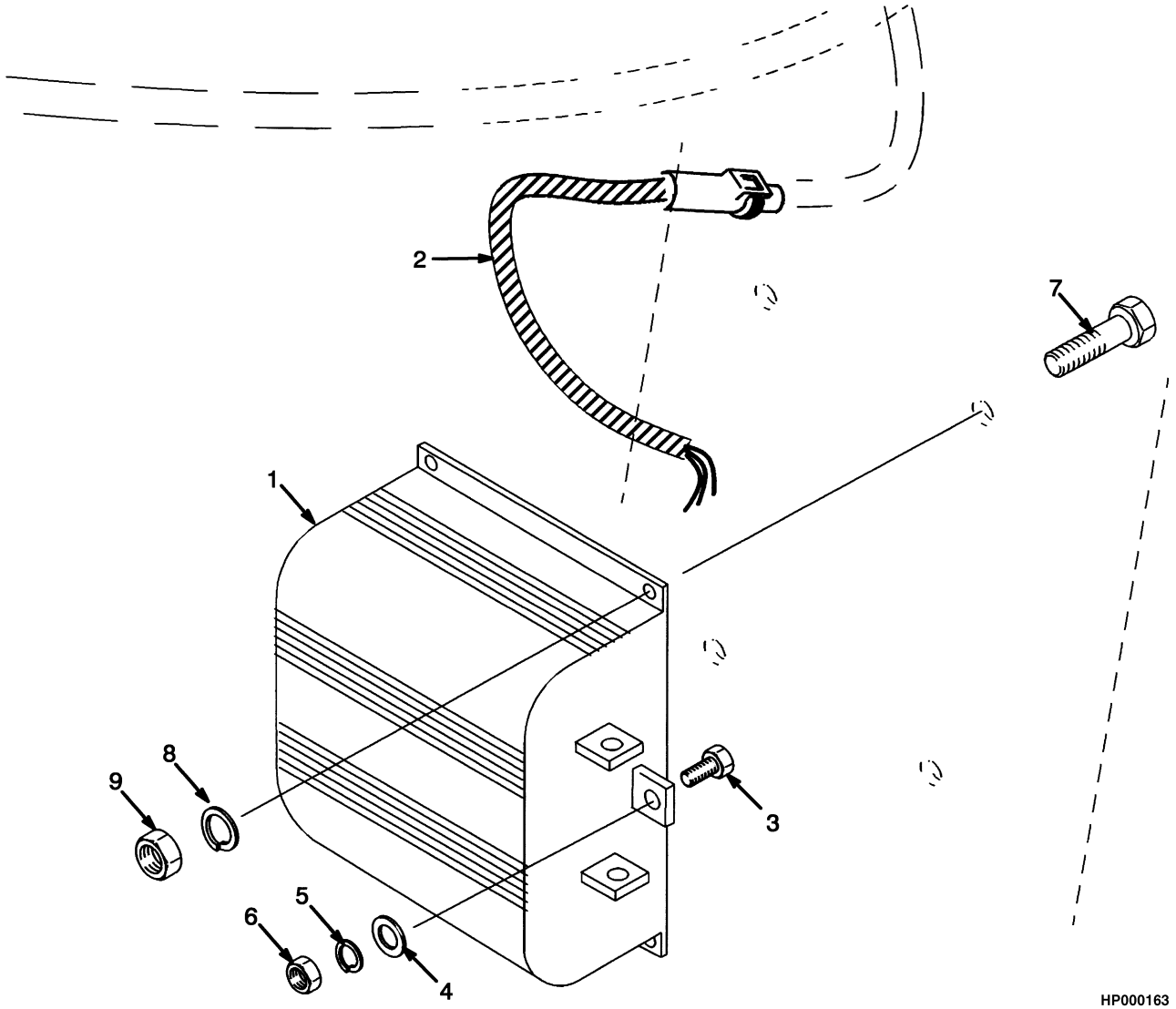

ITEM		PART NO.	DESCRIPTION	QTY
1	**a**	1390575	Power Converter	1
1	**b**	2066643	DC Converter	1
2	**a**	2036371	Wire Harness	1
2	**b**	2086419	Wire Harness	1
3	**a**	136681	Capscrew	3
4	**a**	320157	Washer	3
5	**a**	292681	Lockwasher	3
6	**a**	239503	Nut	3
7		18466	Capscrew	4
8		15154	Lockwasher	4
9		15054	Nut	4

FOOTNOTES:
a ⇒ D/B 04/2006
b D/B 04/2006 ⇒

BACK-UP ALARM (Figure 11-20)

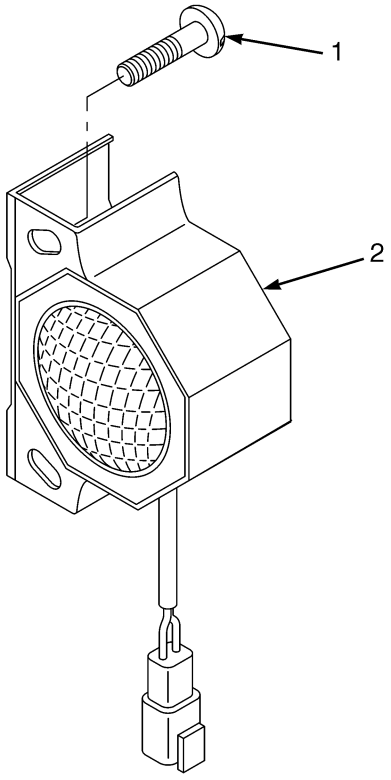

BP000403

©2007 HYSTER COMPANY

BACK-UP ALARM

ITEM	PART NO.	DESCRIPTION	QTY
1	2064926	Back-Up Alarm (87 dbA)	1
2	316678	Screw	2

©2007 HYSTER COMPANY

WIRE HARNESS (Figure 11-21)
REAR LIGHTS

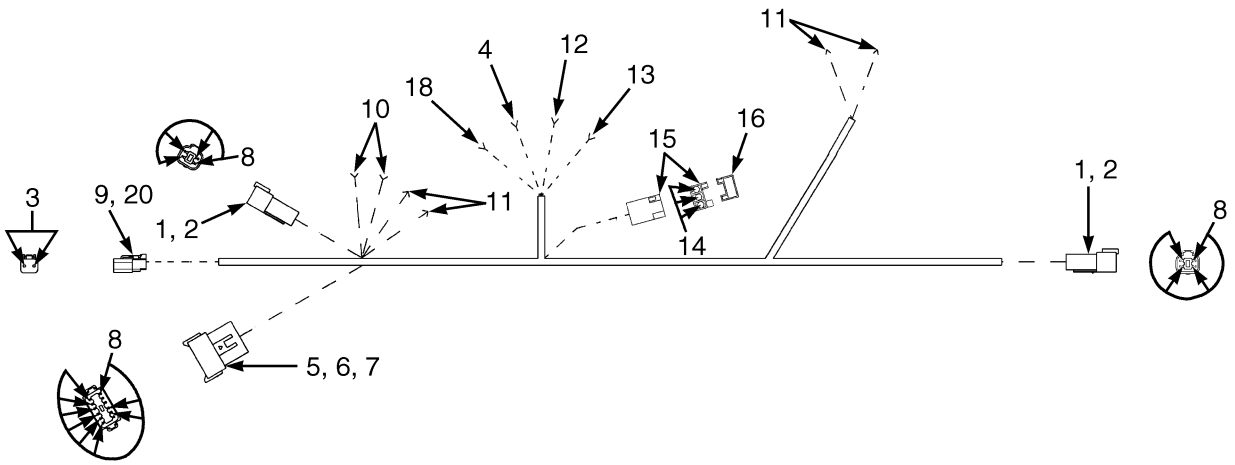

HP000865

ITEM	PART NO.	DESCRIPTION	QTY
	2060876	Wire Harness	1
1	1330411	Connector	2
2	1330416	Secondary Lock	2
3	1330438	Terminal (Socket)	2
4	236901	Terminal	1
5	1330439	Terminal (Plug)	3
6	1352602	Connector	1
7	1352603	Secondary Lock	1
8	1330437	Terminal (Pin)	17
9	1330419	Connector	1
10	1306270	Connector	2
11	1306271	Connector	4
12	248196	Connector	1
13	148648	Connector	1
14	2054463	Socket	3
15	2047859	Housing	1
16	2050719	Diode	1
17	1330424	Secondary Lock	1
18	1352565	Connector	1

©2007 HYSTER COMPANY

WIRE HARNESS (Figure 11-22)
SWITCH

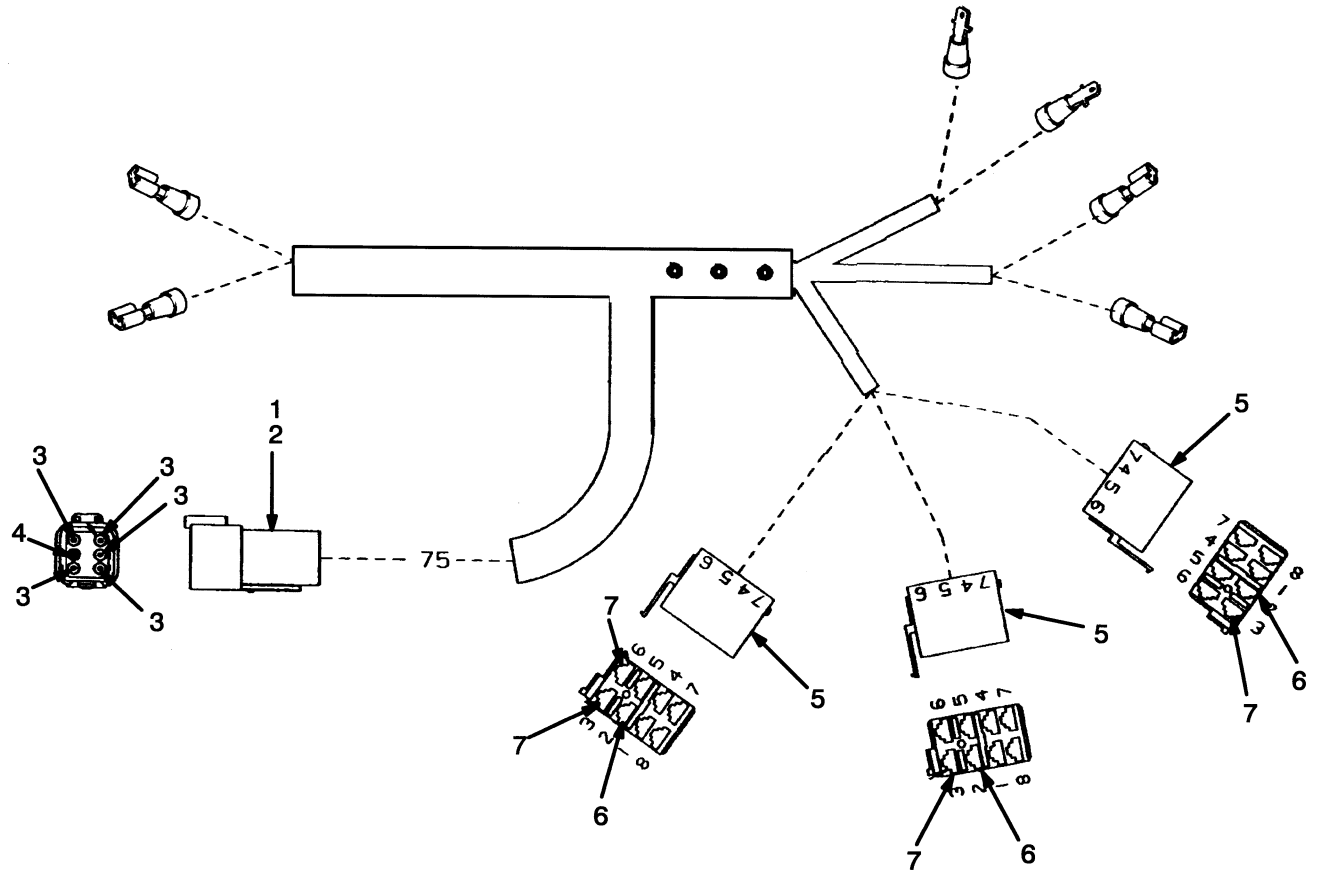

ITEM	PART NO.	DESCRIPTION	QTY
	1380550	Wire Harness	1
1	1330412	Connector	1
2	1330417	Secondary Lock	1
3	1330437	Terminal (Pin)	5
4	1330439	Terminal (Plug)	1
5	1382308	Socket (Switch)	3
6	1331233	Blade	3
7	233141	Terminal	4

WIRE HARNESS (Figure 11-23)
TRACTION CUT-OUT
(⇒S/N G108N03309D)

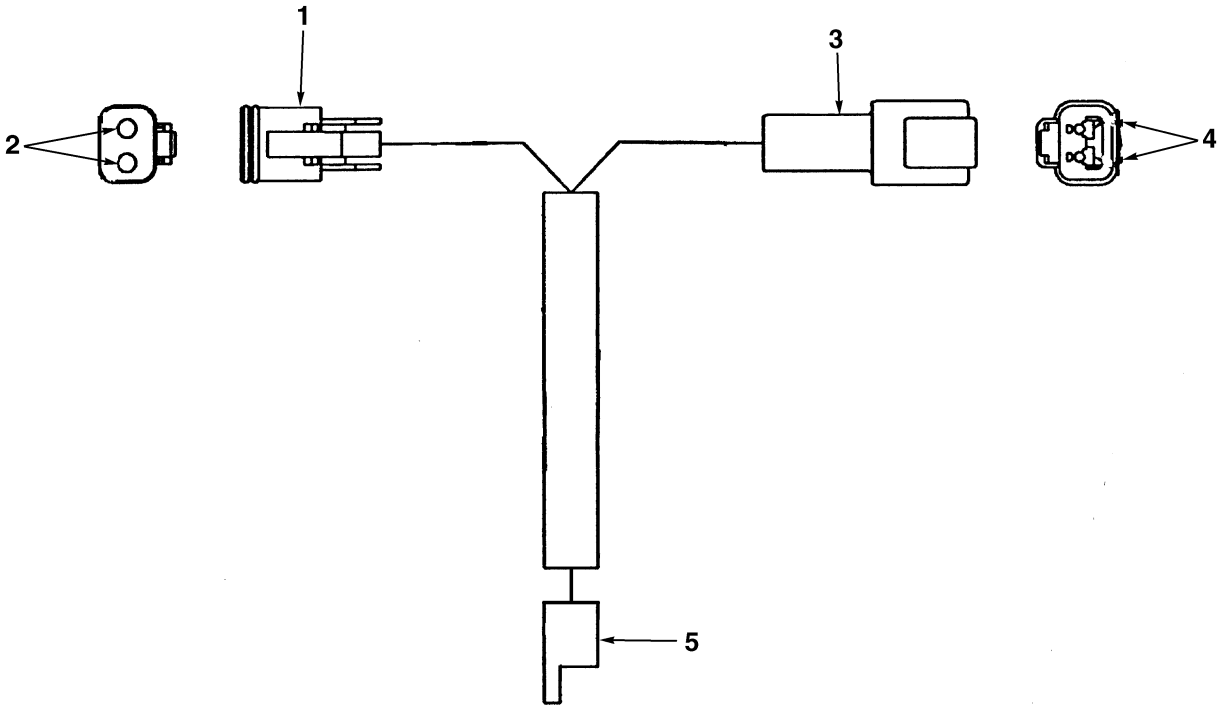

HP000802

©2007 HYSTER COMPANY

WIRE HARNESS
TRACTION CUT-OUT
(⇒S/N G108N03309D)

ITEM	PART NO.	DESCRIPTION	QTY
	2060358	Wire Harness	1
1	. . . . .	Connector Assembly (Seat Switch Harness)	1
1	1330424	Secondary Lock	1
1	1330419	Connector	1
2	1330438	Terminal (Socket)	2
3	. . . . .	Connector Assembly (Main Harness)	1
3	1330414	Secondary Lock	1
3	1330409	Connector	1
4	1330437	Terminal (Pin)	1
5	1498185	Connector (Battery Arm Switch)	1

©2007 HYSTER COMPANY

WIRE HARNESS (Figure 11-24)
TRACTION CUT-OUT
(S/N G108N03310D⇒)

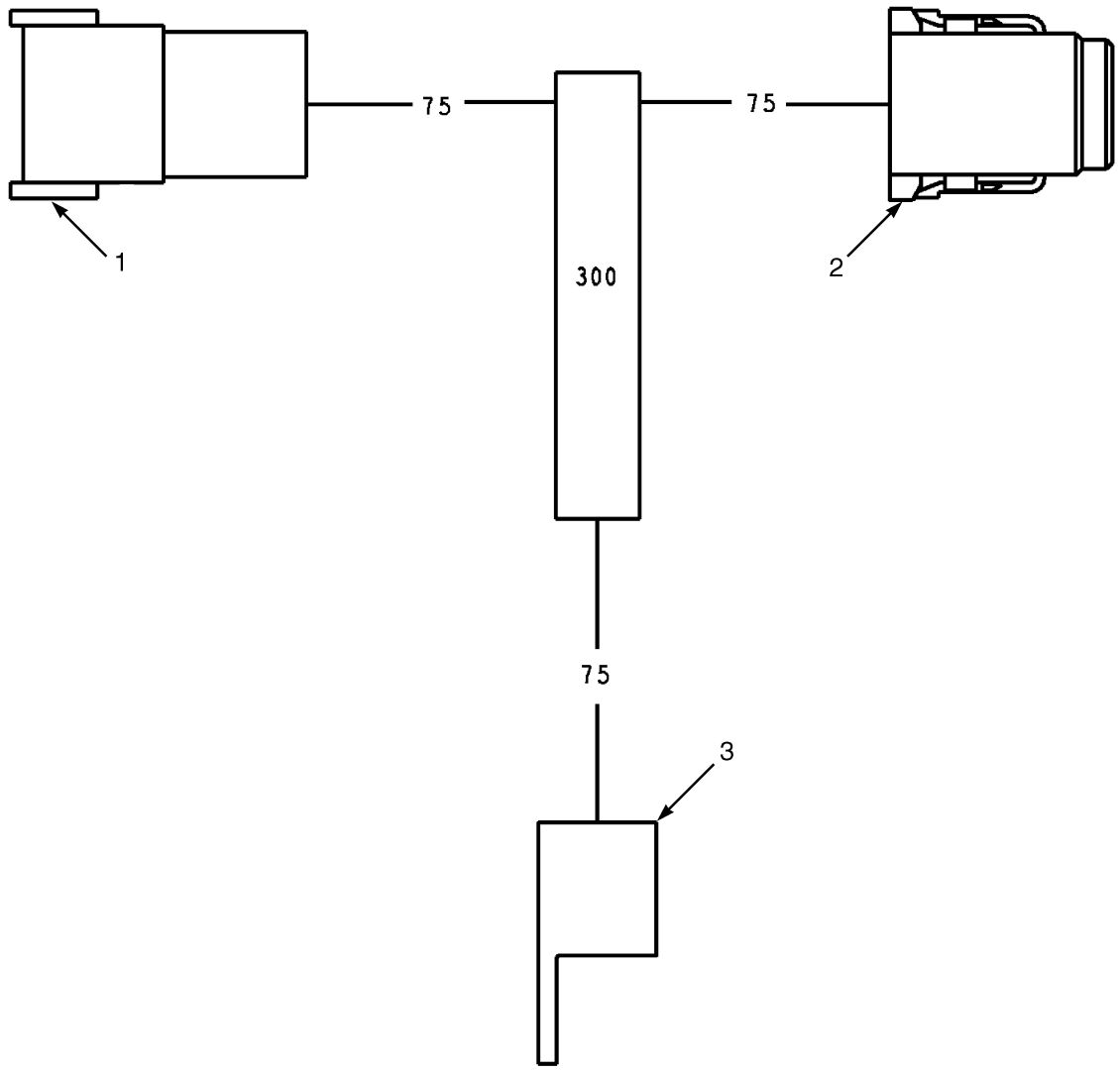

BP080475

ITEM	PART NO.	DESCRIPTION	QTY
	2088742	Wire Harness	1
1	. . . . .	Connector Assembly (Main Harness)	1
1	1541991	Connector	1
1	1541992	Secondary Lock	1
1	1463139	Terminal	7
2	. . . . .	Connector Assembly (Seat Switch Harness)	1
2	1541988	Connector	1
2	1541989	Secondary Lock	1

©2007 HYSTER COMPANY

WIRE HARNESS
TRACTION CUT-OUT
(S/N G108N03310D⇒)

ITEM	PART NO.	DESCRIPTION	QTY
2	1463138	Pin	7
3	1498185	Connector (Battery Switch)	1

NOTES

12 FIELD CONVERSION KITS

SECTION 12
FIELD CONVERSION KITS

DESCRIPTION	PAGE
AUXILARY TUBE EXTENSION KIT FOUR STAGE FULL FREE-LIFT	12-4
AUXILARY TUBE EXTENSION KIT TWO AND THREE STAGE FULL FREE-LIFT	12-4
AUXILARY TUBE EXTENSION KIT TWO STAGE LIMITED FREE-LIFT	12-3
CONTROL VALVE	12-2
CONTROL VALVES CONVERSION KITS ELECTRONIC HYDRAULICS	12-12
DIRECTIONAL CONTROL CONVERSION	12-3
ELECTRICAL CONVERSIONS	12-2
FENDER KITS	12-3
HEADER HOSE CONVERSION KITS FOUR STAGE FULL FREE-LIFT	12-12
HEADER HOSE CONVERSION KITS THREE STAGE FULL FREE-LIFT E45-55Z	12-9
HEADER HOSE CONVERSION KITS THREE STAGE FULL FREE-LIFT E60-65Z	12-10
HEADER HOSE CONVERSION KITS TWO STAGE FULL FREE-LIFT E45-55Z	12-7
HEADER HOSE CONVERSION KITS TWO STAGE FULL FREE-LIFT E60-65Z	12-8
HEADER HOSE CONVERSION KITS TWO STAGE LIMITED FREE-LIFT E45-55Z	12-5
HEADER HOSE CONVERSION KITS TWO STAGE LIMITED FREE-LIFT E60-65Z	12-6
MAST TILT CONVERSION KITS	12-2
WIDE TREAD KITS	12-3

©2007 HYSTER COMPANY

ELECTRICAL CONVERSIONS

DESCRIPTION	PART NUMBER
Electric Seat Brake Kit	**a** 1661417
Electric Seat Brake Kit	**b** 1661424

FOOTNOTES:
a ⇒ S/N G108N05936E
b S/N G108N05937E ⇒

CONTROL VALVE

DESCRIPTION	PART NUMBER
3 Function Non-detent to 3 Function Detent	1358321
3 Function Non-Dentent to 4 Function	1364788
3 Function Detented to 4 Function	1364789

MAST TILT CONVERSION KITS

DESCRIPTION	PART NUMBER
Mast Tilt Conversion Kit 5°Forward/5°Back	1358462
Mast Tilt Conversion Kit 5°Forward/4°Back	1380106

ELECTRICAL CONVERSIONS

DESCRIPTION	PART NUMBER
Turn Light Kit	1566818
12V DC-DC Convertor Kit	**b** 865970
12V DC-DC Convertor Kit	**c** 865971
Strobe Light Kit	**d** 1566829
Back-Up Alarm Kit	**d** 1566827
12V Headlight Kit	**a** 1566838
12V Rear Driving Light Kit	**a** 1566840
Brake and Back-Up Light Kit	**a** 1566843
Electric Seat Brake Kit	1567100

FOOTNOTES:
a 12V DC-DC Converter Required
b 36V Truck
c 48V Truck
d Without Lights, 2036351 and 2060876 Wire Harness in Kit Required

©2007 HYSTER COMPANY

DIRECTIONAL CONTROL CONVERSION

DESCRIPTION	PART NUMBER
Forward/Reverse Lever To Monotrol Pedal Kit	1566815
Monotrol Pedal to Forward/Reverse Lever Kit	1566816

FENDER KITS

DESCRIPTION	PART NUMBER
Wide Fender Kit	**b** 1358318
Wide Fender Kit	**d** 1358319
Wide Fender Kit	**f** 1358320
Wide Fender Kit	**a** 1380840
Wide Fender Kit	**c** 1380841
Wide Fender Kit	**e** 1380842

FOOTNOTES:
a 27.5 in. Battery Compartment With Battery Rollers
b 27.5 in. Battery Compartment Without Battery Rollers
c 33.3 in. Battery Compartment With Battery Rollers
d 33.3 in. Battery Compartment Without Battery Rollers
e 39.9 in. Battery Compartment With Battery Rollers
f 39.9 in. Battery Compartment Without Battery Rollers

WIDE TREAD KITS

DESCRIPTION	PART NUMBER
Kit-Wide Fender 700 MM Battery Compartment without Battery Rollers	1637456
Kit-Wide Fender 847 mm Battery Compartment without Battery Rollers	1637457
Kit-Wide Fender 1015 MM Battery Compartment without Battery Rollers	1637458

AUXILARY TUBE EXTENSION KIT TWO STAGE LIMITED FREE-LIFT

DESCRIPTION	PART NUMBER
Tube Extension Kit, 3 Function E45Z	1362410
Tube Extension Kit, 4 Function E45Z	1362411
Tube Extension Kit, 3 Function E50-55Z	1362412
Tube Extension Kit, 4 Function E50-55Z	1362413
Tube Extension Kit, 3 Function E60-65Z	1362414
Tube Extension Kit, 4 Function E60-65Z	1362415
Quick Disconnect Kit	1362426
Rotator Tube Extension Kit E50-55Z	1377957
Rotator Tube Extension Kit E60-65Z	1377958
Quick Disconnect Fittings Kit	1377952

©2007 HYSTER COMPANY

AUXILARY TUBE EXTENSION KIT TWO AND THREE STAGE FULL FREE-LIFT

DESCRIPTION	PART NUMBER
Tube Extension Kit, 3 Function, Class II E45-55Z	1381794
Tube Extension Kit, 4 Function, Class II E45-55Z	1381795
Quick Disconnect Kit	1362426
Tube Extension Kit, 3 Function, Class III E60-65Z	1381796
Tube Extension Kit, 4 Function, Class III E60-65Z	1381797
Quick Disconnect Kit	1362426
Tube Extension Kit, Rotator, Class II E45-55Z	1381798
Quick Disconnect Fittings Kit	1377952
Tube Extension Kit, Rotator, Class III E60-65Z	1381799
Quick Disconnect Fittings Kit	1377952

AUXILARY TUBE EXTENSION KIT FOUR STAGE FULL FREE-LIFT

DESCRIPTION	PART NUMBER
Tube Extension Kit, 3 Function	1370398
Tube Extension Kit, 4 Function	1370399

©2007 HYSTER COMPANY

HEADER HOSE CONVERSION KITS TWO STAGE LIMITED FREE-LIFT E45-55Z

Two To Three Function

DESCRIPTION	OALH					QTY
	2093 mm (82.4 in.)	2992 mm (117.8 in.)	3292 mm (129.6 in.)	3792 mm (149.3 in.)	4292 mm (169.0 in.)	
Mast Group Number	B507 2093	B507 2992	B507 3292	B507 3792	B507 4292	
Header Hose Conversion Kit	1381820	1377276	1354666	1354668	1354671	1

Two to Four Function

DESCRIPTION	OALH					QTY
	2093 mm (82.4 in.)	2992 mm (117.8 in.)	3292 mm (129.6 in.)	3792 mm (149.3 in.)	4292 mm (169.0 in.)	
Mast Group Number	B507 2093	B507 2992	B507 3292	B507 3792	B507 4292	
Header Hose Conversion Kit	1381822	1377278	1377279	1354670	1377280	1

Three to Four Function

DESCRIPTION	OALH					QTY
	2093 mm (82.4 in.)	2992 mm (117.8 in.)	3292 mm (129.6 in.)	3792 mm (149.3 in.)	4292 mm (169.0 in.)	
Mast Group Number	B507 2093	B507 2992	B507 3292	B507 3792	B507 4292	
Header Hose Conversion Kit	1381821	1377277	1354667	1354669	1354672	1

©2007 HYSTER COMPANY

HEADER HOSE CONVERSION KITS TWO STAGE LIMITED FREE-LIFT E60-65Z

Two to Three Function

DESCRIPTION	OALH				QTY
	2859 mm (112.6 in.)	3159 mm (124.4 in.)	3659 mm (144.1 in.)	4159 mm (163.7 in.)	
Mast Group Number	B562 2859	B562 3159	B562 3659	B562 4159	
Header Hose Conversion Kit	1377276	1354666	1354668	1354671	1

Two to Four Function

DESCRIPTION	OALH				QTY
	2859 mm (112.6 in.)	3159 mm (124.4 in.)	3659 mm (144.1 in.)	4159 mm (163.7 in.)	
Mast Group Number	B562 2859	B562 3159	B562 3659	B562 4159	
Header Hose Conversion Kit	1377278	1377279	1354670	1377280	1

Three to Four Function

DESCRIPTION	OALH				QTY
	2859 mm (112.6 in.)	3159 mm (124.4 in.)	3659 mm (144.1 in.)	4159 mm (163.7 in.)	
Mast Group Number	B562 2859	B562 3159	B562 3659	B562 4159	
Header Hose Conversion Kit	1377277	1354667	1354669	1354672	1

©2007 HYSTER COMPANY

HEADER HOSE CONVERSION KITS TWO STAGE FULL FREE-LIFT E45-55Z

Two to Three Function

DESCRIPTION	OALH			QTY
	2962 mm (116.6 in.)	3262 mm (128.4 in.)	3762 mm (148.1 in.)	
Mast Group Number	B509 2962	B509 3262	B509 3762	
Header Hose Conversion Kit	1381850	1381855	1381859	1

Two to Four Function

DESCRIPTION	OALH			QTY
	2962 mm (116.6 in.)	3262 mm (128.4 in.)	3762 mm (148.1 in.)	
Mast Group Number	B509 2962	B509 3262	B509 3762	
Header Hose Conversion Kit	1381851	1381856	1381860	1

Three to Four Function

DESCRIPTION	OALH			QTY
	2962 mm (116.6 in.)	3262 mm (128.4 in.)	3762 mm (148.1 in.)	
Mast Group Number	B509 2962	B509 3262	B509 3762	
Header Hose Conversion Kit	1381852	1362380	1377296	1

©2007 HYSTER COMPANY

HEADER HOSE CONVERSION KITS TWO STAGE FULL FREE-LIFT E60-65Z

Three to Four Function

DESCRIPTION	OALH			QTY
	2860 mm (112.6 in.)	3160 mm (124.4 in.)	3660 mm (144.1 in.)	
Mast Group Number	B564 2860	B564 3160	B564 3660	
Header Hose Conversion Kit	1381849	1362380	1377296	1

Two to Four Function

DESCRIPTION	OALH			QTY
	2860 mm (112.6 in.)	3160 mm (124.4 in.)	3660 mm (144.1 in.)	
Mast Group Number	B564 2860	B564 3160	B564 3660	
Header Hose Conversion Kit	1381854	1381858	1381862	1

©2007 HYSTER COMPANY

HEADER HOSE CONVERSION KITS THREE STAGE FULL FREE-LIFT E45-55Z

Two to Three Function

DESCRIPTION	OALH					QTY
	4310 mm (169.7 in.)	4760 mm (187.4 in.)	4910 mm (193.3 in.)	5510 mm (216.9 in.)	5960 mm (234.6 in.)	
Mast Group Number	B508 4310	B508 4760	B508 4910	B508 5510	B508 5960	
Header Hose Conversion Kit	1381825	1381829	1381833	1381839	1381843	1

Two to Four Function

DESCRIPTION	OALH					QTY
	4310 mm (169.7 in.)	4760 mm (187.4 in.)	4910 mm (193.3 in.)	5510 mm (216.9 in.)	5960 mm (234.6 in.)	
Mast Group Number	B508 4310	B508 4760	B508 4910	B508 5510	B508 5960	
Header Hose Conversion Kit	1381826	1381830	1381834	1381840	1381844	1

Three to Four Function

DESCRIPTION	OALH					QTY
	4310 mm (169.7 in.)	4760 mm (187.4 in.)	4910 mm (193.3 in.)	5510 mm (216.9 in.)	5960 mm (234.6 in.)	
Mast Group Number	B508 4310	B508 4760	B508 4910	B508 5510	B508 5960	
Header Hose Conversion Kit	1354653	1368670	1377316	1377306	1377309	1

©2007 HYSTER COMPANY

HEADER HOSE CONVERSION KITS THREE STAGE FULL FREE-LIFT E60-65Z

Two to Three Function

DESCRIPTION	OALH					QTY
	4118 mm (162.1 in.)	4568 mm (179.8 in.)	4718 mm (185.7 in.)	4868 mm (191.7 in.)	5318 mm (209.4 in.)	
Mast Group Number	B563 4118	B563 4568	B563 4718	B563 4868	B563 5318	
Header Hose Conversion Kit	1381827	1381831	1381835	1381837	1381841	1

Three to Four Function

DESCRIPTION	OALH					QTY
	4118 mm (162.1 in.)	4568 mm (179.8 in.)	4718 mm (185.7 in.)	4868 mm (191.7 in.)	5318 mm (209.4 in.)	
Mast Group Number	B563 4118	B563 4568	B563 4718	B563 4868	B563 5318	
Header Hose Conversion Kit	1354653	1368670	1377316	1354661	1377306	1

See Service Manual for service procedures.
©2007 HYSTER COMPANY

HEADER HOSE CONVERSION KITS FOUR STAGE FULL FREE-LIFT

Two to Four Function

DESCRIPTION	OALH					QTY
	5450 mm (214.6 in.)	5754 mm (226.5 in.)	6058 mm (238.5 in.)	6364 mm (250.6 in.)	6670 mm (262.6 in.)	
Mast Group Number	C515 5450	C515 5754	C515 6058	C515 6364	C515 6670	
Header Hose Conversion Kit	1372409	1372412	1372415	1372418	1372421	1

DESCRIPTION	OALH				QTY
	6977 mm (274.7 in.)	7274 mm (286.4 in.)	7583 mm (298.5 in.)	7886 mm (310.5 in.)	
Mast Group Number	C515 6977	C515 7274	C515 7583	C515 7886	
Header Hose Conversion Kit	1372424	1372427	1372430	1372433	1

Two to Three Function

DESCRIPTION	OALH					QTY
	5450 mm (214.6 in.)	5754 mm (226.5 in.)	6058 mm (238.5 in.)	6364 mm (250.6 in.)	6670 mm (262.6 in.)	
Mast Group Number	C515 5450	C515 5754	C515 6058	C515 6364	C515 6670	
Header Hose Conversion Kit	1372407	1372410	1372413	1372416	1372419	1

DESCRIPTION	OALH				QTY
	6977 mm (274.7 in.)	7274 mm (286.4 in.)	7583 mm (298.5 in.)	7886 mm (310.5 in.)	
Mast Group Number	C515 6977	C515 7274	C515 7583	C515 7886	
Header Hose Conversion Kit	1372422	1372425	1372428	1372431	1

Three to Four Function

©2007 HYSTER COMPANY

HEADER HOSE CONVERSION KITS FOUR STAGE FULL FREE-LIFT

DESCRIPTION	OALH					QTY
	5450 mm (214.6 in.)	5754 mm (226.5 in.)	6058 mm (238.5 in.)	6364 mm (250.6 in.)	6670 mm (262.6 in.)	
Mast Group Number	**C515 5450**	**C515 5754**	**C515 6058**	**C515 6364**	**C515 6670**	
Header Hose Conversion Kit	1372408	1372411	1372414	1372417	1372420	1

DESCRIPTION	OALH				QTY
	6977 mm (274.7 in.)	7274 mm (286.4 in.)	7583 mm (298.5 in.)	7886 mm (310.5 in.)	
Mast Group Number	**C515 6977**	**C515 7274**	**C515 7583**	**C515 7886**	
Header Hose Conversion Kit	1372423	1372426	1372429	1372432	1

CONTROL VALVES CONVERSION KITS ELECTRONIC HYDRAULICS

DESCRIPTION	PART NUMBER
Three Function Mini Levers without Clamp to Three Function with Clamp	1593485
Three Function Mini Levers without Clamp to Four Function without Clamp	**b** 1593475
Three Function Mini Levers without Clamp to Four Function with Clamp	**b** 1593476
Three Function Mini Levers without Clamp to Four Function without Clamp	**a** 1593477
Three Function Mini Levers without Clamp to Four Function with Clamp	**a** 1593478
Three Function Joystick to Four Function	**b** 1611038
Three Function Joystick to Four Function	**a** 1611039

FOOTNOTES:
a High Flow
b Standard Flow

©2007 HYSTER COMPANY

13 NUMERICAL INDEX

SECTION 13
NUMERICAL INDEX

PART NO.	PG	ITEM
139	1-12	59
	1-16	46
	1-20	54
12891	7-21	3
	9-23	3
	9-25	3
	11-3	14
	11-7	21
12892	1-11	9
	1-15	14
	1-19	25
12949	6-39	26
	6-39	43
	6-40	58
	6-43	26
	6-43	43
	6-44	57
	6-44	72
13957	4-19	12
	4-19	20
13963	4-17	13
	4-19	13
14191	4-10	8
14480	11-17	21
14560	4-9	4
14591	6-39	8
	6-43	8
14603	7-12	15
	9-7	17
	10-13	22
14692	9-28	20
14760	11-23	4
	11-25	4
14899	5-3	21
15025	1-12	38
	1-16	49
	1-19	5
15029	5-17	4
	5-21	4
15032	3-7	32
15039	5-11	8
	5-27	17
15049	5-3	32
	11-31	22
	11-33	19
15052	11-37	17
15054	6-33	16
	6-37	7
	11-39	9
15055	1-11	5
	1-11	5
	1-15	23
	1-20	38
	5-17	49
	5-21	48
	6-39	1
	6-43	1
15056	1-4	36
15086	4-5	14
	5-15	15
	5-17	41
	5-21	44
15114	1-31	6
	1-47	8
	1-51	11
	11-27	35
15125	1-11	23
	1-15	10
	1-19	22
15127	1-7	19
	10-32	22
15134	1-25	4
	4-3	8
	5-12	52
	6-27	24
	6-57	17
15135	1-12	65
	1-16	38
	1-20	45
	6-29	14
15151	5-3	31
	11-31	21
	11-33	18
15152	11-37	16
15154	11-27	16
	11-39	8
15155	1-11	4
	1-12	61
	1-15	22
	1-19	35
15156	1-3	35
	1-25	5
	4-3	7
	4-5	13
	4-9	29
	6-27	5
15162	1-25	12
15163	5-11	25
	5-27	18
15172	5-12	54
	6-33	30
15175	1-28	3
	1-31	7
	1-34	3
	1-35	3
	1-44	3
	1-45	3
	1-47	9
	1-48	3
	1-51	10
15176	1-3	27
15177	1-12	58
	1-16	43
	1-19	19
15178	6-27	3
15180	5-3	5
	5-11	39
15200	5-11	10
	10-32	25
15211	5-11	19
	6-33	27
	7-12	4
	7-21	10
	8-16	8
	8-19	23
	8-35	10
	8-37	10
	9-9	23
	9-11	23
	9-23	10
	9-25	10
	10-5	18
	10-11	10
	10-27	10
	10-29	10
	11-3	21
	11-5	17
	11-7	17
15212	1-12	40
	1-16	45
	1-20	55
	4-3	4
	5-11	29
15222	6-29	36
	10-3	12
	10-9	16
15223	8-16	9
	10-9	17
	10-11	11
15225	4-17	12
15227	4-17	21
	4-19	34
15236	6-63	3
15315	3-3	34
15483	6-40	50
	6-44	64
15866	6-5	30
	6-9	10
	6-13	6
15880	8-32	11
	9-20	11
15915	6-33	17
	6-37	6
15923	11-27	28
15931	5-29	11
16001	3-3	39
16041	11-3	12
	11-5	12
	11-7	12
16151	3-3	7
16168	5-3	20
	11-33	2
16337	6-61	6
16394	1-11	8
	1-19	34
16447	11-15	11
	11-17	11
	11-21	8
	11-23	3
	11-25	3
16448	11-15	11
	11-17	11
16450	10-15	13
16480	6-39	40
	6-43	40
16481	6-5	22
	6-9	35
	6-13	36
	6-39	8
	6-43	8
	6-55	4
16483	4-9	8
	5-17	5
	5-21	5
	6-33	19
	10-13	18
	11-10	4
	11-11	4
	11-12	4
	11-15	19
	11-17	18
	11-23	11
	11-25	11
16484	4-9	24
	6-13	18
	6-14	49
	6-14	50
	6-14	51

©2007 HYSTER COMPANY

NUMERICAL INDEX (Continued)

PART NO.	PG	ITEM
	6-14	52
	6-33	22
	6-33	24
	6-33	25
	6-33	26
	6-39	11
	6-43	11
16485	4-9	11
	6-5	33
	6-9	7
	6-10	47
	6-13	1
	6-33	20
	6-39	9
	6-43	9
	7-12	20
	7-12	22
	8-16	25
	8-16	26
	8-19	5
	9-7	15
	9-7	16
	9-7	22
	9-9	3
	9-9	10
	9-11	3
	9-11	10
	10-13	7
	10-13	17
	10-13	19
	10-15	27
16486	6-5	34
	6-6	39
	6-9	5
	7-12	15
	8-16	20
	9-7	17
	10-13	22
	10-15	26
16487	6-57	4
	6-59	26
16540	5-17	5
	5-21	5
16541	6-14	50
	6-33	25
16542	6-5	33
	6-9	7
	6-10	47
	6-33	20
16543	10-15	26
16558	11-10	4
	11-11	4
	11-12	4
16559	6-14	52
	6-33	26
16560	6-13	1
	9-7	15
	10-13	17
16567	4-9	8
16578	7-12	22
	8-16	25
	9-7	16
	10-13	7
16693	4-9	7
	11-15	12
	11-21	9
	11-23	5
	11-25	5
16706	6-39	17
	6-39	31
	6-40	48
	6-43	18
	6-43	31
	6-44	48
	6-44	62
16708	5-29	9
16745	6-10	45
	6-14	49
	6-33	22
	6-33	24
16815	4-3	6
16828	6-27	6
16836	1-15	19
16865	4-3	21
	5-11	34
	5-17	13
	5-29	8
16882	7-12	27
	8-16	29
	9-7	19
	10-13	27
16925	11-15	12
	11-17	12
16933	11-15	15
	11-17	12
	11-17	15
	11-23	15
	11-25	15
16982	7-12	17
	8-16	22
	9-7	18
	10-13	10
17105	1-3	32
17196	4-9	24
17321	6-5	3
	6-5	3
	6-9	26
	6-13	30
	6-13	31
	6-14	47
	6-14	48
17635	8-20	28
18419	5-17	14
18460	6-33	4
18466	11-39	7
18494	1-3	3
18515	1-11	19
	1-15	21
	1-20	36
	1-27	9
18535	4-9	28
18697	5-12	56
18720	11-27	17
	11-27	29
18727	1-27	4
18731	1-27	13
	1-33	23
	1-39	35
18832	11-3	10
	11-5	10
	11-7	10
19923	5-17	34
	5-21	26
19979	6-29	9
21189	4-17	2
	4-19	3
21420	3-3	33
26617	6-15	14
	6-19	30
30076	3-3	31
33657	3-3	23
35502	3-3	37
37752	7-8	8
	7-8	8
	8-8	12
	8-8	12
	8-20	30
	9-9	25
	9-11	25
	10-5	15
	10-9	10
	10-16	34
39348	7-14	7
	7-18	3
	8-23	13
	8-27	13
	8-32	13
	9-20	13
	10-23	3
39362	4-9	27
39374	6-65	6
39678	4-17	17
	4-19	17
39714	3-3	16
44542	4-17	27
	4-19	31
46388	6-65	5
46698	1-25	6
53162	4-3	20
	5-11	36
	5-29	7
	11-27	2
55146	10-25	7
55434	6-63	13
57597	3-3	9
57664	6-39	7
	6-39	19
	6-39	33
	6-43	7
	6-43	19
	6-43	33
	6-44	50
	10-19	6
	10-23	7
58901	7-4	8
	7-8	3
	8-4	8
	8-8	8
	8-12	3
	8-35	3
	8-37	3
	9-3	8
	9-5	3
	10-3	3
	10-5	3
	10-9	3
	10-11	3
	10-27	4
	10-29	3
	11-5	21
	11-7	21
58902	10-32	42
58903	4-17	6
	4-19	6
59229	7-18	9
	8-23	10
	8-27	10
	9-14	8

©2007 HYSTER COMPANY

NUMERICAL INDEX (Continued)

PART NO.	PG	ITEM
	9-16	8
60949	3-3	8
61056	6-5	26
	6-9	11
	6-13	5
66359	5-3	2
	5-11	15
69029	3-7	39
	4-17	22
	4-19	35
78562	6-57	14
85550	4-9	9
85885	3-3	25
88431	8-19	1
88436	8-19	1
	10-6	20
	10-9	18
	10-11	12
88441	8-16	1
	8-19	1
	10-6	20
	10-9	18
	10-11	12
	10-11	13
90263	8-32	11
	9-20	11
92861	7-15	11
	7-18	9
	8-23	10
	8-27	10
92942	3-7	27
104506	7-4	3
	8-4	3
	8-8	3
	9-3	3
	10-3	7
	10-5	7
	10-9	7
105817	4-9	3
110322	10-32	37
110922	3-7	37
110923	3-7	37
110924	3-7	37
114312	1-12	50
	1-15	29
	1-19	13
	2-11	10
	2-13	10
	5-27	28
	5-29	12
	11-10	3
	11-11	3
	11-12	3
114369	11-15	8
	11-17	8
117095	4-9	6
118714	3-3	28
119236	4-17	9
	4-19	9
121085	4-9	1
	6-10	50
124359	10-13	16
127045	4-17	10
	4-19	10
	6-5	12
	6-9	18
	6-13	24
	6-59	6
129339	10-3	11
	10-9	15
129361	7-12	1
	8-19	1
129387	7-4	7
	7-8	4
	8-4	7
	8-8	7
	8-12	4
	8-35	4
	8-37	4
	9-3	7
	9-5	4
	10-3	4
	10-5	4
	10-9	4
	10-11	4
	10-27	6
	10-29	4
	11-5	19
	11-7	19
129563	4-9	12
	11-28	52
129888	2-49	12
130845	4-9	10
131358	7-12	7
	7-21	8
	8-16	11
	8-19	17
	8-35	8
	8-37	8
	9-7	3
	9-9	4
	9-12	32
	9-23	8
	9-25	8
	10-27	3
	10-29	8
	11-3	19
	11-5	15
	11-7	15
131716	7-4	4
	8-4	4
	8-8	4
	9-3	4
	10-3	6
	10-5	6
	10-9	6
132401	6-37	8
132860	8-20	33
	9-9	28
	9-12	28
132861	6-13	14
134675	6-63	14
134810	2-45	4
	5-31	4
135588	8-16	1
	10-6	20
	10-9	18
	10-11	12
	10-11	13
135619	8-19	1
	10-6	20
	10-9	18
	10-11	12
135634	8-16	1
135657	4-17	18
	4-19	18
135658	4-17	18
	4-19	18
136681	1-3	17
	2-3	4
	2-11	12
	2-13	12
	4-9	26
	6-33	9
	6-37	18
	10-32	28
	11-15	6
	11-17	6
	11-21	6
	11-27	37
	11-27	43
	11-39	3
136687	1-12	46
	2-4	32
	4-5	10
	5-3	27
	6-29	7
	6-37	17
136692	1-3	4
	1-3	14
	1-11	32
	1-15	36
	1-20	43
	3-3	44
	4-9	32
	5-3	9
	5-17	3
	5-21	3
	5-27	11
	6-9	24
	6-13	40
	6-29	31
	6-34	44
	6-57	12
	6-59	23
	11-27	44
136704	5-11	26
	7-12	13
	7-24	2
	8-19	8
	11-37	9
136749	2-3	5
	3-7	5
	4-3	28
	5-11	45
	5-17	45
	5-21	45
	6-5	15
	6-27	10
	8-19	14
	8-40	6
	9-28	8
	10-13	15
	10-15	11
	11-35	8
	11-37	6
136985	1-3	28
	1-11	31
	3-3	42
	5-3	8
	6-5	27
	6-9	16
	6-13	12
	6-29	34
	9-9	9
	9-11	9
137852	9-28	13
145639	1-28	4

NUMERICAL INDEX (Continued)

PART NO.	PG	ITEM
	1-34	4
	1-35	4
	1-44	4
	1-45	4
	1-48	4
	5-11	46
	5-12	64
145641	10-15	20
145978	3-3	24
147972	9-14	7
	9-16	7
147973	8-32	10
	9-20	10
148606	2-39	36
	2-53	13
148611	2-39	34
	2-39	35
	2-53	12
	2-53	13
148648	5-31	7
	11-42	13
153667	2-3	3
153716	4-17	30
	4-19	21
153717	4-17	31
	4-19	22
154355	8-19	6
	9-9	11
	9-11	11
154375	6-65	4
156194	4-17	32
	4-19	23
156195	4-17	32
	4-19	23
160266	6-5	25
	6-9	14
	6-13	10
161003	7-12	25
	8-16	5
	8-19	20
	9-9	20
	9-11	20
	10-5	8
	10-11	5
161059	8-19	1
	10-11	13
164474	8-16	1
	8-19	1
	10-6	20
	10-9	18
	10-11	12
	10-11	13
164488	11-37	12
164639	4-17	26
	4-19	32
164840	8-32	10
	9-20	10
166857	4-9	2
	6-10	49
	6-13	21
	6-57	15
	6-59	17
168054	1-25	13
169592	6-14	51
169874	1-3	2
	1-7	11
170658	1-53	20
175861	6-29	3
175944	5-31	8
176640	2-4	35
	2-11	26
	2-13	30
	3-11	3
	5-27	12
	6-27	11
	6-27	20
	6-33	13
	6-37	12
177352	8-16	1
177459	9-9	3
178119	9-9	6
	9-11	6
	10-15	12
180057	7-12	1
	8-16	1
180074	8-19	1
180137	10-11	13
180176	8-16	1
	10-6	20
	10-9	18
	10-11	12
180177	10-11	13
180217	8-19	1
	10-11	13
181045	2-45	3
	5-31	3
181046	2-43	10
182115	5-11	14
182332	10-11	13
182342	10-3	15
182343	8-16	1
182376	10-3	10
	10-9	13
182377	10-3	9
	10-9	12
183614	4-17	20
	4-19	33
183615	4-17	20
	4-19	33
184761	8-16	20
185856	4-17	16
	4-19	16
185857	4-17	16
	4-19	16
185858	4-17	16
	4-19	16
185860	4-17	33
	4-19	24
185869	4-17	8
	4-19	8
185870	4-17	11
	4-19	11
185872	4-17	11
	4-19	11
186227	4-9	11
187388	7-14	8
	7-18	6
	8-23	7
	8-27	7
	8-32	7
	9-20	7
	10-19	14
	10-25	16
187791	1-15	4
	1-19	15
188227	6-5	19
	6-9	40
	6-14	43
188486	6-39	9
	6-43	9
188516	6-39	22
	6-40	54
	6-43	22
	6-44	53
	6-44	68
188518	6-39	24
	6-40	56
	6-43	24
	6-44	55
	6-44	70
188519	6-39	25
	6-39	42
	6-40	57
	6-43	25
	6-43	42
	6-44	56
	6-44	71
188534	6-39	3
	6-43	3
189595	7-12	20
	8-16	26
	9-7	22
190580	10-25	14
190757	6-5	29
	6-9	8
	6-13	7
190811	2-3	26
	2-4	26
190887	8-32	12
	9-14	3
	9-16	3
	9-20	12
	10-25	9
191072	10-3	15
191076	10-3	15
191085	10-3	15
191089	10-3	15
193164	3-7	13
194607	10-3	15
194705	10-13	20
195293	2-4	26
195296	2-3	26
196927	1-53	16
197064	5-11	35
	5-17	16
197065	5-3	30
	11-31	12
	11-33	17
197066	1-16	58
	5-27	19
197067	11-37	15
197068	1-7	28
	6-33	15
	6-37	5
197327	8-16	1
197345	7-12	1
	8-19	1
	9-9	2
198956	2-11	6
	2-13	6
199524	6-39	10
	6-43	10
201766	10-13	18
201781	6-9	20
	6-13	26
	6-59	8
201829	10-25	11
203071	4-10	7

©2007 HYSTER COMPANY

NUMERICAL INDEX (Continued)

PART NO.	PG	ITEM
203694	2-3	26
	2-4	26
205120	6-39	20
	6-39	34
	6-43	20
	6-43	34
	6-44	51
205121	6-39	15
	6-39	29
	6-39	46
	6-43	16
	6-43	29
	6-43	46
	6-44	60
205122	6-39	18
	6-39	32
	6-40	49
	6-43	15
	6-43	32
	6-44	49
	6-44	63
205123	6-39	21
	6-39	35
	6-43	21
	6-43	35
	6-44	52
206150	6-10	46
	6-13	18
206749	10-3	15
210229	11-27	10
214364	5-27	27
	6-5	6
	6-5	6
	6-9	34
	6-13	34
	8-16	19
	8-40	25
	9-7	11
	10-13	12
214444	8-16	1
215211	7-4	5
	8-4	5
	8-8	5
	9-3	5
215212	10-3	5
	10-5	5
	10-9	5
216877	1-3	31
216895	3-11	2
218612	6-57	3
	6-59	2
220000	6-33	8
	6-37	4
220003	6-33	7
220289	5-3	29
	11-31	20
	11-33	16
220312	5-27	16
220361	6-25	30
220426	4-3	19
	5-17	15
	11-27	1
220428	5-11	33
	5-29	13
220430	6-33	28
220504	11-37	14
221341	6-33	2
	10-32	24
221476	11-27	33
221521	3-7	24
221588	3-7	14
221680	3-3	1
221733	1-27	5
221763	1-12	39
	1-19	11
221771	1-61	3
221777	1-25	11
221780	11-27	8
222024	1-16	57
222029	1-27	21
222492	6-10	48
	6-13	20
	6-33	19
222523	2-37	4
	2-38	20
	2-38	23
	5-3	35
	5-31	9
222584	6-5	31
	6-9	9
	6-13	8
222665	1-27	14
223389	7-12	1
	8-19	1
	10-6	20
	10-9	18
	10-11	12
226458	11-3	7
227145	2-11	15
	2-13	15
227221	4-9	34
229348	11-15	16
	11-17	16
229349	11-15	17
	11-17	17
230443	3-3	32
230882	11-27	21
230885	5-11	42
231020	10-5	16
231084	8-19	1
	9-9	2
233141	2-35	21
	2-37	16
	2-50	15
	11-43	7
234038	3-7	11
236901	5-31	6
	11-42	4
237192	4-20	3
237208	4-20	3
237213	3-14	3
237812	10-19	12
238637	8-19	5
239503	1-7	24
	1-20	52
	2-3	17
	2-7	2
	3-11	6
	4-9	25
	5-11	4
	5-17	7
	5-21	7
	5-27	24
	6-5	7
	6-5	7
	6-9	27
	6-13	29
	6-27	16
	6-33	21
	6-34	47
	6-37	15
	6-47	8
	11-27	4
	11-35	9
	11-37	7
	11-39	6
239784	6-5	22
	6-9	35
	6-13	36
244272	6-59	3
246001	5-15	23
	5-17	29
	5-21	20
	10-32	47
246869	6-57	6
	6-59	32
246994	7-12	1
248196	2-37	15
	2-38	20
	2-38	23
	2-49	4
	2-50	14
	2-53	1
	11-42	12
251099	1-12	60
	1-16	47
	1-19	4
	5-27	14
255578	6-13	19
257913	7-14	5
	7-18	4
	8-23	5
	8-27	5
	8-32	5
	9-20	5
	10-19	11
	10-25	13
258590	6-9	23
	6-13	39
	6-59	21
259781	4-20	3
259782	4-20	3
261157	6-57	5
	6-59	30
261379	3-7	23
262319	8-16	1
264007	11-31	2
264134	11-27	12
264159	3-7	7
264892	3-3	30
264893	3-3	29
266733	4-17	19
	4-19	19
269448	1-27	2
269449	1-27	3
270077	10-19	8
	10-23	9
273775	10-32	38
275672	2-19	3
287816	1-12	45
	5-3	24
	6-29	26
	6-59	10
287837	8-19	13
	9-9	15
	9-11	4
287851	11-27	31
287854	1-11	31

©2007 HYSTER COMPANY

NUMERICAL INDEX (Continued)

PART NO.	PG	ITEM
	1-16	41
	1-20	48
287860	3-3	10
	5-3	11
	6-9	22
	6-13	38
	6-59	20
	8-40	27
292500	5-21	16
	6-29	19
	6-37	16
292501	2-11	28
	2-13	32
	4-3	22
	6-29	4
292502	5-11	12
	7-24	14
	10-32	4
292504	2-4	28
292507	2-4	29
	2-7	11
	10-32	30
292508	7-24	3
292509	4-9	20
292513	2-13	39
292515	1-11	10
	1-15	28
	1-20	41
	3-3	43
292517	10-13	24
292521	5-27	8
292529	1-3	26
	8-19	15
	9-9	16
292530	8-19	15
	9-11	16
292531	10-13	6
	10-15	16
292532	7-12	9
	8-16	14
	8-19	10
	9-7	6
292533	7-24	11
	8-40	14
	9-28	27
292534	8-40	17
292535	10-15	4
	10-32	12
292537	1-25	7
	10-32	34
292576	5-3	6
292577	5-11	37
292654	6-23	5
	6-25	5
292656	6-63	8
292665	2-3	14
292667	2-13	24
	2-25	6
292668	11-33	9
292669	3-13	19
292670	3-13	20
	6-55	1
292676	2-3	13
292678	2-25	5
	3-13	17
	5-15	4
	5-18	51
	5-21	34
	5-22	50
292679	11-33	8
292680	1-7	27
	1-12	47
	1-12	47
	2-4	30
	2-11	27
	2-13	31
	4-3	23
	5-3	3
	5-3	26
	5-12	57
	5-21	15
	6-29	8
	6-59	11
292681	1-3	19
	1-7	23
	1-11	15
	2-3	9
	2-11	3
	2-11	11
	2-11	25
	2-13	3
	2-13	11
	2-13	29
	3-7	4
	3-11	5
	3-13	18
	4-3	29
	4-9	23
	5-11	6
	5-15	9
	5-17	9
	5-21	9
	5-27	22
	6-5	8
	6-5	8
	6-9	28
	6-13	16
	6-27	8
	6-27	15
	6-33	10
	6-34	46
	6-37	13
	6-47	4
	10-32	29
	11-15	7
	11-17	7
	11-21	7
	11-27	5
	11-35	10
	11-37	8
	11-39	5
292682	1-3	6
	1-3	15
	1-11	20
	1-15	27
	1-20	40
	2-13	38
	3-3	12
	4-9	31
	5-27	10
	6-5	28
	6-9	15
	6-13	11
	6-29	32
	6-34	43
	6-57	11
	6-59	22
	10-16	32
	11-27	45
292683	1-3	30
	3-3	18
	5-15	22
	5-17	28
	5-21	19
	6-63	7
	7-24	10
	8-20	25
	9-9	29
	9-12	29
	10-15	17
292687	3-3	5
	10-15	29
293601	1-11	12
293613	1-11	14
	3-13	13
	6-27	7
293628	4-17	14
	4-19	14
293646	3-3	17
293648	4-17	35
	4-19	26
293650	6-63	6
293651	1-23	7
293686	4-17	5
	4-19	5
293706	10-15	28
293708	3-3	4
293762	4-3	13
293779	2-13	19
	4-3	14
	11-31	25
	11-33	13
293782	10-32	46
293795	8-40	18
	9-28	5
	10-32	40
293796	2-13	18
	9-28	12
	11-31	11
	11-33	14
293799	1-12	41
	1-16	51
	1-19	7
295649	9-14	4
	9-16	4
296000	9-28	5
296010	4-3	30
	5-15	8
	5-17	24
	5-21	17
296011	2-11	4
	2-13	4
296014	2-11	30
	3-13	21
296028	9-9	7
	9-11	7
296158	6-29	11
296160	1-7	2
296161	1-7	20
	1-7	32
	1-12	62
	1-15	2
296165	6-47	2
296166	1-7	25
	2-7	5
	6-34	39
296167	1-7	21
	1-20	51

©2007 HYSTER COMPANY

NUMERICAL INDEX (Continued)

PART NO.	PG	ITEM
	5-17	10
	5-21	10
	6-47	6
296168	5-11	3
	11-27	15
296173	1-11	16
	1-15	5
	1-19	17
296174	1-12	66
	1-15	33
	1-20	57
	4-9	30
	6-34	41
	6-57	9
	6-59	25
296205	4-5	6
296215	4-3	33
296226	5-15	11
	5-17	36
	5-21	28
296237	10-16	31
	10-33	48
296249	1-3	9
	11-28	51
296360	1-7	26
296379	5-11	47
296395	3-13	11
296415	5-27	30
296416	2-7	3
296417	2-7	10
296418	6-13	15
	6-47	3
	11-35	15
296419	1-16	53
296421	1-3	7
	11-27	46
296422	7-12	10
	8-16	15
	9-7	7
296423	1-25	8
	1-61	3
296426	7-12	23
	8-16	4
	8-19	19
	9-9	19
	9-11	19
	10-11	6
	11-3	8
296431	3-3	6
296484	11-15	10
	11-17	10
297531	7-14	6
	7-18	5
	8-23	6
	8-27	6
	8-32	6
	9-20	6
	10-19	13
	10-25	15
297649	10-5	9
300932	5-17	27
	5-21	18
300937	1-25	14
	1-61	4
	4-17	28
	4-19	30
	7-12	12
	8-16	17
	8-19	16
	9-7	9
	9-9	18
	9-11	18
	9-28	31
	10-13	9
	10-15	7
	10-32	7
300982	6-63	4
	10-3	14
302020	2-17	12
	2-23	10
302024	2-13	23
302026	5-27	21
302036	11-33	7
302040	2-19	8
302233	2-3	11
302398	4-5	7
302400	4-3	31
	5-3	15
302450	1-64	2
302461	8-20	32
	9-9	27
	9-11	27
	9-28	23
302462	7-8	9
	8-8	9
302487	11-3	11
	11-5	11
	11-7	11
303117	6-13	17
303294	5-31	10
304200	8-16	1
304526	8-20	34
	9-9	30
	9-12	30
	10-5	12
	10-9	8
305769	3-3	22
308117	6-63	2
309007	10-15	25
309062	8-33	15
	9-20	15
310436	5-27	4
	5-29	3
310549	10-15	24
311498	1-53	16
313805	1-12	42
	1-12	64
	1-15	31
	1-19	12
	6-29	21
	6-29	28
	7-24	15
	10-32	6
313828	2-4	36
	7-12	26
	7-24	5
	8-16	24
	8-19	9
	8-40	7
	9-7	12
	9-28	9
	10-13	13
	10-15	9
	10-32	36
	11-15	9
	11-17	9
	11-37	10
314878	2-17	9
316306	7-12	17
	8-16	22
	9-7	18
316678	11-31	17
	11-33	6
	11-35	6
	11-38	3
	11-41	2
316826	1-11	17
	1-12	69
	1-15	35
	1-19	20
	8-40	3
	9-9	5
	9-11	5
	10-13	25
316828	5-3	7
	5-11	41
316835	1-12	72
	6-27	23
	11-35	16
316836	5-17	1
	5-21	1
316879	11-17	19
317594	4-9	19
	6-34	48
317735	8-35	7
	8-37	7
	9-23	7
	9-25	7
	10-27	8
	10-29	7
	11-5	13
	11-7	13
320076	8-16	1
	10-6	20
	10-9	18
	10-11	12
	10-11	13
320154	2-13	22
	2-25	4
	5-15	2
	5-17	26
	5-21	33
320155	4-3	36
320156	1-7	2
	1-12	63
	1-15	30
	2-4	31
	2-11	29
	2-13	17
	4-3	24
	5-11	48
	6-29	5
	11-27	22
	11-31	23
	11-33	12
320157	2-3	6
	2-11	2
	2-13	2
	5-11	5
	5-17	8
	5-21	8
	5-27	23
	6-5	9
	6-5	9
	6-9	33
	6-13	35
	6-27	21
	6-29	27

©2007 HYSTER COMPANY

NUMERICAL INDEX (Continued)

PART NO.	PG	ITEM
	6-33	11
	6-37	14
	7-12	14
	8-16	18
	9-7	10
	10-13	14
	10-15	10
	10-32	35
	11-27	6
	11-37	11
	11-39	4
320158	1-3	18
	1-7	22
	1-20	53
	2-4	37
	2-11	24
	2-13	28
	3-11	4
	4-9	22
	5-11	43
	5-12	63
	5-17	46
	5-21	46
	6-27	13
	8-40	26
	11-27	38
	11-27	42
320159	1-11	18
	1-16	40
	1-20	47
	2-13	37
	5-3	14
	5-27	9
	6-29	35
	9-9	8
	9-11	8
	10-13	26
	10-15	21
320160	1-12	57
	1-12	68
	1-15	6
	1-19	18
	8-40	19
	10-32	31
320161	1-23	6
	4-17	29
	4-19	25
	8-19	24
	9-9	17
	9-11	17
	10-13	8
	10-15	5
320162	1-3	29
320169	10-15	30
320171	8-40	31
	9-28	30
	10-32	43
320289	6-39	36
	6-43	36
320291	6-39	41
	6-43	41
322824	7-18	10
	9-14	9
	9-16	9
322902	7-18	12
	9-14	11
	9-16	11
323061	10-13	10
323090	7-12	11
	8-16	16
	9-7	8
	10-13	5
324802	4-17	1
324858	4-17	34
324863	3-3	19
324864	4-17	36
324871	3-7	38
324872	3-8	40
324875	3-7	2
324972	4-9	33
	6-34	42
325056	4-9	35
325058	6-27	9
325521	1-3	12
325549	3-7	1
325550	3-7	1
325551	3-7	1
325552	3-7	8
325568	3-3	26
325599	5-17	32
	5-21	24
325616	1-12	56
	1-16	37
	1-20	44
	8-20	38
325697	3-8	41
325699	5-29	6
325799	5-27	29
325809	2-13	35
325956	1-54	28
325957	1-54	28
325958	1-54	28
326003	1-25	1
326347	1-25	9
329067	1-23	10
329218	4-10	1
329221	4-10	5
329222	4-10	
334156	7-18	15
	8-23	9
	8-27	9
334418	3-7	12
334447	3-7	28
334456	3-7	15
334481	3-7	10
334571	3-7	33
334580	3-7	26
335012	7-18	14
	8-23	11
	8-27	11
335041	8-16	1
335661	10-5	19
335988	1-27	20
335991	1-27	19
337174	8-16	1
	8-19	1
337179	7-12	18
	8-16	27
	9-7	21
338075	2-17	9
341462	6-39	39
	6-43	39
344150	10-6	20
	10-9	18
	10-11	12
345423	4-3	9
346330	2-45	2
	5-31	2
346842	3-7	30
346843	3-7	30
346844	3-7	30
346845	3-7	30
346846	3-7	30
346847	3-7	30
350996	2-17	9
351666	10-3	8
351693	10-3	15
352055	6-39	38
	6-43	38
352885	5-27	5
	5-29	4
353144	1-7	9
353569	1-12	52
	1-15	11
	1-19	23
353883	6-39	6
	6-43	6
354077	6-5	17
	6-9	42
354669	4-13	3
354671	4-13	8
355327	6-27	22
355374	1-11	29
	1-16	39
	1-20	46
	6-27	14
356505	8-19	7
	9-7	14
	9-9	12
	9-11	12
356556	10-9	14
357749	7-12	19
	8-16	28
358069	4-13	5
358072	4-13	4
358073	4-13	10
358076	4-13	9
359819	2-13	36
361973	1-3	8
	6-30	38
	11-27	47
361984	6-5	18
	6-5	20
	6-9	41
	6-14	46
361988	3-11	8
362030	1-12	44
362034	6-5	34
	6-9	4
362036	5-29	10
364854	1-27	8
366115	8-35	5
	8-37	5
	10-27	11
	10-29	5
	11-5	20
	11-7	20
366116	7-21	5
	9-23	5
	9-25	5
	11-3	16
	11-7	20
366713	3-3	2
366715	3-3	3
367251	1-11	3
	1-15	24
	1-20	39
367419	1-62	1

©2007 HYSTER COMPANY

NUMERICAL INDEX (Continued)

PART NO.	PG	ITEM
367420	1-62	1
367421	1-62	1
367422	1-62	1
367423	1-62	1
367424	1-62	1
368618	1-12	53
	1-15	9
	1-19	21
	5-27	3
	5-29	2
369573	1-53	4
369804	6-6	38
	6-9	3
	6-13	2
369812	4-17	15
	4-19	15
370250	1-53	19
370251	1-53	19
370252	1-53	19
370253	1-53	19
370254	1-53	19
370255	1-53	19
370256	1-53	19
370257	1-53	19
370258	1-53	19
370259	1-53	19
370730	2-45	1
	5-31	1
373875	6-27	4
374160	5-11	40
	6-33	35
375984	5-12	58
378424	6-39	5
	6-43	5
378547	2-20	3
379197	1-27	10
379198	1-27	11
379199	1-27	16
	1-33	24
379522	2-20	5
379524	2-20	7
379697	1-27	17
	1-33	25
379698	1-27	18
	1-33	26
379902	2-4	33
381919	4-3	17
383978	2-19	1
383979	2-23	4
383984	2-20	4
384211	1-62	1
384213	1-62	1
384214	1-62	1
384215	1-62	1
384216	1-62	1
384398	2-20	1
385855	6-39	23
	6-39	37
	6-40	55
	6-43	23
	6-43	37
	6-44	54
	6-44	69
386851	10-19	15
	10-23	11
387867	5-3	16
	11-33	1
389687	1-54	22
389688	1-54	22
391665	5-12	61
392238	1-31	8
	1-47	13
	1-51	12
615135	10-25	6
636941	8-32	14
	9-20	14
637565	8-33	16
	9-20	16
637635	7-18	5
638246	7-15	12
	7-18	14
	8-23	11
	8-27	11
638249	10-19	7
	10-23	8
638250	10-25	12
806974	4-20	3
806975	4-20	3
815597	5-27	31
878111	4-9	5
878185	11-35	7
878236	1-27	12
	1-28	2
	1-33	27
	1-34	2
	1-35	2
	1-44	2
	1-45	2
	1-48	2
878833	5-3	18
878834	5-3	22
893523	1-54	26
893818	1-33	29
893955	2-25	1
893958	2-25	1
893959	2-25	1
893962	2-25	1
915474	5-27	20
986559	8-16	1
986599	7-12	1
	8-16	1
986601	8-16	1
1198757	2-11	30
1301870	7-12	1
1302024	11-37	13
1302258	11-31	3
1302665	6-57	13
1305382	11-37	20
1306270	2-37	6
	2-37	7
	2-49	6
	11-42	10
1306271	2-37	5
	2-38	32
	2-49	6
	2-53	10
	11-37	21
	11-38	6
	11-42	11
1306585	1-27	6
1306588	1-27	7
1308349	5-3	34
1309280	2-3	18
1309419	6-39	5
	6-43	5
1309420	6-40	52
	6-44	66
1309422	6-40	51
	6-44	65
1309775	11-37	3
1309875	6-40	53
	6-44	67
1309877	4-13	6
1310389	4-10	3
1310391	4-10	2
1310393	4-10	6
1318690	5-15	17
	5-17	30
	5-21	38
1319668	7-15	9
	7-18	7
	8-23	8
	8-27	8
	9-14	5
	9-16	5
1321928	6-5	31
1321929	6-5	34
1324029	5-5	2
1324035	5-5	9
1324040	5-5	6
1324041	5-5	7
1324042	5-5	8
1324048	5-5	4
1325119	6-63	14
	11-27	9
1327196	5-25	2
1327246	3-3	36
1329250	4-3	11
1330409	1-27	23
	1-33	28
	1-37	8
	11-45	3
1330410	5-18	50
	5-21	49
1330411	2-43	7
	11-42	1
1330412	2-33	11
	2-35	11
	2-39	33
	2-53	11
	5-31	15
	11-43	1
1330414	1-27	24
	1-33	28
	1-37	8
	11-45	3
1330416	2-43	8
	11-42	2
1330417	2-33	12
	2-35	12
	2-39	33
	2-53	11
	5-31	16
	11-43	2
1330419	2-33	4
	2-35	4
	2-37	12
	2-38	28
	2-38	29
	2-49	9
	2-49	10
	2-49	12
	2-53	7
	2-53	8
	11-42	9
	11-45	1
1330420	2-33	6
	2-35	6

NUMERICAL INDEX (Continued)

PART NO.	PG	ITEM
	2-37	1
	2-37	9
	2-37	14
	2-38	18
	2-49	2
	2-49	8
	2-50	17
	2-54	17
1330421	2-33	2
	2-35	2
	2-37	2
	2-37	10
	2-38	27
	2-49	3
	2-49	5
	2-49	11
	2-53	6
1330422	2-43	3
	5-31	11
1330424	2-33	5
	2-35	5
	2-37	12
	2-38	28
	2-38	29
	2-49	9
	2-49	10
	2-49	12
	2-53	7
	2-53	8
	11-42	17
	11-45	1
1330426	2-33	7
	2-35	7
	2-37	1
	2-37	9
	2-37	14
	2-49	2
	2-49	8
	2-54	17
1330427	2-33	3
	2-35	3
	2-37	2
	2-37	10
	2-38	27
	2-49	3
	2-49	5
	2-49	11
	2-53	6
	5-18	50
	5-22	49
1330428	2-43	4
	5-31	12
1330433	1-27	25
	1-33	28
	1-37	8
1330437	2-39	33
	2-43	9
	2-53	11
	5-31	17
	11-42	8
	11-43	3
	11-45	4
1330438	2-37	1
	2-37	2
	2-37	9
	2-37	10
	2-37	12
	2-37	14
	2-38	18
	2-38	27
	2-38	28
	2-38	29
	2-41	5
	2-41	6
	2-41	8
	2-41	9
	2-41	10
	2-41	11
	2-41	12
	2-41	13
	2-43	1
	2-49	2
	2-49	3
	2-49	5
	2-49	8
	2-49	9
	2-49	10
	2-49	11
	2-49	12
	2-50	17
	2-53	6
	2-53	7
	2-53	8
	2-54	17
	5-31	14
	11-42	3
	11-45	2
1330439	2-37	8
	2-39	33
	2-43	2
	2-49	5
	2-53	11
	5-31	13
	11-42	5
	11-43	4
1330917	1-53	13
1330919	1-53	12
1330920	1-53	3
1330924	1-53	7
1330938	2-17	1
	2-20	
1330998	5-11	22
1330999	5-11	23
1331002	5-11	24
1331233	2-35	21
	11-43	6
1332745	1-62	1
1333329	8-16	10
1333382	7-12	8
	8-16	12
	9-7	4
1333385	3-3	40
1333392	7-12	16
	8-16	21
	9-7	13
	10-13	11
1333396	7-4	6
	7-8	5
	8-4	6
	8-8	6
	8-12	5
	9-3	6
	9-5	5
	10-3	2
	10-5	2
	10-9	2
	10-11	2
1333399	8-35	2
	8-37	2
	10-5	11
	10-27	5
	10-29	2
	11-5	18
	11-7	18
1333572	5-11	21
1334638	5-7	9
	5-9	26
1334639	5-7	8
	5-9	19
1334642	5-7	6
	5-9	9
1334644	5-9	23
1334645	5-7	21
	5-9	21
1334646	5-7	21
	5-9	21
1334647	5-7	2
1334648	5-7	1
1335110	5-27	15
1335129	1-53	15
	1-53	15
1335142	1-53	10
1335147	1-53	6
1335411	1-54	27
1335546	6-55	2
1335547	6-55	4
1335620	2-20	8
1335967	4-3	27
1335987	4-3	26
1337017	5-11	27
1337159	6-5	14
1337196	4-3	38
1337197	2-4	34
1338087	1-62	1
1338088	1-62	1
1338089	1-62	1
1338097	1-62	1
1338098	1-62	1
1338728	3-8	42
1338729	3-7	31
1338730	3-7	16
1338740	6-65	10
1338741	6-65	8
1338744	6-65	2
1338916	5-9	16
1338917	5-9	15
1339093	3-14	3
1339094	3-14	3
1339095	3-14	3
1339096	3-15	3
1339097	3-14	3
1339098	3-14	3
1339636	6-29	13
1339672	1-53	9
1339674	1-53	8
1339799	6-29	13
1340147	5-15	16
1340222	1-3	13
1340224	1-3	13
1340364	6-29	2
1340366	6-29	18
1340422	6-29	10
1340460	1-25	3
1340470	5-29	4
1340493	5-11	38
1340504	6-33	3
1340531	1-12	49
1340637	6-6	36

©2007 HYSTER COMPANY

NUMERICAL INDEX (Continued)

PART NO.	PG	ITEM
	6-9	37
	6-13	13
1340652	6-29	24
1340653	6-29	23
1340654	6-29	20
1340655	6-29	1
1340659	6-5	24
	6-9	13
1340672	6-33	18
	6-37	
	6-39	
1340673	6-33	18
	6-37	
	6-43	
1340685	5-11	16
1340687	5-11	28
1340697	6-5	10
	6-9	29
1340698	6-5	11
	6-9	30
1340702	6-29	30
1340703	6-33	31
1340742	6-29	16
1340743	1-12	43
1340745	6-33	3
1340796	2-3	7
1340866	1-12	34
	1-16	55
	1-19	10
1340867	1-12	35
	1-16	54
	1-19	9
1340869	6-33	32
	6-37	1
1340891	6-63	5
1340900	6-5	2
	6-9	43
1340901	6-5	1
	6-10	44
1340902	5-3	17
1340904	6-5	16
1340905	6-5	13
1340975	5-29	1
1340976	5-27	2
	5-29	1
1340979	5-3	4
1340985	5-27	7
1340988	5-27	1
	5-29	
1340989	5-27	25
1340998	5-3	12
1341002	7-4	1
	9-3	1
1341003	9-3	1
1341004	7-4	1
	8-4	1
	9-3	1
1341005	7-4	1
	8-4	1
	9-3	1
1341006	7-4	1
	8-4	1
1341007	7-4	1
	8-4	1
	9-3	1
1341008	7-4	1
	8-4	1
	9-3	1
1341009	7-4	1
	9-3	1
1341010	7-4	1
	8-4	1
	9-3	1
1341011	7-4	1
	8-4	1
	9-3	1
1341012	8-4	1
	9-3	1
1341013	7-4	1
	8-4	1
	9-3	1
1341014	8-4	1
1341015	8-4	1
1341016	7-4	1
	8-4	1
1341017	7-4	1
	8-4	1
1341018	7-4	1
1341019	7-4	1
	8-4	1
1341020	8-4	1
1341021	8-4	1
1341022	8-4	1
1341024	8-4	1
1341207	7-8	1
1341209	7-8	1
1341210	7-8	1
1341211	7-8	1
1341212	7-8	1
1341213	7-8	1
1341214	7-8	1
1341215	7-8	1
1341216	7-8	1
1341218	7-8	1
1341220	7-8	1
1341221	7-8	1
1341222	7-8	1
1341223	7-8	1
1341395	7-14	
1341398	7-14	
1341399	7-14	
1341400	7-14	
1341403	7-14	
1341406	7-14	
1341408	7-14	
1341432	7-14	
1341435	7-14	
1341436	7-14	
1341437	7-14	
1341440	7-14	
1341443	7-14	
1341445	7-14	
1341481	7-18	
1341518	7-18	
1341542	8-23	
1341543	8-23	
1341544	8-23	
1341545	8-23	
1341546	8-23	
1341547	8-23	
1341548	8-23	
1341549	8-23	
1341550	8-23	
1341551	8-23	
1341552	8-23	
1341553	8-23	
1341554	8-23	
1341555	8-23	
1341556	8-23	
1341557	8-23	
1341558	8-23	
1341559	8-23	
1341575	8-27	
1341576	8-27	
1341577	8-27	
1341578	8-27	
1341579	8-27	
1341580	8-27	
1341581	8-27	
1341582	8-27	
1341583	8-27	
1341584	8-27	
1341585	8-27	
1341586	8-27	
1341587	8-27	
1341588	8-27	
1341589	8-27	
1341590	8-27	
1341591	8-27	
1341592	8-27	
1341608	8-23	
1341609	8-23	
1341610	8-23	
1341611	8-23	
1341612	8-23	
1341613	8-23	
1341614	8-23	
1341615	8-23	
1341616	8-23	
1341617	8-23	
1341618	8-23	
1341619	8-23	
1341641	8-27	
1341642	8-27	
1341643	8-27	
1341644	8-27	
1341645	8-27	
1341646	8-27	
1341647	8-27	
1341648	8-27	
1341649	8-27	
1341650	8-27	
1341651	8-27	
1341652	8-27	
1341714	8-8	1
1341715	8-8	1
1341716	8-8	1
1341717	8-8	1
1341718	8-8	1
1341719	8-8	1
1341720	8-8	1
1341721	8-8	1
1341722	8-8	1
1341723	8-8	1
1341724	8-8	1
1341725	8-8	1
1341726	8-8	1
1341727	8-8	1
1341728	8-8	1
1341729	8-8	1
1341730	8-8	1
1341731	8-8	1
1342079	7-12	1
1342116	9-11	2
1342119	8-19	1
1342120	8-16	1
1342121	7-12	1
	8-16	1

©2007 HYSTER COMPANY

NUMERICAL INDEX (Continued)

PART NO.	PG	ITEM
1342122	8-16	1
1342123	7-12	1
	8-16	1
	8-19	1
1342124	8-16	1
1342126	7-12	1
	8-16	1
1342127	8-16	1
1342128	8-16	1
1342129	8-16	1
1342130	8-16	1
1342133	7-12	1
1342370	9-11	2
1342373	9-11	2
1342375	8-19	1
1342376	8-19	1
	9-11	2
1342377	8-19	1
	9-11	2
1342378	8-19	1
	9-11	2
1342379	8-19	1
	9-11	2
1342380	7-12	1
	8-19	1
	9-11	2
1342381	7-12	1
	8-19	1
1342382	7-12	1
	8-19	1
1342383	7-12	1
	8-19	1
1342384	7-12	1
1342385	7-12	1
1342387	8-16	1
1342388	7-12	1
	8-16	1
1342389	7-12	1
1342391	8-19	1
1342393	7-12	1
1342407	8-19	2
1342408	8-19	2
1342409	8-19	2
1342410	8-19	2
1342411	8-19	2
1342412	8-19	2
1342413	8-19	2
1342414	8-19	2
1342415	8-19	2
1342416	8-19	2
1342417	8-19	2
1342418	8-19	2
1342419	8-19	2
1342420	8-19	2
1342421	8-19	2
1342422	8-19	2
1342423	8-19	2
1342424	8-19	2
1342471	9-5	1
1342472	9-5	1
1342473	9-5	1
1342474	9-5	1
1342476	9-5	1
1342477	9-5	1
1342478	9-5	1
1342479	9-5	1
1342480	9-5	1
1342481	9-5	1
1342482	9-5	1
1343452	6-9	17
	6-13	23
	6-33	23
	6-59	5
1343537	4-3	35
1343572	4-3	34
1343573	4-3	1
1343574	4-3	32
1343577	4-5	1
1343578	4-5	2
1343579	4-5	3
1343593	4-5	5
1343594	4-5	9
1343595	4-3	18
1343598	4-5	4
1343607	4-3	3
1343630	5-3	19
1343827	6-5	32
	6-17	
	6-27	1
1343989	8-19	21
1343990	1-23	8
	1-61	2
	10-32	14
1345190	7-24	9
	8-40	12
	9-28	29
	10-32	11
1345199	8-40	8
	9-28	10
1345204	8-40	9
	9-28	11
	10-16	37
1345216	7-4	2
	7-8	2
	8-4	2
	8-8	2
	8-12	2
	8-35	1
	8-37	1
	8-37	1
	9-3	2
	9-5	2
	10-3	1
	10-5	1
	10-9	1
	10-11	1
	10-27	2
1345219	7-21	2
	9-23	2
	9-25	2
	11-3	13
	11-7	18
1345263	7-21	4
	9-23	4
	9-25	4
	11-3	15
	11-7	19
1345264	7-21	1
	9-23	1
	9-25	1
	9-25	1
	10-29	1
1345308	9-11	1
1345309	9-11	1
1345310	9-11	1
1345311	9-9	1
1345313	9-11	1
1345314	9-9	1
	9-11	1
1345315	9-11	1
1345316	9-11	1
1345317	9-11	1
1345318	9-11	1
1345319	9-11	1
1345348	7-24	16
1345354	6-63	11
1345359	8-19	3
1345360	8-19	3
1345361	8-19	3
1345362	8-19	3
1345363	8-19	3
1345364	8-19	3
1345365	8-19	3
1345366	8-19	3
1345367	8-19	3
1345368	8-19	3
1345369	8-19	3
1345370	8-19	3
1345371	8-19	3
1345372	8-19	3
1345373	8-19	3
1345374	8-19	3
1345375	8-19	3
1345376	8-19	3
1345401	8-19	12
1345403	7-12	21
	8-16	23
	9-7	20
	10-13	3
1345412	7-24	4
1345413	7-24	4
1345423	9-28	15
1345568	9-28	3
1345569	9-28	3
1345571	9-28	3
1345573	9-28	3
1345574	9-28	4
1345581	8-40	1
1345908	2-20	2
1345909	2-20	6
1347004	4-3	15
	4-5	
1347048	5-3	10
	5-5	
1347088	1-11	3
	1-15	24
	1-20	39
1348246	8-40	22
1348247	8-40	22
1349446	1-61	1
1350914	2-3	2
1351068	2-43	5
1351069	2-43	6
1351070	2-33	8
	2-35	8
	2-37	17
	2-50	16
1351076	2-33	9
	2-35	9
	2-37	17
	2-50	16
1351150	6-27	17
1351473	1-27	1
1351682	2-3	16
1351689	5-15	18
	5-17	22
	5-21	41
1351926	3-3	14

©2007 HYSTER COMPANY

NUMERICAL INDEX (Continued)

PART NO.	PG	ITEM
1351927	3-3	15
1351930	3-3	20
1351935	3-3	21
1351949	3-7	3
1352563	4-3	17
1352564	2-37	13
	2-38	26
	2-50	13
1352565	5-31	5
	11-42	18
1352602	11-42	6
1352603	11-42	7
1353408	7-21	7
	11-3	18
1353464	8-40	23
1353530	7-24	19
	7-24	17
	8-40	4
	9-28	16
	10-32	2
1354140	1-27	22
	1-31	1
	1-37	8
1354153	1-53	17
1354155	1-53	17
1354157	1-53	17
1354159	1-53	17
1354300	4-5	11
1354323	1-7	1
	5-11	11
1354342	1-53	17
1354343	1-53	17
1354561	9-28	1
1354902	8-20	36
	9-11	15
1354903	8-19	22
1354904	9-28	6
1354906	8-40	16
1354907	8-40	16
1354913	7-12	28
1354915	7-12	24
	8-16	13
	9-7	5
1354916	7-12	24
	8-16	13
	9-7	5
1354917	7-12	24
	8-16	13
	9-7	5
1354918	9-28	18
1354919	7-24	13
1354921	7-24	13
1354956	9-9	10
	9-11	10
1354961	8-40	24
1354962	8-20	37
1354967	9-9	14
	9-11	14
1354975	3-7	36
1354990	5-27	26
1354997	3-3	38
1355127	7-14	3
	7-18	8
1355145	7-14	1
1355146	7-14	2
1355148	7-14	1
1355157	7-14	1
1355158	7-14	2
1355160	7-14	1
1355161	7-14	1
1355162	7-14	2
1355164	7-14	1
1355165	7-14	1
1355166	7-14	2
1355168	7-14	1
1355177	7-14	1
1355178	7-14	2
1355180	7-14	1
1355190	7-14	1
1355191	7-14	2
1355193	7-14	1
1355198	7-14	1
1355199	7-14	2
1355200	7-14	1
1355276	7-15	14
	7-19	18
1355281	7-18	2
1355287	7-18	1
1355292	7-18	1
1355293	7-18	2
1355295	7-18	1
1355305	5-5	13
1355335	4-7	1
1355350	7-18	1
1355351	7-18	2
1355353	7-18	1
1355354	7-18	1
1355355	7-18	2
1355357	7-18	1
1355358	7-18	1
1355359	7-18	2
1355362	7-18	1
1355363	7-18	2
1355365	7-18	1
1355366	7-18	1
1355367	7-18	2
1355369	7-18	1
1355370	7-18	1
1355371	7-18	2
1355373	7-18	1
1355374	7-18	1
1355375	7-18	2
1355377	7-18	1
1355378	7-18	1
1355379	7-18	2
1355381	7-18	1
1355390	7-18	1
1355391	7-18	2
1355393	7-18	1
1355398	7-18	1
1355399	7-18	2
1355401	7-18	1
1355402	7-18	1
1355403	7-18	2
1355405	7-18	1
1355406	7-18	1
1355407	7-18	2
1355412	7-18	1
1355496	8-23	3
	8-27	3
1355497	8-23	16
	8-27	16
1355587	8-23	2
	8-27	2
1355589	8-23	1
1355590	8-27	1
1355591	8-23	2
	8-27	2
1355593	8-23	1
1355594	8-27	1
1355595	8-23	2
	8-27	2
1355597	8-23	1
1355598	8-27	1
1355599	8-23	2
	8-27	2
1355601	8-23	1
1355602	8-27	1
1355603	8-23	2
	8-27	2
1355605	8-23	1
1355606	8-27	1
1355607	8-23	2
	8-27	2
1355609	8-23	1
1355610	8-23	4
	8-27	4
1355611	8-27	1
1355612	8-23	2
	8-27	2
1355614	8-23	1
1355615	8-27	1
1355616	8-23	2
	8-27	2
1355618	8-23	1
1355619	8-27	1
1355620	8-23	2
	8-27	2
1355622	8-23	1
1355623	8-27	1
1355624	8-23	2
	8-27	2
1355626	8-23	4
	8-27	4
1355627	8-23	1
1355628	8-27	1
1355629	8-23	2
	8-27	2
1355631	8-23	1
1355632	8-27	1
1355633	8-23	2
	8-27	2
1355635	8-23	1
1355636	8-27	1
1355637	8-23	2
	8-27	2
1355639	8-23	1
1355640	8-27	1
1355641	8-23	2
	8-27	2
1355643	8-23	4
	8-27	4
1355644	8-23	1
1355645	8-27	1
1355646	8-23	2
	8-27	2
1355648	8-23	1
1355649	8-27	1
1355650	8-23	2
	8-27	2
1355652	8-23	1
1355653	8-27	1
1355654	8-23	2
	8-27	2
1355656	8-23	1
1355660	8-23	4
	8-27	4
1355704	8-27	1

NUMERICAL INDEX (Continued)

PART NO.	PG	ITEM
1355705	8-23	2
	8-27	2
1355707	8-23	1
1355710	8-23	2
	8-27	2
1355711	8-23	4
	8-27	4
1355713	8-23	3
	8-27	3
1355714	8-24	17
	8-28	17
1355718	8-27	1
1355722	8-23	1
1355728	8-27	1
1355729	8-23	2
	8-27	2
1355731	8-23	1
1355732	8-27	1
1355733	8-23	2
	8-27	2
1355735	8-23	1
1355736	8-27	1
1355737	8-23	2
	8-27	2
1355739	8-23	1
1355740	8-27	1
1355741	8-23	2
	8-27	2
1355743	8-23	1
1355744	8-27	1
1355745	8-23	2
	8-27	2
1355747	8-23	1
1355748	8-27	1
1355749	8-23	2
	8-27	2
1355751	8-23	4
	8-27	4
1355752	8-23	1
1355753	8-27	1
1355754	8-23	2
	8-27	2
1355756	8-23	1
1355757	8-27	1
1355758	8-23	2
	8-27	2
1355760	8-23	1
1355761	8-27	1
1355762	8-23	2
	8-27	2
1355764	8-23	1
1355765	8-23	4
	8-27	4
1355766	8-27	1
1355767	8-23	2
	8-27	2
1355769	8-23	1
1355770	8-27	1
1355771	8-23	2
	8-27	2
1355773	8-23	1
1355892	9-14	1
1355893	9-14	2
1355898	9-14	2
1355900	9-14	1
1355904	9-14	1
1355905	9-14	2
1355910	9-14	1
1355911	9-14	2
1355922	9-14	1
1355923	9-14	2
1355928	9-14	1
1355929	9-14	2
1355934	9-14	1
1355935	9-14	2
1355940	9-14	1
1355941	9-14	2
1355946	9-14	1
1355947	9-14	2
1355952	9-14	1
1355953	9-14	2
1355958	9-14	1
1355959	9-14	2
1356062	9-20	2
1356065	8-32	2
	9-20	2
1356068	8-32	2
	9-20	2
1356071	8-32	2
1356074	8-32	2
1356080	8-32	2
1356083	8-32	2
1356086	8-32	2
1356113	4-9	21
	6-33	36
	6-57	10
	6-59	24
1356209	2-17	7
1356211	2-17	15
1356217	2-17	5
1356292	8-32	3
	9-20	3
1356350	11-38	1
1356352	11-38	2
1356354	11-38	4
1356377	1-3	25
1356560	8-32	2
	9-20	2
1356563	8-32	2
1356566	8-32	2
1356569	8-32	2
	9-20	2
1356572	8-32	2
1356578	8-32	2
1356581	8-32	2
	9-20	2
1356584	8-32	2
1356587	8-32	2
1356590	8-32	2
1356593	8-32	2
1356596	8-32	2
1356599	8-32	2
1356605	8-32	2
1356608	8-32	2
1356611	8-32	2
1356614	8-32	2
1356620	8-32	2
1356661	8-32	3
	9-20	3
1356662	8-33	19
	9-20	18
1356670	9-20	2
1356673	9-20	2
1356676	9-20	2
1356682	8-32	2
1356688	8-32	2
	9-20	2
1356691	8-32	2
	9-20	2
1356694	8-32	2
	9-20	2
1356697	8-32	2
	9-20	2
1356747	9-14	13
	9-16	13
1356748	8-23	15
	8-27	15
	9-16	14
1356749	7-14	4
	7-18	11
	7-18	11
	8-23	14
	8-27	14
	9-14	10
	9-16	10
1356750	7-15	13
	7-19	16
	8-23	12
	8-27	12
1356751	7-18	16
	8-23	12
	8-27	12
1356780	9-16	1
1356781	9-16	1
1356782	9-16	1
1356783	9-16	1
1356785	9-16	1
1356786	9-16	1
1356787	9-16	1
1356788	9-16	1
1356789	9-16	1
1356790	9-16	1
1356791	9-16	1
1357196	5-5	10
1357197	5-5	1
1357199	5-5	3
1357201	5-5	5
1357263	2-3	26
	2-4	26
1357361	6-39	14
	6-39	28
	6-39	45
	6-43	14
	6-43	28
	6-43	45
	6-44	59
1358934	9-16	2
1358935	9-16	2
1358936	9-16	2
1358937	9-16	2
1358939	9-16	2
1358940	9-16	2
1358941	9-16	2
1358942	9-16	2
1358943	9-16	2
1358944	9-16	2
1358945	9-16	2
1358969	8-33	18
	9-20	17
1358970	8-32	9
	9-20	9
	10-19	5
	10-23	6
	10-25	5
1358972	8-32	14
	9-20	14
1358973	8-27	1
1359245	9-23	1

©2007 HYSTER COMPANY

NUMERICAL INDEX (Continued)

PART NO.	PG	ITEM
1359246	9-23	1
1359325	7-21	1
1359326	7-21	1
1359587	1-12	51
1359620	6-5	4
	6-5	4
	6-9	31
	6-13	32
1360127	8-23	15
	8-27	15
1360141	10-25	17
1360328	9-28	21
1360329	9-28	21
1360330	9-28	21
1360331	9-28	21
1360333	9-28	21
1360334	9-28	21
1360335	9-28	21
1360336	9-28	21
1360337	9-28	21
1360338	9-28	21
1360339	9-28	21
1360358	9-28	22
1360359	9-28	22
1360360	9-28	22
1360361	9-28	22
1360363	9-28	22
1360364	9-28	22
1360365	9-28	22
1360366	9-28	22
1360367	9-28	22
1360368	9-28	22
1360369	9-28	22
1360386	7-24	12
	8-40	15
	9-28	14
	10-32	5
1360387	9-9	13
	9-11	13
1360507	7-24	20
	7-24	18
	8-40	5
	9-28	7
	9-28	19
	10-32	3
1360534	8-20	27
1360538	8-40	21
1360544	9-11	26
1360548	7-24	7
	10-32	13
1360549	7-24	6
	8-40	10
	10-32	8
1360792	5-7	15
	5-9	22
1360793	5-7	14
	5-9	28
1360794	5-7	13
	5-9	27
1360795	5-9	12
1360796	5-7	12
	5-9	14
1360797	5-9	13
1360798	5-7	16
	5-9	29
1360872	1-33	12
1360904	11-27	11
1361142	6-5	5
	6-5	5
	6-9	32
	6-13	33
1361302	8-32	4
	9-20	4
	10-25	8
1361500	5-9	23
1361501	5-7	19
	5-9	25
1361502	5-7	20
	5-9	20
1361503	5-7	3
	5-9	7
1361504	5-7	4
	5-9	8
1361505	5-7	13
	5-9	27
1361506	5-9	12
1361507	5-7	12
	5-9	14
1362043	11-38	1
1362044	11-38	1
1362047	1-37	2
1362049	1-33	3
	1-37	1
1362052	1-33	5
1362053	1-33	6
1362058	1-33	10
	1-37	12
1362061	1-33	13
1362062	1-33	14
1362063	1-33	15
1362064	1-33	16
1362065	1-33	17
1362184	6-29	12
1362273	6-33	5
1362274	6-33	1
1362277	6-27	12
	6-33	14
	6-37	3
1362279	6-33	6
	6-37	2
1362387	8-40	11
1362390	8-19	11
1362401	11-15	3
1362402	11-15	2
1362403	11-15	1
1362404	11-15	3
1362405	11-15	4
1362406	11-17	
1362407	11-17	
1362408	11-17	
1362409	11-17	
1362412	11-15	
1362413	11-15	
1362414	11-15	
1362415	11-15	
1362422	11-15	13
	11-17	13
1362423	11-15	14
	11-17	14
1362426	11-17	22
1362432	11-15	4
1362880	10-25	3
1362881	10-25	10
1363816	1-61	1
1363817	1-61	1
1363916	1-23	4
1363917	1-23	3
1364045	1-53	2
1364096	1-12	36
	1-16	50
	1-19	6
1364243	1-12	37
	1-16	52
	1-19	8
1364258	6-5	21
	6-9	39
	6-13	41
1364262	2-11	7
	2-13	7
1364263	6-57	16
1364264	11-31	15
1364265	11-31	16
1364267	4-9	15
1364270	2-11	8
	2-13	8
1364271	4-3	2
1364272	5-17	38
	5-21	30
	6-33	37
1364274	4-9	13
1364280	6-57	8
	6-59	29
1364379	1-27	
1364395	1-7	14
1364399	1-7	13
1364537	1-11	27
	1-15	25
	1-19	33
1364538	1-11	24
	1-15	12
	1-19	31
1364541	11-31	1
1364542	11-31	24
1364548	11-37	18
1364633	2-3	8
1364671	6-5	24
	6-9	1
1364709	6-57	13
1364729	1-11	7
	1-15	20
	1-20	37
1364803	3-11	1
1364804	3-11	1
1364806	3-11	1
1364824	3-11	7
1365140	8-16	10
	10-11	8
1365500	9-28	1
1365502	9-28	1
1365503	9-28	1
1365504	9-28	1
1365508	9-28	2
1365510	9-28	2
1365512	9-28	2
1365514	9-28	2
1365516	9-28	2
1365517	9-28	2
1365518	9-28	2
1365520	9-28	2
1365521	9-28	2
1365522	9-28	2
1365523	9-28	2
1366081	6-5	35
	6-63	1
	6-65	
1366082	6-65	10
1366083	6-65	11
1366085	6-5	35

NUMERICAL INDEX (Continued)

PART NO.	PG	ITEM
	6-63	1
	6-65	
1366086	6-65	11
1366146	7-24	1
1367137	1-33	18
	1-37	1
1367645	11-35	11
	11-37	19
1368311	7-24	1
1368312	7-24	1
1368313	7-24	1
1368322	7-24	1
1368323	7-24	1
1368352	9-28	4
1368400	9-28	3
1368402	9-28	3
1368411	8-40	1
1368412	8-40	1
1368421	8-40	1
1368441	9-28	4
1368442	9-28	4
1368446	8-40	1
1368656	7-8	6
	8-8	10
1369326	9-11	2
1369344	7-21	6
	8-35	6
	8-37	6
	9-23	6
	9-25	6
	11-3	17
	11-5	14
	11-7	14
1369345	7-21	6
	8-35	6
	8-37	6
	9-23	6
	9-25	6
	10-27	7
	10-29	6
	11-3	17
	11-5	14
	11-7	14
1369356	7-12	6
	8-16	6
	8-19	18
	9-11	21
1369357	7-12	6
	8-16	6
	8-19	18
	9-9	21
	10-5	10
	10-11	7
1369602	7-24	1
1369605	7-24	1
1369606	7-24	1
1369607	7-24	1
1369608	7-24	1
1369614	7-24	1
1369639	9-28	4
1369640	9-28	4
1370119	10-15	19
1370158	10-32	20
1370187	10-5	13
1370191	10-5	14
1370194	10-15	22
1370203	10-3	1
1370204	10-3	1
1370205	10-3	1
1370206	10-3	1
1370207	10-3	1
1370208	10-3	1
1370209	10-3	1
1370210	10-3	1
1370211	10-3	1
1370223	10-5	1
1370224	10-5	1
1370225	10-5	1
1370226	10-5	1
1370227	10-5	1
1370228	10-5	1
1370229	10-5	1
1370230	10-5	1
1370231	10-5	1
1370243	10-9	1
1370244	10-9	1
1370245	10-9	1
1370246	10-9	1
1370247	10-9	1
1370248	10-9	1
1370249	10-9	1
1370250	10-9	1
1370251	10-9	1
1370257	10-13	21
1370258	10-13	21
1370259	10-13	21
1370318	10-32	33
1370319	10-32	15
1370357	10-32	26
1370360	10-15	15
1370376	10-32	19
1370377	10-32	18
1370378	10-32	32
1370379	10-32	16
1370398	11-21	
1370399	11-21	
1370420	10-13	23
1370469	10-32	41
1370470	10-33	49
1370479	11-15	5
	11-17	5
	11-21	5
1370480	11-17	4
1370481	11-17	3
1370482	11-17	2
1370483	11-17	1
1370484	11-17	2
1370485	11-17	4
1370486	11-17	1
1370487	11-17	3
1370492	11-15	2
1370493	11-15	1
1370508	10-32	10
1370516	10-15	23
1370517	10-13	4
1370518	10-15	14
1370521	10-15	6
1370524	10-16	36
1370553	10-15	2
1370554	10-15	2
1370555	10-15	2
1370556	10-15	2
1370557	10-15	2
1370558	10-15	2
1370559	10-15	2
1370560	10-15	2
1370561	10-15	2
1370576	10-15	3
1370579	10-32	17
1370580	10-32	23
1370728	6-29	6
1371660	9-23	
1371661	9-23	
1371662	7-21	
1371663	7-21	
1371746	6-17	17
1371805	11-21	3
1371806	11-21	2
1371807	11-21	4
1371808	11-21	1
1371944	10-32	27
1371947	10-32	39
1372063	10-32	21
1372064	10-32	21
1372065	10-32	21
1372066	10-32	21
1372067	10-32	21
1372068	10-32	21
1372069	10-32	21
1372070	10-32	21
1372071	10-32	21
1372341	6-63	12
1374135	6-39	13
	6-43	13
1374136	6-39	27
	6-43	27
1374138	6-39	44
	6-44	58
1374141	6-39	4
1374142	6-39	2
1374144	6-40	59
1374145	6-43	44
1374147	6-44	73
1374148	6-43	2
1374179	1-37	2
1374188	1-33	9
1374190	1-33	11
	1-37	11
1374750	1-27	15
	1-33	22
1374846	3-7	35
1375022	5-7	10
	5-9	10
	5-12	53
1375024	5-7	10
	5-9	10
	5-12	53
1375036	5-11	20
1375048	5-7	12
	5-9	33
1375049	5-7	12
	5-9	33
1375168	11-35	14
1375171	11-35	12
1375172	11-35	12
1375580	6-63	12
1375595	10-3	13
1375752	3-3	27
1375754	3-14	2
1375756	3-14	2
1375758	3-14	2
1375771	3-14	1
1375772	3-14	1
1375773	3-14	1
1375774	3-14	1
1375848	1-27	12
	1-33	27
	1-39	36

See Service Manual for service procedures.
©2007 HYSTER COMPANY

NUMERICAL INDEX (Continued)

PART NO.	PG	ITEM
1376117	9-28	4
1376120	9-28	4
1376126	9-28	4
1376127	8-40	1
1376131	8-40	1
1376161	8-40	1
1376162	8-40	1
1376163	8-40	1
1376165	8-40	1
1376166	8-40	1
1376168	8-40	1
1376169	8-40	1
1376170	8-40	1
1376171	8-40	1
1376423	6-63	10
1376424	6-63	9
1376425	6-17	8
1376427	6-17	15
1376437	11-27	20
1376439	11-31	4
1376440	11-31	5
1376441	11-31	6
1376446	11-31	7
1376679	1-33	
1376680	1-33	
1376743	4-3	40
1376812	1-7	12
1377252	6-17	16
1377253	6-17	3
1377254	6-17	9
1377378	1-11	13
1377379	2-3	12
1377399	11-38	5
1377414	5-27	1
	5-29	
1377661	5-11	30
1377670	1-11	22
	1-15	15
	1-19	29
1377925	11-15	5
	11-17	5
1377926	11-17	1
1377927	11-17	1
1377928	11-15	8
	11-17	8
1377929	11-17	2
1377930	11-17	2
1377931	11-15	1
1377932	11-15	2
1377933	11-15	1
1377934	11-15	2
1377945	11-15	18
1377948	11-17	20
1377949	11-17	20
1377955	11-17	
1377956	11-17	
1377957	11-15	
1377958	11-15	
1378307	1-33	4
1378435	5-17	21
1378600	4-3	25
1378690	8-20	31
	9-9	24
	9-11	24
1378691	7-8	7
	8-8	11
1378692	8-20	30
	9-9	25
1378693	8-20	30
	9-11	25
1378694	7-8	8
	8-8	12
1378698	7-8	8
	8-8	12
1378699	7-8	8
	7-8	8
	8-8	12
	8-8	12
	8-20	30
	9-9	25
	9-11	25
	10-9	11
	10-16	35
1378724	10-20	16
1378732	1-64	1
1378733	1-64	1
1378734	1-64	1
1378735	1-64	1
1378736	1-64	1
1378737	1-64	1
1378760	1-64	5
1378761	1-64	5
1378762	1-64	4
1378763	1-64	3
1378765	1-64	6
1378766	1-65	6
1378786	1-64	1
1378788	1-64	1
1378789	1-64	1
1378790	1-64	1
1378791	1-64	1
1378807	1-64	1
1378808	1-64	1
1378809	1-64	1
1378900	1-12	54
	1-15	17
	1-19	28
1378902	1-12	55
	1-15	18
	1-19	30
1378975	1-11	26
	1-15	16
	1-19	27
1379003	10-19	1
1379004	10-19	1
1379005	10-19	1
1379006	10-19	1
1379007	10-19	1
1379008	10-19	1
1379009	10-19	1
1379010	10-19	1
1379011	10-19	1
1379018	10-23	1
1379019	10-23	1
1379020	10-23	1
1379021	10-23	1
1379022	10-23	1
1379023	10-23	1
1379024	10-23	1
1379025	10-23	1
1379026	10-23	1
1379033	10-19	2
1379034	10-19	2
1379035	10-19	2
1379036	10-19	2
1379037	10-19	2
1379038	10-19	2
1379039	10-19	2
1379040	10-19	2
1379041	10-19	2
1379048	10-23	2
1379049	10-23	2
1379050	10-23	2
1379051	10-23	2
1379052	10-23	2
1379053	10-23	2
1379054	10-23	2
1379055	10-23	2
1379056	10-23	2
1379062	10-19	3
	10-23	4
1379063	10-19	10
1379064	10-19	9
	10-23	10
1379283	7-8	1
1379289	7-4	1
1379356	10-25	1
1379357	10-25	1
1379358	10-25	1
1379359	10-25	1
1379360	10-25	1
1379361	10-25	1
1379362	10-25	1
1379363	10-25	1
1379364	10-25	1
1379371	10-25	2
1379372	10-25	2
1379373	10-25	2
1379374	10-25	2
1379375	10-25	2
1379376	10-25	2
1379377	10-25	2
1379378	10-25	2
1379379	10-25	2
1379443	1-54	24
1379461	8-35	
1379462	8-35	
1379467	10-27	
1379489	10-13	19
	10-15	27
1379528	3-14	1
1379529	3-14	1
1379530	3-14	1
1379531	3-14	1
1379532	3-14	1
1379534	3-14	1
1379536	3-14	1
1379537	3-14	1
1379538	3-14	1
1379539	3-14	1
1379682	8-20	30
	9-9	25
1379683	8-20	30
	9-11	25
1379684	7-8	8
	8-8	12
1379685	7-8	8
	8-8	12
1379687	7-12	16
1379758	5-7	25
	5-9	23
1379807	1-54	25
1379808	1-54	25
1380036	9-11	3
1380316	3-3	11
1380550	11-31	19
	11-43	
1380584	1-54	23

©2007 HYSTER COMPANY

NUMERICAL INDEX (Continued)

PART NO.	PG	ITEM
1380825	11-35	13
1380879	7-18	8
	9-14	6
	9-16	6
1380976	9-14	6
	9-16	6
1381082	6-65	3
1381354	8-12	1
1381355	8-12	1
1381356	8-12	1
1381357	8-12	1
1381358	8-12	1
1381359	8-12	1
1381360	8-12	1
1381361	8-12	1
1381362	8-12	1
1381363	8-12	1
1381364	8-12	1
1381365	8-12	1
1381366	8-12	1
1381367	8-12	1
1381368	8-12	1
1381369	8-12	1
1381370	8-12	1
1381371	8-12	1
1381387	10-11	1
1381388	10-11	1
1381389	10-11	1
1381390	10-11	1
1381391	10-11	1
1381392	10-11	1
1381393	10-11	1
1381394	10-11	1
1381395	10-11	1
1381562	8-35	1
1381563	8-35	1
1381570	10-27	1
1381765	11-23	6
	11-25	6
1381766	11-23	7
	11-25	7
1381816	1-64	1
1381817	1-64	1
1381909	1-7	15
1381910	1-7	10
1381913	10-9	9
1381914	10-15	18
1381916	10-16	33
1381917	10-9	9
1381918	1-7	16
1381919	1-7	17
1382111	1-33	1
1382112	1-33	2
1382113	1-33	1
1382114	1-33	2
1382130	11-37	1
1382302	11-31	13
	11-35	5
1382303	11-35	4
1382308	11-43	5
1382311	1-7	7
1382312	1-7	7
1382313	1-7	6
	1-7	6
1382674	6-6	37
	6-9	38
	6-14	42
1383062	6-65	1
1383178	5-11	13
1383179	5-11	17
1383180	5-11	44
1383192	5-11	18
1383457	3-7	22
1383475	3-7	17
1383476	3-7	18
1383478	3-7	18
1383480	3-7	21
1383481	3-7	20
1383482	3-7	19
1383483	3-7	25
1383680	1-11	2
	1-12	71
	1-15	7
	1-20	42
1383681	2-13	20
	11-31	14
	11-33	15
1383686	7-14	
1383687	7-14	
1383688	7-14	2
1383689	7-14	1
1383690	7-14	1
1385535	6-59	19
1385758	1-11	28
	1-16	47
	1-19	3
1385759	1-11	28
	1-16	47
	1-19	3
1385760	1-11	28
	1-16	47
	1-19	3
1385761	1-11	33
	1-16	48
	1-19	1
1386696	1-23	1
1386697	1-23	1
1386698	1-23	1
1386699	1-23	1
1386700	1-23	1
1386701	1-23	1
1388309	6-34	45
1388314	1-7	3
1388315	1-7	3
1388838	4-19	28
1389330	5-3	1
1390182	1-23	5
	8-40	13
1390302	5-11	15
1390365	11-23	8
	11-25	8
1390366	11-23	9
	11-25	9
1390416	9-28	3
1390417	9-28	3
1390426	9-28	3
1390429	9-28	3
1390575	11-39	1
1391205	4-3	9
1391206	4-3	9
1392495	1-33	8
1393738	5-11	51
1395285	8-20	29
	9-9	26
1395291	8-40	29
	9-28	24
1395292	8-40	30
	9-28	25
1396406	8-40	28
	9-28	26
1397863	4-3	39
1397864	4-3	37
1397885	1-3	21
1397886	1-3	21
1397887	1-3	21
1397893	1-3	22
1397894	1-3	22
1397895	1-3	22
1397909	1-3	23
1397910	1-3	23
1397924	1-3	16
1397926	1-3	24
1397927	1-3	24
1398007	5-3	13
1398476	7-24	1
1398509	7-24	1
1398644	7-24	1
1398698	9-28	3
1398950	9-28	4
1398954	8-40	1
1398958	8-40	1
1401746	11-3	9
	11-5	9
	11-7	9
1450092	6-29	6
1450503	4-3	12
1451697	4-7	3
1451698	4-7	5
1451703	4-7	8
1451712	4-7	12
1452459	4-13	1
1452953	1-23	2
1452954	1-23	2
1452955	1-23	2
1453180	4-3	5
	4-7	
1453260	6-27	2
1454122	2-19	7
1454478	2-23	8
1455066	6-5	32
	6-9	6
	6-15	
	6-27	1
1455769	4-7	2
1455770	4-7	4
1455771	4-7	6
1455773	4-7	10
1455776	4-7	13
1455779	4-7	14
1455780	4-7	11
1457089	1-3	33
1457126	3-7	9
1457127	3-7	9
1457128	3-3	41
	3-7	
1457856	3-7	6
1459112	1-31	5
	1-37	7
1459114	1-33	19
1459238	6-15	15
1459239	6-15	3
1459240	6-15	8
1459371	6-15	1
1459372	6-15	9
1460397	1-7	18
1460442	5-3	28
1461669	4-20	2
1461671	4-17	24

©2007 HYSTER COMPANY

NUMERICAL INDEX (Continued)

PART NO.	PG	ITEM
	4-19	37
1461672	4-17	23
	4-19	36
1461719	6-43	4
1462171	4-20	1
1462172	4-20	1
1462173	4-20	1
1462174	4-20	1
1462175	4-20	1
1462176	4-20	1
1462389	5-11	31
1462463	5-11	50
	5-12	62
1462535	5-11	7
1462551	7-12	29
	8-16	30
	9-7	23
	10-13	28
1462909	5-11	9
1463138	2-46	1
	11-46	2
1463139	2-37	8
	2-39	38
	2-41	1
	2-46	2
	2-49	7
	2-54	16
	11-46	1
1463140	2-47	3
1463912	5-15	5
	5-18	52
	5-21	23
1464149	4-17	3
	4-19	2
1464150	4-17	3
	4-19	2
1464875	5-11	49
1465140	6-19	40
1465504	8-20	35
1465530	1-3	1
1465533	1-7	8
1467430	4-7	18
1467511	1-53	18
1467512	1-53	18
1467514	1-39	2
	1-47	4
	1-51	3
1467515	1-39	2
	1-47	4
	1-51	3
1467523	1-43	1
	1-47	17
	1-51	18
1467524	1-43	2
	1-47	19
	1-51	20
1467525	1-43	3
	1-47	16
	1-51	17
1467526	1-43	4
	1-47	18
	1-51	19
1467527	1-43	5
	1-47	20
	1-51	21
1467529	1-43	7
	1-47	14
	1-51	15
1467531	1-43	6
1468398	6-33	12
1468404	6-29	33
1468405	1-11	30
	1-16	42
	1-20	49
1468406	6-33	12
1468408	6-29	33
1468409	6-29	29
1468471	5-29	5
1470152	1-39	1
	1-47	1
	1-51	1
1470153	1-39	1
	1-47	1
	1-51	1
1470155	1-39	37
	1-47	12
	1-51	9
1470156	1-39	38
	1-47	2
1470157	1-39	39
	1-47	2
	1-51	2
1470158	1-39	40
1470159	1-39	34
1470160	1-43	8
1470163	1-39	29
	1-47	5
	1-51	5
1470164	1-39	41
1470687	5-12	55
1471535	1-12	70
1471800	6-23	18
	6-25	18
1474912	10-15	8
1474913	10-32	44
1475249	5-29	5
1475250	5-29	5
1475444	6-57	1
1476241	5-21	14
1476421	5-3	25
1477079	5-12	59
1477166	1-62	5
1477167	1-62	6
1477237	1-62	6
1479104	11-27	23
1479233	10-32	1
1479234	10-32	1
1479235	10-32	1
1479236	10-32	1
1479237	10-32	1
1479238	10-32	1
1479239	10-32	1
1479240	10-32	1
1479241	10-32	1
1482726	10-32	45
1482729	10-32	45
1483375	1-3	20
	11-27	39
1483410	3-7	29
1483414	11-27	32
1483415	11-27	41
1483660	2-4	27
1483661	11-23	14
	11-25	14
1483663	11-23	12
	11-25	12
1483664	11-23	13
	11-25	13
1483828	1-43	9
1484361	2-41	5
	2-41	6
	2-41	8
	2-41	9
	2-41	10
	2-41	11
	2-41	12
	2-41	13
1484377	2-39	38
	2-46	1
	2-46	2
	2-49	7
	2-54	16
1484557	2-33	13
	2-35	13
1484558	2-33	14
	2-35	14
1485690	11-27	40
1485692	11-27	40
1485694	11-27	40
1486178	11-3	
1486179	11-7	
1486180	11-5	
1486181	11-7	
1486188	11-3	
1486189	11-7	
1486190	11-5	
1486245	11-27	19
1486566	5-21	13
1486836	6-63	10
1488918	11-3	1
1488965	11-7	1
1488966	11-5	1
1488974	11-3	2
	11-5	2
	11-7	2
1488998	11-3	1
1488999	11-7	1
1489000	11-5	1
1489001	11-7	1
1489010	11-3	2
	11-5	2
	11-7	2
1489016	11-9	1
1489017	11-9	1
1489034	11-10	2
1489035	11-9	3
1489037	11-9	2
1489039	11-9	5
1489050	11-11	2
	11-12	2
1489166	1-39	
	1-43	
1489167	1-39	
	1-43	
1489179	1-23	1
1489180	1-23	1
1489181	1-23	1
1489696	1-39	42
	1-47	6
	1-51	4
1490243	2-41	5
	2-41	6
	2-41	8
	2-41	9
	2-41	10
	2-41	11
	2-41	12
	2-41	13

©2007 HYSTER COMPANY

NUMERICAL INDEX (Continued)

PART NO.	PG	ITEM
1491830	4-5	8
1492644	6-65	12
1493458	1-37	8
1493957	1-3	11
	11-28	49
1494017	7-24	8
	8-40	2
	8-40	32
	9-28	28
	10-32	9
1494076	1-39	2
	1-47	4
	1-51	3
1494077	1-39	2
	1-47	4
	1-51	3
1494198	11-27	14
1494199	11-27	25
1494610	6-23	7
	6-25	7
1494920	1-7	30
1494921	1-7	30
1494922	1-7	30
1494924	1-7	29
1494925	1-7	29
1494926	1-7	29
1495369	11-27	30
1495370	11-27	27
1495405	11-27	26
1495699	2-19	6
1495881	6-63	15
1495956	5-15	10
1495967	5-15	19
	5-17	23
	5-21	21
1495980	5-15	12
1496922	9-14	14
	9-16	15
1497566	11-27	34
1497568	11-27	36
1498063	5-15	6
1498185	2-33	10
	2-35	10
	2-37	13
	2-38	26
	2-49	13
	11-45	5
	11-47	3
1498325	11-9	4
1498326	11-3	22
	11-5	22
	11-7	22
1498406	4-3	16
	11-27	3
1498407	5-11	32
1498408	5-17	17
1498965	5-15	7
	5-17	25
	5-21	22
	5-25	
1499111	7-19	17
1499243	5-15	13
	5-21	43
1499327	5-15	14
1500782	1-62	4
1500784	1-62	4
1501412	4-10	10
1502092	6-23	28
	6-25	26
1502093	6-23	29
	6-25	27
1502094	6-23	24
	6-25	23
1502095	6-23	2
	6-23	25
	6-25	2
	6-25	24
1502097	6-23	11
	6-25	11
1502098	6-23	17
	6-25	17
1502099	6-23	12
	6-25	12
1502100	6-23	13
	6-25	13
1502101	6-23	14
	6-25	14
1502104	6-23	9
	6-25	9
1502105	6-23	4
	6-25	4
1502106	6-23	6
	6-25	6
1502108	6-23	8
	6-25	8
1502110	6-23	19
	6-25	19
1502111	6-23	1
	6-25	1
1502114	6-23	22
1502115	6-23	26
1502120	6-23	3
	6-25	3
1503096	11-9	6
1503378	6-29	22
1503379	6-29	17
1503475	11-12	2
1503476	11-10	2
	11-11	2
	11-12	2
1503478	11-10	1
1503479	11-10	1
1503481	11-11	1
	11-12	1
1503482	11-11	1
	11-12	1
1503483	11-12	1
1504010	7-21	6
	8-35	6
	8-37	6
	9-23	6
	9-25	6
	11-3	17
	11-3	17
	11-5	14
	11-7	14
1504011	7-21	6
1504012	8-35	6
	8-37	6
	9-23	6
	9-25	6
	11-3	17
	11-5	14
	11-7	14
1504041	3-3	35
	5-7	
1504042	3-3	35
	5-7	
1504125	4-3	10
1504374	6-25	
	6-27	19
1504450	6-25	31
1504529	6-25	32
1507425	6-23	30
	6-25	28
1507426	6-23	15
	6-25	15
1507427	6-23	27
	6-25	25
1507429	6-23	21
	6-25	21
1507430	6-23	20
	6-25	20
1507461	6-23	16
	6-25	16
1507462	6-23	10
	6-25	10
1507463	6-23	23
	6-25	22
1508079	5-7	11
	5-9	11
1508081	5-7	11
	5-9	11
1508206	2-33	15
	2-35	15
	2-38	22
	2-38	25
	2-53	3
	2-53	5
1508211	2-33	16
	2-35	16
	2-38	21
	2-38	24
	2-53	2
	2-53	4
1508212	2-33	17
	2-35	17
	2-39	39
	2-54	18
1508232	2-38	21
	2-38	22
	2-38	24
	2-38	25
	2-53	2
	2-53	3
	2-53	4
	2-53	5
1508233	2-33	18
	2-35	18
	2-38	21
	2-38	22
	2-38	24
	2-38	25
	2-53	2
	2-53	3
	2-53	4
	2-53	5
1508240	2-39	39
	2-54	18
1509882	6-29	25
1509890	2-7	7
	2-41	4
1509942	1-3	10
	11-28	50
1509943	11-27	12
1510058	6-6	40
	6-17	14
	6-27	50

©2007 HYSTER COMPANY

NUMERICAL INDEX (Continued)

PART NO.	PG	ITEM
1510115	6-59	15
1510876	5-15	21
1512081	5-15	6
1512410	2-11	23
	2-13	27
1514072	2-13	40
1514074	2-11	17
1514076	2-13	41
1514429	2-25	12
	2-27	6
1514866	7-12	5
	7-21	9
	8-16	7
	8-20	26
	8-35	9
	8-37	9
	9-9	22
	9-11	22
	9-23	9
	9-25	9
	10-5	17
	10-11	9
	10-27	9
	10-29	9
	11-3	20
	11-5	16
	11-7	16
1516799	6-29	15
1516800	6-29	15
1516801	6-29	15
1516977	2-9	1
1517441	11-23	10
	11-25	10
1517448	11-23	1
1517449	11-23	2
1517450	11-25	1
1517451	11-25	2
1517452	11-23	1
1517453	11-23	2
1517905	6-51	40
1518159	11-27	24
1518219	11-23	17
	11-25	17
1518233	11-23	
1518234	11-23	
1518235	11-25	
1518236	11-23	
1518237	11-23	
1518238	11-23	
1518239	11-23	
1518240	11-23	
1518241	11-23	
1518249	11-23	1
1518250	11-23	2
1518251	11-23	1
1518252	11-23	2
1518253	11-23	1
1518254	11-23	2
1518372	5-3	23
1518932	6-27	18
1518991	11-23	
1518992	11-23	
1520609	4-3	41
1520933	2-11	9
	2-13	9
1523732	1-62	2
1523733	1-62	3
1523734	1-63	7
1523735	1-63	8
1523737	1-62	3
1523739	1-63	8
1524195	6-51	6
1524525	2-4	27
1525354	4-19	27
1525567	2-39	38
	2-54	16
1525568	2-41	1
1525718	2-9	1
1525827	11-31	9
	11-33	11
1525920	2-38	31
	2-46	3
	2-53	10
1525921	2-17	13
1526082	11-37	2
1526118	11-27	13
1526709	1-54	30
1528991	2-17	14
1528992	2-17	10
1528998	2-23	5
1529046	2-39	38
	2-41	1
	2-54	16
1530960	2-47	3
1530961	2-47	3
1531001	6-59	12
1531210	5-11	1
1531211	5-11	2
1531984	11-35	1
1532664	2-33	20
	2-35	20
	2-38	18
	2-50	17
1532762	2-7	4
1532765	2-19	5
1532775	2-7	1
	2-41	7
1532776	2-7	8
	2-41	2
	2-41	3
1533592	2-11	20
1534418	4-19	1
1534420	4-19	
1534660	1-53	5
	1-54	31
1535169	1-12	67
	1-15	34
	1-20	56
1535249	11-27	7
1535303	2-11	1
	2-13	1
1536813	1-23	9
1537132	2-11	13
	2-13	13
1537135	2-35	21
	2-37	16
	2-50	15
1537683	11-35	3
	11-37	4
1537991	1-25	10
1537992	1-25	10
1537993	1-25	10
1538410	1-11	6
1538412	1-11	6
1538414	1-11	6
1538963	1-11	21
	1-15	13
	1-19	24
1540667	2-14	44
1540668	2-13	34
	2-23	
1541956	2-13	25
1541988	2-46	1
	11-46	2
1541989	2-46	1
	11-46	2
1541991	2-37	8
	2-46	2
	2-49	7
	11-46	1
1541992	2-37	8
	2-46	2
	2-49	7
	11-46	1
1542433	2-11	5
	2-13	5
	2-17	
1543254	4-19	29
1544196	1-11	25
	1-15	1
	1-19	26
1544764	11-35	1
1544944	4-9	18
1545111	2-17	11
	2-23	9
1546460	1-25	2
1546689	1-40	43
	1-43	10
	1-51	14
1547469	5-25	4
1547470	5-25	5
1547471	5-25	1
1547472	5-25	3
1547837	2-3	26
	2-4	26
1547847	2-3	19
1548040	2-3	26
1548041	2-3	26
1548187	1-54	29
1548319	2-3	20
1548320	2-3	21
1548321	2-3	22
1548322	2-3	23
1548323	2-3	24
1548324	2-3	25
1548325	2-3	24
1548326	2-3	25
1548327	2-3	20
1548328	2-3	21
1548329	2-3	22
1548330	2-3	23
1548331	2-3	24
1548332	2-3	25
1548333	2-3	24
1548334	2-3	25
1548335	2-3	20
1548336	2-3	21
1548337	2-3	22
1548338	2-3	23
1548339	2-3	24
1548340	2-3	25
1548342	2-3	25
1548344	2-3	25
1549407	2-11	23
	2-13	27
1550646	2-25	7
1550647	2-25	3
1550764	1-64	1

©2007 HYSTER COMPANY

NUMERICAL INDEX (Continued)

PART NO.	PG	ITEM
1552107	2-25	9
1553414	2-17	2
	2-19	
1553416	2-17	16
1553417	2-17	19
1553427	2-19	7
1553428	2-19	9
1553429	2-19	2
1553441	2-23	1
1554510	2-11	18
1555680	11-33	5
1555731	2-27	1
	2-27	3
	2-31	1
	2-31	1
1555873	3-13	1
1555874	3-13	2
1555875	3-13	3
1555878	3-13	6
1555879	3-13	7
1555881	3-13	9
	6-21	30
1555882	3-13	10
1555883	3-13	14
1555884	3-13	15
1555885	3-13	16
1555888	3-13	32
1555891	3-13	24
	6-21	20
1555892	3-13	26
	6-21	12
1555894	3-13	28
	6-21	11
1555895	3-13	29
1555896	3-13	30
1555897	3-13	31
1555902	6-21	18
1555903	6-21	13
1555907	6-21	28
1555908	6-21	14
1556324	11-33	4
1556484	2-11	14
	2-13	14
1556487	11-31	10
	11-33	10
1556488	1-12	48
	1-15	26
	1-19	32
1556669	1-12	48
	1-15	26
	1-19	32
1563211	1-47	11
	1-51	6
1563216	1-31	2
1563217	1-31	2
1563222	1-31	1
1563224	1-37	3
1563225	1-37	4
1563227	1-37	10
1563351	1-31	1
1563358	1-3	34
1563368	2-11	19
	2-13	42
1564274	1-11	1
1564275	1-11	1
1564276	1-11	1
1564277	1-11	1
1564278	1-11	1
1564279	1-11	1
1564986	3-11	18
	3-13	36
1564987	3-11	18
	6-23	31
1565025	6-23	30
	6-25	28
1565693	2-11	16
	2-13	16
1565840	11-35	1
1566564	8-41	33
1566614	5-15	20
	5-17	48
	5-21	47
1566736	8-37	1
1566769	9-25	1
1566773	10-29	1
1566778	9-25	1
1566791	8-37	1
1568271	4-17	7
	4-19	7
1568332	5-17	33
	5-21	25
1568333	5-17	35
	5-21	27
1568334	5-17	31
1568335	5-17	11
	5-21	11
1568336	5-17	43
	5-21	37
1568341	5-17	6
	5-21	6
1568342	5-17	12
1568343	5-17	42
	5-21	39
1568344	5-17	44
	5-21	42
1568346	5-17	37
	5-21	29
1569995	2-47	2
1572664	5-17	39
	5-21	31
1573121	4-5	12
1578672	6-19	7
1579267	2-11	23
	2-13	27
1579847	2-25	13
1580129	5-27	13
1580889	2-13	40
1581747	5-17	2
	5-21	2
1581833	11-5	7
	11-7	7
1581854	11-5	8
	11-7	8
1582160	6-59	16
1582161	6-59	14
1583835	6-39	12
	6-43	12
1584051	1-37	6
1584116	1-37	6
1584631	1-47	21
	1-51	22
1584806	5-18	55
	5-22	55
1586786	2-11	21
	2-13	33
1586964	1-48	1
1586965	1-48	1
1589493	6-13	25
1589499	6-9	21
	6-13	27
	6-59	9
	6-61	
1591185	2-27	1
	2-27	3
	2-29	1
	2-31	1
1591553	1-47	4
	1-51	3
1591652	1-31	4
	1-37	9
	1-47	7
1591664	5-7	7
	5-9	18
1591665	5-7	7
	5-9	18
1591667	4-10	6
1591967	4-10	5
1592658	5-27	6
1593346	6-33	29
1593347	5-17	18
	6-33	33
1593351	4-10	
	4-19	4
1593352	4-10	11
1593839	1-3	34
1596466	6-9	19
	6-59	7
1596467	6-9	25
	6-13	28
	6-59	13
1598221	2-27	5
	2-29	1
	2-31	1
1598222	2-27	2
	2-29	1
	2-29	1
1598223	2-27	5
	2-29	1
	2-29	1
	2-31	1
	2-31	1
1598224	2-29	6
1598283	2-25	2
1598504	1-31	3
	1-37	5
	1-47	3
	1-51	7
1599401	5-15	1
1599702	1-15	3
1599703	1-15	3
1599704	1-15	3
1599705	1-15	3
1599706	1-15	3
1599707	1-15	3
1600020	3-13	27
1600030	3-13	35
1600031	3-13	33
1600035	3-13	8
1600037	3-13	5
1600038	3-13	4
1600092	2-23	11
1600126	1-47	22
	1-51	23
1600556	1-19	14
1600557	1-19	14
1600558	1-19	14
1601245	1-16	44
1601251	1-19	16

©2007 HYSTER COMPANY

NUMERICAL INDEX (Continued)

PART NO.	PG	ITEM
1601252	1-19	16
1601254	1-19	16
1601262	1-16	44
1601264	1-20	50
1601999	6-13	30
1602000	6-13	31
1602001	6-14	48
1602002	6-14	47
1603739	1-28	1
1603740	1-28	1
1603742	1-34	1
1603743	1-34	1
1603745	1-44	1
1603746	1-44	1
1603757	1-35	1
1603758	1-35	1
1603760	1-45	1
1603761	1-45	1
1605784	1-15	32
1605785	1-15	32
1605786	1-15	32
1605989	6-47	7
1605994	1-7	5
1606260	1-7	5
1606261	1-7	4
1606265	1-7	4
1609624	6-29	37
1611582	6-61	4
1611583	6-61	1
1611586	6-61	2
1612106	6-55	5
1612107	6-55	1
1612108	6-55	2
1612110	6-51	16
	6-53	4
1612111	6-51	28
	6-53	5
1612112	6-51	42
	6-53	6
1612113	6-51	4
	6-51	17
	6-51	27
	6-53	3
1612119	6-55	5
1612120	6-55	1
1612589	3-7	34
1614933	6-51	22
1614934	6-51	10
1614935	6-51	20
1614936	6-51	1
	6-53	6
1614939	6-51	12
1614940	6-51	8
1614941	6-51	5
1614942	6-51	18
1614944	6-51	41
1614945	6-51	43
1614946	6-51	44
1614947	6-51	45
1614948	6-51	46
1615769	6-51	3
	6-51	26
1616081	6-59	31
1616225	3-7	33
1616384	2-47	1
1616386	2-47	1
1616388	2-47	1
1616390	2-47	1
1618101	5-3	22
1618102	5-3	18
1618938	1-3	5
	11-28	48
1618982	6-23	32
	6-25	33
1622213	6-19	3
1622214	6-19	10
1622215	6-19	6
1622216	6-19	11
1622217	6-19	8
1622569	5-17	40
	5-21	32
1624333	6-57	1
	6-59	31
1627418	5-12	60
1627639	1-47	15
	1-51	16
1628069	3-3	35
	5-9	
1628070	3-3	35
	5-9	
1628739	5-21	36
1632493	2-9	1
1632494	2-9	1
1635431	6-29	16
1635587	6-51	14
1635588	6-51	24
1637285	1-39	2
	1-47	4
	1-51	3
1637806	5-17	19
1637986	5-9	2
1641881	6-37	10
1641884	6-37	9
1641885	6-34	42
1643266	11-28	49
1643405	8-40	20
	9-28	17
	10-33	49
1643631	2-11	22
	2-13	26
1647532	1-37	13
	1-47	10
	1-51	13
1648202	3-13	37
	6-21	36
1650385	1-33	7
1650564	6-5	23
	6-9	2
	6-13	4
1651234	5-21	12
1651426	11-27	41
1652290	11-37	1
1654891	1-37	9
	1-47	7
	1-51	8
1655319	4-20	3
1656201	4-20	1
1658063	2-27	1
	2-27	3
	2-29	4
	2-31	4
1659462	5-21	40
1660080	6-57	7
	6-59	28
1660759	6-37	11
1662409	11-38	1
1665174	1-16	47
	1-19	3
1665175	1-16	47
	1-19	3
1665176	1-16	47
	1-19	3
1669381	6-40	53
	6-44	67
1670767	3-13	34
2004005	2-3	10
	5-3	33
2007554	2-37	3
	2-49	4
	2-53	14
2013075	7-15	10
	7-18	15
	8-23	9
	8-27	9
2013088	8-32	15
	9-20	15
2013089	8-33	16
	9-20	16
2013099	8-32	8
	9-20	8
	10-19	4
	10-23	5
	10-25	4
2023868	1-3	13
2023901	1-8	33
2023903	1-7	31
2026017	4-9	15
2026802	6-34	38
2027398	5-9	1
2027694	1-16	56
2027720	5-9	34
2027721	5-9	34
2032490	4-10	4
2033614	4-9	17
	4-13	
2034265	4-13	7
2034266	4-13	2
2034484	2-23	2
2034906	1-11	11
2035275	2-33	1
	2-35	1
	2-37	4
	2-38	30
	2-39	37
	2-53	9
	2-53	15
2035276	2-38	19
	2-38	30
	2-39	37
	2-49	1
	2-53	9
	2-53	15
2035396	2-23	3
2036180	6-34	40
2036351	11-31	18
2036371	11-39	2
2036668	6-5	32
	6-27	1
2037311	1-33	28
2037318	6-57	2
	6-59	27
2037319	6-57	3
	6-59	1
2038847	10-19	15
	10-23	11
2040959	5-7	2
2041472	2-39	39
	2-54	18

©2007 HYSTER COMPANY

NUMERICAL INDEX (Continued)

PART NO.	PG	ITEM
2043528	11-3	3
	11-5	3
	11-7	3
	11-9	
2043529	11-3	3
	11-5	3
	11-7	3
	11-9	
2043530	11-3	6
	11-5	6
	11-7	6
2043531	11-3	4
	11-5	4
	11-7	4
2043532	11-3	4
	11-5	4
	11-7	4
2043533	11-3	5
	11-5	5
	11-7	5
2043534	11-3	5
	11-5	5
	11-7	5
2044370	4-10	9
	6-65	7
2045129	4-3	9
2045134	2-37	17
	2-50	16
2045529	6-23	
	6-25	
	6-27	19
2045705	9-14	
2045708	9-14	
2045744	9-14	
2045745	9-14	
2045746	9-14	
2045749	9-14	
2045750	9-14	
2045751	9-14	
2045752	9-14	
2045753	9-14	
2045754	9-14	
2045755	9-14	
2045776	9-14	
2045795	9-16	
2045799	9-16	
2045838	9-16	
2045839	9-16	
2045840	9-16	
2045843	9-16	
2045844	9-16	
2045845	9-16	
2045846	9-16	
2045847	9-16	
2045848	9-16	
2045869	9-16	
2045871	9-16	
2046035	6-33	34
2046163	7-18	13
2046173	7-18	
2046174	7-18	
2046175	7-18	
2046176	7-18	
2046177	7-18	
2046179	7-18	
2046181	7-18	
2046182	7-18	
2046188	7-18	
2046189	7-18	
2046190	7-18	
2046191	7-18	
2046192	7-18	
2046193	7-18	
2046194	7-18	
2046195	7-18	
2046196	7-18	
2046198	7-18	
2046200	7-18	
2046201	7-18	
2046243	11-7	4
2046244	11-7	5
2046245	11-7	4
2046246	11-7	5
2046547	2-33	19
	2-35	19
	2-38	19
	2-49	1
2046671	2-3	15
2046715	9-14	12
	9-16	12
2046756	4-3	17
2046772	7-18	
2046985	7-18	
2047207	7-18	
2047208	7-18	
2047825	11-35	2
2047859	11-42	15
2048106	7-4	
	7-8	
2048113	7-4	
	7-8	
2048116	7-4	
	7-8	
2048117	7-4	
	7-8	
2048118	7-4	
	7-8	
2048121	7-4	
	7-8	
2048125	7-4	
	7-8	
2048128	7-4	
	7-8	
2048149	7-4	
	7-8	
2048151	7-4	
	7-8	
2048152	7-4	
	7-8	
2048153	7-4	
	7-8	
2048154	7-4	
	7-8	
2048155	7-4	
	7-8	
2048156	7-4	
	7-8	
2048157	7-4	
	7-8	
2048158	7-4	
	7-8	
2048160	7-4	
	7-8	
2048162	7-4	
	7-8	
2048163	7-4	
	7-8	
2048164	7-4	
	7-8	
2048204	8-4	
	8-8	
	8-12	
2048227	8-4	
	8-8	
	8-12	
2048228	8-4	
	8-8	
	8-12	
2048229	8-4	
	8-8	
	8-12	
2048230	8-4	
	8-8	
	8-12	
2048231	8-4	
	8-8	
	8-12	
2048232	8-4	
	8-8	
	8-12	
2048233	8-4	
	8-8	
	8-12	
2048234	8-4	
	8-8	
	8-12	
2048235	8-4	
	8-8	
	8-12	
2048236	8-4	
	8-8	
	8-12	
2048237	8-4	
	8-8	
	8-12	
2048238	8-4	
	8-8	
	8-12	
2048239	8-4	
	8-8	
	8-12	
2048240	8-4	
	8-8	
	8-12	
2048241	8-4	
	8-8	
	8-12	
2048242	8-4	
	8-8	
	8-12	
2048243	8-4	
	8-8	
	8-12	
2048282	8-4	
	8-8	
	8-12	
2048284	8-4	
	8-8	
	8-12	
2048285	8-4	
	8-8	
	8-12	
2048287	8-4	
	8-8	
	8-12	
2048289	8-4	
	8-8	
	8-12	

See Service Manual for service procedures.
©2007 HYSTER COMPANY

NUMERICAL INDEX (Continued)

PART NO.	PG	ITEM
2048291	8-4	
	8-8	
	8-12	
2048292	8-4	
	8-8	
	8-12	
2048294	8-4	
	8-8	
	8-12	
2048296	8-4	
	8-8	
	8-12	
2048298	8-4	
	8-8	
	8-12	
2048300	8-4	
	8-8	
	8-12	
2048302	8-4	
	8-8	
	8-12	
2048392	9-3	
	9-5	
2048400	9-3	
	9-5	
2048409	9-3	
	9-5	
2048463	9-3	
	9-5	
2048466	9-3	
	9-5	
2048468	9-3	
	9-5	
2048475	9-3	
	9-5	
2048478	9-3	
	9-5	
2048480	9-3	
	9-5	
2048483	9-3	
	9-5	
2048485	9-3	
	9-5	
2048488	9-3	
	9-5	
2048489	9-3	
	9-5	
2048577	10-3	
	10-5	
	10-9	
	10-11	
2048578	10-3	
	10-5	
	10-9	
	10-11	
2048579	10-3	
	10-5	
	10-9	
	10-11	
2048580	10-3	
	10-5	
	10-9	
	10-11	
2048581	10-3	
	10-5	
	10-9	
	10-11	
2048582	10-3	
	10-5	
	10-9	
	10-11	
2048583	10-3	
	10-5	
	10-9	
	10-11	
2048584	10-3	
	10-5	
	10-9	
	10-11	
2048585	10-3	
	10-5	
	10-9	
	10-11	
2050719	11-42	16
2053770	8-32	
2053771	8-32	
	9-20	
2053772	8-32	
	9-20	
2053773	8-32	
	9-20	
2053774	8-32	
2053775	8-32	
2053795	8-32	
	9-20	
2053796	8-32	
	9-20	
2053797	8-32	
2053798	8-32	
2053799	8-32	
2053800	8-32	
2053829	8-32	
2054463	11-42	14
2056631	2-13	43
2058118	8-32	
2058120	8-32	
2058121	8-32	
2058123	8-32	
	9-20	
2058124	8-32	
2058125	8-32	
2058126	8-32	
2058128	8-32	
2058129	8-32	
2058130	8-32	
2058132	8-32	
2058193	8-32	
2058210	8-32	1
	9-20	1
2058211	8-32	1
2058212	8-32	1
2058213	8-32	1
	9-20	1
2058214	8-32	1
2058217	8-32	1
	9-20	1
2058218	8-32	1
2058219	8-32	1
2058220	8-32	1
2058222	8-32	1
2058223	8-32	1
2058225	8-32	1
2058226	8-32	1
2058227	8-32	1
2058228	8-32	1
2058230	8-32	1
2058249	9-20	1
2058250	9-20	1
2058252	8-32	1
	9-20	1
2058253	8-32	1
	9-20	1
2058254	9-20	1
2058255	8-32	1
	9-20	1
2058257	8-32	1
2058258	8-32	1
2060358	11-27	18
	11-45	
2060547	2-3	1
	2-33	
2060876	11-31	8
	11-42	
2060877	2-4	38
	2-43	
2061863	9-20	
2061865	9-20	
2061867	8-32	
	9-20	
2061868	8-32	
	9-20	
2061869	9-20	
2061870	8-32	
	9-20	
2061872	8-32	
2061874	8-32	
2062718	2-25	8
2063266	3-3	13
	3-13	
2063339	6-21	
	6-27	19
2063379	4-9	16
	4-15	1
2063645	8-32	1
	9-20	1
2063690	8-32	1
2063691	8-32	1
	9-20	1
2063692	8-32	1
	9-20	1
2063693	8-32	1
2063917	5-15	1
	5-17	50
	5-21	49
2064753	8-32	1
2064754	8-32	1
2064782	9-20	1
2064843	9-20	
2064926	11-41	1
2065130	10-19	15
	10-23	11
2065131	10-19	15
	10-23	11
2065132	10-19	15
	10-23	11
2065133	10-19	15
	10-23	11
2065849	5-15	3
2066260	2-13	21
2066643	11-39	1
2067821	5-3	36
	5-31	
2068026	6-29	20
2068027	6-29	1
2070134	2-45	
	11-33	3
2070776	8-37	
2070777	8-37	

©2007 HYSTER COMPANY

NUMERICAL INDEX (Continued)

PART NO.	PG	ITEM
2070778	9-25	
2070779	9-25	
2070780	10-29	
2071079	6-59	4
2071094	4-10	7
2073093	11-37	5
2073114	1-59	3
2073115	1-59	2
2073116	1-59	6
2073117	1-59	7
2073118	1-59	4
2073119	1-59	8
2073121	1-59	9
2073122	1-59	10
2073123	1-59	11
2074151	2-3	1
	2-35	
2074859	5-17	20
2075656	1-53	1
2075998	2-3	1
	2-7	12
	2-37	
2076074	6-9	12
	6-13	9
	6-19	
	6-27	1
2076567	2-27	1
2076568	2-27	3
2076569	2-27	1
2076570	2-27	3
2077768	6-47	5
2077802	2-7	9
2077826	2-7	6
	2-41	
	6-47	1
2078733	6-48	2
	6-53	2
2078734	6-48	2
	6-55	
2078735	6-48	2
	6-53	1
2078736	6-48	1
	6-51	
2078738	6-48	
2078740	6-48	
2078742	6-48	
2078784	6-13	22
2078785	6-59	18
2078787	6-13	3
2078813	6-14	45
2078814	6-14	44
2079477	1-15	8
	1-19	2
	2-46	
2083746	6-29	24
2083747	6-29	23
2084703	2-25	10
	2-47	
2085169	2-25	1
2085170	2-25	1
2085173	2-25	
2085174	2-25	
2085177	2-25	1
2085178	2-25	1
2085181	2-25	
2085182	2-25	
2085877	1-59	5
2085878	1-57	4
2085879	1-57	8
2085880	1-57	9
2085881	1-57	10
2086419	11-39	2
2086421	5-17	47
	5-21	35
2086556	1-57	1
2086557	1-57	2
2086558	1-57	3
2086559	1-57	7
2086560	1-57	5
2086561	1-57	6
2087152	1-37	1
2087153	1-37	1
2087154	1-47	
2087155	1-47	
2087158	1-51	
2087159	1-51	
2087663	1-31	
2087664	1-31	
2087665	1-37	1
2087666	1-37	1
2087667	1-47	
2087668	1-47	
2088742	11-27	18
	11-46	
2090160	1-59	12
2093047	1-59	1
2093806	2-25	
2093807	2-25	
2093808	2-25	
2093809	2-25	
2095342	2-49	
	2-53	
2095551	2-11	23
	2-13	27
2096515	2-7	9
2099222	2-29	1
2099223	2-31	1
2099226	2-29	1
2099227	2-31	1
2100181	2-11	23
	2-13	27
2302313	10-23	
2302405	10-19	
2302461	2-17	6
2302701	10-25	
2302821	10-23	
2302899	6-65	9
2303108	10-25	
2303152	10-23	
2303239	6-17	1
2303249	2-17	18
2303700	6-25	29
2303801	2-17	17
2303821	2-17	4
	2-23	7
2303932	10-25	
2304170	2-17	3
	2-23	6
2304354	10-19	
2304572	2-19	4
2304574	10-25	
2304616	10-19	
2304661	10-23	12
2304931	8-32	1
2306260	10-23	
2306476	1-53	14
2306675	10-23	
2306897	10-25	
2306932	10-25	
2307263	10-19	
2307276	10-23	
2307400	1-54	23
2307803	2-17	8
2308031	10-19	
2308424	10-23	
2308673	1-53	20
2308770	10-25	
2308828	10-25	
2308869	10-19	
2309065	10-19	
2309481	6-17	4
2309637	10-25	
2309766	7-12	17
	8-16	22
	9-7	18
2309799	1-53	14
2310036	8-32	1
2310086	10-23	
2310412	10-19	
2310629	10-23	
2311126	10-19	
2311349	1-25	25
3009159	11-17	19

©2007 HYSTER COMPANY


HYSTER