RUTHZIL TRATOR COMERCIAL DE PEÇAS LTDA 11 97083-6812 ROLANDO CITRANGULO

Bobcat®

Parts Manual
E45 Compact Excavator

OUTUBRO 2012

S/N AG3G11001 & Above
S/N AHHC11001 & Above

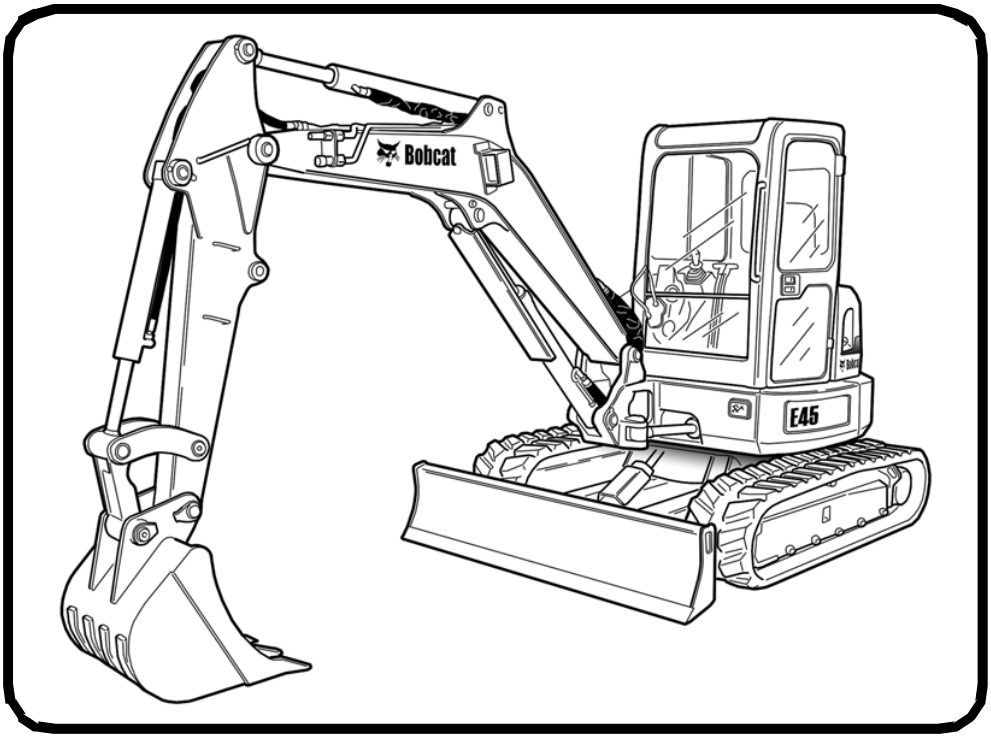

6989438 (6-11) Revised (10-12)

Printed in U.S.A.

© Bobcat Company 2012

GENERAL INFORMATION

Before ordering parts, ALWAYS provide dealer with your product model number and complete serial number information. Before ordering parts, verify correct part numbers and / or serial numbers with your dealer. When using the machine serial number, use the complete number.

The number shown in the quantity column in this manual is the number of parts needed for the illustration on the page. For some parts an "x" will be shown in the quantity column. This "x" indicates that the quantity to be used is "As Needed".

When references LH (Left Hand) and RH (Right Hand) are used in this manual it is done from the operator's seat in the forward operating position.

When "See Illustration…." appears in the remarks column refer to the contents page for the illustration title to find page number location.

When "See BTI…." appears in the remarks column contact a Bobcat dealer.

For additional information on the Bobcat website visit
www.bobcat.com **or** www.bobcat.eu

TRANSLATED DECAL KITS

AR = Argentina (Spanish) BR = Brazil (Portugese) CA = French Canadian
JP = Japanese

DISPOSITION

(Found in the Remarks Column)

[A] = Use Up
[B] = Use Up on Other Applications
[C] = File SDR Report with Bobcat Parts Sales
[D] = Part Number Error

ABBREVIATION / ACRONYM LIST

A/C = Air Condition
ACS = Advanced Control System
AHC = Advanced Hand Controls
ASSY = Assembly
AUX = Auxiliary
AWS = All Wheel Steer
BICS = Bobcat Interlock Control System
BPV = Bucket Positioning Valve
BTI = Bobcat Technical Information Bulletin
C/I = Construction/Industrial
CT = Compact Tractor
CTL = Compact Track Loader
CYL = Cylinder
DIA = Diameter
DIFF = Differential
DLX = Deluxe
DPF = Diesel Particluate Filter
ECU = Electronic Control Unit
EF = EarthForce™
EGR = Exhaust Gas Recirculation
ELEC = Electrical
EMEA = Europe/Middle East/Africa
ENG = Engine
EXC = Excavator
FM = Front Mounted
FOPS = Falling Object Protective Structure
GAL = Gallon
HD = Heavy Duty
HVAC = Heating Ventilation & Air Condition
HYD = Hydraulic
ID = Inside Diameter
IGN = Ignition
INJ = Injection
ISO = International Organization for Standardization
LA = Long Arm
LDR = Loader
L/P = Low Profile
LH = Left Hand
MEA = Middle East Africa
MFR = Main Frame
MM = Millimeters
NA = North America
NAP = Not Available as Parts
NSS = Not Serviced Separately
OD = Outside Diameter
OM = Operation & Maintenance Manual
PM = Parts Manual
PTO = Power Take Off
PWM = Pulse Width Modulation
QT = Quart
Ref. = Reference
REM = Remanufactured
RH = Right Hand
ROC = Rated Operating Capacity
ROPS = Rollover Protective Structure
SA = Standard Arm
SALES = (Order Through Sales Department)
SCPA = Standard Controls W/Power Assist
SD = Severe Duty
SDR = Shipping Discrepancy Report
SJC = Selectable Joystick Controls
SL = Service Letter
SM = Service Manual
SSL = Skid Steer Loader
STD = Standard
TEMP = Temperature
THL = (Control Pattern)
TICS = Toolcat® Interlock Control System
TRANS = Transmission
USB = Universal Serial Bus
UV = Utility Vehicle
VEH = Vehicle
W/A = Welded Assembly
W/ = With
W/O = Without
WMC = Work Machine
“ = Inches
‘ = Feet

CONTENTS

MAINTENANCE ITEMS 1-12
MAINTENANCE ITEMS 1-4
SCHEDULED MAINTENANCE ITEMS 5-12
MAIN FRAME 13-52
UPPERSTRUCTURE 13
COUNTERWEIGHT 15
OPERATOR AREA & SEAT 17-20
SEAT 21
OPERATOR CAB 23-42
CANOPY 43
INSULATION 45
RH COVER 47-50
REAR DOOR 51
UNDERCARRIAGE 53-66
UNDERCARRIAGE 53
TRACK TENSIONER 55-58
FRONT IDLER 59-62
TRACK ROLLER 63-66
WORK EQUIPMENT 67-80
ARM 67
BUCKET LINK 69-72
BOOM 73
BLADE 75
ANGLE BLADE 77
BOOM SWING FRAME 79
CONTROLS 81-88
CONTROL CONSOLE 81-84
TRAVEL CONTROL 85
THROTTLE CONTROL 87
HYDRAULIC SYSTEM 89-208
HYDROSTATIC OIL FILTER 127
HYDRAULIC PISTON PUMP 129
MANIFOLD ASSY 131-134
SELECTOR VALVE ASSY 135-138
LH JOYSTICK 139
RH JOYSTICK 141
TRAVEL CONTROLLER 143
BLADE JOYSTICK 145-148
SWIVEL ASSY 149-152
TRAVEL MOTOR 153-156
SLEW MOTOR 157-164
HYDRAULIC CONTROL VALVE 165-192
ARM CYLINDER 193
BLADE CYLINDER 195-198
ANGLE BLADE CYLINDER 199
BOOM CYLINDER 201
BOOM SWING CYLINDER 203
BUCKET CYLINDER 205
EXTENDABLE ARM CYLINDER 207
HYDRAULIC CIRCUITRY 89-126
ELECTRICAL SYSTEM 209-222
CAB ELECTRICAL CIRCUITRY 209

CONTENTS (Cont'd)

ELECTRICAL SYSTEM
ENGINE ELECTRICAL CIRCUITRY 211
CONTROLS ELECTRICAL 213-218
ALTERNATOR 219
STARTER 221
POWER UNIT 223-280
ENGINE & ATTACHING PARTS 223-232
ENGINE & GASKET KITS 233
UPPER GASKET KIT 235
LOWER GASKET KIT 237-240
GEARCASE 241-244
CRANKCASE 245
ROCKER ARM COVER 247
VALVE AND ROCKER ARM 249
CYLINDER HEAD 251
OIL PAN 253
PISTON & CRANKSHAFT 255-258
FUEL CAMSHAFT 259
CAMSHAFT 261
WATER PUMP 263
WATER FLANGE AND THERMOSTAT 265
MANIFOLDS 267
ENGINE STOP LEVER 269
GOVERNOR 271
SPEED CONTROL PLATE 273
FUEL AND INJECTION PUMP 275
INJECTOR NOZZLES 277
AIR CLEANER 279
ACCESSORIES & OPTIONS 281-404
ARM KIT 281-284
AUTO-SHIFT KIT 285
AUXILIARY COUPLER ARM KIT 287
BEACON KIT 289
BLOCK HEATER 291
COUNTERWEIGHT KIT 293
DECALS 295-304
DEFLECTOR KIT 305
DIRECT TO TANK KIT 307
EUROPEAN ACCESSORIES 309-314
EXTENDABLE ARM 315-318
FIRE EXTINGUISHER 319
FUEL SEDIMENT BOWL KIT 321
HEATER & A/C 323-344
KEYLESS IGNITION KIT 345
LOAD HOLD KIT 347-352
LOAD HOLD 349-354
MIRROR KIT 355
MOTION ALARM KIT 357-360
PURIFIER 361
RADIO FREQUENCY IDENTIFICATION KIT 363
RADIO KIT 365
SEAT BELT KIT 367

CONTENTS (Cont'd)

ACCESSORIES & OPTIONS
SECONDARY AUXILIARY KIT 369
SECONDARY AUXILARY VALVE 371
SPECIAL APPLICATION KIT 373
STROBE KIT 375
TOP GUARD KIT 377-380
TOP GUARD LIGHT KIT 381
TRACK KIT 383
TRACK PAD KIT 385
TRACKS 387-390
X-CHANGE 391-400
BULK ITEMS 401-404
NUMERICAL INDEX 406-452

Use only Bobcat belts and hoses to maintain maximum service life.

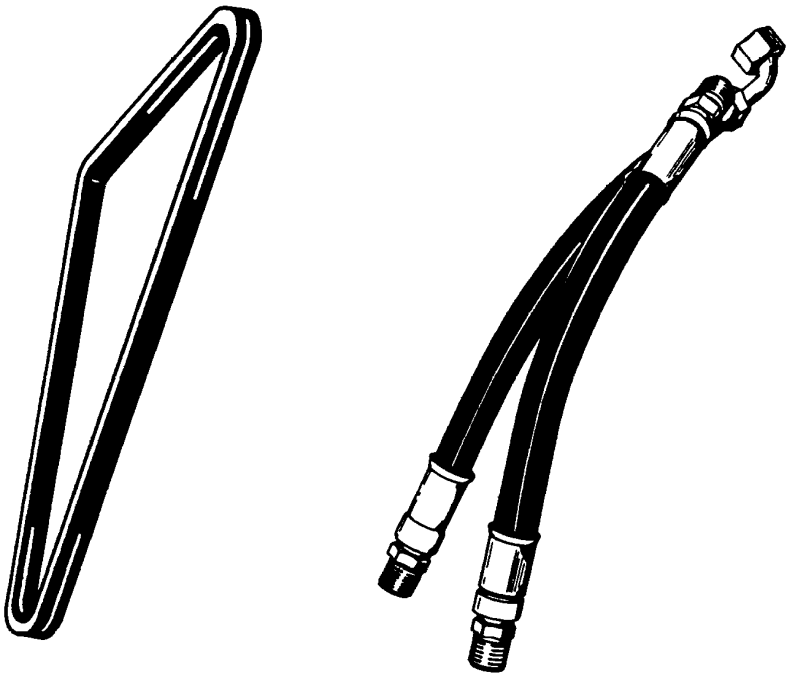

Available from Bobcat Parts.

Bobcat®

MAINTENANCE ITEMS

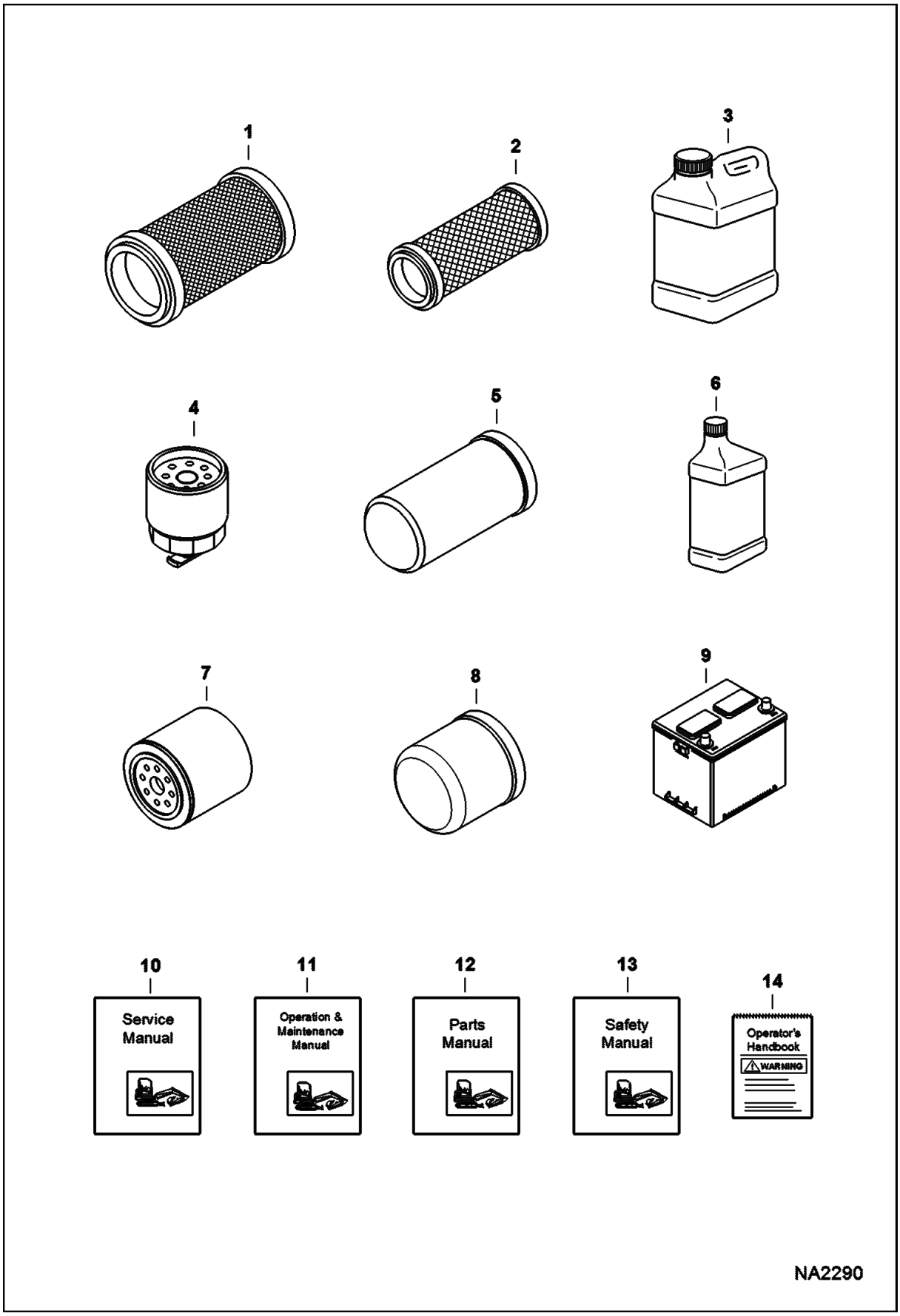

MAINTENANCE ITEMS (Cont'd)

Ref No	Part Number	Description	Remarks	Serial Number	Qty
1	6666375	FILTER, AIR OUTER	See Illustration AIR CLEANER/ PE2909		1
2	6666376	FILTER, AIR INNER	See Illustration AIR CLEANER/ PE2909		1
3	6903117	FLUID, OIL HYD 2.5 GAL 2			x
3	6903118	FLUID, OIL HYD 5 GAL			x
3	6903119	FLUID, OIL HYD 55 GAL DRUM			x
4	6667352	FILTER, FUEL W/SEPERATOR 12	See Illustration ENGINE & ATTACHING PARTS/ NA2564		1
5	6668819	FILTER, OIL HYD	See Illustration HYDROSTATIC OIL FILTER/ NA1844		1
6	6903109	OIL 30W QT. 12			x
6	6903110	OIL, 30W GAL. 6			x
6	6903111	OIL 30W 2.5 GAL 2			x
6	7023076	OIL, 10W30 QT 12	Was 6903107 [A]		x
6	7023077	OIL, 10W30 GAL 6	Was 6903108 [A]		x
6	7023078	OIL, 10W30 2.5 GAL 2	Was 6903112 [A]		x
6	7023080	OIL, 15W40 QT 12	Was 6903105 [A]		x
6	7023081	OIL, 15W40 GAL 6	Was 6903106 [A]		x
6	7023082	OIL, 15W40 2.5 GAL 2	Was 6903113 [A]		x
7	6675517	FILTER, OIL ENG	See Illustration GEARCASE/ NA2518		1
8	6516722	FILTER	See Illustration HYDRAULIC CIRCUITRY/ NA2623 See Illustration HYDRAULIC CIRCUITRY/ NA2681		1
9	6670251	BATTERY, DRY 530 AMP	See Illustration CONTROLS ELECTRICAL/ NA2561		1
9	6674687	BATTERY, DRY 600 AMP	See Illustration CONTROLS ELECTRICAL/ NA2561		1
10	6989437	MANUAL SERVICE E45 EXCAVATOR	printed		1
10	6989437-CD	MANUAL SERVICE E45 EXCAVATOR CD	CD		1
11	6989436	MANUAL OPERATION E45 EXCAVATOR	printed		1
11	6989436-CD	MANUAL OPERATION E45 EXCAVATOR CD	CD		1
12	6989438	MANUAL, PARTS E45 EXCAVATOR	printed		1
12	6989438-CD	MANUAL, PARTS E45 EXCAVATOR CD	CD		1
13	6901951	MANUAL EMI SAFETY - EXCAVATOR			1

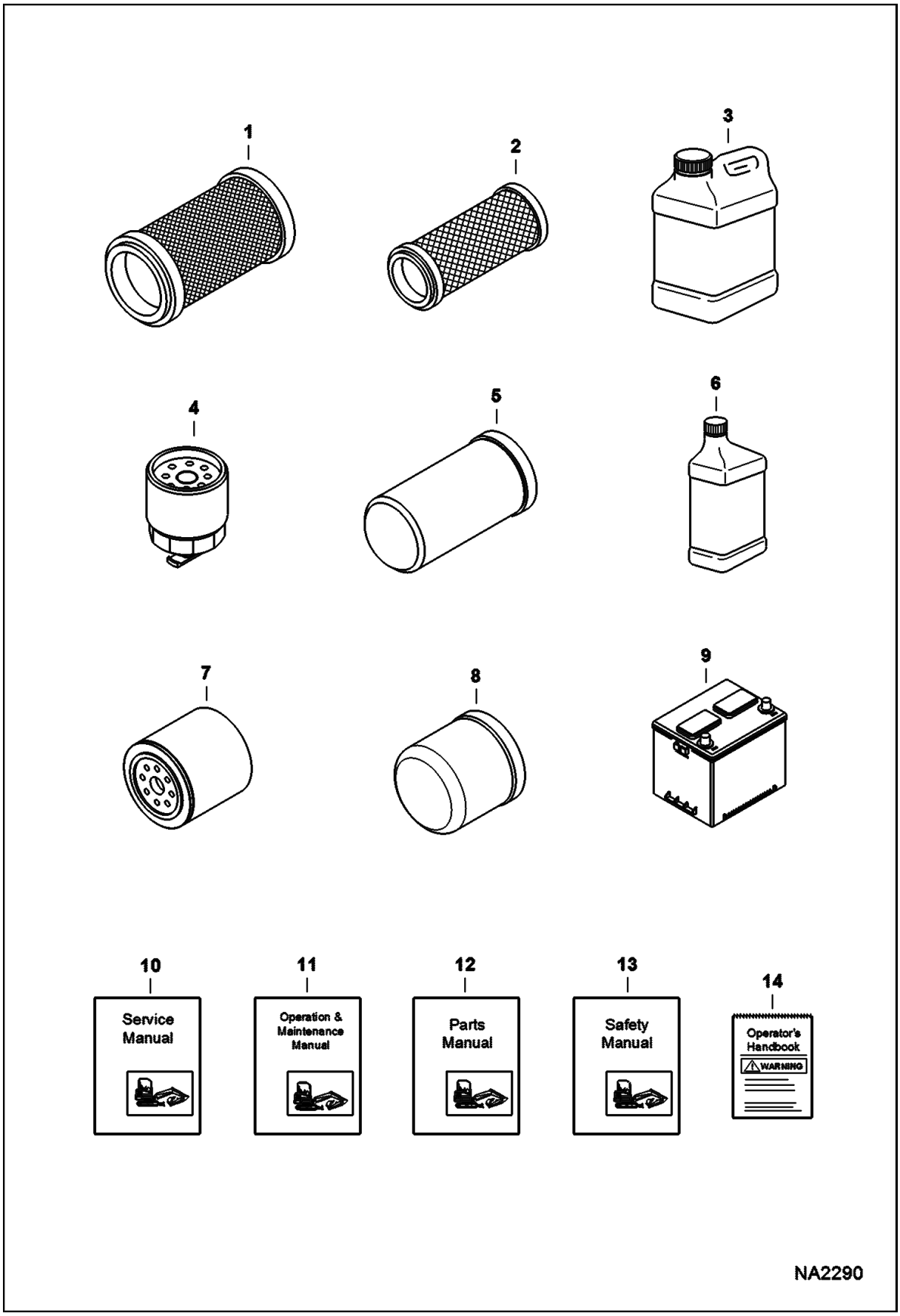
1
2
3
4
5
6
7
8
9
10
Service Manual
11
Operation & Maintenance Manual
12
Parts Manual
13
Safety Manual
14
Operator's Handbook
WARNING
NA2290

MAINTENANCE ITEMS (Cont'd)

Ref No	Part Number	Description	Remarks	Serial Number	Qty
14	6987271	HANDBOOK, OPERATION & MAINTENANCE			1

SCHEDULED MAINTENANCE ITEMS
(50 Hour)

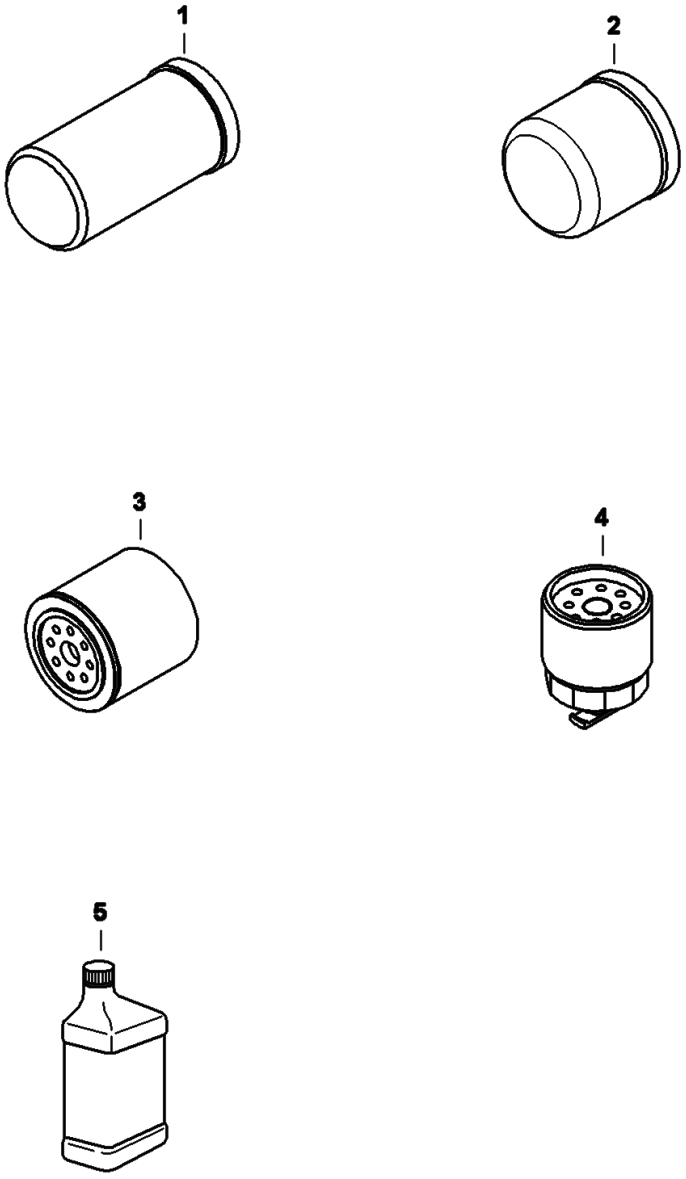

SCHEDULED MAINTENANCE ITEMS (Cont'd)
(50 Hour)

Ref No	Part Number	Description	Remarks	Serial Number	Qty
1	6668819	FILTER, OIL HYD	See Illustration HYDROSTATIC OIL FILTER/ NA1844		1
2	6516722	FILTER	See Illustration HYDRAULIC CIRCUITRY/ NA2623 See Illustration HYDRAULIC CIRCUITRY/ NA2681		1
3	6675517	FILTER, OIL ENG	See Illustration GEARCASE/ NA2518		1
4	6667352	FILTER, FUEL W/SEPERATOR 12	See Illustration ENGINE & ATTACHING PARTS/ NA2564		1
5	6903121	LUBE, GEAR 12			x

SCHEDULED MAINTENANCE ITEMS
(250 Hour)

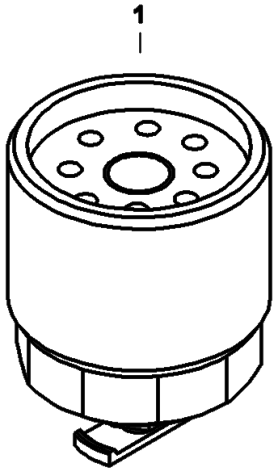

NA2322

SCHEDULED MAINTENANCE ITEMS (Cont'd)
(250 Hour)

Ref No	Part Number	Description	Remarks	Serial Number	Qty
1	6667352	FILTER, FUEL W/SEPERATOR 12	See Illustration ENGINE & ATTACHING PARTS/ NA2564		1

SCHEDULED MAINTENANCE ITEMS
(500 Hour)

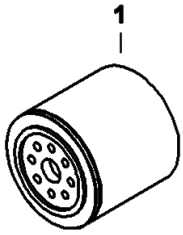



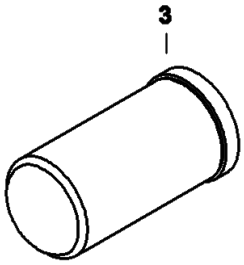

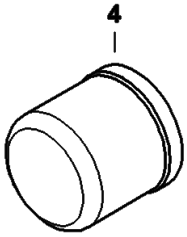

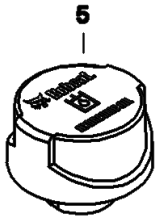

NA2323

SCHEDULED MAINTENANCE ITEMS (Cont'd)
(500 Hour)

Ref No	Part Number	Description	Remarks	Serial Number	Qty
1	6675517	FILTER, OIL ENG	See Illustration GEARCASE/ NA2518		1
2	6903109	OIL 30W QT. 12			x
2	6903110	OIL, 30W GAL. 6			x
2	6903111	OIL 30W 2.5 GAL 2			x
2	7023076	OIL, 10W30 QT 12	Was 6903107 [A]		x
2	7023077	OIL, 10W30 GAL 6	Was 6903108 [A]		x
2	7023078	OIL, 10W30 2.5 GAL 2	Was 6903112 [A]		x
2	7023080	OIL, 15W40 QT 12	Was 6903105 [A]		x
2	7023081	OIL, 15W40 GAL 6	Was 6903106 [A]		x
2	7023082	OIL, 15W40 2.5 GAL 2	Was 6903113 [A]		x
3	6668819	FILTER, OIL HYD	See Illustration HYDROSTATIC OIL FILTER/ NA1844		1
4	6516722	FILTER	See Illustration HYDRAULIC CIRCUITRY/ NA2623 See Illustration HYDRAULIC CIRCUITRY/ NA2681		1
5	6692836	CAP, HYDRAULIC TANK	See Illustration HYDRAULIC CIRCUITRY/ NA2623		1

SCHEDULED MAINTENANCE ITEMS
(1000 Hour)

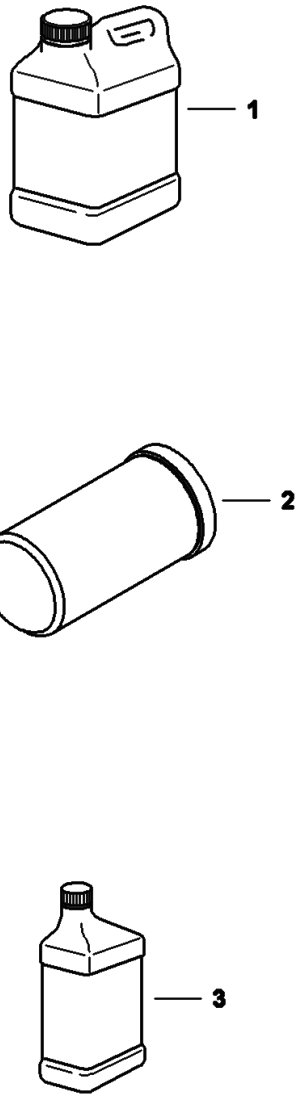

NA2324

SCHEDULED MAINTENANCE ITEMS (Cont'd)
(1000 Hour)

Ref No	Part Number	Description	Remarks	Serial Number	Qty
1	6903117	FLUID, OIL HYD 2.5 GAL 2			x
1	6903118	FLUID, OIL HYD 5 GAL			x
1	6903119	FLUID, OIL HYD 55 GAL DRUM			x
2	6668819	FILTER, OIL HYD	See Illustration HYDROSTATIC OIL FILTER/ NA1844		1
3	6903121	LUBE, GEAR 12			x

UPPERSTRUCTURE

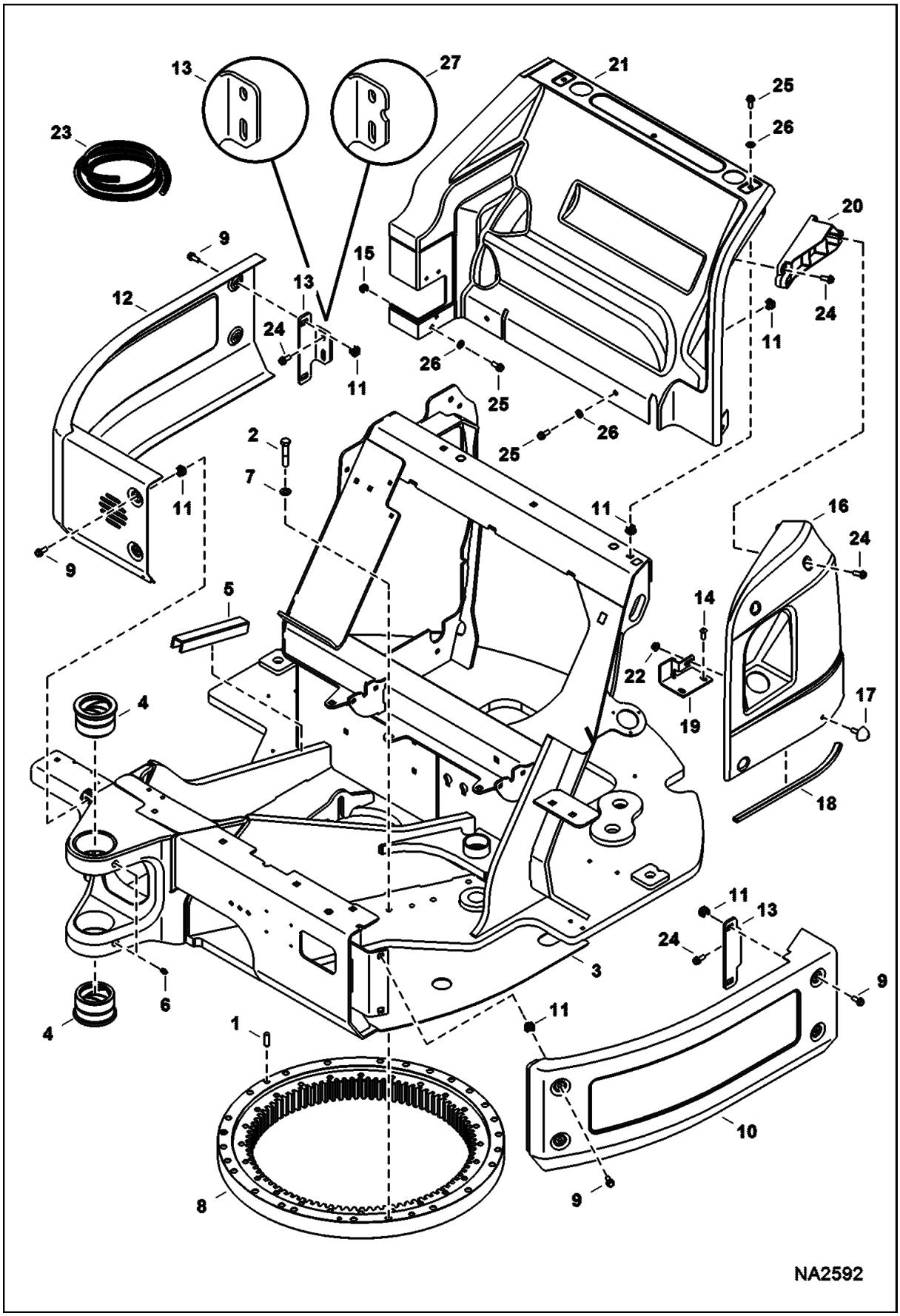

UPPERSTRUCTURE (Cont'd)

Ref No	Part Number	Description	Remarks	Serial Number	Qty
1	7171260	PIN, PARALLEL			2
2	55CM1470	SCREW			24
3	7172424	UPPERSTRUCTURE			1
4		BUSHING, PIVOT	See Illustration BOOM SWING FRAME/ NA2558 for replacement parts listed but not shown on this illustration - NAP - Order (2) each of 7198542 pin, 7198707 bushing, & 7196719 bushing - Was 7184360 [A]	AG3G11001 - 12033	2
4		BUSHING, PIVOT	See Illustration BOOM SWING FRAME/ NA2558 for replacement parts listed but not shown on this illustration - NAP - Order (2) each of 7198542 pin, 7198707 bushing, & 7196719 bushing - Was 7184360 [A]	AHHC11001 - 12008	2
4	7198707	BUSHING, PIVOT		AHHC12009 & Above	2
4	7198707	BUSHING, PIVOT		AG3G12034 & Above	2
5	7185431	GROMMET			1
6	10H25	FITTING, GREASE 5			2
7	18EM1426	WASHER			24
8	7021044	RING, SLEW	See Illustration UNDERCARRIAGE/ NA2646 Was 6692962 [A]		1
9	7009798	SCREW			23
10	7148372	CHANNEL, LH			1
11	7155413	NUT			13
12	7168598	COVER, RH			1
13	7177373	BRACKET, COVER SIDE			2
14	6817769	BOLT			2
15	7155411	NUT			1
16	7175138	COVER, LH			1
17	7178703	BUMPER, RUBBER			1
18		SEAL, BULB	NAP - 18" (457 mm) - Order Ref. 23		1
19	7220347	COVER, LH	Was 7182491 [A]		1
20	7183989	BRACKET			1
21	7187133	PANEL, ENGINE			1
22	43DM10	NUT			1
23	7170493	SEAL, BULK	bulk - sold per foot		x
24	29CM1025	BOLT	Was 7009798 [B]		4
25	29CM1025	BOLT	Was 1CM1025 [B]		6
26	15EM100	WASHER	Used W/bolt W/O flange - Was 1EM100 [B]		6
27	7205949	BRACKET, COVER SIDE	W/identifier notch and unique slot location - replaces bracket W/notch for proper alignment of RH cover with some counterweights		1

COUNTERWEIGHT

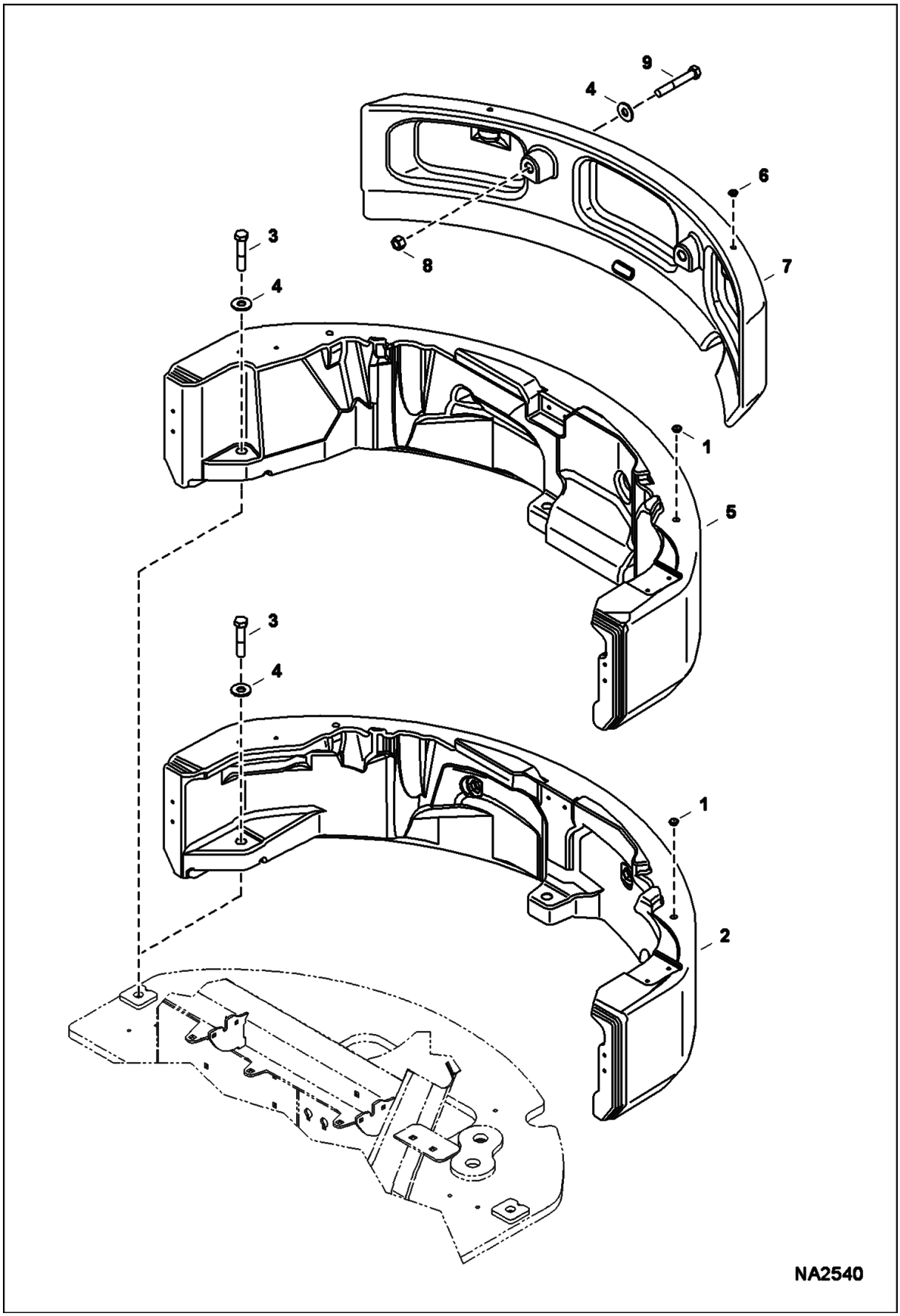

COUNTERWEIGHT (Cont'd)

Ref No	Part Number	Description	Remarks	Serial Number	Qty
1	7010917	PLUG			2
2	7172448	COUNTERWEIGHT	W/standard arm		1
3	1CM20100	SCREW			3
4	25E28	WASHER			3
5	7172453	COUNTERWEIGHT	W/long arm		1
6	7010676	PLUG			2
7	7172451	COUNTERWEIGHT	add-on		1
8	4DM20	NUT			2
9	53CM20130	SCREW			2

OPERATOR AREA & SEAT
(Floor)

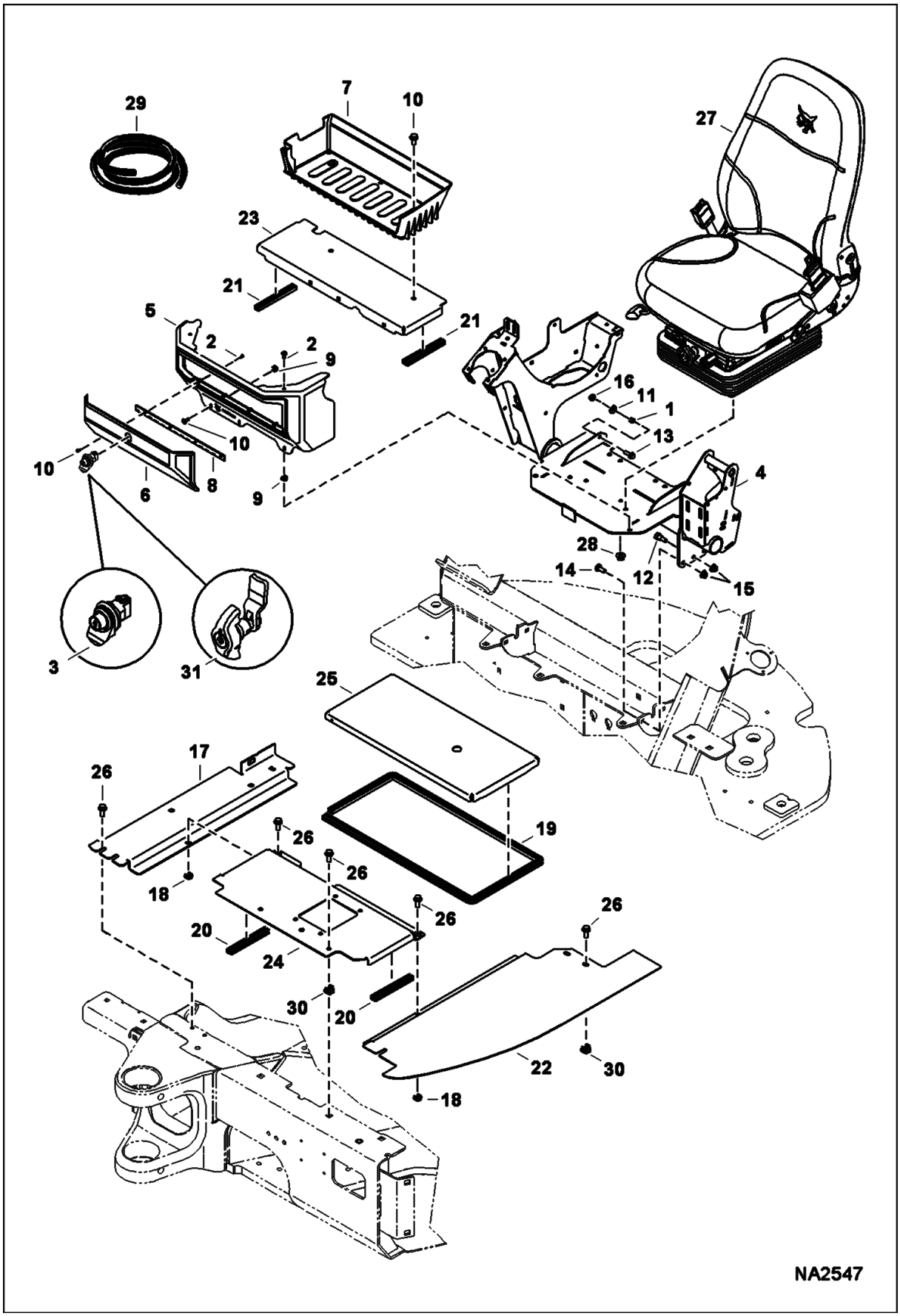

OPERATOR AREA & SEAT (Cont'd)
(Floor)

Ref No	Part Number	Description	Remarks	Serial Number	Qty
1	6802539	SPACER			2
2	6803202	SCREW			5
3		LATCH, HANDLE	NAP - Order 7186648 latch & 7188090 door - Was 7008359 [C]	AG3G11001 - 11002	1
3		LATCH, HANDLE	NAP - Order 7186648 latch & 7188090 door - Was 7008359 [C]	AHHC11001 - 11004	1
4		CONTROLLER, JOYSTICK ASSY	See Illustration CONTROL CONSOLE/ NA2250		1
5	7170706	CONTAINER, STORAGE			1
6		DOOR, STORAGE	NAP - part number is molded on back side - Order 7186648 latch & 7188090 door - Was 7170707 [C]	AG3G11001 - 11002	1
6		DOOR, STORAGE	NAP - part number is molded on back side - Order 7186648 latch & 7188090 door - Was 7170707 [C]	AHHC11001 - 11004	1
6	7188090	DOOR, STORAGE	part number is molded on back side - Use W/Ref. 31	AG3G11003 & Above	1
6	7188090	DOOR, STORAGE	part number is molded on back side - Use W/Ref. 31	AHHC11005 & Above	1
7	7170708	CONTAINER, STORAGE			1
8	7170709	HINGE, COVER			1
9	7170765	NUT			5
10	7208340	SCREW	Was 7179240 [A]		8
11	25E16	WSHR			2
12	28CM1025	BOLT			4
13	29CM825	BOLT			2
14	38CM1212	BOLT, SHOULDER			2
15	43DM10	NUT			6
16	51DM8	NUT			8
17	7146428	PLATE, FLOOR			1
18	7155411	NUT			2
19		SEAL, BULB	NAP - 67" (1702 mm) long - Order Ref. 29		1
20		SEAL, BULB	NAP - 7" (178 mm) long - Order Ref. 29		2
21		SEAL, BULB	NAP - 6" (152 mm) long - Order Ref. 29		2
22	7174461	PLATE, FLOOR			1
23	7210906	PLATE, FLOOR	Was 7178332 [A]	AG3G11001 - 11609	1
23	7210906	PLATE, FLOOR	Was 7178332 [A]	AHHC11001 - 11354	1
23	7210906	PLATE, FLOOR	Was 7198879 [A]	AG3G11610 & Above	1
23	7210906	PLATE, FLOOR	Was 7198879 [A]	AHHC11355 & Above	1
24	7178333	PLATE, FLOOR			1
25	7178334	PLATE, FLOOR			1
26	29CM1025	BOLT	Was 29CM1020 [B]		12
27	7169360	SEAT, OPERATOR SUSPENSION CLOTH	See Illustration SEAT/ NA2287		1
27	7157550	SEAT, OPERATOR SUSPENSION VINYL	See Illustration SEAT/ NA2287		1
28	51DM8	NUT			4
29	7177959	SEAL, BULK	bulk - sold per foot		x

OPERATOR AREA & SEAT (Cont'd)
(Floor)

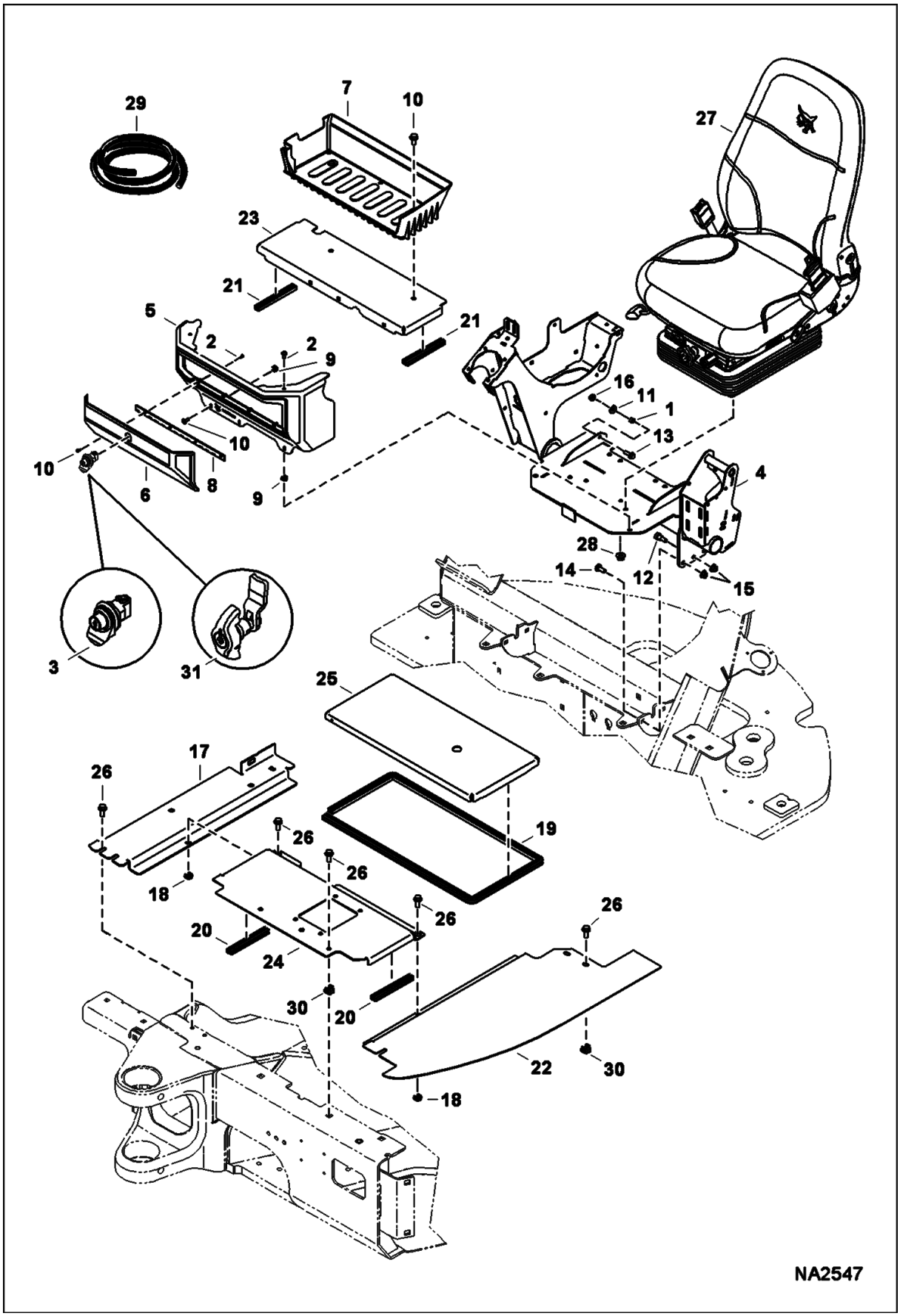

OPERATOR AREA & SEAT (Cont'd)
(Floor)

Ref No	Part Number	Description	Remarks	Serial Number	Qty
30	7155413	NUT			8
31	7186648	LATCH, HANDLE	Use W/Ref. 6 (7188090 door)	AG3G11003 & Above	1
31	7186648	LATCH, HANDLE	Use W/Ref. 6 (7188090 door)	AHHC11005 & Above	1

SEAT
(Suspension)

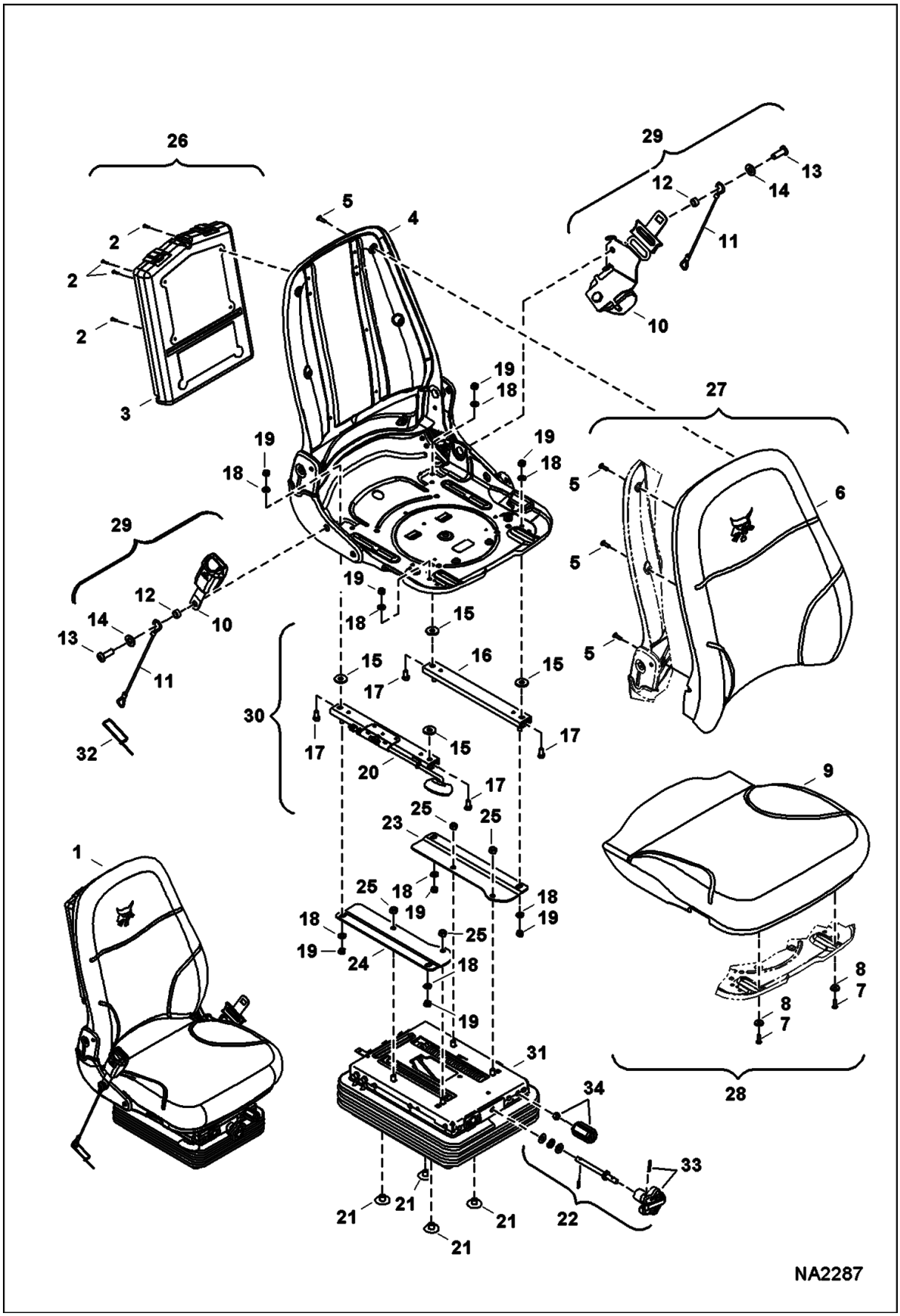

SEAT (Cont'd)
(Suspension)

Ref No	Part Number	Description	Remarks	Serial Number	Qty
1	7157550	SEAT, OPERATOR SUSPENSION VINYL	Ref. 2-34		1
1	7169360	SEAT, OPERATOR SUSPENSION CLOTH	Ref. 2-34		1
2		RIVET	NSS		4
3		BOX	NSS - manual		1
4	7012620	KIT, SEAT OPERATOR TOP			1
5		BOLT	NSS		4
6		CUSHION, SEAT	NSS		1
7		BOLT	NSS		4
8		WASHER	NSS		4
9		CUSHION, SEAT	NSS		1
10		SEAT BELT	NSS		1
11		TETHER	NSS		2
12		SPACER	NSS		2
13		BOLT	NSS		2
14		WASHER	NSS		2
15		WASHER	NSS		4
16		SLIDE	NSS		1
17		BOLT	NSS		4
18		WASHER	NSS		8
19		NUT	NSS		8
20		SLIDE	NSS		1
21		PROTECTOR	NSS		4
22	7020238	KIT, KNOB	W/Ref. 33 & 34		1
23		BRACKET	NSS		1
24		BRACKET	NSS		1
25		NUT	NSS		4
26	7012622	KIT, CONTAINER MANUAL	Ref. 2 & 3		1
27	7012625	KIT, BACKREST SEAT	cloth - Ref. 5 & 6		1
27	7012623	KIT, BACKREST SEAT	vinyl - Ref. 5 & 6		1
28	7012626	KIT, CUSHION SEAT	cloth - Ref. 7-9		1
28	7012624	KIT, CUSHION SEAT VINYL	Ref. 7-9		1
29	7012344	BELT, SEAT	Ref. 10-14		1
29		BELT, SEAT	3" KIT		1
30	7012621	KIT, SLIDE	Ref. 15-20		1
31	7020350	KIT, SUSPENSION ASSY	W/Ref. 22 - Was 7012627 [A]		1
32		STRAP	NSS		1
33	7020240	KNOB, ADJUSTMENT WEIGHT			1
34	7020241	KNOB, ADJUSTMENT HEIGHT			1

OPERATOR CAB
(Mounting, Front Window, & Door)

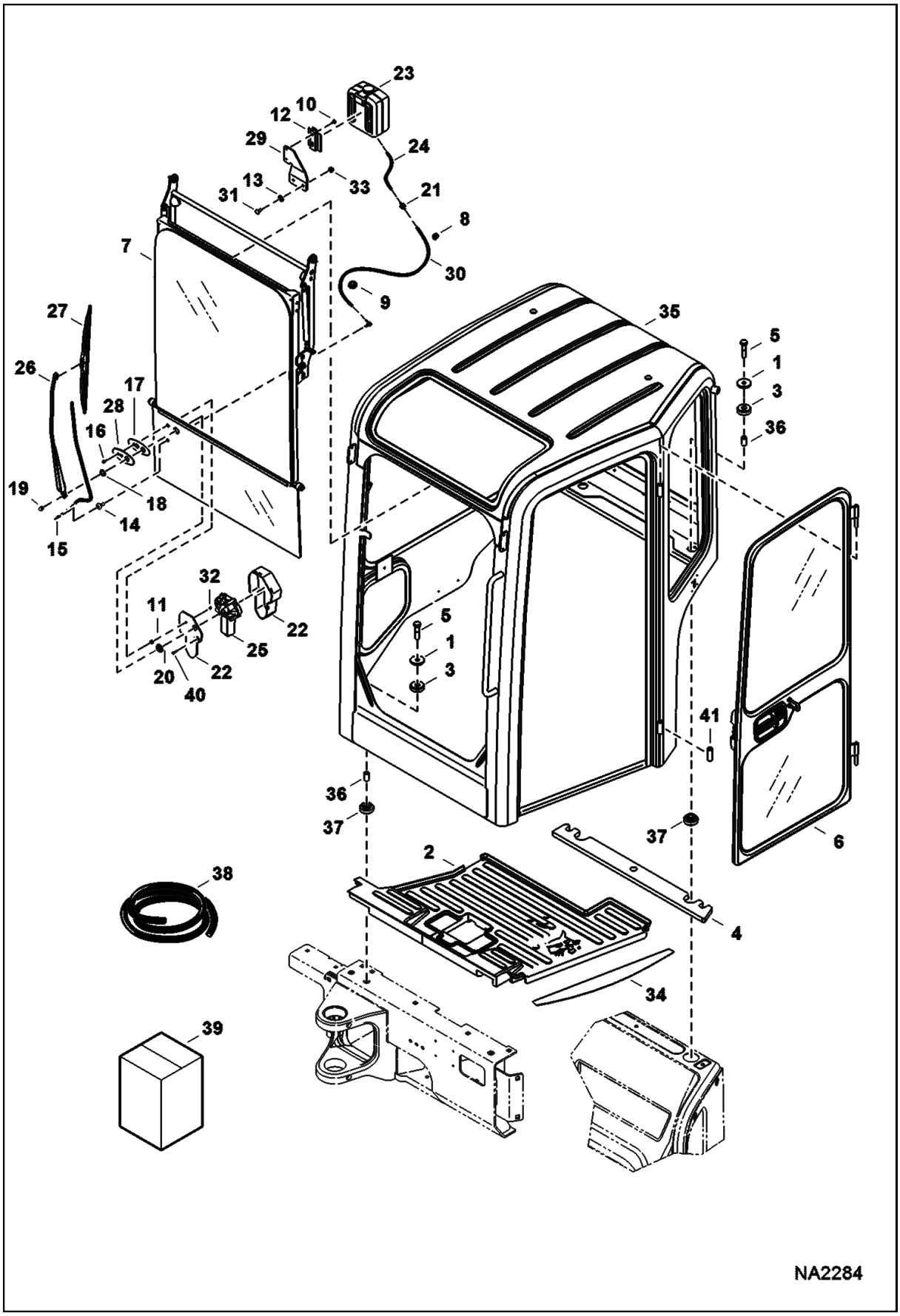

OPERATOR CAB (Cont'd)
(Mounting, Front Window, & Door)

Ref No	Part Number	Description	Remarks	Serial Number	Qty
1	6805244	WASHER			6
2	7145801	MAT, FLOOR			1
3		MOUNT, CAB	NAP - flat - Order Ref. 39 - Was 7176021 [A]		4
4	7187368	SEAL, CROSSMEMBER			2
5	7CM1460	SCREW			4
6	7188990	DOOR, CAB ASSY	See Illustration OPERATOR CAB/ NA2748 Was 7157151 [D]		1
7		WINDOW, CAB FRONT	See Illustration OPERATOR CAB/ NA2790		1
8	515069	GROMMET			1
9	6587887	GROMMET			1
10	6589675	SCREW			2
11	6664085	BUSHING			1
12	6664557	BRACKET			1
13	6675859	RETAINER			2
14	6676499	GROMMET			1
15	6676917	ELBOW			2
16	6677837	BOLT			1
17	6677839	GASKET			1
18	6677842	NUT			1
19	6677843	NUT			1
20	6677847	GROMMET			1
21	6682462	VALVE			1
22	6685140	COVER			1
23	6691499	TANK ASSY	W/ 6664554 pump		1
23	6664554	PUMP, WIPER WASHER			1
24		HOSE, WIPER SHORT	NAP - 4" (102 mm) long - Order Ref. 38		1
25	7008934	MOTOR, WIPER			1
26	7008936	ARM, WIPER			1
27	7008937	BLADE, WIPER WINDOW			1
28	7009047	PLATE			1
29	7172778	BRACKET, TANK			1
30		HOSE, WASHER	NAP - 30.32" (770 mm) long - Order Ref. 38		1
31	28CM820	BOLT			2
32	4DM5	NUT			1
33	51DM8	NUT			2
34	7180283	TREAD, SAFETY			1
35		CAB, W/A	NAP - Was 7190136 [A]		1
35	7184146	KIT, CAB	Includes top, side, & rear windows & 6989497 instruction - Order decals as needed - Also Order 7223420 frameless window kit if replacing cab W/framed window		1
35	6989497	INSTRUCTIONS			1
35	7221992	KIT, CAB	Includes decals and 6990465 instruction - Also Order 7223420 frameless window kit if replacing cab W/framed window		1
35	6990465	INSTRUCTIONS			1
36		TUBE	NAP - Order Ref. 39 - Was 7176022 [A]		4
37		MOUNT, CAB	NAP - W/ lip - Order Ref. 39 - Was 7176023 [A]		4
38	6708310	HOSE, BULK 100	clear - 0.154" ID - sold per foot		x
39	7174043	MOUNT, LOAD ISOLATOR ASSY	Ref. 3, 36, & 37 - includes 1 assy		4
40	6681911	SCREW			2

OPERATOR CAB (Cont'd)
(Mounting, Front Window, & Door)

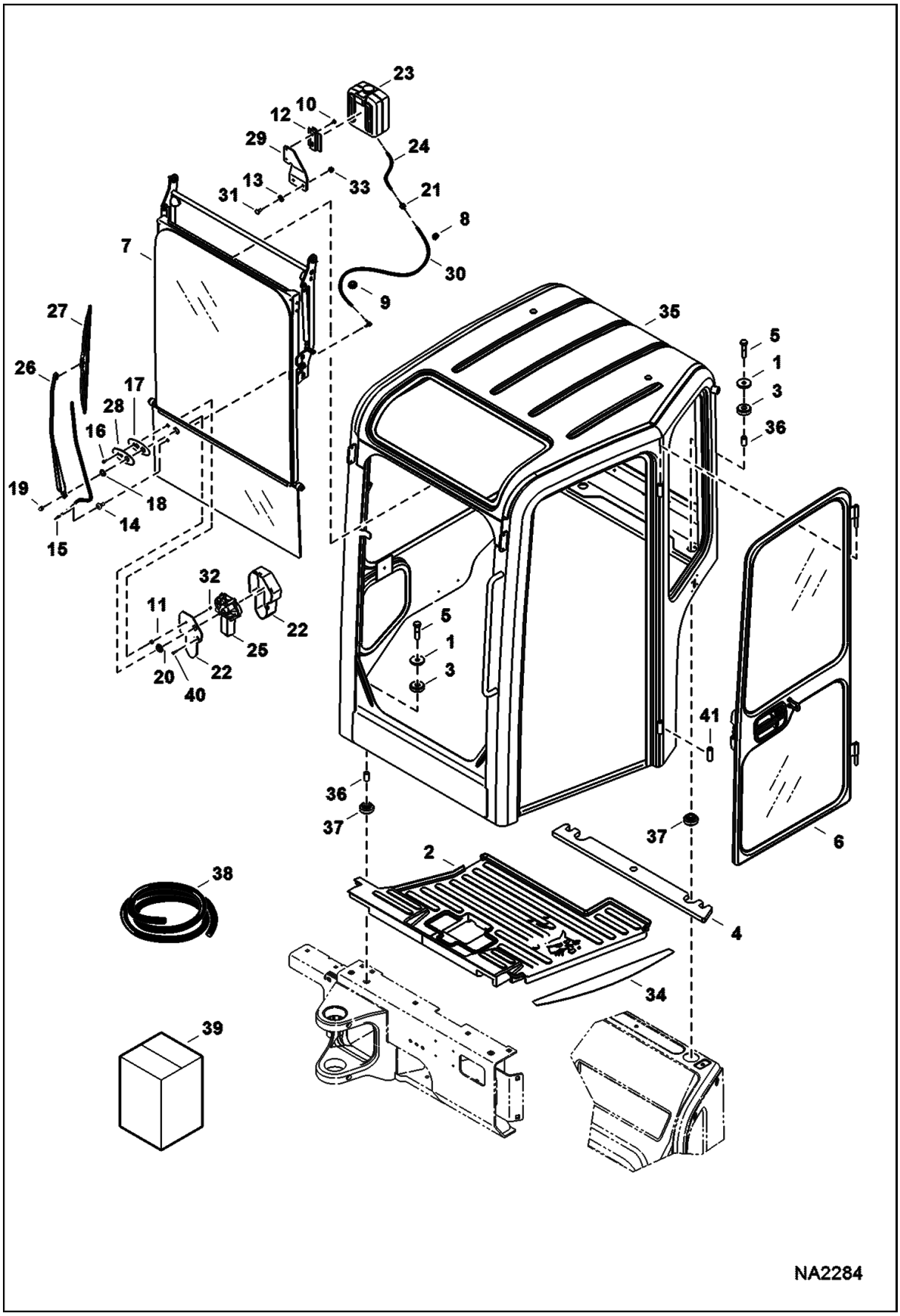

OPERATOR CAB (Cont'd)
(Mounting, Front Window, & Door)

Ref No	Part Number	Description	Remarks	Serial Number	Qty
41	6719341	HINGE			2

OPERATOR CAB
(RH Window & Insulation)

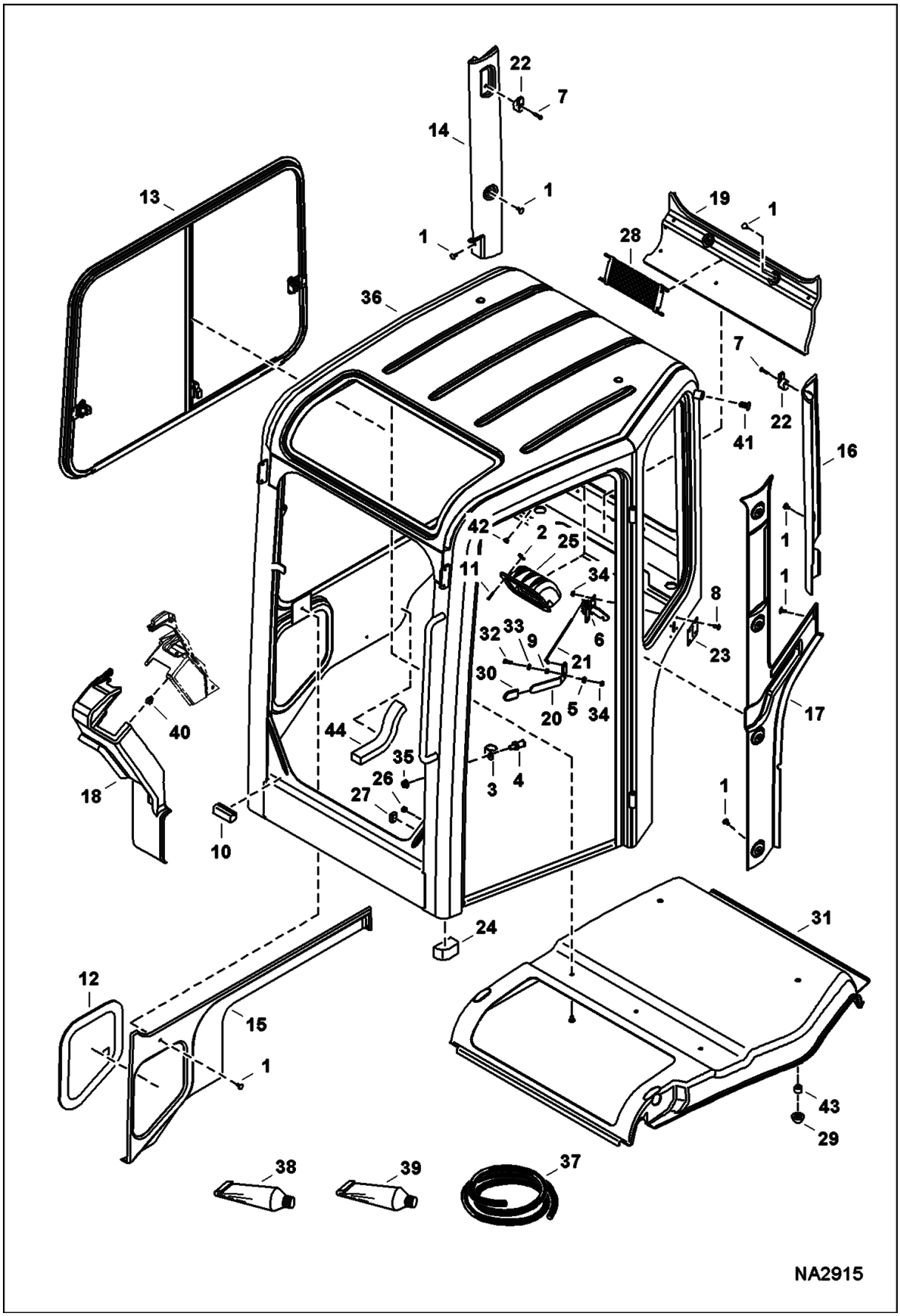

OPERATOR CAB (Cont'd)
(RH Window & Insulation)

Ref No	Part Number	Description	Remarks	Serial Number	Qty
1	7182464	CLIP	plastic tree		16
2	6685744	CLIP			4
3	6688999	STRIKER GUARD			1
4	6689007	STRIKER BOLT			1
5	6698186	BEARING, CLIP			1
6	7013663	LATCH, HOLD OPEN	Was 7012677 [A]		1
7	6808424	SCREW			2
8	6803202	SCREW			4
9	7155449	SPACER			1
10	7174507	MOUNT, WINDOW	rubber		2
11	7163690	SCREW			4
12	7166468	WINDOW, CAB SIDE FIXED			1
13	7166474	WINDOW, CAB SLIDING	See Illustration OPERATOR CAB/ NA2283		1
14	7167095	PANEL, RH	if equipped		1
15	7167096	PANEL, RH			1
16	7167097	PANEL, LH	if equipped		1
17	7167098	PANEL, LH			1
18	7168404	COVER, RH			1
19	7169993	PANEL, REAR			1
20	7170488	LEVER			1
21	7189242	LINK	Was 7170489 [D]		1
22	7170632	HOOK, COAT	if equipped		1
23	7170799	SEAL, LATCH			1
24	7180618	SEAL, CAB			1
25	7173287	HOLDER			1
26	7174944	PLUG			1
27		SEAL	NAP - 1" (25 mm) long - Order Ref. 37		2
28	7176501	HOLDER, MANUAL			1
29	7178702	BUMPER, RUBBER			2
30	7178708	COVER, HANDLE			1
31	7179100	HEADLINER			1
32	1CM620	BOLT			1
33	25E13	WASHER 5			1
34	51DM6	NUT			5
35	55D7	NUT			1
36		CAB, W/A	NAP - Was 7190136 [A]		1
36	7184146	KIT, CAB	Includes top, side, & rear windows & 6989497 instruction - Order decals as needed - Also Order 7223420 frameless window kit if replacing cab W/framed window		1
36	6989497	INSTRUCTIONS			1
36	7221992	KIT, CAB	Includes decals and 6990465 instruction - Also Order 7223420 frameless window kit if replacing cab W/framed window		1
36	6990465	INSTRUCTIONS			1
37	7174508	SEAL, BULK/FT	bulk - sold per foot		x
38	6808882	ADHESIVE	10.5 fluid oz.		x
39	7102268	PRIMER	4.2 fluid oz.		x
40	7165333	CLIP			4
41	7012810	PLUG			1
42	6649949	PLUG			1

OPERATOR CAB (Cont'd)
(RH Window & Insulation)

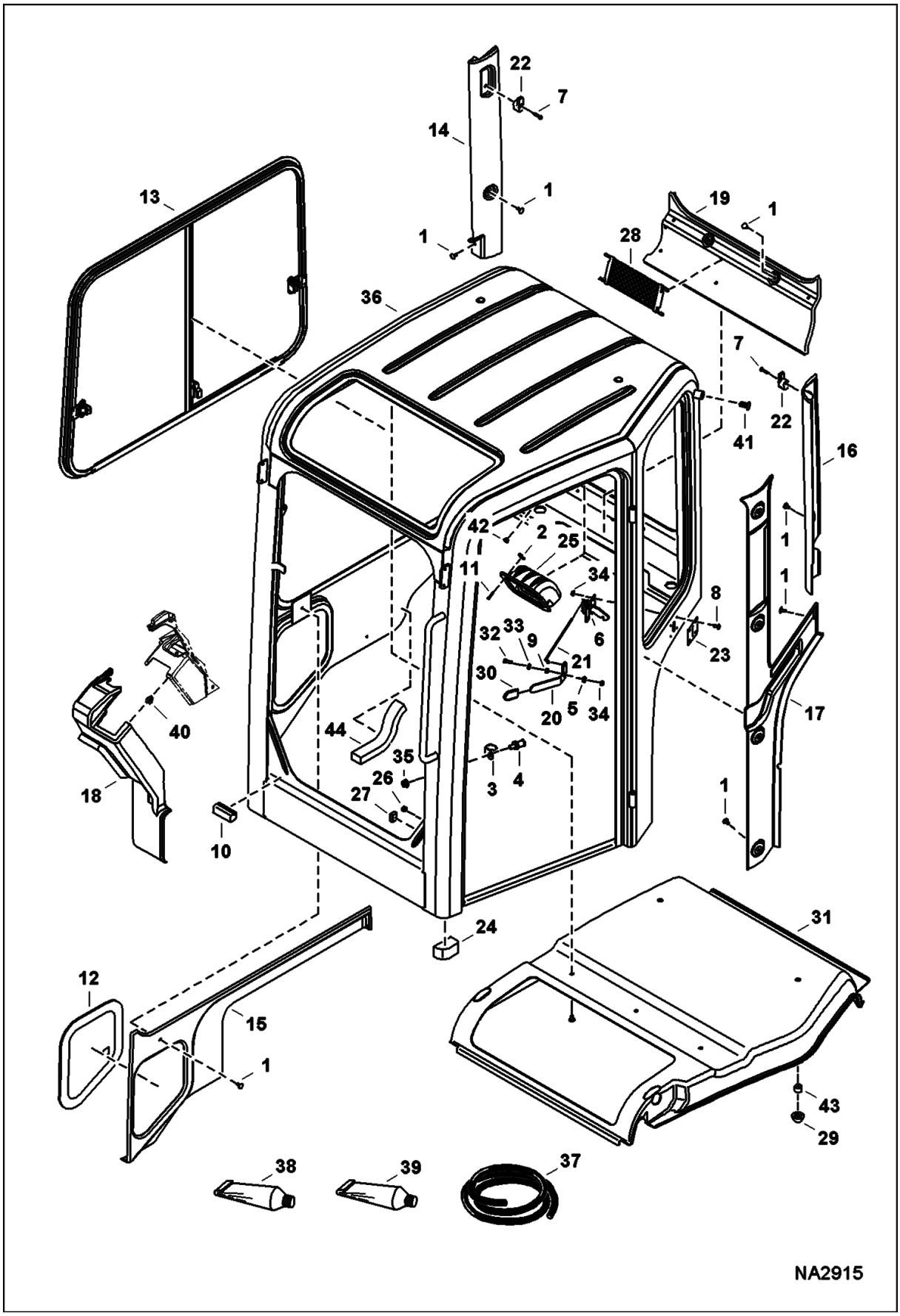

OPERATOR CAB (Cont'd)
(RH Window & Insulation)

Ref No	Part Number	Description	Remarks	Serial Number	Qty
43	7182957	SPACER			2
44	7182732	INSULATION			1

OPERATOR CAB
(Windows & Seals)

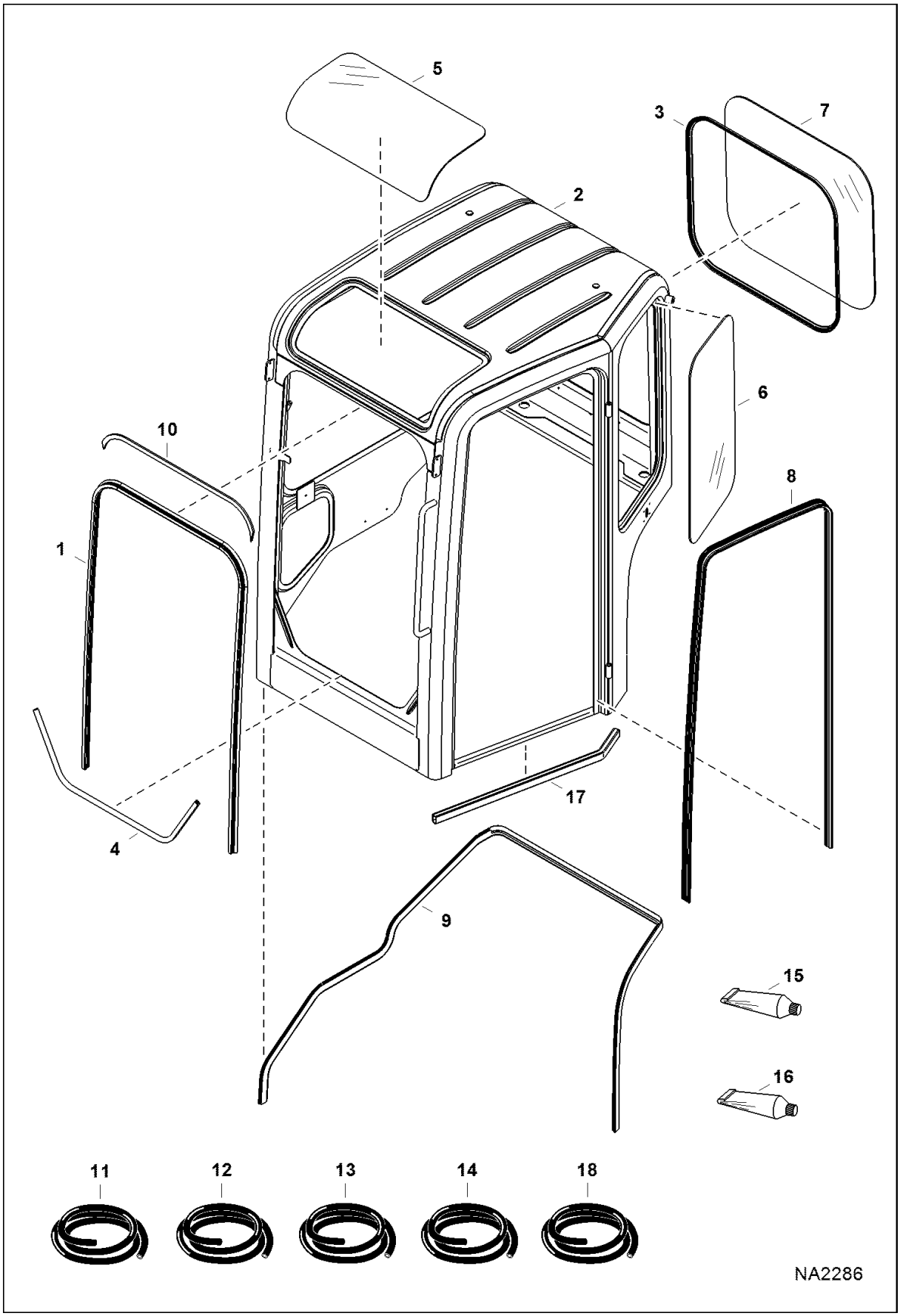

OPERATOR CAB (Cont'd)
(Windows & Seals)

Ref No	Part Number	Description	Remarks	Serial Number	Qty
1	7181541	SEAL			1
2		CAB, W/A	NAP - Was 7190136 [A]		1
2	7184146	KIT, CAB	Includes top, side, & rear windows & 6989497 instruction - Order decals as needed - Also Order 7223420 frameless window kit if replacing cab W/framed window		1
2	6989497	INSTRUCTIONS			1
2	7221992	KIT, CAB	Includes decals and 6990465 instruction - Also Order 7223420 frameless window kit if replacing cab W/framed window		1
2	6990465	INSTRUCTIONS			1
3		SEAL, CAB	NAP - 98.5" (2500 mm) long - Order Ref. 12		1
4		SEAL, WINDOW	NAP - 40.5" (1028 mm) long - Order Ref. 13		1
5	7180309	WINDOW, CAB TOP	Was 7166471 [A]		1
6	7170287	WINDOW, CAB SIDE FIXED			1
7	7170288	WINDOW, CAB REAR			1
8		SEAL, DOOR	NAP - 128" (3250 mm) long - Order Ref. 14		1
9	7162756	SEAL, CAB			1
10	7217223	SEAL, WINDOW	if equipped		1
11		SEAL	NAP - bulk - sold per foot - Was 7181540 [B]		x
12	6815939	SEAL	bulk - sold per foot		x
13	7215489	SEAL, BULK/FT	bulk - sold per foot - Was 7162757 [A]		x
14	7171866	SEAL, BULK/FT	bulk - sold per foot		x
15	6808882	ADHESIVE	10.5 fluid oz.		x
16	7102268	PRIMER	4.2 fluid oz.		1
17		SEAL, CAB	NAP - 32" (813 mm) long - Order Ref. 18		1
18	7181465	SEAL, BULK / FT	bulk - sold per foot		x

OPERATOR CAB
(Door)

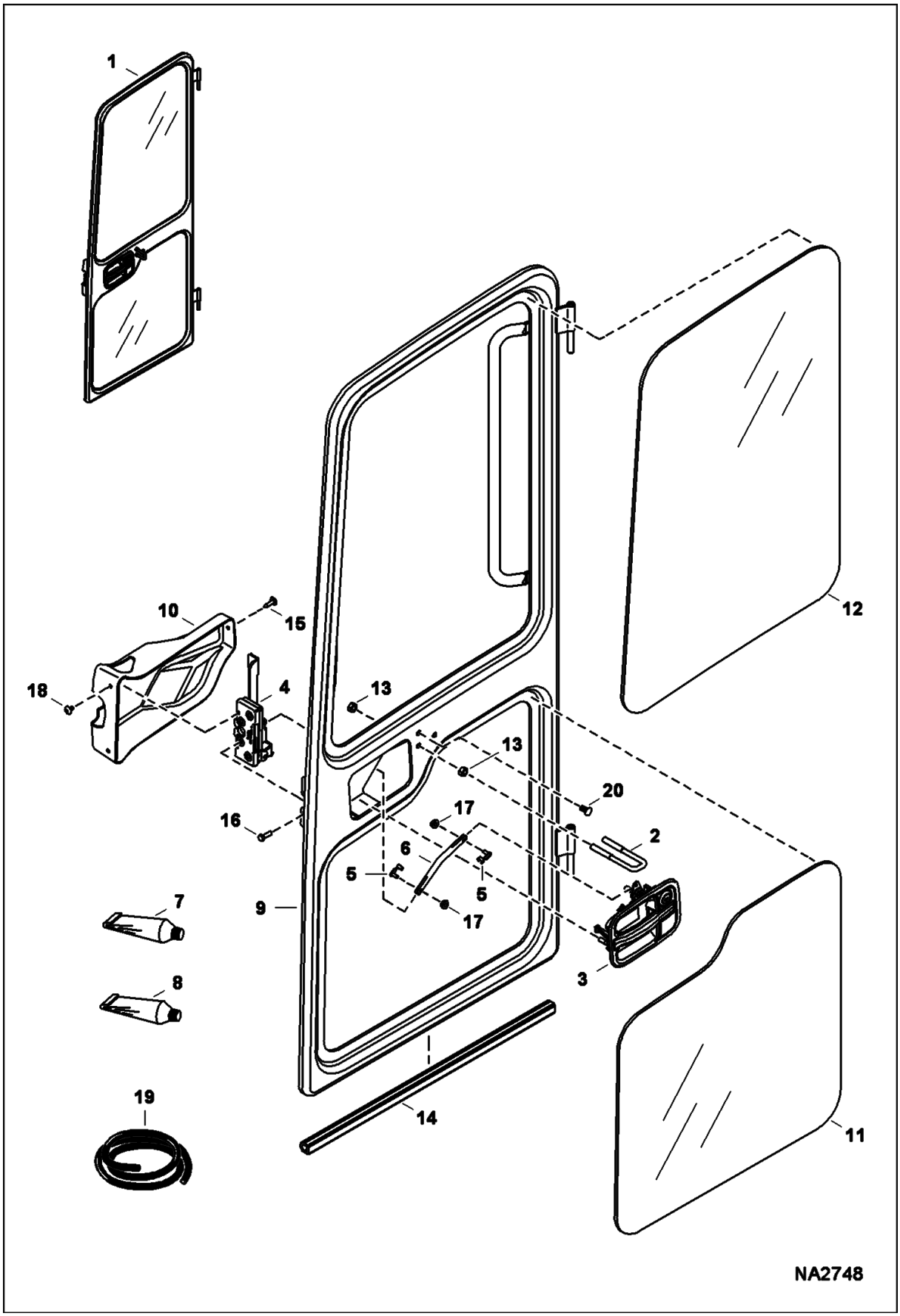

OPERATOR CAB (Cont'd)
(Door)

Ref No	Part Number	Description	Remarks	Serial Number	Qty
1	7188990	DOOR, CAB ASSY	Ref. 2-20		1
2	7188996	U-BOLT			1
3	7008365	HANDLE, DOOR CAB	does not include key - Uses ignition key		1
4	7008366	LATCH, DOOR CAB			1
5	7008367	CLIP, DOOR CAB			2
6	7008368	ROD			1
7	6808882	ADHESIVE			x
8	7102268	PRIMER			x
9		DOOR W/A	NAP - Order Ref. 1		1
10	7189891	COVER, LATCH			1
11	7170289	WINDOW, DOOR CAB LOWER			1
12	7170290	WINDOW, DOOR CAB UPPER			1
13	7170874	NUT			4
14		SEAL, BULB	NAP - 574 mm (22.6") long - Order Ref. 19		1
15	7175050	SCREW			1
16	1CM620	BOLT			2
17	51DM6	NUT			2
18	6589675	SCREW			2
19	7174361	SEAL, BULK	bulk - sold per foot		x
20	7012810	PLUG			1

OPERATOR CAB
(Front Window) (W/Frame)

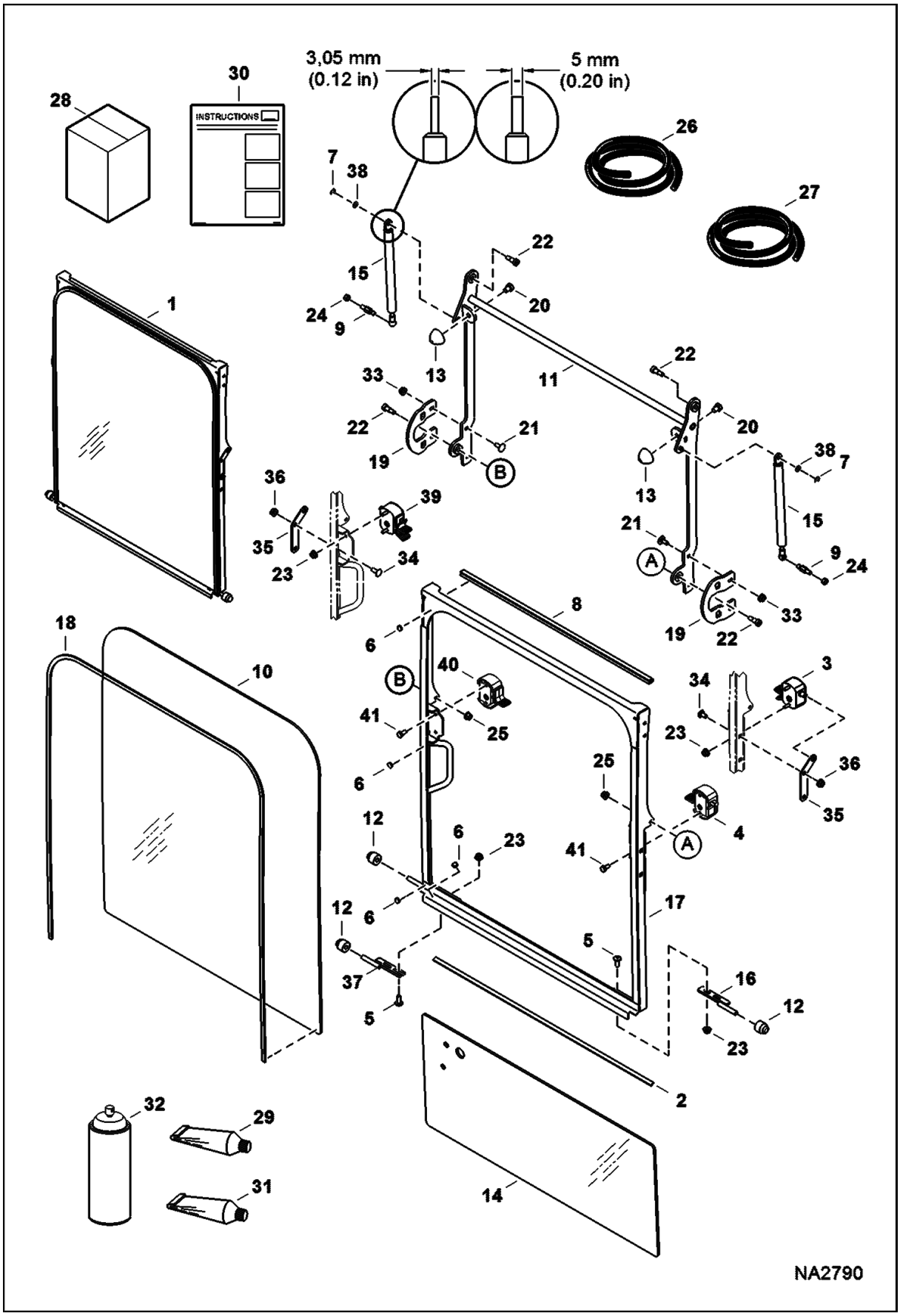

OPERATOR CAB (Cont'd)
(Front Window) (W/Frame)

Ref No	Part Number	Description	Remarks	Serial Number	Qty
1		WINDOW, CAB FRONT	NAP - Ref. 2-25, & 33-36 - Was 7155916 [A]		1
1	7215893	KIT, WINDOW	Ref. 2, 4-6, 8, 10, 12, 16-18, 23, 25, 37, 40 & 41		1
1	6990363	INSTRUCTIONS			1
2		SEAL, WINDOW	NAP - flat - 28" (711 mm) long - Order Ref. 26		1
3		LATCH, LH	See BTI416 - W/round pin	AG3G11001 - 12676	1
3		LATCH, LH	See BTI416 - W/round pin	AHHC11001 - 12501	1
4	7023294	LATCH, LH	W/square pin	AG3G12677 & Above	1
4	7023294	LATCH, LH	W/square pin	AHHC12502 & Above	1
5	6803202	SCREW			4
6	7101512	BUMPER			8
7	9JM60	PIN, RETAINER			2
8		TRIM, WINDOW	NAP - 24.2" (616 mm) long - Order Ref. 27		1
9	7177735	STUD, BALL JOINT			2
10		WINDOW, FRONT	NAP - Order Ref. 28 - Was 7178678 [D]		1
11		LINK, WINDOW FRONT	See BTI416 NAP - Was 7194753 [A]	AG3G11001 - 12534	1
11		LINK, WINDOW FRONT	See BTI416 NAP - Was 7194753 [A]	AHHC11001 - 12484	1
11	7220258	LINK, WINDOW FRONT		AG3G12535 & Above	1
11	7220258	LINK, WINDOW FRONT		AHHC12485 & Above	1
12	7178689	ROLLER			2
13	7178702	BUMPER, RUBBER			2
14	7179045	WINDOW, CAB LOWER			1
15	7179320	GAS SPRING	3,05 mm (.12") base end - must use in matching pairs		2
15	7209896	GAS SPRING	5 mm (.20") base end - must use in matching pairs		2
16		MOUNT, ROLLER	See BTI416 [A]	AG3G11001 - 12534	1
16		MOUNT, ROLLER	See BTI416 [A]	AHHC11001 - 12484	1
16	7214569	MOUNT, ROLLER		AG3G12535 & Above	1
16	7214569	MOUNT, ROLLER		AHHC12485 & Above	1
17		FRAME, WINDOW W/A	NAP - Order Ref. 1		1
18		SEAL, WINDOW	NAP - 90.5" (2300 mm) long - Order Ref. 26		1
19		PLATE, LATCH	See BTI416 NAP - Was 7183988 [A]	AG3G11001 - 11180	2
19		PLATE, LATCH	See BTI416 NAP - Was 7183988 [A]	AHHC11001 - 11119	2
19	7194706	PLATE, LATCH	Use W/Ref. 11	AG3G11181 & Above	2
19	7194706	PLATE, LATCH	Use W/Ref. 11	AHHC11120 & Above	2
20	1CM1012	SCREW			2
21	28CM620	BOLT CARRIAGE	6 mm thread - Was 21CM616 [B]		4

OPERATOR CAB (Cont'd)
(Front Window) (W/Frame)

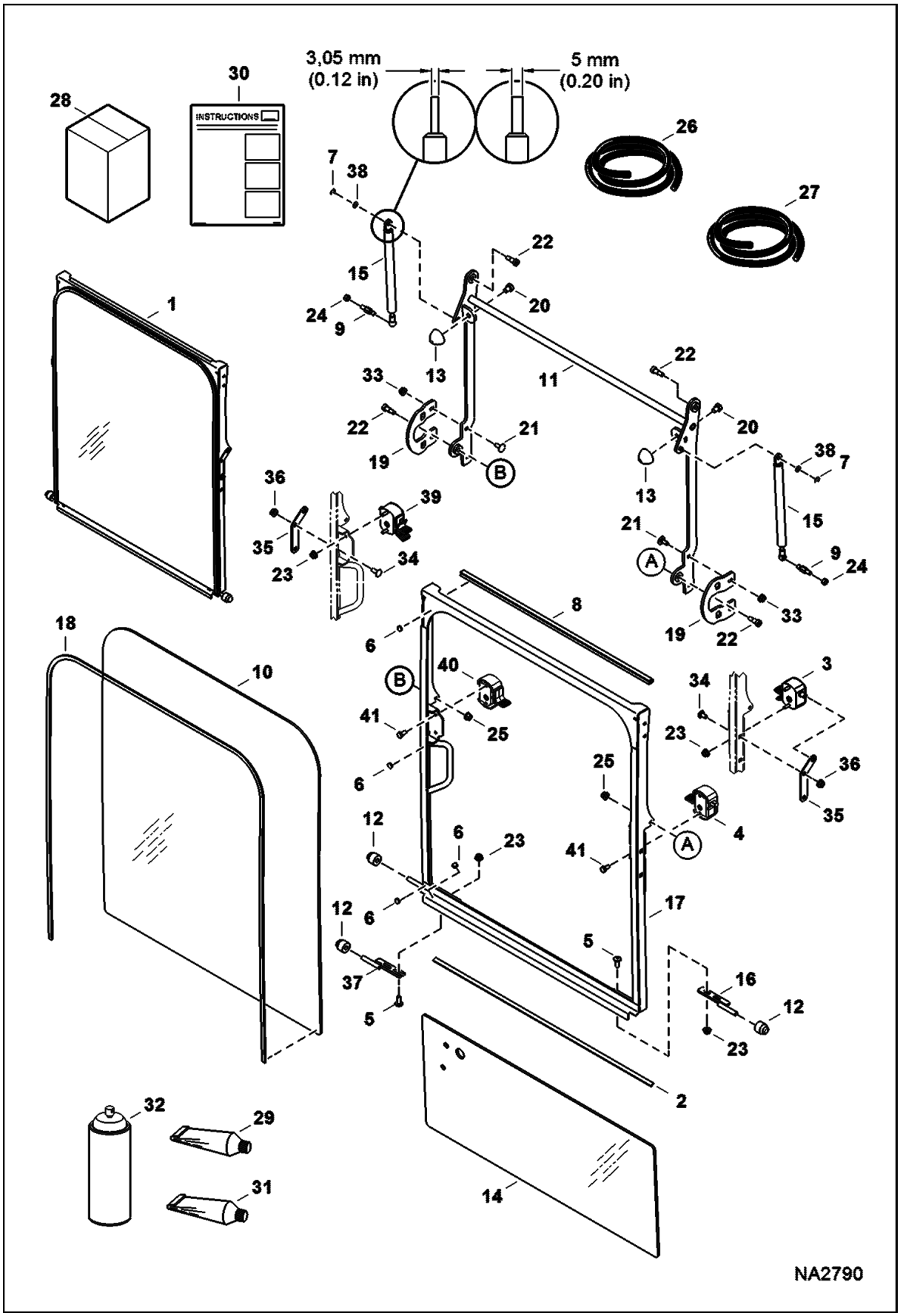

OPERATOR CAB (Cont'd)
(Front Window) (W/Frame)

Ref No	Part Number	Description	Remarks	Serial Number	Qty
		8.8			
21	28CM820	BOLT	8 mm thread		4
22	38C608	SCREW			4
23	51DM6	NUT			10
24	53DM8	NUT			2
25	83D5	NUT 5			2
26	6648416	SEAL(BULK /FT)	bulk - sold per foot		x
27	6682492	TRIM	bulk - sold per foot		x
28	7185152	KIT, WINDOW *SEE NOTE*	Ref. 6, 10, 29, & 30 - Also Order Ref. 31 & 32		1
29	6808882	ADHESIVE			1
30	6989489	INSTRUCTIONS			1
31	7102268	PRIMER			1
32	7110861	CLEANER			1
33	51DM6	NUT	6 mm thread		4
33	51DM8	NUT	8 mm thread		4
34	28CM816	BOLT	carriage - if equipped		4
34	33GM816	BOLT	torx - if equipped		4
35	7192212	BRACKET, LATCH	if equipped - Use W/NAP latch W/round pin only		2
36	51DM8	NUT	8 mm thread		4
37		MOUNT, ROLLER	See BTI416	AHHC11001 - 12484	1
37		MOUNT, ROLLER	See BTI416	AG3G11001 - 12534	1
37	7214570	MOUNT, ROLLER		AG3G12535 & Above	1
37	7214570	MOUNT, ROLLER		AHHC12485 & Above	1
38	15EM80	WASHER	if equipped		2
39		LATCH, RH	See BTI416 - W/round pin	AG3G11001 - 12676	1
39		LATCH, RH	See BTI416 - W/round pin	AHHC11001 - 12501	1
40	7023293	LATCH, RH	W/square pin	AG3G12677 & Above	1
40	7023293	LATCH, RH	W/square pin	AHHC12502 & Above	1
41	1CM612	BOLT	Use W/square pin latch		4

OPERATOR CAB
(Front Window) (Frameless)

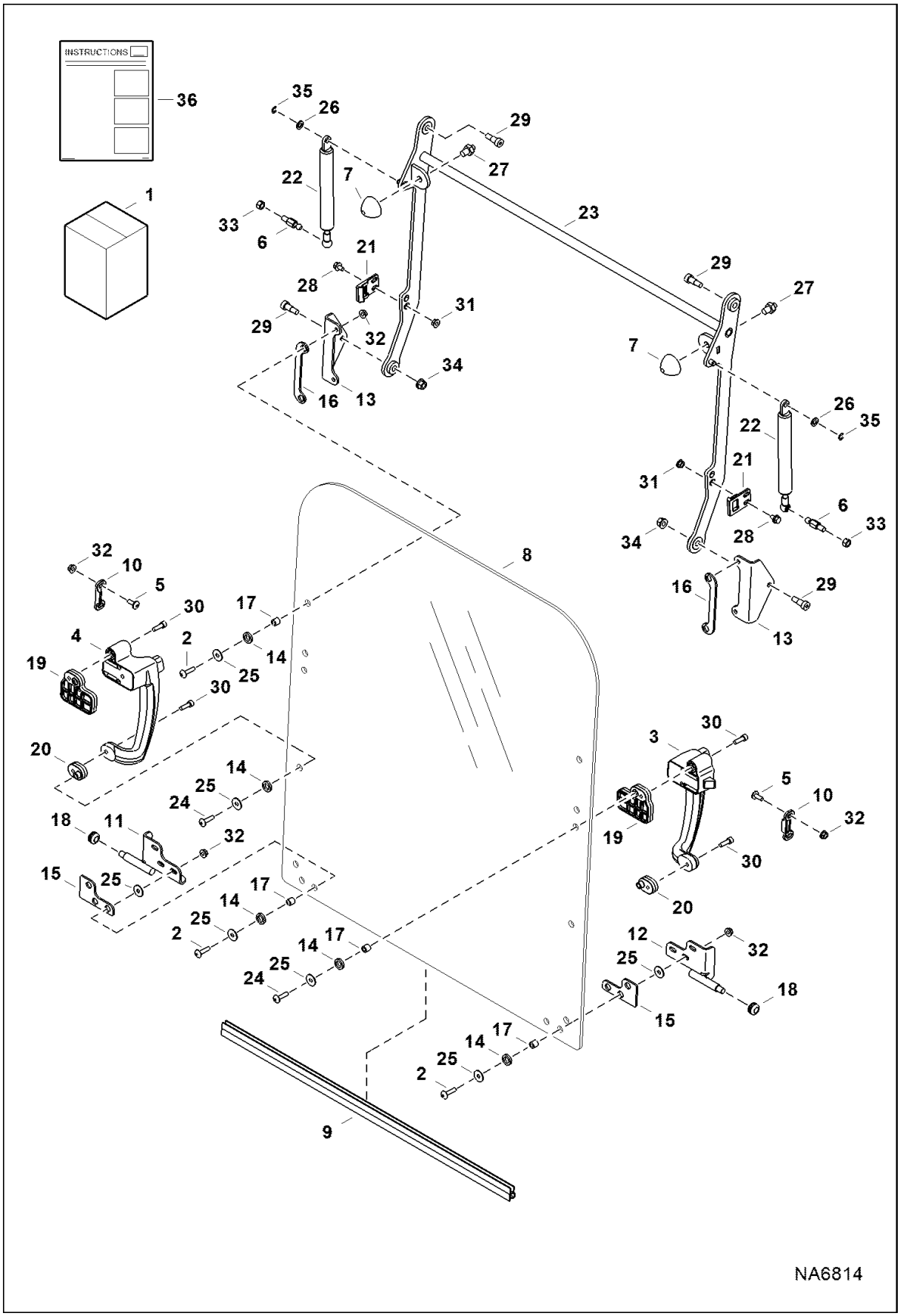

OPERATOR CAB (Cont'd)
(Front Window) (Frameless)

Ref No	Part Number	Description	Remarks	Serial Number	Qty
1	7223423	KIT, WINDOW FRONT W/O LINK	Ref. 2-4, 8, 9, 11-20, 24, 25, 30, 32, & 36		1
1	7223420	KIT, WINDOW FRONT W/ LINK	Ref. 2-36		1
2	6816193	SCREW			10
3	7023166	LATCH, WINDOW CAB			1
4	7023167	LATCH, WINDOW CAB			1
5	7122310	TORX BOLT			4
6	7177735	STUD, BALL JOINT			2
7	7178702	BUMPER, RUBBER			2
8	7209964	WINDOW, CAB FRONT			1
9	7210015	SEAL, WINDOW			1
10	7210303	STRIKER, LATCH WINDOW			2
11	7210694	MOUNT, ROLLER			1
12	7210696	MOUNT, ROLLER			1
13	7210795	MOUNT, WINDOW			2
14	7210811	GASKET, WASHER			14
15	7210819	GASKET, ROLLER			2
16	7210822	GASKET, MOUNT			2
17	7210929	SPACER, BRACKET			12
18	7212726	ROLLER, WINDOW			2
19	7213043	SPACER, LATCH UPPER			2
20	7213044	SPACER, LATCH LOWER			2
21	7213572	STRIKER, LATCH WINDOW			2
22	7213698	GAS SPRING			2
23	7214144	LINK, WINDOW FRONT			1
24	7215172	SCREW, MACHINE			4
25	7215175	WASHER, FLAT			20
26	15EM80	WASHER			2
27	1CM1012	SCREW			2
28	29CM610	BOLT			4
29	38C608	SCREW			4
30	3GM620	SCREW, MACHINE			4
31	43DM6	NUT			4
32	45DM6	NUT 10			14
33	53DM8	NUT			2
34	83D5	NUT 5			2
35	9JM60	PIN, RETAINER			2
36	6990513	INSTRUCTIONS			1

OPERATOR CAB
(RH Window)(Slider)

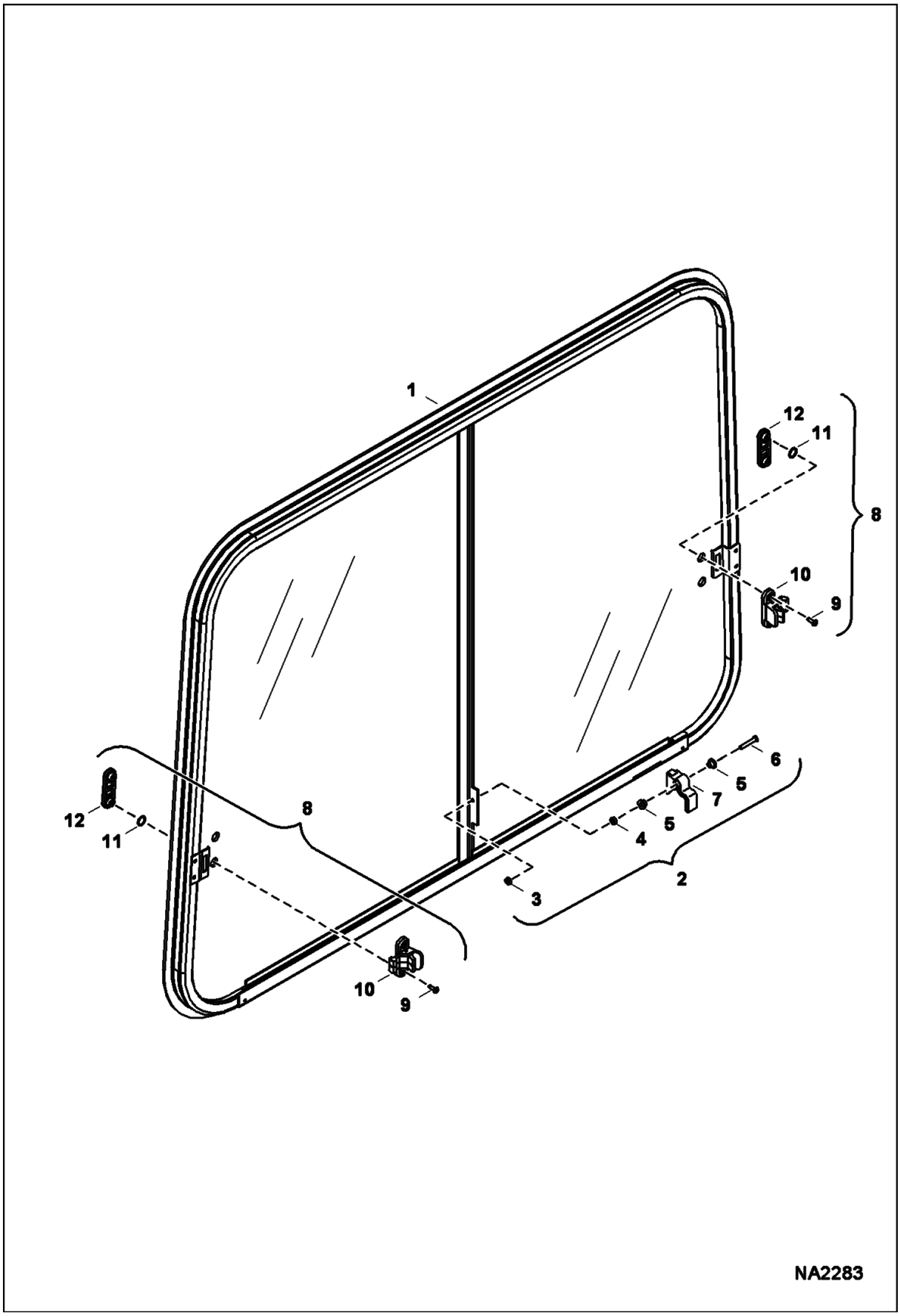

OPERATOR CAB (Cont'd)
(RH Window)(Slider)

Ref No	Part Number	Description	Remarks	Serial Number	Qty
1	7166474	WINDOW, CAB SLIDING	Ref. 2-12 - glass and other parts not shown are NSS		1
2	7010509	LATCH, WINDOW CAB	Ref. 3-7		1
3	7010605	NUT			1
4	7010606	WASHER			1
5	7010607	SPACER			2
6	7010608	SCREW			1
7	7010609	LATCH, WINDOW CAB			1
8	7010510	LATCH, WINDOW CAB	Ref. 9-12		2
9	7010505	SCREW			2
10	7010506	LATCH			1
11	7010507	O-RING			2
12	7010508	CATCH, LATCH			1

CANOPY

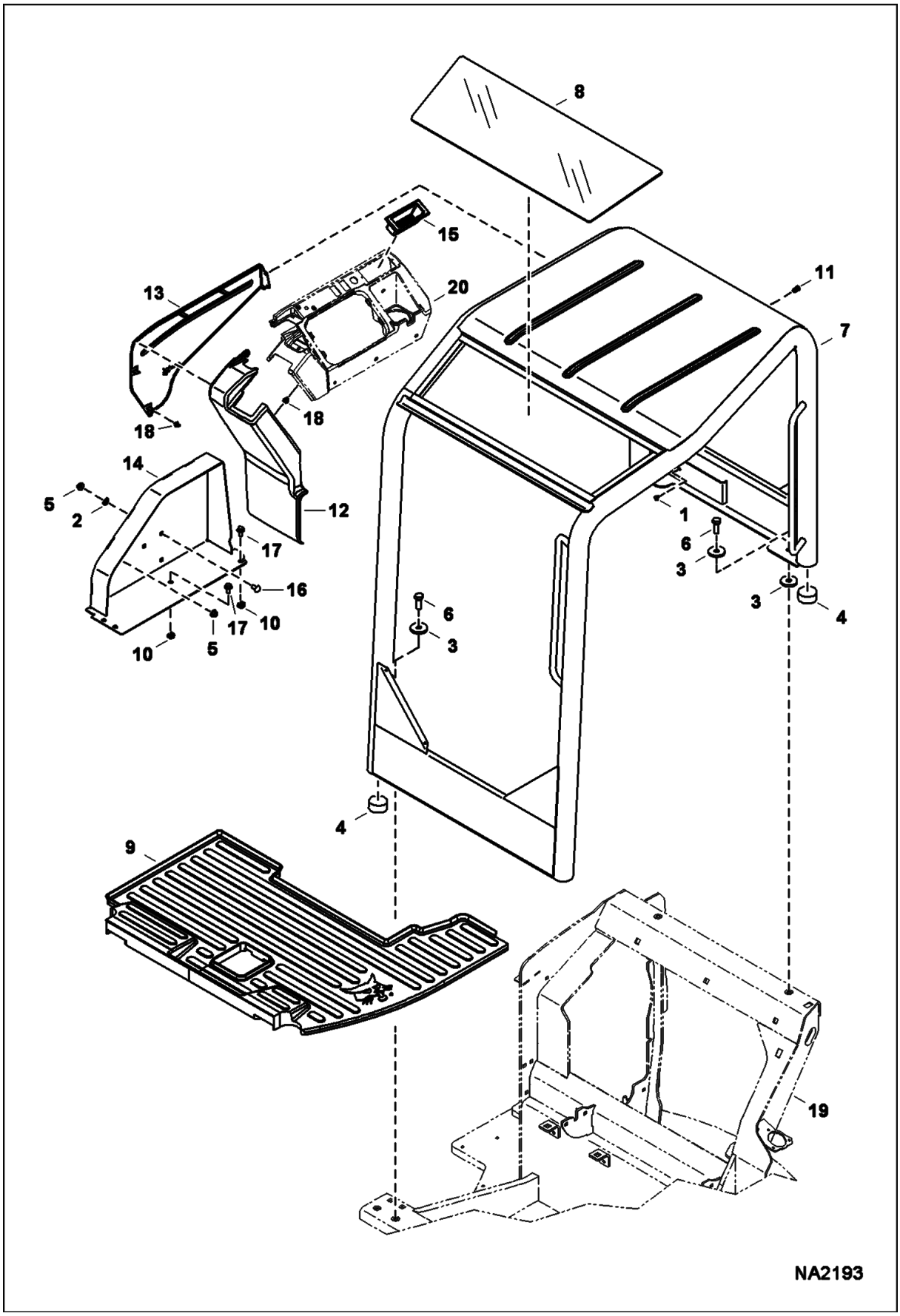

CANOPY (Cont'd)

Ref No	Part Number	Description	Remarks	Serial Number	Qty
1	6589675	SCREW			1
2	6674264	RETAINER NUT			4
3	6805244	WASHER			6
4	6816135	INSULATION			4
5	43DM10	NUT			6
6	7CM1440	BOLT			4
7	7221994	KIT, CANOPY	Includes decals - Was 7143470 [A]		1
7	6990467	INSTRUCTIONS			1
8	7143481	WINDOW, CANOPY TOP			1
8	6808882	ADHESIVE	10.5 fluid oz.		1
8	7102268	PRIMER	4.2 fluid oz.		1
9	7153688	MAT, FLOOR CANOPY			1
10	7155411	NUT			2
11	7160383	RIVET, BIRD CAGE			2
12	7165566	COVER, RH			1
13	7165567	COVER, RH			1
14	7170762	PANEL, RH			1
15	7171397	CONTAINER, STORAGE			1
16	28CM1020	BOLT			4
17	29CM1025	BOLT			2
18	7165333	CLIP			8
19		UPPERSTRUCTURE	See Illustration UPPERSTRUCTURE/ NA2592		1
20		COVER, RH	See Illustration CONTROLS ELECTRICAL/ NA2561		1

INSULATION

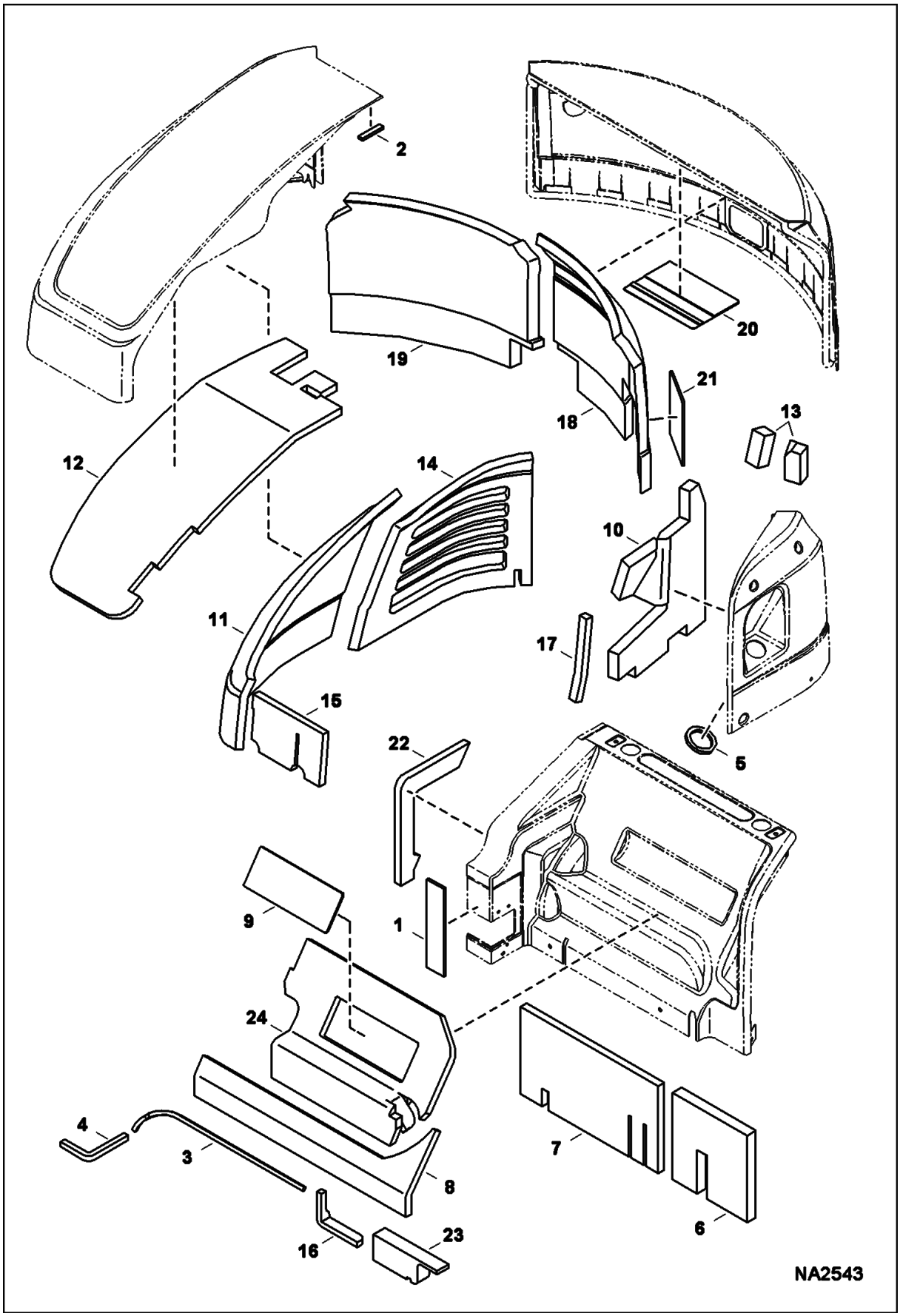

INSULATION (Cont'd)

Ref No	Part Number	Description	Remarks	Serial Number	Qty
1	7156375	SEAL, RH PANEL			1
2	7170795	SEAL, COVER			1
3	7172738	SEAL, ENG			1
4	7175504	SEAL, ENG			1
5	7176171	INSULATION, PANEL LH			1
6	7180096	INSULATION, ENG			1
7	7180097	INSULATION, ENG			1
8	7180098	INSULATION, ENG			1
9	7180188	INSULATION, ENG			1
10	7180219	INSULATION, PANEL LH			1
11	7180844	INSULATION, COVER RH			1
12	7180845	INSULATION, COVER RH			1
13	7181884	INSULATION, BLOCK			2
14	7183410	INSULATION, COVER RH			1
15	7183411	INSULATION, COVER RH			1
16	7185352	INSULATION			1
17	7185739	INSULATION, RADIATOR			1
18	7186607	INSULATION, DOOR REAR			1
19	7186608	INSULATION, DOOR REAR			1
20	7186700	PAD, DECAL			1
21	7187343	INSULATION, DOOR REAR			1
22	7188770	INSULATION, ENG			1
23	7188813	SEAL, TANK FUEL			1
24	7189795	INSULATION, PANEL ENG			1

RH COVER
(S/N AG3G11001 - 12372, AHHC11001 - 12421)

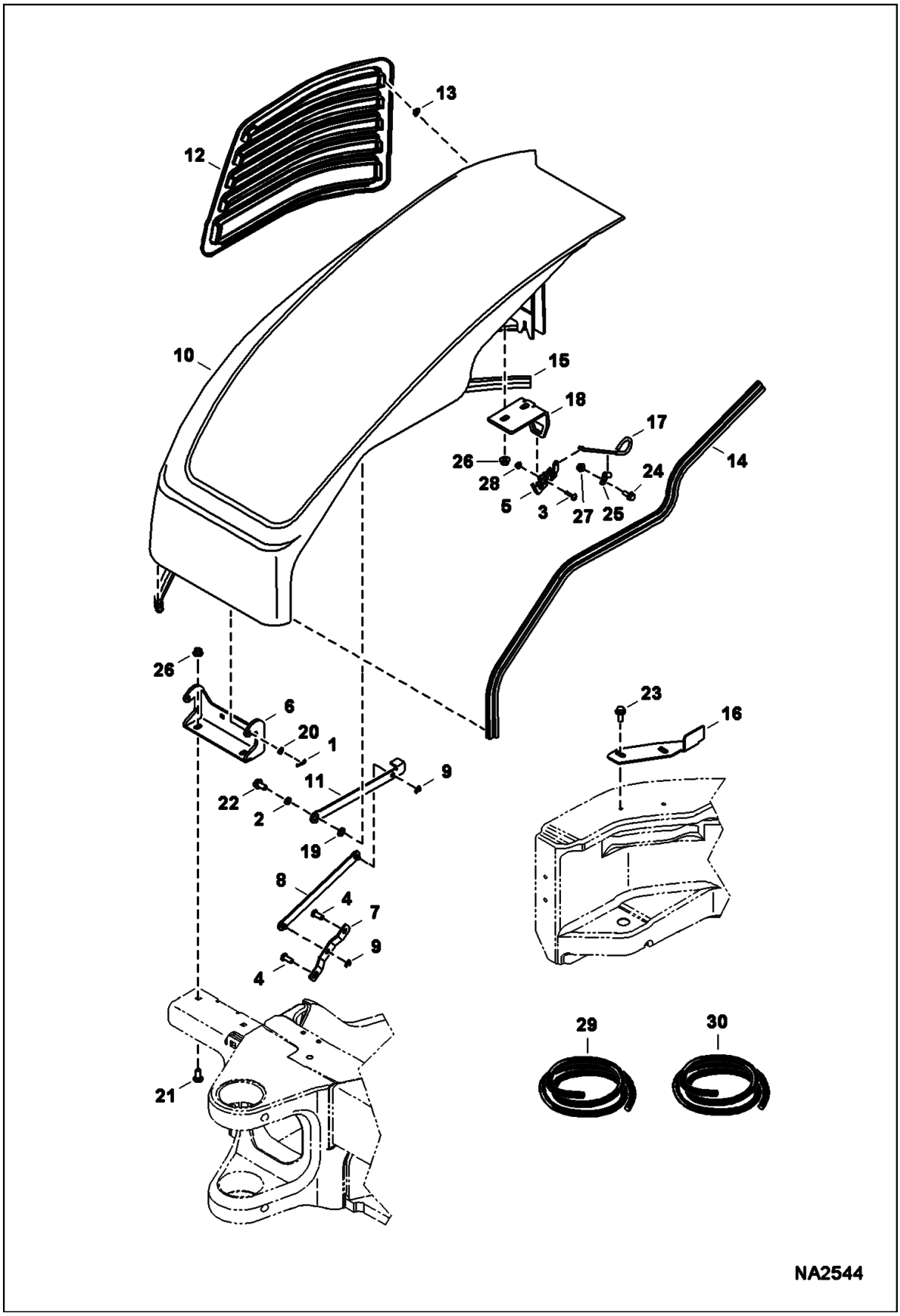

RH COVER (Cont'd)
(S/N AG3G11001 - 12372, AHHC11001 - 12421)

Ref No	Part Number	Description	Remarks	Serial Number	Qty
1	6513495	COTTER PIN			2
2	6810385	BUSHING			1
3	6816193	SCREW			2
4	6817769	BOLT			2
5	7000993	LATCH, REAR DOOR			1
6	7148098	HINGE, COVER			1
7	7165414	BRACKET			1
8	7170445	LINK			1
9	7170446	PIN, RETAINER			2
10	7175327	COVER, RH			1
11	7176094	LINK			1
12	7177100	SCREEN, OUTER			1
13	7178670	CLIP			20
14		SEAL, BULB	NAP - 45.7" (1162 mm) long - Order Ref. 29		1
15		SEAL, BULB	NAP - 55.5" (1410 mm) long - Order Ref. 30		1
16	7184225	BRACKET			1
17	7184264	LATCH, HANDLE			1
18	7185351	BRACKET			1
19	15EM120	WASHER			1
20	15EM80	WASHER			2
21	28CM1025	BOLT			2
22	29CM1020	BOLT			1
23	29CM1025	BOLT			2
24	29CM820	SCREW			1
25	30H19	CLIP			1
26	43DM10	NUT			4
27	43DM8	NUT			1
28	51DM6	NUT	Was 53DM6 [B,D]		2
29	7160901	SEAL, BULK	bulk - sold per foot		x
30	7170493	SEAL, BULK	bulk - sold per foot		x

RH COVER
(S/N AG3G12373 & Above, AHHC12422 & Above)

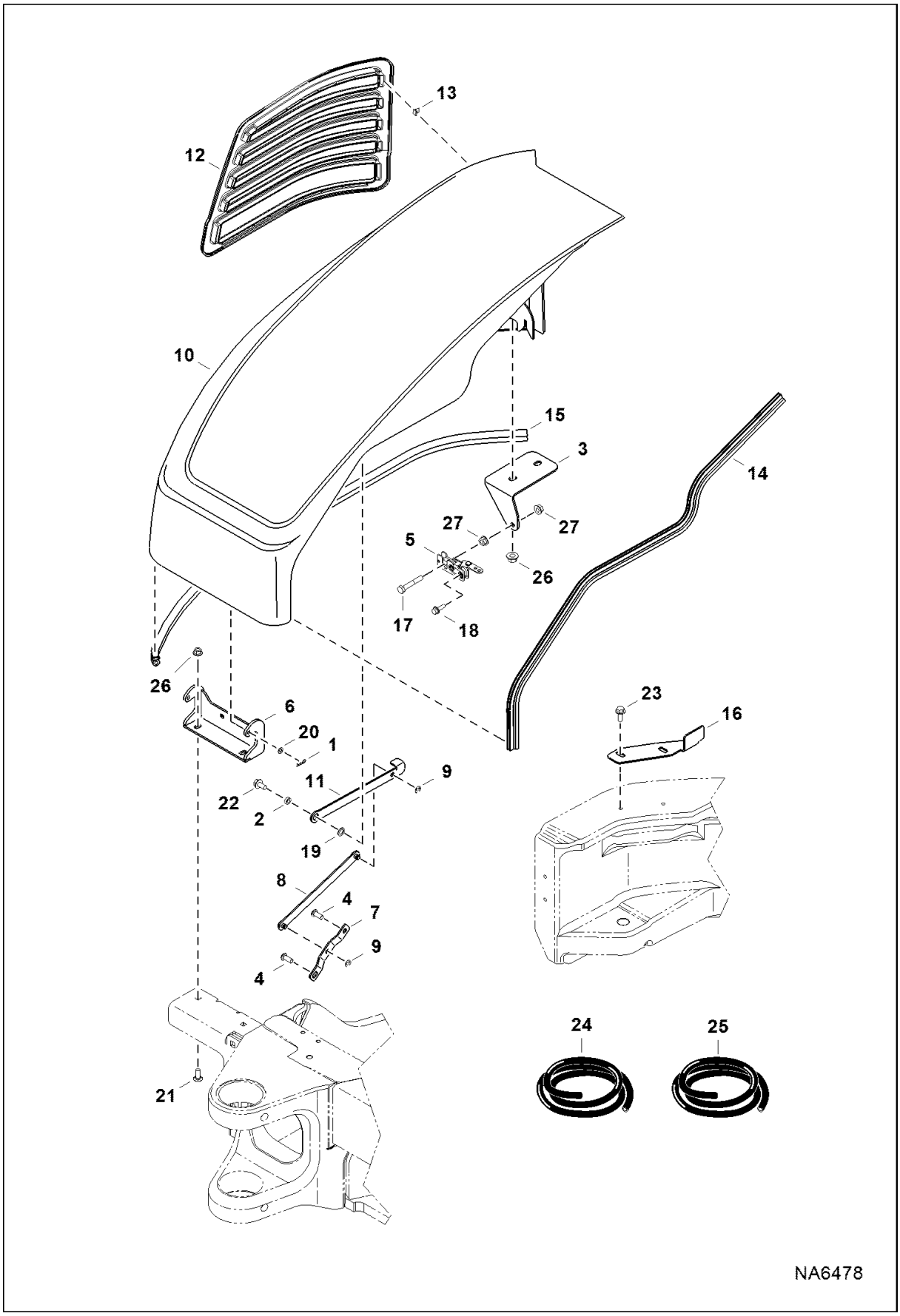

RH COVER (Cont'd)
(S/N AG3G12373 & Above, AHHC12422 & Above)

Ref No	Part Number	Description	Remarks	Serial Number	Qty
1	6513495	COTTER PIN			2
2	6810385	BUSHING			1
3	7191716	BRACKET, LATCH			1
4	6817769	BOLT			2
5	7206615	LATCH, COVER			1
6	7148098	HINGE, COVER			1
7	7165414	BRACKET			1
8	7170445	LINK			1
9	7170446	PIN, RETAINER			2
10	7214097	COVER, RH			1
11	7176094	LINK			1
12	7177100	SCREEN, OUTER			1
13	7178670	CLIP			20
14		SEAL, BULB	NAP - 45.7" (1162 mm) long - Order Ref. 24		1
15		SEAL, BULB	NAP - 55.5" (1410 mm) long - Order Ref. 25		1
16	7184225	BRACKET			1
17	1CM850	BOLT			1
18	29CM620	SCREW			2
19	15EM120	WASHER			1
20	15EM80	WASHER			2
21	28CM1025	BOLT			2
22	29CM1020	BOLT			1
23	29CM1025	BOLT			2
24	7160901	SEAL, BULK	bulk - sold per foot		x
25	7170493	SEAL, BULK	bulk - sold per foot		x
26	43DM10	NUT			4
27	43DM8	NUT			1

REAR DOOR

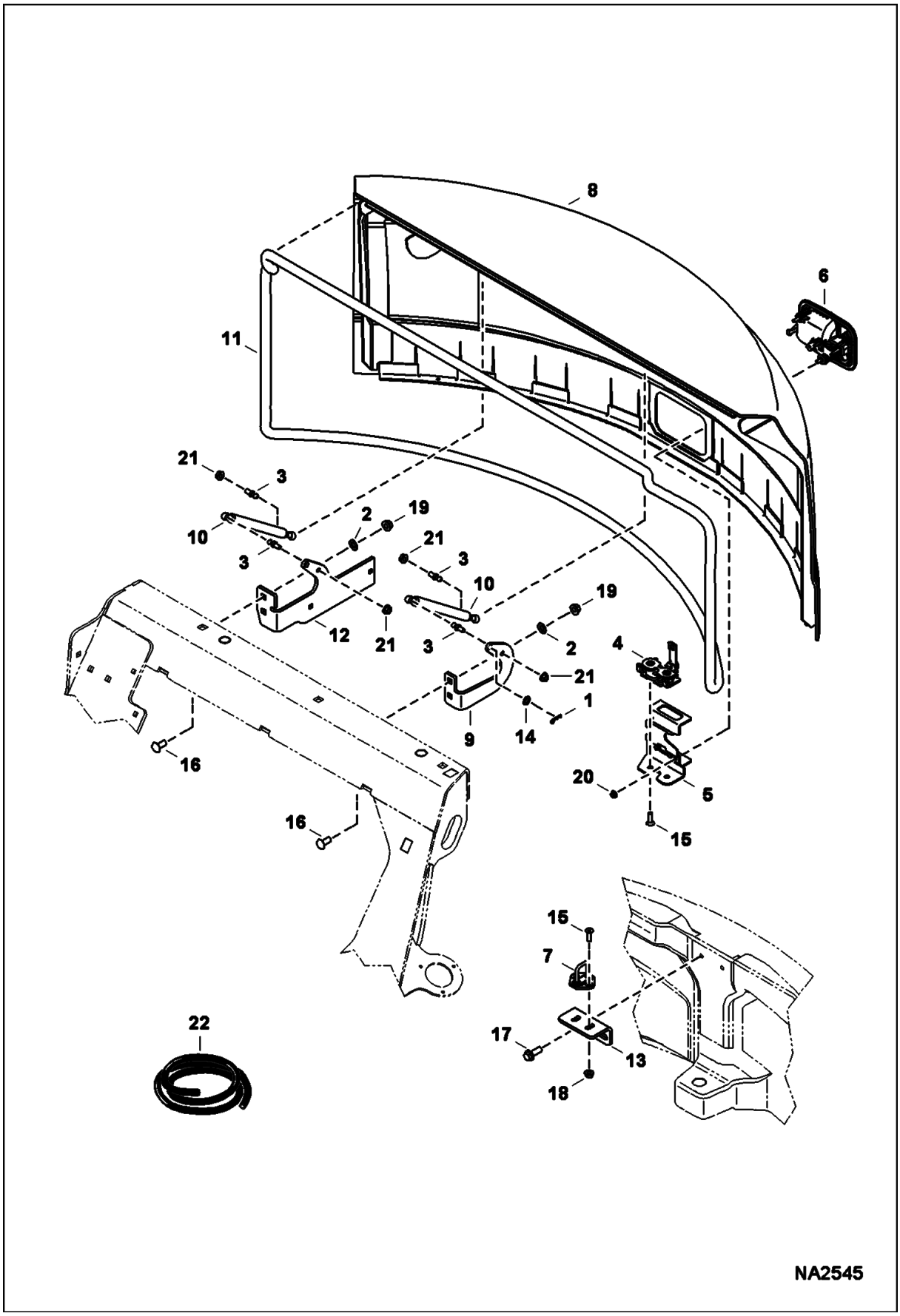
8
6
11
21
3
10
2
19
3
21
3
10
19
12
21
3
2
4
21
1
9
14
16
20
5
16
15
15
7
17
13
18
22
NA2545

REAR DOOR (Cont'd)

Ref No	Part Number	Description	Remarks	Serial Number	Qty
1	6513495	COTTER PIN			2
2	6674264	RETAINER NUT			4
3	7170322	STUD, BALL JOINT			4
4	7170871	LATCH, DOOR REAR			1
5	7170872	BRACKET, LATCH			1
6	7170873	LATCH, HANDLE			1
7	7170944	STRIKER, LATCH DOOR			1
8	7175332	REAR DOOR			1
9	7177920	HINGE, DOOR REAR			1
10	7177996	GAS SPRING			2
11		SEAL, BULB	NAP - 146" (3708 mm) long - Order Ref. 22		1
12	7182174	HINGE, DOOR REAR			1
13	7182359	BRACKET			1
14	15EM100	WASHER			2
15	23GM825	SCREW			4
16	28CM1025	BOLT			4
17	29CM1030	BOLT			2
18	43DM8	NUT			2
19	51DM10	NUT			4
20	51DM6	NUT			2
21	51DM8	NUT			4
22	7160901	SEAL, BULK	bulk - sold per foot		x

UNDERCARRIAGE

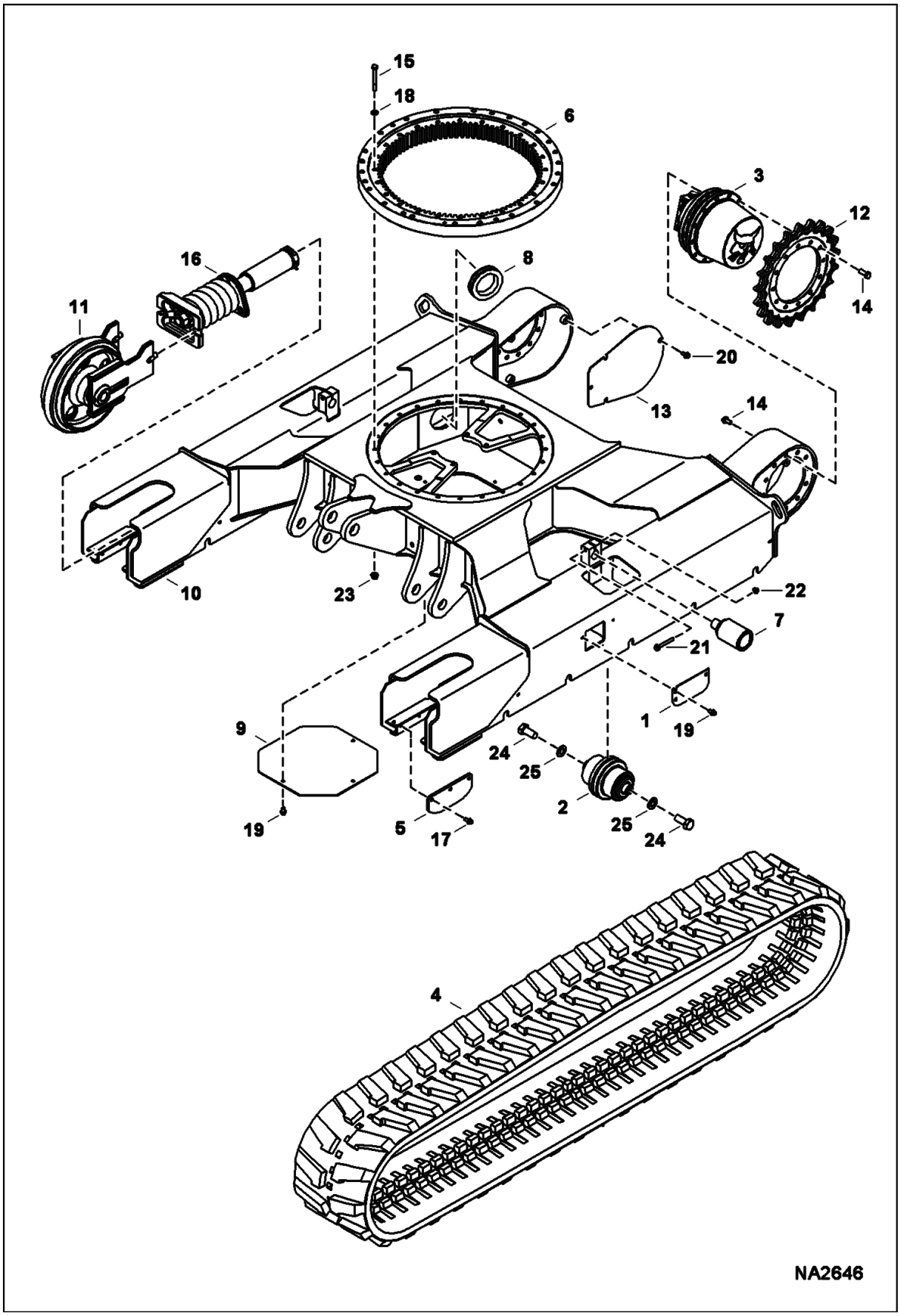

Ref No	Part Number	Description	Remarks	Serial Number	Qty
1	6596723	COVER			1
2	7013577	ROLLER, TRACK	See Illustration TRACK ROLLER/ NA2649 for rubber tracks - Was 6693490 [A]		10
2	7013578	ROLLER, TRACK	See Illustration TRACK ROLLER/ NA2649 for steel tracks - Was 6693499 [A]		10
3		TRAVEL MOTOR	See Illustration TRAVEL MOTOR/ D2403		2
4		TRACK, RUBBER	See Illustration TRACKS/ NA6193		2
4		TRACK, STEEL	See Illustration TRACKS/ NA2650		2
5	7178853	PLATE, GUIDE			2
6	7021044	RING, SLEW	See Illustration UPPERSTRUCTURE/ NA2592 Was 6692962 [A]		1
7	6692966	ROLLER, TRACK	See Illustration TRACK ROLLER/ NA2025		2
8	7127210	GROMMET			2
9	7142236	COVER, ACCESS			1
10	7142448	UNDERCARRIAGE			1
11		IDLER, ASSY	See Illustration FRONT IDLER/ NA2648		2
12	7199008	SPROCKET, MACHINED	Was 7142453 [A]		2
13	7142456	COVER, MOTOR			2
14	55CM1435	SCREW			24
15	7CM12100	BOLT			24
16		TENSIONER, TRACK ASSY	See Illustration TRACK TENSIONER/ NA2647		2
17	26GM10025	SCREW			12
18	18EM1224	WASHER			24
19	26GM10020	BOLT			8
20	29CM1020	BOLT			6
21	29CM1080	SCREW			2
22	51DM10	NUT			2
23	51DM12	NUT			24
24	7015398	BOLT			20
25	7015399	WASHER			20

TRACK TENSIONER

(S/N AG3G11001 - 12397, AHHC11001 - 12435)

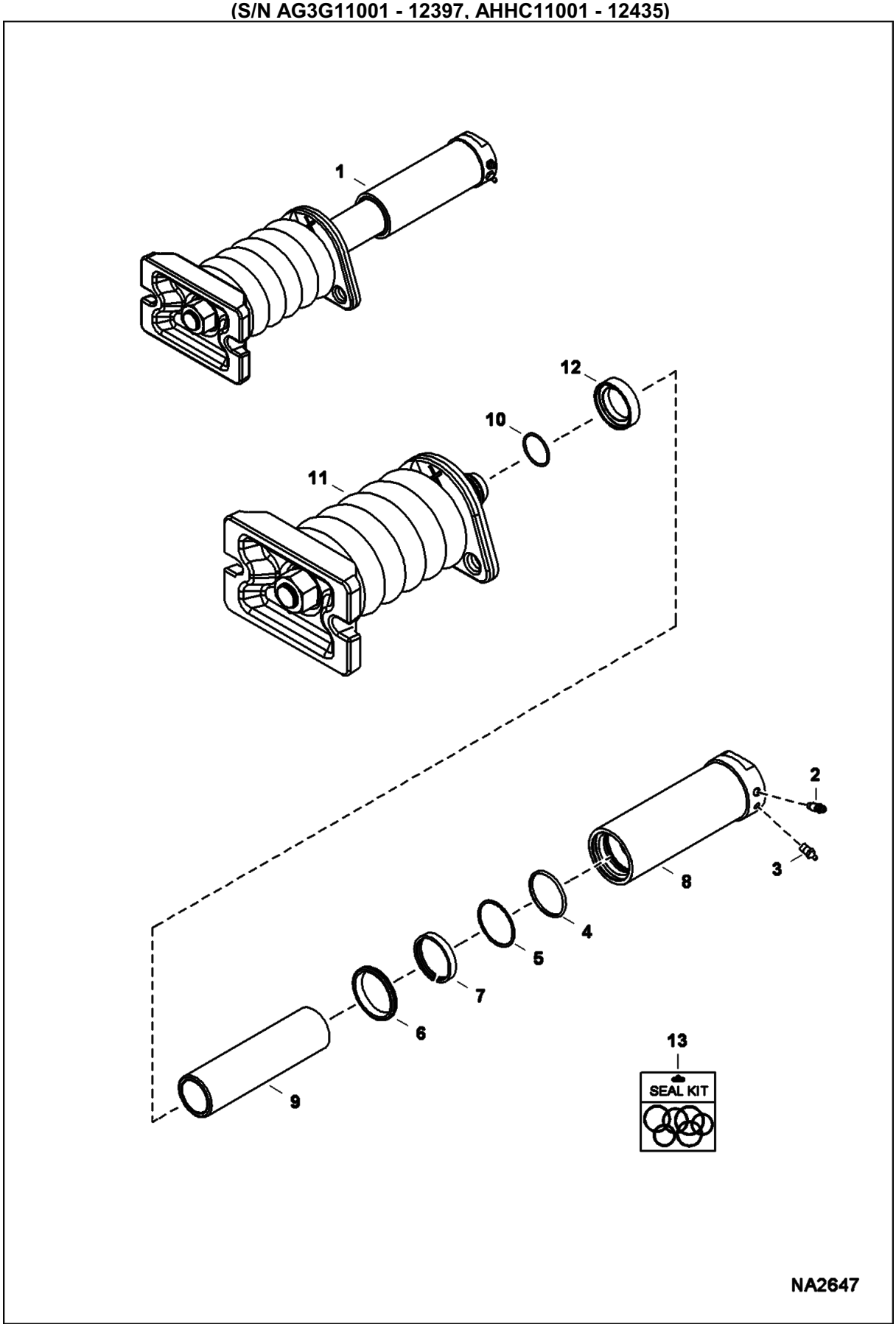

TRACK TENSIONER (Cont'd)

(S/N AG3G11001 - 12397, AHHC11001 - 12435)

Ref No	Part Number	Description	Remarks	Serial Number	Qty
1	7181320	TENSIONER, TRACK ASSY	Ref. 2-11 - Also Order Ref. 12 for steel tracks		1
2	6645812	SCREW, BLEED			1
3	6655752	FITTING	68,900 kpa (10,000 psi) - DO NOT SUBSTITUTE		1
4	6672338	O-RING			1
5	6685154	RING, BACK-UP			1
6	6686968	SEAL, WIPER ROD			1
7	6688839	WEAR RING	9,53 mm (0.38") wide		1
8	7180324	TUBE, GREASE			1
9	7135356	SHAFT, CHROME			1
10	25K30118	O RING 10			1
11		SPRING ASSY	NAP - Order Ref. 1		1
12	7164410	SPACER	Use for steel tracks only - not included in Ref. 1		1
13	7163219	KIT, SEAL	Ref. 4-7		1

TRACK TENSIONER

(S/N AG3G12398 & Above, AHHC12436 & Above)

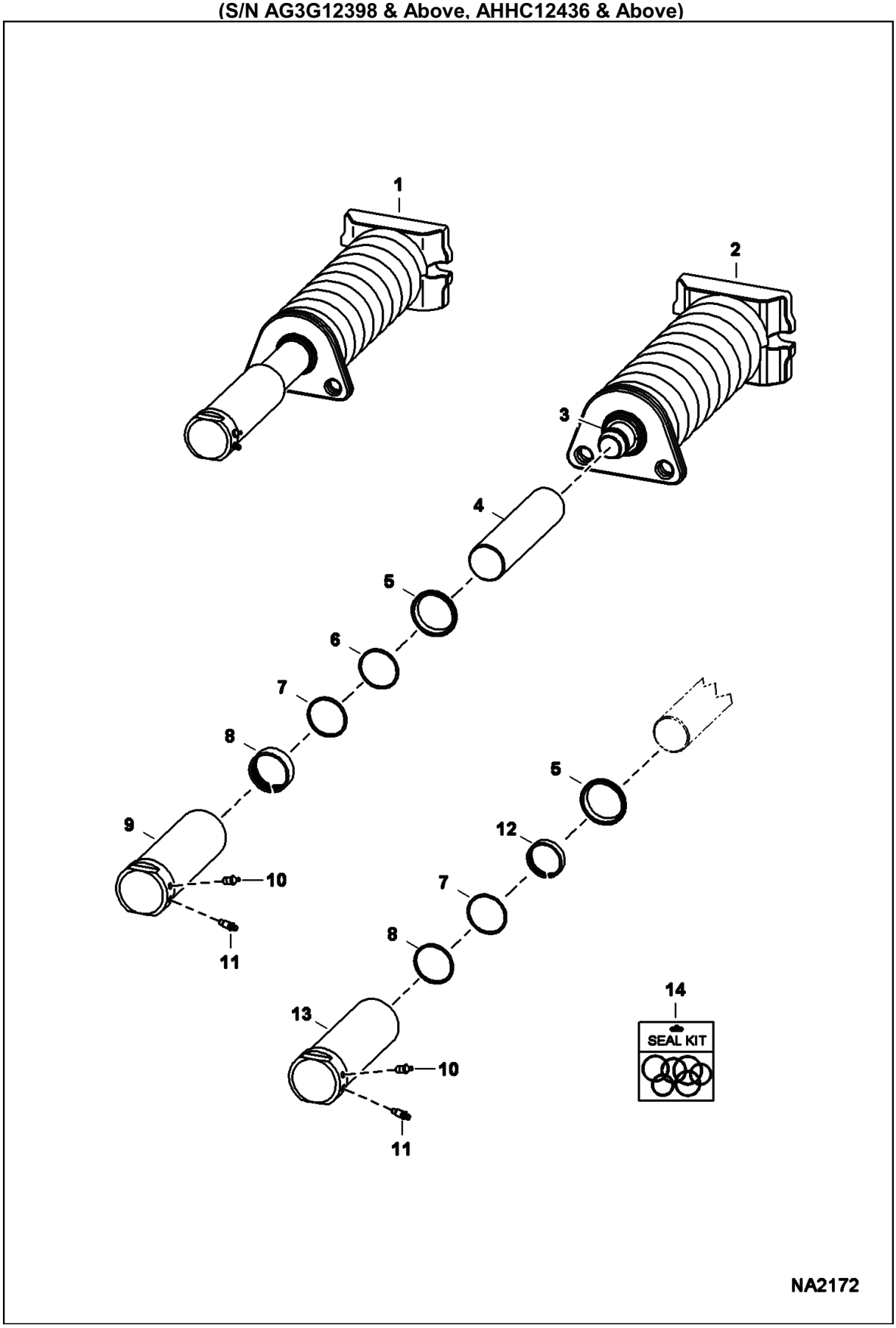

TRACK TENSIONER (Cont'd)

(S/N AG3G12398 & Above, AHHC12436 & Above)

Ref No	Part Number	Description	Remarks	Serial Number	Qty
1		TENSIONER, TRACK ASSY	NAP - Ref. 2-12 - Order 7180664 tensioner - Was 7152280 [A]		2
1	7180664	TENSIONER, TRACK ASSY	Ref. 2-7 & 10-13		1
2		COIL SPRING ASSY	NSS - Order Ref. 1		1
3	25K30118	O RING 10	not in seal kit		1
4	7135356	SHAFT, CHROME			1
5	6686968	SEAL, WIPER ROD			1
6	6685154	RING, BACK-UP			1
7	6672338	O-RING			1
8	7000773	RING, WEAR	.75" (19,05 mm) wide - Use W/Ref. 1 (NAP/ 7152280 tensioner)		1
9		TUBE, GREASE	NAP - Use W/Ref. 1 (NAP/ 7152280 tensioner) - Order Ref. 13 & 14 - Was 7135353 [A]		1
10	6655752	FITTING	68,900 kpa (10,000 psi) - DO NOT SUBSTITUTE		1
11	6645812	SCREW, BLEED			1
12	6688839	WEAR RING	9,53 mm (0.38") wide - Use W/Ref. 1 (7180664 tensioner)		1
13	7180324	TUBE, GREASE	Use W/Ref. 1 (7180664 tensioner)		1
14	7163219	KIT, SEAL	Ref. 5-8 & 12 - Was 7180690 [A]		1

FRONT IDLER
(W/ holes in idler)

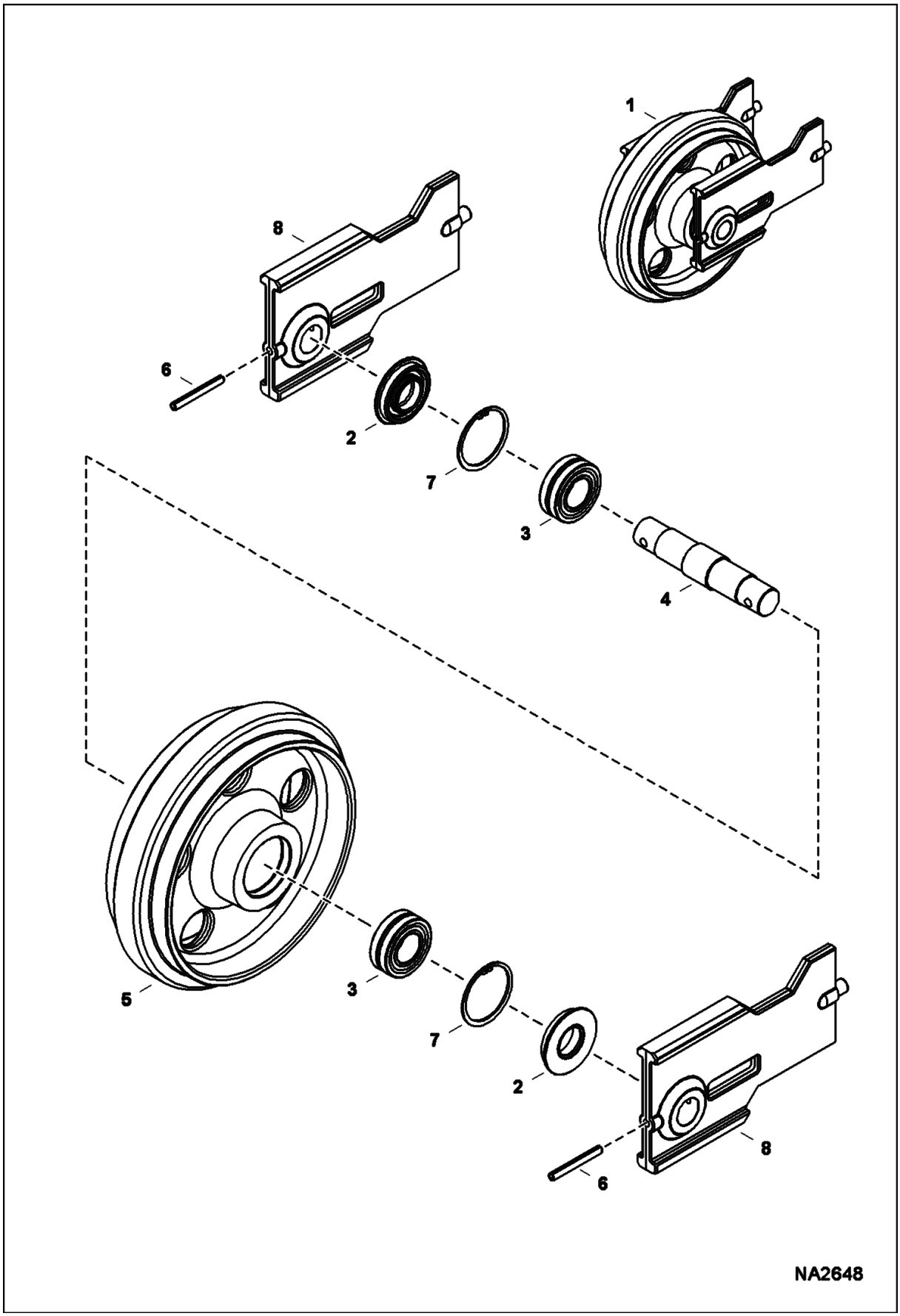

FRONT IDLER (Cont'd)
(W/ holes in idler)

Ref No	Part Number	Description	Remarks	Serial Number	Qty
1		IDLER, ASSY	See Illustration FRONT IDLER/ NA6086 Ref. 2-8 - for rubber and steel tracks - Was 7142452 [A]		2
2	6679882	SEAL, OIL			2
3	6686728	BEARING			2
4	7109138	SHAFT			1
5	7143085	IDLER, MACHINED			1
6	2JM1085	ROLL PIN			2
7	7JM80	SNAP RING			2
8	6627777	BLOCK			2

FRONT IDLER
(W/O holes in idler)

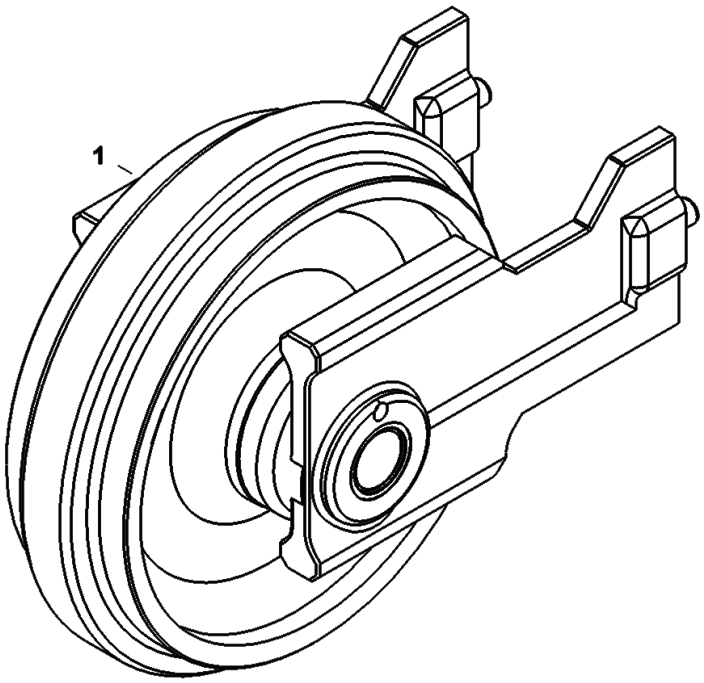

NA6086

FRONT IDLER (Cont'd)
(W/O holes in idler)

Ref No	Part Number	Description	Remarks	Serial Number	Qty
1	7199075	IDLER, ASSY	for rubber and steel tracks	AG3G11001 - 12397	2
1	7199075	IDLER, ASSY	for rubber and steel tracks	AHHC11001 - 12435	2
1	7202053	IDLER, ASSY	for rubber and steel tracks	AG3G12398 & Above	2
1	7202053	IDLER, ASSY	for rubber and steel tracks	AHHC12436 & Above	2

TRACK ROLLER
(Bottom)

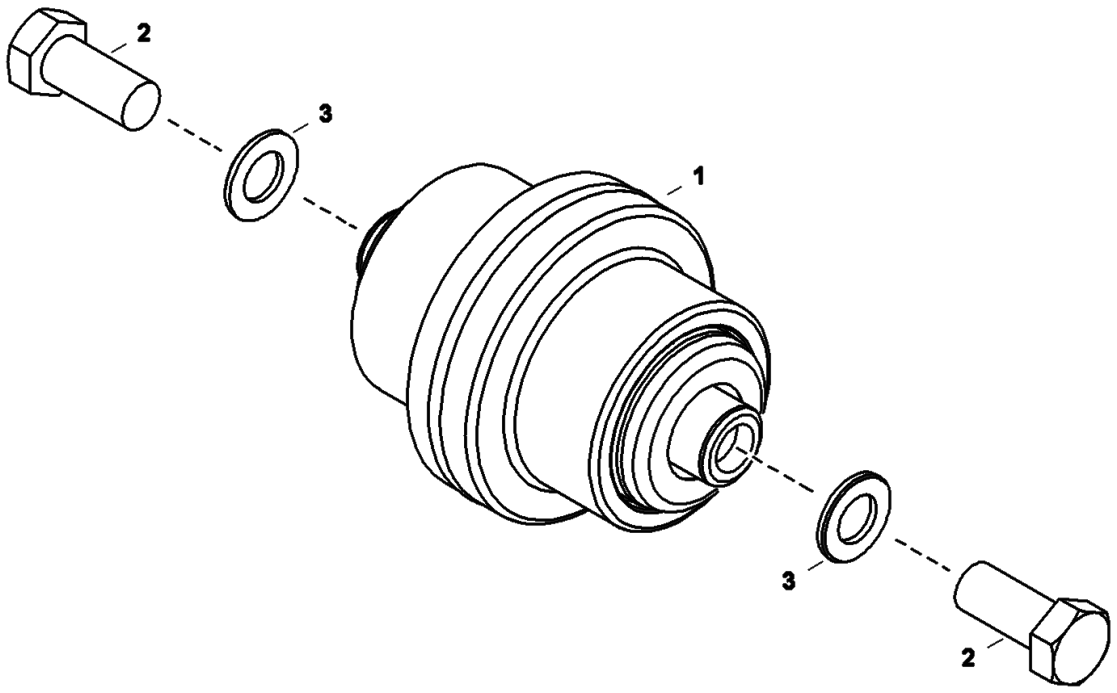

NA2649

TRACK ROLLER (Cont'd)
(Bottom)

Ref No	Part Number	Description	Remarks	Serial Number	Qty
1	7013577	ROLLER, TRACK	for rubber tracks - W/Ref. 2 & 3 - Was 6693490 [A]		10
1	7013578	ROLLER, TRACK	for steel tracks - W/Ref. 2 & 3 - Was 6693499 [A]		10
2	7015398	BOLT			20
3	7015399	WASHER			20

TRACK ROLLER
(Top)

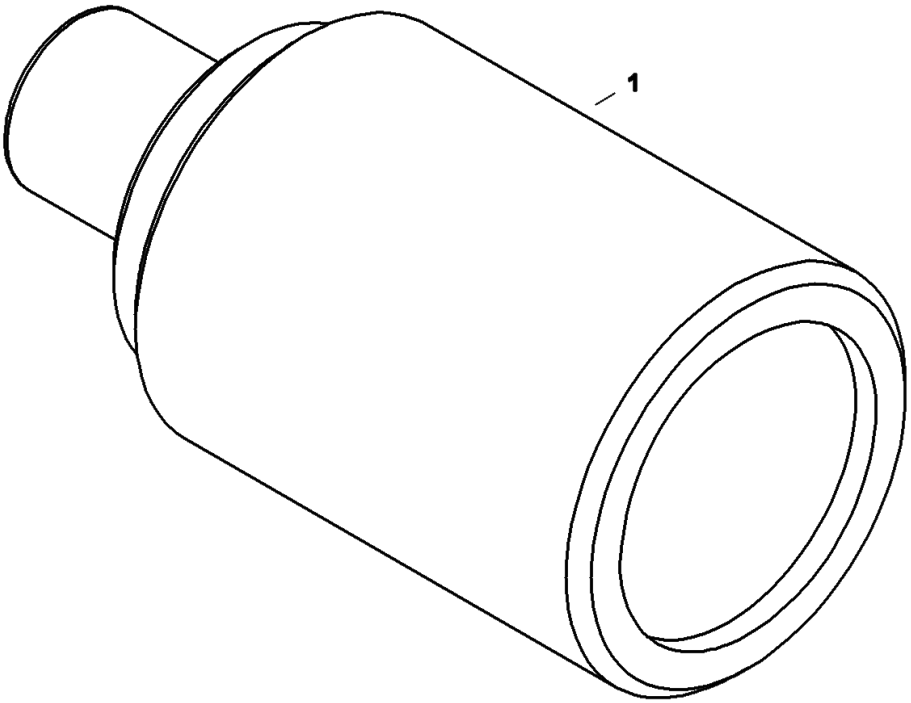

NA2025

TRACK ROLLER (Cont'd)
(Top)

Ref No	Part Number	Description	Remarks	Serial Number	Qty
1	6692966	ROLLER, TRACK	for rubber & steel tracks		2

ARM

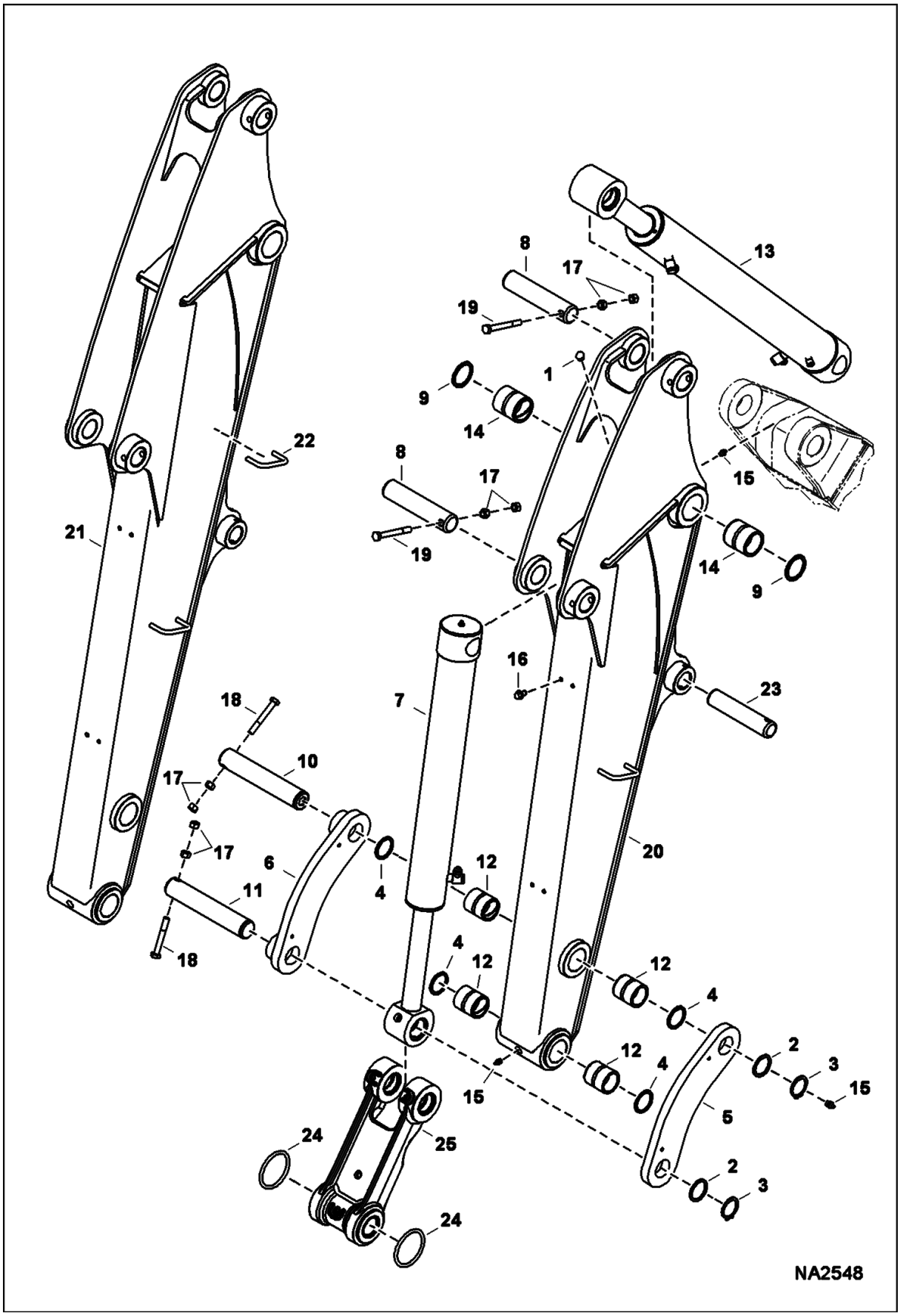

Ref No	Part Number	Description	Remarks	Serial Number	Qty
1	6597572	BUMPER			1
2	6628547	WASHER			4
3	6668787	RING			2
4	6669287	SEAL			6
5	7142836	LINK			1
6	7142838	LINK, ASSY			1
7		CYLINDER, BUCKET	See Illustration BUCKET CYLINDER/ NA1938		1
8	7208620	PIN, PIVOT	Was 7143040 [A]		2
9	7143551	SEAL, DUST			2
10	7144499	PIN, PIVOT			1
11	7144500	PIN, PIVOT			1
12	7172745	BUSHING, WEAR			4
13		CYLINDER, ARM	See Illustration ARM CYLINDER/ NA1937		1
14	7188685	BUSHING, WEAR			2
15	10H25	FITTING, GREASE 5			2
16	26GM10020	BOLT			4
17	4DM12	NUT HEX			6
18	7CM1290	SCREW			2
19	7CM12110	BOLT			2
20	7208982	ARM, DIPPER W/A EXC	Also Order Ref. 4, 9, 12, & 14 - Was 7122550 [A]		1
21	7208983	ARM, DIPPER W/A LONG EXC	Also Order Ref. 4, 9, 12, & 14 - Was 7122551 [A]		1
22	6586391	GUIDE	weld-on		2
23		PIN	clamp - see clamp attachment		1
24	7143561	O-RING			2
25	7165792	LINK, ASSY	See Illustration BUCKET LINK/ NA2207		1

BUCKET LINK
(Pin-On X-Change)

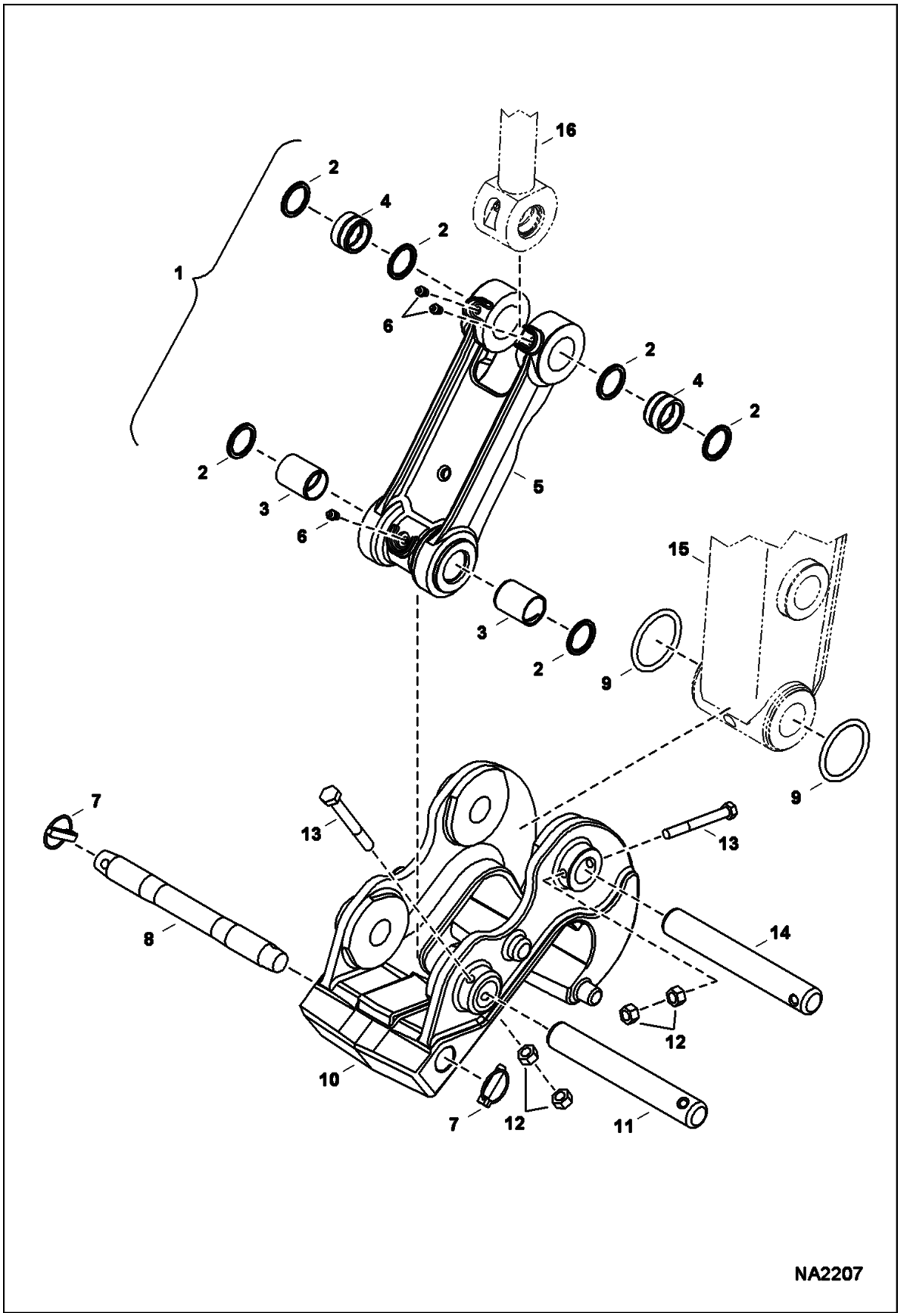

BUCKET LINK (Cont'd)
(Pin-On X-Change)

Ref No	Part Number	Description	Remarks	Serial Number	Qty
1	7165792	LINK, ASSY	Ref. 2-6		1
1		LINK, HYD X-CHANGE	See Illustration X-CHANGE/ NA2581		1
2	6669287	SEAL			6
3	7172745	BUSHING, WEAR			2
4	7173292	BUSHING, WEAR			2
5		LINK	NAP - Order Ref. 1		1
6	10H25	FITTING, GREASE 5			3
7	6560382	PIN, LOCK			2
8	7137214	PIN			1
9	7143561	O-RING	3.23" (81,9 mm) ID		2
10	7204274	X-CHANGE, PIN-ON			1
10		X-CHANGE, HYD	See Illustration X-CHANGE/ NA2581		1
11	7143036	PIN, PIVOT			1
12	43DM10	NUT			4
13	7CM12100	BOLT			2
14	7143036	PIN, PIVOT	10.97" (278.7 mm) long		1
14	7166241	PIN, PIVOT	17.2" (436 mm) long - see clamp attachment		1
15		ARM	See Illustration ARM/ NA2548		1
16		CYLINDER, BUCKET	See Illustration BUCKET CYLINDER/ NA1938		1

BUCKET LINK
(Pin-On Attachment)

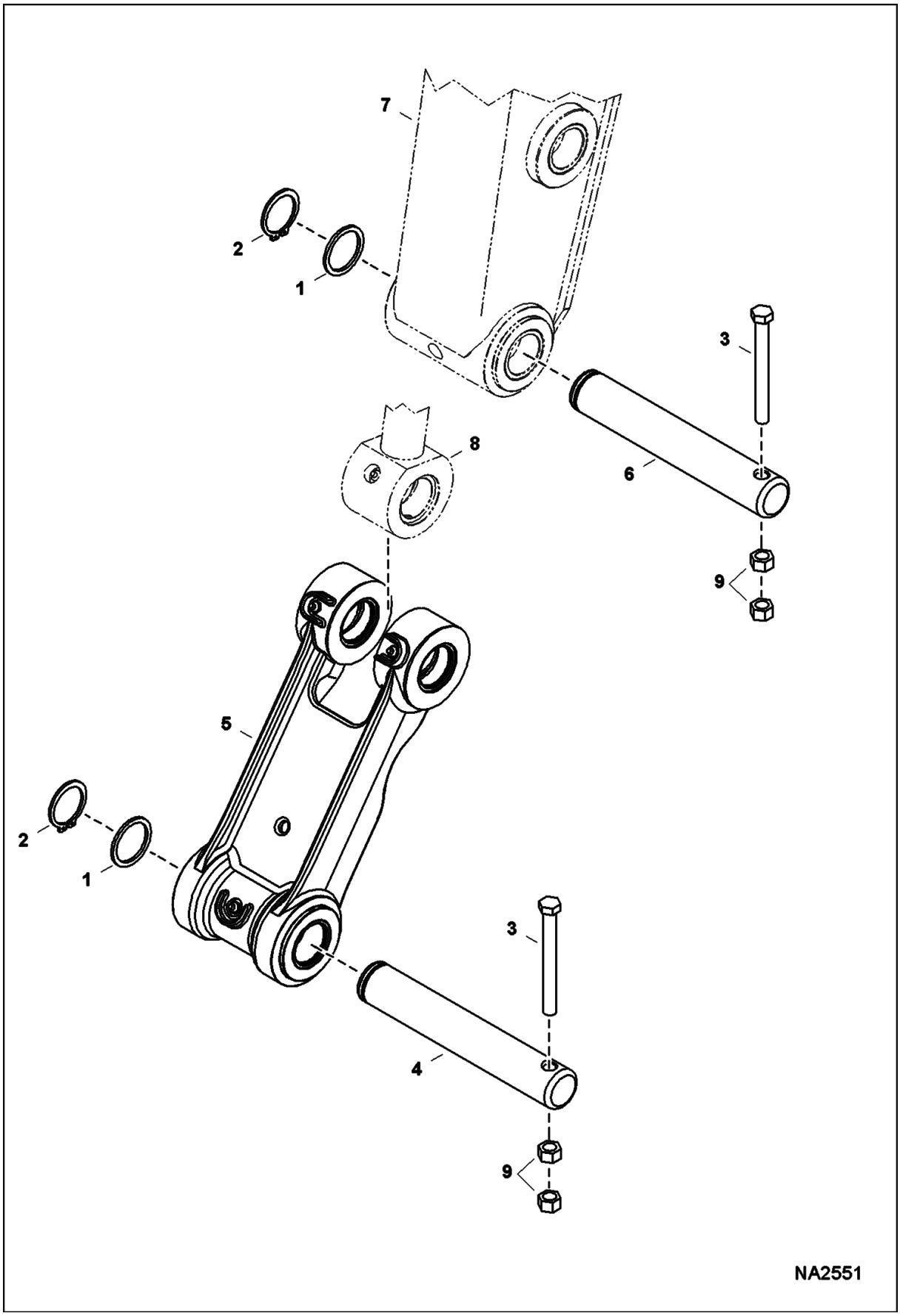

BUCKET LINK (Cont'd)
(Pin-On Attachment)

Ref No	Part Number	Description	Remarks	Serial Number	Qty
1	6628547	WASHER			2
2	6668787	RING			2
3	7CM12100	BOLT			2
4	7143036	PIN, PIVOT			1
5	7165792	LINK, ASSY	See Illustration BUCKET LINK/ NA2207		1
6	7143036	PIN, PIVOT	10.97" (278.7 mm) long [A]		1
6	7166241	PIN, PIVOT	17.2" (436 mm) long - see clamp attachment		1
7		ARM	See Illustration ARM/ NA2548		1
8		CYLINDER, BUCKET	See Illustration BUCKET CYLINDER/ NA1938		1
9	4DM12	NUT HEX			4

BOOM

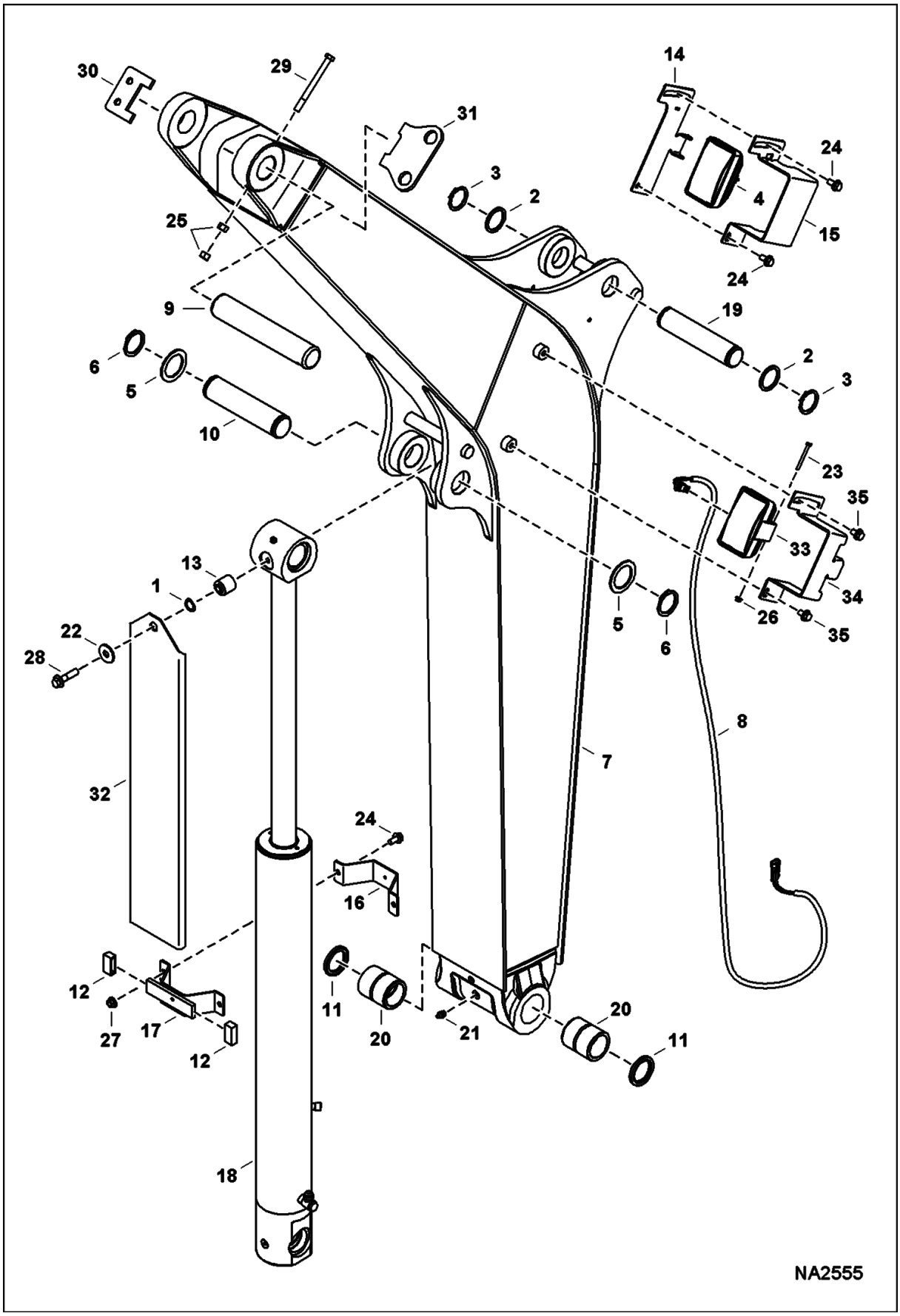
30
29
31
14
24
3
2
4
15
25
24
9
19
6
5
2
3
10
23
35
33
13
1
0
34
26
35
22
28
5
6
8
7
32
24
16
12
27
17
12
11
20
21
20
11
18
NA2555

BOOM (Cont'd)

Ref No	Part Number	Description	Remarks	Serial Number	Qty
1	6536803	WASHER			1
2	6628547	WASHER			2
3	6668787	RING			4
4	6691410	LIGHT	Use W/Ref. 14 & 15		1
4	6692400	BULB			1
5	6812687	WASHER			2
6	6812713	RING			2
7		BOOM, ARM DIPPER	NAP - Order 7195359 boom and 7195361 decal - Also Order Ref. 11 & 20 - Was 7122544	AG3G11001 - 11042	1
7		BOOM, ARM DIPPER	NAP - Order 7195359 boom and 7195361 decal - Also Order Ref. 11 & 20 - Was 7122544	AHHC11001 - 11018	1
7	7207050	BOOM, ARM DIPPER	Also Order Ref. 11 & 20 - Was 7195359 [A]	AG3G11043 & Above	1
7	7207050	BOOM, ARM DIPPER	Also Order Ref. 11 & 20 - Was 7195359 [A]	AHHC11019 & Above	1
8	7135895	HARNESS			1
9	7143012	PIN, PIVOT			1
10	7143038	PIN, PIVOT			1
11	7143551	SEAL, DUST			2
12	7144089	COVER			2
13	7166239	SPACER			1
14		BRACKET, LIGHT WORKING	NAP - Order Ref. 33-35 - Was 7171613 [A]		1
15		BRACKET, LIGHT WORKING	NAP - Order Ref. 33-35 - Was 7171614 [A]		1
16	7192534	CLAMP, HALF	Was 7175650 [A]		1
17	7192536	CLAMP, HALF	Was 7175651 [A]		1
18		CYLINDER, BOOM	See Illustration BOOM CYLINDER/ NA2837		1
19	7179001	PIN, PIVOT			1
20	7188685	BUSHING, WEAR			2
21	10H25	FITTING, GREASE 5			2
22	17EM120	WASHER			1
23	1CM655	SCREW			1
24	29CM1020	BOLT			4
25	4DM12	NUT HEX			4
26	51DM6	NUT			1
27	51DM10	NUT			2
28	59CM1250	BOLT, FLANGE			1
29	7CM12140	BOLT			1
30	7198272	PLATE, MOUNT COUPLER	bolt-on - Was 7153112 [A]		1
31	7198270	PLATE, MOUNT COUPLER	weld-on - Was 7122584 [A]		1
32	7165962	SHIELD, CYL			1
33	7018038	LIGHT	Use W/Ref. 34		1
33	6692400	BULB			1
34	7195369	BRACKET, LIGHT WORKING			1
35	29CM1016	BOLT			2

BLADE

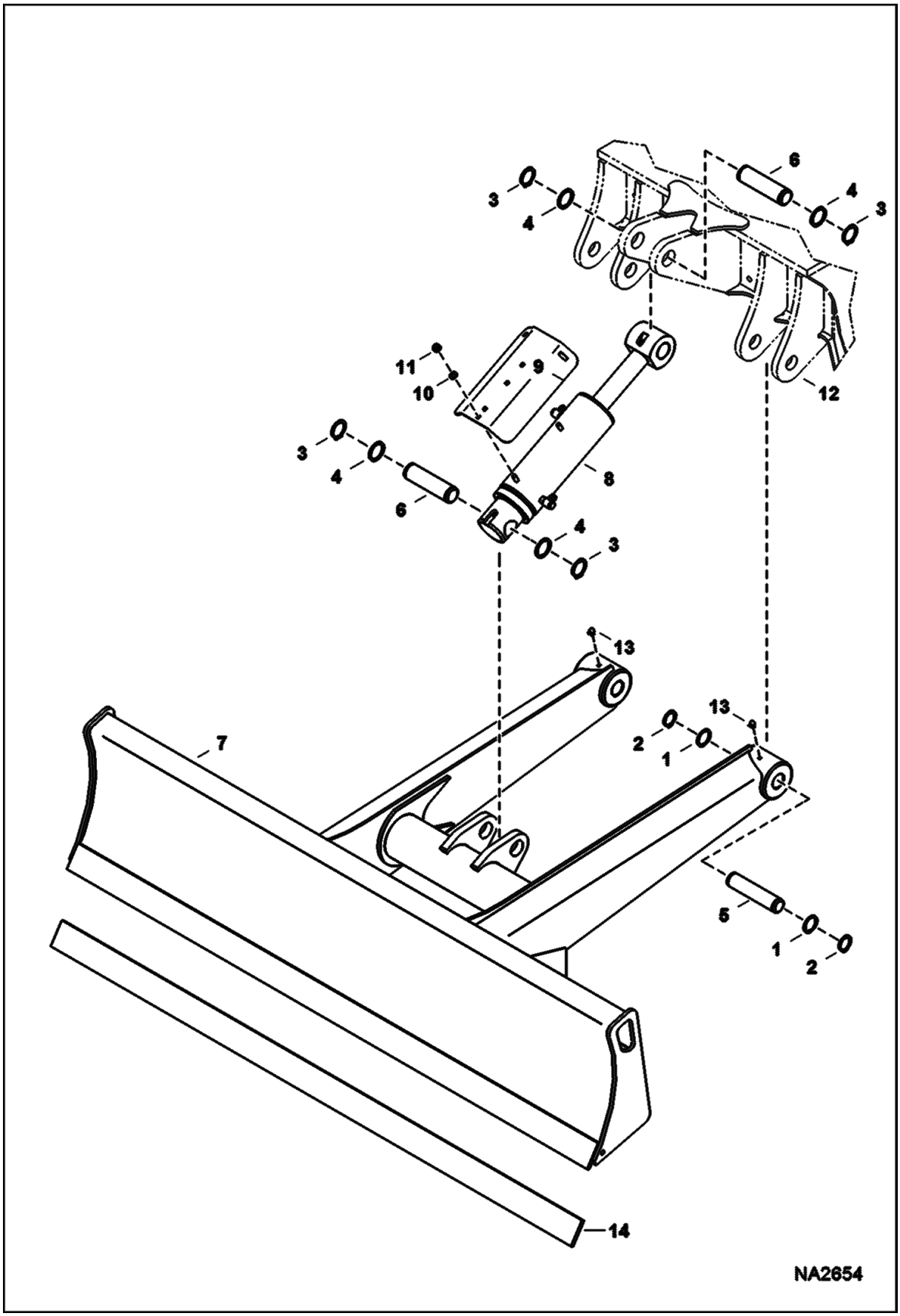

BLADE (Cont'd)

Ref No	Part Number	Description	Remarks	Serial Number	Qty
1	6666549	WASHER			4
2	6665618	RING			4
3	6668787	RING			4
4	6628547	WASHER			4
5	7142521	PIN			2
6	7142522	PIN			2
7	7142449	BLADE, EXC	W/Ref. 14		1
8		CYLINDER, BLADE	See Illustration BLADE CYLINDER/ NA2722 for standard blade		1
9	7188746	SHIELD, CYL			1
10	25E17	WASHER 5			2
11	43DM10	NUT			3
12		UNDERCARRIAGE	See Illustration UNDERCARRIAGE/ NA2646		1
13	12H15	FITTING, GREASE 5			2
14		EDGE, CUTTING WELD-ON 76	See BTI417	AG3G11001 - 12027	1
14		EDGE, CUTTING WELD-ON 76	See BTI417	AHHC11001 - 11999	1
14	7142484	EDGE, CUTTING WELD-ON 76		AG3G12028 & Above	1
14	7142484	EDGE, CUTTING WELD-ON 76		AHHC12000 & Above	1

ANGLE BLADE

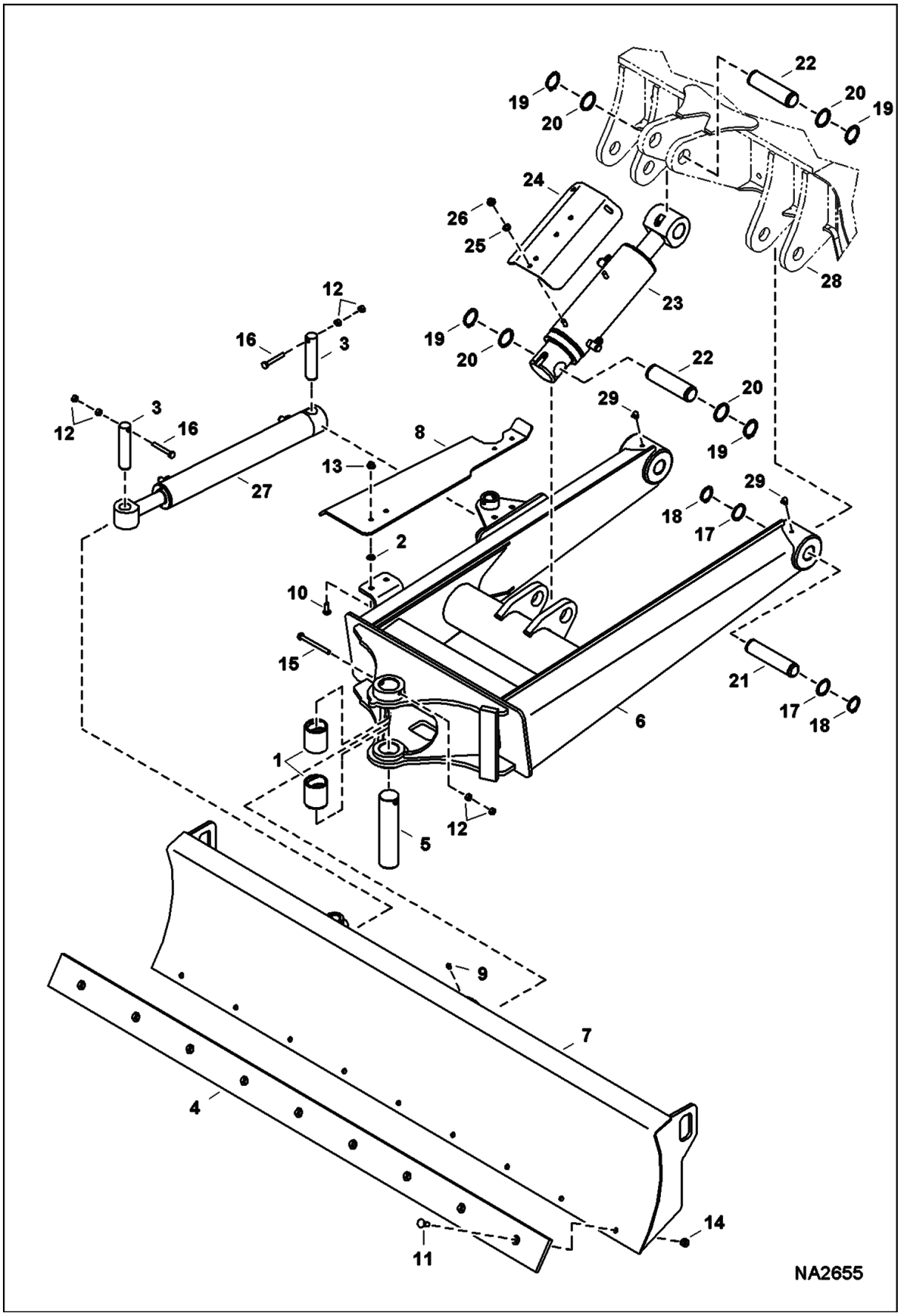
22
19
20
20
19
24
26
25
28
23
12
16
3
19
20
22
20
19
29
3
12
16
8
13
27
29
18
17
2
10
15
21
17
18
6
1
12
5
9
7
4
14
11
NA2655

ANGLE BLADE (Cont'd)

Ref No	Part Number	Description	Remarks	Serial Number	Qty
1	6597689	BUSHING, PRESS FIT			2
2	6674264	RETAINER NUT			4
3	6702935	PIN, PIVOT			2
4	7142520	EDGE, CUTTING BOLT-ON 78"			1
5	7142514	PIN, PIVOT			1
6	7142450	FRAME, BLADE ANGLE EXC			1
7	7198564	BLADE, ANGLE EXC	Was 7194021 [A]		1
8	7176116	GUARD, ANGLE BLADE			1
9	10H25	FITTING, GREASE 5			1
10	28CM1030	BOLT			4
11	39C820	BOLT			9
12	4DM10	NUT			6
13	51DM10	NUT			4
14	63D8	NUT			9
15	7CM10110	SCREW			1
16	7CM1070	BOLT			2
17	6666549	WASHER			4
18	6665618	RING			4
19	6668787	RING			4
20	6628547	WASHER			4
21	7142521	PIN			2
22	7142522	PIN			2
23		CYLINDER, BLADE	See Illustration BLADE CYLINDER/ NA2663		1
24	7188746	SHIELD, CYL			1
25	25E17	WASHER 5			2
26	43DM10	NUT			3
27		CYLINDER, ANGLE BLADE	See Illustration ANGLE BLADE CYLINDER/ NA2664		1
28		UNDERCARRIAGE	See Illustration UNDERCARRIAGE/ NA2646		1
29	12H15	FITTING, GREASE 5			2

BOOM SWING FRAME

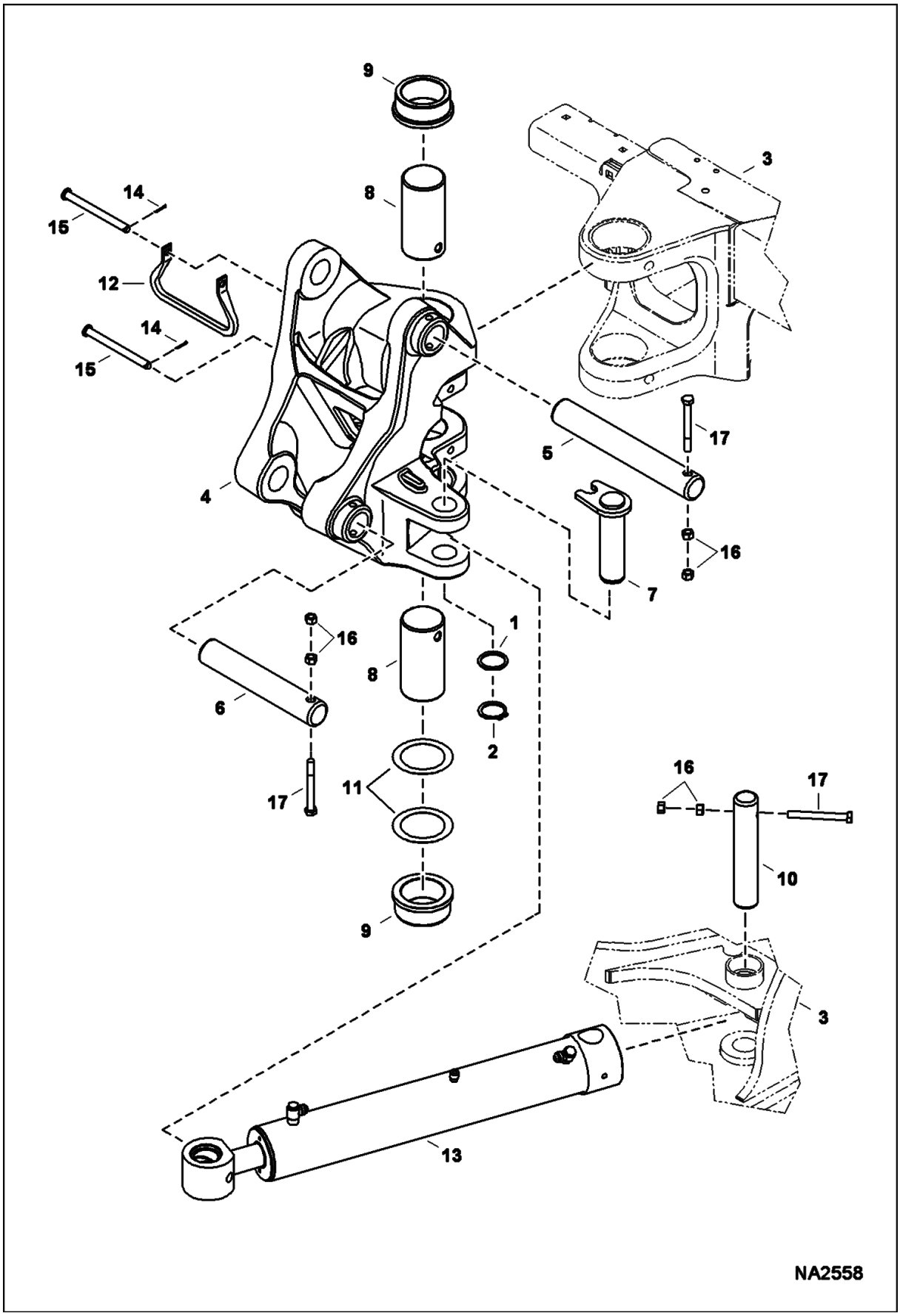

BOOM SWING FRAME (Cont'd)

Ref No	Part Number	Description	Remarks	Serial Number	Qty
1	6628547	WASHER			1
2	6668787	RING			1
3		UPPERSTRUCTURE	See Illustration UPPERSTRUCTURE/ NA2592		1
4	7142818	FRAME, SWING			1
5	7143014	PIN, PIVOT			1
6	7143016	PIN, PIVOT			1
7	7143017	PIN, PIVOT			1
8		PIN, PIVOT	See Illustration UPPERSTRUCTURE/ NA2592 for replacement parts listed but not shown on this illustration - NAP - Order (2) each of Ref. 9 (7196719 bushing), 7198707 bushing, & 7198542 pin - Was 7143530 [A]	AG3G11001 - 12033	2
8		PIN, PIVOT	See Illustration UPPERSTRUCTURE/ NA2592 for replacement parts listed but not shown on this illustration - NAP - Order (2) each of Ref. 9 (7196719 bushing), 7198707 bushing, & 7198542 pin - Was 7143530 [A]	AHHC11001 - 12008	2
8	7198542	PIN, PIVOT		AG3G12034 & Above	2
8	7198542	PIN, PIVOT		AHHC12009 & Above	2
9		BUSHING, PIVOT	See Illustration UPPERSTRUCTURE/ NA2592 for replacement parts listed but not shown on this illustration - NAP - Order (2) each of Ref. 8 (7198542 pin), 7198707 bushing, & 7196719 bushing - Was 7144176 [A]	AG3G11001 - 12033	2
9		BUSHING, PIVOT	See Illustration UPPERSTRUCTURE/ NA2592 for replacement parts listed but not shown on this illustration - NAP - Order (2) each of Ref. 8 (7198542 pin), 7198707 bushing, & 7196719 bushing - Was 7144176 [A]	AHHC11001 - 12008	2
9	7196719	BUSHING, PIVOT		AG3G12034 & Above	2
9	7196719	BUSHING, PIVOT		AHHC12009 & Above	2
10	7165992	PIN, PIVOT			1
11	7165993	SHIM			2
12	7165995	SUPPORT, BRACKET			1
13		CYLINDER, SWING	See Illustration BOOM SWING CYLINDER/ NA1936		1
14	13JM320	PIN			2
15	14JM14160	PIN, CLEVIS			2
16	4DM12	NUT HEX			6
17	7CM12110	BOLT			3

CONTROL CONSOLE
(LH)

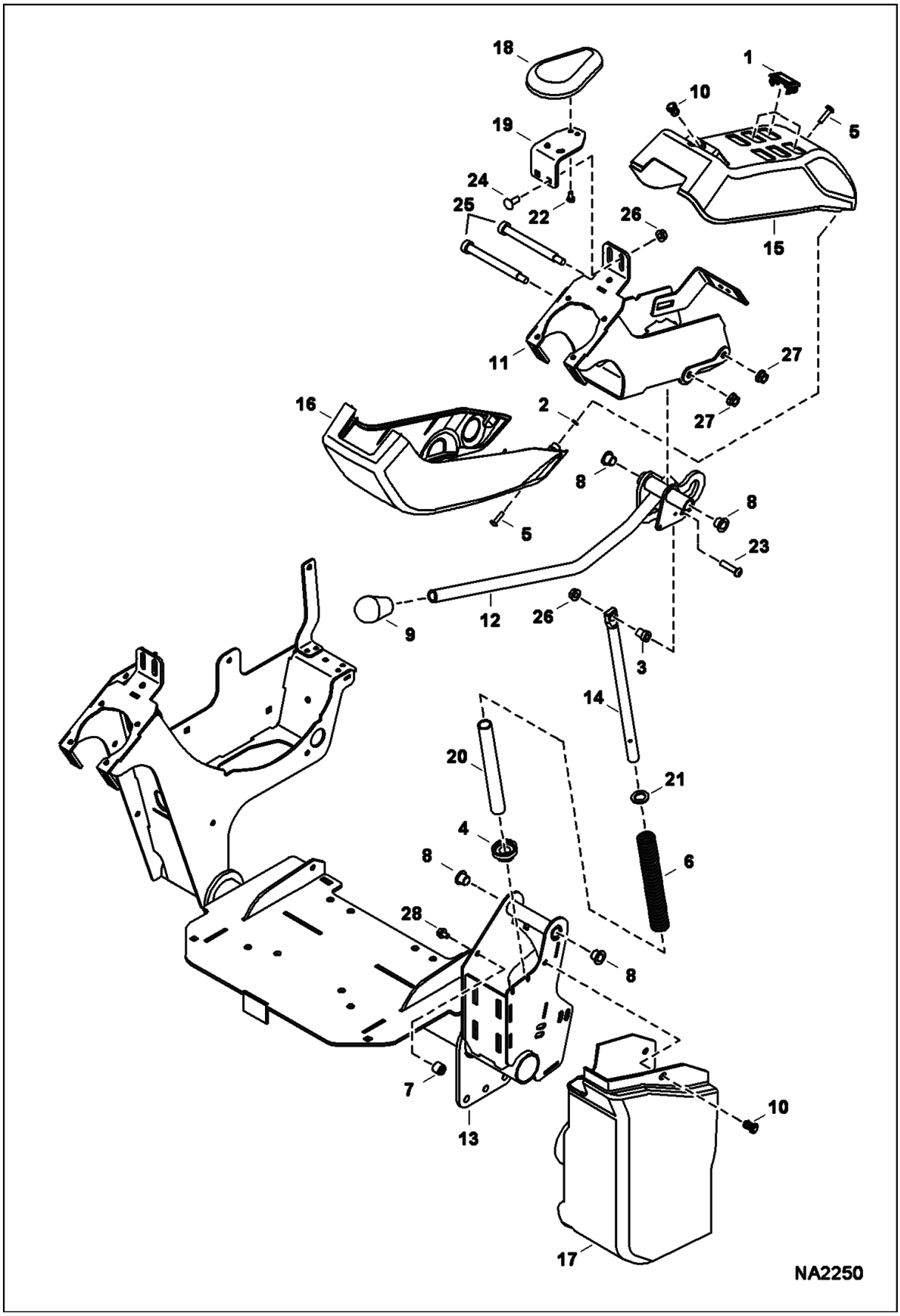

CONTROL CONSOLE (Cont'd)
(LH)

Ref No	Part Number	Description	Remarks	Serial Number	Qty
1	6665314	PLUG			3
2	6675212	RETAINER			1
3	6808749	BUSHING			1
4	6810456	BUSHING			1
5	6816193	SCREW			2
6	7003497	SPRING, COMPRESSION			1
7	7003498	BEARING, ROLLER			1
8	7003499	BUSHING			4
9	7154041	KNOB			1
10	7160383	RIVET, BIRD CAGE			3
11	7164042	CONSOLE, JOYSTICK			1
12	7164046	HANDLE, OPERATING		AG3G11001 - 11118	1
12	7164046	HANDLE, OPERATING		AHHC11001 - 11044	1
12	7199664	HANDLE, OPERATING		AHHC11045 & Above	1
12	7199664	HANDLE, OPERATING		AG3G11119 & Above	1
13		CONTROLLER, JOYSTICK ASSY	NAP - Order 7199668 controller assy and Ref. 12 (7199664 handle) - Was 7164872 [A]	AG3G11001 - 11118	1
13		CONTROLLER, JOYSTICK ASSY	NAP - Order 7199668 controller assy and Ref. 12 (7199664 handle) - Was 7164872 [A]	AHHC11001 - 11044	1
13	7199668	CONTROLLER, JOYSTICK ASSY		AG3G11119 & Above	1
13	7199668	CONTROLLER, JOYSTICK ASSY		AHHC11045 & Above	1
14	7165097	SHAFT			1
15	7165562	COVER, LH			1
16	7165563	COVER, LH			1
17	7165564	COVER, LH			1
18	7169719	SUPPORT			1
19	7169720	MOUNT, ARMREST			1
20	7171264	SPACER, TUBE			1
21	15EM160	WASHERS			1
22	1CM612	BOLT			3
23	27CM835	SCREW			1
24	28CM820	BOLT			2
25	38C868	SCREW			2
26	51DM8	NUT			3
27	53D6	NUT			2
28	59CM812	SCREW HX FLNG W/T8.8			1

CONTROL CONSOLE
(RH)

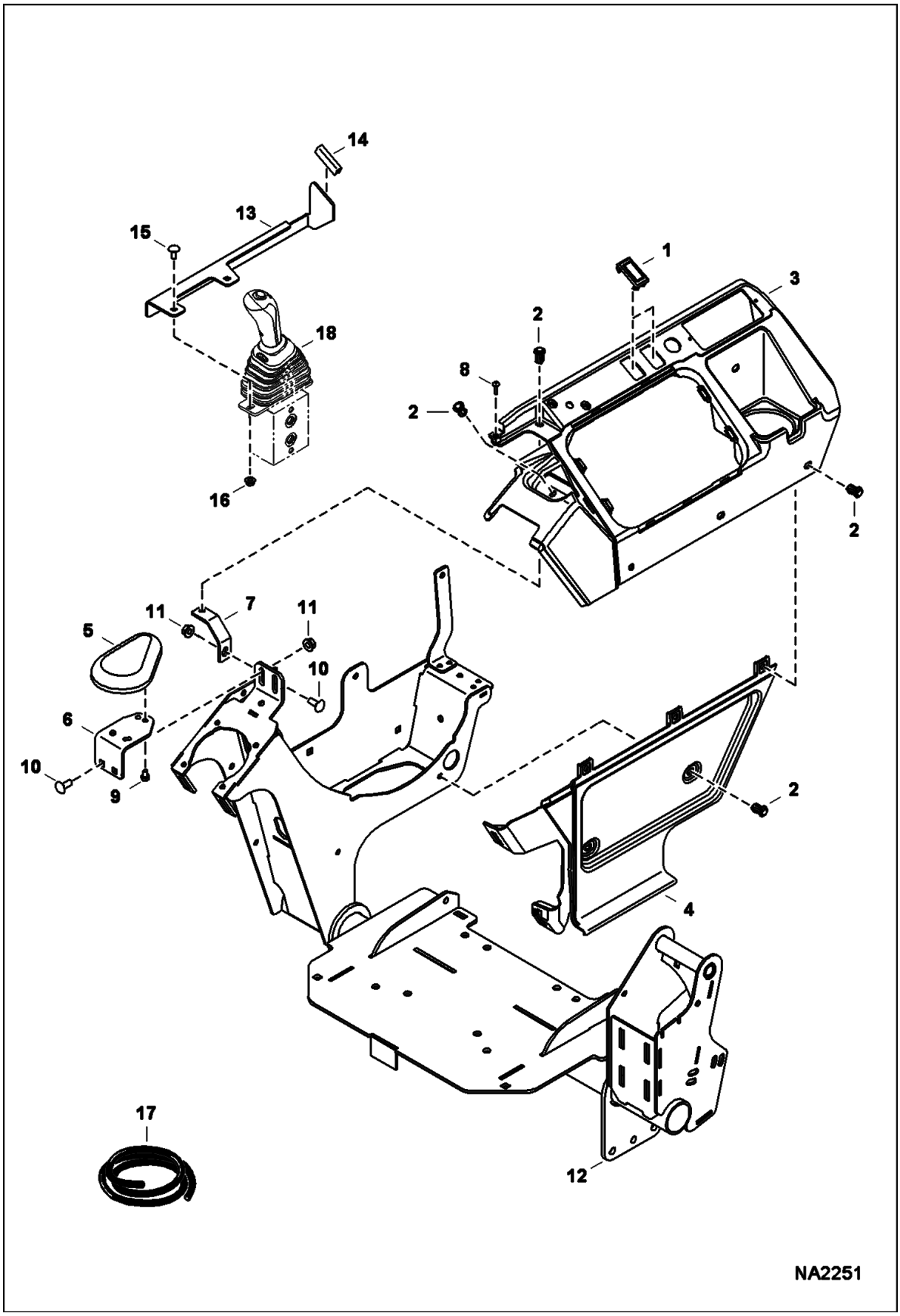

CONTROL CONSOLE (Cont'd)
(RH)

Ref No	Part Number	Description	Remarks	Serial Number	Qty
1	6665314	PLUG			2
2	7160383	RIVET, BIRD CAGE			8
3	7165565	COVER, RH			1
4	7168965	COVER, RH			1
5	7169719	SUPPORT			1
6	7169720	MOUNT, ARMREST			1
7	7174826	BRACKET			1
8	7177015	SCREW			1
9	1CM612	BOLT			3
10	28CM820	BOLT			3
11	51DM8	NUT			3
12		CONTROLLER, JOYSTICK ASSY	See Illustration CONTROL CONSOLE/ NA2250		1
13	7181142	BRACKET, SUPPORT			1
14		TRIM	NAP - 1.75" (43.8 mm) long - Order Ref. 17		1
15	21CM616	SCREW			2
16	51DM6	NUT			2
17	6682492	TRIM	bulk - sold per foot		x
18		JOYSTICK, BLADE	See Illustration BLADE JOYSTICK/ NA2308		1
18		JOYSTICK, BLADE	See Illustration BLADE JOYSTICK/ NA2339 for angle blade		1

TRAVEL CONTROL

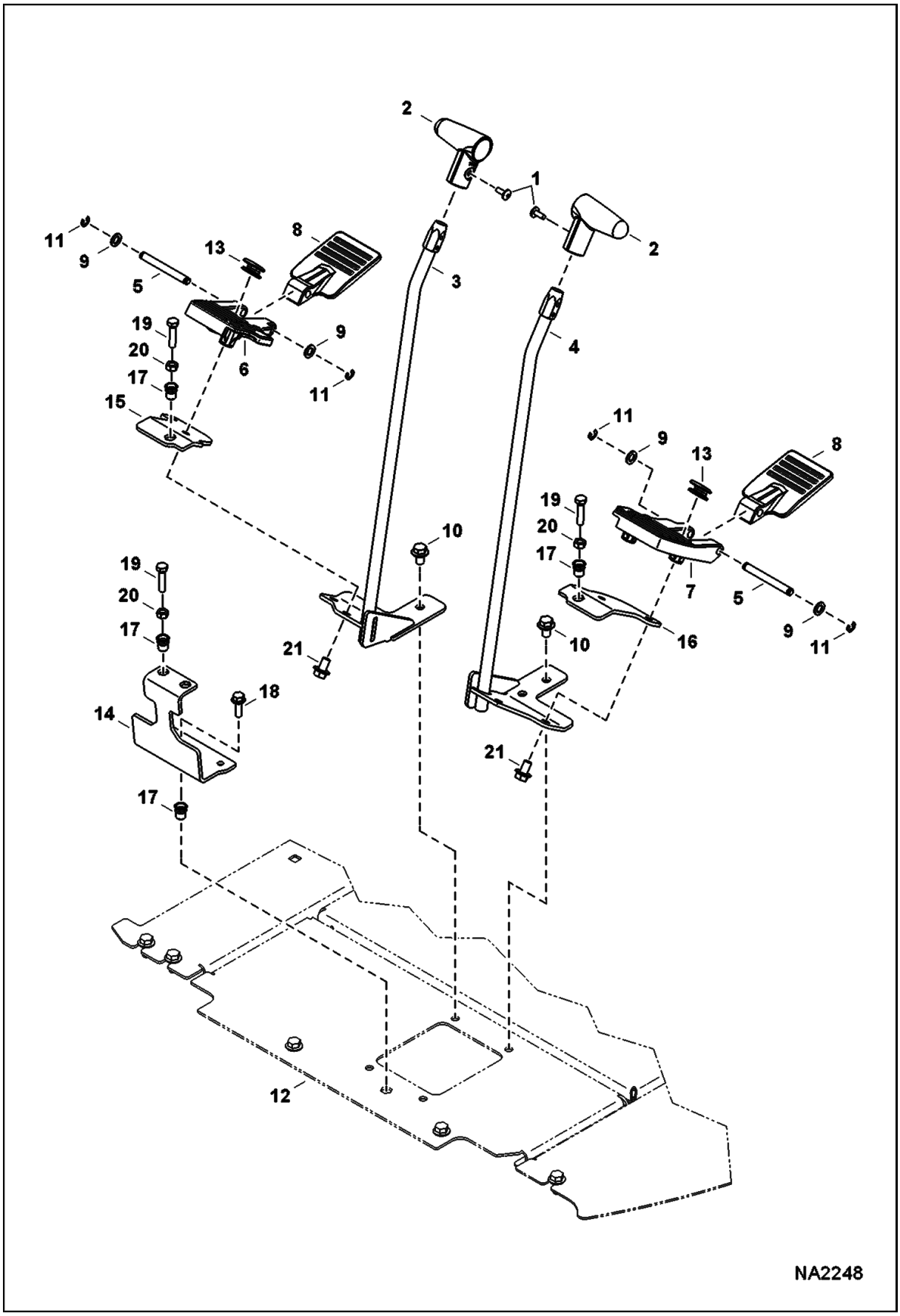

TRAVEL CONTROL (Cont'd)

Ref No	Part Number	Description	Remarks	Serial Number	Qty
1	6803202	SCREW			2
2	7163788	HANDLE, LEVER CONTROL			2
3	7164047	LEVER, CONTROL			1
4	7164048	LEVER, CONTROL			1
5	7164061	PIN, HINGE			2
6	7167166	PEDAL, RH			1
7	7167167	PEDAL, LH			1
8	7167168	PEDAL, BACK			2
9	15EM100	WASHER			4
10	29CM1020	BOLT	Was 29CM1016 [B]		4
11	9JM70	RETAINER SHAFT			4
12		PLATE, FLOOR	See Illustration OPERATOR AREA & SEAT/ NA2547		1
13	7181057	GROMMET			2
14	7186570	BRACKET	China		1
15	7186572	PLATE	China		1
16	7186698	PLATE	China		1
17	7186741	INSERT	China		5
18	29CM825	BOLT	China		1
19	4CM835	BOLT	China		4
20	4DM8	NUT	China		4
21	29CM1020	BOLT			4

THROTTLE CONTROL

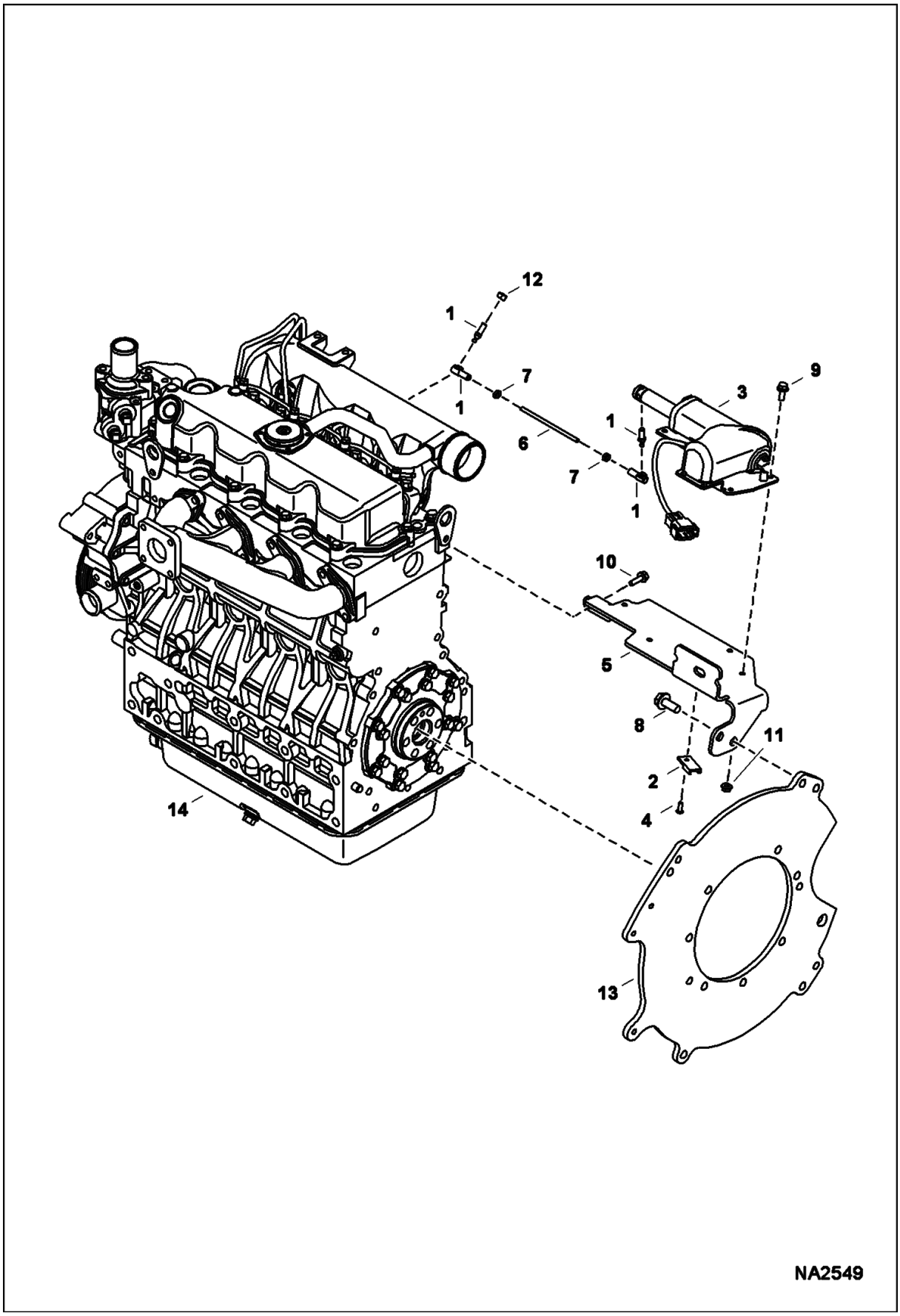

THROTTLE CONTROL (Cont'd)

Ref No	Part Number	Description	Remarks	Serial Number	Qty
1	6644965	BALL JOINT			2
2	6665000	CLIP			1
3	6698169	ACTUATOR, THROTTLE			1
4	6814428	RIVET			1
5	7174029	BRACKET, THROTTLE			1
6	7162140	LINK, THROTTLE			1
7	14D10	NUT			2
8	29CM1025	BOLT			2
9	29CM616	BOLT			3
10	29CM620	SCREW			1
11	51DM6	NUT			3
12	62D4	NUT			2
13		PLATE, FLYWHEEL	See Illustration ENGINE & ATTACHING PARTS/ NA2563		1
14		ENGINE	See Illustration ENGINE & GASKET KITS/ NA1527		1

HYDRAULIC CIRCUITRY
(Upper/Swing)

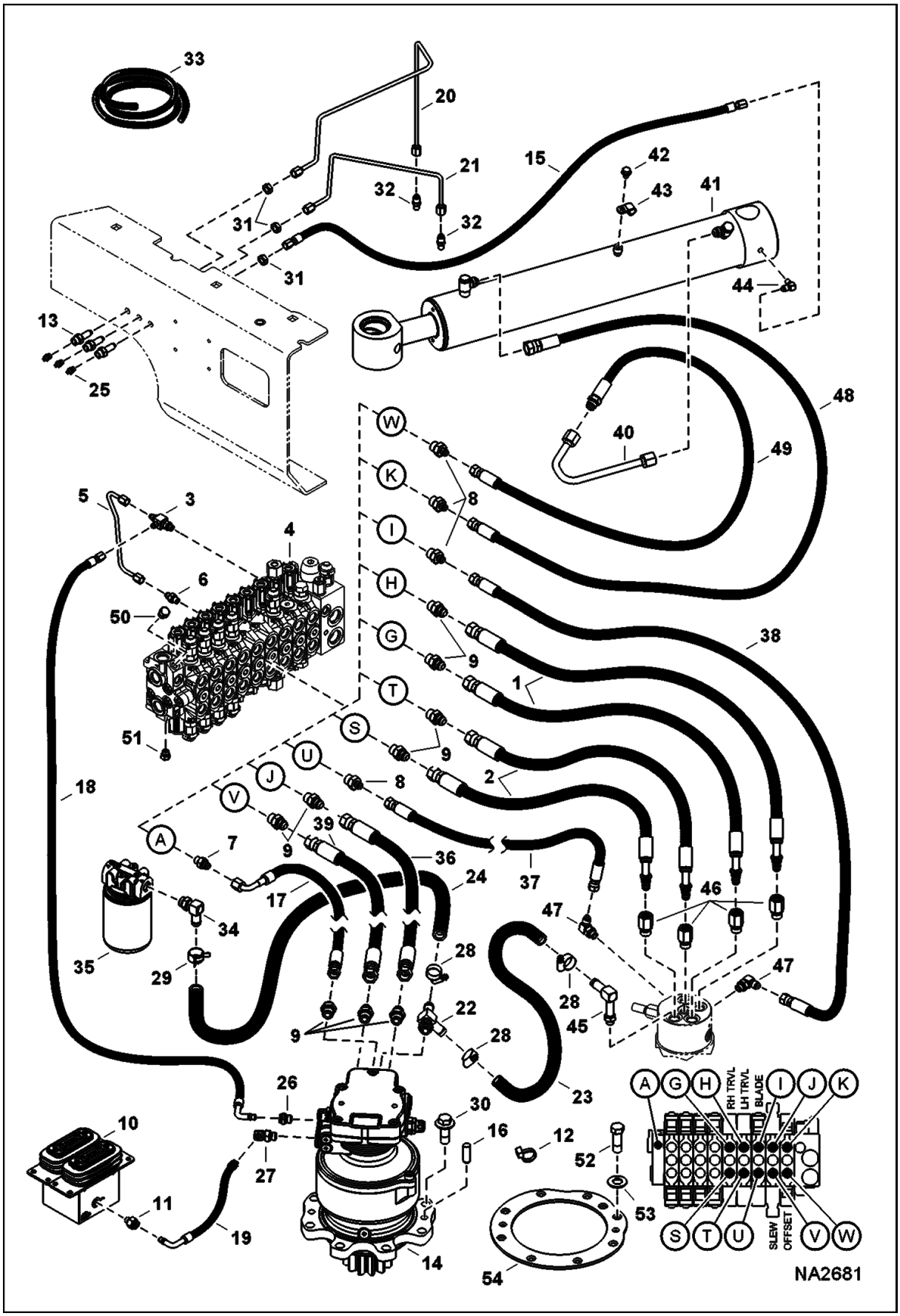

HYDRAULIC CIRCUITRY (Cont'd)
(Upper/Swing)

Ref No	Part Number	Description	Remarks	Serial Number	Qty
1	7175290	HOSE, HYD	27.63" (702 mm) long - Also Order Ref. 46		2
1	7179651	HOSE, HYD	29.30" (744 mm) long - Also Order Ref. 46		2
2	7175291	HOSE, HYD	25.88" (657 mm) long - Also Order Ref. 46		2
2	7179650	HOSE, HYD	27.5" (699 mm long) - Also Order Ref. 46		2
3	7023611	VALVE, SHUTTLE	Was 6697919 [A]		1
3	79K4	O RING 10			x
4	7010255	VALVE, CONTROL	See Illustration HYDRAULIC CONTROL VALVE/ NA2724 9 section - W/O angle blade		1
4	7001660	VALVE, CONTROL	See Illustration HYDRAULIC CONTROL VALVE/ NA2725 10 section - W/ angle blade		1
5	7176766	TUBELINE, HYD			1
6	15KB0404	FTG HYD S Connector			1
6	79K4	O RING 10			x
7	15KB0606	FITTING, HYD CONNECTOR			1
7	79K6	O RING 10			x
8	15KB0608	FITTING, HYD CONNECTOR			5
8	79K8	O RING 10			x
9	15KB0808	FITTING, HYD CONNECTOR			10
9	79K8	O RING 10			x
10	6697935	VALVE, PEDAL DUAL	See Illustration TRAVEL CONTROLLER/ NA2307		1
11	10L0604	FITTING, HYD CONNECTOR			1
11	78K4	O'RING			x
11	7011053	CLIP			x
12	6624289	STRAP, TIE			1
13	6807184	FITTING			3
14	7013210	SLEW MOTOR	See Illustration SLEW MOTOR/ NA2669		1
15	7145016	HOSE ASSY			1
16	7171260	PIN, PARALLEL			2
17	7175204	HOSE, HYD			1
18	7175205	HOSE, HYD			1
19	7175206	HOSE, HYD			1
20	7179645	TUBELINE, HYD			1
21	7179646	TUBELINE, HYD			1
22	7188548	FITTING, HYD TEE			1
22	79K8	O RING 10			x
23	7188549	HOSE, HYD FORMED			1
24		HOSE, HYD	NAP - 36.75" (933 mm) long - Order Ref. 33		1
25	10H25	FITTING, GREASE 5			3
26	10L0606	FITTING, HYD CONNECTOR			1
26	78K6	O'RING			x
26	7011053	CLIP			x
27	17KB0406	FITTING, HYD ELBOW			1
27	79K6	O RING 10			x
28	42HL100	CLAMP, HOSE			3
29	5HM23	CLAMP			1

HYDRAULIC CIRCUITRY (Cont'd)
(Upper/Swing)

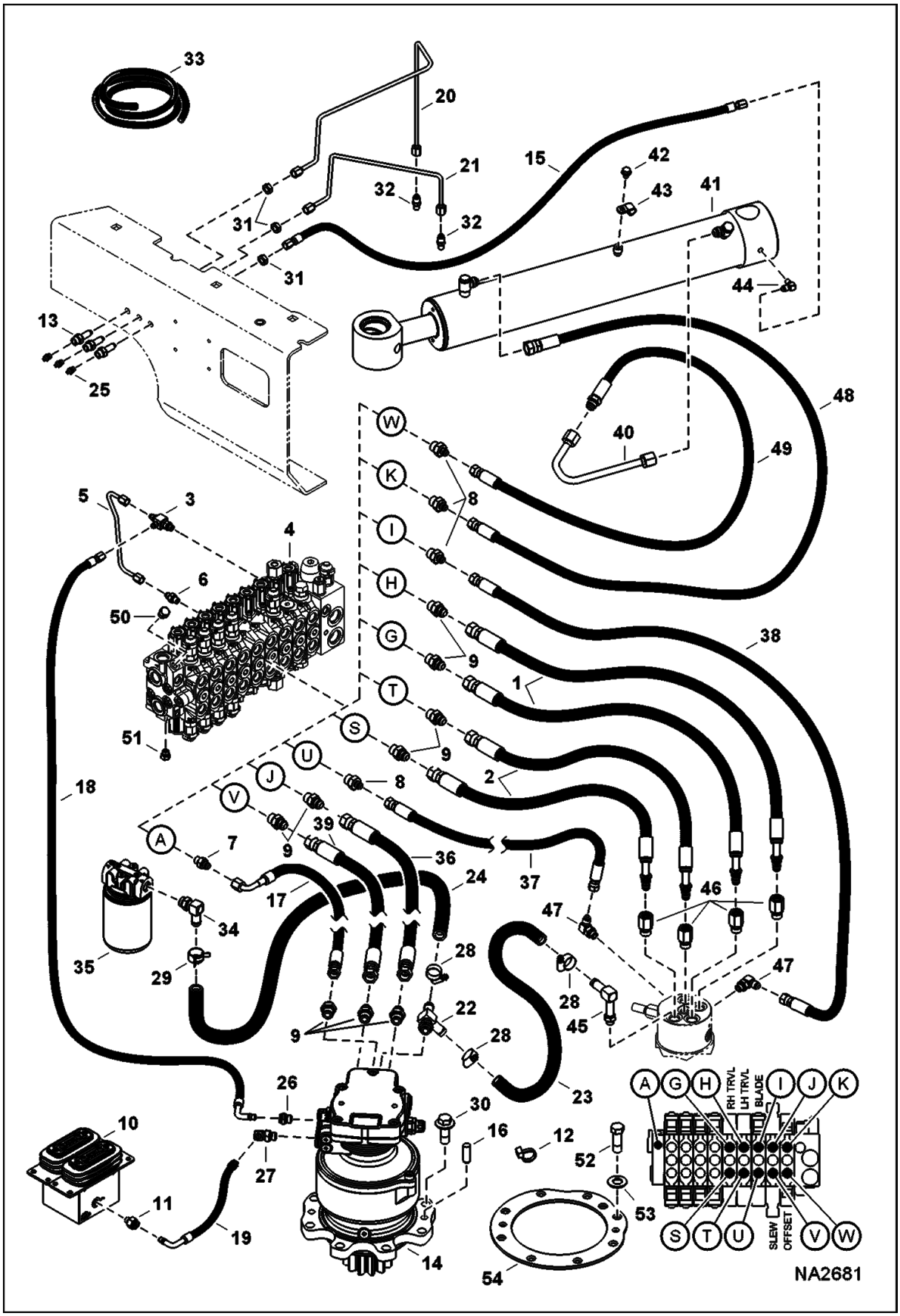

HYDRAULIC CIRCUITRY (Cont'd)
(Upper/Swing)

Ref No	Part Number	Description	Remarks	Serial Number	Qty
30	60CM1640	SCREW		AG3G11003 & Above	8
30	60CM1640	SCREW		AHHC11005 & Above	8
31	86F3	LOCKNUT			3
32	89F3	ADAPTOR			2
33	6578172	HOSE	bulk - sold per foot		x
34	17KB0808	FITTING, HYD ELBOW			2
34	79K8	O RING 10			x
35	6686217	FILTER ASSY	See Illustration HYDRAULIC CIRCUITRY/ NA2623		1
35	6516722	FILTER			1
36	7175288	HOSE, HYD			1
37	7177018	HOSE, HYD			1
38	7177019	HOSE, HYD			1
39	7189475	HOSE, HYD			1
40	7165994	TUBELINE, HYD			1
41		CYLINDER, BOOM SWING	See Illustration BOOM SWING CYLINDER/ NA1936		1
42	29CM812	BOLT			1
43	30H30	CLAMP			1
44	83F3	ELBOW 5			1
45	7188547	FITTING, ELBOW			1
45	79K6	O RING 10			x
46	15HB0808	FITTING	Also Order hose		4
46	79K8	O RING 10			x
47	17KB0606	FITTING			2
47	79K6	O RING 10			x
48	7176115	HOSE, HYD	W/O 2nd aux		1
48		HOSE, HYD	See Illustration SECONDARY AUXILIARY KIT/ NA2582 W/ 2nd aux		1
48		TUBELINE, HYD	See Illustration SECONDARY AUXILIARY KIT/ NA2582 W/ 2nd aux		1
49	7179626	HOSE, HYD	W/O 2nd aux		1
49		HOSE, HYD ASSY	See Illustration SECONDARY AUXILIARY KIT/ NA2582 W/ 2nd aux		1
49		TUBELINE, HYD	See Illustration SECONDARY AUXILIARY KIT/ NA2582 W/ 2nd aux		1
50	24K5	PLUG	W/O 2nd aux		1
50	79K6	O RING 10			x
50		FITTING	See Illustration SECONDARY AUXILIARY KIT/ NA2582 W/ 2nd aux		1
51	24K3	PLUG	W/O hydraulic X-Change		1
51	79K4	O RING 10			x
51		FITTING	See Illustration X-CHANGE/ NA2581 W/ hydraulic X-Change		1
52	7CM1645	SCREW		AG3G11001 - 11002	8
52	7CM1645	SCREW		AHHC11001 - 11004	8
53	15EM160	WASHERS		AG3G11001 - 11002	8
53	15EM160	WASHERS		AHHC11001 - 11004	8
54	7190647	SPACER		AG3G11001 - 11002	1
54	7190647	SPACER		AHHC11001 -	1

HYDRAULIC CIRCUITRY (Cont'd)
(Upper/Swing)

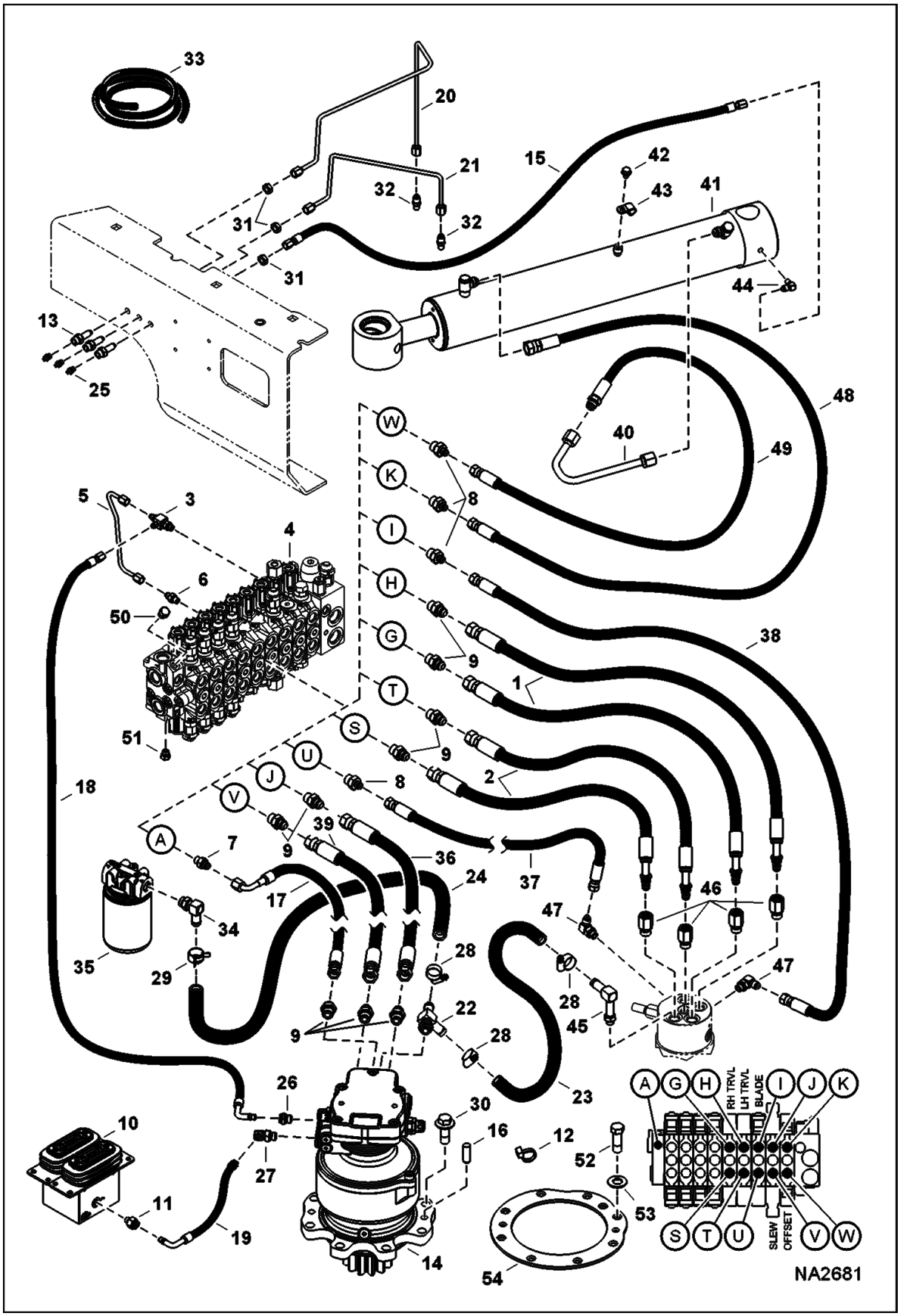

Ref No	Part Number	Description	Remarks	Serial Number	Qty
				11004	

HYDRAULIC CIRCUITRY
(Lower)(W/O Angle Blade)

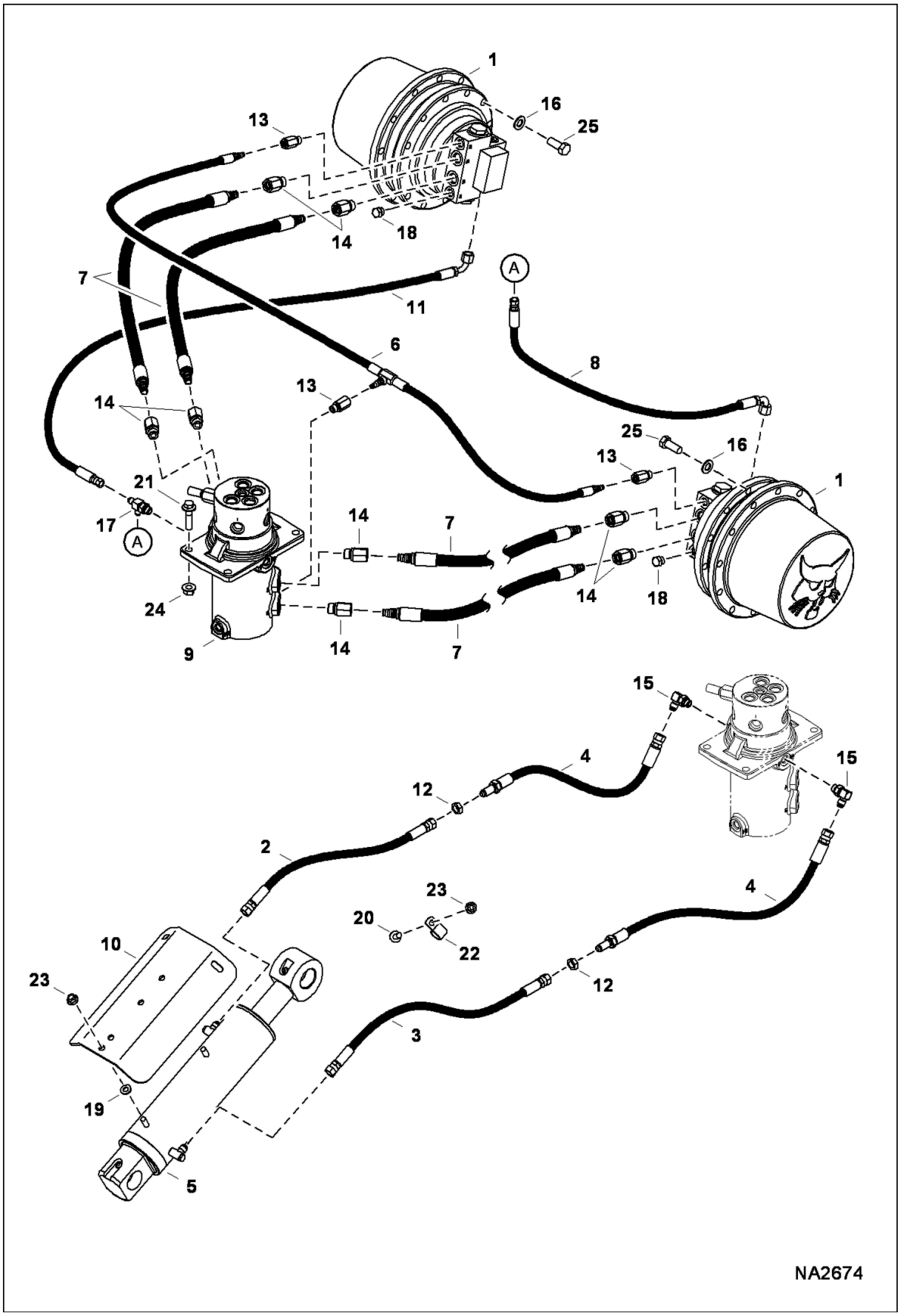

HYDRAULIC CIRCUITRY (Cont'd)
(Lower)(W/O Angle Blade)

Ref No	Part Number	Description	Remarks	Serial Number	Qty
1	7012323	MOTOR, DRIVE HYD TRAVEL	See Illustration TRAVEL MOTOR/ D2403		2
2	7144048	HOSE, HYD	.5625" & .75" fitting		1
2	7205336	HOSE, HYD	.5625" fittings		1
3	7144049	HOSE, HYD	.5625" & .75" fitting		1
3	7205337	HOSE, HYD	.5625" fittings		1
4	7144058	HOSE, HYD			2
5		CYLINDER, BLADE	See Illustration BLADE CYLINDER/ NA2722		1
6	7173031	HOSE, HYD ASSY	Also Order Ref. 13		1
7	7174574	HOSE, HYD	Also Order Ref. 14		4
8	7188111	HOSE, HYD			1
9	7143734	SWIVEL, HYD ASSY	See Illustration SWIVEL ASSY/ NA2262		1
10	7188746	SHIELD, CYL			1
11	7190630	HOSE, HYD			1
12	86F5	NUT			2
13	15HB0406	FITTING, HYD CONNECTOR	Also Order hose		3
13	79K6	O RING 10			x
14	15HB0808	FITTING	Also Order hose		8
14	78K8	O RING			x
15	17KB0606	FITTING			2
15	79K6	O RING 10			x
16	18EM1426	WASHER			24
17	21KB0406	FTG HYD STRAIGHT TEE			1
17	79K6	O RING 10			x
18	24K5	PLUG			2
18	79K6	O RING 10			x
19	25E17	WASHER 5			2
20	29CM1025	BOLT			1
21	29CM1250	BOLT			4
22	30H46	CLIP			1
23	43DM10	NUT			3
24	51DM12	NUT			4
25	55CM1435	SCREW			24

HYDRAULIC CIRCUITRY
(Lower)(W/ Angle Blade)

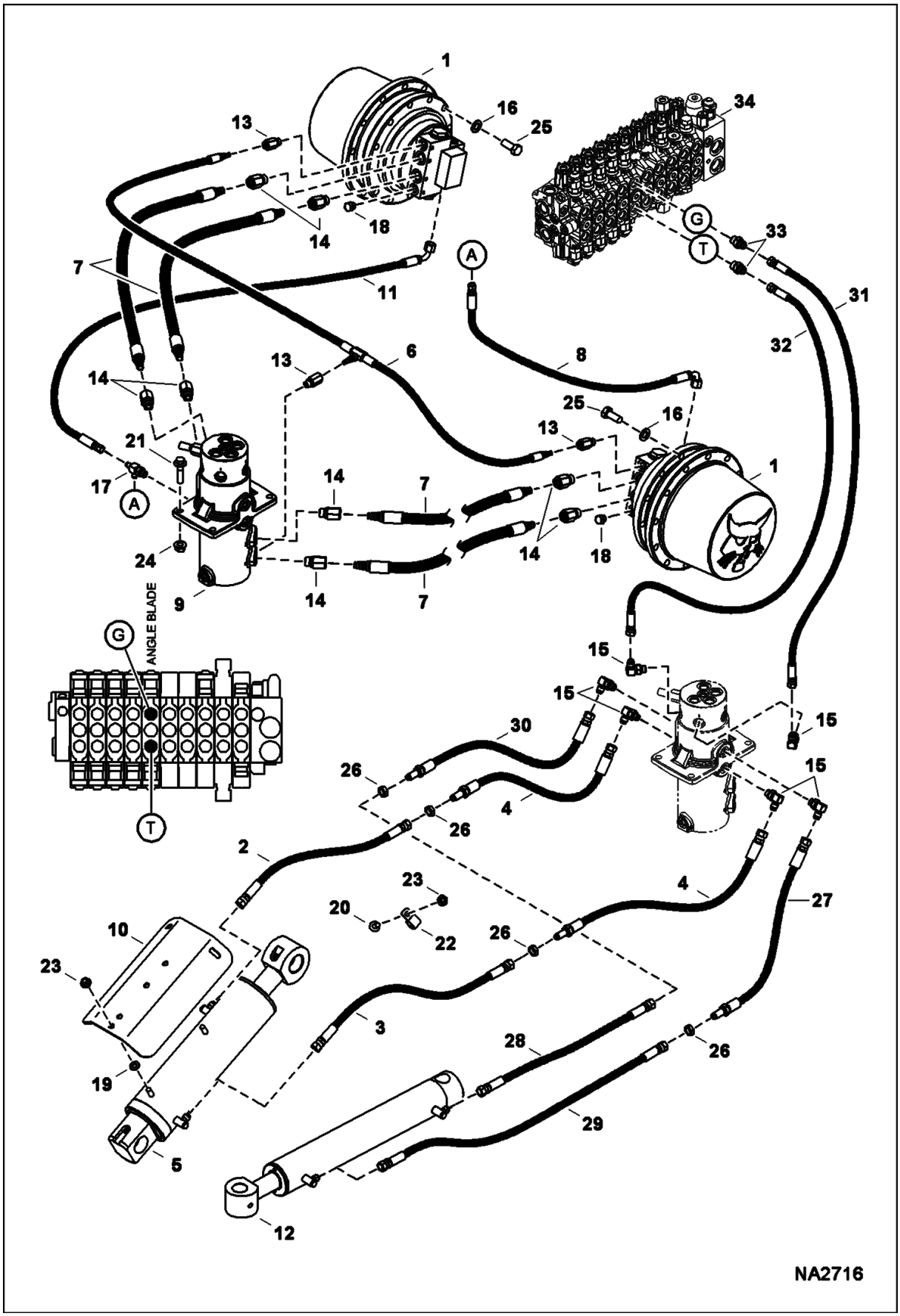

HYDRAULIC CIRCUITRY (Cont'd)
(Lower)(W/ Angle Blade)

Ref No	Part Number	Description	Remarks	Serial Number	Qty
1	7012323	MOTOR, DRIVE HYD TRAVEL	See Illustration TRAVEL MOTOR/ D2403		2
2	7144048	HOSE, HYD	.5625" & .75" fitting		1
2	7205336	HOSE, HYD	.5625" fittings		1
3	7144049	HOSE, HYD	.5625" & .75" fitting		1
3	7205337	HOSE, HYD	.5625" fittings		1
4	7144058	HOSE, HYD			2
5		CYLINDER, BLADE	See Illustration HYDRAULIC CIRCUITRY/ NA2716		1
6	7173031	HOSE, HYD ASSY	Also Order Ref. 13		1
7	7174574	HOSE, HYD	Also Order Ref. 14		4
8	7188111	HOSE, HYD			1
9	7152908	SWIVEL, HYD ASSY	See Illustration SWIVEL ASSY/ NA2346		1
10	7188746	SHIELD, CYL			1
11	7190630	HOSE, HYD			1
12		CYLINDER, ANGLE BLADE	See Illustration ANGLE BLADE CYLINDER/ NA2664		1
13	15HB0406	FITTING, HYD CONNECTOR	Also Order hose		3
13	79K6	O RING 10			x
14	15HB0808	FITTING	Also Order hose		8
14	78K8	O RING			x
15	17KB0606	FITTING			6
15	79K6	O RING 10			x
16	18EM1426	WASHER			24
17	21KB0406	FTG HYD STRAIGHT TEE			1
17	79K6	O RING 10			x
18	24K5	PLUG			2
18	79K6	O RING 10			x
19	25E17	WASHER 5			2
20	29CM1025	BOLT			1
21	29CM1250	BOLT			4
22	30H46	CLIP			1
23	43DM10	NUT			3
24	51DM12	NUT			4
25	55CM1435	SCREW			24
26	86F5	NUT			2
27	7144055	HOSE, HYD			1
28	7144064	HOSE, HYD			1
29	7144065	HOSE, HYD			1
30	7144066	HOSE, HYD			1
31	7177872	HOSE, HYD			1
32	7177873	HOSE, HYD			1
33	15KB0608	FITTING, HYD CONNECTOR			2
33	79K8	O RING 10			x
34	7001660	VALVE, CONTROL	See Illustration HYDRAULIC CONTROL VALVE/ NA2725		1

HYDRAULIC CIRCUITRY
(Work Hoses & Control Valve)

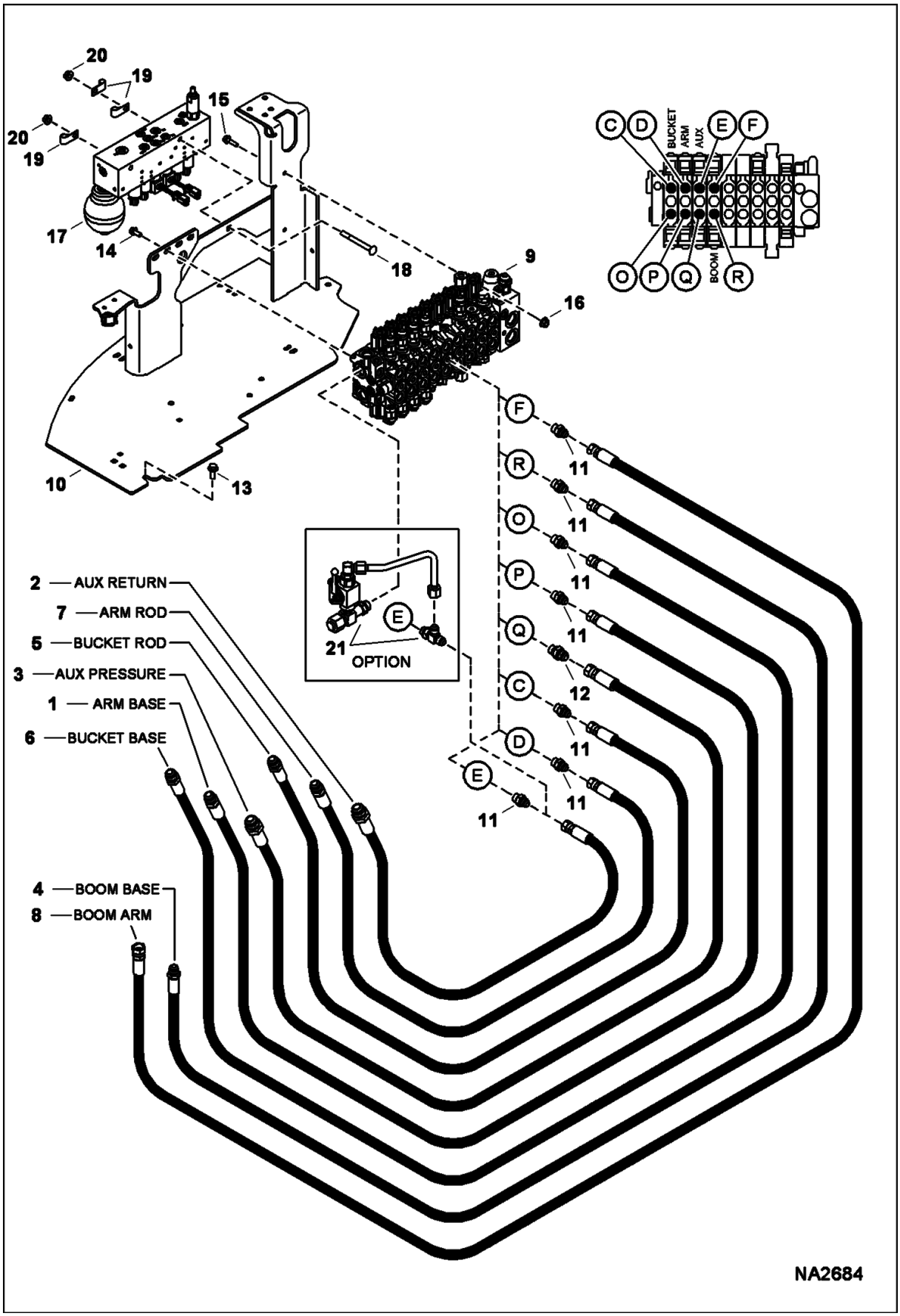

HYDRAULIC CIRCUITRY (Cont'd)
(Work Hoses & Control Valve)

Ref No	Part Number	Description	Remarks	Serial Number	Qty
1	7175230	HOSE, HYD			1
2	7175231	HOSE, HYD			1
3	7175232	HOSE, HYD			1
4	7175233	HOSE, HYD			1
5	7175283	HOSE, HYD			1
6	7175284	HOSE, HYD			1
7	7175285	HOSE, HYD			1
8	7175286	HOSE, HYD			1
9	7010255	VALVE, CONTROL	See Illustration HYDRAULIC CONTROL VALVE/ NA2724 9 section - W/O angle blade		1
9	7001660	VALVE, CONTROL	See Illustration HYDRAULIC CONTROL VALVE/ NA2725 10 section - W/ angle blade		1
10	7201805	MOUNT, VALVE	Was 7174543 [A]		1
11	15KB0808	FITTING, HYD CONNECTOR			5
11	79K8	O RING 10			x
12	15KB1008	FITTING, HYD CONNECTOR			1
12	79K8	O RING 10			x
13	29CM1025	BOLT			4
14	29CM820	SCREW			1
15	29CM830	CAPSCREW			2
16	43DM8	NUT			2
17	7023282	MANIFOLD, HYD ASSY	See Illustration MANIFOLD ASSY/ NA1976 W/O angle blade - Was 7176761 [A]		1
17	7023283	MANIFOLD, HYD ASSY	See Illustration MANIFOLD ASSY/ NA1975 W/ angle blade - Was 7176625 [A]		1
18	28CM10100	BOLT			2
19	30HJ608	CLAMP			3
20	43DM10	NUT			2
21		VALVE, OPTION	See Illustration HYDRAULIC CIRCUITRY/ NA2621		1

HYDRAULIC CIRCUITRY
(Work Tubelines & Cylinders)

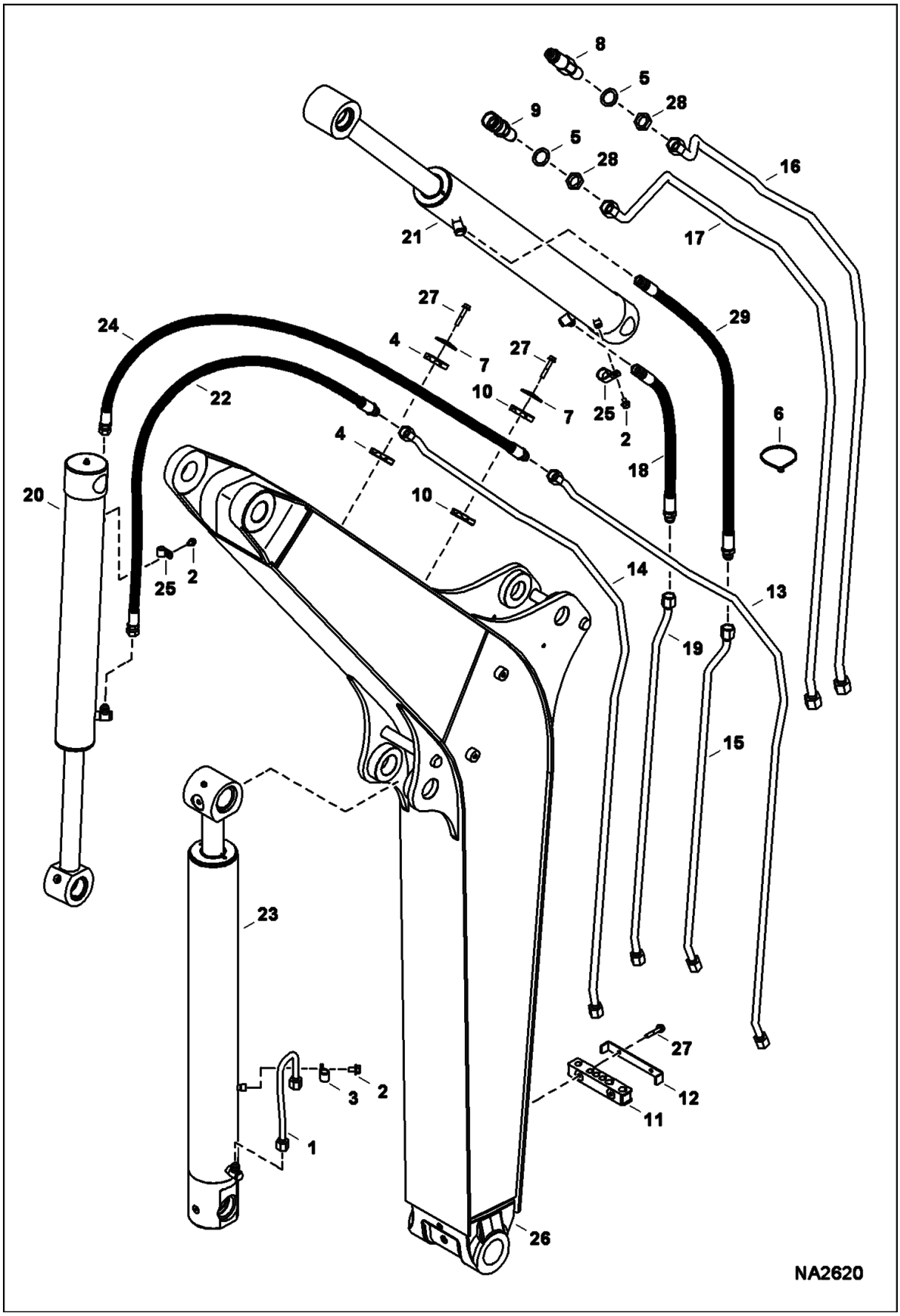

HYDRAULIC CIRCUITRY (Cont'd)
(Work Tubelines & Cylinders)

Ref No	Part Number	Description	Remarks	Serial Number	Qty
1	7156070	TUBELINE, HYD	W/O load hold option		1
1		TUBELINE, HYD	See Illustration LOAD HOLD KIT/ NA2639 - W/ load hold option		1
2	29CM816	SCREW			2
3	30H30	CLAMP			1
4	6577697	CLAMP			2
5	6589699	WASHER			2
6	6610510	TIE			2
7	6652521	PLATE			2
8	6676445	COUPLER			1
9	6676447	COUPLER			1
10	6729702	CLAMP			2
11	7012329	CLAMP, TUBELINE			2
12	7122596	BRACKET			2
13	7142982	TUBELINE, HYD			1
14	7142986	TUBELINE, HYD			1
15	7142990	TUBELINE, HYD			1
16	7142994	TUBELINE, HYD			1
17	7142998	TUBELINE, HYD			1
18	7143684	HOSE, HYD ASSY			1
19	7150743	TUBELINE, HYD			1
20		CYLINDER, BUCKET	See Illustration BUCKET CYLINDER/ NA1938		1
21		CYLINDER, ARM	See Illustration ARM CYLINDER/ NA1937		1
22	7167226	HOSE, HYD ASSY			1
23		CYLINDER, BOOM	See Illustration BOOM CYLINDER/ NA2837		1
24	7167225	HOSE, HYD ASSY			1
25	30H50	CLIP			3
26		BOOM W/A	See Illustration BOOM/ NA2555		1
27	59CM845	BOLT, FLANGE			4
28	86F8	NUT 5			2
29	7177855	HOSE, HYD ASSY	W/O load hold option		1
29		HOSE, HYD ASSY	See Illustration LOAD HOLD KIT/ NA2637 - W/ load hold option		1

HYDRAULIC CIRCUITRY
(Cooler/Filter & Direct to Tank)

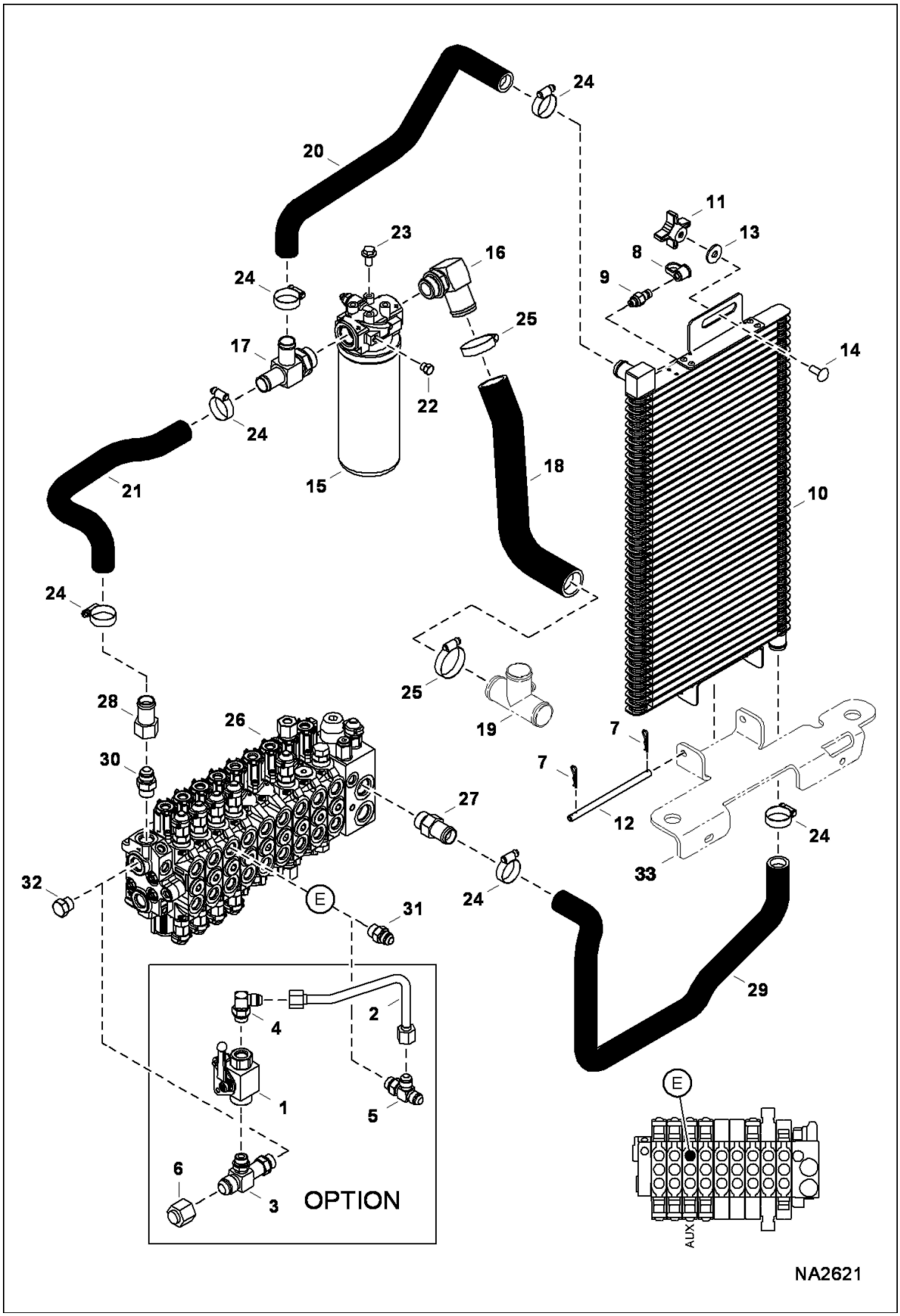

HYDRAULIC CIRCUITRY (Cont'd)
(Cooler/Filter & Direct to Tank)

Ref No	Part Number	Description	Remarks	Serial Number	Qty
1	6693507	VALVE, BALL	See Illustration SELECTOR VALVE ASSY/ NA2306		1
2	7176915	TUBELINE, HYD			1
3	7178217	FITTING, HYD TEE			1
3	79K8	O RING 10			x
3	79K10	O RING 10			x
4	17KB0808	FITTING, HYD ELBOW			1
4	79K8	O RING 10			x
5	21KB0808	FTG HYD STRAIGHT TEE			1
5	79K8	O RING 10			x
6	36K8	CAP			1
7	1306637	CLIP			2
8	6630367	CAP			1
9	6658103	COUPLER			1
10	7003679	EXCHANGER, OIL COOLER			1
11	7167576	NUT, WING			1
12	7174835	PIN			1
13	17EM100	WASHER			1
14	28CM1025	BOLT			1
15	7008373	FILTER, OIL HYD ASSY	See Illustration HYDROSTATIC OIL FILTER/ NA1844		1
16	7166248	FITTING			1
16	79K16	O RING 10			x
17	7166249	FITTING			1
17	79K16	O RING 10			x
18	7179439	HOSE, HYD FORMED			1
19		FITTING, HYD TEE	See Illustration HYDRAULIC CIRCUITRY/ NA2623		1
20	7211375	HOSE, HYD FORMED	Was 7185145 [C]		1
21	7211376	HOSE, HYD FORMED	Was 7185146 [C]		1
22	24K3	PLUG			1
22	79K4	O RING 10			x
23	29CM1020	BOLT			2
24	42HL150	CLAMP, HOSE			8
25	42HL200	CLAMP, HOSE			2
26	7010255	VALVE, CONTROL	See Illustration HYDRAULIC CONTROL VALVE/ NA2724 9 section - W/O angle blade		1
26	7001660	VALVE, CONTROL	See Illustration HYDRAULIC CONTROL VALVE/ NA2725 10 section - W/ angle blade		1
27	7012352	VALVE, BUILDUP			1
27	79K12	O RING 10			x
28	7012353	VALVE, BUILDUP			1
29	7211374	HOSE, HYD FORMED	Was 7176765 [C]		1
30	15KB1010	FITTING, HYD CONNECTOR			1
30	79K10	O RING 10			x
31	15KB0808	FITTING, HYD CONNECTOR	See Illustration HYDRAULIC CIRCUITRY/ NA2684		1
31	79K8	O RING 10			x
32	24K7	PLUG			1

HYDRAULIC CIRCUITRY (Cont'd)
(Cooler/Filter & Direct to Tank)

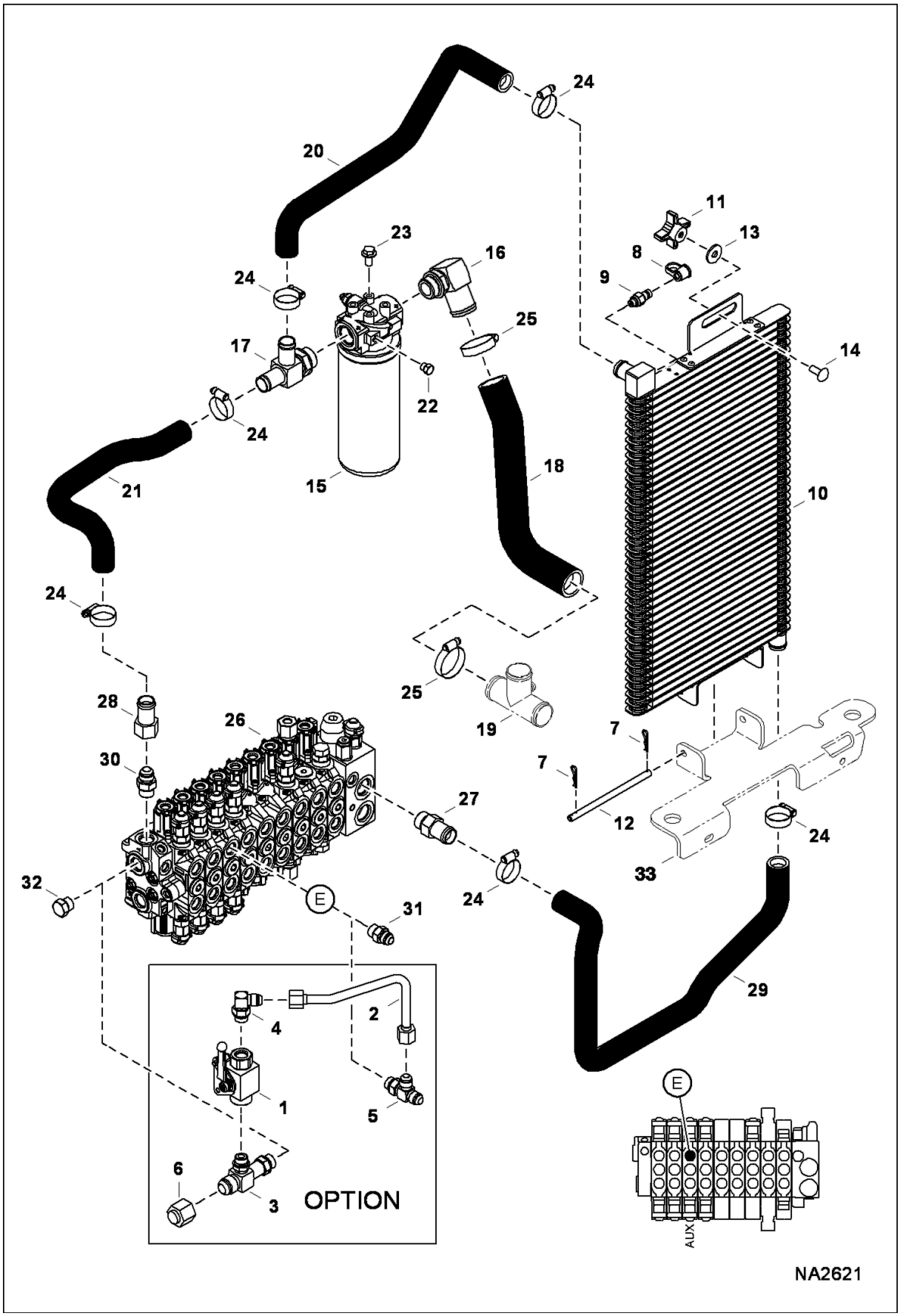

Ref No	Part Number	Description	Remarks	Serial Number	Qty
32	79K10	O RING 10			x
33		SUPPORT, RADIATOR	See Illustration ENGINE & ATTACHING PARTS/ NA2560		1

HYDRAULIC CIRCUITRY
(Tank & Pump)

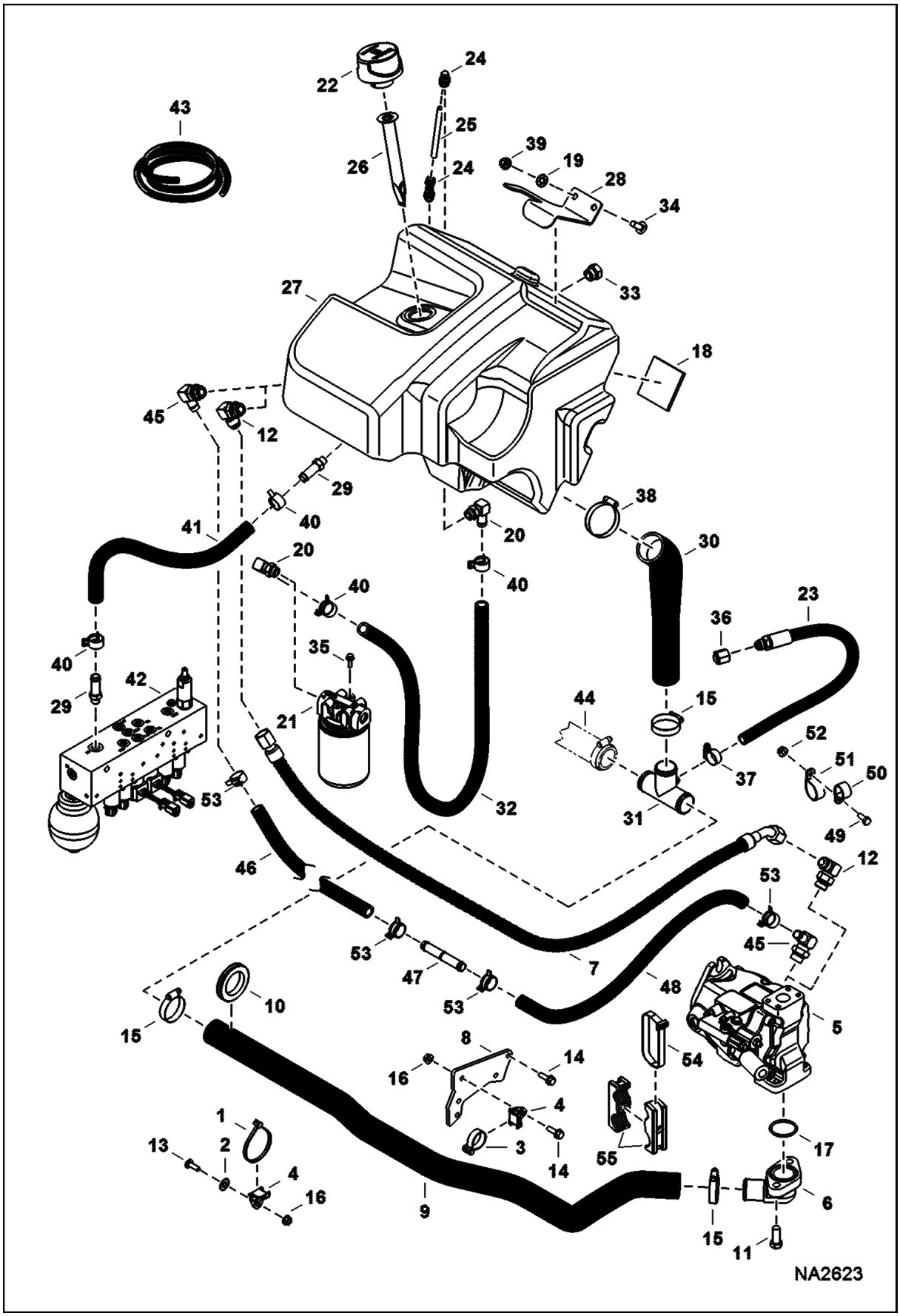

HYDRAULIC CIRCUITRY (Cont'd)
(Tank & Pump)

Ref No	Part Number	Description	Remarks	Serial Number	Qty
1	6624289	STRAP, TIE			1
2	6675859	RETAINER			1
3	6678669	STRAP			1
4	6678818	MOUNT			1
5	7010203	PUMP, HYD PISTON	See Illustration HYDRAULIC PISTON PUMP/ NA5010		1
6	7151504	INLET, PUMP			1
7	7178047	HOSE, HYD		AG3G11001 - 11180	1
7	7178047	HOSE, HYD		AHHC11001 - 11117	1
8	7178153	MOUNT			1
9	7179416	HOSE, HYD FORMED			1
10	7183315	GROMMET			1
11	17C820	BOLT			2
12	17KB1010	FITTING, HYD ELBOW		AG3G11001 - 11180	2
12	17KB1010	FITTING, HYD ELBOW		AHHC11001 - 11117	2
12	79K10	O RING 10			x
13	28CM825	BOLT			1
14	29CM825	BOLT			5
15	42HL200	CLAMP, HOSE			3
16	51DM8	NUT			4
17	58K225	O RING 10	Was 58K224 [B]		1
18	6578278	PAD			4
19	6674264	RETAINER NUT			2
20	6680952	FITTING 90 DEG BARB			2
20	79K8	O RING 10			x
21	6686217	FILTER ASSY	See Illustration HYDRAULIC CIRCUITRY/ NA2681		1
21	6516722	FILTER			x
22	6692836	CAP, HYDRAULIC TANK			1
23	6713504	HOSE			1
24	7013179	FITTING			2
24	79K6	O RING 10			x
25	7013180	TUBE			1
26	7128723	SCREEN			1
27		TANK, HYD	NAP - W/Port for Ref. 33 - Was 7172644		1
27	7172644	TANK, HYD			1
28	7173137	BRACKET			1
29	7178858	FITTING, ADAPTER			3
29	79K6	O RING 10			3
30	7179440	HOSE, HYD FORMED			1
31	7179508	FITTING, HYD TEE			1
32		HOSE, DRAIN	NAP - 44.5" (1130 mm) long - Order Ref. 43		1
33	24K7	PLUG	Use W/Ref. 24 NAP tank		1
33	79K10	O RING 10			x
34	28CM1030	BOLT			2
35	35C412	BOLT			2
36	36K6	CAP			1

HYDRAULIC CIRCUITRY (Cont'd)
(Tank & Pump)

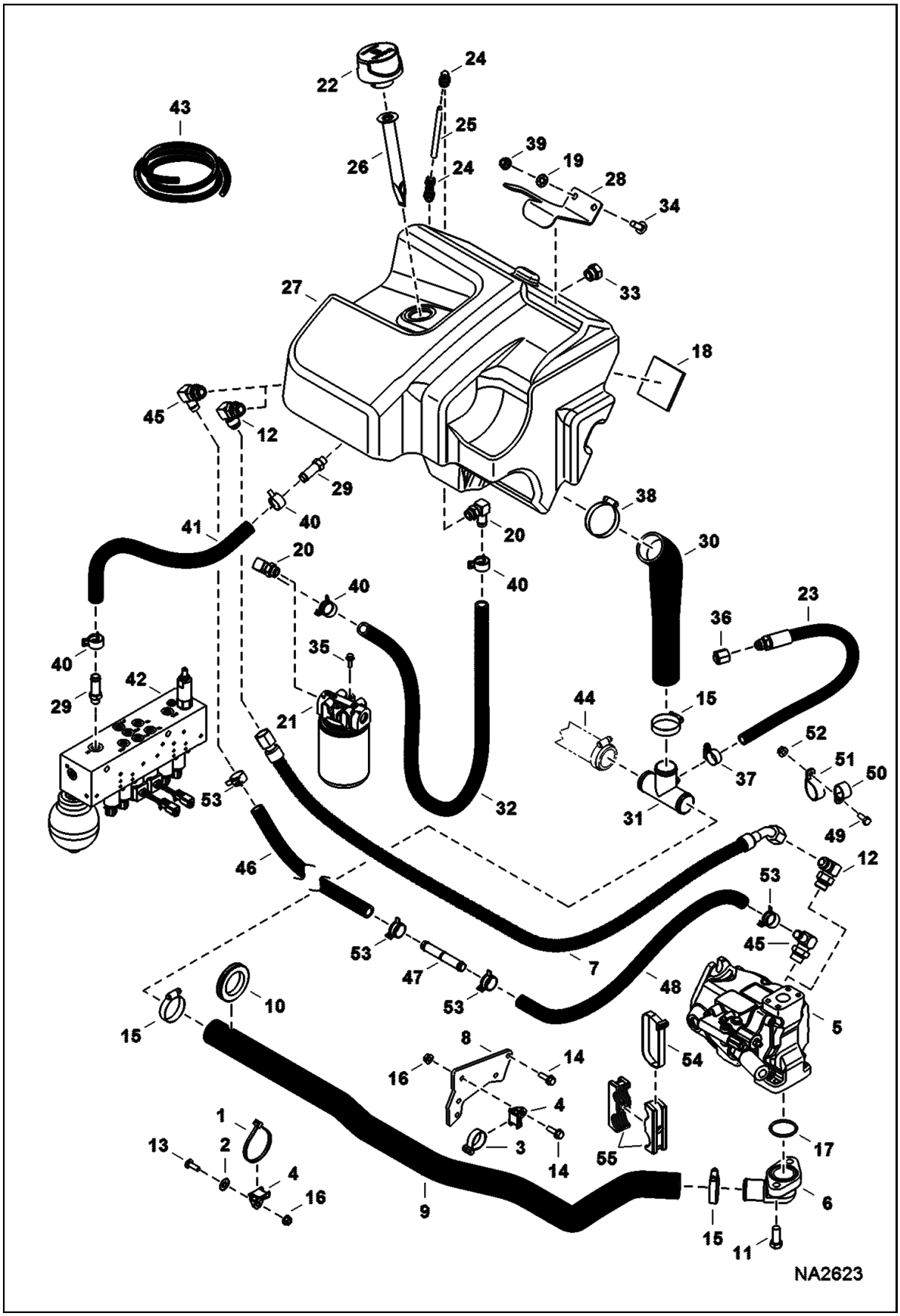

HYDRAULIC CIRCUITRY (Cont'd)
(Tank & Pump)

Ref No	Part Number	Description	Remarks	Serial Number	Qty
37	5HM20	CLAMP	Was 42HL100 [B]		1
38	42HL250	CLAMP			1
39	43DM10	NUT			2
40	5HM23	CLAMP			6
41		HOSE, DRAIN	NAP - 21" (533 mm) long - Order Ref. 43		1
42	7023282	MANIFOLD, HYD ASSY	See Illustration MANIFOLD ASSY/ NA1976 - W/O angle blade - Was 7176761 [A]		1
42	7023283	MANIFOLD, HYD ASSY	See Illustration MANIFOLD ASSY/ NA1975 - W/ angle blade - Was 7176625 [A]		1
43	6578172	HOSE	bulk - sold per foot		x
44		HOSE, HYD FORMED	See Illustration HYDRAULIC CIRCUITRY/ NA2621		1
45	7195417	FITTING, HYD ELBOW		AG3G11181 & Above	1
45	7195417	FITTING, HYD ELBOW		AHHC11118 & Above	1
46		HOSE, HYD	NAP - 922 mm (36.3") long - Order Ref. 43	AG3G11181 & Above	1
46		HOSE, HYD	NAP - 922 mm (36.3") long - Order Ref. 43	AHHC11118 & Above	1
47	7195825	UNION		AG3G11181 & Above	1
47	7195825	UNION		AHHC11118 & Above	1
48	7215095	HOSE, HYD FORMED	Was 7196595 [A]	AG3G11181 & Above	1
48	7215095	HOSE, HYD FORMED	Was 7196595 [A]	AHHC11118 & Above	1
49	1CM820	BOLT		AG3G11181 - 12351	1
49	1CM820	BOLT		AHHC11118 - 12415	1
50	30H49	CLAMP		AG3G11181 - 12351	1
50	30H49	CLAMP		AHHC11118 - 12415	1
51	30H110	CLIP	Was 30H58 [A]	AG3G11181 - 12351	1
51	30H110	CLIP	Was 30H58 [A]	AHHC11118 - 12415	1
52	51DM8	NUT		AG3G11181 - 12351	1
52	51DM8	NUT		AHHC11118 - 12415	1
53	5HM23	CLAMP		AG3G11181 & Above	4
53	5HM23	CLAMP		AHHC11118 & Above	4
54	6685156	RETAINER		AG3G12352 & Above	1
54	6685156	RETAINER		AHHC12416 & Above	1
55	7198913	CLAMP, HALF		AHHC12416 & Above	2
55	7198913	CLAMP, HALF		AG3G12352 & Above	2

HYDRAULIC CIRCUITRY
(Pilot W/O JPS)

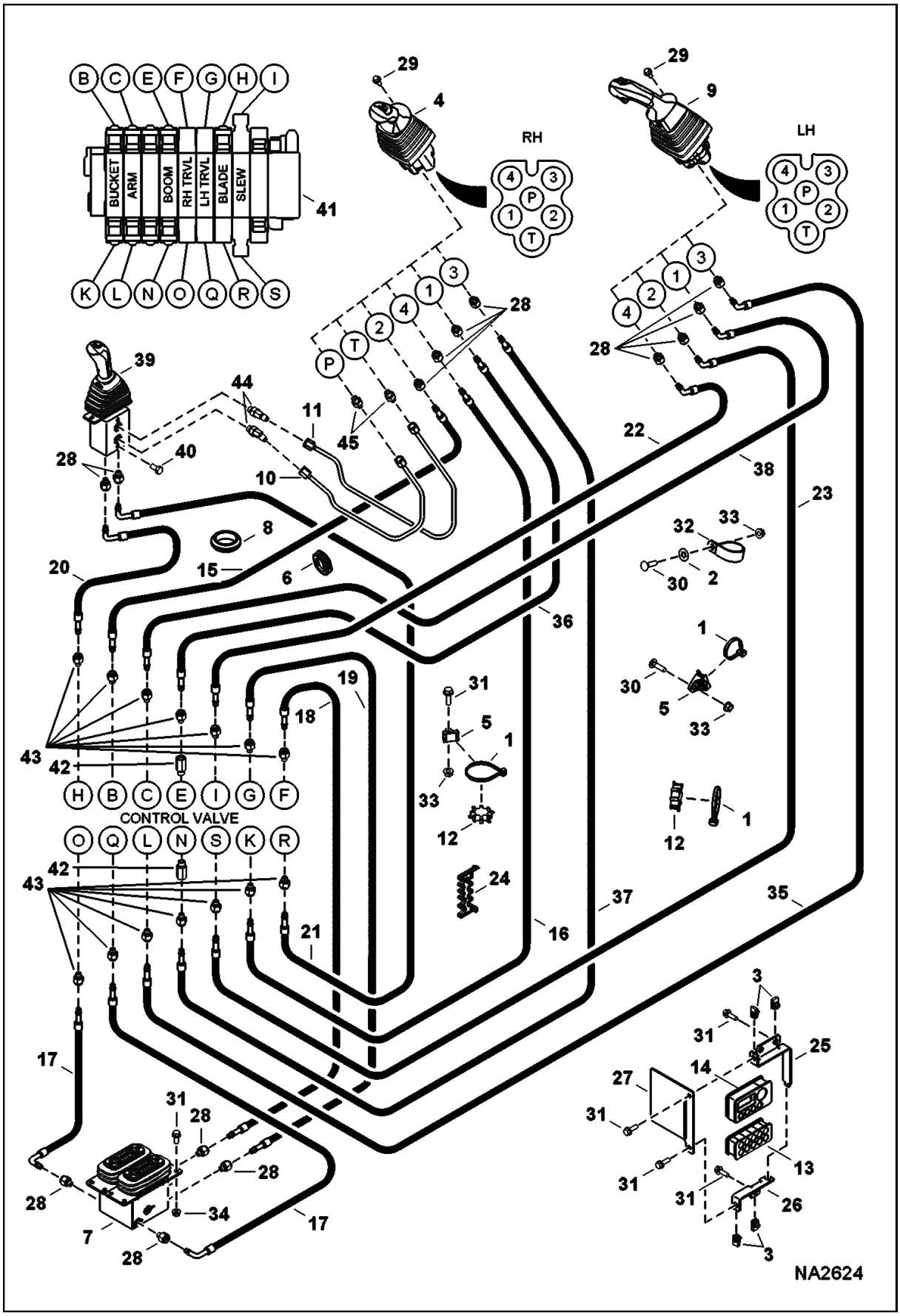

HYDRAULIC CIRCUITRY (Cont'd)
(Pilot W/O JPS)

Ref No	Part Number	Description	Remarks	Serial Number	Qty
1	6624289	STRAP, TIE			4
2	6675859	RETAINER			1
3	6676169	NUT			5
4	6677895	JOYSTICK	See Illustration RH JOYSTICK/ MS1352		1
5	6678818	MOUNT			3
6	6681886	GROMMET			1
7	6697935	VALVE, PEDAL DUAL	See Illustration TRAVEL CONTROLLER/ NA2307		1
8	6806443	GROMMET			1
9	7008320	LEVER, JOYSTICK W/PWM	See Illustration LH JOYSTICK/ NA2224		1
10	7164909	HOSE, HYD ASSY			1
10	7191228	TUBELINE, HYD			1
11	7164910	HOSE, HYD ASSY			1
11	7191229	TUBELINE, HYD			1
12	7169988	CLIP, HOSE			2
13	7175013	GUIDE, HOSE			1
14	7223146	GUIDE, HOSE	Was 7175014 [A]		1
15	7175214	HOSE, HYD	Was 7175183 [A]		1
16	7175184	HOSE, HYD			1
17	7175186	HOSE, HYD			2
18	7175191	HOSE, HYD			1
19	7175192	HOSE, HYD			1
20	7175193	HOSE, HYD			1
21	7175194	HOSE, HYD			1
22	7175195	HOSE, HYD			1
23	7175196	HOSE, HYD			1
24	7178575	CLIP, HOSE			1
25	7178918	BRACKET			1
26	7178919	BRACKET			1
27	7178989	PLATE			1
28	10L0604	FITTING, HYD CONNECTOR			18
28	78K4	O'RING			x
28	7011053	CLIP			x
29	26GM8020	SCREW			8
30	28CM830	BOLT			3
31	29CM825	BOLT			10
32	30H85	CLAMP			1
33	43DM8	NUT			4
34	51DM8	NUT			4
35	7175213	HOSE, HYD			1
36	7175214	HOSE, HYD			1
37	7175215	HOSE, HYD			1
38	7176974	HOSE, HYD			1
39	7008581	JOYSTICK, BLADE	See Illustration BLADE JOYSTICK/ NA2308 W/O angle blade		1
39	6698142	JOYSTICK, BLADE	See Illustration BLADE JOYSTICK/ NA2339 W/ angle blade		1
40	1CM816	BOLT			2
41	7010255	VALVE, CONTROL	See Illustration HYDRAULIC CONTROL VALVE/ NA2724 9 section - W/O angle blade		1
41	7001660	VALVE, CONTROL	See Illustration HYDRAULIC CONTROL VALVE/ NA2725 10 section - W/ angle blade		1

HYDRAULIC CIRCUITRY (Cont'd)
(Pilot W/O JPS)

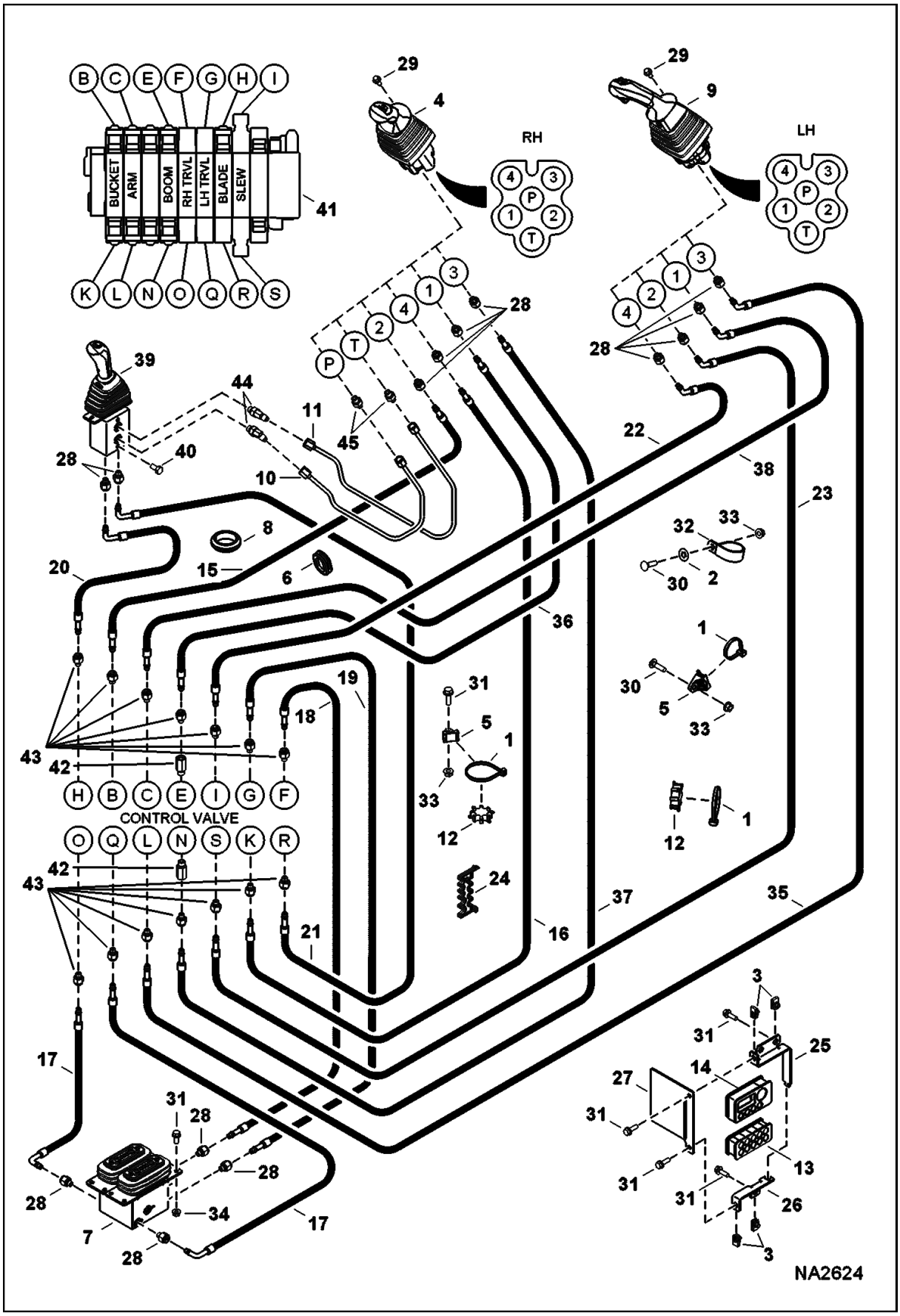

HYDRAULIC CIRCUITRY (Cont'd)
(Pilot W/O JPS)

Ref No	Part Number	Description	Remarks	Serial Number	Qty
42	7012494	ORIFICE			2
42	79K6	O RING 10			x
43	10L0606	FITTING, HYD CONNECTOR			14
43	78K6	O'RING			x
43	7011053	CLIP			x
44	10L0604	FITTING, HYD CONNECTOR	Use W/hoses		2
44	78K4	O'RING			x
44	7011053	CLIP			x
44	18KB0404	FTG HYD ELBOW 45	Use W/tubelines		2
44	79K4	O RING 10			x
45	10L0604	FITTING, HYD CONNECTOR	Use W/hoses		2
45	78K4	O'RING			x
45	7011053	CLIP			x
45	15KB0404	FTG HYD S Connector	Use W/tublines		2
45	79K4	O RING 10			x

HYDRAULIC CIRCUITRY
(Pilot W/ JPS)

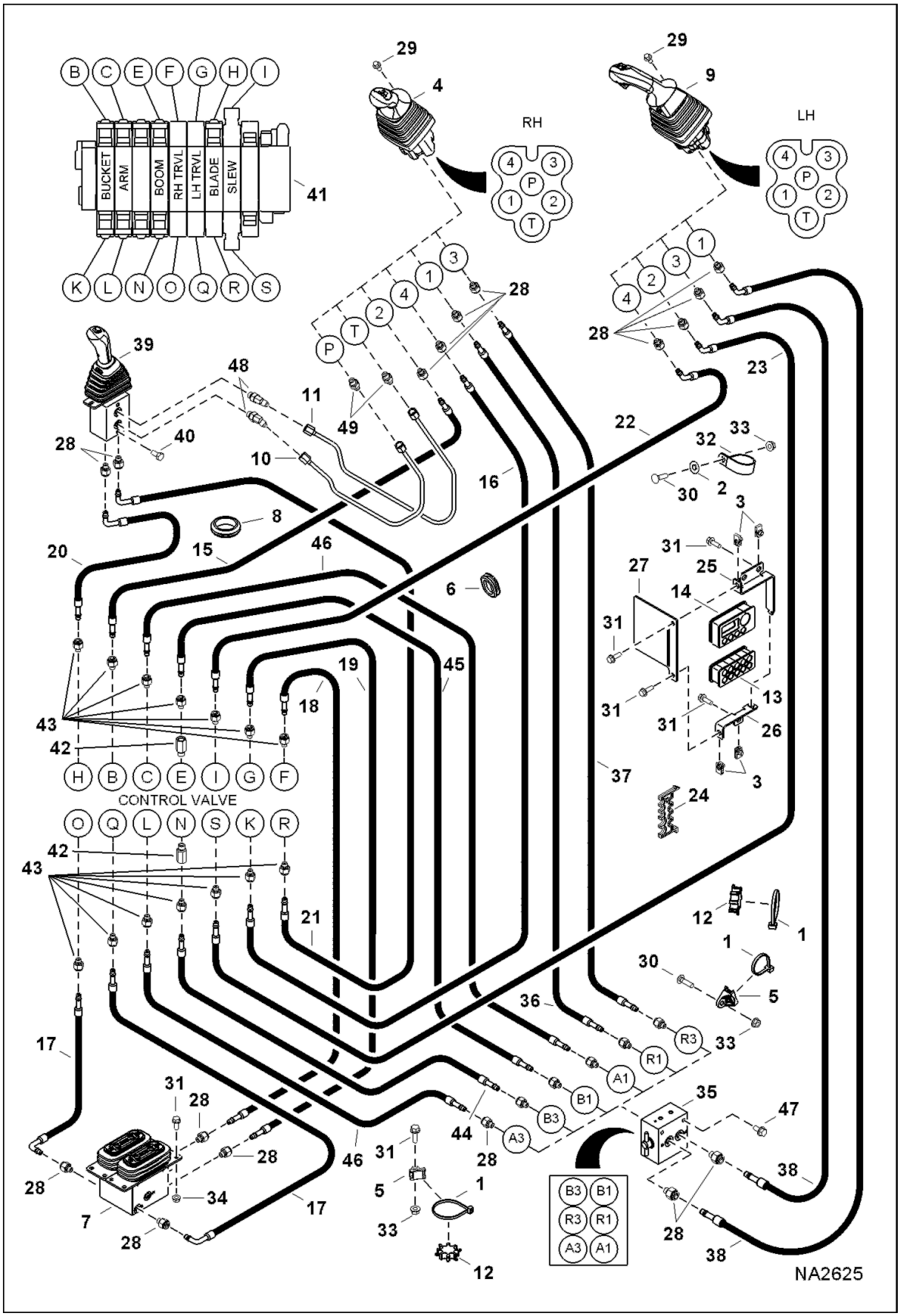

HYDRAULIC CIRCUITRY (Cont'd)
(Pilot W/ JPS)

Ref No	Part Number	Description	Remarks	Serial Number	Qty
1	6624289	STRAP, TIE			4
2	6675859	RETAINER			1
3	6676169	NUT			5
4	6677895	JOYSTICK	See Illustration RH JOYSTICK/ MS1352		1
5	6678818	MOUNT			3
6	6681886	GROMMET			1
7	6697935	VALVE, PEDAL DUAL	See Illustration TRAVEL CONTROLLER/ NA2307		1
8	6806443	GROMMET			1
9	7008320	LEVER, JOYSTICK W/PWM	See Illustration LH JOYSTICK/ NA2224		1
10	7164909	HOSE, HYD ASSY			1
10	7191228	TUBELINE, HYD			1
11	7164910	HOSE, HYD ASSY			1
11	7191229	TUBELINE, HYD			1
12	7169988	CLIP, HOSE			2
13	7175013	GUIDE, HOSE			1
14	7223146	GUIDE, HOSE	Was 7175014 [A]		1
15	7175214	HOSE, HYD	Was 7175183 [A]		1
16	7175184	HOSE, HYD			1
17	7175186	HOSE, HYD			2
18	7175191	HOSE, HYD			1
19	7175192	HOSE, HYD			1
20	7175193	HOSE, HYD			1
21	7175194	HOSE, HYD			1
22	7175195	HOSE, HYD			1
23	7175196	HOSE, HYD			1
24	7178575	CLIP, HOSE			1
25	7178918	BRACKET			1
26	7178919	BRACKET			1
27	7178989	PLATE			1
28	10L0604	FITTING, HYD CONNECTOR			18
28	78K4	O'RING			x
28	7011053	CLIP			x
29	26GM8020	SCREW			8
30	28CM830	BOLT			3
31	29CM825	BOLT			10
32	30H85	CLAMP			1
33	43DM8	NUT			4
34	51DM8	NUT			4
35	7193055	VALVE, JPS	Was 7008308 [A]		1
36	7164903	HOSE, HYD ASSY			1
37	7164904	HOSE, HYD ASSY			1
38	7169837	HOSE, HYD ASSY			1
39	7008581	JOYSTICK, BLADE	See Illustration BLADE JOYSTICK/ NA2308 W/O angle blade		1
39	6698142	JOYSTICK, BLADE	See Illustration BLADE JOYSTICK/ NA2339 W/ angle blade		1
40	1CM816	BOLT			2
41	7010255	VALVE,	See Illustration HYDRAULIC CONTROL VALVE/		1

HYDRAULIC CIRCUITRY (Cont'd)
(Pilot W/ JPS)

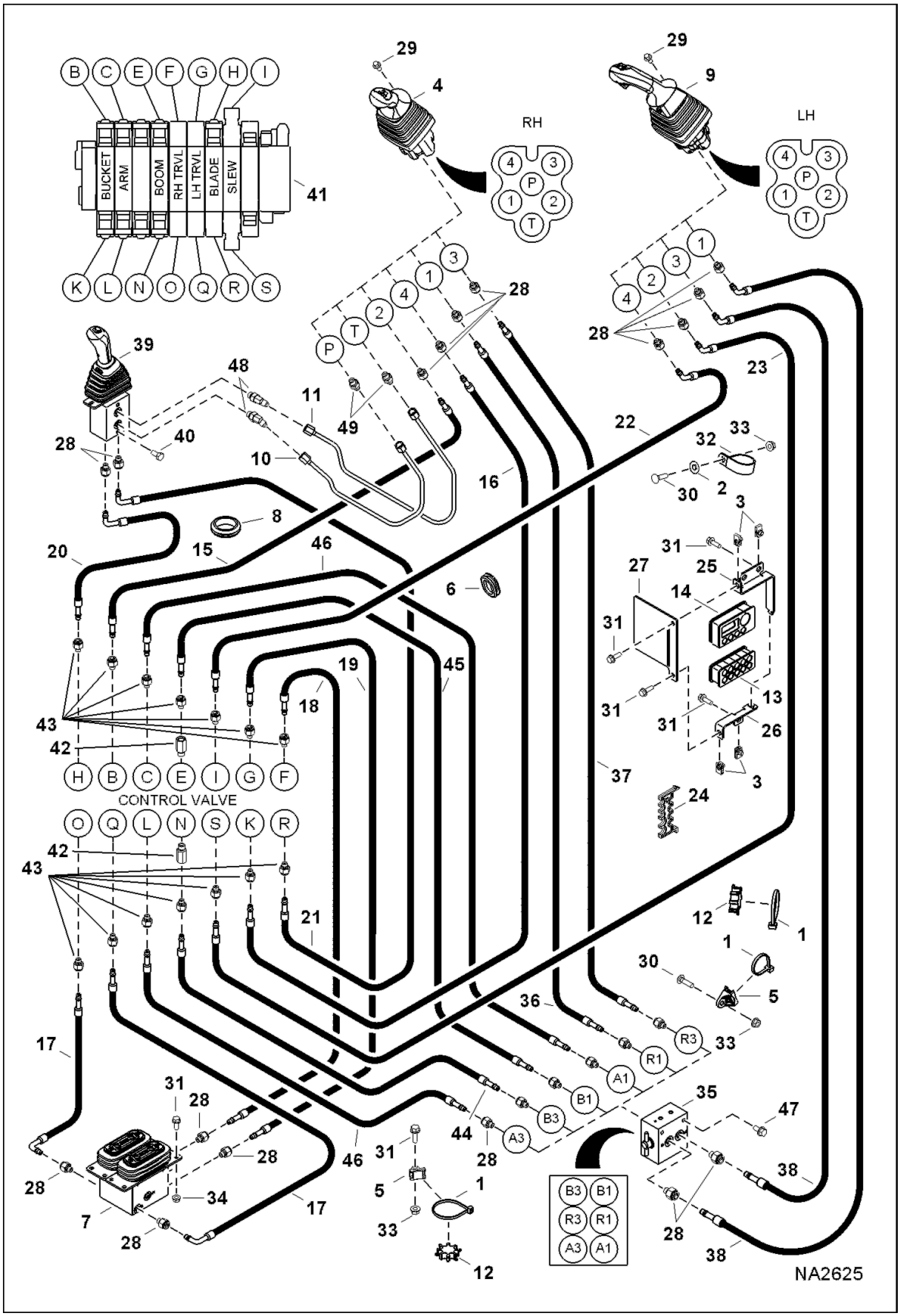

HYDRAULIC CIRCUITRY (Cont'd)
(Pilot W/ JPS)

Ref No	Part Number	Description	Remarks	Serial Number	Qty
		CONTROL	NA2724 9 section - W/O angle blade		
41	7001660	VALVE, CONTROL	See Illustration HYDRAULIC CONTROL VALVE/ NA2725 10 section - W/ angle blade		1
42	7012494	ORIFICE			2
42	79K6	O RING 10			x
43	10L0606	FITTING, HYD CONNECTOR			14
43	78K6	O'RING			x
43	7011053	CLIP			x
44	7175207	HOSE, HYD			1
45	7175210	HOSE, HYD			2
46	7175212	HOSE, HYD			1
47	29CM816	SCREW			2
48	10L0604	FITTING, HYD CONNECTOR	Use W/hoses		2
48	78K4	O'RING			x
48	7011053	CLIP			x
48	18KB0404	FTG HYD ELBOW 45	Use W/tubelines		2
48	79K4	O RING 10			x
49	10L0604	FITTING, HYD CONNECTOR	Use W/hoses		2
49	78K4	O'RING			x
49	7011053	CLIP			x
49	15KB0404	FTG HYD S Connector	Use W/tubelines		2
49	79K4	O RING 10			x

HYDRAULIC CIRCUITRY
(Manifold & Pump)
(W/O Angle Blade)

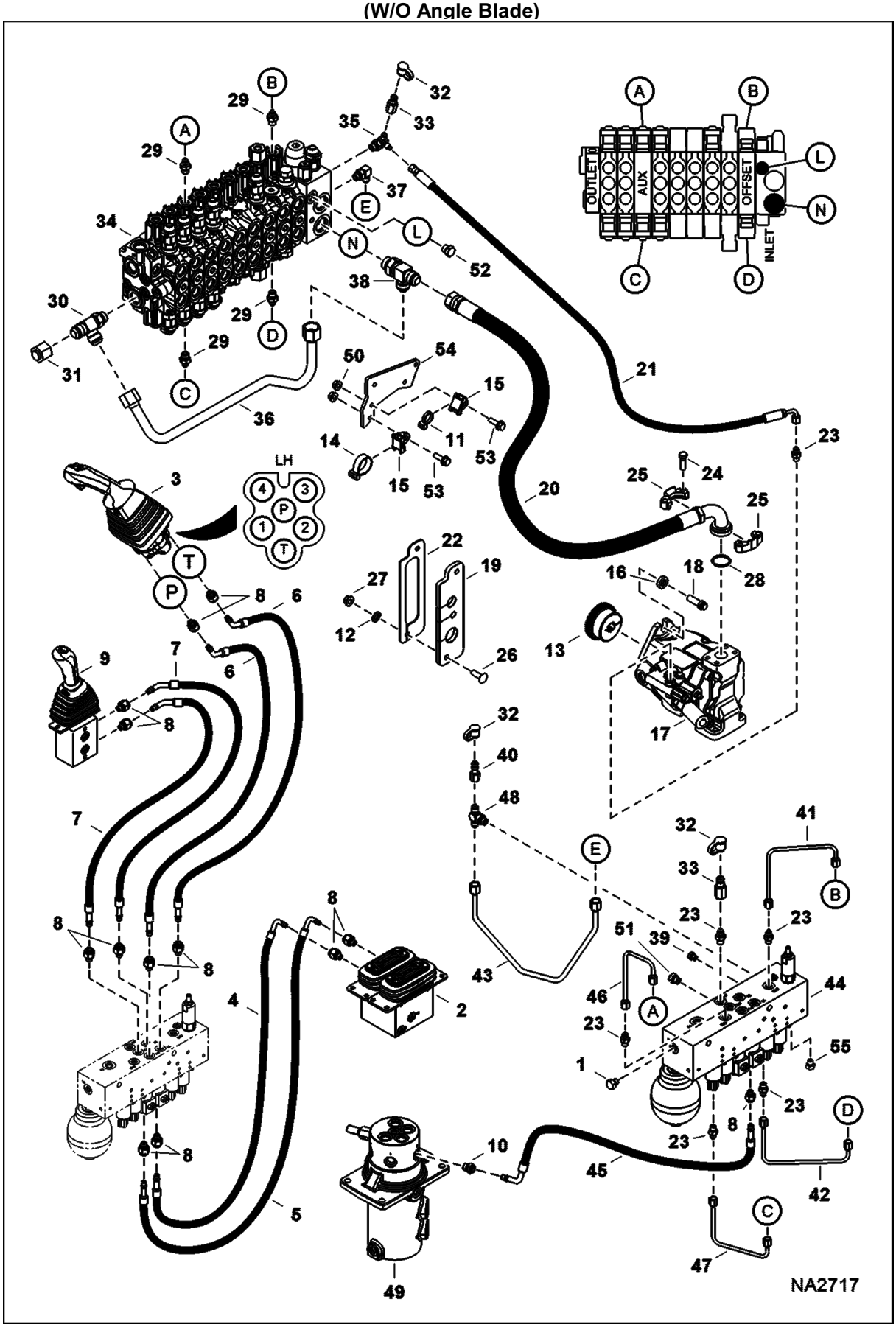

HYDRAULIC CIRCUITRY (Cont'd)
(Manifold & Pump)
(W/O Angle Blade)

Ref No	Part Number	Description	Remarks	Serial Number	Qty
1	24K3	PLUG	W/O boom load hold option		1
1		FITTING	See Illustration LOAD HOLD KIT/ NA2639 W/ boom load hold option		1
1	79K4	O RING 10			x
2	6697935	VALVE, PEDAL DUAL	See Illustration TRAVEL CONTROLLER/ NA2307		1
3	7008320	LEVER, JOYSTICK W/PWM	See Illustration LH JOYSTICK/ NA2224		1
4	7175187	HOSE, HYD			1
5	7175188	HOSE, HYD			1
6	7175189	HOSE, HYD			2
7	7175190	HOSE, HYD			2
8	10L0604	FITTING, HYD CONNECTOR			13
8	78K4	O'RING			x
8	7011053	CLIP			x
9	7008581	JOYSTICK, BLADE	See Illustration BLADE JOYSTICK/ NA2308		1
10	10L0606	FITTING, HYD CONNECTOR			1
10	78K6	O'RING			x
10	7011053	CLIP			x
11	6624289	STRAP, TIE			1
12	6674264	RETAINER NUT			2
13	6676535	COUPLER			1
14	6678669	STRAP			1
15	6678818	MOUNT			2
16	6701097	WASHER			2
17	7010203	PUMP, HYD PISTON	See Illustration HYDRAULIC PISTON PUMP/ NA5010		1
18	7012660	BOLT, FLANGE			2
19	7176628	GROMMET			1
20	7178046	HOSE, HYD			1
21	7178048	HOSE, HYD			1
22	7178082	BRACKET			1
23	15KB0404	FTG HYD S Connector			6
23	79K4	O RING 10			x
24	17C620	BOLT			4
25	19J16	FLANGE			2
26	28CM1030	BOLT			2
27	43DM10	NUT			2
28	58K219	O RING 10			1
29	15KB0406	FTG HYD S CONNECTOR			4
29	79K6	O RING 10			x
30	21KB1210	FITTING, HYD TEE			1
30	79K10	O RING 10			x
31	36K8	CAP			1
32	6630367	CAP			3
33	7000009	PLUG			2
34	7010255	VALVE, CONTROL	See Illustration HYDRAULIC CONTROL VALVE/ NA2724		1
35	7157717	TEE			1
36	7179643	TUBELINE, HYD			1

HYDRAULIC CIRCUITRY (Cont'd)
(Manifold & Pump)
(W/O Angle Blade)

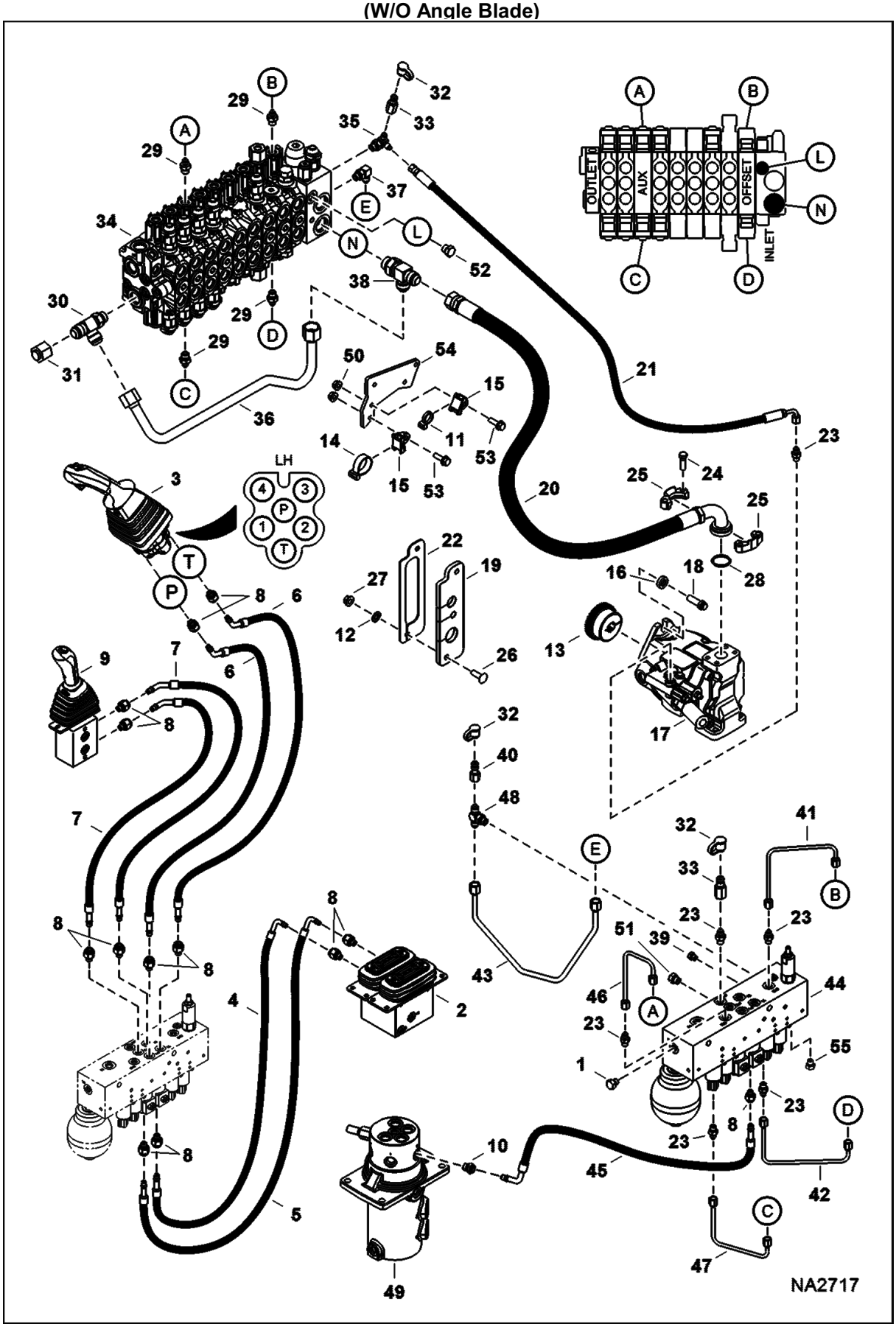

HYDRAULIC CIRCUITRY (Cont'd)
(Manifold & Pump)
(W/O Angle Blade)

Ref No	Part Number	Description	Remarks	Serial Number	Qty
37	17KB0606	FITTING			1
37	79K6	O RING 10			x
38	21KB1212	FITTING, HYD TEE			1
38	79K10	O RING 10			x
39	24K3	PLUG	W/O hydraulic X-Change		1
39		FITTING	See Illustration X-CHANGE/ NA2581 W/ hydraulic X-Change		1
39	79K4	O RING 10			x
40	6661753	PLUG			1
41	7176176	TUBELINE, HYD			1
42	7176177	TUBELINE, HYD			1
43	7176300	TUBELINE, HYD			1
44	7023282	MANIFOLD, HYD ASSY	See Illustration MANIFOLD ASSY/ NA1976 - Was 7176761 [A]		1
45	7175224	HOSE, HYD			1
46	7179637	TUBELINE, HYD			1
47	7179638	TUBELINE, HYD			1
48	19KB0606	TEE			1
48	79K6	O RING 10			x
49	7143734	SWIVEL, HYD ASSY	See Illustration SWIVEL ASSY/ NA2262		1
50	51DM8	NUT			5
51	24K5	PLUG	W/O 2nd aux		1
51		FITTING	See Illustration SECONDARY AUXILIARY KIT/ NA2582 W/ 2nd aux		1
51	79K6	O RING 10			x
52	24K5	PLUG	W/O hydraulic X-Change		1
52		FITTING	See Illustration X-CHANGE/ NA2581 W/ hydraulic X-Change		1
52	79K6	O RING 10			x
53	29CM825	BOLT			5
54	7178153	MOUNT			1
55	24K5	PLUG	if equipped		1
55	79K6	O RING 10			x

HYDRAULIC CIRCUITRY
(Manifold & Pump)
(W/ Angle Blade)

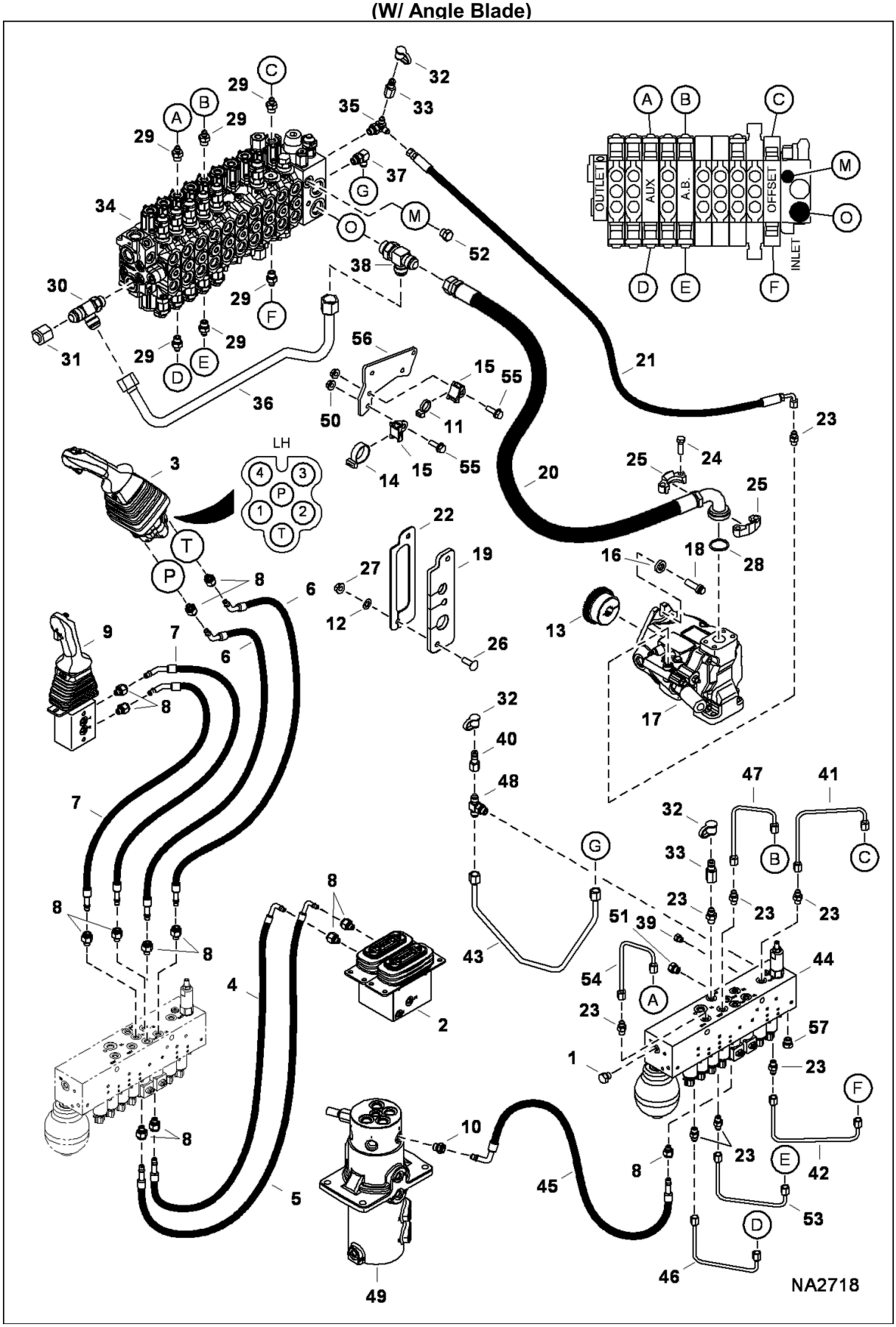

HYDRAULIC CIRCUITRY (Cont'd)
(Manifold & Pump)
(W/ Angle Blade)

Ref No	Part Number	Description	Remarks	Serial Number	Qty
1	24K3	PLUG	W/O boom load hold option		1
1		FITTING	See Illustration LOAD HOLD KIT/ NA2639 W/ boom load hold option		1
1	79K4	O RING 10			x
2	6697935	VALVE, PEDAL DUAL	See Illustration TRAVEL CONTROLLER/ NA2307		1
3	7008320	LEVER, JOYSTICK W/PWM	See Illustration LH JOYSTICK/ NA2224		1
4	7175187	HOSE, HYD			1
5	7175188	HOSE, HYD			1
6	7175189	HOSE, HYD			2
7	7175190	HOSE, HYD			2
8	10L0604	FITTING, HYD CONNECTOR			13
8	78K4	O'RING			x
8	7011053	CLIP			x
9	6698142	JOYSTICK, BLADE	See Illustration BLADE JOYSTICK/ NA2339		1
10	10L0606	FITTING, HYD CONNECTOR			1
10	78K6	O'RING			x
10	7011053	CLIP			x
11	6624289	STRAP, TIE			1
12	6674264	RETAINER NUT			2
13	6676535	COUPLER			1
14	6678669	STRAP			1
15	6678818	MOUNT			2
16	6701097	WASHER			2
17	7010203	PUMP, HYD PISTON	See Illustration HYDRAULIC PISTON PUMP/ NA5010		1
18	7012660	BOLT, FLANGE			2
19	7176628	GROMMET			1
20	7178046	HOSE, HYD			1
21	7178048	HOSE, HYD			1
22	7178082	BRACKET			1
23	15KB0404	FTG HYD S Connector			6
23	79K4	O RING 10			x
24	17C620	BOLT			4
25	19J16	FLANGE			2
26	28CM1030	BOLT			2
27	43DM10	NUT			2
28	58K219	O RING 10			1
29	15KB0406	FTG HYD S CONNECTOR			4
29	79K6	O RING 10			x
30	21KB1210	FITTING, HYD TEE			1
30	79K10	O RING 10			x
31	36K8	CAP			1
32	6630367	CAP			3
33	7000009	PLUG			2
34	7001660	VALVE, CONTROL	See Illustration HYDRAULIC CONTROL VALVE/ NA2725		1
35	7157717	TEE			1
36	7176310	TUBELINE, HYD			1

HYDRAULIC CIRCUITRY (Cont'd)
(Manifold & Pump)
(W/ Angle Blade)

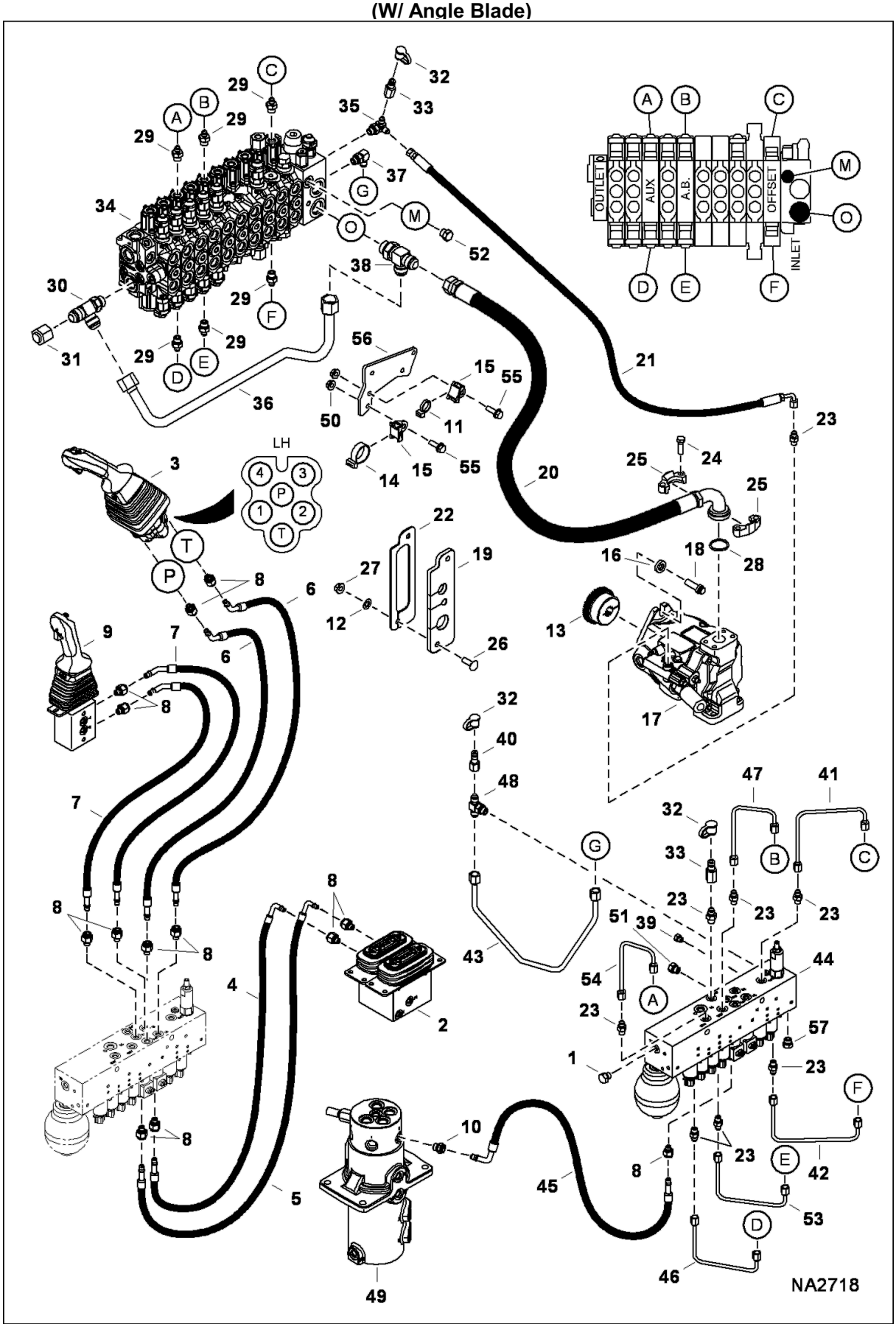

HYDRAULIC CIRCUITRY (Cont'd)
(Manifold & Pump)
(W/ Angle Blade)

Ref No	Part Number	Description	Remarks	Serial Number	Qty
37	17KB0606	FITTING			1
37	79K6	O RING 10			x
38	21KB1212	FITTING, HYD TEE			1
38	79K10	O RING 10			x
39	24K3	PLUG	W/O hydraulic X-Change		1
39		FITTING	See Illustration X-CHANGE/ NA2581 W/ hydraulic X-Change		1
39	79K4	O RING 10			x
40	6661753	PLUG			1
41	7176176	TUBELINE, HYD			1
42	7176177	TUBELINE, HYD			1
43	7176300	TUBELINE, HYD			1
44	7023283	MANIFOLD, HYD ASSY	See Illustration MANIFOLD ASSY/ NA1975 - Was 7176625 [A]		1
45	7175224	HOSE, HYD			1
46	7176175	TUBELINE, HYD			1
47	7176294	TUBELINE, HYD			1
48	19KB0606	TEE			1
48	79K6	O RING 10			x
49	7152908	SWIVEL, HYD ASSY	See Illustration SWIVEL ASSY/ NA2346		1
50	51DM8	NUT			5
51	24K5	PLUG	W/O 2nd aux		1
51		FITTING	See Illustration SECONDARY AUXILIARY KIT/ NA2582 W/ 2nd aux		1
51	79K6	O RING 10			x
52	24K5	PLUG	W/O hydraulic X-Change		1
52		FITTING	See Illustration X-CHANGE/ NA2581 W/ hydraulic X-Change		1
52	79K6	O RING 10			x
53	7176295	TUBELINE, HYD			1
54	7176174	TUBELINE, HYD			1
55	29CM825	BOLT			5
56	7178153	MOUNT			1
57	24K5	PLUG			1
57	79K6	O RING 10			x

HYDROSTATIC OIL FILTER

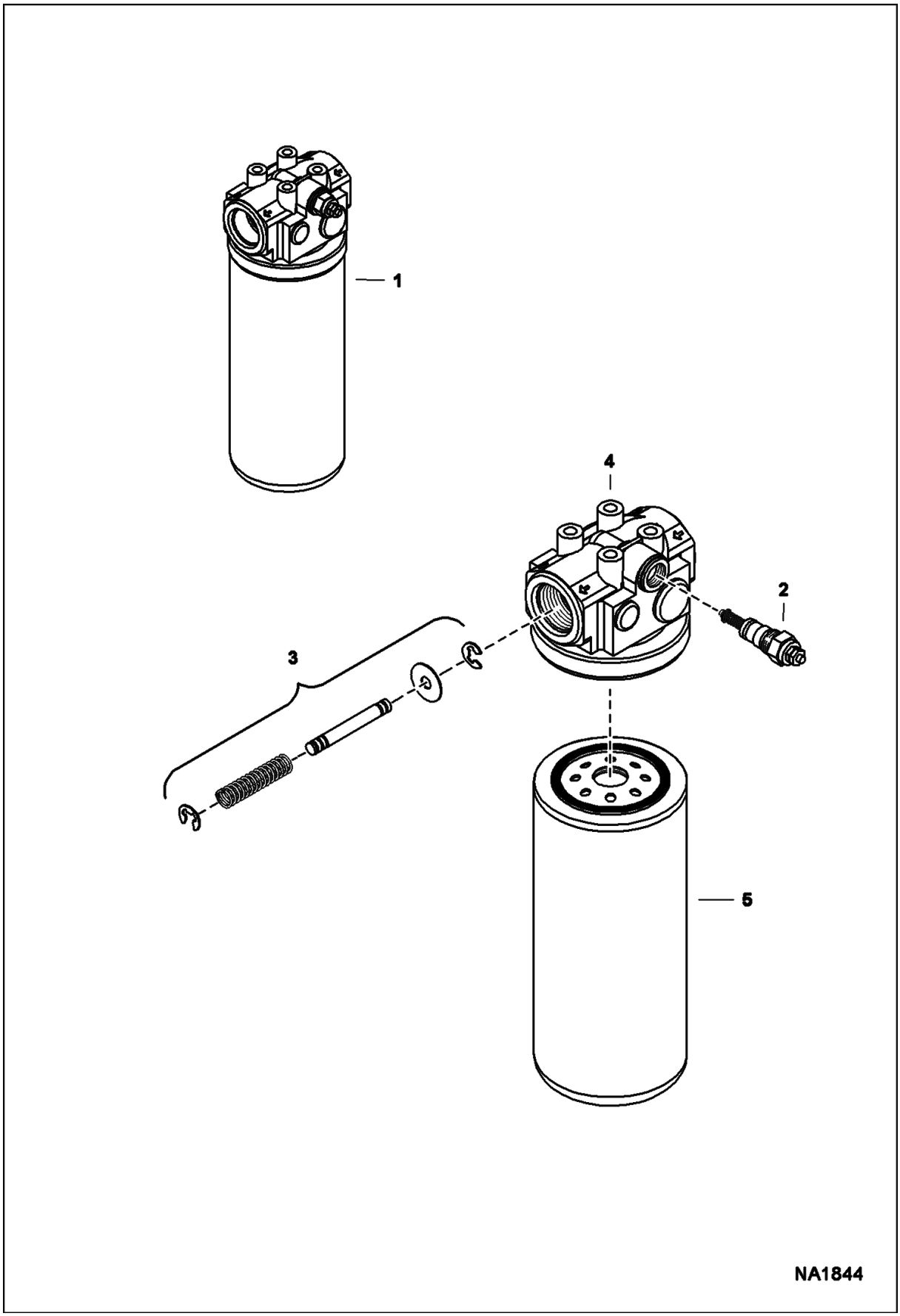

HYDROSTATIC OIL FILTER (Cont'd)

Ref No	Part Number	Description	Remarks	Serial Number	Qty
1	7008373	FILTER, OIL HYD ASSY	Ref. 2-5		1
2	6660260	SWITCH	pressure - normally closed		1
2	6599365	KIT	nut, washer & O-rings		1
3		VALVE	NAP - by-pass (50 PSI - Order Ref. 1)		1
4		HEAD	NSS - Order Ref. 1		1
5	6668819	FILTER, OIL HYD	9.5" (241,3 mm) long		1

HYDRAULIC PISTON PUMP

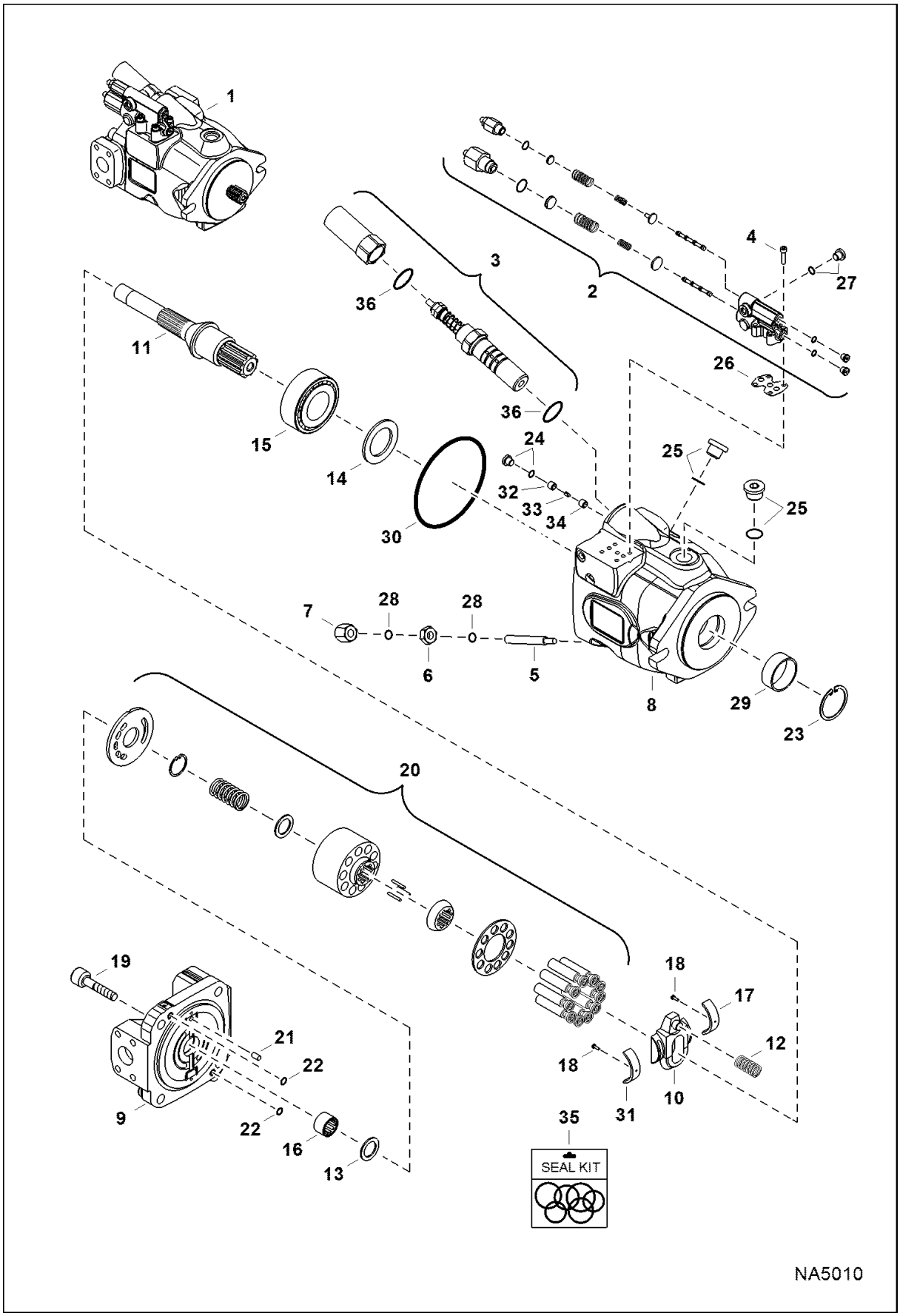

HYDRAULIC PISTON PUMP (Cont'd)

Ref No	Part Number	Description	Remarks	Serial Number	Qty
1	7010203	PUMP, HYD PISTON	Ref. 2-34 & 36		1
2	6691520	CONTROLLER			1
3	7015986	VALVE, CONTROL			1
4	6672255	BOLT			4
5	6690386	SCREW			1
6	6690387	NUT			1
7	6690388	CAP NUT			1
8		HOUSING	NAP - Order Ref. 1		1
8	6682879	PIN	- Was 6688039 [A]		x
9		PORT PLATE	NAP - Order Ref. 1		1
9	6682879	PIN	- Was 6688039 [A]		x
10	7015989	SWASHPLATE			1
11	7015990	SHAFT, DRIVE			1
12	7015991	SPRING			1
13	6691449	SHIM			1
14	6691461	RING			1
15	7015992	BEARING			1
16	6691452	BEARING			1
17	7015993	BEARING			1
18	6690404	SCREW			2
19	7015995	BOLT			4
20	7015988	GROUP, ROTATING			1
21	6672235	DOWEL PIN			1
22	6690407	SEAL RING			2
23	6691458	RING			1
24	6671832	PLUG			1
25	6690385	PLUG			2
26	6691519	GASKET			1
27	6691491	PLUG			1
28	6691457	O-RING			2
29	7015994	SEAL, SHAFT			1
30	6691455	O-RING			1
31	7015993	BEARING			1
32		ORIFICE	NSS		1
33		SPOOL	NSS		1
34		ORIFICE	NSS		1
35	7015987	KIT, SEAL	Ref. 22-30		1
36	6691456	O-RING			2

MANIFOLD ASSY
(W/O Angle Blade)

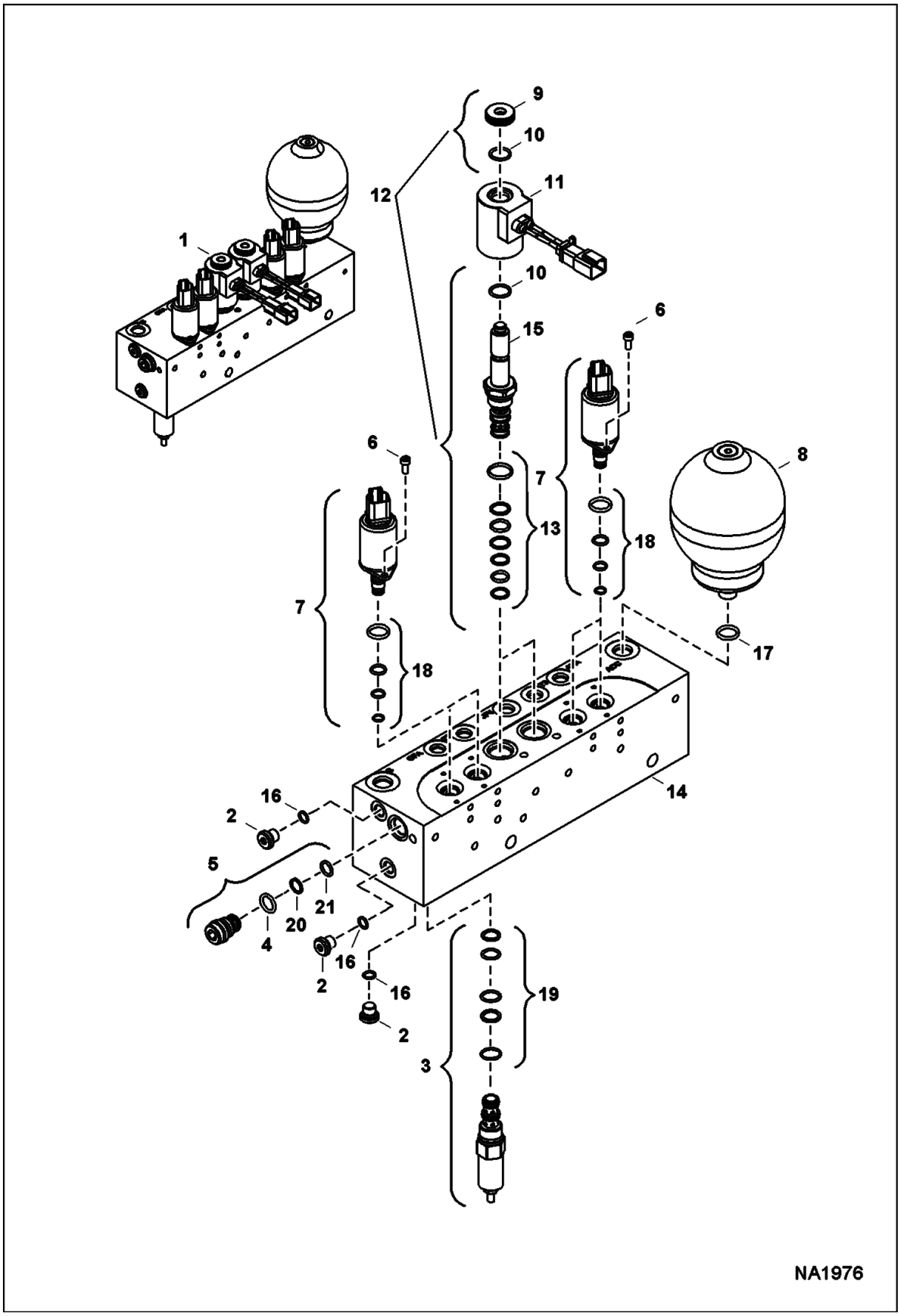

MANIFOLD ASSY (Cont'd)
(W/O Angle Blade)

Ref No	Part Number	Description	Remarks	Serial Number	Qty
1	7023282	MANIFOLD, HYD ASSY	Ref. 2-21 - Was 7176761 [A]		1
2	6678993	PLUG	W/Ref. 16		3
3	6685284	VALVE			1
4	7010628	O-RING			1
5	6678990	VALVE			1
6	7010627	SCREW			8
7	7010626	COIL, SOLENOID			4
8	6685832	ACCUMULATOR	W/Ref. 17		1
9	6688625	NUT			2
10	6679509	O-RING			4
11	7010625	COIL, SOLENOID			2
12	6678988	VALVE	does not include Ref. 11 - Was 7010624 [A]		2
13	6679078	SEAL KIT			1
14		BLOCK	NSS		1
15		STEM	NSS		2
16		O-RING	NSS		3
17	6679605	O-RING			1
18	7019203	KIT, SEAL			2
19		KIT, SEAL	NSS		1
20		O-RING	NSS		1
21		O-RING	NSS		1

MANIFOLD ASSY
(W/ Angle Blade)

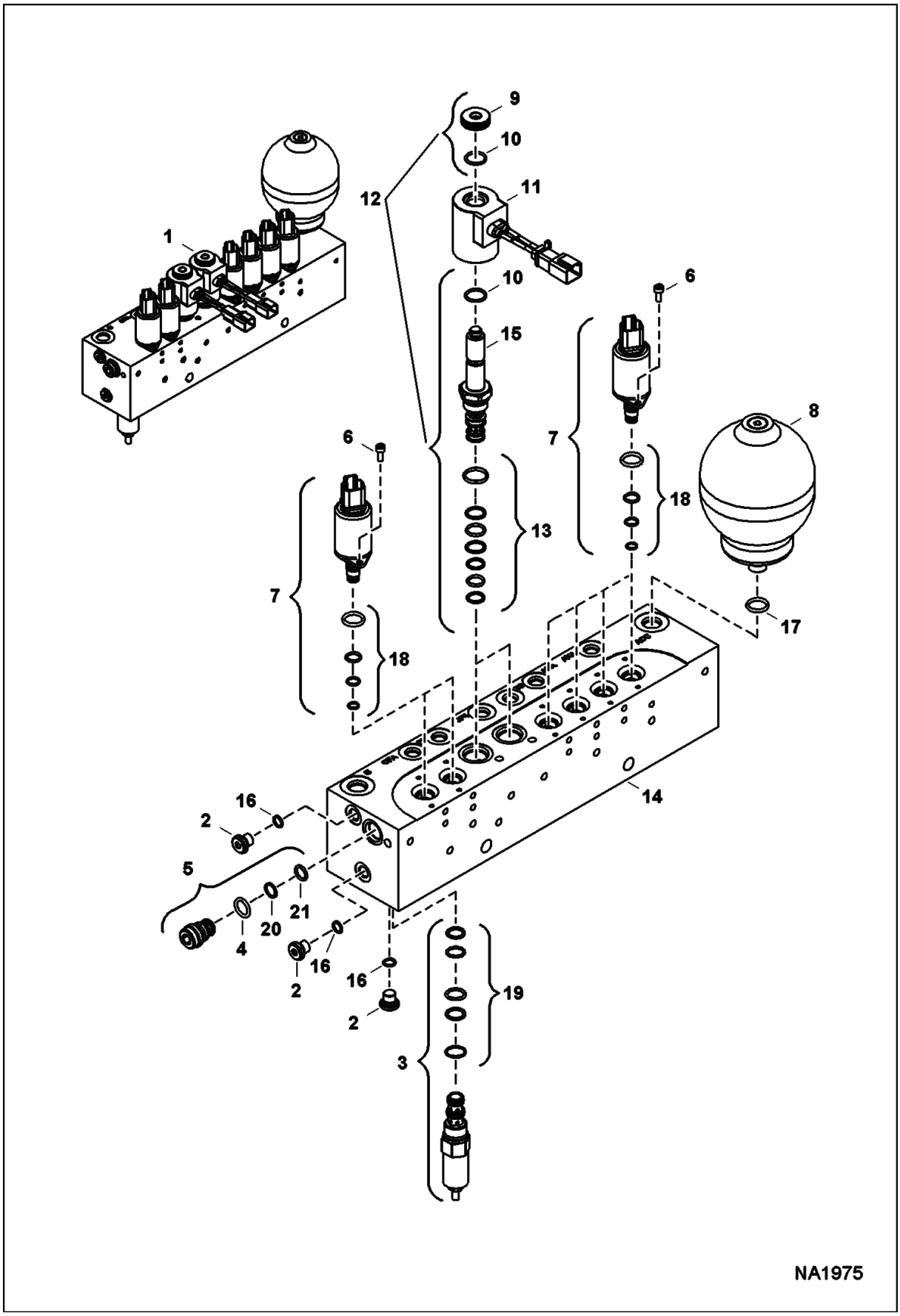

MANIFOLD ASSY (Cont'd)
(W/ Angle Blade)

Ref No	Part Number	Description	Remarks	Serial Number	Qty
1	7023283	MANIFOLD, HYD ASSY	Ref. 2-21 - Was 7176625 [A]		1
2	6678993	PLUG	W/Ref. 16		3
3	6685284	VALVE			1
4	7010628	O-RING			1
5	6678990	VALVE			1
6	7010627	SCREW			12
7	7010626	COIL, SOLENOID			6
8	6685832	ACCUMULATOR	W/Ref. 17		1
9	6688625	NUT			2
10	6679509	O-RING			4
11	7010625	COIL, SOLENOID			2
12	6678988	VALVE	does not include Ref. 11 - Was 7010624 [A]		2
13	6679078	SEAL KIT			1
14		BLOCK	NSS		1
15		STEM	NSS		2
16		O-RING	NSS		1
17	6679605	O-RING			1
18	7019203	KIT, SEAL			2
19		KIT, SEAL	NSS		1
20		O-RING	NSS		1
21		O-RING	NSS		1

SELECTOR VALVE ASSY
(JPS) (ISO/STD)

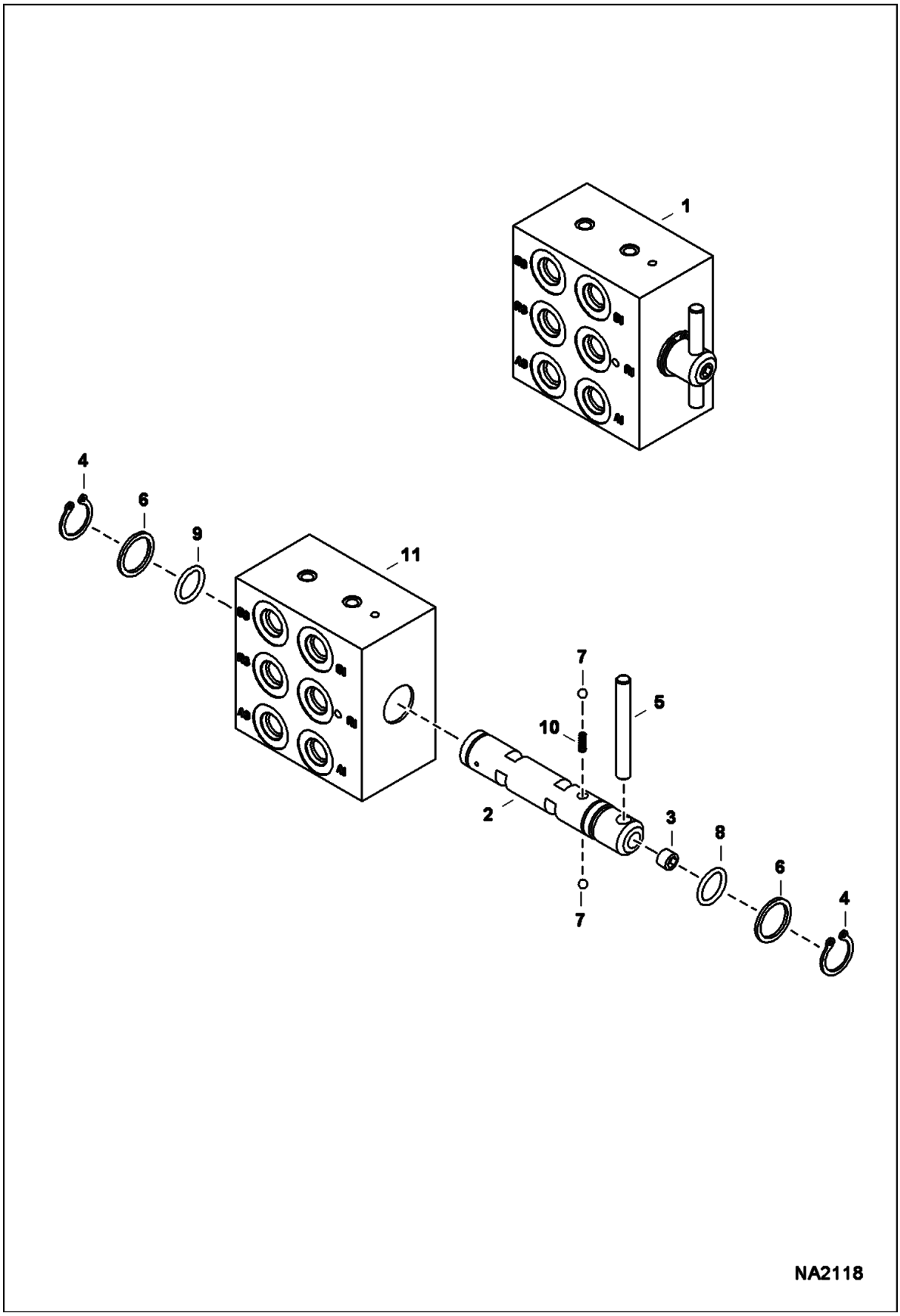

SELECTOR VALVE ASSY (Cont'd)
(JPS) (ISO/STD)

Ref No	Part Number	Description	Remarks	Serial Number	Qty
1	7193055	VALVE, JPS	Ref. 2-11 - Was 7008308 [A]		1
2	7009343	SPOOL, VALVE			1
3	7010037	SCREW			4
4	7009345	RING, SNAP			2
5	7010035	HANDLE			1
6	7010036	WASHER			2
7	7009348	BALL, 3/16 DIA			2
8	7009349	O-RING			1
9	6679499	O-RING			1
10	7009350	SPRING, SPOOL			1
11		BLOCK	NSS - Order Ref. 1		1

SELECTOR VALVE ASSY
(Direct to Tank)

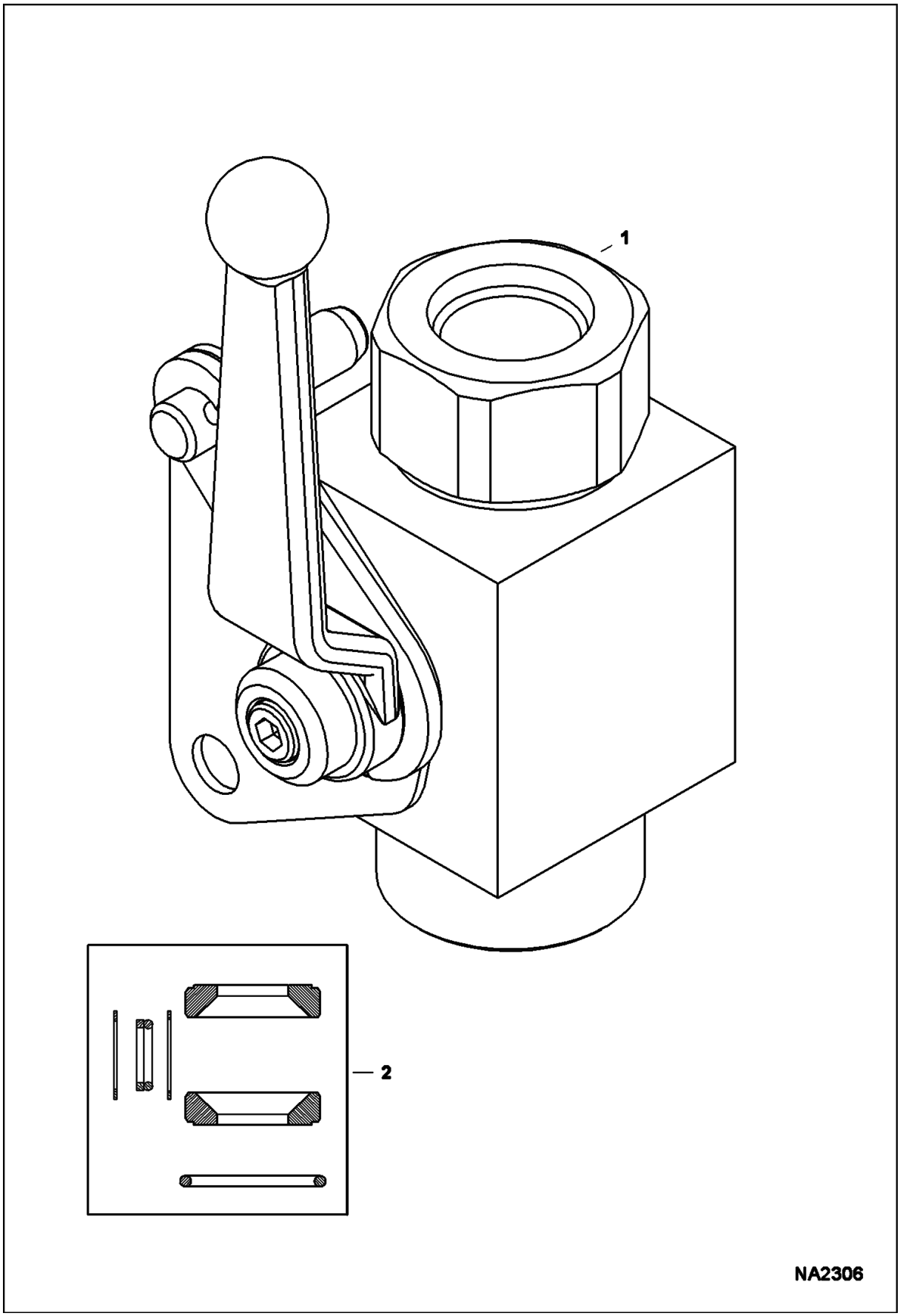

SELECTOR VALVE ASSY (Cont'd)
(Direct to Tank)

Ref No	Part Number	Description	Remarks	Serial Number	Qty
1	6693507	VALVE, BALL			1
2	7012201	KIT, SEAL			1

LH JOYSTICK

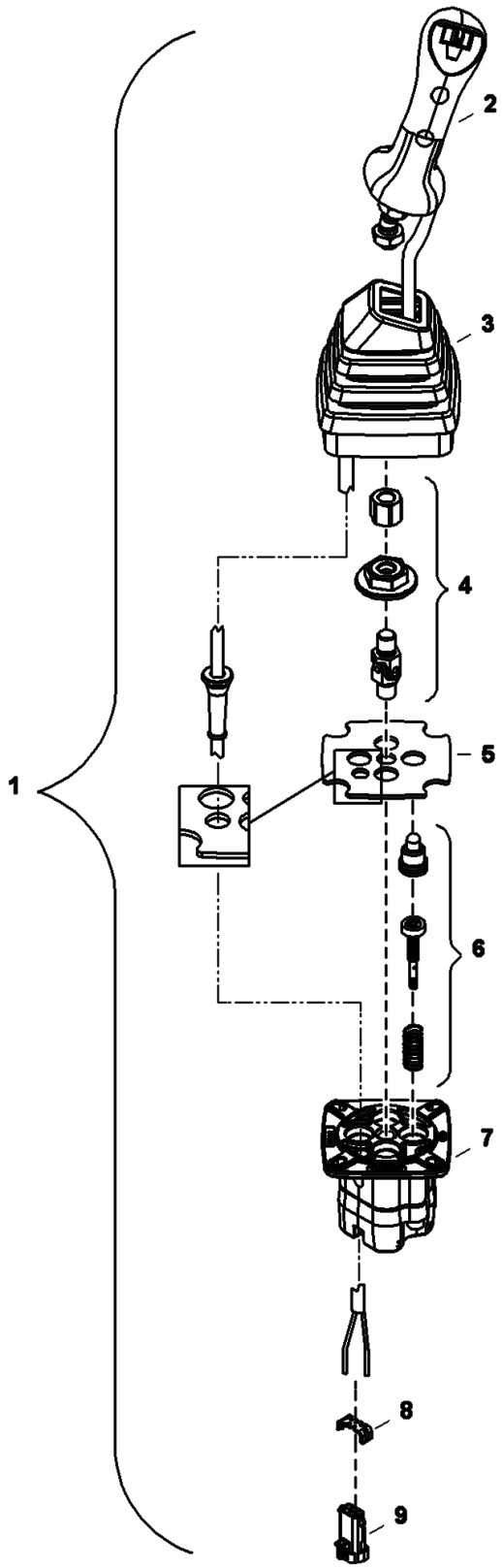

LH JOYSTICK (Cont'd)

Ref No	Part Number	Description	Remarks	Serial Number	Qty
1	7008320	LEVER, JOYSTICK W/PWM	Ref. 2-9		1
2	7010197	HANDLE, JOYSTICK			1
3	6692548	BOOT			1
4	6679956	KIT			1
5		FLANGE	NSS - Order Ref. 7		1
6	6692549	KIT, PLUNGER			4
7	6684714	HOUSING	W/Ref. 5		1
8	6679958	LOCK			1
9	6679960	CONNECTOR			1

RH JOYSTICK

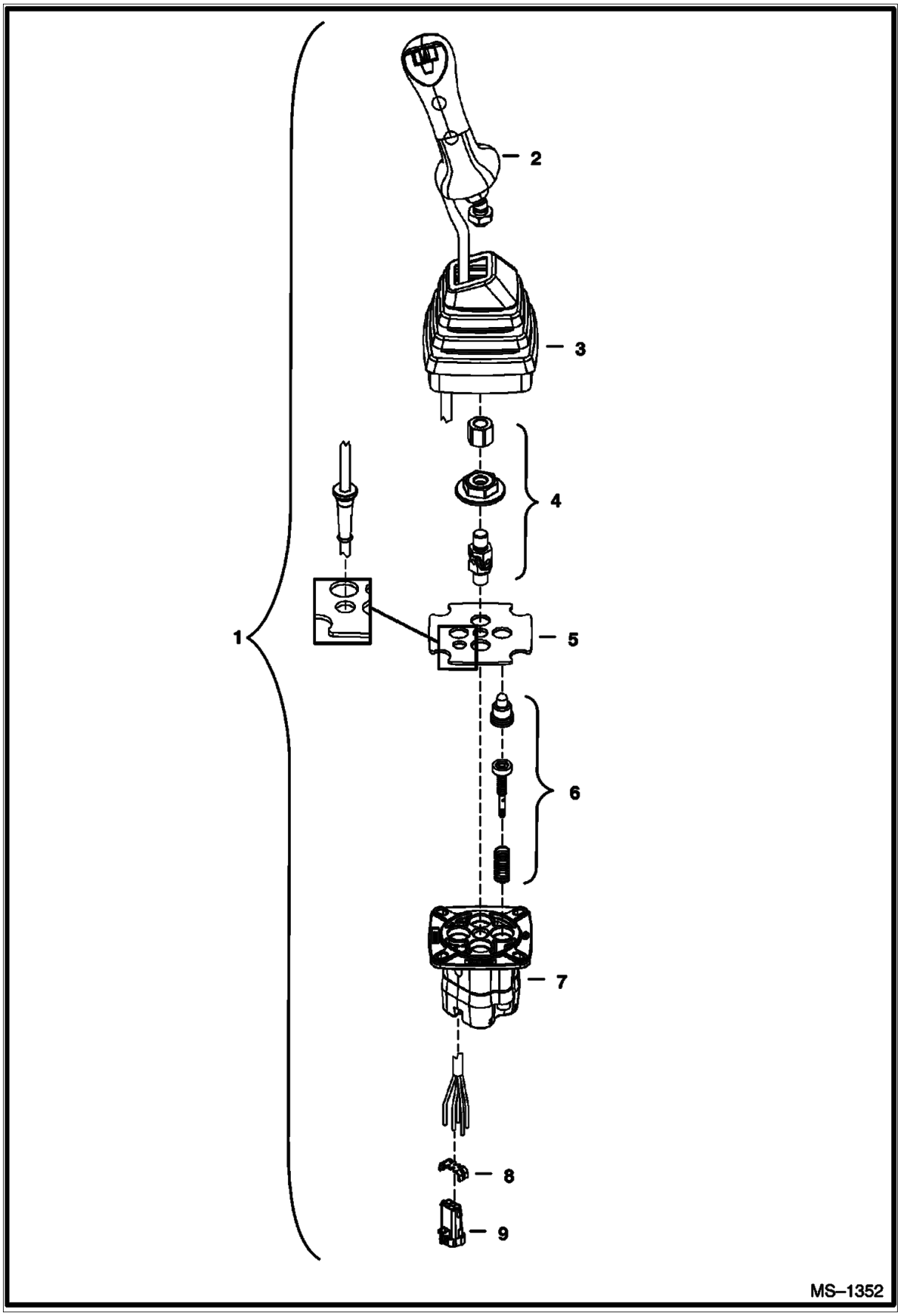

RH JOYSTICK (Cont'd)

Ref No	Part Number	Description	Remarks	Serial Number	Qty
1	6677895	JOYSTICK	RH - Ref. 2-9		1
2	6679953	HANDLE, JOYSTICK			1
3	6692548	BOOT			1
4	6679956	KIT			1
5		FLANGE	NAP - Order Ref. 7 - Was 6679957 [A]		1
6	6692549	KIT, PLUNGER			4
7	6684714	HOUSING	W/Ref. 5		1
8	6679958	LOCK			1
9	6679960	CONNECTOR			1

TRAVEL CONTROLLER
(Dual Pedal Valve)

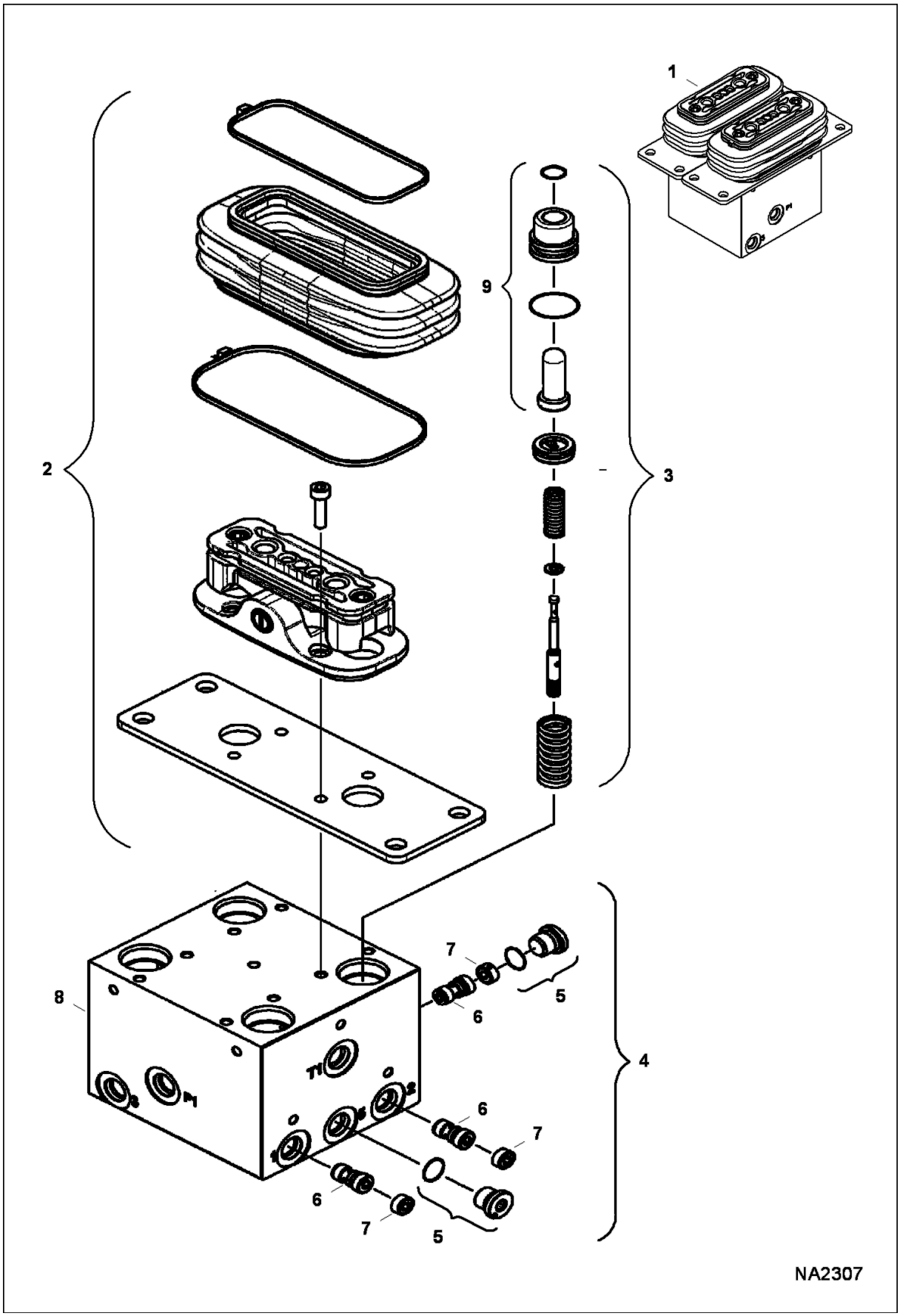

TRAVEL CONTROLLER (Cont'd)
(Dual Pedal Valve)

Ref No	Part Number	Description	Remarks	Serial Number	Qty
1	6697935	VALVE, PEDAL DUAL	Ref. 2-9		1
2	7012019	BASE, JOYSTICK			2
3	7012020	SPOOL, ACTUATOR ASSY			4
4	7012021	HOUSING, JOYSTICK	Ref. 5-8		1
5	6686236	PLUG			2
6	6685332	SPOOL			3
7	7012022	PLUG			3
8		HOUSING	NSS - Order Ref. 4		1
9	7018015	KIT, PLUNGER			4

BLADE JOYSTICK
(W/O Angle Blade)

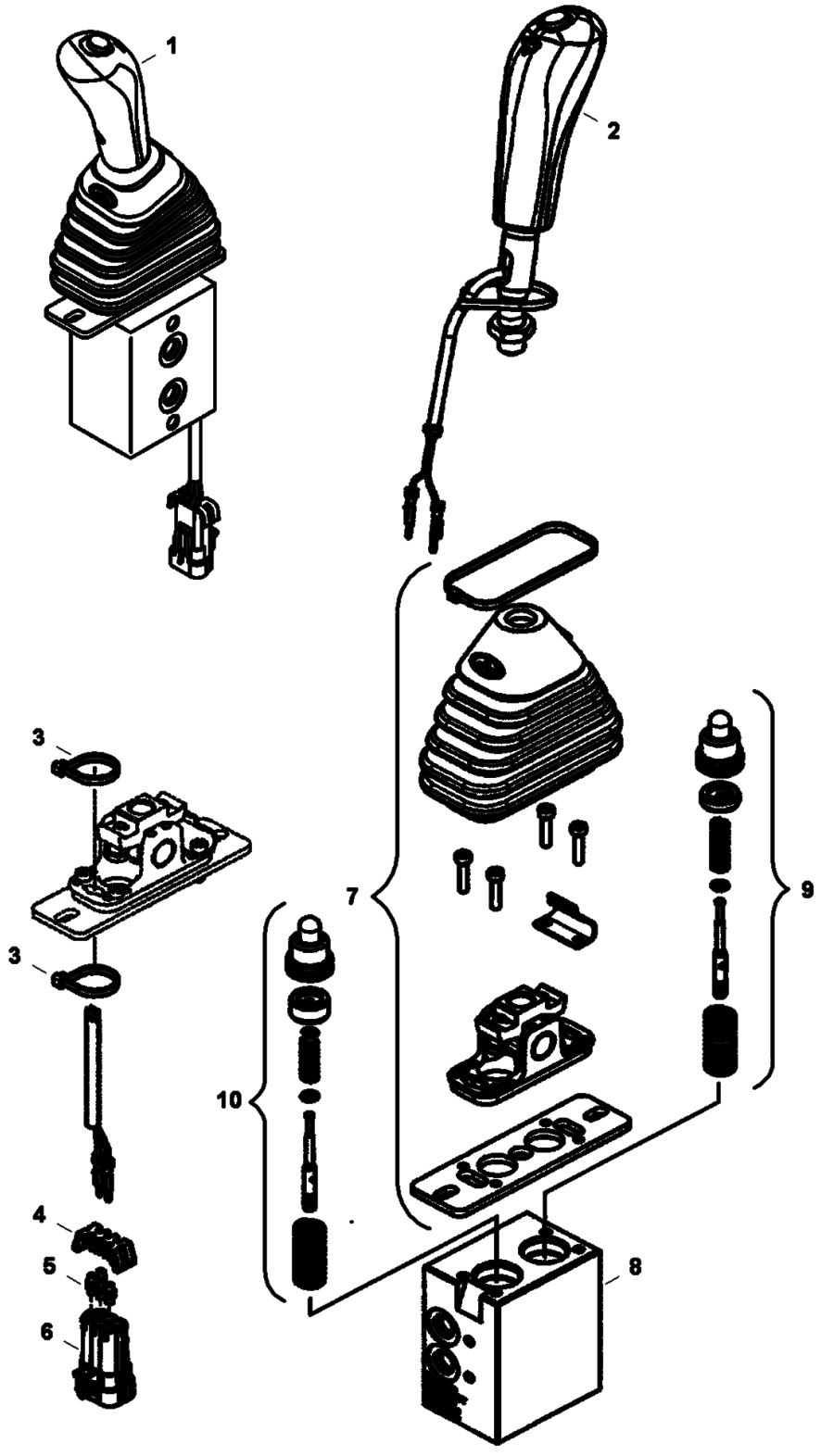

BLADE JOYSTICK (Cont'd)
(W/O Angle Blade)

Ref No	Part Number	Description	Remarks	Serial Number	Qty
1	7008581	JOYSTICK, BLADE	Ref. 2-10		1
2	7010549	HANDLE, JOYSTICK			1
3	6610510	TIE			3
4	7010550	LOCK			1
5	7010551	PLUG			4
6	7010552	CONNECTOR			1
7	7010553	BASE, JOYSTICK			1
8	7010554	HOUSING, JOYSTICK			1
9	7010555	SPOOL, ACTUATOR ASSY			1
10	7010556	SPOOL, ACTUATOR ASSY			1

BLADE JOYSTICK
(W/ Angle Blade)

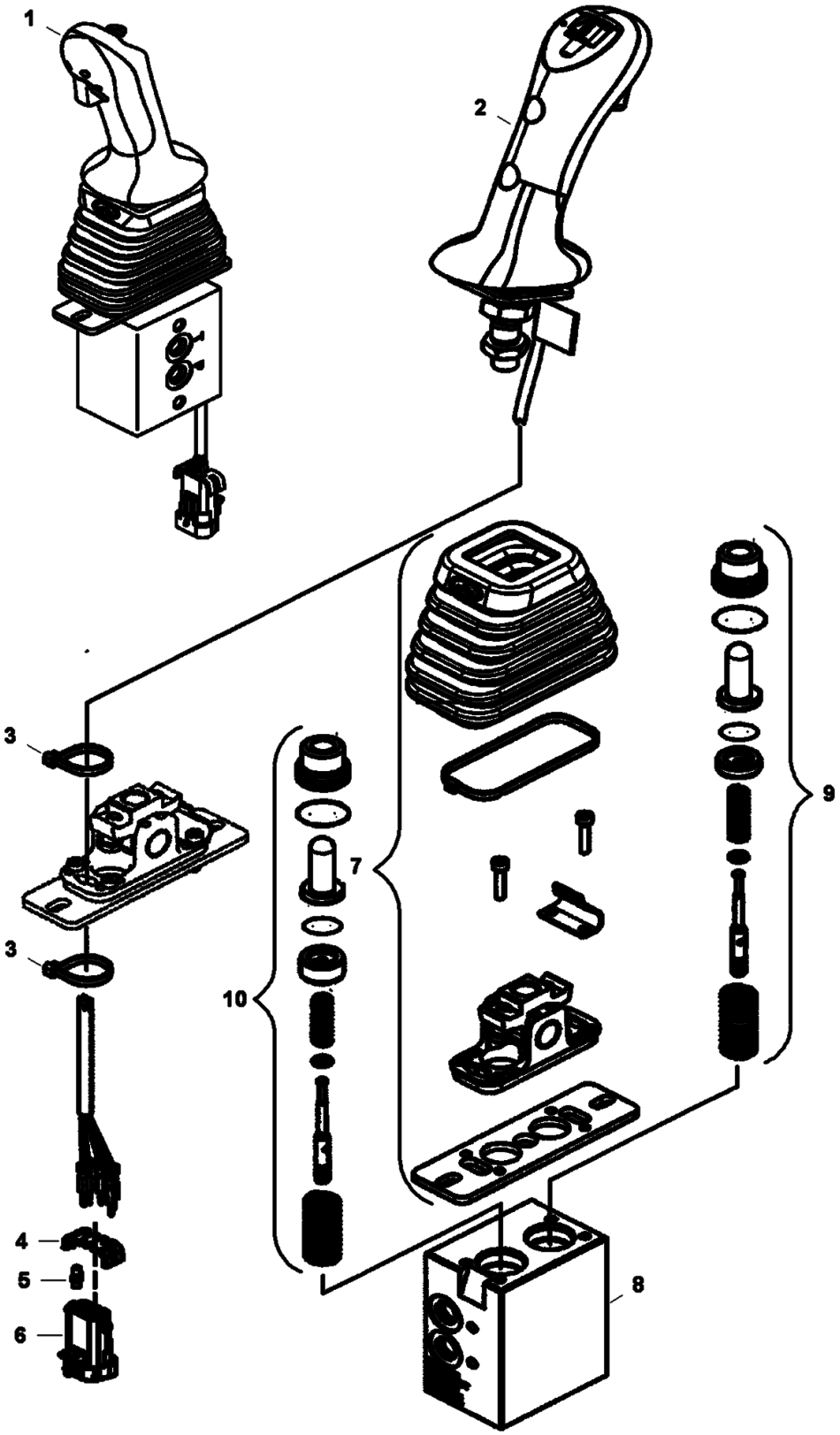

BLADE JOYSTICK (Cont'd)
(W/ Angle Blade)

Ref No	Part Number	Description	Remarks	Serial Number	Qty
1	6698142	JOYSTICK, BLADE			1
2	7010557	HANDLE, JOYSTICK			1
3	6610510	TIE			3
4	7010550	LOCK			1
5	7010551	PLUG			4
6	7010552	CONNECTOR			1
7	7010558	BASE, JOYSTICK			1
8	7010554	HOUSING, JOYSTICK			1
9	7010555	SPOOL, ACTUATOR ASSY			1
10	7010556	SPOOL, ACTUATOR ASSY			1

SWIVEL ASSY
(W/O Angle Blade)

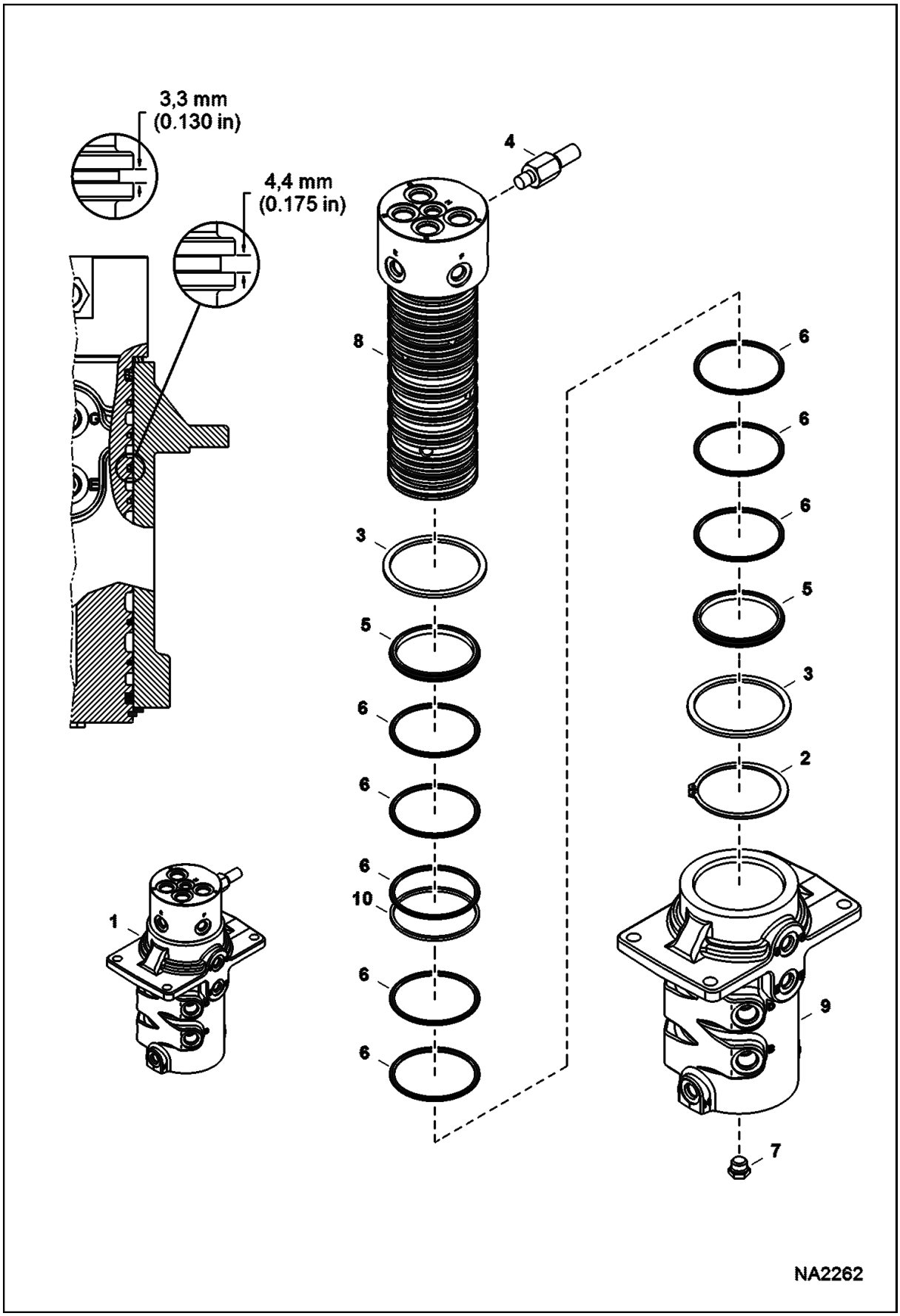

SWIVEL ASSY (Cont'd)
(W/O Angle Blade)

Ref No	Part Number	Description	Remarks	Serial Number	Qty
1		SWIVEL, HYD ASSY	NAP - Ref. 2-9 - Was 7143734 [A]		1
1	7143734	SWIVEL, HYD ASSY	Ref. 2-10		1
2	6662076	RING			1
3	6674221	WASHER			2
4	6810029	STOP			1
5	7100535	SEAL	Was 6810610 [A]		2
6	6810813	SEAL, OIL	2 pc seal		8
7	6812171	PLUG			4
7	79K6	O RING 10			4
8	7143717	SPOOL, SWIVEL			1
9		BARREL	NAP - Order Ref. 1		1
10	6679248	RING	Use W/Ref. 6 W/spool W/4,44 mm (.175") groove height on the third O-ring groove from the top		1

SWIVEL ASSY
(W/ Angle Blade)

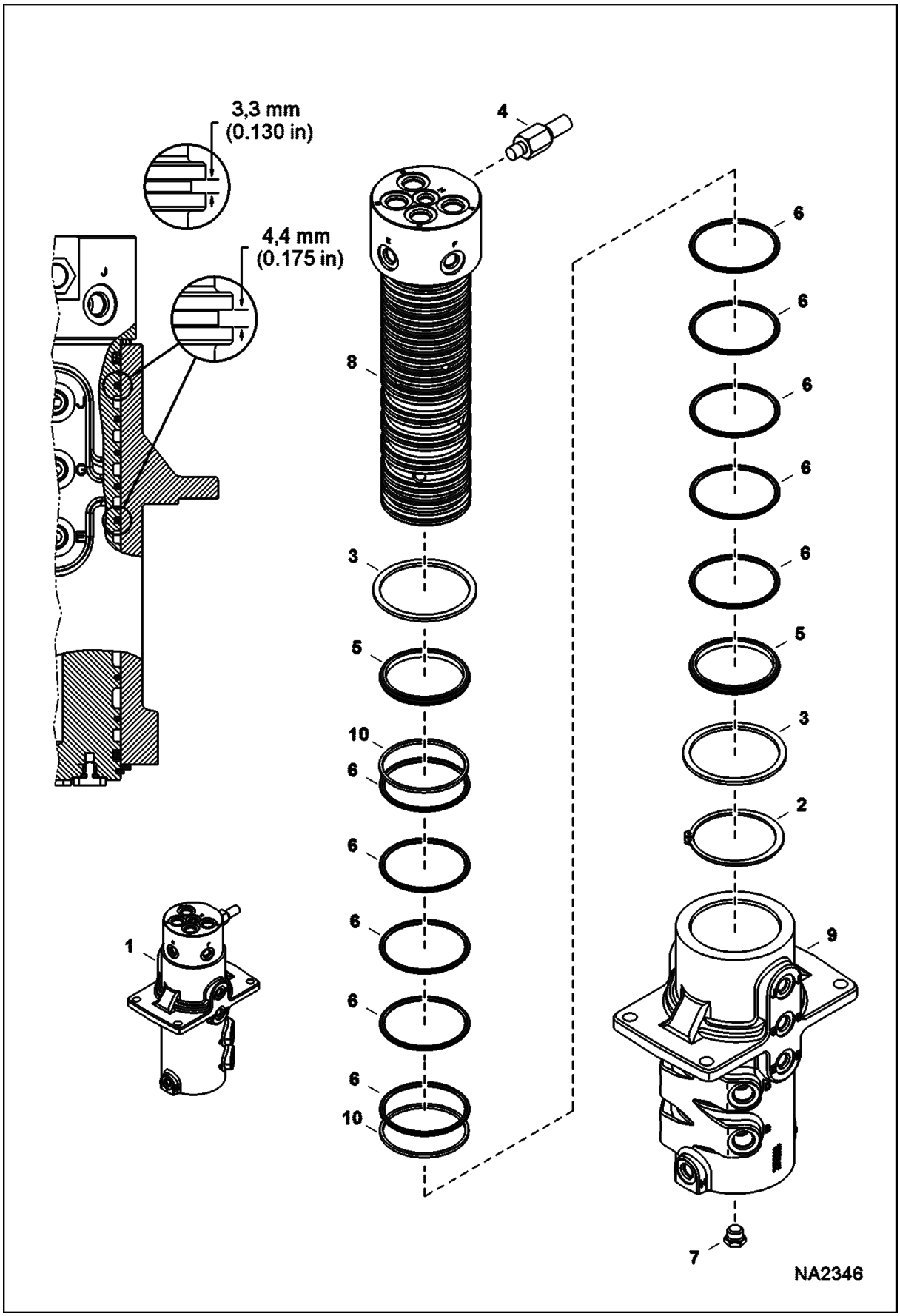

SWIVEL ASSY (Cont'd)
(W/ Angle Blade)

Ref No	Part Number	Description	Remarks	Serial Number	Qty
1		SWIVEL, HYD ASSY	NAP - Ref. 2-9 - Was 7152908 [A]		1
1	7152908	SWIVEL, HYD ASSY	Ref. 2-10		1
2	6662076	RING			1
3	6674221	WASHER			2
4	6810029	STOP			1
5	7100535	SEAL	Was 6810610 [A]		2
6	6810813	SEAL, OIL	2 pc seal		10
7	6812171	PLUG			6
7	79K6	O RING 10			4
8	7152911	SPOOL, SWIVEL			1
9		BARREL	NAP - Order Ref. 1		1
10	6679248	RING	Use W/Ref. 6 W/spool W/4,44 mm (.175") groove height on the first and fifth O-ring grooves from the top		2

TRAVEL MOTOR

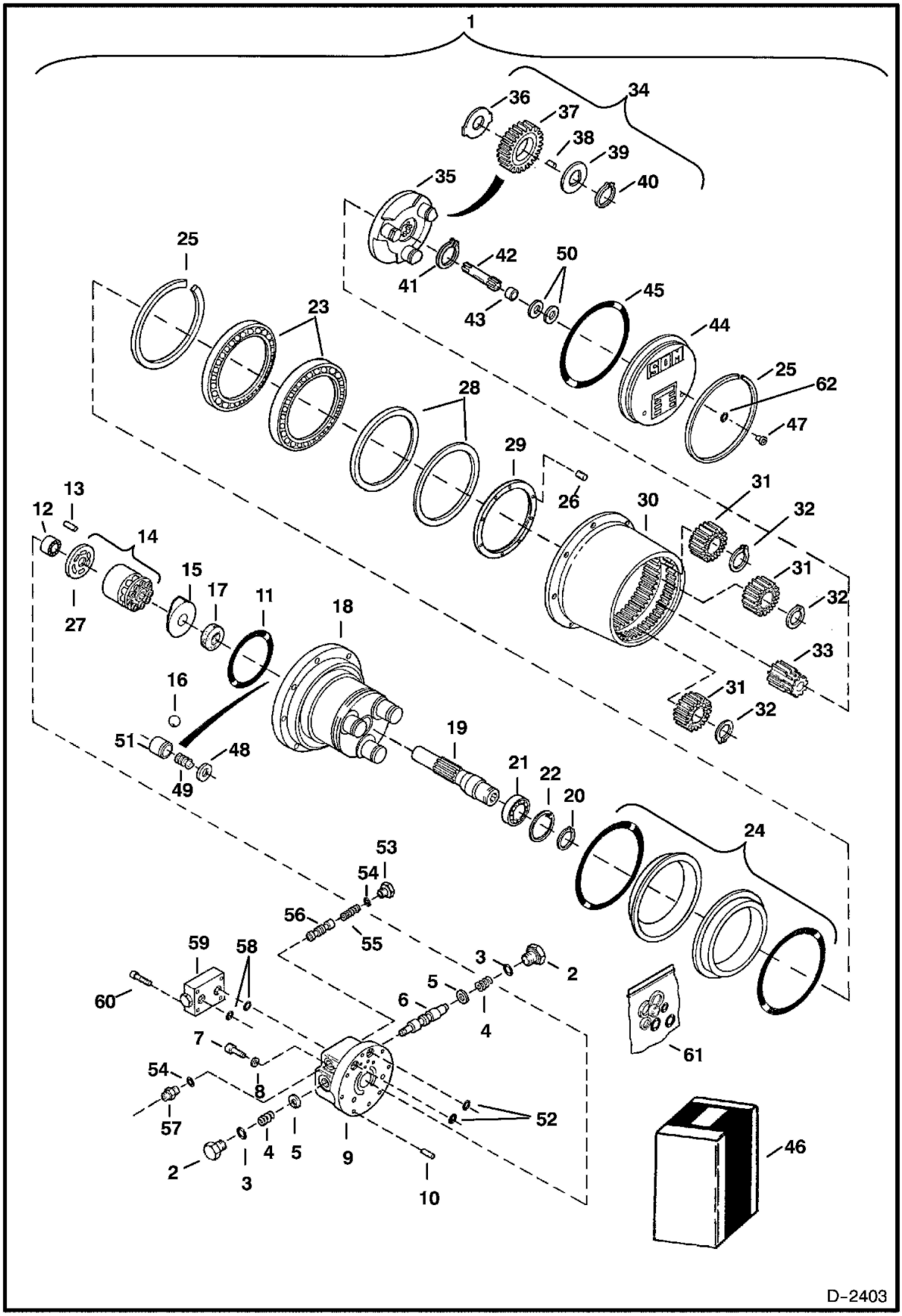

Ref No	Part Number	Description	Remarks	Serial Number	Qty
1	7012323	MOTOR, DRIVE HYD TRAVEL	travel - W/Ref. 2-62		2
2	6671915	PLUG			2
3	6671911	O-RING	Incl. W/Ref. 61		2
4	6670138	SPRING			2
5	6671917	WASHER			2
6	6671918	SPOOL			2
7	6671919	SCREW			6
8	6671920	WASHER			6
9	6671936	HOUSING			1
10	6671913	PIN			2
11	6671946	O-RING	Incl. W/Ref. 61		1
12	6671947	BEARING			1
13	6688111	PIN			1
14	6671944	PISTON ASSY			1
15	6671942	PLATE	swash		1
16	6670130	BALL			1
17	6671941	SEAL	Incl. W/Ref. 61		1
18	6671924	HOUSING			1
19	6671948	SHAFT, MOTOR DRIVE			1
20	6669130	SNAP RING			1
21	6671940	BEARING			1
22	6671951	SNAP RING			1
23	6671937	BEARING, MOTOR TRAVEL			2
24		FLOATING SEAL	NSS - O-ring & flange - Incl. W/Ref. 46		2
25	6671932	SNAP RING			2
26	6671935	BOLT			3
27	6671945	VALVE PLATE			1
28	6671939	SHIM KIT	Includes a 0,2 mm & 0,3 mm thick shim		1
29	6671931	NUT	bearing		1
30	6671925	HOUSING			1
31	6671926	GEAR	W/bearing		3
32	6669102	SNAP RING			3
33	6671927	SHAFT			1
34	7012328	GEAR, MOTOR	W/Ref. 35-40		1
35	6692825	CARRIER			1
36	6669260	WASHER			3
37		GEAR	NSS		3
38		BEARING	NSS - needle (18) needed for each gear		54
39		WASHER	NAP		3
40	6669117	SNAP RING			3
41	6671930	SNAP RING			1
42	6692823	GEAR			1
43	6667747	SPACER			1
44	6671923	COVER			1
45	6692824	O-RING	Incl. W/Ref. 61		1
46	6671949	SEAL KIT	Incl. Ref. 24 & 61		x
47	6667771	PLUG	W/Ref. 62 - for cover W/ 1/8" hole		2
48	6671953	WASHER			2
49	6670132	SPRING			2
50	6669597	SHIM	.0007 " (0,2 mm) thick		x
50	6669598	SHIM	.012" (0,3 mm) thick		x
50	6669599	SHIM	.019" (0,5 mm) thick		x
51	6671952	PISTON			2
52	6671943	O-RING	Incl. W/Ref. 61		2

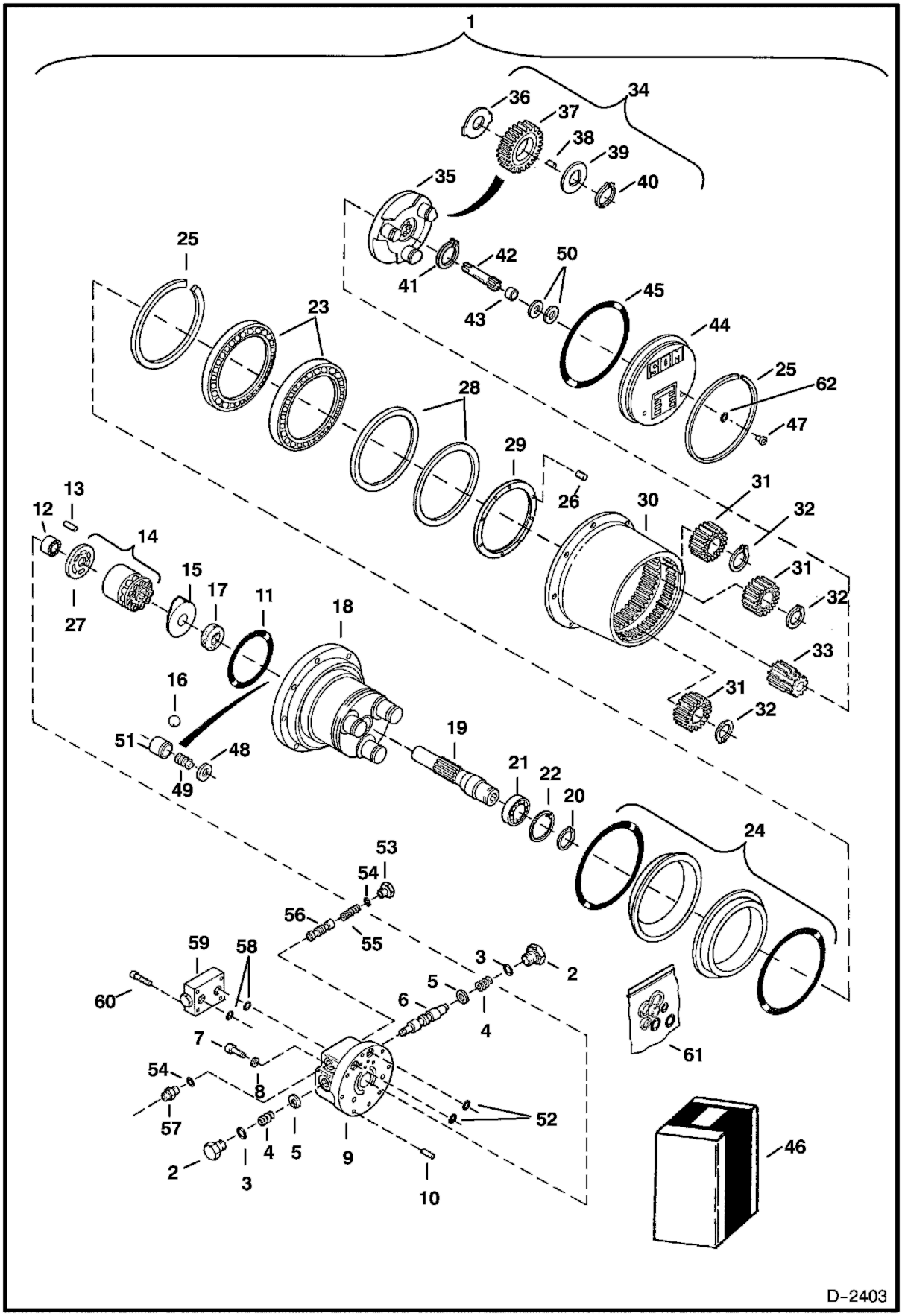
1
34
36
37
38
39
40
35
25
42
50
41
43
45
44
23
25
62
47
28
29
26
30
31
32
13
12
14
15
17
11
18
27
31
32
33
16
31
32
51
48
49
19
21
22
20
24
53
54
56
55
59
58
3
2
60
5
6
4
7
61
54
8
52
57
4
5
9
2
3
10
46
D-2403

Ref No	Part Number	Description	Remarks	Serial Number	Qty
53	6671933	PLUG			1
54	6679861	O-RING	Incl. W/Ref. 61		2
55	6686078	SPRING			1
56	6670704	SPOOL			1
57	6670136	ADAPTER			1
58	6671921	O-RING	Incl. W/Ref. 61		2
59	6670134	VALVE ASSY	relief - Available as an assembly only - No Serviceable Parts		1
59	6687755	KIT, SEAL	for 6670134		1
59	6679326	WASHER	sealing - for plug		1
60	6670135	BOLT			4
61	6671950	SEAL KIT	Incl. Ref. 3, 11, 17, 45, 52, 54 & 58		x
62	6675272	WASHER			1

SLEW MOTOR
(Motor)

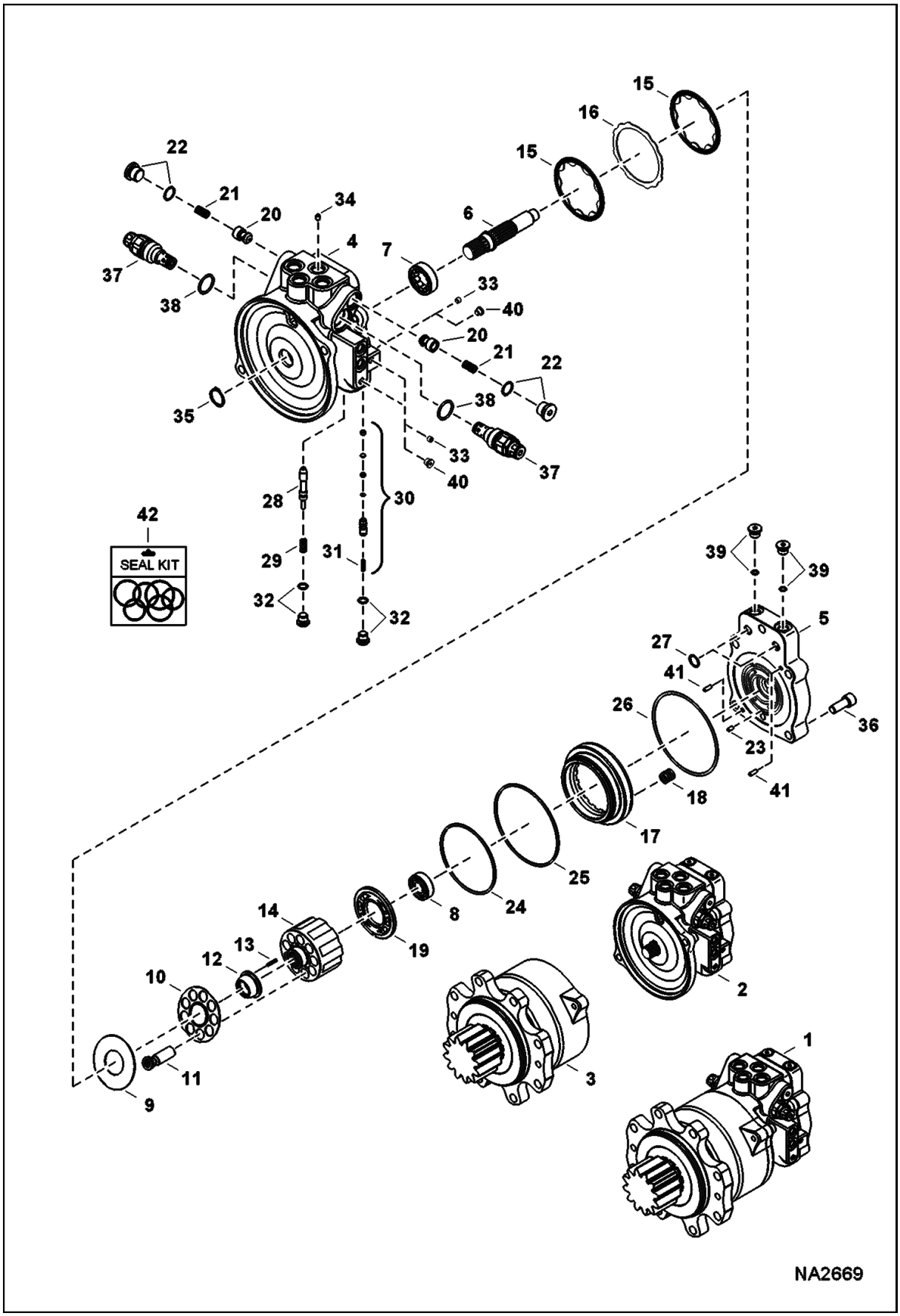

SLEW MOTOR (Cont'd)
(Motor)

Ref No	Part Number	Description	Remarks	Serial Number	Qty
1		MOTOR, HYD SLEW	NAP - Order 7020242 slew motor & (8) 60CM1640 bolts - discard existing spacer, bolts, and washers - Was 7010259 [A]	AG3G11001 - 11002	1
1		MOTOR, HYD SLEW	NAP - Order 7020242 slew motor & (8) 60CM1640 bolts - discard existing spacer, bolts, and washers - Was 7010259 [A]	AHHC11001 - 11004	1
1		SLEW MOTOR	NAP - Order 7020242 - Was 7013210 [A]	AG3G11003 - 11116	1
1		SLEW MOTOR	NAP - Order 7020242 - Was 7013210 [A]	AHHC11005 - 11044	1
1	7020242	MOTOR, SLEW	Ref. 2-41	AHHC11045 & Above	1
1	7020242	MOTOR, SLEW	Ref. 2-41	AG3G11117 & Above	1
2		MOTOR, HYD SLEW	NSS - Order Ref. 1		1
3		CARRIER	See Illustration SLEW MOTOR/ NA2723 - NSS - Order Ref. 1		1
4		HOUSING	NSS - Order Ref. 1		1
5	7022119	HOUSING, VALVE	Was 7019215 [A]		1
6	7019216	SHAFT, DRIVE			1
7	7019217	BEARING, ROLLER			1
8	7019218	BEARING, BALL			1
9	7019219	PLATE, SHOE			1
10	7019220	PLATE, RETAINER			1
11	7019214	PISTON, ASSY			9
12	7019221	BUSHING			1
13	7019222	SPRING			9
14	7019223	BLOCK, CYL			1
15	7019224	PLATE, FRICTION			2
16	7019225	PLATE			1
17	7019226	PISTON, BRAKE			1
18	7019227	SPRING			16
19	7019228	PLATE, VALVE			1
20	7019229	PLUNGER			2
21	7019230	SPRING, CHECK VALVE			2
22	7019231	PLUG			2
23	7019232	PIN, SPRING			1
24	7019233	O-RING			1
25	7019234	O-RING			1
26	7019235	O-RING			1
27	7009881	ORING			2
28	7019237	SPOOL, VALVE			1
29	7019238	SPRING			1
30	7019239	PLUNGER			1
31	7019240	SPRING			1
32	7019241	PLUG			2
33	7009897	PLUG		AG3G11001 - 11116	4
33	7009897	PLUG		AHHC11001 - 11044	4
34	7019243	ORIFICE			1

SLEW MOTOR (Cont'd)
(Motor)

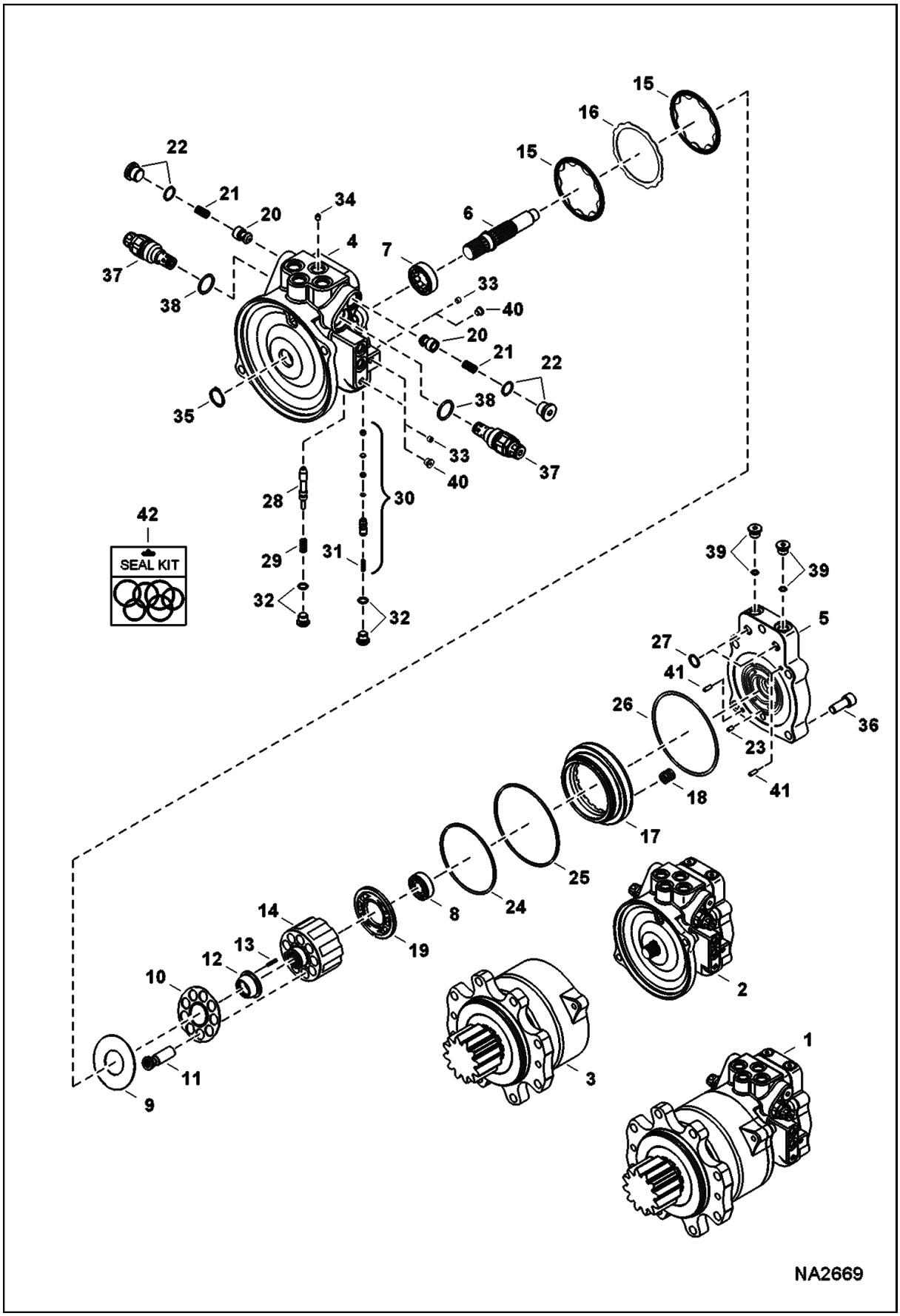

SLEW MOTOR (Cont'd)
(Motor)

Ref No	Part Number	Description	Remarks	Serial Number	Qty
35	7019244	RING, SNAP			4
36	7019245	BOLT			7
37	7019246	VALVE, RELIEF			2
38	7019247	O-RING			1
39	7019242	PLUG			3
40	7022120	PLUG		AG3G11117 & Above	4
40	7022120	PLUG		AHHC11045 & Above	4
41	7022121	PIN, STRAIGHT		AHHC11045 & Above	2
41	7022121	PIN, STRAIGHT		AG3G11117 & Above	2
42	7019213	KIT, SEAL	Ref. 24-27 & 38 on this page and Ref. 2 & 9 on NA2723		1

SLEW MOTOR
(Carrier)

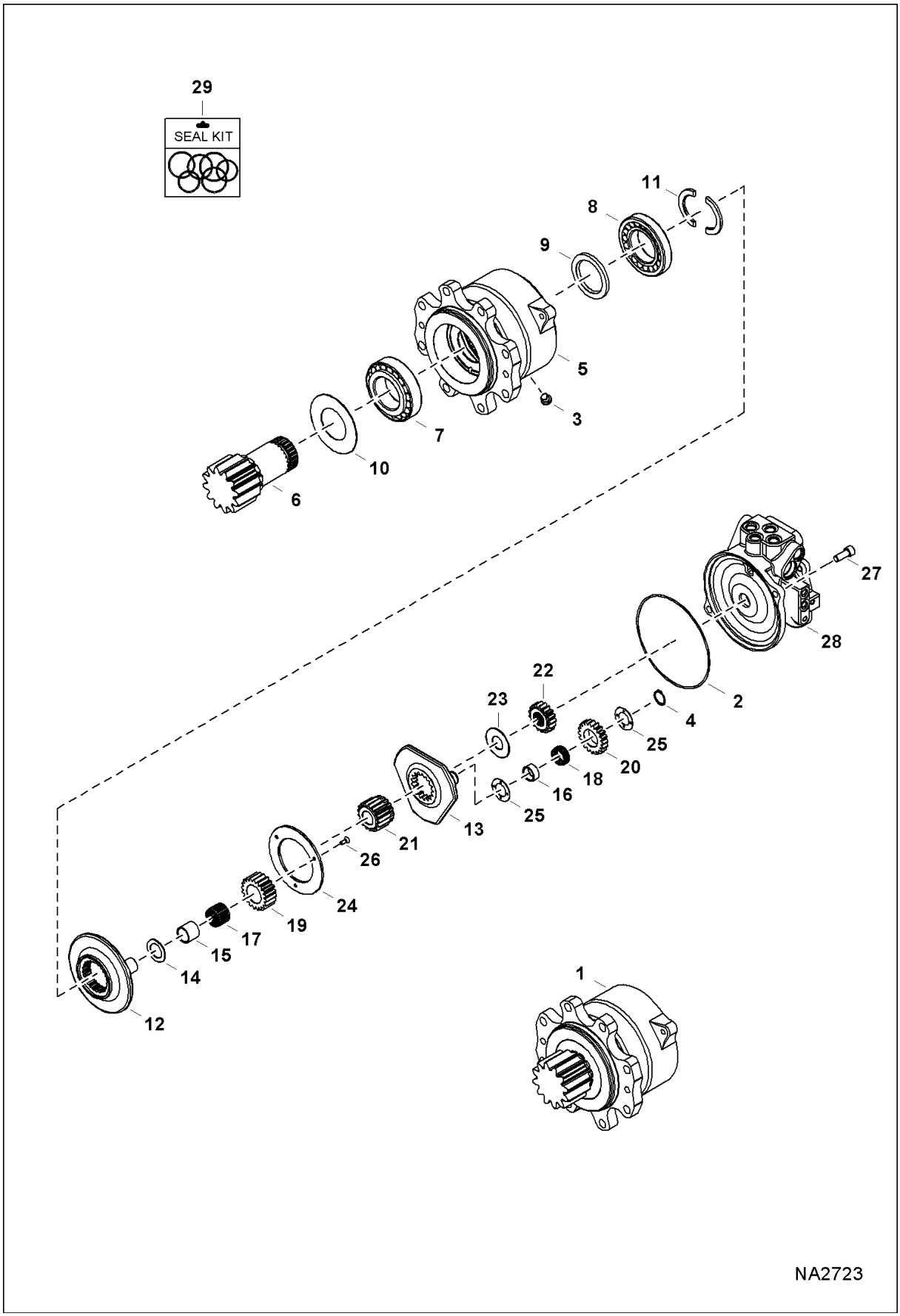

SLEW MOTOR (Cont'd)
(Carrier)

Ref No	Part Number	Description	Remarks	Serial Number	Qty
1		CARRIER	See Illustration SLEW MOTOR/ NA2669 NSS - Ref. 2-27		1
2	7019236	O-RING			1
3	7019242	PLUG			1
4	7019244	RING, SNAP			3
5		HOUSING	NAP - Order 7013210 slew motor & (8) 60CM1640 bolts - discard existing spacer, bolts, and washers	AG3G11001 - 11002	1
5		HOUSING	NAP - Order 7013210 slew motor	AHHC11005 & Above	1
5		HOUSING	NAP - Order 7013210 slew motor	AG3G11003 & Above	1
5		HOUSING	NAP - Order 7013210 slew motor & (8) 60CM1640 bolts - discard existing spacer, bolts, and washers	AHHC11001 - 11004	1
6		SHAFT, MOTOR	NSS - Order 7013210 slew motor & (8) 60CM1640 bolts - discard existing spacer, bolts, and washers	AG3G11001 - 11002	1
6		SHAFT, MOTOR	NSS - Order 7013210 slew motor & (8) 60CM1640 bolts - discard existing spacer, bolts, and washers	AHHC11001 - 11004	1
6	7019295	SHAFT, MOTOR		AG3G11003 & Above	1
6	7019295	SHAFT, MOTOR		AHHC11005 & Above	1
7	7019248	BEARING, TAPERED ROLLER			1
8	7019249	BEARING, TAPERED ROLLER			1
9	7019250	SEAL, OIL			1
10	7019251	COVER, BEARING			1
11	7019252	COLLAR, HALF			2
12	7019253	CARRIER, MOTOR			1
13	7019254	CARRIER, MOTOR			1
14	7019255	WASHER, THRUST			3
15	7019256	RING, INNER			3
16	7019257	RING, INNER			3
17	7019258	BEARING, NEEDLE			3
18	7019259	BEARING, NEEDLE			3
19	7019260	GEAR, MOTOR			3
20	7019261	GEAR, MOTOR			3
21	7019262	GEAR, MOTOR			1
22	7019263	GEAR, MOTOR			1
23	7019264	WASHER, THRUST			1
24	7019265	PLATE			1
25	7019266	WASHER, THRUST			3
26	7019289	BOLT			6
27	7019245	BOLT			2
28		MOTOR, HYD SLEW	See Illustration SLEW MOTOR/ NA2669		1
29	7019213	KIT, SEAL	Ref. 2 & 9 on this page and Ref. 24-27 & 38 on		1

SLEW MOTOR (Cont'd)
(Carrier)

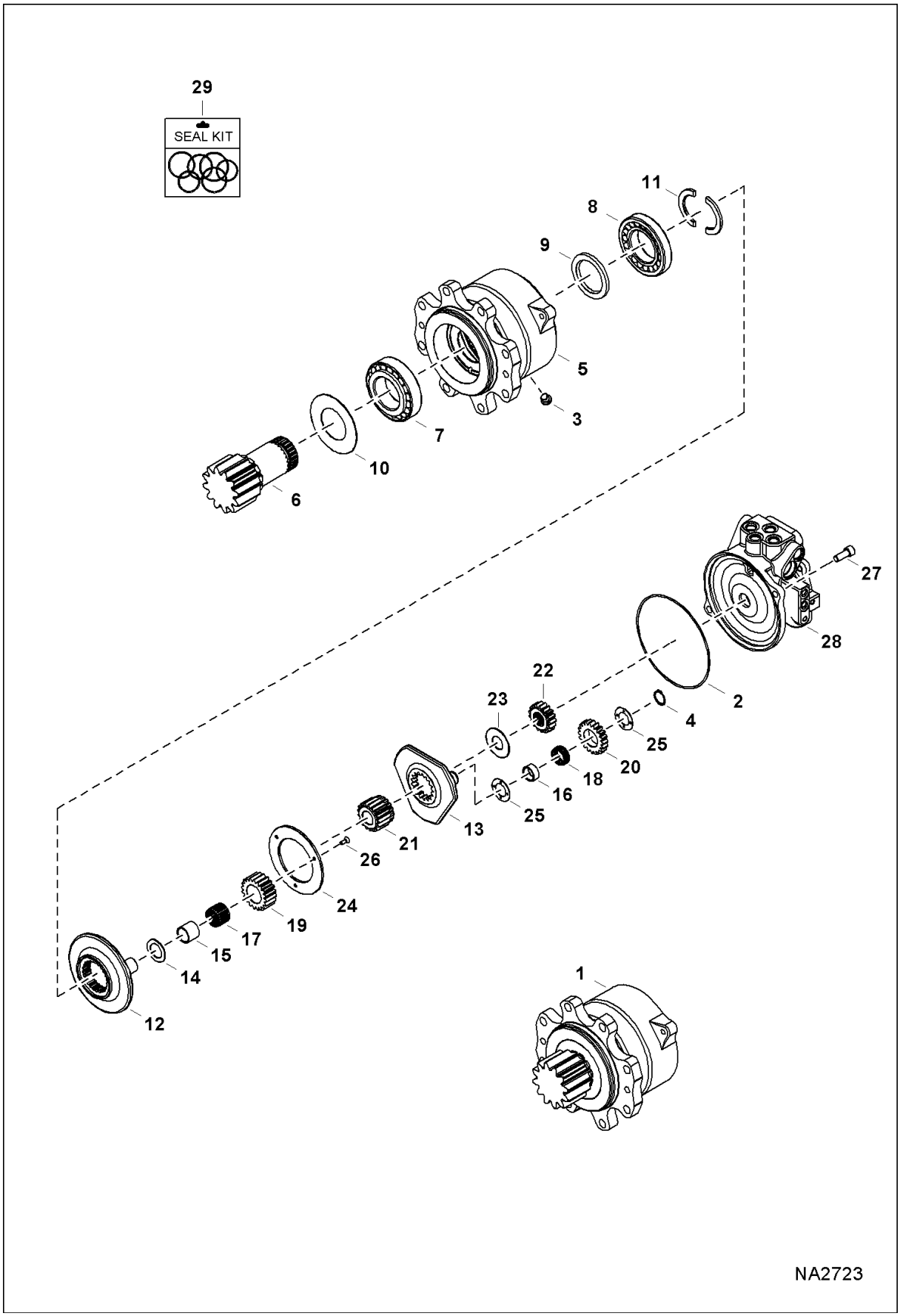

SLEW MOTOR (Cont'd)
(Carrier)

Ref No	Part Number	Description	Remarks	Serial Number	Qty
			NA2669		

HYDRAULIC CONTROL VALVE
(9 Section Assembly)
(W/O Angle Blade)

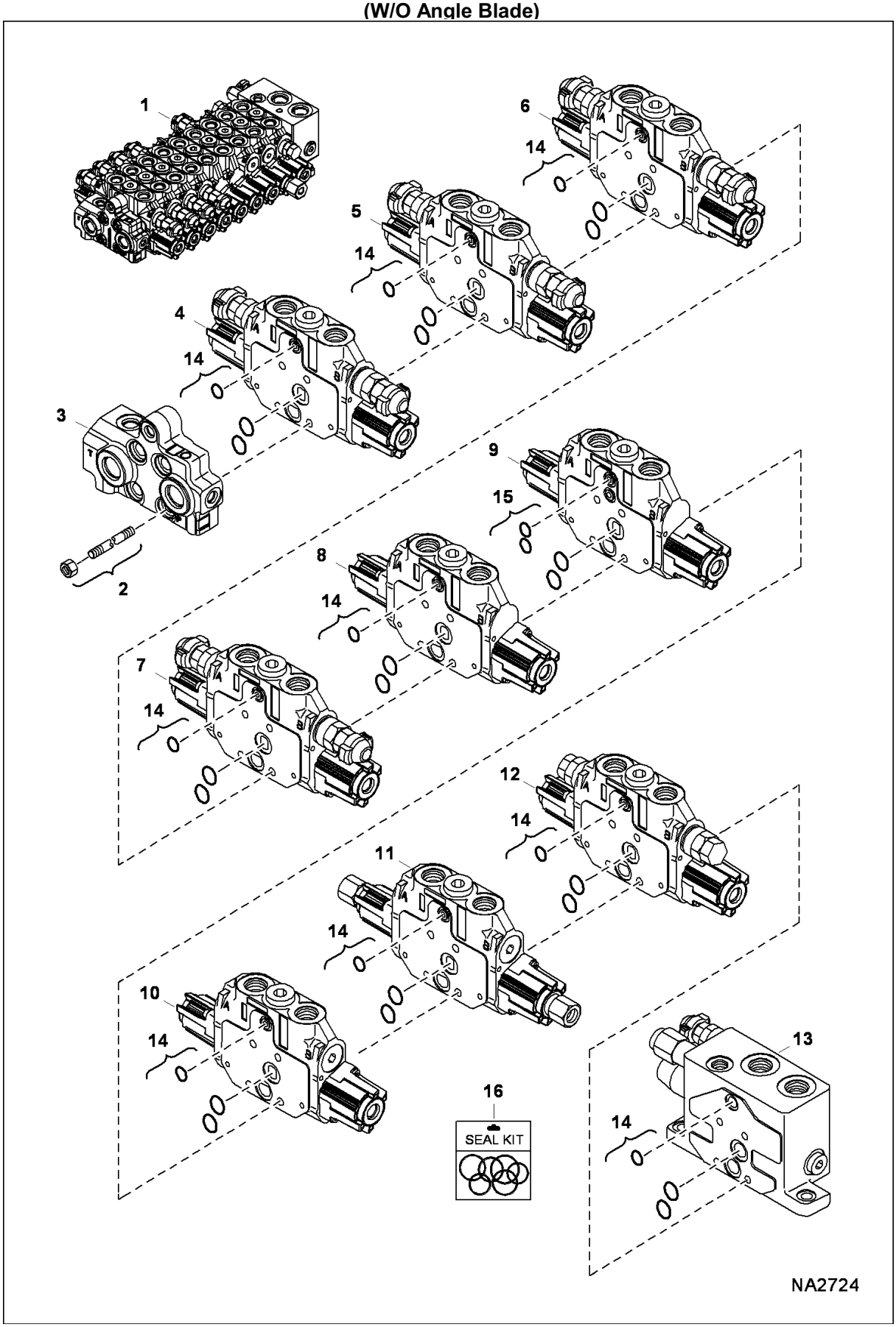

HYDRAULIC CONTROL VALVE (Cont'd)
(9 Section Assembly)
(W/O Angle Blade)

Ref No	Part Number	Description	Remarks	Serial Number	Qty
1	7010255	VALVE, CONTROL	Ref. 2-15		1
2	6677476	TIE ROD KIT			1
3	7016139	SECTION, VALVE	See Illustration HYDRAULIC CONTROL VALVE/ NA5128 - outlet		1
4	7016137	SECTION, VALVE	See Illustration HYDRAULIC CONTROL VALVE/ NA5126 - bucket		1
5	7016135	SECTION, VALVE	See Illustration HYDRAULIC CONTROL VALVE/ NA5126A - arm		1
6	7016134	SECTION, VALVE	See Illustration HYDRAULIC CONTROL VALVE/ NA5126B - auxiliary		1
7	7016132	SECTION, VALVE	See Illustration HYDRAULIC CONTROL VALVE/ NA5126C - boom		1
8	7016130	SECTION, VALVE	See Illustration HYDRAULIC CONTROL VALVE/ NA5222 - RH travel		1
9	7016129	SECTION, VALVE	See Illustration HYDRAULIC CONTROL VALVE/ NA5222A - LH travel		1
10	7016128	SECTION, VALVE	See Illustration HYDRAULIC CONTROL VALVE/ NA5125 - blade		1
11	7016127	SECTION, VALVE	See Illustration HYDRAULIC CONTROL VALVE/ NA5228 - slew		1
12	7016124	SECTION, VALVE	See Illustration HYDRAULIC CONTROL VALVE/ NA5124 - boom swing		1
13	6685238	VALVE	See Illustration HYDRAULIC CONTROL VALVE/ NA5221 - inlet		1
14	6677467	KIT, SEAL			9
15	6677472	KIT,SEAL			1
16	6677701	SEAL KIT	includes Ref. 15 & (9) 6677470 section assembly seal kits		1

HYDRAULIC CONTROL VALVE
(10 Section Assembly)
(W/ Angle Blade)

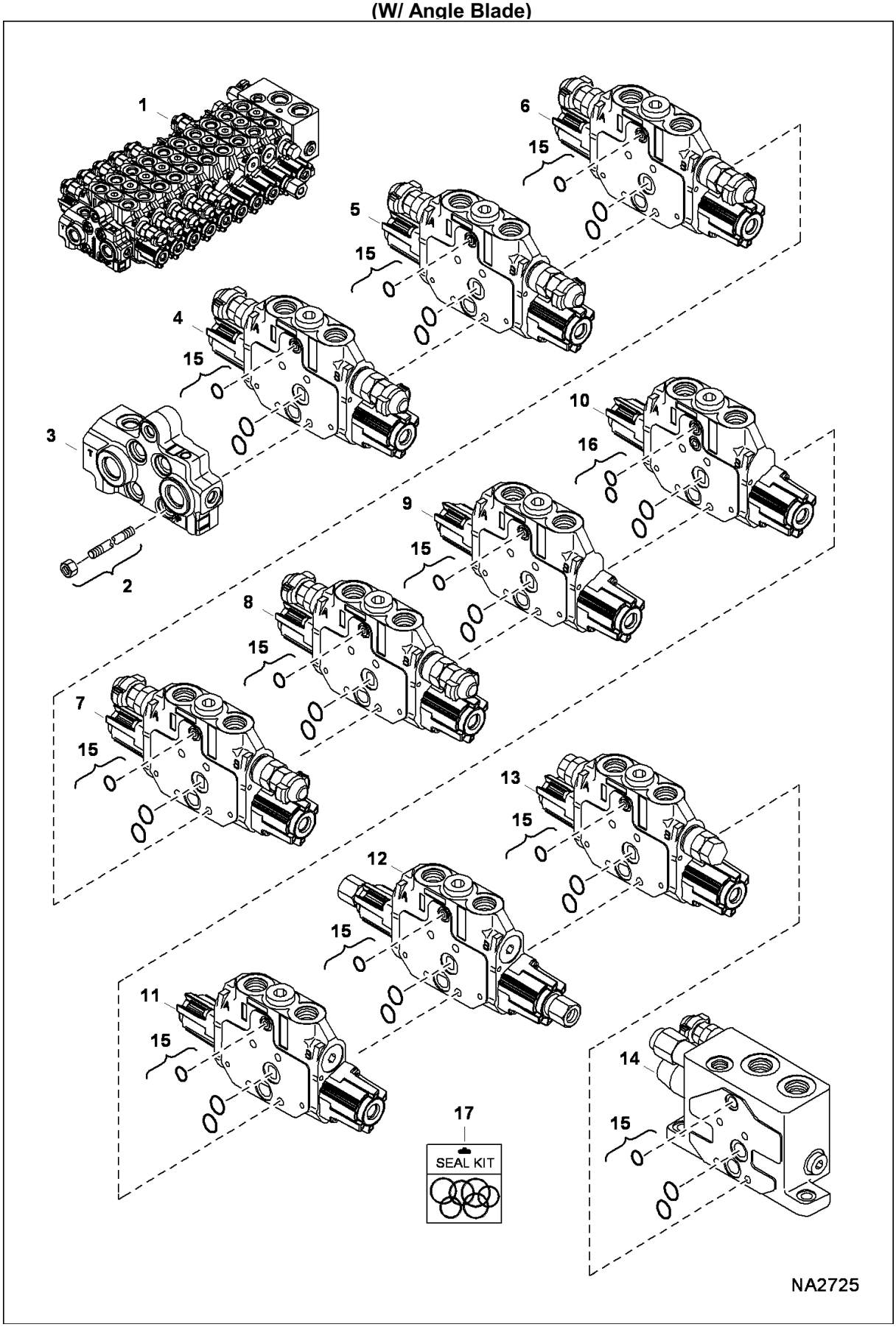

HYDRAULIC CONTROL VALVE (Cont'd)
(10 Section Assembly)
(W/ Angle Blade)

Ref No	Part Number	Description	Remarks	Serial Number	Qty
1	7001660	VALVE, CONTROL	Ref. 2-16		1
2	7016140	KIT, ROD TIE			1
3	7016139	SECTION, VALVE	See Illustration HYDRAULIC CONTROL VALVE/ NA5128 - outlet		1
4	7016137	SECTION, VALVE	See Illustration HYDRAULIC CONTROL VALVE/ NA5126 - bucket		1
5	7016135	SECTION, VALVE	See Illustration HYDRAULIC CONTROL VALVE/ NA5126A - arm		1
6	7016134	SECTION, VALVE	See Illustration HYDRAULIC CONTROL VALVE/ NA5126B - auxiliary		1
7	7016132	SECTION, VALVE	See Illustration HYDRAULIC CONTROL VALVE/ NA5126C - boom		1
8	7016131	SECTION, VALVE	See Illustration HYDRAULIC CONTROL VALVE/ NA5126D - angle blade		1
9	7016130	SECTION, VALVE	See Illustration HYDRAULIC CONTROL VALVE/ NA5222 - RH travel		1
10	7016129	SECTION, VALVE	See Illustration HYDRAULIC CONTROL VALVE/ NA5222A - LH travel		1
11	7016128	SECTION, VALVE	See Illustration HYDRAULIC CONTROL VALVE/ NA5125 - blade		1
12	7016127	SECTION, VALVE	See Illustration HYDRAULIC CONTROL VALVE/ NA5228 - slew		1
13	7016124	SECTION, VALVE	See Illustration HYDRAULIC CONTROL VALVE/ NA5124 - boom swing		1
14	6685238	VALVE	See Illustration HYDRAULIC CONTROL VALVE/ NA5221 - inlet		1
15	6677467	KIT, SEAL			10
16	6677472	KIT,SEAL			1
17	7018031	KIT, SEAL	includes Ref. 15, 16, & (10) 6677470 section assembly seal kits		1

HYDRAULIC CONTROL VALVE
(Outlet Section)

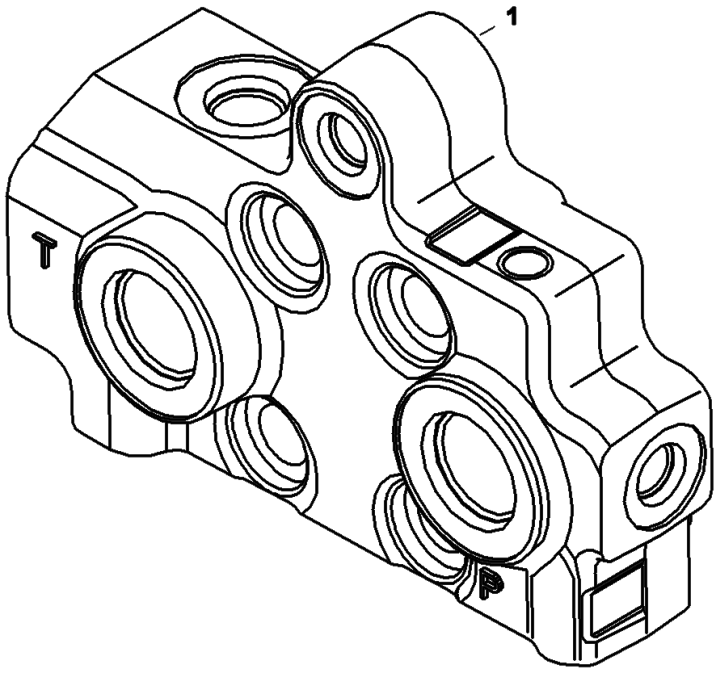

NA5128

HYDRAULIC CONTROL VALVE (Cont'd)
(Outlet Section)

Ref No	Part Number	Description	Remarks	Serial Number	Qty
1	7016139	SECTION, VALVE	outlet		1

HYDRAULIC CONTROL VALVE
(Bucket Section)

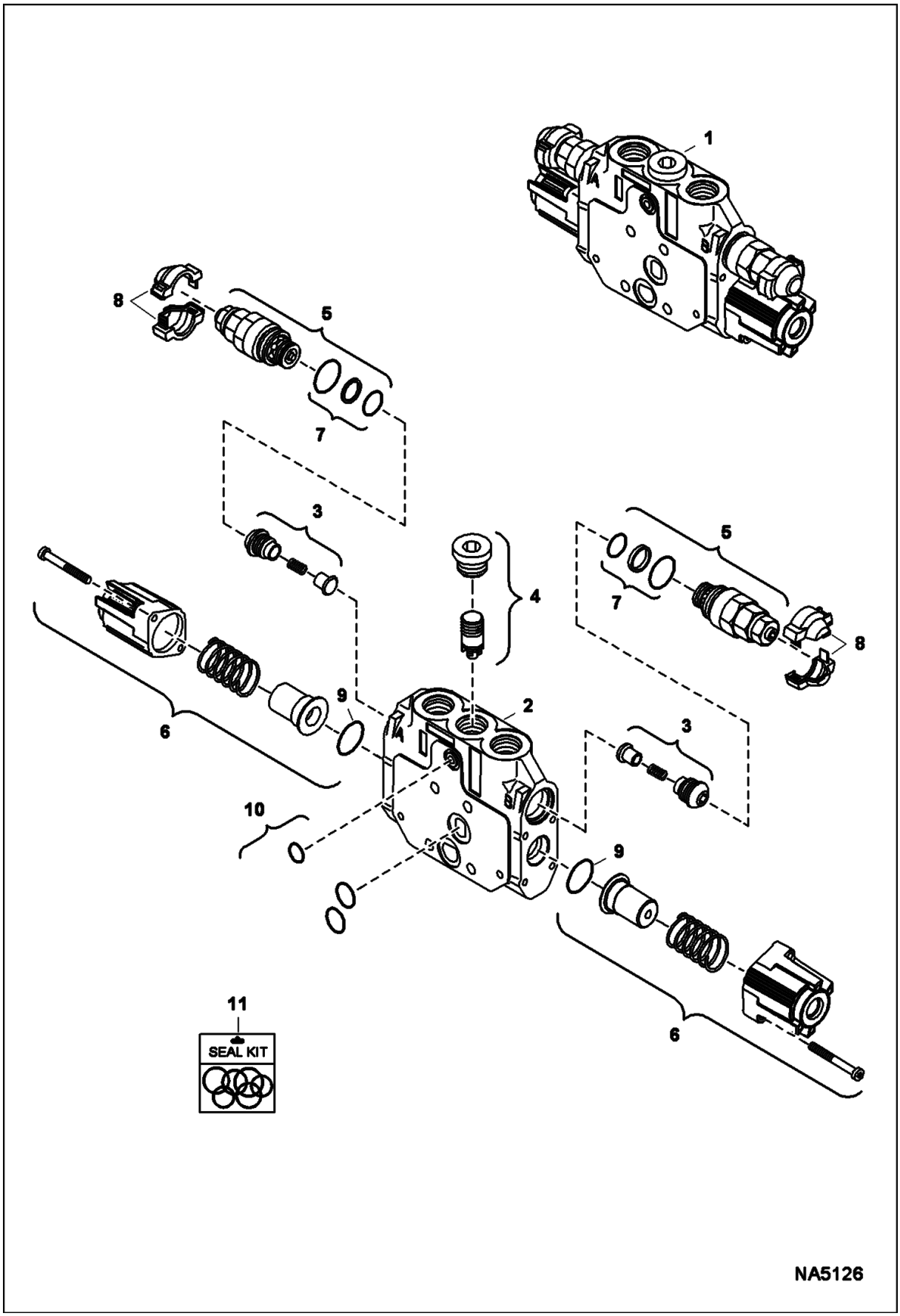

HYDRAULIC CONTROL VALVE (Cont'd)
(Bucket Section)

Ref No	Part Number	Description	Remarks	Serial Number	Qty
1	7016137	SECTION, VALVE	Ref. 2-11		1
2		HOUSING, VALVE	NSS - Order Ref. 1		1
3	6677689	CHECK VALVE			2
4	6677690	KIT, COMPENSATOR			1
5	6685249	VALVE,RELIEF			2
6	6677699	ACTUATOR	includes both sides		1
7	6910713	SEAL KIT			2
8	6687072	KIT			2
9		O-RING	NSS - Order Ref. 11		2
10	6677467	KIT, SEAL			1
11	6677470	SEAL KIT	Ref. 9 & 10		1

HYDRAULIC CONTROL VALVE
(Arm Section)

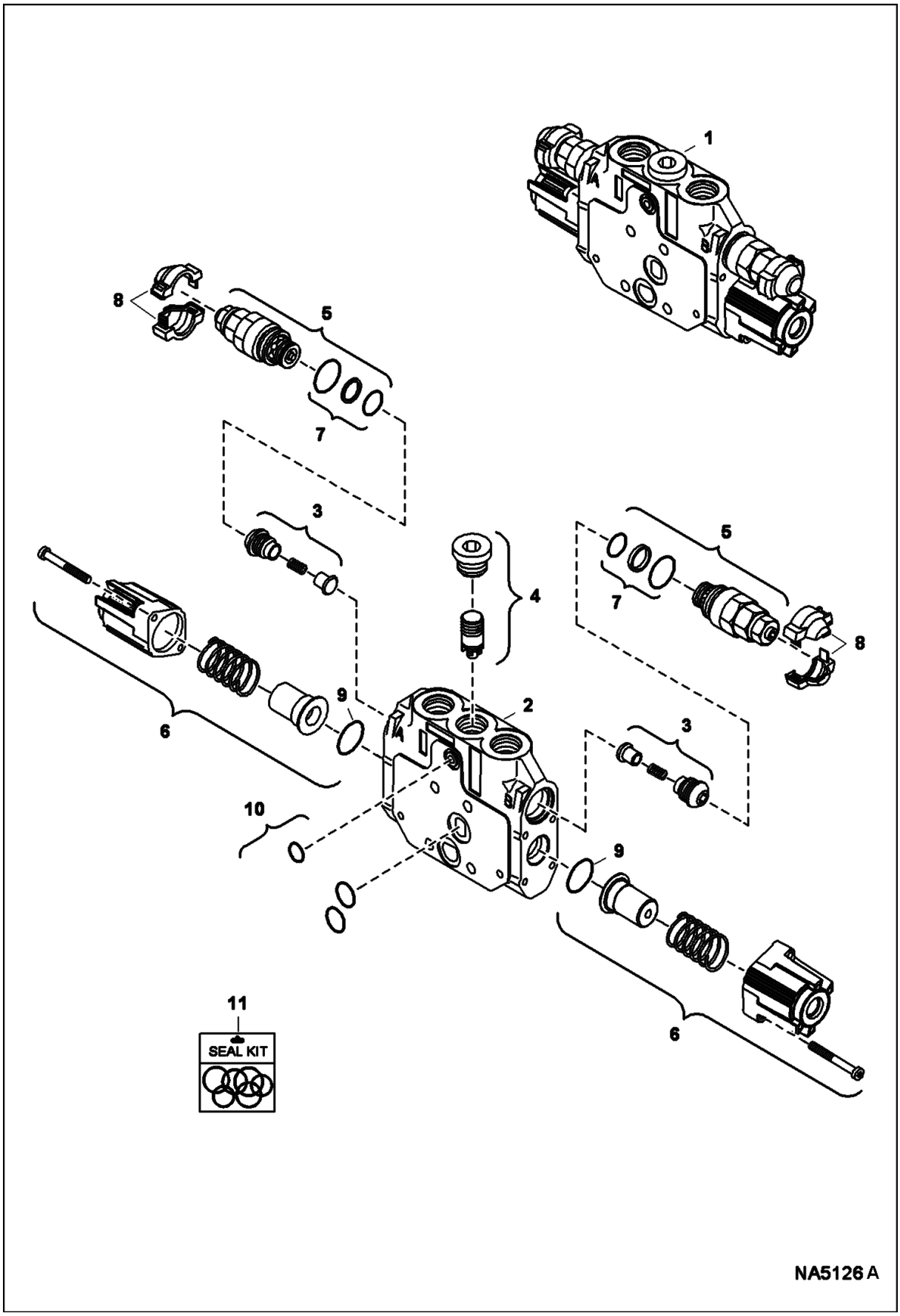

HYDRAULIC CONTROL VALVE (Cont'd)
(Arm Section)

Ref No	Part Number	Description	Remarks	Serial Number	Qty
1	7016135	SECTION, VALVE	Ref. 2-11		1
2		HOUSING, VALVE	NSS - Order Ref. 1		1
3	6677689	CHECK VALVE			2
4	6677690	KIT, COMPENSATOR			1
5	6685249	VALVE,RELIEF			2
6	6677699	ACTUATOR	includes both sides		1
7	6910713	SEAL KIT			2
8	6687072	KIT			2
9		O-RING	NSS - Order Ref. 11		2
10	6677467	KIT, SEAL			1
11	6677470	SEAL KIT	Ref. 9 & 10		1

HYDRAULIC CONTROL VALVE
(Aux Section)

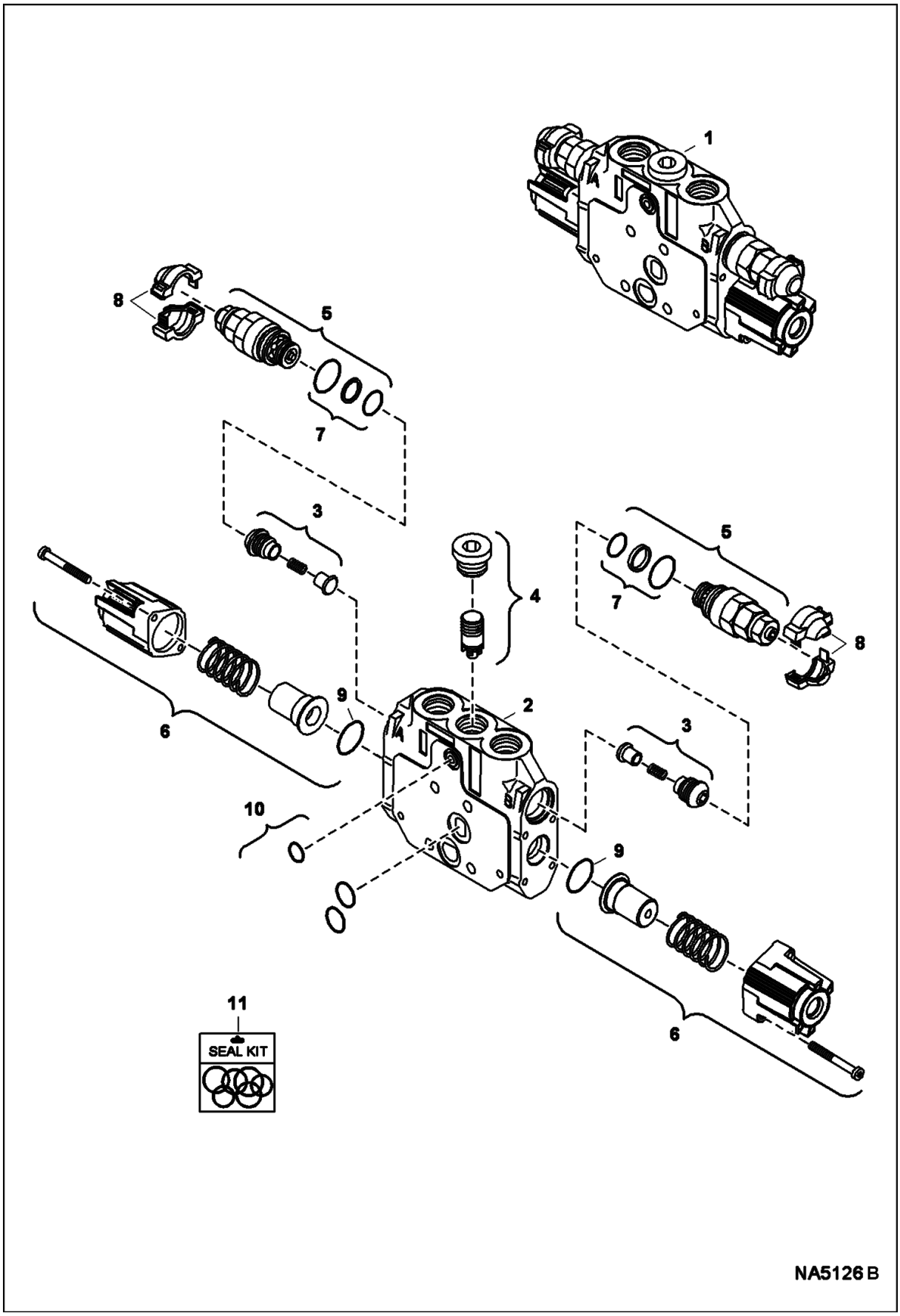

HYDRAULIC CONTROL VALVE (Cont'd)
(Aux Section)

Ref No	Part Number	Description	Remarks	Serial Number	Qty
1	7016134	SECTION, VALVE	Ref. 2-11		1
2		HOUSING, VALVE	NSS - Order Ref. 1		1
3	6677689	CHECK VALVE			2
4	6677690	KIT, COMPENSATOR			1
5	6685249	VALVE,RELIEF			2
6	6677699	ACTUATOR	includes both sides		1
7	6910713	SEAL KIT			2
8	6687072	KIT			2
9		O-RING	NSS - Order Ref. 11		2
10	6677467	KIT, SEAL			1
11	6677470	SEAL KIT	Ref. 9 & 10		1

HYDRAULIC CONTROL VALVE
(Boom Section)

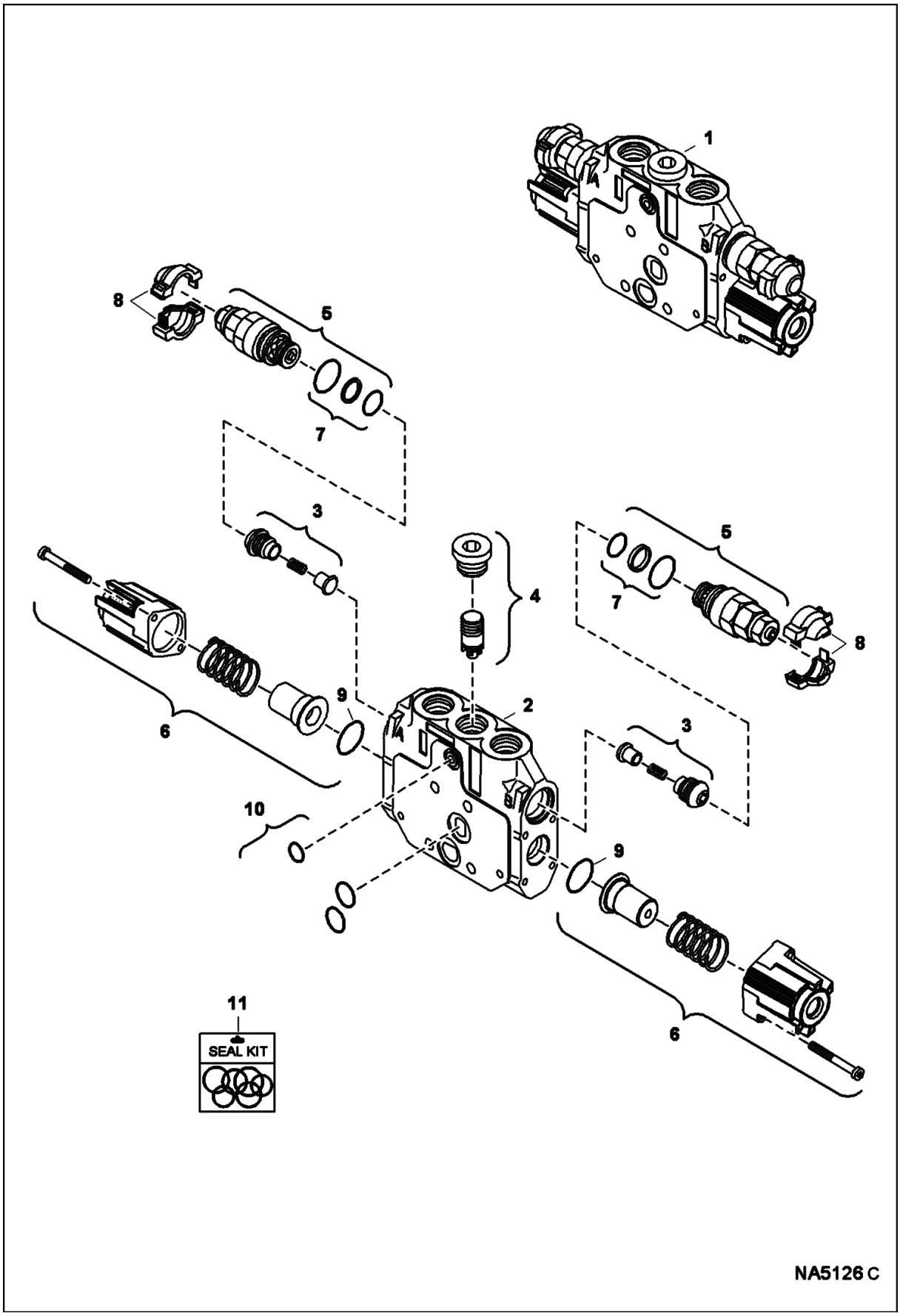

HYDRAULIC CONTROL VALVE (Cont'd)
(Boom Section)

Ref No	Part Number	Description	Remarks	Serial Number	Qty
1	7016132	SECTION, VALVE	Ref. 2-11		1
2		HOUSING, VALVE	NSS - Order Ref. 1		1
3	6677689	CHECK VALVE			2
4	6677690	KIT, COMPENSATOR			1
5	6685249	VALVE,RELIEF			2
6	6677699	ACTUATOR	includes both sides		1
7	6910713	SEAL KIT			2
8	6687072	KIT			2
9		O-RING	NSS - Order Ref. 11		2
10	6677467	KIT, SEAL			1
11	6677470	SEAL KIT	Ref. 9 & 10		1

HYDRAULIC CONTROL VALVE
(Angle Blade Section)

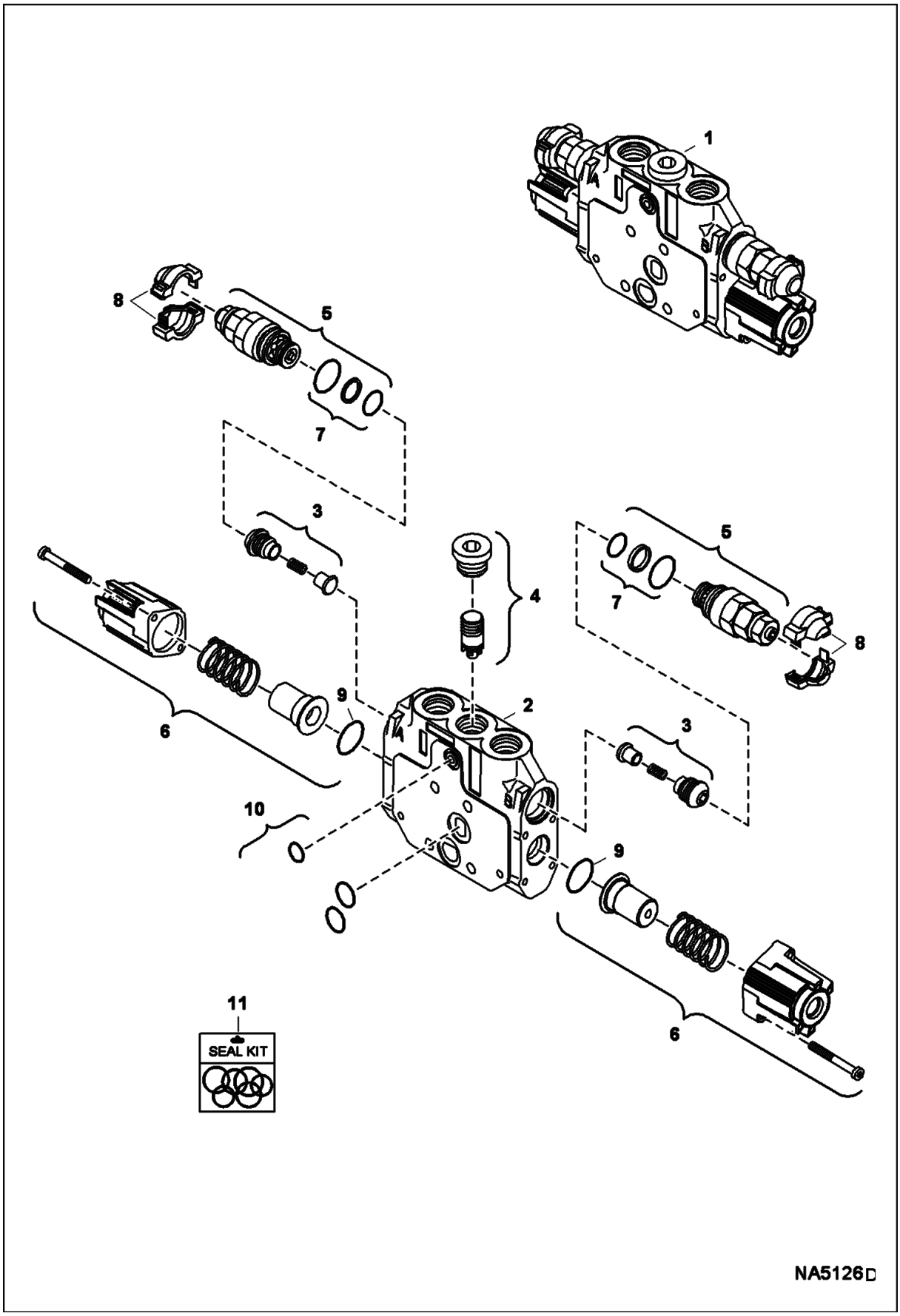

HYDRAULIC CONTROL VALVE (Cont'd)
(Angle Blade Section)

Ref No	Part Number	Description	Remarks	Serial Number	Qty
1	7016131	SECTION, VALVE	Ref. 2-11		1
2		HOUSING, VALVE	NSS - Order Ref. 1		1
3	6677689	CHECK VALVE			2
4	6677690	KIT, COMPENSATOR			1
5	6685249	VALVE,RELIEF			2
6	6677699	ACTUATOR	includes both sides		1
7	6910713	SEAL KIT			2
8	6687072	KIT			2
9		O-RING	NSS - Order Ref. 11		2
10	6677467	KIT, SEAL			1
11	6677470	SEAL KIT	Ref. 9 & 10		1

HYDRAULIC CONTROL VALVE
(RightTravel Section)

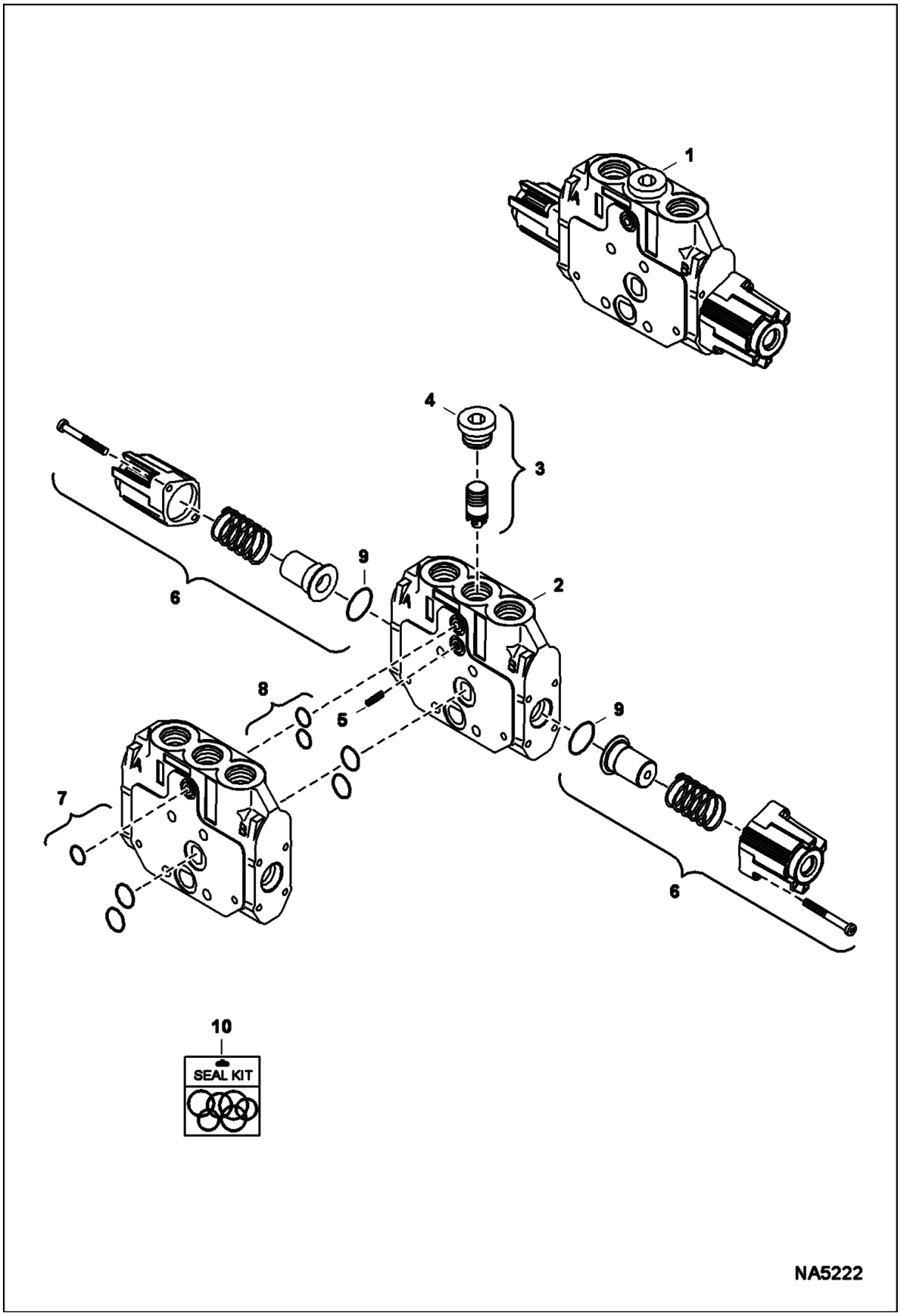

HYDRAULIC CONTROL VALVE (Cont'd)
(RightTravel Section)

Ref No	Part Number	Description	Remarks	Serial Number	Qty
1	7016130	SECTION, VALVE	Ref. 2-7, 9 & 10		1
2		HOUSING, VALVE	NSS - Order Ref. 1		1
3	6677690	KIT, COMPENSATOR			1
4	6685248	PLUG			1
5	6677695	SCREW			1
6	6677699	ACTUATOR	includes both sides		1
7	6677467	KIT, SEAL			1
8	6677472	KIT,SEAL	not included with right travel section - Also Order if needed		1
9		O-RING	NSS - Order Ref. 10		2
10	6677470	SEAL KIT	Ref. 7 & 9		1

HYDRAULIC CONTROL VALVE
(LeftTravel Section)

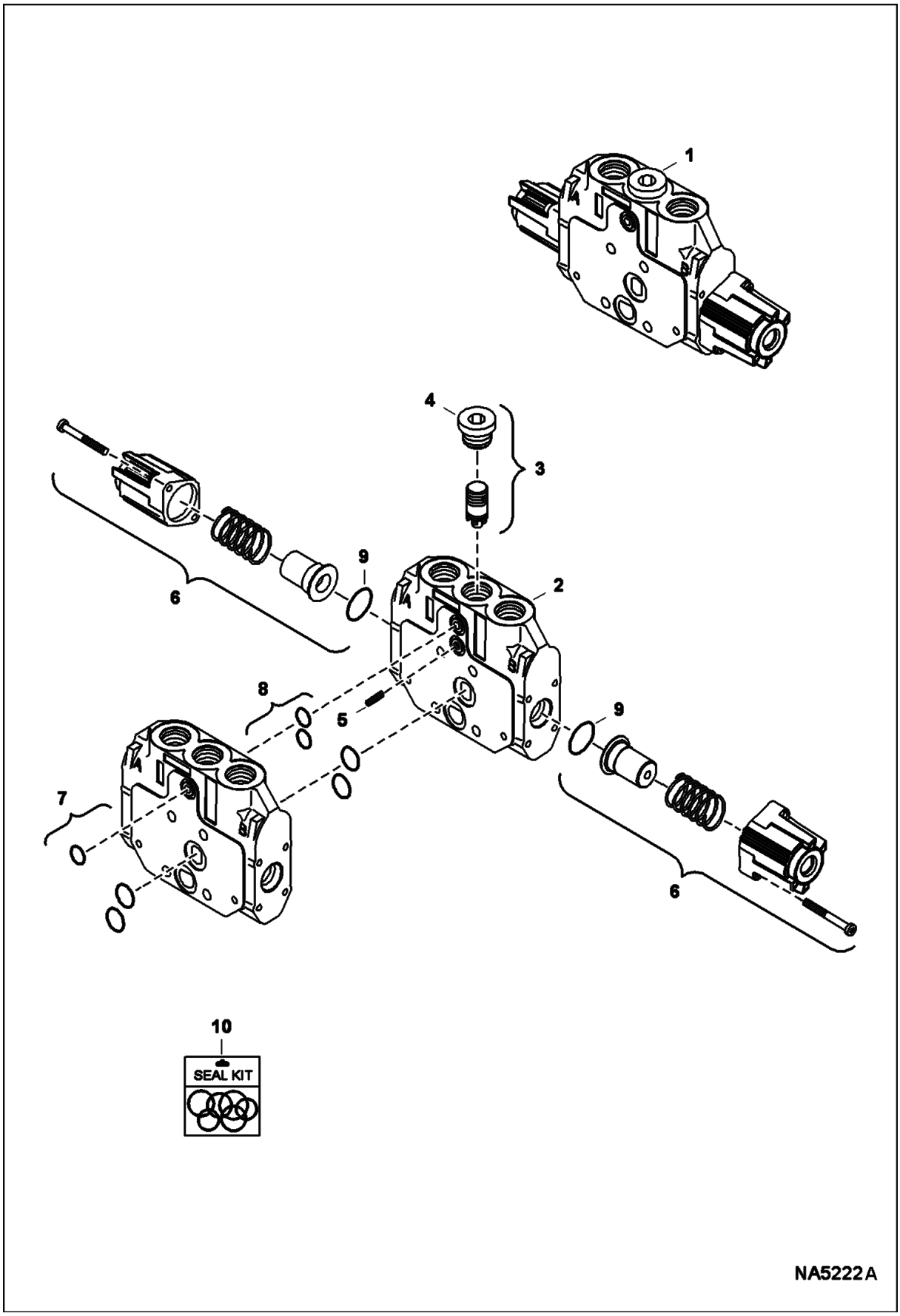

HYDRAULIC CONTROL VALVE (Cont'd)
(LeftTravel Section)

Ref No	Part Number	Description	Remarks	Serial Number	Qty
1	7016129	SECTION, VALVE	Ref. 2-4, 6, & 8-10		1
2		HOUSING, VALVE	NSS - Order Ref. 1		1
3	6677690	KIT, COMPENSATOR			1
4	6685248	PLUG			1
5	6677695	SCREW	not included with left travel section - Also Order if needed		1
6	6677699	ACTUATOR	includes both sides		1
7	6677467	KIT, SEAL	not included with left travel section - Also Order if needed		1
8	6677472	KIT,SEAL			1
9		O-RING	NSS - Order Ref. 10		2
10	6677470	SEAL KIT	Ref. 7 & 9		1

HYDRAULIC CONTROL VALVE
(Blade Section)

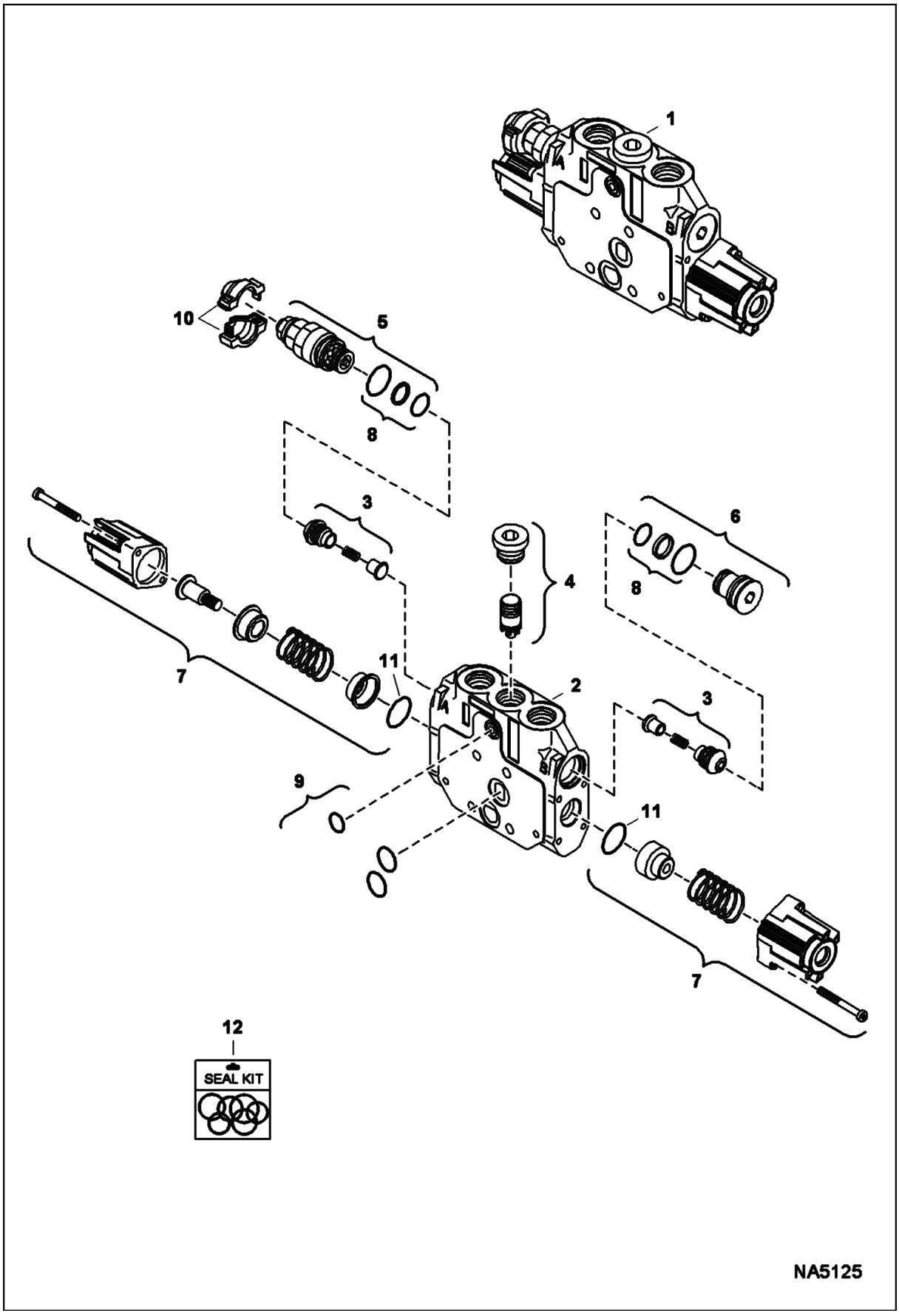

HYDRAULIC CONTROL VALVE (Cont'd)
(Blade Section)

Ref No	Part Number	Description	Remarks	Serial Number	Qty
1	7016128	SECTION, VALVE	Ref. 2-12		1
2		HOUSING, VALVE	NSS - Order Ref. 1		1
3	6677689	CHECK VALVE			2
4	6677690	KIT, COMPENSATOR			1
5	6685249	VALVE,RELIEF			1
6	6677471	PLUG ASSY			1
7	7016143	KIT, CAP	includes both sides		1
8	6910713	SEAL KIT			2
9	6677467	KIT, SEAL			1
10	6687072	KIT			1
11		O-RING	NSS - Order Ref. 12		2
12	6677470	SEAL KIT	Ref. 9 & 11		1

HYDRAULIC CONTROL VALVE
(Slew Section)

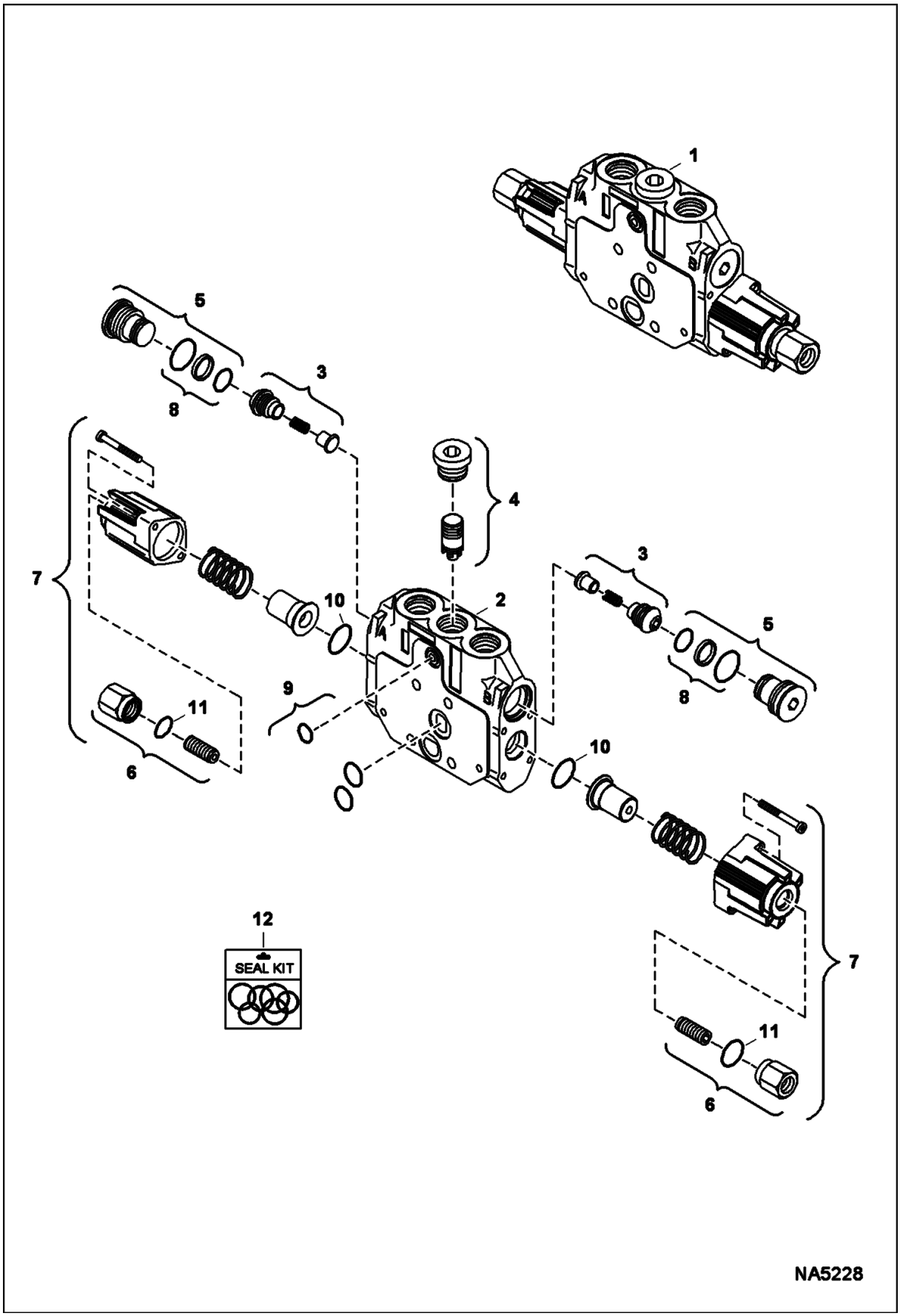

HYDRAULIC CONTROL VALVE (Cont'd)
(Slew Section)

Ref No	Part Number	Description	Remarks	Serial Number	Qty
1	7016127	SECTION, VALVE	Ref. 2-12		1
2		HOUSING, VALVE	NSS - Order Ref. 1		1
3	6677689	CHECK VALVE			2
4	6677692	KIT COMPENSATOR			1
5	6677471	PLUG ASSY			2
6	6691075	KIT			2
7	7016142	KIT, CAP	includes both sides		1
8	6910713	SEAL KIT			2
9	6677467	KIT, SEAL			1
10		O-RING	NSS - Order Ref. 12		2
11		O-RING	NSS - Order Ref. 12		2
12	6677470	SEAL KIT	Ref. 9-11		1

HYDRAULIC CONTROL VALVE
(Boom Swing Section)

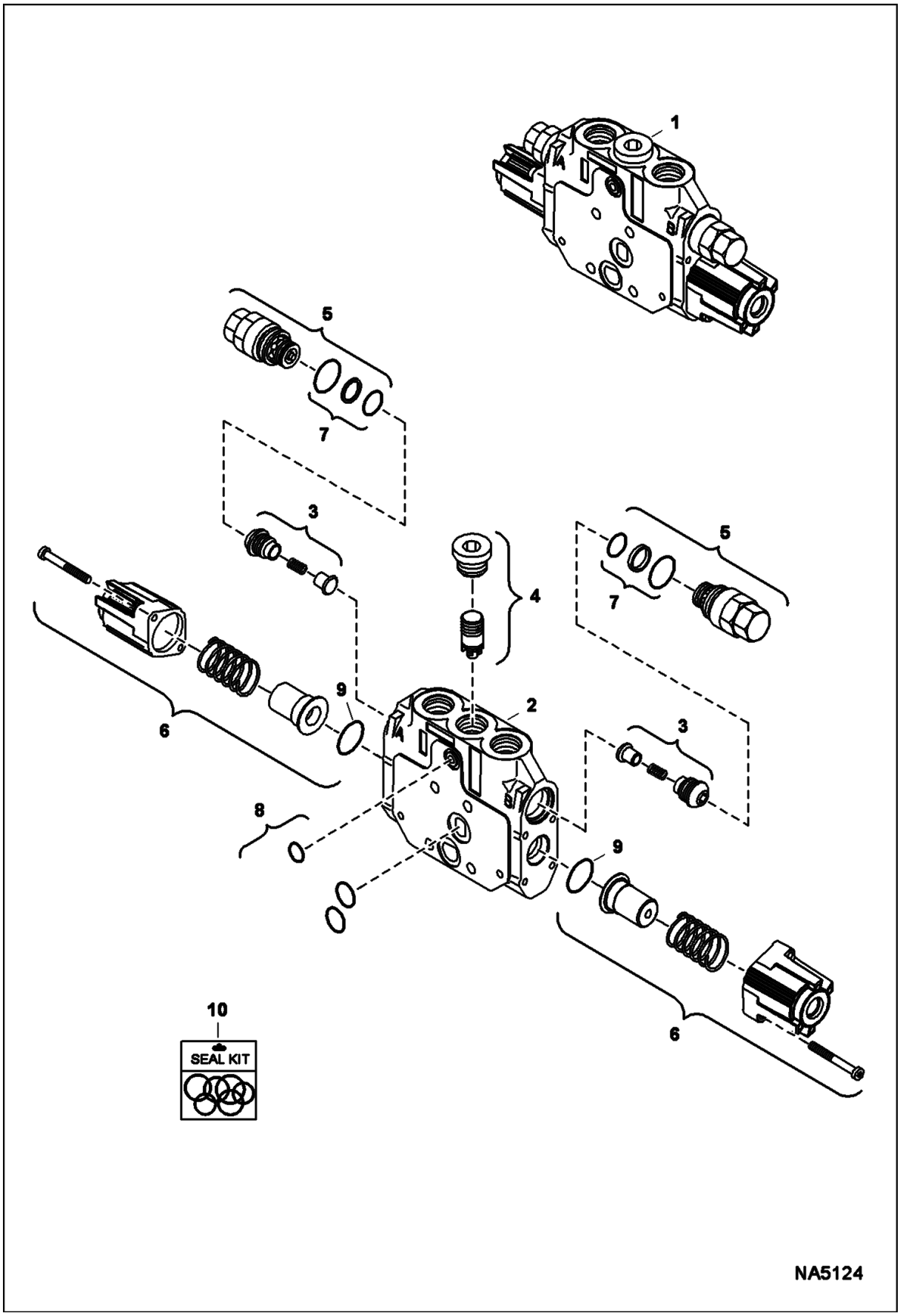

HYDRAULIC CONTROL VALVE (Cont'd)
(Boom Swing Section)

Ref No	Part Number	Description	Remarks	Serial Number	Qty
1	7016124	SECTION, VALVE	Ref. 2-10		1
2		HOUSING, VALVE	NSS - Order Ref. 1		1
3	6677689	CHECK VALVE			2
4	6677690	KIT, COMPENSATOR			1
5	7016141	VALVE, ANTI-CAV			2
6	6677699	ACTUATOR	includes both sides		1
7	6910713	SEAL KIT			2
8	6677467	KIT, SEAL			1
9		O-RING	NSS - Order Ref. 10		1
10	6677470	SEAL KIT	Ref. 8 & 9		1

HYDRAULIC CONTROL VALVE
(Inlet Section)

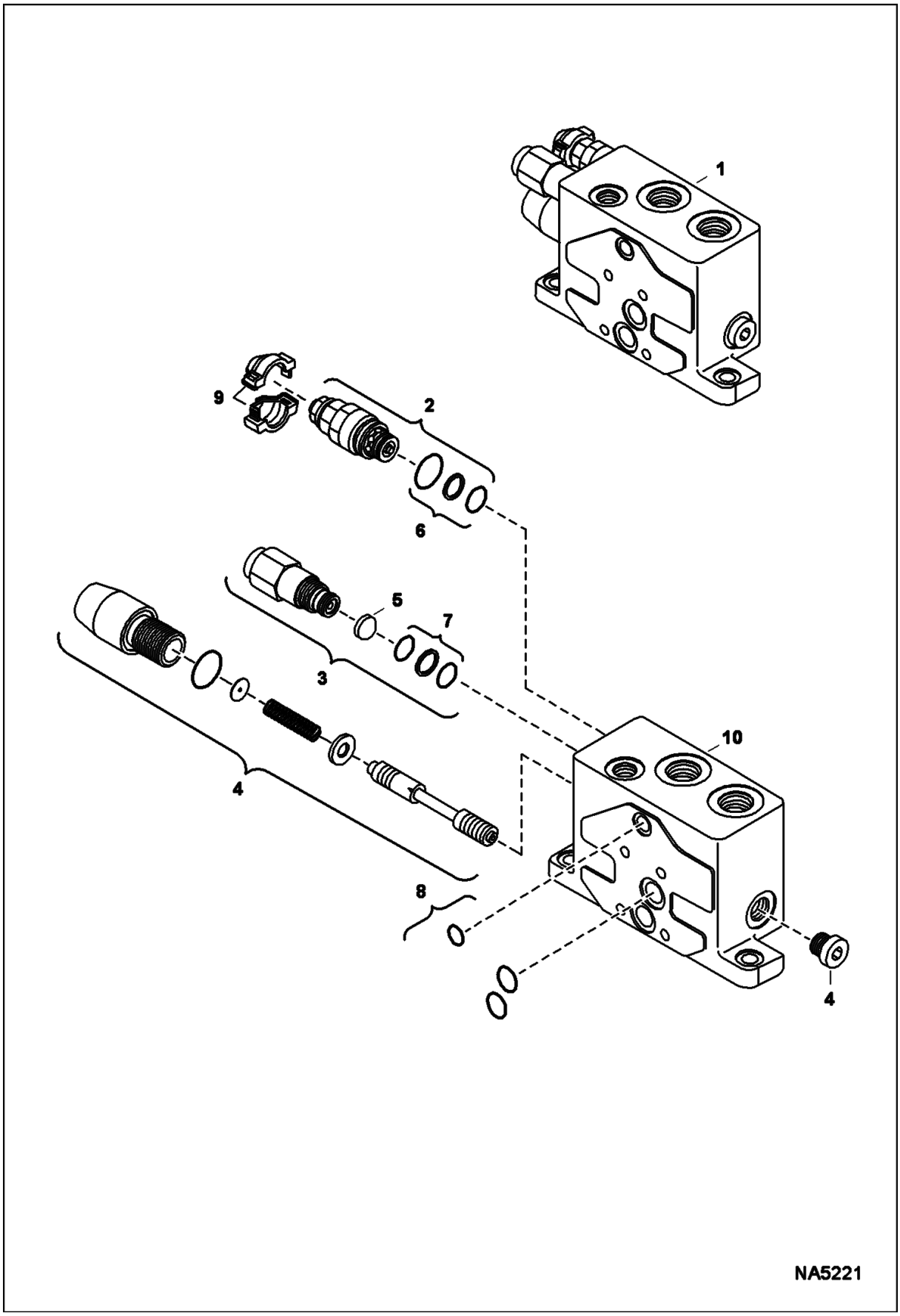

HYDRAULIC CONTROL VALVE (Cont'd)
(Inlet Section)

Ref No	Part Number	Description	Remarks	Serial Number	Qty
1	6685238	VALVE	Ref. 2-10		1
2	6687055	VALVE			1
3	6686593	REGULATOR			1
4	6686899	VALVE			1
5	6687064	FILTER			1
6	6677463	SEAL KIT			1
7	6685258	SEAL KIT			1
8	6677467	KIT, SEAL			1
9	6687072	KIT			1
10		HOUSING, VALVE	NSS - Order Ref. 1		1

ARM CYLINDER

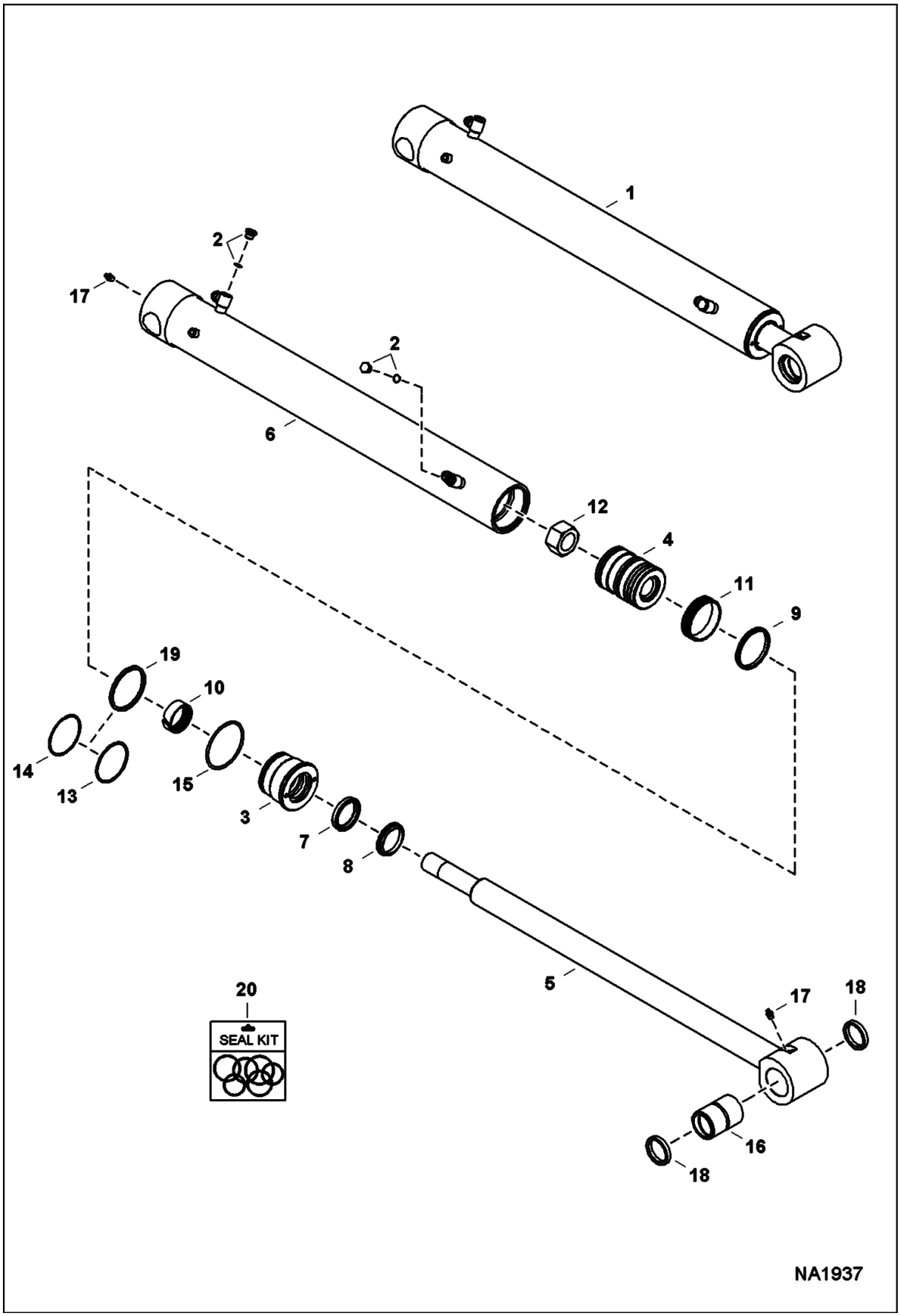

ARM CYLINDER (Cont'd)

Ref No	Part Number	Description	Remarks	Serial Number	Qty
1	7175158	CYLINDER, ARM	Ref. 2-15 - Also Order Ref. 16-18		1
2	6812171	PLUG	W/ O-ring		2
2	75K6	O-RING			x
3	6817122	HEAD			1
4	7166188	PISTON, CYL			1
5	7175160	ROD, CYL	Also Order Ref. 16-18		1
6	7175159	TUBE, CASE CYL	W/Ref. 2 & 15 - Also Order Ref. 17		1
7	6667328	SEAL			1
8	6686998	WIPER, ROD CYL			1
9	6692326	SEAL, BP			1
10	7000772	RING, WEAR			1
11	7000778	RING, WEAR			1
12	7154049	NUT			1
13	58K234	O RING 10			1
14	73K234	BACK-UP RING			1
15	82K236	O-RING			1
16	7166187	BUSHING, WEAR			1
17	10H25	FITTING, GREASE 5			2
18	6669287	SEAL			2
19	7008354	SEAL, QUAD			1
20	7166257	KIT, SEAL	Ref. 7-12, 15, & 19		1

BLADE CYLINDER
(Lift)(Standard Blade)

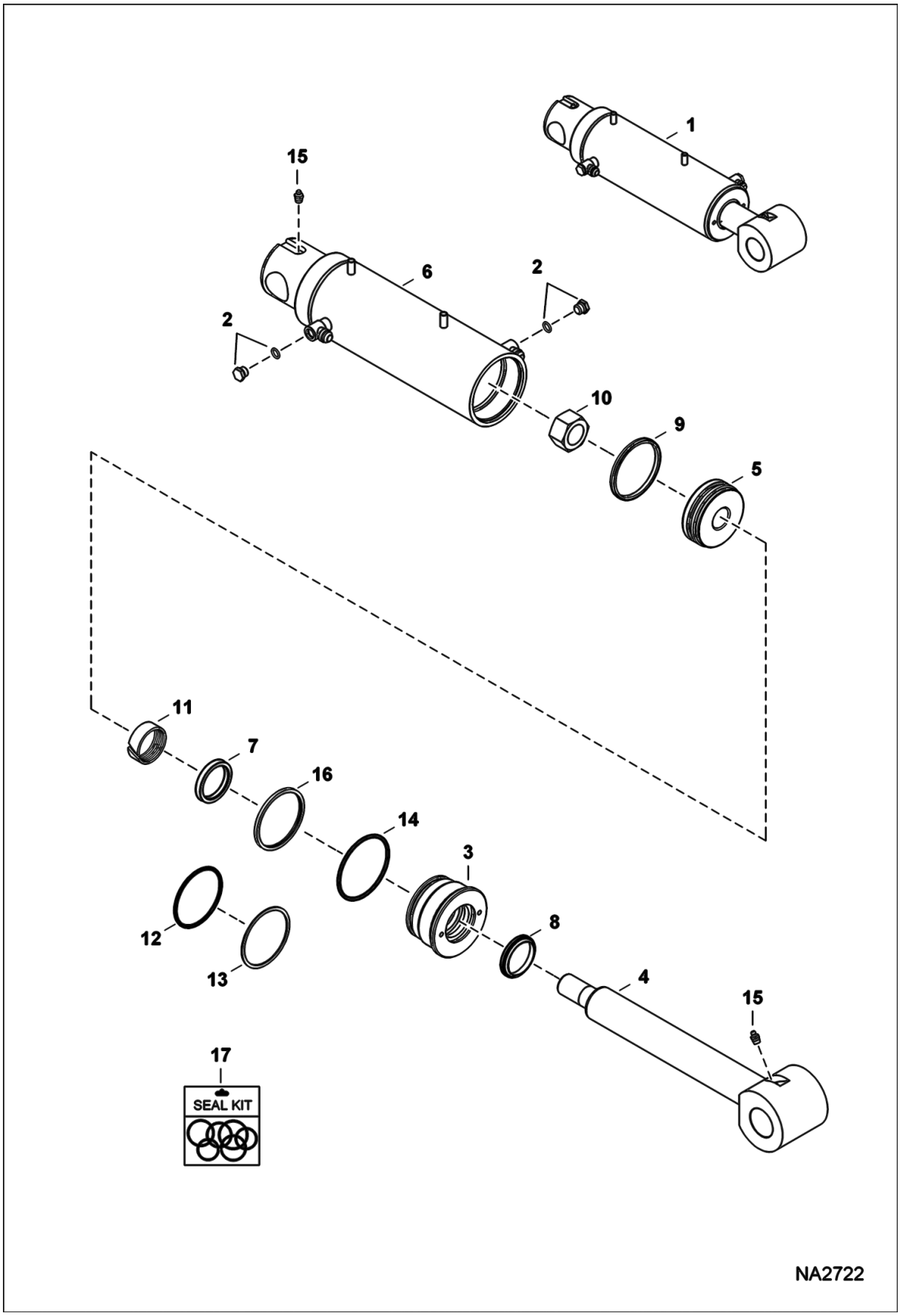

BLADE CYLINDER (Cont'd)
(Lift)(Standard Blade)

Ref No	Part Number	Description	Remarks	Serial Number	Qty
1		CYLINDER, BLADE	NAP - W/.75" fittings - Order Ref. 1 - Also Order (1) each of hoses 7205336 & 7205337 - Was 7188930 [A]		1
1	7201732	CYLINDER, BLADE	W/.5625 fittings - Ref. 2-14 - Also Order Ref. 15 [A]		1
2	6812171	PLUG	.5625" OD - Use W/NAP cylinder		2
2	75K6	O-RING			x
2	6812170	PLUG	.375" OD		2
2	75K3	O-RING			x
3	6815090	HEAD			1
4	7165715	ROD, CYL	Also Order Ref. 15		1
5	7188134	PISTON, CYL			1
6		TUBE, CASE CYL	NAP - W/.75" fittings - Order Ref. 6 - Also Order (1) each of hoses 7106389 & 7144956 - Was 7188932 [A]		1
6	7201733	TUBE, CASE CYL	W/.5625 fittings - Ref. 2 & 14 - Also Order Ref. 15 [A]		1
7	6667328	SEAL			1
8	6686998	WIPER, ROD CYL			1
9	6692807	SEAL			1
10	6810540	NUT			1
11	7000772	RING, WEAR			1
12	58K340	O RING 10			1
13	73K340	BKUP RING			1
14	82K240	O-RING			1
15	10H25	FITTING, GREASE 5			2
16	7008352	SEAL, QUAD			1
17	7196481	KIT, SEAL	Ref. 7-11, 14 & 16 - Was 7161987 [A]		1

BLADE CYLINDER
(Lift)(Angle Blade)

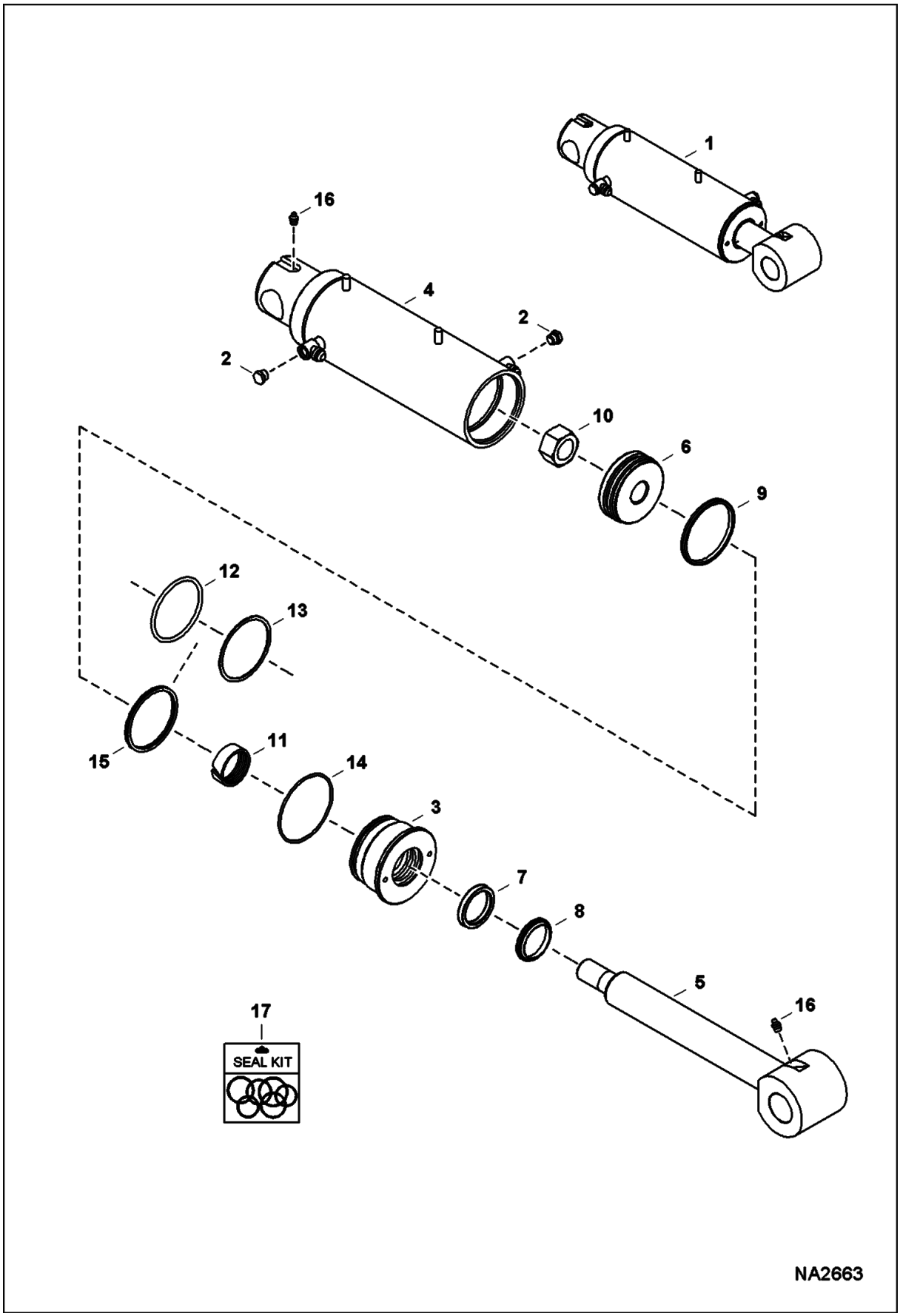

BLADE CYLINDER (Cont'd)
(Lift)(Angle Blade)

Ref No	Part Number	Description	Remarks	Serial Number	Qty
1	7165711	CYLINDER, BLADE	Ref. 2-15 - Also Order Ref. 16		1
2	6812171	PLUG			2
2	75K6	O-RING			x
3	7104264	HEAD			1
4	7165713	TUBE, CASE CYL	W/Ref. 2 & 14 - Also Order Ref. 16		1
5	7165715	ROD, CYL	Also Order Ref. 16		1
6	7165718	PISTON, CYL			1
7	6667328	SEAL			1
8	6686998	WIPER, ROD CYL			1
9	6692808	O-RING			1
10	6810540	NUT			1
11	7000772	RING, WEAR			1
12	25K60320	O RING 10			1
13	73K342	RING			1
14	82K242	O-RING			1
15	7008351	SEAL, QUAD			1
16	10H25	FITTING, GREASE 5			2
17		KIT, SEAL	NAP - Ref. 7-14 - Was 7165725 [A]		1
17	7196449	KIT, SEAL	Ref. 7-11, 14 & 15		1

ANGLE BLADE CYLINDER

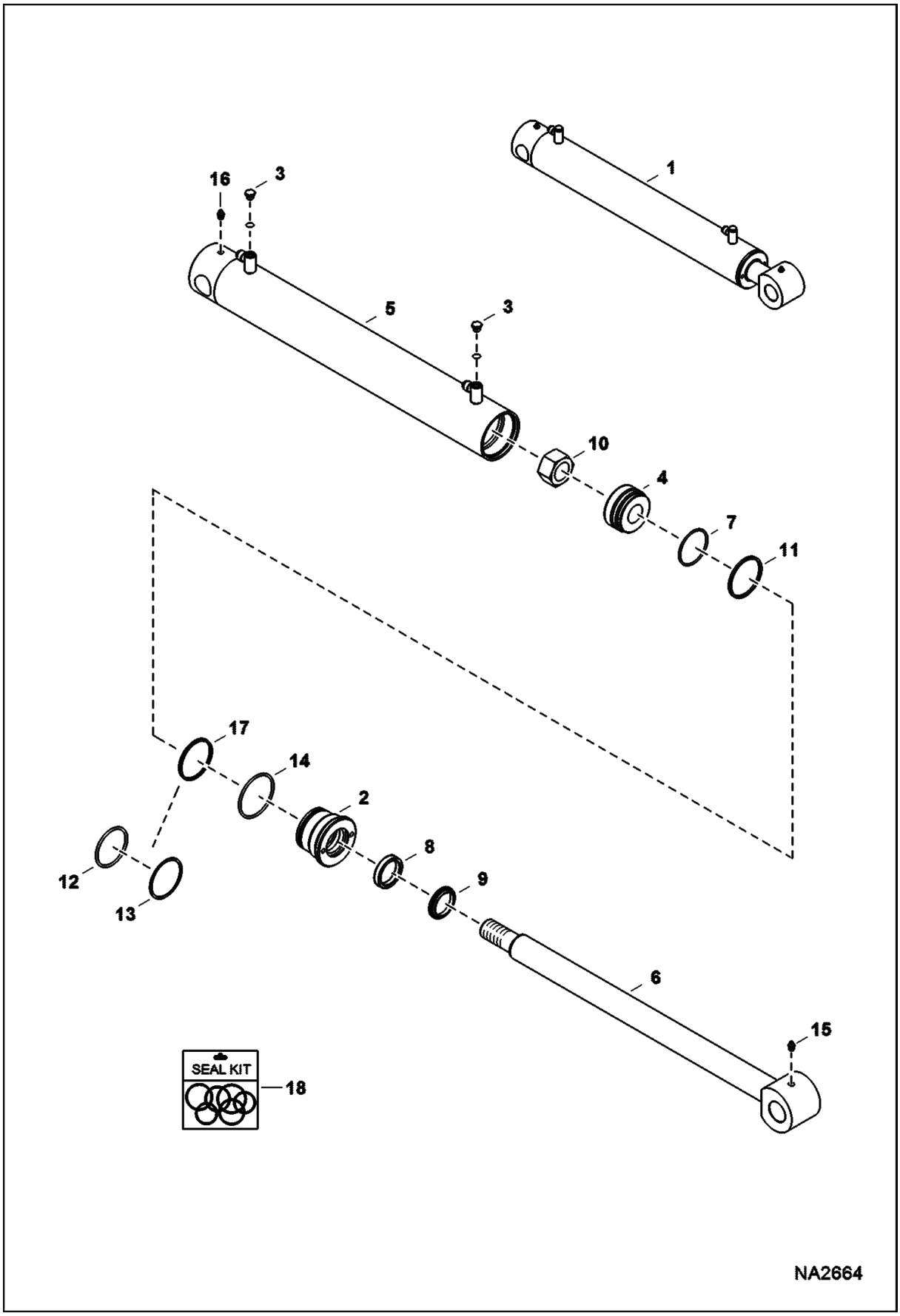

ANGLE BLADE CYLINDER (Cont'd)

Ref No	Part Number	Description	Remarks	Serial Number	Qty
1	7164492	CYLINDER, BLADE	Ref. 2-14 - Also Order Ref. 15 & 16		1
2	6806124	HEAD			1
3	6812170	PLUG			2
3	75K3	O-RING			x
4	6815011	PISTON			1
5	7134020	TUBE ASSY	W/Ref. 3 & 14 - Also Order Ref. 16		1
6	7134019	SHAFT W/A	Also Order Ref. 15		1
7	1522534	SEAL			1
8	6667326	SEAL			1
9	6690707	WIPER, ROD CYL			1
10	6810539	NUT			1
11	25K30202	O RING 10			1
12	25K40208	O RING 10			1
13	73K228	BACK-UP RING			1
14	82K230	O-RING			1
15	10H25	FITTING, GREASE 5			1
16	12H15	FITTING, GREASE 5			1
17	7008778	SEAL, QUAD			1
18	7135559	SEAL KIT	Ref. 7-11, 14, & 17		1

BOOM CYLINDER

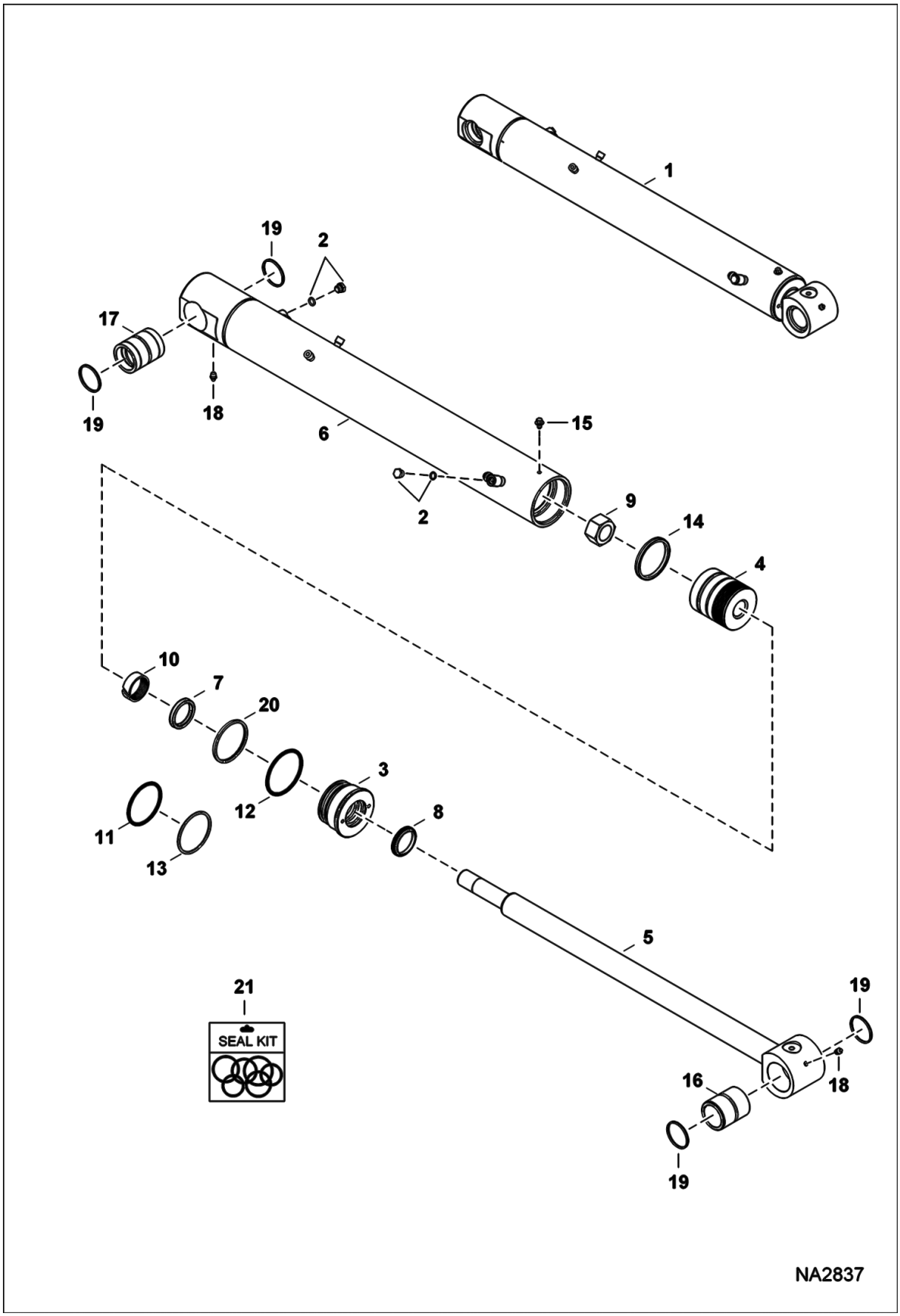

BOOM CYLINDER (Cont'd)

Ref No	Part Number	Description	Remarks	Serial Number	Qty
1		CYLINDER, BOOM	NAP - Ref. 2-14 - Order 7192624 cylinder and 7192534 clamp - Also Order Ref. 16-19 - Was 7190008 [A]	AG3G11001 - 11006	1
1		CYLINDER, BOOM	NAP - Ref. 2-14 - Order 7192624 cylinder and 7192534 clamp - Also Order Ref. 16-19 - Was 7190008 [A]	AHHC11001 - 11005	1
1	7192624	CYLINDER, BOOM	Ref. 2-15 - Also Order Ref. 16-19	AG3G11007 & Above	1
1	7192624	CYLINDER, BOOM	Ref. 2-15 - Also Order Ref. 16-19	AHHC11006 & Above	1
2	6812171	PLUG			2
2	75K6	O-RING			x
3	7192625	HEAD, CYL HYD			1
4	7190007	PISTON, CYL	W/Ref. 14		1
5	7175760	ROD, CYL	Also Order Ref. 16, 18, & 19		1
6		TUBE, CASE CYL	NAP - W/Ref. 2 & 12 - Order 7175757 tube and Ref. 3 - Also Order Ref. 17 & 18 - Was 7175757 [A]	AG3G11001 - 11006	1
6		TUBE, CASE CYL	NAP - W/Ref. 2 & 12 - Order 7175757 tube and Ref. 3 - Also Order Ref. 17 & 18 - Was 7175757 [A]	AHHC11001 - 11005	1
6	7175757	TUBE, CASE CYL	W/Ref. 2, 12, & 15 - Also Order Ref. 17 & 18	AG3G11007 & Above	1
6	7175757	TUBE, CASE CYL	W/Ref. 2, 12, & 15 - Also Order Ref. 17 & 18	AHHC11006 & Above	1
7	6667328	SEAL			1
8	6686998	WIPER, ROD CYL			1
9	7154049	NUT			1
10	7000772	RING, WEAR			1
11	58K340	O RING 10			1
12	82K240	O-RING			1
13	73K340	BKUP RING			1
14	6692807	SEAL			1
15	7017858	SET SCREW	Was 26GM8013 [B]	AG3G11007 & Above	1
15	7017858	SET SCREW	Was 26GM8013 [B]	AHHC11006 & Above	1
16	7166186	BUSHING, WEAR			1
17	7185938	BUSHING, WEAR			1
18	10H25	FITTING, GREASE 5			2
19	7143551	SEAL, DUST			4
20	7008352	SEAL, QUAD			1
21	7196484	KIT, SEAL	Ref. 7-10, 12, 14 & 20 - Was 7190017 [A]		1

BOOM SWING CYLINDER

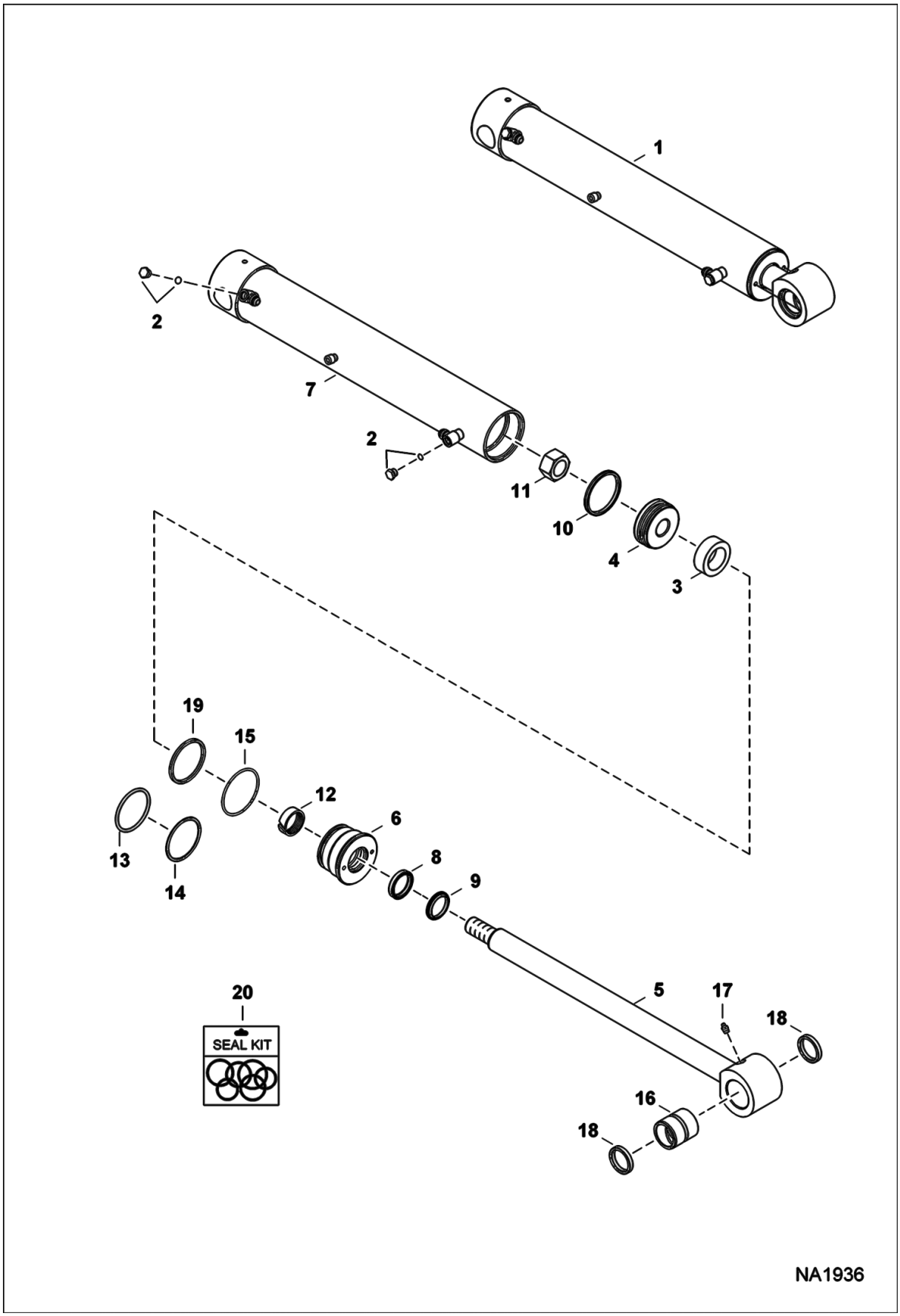

BOOM SWING CYLINDER (Cont'd)

Ref No	Part Number	Description	Remarks	Serial Number	Qty
1	7178023	CYLINDER, SWING	Ref. 2-15 - Also Order Ref. 16-18		1
2	6812171	PLUG	W/ O-ring		2
2	75K6	O-RING			x
3	7147221	SPACER			1
4	7166019	PISTON			1
5	7178025	ROD, CYL	Also Order Ref. 16-18		1
6	7188135	HEAD, CYL HYD			1
7	7178024	TUBE, CASE CYL	W/Ref. 2 & 15		1
8	6667327	SEAL			1
9	6686999	WIPER, ROD CYL			1
10	6692806	SEAL, CYLINDER			1
11	6810540	NUT			1
12	7000771	RING, WEAR			1
13		O RING 10	NAP - Order Ref. 19 - Was 58K338 [B]		1
14		RING	NAP - Order Ref. 19 - Was 73K338 [B]		1
15	82K238	O-RING			1
16	7172745	BUSHING, WEAR			1
17	10H25	FITTING, GREASE 5			1
18	6669287	SEAL			2
19	7008353	SEAL, QUAD			1
20	7196905	KIT, SEAL	Ref. 8-12, 15 & 19 - Was 7190394 [A]		1

BUCKET CYLINDER

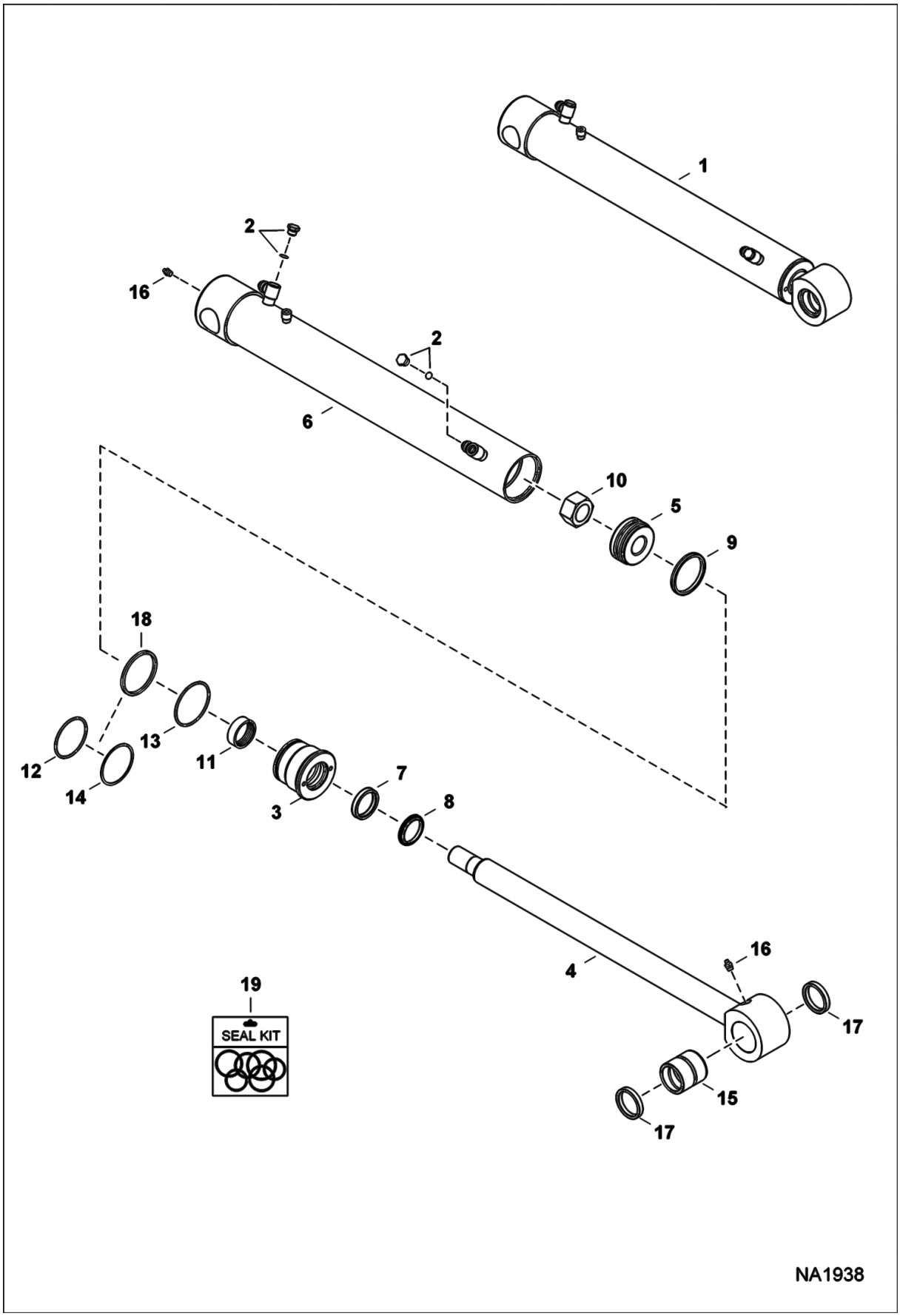

BUCKET CYLINDER (Cont'd)

Ref No	Part Number	Description	Remarks	Serial Number	Qty
1	7175041	CYLINDER, BUCKET	Ref. 2-14 - Also Order Ref. 15-17		1
2	6812171	PLUG	W/ O-ring		2
2	75K6	O-RING			x
3	6817562	HEAD			1
4	7175047	ROD, CYL	Also Order Ref. 15-17		1
5	7175113	PISTON, CYL			1
6	7175044	TUBE, CASE CYL	W/Ref. 2 & 14 - Also Order Ref. 16		1
7	6667327	SEAL			1
8	6686999	WIPER, ROD CYL			1
9	6692325	SEAL, PISTON			1
10	6810540	NUT			1
11	7000771	RING, WEAR			1
12	58K232	O RING 10			1
13	58K234	O RING 10			1
14	73K232	RING, BACK-UP			1
15	7173984	BUSHING, WEAR			1
16	10H25	FITTING, GREASE 5			2
17	6669287	SEAL			2
18	7008355	SEAL, QUAD			1
19	7161331	KIT, SEAL	Ref. 7-14		1

EXTENDABLE ARM CYLINDER

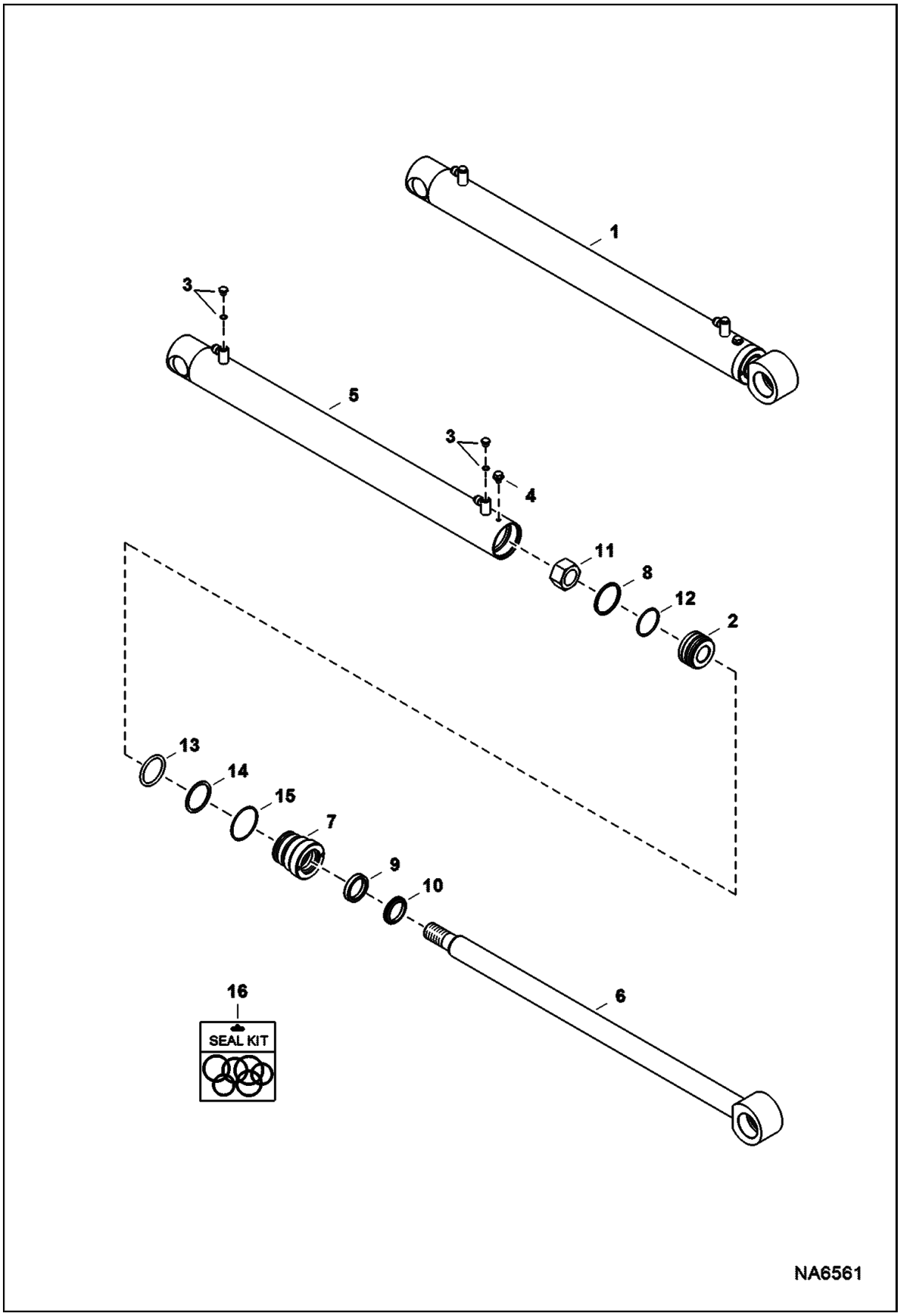

EXTENDABLE ARM CYLINDER (Cont'd)

Ref No	Part Number	Description	Remarks	Serial Number	Qty
1	7219322	CYLINDER	Ref. 2-15		1
2	6807879	PISTON			1
3	6812170	PLUG			2
3	75K3	O-RING			x
4	7017857	SET SCREW			1
5	7210525	TUBE, CASE CYL	W/Ref. 3 and Ref. 15		1
6	7210526	ROD, CYL			1
7	7219005	HEAD, CYL HYD			1
8	6519328	SEAL			1
9	6667326	SEAL			1
10	6690707	WIPER, ROD CYL			1
11	6810539	NUT			1
12	25K30126	O RING 10			1
13	25K60128	O RING 10			1
14	73K328	RING			1
15	82K140	O-RING			1
16	7135557	KIT, SEAL	Ref. 8-15		1

CAB ELECTRICAL CIRCUITRY

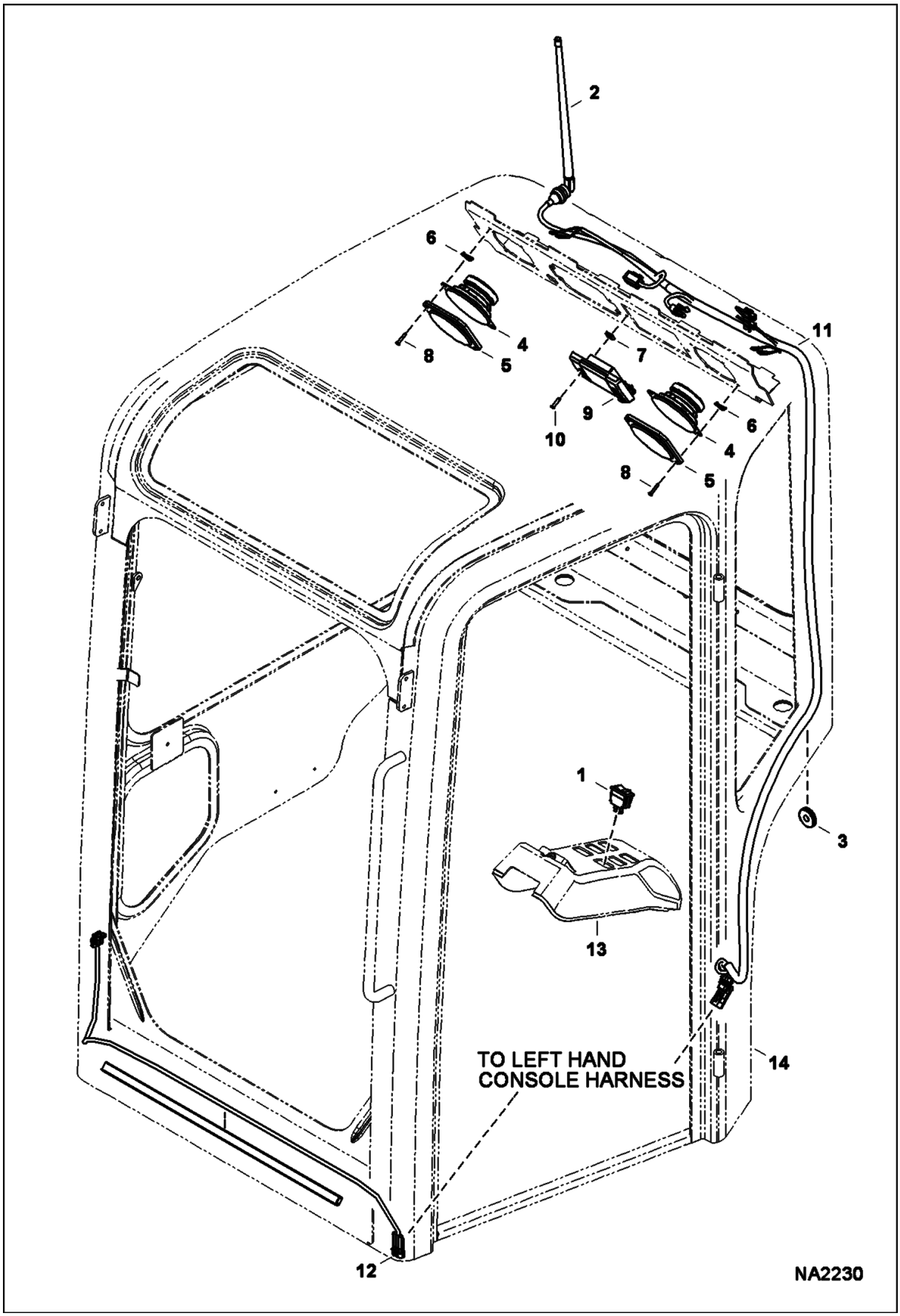

CAB ELECTRICAL CIRCUITRY (Cont'd)

Ref No	Part Number	Description	Remarks	Serial Number	Qty
1	6671113	SWITCH			1
2	6676114	ANTENNA, RADIO			1
3	6682697	GROMMET			1
4	6903211	SPEAKER 4 INCH	- Was 6685606 [A]		2
5	6685607	GRILL			2
6	6685744	CLIP			8
7	7142762	CLIP			2
8	7163690	SCREW			8
9	7166629	LIGHT, CAB HEADLINER	2 position switch		1
10	7170114	SCREW			2
11	7171741	HARNESS, CAB			1
12	7171777	HARNESS, WIPER			1
13		COVER, LH	See Illustration CONTROL CONSOLE/ NA2250		1
14		CAB, W/A	See Illustration OPERATOR CAB/ NA2284		1

ENGINE ELECTRICAL CIRCUITRY

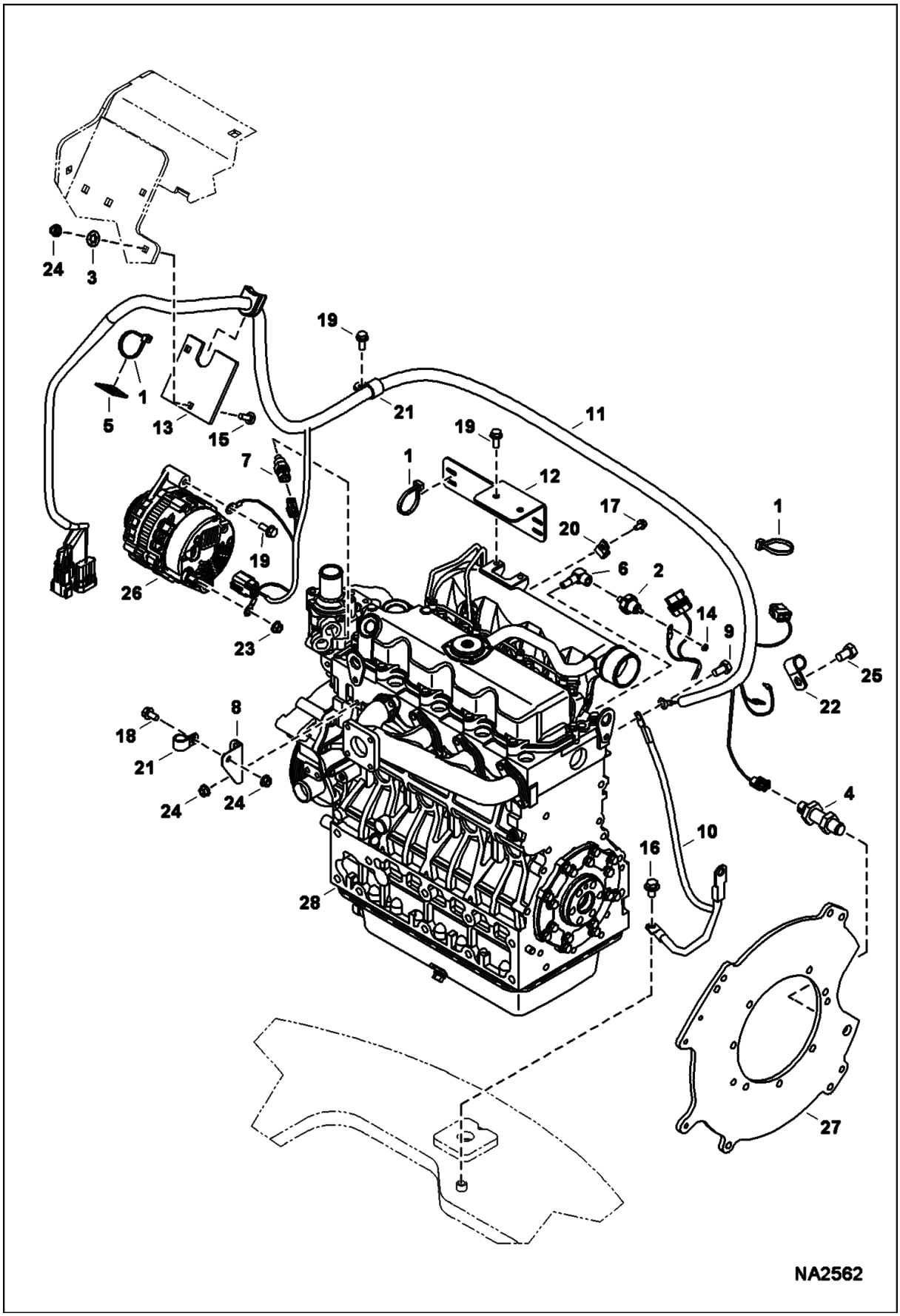

ENGINE ELECTRICAL CIRCUITRY (Cont'd)

Ref No	Part Number	Description	Remarks	Serial Number	Qty
1	6624289	STRAP, TIE			4
2	6631010	SWITCH, PRESS OIL ENG			1
3	6674264	RETAINER NUT			2
4	6693921	SENSOR, RPM			0
5	6693924	MOUNT			1
6	6707040	ELBOW			1
7	6718414	SENDER, TEMP ENG			1
8	7100529	BRACKET			1
9	5CM1020	SCREW	W/thread lock applied - Was 7120308 [D]		1
10	7151891	HARNESS, GROUND			1
11	7175747	HARNESS, ENG			1
12	7177292	BRACKET, HARNESS			1
13	7188776	PLATE, SEAL			1
14	12D8	NUT			1
15	28CM825	BOLT			2
16	29CM1016	BOLT			1
17	29CM612	BOLT, FLANGED			1
18	29CM816	SCREW			1
19	29CM820	SCREW			4
20	30H26	CLIP			1
21	30H38	CLIP	Was 30H37 [B]		1
22	30H44	CLAMP			1
23	43DM8	NUT			1
24	51DM8	NUT			5
25	6CM1220	BOLT			1
26		ALTERNATOR	See Illustration ALTERNATOR/ NA2234		1
27		PLATE, FLYWHEEL	See Illustration ENGINE & ATTACHING PARTS/ NA2563		1
28		ENGINE	See Illustration ENGINE & GASKET KITS/ NA1527		1

CONTROLS ELECTRICAL
(LH Console)

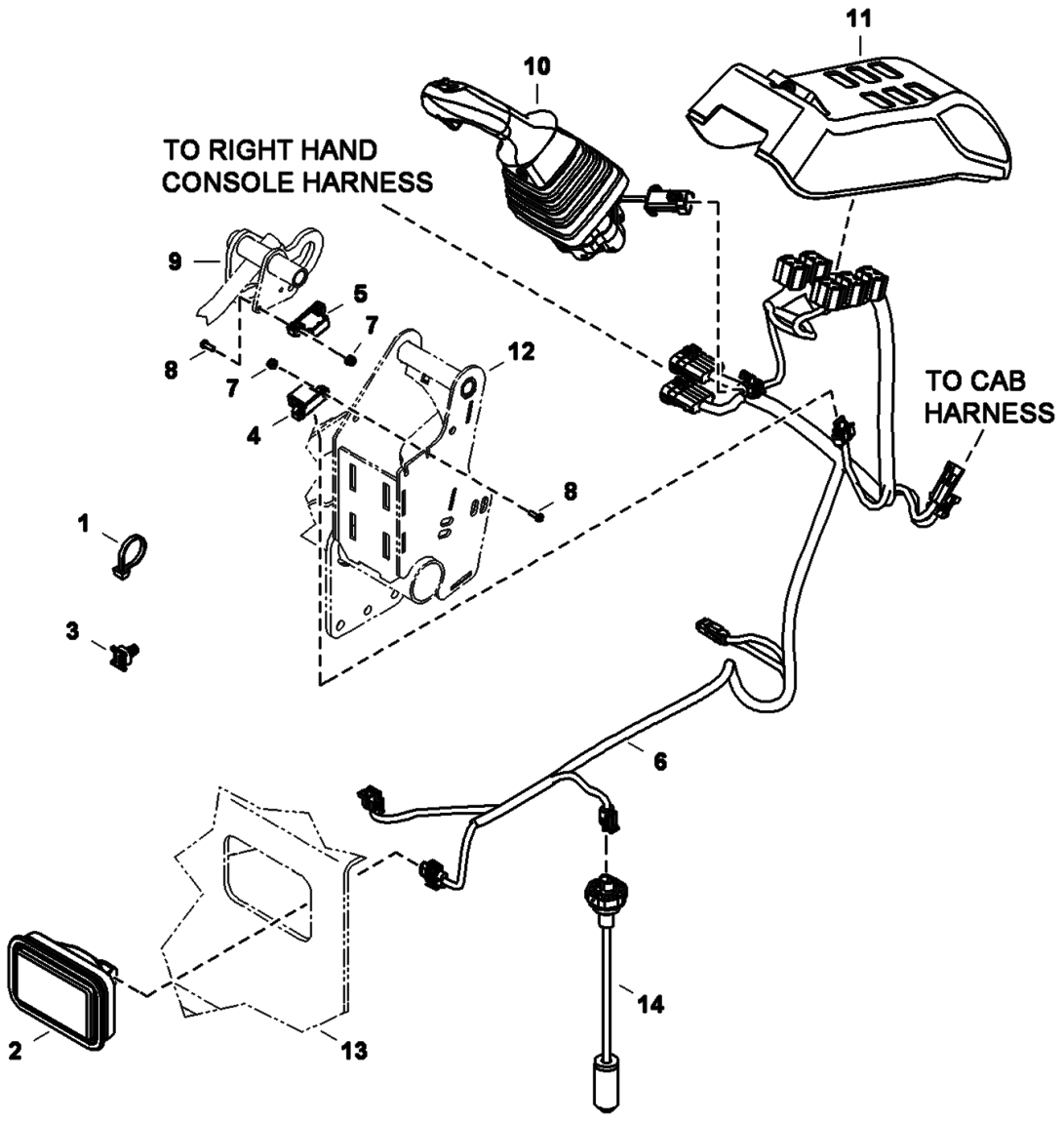

CONTROLS ELECTRICAL (Cont'd)
(LH Console)

Ref No	Part Number	Description	Remarks	Serial Number	Qty
1	6624289	STRAP, TIE			5
2	6676238	LIGHT			1
2	6667934	BULB			1
2	6676725	BEZEL			1
3	7015668	MOUNT FIR TREE	push in - Use W/tie strap - Was 6678666 [B]		1
4	6680427	SENSOR			1
5	6680428	SENSOR			1
6	7147340	HARNESS, CONSOLE LH			1
7	50D8	NUT			4
8	87G808	SCREW			4
9		HANDLE	See Illustration CONTROL CONSOLE/ NA2250		1
10		JOYSTICK, LH			1
11		COVER, LH	See Illustration CONTROL CONSOLE/ NA2250		1
12		CONTROLLER, JOYSTICK ASSY	See Illustration CONTROL CONSOLE/ NA2250		1
13		UPPERSTRUCTURE	See Illustration UPPERSTRUCTURE/ NA2592		1
14		SENSOR, FUEL	See Illustration ENGINE & ATTACHING PARTS/ NA2564		1

CONTROLS ELECTRICAL
(RH Console)

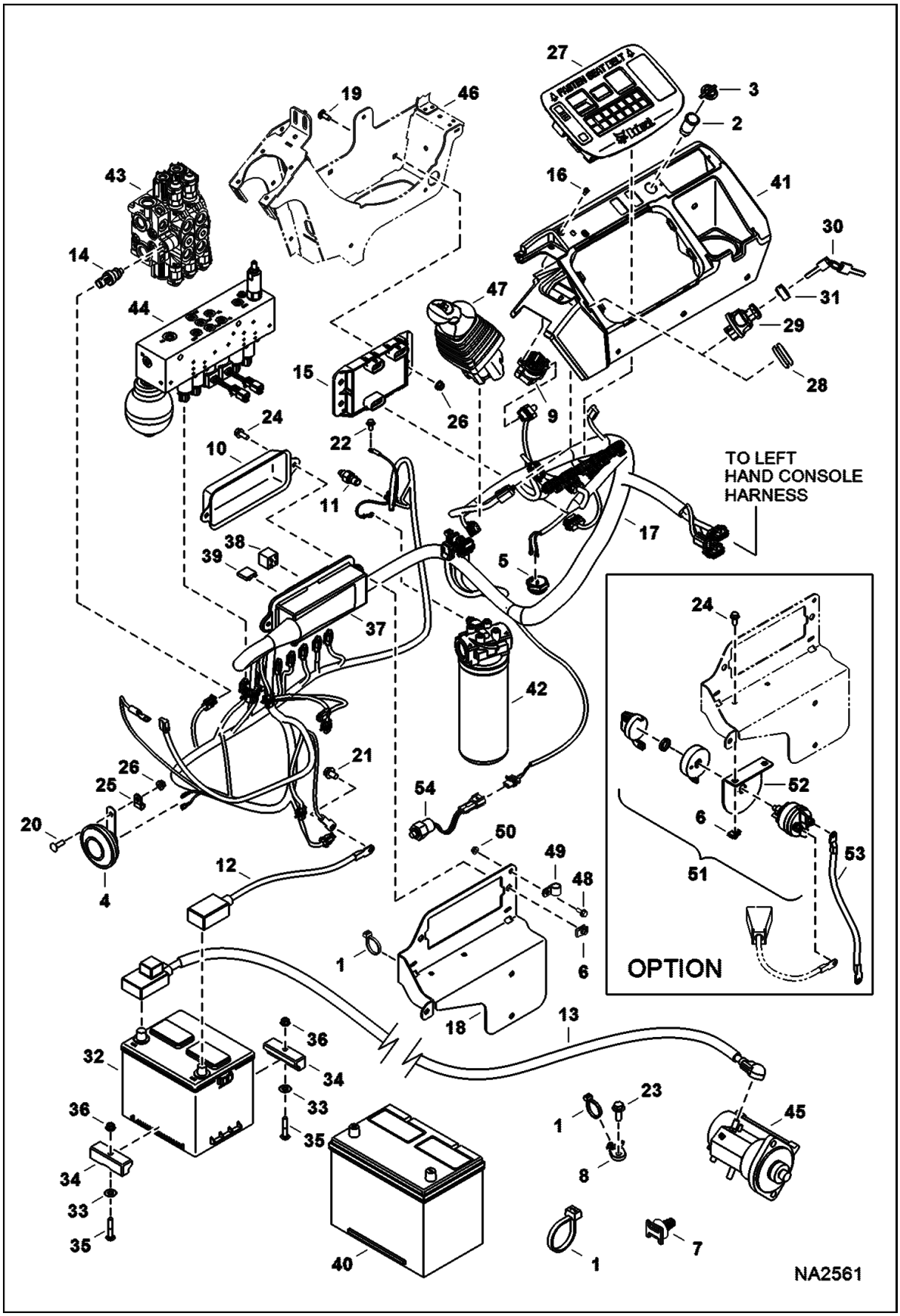

CONTROLS ELECTRICAL (Cont'd)
(RH Console)

Ref No	Part Number	Description	Remarks	Serial Number	Qty
1	6624289	STRAP, TIE			17
2	6664223	OUTLET			1
3	6664224	CAP			1
4	6671106	HORN			1
5	6675705	ALARM			1
6	6676169	NUT			4
7	7015668	MOUNT FIR TREE	push in - Use W/tie strap - Was 6678666 [B]		3
8	6679034	MOUNT			2
9	6698640	CONTROL, THROTTLE			1
9	7022367	KNOB			1
10	6716621	COVER			1
11	6727869	SENDER,HYD TEMP			1
12	6807431	CABLE			1
13	6809043	CABLE			1
14	7022000	SENSOR, PRESS OIL HYD	Was 7008372 [A]		1
15	7010112	CONTROLLER, THROTTLE AIC			1
16	7135909	SCREW			2
17	7205968	HARNESS, CONSOLE RH	Was 7175754 [A]		1
18	7185586	BRACKET, RELAY CENTER			1
19	28CM820	BOLT			2
20	28CM825	BOLT			1
21	29CM1016	BOLT			1
22	29CM1020	BOLT			1
23	29CM1025	BOLT			1
24	29CM820	SCREW			7
25	30H22	CLIP			1
26	43DM8	NUT			6
27		CONTROLLER, KEYED PANEL	NAP - W/O selectable aux hyd flow - Was 6698608 [B]		1
27	7021081	CONTROLLER, KEYED PANEL	W/selectable aux hyd flow		1
27		CONTROLLER, KEYLESS PANEL	NAP - W/O selectable aux hyd flow - Was 6698609 [B]		1
27	7021082	CONTROLLER, KEYLESS PANEL	W/selectable aux hyd flow		1
28	6676922	PLUG			1
29	6693245	SWITCH, IGN			1
30	6693241	KEY 10			1
31	7000328	ADAPTER, SWITCH IGN			1
32	6670251	BATTERY, DRY 530 AMP			1
33	6675859	RETAINER			2
34	7120672	TIE DOWN			2
35	28CM845	BOLT			2
36	43DM8	NUT			2
37	6718659	HOUSING			1
38	6679820	RELAY			6
39	6654803	FUSE 5A			1
39	6654805	FUSE 10A			1

CONTROLS ELECTRICAL (Cont'd)
(RH Console)

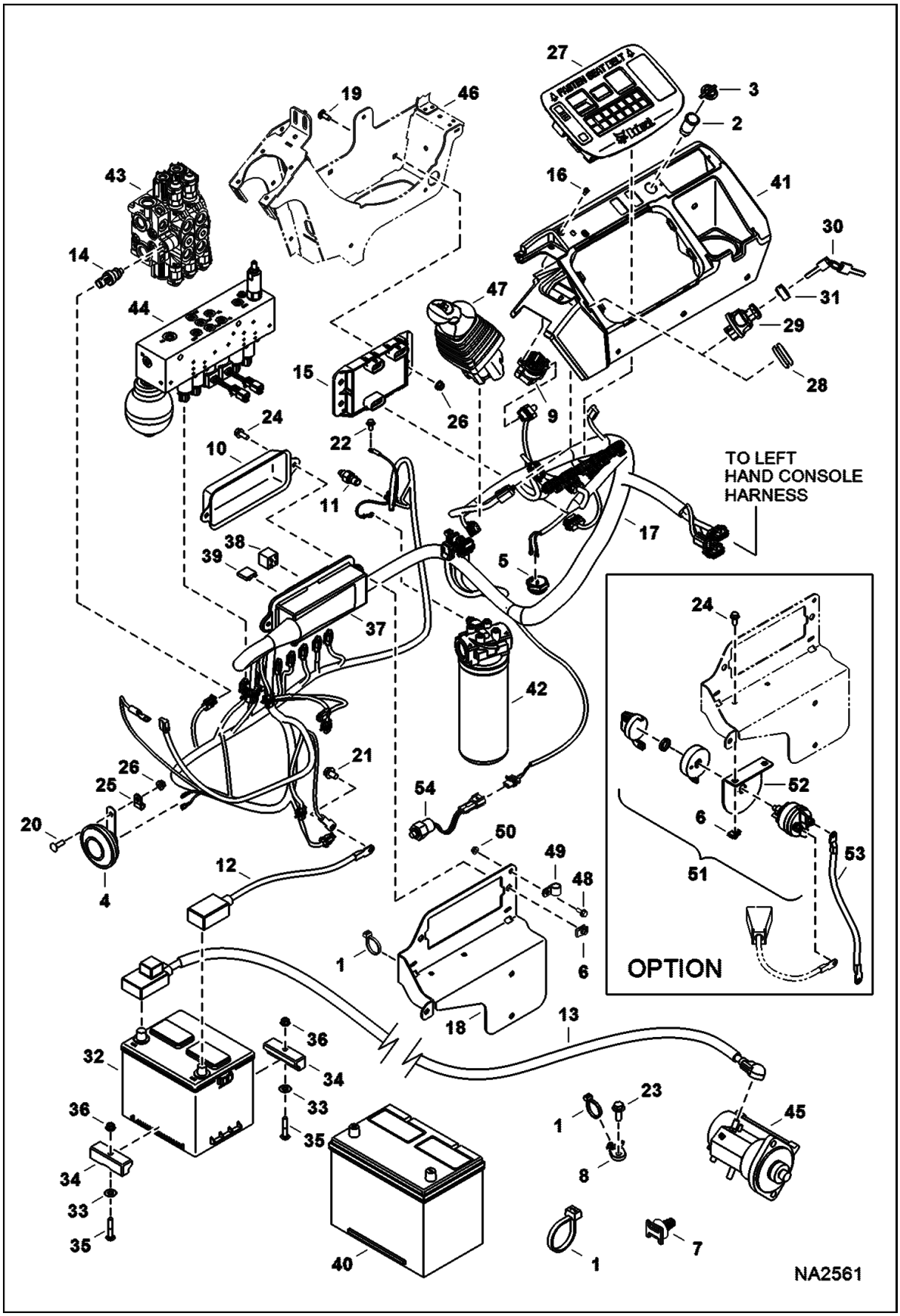

CONTROLS ELECTRICAL (Cont'd)
(RH Console)

Ref No	Part Number	Description	Remarks	Serial Number	Qty
39	6654806	FUSE, 15A			1
39	6625575	FUSE, 20A			3
39	6702444	FUSE 25A 5			6
40	6674687	BATTERY, DRY 600 AMP			1
41		COVER, RH	See Illustration CONTROL CONSOLE/ NA2251		1
42		FILTER ASSY	See Illustration HYDROSTATIC OIL FILTER/ NA1844		1
43		CONTROL VALVE	See Illustration HYDRAULIC CONTROL VALVE/ NA2724 9 section - W/O angle blade		1
43		CONTROL VALVE	See Illustration HYDRAULIC CONTROL VALVE/ NA2725 10 section - W/ angle blade		1
44		MANIFOLD	See Illustration MANIFOLD ASSY/ NA1976 W/O angle blade		1
44		MANIFOLD	See Illustration MANIFOLD ASSY/ NA1975 W/ angle blade		1
45		STARTER	See Illustration STARTER/ D2437		1
46		CONTROLLER, JOYSTICK ASSY	See Illustration CONTROL CONSOLE/ NA2251		1
47		JOYSTICK, RH	See Illustration RH JOYSTICK/ MS1352		1
48	29CM616	BOLT			1
49	30H34	CLAMP			1
50	43DM6	NUT			1
51	7008064	SWITCH, DISCONNECT			1
52	7170060	BRACKET, DISCONNECT			1
53	7171890	CABLE, NEGATIVE			1
54	7008933	SWITCH, PRESS OIL HYD			1

ALTERNATOR

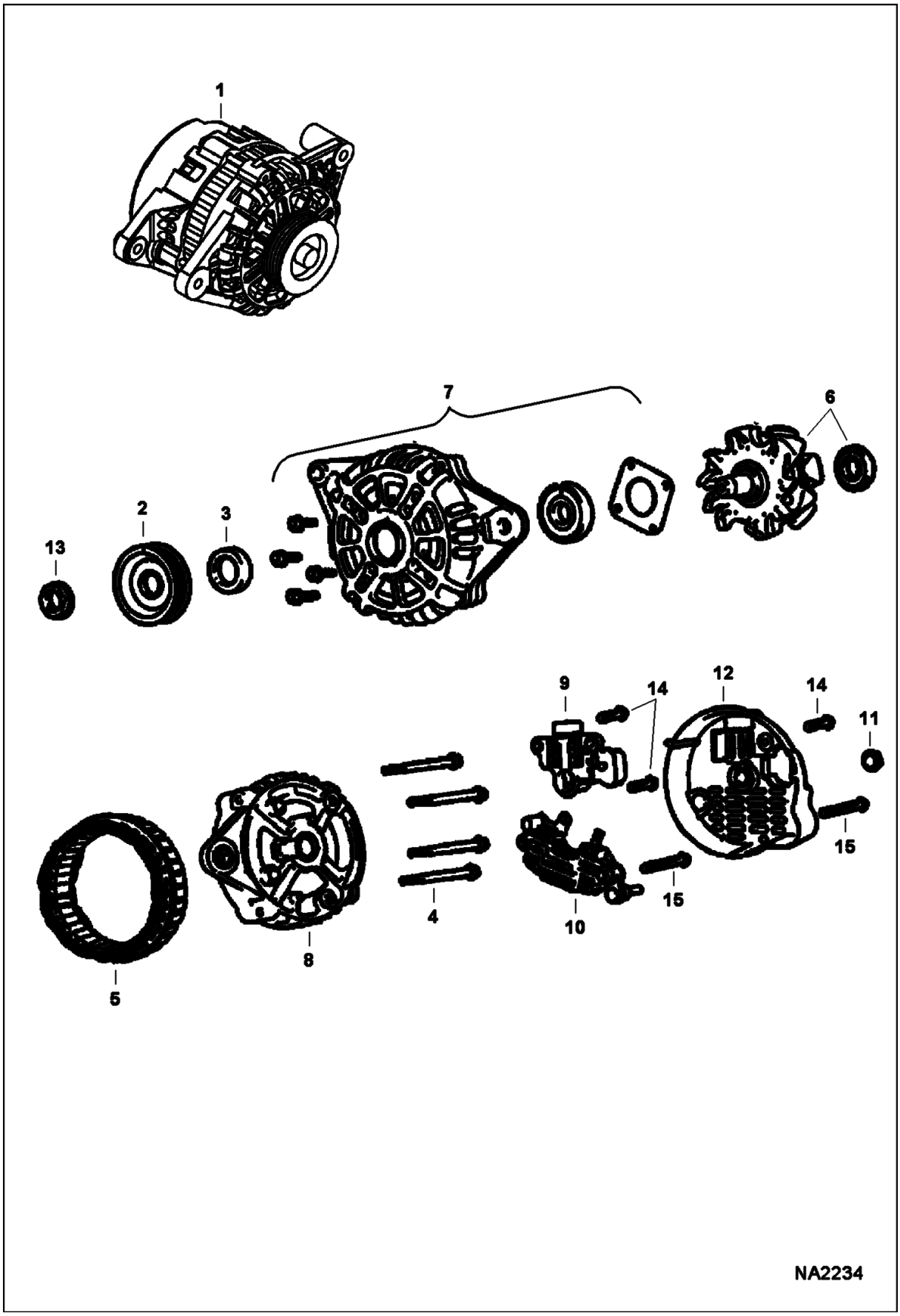

ALTERNATOR (Cont'd)

Ref No	Part Number	Description	Remarks	Serial Number	Qty
1	7008772	ALTERNATOR, 90 AMP	Ref. 2-15		1
2	7010200	PULLEY, ALT			1
3	6677495	SPACER			1
4	6684397	BOLT			4
5	6677493	STATOR			1
6	6677492	ROTOR	assy		1
7	6677491	BRACKET	assy		1
8	6677490	BRACKET			1
9	6684650	REGULATOR			1
10	6677488	RECTIFIER			1
11	6677486	NUT			1
12	6677487	COVER			1
13	6691539	HEX. NUT			1
14		BOLT	NSS		x
15		BOLT	NSS		x

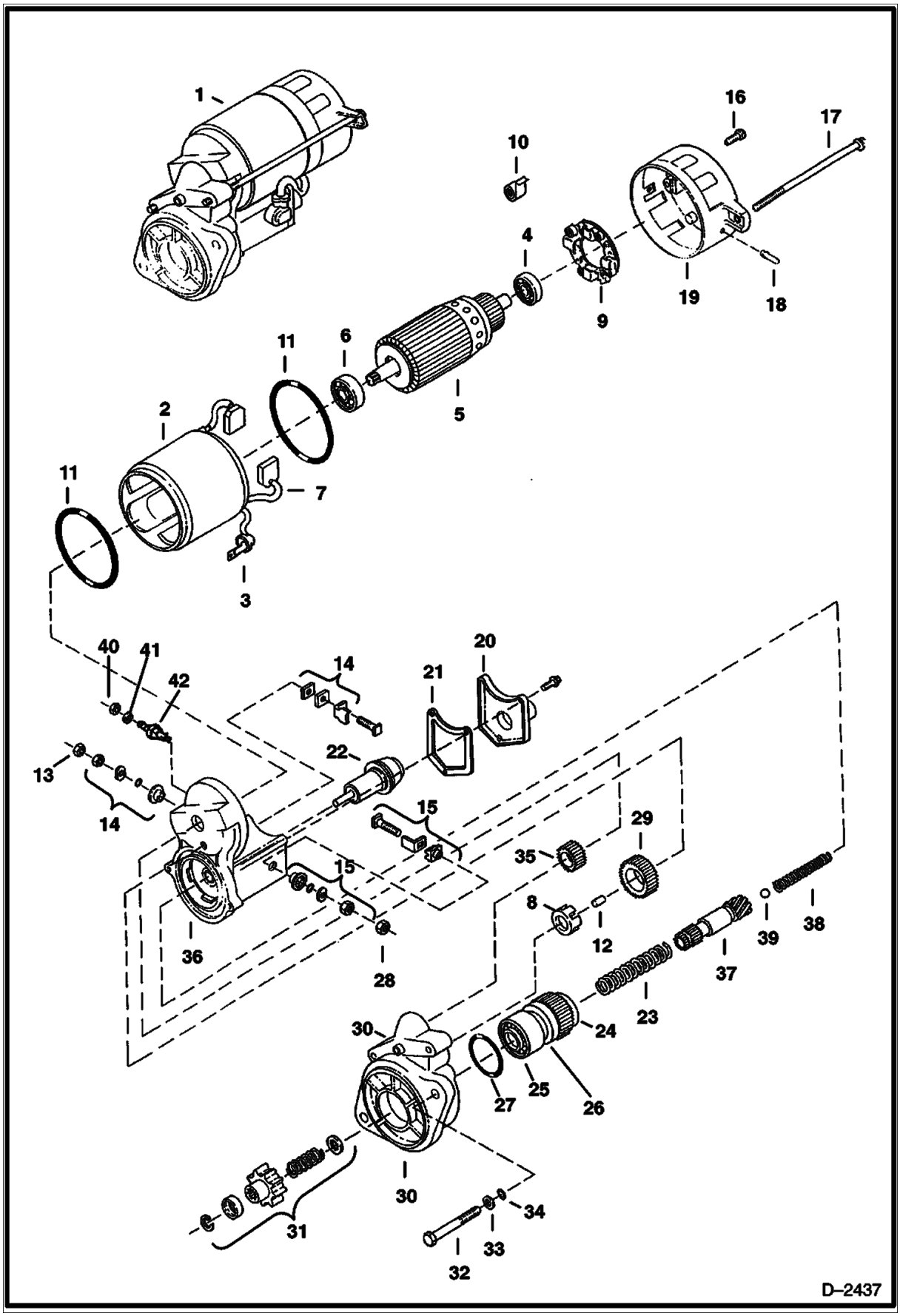
1
16
17
10
4
9
19
18
11
6
5
2
11
7
3
40
41
42
14
21
20
22
13
14
15
29
35
15
8
12
39
38
36
28
37
23
30
24
25
27
26
30
31
34
33
32
D–2437

STARTER (Cont'd)

Ref No	Part Number	Description	Remarks	Serial Number	Qty
1	6670727	STARTER			1
1	6670727REM	STARTER			1
2		YOKE	NSS - Was 6674817 [A]		2
3	6672178	COVER			1
4		BEARING	NSS - Was 6674819 [A]		1
5	6674818	ARMATURE	W/Ref. 4 & 6		1
6	6671985	BEARING			1
6	6671984	BEARING			1
7		BRUSHES	NSS - Order Ref. 2		2
8	6672000	RETAINER			1
9		HOLDER	NSS - Was 6674836 [A]		1
10		SPRING	NSS - brush		1
11	6671982	O-RING			2
12	6671999	ROLLER			2
13	6672008	NUT			1
14		KIT	NSS - Was 6675109 [A]		1
15		STARTER	NSS - Was 6674826 [A]		1
16		SCREW	NSS - Was 6674834 [A]		2
17		BOLT	NSS - Was 6674833 [A]		2
18	6672007	BUSHING	drain		1
19		FRAME	NSS - Was 6674832 [A]		1
20		COVER	NSS - Was 6674829 [A]		1
21		GASKET	NSS - Was 6674828 [A]		1
22		PLUNGER	NSS - Was 6674827 [A]		1
23	6671991	SPRING	compression		1
24		BEARING	NAP - Order Ref. 26		1
25		BEARING	NAP - Order Ref. 26		1
26	6674821	CLUTCH	W/Ref. 24-25		1
27	6672013	O-RING			1
28	6672006	NUT			1
29	6672001	PINION			1
30		HOUSING	NSS - Was 6674823 [A]		1
31	6672172	KIT	starter		1
32		SCREW	NSS - Was 6674835 [A]		2
33		WASHER	NSS - Was 6666629 [A]		2
34	6666631	WASHER			2
35		PINION	NSS - Was 6674824 [A]		1
36		SWITCH	NSS - Was 6674942 [A]		1
37		SHAFT	NSS - Was 6671992 [A]		1
38	6674831	SPRING	compression oil		1
39		BALL	NSS - Was 6671122 [A]		1
40	6672011	NUT			1
41	6672012	WASHER			1
42	6671997	BOLT			1

ENGINE & ATTACHING PARTS
(Radiator Water Exchanger)

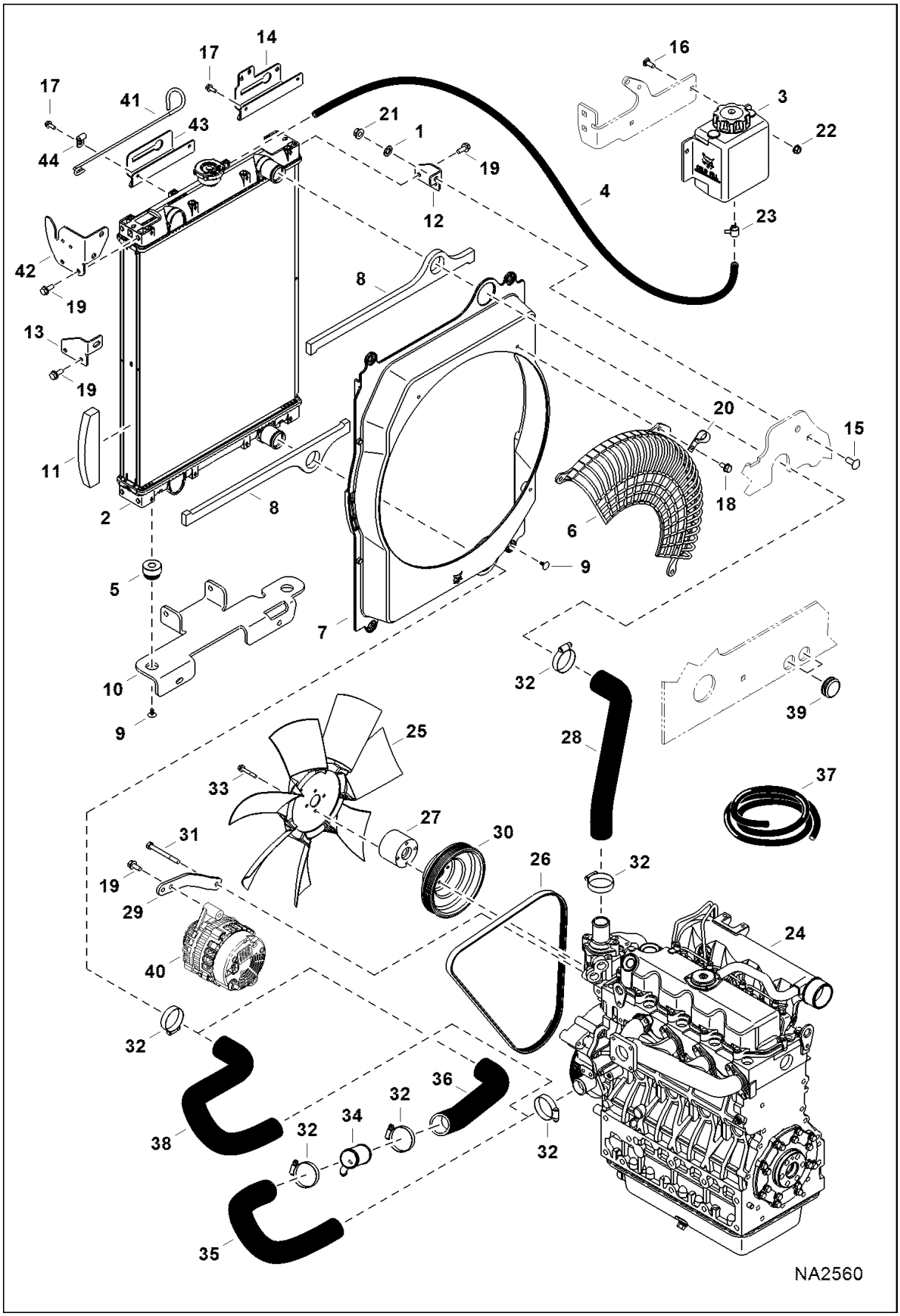

ENGINE & ATTACHING PARTS (Cont'd)
(Radiator Water Exchanger)

Ref No	Part Number	Description	Remarks	Serial Number	Qty
1	6674264	RETAINER NUT			4
2	7003475	EXCHANGER, WATER RADIATOR			1
2	6646678	CAP			1
3	7008312	TANK, COOLANT			1
3	7218789	CAP, OVERFLOW COOLANT	Was 6675551 [B]		1
4		HOSE, FUEL	NAP - 26" (660 mm) long - Order Ref. 37		1
5	7139574	MOUNT RUBBER			2
6	7146599	GUARD, FAN			1
7	7168071	SHROUD, FAN			1
8	7170400	SEAL RADAITOR			2
9	7170740	CLIP PLASTIC TREE			6
10	7173965	SUPPORT, RADIATOR	See Illustration HYDRAULIC CIRCUITRY/ NA2621		1
11	7175062	SEAL, RADIATOR			2
12	7180161	MOUNT, RADIATOR			1
13	7180245	MOUNT, RADIATOR		AG3G11001 - 12372	1
13	7180245	MOUNT, RADIATOR		AHHC11001 - 12421	1
14	7181476	BRACKET, EXCHANGER		AG3G11001 - 12372	1
14	7181476	BRACKET, EXCHANGER		AHHC11001 - 12421	1
15	28CM1025	BOLT			5
16	28CM820	BOLT			2
17	29CM616	BOLT			2
18	29CM816	SCREW			3
19	29CM820	SCREW			7
20	30HJ512	CLAMP			1
21	43DM10	NUT			4
22	51DM8	NUT			2
23	5HM14	CLAMP			1
24		ENGINE	See Illustration ENGINE & GASKET KITS/ NA1527		1
25	7010054	FAN, ENG COOLANT			1
26	7010894	BELT, FAN			1
27	7173388	SPACER			1
28	7178519	HOSE, WATER UPPER			1
29	7185456	BRACKET, ALT			1
30	7185459	PULLEY, FAN ENG			1
31	1CM880	BOLT			1
32	42HL200	CLAMP, HOSE			6
33	60CM660	SCREW			4
34	7156272	TEE			1
35	7179826	HOSE, WATER FORMED	W/heater or A/C		1
36	7184694	HOSE, HEATER FORMED	W/heater or A/C		1
37	6577822	HOSE	bulk - sold per foot		x
38	7146552	HOSE, WATER	W/O heater or A/C		1

ENGINE & ATTACHING PARTS (Cont'd)
(Radiator Water Exchanger)

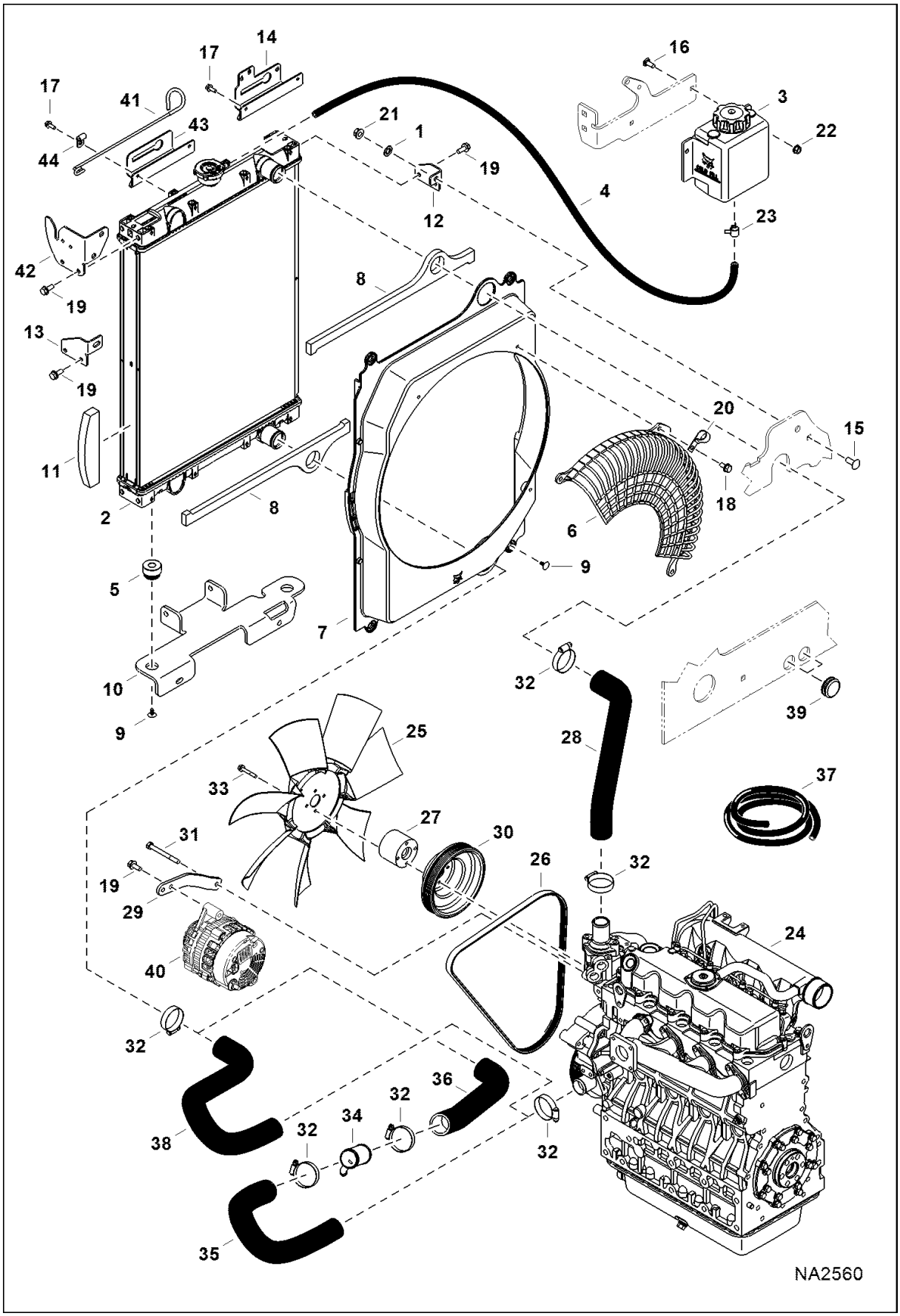

Ref No	Part Number	Description	Remarks	Serial Number	Qty
		LOWER			
39	6810133	GROMMET			2
40	7008772	ALTERNATOR, 90 AMP	See Illustration ALTERNATOR/ NA2234		1
41	7191746	ROD, RELEASE		AHHC12422 & Above	1
41	7191746	ROD, RELEASE		AG3G12373 & Above	1
42	7199747	MOUNT, RADIATOR		AG3G12373 & Above	1
42	7199747	MOUNT, RADIATOR		AHHC12422 & Above	1
43	7213293	BRACKET, MOUNTING		AG3G12373 & Above	1
43	7213293	BRACKET, MOUNTING		AHHC12422 & Above	1
44	30H19	CLIP		AG3G12373 & Above	2
44	30H19	CLIP		AHHC12422 & Above	2

ENGINE & ATTACHING PARTS
(Air Cleaner, Muffler, Engine Mounts)

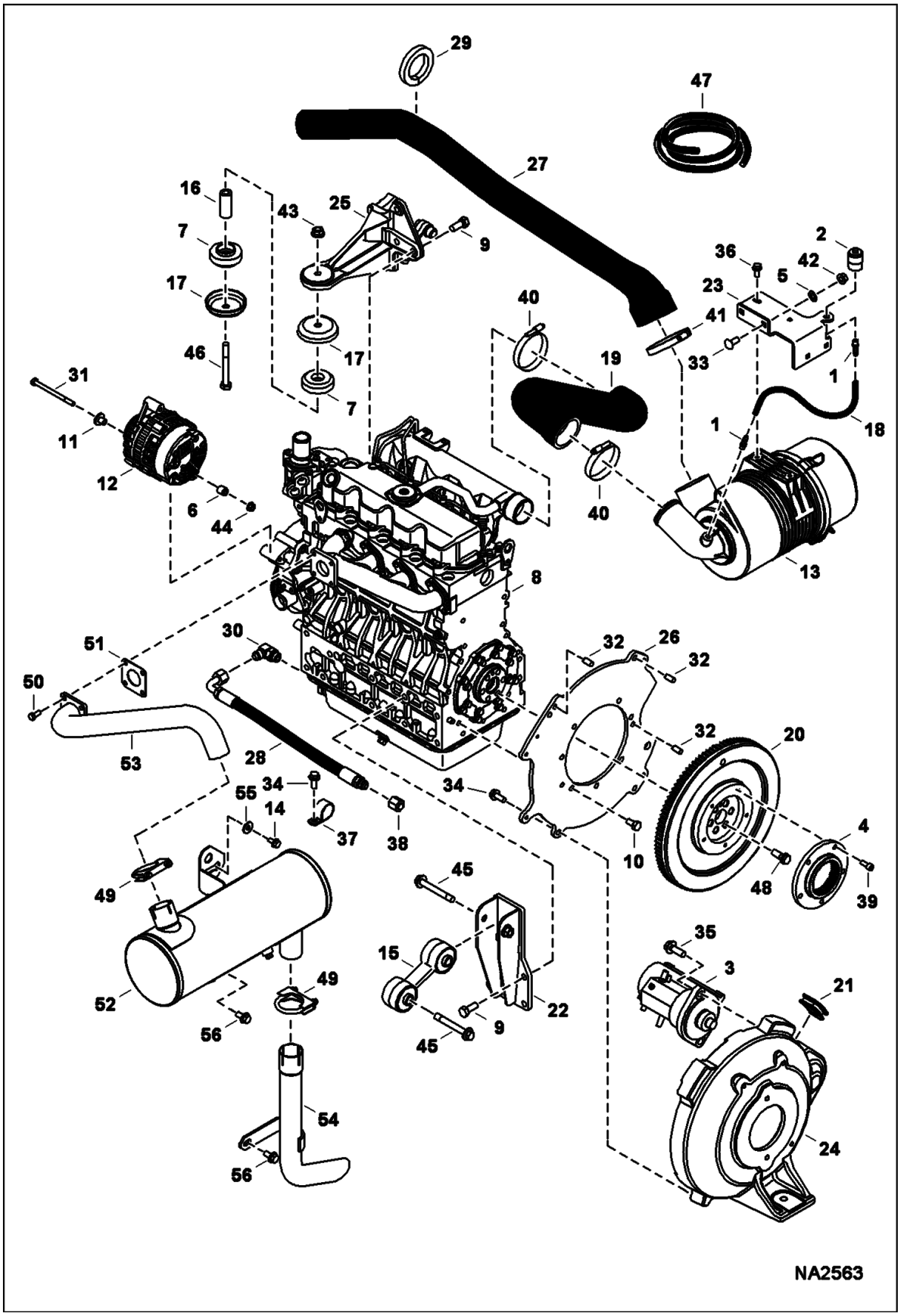

ENGINE & ATTACHING PARTS (Cont'd)
(Air Cleaner, Muffler, Engine Mounts)

Ref No	Part Number	Description	Remarks	Serial Number	Qty
1	6505813	CONNECTOR			2
2	6515007	GAUGE			1
3	6670727	STARTER	See Illustration STARTER/ D2437		1
4	6670757	COUPLER			1
5	6674264	RETAINER NUT			2
6	6675838	BUSHING			1
7	6688993	MOUNT			4
8		ENGINE	See Illustration ENGINE & GASKET KITS/ NA1527		1
9	6719828	BOLT			7
10	6733378	SCREW			7
11	6816532	SPACER			1
12	7008772	ALTERNATOR, 90 AMP	See Illustration ALTERNATOR/ NA2234		1
13	7010245	FILTER, AIR	See Illustration AIR CLEANER/ PE2909		1
14	29CM816	SCREW			1
15	7021924	MOUNT, ENG	Was 7013153 [A]		1
16	7116850	SPACER			2
17	7116851	CUP			4
18		HOSE	NAP - 16" (406,5 mm) long - Order Ref. 47		1
19	7146541	HOSE, AIR INTAKE			1
20	7161404	FLYWHEEL, ENG ASSY			1
20	6510470	RING GEAR			1
21	7173007	PLUG			1
22	7178934	MOUNT, ENG			1
23	7178997	BRACKET, FILTER			1
24	7181129	MOUNT, ENG			1
25	7203367	MOUNT, ENG	Was 7181214 [A]		1
26	7181443	PLATE, FLYWHEEL			1
27	7185311	HOSE, AIR INTAKE			1
28	7188326	HOSE, DRAIN OIL ENG			1
29	7189227	SEAL, HOSE			1
30	17KB0808	FITTING, HYD ELBOW			1
30	79K8	O RING 10			x
31	1CM8110	HEX CAP S			1
32	23JM1024	PIN HARDENED PARALLE			3
33	28CM1025	BOLT			2
34	29CM1025	BOLT			4
35	29CM1235	BOLT			2
36	29CM820	SCREW			2
37	30H75	CLAMP			1
38	36K6	CAP			1
39	9GM820	SCREW	Was 3GM820 [B]		5
40	42HC325	CLAMP			2
41	42HL375	CLAMP, HOSE			1
42	43DM10	NUT			2
43	51DM12	NUT			2
44	51DM8	NUT			1
45	60CM1290	BOLT			2
46	10CM12110	BOLT	Was 7CM12100 [B]		2

ENGINE & ATTACHING PARTS (Cont'd)
(Air Cleaner, Muffler, Engine Mounts)

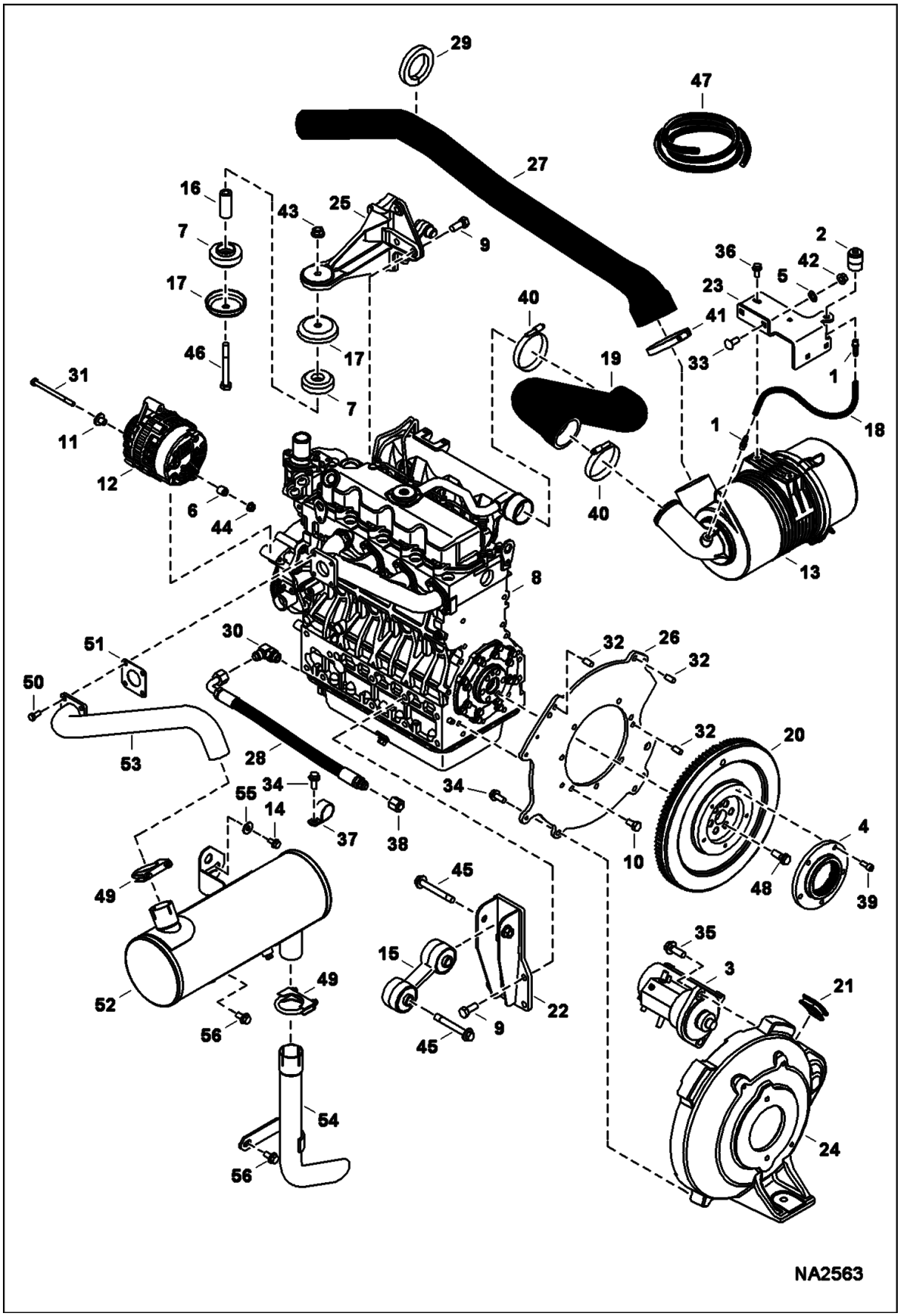

ENGINE & ATTACHING PARTS (Cont'd)
(Air Cleaner, Muffler, Engine Mounts)

Ref No	Part Number	Description	Remarks	Serial Number	Qty
47	6557720	HOSE	bulk - sold per foot		x
48	6598275	BOLT			6
49	6677363	CLAMP, FULL CIRCLE			2
50	6701123	SCREW			4
51	6727752	GASKET			1
52	7001911	MUFFLER, EXHAUST			1
52		MUFFLER, PURIFIER	See Illustration PURIFIER/ NA2607		1
53	7001937	TUBE, EXHAUST			1
54	7009596	PIPE, TUBE EXHAUST			1
55	17EM80	WASHER			1
56	29CM1020	BOLT			3

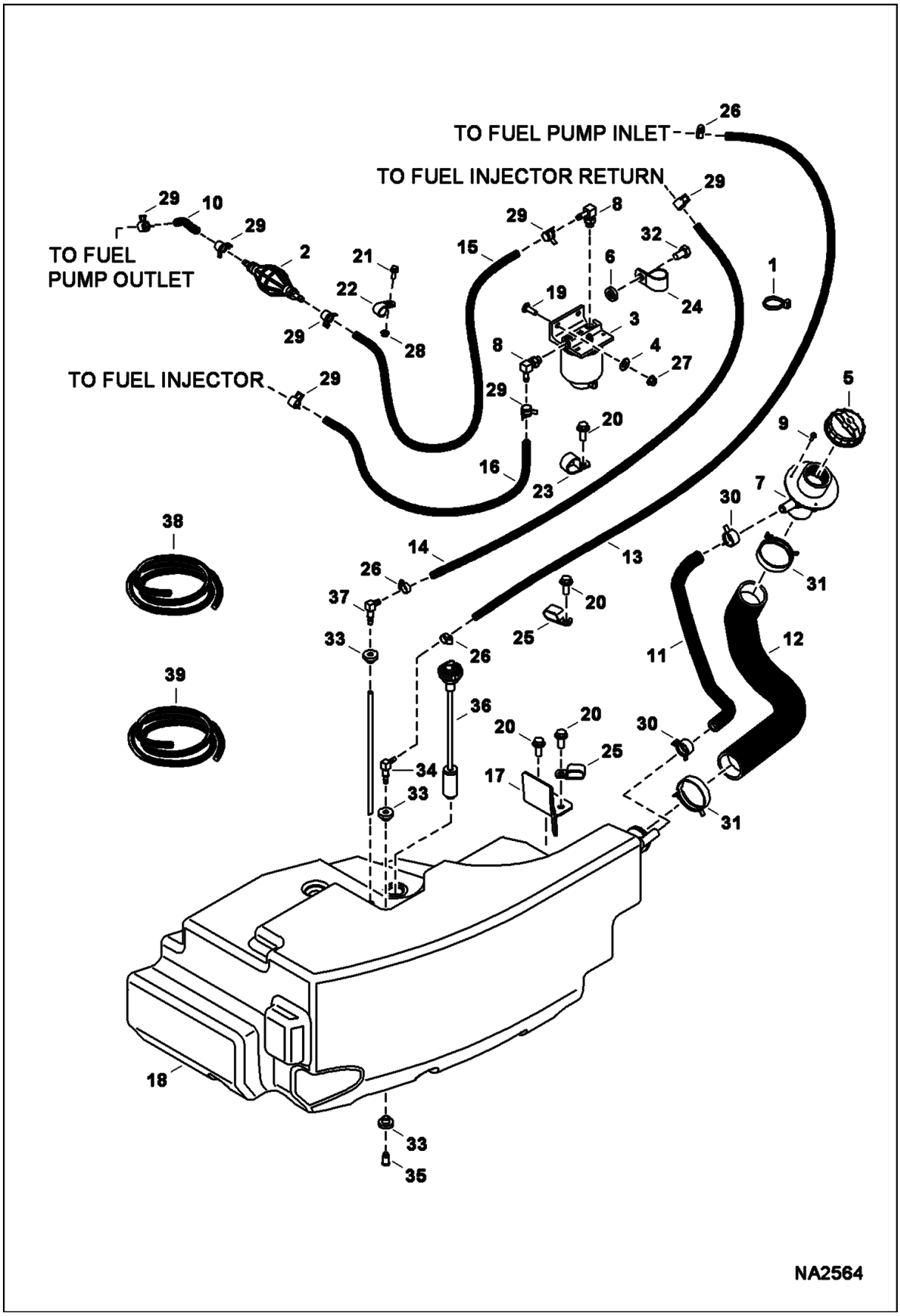
TO FUEL PUMP INLET
TO FUEL INJECTOR RETURN
TO FUEL PUMP OUTLET
TO FUEL INJECTOR
NA2564

ENGINE & ATTACHING PARTS (Cont'd)
(Fuel System)

Ref No	Part Number	Description	Remarks	Serial Number	Qty
1	6624289	STRAP, TIE			3
2	6667170	PUMP			1
3	6667353	FILTER ASSY			1
3	6667352	FILTER, FUEL W/SEPERATOR 12			x
4	6675859	RETAINER			2
5	7019288	CAP, FUEL LOCKING	green - Was 6680151 [A]		1
5	7023550	CAP, DIESEL LOCKING	black		1
6	6701097	WASHER			1
7	6701449	FILLER TUBE			1
8	6715183	ELBOW			2
8	79K5	O RING 10			1
9	7106279	BOLT			3
10		HOSE, FUEL	NAP - 64 mm (2.5") long - Order Ref. 38		1
11	7172473	HOSE, FUEL			1
12	7172474	HOSE, INLET			1
13		HOSE, FUEL	NAP - 2260 mm (89") long - Order Ref. 39		1
14		HOSE, FUEL	NAP - 2030 mm (80") long - Order Ref. 38		1
15		HOSE, FUEL	NAP - 2337 mm (92") long - Order Ref. 38		1
16		HOSE, FUEL	NAP - 2489 mm (98") long - Order Ref. 38		1
17	7227060	BRACKET, TANK FUEL	Was 7174609 [C]		1
18	7172472	TANK, FUEL			1
19	28CM825	BOLT			2
20	29CM1025	BOLT			5
21	29CM616	BOLT			1
22	30H37	CLAMP			1
23	30H73	CLAMP			1
24	30H74	CLAMP, HOSE			1
25	30H31	CLAMP 10			3
26	42HS04	CLAMP, HOSE			3
27	43DM8	NUT			2
28	51DM6	NUT			1
29	5HM14	CLAMP			7
30	5HM23	CLAMP			2
31	5HM58	CLAMP			2
32	6CM1220	BOLT			1
33	6553411	BUSHING			3
34	6598908	ELBOW			1
35	6599645	PLUG, STEEL			1
36	7216451	SENSOR, FUEL	Was 6680453 [A]		1
37	6666302	ELBOW	Was 7126672 [B]		1
38	6577822	HOSE	bulk - sold per foot		x
39	6578169	HOSE	bulk - sold per foot - 0.19" ID		x
39	6578169	HOSE	bulk - sold per foot - 0.19" ID		x

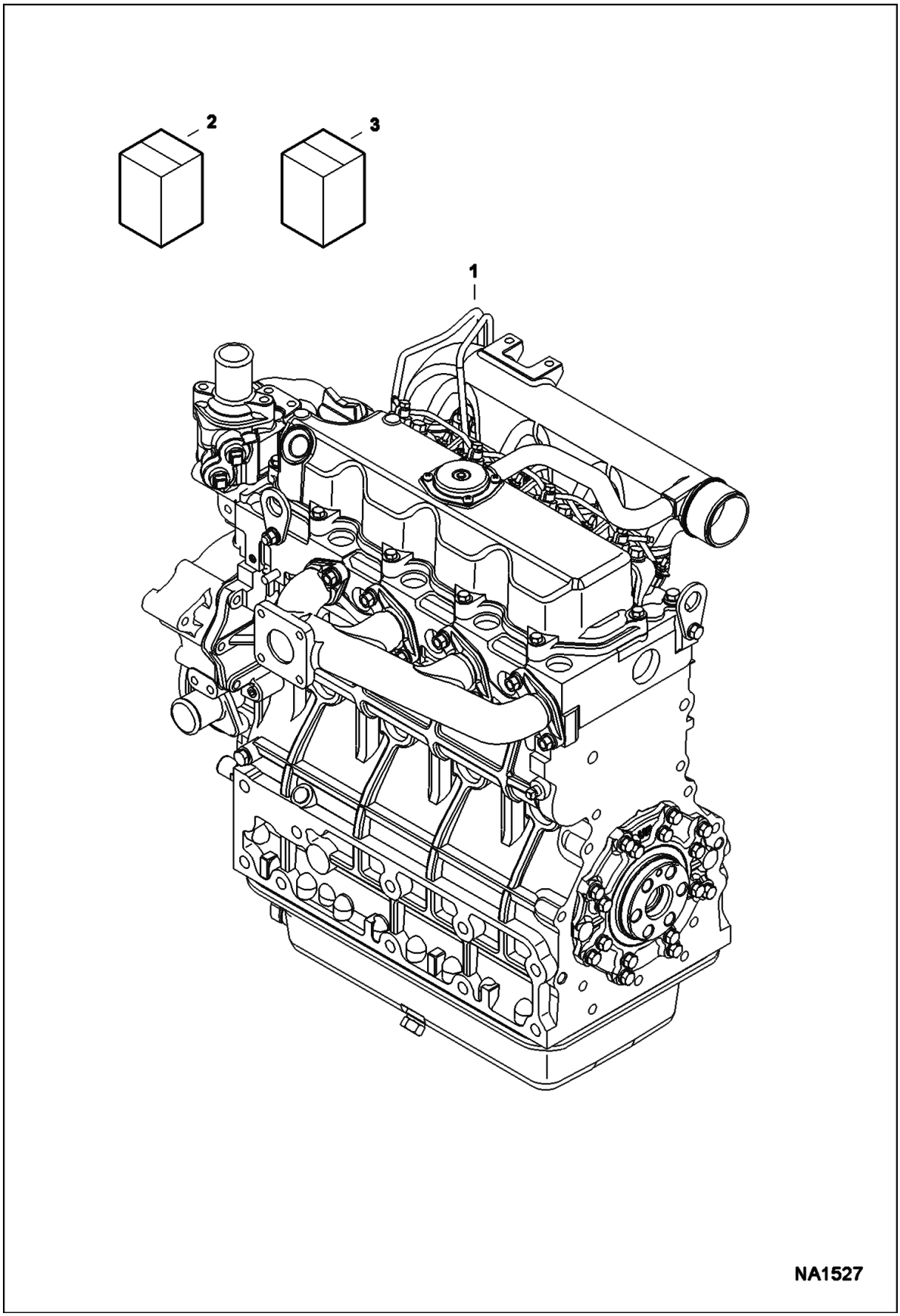
2
3
1
NA1527

Ref No	Part Number	Description	Remarks	Serial Number	Qty
1		ENGINE, V2403-M-DI-E3B-BC-2	NAP - model V2403-M-DI-E3B-BC-2 - Order 6692881	AG3G11001-11009	1
1		ENGINE, V2403-M-DI-E3B-BC-2	NAP - model V2403-M-DI-E3B-BC-2 - Order 6692881	AHHC11001-11010	1
1	6692881	ENGINE, V2403-M-DI-E3B-BC-5		AHHC11011 & Above	1
1	6692881	ENGINE, V2403-M-DI-E3B-BC-5		AG3G11010 & Above	1
2	6689012	KIT, GASKET ENG UPPER	See Illustration UPPER GASKET KIT/ NA2577		1
3	6689018	KIT, GASKET ENG LOWER	See Illustration LOWER GASKET KIT/ NA6182	E/ 9FZ999 & Below	1
3	7013263	KIT, GASKET ENG LOWER	See Illustration LOWER GASKET KIT/ NA2578	E/ 9G0001 & Above	1

UPPER GASKET KIT

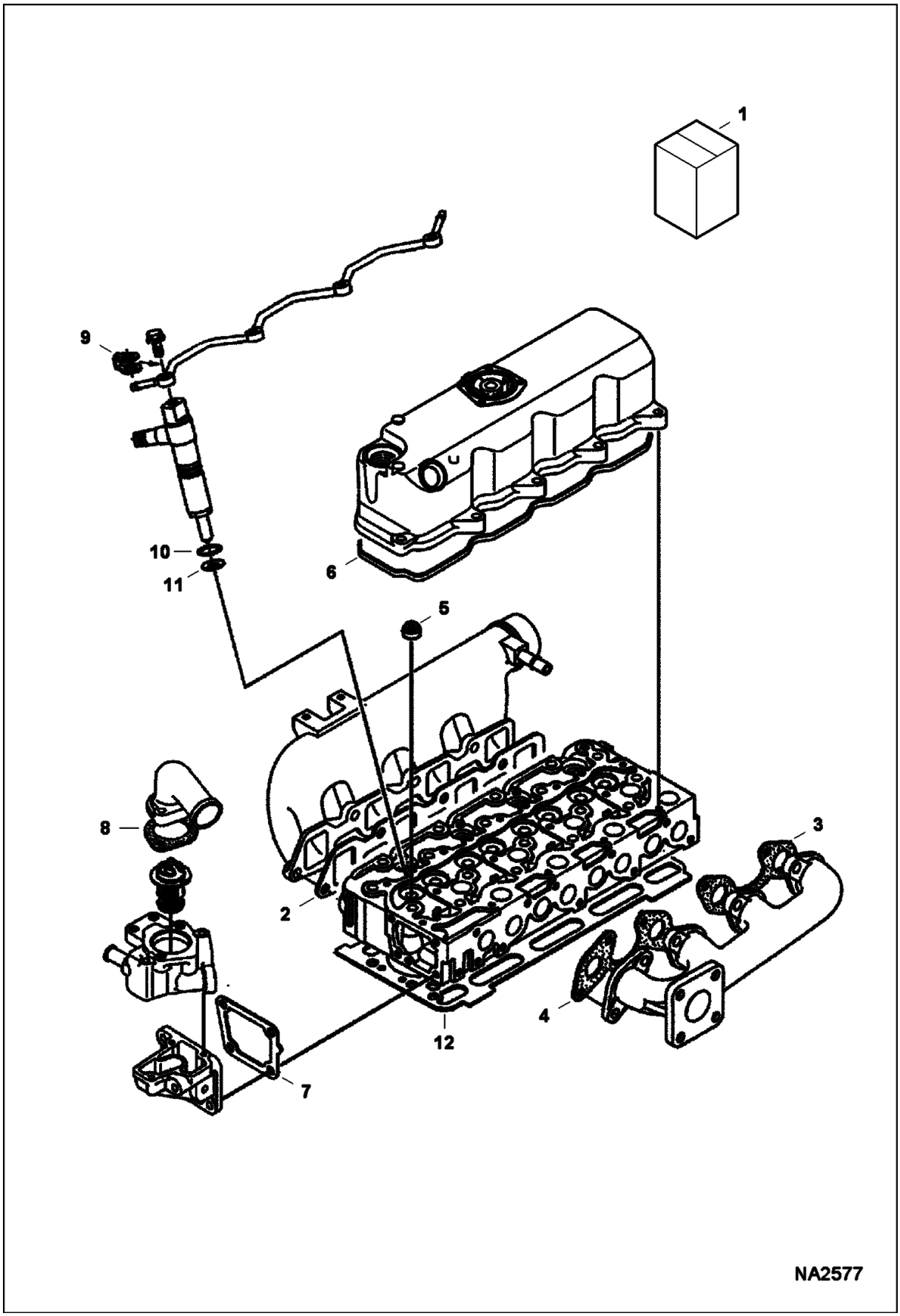

UPPER GASKET KIT (Cont'd)

Ref No	Part Number	Description	Remarks	Serial Number	Qty
1	6689012	KIT, GASKET ENG UPPER	Ref. 2-11 - does not include head gasket		1
2	6684877	GASKET	See Illustration MANIFOLDS/ B27073 - intake manifold		1
3	6666791	GASKET	See Illustration MANIFOLDS/ B27073 - exhaust - rear		1
4	6666781	GASKET	See Illustration MANIFOLDS/ B27073 - exhaust - front		1
5	6653830	SEAL, STEM VALVE	See Illustration CYLINDER HEAD/ B27066		8
6	6684780	GASKET	See Illustration ROCKER ARM COVER/ NA2519 - rocker arm cover		1
7	6666802	GASKET	See Illustration WATER FLANGE AND THERMOSTAT/ B27049 - water flange		1
8	6684863	GASKET	See Illustration WATER FLANGE AND THERMOSTAT/ B27049 - thermostat		1
9	6685498	GASKET	See Illustration INJECTOR NOZZLES/ B27078 - return line		4
10	6670769	O-RING	See Illustration INJECTOR NOZZLES/ B27078 - injector nozzle		4
11	6969824	GASKET, NOZZLE INJ	See Illustration INJECTOR NOZZLES/ B27078 - heat shield		4
12		GASKET, HEAD	See Illustration CYLINDER HEAD/ B27066 - not in kit		x

LOWER GASKET KIT
(S/N E/ 9FZ999 & Below)

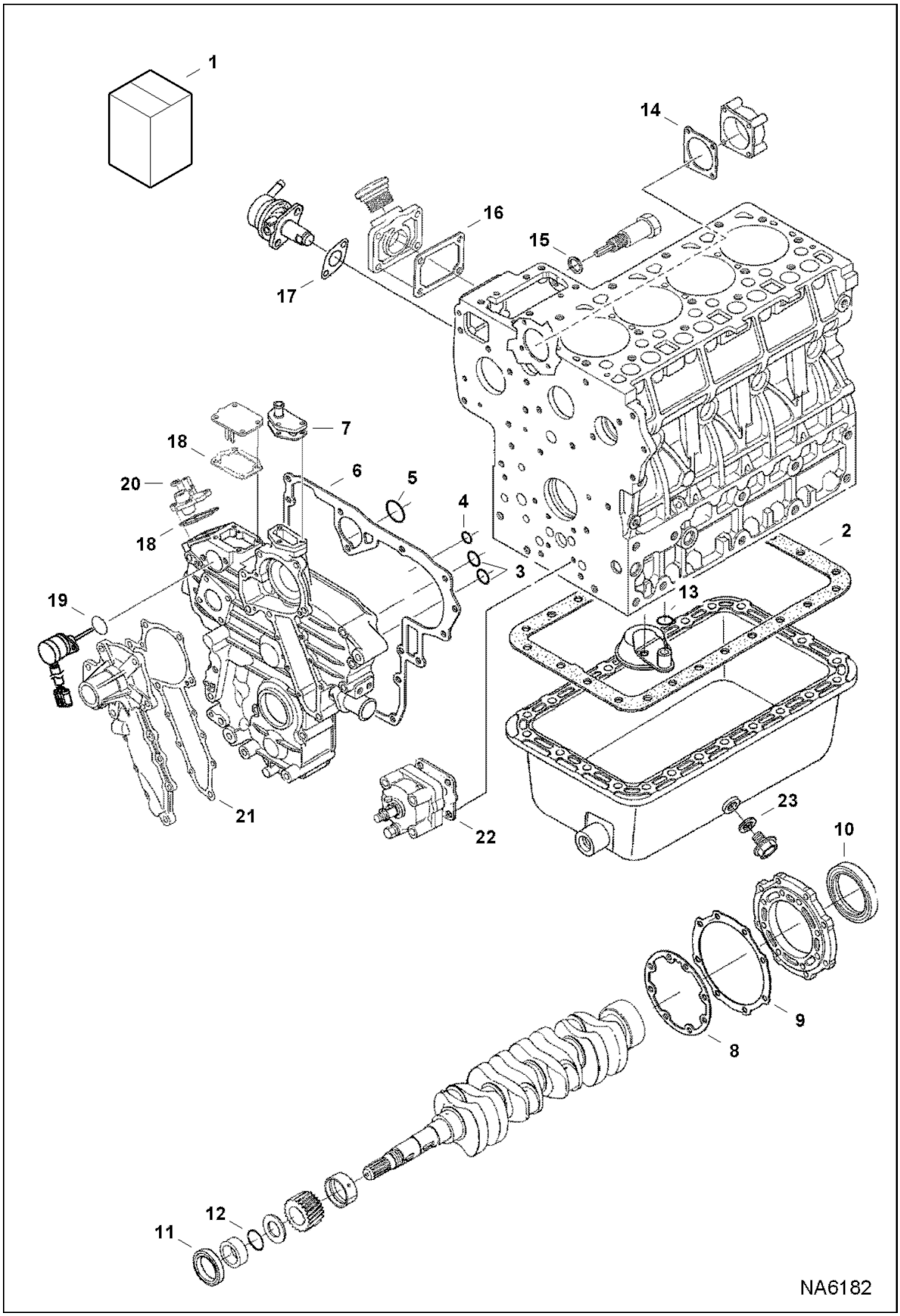

LOWER GASKET KIT (Cont'd)
(S/N E/ 9FZ999 & Below)

Ref No	Part Number	Description	Remarks	Serial Number	Qty
1	6689018	KIT, GASKET ENG LOWER	Ref. 2-23		1
2	6666817	GASKET	See Illustration OIL PAN/ B27046 - oil pan		1
3	6685467	O-RING	See Illustration GEARCASE/ B27062 - gear case		2
4	6685468	O-RING	See Illustration GEARCASE/ B27062 - gear case		1
5	6685466	O-RING	See Illustration GEARCASE/ B27062 - gear case		1
6	6684770	GASKET	See Illustration GEARCASE/ B27062 - gearcase		1
7	6666803	GASKET	See Illustration GEARCASE/ B27062 - return flange		1
8	6684788	GASKET	See Illustration PISTON & CRANKSHAFT/ B27068 - bearing case		1
9	6666814	GASKET	See Illustration PISTON & CRANKSHAFT/ B27068 - case cover		1
10	6684789	SEAL	See Illustration PISTON & CRANKSHAFT/ B27068 - oil rear main		1
11	7024826	SEAL, OIL	See Illustration PISTON & CRANKSHAFT/ B27068 - oil frt main - oil frt main - Was 6631664		1
12	3974577	O RING	See Illustration PISTON & CRANKSHAFT/ B27068 - crankshaft frt		1
13	6684754	O-RING	See Illustration OIL PAN/ B27046 - oil screen		1
14	6692386	GASKET	See Illustration FUEL CAMSHAFT/ B27069 - fuel camshaft cover		1
15	6684818	SEAL	See Illustration SPEED CONTROL PLATE/ B27076 - idle adj. bolt		1
16	6666783	GASKET	See Illustration CRANKCASE/ B27063 - oil fill flange		1
17	6686037	GASKET	See Illustration FUEL AND INJECTION PUMP/ B27077 - fuel pump		1
18	6684841	GASKET	See Illustration ENGINE STOP LEVER/ B27074 See Illustration SPEED CONTROL PLATE/ B27076 - boost cover		2
19	6685465	O-RING	See Illustration ENGINE STOP LEVER/ B27074 - stop solenoid		1
20	6685476	SEAL	See Illustration SPEED CONTROL PLATE/ B27076 - speed control lever		1
21	6684870	GASKET	See Illustration WATER PUMP/ B27208 - water pump		1
22	6666782	GASKET	See Illustration CRANKCASE/ B27063 - oil pump		1
23	6680484	GASKET	See Illustration OIL PAN/ B27046 - drain plug		1

LOWER GASKET KIT
(S/N E/ 9G0001 & Above)

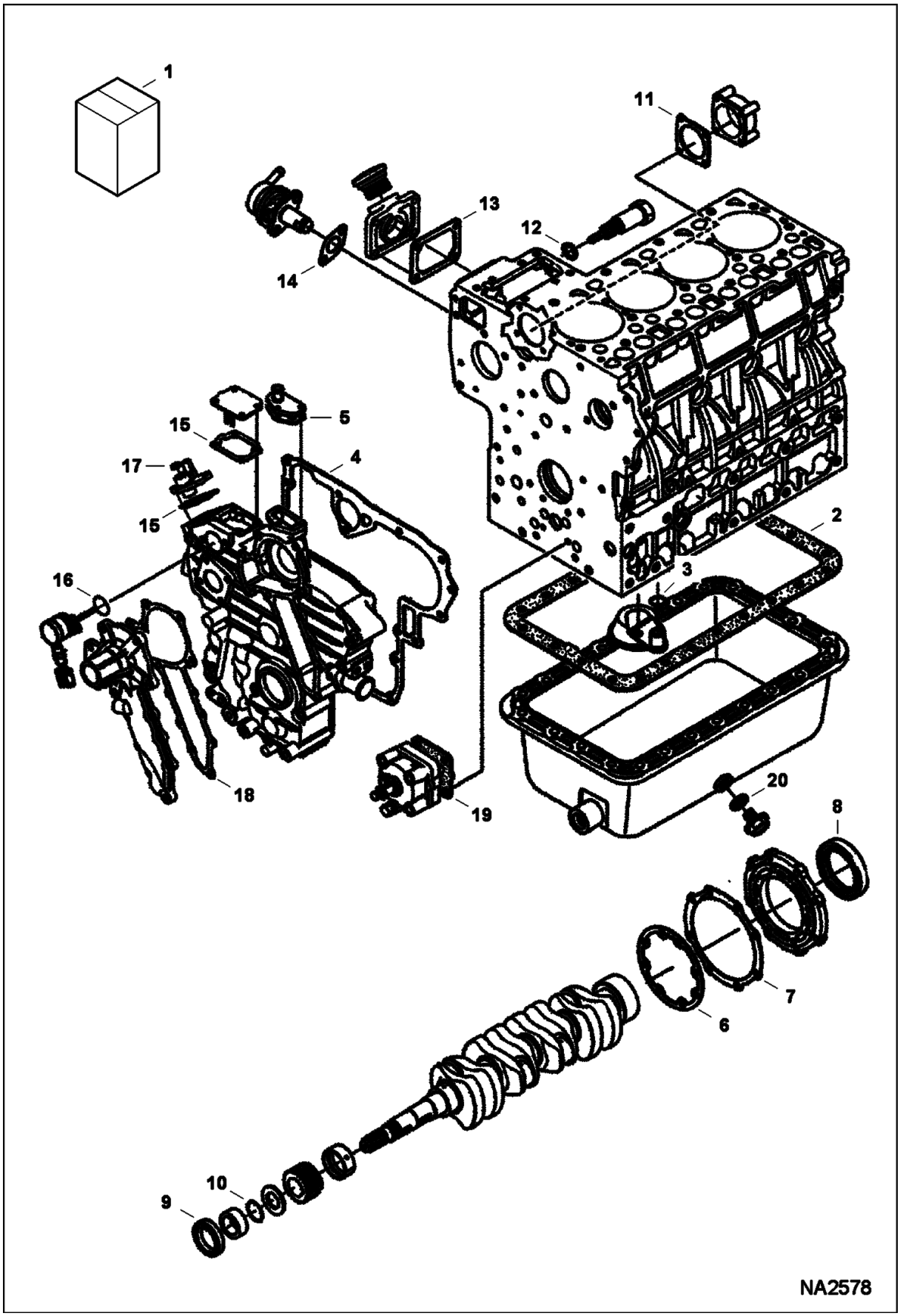

LOWER GASKET KIT (Cont'd)
(S/N E/ 9G0001 & Above)

Ref No	Part Number	Description	Remarks	Serial Number	Qty
1	7013263	KIT, GASKET ENG LOWER	Ref. 2-20		1
2	6666817	GASKET	See Illustration OIL PAN/ B27046 - oil pan		1
3	6684754	O-RING	See Illustration OIL PAN/ B27046 - oil screen		1
4	7010599	GASKET, GEARCASE	See Illustration GEARCASE/ NA2518		1
5	6666803	GASKET	See Illustration GEARCASE/ NA2518 - return flange		1
6	6684788	GASKET	See Illustration PISTON & CRANKSHAFT/ B27068 - bearing case		1
7	6666814	GASKET	See Illustration PISTON & CRANKSHAFT/ B27068 - case cover		1
8	6684789	SEAL	See Illustration PISTON & CRANKSHAFT/ B27068 - oil		1
9	7024826	SEAL, OIL	See Illustration PISTON & CRANKSHAFT/ B27068 - crankshaft frt - oil frt main - Was 6631664		1
10	3974577	O RING	See Illustration PISTON & CRANKSHAFT/ B27068 - crankshaft frt		1
11	6692386	GASKET	See Illustration FUEL CAMSHAFT/ B27069 - fuel camshaft cover		1
12	6684818	SEAL	See Illustration SPEED CONTROL PLATE/ B27076 - idle adj. bolt		1
13	6666783	GASKET	See Illustration CRANKCASE/ B27063 - pump cover		1
14	6686037	GASKET	See Illustration FUEL AND INJECTION PUMP/ B27077 - fuel pump		1
15	6684841	GASKET	See Illustration ENGINE STOP LEVER/ B27074 - plate		2
16	6685465	O-RING	See Illustration ENGINE STOP LEVER/ B27074 - stop solenoid		1
17	6685476	SEAL	See Illustration SPEED CONTROL PLATE/ B27076 - speed control lever		1
18	6684870	GASKET	See Illustration WATER PUMP/ B27208 - water pump		1
19	6666782	GASKET	See Illustration CRANKCASE/ B27063 - oil pump		1
20	6680484	GASKET	See Illustration OIL PAN/ B27046 - drain plug		1

GEARCASE
(S/N E/ 9FZ999 & Below)

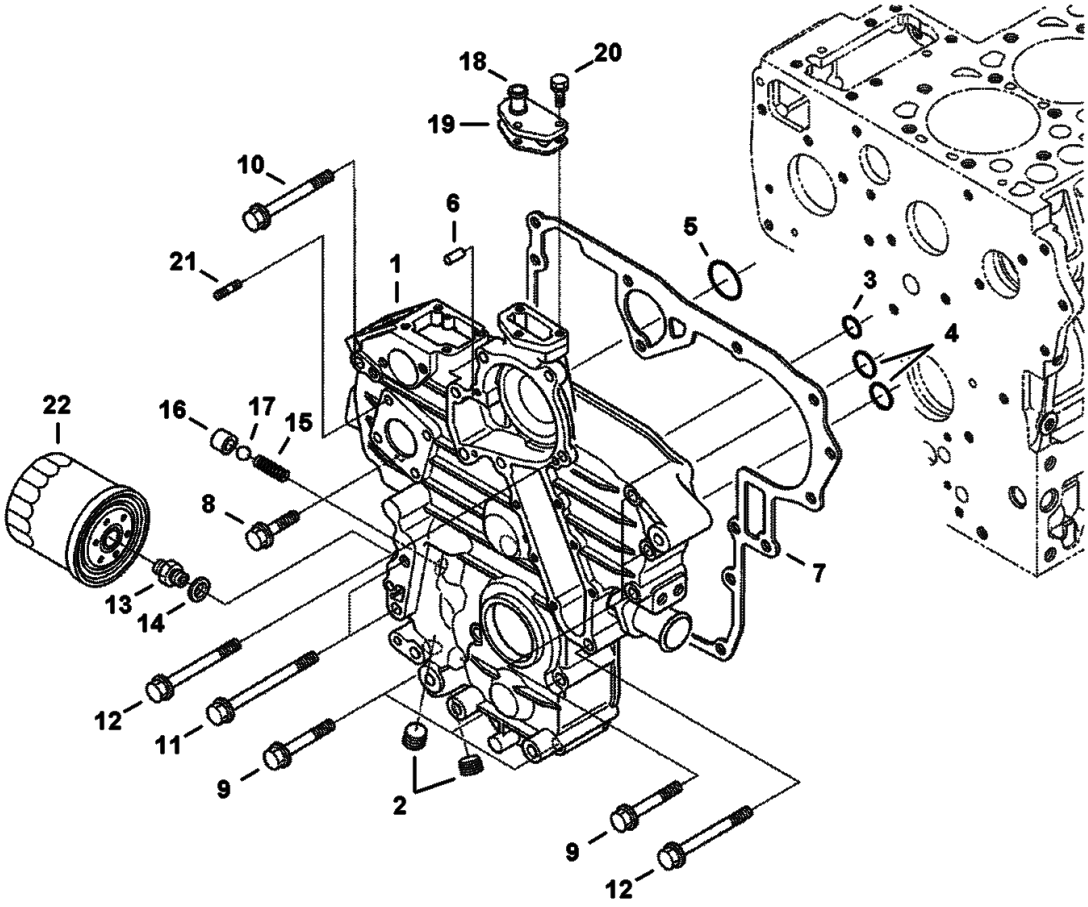

B-27062

GEARCASE (Cont'd)
(S/N E/ 9FZ999 & Below)

Ref No	Part Number	Description	Remarks	Serial Number	Qty
1		HOUSING, GEAR	NAP - W/Ref. 2 - Order 7015260 housing & 7010599 gasket and DO NOT USE Ref. 3-5 - Was 6686045 [A]		1
2	6672360	PLUG			2
3	6685466	O-RING			1
4	6685467	O-RING			2
5	6685468	O-RING			1
6	3974395	PIN			2
7	6684770	GASKET			1
8	6680706	BOLT			1
9	6692375	BOLT			7
10	6680686	BOLT			1
11	6692376	BOLT			2
12	6692377	BOLT			4
13	6653809	CONNECTOR			1
14	6685501	WASHER			1
15	6652652	SPRING			1
16	3974893	SEAT			1
17	10J13	BALL	Was 6969574 [A]		1
18	3974894	FLANGE			1
19	6666803	GASKET			1
20	4CM620	BOLT			3
21	6652764	STUD			4
22	6675517	FILTER, OIL ENG			1

GEARCASE
(S/N E/ 9G0001 & Above)

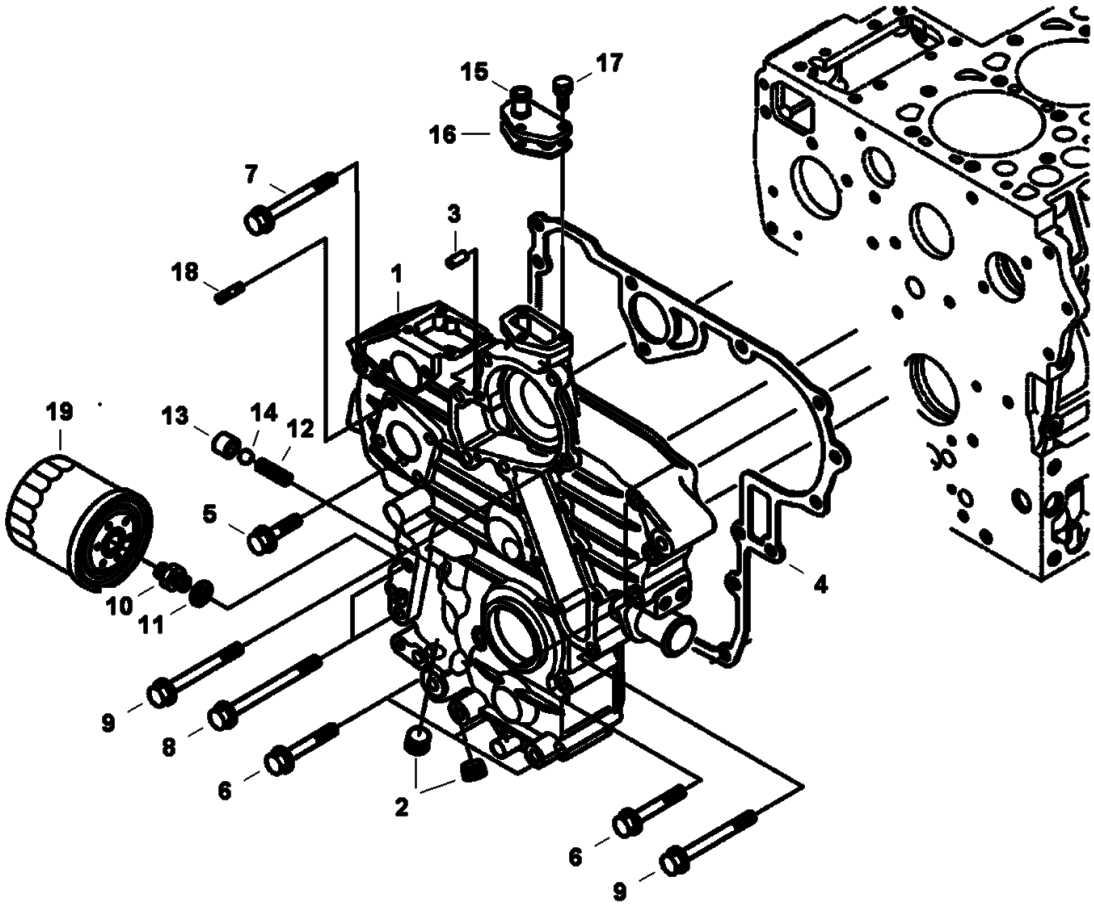

NA2518

GEARCASE (Cont'd)
(S/N E/ 9G0001 & Above)

Ref No	Part Number	Description	Remarks	Serial Number	Qty
1	7015260	HOUSING, GEAR	W/Ref. 2		1
2	6672360	PLUG			2
3	3974395	PIN			2
4	7010599	GASKET, GEARCASE			1
5	6680706	BOLT			1
6	6692375	BOLT			7
7	6680686	BOLT			1
8	6692376	BOLT			2
9	6692377	BOLT			4
10	6653809	CONNECTOR			1
11	6685501	WASHER			1
12	6652652	SPRING			1
13	3974893	SEAT			1
14	10J13	BALL			1
15	3974894	FLANGE			1
16	6666803	GASKET			1
17	4CM620	BOLT			3
18	6652764	STUD			4
19	6675517	FILTER, OIL ENG			1

CRANKCASE

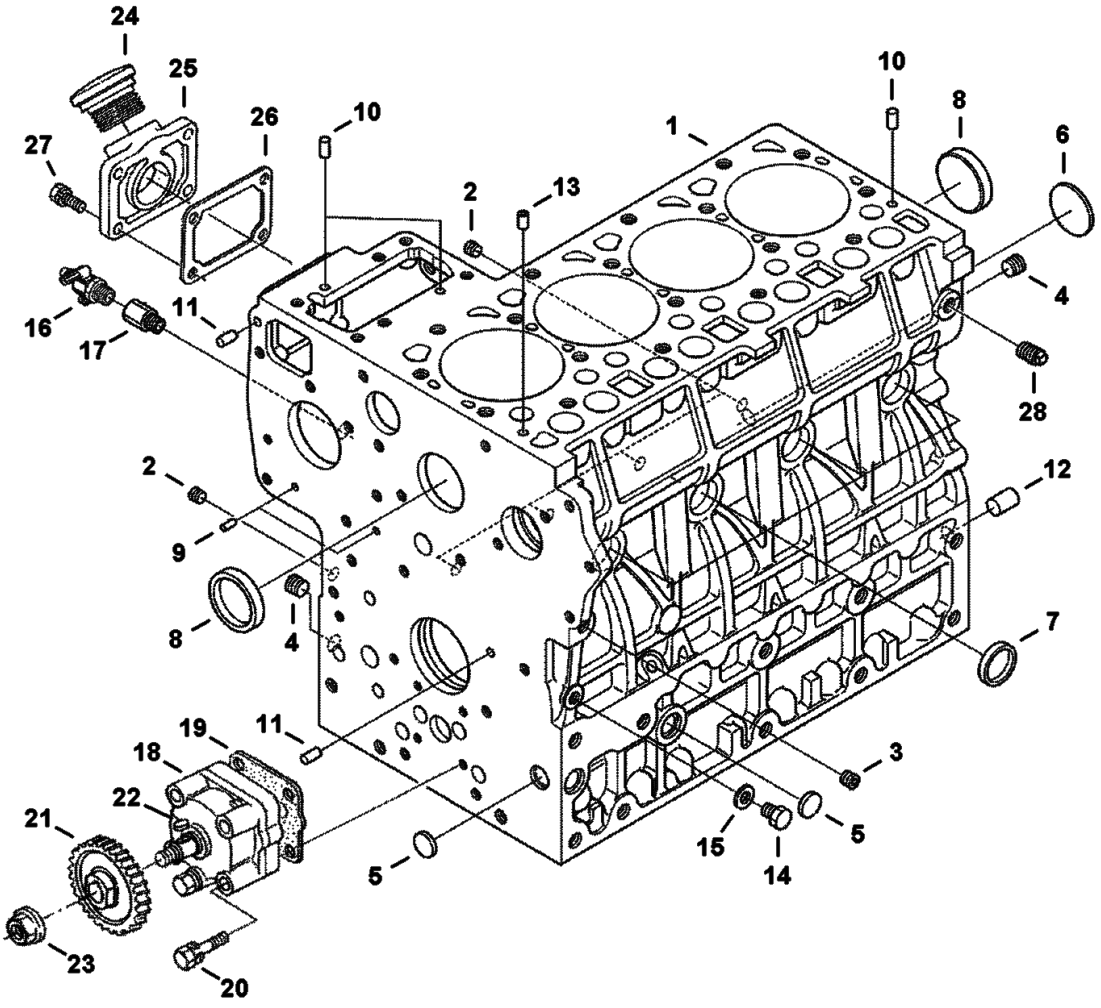

B-27063

Ref No	Part Number	Description	Remarks	Serial Number	Qty
1	6698098	BLOCK, ENGINE	W/Ref. 2-13		1
2	6652574	PLUG			5
3	6655869	PLUG			1
4	6652575	PLUG			2
5	6667418	PLUG			3
6	6657663	PLUG			1
7	3974389	CAP, SEALING			6
8	3974390	PLUG			2
9	3974393	PIN			2
10	3974394	PIN			3
11	3974395	PIN			2
12	3974868	PIN			1
13	3974037	PIN			1
14	7022679	PLUG	Was 6683104 [A]		1
15	3974095	MET-GASK			1
16	6672190	DRAINCOCK			1
17	3974871	CONNECTOR			1
18	6689441	PUMP, OIL ENG			1
19	6666782	GASKET			1
20	6670770	BOLT			4
21	3975441	GEAR, CAMSHAFT			1
22	6969805	KEY,FEATHER			1
23	6653888	NUT			1
24	7015273	PLUG, FILL	oil fill - Was 6685472 [A]		1
25	6685478	FLANGE			1
26	6666783	GASKET			1
27	6652580	BOLT			4
28	16F2	PLUG			1

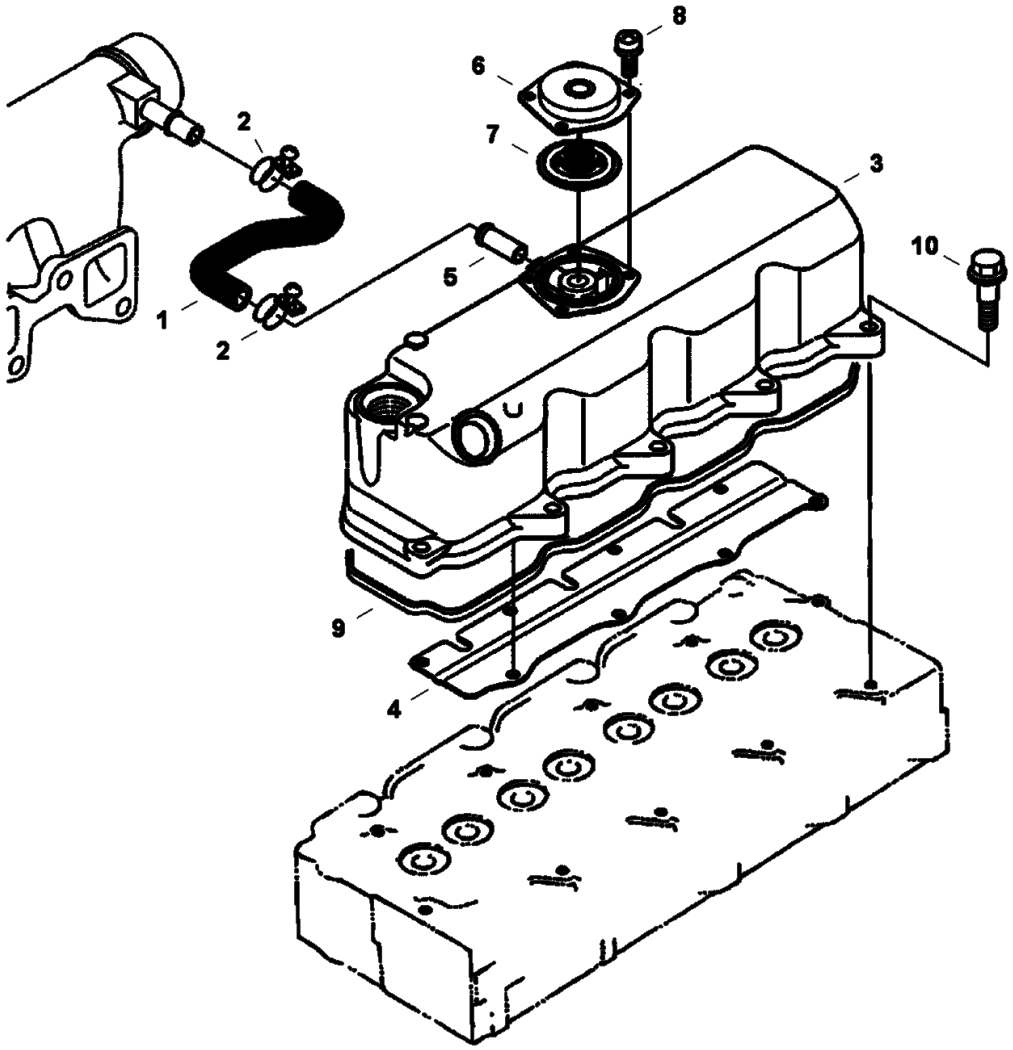

NA2519

ROCKER ARM COVER (Cont'd)

Ref No	Part Number	Description	Remarks	Serial Number	Qty
1	6685524	TUBE, BREATHER			1
2	3974679	BAND			2
3	7010356	COVER, HEAD CYL ENG	W/Ref. 4-8 - Was 6685085 [D]		1
4		SHIELD	NAP - breather - Order Ref. 3		1
5	6655880	PIPE			1
6	6969803	COVER, BREATHER			1
7	6685087	VALVE			1
8	3975436	SCREW	W/washer		4
9	6684780	GASKET			1
10	6684781	BOLT			10

VALVE AND ROCKER ARM

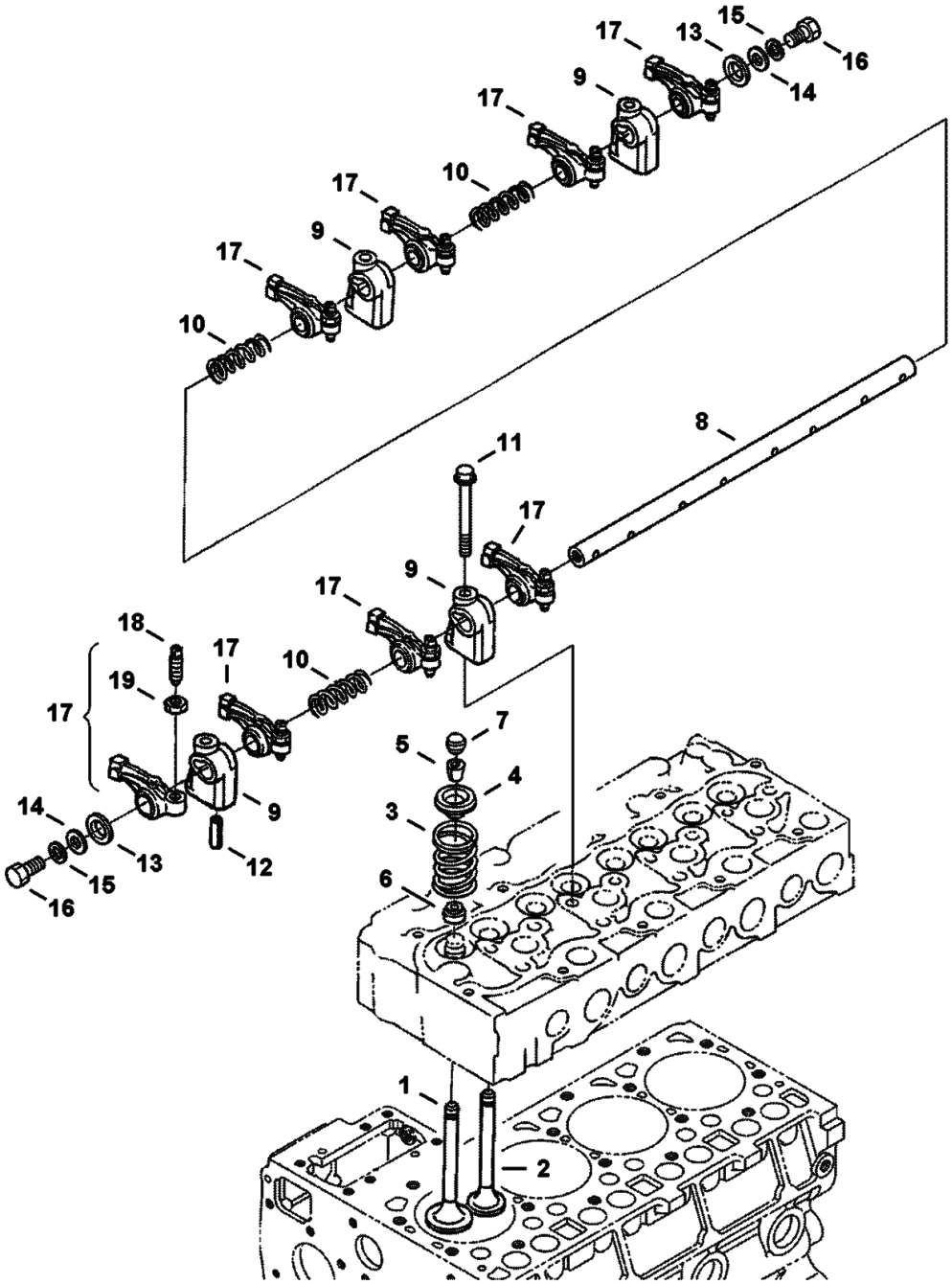

VALVE AND ROCKER ARM (Cont'd)

Ref No	Part Number	Description	Remarks	Serial Number	Qty
1	6684872	VALVE	intake		4
2	7020386	VALVE	exhaust - Was 6684873 [A]		4
3	3974514	SPRING 5	valve		8
4	3974515	RETAINER	valve spring		8
5	6684874	COLLAR	valve spring - set of 2		8
6	6653830	SEAL, STEM VALVE			8
7	3974518	CAP	valve		8
8	6684875	SHAFT	rocker arm		1
9	3974521	MOUNT	rocker arm		4
10	6653833	SPRING	rocker arm		3
11	6680685	BOLT			4
12	6667461	PIN	spring		1
13	3974524	WASHER	rocker arm		2
14	6667451	WASHER	plain		2
15	6667422	WASHER	spring		2
16	5CM812	BOLT			2
17	6655870	ROCKER ARM	W/Ref. 18 & 19		8
18	3974920	SCREW	adjusting		8
19	2DM8	NUT			8

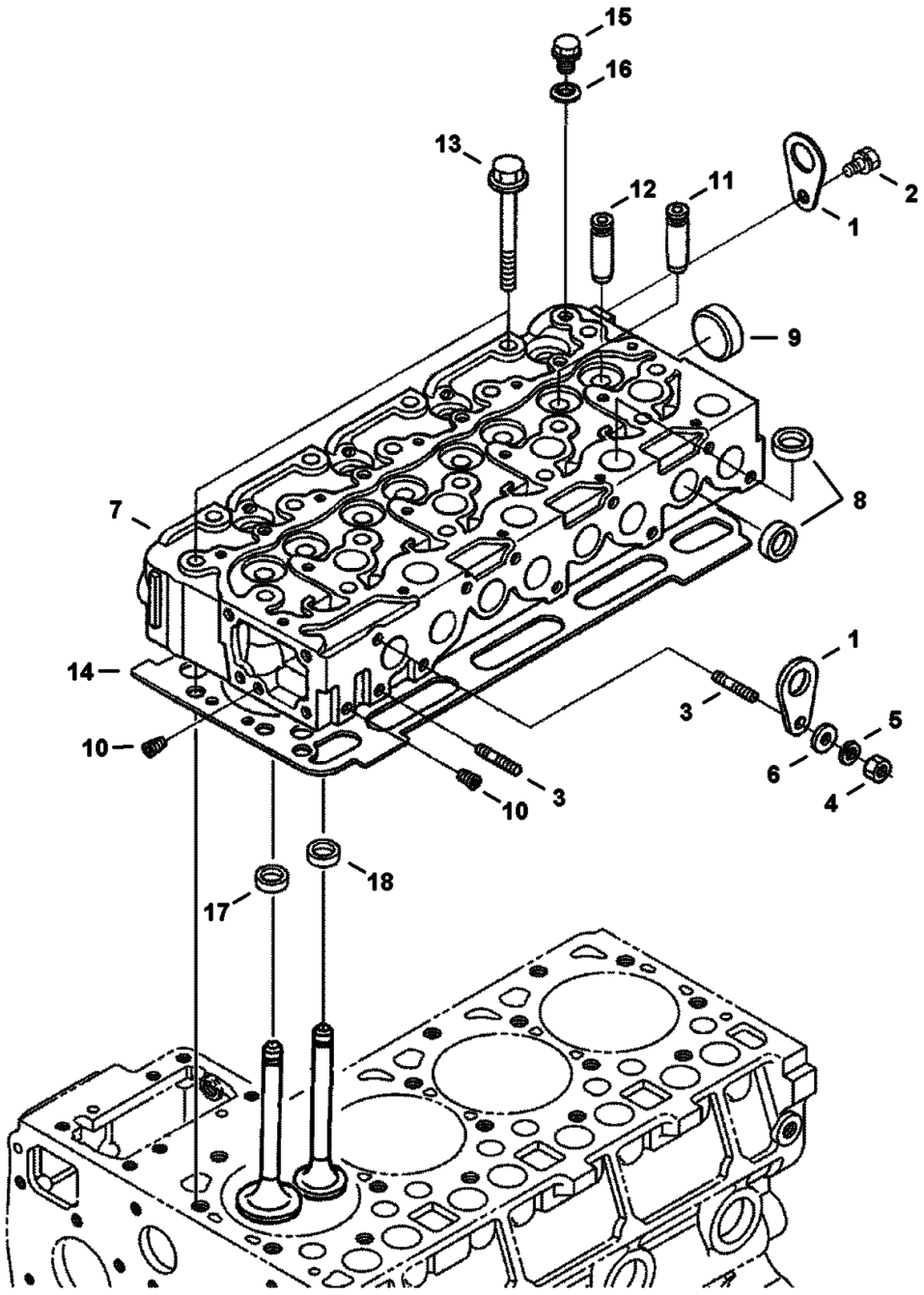
15
16
13
12
11
2
1
9
8
7
14
1
3
5
6
4
10
3
10
18
17
B-27066

CYLINDER HEAD (Cont'd)

Ref No	Part Number	Description	Remarks	Serial Number	Qty
1	3974882	HOOK			2
2	6667421	BOLT			1
3	6598156	STUD			2
4	6652792	NUT			1
5	6667422	WASHER			1
6	2EM8	WASHER, PLAIN	6969796 [A]		1
7	6685503	CYLINDER	W/Ref. 8-12, 17 & 18		1
8	3974432	PLUG			12
9	3974433	PLUG			1
10	6598116	PLUG			2
11	6655154	GUIDE			4
12	6969990	GUIDE			4
13	6655158	BOLT			18
14	6685078	GASKET	- 15		1
14	6685077	GASKET	- 20		1
14	6685079	GASKET	- 25		1
14	6685080	GASKET	- 30		1
14	6685081	GASKET	- 35		1
15	6655160	PLUG			1
16	6655161	WASHER	W/rubber		1
17	6684762	SEAT	valve inlet		4
18	6684763	SEAT	exhaust valve		4

OIL PAN

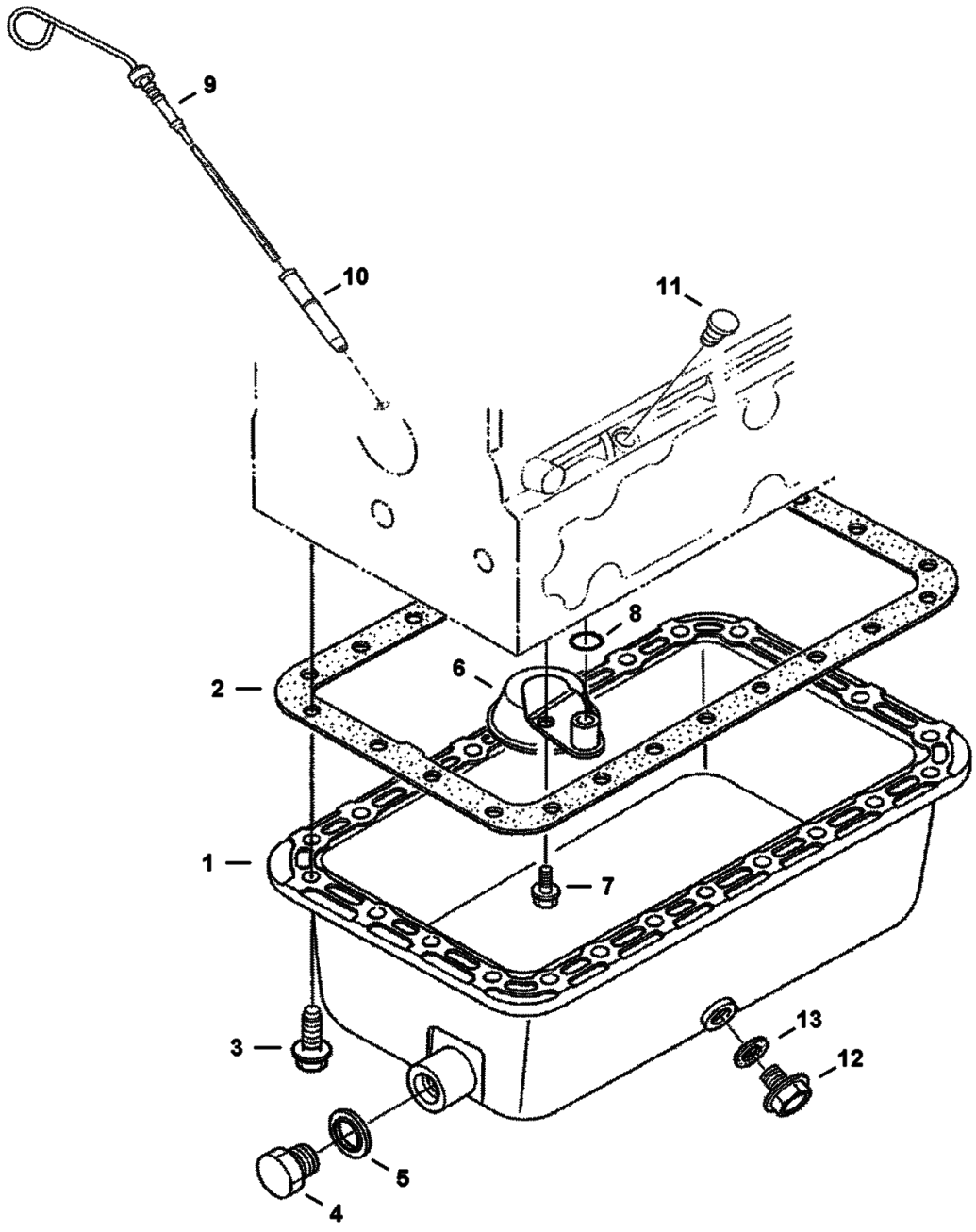

OIL PAN (Cont'd)

Ref No	Part Number	Description	Remarks	Serial Number	Qty
1	6655151	PAN, OIL			1
2	6666817	GASKET	oil pan		1
3	7001922	BOLT			24
4	6680657	PLUG			1
5	6631046	SEAL			1
6	6655194	SCREEN, OIL			1
7	6685109	BOLT, FLANGE			1
8	6684754	O-RING			1
9	6677202	DIPSTICK, OIL ENG	oil - long - use W/guide		1
10	6677203	TUBE,DIPSTICK			1
11	6969804	PLUG,OIL GAUGE			1
12	6692381	DRAIN PLUG			1
13	6680484	GASKET			1

PISTON & CRANKSHAFT

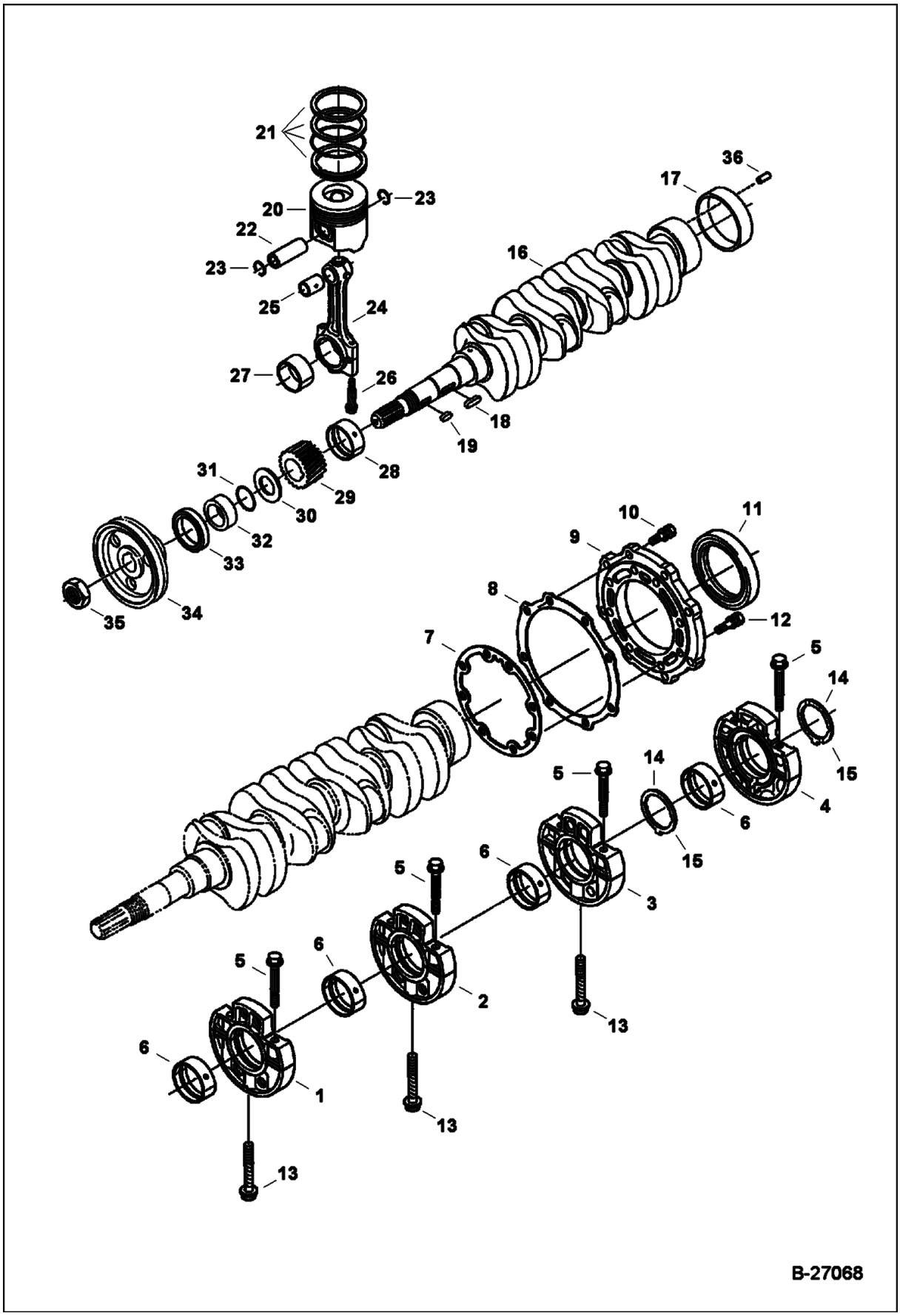

PISTON & CRANKSHAFT (Cont'd)

Ref No	Part Number	Description	Remarks	Serial Number	Qty
1	6685483	CASE, MAIN BRG.	W/Ref. 5 & 6		1
2	6685484	CASE, MAIN BRG.	W/Ref. 5 & 6		1
3	6685485	CASE	W/Ref. 5 & 6		1
4	6689503	CASE MAIN BRG	W/Ref. 5 & 6		1
5	6685482	BOLT			2
6	7015265	BEARING, ENG CRANKSHAFT	main - std. - Was 6685487 [A]		4
6	6685492	BEARING	main (-0,20 mm)		1
6	6685493	BEARING	main (-0,40 mm)		1
7	6684788	GASKET			1
8	6666814	GASKET			1
9	6655166	COVER			1
10	4CM825	BOLT			8
11	6684789	SEAL			1
12	6969808	BOLT			8
13	6653821	BOLT			3
14	7015266	WASHER, THRUST	side thrust - Std. - Was 6685488 [A]		2
14	6685494	WASHER	side thrust - (+0,20 mm)		2
14	6685495	WASHER	side thrust - (+0,40 mm)		2
15	7015267	WASHER, THRUST	std - Was 6685489 [A]		2
15	6685496	WASHER	side thrust - (+0,20 mm)		2
15	6685497	WASHER	side thrust - (+0,40 mm)		2
16	7010201	CRANKSHAFT, ENG	W/Ref. 17		1
17	6653859	SLEEVE			1
18	6684809	KEY			1
19	3974546	KEY			1
20	6698104	PISTON	NAP - std (00) (1G861-2112)		4
20	6698103	PISTON	+.25 mm (00) (1G861-2112 OS25)		4
20	6698104	PISTON	std (05) (1G861-2111)		4
20	6698105	PISTON	+.25 mm (05) (1G861-2111 OS25)		4
20	6698104	PISTON	sts (10) (1G861-2113)		4
20	6698105	PISTON	+.25 mm (10) (1G861-2113 OS25) - Was 6698107 [A]		4
21	6685095	RING, PISTON	piston - std		4
21	6685096	PISTON RING	piston - (+0,25 mm)		4
22	6655179	PIN, PISTON ENG	piston		4
23	6686997	CIR-CLIP			8
24	6655181	ROD, CONNECTING	W/Ref. 25-27		4
25	6655243	BUSHING			4
26		BOLT	NAP - Order 2 of 7020998 bolt and be advised of different torque specs		8
27	7015270	BEARING, ENG ROD CONNECTING	rod - std. - Was 6655183 [A]		4
27	6655236	BEARING	rod (-0,20 mm)		4
27	6655237	BEARING	rod (-0,40 mm)		4
28	7015264	BEARING, ENG CRANKSHAFT	main - Std. - Was 6685486 [A]		1
28	6685490	BEARING	main (-0,20 mm)		1
28	6685491	BEARING	main (-0,40 mm		1
29	6684808	GEAR			1
30	6653861	SLINGER, OIL			1

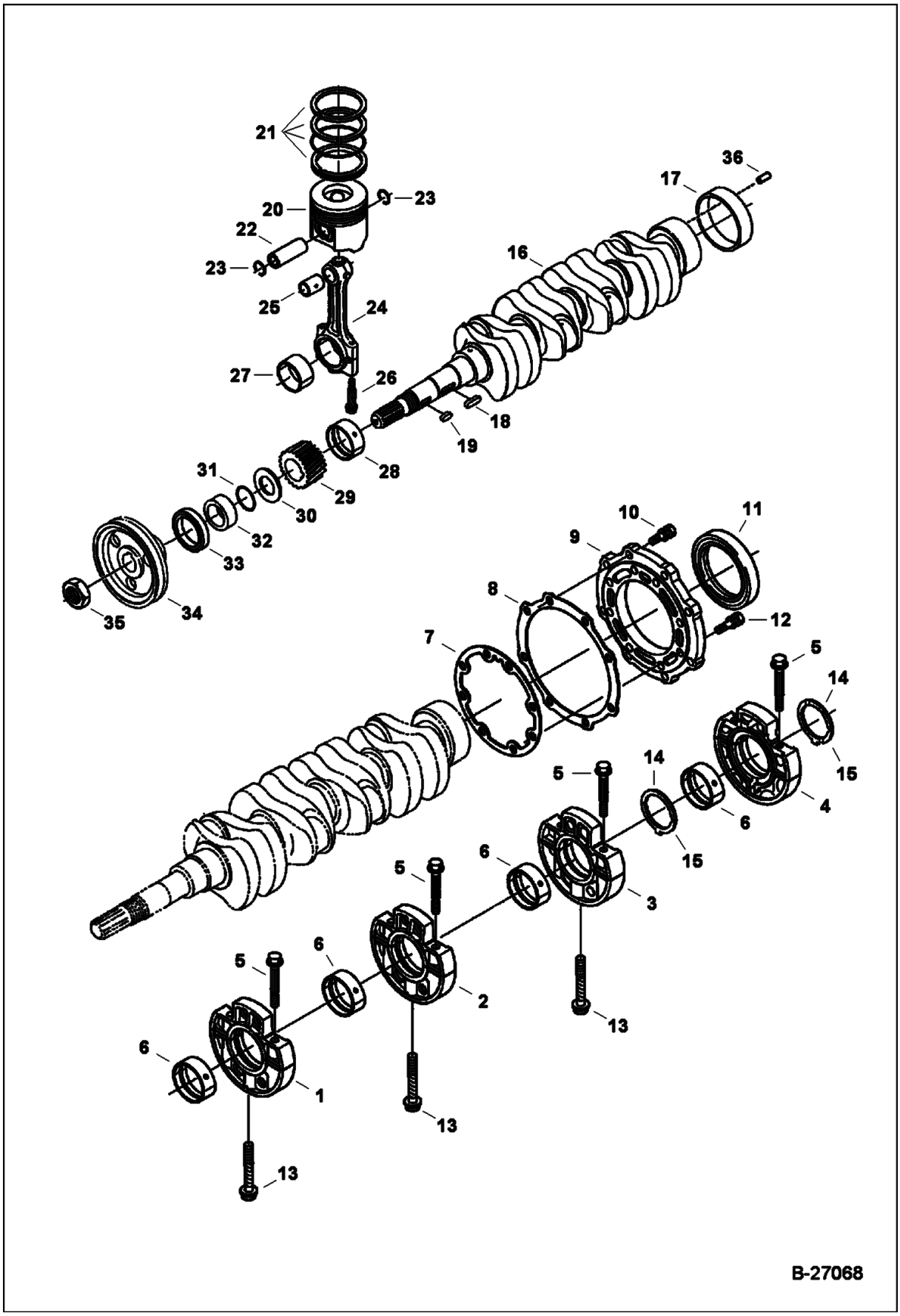
21
20
22
23
23
25
24
27
26
36
17
16
18
19
28
31
29
30
32
33
34
35
10
11
9
8
12
7
5
14
15
4
6
5
14
15
6
5
6
3
13
5
6
2
13
6
1
13
B-27068

Ref No	Part Number	Description	Remarks	Serial Number	Qty
31	3974577	O RING			1
32	3975337	COLLAR			1
33	7024826	SEAL, OIL	oil frt main - Was 6631664 [A]		1
34	6685521	PULLEY			1
35	3974671	NUT			1
36	7008888	PIN, STRAIGHT			1

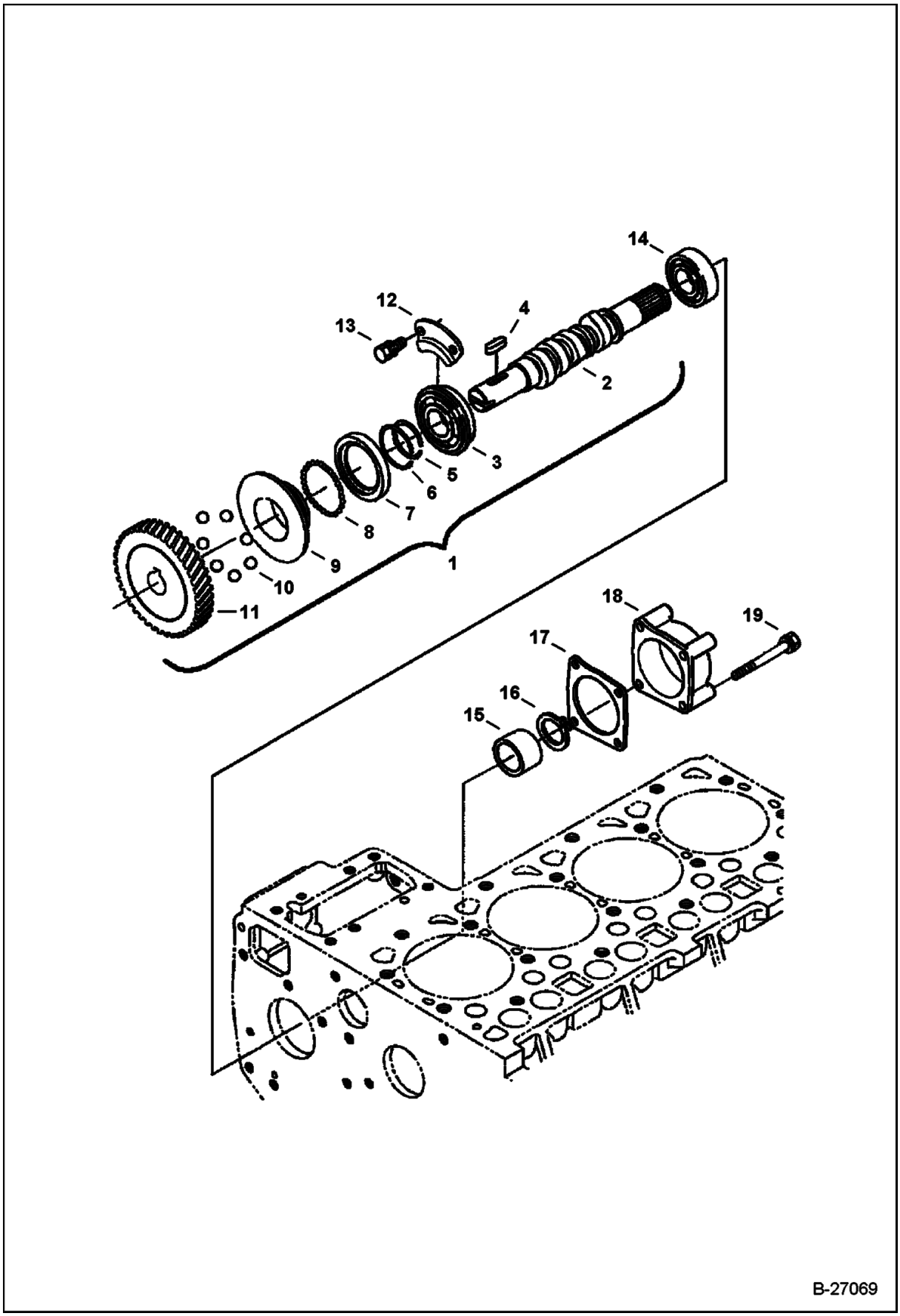
14
12
13
4
2
3
5
6
7
8
9
10
11
1
18
19
17
16
15
B-27069

FUEL CAMSHAFT (Cont'd)

Ref No	Part Number	Description	Remarks	Serial Number	Qty
1	6698425	CAMSHAFT, FUEL	Ref. 2-11		1
2		CAMSHAFT	NSS - Order Ref. 1		1
3	6698110	BEARING, BALL			1
4	6598099	KEY			1
5	3974618	CIR-CLIP	governor sleeve		1
6	3974620	CIR-CLIP			1
7	6692385	CASE	governor ball		1
8	6969817	BALL			39
9	6655213	SLEEVE	governor		1
10	6655215	BALL			7
11	6655212	GEAR			1
12	6686047	STOPPER	fuel camshaft		1
13	6667420	BOLT			2
14	6686042	BEARING, BALL			1
15	6686041	COLLAR			1
16	5JM25	CIR-CLIP			1
17	6692386	GASKET	cover		1
18	3974996	COVER	fuel camshaft		1
19	6651934	BOLT			4

CAMSHAFT

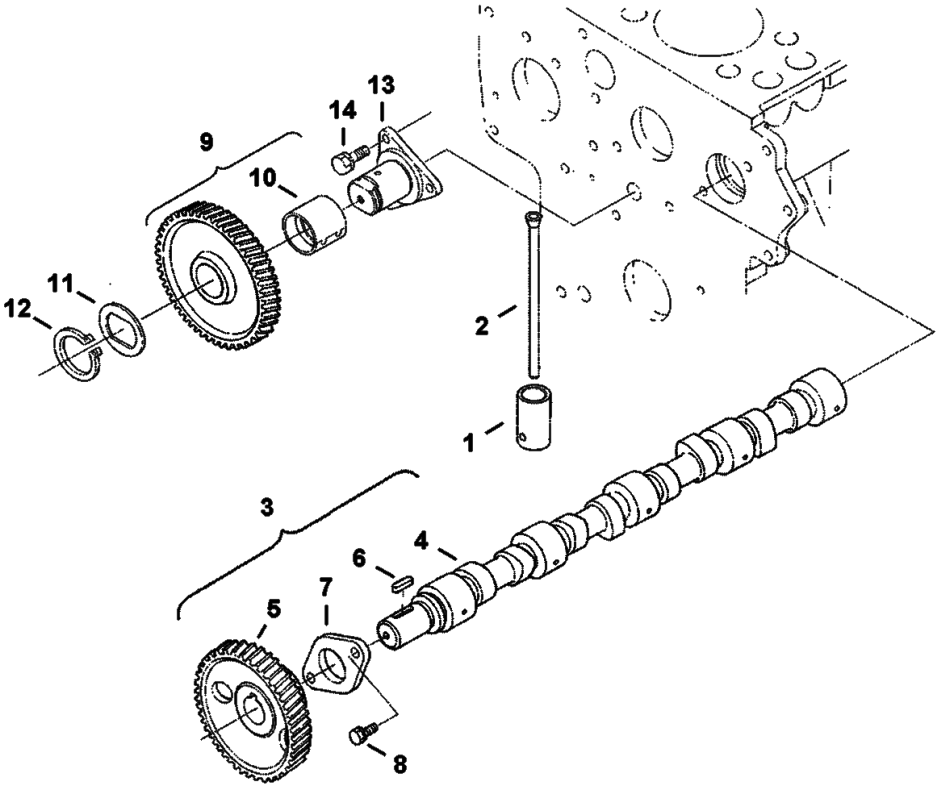

B-27070

Ref No	Part Number	Description	Remarks	Serial Number	Qty
1	7015269	TAPPET	Was 6667428 [A]		8
2	6686035	PUSH ROD			8
3	6698418	CAMSHAFT	Ref. 4-7		1
4		CAMSHAFT	NSS - Order Ref. 3		1
5	6684792	GEAR	camshaft		1
6	3974546	KEY			1
7	3974547	STOPPER	camshaft		1
8	6969812	BOLT			2
9	6684793	GEAR	idle - W/Ref. 10		1
10	6684794	BUSHING	idle gear		1
11	6684795	COLLAR			1
12	6667433	CIRCLIP			1
13	6698113	SHAFT, IDLE GEAR			1
14	6969812	BOLT			3

WATER PUMP

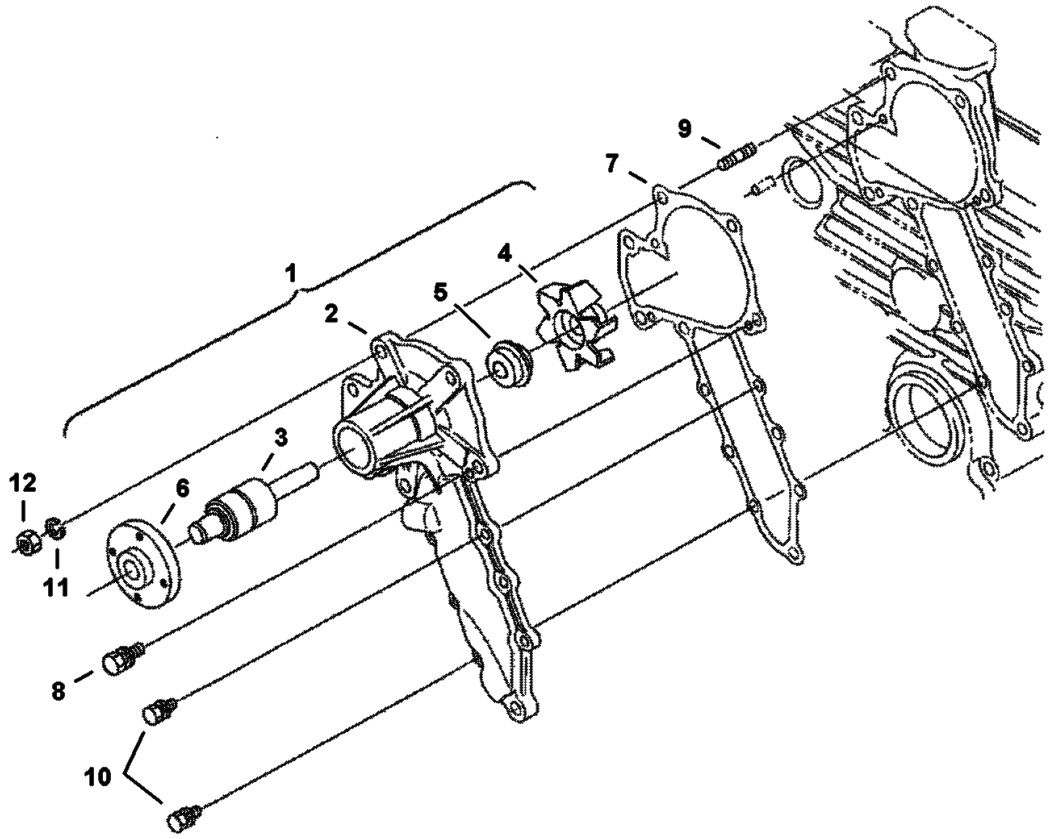

B-27208

WATER PUMP (Cont'd)

Ref No	Part Number	Description	Remarks	Serial Number	Qty
1	6685105	PUMP	Ref. 2-6		1
2		HOUSING	NAP - Order Ref. 1		1
3	6685474	BEARING			1
4	6667460	IMPELLER			1
5	6684868	SEAL			1
6	6684869	FLANGE			1
7	6684870	GASKET			1
8	6969808	BOLT			2
9	3974267	STUD			1
10	6652580	BOLT			6
11	6667422	WASHER			1
12	6652792	NUT			1

WATER FLANGE AND THERMOSTAT

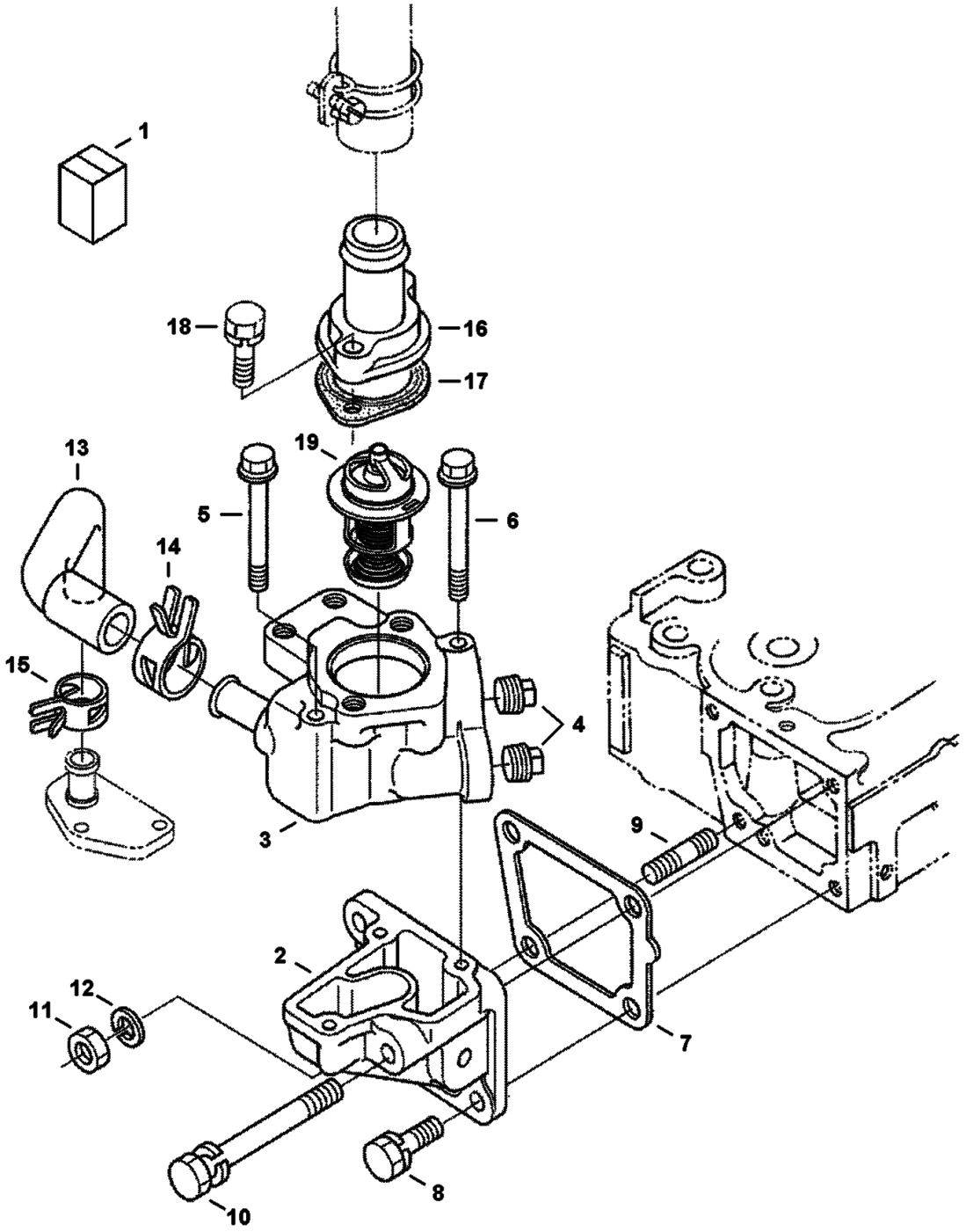

WATER FLANGE AND THERMOSTAT (Cont'd)

Ref No	Part Number	Description	Remarks	Serial Number	Qty
1	6684854	FLANGE ASSY	water - Ref. 2-6		1
2		FLANGE, WATER LOWER	NSS - Order Ref. 1		1
3		FLANGE, WATER UPPER	NSS - Order Ref. 1		1
4	6684857	PLUG			2
5	6684858	BOLT			2
6	6685104	BOLT			1
7	6666802	GASKET	flange to head		1
8	6657415	BOLT			2
9	6652670	STUD			1
10	6684861	BOLT			1
11	6652792	NUT			1
12	6667422	WASHER	spring		1
13	6684862	PIPE	water return		1
14	6698115	CLAMP, HOSE			1
15	6684889	CLAMP			1
16	6598118	COVER	thermostat		1
17	6684863	GASKET	thermostat		1
18	6969799	BOLT			2
19		THERMOSTAT	See BTI421		1

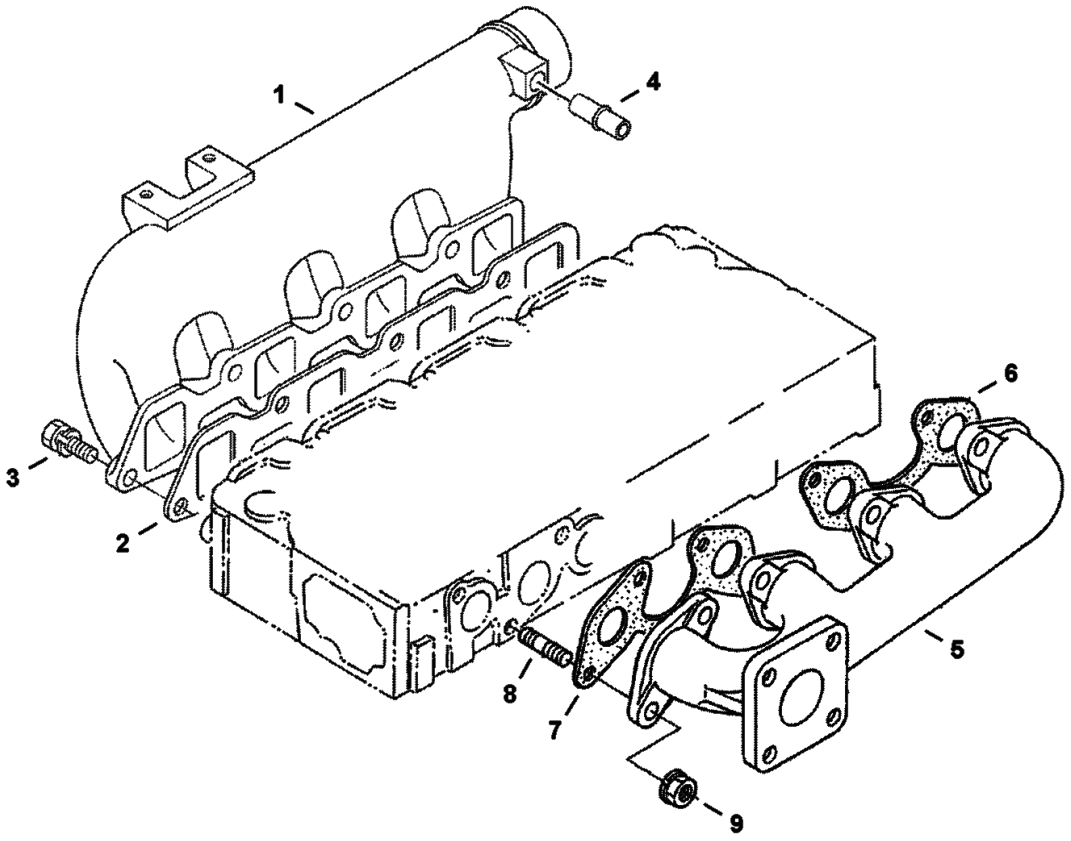

B-27073

MANIFOLDS (Cont'd)

Ref No	Part Number	Description	Remarks	Serial Number	Qty
1	6685525	MANIFOLD	intake - W/Ref. 4		1
2	6684877	GASKET	intake manifold		1
3	4CM822	BOLT			1
4	6655880	PIPE			7
5	6651482	MANIFOLD, EXHAUST	exhaust		1
6	6666791	GASKET	exhaust - rear		1
7	6666781	GASKET	exhaust - front		1
8	6652670	STUD			8
9	6682532	NUT			8

ENGINE STOP LEVER

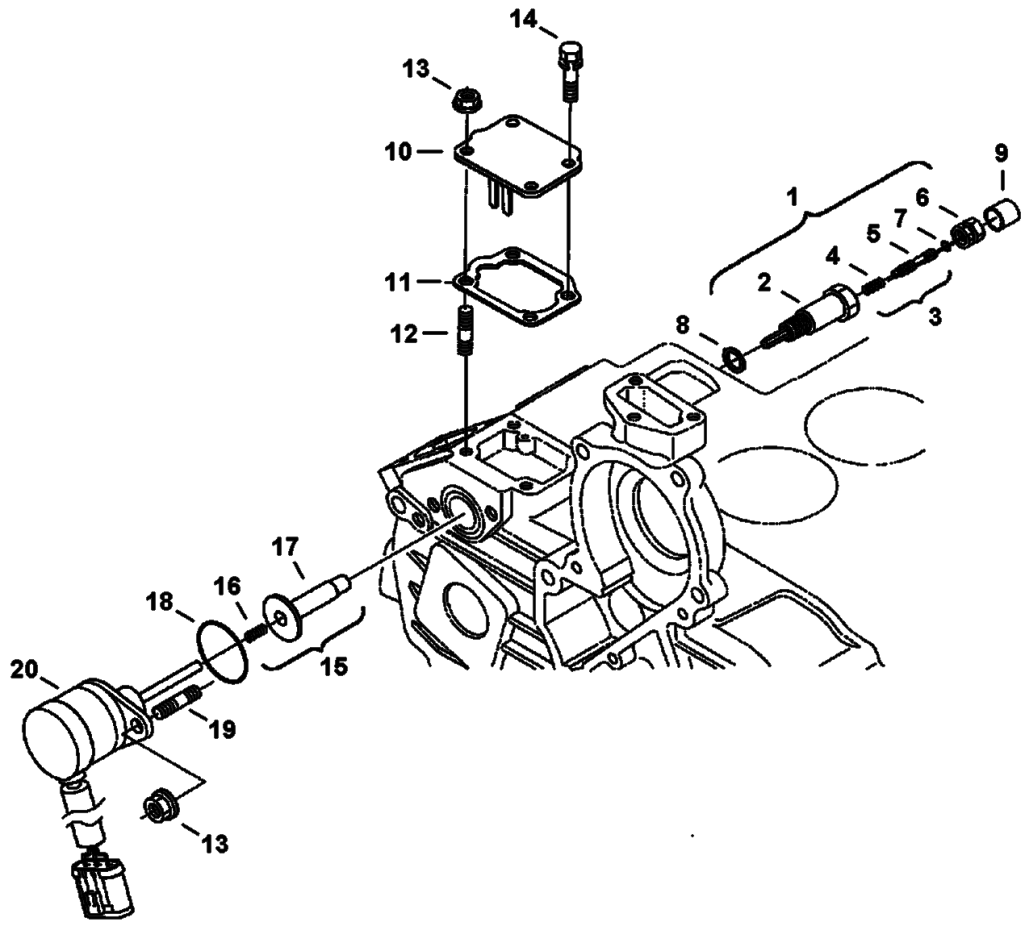

B-27074

ENGINE STOP LEVER (Cont'd)

Ref No	Part Number	Description	Remarks	Serial Number	Qty
1	6686334	IDLE APPARATUS	Ref. 2-6		1
2		APPARATUS, IDLE	NSS - Order Ref. 1		1
3	6685513	BOLT, ADJ.	assy - Ref. 4 & 5		1
4		SPRING	NSS - Order Ref. 3		1
5		BOLT, ADJUSTING	NSS - Order Ref. 3		1
6	6684817	NUT	spring		1
7	6684891	SEAL			1
8	6684818	SEAL			1
9	6684819	CAP			1
10	6698116	COVER	boost housing		1
11	6684841	GASKET	boost housing		1
12	6683087	STUD			2
13	6670533	NUT			4
14	4CM616	BOLT			2
15	6684825	GUIDE, SOLENOID			1
16		SPRING	NSS - Order Ref. 15		1
17		PLUNGER	NSS - Order Ref. 15		1
18	6685465	O-RING			1
19	6652764	STUD			2
20	6691498	SOLENOID, SHUTOFF FUEL	240 mm (9.45") lead		1

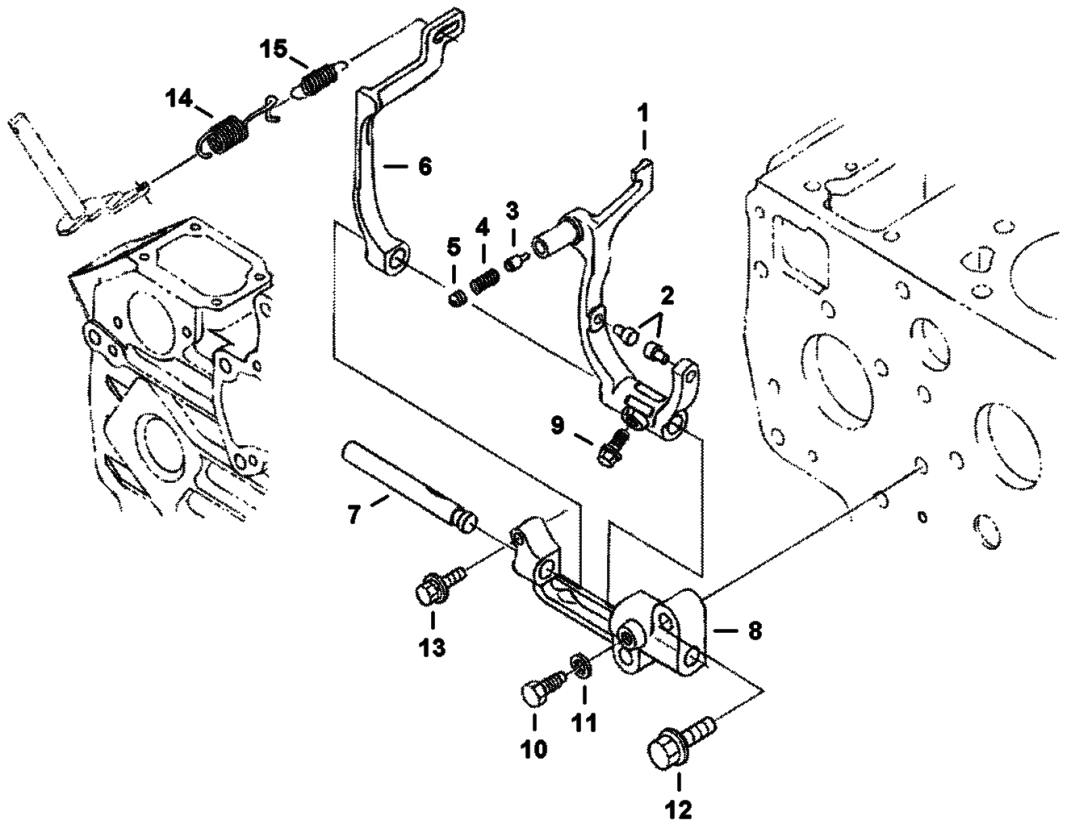

B-27037

Ref No	Part Number	Description	Remarks	Serial Number	Qty
1	6698426	LEVER, FORK	W/Ref. 2-11		1
2		PIN	NSS - Order Ref. 1		2
3		PIN	NSS - Order Ref. 1		1
4		SPRING	NSS - Order Ref. 1		1
5		SCREW, SET	NSS - Order Ref. 1		1
6	6684832	LEVER	fork		1
7	6684833	SHAFT	fork lever		1
8	6653916	HOLDER	fork lever		1
9	6680830	BOLT			1
10	3974662	BOLT			1
11	6667419	WASHER	spring		1
12	6680706	BOLT			2
13	6685464	BOLT			1
14	6689599	SPRING	governor		1
15	6685514	SPRING	governor		1

SPEED CONTROL PLATE

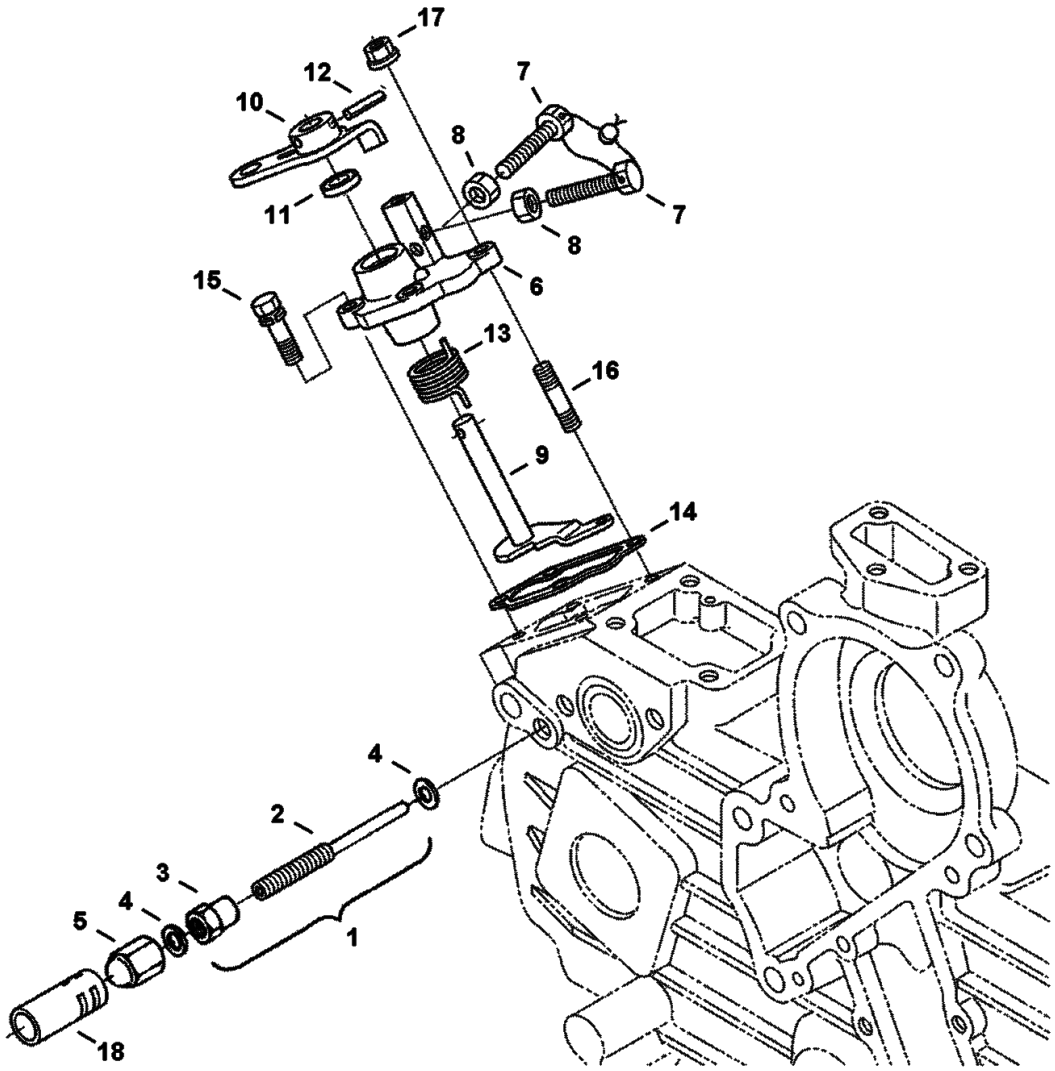

B-27076

SPEED CONTROL PLATE (Cont'd)

Ref No	Part Number	Description	Remarks	Serial Number	Qty
1	6684836	BOLT, ADJUSTING	assy - Ref. 2 & 3		1
2	6686985	BOLT, ADJUSTING			1
3	3974971	NUT			1
4	3974972	GASKET			2
5	6655223	NUT			1
6	6685526	PLATE, CONTROL	W/Ref. 7-13		1
7	7010195	BOLT, ADJUSTMENT			2
8	1DM6	NUT			2
9	6684838	LEVER	governor		1
10	6684839	LEVER	speed control		1
11	6685476	SEAL	oil		1
12	6598098	PIN	spring		1
13	6684823	SPRING	return		1
14	6684841	GASKET	control plate		1
15	4CM620	BOLT			2
16	6652764	STUD			2
17	6670533	NUT			2
18		CAP, SECURITY	NAP		1

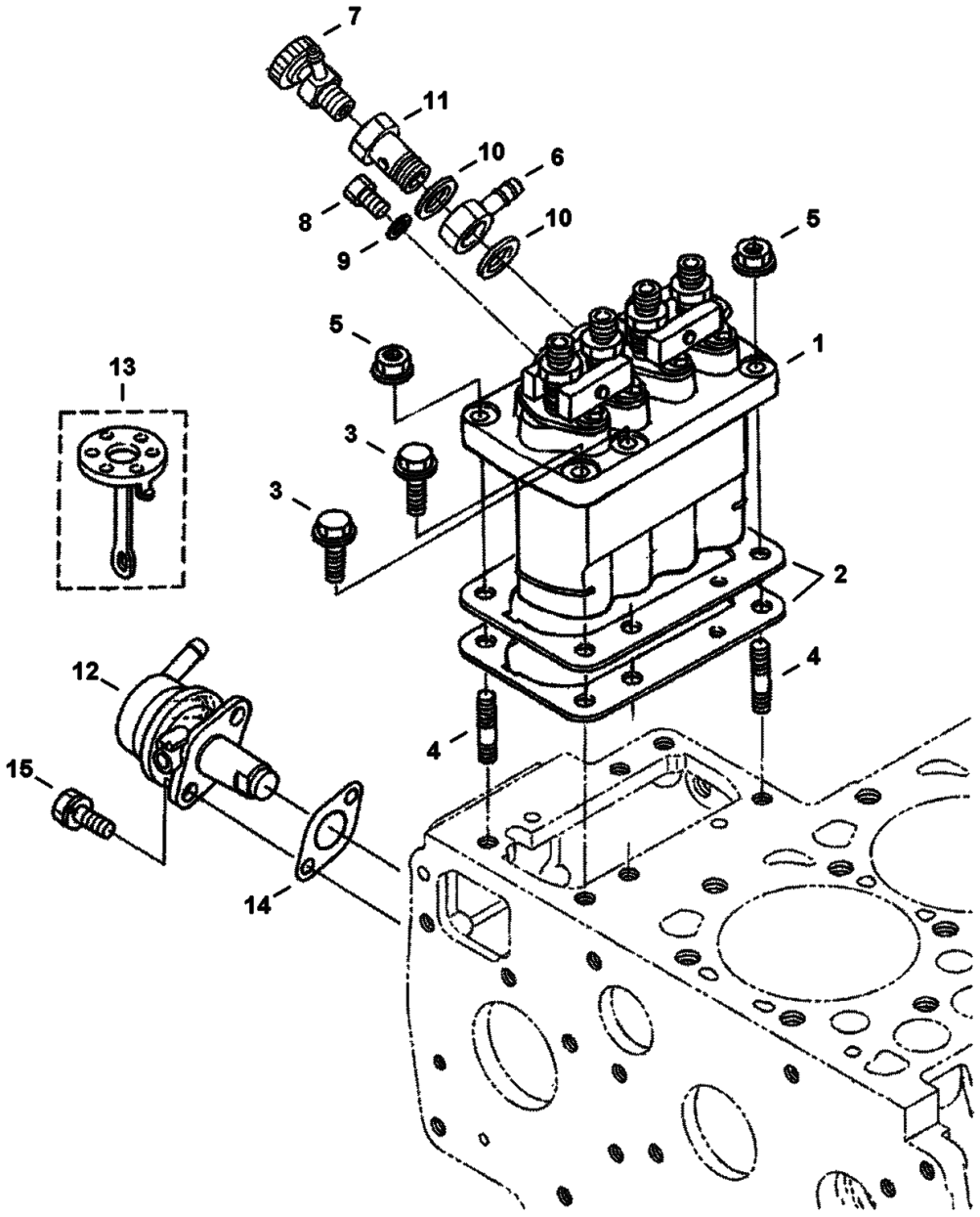

B-27077

FUEL AND INJECTION PUMP (Cont'd)

Ref No	Part Number	Description	Remarks	Serial Number	Qty
1	7021764	PUMP, FUEL INJ	assy - Was 6698118 [A]		1
2	6698119	SHIM	0,175 mm - injection pump		1
2	3974626	SHIM	0,20 mm - injection pump		1
2	6682515	SHIM	0,25 mm - injection pump		1
2	6655210	SHIM	0,30 mm - injection pump		1
2	6684829	SHIM	0,35 mm - injection pump		1
3	6680801	BOLT			4
4	6652670	STUD			2
5	6969819	NUT, FLANGE			2
6	6513707	JOINT	eye		1
7	6598102	VALVE	jet start		1
8	6599084	SCREW	bleed		2
9	6685471	GASKET			2
10	6698120	GASKET	Use W/Ref. 11 eye bolt 6685473		2
10	7019024	GASKET	Use W/Ref. 11 eye bolt 7019023		2
11	6685473	BOLT, EYE 12MM	Use W/Ref. 10 gasket 6698120		1
11	7019023	BOLT, EYE 12MM	Use W/Ref. 10 gasket 7019024		1
12	6655216	FUEL PUMP	W/Ref. 13		1
13	6667458	DIAPHRAGM	replacement		1
14	6686037	GASKET	fuel pump		1
15	4CM616	BOLT			2

INJECTOR NOZZLES

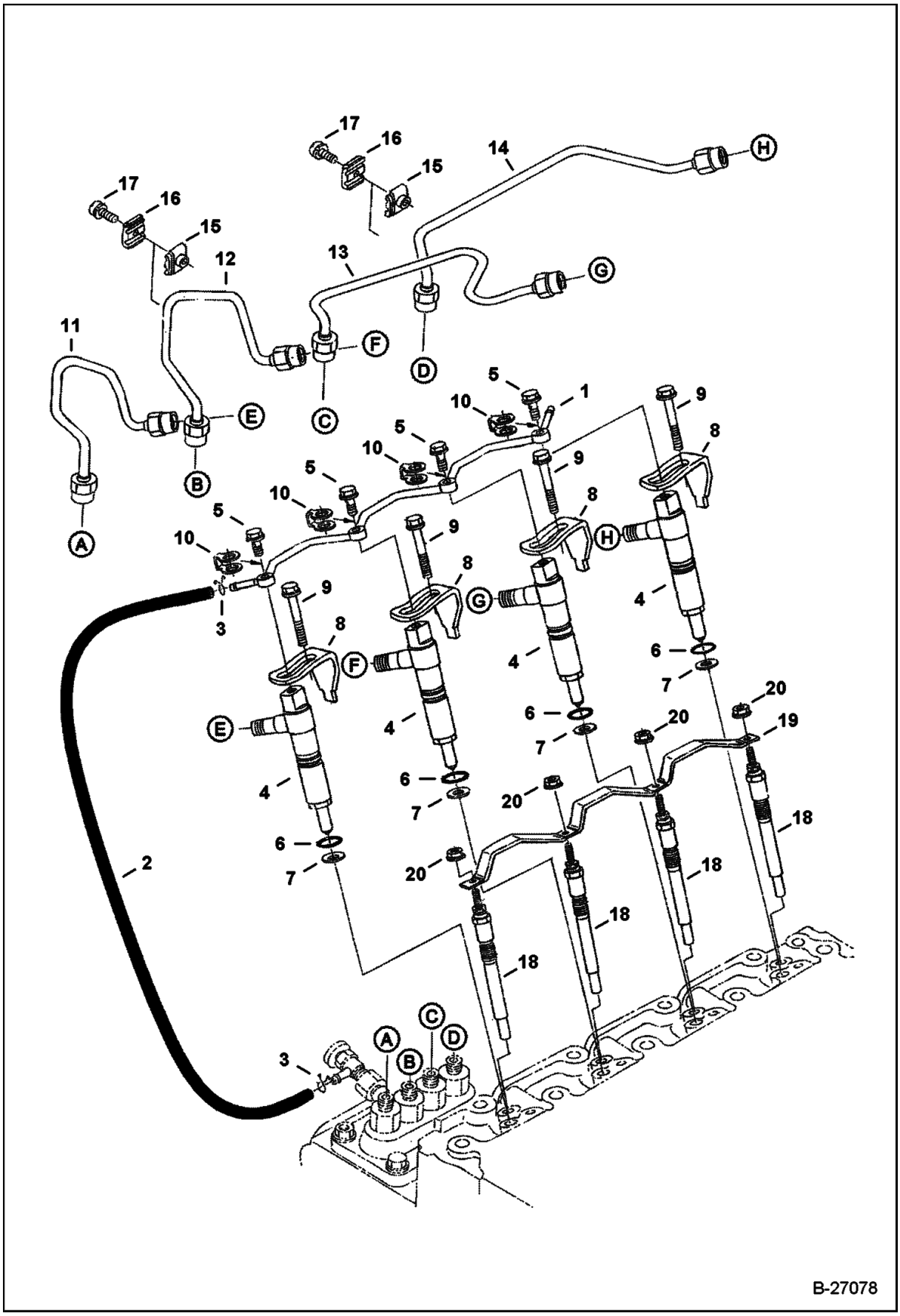

INJECTOR NOZZLES (Cont'd)

Ref No	Part Number	Description	Remarks	Serial Number	Qty
1	6684842	PIPE, OVERFLOW			1
2	6974656	TUBE ASSY, OVERFLOW	W/Ref. 3		1
3	6654718	CLAMP			2
4	6698427	INJECTOR, FUEL ASSY			4
4	6698427REM	NOZZLE, FUEL INJ. KUBOTA V2403			4
5	6680788	BOLT	Was 6689528 [A]		4
6	6670769	O-RING			4
7	6969824	GASKET, NOZZLE INJ			4
8	7015275	CLAMP, INJECTION	nozzle - Was 6684845 [A]		4
9	6684844	BOLT			4
10	6685498	GASKET			4
11	6685102	PIPE			1
12	6685103	PIPE			1
13	6684848	PIPE, INJECTION			1
14	6684849	PIPE, INJECTION			1
15	6652688	CLAMP			2
16	6652689	CLAMP			2
17	3974260	SCREW			2
18	6684850	GLOW PLUG			4
19	6969825	CORD, GLOW PLUG			1
20	6670472	NUT			4

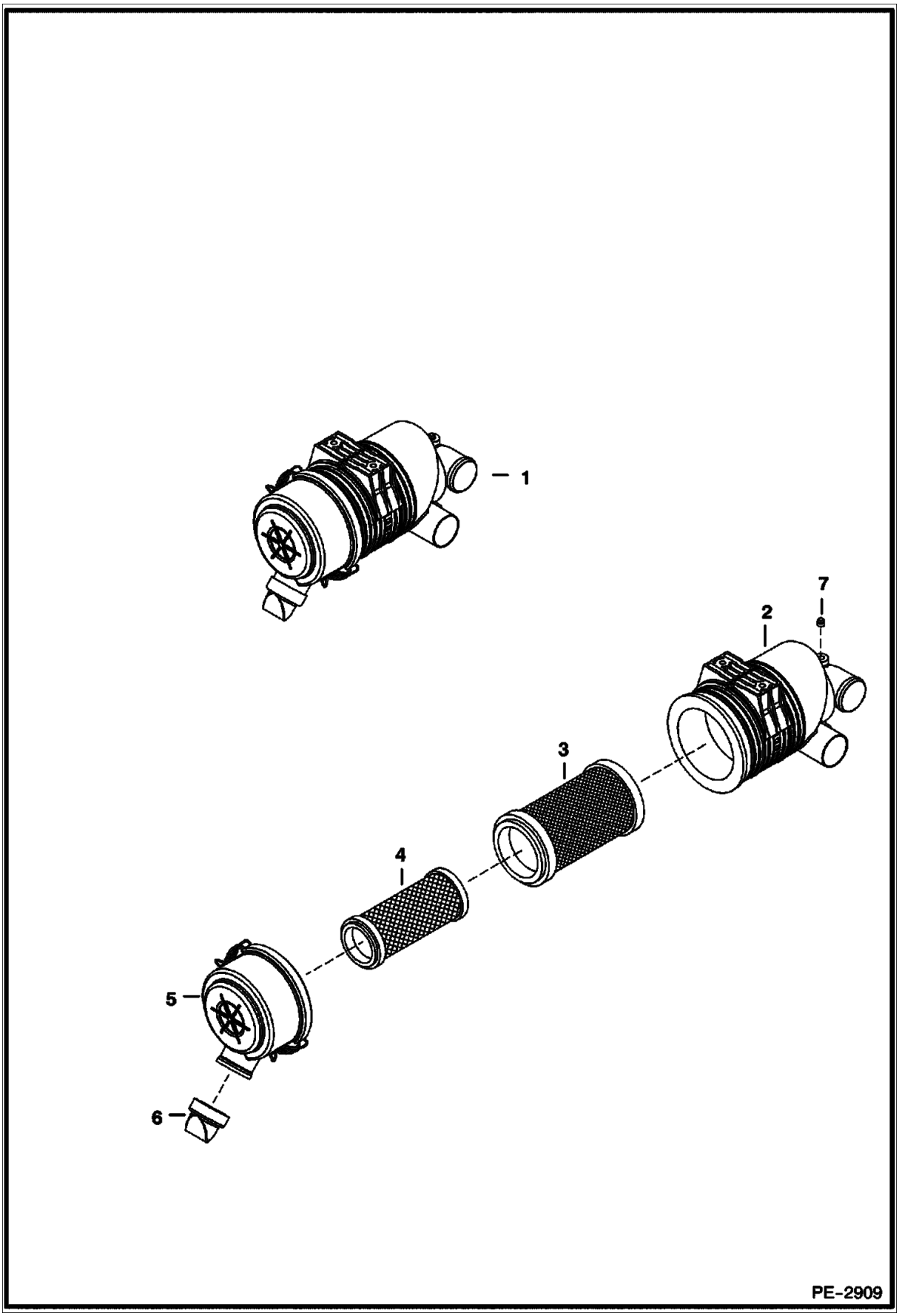
1
2
7
3
4
5
6
PE-2909

Ref No	Part Number	Description	Remarks	Serial Number	Qty
1	7010245	FILTER, AIR	W/Ref. 2-7		1
2		TANK	NSS - Order Ref. 1		1
3	6666375	FILTER, AIR OUTER			1
4	6666376	FILTER, AIR INNER			1
5	6666377	FILTER			1
6	6666378	VALVE			1
7	6675699	PLUG			1

ARM KIT
(Long)

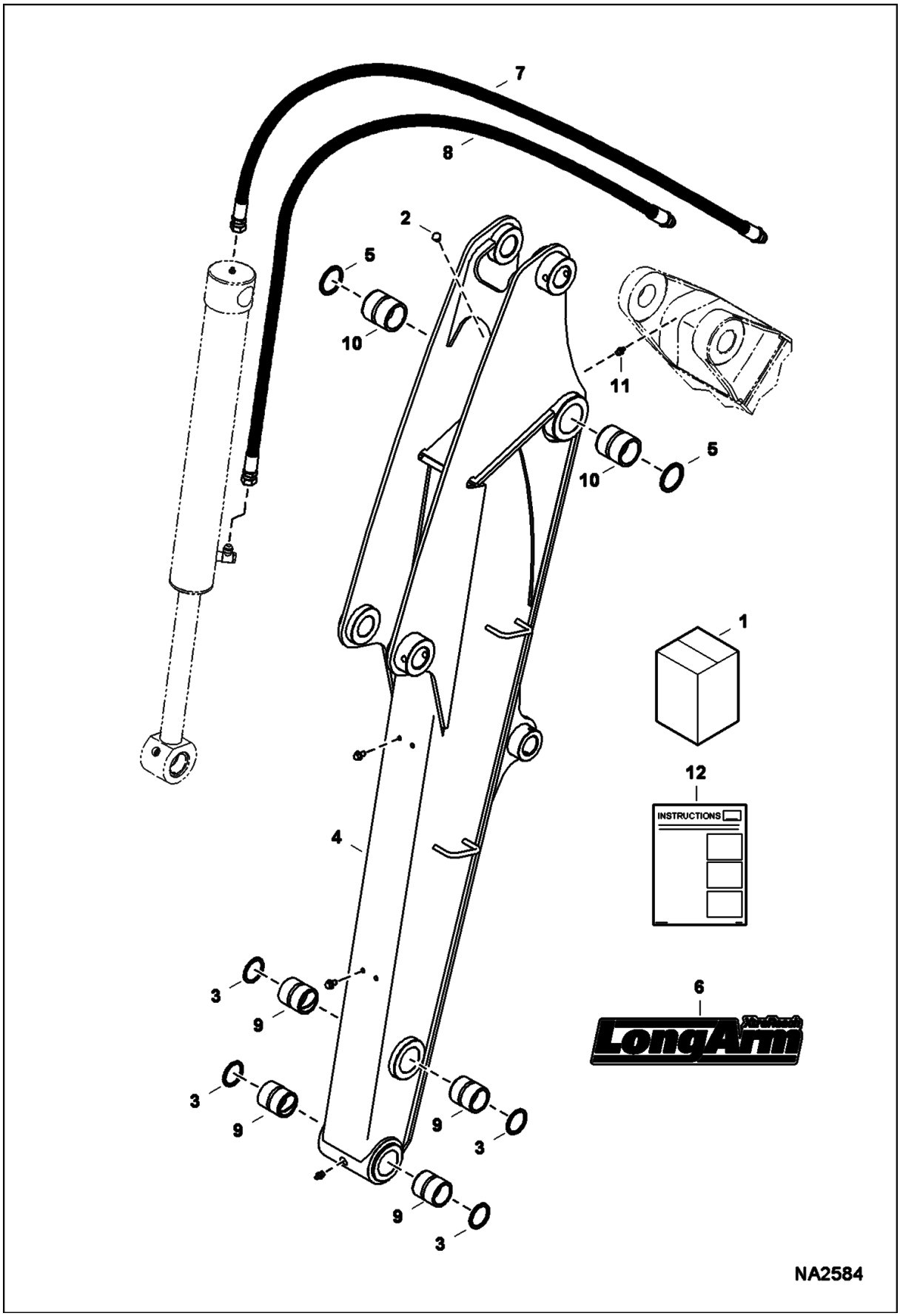

ARM KIT (Cont'd)
(Long)

Ref No	Part Number	Description	Remarks	Serial Number	Qty
1		KIT, LONG ARM	SALES #7185279 - Ref. 2-12 - If excavator is not equipped with counterweight, Also Order Sales #7184310		1
2	6597572	BUMPER			1
3	6669287	SEAL			4
4	7208983	ARM, DIPPER W/A LONG EXC	- Was 7122551 [A]		1
5	7143551	SEAL, DUST			2
6	7147433	DECAL, ARM LONG			1
7	7167234	HOSE, HYD ASSY	Was 7167225 [B,D]		1
8	7188727	HOSE, HYD	Was 7167226 [B,D]		1
9	7172745	BUSHING, WEAR			4
10	7188685	BUSHING, WEAR			2
11	10H25	FITTING, GREASE 5			2
12	6987432	INSTRUCTIONS			1

ARM KIT
(Standard)

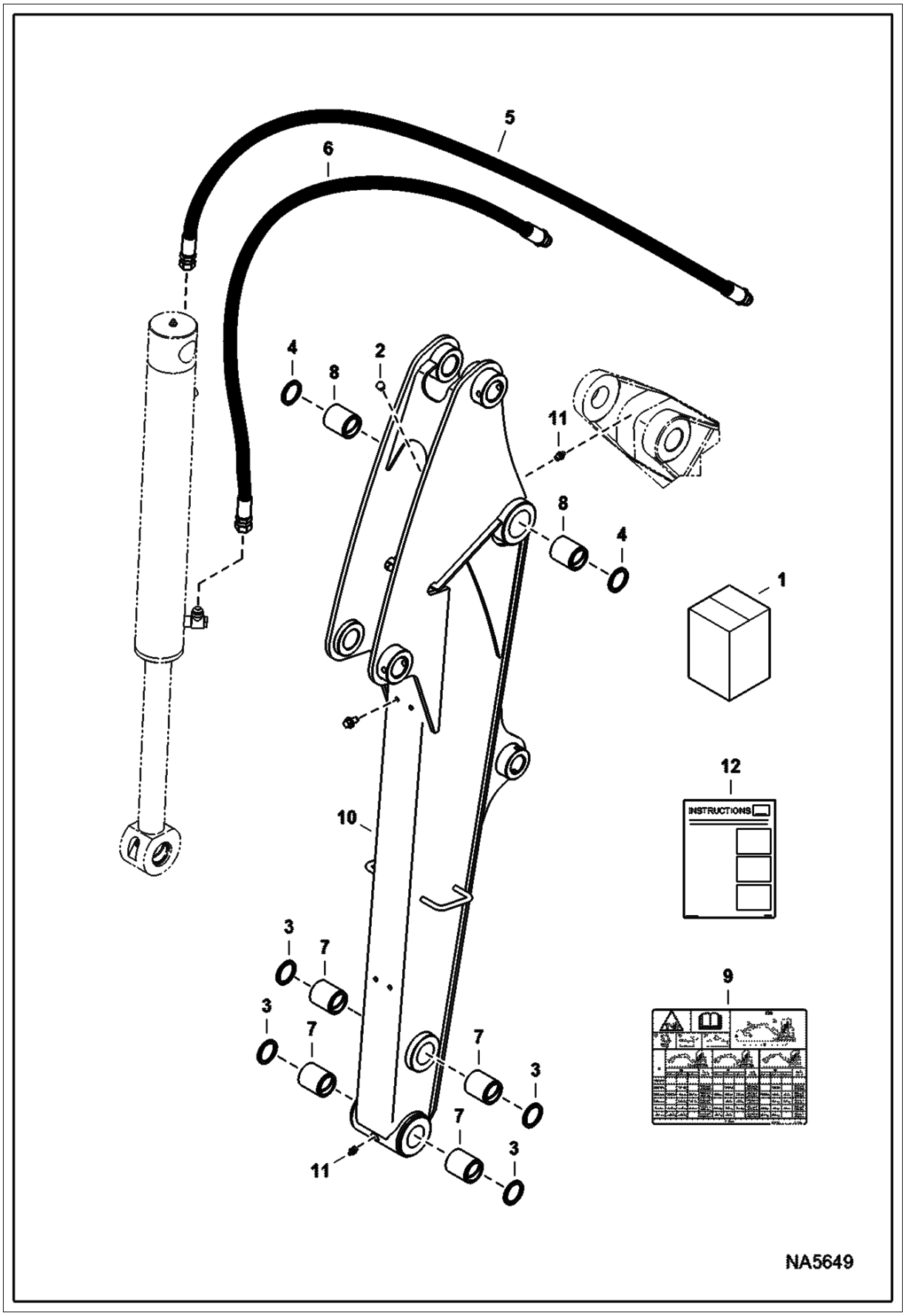

ARM KIT (Cont'd)
(Standard)

Ref No	Part Number	Description	Remarks	Serial Number	Qty
1		KIT, ARM STANDARD	SALES #7205433 - Ref. 2-12		1
2	6597572	BUMPER			1
3	7143551	SEAL, DUST			2
4	6669287	SEAL			4
5	7167225	HOSE, HYD ASSY			1
6	7167226	HOSE, HYD ASSY			1
7	7172745	BUSHING, WEAR			4
8	7188685	BUSHING, WEAR			2
9	7188427	DECAL, CAPACITY LIFT	E42		1
9	7188431	DECAL, CAPACITY LIFT	E45		1
10	7208982	ARM, DIPPER W/A EXC	- Was 7122550 [A]		1
11	10H25	FITTING, GREASE 5			2
12	6987432	INSTRUCTIONS			1

AUTO-SHIFT KIT
(S/N AG3G11001 - 11999, AHHC11001 - 11999)

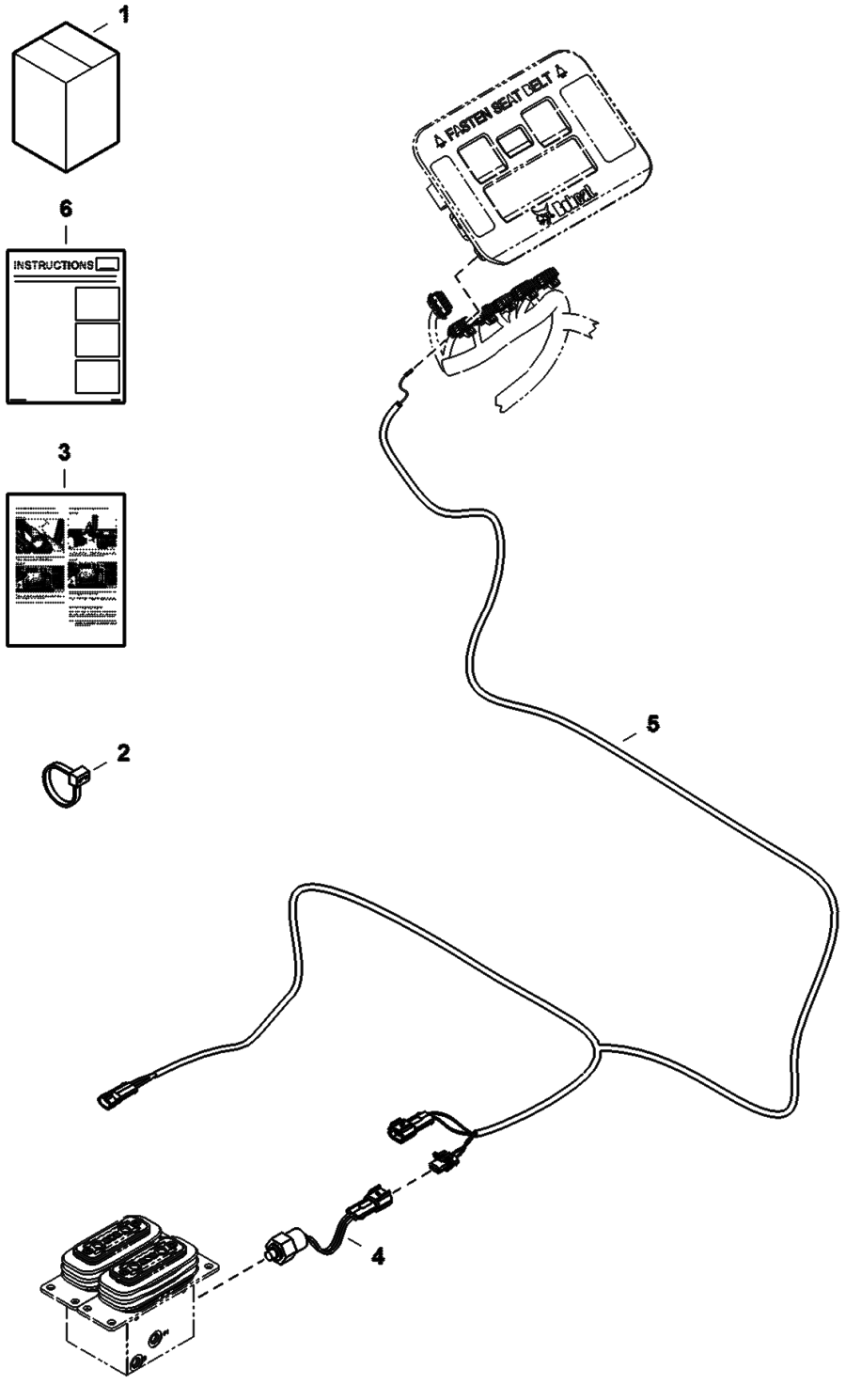

AUTO-SHIFT KIT (Cont'd)
(S/N AG3G11001 - 11999, AHHC11001 - 11999)

Ref No	Part Number	Description	Remarks	Serial Number	Qty
1	7205971	KIT, AUTO-SHIFT	Ref. 2-6		1
2	6624289	STRAP, TIE			6
3	6990215	DECAL			1
4	7008933	SWITCH, PRESS OIL HYD			1
5	7205984	HARNESS, AUTO-SHIFT			1
6	6990197	INSTRUCTIONS			1

AUXILIARY COUPLER ARM KIT

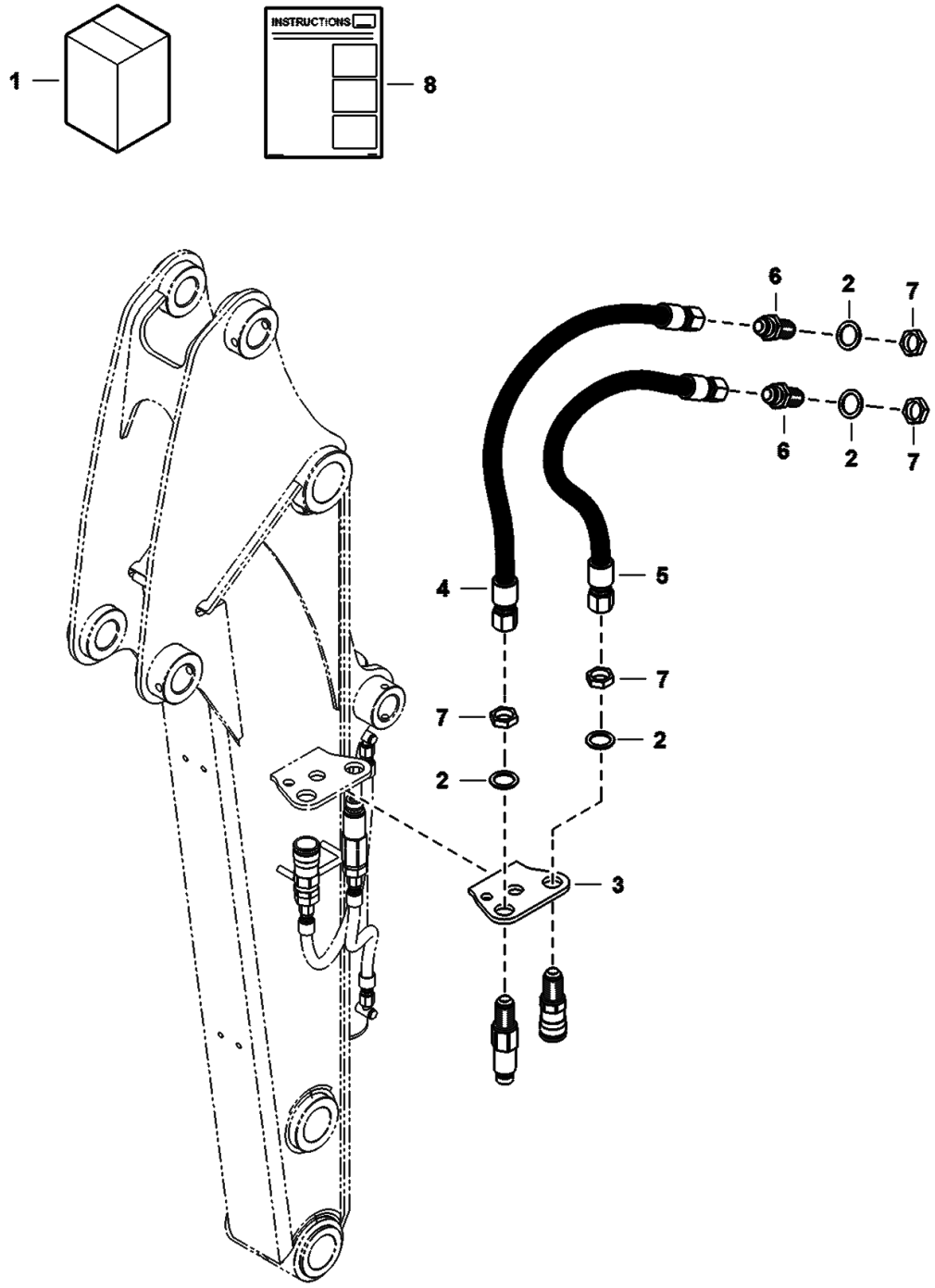

AUXILIARY COUPLER ARM KIT (Cont'd)

Ref No	Part Number	Description	Remarks	Serial Number	Qty
1	7210711	KIT, AUX ARM COUPLER	std arm - Ref. 2-8		1
1	7210710	KIT, AUX ARM COUPLER	long arm - Ref. 2-8		1
2	6589699	WASHER			4
3	7198270	PLATE, MOUNT COUPLER			1
4	7210732	HOSE, HYD	std arm		1
4	7210734	HOSE, HYD	long arm		1
5	7210733	HOSE, HYD	std arm		1
5	7210735	HOSE, HYD	long arm		1
6	45K8	ADAPTOR			2
7	86F8	NUT 5			4
8	6990322	INSTRUCTIONS			1

BEACON KIT

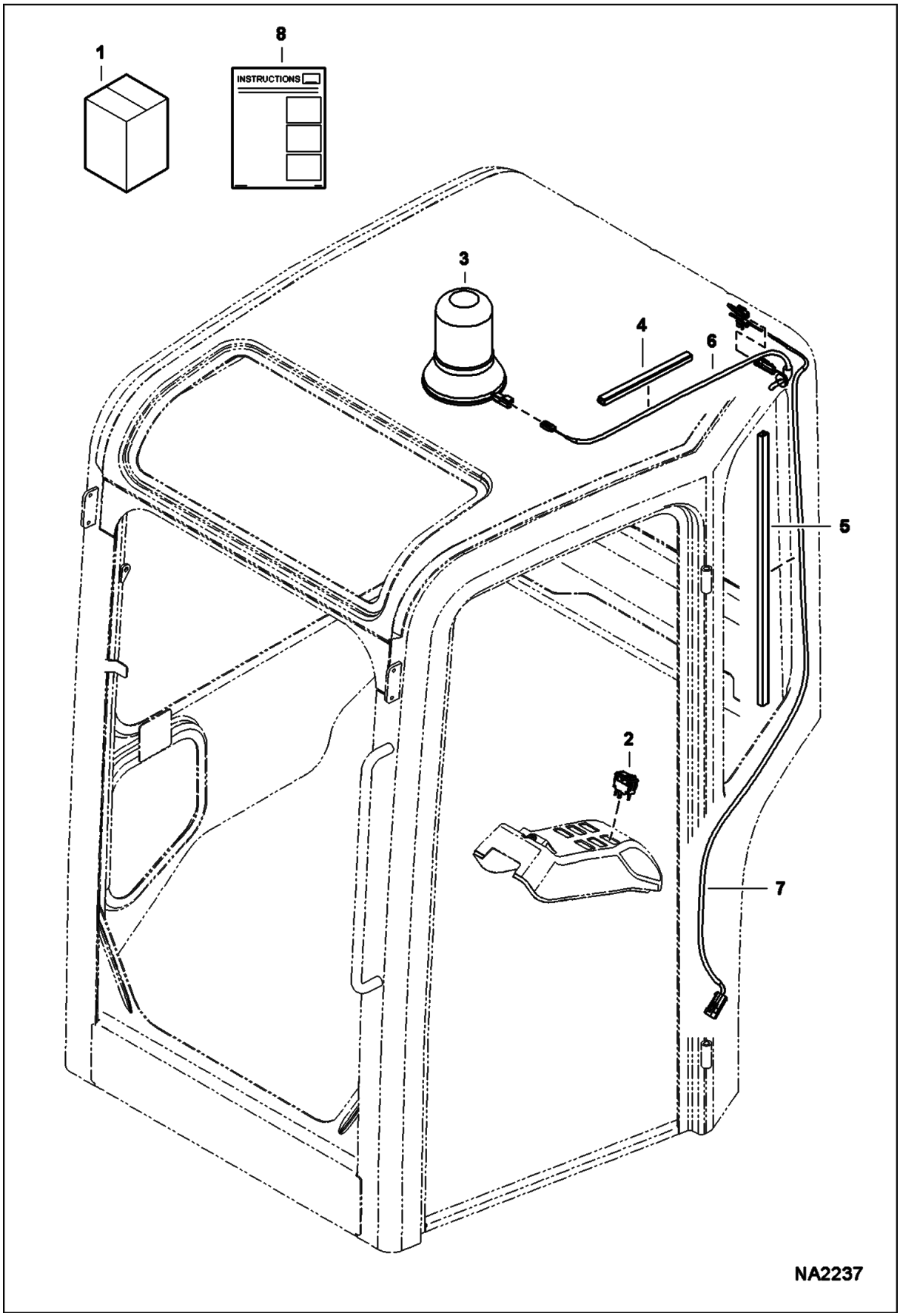

BEACON KIT (Cont'd)

Ref No	Part Number	Description	Remarks	Serial Number	Qty
1	7172554	KIT, BEACON LIGHT	Ref. 2-8		1
2	6665317	SWITCH			1
3	6675523	BEACON			1
4	6682740	RETAINER, WIRE			1
5	6682741	RETAINER, WIRE			1
6	7172972	HARNESS, BEACON/STROBE			1
7	7172977	HARNESS, CANOPY			1
8	6987321	INSTRUCTIONS			1

BLOCK HEATER
(Engine)

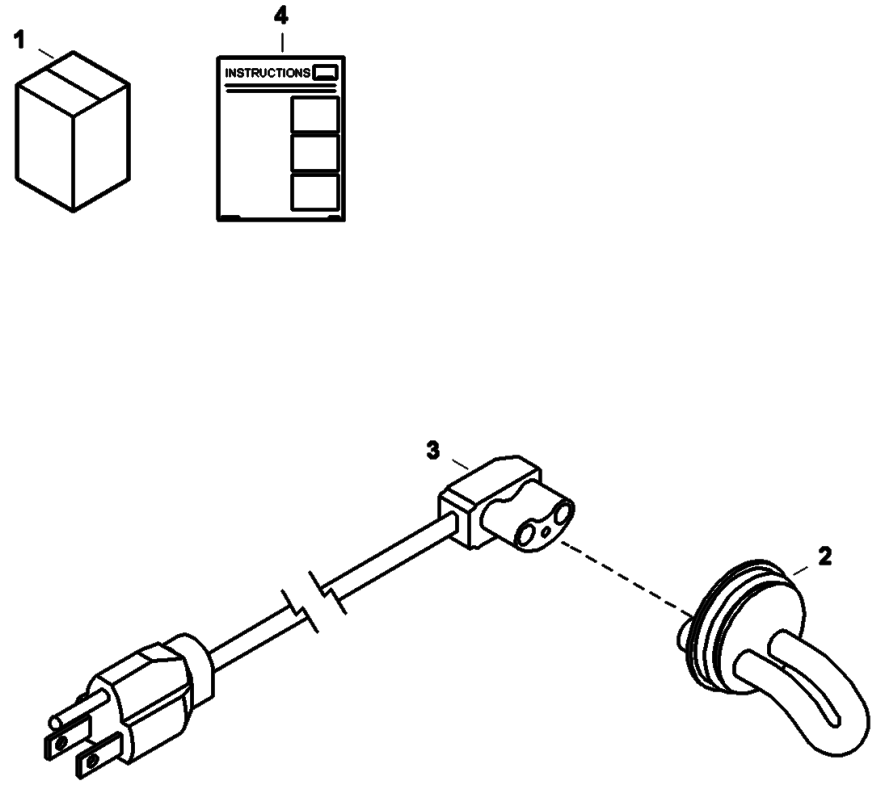

NA2491

BLOCK HEATER (Cont'd)
(Engine)

Ref No	Part Number	Description	Remarks	Serial Number	Qty
1	7188091	KIT, HEATER BLOCK ENG	Ref. 2-4		1
2		HEATER, BLOCK ENG PLUG SOFT	NAP - Order Ref. 1		1
3	7012491	CORD, HEATER BLOCK ENG			1
4	6720038	INSTRUCTIONS			1

COUNTERWEIGHT KIT

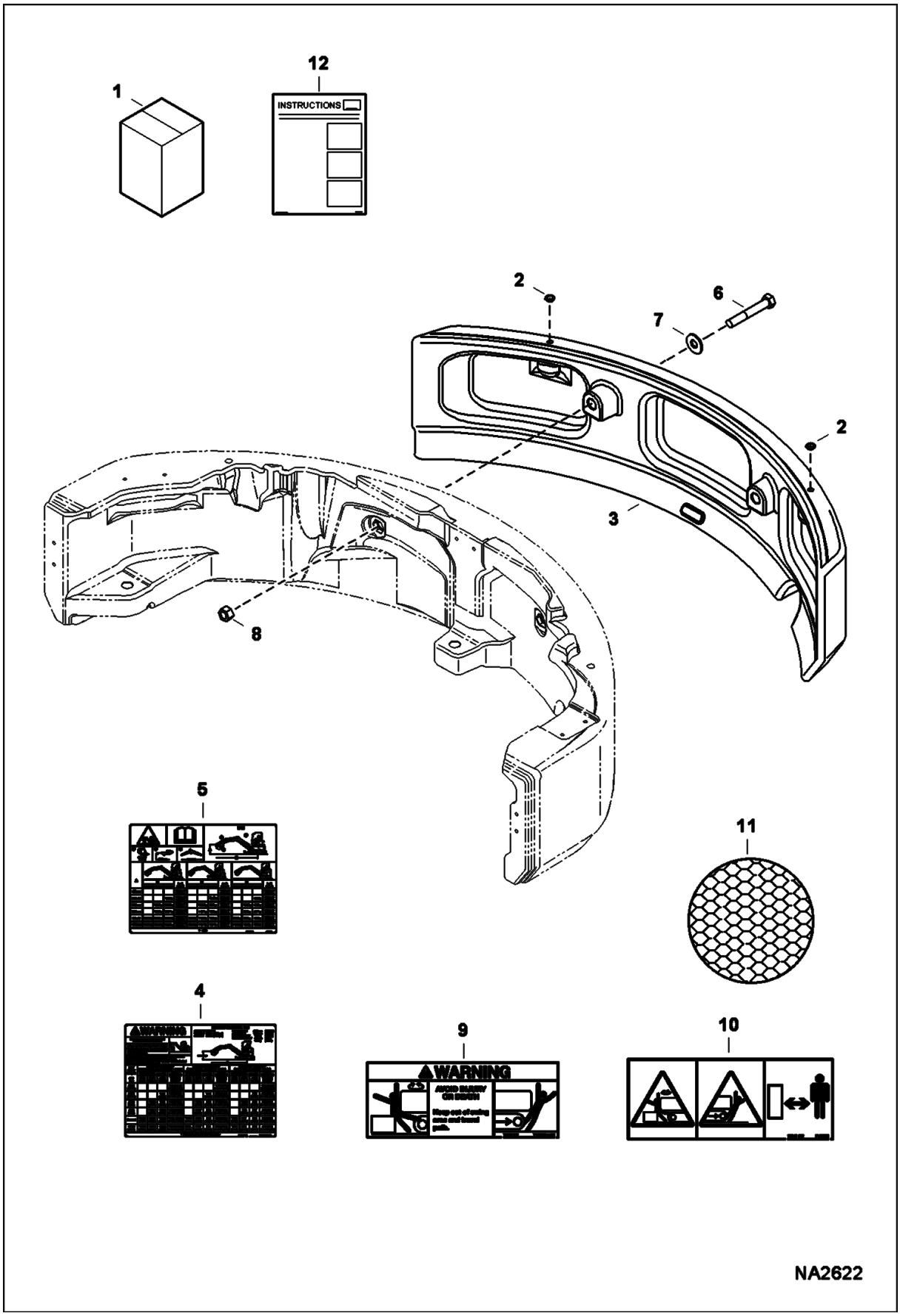

COUNTERWEIGHT KIT (Cont'd)

Ref No	Part Number	Description	Remarks	Serial Number	Qty
1	7184310	KIT, COUNTERWEIGHT	Ref. 2-12		1
2	7010676	PLUG			2
3	7172451	COUNTERWEIGHT			1
4	7188428	DECAL, CAPACITY LIFT	text - E42 with long arm		1
4	7188440	DECAL, CAPACITY LIFT	text - E42 with standard arm		1
4	7188432	DECAL, CAPACITY LIFT	text - E45 with long arm		1
4	7188441	DECAL, CAPACITY LIFT	text - E45 with standard arm		1
4	7188436	DECAL, CAPACITY LIFT	text - E50 with long arm		1
4	7188442	DECAL, CAPACITY LIFT	text - E50 with standard arm		1
5	7188429	DECAL, CAPACITY LIFT	no-text - E42 with long arm		1
5	7188433	DECAL, CAPACITY LIFT	no-text - E45 with long arm		1
5	7188437	DECAL, CAPACITY LIFT	no-text - E50 with long arm		1
6	53CM20130	SCREW			2
7	25E28	WASHER			2
8	4DM20	NUT			2
9	7169006	DECAL, STAY CLEAR	text		1
10	7169009	DECAL, STAY CLEAR	no-text		1
11	7106627	DECAL, REFLECTIVE			2
12	6989456	INSTRUCTIONS			1

DECALS
(Inside)

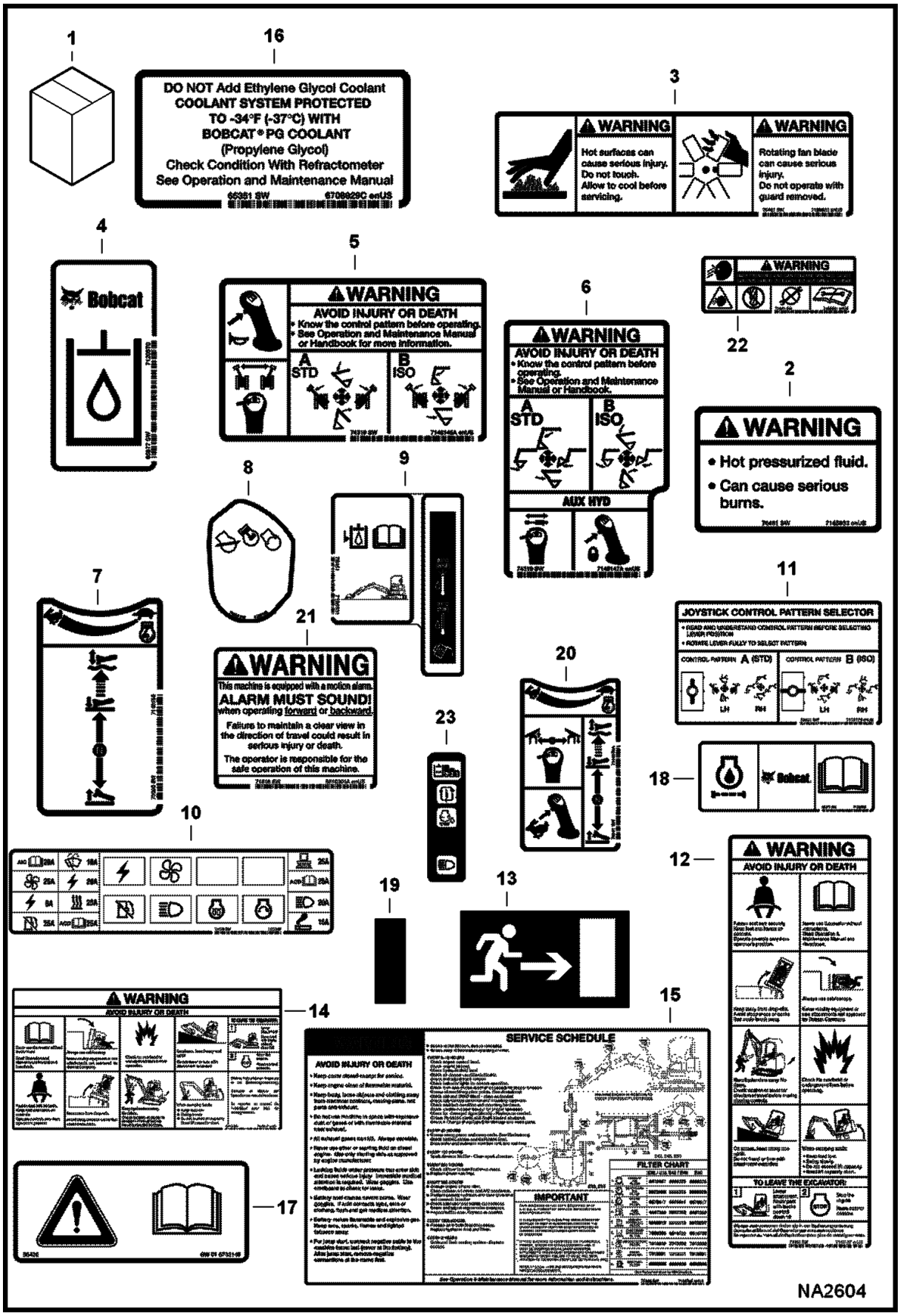

DECALS (Cont'd)
(Inside)

Ref No	Part Number	Description	Remarks	Serial Number	Qty
1	6990002	KIT, DECAL	See Illustration DECALS/ NA2729 includes Ref. 2-21 - Also includes Ref. 2-19 on this page		1
1	7186636AR	KIT, DECAL			1
1	7186636BR	KIT, DECAL			1
1	7186636CA	KIT, DECAL			1
2	7185933	DECAL, WARNING			1
3	7185932	DECAL, WARNING			1
4	7120570	DECAL	hydraulic oil		1
5	7148145	DECAL, LH STD/ISO			1
6	7148147	DECAL, RH STD/ISO			1
7	7148155	DECAL, BLADE			1
8	7186708	DECAL, SWITCH IGN			1
9	7186931	DECAL, FILL LINE			1
10	7172409	DECAL, FUSE			1
11	7178179	DECAL, STD/ISO			1
12	7148157	DECAL, WARNING			1
13	7169014	DECAL, EXIT			1
14	7178177	DECAL, WARNING			1
15	7188747	DECAL, SERVICE			1
16	6708929	DECAL, COOLANT	propylene glycol		1
17	6732148	DECAL			1
18	7120569	DECAL, FILTER			1
19		DECAL, BLANK	NAP - Was 7175408 [A]		1
20	7148156	DECAL, ANGLE BLADE	not in kit		1
21	6810004	DECAL, WARNING	not in kit		1
22	7169291	DECAL	gas spring - not in kit		2
23	7201276	DECAL, INDICATOR	not in kit		1

DECALS
(Outside)

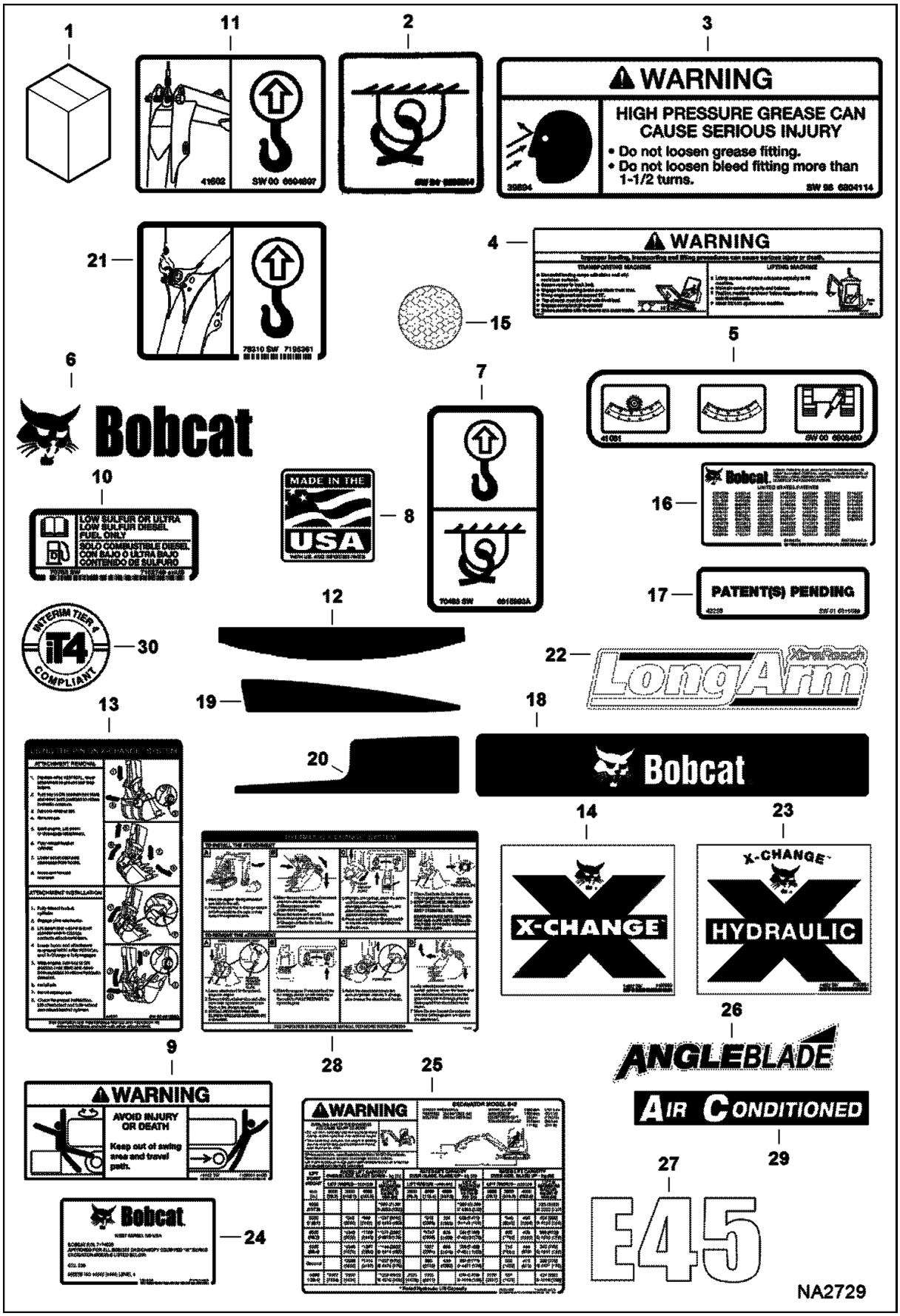

DECALS (Cont'd)
(Outside)

Ref No	Part Number	Description	Remarks	Serial Number	Qty
1	6990002	KIT, DECAL	See Illustration DECALS/ NA2604 includes Ref. 2-19 - Also includes Ref. 2-21 on this page		1
1	7186636AR	KIT, DECAL			1
1	7186636BR	KIT, DECAL			1
1	7186636CA	KIT, DECAL			1
2	6595014	DECAL	tie down		3
3	7168039	DECAL, WARNING	See Illustration DECALS/ NA6216 - high pressure grease - Was 6804114 [A]		2
4	7178178	DECAL, WARNING			1
5	6808480	DECAL	remote grease		1
6	6815489	DECAL	logo - 402 mm (15.81") long		2
6	7167716	DECAL, LOGO	338 mm (13.32") long		2
6	6727324	DECAL, LOGO BOBCAT AND HEAD	210 mm (8.25") long		1
7	6815993	DECAL, LIFT	tie down		2
8	7208146	DECAL	made in USA - Was 7136123 [A]		2
9	7169006	DECAL, STAY CLEAR			1
10	7152748	DECAL, FUEL DIESEL			1
11	6594897	DECAL	boom lift - pin mount		1
12	7180283	TREAD, SAFETY			1
13	6818059	DECAL	Using Pin-On X-Change		1
14	7160880	DECAL, X-CHANGE	Pin-On		1
15	7106627	DECAL, REFLECTIVE	reflective		2
16		DECAL	NAP - patent - Was 6557224 [C]		1
17		DECAL	NAP - patent pending - Was 6810666 [A]		1
18	7175346	DECAL, LOGO			1
19	7178412	DECAL, COVER	right		1
20	7178413	DECAL, COVER	left		1
21	7195361	DECAL, BOOM LIFT	clevis mount	AG3G11001 - 11042	1
21	7195361	DECAL, BOOM LIFT	clevis mount	AHHC11019 & Above	1
22	7147433	DECAL, ARM LONG	not in kit		1
23	7160881	DECAL, X-CHANGE	hydraulic - not in kit		1
24	7181121	DECAL, APPS SPECIAL	not in kit		1
24	7181127	DECAL, GUARD TOP	canopy - not in kit		1
24	7181128	DECAL, GUARD TOP	cab - not in kit		1
25	7188430	DECAL, CAPACITY LIFT	std arm - not in kit		1
25	7188432	DECAL, CAPACITY LIFT	long arm - not in kit		1
25	7188441	DECAL, CAPACITY LIFT	std arm W/heavy counterweight - not in kit		1
25	7221251	DECAL, CAPACITY LIFT	extendable arm - not in kit		1
26	7177956	DECAL, BLADE	not in kit		1

DECALS (Cont'd)
(Outside)

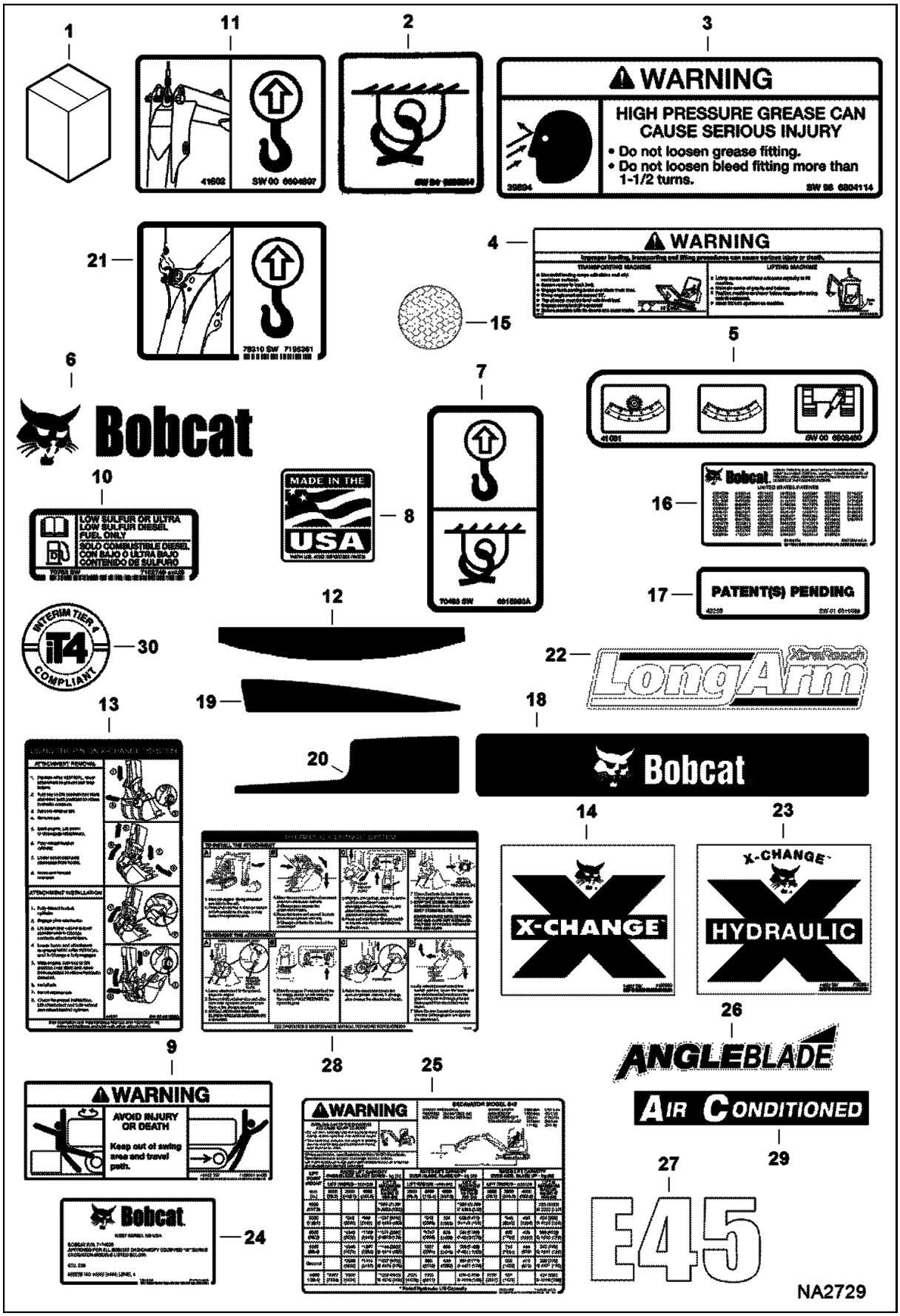

DECALS (Cont'd)
(Outside)

Ref No	Part Number	Description	Remarks	Serial Number	Qty
		ANGLE			
27	7181022	DECAL, MODEL	not in kit		2
28	7134587	DECAL, X-CHANGE	using hydraulic X-Change W/retainer pin - not in kit		1
28	7220131	DECAL, X-CHANGE	using hydraulic X-Change W/O retainer pin - not in kit		1
29	7166916	DECAL, A/C	not in kit		2
30	7204037	DECAL	iT4 compliant - not in kit		1

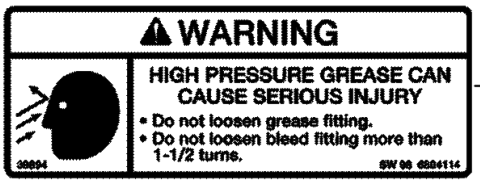
WARNING
HIGH PRESSURE GREASE CAN CAUSE SERIOUS INJURY
• Do not loosen grease fitting.
• Do not loosen bleed fitting more than 1-1/2 turns.

1

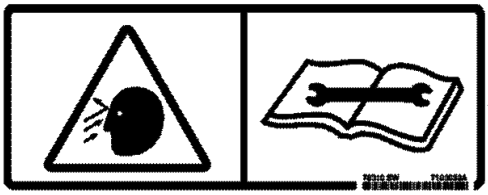

2

NA6216

DECALS (Cont'd)
(Outside)

Ref No	Part Number	Description	Remarks	Serial Number	Qty
1		DECAL, WARNING	NAP - high pressure grease - Order Ref. 2 - Was 6804114 [A]		1
2	7168039	DECAL, WARNING	high pressure grease		2

DECALS
(EMEA No-text)

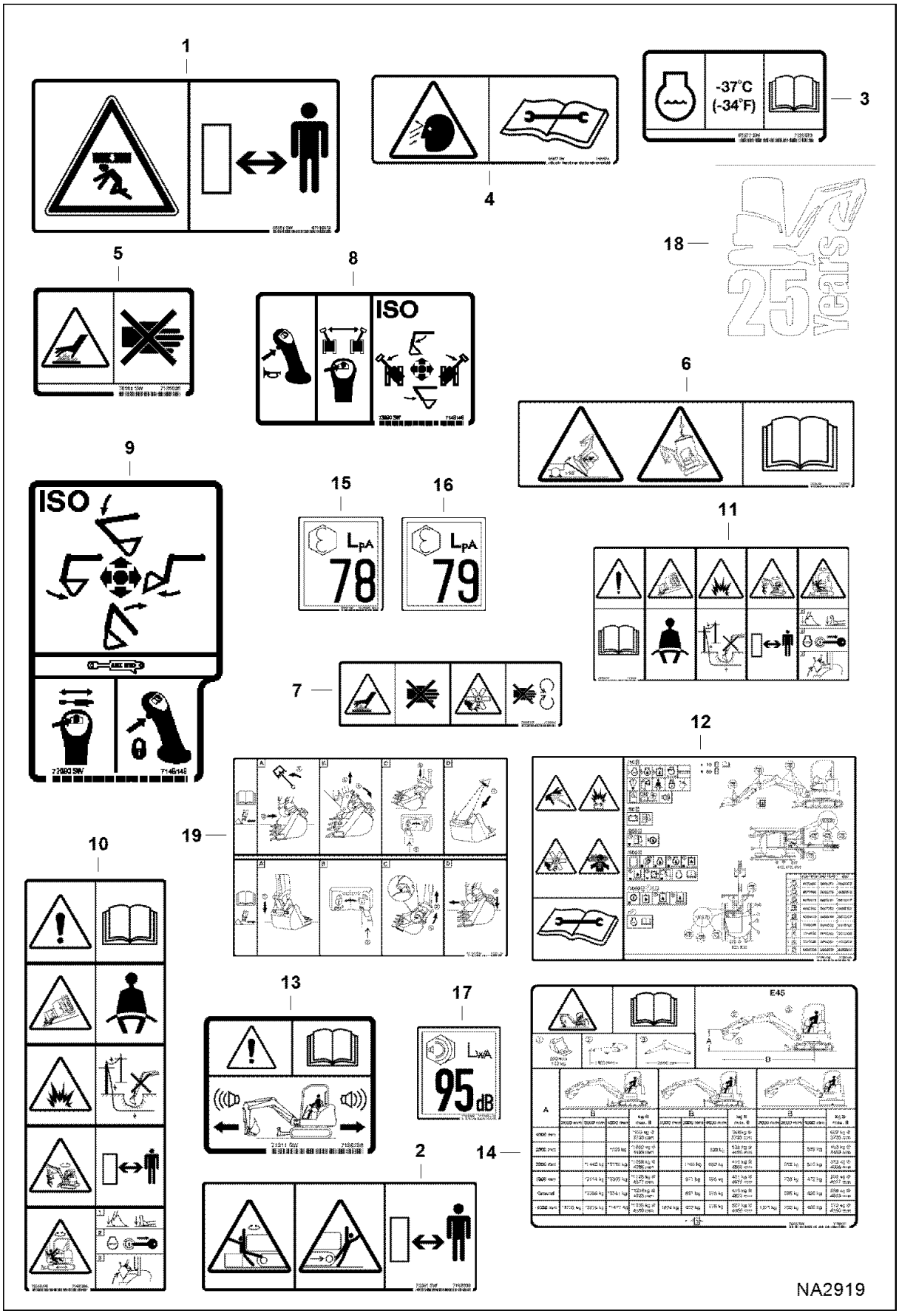

DECALS (Cont'd)
(EMEA No-text)

Ref No	Part Number	Description	Remarks	Serial Number	Qty
1	6713507	DECAL	stay clear		2
2	7169009	DECAL, STAY CLEAR			1
3	7120573	DECAL	engine coolant		1
4	7168039	DECAL, WARNING	warning - Was 7120574		2
5	7185935	DECAL, WARNING			1
6	7178215	DECAL, WARNING			1
7	7185934	DECAL, WARNING			1
8	7148146	DECAL, LH ISO			1
9	7148148	DECAL, RH ISO			1
10	7148158	DECAL, WARNING			1
11	7178216	DECAL, WARNING			1
12	7188748	DECAL, SERVICE			1
13	7136738	DECAL WARNING			1
14	7188431	DECAL, CAPACITY LIFT	std arm		1
14	7188433	DECAL, CAPACITY LIFT	long arm		1
15	6534820	DECAL	sound - cab		1
16	6809736	DECAL	sound - canopy		1
17	7117748	DECAL	sound - power		1
18	7218061	DECAL, 25 YEAR			2
19	7220130	DECAL, X-CHANGE			1

DEFLECTOR KIT

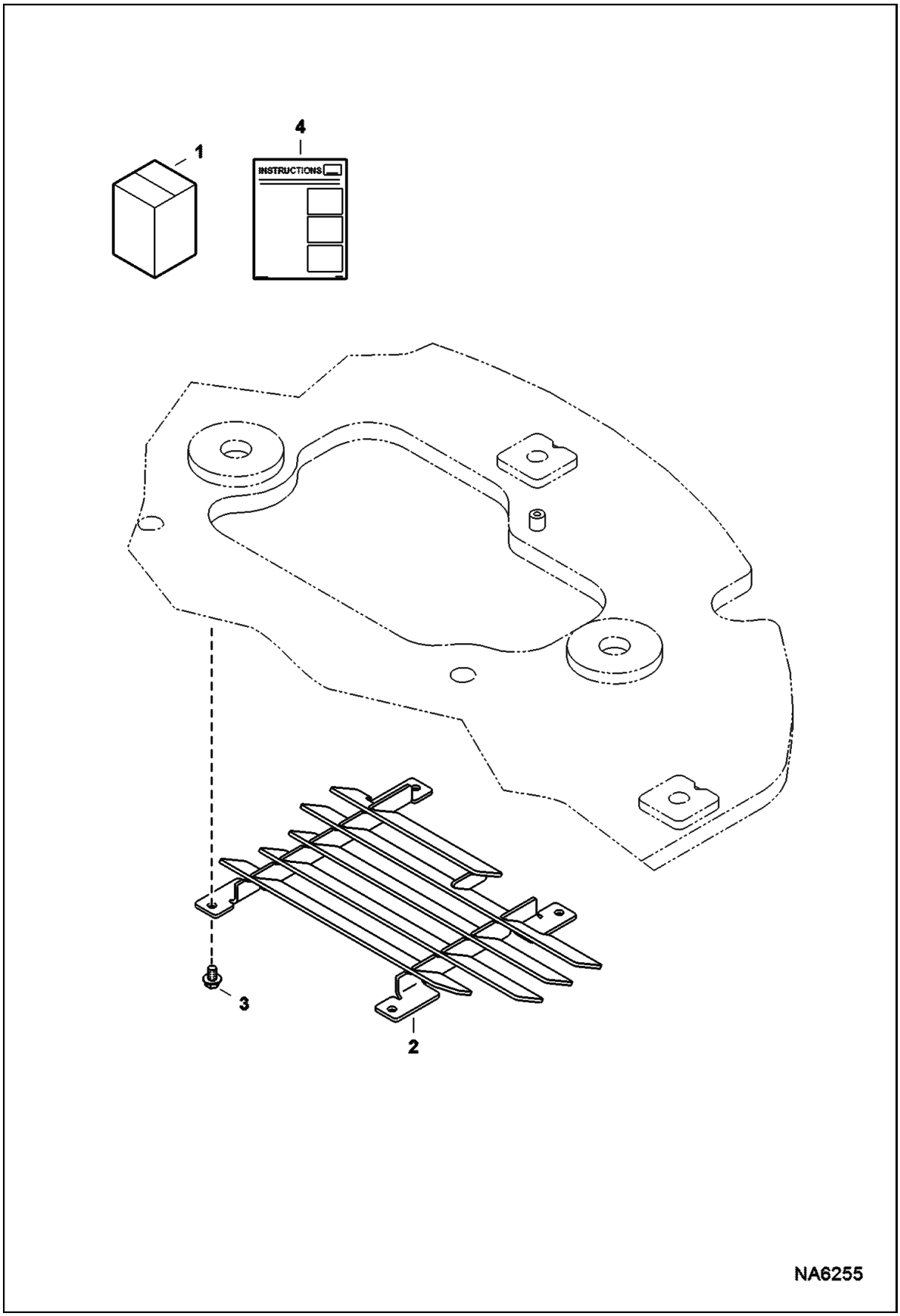

DEFLECTOR KIT (Cont'd)

Ref No	Part Number	Description	Remarks	Serial Number	Qty
1		KIT, DEFLECTOR	NAP - Order components - Was 7204965 [A]		1
2	7202728	LOUVER			1
3	29CM1016	BOLT			4
4	6990165	INSTRUCTIONS			1

DIRECT TO TANK KIT

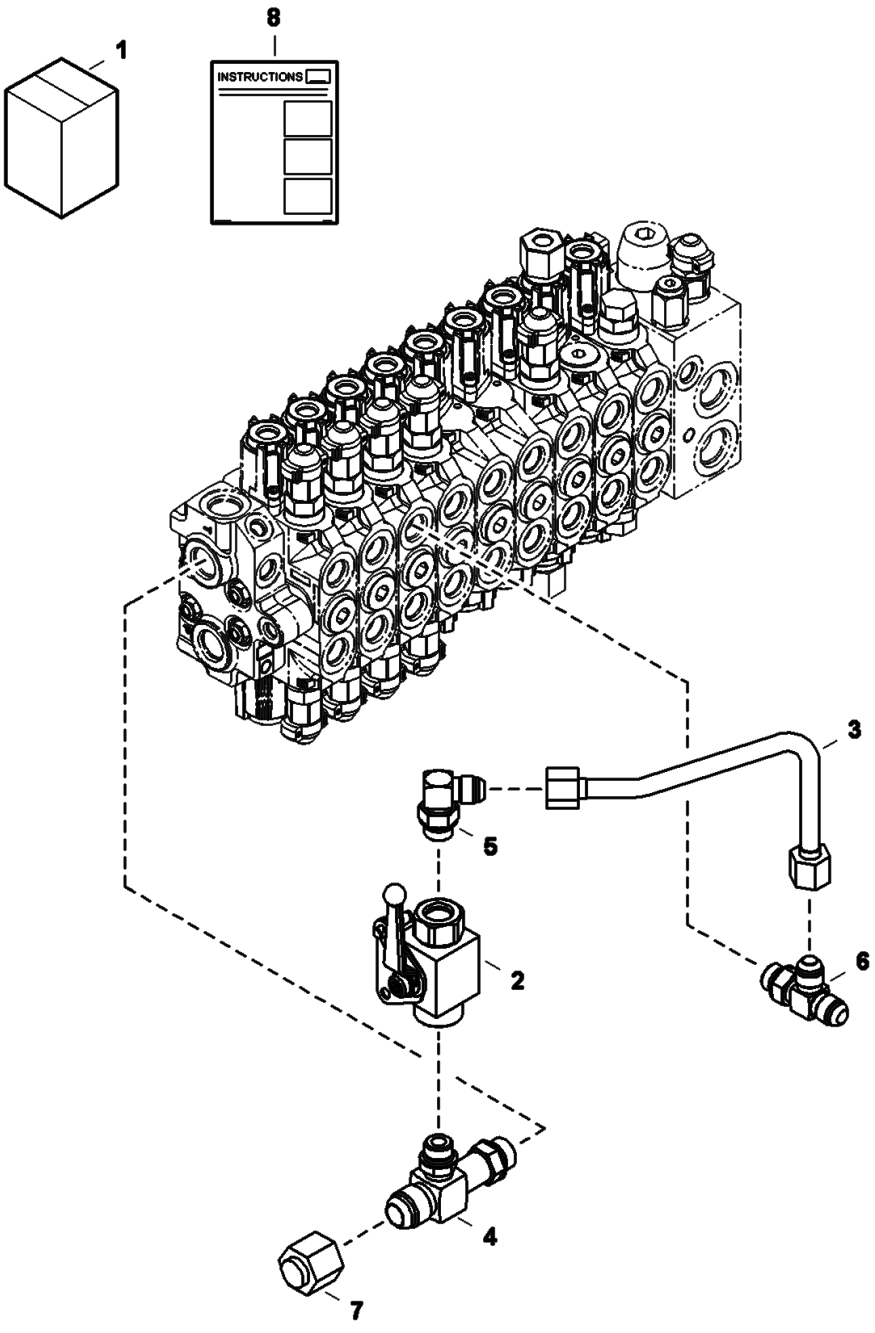

DIRECT TO TANK KIT (Cont'd)

Ref No	Part Number	Description	Remarks	Serial Number	Qty
1	7195345	KIT, DIRECT TO TANK	Ref. 2-8		1
2	6693507	VALVE, BALL	See Illustration SELECTOR VALVE ASSY/ NA2306		1
3	7176915	TUBELINE, HYD			1
4	7178217	FITTING, HYD TEE			1
4	79K8	O RING 10			x
5	17KB0808	FITTING, HYD ELBOW			1
5	79K8	O RING 10			x
6	21KB0808	FTG HYD STRAIGHT TEE			1
6	79K8	O RING 10			x
7	36K8	CAP			1
8	6989783	INSTRUCTIONS			1

EUROPEAN ACCESSORIES
(Deluxe Control Kit)

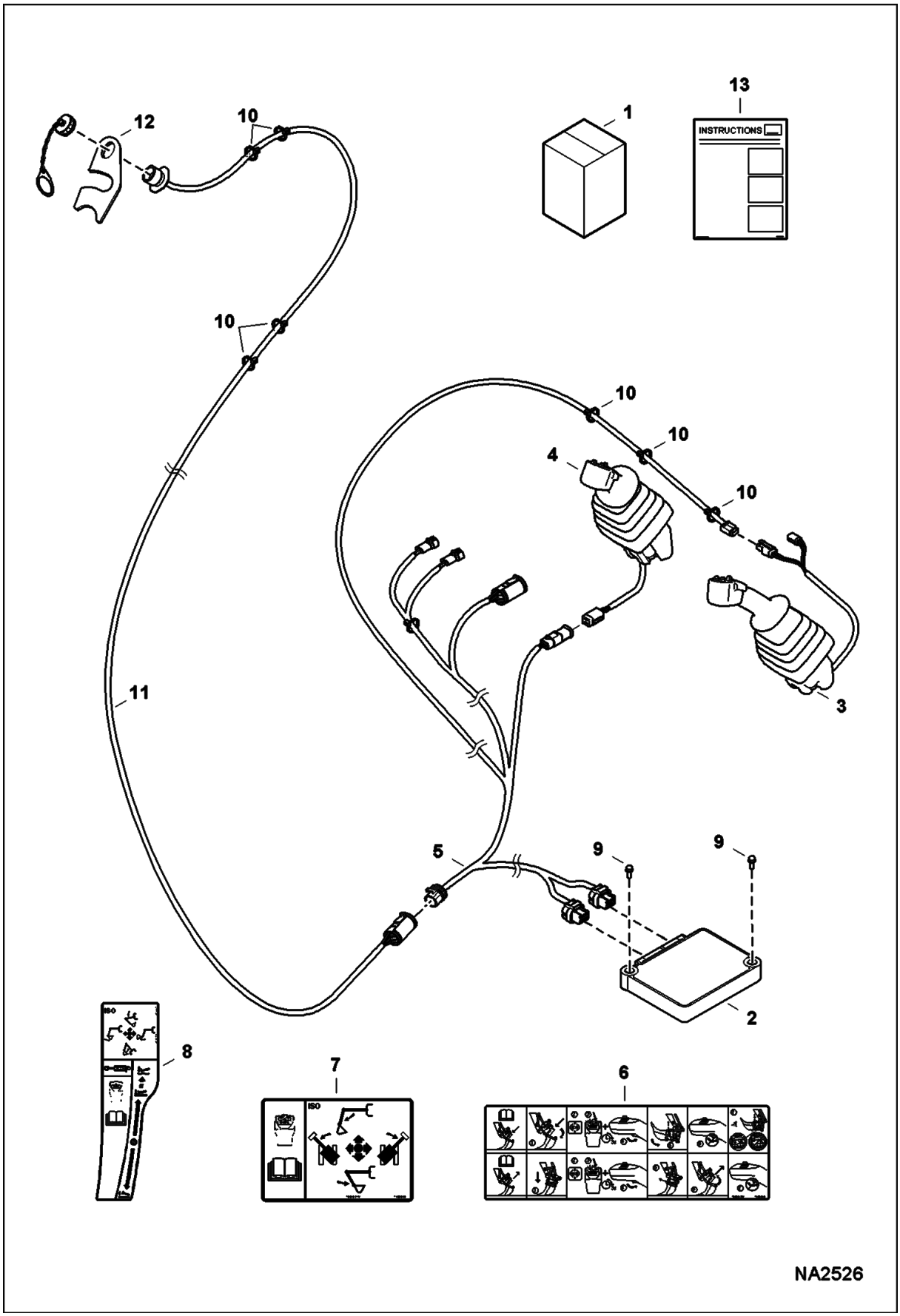

EUROPEAN ACCESSORIES (Cont'd)
(Deluxe Control Kit)

Ref No	Part Number	Description	Remarks	Serial Number	Qty
1	7181285	KIT, CONTROL ATTACH	Ref. 2-13		1
2	7009046	CONTROLLER, AUX CONTROL			1
3	7010038	JOYSTICK, LH			1
4	7010039	JOYSTICK, RH			1
5	7181284	HARNESS, BOOM			1
6	7183846	DECAL, OPERATION			1
7	7182064	DECAL, LH ISO			1
8	7182065	DECAL, RH ISO			1
9	1CM1016	SCREW			2
10	6624289	STRAP, TIE			8
11	7183679	HARNESS, BOOM	Was 6718426 [B,D]		1
12	7183676	MOUNT			1
13		INSTRUCTIONS	INSTRUCTIONS NAP - Was 6989531 [A]		1

EUROPEAN ACCESSORIES
(Quick Coupler Kit)
(Klac System)

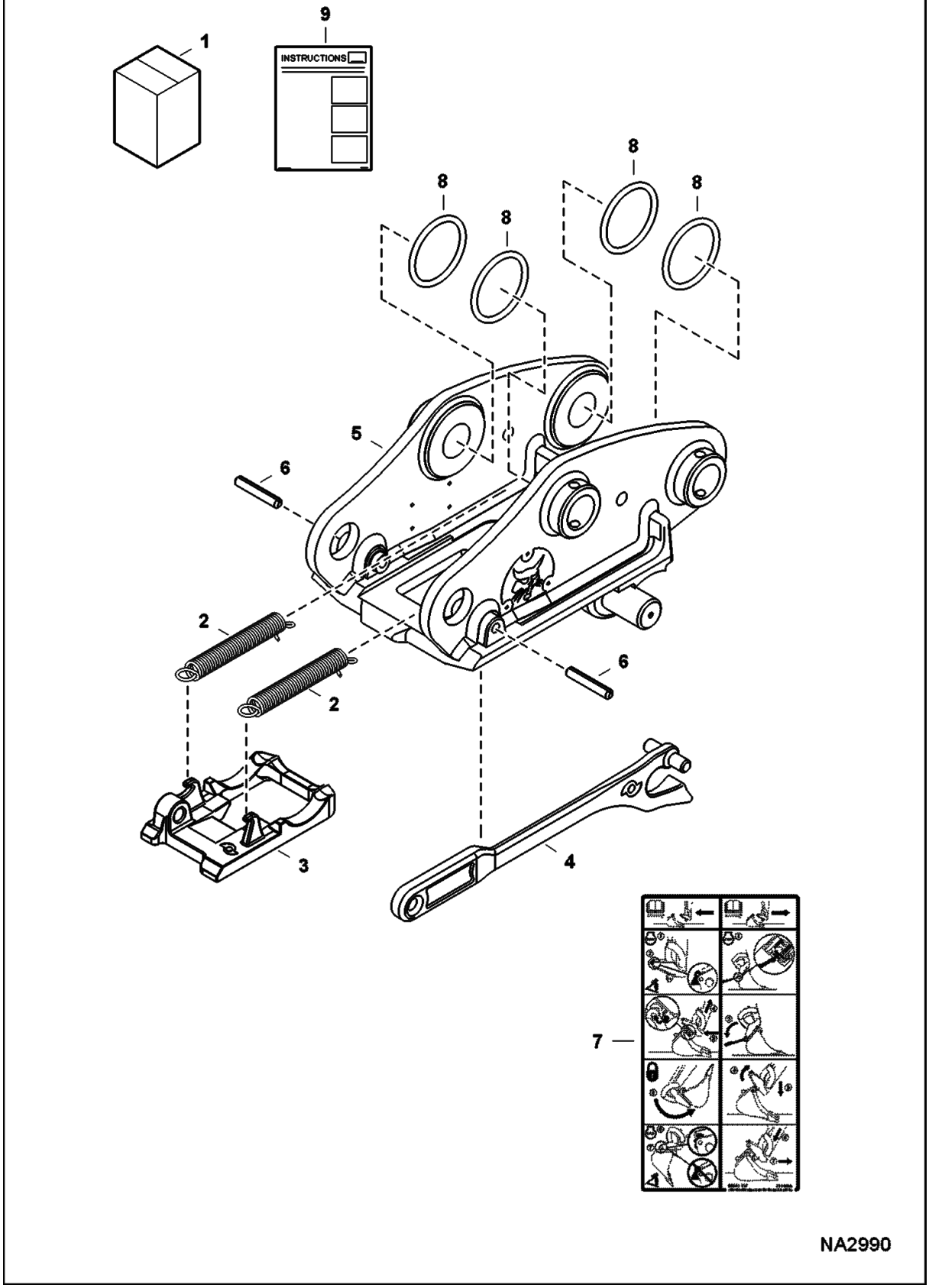

EUROPEAN ACCESSORIES (Cont'd)
(Quick Coupler Kit)
(Klac System)

Ref No	Part Number	Description	Remarks	Serial Number	Qty
1		KIT, QUICK COUPLER	W/Ref. 2-9, SALES #7190553		1
2	7020781	SPRING			2
3	6692788	LOCKING PLATE			1
4	6692740	KEY			1
5		COUPLER, QUICK KC1	NAP - Order Ref. 1		1
6	7020782	PIN, ROLL			2
7	7139000	DECAL, USING CPLR	using coupler		1
8	6674145	O-RING			4
9	6987344	INTRUCTIONS, INSTALLATION	INTRUCTIONS, INSTALLATION		1

EUROPEAN ACCESSORIES
(Quick Coupler Kit)
(Lehnhoff System)

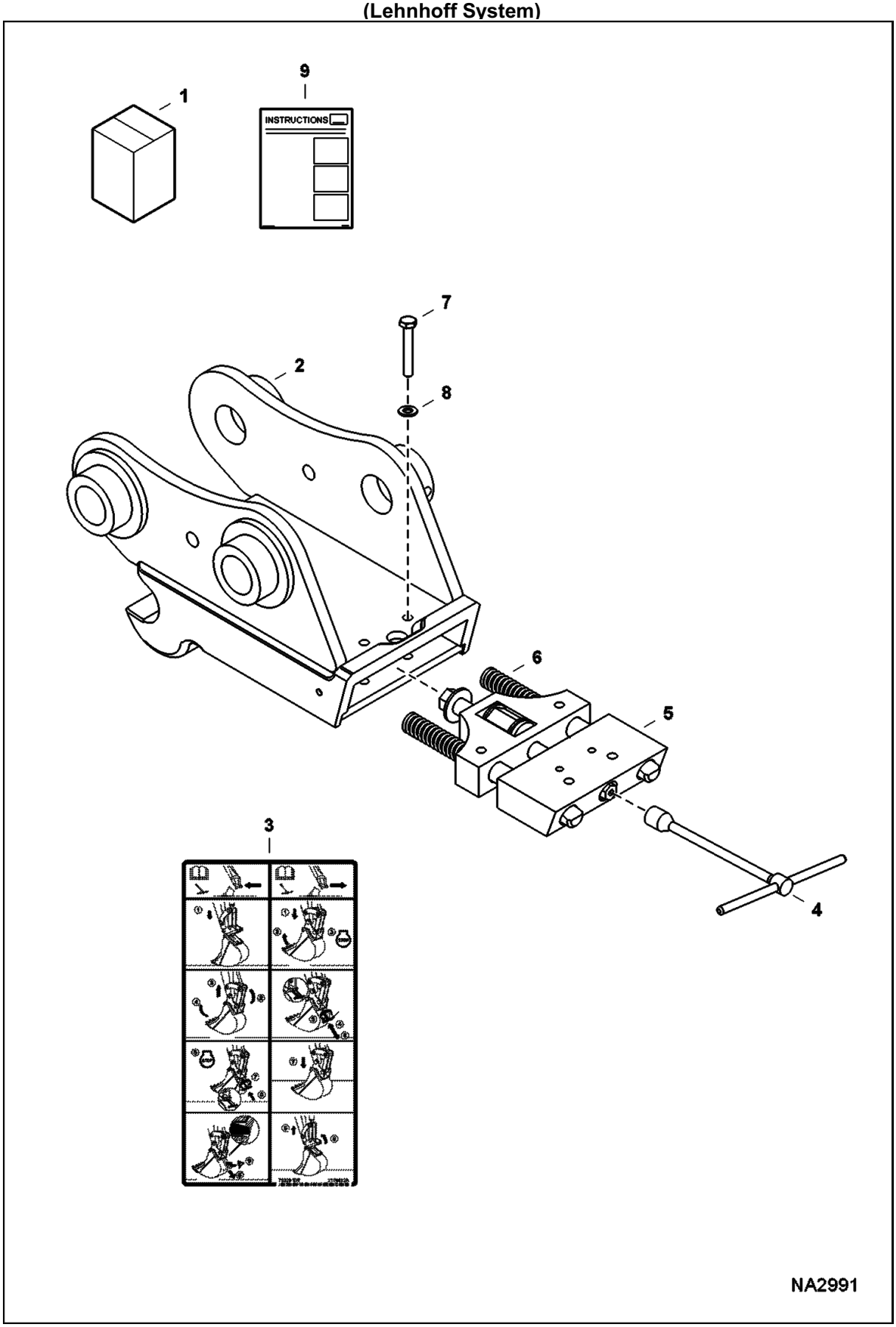

EUROPEAN ACCESSORIES (Cont'd)
(Quick Coupler Kit)
(Lehnhoff System)

Ref No	Part Number	Description	Remarks	Serial Number	Qty
1			W/Ref. 2-9 - SALES #7190554		1
2			NAP - Order Ref. 1		1
3	7174312	DECAL			1
4	6690918	SOCKET WRENCH M19			1
5	6690915	LOCK ASSY			1
6	6690928	SPRING, PRESSURE			2
7	6690916	BOLT			2
8	6690917	WASHER, LOCK			2
9	6987333	INSTRUCTIONS, INSTALL	INSTRUCTIONS, INSTALL		1

EXTENDABLE ARM
(Kit)

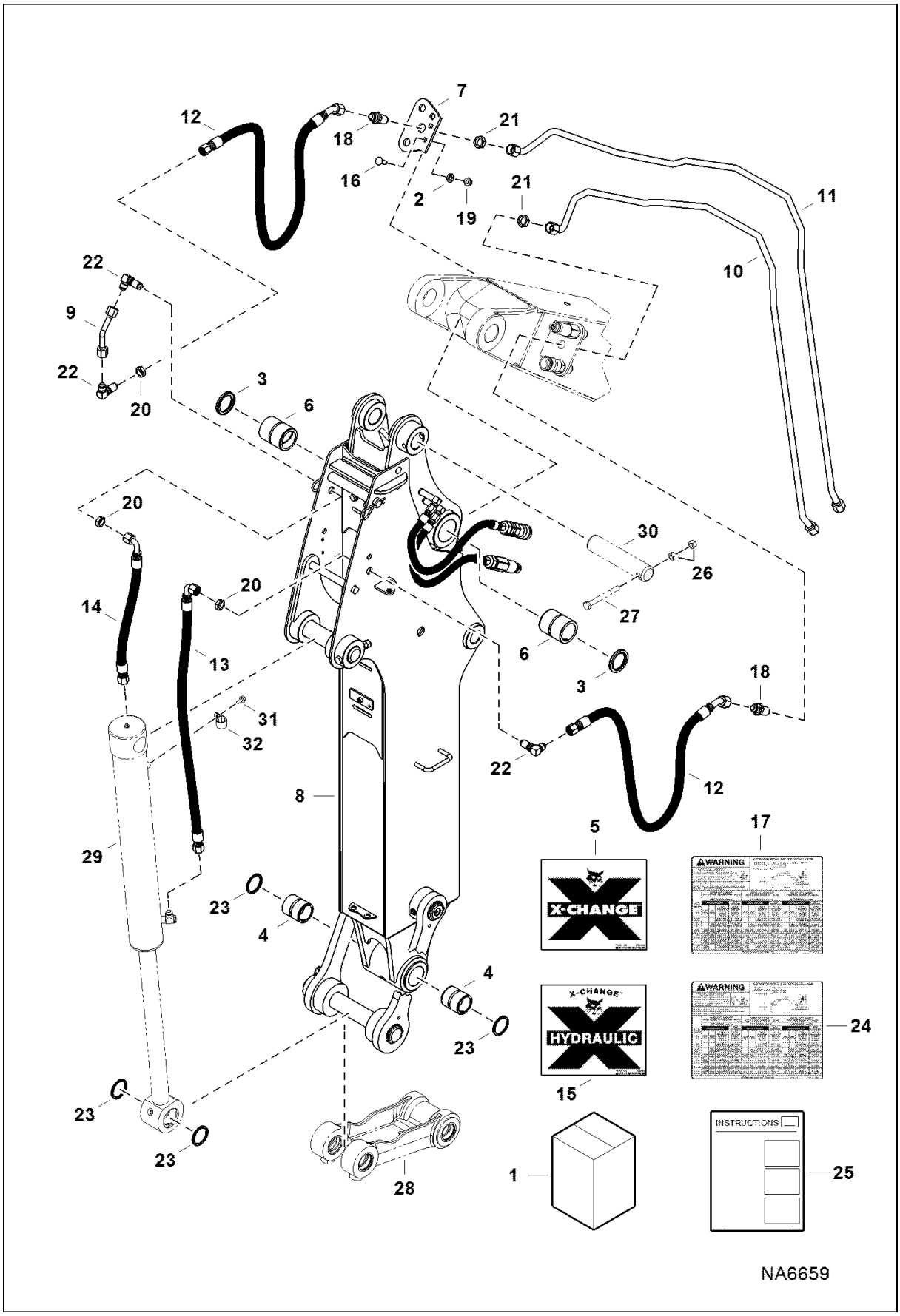

EXTENDABLE ARM (Cont'd)
(Kit)

Ref No	Part Number	Description	Remarks	Serial Number	Qty
1	7221751	KIT, ARM EXTENDABLE	Ref. 2-25		1
2	6674264	RETAINER NUT			2
3	7143551	SEAL, DUST			2
4	7172745	BUSHING, WEAR			2
5	7160880	DECAL, X-CHANGE			2
6	7188685	BUSHING, WEAR			2
7	7198272	PLATE, MOUNT COUPLER			1
8		ARM, DIPPER W/A EXT EXC	See Illustration EXTENDABLE ARM/ NA6660 - NSS		1
9	7206330	TUBELINE, HYD			1
10	7207034	TUBELINE, HYD			1
11	7207035	TUBELINE, HYD			1
12	7207040	HOSE, HYD			2
13	7207044	HOSE, HYD			1
14	7207045	HOSE, HYD			1
15	7160881	DECAL, X-CHANGE			2
16	28CM1030	BOLT			2
17	7221250	DECAL, CAPACITY LIFT	E42		1
18	45K7	CONNECTR			2
19	51DM10	NUT			2
20	86F6	NUT			3
21	86F7	LOCK NUT			2
22	88F6	ELBOW			3
23	6669287	SEAL			2
24	7221251	DECAL, CAPACITY LIFT	E45		1
25	6990120	INSTRUCTION	INSTRUCTION		1
26	4DM12	NUT HEX	not in kit		2
27	7CM12110	BOLT	not in kit		1
28	7165792	LINK, ASSY	See Illustration BUCKET LINK/ NA2207 - not in kit		1
29	7175041	CYLINDER, BUCKET	See Illustration BUCKET CYLINDER/ NA1938 - not in kit		1
30	7208620	PIN, PIVOT	not in kit		1
31	29CM816	SCREW	not in kit		1
32	30H50	CLIP	not in kit		1

EXTENDABLE ARM
(Assy)

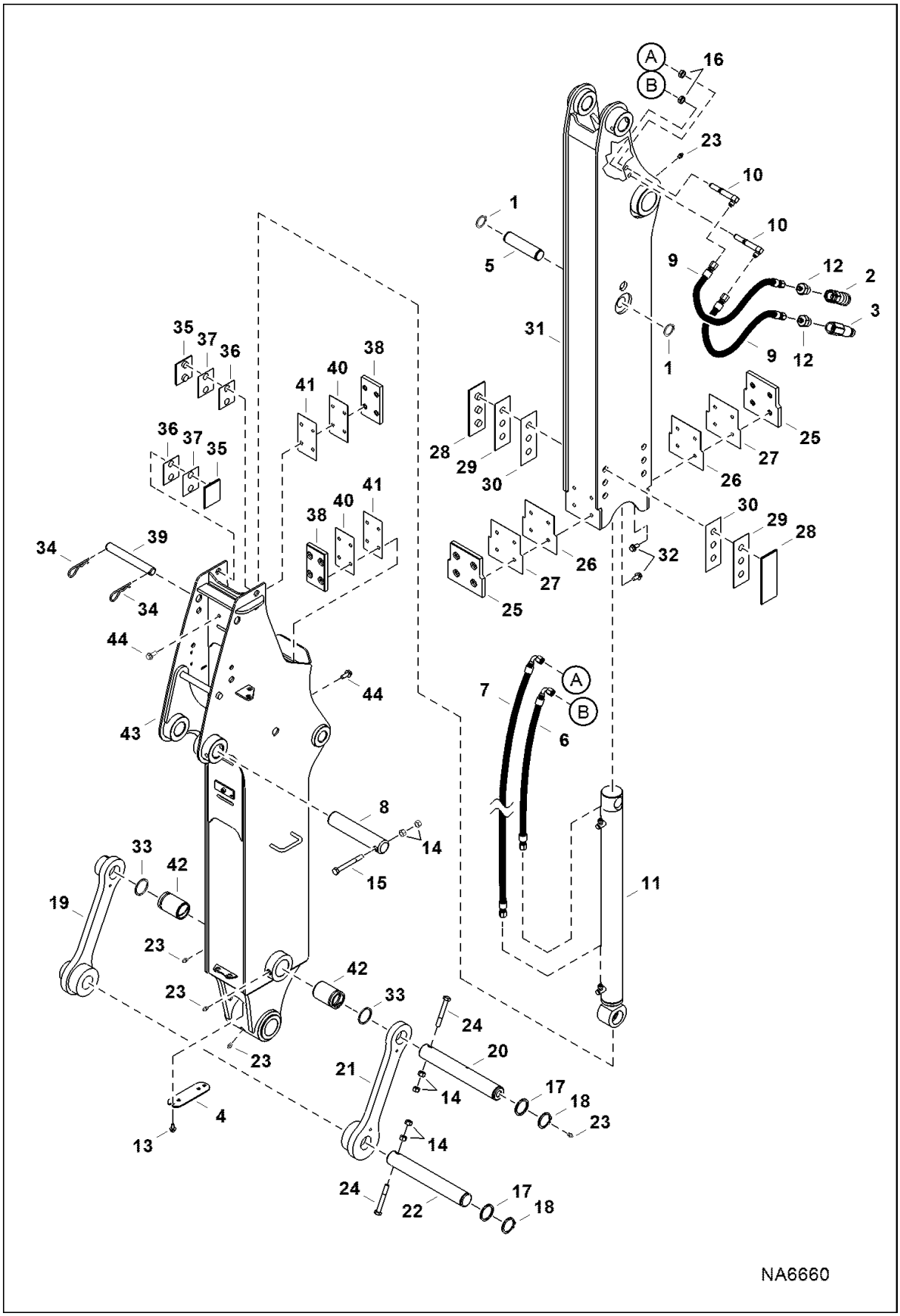

EXTENDABLE ARM (Cont'd)
(Assy)

Ref No	Part Number	Description	Remarks	Serial Number	Qty
1	6534154	RING			2
2	6672960	COUPLER, FF FEMALE			1
3	6674688	COUPLER, FF MALE			1
4	7198050	COVER, PLATE			1
5	7205623	PIN, PIVOT CYL			1
6	7205626	HOSE, HYD			1
7	7205627	HOSE, HYD			1
8	7205685	PIN, PIVOT CYL			1
9	7207017	HOSE, HYD			2
10	7207018	FITTING, HYD ELBOW			2
11	7219322	CYLINDER	See Illustration EXTENDABLE ARM CYLINDER/ NA6561		1
12	15KB0612	FITTING, HYD CONNECTOR			2
12	79K12	O RING 10			x
13	29CM816	SCREW			2
14	4DM12	NUT HEX			6
15	7CM12110	BOLT			1
16	86F5	NUT			2
17	6628547	WASHER			2
18	6668787	RING			2
19	7205691	LINK, ASSY			1
20	7205692	PIN, PIVOT CYL			1
21	7205693	LINK, ASSY			1
22	7205694	PIN, PIVOT CYL			1
23	10H25	FITTING, GREASE 5			5
24	7CM1290	SCREW			2
25	7205622	PAD, WEAR ASSY			2
26	7205642	SHIM			2
27	7205643	SHIM			2
28	7205644	PAD, WEAR			4
29	7205645	SHIM			4
30	7205646	SHIM			4
31	7206311	ARM, INNER EXTENDABLE			1
32	59CM1020	SCREW HX FLNG W/T8.8			8
33	6669287	SEAL			2
34	6675029	PIN			2
35	7194399	PAD, WEAR			2
36	7194400	SHIM			2
37	7194401	SHIM			2
38	7205653	PAD, WEAR ASSY			2
39	7205654	PIN			1
40	7205655	SHIM			2
41	7205656	SHIM			2
42	7205657	BUSHING, WEAR			2
43	7206321	ARM, OUTER EXTENDABLE			1
44	59CM1025	SCREW HX FLNG W/T 8.8			8

FIRE EXTINGUISHER

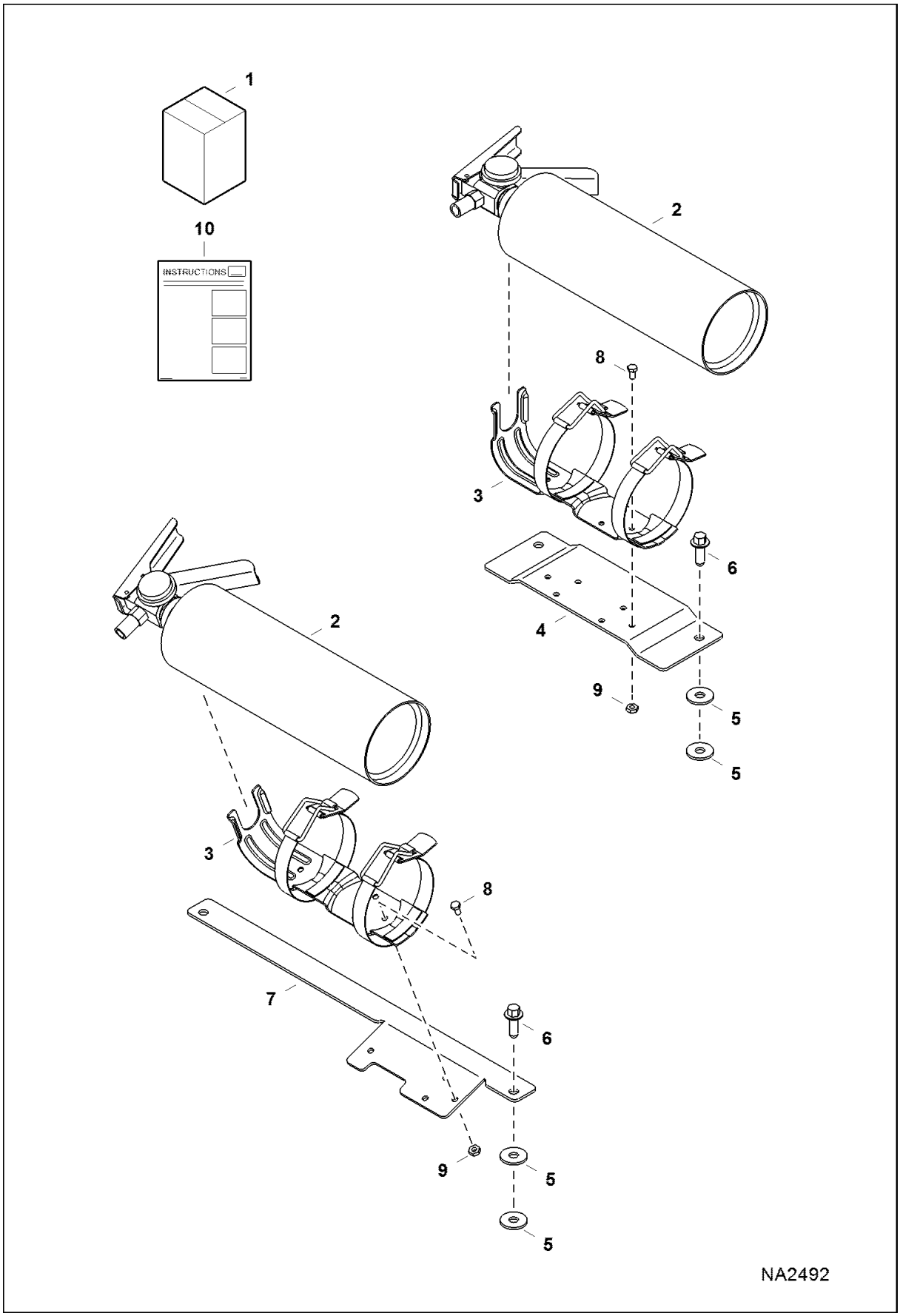

FIRE EXTINGUISHER (Cont'd)

Ref No	Part Number	Description	Remarks	Serial Number	Qty
1	7186792	KIT, EXTINGUISHER FIRE	Ref. 2-10		1
2	7224664	EXTINGUISHER, FIRE	W/Ref. 3 - Was 7168164 [A]		1
3		BRACKET, EXTINGUISHER FIRE	NSS - 1 clamp		1
3	7224665	BRACKET, EXTINGUISHER FIRE	2 clamp		1
4	7187102	BRACKET, MOUNTING	canopy		1
5	17EM80	WASHER			4
6	26GM8020	SCREW			2
7	7187101	BRACKET, MOUNTING	cab		1
8	45G1006	BOLT			4
9	12D10	NUT			4
10	6989530	INSTRUCTIONS			1

FUEL SEDIMENT BOWL KIT

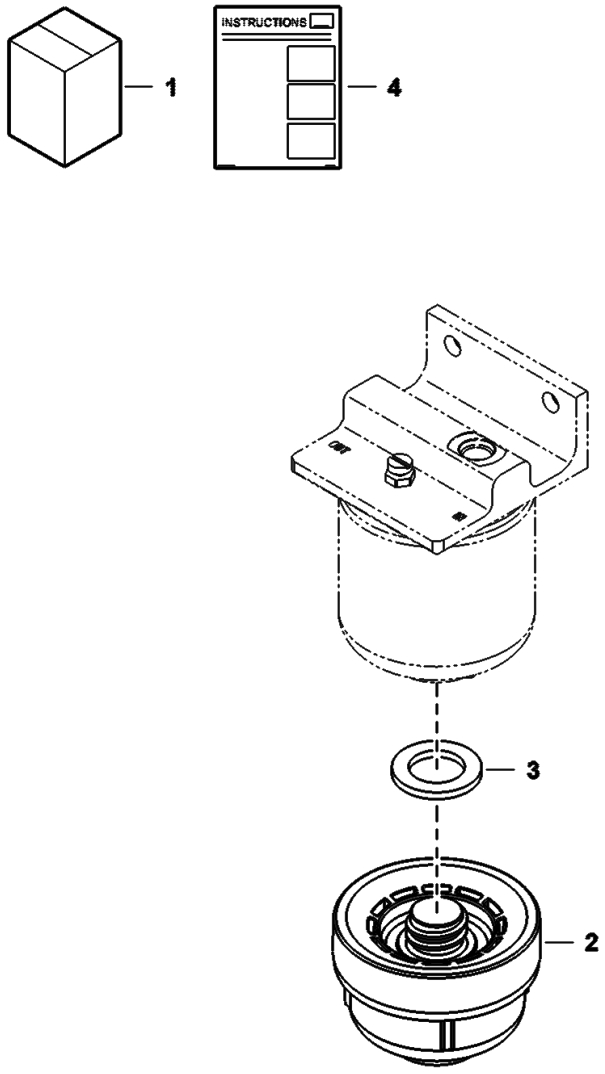

NA6088

FUEL SEDIMENT BOWL KIT (Cont'd)

Ref No	Part Number	Description	Remarks	Serial Number	Qty
1		KIT, BOWL FUEL	NAP - Order components - Was 7177215 [A]		1
2	7167163	BOWL, FUEL	W/Ref. 3		1
3	7177212	GASKET			1
4	6987336	INSTRUCTIONS			1

HEATER & A/C
(Heater Kit)

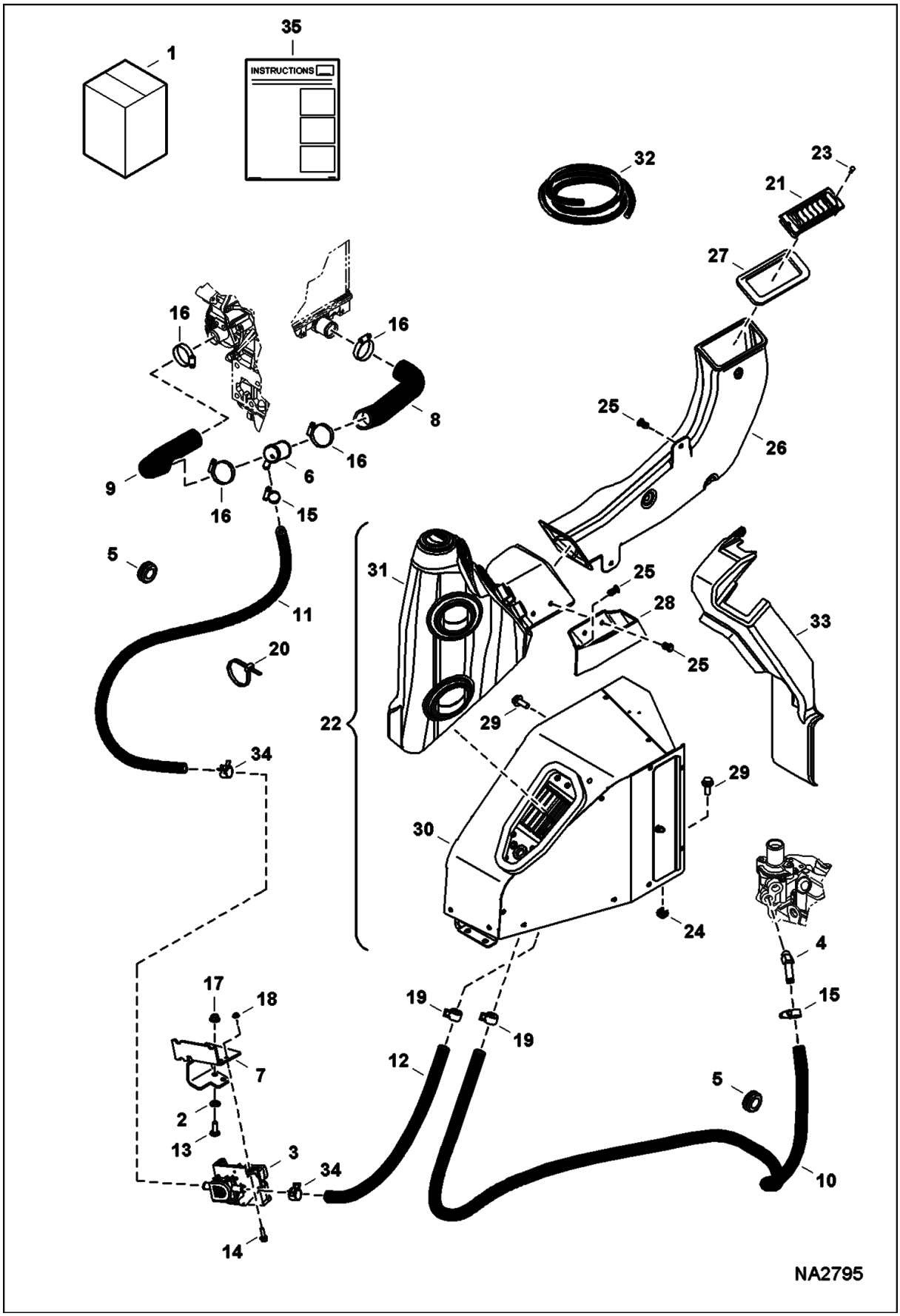

HEATER & A/C (Cont'd)
(Heater Kit)

Ref No	Part Number	Description	Remarks	Serial Number	Qty
1	7193840	KIT, HEATER	Ref. 2-35		1
2	6674264	RETAINER NUT			2
3	7003456	VALVE, MOTORIZED ASSY	- Was 6693147 [B]		1
4	6731085	ELBOW			1
5	7136776	GROMMET			2
6	7156272	TEE			1
7	7183801	BRACKET			1
8	7179826	HOSE, WATER FORMED			1
9	7184694	HOSE, HEATER FORMED			1
10		HOSE, HEATER	NAP - 110.9" (2818 mm) long - Order Ref. 32		1
11		HOSE, HEATER	NAP - 67.1" (1704 mm) long - Order Ref. 32		1
12		HOSE, HEATER	NAP - 17.5" (444 mm) long - Order Ref. 32		1
13	28CM1030	BOLT			2
14	29CM620	SCREW			2
15	5HM20	CLAMP	Was 42HL100 [B]		2
16	42HL200	CLAMP, HOSE			4
17	43DM10	NUT			2
18	43DM6	NUT			2
19	5HM20	CLAMP			2
20	6624289	STRAP, TIE			7
21	6676713	LOUVER			1
22		HEATER, CAB	NAP - Order Ref. 30 & 31		1
23	6814024	SCREW			2
24	7155411	NUT			1
25	7160383	RIVET, BIRD CAGE			5
26	7162750	DUCT, AIR			1
27	7171356	SEAL, DUCT			1
28	7174321	CONTAINER, STORAGE			1
29	29CM1025	BOLT			4
30	7018004	HEATER, CAB	See Illustration HEATER & A/C/ NA2792		1
31		DUCT, AIR ASSY	See Illustration HEATER & A/C/ NA2794		1
32	6565977	HOSE	bulk - sold per foot		x
33	7168404	COVER, RH			1
34	5HM20	CLAMP	Was 5HM21 [B]		2
35	6989498	INSTRUCTIONS	INSTRUCTIONS Was 6989776 [A]		1

HEATER & A/C
(Heater Assembly)

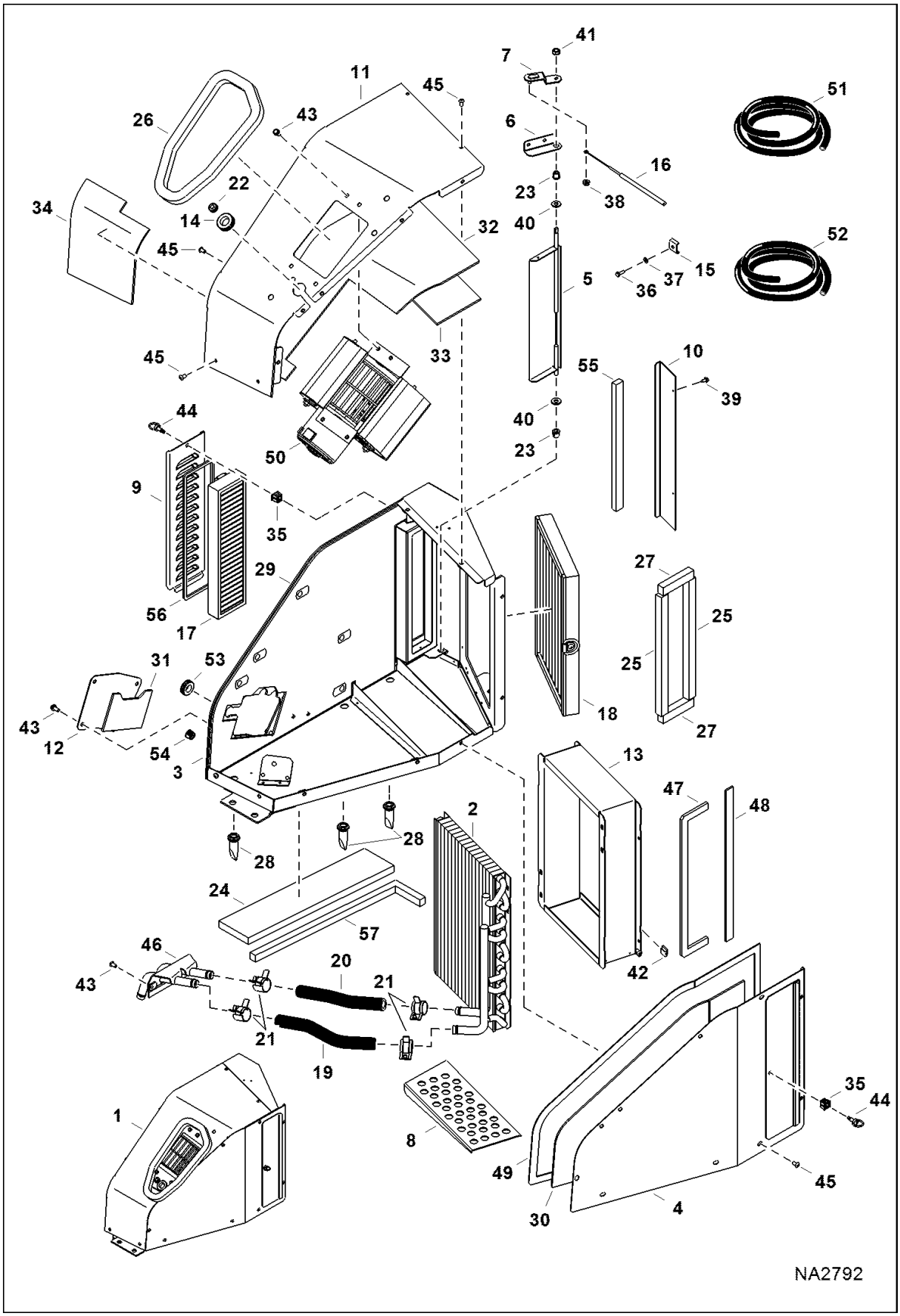

Ref No	Part Number	Description	Remarks	Serial Number	Qty
1	7018004	HEATER, CAB	Ref. 2-57		1
2	7011125	COIL, HEATER			1
3	7017997	HOUSING, BASE	Was 7019997 [D]		1
4	7018000	COVER, ASSY			1
5	7011122	DOOR, CONTROL AIR			1
6	7011121	BRACKET			1
7	7011120	LEVER			1
8	7011119	PLATE, SUPPORT			1
9	7011118	LOUVER			1
10	7011117	PLATE			1
11	7017998	COVER			1
12	7017999	PLATE, VALVE			1
13	7011114	PAN, COIL			1
14	7011113	HARNESS, HEATER	harness not shown - grommet included		1
15	7011112	CLAMP, CABLE			1
16	7011111	CABLE, A/C			1
17	7010331	FRESH AIR FILTER			1
18	7010332	FILTER RECIRCULATION			1
19		HOSE, HEATER	NAP - 175 mm (6.9") long - Order Ref. 51		1
20		HOSE, HEATER	NAP - 150 mm (5.9") long - Order Ref. 51		1
21	7003458	CLAMP, HOSE			4
22	6684947	GROMMET			1
23	7011110	BUSHING			2
24	7011109	FOAM	if equipped		1
25		SEAL, FOAM	NAP - 235 mm (9.25") long - Order Ref. 52		2
26		SEAL, FOAM	NAP - 508 mm (20") long - Order Ref. 52		1
27		SEAL, FOAM	NAP - 270 mm (2.75") long - Order Ref. 52		2
28	7018001	VALVE, DRAIN			3
29	7011108	INSULATION, HEATER	if equipped		1
30	7011107	INSULATION, HEATER	if equipped		1
31	7011106	INSULATION, HEATER	if equipped		1
32	7011105	INSULATION, HEATER	if equipped		1
33	7011104	INSULATION, HEATER	3,175 mm (.125") thick - if equipped		1
33	7025605	INSULATION, HEATER	6,35 mm (.25") thick - if equipped		1
34	7011103	INSULATION, HEATER	if equipped		1
35	6677555	RECEPTACLE			2
36	7011102	BOLT			1
37	6693223	WASHER			1
38	6679675	NUT			1
39	6677119	SCREW			2
40	7011101	WASHER			2
41	7011100	NUT			1
42	6676539	CLIP			4
43	6691532	SCREW	Was 6677118 [A]		12
44	7011099	STUD			2

HEATER & A/C (Cont'd)
(Heater Assembly)

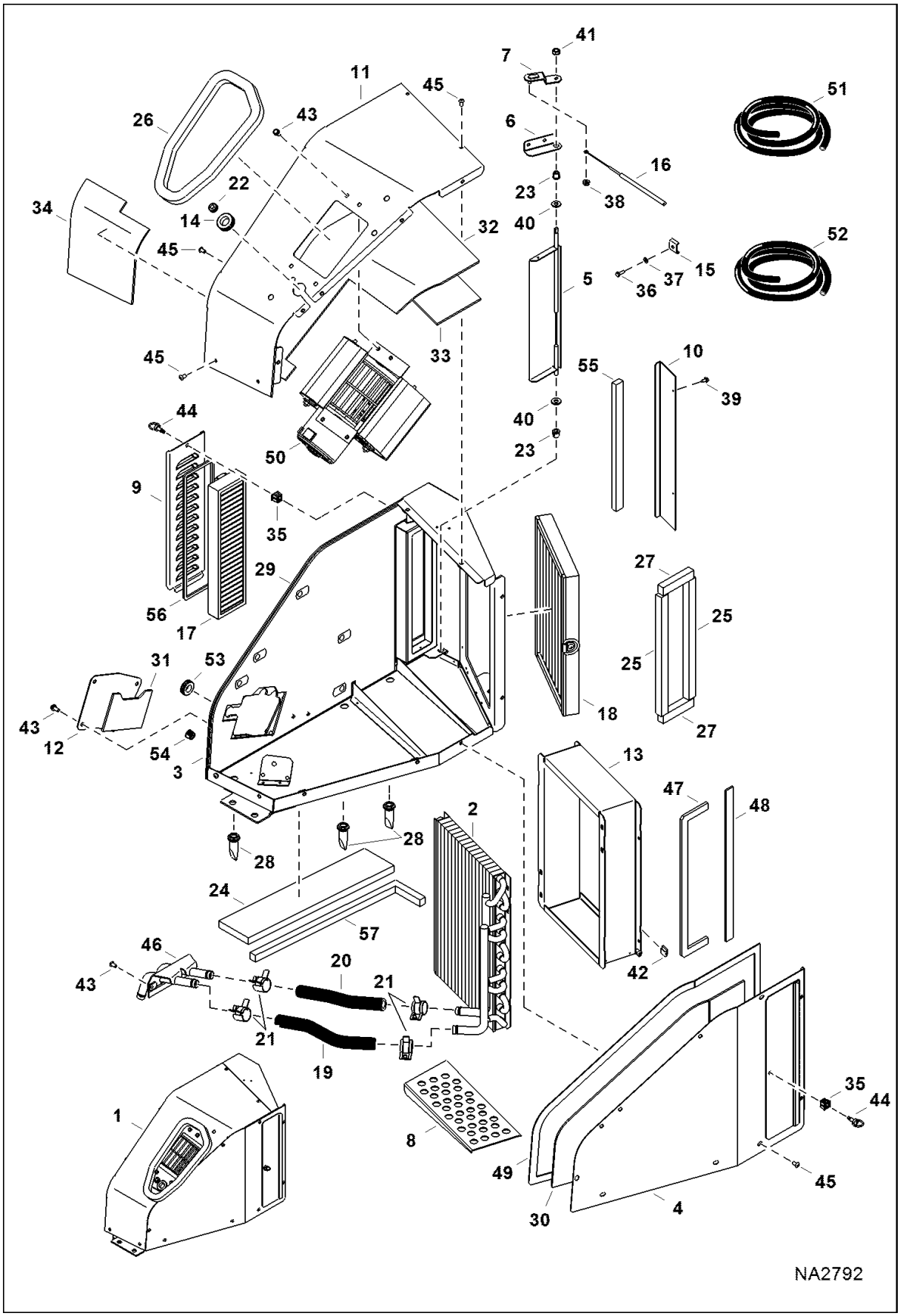

Ref No	Part Number	Description	Remarks	Serial Number	Qty
45	6691532	SCREW	Was 7011098		18
46	7018002	CONNECTOR			1
47	6696953	FOAM			1
48	7011096	FOAM			1
49	6693236	FOAM			1
50	7011131	BLOWER, HEATER & A/C			1
50	7023573	RESISTOR			1
51	6565977	HOSE	bulk - sold per foot - Was 7003457 [A]		x
52	7003460	SEAL, FOAM	bulk - sold per foot		x
53	7003459	GROMMET			1
54	7003511	PLUG			1
55	6693234	FOAM			1
56	7018003	SEAL, FOAM			1
57		INSULATION, HEATER	NAP - 465 mm (18.31") long - Order Ref. 52 - if equipped		1

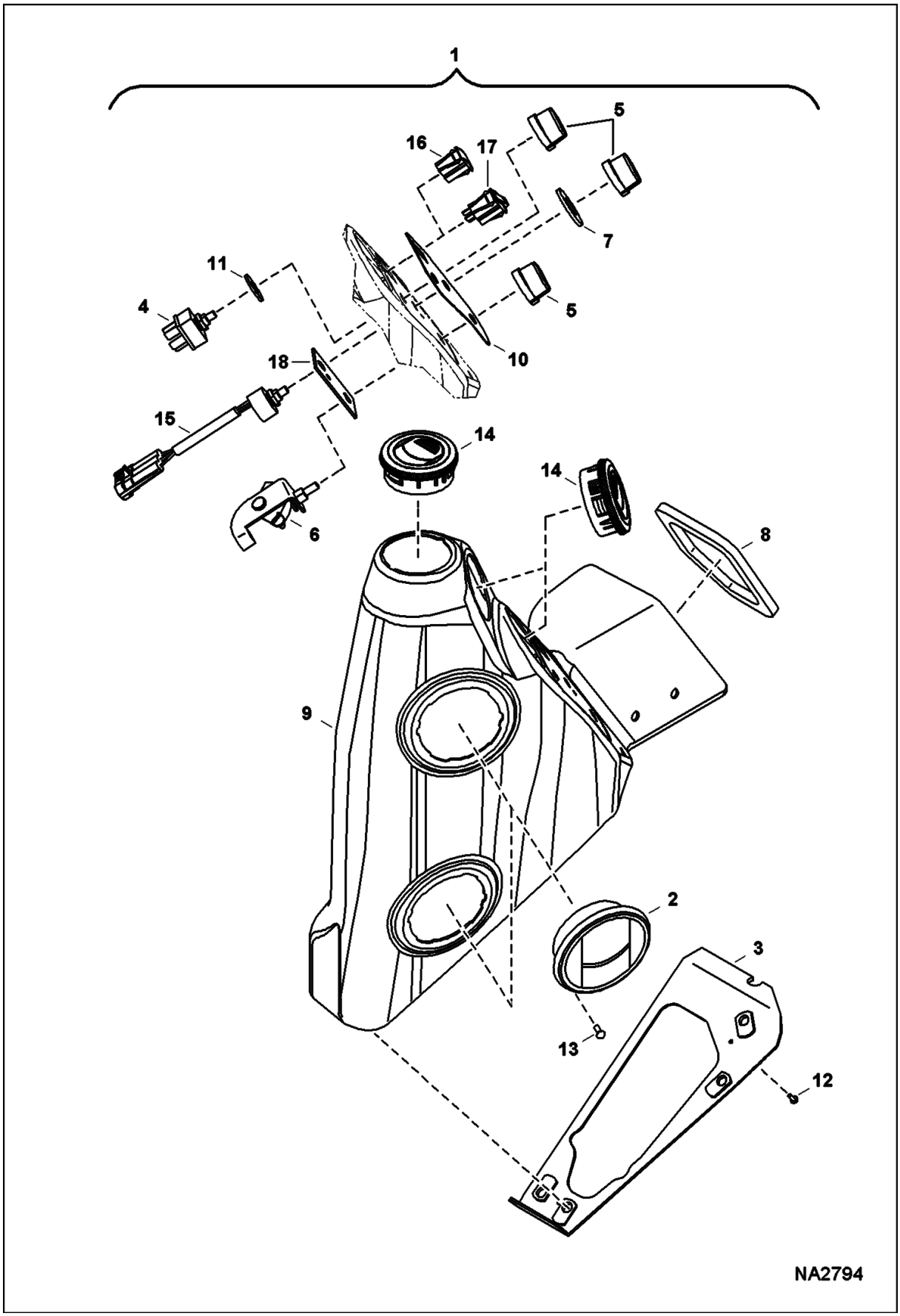
1
5
16
17
7
11
4
5
10
18
15
14
14
6
8
9
2
3
13
12
NA2794

HEATER & A/C (Cont'd)
(Heater/HVAC Duct)

Ref No	Part Number	Description	Remarks	Serial Number	Qty
1		DUCT, AIR ASSY	NAP - Order components		1
2	7011094	LOUVER			2
3	7018006	BRACKET			1
4	6675176	SWITCH			1
5	6684940	KNOB			3
6	7018008	CONTROL			1
7	7011092	WASHER, CUSHION			1
8	7003460	SEAL, FOAM			1
9	7011091	DUCT, AIR			1
10	7011090	DECAL			1
11	7018009	WASHER			1
12	7011088	RIVET, POP			2
13	7011086	SCREW, TAPPING			8
14	7011095	LOUVER			3
15	7018010	SWITCH, CONTROL TEMP			1
16	6675181	PLUG			1
17	7169112	SWITCH, ROCKER A/C	Was 6719176 [A]		1
18	7018007	PLATE			1

HEATER & A/C
(A/C Kit)

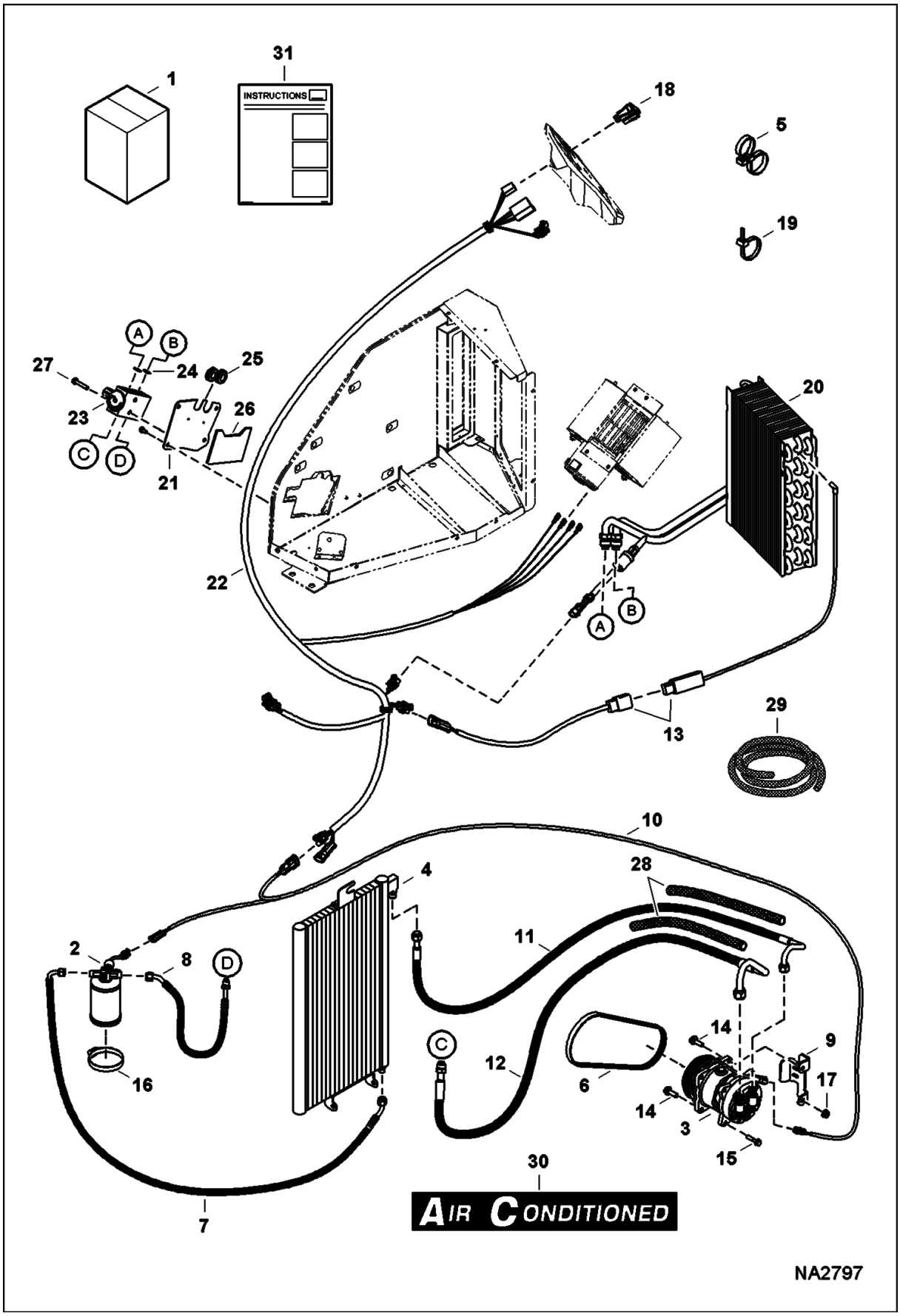

HEATER & A/C (Cont'd)
(A/C Kit)

Ref No	Part Number	Description	Remarks	Serial Number	Qty
1	7193842	KIT, A/C	Ref. 2-31		1
2	7025095	RECEIVER, DRIER A/C	Was 6680311 [B]		1
3	7023577	COMPRESSOR, A/C	Was 6698358 [A]		1
4	7179690	CONDENSER, A/C			1
5	7009540	STRAP, DOUBLE			1
6	7010252	BELT, COMPRESSOR A/C			1
7	7179819	HOSE, A/C ASSY			1
8	7179820	HOSE, A/C ASSY	W/O charge port		1
8	7223708	HOSE, A/C ASSY	W/ charge port		1
8	7009976	O-RING	#6		x
9	7156374	BRACKET			1
10	7168895	HARNESS, AC CLUTCH			1
11	7179818	HOSE, A/C ASSY			1
12	7179821	HOSE, A/C ASSY	W/O charge port		1
12	7223709	HOSE, A/C ASSY	W/ charge port		1
12	7009978	O-RING	#10		x
13	7008040	MODULE, DE-ICER ELECTRONIC			1
14	29CM1030	BOLT			4
15	29CM835	BOLT			1
16	42H48	CLAMP 5			1
17	43DM10	NUT			1
18	7169112	SWITCH, ROCKER A/C	Was 6719176 [A]		1
19	6624289	STRAP, TIE			12
20	7017995	EVAPORATOR			1
21	7017996	BRACKET, VALVE			1
22	7011128	HARNESS, HVAC	harness not shown - grommet included		1
23	7008034	BLOCK, VALVE A/C			1
24	7009977	O-RING	#8 - Was 6675538 [A]		2
25	7003459	GROMMET			2
26	7011106	INSULATION, HEATER			1
27	6691534	SCREW			2
28		COVER, HOSE	NAP - 22" (559 mm) long - Order Ref. 29		2
29	7187433	COVER, HOSE BULK/FT	bulk - sold per foot		x
30	7166916	DECAL, A/C	not in kit		2
31	6989500	INSTRUCTIONS	INSTRUCTIONS Was 6989778 [A]		1

HEATER & A/C
(HVAC Kit)

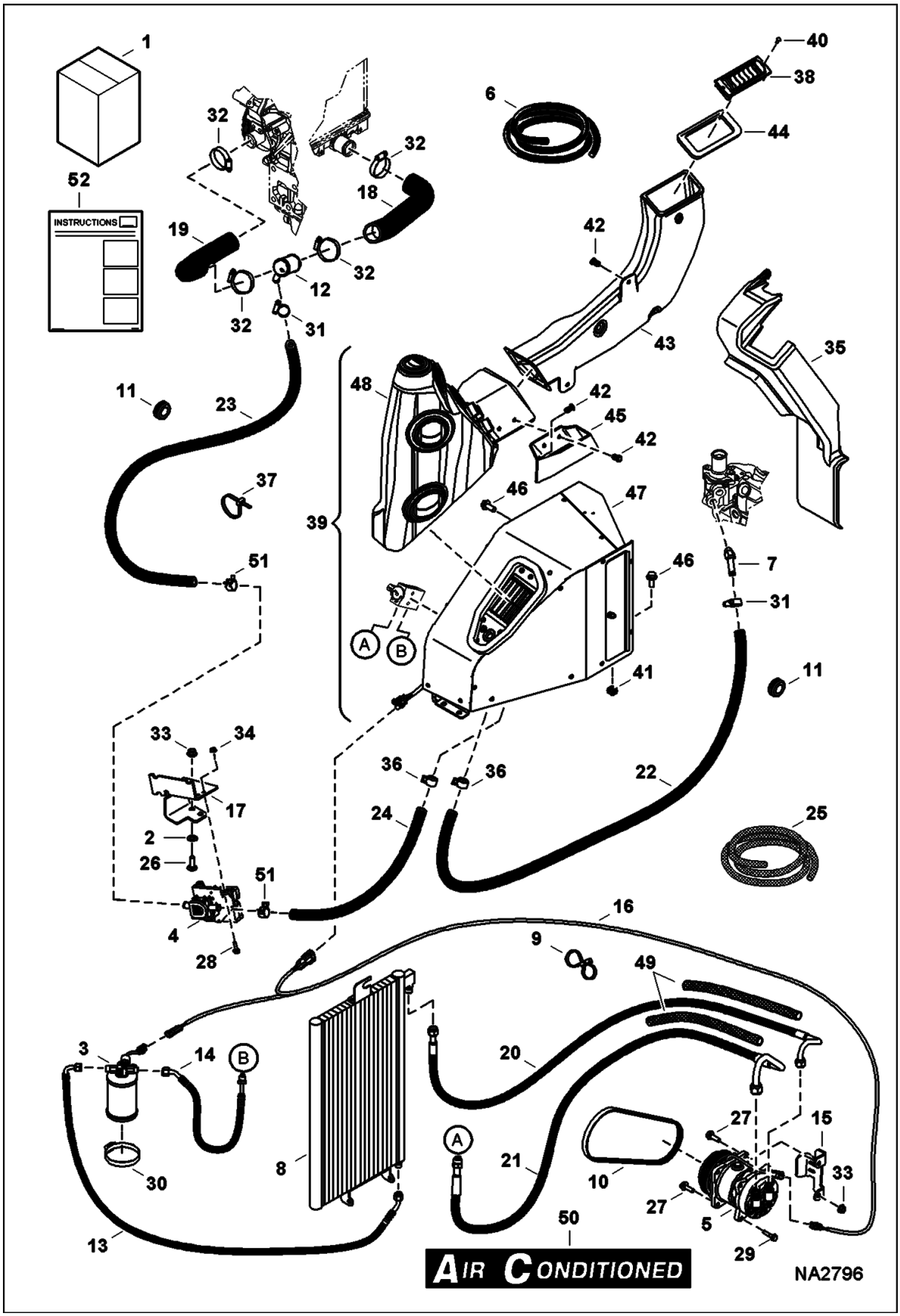

HEATER & A/C (Cont'd)
(HVAC Kit)

Ref No	Part Number	Description	Remarks	Serial Number	Qty
1	7193841	KIT, HVAC EXC	Ref. 2-52		1
2	6674264	RETAINER NUT			2
3	7025095	RECEIVER, DRIER A/C	Was 6680311 [B]		1
4	7003456	VALVE, MOTORIZED ASSY	- Was 6693147 [B]		1
5	7023577	COMPRESSOR, A/C	Was 6698358 [A]		1
6	6565977	HOSE	bulk - sold per foot		x
7	6731085	ELBOW			1
8	7179690	CONDENSER, A/C			1
9	7009540	STRAP, DOUBLE			1
10	7010252	BELT, COMPRESSOR A/C			1
11	7136776	GROMMET			2
12	7156272	TEE			1
13	7179819	HOSE, A/C ASSY			1
14	7179820	HOSE, A/C ASSY	W/O charge port		1
14	7223708	HOSE, A/C ASSY	W/ charge port		1
14	7009976	O-RING	#6		x
15	7156374	BRACKET			1
16	7168895	HARNESS, AC CLUTCH			1
17	7183801	BRACKET			1
18	7179826	HOSE, WATER FORMED			1
19	7184694	HOSE, HEATER FORMED			1
20	7179818	HOSE, A/C ASSY			1
21	7179821	HOSE, A/C ASSY	W/O charge port		1
21	7223709	HOSE, A/C ASSY	W/ charge port		1
21	7009978	O-RING	#10		x
22		HOSE, HEATER	NAP - 110.9" (2818 mm) long - Order Ref. 6		1
23		HOSE, HEATER	NAP - 67.1" (1704 mm) long - Order Ref. 6		1
24		HOSE, HEATER	NAP - 17.5" (444 mm) long - Order Ref. 6		1
25	7187433	COVER, HOSE BULK/FT	bulk - sold per foot		x
26	28CM1030	BOLT			2
27	29CM1030	BOLT			4
28	29CM620	SCREW			2
29	29CM835	BOLT			1
30	42H48	CLAMP 5			2
31	42HL100	CLAMP, HOSE			2
32	42HL200	CLAMP, HOSE			4
33	43DM10	NUT			3
34	43DM6	NUT			2
35	7168404	COVER, RH			1
36	5HM20	CLAMP			2
37	6624289	STRAP, TIE			13
38	6676713	LOUVER			1
39		HVAC, ASSY	NAP - Order Ref. 47 & 48		1
40	6814024	SCREW			2
41	7155411	NUT			1
42	7160383	RIVET, BIRD			5

HEATER & A/C (Cont'd)
(HVAC Kit)

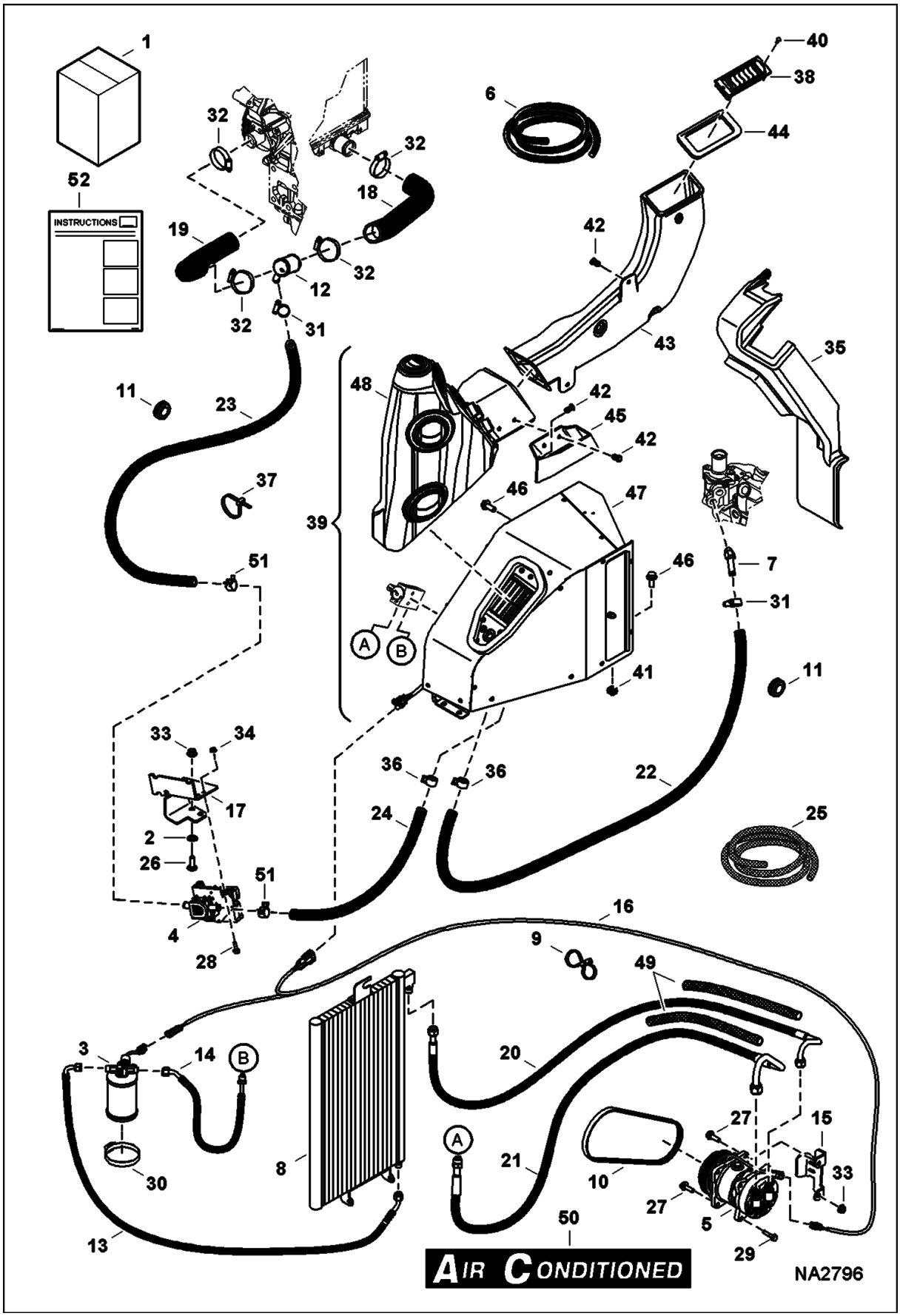

Ref No	Part Number	Description	Remarks	Serial Number	Qty
		CAGE			
43	7162750	DUCT, AIR			1
44	7171356	SEAL, DUCT			1
45	7174321	CONTAINER, STORAGE			1
46	29CM1025	BOLT			4
47	7018005	HVAC ASSY	See Illustration HEATER & A/C/ NA2793	AG3G11001 -	1
47	7018005	HVAC ASSY	See Illustration HEATER & A/C/ NA2793	AHHC11001 -	1
47	7025145	HVAC ASSY	See Illustration HEATER & A/C/ NA6844	& Above	1
48		DUCT, AIR ASSY	See Illustration HEATER & A/C/ NA2794		1
49		COVER, HOSE	NAP - 22" (559 mm) long - Order Ref. 25		2
50	7166916	DECAL, A/C	not in kit		2
51	5HM21	CLAMP, HOSE			2
52	6989499	INSTRUCTIONS	INSTRUCTIONS Was 6989777 [A]		1

HEATER & A/C
(HVAC Assembly)
(S/N AG3G11001 - , AHHC11001 -)

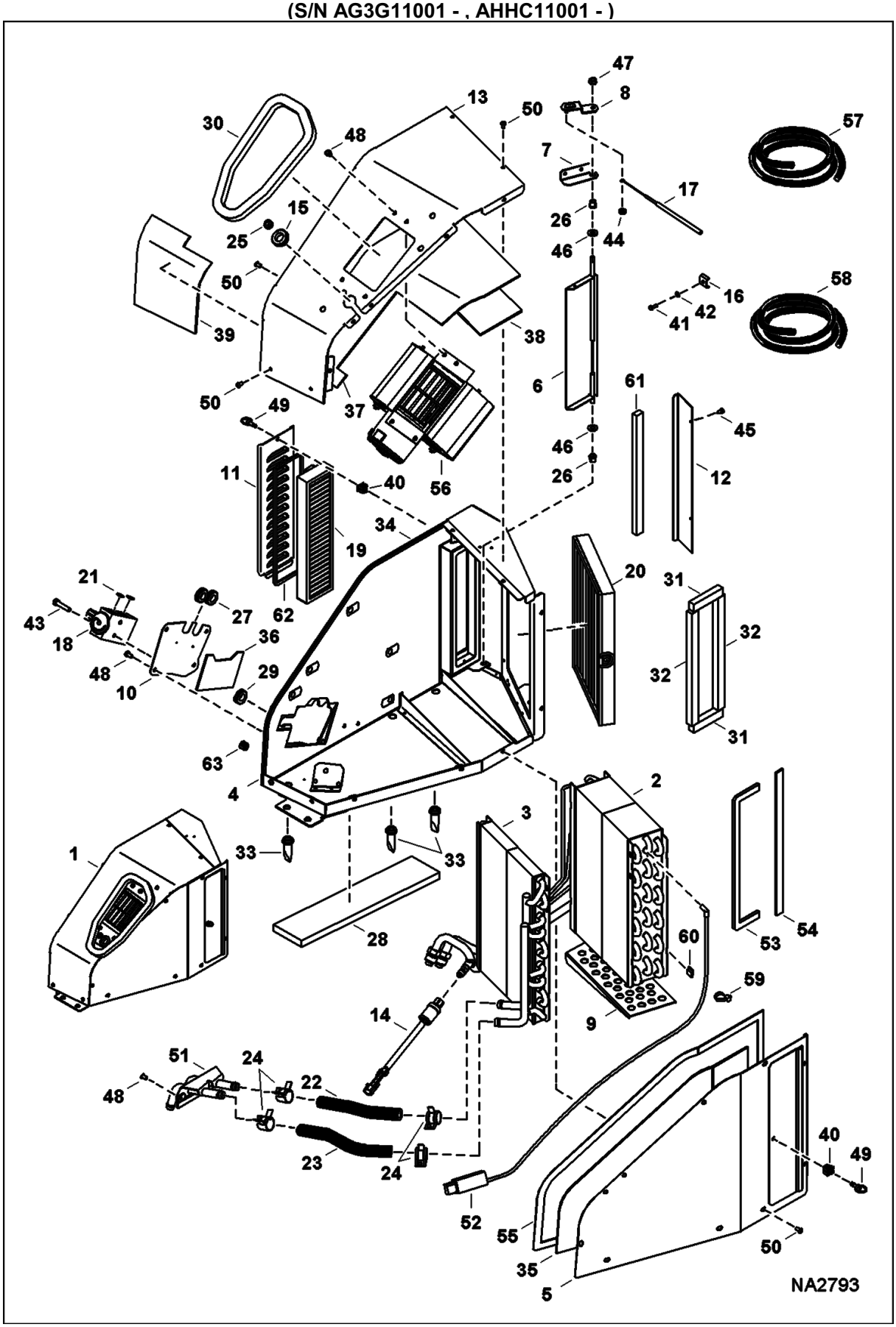

HEATER & A/C (Cont'd)
(HVAC Assembly)
(S/N AG3G11001 - , AHHC11001 -)

Ref No	Part Number	Description	Remarks	Serial Number	Qty
1	7018005	HVAC ASSY	Ref. 2-62		1
2	7017995	EVAPORATOR			1
3	7011125	COIL, HEATER			1
4	7017997	HOUSING, BASE	Was 7019997 [D]		1
5	7018000	COVER, ASSY			1
6	7011122	DOOR, CONTROL AIR			1
7	7011121	BRACKET			1
8	7011120	LEVER			1
9	7011119	PLATE, SUPPORT			1
10	7017996	BRACKET, VALVE			1
11	7011118	LOUVER			1
12	7011117	PLATE			1
13	7017998	COVER	Was 7019998 [D]		1
14	6679085	SWITCH	LPCO - Was 6697954 [A]		1
15	7011128	HARNESS, HVAC	harness not shown - grommet included		1
16	7011112	CLAMP, CABLE			1
17	7011111	CABLE, A/C			1
18	7008034	BLOCK, VALVE A/C			1
19	7010331	FRESH AIR FILTER			1
20	7010332	FILTER RECIRCULATION			1
21	7009977	O-RING	#8 - Was 6675538 [A]		2
22		HOSE	NAP - 5.9" (150 mm) long - Order Ref. 57		1
23		HOSE	NAP - 6.9" (175 mm) long - Order Ref. 57		1
24	7003458	CLAMP, HOSE			4
25	6684947	GROMMET			1
26	7011110	BUSHING			2
27	7003459	GROMMET			2
28	7011109	FOAM			1
29	7003459	GROMMET			1
30		SEAL, FOAM	NAP - 20" (508 mm) long - Order Ref. 58		1
31		SEAL, FOAM	NAP - 2.75" (70 mm) long - Order Ref. 58		2
32		SEAL, FOAM	NAP - 9.25" (235 mm) long - Order Ref. 58		2
33	7018001	VALVE, DRAIN			3
34	7011108	INSULATION, HEATER			1
35	7011107	INSULATION, HEATER			1
36	7011106	INSULATION, HEATER			1
37	7011105	INSULATION, HEATER			1
38	7011104	INSULATION, HEATER			1
39	7011103	INSULATION, HEATER			1
40	6677555	RECEPTACLE			2
41	7011102	BOLT			1
42	6693223	WASHER			1
43	6691534	SCREW			2
44	6679675	NUT			1
45	6677119	SCREW			2

HEATER & A/C (Cont'd)
(HVAC Assembly)
(S/N AG3G11001 - , AHHC11001 -)

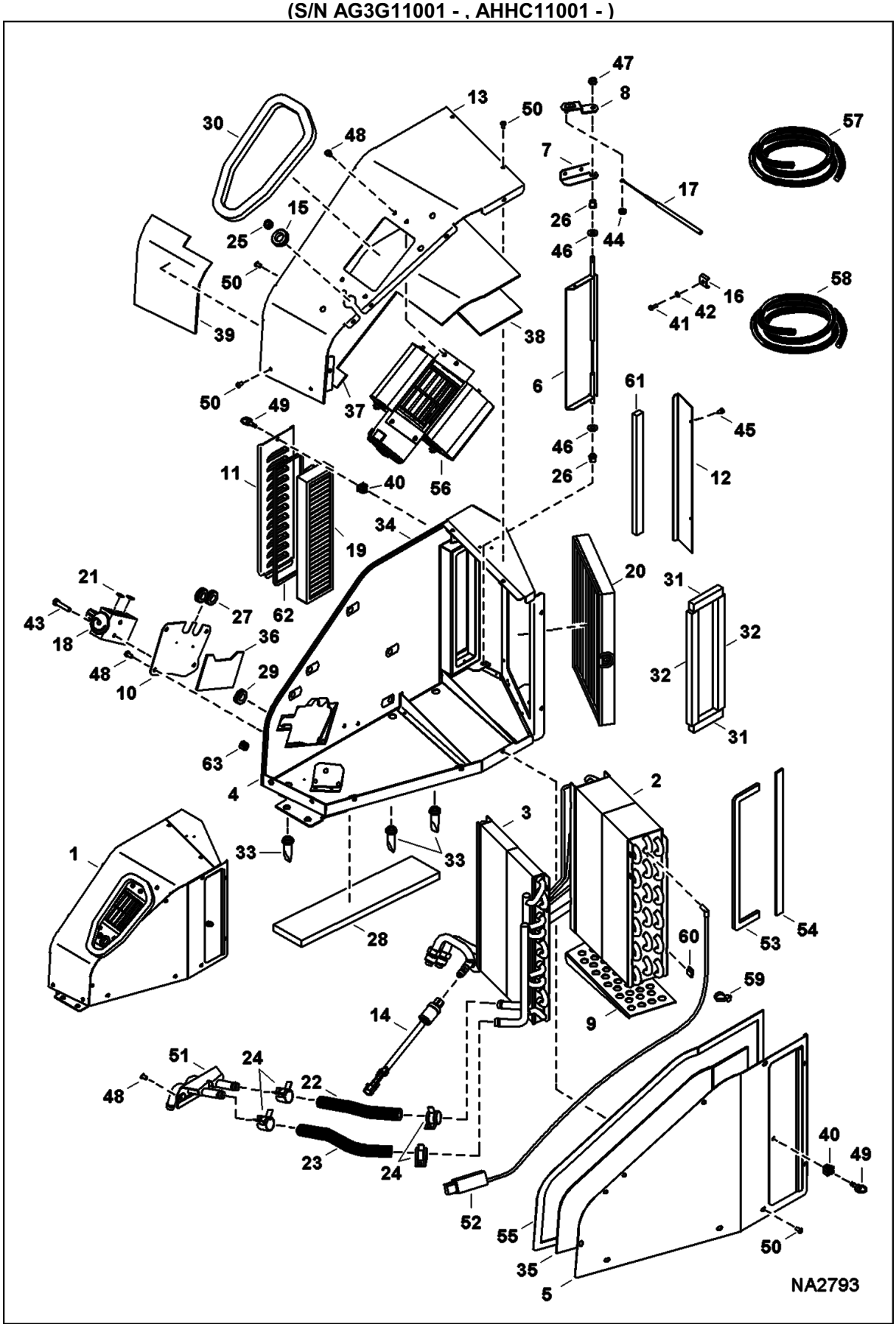

HEATER & A/C (Cont'd)
(HVAC Assembly)
(S/N AG3G11001 - , AHHC11001 -)

Ref No	Part Number	Description	Remarks	Serial Number	Qty
46	7011101	WASHER			2
47	7011100	NUT			1
48	6691532	SCREW	Was 6677118 [A]		12
49	7011099	STUD			2
50	6691532	SCREW	Was 7011098		18
51	7018002	CONNECTOR			1
52	7008040	MODULE, DE-ICER ELECTRONIC			1
53	6696953	FOAM			1
54	7011096	FOAM			1
55	6693236	FOAM			1
56	7011131	BLOWER, HEATER & A/C			1
56	7023573	RESISTOR			1
57	6565977	HOSE	bulk - sold per foot - Was 7003457 [A]		x
58	7003460	SEAL, FOAM			x
59	6684948	STRAP TIE			2
60	6676539	CLIP			6
61	6693234	FOAM			1
62	7018003	SEAL, FOAM			1
63	7003511	PLUG			1

HEATER & A/C
(HVAC Assembly)
(S/N & Above)

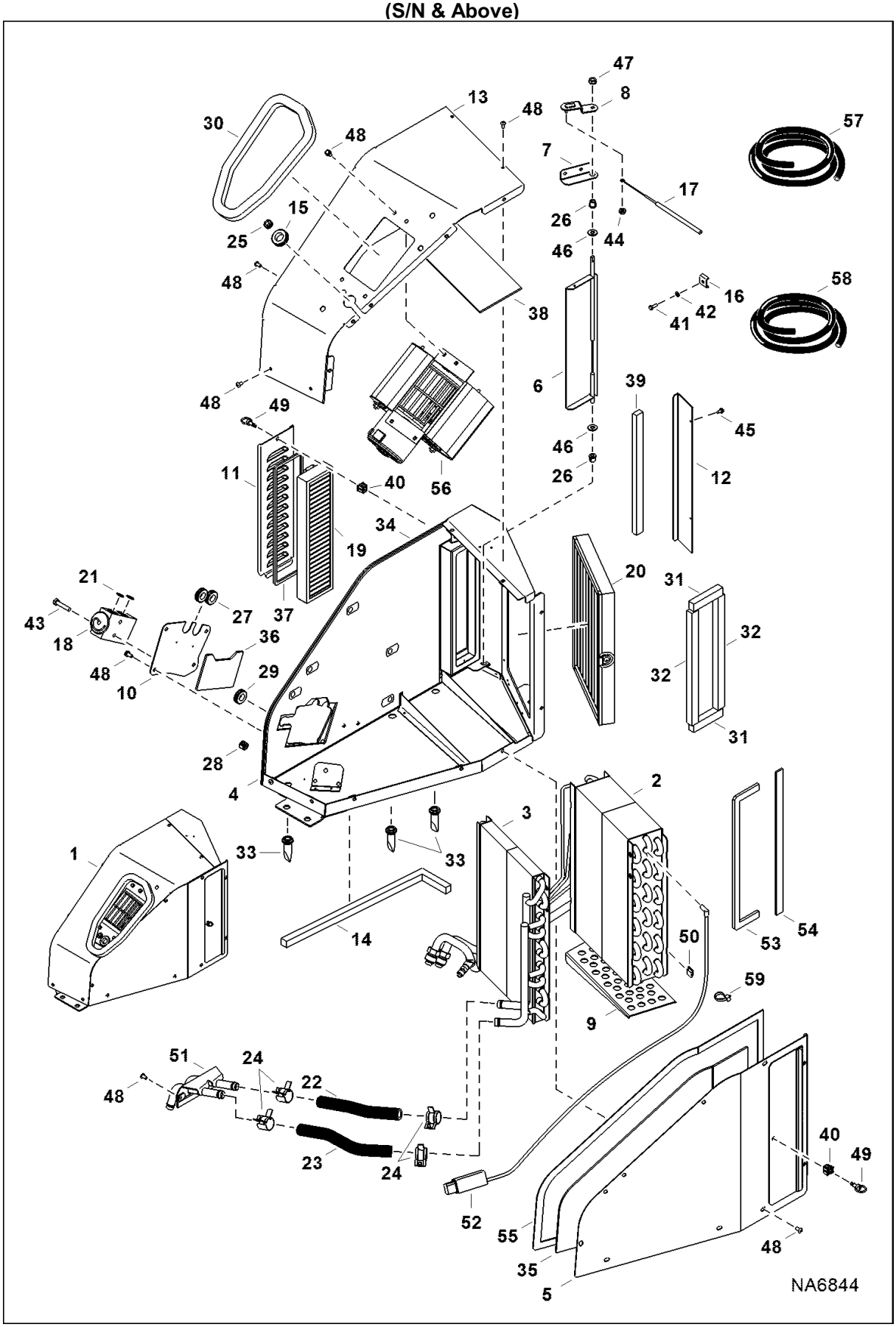

HEATER & A/C (Cont'd)
(HVAC Assembly)
(S/N & Above)

Ref No	Part Number	Description	Remarks	Serial Number	Qty
1	7025145	HVAC ASSY	Ref. 2-59		1
2	7025603	COIL, EVAPORATOR			1
3	7011125	COIL, HEATER			1
4	7017997	HOUSING, BASE			1
5	7018000	COVER, ASSY			1
6	7011122	DOOR, CONTROL AIR			1
7	7011121	BRACKET			1
8	7011120	LEVER			1
9	7011119	PLATE, SUPPORT			1
10	7017996	BRACKET, VALVE			1
11	7011118	LOUVER			1
12	7011117	PLATE			1
13	7017998	COVER			1
14		INSULATION, HVAC	NAP - 465 mm (18.31") long - Order Ref. 58 - if equipped		1
15	7025604	HARNESS, HVAC	harness not shown - grommet included		1
16	7011112	CLAMP, CABLE			1
17	7011111	CABLE, A/C			1
18	6675534	BLOCK, A/C VALVE			1
19	7010331	FRESH AIR FILTER			1
20	7010332	FILTER RECIRCULATION			1
21	7009977	O-RING	#8		2
22		HOSE	NAP - 150 mm (5.9") long - Order Ref. 57		1
23		HOSE	NAP - 175 mm (6.9") long - Order Ref. 57		1
24	7003458	CLAMP, HOSE			4
25	6684947	GROMMET			1
26	7011110	BUSHING			2
27	7003459	GROMMET			2
28	7003511	PLUG			1
29	7003459	GROMMET			1
30		SEAL, FOAM	NAP - 508 mm (20") long - Order Ref. 58		1
31		SEAL, FOAM	NAP - 70 mm (2.75") long - Order Ref. 58		2
32		SEAL, FOAM	NAP - 235 mm (9.25") long - Order Ref. 58		2
33	7018001	VALVE, DRAIN			3
34	7011108	INSULATION, HEATER			1
35	7011107	INSULATION, HEATER			1
36	7011106	INSULATION, HEATER			1
37	7018003	SEAL, FOAM			1
38	7025605	INSULATION, HEATER			1
39	6693234	FOAM			1
40	6677555	RECEPTACLE			2
41	7011102	BOLT			1
42	6693223	WASHER			1
43	6691534	SCREW			2
44	6679675	NUT			1
45	6677119	SCREW			2

HEATER & A/C (Cont'd)
(HVAC Assembly)
(S/N & Above)

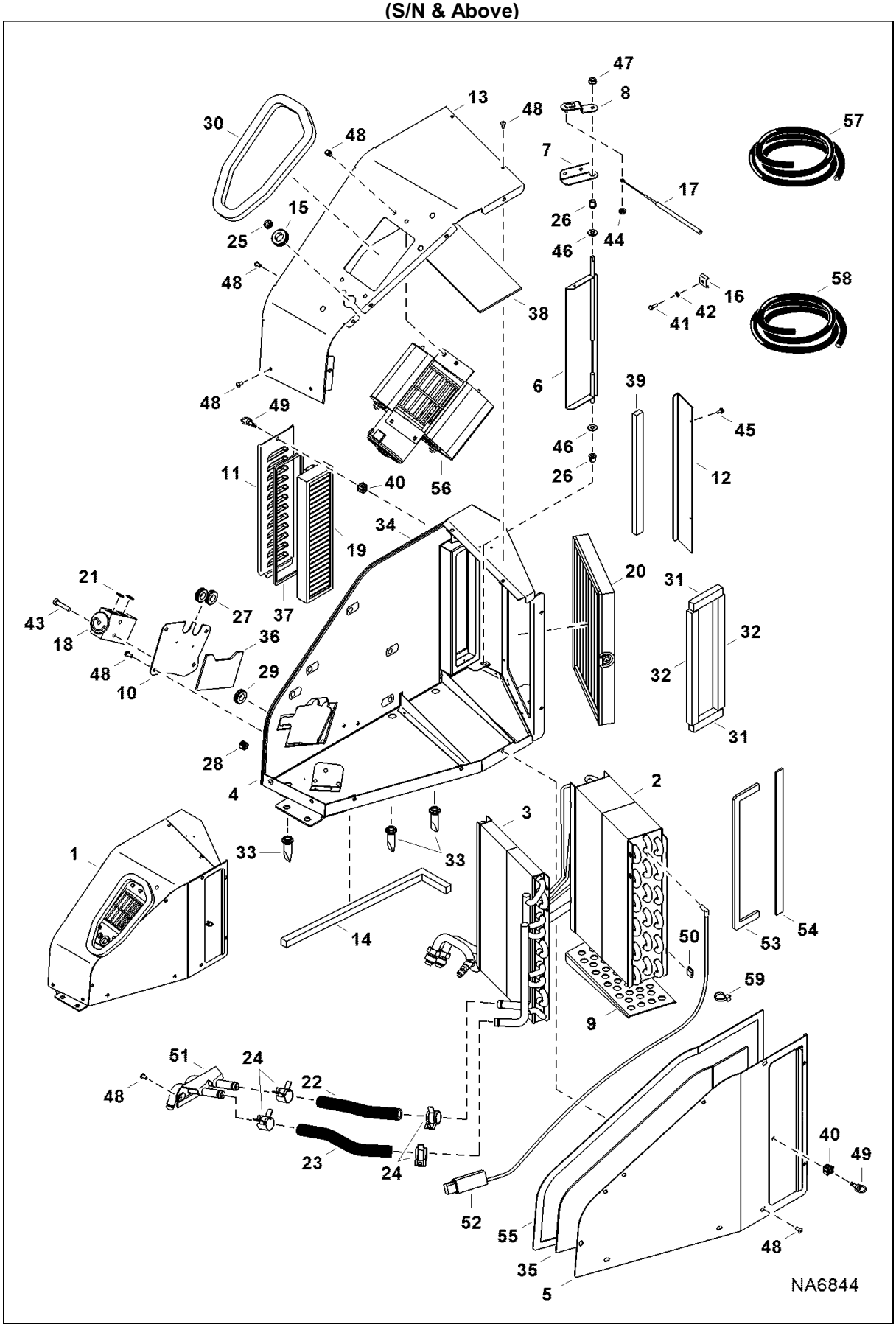

HEATER & A/C (Cont'd)
(HVAC Assembly)
(S/N & Above)

Ref No	Part Number	Description	Remarks	Serial Number	Qty
46	7011101	WASHER			2
47	7011100	NUT			1
48	6691532	SCREW			30
49	7011099	STUD			2
50	6676539	CLIP			6
51	7018002	CONNECTOR			1
52	7193539	THERMOSTAT			1
53	6696953	FOAM			1
54	7011096	FOAM			1
55	6693236	FOAM			1
56	7011131	BLOWER, HEATER & A/C			1
56	7023573	RESISTOR			1
57	6565977	HOSE	bulk - sold per foot		x
58	7003460	SEAL, FOAM	bulk - sold per foot		x
59	6684948	STRAP TIE			2

KEYLESS IGNITION KIT

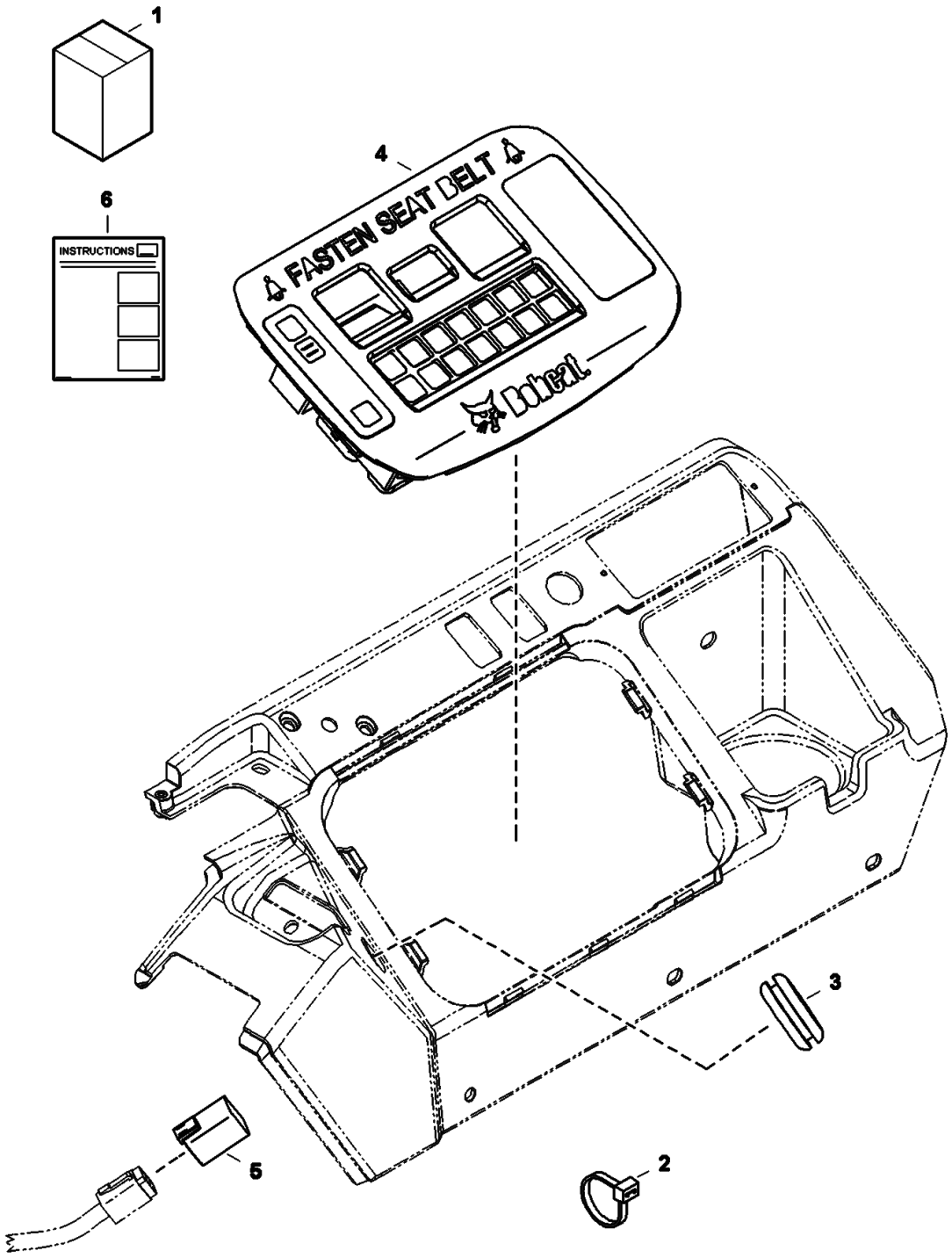

KEYLESS IGNITION KIT (Cont'd)

Ref No	Part Number	Description	Remarks	Serial Number	Qty
1		KIT, IGN KEYLESS	NAP - W/O selectable aux hyd flow - Was 7181592 [B]		1
1	7202829	KIT, IGN KEYLESS	W/selectable aux hyd flow - Ref. 2-6 [B]		1
2	6610510	TIE			1
3	6676922	PLUG			1
4	7021082	CONTROLLER, KEYLESS PANEL	Was 6698609 [B]		1
5	7010502	CAP, CONNECTOR			1
6	6989410	INSTRUCTIONS			1

LOAD HOLD KIT
(Arm)

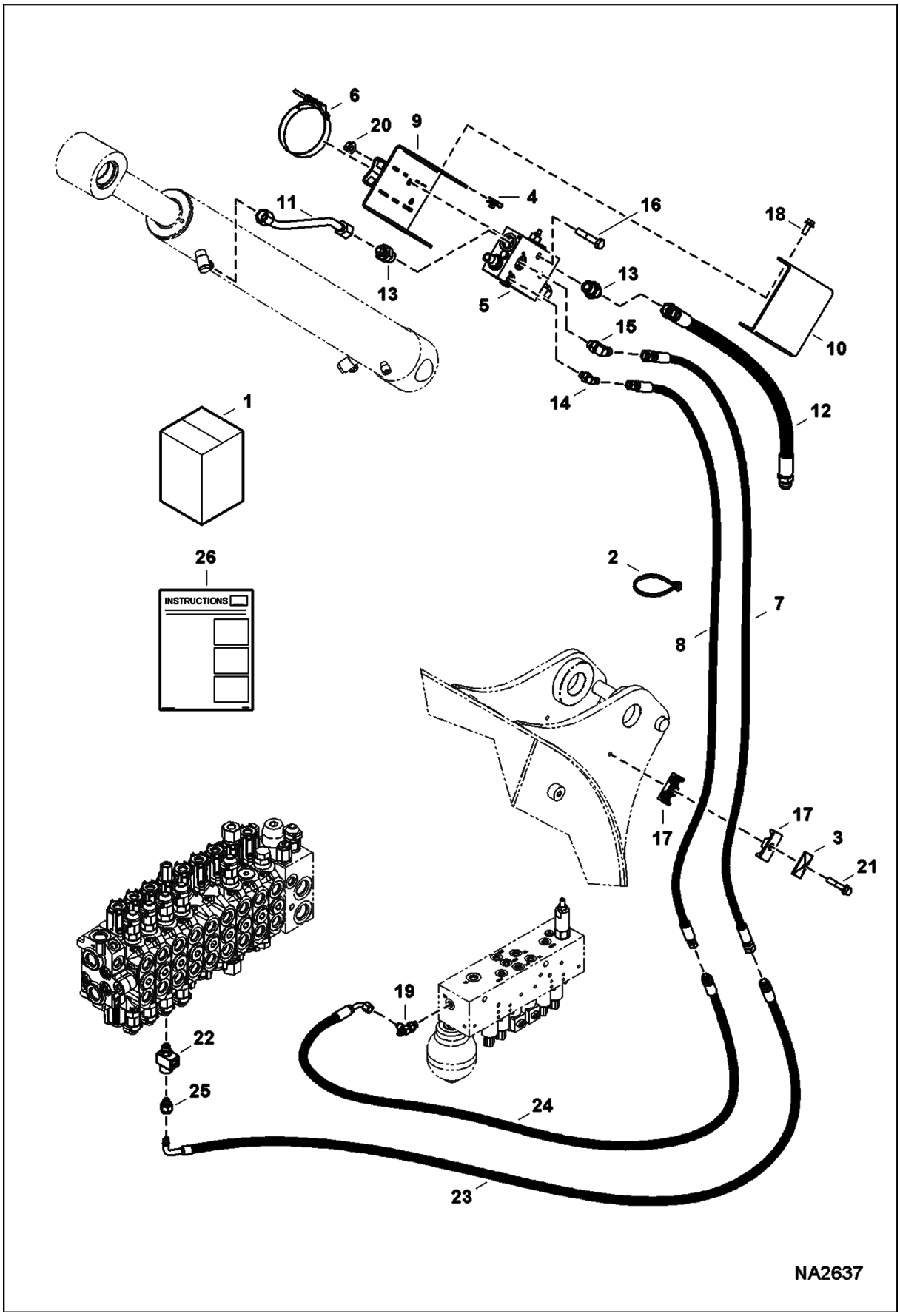

LOAD HOLD KIT (Cont'd)
(Arm)

Ref No	Part Number	Description	Remarks	Serial Number	Qty
1	7199461	KIT, LOAD HOLD ARM	Ref. 2-26		1
2	6624289	STRAP, TIE			2
3	6652521	PLATE			1
4	6676169	NUT			4
5	7013150	VALVE, LOCK LOAD	See Illustration LOAD HOLD/ NA2638		1
6	7013233	CLAMP, T-BOLT			2
7	7176167	HOSE, HYD			1
8	7176168	HOSE, HYD			1
9	7186557	BRACKET			1
10	7186560	BRACKET			1
11	7186561	TUBELINE, HYD			1
12	7189959	HOSE, HYD			1
13	15KB0810	FITTING, HYD CONNECTOR			2
13	79K10	O RING 10			x
14	17KB0404	FTG HYD ELBOW 90			1
14	79K4	O RING 10			x
15	17KB0606	FITTING			1
15	79K6	O RING 10			x
16	1CM1055	BOLT			2
17	6577697	CLAMP			2
18	29CM820	SCREW			4
19	21KB0404	FITTING, HYD TEE			1
19	79K4	O RING 10			x
20	51DM10	NUT			2
21	59CM845	BOLT, FLANGE			1
22	7185275	FITTING, HYD TEE			1
22	79K6	O RING 10			x
23	7187993	HOSE, HYD			1
24	7187994	HOSE, HYD			1
25	10L0606	FITTING, HYD CONNECTOR			1
25	78K6	O'RING			x
25	7011053	CLIP			x
26	6990072	INSTRUCTIONS			1

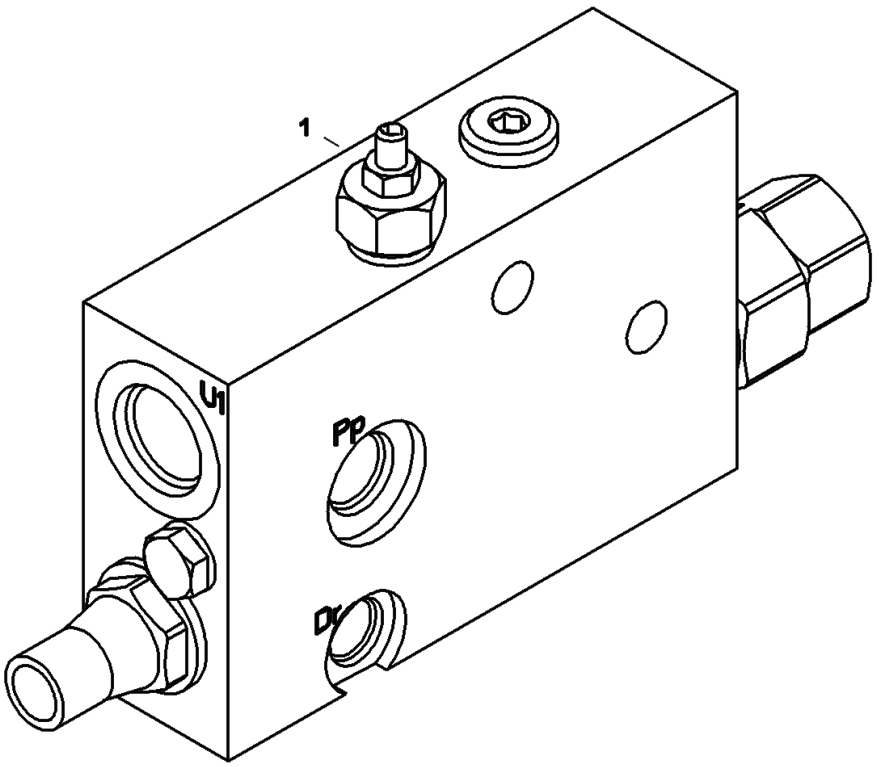

NA2638

LOAD HOLD (Cont'd)
(Arm)
(Valve)

Ref No	Part Number	Description	Remarks	Serial Number	Qty
1	7013150	VALVE, LOCK LOAD			1

LOAD HOLD KIT
(Boom)

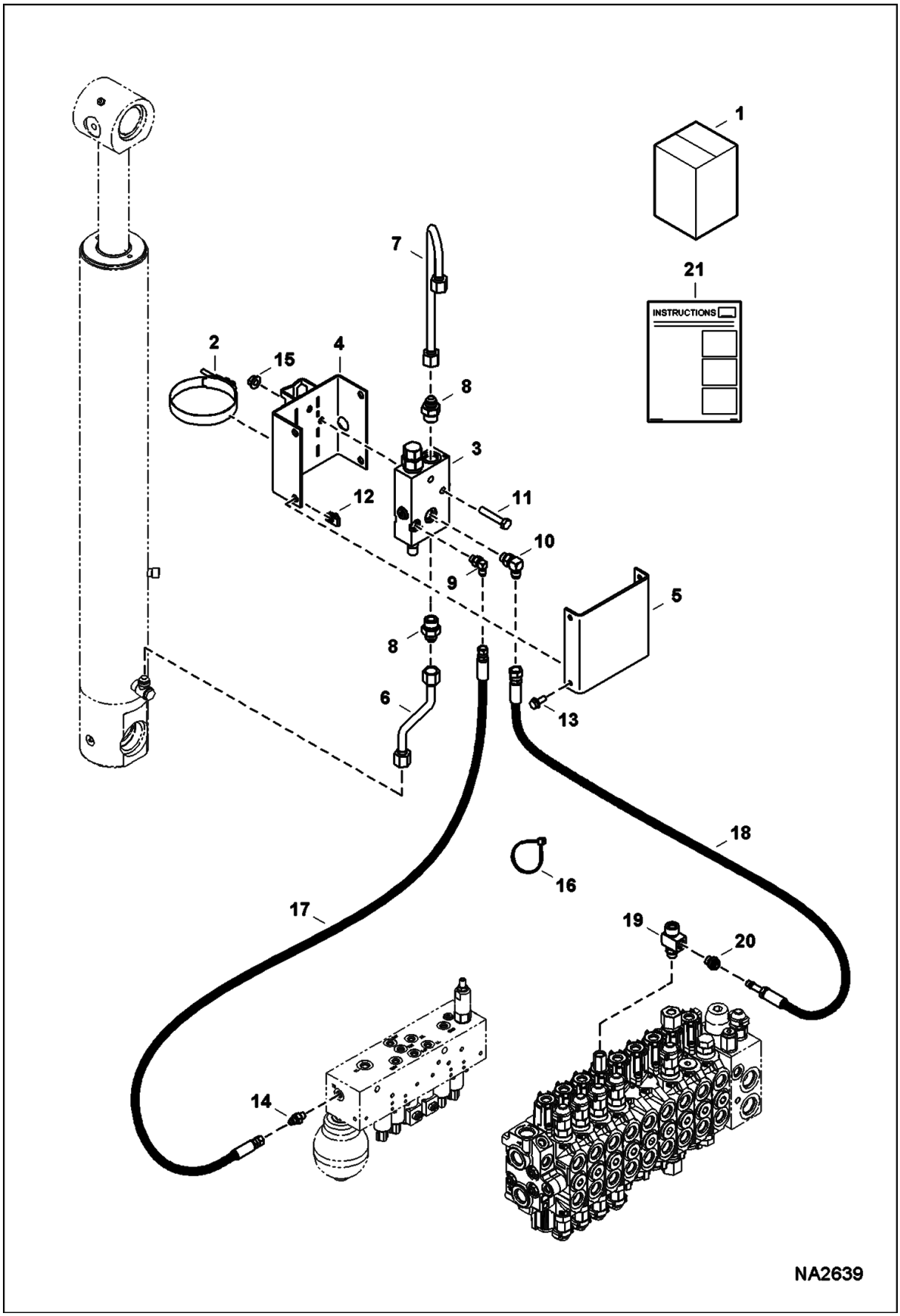

LOAD HOLD KIT (Cont'd)
(Boom)

Ref No	Part Number	Description	Remarks	Serial Number	Qty
1	7199464	KIT, LOAD HOLD BOOM	Ref. 2-21		1
2	7011956	CLAMP, T-BOLT			2
3	7013140	VALVE, LOCK LOAD	See Illustration LOAD HOLD/ NA2640		1
4	7186094	BRACKET			1
5	7186097	BRACKET			1
6	7186448	TUBELINE, HYD			1
7	7186449	TUBELINE, HYD			1
8	15KB0810	FITTING, HYD CONNECTOR			2
8	79K10	O RING 10			x
9	17KB0404	FTG HYD ELBOW 90			1
9	79K4	O RING 10			x
10	17KB0606	FITTING			1
10	79K6	O RING 10			x
11	1CM1055	BOLT			2
12	6676169	NUT			4
13	29CM820	SCREW			4
14	15KB0404	FTG HYD S Connector			1
14	79K4	O RING 10			x
15	51DM10	NUT			2
16	6624289	STRAP, TIE			2
17	7179693	HOSE, HYD			1
18	7179694	HOSE, HYD			1
19	7185275	FITTING, HYD TEE			1
19	79K6	O RING 10			x
20	10L0606	FITTING, HYD CONNECTOR			1
20	78K6	O'RING			x
20	7011053	CLIP			x
21	6990073	INSTRUCTIONS			1

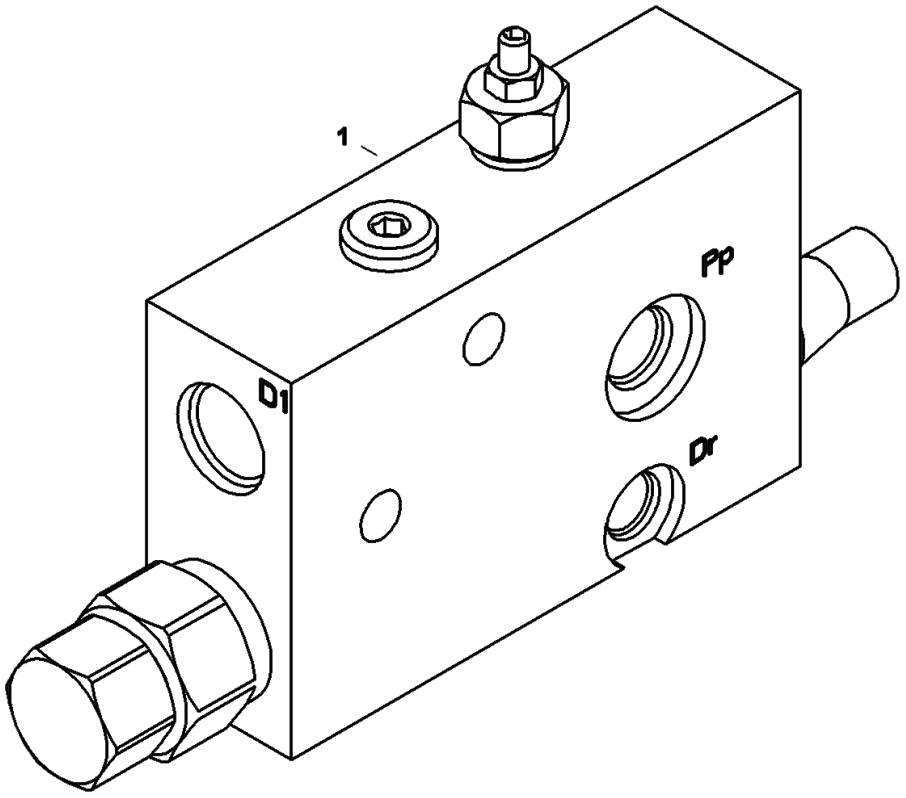

NA2640

LOAD HOLD (Cont'd)
(Boom)
(Valve)

Ref No	Part Number	Description	Remarks	Serial Number	Qty
1	7013140	VALVE, LOCK LOAD			1

MIRROR KIT

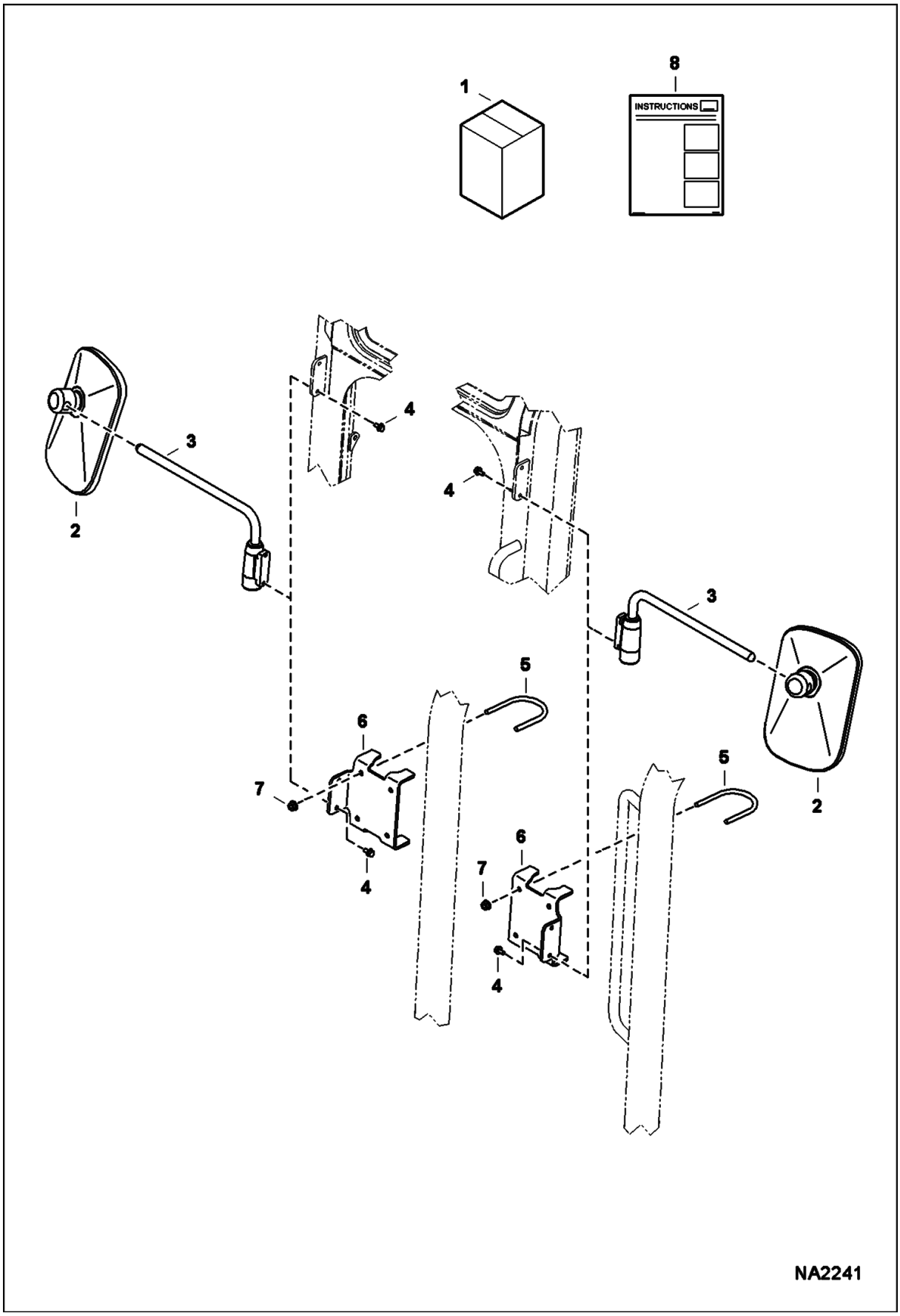

Ref No	Part Number	Description	Remarks	Serial Number	Qty
1	7173148	KIT, MIRROR	Ref. 2-8		1
2	6684564	HEAD			2
3	6684567	ARM			2
4	29CM612	BOLT, FLANGED			4
5	7176604	U-BOLT			4
6	7180021	BRACKET, MIRROR			2
7	43DM8	NUT			8
8	6987412	INSTRUCTIONS			1

MOTION ALARM KIT
(S/N AG3G11001 - 11999, AHHC11001 - 11999)

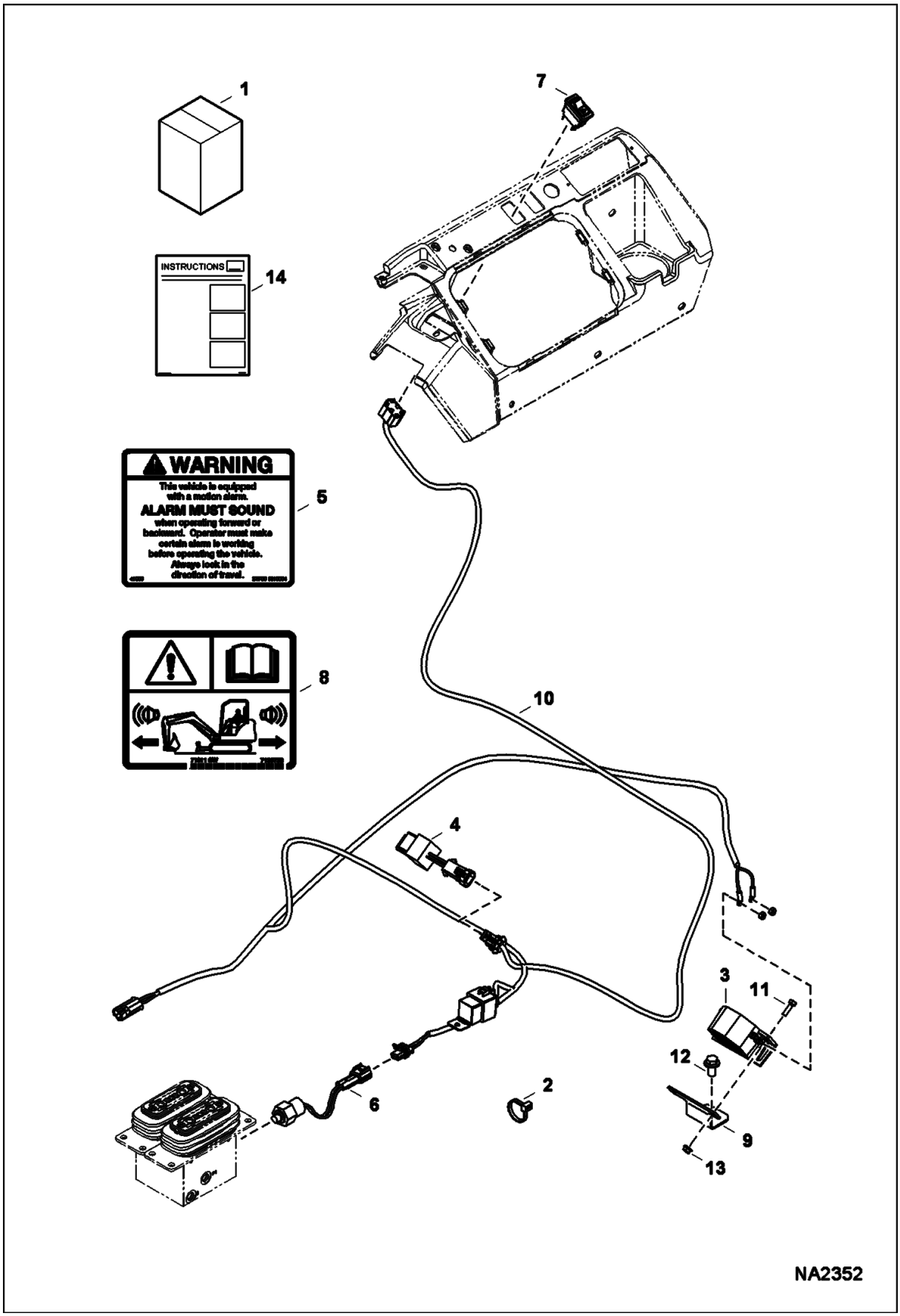

MOTION ALARM KIT (Cont'd)
(S/N AG3G11001 - 11999, AHHC11001 - 11999)

Ref No	Part Number	Description	Remarks	Serial Number	Qty
1	7183650	KIT, ALARM MOTION	Ref. 2-14		1
2	6624289	STRAP, TIE			13
3	6651512	ALARM BACKUP			1
4	6675928	RELAY, LATCHING			1
5	6810004	DECAL, WARNING	text		1
6	7008933	SWITCH, PRESS OIL HYD			1
7	7010298	SWITCH, ALARM MOTION			1
8	7136738	DECAL WARNING	no-text		1
9	7168280	BRACKET, ALARM			1
10	7180310	HARNESS, ALARM MOTION	Use W/ switch and relay		1
11	1CM620	BOLT			2
12	29CM1020	BOLT			1
13	43DM6	NUT			2
14	6989449	INSTRUCTIONS			1

MOTION ALARM KIT
(S/N AG3G12001 & Above, AHHC12001 & Above)

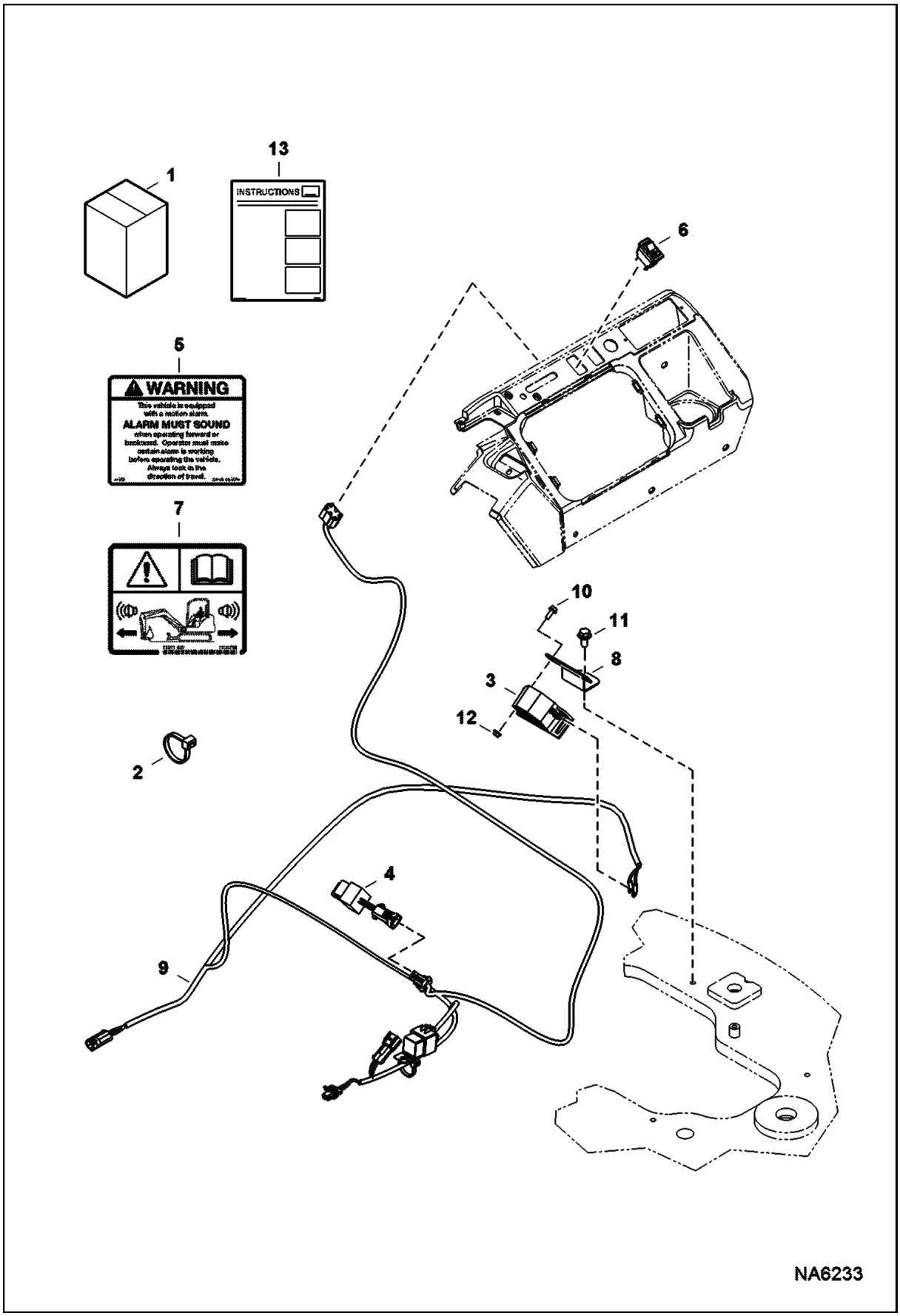

MOTION ALARM KIT (Cont'd)
(S/N AG3G12001 & Above, AHHC12001 & Above)

Ref No	Part Number	Description	Remarks	Serial Number	Qty
1	7205970	KIT, ALARM MOTION	Ref. 2-13		1
2	6624289	STRAP, TIE			13
3	6651512	ALARM BACKUP			1
4	6675928	RELAY, LATCHING			1
5	6810004	DECAL, WARNING			1
6	7010298	SWITCH, ALARM MOTION			1
7	7136738	DECAL WARNING			1
8	7168280	BRACKET, ALARM			1
9	7205969	HARNESS, ALARM MOTION			1
9	6670312	SWITCH, MAGNETIC	relay		1
10	1CM620	BOLT			2
11	29CM1020	BOLT			1
12	43DM6	NUT			2
13	6990196	INSTRUCTIONS			1

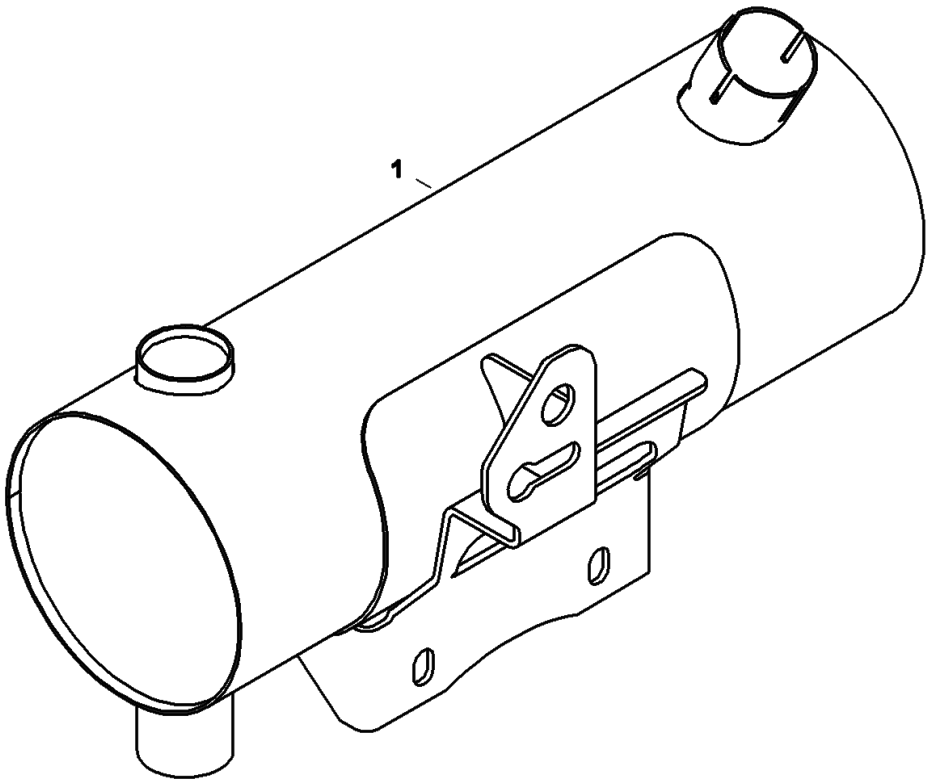

NA2607

Ref No	Part Number	Description	Remarks	Serial Number	Qty
1	7011981	MUFFLER, PURIFIER			1

RADIO FREQUENCY IDENTIFICATION KIT
(RFID)

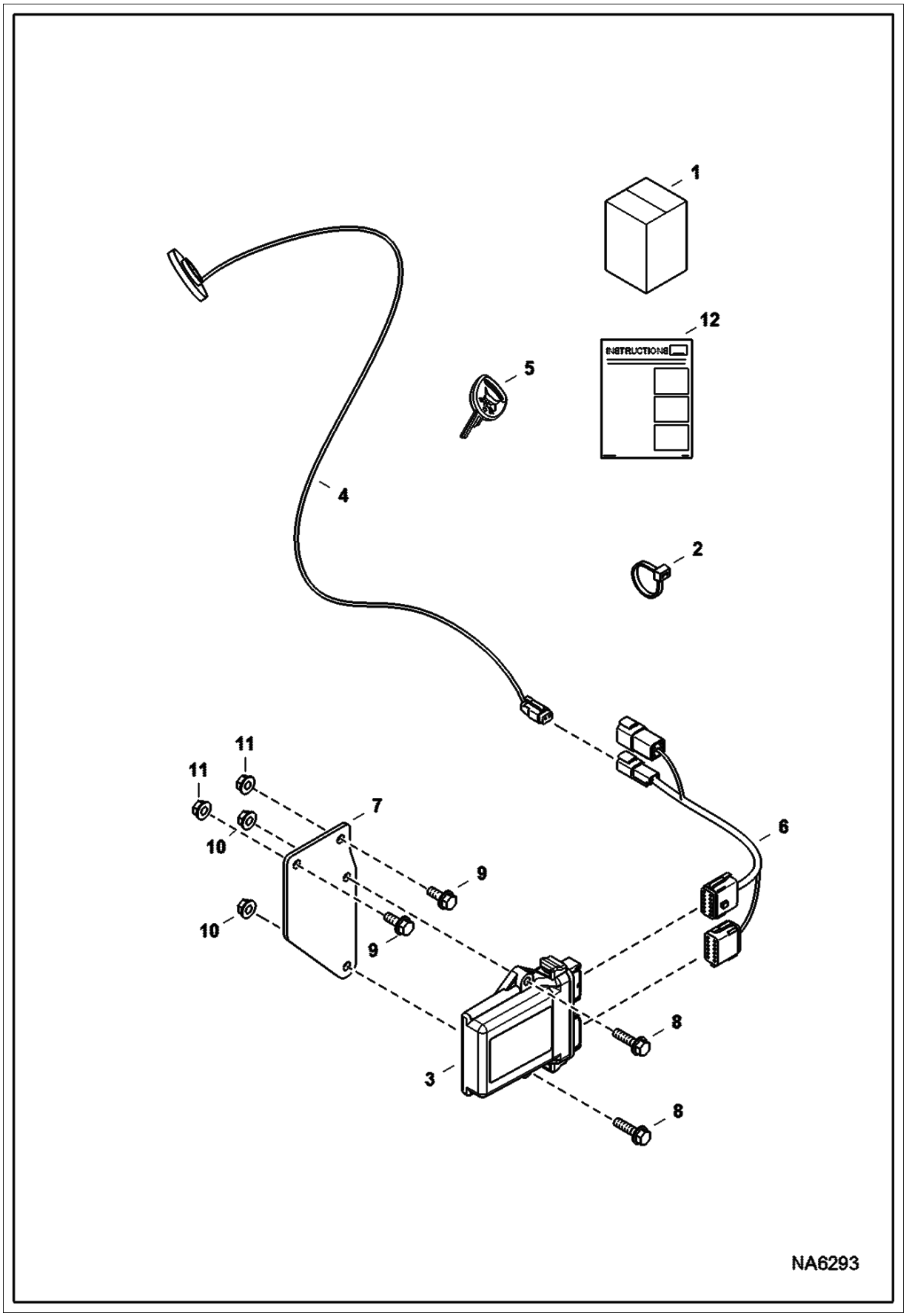

RADIO FREQUENCY IDENTIFICATION KIT (Cont'd)
(RFID)

Ref No	Part Number	Description	Remarks	Serial Number	Qty
1	7176504	KIT, RFID			1
2	6624289	STRAP, TIE			6
3	7021126	CONTROLLER, RFID			1
4	7021127	ANTENNA, RFID			1
5	7021128	KEY, RFID			2
6	7176533	HARNESS, SECURITY RFID			1
7	7176545	MOUNT			1
8	29CM630	BOLT			2
9	29CM816	SCREW			2
10	43DM8	NUT			2
11	51DM6	NUT			2
12	6987409	INSTRUCTIONS			1

RADIO KIT

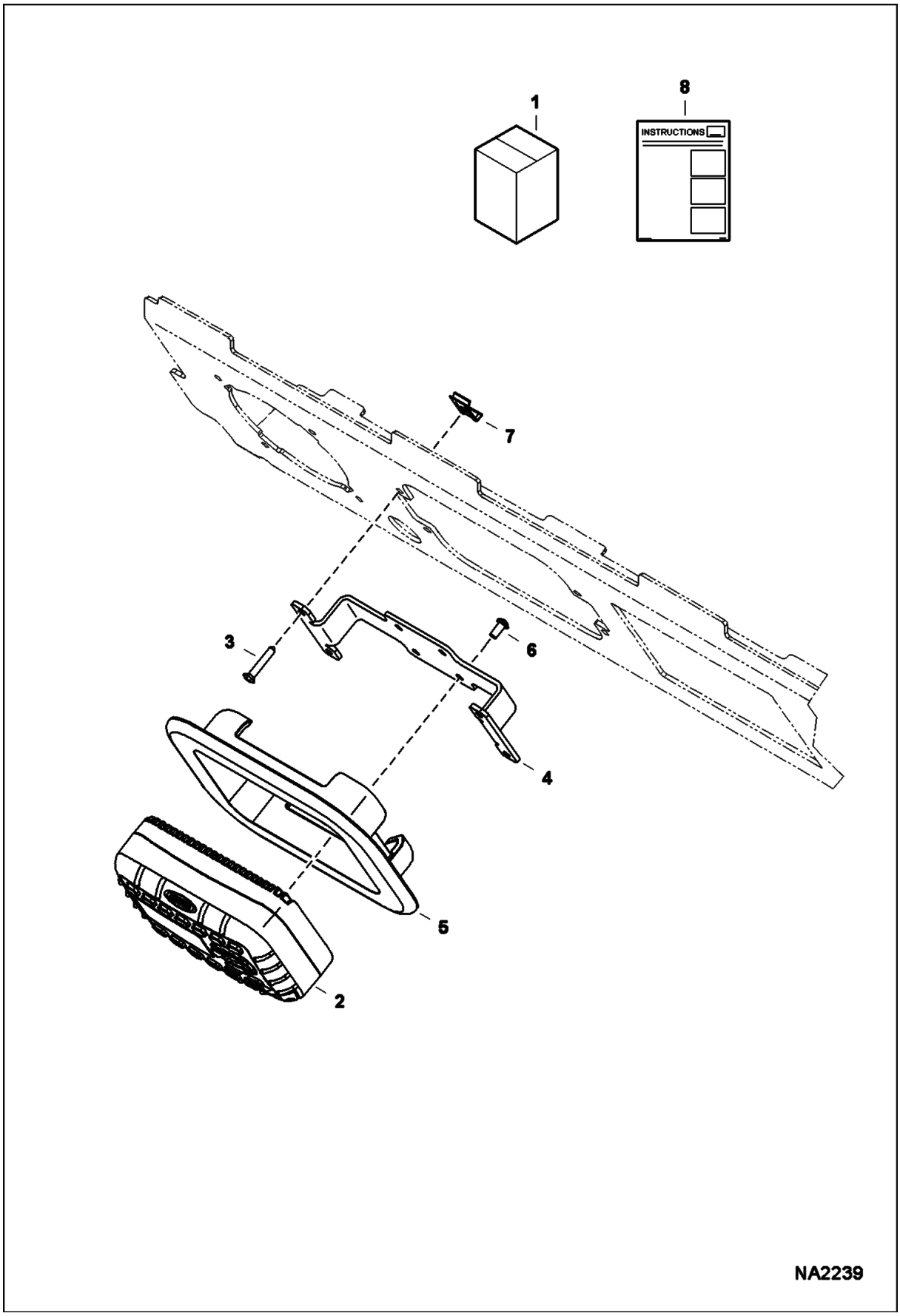

RADIO KIT (Cont'd)

Ref No	Part Number	Description	Remarks	Serial Number	Qty
1	6988434	KIT, RADIO M-SERIES EXCAVATORS	Ref. 2-8		1
2	6988336	RADIO, MINI BOBCAT			1
3	7163690	SCREW			4
4	7166859	BRACKET, RADIO			1
5	7173341	GROMMET			1
6		SCREW	NSS		x
7	6685744	CLIP			4
8	6987357	INSTRUCTIONS			1

SEAT BELT KIT
(3 Inch)

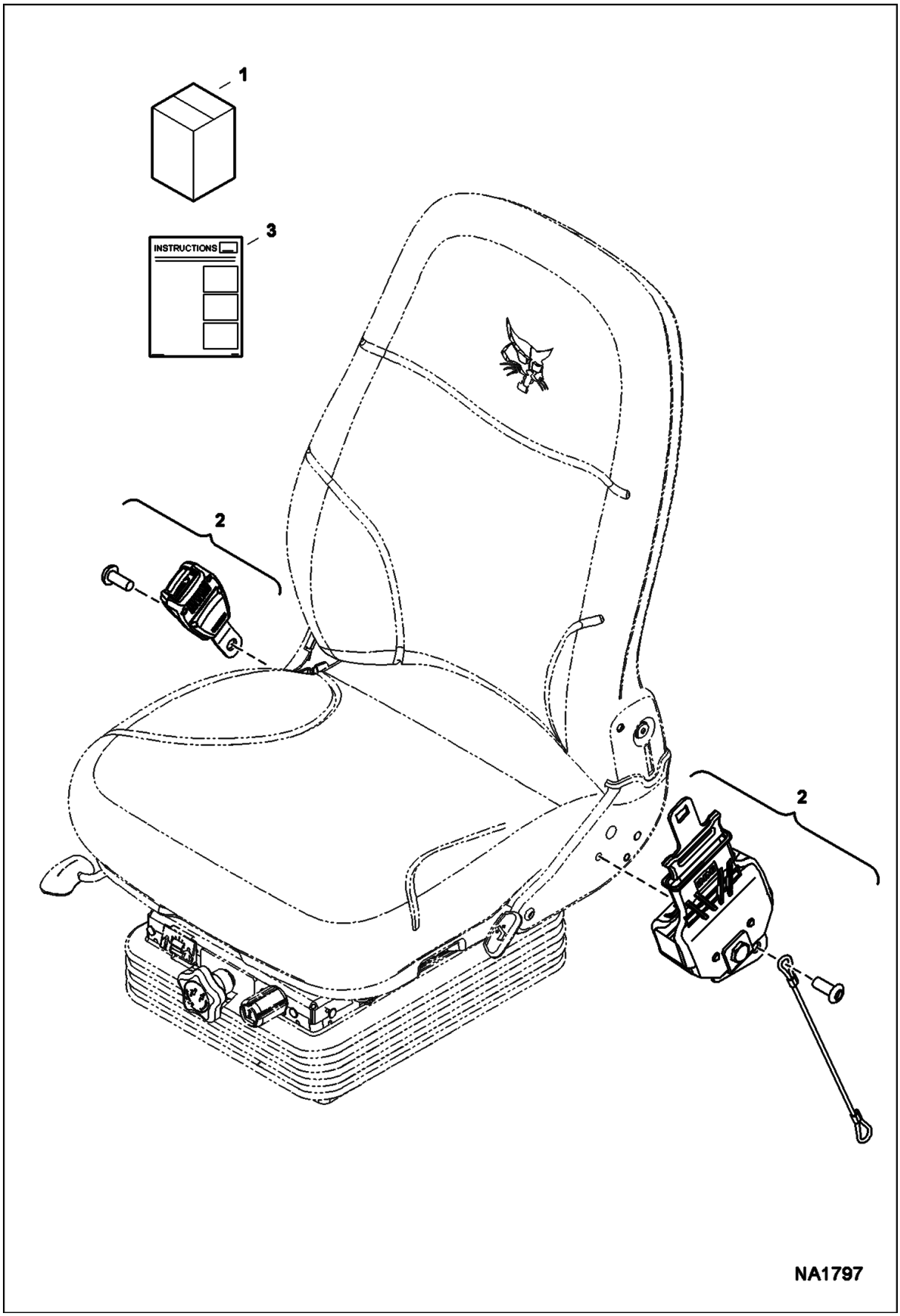

SEAT BELT KIT (Cont'd)
(3 Inch)

Ref No	Part Number	Description	Remarks	Serial Number	Qty
1		KIT, SEAT BELT	NAP - Order components		1
2	7010428	BELT, SEAT			1
3	6989413	INSTRUCTIONS			1

SECONDARY AUXILIARY KIT

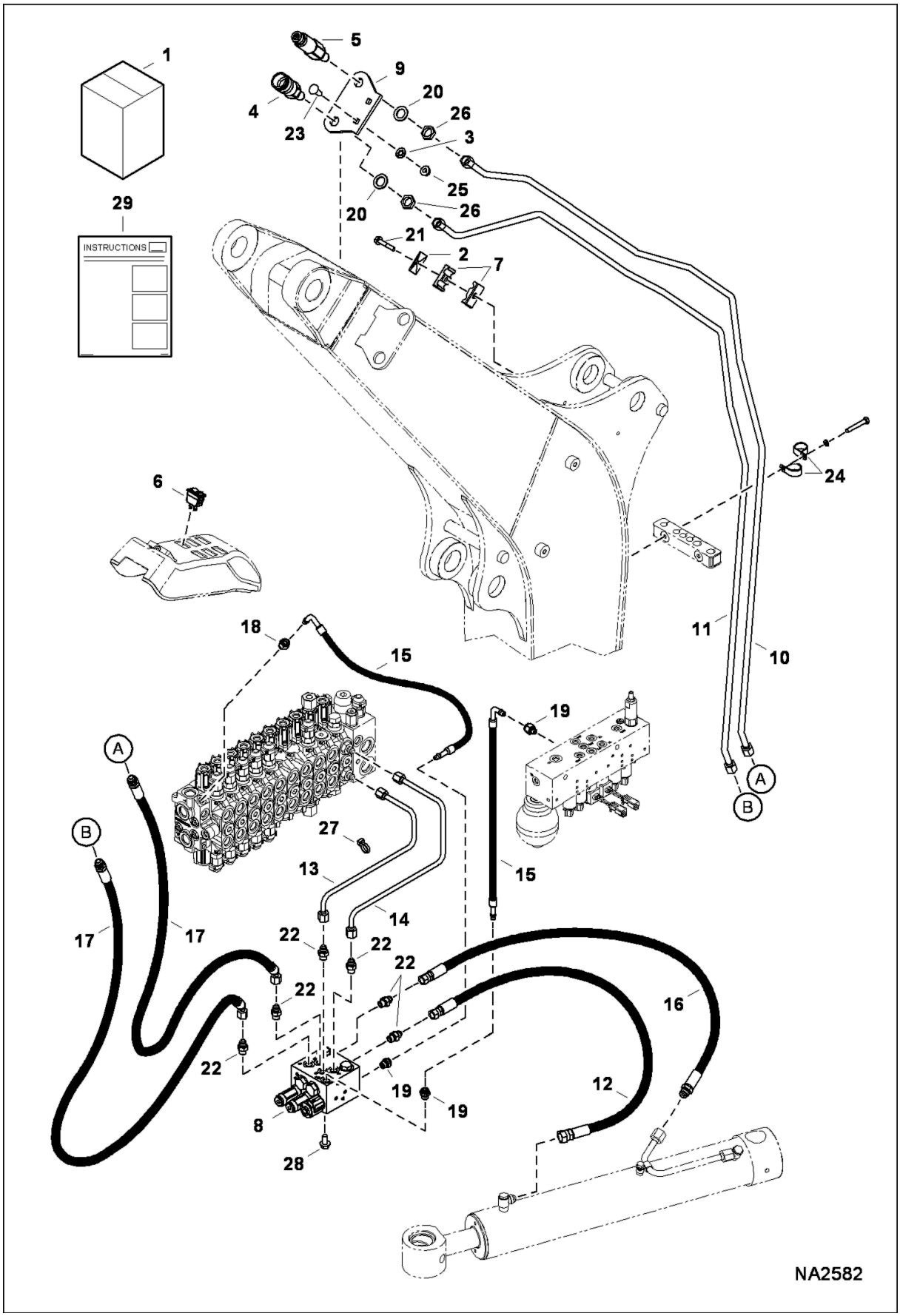

SECONDARY AUXILIARY KIT (Cont'd)

Ref No	Part Number	Description	Remarks	Serial Number	Qty
1	7185285	KIT, AUX SECONDARY	Ref. 2-29		1
2	6652521	PLATE			1
3	6674264	RETAINER NUT			2
4	6676559	COUPLER, FF FEMALE	1/2"		1
5	6676560	COUPLER, FF MALE	1/2"		1
6	6679906	SWITCH			1
7	6701892	CLAMP			2
8	7010128	VALVE, AUX SECONDARY	See Illustration SECONDARY AUXILARY VALVE/ NA2279		1
9	7198272	PLATE, MOUNT COUPLER	bolt-on - Was 7153112 [A]		1
10	7167213	TUBELINE, HYD			1
11	7167214	TUBELINE, HYD			1
12	7176115	HOSE, HYD			1
13	7176762	TUBELINE, HYD		AG3G11001 - 11609	1
13	7176762	TUBELINE, HYD		AHHC11001 - 11354	1
13	7201857	TUBELINE, HYD		AG3G11610 & Above	1
13	7201857	TUBELINE, HYD		AHHC11355 & Above	1
14	7176763	TUBELINE, HYD		AG3G11001 - 11609	1
14	7176763	TUBELINE, HYD		AHHC11001 - 11354	1
14	7201856	TUBELINE, HYD		AG3G11610 & Above	1
14	7201856	TUBELINE, HYD		AHHC11355 & Above	1
15	7176993	HOSE, HYD			2
16	7177142	HOSE, HYD			1
17	7177148	HOSE, HYD			2
18	10L0604	FITTING, HYD CONNECTOR			1
18	78K4	O'RING			x
18	7011053	CLIP			x
19	10L0606	FITTING, HYD CONNECTOR			3
19	78K6	O'RING			x
19	7011053	CLIP			x
20	15EM200	WASHERS			2
21	59CM845	BOLT, FLANGE			1
22	15KB0606	FITTING, HYD CONNECTOR			6
22	79K6	O RING 10			x
23	28CM1030	BOLT			2
24	30H30	CLAMP			4
25	51DM10	NUT			2
26	86F6	NUT			2
27	6624289	STRAP, TIE			1
28	29CM1020	BOLT			2
29	6989503	INSTRUCTIONS			1

SECONDARY AUXILARY VALVE

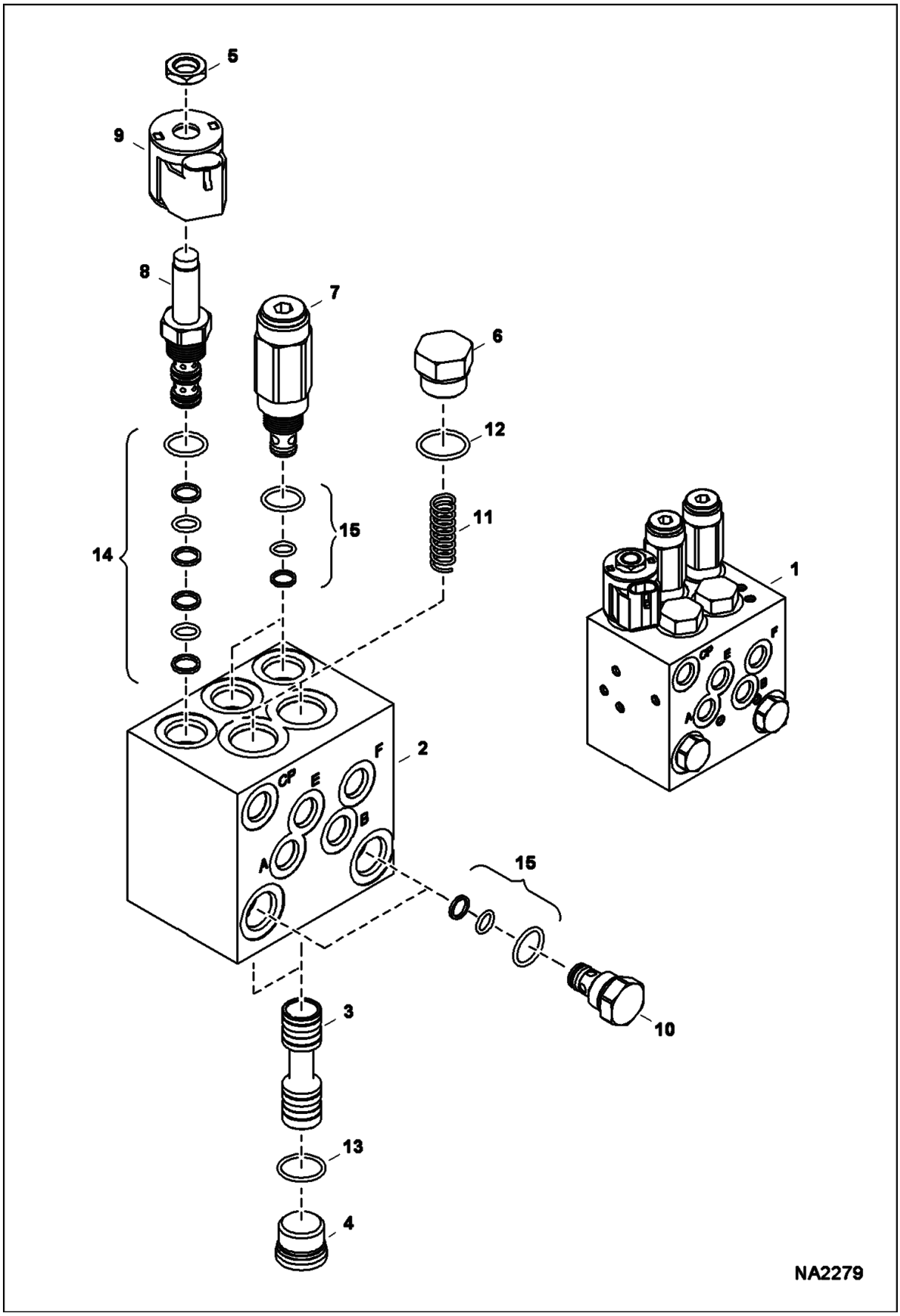

SECONDARY AUXILARY VALVE (Cont'd)

Ref No	Part Number	Description	Remarks	Serial Number	Qty
1	7010128	VALVE, AUX SECONDARY	Ref. 2-15		1
2		BLOCK, MANIFOLD	NSS		1
3	7010297	SPOOL, VALVE			2
4	6678563	PLUG			2
5		NUT	NSS - Order Ref. 8		1
6	7008556	PLUG			2
7	6680956	VALVE			2
8	6680957	VALVE			1
9	6680958	COIL	Was 6689082 [A]		1
10	6664026	CHECK VALVE			2
11	7010296	SPRING, COMPRESSION			2
12	79K10	O RING 10			2
13		O-RING	NSS - Order Ref. 4		2
14	6669736	SEAL KIT			1
15	6672515	KIT, SEAL			1

SPECIAL APPLICATION KIT
(Cab and Canopy)

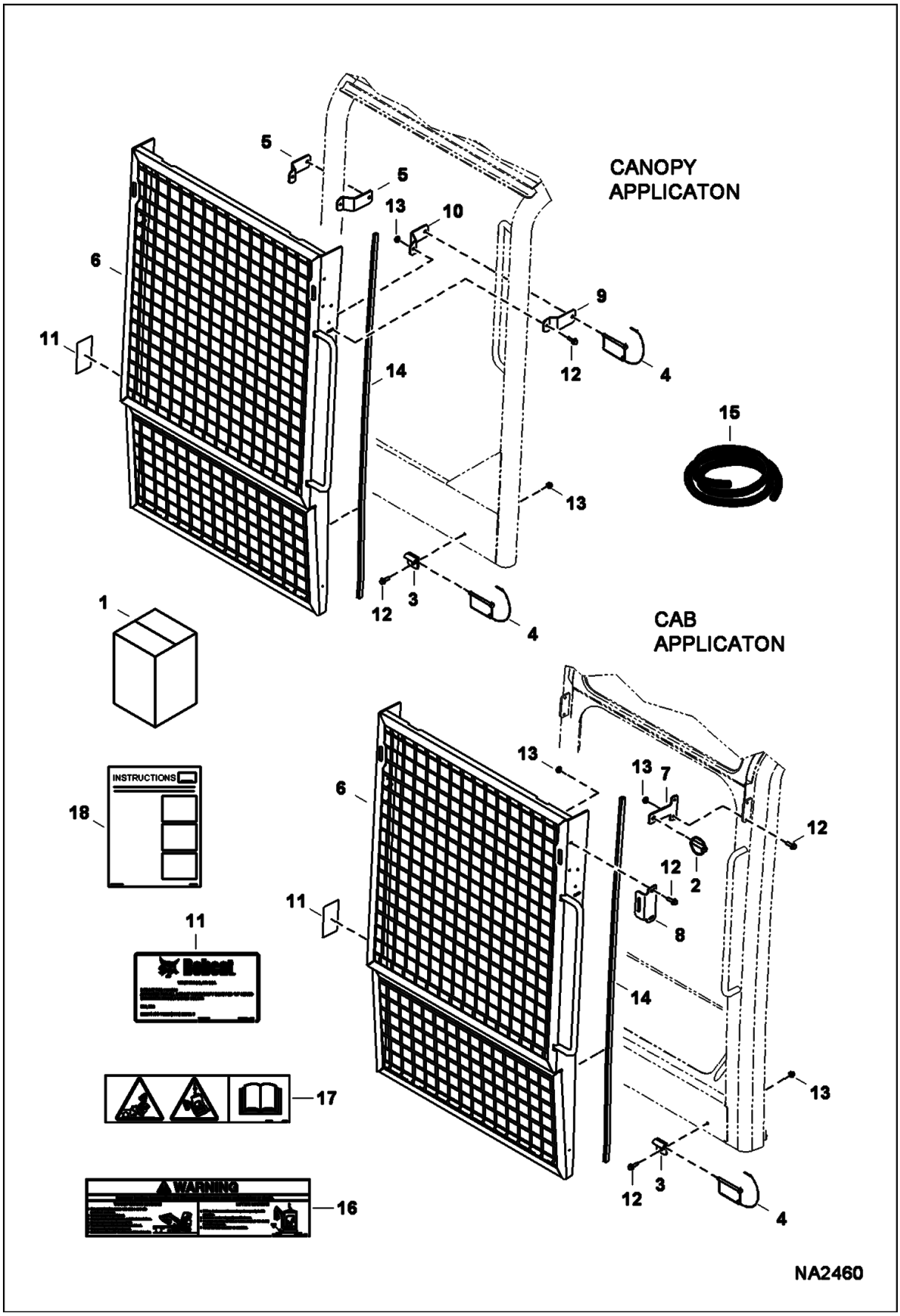

SPECIAL APPLICATION KIT (Cont'd)
(Cab and Canopy)

Ref No	Part Number	Description	Remarks	Serial Number	Qty
1	7174035	KIT, APPS SPECIAL	Ref. 2-18		1
2	6668928	LOCK PIN			2
3	6808924	HINGE			2
4	6808926	PIN			4
5	6818017	BRACKET			2
6	7174036	GUARD, CAB			1
7	7174037	PLATE			2
8	7174038	BRACKET			2
9	7181010	BRACKET			1
10	7181011	BRACKET			1
11	7181121	DECAL, APPS SPECIAL			1
12	29CM620	SCREW			12
13	51DM6	NUT			12
14		TRIM	NAP - 50" (1270 mm) long - Order Ref. 15		2
15	6682492	TRIM	bulk - sold per foot		x
16	7178178	DECAL, WARNING			1
17	7178215	DECAL, WARNING			1
18	6989510	INSTRUCTIONS			1

STROBE KIT

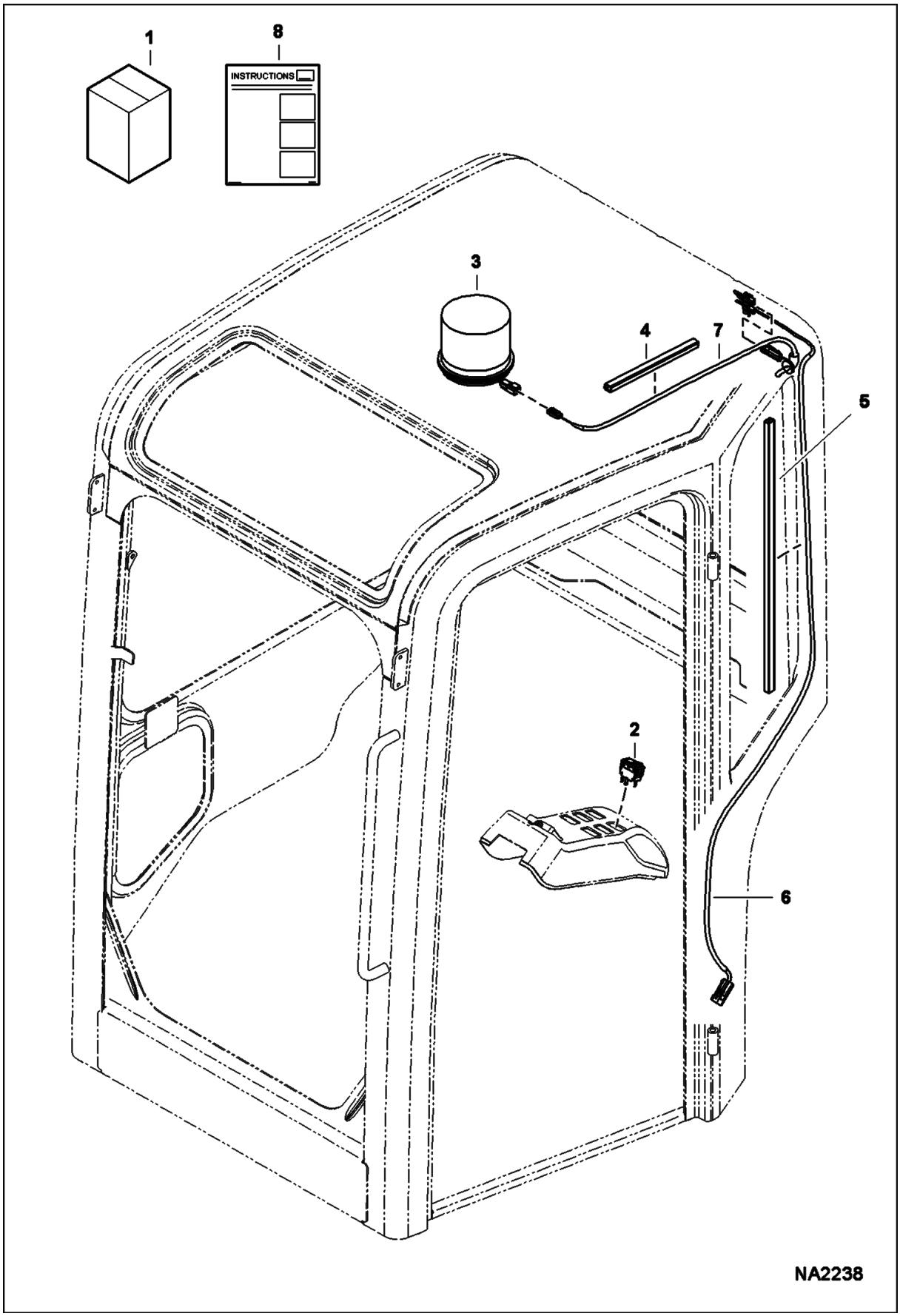

STROBE KIT (Cont'd)

Ref No	Part Number	Description	Remarks	Serial Number	Qty
1	7172974	KIT, STROBE LIGHT	Ref. 2-8		1
2	6665317	SWITCH			1
3	7219903	LIGHT, STROBE	4200 series light - Was 6675522 [A]		1
3	6697796	FLASHTUBE	3-pin rectangular base bulb - Use W/NAP 6675522 strobe light		1
3	7025589	FLASHTUBE	Use W/ 7219903 strobe light		1
3	6697797	AMBER LENS			1
4	6682740	RETAINER, WIRE			1
5	6682741	RETAINER, WIRE			1
6	7172972	HARNESS, BEACON/STROBE			1
7	7172977	HARNESS, CANOPY			1
8	6987322	INSTRUCTIONS			1

TOP GUARD KIT
(Cab)

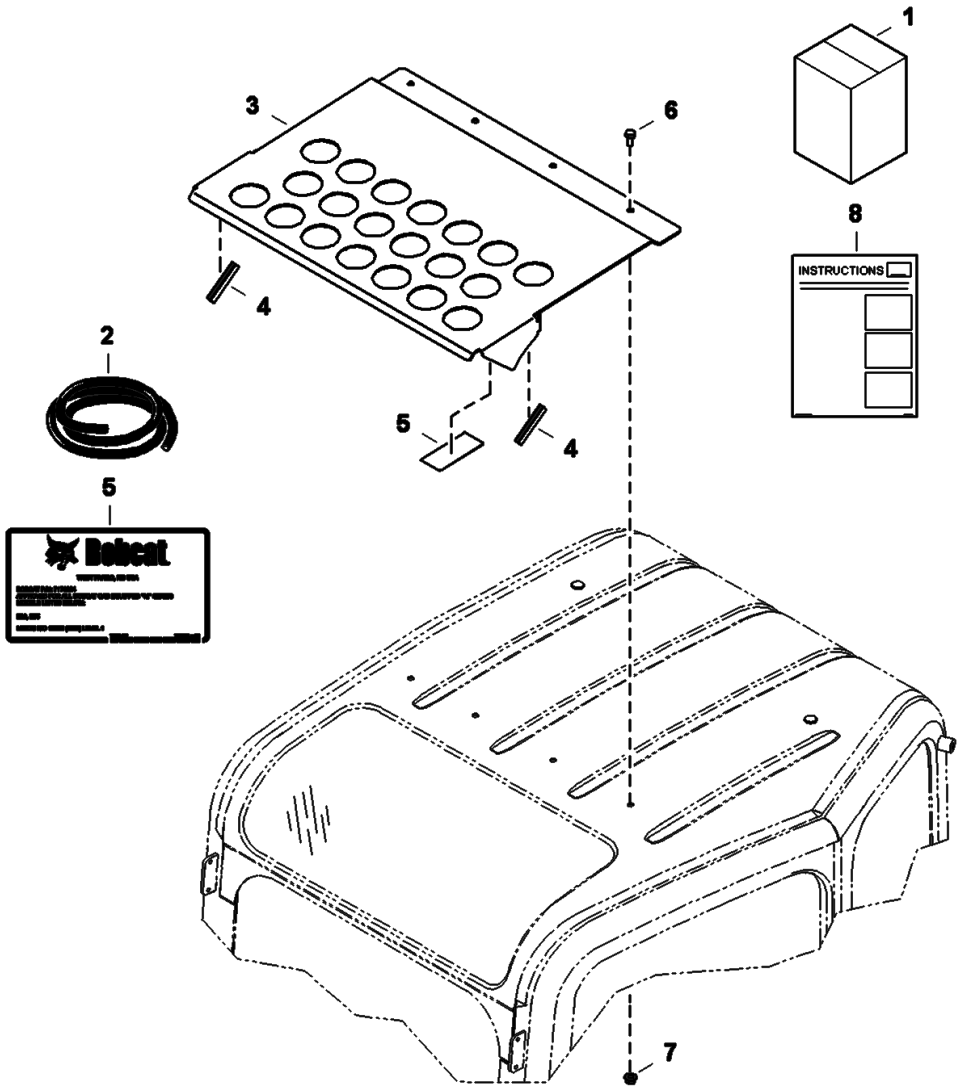

TOP GUARD KIT (Cont'd)
(Cab)

Ref No	Part Number	Description	Remarks	Serial Number	Qty
1	7173584	KIT, GUARD CAB	Ref. 2-8		1
2	6682492	TRIM	bulk - sold per foot		x
3	7173484	GUARD, CAB			1
4		TRIM	NAP - 5" (127 mm) long - Order Ref. 2		2
5	7181128	DECAL, GUARD TOP			1
6	1CM1012	SCREW			4
7	51DM10	NUT			4
8	6987408	INSTRUCTIONS			1

TOP GUARD KIT
(Canopy)

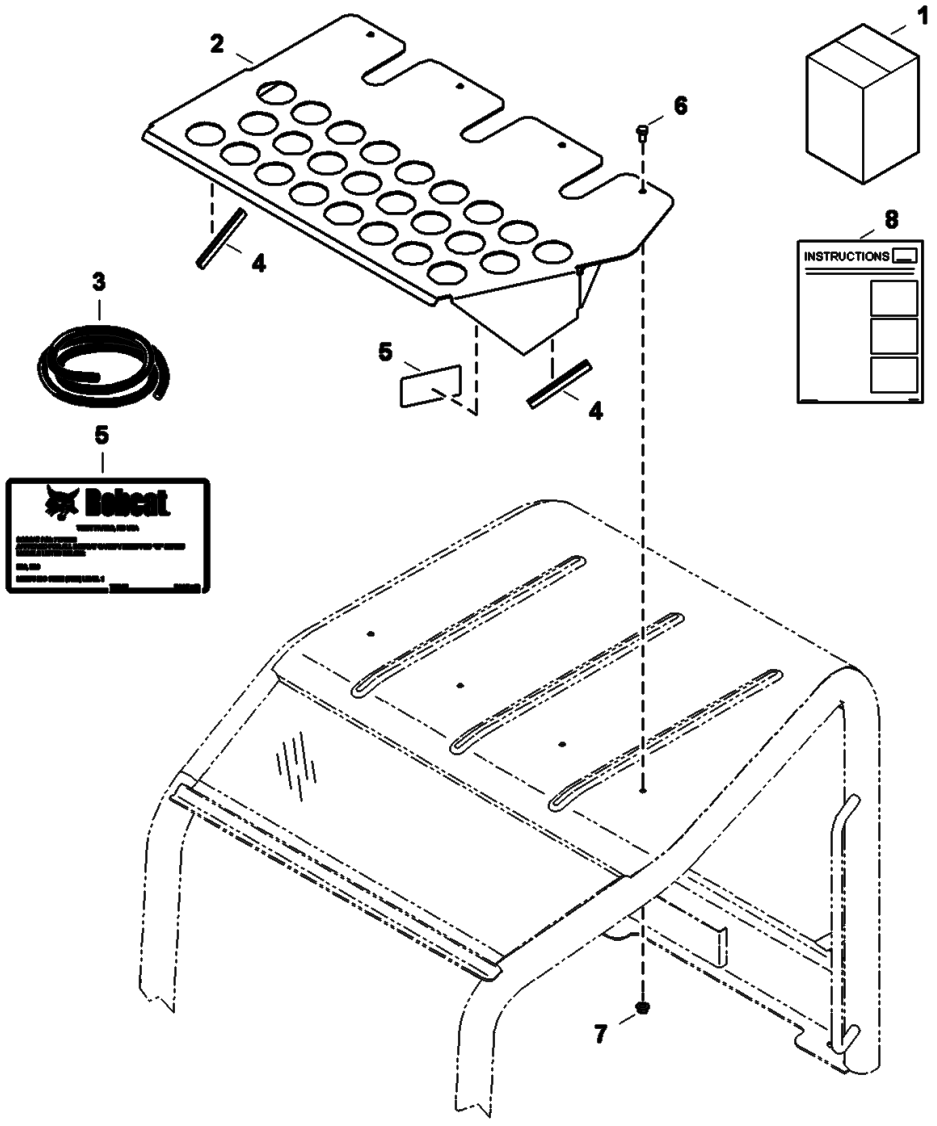

NA2462

TOP GUARD KIT (Cont'd)
(Canopy)

Ref No	Part Number	Description	Remarks	Serial Number	Qty
1	7173308	KIT, GUARD CANOPY	Ref. 2-8		1
2	7173483	GUARD, CANOPY			1
3	6682492	TRIM	bulk - sold per foot		x
4		TRIM	NAP - 5" (127 mm) long - Order Ref. 3		1
5	7181127	DECAL, GUARD TOP			1
6	1CM1020	BOLT			4
7	51DM10	NUT			4
8	6987408	INSTRUCTIONS			1

TOP GUARD LIGHT KIT

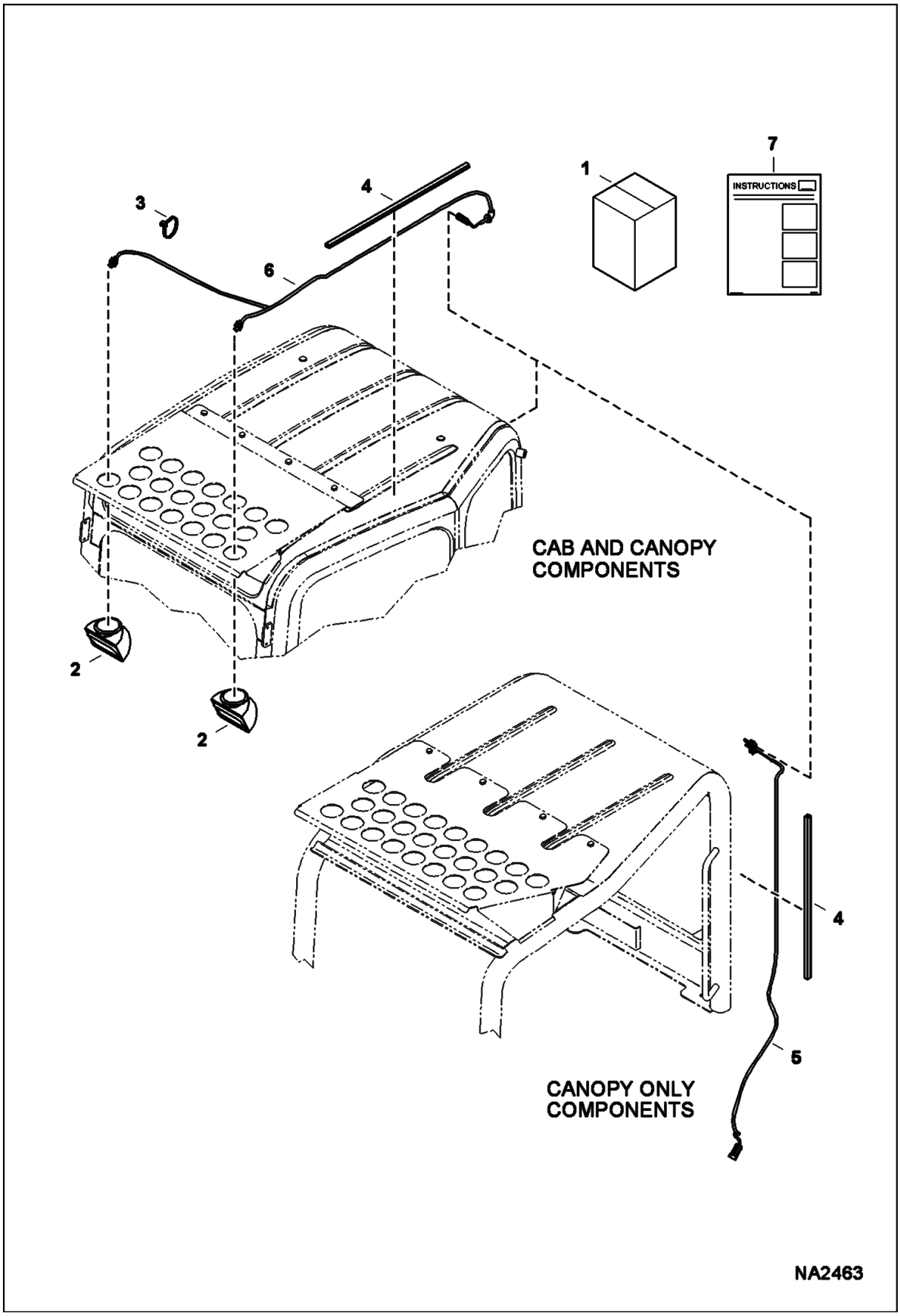

TOP GUARD LIGHT KIT (Cont'd)

Ref No	Part Number	Description	Remarks	Serial Number	Qty
1	7173478	KIT, GUARD LIGHT	Ref. 2-7		1
2	6577801	LIGHT			2
2	6649478	BULB HOUSING			2
2	6578824	HOUSING			2
2	6667934	BULB			2
2	6578528	HARNESS			2
3	6624289	STRAP, TIE			4
4	6682741	RETAINER, WIRE			2
5	7172977	HARNESS, CANOPY			1
6	7173482	HARNESS, LIGHTS			1
7	6987497	INSTRUCTIONS			1

TRACK KIT
(Steel)

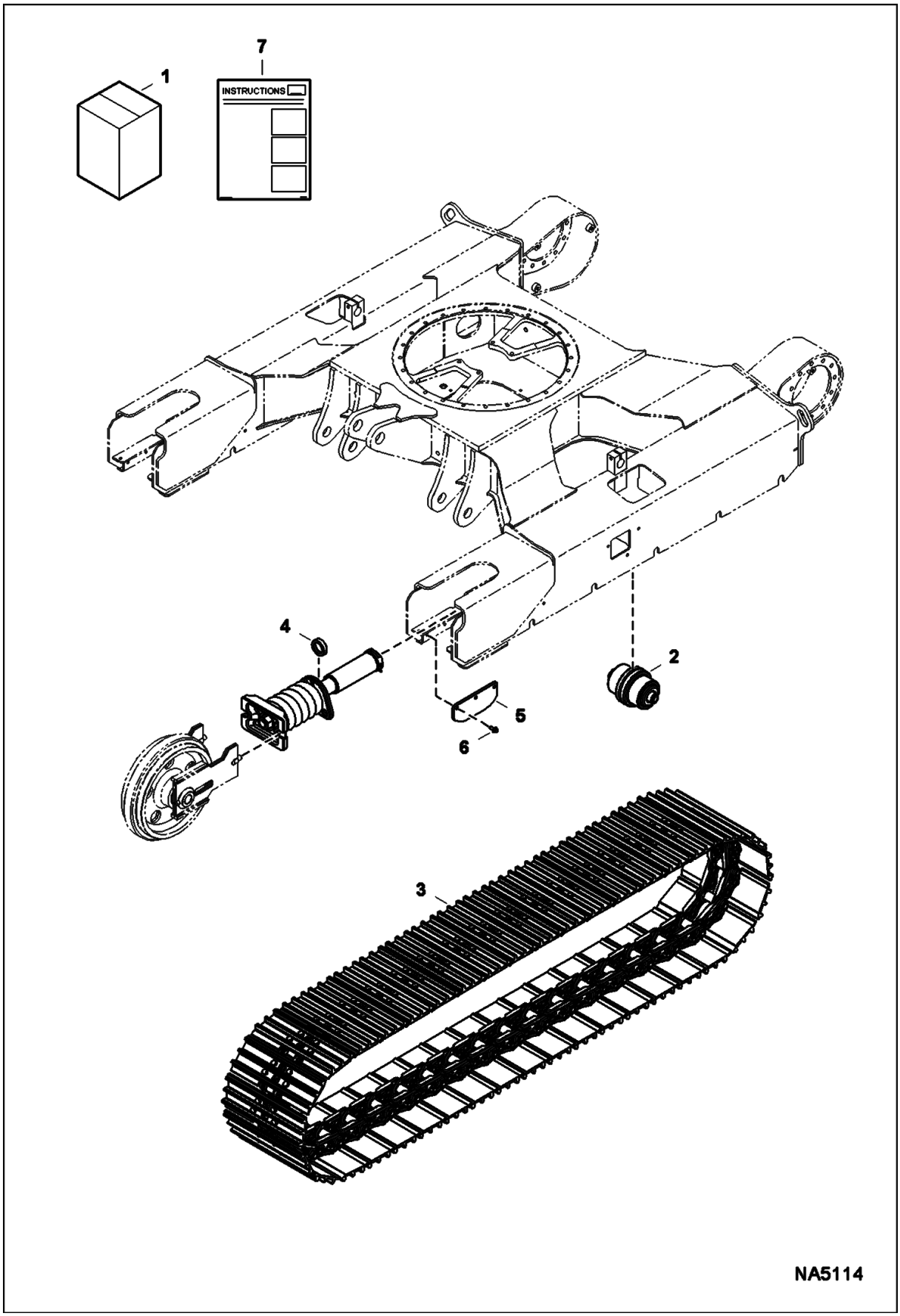

TRACK KIT (Cont'd)
(Steel)

Ref No	Part Number	Description	Remarks	Serial Number	Qty
1	7192453	KIT, TRACK STEEL	Ref. 2-7		1
2	7013578	ROLLER, TRACK	- Was 6693499 [A]		10
3	7009151	TRACK, STEEL	See Illustration TRACKS/ NA2650		2
4	7164410	SPACER			2
5	7178853	PLATE, GUIDE			4
6	26GM10025	SCREW			12
7	6989701	INSTRUCTIONS			1

TRACK PAD KIT

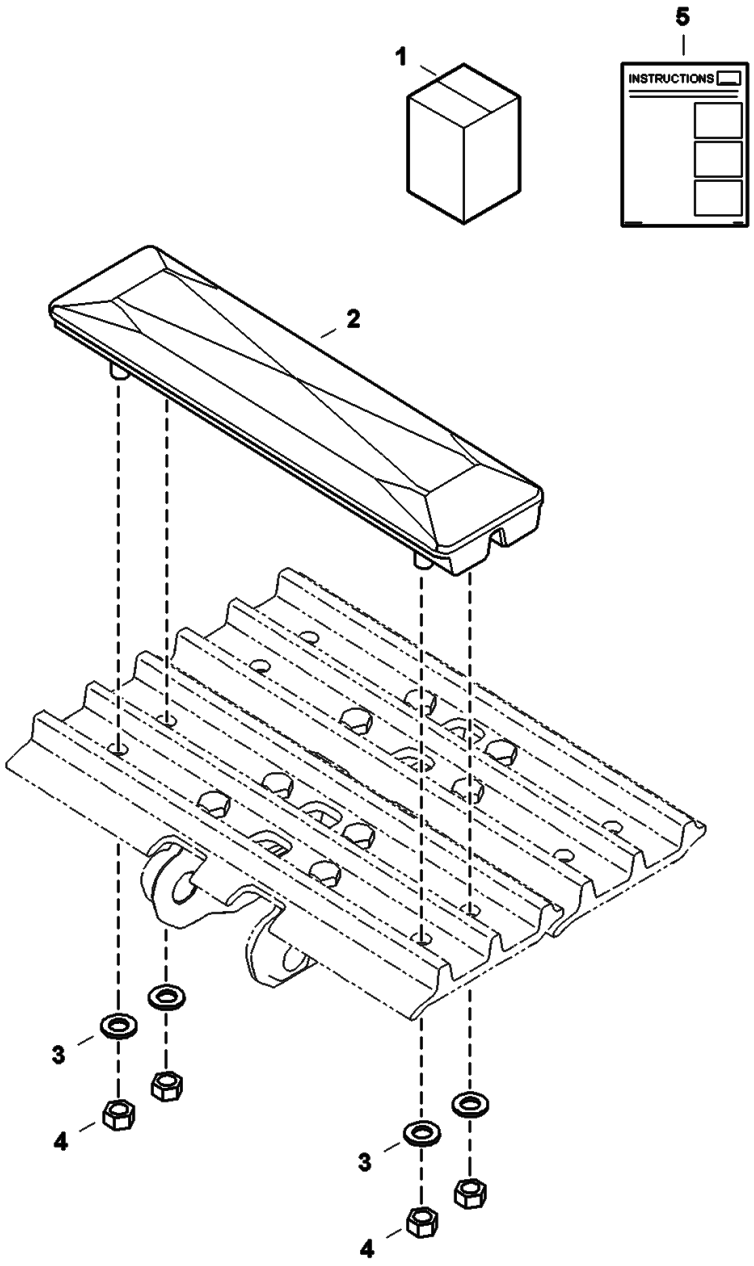

TRACK PAD KIT (Cont'd)

Ref No	Part Number	Description	Remarks	Serial Number	Qty
1	7199213	KIT, PAD STREET	Ref. 2-5		1
2	7016901	PAD, STREET ASSY	W/Ref. 3 & 4		78
3	1EM120	WASHER			x
4	4DM12	NUT HEX			x
5	6987375	INSTRUCTIONS			1

TRACKS
(Rubber)

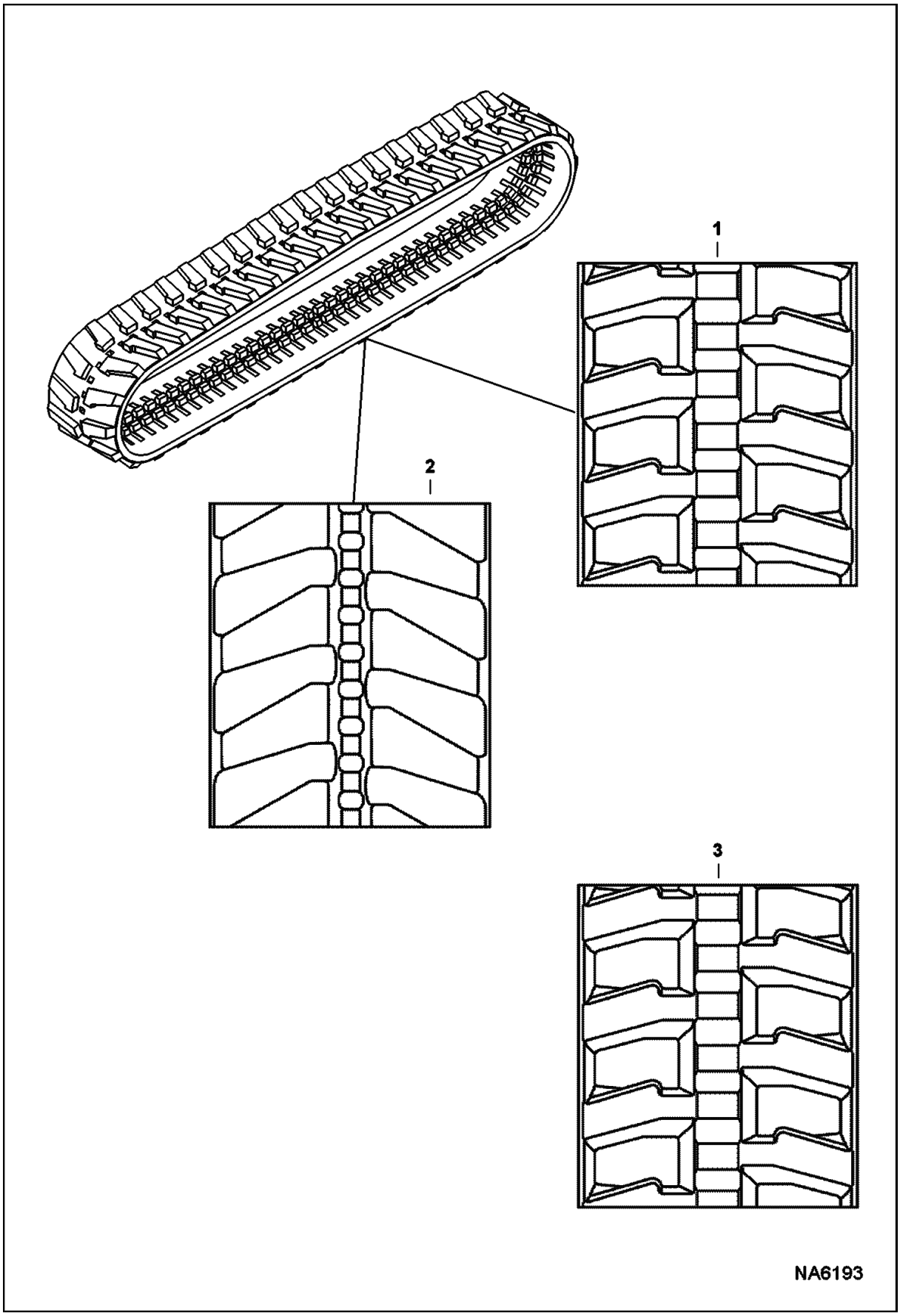

TRACKS (Cont'd)
(Rubber)

Ref No	Part Number	Description	Remarks	Serial Number	Qty
1	6692960	TRACK, RUBBER (400X74X73) 16" BOBCAT	factory option		2
2	6678826	TRACK, 16"(400X74X73)	factory option		2
3	7024957	TRACK RUBBER (400X74X73) 16" EF	Was 6988835 [B,D]		2

TRACKS
(Steel)

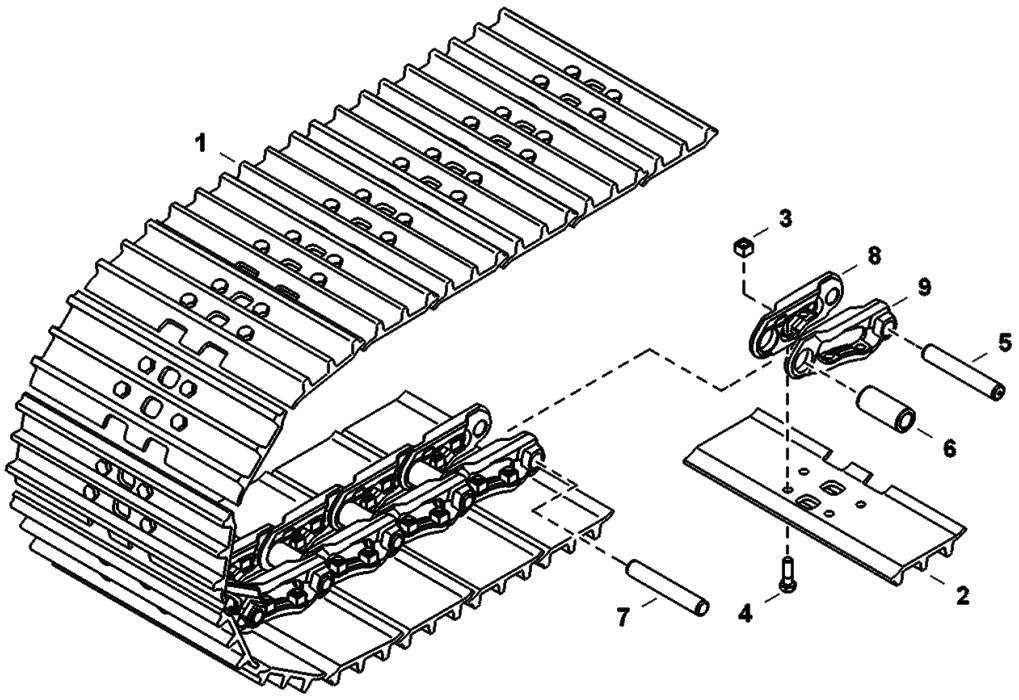

NA2650

TRACKS (Cont'd)
(Steel)

Ref No	Part Number	Description	Remarks	Serial Number	Qty
1	7009151	TRACK, STEEL	Ref. 2-9		2
2	7012334	PAD, TRACK STEEL	quantity shown for 1 track		39
3	7008955	NUT	quantity shown for 1 track		156
4	7008954	BOLT	quantity shown for 1 track		156
5	7012339	PIN, MASTER	quantity shown for 1 track		1
6	7012340	BUSHING	quantity shown for 1 track		39
7	7012341	PIN	quantity shown for 1 track		38
8	7012342	LINK, LH	quantity shown for 1 track		39
9	7012343	LINK, RH	quantity shown for 1 track		39

X-CHANGE
(Pin-On)
(Kit)

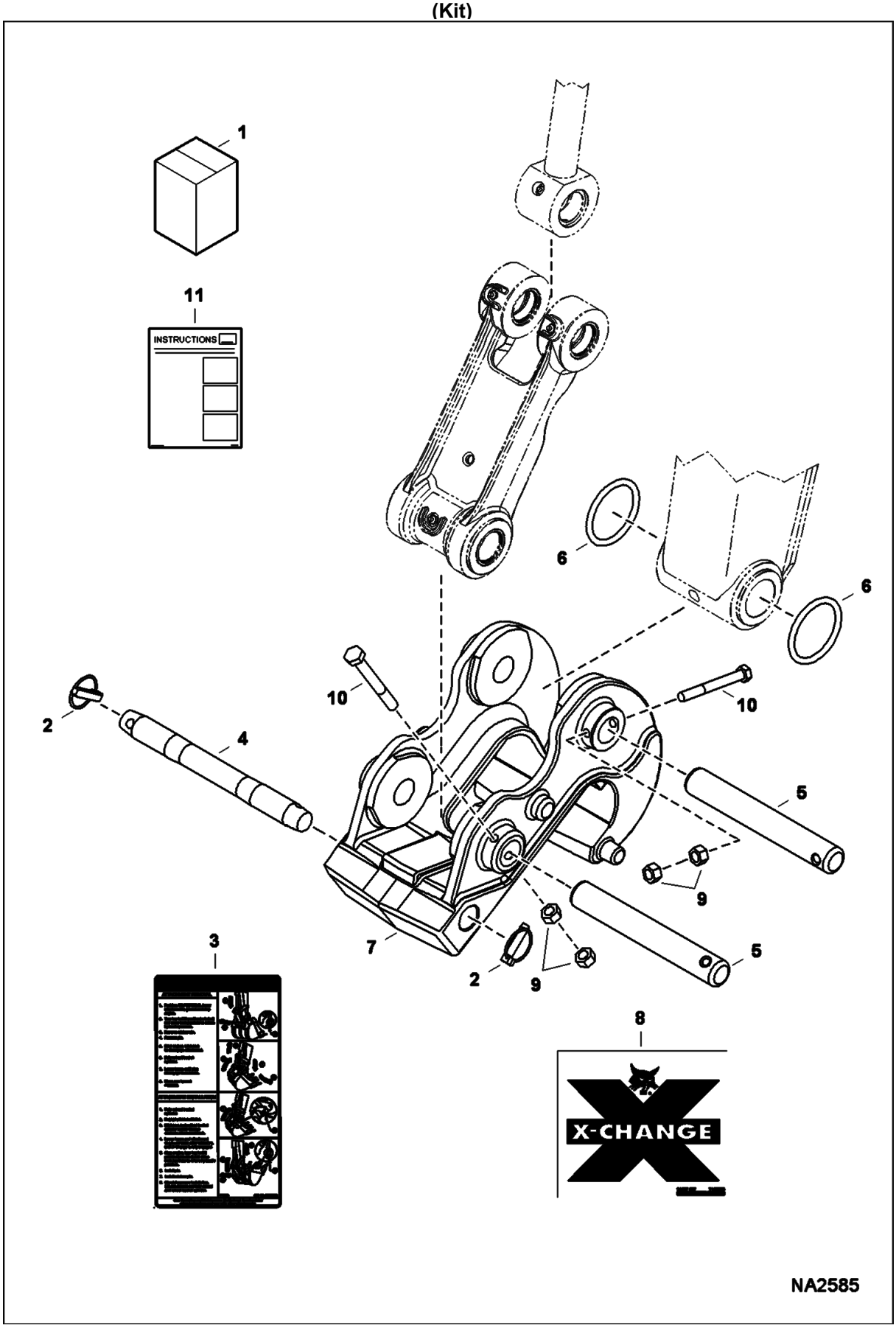

X-CHANGE (Cont'd)
(Pin-On)
(Kit)

Ref No	Part Number	Description	Remarks	Serial Number	Qty
1		KIT, X-CHANGE PIN-ON	SALES #7185281 - Ref. 2-11		1
2	6560382	PIN, LOCK			2
3	6818059	DECAL			1
4	7137214	PIN			1
5	7143036	PIN, PIVOT			2
6	7143561	O-RING			2
7	7204274	X-CHANGE, PIN-ON			1
8	7160880	DECAL, X-CHANGE			2
9	4DM12	NUT HEX			4
10	7CM12100	BOLT			2
11	6989501	INSTRUCTIONS			1

X-CHANGE
(Hydraulic)
(Kit)

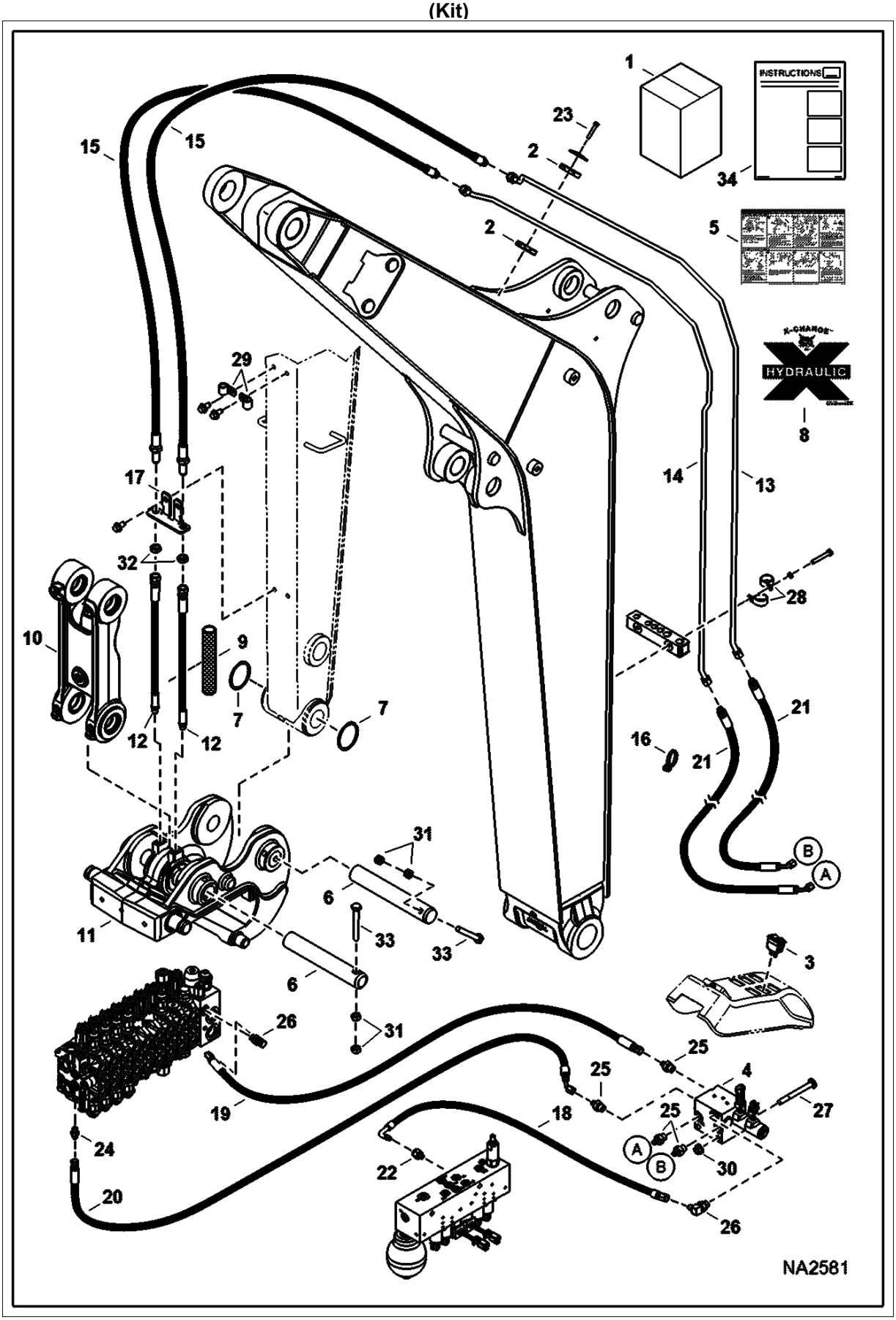

X-CHANGE (Cont'd)
(Hydraulic)
(Kit)

Ref No	Part Number	Description	Remarks	Serial Number	Qty
1	7185283	KIT, X-CHANGE HYD	Ref. 2-34		1
2	6664381	CLAMP			4
3	6688667	SWITCH			1
4	7008786	MANIFOLD, HYD ASSY	See Illustration X-CHANGE/ NA2303		1
5	7134587	DECAL, X-CHANGE	using hydraulic X-Change W/retainer pin - text - not in kit		1
5	7220131	DECAL, X-CHANGE	using hydraulic X-Change W/O retainer pin - text		1
5	7220130	DECAL, X-CHANGE	using hydraulic X-Change W/O retainer pin - No-text		1
6	7143036	PIN, PIVOT			2
7	7143561	O-RING			2
8	7160881	DECAL, X-CHANGE			2
9	7161761	GUARD, FABRIC			1
10	7165793	LINK, ASSY	See Illustration X-CHANGE/ NA2583		1
11	7205987	X-CHANGE, HYD	See Illustration X-CHANGE/ NA2583 - Was 7165796 [C]		1
12	7165958	HOSE, HYD ASSY			2
13	7167211	TUBELINE, HYD			1
14	7167212	TUBELINE, HYD			1
15	7167230	HOSE, HYD ASSY	for standard arm		2
15	7167231	HOSE, HYD ASSY	for long arm		2
16	6624289	STRAP, TIE			3
17	7167535	BRACKET			1
18	7177114	HOSE, HYD			1
19	7177166	HOSE, HYD			1
20	7199544	HOSE, HYD	Was 7177168 [A]		1
21	7177732	HOSE, HYD			2
22	10L0604	FITTING, HYD CONNECTOR			1
22	78K6	O'RING			x
22	7011053	CLIP			x
23	59CM870	BOLT, FLANGE			2
24	15KB0404	FTG HYD S Connector			1
24	79K4	O RING 10			x
25	15KB0406	FTG HYD S CONNECTOR			4
25	79K6	O RING 10			x
26	17KB0406	FITTING, HYD ELBOW			2
26	79K6	O RING 10			x
27	28CM10100	BOLT			2
28	30H22	CLIP			4
29	30H35	CLAMP 10			2
30	43DM10	NUT			2
31	4DM12	NUT HEX			4
32	86F5	NUT			2
33	7CM12100	BOLT			2
34	6989502	INSTRUCTIONS			1

X-CHANGE
(Hydraulic)
(Link, Swivel, X-Change)

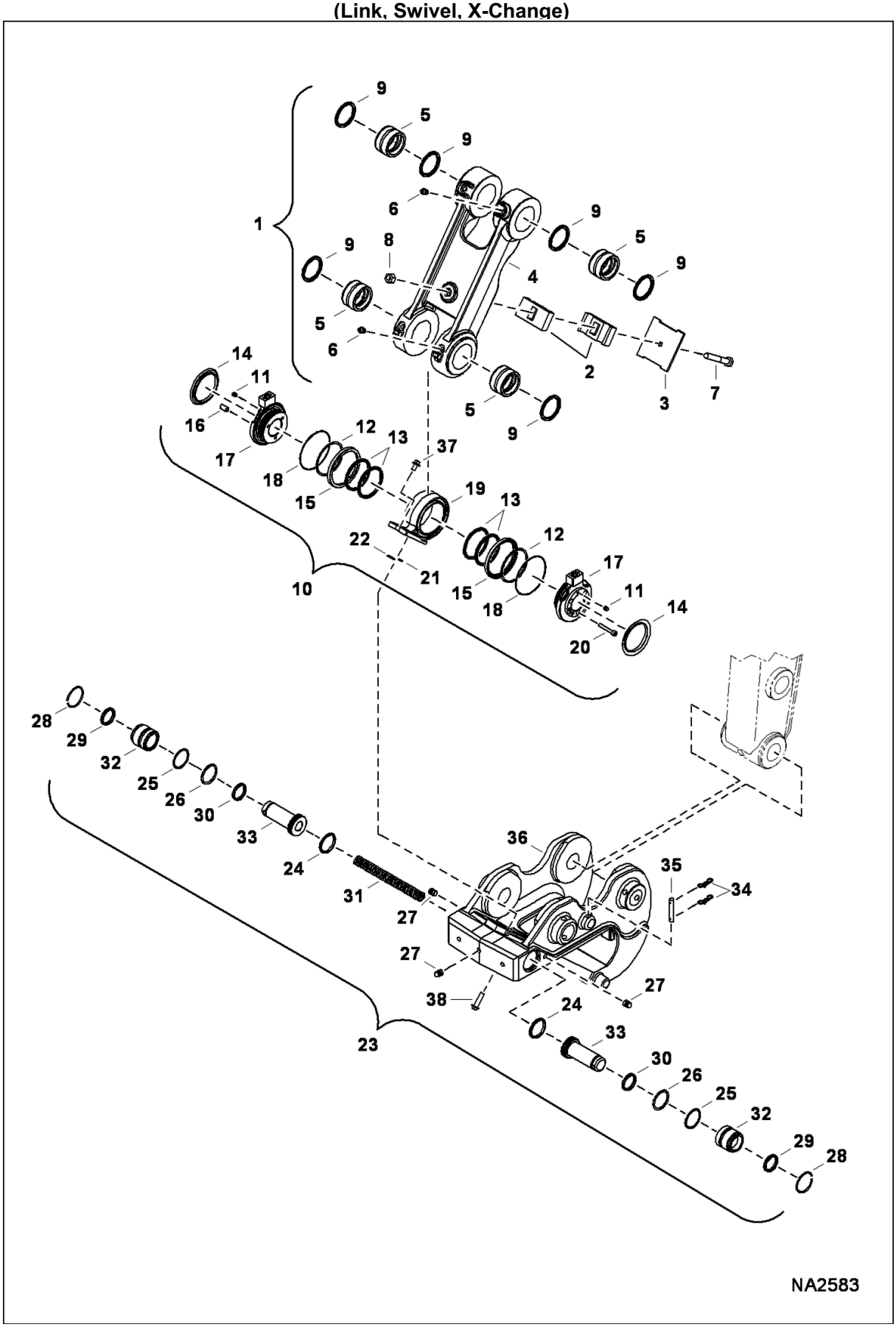

X-CHANGE (Cont'd)
(Hydraulic)
(Link, Swivel, X-Change)

Ref No	Part Number	Description	Remarks	Serial Number	Qty
1	7165793	LINK, ASSY	Ref. 2-9		1
2	7115813	BLOCK RUBBER			2
3		COVER, HOSE	NAP - as shown W/tabbed corners - Order (1) each of 7226712 hose cover and Ref. 7 (59CM1060 screw) - Was 7115814 [A]		1
3	7226712	COVER, HOSE	not shown - W/notched corners		1
4		LINK, HYD X-CHANGE	NSS - Order Ref. 1		13
5	7173292	BUSHING, WEAR			4
6	10H25	FITTING, GREASE 5			4
7	59CM1060	SCREW	Was 1CM1055 [B]		1
8	4DM10	NUT			1
9	6669287	SEAL			6
10	7172955	SWIVEL, HYD ASSY	Ref. 11-22		1
11	6686678	PLUG			2
12	6686681	RING			2
13	6688745	SEAL			4
14	6688850	SEAL			2
15	6689565	SEAL			2
16	6816599	NUT			3
17	7120821	SWIVEL			2
18	7121281	O-RING			2
19		SWIVEL	NAP - Order Ref. 10 - Was 7172954 [A]		1
20	3GM645	SCREW			3
21	58K10	O RING 10			1
22	58K015	O-RING 10			1
23	7205987	X-CHANGE, HYD	Ref, 10, 24-33, & 36-38 - Was 7165796 [C]		1
24	6680402	SEAL			2
25	6680998	RING			2
26	6683233	O-RING			2
27	6686679	PLUG			5
28	6686682	RING			2
29	6688634	SEAL PIN			2
30	6690161	SEAL PIN			2
31	6815592	SPRING			1
32	7114212	HEAD			2
33	7126140	PISTON, PIN	W/retainer pin hole		2
33	7221582	PISTON, PIN	W/O retainer pin hole		2
34	7130431	CLIP	if equipped		4
35	7132119	PIN	if equipped		2
36		X-CHANGE, HYD	NSS - Order Ref. 23		1
37	29CM1020	BOLT			1
38	29CM1030	BOLT			1

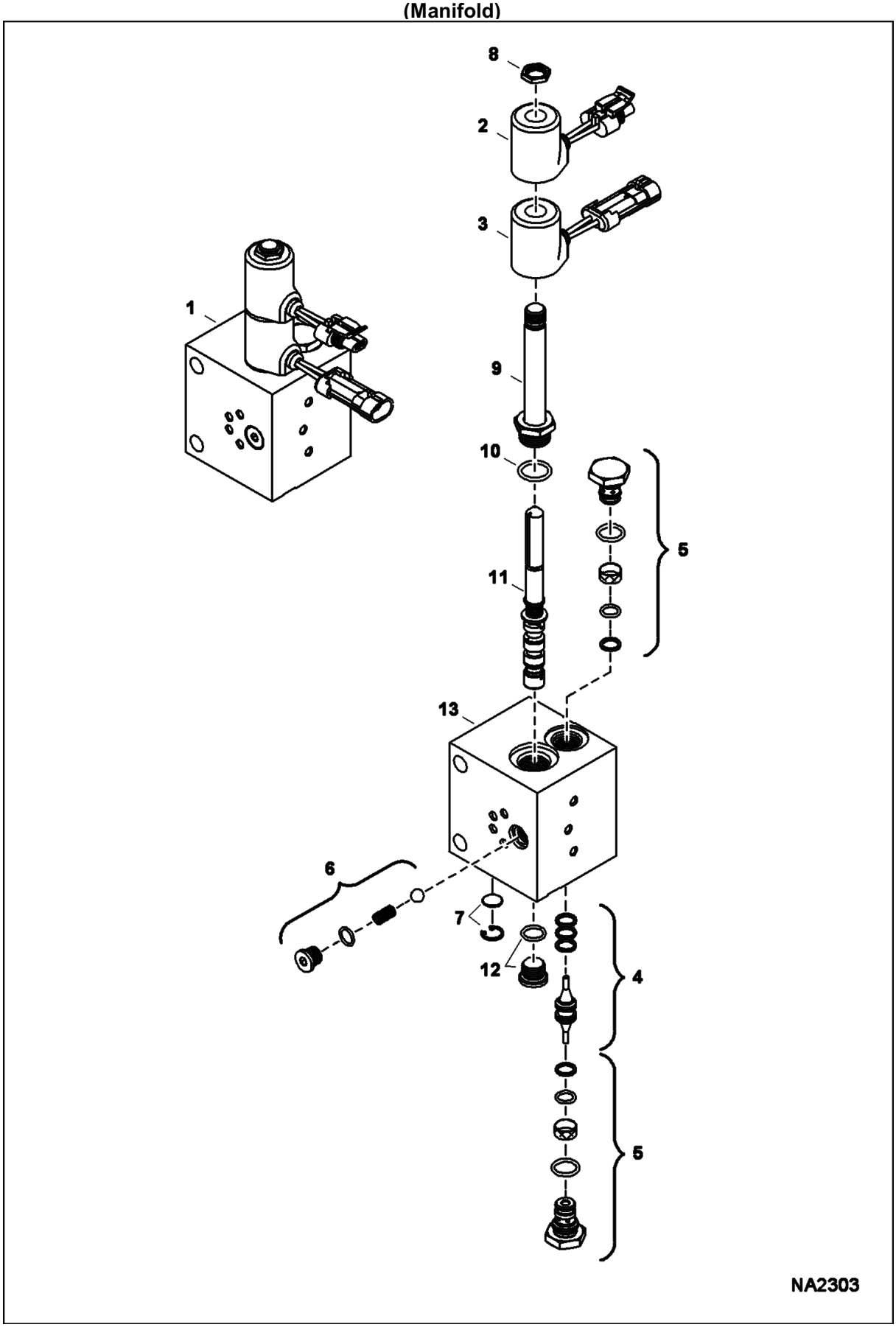
8
2
3
1
9
10
5
11
13
6
7
12
4
5
NA2303

X-CHANGE (Cont'd)
(Hydraulic)
(Manifold)

Ref No	Part Number	Description	Remarks	Serial Number	Qty
1	7008786	MANIFOLD, HYD ASSY	Ref. 2-13		1
2	6684743	SOLENOID			1
3	6684744	SOLENOID			1
4	6689981	PISTON ASSY			1
5	7001678	VALVE, CHECK			2
6	6689982	VALVE KIT			1
7	6689983	FILTER KIT			1
8	6684742	NUT			1
9		STEM	NSS		1
10		O-RING	NSS		1
11		SPOOL	NSS		1
12		PLUG	NSS		1
13		BLOCK	NSS		1

X-CHANGE
(Hydraulic) (Extendable Arm)
(Kit)

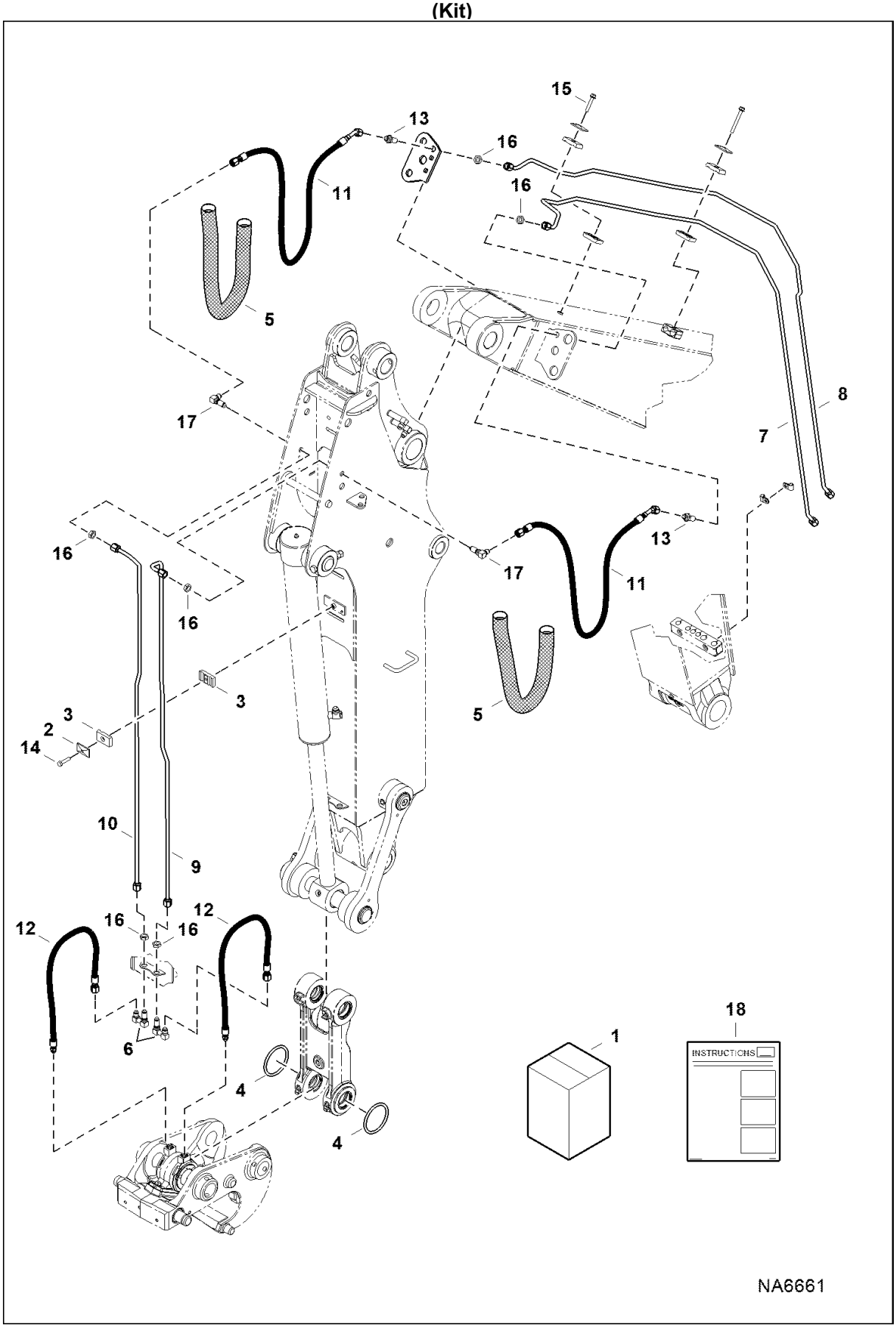

X-CHANGE (Cont'd)
(Hydraulic) (Extendable Arm)
(Kit)

Ref No	Part Number	Description	Remarks	Serial Number	Qty
1	7221761	KIT, X-CHANGE HYD EXT	Ref. 2-18		1
2	6652521	PLATE			2
3	6664381	CLAMP			2
4	7143561	O-RING			2
5	7201520	GUARD, FABRIC			2
6	7207020	FITTING, HYD CONNECTOR			2
7	7207032	TUBELINE, HYD			1
8	7207033	TUBELINE, HYD			1
9	7207036	TUBELINE, HYD			1
10	7207037	TUBELINE, HYD			1
11	7207041	HOSE, HYD			2
12	7207046	HOSE, HYD			2
13	45K5	FITTING			2
14	53CM835	SCREW			1
15	59CM845	BOLT, FLANGE			1
16	86F5	NUT			6
17	88F5	ELBOW			2
18	6990464	INSTRUCTIONS			1

BULK ITEMS

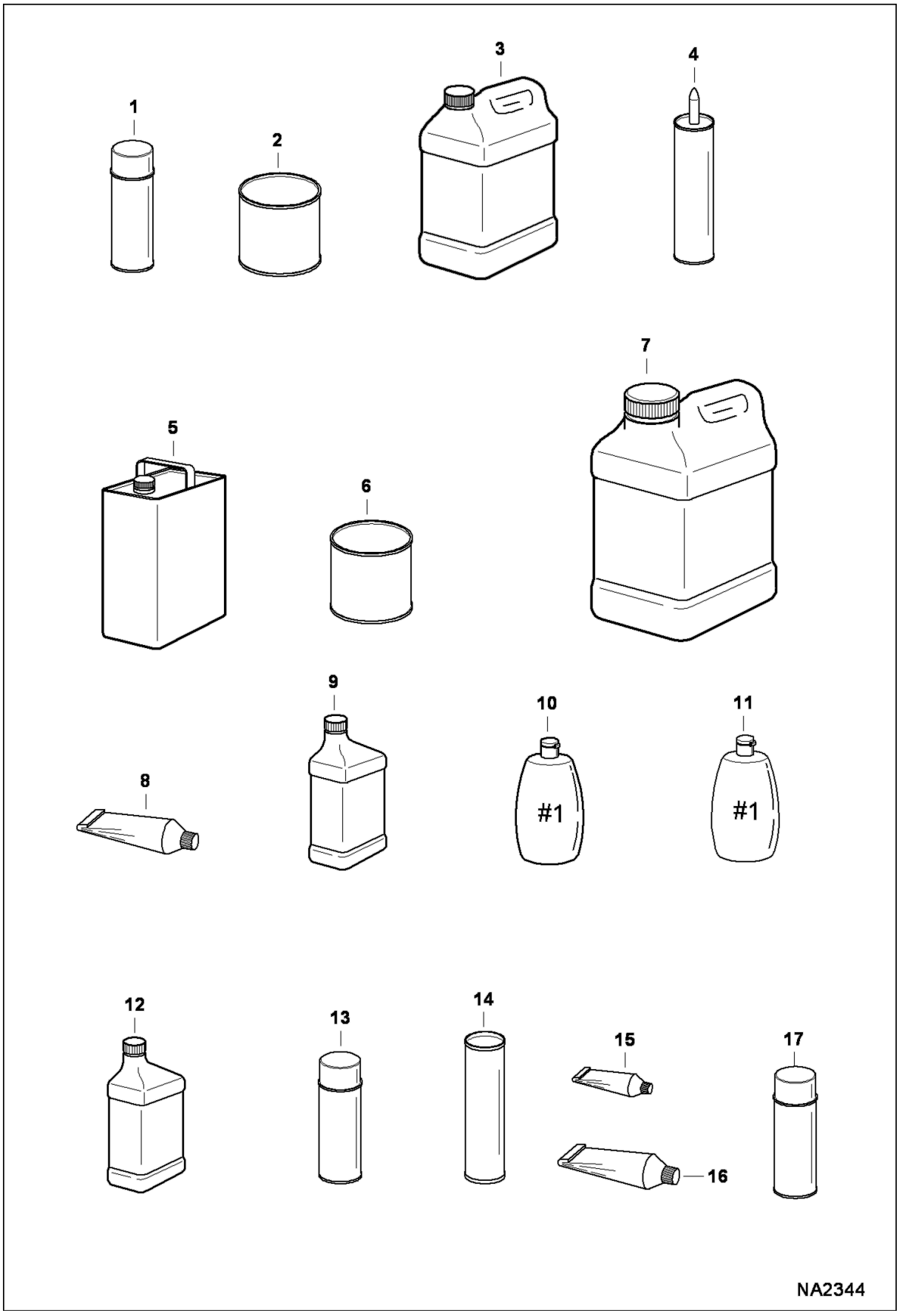

BULK ITEMS (Cont'd)

Ref No	Part Number	Description	Remarks	Serial Number	Qty
1	6902228	PAINT, ORANGE SPRAY CAN 6			x
1	6902229	PAINT, CHARCOAL SPRAY CAN 6			x
1	6902230	PAINT, WHITE SPRAY CAN 6			x
2	6902233	PAINT, ORANGE QT 6			x
2	6902234	PAINT, CHARCOAL QT 6			x
2	6902235	PAINT, WHITE QT 6			x
3	6983128	ANTIFREEZE/COOLANT, PG 53/47 PREMIX GAL 6			x
3	6983129	ANTIFREEZE/COOLANT, PG CONCENTRATE GAL 6			x
4	6633583	SEALANT, POLYURETHANE 300 ML	tube - 300 ml		x
5		REDUCER	NAP - gallon		x
6	6902236	PRIMER QT. 6	quart		x
7	6903117	FLUID, OIL HYD 2.5 GAL 2			x
7	6903118	FLUID, OIL HYD 5 GAL			x
7	6903119	FLUID, OIL HYD 55 GAL DRUM			x
8	6599360	SEALANT, ELEC .3 OZ	electrical - tube - 3 oz		x
8	6685372	SEALANT, GASKET LIQUID 10.1 OZ	tube - 0.57 kg (20 oz)		x
9	6903121	LUBE, GEAR 12			x
10	6630188	POLISH #1	window - #1 - 8 oz		x
11	6630189	POLISH #2	window - scratch remover - #2 - 8 oz		x
12	6903109	OIL 30W QT. 12			x
12	7023076	OIL, 10W30 QT 12	Was 6903107 [A]		x
12	7023080	OIL, 15W40 QT 12	Was 6903105 [A]		x
12	7023077	OIL, 10W30 GAL 6	Was 6903108 [A]		x
12	7023081	OIL, 15W40 GAL 6	Was 6903106 [A]		x
12	6903110	OIL, 30W GAL. 6			x
12	7023082	OIL, 15W40 2.5 GAL 2	Was 6903113 [A]		x
12	7023078	OIL, 10W30 2.5 GAL 2	Was 6903112 [A]		x
12	6903111	OIL 30W 2.5 GAL 2			x
13	6675380	ADHESIVE, SPRAY 10.5 OZ			x

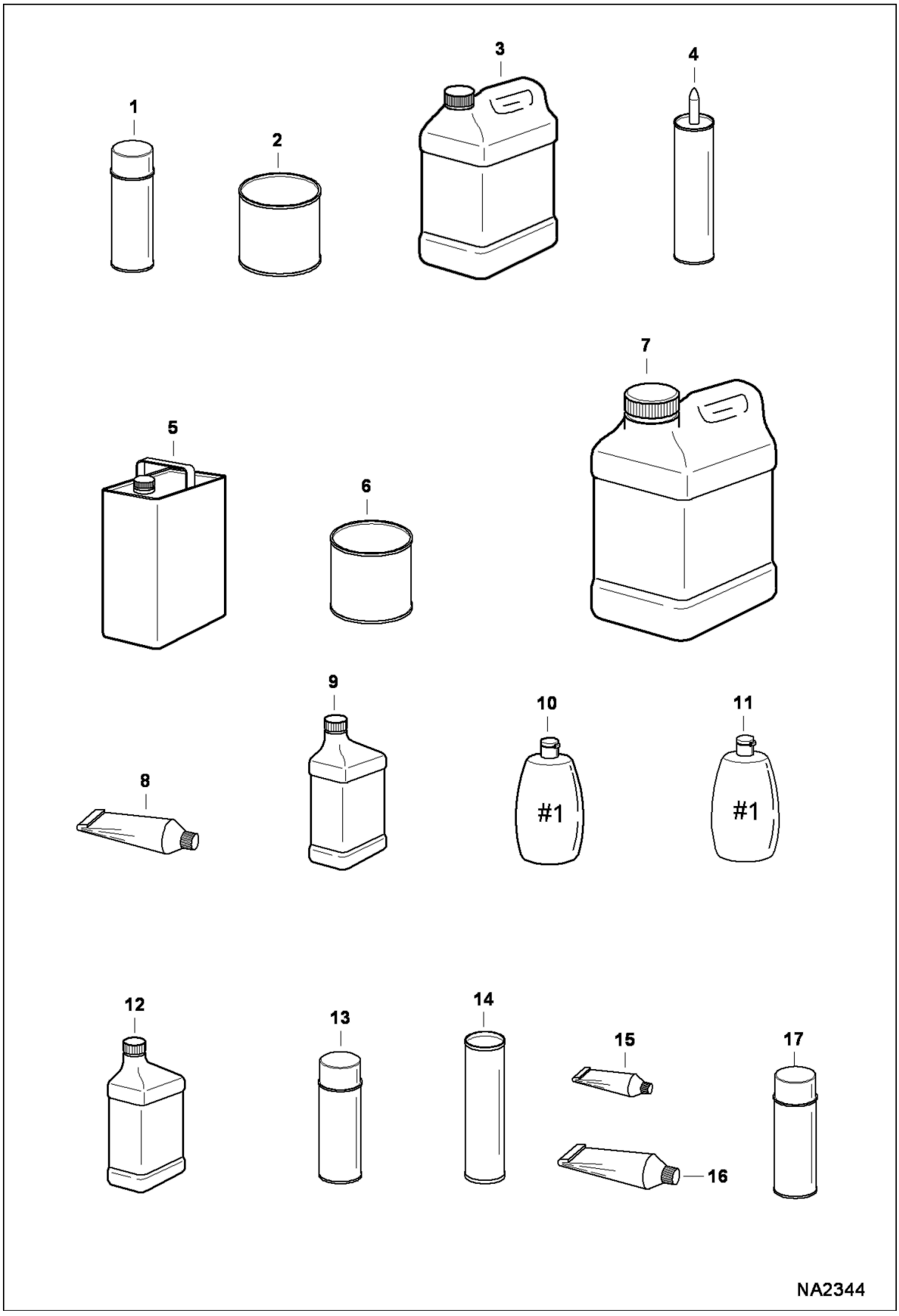
1
2
3
4
5
6
7
8
9
10
#1
11
#1
12
13
14
15
16
17
NA2344

Ref No	Part Number	Description	Remarks	Serial Number	Qty
14	6903122	GREASE, MULTI PURPOSE #2 - 10			x
14		GREASE	NAP - 14.5 oz. cartridge - For fan idler bearing & spring loaded drive idler		x
15	6650407	ADHESIVE	tube - 1 oz		x
16	6650388	SEALANT	flange		x
17	6736644	PAINT, ORANGE .5 OZ	orange - spray can - .5 oz		x
17	6736641	PAINT, CHARCOAL .5 OZ	charcoal - spray can - .5 oz		x
17	6736642	PAINT, WHITE .5 OZ	white - spray can - .5 oz		x
17	6736645	PAINT, RED .5 OZ	red - spray can - .5 oz		x

Part No.	Description	Was	Code	Page
10CM12110	BOLT	7CM12100	B	228
10H25	FITTING, GREASE 5			14, 68, 70, 74, 78, 90, 194, 196, 198, 200, 202, 204, 206, 282, 284, 318, 396
10J13	BALL	6969574	A	242, 244
10J13	BALL			242, 244
10L0604	FITTING, HYD CONNECTOR			90, 112, 114, 116, 118, 120, 124, 370, 394
10L0606	FITTING, HYD CONNECTOR			90, 114, 118, 120, 124, 348, 352, 370
12D10	NUT			320
12D8	NUT			212
12H15	FITTING, GREASE 5			76, 78, 200
1306637	CLIP			104
13JM320	PIN			80
14D10	NUT			88
14JM14160	PIN, CLEVIS			80
1522534	SEAL			200
15EM100	WASHER			14, 52, 86
15EM100	WASHER	1EM100	B	14, 52, 86
15EM120	WASHER			48, 50
15EM160	WASHERS			82, 92
15EM200	WASHERS			370
15EM80	WASHER			38, 40, 48, 50
15HB0406	FITTING, HYD CONNECTOR			96, 98
15HB0808	FITTING			92, 96, 98
15KB0404	FTG HYD S Connector			90, 114, 118, 120, 124, 352, 394
15KB0406	FTG HYD S CONNECTOR			120, 124, 394
15KB0606	FITTING, HYD CONNECTOR			90, 370
15KB0608	FITTING, HYD CONNECTOR			90, 98
15KB0612	FITTING, HYD CONNECTOR			318
15KB0808	FITTING, HYD CONNECTOR			90, 100, 104
15KB0810	FITTING, HYD CONNECTOR			348, 352
15KB1008	FITTING, HYD CONNECTOR			100
15KB1010	FITTING, HYD CONNECTOR			104
16F2	PLUG			246
17C620	BOLT			120, 124
17C820	BOLT			108
17EM100	WASHER			104
17EM120	WASHER			74
17EM80	WASHER			230, 320
17KB0404	FTG HYD ELBOW 90			348, 352
17KB0406	FITTING, HYD ELBOW			90, 394
17KB0606	FITTING			92, 96, 98, 120, 121, 122, 124, 125, 126, 348, 352

Code for disposition of old part number
A -- Use up
B -- Use on other application (See PNI)
C -- File PDR Report with Bobcat Parts Sales
D -- Part Number Error

Part No.	Description	Was	Code	Page
17KB0808	FITTING, HYD ELBOW			92, 104, 228, 308
17KB1010	FITTING, HYD ELBOW			108
18EM1224	WASHER			54
18EM1426	WASHER			14, 96, 98
18KB0404	FTG HYD ELBOW 45			114, 118
19J16	FLANGE			120, 124
19KB0606	TEE			122, 126
1CM1012	SCREW			36, 40, 378
1CM1016	SCREW			310
1CM1020	BOLT			380
1CM1055	BOLT			348, 352
1CM20100	SCREW			16
1CM612	BOLT			38, 82, 84
1CM620	BOLT			28, 34, 358, 360
1CM655	SCREW			74
1CM8110	HEX CAP S			228
1CM816	BOLT			112, 116
1CM820	BOLT			110
1CM850	BOLT			50
1CM880	BOLT			224
1DM6	NUT			274
1EM120	WASHER			386
21CM616	SCREW			84
21KB0404	FITTING, HYD TEE			348
21KB0406	FTG HYD STRAIGHT TEE			96, 98
21KB0808	FTG HYD STRAIGHT TEE			104, 308
21KB1210	FITTING, HYD TEE			120, 124
21KB1212	FITTING, HYD TEE			122, 126
23GM825	SCREW			52
23JM1024	PIN HARDENED PARALLE			228
24K3	PLUG			92, 104, 119, 120, 122, 123, 124, 126
24K5	PLUG			92, 96, 98, 122, 126
24K7	PLUG			104, 108
25E13	WASHER 5			28
25E16	WSHR			18
25E17	WASHER 5			76, 78, 96, 98
25E28	WASHER			16, 294
25K30118	O RING 10			56, 58
25K30126	O RING 10			208
25K30202	O RING 10			200
25K40208	O RING 10			200
25K60128	O RING 10			208
25K60320	O RING 10			198
26GM10020	BOLT			54, 68
26GM10025	SCREW			54, 384
26GM8020	SCREW			112, 116, 320
27CM835	SCREW			82
28CM10100	BOLT			100, 394
28CM1020	BOLT			44
28CM1025	BOLT			18, 48, 50, 52, 104, 224, 228

Code for disposition of old part number
A -- Use up
B -- Use on other application (See PNI)
C -- File PDR Report with Bobcat Parts Sales
D -- Part Number Error

Part No.	Description	Was	Code	Page
28CM1030	BOLT			78, 108, 120, 124, 316, 324, 334, 370
28CM620	BOLT CARRIAGE 8.8	21CM616	B	36, 37, 38
28CM816	BOLT			38
28CM820	BOLT			24, 38, 82, 84, 216, 224
28CM825	BOLT			108, 212, 216, 232
28CM830	BOLT			112, 116
28CM845	BOLT			216
29CM1016	BOLT			74, 212, 216, 306
29CM1020	BOLT	29CM1016	B	48, 50, 54, 74, 86, 104, 216, 230, 358, 360, 370, 396
29CM1020	BOLT			48, 50, 54, 74, 86, 104, 216, 230, 358, 360, 370, 396
29CM1025	BOLT			14, 18, 44, 48, 50, 88, 96, 98, 100, 216, 228, 232, 324, 336
29CM1025	BOLT	7009798	B	14, 18, 44, 48, 50, 88, 96, 98, 100, 216, 228, 232, 324, 336
29CM1025	BOLT	29CM1020	B	14, 18, 44, 48, 50, 88, 96, 98, 100, 216, 228, 232, 324, 336
29CM1025	BOLT	1CM1025	B	14, 18, 44, 48, 50, 88, 96, 98, 100, 216, 228, 232, 324, 336
29CM1030	BOLT			52, 332, 334, 396
29CM1080	SCREW			54
29CM1235	BOLT			228
29CM1250	BOLT			96, 98
29CM610	BOLT			40
29CM612	BOLT, FLANGED			212, 356
29CM616	BOLT			88, 218, 224, 232
29CM620	SCREW			50, 88, 324, 334, 374
29CM630	BOLT			364
29CM812	BOLT			92
29CM816	SCREW			102, 118, 212, 224, 228, 316, 318, 364
29CM820	SCREW			48, 100, 212, 216, 224, 228, 348, 352
29CM825	BOLT			18, 86, 108, 112, 116, 122, 126
29CM830	CAPSCREW			100
29CM835	BOLT			332, 334
2DM8	NUT			250
2EM8	WASHER, PLAIN		A	252
2JM1085	ROLL PIN			60
30H110	CLIP	30H58	A	110
30H19	CLIP			48, 226
30H22	CLIP			216, 394
30H26	CLIP			212
30H30	CLAMP			92, 102, 370
30H31	CLAMP 10			232
30H34	CLAMP			218
30H35	CLAMP 10			394
30H37	CLAMP			232
30H38	CLIP	30H37	B	212
30H44	CLAMP			212
30H46	CLIP			96, 98
30H49	CLAMP			110
30H50	CLIP			102, 316
30H73	CLAMP			232
30H74	CLAMP, HOSE			232
30H75	CLAMP			228

Code for disposition of old part number
A -- Use up
B -- Use on other application (See PNI)
C -- File PDR Report with Bobcat Parts Sales
D -- Part Number Error

Part No.	Description	Was	Code	Page
30H85	CLAMP			112, 116
30HJ512	CLAMP			224
30HJ608	CLAMP			100
33GM816	BOLT			38
35C412	BOLT			108
36K6	CAP			108, 228
36K8	CAP			104, 120, 124, 308
38C608	SCREW			38, 40
38C868	SCREW			82
38CM1212	BOLT, SHOULDER			18
3974037	PIN			246
3974095	MET-GASK			246
3974260	SCREW			278
3974267	STUD			264
3974389	CAP, SEALING			246
3974390	PLUG			246
3974393	PIN			246
3974394	PIN			246
3974395	PIN			242, 244, 246
3974432	PLUG			252
3974433	PLUG			252
3974514	SPRING 5			250
3974515	RETAINER			250
3974518	CAP			250
3974521	MOUNT			250
3974524	WASHER			250
3974546	KEY			256, 262
3974547	STOPPER			262
3974577	O RING			238, 240, 256, 257, 258
3974618	CIR-CLIP			260
3974620	CIR-CLIP			260
3974626	SHIM			276
3974662	BOLT			272
3974671	NUT			258
3974679	BAND			248
3974868	PIN			246
3974871	CONNECTOR			246
3974882	HOOK			251, 252
3974893	SEAT			242, 244
3974894	FLANGE			242, 244
3974920	SCREW			250
3974971	NUT			274
3974972	GASKET			274
3974996	COVER			260
3975337	COLLAR			258
3975436	SCREW			248
3975441	GEAR, CAMSHAFT			246
39C820	BOLT			78
3GM620	SCREW, MACHINE			40
3GM645	SCREW			396
42H48	CLAMP 5			332, 334
42HC325	CLAMP			228
42HL100	CLAMP, HOSE			90, 334
42HL150	CLAMP, HOSE			104

Code for disposition of old part number
A -- Use up
B -- Use on other application (See PNI)
C -- File PDR Report with Bobcat Parts Sales
D -- Part Number Error

Part No.	Description	Was	Code	Page
42HL200	CLAMP, HOSE			104, 108, 224, 324, 334
42HL250	CLAMP			110
42HL375	CLAMP, HOSE			228
42HS04	CLAMP, HOSE			232
43DM10	NUT			14, 18, 44, 48, 50, 70, 76, 78, 96, 98, 100, 110, 120, 124, 224, 228, 324, 332, 334, 394
43DM6	NUT			40, 218, 324, 334, 358, 360
43DM8	NUT			48, 50, 52, 100, 112, 116, 212, 216, 232, 356, 364
45DM6	NUT 10			40
45G1006	BOLT			320
45K5	FITTING			400
45K7	CONNECTR			316
45K8	ADAPTOR			288
4CM616	BOLT			270, 276
4CM620	BOLT			242, 244, 274
4CM822	BOLT			268
4CM825	BOLT			256
4CM835	BOLT			86
4DM10	NUT			78, 396
4DM12	NUT HEX			68, 72, 74, 80, 316, 318, 386, 392, 394
4DM20	NUT			16, 294
4DM5	NUT			24
4DM8	NUT			86
50D8	NUT			214
515069	GROMMET			24
51DM10	NUT			52, 54, 74, 78, 316, 348, 352, 370, 378, 380
51DM12	NUT			54, 96, 98, 228
51DM6	NUT	53DM6	B,D	28, 34, 38, 48, 52, 74, 84, 88, 232, 364, 374
51DM6	NUT			28, 34, 38, 48, 52, 74, 84, 88, 232, 364, 374
51DM8	NUT			18, 24, 38, 52, 82, 84, 108, 110, 112, 116, 122, 126, 212, 224, 228
53CM20130	SCREW			16, 294
53CM835	SCREW			400
53D6	NUT			82
53DM8	NUT			38, 40
55CM1435	SCREW			54, 96, 98
55CM1470	SCREW			14
55D7	NUT			28
58K015	O-RING 10			396
58K10	O RING 10			396
58K219	O RING 10			120, 124
58K225	O RING 10	58K224	B	108
58K232	O RING 10			206
58K234	O RING 10			194, 206
58K340	O RING 10			196, 202
59CM1020	SCREW HX FLNG W/T8.8			318
59CM1025	SCREW HX FLNG W/T 8.8			318
59CM1060	SCREW	1CM1055	B	396
59CM1250	BOLT, FLANGE			74
59CM812	SCREW HX FLNG W/T8.8			82
59CM845	BOLT, FLANGE			102, 348, 370, 400

Code for disposition of old part number
A -- Use up
B -- Use on other application (See PNI)
C -- File PDR Report with Bobcat Parts Sales
D -- Part Number Error

Part No.	Description	Was	Code	Page
59CM870	BOLT, FLANGE			394
5CM1020	SCREW	7120308	D	212
5CM812	BOLT			250
5HM14	CLAMP			224, 232
5HM20	CLAMP			108, 109, 110, 324, 334
5HM20	CLAMP	42HL100	B	108, 109, 110, 324, 334
5HM20	CLAMP	5HM21	B	108, 109, 110, 324, 334
5HM21	CLAMP, HOSE			336
5HM23	CLAMP			90, 110, 232
5HM58	CLAMP			232
5JM25	CIR-CLIP			260
60CM1290	BOLT			228
60CM1640	SCREW			90, 91, 92
60CM660	SCREW			224
62D4	NUT			88
63D8	NUT			78
6505813	CONNECTOR			227, 228
6510470	RING GEAR			228
6513495	COTTER PIN			47, 48, 49, 50, 51, 52
6513707	JOINT			276
6515007	GAUGE			228
6516722	FILTER			2, 6, 10, 92, 108
6519328	SEAL			208
6534154	RING			317, 318
6534820	DECAL			304
6536803	WASHER			73, 74
6553411	BUSHING			232
6557720	HOSE			228, 229, 230
6560382	PIN, LOCK			70, 392
6565977	HOSE	7003457	A	324, 328, 334, 340, 344
6565977	HOSE			324, 328, 334, 340, 344
6577697	CLAMP			102, 348
6577801	LIGHT			382
6577822	HOSE			224, 232
6578169	HOSE			232
6578172	HOSE			92, 110
6578278	PAD			108
6578528	HARNESS			382
6578824	HOUSING			382
6586391	GUIDE			68
6587887	GROMMET			24
6589675	SCREW			24, 34, 43, 44
6589699	WASHER			102, 288
6594897	DECAL			298
6595014	DECAL			298
6596723	COVER			53, 54
6597572	BUMPER			67, 68, 282, 284
6597689	BUSHING, PRESS FIT			77, 78
6598098	PIN			274
6598099	KEY			260
6598102	VALVE			276
6598116	PLUG			252
6598118	COVER			266
6598156	STUD			252

Code for disposition of old part number
A -- Use up
B -- Use on other application (See PNI)
C -- File PDR Report with Bobcat Parts Sales
D -- Part Number Error

Part No.	Description	Was	Code	Page
6598275	BOLT			230
6598908	ELBOW			232
6599084	SCREW			276
6599360	SEALANT, ELEC .3 OZ			402
6599365	KIT			128
6599645	PLUG, STEEL			232
6610510	TIE			102, 146, 148, 346
6624289	STRAP, TIE			90, 107, 108, 111, 112, 115, 116, 120, 124, 211, 212, 213, 214, 215, 216, 231, 232, 286, 310, 324, 332, 334, 348, 352, 358, 360, 364, 370, 382, 394
6625575	FUSE, 20A			218
6627777	BLOCK			60
6628547	WASHER			68, 71, 72, 74, 76, 78, 79, 80, 318
6630188	POLISH #1			402
6630189	POLISH #2			402
6630367	CAP			104, 120, 124
6631010	SWITCH, PRESS OIL ENG			212
6631046	SEAL			254
6633583	SEALANT, POLYURETHANE 300 ML			402
6644965	BALL JOINT			87, 88
6645812	SCREW, BLEED			56, 58
6646678	CAP			224
6648416	SEAL(BULK /FT)			38
6649478	BULB HOUSING			382
6649949	PLUG			28
6650388	SEALANT			404
6650407	ADHESIVE			404
6651482	MANIFOLD, EXHAUST			268
6651512	ALARM BACKUP			358, 360
6651934	BOLT			260
6652521	PLATE			102, 348, 370, 400
6652574	PLUG			246
6652575	PLUG			246
6652580	BOLT			246, 264
6652652	SPRING			242, 244
6652670	STUD			266, 268, 276
6652688	CLAMP			278
6652689	CLAMP			278
6652764	STUD			242, 244, 270, 274
6652792	NUT			252, 264, 266
6653809	CONNECTOR			242, 244
6653821	BOLT			256
6653830	SEAL, STEM VALVE			236, 250
6653833	SPRING			250
6653859	SLEEVE			256
6653861	SLINGER, OIL			256
6653888	NUT			246
6653916	HOLDER			272
6654718	CLAMP			278

Code for disposition of old part number
A -- Use up
B -- Use on other application (See PNI)
C -- File PDR Report with Bobcat Parts Sales
D -- Part Number Error

Part No.	Description	Was	Code	Page
6654803	FUSE 5A			216
6654805	FUSE 10A			216
6654806	FUSE, 15A			216, 217, 218
6655151	PAN, OIL			253, 254
6655154	GUIDE			252
6655158	BOLT			252
6655160	PLUG			252
6655161	WASHER			252
6655166	COVER			256
6655179	PIN, PISTON ENG			256
6655181	ROD, CONNECTING			256
6655194	SCREEN, OIL			254
6655210	SHIM			276
6655212	GEAR			260
6655213	SLEEVE			260
6655215	BALL			260
6655216	FUEL PUMP			276
6655223	NUT			274
6655236	BEARING			256
6655237	BEARING			256
6655243	BUSHING			256
6655752	FITTING			56, 58
6655869	PLUG			246
6655870	ROCKER ARM			250
6655880	PIPE			248, 268
6657415	BOLT			266
6657663	PLUG			246
6658103	COUPLER			104
6660260	SWITCH			128
6661753	PLUG			122, 126
6662076	RING			150, 152
6664026	CHECK VALVE			372
6664085	BUSHING			24
6664223	OUTLET			216
6664224	CAP			216
6664381	CLAMP			394, 400
6664554	PUMP, WIPER WASHER			24
6664557	BRACKET			24
6665000	CLIP			88
6665314	PLUG			81, 82, 83, 84
6665317	SWITCH			290, 376
6665618	RING			76, 78
6666302	ELBOW	7126672	B	232
6666375	FILTER, AIR OUTER			1, 2, 280
6666376	FILTER, AIR INNER			2, 280
6666377	FILTER			280
6666378	VALVE			280
6666549	WASHER			75, 76, 78
6666631	WASHER			222
6666781	GASKET			236, 268
6666782	GASKET			238, 240, 246
6666783	GASKET			238, 240, 246
6666791	GASKET			236, 268
6666802	GASKET			236, 266

Code for disposition of old part number
A -- Use up
B -- Use on other application (See PNI)
C -- File PDR Report with Bobcat Parts Sales
D -- Part Number Error

Part No.	Description	Was	Code	Page
6666803	GASKET			238, 240, 242, 244
6666814	GASKET			238, 240, 256
6666817	GASKET			238, 240, 254
6667170	PUMP			232
6667326	SEAL			200, 208
6667327	SEAL			204, 206
6667328	SEAL			194, 196, 198, 202
6667352	FILTER, FUEL W/SEPERATOR 12			2, 6, 7, 8, 232
6667353	FILTER ASSY			232
6667418	PLUG			246
6667419	WASHER			272
6667420	BOLT			260
6667421	BOLT			252
6667422	WASHER			250, 252, 264, 266
6667433	CIRCLIP			262
6667451	WASHER			250
6667458	DIAPHRAGM			276
6667460	IMPELLER			264
6667461	PIN			250
6667747	SPACER			154
6667771	PLUG			154
6667934	BULB			214, 382
6668787	RING			68, 72, 74, 76, 78, 80, 318
6668819	FILTER, OIL HYD			2, 5, 6, 10, 12, 128
6668928	LOCK PIN			374
6669102	SNAP RING			154
6669117	SNAP RING			154
6669130	SNAP RING			154
6669260	WASHER			154
6669287	SEAL			68, 70, 194, 204, 206, 282, 284, 316, 318, 396
6669597	SHIM			154
6669598	SHIM			154
6669599	SHIM			154
6669736	SEAL KIT			372
6670130	BALL			154
6670132	SPRING			154
6670134	VALVE ASSY			156
6670135	BOLT			156
6670136	ADAPTER			156
6670138	SPRING			154
6670251	BATTERY, DRY 530 AMP			2, 216
6670312	SWITCH, MAGNETIC			360
6670472	NUT			278
6670533	NUT			270, 274
6670704	SPOOL			156
6670727	STARTER			221, 222, 228
6670727REM	STARTER			222
6670757	COUPLER			228
6670769	O-RING			236, 278
6670770	BOLT			246
6671106	HORN			216
6671113	SWITCH			209, 210
6671832	PLUG			130

Code for disposition of old part number
A -- Use up
B -- Use on other application (See PNI)
C -- File PDR Report with Bobcat Parts Sales
D -- Part Number Error

Part No.	Description	Was	Code	Page
6671911	O-RING			154
6671913	PIN			154
6671915	PLUG			154
6671917	WASHER			154
6671918	SPOOL			154
6671919	SCREW			154
6671920	WASHER			154
6671921	O-RING			156
6671923	COVER			154
6671924	HOUSING			154
6671925	HOUSING			154
6671926	GEAR			154
6671927	SHAFT			154
6671930	SNAP RING			154
6671931	NUT			154
6671932	SNAP RING			154
6671933	PLUG			155, 156
6671935	BOLT			154
6671936	HOUSING			154
6671937	BEARING, MOTOR TRAVEL			154
6671939	SHIM KIT			154
6671940	BEARING			154
6671941	SEAL			154
6671942	PLATE			154
6671943	O-RING			154
6671944	PISTON ASSY			154
6671945	VALVE PLATE			154
6671946	O-RING			154
6671947	BEARING			154
6671948	SHAFT, MOTOR DRIVE			154
6671949	SEAL KIT			154
6671950	SEAL KIT			156
6671951	SNAP RING			154
6671952	PISTON			154
6671953	WASHER			154
6671982	O-RING			222
6671984	BEARING			222
6671985	BEARING			222
6671991	SPRING			222
6671997	BOLT			222
6671999	ROLLER			222
6672000	RETAINER			222
6672001	PINION			222
6672006	NUT			222
6672007	BUSHING			222
6672008	NUT			222
6672011	NUT			222
6672012	WASHER			222
6672013	O-RING			222
6672172	KIT			222
6672178	COVER			222
6672190	DRAINCOCK			246
6672235	DOWEL PIN			130

Code for disposition of old part number
A -- Use up
B -- Use on other application (See PNI)
C -- File PDR Report with Bobcat Parts Sales
D -- Part Number Error

Part No.	Description	Was	Code	Page
6672255	BOLT			130
6672338	O-RING			56, 58
6672360	PLUG			242, 244
6672515	KIT, SEAL			372
6672960	COUPLER, FF FEMALE			318
6674145	O-RING			312
6674221	WASHER			150, 152
6674264	RETAINER NUT			44, 52, 78, 108, 120, 124, 212, 223, 224, 228, 316, 324, 334, 370
6674687	BATTERY, DRY 600 AMP			2, 218
6674688	COUPLER, FF MALE			318
6674818	ARMATURE			222
6674821	CLUTCH			222
6674831	SPRING			222
6675029	PIN			318
6675176	SWITCH			330
6675181	PLUG			330
6675212	RETAINER			82
6675272	WASHER			156
6675380	ADHESIVE, SPRAY 10.5 OZ			402
6675517	FILTER, OIL ENG			2, 6, 9, 10, 242, 244
6675523	BEACON			290
6675534	BLOCK, A/C VALVE			342
6675699	PLUG			280
6675705	ALARM			216
6675838	BUSHING			228
6675859	RETAINER			24, 108, 112, 116, 216, 232
6675928	RELAY, LATCHING			358, 360
6676114	ANTENNA, RADIO			210
6676169	NUT			112, 116, 216, 348, 352
6676238	LIGHT			214
6676445	COUPLER			102
6676447	COUPLER			102
6676499	GROMMET			24
6676535	COUPLER			120, 124
6676539	CLIP			326, 340, 344
6676559	COUPLER, FF FEMALE			370
6676560	COUPLER, FF MALE			370
6676713	LOUVER			324, 334
6676725	BEZEL			214
6676917	ELBOW			24
6676922	PLUG			216, 346
6677119	SCREW			326, 338, 342
6677202	DIPSTICK, OIL ENG			254
6677203	TUBE,DIPSTICK			254
6677363	CLAMP, FULL CIRCLE			230
6677463	SEAL KIT			192
6677467	KIT, SEAL			166, 168, 172, 174, 176, 178, 180, 182, 184, 186, 188, 190, 192

Code for disposition of old part number
A -- Use up
B -- Use on other application (See PNI)
C -- File PDR Report with Bobcat Parts Sales
D -- Part Number Error

Part No.	Description	Was	Code	Page
6677470	SEAL KIT			172, 174, 176, 178, 180, 182, 184, 186, 188, 190
6677471	PLUG ASSY			186, 188
6677472	KIT,SEAL			166, 168, 182, 184
6677476	TIE ROD KIT			166
6677486	NUT			220
6677487	COVER			220
6677488	RECTIFIER			220
6677490	BRACKET			220
6677491	BRACKET			220
6677492	ROTOR			220
6677493	STATOR			220
6677495	SPACER			220
6677555	RECEPTACLE			326, 338, 342
6677689	CHECK VALVE			172, 174, 176, 178, 180, 186, 188, 190
6677690	KIT, COMPENSATOR			172, 174, 176, 178, 180, 182, 184, 186, 190
6677692	KIT COMPENSATOR			188
6677695	SCREW			182, 184
6677699	ACTUATOR			172, 174, 176, 178, 180, 182, 184, 190
6677701	SEAL KIT			166
6677837	BOLT			24
6677839	GASKET			24
6677842	NUT			24
6677843	NUT			24
6677847	GROMMET			24
6677895	JOYSTICK			112, 116, 141, 142
6678563	PLUG			372
6678669	STRAP			108, 120, 124
6678818	MOUNT			108, 112, 116, 120, 124
6678826	TRACK, 16"(400X74X73)			388
6678988	VALVE	7010624	A	132, 134
6678990	VALVE			132, 134
6678993	PLUG			132, 134
6679034	MOUNT			216
6679078	SEAL KIT			132, 134
6679085	SWITCH	6697954	A	338
6679248	RING			150, 152
6679326	WASHER			156
6679499	O-RING			136
6679509	O-RING			132, 134
6679605	O-RING			132, 134
6679675	NUT			326, 338, 342
6679820	RELAY			216
6679861	O-RING			156
6679882	SEAL, OIL			60
6679906	SWITCH			370
6679953	HANDLE, JOYSTICK			142
6679956	KIT			140, 142
6679958	LOCK			140, 142
6679960	CONNECTOR			140, 142
6680402	SEAL			396
6680427	SENSOR			214
6680428	SENSOR			214

Code for disposition of old part number
A -- Use up
B -- Use on other application (See PNI)
C -- File PDR Report with Bobcat Parts Sales
D -- Part Number Error

Part No.	Description	Was	Code	Page
6680484	GASKET			238, 240, 254
6680657	PLUG			254
6680685	BOLT			250
6680686	BOLT			242, 244
6680706	BOLT			242, 244, 272
6680788	BOLT	6689528	A	278
6680801	BOLT			276
6680830	BOLT			272
6680952	FITTING 90 DEG BARB			108
6680956	VALVE			372
6680957	VALVE			372
6680958	COIL	6689082	A	372
6680998	RING			396
6681886	GROMMET			112, 116
6681911	SCREW			24
6682462	VALVE			24
6682492	TRIM			38, 84, 374, 378, 380
6682515	SHIM			276
6682532	NUT			268
6682697	GROMMET			210
6682740	RETAINER, WIRE			290, 376
6682741	RETAINER, WIRE			290, 376, 382
6682879	PIN	6688039	A	130
6683087	STUD			270
6683233	O-RING			396
6684397	BOLT			220
6684564	HEAD			356
6684567	ARM			356
6684650	REGULATOR			220
6684714	HOUSING			140, 142
6684742	NUT			398
6684743	SOLENOID			398
6684744	SOLENOID			398
6684754	O-RING			238, 240, 254
6684762	SEAT			252
6684763	SEAT			252
6684770	GASKET			238, 242
6684780	GASKET			236, 248
6684781	BOLT			248
6684788	GASKET			238, 240, 256
6684789	SEAL			238, 240, 256
6684792	GEAR			262
6684793	GEAR			262
6684794	BUSHING			262
6684795	COLLAR			262
6684808	GEAR			256
6684809	KEY			256
6684817	NUT			270
6684818	SEAL			238, 240, 270
6684819	CAP			270
6684823	SPRING			274
6684825	GUIDE, SOLENOID			270
6684829	SHIM			276
6684832	LEVER			272

Code for disposition of old part number
A -- Use up
B -- Use on other application (See PNI)
C -- File PDR Report with Bobcat Parts Sales
D -- Part Number Error

Part No.	Description	Was	Code	Page
6684833	SHAFT			272
6684836	BOLT, ADJUSTING			273, 274
6684838	LEVER			274
6684839	LEVER			274
6684841	GASKET			238, 240, 270, 274
6684842	PIPE, OVERFLOW			277, 278
6684844	BOLT			278
6684848	PIPE, INJECTION			278
6684849	PIPE, INJECTION			278
6684850	GLOW PLUG			278
6684854	FLANGE ASSY			265, 266
6684857	PLUG			266
6684858	BOLT			266
6684861	BOLT			266
6684862	PIPE			266
6684863	GASKET			236, 266
6684868	SEAL			264
6684869	FLANGE			264
6684870	GASKET			238, 240, 264
6684872	VALVE			249, 250
6684874	COLLAR			250
6684875	SHAFT			250
6684877	GASKET			236, 268
6684889	CLAMP			266
6684891	SEAL			270
6684940	KNOB			330
6684947	GROMMET			326, 338, 342
6684948	STRAP TIE			340, 344
6685077	GASKET			252
6685078	GASKET			252
6685079	GASKET			252
6685080	GASKET			252
6685081	GASKET			252
6685087	VALVE			248
6685095	RING, PISTON			256
6685096	PISTON RING			256
6685102	PIPE			278
6685103	PIPE			278
6685104	BOLT			266
6685105	PUMP			263, 264
6685109	BOLT, FLANGE			254
6685140	COVER			24
6685154	RING, BACK-UP			56, 58
6685156	RETAINER			110
6685238	VALVE			166, 168, 191, 192
6685248	PLUG			182, 184
6685249	VALVE,RELIEF			172, 174, 176, 178, 180, 186
6685258	SEAL KIT			192
6685284	VALVE			132, 134
6685332	SPOOL			144
6685372	SEALANT, GASKET LIQUID 10.1 OZ			402
6685464	BOLT			272
6685465	O-RING			238, 240, 270
6685466	O-RING			238, 242

Code for disposition of old part number
A -- Use up
B -- Use on other application (See PNI)
C -- File PDR Report with Bobcat Parts Sales
D -- Part Number Error

Part No.	Description	Was	Code	Page
6685467	O-RING			238, 242
6685468	O-RING			238, 242
6685471	GASKET			276
6685473	BOLT, EYE 12MM			276
6685474	BEARING			264
6685476	SEAL			238, 240, 274
6685478	FLANGE			246
6685482	BOLT			256
6685483	CASE, MAIN BRG.			255, 256
6685484	CASE, MAIN BRG.			256
6685485	CASE			256
6685490	BEARING			256
6685491	BEARING			256
6685492	BEARING			256
6685493	BEARING			256
6685494	WASHER			256
6685495	WASHER			256
6685496	WASHER			256
6685497	WASHER			256
6685498	GASKET			236, 278
6685501	WASHER			242, 244
6685503	CYLINDER			252
6685513	BOLT, ADJ.			270
6685514	SPRING			272
6685521	PULLEY			258
6685524	TUBE, BREATHER			247, 248
6685525	MANIFOLD			267, 268
6685526	PLATE, CONTROL			274
6685607	GRILL			210
6685744	CLIP			28, 210, 366
6685832	ACCUMULATOR			132, 134
6686035	PUSH ROD			262
6686037	GASKET			238, 240, 276
6686041	COLLAR			260
6686042	BEARING, BALL			260
6686047	STOPPER			260
6686078	SPRING			156
6686217	FILTER ASSY			92, 108
6686236	PLUG			144
6686334	IDLE APPARATUS			269, 270
6686593	REGULATOR			192
6686678	PLUG			396
6686679	PLUG			396
6686681	RING			396
6686682	RING			396
6686728	BEARING			60
6686899	VALVE			192
6686968	SEAL, WIPER ROD			56, 58
6686985	BOLT, ADJUSTING			274
6686997	CIR-CLIP			256
6686998	WIPER, ROD CYL			194, 196, 198, 202
6686999	WIPER, ROD CYL			204, 206
6687055	VALVE			192
6687064	FILTER			192

Code for disposition of old part number

A -- Use up
B -- Use on other application (See PNI)
C -- File PDR Report with Bobcat Parts Sales
D -- Part Number Error

Part No.	Description	Was	Code	Page
6687072	KIT			172, 174, 176, 178, 180, 186, 192
6687755	KIT, SEAL			156
6688111	PIN			154
6688625	NUT			132, 134
6688634	SEAL PIN			396
6688667	SWITCH			394
6688745	SEAL			396
6688839	WEAR RING			56, 58
6688850	SEAL			396
6688993	MOUNT			228
6688999	STRIKER GUARD			28
6689007	STRIKER BOLT			28
6689012	KIT, GASKET ENG UPPER			234, 235, 236
6689018	KIT, GASKET ENG LOWER			234, 237, 238
6689441	PUMP, OIL ENG			246
6689503	CASE MAIN BRG			256
6689565	SEAL			396
6689599	SPRING			272
6689981	PISTON ASSY			398
6689982	VALVE KIT			398
6689983	FILTER KIT			398
6690161	SEAL PIN			396
6690385	PLUG			130
6690386	SCREW			130
6690387	NUT			130
6690388	CAP NUT			130
6690404	SCREW			130
6690407	SEAL RING			130
6690707	WIPER, ROD CYL			200, 208
6690915	LOCK ASSY			314
6690916	BOLT			314
6690917	WASHER, LOCK			314
6690918	SOCKET WRENCH M19			314
6690928	SPRING, PRESSURE			314
6691075	KIT			188
6691410	LIGHT			74
6691449	SHIM			130
6691452	BEARING			130
6691455	O-RING			130
6691456	O-RING			130
6691457	O-RING			130
6691458	RING			130
6691461	RING			130
6691491	PLUG			130
6691498	SOLENOID, SHUTOFF FUEL			270
6691499	TANK ASSY			24
6691519	GASKET			130
6691520	CONTROLLER			130
6691532	SCREW			326, 327, 328, 340, 344
6691532	SCREW	6677118	A	326, 327, 328, 340, 344
6691532	SCREW	7011098		326, 327, 328, 340, 344

Code for disposition of old part number
A -- Use up
B -- Use on other application (See PNI)
C -- File PDR Report with Bobcat Parts Sales
D -- Part Number Error

Part No.	Description	Was	Code	Page
6691534	SCREW			332, 338, 342
6691539	HEX. NUT			220
6692325	SEAL, PISTON			206
6692326	SEAL, BP			194
6692375	BOLT			242, 244
6692376	BOLT			242, 244
6692377	BOLT			242, 244
6692381	DRAIN PLUG			254
6692385	CASE			260
6692386	GASKET			238, 240, 260
6692400	BULB			74
6692548	BOOT			140, 142
6692549	KIT, PLUNGER			140, 142
6692740	KEY			312
6692788	LOCKING PLATE			312
6692806	SEAL, CYLINDER			204
6692807	SEAL			196, 202
6692808	O-RING			198
6692823	GEAR			154
6692824	O-RING			154
6692825	CARRIER			154
6692836	CAP, HYDRAULIC TANK			10, 108
6692881	ENGINE, V2403-M-DI-E3B-BC-5			234
6692960	TRACK, RUBBER (400X74X73) 16" BOBCAT			387, 388
6692966	ROLLER, TRACK			54, 65, 66
6693223	WASHER			326, 338, 342
6693234	FOAM			328, 340, 342
6693236	FOAM			328, 340, 344
6693241	KEY 10			216
6693245	SWITCH, IGN			216
6693507	VALVE, BALL			103, 104, 137, 138, 308
6693921	SENSOR, RPM			212
6693924	MOUNT			212
6696953	FOAM			328, 340, 344
6697796	FLASHTUBE			376
6697797	AMBER LENS			376
6697935	VALVE, PEDAL DUAL			90, 112, 116, 120, 124, 143, 144
6698098	BLOCK, ENGINE			245, 246
6698103	PISTON			256
6698104	PISTON			256
6698105	PISTON			256
6698105	PISTON	6698107	A	256
6698110	BEARING, BALL			260
6698113	SHAFT, IDLE GEAR			262
6698115	CLAMP, HOSE			266
6698116	COVER			270
6698119	SHIM			276
6698120	GASKET			276
6698142	JOYSTICK, BLADE			112, 116, 124, 147, 148

Code for disposition of old part number
A -- Use up
B -- Use on other application (See PNI)
C -- File PDR Report with Bobcat Parts Sales
D -- Part Number Error

Part No.	Description	Was	Code	Page
6698169	ACTUATOR, THROTTLE			88
6698186	BEARING, CLIP			28
6698418	CAMSHAFT			262
6698425	CAMSHAFT, FUEL			259, 260
6698426	LEVER, FORK			271, 272
6698427	INJECTOR, FUEL ASSY			278
6698427REM	NOZZLE, FUEL INJ. KUBOTA V2403			278
6698640	CONTROL, THROTTLE			216
6701097	WASHER			120, 124, 232
6701123	SCREW			230
6701449	FILLER TUBE			232
6701892	CLAMP			370
6702444	FUSE 25A 5			218
6702935	PIN, PIVOT			78
6707040	ELBOW			212
6708310	HOSE, BULK 100			24
6708929	DECAL, COOLANT			296
6713504	HOSE			108
6713507	DECAL			303, 304
6715183	ELBOW			232
6716621	COVER			216
6718414	SENDER, TEMP ENG			212
6718659	HOUSING			216
6719341	HINGE			24, 25, 26
6719828	BOLT			228
6720038	INSTRUCTIONS			292
6727324	DECAL, LOGO BOBCAT AND HEAD			298
6727752	GASKET			230
6727869	SENDER,HYD TEMP			216
6729702	CLAMP			102
6731085	ELBOW			324, 334
6732148	DECAL			296
6733378	SCREW			228
6736641	PAINT, CHARCOAL .5 OZ			404
6736642	PAINT, WHITE .5 OZ			404
6736644	PAINT, ORANGE .5 OZ			404
6736645	PAINT, RED .5 OZ			404
6802539	SPACER			17, 18
6803202	SCREW			18, 28, 36, 85, 86
6805244	WASHER			23, 24, 44
6806124	HEAD			200
6806443	GROMMET			112, 116
6807184	FITTING			90
6807431	CABLE			216
6807879	PISTON			208
6808424	SCREW			28
6808480	DECAL			298
6808749	BUSHING			82

Code for disposition of old part number
A -- Use up
B -- Use on other application (See PNI)
C -- File PDR Report with Bobcat Parts Sales
D -- Part Number Error

Part No.	Description	Was	Code	Page
6808882	ADHESIVE			28, 32, 34, 38, 44
6808924	HINGE			374
6808926	PIN			374
6809043	CABLE			216
6809736	DECAL			304
6810004	DECAL, WARNING			296, 358, 360
6810029	STOP			150, 152
6810133	GROMMET			226
6810385	BUSHING			48, 50
6810456	BUSHING			82
6810539	NUT			200, 208
6810540	NUT			196, 198, 204, 206
6810813	SEAL, OIL			150, 152
6812170	PLUG			196, 200, 208
6812171	PLUG			150, 152, 194, 196, 198, 202, 204, 206
6812687	WASHER			74
6812713	RING			74
6814024	SCREW			324, 334
6814428	RIVET			88
6815011	PISTON			200
6815090	HEAD			196
6815489	DECAL			298
6815592	SPRING			396
6815939	SEAL			32
6815993	DECAL, LIFT			298
6816135	INSULATION			44
6816193	SCREW			40, 48, 82
6816532	SPACER			228
6816599	NUT			396
6817122	HEAD			194
6817562	HEAD			206
6817769	BOLT			14, 48, 50
6818017	BRACKET			374
6818059	DECAL			298, 392
6901951	MANUAL EMI SAFETY - EXCAVATOR			2
6902228	PAINT, ORANGE SPRAY CAN 6			401, 402
6902229	PAINT, CHARCOAL SPRAY CAN 6			402
6902230	PAINT, WHITE SPRAY CAN 6			402
6902233	PAINT, ORANGE QT 6			402
6902234	PAINT, CHARCOAL QT 6			402
6902235	PAINT, WHITE QT 6			402
6902236	PRIMER QT. 6			402
6903109	OIL 30W QT. 12			2, 10, 402
6903110	OIL, 30W GAL. 6			2, 10, 402
6903111	OIL 30W 2.5 GAL 2			2, 10, 402
6903117	FLUID, OIL HYD 2.5 GAL 2			2, 11, 12, 402

Code for disposition of old part number
A -- Use up
B -- Use on other application (See PNI)
C -- File PDR Report with Bobcat Parts Sales
D -- Part Number Error

Part No.	Description	Was	Code	Page
6903118	FLUID, OIL HYD 5 GAL			2, 12, 402
6903119	FLUID, OIL HYD 55 GAL DRUM			2, 12, 402
6903121	LUBE, GEAR 12			6, 12, 402
6903122	GREASE, MULTI PURPOSE #2 - 10			402, 403, 404
6903211	SPEAKER 4 INCH	6685606	A	210
6910713	SEAL KIT			172, 174, 176, 178, 180, 186, 188, 190
6969799	BOLT			266
6969803	COVER, BREATHER			248
6969804	PLUG,OIL GAUGE			254
6969805	KEY,FEATHER			246
6969808	BOLT			256, 264
6969812	BOLT			262
6969817	BALL			260
6969819	NUT, FLANGE			276
6969824	GASKET, NOZZLE INJ			236, 278
6969825	CORD, GLOW PLUG			278
6969990	GUIDE			252
6974656	TUBE ASSY, OVERFLOW			278
6983128	ANTIFREEZE/COOLANT, PG 53/47 PREMIX GAL 6			402
6983129	ANTIFREEZE/COOLANT, PG CONCENTRATE GAL 6			402
6987271	HANDBOOK, OPERATION & MAINTENANCE			2, 3, 4
6987321	INSTRUCTIONS			290
6987322	INSTRUCTIONS			376
6987333	INSTRUCTIONS, INSTALL			314
6987336	INSTRUCTIONS			322
6987344	INTRUCTIONS, INSTALLATION			312
6987357	INSTRUCTIONS			366
6987375	INSTRUCTIONS			386
6987408	INSTRUCTIONS			378, 380
6987409	INSTRUCTIONS			364
6987412	INSTRUCTIONS			356
6987432	INSTRUCTIONS			282, 284
6987497	INSTRUCTIONS			382
6988336	RADIO, MINI BOBCAT			366
6988434	KIT, RADIO M-SERIES EXCAVATORS			365, 366
6989410	INSTRUCTIONS			346
6989413	INSTRUCTIONS			368

Code for disposition of old part number
A -- Use up
B -- Use on other application (See PNI)
C -- File PDR Report with Bobcat Parts Sales
D -- Part Number Error

Part No.	Description	Was	Code	Page
6989436	MANUAL OPERATION E45 EXCAVATOR			2
6989436-CD	MANUAL OPERATION E45 EXCAVATOR CD			2
6989437	MANUAL SERVICE E45 EXCAVATOR			2
6989437-CD	MANUAL SERVICE E45 EXCAVATOR CD			2
6989438	MANUAL, PARTS E45 EXCAVATOR			2
6989438-CD	MANUAL, PARTS E45 EXCAVATOR CD			2
6989449	INSTRUCTIONS			358
6989456	INSTRUCTIONS			294
6989489	INSTRUCTIONS			38
6989497	INSTRUCTIONS			24, 28, 32
6989498	INSTRUCTIONS	6989776	A	324
6989499	INSTRUCTIONS	6989777	A	336
6989500	INSTRUCTIONS	6989778	A	332
6989501	INSTRUCTIONS			392
6989502	INSTRUCTIONS			394
6989503	INSTRUCTIONS			370
6989510	INSTRUCTIONS			374
6989530	INSTRUCTIONS			320
6989701	INSTRUCTIONS			384
6989783	INSTRUCTIONS			308
6990002	KIT, DECAL			295, 296, 297, 298
6990072	INSTRUCTIONS			348
6990073	INSTRUCTIONS			352
6990120	INSTRUCTION			316
6990165	INSTRUCTIONS			306
6990196	INSTRUCTIONS			360
6990197	INSTRUCTIONS			286
6990215	DECAL			286
6990322	INSTRUCTIONS			288
6990363	INSTRUCTIONS			36
6990464	INSTRUCTIONS			400
6990465	INSTRUCTIONS			24, 28, 32
6990467	INSTRUCTIONS			44
6990513	INSTRUCTIONS			40
6CM1220	BOLT			212, 232
7000009	PLUG			120, 124
7000328	ADAPTER, SWITCH IGN			216
7000771	RING, WEAR			204, 206
7000772	RING, WEAR			194, 196, 198, 202
7000773	RING, WEAR			58
7000778	RING, WEAR			194
7000993	LATCH, REAR DOOR			48
7001660	VALVE, CONTROL			90, 98, 100, 104, 112, 118, 124, 167, 168
7001678	VALVE, CHECK			398

Code for disposition of old part number
A -- Use up
B -- Use on other application (See PNI)
C -- File PDR Report with Bobcat Parts Sales
D -- Part Number Error

Part No.	Description	Was	Code	Page
7001911	MUFFLER, EXHAUST			230
7001922	BOLT			254
7001937	TUBE, EXHAUST			230
7003456	VALVE, MOTORIZED ASSY	6693147	B	324, 334
7003458	CLAMP, HOSE			326, 338, 342
7003459	GROMMET			328, 332, 338, 342
7003460	SEAL, FOAM			328, 330, 340, 344
7003475	EXCHANGER, WATER RADIATOR			224
7003497	SPRING, COMPRESSION			82
7003498	BEARING, ROLLER			82
7003499	BUSHING			82
7003511	PLUG			328, 340, 342
7003679	EXCHANGER, OIL COOLER			104
7008034	BLOCK, VALVE A/C			332, 338
7008040	MODULE, DE-ICER ELECTRONIC			332, 340
7008064	SWITCH, DISCONNECT			218
7008312	TANK, COOLANT			224
7008320	LEVER, JOYSTICK W/PWM			112, 116, 120, 124, 139, 140
7008351	SEAL, QUAD			198
7008352	SEAL, QUAD			196, 202
7008353	SEAL, QUAD			204
7008354	SEAL, QUAD			194
7008355	SEAL, QUAD			206
7008365	HANDLE, DOOR CAB			34
7008366	LATCH, DOOR CAB			34
7008367	CLIP, DOOR CAB			34
7008368	ROD			34
7008373	FILTER, OIL HYD ASSY			104, 127, 128
7008556	PLUG			372
7008581	JOYSTICK, BLADE			112, 116, 120, 145, 146
7008772	ALTERNATOR, 90 AMP			219, 220, 226, 228
7008778	SEAL, QUAD			200
7008786	MANIFOLD, HYD ASSY			394, 397, 398
7008888	PIN, STRAIGHT			258
7008933	SWITCH, PRESS OIL HYD			218, 286, 358
7008934	MOTOR, WIPER			24
7008936	ARM, WIPER			24
7008937	BLADE, WIPER WINDOW			24
7008954	BOLT			390
7008955	NUT			390

Code for disposition of old part number
A -- Use up
B -- Use on other application (See PNI)
C -- File PDR Report with Bobcat Parts Sales
D -- Part Number Error

Part No.	Description	Was	Code	Page
7009046	CONTROLLER, AUX CONTROL			310
7009047	PLATE			24
7009151	TRACK, STEEL			384, 389, 390
7009343	SPOOL, VALVE			136
7009345	RING, SNAP			136
7009348	BALL, 3/16 DIA			136
7009349	O-RING			136
7009350	SPRING, SPOOL			136
7009540	STRAP, DOUBLE			332, 334
7009596	PIPE, TUBE EXHAUST			230
7009798	SCREW			14
7009881	ORING			158
7009897	PLUG			158
7009976	O-RING			332, 334
7009977	O-RING			332, 338, 342
7009977	O-RING	6675538	A	332, 338, 342
7009978	O-RING			332, 334
7010035	HANDLE			136
7010036	WASHER			136
7010037	SCREW			136
7010038	JOYSTICK, LH			310
7010039	JOYSTICK, RH			310
7010054	FAN, ENG COOLANT			224
7010112	CONTROLLER, THROTTLE AIC			216
7010128	VALVE, AUX SECONDARY			370, 371, 372
7010195	BOLT, ADJUSTMENT			274
7010197	HANDLE, JOYSTICK			140
7010200	PULLEY, ALT			220
7010201	CRANKSHAFT, ENG			256
7010203	PUMP, HYD PISTON			108, 120, 124, 129, 130
7010245	FILTER, AIR			228, 279, 280
7010252	BELT, COMPRESSOR A/C			332, 334
7010255	VALVE, CONTROL			90, 100, 104, 112, 116, 117, 118, 120, 165, 166
7010296	SPRING, COMPRESSION			372
7010297	SPOOL, VALVE			372
7010298	SWITCH, ALARM MOTION			358, 360
7010331	FRESH AIR FILTER			326, 338, 342
7010332	FILTER RECIRCULATION			326, 338, 342
7010356	COVER, HEAD CYL ENG	6685085	D	248
7010428	BELT, SEAT			368
7010502	CAP, CONNECTOR			346
7010505	SCREW			42
7010506	LATCH			42
7010507	O-RING			42

Code for disposition of old part number

A -- Use up
B -- Use on other application (See PNI)
C -- File PDR Report with Bobcat Parts Sales
D -- Part Number Error

Part No.	Description	Was	Code	Page
7010508	CATCH, LATCH			42
7010509	LATCH, WINDOW CAB			42
7010510	LATCH, WINDOW CAB			42
7010549	HANDLE, JOYSTICK			146
7010550	LOCK			146, 148
7010551	PLUG			146, 148
7010552	CONNECTOR			146, 148
7010553	BASE, JOYSTICK			146
7010554	HOUSING, JOYSTICK			146, 148
7010555	SPOOL, ACTUATOR ASSY			146, 148
7010556	SPOOL, ACTUATOR ASSY			146, 148
7010557	HANDLE, JOYSTICK			148
7010558	BASE, JOYSTICK			148
7010599	GASKET, GEARCASE			240, 244
7010605	NUT			42
7010606	WASHER			42
7010607	SPACER			42
7010608	SCREW			42
7010609	LATCH, WINDOW CAB			42
7010625	COIL, SOLENOID			132, 134
7010626	COIL, SOLENOID			132, 134
7010627	SCREW			132, 134
7010628	O-RING			132, 134
7010676	PLUG			16, 294
7010894	BELT, FAN			224
7010917	PLUG			15, 16
7011053	CLIP			90, 112, 114, 116, 118, 120, 124, 348, 352, 370, 394
7011086	SCREW, TAPPING			330
7011088	RIVET, POP			330
7011090	DECAL			330
7011091	DUCT, AIR			330
7011092	WASHER, CUSHION			330
7011094	LOUVER			330
7011095	LOUVER			330
7011096	FOAM			328, 340, 344
7011099	STUD			326, 340, 344
7011100	NUT			326, 340, 344
7011101	WASHER			326, 338, 339, 340, 342, 343, 344
7011102	BOLT			326, 338, 342
7011103	INSULATION, HEATER			326, 338
7011104	INSULATION, HEATER			326, 338
7011105	INSULATION, HEATER			326, 338
7011106	INSULATION, HEATER			326, 332, 338, 342

Code for disposition of old part number
A -- Use up
B -- Use on other application (See PNI)
C -- File PDR Report with Bobcat Parts Sales
D -- Part Number Error

Part No.	Description	Was	Code	Page
7011107	INSULATION, HEATER			326, 338, 342
7011108	INSULATION, HEATER			326, 338, 342
7011109	FOAM			326, 338
7011110	BUSHING			326, 338, 342
7011111	CABLE, A/C			326, 338, 342
7011112	CLAMP, CABLE			326, 338, 342
7011113	HARNESS, HEATER			326
7011114	PAN, COIL			326
7011117	PLATE			326, 338, 342
7011118	LOUVER			326, 338, 342
7011119	PLATE, SUPPORT			326, 338, 342
7011120	LEVER			326, 338, 342
7011121	BRACKET			326, 338, 342
7011122	DOOR, CONTROL AIR			326, 338, 342
7011125	COIL, HEATER			326, 338, 342
7011128	HARNESS, HVAC			332, 338
7011131	BLOWER, HEATER & A/C			328, 340, 344
7011956	CLAMP, T-BOLT			352
7011981	MUFFLER, PURIFIER			361, 362
7012019	BASE, JOYSTICK			144
7012020	SPOOL, ACTUATOR ASSY			144
7012021	HOUSING, JOYSTICK			144
7012022	PLUG			144
7012201	KIT, SEAL			138
7012323	MOTOR, DRIVE HYD TRAVEL			95, 96, 97, 98, 153, 154
7012328	GEAR, MOTOR			154
7012329	CLAMP, TUBELINE			102
7012334	PAD, TRACK STEEL			390
7012339	PIN, MASTER			390
7012340	BUSHING			390
7012341	PIN			390
7012342	LINK, LH			390
7012343	LINK, RH			390
7012344	BELT, SEAT			22
7012352	VALVE, BUILDUP			104
7012353	VALVE, BUILDUP			104
7012491	CORD, HEATER BLOCK ENG			292
7012494	ORIFICE			112, 113, 114, 118
7012620	KIT, SEAT OPERATOR TOP			22
7012621	KIT, SLIDE			22
7012622	KIT, CONTAINER MANUAL			22
7012623	KIT, BACKREST SEAT			22

Code for disposition of old part number
A -- Use up
B -- Use on other application (See PNI)
C -- File PDR Report with Bobcat Parts Sales
D -- Part Number Error

Part No.	Description	Was	Code	Page
7012624	KIT, CUSHION SEAT VINYL			22
7012625	KIT, BACKREST SEAT			22
7012626	KIT, CUSHION SEAT			22
7012660	BOLT, FLANGE			120, 124
7012810	PLUG			28, 34
7013140	VALVE, LOCK LOAD			352, 353, 354
7013150	VALVE, LOCK LOAD			348, 349, 350
7013179	FITTING			108
7013180	TUBE			108
7013210	SLEW MOTOR			90
7013233	CLAMP, T-BOLT			348
7013263	KIT, GASKET ENG LOWER			234, 239, 240
7013577	ROLLER, TRACK	6693490	A	54, 63, 64
7013578	ROLLER, TRACK	6693499	A	54, 64, 384
7013663	LATCH, HOLD OPEN	7012677	A	28
7015260	HOUSING, GEAR			243, 244
7015264	BEARING, ENG CRANKSHAFT	6685486	A	256
7015265	BEARING, ENG CRANKSHAFT	6685487	A	256
7015266	WASHER, THRUST	6685488	A	256
7015267	WASHER, THRUST	6685489	A	256
7015269	TAPPET	6667428	A	261, 262
7015270	BEARING, ENG ROD CONNECTING	6655183	A	256
7015273	PLUG, FILL	6685472	A	246
7015275	CLAMP, INJECTION	6684845	A	278
7015398	BOLT			54, 64
7015399	WASHER			54, 64
7015668	MOUNT FIR TREE	6678666	B	214, 216
7015986	VALVE, CONTROL			130
7015987	KIT, SEAL			130
7015988	GROUP, ROTATING			130
7015989	SWASHPLATE			130
7015990	SHAFT, DRIVE			130
7015991	SPRING			130
7015992	BEARING			130
7015993	BEARING			130
7015994	SEAL, SHAFT			130
7015995	BOLT			130
7016124	SECTION, VALVE			166, 168, 189, 190
7016127	SECTION, VALVE			166, 168, 187, 188
7016128	SECTION, VALVE			166, 168, 185, 186
7016129	SECTION, VALVE			166, 168, 183, 184
7016130	SECTION, VALVE			166, 168, 181, 182
7016131	SECTION, VALVE			168, 179, 180
7016132	SECTION, VALVE			166, 168, 177, 178
7016134	SECTION, VALVE			166, 168, 175, 176
7016135	SECTION, VALVE			166, 168, 173, 174
7016137	SECTION, VALVE			166, 168, 171, 172
7016139	SECTION, VALVE			166, 168, 169, 170
7016140	KIT, ROD TIE			168

Code for disposition of old part number
A -- Use up
B -- Use on other application (See PNI)
C -- File PDR Report with Bobcat Parts Sales
D -- Part Number Error

Part No.	Description	Was	Code	Page
7016141	VALVE, ANTI-CAV			190
7016142	KIT, CAP			188
7016143	KIT, CAP			186
7016901	PAD, STREET ASSY			386
7017857	SET SCREW			208
7017858	SET SCREW	26GM8013	B	202
7017995	EVAPORATOR			332, 338
7017996	BRACKET, VALVE			332, 338, 342
7017997	HOUSING, BASE	7019997	D	326, 338, 342
7017997	HOUSING, BASE			326, 338, 342
7017998	COVER	7019998	D	326, 338, 342
7017998	COVER			326, 338, 342
7017999	PLATE, VALVE			326
7018000	COVER, ASSY			326, 338, 342
7018001	VALVE, DRAIN			326, 338, 342
7018002	CONNECTOR			328, 340, 344
7018003	SEAL, FOAM			328, 340, 342
7018004	HEATER, CAB			324, 325, 326
7018005	HVAC ASSY			336, 337, 338
7018006	BRACKET			330
7018007	PLATE			330
7018008	CONTROL			330
7018009	WASHER			330
7018010	SWITCH, CONTROL TEMP			330
7018015	KIT, PLUNGER			144
7018031	KIT, SEAL			168
7018038	LIGHT			74
7019023	BOLT, EYE 12MM			276
7019024	GASKET			276
7019203	KIT, SEAL			132, 134
7019213	KIT, SEAL			160, 162, 163, 164
7019214	PISTON, ASSY			158
7019216	SHAFT, DRIVE			158
7019217	BEARING, ROLLER			158
7019218	BEARING, BALL			158
7019219	PLATE, SHOE			158
7019220	PLATE, RETAINER			158
7019221	BUSHING			158
7019222	SPRING			158
7019223	BLOCK, CYL			158
7019224	PLATE, FRICTION			158
7019225	PLATE			158
7019226	PISTON, BRAKE			158
7019227	SPRING			158
7019228	PLATE, VALVE			158
7019229	PLUNGER			158
7019230	SPRING, CHECK VALVE			158
7019231	PLUG			158
7019232	PIN, SPRING			158
7019233	O-RING			158
7019234	O-RING			158
7019235	O-RING			158
7019236	O-RING			162

Code for disposition of old part number
A -- Use up
B -- Use on other application (See PNI)
C -- File PDR Report with Bobcat Parts Sales
D -- Part Number Error

Part No.	Description	Was	Code	Page
7019237	SPOOL, VALVE			158
7019238	SPRING			158
7019239	PLUNGER			158
7019240	SPRING			158
7019241	PLUG			158
7019242	PLUG			160, 162
7019243	ORIFICE			158
7019244	RING, SNAP			158, 159, 160, 162
7019245	BOLT			160, 162
7019246	VALVE, RELIEF			160
7019247	O-RING			160
7019248	BEARING, TAPERED ROLLER			162
7019249	BEARING, TAPERED ROLLER			162
7019250	SEAL, OIL			162
7019251	COVER, BEARING			162
7019252	COLLAR, HALF			162
7019253	CARRIER, MOTOR			162
7019254	CARRIER, MOTOR			162
7019255	WASHER, THRUST			162
7019256	RING, INNER			162
7019257	RING, INNER			162
7019258	BEARING, NEEDLE			162
7019259	BEARING, NEEDLE			162
7019260	GEAR, MOTOR			162
7019261	GEAR, MOTOR			162
7019262	GEAR, MOTOR			162
7019263	GEAR, MOTOR			162
7019264	WASHER, THRUST			162
7019265	PLATE			162
7019266	WASHER, THRUST			162
7019288	CAP, FUEL LOCKING	6680151	A	232
7019289	BOLT			162
7019295	SHAFT, MOTOR			162
7020238	KIT, KNOB			22
7020240	KNOB, ADJUSTMENT WEIGHT			22
7020241	KNOB, ADJUSTMENT HEIGHT			22
7020242	MOTOR, SLEW			158
7020350	KIT, SUSPENSION ASSY	7012627	A	22
7020386	VALVE	6684873	A	250
7020781	SPRING			312
7020782	PIN, ROLL			312
7021044	RING, SLEW	6692962	A	14, 54
7021081	CONTROLLER, KEYED PANEL			216
7021082	CONTROLLER, KEYLESS PANEL			216, 346

Code for disposition of old part number
A -- Use up
B -- Use on other application (See PNI)
C -- File PDR Report with Bobcat Parts Sales
D -- Part Number Error

Part No.	Description	Was	Code	Page
7021082	CONTROLLER, KEYLESS PANEL	6698609	B	216, 346
7021126	CONTROLLER, RFID			364
7021127	ANTENNA, RFID			364
7021128	KEY, RFID			364
7021764	PUMP, FUEL INJ	6698118	A	275, 276
7021924	MOUNT, ENG	7013153	A	228
7022000	SENSOR, PRESS OIL HYD	7008372	A	216
7022119	HOUSING, VALVE	7019215	A	158
7022120	PLUG			160
7022121	PIN, STRAIGHT			160
7022367	KNOB			216
7022679	PLUG	6683104	A	246
7023076	OIL, 10W30 QT 12	6903107	A	2, 10, 402
7023077	OIL, 10W30 GAL 6	6903108	A	2, 10, 402
7023078	OIL, 10W30 2.5 GAL 2	6903112	A	2, 10, 402
7023080	OIL, 15W40 QT 12	6903105	A	2, 10, 402
7023081	OIL, 15W40 GAL 6	6903106	A	2, 10, 402
7023082	OIL, 15W40 2.5 GAL 2	6903113	A	2, 10, 402
7023166	LATCH, WINDOW CAB			40
7023167	LATCH, WINDOW CAB			40
7023282	MANIFOLD, HYD ASSY	7176761	A	100, 110, 122, 131, 132
7023283	MANIFOLD, HYD ASSY	7176625	A	100, 110, 126, 133, 134
7023293	LATCH, RH			38
7023294	LATCH, LH			36
7023550	CAP, DIESEL LOCKING			232
7023573	RESISTOR			328, 340, 344
7023577	COMPRESSOR, A/C	6698358	A	332, 334
7023611	VALVE, SHUTTLE	6697919	A	90
7024826	SEAL, OIL	6631664		238, 240, 258
7024826	SEAL, OIL	6631664	A	238, 240, 258
7024957	TRACK RUBBER (400X74X73) 16" EF	6988835	B,D	388
7025095	RECEIVER, DRIER A/C	6680311	B	332, 334
7025145	HVAC ASSY			336, 341, 342
7025589	FLASHTUBE			376
7025603	COIL, EVAPORATOR			342
7025604	HARNESS, HVAC			342
7025605	INSULATION, HEATER			326, 342
7100529	BRACKET			212
7100535	SEAL	6810610	A	150, 152
7101512	BUMPER			36
7102268	PRIMER			28, 32, 34, 38, 44
7104264	HEAD			198
7106279	BOLT			232

Code for disposition of old part number
A -- Use up
B -- Use on other application (See PNI)
C -- File PDR Report with Bobcat Parts Sales
D -- Part Number Error

Part No.	Description	Was	Code	Page
7106627	DECAL, REFLECTIVE			294, 298
7109138	SHAFT			60
7110861	CLEANER			38
7114212	HEAD			396
7115813	BLOCK RUBBER			396
7116850	SPACER			228
7116851	CUP			228
7117748	DECAL			304
7120569	DECAL, FILTER			296
7120570	DECAL			296
7120573	DECAL			304
7120672	TIE DOWN			216
7120821	SWIVEL			396
7121281	O-RING			396
7122310	TORX BOLT			40
7122596	BRACKET			102
7126140	PISTON, PIN			396
7127210	GROMMET			54
7128723	SCREEN			108
7130431	CLIP			396
7132119	PIN			396
7134019	SHAFT W/A			200
7134020	TUBE ASSY			200
7134587	DECAL, X-CHANGE			300, 394
7135356	SHAFT, CHROME			56, 58
7135557	KIT, SEAL			208
7135559	SEAL KIT			200
7135895	HARNESS			74
7135909	SCREW			216
7136738	DECAL WARNING			304, 358, 360
7136776	GROMMET			324, 334
7137214	PIN			70, 392
7139000	DECAL, USING CPLR			312
7139574	MOUNT RUBBER			224
7142236	COVER, ACCESS			54
7142448	UNDERCARRIAGE			54
7142449	BLADE, EXC			76
7142450	FRAME, BLADE ANGLE EXC			78
7142456	COVER, MOTOR			54
7142484	EDGE, CUTTING WELD-ON 76			76
7142514	PIN, PIVOT			78
7142520	EDGE, CUTTING BOLT-ON 78"			78
7142521	PIN			76, 78
7142522	PIN			76, 78
7142762	CLIP			210
7142818	FRAME, SWING			80
7142836	LINK			68
7142838	LINK, ASSY			68
7142982	TUBELINE, HYD			102
7142986	TUBELINE, HYD			102

Code for disposition of old part number
A -- Use up
B -- Use on other application (See PNI)
C -- File PDR Report with Bobcat Parts Sales
D -- Part Number Error

Part No.	Description	Was	Code	Page
7142990	TUBELINE, HYD			102
7142994	TUBELINE, HYD			102
7142998	TUBELINE, HYD			102
7143012	PIN, PIVOT			74
7143014	PIN, PIVOT			80
7143016	PIN, PIVOT			80
7143017	PIN, PIVOT			80
7143036	PIN, PIVOT		A	70, 72, 392, 394
7143036	PIN, PIVOT			70, 72, 392, 394
7143038	PIN, PIVOT			74
7143085	IDLER, MACHINED			60
7143481	WINDOW, CANOPY TOP			44
7143551	SEAL, DUST			68, 74, 202, 282, 284, 316
7143561	O-RING			68, 70, 392, 394, 400
7143684	HOSE, HYD ASSY			102
7143717	SPOOL, SWIVEL			150
7143734	SWIVEL, HYD ASSY			96, 122, 150
7144048	HOSE, HYD			96, 98
7144049	HOSE, HYD			96, 98
7144055	HOSE, HYD			98
7144058	HOSE, HYD			96, 98
7144064	HOSE, HYD			98
7144065	HOSE, HYD			98
7144066	HOSE, HYD			98
7144089	COVER			74
7144499	PIN, PIVOT			68
7144500	PIN, PIVOT			68
7145016	HOSE ASSY			90
7145801	MAT, FLOOR			24
7146428	PLATE, FLOOR			18
7146541	HOSE, AIR INTAKE			228
7146552	HOSE, WATER LOWER			224, 225, 226
7146599	GUARD, FAN			224
7147221	SPACER			204
7147340	HARNESS, CONSOLE LH			214
7147433	DECAL, ARM LONG			282, 298
7148098	HINGE, COVER			48, 50
7148145	DECAL, LH STD/ISO			296
7148146	DECAL, LH ISO			304
7148147	DECAL, RH STD/ISO			296
7148148	DECAL, RH ISO			304
7148155	DECAL, BLADE			296
7148156	DECAL, ANGLE BLADE			296
7148157	DECAL, WARNING			296
7148158	DECAL, WARNING			304
7148372	CHANNEL, LH			14
7150743	TUBELINE, HYD			102
7151504	INLET, PUMP			108
7151891	HARNESS, GROUND			212
7152748	DECAL, FUEL DIESEL			298

Code for disposition of old part number

A -- Use up
B -- Use on other application (See PNI)
C -- File PDR Report with Bobcat Parts Sales
D -- Part Number Error

Part No.	Description	Was	Code	Page
7152908	SWIVEL, HYD ASSY			98, 126, 152
7152911	SPOOL, SWIVEL			152
7153688	MAT, FLOOR CANOPY			44
7154041	KNOB			82
7154049	NUT			194, 202
7155411	NUT			14, 18, 44, 324, 334
7155413	NUT			14, 18, 19, 20
7155449	SPACER			28
7156070	TUBELINE, HYD			101, 102
7156272	TEE			224, 324, 334
7156374	BRACKET			332, 334
7156375	SEAL, RH PANEL			45, 46
7157550	SEAT, OPERATOR SUSPENSION VINYL			18, 21, 22
7157717	TEE			120, 124
7160383	RIVET, BIRD CAGE			44, 82, 84, 324, 334, 335, 336
7160880	DECAL, X-CHANGE			298, 316, 392
7160881	DECAL, X-CHANGE			298, 316, 394
7160901	SEAL, BULK			48, 50, 52
7161331	KIT, SEAL			206
7161404	FLYWHEEL, ENG ASSY			228
7161761	GUARD, FABRIC			394
7162140	LINK, THROTTLE			88
7162750	DUCT, AIR			324, 336
7162756	SEAL, CAB			32
7163219	KIT, SEAL	7180690	A	56, 58
7163219	KIT, SEAL			56, 58
7163690	SCREW			28, 210, 366
7163788	HANDLE, LEVER CONTROL			86
7164042	CONSOLE, JOYSTICK			82
7164046	HANDLE, OPERATING			82
7164047	LEVER, CONTROL			86
7164048	LEVER, CONTROL			86
7164061	PIN, HINGE			86
7164410	SPACER			56, 384
7164492	CYLINDER, BLADE			199, 200
7164903	HOSE, HYD ASSY			116
7164904	HOSE, HYD ASSY			116
7164909	HOSE, HYD ASSY			112, 116
7164910	HOSE, HYD ASSY			112, 116
7165097	SHAFT			82
7165333	CLIP			28, 44
7165414	BRACKET			48, 50
7165562	COVER, LH			82
7165563	COVER, LH			82
7165564	COVER, LH			82
7165565	COVER, RH			84
7165566	COVER, RH			44
7165567	COVER, RH			44
7165711	CYLINDER, BLADE			197, 198

Code for disposition of old part number

A -- Use up
B -- Use on other application (See PNI)
C -- File PDR Report with Bobcat Parts Sales
D -- Part Number Error

Part No.	Description	Was	Code	Page
7165713	TUBE, CASE CYL			198
7165715	ROD, CYL			196, 198
7165718	PISTON, CYL			198
7165792	LINK, ASSY			68, 69, 70, 72, 316
7165793	LINK, ASSY			394, 395, 396
7165958	HOSE, HYD ASSY			394
7165962	SHIELD, CYL			74
7165992	PIN, PIVOT			80
7165993	SHIM			80
7165994	TUBELINE, HYD			92
7165995	SUPPORT, BRACKET			80
7166019	PISTON			204
7166186	BUSHING, WEAR			202
7166187	BUSHING, WEAR			194
7166188	PISTON, CYL			194
7166239	SPACER			74
7166241	PIN, PIVOT			70, 72
7166248	FITTING			104
7166249	FITTING			104
7166257	KIT, SEAL			194
7166468	WINDOW, CAB SIDE FIXED			28
7166474	WINDOW, CAB SLIDING			28, 41, 42
7166629	LIGHT, CAB HEADLINER			210
7166859	BRACKET, RADIO			366
7166916	DECAL, A/C			300, 332, 336
7167095	PANEL, RH			28
7167096	PANEL, RH			28
7167097	PANEL, LH			28
7167098	PANEL, LH			28
7167163	BOWL, FUEL			322
7167166	PEDAL, RH			86
7167167	PEDAL, LH			86
7167168	PEDAL, BACK			86
7167211	TUBELINE, HYD			394
7167212	TUBELINE, HYD			394
7167213	TUBELINE, HYD			370
7167214	TUBELINE, HYD			370
7167225	HOSE, HYD ASSY			102, 284
7167226	HOSE, HYD ASSY			102, 284
7167230	HOSE, HYD ASSY			394
7167231	HOSE, HYD ASSY			394
7167234	HOSE, HYD ASSY	7167225	B,D	282
7167535	BRACKET			394
7167576	NUT, WING			104
7167716	DECAL, LOGO			298
7168039	DECAL, WARNING			298, 302, 304
7168039	DECAL, WARNING	6804114	A	298, 302, 304
7168039	DECAL, WARNING	7120574		298, 302, 304
7168071	SHROUD, FAN			224
7168280	BRACKET, ALARM			358, 360
7168404	COVER, RH			28, 324, 334

Code for disposition of old part number

A -- Use up

B -- Use on other application (See PNI)

C -- File PDR Report with Bobcat Parts Sales

D -- Part Number Error

Part No.	Description	Was	Code	Page
7168598	COVER, RH			14
7168895	HARNESS, AC CLUTCH			332, 334
7168965	COVER, RH			84
7169006	DECAL, STAY CLEAR			294, 298
7169009	DECAL, STAY CLEAR			294, 304
7169014	DECAL, EXIT			296
7169112	SWITCH, ROCKER A/C	6719176	A	330, 332
7169291	DECAL			296
7169360	SEAT, OPERATOR SUSPENSION CLOTH			18, 22
7169719	SUPPORT			82, 84
7169720	MOUNT, ARMREST			82, 84
7169837	HOSE, HYD ASSY			116
7169988	CLIP, HOSE			112, 116
7169993	PANEL, REAR			28
7170060	BRACKET, DISCONNECT			218
7170114	SCREW			210
7170287	WINDOW, CAB SIDE FIXED			32
7170288	WINDOW, CAB REAR			32
7170289	WINDOW, DOOR CAB LOWER			34
7170290	WINDOW, DOOR CAB UPPER			34
7170322	STUD, BALL JOINT			52
7170400	SEAL RADAITOR			224
7170445	LINK			48, 50
7170446	PIN, RETAINER			48, 50
7170488	LEVER			28
7170493	SEAL, BULK			14, 48, 50
7170632	HOOK, COAT			28
7170706	CONTAINER, STORAGE			18
7170708	CONTAINER, STORAGE			18
7170709	HINGE, COVER			18
7170740	CLIP PLASTIC TREE			224
7170762	PANEL, RH			44
7170765	NUT			18
7170795	SEAL, COVER			46
7170799	SEAL, LATCH			28
7170871	LATCH, DOOR REAR			52
7170872	BRACKET, LATCH			52
7170873	LATCH, HANDLE			52
7170874	NUT			34
7170944	STRIKER, LATCH DOOR			52

Code for disposition of old part number
A -- Use up
B -- Use on other application (See PNI)
C -- File PDR Report with Bobcat Parts Sales
D -- Part Number Error

Part No.	Description	Was	Code	Page
7171260	PIN, PARALLEL			13, 14, 90
7171264	SPACER, TUBE			82
7171356	SEAL, DUCT			324, 336
7171397	CONTAINER, STORAGE			44
7171741	HARNESS, CAB			210
7171777	HARNESS, WIPER			210
7171866	SEAL, BULK/FT			32
7171890	CABLE, NEGATIVE			218
7172409	DECAL, FUSE			296
7172424	UPPERSTRUCTURE			14
7172448	COUNTERWEIGHT			16
7172451	COUNTERWEIGHT			16, 294
7172453	COUNTERWEIGHT			16
7172472	TANK, FUEL			232
7172473	HOSE, FUEL			232
7172474	HOSE, INLET			232
7172554	KIT, BEACON LIGHT			289, 290
7172644	TANK, HYD			108
7172738	SEAL, ENG			46
7172745	BUSHING, WEAR			68, 70, 204, 282, 284, 316
7172778	BRACKET, TANK			24
7172955	SWIVEL, HYD ASSY			396
7172972	HARNESS, BEACON/STROBE			290, 376
7172974	KIT, STROBE LIGHT			375, 376
7172977	HARNESS, CANOPY			290, 376, 382
7173007	PLUG			228
7173031	HOSE, HYD ASSY			96, 98
7173137	BRACKET			108
7173148	KIT, MIRROR			355, 356
7173287	HOLDER			28
7173292	BUSHING, WEAR			70, 396
7173308	KIT, GUARD CANOPY			379, 380
7173341	GROMMET			366
7173388	SPACER			224
7173478	KIT, GUARD LIGHT			381, 382
7173482	HARNESS, LIGHTS			382
7173483	GUARD, CANOPY			380
7173484	GUARD, CAB			378
7173584	KIT, GUARD CAB			377, 378
7173965	SUPPORT, RADIATOR			224
7173984	BUSHING, WEAR			206
7174029	BRACKET, THROTTLE			88
7174035	KIT, APPS SPECIAL			373, 374
7174036	GUARD, CAB			374
7174037	PLATE			374
7174038	BRACKET			374
7174043	MOUNT, LOAD ISOLATOR ASSY			24
7174312	DECAL			314

Code for disposition of old part number

A -- Use up
B -- Use on other application (See PNI)
C -- File PDR Report with Bobcat Parts Sales
D -- Part Number Error

Part No.	Description	Was	Code	Page
7174321	CONTAINER, STORAGE			324, 336
7174361	SEAL, BULK			34
7174461	PLATE, FLOOR			18
7174507	MOUNT, WINDOW			28
7174508	SEAL, BULK/FT			28
7174574	HOSE, HYD			96, 98
7174826	BRACKET			84
7174835	PIN			104
7174944	PLUG			28
7175013	GUIDE, HOSE			112, 116
7175041	CYLINDER, BUCKET			205, 206, 316
7175044	TUBE, CASE CYL			206
7175047	ROD, CYL			206
7175050	SCREW			34
7175062	SEAL, RADIATOR			224
7175113	PISTON, CYL			206
7175138	COVER, LH			14
7175158	CYLINDER, ARM			193, 194
7175159	TUBE, CASE CYL			194
7175160	ROD, CYL			194
7175184	HOSE, HYD			112, 116
7175186	HOSE, HYD			112, 116
7175187	HOSE, HYD			120, 124
7175188	HOSE, HYD			120, 124
7175189	HOSE, HYD			120, 124
7175190	HOSE, HYD			120, 124
7175191	HOSE, HYD			112, 116
7175192	HOSE, HYD			112, 116
7175193	HOSE, HYD			112, 116
7175194	HOSE, HYD			112, 116
7175195	HOSE, HYD			112, 116
7175196	HOSE, HYD			112, 116
7175204	HOSE, HYD			90
7175205	HOSE, HYD			90
7175206	HOSE, HYD			90
7175207	HOSE, HYD			118
7175210	HOSE, HYD			118
7175212	HOSE, HYD			118
7175213	HOSE, HYD			112
7175214	HOSE, HYD			112, 116
7175214	HOSE, HYD	7175183	A	112, 116
7175215	HOSE, HYD			112
7175224	HOSE, HYD			122, 126
7175230	HOSE, HYD			99, 100
7175231	HOSE, HYD			100
7175232	HOSE, HYD			100
7175233	HOSE, HYD			100
7175283	HOSE, HYD			100
7175284	HOSE, HYD			100
7175285	HOSE, HYD			100
7175286	HOSE, HYD			100
7175288	HOSE, HYD			92
7175290	HOSE, HYD			89, 90
7175291	HOSE, HYD			90

Code for disposition of old part number

A -- Use up
B -- Use on other application (See PNI)
C -- File PDR Report with Bobcat Parts Sales
D -- Part Number Error

Part No.	Description	Was	Code	Page
7175327	COVER, RH			48
7175332	REAR DOOR			52
7175346	DECAL, LOGO			298
7175504	SEAL, ENG			46
7175747	HARNESS, ENG			212
7175757	TUBE, CASE CYL			202
7175760	ROD, CYL			202
7176094	LINK			48, 50
7176115	HOSE, HYD			92, 370
7176116	GUARD, ANGLE BLADE			78
7176167	HOSE, HYD			348
7176168	HOSE, HYD			348
7176171	INSULATION, PANEL LH			46
7176174	TUBELINE, HYD			126
7176175	TUBELINE, HYD			126
7176176	TUBELINE, HYD			122, 126
7176177	TUBELINE, HYD			122, 126
7176294	TUBELINE, HYD			126
7176295	TUBELINE, HYD			126
7176300	TUBELINE, HYD			122, 126
7176310	TUBELINE, HYD			124
7176501	HOLDER, MANUAL			28
7176504	KIT, RFID			363, 364
7176533	HARNESS, SECURITY RFID			364
7176545	MOUNT			364
7176604	U-BOLT			356
7176628	GROMMET			120, 124
7176762	TUBELINE, HYD			370
7176763	TUBELINE, HYD			370
7176766	TUBELINE, HYD			90
7176915	TUBELINE, HYD			104, 308
7176974	HOSE, HYD			112
7176993	HOSE, HYD			370
7177015	SCREW			84
7177018	HOSE, HYD			92
7177019	HOSE, HYD			92
7177100	SCREEN, OUTER			48, 50
7177114	HOSE, HYD			394
7177142	HOSE, HYD			370
7177148	HOSE, HYD			370
7177166	HOSE, HYD			394
7177212	GASKET			322
7177292	BRACKET, HARNESS			212
7177373	BRACKET, COVER SIDE			14
7177732	HOSE, HYD			394
7177735	STUD, BALL JOINT			36, 40
7177855	HOSE, HYD ASSY			102
7177872	HOSE, HYD			98
7177873	HOSE, HYD			98
7177920	HINGE, DOOR REAR			52

Code for disposition of old part number
A -- Use up
B -- Use on other application (See PNI)
C -- File PDR Report with Bobcat Parts Sales
D -- Part Number Error

Part No.	Description	Was	Code	Page
7177956	DECAL, BLADE ANGLE			298, 299, 300
7177959	SEAL, BULK			18
7177996	GAS SPRING			52
7178023	CYLINDER, SWING			203, 204
7178024	TUBE, CASE CYL			204
7178025	ROD, CYL			204
7178046	HOSE, HYD			120, 124
7178047	HOSE, HYD			108
7178048	HOSE, HYD			120, 124
7178082	BRACKET			120, 124
7178153	MOUNT			108, 122, 126
7178177	DECAL, WARNING			296
7178178	DECAL, WARNING			298, 374
7178179	DECAL, STD/ISO			296
7178215	DECAL, WARNING			304, 374
7178216	DECAL, WARNING			304
7178217	FITTING, HYD TEE			104, 308
7178333	PLATE, FLOOR			18
7178334	PLATE, FLOOR			18
7178412	DECAL, COVER			298
7178413	DECAL, COVER			298
7178519	HOSE, WATER UPPER			224
7178575	CLIP, HOSE			112, 116
7178670	CLIP			48, 50
7178689	ROLLER			36
7178702	BUMPER, RUBBER			28, 36, 40
7178703	BUMPER, RUBBER			14
7178708	COVER, HANDLE			28
7178853	PLATE, GUIDE			54, 384
7178858	FITTING, ADAPTER			108
7178918	BRACKET			112, 116
7178919	BRACKET			112, 116
7178934	MOUNT, ENG			228
7178989	PLATE			112, 116
7178997	BRACKET, FILTER			228
7179001	PIN, PIVOT			74
7179045	WINDOW, CAB LOWER			36
7179100	HEADLINER			28
7179320	GAS SPRING			36
7179416	HOSE, HYD FORMED			108
7179439	HOSE, HYD FORMED			104
7179440	HOSE, HYD FORMED			108
7179508	FITTING, HYD TEE			108
7179626	HOSE, HYD			92
7179637	TUBELINE, HYD			122
7179638	TUBELINE, HYD			122
7179643	TUBELINE, HYD			120
7179645	TUBELINE, HYD			90
7179646	TUBELINE, HYD			90

Code for disposition of old part number
A -- Use up
B -- Use on other application (See PNI)
C -- File PDR Report with Bobcat Parts Sales
D -- Part Number Error

Part No.	Description	Was	Code	Page
7179650	HOSE, HYD			90
7179651	HOSE, HYD			90
7179690	CONDENSER, A/C			332, 334
7179693	HOSE, HYD			352
7179694	HOSE, HYD			352
7179818	HOSE, A/C ASSY			332, 334
7179819	HOSE, A/C ASSY			332, 334
7179820	HOSE, A/C ASSY			332, 334
7179821	HOSE, A/C ASSY			332, 334
7179826	HOSE, WATER FORMED			224, 324, 334
7180021	BRACKET, MIRROR			356
7180096	INSULATION, ENG			46
7180097	INSULATION, ENG			46
7180098	INSULATION, ENG			46
7180161	MOUNT, RADIATOR			224
7180188	INSULATION, ENG			46
7180219	INSULATION, PANEL LH			46
7180245	MOUNT, RADIATOR			224
7180283	TREAD, SAFETY			24, 298
7180309	WINDOW, CAB TOP	7166471	A	32
7180310	HARNESS, ALARM MOTION			358
7180324	TUBE, GREASE			56, 58
7180618	SEAL, CAB			28
7180664	TENSIONER, TRACK ASSY			58
7180844	INSULATION, COVER RH			46
7180845	INSULATION, COVER RH			46
7181010	BRACKET			374
7181011	BRACKET			374
7181022	DECAL, MODEL			300
7181057	GROMMET			86
7181121	DECAL, APPS SPECIAL			298, 374
7181127	DECAL, GUARD TOP			298, 380
7181128	DECAL, GUARD TOP			298, 378
7181129	MOUNT, ENG			228
7181142	BRACKET, SUPPORT			84
7181284	HARNESS, BOOM			310
7181285	KIT, CONTROL ATTACH			309, 310
7181320	TENSIONER, TRACK ASSY			55, 56
7181443	PLATE, FLYWHEEL			228
7181465	SEAL, BULK / FT			32
7181476	BRACKET, EXCHANGER			224
7181541	SEAL			31, 32
7181884	INSULATION, BLOCK			46

Code for disposition of old part number
A -- Use up
B -- Use on other application (See PNI)
C -- File PDR Report with Bobcat Parts Sales
D -- Part Number Error

Part No.	Description	Was	Code	Page
7182064	DECAL, LH ISO			310
7182065	DECAL, RH ISO			310
7182174	HINGE, DOOR REAR			52
7182359	BRACKET			52
7182464	CLIP			27, 28
7182732	INSULATION			30
7182957	SPACER			28, 29, 30
7183315	GROMMET			108
7183410	INSULATION, COVER RH			46
7183411	INSULATION, COVER RH			46
7183650	KIT, ALARM MOTION			357, 358
7183676	MOUNT			310
7183679	HARNESS, BOOM	6718426	B,D	310
7183801	BRACKET			324, 334
7183846	DECAL, OPERATION			310
7183989	BRACKET			14
7184146	KIT, CAB			24, 28, 32
7184225	BRACKET			48, 50
7184264	LATCH, HANDLE			48
7184310	KIT, COUNTERWEIGHT			293, 294
7184694	HOSE, HEATER FORMED			224, 324, 334
7185152	KIT, WINDOW *SEE NOTE*			38
7185275	FITTING, HYD TEE			348, 352
7185283	KIT, X-CHANGE HYD			393, 394
7185285	KIT, AUX SECONDARY			369, 370
7185311	HOSE, AIR INTAKE			228
7185351	BRACKET			48
7185352	INSULATION			46
7185431	GROMMET			14
7185456	BRACKET, ALT			224
7185459	PULLEY, FAN ENG			224
7185586	BRACKET, RELAY CENTER			216
7185739	INSULATION, RADIATOR			46
7185932	DECAL, WARNING			296
7185933	DECAL, WARNING			296
7185934	DECAL, WARNING			304
7185935	DECAL, WARNING			304
7185938	BUSHING, WEAR			202
7186094	BRACKET			352
7186097	BRACKET			352
7186448	TUBELINE, HYD			352
7186449	TUBELINE, HYD			352
7186557	BRACKET			348
7186560	BRACKET			348
7186561	TUBELINE, HYD			348
7186570	BRACKET			86

Code for disposition of old part number

A -- Use up
B -- Use on other application (See PNI)
C -- File PDR Report with Bobcat Parts Sales
D -- Part Number Error

Part No.	Description	Was	Code	Page
7186572	PLATE			86
7186607	INSULATION, DOOR REAR			46
7186608	INSULATION, DOOR REAR			46
7186636AR	KIT, DECAL			296, 298
7186636BR	KIT, DECAL			296, 298
7186636CA	KIT, DECAL			296, 298
7186648	LATCH, HANDLE			20
7186698	PLATE			86
7186700	PAD, DECAL			46
7186708	DECAL, SWITCH IGN			296
7186741	INSERT			86
7186792	KIT, EXTINGUISHER FIRE			319, 320
7186931	DECAL, FILL LINE			296
7187101	BRACKET, MOUNTING			320
7187102	BRACKET, MOUNTING			320
7187133	PANEL, ENGINE			14
7187343	INSULATION, DOOR REAR			46
7187368	SEAL, CROSSMEMBER			24
7187433	COVER, HOSE BULK/FT			332, 334
7187993	HOSE, HYD			348
7187994	HOSE, HYD			348
7188090	DOOR, STORAGE			18
7188091	KIT, HEATER BLOCK ENG			291, 292
7188111	HOSE, HYD			96, 98
7188134	PISTON, CYL			196
7188135	HEAD, CYL HYD			204
7188326	HOSE, DRAIN OIL ENG			228
7188427	DECAL, CAPACITY LIFT			284
7188428	DECAL, CAPACITY LIFT			294
7188429	DECAL, CAPACITY LIFT			294
7188430	DECAL, CAPACITY LIFT			298
7188431	DECAL, CAPACITY LIFT			284, 304
7188432	DECAL, CAPACITY LIFT			294, 298
7188433	DECAL, CAPACITY LIFT			294, 304
7188436	DECAL, CAPACITY LIFT			294
7188437	DECAL, CAPACITY LIFT			294

Code for disposition of old part number
A -- Use up
B -- Use on other application (See PNI)
C -- File PDR Report with Bobcat Parts Sales
D -- Part Number Error

Part No.	Description	Was	Code	Page
7188440	DECAL, CAPACITY LIFT			294
7188441	DECAL, CAPACITY LIFT			294, 298
7188442	DECAL, CAPACITY LIFT			294
7188547	FITTING, ELBOW			92
7188548	FITTING, HYD TEE			90
7188549	HOSE, HYD FORMED			90
7188685	BUSHING, WEAR			68, 74, 282, 284, 316
7188727	HOSE, HYD	7167226	B,D	282
7188746	SHIELD, CYL			76, 78, 96, 98
7188747	DECAL, SERVICE			296
7188748	DECAL, SERVICE			304
7188770	INSULATION, ENG			46
7188776	PLATE, SEAL			212
7188813	SEAL, TANK FUEL			46
7188990	DOOR, CAB ASSY	7157151	D	24, 33, 34
7188990	DOOR, CAB ASSY			24, 33, 34
7188996	U-BOLT			34
7189227	SEAL, HOSE			228
7189242	LINK	7170489	D	28
7189475	HOSE, HYD			92
7189795	INSULATION, PANEL ENG			46
7189891	COVER, LATCH			34
7189959	HOSE, HYD			348
7190007	PISTON, CYL			202
7190630	HOSE, HYD			96, 98
7190647	SPACER			92, 93, 94
7191228	TUBELINE, HYD			112, 116
7191229	TUBELINE, HYD			112, 116
7191716	BRACKET, LATCH			50
7191746	ROD, RELEASE			226
7192212	BRACKET, LATCH			38
7192453	KIT, TRACK STEEL			383, 384
7192534	CLAMP, HALF	7175650	A	74
7192536	CLAMP, HALF	7175651	A	74
7192624	CYLINDER, BOOM			202
7192625	HEAD, CYL HYD			202
7193055	VALVE, JPS	7008308	A	116, 135, 136
7193539	THERMOSTAT			344
7193840	KIT, HEATER			323, 324
7193841	KIT, HVAC EXC			333, 334
7193842	KIT, A/C			331, 332
7194399	PAD, WEAR			318
7194400	SHIM			318
7194401	SHIM			318
7194706	PLATE, LATCH			36
7195345	KIT, DIRECT TO TANK			307, 308
7195361	DECAL, BOOM LIFT			298
7195369	BRACKET, LIGHT WORKING			74

Code for disposition of old part number
A -- Use up
B -- Use on other application (See PNI)
C -- File PDR Report with Bobcat Parts Sales
D -- Part Number Error

Part No.	Description	Was	Code	Page
7195417	FITTING, HYD ELBOW			110
7195825	UNION			110
7196449	KIT, SEAL			198
7196481	KIT, SEAL	7161987	A	196
7196484	KIT, SEAL	7190017	A	202
7196719	BUSHING, PIVOT			80
7196905	KIT, SEAL	7190394	A	204
7198050	COVER, PLATE			318
7198270	PLATE, MOUNT COUPLER	7122584	A	74, 288
7198270	PLATE, MOUNT COUPLER			74, 288
7198272	PLATE, MOUNT COUPLER	7153112	A	74, 316, 370
7198272	PLATE, MOUNT COUPLER			74, 316, 370
7198542	PIN, PIVOT			80
7198564	BLADE, ANGLE EXC	7194021	A	78
7198707	BUSHING, PIVOT			14
7198913	CLAMP, HALF			110
7199008	SPROCKET, MACHINED	7142453	A	54
7199075	IDLER, ASSY			61, 62
7199213	KIT, PAD STREET			385, 386
7199461	KIT, LOAD HOLD ARM			347, 348
7199464	KIT, LOAD HOLD BOOM			351, 352
7199544	HOSE, HYD	7177168	A	394
7199664	HANDLE, OPERATING			82
7199668	CONTROLLER, JOYSTICK ASSY			82
7199747	MOUNT, RADIATOR			226
7201276	DECAL, INDICATOR			296
7201520	GUARD, FABRIC			400
7201732	CYLINDER, BLADE		A	196
7201733	TUBE, CASE CYL		A	196
7201805	MOUNT, VALVE	7174543	A	100
7201856	TUBELINE, HYD			370
7201857	TUBELINE, HYD			370
7202053	IDLER, ASSY			62
7202728	LOUVER			306
7202829	KIT, IGN KEYLESS		B	346
7203367	MOUNT, ENG	7181214	A	228
7204037	DECAL			300
7204274	X-CHANGE, PIN-ON			70, 392
7205336	HOSE, HYD			96, 98
7205337	HOSE, HYD			96, 98
7205622	PAD, WEAR ASSY			318
7205623	PIN, PIVOT CYL			318
7205626	HOSE, HYD			318
7205627	HOSE, HYD			318
7205642	SHIM			318

Code for disposition of old part number
A -- Use up
B -- Use on other application (See PNI)
C -- File PDR Report with Bobcat Parts Sales
D -- Part Number Error

Part No.	Description	Was	Code	Page
7205643	SHIM			318
7205644	PAD, WEAR			318
7205645	SHIM			318
7205646	SHIM			318
7205653	PAD, WEAR ASSY			318
7205654	PIN			318
7205655	SHIM			318
7205656	SHIM			318
7205657	BUSHING, WEAR			318
7205685	PIN, PIVOT CYL			318
7205691	LINK, ASSY			318
7205692	PIN, PIVOT CYL			318
7205693	LINK, ASSY			318
7205694	PIN, PIVOT CYL			318
7205949	BRACKET, COVER SIDE			14
7205968	HARNESS, CONSOLE RH	7175754	A	216
7205969	HARNESS, ALARM MOTION			360
7205970	KIT, ALARM MOTION			359, 360
7205971	KIT, AUTO-SHIFT			285, 286
7205984	HARNESS, AUTO-SHIFT			286
7205987	X-CHANGE, HYD	7165796	C	394, 396
7206311	ARM, INNER EXTENDABLE			318
7206321	ARM, OUTER EXTENDABLE			318
7206330	TUBELINE, HYD			316
7206615	LATCH, COVER			50
7207017	HOSE, HYD			318
7207018	FITTING, HYD ELBOW			318
7207020	FITTING, HYD CONNECTOR			400
7207032	TUBELINE, HYD			400
7207033	TUBELINE, HYD			400
7207034	TUBELINE, HYD			316
7207035	TUBELINE, HYD			316
7207036	TUBELINE, HYD			400
7207037	TUBELINE, HYD			400
7207040	HOSE, HYD			316
7207041	HOSE, HYD			400
7207044	HOSE, HYD			316
7207045	HOSE, HYD			316
7207046	HOSE, HYD			400
7207050	BOOM, ARM DIPPER	7195359	A	74
7208146	DECAL	7136123	A	298
7208340	SCREW	7179240	A	18
7208620	PIN, PIVOT			68, 316
7208620	PIN, PIVOT	7143040	A	68, 316
7208982	ARM, DIPPER W/A EXC	7122550	A	68, 284

Code for disposition of old part number
A -- Use up
B -- Use on other application (See PNI)
C -- File PDR Report with Bobcat Parts Sales
D -- Part Number Error

Part No.	Description	Was	Code	Page
7208983	ARM, DIPPER W/A LONG EXC	7122551	A	68, 282
7209896	GAS SPRING			36
7209964	WINDOW, CAB FRONT			40
7210015	SEAL, WINDOW			40
7210303	STRIKER, LATCH WINDOW			40
7210525	TUBE, CASE CYL			208
7210526	ROD, CYL			208
7210694	MOUNT, ROLLER			40
7210696	MOUNT, ROLLER			40
7210710	KIT, AUX ARM COUPLER			288
7210711	KIT, AUX ARM COUPLER			287, 288
7210732	HOSE, HYD			288
7210733	HOSE, HYD			288
7210734	HOSE, HYD			288
7210735	HOSE, HYD			288
7210795	MOUNT, WINDOW			40
7210811	GASKET, WASHER			40
7210819	GASKET, ROLLER			40
7210822	GASKET, MOUNT			40
7210906	PLATE, FLOOR	7178332	A	18
7210906	PLATE, FLOOR	7198879	A	18
7210929	SPACER, BRACKET			40
7211374	HOSE, HYD FORMED	7176765	C	104
7211375	HOSE, HYD FORMED	7185145	C	104
7211376	HOSE, HYD FORMED	7185146	C	104
7212726	ROLLER, WINDOW			40
7213043	SPACER, LATCH UPPER			40
7213044	SPACER, LATCH LOWER			40
7213293	BRACKET, MOUNTING			226
7213572	STRIKER, LATCH WINDOW			40
7213698	GAS SPRING			40
7214097	COVER, RH			50
7214144	LINK, WINDOW FRONT			40
7214569	MOUNT, ROLLER			36
7214570	MOUNT, ROLLER			38
7215095	HOSE, HYD FORMED	7196595	A	110
7215172	SCREW, MACHINE			40
7215175	WASHER, FLAT			40
7215489	SEAL, BULK/FT	7162757	A	32
7215893	KIT, WINDOW			36
7216451	SENSOR, FUEL	6680453	A	232

Code for disposition of old part number
A -- Use up
B -- Use on other application (See PNI)
C -- File PDR Report with Bobcat Parts Sales
D -- Part Number Error

Part No.	Description	Was	Code	Page
7217223	SEAL, WINDOW			32
7218061	DECAL, 25 YEAR			304
7218789	CAP, OVERFLOW COOLANT	6675551	B	224
7219005	HEAD, CYL HYD			208
7219322	CYLINDER			207, 208, 318
7219903	LIGHT, STROBE	6675522	A	376
7220130	DECAL, X-CHANGE			304, 394
7220131	DECAL, X-CHANGE			300, 394
7220258	LINK, WINDOW FRONT			36
7220347	COVER, LH	7182491	A	14
7221250	DECAL, CAPACITY LIFT			316
7221251	DECAL, CAPACITY LIFT			298, 316
7221582	PISTON, PIN			396
7221751	KIT, ARM EXTENDABLE			315, 316
7221761	KIT, X-CHANGE HYD EXT			399, 400
7221992	KIT, CAB			24, 28, 32
7221994	KIT, CANOPY	7143470	A	44
7223146	GUIDE, HOSE	7175014	A	112, 116
7223420	KIT, WINDOW FRONT W/ LINK			40
7223423	KIT, WINDOW FRONT W/O LINK			39, 40
7223708	HOSE, A/C ASSY			332, 334
7223709	HOSE, A/C ASSY			332, 334
7224664	EXTINGUISHER, FIRE	7168164	A	320
7224665	BRACKET, EXTINGUISHER FIRE			320
7226712	COVER, HOSE			396
7227060	BRACKET, TANK FUEL	7174609	C	232
73K228	BACK-UP RING			200
73K232	RING, BACK-UP			206
73K234	BACK-UP RING			194
73K328	RING			208
73K340	BKUP RING			196, 202
73K342	RING			198
75K3	O-RING			196, 200, 208
75K6	O-RING			194, 196, 198, 202, 204, 206
78K4	O'RING			90, 112, 114, 116, 118, 120, 124, 370
78K6	O'RING			90, 114, 118, 120, 124, 348, 352, 370, 394
78K8	O RING			96, 98
79K10	O RING 10			104, 105, 106, 108, 120, 122, 124, 126, 348, 352, 372
79K12	O RING 10			104, 318
79K16	O RING 10			104
79K4	O RING 10			90, 92, 104, 114, 118, 120, 122, 124, 126, 348, 352, 394

Code for disposition of old part number
A -- Use up
B -- Use on other application (See PNI)
C -- File PDR Report with Bobcat Parts Sales
D -- Part Number Error

Part No.	Description	Was	Code	Page
79K5	O RING 10			232
79K6	O RING 10			90, 92, 96, 98, 108, 114, 118, 120, 122, 124, 126, 150, 152, 348, 352, 370, 394
79K8	O RING 10			90, 92, 98, 100, 104, 108, 228, 308
7CM10110	SCREW			78
7CM1070	BOLT			78
7CM12100	BOLT			54, 70, 72, 392, 394
7CM12110	BOLT			68, 80, 316, 318
7CM12140	BOLT			74
7CM1290	SCREW			68, 318
7CM1440	BOLT			44
7CM1460	SCREW			24
7CM1645	SCREW			92
7JM80	SNAP RING			60
82K140	O-RING			208
82K230	O-RING			200
82K236	O-RING			194
82K238	O-RING			204
82K240	O-RING			196, 202
82K242	O-RING			198
83D5	NUT 5			38, 40
83F3	ELBOW 5			92
86F3	LOCKNUT			92
86F5	NUT			96, 98, 318, 394, 400
86F6	NUT			316, 370
86F7	LOCK NUT			316
86F8	NUT 5			102, 288
87G808	SCREW			214
88F5	ELBOW			400
88F6	ELBOW			316
89F3	ADAPTOR			92
9GM820	SCREW	3GM820	B	228
9JM60	PIN, RETAINER			36, 40
9JM70	RETAINER SHAFT			86

Code for disposition of old part number
A -- Use up
B -- Use on other application (See PNI)
C -- File PDR Report with Bobcat Parts Sales
D -- Part Number Error