RUTHZIL TRATOR COMERCIAL DE PEÇAS LTDA 11 97083-6812 ROLANDO CITRANGULO

# Bobcat®

# Parts Manual
# E80 Compact Excavator

JULHO 2010

## S/N AETB11001 & Above
## S/N AET311001 & Above

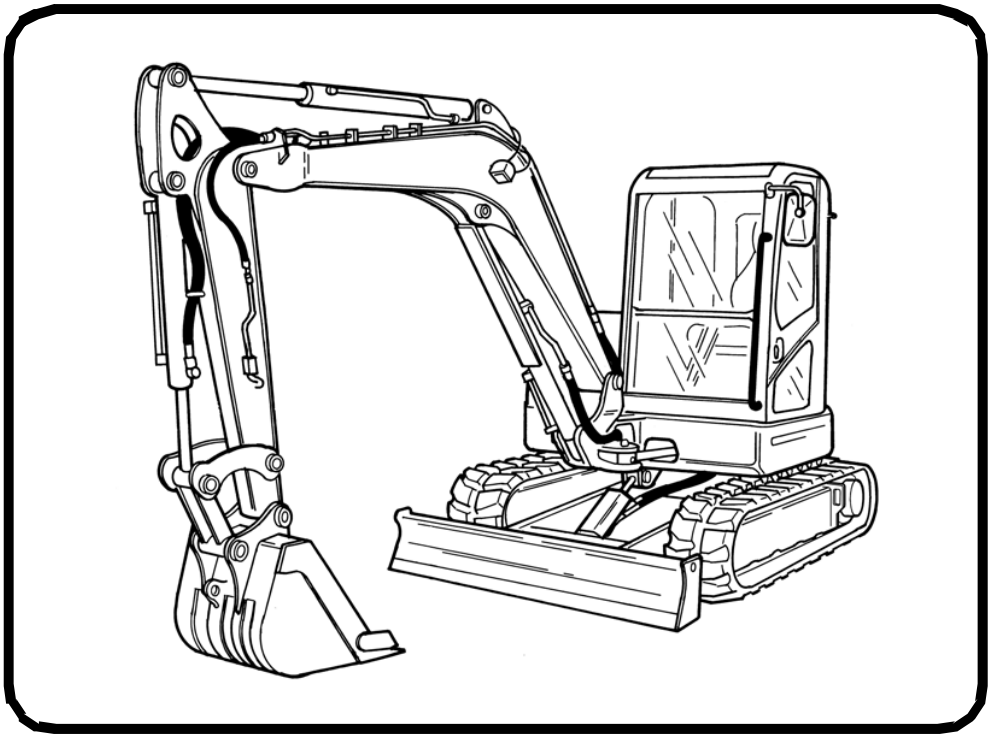

6987195 (2-10) Revised (7-10)

Printed in U.S.A.

© Bobcat Company 2010

Page 1 - OSS# 2089524 - All rights reserved by Bobcat Company - 05/11/2012 - 06:30:39 - Produced by Ken Cook Co. with mediaioff

# GENERAL INFORMATION

**Before ordering parts, ALWAYS provide dealer with your product model number and complete serial number information. Before ordering parts, verify correct part numbers and/or serial numbers with your dealer. When using the machine serial number, use the complete number.**

**The number shown in the quantity column in this manual is the number of parts needed for the illustration on the page. For some parts an "x" will be shown in the quantity column. This "x" indicates that the quantity to be used is "As Needed".**

**When references LH (Left Hand) and RH (Right Hand) are used in this manual, it is done from the operator's seat in the forward operating position.**

**When "See Illustration…." appears in the remarks column, refer to the contents page for the illustration title to find page number location.**

**Some of the illustrations and information found in this parts manual were supplied to Bobcat by machine component companies.**

**For additional information on the Bobcat website visit** www.bobcat.com

# ABBREVIATIONS

| | | | |
|---|---|---|---|
| ACS | = Advanced Control System | MM | = Millimeters |
| AHC | = Advanced Hand Controls | NAP | = Not Available as Parts |
| A/C | = Air Condition | NSS | = Not Serviced Separately |
| ASSY | = Assembly | OD | = Outside Diameter |
| AUX | = Auxiliary | OM | = Operation & Maint Manual |
| AWS | = All Wheel Steer | PM | = Parts Manual |
| BPV | = Bucket Positioning Valve | PWM | = Pulse Width Modulation |
| BTI | = Bobcat Technical Information Bulletin | QT | = Quart |
| CYL | = Cylinder | RH | = Right Hand |
| DLX | = Deluxe | SALES | = Sales Deparment |
| ELEC | = Electrical | SJC | = Selectable Joystick Controls |
| EMEA | = Europe/Middle East/Africa | SL | = Service Letter |
| ENG | = Engine | SM | = Service Manual |
| GAL | = Gallon | STD | = Standard |
| HVAC | = Heating Ventilation & Air Condition | TEMP | = Temperature |
| HYD | = Hydraulic | TRANS | = Transmission |
| ID | = Inside Diameter | W/A | = Welded Assembly |
| IGN | = Ignition | W/ | = With |
| INJ | = Injection | W/O | = Without |
| LH | = Left Hand | " | = Inches |
| MFR | = Main Frame | ' | = Feet |

Page 2 - OSS# 2089524 - All rights reserved by Bobcat Company - 05/11/2012 - 06:30:39 - Produced by Ken Cook Co. with medialoff

# GENERAL INFORMATION (Cont'd)

## TRANSLATION KITS & DECAL KITS

**AR = Argentina (Spanish) BR = Brazil (Portugese) JP = Japanese**
**(Translation Kit includes Safety Manual, Operators Manual & Decal Kit)**

## DISPOSITION

**(Found in the Remarks Column)**

**[A] = Use Up**
**[B] = Use Up on Other Applications**
**[C] = File PDR Report with Bobcat Parts Sales**
**[D] = Part Number Error**

Page 3 - OSS# 2089524 - All rights reserved by Bobcat Company - 05/11/2012 - 06:30:39 - Produced by Ken Cook Co. with mediaioff

# NOTE D'INFORMATION

Pour toute référence au numéro de série de l'engin, toujours donner le numéro complet.

Le chiffré apparaissant dans la colonne des quantités de ce manuel représentent le nombre de pièces nécessaires pour l'illustration reprise sur la page. Dans certains cas, on lira un "x" dans la colonne des quantités. Cet "x" indique que la quantité nécessaire est "selon besoin".

Pour toute référence vers la GAUCHE ou la DROITE dans ce manuel, considérer que la personne se trouve assise dans le siège de l'opérateur, en position de fonctionnement en marche avant.

Certaines illustrations et informations reprises dans ce manuel de pièces de rechange ont été fournies à Bobcat/Ingersoll–Rand par des fabricants de composants.

## ABREVIATIONS & SYMBOLES

| | |
|---|---|
| **SALES** | = Commander au Service Ventes à Bruxelles |
| **NSS** | = Pas vendu séparément |
| **NAP** | = Non disponible comme pièce de rechange |
| ***** | = Chapitre, page ou numéro de pièce modifié ou supplémentaire |
| **BTI** | = Bobcat Technical Information Bulletin : voir à la fin de la microfiché du modèle concerné ou la microfiche générale reprenant l' ensemble des "BTI". |
| **was 6535403** | = était avant 6535403 |
| **adj. (adjustment)** | = réglage |
| **Assembly** | = ensemble |
| **available W/Ref.** | = disponible avec réf. |
| **bulk/sold per foot** | = en vrac/vendu par pied |
| **does not include** | = ne comprend pas |
| **included with** | = compris dans |
| **I.D.** | = D.I. (diamètre intérieur) |
| **O.D.** | = D.E. (diamètre extérieur) |
| **not in kit** | = pas en kit |
| **W/ – WO/** | = inclus/ – non inclus/ |
| **Qty** | = quantité requise |
| **see page/ref.** | = voir page/réf. |
| **used with ref/** | = utilisé avec réf. |
| **0,05 inch thickness** | = 0,05 pouce d'épaisseur (un pouce = 25.4 mm) |
| **weld on** | = à souder |



Page 4 - OSS# 2089524 - All rights reserved by Bobcat Company - 05/11/2012 - 06:30:39 - Produced by Ken Cook Co. with mediaIoff

# ALLGEMEINE INFORMATIONEN

Bei Angabe der Maschinen-Seriennummer stets die komplette Nummer angeben.

Bei der in der Mengenspalte (Anzahl) in diesem Handbuch angegebenen Zahl handelt es sich um die Anzahl von Teilen, die für die Abbildung auf der betreffenden Seite benötigt werden. Bei manchen Teilen in der Mengenspalte ist ein “x” angegeben. Dieses “x” weist darauf hin, dass sich die Anzahl der verwendeten Teile auf den “Bedarf” bezieht.

Bei Verwendung der Seitenangaben links und rechts in diesem Handbuch gelten diese für die Blickrichtung vom Fahrersitz aus, und zwar in Vorwärts-Betriebsrichtung.

Einige der in diesem Ersatzteilhandbuch aufgeführten Abbildungen und Informationen wurden der Bobcat/Ingersoll-Rand von den Herstellern von Maschinenbauteilen zur Verfügung gestellt.

## ABKÜRZUNGEN UND SYMBOLE

| | |
|---|---|
| **SALES** | = Bestellung bei der Verkaufsabteilung in Brüssel |
| **NSS** | = Nicht einzeln erhältlich |
| **NAP** | = Nicht als Ersatzteil erhältlich |
| ***** | = Geänderte oder hinzugefügte Abschnitte, Seiten oder Teilenummern |
| **BTI** | = Bobcat Technical Information Bulletin : Siehe am Ende der Mikrokarte des jeweiligen Modells oder der allgemeinen Mikrokarte der BTI. |
| **was 6535403** | = War 6535403 |
| **adj.** | = Einstellung |
| **Assembly** | = Baugruppe |
| **available W/Ref.** | = erhältlich mit der Referenz |
| **bulk/sold per foot** | = Mengenabnahme / Verkauf pro Fuss |
| **does not include** | = beinhaltet nicht |
| **included with** | = enthalten in |
| **I.D.** | = Innendurchmesser |
| **O.D.** | = Aussendurchmesser |
| **not in kit** | = nicht in Bausatz |
| **W/ – WO/** | = mit/ – ohne/ |
| **Qty** | = Anzahl |
| **see page/ref.** | = Siehe Seite / Referenz |
| **used with ref.** | = verwendet mit Referenz |
| **0.05 inch thickness** | = Dicke : 0.05 Zoll (ein Zoll = 25.4 mm) |
| **weld on** | = anschweissen |



Page 5 - OSS# 2089524 - All rights reserved by Bobcat Company - 05/11/2012 - 06:30:39 - Produced by Ken Cook Co. with mediaioff

# INFORMAZIONI GENERALI

Quando si usa il numero di serie della macchina usare il numero completo.

Il numero mostrato nella colonna della quantità di questo manuale corrisponde al numero di componenti necessari per l'illustrazione della pagina. Per alcuni componenti appare "X" nella colonna delle quantità. Questa "X" indica che la quantità da usare è "come necessario".

See in questo manuale si fa riferimento alla parte destra o sinistra, si intende dal sedile dell'operatore nella posizione in avanti di funzionamento.

Alcune delle illustrazioni e informazioni trovate in questo manuale di componenti sono state fornite alla Bobcat/Ingersoll–Rand da società di componenti di macchine.

## SIMBOLI E ABBREVIAZIONI

| | |
|---|---|
| **SALES** | = Ordinare al servizio vendite di Bruxelles |
| **NSS** | = Non vendute separatamente |
| **NAP** | = Non disponibile come componente |
| ***** | = Sezioni, pagine o numeri di componente cambiati o aggiunti |
| **BTI** | = (Bobcat Technical information) Ved. al termine del microfiche del modello relativo oppure microfiche generale |
| **was 6535403** | = era 6535403 |
| **adj. (adjustment)** | = regol. (regolazione) |
| **Assembly** | = Complessivo |
| **available W/Ref.** | = disponibile con rif. |
| **bulk/sold per foot** | = alla rinfusa/venduto al piede |
| **does not include** | = non comprende |
| **Included with** | = compreso con |
| **I.D.** | = d. i. |
| **O.D.** | = d. e. |
| **not in kit** | = non fa parte del kit |
| **W/ – WO/** | = con – senza |
| **Qty** | = Qtà |
| **see page/ref** | = ved. pagina/rif. |
| **used with ref.** | = usato con il rif. |
| **0,05 inch thickness** | = spessore 0,05 pollici (un pollice = 25,4 mm) |
| **weld on** | = a saldare |



Page 6 - OSS# 2089524 - All rights reserved by Bobcat Company - 05/11/2012 - 06:30:39 - Produced by Ken Cook Co. with mediaioff

# INFORMACION GENERAL

Al utilizar el número de serie de la máquina, debe emplearse el número completo.

El número que figura en la columna de “Unidades” en este manual es el número de piezas que se necesitan para la ilustración que consta en la página. En algunas piezas aparece una “x” en la columna de “Unidades”. Esta “x” indica que las unidades a utilizar son “según sea necesario”.

Cuando se empleen las referencias izq. y dcha., éstas se entienden mirando desde el asiento del conductor, en posición de marcha adelante.

Algunas de las ilustraciones y la información que figuran en este manual de piezas han sido facilitadas a Bobcat/Ingersoll–Rand por empresas de componentes de máquinas.

## ABREVIATURAS Y SIMBOLOS

| | |
|---|---|
| **VENTAS** | = Pedido al Departamento de Ventas de Bruselas |
| **NSS** | = No se vende por separado |
| **NAP** | = No disponible como pieza de repuesto |
| ***** | = Secciones, páginas o referencias modificadas o añadidas |
| **BTI** | = (Bobcat Tecnical Information) Ver al final de la microficha del modelo afectado o en la microficha general “Boletín de Información Técnica Bobcat”. |
| **was 6535403** | = era anteriormente el 6535403 |
| **adj. (adjustment)** | = ajuste |
| **assembly** | = conjunto |
| **available W/Ref.** | = disponible con la ref. |
| **bulk/sold per foot** | = a granel/vendido por pies |
| **does not include** | = no incluye |
| **included with** | = incluido en |
| **I.D.** | = diámetro interior |
| **O.D.** | = diámetro exterior |
| **not in kit** | = no en el kit |
| **W/ – WO/** | = con/ – sin |
| **Qty** | = Unidades |
| **see page /ref.** | = ver página/ref. |
| **used with ref.** | = empleado con la ref. |
| **0,05 inch thickness** | = 0,05 pulgadas de espesor (1 pulgada = 25,4 mm) |
| **weld on** | = debe ser soldado |



Page 7 - OSS# 2089524 - All rights reserved by Bobcat Company - 05/11/2012 - 06:30:39 - Produced by Ken Cook Co. with mediaioff

# ALGEMENE INFORMATIE

Als u het serienummer van de machine gebruikt, geef dan het gehele serienummer.

Het cijfer dat voorkomt in de kolom “Aantal”, in deze handleiding, is het aantal onderdelen dat nodig is van de illustratie op de pagina. Voor sommige onderdelen staat er een “x” in de kolom “Aantal”. Deze “x” betekent dat er een aantal “zoals nodig” vereist is.

Wanneer er in deze handleiding naar “links” en naar “rechts” gerefereerd wordt, moet dit verstaan worden voor een bestuurder die in de bestuurdersstoel zit in de voorwaartse bedrijfsstand.

Sommige van de illustraties en informatie in deze onderdelen-handleiding werden door firma’s van machine-componenten geleverd aan Bobcat/Ingersoll-Rand.

## AFKORTINGEN EN SYMBOLEN

| | |
|---|---|
| **SALES** | = Bestellen bij de Verkoopafdeling te Brussel |
| **NSS** | = Niet afzonderlijk te verkrijgen |
| **NAP** | = Niet beschikbaar als onderdeel |
| * | = Gewijzigde of toegevoegde paragrafen, pagina’s of onderdeelnummers |
| **BTI** | = Bobcat Technical Information Bulletin : Zie einde van de microfiche van het desbetreffende model of einde van de algemene microfiche die het geheel van alle “BTI” herneemt. |
| **was 6535403** | = was vroeger 6535403 |
| **adj. (adjustment)** | = afstelling |
| **Assembly** | = geheel |
| **available W/Ref.** | = beschikbaar met ref. |
| **bulk/sold per foot** | = bulk/aan de meter verkocht |
| **does not include** | = bevat niet |
| **includes with** | = is bevat in |
| **I.D.** | = $\phi$ inw. (inwendige diameter) |
| **O.D.** | = $\phi$ uitw. (uitwendige diameter) |
| **not in kit** | = niet in de kit |
| **W/ - WO/** | = met/ - zonder/ |
| **Qty** | = vereiste aantal |
| **see page/ref.** | = zie pagina/ref. |
| **used with ref/** | = gebruikt met ref. |
| **0,05 inch thickness** | = 0.05 inch dik (een inch = 25.4 mm) |
| **weld on** | = te lassen |



Page 8 - OSS# 2089524 - All rights reserved by Bobcat Company - 05/11/2012 - 06:30:39 - Produced by Ken Cook Co. with mediaioff

# Use only Bobcat belts and hoses to maintain maximum service life.

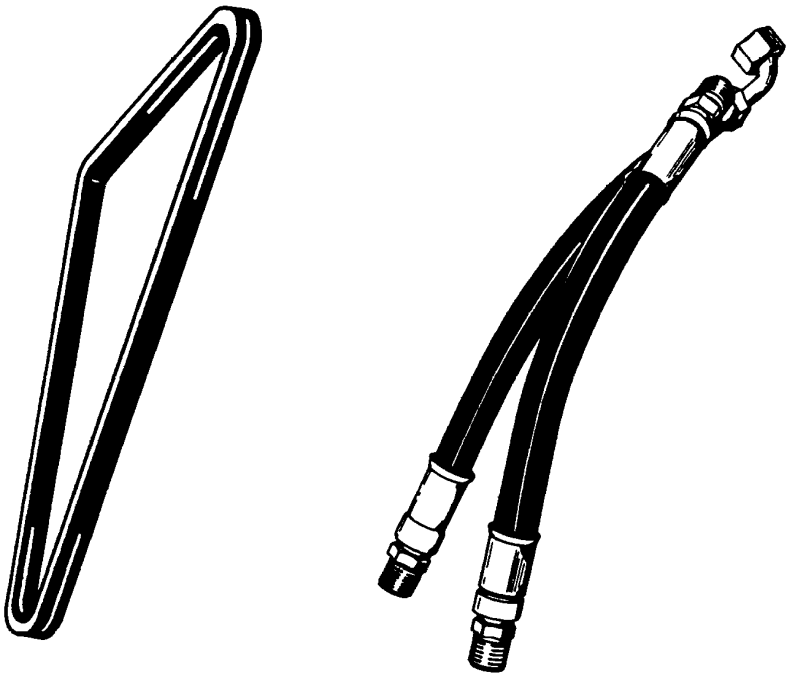

## Available from Bobcat Parts.

Bobcat



Page 9 - OSS# 2089524 - All rights reserved by Bobcat Company - 05/11/2012 - 06:30:39 - Produced by Ken Cook Co. with mediaioff

## CONTENTS


**MAINTENANCE ITEMS ..... 1-42**
MAINTENANCE ITEMS ..... 1-10
SCHEDULED MAINTENANCE ITEMS ..... 11-42
**MAIN FRAME ..... 43-114**
BOOM WORK LIGHT ..... 107
CAB WORK LIGHT ..... 109
SIDE MIRROR ..... 111
SUNVISOR ..... 113
UPPERSTRUCTURE ..... 43-50
OPERATOR CAB ..... 51-76
AIR CONDITIONING ..... 77-92
RH COVER ..... 93-98
TAILGATE ..... 99-106
**UNDERCARRIAGE ..... 115-130**
UNDERCARRIAGE ..... 115
TRACK TENSIONER ..... 117
FRONT IDLER ..... 119
TRACK ROLLER ..... 121-124
TRACK ..... 125-130
**WORK EQUIPMENT ..... 131-138**
ARM ..... 131-134
BOOM ..... 135
SWING FRAME ..... 137
**CONTROLS ..... 139-146**
LH CONTROL ..... 139
RH CONTROL ..... 141
TRAVEL ..... 143
BOOM SWING CONTROLS ..... 145
**HYDRAULIC SYSTEM ..... 147-292**
HYDRAULIC CIRCUITRY ..... 147-192
HYDRAULIC PILOT CIRCUITRY ..... 193-218
HYDRAULIC PUMP ..... 219-222
MANIFOLD VALVE ..... 223-226
PEDAL VALVE ..... 227-230
JOYSTICK VALVES ..... 231
JOYSTICK ..... 233
SWIVEL JOINT ..... 235
DRIVE MOTOR ..... 237-242
SLEW MOTOR ..... 243-246
CONTROL VALVE ..... 247
VALVE SECTION ..... 249-274
ARM CYLINDER ..... 275-278
BOOM CYLINDER ..... 279
BUCKET CYLINDER ..... 281
BLADE CYLINDER ..... 283-290
BOOM SLEW CYLINDER ..... 291
**ELECTRICAL SYSTEM ..... 293-318**
ELECTRICAL ..... 293-312
ALTERNATOR ..... 313
STARTER ..... 315
BOOM LOAD HOLDING VALVE ..... 317
**POWER UNIT ..... 319-376**





Page 10 - OSS# 2089524 - All rights reserved by Bobcat Company - 05/11/2012 - 06:30:39 - Produced by Ken Cook Co. with media1off

## CONTENTS (Cont'd)


**POWER UNIT**

ENGINE & ATTACHING PARTS ..... 319-334
ENGINE GASKET KIT ..... 335
GEARCASE ..... 337
CRANKCASE ..... 339
CYLINDER HEAD, VALVE & ROCKER ARMS & COVER ..... 341-344
OIL PAN & FLYWHEEL HOUSING ..... 345
DIPSTICK & FILTER ..... 347
CRANKSHAFT ..... 349
FUEL CAMSHAFT ..... 351
WATER PUMP & THERMOSTAT ..... 353
MANIFOLD ..... 355-358
SPEED CONTROL PLATE ..... 359-362
GOVERNOR ..... 363
FUEL & INJECTION PUMP & NOZZLES ..... 365
FUEL SYSTEM ..... 367-374
FUEL TRANSFER PUMP & CHECK VALVE ..... 375

**ACCESSORIES & OPTIONS ..... 377-466**

ARM KIT ..... 377-380
ARTICULATED BOOM ..... 381-414
ARTICULATED BOOM HYDRAULICS ..... 383-394
BLADE CYLINDER KIT ..... 415
DECALS ..... 417-424
FUEL TRANSFER PUMP KIT ..... 425
FUEL TRANSFER PUMP & CHECK VALVE ..... 427
ISO SELECTOR VALVE TOOL ..... 429
MOTION ALARM ..... 431
MOTION ALARM KIT ..... 433
QUICK COUPLER KIT ..... 435-438
ROTATING BEACON KIT ..... 439-442
SEATBELT KIT ..... 443
SPECIAL APPLICATION ..... 445
SPECIAL APPLICATION KIT ..... 447-450
STROBE LIGHT KIT ..... 451-454
TRACK KIT ..... 455-458
2ND AUXILIARY HYDRAULICS KIT ..... 459
3RD AUXILIARY HYDRAULICS KIT ..... 461-464
BULK ITEMS ..... 465

**NUMERICAL INDEX ..... 468-516**


Page 11 - OSS# 2089524 - All rights reserved by Bobcat Company - 05/11/2012 - 06:30:39 - Produced by Ken Cook Co. with media1off

# MAINTENANCE ITEMS
# (EMEA)

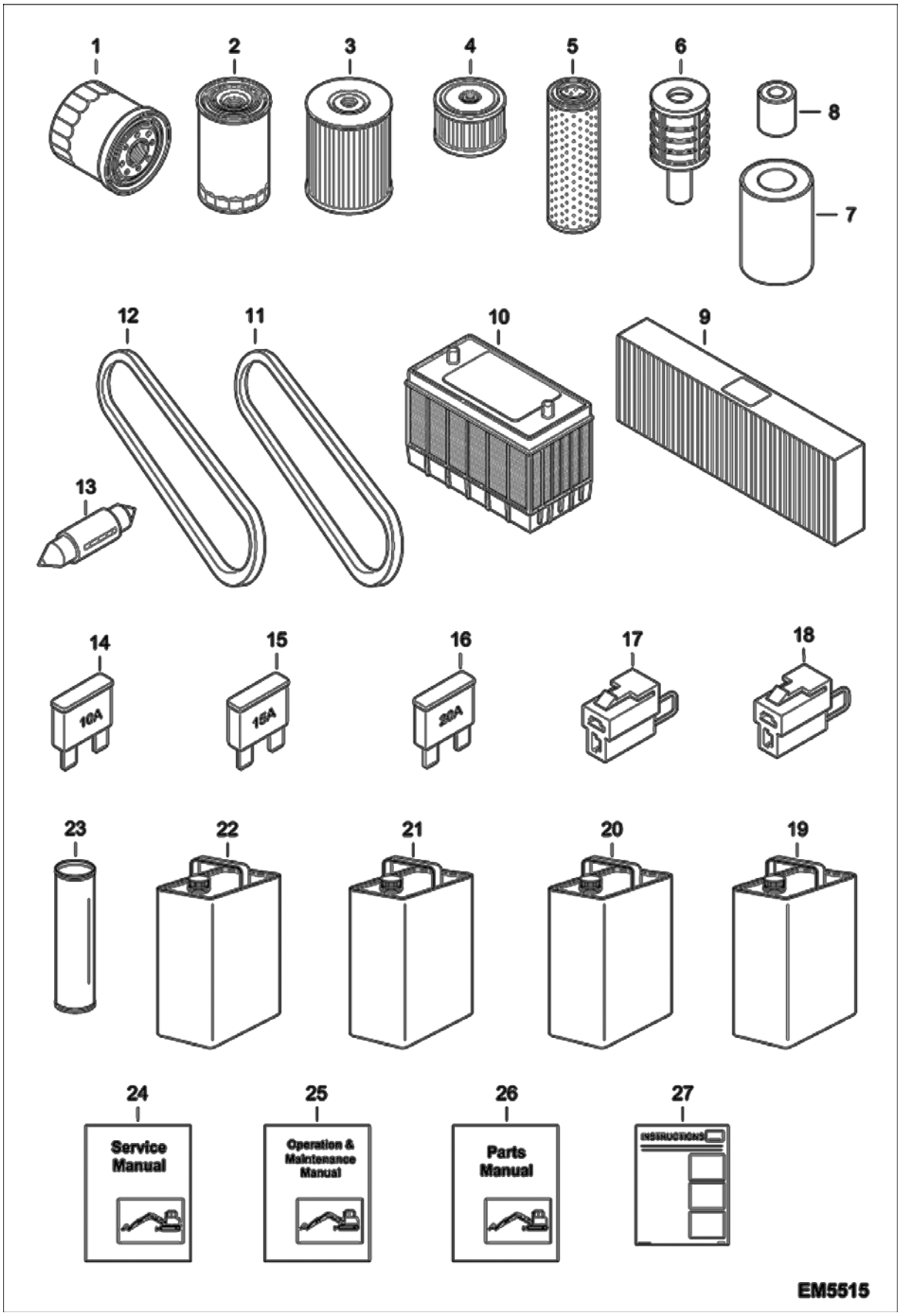




Page 12 - OSS# 2089524 - All rights reserved by Bobcat Company - 05/11/2012 - 06:30:39 - Produced by Ken Cook Co. with media1off

## MAINTENANCE ITEMS (Cont'd)
## (EMEA)

| Ref No | Part Number | Description | Remarks | Serial Number | Qty |
|---|---|---|---|---|---|
| 1 | 7010347 | FILTER, OIL | See Illustration DIPSTICK & FILTER/ E80-019 Was 7004996 [A] | | 1 |
| 2 | 7010351 | FILTER, FUEL | See Illustration FUEL SYSTEM/ E80-024 Was 7006269 [A] | | 1 |
| 3 | 7006811 | FILTER STRAINER SUCTION | See Illustration HYDRAULIC CIRCUITRY/ EM5924 | | 1 |
| 4 | 7006806 | FILTER, AIR BREATHER | See Illustration HYDRAULIC CIRCUITRY/ EM5924 | | 1 |
| 5 | 7004884 | FILTER RETURN | See Illustration HYDRAULIC CIRCUITRY/ EM5924 | | 1 |
| 6 | 7013148 | FILTER | See Illustration FUEL SYSTEM/ E80-024 Was 7005081 [A] | | 1 |
| 7 | 6666333 | FILTER, AIR OUTER | See Illustration ENGINE & ATTACHING PARTS/ EM5939 | | 1 |
| 8 | 6666334 | FILTER, AIR INNER | See Illustration ENGINE & ATTACHING PARTS/ EM5939 | | 1 |
| 9 | 7006085 | FILTER A/C | See Illustration OPERATOR CAB/ E80-1390 | | |
| 10 | 6987600 | BATTERY, 100AH | See Illustration ELECTRICAL/ EM7046 EMEA | | 1 |
| 10 | 7005712 | BATTERY 100AH | See Illustration ELECTRICAL/ EM7046 US | | 1 |
| 11 | 7004451 | BELT V | See Illustration WATER PUMP & THERMOSTAT/ E80-020 | | 1 |
| 12 | 7005577 | BELT COMPRESSOR | See Illustration AIR CONDITIONING/ E80-1540 | | 1 |
| 13 | 7004887 | LIGHT BULB 12V/10W | See Illustration OPERATOR CAB/ E80-1380 12V/10W | | 1 |
| 14 | 6654805 | FUSE 10A | 10A | | 2 |
| 15 | 6654806 | FUSE, 15A | 15A | | 2 |
| 16 | 6625575 | FUSE, 20A | 20A | | 1 |
| 17 | 7004896 | LINK FUSIBLE | | | 1 |
| 18 | 7005009 | FUSIBLE LINK | | | 1 |
| 19 | 6987500A | OIL 30W 5L | Can - 5L | | x |
| 19 | 6987500B | OIL, 30 W 25L | Container - 25L | | x |
| 19 | 6987500C | OIL, 30W 209L | Drum - 209L | | x |
| 19 | 6987500D | OIL, ENGINE SAE 0W/30, 1000L | Tank - 1000L | | x |
| 19 | 6904840A | OIL, 10W30 5 L | Can - 5L | | x |
| 19 | 6904840B | OIL, 10W30 25L | Container - 25L | | x |
| 19 | 6904840C | OIL, 10W30 209L | Drum - 209L | | x |
| 19 | 6904840D | OIL, ENGINE SAE 10W/30, 1000L | Tank - 1000L | | x |
| 19 | 6904841A | OIL, 15W40 5L | Can - 5L | | x |
| 19 | 6904841B | OIL, 15W40 25L | Container - 25L | | x |
| 19 | 6904841C | OIL, 15W40 209L | Drum - 209L | | x |
| 19 | 6904841D | OIL, ENGINE SAE 15W/40, 1000L | Tank - 1000L | | x |
| 19 | 6987501A | OIL, ENGINE SAE 20W/50, 5L | Can - 5L | | x |
| 19 | 6987501B | OIL, ENGINE SAE 20W/50, 25L | Container - 25L | | x |
| 19 | 6987501C | OIL, ENGINE SAE 20W/50, 209L | Drum - 209L | | x |
| 19 | 6987501D | OIL, ENGINE SAE 20W/50, 1000L | Tank - 1000L | | x |
| 20 | 6904842A | FLUID, OIL HYD 5L | Can - 5L | | x |
| 20 | 6904843A | FLUID, OIL HYD BIO 5L | Can - 5L | | x |



Page 13 - OSS# 2089524 - All rights reserved by Bobcat Company - 05/11/2012 - 06:30:39 - Produced by Ken Cook Co. with media1off

## MAINTENANCE ITEMS (Cont'd)
## (EMEA)

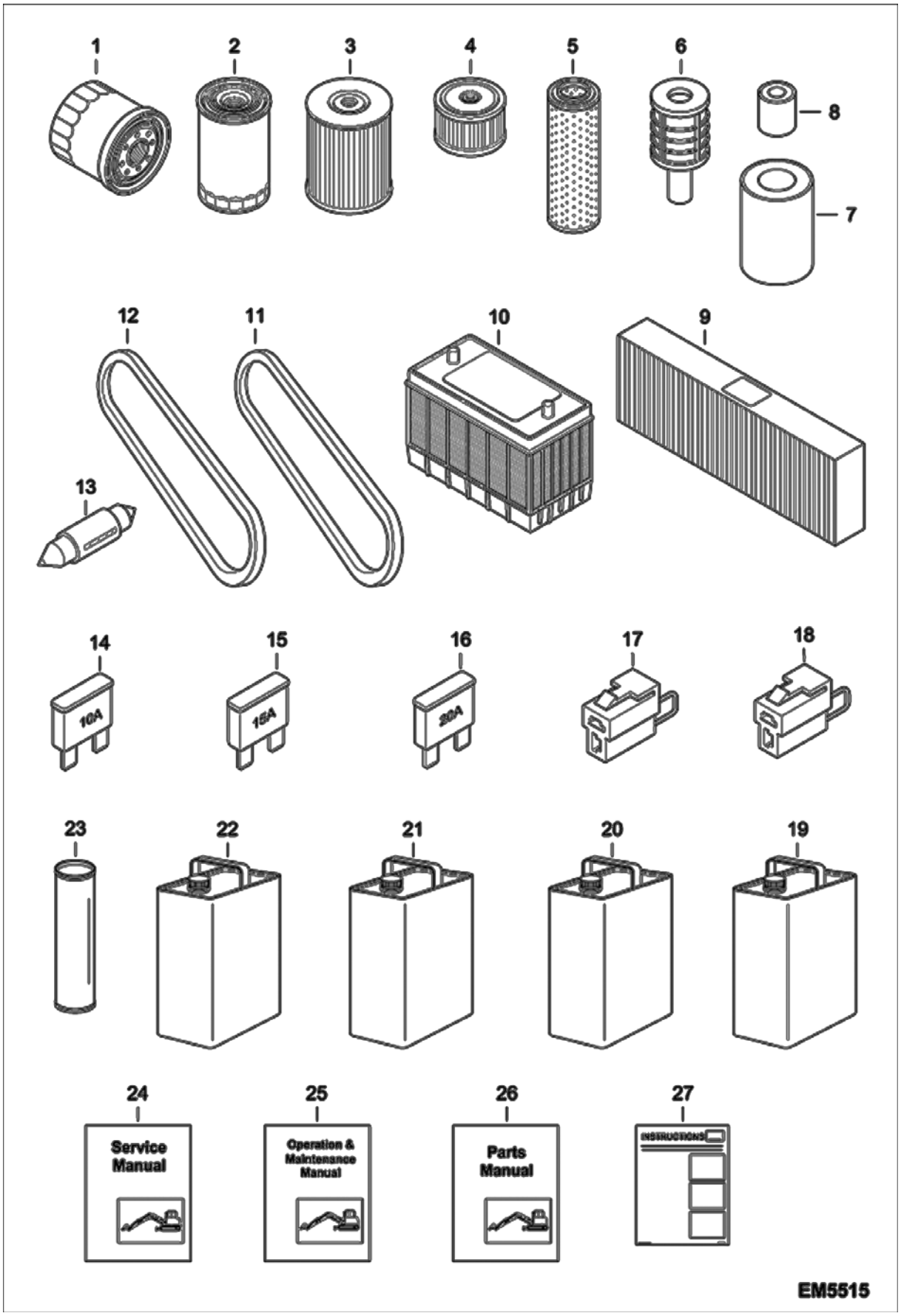




Page 14 - OSS# 2089524 - All rights reserved by Bobcat Company - 05/11/2012 - 06:30:39 - Produced by Ken Cook Co. with media1off

## MAINTENANCE ITEMS (Cont'd)
## (EMEA)

| Ref No | Part Number | Description | Remarks | Serial Number | Qty |
|---|---|---|---|---|---|
| 20 | 6904842B | FLUID, OIL HYD 25L | Container - 25L | | x |
| 20 | 6904843B | FLUID, OIL HYD BIO 25L | Container - 25L | | x |
| 20 | 6904842C | FLUID, OIL HYD 209L | Drum - 209L | | x |
| 20 | 6904843C | FLUID, OIL HYD BIO 209L | Drum - 209L | | x |
| 20 | 6904842D | FLUID, OIL HYD 1000L | Tank - 1000L | | x |
| 20 | 6904843D | FLUID, OIL HYD BIO 1000L | Tank - 1000L | | x |
| 21 | 6903121 | LUBE, GEAR 12 | QT- Sold per 12 containers | | x |
| 22 | 6987596A | EG COOLANT, ANTIFREEZE -36 DEGREE CELCIUS | Can - 5L, concentrated | | x |
| 22 | 6987596B | EG COOLANT, ANTIFREEZE -36 DEGREE CELCIUS | Container - 25L, concentrated | | x |
| 22 | 6987596C | EG COOLANT, ANTIFREEZE -36 DEGREE CELCIUS | Drum - 209L, concentrated | | x |
| 22 | 6987596D | EG COOLANT, ANTIFREEZE -36 DEGREE CELCIUS | Tank - 1000L, concentrated | | x |
| 22 | 6987597A | EG COOLANT, ANTIFREEZE -36 DEGREE CELCIUS | Can - 5L, premixed | | x |
| 22 | 6987597B | EG COOLANT, ANTIFREEZE -36 DEGREE CELCIUS | Container - 25L, premixed | | x |
| 22 | 6987597C | EG COOLANT, ANTIFREEZE -36 DEGREE CELCIUS | Drum - 209L, premixed | | x |
| 22 | 6987597D | EG COOLANT, ANTIFREEZE -36 DEGREE CELCIUS | Tank - 1000L, premixed | | x |
| 23 | 6903122 | GREASE, MULTI PURPOSE #2 - 10 | 400 GR multi purpose | | x |
| 23 | 6687884 | GREASE, HD SUPREME 10 | 400 GR supreme HD | | x |
| 23 | 6687885 | GREASE, HP EXTREME - 10 | 400 GR extreme HP | | x |
| 24 | 6987194 | MANUAL SERVICE E80 EXCAVATOR | | | 1 |
| 25 | 6987193 | MANUAL OPERATION E80 EXCAVATOR | | | 1 |



Page 15 - OSS# 2089524 - All rights reserved by Bobcat Company - 05/11/2012 - 06:30:39 - Produced by Ken Cook Co. with media1off

## MAINTENANCE ITEMS (Cont'd)
## (EMEA)

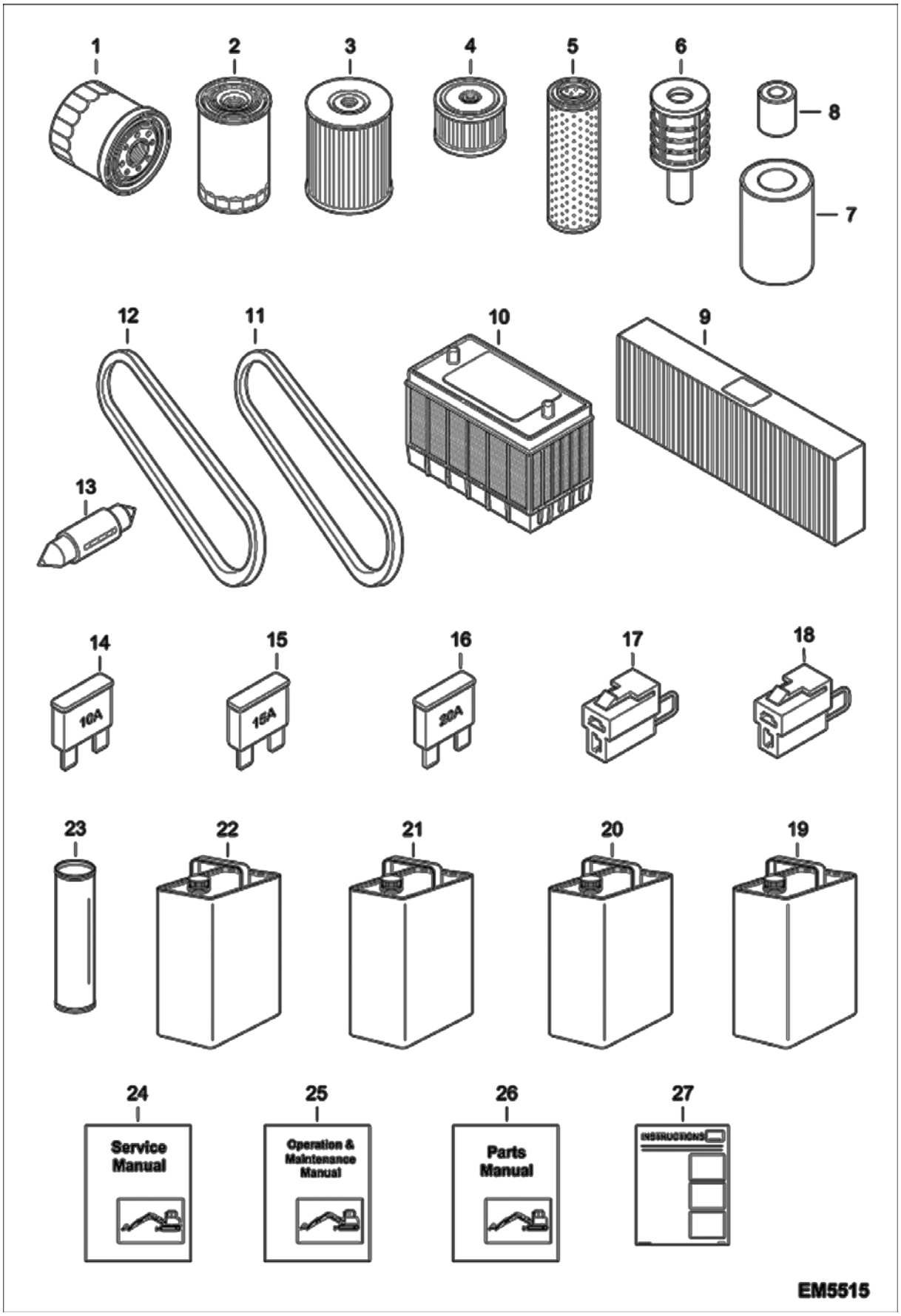




Page 16 - OSS# 2089524 - All rights reserved by Bobcat Company - 05/11/2012 - 06:30:39 - Produced by Ken Cook Co. with media1off

## MAINTENANCE ITEMS (Cont'd)
## (EMEA)

| Ref No | Part Number | Description | Remarks | Serial Number | Qty |
|---|---|---|---|---|---|
| 26 | 6987195 | MANUAL, PARTS E80 EXCAVATOR | | | 1 |
| 27 | 6987304 | HANDBOOK, OPERATION & MAINTENANCE | | | 1 |

Page 17 - OSS# 2089524 - All rights reserved by Bobcat Company - 05/11/2012 - 06:30:39 - Produced by Ken Cook Co. with media1off

## MAINTENANCE ITEMS
## (US)

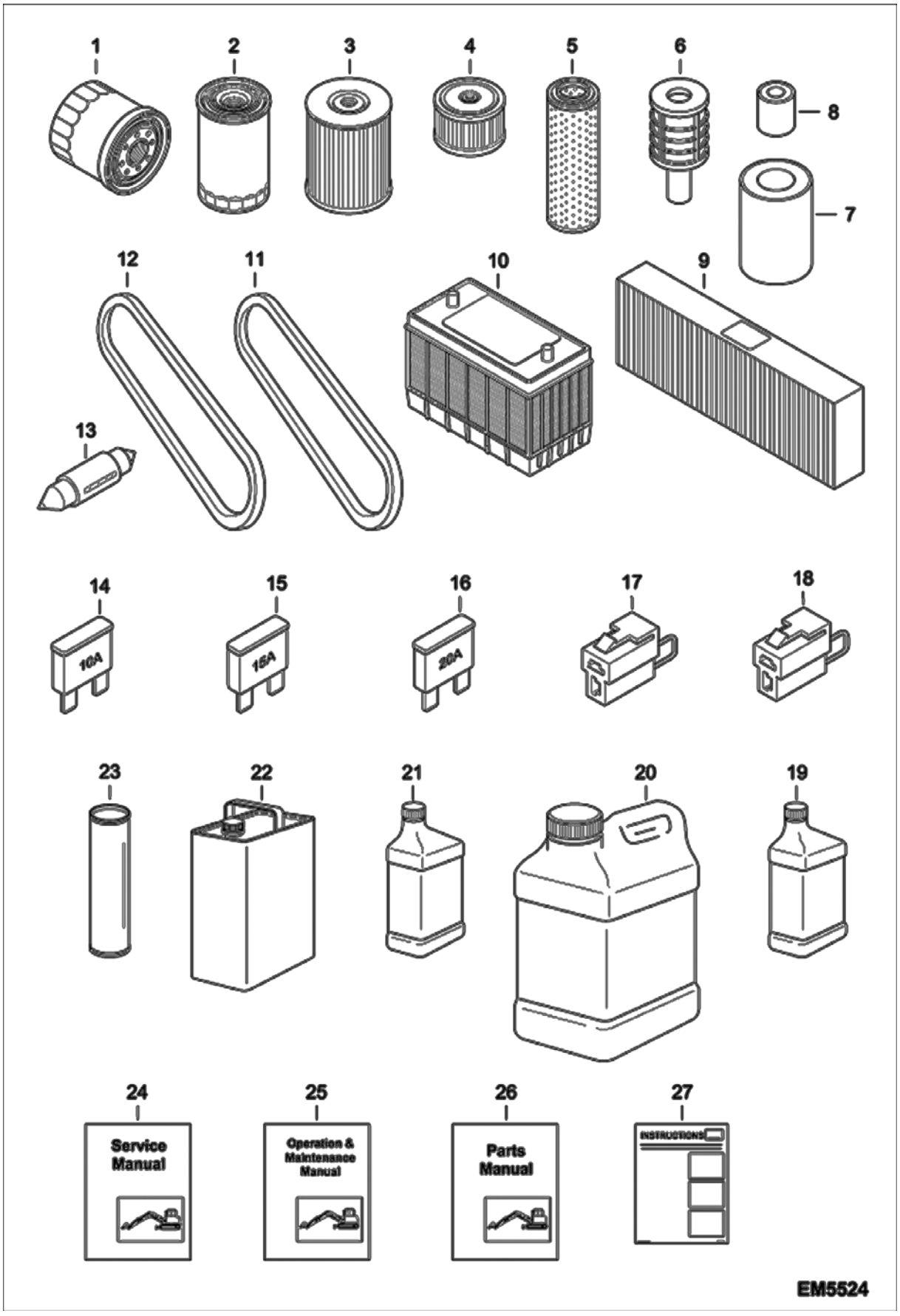




Page 18 - OSS# 2089524 - All rights reserved by Bobcat Company - 05/11/2012 - 06:30:39 - Produced by Ken Cook Co. with media1off

## MAINTENANCE ITEMS (Cont'd)
## (US)

| Ref No | Part Number | Description | Remarks | Serial Number | Qty |
|---|---|---|---|---|---|
| 1 | 7010347 | FILTER, OIL | See Illustration DIPSTICK & FILTER/ E80-019 Was 7004996 [A] | | 1 |
| 2 | 7010351 | FILTER, FUEL | See Illustration FUEL SYSTEM/ E80-024 Was 7006269 [A] | | 1 |
| 3 | 7006811 | FILTER STRAINER SUCTION | See Illustration HYDRAULIC CIRCUITRY/ EM5924 | | 1 |
| 4 | 7006806 | FILTER, AIR BREATHER | See Illustration HYDRAULIC CIRCUITRY/ EM5924 | | 1 |
| 5 | 7004884 | FILTER RETURN | See Illustration HYDRAULIC CIRCUITRY/ EM5924 | | 1 |
| 6 | 7013148 | FILTER | Was 7005081 [A] | | 1 |
| 7 | 6666333 | FILTER, AIR OUTER | | | 1 |
| 8 | 6666334 | FILTER, AIR INNER | | | 1 |
| 9 | 7006085 | FILTER A/C | | | 1 |
| 10 | 7005712 | BATTERY 100AH | See Illustration ELECTRICAL/ EM7046 | | 1 |
| 11 | 7004451 | BELT V | See Illustration WATER PUMP & THERMOSTAT/ E80-020 | | 1 |
| 12 | 7005577 | BELT COMPRESSOR | See Illustration AIR CONDITIONING/ E80-1540 | | 1 |
| 13 | 7004887 | LIGHT BULB 12V/10W | See Illustration OPERATOR CAB/ E80-1380 12V/10W | | 1 |
| 14 | 6654805 | FUSE 10A | 10A | | 2 |
| 15 | 6654806 | FUSE, 15A | 15A | | 2 |
| 16 | 6625575 | FUSE, 20A | 20A | | 1 |
| 17 | 7004896 | LINK FUSIBLE | | | 1 |
| 18 | 7005009 | FUSIBLE LINK | | | 1 |
| 19 | 6903107 | OIL, 10W30 QT. 12 | QT- Sold per 12 containers | | x |
| 19 | 6903108 | OIL, 10W30 GAL. 6 | GAL - Sold per 4 jugs | | x |
| 19 | 6903112 | OIL, 10W30 2.5 GAL 2 | 2.5 GAL - Sold per 2 jugs | | x |
| 19 | 6903105 | OIL, 15W40 QT. 12 | QT- Sold per 12 containers | | x |
| 19 | 6903106 | OIL, 15W40 GAL. 6 | GAL - Sold per 4 jugs | | x |
| 19 | 6903113 | OIL, 15W40 2.5 GAL. 2 | 2.5 GAL - Sold per 2 jugs | | x |
| 19 | 6903109 | OIL 30W QT. 12 | QT- Sold per 12 containers | | x |
| 19 | 6903110 | OIL, 30W GAL. 6 | GAL - Sold per 4 jugs | | x |
| 19 | 6903111 | OIL 30W 2.5 GAL 2 | 2.5 GAL - Sold per 2 jugs | | x |
| 20 | 6903117 | FLUID, OIL HYD 2.5 GAL 2 | 2.5 GAL - Sold per 2 containers | | x |
| 20 | 6903118 | FLUID, OIL HYD 5 GAL | 5 GAL | | x |
| 20 | 6903119 | FLUID, OIL HYD 55 GAL | 55 GAL | | x |
| 21 | 6903121 | LUBE, GEAR 12 | QT- Sold per 12 containers | | x |
| 22 | 6988096 | ANTIFREEZE,EG PREMIX 1 GAL (6) | GAL - premixed | | x |
| 22 | 6988097 | ANTIFREEZE, EG CONCENTR 1 GAL (6) | GAL - concentrate | | x |



Page 19 - OSS# 2089524 - All rights reserved by Bobcat Company - 05/11/2012 - 06:30:39 - Produced by Ken Cook Co. with media1off

## MAINTENANCE ITEMS (Cont'd)
## (US)

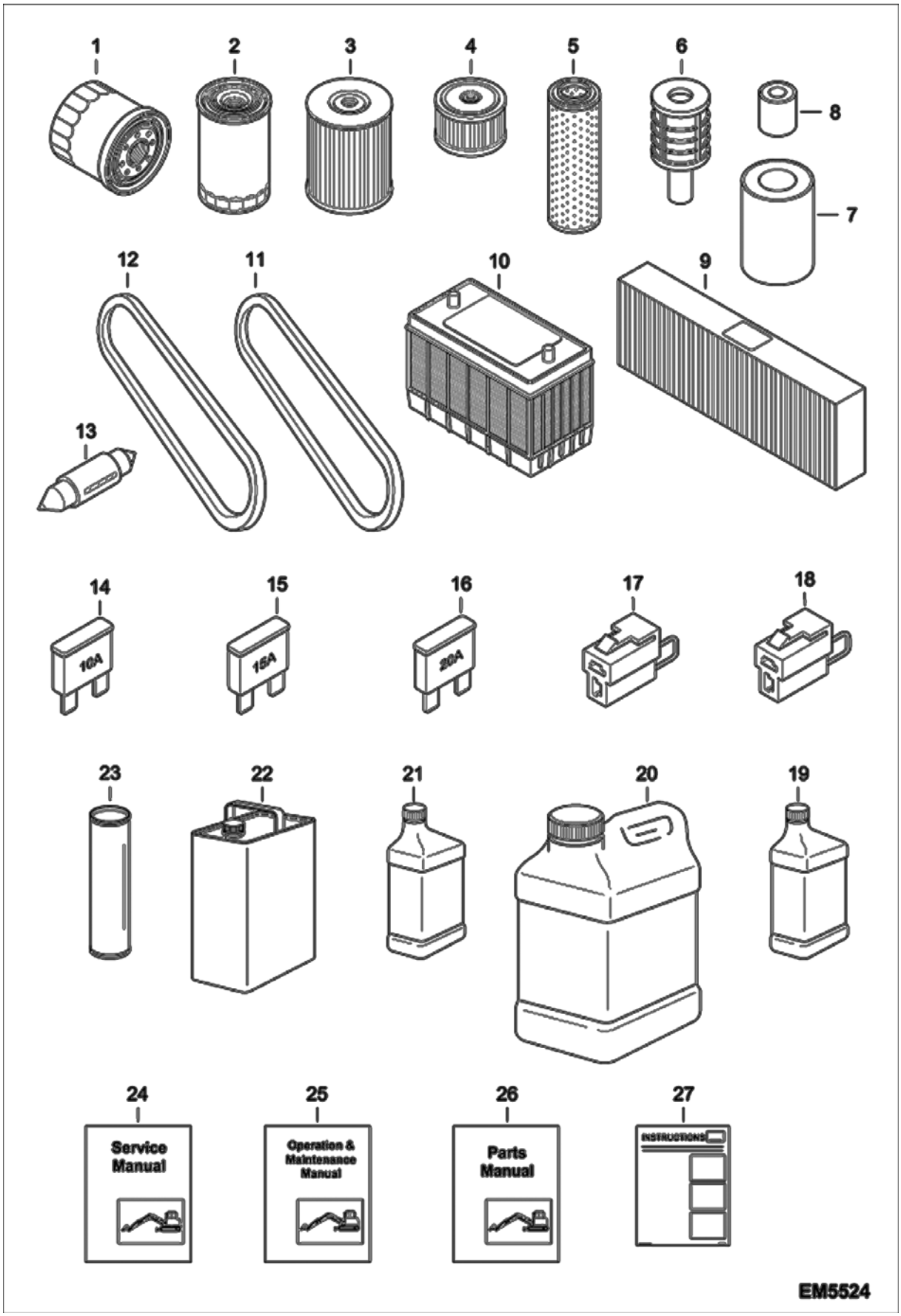




Page 20 - OSS# 2089524 - All rights reserved by Bobcat Company - 05/11/2012 - 06:30:39 - Produced by Ken Cook Co. with media1off

## MAINTENANCE ITEMS (Cont'd)
## (US)

| Ref No | Part Number | Description | Remarks | Serial Number | Qty |
|---|---|---|---|---|---|
| 23 | 6903122 | GREASE, MULTI PURPOSE #2 - 10 | 400 GR multi purpose | | x |
| 23 | 6687884 | GREASE, HD SUPREME 10 | 400 GR supreme HD | | x |
| 23 | 6687885 | GREASE, HP EXTREME - 10 | 400 GR extreme HP | | x |
| 24 | 6987194 | MANUAL SERVICE E80 EXCAVATOR | | | 1 |
| 25 | 6987193 | MANUAL OPERATION E80 EXCAVATOR | | | 1 |
| 26 | 6987195 | MANUAL, PARTS E80 EXCAVATOR | | | 1 |
| 26 | 6987195-CD | MANUAL, PARTS E80 EXCAVATOR CD | | | 1 |
| 27 | 6987304 | HANDBOOK, OPERATION & MAINTENANCE | | | 1 |

Page 21 - OSS# 2089524 - All rights reserved by Bobcat Company - 05/11/2012 - 06:30:39 - Produced by Ken Cook Co. with media1off

## SCHEDULED MAINTENANCE ITEMS
## (Every 10 Hours For The First 100 Hours)
## (Every 10 Hours When Operating In Water)




EM5919



Page 22 - OSS# 2089524 - All rights reserved by Bobcat Company - 05/11/2012 - 06:30:39 - Produced by Ken Cook Co. with media1off

## SCHEDULED MAINTENANCE ITEMS (Cont'd)
## (Every 10 Hours For The First 100 Hours)
### (Every 10 Hours When Operating In Water)

| Ref No | Part Number | Description | Remarks | Serial Number | Qty |
|---|---|---|---|---|---|
| 1 | 6903122 | GREASE, MULTI PURPOSE #2 - 10 | 400 GR multi purpose | | x |
| 1 | 6687884 | GREASE, HD SUPREME 10 | 400 GR supreme HD | | x |
| 1 | 6687885 | GREASE, HP EXTREME - 10 | 400 GR extreme HP | | x |

Page 23 - OSS# 2089524 - All rights reserved by Bobcat Company - 05/11/2012 - 06:30:39 - Produced by Ken Cook Co. with media1off

## SCHEDULED MAINTENANCE ITEMS
## (50 Hours)




EM5511



Page 24 - OSS# 2089524 - All rights reserved by Bobcat Company - 05/11/2012 - 06:30:39 - Produced by Ken Cook Co. with media1off

## SCHEDULED MAINTENANCE ITEMS (Cont'd)
## (50 Hours)

| Ref No | Part Number | Description | Remarks | Serial Number | Qty |
|---|---|---|---|---|---|
| 1 | 6903122 | GREASE, MULTI PURPOSE #2 - 10 | 400 GR multi purpose | | x |
| 1 | 6687884 | GREASE, HD SUPREME 10 | 400 GR supreme HD | | x |
| 1 | 6687885 | GREASE, HP EXTREME - 10 | 400 GR extreme HP | | x |

Page 25 - OSS# 2089524 - All rights reserved by Bobcat Company - 05/11/2012 - 06:30:39 - Produced by Ken Cook Co. with media1off

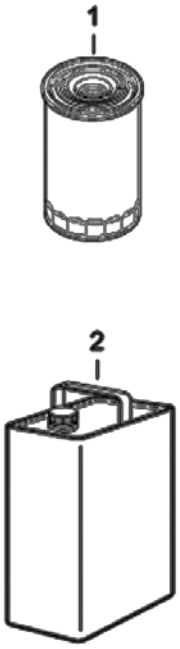


EM5517



Page 26 - OSS# 2089524 - All rights reserved by Bobcat Company - 05/11/2012 - 06:30:39 - Produced by Ken Cook Co. with media1off

## SCHEDULED MAINTENANCE ITEMS (Cont'd)
## (First 100 Hours EMEA)

| Ref No | Part Number | Description | Remarks | Serial Number | Qty |
|---|---|---|---|---|---|
| 1 | 7010351 | FILTER, FUEL | See Illustration FUEL SYSTEM/ E80-024 Was 7006269 [A] | | 1 |
| 2 | 6903121 | LUBE, GEAR 12 | QT- Sold per 12 containers | | x |

Page 27 - OSS# 2089524 - All rights reserved by Bobcat Company - 05/11/2012 - 06:30:39 - Produced by Ken Cook Co. with media1off

## SCHEDULED MAINTENANCE ITEMS
## (First 100 Hours US)




EM5526



Page 28 - OSS# 2089524 - All rights reserved by Bobcat Company - 05/11/2012 - 06:30:39 - Produced by Ken Cook Co. with media1off

## SCHEDULED MAINTENANCE ITEMS (Cont'd)
## (First 100 Hours US)

| Ref No | Part Number | Description | Remarks | Serial Number | Qty |
|---|---|---|---|---|---|
| 1 | 7010351 | FILTER, FUEL | See Illustration FUEL SYSTEM/ E80-024 Was 7006269 [A] | | 1 |
| 2 | 6903121 | LUBE, GEAR 12 | QT- Sold per 12 containers | | x |

Page 29 - OSS# 2089524 - All rights reserved by Bobcat Company - 05/11/2012 - 06:30:39 - Produced by Ken Cook Co. with media1off

## SCHEDULED MAINTENANCE ITEMS
## (First 250 Hours)




EM6011



Page 30 - OSS# 2089524 - All rights reserved by Bobcat Company - 05/11/2012 - 06:30:39 - Produced by Ken Cook Co. with media1off

## SCHEDULED MAINTENANCE ITEMS (Cont'd)
## (First 250 Hours)

| Ref No | Part Number | Description | Remarks | Serial Number | Qty |
|---|---|---|---|---|---|
| 1 | 7004884 | FILTER RETURN | See Illustration HYDRAULIC CIRCUITRY/ EM5924 | | 1 |
| 2 | 7006806 | FILTER, AIR BREATHER | See Illustration HYDRAULIC CIRCUITRY/ EM5924 | | 1 |

Page 31 - OSS# 2089524 - All rights reserved by Bobcat Company - 05/11/2012 - 06:30:39 - Produced by Ken Cook Co. with media1off

## SCHEDULED MAINTENANCE ITEMS
## (250 Hours EMEA)

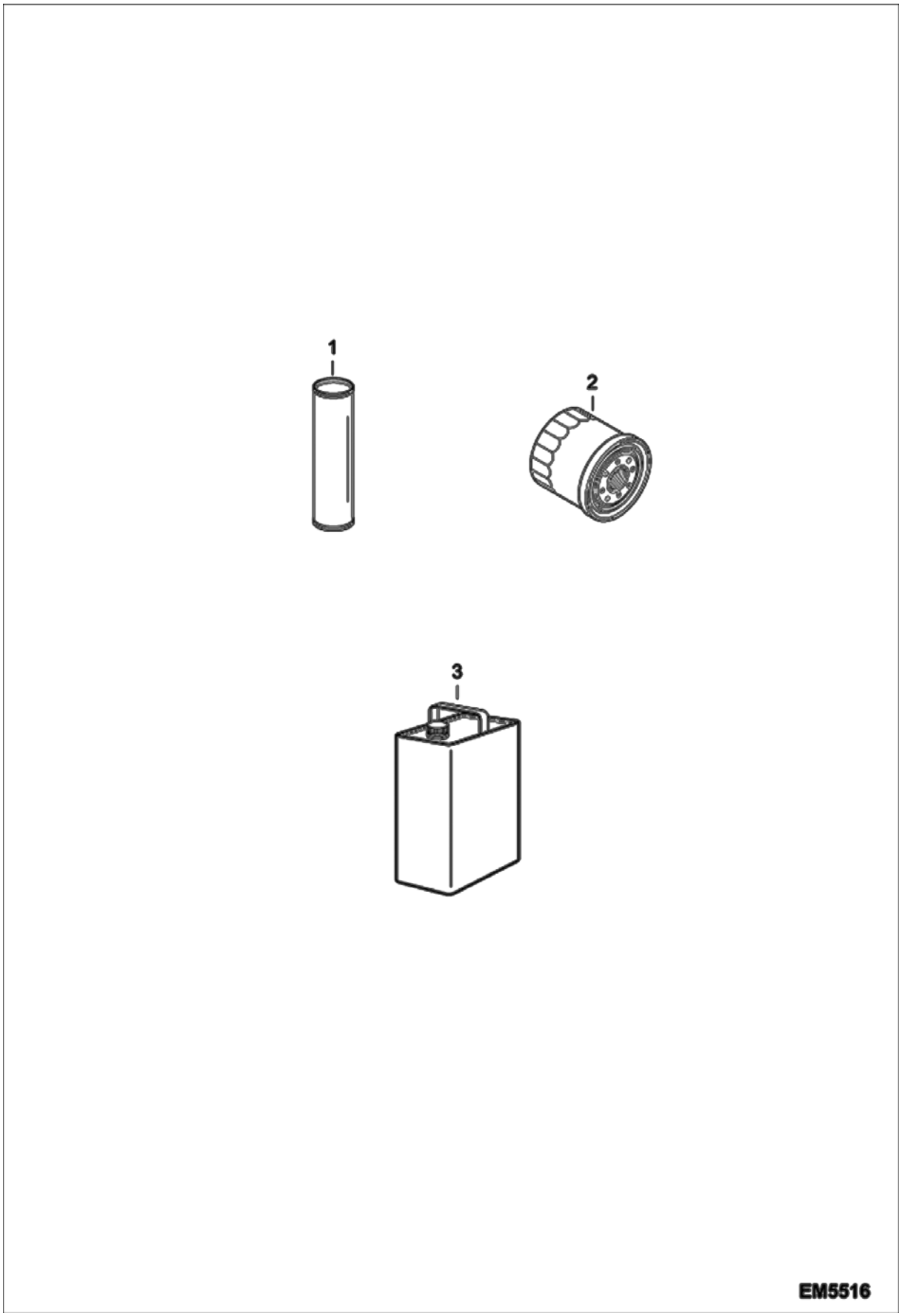




Page 32 - OSS# 2089524 - All rights reserved by Bobcat Company - 05/11/2012 - 06:30:39 - Produced by Ken Cook Co. with media1off

## SCHEDULED MAINTENANCE ITEMS (Cont'd)
## (250 Hours EMEA)

| Ref No | Part Number | Description | Remarks | Serial Number | Qty |
|---|---|---|---|---|---|
| 1 | 6903122 | GREASE, MULTI PURPOSE #2 - 10 | 400 GR multi purpose | | x |
| 1 | 6687884 | GREASE, HD SUPREME 10 | 400 GR supreme HD | | x |
| 1 | 6687885 | GREASE, HP EXTREME - 10 | 400 GR extreme HP | | x |
| 2 | 7010347 | FILTER, OIL | See Illustration DIPSTICK & FILTER/ E80-019 Was 7004996 [A] | | 1 |
| 3 | 6904840A | OIL, 10W30 5 L | Can - 5L | | x |
| 3 | 6904840B | OIL, 10W30 25L | Container - 25L | | x |
| 3 | 6904840C | OIL, 10W30 209L | Drum - 209L | | x |
| 3 | 6904840D | OIL, ENGINE SAE 10W/30, 1000L | Tank - 1000L | | x |
| 3 | 6904841A | OIL, 15W40 5L | Can - 5L | | x |
| 3 | 6904841B | OIL, 15W40 25L | Container - 25L | | x |
| 3 | 6904841C | OIL, 15W40 209L | Drum - 209L | | x |
| 3 | 6904841D | OIL, ENGINE SAE 15W/40, 1000L | Tank - 1000L | | x |
| 3 | 6987501A | OIL, ENGINE SAE 20W/50, 5L | Can - 5L | | x |
| 3 | 6987501B | OIL, ENGINE SAE 20W/50, 25L | Container - 25L | | x |
| 3 | 6987501C | OIL, ENGINE SAE 20W/50, 209L | Drum - 209L | | x |
| 3 | 6987501D | OIL, ENGINE SAE 20W/50, 1000L | Tank - 1000L | | x |
| 3 | 6987500A | OIL 30W 5L | Can - 5L | | x |
| 3 | 6987500B | OIL, 30 W 25L | Container - 25L | | x |
| 3 | 6987500C | OIL, 30W 209L | Drum - 209L | | x |
| 3 | 6987500D | OIL, ENGINE SAE 0W/30, 1000L | Tank - 1000L | | x |

Page 33 - OSS# 2089524 - All rights reserved by Bobcat Company - 05/11/2012 - 06:30:39 - Produced by Ken Cook Co. with media1off

## SCHEDULED MAINTENANCE ITEMS
## (250 Hours US)

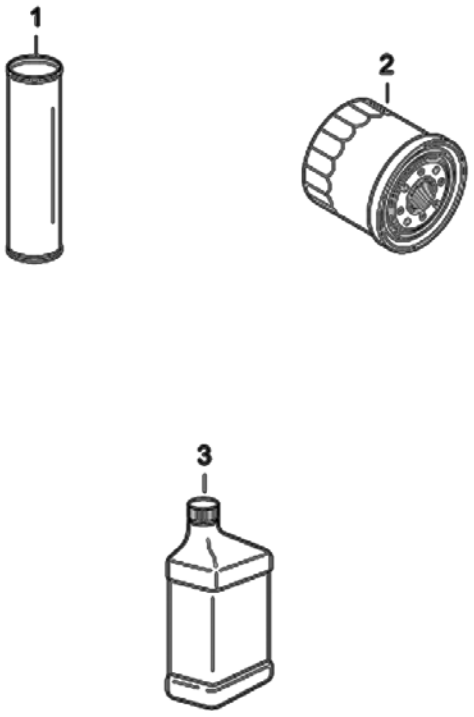




Page 34 - OSS# 2089524 - All rights reserved by Bobcat Company - 05/11/2012 - 06:30:39 - Produced by Ken Cook Co. with media1off

## SCHEDULED MAINTENANCE ITEMS (Cont'd)
## (250 Hours US)

| Ref No | Part Number | Description | Remarks | Serial Number | Qty |
|---|---|---|---|---|---|
| 1 | 6903122 | GREASE, MULTI PURPOSE #2 - 10 | 400 GR multi purpose | | x |
| 1 | 6687884 | GREASE, HD SUPREME 10 | 400 GR supreme HD | | x |
| 1 | 6687885 | GREASE, HP EXTREME - 10 | 400 GR extreme HP | | x |
| 2 | 7010347 | FILTER, OIL | See Illustration DIPSTICK & FILTER/ E80-019 Was 7004996 [A] | | 1 |
| 3 | 6903107 | OIL, 10W30 QT. 12 | QT- Sold per 12 containers | | x |
| 3 | 6903108 | OIL, 10W30 GAL. 6 | GAL - Sold per 4 jugs | | x |
| 3 | 6903112 | OIL, 10W30 2.5 GAL 2 | 2.5 GAL - Sold per 2 jugs | | x |
| 3 | 6903105 | OIL, 15W40 QT. 12 | QT- Sold per 12 containers | | x |
| 3 | 6903106 | OIL, 15W40 GAL. 6 | GAL - Sold per 4 jugs | | x |
| 3 | 6903113 | OIL, 15W40 2.5 GAL. 2 | 2.5 GAL - Sold per 2 jugs | | x |
| 3 | 6903109 | OIL 30W QT. 12 | QT- Sold per 12 containers | | x |
| 3 | 6903110 | OIL, 30W GAL. 6 | GAL - Sold per 4 jugs | | x |
| 3 | 6903111 | OIL 30W 2.5 GAL 2 | 2.5 GAL - Sold per 2 jugs | | x |

Page 35 - OSS# 2089524 - All rights reserved by Bobcat Company - 05/11/2012 - 06:30:39 - Produced by Ken Cook Co. with media1off

## SCHEDULED MAINTENANCE ITEMS
## (500 Hours)

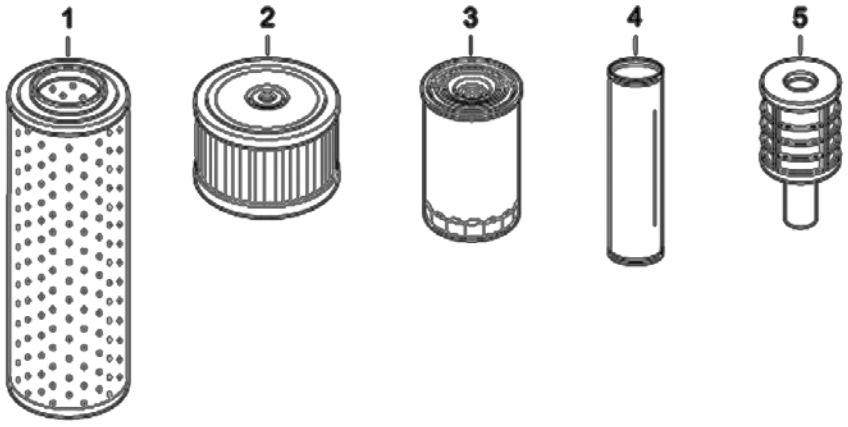


EM5518



Page 36 - OSS# 2089524 - All rights reserved by Bobcat Company - 05/11/2012 - 06:30:39 - Produced by Ken Cook Co. with media1off

## SCHEDULED MAINTENANCE ITEMS (Cont'd)
## (500 Hours)

| Ref No | Part Number | Description | Remarks | Serial Number | Qty |
|---|---|---|---|---|---|
| 1 | 7004884 | FILTER RETURN | See Illustration HYDRAULIC CIRCUITRY/ EM5924 | | 1 |
| 2 | 7006806 | FILTER, AIR BREATHER | See Illustration HYDRAULIC CIRCUITRY/ EM5924 | | 1 |
| 3 | 7010351 | FILTER, FUEL | See Illustration FUEL SYSTEM/ E80-024 Was 7006269 [A] | | 1 |
| 4 | 6903122 | GREASE, MULTI PURPOSE #2 - 10 | 400 GR multi purpose | | x |
| 4 | 6687884 | GREASE, HD SUPREME 10 | 400 GR supreme HD | | x |
| 4 | 6687885 | GREASE, HP EXTREME - 10 | 400 GR extreme HP | | x |
| 5 | 7013148 | FILTER | See Illustration FUEL SYSTEM/ E80-024 | | 1 |

Page 37 - OSS# 2089524 - All rights reserved by Bobcat Company - 05/11/2012 - 06:30:39 - Produced by Ken Cook Co. with media1off

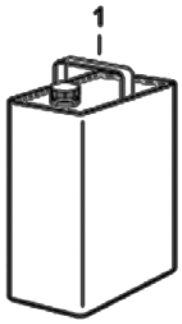


EM5917



Page 38 - OSS# 2089524 - All rights reserved by Bobcat Company - 05/11/2012 - 06:30:39 - Produced by Ken Cook Co. with media1off

## SCHEDULED MAINTENANCE ITEMS (Cont'd)
## (First 12 Months EMEA)

| Ref No | Part Number | Description | Remarks | Serial Number | Qty |
|---|---|---|---|---|---|
| 1 | 6987596A | EG COOLANT, ANTIFREEZE -36 DEGREE CELCIUS | Can - 5L, concentrated | | x |
| 1 | 6987596B | EG COOLANT, ANTIFREEZE -36 DEGREE CELCIUS | Container - 25L, concentrated | | x |
| 1 | 6987596C | EG COOLANT, ANTIFREEZE -36 DEGREE CELCIUS | Drum - 209L, concentrated | | x |
| 1 | 6987596D | EG COOLANT, ANTIFREEZE -36 DEGREE CELCIUS | Tank - 1000L, concentrated | | x |
| 1 | 6987597A | EG COOLANT, ANTIFREEZE -36 DEGREE CELCIUS | Can - 5L, premixed | | x |
| 1 | 6987597B | EG COOLANT, ANTIFREEZE -36 DEGREE CELCIUS | Container - 25L, premixed | | x |
| 1 | 6987597C | EG COOLANT, ANTIFREEZE -36 DEGREE CELCIUS | Drum - 209L, premixed | | x |
| 1 | 6987597D | EG COOLANT, ANTIFREEZE -36 DEGREE CELCIUS | Tank - 1000L, premixed | | x |

Page 39 - OSS# 2089524 - All rights reserved by Bobcat Company - 05/11/2012 - 06:30:39 - Produced by Ken Cook Co. with media1off

## SCHEDULED MAINTENANCE ITEMS
## (First 12 Months US)




EM5918



Page 40 - OSS# 2089524 - All rights reserved by Bobcat Company - 05/11/2012 - 06:30:39 - Produced by Ken Cook Co. with media1off

## SCHEDULED MAINTENANCE ITEMS (Cont'd)
## (First 12 Months US)

| Ref No | Part Number | Description | Remarks | Serial Number | Qty |
|---|---|---|---|---|---|
| 1 | 6988096 | ANTIFREEZE,EG PREMIX 1 GAL (6) | GAL - premixed | | x |
| 1 | 6988097 | ANTIFREEZE, EG CONCENTR 1 GAL (6) | GAL - concentrate | | x |

Page 41 - OSS# 2089524 - All rights reserved by Bobcat Company - 05/11/2012 - 06:30:39 - Produced by Ken Cook Co. with media1off

## SCHEDULED MAINTENANCE ITEMS
## (1000 Hours Or Every 12 Months EMEA)

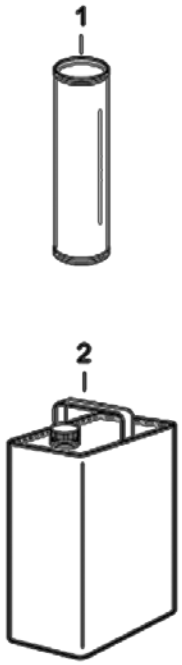


EM5519



Page 42 - OSS# 2089524 - All rights reserved by Bobcat Company - 05/11/2012 - 06:30:39 - Produced by Ken Cook Co. with media1off

## SCHEDULED MAINTENANCE ITEMS (Cont'd)
## (1000 Hours Or Every 12 Months EMEA)

| Ref No | Part Number | Description | Remarks | Serial Number | Qty |
|---|---|---|---|---|---|
| 1 | 6903122 | GREASE, MULTI PURPOSE #2 - 10 | 400 GR multi purpose | | x |
| 1 | 6687884 | GREASE, HD SUPREME 10 | 400 GR supreme HD | | x |
| 1 | 6687885 | GREASE, HP EXTREME - 10 | 400 GR extreme HP | | x |
| 2 | 6904845A | TRANSMISSION OIL, 5L | Can - 5L | | x |
| 2 | 6904845B | TRANSMISSION OIL, 25L | Container - 25L | | x |
| 2 | 6904845C | TRANSMISSION OIL, 209L | Drum - 209L | | x |
| 2 | 6904845D | TRANSMISSION OIL, 1000L | Tank - 1000L | | x |

Page 43 - OSS# 2089524 - All rights reserved by Bobcat Company - 05/11/2012 - 06:30:39 - Produced by Ken Cook Co. with media1off

## SCHEDULED MAINTENANCE ITEMS
## (1000 Hours Or Every 12 Months US)




EM5527



Page 44 - OSS# 2089524 - All rights reserved by Bobcat Company - 05/11/2012 - 06:30:39 - Produced by Ken Cook Co. with media1off

## SCHEDULED MAINTENANCE ITEMS (Cont'd)
## (1000 Hours Or Every 12 Months US)

| Ref No | Part Number | Description | Remarks | Serial Number | Qty |
|---|---|---|---|---|---|
| 1 | 6903122 | GREASE, MULTI PURPOSE #2 - 10 | 400 GR multi purpose | | x |
| 1 | 6687884 | GREASE, HD SUPREME 10 | 400 GR supreme HD | | x |
| 1 | 6687885 | GREASE, HP EXTREME - 10 | 400 GR extreme HP | | x |
| 2 | 6687120 | BOBCAT TRANS/DIFFERENTIAL FLUID 12 | QT- Sold per 12 containers | | x |
| 2 | 6988098 | TRANS/DIFFERENTIAL FLUID 1 GAL (6) | GAL - Sold per 4 jugs | | x |
| 2 | 6988099 | TRANS/DIFFERENTIAL FLUID 2.5 GAL (2) | 2.5 GAL - Sold per 2 jugs | | x |

Page 45 - OSS# 2089524 - All rights reserved by Bobcat Company - 05/11/2012 - 06:30:39 - Produced by Ken Cook Co. with media1off

## SCHEDULED MAINTENANCE ITEMS
## (2000 Hours Or Every 12 Months EMEA)

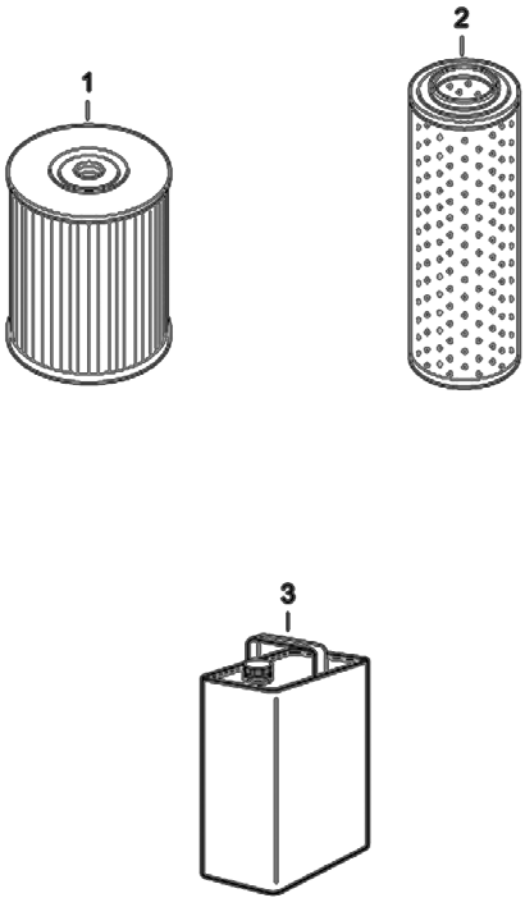




Page 46 - OSS# 2089524 - All rights reserved by Bobcat Company - 05/11/2012 - 06:30:39 - Produced by Ken Cook Co. with media1off

## SCHEDULED MAINTENANCE ITEMS (Cont'd)
## (2000 Hours Or Every 12 Months EMEA)

| Ref No | Part Number | Description | Remarks | Serial Number | Qty |
|---|---|---|---|---|---|
| 1 | 7006811 | FILTER STRAINER SUCTION | See Illustration HYDRAULIC CIRCUITRY/ EM5924 | | 1 |
| 2 | 7004884 | FILTER RETURN | See Illustration HYDRAULIC CIRCUITRY/ EM5924 | | 1 |
| 3 | 6904842A | FLUID, OIL HYD 5L | Can - 5L | | x |
| 3 | 6904843A | FLUID, OIL HYD BIO 5L | Can - 5L | | x |
| 3 | 6904842B | FLUID, OIL HYD 25L | Container - 25L | | x |
| 3 | 6904843B | FLUID, OIL HYD BIO 25L | Container - 25L | | x |
| 3 | 6904842C | FLUID, OIL HYD 209L | Drum - 209L | | x |
| 3 | 6904843C | FLUID, OIL HYD BIO 209L | Drum - 209L | | x |
| 3 | 6904842D | FLUID, OIL HYD 1000L | Tank - 1000L | | x |
| 3 | 6904843D | FLUID, OIL HYD BIO 1000L | Tank - 1000L | | x |

Page 47 - OSS# 2089524 - All rights reserved by Bobcat Company - 05/11/2012 - 06:30:39 - Produced by Ken Cook Co. with media1off

## SCHEDULED MAINTENANCE ITEMS
## (2000 Hours Or Every 12 Months US)

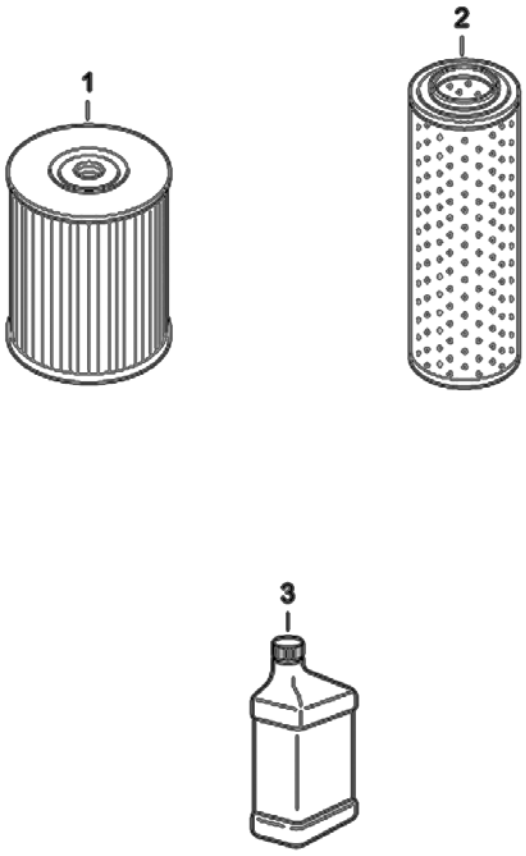




Page 48 - OSS# 2089524 - All rights reserved by Bobcat Company - 05/11/2012 - 06:30:39 - Produced by Ken Cook Co. with media1off

## SCHEDULED MAINTENANCE ITEMS (Cont'd)
## (2000 Hours Or Every 12 Months US)

| Ref No | Part Number | Description | Remarks | Serial Number | Qty |
|---|---|---|---|---|---|
| 1 | 7006811 | FILTER STRAINER SUCTION | See Illustration HYDRAULIC CIRCUITRY/ EM5924 | | 1 |
| 2 | 7004884 | FILTER RETURN | See Illustration HYDRAULIC CIRCUITRY/ EM5924 | | 1 |
| 3 | 6903117 | FLUID, OIL HYD 2.5 GAL 2 | 2.5 GAL - Sold per 2 containers | | x |
| 3 | 6903118 | FLUID, OIL HYD 5 GAL | 5 GAL | | x |
| 3 | 6903119 | FLUID, OIL HYD 55 GAL | 55 GAL | | x |

Page 49 - OSS# 2089524 - All rights reserved by Bobcat Company - 05/11/2012 - 06:30:39 - Produced by Ken Cook Co. with media1off

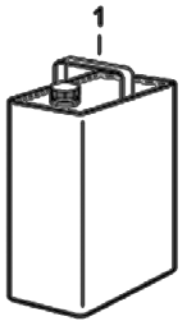


EM5915



Page 50 - OSS# 2089524 - All rights reserved by Bobcat Company - 05/11/2012 - 06:30:39 - Produced by Ken Cook Co. with media1off

## SCHEDULED MAINTENANCE ITEMS (Cont'd)
## (Every 24 Months EMEA)

| Ref No | Part Number | Description | Remarks | Serial Number | Qty |
|---|---|---|---|---|---|
| 1 | 6987596A | EG COOLANT, ANTIFREEZE -36 DEGREE CELCIUS | Can - 5L, concentrated | | x |
| 1 | 6987596B | EG COOLANT, ANTIFREEZE -36 DEGREE CELCIUS | Container - 25L, concentrated | | x |
| 1 | 6987596C | EG COOLANT, ANTIFREEZE -36 DEGREE CELCIUS | Drum - 209L, concentrated | | x |
| 1 | 6987596D | EG COOLANT, ANTIFREEZE -36 DEGREE CELCIUS | Tank - 1000L, concentrated | | x |
| 1 | 6987597A | EG COOLANT, ANTIFREEZE -36 DEGREE CELCIUS | Can - 5L, premixed | | x |
| 1 | 6987597B | EG COOLANT, ANTIFREEZE -36 DEGREE CELCIUS | Container - 25L, premixed | | x |
| 1 | 6987597C | EG COOLANT, ANTIFREEZE -36 DEGREE CELCIUS | Drum - 209L, premixed | | x |
| 1 | 6987597D | EG COOLANT, ANTIFREEZE -36 DEGREE CELCIUS | Tank - 1000L, premixed | | x |

Page 51 - OSS# 2089524 - All rights reserved by Bobcat Company - 05/11/2012 - 06:30:39 - Produced by Ken Cook Co. with media1off

## SCHEDULED MAINTENANCE ITEMS
## (Every 24 Months US)




EM5916



Page 52 - OSS# 2089524 - All rights reserved by Bobcat Company - 05/11/2012 - 06:30:39 - Produced by Ken Cook Co. with media1off

## SCHEDULED MAINTENANCE ITEMS (Cont'd)
## (Every 24 Months US)

| Ref No | Part Number | Description | Remarks | Serial Number | Qty |
|---|---|---|---|---|---|
| 1 | 6988096 | ANTIFREEZE,EG PREMIX 1 GAL (6) | GAL - premixed | | x |
| 1 | 6988097 | ANTIFREEZE, EG CONCENTR 1 GAL (6) | GAL - concentrate | | x |

Page 53 - OSS# 2089524 - All rights reserved by Bobcat Company - 05/11/2012 - 06:30:39 - Produced by Ken Cook Co. with media1off

# UPPERSTRUCTURE

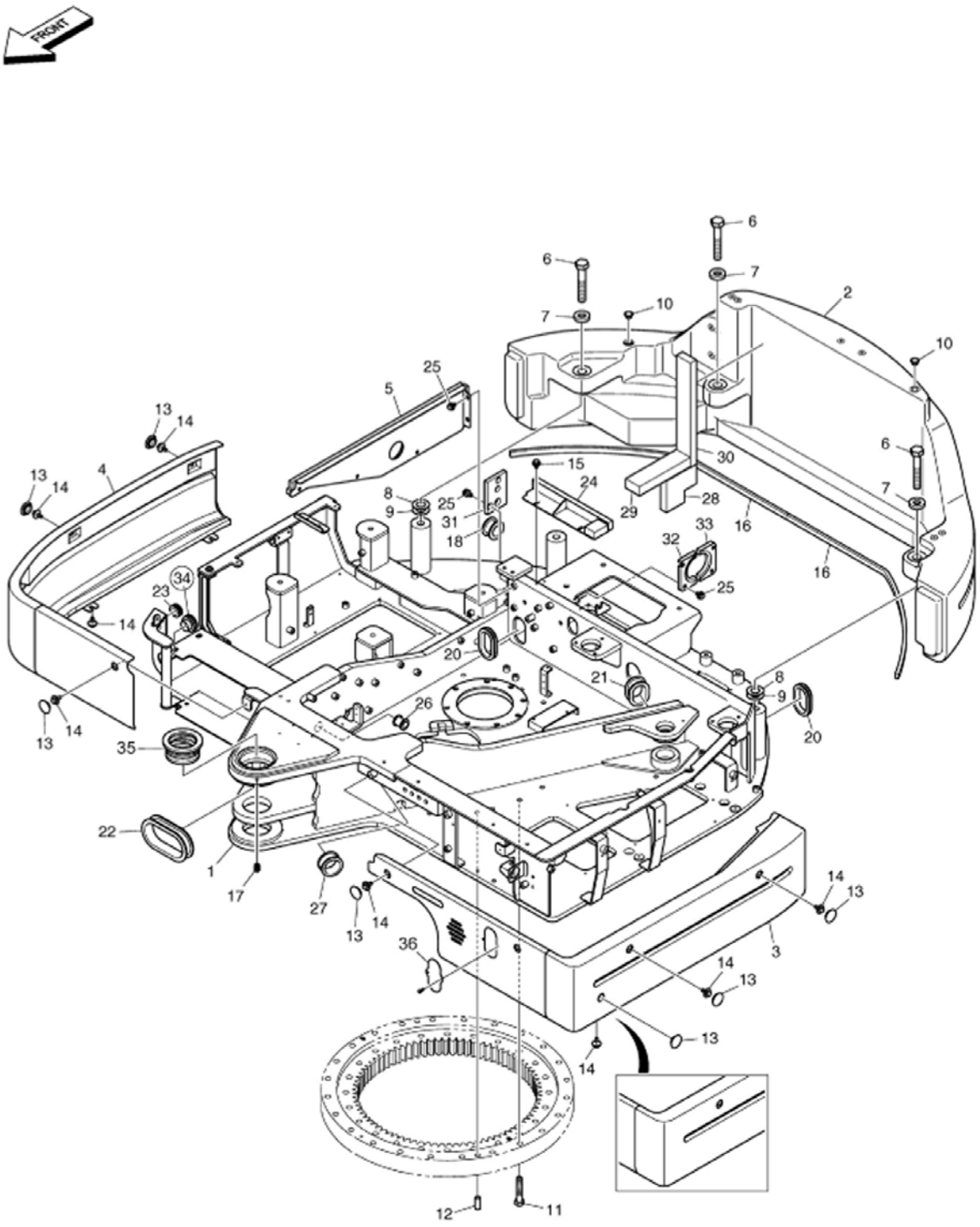




Page 54 - OSS# 2089524 - All rights reserved by Bobcat Company - 05/11/2012 - 06:30:39 - Produced by Ken Cook Co. with media1off

| Ref No | Part Number | Description | Remarks | Serial Number | Qty |
|---|---|---|---|---|---|
| 1 | | FRAME, MAIN | NLA - W/Ref. 35 Was 7008206 [A] | AET311001 - 11051 | 1 |
| 1 | | FRAME, MAIN | NLA - W/Ref. 35 Was 7008206 [A] | AETB11001 - 11051 | 1 |
| 1 | | FRAME, MAIN | NLA - W/Ref. 35 Was 7015430 [A] | AET311001 - 11191 | 1 |
| 1 | | FRAME, MAIN | NLA - W/Ref. 35 Was 7015430 [A] | AETB11001 - 11191 | 1 |
| 1 | 7017386 | FRAME, MAIN | W/Ref. 35 | AET311192 & Above | 1 |
| 1 | 7017386 | FRAME, MAIN | W/Ref. 35 | AETB11192 & Above | 1 |
| 2 | 7006241 | COUNTERWEIGHT | | | 1 |
| 3 | | COVER, SIDE LH | NLA Was 7006153 [A] | AET311001 - 11051 | 1 |
| 3 | | COVER, SIDE LH | NLA Was 7006153 [A] | AETB11001 - 11051 | 1 |
| 3 | 7015431 | COVER | | AET311001 & Above | 1 |
| 3 | 7015431 | COVER | | AETB11001 & Above | 1 |
| 4 | 7006154 | COVER SIDE RH | | | 1 |
| 5 | 7017409 | COVER, BAFFLE | Was 7006330 [A] | | 1 |
| 6 | 7005117 | BOLT | | | 3 |
| 7 | 7004502 | WASHER | | | 3 |
| 8 | 7004491 | SHIM | | | 3 |
| 9 | 7004493 | SHIM | | | 3 |
| 10 | 7003922 | CAP | | | 2 |
| 11 | 7007713 | BOLT | | | 24 |
| 12 | | PIN, KNOCK | NLA Was 7004568 [A] | AET311001 - 11207 | 2 |
| 12 | | PIN, KNOCK | NLA Was 7004568 [A] | AETB11001 - 11207 | 2 |
| 12 | 7012272 | PIN,DOWEL | | AET311001 & Above | 2 |
| 12 | 7012272 | PIN,DOWEL | | AETB11001 & Above | 2 |
| 13 | 7005653 | PAD | | AET311001 - 11051 | 7 |
| 13 | 7005653 | PAD | | AETB11001 - 11051 | 7 |
| 13 | 7005623 | ADAPTER | | AET311052 & Above | 8 |
| 13 | 7005623 | ADAPTER | | AETB11052 & Above | 8 |
| 14 | 7005128 | BOLT SET | | | 13 |
| 15 | 7005129 | BOLT SET | | | 2 |
| 16 | 7006351 | PAD | | | 2 |
| 17 | 7007895 | NIPPLE | | | 1 |
| 18 | 7005592 | BUSHING RUBBER | | | 1 |
| 20 | 7005581 | BUSHING RUBBER | | | 2 |
| 21 | 7005586 | BUSHING RUBBER | | | 1 |
| 22 | 7005584 | GROMMET | | | 1 |



Page 55 - OSS# 2089524 - All rights reserved by Bobcat Company - 05/11/2012 - 06:30:39 - Produced by Ken Cook Co. with media1off

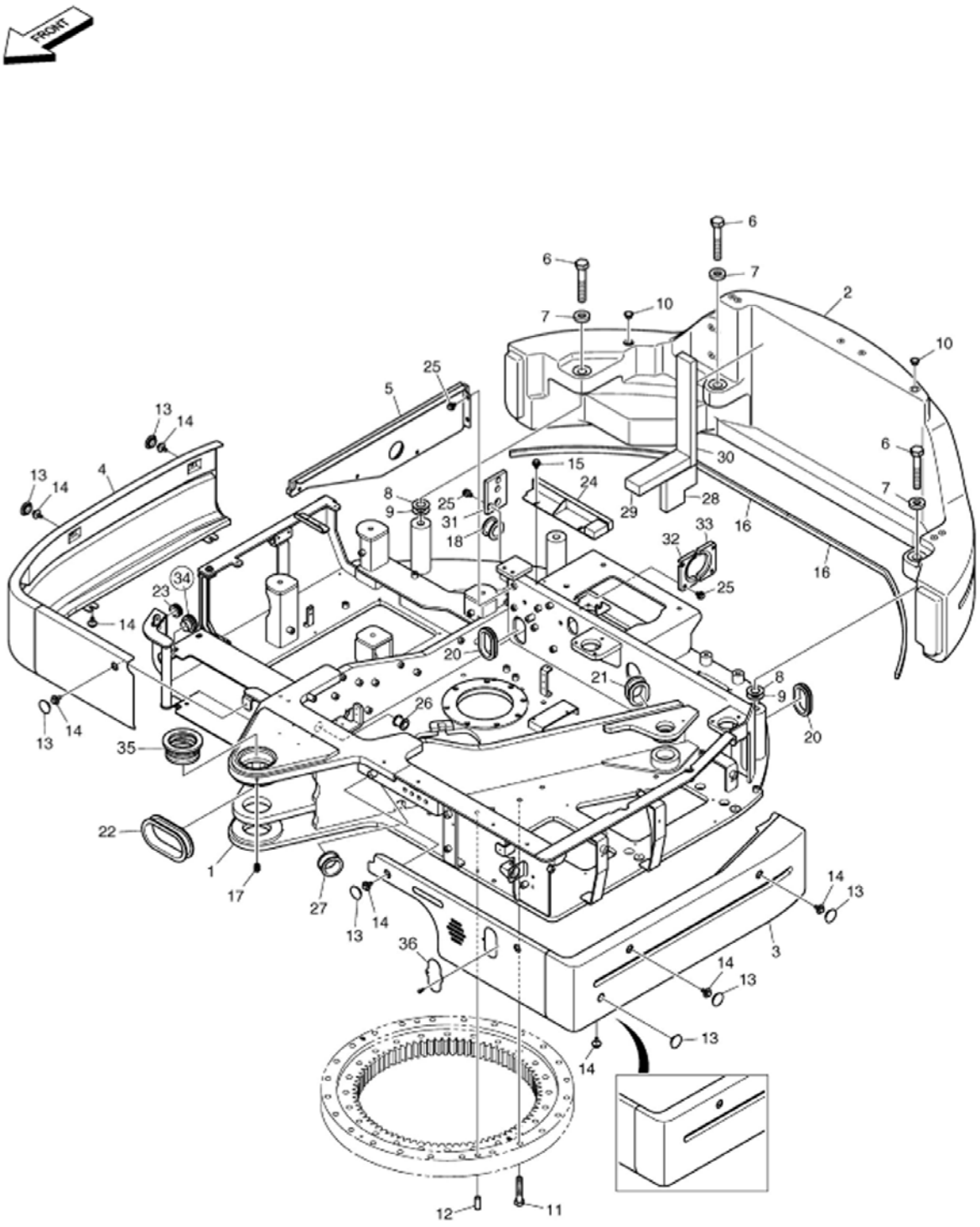


EM6003



Page 56 - OSS# 2089524 - All rights reserved by Bobcat Company - 05/11/2012 - 06:30:39 - Produced by Ken Cook Co. with mediaioff

| Ref No | Part Number | Description | Remarks | Serial Number | Qty |
|---|---|---|---|---|---|
| 23 | 7006536 | BUSHING | | | 1 |
| 24 | 7006578 | COVER BAFFLE | | | 1 |
| 25 | 7005135 | BOLT | | | 11 |
| 26 | 7005595 | BUSHING RUBBER | | | 1 |
| 27 | 7005596 | BUSHING RUBBER | | | 1 |
| 28 | 7006736 | FOAM | | | 1 |
| 29 | 7006737 | FOAM | | | 1 |
| 30 | 7006738 | FOAM | | | 1 |
| 31 | 7006739 | COVER BAFFLE | | | 1 |
| 32 | 7006741 | COVER BAFFLE | | | 1 |
| 33 | 7006742 | COVER BAFFLE | | | 1 |
| 34 | 7005590 | BUSHING RUBBER | | AET311001 - 11051 | 1 |
| 34 | 7005590 | BUSHING RUBBER | | AETB11001 - 11051 | 1 |
| 35 | 7006283 | BUSHING | | | 1 |
| 36 | 7006365 | COVER | | | 1 |

Page 57 - OSS# 2089524 - All rights reserved by Bobcat Company - 05/11/2012 - 06:30:39 - Produced by Ken Cook Co. with media1off

# UPPERSTRUCTURE
## (Lubrication Piping)

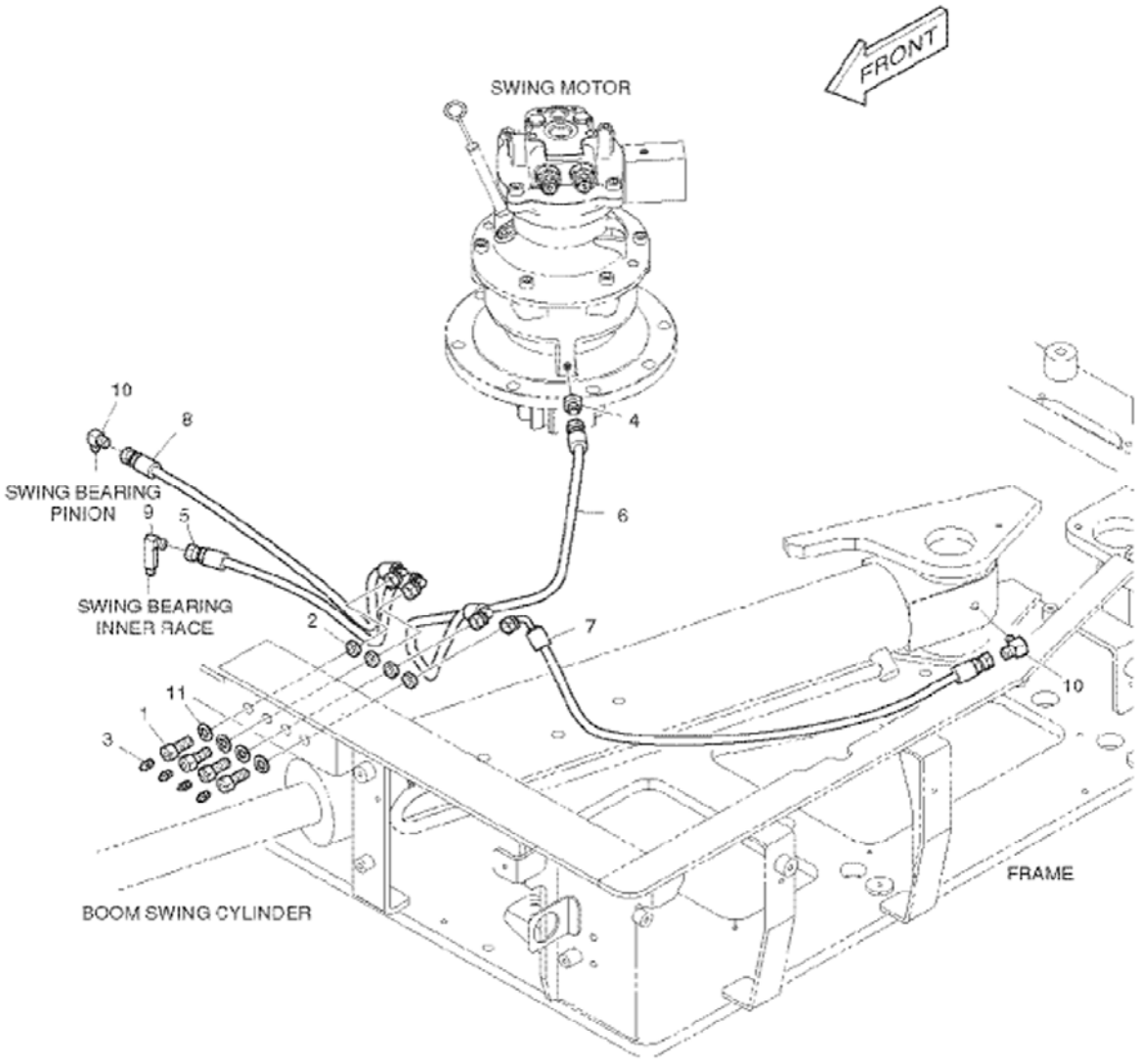


E80-1550



Page 58 - OSS# 2089524 - All rights reserved by Bobcat Company - 05/11/2012 - 06:30:39 - Produced by Ken Cook Co. with media1off

## UPPERSTRUCTURE (Cont'd)
## (Lubrication Piping)

| Ref No | Part Number | Description | Remarks | Serial Number | Qty |
|---|---|---|---|---|---|
| 1 | 7003952 | REDUCER | | | 4 |
| 2 | 7003878 | NUT | | | 4 |
| 3 | 7010246 | FITTING, GREASE | Was 7007894 [A] | | 4 |
| 4 | 7004669 | ADAPTER | | | 1 |
| 5 | 7005375 | HOSE | | | 1 |
| 6 | 7005355 | HOSE | | | 1 |
| 7 | 7005355 | HOSE | | | 1 |
| 8 | 7005315 | HOSE PF1/4-620L | | | 1 |
| 9 | 7005557 | ELBOW | | | 1 |
| 10 | 7004705 | ELBOW | | | 2 |
| 11 | 7007819 | WASHER PLAIN | | | 4 |

Page 59 - OSS# 2089524 - All rights reserved by Bobcat Company - 05/11/2012 - 06:30:39 - Produced by Ken Cook Co. with media1off

# UPPERSTRUCTURE
## (Under Covers)

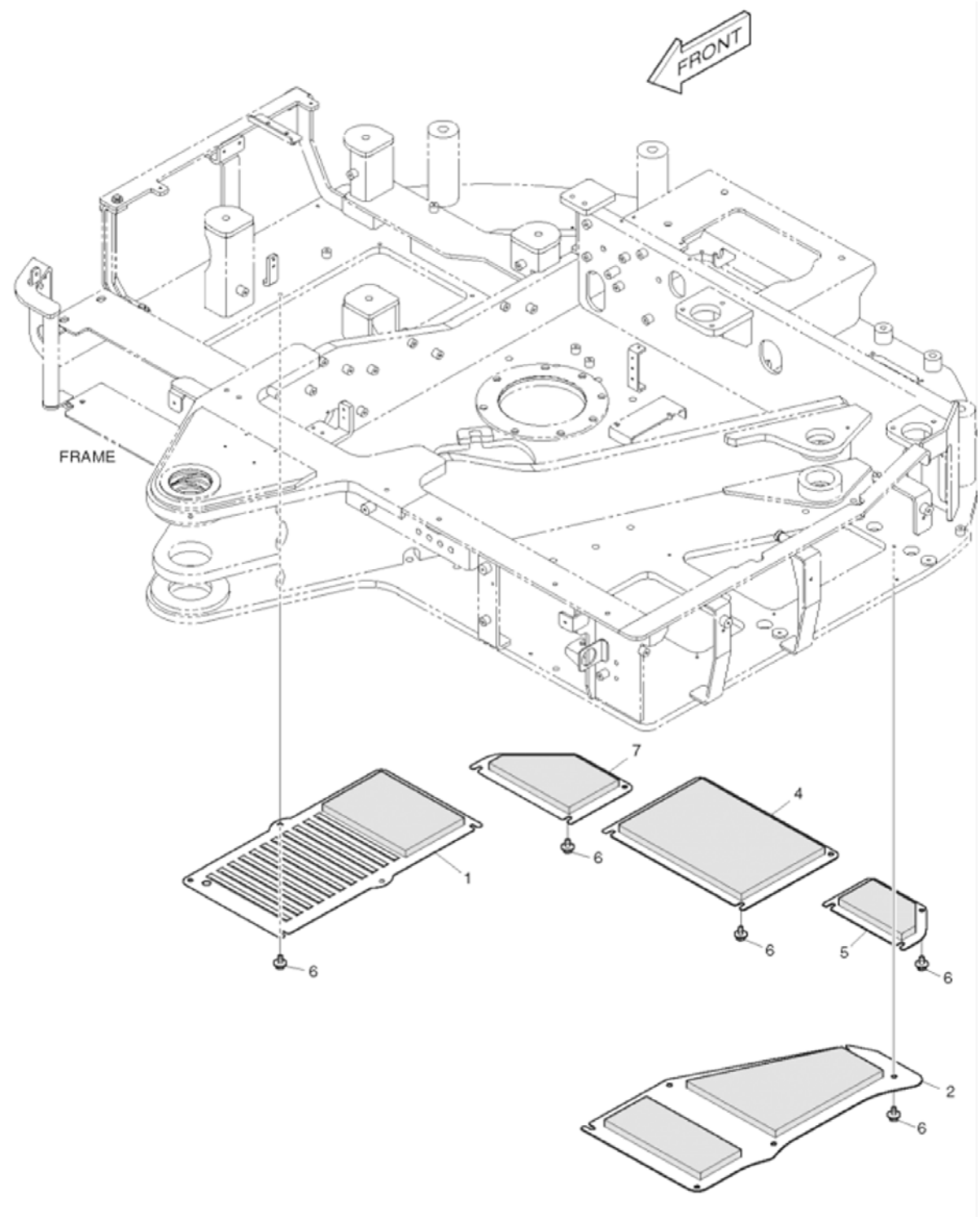


E80-1530



Page 60 - OSS# 2089524 - All rights reserved by Bobcat Company - 05/11/2012 - 06:30:39 - Produced by Ken Cook Co. with media1off

## UPPERSTRUCTURE (Cont'd)
## (Under Covers)

| Ref No | Part Number | Description | Remarks | Serial Number | Qty |
|---|---|---|---|---|---|
| 1 | 7006299 | COVER LOWER | | | 1 |
| 2 | 7006300 | COVER LOWER | | | 1 |
| 4 | 7006302 | COVER LOWER | | | 1 |
| 5 | 7006303 | COVER LOWER | | | 1 |
| 6 | 7012229 | BOLT;FLANGE | Was 7005129 [A] | | 23 |
| 7 | 7006301 | COVER LOWER | | | 1 |

Page 61 - OSS# 2089524 - All rights reserved by Bobcat Company - 05/11/2012 - 06:30:39 - Produced by Ken Cook Co. with media1off

# OPERATOR CAB
## (Floor)

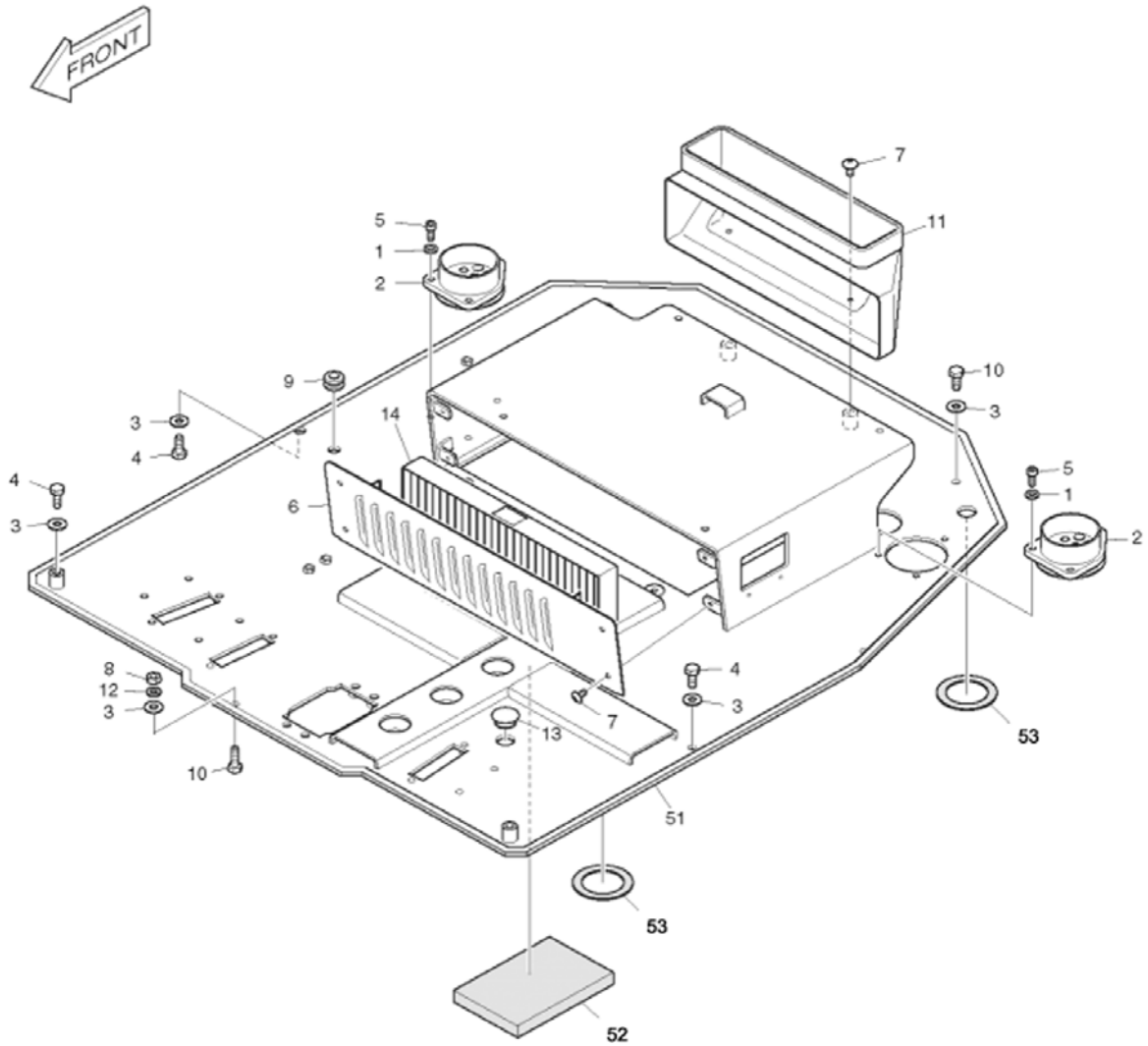


E80-1390



Page 62 - OSS# 2089524 - All rights reserved by Bobcat Company - 05/11/2012 - 06:30:39 - Produced by Ken Cook Co. with media1off

## OPERATOR CAB (Cont'd)
## (Floor)

| Ref No | Part Number | Description | Remarks | Serial Number | Qty |
|---|---|---|---|---|---|
| 1 | 7004515 | WASHER | | | 6 |
| 2 | 7005841 | BUSHING RUBBER | | | 2 |
| 3 | 7004509 | WASHER | | | 8 |
| 4 | 7004534 | BOLT | | | 5 |
| 5 | 7007735 | BOLT | | | 6 |
| 6 | 7006337 | COVER | | | 1 |
| 7 | 7004547 | BOLT | | | 6 |
| 8 | 7007798 | NUT M10X1.5 | | | 1 |
| 9 | 7004604 | BUSHING RUBBER | | | 1 |
| 10 | 7004530 | BOLT M10X1.5X30 | | | 3 |
| 11 | 7005880 | DUCT REAR | | | 1 |
| 12 | 7004522 | WASHER | | | 1 |
| 13 | 7004626 | CAP RUBBER | | | 1 |
| 14 | 7006085 | FILTER A/C | | | 1 |
| 51 | 7008215 | PLATE, FLOOR | | | 1 |
| 52 | 7006735 | FOAM | | | 1 |
| 53 | 7006796 | FOAM | | | 2 |

Page 63 - OSS# 2089524 - All rights reserved by Bobcat Company - 05/11/2012 - 06:30:39 - Produced by Ken Cook Co. with media1off

# OPERATOR CAB
## (Mounting)

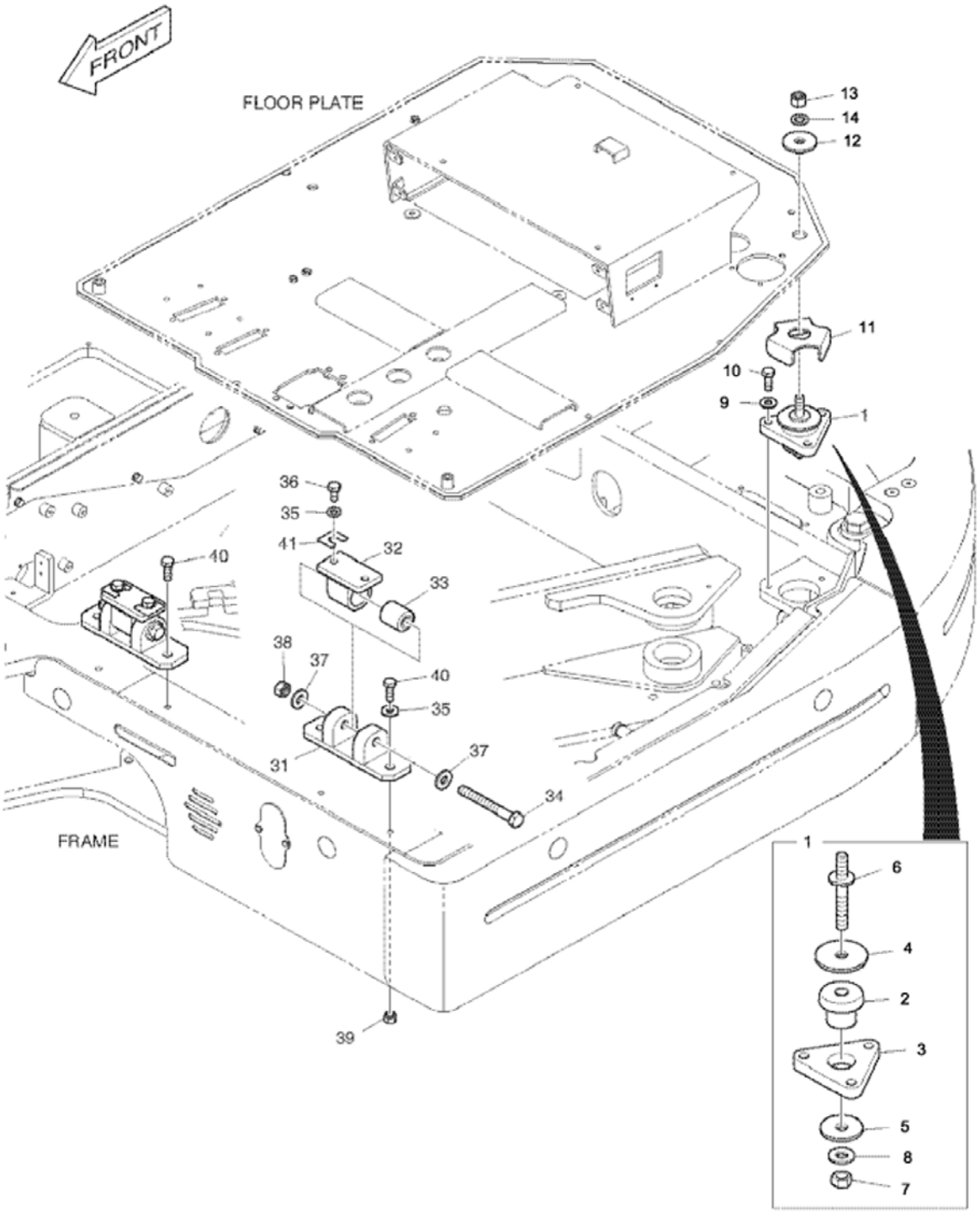


E80-1330



Page 64 - OSS# 2089524 - All rights reserved by Bobcat Company - 05/11/2012 - 06:30:39 - Produced by Ken Cook Co. with media1off

## OPERATOR CAB (Cont'd)
## (Mounting)

| Ref No | Part Number | Description | Remarks | Serial Number | Qty |
|---|---|---|---|---|---|
| 1 | 7006170 | MOUNT ASSY | W/Ref. 2-8 | | 2 |
| 2 | 7006075 | MOUNT CAB RUBBER | rubber | | 1 |
| 3 | 7006167 | PLATE | | | 1 |
| 4 | 7008208 | PLATE | | | 1 |
| 5 | 7006168 | PLATE | | | 1 |
| 6 | 7006169 | BOLT STUD | | | 1 |
| 7 | 7004566 | NUT | | | 1 |
| 8 | 7004468 | WASHER | | | 1 |
| 9 | 7004514 | WASHER | | | 6 |
| 10 | 7004542 | BOLT | | | 6 |
| 11 | 7006281 | PLATE | | | 2 |
| 12 | 7006168 | PLATE | | | 2 |
| 13 | 7004566 | NUT | | | 2 |
| 14 | 7007823 | WASHER PLAIN | | | 2 |
| 31 | 7006207 | BRACKET | | | 2 |
| 32 | 7006208 | BRACKET | | | 2 |
| 33 | 7006648 | MOUNT CAB RUBBER | rubber | | 2 |
| 34 | 7007711 | BOLT M16X2.0X130 | | | 2 |
| 35 | 7004518 | WASHER PLAIN | | | 8 |
| 36 | 7004537 | BOLT | | | 4 |
| 37 | 7004468 | WASHER | | | 4 |
| 38 | 7004566 | NUT | | | 2 |
| 39 | 7004567 | NUT LOCK | | | 2 |
| 40 | 7004542 | BOLT | | | 4 |
| 41 | 7008180 | SHIM, 2T | 2,0 mm | | 4 |

Page 65 - OSS# 2089524 - All rights reserved by Bobcat Company - 05/11/2012 - 06:30:39 - Produced by Ken Cook Co. with media1off

# OPERATOR CAB
## (Tilting Support)

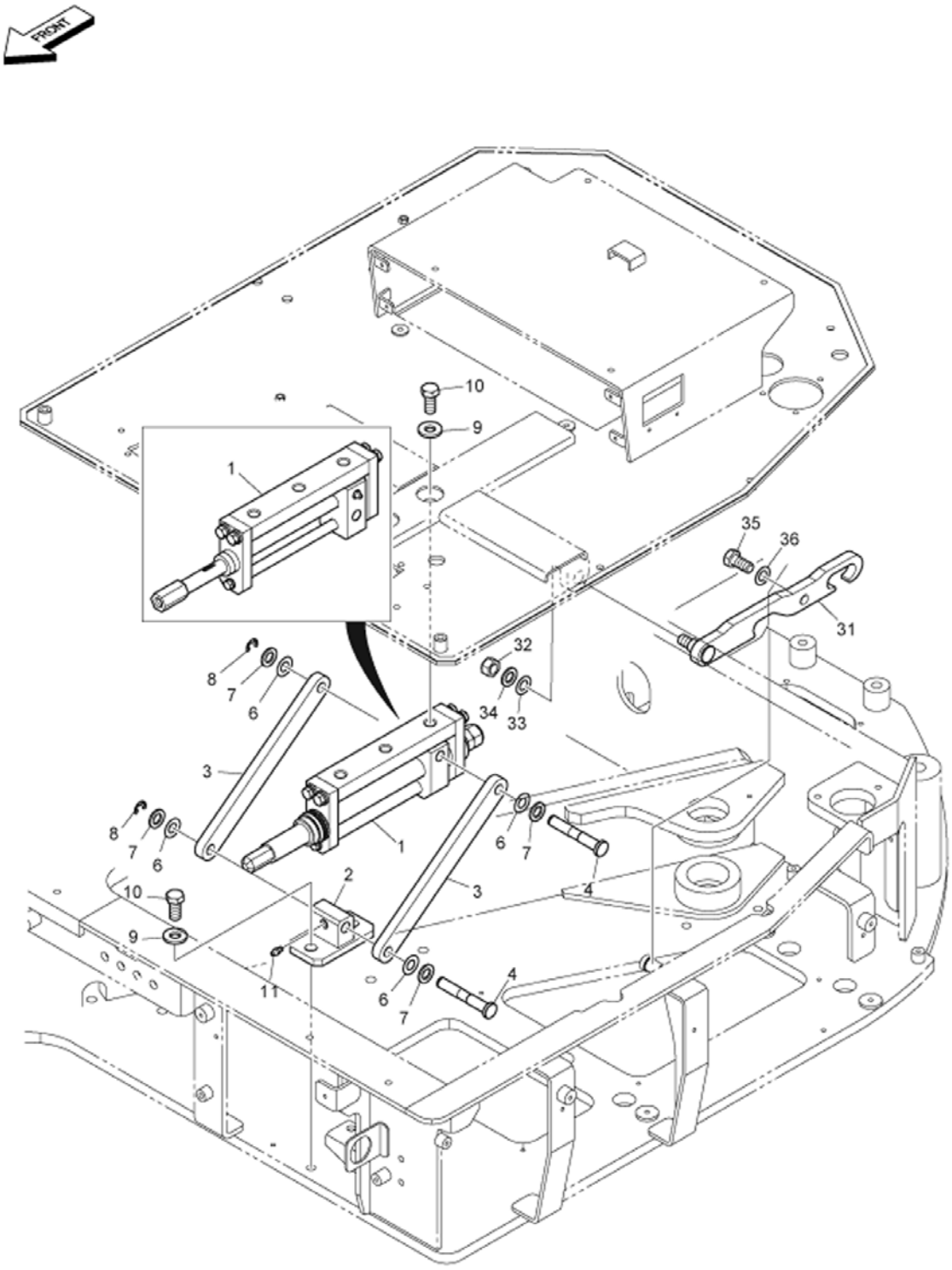


EM5943



Page 66 - OSS# 2089524 - All rights reserved by Bobcat Company - 05/11/2012 - 06:30:39 - Produced by Ken Cook Co. with media1off

## OPERATOR CAB (Cont'd)
## (Tilting Support)

| Ref No | Part Number | Description | Remarks | Serial Number | Qty |
|---|---|---|---|---|---|
| 1 | 7006206 | PLATE ASSY | | AET311001 - 11172 | 1 |
| 1 | 7006206 | PLATE ASSY | | AETB11001 - 11172 | 1 |
| 1 | 7013288 | PLATE ASSY | | AET311173 & Above | 1 |
| 1 | 7013288 | PLATE ASSY | | AETB11173 & Above | 1 |
| 2 | 7006136 | BRACKET | | | 1 |
| 3 | 7006137 | LINK | | AET311001 - 11172 | 2 |
| 3 | 7006137 | LINK | | AETB11001 - 11172 | 2 |
| 3 | 7013241 | LINK | | AET311173 & Above | 2 |
| 3 | 7013241 | LINK | | AETB11173 & Above | 2 |
| 4 | 7006138 | PIN | | | 2 |
| 6 | 7004497 | SHIM | | | 8 |
| 7 | 7007823 | WASHER PLAIN | | | 4 |
| 8 | 7007890 | RING RETAINING | | | 2 |
| 9 | 7004519 | WASHER | | | 5 |
| 10 | 7007647 | BOLT M16X2.0X35 | | | 5 |
| 11 | 7010247 | FITTING, GREASE | Was 7007893 [A] | | 1 |
| 31 | 7006362 | BAR | | AET311001 - 11172 | 1 |
| 31 | 7006362 | BAR | | AETB11001 - 11172 | 1 |
| 31 | 7013242 | BAR | | AET311173 & Above | 1 |
| 31 | 7013242 | BAR | | AETB11173 & Above | 1 |
| 32 | 7004566 | NUT | | | 1 |
| 33 | 7005659 | SHIM | | | 1 |
| 34 | 7007823 | WASHER PLAIN | | | 1 |
| 35 | 7007647 | BOLT M16X2.0X35 | | | 1 |
| 36 | 7004469 | WASHER | | | 1 |

Page 67 - OSS# 2089524 - All rights reserved by Bobcat Company - 05/11/2012 - 06:30:39 - Produced by Ken Cook Co. with media1off

# OPERATOR CAB
## (Floor Mat)

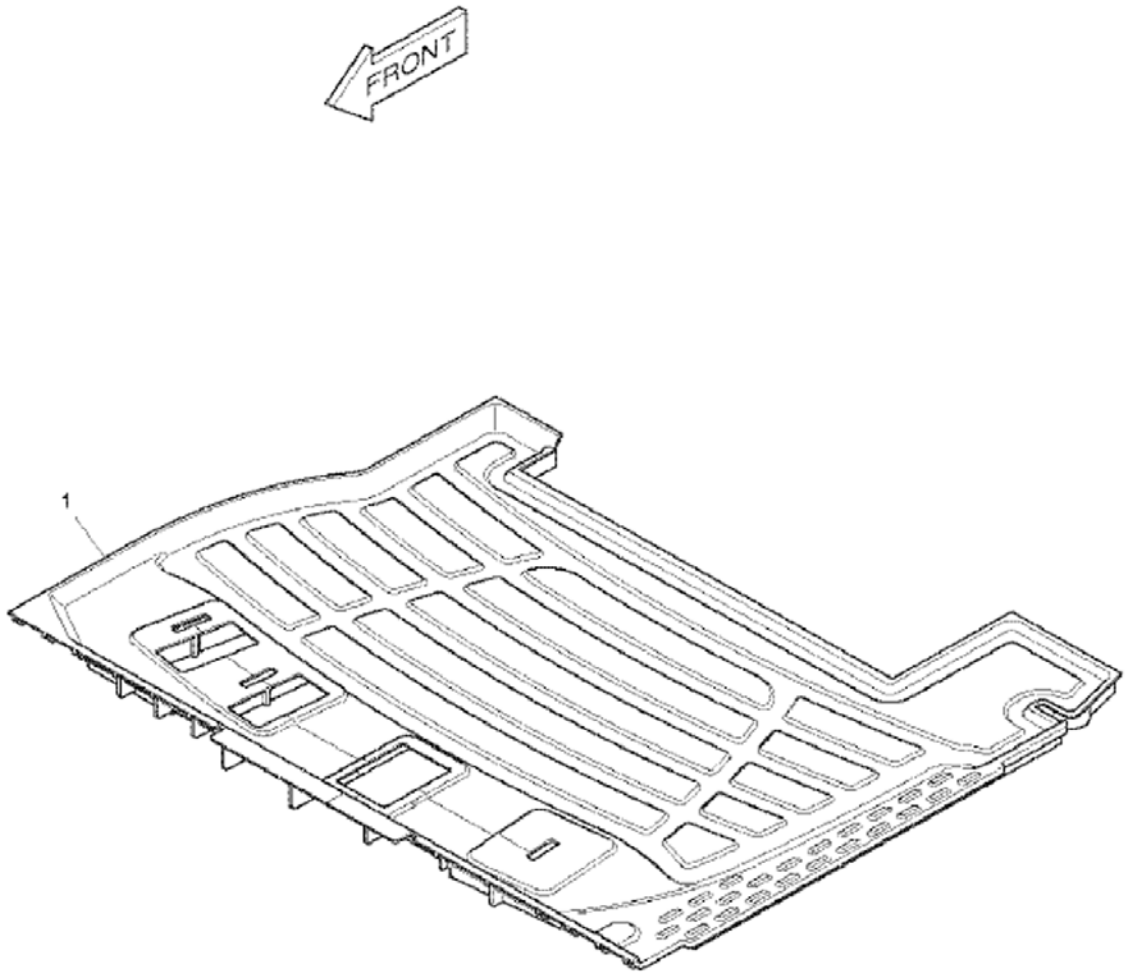


E80-1500



Page 68 - OSS# 2089524 - All rights reserved by Bobcat Company - 05/11/2012 - 06:30:39 - Produced by Ken Cook Co. with media1off

## OPERATOR CAB (Cont'd)
## (Floor Mat)

| Ref No | Part Number | Description | Remarks | Serial Number | Qty |
|---|---|---|---|---|---|
| 1 | 7006472 | MAT FLOOR | | | 1 |

Page 69 - OSS# 2089524 - All rights reserved by Bobcat Company - 05/11/2012 - 06:30:39 - Produced by Ken Cook Co. with media1off

# OPERATOR CAB
## (Seat Base)

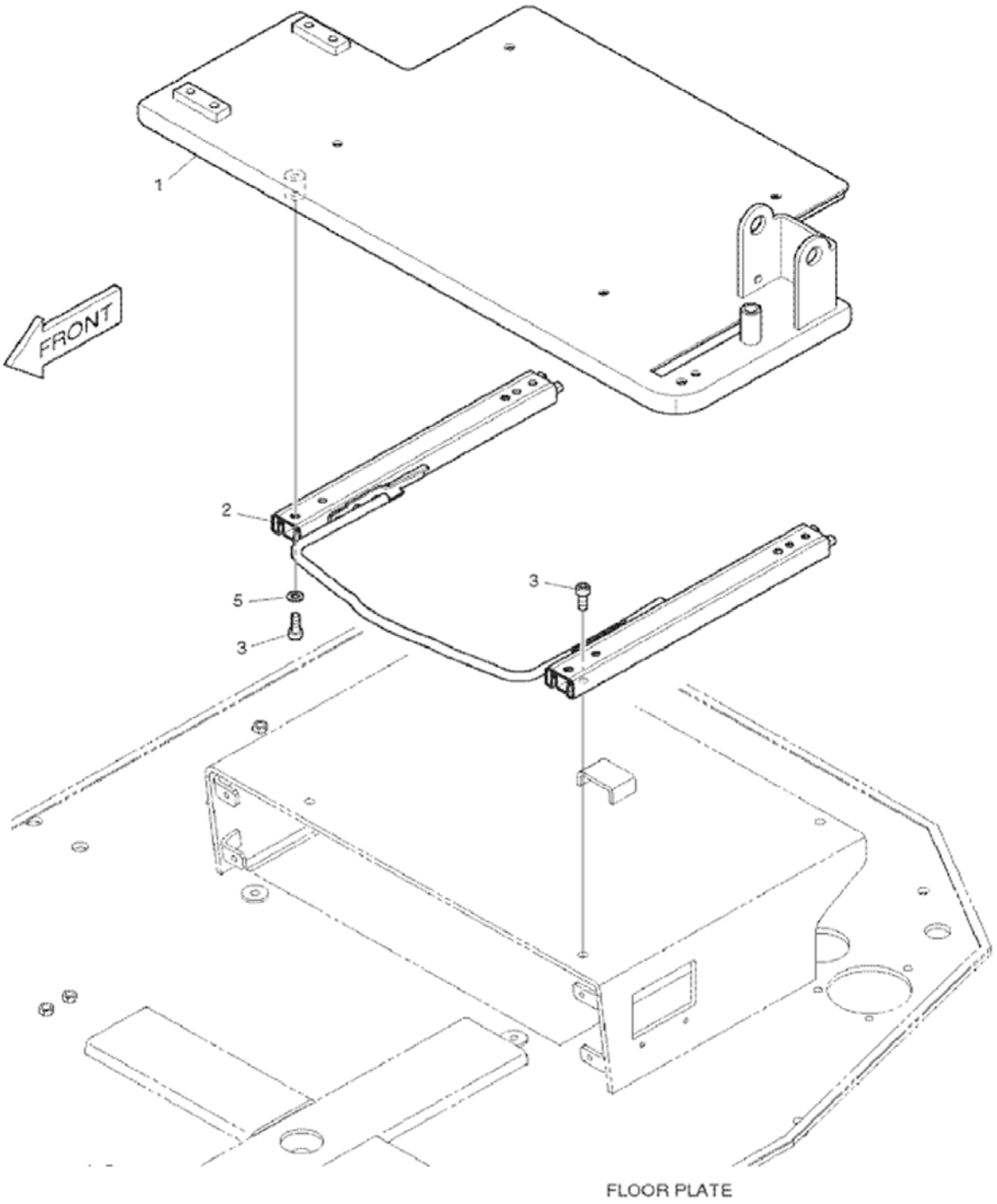


FLOOR PLATE

E80-1410



Page 70 - OSS# 2089524 - All rights reserved by Bobcat Company - 05/11/2012 - 06:30:39 - Produced by Ken Cook Co. with media1off

## OPERATOR CAB (Cont'd)
## (Seat Base)

| Ref No | Part Number | Description | Remarks | Serial Number | Qty |
|---|---|---|---|---|---|
| 1 | 7006338 | PLATE | | | 1 |
| 2 | 7005638 | GUIDE RAIL | | | 1 |
| 3 | 7007735 | BOLT | | | 8 |
| 5 | 7004521 | WASHER SPRING | | | 4 |

Page 71 - OSS# 2089524 - All rights reserved by Bobcat Company - 05/11/2012 - 06:30:39 - Produced by Ken Cook Co. with media1off

# OPERATOR CAB
## (Seat Mounting)

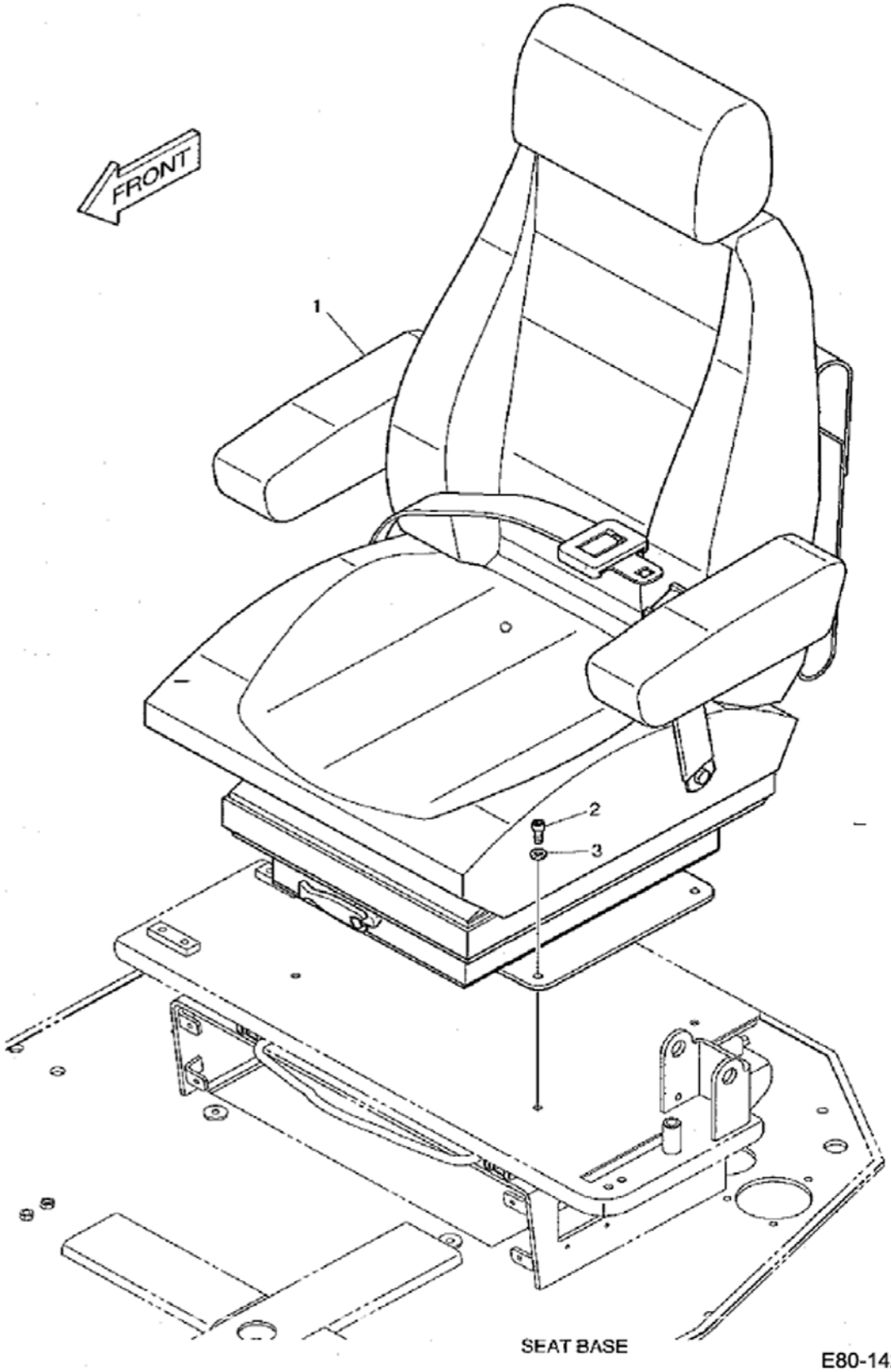




Page 72 - OSS# 2089524 - All rights reserved by Bobcat Company - 05/11/2012 - 06:30:39 - Produced by Ken Cook Co. with media1off

## OPERATOR CAB (Cont'd)
## (Seat Mounting)

| Ref No | Part Number | Description | Remarks | Serial Number | Qty |
|---|---|---|---|---|---|
| 1 | 7006201 | SEAT, SUSPENSION | W/suspension | | 1 |
| 2 | 7007735 | BOLT | | | 4 |
| 3 | 7004515 | WASHER | | | 4 |

Page 73 - OSS# 2089524 - All rights reserved by Bobcat Company - 05/11/2012 - 06:30:39 - Produced by Ken Cook Co. with media1off

# OPERATOR CAB
## (Seat)

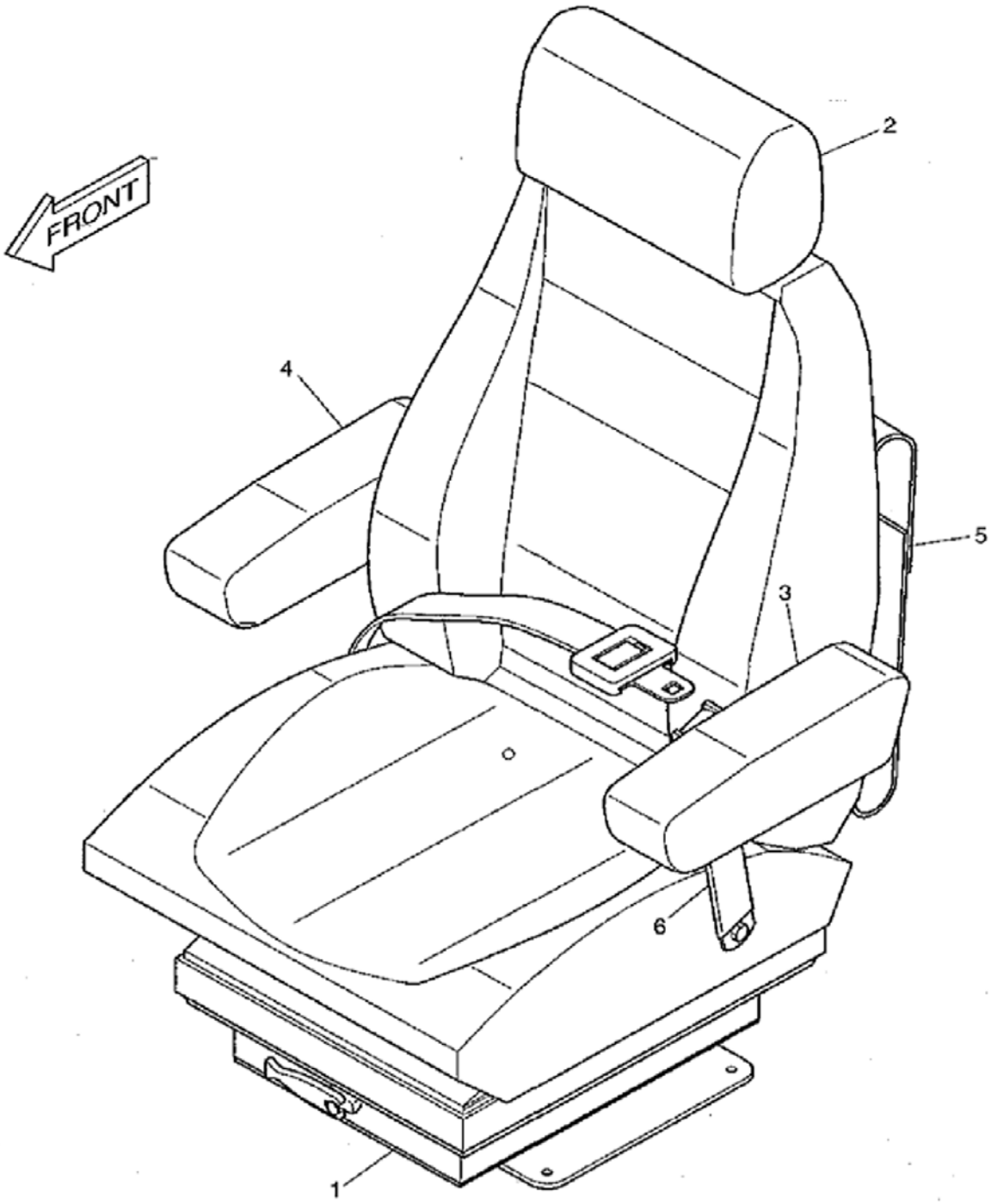


E80-1430



Page 74 - OSS# 2089524 - All rights reserved by Bobcat Company - 05/11/2012 - 06:30:39 - Produced by Ken Cook Co. with media1off

## OPERATOR CAB (Cont'd)
## (Seat)

| Ref No | Part Number | Description | Remarks | Serial Number | Qty |
|---|---|---|---|---|---|
| 1 | 7006201 | SEAT, SUSPENSION | W/suspension | | 1 |
| 1 | 7006947 | STABILIZER SUSPENSION | | | 1 |
| 2 | 7006948 | HEAD REST | | | 1 |
| 3 | 7006949 | ARM REST LH | | | 1 |
| 4 | 7006950 | ARM REST RH | | | 1 |
| 5 | 7006951 | BAG DOCUMENT | | | 1 |
| 6 | 7006952 | BELT SEAT | | | 1 |

Page 75 - OSS# 2089524 - All rights reserved by Bobcat Company - 05/11/2012 - 06:30:39 - Produced by Ken Cook Co. with media1off

# OPERATOR CAB
## (Windows)

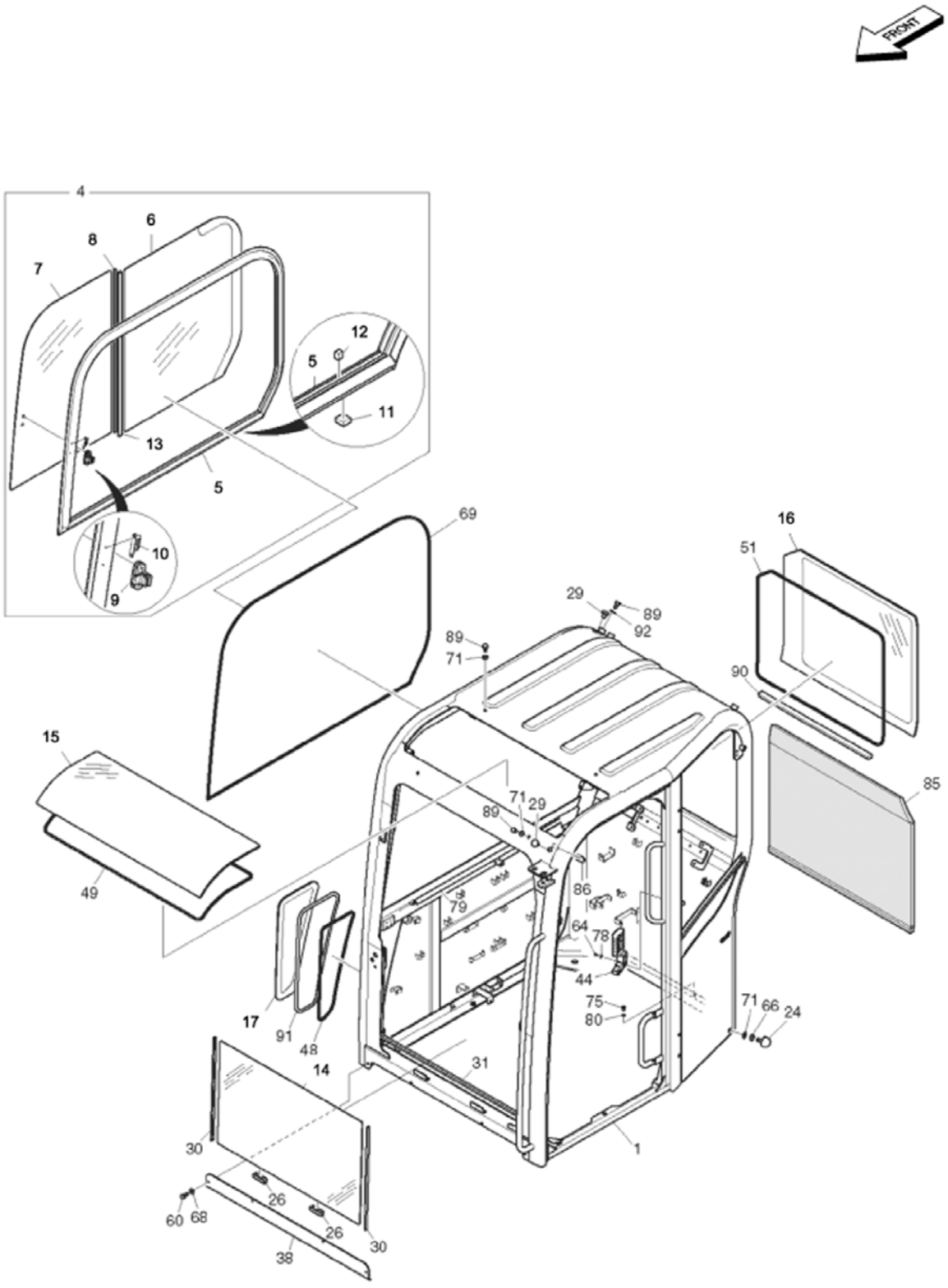


EM7020



Page 76 - OSS# 2089524 - All rights reserved by Bobcat Company - 05/11/2012 - 06:30:39 - Produced by Ken Cook Co. with media1off

## OPERATOR CAB (Cont'd)
## (Windows)

| Ref No | Part Number | Description | Remarks | Serial Number | Qty |
|---|---|---|---|---|---|
| 1 | | CAB ASSY | NLA Was 7006605 [A] | AET311001 - 11015 | 1 |
| 1 | | CAB ASSY | NLA Was 7006605 [A] | AETB11001 - 11015 | 1 |
| 1 | | CAB ASSY | NLA Was 7015428 [A] | AET311001 - 11172 | 1 |
| 1 | | CAB ASSY | NLA Was 7015428 [A] | AETB11001 - 11172 | 1 |
| 1 | | CAB ASSY | NLA Was 7012578 [A] | AET311001 - 11191 | 1 |
| 1 | | CAB ASSY | NLA Was 7012578 [A] | AETB11001 - 11191 | 1 |
| 1 | 7017368 | CAB ASSY | See next pages for additional parts that are all included with this assy | AET311001 & Above | 1 |
| 1 | 7017368 | CAB ASSY | See next pages for additional parts that are all included with this assy | AETB11001 & Above | 1 |
| 4 | 7006022 | FRAME SASH ASSY RH | W/Ref. 5-13 | | 1 |
| 5 | | FRAME, SASH | NAP - Order Ref. 4 | | 1 |
| 6 | 7006783 | GLASS | | | 1 |
| 7 | 7006782 | GLASS | | | 1 |
| 8 | 7004623 | STRIP | | | 1 |
| 9 | 7004584 | LOCK | | | 1 |
| 10 | 7003867 | LOCK STOP | | | 1 |
| 11 | 7005046 | STOP RUBBER | | | 4 |
| 12 | 7004627 | STOP GLASS | | | 2 |
| 13 | 7004931 | BAR | | | 1 |
| 14 | 7006172 | GLASS LOWER | | | 1 |
| 15 | 7006173 | GLAS SUPPER | | | 1 |
| 16 | 7006175 | GLASS REAR | | | 1 |
| 17 | 7006176 | GLASS LOWER RH | | | 1 |
| 24 | 7003928 | STOP SLIDE DOOR | | | 1 |
| 26 | 7004624 | STOP RUBBER | | | 2 |
| 29 | 7004620 | BUSHING RUBBER | | | 2 |
| 30 | 7006183 | EDGE RUBBER | | | 2 |
| 31 | 7005857 | SEAL EXTRUSION | | | 1 |
| 38 | 7006187 | COVER FRONT | | | 1 |
| 44 | 7004838 | TOOL HAMMER | | | 1 |
| 48 | 7006018 | DAMPER | Was 7006191 [D] | | 1 |
| 49 | 7006078 | DAMPER | Was 7006192 [D] | | 1 |
| 51 | 7006078 | DAMPER | Was 7006194 [D] | | 1 |
| 60 | 7004546 | BOLT | | | 4 |
| 64 | 7004540 | BOLT | | | 3 |
| 66 | 7004563 | NUT | | | 1 |
| 68 | 7004515 | WASHER | | | 4 |
| 69 | 7006278 | DAMPER | | | 1 |
| 71 | 7004512 | WASHER PLAIN | | | 5 |
| 75 | 7007785 | SCREW M6X1.0X12 | | | 1 |
| 78 | 7007808 | WASHER | | | 3 |
| 79 | 7006246 | FOAM POLYURETHANE | | | 1 |
| 80 | 7007833 | WASHER | | | 1 |



Page 77 - OSS# 2089524 - All rights reserved by Bobcat Company - 05/11/2012 - 06:30:39 - Produced by Ken Cook Co. with media1off

## OPERATOR CAB (Cont'd)
## (Windows)

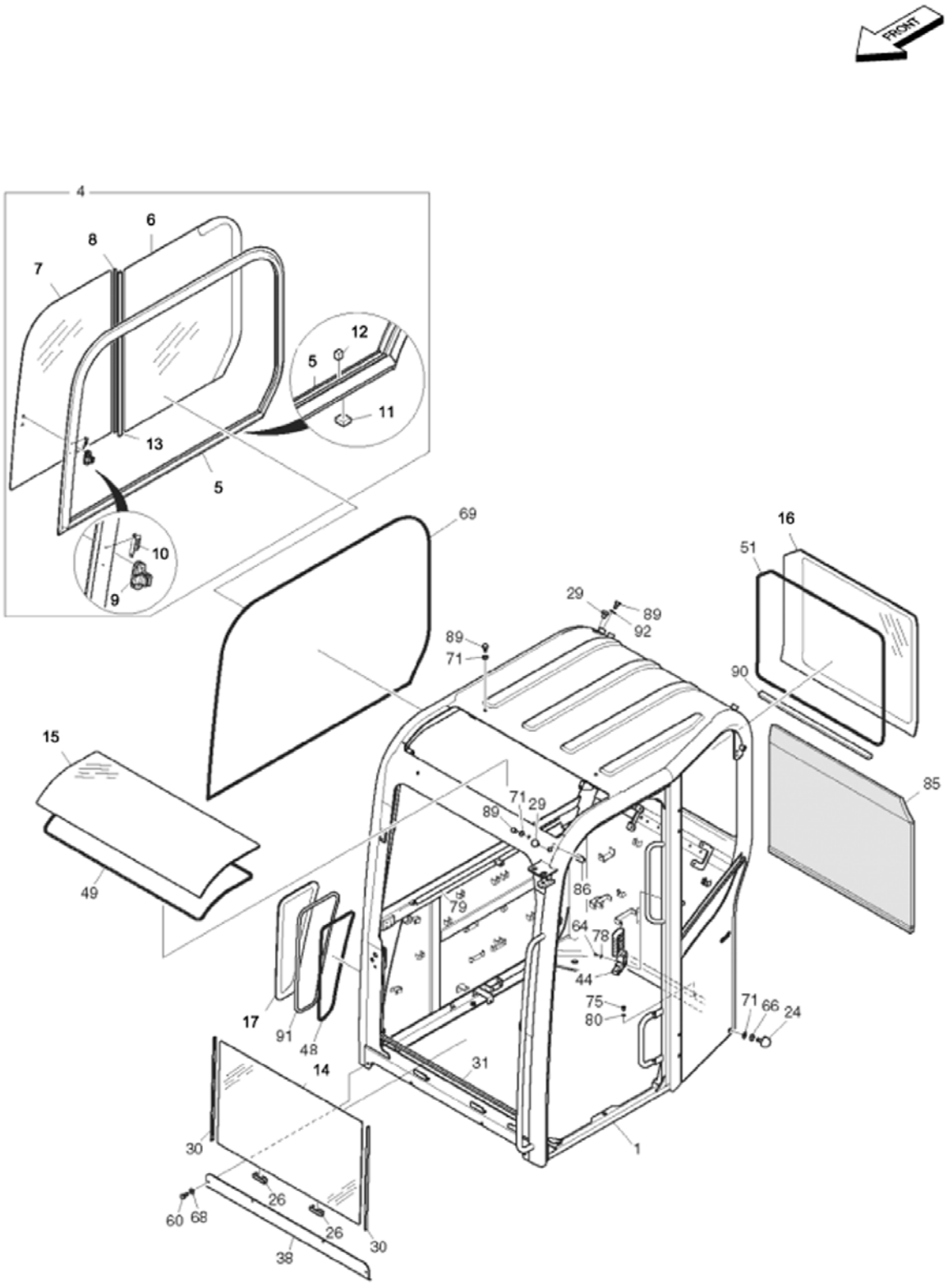


EM7020



Page 78 - OSS# 2089524 - All rights reserved by Bobcat Company - 05/11/2012 - 06:30:39 - Produced by Ken Cook Co. with media1off

## OPERATOR CAB (Cont'd)
## (Windows)

| Ref No | Part Number | Description | Remarks | Serial Number | Qty |
|---|---|---|---|---|---|
| | | SPRING | | | |
| 85 | 7006291 | FOAM | | | 1 |
| 86 | 7005588 | BUSHING RUBBER | | | 1 |
| 89 | 7004544 | BOLT | | | 7 |
| 90 | 7006716 | FOAM | | | 1 |
| 91 | 7006647 | EDGE | | | 1 |
| 92 | 7004509 | WASHER | | | 3 |

Page 79 - OSS# 2089524 - All rights reserved by Bobcat Company - 05/11/2012 - 06:30:39 - Produced by Ken Cook Co. with media1off

# OPERATOR CAB
## (Door & Windows)

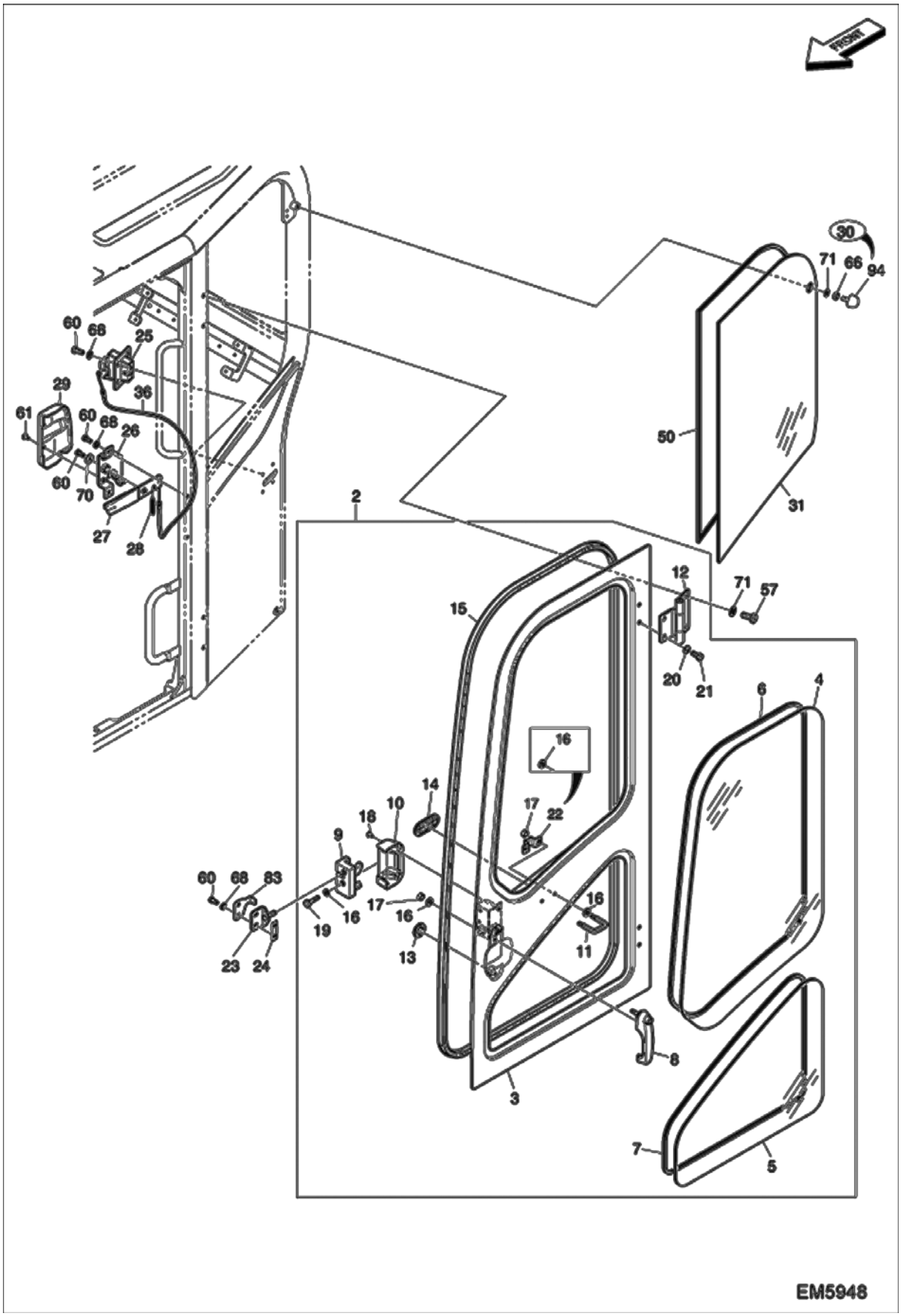




Page 80 - OSS# 2089524 - All rights reserved by Bobcat Company - 05/11/2012 - 06:30:39 - Produced by Ken Cook Co. with mediaioff

## OPERATOR CAB (Cont'd)
## (Door & Windows)

| Ref No | Part Number | Description | Remarks | Serial Number | Qty |
|---|---|---|---|---|---|
| 2 | | DOOR ASSY | NLA - Ref. 5-21 Was 7008197 [A] | AET311001 - 11015 | 1 |
| 2 | | DOOR ASSY | NLA - Ref. 5-21 Was 7008197 [A] | AETB11001 - 11015 | 1 |
| 2 | | DOOR ASSY | NLA - Ref. 5-21 Was 7015427 [A] | AET311001 - 11172 | 1 |
| 2 | | DOOR ASSY | NLA - Ref. 5-21 Was 7015427 [A] | AETB11001 - 11172 | 1 |
| 2 | | DOOR ASSY | NLA - Ref. 5-21 Was 7012495 [A] | AET311001 - 11191 | 1 |
| 2 | | DOOR ASSY | NLA - Ref. 5-21 Was 7012495 [A] | AETB11001 - 11191 | 1 |
| 2 | 7017369 | DOOR ASSY | Ref. 5-22 | AET311001 & Above | 1 |
| 2 | 7017369 | DOOR ASSY | Ref. 5-22 | AETB11001 & Above | 1 |
| 3 | | BODY, DOOR | NAP - Order Ref. 2 | | 1 |
| 4 | 7006013 | GLASS DOOR | | | 1 |
| 5 | 7006014 | GLASS DOOR LOWER | | | 1 |
| 6 | 7006019 | DAMPER | | | 1 |
| 7 | 7006018 | DAMPER | | | 1 |
| 8 | 7006460 | HANDLE DOOR | | | 1 |
| 8 | 7006802 | KEY SWITCH STARTER | | | 1 |
| 9 | 7006740 | CATCH DOOR INNER | | | 1 |
| 10 | 7005795 | COVER CATCH | | | 1 |
| 11 | 7004600 | HOOK CATCH DOOR | | AET311001 - 11172 | 1 |
| 11 | 7004600 | HOOK CATCH DOOR | | AETB11001 - 11172 | 1 |
| 11 | 7013286 | HOOK, CATCH DOOR | | AETB11173 & Above | 1 |
| 11 | 7013286 | HOOK, CATCH DOOR | | AET311173 & Above | 1 |
| 12 | 7006015 | HINGE | | | 2 |
| 13 | 7004617 | BUSHING RUBBER | | | 1 |
| 14 | 7006017 | COVER | | | 1 |
| 15 | 7005813 | SEAL EXTRUSION | Was 7006016 [A] | | 1 |
| 16 | 7004515 | WASHER | | AET311001 - 11191 | 8 |
| 16 | 7004515 | WASHER | | AETB11001 - 11191 | 8 |
| 16 | 7004515 | WASHER | | AET311192 & Above | 6 |
| 16 | 7004515 | WASHER | | AETB11192 & Above | 6 |
| 17 | 7007796 | NUT | | | 4 |
| 18 | 7004548 | BOLT | | | 2 |
| 19 | 7004551 | BOLT | | | 2 |
| 20 | 7004512 | WASHER PLAIN | | | 4 |
| 21 | 7004534 | BOLT | | | 4 |
| 22 | 7017370 | BRACKET | | AET311192 & Above | 1 |



Page 81 - OSS# 2089524 - All rights reserved by Bobcat Company - 05/11/2012 - 06:30:39 - Produced by Ken Cook Co. with media1off

## OPERATOR CAB (Cont'd)
## (Door & Windows)

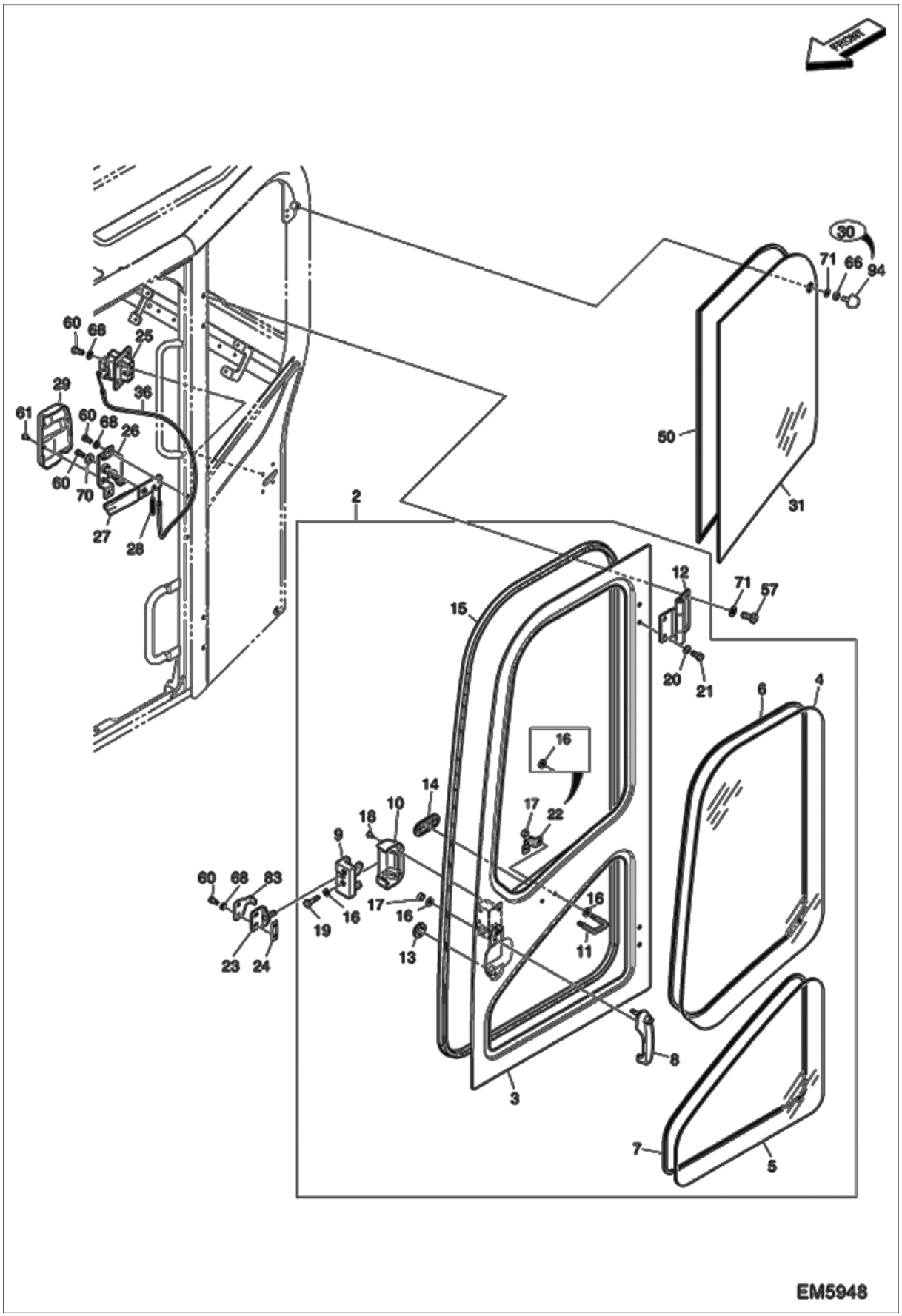




Page 82 - OSS# 2089524 - All rights reserved by Bobcat Company - 05/11/2012 - 06:30:39 - Produced by Ken Cook Co. with media1off

## OPERATOR CAB (Cont'd)
## (Door & Windows)

| Ref No | Part Number | Description | Remarks | Serial Number | Qty |
|---|---|---|---|---|---|
| 22 | 7017370 | BRACKET | | AETB11192 & Above | 1 |
| 23 | 7006289 | STRIKER DOOR | | | 1 |
| 24 | 7005992 | PLATE | | | 1 |
| 25 | 7004591 | LOCK BACK | | | 1 |
| 26 | 7006178 | BRACKET LEVER | | | 1 |
| 27 | 7006179 | LEVER BACK LOCK | | | 1 |
| 28 | 7004595 | SPRING | | | 1 |
| 29 | 7006180 | COVER LEVER | | | 1 |
| 30 | 7003928 | STOP SLIDE DOOR | | AET311001 - 11172 | 1 |
| 30 | 7003928 | STOP SLIDE DOOR | | AETB11001 - 11172 | 1 |
| 31 | 7006174 | GLASS LH | | | 1 |
| 36 | 7003913 | WIRE | | | 1 |
| 50 | 7006078 | DAMPER | Was 7006193 [D] | | 1 |
| 57 | 7004534 | BOLT | | | 4 |
| 60 | 7004546 | BOLT | | | 9 |
| 61 | 7004547 | BOLT | | | 2 |
| 66 | 7004563 | NUT | | | 1 |
| 68 | 7004515 | WASHER | | | 8 |
| 70 | 7004520 | WASHER PLAIN | | | 1 |
| 71 | 7004512 | WASHER PLAIN | | | 5 |
| 83 | 7006290 | PLATE | | | 1 |
| 94 | 7012496 | STOPPER;RUBBER | | AET311173 & Above | 1 |
| 94 | 7012496 | STOPPER;RUBBER | | AETB11173 & Above | 1 |

Page 83 - OSS# 2089524 - All rights reserved by Bobcat Company - 05/11/2012 - 06:30:39 - Produced by Ken Cook Co. with media1off

# OPERATOR CAB
## (Front Window)

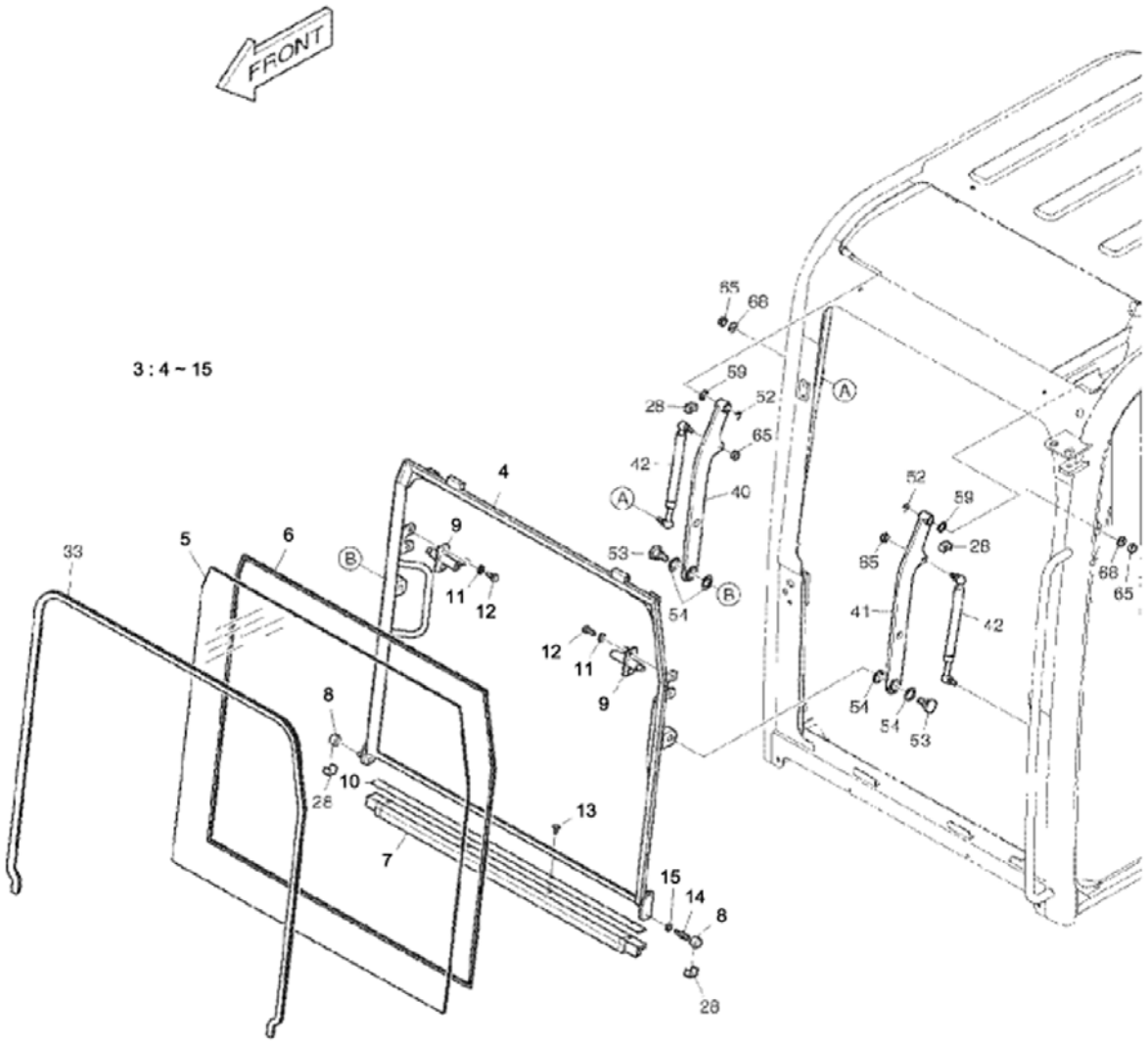


E80-1370



Page 84 - OSS# 2089524 - All rights reserved by Bobcat Company - 05/11/2012 - 06:30:39 - Produced by Ken Cook Co. with media1off

## OPERATOR CAB (Cont'd)
## (Front Window)

| Ref No | Part Number | Description | Remarks | Serial Number | Qty |
|---|---|---|---|---|---|
| 3 | 7006038 | FRAME DOOR SLIDE ASSY | W/Ref. 4-15 | | 1 |
| 4 | | BODY, SLIDE DOOR | NAP - Order Ref. 3 | | 1 |
| 5 | 7006077 | GLASS SLIDE DOOR | | | 1 |
| 6 | 7006078 | DAMPER | | | 1 |
| 7 | 7006079 | EDGE RUBBER | | | 1 |
| 8 | 7004932 | ROLLER | | | 2 |
| 9 | 7006080 | LATCH SLIDE DOOR | | | 2 |
| 10 | 7005768 | PLATE TRIM | Was 7005767 [A] | | 1 |
| 11 | 7004515 | WASHER | | | 4 |
| 12 | 7004546 | BOLT | | | 4 |
| 13 | 7004548 | BOLT | | | 4 |
| 14 | 7006081 | PIN | | | 1 |
| 15 | 7004562 | NUT | | | 1 |
| 28 | 7003929 | STOP RUBBER | | | 4 |
| 33 | 7006185 | SEAL EXTRUSION | | | 1 |
| 40 | 7006189 | BAR SLIDE DOOR RH | RH | | 1 |
| 41 | 7006190 | BAR SLIDE DOOR LH | LH | | 1 |
| 42 | 7005144 | CYLINDER GAS | | | 2 |
| 52 | 7007889 | RING SNAP | | | 2 |
| 53 | 7006195 | PIN | | | 2 |
| 54 | 7005659 | SHIM | | | 4 |
| 59 | 7004487 | SHIM | | | 2 |
| 65 | 7004562 | NUT | | | 4 |
| 68 | 7004515 | WASHER | | | 2 |

Page 85 - OSS# 2089524 - All rights reserved by Bobcat Company - 05/11/2012 - 06:30:39 - Produced by Ken Cook Co. with media1off

# OPERATOR CAB
## (Interior)

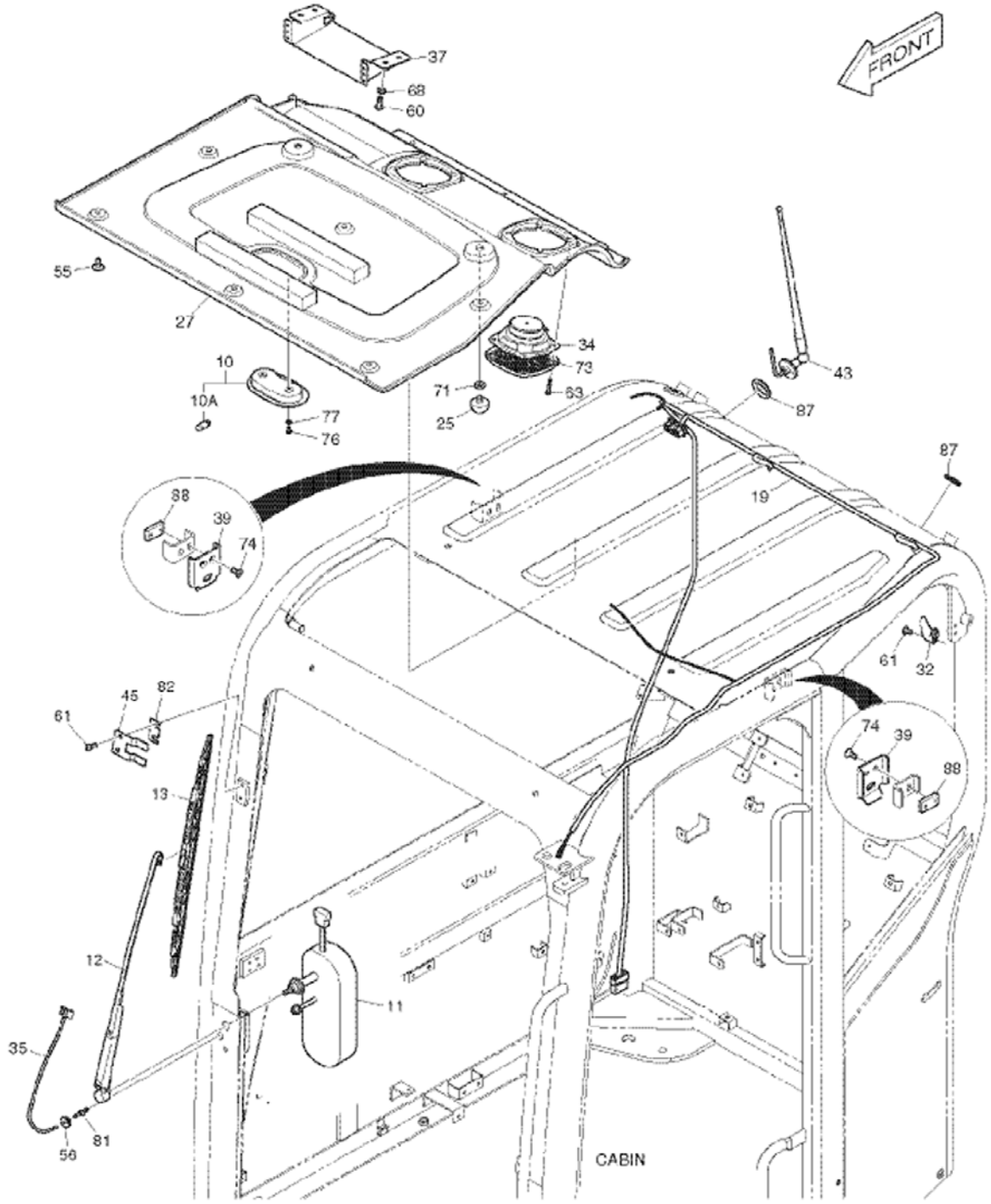


E80-1380



Page 86 - OSS# 2089524 - All rights reserved by Bobcat Company - 05/11/2012 - 06:30:39 - Produced by Ken Cook Co. with media1off

## OPERATOR CAB (Cont'd)
## (Interior)

| Ref No | Part Number | Description | Remarks | Serial Number | Qty |
|---|---|---|---|---|---|
| 10 | 7005022 | LAMP ROOM | | | 1 |
| 10 | 7004887 | LIGHT BULB 12V/10W | 12V/10W | | 1 |
| 11 | 7005684 | MOTOR WIPER | | | 1 |
| 12 | 7005026 | ARM WIPER MOTOR | | | 1 |
| 13 | 7006284 | BLADE WIPER | | | 1 |
| 19 | 7006219 | HARNESS CAB SUB | | | 1 |
| 25 | 7004972 | STOP RUBBER | | | 2 |
| 27 | 7006182 | COVER ROOF | | | 1 |
| 32 | 7005676 | HOOK COAT | | | 1 |
| 34 | 7004908 | SPEAKER | | | 2 |
| 35 | 7004970 | NOZZLE WIPER MOTOR | | | 1 |
| 37 | 7006186 | BRACKET | | | 1 |
| 39 | 7006188 | BRACKET | | | 2 |
| 43 | 7005027 | ANTENNA | | | 1 |
| 45 | 7006145 | PLATE | | | 1 |
| 55 | 7005648 | RIVET | | | 9 |
| 56 | 7005680 | GROMMET | | | 1 |
| 60 | 7004546 | BOLT | | | 4 |
| 61 | 7004547 | BOLT | | | 3 |
| 63 | 7004532 | BOLT | | | 8 |
| 68 | 7004515 | WASHER | | | 4 |
| 71 | 7004512 | WASHER PLAIN | | | 2 |
| 73 | 7005675 | COVER SPEAKER | | | 2 |
| 74 | 7004529 | BOLT | | | 4 |
| 76 | 7007778 | BOLT | | | 2 |
| 77 | 7007810 | WASHER | | | 2 |
| 81 | 7004858 | ADAPTER | | | 1 |
| 82 | 7005042 | PLATE WIPER | | | 1 |
| 87 | 7005681 | EDGE RUBBER | | | 1 |
| 88 | 7006621 | SCREW SET | | | 2 |

Page 87 - OSS# 2089524 - All rights reserved by Bobcat Company - 05/11/2012 - 06:30:39 - Produced by Ken Cook Co. with media1off

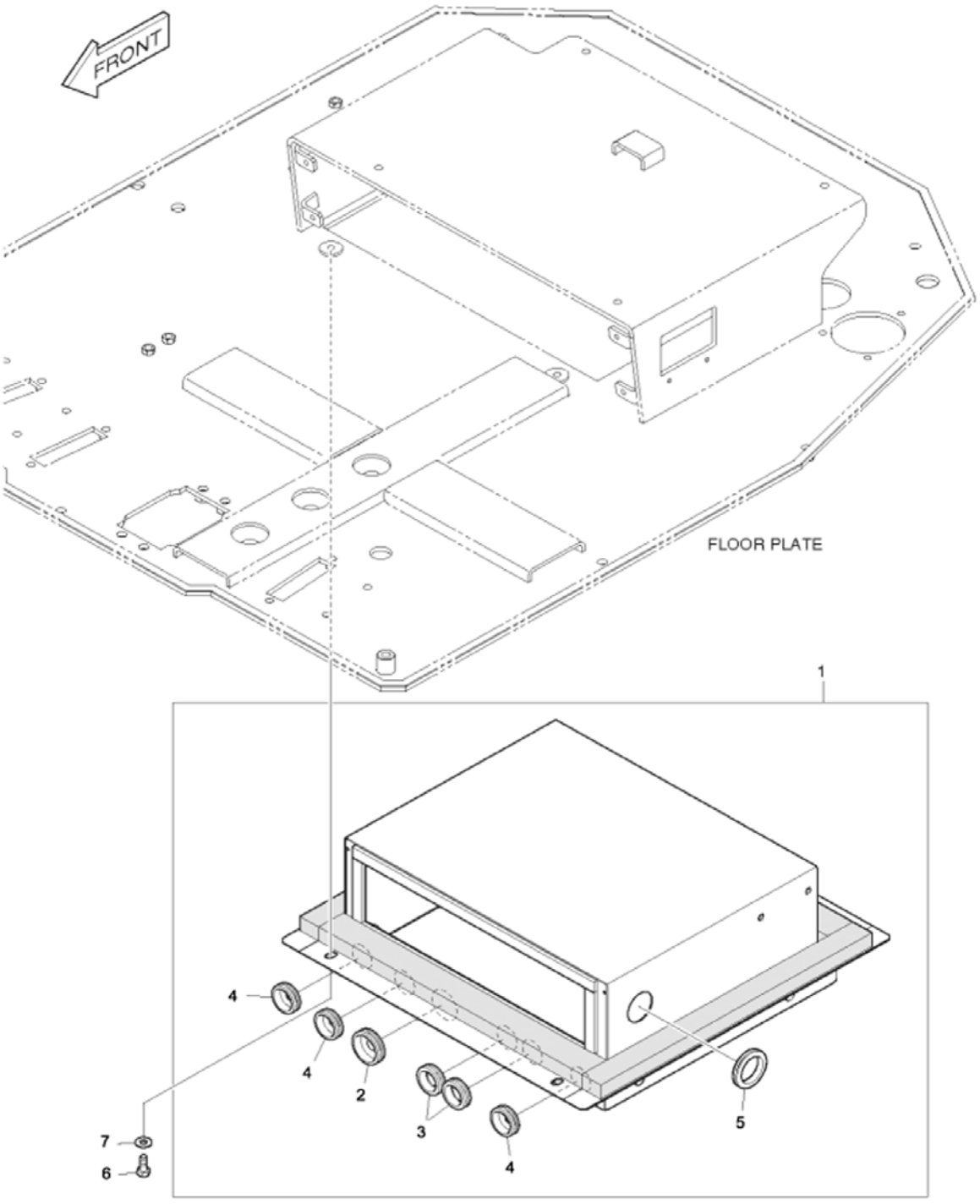


E80-1400



Page 88 - OSS# 2089524 - All rights reserved by Bobcat Company - 05/11/2012 - 06:30:39 - Produced by Ken Cook Co. with media1off

## AIR CONDITIONING (Cont'd)
## (Box)

| Ref No | Part Number | Description | Remarks | Serial Number | Qty |
|---|---|---|---|---|---|
| 1 | 7008205 | PLATE | W/Ref. 2-5 | | 1 |
| 2 | 7005961 | BUSHING RUBBER | | | 2 |
| 3 | 7005962 | BUSHING RUBBER | | | 1 |
| 4 | 7005963 | BUSHING RUBBER | | | 3 |
| 5 | 7004603 | BUSHING RUBBER | | | 1 |
| 6 | 7004546 | BOLT | | | 4 |
| 7 | 7004515 | WASHER | | | 4 |

Page 89 - OSS# 2089524 - All rights reserved by Bobcat Company - 05/11/2012 - 06:30:39 - Produced by Ken Cook Co. with media1off

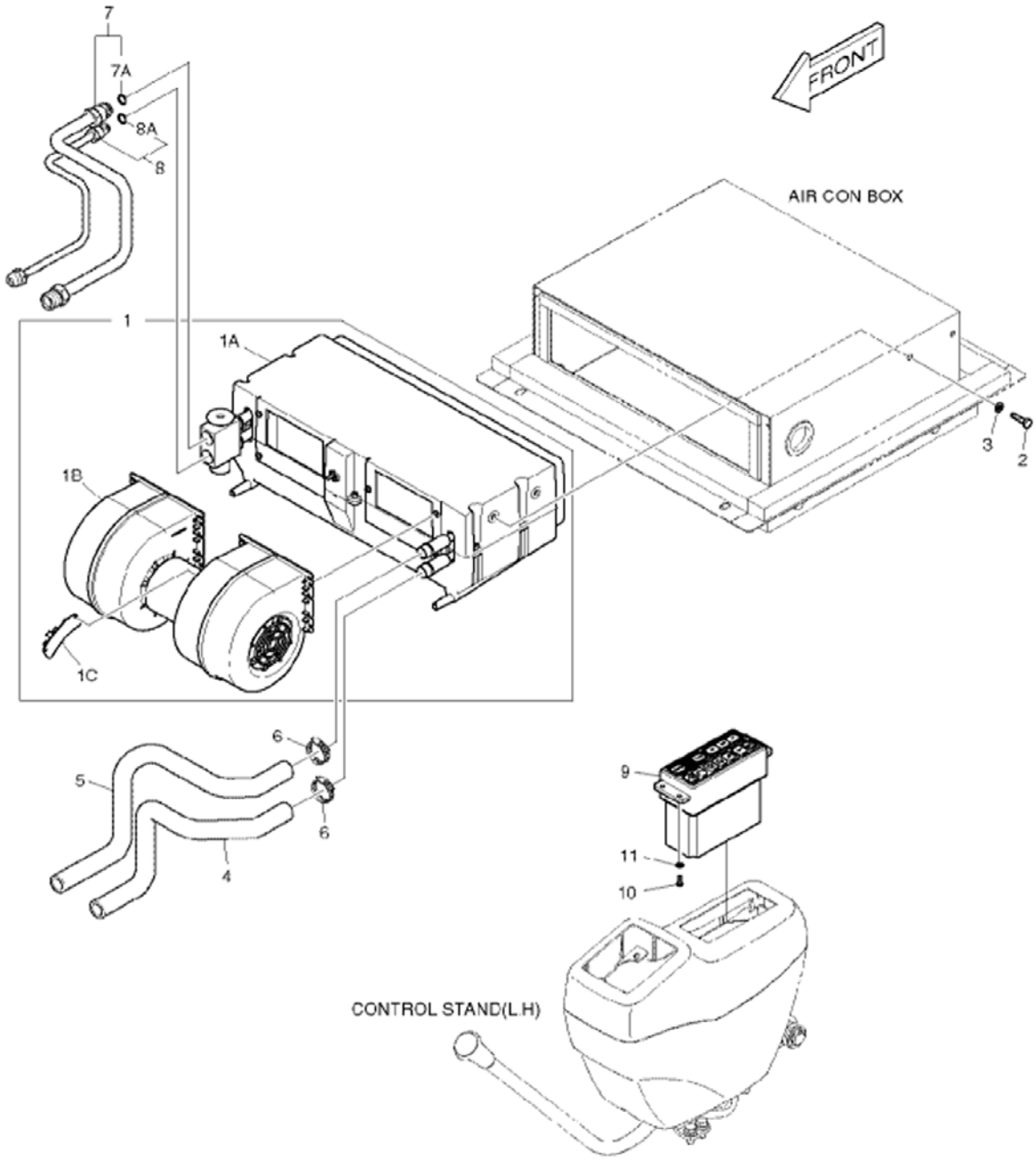


E80-1620



Page 90 - OSS# 2089524 - All rights reserved by Bobcat Company - 05/11/2012 - 06:30:39 - Produced by Ken Cook Co. with media1off

## AIR CONDITIONING (Cont'd)
## (Cab)

| Ref No | Part Number | Description | Remarks | Serial Number | Qty |
|---|---|---|---|---|---|
| 1 | 7005823 | CONDITIONER AIR | W/thermostat | | 1 |
| 1 | 7006233 | CORE ASSY | | | 1 |
| 1 | 7006234 | MOTOR BLOWER ASSY | | | 1 |
| 1 | 7006235 | RESISTOR BOX ASSY | | | 1 |
| 2 | 7007609 | BOLT | | | 4 |
| 3 | 7007833 | WASHER SPRING | | | 4 |
| 4 | 7006598 | HOSE HEATER | | | 1 |
| 5 | 7006599 | HOSE HEATER | | | 1 |
| 6 | 7007974 | CLAMP | | | 2 |
| 7 | 7006594 | TUBELINE A/C SUCTION | | | 1 |
| 7 | 7006239 | ORING | | | 1 |
| 8 | 7006597 | TUBELINE A/C LIQUID | | | 1 |
| 8 | 7006238 | ORING | | | 1 |
| 9 | 7005714 | CONTROLLER A/C | | | 1 |
| 10 | 7007777 | BOLT | | | 4 |
| 11 | 7007809 | WASHER PLAIN | | | 4 |

Page 91 - OSS# 2089524 - All rights reserved by Bobcat Company - 05/11/2012 - 06:30:39 - Produced by Ken Cook Co. with media1off

# AIR CONDITIONING
## (Chassis)

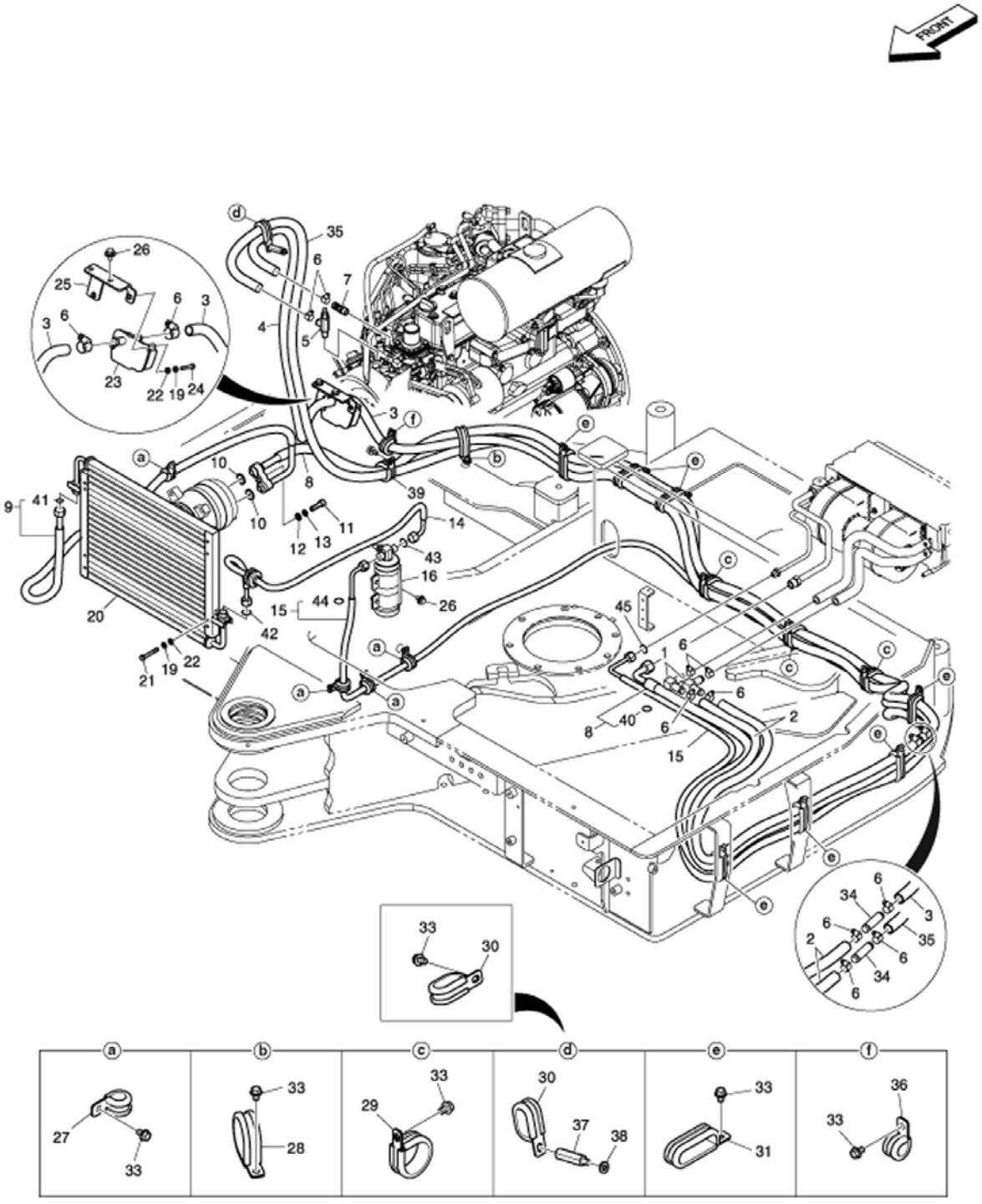




Page 92 - OSS# 2089524 - All rights reserved by Bobcat Company - 05/11/2012 - 06:30:39 - Produced by Ken Cook Co. with mediaioff

| Ref No | Part Number | Description | Remarks | Serial Number | Qty |
|---|---|---|---|---|---|
| 1 | 7006600 | COUPLER JOINT HOSE | | | 2 |
| 2 | 7004789 | HOSE RUBBER | | | 2 |
| 3 | 7004793 | HOSE RUBBER | | | 1 |
| 4 | 7004791 | HOSE | | | 1 |
| 5 | 7005808 | VALVE | | | 1 |
| 6 | 7007975 | CLAMP | | | 12 |
| 7 | 7005556 | ADAPTER | | | 1 |
| 8 | 7006478 | HOSE SUCTION | W/Ref. 40 | | 1 |
| 9 | 7006475 | HOSE DISCHARGE | W/Ref. 41 | | 1 |
| 10 | 7004664 | WASHER SEAL | | | 2 |
| 11 | 7007750 | BOLT SOCKET M10X1.5X35 | | | 1 |
| 12 | 7013265 | WASHER PLAIN | Was 7007825 [A] | | 1 |
| 13 | 7007843 | WASHER SPRING | | | 1 |
| 14 | 7004796 | HOSE LIQUID | W/Ref. 42-43 | AET311001 - 11191 | 1 |
| 14 | 7004796 | HOSE LIQUID | W/Ref. 42-43 | AETB11001 - 11191 | 1 |
| 14 | 7017382 | HOSE, LIQUID | W/Ref. 42-43 | AET311192 & Above | 1 |
| 14 | 7017382 | HOSE, LIQUID | W/Ref. 42-43 | AETB11192 & Above | 1 |
| 15 | 7006479 | HOSE A/C | W/Ref. 44-45 | AET311001 - 11191 | 1 |
| 15 | 7006479 | HOSE A/C | W/Ref. 44-45 | AETB11001 - 11191 | 1 |
| 15 | 7017383 | HOSE, LIQUID | W/Ref. 44-45 | AET311192 & Above | 1 |
| 15 | 7017383 | HOSE, LIQUID | W/Ref. 44-45 | AETB11192 & Above | 1 |
| 16 | 7004841 | RECEIVER DRIER | | | 1 |
| 19 | 7007833 | WASHER SPRING | | | 6 |
| 20 | 7004891 | CONDENSER ASSY | | | 1 |
| 21 | 7007652 | BOLT | | | 4 |
| 22 | 7007814 | WASHER | | | 6 |
| 23 | 7012255 | VALVE,WATER;HEATER | Was 7006247 [A] | | 1 |
| 24 | 7007611 | BOLT | | | 2 |
| 25 | 7006471 | BRACKET | | | 1 |
| 26 | 7005129 | BOLT SET | | | 4 |
| 27 | 7003895 | CLIP | | AET311001 - 11181 | 4 |
| 27 | 7003895 | CLIP | | AETB11001 - 11181 | 4 |
| 27 | 7003895 | CLIP | | AET311182 - 11191 | 5 |
| 27 | 7003895 | CLIP | | AETB11182 - 11191 | 5 |
| 27 | 7003895 | CLIP | | AET311192 & Above | 4 |
| 27 | 7003895 | CLIP | | AETB11192 & | 4 |



Page 93 - OSS# 2089524 - All rights reserved by Bobcat Company - 05/11/2012 - 06:30:39 - Produced by Ken Cook Co. with media1off

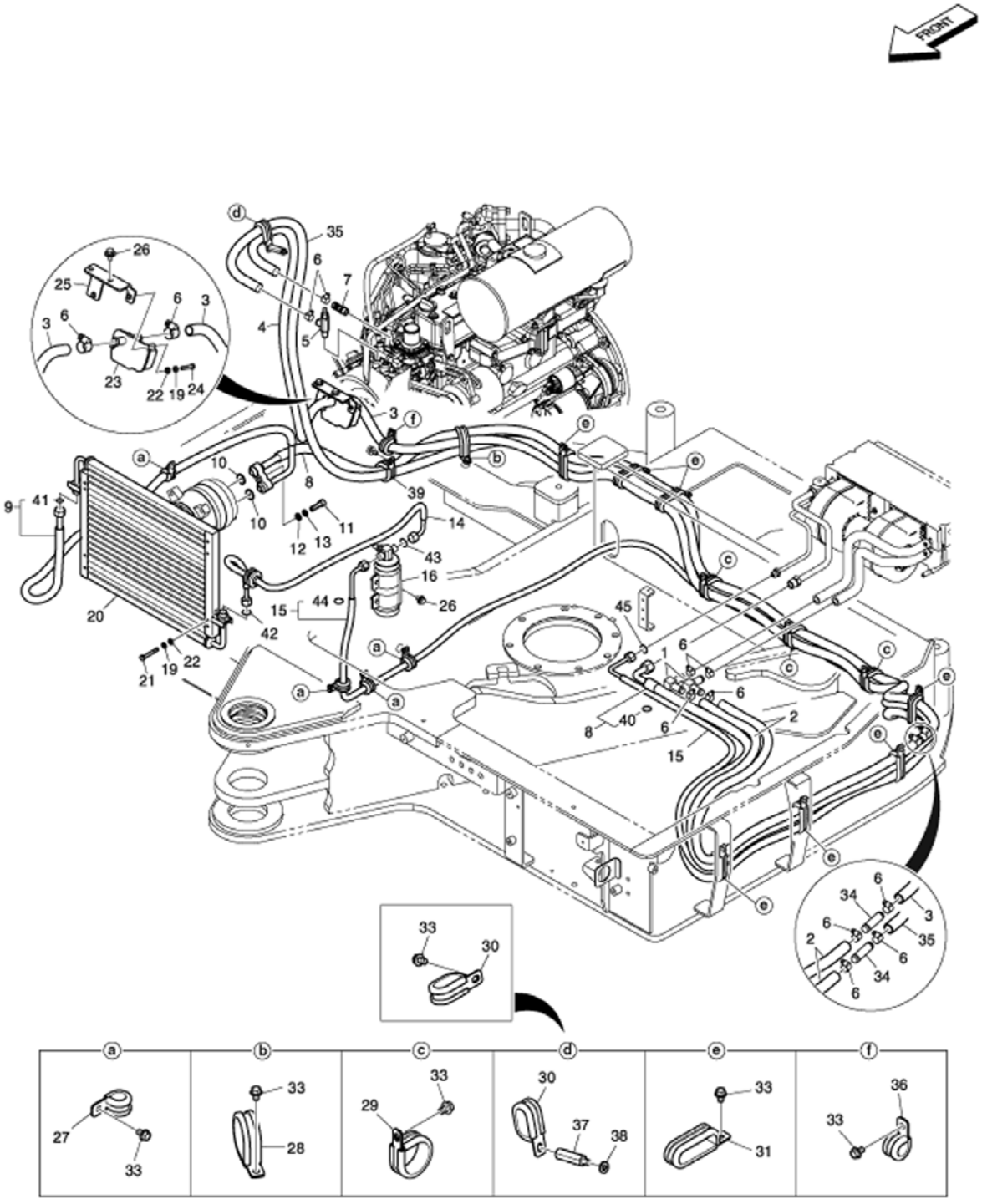




Page 94 - OSS# 2089524 - All rights reserved by Bobcat Company - 05/11/2012 - 06:30:39 - Produced by Ken Cook Co. with mediaioff

| Ref No | Part Number | Description | Remarks | Serial Number | Qty |
|---|---|---|---|---|---|
| | | | | Above | |
| 28 | 7003901 | CLIP | | | 1 |
| 29 | 7003901 | CLIP | | | 3 |
| 30 | 7003905 | CLIP | | | 1 |
| 31 | 7003907 | CLIP | | | 7 |
| 33 | 7005629 | BOLT | | AET311001 - 11191 | 17 |
| 33 | 7005629 | BOLT | | AETB11001 - 11191 | 17 |
| 33 | 7005629 | BOLT | | AET311192 & Above | 16 |
| 33 | 7005629 | BOLT | | AETB11192 & Above | 16 |
| 34 | 7005949 | COUPLER JOINT HOSE | | | 2 |
| 35 | 7004792 | HOSE RUBBER | | | 1 |
| 36 | 7003896 | CLIP | | | 1 |
| 37 | 7004554 | BOLT STUD | | AET311192 & Above | 1 |
| 37 | 7004554 | BOLT STUD | | AETB11192 & Above | 1 |
| 38 | 7007854 | PIN SPLIT | | AET311192 & Above | 1 |
| 38 | 7007854 | PIN SPLIT | | AETB11192 & Above | 1 |
| 39 | 7017385 | CLIP | | AET311192 & Above | 1 |
| 39 | 7017385 | CLIP | | AETB11192 & Above | 1 |
| 40 | 7006239 | ORING | | | 1 |
| 41 | 7005656 | ORING | | | 1 |
| 42 | 7017384 | ORING | | AET311192 & Above | 1 |
| 42 | 7017384 | ORING | | AETb11192 & Above | 1 |
| 43 | 7005657 | ORING | | AET311192 & Above | 1 |
| 43 | 7005657 | ORING | | AETB11192 & Above | 1 |
| 44 | 7006238 | ORING | | AET311001 - 11191 | 2 |
| 44 | 7006238 | ORING | | AETB11001 - 11191 | 2 |
| 44 | 7006238 | ORING | | AET311192 & Above | 1 |
| 44 | 7006238 | ORING | | AETB11192 & Above | 1 |
| 45 | 7017384 | ORING | | AET311192 & Above | 1 |
| 45 | 7017384 | ORING | | AETB11192 & Above | 1 |

Page 95 - OSS# 2089524 - All rights reserved by Bobcat Company - 05/11/2012 - 06:30:39 - Produced by Ken Cook Co. with media1off

# AIR CONDITIONING
## (Compressor)

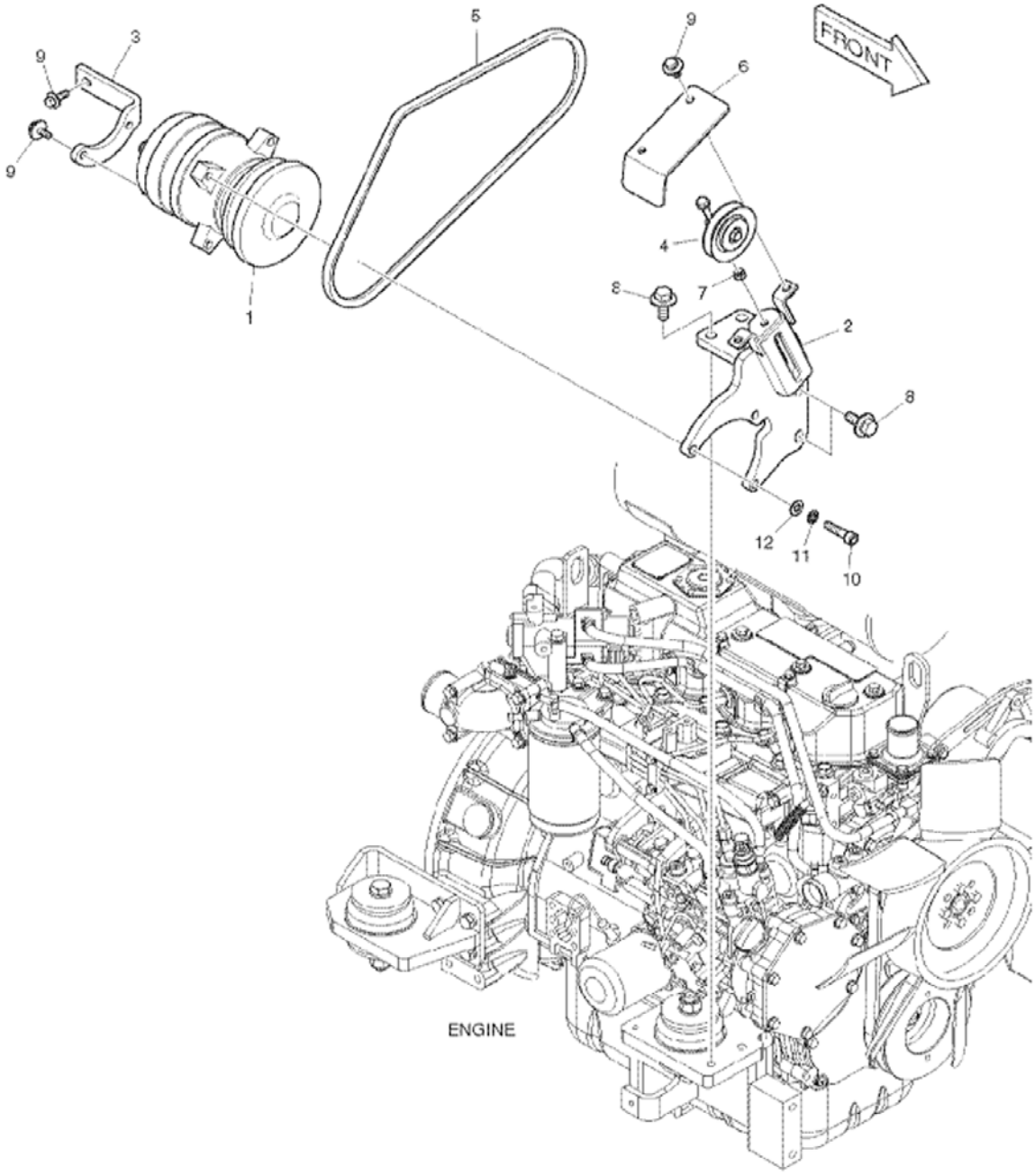


E80-1540



Page 96 - OSS# 2089524 - All rights reserved by Bobcat Company - 05/11/2012 - 06:30:39 - Produced by Ken Cook Co. with media1off

## AIR CONDITIONING (Cont'd)
## (Compressor)

| Ref No | Part Number | Description | Remarks | Serial Number | Qty |
|---|---|---|---|---|---|
| 1 | 7004842 | COMPRESSOR ASSY | | | 1 |
| 2 | 7006465 | BRACKET | | | 1 |
| 3 | 7005891 | BRACKET | | | 1 |
| 4 | 7006557 | PULLEY | | | 1 |
| 5 | 7005577 | BELT COMPRESSOR | | | 1 |
| 6 | 7006381 | COVER | | | 1 |
| 7 | 7007796 | NUT | | | 2 |
| 8 | 7005124 | BOLT SET | | | 4 |
| 9 | 7005128 | BOLT SET | | | 5 |
| 10 | 7007751 | BOLT SOCKET M10X1.5X40 | | | 3 |
| 11 | 7007844 | WASHER | | | 3 |
| 12 | 7007818 | WASHER PLAIN M10 | | | 3 |

Page 97 - OSS# 2089524 - All rights reserved by Bobcat Company - 05/11/2012 - 06:30:39 - Produced by Ken Cook Co. with media1off

# AIR CONDITIONING
## (Rear Cover & Ducts)

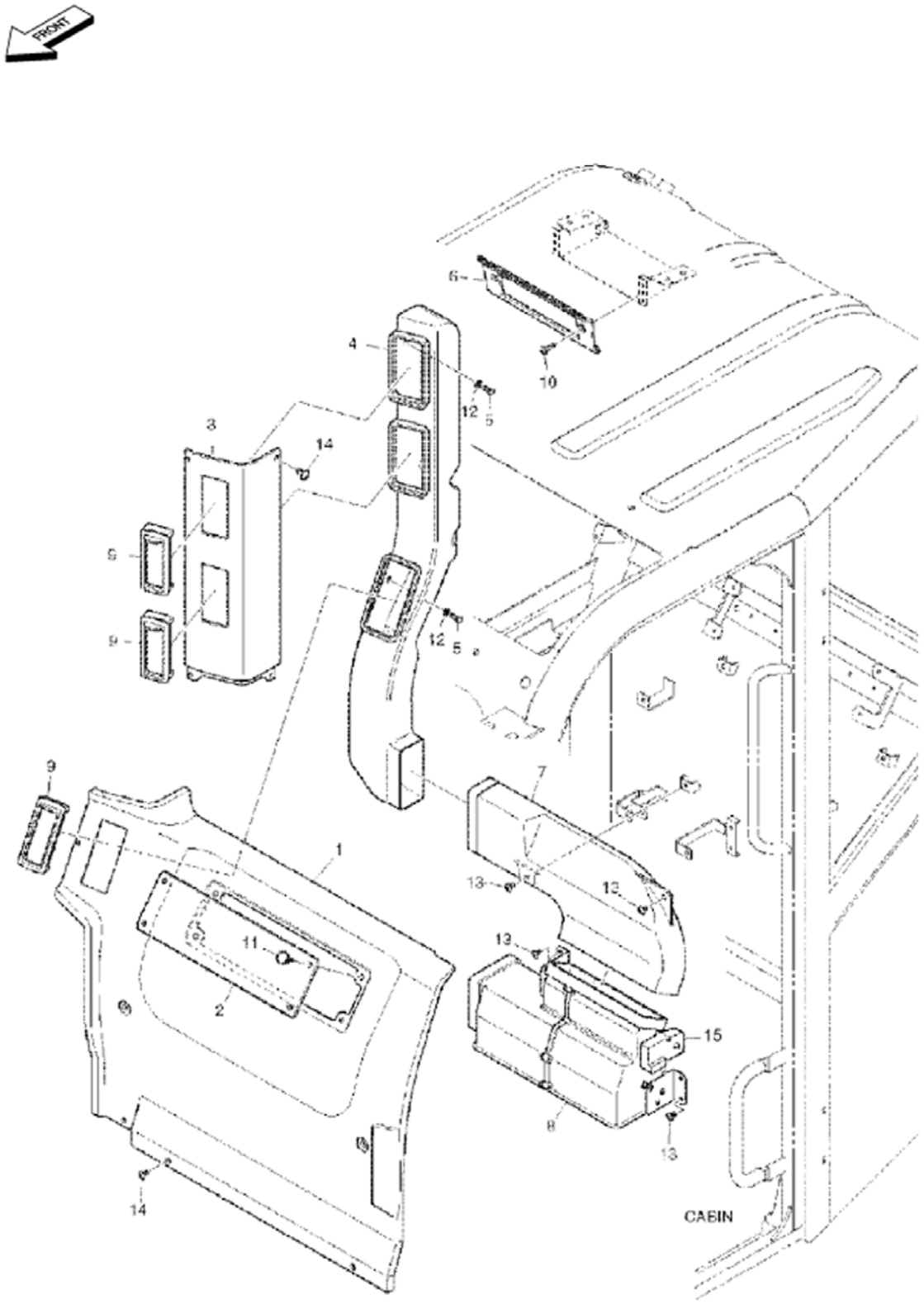


EM7017



Page 98 - OSS# 2089524 - All rights reserved by Bobcat Company - 05/11/2012 - 06:30:39 - Produced by Ken Cook Co. with media1off

## AIR CONDITIONING (Cont'd)
## (Rear Cover & Ducts)

| Ref No | Part Number | Description | Remarks | Serial Number | Qty |
|---|---|---|---|---|---|
| 1 | 7006262 | COVER REAR | | | 1 |
| 2 | 7006266 | COVER | | | 1 |
| 3 | 7006263 | COVER PILLAR | | | 1 |
| 4 | 7006307 | DUCT PILLAR | | | 1 |
| 5 | 7004550 | BOLT | | | 2 |
| 6 | 7005945 | COVER CASSETTE | | | 1 |
| 7 | 7005777 | DUCT REAR | | | 1 |
| 8 | | DUCT, CONTROL | NLA Was 7005776 [A] | AET311001 - 11191 | 1 |
| 8 | | DUCT, CONTROL | NLA Was 7005776 [A] | AETB11001 - 11191 | 1 |
| 8 | 7017367 | DUCT, CONTROL | | AET311001 & Above | 1 |
| 8 | 7017367 | DUCT, CONTROL | | AETB11001 & Above | 1 |
| 9 | 7015588 | NOZZLE;DUCT | Was 7005654 [A] | | 3 |
| 10 | 7004549 | BOLT GREEN | | | 2 |
| 11 | 7006282 | BOLT | | | 4 |
| 12 | 7004516 | WASHER PLAIN | | | 2 |
| 13 | 7004547 | BOLT | | | 6 |
| 14 | 7004531 | BOLT | | | 10 |
| 15 | 7006530 | MOTOR MIX | | | 1 |

Page 99 - OSS# 2089524 - All rights reserved by Bobcat Company - 05/11/2012 - 06:30:39 - Produced by Ken Cook Co. with media1off

# AIR CONDITIONING
## (Side Cover & Ducts)

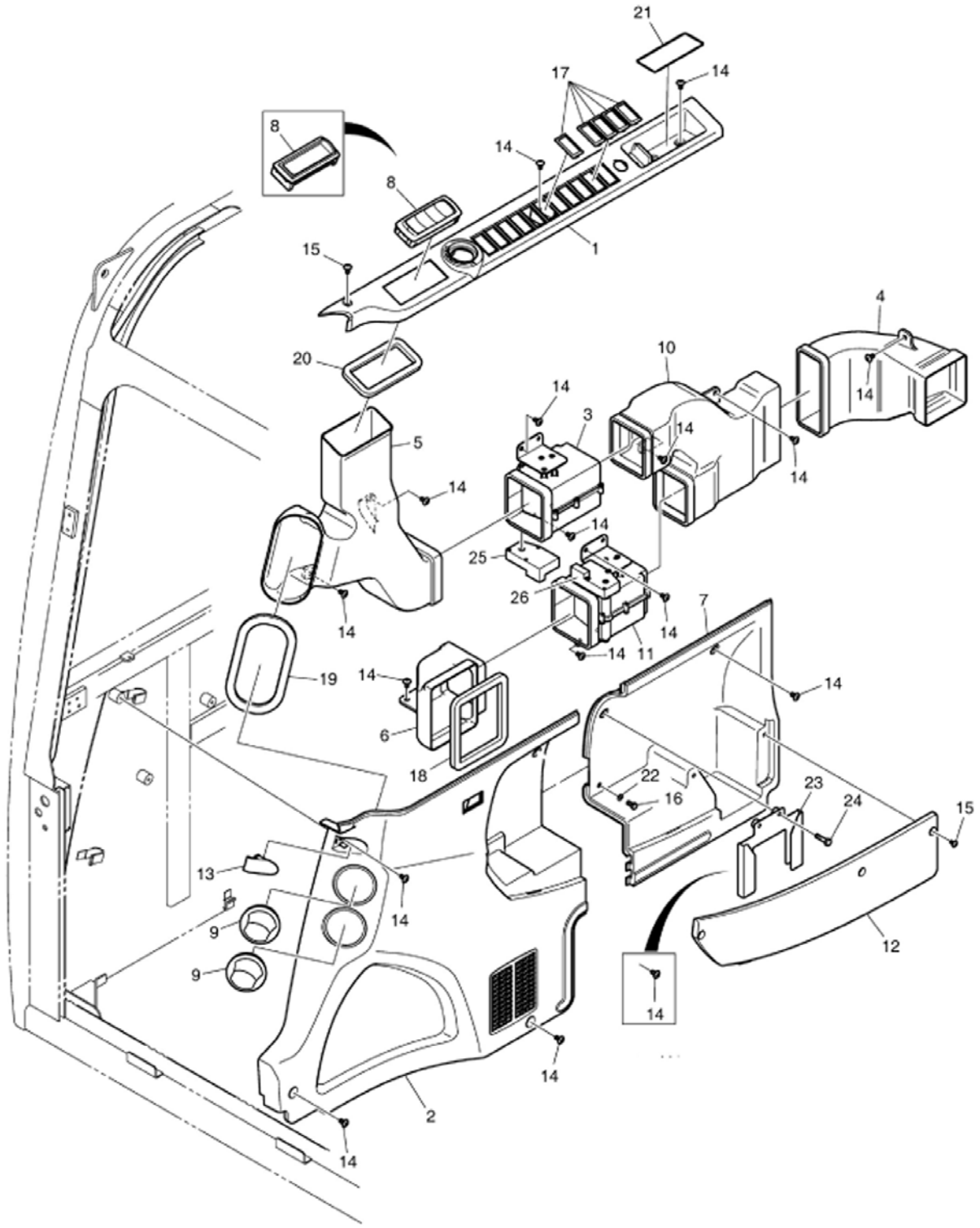


EM7011



Page 100 - OSS# 2089524 - All rights reserved by Bobcat Company - 05/11/2012 - 06:30:39 - Produced by Ken Cook Co. with mediaIoff

# AIR CONDITIONING (Cont'd)
## (Side Cover & Ducts)

| Ref No | Part Number | Description | Remarks | Serial Number | Qty |
|---|---|---|---|---|---|
| 1 | 7005779 | COVER SWITCH | | AET311001 - 11015 | 1 |
| 1 | 7005779 | COVER SWITCH | | AETB11001 - 11015 | 1 |
| 1 | 7008184 | COVER, SWITCH | | AET311001 - 11191 | 1 |
| 1 | 7008184 | COVER, SWITCH | | AETB11001 - 11191 | 1 |
| 1 | 7015616 | COVER,SIDE;S/W COVER | | AET311001 & Above | 1 |
| 1 | 7015616 | COVER,SIDE;S/W COVER | | AETB11001 & Above | 1 |
| 2 | 7005784 | COVER SIDE FRONT | | | 1 |
| 3 | 7005780 | DUCT CONTROL | | AET311001 - 11191 | 1 |
| 3 | 7005780 | DUCT CONTROL | | AETB11001 - 11191 | 1 |
| 3 | 7015585 | DUCT,CONTROL | | AET311001 & Above | 1 |
| 3 | 7015585 | DUCT,CONTROL | | AETB11001 & Above | 1 |
| 4 | 7005781 | DUCT REAR | | | 1 |
| 5 | 7005782 | DUCT FACE | | | 1 |
| 6 | 7005783 | DUCT DEF | | | 1 |
| 7 | 7006374 | COVER SIDE REAR | | | 1 |
| 8 | 7015588 | NOZZLE;DUCT | Was 7005654 [A] | | 1 |
| 9 | 7005643 | NOZZLE | | | 2 |
| 10 | 7005881 | DUCT REAR | | | 1 |
| 11 | 7005902 | DUCT CONTROL | | AET311001 - 11191 | 1 |
| 11 | 7005902 | DUCT CONTROL | | AETB11001 - 11191 | 1 |
| 11 | 7015586 | DUCT,CONTROL | | AET311001 & Above | 1 |
| 11 | 7015586 | DUCT,CONTROL | | AETB11001 & Above | 1 |
| 12 | 7005948 | COVER POCKET | | | 1 |
| 13 | 7005953 | COVER HOLE | | | 1 |
| 14 | 7004547 | BOLT | | AET311001 - 11191 | 23 |
| 14 | 7004547 | BOLT | | AETB11001 - 11191 | 23 |
| 14 | 7004547 | BOLT | | AET311192 & Above | 21 |
| 14 | 7004547 | BOLT | | AETB11192 & Above | 21 |
| 15 | 7004548 | BOLT | | | 4 |
| 16 | 7004538 | BOLT | | | 2 |
| 17 | 7004930 | COVER | | | 5 |
| 18 | 7006113 | FOAM DUCT | | | 1 |
| 19 | 7006114 | FOAM DUCT | | | 1 |
| 20 | 7006115 | FOAM DUCT | | | 1 |
| 21 | 7006256 | PAD RUBBER | | | 1 |
| 22 | 7004516 | WASHER PLAIN | | | 2 |
| 23 | 7017366 | BRACKET | | AET311192 & | 1 |



Page 101 - OSS# 2089524 - All rights reserved by Bobcat Company - 05/11/2012 - 06:30:39 - Produced by Ken Cook Co. with mediaioff

## AIR CONDITIONING (Cont'd)
## (Side Cover & Ducts)

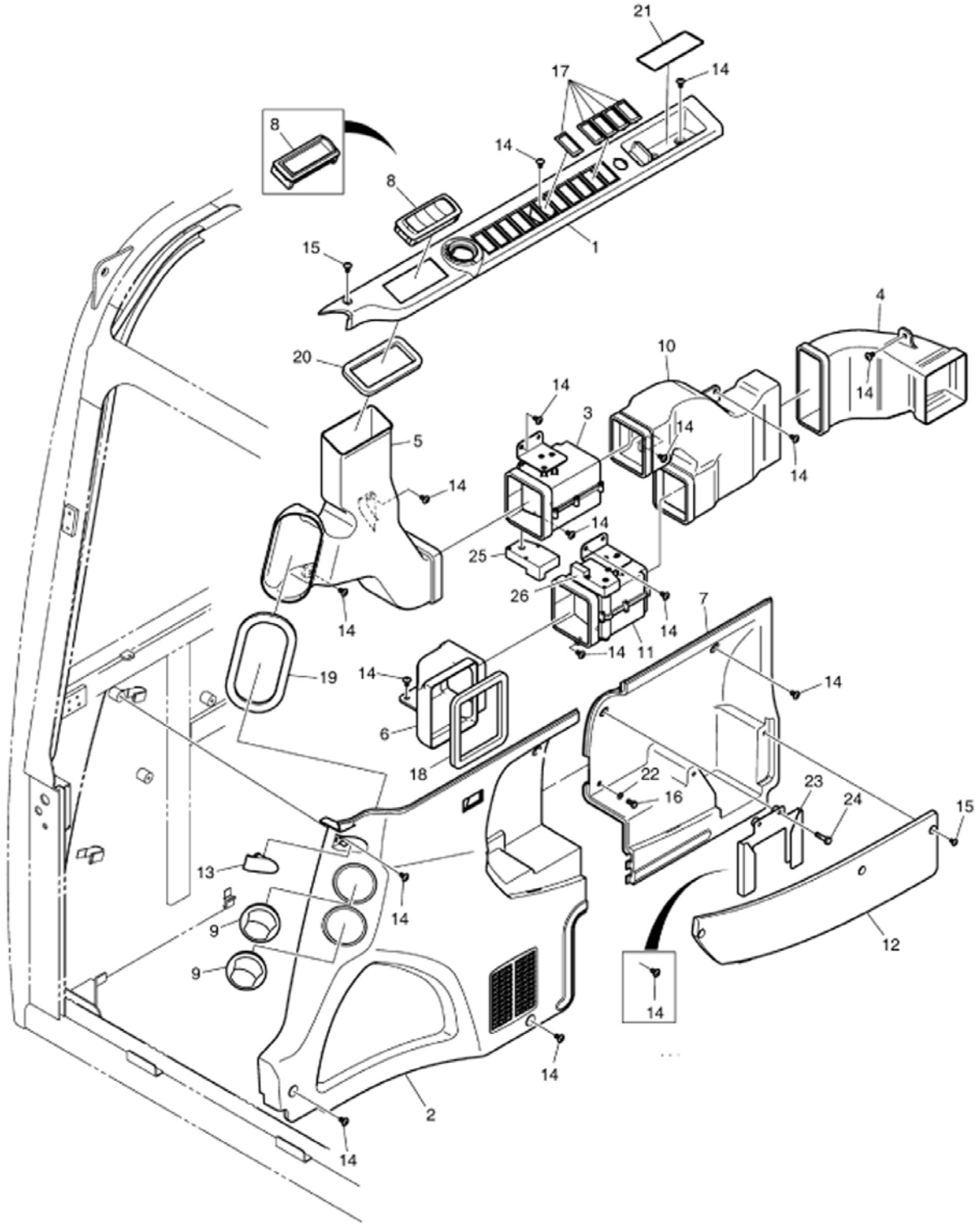


EM7011



Page 102 - OSS# 2089524 - All rights reserved by Bobcat Company - 05/11/2012 - 06:30:39 - Produced by Ken Cook Co. with mediaIoff

## AIR CONDITIONING (Cont'd)
## (Side Cover & Ducts)

| Ref No | Part Number | Description | Remarks | Serial Number | Qty |
|---|---|---|---|---|---|
| | | | | Above | |
| 23 | 7017366 | BRACKET | | AETB11192 & Above | 1 |
| 24 | 7007609 | BOLT | | AET311192 & Above | 2 |
| 24 | 7007609 | BOLT | | AETB11192 & Above | 2 |
| 25 | 7006530 | MOTOR MIX | | | 1 |
| 26 | 7006530 | MOTOR MIX | | | 1 |

Page 103 - OSS# 2089524 - All rights reserved by Bobcat Company - 05/11/2012 - 06:30:39 - Produced by Ken Cook Co. with mediaioff

# RH COVER
# (S/N AET311001-11191 + AETB11001-11191)

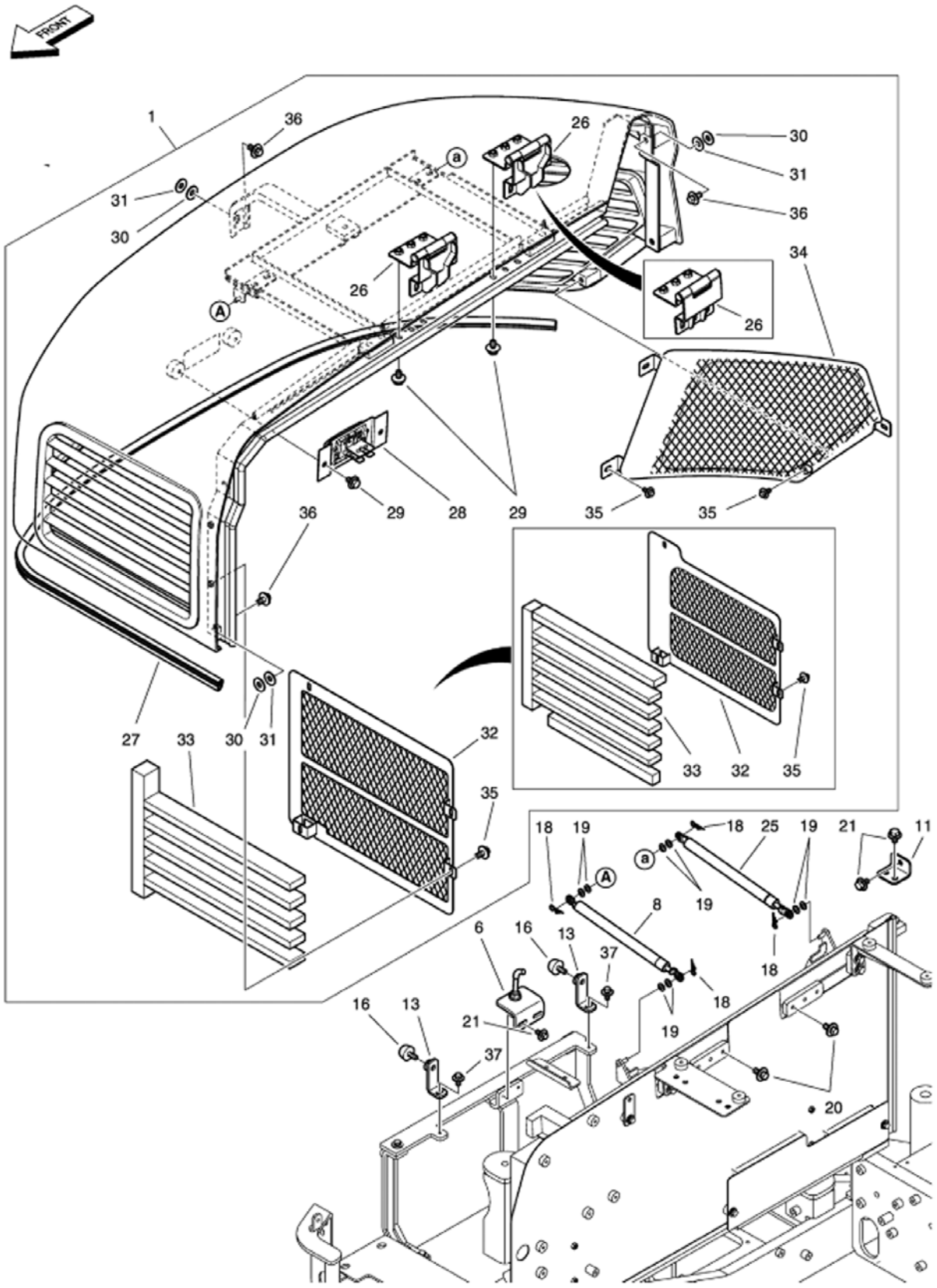




Page 104 - OSS# 2089524 - All rights reserved by Bobcat Company - 05/11/2012 - 06:30:39 - Produced by Ken Cook Co. with mediaIoff

## RH COVER (Cont'd)
## (S/N AET311001-11191 + AETB11001-11191)

| Ref No | Part Number | Description | Remarks | Serial Number | Qty |
|---|---|---|---|---|---|
| 1 | | BONNET ASSY | NLA - W/Ref. 26-37 Was 7008239 [A] | AET311001 - 11051 | 1 |
| 1 | | BONNET ASSY | NLA - W/Ref. 26-37 Was 7008239 [A] | AETB11001 - 11051 | 1 |
| 1 | 7015402 | BONNET ASSY | W/Ref. 26-37 | AET311001 & Above | 1 |
| 1 | 7015402 | BONNET ASSY | W/Ref. 26-37 | AETB11001 & Above | 1 |
| 6 | 7008245 | STRIKER | | AET311001 - 11051 | 1 |
| 6 | 7008245 | STRIKER | | AETB11001 - 11051 | 1 |
| 6 | 7015407 | STRIKER | | AET311001 & Above | 1 |
| 6 | 7015407 | STRIKER | | AETB11001 & Above | 1 |
| 8 | 7008267 | CYLINDER, GAS SPRING | | | 1 |
| 11 | 7008247 | PLATE | | | 1 |
| 13 | 7006347 | BRACKET | | | 2 |
| 16 | 7003928 | STOP SLIDE DOOR | | | 2 |
| 18 | 7004569 | PIN | | | 4 |
| 19 | 7007816 | WASHER | | | 11 |
| 20 | 7005136 | BOLT SET | | | 6 |
| 21 | 7005129 | BOLT SET | | AET311001 - 11102 | 7 |
| 21 | 7005129 | BOLT SET | | AETB11001 - 11102 | 7 |
| 21 | 7005129 | BOLT SET | | AET311103 & Above | 5 |
| 21 | 7005129 | BOLT SET | | AETB11103 & Above | 5 |
| 25 | 7008283 | CYLINDER, GAS SPRING | | | 1 |
| 26 | 7008244 | HINGE | | AET311001 - 11051 | 2 |
| 26 | 7008244 | HINGE | | AETB11001 - 11051 | 2 |
| 26 | 7015403 | HINGE | | AET311001 & Above | 2 |
| 26 | 7015403 | HINGE | | AETB11001 & Above | 2 |
| 27 | 7006680 | SEAL EXTRUSION | | | 1 |
| 28 | 7012749 | CATCH | Was 7005859 [D] | | 1 |
| 29 | 7005136 | BOLT SET | | | 8 |
| 30 | 7005597 | SHIM | | | 5 |
| 31 | 7005598 | SHIM | | | 5 |
| 32 | 7008268 | BRACKET | | AET311001 - 11051 | 1 |
| 32 | 7008268 | BRACKET | | AETB11001 - 11051 | 1 |
| 32 | 7015404 | BRACKET | | AETB11001 & Above | 1 |
| 32 | 7015404 | BRACKET | | AET311001 & Above | 1 |



Page 105 - OSS# 2089524 - All rights reserved by Bobcat Company - 05/11/2012 - 06:30:39 - Produced by Ken Cook Co. with mediaioff

## RH COVER (Cont'd)
## (S/N AET311001-11191 + AETB11001-11191)

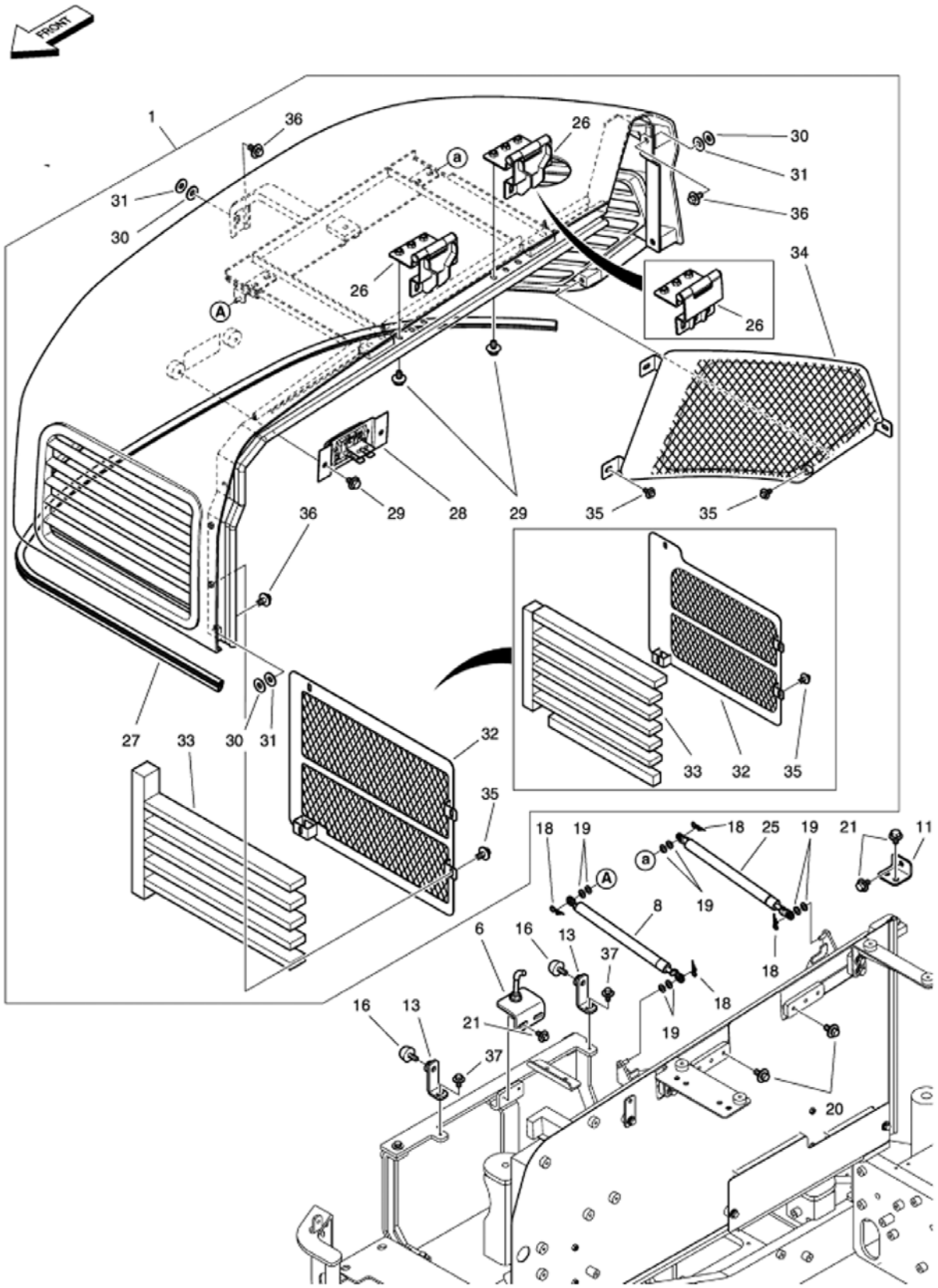


EM5928



Page 106 - OSS# 2089524 - All rights reserved by Bobcat Company - 05/11/2012 - 06:30:39 - Produced by Ken Cook Co. with mediaioff

## RH COVER (Cont'd)
## (S/N AET311001-11191 + AETB11001-11191)

| Ref No | Part Number | Description | Remarks | Serial Number | Qty |
|---|---|---|---|---|---|
| 33 | | FOAM | NLA Was 7006760 [A] | AET311001 - 11051 | 1 |
| 33 | | FOAM | NLA Was 7006760 [A] | AETB11001 - 11051 | 1 |
| 33 | 7015405 | SPONGE | | AET311001 & Above | 1 |
| 33 | 7015405 | SPONGE | | AETB11001 & Above | 1 |
| 34 | 7008269 | BRACKET | | AET311001 - 11051 | 1 |
| 34 | 7008269 | BRACKET | | AETB11001 - 11051 | 1 |
| 34 | 7015406 | BRACKET | | AET311001 & Above | 1 |
| 34 | 7015406 | BRACKET | | AETB11001 & Above | 1 |
| 35 | 7005129 | BOLT SET | Was 7005129 [A] | | 7 |
| 36 | 7005121 | BOLT SET | | | 5 |
| 37 | 7012228 | BOLT,FLANGE | | AET311103 & Above | 2 |
| 37 | 7012228 | BOLT,FLANGE | | AETB11103 & Above | 2 |

Page 107 - OSS# 2089524 - All rights reserved by Bobcat Company - 05/11/2012 - 06:30:39 - Produced by Ken Cook Co. with mediaioff

# RH COVER
# (S/N AET311192 & Above + AETB11192 & Above)

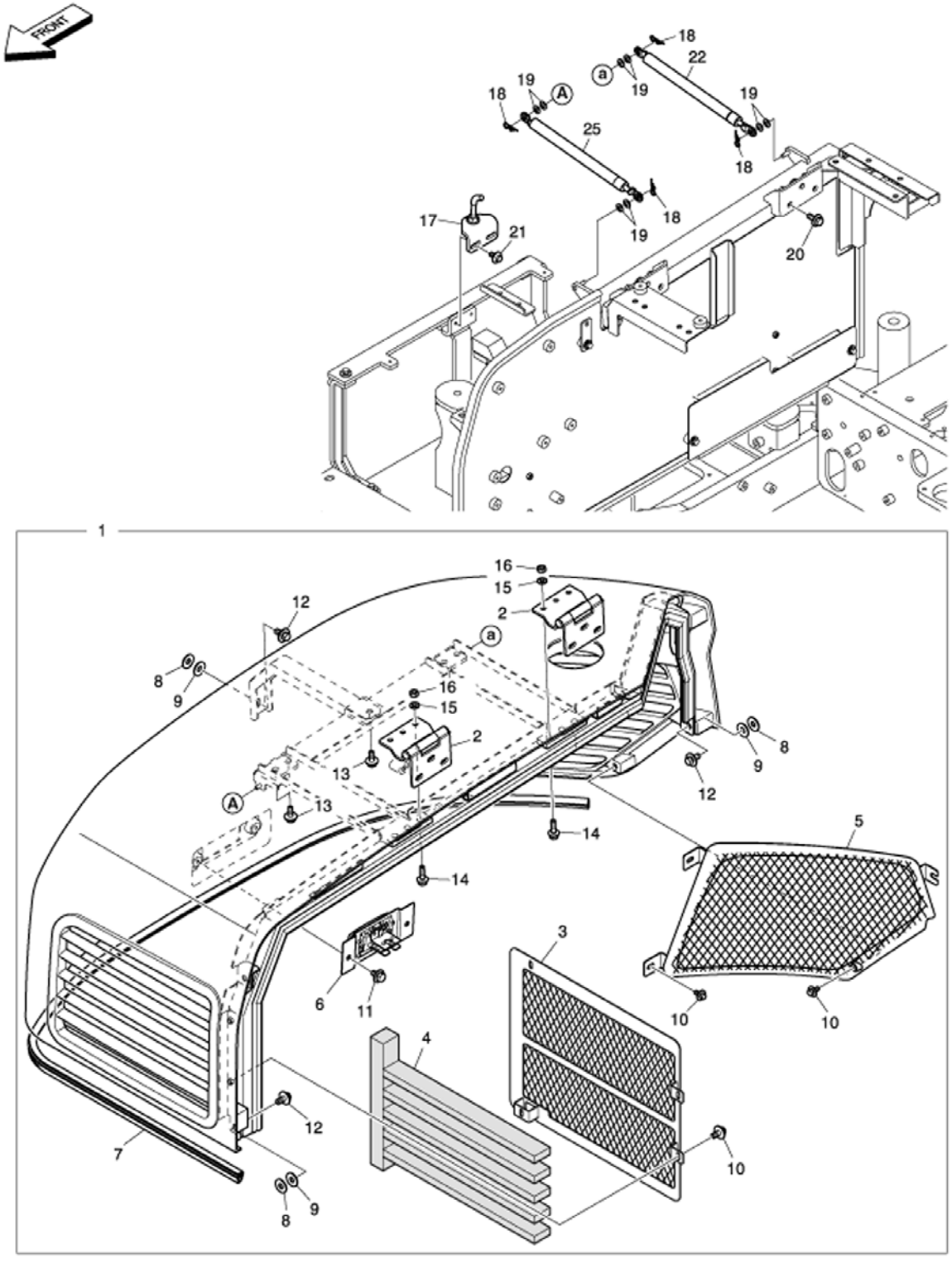


EM7052



Page 108 - OSS# 2089524 - All rights reserved by Bobcat Company - 05/11/2012 - 06:30:39 - Produced by Ken Cook Co. with mediaioff

## RH COVER (Cont'd)
## (S/N AET311192 & Above + AETB11192 & Above)

| Ref No | Part Number | Description | Remarks | Serial Number | Qty |
|---|---|---|---|---|---|
| 1 | 7017387 | BONNET ASSY | W/Ref. 2-16 | | 1 |
| 2 | 7017388 | HINGE | | | 2 |
| 3 | 7015404 | BRACKET | | | 1 |
| 4 | 7017389 | FOAM | | | 1 |
| 5 | 7017390 | BRACKET | | | 1 |
| 6 | 7012749 | CATCH | Was 7005859 [A] | | 1 |
| 7 | 7006680 | SEAL EXTRUSION | | | 1 |
| 8 | 7005597 | SHIM | | | 5 |
| 9 | 7005598 | SHIM | | | 5 |
| 10 | 7005129 | BOLT SET | | | 8 |
| 11 | 7005136 | BOLT SET | | | 2 |
| 12 | 7005121 | BOLT SET | | | 5 |
| 13 | 7005120 | BOLT SET | | | 5 |
| 14 | 7017391 | BOLT, SET | | | 6 |
| 15 | 7007818 | WASHER PLAIN M10 | | | 2 |
| 16 | 7007798 | NUT M10X1.5 | | | 2 |
| 17 | 7017392 | STRIKER | | | 1 |
| 18 | 7004569 | PIN | | | 4 |
| 19 | 7007816 | WASHER | | | 11 |
| 20 | 7005120 | BOLT SET | | | 6 |
| 21 | 7005129 | BOLT SET | | | 2 |
| 22 | 7008267 | CYLINDER, GAS SPRING | | | 1 |
| 25 | 7008283 | CYLINDER, GAS SPRING | | | 1 |

Page 109 - OSS# 2089524 - All rights reserved by Bobcat Company - 05/11/2012 - 06:30:39 - Produced by Ken Cook Co. with mediaioff

# TAILGATE
# (S/N AET311001-11191 + AETB11001-11191)

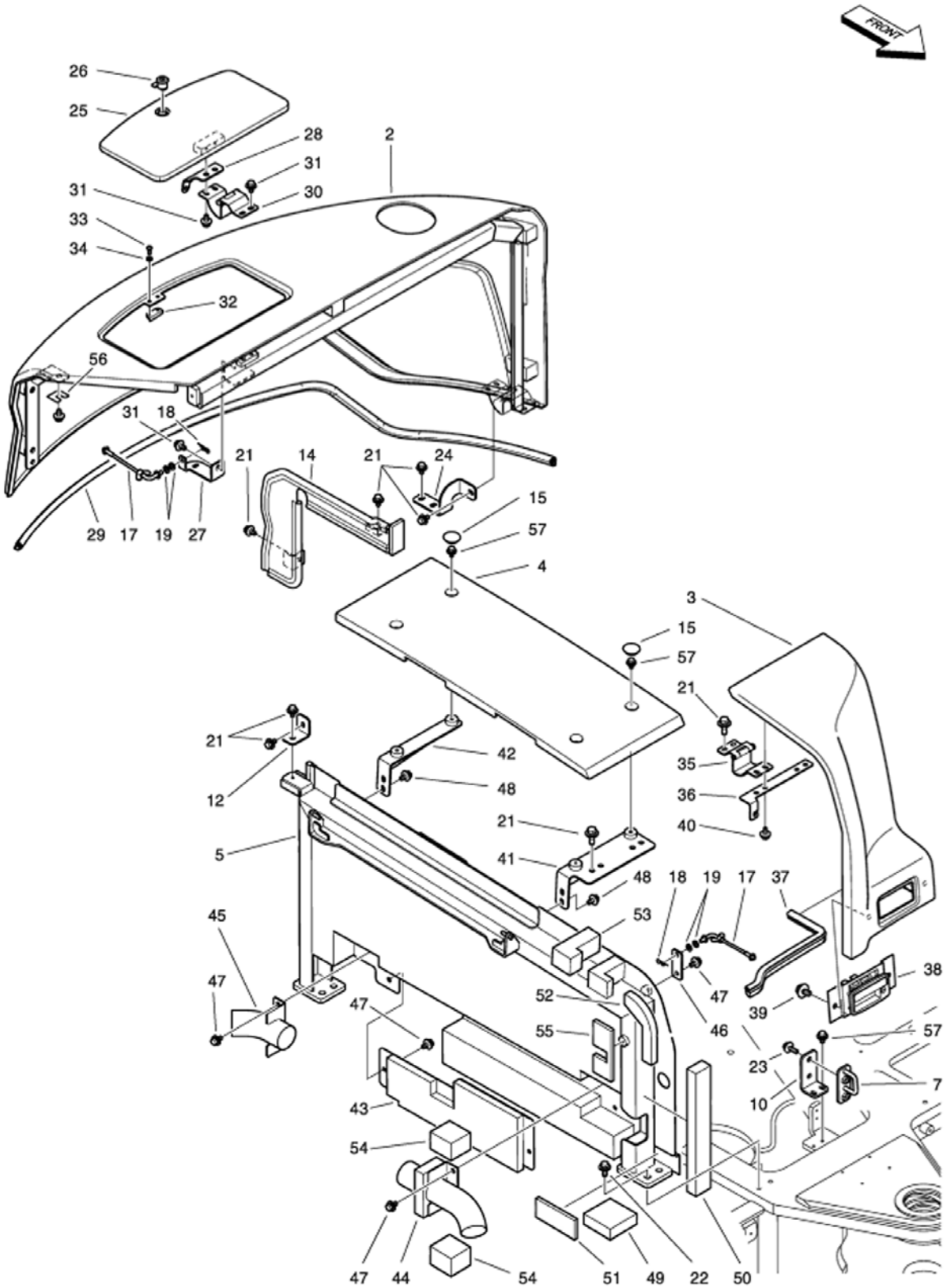


EM5930



Page 110 - OSS# 2089524 - All rights reserved by Bobcat Company - 05/11/2012 - 06:30:39 - Produced by Ken Cook Co. with mediaioff

## TAILGATE (Cont'd)
## (S/N AET311001-11191 + AETB11001-11191)

| Ref No | Part Number | Description | Remarks | Serial Number | Qty |
|---|---|---|---|---|---|
| 2 | 7008240 | COVER ASSY | W/Ref. 25-34 | | 1 |
| 3 | 7008241 | COVER, BATTERY ASSY | W/Ref. 35-40 | | 1 |
| 4 | 7008242 | COVER, SIDE | | | 1 |
| 5 | | SUPPORT ASSY | NLA - W/Ref. 41-48 Was 7008249 [A] | AET311001 - 11051 | 1 |
| 5 | | SUPPORT ASSY | NLA - W/Ref. 41-48 Was 7008249 [A] | AETB11001 - 11051 | 1 |
| 5 | | SUPPORT ASSY | NLA - W/Ref. 41-48 Was 7015408 [A] | AET311001 - 11102 | 1 |
| 5 | | SUPPORT ASSY | NLA - W/Ref. 41-48 Was 7015408 [A] | AETB11001 - 11102 | 1 |
| 5 | 7012251 | SUPPORT ASSY | W/Ref. 41-48 | AET311001 & Above | 1 |
| 5 | 7012251 | SUPPORT ASSY | W/Ref. 41-48 | AETB11001 & Above | 1 |
| 7 | 7006646 | STRIKER | | | 1 |
| 10 | 7006668 | PLATE | | | 1 |
| 12 | 7006665 | PLATE | | | 1 |
| 14 | 7008218 | DIAPHRAGM, BAFFLE | | | 1 |
| 15 | 7005658 | CAP RUBBER | | | 4 |
| 17 | 7006662 | STRAP | | | 2 |
| 18 | 7004569 | PIN | | | 2 |
| 19 | 7007816 | WASHER | | | 4 |
| 21 | 7005129 | BOLT SET | | AET311001 - 11102 | 18 |
| 21 | 7005129 | BOLT SET | | AETB11001 - 11102 | 18 |
| 21 | 7005129 | BOLT SET | | AET311103 & Above | 12 |
| 21 | 7005129 | BOLT SET | | AETB11103 & Above | 12 |
| 22 | 7005124 | BOLT SET | | | 4 |
| 23 | 7005132 | BOLT SET | | | 2 |
| 24 | 7006762 | PLATE | | | 1 |
| 25 | 7008243 | COVER, ROOF | | | 1 |
| 26 | 7006690 | KEY LOCK | | | 1 |
| 27 | 7008252 | PLATE | | | 1 |
| 28 | 7008254 | PLATE | | | 1 |
| 29 | 7006681 | SEAL EXTRUSION | | | 1 |
| 30 | 7008255 | HINGE | | | 1 |
| 31 | 7005129 | BOLT SET | | | 6 |
| 32 | 7006689 | PLATE | | | 1 |
| 33 | 7007786 | BOLT | | | 2 |
| 34 | 7007833 | WASHER SPRING | | | 2 |
| 35 | 7006644 | HINGE | | | 2 |
| 36 | 7008248 | PLATE | | | 1 |
| 37 | 7008253 | STRIP, WEATHER | | | 1 |
| 38 | 7012749 | CATCH | Was 7005859 [D] | | 1 |
| 39 | 7005136 | BOLT SET | | | 2 |
| 40 | 7005129 | BOLT SET | | | 4 |
| 41 | 7008250 | BRACKET | | | 1 |
| 42 | 7008251 | BRACKET | | | 1 |



Page 111 - OSS# 2089524 - All rights reserved by Bobcat Company - 05/11/2012 - 06:30:39 - Produced by Ken Cook Co. with mediaioff

## TAILGATE (Cont'd)
## (S/N AET311001-11191 + AETB11001-11191)

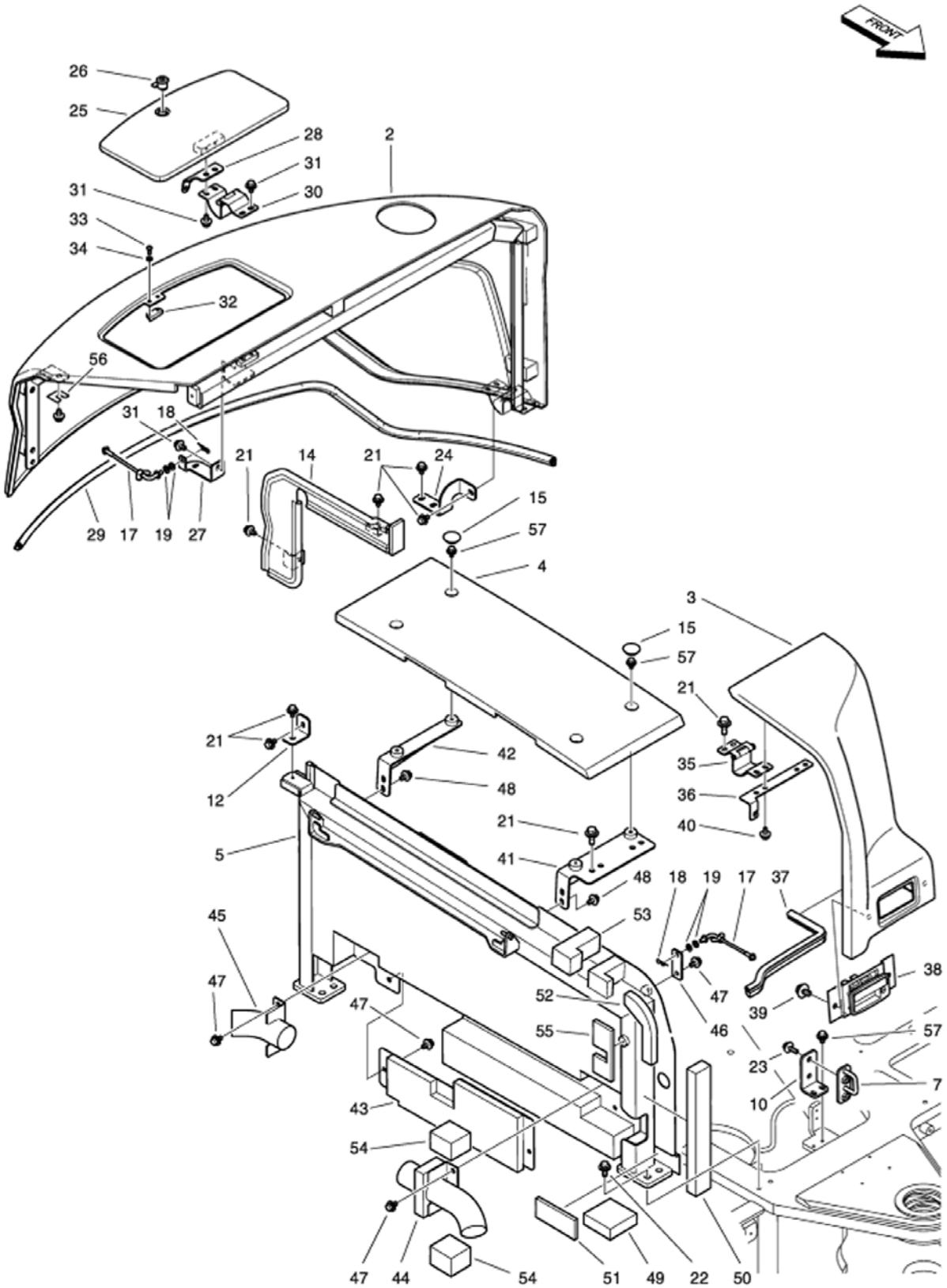


EM5930



Page 112 - OSS# 2089524 - All rights reserved by Bobcat Company - 05/11/2012 - 06:30:39 - Produced by Ken Cook Co. with mediaioff

| Ref No | Part Number | Description | Remarks | Serial Number | Qty |
|---|---|---|---|---|---|
| 43 | 7006676 | BRACKET | | | 1 |
| 44 | 7006677 | BRACKET | | | 1 |
| 45 | 7006678 | BRACKET | | | 1 |
| 46 | 7006685 | PLATE | | | 1 |
| 47 | 7005129 | BOLT SET | | | 7 |
| 48 | 7005136 | BOLT SET | | | 4 |
| 49 | 7015409 | SPONGE | | AET311052 & Above | 1 |
| 49 | 7015409 | SPONGE | | AETB11052 & Above | 1 |
| 50 | 7015410 | FOAM | | AET311052 & Above | 1 |
| 50 | 7015410 | FOAM | | AETB11052 & Above | 1 |
| 51 | 7015411 | SEAL | | AET311052 & Above | 1 |
| 51 | 7015411 | SEAL | | AETB11052 & Above | 1 |
| 52 | 7015412 | FOAM | | AET311052 & Above | 1 |
| 52 | 7015412 | FOAM | | AETB11052 & Above | 1 |
| 53 | 7015413 | SEAL | | AET311052 & Above | 1 |
| 53 | 7015413 | SEAL | | AETB11052 & Above | 1 |
| 54 | 7015414 | FOAM | | AET311052 & Above | 2 |
| 54 | 7015414 | FOAM | | AETB11052 & Above | 2 |
| 55 | 7015415 | FOAM | | AET311052 & Above | 1 |
| 55 | 7015415 | FOAM | | AETB11052 & Above | 1 |
| 56 | 7015416 | SHIM | | AET311052 & Above | 5 |
| 56 | 7015416 | SHIM | | AETB11052 & Above | 5 |
| 57 | 7012228 | BOLT,FLANGE | | AET311103 & Above | 6 |
| 57 | 7012228 | BOLT,FLANGE | | AETB11103 & Above | 6 |

Page 113 - OSS# 2089524 - All rights reserved by Bobcat Company - 05/11/2012 - 06:30:39 - Produced by Ken Cook Co. with mediaioff

# TAILGATE
## (S/N AET311192 & Above + AETB11192 & Above)

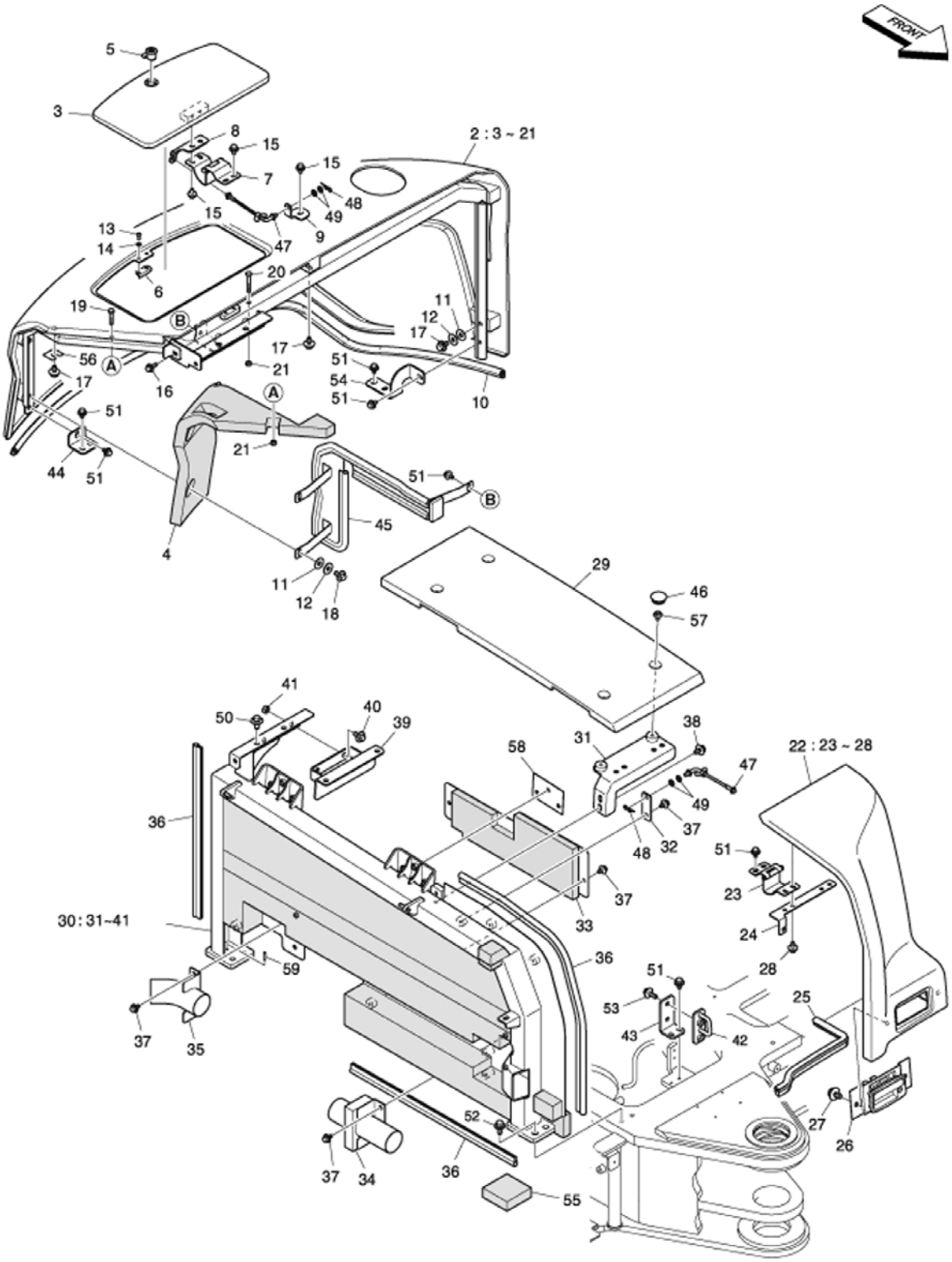


EM7053



Page 114 - OSS# 2089524 - All rights reserved by Bobcat Company - 05/11/2012 - 06:30:39 - Produced by Ken Cook Co. with mediaIoff

## TAILGATE (Cont'd)
## (S/N AET311192 & Above + AETB11192 & Above)

| Ref No | Part Number | Description | Remarks | Serial Number | Qty |
|---|---|---|---|---|---|
| 2 | 7017393 | COVER ASSY | W/Ref. 3-21 | | 1 |
| 3 | 7008243 | COVER, ROOF | | | 1 |
| 4 | 7017394 | SEAL | | | 1 |
| 5 | 7006690 | KEY LOCK | | | 1 |
| 6 | 7006689 | PLATE | | | 1 |
| 7 | 7008255 | HINGE | | | 1 |
| 8 | 7017395 | PLATE | | | 1 |
| 9 | 7017396 | PLATE | | | 1 |
| 10 | 7006681 | SEAL EXTRUSION | | | 1 |
| 11 | 7005597 | SHIM | | | 4 |
| 12 | 7005598 | SHIM | | | 4 |
| 13 | 7007786 | BOLT | | | 2 |
| 14 | 7007833 | WASHER SPRING | | | 2 |
| 15 | 7005129 | BOLT SET | | | 5 |
| 16 | 7005128 | BOLT SET | | | 1 |
| 17 | 7005136 | BOLT SET | | | 5 |
| 18 | 7005121 | BOLT SET | | | 2 |
| 19 | 7017397 | BOLT | | | 1 |
| 20 | 7007660 | BOLT | | | 1 |
| 21 | 7007796 | NUT | | | 2 |
| 22 | 7008241 | COVER, BATTERY ASSY | | | 1 |
| 23 | 7006644 | HINGE | | | 2 |
| 24 | 7008248 | PLATE | | | 1 |
| 25 | 7008253 | STRIP, WEATHER | | | 1 |
| 26 | 7012749 | CATCH | Was 7005859 [A] | | 1 |
| 27 | 7005136 | BOLT SET | | | 2 |
| 28 | 7005129 | BOLT SET | | | 4 |
| 29 | 7017398 | COVER, SIDE | | | 1 |
| 30 | 7017399 | SIDE, ARCH ASSY | | | 1 |
| 31 | 7017400 | BRACKET | | | 1 |
| 32 | 7006685 | PLATE | | | 1 |
| 33 | 7006678 | BRACKET | | | 1 |
| 34 | 7017401 | BRACKET | | | 1 |
| 35 | 7006678 | BRACKET | | | 1 |
| 36 | 7017402 | STRIP, WEATHER | | | 1 |
| 37 | 7005129 | BOLT SET | | | 7 |
| 38 | 7005136 | BOLT SET | | | 2 |
| 39 | 7017403 | BRACKET | | | 1 |
| 40 | 7005121 | BOLT SET | | | 2 |
| 41 | 7007798 | NUT M10X1.5 | | | 2 |
| 42 | 7006646 | STRIKER | | | 1 |
| 43 | 7006668 | PLATE | | | 1 |
| 44 | 7008247 | PLATE | | | 1 |
| 45 | 7017404 | BAFFLE | | | 1 |
| 46 | 7017405 | PLUG | | | 4 |
| 47 | 7006662 | STRAP | | | 2 |
| 48 | 7004569 | PIN | | | 2 |
| 49 | 7007816 | WASHER | | | 4 |
| 50 | 7005120 | BOLT SET | | | 2 |
| 51 | 7005129 | BOLT SET | | | 13 |
| 52 | 7005124 | BOLT SET | | | 4 |



Page 115 - OSS# 2089524 - All rights reserved by Bobcat Company - 05/11/2012 - 06:30:39 - Produced by Ken Cook Co. with mediaioff

## TAILGATE (Cont'd)
## (S/N AET311192 & Above + AETB11192 & Above)

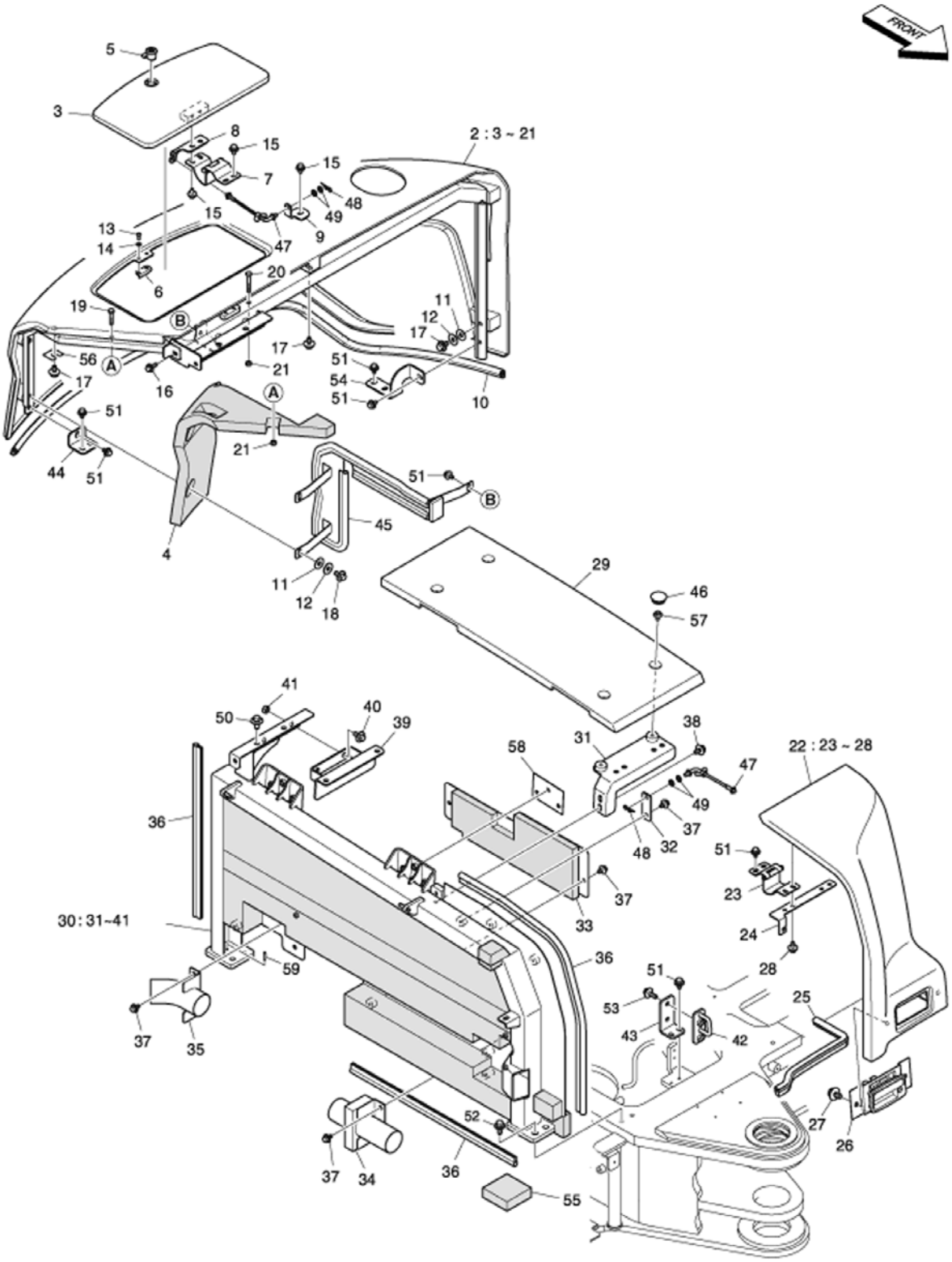


EM7053



Page 116 - OSS# 2089524 - All rights reserved by Bobcat Company - 05/11/2012 - 06:30:39 - Produced by Ken Cook Co. with mediaIoff

## TAILGATE (Cont'd)
## (S/N AET311192 & Above + AETB11192 & Above)

| Ref No | Part Number | Description | Remarks | Serial Number | Qty |
|---|---|---|---|---|---|
| 53 | 7005132 | BOLT SET | | | 2 |
| 54 | 7006762 | PLATE | | | 1 |
| 55 | 7015409 | SPONGE | | | 1 |
| 56 | 7015416 | SHIM | | | 5 |
| 57 | 7012228 | BOLT,FLANGE | | | 4 |
| 58 | 7017406 | SHIM | | | 1 |
| 59 | 7017407 | PIN, KNOCK | | | 1 |

Page 117 - OSS# 2089524 - All rights reserved by Bobcat Company - 05/11/2012 - 06:30:39 - Produced by Ken Cook Co. with mediaioff

# BOOM WORK LIGHT

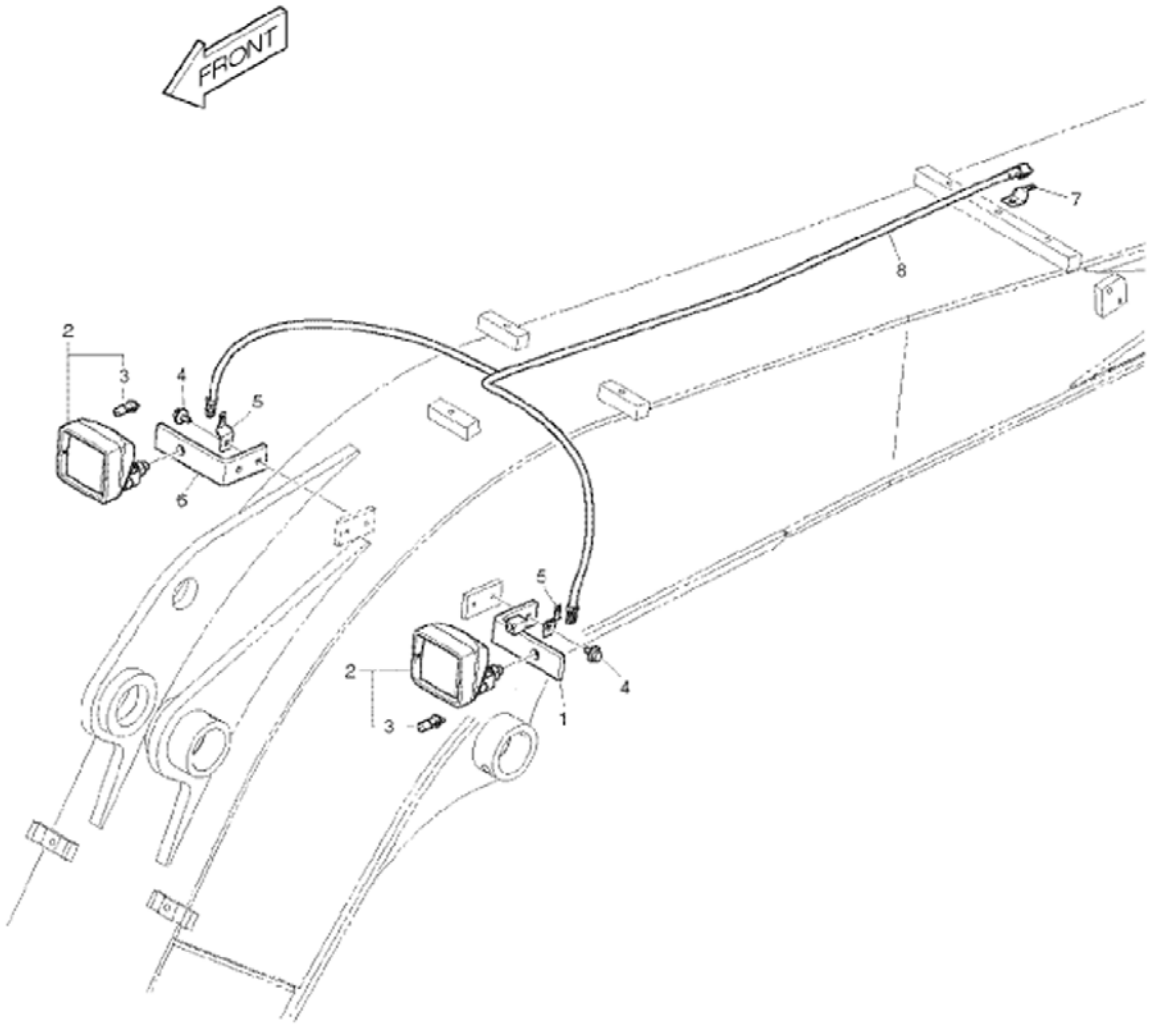


EM7024



Page 118 - OSS# 2089524 - All rights reserved by Bobcat Company - 05/11/2012 - 06:30:39 - Produced by Ken Cook Co. with mediaIoff

| Ref No | Part Number | Description | Remarks | Serial Number | Qty |
|---|---|---|---|---|---|
| 1 | 7003970 | BRACKET LAMP | | | 1 |
| 2 | | LIGHT, BULB | NLA Was 7004886 [A] | AET311001 - 11191 | 1 |
| 2 | | LIGHT, BULB | NLA Was 7004886 [A] | AETB11001 - 11191 | 1 |
| 2 | 7015612 | LAMP;WORKING | | AET311001 & Above | 1 |
| 2 | 7015612 | LAMP;WORKING | | AETB11001 & Above | 1 |
| 3 | 7005713 | LAMP WORK | | | 2 |
| 4 | 7005129 | BOLT SET | | | 1 |
| 5 | 7004826 | BRACKET HOUSING | | | 2 |
| 6 | 7003971 | BRACKET LAMP | | | 1 |
| 7 | 7005803 | BRACKET | | | 1 |
| 8 | 7006631 | HARNESS WORK LAMP | | | 1 |

Page 119 - OSS# 2089524 - All rights reserved by Bobcat Company - 05/11/2012 - 06:30:39 - Produced by Ken Cook Co. with mediaioff

# CAB WORK LIGHT

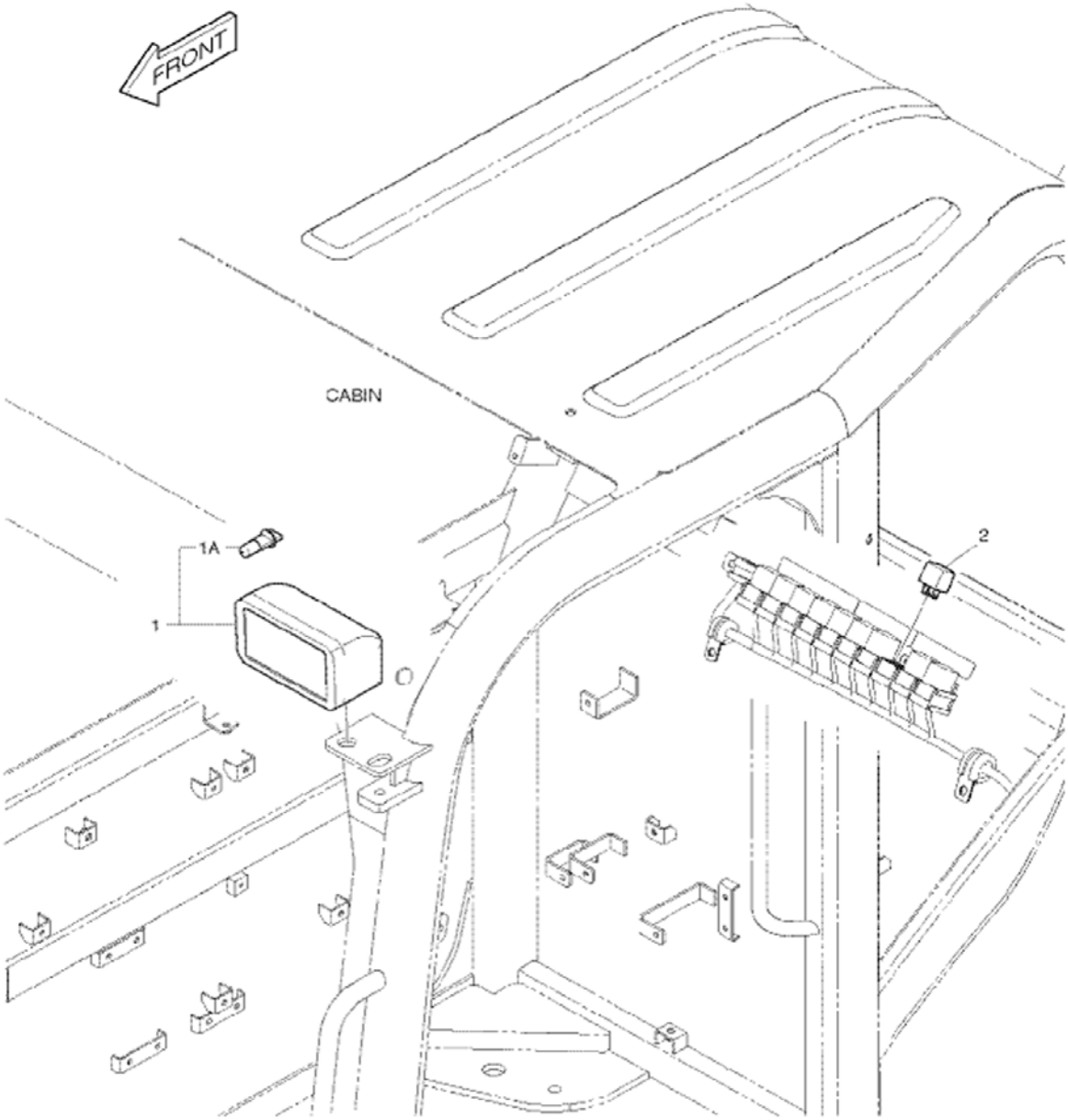


E80-6290



Page 120 - OSS# 2089524 - All rights reserved by Bobcat Company - 05/11/2012 - 06:30:39 - Produced by Ken Cook Co. with mediaioff

| Ref No | Part Number | Description | Remarks | Serial Number | Qty |
|---|---|---|---|---|---|
| 1 | 7004907 | LAMP WORK | | | 1 |
| 1 | 7004886 | LIGHT BULB 12V 55W | 12V/55W | | 1 |
| 2 | 7004910 | RELAY | | | 1 |

Page 121 - OSS# 2089524 - All rights reserved by Bobcat Company - 05/11/2012 - 06:30:39 - Produced by Ken Cook Co. with mediaioff

# SIDE MIRROR

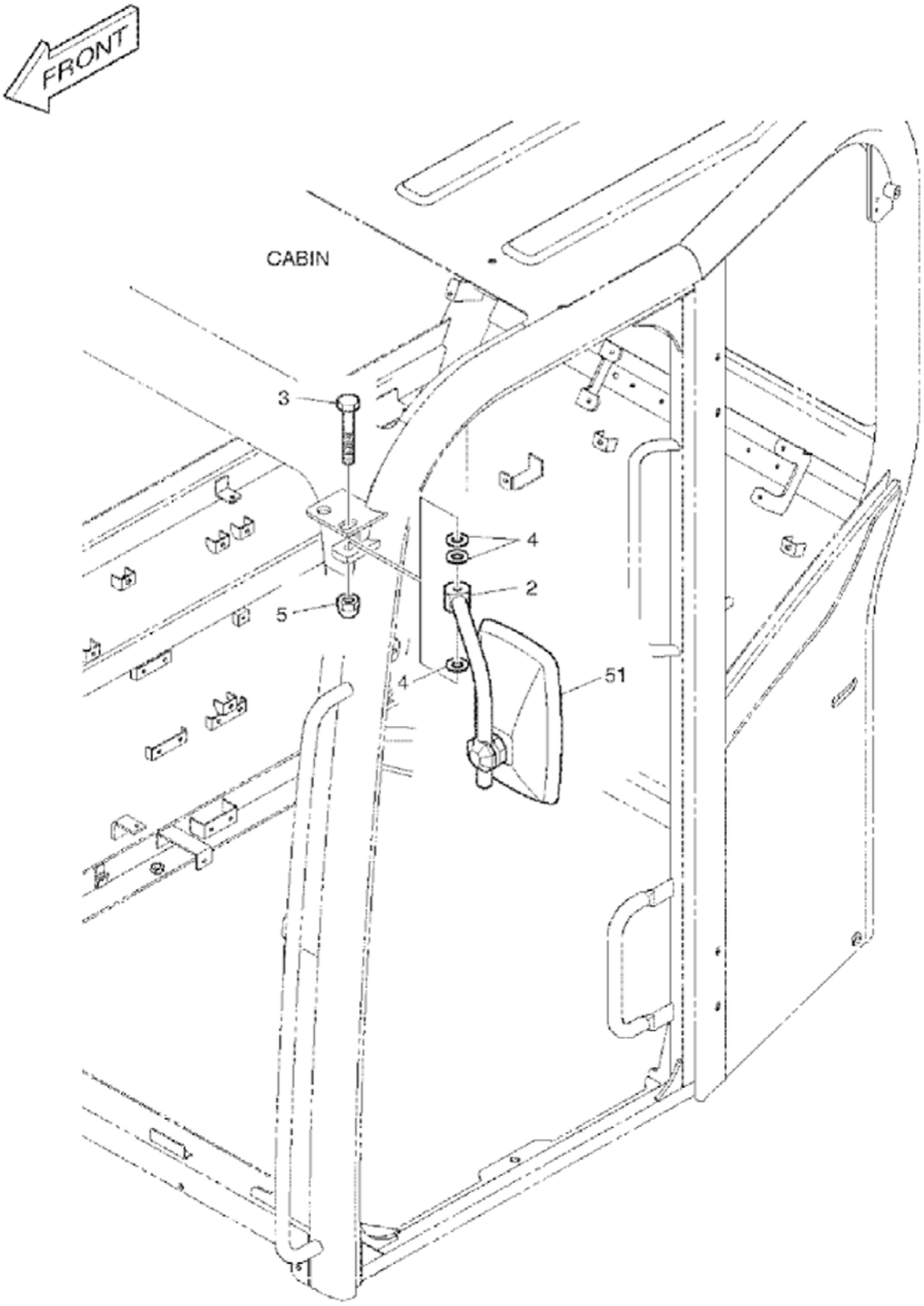


E80-6350



Page 122 - OSS# 2089524 - All rights reserved by Bobcat Company - 05/11/2012 - 06:30:39 - Produced by Ken Cook Co. with mediaIoff

## SIDE MIRROR (Cont'd)

| Ref No | Part Number | Description | Remarks | Serial Number | Qty |
|---|---|---|---|---|---|
| 2 | 7006082 | BRACKET STAY MIRROR | | | 1 |
| 3 | 7004539 | BOLT | | | 1 |
| 4 | 7004513 | WASHER | | | 3 |
| 5 | 7004564 | NUT CAP | | | 1 |
| 51 | 7006805 | MIRROR SIDE | | | 1 |

Page 123 - OSS# 2089524 - All rights reserved by Bobcat Company - 05/11/2012 - 06:30:39 - Produced by Ken Cook Co. with mediaioff

# SUNVISOR

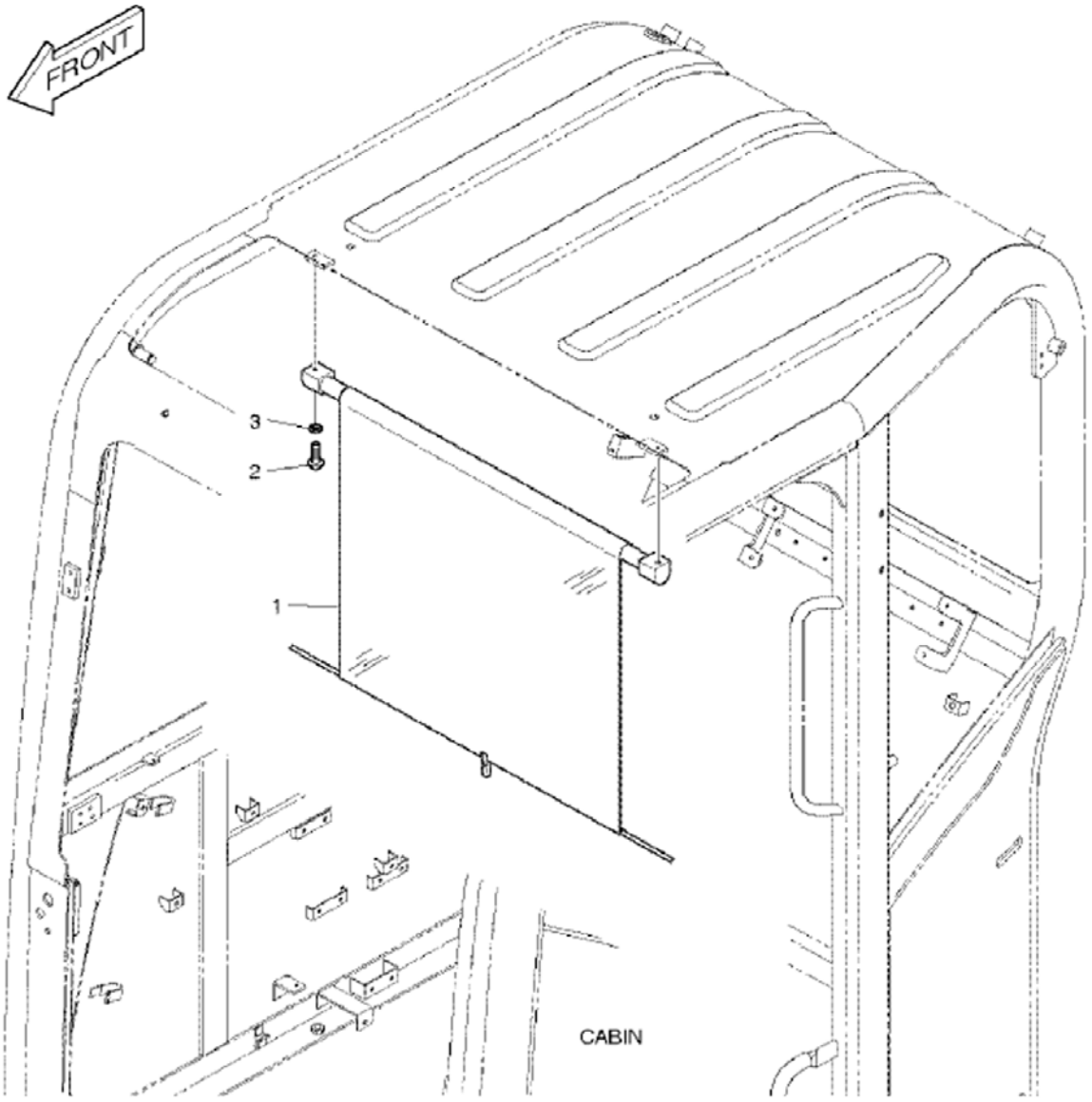


E80-6340



Page 124 - OSS# 2089524 - All rights reserved by Bobcat Company - 05/11/2012 - 06:30:39 - Produced by Ken Cook Co. with mediaioff

| Ref No | Part Number | Description | Remarks | Serial Number | Qty |
|---|---|---|---|---|---|
| 1 | 7005040 | GUARD SUN VISOR | | | 1 |
| 2 | 7004553 | SCREW M6X1.0X10 | | | 2 |
| 3 | 7004516 | WASHER PLAIN | | | 2 |

Page 125 - OSS# 2089524 - All rights reserved by Bobcat Company - 05/11/2012 - 06:30:39 - Produced by Ken Cook Co. with mediaioff

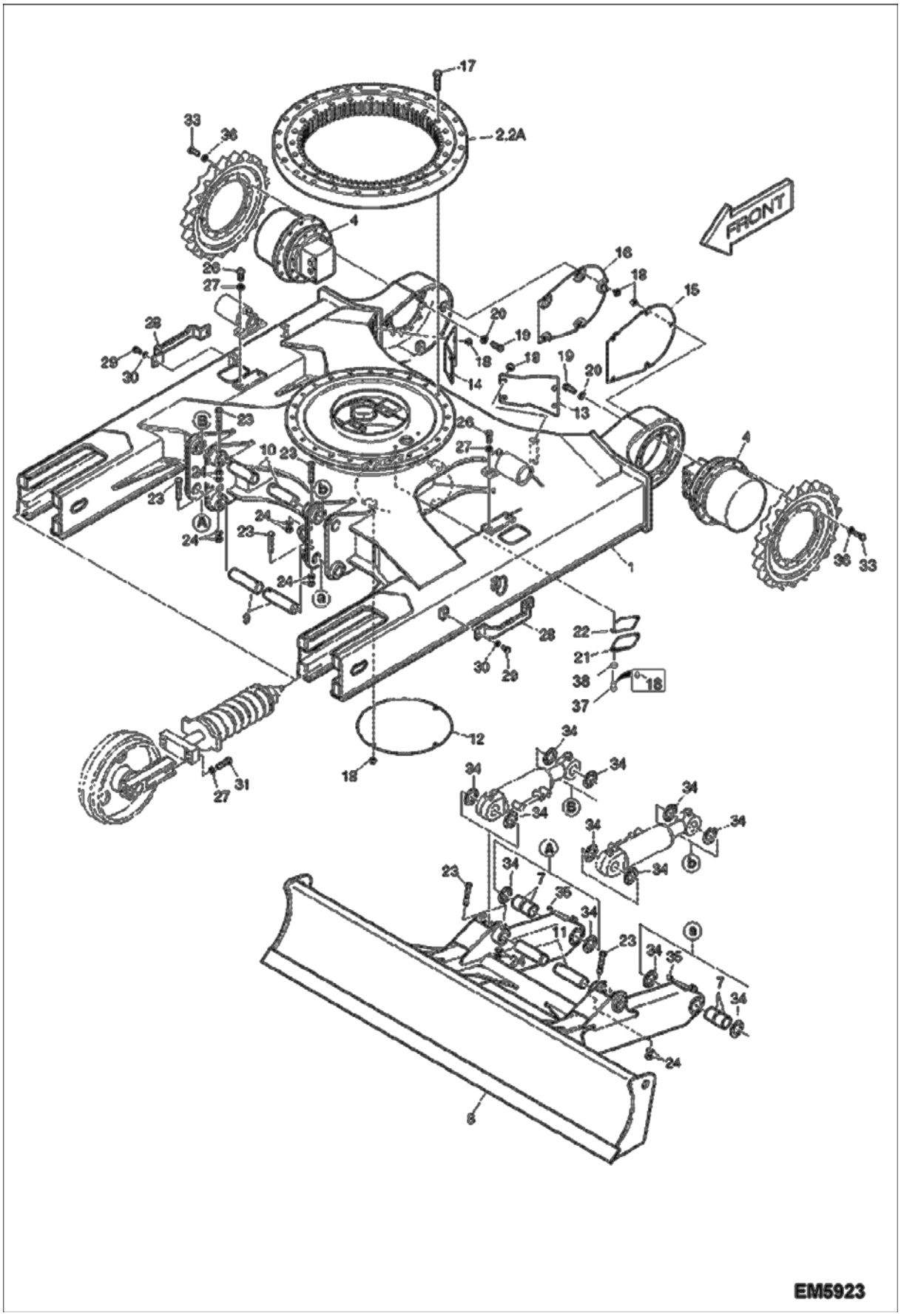




Page 126 - OSS# 2089524 - All rights reserved by Bobcat Company - 05/11/2012 - 06:30:39 - Produced by Ken Cook Co. with mediaIoff

| Ref No | Part Number | Description | Remarks | Serial Number | Qty |
|---|---|---|---|---|---|
| 1 | 7012273 | FRAME,TRACK | Was 7006083 [A] | | 1 |
| 2 | 7006288 | SWING BEARING | | | 1 |
| 2 | 7003945 | SEAL | | | 2 |
| 4 | 7006068 | MOTOR TRAVEL | See Illustration DRIVE MOTOR/ E80-4130 | | 2 |
| 6 | 7012274 | BLADE,DOZER | W/Ref. 7 Was 7006092 [A] | | 1 |
| 7 | 7004456 | BUSHING | | | 4 |
| 9 | 7006630 | PIN | | | 2 |
| 10 | 7006632 | PIN | | | 2 |
| 11 | 7006633 | PIN | | | 2 |
| 12 | 7004927 | COVER | | | 1 |
| 13 | 7006161 | COVER | | | 1 |
| 14 | 7006162 | COVER | | | 1 |
| 15 | 7004928 | COVER LH | | | 1 |
| 16 | 7004929 | COVER RH | | | 1 |
| 17 | 7007712 | BOLT | | | 24 |
| 18 | 7005130 | BOLT SET | | AET311001 - 11051 | 24 |
| 18 | 7005130 | BOLT SET | | AETB11001 - 11051 | 24 |
| 18 | 7005130 | BOLT SET | | AET311052 - 11102 | 22 |
| 18 | 7005130 | BOLT SET | | AETB11052 - 11102 | 22 |
| 18 | 7012244 | BOLT,FLANGE | | AET311052 & Above | 22 |
| 18 | 7012244 | BOLT,FLANGE | | AETB11052 & Above | 22 |
| 19 | 7007650 | BOLT | | | 24 |
| 20 | 7004507 | WASHER PLAIN | | | 24 |
| 21 | 7004926 | COVER GREASE | | | 1 |
| 22 | 7004643 | SEAL | | | 1 |
| 23 | 7007698 | BOLT | | | 6 |
| 24 | 7007800 | NUT M14 | | | 12 |
| 26 | 7007649 | BOLT | | | 4 |
| 27 | 7007839 | WASHER SPRING | | | 12 |
| 28 | 7005047 | STEP | | | 2 |
| 29 | 7007640 | BOLT | | | 4 |
| 30 | 7007836 | WASHER SPRING M12 | | | 4 |
| 31 | 7007704 | BOLT M16X2.0X70 | | | 8 |
| 33 | 7007695 | BOLT | | | 24 |
| 34 | 7004501 | SHIM | | | 12 |
| 35 | 7010249 | FITTING, GREASE | Was 7007896 [A] | | 2 |
| 36 | 7007837 | WASHER | | | 24 |
| 37 | 7007626 | BOLT | | AET311052 & Above | 2 |
| 37 | 7007626 | BOLT | | AETB11052 & Above | 2 |
| 38 | 7007835 | WASHER SPRING | | AET311052 & Above | 2 |
| 38 | 7007835 | WASHER SPRING | | AETB11052 & Above | 2 |

Page 127 - OSS# 2089524 - All rights reserved by Bobcat Company - 05/11/2012 - 06:30:39 - Produced by Ken Cook Co. with mediaioff

# TRACK TENSIONER

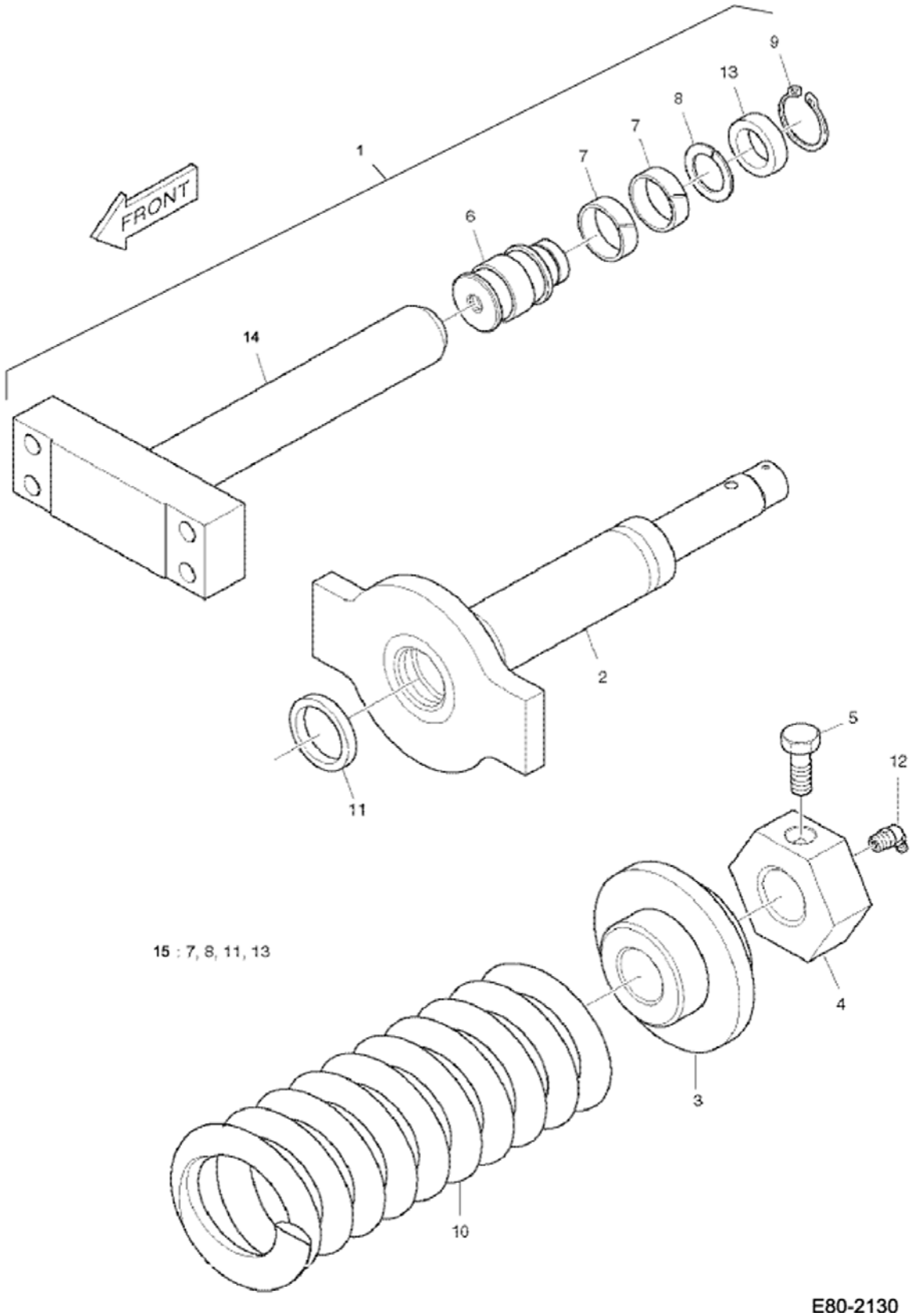


E80-2130



Page 128 - OSS# 2089524 - All rights reserved by Bobcat Company - 05/11/2012 - 06:30:39 - Produced by Ken Cook Co. with mediaIoff

| Ref No | Part Number | Description | Remarks | Serial Number | Qty |
|---|---|---|---|---|---|
| 1 | 7012253 | SPRING ASSY,TRACK | W/Ref. 2-14 Was 7004598 [A] | | 2 |
| 2 | | CYLINDER ASSY | NAP - Order Ref. 1 | | 1 |
| 3 | | FLANGE | NAP - Order Ref. 1 | | 1 |
| 4 | 7004559 | NUT | | | 1 |
| 5 | 7004526 | BOLT | | | 1 |
| 6 | | PISTON | NAP - Order Ref. 1 | | 1 |
| 7 | | RING, PISTON | NAP - Order Ref. 15 | | 2 |
| 8 | | PACKING | NAP - Order Ref. 15 | | 1 |
| 9 | 7007876 | RING SNAP | | | 1 |
| 10 | 7006795 | SPRING | | | 1 |
| 11 | | SEAL, DUST | NAP - Order Ref. 15 | | 1 |
| 12 | 7004977 | VALVE | | | 1 |
| 13 | | RING, BACK-UP | NAP - Order Ref. 15 | | 1 |
| 14 | | ROD, PISTON | NAP - Order Ref. 1 exchanger assy | | 1 |
| 15 | 7020395 | SEAL KIT | W/Ref. 7, 8, 11 & 13 Was 7004597 [A] | | 1 |

Page 129 - OSS# 2089524 - All rights reserved by Bobcat Company - 05/11/2012 - 06:30:39 - Produced by Ken Cook Co. with mediaioff

# FRONT IDLER

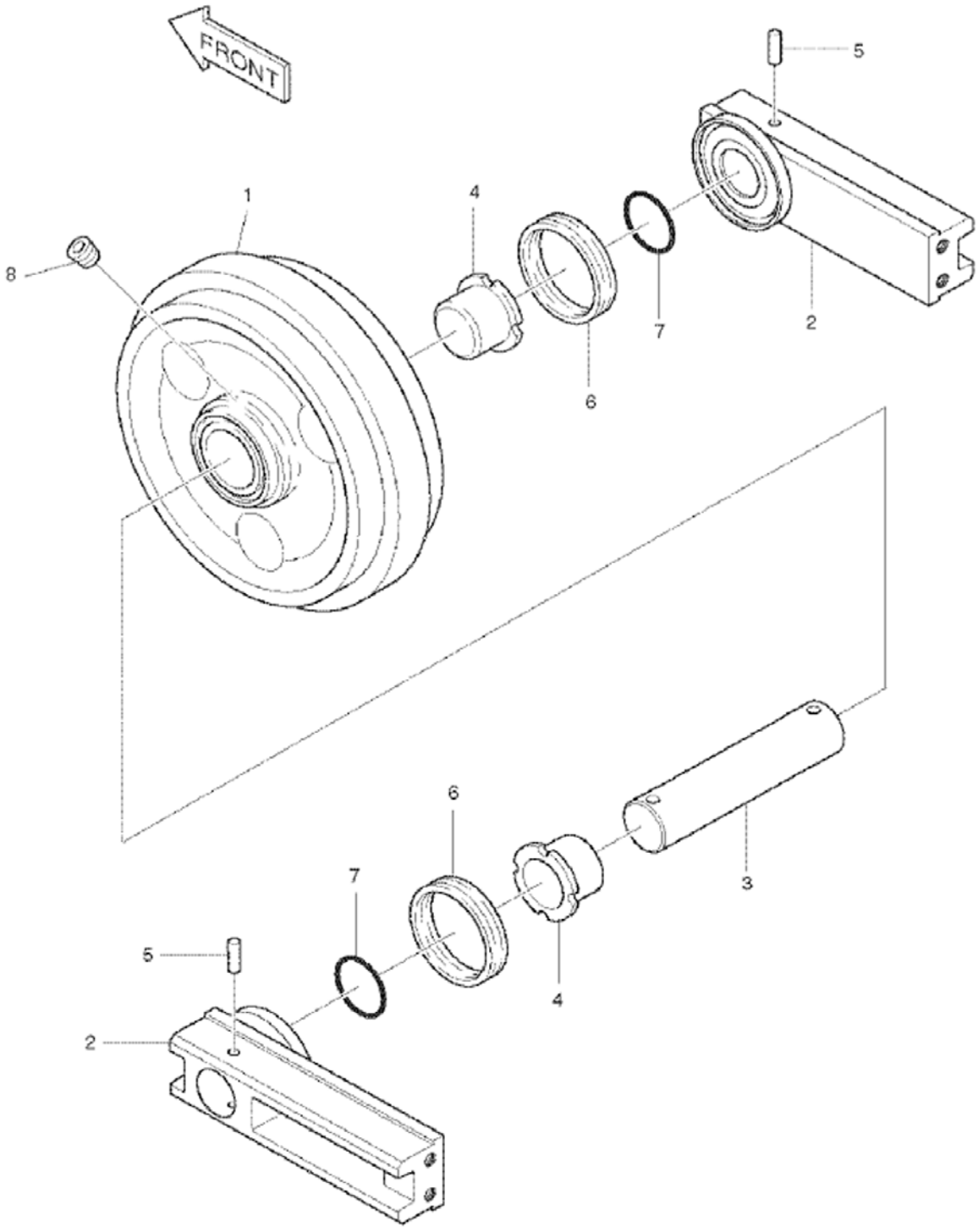




Page 130 - OSS# 2089524 - All rights reserved by Bobcat Company - 05/11/2012 - 06:30:39 - Produced by Ken Cook Co. with mediaioff

## FRONT IDLER (Cont'd)

| Ref No | Part Number | Description | Remarks | Serial Number | Qty |
|---|---|---|---|---|---|
| 1 | 7004844 | IDLER ASSY | W/Ref. 2-8 | | 2 |
| 1 | | BODY | NAP - Order Ref. 1 | | 1 |
| 2 | 7003851 | SUPPORT | | | 2 |
| 3 | 7003857 | SHAFT | | | 1 |
| 4 | 7003852 | BUSHING | | | 2 |
| 5 | 7007862 | PIN SPRING | | | 2 |
| 6 | 7003940 | SEAL FLOATING | | | 2 |
| 7 | 7007935 | ORING | | | 2 |
| 8 | 7004671 | PLUG PT 1/8 | | | 1 |

Page 131 - OSS# 2089524 - All rights reserved by Bobcat Company - 05/11/2012 - 06:30:39 - Produced by Ken Cook Co. with mediaioff

# TRACK ROLLER
## (Bottom)

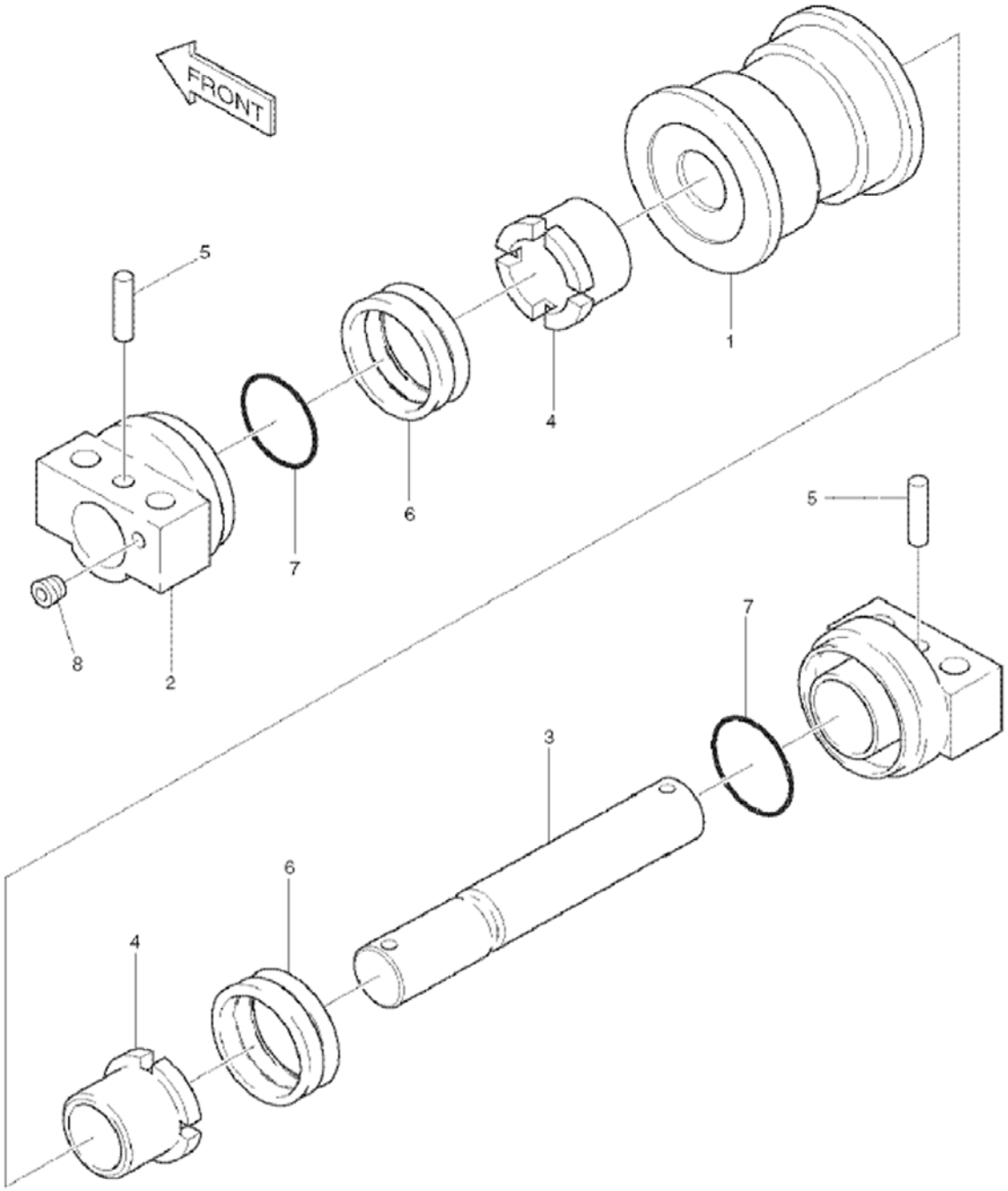


E80-2150



Page 132 - OSS# 2089524 - All rights reserved by Bobcat Company - 05/11/2012 - 06:30:39 - Produced by Ken Cook Co. with mediaIoff

## TRACK ROLLER (Cont'd)
## (Bottom)

| Ref No | Part Number | Description | Remarks | Serial Number | Qty |
|---|---|---|---|---|---|
| 1 | 7004933 | ROLLER LOWER | W/Ref. 2-8 | | 10 |
| 2 | 7003808 | COLLAR | | | 2 |
| 3 | 7003807 | SHAFT | | | 1 |
| 4 | 7003714 | BUSHING | | | 2 |
| 5 | 7003741 | PIN | | | 2 |
| 6 | 7004665 | SEAL FLOATING | | | 2 |
| 7 | 7007933 | ORING | | | 2 |
| 8 | 7004673 | PLUG | | | 2 |

Page 133 - OSS# 2089524 - All rights reserved by Bobcat Company - 05/11/2012 - 06:30:39 - Produced by Ken Cook Co. with mediaioff

# TRACK ROLLER
## (Top)

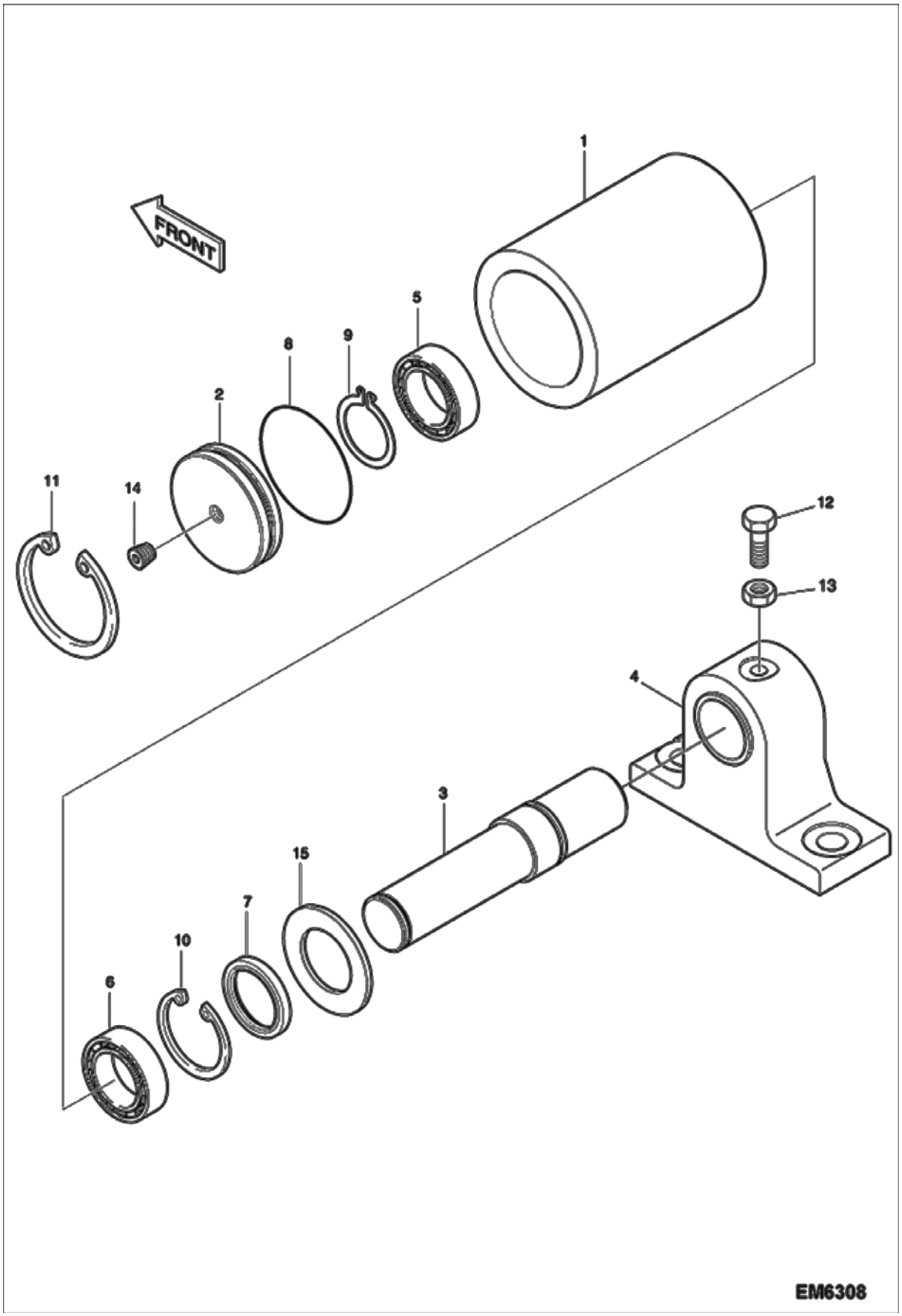




Page 134 - OSS# 2089524 - All rights reserved by Bobcat Company - 05/11/2012 - 06:30:39 - Produced by Ken Cook Co. with mediaIoff

## TRACK ROLLER (Cont'd)
## (Top)

| Ref No | Part Number | Description | Remarks | Serial Number | Qty |
|---|---|---|---|---|---|
| 1 | 7012275 | ROLLER,UPPER | W/Ref. 2-14 Was 7006091 [A] | | 2 |
| 2 | | COVER | NAP - Order Ref. 1 | | 1 |
| 3 | | SHAFT | NAP - Order Ref. 1 | | 1 |
| 4 | | BRACKET | NAP - Order Ref. 1 | | 1 |
| 5 | 7007865 | BEARING BALL | | | 1 |
| 6 | 7007866 | BEARING BALL | | | 1 |
| 7 | 7003941 | SEAL OIL | | | 1 |
| 8 | 7007938 | ORING | | | 1 |
| 9 | 7007876 | RING SNAP | | | 1 |
| 10 | 7007867 | RING SNAP | | | 1 |
| 11 | 7007887 | RING SNAP | | | 1 |
| 12 | 7007639 | BOLT | | | 1 |
| 13 | 7007804 | NUT | | | 1 |
| 14 | 7004671 | PLUG PT 1/8 | | | 1 |
| 15 | 7015432 | PLATE | | AET311208 & Above | 1 |
| 15 | 7015432 | PLATE | | AETB11208 & Above | 1 |

Page 135 - OSS# 2089524 - All rights reserved by Bobcat Company - 05/11/2012 - 06:30:39 - Produced by Ken Cook Co. with mediaioff

# TRACK
# (Rubber)

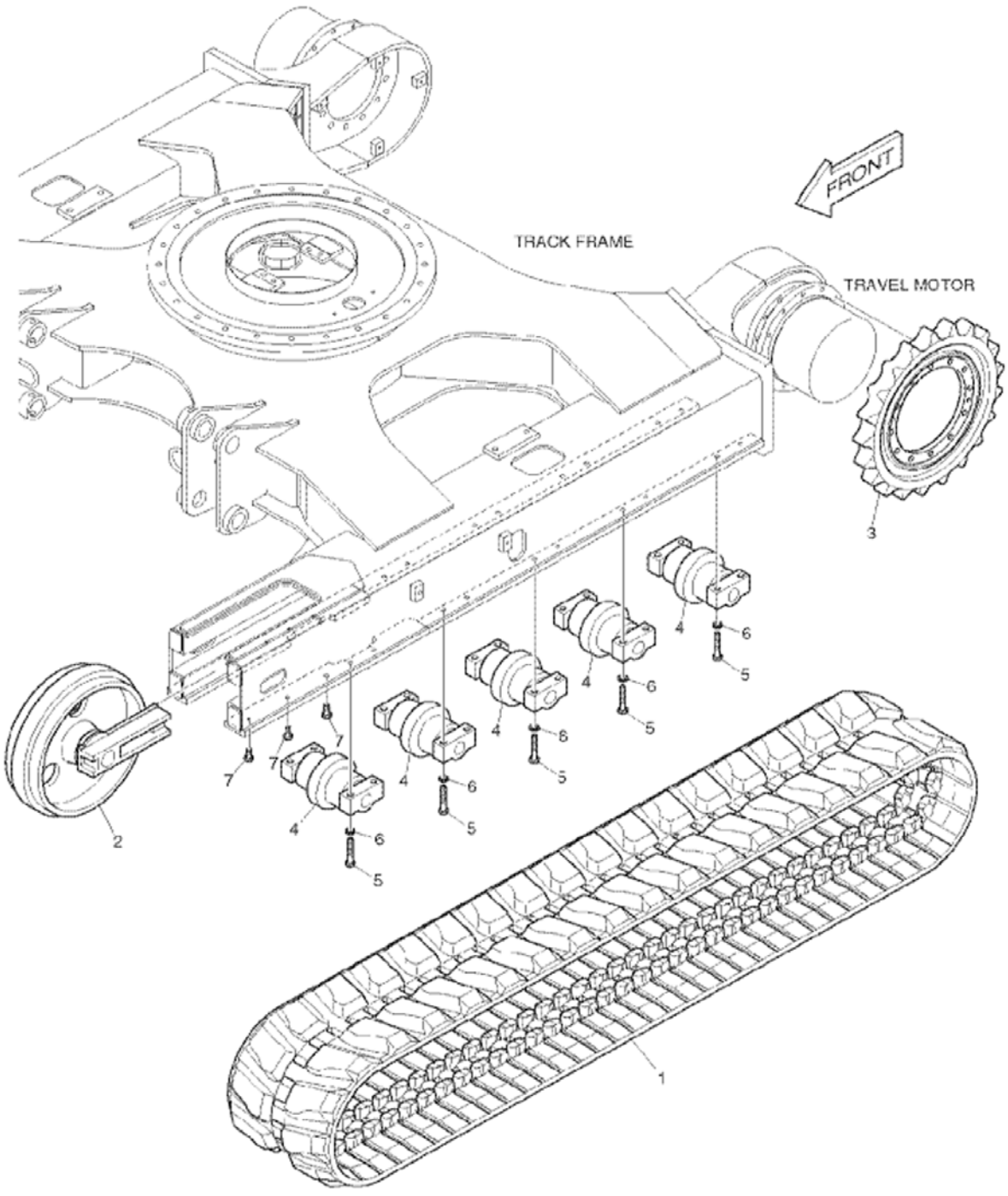


E80-2110



Page 136 - OSS# 2089524 - All rights reserved by Bobcat Company - 05/11/2012 - 06:30:39 - Produced by Ken Cook Co. with mediaIoff

## TRACK (Cont'd)
## (Rubber)

| Ref No | Part Number | Description | Remarks | Serial Number | Qty |
|---|---|---|---|---|---|
| 1 | 7006332 | TRACK, RUBBER (450X84X76) 18" BOBCAT | | | 2 |
| 2 | 7004844 | IDLER ASSY | See Illustration FRONT IDLER/ E80-2120 | | 2 |
| 3 | 7004454 | SPROCKET | | | 2 |
| 4 | 7004933 | ROLLER LOWER | See Illustration TRACK ROLLER/ E80-2150 | | 10 |
| 5 | 7007697 | BOLT | | | 40 |
| 6 | 7007837 | WASHER | | | 40 |
| 7 | 7007644 | BOLT | | | 12 |

Page 137 - OSS# 2089524 - All rights reserved by Bobcat Company - 05/11/2012 - 06:30:39 - Produced by Ken Cook Co. with mediaioff

# TRACK
## (Steel)

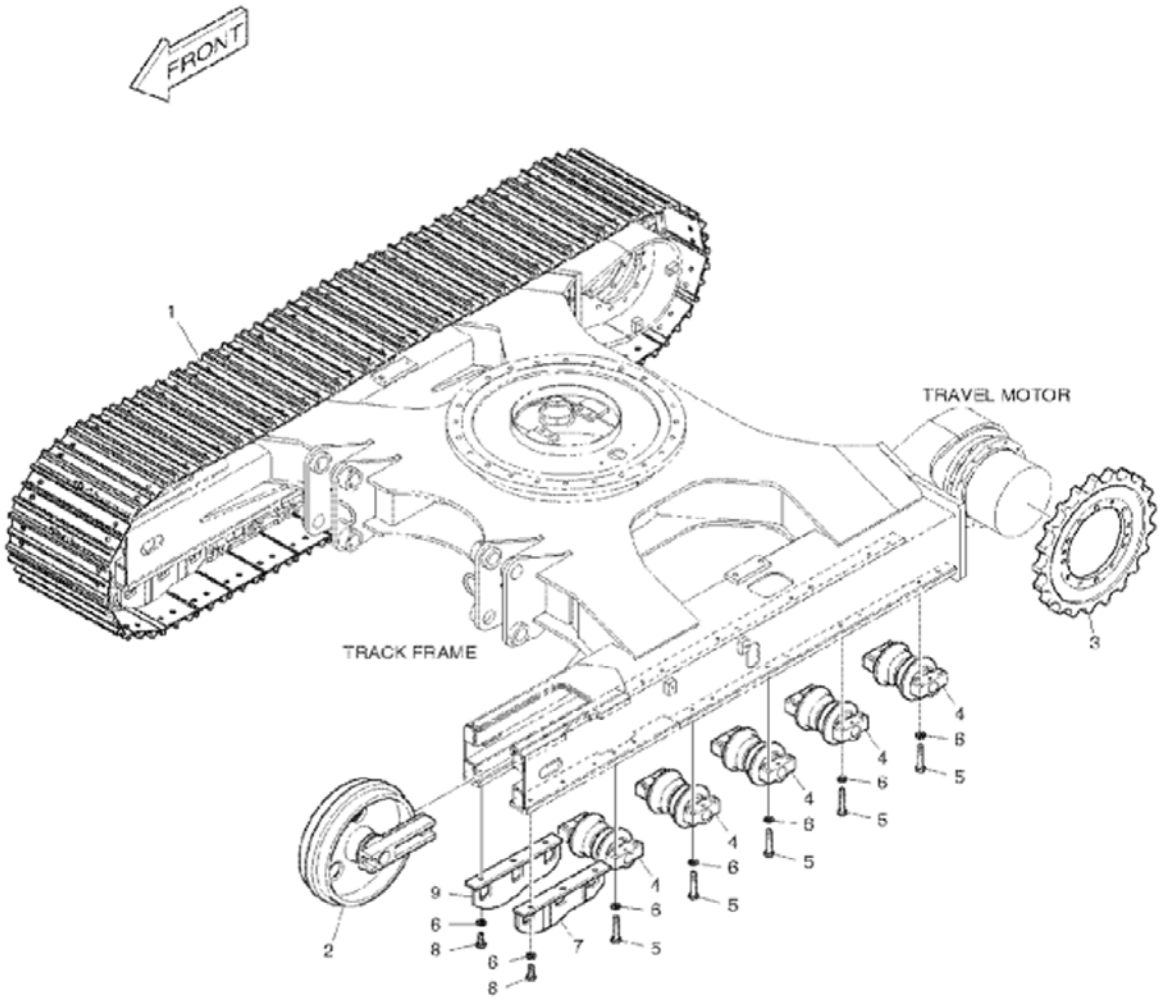


E80-6200



Page 138 - OSS# 2089524 - All rights reserved by Bobcat Company - 05/11/2012 - 06:30:39 - Produced by Ken Cook Co. with mediaIoff

## TRACK (Cont'd)
## (Steel)

| Ref No | Part Number | Description | Remarks | Serial Number | Qty |
|---|---|---|---|---|---|
| 1 | 7008209 | SHOE, TRACK ASSY 450MM | | | 2 |
| 2 | 7008151 | IDLER ASSY | | | 2 |
| 3 | 7008133 | SPROCKET | | | 2 |
| 4 | 7008152 | ROLLER, LOWER | | | 10 |
| 5 | 7007696 | BOLT | | | 40 |
| 6 | 7007837 | WASHER | | | 52 |
| 7 | 7008229 | GUARD, TRACK | | | 2 |
| 8 | 7007645 | BOLT | | | 12 |
| 9 | 7008230 | GUARD, TRACK | | | 2 |

Page 139 - OSS# 2089524 - All rights reserved by Bobcat Company - 05/11/2012 - 06:30:39 - Produced by Ken Cook Co. with mediaioff

# TRACK
## (Steel 400mm)

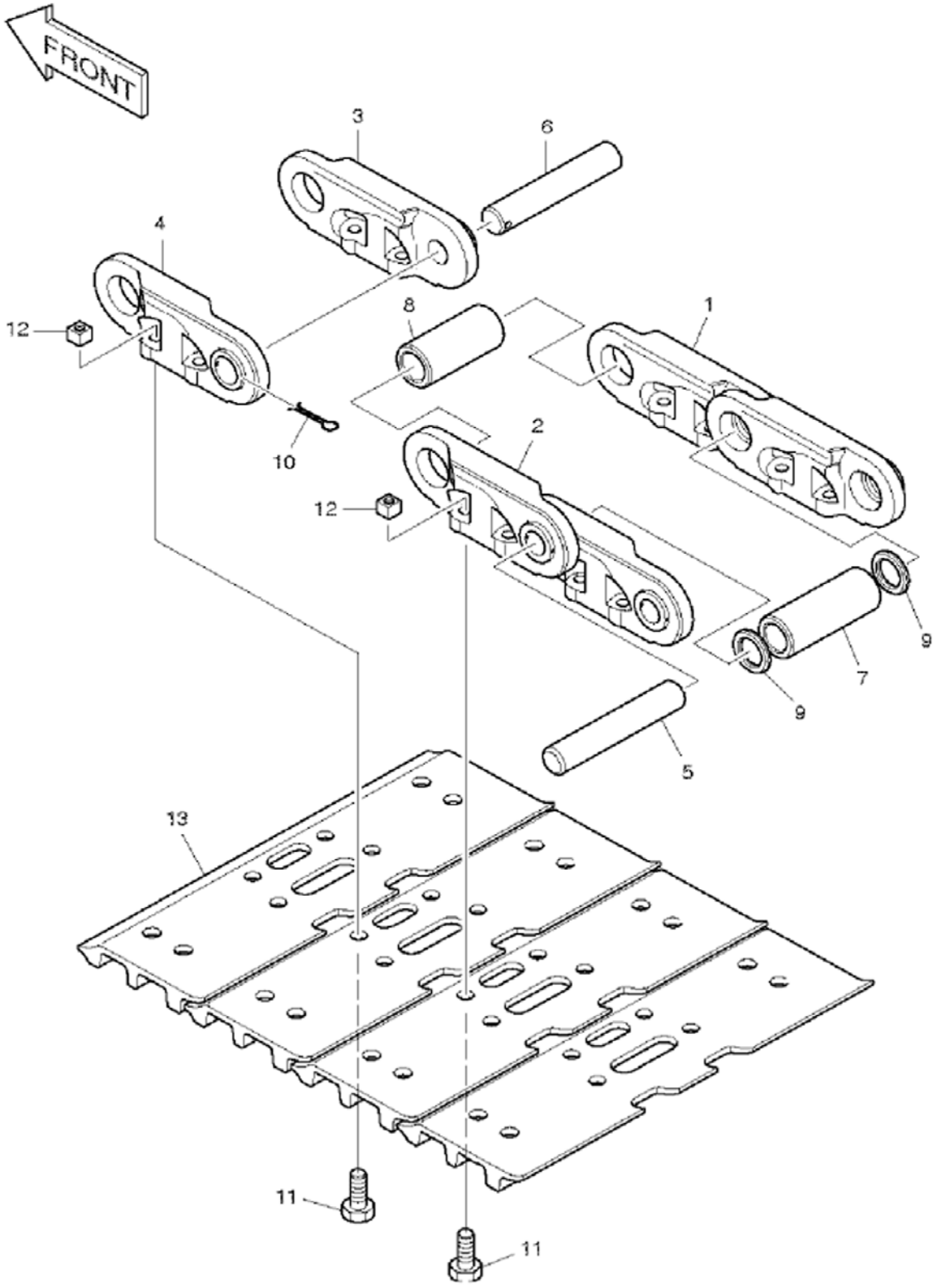


E80-6210



Page 140 - OSS# 2089524 - All rights reserved by Bobcat Company - 05/11/2012 - 06:30:39 - Produced by Ken Cook Co. with mediaioff

## TRACK (Cont'd)
## (Steel 400mm)

| Ref No | Part Number | Description | Remarks | Serial Number | Qty |
|---|---|---|---|---|---|
| 1 | 7008209 | SHOE, TRACK ASSY 450MM | | | 2 |
| 1 | 7008156 | LINK, TRACK RH | | | 38 |
| 2 | 7008153 | LINK, TRACK LH | | | 38 |
| 3 | 7008154 | LINK, MASTER RH | | | 1 |
| 4 | 7008155 | LINK, MASTER LH | | | 1 |
| 5 | 7008139 | PIN, TRACK | | | 38 |
| 6 | 7008140 | PIN, MASTER | | | 1 |
| 7 | 7008134 | BUSHING, TRACK | | | 38 |
| 8 | 7008135 | BUSHING, MASTER | | | 1 |
| 9 | 7008136 | SPACER | | | 2 |
| 10 | 7008141 | PIN, COTTER | | | 1 |
| 11 | 7008137 | BOLT | | | 156 |
| 12 | 7008138 | NUT | | | 156 |
| 13 | 7008157 | SHOE | | | 39 |

Page 141 - OSS# 2089524 - All rights reserved by Bobcat Company - 05/11/2012 - 06:30:39 - Produced by Ken Cook Co. with mediaioff

# ARM
## (1.7 m) (EMEA)

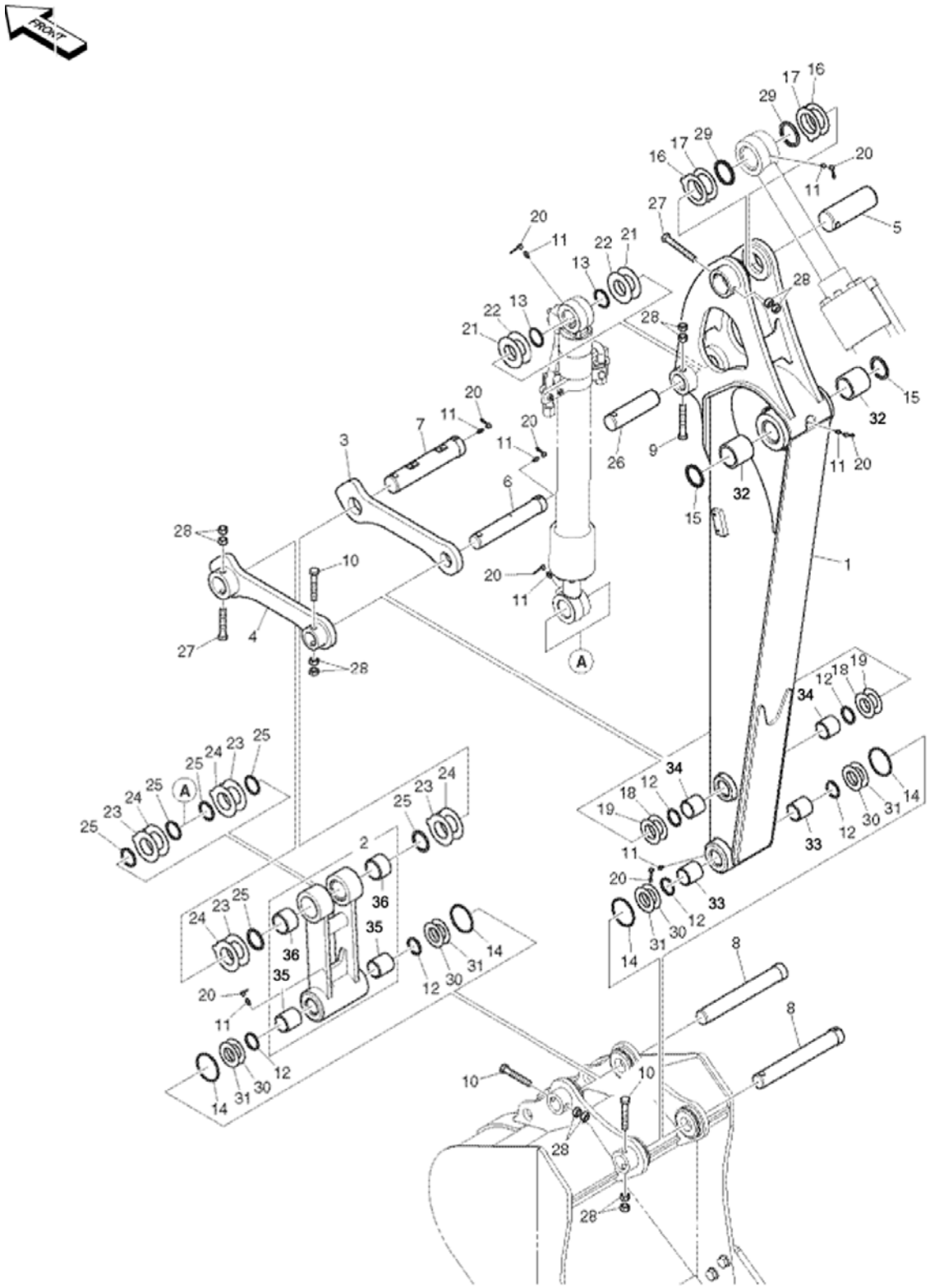




Page 142 - OSS# 2089524 - All rights reserved by Bobcat Company - 05/11/2012 - 06:30:39 - Produced by Ken Cook Co. with mediaioff

# ARM (Cont'd)
# (1.7 m) (EMEA)

| Ref No | Part Number | Description | Remarks | Serial Number | Qty |
|---|---|---|---|---|---|
| 1 | 7015638 | ARM,MACHINE;THUMB(1.7M) | W/Ref. 32-34 Was 7010542 [A] | AET311001 - 11183 | 1 |
| 1 | 7015638 | ARM,MACHINE;THUMB(1.7M) | W/Ref. 32-34 Was 7010542 [A] | AETB11001 - 11183 | 1 |
| 1 | 7015657 | ARM 1.7M | 1.7m - W/Ref. 32-34 | AET311184 & Above | 1 |
| 1 | 7015657 | ARM 1.7M | 1.7m - W/Ref. 32-34 | AETB11184 & Above | 1 |
| 1 | 7015638 | ARM,MACHINE;THUMB(1.7M) | Optional - W/Ref. 32-34 | | 1 |
| 2 | 7006011 | LINK PUSH | W/Ref. 35-36 | | 1 |
| 3 | 7003919 | LINK GUIDE RH | | | 1 |
| 4 | 7003920 | LINK GUIDE LH | | | 1 |
| 5 | 7003887 | PIN | | | 1 |
| 6 | 7003889 | PIN | | | 1 |
| 7 | 7003888 | PIN | | | 1 |
| 8 | 7015653 | PIN;ARM/LINK TO BUCKET | Was 7004571 [A] | | 2 |
| 9 | 7007709 | BOLT | | | 1 |
| 10 | 7007708 | BOLT | | | 3 |
| 11 | 7010247 | FITTING, GREASE | Was 7007893 [D] | | 8 |
| 12 | 7004637 | SEAL DUST | | | 6 |
| 13 | 7004638 | SEAL DUST | | | 2 |
| 14 | 7003939 | ORING | | | 4 |
| 15 | 7004641 | SEAL DUST | | | 2 |
| 16 | 7005615 | SHIM 1.0T | 1,0 mm | | 2 |
| 17 | 7005616 | SHIM 1.6T | 1,6 mm | | 2 |
| 18 | 7005604 | SHIM 1.0T | 1,0 mm | | 2 |
| 19 | 7005605 | SHIM 1.6T | 1,6 mm | | 2 |
| 20 | 7003923 | CAP GREASE NIPPLE | | | 8 |
| 21 | 7005606 | SHIM 1.0T | 1,0 mm | | 2 |
| 22 | 7005607 | SHIM 1.6T | 1,6 mm | | 2 |
| 23 | 7005620 | SHIM 1.0T | 1,0 mm | | 4 |
| 24 | 7005621 | SHIM 1.6T | 1,6 mm | | 4 |
| 25 | 7004639 | SEAL DUST | | | 6 |
| 26 | 7006141 | PIN | | | 1 |
| 27 | 7007710 | BOLT | | | 2 |
| 28 | 7007801 | NUT M16X1.0 | | | 12 |
| 29 | 7004640 | SEAL DUST | | | 2 |
| 30 | 7004482 | SHIM | | | 4 |
| 31 | 7004483 | SHIM | | | 4 |
| 32 | 7006001 | BUSHING | | | 2 |
| 33 | 7006002 | BUSHING | | | 2 |
| 34 | 7005748 | BUSHING | | | 2 |
| 35 | 7006002 | BUSHING | | | 2 |
| 36 | 7006003 | BUSHING | | | 2 |

Page 143 - OSS# 2089524 - All rights reserved by Bobcat Company - 05/11/2012 - 06:30:39 - Produced by Ken Cook Co. with mediaioff

# ARM
# (2.25 m)

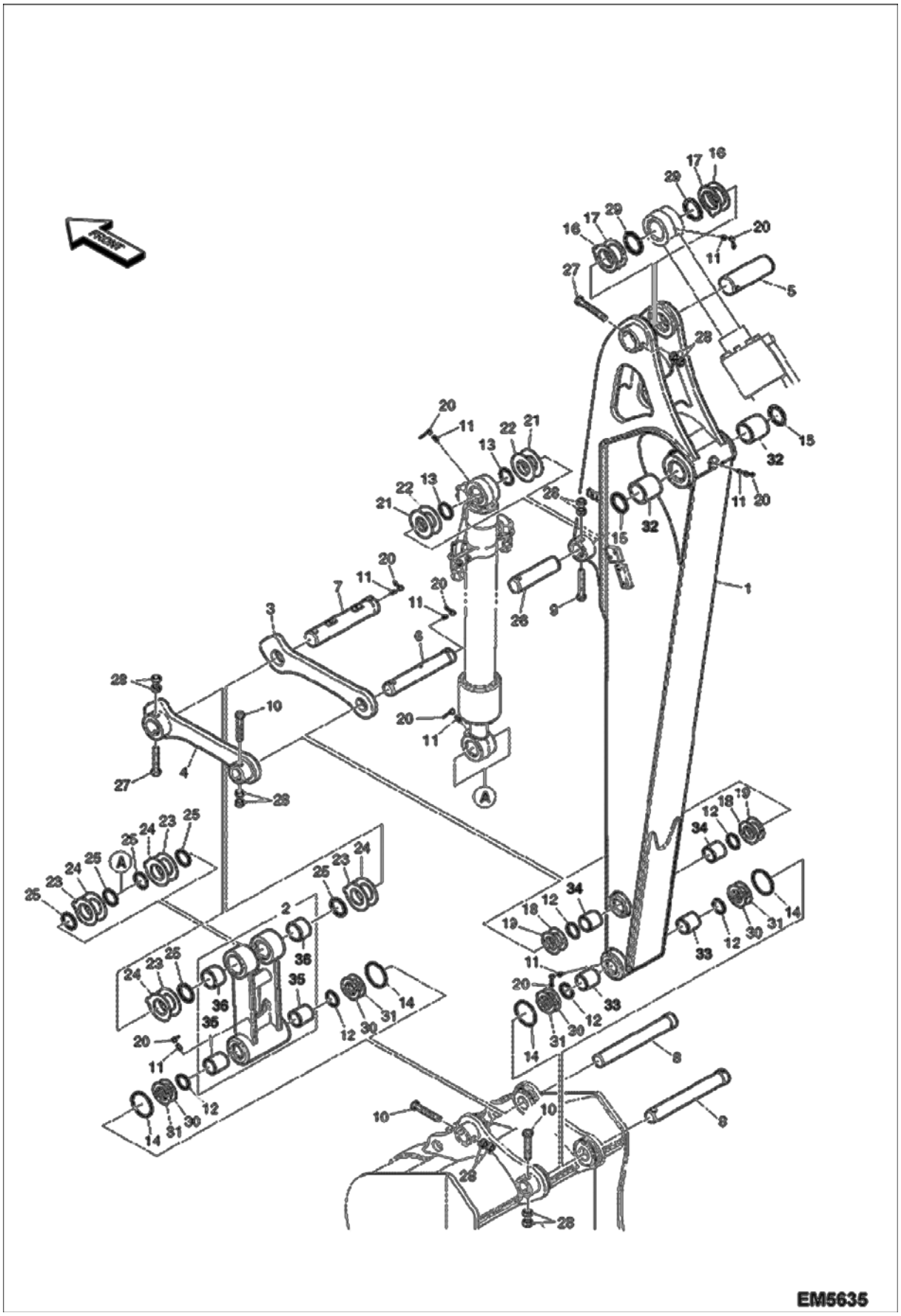




Page 144 - OSS# 2089524 - All rights reserved by Bobcat Company - 05/11/2012 - 06:30:39 - Produced by Ken Cook Co. with mediaIoff

## ARM (Cont'd)
## (2.25 m)

| Ref No | Part Number | Description | Remarks | Serial Number | Qty |
|---|---|---|---|---|---|
| 1 | 7015639 | ARM,MACHINE;THUMB(2.25M) | W/Ref. 32-34 Was 7010539 [A] | | 1 |
| 1 | 7015639 | ARM,MACHINE;THUMB(2.25M) | Optional - W/Ref. 32-34 | | 1 |
| 2 | 7006011 | LINK PUSH | W/Ref. 35-36 | | 1 |
| 3 | 7003919 | LINK GUIDE RH | | | 1 |
| 4 | 7003920 | LINK GUIDE LH | | | 1 |
| 5 | 7003887 | PIN | | | 1 |
| 6 | 7003889 | PIN | | | 1 |
| 7 | 7003888 | PIN | | | 1 |
| 8 | 7015653 | PIN;ARM/LINK TO BUCKET | Was 7004571 [A] | | 2 |
| 9 | 7007709 | BOLT | | | 1 |
| 10 | 7007708 | BOLT | | | 3 |
| 11 | 7010247 | FITTING, GREASE | Was 7007893 [A] | | 8 |
| 12 | 7004637 | SEAL DUST | | | 6 |
| 13 | 7004638 | SEAL DUST | | | 2 |
| 14 | 7003939 | ORING | | | 4 |
| 15 | 7004641 | SEAL DUST | | | 2 |
| 16 | 7005615 | SHIM 1.0T | 1,0 mm | | 2 |
| 17 | 7005616 | SHIM 1.6T | 1,6 mm | | 2 |
| 18 | 7005604 | SHIM 1.0T | 1,0 mm | | 2 |
| 19 | 7005605 | SHIM 1.6T | 1,6 mm | | 2 |
| 20 | 7003923 | CAP GREASE NIPPLE | | | 8 |
| 21 | 7005606 | SHIM 1.0T | 1,0 mm | | 2 |
| 22 | 7005607 | SHIM 1.6T | 1,6 mm | | 2 |
| 23 | 7005620 | SHIM 1.0T | 1,0 mm | | 4 |
| 24 | 7005621 | SHIM 1.6T | 1,6 mm | | 4 |
| 25 | 7004639 | SEAL DUST | | | 6 |
| 26 | 7006141 | PIN | | | 1 |
| 27 | 7007710 | BOLT | | | 2 |
| 28 | 7007801 | NUT M16X1.0 | | | 12 |
| 29 | 7004640 | SEAL DUST | | | 2 |
| 30 | 7004482 | SHIM | | | 4 |
| 31 | 7004483 | SHIM | | | 4 |
| 32 | 7006001 | BUSHING | | | 2 |
| 33 | 7006002 | BUSHING | | | 2 |
| 34 | 7005748 | BUSHING | | | 2 |
| 35 | 7006002 | BUSHING | | | 2 |
| 36 | 7006003 | BUSHING | | | 2 |

Page 145 - OSS# 2089524 - All rights reserved by Bobcat Company - 05/11/2012 - 06:30:39 - Produced by Ken Cook Co. with mediaioff

# BOOM

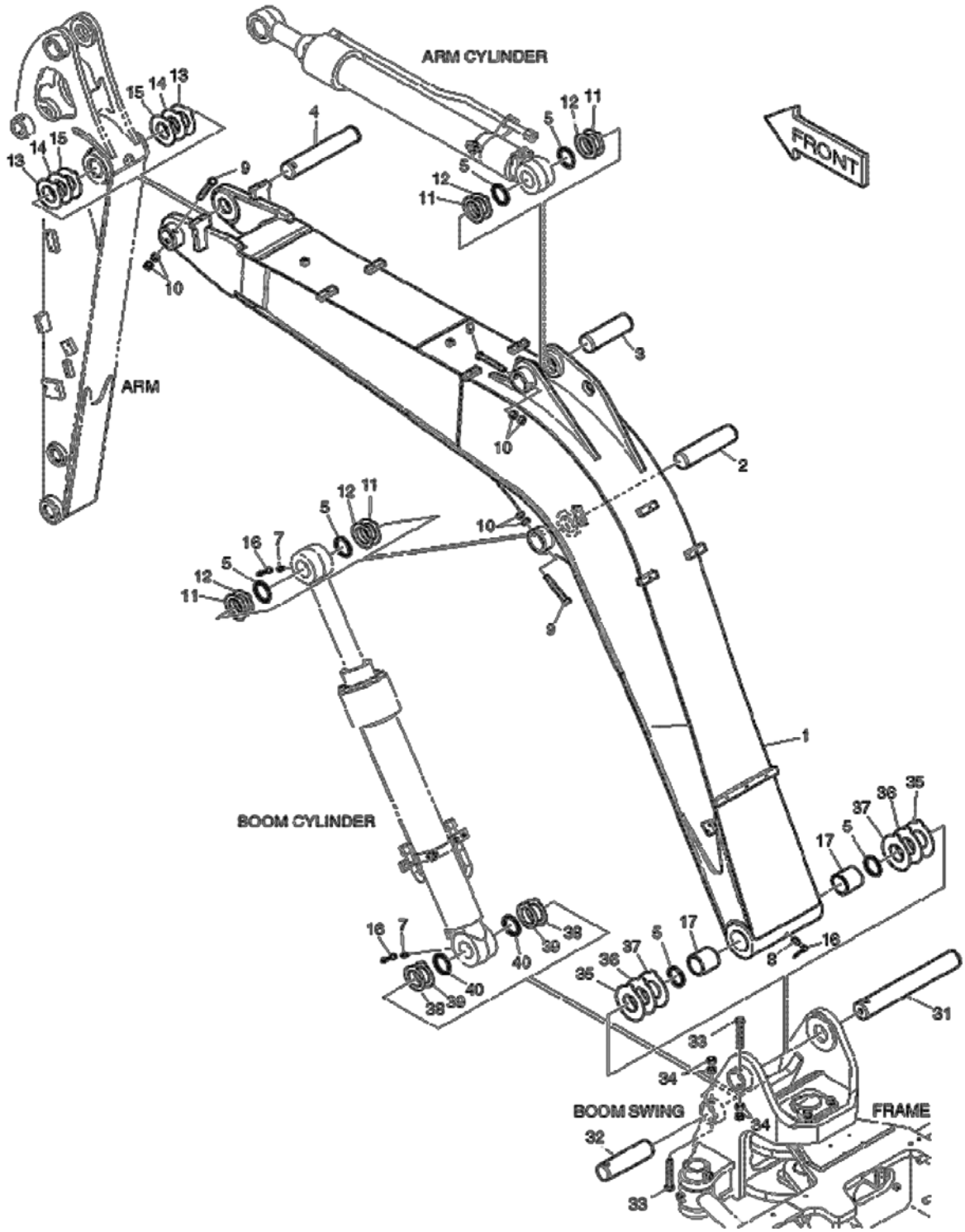


E80-3100



Page 146 - OSS# 2089524 - All rights reserved by Bobcat Company - 05/11/2012 - 06:30:39 - Produced by Ken Cook Co. with mediaIoff

| Ref No | Part Number | Description | Remarks | Serial Number | Qty |
|---|---|---|---|---|---|
| 1 | 7005959 | BOOM MACH 3.38M | 3.38M - W/Ref. 17 | | 1 |
| 2 | 7003884 | PIN | | | 1 |
| 3 | 7003885 | PIN | | | 1 |
| 4 | 7003886 | PIN | | | 1 |
| 5 | 7004640 | SEAL DUST | | | 6 |
| 7 | 7010247 | FITTING, GREASE | Was 7007893 [A] | | 2 |
| 8 | 7007897 | FITTING GREASE | | | 1 |
| 9 | 7007710 | BOLT | | | 3 |
| 10 | 7007801 | NUT M16X1.0 | | | 6 |
| 11 | 7005615 | SHIM 1.0T | 1,0 mm | | 4 |
| 12 | 7005616 | SHIM 1.6T | 1,6 mm | | 4 |
| 13 | 7005617 | SHIM 1.0T | 1,0 mm | | 2 |
| 14 | 7005618 | SHIM 1.3T | 1,3 mm | | 2 |
| 15 | 7005619 | SHIM 1.6T | 1,6 mm | | 2 |
| 16 | 7003923 | CAP GREASE NIPPLE | | | 3 |
| 17 | 7006000 | BUSHING | | | 2 |
| 31 | 7003882 | PIN | | | 1 |
| 32 | 7003883 | PIN | | | 1 |
| 33 | 7007710 | BOLT | | | 2 |
| 34 | 7007801 | NUT M16X1.0 | | | 4 |
| 35 | 7005612 | SHIM 1.0T | 1,0 mm | | 2 |
| 36 | 7005613 | SHIM 1.3T | 1,3 mm | | 2 |
| 37 | 7005614 | SHIM 1.6T | 1,6 mm | | 2 |
| 38 | 7005615 | SHIM 1.0T | 1,0 mm | | 2 |
| 39 | 7005616 | SHIM 1.6T | 1,6 mm | | 2 |
| 40 | 7004640 | SEAL DUST | | | 2 |

Page 147 - OSS# 2089524 - All rights reserved by Bobcat Company - 05/11/2012 - 06:30:39 - Produced by Ken Cook Co. with mediaioff

# SWING FRAME

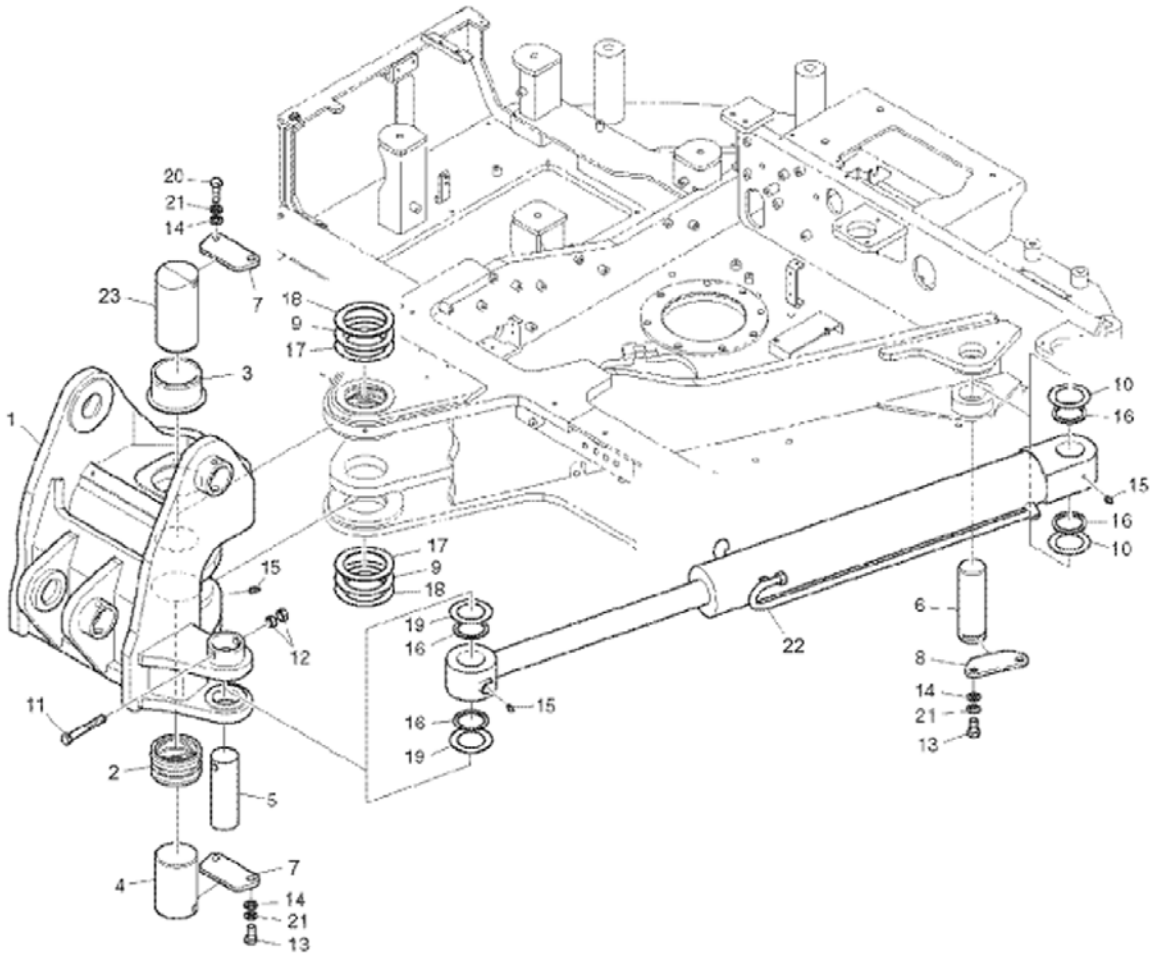


EM7055



Page 148 - OSS# 2089524 - All rights reserved by Bobcat Company - 05/11/2012 - 06:30:39 - Produced by Ken Cook Co. with mediaIoff

| Ref No | Part Number | Description | Remarks | Serial Number | Qty |
|---|---|---|---|---|---|
| 1 | | BRACKET, SWING | NLA - W/Ref. 2-3 Was 7006152 [A] | AET311001 - 11051 | 1 |
| 1 | | BRACKET, SWING | NLA - W/Ref. 2-3 Was 7006152 [A] | AETB11001 - 11051 | 1 |
| 1 | | BRACKET, SWING | NLA - W/Ref. 2-3 Was 7017071 [A] | AET311001 - 11191 | 1 |
| 1 | | BRACKET, SWING | NLA - W/Ref. 2-3 Was 7017071 [A] | AETB11001 - 11191 | 1 |
| 1 | 7017408 | BRACKET, SWING | | AET311001 & Above | 1 |
| 1 | 7017408 | BRACKET, SWING | | AETB11001 & Above | 1 |
| 2 | 7006257 | BUSHING, LOWER | | | 1 |
| 3 | 7006306 | BUSHING, UPPER | | | 1 |
| 4 | 7006252 | PIN | | | 1 |
| 5 | 7006253 | PIN | | | 1 |
| 6 | 7006556 | PIN | | | 1 |
| 7 | 7006254 | PLATE | | | 2 |
| 8 | 7005043 | PLATE | | | 1 |
| 9 | 7004494 | SHIM | | | 2 |
| 10 | 7004498 | SHIM | | | 2 |
| 11 | 7007710 | BOLT | | | 1 |
| 12 | 7007801 | NUT M16X1.0 | | | 2 |
| 13 | 7007647 | BOLT M16X2.0X35 | | | 4 |
| 14 | 7007823 | WASHER PLAIN | | | 6 |
| 15 | 7007895 | NIPPLE | | | 3 |
| 16 | 7004640 | SEAL DUST | | | 4 |
| 17 | 7006524 | SHIM | | | 2 |
| 18 | 7005601 | SHIM | | | 2 |
| 19 | 7004492 | SHIM | | | 2 |
| 20 | 7007650 | BOLT | | | 2 |
| 21 | 7007839 | WASHER SPRING | | | 6 |
| 22 | 7006155 | CYLINDER BOOM SWING | See Illustration BOOM SLEW CYLINDER/ E80-4350 | | 1 |
| 23 | 7006251 | PIN | | | 1 |

Page 149 - OSS# 2089524 - All rights reserved by Bobcat Company - 05/11/2012 - 06:30:39 - Produced by Ken Cook Co. with mediaioff

# LH CONTROL

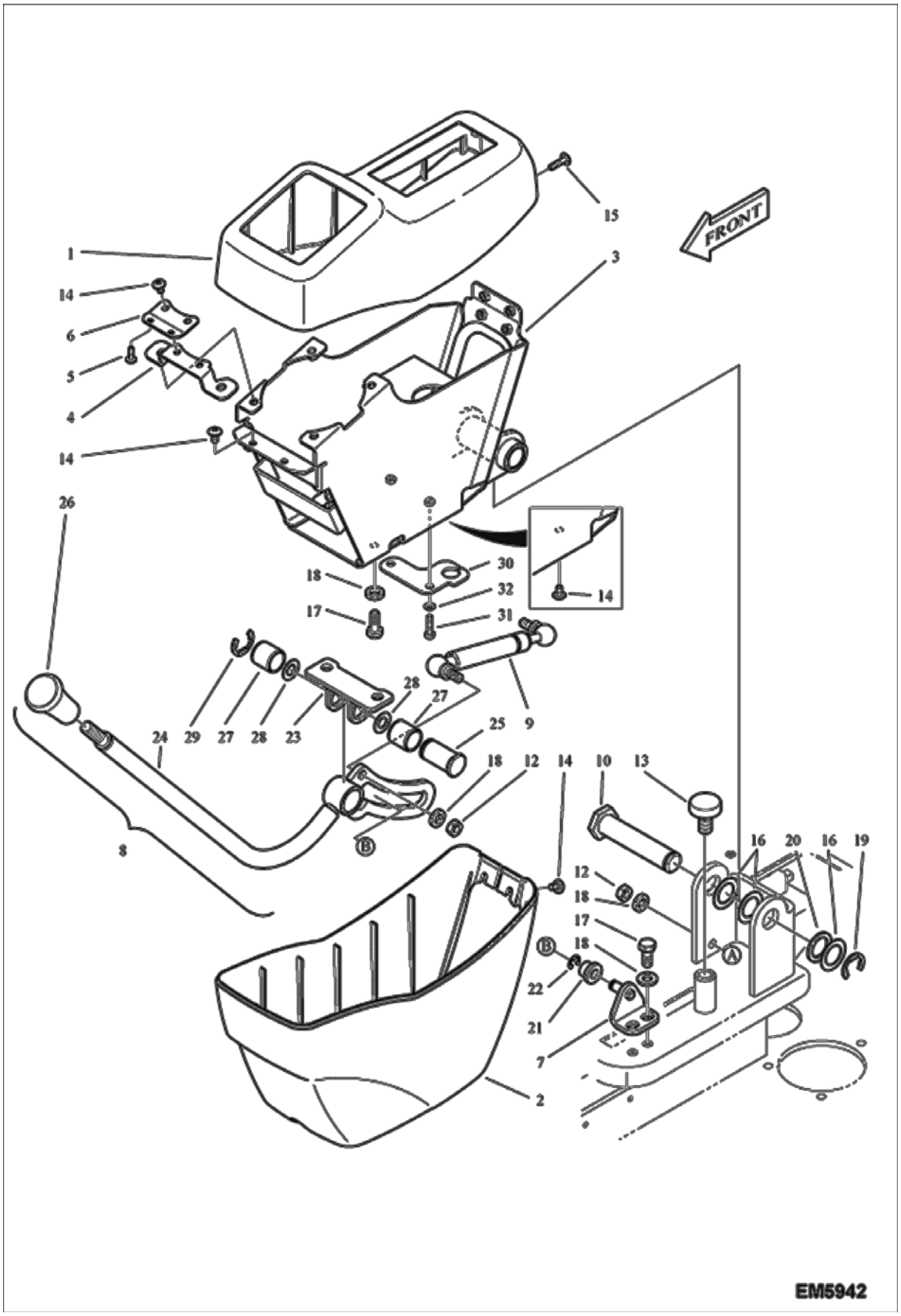




Page 150 - OSS# 2089524 - All rights reserved by Bobcat Company - 05/11/2012 - 06:30:39 - Produced by Ken Cook Co. with mediaIoff

| Ref No | Part Number | Description | Remarks | Serial Number | Qty |
|---|---|---|---|---|---|
| 1 | 7006260 | HOUSING UPPER LH | | | 1 |
| 2 | 7006261 | HOUSING LOWER | | | 1 |
| 3 | 7017306 | BRACKET, STAND | Was 7006264 [A] | | 1 |
| 4 | 7005894 | PLATE | | | 1 |
| 5 | 7007789 | BOLT | | | 2 |
| 6 | 7005893 | PLATE | | | 1 |
| 7 | 7006717 | PLATE | | | 1 |
| 8 | 7006328 | LEVER ASSYSAFETY | W/Ref. 23-29 | | 1 |
| 9 | 7005143 | CYLINDER GAS | | | 1 |
| 10 | 7006611 | PIN | | | 1 |
| 12 | 7004562 | NUT | | | 2 |
| 13 | 7004625 | STOP | | | 1 |
| 14 | 7004548 | BOLT | | AET311001 - 11172 | 8 |
| 14 | 7004548 | BOLT | | AETB11001 - 11172 | 8 |
| 14 | 7004548 | BOLT | | AET311173 & Above | 6 |
| 14 | 7004548 | BOLT | | AETB11173 & Above | 6 |
| 15 | 7004549 | BOLT GREEN | | | 2 |
| 16 | 7005659 | SHIM | | | 3 |
| 17 | 7004546 | BOLT | | | 4 |
| 18 | 7004515 | WASHER | | | 6 |
| 19 | 7005662 | RING | Was 7007891 [D] | | 1 |
| 20 | 7004523 | WASHER | | | 1 |
| 21 | 7005661 | ROLLER | | | 1 |
| 22 | 7005663 | RING | | | 1 |
| 23 | 7006325 | PLATE | | | 1 |
| 24 | 7006326 | LEVER | | | 1 |
| 25 | 7006324 | PIN | | | 1 |
| 26 | 7005674 | HANDLE GRIP | | | 1 |
| 27 | 7004460 | BUSHING | | | 2 |
| 28 | 7004479 | SHIM | | | 2 |
| 29 | 7005662 | RING | Was 7007891 [D] | | 1 |
| 30 | 7013287 | PLATE, STOPPER | | AET311173 & Above | 1 |
| 30 | 7013287 | PLATE, STOPPER | | AETB11173 & Above | 1 |
| 31 | 7007601 | BOLT | | AET311173 & Above | 2 |
| 31 | 7007601 | BOLT | | AETB11173 & Above | 2 |
| 32 | 7007810 | WASHER | | AET311173 & Above | 2 |
| 32 | 7007810 | WASHER | | AETB11173 & Above | 2 |

Page 151 - OSS# 2089524 - All rights reserved by Bobcat Company - 05/11/2012 - 06:30:39 - Produced by Ken Cook Co. with mediaioff

# RH CONTROL

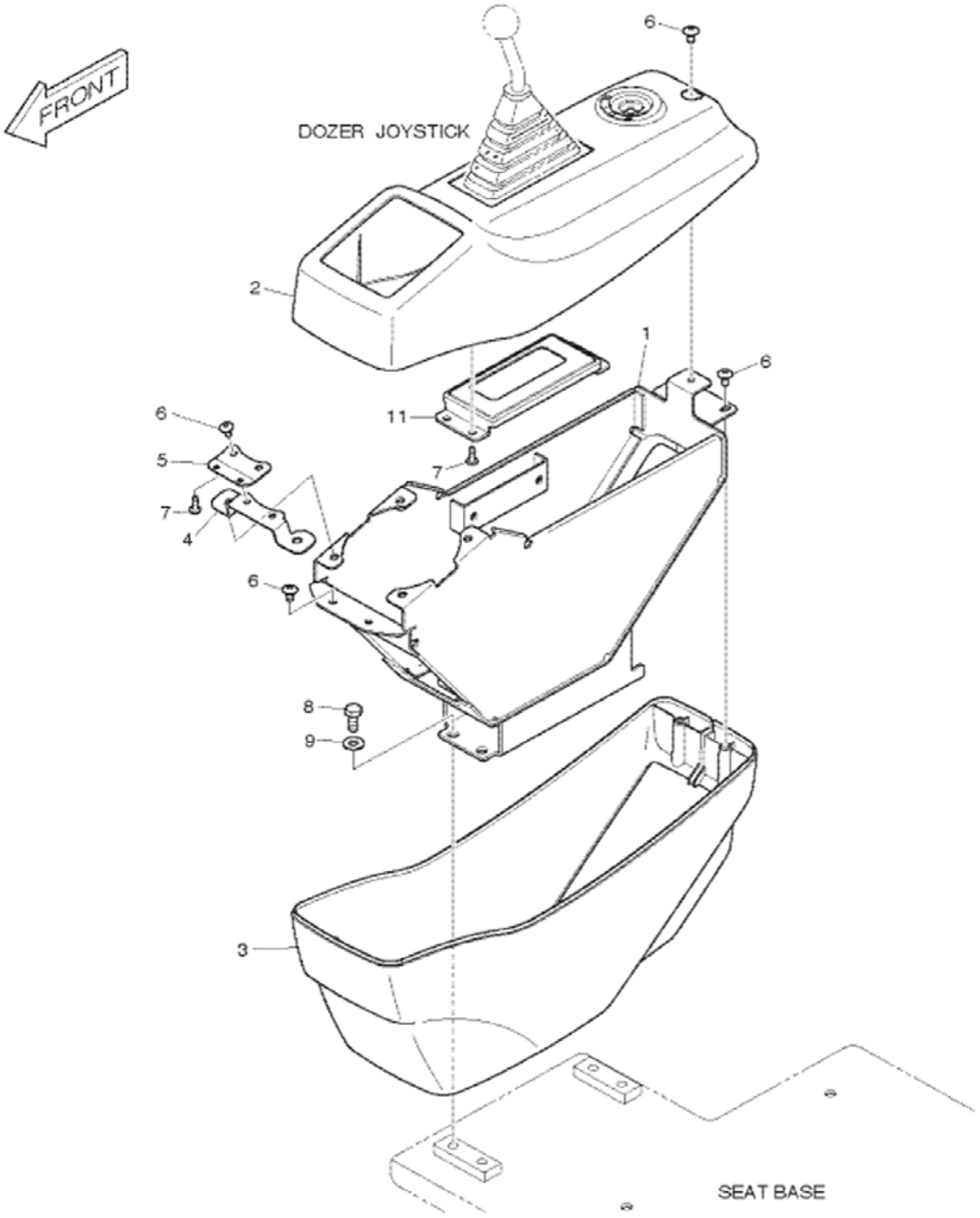


E80-1470



Page 152 - OSS# 2089524 - All rights reserved by Bobcat Company - 05/11/2012 - 06:30:39 - Produced by Ken Cook Co. with mediaIoff

| Ref No | Part Number | Description | Remarks | Serial Number | Qty |
|---|---|---|---|---|---|
| 1 | 7017305 | BRACKET, STAND | Was 7005771 [A] | | 1 |
| 2 | 7005895 | HOUSING UPPER RH | | | 1 |
| 3 | 7005773 | HOUSING LOWER | | | 1 |
| 4 | 7005894 | PLATE | | | 1 |
| 5 | 7005893 | PLATE | | | 1 |
| 6 | 7004548 | BOLT | | | 7 |
| 7 | 7007789 | BOLT | | | 6 |
| 8 | 7004546 | BOLT | | | 4 |
| 9 | 7004515 | WASHER | | | 4 |
| 11 | 7005947 | COVER STAND RH | | | 1 |

Page 153 - OSS# 2089524 - All rights reserved by Bobcat Company - 05/11/2012 - 06:30:39 - Produced by Ken Cook Co. with mediaioff

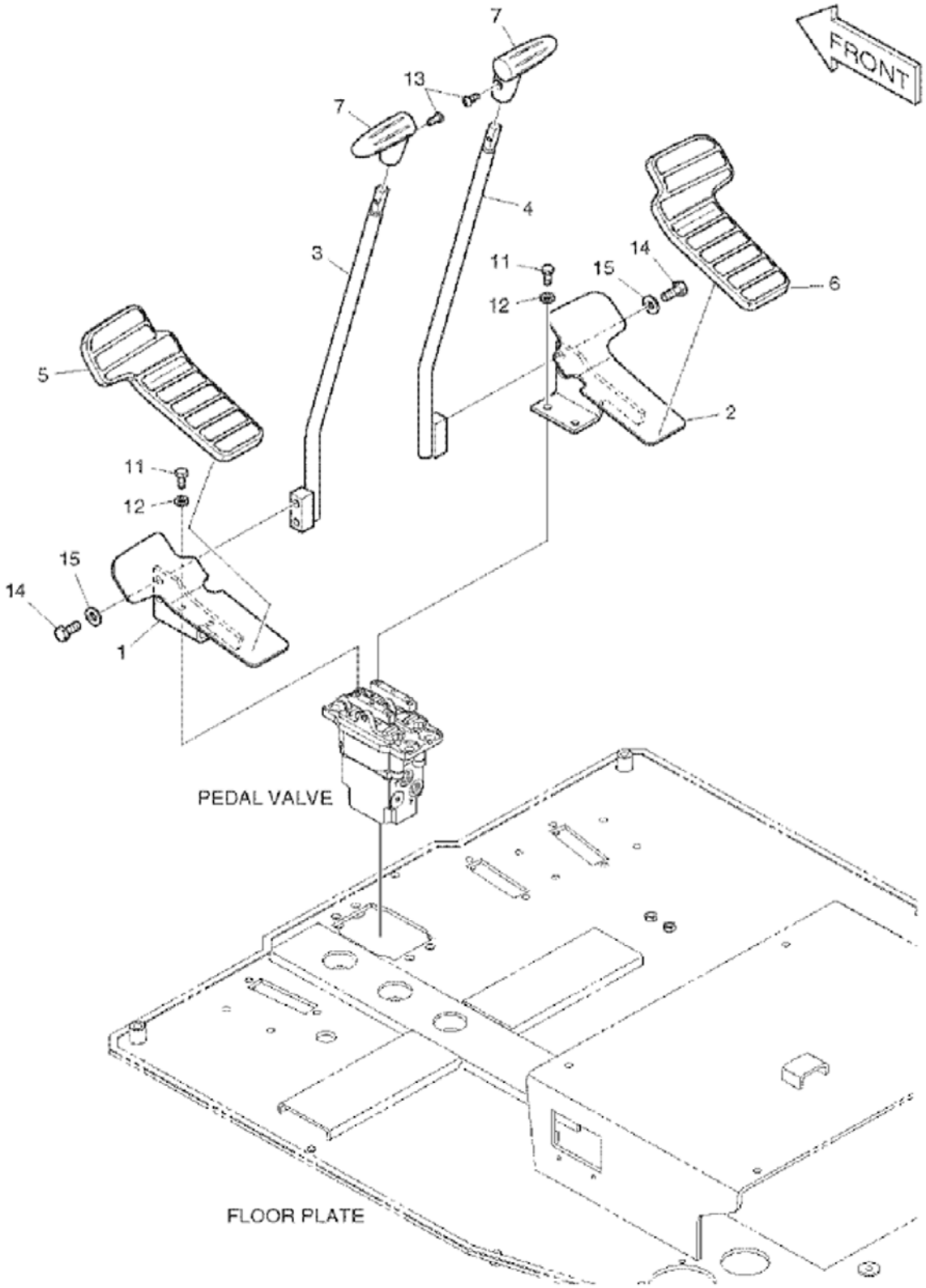


E80-1440



Page 154 - OSS# 2089524 - All rights reserved by Bobcat Company - 05/11/2012 - 06:30:39 - Produced by Ken Cook Co. with mediaioff

| Ref No | Part Number | Description | Remarks | Serial Number | Qty |
|---|---|---|---|---|---|
| 1 | 7006585 | BRACKET PEDAL LH | | | 1 |
| 2 | 7006586 | BRACKET PEDAL RH | | | 1 |
| 3 | 7006695 | LEVER LH | | | 1 |
| 4 | 7006696 | LEVER RH | | | 1 |
| 5 | 7003937 | PEDAL RUBBER LH | | | 1 |
| 6 | 7003938 | PEDAL RUBBER RH | | | 1 |
| 7 | 7005672 | HANDLE GRIP | | | 2 |
| 11 | 7004546 | BOLT | | | 4 |
| 12 | 7004515 | WASHER | | | 4 |
| 13 | 7004552 | BOLT | | | 2 |
| 14 | 7004534 | BOLT | | | 4 |
| 15 | 7004509 | WASHER | | | 4 |

Page 155 - OSS# 2089524 - All rights reserved by Bobcat Company - 05/11/2012 - 06:30:39 - Produced by Ken Cook Co. with mediaioff

# BOOM SWING CONTROLS

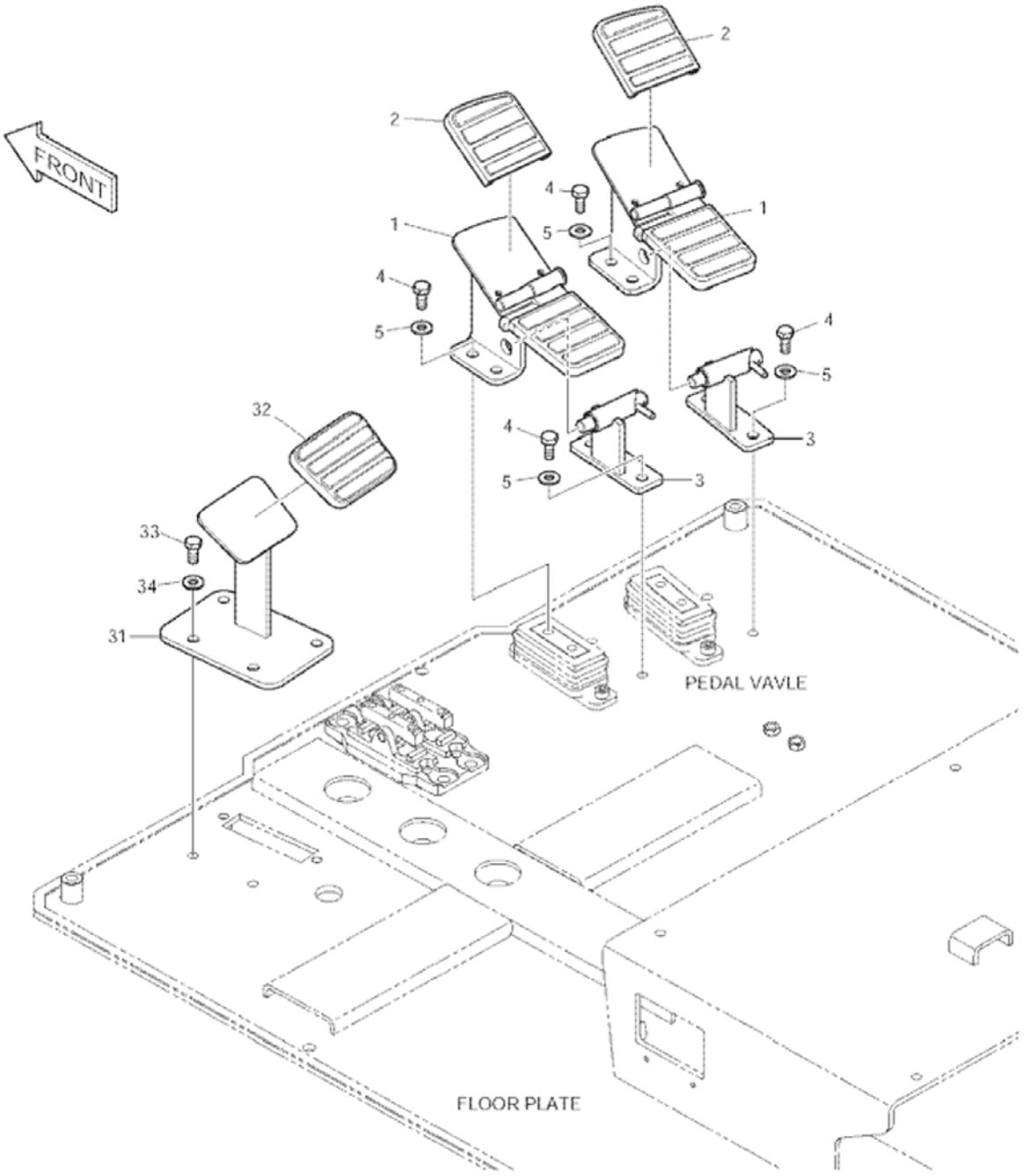


E80-1450



Page 156 - OSS# 2089524 - All rights reserved by Bobcat Company - 05/11/2012 - 06:30:39 - Produced by Ken Cook Co. with mediaioff

| Ref No | Part Number | Description | Remarks | Serial Number | Qty |
|---|---|---|---|---|---|
| 1 | 7006706 | PEDAL ASSY | | | 2 |
| 2 | 7006702 | PEDAL RUBBER | | | 2 |
| 3 | 7006232 | LATCH | | | 2 |
| 4 | 7004546 | BOLT | | | 8 |
| 5 | 7004515 | WASHER | | | 8 |
| 31 | 7006442 | BRACKET | | | 1 |
| 32 | 7005644 | PAD RUBBER PEDAL | | | 1 |
| 33 | 7004546 | BOLT | | | 4 |
| 34 | 7004515 | WASHER | | | 4 |

Page 157 - OSS# 2089524 - All rights reserved by Bobcat Company - 05/11/2012 - 06:30:39 - Produced by Ken Cook Co. with mediaioff

# HYDRAULIC CIRCUITRY
## (Upper/Slew) (Slew Motor & Valve)

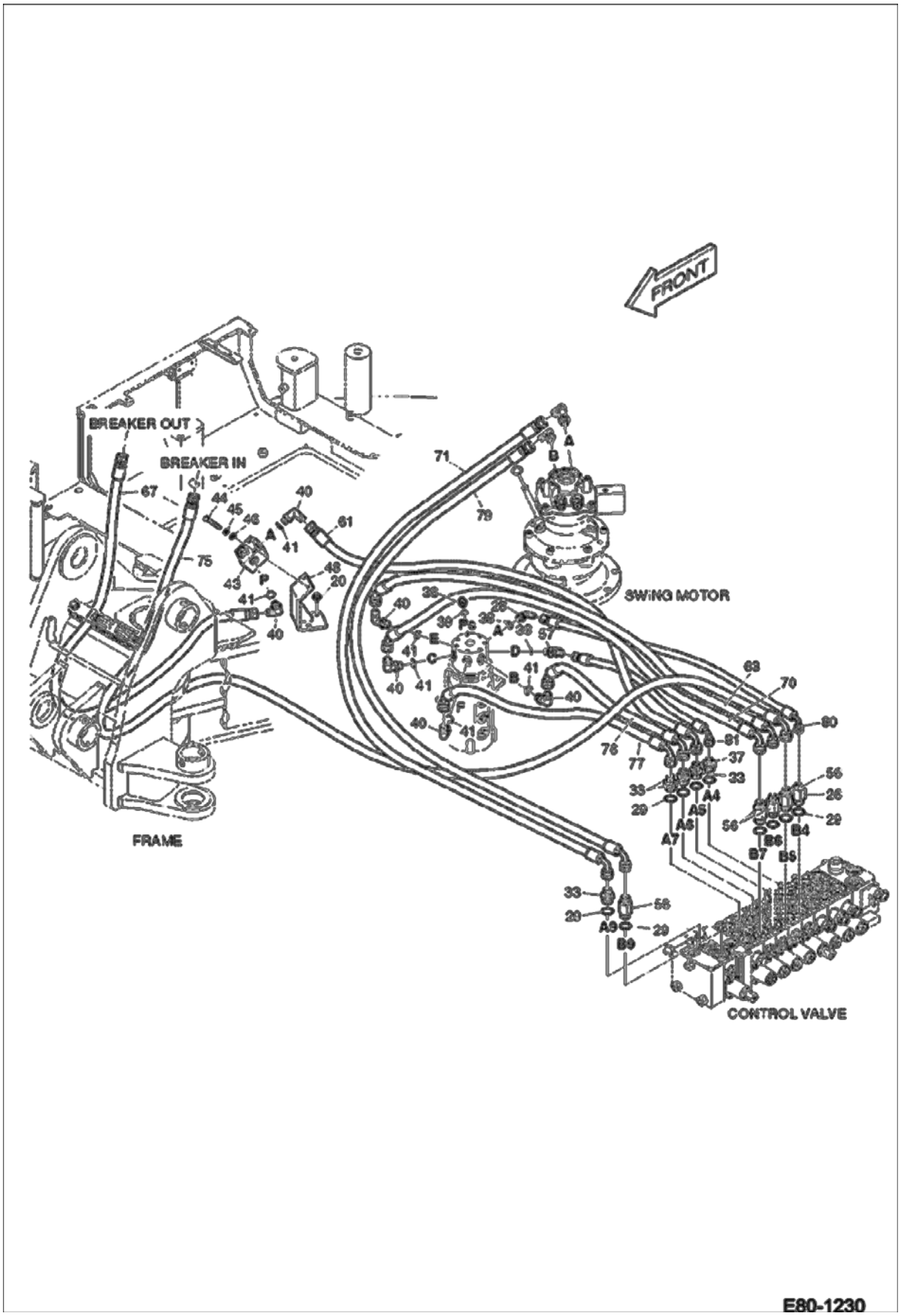




Page 158 - OSS# 2089524 - All rights reserved by Bobcat Company - 05/11/2012 - 06:30:39 - Produced by Ken Cook Co. with mediaioff

| Ref No | Part Number | Description | Remarks | Serial Number | Qty |
|---|---|---|---|---|---|
| 20 | 7005129 | BOLT SET | | | 2 |
| 26 | 7005543 | ADAPTER | | | 1 |
| 28 | 7004716 | ELBOW | | | 1 |
| 29 | 7004628 | ORING | | | 10 |
| 33 | 7005542 | ADAPTER | | | 4 |
| 36 | 7004683 | ADAPTER | | | 1 |
| 37 | 7004677 | ADAPTER | | | 1 |
| 38 | 7007909 | ORING | | | 2 |
| 39 | 7007906 | ORING | | | 1 |
| 40 | 7004710 | ELBOW | | | 6 |
| 41 | 7007911 | ORING | | | 6 |
| 43 | 7004976 | VALVE SWITCH | | | 1 |
| 44 | 7007660 | BOLT | | | 2 |
| 45 | 7007829 | WASHER | | | 2 |
| 46 | 7007815 | WASHER PLAIN | | | 2 |
| 48 | 7006566 | BRACKET | | | 1 |
| 56 | 7005546 | ADAPTER | | | 4 |
| 57 | 7004756 | ELBOW | | | 1 |
| 61 | 7005436 | HOSE PF1/2-1080L | | | 1 |
| 63 | 7005226 | HOSE | | | 1 |
| 67 | 7011041 | HOSE, HYD | Was 7005500 [C] | | 1 |
| 70 | 7005229 | HOSE PF1/2-990L | | | 1 |
| 71 | 7005430 | HOSE | | | 1 |
| 75 | 7011044 | HOSE, HYD | Was 7005438 [C] | | 1 |
| 76 | 7005230 | HOSE PF1/2-800L | | | 1 |
| 77 | 7005231 | HOSE PF1/2-830L | | | 1 |
| 79 | 7005430 | HOSE | | | 1 |
| 80 | 7005441 | HOSE PF3/8-950L | | | 1 |
| 81 | 7005442 | HOSE PF3/8-830L | | | 1 |

Page 159 - OSS# 2089524 - All rights reserved by Bobcat Company - 05/11/2012 - 06:30:39 - Produced by Ken Cook Co. with mediaioff

# HYDRAULIC CIRCUITRY
## (Upper) (Swing Cylinder & Valve)

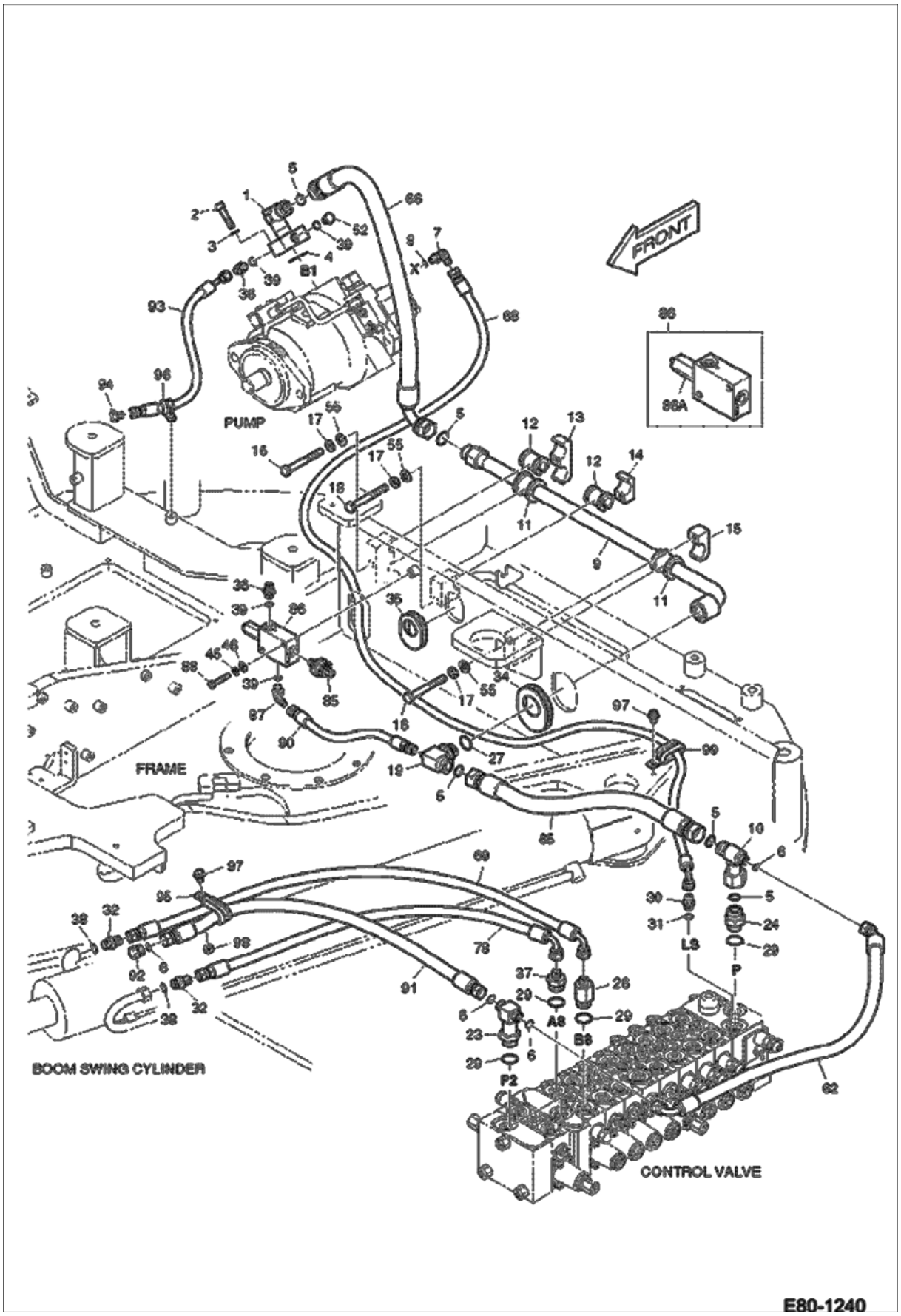




Page 160 - OSS# 2089524 - All rights reserved by Bobcat Company - 05/11/2012 - 06:30:39 - Produced by Ken Cook Co. with mediaIoff

## HYDRAULIC CIRCUITRY (Cont'd)
## (Upper) (Swing Cylinder & Valve)

| Ref No | Part Number | Description | Remarks | Serial Number | Qty |
|---|---|---|---|---|---|
| 1 | 7006544 | FLANGE | | | 1 |
| 2 | 7007752 | BOLT | | | 4 |
| 3 | 7008302 | WASHER, SPRING M10 | | | 4 |
| 4 | 7004630 | ORING | | | 1 |
| 5 | 7007960 | ORING | | | 5 |
| 6 | 7007959 | ORING | | | 4 |
| 7 | 7004715 | ELBOW | | | 1 |
| 8 | 7004632 | ORING | | | 1 |
| 9 | 7006554 | TUBELINE | | | 1 |
| 10 | 7005569 | TEE | | | 1 |
| 11 | 7005622 | PAD | | | 2 |
| 12 | 7006563 | PAD | | | 2 |
| 13 | 7006562 | CLAMP | | | 1 |
| 14 | 7006565 | CLAMP | | | 1 |
| 15 | 7006564 | CLAMP | | | 1 |
| 16 | 7007691 | BOLT | | | 2 |
| 17 | 7007836 | WASHER SPRING M12 | | | 3 |
| 18 | 7007690 | BOLT | | | 1 |
| 19 | 7006746 | ELBOW | | | 1 |
| 23 | 7005563 | TEE | | | 1 |
| 24 | 7004771 | ADAPTER | | | 1 |
| 26 | 7005543 | ADAPTER | | | 1 |
| 27 | 7007917 | ORING | | | 1 |
| 29 | 7004628 | ORING | | | 4 |
| 30 | 7004693 | ADAPTER | | | 1 |
| 31 | 7007961 | ORING | | | 1 |
| 32 | 7004700 | ADAPTER | | | 2 |
| 34 | 7006583 | GROMMET | | | 1 |
| 35 | 7006582 | GROMMET | | | 1 |
| 36 | 7004683 | ADAPTER | | | 2 |
| 37 | 7004677 | ADAPTER | | | 1 |
| 38 | 7007909 | ORING | | | 2 |
| 39 | 7007906 | ORING | | | 4 |
| 45 | 7007829 | WASHER | | | 2 |
| 46 | 7007815 | WASHER PLAIN | | | 2 |
| 52 | 7005574 | PLUG | | | 1 |
| 55 | 7007820 | WASHER SPRING | | | 3 |
| 62 | 7005148 | HOSE UNF13/16-530L | | | 1 |
| 65 | 7005145 | HOSE UNF1 3/16-510L | | | 1 |
| 66 | 7005147 | HOSE | | | 1 |
| 68 | 7005437 | HOSE PF1/4-1740L | | | 1 |
| 69 | 7005432 | HOSE | | | 1 |
| 78 | 7008172 | HOSE | | | 1 |
| 85 | 7006223 | SWITCH PRESSURE | | | 1 |
| 86 | 7006719 | VALVE REDUCING | | | 1 |
| 86 | 7007595 | VALVE RELIEF | | | 1 |
| 87 | 7004713 | ELBOW | | | 1 |
| 88 | 7007657 | BOLT | | | 2 |
| 90 | 7008178 | HOSE | | | 1 |



Page 161 - OSS# 2089524 - All rights reserved by Bobcat Company - 05/11/2012 - 06:30:39 - Produced by Ken Cook Co. with mediaioff

## HYDRAULIC CIRCUITRY (Cont'd)
## (Upper) (Swing Cylinder & Valve)

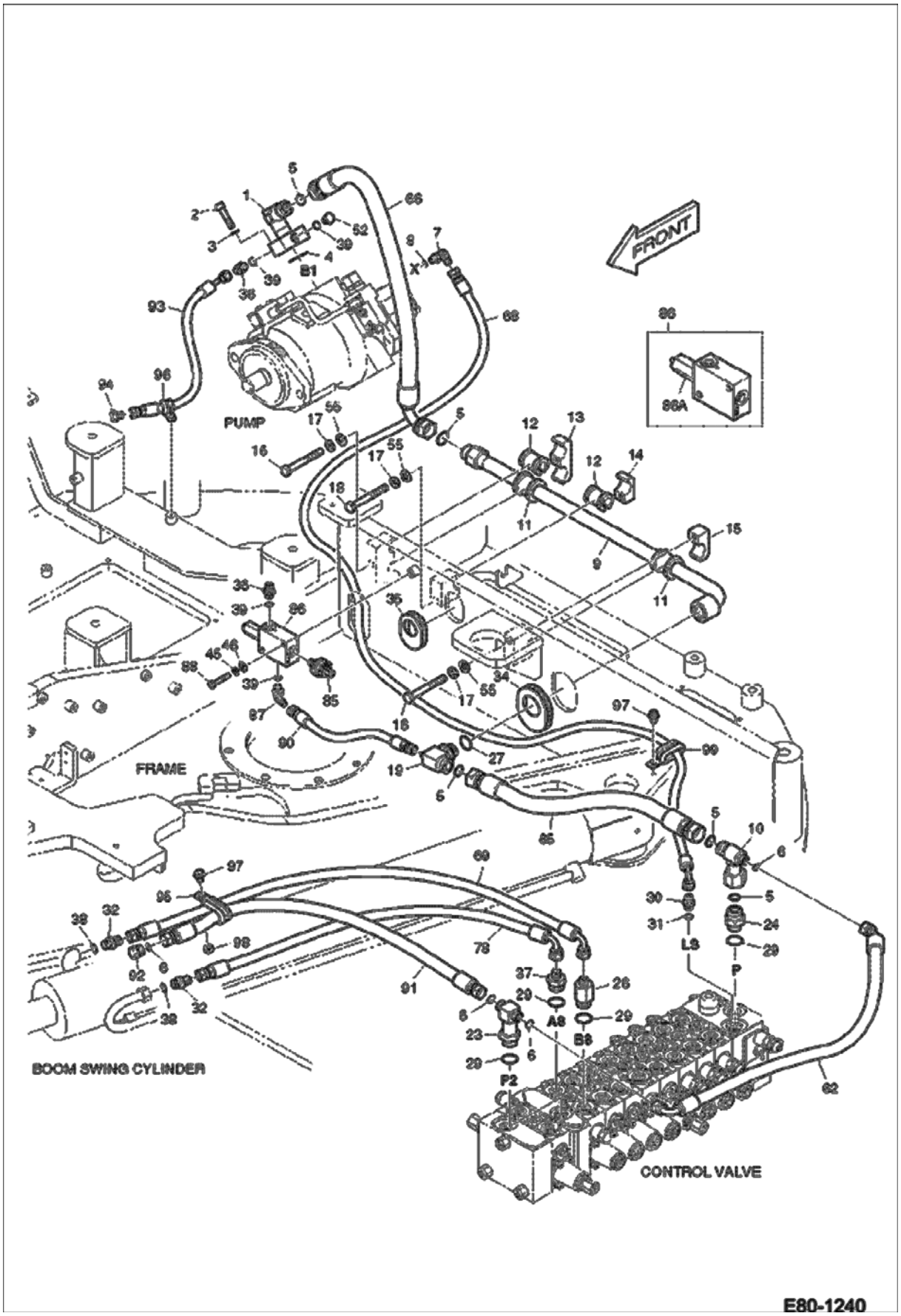




Page 162 - OSS# 2089524 - All rights reserved by Bobcat Company - 05/11/2012 - 06:30:39 - Produced by Ken Cook Co. with mediaioff

| Ref No | Part Number | Description | Remarks | Serial Number | Qty |
|---|---|---|---|---|---|
| 91 | 7005146 | HOSE UNF13/16-630L | | | 1 |
| 92 | 7005576 | PLUG | | | 1 |
| 93 | 7005380 | HOSE PF1/4-410L | | | 1 |
| 94 | 7004754 | PLUG | | | 1 |
| 95 | 7003903 | CLIP | | | 1 |
| 96 | 7003894 | CLIP | | | 1 |
| 97 | 7005629 | BOLT | | | 2 |
| 98 | 7007797 | NUT | | | 1 |
| 99 | 7003904 | CLIP | | | 1 |

Page 163 - OSS# 2089524 - All rights reserved by Bobcat Company - 05/11/2012 - 06:30:39 - Produced by Ken Cook Co. with mediaioff

# HYDRAULIC CIRCUITRY
## (Lower) (Drive)

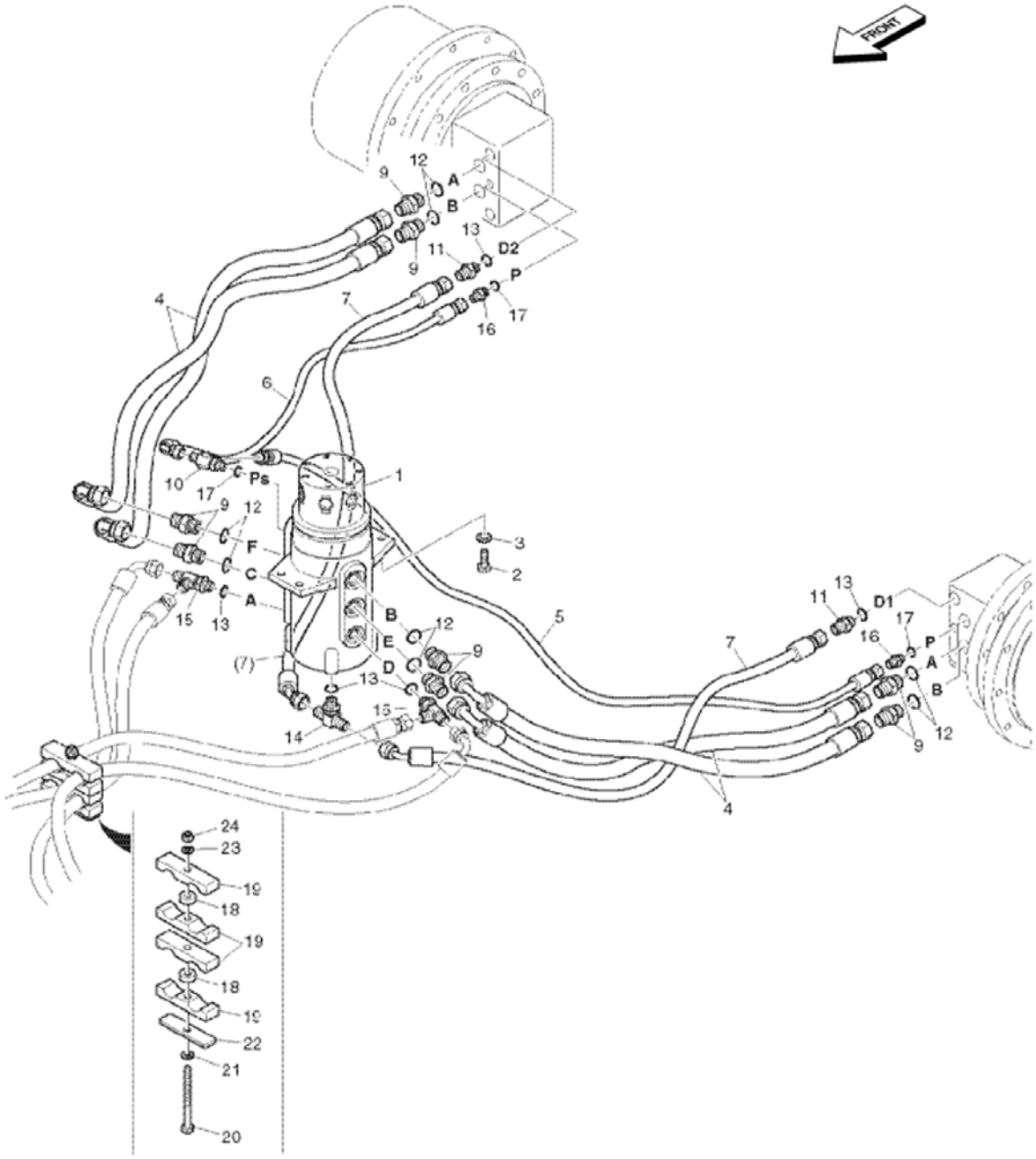


EM6395



Page 164 - OSS# 2089524 - All rights reserved by Bobcat Company - 05/11/2012 - 06:30:39 - Produced by Ken Cook Co. with mediaIoff

## HYDRAULIC CIRCUITRY (Cont'd)
## (Lower) (Drive)

| Ref No | Part Number | Description | Remarks | Serial Number | Qty |
|---|---|---|---|---|---|
| 1 | 7006067 | EYE JOINT CENTER | See Illustration SWIVEL JOINT/ E80-4280 | | 1 |
| 2 | 7007669 | BOLT | | | 4 |
| 3 | 7007836 | WASHER SPRING M12 | | | 4 |
| 4 | 7005182 | HOSE | | | 4 |
| 5 | 7005511 | HOSE | | | 1 |
| 6 | 7005445 | HOSE PF1/4-1380L | | | 1 |
| 7 | 7005276 | HOSE PF3/8-1300L | | | 2 |
| 9 | 7004699 | ADAPTER | | | 8 |
| 10 | 7004738 | TEE | | | 1 |
| 11 | 7004700 | ADAPTER | | | 2 |
| 12 | 7007911 | ORING | | | 8 |
| 13 | 7007909 | ORING | | | 5 |
| 14 | 7004751 | TEE | | | 1 |
| 15 | 7004741 | TEE | | | 2 |
| 16 | 7004683 | ADAPTER | | | 2 |
| 17 | 7007906 | ORING | | | 3 |
| 18 | 7003860 | SPACER | | | 2 |
| 19 | 7004587 | CLAMP | | | 4 |
| 20 | 7007680 | BOLT | | | 1 |
| 21 | 7007835 | WASHER SPRING | | | 1 |
| 22 | 7006518 | PLATE | | | 1 |
| 23 | 7013265 | WASHER PLAIN | Was 7007825 [A] | | 1 |
| 24 | 7005682 | NUT LOCK | | | 1 |

Page 165 - OSS# 2089524 - All rights reserved by Bobcat Company - 05/11/2012 - 06:30:39 - Produced by Ken Cook Co. with mediaioff

# HYDRAULIC CIRCUITRY
## (Lower) (Blade W/O Lock Valve)

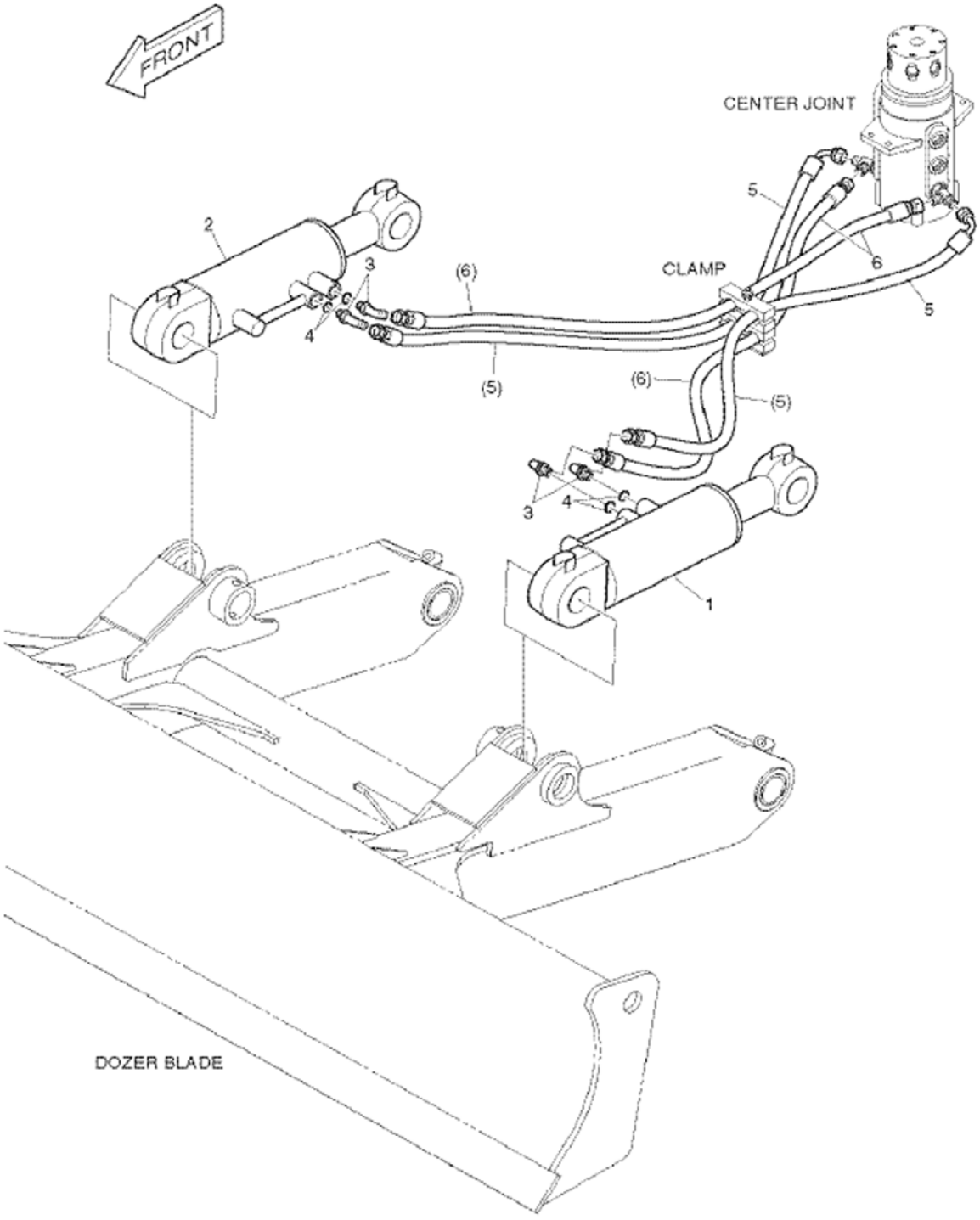


E80-2170



Page 166 - OSS# 2089524 - All rights reserved by Bobcat Company - 05/11/2012 - 06:30:39 - Produced by Ken Cook Co. with mediaioff

## HYDRAULIC CIRCUITRY (Cont'd)
## (Lower) (Blade W/O Lock Valve)

| Ref No | Part Number | Description | Remarks | Serial Number | Qty |
|---|---|---|---|---|---|
| 1 | 7006095 | CYLINDER DOZER LH | See Illustration BLADE CYLINDER/ E80-4360 | | 1 |
| 2 | 7006096 | CYLINDER DOZER RH | See Illustration BLADE CYLINDER/ E80-4370 | | 1 |
| 3 | 7004716 | ELBOW | | | 4 |
| 4 | 7007909 | ORING | | | 4 |
| 5 | 7005194 | HOSE | | | 2 |
| 6 | 7005159 | HOSE | | | 2 |

Page 167 - OSS# 2089524 - All rights reserved by Bobcat Company - 05/11/2012 - 06:30:39 - Produced by Ken Cook Co. with mediaioff

# HYDRAULIC CIRCUITRY
## (Lower) (Blade W/Lock Valve)

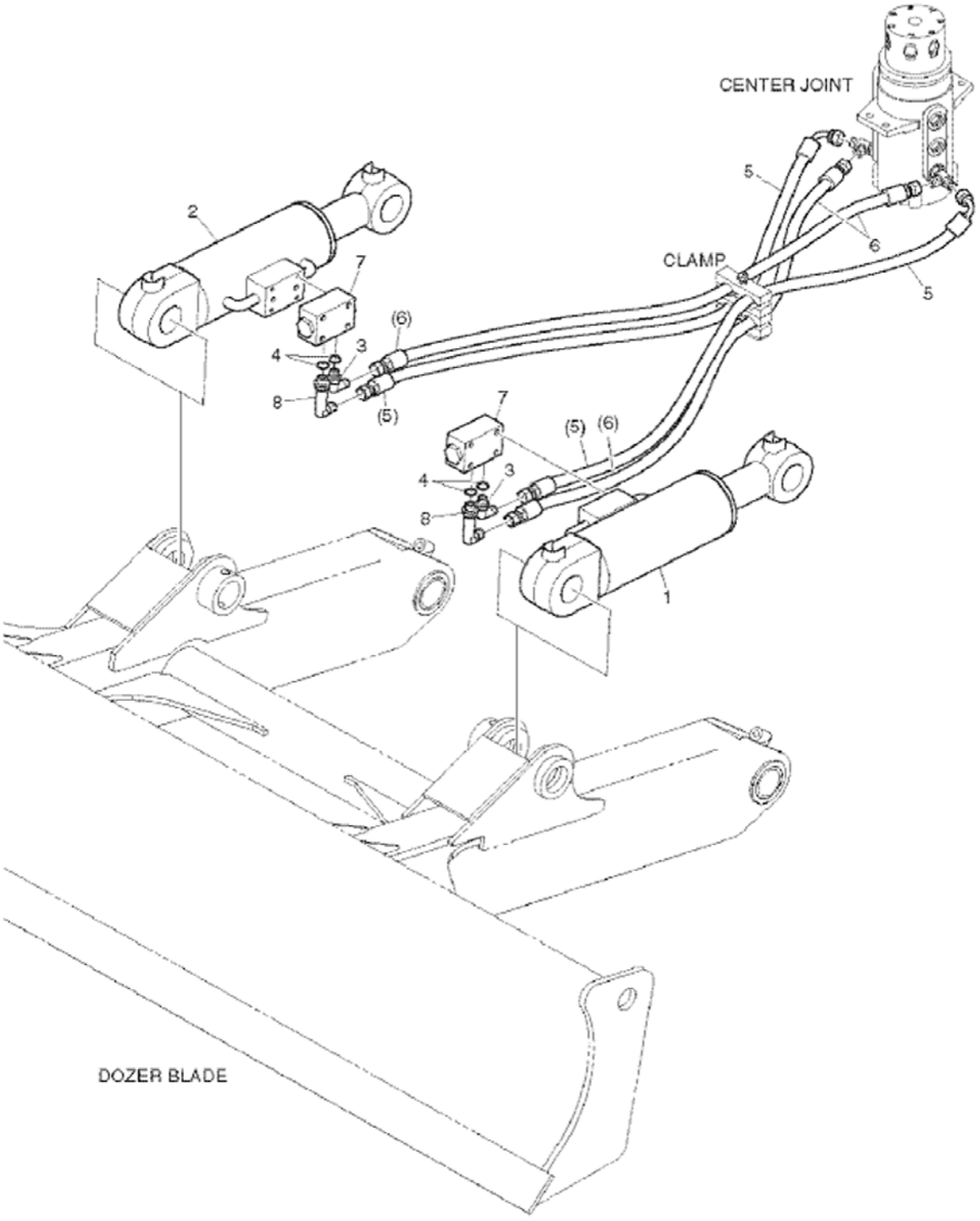


E80-6230



Page 168 - OSS# 2089524 - All rights reserved by Bobcat Company - 05/11/2012 - 06:30:39 - Produced by Ken Cook Co. with mediaioff

## HYDRAULIC CIRCUITRY (Cont'd)
## (Lower) (Blade W/Lock Valve)

| Ref No | Part Number | Description | Remarks | Serial Number | Qty |
|---|---|---|---|---|---|
| 1 | 7006547 | CYLINDER DOZER LH | See Illustration BLADE CYLINDER/ E80-4380 | | 1 |
| 2 | 7006548 | CYLINDER DOZER RH | See Illustration BLADE CYLINDER/ E80-4390 | | 1 |
| 3 | 7004716 | ELBOW | | | 2 |
| 4 | 7007909 | ORING | | | 4 |
| 5 | 7005202 | HOSE | | | 2 |
| 6 | 7005152 | HOSE | | | 2 |
| 7 | 7006513 | VALVE CHECK | | | 2 |
| 8 | 7004722 | ELBOW | | | 2 |

Page 169 - OSS# 2089524 - All rights reserved by Bobcat Company - 05/11/2012 - 06:30:39 - Produced by Ken Cook Co. with mediaioff

# HYDRAULIC CIRCUITRY
## (Work Hoses) (Arm, Boom, Bucket)

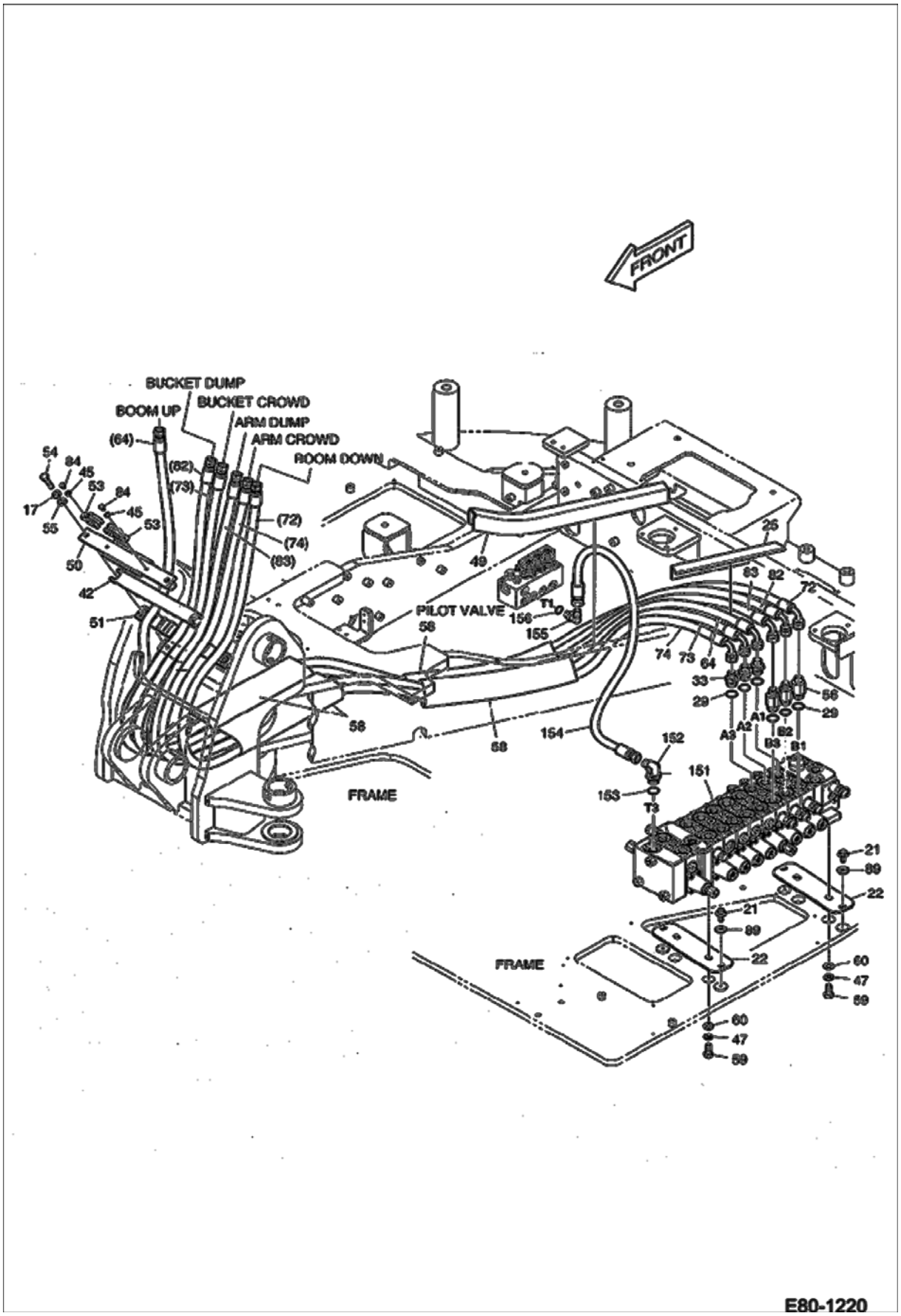




Page 170 - OSS# 2089524 - All rights reserved by Bobcat Company - 05/11/2012 - 06:30:39 - Produced by Ken Cook Co. with mediaIoff

## HYDRAULIC CIRCUITRY (Cont'd)
## (Work Hoses) (Arm, Boom, Bucket)

| Ref No | Part Number | Description | Remarks | Serial Number | Qty |
|---|---|---|---|---|---|
| 17 | 7007836 | WASHER SPRING M12 | | | 2 |
| 21 | 7005120 | BOLT SET | | | 4 |
| 22 | 7006277 | PLATE | | | 2 |
| 25 | 7006601 | PAD | | | 1 |
| 29 | 7004628 | ORING | | | 6 |
| 33 | 7005542 | ADAPTER | | | 3 |
| 42 | 7006541 | CLAMP HOSE | | | 1 |
| 45 | 7007829 | WASHER | | | 2 |
| 47 | 7007837 | WASHER | | | 4 |
| 49 | 7006438 | PAD | | | 1 |
| 50 | 7008225 | PLATE | | | 1 |
| 51 | 7006542 | CLAMP HOSE | | | 1 |
| 53 | 7003902 | CLIP | | | 2 |
| 54 | 7007686 | BOLT | Was 7007685 [B] | | 2 |
| 55 | 7007820 | WASHER SPRING | | | 2 |
| 56 | 7005546 | ADAPTER | | | 3 |
| 58 | 7005639 | GUARD | | | 4 |
| 59 | 7007643 | BOLT | | | 4 |
| 60 | 7007821 | WASHER | | | 4 |
| 64 | 7011040 | VALVE, BPV | Was 7005423 [C] | | 1 |
| 72 | 7011045 | HOSE, HYD | Was 7005424 [C] | | 1 |
| 73 | 7011042 | HOSE, HYD | Was 7005425 [C] | | 1 |
| 74 | 7011043 | HOSE, HYD | Was 7005427 [C] | | 1 |
| 82 | 7005426 | HOSE | | | 1 |
| 83 | 7011046 | HOSE, HYD | Was 7005428 [C] | | 1 |
| 84 | 7007612 | BOLT | | | 2 |
| 89 | 7006765 | PLATE SHEET ANTI VIBRATION | | | 4 |
| 151 | 7012018 | MAIN CONTROL VALVE | Was 7006686 [D] | | 1 |
| 152 | 7008144 | ELBOW | | | 1 |
| 153 | 7004628 | ORING | | | 1 |
| 154 | 7008146 | HOSE, PF1/2-1100L | | | 1 |
| 155 | 7004710 | ELBOW | | | 1 |
| 156 | 7007911 | ORING | | | 1 |

Page 171 - OSS# 2089524 - All rights reserved by Bobcat Company - 05/11/2012 - 06:30:39 - Produced by Ken Cook Co. with mediaioff

# HYDRAULIC CIRCUITRY
## (Work) (2ndAux/Rotation)

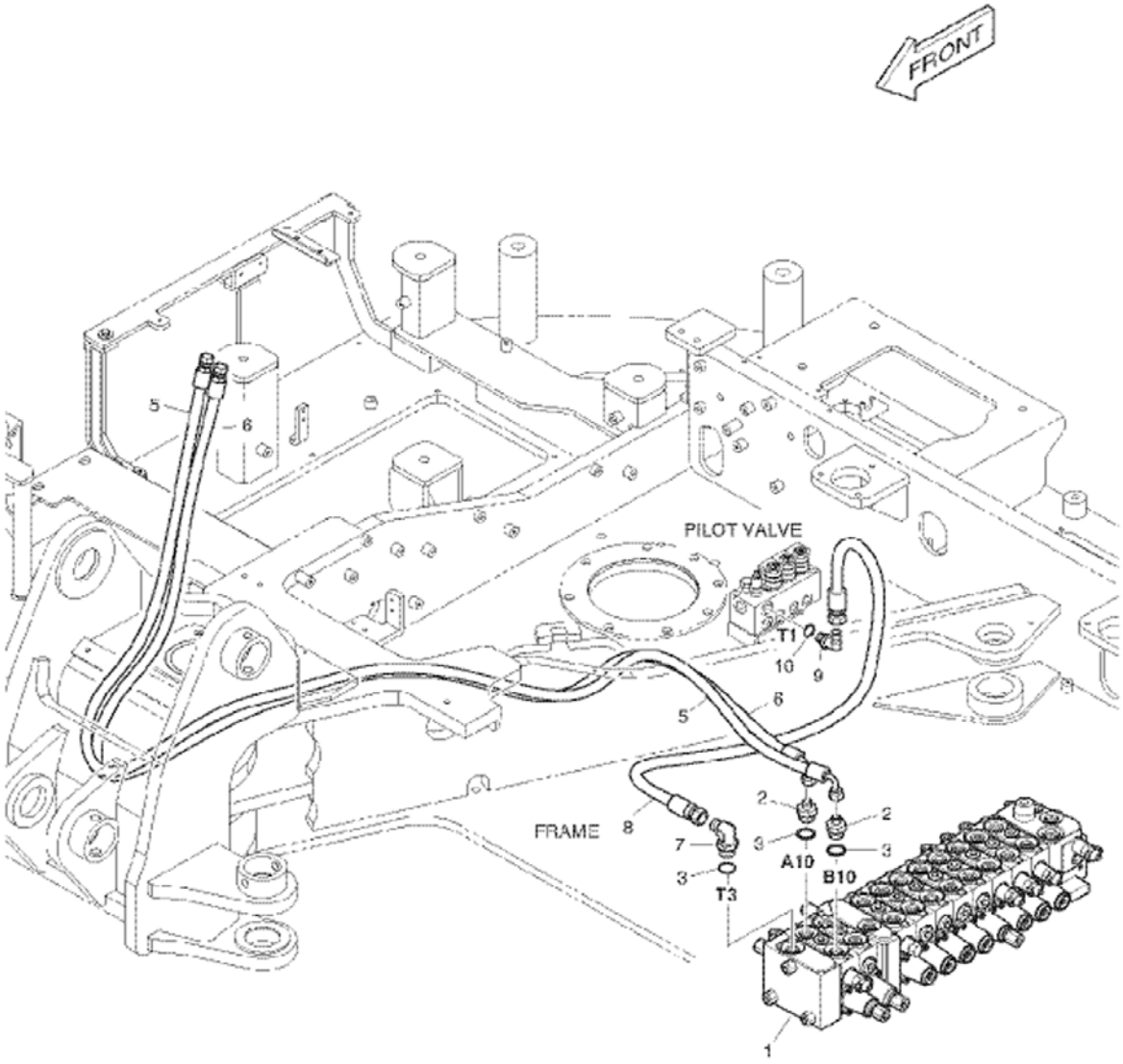


E80-6110



Page 172 - OSS# 2089524 - All rights reserved by Bobcat Company - 05/11/2012 - 06:30:39 - Produced by Ken Cook Co. with mediaioff

## HYDRAULIC CIRCUITRY (Cont'd)
## (Work) (2ndAux/Rotation)

| Ref No | Part Number | Description | Remarks | Serial Number | Qty |
|---|---|---|---|---|---|
| 1 | 7012018 | MAIN CONTROL VALVE | See Illustration CONTROL VALVE/ E80-4420 Was 7006687 [D] | | 1 |
| 2 | 7004677 | ADAPTER | | | 2 |
| 3 | 7004628 | ORING | | | 3 |
| 5 | 7011048 | HOSE, HYD | Was 7005439 [C] | | 1 |
| 6 | 7011047 | HOSE, HYD | Was 7005440 [C] | | 1 |
| 7 | 7008144 | ELBOW | | | 1 |
| 8 | 7008146 | HOSE, PF1/2-1100L | | | 1 |
| 9 | 7004710 | ELBOW | | | 1 |
| 10 | 7007911 | ORING | | | 1 |

Page 173 - OSS# 2089524 - All rights reserved by Bobcat Company - 05/11/2012 - 06:30:39 - Produced by Ken Cook Co. with mediaioff

## HYDRAULIC CIRCUITRY
## (Slew Motor & Case Drain)

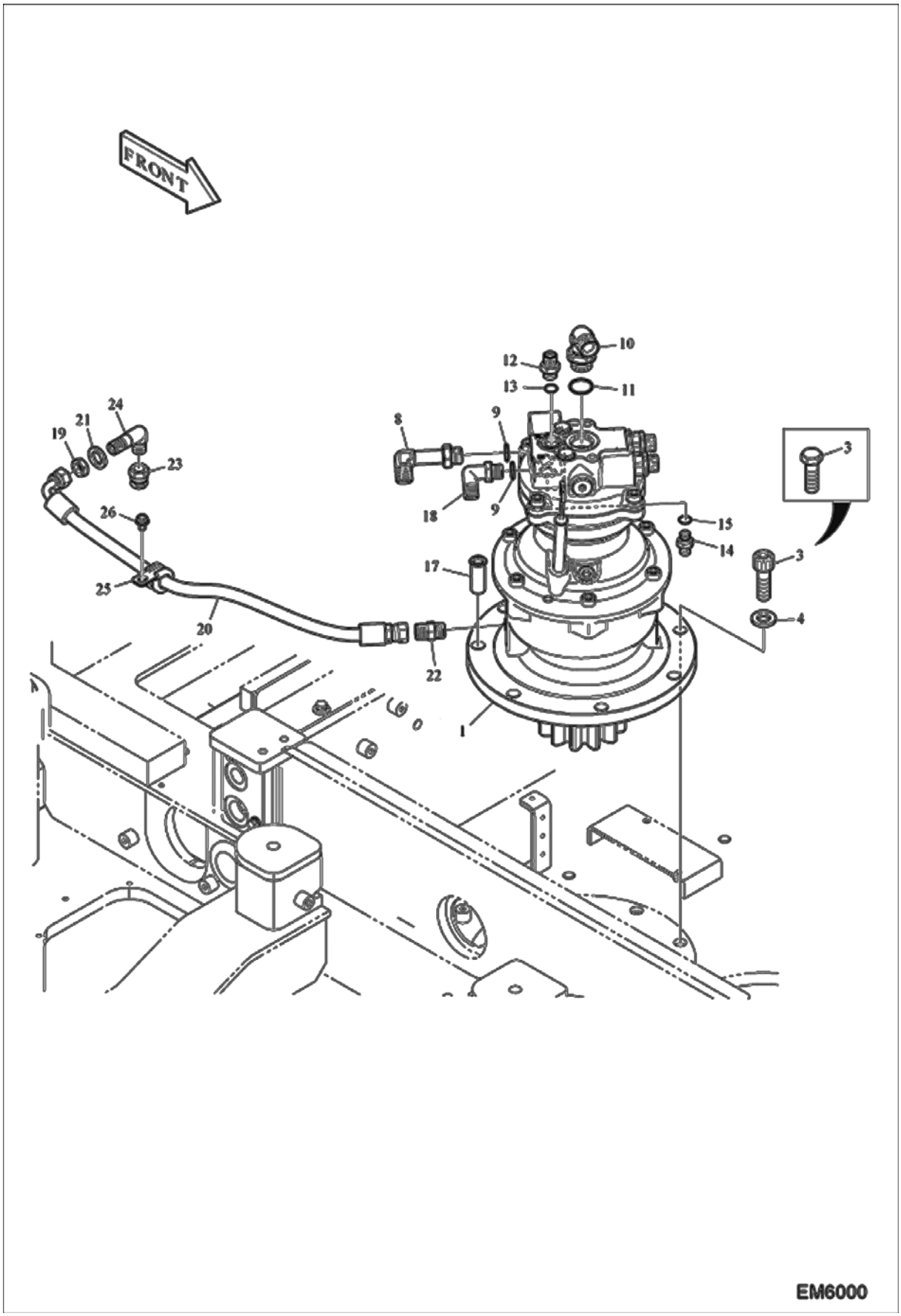




Page 174 - OSS# 2089524 - All rights reserved by Bobcat Company - 05/11/2012 - 06:30:39 - Produced by Ken Cook Co. with mediaioff

## HYDRAULIC CIRCUITRY (Cont'd)
## (Slew Motor & Case Drain)

| Ref No | Part Number | Description | Remarks | Serial Number | Qty |
|---|---|---|---|---|---|
| 1 | 7006694 | MOTOR SWING | See Illustration SLEW MOTOR/ E80-4120 | | 1 |
| 3 | 7007703 | BOLT | | AET311001 - 11081 | 7 |
| 3 | 7007703 | BOLT | | AETB11001 - 11081 | 7 |
| 3 | 7007774 | BOLT | | AET311082 & Above | 7 |
| 3 | 7007774 | BOLT | | AETB11082 & Above | 7 |
| 4 | 7004507 | WASHER PLAIN | | AET311001 - 11081 | 7 |
| 4 | 7004507 | WASHER PLAIN | | AETB11001 - 11081 | 7 |
| 4 | 7007839 | WASHER SPRING | | AET311082 & Above | 7 |
| 4 | 7007839 | WASHER SPRING | | AETB11082 & Above | 7 |
| 8 | 7004718 | ADAPTER | | | 1 |
| 9 | 7007911 | ORING | | | 2 |
| 10 | 7004723 | ELBOW | | | 1 |
| 11 | 7007916 | ORING | | | 1 |
| 12 | 7004700 | ADAPTER | | | 1 |
| 13 | 7007909 | ORING | | | 1 |
| 14 | 7004683 | ADAPTER | | | 2 |
| 15 | 7007906 | ORING | | | 2 |
| 17 | 7006649 | PIN | | | 1 |
| 18 | 7004710 | ELBOW | | | 1 |
| 19 | 7010969 | NUT | Was 7003875 [A] | | 1 |
| 20 | 7005363 | HOSE PF3/8-630L | | | 1 |
| 21 | 7007822 | WASHER SPRING | | | 1 |
| 22 | 7004668 | ADAPTER | | | 1 |
| 23 | 7004765 | PLUG | | | 1 |
| 24 | 7005570 | ELBOW | | | 1 |
| 25 | 7003895 | CLIP | | | 1 |
| 26 | 7005629 | BOLT | | | 1 |

Page 175 - OSS# 2089524 - All rights reserved by Bobcat Company - 05/11/2012 - 06:30:39 - Produced by Ken Cook Co. with mediaioff

# HYDRAULIC CIRCUITRY
## (Slew Motor & Control Valve Return)

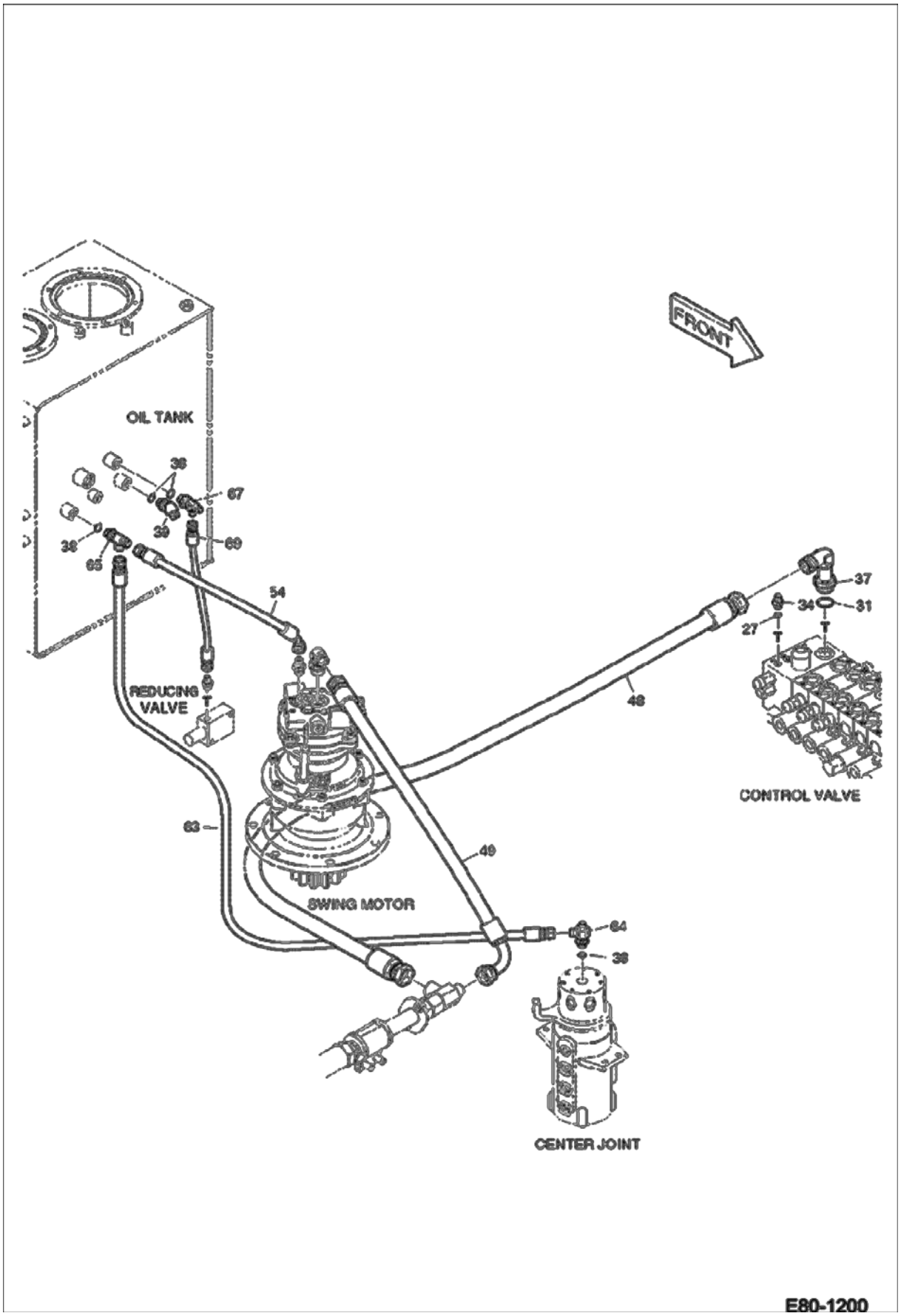




Page 176 - OSS# 2089524 - All rights reserved by Bobcat Company - 05/11/2012 - 06:30:39 - Produced by Ken Cook Co. with mediaioff

## HYDRAULIC CIRCUITRY (Cont'd)
## (Slew Motor & Control Valve Return)

| Ref No | Part Number | Description | Remarks | Serial Number | Qty |
|---|---|---|---|---|---|
| 27 | 7007961 | ORING | | | 1 |
| 31 | 7007963 | ORING | | | 1 |
| 34 | 7004693 | ADAPTER | | | 1 |
| 37 | 7004719 | ELBOW | | | 1 |
| 38 | 7007909 | ORING | | | 4 |
| 39 | 7004756 | ELBOW | | | 1 |
| 48 | 7005153 | HOSE | | | 1 |
| 49 | 7004781 | HOSE | | | 1 |
| 54 | 7005288 | HOSE | | | 1 |
| 63 | 7005515 | HOSE | | | 1 |
| 64 | 7004739 | TEE | | | 1 |
| 65 | 7004741 | TEE | | | 1 |
| 67 | 7004746 | TEE | | | 1 |
| 69 | 7005466 | HOSE | | AET311001 - 11143 | 1 |
| 69 | 7005466 | HOSE | | AETB11001 - 11143 | 1 |
| 69 | 7015429 | HOSE | | AET311144 & Above | 1 |
| 69 | 7015429 | HOSE | | AETB11144 & Above | 1 |

Page 177 - OSS# 2089524 - All rights reserved by Bobcat Company - 05/11/2012 - 06:30:39 - Produced by Ken Cook Co. with mediaioff

# HYDRAULIC CIRCUITRY
# (Arm 1.7 m)

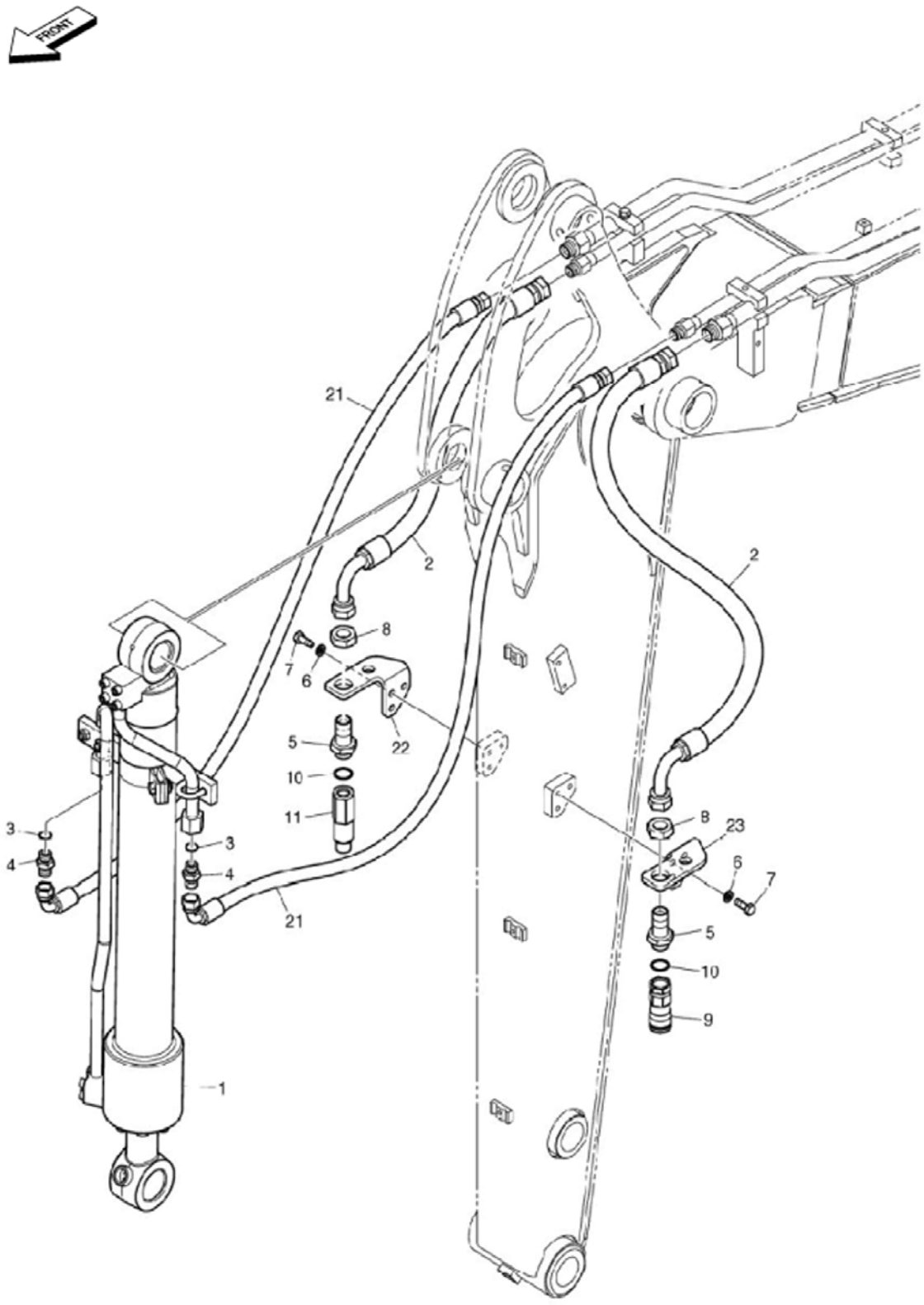


EM6061



Page 178 - OSS# 2089524 - All rights reserved by Bobcat Company - 05/11/2012 - 06:30:39 - Produced by Ken Cook Co. with mediaIoff

## HYDRAULIC CIRCUITRY (Cont'd)
## (Arm 1.7 m)

| Ref No | Part Number | Description | Remarks | Serial Number | Qty |
|---|---|---|---|---|---|
| 1 | 7012249 | CYLINDER;BUCKET | | | 1 |
| 2 | 7010545 | HOSE | | | 2 |
| 3 | 7007911 | ORING | | | 2 |
| 4 | 7004699 | ADAPTER | | | 2 |
| 5 | 7015433 | ADAPTER | | | 2 |
| 6 | 7007835 | WASHER SPRING | | | 6 |
| 7 | 7007669 | BOLT | | | 6 |
| 8 | 7015434 | NUT | | | 2 |
| 9 | 6672960 | COUPLER, FF FEMALE | straight | | 1 |
| 10 | 7009947 | O-RING | | | 2 |
| 11 | 6674688 | COUPLER, FF MALE | straight | | 1 |
| 21 | 7005443 | HOSE | | | 2 |
| 22 | 7010543 | BRACKET | | | 1 |
| 23 | 7010544 | BRACKET | | | 1 |

Page 179 - OSS# 2089524 - All rights reserved by Bobcat Company - 05/11/2012 - 06:30:39 - Produced by Ken Cook Co. with mediaioff

# HYDRAULIC CIRCUITRY
# (Arm 2.25 m)

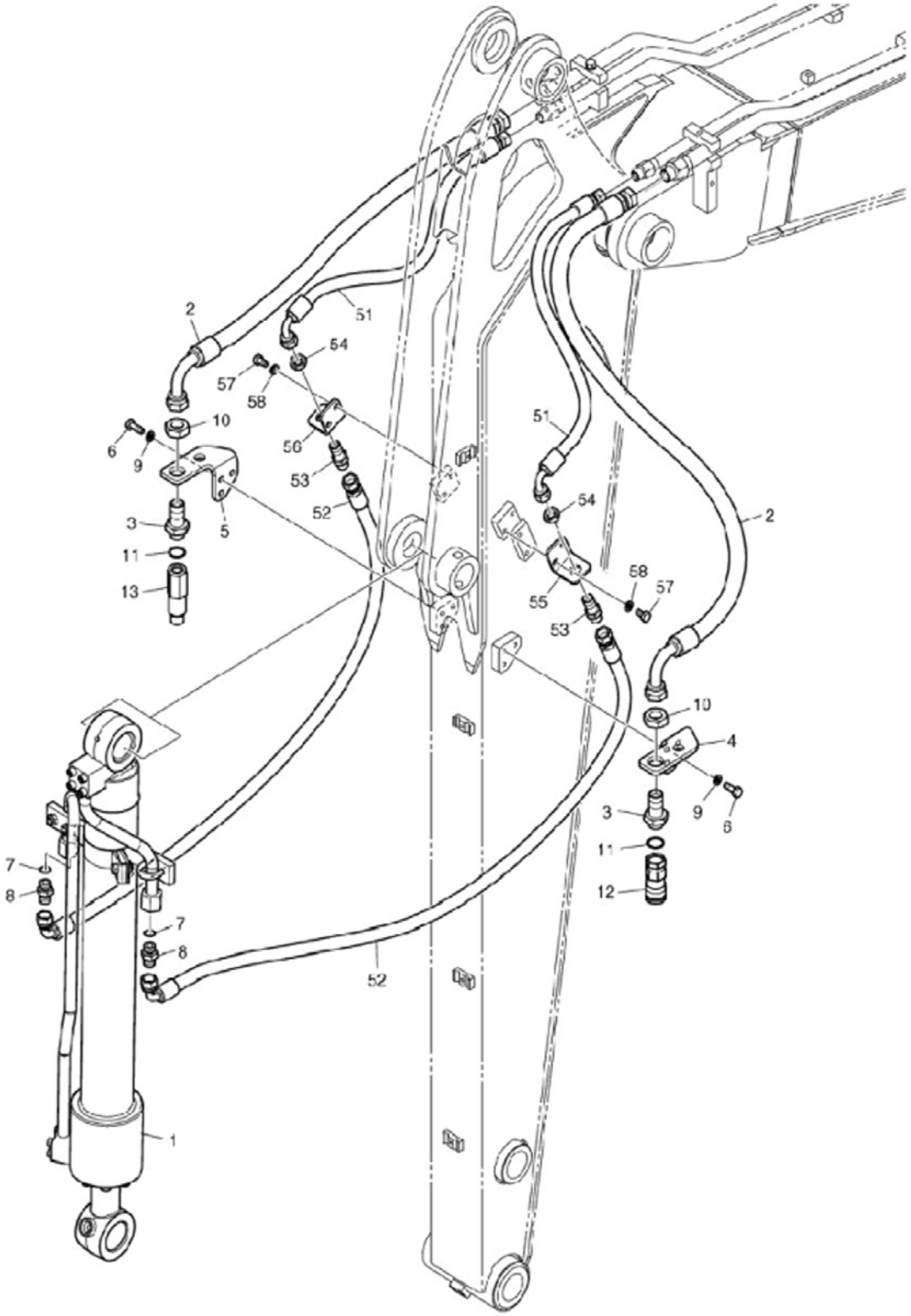


EM6068



Page 180 - OSS# 2089524 - All rights reserved by Bobcat Company - 05/11/2012 - 06:30:39 - Produced by Ken Cook Co. with mediaIoff

## HYDRAULIC CIRCUITRY (Cont'd)
## (Arm 2.25 m)

| Ref No | Part Number | Description | Remarks | Serial Number | Qty |
|---|---|---|---|---|---|
| 1 | 7012249 | CYLINDER;BUCKET | | | 1 |
| 2 | 7005187 | HOSE | | | 2 |
| 3 | 7015433 | ADAPTER | | | 2 |
| 4 | 7009945 | BRACKET | | | 1 |
| 5 | 7009946 | BRACKET | | | 1 |
| 6 | 7007669 | BOLT | | | 6 |
| 7 | 7007911 | ORING | | | 2 |
| 8 | 7004699 | ADAPTER | | | 2 |
| 9 | 7007835 | WASHER SPRING | | | 6 |
| 10 | 7015434 | NUT | | | 2 |
| 11 | 7009947 | O-RING | | | 2 |
| 12 | 6672960 | COUPLER, FF FEMALE | straight | | 1 |
| 13 | 6674688 | COUPLER, FF MALE | straight | | 1 |
| 51 | 7010540 | HOSE | | | 2 |
| 52 | 7010541 | HOSE | | | 2 |
| 53 | 7005566 | ADAPTER | | | 2 |
| 54 | 7003876 | NUT | | | 2 |
| 55 | 7005925 | BRACKET LH | | | 1 |
| 56 | 7005926 | BRACKET RH | | | 1 |
| 57 | 7007626 | BOLT | | | 4 |
| 58 | 7007835 | WASHER SPRING | | | 4 |

Page 181 - OSS# 2089524 - All rights reserved by Bobcat Company - 05/11/2012 - 06:30:39 - Produced by Ken Cook Co. with mediaioff

## HYDRAULIC CIRCUITRY
## (Arm 1.7 m)  (2nd Auxiliary/Rotation)

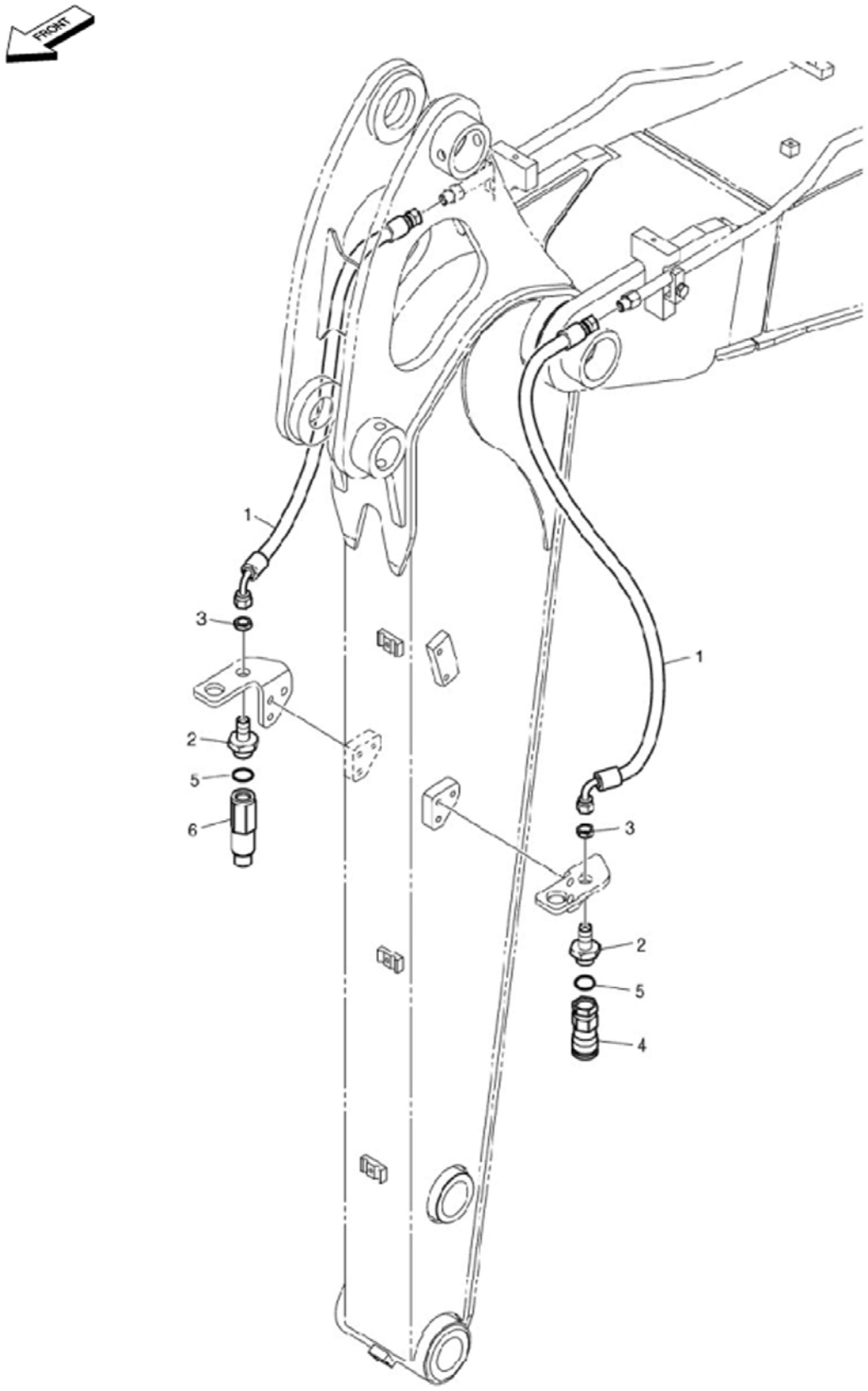


EM6062



Page 182 - OSS# 2089524 - All rights reserved by Bobcat Company - 05/11/2012 - 06:30:39 - Produced by Ken Cook Co. with mediaIoff

## HYDRAULIC CIRCUITRY (Cont'd)
## (Arm 1.7 m) (2nd Auxiliary/Rotation)

| Ref No | Part Number | Description | Remarks | Serial Number | Qty |
|---|---|---|---|---|---|
| 1 | 7005391 | HOSE | | | 2 |
| 2 | 7010024 | ADAPTER | | | 2 |
| 3 | 7003875 | NUT | | | 2 |
| 4 | 6672960 | COUPLER, FF FEMALE | straight | | 1 |
| 5 | 7009947 | O-RING | | | 2 |
| 6 | 6674688 | COUPLER, FF MALE | straight | | 1 |

Page 183 - OSS# 2089524 - All rights reserved by Bobcat Company - 05/11/2012 - 06:30:39 - Produced by Ken Cook Co. with mediaioff

## HYDRAULIC CIRCUITRY
## (Arm 2.25 m) (2nd Auxiliary/Rotation)

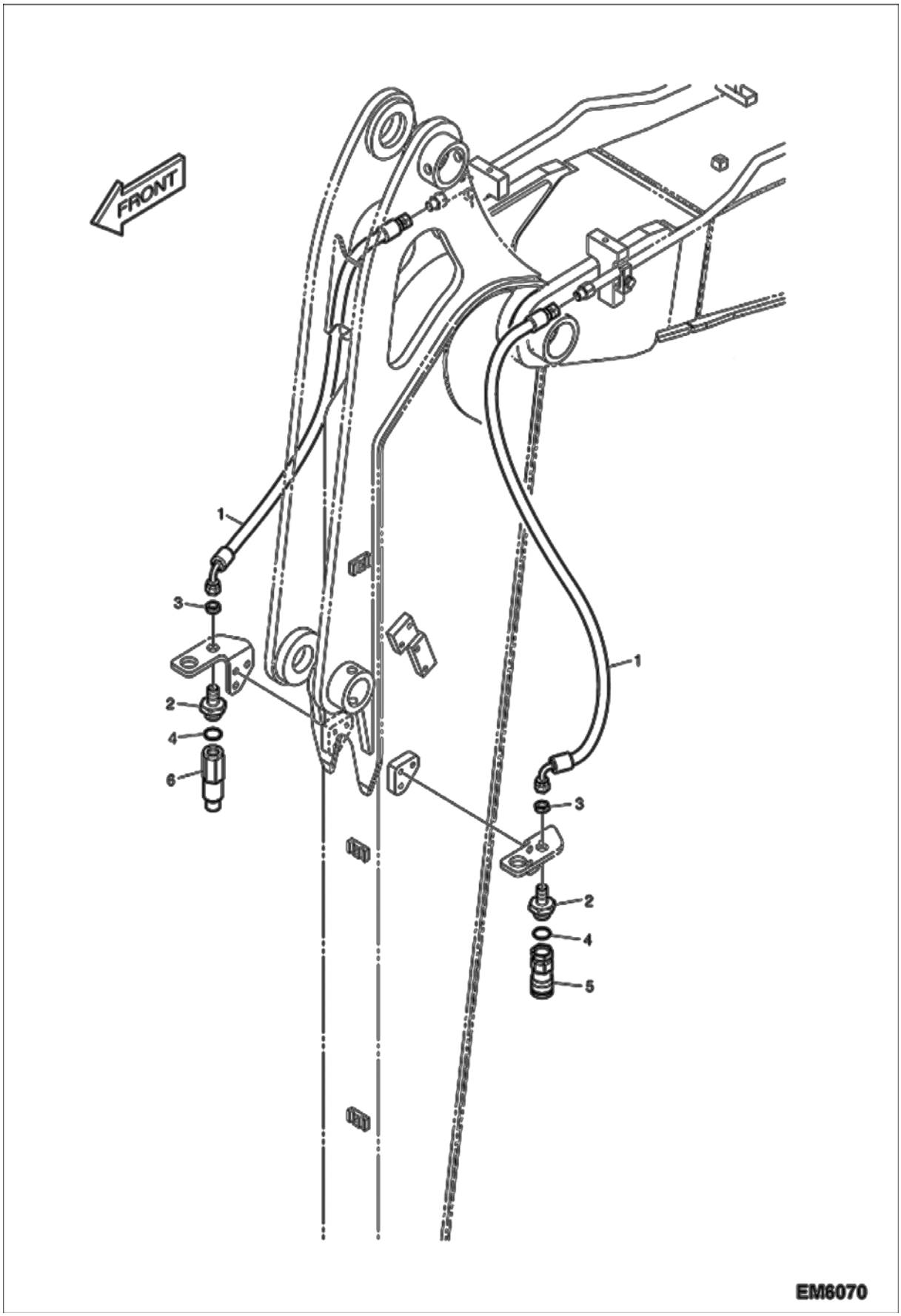




Page 184 - OSS# 2089524 - All rights reserved by Bobcat Company - 05/11/2012 - 06:30:39 - Produced by Ken Cook Co. with mediaIoff

## HYDRAULIC CIRCUITRY (Cont'd)
## (Arm 2.25 m) (2nd Auxiliary/Rotation)

| Ref No | Part Number | Description | Remarks | Serial Number | Qty |
|---|---|---|---|---|---|
| 1 | 7005394 | HOSE | | | 2 |
| 2 | 7010024 | ADAPTER | | | 2 |
| 3 | 7003875 | NUT | | | 2 |
| 4 | 7009947 | O-RING | | | 2 |
| 5 | 6672960 | COUPLER, FF FEMALE | straight | | 1 |
| 6 | 6674688 | COUPLER, FF MALE | straight | | 1 |

Page 185 - OSS# 2089524 - All rights reserved by Bobcat Company - 05/11/2012 - 06:30:39 - Produced by Ken Cook Co. with mediaioff

# HYDRAULIC CIRCUITRY
## (Arm 1.7 m) (3rd Auxiliary/Clamshell)

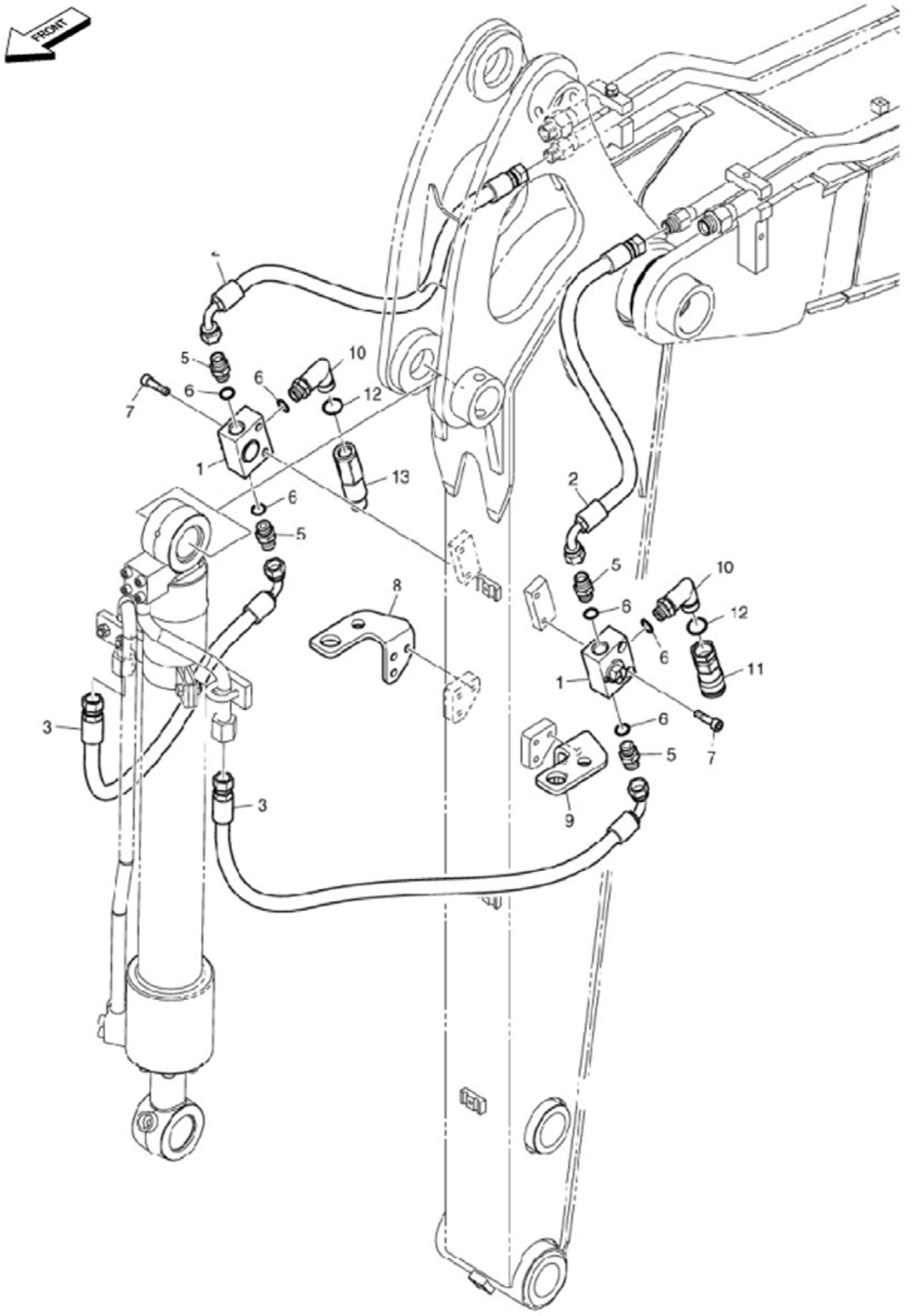


EM6063



Page 186 - OSS# 2089524 - All rights reserved by Bobcat Company - 05/11/2012 - 06:30:39 - Produced by Ken Cook Co. with mediaIoff

## HYDRAULIC CIRCUITRY (Cont'd)
## (Arm 1.7 m) (3rd Auxiliary/Clamshell)

| Ref No | Part Number | Description | Remarks | Serial Number | Qty |
|---|---|---|---|---|---|
| 1 | 7004981 | VALVE SWITCH | | | 2 |
| 2 | 7005444 | HOSE | | | 2 |
| 3 | 7005462 | HOSE | | | 2 |
| 5 | 7004699 | ADAPTER | | | 4 |
| 6 | 7007911 | ORING | | | 6 |
| 7 | 7007751 | BOLT SOCKET M10X1.5X40 | | | 4 |
| 8 | 7009946 | BRACKET | | | 1 |
| 9 | 7009945 | BRACKET | | | 1 |
| 10 | 7009943 | ELBOW | | | 2 |
| 11 | 6672960 | COUPLER, FF FEMALE | straight | | 1 |
| 12 | 7009947 | O-RING | | | 2 |
| 13 | 6674688 | COUPLER, FF MALE | straight | | 1 |

Page 187 - OSS# 2089524 - All rights reserved by Bobcat Company - 05/11/2012 - 06:30:39 - Produced by Ken Cook Co. with mediaioff

## HYDRAULIC CIRCUITRY
## (Arm 2.25 m) (3rd Auxiliary/Clamshell)

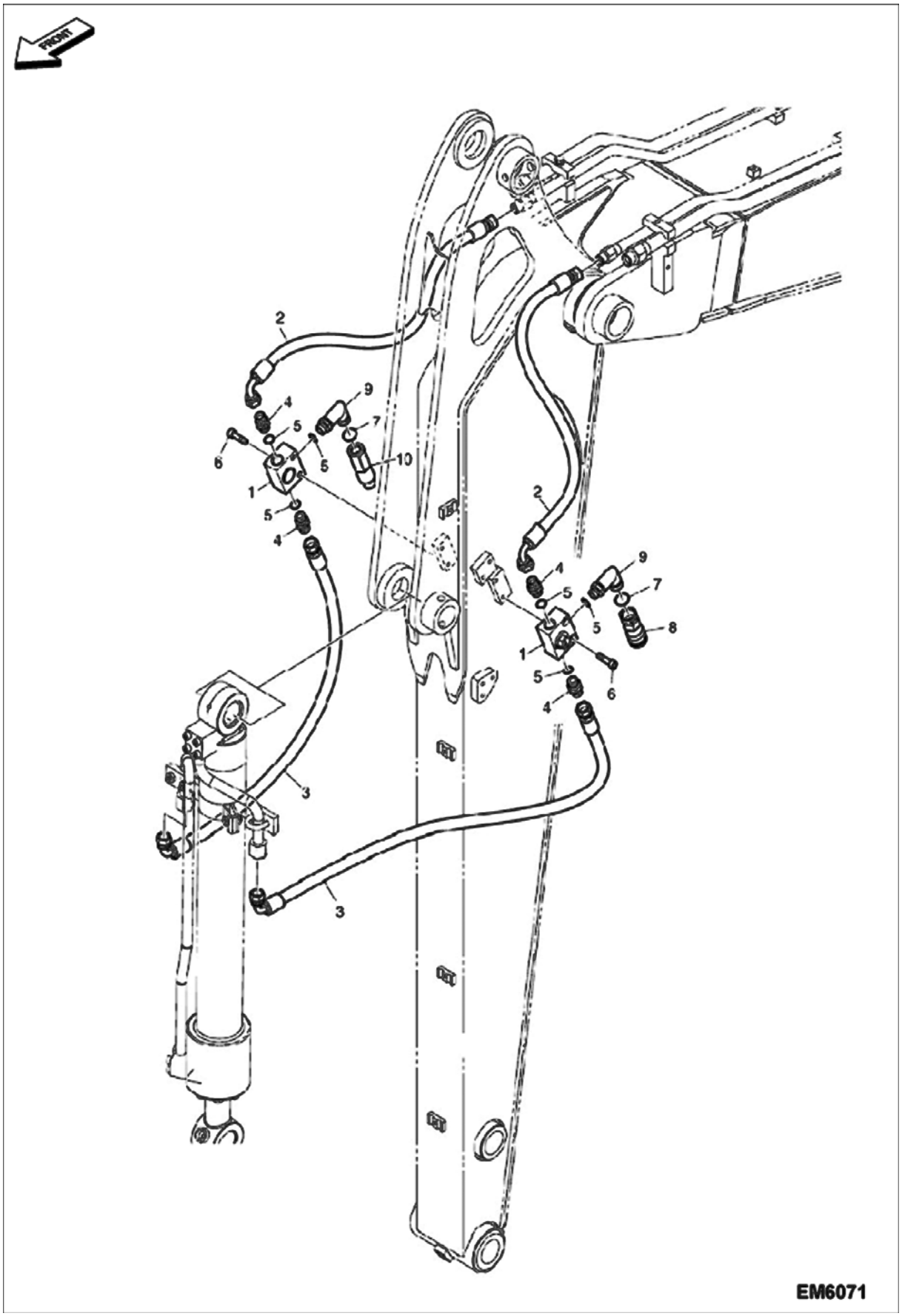




Page 188 - OSS# 2089524 - All rights reserved by Bobcat Company - 05/11/2012 - 06:30:39 - Produced by Ken Cook Co. with mediaIoff

## HYDRAULIC CIRCUITRY (Cont'd)
## (Arm 2.25 m) (3rd Auxiliary/Clamshell)

| Ref No | Part Number | Description | Remarks | Serial Number | Qty |
|---|---|---|---|---|---|
| 1 | 7004981 | VALVE SWITCH | | | 2 |
| 2 | 7010540 | HOSE | | | 2 |
| 3 | 7005463 | HOSE | | | 2 |
| 4 | 7004699 | ADAPTER | | | 4 |
| 5 | 7007911 | ORING | | | 6 |
| 6 | 7007751 | BOLT SOCKET M10X1.5X40 | | | 4 |
| 7 | 7009947 | O-RING | | | 2 |
| 8 | 6672960 | COUPLER, FF FEMALE | straight | | 1 |
| 9 | 7009943 | ELBOW | | | 2 |
| 10 | 6674688 | COUPLER, FF MALE | straight | | 1 |

Page 189 - OSS# 2089524 - All rights reserved by Bobcat Company - 05/11/2012 - 06:30:39 - Produced by Ken Cook Co. with mediaioff

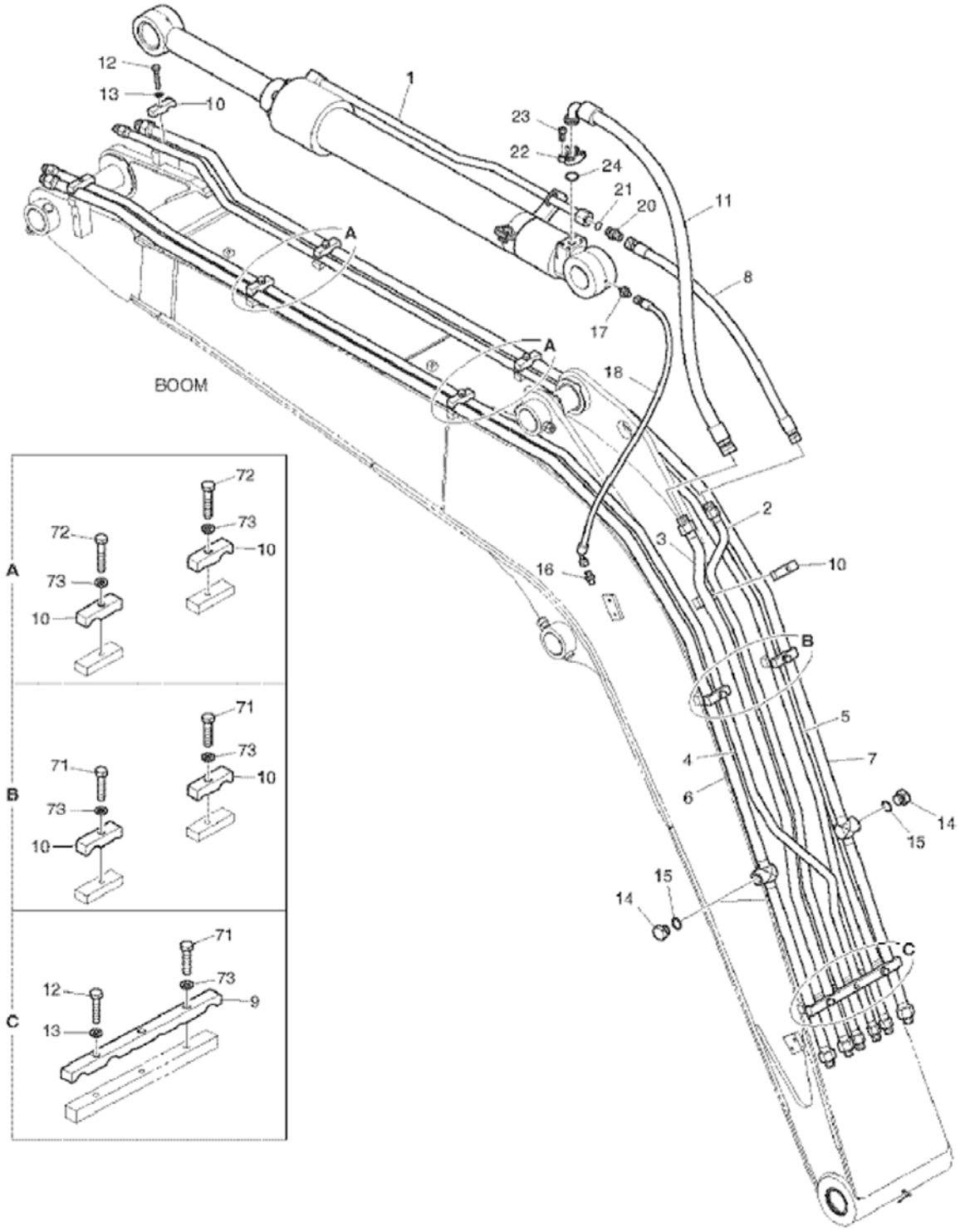


E80-3130



Page 190 - OSS# 2089524 - All rights reserved by Bobcat Company - 05/11/2012 - 06:30:39 - Produced by Ken Cook Co. with mediaIoff

## HYDRAULIC CIRCUITRY (Cont'd)
## (Boom) (Arm Cylinder)

| Ref No | Part Number | Description | Remarks | Serial Number | Qty |
|---|---|---|---|---|---|
| 1 | 7006028 | CYLINDER ARM | See Illustration ARM CYLINDER/ E80-4330 | | 1 |
| 2 | 7006030 | TUBELINE | | | 1 |
| 3 | 7006031 | TUBELINE | | | 1 |
| 4 | 7006032 | TUBELINE | | | 1 |
| 5 | 7006033 | TUBELINE | | | 1 |
| 6 | 7006034 | TUBELINE | | | 1 |
| 7 | 7006035 | TUBELINE | | | 1 |
| 8 | 7005151 | HOSE | | | 1 |
| 9 | 7006036 | CLAMP | | | 1 |
| 10 | 7006037 | CLAMP | | | 9 |
| 11 | 7005150 | HOSE | | | 1 |
| 12 | 7007674 | BOLT | | | 2 |
| 13 | 7007835 | WASHER SPRING | | | 2 |
| 14 | 7004733 | PLUG | | | 2 |
| 15 | 7007916 | ORING | | | 2 |
| 16 | 7004667 | ADAPTER | | | 1 |
| 17 | 7004669 | ADAPTER | | | 1 |
| 18 | 7005177 | HOSE | | | 1 |
| 20 | 7004699 | ADAPTER | | | 1 |
| 21 | 7007911 | ORING | | | 1 |
| 22 | 7004777 | FLANGE | | | 2 |
| 23 | 7007748 | BOLT SOCKET M10X1.5X30 | | | 4 |
| 24 | 7004631 | ORING | | | 1 |
| 71 | 7007674 | BOLT | | | 3 |
| 72 | 7007672 | BOLT | | | 4 |
| 73 | 7007835 | WASHER SPRING | | | 7 |

Page 191 - OSS# 2089524 - All rights reserved by Bobcat Company - 05/11/2012 - 06:30:39 - Produced by Ken Cook Co. with mediaioff

# HYDRAULIC CIRCUITRY
## (Boom) (Arm Load Holding Valve)

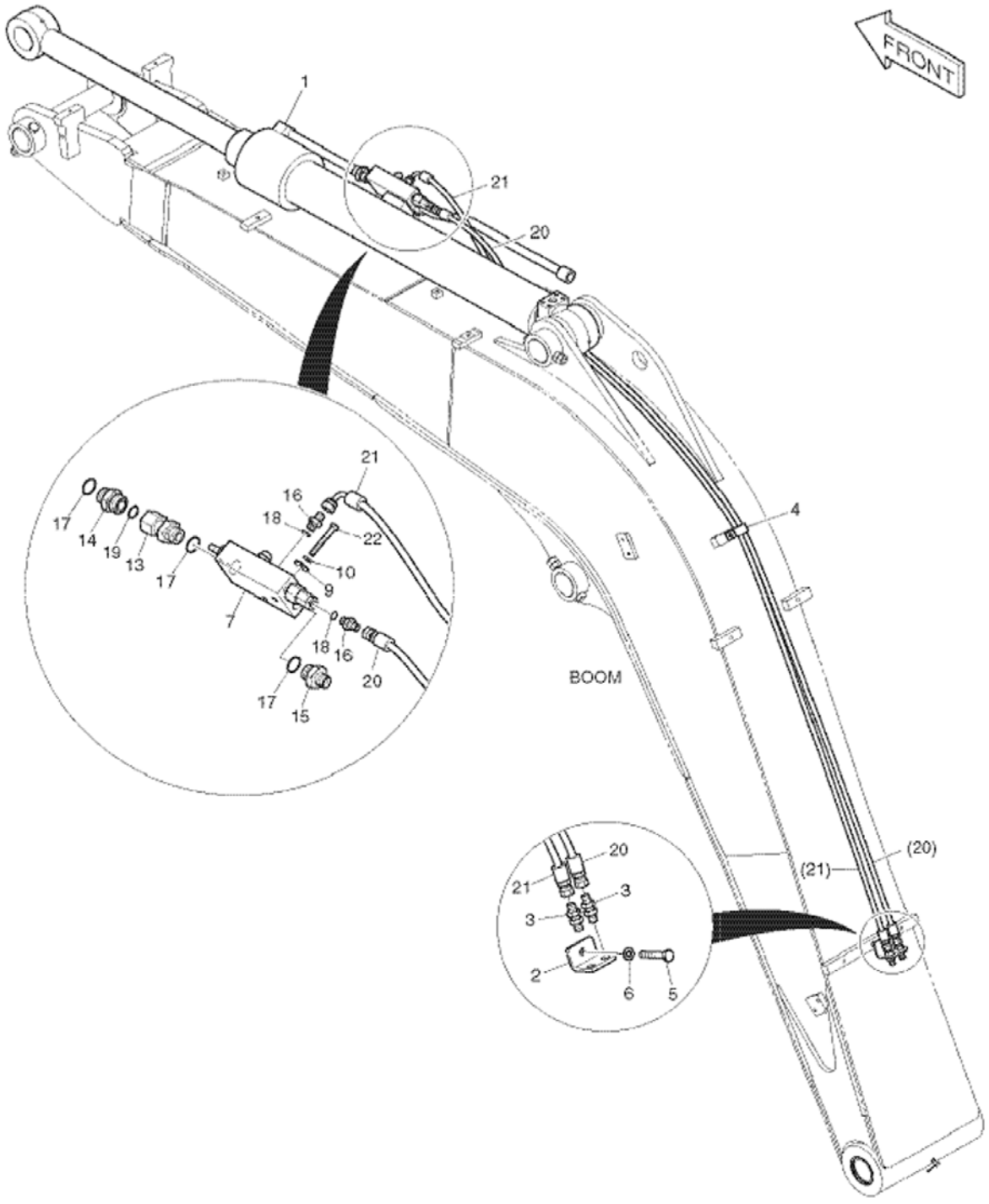


E80-6420



Page 192 - OSS# 2089524 - All rights reserved by Bobcat Company - 05/11/2012 - 06:30:39 - Produced by Ken Cook Co. with mediaIoff

## HYDRAULIC CIRCUITRY (Cont'd)
## (Boom) (Arm Load Holding Valve)

| Ref No | Part Number | Description | Remarks | Serial Number | Qty |
|---|---|---|---|---|---|
| 1 | 7006799 | CYLINDER ARM LOCK VALVE | See Illustration ARM CYLINDER/ EM6366 W/Lock valve | | 1 |
| 2 | 7003968 | BRACKET | | | 1 |
| 3 | 7003949 | ADAPTER | | | 2 |
| 4 | 7005573 | CLIP | | | 1 |
| 5 | 7007675 | BOLT | | | 1 |
| 6 | 7007835 | WASHER SPRING | | | 1 |
| 7 | 7004980 | VALVE LOCK | | | 1 |
| 9 | 7004470 | WASHER PLAIN | | | 2 |
| 10 | 7007834 | WASHER SPRING | | | 2 |
| 13 | 7005552 | ADAPTER | | | 1 |
| 14 | 7004775 | ADAPTER | | | 1 |
| 15 | 7004686 | ADAPTER | | | 1 |
| 16 | 7004683 | ADAPTER | | | 2 |
| 17 | 7007917 | ORING | | | 3 |
| 18 | 7007906 | ORING | | | 2 |
| 19 | 7007960 | ORING | | | 1 |
| 20 | 7005162 | HOSE | | | 1 |
| 21 | 7005195 | HOSE | | | 1 |
| 22 | 7007661 | BOLT | | | 2 |

Page 193 - OSS# 2089524 - All rights reserved by Bobcat Company - 05/11/2012 - 06:30:39 - Produced by Ken Cook Co. with mediaioff

# HYDRAULIC CIRCUITRY
## (Boom) (Boom Cylinder) (Boom Load Holding Valve)

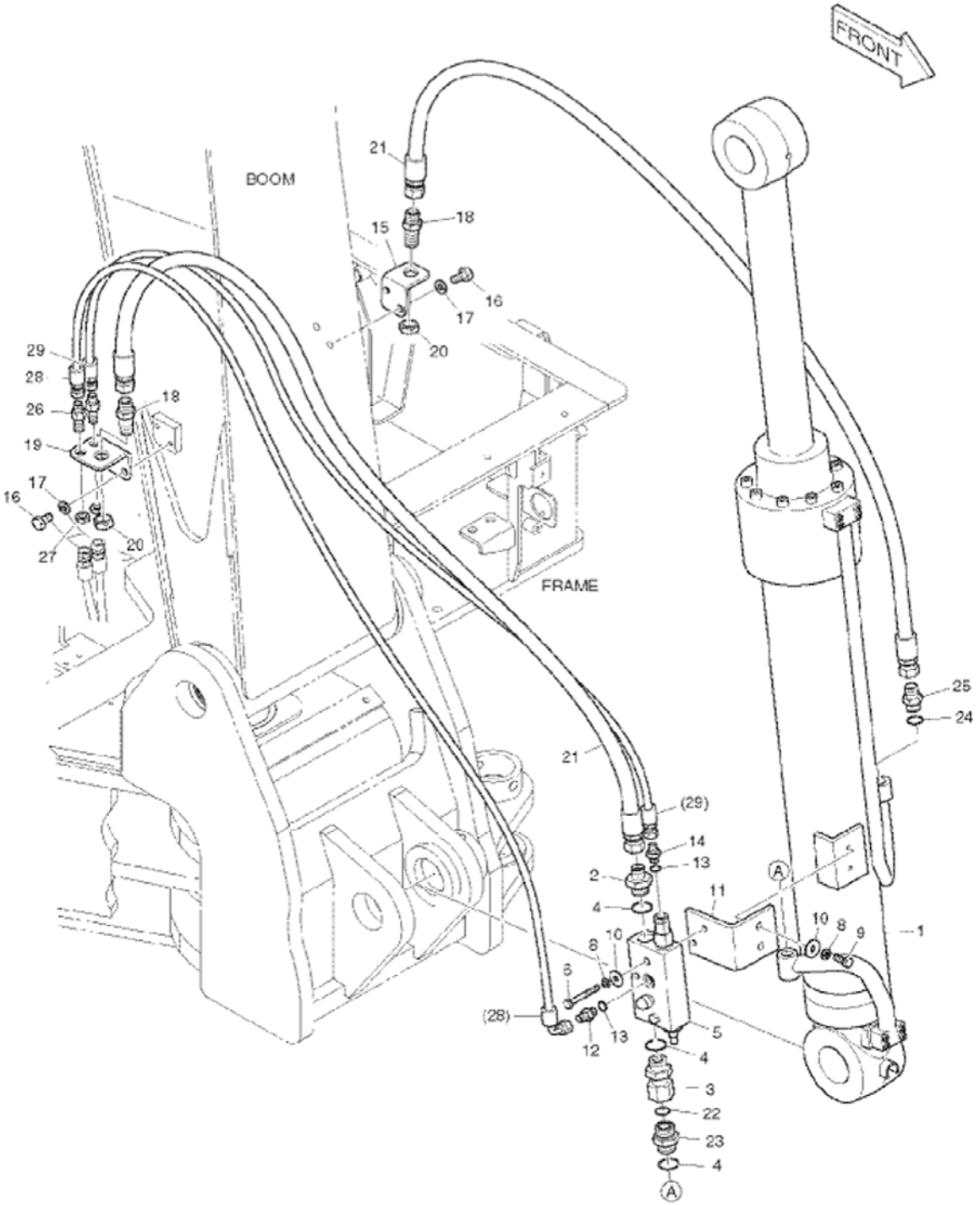


E80-3140



Page 194 - OSS# 2089524 - All rights reserved by Bobcat Company - 05/11/2012 - 06:30:39 - Produced by Ken Cook Co. with mediaIoff

| Ref No | Part Number | Description | Remarks | Serial Number | Qty |
|---|---|---|---|---|---|
| 1 | 7012246 | CYLINDER,BOOM | See Illustration BOOM CYLINDER/ EM6001 W/Lock valve Was 7006045 [A] | | 1 |
| 2 | 7004686 | ADAPTER | | | 1 |
| 3 | 7005552 | ADAPTER | | | 1 |
| 4 | 7007917 | ORING | | | 3 |
| 5 | 7004980 | VALVE LOCK | | | 1 |
| 6 | 7007663 | BOLT | | | 2 |
| 8 | 7007834 | WASHER SPRING | | | 4 |
| 9 | 7007618 | BOLT | | | 2 |
| 10 | 7004470 | WASHER PLAIN | | | 4 |
| 11 | 7006146 | BRACKET | | | 1 |
| 12 | 7004683 | ADAPTER | | | 1 |
| 13 | 7007906 | ORING | | | 2 |
| 14 | 7004683 | ADAPTER | | | 1 |
| 15 | 7005925 | BRACKET LH | | | 1 |
| 16 | 7007626 | BOLT | | | 4 |
| 17 | 7007835 | WASHER SPRING | | | 4 |
| 18 | 7003950 | ADAPTER | | | 2 |
| 19 | 7006753 | BRACKET RH | | | 1 |
| 20 | 7003876 | NUT | | | 2 |
| 21 | 2185-1776D20 | HOSE, HYD | NLA Was 7005501 [A] | AET311001 - 11191 | 2 |
| 21 | 2185-1776D20 | HOSE, HYD | NLA Was 7005501 [A] | AETB11001 - 11191 | 2 |
| 21 | 7015633 | HOSE | | AET311001 & Above | 2 |
| 21 | 7015633 | HOSE | | AETB11001 & Above | 2 |
| 22 | 7007960 | ORING | | | 1 |
| 23 | 7004775 | ADAPTER | | | 1 |
| 24 | 7007911 | ORING | | | 1 |
| 25 | 7004699 | ADAPTER | | | 1 |
| 26 | 7005567 | ADAPTER | | | 2 |
| 27 | 7003878 | NUT | | | 2 |
| 28 | 2185-1776D20 | HOSE, HYD | NLA Was 7005186 [A] | AET311001 - 11191 | 1 |
| 28 | 2185-1776D20 | HOSE, HYD | NLA Was 7005186 [A] | AETB11001 - 11191 | 1 |
| 28 | 7015634 | HOSE | | AET311001 & Above | 1 |
| 28 | 7015634 | HOSE | | AETB11001 & Above | 1 |
| 29 | 2185-1776D20 | HOSE, HYD | NLA Was 7005155 [A] | AET311001 - 11191 | 1 |
| 29 | 2185-1776D20 | HOSE, HYD | NLA Was 7005155 [A] | AETB11001 - 11191 | 1 |
| 29 | 7015635 | HOSE | | AET311001 & Above | 1 |
| 29 | 7015635 | HOSE | | AETB11001 & Above | 1 |

Page 195 - OSS# 2089524 - All rights reserved by Bobcat Company - 05/11/2012 - 06:30:39 - Produced by Ken Cook Co. with mediaioff

# HYDRAULIC CIRCUITRY
## (Boom) (2nd Auxiliary/Rotation)

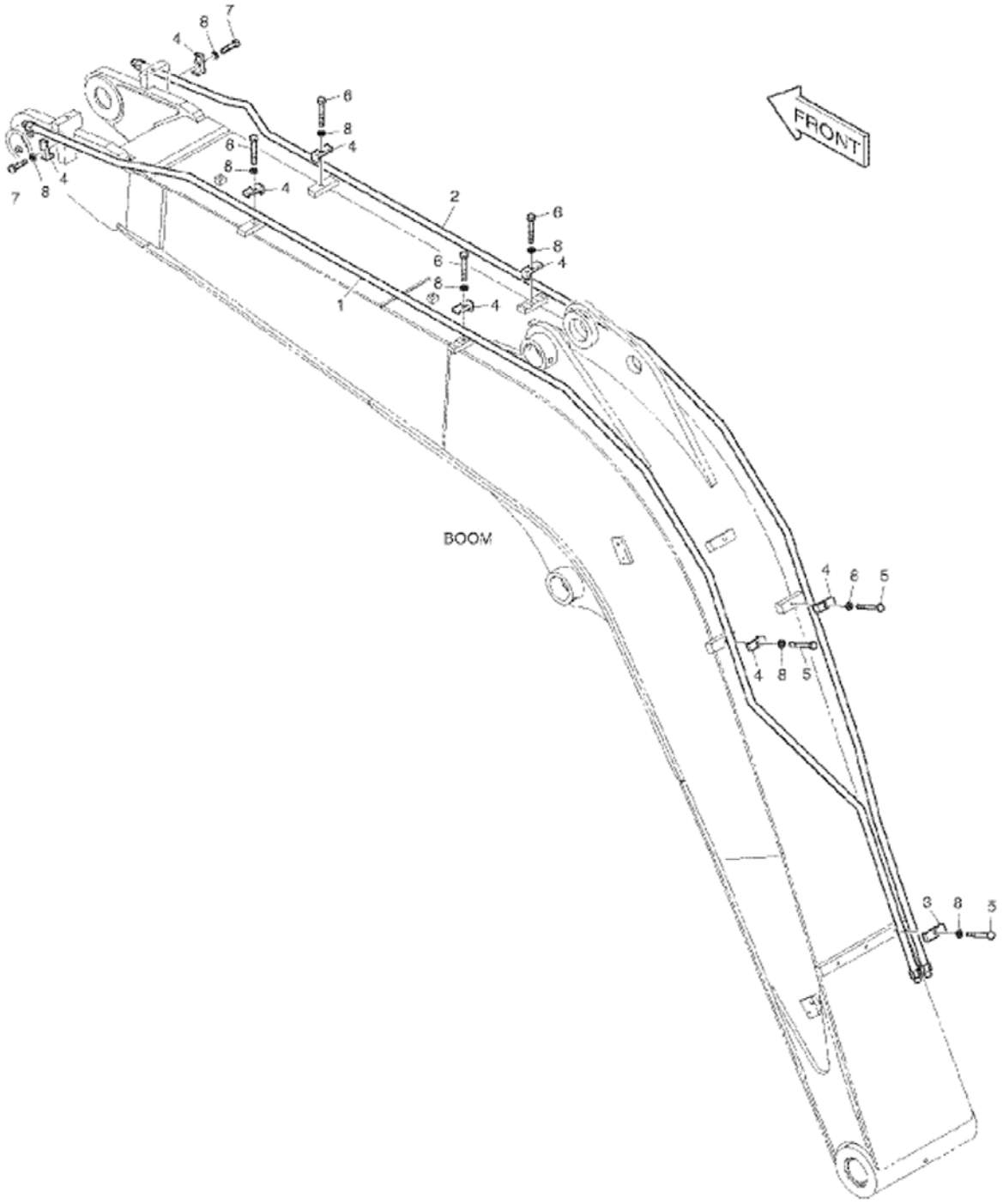


E80-6130



Page 196 - OSS# 2089524 - All rights reserved by Bobcat Company - 05/11/2012 - 06:30:39 - Produced by Ken Cook Co. with mediaIoff

## HYDRAULIC CIRCUITRY (Cont'd)
## (Boom) (2nd Auxiliary/Rotation)

| Ref No | Part Number | Description | Remarks | Serial Number | Qty |
|---|---|---|---|---|---|
| 1 | 7006039 | TUBELINE | | | 1 |
| 2 | 7006040 | TUBELINE | | | 1 |
| 3 | 7005921 | CLAMP | | | 1 |
| 4 | 7005920 | CLAMP | | | 8 |
| 5 | 7007678 | BOLT | | | 3 |
| 6 | 7007677 | BOLT | | | 4 |
| 7 | 7007671 | BOLT | | | 2 |
| 8 | 7007835 | WASHER SPRING | | | 9 |

Page 197 - OSS# 2089524 - All rights reserved by Bobcat Company - 05/11/2012 - 06:30:39 - Produced by Ken Cook Co. with mediaioff

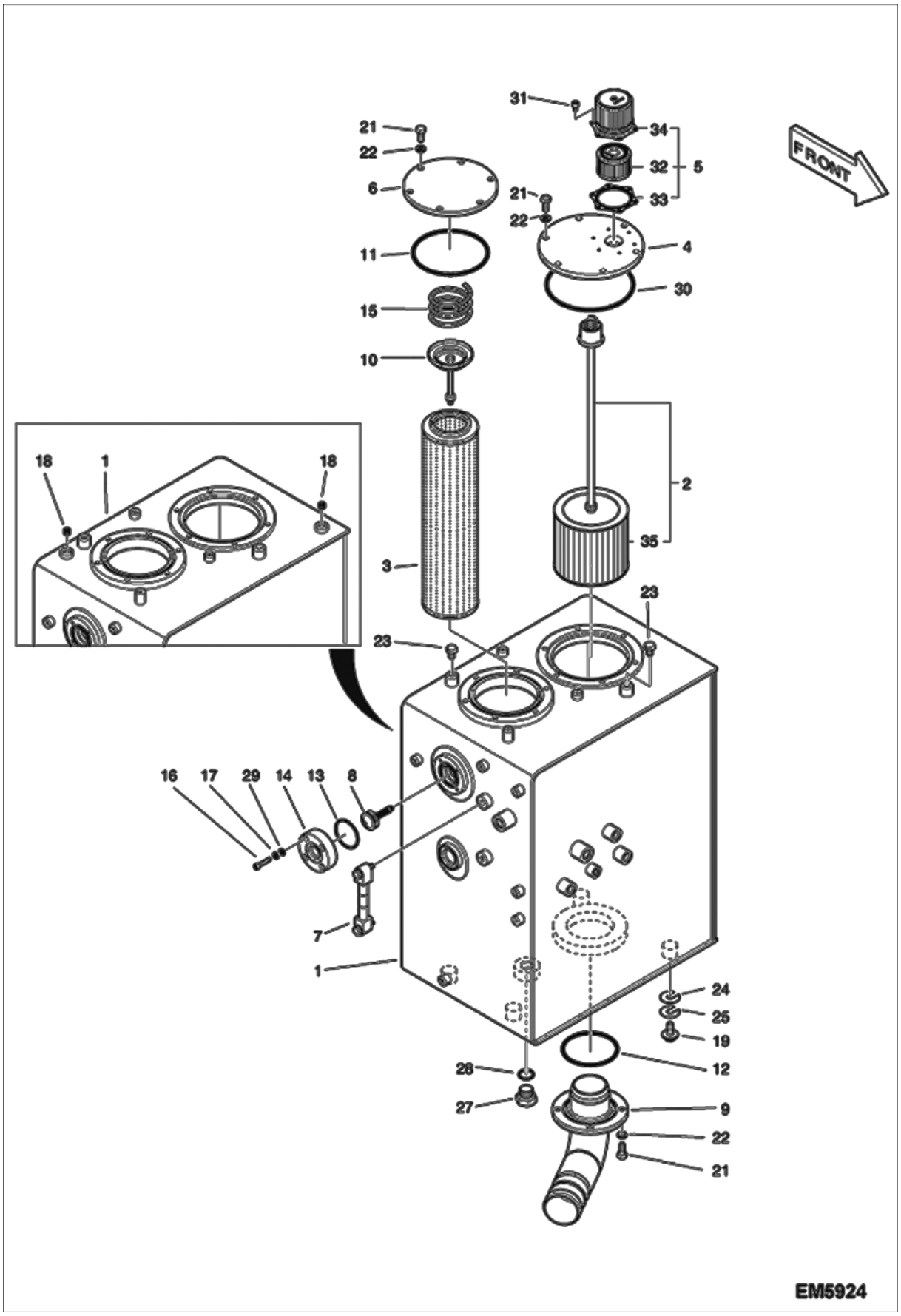




Page 198 - OSS# 2089524 - All rights reserved by Bobcat Company - 05/11/2012 - 06:30:39 - Produced by Ken Cook Co. with mediaIoff

## HYDRAULIC CIRCUITRY (Cont'd)
## (Oil Tank)

| Ref No | Part Number | Description | Remarks | Serial Number | Qty |
|---|---|---|---|---|---|
| 1 | 7012254 | TANK,OIL | Was 7006124 [A] | | 1 |
| 2 | 7006462 | FILTER SUCTION | W/Ref. 35 | | 1 |
| 3 | 7004884 | FILTER RETURN | | | 1 |
| 4 | 7004882 | COVER | | | 1 |
| 5 | 7006807 | FILTER BREATHER AIR | W/Ref. 32-34 | | 1 |
| 6 | 7004997 | COVER | | | 1 |
| 7 | 7003868 | GAUGE LEVEL | | | 1 |
| 8 | 7005679 | VALVE BYPASS 2.5K | 2.5K | | 1 |
| 9 | 7006140 | TUBELINE SUCTION | | | 1 |
| 10 | 7004870 | VALVE BYPASS | | | 1 |
| 11 | 7007955 | ORING | | | 1 |
| 12 | 7007946 | ORING | | | 1 |
| 13 | 7007936 | ORING | Was 7007926 [A] | | 1 |
| 14 | 7006061 | COVER TANK | | | 1 |
| 15 | 7004593 | SPRING | | | 1 |
| 16 | 7007728 | BOLT SOCKET | | | 4 |
| 17 | 7007833 | WASHER SPRING | | | 4 |
| 18 | 7004673 | PLUG | use W/Ref. 7006124 tank | | 2 |
| 19 | 7005122 | BOLT SET | | | 4 |
| 21 | 7007628 | BOLT | | | 16 |
| 22 | 7007835 | WASHER SPRING | | | 16 |
| 23 | 7007635 | BOLT M12X1.75X16 | | | 2 |
| 24 | 7003859 | SHIM | | | 4 |
| 25 | 7006522 | SHIM | | | 4 |
| 27 | 7005575 | PLUG | | | 1 |
| 28 | 7007916 | ORING | | | 1 |
| 29 | 7007814 | WASHER | | | 4 |
| 30 | 7007956 | ORING | | | 1 |
| 31 | 7007719 | BOLT | | | 6 |
| 32 | 7006806 | FILTER, AIR BREATHER | Was 7006808 [A] | | 1 |
| 33 | 7006946 | GASKET | | | 1 |
| 34 | | CAP | NSS - Order Ref. 5 | | 1 |
| 35 | 7006811 | FILTER STRAINER SUCTION | | | 1 |

Page 199 - OSS# 2089524 - All rights reserved by Bobcat Company - 05/11/2012 - 06:30:39 - Produced by Ken Cook Co. with mediaioff

# HYDRAULIC CIRCUITRY
## (Supply & Return)

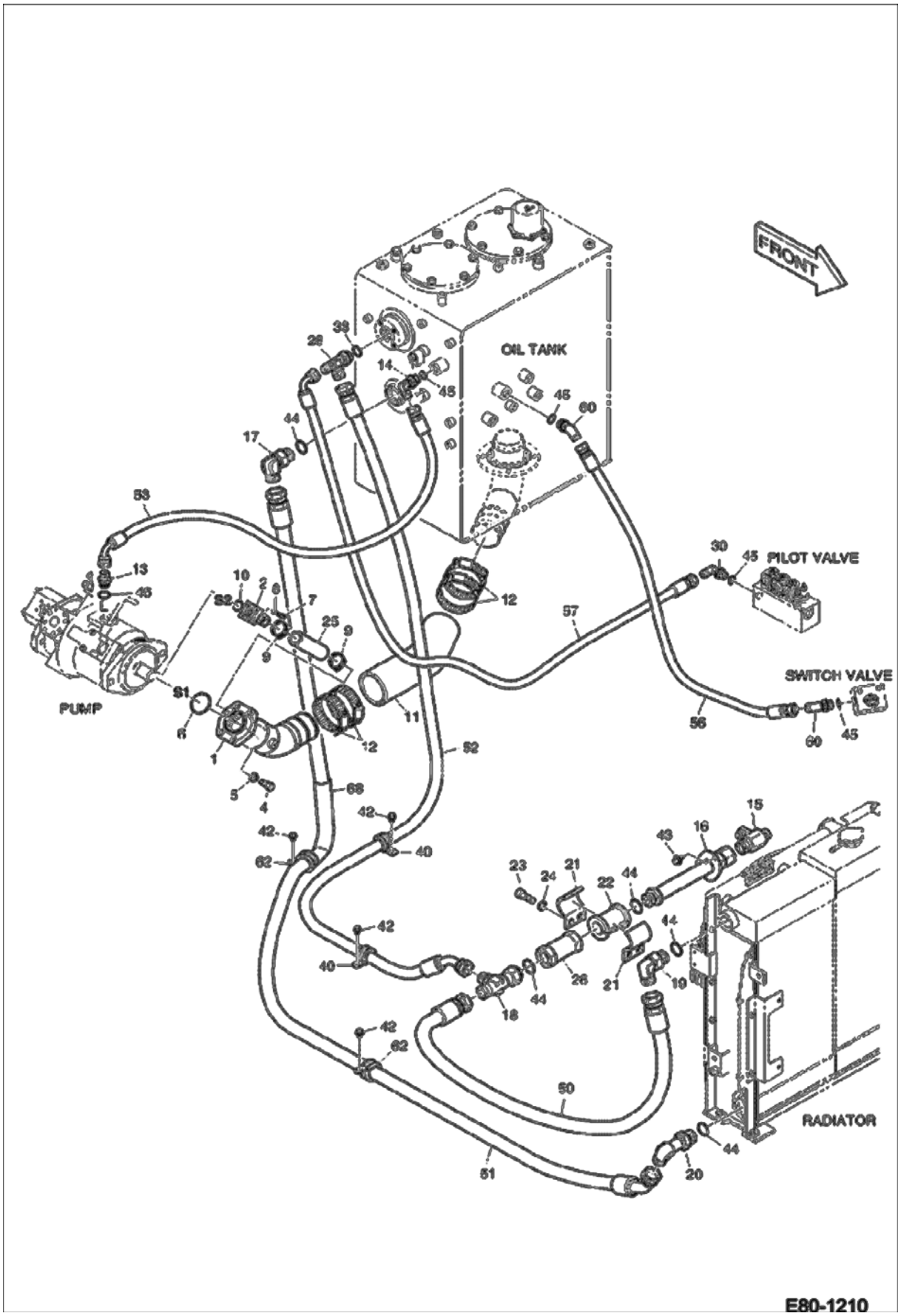




Page 200 - OSS# 2089524 - All rights reserved by Bobcat Company - 05/11/2012 - 06:30:39 - Produced by Ken Cook Co. with mediaIoff

## HYDRAULIC CIRCUITRY (Cont'd)
## (Supply & Return)

| Ref No | Part Number | Description | Remarks | Serial Number | Qty |
|---|---|---|---|---|---|
| 1 | 7006305 | TUBELINE SUCTION | | | 1 |
| 2 | 7006408 | TUBELINE SUCTION | | | 1 |
| 4 | 7007761 | BOLT M12X1.75X35 | | | 4 |
| 5 | 7007845 | WASHER SPRING | | | 4 |
| 6 | 7004633 | ORING | | | 1 |
| 7 | 7007726 | BOLT | | | 4 |
| 8 | 7008301 | WASHER | | | 4 |
| 9 | 7007976 | CLAMP HOSE | | | 2 |
| 10 | 7007915 | ORING | | | 1 |
| 11 | 7006294 | HOSE | | | 1 |
| 12 | 7007982 | CLAMP | | | 4 |
| 13 | 7004690 | ADAPTER | | | 1 |
| 14 | 7004717 | ELBOW | | | 1 |
| 15 | 7005568 | TEE | | | 1 |
| 16 | 7006425 | TUBELINE | | | 1 |
| 17 | 7004708 | ELBOW | | | 1 |
| 18 | 7004742 | TEE | | | 1 |
| 19 | 7004725 | ELBOW | | | 1 |
| 20 | 7005560 | ELBOW | | | 1 |
| 21 | 7003908 | CLAMP | | | 2 |
| 22 | 7003931 | PAD | | | 1 |
| 23 | 7007771 | BOLT | | | 2 |
| 24 | 7007837 | WASHER | | | 2 |
| 25 | 7004783 | HOSE | | | 1 |
| 26 | 7006757 | VALVE BYPASS | | | 1 |
| 28 | 7005565 | TEE | | | 1 |
| 30 | 7004710 | ELBOW | | | 1 |
| 33 | 7007916 | ORING | | | 1 |
| 40 | 7003896 | CLIP | | | 2 |
| 42 | 7005629 | BOLT | | | 4 |
| 43 | 7005129 | BOLT SET | | | 2 |
| 44 | 7007920 | ORING | | | 5 |
| 45 | 7007911 | ORING | | | 4 |
| 46 | 7007962 | ORING | | | 1 |
| 50 | 7005154 | HOSE | | | 1 |
| 51 | 7005175 | HOSE | | | 1 |
| 52 | 7005176 | HOSE | | | 1 |
| 53 | 7005204 | HOSE | | | 1 |
| 56 | 7005163 | HOSE | | | 1 |
| 57 | 7005447 | HOSE | | | 1 |
| 60 | 7004757 | ELBOW | | | 2 |
| 62 | 7003897 | CLIP | | | 2 |
| 68 | 7006523 | GUARD PROTECTOR | | | 1 |

Page 201 - OSS# 2089524 - All rights reserved by Bobcat Company - 05/11/2012 - 06:30:39 - Produced by Ken Cook Co. with mediaioff

# HYDRAULIC CIRCUITRY
## (Manifold & Pump)

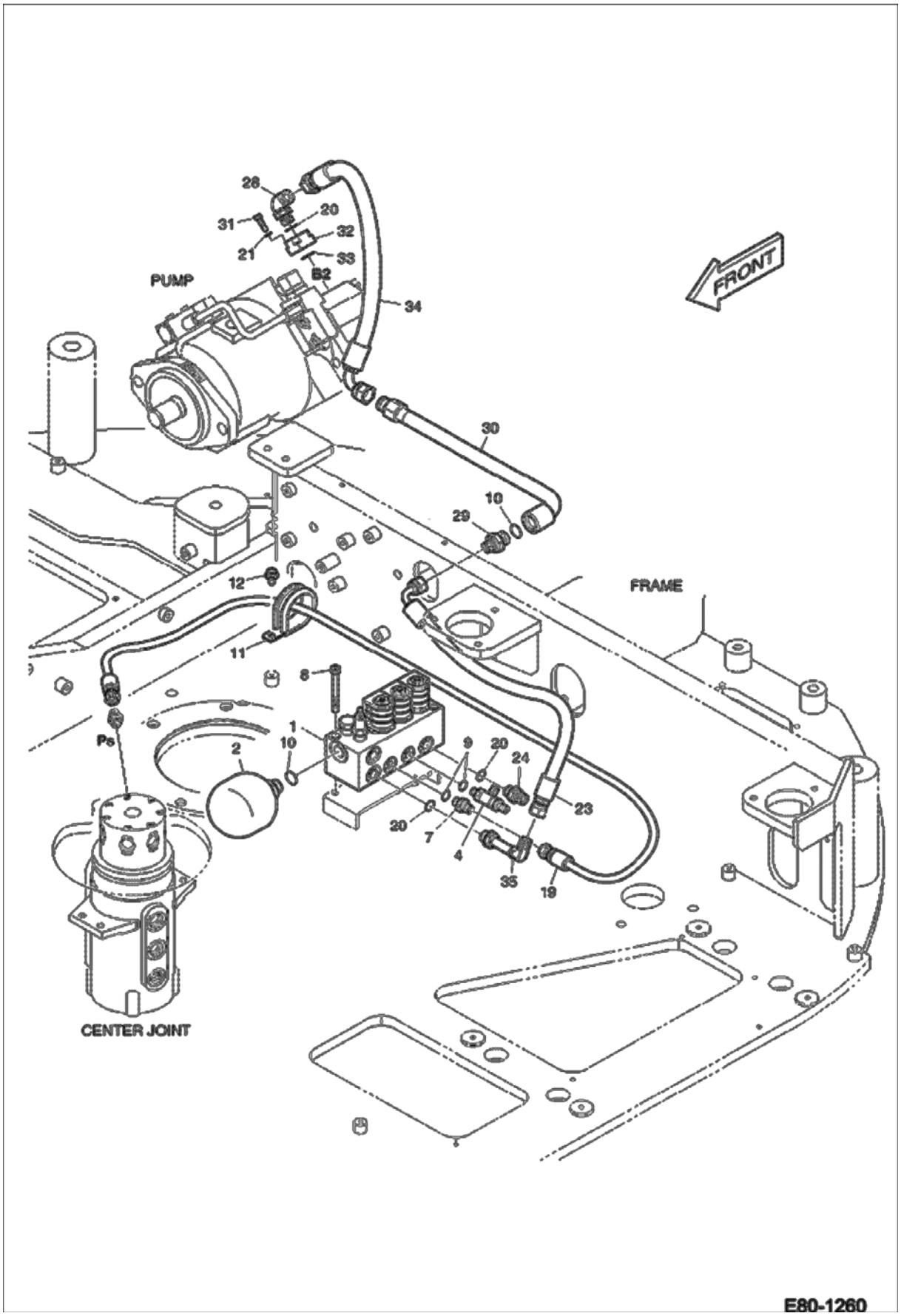




Page 202 - OSS# 2089524 - All rights reserved by Bobcat Company - 05/11/2012 - 06:30:39 - Produced by Ken Cook Co. with mediaIoff

## HYDRAULIC CIRCUITRY (Cont'd)
## (Manifold & Pump)

| Ref No | Part Number | Description | Remarks | Serial Number | Qty |
|---|---|---|---|---|---|
| 1 | 7008257 | VALVE, PILOT | See Illustration MANIFOLD VALVE/ E80-4410 | | 1 |
| 2 | 7004876 | ACCUMULATOR | | | 1 |
| 4 | 7003959 | TEE SHUTTLE | | | 1 |
| 7 | 7004683 | ADAPTER | | | 1 |
| 8 | 7007743 | BOLT | | | 2 |
| 9 | 7007906 | ORING | | | 2 |
| 10 | 7007911 | ORING | | | 2 |
| 11 | 7003901 | CLIP | | | 1 |
| 12 | 7005629 | BOLT | | | 1 |
| 19 | 7005473 | HOSE | | | 1 |
| 20 | 7007909 | ORING | | | 3 |
| 21 | 7008301 | WASHER | | | 4 |
| 23 | 7005378 | HOSE PF3/8-430L | | | 1 |
| 24 | 7004700 | ADAPTER | | | 1 |
| 28 | 7004709 | ELBOW | | | 1 |
| 29 | 7008148 | FILTER, ADAPTER | | | 1 |
| 30 | 7006555 | TUBELINE | | | 1 |
| 31 | 7007724 | BOLT | | | 4 |
| 32 | 7004985 | BLOCK | | | 1 |
| 33 | 7007960 | ORING | | | 1 |
| 34 | 7005429 | HOSE | | | 1 |
| 35 | 7004714 | ELBOW | | | 1 |

Page 203 - OSS# 2089524 - All rights reserved by Bobcat Company - 05/11/2012 - 06:30:39 - Produced by Ken Cook Co. with mediaioff

## HYDRAULIC PILOT CIRCUITRY
## (Arm & Boom)

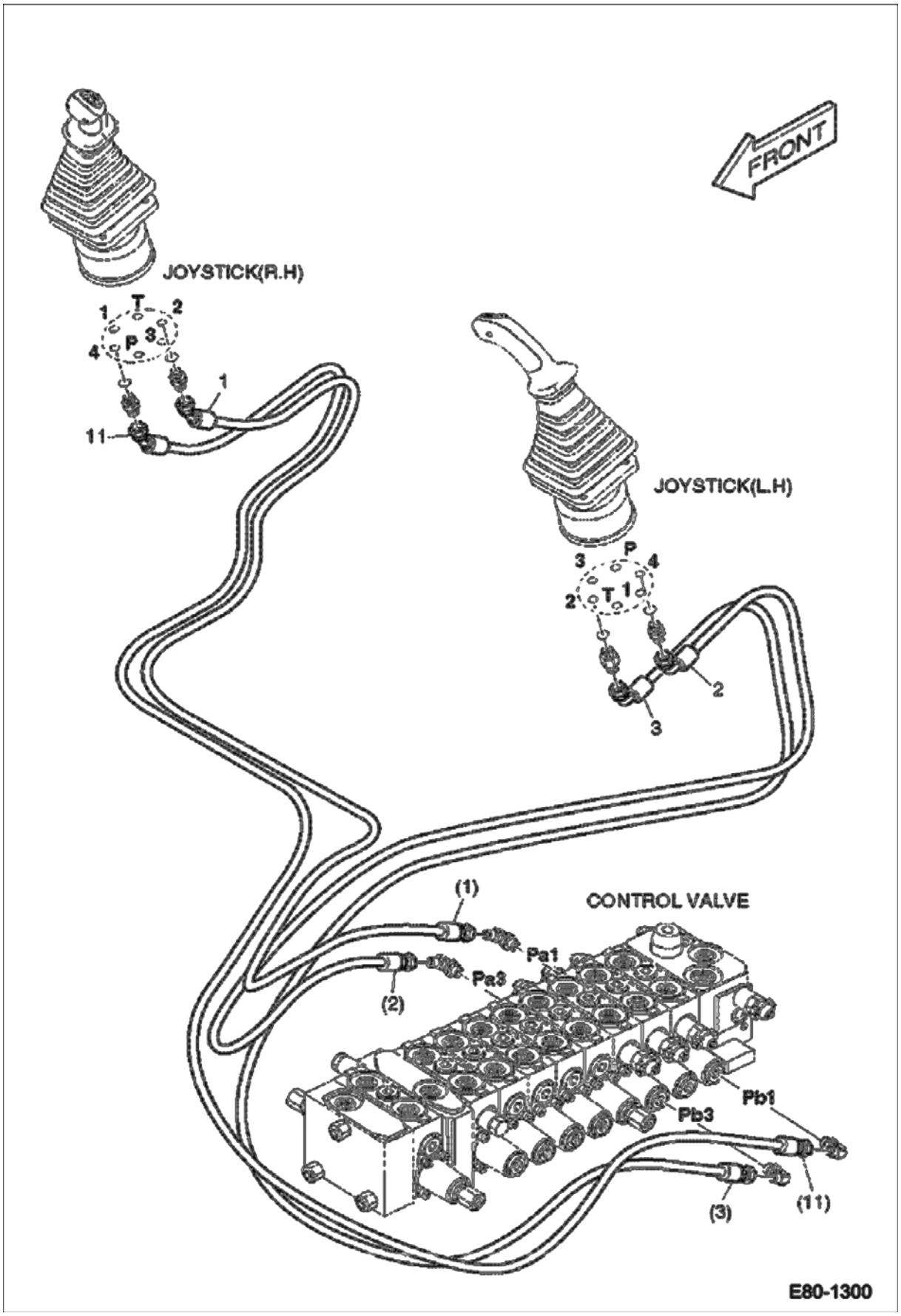




Page 204 - OSS# 2089524 - All rights reserved by Bobcat Company - 05/11/2012 - 06:30:39 - Produced by Ken Cook Co. with mediaioff

## HYDRAULIC PILOT CIRCUITRY (Cont'd)
## (Arm & Boom)

| Ref No | Part Number | Description | Remarks | Serial Number | Qty |
|---|---|---|---|---|---|
| 1 | 7005284 | HOSE | | | 1 |
| 2 | 7005345 | HOSE PF1/4-2500L | | | 1 |
| 3 | 7005346 | HOSE | | | 1 |
| 11 | 7005282 | HOSE | | | 1 |

Page 205 - OSS# 2089524 - All rights reserved by Bobcat Company - 05/11/2012 - 06:30:39 - Produced by Ken Cook Co. with mediaioff

# HYDRAULIC PILOT CIRCUITRY
## (Arm & Boom)

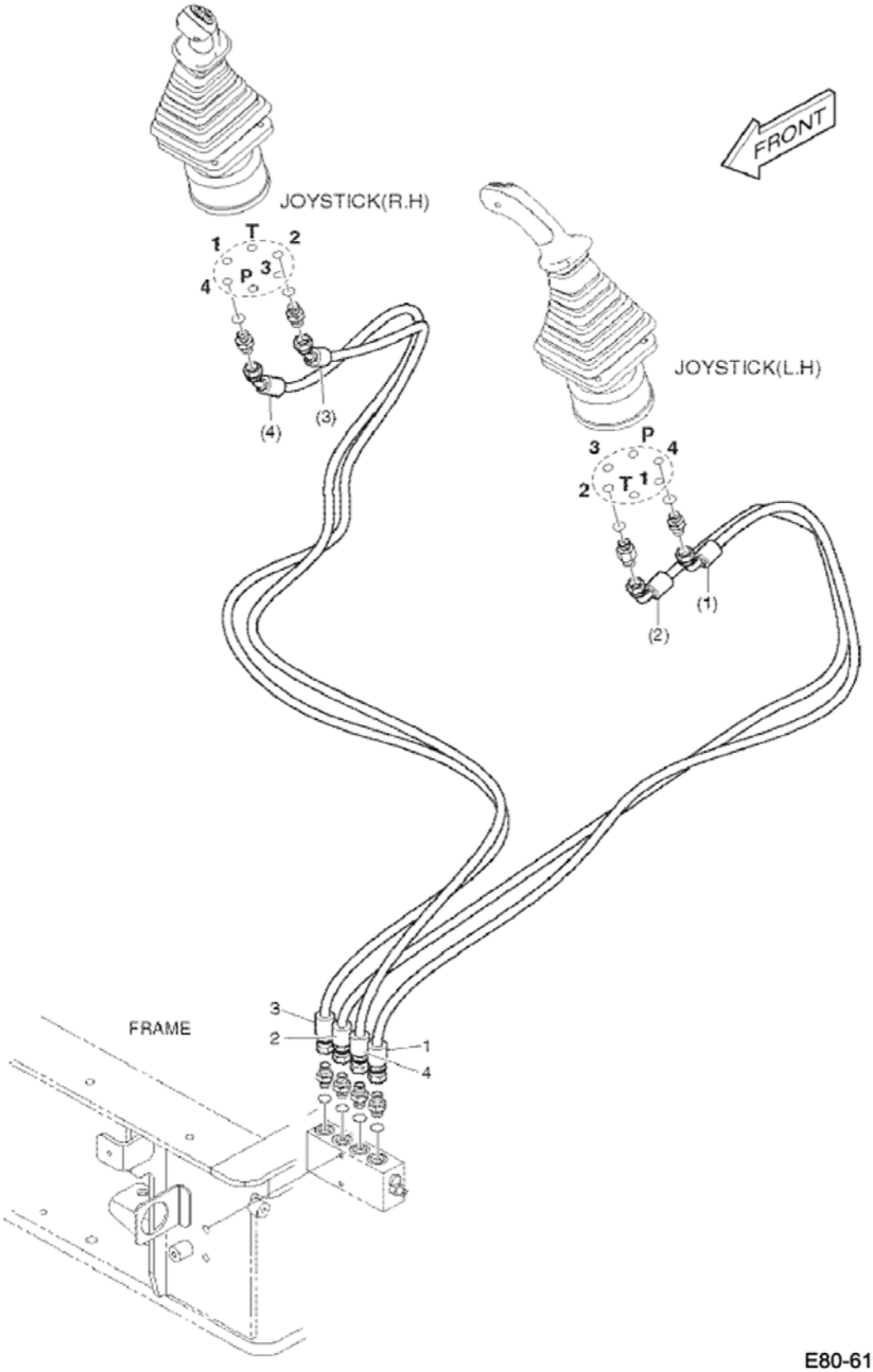


E80-6190



Page 206 - OSS# 2089524 - All rights reserved by Bobcat Company - 05/11/2012 - 06:30:39 - Produced by Ken Cook Co. with mediaioff

## HYDRAULIC PILOT CIRCUITRY (Cont'd)
## (Arm & Boom)

| Ref No | Part Number | Description | Remarks | Serial Number | Qty |
|---|---|---|---|---|---|
| 1 | 7005354 | HOSE PF1/4-1650L | | | 1 |
| 2 | 7005301 | HOSE PF1/4-1700L | | | 1 |
| 3 | 7005261 | HOSE PF1/4-1880L | | | 1 |
| 4 | 7005279 | HOSE PF1/4-1950L | | | 1 |

Page 207 - OSS# 2089524 - All rights reserved by Bobcat Company - 05/11/2012 - 06:30:39 - Produced by Ken Cook Co. with mediaioff

# HYDRAULIC PILOT CIRCUITRY
## (Arm & Boom)

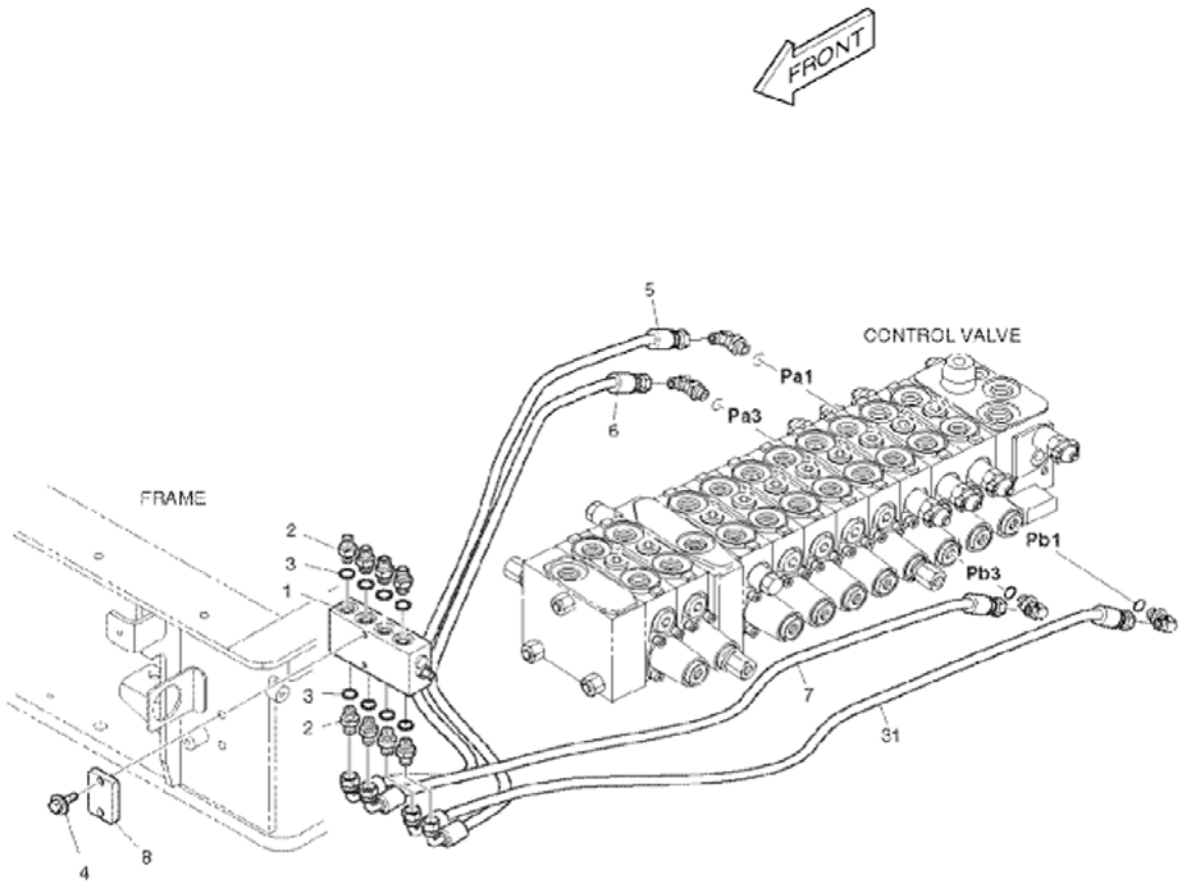


E80-6180



Page 208 - OSS# 2089524 - All rights reserved by Bobcat Company - 05/11/2012 - 06:30:39 - Produced by Ken Cook Co. with mediaoff

## HYDRAULIC PILOT CIRCUITRY (Cont'd)
## (Arm & Boom)

| Ref No | Part Number | Description | Remarks | Serial Number | Qty |
|---|---|---|---|---|---|
| 1 | 7005634 | VALVE SELECT | | | 1 |
| 2 | 7004683 | ADAPTER | | | 8 |
| 3 | 7007906 | ORING | | | 8 |
| 4 | 7005132 | BOLT SET | | | 2 |
| 5 | 7005366 | HOSE PF1/4-1000L | | | 1 |
| 6 | 7005328 | HOSE PF1/4-980L | | | 1 |
| 7 | 7005406 | HOSE PF1/4-760L | | | 1 |
| 8 | 7006754 | SPACER | | | 1 |
| 31 | 7005304 | HOSE | | | 1 |

Page 209 - OSS# 2089524 - All rights reserved by Bobcat Company - 05/11/2012 - 06:30:39 - Produced by Ken Cook Co. with mediaioff

# HYDRAULIC PILOT CIRCUITRY
## (Slew Motor)

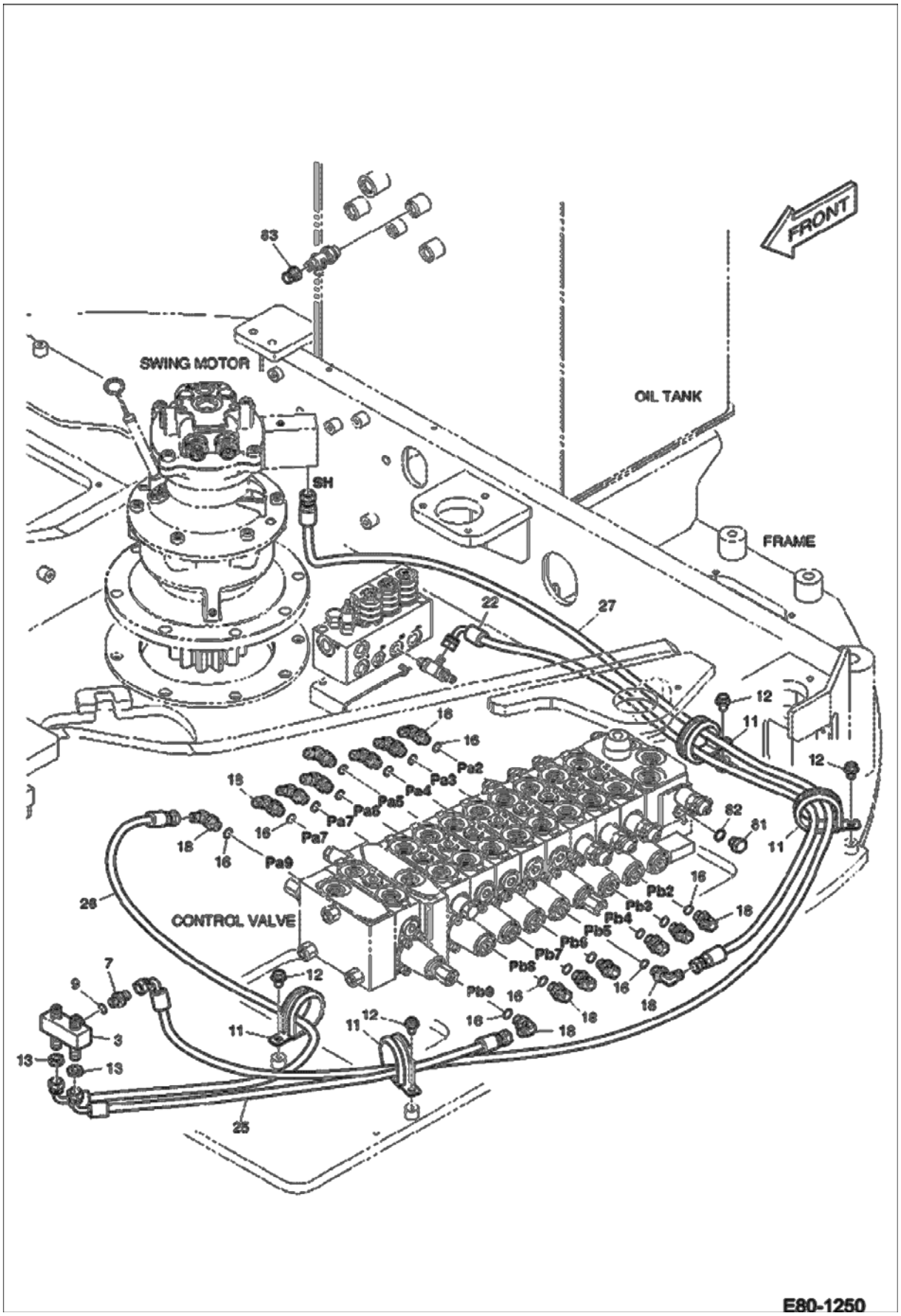




Page 210 - OSS# 2089524 - All rights reserved by Bobcat Company - 05/11/2012 - 06:30:39 - Produced by Ken Cook Co. with mediaIoff

## HYDRAULIC PILOT CIRCUITRY (Cont'd)
## (Slew Motor)

| Ref No | Part Number | Description | Remarks | Serial Number | Qty |
|---|---|---|---|---|---|
| 3 | 7004978 | VALVE SHUTTLE | | | 1 |
| 7 | 7004683 | ADAPTER | | | 1 |
| 9 | 7007906 | ORING | | | 1 |
| 11 | 7003901 | CLIP | | | 4 |
| 12 | 7005629 | BOLT | | | 4 |
| 13 | 7003878 | NUT | | | 2 |
| 16 | 7007961 | ORING | | | 16 |
| 18 | 7005558 | ELBOW | | | 16 |
| 22 | 7005341 | HOSE PF1/4-1200L | | | 1 |
| 25 | 7005344 | HOSE | | | 1 |
| 26 | 7005315 | HOSE PF1/4-620L | | | 1 |
| 27 | 7005318 | HOSE PF1/4-2320L | | | 1 |
| 81 | 7004735 | PLUG | | | 1 |
| 82 | 7007961 | ORING | | | 1 |
| 83 | 7004764 | PLUG | | | 1 |

Page 211 - OSS# 2089524 - All rights reserved by Bobcat Company - 05/11/2012 - 06:30:39 - Produced by Ken Cook Co. with mediaioff

# HYDRAULIC PILOT CIRCUITRY
## (Travel W/O Motion Alarm)

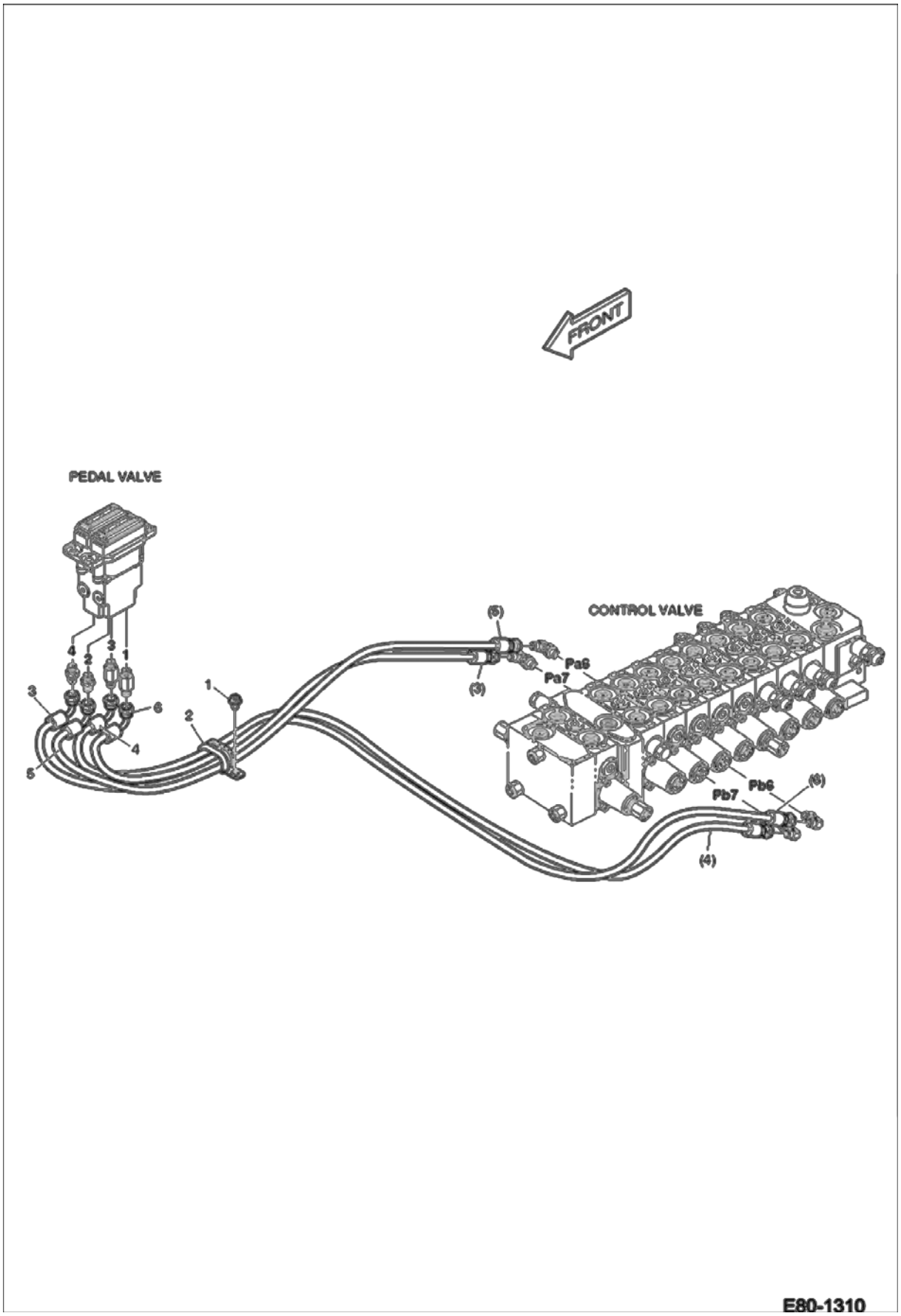




Page 212 - OSS# 2089524 - All rights reserved by Bobcat Company - 05/11/2012 - 06:30:39 - Produced by Ken Cook Co. with mediaioff

## HYDRAULIC PILOT CIRCUITRY (Cont'd)
## (Travel W/O Motion Alarm)

| Ref No | Part Number | Description | Remarks | Serial Number | Qty |
|---|---|---|---|---|---|
| 1 | 7005629 | BOLT | | | 1 |
| 2 | 7003903 | CLIP | | | 1 |
| 3 | 7005323 | HOSE | | | 1 |
| 4 | 7005300 | HOSE PF1/4-1110L | | | 1 |
| 5 | 7005306 | HOSE | | | 1 |
| 6 | 7005348 | HOSE | | | 1 |

Page 213 - OSS# 2089524 - All rights reserved by Bobcat Company - 05/11/2012 - 06:30:39 - Produced by Ken Cook Co. with mediaioff

# HYDRAULIC PILOT CIRCUITRY
## (Travel W/Motion Alarm)

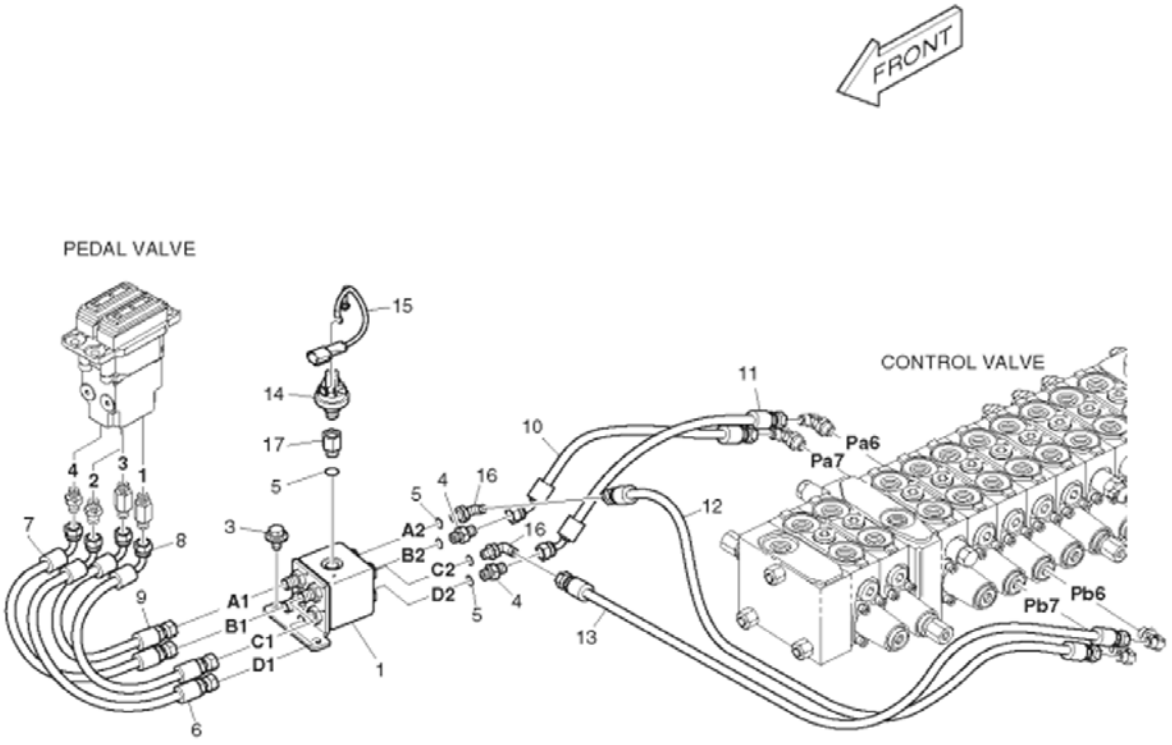


E80-6160



Page 214 - OSS# 2089524 - All rights reserved by Bobcat Company - 05/11/2012 - 06:30:39 - Produced by Ken Cook Co. with mediaioff

## HYDRAULIC PILOT CIRCUITRY (Cont'd)
## (Travel W/Motion Alarm)

| Ref No | Part Number | Description | Remarks | Serial Number | Qty |
|---|---|---|---|---|---|
| 1 | 7008274 | VALVE, SHUTTLE | | | 1 |
| 3 | 7005135 | BOLT | | | 2 |
| 4 | 7004683 | ADAPTER | | | 2 |
| 5 | 7007906 | ORING | | | 5 |
| 6 | 7005358 | HOSE PF1/4-330L | | | 1 |
| 7 | 7005358 | HOSE PF1/4-330L | | | 1 |
| 8 | 7005361 | HOSE PF1/4-310L | | | 1 |
| 9 | 7005361 | HOSE PF1/4-310L | | | 1 |
| 10 | 7005289 | HOSE PF1/4-380L | | | 1 |
| 11 | 7005263 | HOSE | | | 1 |
| 12 | 7005474 | HOSE PF1/4-650L | | | 1 |
| 13 | 7005488 | HOSE | | | 1 |
| 14 | 7005031 | SWITCH PRESSURE | | | 1 |
| 15 | 7005012 | HARNESS JOINT | | | 1 |
| 16 | 7004713 | ELBOW | | | 2 |
| 17 | 7005554 | REDUCER | | | 1 |

Page 215 - OSS# 2089524 - All rights reserved by Bobcat Company - 05/11/2012 - 06:30:39 - Produced by Ken Cook Co. with mediaioff

# HYDRAULIC PILOT CIRCUITRY
## (LH Joystick)

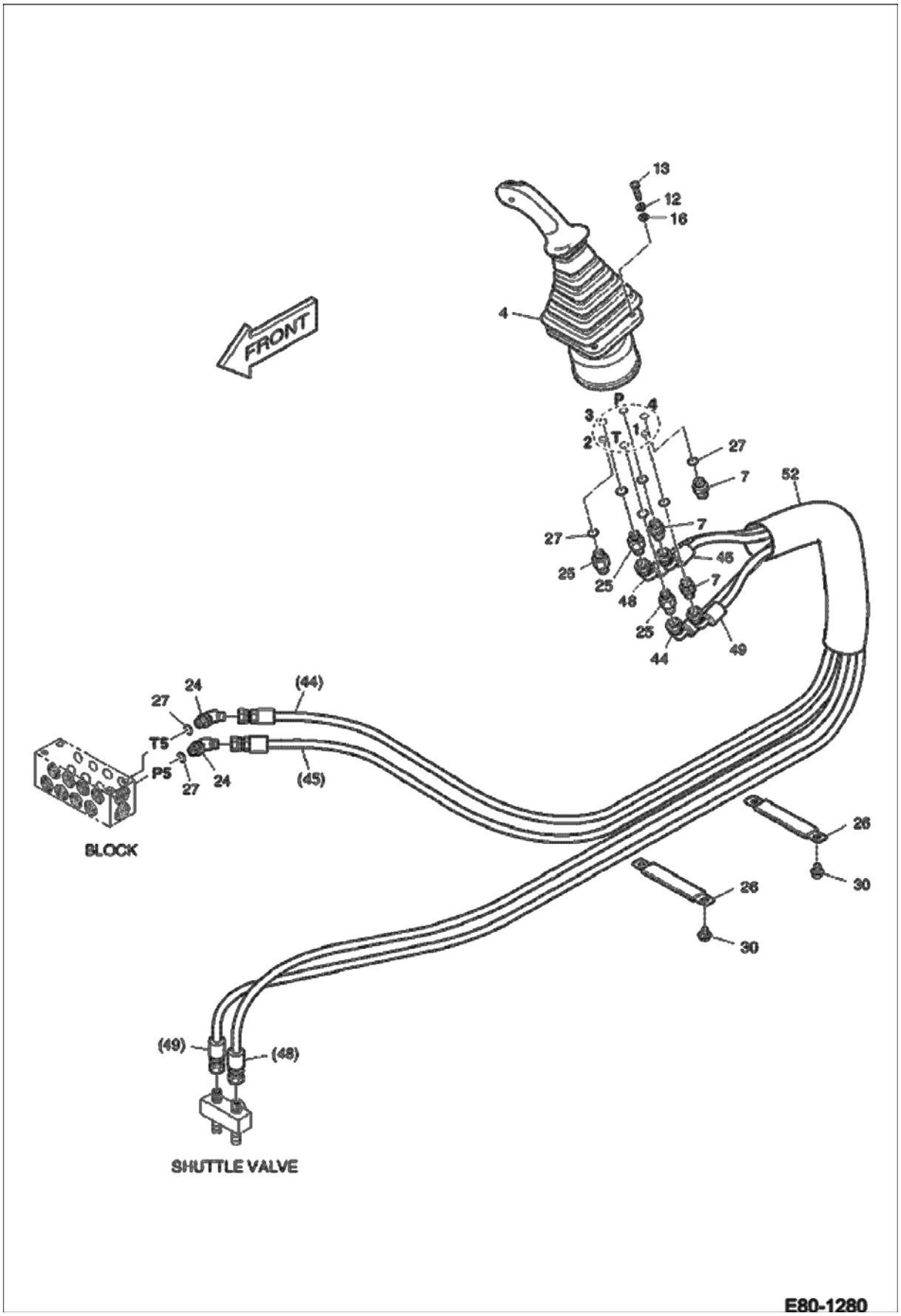




Page 216 - OSS# 2089524 - All rights reserved by Bobcat Company - 05/11/2012 - 06:30:39 - Produced by Ken Cook Co. with mediaioff

## HYDRAULIC PILOT CIRCUITRY (Cont'd)
## (LH Joystick)

| Ref No | Part Number | Description | Remarks | Serial Number | Qty |
|---|---|---|---|---|---|
| 4 | 7006447 | JOYSTICK LH | See Illustration JOYSTICK VALVES/ E80-4290 LH | | 1 |
| 7 | 7004683 | ADAPTER | | | 3 |
| 12 | 7007833 | WASHER SPRING | | | 4 |
| 13 | 7007610 | BOLT | | | 4 |
| 16 | 7007814 | WASHER | | | 4 |
| 24 | 7004755 | ELBOW | | | 2 |
| 25 | 7004695 | ADAPTER | | | 3 |
| 26 | 7006571 | CLIP | | | 2 |
| 27 | 7007906 | ORING | | | 8 |
| 30 | 7005629 | BOLT | | | 4 |
| 44 | 7005326 | HOSE PF1/4-1530L | | | 1 |
| 45 | 7005381 | HOSE PF1/4-1560L | | | 1 |
| 48 | 7005331 | HOSE PF1/4-1750L | | | 1 |
| 49 | 7005331 | HOSE PF1/4-1750L | | | 1 |
| 52 | 7006572 | GUARD PROTECTOR | | | 1 |

Page 217 - OSS# 2089524 - All rights reserved by Bobcat Company - 05/11/2012 - 06:30:39 - Produced by Ken Cook Co. with mediaioff

# HYDRAULIC PILOT CIRCUITRY
## (RH Joystick & Blade Control Valve)

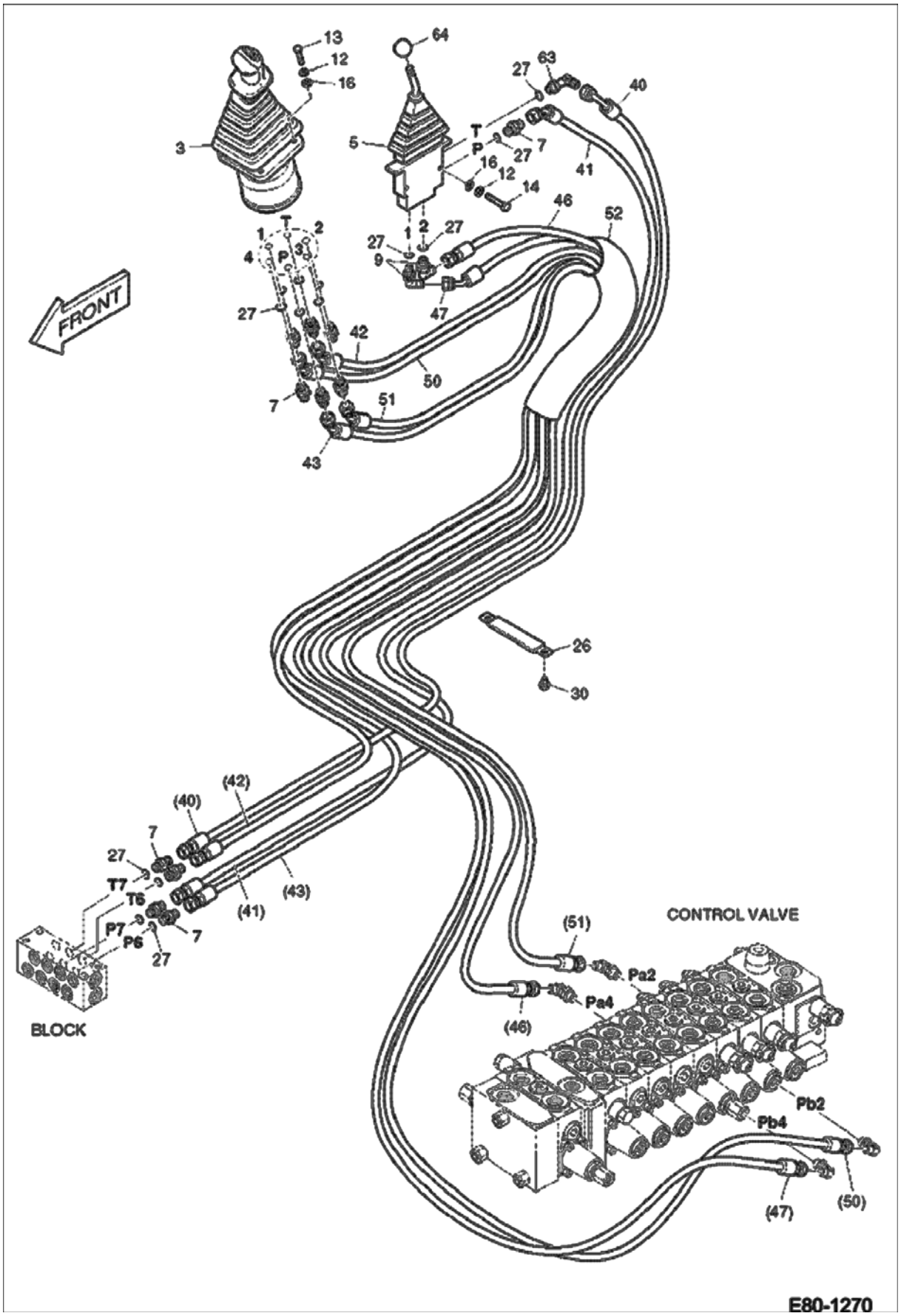




Page 218 - OSS# 2089524 - All rights reserved by Bobcat Company - 05/11/2012 - 06:30:39 - Produced by Ken Cook Co. with mediaioff

# HYDRAULIC PILOT CIRCUITRY (Cont'd)
# (RH Joystick & Blade Control Valve)

| Ref No | Part Number | Description | Remarks | Serial Number | Qty |
|---|---|---|---|---|---|
| 3 | 7006448 | JOYSTICK RH | See Illustration JOYSTICK VALVES/ E80-4290 RH | | 1 |
| 5 | 7006577 | JOYSTICK DOZER | See Illustration JOYSTICK/ E80-4300 | | 1 |
| 7 | 7004683 | ADAPTER | | | 11 |
| 9 | 7004713 | ELBOW | | | 2 |
| 12 | 7007833 | WASHER SPRING | | | 6 |
| 13 | 7007610 | BOLT | | | 4 |
| 14 | 7007651 | BOLT | | | 2 |
| 16 | 7007814 | WASHER | | | 6 |
| 26 | 7006571 | CLIP | | | 1 |
| 27 | 7007906 | ORING | | | 14 |
| 30 | 7005629 | BOLT | | | 2 |
| 40 | 7005300 | HOSE PF1/4-1110L | | | 1 |
| 41 | 7005271 | HOSE PF1/4-1000L | | | 1 |
| 42 | 7005270 | HOSE PF1/4-1150L | | | 1 |
| 43 | 7005274 | HOSE PF1/4-1180L | | | 1 |
| 46 | 7005490 | HOSE PF1/4-2575L | | | 1 |
| 47 | 7005264 | HOSE PF1/4-2350L | | | 1 |
| 50 | 7005273 | HOSE PF1/4-2590L | | | 1 |
| 51 | 7005283 | HOSE PF1/4-2800L | | | 1 |
| 52 | 7006572 | GUARD PROTECTOR | | | 1 |
| 63 | 7004721 | ELBOW | | | 1 |
| 64 | 7003914 | HANDLE GRIP | | | 1 |

Page 219 - OSS# 2089524 - All rights reserved by Bobcat Company - 05/11/2012 - 06:30:39 - Produced by Ken Cook Co. with mediaioff

# HYDRAULIC PILOT CIRCUITRY
## (Travel & Pedal Valves)

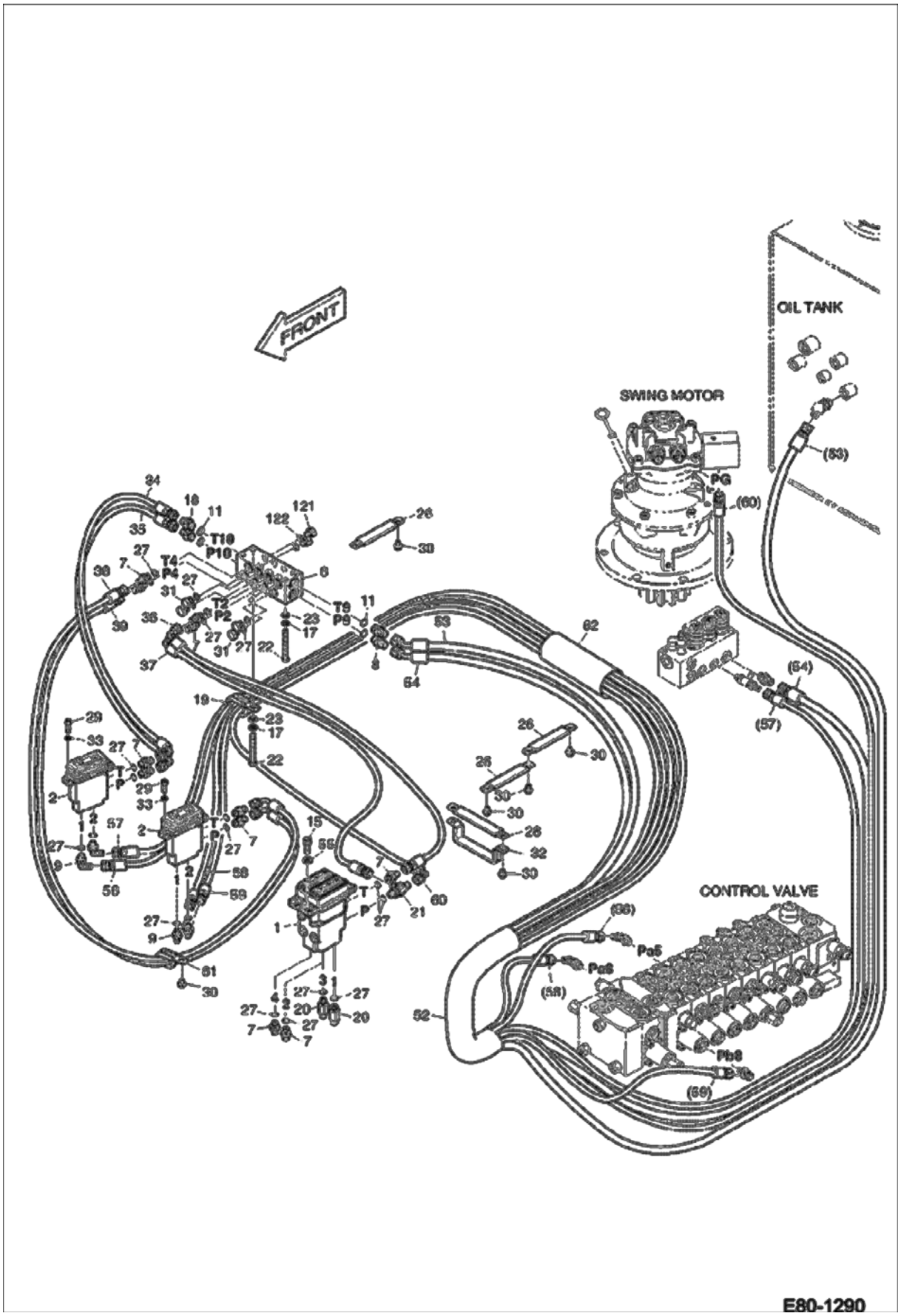




Page 220 - OSS# 2089524 - All rights reserved by Bobcat Company - 05/11/2012 - 06:30:39 - Produced by Ken Cook Co. with mediaIoff

# HYDRAULIC PILOT CIRCUITRY (Cont'd)
## (Travel & Pedal Valves)

| Ref No | Part Number | Description | Remarks | Serial Number | Qty |
|---|---|---|---|---|---|
| 1 | 7008233 | VALVE, PEDAL | See Illustration PEDAL VALVE/ E80-4310 | | 1 |
| 2 | 7006576 | VALVE, PEDAL | See Illustration PEDAL VALVE/ E80-4400 | | 2 |
| 6 | 7005742 | BLOCK | | | 1 |
| 7 | 7004683 | ADAPTER | | | 11 |
| 8 | 7004696 | ADAPTER | | | 2 |
| 9 | 7004713 | ELBOW | | | 4 |
| 11 | 7007909 | ORING | | | 4 |
| 15 | 7007748 | BOLT SOCKET M10X1.5X30 | | | 4 |
| 17 | 7007834 | WASHER SPRING | | | 4 |
| 18 | 7004694 | ADAPTER | | | 2 |
| 19 | 7003903 | CLIP | | | 1 |
| 20 | 7004702 | ADAPTER | | | 2 |
| 21 | 7004738 | TEE | | | 1 |
| 22 | 7007667 | BOLT | | | 4 |
| 23 | 7007816 | WASHER | | | 4 |
| 26 | 7006571 | CLIP | | | 3 |
| 27 | 7007906 | ORING | | | 22 |
| 28 | 7006570 | CLIP | | | 1 |
| 29 | 7007737 | BOLT | | | 4 |
| 30 | 7005629 | BOLT | | | 8 |
| 31 | 7004732 | PLUG | | | 4 |
| 32 | 7006608 | CLIP | | | 1 |
| 33 | 7007842 | WASHER SPRING | | | 4 |
| 34 | 7005412 | HOSE | | | 1 |
| 35 | 7005412 | HOSE | | | 1 |
| 36 | 7005412 | HOSE | | | 1 |
| 37 | 7005412 | HOSE | | | 1 |
| 38 | 7005295 | HOSE | | | 1 |
| 39 | 7005330 | HOSE PF1/4-600L | | | 1 |
| 52 | 7006572 | GUARD PROTECTOR | | | 1 |
| 53 | 7005269 | HOSE | | | 1 |
| 54 | 7005285 | HOSE | | | 1 |
| 55 | 7007835 | WASHER SPRING | | | 4 |
| 56 | 7005486 | HOSE PF1/4-2130L | | | 1 |
| 57 | 7005516 | HOSE PF1/4-3330L | | | 1 |
| 58 | 7005480 | HOSE PF1/4-1950L | | | 1 |
| 59 | 7005506 | HOSE PF1/4-1800L | | | 1 |
| 60 | 7005327 | HOSE PF1/4-3530L | | | 1 |
| 61 | 7003902 | CLIP | | | 1 |
| 62 | 7006523 | GUARD PROTECTOR | | | 1 |
| 121 | 7004732 | PLUG | | | 2 |
| 122 | 7007906 | ORING | | | 2 |

Page 221 - OSS# 2089524 - All rights reserved by Bobcat Company - 05/11/2012 - 06:30:39 - Produced by Ken Cook Co. with mediaioff

# HYDRAULIC PILOT CIRCUITRY
# (W/O Arm Load Holding Valve)

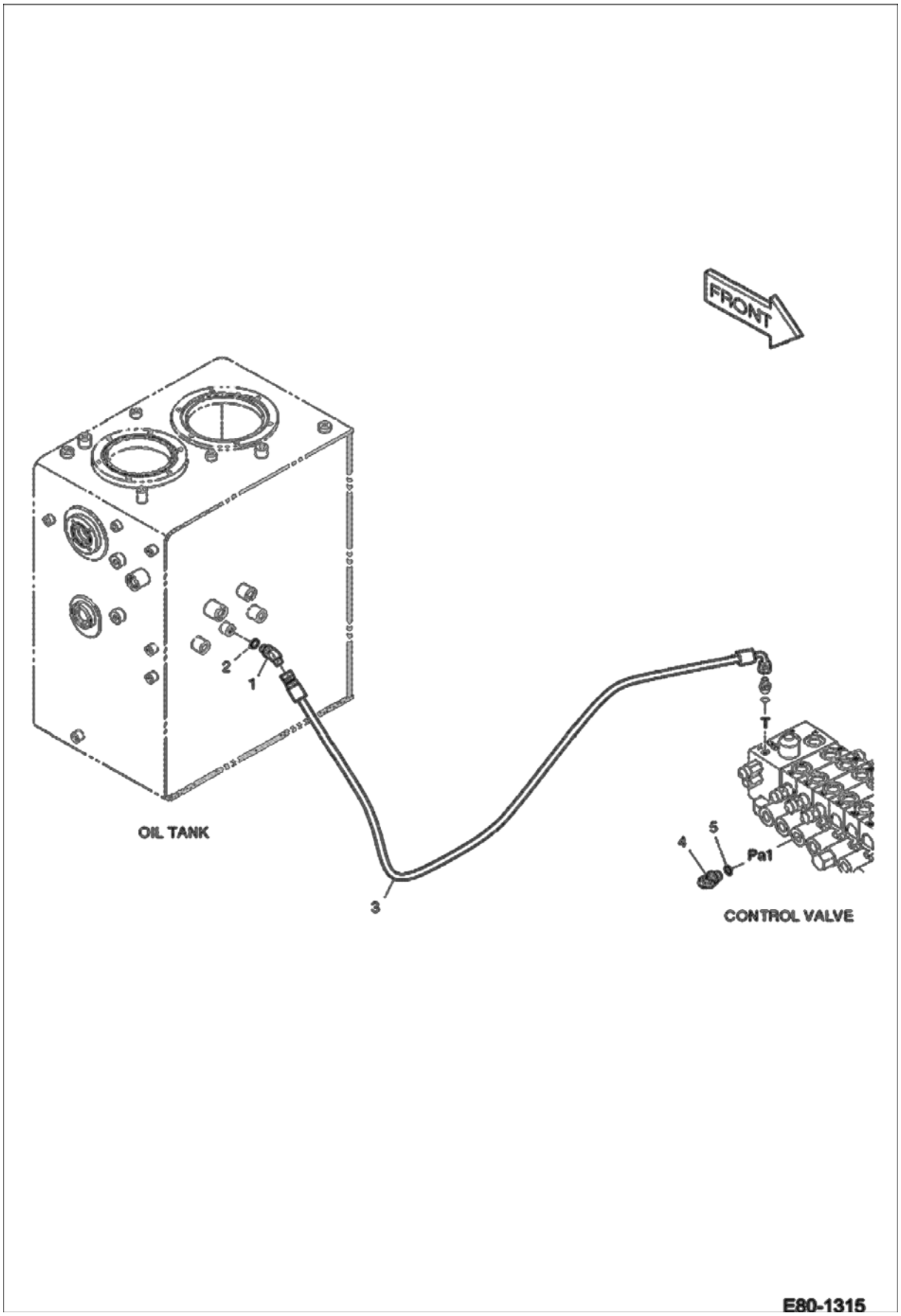




Page 222 - OSS# 2089524 - All rights reserved by Bobcat Company - 05/11/2012 - 06:30:39 - Produced by Ken Cook Co. with mediaIoff

## HYDRAULIC PILOT CIRCUITRY (Cont'd)
## (W/O Arm Load Holding Valve)

| Ref No | Part Number | Description | Remarks | Serial Number | Qty |
|---|---|---|---|---|---|
| 1 | 7004755 | ELBOW | | | 1 |
| 2 | 7007906 | ORING | | | 1 |
| 3 | 7005350 | HOSE | | | 1 |
| 4 | 7005558 | ELBOW | | | 1 |
| 5 | 7007961 | ORING | | | 1 |

Page 223 - OSS# 2089524 - All rights reserved by Bobcat Company - 05/11/2012 - 06:30:39 - Produced by Ken Cook Co. with mediaioff

# HYDRAULIC PILOT CIRCUITRY
# (W/Arm Load Holding Valve)

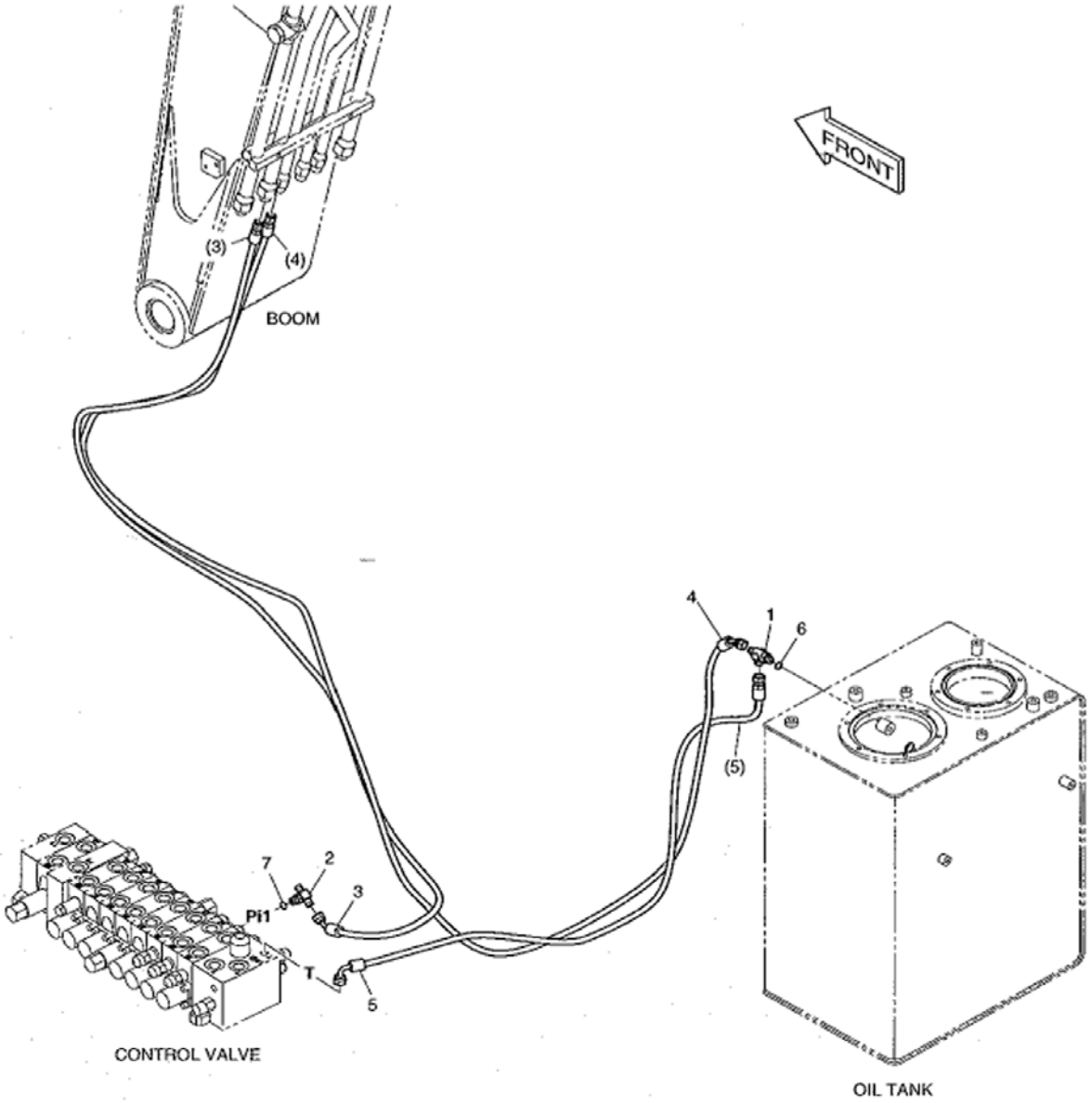


E80-6410



Page 224 - OSS# 2089524 - All rights reserved by Bobcat Company - 05/11/2012 - 06:30:39 - Produced by Ken Cook Co. with mediaioff

## HYDRAULIC PILOT CIRCUITRY (Cont'd)
## (W/Arm Load Holding Valve)

| Ref No | Part Number | Description | Remarks | Serial Number | Qty |
|---|---|---|---|---|---|
| 1 | 7004738 | TEE | | | 1 |
| 2 | 7004750 | TEE | | | 1 |
| 3 | 7005265 | HOSE | | | 1 |
| 4 | 7005281 | HOSE | | | 1 |
| 5 | 7005350 | HOSE | | | 1 |
| 6 | 7007906 | ORING | | | 1 |
| 7 | 7007961 | ORING | | | 1 |

Page 225 - OSS# 2089524 - All rights reserved by Bobcat Company - 05/11/2012 - 06:30:39 - Produced by Ken Cook Co. with mediaioff

## HYDRAULIC PILOT CIRCUITRY
## (Boom Load Holding Valve)

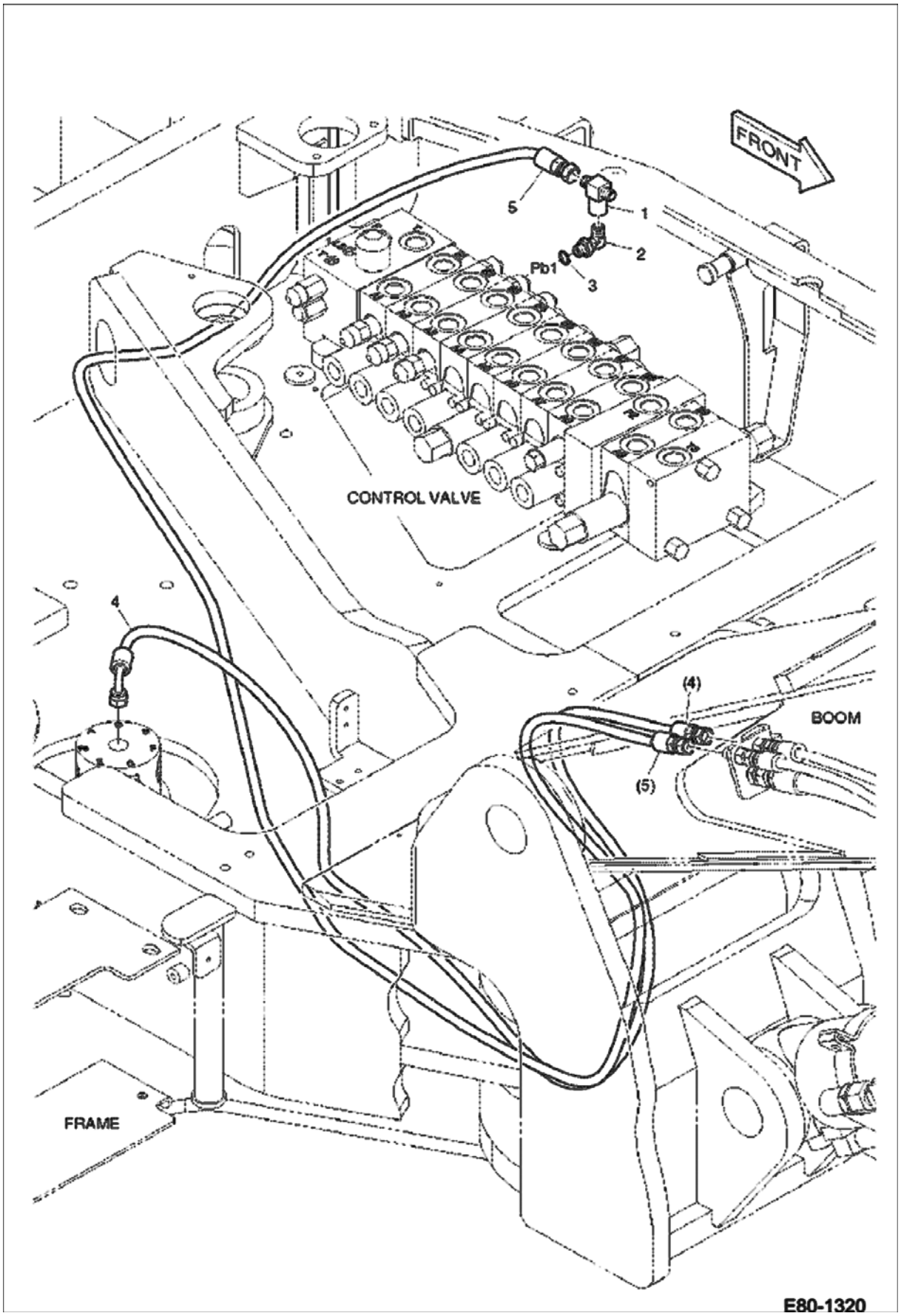




Page 226 - OSS# 2089524 - All rights reserved by Bobcat Company - 05/11/2012 - 06:30:39 - Produced by Ken Cook Co. with mediaIoff

## HYDRAULIC PILOT CIRCUITRY (Cont'd)
## (Boom Load Holding Valve)

| Ref No | Part Number | Description | Remarks | Serial Number | Qty |
|---|---|---|---|---|---|
| 1 | 7004768 | TEE | | | 1 |
| 2 | 7005558 | ELBOW | | | 1 |
| 3 | 7007961 | ORING | | | 1 |
| 4 | 7005332 | HOSE PF1/4-2570L | | | 1 |
| 5 | 7005517 | HOSE PF1/4-3700L | | | 1 |

Page 227 - OSS# 2089524 - All rights reserved by Bobcat Company - 05/11/2012 - 06:30:39 - Produced by Ken Cook Co. with mediaioff

# HYDRAULIC PILOT CIRCUITRY
## (2nd Auxiliary/Rotation)

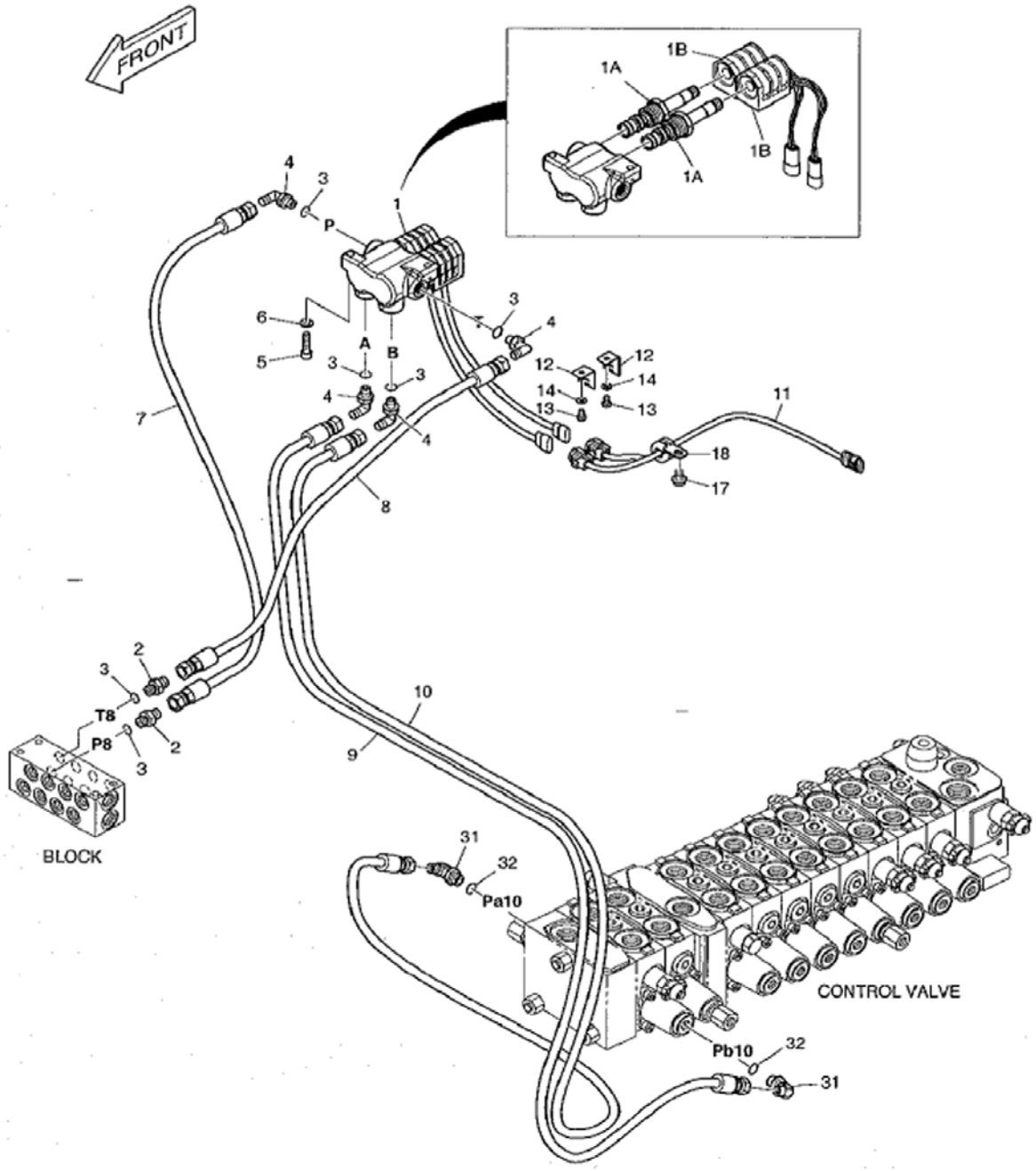


E80-6120



Page 228 - OSS# 2089524 - All rights reserved by Bobcat Company - 05/11/2012 - 06:30:39 - Produced by Ken Cook Co. with mediaioff

## HYDRAULIC PILOT CIRCUITRY (Cont'd)
## (2nd Auxiliary/Rotation)

| Ref No | Part Number | Description | Remarks | Serial Number | Qty |
|---|---|---|---|---|---|
| 1 | 7008284 | VALVE, SOLENOID | | | 1 |
| 1 | 7008289 | SPOOL, SOLENOID | | | 2 |
| 1 | 7003848 | COIL | | | 2 |
| 2 | 7004683 | ADAPTER | | | 2 |
| 3 | 7007906 | ORING | | | 6 |
| 4 | 7004713 | ELBOW | | | 4 |
| 5 | 7008297 | BOLT, SOCKET M8X1.25X30 | | | 2 |
| 6 | 7007842 | WASHER SPRING | | | 2 |
| 7 | 7005469 | HOSE | | | 1 |
| 8 | 7005471 | HOSE | | | 1 |
| 9 | 7005476 | HOSE | | | 1 |
| 10 | 7005491 | HOSE | | | 1 |
| 11 | 7006627 | HARNESS JOINT | | | 1 |
| 12 | 7004824 | BRACKET HOUSING | | | 2 |
| 13 | 7007602 | BOLT | | | 2 |
| 14 | 7007833 | WASHER SPRING | | | 2 |
| 17 | 7005629 | BOLT | | | 1 |
| 18 | 7003894 | CLIP | | | 1 |
| 31 | 7005558 | ELBOW | | | 2 |
| 32 | 7007961 | ORING | | | 2 |

Page 229 - OSS# 2089524 - All rights reserved by Bobcat Company - 05/11/2012 - 06:30:39 - Produced by Ken Cook Co. with mediaioff

# HYDRAULIC PUMP
# (Gear Pump & Pilot Valve)

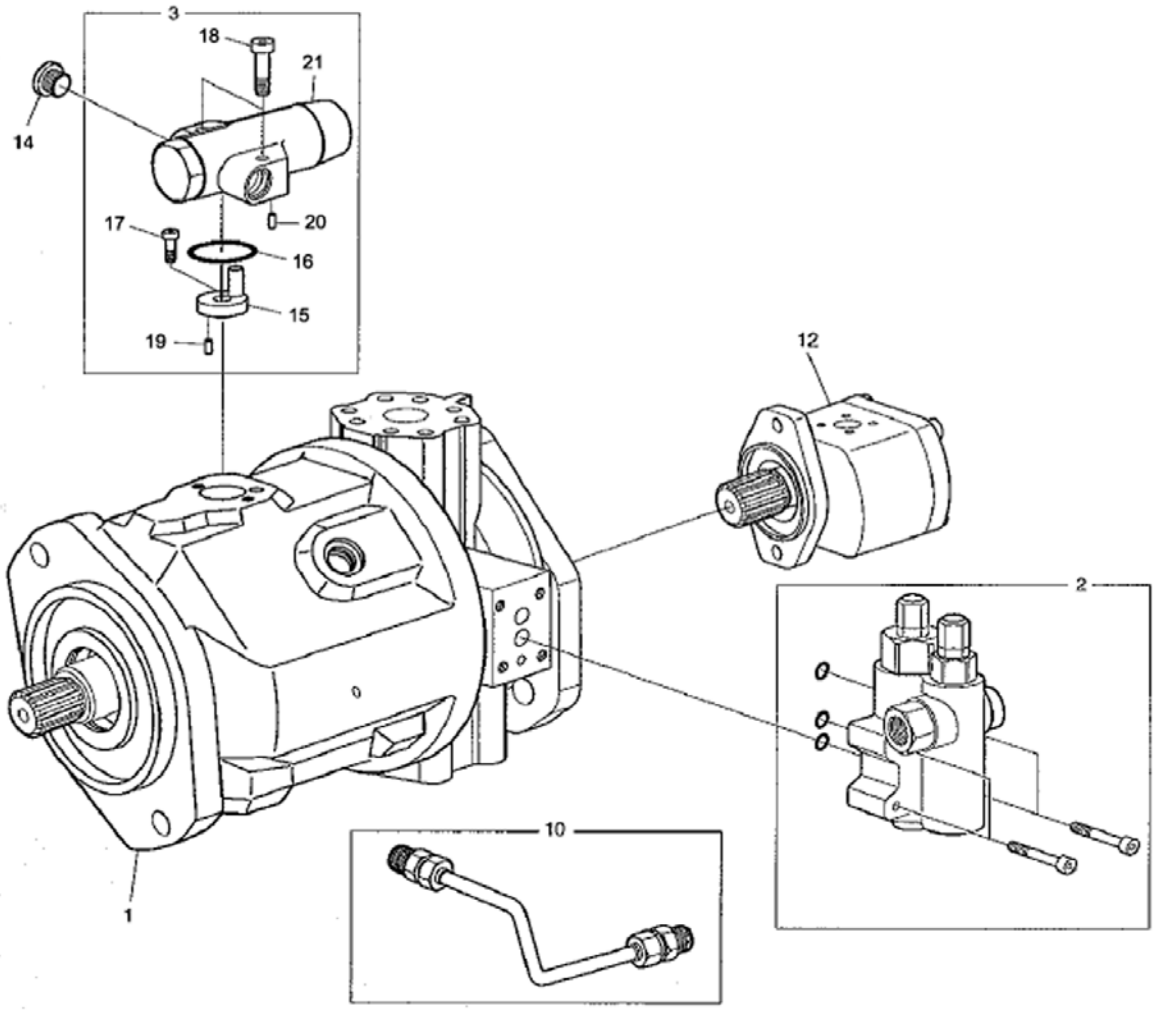


E80-4100



Page 230 - OSS# 2089524 - All rights reserved by Bobcat Company - 05/11/2012 - 06:30:39 - Produced by Ken Cook Co. with mediaIoff

## HYDRAULIC PUMP (Cont'd)
## (Gear Pump & Pilot Valve)

| Ref No | Part Number | Description | Remarks | Serial Number | Qty |
|---|---|---|---|---|---|
| 1 | 7004963 | PUMP ASSY | See Illustration HYDRAULIC PUMP/ E80-4110 W/Ref. 2-14 | | 1 |
| 2 | 7007374 | VALVE PILOT | | | 1 |
| 2 | 7004654 | ORING | | | 3 |
| 2 | 7007727 | SCREW SOCKET | | | 4 |
| 3 | 7007373 | VALVE PILOT | W/Ref. 15-21 | | 1 |
| 10 | 7007364 | TUBELINE ASSY | | | 1 |
| 10 | 7007361 | FITTING GREASE | | | 2 |
| 10 | 7007362 | RING SPACER | | | 2 |
| 12 | 7007375 | PUMP GEAR | | | 1 |
| 14 | 7006848 | PLUG | | | 1 |
| 15 | 7007349 | CARRIER LR | | | 1 |
| 16 | 7004649 | ORING | | | 1 |
| 17 | 7007721 | SCREW SOCKET | | | 1 |
| 18 | 7007725 | SCREW SOCKET | | | 2 |
| 19 | 7007855 | PIN SELF LOCKING | | | 1 |
| 20 | 7007857 | PIN SELF LOCKING | | | 1 |
| 21 | 7007346 | CAP INSULATION | | | 1 |

Page 231 - OSS# 2089524 - All rights reserved by Bobcat Company - 05/11/2012 - 06:30:39 - Produced by Ken Cook Co. with mediaioff

# HYDRAULIC PUMP
## (Rotary Group)

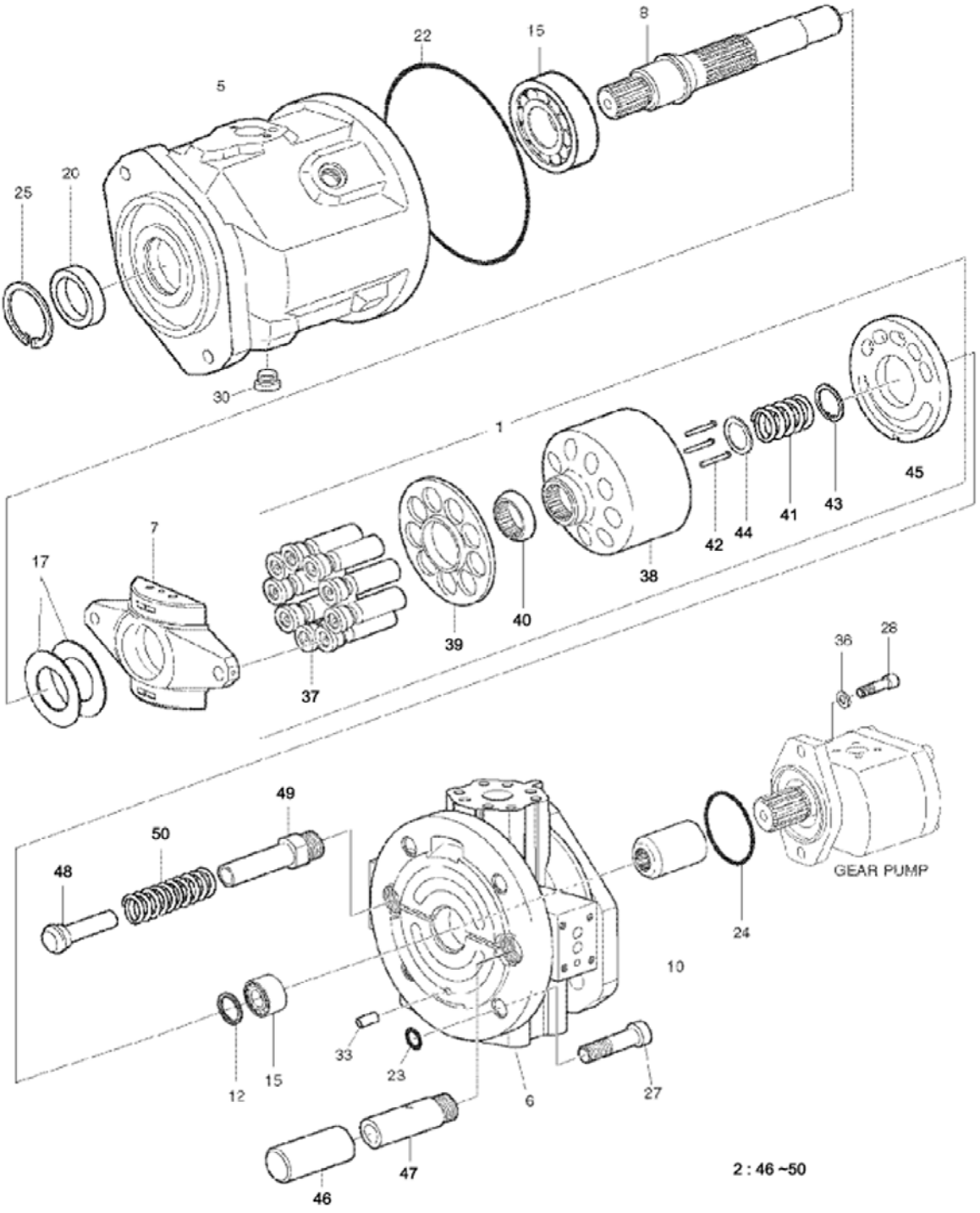


E80-4110



Page 232 - OSS# 2089524 - All rights reserved by Bobcat Company - 05/11/2012 - 06:30:39 - Produced by Ken Cook Co. with mediaIoff

## HYDRAULIC PUMP (Cont'd)
## (Rotary Group)

| Ref No | Part Number | Description | Remarks | Serial Number | Qty |
|---|---|---|---|---|---|
| 1 | 7007368 | ROTATOR ASSY | W/Ref. 37-45 | | 1 |
| 2 | 7007352 | HOUSING CONTROL | W/Ref. 46-50 | | 1 |
| 5 | 7007353 | HOUSING PUMP | | | 1 |
| 6 | 7007369 | PLATE PORT | | | 1 |
| 7 | 7007363 | PLATE SWASH | | | 1 |
| 8 | 7007372 | SHAFT DRIVE | | | 1 |
| 10 | 7007360 | COUPLER GEAR SHAFT | | | 1 |
| 12 | 7007356 | SHIM | | | 1 |
| 15 | 7007359 | BEARING SET | | | 1 |
| 17 | 7007348 | SHIM | | | 2 |
| 20 | 7007343 | SEAL SHAFT | | | 1 |
| 22 | 7007344 | ORING | | | 1 |
| 23 | 7007345 | ORING | | | 4 |
| 24 | 7007339 | ORING | | | 1 |
| 25 | 7007358 | RING SAFETY | | | 1 |
| 27 | 7007770 | SCREW SOCKET | | | 4 |
| 28 | 7007746 | BOLT HEX SOCKET M10X5L | | | 2 |
| 30 | 7007365 | PLUG | | | 1 |
| 33 | 7007340 | PIN DOWEL | | | 1 |
| 36 | 7007376 | WASHER | | | 2 |
| 37 | 7007355 | PISTON ASSY | | | 9 |
| 38 | 7007371 | CYLINDER | | | 1 |
| 39 | 7007366 | PLATE RETAINING | | | 1 |
| 40 | 7007357 | BALL RETAINING | | | 1 |
| 41 | 7007341 | SPRING | | | 1 |
| 42 | 7007370 | PIN PRESSURE | | | 3 |
| 43 | 7007354 | RING SEEGER V | | | 1 |
| 44 | 7007342 | WASHER THRUST | | | 1 |
| 45 | 7007367 | PLATE DISTRIBUTOR | | | 1 |
| 46 | 7007351 | PISTON CONTROL | | | 1 |
| 47 | | GUIDE, PISTON | NAP - Order Ref. 2 | | 1 |
| 48 | 7007350 | PISTON COUNTER | | | 1 |
| 49 | | GUIDE, PISTON | NAP - Order Ref. 2 | | 1 |
| 50 | 7007347 | SPRING | | | 1 |

Page 233 - OSS# 2089524 - All rights reserved by Bobcat Company - 05/11/2012 - 06:30:39 - Produced by Ken Cook Co. with mediaioff

# MANIFOLD VALVE
# (S/N AETB11001 - 11051, AET311001 - 11051)

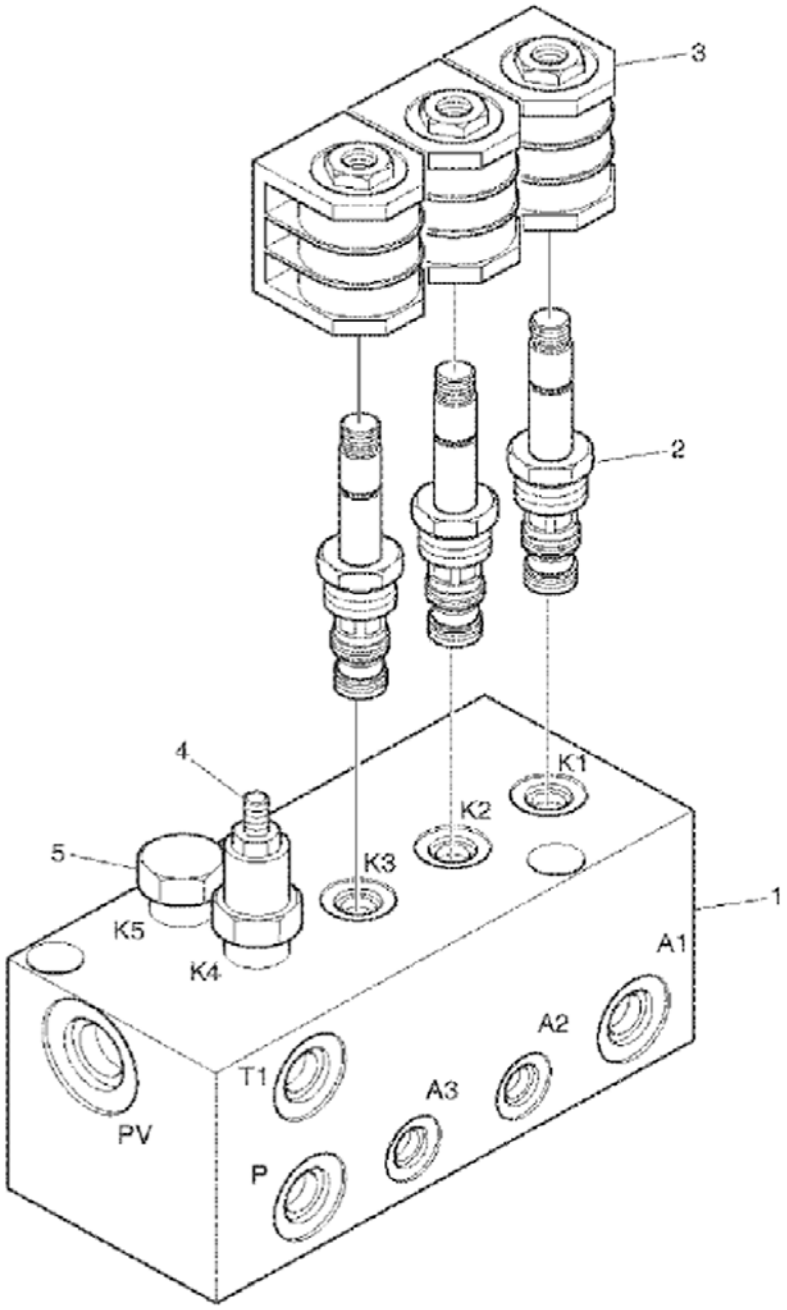


E80-4410



Page 234 - OSS# 2089524 - All rights reserved by Bobcat Company - 05/11/2012 - 06:30:39 - Produced by Ken Cook Co. with mediaioff

## MANIFOLD VALVE (Cont'd)
## (S/N AETB11001 - 11051, AET311001 - 11051)

| Ref No | Part Number | Description | Remarks | Serial Number | Qty |
|---|---|---|---|---|---|
| 1 | 7008257 | VALVE, PILOT | W/Ref. 2-5 | | 1 |
| 2 | 7006824 | SPOOL SOLENOID | Was 7008132 [A] | | 3 |
| 3 | 7003848 | COIL | | | 3 |
| 4 | 7008158 | VALVE, RELIEF | | | 1 |
| 5 | 7013231 | VALVE, CHECK | Was 7008292 [D] | | 1 |

Page 235 - OSS# 2089524 - All rights reserved by Bobcat Company - 05/11/2012 - 06:30:39 - Produced by Ken Cook Co. with mediaioff

## MANIFOLD VALVE
## (S/N AETB11052 & Above, AET311052 & Above)

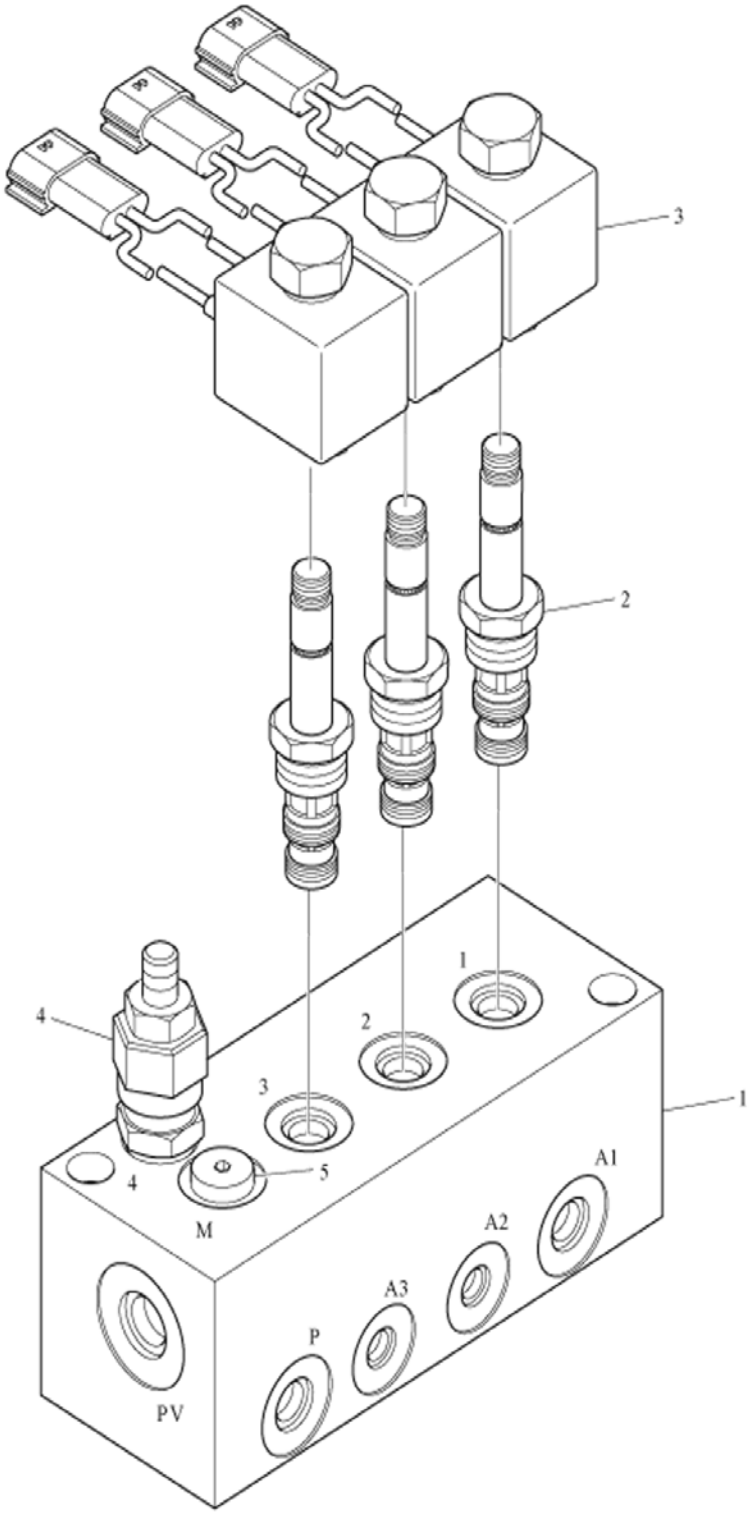


E80-4411



Page 236 - OSS# 2089524 - All rights reserved by Bobcat Company - 05/11/2012 - 06:30:39 - Produced by Ken Cook Co. with mediaIoff

## MANIFOLD VALVE (Cont'd)
## (S/N AETB11052 & Above, AET311052 & Above)

| Ref No | Part Number | Description | Remarks | Serial Number | Qty |
|---|---|---|---|---|---|
| 1 | 7013204 | VALVE SOLENOID | W/Ref. 2-5 | | 1 |
| 2 | 7007545 | SPOOL SOLENOID | | | 3 |
| 3 | 7007543 | COIL | | | 3 |
| 4 | 7013229 | VALVE, RELIEF | | | 1 |
| 5 | 7013230 | VALVE, CHECK | | | 1 |

Page 237 - OSS# 2089524 - All rights reserved by Bobcat Company - 05/11/2012 - 06:30:39 - Produced by Ken Cook Co. with mediaioff

# PEDAL VALVE

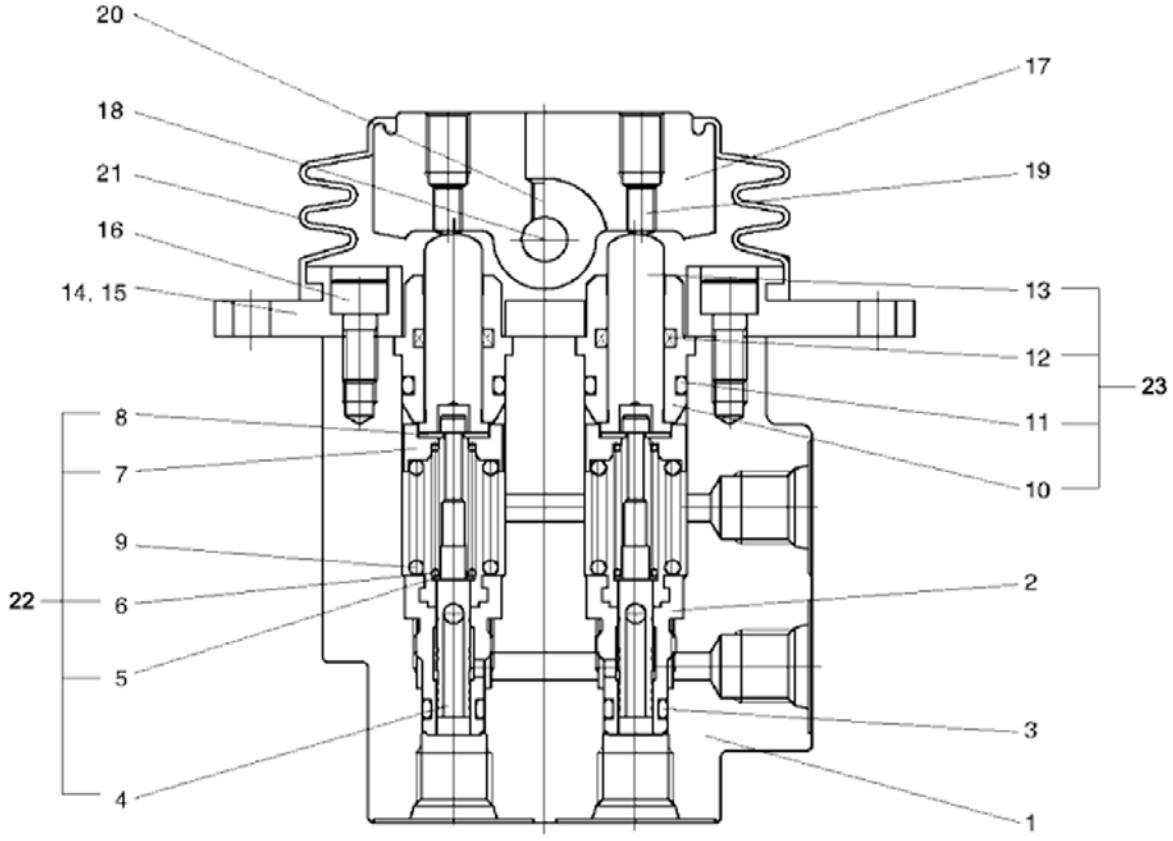


E80-4400



Page 238 - OSS# 2089524 - All rights reserved by Bobcat Company - 05/11/2012 - 06:30:39 - Produced by Ken Cook Co. with mediaIoff

# PEDAL VALVE (Cont'd)

| Ref No | Part Number | Description | Remarks | Serial Number | Qty |
|---|---|---|---|---|---|
| 1 | 7006576 | VALVE, PEDAL | | | 1 |
| 2 | 7003799 | PLUG | | | 2 |
| 3 | 7007903 | ORING | | | 2 |
| 4 | | SPOOL | NAP - Order Ref. 22 | | 2 |
| 5 | | SEAT, SPRING | NAP - Order Ref. 22 | | 2 |
| 6 | | SPRING | NAP - Order Ref. 22 | | 2 |
| 7 | | SEAT, SPRING | NAP - Order Ref. 22 | | 2 |
| 8 | | STOPPER | NAP - Order Ref. 22 | | 2 |
| 9 | | SPRING | NAP - Order Ref. 22 | | 2 |
| 10 | | PLUG | NAP - Order Ref. 23 | | 2 |
| 11 | 7007909 | ORING | | | 2 |
| 12 | | SEAL, ROD | NAP - Order Ref. 23 | | 2 |
| 13 | | ROD, PUSH | NAP - Order Ref. 23 | | 2 |
| 14 | 7006886 | COVER | | | 1 |
| 15 | 7004458 | BUSHING DU | | | 2 |
| 16 | 7007723 | BOLT SOCKET | | | 2 |
| 17 | 7006887 | CAM | | | 1 |
| 18 | 7006888 | PIN | | | 1 |
| 19 | 7006889 | SCREW ADJUST | | | 2 |
| 20 | 7007790 | BOLT SOCKET | | | 3 |
| 21 | 7006890 | DIAPHRAGM BELLOWS | | | 1 |
| 22 | 7006880 | KIT SPOOL | W/Ref. 4-9 | | 1 |
| 23 | 7006884 | KIT PLUG | W/Ref. 10-13 | | 1 |

Page 239 - OSS# 2089524 - All rights reserved by Bobcat Company - 05/11/2012 - 06:30:39 - Produced by Ken Cook Co. with mediaioff

# PEDAL VALVE
# (Travel)

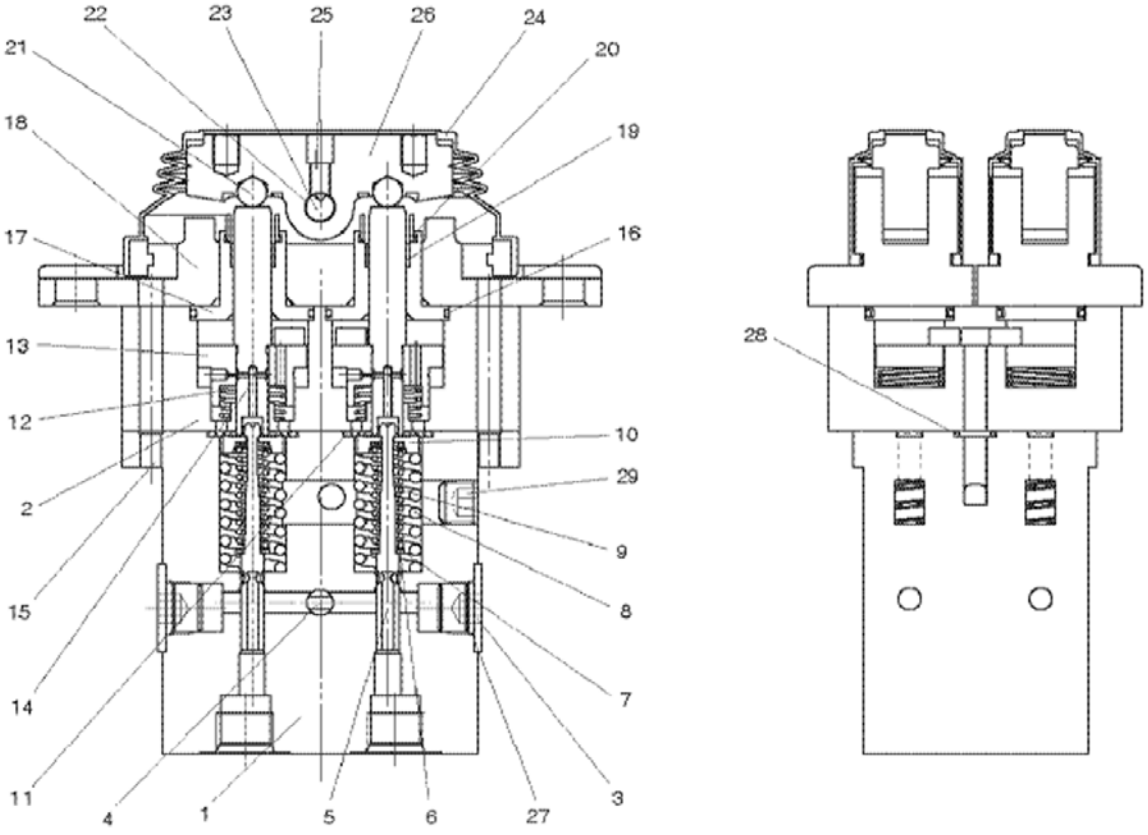


E80-4310



Page 240 - OSS# 2089524 - All rights reserved by Bobcat Company - 05/11/2012 - 06:30:39 - Produced by Ken Cook Co. with mediaioff

## PEDAL VALVE (Cont'd)
## (Travel)

| Ref No | Part Number | Description | Remarks | Serial Number | Qty |
|---|---|---|---|---|---|
| 1 | 7008233 | VALVE, PEDAL | Ref. 2-29 | | 1 |
| 1 | | HOUSING, LOWER | NAP - Order complete assy | | 1 |
| 2 | | HOUSING, UPPER | NAP - Order Ref. 1 | | 1 |
| 3 | 7004727 | PLUG | | | 3 |
| 4 | 7003955 | PLUG | | | 2 |
| 5 | 7007027 | SPOOL | | | 4 |
| 6 | 7007028 | WASHER | | | 4 |
| 7 | 7007029 | WASHER | | | 4 |
| 8 | 7007030 | SPRING | | | 4 |
| 9 | 7007416 | SPRING | | | 4 |
| 10 | 7007032 | SPRING SEAT | | | 4 |
| 11 | 7007912 | ORING | | | 4 |
| 12 | 7007033 | SPRING | | | 4 |
| 13 | 7007034 | PISTON | | | 4 |
| 14 | 7007035 | ROD PUSH | | | 4 |
| 15 | 7007730 | BOLT SOCKET | | | 4 |
| 16 | 7004663 | ORING | | | 4 |
| 17 | 7007036 | PLUG | | | 4 |
| 18 | 7008285 | COVER | | | 2 |
| 19 | 7007038 | SEAL | | | 4 |
| 20 | 7007039 | CAP GREASE | | | 4 |
| 21 | 7007871 | BALL STEEL | | | 4 |
| 22 | 7004457 | BUSHING | | | 4 |
| 23 | 7007040 | SHAFT CAM | | | 2 |
| 24 | 7007041 | DIAPHRAGM BELLOWS | | | 2 |
| 25 | 7007791 | BOLT | | | 2 |
| 26 | 7007042 | CAM | | | 2 |
| 27 | 7007906 | ORING | | | 3 |
| 28 | 7007903 | ORING | | | 2 |
| 29 | 7004673 | PLUG | | | 2 |

Page 241 - OSS# 2089524 - All rights reserved by Bobcat Company - 05/11/2012 - 06:30:39 - Produced by Ken Cook Co. with mediaioff

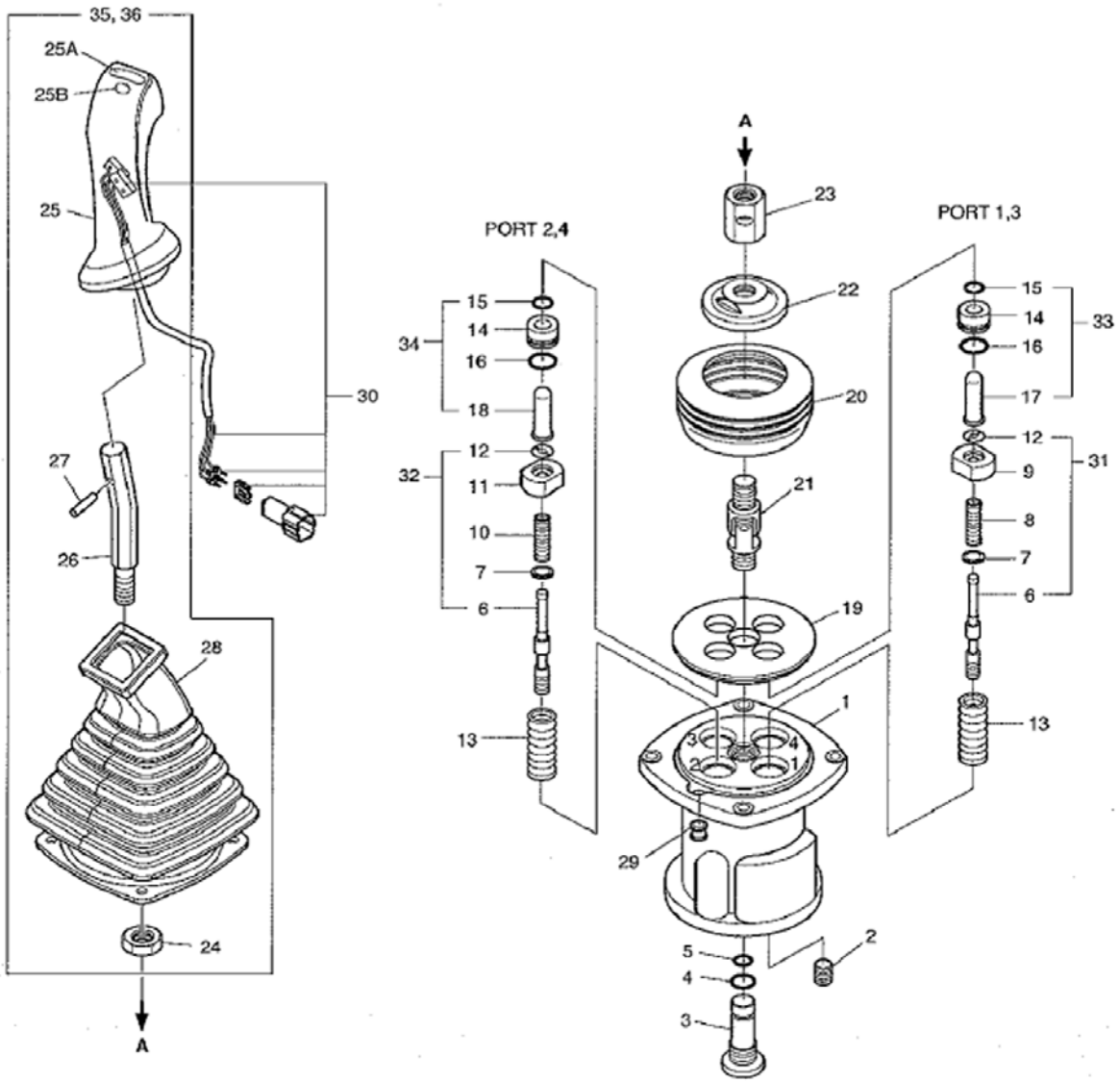


E80-4290



Page 242 - OSS# 2089524 - All rights reserved by Bobcat Company - 05/11/2012 - 06:30:39 - Produced by Ken Cook Co. with mediaioff

| Ref No | Part Number | Description | Remarks | Serial Number | Qty |
|---|---|---|---|---|---|
| 1 | 7006447 | JOYSTICK LH | LH - Ref. 2-36 | | 1 |
| 1 | 7006448 | JOYSTICK RH | RH - Ref. 2-36 | | 1 |
| 1 | | HOUSING | NAP - Order complete assy | | 1 |
| 2 | 7004671 | PLUG PT 1/8 | | | 4 |
| 3 | 7006852 | PLUG PF3/8 | | | 1 |
| 4 | 7007909 | ORING | | | 1 |
| 5 | 7007931 | ORING | | | 1 |
| 6 | | SPOOL | NAP - Order Ref. 31 kit for port 1 & 3 and Ref. 32 kit for ports 2 & 4 | | 4 |
| 7 | 7003716 | SHIM | | | 4 |
| 8 | | SPRING | NAP - Order Ref. 31 | | 2 |
| 9 | 7003837 | SEAT SPRING | | | 2 |
| 10 | | SPRING | NAP - Order Ref. 32 | | 2 |
| 11 | | SEAT, SPRING | NAP - Order Ref. 32 | | 2 |
| 12 | 7003927 | STOP | | | 4 |
| 13 | 7003743 | SPRING | | | 4 |
| 14 | | PLUG | NAP - Order Ref. 33 kit for port 1 & 3 and Ref. 34 kit for ports 2 & 4 | | 4 |
| 15 | 7006819 | SEAL ROD | | | 4 |
| 16 | 7007913 | ORING | | | 4 |
| 17 | 7003840 | ROD PUSH | | | 2 |
| 18 | | ROD, PUSH | NAP - Order Ref. 34 | | 2 |
| 19 | 7003819 | PLATE | | | 1 |
| 20 | 7003750 | BOOT | | | 1 |
| 21 | 7003749 | COUPLER JOINT ASSY | | | 1 |
| 22 | 7003822 | PLATE SWASH | | | 1 |
| 23 | 7003733 | NUT HEX | | | 1 |
| 24 | 7007800 | NUT M14 | | | 1 |
| 25 | 7006820 | HANDLE ASSY LH | | | 1 |
| 25 | 7006821 | HANDLE ASSY RH | | | 1 |
| 25 | 7003751 | CAP ROUND | | | 1 |
| 25 | 7003752 | CAP PEANUT | | | 1 |
| 26 | 7007417 | BAR HANDLE | | | 1 |
| 27 | 7007859 | PIN SPRING | | | 1 |
| 28 | 7006822 | BOOT | | | 1 |
| 29 | 7003711 | BUSHING | | | 1 |
| 30 | 7006823 | CONNECTOR ASSY | | | 1 |
| 31 | 7007454 | KIT SPOOL PORT 1 & 3 | for ports 1 & 3 | | 1 |
| 32 | 7007455 | KIT SPOOL PORT 2 & 4 | for ports 2 & 4 | | 1 |
| 33 | 7007418 | PLUG KIT PORT 1 & 3 | for ports 1 & 3 | | 1 |
| 34 | 7007419 | PLUG KIT PORT 2 & 4 | for ports 2 & 4 | | 1 |
| 35 | 7007420 | HANDLE KIT LH | | | 1 |
| 36 | 7007421 | HANDLE KIT RH | | | 1 |

Page 243 - OSS# 2089524 - All rights reserved by Bobcat Company - 05/11/2012 - 06:30:39 - Produced by Ken Cook Co. with mediaioff

# JOYSTICK
## (Blade)

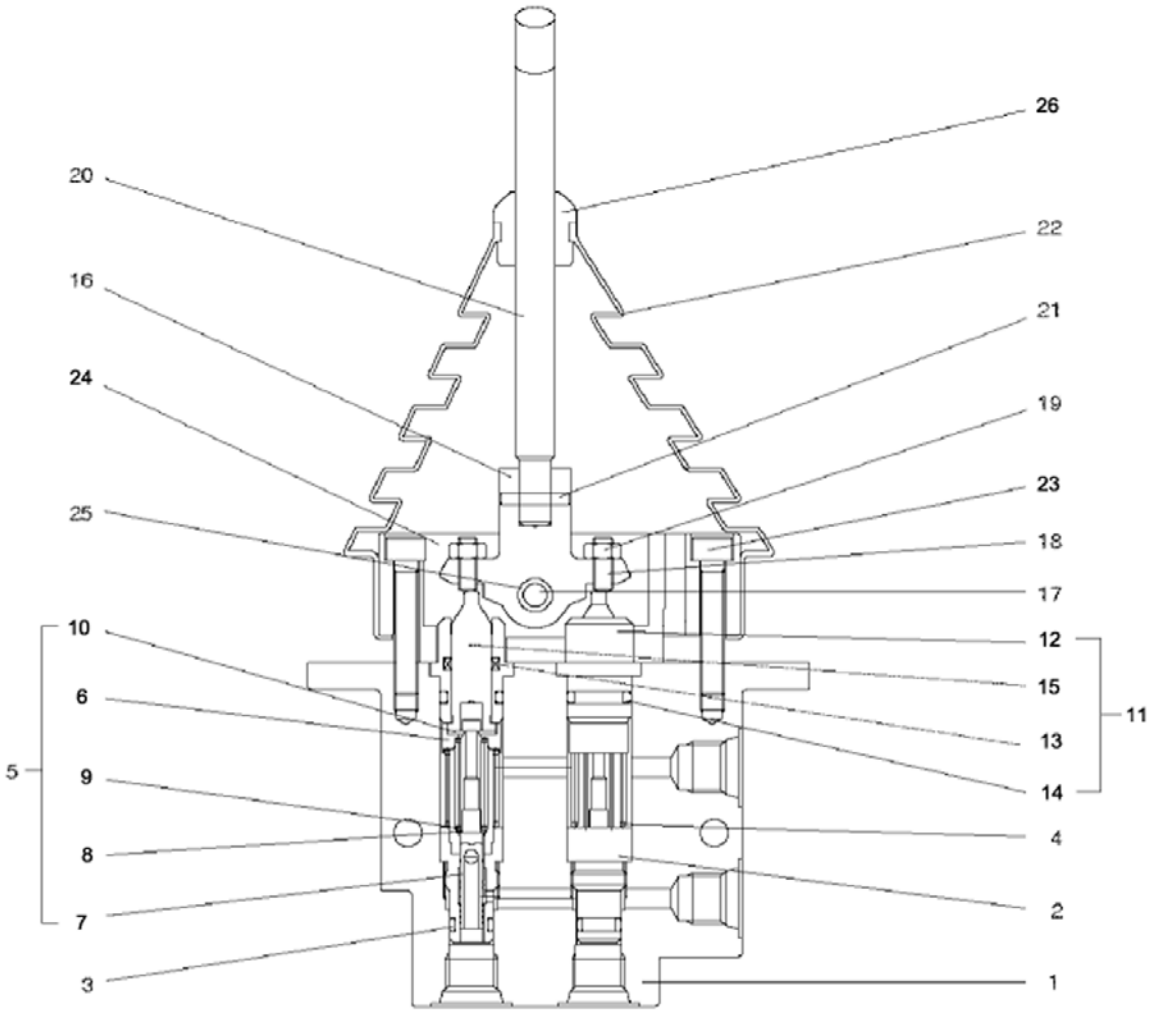


E80-4300



Page 244 - OSS# 2089524 - All rights reserved by Bobcat Company - 05/11/2012 - 06:30:39 - Produced by Ken Cook Co. with mediaIoff

## JOYSTICK (Cont'd)
## (Blade)

| Ref No | Part Number | Description | Remarks | Serial Number | Qty |
|---|---|---|---|---|---|
| 1 | 7006577 | JOYSTICK DOZER | W/Ref. 2-26 | | 1 |
| 2 | 7003799 | PLUG | | | 2 |
| 3 | 7007903 | ORING | | | 2 |
| 4 | 7006816 | SPRING | | | 2 |
| 5 | 7007043 | KIT SPOOL | W/Ref. 6-10 | | 1 |
| 6 | | SEAT, SPRING | NAP - Order Ref. 5 | | 2 |
| 7 | | SPOOL | NAP - Order Ref. 5 | | 2 |
| 8 | | SEAT, SPRING | NAP - Order Ref. 5 | | 2 |
| 9 | | SPRING | NAP - Order Ref. 5 | | 2 |
| 10 | | STOPPER | NAP - Order Ref. 5 | | 2 |
| 11 | 7007044 | PLUG KIT | W/Ref. 12-15 | | 1 |
| 12 | | PLUG | NAP - Order Ref. 12 | | 2 |
| 13 | | SEAL, ROD | NAP - Order Ref. 12 | | 2 |
| 14 | 7007909 | ORING | | | 2 |
| 15 | | ROD, PUSH | NAP - Order Ref. 12 | | 2 |
| 16 | 7007729 | BOLT | | | 2 |
| 17 | 7006892 | PIN | | | 1 |
| 18 | 7003731 | BOLT | | | 2 |
| 19 | 7007803 | NUT | | | 2 |
| 20 | 7003809 | LEVER | | | 1 |
| 21 | 7007856 | PIN SPRING | | | 1 |
| 22 | 7006825 | BOOT | | | 1 |
| 23 | 7003842 | GUIDE | | | 1 |
| 24 | 7006891 | COVER | | | 1 |
| 25 | 7006893 | RING SNAP | | | 1 |
| 26 | 7003712 | BUSHING | | | 1 |
| 26 | 7006826 | KIT SEAL | W/Ref. 3, 13 & 14 | | 1 |

Page 245 - OSS# 2089524 - All rights reserved by Bobcat Company - 05/11/2012 - 06:30:39 - Produced by Ken Cook Co. with mediaioff

# SWIVEL JOINT

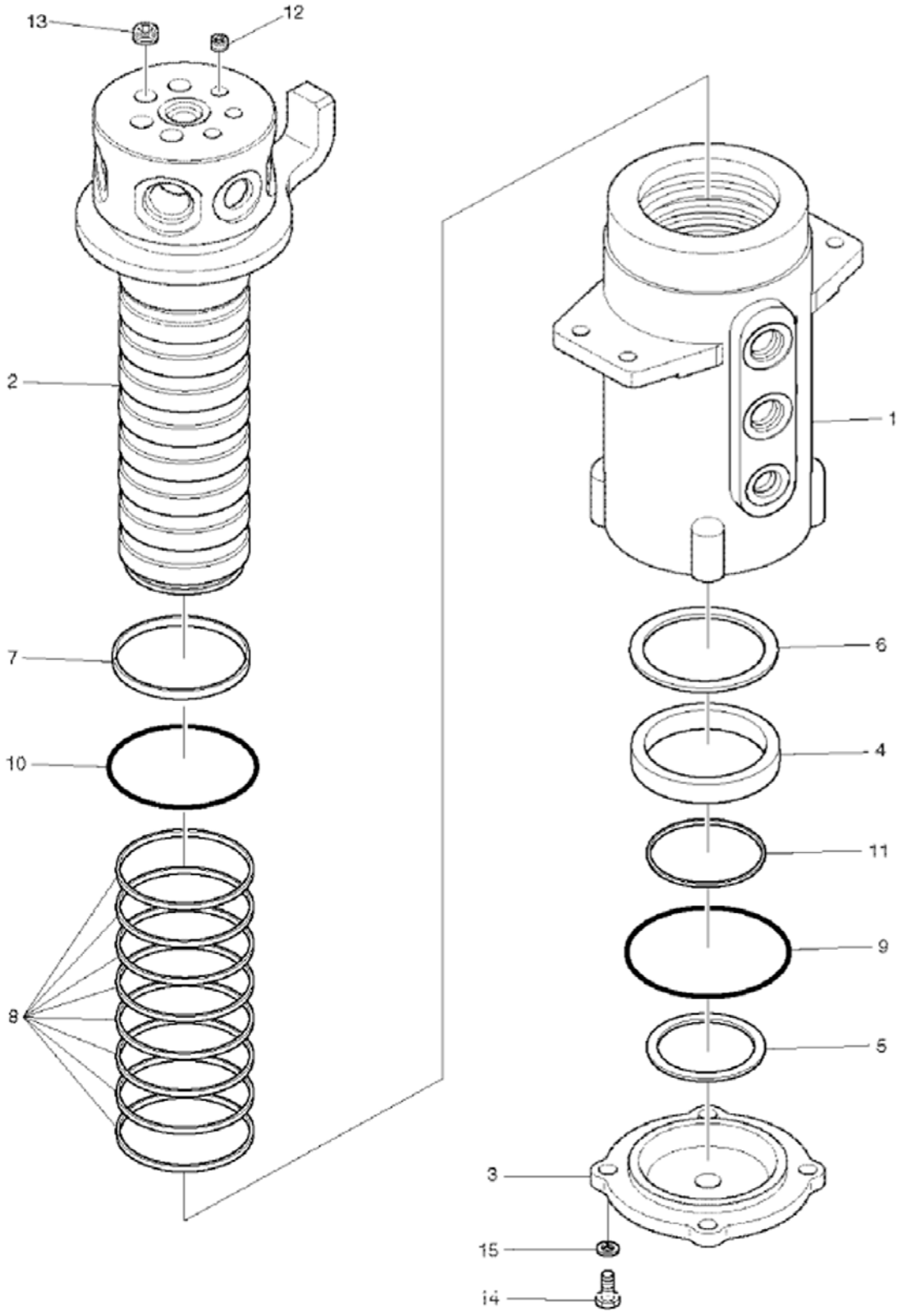




Page 246 - OSS# 2089524 - All rights reserved by Bobcat Company - 05/11/2012 - 06:30:39 - Produced by Ken Cook Co. with mediaIoff

| Ref No | Part Number | Description | Remarks | Serial Number | Qty |
|---|---|---|---|---|---|
| 1 | 7006067 | EYE JOINT CENTER | Ref. 2-15 | | 1 |
| 2 | | SHAFT ASSY | NAP - Order Ref. 1 | | 1 |
| 3 | | COVER | NAP - Order Ref. 1 | | 1 |
| 4 | | SPACER | NAP - Order Ref. 1 | | 1 |
| 5 | | SHIM | NAP - Order Ref. 1 | | 1 |
| 6 | | SHIM | NAP - Order Ref. 1 | | 1 |
| 7 | | DUST, SEAL | NAP - Order Ref. 15 seal kit | | 1 |
| 8 | | SEAL, SLIPPER | NAP - Order Ref. 15 seal kit | | 8 |
| 9 | 7007943 | ORING | | | 1 |
| 10 | 7007927 | ORING | | | 1 |
| 11 | 7007879 | RING RETAINER | | | 1 |
| 12 | 7004673 | PLUG | | | 3 |
| 13 | 7004674 | PLUG PT3/8 | | | 4 |
| 14 | 7007629 | BOLT | | | 4 |
| 15 | 7007835 | WASHER SPRING | | | 4 |
| 15 | 7007413 | KIT SEAL | W/Ref. 7-10 | | 1 |

Page 247 - OSS# 2089524 - All rights reserved by Bobcat Company - 05/11/2012 - 06:30:39 - Produced by Ken Cook Co. with mediaioff

# DRIVE MOTOR

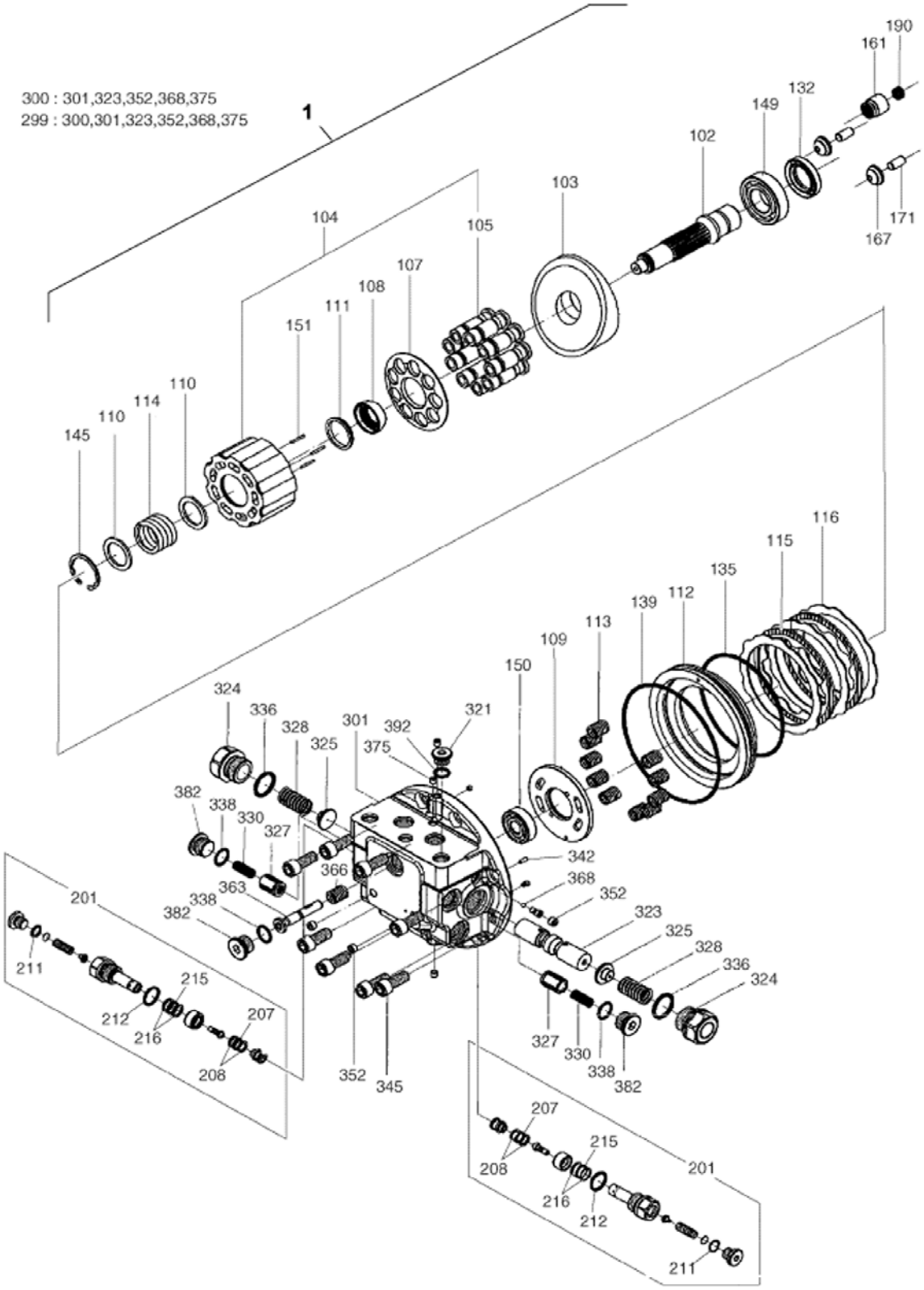


E80-4130



Page 248 - OSS# 2089524 - All rights reserved by Bobcat Company - 05/11/2012 - 06:30:39 - Produced by Ken Cook Co. with mediaIoff

| Ref No | Part Number | Description | Remarks | Serial Number | Qty |
|---|---|---|---|---|---|
| 1 | 7007467 | MOTOR TRAVEL | W/Ref. 102-392 | | 1 |
| 102 | 7007468 | SHAFT | | | 1 |
| 103 | 7007469 | PLATE SWASH | | | 1 |
| 104 | 7007489 | CYLINDER & PISTON KIT | | | 1 |
| 105 | 7007488 | PISTON ASSY | | | 1 |
| 107 | 7007486 | PLATE RETAINER | | | 1 |
| 108 | 7007483 | BALL THRUST | | | 1 |
| 109 | 7007470 | PLATE TIMING | | | 1 |
| 110 | 7004015 | WASHER | | | 2 |
| 111 | 7012804 | WASHER | Was 7004016 [D] | | 1 |
| 112 | 7004372 | PISTON | | | 1 |
| 113 | 7006931 | SPRING | | | 10 |
| 114 | 7007487 | SPRING | | | 1 |
| 115 | 7003820 | PLATE FRICTION | | | 2 |
| 116 | 7003821 | PLATE MATING | | | 3 |
| 132 | 7007500 | SEAL OIL | | | 1 |
| 135 | 7004223 | ORING | | | 1 |
| 139 | 7004222 | ORING | | | 1 |
| 145 | 7007888 | RING SNAP | | | 1 |
| 149 | 7003700 | BEARING BALL | | | 1 |
| 150 | 7007491 | BEARING BALL | | | 1 |
| 151 | 7003987 | ROLLER | | | 3 |
| 161 | 7007484 | PISTON ASSY | | | 1 |
| 167 | 7004446 | PIVOT | | | 2 |
| 171 | 7004168 | PIN PARALLEL | | | 2 |
| 190 | 7004193 | SPRING | | | 1 |
| 201 | 7007478 | VALVE RELIEF | | | 2 |
| 207 | 7007931 | ORING | | | 2 |
| 208 | 7007964 | RING BACK-UP | | | 4 |
| 211 | 7007906 | ORING | | | 2 |
| 212 | 7007912 | ORING | | | 2 |
| 215 | 7007932 | ORING | | | 2 |
| 216 | 7007498 | RING BACK-UP | | | 4 |
| 299 | 7007479 | FLANGE REAR ASSY | | | 1 |
| 300 | 7007480 | FLANGE REAR KIT | | | 1 |
| 301 | | FLANGE, REAR | NAP - Order Ref. 299 or Ref. 300 | | 1 |
| 321 | 7004303 | PLUG | | | 1 |
| 323 | | SPOOL | NAP - Order Ref. 299 or Ref. 300 | | 1 |
| 324 | 7007471 | PLUG | | | 2 |
| 325 | 7004200 | SPRING RETAINER | | | 2 |
| 327 | 7007494 | VALVE | | | 2 |
| 328 | 7007481 | SPRING | | | 2 |
| 330 | 7007495 | SPRING | | | 2 |
| 336 | 7007918 | ORING | | | 2 |
| 338 | 7007911 | ORING | | | 3 |
| 342 | 7007848 | PIN PARALLEL | | | 1 |
| 345 | 7007760 | BOLT SOCKET | | | 8 |
| 352 | 7004671 | PLUG PT 1/8 | | | 3 |
| 363 | 7006932 | SPOOL | | | 1 |
| 366 | 7007485 | SPRING | | | 1 |
| 368 | 7007868 | BALL | | | 1 |
| 375 | 7004300 | PLUG | | | 3 |



Page 249 - OSS# 2089524 - All rights reserved by Bobcat Company - 05/11/2012 - 06:30:39 - Produced by Ken Cook Co. with mediaioff

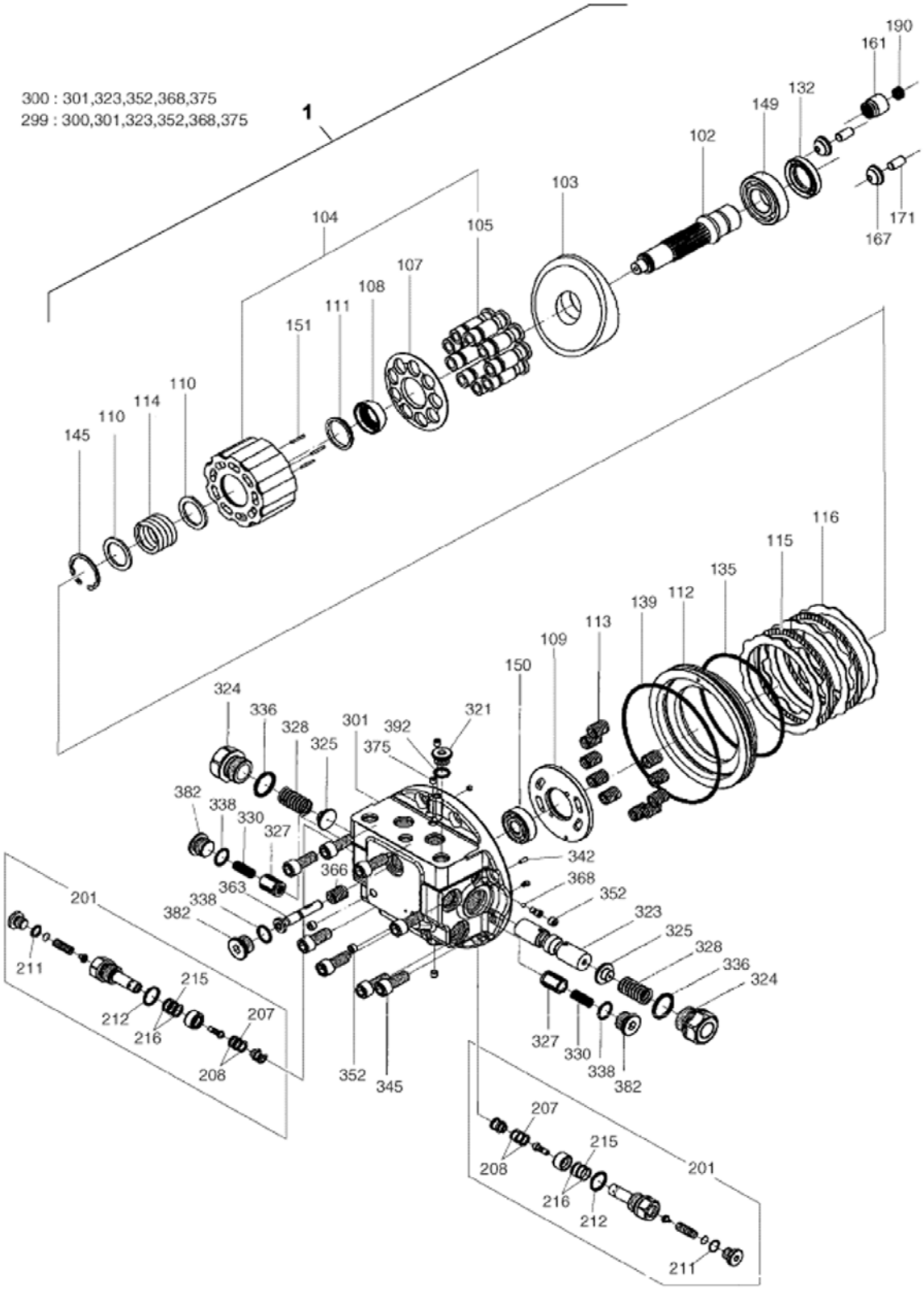


E80-4130



Page 250 - OSS# 2089524 - All rights reserved by Bobcat Company - 05/11/2012 - 06:30:39 - Produced by Ken Cook Co. with mediaIoff

| Ref No | Part Number | Description | Remarks | Serial Number | Qty |
|---|---|---|---|---|---|
| 382 | 7004729 | PLUG RO | | | 3 |
| 392 | 7007909 | ORING | | | 1 |
| 392 | 7007482 | KIT SEAL | | | 1 |

Page 251 - OSS# 2089524 - All rights reserved by Bobcat Company - 05/11/2012 - 06:30:39 - Produced by Ken Cook Co. with mediaioff

# DRIVE MOTOR
# (Reduction Gear)

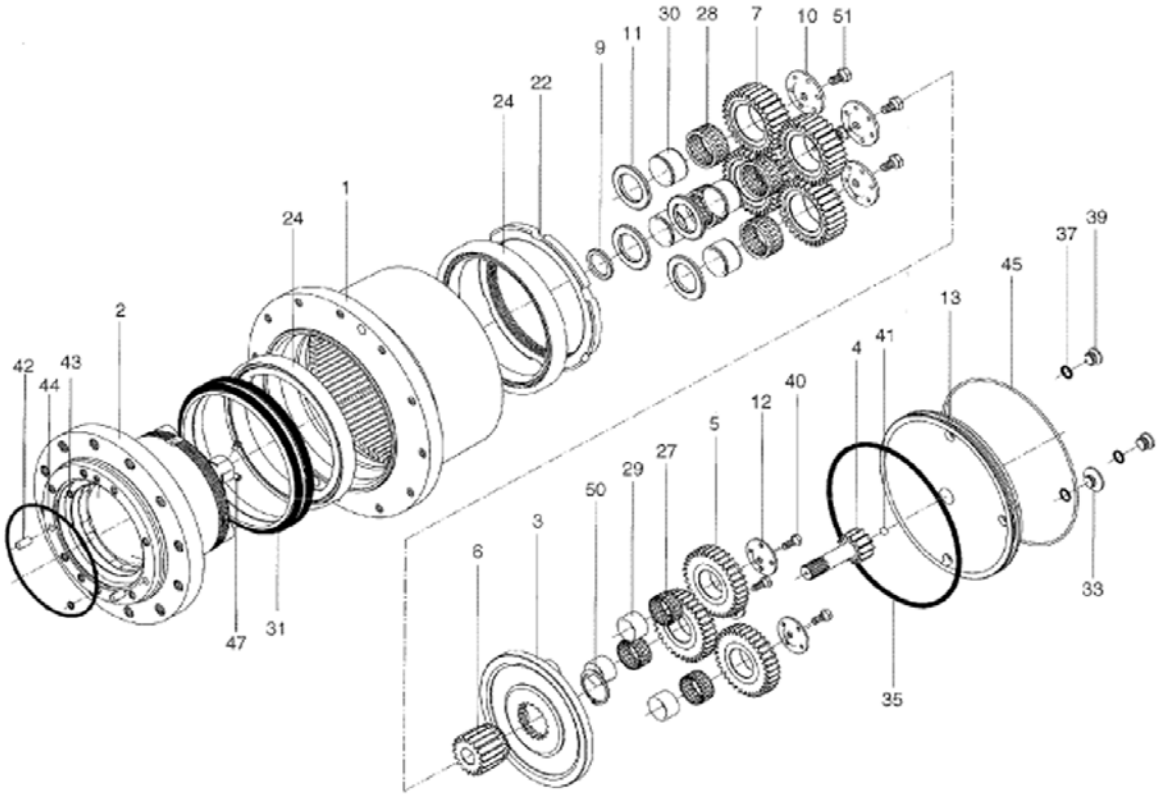


E80-4140



Page 252 - OSS# 2089524 - All rights reserved by Bobcat Company - 05/11/2012 - 06:30:39 - Produced by Ken Cook Co. with mediaIoff

## DRIVE MOTOR (Cont'd)
## (Reduction Gear)

| Ref No | Part Number | Description | Remarks | Serial Number | Qty |
|---|---|---|---|---|---|
| 1 | 7007472 | GEAR REDUCTION | W/Ref. 2-51 | | 1 |
| 1 | 7007456 | HUB | | | 1 |
| 2 | 7007466 | SPINDLE | | | 1 |
| 3 | 7007473 | CARRIER | | | 1 |
| 4 | 7007474 | GEAR SUN 1 | | | 1 |
| 5 | 7007475 | GEAR PLANETARY 1 | | | 3 |
| 6 | 7007476 | GEAR SUN 2 | | | 1 |
| 7 | 7007477 | GEAR PLANETARY 2 | | | 4 |
| 9 | 7007490 | COLLAR THRUST | | | 1 |
| 10 | 7007457 | WASHER THRUST | | | 4 |
| 11 | 7007458 | WASHER THRUST | | | 4 |
| 12 | 7007493 | WASHER THRUST | | | 3 |
| 13 | 7007459 | COVER | | | 1 |
| 22 | 7007460 | NUT RING | | | 1 |
| 24 | 7007461 | BEARING BALL | | | 2 |
| 27 | 7007462 | BEARING NEEDLE ROLLER | | | 3 |
| 28 | 7007463 | BEARING NEEDLE ROLLER | | | 4 |
| 29 | 7007464 | RING INNER | | | 3 |
| 30 | 7007465 | RING INNER | | | 4 |
| 31 | 7007499 | SEAL FLOATING | | | 1 |
| 33 | 7007492 | PLUG | | | 1 |
| 35 | 7007957 | ORING | | | 1 |
| 37 | 7007909 | ORING | | | 3 |
| 39 | 7004303 | PLUG | | | 2 |
| 40 | 7007617 | BOLT | | | 3 |
| 41 | 7007872 | BALL STEEL | | | 1 |
| 42 | 7004168 | PIN PARALLEL | | | 2 |
| 43 | 7007902 | ORING | | | 2 |
| 44 | 7004221 | ORING | | | 1 |
| 45 | 7007496 | RING | | | 1 |
| 47 | 7007497 | SCREW SET | | | 2 |
| 50 | 7007877 | RING RETAINING | | | 1 |
| 51 | 7007626 | BOLT | | | 4 |

Page 253 - OSS# 2089524 - All rights reserved by Bobcat Company - 05/11/2012 - 06:30:39 - Produced by Ken Cook Co. with mediaioff

# SLEW MOTOR

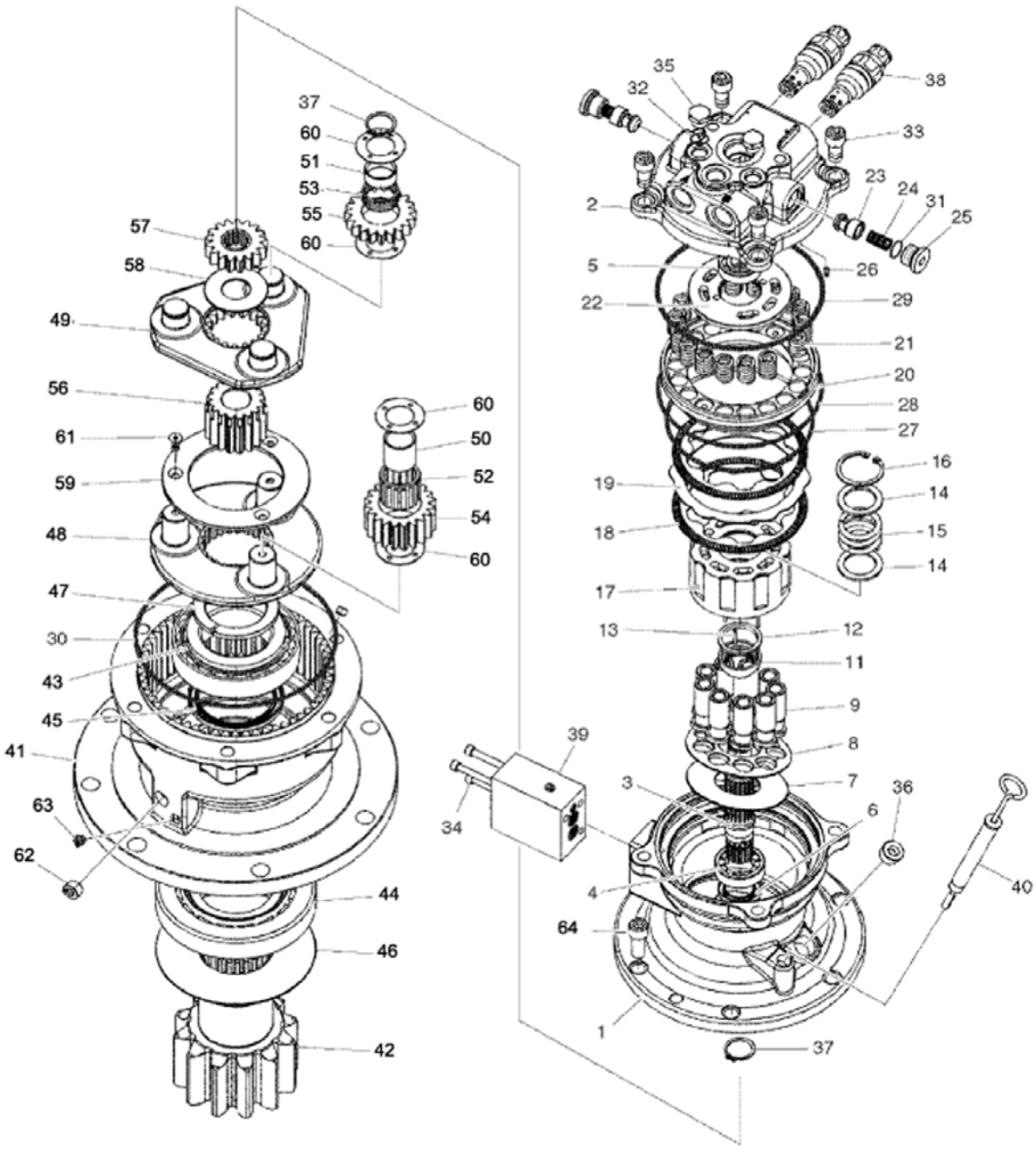


E80-4120



Page 254 - OSS# 2089524 - All rights reserved by Bobcat Company - 05/11/2012 - 06:30:39 - Produced by Ken Cook Co. with mediaioff

| Ref No | Part Number | Description | Remarks | Serial Number | Qty |
|---|---|---|---|---|---|
| 1 | 7006694 | MOTOR SWING | W/Ref. 2-64 | | 1 |
| 1 | | HOUSING | NAP - Order complete assy | | 1 |
| 2 | 7007394 | HOUSING VALVE | | | 1 |
| 3 | 7007392 | SHAFT DRIVE | | | 1 |
| 4 | 7007234 | BEARING ROLLER | | | 1 |
| 5 | 7007403 | BEARING BALL | | | 1 |
| 6 | 7007404 | SEAL OIL | | | 1 |
| 7 | 7007402 | PLATE SHOE | | | 1 |
| 8 | 7007387 | PLATE RETAINER | | | 1 |
| 9 | 7007410 | PISTON ASSY | | | 1 |
| 11 | 7007388 | BALL THRUST | | | 1 |
| 12 | 7007054 | WASHER | | | 1 |
| 13 | 7007389 | ROLLER | | | 3 |
| 14 | 7004015 | WASHER | | | 2 |
| 15 | 7007390 | SPRING | | | 1 |
| 16 | 7007884 | RING SNAP | | | 1 |
| 17 | 7007411 | BLOCK CYLINDER | | | 1 |
| 18 | 7003820 | PLATE FRICTION | | | 2 |
| 19 | 7003821 | PLATE MATING | | | 1 |
| 20 | 7007393 | PISTON BRAKE | | | 1 |
| 21 | 7007391 | SPRING BRAKE | | | 16 |
| 22 | 7007395 | PLATE VALVE | | | 1 |
| 23 | 7007218 | ROLLER PLUNGER | | | 2 |
| 24 | 7007219 | SPRING CHECK | | | 2 |
| 25 | 7007199 | PLUG | | | 2 |
| 26 | 7007848 | PIN PARALLEL | | | 1 |
| 27 | 7004658 | ORING | | | 1 |
| 28 | 7004659 | ORING | | | 1 |
| 29 | 7004660 | ORING | | | 1 |
| 30 | 7004661 | ORING | | | 1 |
| 31 | 7007910 | ORING | | | 2 |
| 32 | 7007906 | ORING | | | 2 |
| 33 | 7007757 | BOLT SOCKET | | | 4 |
| 34 | 7007731 | BOLT SOCKET | | | 3 |
| 35 | 7004732 | PLUG | | | 2 |
| 36 | 7004675 | PLUG | | | 1 |
| 37 | 7007873 | RING SNAP | | | 4 |
| 38 | 7007235 | VALVE RELIEF | | | 2 |
| 39 | 7007408 | VALVE BRAKE | | | 1 |
| 40 | 7007409 | GAUGE OIL LEVEL | | | 1 |
| 41 | | HOUSING, GEAR | NAP - Order Ref. 1 | | 1 |
| 42 | 7007401 | SHAFT PINION | | | 1 |
| 43 | 7007230 | BEARING TAPER ROLLER | | | 1 |
| 44 | 7007405 | BEARING TAPER ROLLER | | | 1 |
| 45 | 7007406 | SEAL OIL | | | 1 |
| 46 | 7007396 | COVER BEARING | | | 1 |
| 47 | 7007203 | COLLAR HALF | | | 2 |
| 48 | 7007397 | CARRIER NO.2 | | | 1 |
| 49 | 7007204 | CARRIER NO.1 | | | 1 |
| 50 | 7007398 | RING INNER | | | 3 |



Page 255 - OSS# 2089524 - All rights reserved by Bobcat Company - 05/11/2012 - 06:30:39 - Produced by Ken Cook Co. with mediaioff

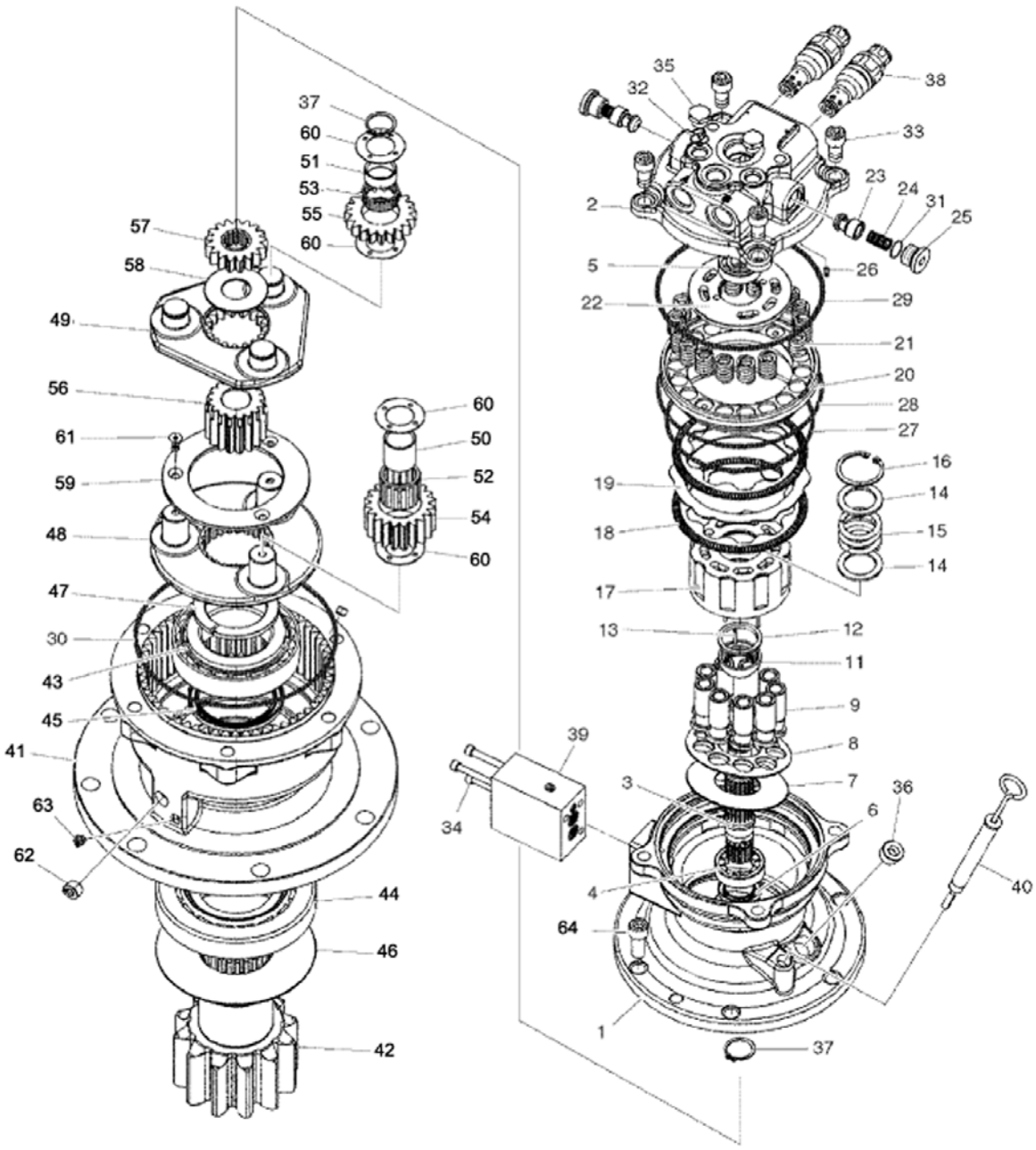


E80-4120



Page 256 - OSS# 2089524 - All rights reserved by Bobcat Company - 05/11/2012 - 06:30:39 - Produced by Ken Cook Co. with mediaioff

| Ref No | Part Number | Description | Remarks | Serial Number | Qty |
|---|---|---|---|---|---|
| | | NO.2 | | | |
| 51 | 7007206 | RING NO.1 INNER | | | 3 |
| 52 | 7007407 | BEARING NEEDLE | | | 3 |
| 53 | 7007233 | BEARING NEEDLE | | | 3 |
| 54 | 7007399 | GEAR PLANET NO.2 | | | 3 |
| 55 | 7007208 | GEAR NO.1 PLANET | | | 3 |
| 56 | 7007400 | GEAR SUN NO.2 | | | 1 |
| 57 | 7007210 | GEAR NO.1 SUN | | | 1 |
| 58 | 7007212 | WASHER NO.1 THRUST | | | 1 |
| 59 | 7007213 | PLATE THRUST | | | 1 |
| 60 | 7007325 | WASHER THRUST | | | 12 |
| 61 | 7007326 | BOLT | | | 3 |
| 62 | 7004674 | PLUG PT3/8 | | | 1 |
| 63 | 7004671 | PLUG PT 1/8 | | | 2 |
| 64 | 7007760 | BOLT SOCKET | | | 6 |
| 64 | 7007415 | KIT SEAL | | | 1 |
| 65 | 7019247 | O-RING | | | 2 |

Page 257 - OSS# 2089524 - All rights reserved by Bobcat Company - 05/11/2012 - 06:30:39 - Produced by Ken Cook Co. with mediaioff

# CONTROL VALVE
# (W/2nd Auxiliary/Rotation)

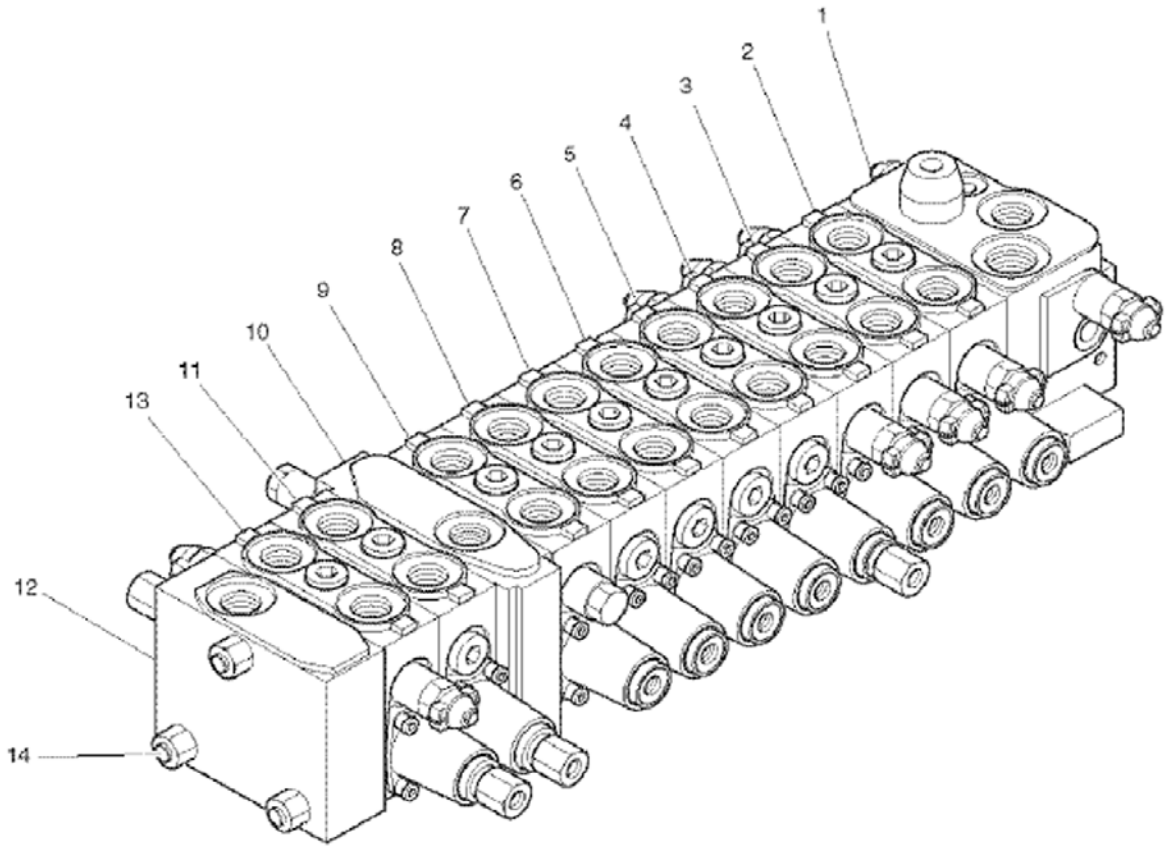


E80-4420



Page 258 - OSS# 2089524 - All rights reserved by Bobcat Company - 05/11/2012 - 06:30:39 - Produced by Ken Cook Co. with mediaioff

## CONTROL VALVE (Cont'd)
## (W/2nd Auxiliary/Rotation)

| Ref No | Part Number | Description | Remarks | Serial Number | Qty |
|---|---|---|---|---|---|
| 1 | 7012018 | MAIN CONTROL VALVE | W/Ref. 1-14 Was 7006687 [D] | | 1 |
| 1 | 7007589 | BLOCK INLET | See Illustration VALVE SECTION/ E80-4160 | | 1 |
| 2 | 7007591 | BLOCK BOOM | See Illustration VALVE SECTION/ E80-4170 | | 1 |
| 3 | 7007592 | BLOCK BUCKET | See Illustration VALVE SECTION/ E80-4190 | | 1 |
| 4 | 7007587 | BLOCK ARM | See Illustration VALVE SECTION/ E80-4180 | | 1 |
| 5 | 7007583 | BLOCK DOZER | See Illustration VALVE SECTION/ E80-4210 | | 1 |
| 6 | 7015670 | BLOCK;OPTION | See Illustration VALVE SECTION/ EM5633 Was 7007584 [A] | | 1 |
| 7 | 7007593 | BLOCK TRAVEL LH | See Illustration VALVE SECTION/ E80-4220 | | 1 |
| 8 | 7007594 | BLOCK TRAVEL RH | See Illustration VALVE SECTION/ E80-4230 | | 1 |
| 9 | 7007585 | BLOCK BOOM SWING | See Illustration VALVE SECTION/ E80-4240 | | 1 |
| 10 | 7007586 | BLOCK INLET | See Illustration VALVE SECTION/ E80-4250 | | 1 |
| 11 | 7007588 | BLOCK SWING | See Illustration VALVE SECTION/ E80-4260 | | 1 |
| 12 | 7007590 | BLOCK OUTLET | See Illustration VALVE SECTION/ E80-4270 | | 1 |
| 13 | 7007597 | BLOCK ROTATING | See Illustration VALVE SECTION/ E80-4430 2ndAux | | 1 |
| 14 | 7007598 | ROD TIE 611L | | | 1 |

Page 259 - OSS# 2089524 - All rights reserved by Bobcat Company - 05/11/2012 - 06:30:39 - Produced by Ken Cook Co. with media1off

# VALVE SECTION
## (Inlet Section)

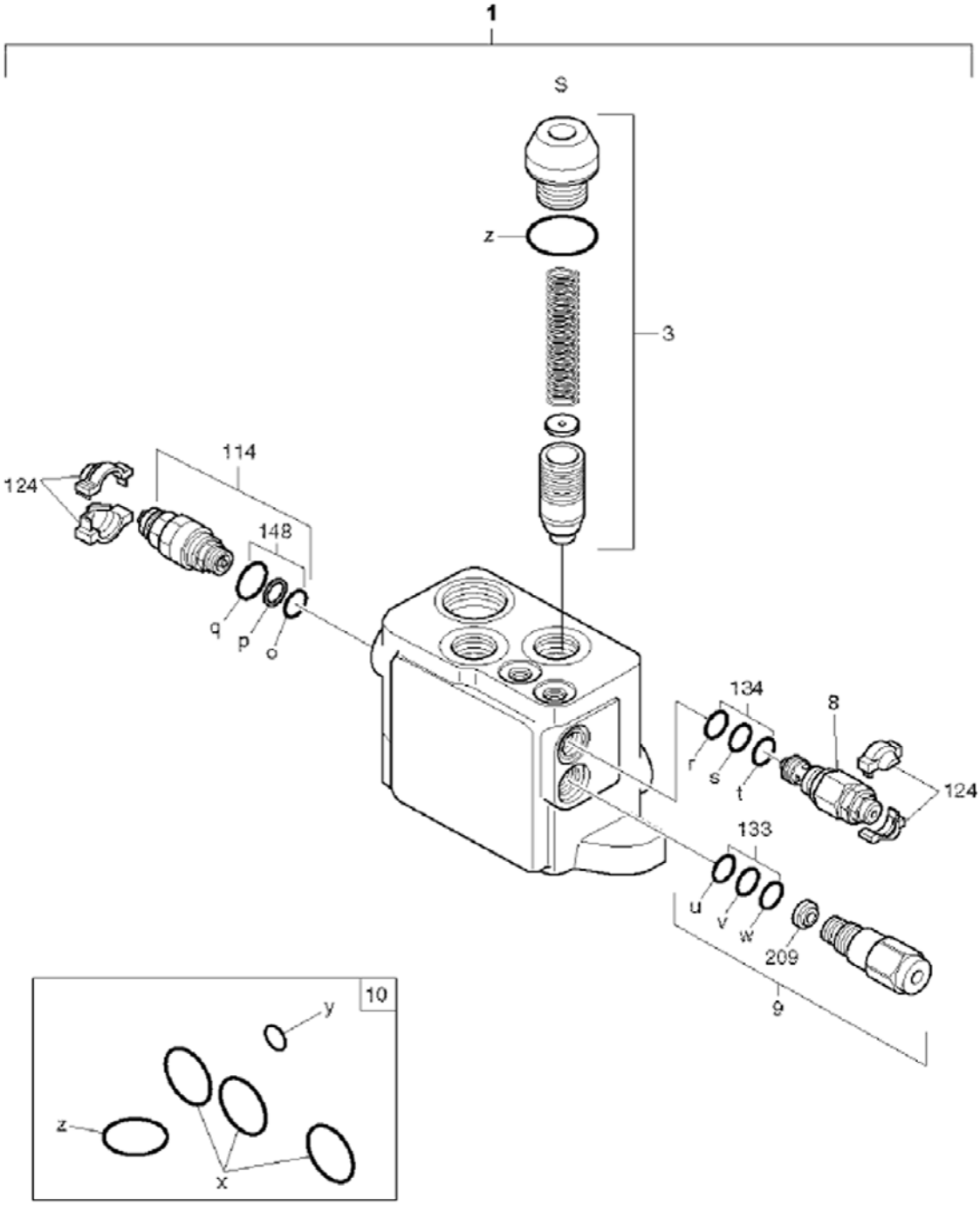


E80-4160



Page 260 - OSS# 2089524 - All rights reserved by Bobcat Company - 05/11/2012 - 06:30:39 - Produced by Ken Cook Co. with mediaioff

## VALVE SECTION (Cont'd)
## (Inlet Section)

| Ref No | Part Number | Description | Remarks | Serial Number | Qty |
|---|---|---|---|---|---|
| 1 | 7007589 | BLOCK INLET | | | 1 |
| 3 | 7007575 | KIT REGULATION | | | 1 |
| 8 | 7007564 | VALVE L/S PRESSURE RELIEF | | | 1 |
| 9 | 7007567 | FILTER FLOW REGULAR FILTER | | | 1 |
| 10 | 7007580 | KIT SEAL | | | 1 |
| 114 | 7007571 | VALVE RELIEF, 340 BAR | 340bar - W/Ref. 148 | | 1 |
| 124 | 7007558 | COVER LOCKING | | | 2 |
| 133 | 7007569 | KIT SEAL FLOWING REGULATOR | | | 1 |
| 134 | 7007559 | KIT SEAL LS RELIEF VALVE | | | 1 |
| 148 | 7007560 | KIT SEAL | | | 2 |
| 209 | 7007566 | FILTER FLOW REGULATOR | | | 1 |

Page 261 - OSS# 2089524 - All rights reserved by Bobcat Company - 05/11/2012 - 06:30:39 - Produced by Ken Cook Co. with mediaioff

# VALVE SECTION
## (Boom Section)

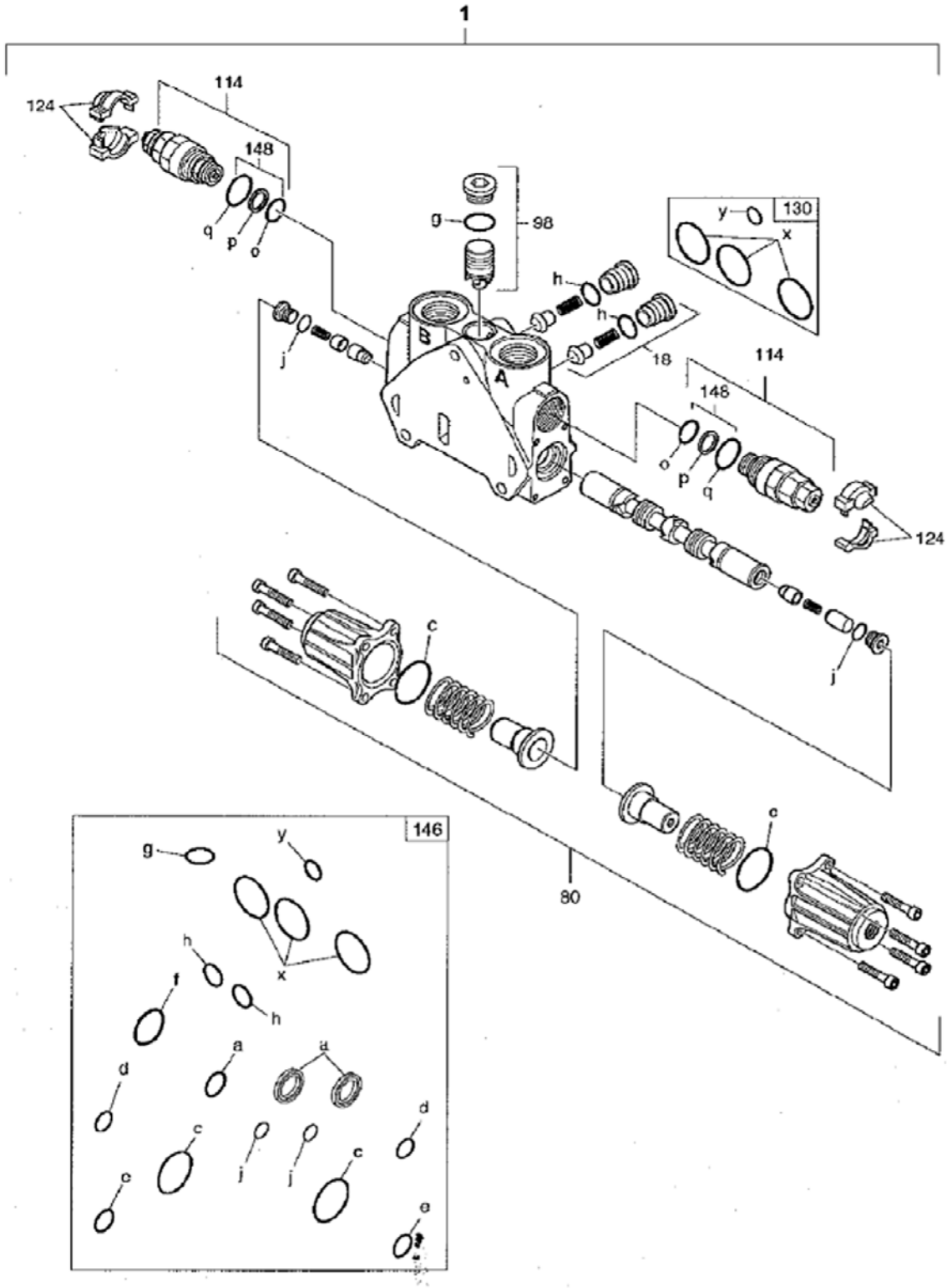


E80-4170



Page 262 - OSS# 2089524 - All rights reserved by Bobcat Company - 05/11/2012 - 06:30:39 - Produced by Ken Cook Co. with mediaIoff

## VALVE SECTION (Cont'd)
## (Boom Section)

| Ref No | Part Number | Description | Remarks | Serial Number | Qty |
|---|---|---|---|---|---|
| 1 | 7007591 | BLOCK BOOM | | | 1 |
| 18 | 7007563 | VALVE CHECK | | | 2 |
| 80 | 7007576 | CAP PLUNGER KIT | | | 1 |
| 98 | 7007572 | VALVE | | | 1 |
| 114 | 7007571 | VALVE RELIEF, 340 BAR | 340bar - W/Ref. 148 | | 2 |
| 124 | 7007558 | COVER LOCKING | | | 2 |
| 130 | 7007565 | KIT SEAL | | | 1 |
| 146 | 7007582 | KIT SEAL | | | 1 |
| 148 | 7007560 | KIT SEAL | | | 2 |

Page 263 - OSS# 2089524 - All rights reserved by Bobcat Company - 05/11/2012 - 06:30:39 - Produced by Ken Cook Co. with mediaioff

# VALVE SECTION
## (Bucket Section)

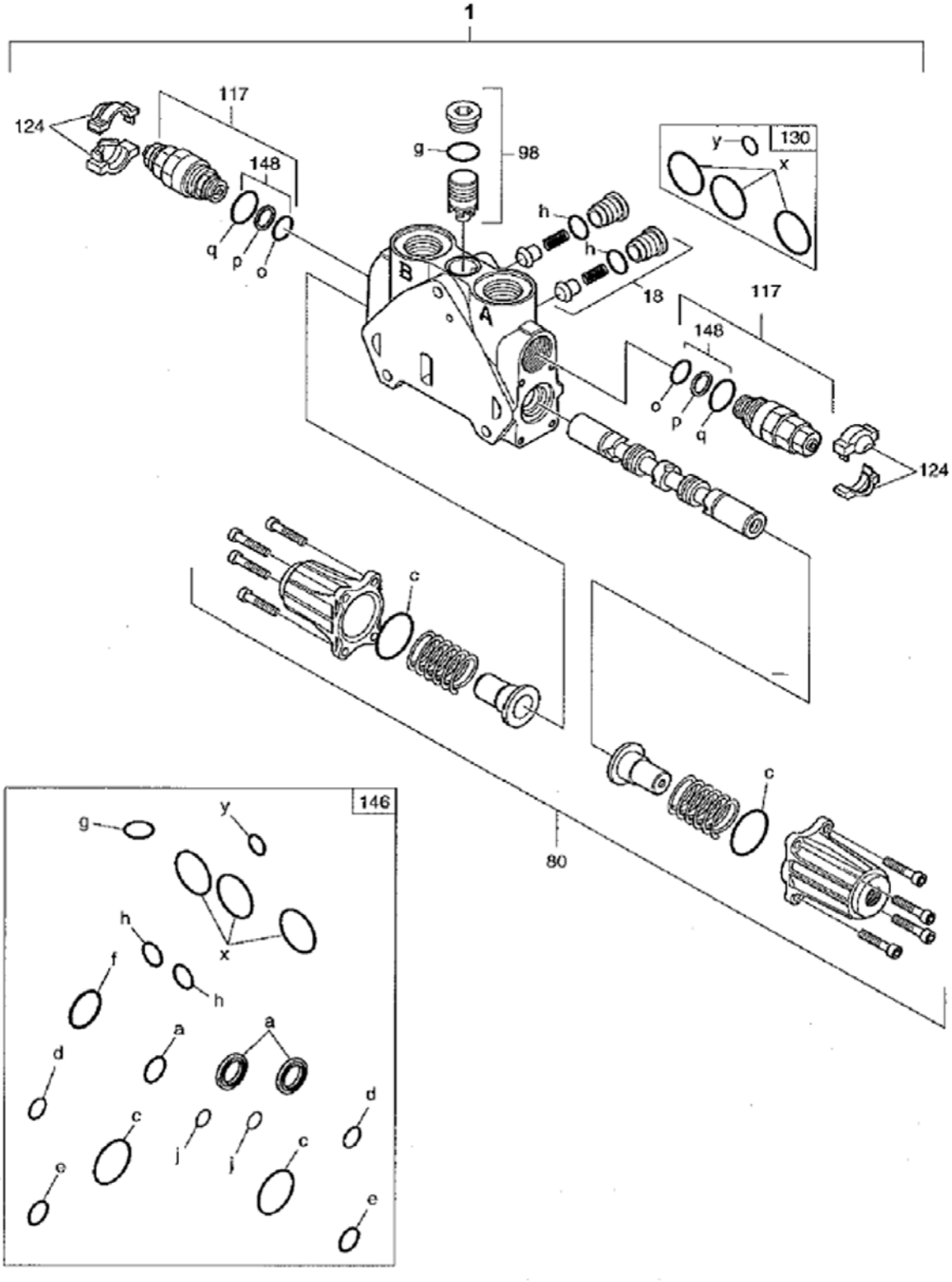


E80-4190



Page 264 - OSS# 2089524 - All rights reserved by Bobcat Company - 05/11/2012 - 06:30:39 - Produced by Ken Cook Co. with mediaioff

## VALVE SECTION (Cont'd)
## (Bucket Section)

| Ref No | Part Number | Description | Remarks | Serial Number | Qty |
|---|---|---|---|---|---|
| 1 | 7007592 | BLOCK BUCKET | | | 1 |
| 18 | 7007563 | VALVE CHECK | | | 2 |
| 80 | 7007576 | CAP PLUNGER KIT | | | 1 |
| 98 | 7007572 | VALVE | | | 1 |
| 117 | 7007571 | VALVE RELIEF, 340 BAR | 340bar - W/Ref. 148 | | 2 |
| 124 | 7007558 | COVER LOCKING | | | 2 |
| 130 | 7007565 | KIT SEAL | | | 1 |
| 146 | 7007582 | KIT SEAL | | | 1 |
| 148 | 7007560 | KIT SEAL | | | 2 |

Page 265 - OSS# 2089524 - All rights reserved by Bobcat Company - 05/11/2012 - 06:30:39 - Produced by Ken Cook Co. with mediaioff

# VALVE SECTION
## (Arm Section)

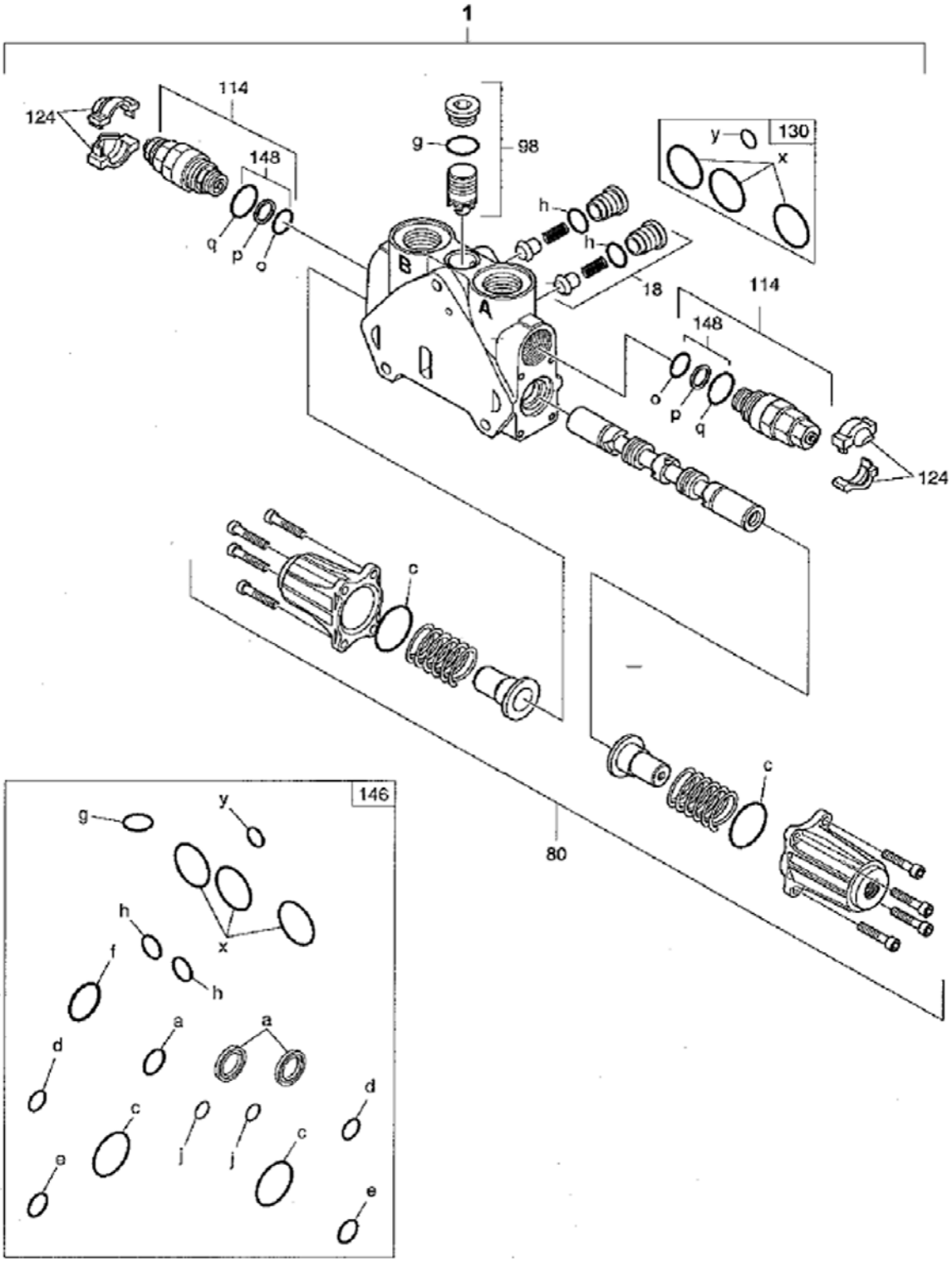


E80-4180



Page 266 - OSS# 2089524 - All rights reserved by Bobcat Company - 05/11/2012 - 06:30:39 - Produced by Ken Cook Co. with mediaIoff

## VALVE SECTION (Cont'd)
## (Arm Section)

| Ref No | Part Number | Description | Remarks | Serial Number | Qty |
|---|---|---|---|---|---|
| 1 | 7007587 | BLOCK ARM | | | 1 |
| 18 | 7007563 | VALVE CHECK | | | 2 |
| 80 | 7007576 | CAP PLUNGER KIT | | | 1 |
| 98 | 7007572 | VALVE | | | 1 |
| 114 | 7007571 | VALVE RELIEF, 340 BAR | 340bar - W/Ref. 148 | | 2 |
| 124 | 7007558 | COVER LOCKING | | | 2 |
| 130 | 7007565 | KIT SEAL | | | 1 |
| 146 | 7007582 | KIT SEAL | | | 1 |
| 148 | 7007560 | KIT SEAL | | | 2 |

Page 267 - OSS# 2089524 - All rights reserved by Bobcat Company - 05/11/2012 - 06:30:39 - Produced by Ken Cook Co. with mediaioff

# VALVE SECTION
## (Blade Section)

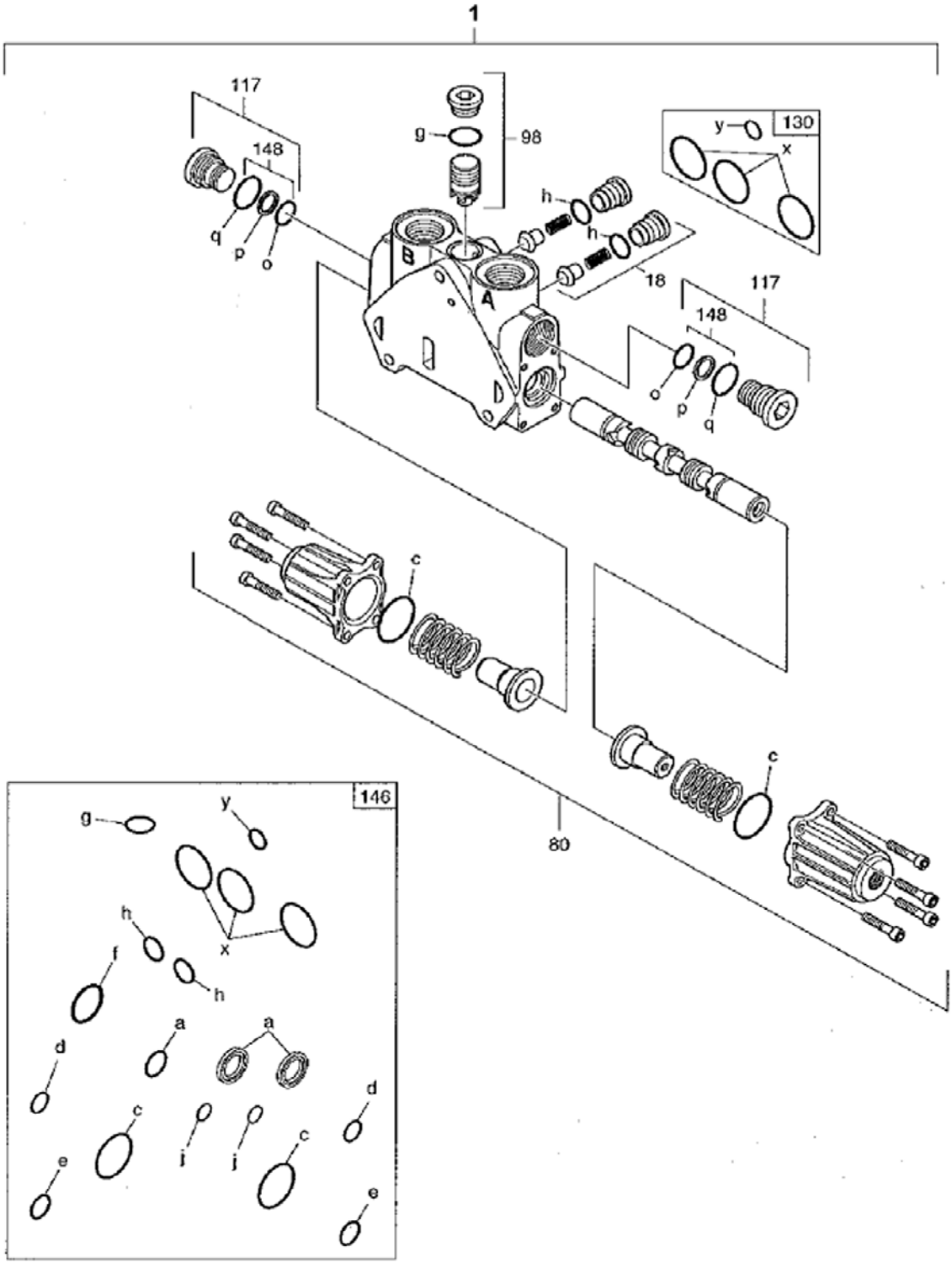


E80-4210



Page 268 - OSS# 2089524 - All rights reserved by Bobcat Company - 05/11/2012 - 06:30:39 - Produced by Ken Cook Co. with mediaIoff

## VALVE SECTION (Cont'd)
## (Blade Section)

| Ref No | Part Number | Description | Remarks | Serial Number | Qty |
|---|---|---|---|---|---|
| 1 | 7007583 | BLOCK DOZER | | | 1 |
| 18 | 7007563 | VALVE CHECK | | | 1 |
| 80 | 7007576 | CAP PLUNGER KIT | | | 1 |
| 98 | 7007572 | VALVE | | | 1 |
| 117 | 7007561 | PLUG | W/Ref. 148 | | 2 |
| 130 | 7007565 | KIT SEAL | | | 1 |
| 146 | 7007582 | KIT SEAL | | | 1 |
| 148 | 7007560 | KIT SEAL | | | 2 |

Page 269 - OSS# 2089524 - All rights reserved by Bobcat Company - 05/11/2012 - 06:30:39 - Produced by Ken Cook Co. with mediaioff

## VALVE SECTION
## (Option Section Auxiliary)

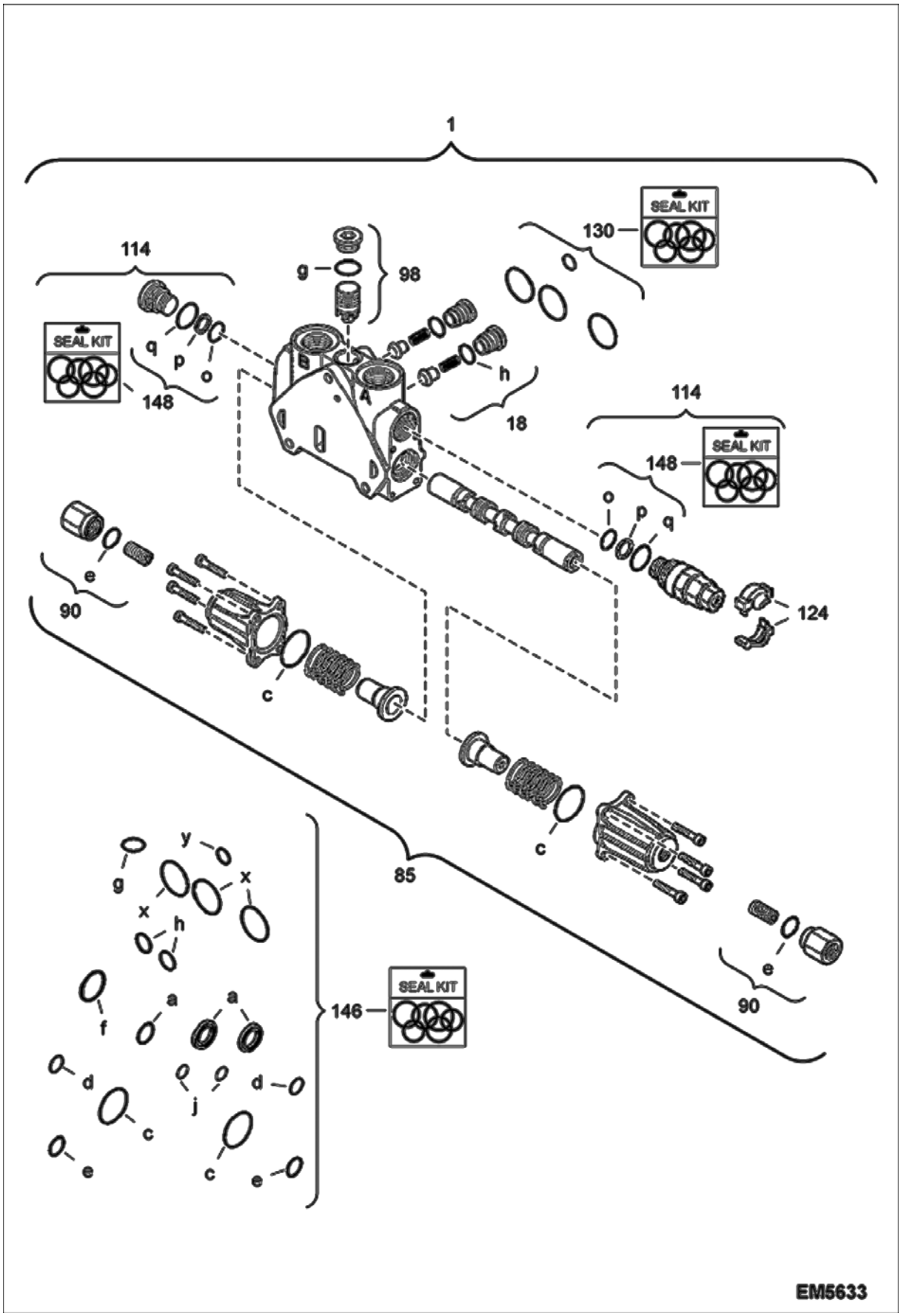




Page 270 - OSS# 2089524 - All rights reserved by Bobcat Company - 05/11/2012 - 06:30:39 - Produced by Ken Cook Co. with mediaioff

## VALVE SECTION (Cont'd)
## (Option Section Auxiliary)

| Ref No | Part Number | Description | Remarks | Serial Number | Qty |
|---|---|---|---|---|---|
| 1 | 7015670 | BLOCK;OPTION | Was 7007584 [A] | | 1 |
| 18 | 7007563 | VALVE CHECK | | | 2 |
| 85 | 7007577 | CAP PLUNGER KIT | | | 1 |
| 90 | 7007574 | KIT STROKE LIMIT | | | 2 |
| 98 | 7007572 | VALVE | | | 1 |
| 114 | 7016116 | VALVE RELIEF, 210 BAR | 210 bar - W/Ref. 148 Was 7007571 [A] | | 2 |
| 124 | 7007558 | COVER LOCKING | | | 2 |
| 130 | 7007565 | KIT SEAL | | | 1 |
| 146 | 7007582 | KIT SEAL | | | 1 |
| 148 | 7007560 | KIT SEAL | | | 2 |

Page 271 - OSS# 2089524 - All rights reserved by Bobcat Company - 05/11/2012 - 06:30:39 - Produced by Ken Cook Co. with mediaioff

# VALVE SECTION
# (LH Travel Section)

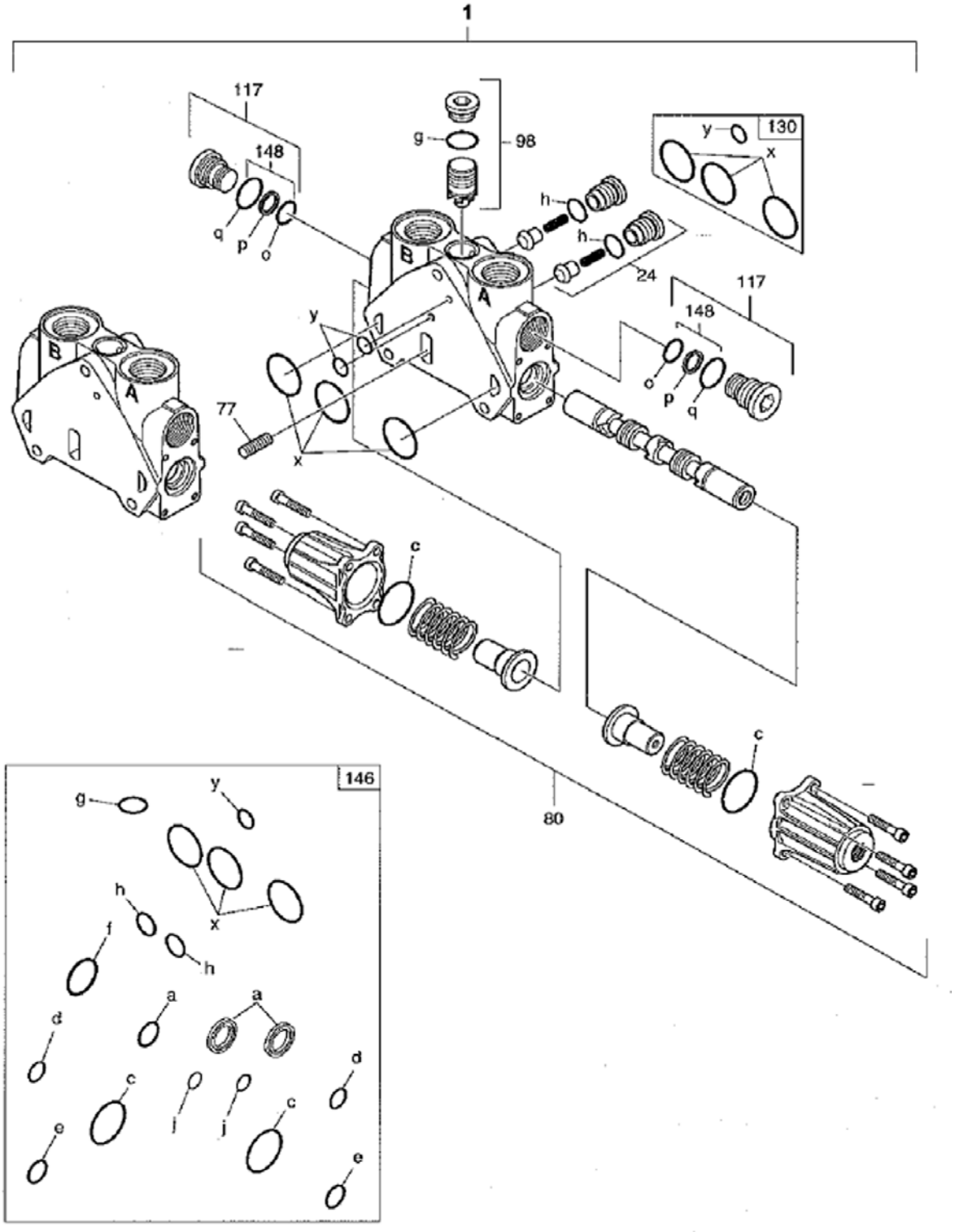


E80-4220



Page 272 - OSS# 2089524 - All rights reserved by Bobcat Company - 05/11/2012 - 06:30:39 - Produced by Ken Cook Co. with mediaioff

## VALVE SECTION (Cont'd)
## (LH Travel Section)

| Ref No | Part Number | Description | Remarks | Serial Number | Qty |
|---|---|---|---|---|---|
| 1 | 7007593 | BLOCK TRAVEL LH | | | 1 |
| 24 | 7007573 | VALVE CHECK | | | 2 |
| 77 | 7007562 | THROTTLE TRANS | | | 1 |
| 80 | 7007576 | CAP PLUNGER KIT | | | 1 |
| 98 | 7007572 | VALVE | | | 1 |
| 117 | 7007561 | PLUG | W/Ref. 148 | | 2 |
| 130 | 7007565 | KIT SEAL | | | 1 |
| 146 | 7007582 | KIT SEAL | | | 1 |
| 148 | 7007560 | KIT SEAL | | | 2 |

Page 273 - OSS# 2089524 - All rights reserved by Bobcat Company - 05/11/2012 - 06:30:39 - Produced by Ken Cook Co. with mediaioff

# VALVE SECTION
# (RH Travel Section)

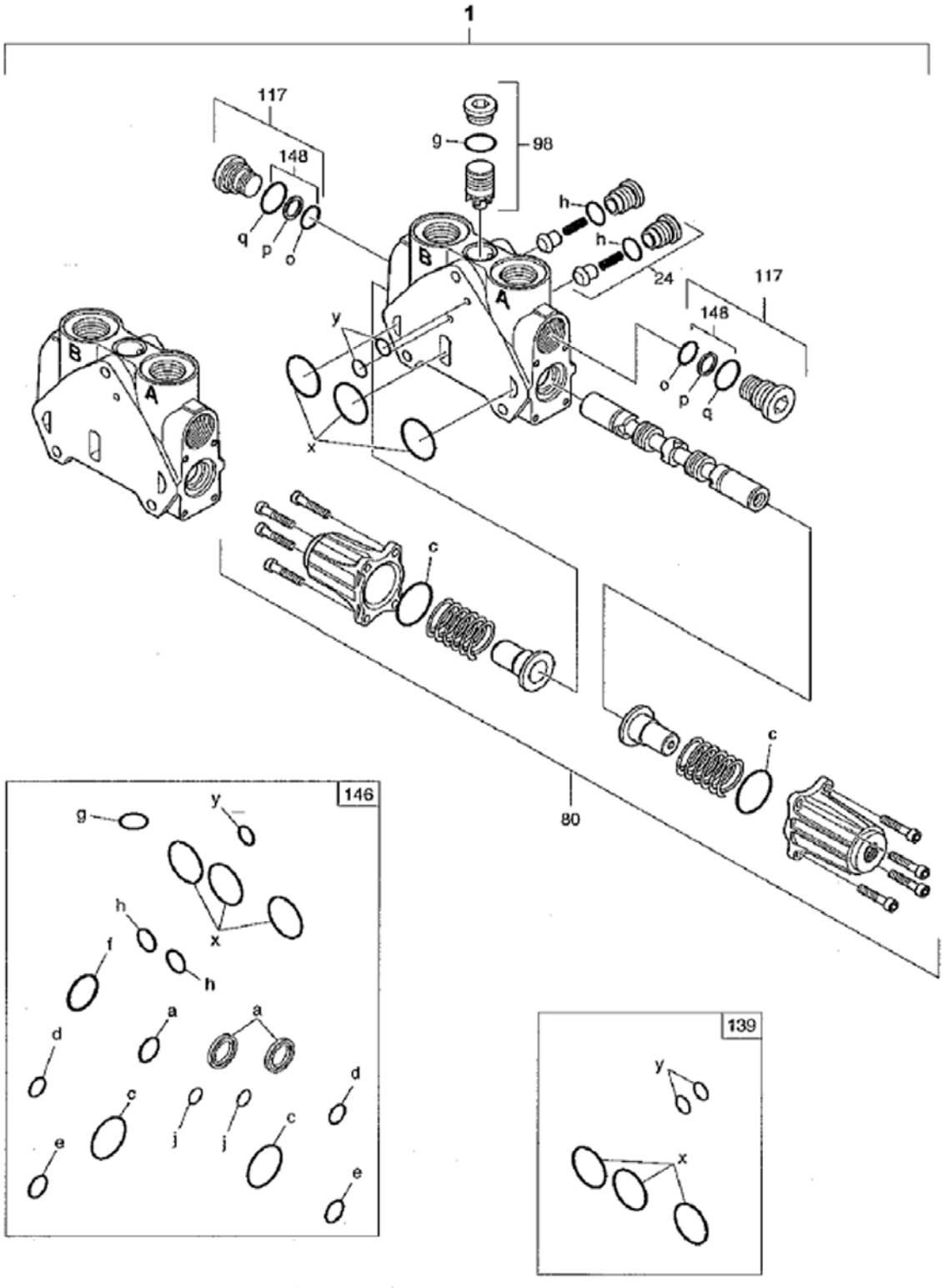


E80-4230



Page 274 - OSS# 2089524 - All rights reserved by Bobcat Company - 05/11/2012 - 06:30:39 - Produced by Ken Cook Co. with mediaIoff

## VALVE SECTION (Cont'd)
## (RH Travel Section)

| Ref No | Part Number | Description | Remarks | Serial Number | Qty |
|---|---|---|---|---|---|
| 1 | 7007594 | BLOCK TRAVEL RH | | | 1 |
| 24 | 7007573 | VALVE CHECK | | | 2 |
| 80 | 7007576 | CAP PLUNGER KIT | | | 1 |
| 98 | 7007572 | VALVE | | | 1 |
| 117 | 7007561 | PLUG | W/Ref. 148 | | 2 |
| 139 | 7007579 | KIT SEAL | | | 1 |
| 146 | 7007582 | KIT SEAL | | | 1 |
| 148 | 7007560 | KIT SEAL | | | 2 |

Page 275 - OSS# 2089524 - All rights reserved by Bobcat Company - 05/11/2012 - 06:30:39 - Produced by Ken Cook Co. with mediaioff

# VALVE SECTION
# (Boom Slew)

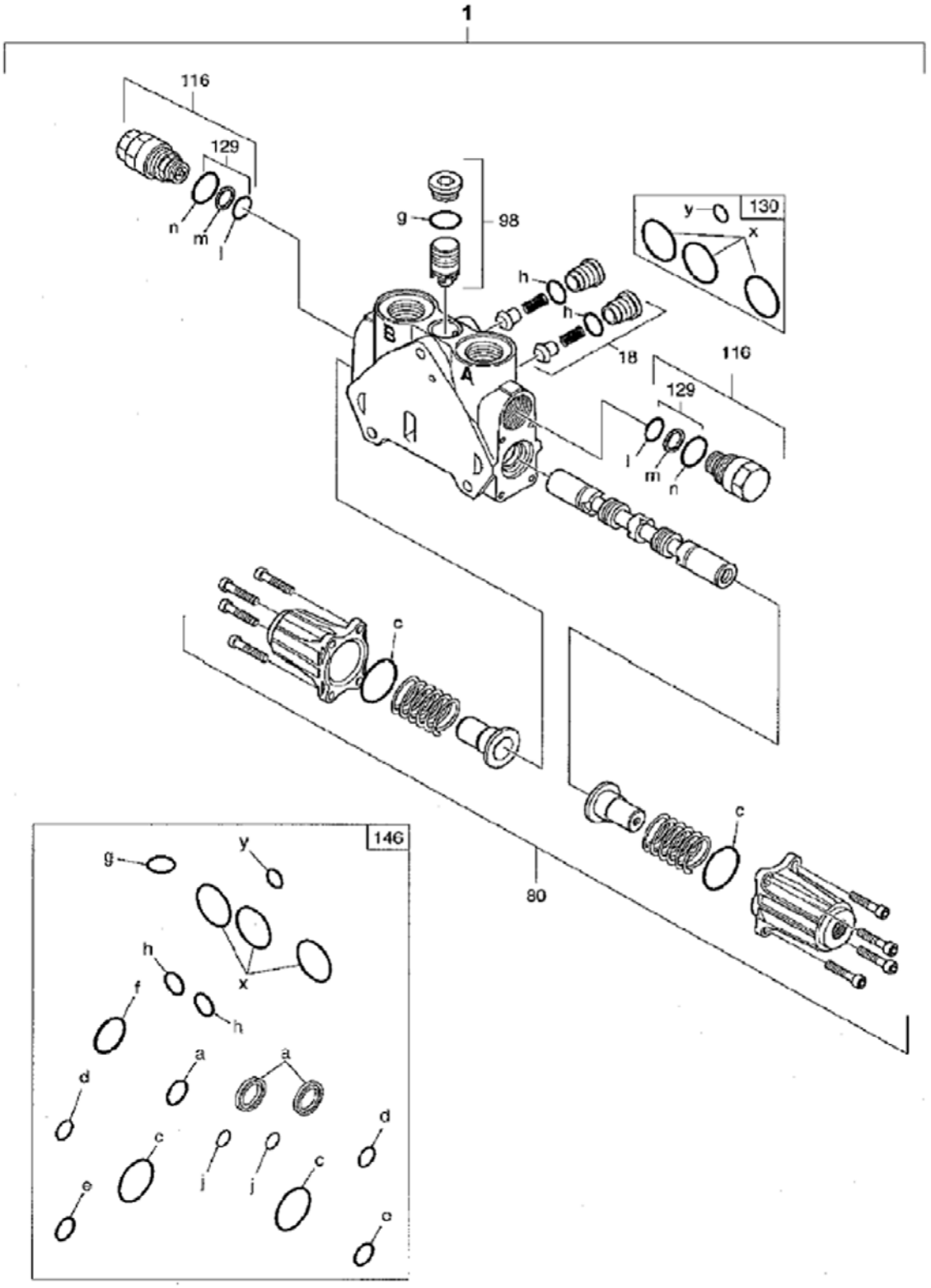


E80-4240



Page 276 - OSS# 2089524 - All rights reserved by Bobcat Company - 05/11/2012 - 06:30:39 - Produced by Ken Cook Co. with mediaioff

## VALVE SECTION (Cont'd)
## (Boom Slew)

| Ref No | Part Number | Description | Remarks | Serial Number | Qty |
|---|---|---|---|---|---|
| 1 | 7007585 | BLOCK BOOM SWING | | | 1 |
| 18 | 7007563 | VALVE CHECK | | | 1 |
| 80 | 7007576 | CAP PLUNGER KIT | | | 1 |
| 98 | 7007572 | VALVE | | | 1 |
| 116 | 7007570 | VALVE ANTI CAVITATION | W/Ref. 129 | | 2 |
| 129 | 7007568 | KIT SEAL | | | 2 |
| 130 | 7007568 | KIT SEAL | | | 1 |
| 146 | 7007582 | KIT SEAL | | | 1 |

Page 277 - OSS# 2089524 - All rights reserved by Bobcat Company - 05/11/2012 - 06:30:39 - Produced by Ken Cook Co. with mediaioff

# VALVE SECTION
## (Inlet Section)

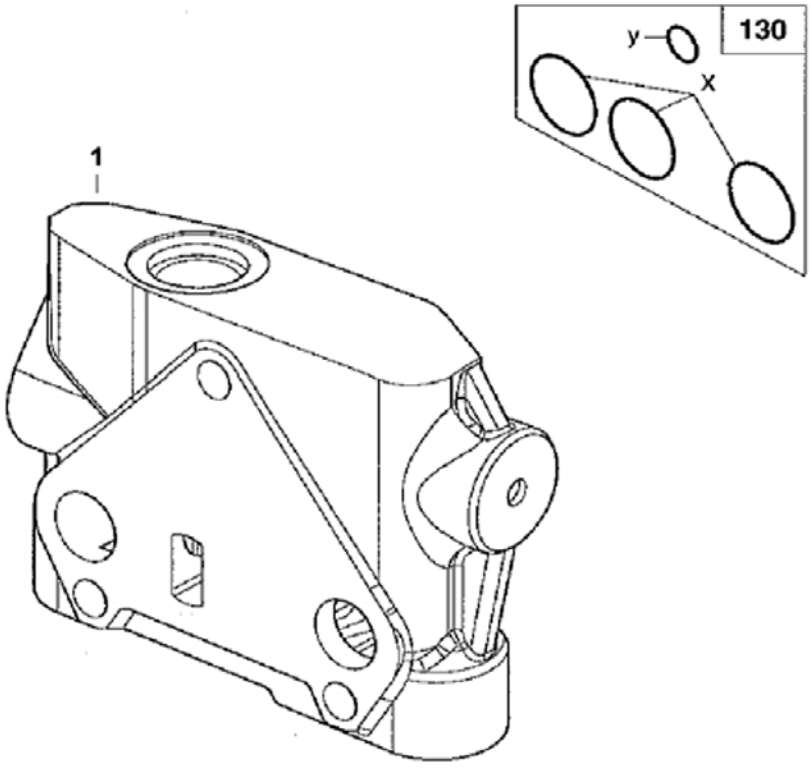


E80-4250



Page 278 - OSS# 2089524 - All rights reserved by Bobcat Company - 05/11/2012 - 06:30:39 - Produced by Ken Cook Co. with mediaioff

## VALVE SECTION (Cont'd)
## (Inlet Section)

| Ref No | Part Number | Description | Remarks | Serial Number | Qty |
|---|---|---|---|---|---|
| 1 | 7007586 | BLOCK INLET | | | 1 |
| 130 | 7007565 | KIT SEAL | | | 1 |

Page 279 - OSS# 2089524 - All rights reserved by Bobcat Company - 05/11/2012 - 06:30:39 - Produced by Ken Cook Co. with mediaioff

# VALVE SECTION
## (Slew Section)

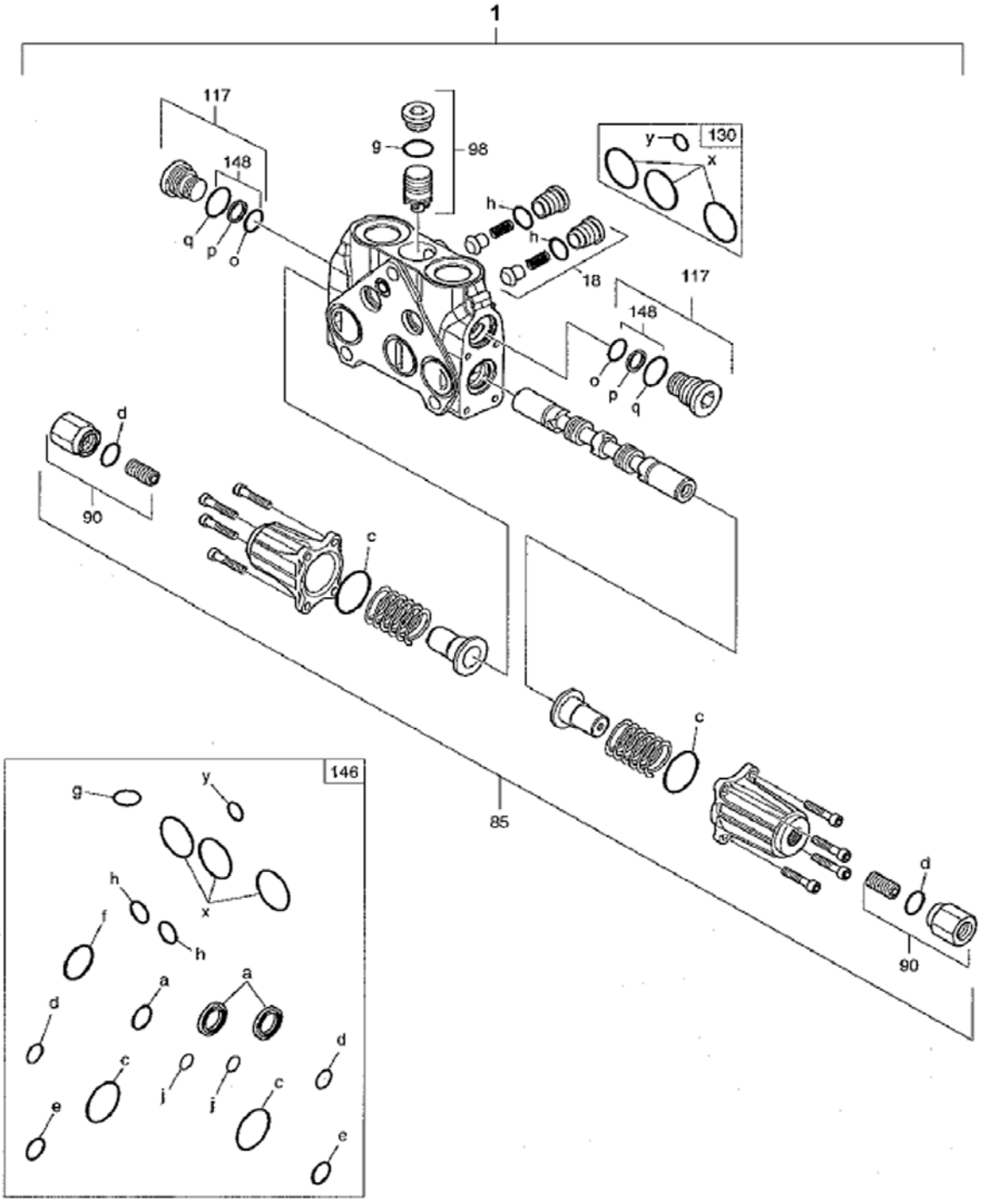


E80-4260



Page 280 - OSS# 2089524 - All rights reserved by Bobcat Company - 05/11/2012 - 06:30:39 - Produced by Ken Cook Co. with mediaioff

## VALVE SECTION (Cont'd)
## (Slew Section)

| Ref No | Part Number | Description | Remarks | Serial Number | Qty |
|---|---|---|---|---|---|
| 1 | 7007588 | BLOCK SWING | | | 1 |
| 18 | 7007563 | VALVE CHECK | | | 1 |
| 85 | 7007577 | CAP PLUNGER KIT | | | 1 |
| 90 | 7007574 | KIT STROKE LIMIT | | | 2 |
| 98 | 7007578 | VALVE | | | 1 |
| 117 | 7007561 | PLUG | W/Ref. 148 | | 2 |
| 130 | 7007565 | KIT SEAL | | | 1 |
| 146 | 7007582 | KIT SEAL | | | 1 |
| 148 | 7007560 | KIT SEAL | | | 2 |

Page 281 - OSS# 2089524 - All rights reserved by Bobcat Company - 05/11/2012 - 06:30:39 - Produced by Ken Cook Co. with mediaioff

# VALVE SECTION
## (2nd Auxiliary/Rotation Section)

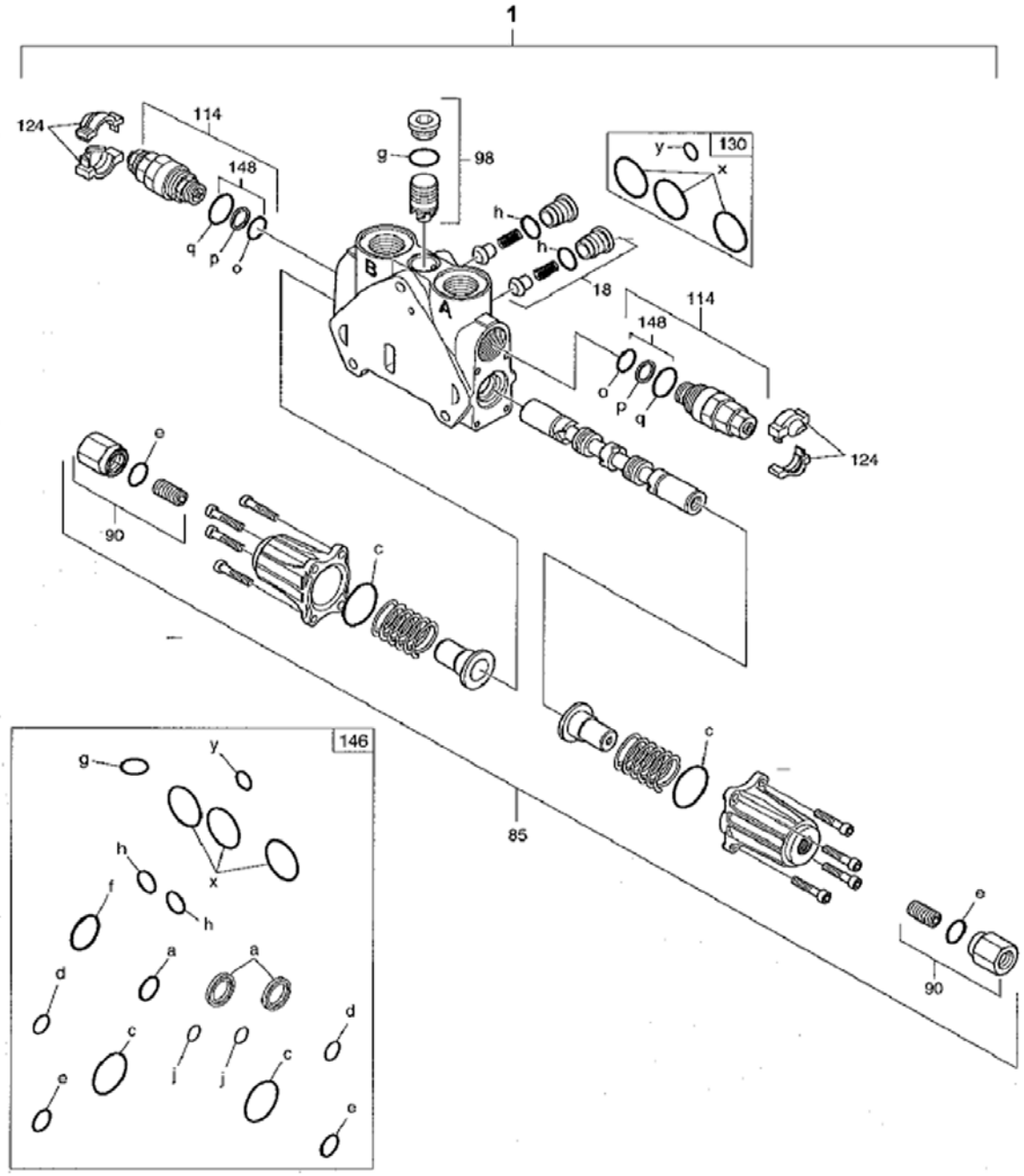


E80-4430



Page 282 - OSS# 2089524 - All rights reserved by Bobcat Company - 05/11/2012 - 06:30:39 - Produced by Ken Cook Co. with mediaioff

## VALVE SECTION (Cont'd)
## (2nd Auxiliary/Rotation Section)

| Ref No | Part Number | Description | Remarks | Serial Number | Qty |
|---|---|---|---|---|---|
| 1 | 7007597 | BLOCK ROTATING | 2ndAux | | 1 |
| 18 | 7007563 | VALVE CHECK | | | 2 |
| 85 | 7007577 | CAP PLUNGER KIT | | | 1 |
| 90 | 7007574 | KIT STROKE LIMIT | | | 2 |
| 98 | 7007572 | VALVE | | | 1 |
| 114 | 7007571 | VALVE RELIEF, 340 BAR | 340bar - W/Ref. 148 | | 2 |
| 124 | 7007558 | COVER LOCKING | | | 2 |
| 130 | 7007565 | KIT SEAL | | | 1 |
| 146 | 7007582 | KIT SEAL | | | 1 |
| 148 | 7007560 | KIT SEAL | | | 2 |

Page 283 - OSS# 2089524 - All rights reserved by Bobcat Company - 05/11/2012 - 06:30:39 - Produced by Ken Cook Co. with mediaioff

# VALVE SECTION
## (Outlet Section)

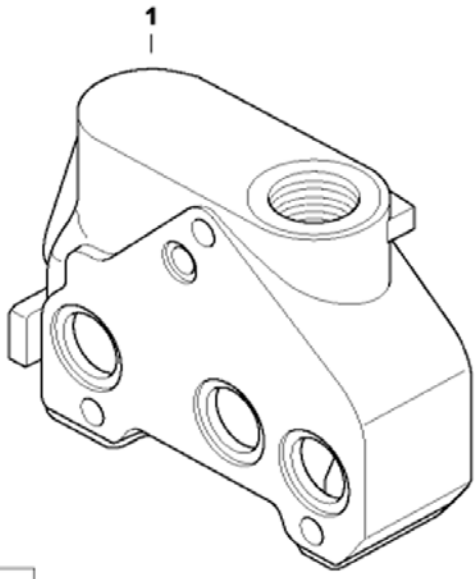


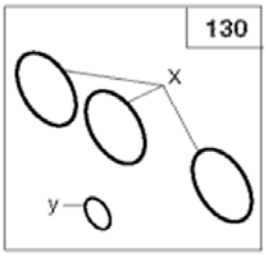


E80-4270



Page 284 - OSS# 2089524 - All rights reserved by Bobcat Company - 05/11/2012 - 06:30:39 - Produced by Ken Cook Co. with mediaioff

## VALVE SECTION (Cont'd)
## (Outlet Section)

| Ref No | Part Number | Description | Remarks | Serial Number | Qty |
|---|---|---|---|---|---|
| 1 | 7007590 | BLOCK OUTLET | | | 1 |
| 130 | 7007565 | KIT SEAL | | | 1 |

Page 285 - OSS# 2089524 - All rights reserved by Bobcat Company - 05/11/2012 - 06:30:39 - Produced by Ken Cook Co. with mediaioff

# ARM CYLINDER
# (W/O Lock Valve)

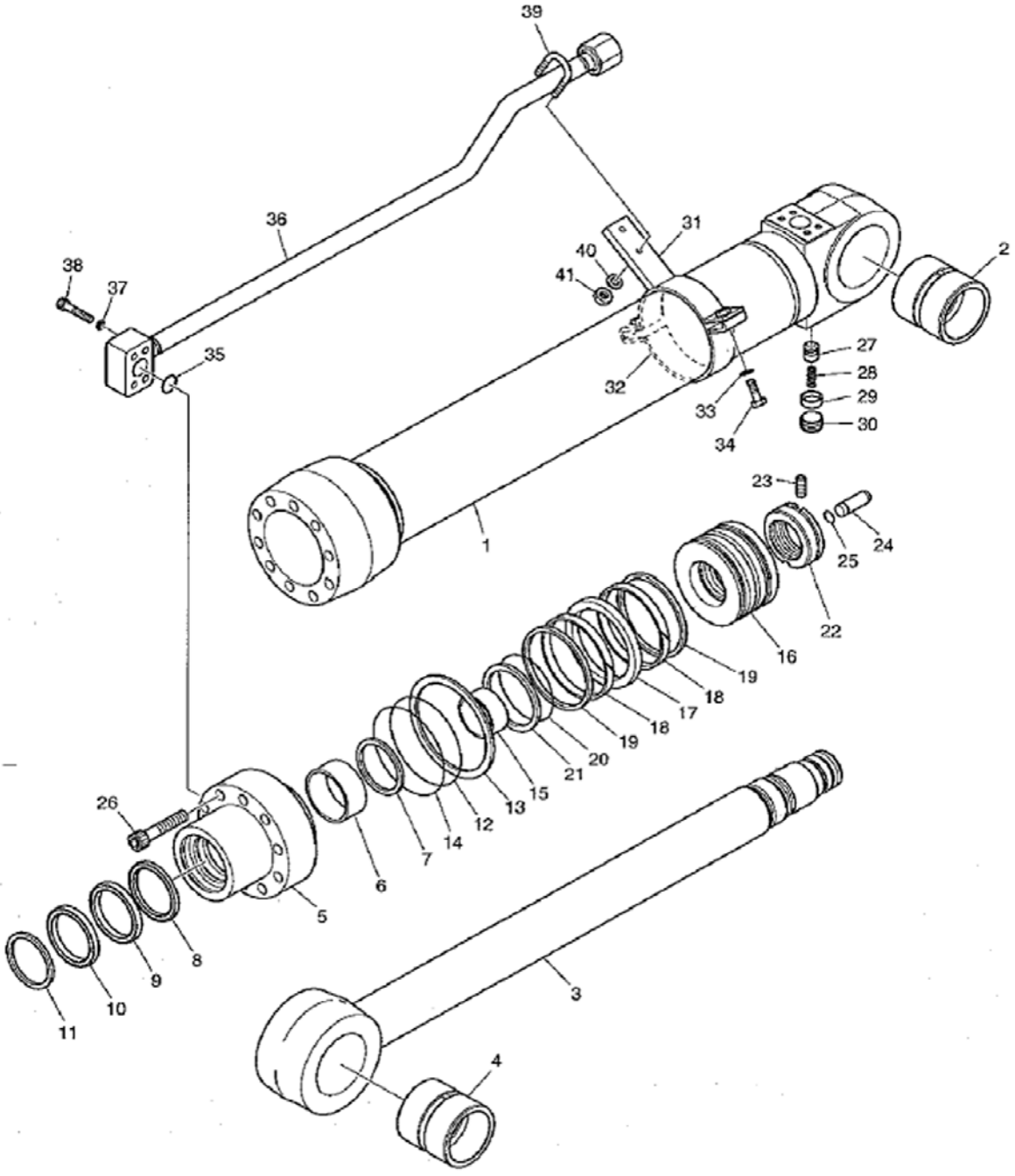


E80-4330



Page 286 - OSS# 2089524 - All rights reserved by Bobcat Company - 05/11/2012 - 06:30:39 - Produced by Ken Cook Co. with mediaioff

## ARM CYLINDER (Cont'd)
## (W/O Lock Valve)

| Ref No | Part Number | Description | Remarks | Serial Number | Qty |
|---|---|---|---|---|---|
| 1 | 7006028 | CYLINDER ARM | W/Ref. 2-41 | | 1 |
| 1 | 7007529 | TUBELINE ASSY | | | 1 |
| 2 | 7006005 | BUSHING | | | 1 |
| 3 | 7007530 | ROD ASSY | | | 1 |
| 4 | 7006005 | BUSHING | | | 1 |
| 5 | 7007509 | COVER ROD | | | 1 |
| 6 | 7003709 | BUSHING DD | | | 1 |
| 7 | 7003722 | RING RETAINING | | | 1 |
| 8 | 7003788 | SEAL BUFFER | | | 1 |
| 9 | 7003758 | SEAL | | | 1 |
| 10 | 7003791 | WIPER DUST | | | 1 |
| 11 | 7003862 | RING RETAINING | | | 1 |
| 12 | 7007944 | ORING | | | 1 |
| 13 | 7003766 | RING BACK-UP | | | 1 |
| 14 | 7007945 | ORING | | | 1 |
| 15 | 7006835 | RING CUSHION | | | 1 |
| 16 | 7006847 | PISTON | | | 1 |
| 17 | 7003947 | SEAL SLIPPER | | | 1 |
| 18 | 7007507 | RING WEAR | | | 2 |
| 19 | 7007502 | RING DUST | | | 2 |
| 20 | 7003755 | ORING | | | 1 |
| 21 | 7006829 | RING BACK-UP | | | 2 |
| 22 | 7006830 | NUT PISTON | | | 1 |
| 23 | 7007792 | SCREW SET | | | 1 |
| 24 | 7003836 | DIAPHRAGM PLUNGER CUSHION | | | 1 |
| 25 | 7003728 | RING STOP | | | 1 |
| 26 | 7007772 | BOLT HEX SOCKET | | | 10 |
| 27 | 7003826 | VALVE CHECK | | | 1 |
| 28 | 7003742 | SPRING | | | 1 |
| 29 | 7003804 | SUPPORT SPRING | | | 1 |
| 30 | 7004674 | PLUG PT3/8 | | | 1 |
| 31 | 7007532 | TUBELINE BAND ASSY | | | 1 |
| 32 | 7007508 | BAND TUBELINE | | | 1 |
| 33 | 7007830 | WASHER SPRING | | | 2 |
| 34 | 7007669 | BOLT | Was 7007668 [A] | | 2 |
| 35 | 7007912 | ORING | | | 1 |
| 36 | 7007531 | TUBELINE ASSY-R | | | 1 |
| 37 | 7007829 | WASHER | | | 4 |
| 38 | 7007740 | BOLT SOCKET M8X45 | | | 4 |
| 39 | 7007505 | U-BOLT | | | 1 |
| 40 | 7007829 | WASHER | | | 2 |
| 41 | 7007796 | NUT | | | 2 |
| 41 | 7007412 | KIT SEAL | W/Ref. 8-10, 12-14 & 17-21 | | 1 |

Page 287 - OSS# 2089524 - All rights reserved by Bobcat Company - 05/11/2012 - 06:30:39 - Produced by Ken Cook Co. with mediaioff

# ARM CYLINDER
# (W/Lock Valve)

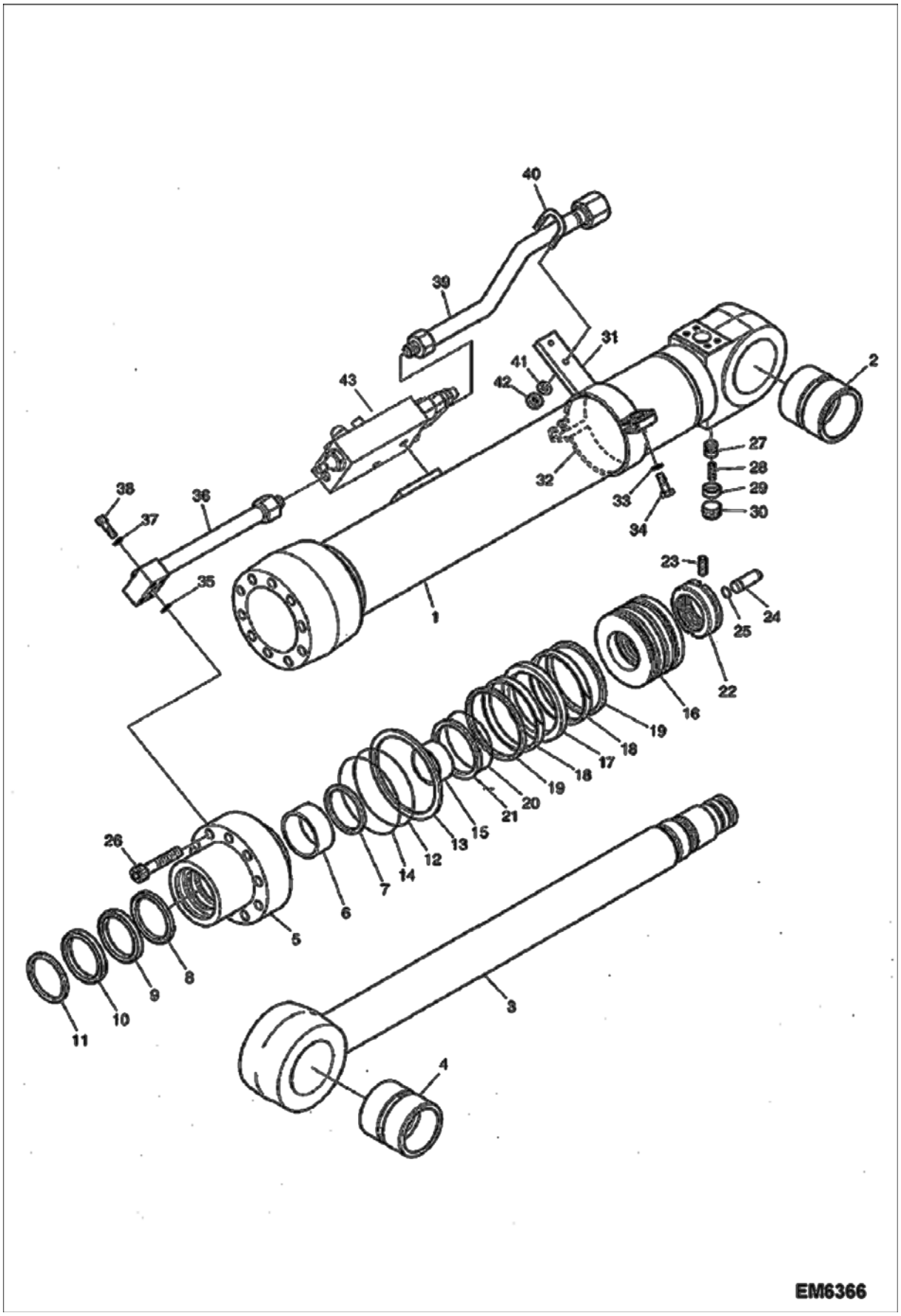




Page 288 - OSS# 2089524 - All rights reserved by Bobcat Company - 05/11/2012 - 06:30:39 - Produced by Ken Cook Co. with mediaioff

## ARM CYLINDER (Cont'd)
## (W/Lock Valve)

| Ref No | Part Number | Description | Remarks | Serial Number | Qty |
|---|---|---|---|---|---|
| 1 | 7006799 | CYLINDER ARM LOCK VALVE | W/Lock valve - W/Ref. 2-42 | | 1 |
| 1 | 7007529 | TUBELINE ASSY | | | 1 |
| 2 | 7006005 | BUSHING | | | 1 |
| 3 | 7007530 | ROD ASSY | | | 1 |
| 4 | 7006005 | BUSHING | | | 1 |
| 5 | 7007509 | COVER ROD | | | 1 |
| 6 | 7003709 | BUSHING DD | | | 1 |
| 7 | 7003722 | RING RETAINING | | | 1 |
| 8 | 7003788 | SEAL BUFFER | | | 1 |
| 9 | 7003758 | SEAL | | | 1 |
| 10 | 7003791 | WIPER DUST | | | 1 |
| 11 | 7003862 | RING RETAINING | | | 1 |
| 12 | 7007944 | ORING | | | 1 |
| 13 | 7003766 | RING BACK-UP | | | 1 |
| 14 | 7007945 | ORING | | | 1 |
| 15 | 7006835 | RING CUSHION | | | 1 |
| 16 | 7006847 | PISTON | | | 1 |
| 17 | 7003947 | SEAL SLIPPER | | | 1 |
| 18 | 7007507 | RING WEAR | | | 2 |
| 19 | 7007502 | RING DUST | | | 2 |
| 20 | 7003755 | ORING | | | 1 |
| 21 | 7006829 | RING BACK-UP | | | 2 |
| 22 | 7006830 | NUT PISTON | | | 1 |
| 23 | 7007792 | SCREW SET | | | 1 |
| 24 | 7003836 | DIAPHRAGM PLUNGER CUSHION | | | 1 |
| 25 | 7003728 | RING STOP | | | 1 |
| 26 | 7007772 | BOLT HEX SOCKET | | | 10 |
| 27 | 7003826 | VALVE CHECK | | | 1 |
| 28 | 7003742 | SPRING | | | 1 |
| 29 | 7003804 | SUPPORT SPRING | | | 1 |
| 30 | 7004674 | PLUG PT3/8 | | | 1 |
| 31 | 7007532 | TUBELINE BAND ASSY | | | 1 |
| 32 | 7007508 | BAND TUBELINE | | | 1 |
| 33 | 7007830 | WASHER SPRING | | | 2 |
| 34 | 7007669 | BOLT | Was 7007668 [A] | | 2 |
| 35 | 7007912 | ORING | | | 1 |
| 36 | 7008290 | TUBELINE ASSY | | | 1 |
| 37 | 7007829 | WASHER | | | 4 |
| 38 | 7007740 | BOLT SOCKET M8X45 | | | 4 |
| 39 | 7008291 | TUBELINE ASSY | | | 1 |
| 40 | 7007505 | U-BOLT | | | 1 |
| 41 | 7007829 | WASHER | | | 2 |
| 42 | 7007796 | NUT | | | 2 |
| 42 | 7007412 | KIT SEAL | W/Ref. 8-10, 12-14 & 17-21 | | 1 |
| 43 | 7004980 | VALVE LOCK | | | 1 |

Page 289 - OSS# 2089524 - All rights reserved by Bobcat Company - 05/11/2012 - 06:30:39 - Produced by Ken Cook Co. with mediaioff

# BOOM CYLINDER
# (W/Lock Valve)

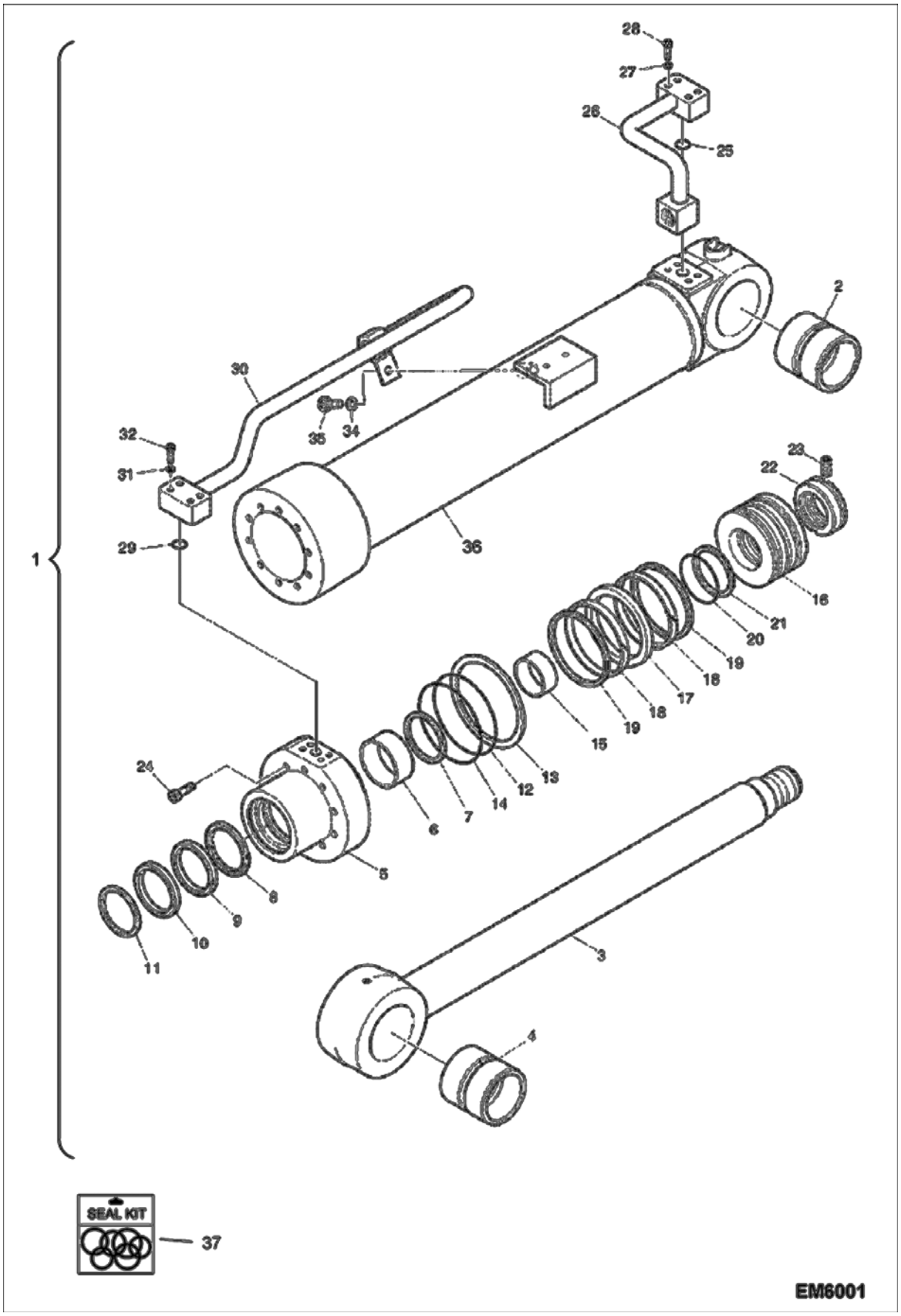




Page 290 - OSS# 2089524 - All rights reserved by Bobcat Company - 05/11/2012 - 06:30:39 - Produced by Ken Cook Co. with mediaioff

## BOOM CYLINDER (Cont'd)
## (W/Lock Valve)

| Ref No | Part Number | Description | Remarks | Serial Number | Qty |
|---|---|---|---|---|---|
| 1 | 7012246 | CYLINDER,BOOM | W/Lock valve - W/Ref. 2-36 Was 7006045 [A] | | 1 |
| 2 | 7006004 | BUSHING | | | 1 |
| 3 | 7007537 | ROD ASSY | | | 1 |
| 4 | 7006004 | BUSHING | | | 1 |
| 5 | 7007535 | ROD COVER | | | 1 |
| 6 | 7003708 | BUSHING DD | | | 1 |
| 7 | 7003864 | RING RETAINING | | | 1 |
| 8 | 7003948 | SEAL BUFFER | | | 1 |
| 9 | 7003797 | SEAL | | | 1 |
| 10 | 7003789 | WIPER DUST | | | 1 |
| 11 | 7006832 | RING RETAINING | | | 1 |
| 12 | 7007950 | ORING | | | 1 |
| 13 | 7006833 | RING BACK-UP | | | 1 |
| 14 | 7007951 | ORING | | | 1 |
| 15 | 7006933 | RING CUSHION | | | 1 |
| 16 | 7007512 | PISTON | | | 1 |
| 17 | 7003779 | RING GLYD | | | 1 |
| 18 | 7003783 | RING WEAR | | | 2 |
| 19 | 7006834 | RING DUST | | | 2 |
| 20 | 7003754 | ORING | | | 1 |
| 21 | 7003765 | RING BACK-UP | | | 2 |
| 22 | 7003735 | NUT PISTON | | | 1 |
| 23 | 7007792 | SCREW SET | | | 1 |
| 24 | 7007775 | BOLT HEX SOCKET | | | 10 |
| 25 | 7007919 | ORING | | | 1 |
| 26 | 7007541 | TUBELINE ASSY-H | | | 1 |
| 27 | 7007830 | WASHER SPRING | | | 4 |
| 28 | 7007754 | BOLT SOCKET | Was 7007753 [D] | | 4 |
| 29 | 7007912 | ORING | | | 1 |
| 30 | 7007542 | TUBELINE ASSY-R | | | 1 |
| 31 | 7007829 | WASHER | | | 4 |
| 32 | 7007742 | BOLT SOCKET | | | 4 |
| 34 | 7007830 | WASHER SPRING | | | 1 |
| 35 | 7007626 | BOLT | Was 7007625 [A] | | 1 |
| 36 | 7007540 | TUBE, CASE CYL | | | 1 |
| 37 | 7004992 | KIT SEAL | W/Ref. 8-10, 12-14 & 17-21 | | 1 |

Page 291 - OSS# 2089524 - All rights reserved by Bobcat Company - 05/11/2012 - 06:30:39 - Produced by Ken Cook Co. with mediaioff

# BUCKET CYLINDER

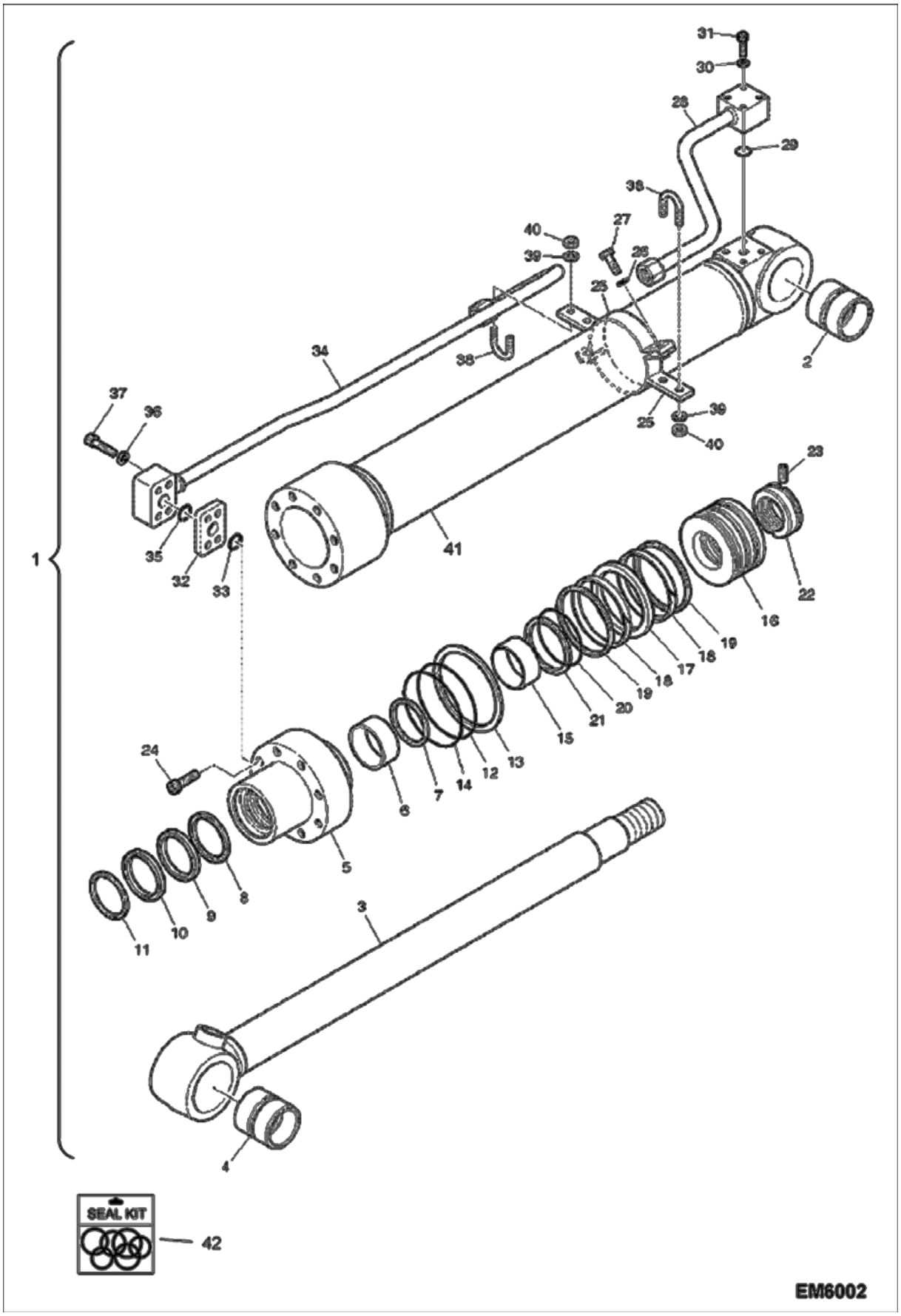




Page 292 - OSS# 2089524 - All rights reserved by Bobcat Company - 05/11/2012 - 06:30:39 - Produced by Ken Cook Co. with mediaioff

| Ref No | Part Number | Description | Remarks | Serial Number | Qty |
|---|---|---|---|---|---|
| 1 | 7012249 | CYLINDER;BUCKET | W/Ref. 2-41 Was 7006049 [A] | | 1 |
| 2 | 7005752 | BUSHING | | | 1 |
| 3 | 7007525 | ROD ASSY | | | 1 |
| 4 | 7006006 | BUSHING | | | 1 |
| 5 | 7007522 | COVER ROD | | | 1 |
| 6 | 7003710 | BUSHING DD | | | 1 |
| 7 | 7007503 | RING RETAINING | | | 1 |
| 8 | 7007025 | SEAL BUFFER | | | 1 |
| 9 | 7003759 | SEAL | | | 1 |
| 10 | 7003792 | WIPER DUST | | | 1 |
| 11 | 7003724 | RING RETAINING | | | 1 |
| 12 | 7007939 | ORING | | | 1 |
| 13 | 7007504 | RING BACK-UP | | | 1 |
| 14 | 7007941 | ORING | | | 1 |
| 15 | 7007501 | RING CUSHION | | | 1 |
| 16 | 7007523 | PISTON | | | 1 |
| 17 | 7007024 | RING GLYD | | | 1 |
| 18 | 7007506 | RING WEAR | | | 2 |
| 19 | 7007022 | RING DUST | | | 2 |
| 20 | 7007925 | ORING | | | 1 |
| 21 | 7007968 | RING BACK-UP | | | 1 |
| 22 | 7003738 | NUT PISTON | | | 1 |
| 23 | 7007792 | SCREW SET | | | 1 |
| 24 | 7007767 | BOLT HEX SOCKET | | | 8 |
| 25 | 7007526 | TUBELINE BAND ASSY | | | 2 |
| 26 | 7007830 | WASHER SPRING | | | 2 |
| 27 | 7007669 | BOLT | Was 7007668 [A] | | 2 |
| 28 | 7007527 | TUBELINE ASSY-H | | | 1 |
| 29 | 7007912 | ORING | | | 1 |
| 30 | 7007829 | WASHER | | | 4 |
| 31 | 7007742 | BOLT SOCKET | | | 4 |
| 32 | 7007510 | SPACER | | | 1 |
| 33 | 7007912 | ORING | | | 1 |
| 34 | 7007528 | TUBELINE ASSY-R | | | 1 |
| 35 | 7007912 | ORING | | | 1 |
| 36 | 7007829 | WASHER | | | 4 |
| 37 | 7007742 | BOLT SOCKET | | | 4 |
| 38 | 7007505 | U-BOLT | | | 2 |
| 39 | 7007829 | WASHER | | | 4 |
| 40 | 7007796 | NUT | | | 4 |
| 41 | 7007524 | TUBELINE ASSY | | | 1 |
| 42 | 7004993 | KIT SEAL | W/Ref. 8-10, 12-14 & 17-21 | | 1 |

Page 293 - OSS# 2089524 - All rights reserved by Bobcat Company - 05/11/2012 - 06:30:39 - Produced by Ken Cook Co. with mediaioff

# BLADE CYLINDER
# (LH W/O Lock Valve)

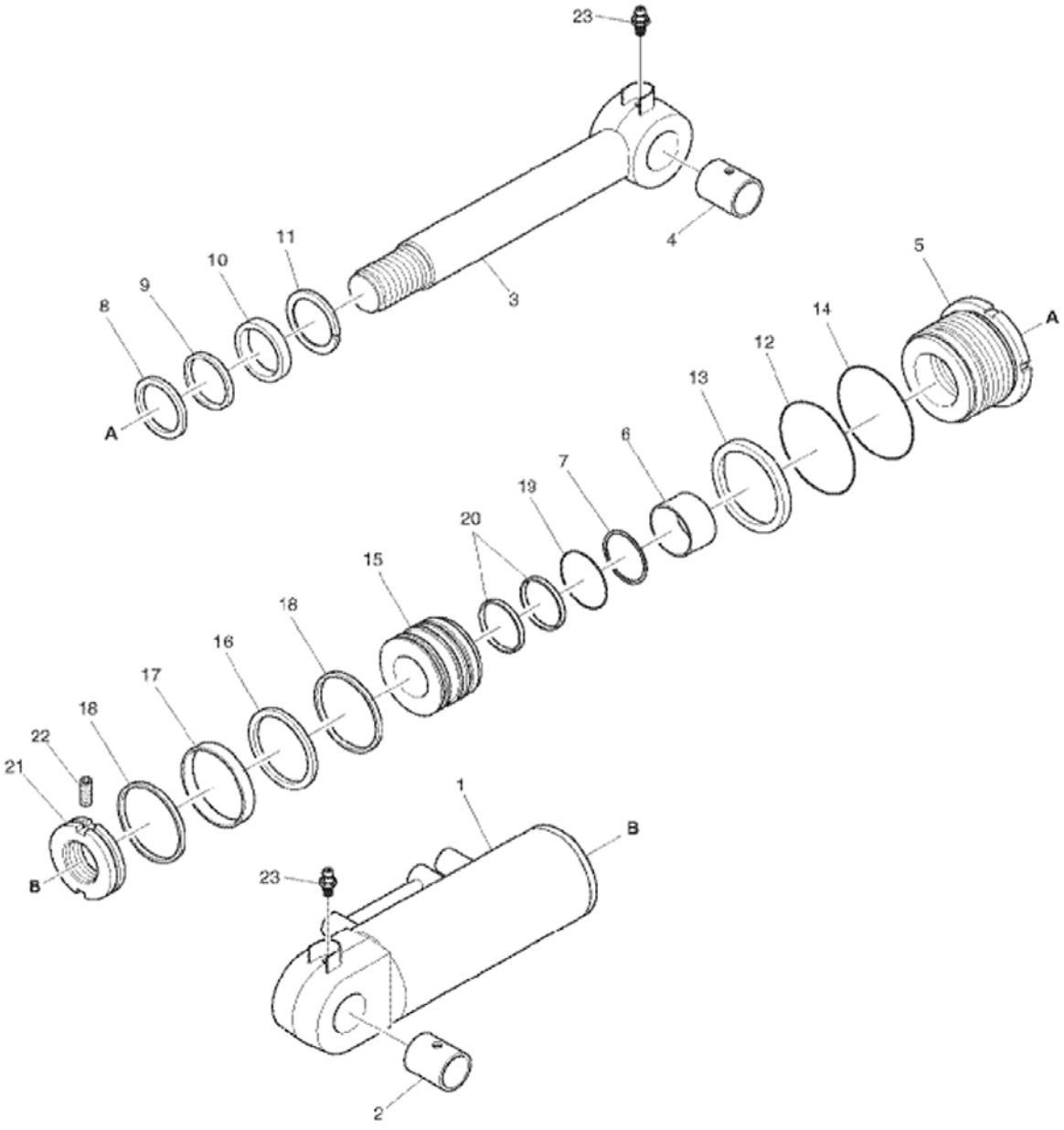


E80-4360



Page 294 - OSS# 2089524 - All rights reserved by Bobcat Company - 05/11/2012 - 06:30:39 - Produced by Ken Cook Co. with mediaioff

## BLADE CYLINDER (Cont'd)
## (LH W/O Lock Valve)

| Ref No | Part Number | Description | Remarks | Serial Number | Qty |
|---|---|---|---|---|---|
| 1 | 7006095 | CYLINDER DOZER LH | W/Ref. 2-23 | | 1 |
| 1 | 7007516 | TUBELINE ASSY LH | | | 1 |
| 2 | 7003706 | BUSHING | | | 1 |
| 3 | 7007517 | ROD ASSY | | | 1 |
| 4 | 7003706 | BUSHING | | | 1 |
| 5 | 7007513 | COVER ROD | | | 1 |
| 6 | 7007333 | BUSHING DU | | | 1 |
| 7 | 7003730 | RING RETAINING | | | 1 |
| 8 | 7003787 | SEAL BUFFER | | | 1 |
| 9 | 7003761 | SEAL | | | 1 |
| 10 | 7003865 | WIPER DUST | | | 1 |
| 11 | 7003864 | RING RETAINING | | | 1 |
| 12 | 7007944 | ORING | | | 1 |
| 13 | 7003772 | RING BACK-UP | | | 1 |
| 14 | 7007945 | ORING | | | 1 |
| 15 | 7007514 | PISTON | | | 1 |
| 16 | 7003947 | SEAL SLIPPER | | | 1 |
| 17 | 7006827 | RING WEAR | | | 1 |
| 18 | 7006828 | RING DUST | | | 2 |
| 19 | 7007935 | ORING | | | 1 |
| 20 | 7007970 | RING BACK-UP | | | 2 |
| 21 | 7003736 | NUT | | | 1 |
| 22 | 7007792 | SCREW SET | | | 1 |
| 23 | 7010247 | FITTING, GREASE | Was 7007893 [A] | | 2 |
| 23 | 7007414 | KIT SEAL | W/Ref. 8-10, 12-14 & 16-22 | | 1 |

Page 295 - OSS# 2089524 - All rights reserved by Bobcat Company - 05/11/2012 - 06:30:39 - Produced by Ken Cook Co. with mediaioff

# BLADE CYLINDER
# (RH W/O Lock Valve)

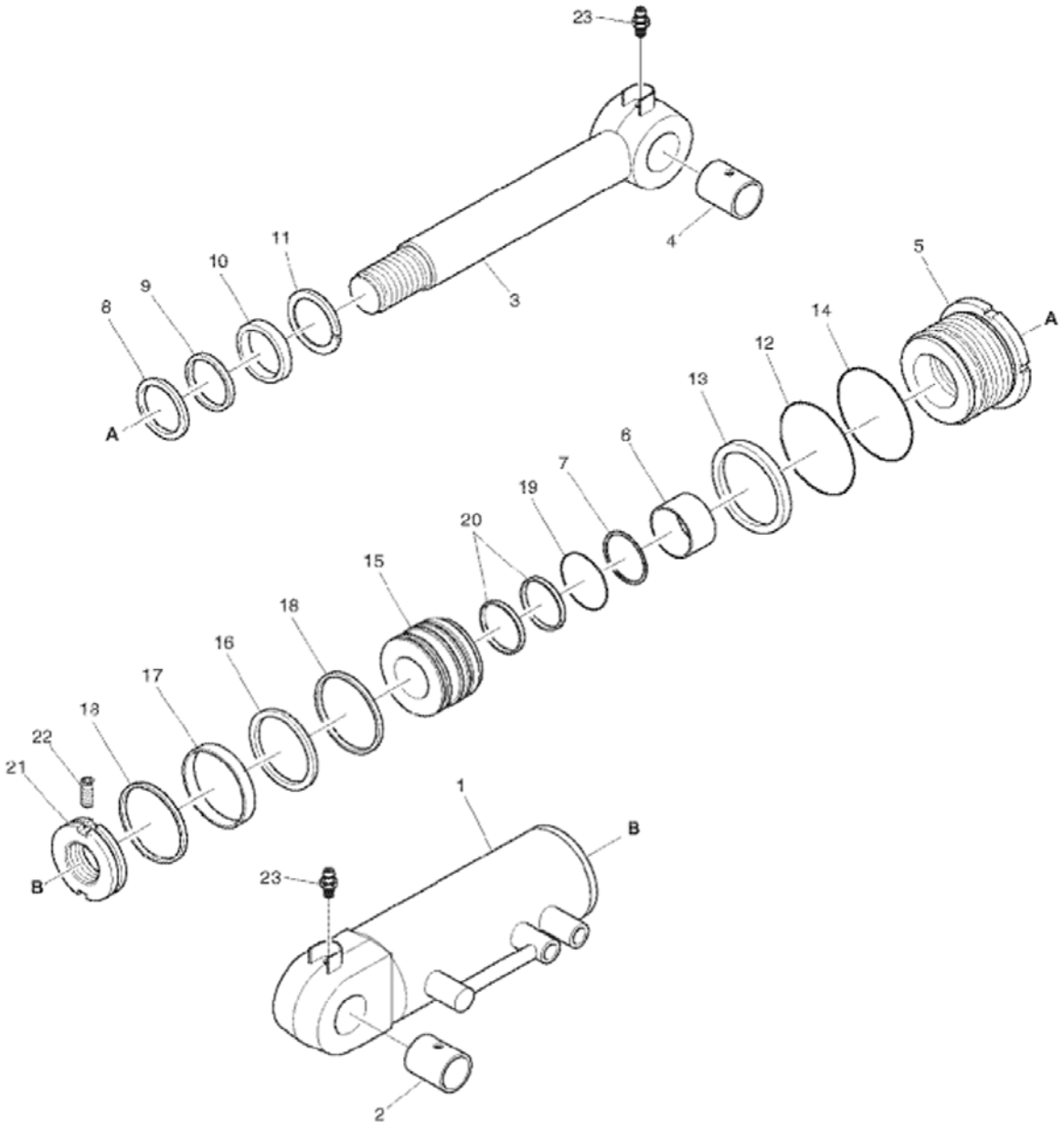


E80-4370



Page 296 - OSS# 2089524 - All rights reserved by Bobcat Company - 05/11/2012 - 06:30:39 - Produced by Ken Cook Co. with mediaioff

## BLADE CYLINDER (Cont'd)
## (RH W/O Lock Valve)

| Ref No | Part Number | Description | Remarks | Serial Number | Qty |
|---|---|---|---|---|---|
| 1 | 7006096 | CYLINDER DOZER RH | W/Ref. 2-23 | | 1 |
| 1 | 7007515 | TUBELINE ASSY RH | | | 1 |
| 2 | 7003706 | BUSHING | | | 1 |
| 3 | 7007517 | ROD ASSY | | | 1 |
| 4 | 7003706 | BUSHING | | | 1 |
| 5 | 7007513 | COVER ROD | | | 1 |
| 6 | 7007333 | BUSHING DU | | | 1 |
| 7 | 7003730 | RING RETAINING | | | 1 |
| 8 | 7003787 | SEAL BUFFER | | | 1 |
| 9 | 7003761 | SEAL | | | 1 |
| 10 | 7003865 | WIPER DUST | | | 1 |
| 11 | 7003864 | RING RETAINING | | | 1 |
| 12 | 7007944 | ORING | | | 1 |
| 13 | 7003772 | RING BACK-UP | | | 1 |
| 14 | 7007945 | ORING | | | 1 |
| 15 | 7007514 | PISTON | | | 1 |
| 16 | 7003947 | SEAL SLIPPER | | | 1 |
| 17 | 7006827 | RING WEAR | | | 1 |
| 18 | 7006828 | RING DUST | | | 2 |
| 19 | 7007935 | ORING | | | 1 |
| 20 | 7007970 | RING BACK-UP | | | 2 |
| 21 | 7003736 | NUT | | | 1 |
| 22 | 7007792 | SCREW SET | | | 1 |
| 23 | 7010247 | FITTING, GREASE | Was 7007893 [A] | | 2 |
| 23 | 7007414 | KIT SEAL | W/Ref. 8-10, 12-14 & 16-20 | | 1 |

Page 297 - OSS# 2089524 - All rights reserved by Bobcat Company - 05/11/2012 - 06:30:39 - Produced by Ken Cook Co. with mediaioff

# BLADE CYLINDER
# (LH W/Lock Valve)

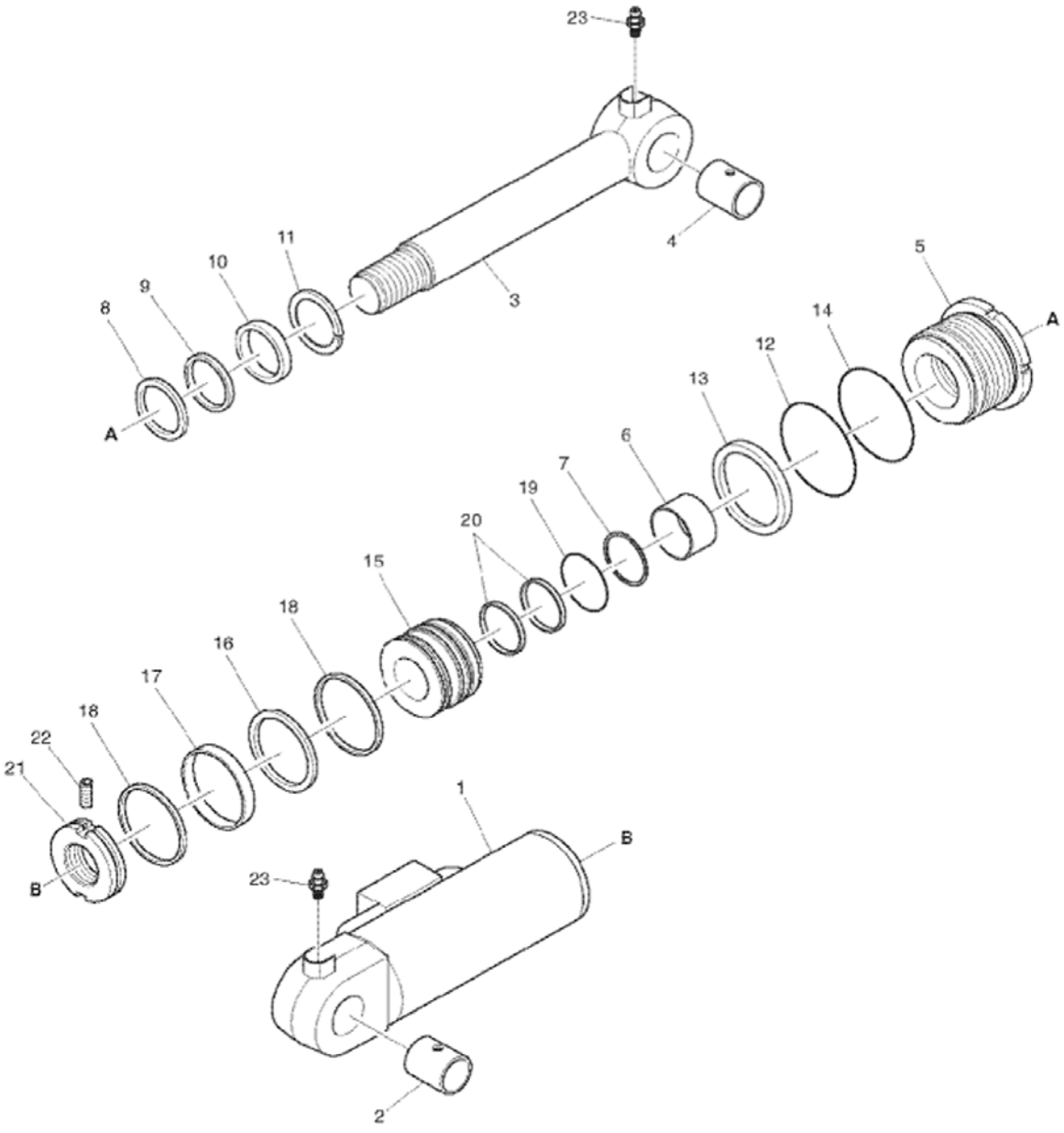


E80-4380



Page 298 - OSS# 2089524 - All rights reserved by Bobcat Company - 05/11/2012 - 06:30:39 - Produced by Ken Cook Co. with mediaIoff

## BLADE CYLINDER (Cont'd)
## (LH W/Lock Valve)

| Ref No | Part Number | Description | Remarks | Serial Number | Qty |
|---|---|---|---|---|---|
| 1 | 7006547 | CYLINDER DOZER LH | W/Ref. 2-23 | | 1 |
| 1 | 7007521 | TUBELINE ASSY LH | | | 1 |
| 2 | 7003706 | BUSHING | | | 1 |
| 3 | 7007517 | ROD ASSY | | | 1 |
| 4 | 7003706 | BUSHING | | | 1 |
| 5 | 7007518 | COVER ROD | | | 1 |
| 6 | 7007333 | BUSHING DU | | | 1 |
| 7 | 7003730 | RING RETAINING | | | 1 |
| 8 | 7003787 | SEAL BUFFER | | | 1 |
| 9 | 7003761 | SEAL | | | 1 |
| 10 | 7003865 | WIPER DUST | | | 1 |
| 11 | 7003864 | RING RETAINING | | | 1 |
| 12 | 7007944 | ORING | | | 1 |
| 13 | 7003772 | RING BACK-UP | | | 1 |
| 14 | 7007945 | ORING | | | 1 |
| 15 | 7007519 | PISTON | | | 1 |
| 16 | 7003947 | SEAL SLIPPER | | | 1 |
| 17 | 7006827 | RING WEAR | | | 1 |
| 18 | 7006828 | RING DUST | | | 2 |
| 19 | 7007935 | ORING | | | 1 |
| 20 | 7007970 | RING BACK-UP | | | 2 |
| 21 | 7003736 | NUT | | | 1 |
| 22 | 7007792 | SCREW SET | | | 1 |
| 23 | 7010247 | FITTING, GREASE | Was 7007893 [A] | | 2 |
| 23 | 7007414 | KIT SEAL | W/Ref. 8-10, 12-14 & 16-20 | | 1 |

Page 299 - OSS# 2089524 - All rights reserved by Bobcat Company - 05/11/2012 - 06:30:39 - Produced by Ken Cook Co. with mediaioff

# BLADE CYLINDER
# (RH W/Lock Valve)

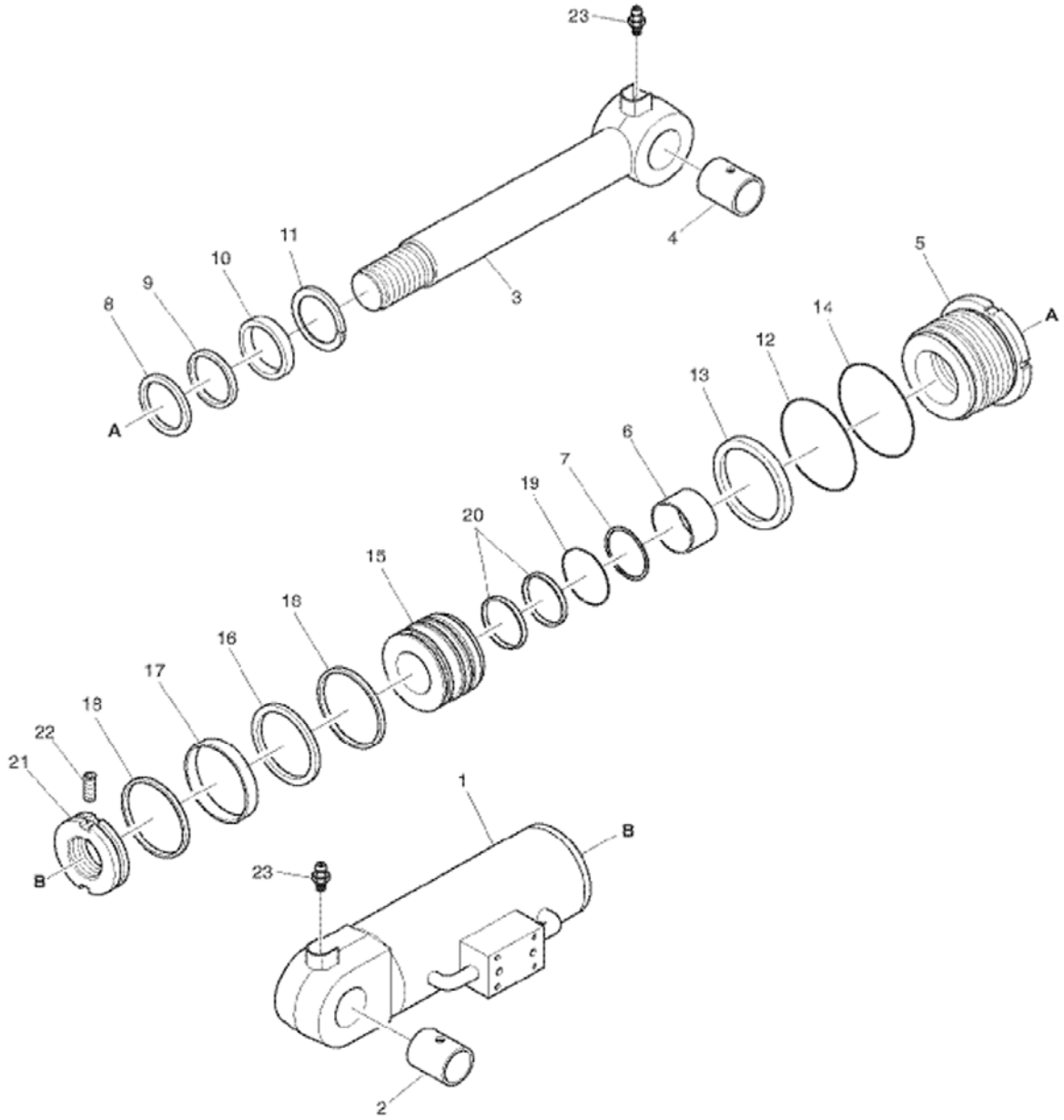


E80-4390



Page 300 - OSS# 2089524 - All rights reserved by Bobcat Company - 05/11/2012 - 06:30:39 - Produced by Ken Cook Co. with mediaioff

## BLADE CYLINDER (Cont'd)
## (RH W/Lock Valve)

| Ref No | Part Number | Description | Remarks | Serial Number | Qty |
|---|---|---|---|---|---|
| 1 | 7006548 | CYLINDER DOZER RH | W/Ref. 2-23 | | 1 |
| 1 | 7007520 | TUBELINE ASSY RH | | | 1 |
| 2 | 7003706 | BUSHING | | | 1 |
| 3 | 7007517 | ROD ASSY | | | 1 |
| 4 | 7003706 | BUSHING | | | 1 |
| 5 | 7007518 | COVER ROD | | | 1 |
| 6 | 7007333 | BUSHING DU | | | 1 |
| 7 | 7003730 | RING RETAINING | | | 1 |
| 8 | 7003787 | SEAL BUFFER | | | 1 |
| 9 | 7003761 | SEAL | | | 1 |
| 10 | 7003865 | WIPER DUST | | | 1 |
| 11 | 7003864 | RING RETAINING | | | 1 |
| 12 | 7007944 | ORING | | | 1 |
| 13 | 7003772 | RING BACK-UP | | | 1 |
| 14 | 7007945 | ORING | | | 1 |
| 15 | 7007519 | PISTON | | | 1 |
| 16 | 7003947 | SEAL SLIPPER | | | 1 |
| 17 | 7006827 | RING WEAR | | | 1 |
| 18 | 7006828 | RING DUST | | | 2 |
| 19 | 7007935 | ORING | | | 1 |
| 20 | 7007970 | RING BACK-UP | | | 2 |
| 21 | 7003736 | NUT | | | 1 |
| 22 | 7007792 | SCREW SET | | | 1 |
| 23 | 7010247 | FITTING, GREASE | Was 7007893 [A] | | 2 |
| 23 | 7007414 | KIT SEAL | W/Ref. 8-10, 12-14 & 16-20 | | 1 |

Page 301 - OSS# 2089524 - All rights reserved by Bobcat Company - 05/11/2012 - 06:30:39 - Produced by Ken Cook Co. with mediaioff

# BOOM SLEW CYLINDER

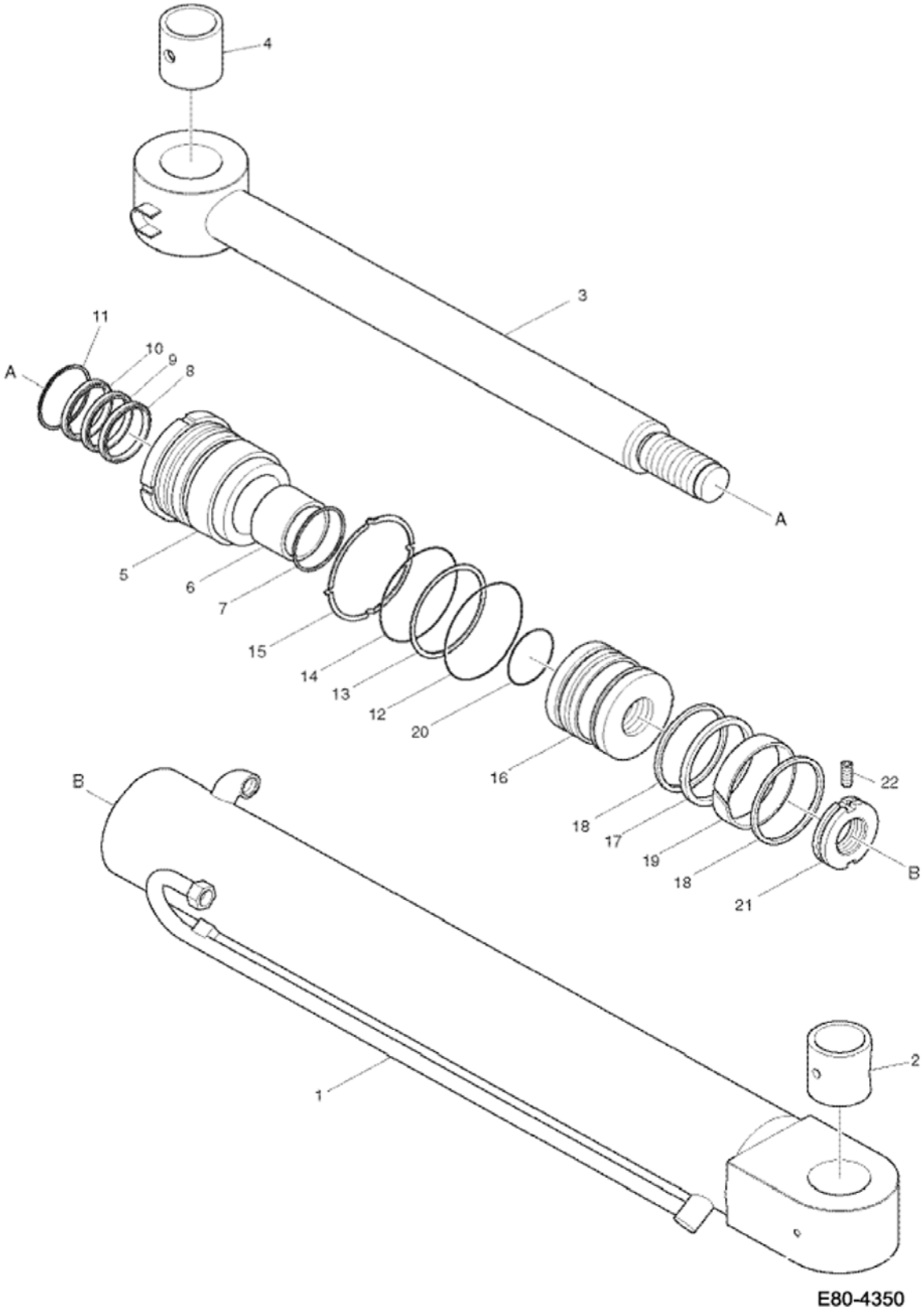




Page 302 - OSS# 2089524 - All rights reserved by Bobcat Company - 05/11/2012 - 06:30:39 - Produced by Ken Cook Co. with mediaIoff

| Ref No | Part Number | Description | Remarks | Serial Number | Qty |
|---|---|---|---|---|---|
| 1 | 7006155 | CYLINDER BOOM SWING | W/Ref. 2-22 | | 1 |
| 1 | 7007547 | TUBELINE ASSY | | | 1 |
| 2 | 7003705 | BUSHING | | | 1 |
| 3 | 7007548 | ROD ASSY | | | 1 |
| 4 | 7003705 | BUSHING | | | 1 |
| 5 | 7007549 | COVER ROD | | | 1 |
| 6 | 7007551 | BUSHING DU | | | 1 |
| 7 | 7003730 | RING RETAINING | | | 1 |
| 8 | 7003787 | SEAL BUFFER | | | 1 |
| 9 | 7003761 | SEAL | | | 1 |
| 10 | 7003865 | WIPER DUST | | | 1 |
| 11 | 7003864 | RING RETAINING | | | 1 |
| 12 | 7007948 | ORING | | | 1 |
| 13 | 7003762 | RING BACK-UP | Was 7012803 [A] | | 1 |
| 14 | 7007950 | ORING | | | 1 |
| 15 | 7003717 | WASHER | | | 1 |
| 16 | 7007550 | PISTON | | | 1 |
| 17 | 7003776 | RING GLYD | | | 1 |
| 18 | 7003795 | RING DUST | | | 2 |
| 19 | 7003796 | RING WEAR | | | 1 |
| 20 | 7007935 | ORING | | | 1 |
| 21 | 7003736 | NUT | | | 1 |
| 22 | 7007792 | SCREW SET | | | 1 |
| 22 | 7013264 | KIT SEAL | W/Ref. 8-10, 12-14 & 16-20 Was 7004994 [A] | | 1 |

Page 303 - OSS# 2089524 - All rights reserved by Bobcat Company - 05/11/2012 - 06:30:39 - Produced by Ken Cook Co. with mediaioff

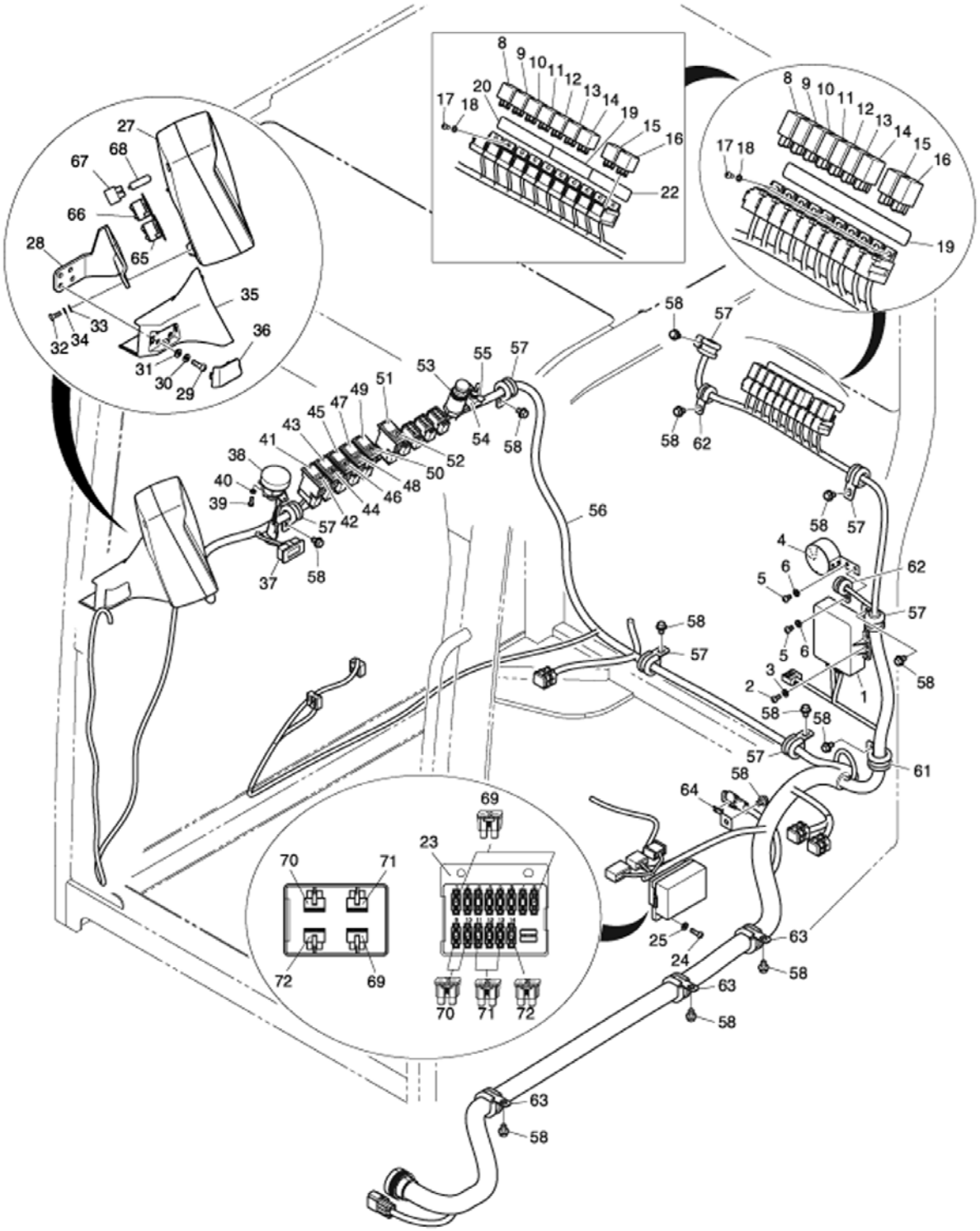




Page 304 - OSS# 2089524 - All rights reserved by Bobcat Company - 05/11/2012 - 06:30:39 - Produced by Ken Cook Co. with mediaioff

| Ref No | Part Number | Description | Remarks | Serial Number | Qty |
|---|---|---|---|---|---|
| 1 | 7006704 | HOUSING CONTROL | | | 1 |
| 2 | 7007785 | SCREW M6X1.0X12 | | | 2 |
| 3 | 7007833 | WASHER SPRING | | | 2 |
| 4 | 7004890 | ALARM PILOT | | | 1 |
| 5 | 7007784 | SCREW M6X1.0X10 | | | 2 |
| 6 | 7007833 | WASHER SPRING | | | 2 |
| 8 | 7004910 | RELAY | | AET311001 - 11196 | 1 |
| 8 | 7004910 | RELAY | | AETB11001 - 11196 | 1 |
| 8 | 7017375 | RELAY | | AET311197 & Above | 1 |
| 8 | 7017375 | RELAY | | AETB11197 & Above | 1 |
| 9 | 7004910 | RELAY | | AET311001 - 11196 | 1 |
| 9 | 7004910 | RELAY | | AETB11001 - 11196 | 1 |
| 9 | 7017375 | RELAY | | AET311197 & Above | 1 |
| 9 | 7017375 | RELAY | | AETB11197 & Above | 1 |
| 10 | 7004910 | RELAY | | AET311001 - 11196 | 1 |
| 10 | 7004910 | RELAY | | AETB11001 - 11196 | 1 |
| 10 | 7017375 | RELAY | | AET311197 & Above | 1 |
| 10 | 7017375 | RELAY | | AETB11197 & Above | 1 |
| 11 | 7004910 | RELAY | | AET311001 - 11196 | 1 |
| 11 | 7004910 | RELAY | | AETB11001 - 11196 | 1 |
| 11 | 7017375 | RELAY | | AET311197 & Above | 1 |
| 11 | 7017375 | RELAY | | AETB11197 & Above | 1 |
| 12 | 7004910 | RELAY | | AET311001 - 11196 | 1 |
| 12 | 7004910 | RELAY | | AETB11001 - 11196 | 1 |
| 12 | 7017375 | RELAY | | AET311197 & Above | 1 |
| 12 | 7017375 | RELAY | | AETB11197 & Above | 1 |
| 13 | 7004910 | RELAY | | AET311001 - 11196 | 1 |
| 13 | 7004910 | RELAY | | AETB11001 - 11196 | 1 |
| 13 | 7017375 | RELAY | | AET311197 & Above | 1 |



Page 305 - OSS# 2089524 - All rights reserved by Bobcat Company - 05/11/2012 - 06:30:39 - Produced by Ken Cook Co. with mediaioff

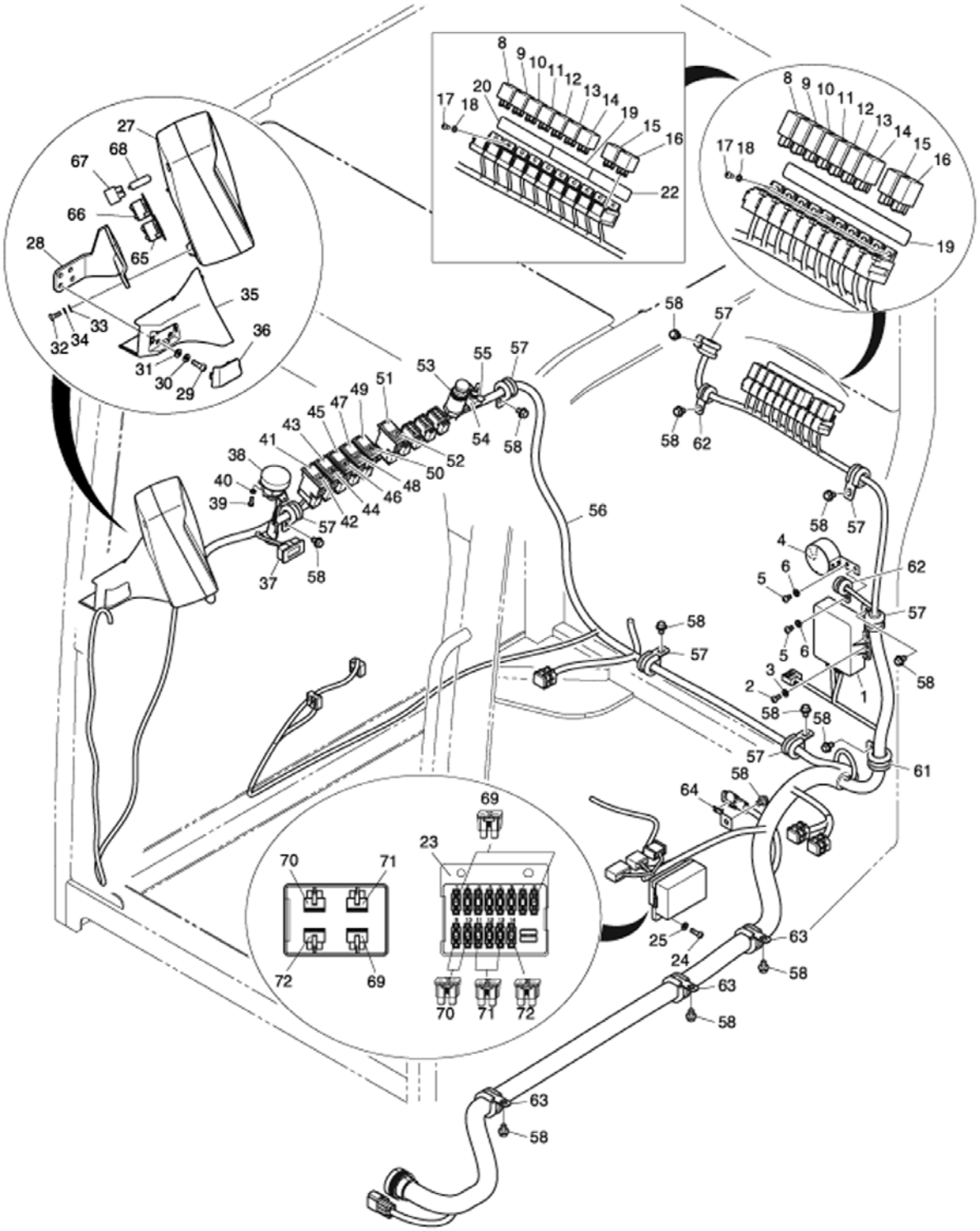




Page 306 - OSS# 2089524 - All rights reserved by Bobcat Company - 05/11/2012 - 06:30:39 - Produced by Ken Cook Co. with mediaioff

| Ref No | Part Number | Description | Remarks | Serial Number | Qty |
|---|---|---|---|---|---|
| 13 | 7017375 | RELAY | | AETB11197 & Above | 1 |
| 14 | 7004910 | RELAY | | AET311001 - 11196 | 1 |
| 14 | 7004910 | RELAY | | AETB11001 - 11196 | 1 |
| 14 | 7017375 | RELAY | | AET311197 & Above | 1 |
| 14 | 7017375 | RELAY | | AETB11197 & Above | 1 |
| 15 | 7004910 | RELAY | | AET311001 - 11196 | 1 |
| 15 | 7004910 | RELAY | | AETB11001 - 11196 | 1 |
| 15 | 7017375 | RELAY | | AET311197 & Above | 1 |
| 15 | 7017375 | RELAY | | AETB11197 & Above | 1 |
| 16 | 7004910 | RELAY | | AET311001 - 11196 | 1 |
| 16 | 7004910 | RELAY | | AETB11001 - 11196 | 1 |
| 16 | 7017375 | RELAY | | AET311197 & Above | 1 |
| 16 | 7017375 | RELAY | | AETB11197 & Above | 1 |
| 17 | 7007779 | SCREW M5X0.8X10 | | AET311001 - 11196 | 5 |
| 17 | 7007779 | SCREW M5X0.8X10 | | AETB11001 - 11196 | 5 |
| 17 | 7007779 | SCREW M5X0.8X10 | | AETB11197 & Above | 3 |
| 17 | 7007779 | SCREW M5X0.8X10 | | AET311197 & Above | 3 |
| 18 | 7007827 | WASHER SPRING | | AET311001 - 11196 | 5 |
| 18 | 7007827 | WASHER SPRING | | AETB11001 - 11196 | 5 |
| 18 | 7007827 | WASHER SPRING | | AET311197 & Above | 3 |
| 18 | 7007827 | WASHER SPRING | | AETB11197 & Above | 3 |
| 19 | 7004818 | PLATE NAME RELAY | | AET311001 - 11196 | 1 |
| 19 | 7004818 | PLATE NAME RELAY | | AETB11001 - 11196 | 1 |
| 19 | 7017376 | PLATE, NAME | | AET311197 & Above | 1 |
| 19 | 7017376 | PLATE, NAME | | AETB11197 & Above | 1 |
| 20 | 7004819 | PLATE NAME RELAY | | AET311001 - 11196 | 1 |
| 20 | 7004819 | PLATE NAME RELAY | | AETB11001 - 11196 | 1 |
| 22 | 7004817 | PLATE NAME RELAY | | AET311001 - 11196 | 1 |
| 22 | 7004817 | PLATE NAME | | AETB11001 - | 1 |



Page 307 - OSS# 2089524 - All rights reserved by Bobcat Company - 05/11/2012 - 06:30:39 - Produced by Ken Cook Co. with mediaioff

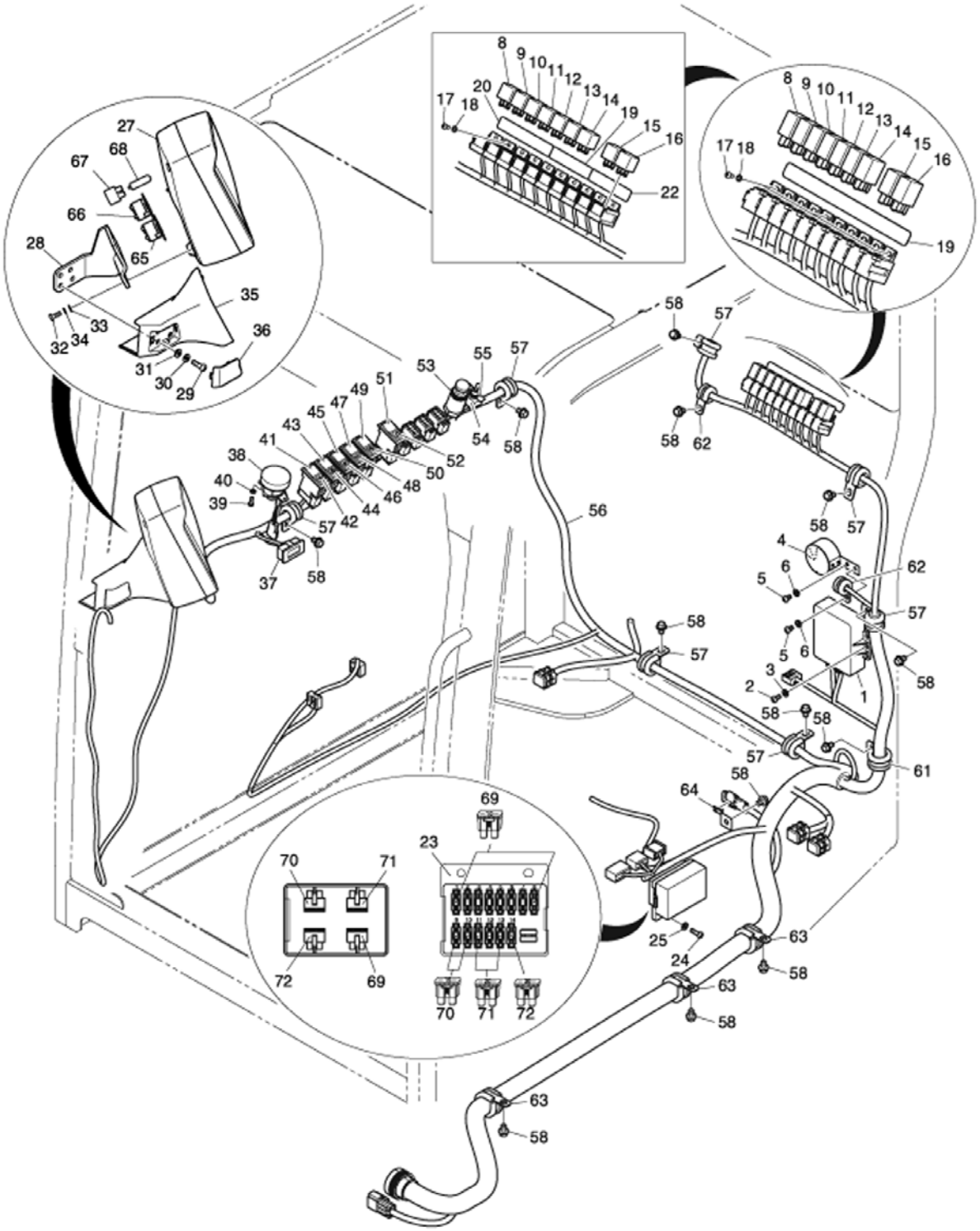




Page 308 - OSS# 2089524 - All rights reserved by Bobcat Company - 05/11/2012 - 06:30:39 - Produced by Ken Cook Co. with mediaoff

| Ref No | Part Number | Description | Remarks | Serial Number | Qty |
|---|---|---|---|---|---|
| | | RELAY | | 11196 | |
| 23 | 7005793 | FUSE BOX | | | 1 |
| 24 | 7007787 | BOLT | | | 2 |
| 25 | 7007833 | WASHER SPRING | | | 2 |
| 27 | 7005927 | PANEL GAUGE | | | 1 |
| 28 | 7006221 | BRACKET GUAGE PANEL | | | 1 |
| 29 | 7007788 | BOLT | | | 4 |
| 30 | 7007828 | WASHER SPRING | | | 4 |
| 31 | 7007811 | WASHER PLAIN | | | 4 |
| 32 | 7007781 | BOLT | | | 4 |
| 33 | 7007810 | WASHER | | | 4 |
| 34 | 7007832 | WASHER SPRING | | | 4 |
| 35 | 7006226 | COVER | | | 1 |
| 36 | 7006227 | CAP MONITOR | | | 1 |
| 37 | 7004899 | METER HOUR | | | 1 |
| 38 | 7005670 | DIAL ENGINE CONTROL | | | 1 |
| 39 | 7007777 | BOLT | | | 2 |
| 40 | 7007826 | WASHER SPRING | | | 2 |
| 41 | 7004916 | SWITCH ROCKER 12V | | | 1 |
| 42 | 7004805 | INSERT AUTO SPEED | | | 1 |
| 43 | 7004916 | SWITCH ROCKER 12V | | | 1 |
| 44 | 7004820 | INSERT AUTO IDLE SW | | | 1 |
| 45 | 7005033 | SWITCH ROCKER | | | 1 |
| 46 | 7004809 | INSERT CAB LAMP SW | | | 1 |
| 47 | 7005033 | SWITCH ROCKER | | | 1 |
| 48 | 7004803 | INSERT WIPER | | | 1 |
| 49 | 7005034 | SWITCH ROCKER | | | 1 |
| 50 | 7004804 | INSERT WASHER | | | 1 |
| 51 | 7004916 | SWITCH ROCKER 12V | | | 1 |
| 52 | 7004807 | INSERT RADIO | | | 1 |
| 53 | 7005029 | LIGHT LIGHTER CIGAR | | | 1 |
| 54 | 7005631 | SWITCH TOGGLE | | | 1 |
| 55 | 7006280 | DECAL E/G STOP | E/G stop | | 1 |
| 56 | 7006469 | HARNESS CAB | | AET311001 - 11196 | 1 |
| 56 | 7006469 | HARNESS CAB | | AETB11001 - 11196 | 1 |
| 56 | 7017377 | HARNESS, CABIN | | AET311197 & Above | 1 |
| 56 | 7017377 | HARNESS, | | AETB11197 & | 1 |



Page 309 - OSS# 2089524 - All rights reserved by Bobcat Company - 05/11/2012 - 06:30:39 - Produced by Ken Cook Co. with mediaioff

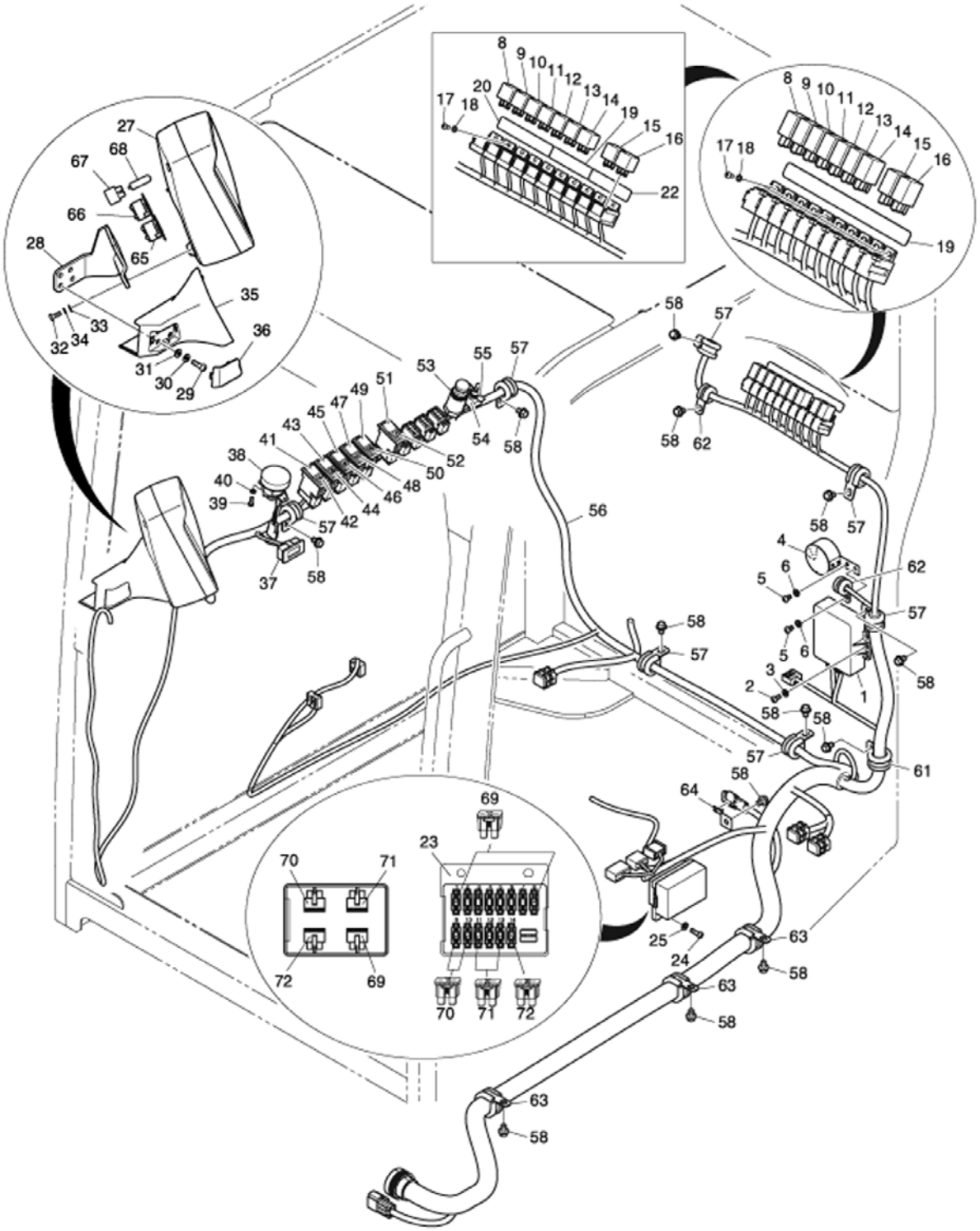




Page 310 - OSS# 2089524 - All rights reserved by Bobcat Company - 05/11/2012 - 06:30:39 - Produced by Ken Cook Co. with mediaoff

| Ref No | Part Number | Description | Remarks | Serial Number | Qty |
|---|---|---|---|---|---|
| | | CABIN | | Above | |
| 57 | 7003895 | CLIP | | | 4 |
| 58 | 7005629 | BOLT | | | 13 |
| 61 | 7003896 | CLIP | | | 1 |
| 62 | 7003894 | CLIP | | | 2 |
| 63 | 7003897 | CLIP | | | 3 |
| 64 | 7004826 | BRACKET HOUSING | | | 1 |
| 65 | 7005010 | GAUGE W/TEMP | | | 1 |
| 66 | 7005011 | GAUGE FUEL | | | 1 |
| 67 | 7005019 | SOCKET LIGHT BULB | | | 2 |
| 68 | 7005004 | LIGHT BULB | | | 2 |
| 69 | 6654805 | FUSE 10A | 10A Was 7004893 [A] | | 9 |
| 70 | 6654806 | FUSE, 15A | 15A Was 7004894 [A] | | 3 |
| 71 | 6625575 | FUSE, 20A | 20A Was 7004895 [A] | | 4 |
| 72 | 6718034 | FUSE, 30A | 30A Was 7004897 [A] | | 2 |

Page 311 - OSS# 2089524 - All rights reserved by Bobcat Company - 05/11/2012 - 06:30:39 - Produced by Ken Cook Co. with mediaioff

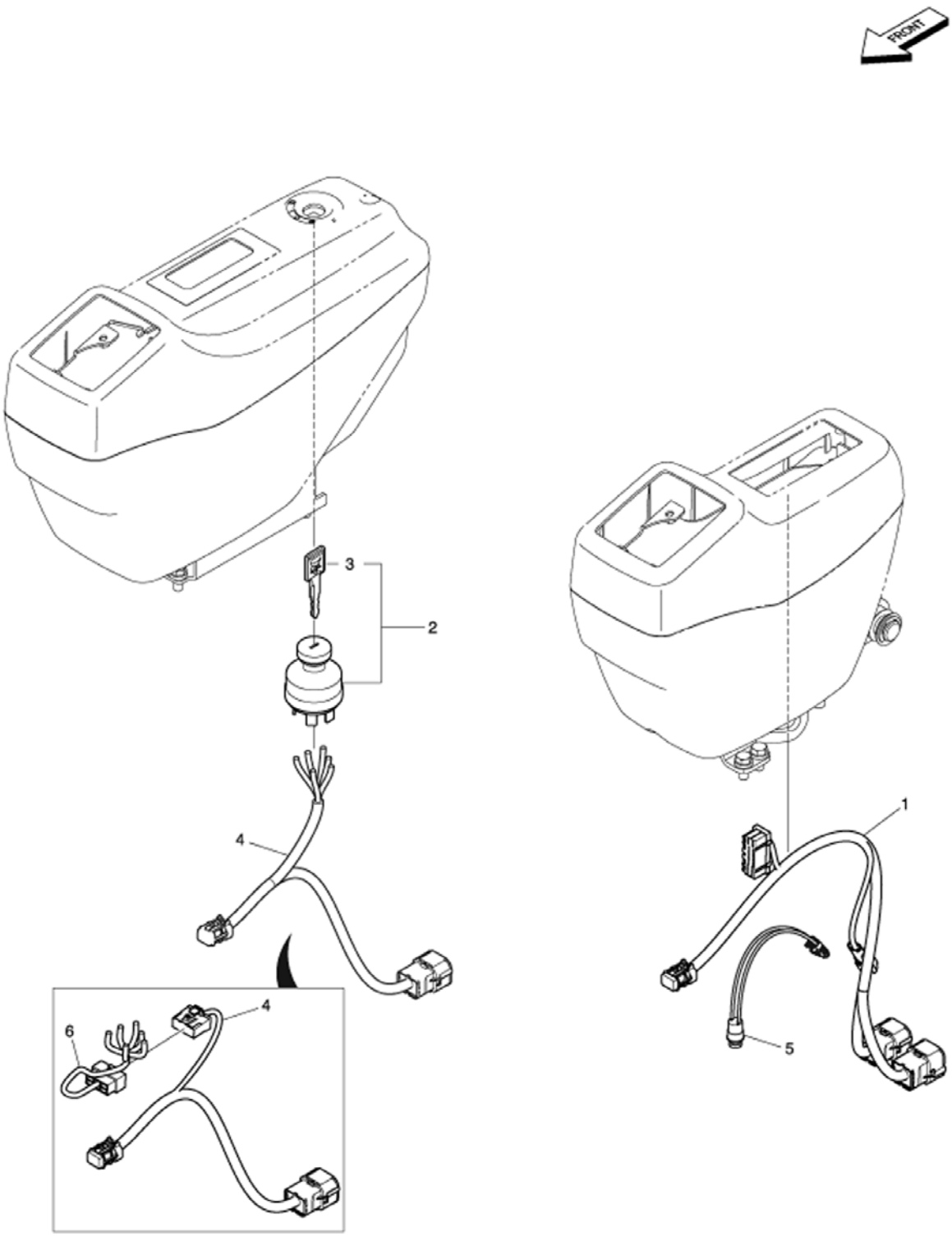


EM7027



Page 312 - OSS# 2089524 - All rights reserved by Bobcat Company - 05/11/2012 - 06:30:39 - Produced by Ken Cook Co. with mediaIoff

| Ref No | Part Number | Description | Remarks | Serial Number | Qty |
|---|---|---|---|---|---|
| 1 | 7006506 | HARNESS CONTROL STAND LH | | AET311001 - 11196 | 1 |
| 1 | 7006506 | HARNESS CONTROL STAND LH | | AETB11001 - 11196 | 1 |
| 1 | 7015618 | HARNESS;CONTROL STAND | | AET311197 & Above | 1 |
| 1 | 7015618 | HARNESS;CONTROL STAND | | AETB11197 & Above | 1 |
| 2 | 7006801 | SWITCH STARTER | W/Ref. 3 | | 1 |
| 3 | 7006802 | KEY SWITCH STARTER | | | 1 |
| 4 | 7005990 | HARNESS CONTROL STAND RH | | AET311001 - 11196 | 1 |
| 4 | 7005990 | HARNESS CONTROL STAND RH | | AETB11001 - 11196 | 1 |
| 4 | 7015631 | HARNESS,CONTROL STAND(R.H) | RH | AET311197 & Above | 1 |
| 4 | 7015631 | HARNESS,CONTROL STAND(R.H) | RH | AETB11197 & Above | 1 |
| 5 | 7005673 | SWITCH PILOT CUT OFF | | | 1 |
| 6 | 7005013 | HARNESS STARTER SWITCH | | AET311001 - 11196 | 1 |
| 6 | 7005013 | HARNESS STARTER SWITCH | | AETB11001 - 11196 | 1 |

Page 313 - OSS# 2089524 - All rights reserved by Bobcat Company - 05/11/2012 - 06:30:39 - Produced by Ken Cook Co. with mediaioff

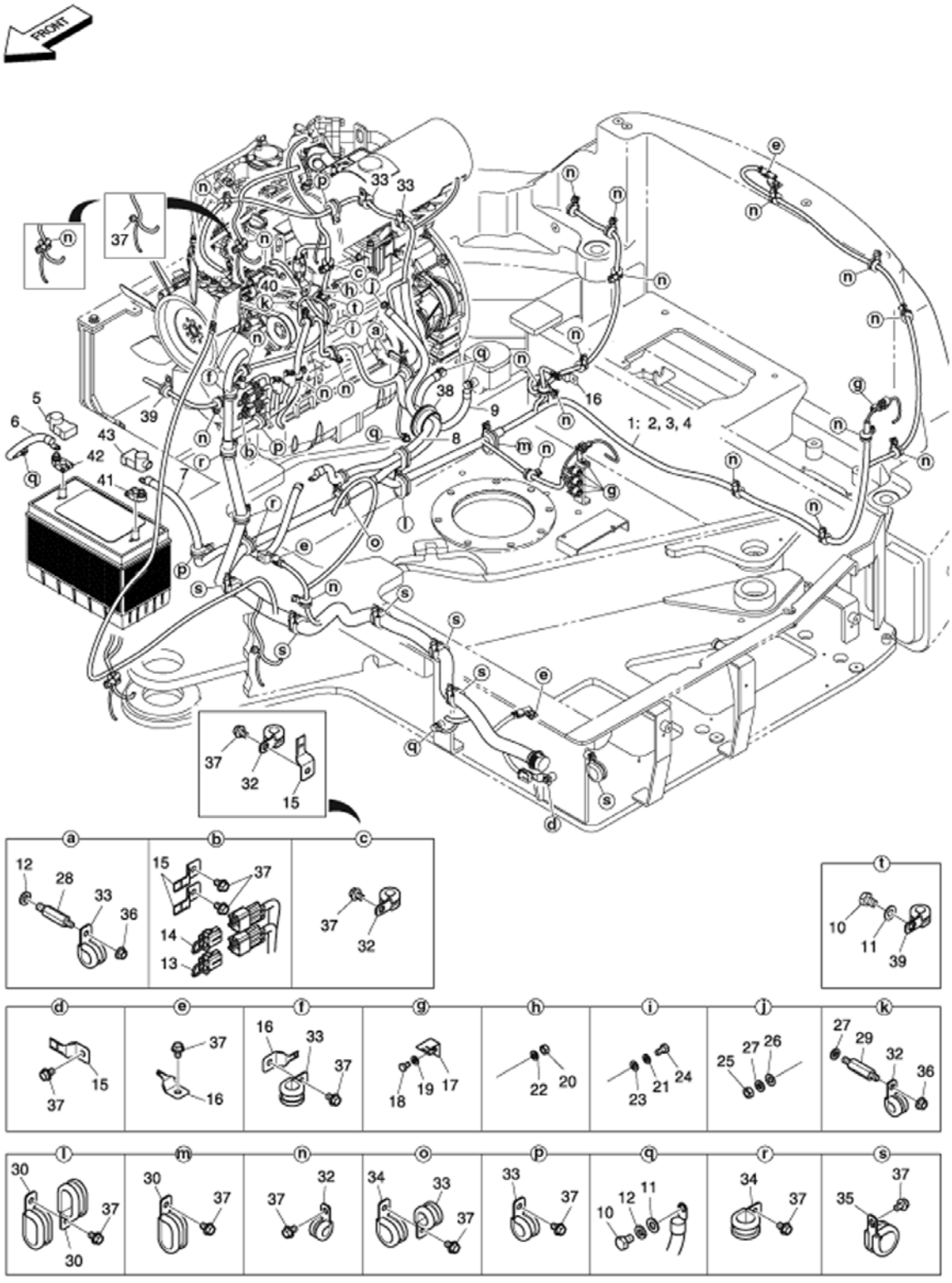


EM6397



Page 314 - OSS# 2089524 - All rights reserved by Bobcat Company - 05/11/2012 - 06:30:39 - Produced by Ken Cook Co. with mediaIoff

| Ref No | Part Number | Description | Remarks | Serial Number | Qty |
|---|---|---|---|---|---|
| 1 | 7006474 | HARNESS MAIN | W/Ref. 2-4 | AET311001 - 11191 | 1 |
| 1 | 7006474 | HARNESS MAIN | W/Ref. 2-4 | AETB11001 - 11191 | 1 |
| 1 | 7017371 | HARNESS, MAIN | W/Ref. 2-4 | AET311192 - 11197 | 1 |
| 1 | 7017371 | HARNESS, MAIN | W/Ref. 2-4 | AETB11192 - 11197 | 1 |
| 1 | 7017373 | HARNESS, MAIN | W/Ref. 2-4 | AET311198 & Above | 1 |
| 1 | 7017373 | HARNESS, MAIN | W/Ref. 2-4 | AETB11198 & Above | 1 |
| 2 | 7004913 | RESITOR DIODE | | | 1 |
| 3 | 7005030 | RESISTOR DIODE ASSY 3A | | | 1 |
| 4 | 7005627 | RESITOR DIODE | | | 2 |
| 5 | 7004616 | CAP BATT TML - | negative | | 1 |
| 6 | 7004921 | CABLE BATTERY | | | 1 |
| 7 | 7004923 | CABLE BATT-BATT RY | | | 1 |
| 8 | 7004919 | CABLE BATTERY | | | 1 |
| 9 | 7005036 | CABLE E/G EARTH | | | 1 |
| 10 | 7007623 | BOLT | | AET311001 - 11191 | 5 |
| 10 | 7007623 | BOLT | | AETB11001 - 11191 | 5 |
| 10 | 7007623 | BOLT | | AET311192 & Above | 6 |
| 10 | 7007623 | BOLT | | AETB11192 & Above | 6 |
| 11 | 7007818 | WASHER PLAIN M10 | | AET311001 - 11191 | 5 |
| 11 | 7007818 | WASHER PLAIN M10 | | AETB11001 - 11191 | 5 |
| 11 | 7007818 | WASHER PLAIN M10 | | AET311192 & Above | 6 |
| 11 | 7007818 | WASHER PLAIN M10 | | AETB11192 & Above | 6 |
| 12 | 7007835 | WASHER SPRING | | | 6 |
| 13 | 7004896 | LINK FUSIBLE | | | 1 |
| 14 | 7005009 | FUSIBLE LINK | | | 1 |
| 15 | 7004825 | BRACKET HOUSING | | AET311001 - 11191 | 4 |
| 15 | 7004825 | BRACKET HOUSING | | AETB11001 - 11191 | 4 |
| 15 | 7004825 | BRACKET HOUSING | | AET311192 & Above | 3 |
| 15 | 7004825 | BRACKET HOUSING | | AETB11192 & Above | 3 |
| 16 | 7004826 | BRACKET HOUSING | | AET311001 - 11191 | 5 |
| 16 | 7004826 | BRACKET HOUSING | | AETB11001 - 11191 | 5 |
| 16 | 7004826 | BRACKET HOUSING | | AET311192 & Above | 4 |



Page 315 - OSS# 2089524 - All rights reserved by Bobcat Company - 05/11/2012 - 06:30:39 - Produced by Ken Cook Co. with mediaioff

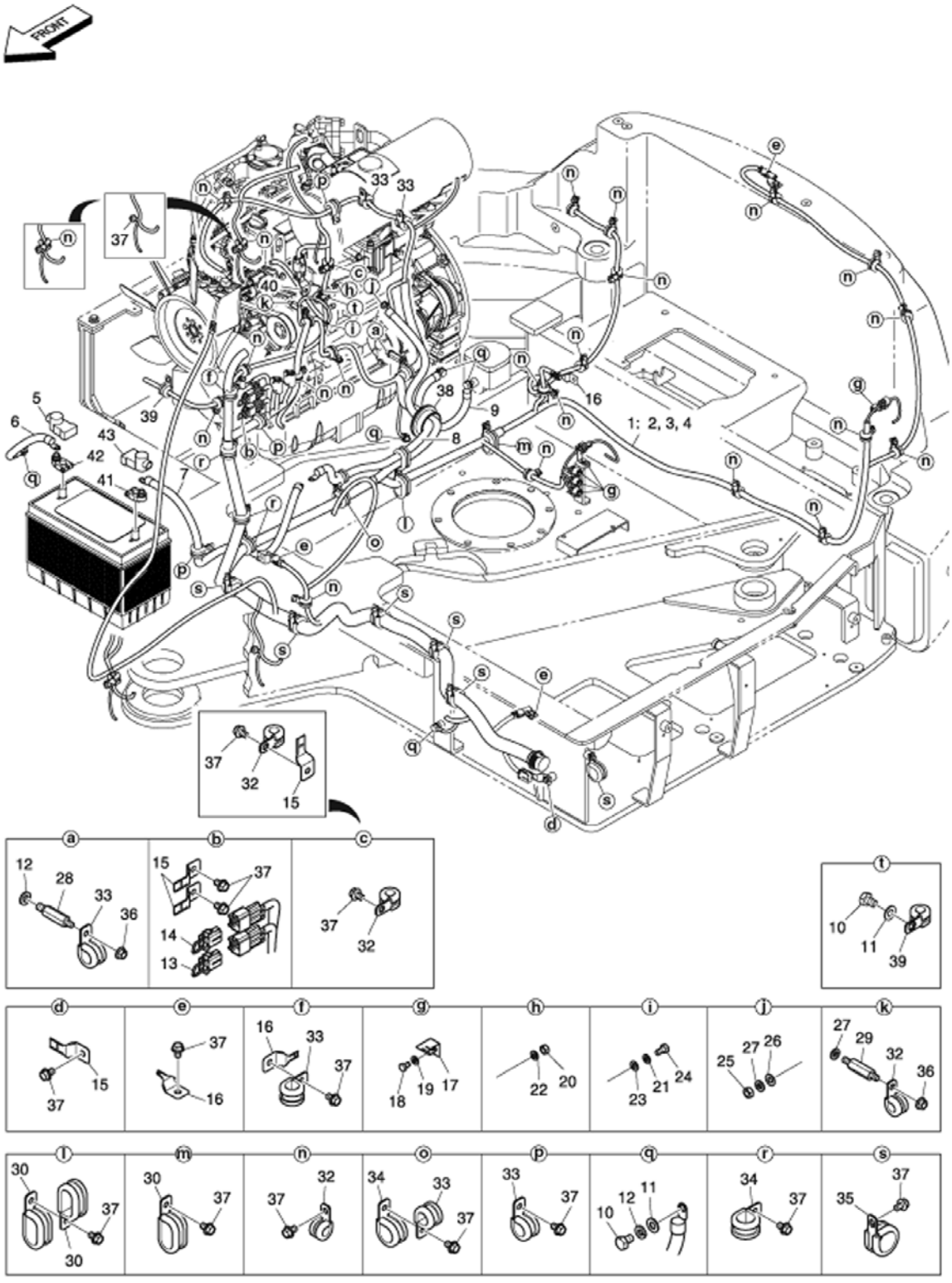




Page 316 - OSS# 2089524 - All rights reserved by Bobcat Company - 05/11/2012 - 06:30:39 - Produced by Ken Cook Co. with mediaIoff

| Ref No | Part Number | Description | Remarks | Serial Number | Qty |
|---|---|---|---|---|---|
| 16 | 7004826 | BRACKET HOUSING | | AETB11192 & Above | 4 |
| 17 | 7004824 | BRACKET HOUSING | | | 5 |
| 18 | 7007602 | BOLT | | | 5 |
| 19 | 7007833 | WASHER SPRING | | | 5 |
| 20 | 7007794 | NUT | | | 1 |
| 21 | 7007827 | WASHER SPRING | | | 1 |
| 22 | 7007827 | WASHER SPRING | | | 1 |
| 23 | 7007810 | WASHER | | | 1 |
| 24 | 7007600 | BOLT | | | 1 |
| 25 | 7007796 | NUT | | | 1 |
| 26 | 7007816 | WASHER | | | 1 |
| 27 | 7007834 | WASHER SPRING | | | 2 |
| 28 | 7003871 | BOLT STUD | | | 1 |
| 29 | 7003870 | BOLT STUD | | | 1 |
| 30 | 7003905 | CLIP | | | 3 |
| 32 | 7003894 | CLIP | | AET311001 - 11081 | 23 |
| 32 | 7003894 | CLIP | | AETB11001 - 11081 | 23 |
| 32 | 7003894 | CLIP | | AET311082 - 11191 | 22 |
| 32 | 7003894 | CLIP | | AETB11082 - 11191 | 22 |
| 32 | 7003894 | CLIP | | AET311092 & Above | 23 |
| 32 | 7003894 | CLIP | | AETB11092 & Above | 23 |
| 33 | 7003895 | CLIP | | | 8 |
| 34 | 7003896 | CLIP | | | 4 |
| 35 | 7003897 | CLIP | | | 6 |
| 36 | 7004561 | NUT | | | 2 |
| 37 | 7005629 | BOLT | | AET311001 - 11081 | 44 |
| 37 | 7005629 | BOLT | | AETB11001 - 11081 | 44 |
| 37 | 7005629 | BOLT | | AET311082 & Above | 43 |
| 37 | 7005629 | BOLT | | AETB11082 & Above | 43 |
| 38 | 7004618 | BUSHING RUBBER | | | 1 |
| 39 | 7003893 | CLIP | | AET311001 - 11191 | 1 |
| 39 | 7003893 | CLIP | | AETB11001 - 11191 | 1 |
| 39 | 7003893 | CLIP | | AET311092 & Above | 2 |
| 39 | 7003893 | CLIP | | AETB11092 & Above | 2 |
| 40 | 7017372 | BRACKET | | AET311092 & Above | 1 |



Page 317 - OSS# 2089524 - All rights reserved by Bobcat Company - 05/11/2012 - 06:30:39 - Produced by Ken Cook Co. with mediaioff

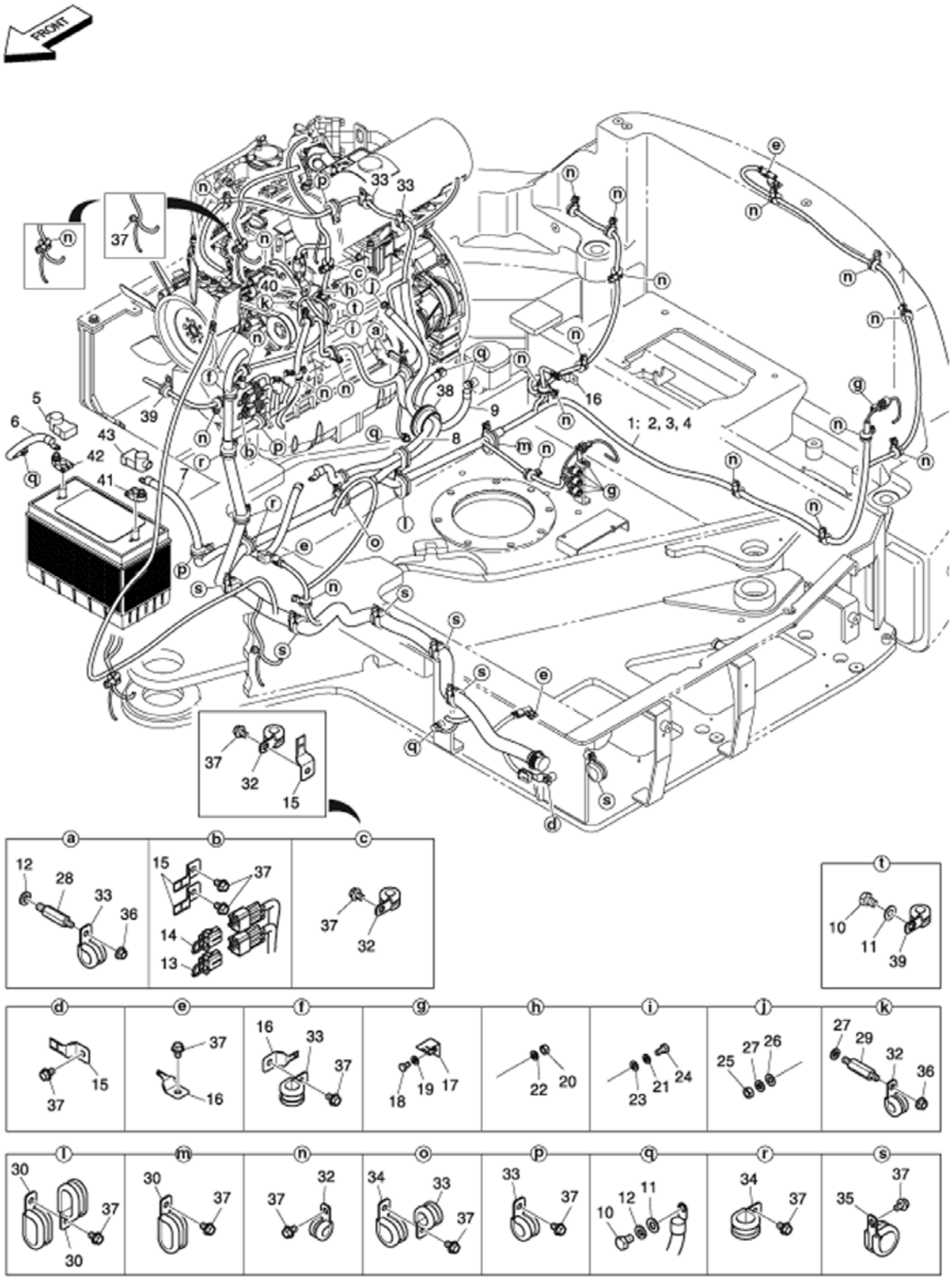


EM6397



Page 318 - OSS# 2089524 - All rights reserved by Bobcat Company - 05/11/2012 - 06:30:39 - Produced by Ken Cook Co. with mediaIoff

| Ref No | Part Number | Description | Remarks | Serial Number | Qty |
|---|---|---|---|---|---|
| 40 | 7017372 | BRACKET | | AETB11092 & Above | 1 |
| 41 | 7004917 | TERMINAL BATTERY + | positive | | 1 |
| 42 | 7008150 | TERMINAL, BATTERY(-) | negative | | 1 |
| 43 | 7004615 | CAP BATT TML + | positive | | 1 |

Page 319 - OSS# 2089524 - All rights reserved by Bobcat Company - 05/11/2012 - 06:30:39 - Produced by Ken Cook Co. with mediaioff

# ELECTRICAL
## (Battery, Washer Pump, Horn, Relays)

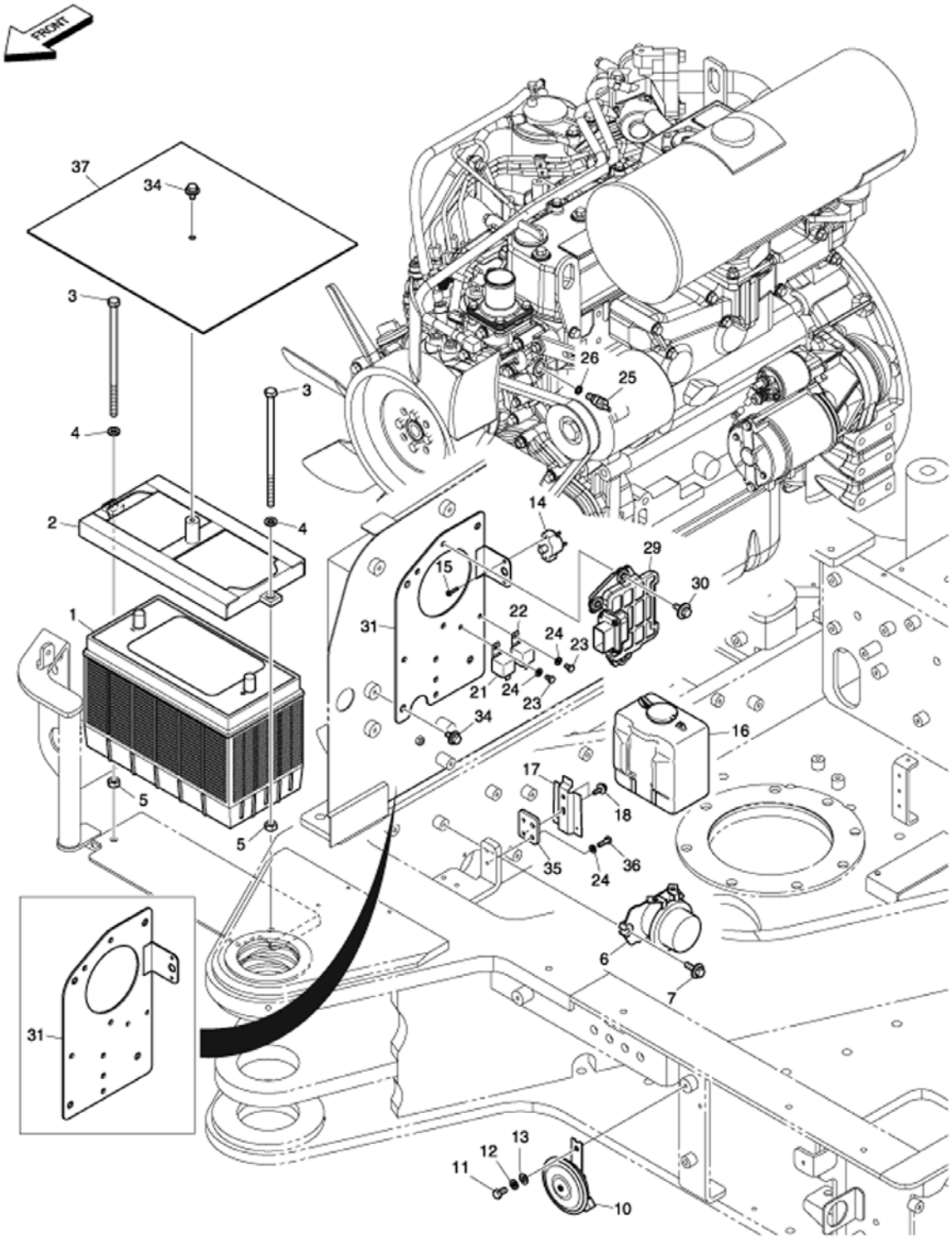


EM7046



Page 320 - OSS# 2089524 - All rights reserved by Bobcat Company - 05/11/2012 - 06:30:39 - Produced by Ken Cook Co. with mediaIoff

# ELECTRICAL (Cont'd)
## (Battery, Washer Pump, Horn, Relays)

| Ref No | Part Number | Description | Remarks | Serial Number | Qty |
|---|---|---|---|---|---|
| 1 | 6987600 | BATTERY, 100AH | EMEA | | 1 |
| 1 | 7005712 | BATTERY 100AH | US | | 1 |
| 2 | 7010546 | BRACKET, BATTERY | Was 7006612 [B, D] | | 1 |
| 3 | 7005116 | BOLT M10X1.5X220 | | | 2 |
| 4 | 7007831 | WASHER SPRING | | | 2 |
| 5 | 7007798 | NUT M10X1.5 | | | 2 |
| 6 | 7004909 | RELAY BATTERY | | | 1 |
| 7 | 7005132 | BOLT SET | | | 2 |
| 10 | 7005005 | HORN HIGH | | AET311001 - 11197 | 1 |
| 10 | 7005005 | HORN HIGH | | AETB11001 - 11197 | 1 |
| 10 | 7017381 | HORN, HIGH | | AET311198 & Above | 1 |
| 10 | 7017381 | HORN, HIGH | | AETB11198 & Above | 1 |
| 11 | 7007615 | BOLT | | | 1 |
| 12 | 7007834 | WASHER SPRING | | | 1 |
| 13 | 7007816 | WASHER | | | 1 |
| 14 | 7004898 | BREAKER CIRCUIT | | | 1 |
| 15 | 7004527 | BOLT | | | 2 |
| 16 | 7004961 | TANK WINDOW WASHER | | | 1 |
| 17 | 7004823 | BRACKET | | | 1 |
| 18 | 7005139 | BOLT M6X1.0X20 | | | 2 |
| 21 | 7015611 | RELAY 70A | 70A Was 7005683 [A] | | 1 |
| 22 | 7015611 | RELAY 70A | 70A Was 7005683 [A] | | 1 |
| 23 | 7007602 | BOLT | | | 2 |
| 24 | 7007833 | WASHER SPRING | | | 4 |
| 25 | 7004911 | SENDER WATER TEMP | | | 1 |
| 26 | 7003942 | GASKET | | | 1 |
| 29 | 7010295 | CONTROLLER ECU COMPLETE | complete Was 7008799 [A] | | 1 |
| 30 | 7005128 | BOLT SET | | | 3 |
| 31 | | BRACKET | NLA Was 7006464 [A] | AET311001 - 11191 | 1 |
| 31 | | BRACKET | NLA Was 7006464 [A] | AETB11001 - 11191 | 1 |
| 31 | 7017380 | BRACKET | | AET311001 & Above | 1 |
| 31 | 7017380 | BRACKET | | AETB11001 & Above | 1 |
| 34 | 7005129 | BOLT SET | | | 5 |
| 35 | 7006698 | BRACKET | | | 1 |
| 36 | 7007608 | BOLT | | | 2 |
| 37 | 7006749 | COVER BATTERY | | | 1 |

Page 321 - OSS# 2089524 - All rights reserved by Bobcat Company - 05/11/2012 - 06:30:39 - Produced by Ken Cook Co. with mediaioff

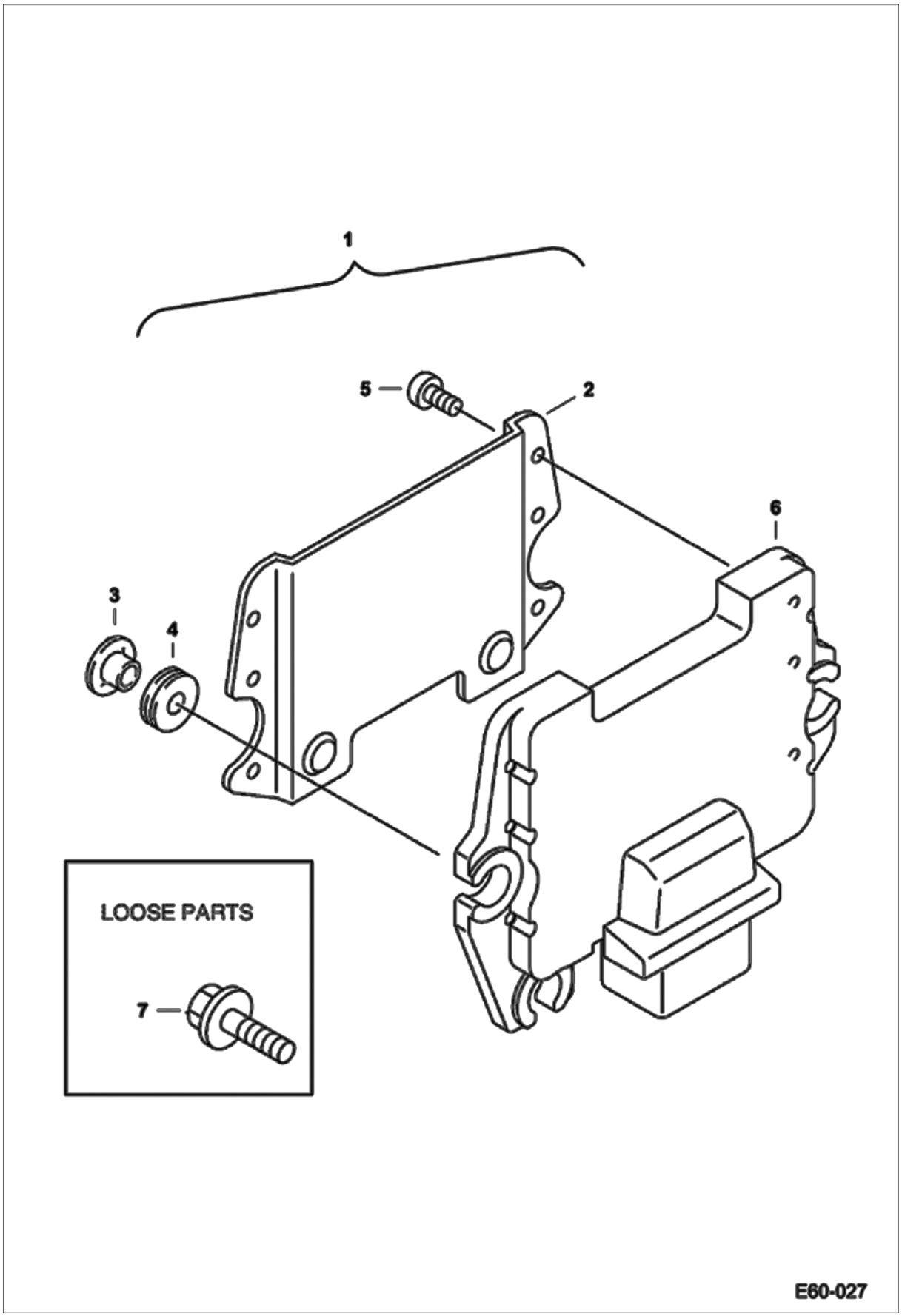




Page 322 - OSS# 2089524 - All rights reserved by Bobcat Company - 05/11/2012 - 06:30:39 - Produced by Ken Cook Co. with mediaIoff

| Ref No | Part Number | Description | Remarks | Serial Number | Qty |
|---|---|---|---|---|---|
| 1 | 7010295 | CONTROLLER ECU COMPLETE | complete - W/Ref. 2-7 | | 1 |
| 2 | 7007142 | PLATE ECU | | | 1 |
| 3 | 7007143 | COLLAR | | | 3 |
| 4 | 7007091 | PAD CUSHION | | | 3 |
| 5 | 7007179 | BOLT | | | 6 |
| 6 | | CONTROLLER, ECU | NAP - Order Ref. 1 Was 7008799 [A] | | 1 |
| 7 | 7006923 | BOLT M8X25 | | | 3 |

Page 323 - OSS# 2089524 - All rights reserved by Bobcat Company - 05/11/2012 - 06:30:39 - Produced by Ken Cook Co. with mediaioff

# ALTERNATOR

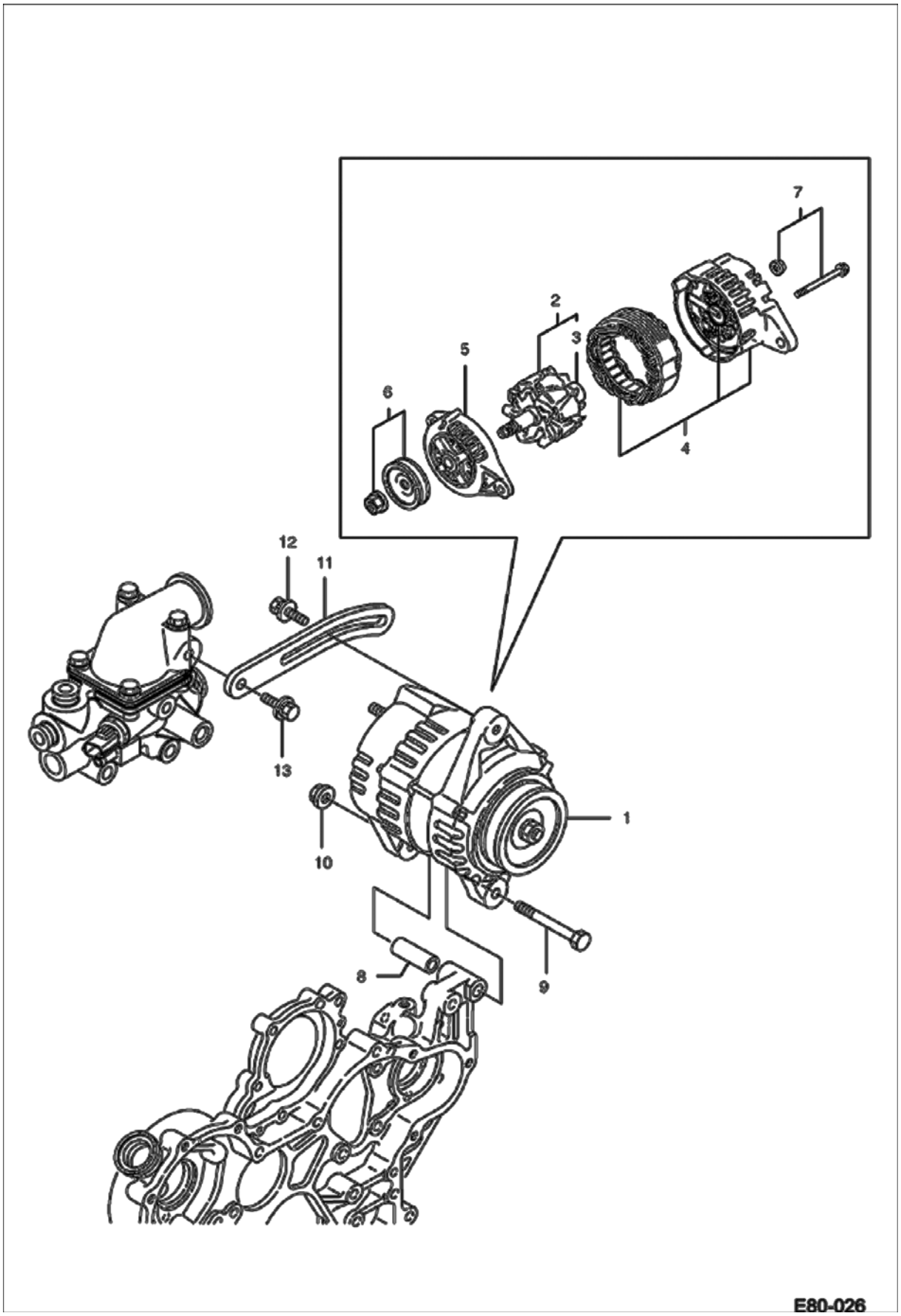




Page 324 - OSS# 2089524 - All rights reserved by Bobcat Company - 05/11/2012 - 06:30:39 - Produced by Ken Cook Co. with mediaioff

| Ref No | Part Number | Description | Remarks | Serial Number | Qty |
|---|---|---|---|---|---|
| 1 | 7005002 | GENERATOR | W/Ref. 2-7 | | 1 |
| 2 | 7004368 | ROTOR ASSY | W/Ref. 3 | | 1 |
| 3 | 7003986 | BEARING BALL | | | 1 |
| 4 | 7004313 | BRACKET ASSY REAR | | | 1 |
| 5 | 7004315 | BRACKET ASSY FRONT | | | 1 |
| 6 | 7003978 | PULLEY | | | 1 |
| 7 | 7004109 | BOLT | | | 1 |
| 8 | 7004012 | SPACER | | | 1 |
| 9 | 7004099 | BOLT M8X110 | | | 1 |
| 10 | 7004161 | NUT | | | 1 |
| 11 | 7004314 | BRACKET AJUSTER | | | 1 |
| 12 | 7004100 | BOLT | | | 1 |
| 13 | 7004084 | BOLT M8X25 | | | 1 |

Page 325 - OSS# 2089524 - All rights reserved by Bobcat Company - 05/11/2012 - 06:30:39 - Produced by Ken Cook Co. with mediaioff

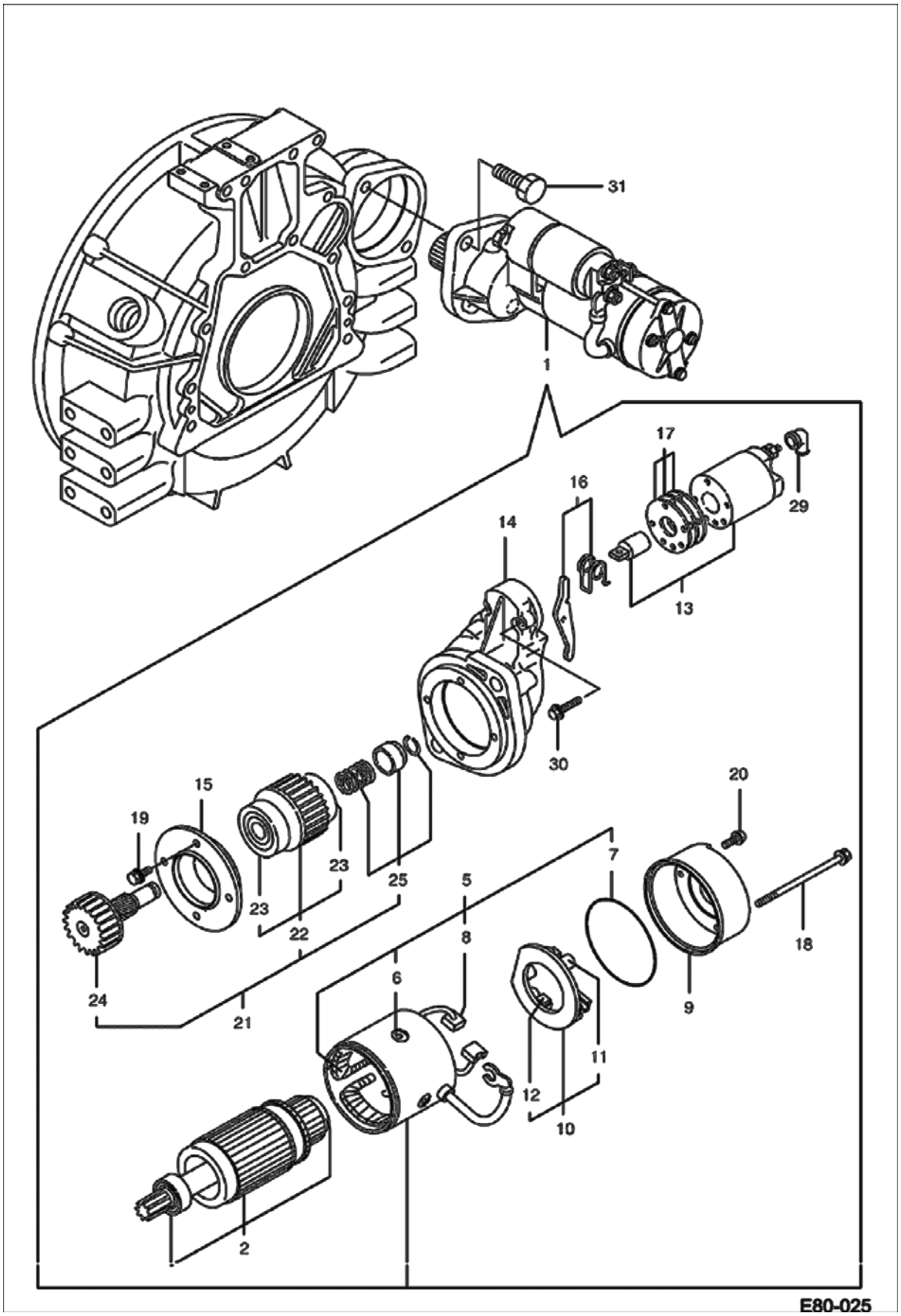




Page 326 - OSS# 2089524 - All rights reserved by Bobcat Company - 05/11/2012 - 06:30:39 - Produced by Ken Cook Co. with mediaIoff

| Ref No | Part Number | Description | Remarks | Serial Number | Qty |
|---|---|---|---|---|---|
| 1 | 7007145 | STARTER | W/Ref. 2-30 | | 1 |
| 2 | 7007146 | ARMATURE ASSY | | | 1 |
| 5 | 7007147 | COIL ASSY FIELD | W/Ref. 6-8 | | 1 |
| 6 | 7007148 | BOLT | | | 4 |
| 7 | 7007149 | ORING | | | 1 |
| 8 | 7007150 | BRUSH + | positive | | 2 |
| 9 | 7007151 | COVER REAR | | | 1 |
| 10 | 7007152 | HOLDER BRUSH | W/Ref. 11-12 | | 1 |
| 11 | 7007153 | SPRING BRUSH | | | 1 |
| 12 | 7007154 | BRUSH - | negative | | 2 |
| 13 | 7007155 | SWITCH ASSY MAGNETIC | | | 1 |
| 14 | 7007156 | HOUSING GEAR | | | 1 |
| 15 | 7007157 | RETAINER | | | 1 |
| 16 | 7007158 | KIT SHIFT LEVER | | | 1 |
| 17 | 7007159 | COVER DUST | | | 1 |
| 18 | 7007160 | BOLT THROUGHT | | | 2 |
| 19 | 7007161 | BOLT M6X20 | | | 4 |
| 20 | 7007162 | BOLT | | | 2 |
| 21 | 7003977 | PINION ASSY | W/Ref. 22-25 | | 1 |
| 22 | 7004329 | CLUTCH ASSY | | | 1 |
| 23 | 7003998 | BEARING BALL | | | 2 |
| 24 | 7004331 | SHAFT PINION | | | 1 |
| 25 | 7004397 | KIT PINION STOP | | | 1 |
| 29 | 7004423 | COVER TERMINAL | | | 1 |
| 30 | 7004082 | BOLT | | | 2 |
| 31 | 7004083 | BOLT M12X25 | | | 2 |

Page 327 - OSS# 2089524 - All rights reserved by Bobcat Company - 05/11/2012 - 06:30:39 - Produced by Ken Cook Co. with mediaioff

# BOOM LOAD HOLDING VALVE

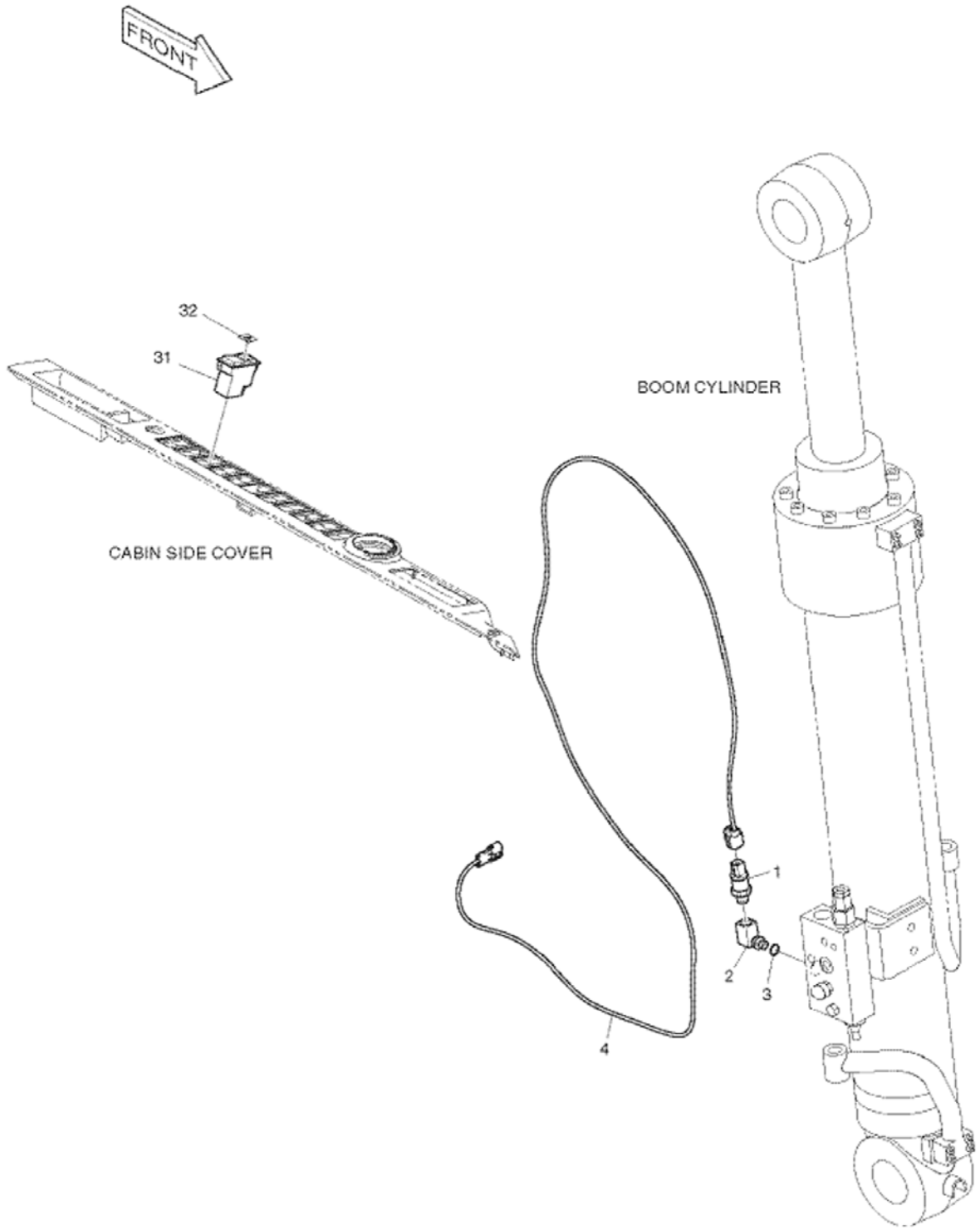


E80-6220



Page 328 - OSS# 2089524 - All rights reserved by Bobcat Company - 05/11/2012 - 06:30:39 - Produced by Ken Cook Co. with mediaioff

| Ref No | Part Number | Description | Remarks | Serial Number | Qty |
|---|---|---|---|---|---|
| 1 | 7004912 | SENSOR PRESSURE | | | 1 |
| 2 | 7005561 | ELBOW | | | 1 |
| 3 | 7007906 | ORING | | | 1 |
| 4 | | HARNESS, PRESS SENSOR | NLA Was 7006792 [A] | AET311001 - 11191 | 1 |
| 4 | | HARNESS, PRESS SENSOR | NLA Was 7006792 [A] | AETB11001 - 11191 | 1 |
| 4 | 7017374 | HARNESS WARNING | | AET311001 & Above | 1 |
| 4 | 7017374 | HARNESS WARNING | | AETB11001 & Above | 1 |
| 31 | 7004916 | SWITCH ROCKER 12V | | | 1 |
| 32 | 7004808 | INSERT OVERLOAD WARNING | | | 1 |

Page 329 - OSS# 2089524 - All rights reserved by Bobcat Company - 05/11/2012 - 06:30:39 - Produced by Ken Cook Co. with mediaioff

# ENGINE & ATTACHING PARTS
## (Engine Mounts)

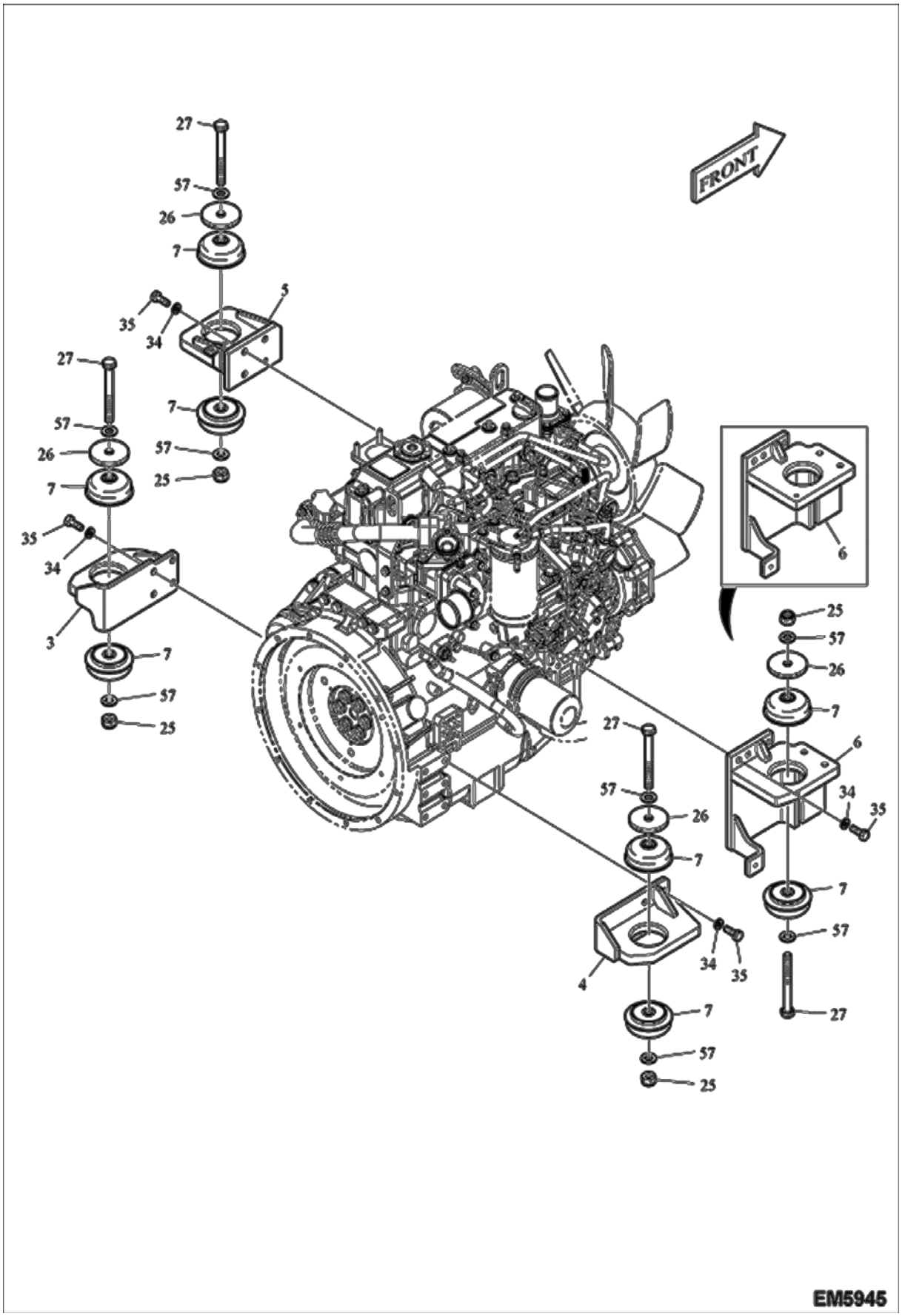




Page 330 - OSS# 2089524 - All rights reserved by Bobcat Company - 05/11/2012 - 06:30:39 - Produced by Ken Cook Co. with mediaIoff

## ENGINE & ATTACHING PARTS (Cont'd)
## (Engine Mounts)

| Ref No | Part Number | Description | Remarks | Serial Number | Qty |
|---|---|---|---|---|---|
| 3 | 7006636 | BRACKET ENGINE MOUNT | | | 1 |
| 4 | 7005820 | BRACKET ENGINE MOUNT | | | 1 |
| 5 | 7005822 | BRACKET ENGINE MOUNT | | | 1 |
| 6 | | BRACKET, ENGINE MOUNT | NLA Was 7006461 [A] | AET311001 - 11170 | 1 |
| 6 | | BRACKET, ENGINE MOUNT | NLA Was 7006461 [A] | AETB11001 - 11170 | 1 |
| 6 | 7012755 | BRACKET;MOUNTING | | AET311001 & Above | 1 |
| 6 | 7012755 | BRACKET;MOUNTING | | AETB11001 & Above | 1 |
| 7 | 7006377 | MOUNT ENGINE RUBBER | | | 8 |
| 25 | 7005141 | NUT LOCK | | | 4 |
| 26 | 7006463 | WASHER | | | 4 |
| 27 | 7007718 | BOLT | | | 4 |
| 34 | 7007835 | WASHER SPRING | | | 18 |
| 35 | 7007630 | BOLT | | | 18 |
| 57 | 7007821 | WASHER | | | 8 |

Page 331 - OSS# 2089524 - All rights reserved by Bobcat Company - 05/11/2012 - 06:30:39 - Produced by Ken Cook Co. with mediaioff

# ENGINE & ATTACHING PARTS
## (Radiator Mounting)

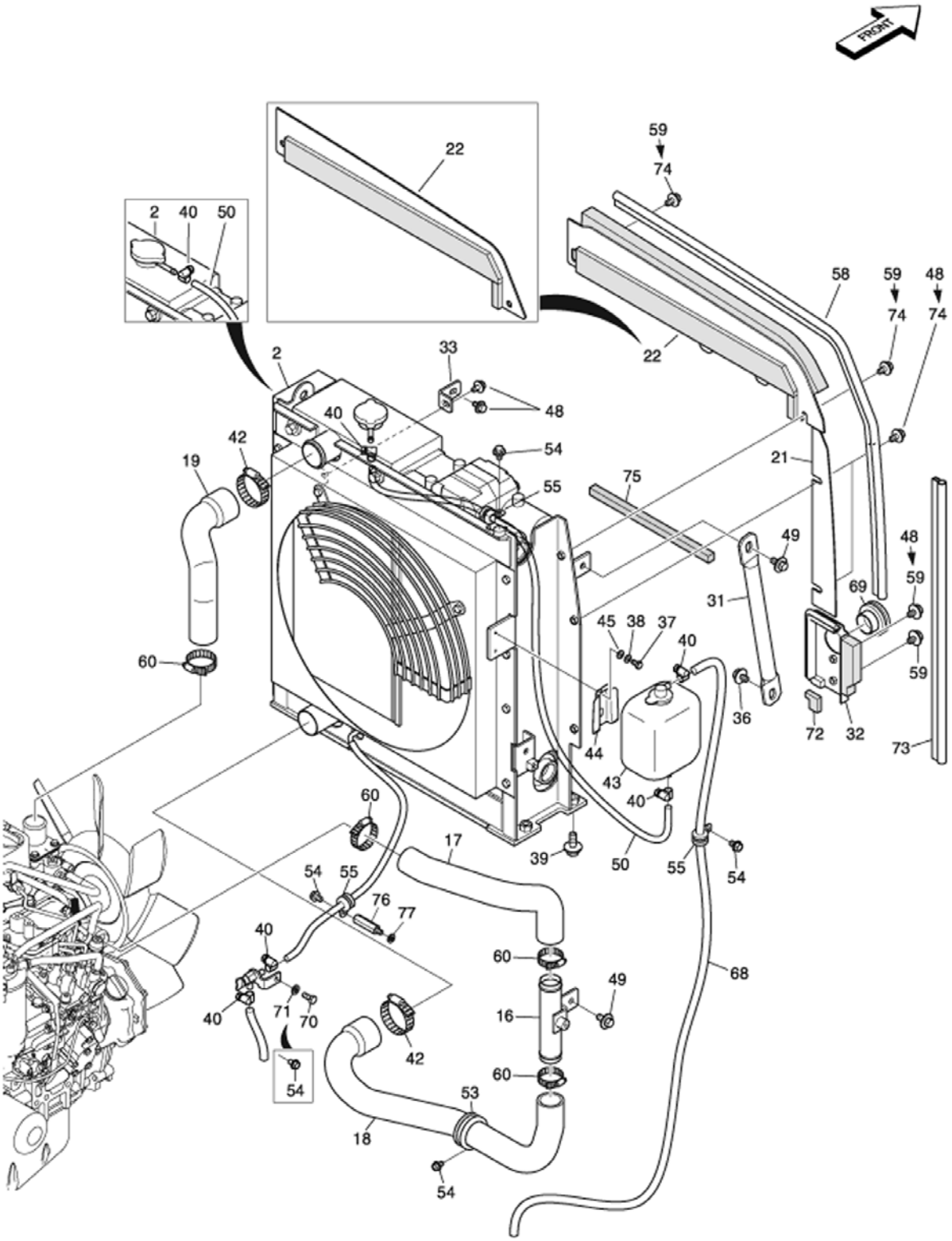




Page 332 - OSS# 2089524 - All rights reserved by Bobcat Company - 05/11/2012 - 06:30:39 - Produced by Ken Cook Co. with mediaioff

# ENGINE & ATTACHING PARTS (Cont'd)
## (Radiator Mounting)

| Ref No | Part Number | Description | Remarks | Serial Number | Qty |
|---|---|---|---|---|---|
| 2 | | RADIATOR ASSY | See Illustration ENGINE & ATTACHING PARTS/ EM5938 NLA Was 7008220 [A] | AET311001 - 11102 | 1 |
| 2 | | RADIATOR ASSY | See Illustration ENGINE & ATTACHING PARTS/ EM5938 NLA Was 7008220 [A] | AETB11001 - 11102 | 1 |
| 2 | | RADIATOR ASSY | See Illustration ENGINE & ATTACHING PARTS/ EM5938 NLA Was 7012250 [A] | AET311001 - 11170 | 1 |
| 2 | | RADIATOR ASSY | See Illustration ENGINE & ATTACHING PARTS/ EM5938 NLA Was 7012250 [A] | AETB11001 - 11170 | 1 |
| 2 | 7012756 | COOLING ASSY | See Illustration ENGINE & ATTACHING PARTS/ EM5938 | AET311001 & Above | 1 |
| 2 | 7012756 | COOLING ASSY | See Illustration ENGINE & ATTACHING PARTS/ EM5938 | AETB11001 & Above | 1 |
| 16 | 7006335 | TUBELINE WATER | | | 1 |
| 17 | 7006334 | HOSE WATER | | | 1 |
| 18 | 7006527 | HOSE WATER | | | 1 |
| 19 | 7013236 | HOSE, WATER | Was 7006336 [A] | | 1 |
| 21 | 7006652 | DIAPHRAGM BAFFLE | | | 1 |
| 22 | 7008246 | DIAPHRAGM, BAFFLE | | AET311001 - 11051 | 1 |
| 22 | 7008246 | DIAPHRAGM, BAFFLE | | AETB11001 - 11051 | 1 |
| 22 | 7015417 | BAFFLE | | AET311052 & Above | 1 |
| 22 | 7015417 | BAFFLE | | AETB11052 & Above | 1 |
| 31 | 7006354 | STRAP | | | 1 |
| 32 | 7006526 | DIAPHRAGM BAFFLE | | | 1 |
| 33 | 7006531 | PLATE | | | 1 |
| 36 | 7004555 | BOLT SET | | | 1 |
| 37 | 7007603 | BOLT | | | 2 |
| 38 | 7007828 | WASHER SPRING | | | 2 |
| 39 | 7008160 | BOLT, SET | | | 4 |
| 40 | 7007973 | CLAMP | | | 6 |
| 42 | 7012809 | CLAMP | Was 7007978 [D] | | 2 |
| 43 | 7007331 | TANK ASSY RESERVE | | | 1 |
| 44 | 7007332 | BRACKET | | | 1 |
| 45 | 7007814 | WASHER | | | 2 |
| 48 | 7005129 | BOLT SET | | AET311001 - 11102 | 5 |
| 48 | 7005129 | BOLT SET | | AETB11001 - 11102 | 5 |
| 48 | 7005129 | BOLT SET | | AET311103 & Above | 2 |
| 48 | 7005129 | BOLT SET | | AETB11103 & Above | 2 |
| 49 | 7005121 | BOLT SET | | | 2 |
| 50 | 7004784 | HOSE | | | 1 |
| 53 | 7003892 | CLIP | | | 1 |
| 54 | 7005629 | BOLT | | AET311001 - 11051 | 5 |
| 54 | 7005629 | BOLT | | AETB11001 - 11051 | 5 |



Page 333 - OSS# 2089524 - All rights reserved by Bobcat Company - 05/11/2012 - 06:30:39 - Produced by Ken Cook Co. with mediaioff

# ENGINE & ATTACHING PARTS (Cont'd)
## (Radiator Mounting)

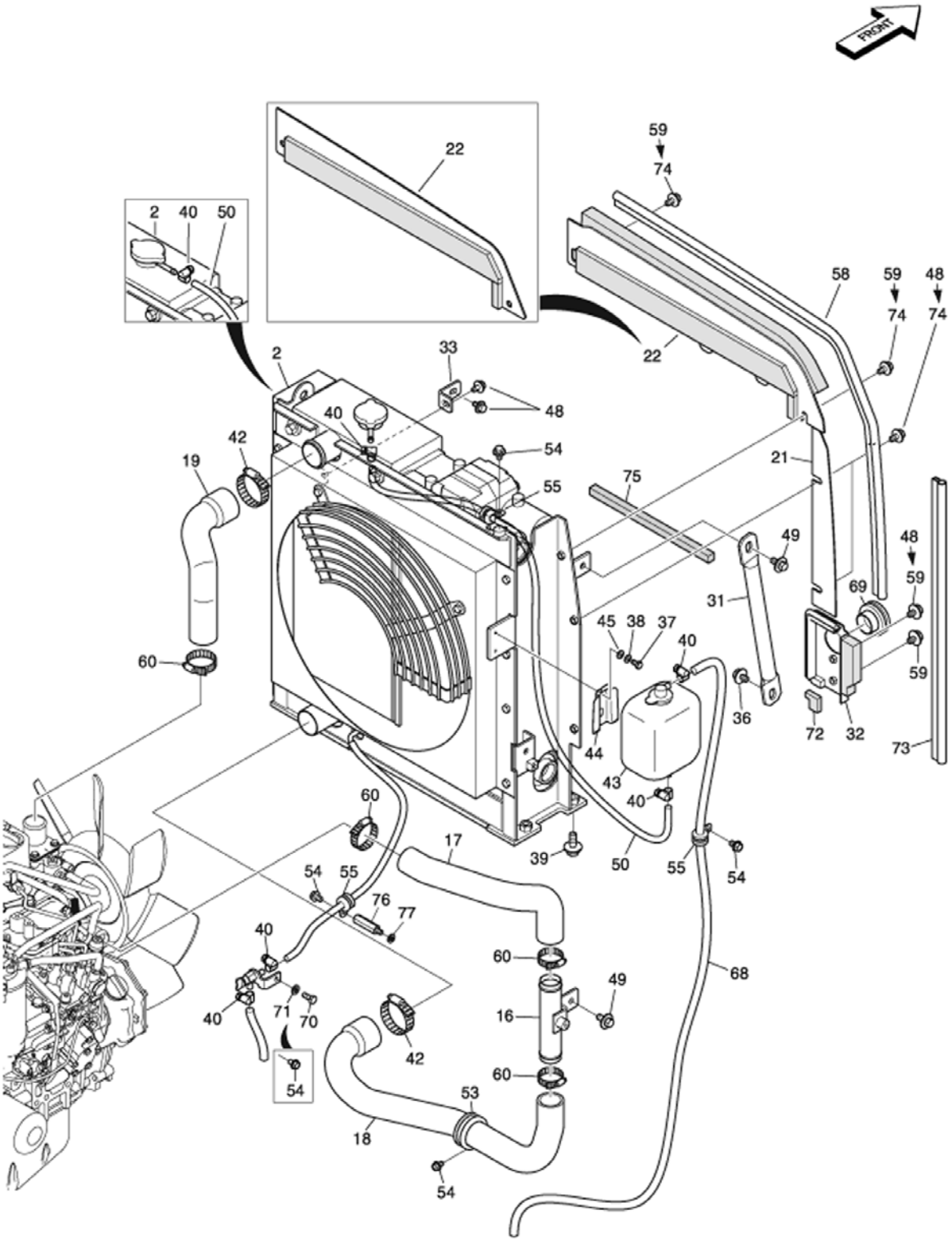


EM5934



Page 334 - OSS# 2089524 - All rights reserved by Bobcat Company - 05/11/2012 - 06:30:39 - Produced by Ken Cook Co. with mediaioff

# ENGINE & ATTACHING PARTS (Cont'd)
## (Radiator Mounting)

| Ref No | Part Number | Description | Remarks | Serial Number | Qty |
|---|---|---|---|---|---|
| 54 | 7005629 | BOLT | | AET311052 & Above | 4 |
| 54 | 7005629 | BOLT | | AETB11052 & Above | 4 |
| 55 | 7003894 | CLIP | | | 3 |
| 58 | 7006691 | STRIP WEATHER | | | 1 |
| 59 | 7005128 | BOLT SET | | AET311001 - 11102 | 3 |
| 59 | 7005128 | BOLT SET | | AETB11001 - 11102 | 3 |
| 59 | 7012229 | BOLT;FLANGE | | AET311103 & Above | 2 |
| 59 | 7012229 | BOLT;FLANGE | | AETB11103 & Above | 2 |
| 60 | 7007977 | CLAMP | | | 4 |
| 68 | 7004787 | HOSE | | | 1 |
| 69 | 7015418 | BUSHING, RUBBER | | AET311052 & Above | 1 |
| 69 | 7015418 | BUSHING, RUBBER | | AETB11052 & Above | 1 |
| 70 | 7007605 | BOLT | | AET311052 & Above | 1 |
| 70 | 7007605 | BOLT | | AETB11052 & Above | 1 |
| 71 | 7007814 | WASHER | | AET311052 & Above | 1 |
| 71 | 7007814 | WASHER | | AETB11052 & Above | 1 |
| 72 | 7015419 | SEAL | | AET311052 & Above | 1 |
| 72 | 7015419 | SEAL | | AETB11052 & Above | 1 |
| 73 | 7015420 | STRIP, WEATHER | | AET311052 & Above | 1 |
| 73 | 7015420 | STRIP, WEATHER | | AETB11052 & Above | 1 |
| 74 | 7012228 | BOLT,FLANGE | | AET311103 & Above | 4 |
| 74 | 7012228 | BOLT,FLANGE | | AETB11103 & Above | 4 |
| 75 | 7012746 | FOAM | use W/7012756 | | 1 |
| 76 | 7004554 | BOLT STUD | | AET311192 & Above | 1 |
| 76 | 7004554 | BOLT STUD | | AETB11192 & Above | 1 |
| 77 | 7007829 | WASHER | | AET311192 & Above | 1 |
| 77 | 7007829 | WASHER | | AETB11192 & Above | 1 |

Page 335 - OSS# 2089524 - All rights reserved by Bobcat Company - 05/11/2012 - 06:30:39 - Produced by Ken Cook Co. with mediaioff

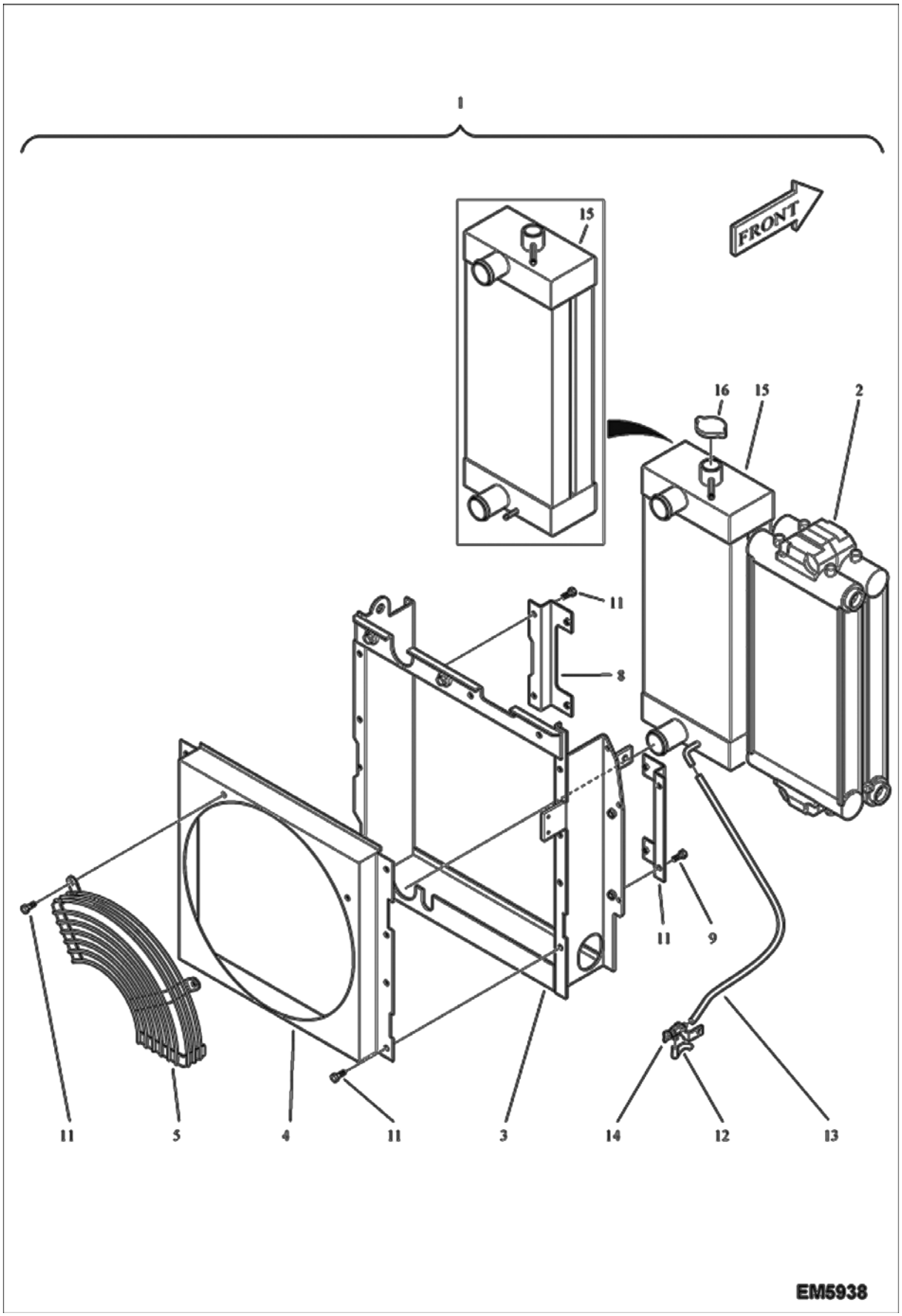




Page 336 - OSS# 2089524 - All rights reserved by Bobcat Company - 05/11/2012 - 06:30:39 - Produced by Ken Cook Co. with mediaIoff

# ENGINE & ATTACHING PARTS (Cont'd)
## (Radiator)

| Ref No | Part Number | Description | Remarks | Serial Number | Qty |
|---|---|---|---|---|---|
| 1 | | RADIATOR ASSY | NLA - W/Ref. 2-14 Was 7008220 [A] | AET311001 - 11102 | 1 |
| 1 | | RADIATOR ASSY | NLA - W/Ref. 2-14 Was 7008220 [A] | AETB11001 - 11102 | 1 |
| 1 | | RADIATOR ASSY | NLA - W/Ref. 2-14 Was 7012250 [A] | AET311001 - 11170 | 1 |
| 1 | | RADIATOR ASSY | NLA - W/Ref. 2-14 Was 7012250 [A] | AETB11001 - 11170 | 1 |
| 1 | 7012756 | COOLING ASSY | W/Ref. 2-14 | AETB11001 & Above | 1 |
| 1 | 7012756 | COOLING ASSY | W/Ref. 2-14 | AET311001 & Above | 1 |
| 2 | | COOLER, OIL | Was 7007423 [A] | AET311001 - 11102 | 1 |
| 2 | | COOLER, OIL | Was 7007423 [A] | AETB11001 - 11102 | 1 |
| 2 | 7015422 | COOLING, OIL | | AET311001 & Above | 1 |
| 2 | 7015422 | COOLING, OIL | | AETB11001 & Above | 1 |
| 3 | | FRAME | NAP - Order Ref. 1 | | 1 |
| 4 | 7007424 | SHROUD | | AET311001 - 11102 | 1 |
| 4 | 7007424 | SHROUD | | AETB11001 - 11102 | 1 |
| 4 | 7015423 | SHROUD, FAN | | AET311103 & Above | 1 |
| 4 | 7015423 | SHROUD, FAN | | AETB11103 & Above | 1 |
| 5 | 7007425 | GUARD FAN | | AET311001 - 11102 | 1 |
| 5 | 7007425 | GUARD FAN | | AETB11001 - 11102 | 1 |
| 5 | 7015424 | GUARD, FAN | | AET311103 & Above | 1 |
| 5 | 7015424 | GUARD, FAN | | AETB11103 & Above | 1 |
| 8 | 7007556 | BRACKET | | | 1 |
| 9 | 7007557 | BRACKET | | | 1 |
| 11 | 7005131 | BOLT M8X1.25X15 | | | 11 |
| 12 | 7003962 | HOSE 340L | | | 1 |
| 13 | 7004786 | HOSE 700L | | | 1 |
| 14 | 7005671 | FITTING COCK DRAIN | | | 1 |
| 15 | | RADIATOR | NLA - W/Ref. 16 Was 7007422 [A] | AET311001 - 11102 | 1 |
| 15 | | RADIATOR | NLA - W/Ref. 16 Was 7007422 [A] | AETB11001 - 11102 | 1 |
| 15 | 7015421 | COOLING | W/Ref. 16 | AET311001 & Above | 1 |
| 15 | 7015421 | COOLING | W/Ref. 16 | AETB11001 & Above | 1 |
| 16 | 7005051 | CAP | | | 1 |

Page 337 - OSS# 2089524 - All rights reserved by Bobcat Company - 05/11/2012 - 06:30:39 - Produced by Ken Cook Co. with mediaioff

## ENGINE & ATTACHING PARTS
## (Muffler Mounting) (EMEA)

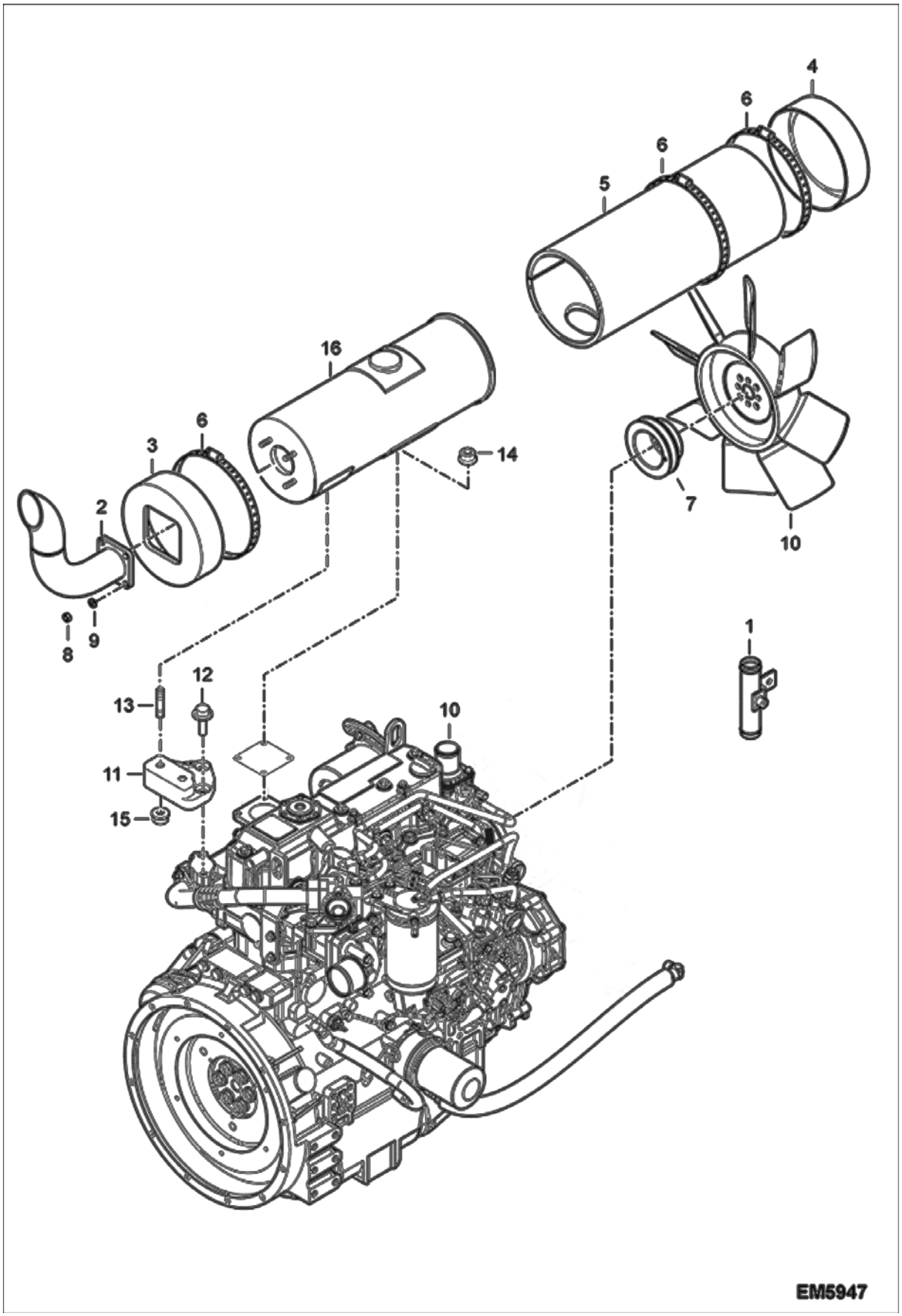




Page 338 - OSS# 2089524 - All rights reserved by Bobcat Company - 05/11/2012 - 06:30:39 - Produced by Ken Cook Co. with mediaIoff

## ENGINE & ATTACHING PARTS (Cont'd)
## (Muffler Mounting) (EMEA)

| Ref No | Part Number | Description | Remarks | Serial Number | Qty |
|---|---|---|---|---|---|
| 1 | 7006335 | TUBELINE WATER | | | 1 |
| 2 | 7006353 | TUBELINE EXHAUST | | | 1 |
| 3 | 7008262 | MAT, GLASS | | | 1 |
| 4 | 7008263 | MAT, GLASS | | | 1 |
| 5 | 7008265 | MAT, GLASS | | | 1 |
| 6 | 7007983 | CLAMP | | | 3 |
| 7 | 7015426 | PULLEY, FAN | | | 1 |
| 8 | 7007796 | NUT | | | 4 |
| 9 | 7007834 | WASHER SPRING | | | 4 |
| 10 | 7006106 | ENGINE ASSY | | | 1 |
| 11 | 7007384 | BRACKET MUFFLER | | | 1 |
| 12 | 7004087 | BOLT PLATED M8X20 | | | 2 |
| 13 | 7007386 | STUD M8X40 | | | 1 |
| 14 | 7004561 | NUT | Was 7004160 [A] | | 4 |
| 15 | 7004561 | NUT | Was 7004160 [A] | | 2 |
| 16 | 7007383 | MUFFLER | | | 1 |

Page 339 - OSS# 2089524 - All rights reserved by Bobcat Company - 05/11/2012 - 06:30:39 - Produced by Ken Cook Co. with mediaioff

# ENGINE & ATTACHING PARTS
## (Muffler Mounting) (US)

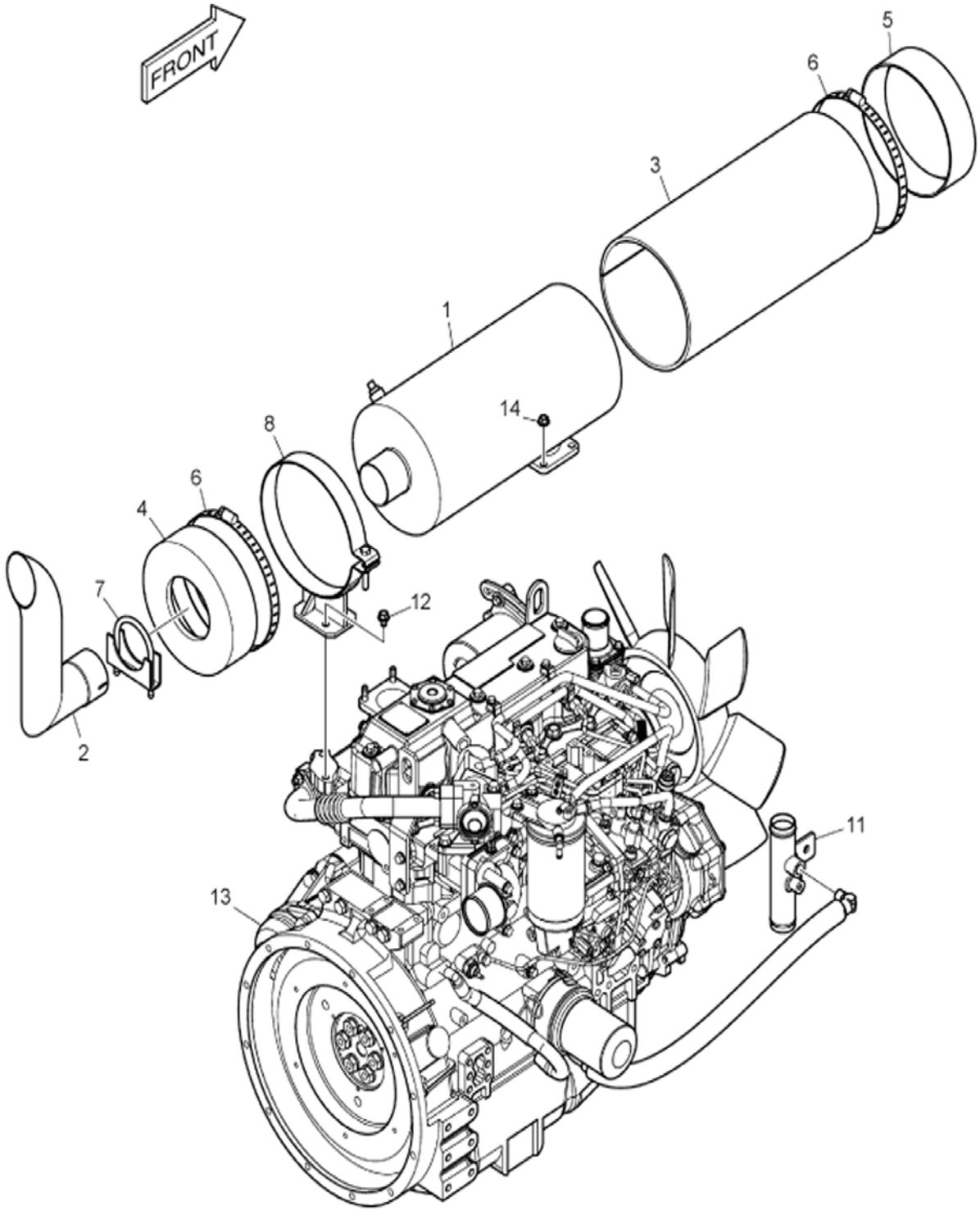


EM5946



Page 340 - OSS# 2089524 - All rights reserved by Bobcat Company - 05/11/2012 - 06:30:39 - Produced by Ken Cook Co. with mediaioff

## ENGINE & ATTACHING PARTS (Cont'd)
## (Muffler Mounting) (US)

| Ref No | Part Number | Description | Remarks | Serial Number | Qty |
|---|---|---|---|---|---|
| 1 | 7012732 | MUFFLER | | | 1 |
| 2 | | TUBELINE, EXHAUST | NLA Was 7015425 [A] | AET311001 - 11170 | 1 |
| 2 | | TUBELINE, EXHAUST | NLA Was 7015425 [A] | AETB11001 - 11170 | 1 |
| 2 | 7012754 | PIPE,EXHAUST | | AET311001 & Above | 1 |
| 2 | 7012754 | PIPE,EXHAUST | | AETB11001 & Above | 1 |
| 3 | 7012737 | MAT;GLASS | | | 1 |
| 4 | 7012738 | MAT;GLASS | | | 1 |
| 5 | 7012739 | MAT;GLASS | | | 1 |
| 6 | 7012740 | CLAMP;HOSE | | | 2 |
| 7 | 7012735 | CLAMP | | | 1 |
| 8 | 7012734 | BAND;MUFFLER | | | 1 |
| 11 | 7012736 | PIPE;WATER | | | 1 |
| 12 | 7005629 | BOLT | | | 2 |
| 13 | 7012753 | ENGINE ASS'Y | | | 1 |
| 14 | 7004561 | NUT | | | 4 |

Page 341 - OSS# 2089524 - All rights reserved by Bobcat Company - 05/11/2012 - 06:30:39 - Produced by Ken Cook Co. with mediaioff

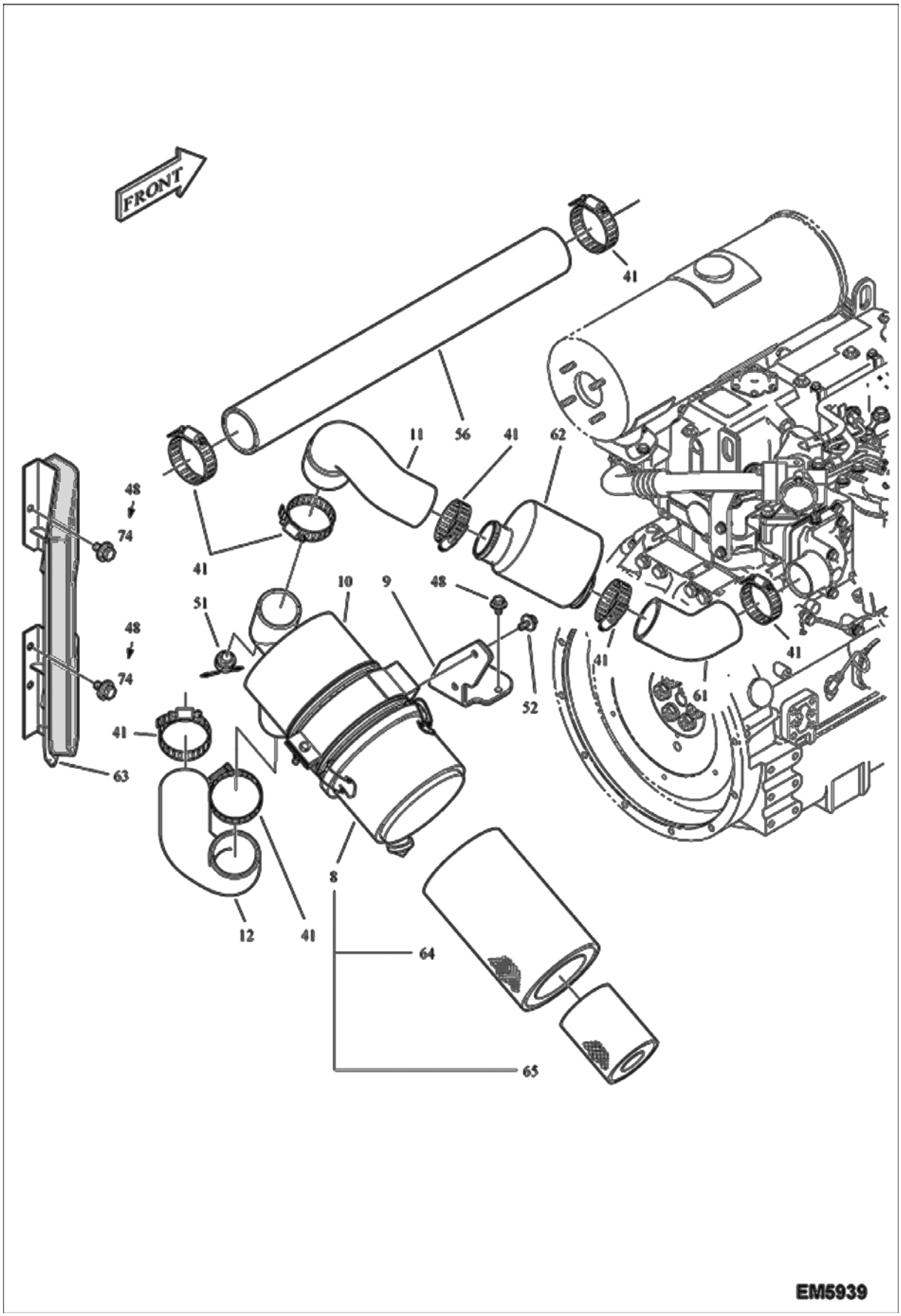




Page 342 - OSS# 2089524 - All rights reserved by Bobcat Company - 05/11/2012 - 06:30:39 - Produced by Ken Cook Co. with mediaIoff

## ENGINE & ATTACHING PARTS (Cont'd)
## (Air Cleaner)

| Ref No | Part Number | Description | Remarks | Serial Number | Qty |
|---|---|---|---|---|---|
| 8 | 7006196 | FILTER AIR CLEANER | | | 1 |
| 9 | 7006132 | BRACKET | | | 1 |
| 10 | 7003891 | CLAMP | | | 1 |
| 11 | 7006720 | HOSE AIR | | | 1 |
| 12 | 7006629 | HOSE AIR | | | 1 |
| 41 | 7007979 | CLAMP HOSE | | | 8 |
| 48 | 7005129 | BOLT SET | | AET311001 - 11102 | 5 |
| 48 | 7005129 | BOLT SET | | AETB11001 - 11102 | 5 |
| 48 | 7005129 | BOLT SET | | AET311003 & Above | 2 |
| 48 | 7005129 | BOLT SET | | AETB11003 & Above | 2 |
| 51 | 7005694 | INDEX INDICATOR DUST | | AET311001 - 11191 | 1 |
| 51 | 7005694 | INDEX INDICATOR DUST | | AETB11001 - 11191 | 1 |
| 51 | 7015632 | INDICATOR,DUST | | AET311192 & Above | 1 |
| 51 | 7015632 | INDICATOR,DUST | | AETB11192 & Above | 1 |
| 52 | 7005133 | BOLT M8X1.25X22 | | | 2 |
| 56 | 7006666 | HOSE AIR | | | 1 |
| 61 | 7006721 | HOSE AIR | | | 1 |
| 62 | 7013267 | MUFFLER SILENCER INTAKE | Was 7004311 [A] | | 1 |
| 63 | 7008260 | COVER, BAFFLE | | | 1 |
| 64 | 6666333 | FILTER, AIR OUTER | Was 7005000 [A] | | 1 |
| 65 | 6666334 | FILTER, AIR INNER | Was 7005001 [A] | | 1 |
| 74 | 7012228 | BOLT,FLANGE | | AET311003 & Above | 3 |
| 74 | 7012228 | BOLT,FLANGE | | AETB11003 & Above | 3 |

Page 343 - OSS# 2089524 - All rights reserved by Bobcat Company - 05/11/2012 - 06:30:39 - Produced by Ken Cook Co. with mediaioff

# ENGINE & ATTACHING PARTS
## (Pump Mounting)

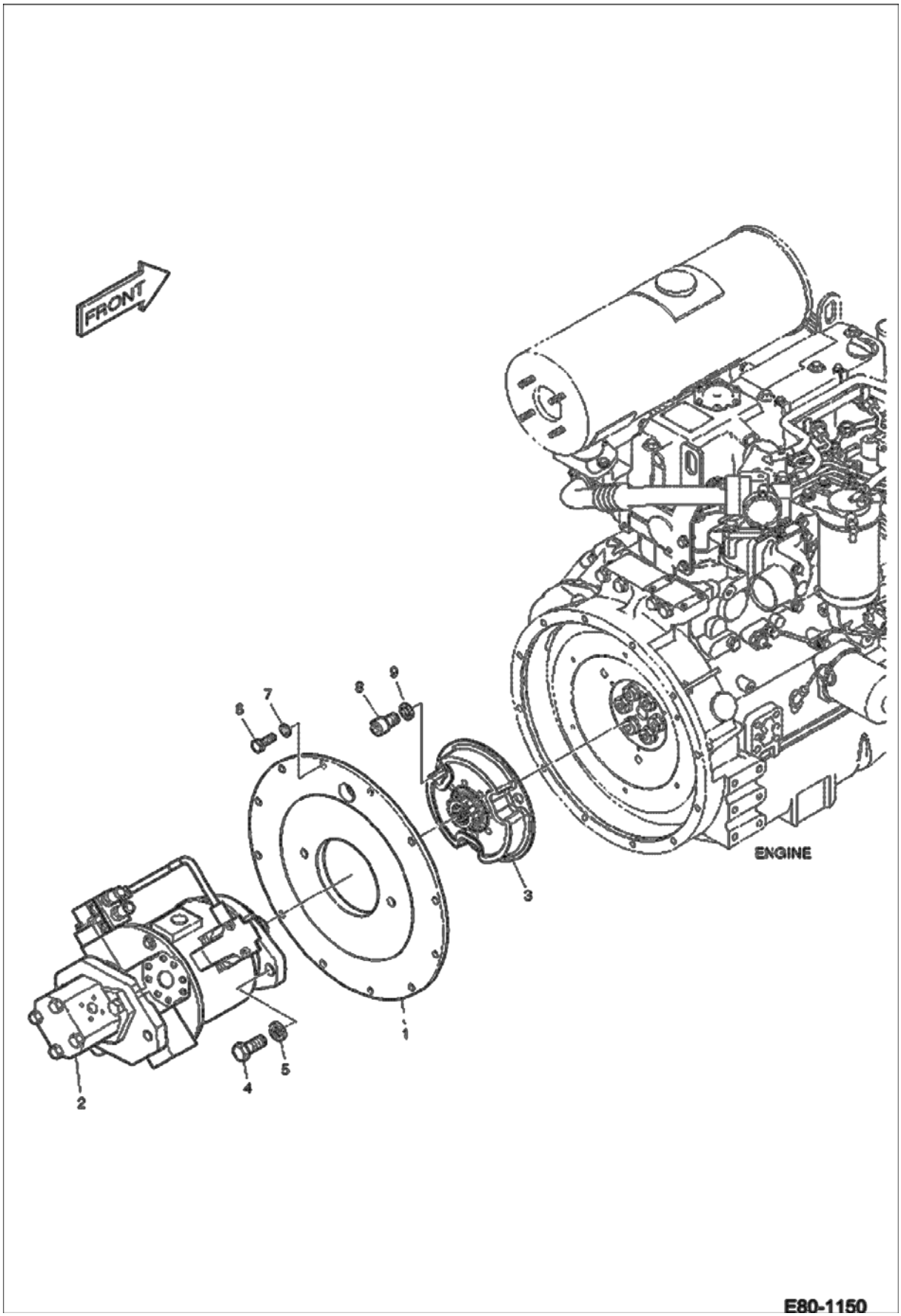




Page 344 - OSS# 2089524 - All rights reserved by Bobcat Company - 05/11/2012 - 06:30:39 - Produced by Ken Cook Co. with mediaIoff

## ENGINE & ATTACHING PARTS (Cont'd)
## (Pump Mounting)

| Ref No | Part Number | Description | Remarks | Serial Number | Qty |
|---|---|---|---|---|---|
| 1 | 7006097 | COVER PUMP | | | 1 |
| 2 | 7004963 | PUMP ASSY | See Illustration HYDRAULIC PUMP/ E80-4100 | | 1 |
| 3 | 7006098 | COUPLER | | | 1 |
| 4 | 7007648 | BOLT | | | 2 |
| 5 | 7007839 | WASHER SPRING | | | 2 |
| 6 | 7007629 | BOLT | | | 12 |
| 7 | 7007835 | WASHER SPRING | | | 12 |
| 8 | 7007773 | BOLT SOCKET | | | 3 |
| 9 | 7007847 | WASHER | | | 3 |

Page 345 - OSS# 2089524 - All rights reserved by Bobcat Company - 05/11/2012 - 06:30:39 - Produced by Ken Cook Co. with mediaioff

# ENGINE GASKET KIT

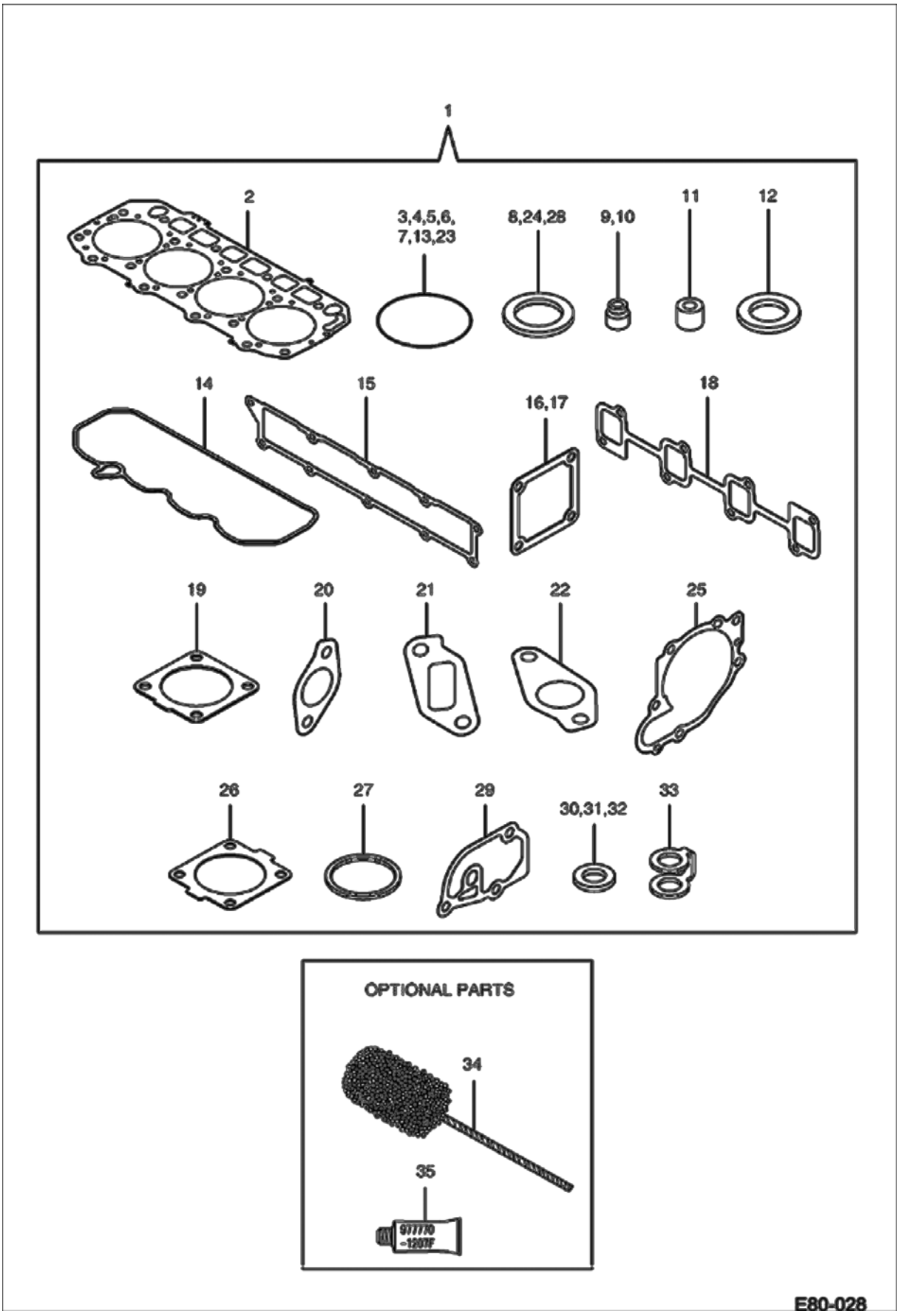




Page 346 - OSS# 2089524 - All rights reserved by Bobcat Company - 05/11/2012 - 06:30:39 - Produced by Ken Cook Co. with mediaioff

## ENGINE GASKET KIT (Cont'd)

| Ref No | Part Number | Description | Remarks | Serial Number | Qty |
|---|---|---|---|---|---|
| 1 | 7007197 | GASKET SET | W/Ref. 2-33 | | 1 |
| 2 | 7006837 | GASKET CYLINDER HEAD | | | 1 |
| 3 | 7007912 | ORING | | | 2 |
| 4 | 7007909 | ORING | | | 1 |
| 5 | | O-RING | NSS | | 1 |
| 6 | 7004275 | SEAL | | | 1 |
| 7 | 7007921 | ORING | | | 3 |
| 8 | 7004231 | SEAL WASHER | | | 1 |
| 9 | 7005087 | SEAL VALVE STEM | | | 8 |
| 10 | 7004276 | SEAL VALVE STEM | | | 8 |
| 11 | 7004210 | GUARD NOZZLE | | | 4 |
| 12 | 7004407 | SEAT NOZZLE | | | 4 |
| 13 | 7007907 | ORING | | | 8 |
| 14 | 7005088 | GASKET CYL HEAD COVER | | | 1 |
| 15 | 7005066 | SEAL INTAKE MANIFOLD | | | 1 |
| 16 | 7005110 | GASKET | | | 1 |
| 17 | 7005111 | GASKET | | | 1 |
| 18 | 7005067 | GASKET EXHAUST MAINFOLD | | | 1 |
| 19 | 7006846 | GASKET SILENCER | | | 1 |
| 20 | 7007113 | GASKET EGR TUBELINE | | | 1 |
| 21 | 7007115 | GASKET EGR IN | | | 1 |
| 22 | 7007116 | GASKET EGR OUT | | | 1 |
| 23 | 7004226 | ORING | | | 1 |
| 24 | 7004019 | WASHER SEAL | | | 7 |
| 25 | 7004217 | GASKET | | | 1 |
| 26 | 7010311 | GASKET, THERMOSTAT | Was 7004218 [A] | | 1 |
| 27 | 7005114 | GASKET THERMOSTAT | | | 1 |
| 28 | | SEAL, WASHER | NSS | | 1 |
| 29 | 7004219 | GASKET HOUSING | | | 1 |
| 30 | 7004216 | GASKET ROUND | | | 1 |
| 31 | 7004215 | GASKET | | | 2 |
| 32 | 7003942 | GASKET | | | 1 |
| 33 | 7004278 | SEAL | | | 5 |
| 34 | 7005089 | HONE, FLEX | | | 1 |
| 35 | 7006924 | GASKET LIQUID | | | 1 |

Page 347 - OSS# 2089524 - All rights reserved by Bobcat Company - 05/11/2012 - 06:30:39 - Produced by Ken Cook Co. with mediaioff

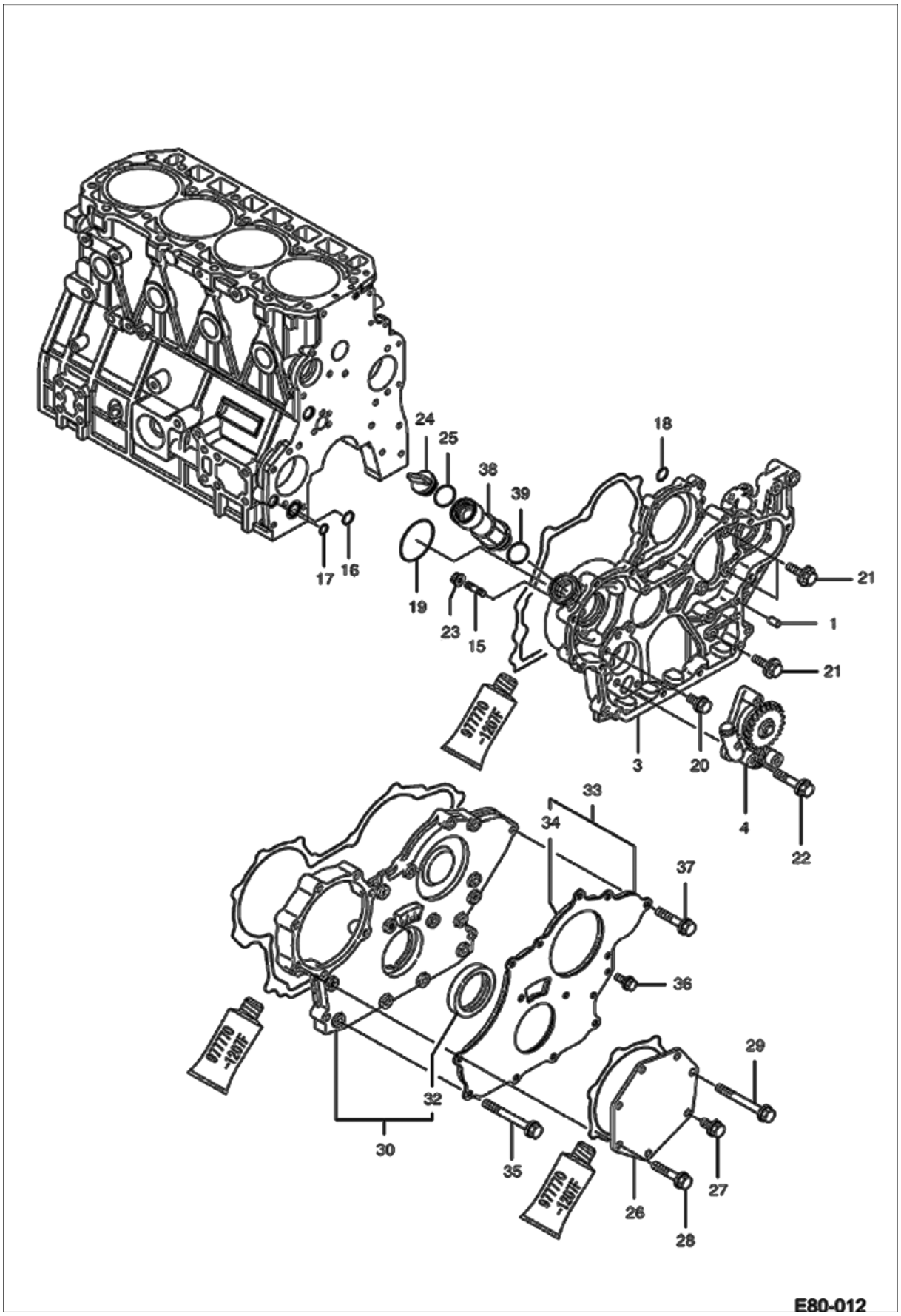




Page 348 - OSS# 2089524 - All rights reserved by Bobcat Company - 05/11/2012 - 06:30:39 - Produced by Ken Cook Co. with mediaIoff

| Ref No | Part Number | Description | Remarks | Serial Number | Qty |
|---|---|---|---|---|---|
| 1 | 7007851 | PIN PARALLEL | | | 4 |
| 3 | 7007163 | HOUSING GEAR | | | 1 |
| 4 | 7005075 | PUMP OIL ASSY | | | 1 |
| 15 | 7004104 | BOLT STUD | | | 4 |
| 16 | 7007912 | ORING | | | 1 |
| 17 | 7007909 | ORING | | | 1 |
| 18 | | O-RING | NSS | | 1 |
| 19 | 7004275 | SEAL | | | 1 |
| 20 | 7004086 | BOLT PLATED M8X16 | | | 1 |
| 21 | 7004087 | BOLT PLATED M8X20 | | | 3 |
| 22 | 7004080 | BOLT PLATED M8X45 | | | 3 |
| 23 | 7004161 | NUT | | | 4 |
| 24 | 7005107 | CAP LUB OIL | | | 1 |
| 25 | 7007921 | ORING | | | 1 |
| 26 | 7004422 | COVER | | | 1 |
| 27 | 7004087 | BOLT PLATED M8X20 | | | 1 |
| 28 | 7004080 | BOLT PLATED M8X45 | | | 5 |
| 29 | 7007186 | BOLT M8X75 PLATED | | | 1 |
| 30 | 7004404 | HOUSING GEAR | W/Ref. 32 | | 1 |
| 32 | 7004274 | SEAL OIL | | | 1 |
| 33 | 7004332 | COVER ASSY | W/Ref. 34 | | 1 |
| 34 | 7004212 | FOAM | | | 1 |
| 35 | 7004090 | BOLT PLATED M8X70 | | | 6 |
| 36 | 7004086 | BOLT PLATED M8X16 | | | 3 |
| 37 | 7004089 | BOLT PLATED M8X40 | | | 5 |
| 38 | 7005109 | TUBELINE | | | 1 |
| 39 | 7007921 | ORING | | | 1 |

Page 349 - OSS# 2089524 - All rights reserved by Bobcat Company - 05/11/2012 - 06:30:39 - Produced by Ken Cook Co. with mediaioff

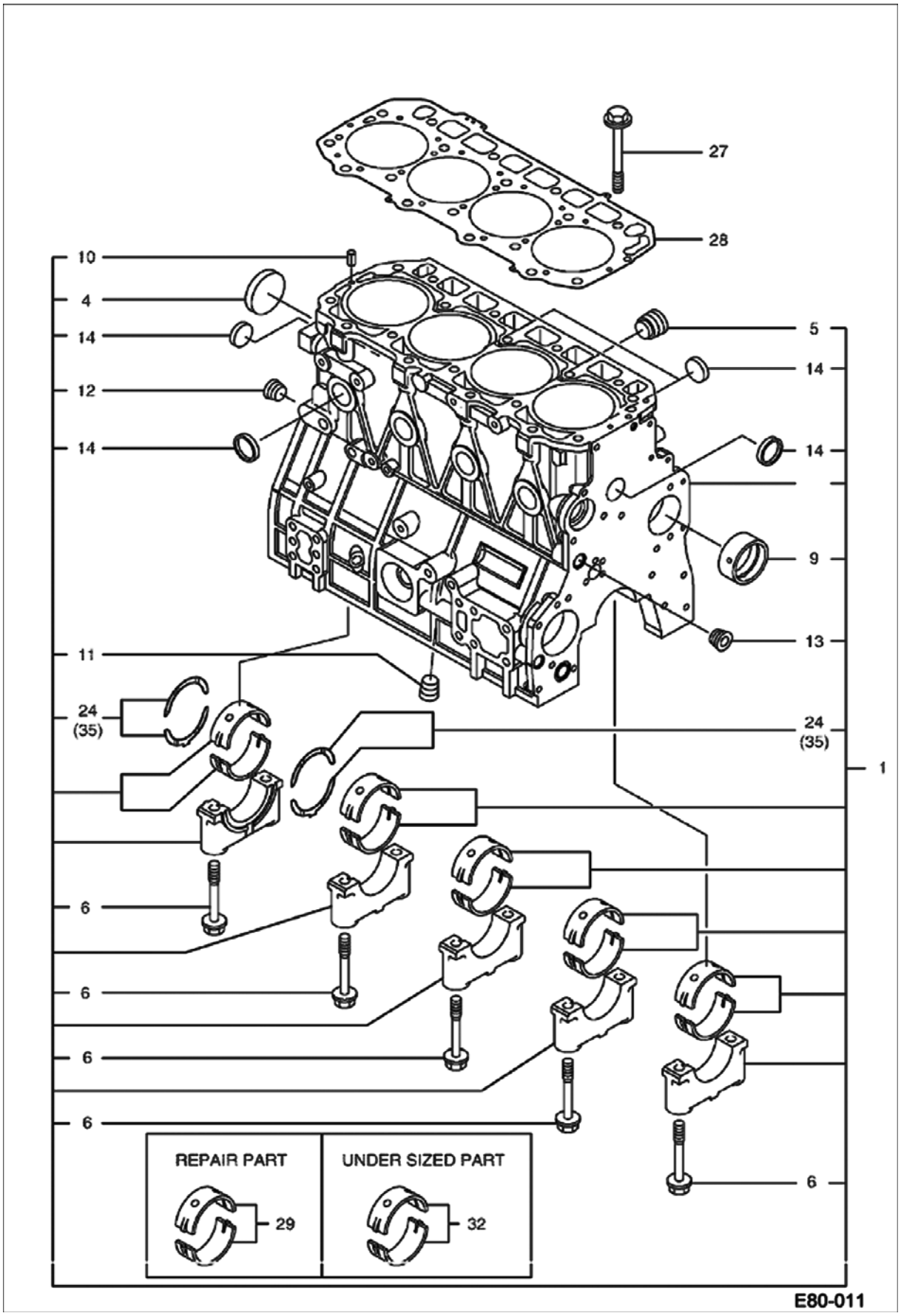




Page 350 - OSS# 2089524 - All rights reserved by Bobcat Company - 05/11/2012 - 06:30:39 - Produced by Ken Cook Co. with mediaioff

| Ref No | Part Number | Description | Remarks | Serial Number | Qty |
|---|---|---|---|---|---|
| 1 | 7007193 | BLOCK CYLINDER ASSY | W/Ref. 4-24 | | 1 |
| 4 | 7004296 | PLUG | | | 1 |
| 5 | 7004292 | PLUG | | | 1 |
| 6 | 7004085 | BOLT | | | 10 |
| 9 | 7004370 | BUSHING CAMSHAFT | | | 1 |
| 10 | 7007860 | PIN SPRING | | | 2 |
| 11 | 7004674 | PLUG PT3/8 | | | 1 |
| 12 | 7004674 | PLUG PT3/8 | | | 1 |
| 13 | 7004674 | PLUG PT3/8 | | | 1 |
| 14 | 7004295 | PLUG | | | 8 |
| 24 | 7005090 | WASHER THRUST STD | | | 2 |
| 27 | 7005053 | BOLT HEAD | | | 18 |
| 28 | 7006837 | GASKET CYLINDER HEAD | | | 1 |
| 29 | 7005054 | BEARING SET MAIN STD | | | 5 |
| 32 | 7005091 | BEARING MAIN 0.25 | | | 5 |
| 35 | 7005092 | WASHER THRUST 0.25 | | | 2 |

Page 351 - OSS# 2089524 - All rights reserved by Bobcat Company - 05/11/2012 - 06:30:39 - Produced by Ken Cook Co. with mediaioff

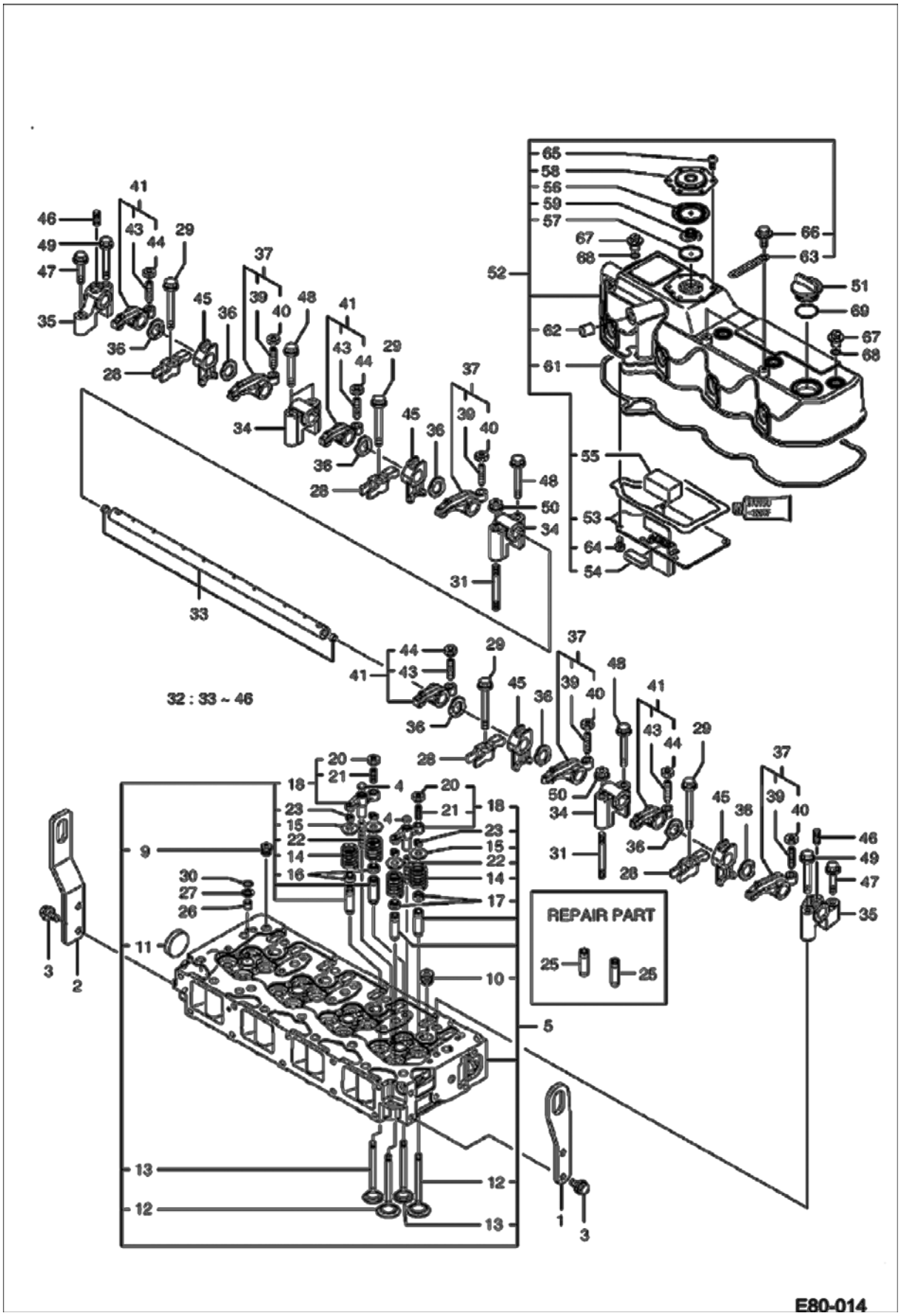




Page 352 - OSS# 2089524 - All rights reserved by Bobcat Company - 05/11/2012 - 06:30:39 - Produced by Ken Cook Co. with mediaIoff

| Ref No | Part Number | Description | Remarks | Serial Number | Qty |
|---|---|---|---|---|---|
| 1 | 7007382 | LIFTER ENGINE | | | 1 |
| 2 | 7007385 | LIFTER ENGINE | | | 1 |
| 3 | 7004086 | BOLT PLATED M8X16 | | | 4 |
| 4 | 7005093 | SEAT A VALVE BRIDGE | | | 8 |
| 5 | 7007107 | CYLINDER HEAD ASSY | W/Ref. 9-23 | | 1 |
| 9 | 7004673 | PLUG | | | 1 |
| 10 | 7004674 | PLUG PT3/8 | | | 4 |
| 11 | 7004293 | PLUG | | | 1 |
| 12 | 7005056 | VALVE INTAKE | | | 8 |
| 13 | 7005057 | VALVE EXHAUST | | | 8 |
| 14 | 7005058 | SPRING VALVE | | | 16 |
| 15 | 7005055 | RETAINER SPRING | | | 16 |
| 16 | 7005087 | SEAL VALVE STEM | | | 8 |
| 17 | 7004276 | SEAL VALVE STEM | | | 8 |
| 18 | 7004406 | VALVE BRIDGE ASSY | | | 8 |
| 20 | 7004146 | NUT M8 | | | 8 |
| 21 | 7004140 | SCREW VALVE BRIDGE | | | 8 |
| 22 | 7004203 | GUIDE VALVE BRIDGE | | | 8 |
| 23 | 7004320 | PIN COTTER ASSY | | | 16 |
| 25 | 7005065 | GUIDE VALVE | | | 16 |
| 26 | 7004210 | GUARD NOZZLE | | | 4 |
| 27 | 7004407 | SEAT NOZZLE | | | 4 |
| 28 | 7004328 | RETAINER VALVE | | | 4 |
| 29 | 7004142 | BOLT FLANGE RETAINER | | | 4 |
| 30 | 7007907 | ORING | | | 4 |
| 31 | 7005094 | BOLT M8X80 | | | 2 |
| 32 | 7005062 | SHAFT ARM ROCKER ASSY | W/Ref. 33-46 | | 1 |
| 33 | 7005059 | SHAFT ROCKER ARM | | | 1 |
| 34 | 7005060 | SUPPORT A | | | 3 |
| 35 | 7005061 | SUPPORT B | | | 2 |
| 36 | 7005095 | WASHER | | | 8 |
| 37 | 7005063 | ARM ASSY ROCKER | W/Ref. 39 & 40 | | 4 |
| 39 | 7004110 | SCREW VALVE | | | 4 |
| 40 | 7004146 | NUT M8 | | | 4 |
| 41 | 7005064 | ARM ASSY ROCKER | W/Ref. 43 & 44 | | 4 |
| 43 | 7004110 | SCREW VALVE | | | 4 |
| 44 | 7004146 | NUT M8 | | | 4 |
| 45 | 7004448 | SUPPORT | | | 4 |
| 46 | 7004141 | STUD M8X22 | | | 2 |
| 47 | 7004089 | BOLT PLATED M8X40 | | | 2 |



Page 353 - OSS# 2089524 - All rights reserved by Bobcat Company - 05/11/2012 - 06:30:39 - Produced by Ken Cook Co. with mediaioff

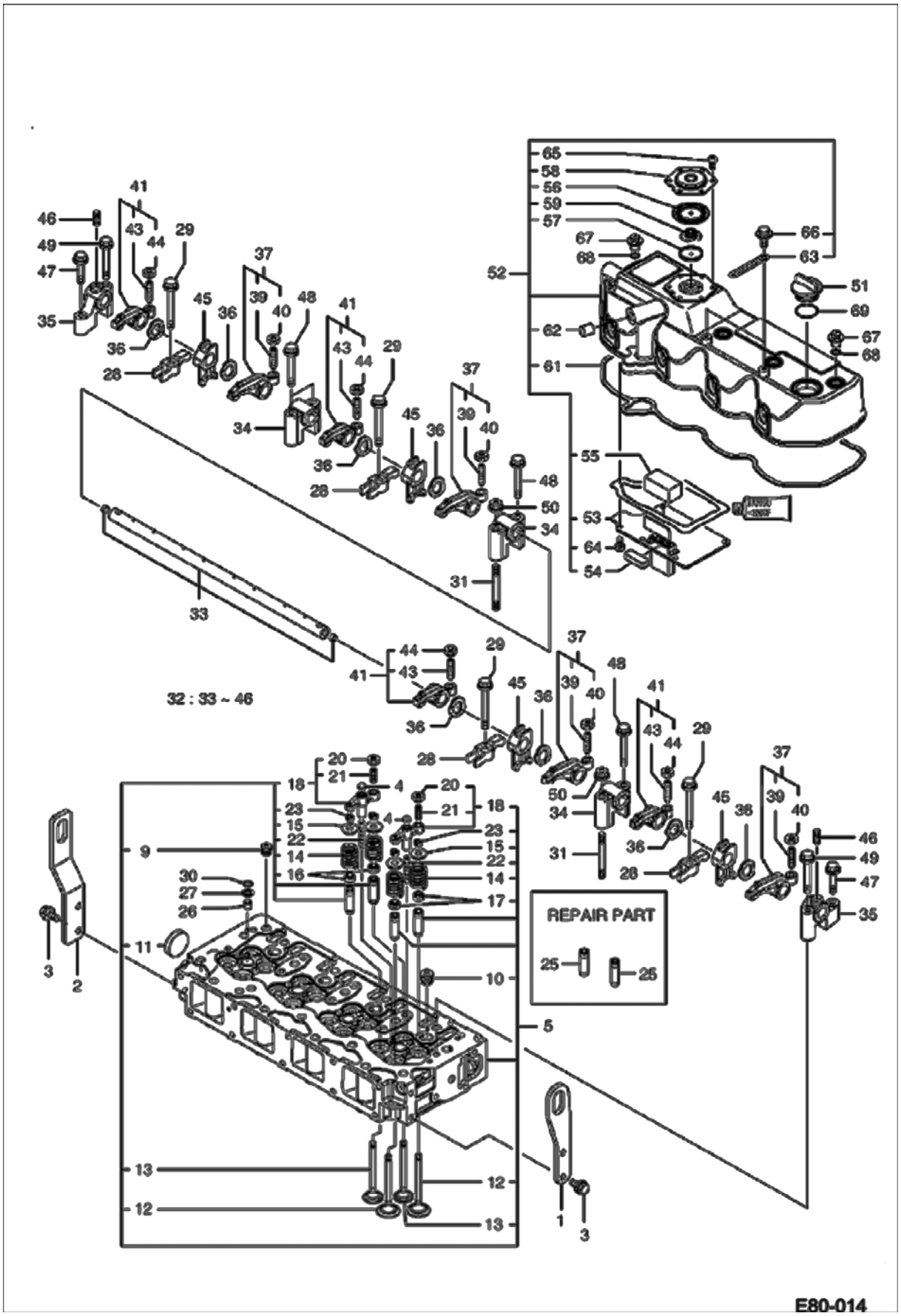




Page 354 - OSS# 2089524 - All rights reserved by Bobcat Company - 05/11/2012 - 06:30:39 - Produced by Ken Cook Co. with mediaIoff

| Ref No | Part Number | Description | Remarks | Serial Number | Qty |
|---|---|---|---|---|---|
| 48 | 7013268 | BOLT PLATED M8X60 | Was 7004098 [A] | | 4 |
| 49 | 7013268 | BOLT PLATED M8X60 | Was 7004098 [A] | | 2 |
| 50 | 7004561 | NUT | Was 7004160 [A] | | 2 |
| 51 | 7005107 | CAP LUB OIL | | | 1 |
| 52 | 7007106 | BONNET ASSY | W/Ref. 53-66 | | 1 |
| 53 | 7007048 | PLATE BAFFLE | | | 1 |
| 54 | 7007049 | DIAPHRAGM BAFFLE | | | 1 |
| 55 | 7004441 | DIAPHRAGM BAFFLE | | | 1 |
| 56 | 7005096 | DIAPHRAGM BREATHER | | | 1 |
| 57 | 7005097 | PLATE CENTER | | | 1 |
| 58 | 7005098 | PLATE BREATHER | | | 1 |
| 59 | 7005099 | SPRING DIAPHRAGM | | | 1 |
| 61 | 7005088 | GASKET CYL HEAD COVER | | | 1 |
| 62 | 7005100 | PLUG | | | 1 |
| 63 | 7007175 | CLIP | | | 2 |
| 64 | 7004105 | SCREW TAPPING | | | 6 |
| 65 | 7004105 | SCREW TAPPING | | | 6 |
| 66 | | BOLT | NSS | | 2 |
| 67 | 7004204 | HANDLE KNOB | | | 4 |
| 68 | 7007907 | ORING | | | 4 |
| 69 | 7007921 | ORING | | | 1 |

Page 355 - OSS# 2089524 - All rights reserved by Bobcat Company - 05/11/2012 - 06:30:39 - Produced by Ken Cook Co. with mediaioff

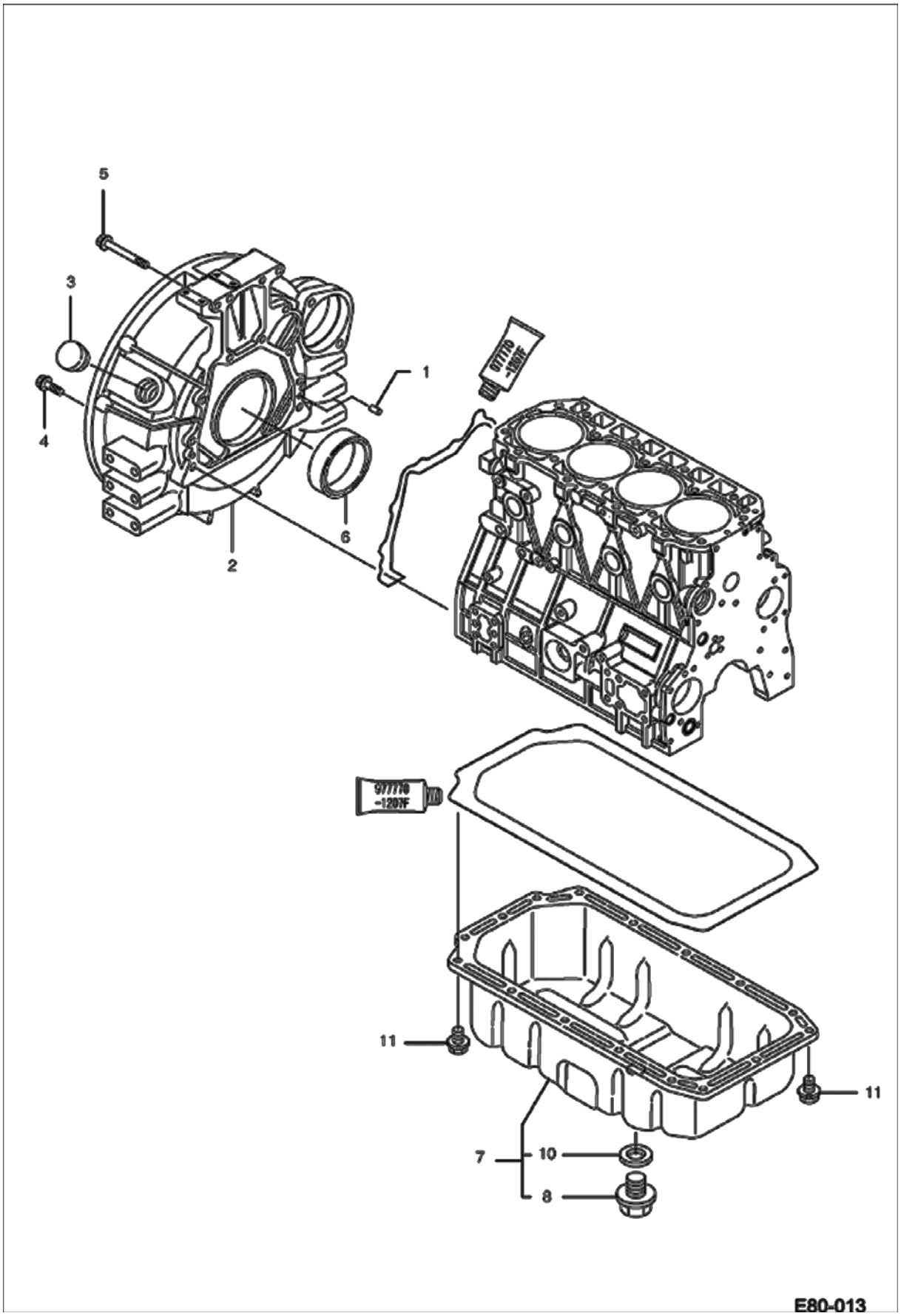




Page 356 - OSS# 2089524 - All rights reserved by Bobcat Company - 05/11/2012 - 06:30:39 - Produced by Ken Cook Co. with mediaIoff

| Ref No | Part Number | Description | Remarks | Serial Number | Qty |
|---|---|---|---|---|---|
| 1 | 7007851 | PIN PARALLEL | | | 2 |
| 2 | 7004425 | HOUSING FLYWHEEL | | | 1 |
| 3 | 7004421 | CAP FLYWHEEL COVER | | | 1 |
| 4 | 7004092 | BOLT PLATED M10X35 | | | 9 |
| 5 | 7004091 | BOLT PLATED M10X70 | | | 4 |
| 6 | 7005052 | SEAL OIL | | | 1 |
| 7 | 7006838 | PAN OIL ASSY | W/Ref. 8 & 10 | | 1 |
| 8 | 7004299 | PLUG DRAIN | | | 1 |
| 10 | 7004231 | SEAL WASHER | | | 1 |
| 11 | 7004093 | BOLT M8X12 | | | 16 |

Page 357 - OSS# 2089524 - All rights reserved by Bobcat Company - 05/11/2012 - 06:30:39 - Produced by Ken Cook Co. with mediaioff

# DIPSTICK & FILTER

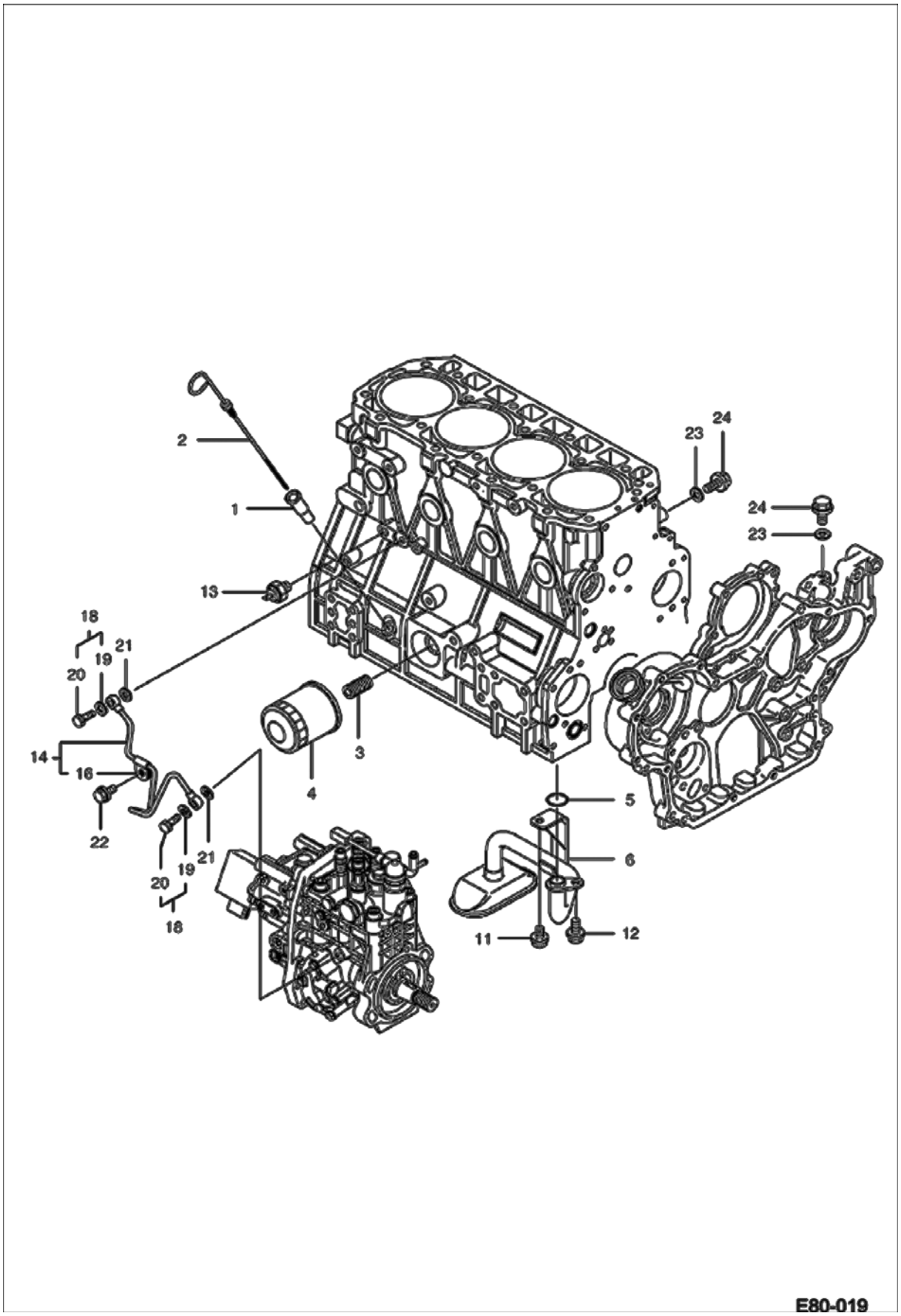




Page 358 - OSS# 2089524 - All rights reserved by Bobcat Company - 05/11/2012 - 06:30:39 - Produced by Ken Cook Co. with mediaIoff

| Ref No | Part Number | Description | Remarks | Serial Number | Qty |
|---|---|---|---|---|---|
| 1 | 7004418 | GUIDE OIL GAUGE | | | 1 |
| 2 | 7006843 | DIPSTICK | | | 1 |
| 3 | 7005113 | STUD OIL FILTER | | | 1 |
| 4 | 7010347 | FILTER, OIL | Was 7004996 [A] | | 1 |
| 5 | 7007912 | ORING | | | 1 |
| 6 | 7007051 | TUBELINE ASSY | | | 1 |
| 11 | 7004093 | BOLT M8X12 | | | 1 |
| 12 | 7004086 | BOLT PLATED M8X16 | | | 1 |
| 13 | 7005076 | SWITCH OIL PRESS | | | 1 |
| 14 | 7007119 | TUBELINE OIL ASSY | W/Ref. 16 | | 1 |
| 16 | 7004316 | CLIP | | | 1 |
| 18 | 7004333 | BOLT JOINT ASSY | W/Ref. 19 & 20 | | 2 |
| 19 | 7004019 | WASHER SEAL | | | 2 |
| 20 | 7004103 | BOLT JOINT | | | 2 |
| 21 | 7004019 | WASHER SEAL | | | 2 |
| 22 | 7004093 | BOLT M8X12 | | | 1 |
| 23 | 7004019 | WASHER SEAL | | | 2 |
| 24 | 7004093 | BOLT M8X12 | | | 2 |

Page 359 - OSS# 2089524 - All rights reserved by Bobcat Company - 05/11/2012 - 06:30:39 - Produced by Ken Cook Co. with mediaioff

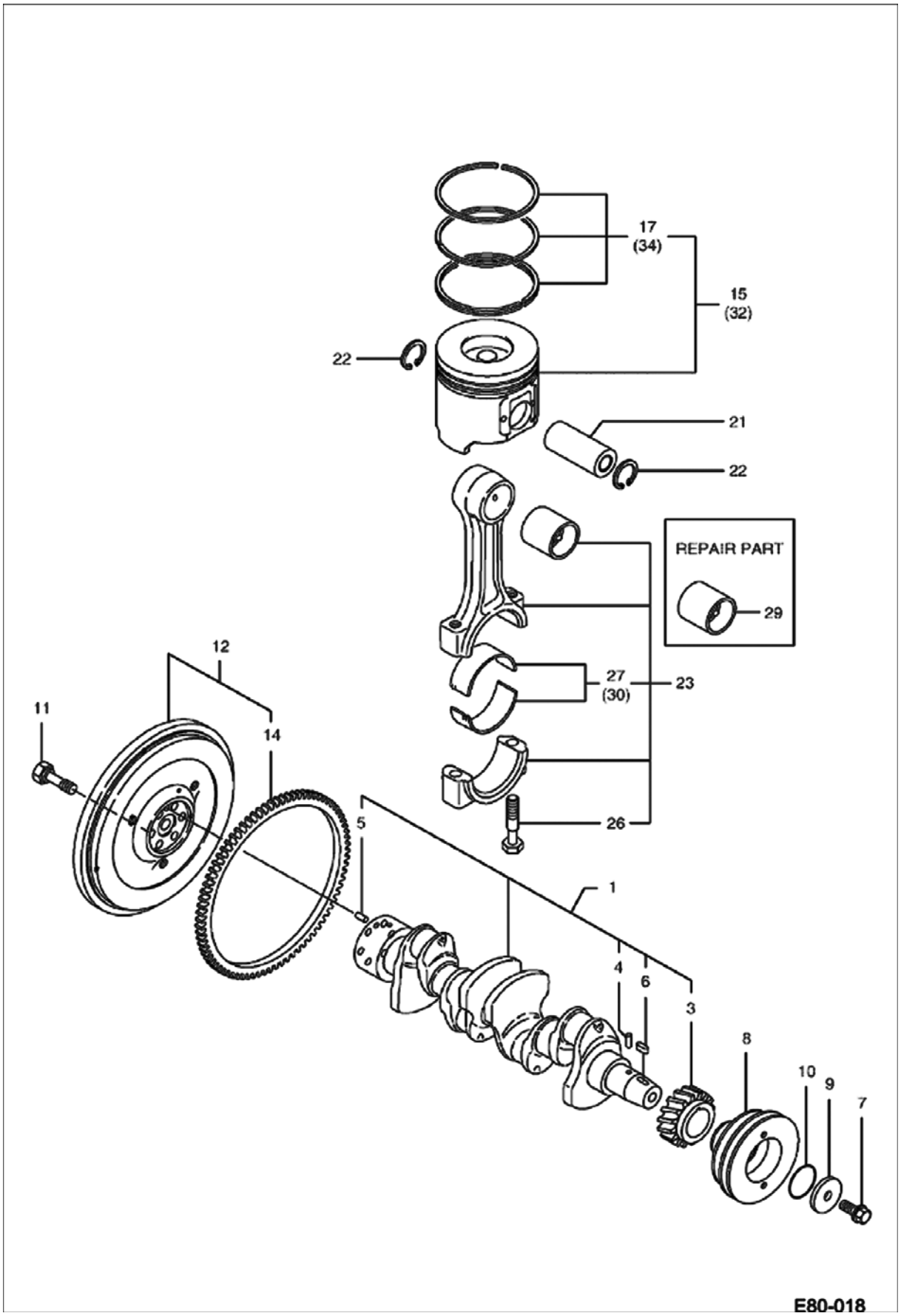




Page 360 - OSS# 2089524 - All rights reserved by Bobcat Company - 05/11/2012 - 06:30:39 - Produced by Ken Cook Co. with mediaIoff

| Ref No | Part Number | Description | Remarks | Serial Number | Qty |
|---|---|---|---|---|---|
| 1 | 7005071 | SHAFT CRANK ASSY | W/Ref. 3-6 | | 1 |
| 3 | 7005070 | GEAR CRANK SHAFT | | | 1 |
| 4 | 7005102 | PIN PARALLEL | | | 1 |
| 5 | 7005103 | PIN PARALLEL | | | 1 |
| 6 | 7004003 | KEY | | | 1 |
| 7 | 7004144 | BOLT V-PULLEY | | | 1 |
| 8 | 7003980 | PULLEY V | | | 1 |
| 9 | 7004018 | WASHER | | | 1 |
| 10 | 7004226 | ORING | | | 1 |
| 11 | 7005104 | BOLT FLYWHEEL | | | 6 |
| 12 | 7004209 | FLYWHEEL ASSY | W/Ref. 14 | | 1 |
| 14 | 7004358 | GEAR RING | | | 1 |
| 15 | 7007118 | PISTON ASSY | W/Ref. 17 | | 4 |
| 17 | 7007117 | RING SET PISTON | | | 4 |
| 21 | 7005072 | PIN PISTON | | | 4 |
| 22 | 7004062 | RING SNAP | | | 8 |
| 23 | 7006842 | ROD CONNECTING ASSY | W/Ref. 26 & 27 | | 4 |
| 26 | 7005073 | BOLT ROD | | | 8 |
| 27 | 7005105 | BEARING ASSY STD. | standard | | 4 |
| 29 | 7005074 | BUSHING PISTON PIN | | | 4 |
| 30 | 7005106 | BEARING CON ROD 0.25 | 0.25 (US) | | 4 |
| 32 | 7007194 | PISTON ASSY 0.25 | 0.25 (US) | | 4 |
| 34 | 7007195 | RING SET PISTON 0.25 | 0.25 (US) | | 4 |

Page 361 - OSS# 2089524 - All rights reserved by Bobcat Company - 05/11/2012 - 06:30:39 - Produced by Ken Cook Co. with mediaioff

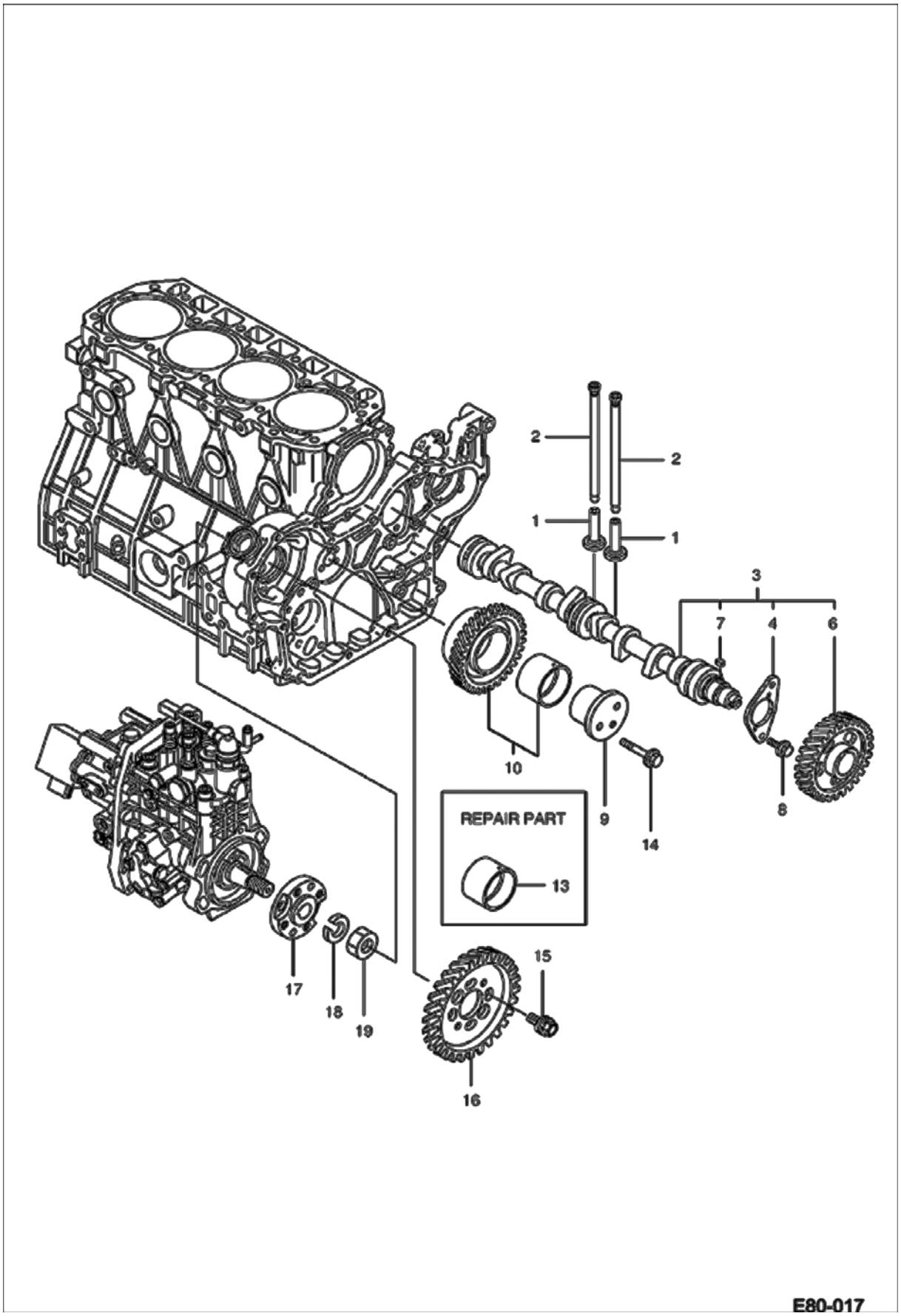




Page 362 - OSS# 2089524 - All rights reserved by Bobcat Company - 05/11/2012 - 06:30:39 - Produced by Ken Cook Co. with mediaIoff

| Ref No | Part Number | Description | Remarks | Serial Number | Qty |
|---|---|---|---|---|---|
| 1 | 7004419 | TAPPET | | | 8 |
| 2 | 7005069 | ROD PUSH | | | 8 |
| 3 | 7007105 | CAMSHAFT ASSY | W/Ref. 4-7 | | 1 |
| 4 | 7004214 | BEARING THRUST | | | 1 |
| 6 | 7005068 | GEAR CAM SHAFT | | | 1 |
| 7 | 7004003 | KEY | | | 1 |
| 8 | 7004086 | BOLT PLATED M8X16 | | | 2 |
| 9 | 7005101 | SHAFT IDLER GEAR | | | 1 |
| 10 | 7004356 | GEAR IDLER ASSY | W/Ref. 13 | | 1 |
| 13 | 7004371 | BUSHING IDLE GEAR | | | 1 |
| 14 | 7004096 | BOLT PLATED M8X55 | | | 3 |
| 15 | 7004143 | BOLT | | | 4 |
| 16 | 7006839 | GEAR INJ PUMP DRIVE | | | 1 |
| 17 | 7006840 | FLANGE | | | 1 |
| 18 | | WASHER, SPRING | NSS | | 1 |
| 19 | | NUT, LOCK | NSS | | 1 |

Page 363 - OSS# 2089524 - All rights reserved by Bobcat Company - 05/11/2012 - 06:30:39 - Produced by Ken Cook Co. with mediaioff

# WATER PUMP & THERMOSTAT

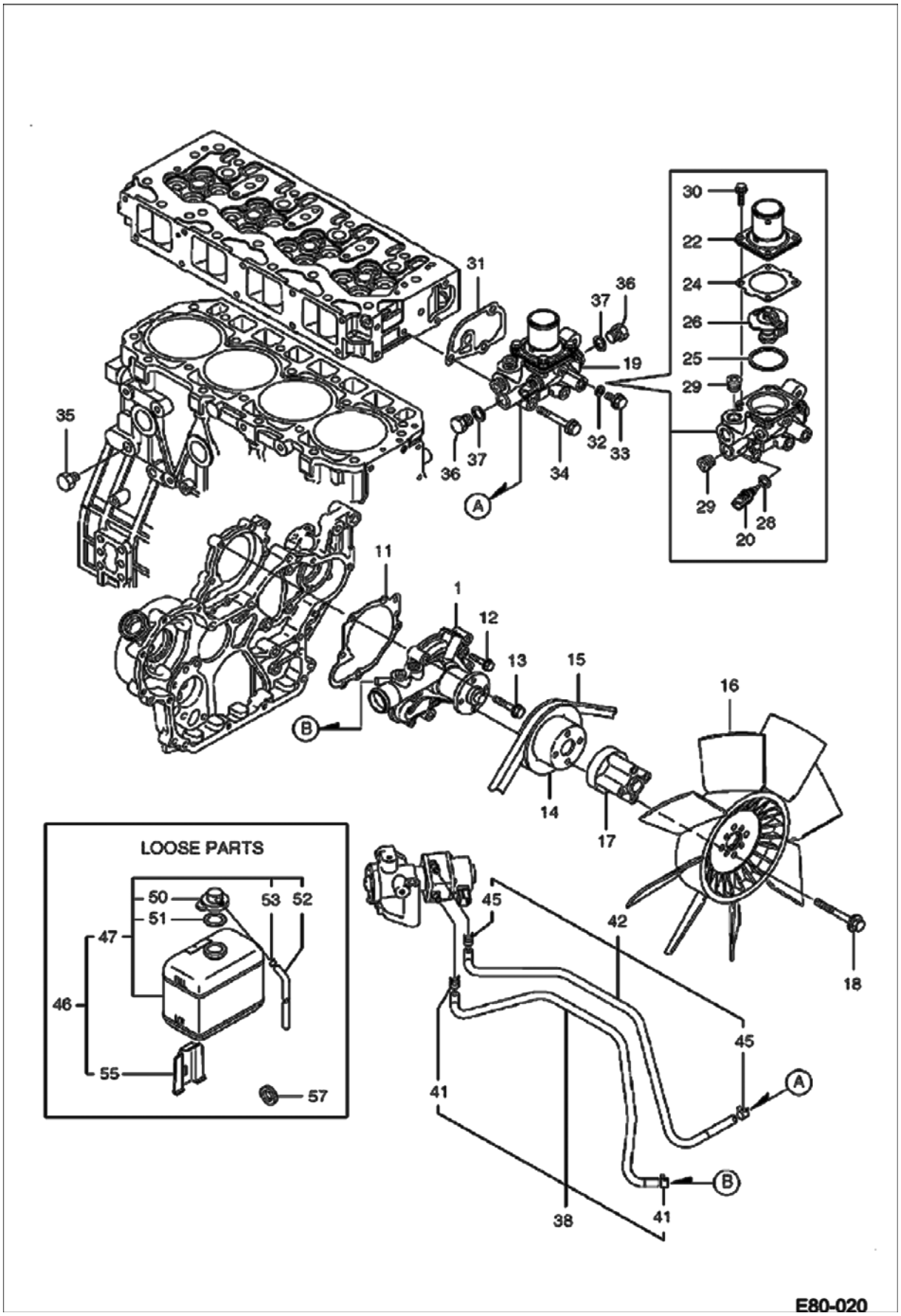




Page 364 - OSS# 2089524 - All rights reserved by Bobcat Company - 05/11/2012 - 06:30:39 - Produced by Ken Cook Co. with mediaioff

| Ref No | Part Number | Description | Remarks | Serial Number | Qty |
|---|---|---|---|---|---|
| 1 | 7007120 | PUMP WATER ASSY | | | 1 |
| 11 | 7004217 | GASKET | | | 1 |
| 12 | 7004078 | BOLT M6X30 | | | 2 |
| 13 | 7004096 | BOLT PLATED M8X55 | | | 5 |
| 14 | 7007047 | PULLEY WATER PUMP | | | 1 |
| 15 | 7004451 | BELT V | | | 1 |
| 16 | 7004449 | FAN COOLING | | | 1 |
| 17 | 7004013 | SPACER FAN | | | 1 |
| 18 | 7004094 | BOLT M8X80 | | | 4 |
| 19 | 7007245 | THERMOSTAT ASSY | W/Ref. 20-30 | | 1 |
| 20 | 7007121 | SENDER, TEMP ENG | | | 1 |
| 22 | 7007050 | COVER THERMOSTAT | | | 1 |
| 24 | 7010311 | GASKET, THERMOSTAT | Was 7004218 [A] | | 1 |
| 25 | 7005114 | GASKET THERMOSTAT | | | 1 |
| 26 | 7005078 | THERMOSTAT | | | 1 |
| 28 | | SEAL, WASHER | NSS | | 1 |
| 29 | 7004294 | PLUG PT8/3 STEEL | PT8/3 steel | | 2 |
| 30 | 7012805 | BOLT | Was 7004097 [D] | | 4 |
| 31 | 7004219 | GASKET HOUSING | | | 1 |
| 32 | 7004216 | GASKET ROUND | | | 1 |
| 33 | 7004093 | BOLT M8X12 | | | 1 |
| 34 | 7013268 | BOLT PLATED M8X60 | Was 7004098 [A] | | 3 |
| 35 | 7004298 | PLUG DRAIN | | | 1 |
| 36 | 7005077 | PLUG M16 | | | 2 |
| 37 | 7004215 | GASKET | | | 2 |
| 38 | 7007122 | TUBELINE ASSY | W/Ref. 41 | | 1 |
| 41 | 7007180 | CLIP | | | 2 |
| 42 | 7007123 | TUBELINE ASSY | W/Ref. 45 | | 1 |
| 45 | 7007180 | CLIP | | | 2 |
| 46 | 7007377 | TANK RESERVOIR SUB ASSY | W/Ref. 47-55 | | 1 |
| 47 | 7007331 | TANK ASSY RESERVE | W/Ref. 50-53 | | 1 |
| 50 | 7007378 | CAP | | | 1 |
| 51 | 7007379 | GASKET | | | 1 |
| 52 | 7007380 | TUBELINE | | | 1 |
| 53 | 7007381 | CLAMP | | | 1 |
| 55 | 7007332 | BRACKET | | | 1 |
| 57 | 7003942 | GASKET | | | 1 |
| 58 | | VALVE EGR | See Illustration MANIFOLD/ EM6398 - Ref. 20 | | 1 |

Page 365 - OSS# 2089524 - All rights reserved by Bobcat Company - 05/11/2012 - 06:30:39 - Produced by Ken Cook Co. with mediaioff

# MANIFOLD
# (Intake)

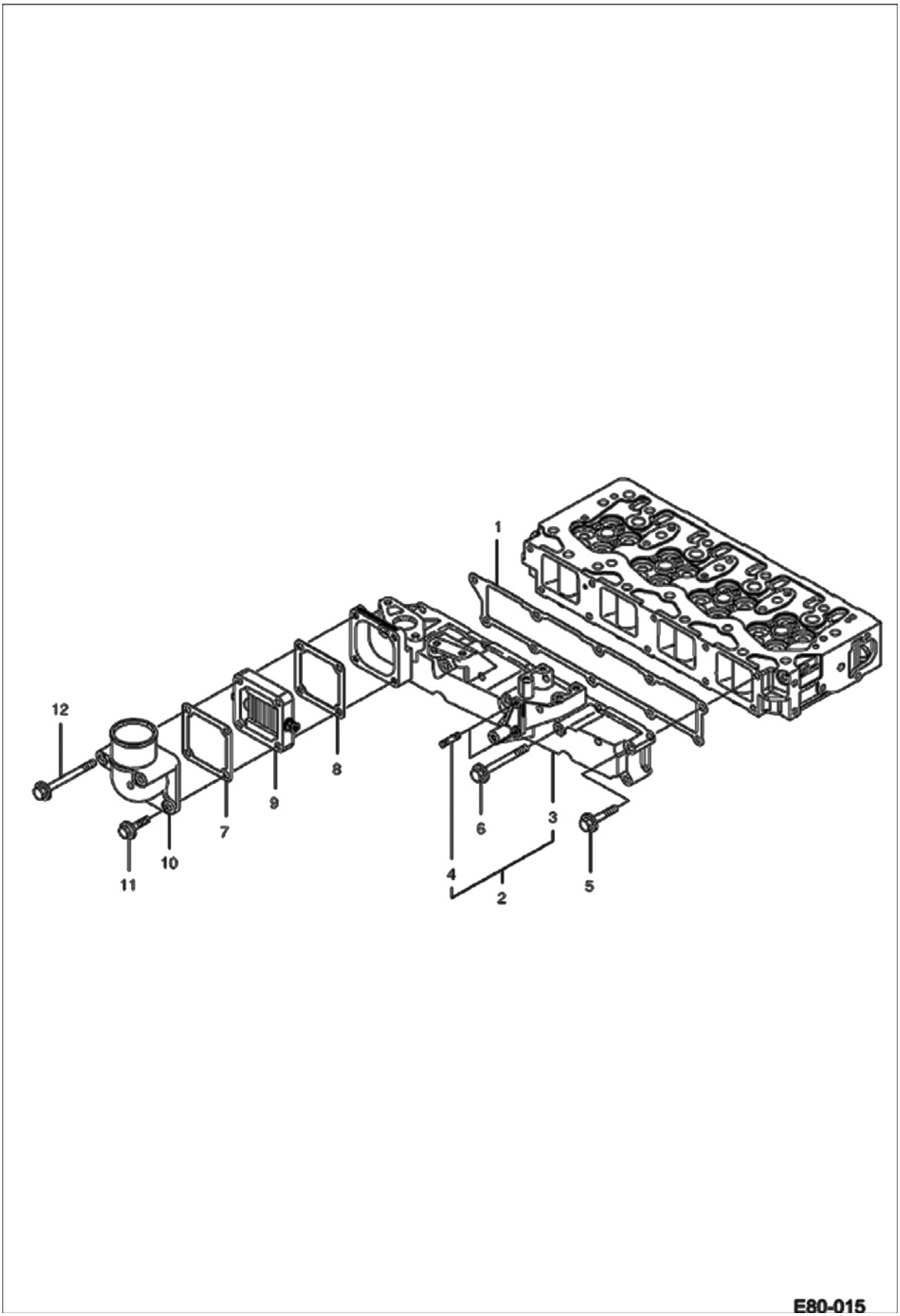




Page 366 - OSS# 2089524 - All rights reserved by Bobcat Company - 05/11/2012 - 06:30:39 - Produced by Ken Cook Co. with mediaioff

## MANIFOLD (Cont'd)
## (Intake)

| Ref No | Part Number | Description | Remarks | Serial Number | Qty |
|---|---|---|---|---|---|
| 1 | 7005066 | SEAL INTAKE MANIFOLD | | | 1 |
| 2 | 7007109 | MANIFOLD INTAKE ASSY | W/Ref. 3- 4 | | 1 |
| 3 | 7007108 | MANIFOLD INTAKE | | | 1 |
| 4 | 7004336 | BOLT STUD | | | 2 |
| 5 | 7004080 | BOLT PLATED M8X45 | | | 6 |
| 6 | 7004094 | BOLT M8X80 | | | 4 |
| 7 | 7005110 | GASKET | | | 1 |
| 8 | 7005111 | GASKET | | | 1 |
| 9 | 7005112 | HEATER AIR | | | 1 |
| 10 | 7007045 | TUBELINE AIR HEATER | | | 1 |
| 11 | 7004089 | BOLT PLATED M8X40 | | | 2 |
| 12 | 7007052 | BOLT | | | 2 |

Page 367 - OSS# 2089524 - All rights reserved by Bobcat Company - 05/11/2012 - 06:30:39 - Produced by Ken Cook Co. with mediaioff

# MANIFOLD
## (Exhaust)

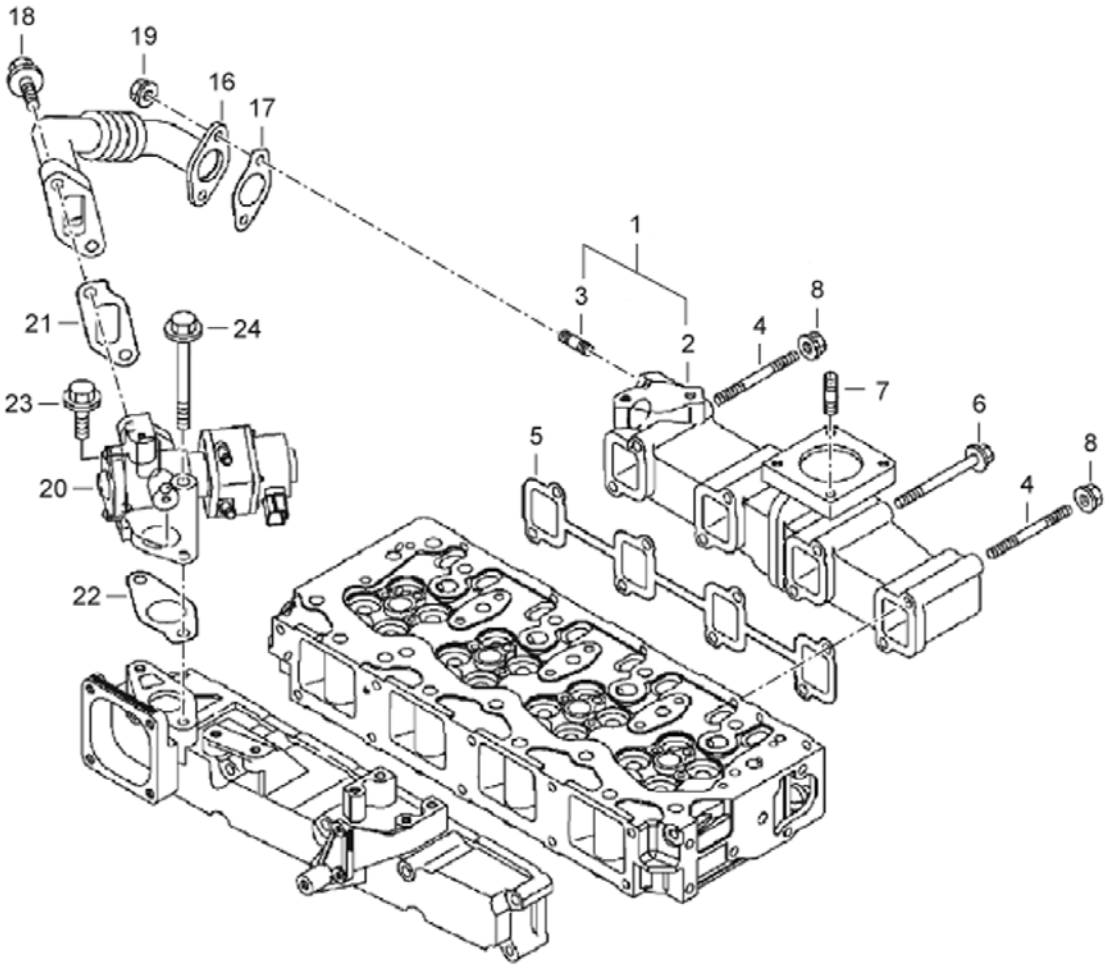


EM6398



Page 368 - OSS# 2089524 - All rights reserved by Bobcat Company - 05/11/2012 - 06:30:39 - Produced by Ken Cook Co. with mediaioff

## MANIFOLD (Cont'd)
## (Exhaust)

| Ref No | Part Number | Description | Remarks | Serial Number | Qty |
|---|---|---|---|---|---|
| 1 | 7007111 | MANIFOLD EXHAUST ASSY | W/Ref. 2-3 | | 1 |
| 2 | 7007110 | MANIFOLD EXHAUST | | | 1 |
| 3 | 7007101 | STUD BOLT M8X20 | | | 2 |
| 4 | 7007099 | BOLT STUD M8X100 | | | 2 |
| 5 | 7005067 | GASKET EXHAUST MAINFOLD | | | 1 |
| 6 | 7007092 | BOLT M8X90 | | | 6 |
| 7 | 7004095 | BOLT M8X22 | | | 4 |
| 8 | 7004561 | NUT | Was 7004160 [A] | | 2 |
| 16 | 7007112 | TUBELINE | | | 1 |
| 17 | 7007113 | GASKET EGR TUBELINE | | | 1 |
| 18 | 7007187 | BOLT M10X30 | | | 2 |
| 19 | 7004561 | NUT | Was 7004160 [A] | | 2 |
| 20 | 7007114 | VALVE EGR | | | 1 |
| 21 | 7007115 | GASKET EGR IN | | | 1 |
| 22 | 7007116 | GASKET EGR OUT | | | 1 |
| 23 | 7007187 | BOLT M10X30 | | | 1 |
| 24 | 7007188 | BOLT M10X95 | | | 1 |

Page 369 - OSS# 2089524 - All rights reserved by Bobcat Company - 05/11/2012 - 06:30:39 - Produced by Ken Cook Co. with mediaioff

# SPEED CONTROL PLATE

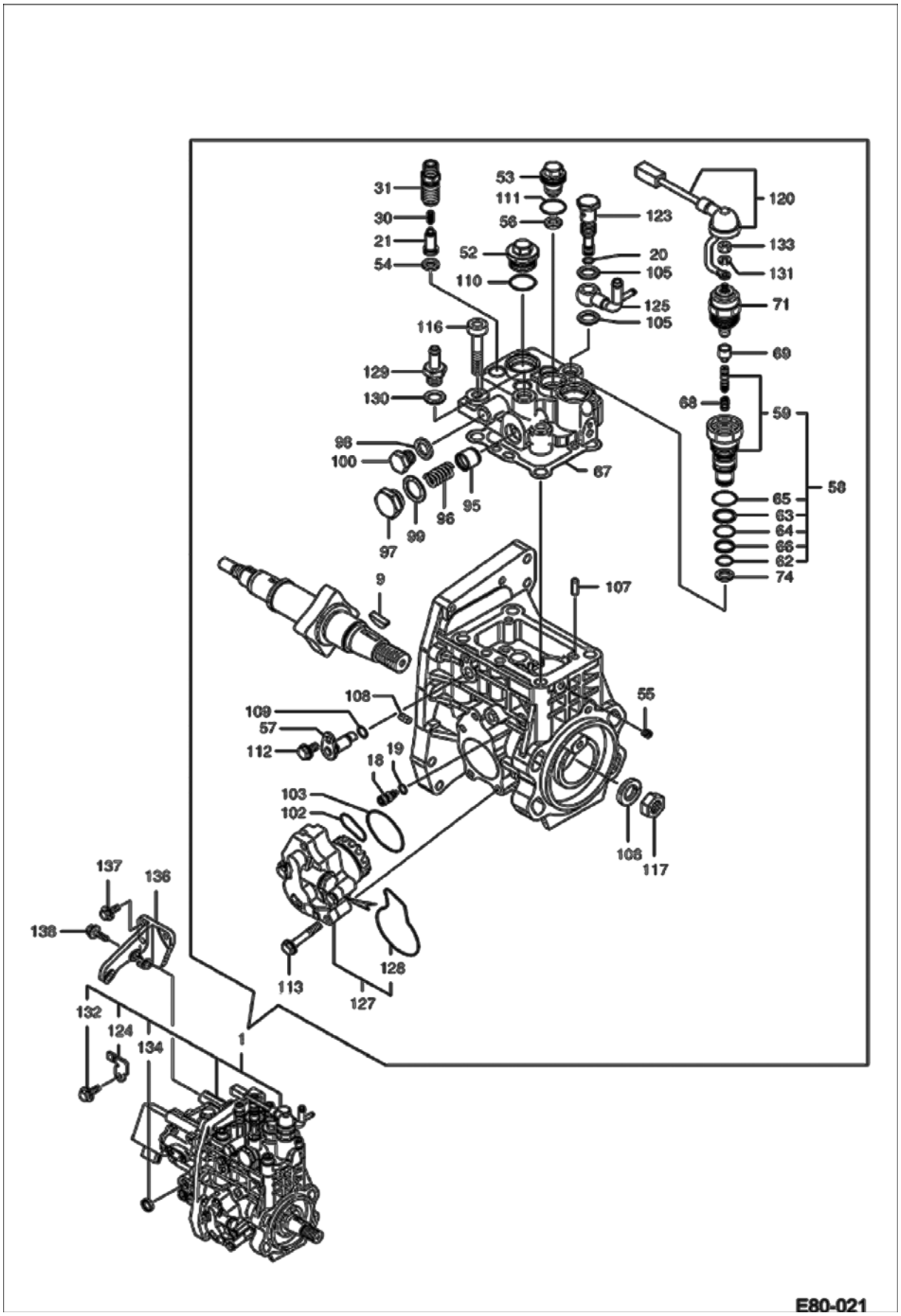




Page 370 - OSS# 2089524 - All rights reserved by Bobcat Company - 05/11/2012 - 06:30:39 - Produced by Ken Cook Co. with mediaIoff

## SPEED CONTROL PLATE (Cont'd)

| Ref No | Part Number | Description | Remarks | Serial Number | Qty |
|---|---|---|---|---|---|
| 1 | 7007198 | PUMP INJECTION ASSY | W/Ref. 9-134 | | 1 |
| 9 | | KEY | NSS Was 7007165 [D] | | 1 |
| 18 | | STOP | NSS Was 7006912 [D] | | 1 |
| 19 | | O-RING | NSS Was 7006910 [D] | | 1 |
| 20 | | O-RING | NSS Was 7006910 [D] | | 1 |
| 21 | | VALVE ASSY, DELIVERY | NSS Was 7007125 [D] | | 4 |
| 30 | | SPRING | NSS | | 4 |
| 31 | | HOLDER, DELIVERY | NSS | | 4 |
| 52 | | PLUG | NSS | | 1 |
| 53 | | PLUG | NSS | | 1 |
| 54 | | WASHER | NSS | | 4 |
| 55 | | PLUG | NSS | | 1 |
| 56 | | SEAL, PLUG | NSS | | 1 |
| 57 | | FILTER | NSS | | 1 |
| 58 | | TIMER, SET | NSS - W/Ref. 59-65 | | 1 |
| 59 | | TIMER ASSY | NSS - Order Ref. 58 | | 1 |
| 62 | | O-RING | NSS | | 1 |
| 63 | | RING, BACKUP | NSS | | 1 |
| 64 | | O-RING | NSS | | 1 |
| 65 | | SEAL | NSS | | 1 |
| 66 | | RING, BACKUP | NSS | | 1 |
| 67 | | SEAL, HEAD | NSS | | 1 |
| 68 | | SPRING, TIMER | NSS | | 1 |
| 69 | | CAP, TIMER | NSS | | 1 |
| 71 | | VALVE, SOLENOID | NSS | | 1 |
| 74 | | SEAL, TIMER | NSS | | 1 |
| 95 | | PISTON | NSS | | 1 |
| 96 | | SPRING | NSS | | 1 |
| 97 | | PLUG | NSS | | 1 |
| 98 | | SEAL, WASHER | NSS | | 1 |
| 99 | | SEAL, WASHER | NSS | | 1 |
| 100 | | PLUG | NSS | | 1 |
| 102 | | O-RING | NSS | | 1 |
| 103 | | O-RING | NSS | | 1 |
| 105 | | SEAL, WASHER | NSS | | 2 |
| 106 | | WASHER, SPRING | NSS | | 1 |
| 107 | | PIN, PARALLEL | NSS | | 2 |
| 108 | | PIN, PARALLEL | NSS Was 7006919 [D] | | 2 |
| 109 | | O-RING | NSS | | 1 |
| 110 | | SEAL | NSS | | 1 |
| 111 | | O-RING | NSS | | 1 |
| 112 | | BOLT | NSS | | 1 |
| 113 | | BOLT | NSS | | 4 |
| 116 | | BOLT | NSS | | 4 |
| 117 | | NUT, LOCK | NSS | | 1 |
| 120 | | HARNESS | NSS | | 1 |
| 123 | | COUPLER, JOINT | NSS | | 1 |
| 124 | | BRACKET | NSS | | 1 |
| 125 | | COUPLER, JOINT | NSS | | 1 |
| 127 | | PUMP ASSY, FUEL FEED | NSS | | 1 |
| 128 | | O-RING | NSS | | 1 |



Page 371 - OSS# 2089524 - All rights reserved by Bobcat Company - 05/11/2012 - 06:30:39 - Produced by Ken Cook Co. with mediaioff

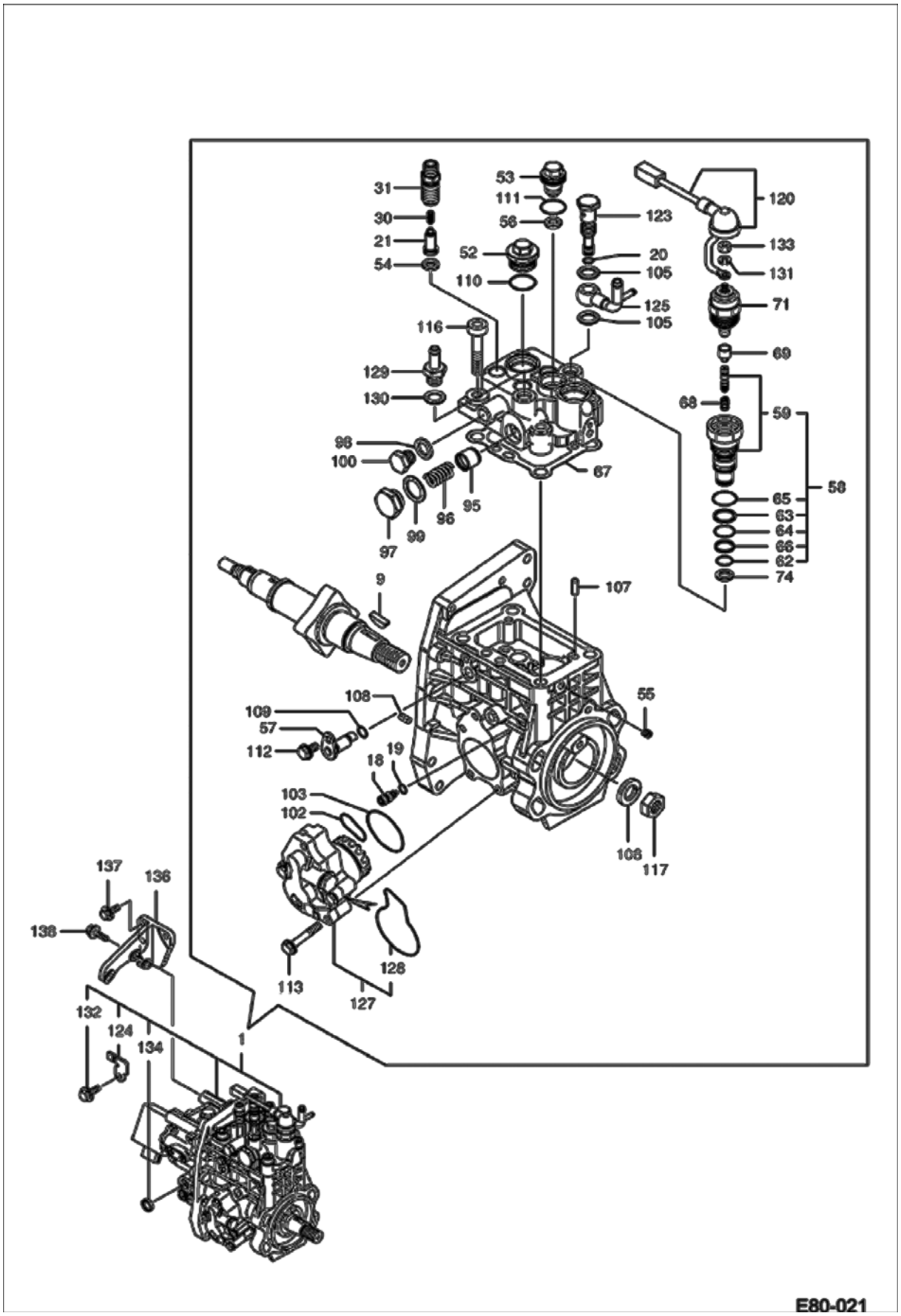




Page 372 - OSS# 2089524 - All rights reserved by Bobcat Company - 05/11/2012 - 06:30:39 - Produced by Ken Cook Co. with mediaIoff

| Ref No | Part Number | Description | Remarks | Serial Number | Qty |
|---|---|---|---|---|---|
| 129 | | COUPLER JOINT, TUBELINE | NSS | | 1 |
| 130 | | SEAL, WASHER | NSS | | 1 |
| 131 | | WASHER | NSS | | 1 |
| 132 | | BOLT | NSS | | 1 |
| 133 | | NUT | NSS | | 1 |
| 134 | | PLUG | NSS | | 1 |
| 136 | 7007124 | BRACKET | | | 1 |
| 137 | 7004087 | BOLT PLATED M8X20 | | | 3 |
| 138 | 7004088 | BOLT M8X30 | | | 3 |

Page 373 - OSS# 2089524 - All rights reserved by Bobcat Company - 05/11/2012 - 06:30:39 - Produced by Ken Cook Co. with mediaioff

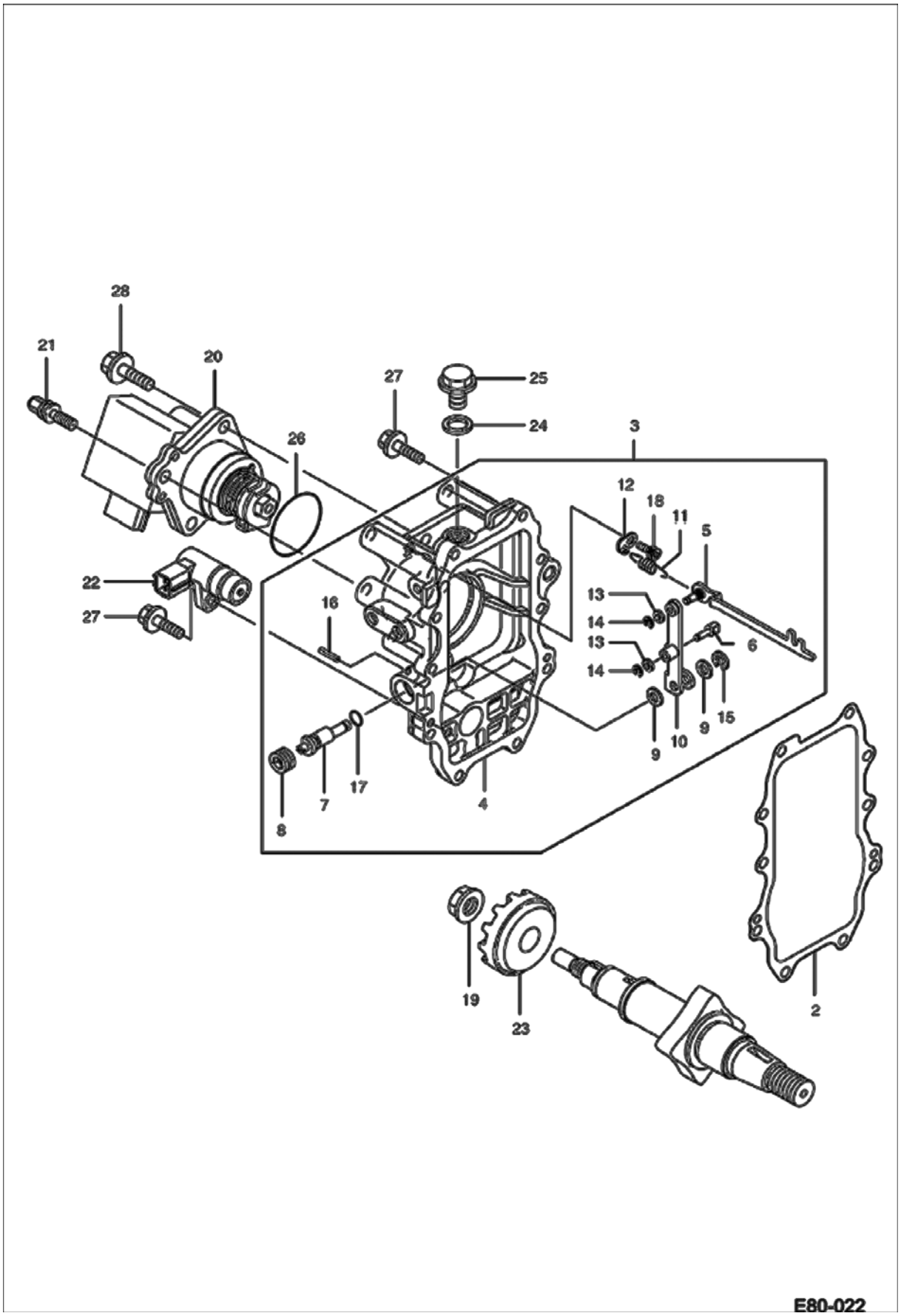




Page 374 - OSS# 2089524 - All rights reserved by Bobcat Company - 05/11/2012 - 06:30:39 - Produced by Ken Cook Co. with mediaIoff

| Ref No | Part Number | Description | Remarks | Serial Number | Qty |
|---|---|---|---|---|---|
| 2 | 7006844 | SEAL HOUSING | | | 1 |
| 3 | 7007137 | GOVERNOR HOUSING ASSY | W/Ref. 4-18 | | 1 |
| 4 | 7007136 | HOUSING GOVERNOR | | | 1 |
| 5 | 7007138 | LINK | | | 1 |
| 6 | 7007144 | PIN | | | 1 |
| 7 | 7007168 | SHAFT | | | 1 |
| 8 | 7007169 | BOLT | | | 1 |
| 9 | 7007170 | SPACER LEVER | | | 2 |
| 10 | 7007139 | LEVER GOVERNOR | | | 1 |
| 11 | 7007171 | SPRING | | | 1 |
| 12 | 7007172 | BRACKET | | | 1 |
| 13 | 7004020 | WASHER | | | 2 |
| 14 | 7007177 | CLIP CIRCLIP | | | 2 |
| 15 | 7004183 | CLIP CIRCLIP | | | 1 |
| 16 | 7007178 | PIN | | | 1 |
| 17 | 7007182 | ORING | | | 1 |
| 18 | 7007189 | BOLT M 5X10 | | | 1 |
| 19 | 7004149 | NUT | | | 1 |
| 20 | 7007140 | ACTUATOR | | | 1 |
| 21 | 7007141 | BOLT | | | 1 |
| 22 | 7007173 | SENSOR | | | 1 |
| 23 | 7007167 | GEAR SENSOR | | | 1 |
| 24 | 7007181 | GASKET | | | 1 |
| 25 | | PLUG | NSS | | 1 |
| 26 | 7007183 | ORING | | | 1 |
| 27 | 7006845 | BOLT M6X25 PLATED | | | 10 |
| 28 | 7006923 | BOLT M8X25 | | | 3 |

Page 375 - OSS# 2089524 - All rights reserved by Bobcat Company - 05/11/2012 - 06:30:39 - Produced by Ken Cook Co. with mediaioff

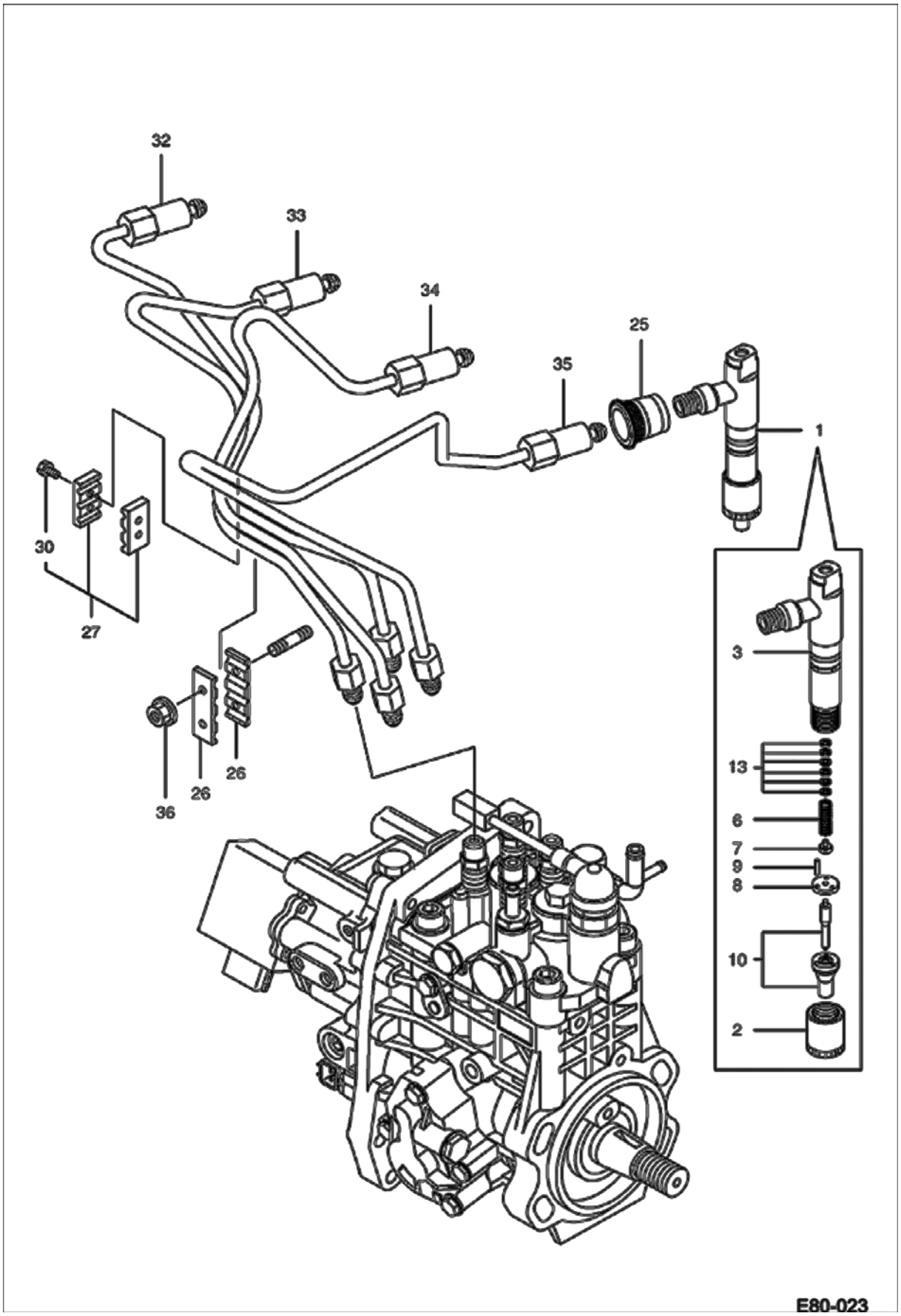




Page 376 - OSS# 2089524 - All rights reserved by Bobcat Company - 05/11/2012 - 06:30:39 - Produced by Ken Cook Co. with mediaioff

| Ref No | Part Number | Description | Remarks | Serial Number | Qty |
|---|---|---|---|---|---|
| 1 | 7007196 | INJECTOR ASSYFUEL | W/Ref. 2-13 | | 4 |
| 2 | 7004147 | NUT | | | 4 |
| 3 | 7007129 | NOZZLE HOLDER ASSY | | | 4 |
| 6 | 7004195 | SPRING | | | 4 |
| 7 | 7004408 | SEAT | | | 4 |
| 8 | 7004384 | PLATE STOP | | | 4 |
| 9 | 7004164 | PIN | | | 8 |
| 10 | 7007130 | NOZZLE ASSY | | | 4 |
| 13 | 7013266 | SHIM ASSY | Was 7004227 [A] | | 4 |
| 25 | 7004277 | SEAL TUBELINE | | | 4 |
| 26 | 7007097 | BRACKET | | | 2 |
| 27 | 7006898 | CLAMP TUBELINE | | | 1 |
| 30 | 7004081 | BOLT M4X14 | | | 2 |
| 32 | 7007132 | TUBELINE INJECTION ASSY | | | 1 |
| 33 | 7007133 | TUBELINE INJECTION ASSY | | | 1 |
| 34 | 7007134 | TUBELINE INJECTION ASSY | | | 1 |
| 35 | 7007135 | TUBELINE INJECTION ASSY | | | 1 |
| 36 | 7004148 | NUT M6 | | | 2 |

Page 377 - OSS# 2089524 - All rights reserved by Bobcat Company - 05/11/2012 - 06:30:39 - Produced by Ken Cook Co. with mediaioff

# FUEL SYSTEM
## (Pump & Filters)

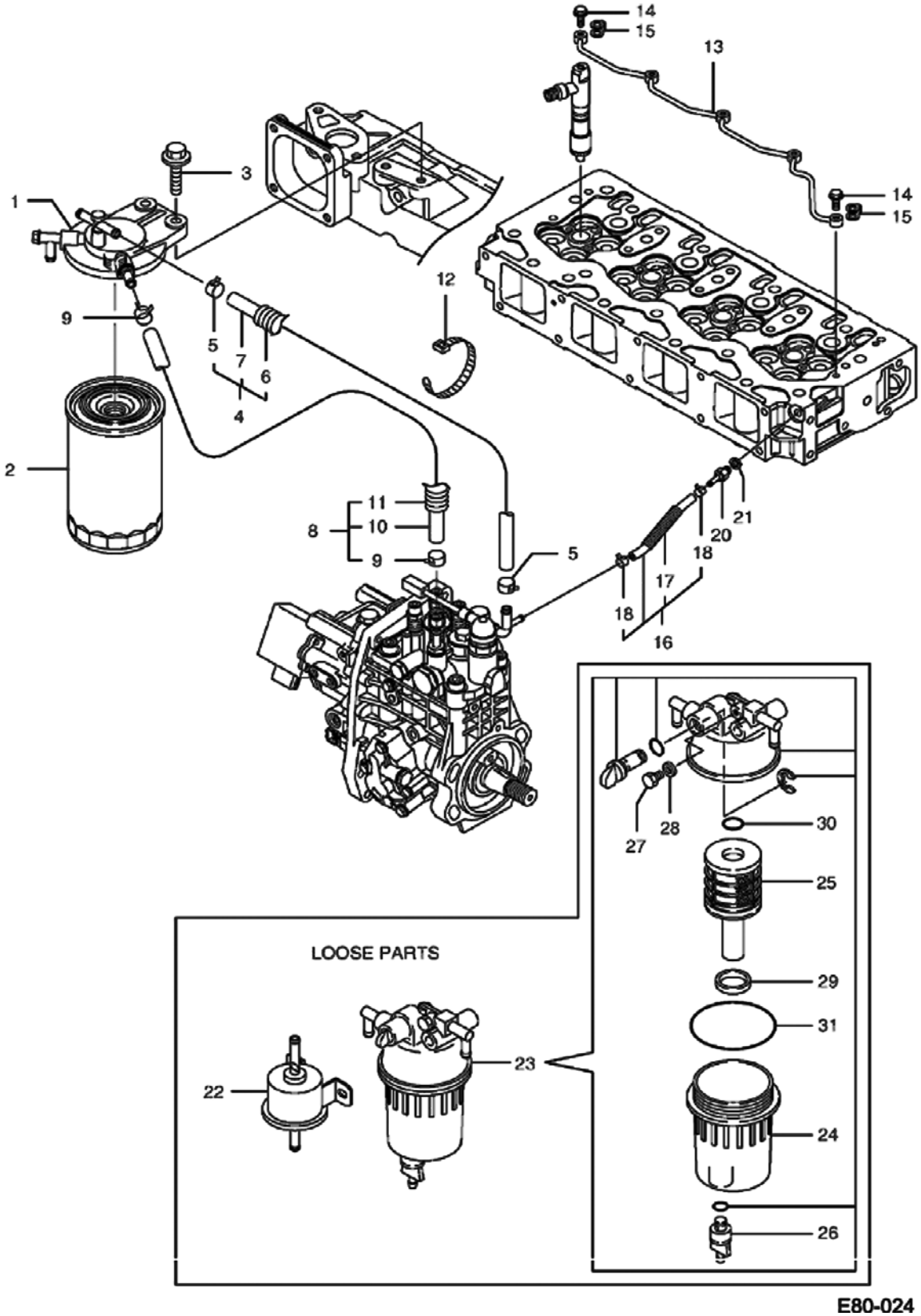


E80-024



Page 378 - OSS# 2089524 - All rights reserved by Bobcat Company - 05/11/2012 - 06:30:39 - Produced by Ken Cook Co. with mediaioff

# FUEL SYSTEM (Cont'd)
## (Pump & Filters)

| Ref No | Part Number | Description | Remarks | Serial Number | Qty |
|---|---|---|---|---|---|
| 1 | 7006897 | BRACKET | | | 1 |
| 2 | 7010351 | FILTER, FUEL | Was 7006269 [D] | | 1 |
| 3 | 7004088 | BOLT M8X30 | | | 2 |
| 4 | 7004206 | TUBELINE FUEL ASSY | Ref. 5-7 | | 1 |
| 5 | 7004182 | CLAMP | | | 2 |
| 6 | 7004211 | GUARD FUEL TUBELINE | | | 1 |
| 7 | 7005108 | TUBELINE FUEL | | | 1 |
| 8 | 7007164 | TUBELINE ASSY FUEL | Ref. 9-11 | | 1 |
| 9 | 7004182 | CLAMP | | | 2 |
| 10 | 7007098 | TUBELINE FUEL | | | 1 |
| 11 | 7004312 | TUBELINE | | | 1 |
| 12 | 7005079 | CLAMP | | | 1 |
| 13 | 7004207 | TUBELINE ASSY RETURN | | | 1 |
| 14 | 7004334 | BOLT | | | 5 |
| 15 | 7004278 | SEAL | | | 5 |
| 16 | 7007131 | TUBELINE FUEL RETURN | Ref. 17 & 18 | | 1 |
| 17 | 7007100 | TUBELINE | | | 1 |
| 18 | 7004186 | CLAMP | | | 2 |
| 20 | 7004335 | HOSE | | | 1 |
| 21 | 7004019 | WASHER SEAL | | | 1 |
| 22 | 7006899 | PUMP FUEL FEED | | | 1 |
| 23 | 7007241 | DISTRIBUTOR ASSY | Ref. 24-31 | | 1 |
| 24 | 7007242 | CUP ASSY | | | 1 |
| 25 | 7013148 | FILTER | Was 7005081 [A] | | 1 |
| 26 | 7005082 | PLUG DRAIN | | | 1 |
| 27 | 7005083 | PLUG BREATHER | | | 1 |
| 28 | 7005084 | SEAL BREATHER | | | 1 |
| 29 | 7005085 | SEAL SPACER | | | 1 |
| 30 | 7007910 | ORING | | | 1 |
| 31 | 7005086 | ORING | | | 1 |

Page 379 - OSS# 2089524 - All rights reserved by Bobcat Company - 05/11/2012 - 06:30:39 - Produced by Ken Cook Co. with mediaioff

# FUEL SYSTEM
## (Hoses)

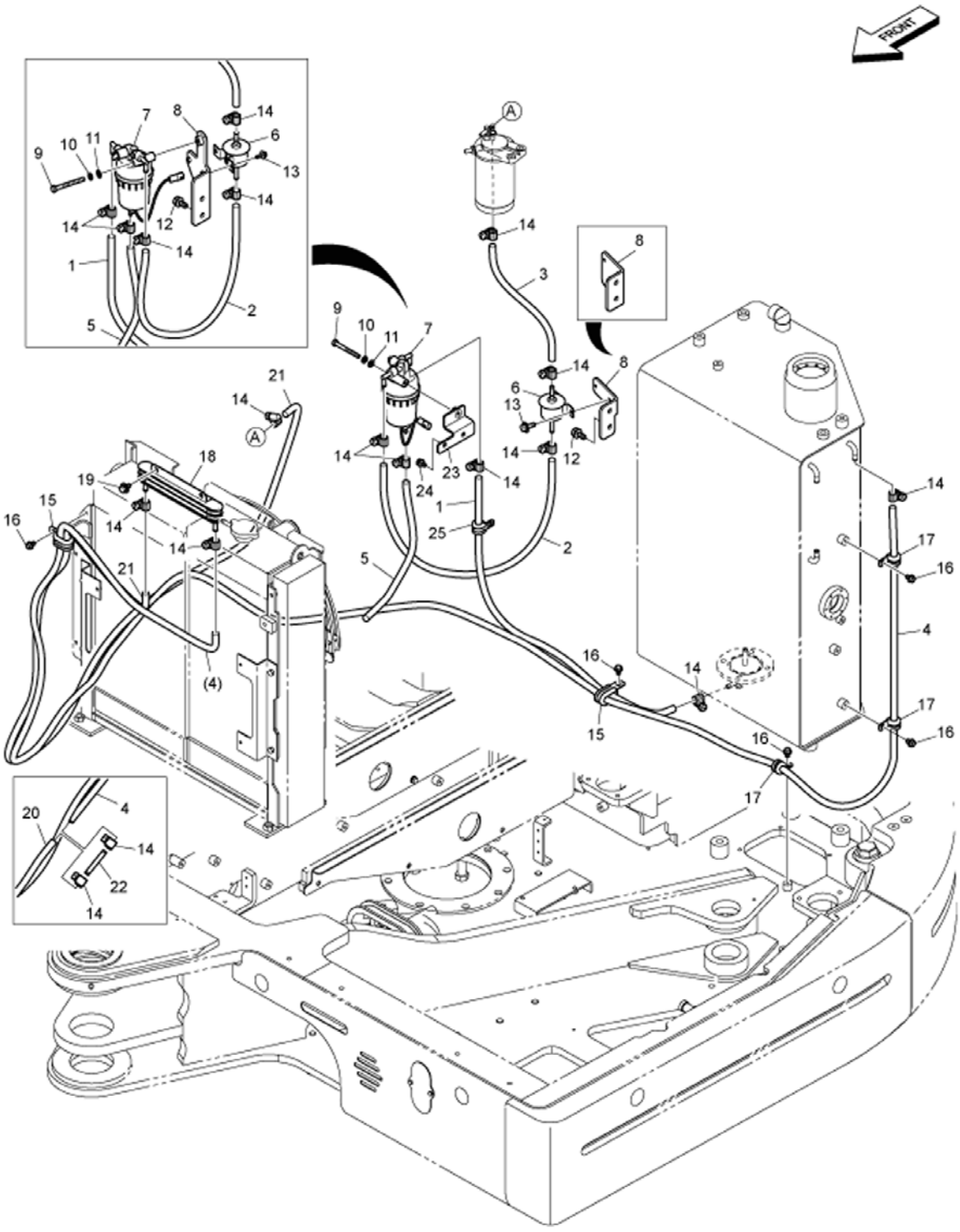




Page 380 - OSS# 2089524 - All rights reserved by Bobcat Company - 05/11/2012 - 06:30:39 - Produced by Ken Cook Co. with mediaIoff

# FUEL SYSTEM (Cont'd)
## (Hoses)

| Ref No | Part Number | Description | Remarks | Serial Number | Qty |
|---|---|---|---|---|---|
| 1 | 7005528 | HOSE FUEL | | | 1 |
| 2 | 7005535 | HOSE FUEL | | | 1 |
| 3 | 7005537 | HOSE FUEL | | | 1 |
| 4 | 7005539 | HOSE | | AET311001 - 11191 | 1 |
| 4 | 7005539 | HOSE | | AETB11001 - 11191 | 1 |
| 4 | 7017378 | HOSE, FUEL | | AET311192 & Above | 1 |
| 4 | 7017378 | HOSE, FUEL | | AETB11192 & Above | 1 |
| 5 | 7005533 | HOSE FUEL | | | 1 |
| 6 | 7006899 | PUMP FUEL FEED | | | 1 |
| 7 | 7007241 | DISTRIBUTOR ASSY | | | 1 |
| 8 | 7006398 | BRACKET | | AET311001 - 11051 | 1 |
| 8 | 7006398 | BRACKET | | AETB11001 - 11051 | 1 |
| 8 | 7012744 | BRACKET | | AET311052 - 11191 | 1 |
| 8 | 7012744 | BRACKET | | AETB11052 - 11191 | 1 |
| 8 | 7017379 | BRACKET | | AET311052 & Above | 1 |
| 8 | 7017379 | BRACKET | | AETB11052 & Above | 1 |
| 9 | 7007665 | BOLT | | | 1 |
| 10 | 7007834 | WASHER SPRING | | | 1 |
| 11 | 7007816 | WASHER | | | 1 |
| 12 | 7005138 | BOLT M10X1.5X25 | | | 2 |
| 13 | 7005139 | BOLT M6X1.0X20 | | | 2 |
| 14 | 7007973 | CLAMP | | AET311001 - 11191 | 13 |
| 14 | 7007973 | CLAMP | | AETB11001 - 11191 | 13 |
| 14 | 7007973 | CLAMP | | AET311192 & Above | 11 |
| 14 | 7007973 | CLAMP | | AETB11192 & Above | 11 |
| 15 | 7003902 | CLIP | | | 2 |
| 16 | 7005629 | BOLT | | | 4 |
| 17 | 7003894 | CLIP | | | 3 |
| 18 | 7007334 | EXCHANGER COOLER FUEL | | | 1 |
| 19 | 7005129 | BOLT SET | | | 2 |
| 20 | 7005538 | HOSE | | AET311001 - 11191 | 1 |
| 20 | 7005538 | HOSE | | AETB11001 - 11191 | 1 |
| 21 | 7005529 | HOSE FUEL | | | 1 |
| 22 | 7005668 | TUBELINE | | AET311001 - 11191 | 1 |
| 22 | 7005668 | TUBELINE | | AETB11001 - | 1 |



Page 381 - OSS# 2089524 - All rights reserved by Bobcat Company - 05/11/2012 - 06:30:39 - Produced by Ken Cook Co. with mediaioff

# FUEL SYSTEM (Cont'd)
## (Hoses)

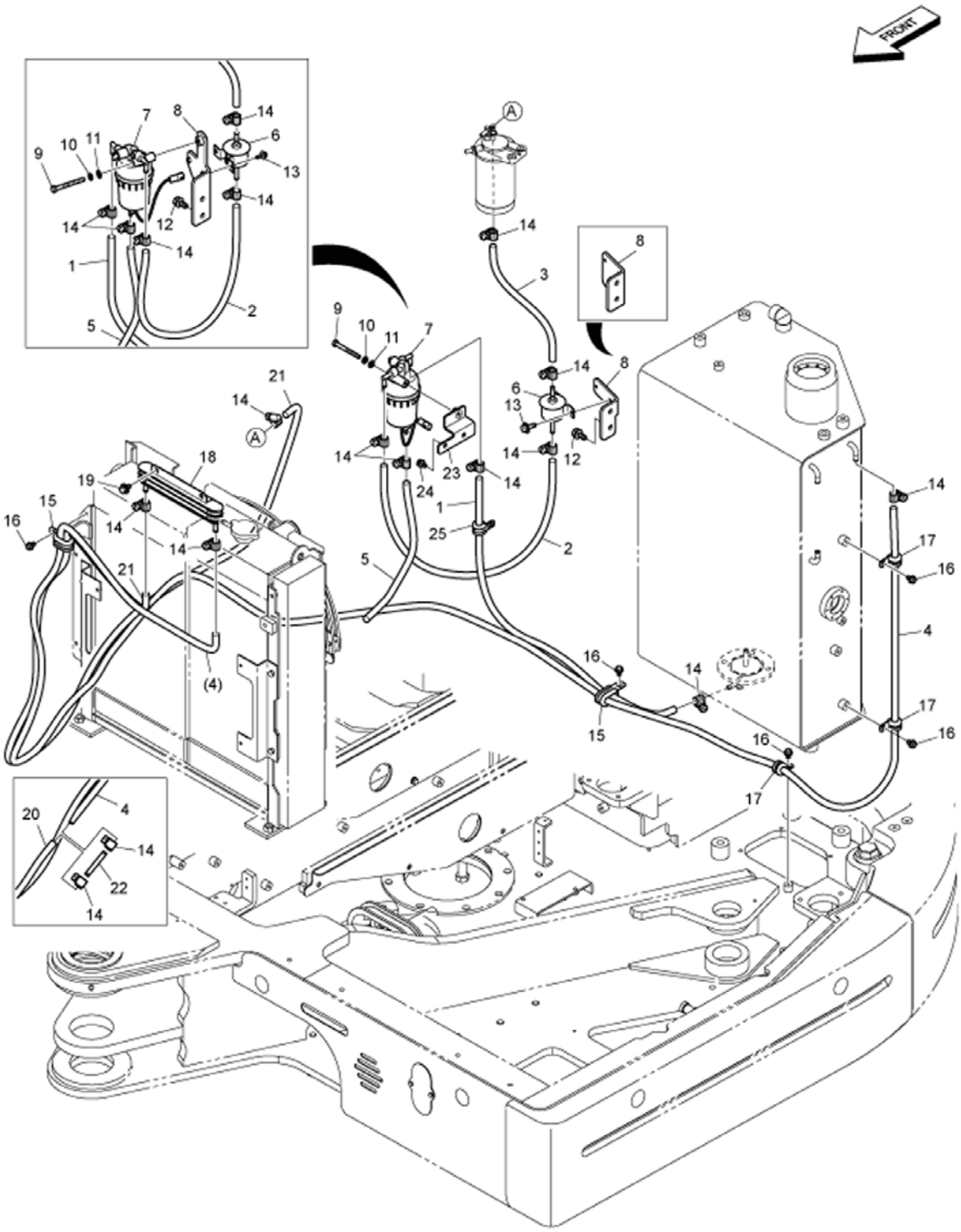




Page 382 - OSS# 2089524 - All rights reserved by Bobcat Company - 05/11/2012 - 06:30:39 - Produced by Ken Cook Co. with mediaIoff

| Ref No | Part Number | Description | Remarks | Serial Number | Qty |
|---|---|---|---|---|---|
| | | | | 11191 | |
| 23 | 7012745 | BRACKET | | AET311052 & Above | 1 |
| 23 | 7012745 | BRACKET | | AETB11052 & Above | 1 |
| 24 | 7005135 | BOLT | | AET311052 & Above | 2 |
| 24 | 7005135 | BOLT | | AETB11052 & Above | 2 |
| 25 | 7003893 | CLIP | | AET311192 & Above | 1 |
| 25 | 7003893 | CLIP | | AETB11192 & Above | 1 |

Page 383 - OSS# 2089524 - All rights reserved by Bobcat Company - 05/11/2012 - 06:30:39 - Produced by Ken Cook Co. with mediaioff

# FUEL SYSTEM
## (Tank)

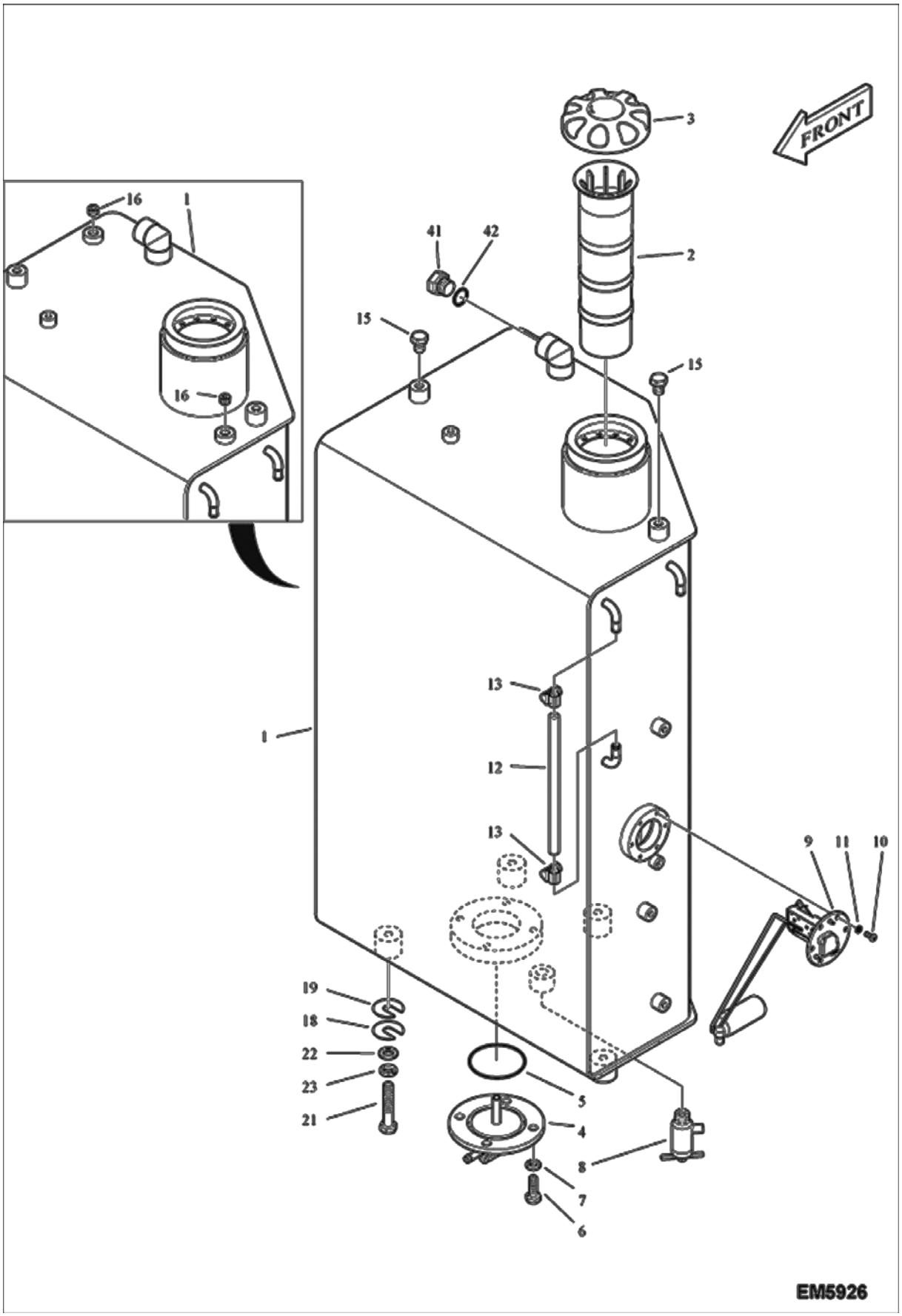




Page 384 - OSS# 2089524 - All rights reserved by Bobcat Company - 05/11/2012 - 06:30:39 - Produced by Ken Cook Co. with mediaioff

## FUEL SYSTEM (Cont'd)
## (Tank)

| Ref No | Part Number | Description | Remarks | Serial Number | Qty |
|---|---|---|---|---|---|
| 1 | 7012252 | TANK,FUEL | Was 7008198 [A] | | 1 |
| 2 | 7004995 | FILTER FUEL STRAINER | | | 1 |
| 3 | 7005641 | CAP FUEL | | | 1 |
| 4 | 7006086 | COVER | | | 1 |
| 5 | 7004635 | ORING | | | 1 |
| 6 | 7007628 | BOLT | | | 4 |
| 7 | 7007835 | WASHER SPRING | | | 4 |
| 8 | 7004801 | FITTING COCK | | | 1 |
| 9 | 7006320 | SENSOR FUEL | | | 1 |
| 10 | 7007780 | BOLT M5X0.8X12 | | | 6 |
| 11 | 7007827 | WASHER SPRING | | | 6 |
| 12 | 7006236 | HOSE FUEL LEVEL | | | 1 |
| 13 | 7007973 | CLAMP | | | 2 |
| 15 | 7007635 | BOLT M12X1.75X16 | | | 2 |
| 16 | 7004673 | PLUG | use W/Ref. 7008198 tank | | 2 |
| 18 | 7003859 | SHIM | | | 6 |
| 19 | 7006522 | SHIM | | | 6 |
| 21 | 7007687 | BOLT | | | 4 |
| 22 | 7007819 | WASHER PLAIN | | | 4 |
| 23 | 7007836 | WASHER SPRING M12 | | | 4 |
| 41 | 7004736 | PLUG | | | 1 |
| 42 | 7007911 | ORING | | | 1 |

Page 385 - OSS# 2089524 - All rights reserved by Bobcat Company - 05/11/2012 - 06:30:39 - Produced by Ken Cook Co. with mediaioff

# FUEL TRANSFER PUMP & CHECK VALVE
## (Filler Pump)

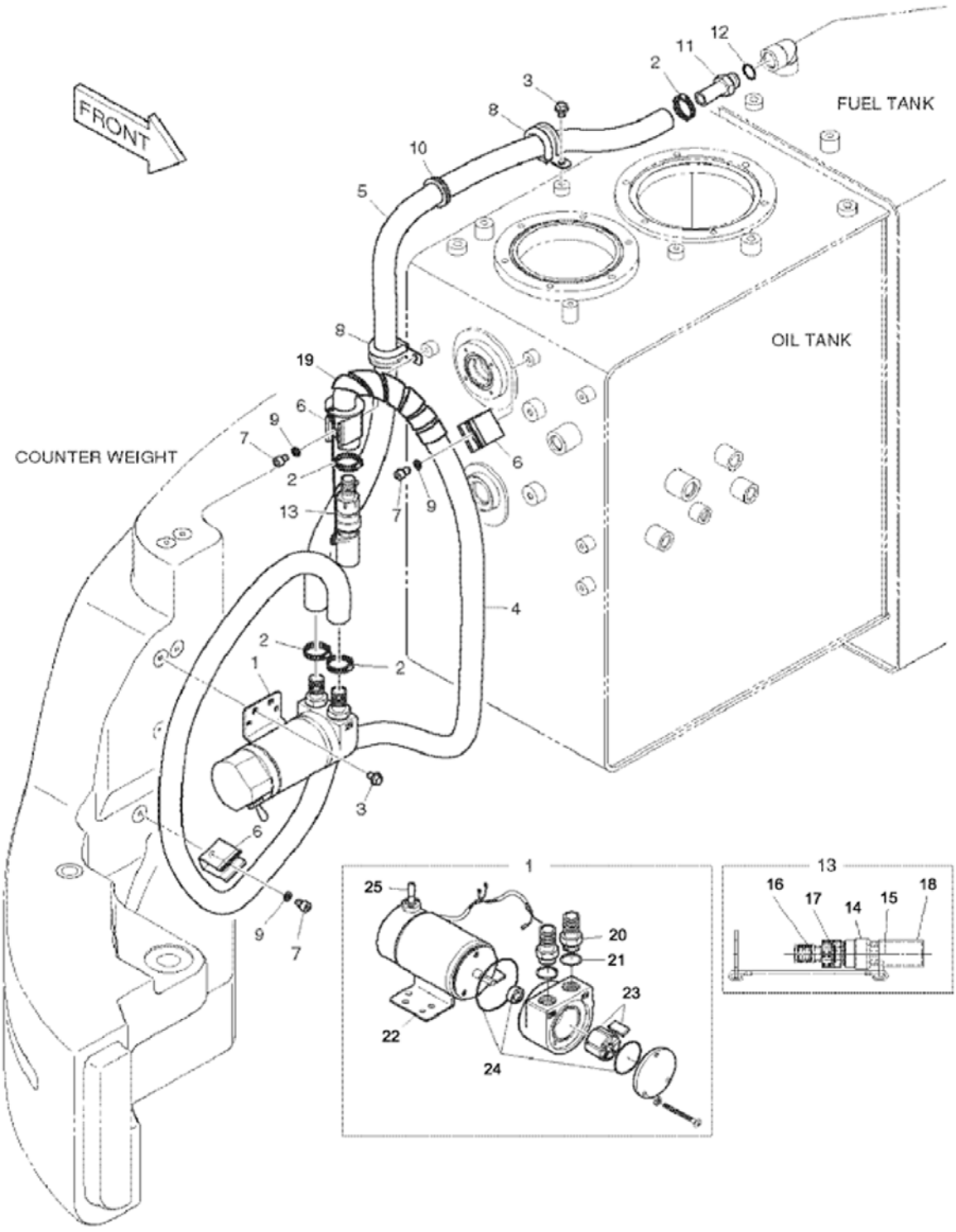


E80-6100



Page 386 - OSS# 2089524 - All rights reserved by Bobcat Company - 05/11/2012 - 06:30:39 - Produced by Ken Cook Co. with mediaIoff

## FUEL TRANSFER PUMP & CHECK VALVE (Cont'd)
## (Filler Pump)

| Ref No | Part Number | Description | Remarks | Serial Number | Qty |
|---|---|---|---|---|---|
| 1 | 7006285 | PUMP FUEL FILLER | W/Ref. 20-25 | | 1 |
| 2 | 7008303 | CLAMP, HOSE | | | 4 |
| 3 | 7005629 | BOLT | | | 1 |
| 4 | 7008266 | HOSE, FUEL | | | 1 |
| 5 | 7006756 | HOSE FUEL | | | 1 |
| 6 | 7006747 | CLAMP | | | 3 |
| 7 | 7007732 | BOLT SOCKET | | | 3 |
| 8 | 7003897 | CLIP | | | 2 |
| 9 | 7007842 | WASHER SPRING | | | 3 |
| 10 | 7004609 | BUSHING RUBBER | | | 1 |
| 11 | 7004748 | ADAPTER | | | 1 |
| 12 | 7007911 | ORING | | | 1 |
| 13 | 7008276 | VALVE, CHECK | W/Ref. 14-18 | | 1 |
| 14 | 7004763 | ADAPTER | | | 1 |
| 15 | 7004860 | VALVE CHECK | | | 1 |
| 16 | 7004878 | FILTER STRAINER | | | 1 |
| 17 | 7007971 | SEAL RING | | | 1 |
| 18 | 7004621 | CAP STRAINER | | | 1 |
| 19 | 7008181 | GUARD, PROTECTOR SLEEVE | | | 1 |
| 20 | 7004763 | ADAPTER | | | 2 |
| 21 | 7007971 | SEAL RING | | | 2 |
| 22 | 7005007 | MOTOR FUEL TRANSFER | | | 1 |
| 23 | 7004967 | KIT VANE | | | 1 |
| 24 | 7004857 | KIT SEAL | | | 1 |
| 25 | 7008149 | SWITCH, TOGGLE | | | 1 |

Page 387 - OSS# 2089524 - All rights reserved by Bobcat Company - 05/11/2012 - 06:30:39 - Produced by Ken Cook Co. with mediaioff

# ARM KIT
## (Short)
## (EMEA)

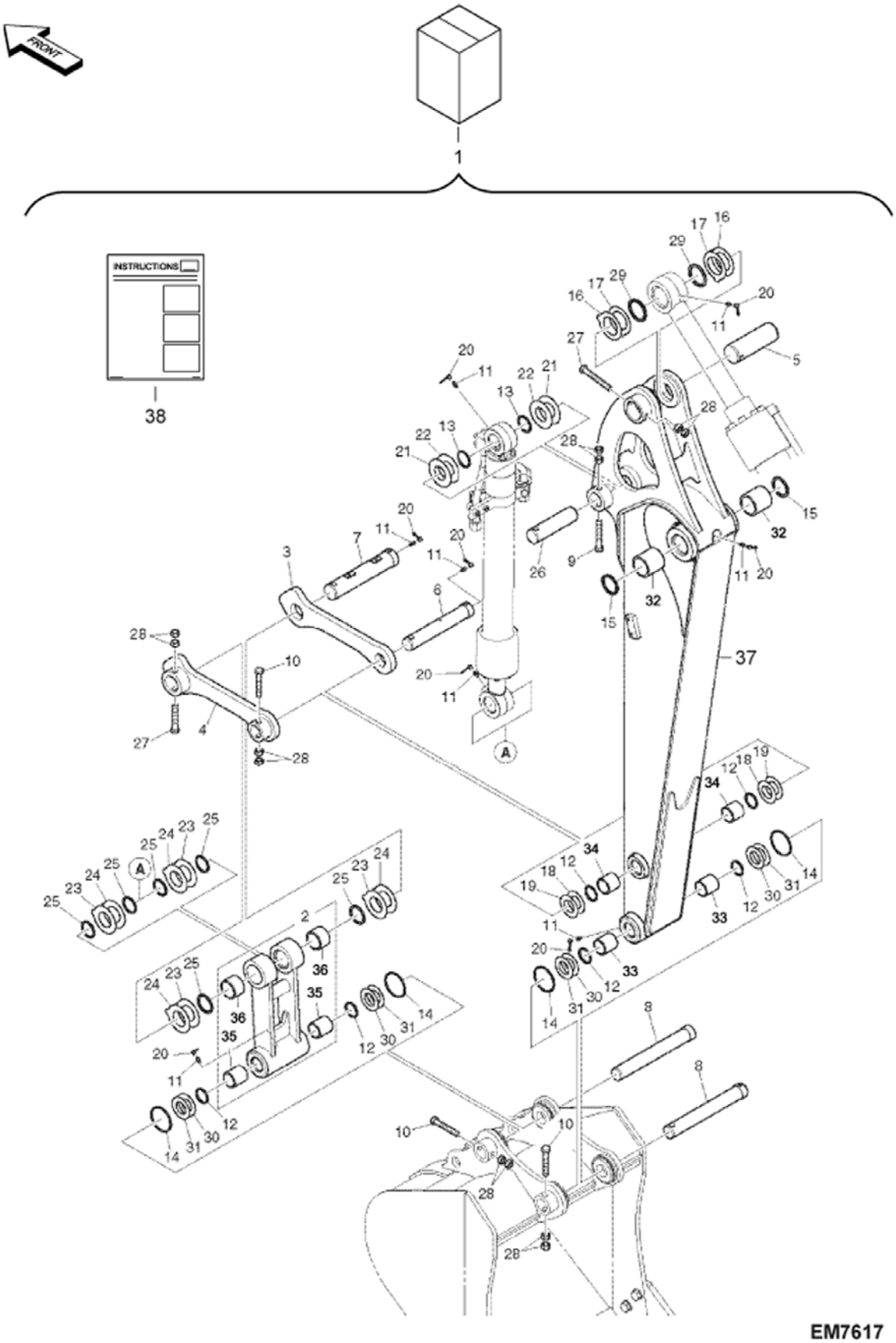




Page 388 - OSS# 2089524 - All rights reserved by Bobcat Company - 05/11/2012 - 06:30:39 - Produced by Ken Cook Co. with mediaIoff

## ARM KIT (Cont'd)
## (Short)
## (EMEA)

| Ref No | Part Number | Description | Remarks | Serial Number | Qty |
|---|---|---|---|---|---|
| 1 | 7178243 | KIT, ARM | short - W/Ref. 2-38 | | |
| 2 | 7006011 | LINK PUSH | W/Ref. 35-36 | | 1 |
| 3 | 7003919 | LINK GUIDE RH | | | 1 |
| 4 | 7003920 | LINK GUIDE LH | | | 1 |
| 5 | 7003887 | PIN | | | 1 |
| 6 | 7003889 | PIN | | | 1 |
| 7 | 7003888 | PIN | | | 1 |
| 8 | 7015653 | PIN;ARM/LINK TO BUCKET | Was 7004571 [A] | | 2 |
| 9 | 7007709 | BOLT | | | 1 |
| 10 | 7007708 | BOLT | | | 3 |
| 11 | 7010247 | FITTING, GREASE | Was 7007893 [D] | | 8 |
| 12 | 7004637 | SEAL DUST | | | 6 |
| 13 | 7004638 | SEAL DUST | | | 2 |
| 14 | 7003939 | ORING | | | 4 |
| 15 | 7004641 | SEAL DUST | | | 2 |
| 16 | 7005615 | SHIM 1.0T | 1,0 mm | | 2 |
| 17 | 7005616 | SHIM 1.6T | 1,6 mm | | 2 |
| 18 | 7005604 | SHIM 1.0T | 1,0 mm | | 2 |
| 19 | 7005605 | SHIM 1.6T | 1,6 mm | | 2 |
| 20 | 7003923 | CAP GREASE NIPPLE | | | 8 |
| 21 | 7005606 | SHIM 1.0T | 1,0 mm | | 2 |
| 22 | 7005607 | SHIM 1.6T | 1,6 mm | | 2 |
| 23 | 7005620 | SHIM 1.0T | 1,0 mm | | 4 |
| 24 | 7005621 | SHIM 1.6T | 1,6 mm | | 4 |
| 25 | 7004639 | SEAL DUST | | | 6 |
| 26 | 7006141 | PIN | | | 1 |
| 27 | 7007710 | BOLT | | | 2 |
| 28 | 7007801 | NUT M16X1.0 | | | 12 |
| 29 | 7004640 | SEAL DUST | | | 2 |
| 30 | 7004482 | SHIM | | | 4 |
| 31 | 7004483 | SHIM | | | 4 |
| 32 | 7006001 | BUSHING | | | 2 |
| 33 | 7006002 | BUSHING | | | 2 |
| 34 | 7005748 | BUSHING | | | 2 |
| 35 | 7006002 | BUSHING | | | 2 |
| 36 | 7006003 | BUSHING | | | 2 |
| 37 | 7015638 | ARM,MACHINE;THUMB(1.7M) | W/Ref. 32-34 Was 7010542 [A] | | 1 |
| 37 | 7015657 | ARM 1.7M | 1.7m - W/Ref. 32-34 | | 1 |
| 37 | 7015638 | ARM,MACHINE;THUMB(1.7M) | Optional - W/Ref. 32-34 | | 1 |
| 38 | 6987383 | INSTRUCTIONS | | | 1 |

Page 389 - OSS# 2089524 - All rights reserved by Bobcat Company - 05/11/2012 - 06:30:39 - Produced by Ken Cook Co. with mediaioff

# ARM KIT
# (Long)

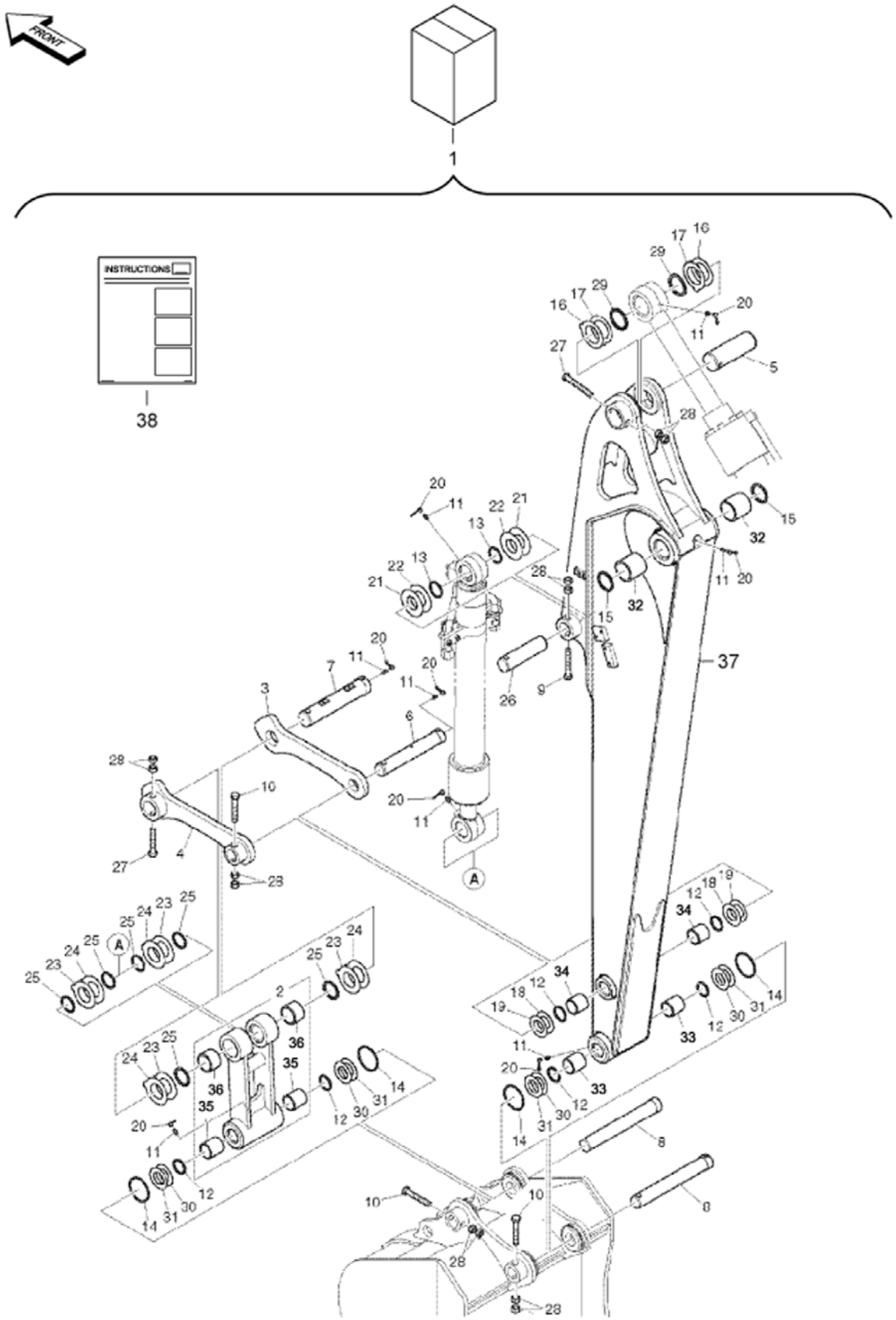




Page 390 - OSS# 2089524 - All rights reserved by Bobcat Company - 05/11/2012 - 06:30:39 - Produced by Ken Cook Co. with mediaIoff

# ARM KIT (Cont'd)
# (Long)

| Ref No | Part Number | Description | Remarks | Serial Number | Qty |
|---|---|---|---|---|---|
| 1 | 7178241 | KIT, ARM LONG | long - W/Ref. 2-38 | | |
| 2 | 7006011 | LINK PUSH | W/Ref. 35-36 | | 1 |
| 3 | 7003919 | LINK GUIDE RH | | | 1 |
| 4 | 7003920 | LINK GUIDE LH | | | 1 |
| 5 | 7003887 | PIN | | | 1 |
| 6 | 7003889 | PIN | | | 1 |
| 7 | 7003888 | PIN | | | 1 |
| 8 | 7015653 | PIN;ARM/LINK TO BUCKET | Was 7004571 [A] | | 2 |
| 9 | 7007709 | BOLT | | | 1 |
| 10 | 7007708 | BOLT | | | 3 |
| 11 | 7010247 | FITTING, GREASE | Was 7007893 [A] | | 8 |
| 12 | 7004637 | SEAL DUST | | | 6 |
| 13 | 7004638 | SEAL DUST | | | 2 |
| 14 | 7003939 | ORING | | | 4 |
| 15 | 7004641 | SEAL DUST | | | 2 |
| 16 | 7005615 | SHIM 1.0T | 1,0 mm | | 2 |
| 17 | 7005616 | SHIM 1.6T | 1,6 mm | | 2 |
| 18 | 7005604 | SHIM 1.0T | 1,0 mm | | 2 |
| 19 | 7005605 | SHIM 1.6T | 1,6 mm | | 2 |
| 20 | 7003923 | CAP GREASE NIPPLE | | | 8 |
| 21 | 7005606 | SHIM 1.0T | 1,0 mm | | 2 |
| 22 | 7005607 | SHIM 1.6T | 1,6 mm | | 2 |
| 23 | 7005620 | SHIM 1.0T | 1,0 mm | | 4 |
| 24 | 7005621 | SHIM 1.6T | 1,6 mm | | 4 |
| 25 | 7004639 | SEAL DUST | | | 6 |
| 26 | 7006141 | PIN | | | 1 |
| 27 | 7007710 | BOLT | | | 2 |
| 28 | 7007801 | NUT M16X1.0 | | | 12 |
| 29 | 7004640 | SEAL DUST | | | 2 |
| 30 | 7004482 | SHIM | | | 4 |
| 31 | 7004483 | SHIM | | | 4 |
| 32 | 7006001 | BUSHING | | | 2 |
| 33 | 7006002 | BUSHING | | | 2 |
| 34 | 7005748 | BUSHING | | | 2 |
| 35 | 7006002 | BUSHING | | | 2 |
| 36 | 7006003 | BUSHING | | | 2 |
| 37 | 7015639 | ARM,MACHINE;THUMB(2.25M) | W/Ref. 32-34 Was 7010539 [A] | | 1 |
| 37 | 7015639 | ARM,MACHINE;THUMB(2.25M) | Optional - W/Ref. 32-34 | | 1 |
| 38 | 6987383 | INSTRUCTIONS | | | 1 |

Page 391 - OSS# 2089524 - All rights reserved by Bobcat Company - 05/11/2012 - 06:30:39 - Produced by Ken Cook Co. with mediaioff

# ARTICULATED BOOM
# (EMEA)

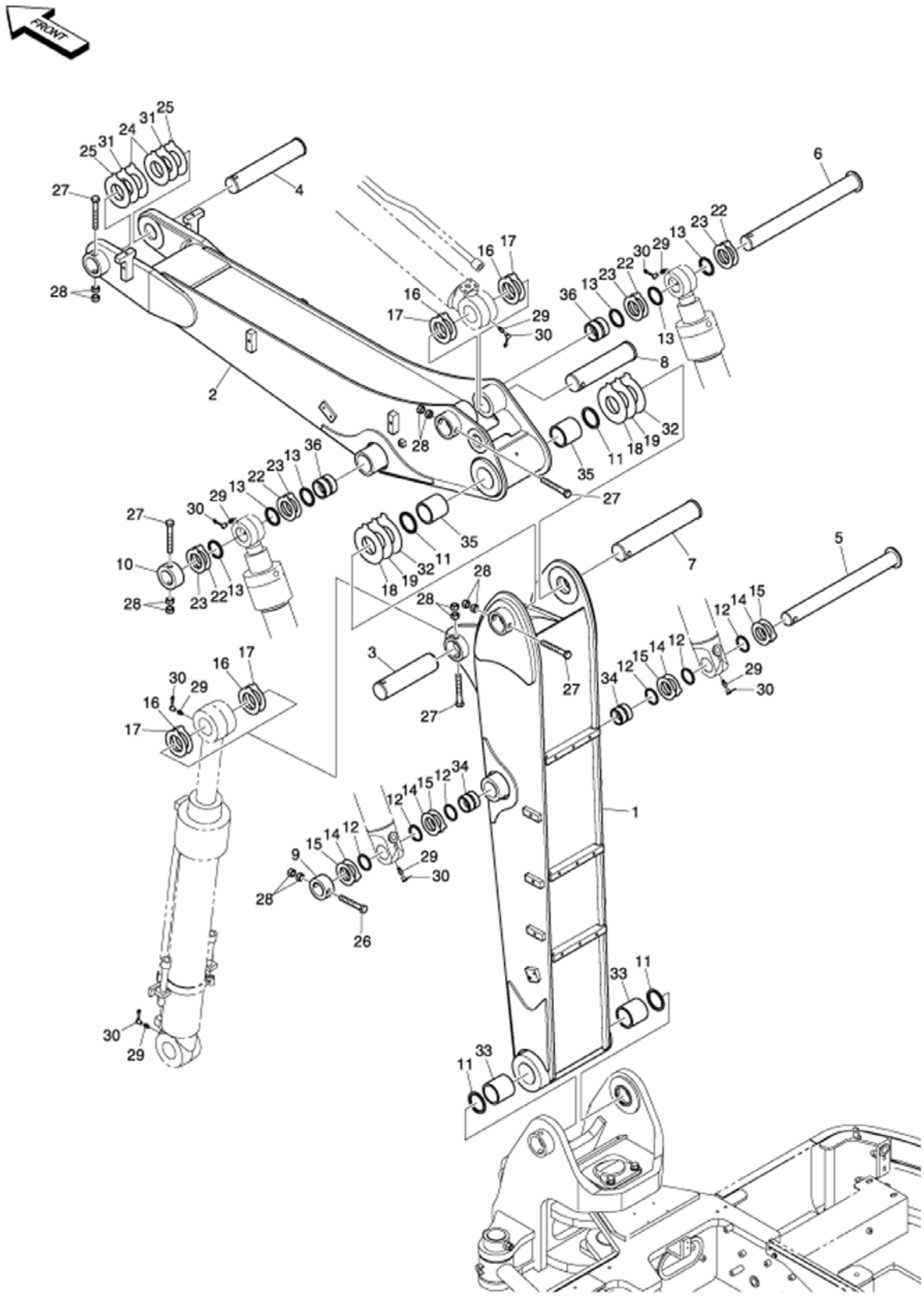




Page 392 - OSS# 2089524 - All rights reserved by Bobcat Company - 05/11/2012 - 06:30:39 - Produced by Ken Cook Co. with mediaIoff

# ARTICULATED BOOM (Cont'd)
# (EMEA)

| Ref No | Part Number | Description | Remarks | Serial Number | Qty |
|---|---|---|---|---|---|
| 1 | 7015658 | BOOM,LOWER | W/Ref. 33-34 | | 1 |
| 2 | 7015640 | BOOM,UPPER | W/Ref. 35-36 | | 1 |
| 3 | 7003884 | PIN | | | 1 |
| 4 | 7003886 | PIN | | | 1 |
| 5 | 7015953 | PIN;ARTI CYL HEAD | | | 1 |
| 6 | 7015954 | PIN;ARTI CYL ROD | | | 1 |
| 7 | 7015955 | PIN | | | 1 |
| 8 | 7015956 | PIN | | | 1 |
| 9 | 7015957 | STOPPER | | | 1 |
| 10 | 7015958 | STOPPER | | | 1 |
| 11 | 7004640 | SEAL DUST | | | 4 |
| 12 | 7004638 | SEAL DUST | | | 6 |
| 13 | 7004639 | SEAL DUST | | | 6 |
| 14 | 7015959 | SHIM 51X85X1.0T | | | 4 |
| 15 | 7015960 | SHIM 51X85X1.6T | | | 4 |
| 16 | 7005615 | SHIM 1.0T | 1,0 mm | | 4 |
| 17 | 7005616 | SHIM 1.6T | 1,6 mm | | 4 |
| 18 | 7005612 | SHIM 1.0T | 1,0 mm | | 2 |
| 19 | 7005614 | SHIM 1.6T | 1,6 mm | | 2 |
| 22 | 7015961 | SHIM 56X90X1.0T | | | 4 |
| 23 | 7015962 | SHIM 56X90X1.6T | | | 4 |
| 24 | 7005617 | SHIM 1.0T | 1,0 mm | | 2 |
| 25 | 7005619 | SHIM 1.6T | 1,6 mm | | 2 |
| 26 | 7007709 | BOLT | | | 1 |
| 27 | 7007710 | BOLT | | | 5 |
| 28 | 7007801 | NUT M16X1.0 | | | 12 |
| 29 | 7010247 | FITTING, GREASE | Was 7007893 [A] | | 7 |
| 30 | 7003923 | CAP GREASE NIPPLE | | | 7 |
| 31 | 7005618 | SHIM 1.3T | 1,3 mm | | 2 |
| 32 | 7005613 | SHIM 1.3T | 1,3 mm | | 2 |
| 33 | 7006000 | BUSHING | | | 2 |
| 34 | 7005752 | BUSHING | | | 2 |
| 35 | 7006000 | BUSHING | | | 2 |
| 36 | 7006006 | BUSHING | | | 2 |

Page 393 - OSS# 2089524 - All rights reserved by Bobcat Company - 05/11/2012 - 06:30:39 - Produced by Ken Cook Co. with mediaioff

# ARTICULATED BOOM HYDRAULICS
## (General Piping) (Arm Cylinder W/O Lock Valve)
## (EMEA)

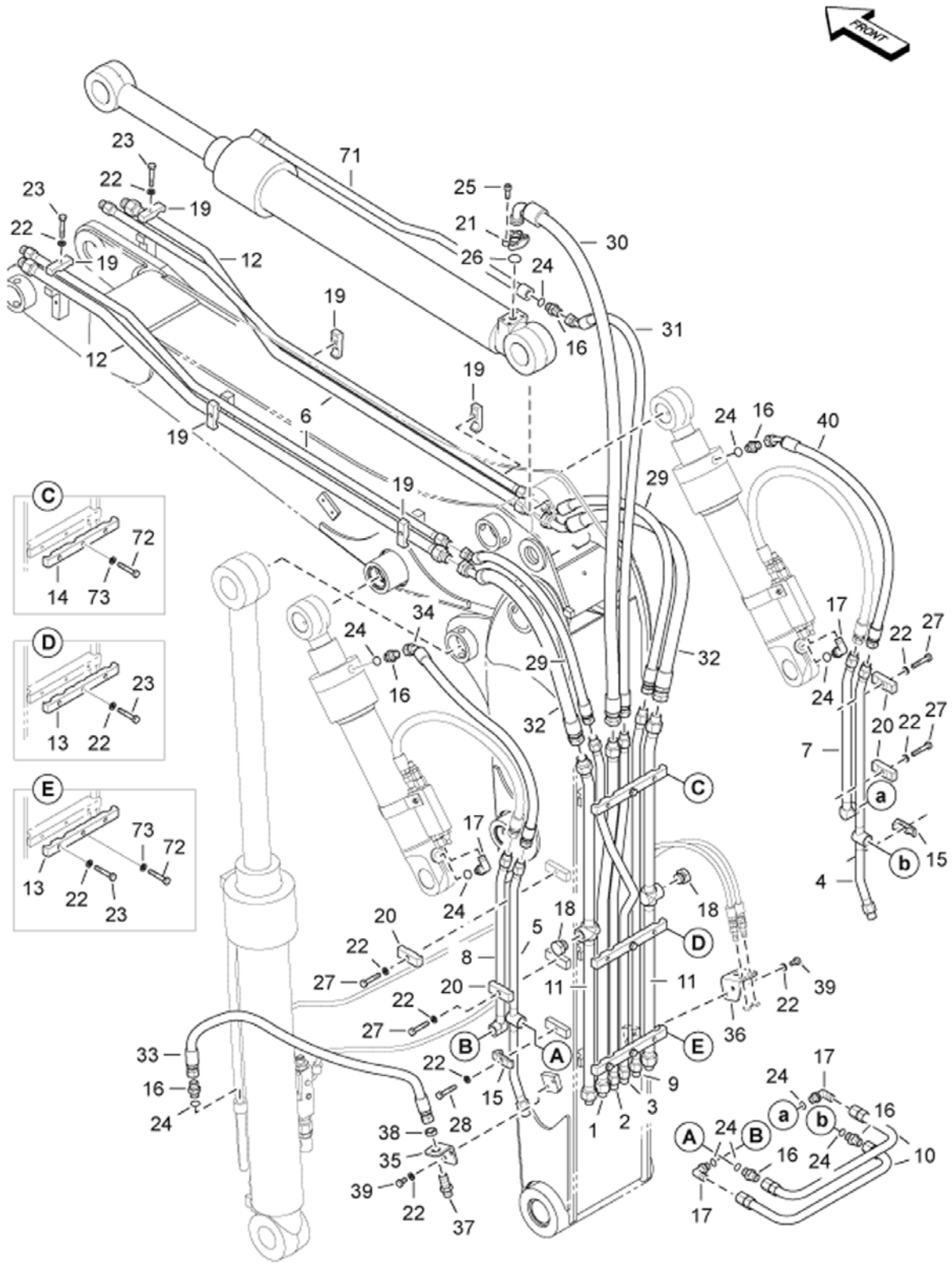




Page 394 - OSS# 2089524 - All rights reserved by Bobcat Company - 05/11/2012 - 06:30:39 - Produced by Ken Cook Co. with mediaIoff

# ARTICULATED BOOM HYDRAULICS (Cont'd)
## (General Piping) (Arm Cylinder W/O Lock Valve)
### (EMEA)

| Ref No | Part Number | Description | Remarks | Serial Number | Qty |
|---|---|---|---|---|---|
| 1 | 7017286 | PIPE | | | 1 |
| 2 | 7017287 | PIPE | | | 1 |
| 3 | 7017288 | PIPE | | | 1 |
| 4 | 7017289 | PIPE | | | 1 |
| 5 | 7017290 | PIPE | | | 1 |
| 6 | 7017291 | PIPE | | | 2 |
| 7 | 7017292 | PIPE | | | 1 |
| 8 | 7017309 | PIPE | | | 1 |
| 9 | 7017293 | PIPE | | | 1 |
| 10 | 7017294 | PIPE | | | 2 |
| 11 | 7017295 | PIPE | | | 2 |
| 12 | 7017296 | PIPE | | | 2 |
| 13 | 7017297 | CLAMP,PIPE | | | 2 |
| 14 | 7017298 | CLAMP,PIPE | | | 1 |
| 15 | 7017299 | CLAMP,PIPE | | | 2 |
| 16 | 7004699 | ADAPTER | | | 6 |
| 17 | 7004710 | ELBOW | | | 4 |
| 18 | 7004733 | PLUG | | | 2 |
| 19 | 7006037 | CLAMP | | | 6 |
| 20 | 7017300 | CLAMP,PIPE | | | 4 |
| 21 | 7004777 | FLANGE | | | 2 |
| 22 | 7007835 | WASHER SPRING | | | 13 |
| 23 | 7007674 | BOLT | | | 4 |
| 24 | 7007911 | ORING | | | 10 |
| 25 | 7007748 | BOLT SOCKET M10X1.5X30 | | | 4 |
| 26 | 7004631 | ORING | | | 1 |
| 27 | 7007673 | BOLT | | | 4 |
| 28 | 7007671 | BOLT | | | 1 |
| 29 | 7015642 | HOSE | | | 2 |
| 30 | 7017301 | HOSE (ST-90) | | | 1 |
| 31 | 7017302 | HOSE (ST-45) | | | 1 |
| 32 | 7015643 | HOSE | | | 2 |
| 33 | 7017303 | HOSE (ST-ST) | | | 1 |
| 34 | 7015644 | HOSE | | | 1 |
| 35 | 7005925 | BRACKET LH | | | 1 |
| 36 | 7006753 | BRACKET RH | | | 1 |
| 37 | 7003950 | ADAPTER | | | 1 |
| 38 | 7003876 | NUT | | | 1 |
| 39 | 7007626 | BOLT | | | 4 |
| 40 | 7015645 | HOSE | | | 1 |
| 71 | 7012247 | CYLINDER;ARM | See Illustration ARTICULATED BOOM/ EM7179 | | 1 |
| 72 | 7007674 | BOLT | | | 2 |
| 73 | 7007835 | WASHER SPRING | | | 2 |

Page 395 - OSS# 2089524 - All rights reserved by Bobcat Company - 05/11/2012 - 06:30:39 - Produced by Ken Cook Co. with mediaioff

# ARTICULATED BOOM HYDRAULICS
## (General Piping) (Arm Cylinder W/Lock Valve)
## (EMEA)

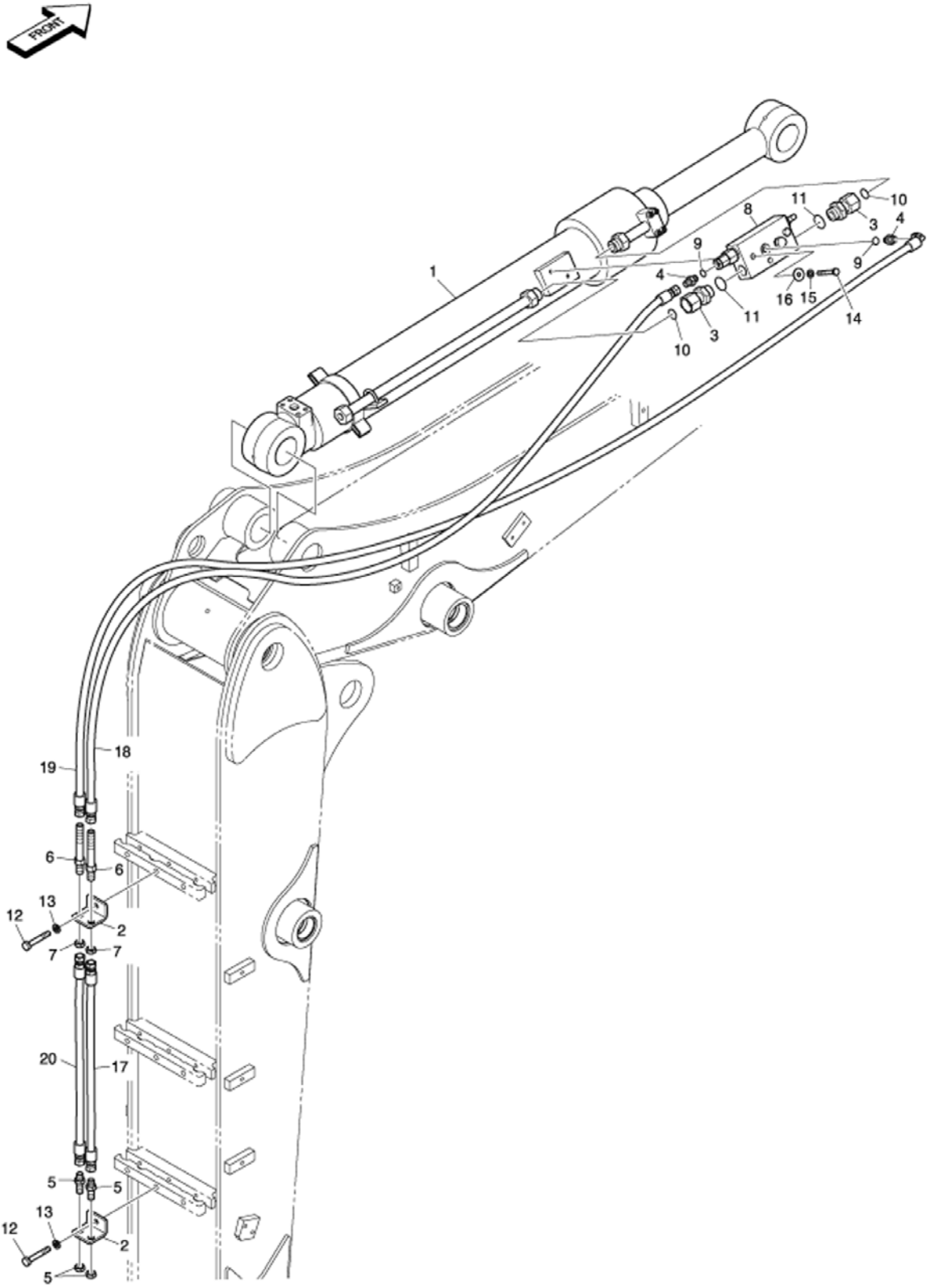


EM6298



Page 396 - OSS# 2089524 - All rights reserved by Bobcat Company - 05/11/2012 - 06:30:39 - Produced by Ken Cook Co. with mediaIoff

## ARTICULATED BOOM HYDRAULICS (Cont'd)
## (General Piping) (Arm Cylinder W/Lock Valve)
## (EMEA)

| Ref No | Part Number | Description | Remarks | Serial Number | Qty |
|---|---|---|---|---|---|
| 1 | 7012248 | CYLINDER;ARM | See Illustration ARTICULATED BOOM/ EM7180 | | 1 |
| 2 | 7003968 | BRACKET | | | 2 |
| 3 | 7005552 | ADAPTER | | | 2 |
| 4 | 7004683 | ADAPTER | | | 2 |
| 5 | 7003949 | ADAPTER | | | 2 |
| 6 | 7005623 | ADAPTER | | | 2 |
| 7 | 7003878 | NUT | | | 2 |
| 8 | 7004980 | VALVE LOCK | | | 1 |
| 9 | 7007906 | ORING | | | 2 |
| 10 | 7007960 | ORING | | | 2 |
| 11 | 7007917 | ORING | | | 2 |
| 12 | 7007675 | BOLT | | | 2 |
| 13 | 7007835 | WASHER SPRING | | | 2 |
| 14 | 7007661 | BOLT | | | 2 |
| 15 | 7007834 | WASHER SPRING | | | 2 |
| 16 | 7004470 | WASHER PLAIN | | | 2 |
| 17 | 7015979 | HOSE PF1/4-830L | | | 1 |
| 18 | 7015980 | HOSE PF1/4-1730L | | | 1 |
| 19 | 7015981 | HOSE 1/4 1860L | | | 1 |
| 20 | 7015979 | HOSE PF1/4-830L | | | 1 |

Page 397 - OSS# 2089524 - All rights reserved by Bobcat Company - 05/11/2012 - 06:30:39 - Produced by Ken Cook Co. with mediaioff

# ARTICULATED BOOM HYDRAULICS
## (Boom Piping)
## (EMEA)

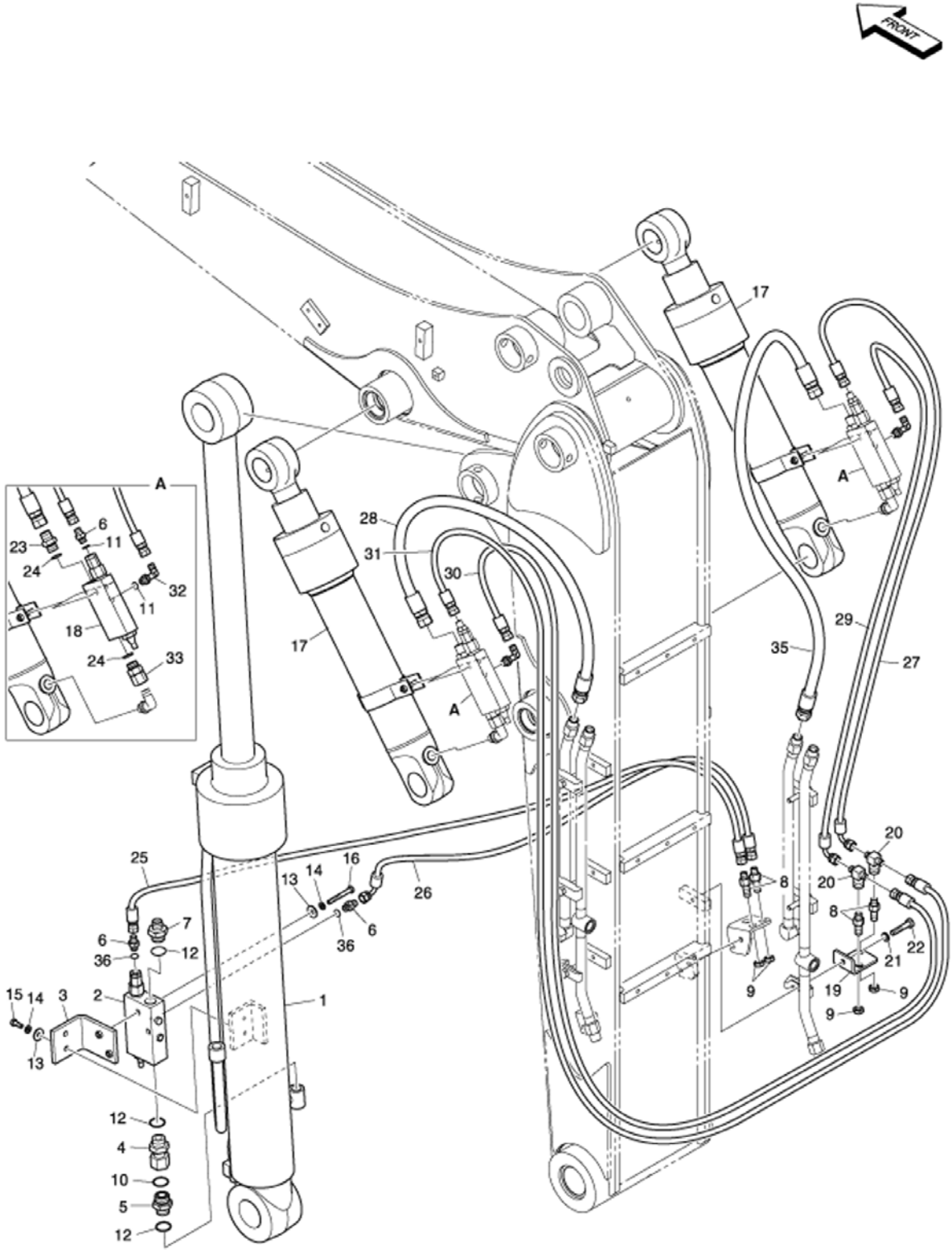


EM6294



Page 398 - OSS# 2089524 - All rights reserved by Bobcat Company - 05/11/2012 - 06:30:39 - Produced by Ken Cook Co. with mediaIoff

# ARTICULATED BOOM HYDRAULICS (Cont'd)
## (Boom Piping)
### (EMEA)

| Ref No | Part Number | Description | Remarks | Serial Number | Qty |
|---|---|---|---|---|---|
| 1 | 7012246 | CYLINDER,BOOM | See Illustration ARTICULATED BOOM/ EM7183 W/Lock valve | | 1 |
| 2 | 7004980 | VALVE LOCK | | | 1 |
| 3 | 7006146 | BRACKET | | | 1 |
| 4 | 7005552 | ADAPTER | | | 1 |
| 5 | 7004775 | ADAPTER | | | 1 |
| 6 | 7004683 | ADAPTER | | | 4 |
| 7 | 7004686 | ADAPTER | | | 1 |
| 8 | 7005567 | ADAPTER | | | 4 |
| 9 | 7003878 | NUT | | | 4 |
| 10 | 7007960 | ORING | | | 1 |
| 11 | 7007906 | ORING | Was 7015968 [A] | | 4 |
| 12 | 7007917 | ORING | | | 3 |
| 13 | 7004470 | WASHER PLAIN | | | 4 |
| 14 | 7007834 | WASHER SPRING | | | 4 |
| 15 | 7007618 | BOLT | | | 2 |
| 16 | 7007663 | BOLT | | | 2 |
| 17 | 7015680 | CYLINDER,ARTI; LOCK V/V | See Illustration ARTICULATED BOOM/ EM7003 | | 2 |
| 18 | 7015969 | VALVE;LOCK | | | 2 |
| 19 | 7015970 | BRACKET | | | 1 |
| 20 | 7004768 | TEE | | | 2 |
| 21 | 7007835 | WASHER SPRING | | | 1 |
| 22 | 7007672 | BOLT | | | 1 |
| 23 | 7004699 | ADAPTER | | | 1 |
| 24 | 7015971 | SEAL | | | 4 |
| 25 | 7015972 | HOSE(ST-ST) | | | 1 |
| 26 | 7015973 | HOSE(ST-90) | | | 1 |
| 27 | 7015974 | HOSE PF1/4-1385L | | | 1 |
| 28 | 7015649 | HOSE PF1/2-790L | | | 1 |
| 29 | 7015975 | HOSE PF1/4-1440L | | | 1 |
| 30 | 7015976 | HOSE PF1/4-2140L | | | 1 |
| 31 | 7015977 | HOSE PF1/4-2000L | | | 1 |
| 32 | 7004721 | ELBOW | | | 2 |
| 33 | 7015978 | ADAPTER | | | 2 |
| 35 | 7015650 | HOSE PF1/2-850L | | | 1 |
| 36 | 7007906 | ORING | | | 2 |

Page 399 - OSS# 2089524 - All rights reserved by Bobcat Company - 05/11/2012 - 06:30:39 - Produced by Ken Cook Co. with mediaioff

# ARTICULATED BOOM HYDRAULICS
## (2nd Auxiliary Piping)
## (EMEA)

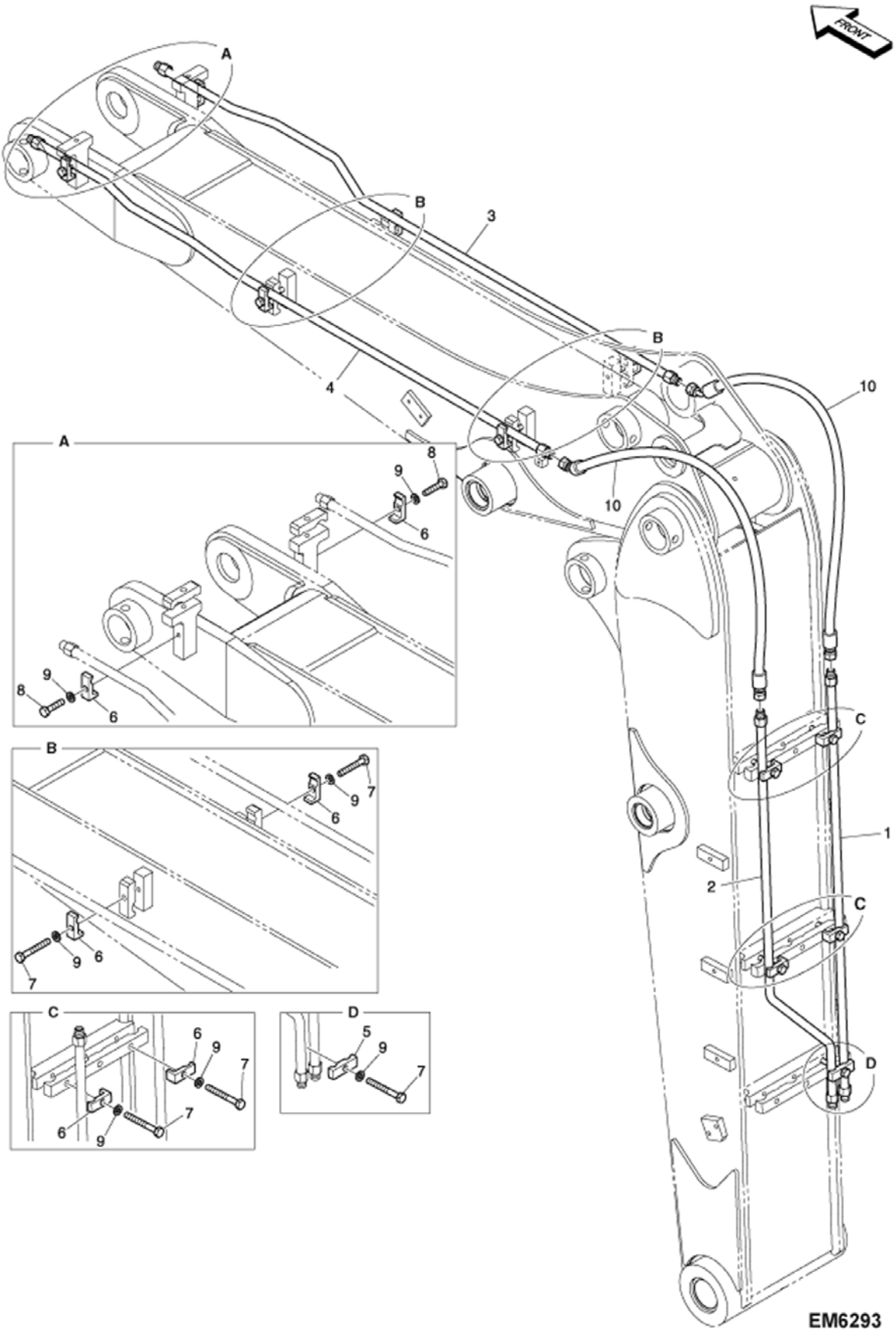




Page 400 - OSS# 2089524 - All rights reserved by Bobcat Company - 05/11/2012 - 06:30:39 - Produced by Ken Cook Co. with mediaIoff

## ARTICULATED BOOM HYDRAULICS (Cont'd)
## (2nd Auxiliary Piping)
## (EMEA)

| Ref No | Part Number | Description | Remarks | Serial Number | Qty |
|---|---|---|---|---|---|
| 1 | 7015964 | PIPE | | | 1 |
| 2 | 7015965 | PIPE | | | 1 |
| 3 | 7015966 | PIPE | | | 1 |
| 4 | 7015967 | PIPE | | | 1 |
| 5 | 7005921 | CLAMP | | | 1 |
| 6 | 7005920 | CLAMP | | | 10 |
| 7 | 7007678 | BOLT | | | 9 |
| 8 | 7007671 | BOLT | | | 2 |
| 9 | 7007835 | WASHER SPRING | | | 11 |
| 10 | 7015646 | HOSE | | | 2 |

Page 401 - OSS# 2089524 - All rights reserved by Bobcat Company - 05/11/2012 - 06:30:39 - Produced by Ken Cook Co. with mediaioff

# ARTICULATED BOOM HYDRAULICS
## (Main Piping)
## (EMEA)

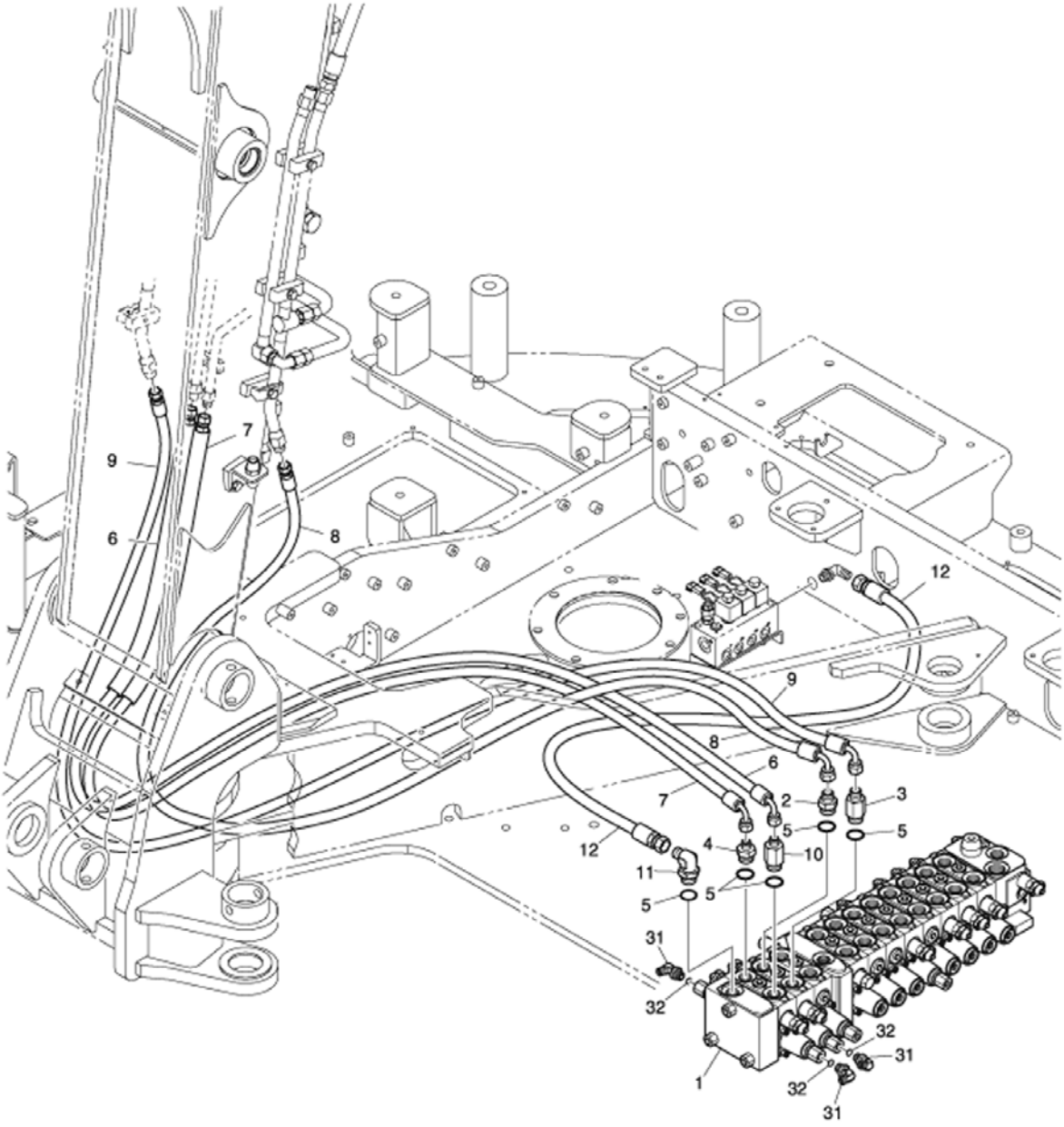


EM6276



Page 402 - OSS# 2089524 - All rights reserved by Bobcat Company - 05/11/2012 - 06:30:39 - Produced by Ken Cook Co. with mediaIoff

## ARTICULATED BOOM HYDRAULICS (Cont'd)
## (Main Piping)
## (EMEA)

| Ref No | Part Number | Description | Remarks | Serial Number | Qty |
|---|---|---|---|---|---|
| 1 | 7015672 | VALVE,CONTROL;ARTI&ROTATING | See Illustration ARTICULATED BOOM/ EM7002 | | 1 |
| 2 | 7005542 | ADAPTER | | | 1 |
| 3 | 7005546 | ADAPTER | | | 1 |
| 4 | 7004677 | ADAPTER | | | 1 |
| 5 | 7004628 | ORING | | | 5 |
| 6 | 7011048 | HOSE, HYD | Was 7010381 [D] | | 1 |
| 7 | 7011047 | HOSE, HYD | Was 7010382 [D] | | 1 |
| 8 | 7011043 | HOSE, HYD | Was 7011076 [D] | | 1 |
| 9 | 7011043 | HOSE, HYD | Was 7011076 [D] | | 1 |
| 10 | 7005543 | ADAPTER | | | 1 |
| 11 | 7008144 | ELBOW | | | 1 |
| 12 | 7015951 | HOSE | | | 1 |
| 31 | 7005558 | ELBOW | | | 3 |
| 32 | 7015963 | O-RING | | | 3 |

Page 403 - OSS# 2089524 - All rights reserved by Bobcat Company - 05/11/2012 - 06:30:39 - Produced by Ken Cook Co. with mediaioff

# ARTICULATED BOOM HYDRAULICS
## (Pilot Piping)
## (EMEA)

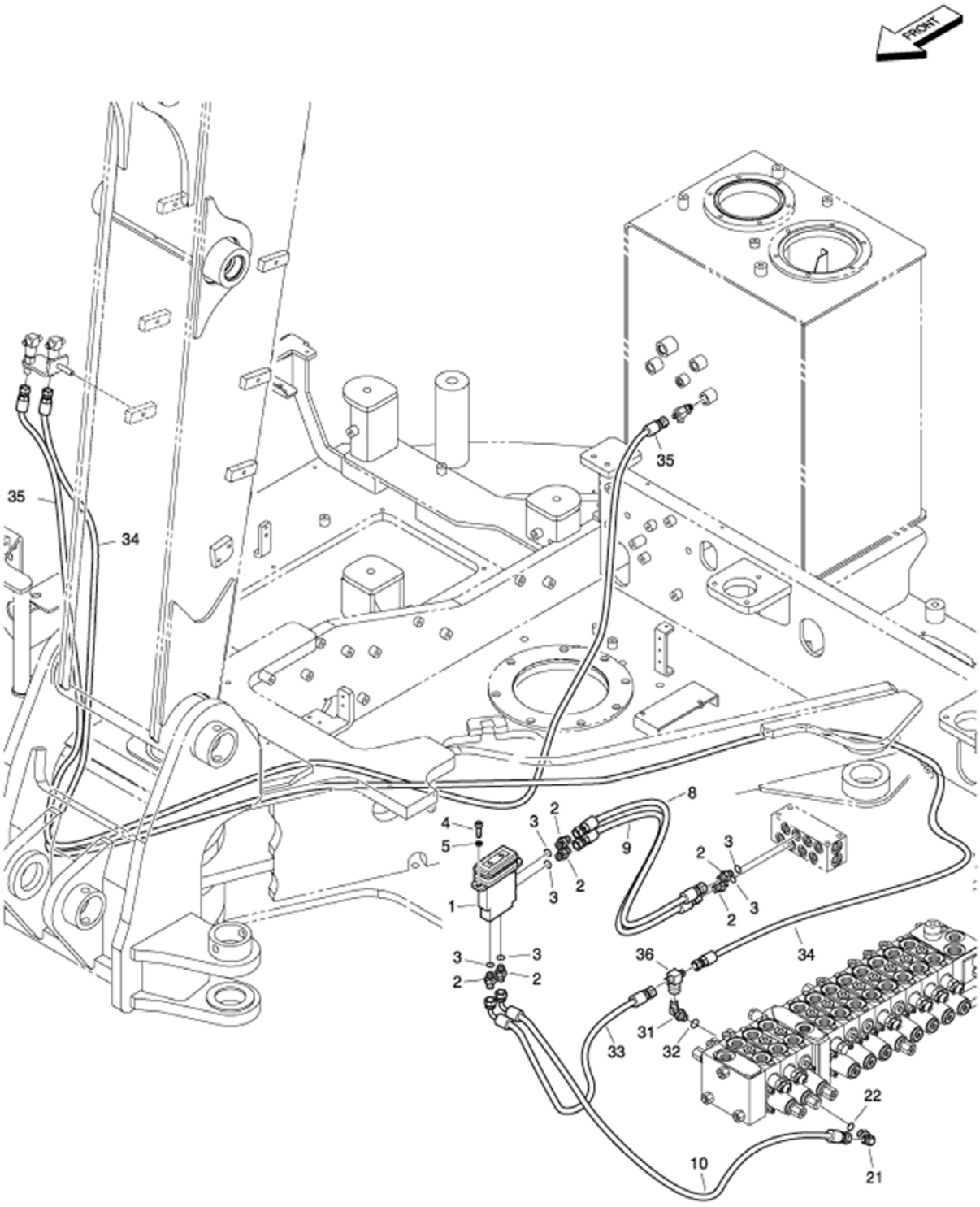


EM6277



Page 404 - OSS# 2089524 - All rights reserved by Bobcat Company - 05/11/2012 - 06:30:39 - Produced by Ken Cook Co. with mediaIoff

## ARTICULATED BOOM HYDRAULICS (Cont'd)
## (Pilot Piping)
## (EMEA)

| Ref No | Part Number | Description | Remarks | Serial Number | Qty |
|---|---|---|---|---|---|
| 1 | 7006576 | VALVE, PEDAL | See Illustration PEDAL VALVE/ E80-4400 | | 1 |
| 2 | 7004683 | ADAPTER | | | 6 |
| 3 | 7007906 | ORING | | | 6 |
| 4 | 7007737 | BOLT | | | 2 |
| 5 | 7007842 | WASHER SPRING | | | 2 |
| 8 | 7017284 | HOSE | | | 1 |
| 9 | 7017284 | HOSE | | | 1 |
| 10 | 7005359 | HOSE PF1/4-700L | | | 1 |
| 21 | 7005558 | ELBOW | | | 1 |
| 22 | 7007961 | ORING | | | 1 |
| 31 | 7005558 | ELBOW | | | 1 |
| 32 | 7007961 | ORING | | | 1 |
| 33 | 7017285 | HOSE | | | 1 |
| 34 | 7017304 | HOSE | | | 1 |
| 35 | 7005516 | HOSE PF1/4-3330L | | | 1 |
| 36 | 7004768 | TEE | | | 1 |

Page 405 - OSS# 2089524 - All rights reserved by Bobcat Company - 05/11/2012 - 06:30:39 - Produced by Ken Cook Co. with mediaioff

# ARTICULATED BOOM
## (Control Valve)
## (EMEA)

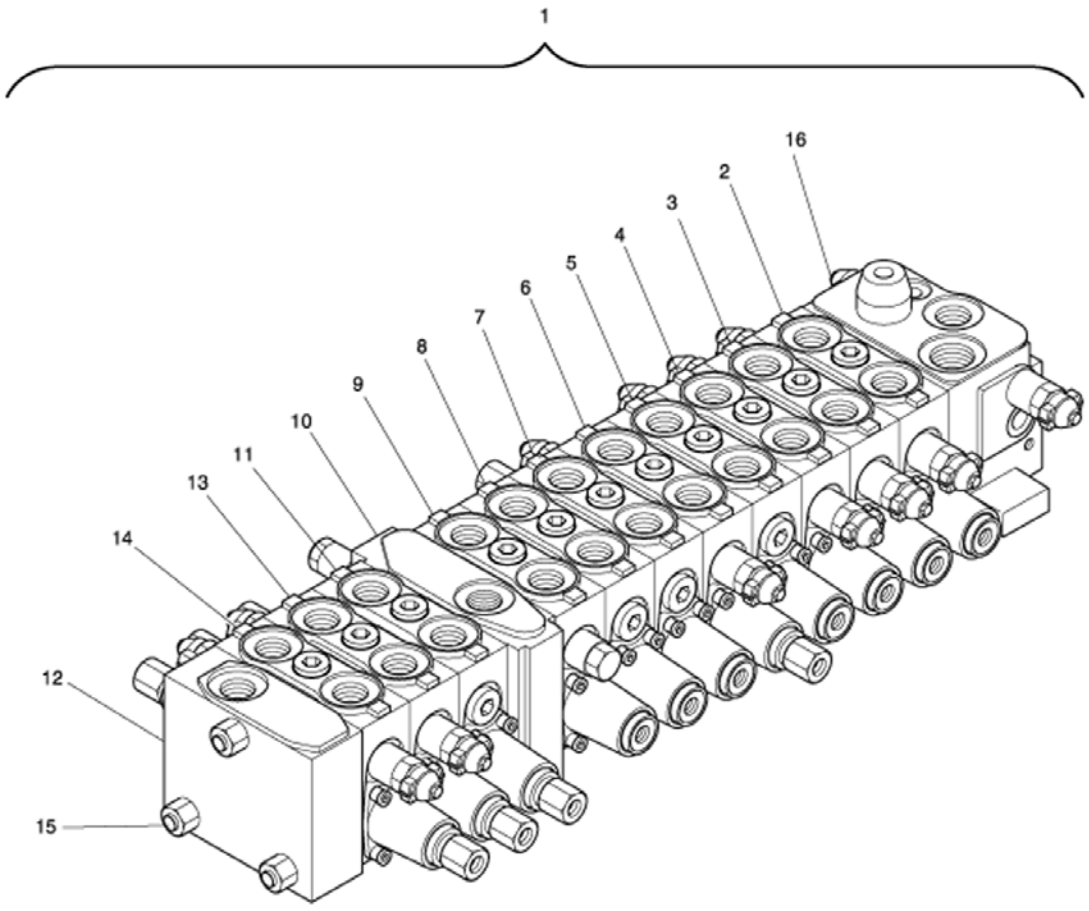


EM7002



Page 406 - OSS# 2089524 - All rights reserved by Bobcat Company - 05/11/2012 - 06:30:39 - Produced by Ken Cook Co. with mediaIoff

## ARTICULATED BOOM (Cont'd)
## (Control Valve)
## (EMEA)

| Ref No | Part Number | Description | Remarks | Serial Number | Qty |
|---|---|---|---|---|---|
| 1 | 7015672 | VALVE,CONTROL;ARTI&ROTATING | W/Ref. 2-16 | | 1 |
| 2 | 7007591 | BLOCK BOOM | See Illustration VALVE SECTION/ E80-4170 | | 1 |
| 3 | 7007592 | BLOCK BUCKET | See Illustration VALVE SECTION/ E80-4190 | | 1 |
| 4 | 7007587 | BLOCK ARM | See Illustration VALVE SECTION/ E80-4180 | | 1 |
| 5 | 7007583 | BLOCK DOZER | See Illustration VALVE SECTION/ E80-4210 | | 1 |
| 6 | 7015670 | BLOCK;OPTION | See Illustration VALVE SECTION/ EM5633 | | 1 |
| 7 | 7007593 | BLOCK TRAVEL LH | See Illustration VALVE SECTION/ E80-4220 | | 1 |
| 8 | 7007594 | BLOCK TRAVEL RH | See Illustration VALVE SECTION/ E80-4230 | | 1 |
| 9 | 7007585 | BLOCK BOOM SWING | See Illustration VALVE SECTION/ E80-4240 | | 1 |
| 10 | 7007586 | BLOCK INLET | See Illustration VALVE SECTION/ E80-4250 | | 1 |
| 11 | 7007588 | BLOCK SWING | See Illustration VALVE SECTION/ E80-4260 | | 1 |
| 12 | 7007598 | ROD TIE 611L | | | 1 |
| 13 | 7007597 | BLOCK ROTATING | See Illustration VALVE SECTION/ E80-4430 2ndAux | | 1 |
| 14 | 7015673 | BLOCK;ROTATING/ARTI | See Illustration ARTICULATED BOOM/ EM7000 | | 1 |
| 15 | 7015674 | ROD KIT,TIE | | | 1 |
| 16 | 7007589 | BLOCK INLET | See Illustration VALVE SECTION/ E80-4160 | | 1 |

Page 407 - OSS# 2089524 - All rights reserved by Bobcat Company - 05/11/2012 - 06:30:39 - Produced by Ken Cook Co. with mediaioff

# ARTICULATED BOOM
## (Valve Section)
## (EMEA)

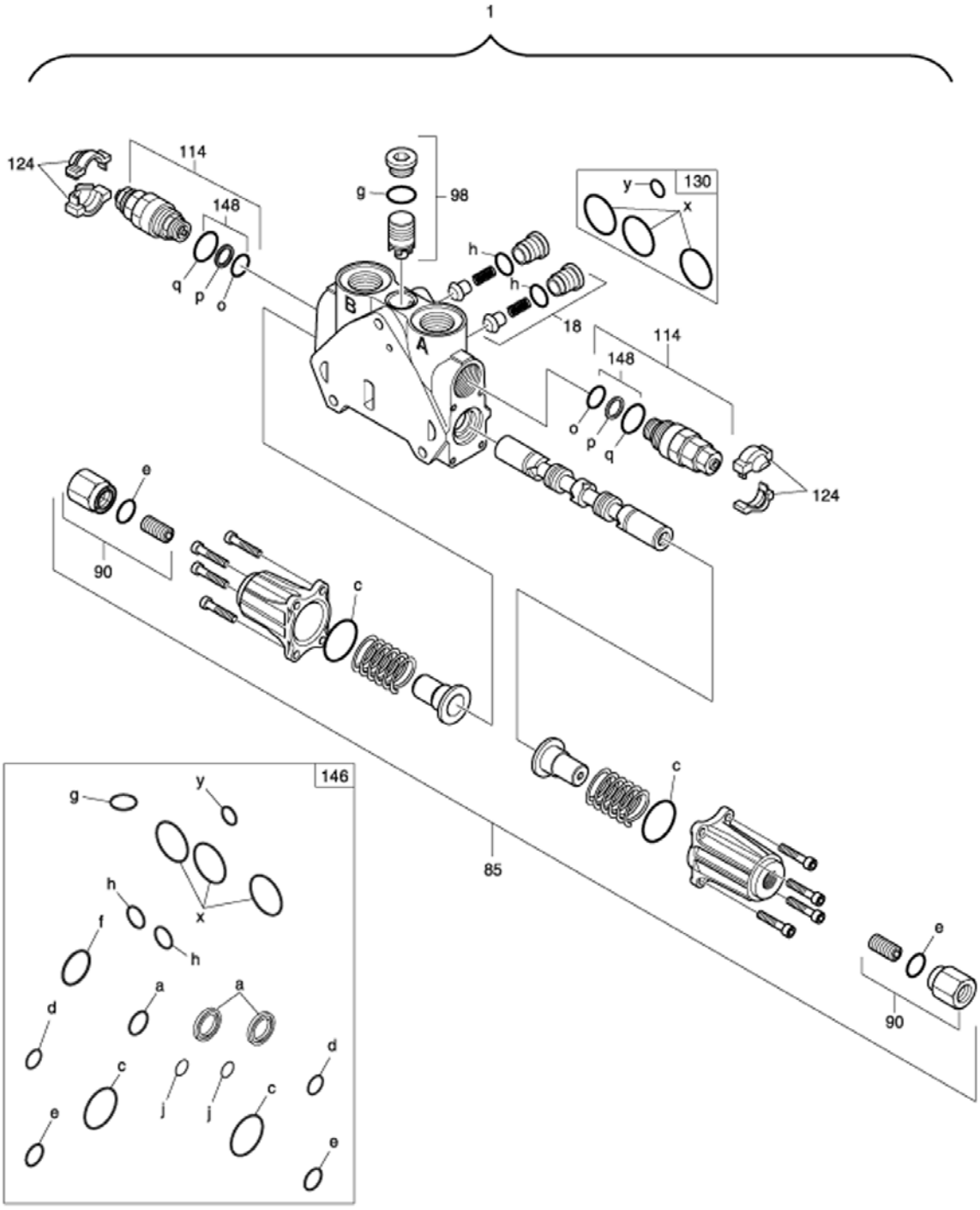


EM7000



Page 408 - OSS# 2089524 - All rights reserved by Bobcat Company - 05/11/2012 - 06:30:39 - Produced by Ken Cook Co. with mediaIoff

## ARTICULATED BOOM (Cont'd)
## (Valve Section)
## (EMEA)

| Ref No | Part Number | Description | Remarks | Serial Number | Qty |
|---|---|---|---|---|---|
| 1 | 7015673 | BLOCK;ROTATING/ARTI | W/Ref. 18-148 | | 1 |
| 18 | 7007563 | VALVE CHECK | | | 2 |
| 85 | 7007577 | CAP PLUNGER KIT | | | 1 |
| 90 | 7007574 | KIT STROKE LIMIT | | | 2 |
| 98 | 7007572 | VALVE | | | 1 |
| 114 | 7015671 | VALVE;RELIEF;310BAR | 310 bar | | 2 |
| 124 | 7007558 | COVER LOCKING | | | 2 |
| 130 | 7007565 | KIT SEAL | | | 1 |
| 146 | 7007582 | KIT SEAL | | | 1 |
| 148 | 7007560 | KIT SEAL | | | 2 |

Page 409 - OSS# 2089524 - All rights reserved by Bobcat Company - 05/11/2012 - 06:30:39 - Produced by Ken Cook Co. with mediaioff

# ARTICULATED BOOM
## (Pedal)
## (EMEA)

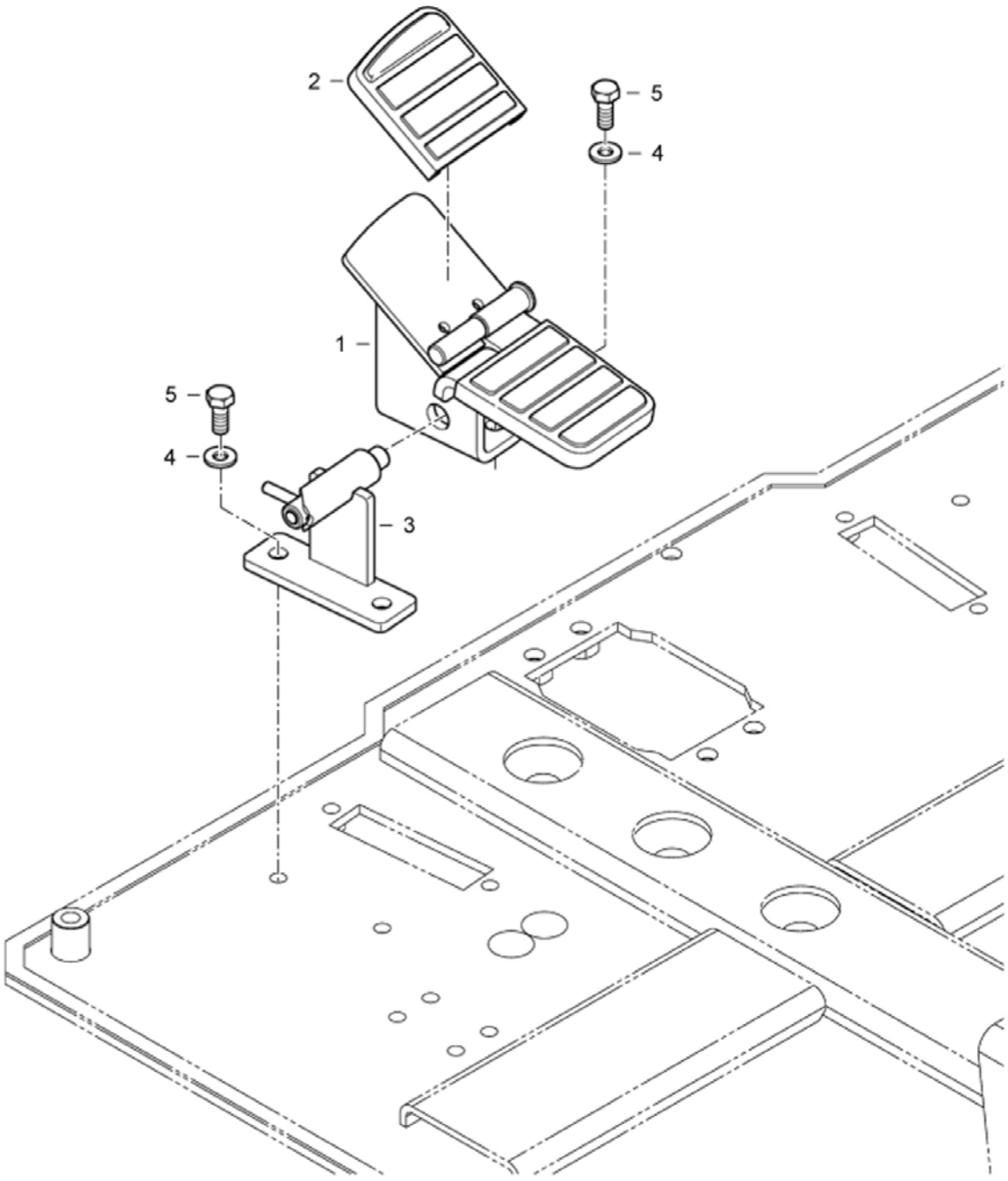


EM7389



Page 410 - OSS# 2089524 - All rights reserved by Bobcat Company - 05/11/2012 - 06:30:39 - Produced by Ken Cook Co. with mediaIoff

## ARTICULATED BOOM (Cont'd)
## (Pedal)
## (EMEA)

| Ref No | Part Number | Description | Remarks | Serial Number | Qty |
|---|---|---|---|---|---|
| 1 | 7006231 | PEDAL | | | 1 |
| 2 | 7018014 | PEDAL | | | 1 |
| 3 | 7006232 | LATCH | | | 1 |
| 4 | 7004515 | WASHER | | | 4 |
| 5 | 7004546 | BOLT | | | 4 |

Page 411 - OSS# 2089524 - All rights reserved by Bobcat Company - 05/11/2012 - 06:30:39 - Produced by Ken Cook Co. with mediaioff

# ARTICULATED BOOM
## (Lower Boom Cylinder)
## (EMEA)

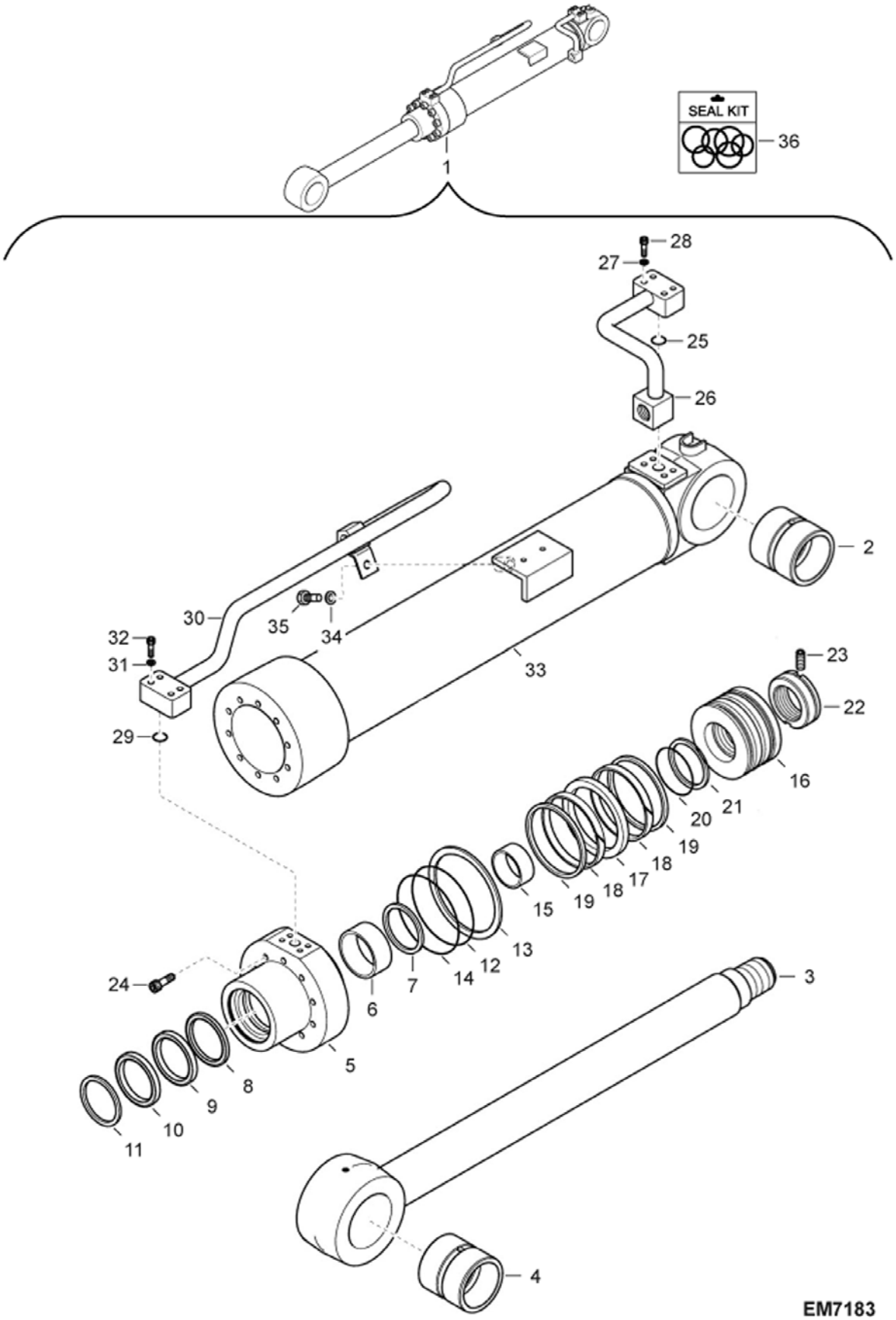




Page 412 - OSS# 2089524 - All rights reserved by Bobcat Company - 05/11/2012 - 06:30:39 - Produced by Ken Cook Co. with mediaioff

## ARTICULATED BOOM (Cont'd)
## (Lower Boom Cylinder)
### (EMEA)

| Ref No | Part Number | Description | Remarks | Serial Number | Qty |
|---|---|---|---|---|---|
| 1 | 7012246 | CYLINDER,BOOM | W/Lock valve - W/Ref. 2-35 Was 7006045 [A] | | 1 |
| 2 | 7006004 | BUSHING | | | 1 |
| 3 | 7007537 | ROD ASSY | | | 1 |
| 4 | 7006004 | BUSHING | | | 1 |
| 5 | 7007535 | ROD COVER | | | 1 |
| 6 | 7003708 | BUSHING DD | | | 1 |
| 7 | 7003864 | RING RETAINING | | | 1 |
| 8 | 7003948 | SEAL BUFFER | | | 1 |
| 9 | 7003797 | SEAL | | | 1 |
| 10 | 7003789 | WIPER DUST | | | 1 |
| 11 | 7006832 | RING RETAINING | | | 1 |
| 12 | 7007950 | ORING | | | 1 |
| 13 | 7006833 | RING BACK-UP | | | 1 |
| 14 | 7007951 | ORING | | | 1 |
| 15 | 7006933 | RING CUSHION | | | 1 |
| 16 | 7007512 | PISTON | | | 1 |
| 17 | 7003779 | RING GLYD | | | 1 |
| 18 | 7003783 | RING WEAR | | | 2 |
| 19 | 7006834 | RING DUST | | | 2 |
| 20 | 7003754 | ORING | | | 1 |
| 21 | 7003765 | RING BACK-UP | | | 2 |
| 22 | 7003735 | NUT PISTON | | | 1 |
| 23 | 7007792 | SCREW SET | | | 1 |
| 24 | 7007775 | BOLT HEX SOCKET | | | 10 |
| 25 | 7007919 | ORING | | | 1 |
| 26 | 7007541 | TUBELINE ASSY-H | | | 1 |
| 27 | 7007830 | WASHER SPRING | | | 4 |
| 28 | 7007754 | BOLT SOCKET | Was 7007753 [A] | | 4 |
| 29 | 7007912 | ORING | | | 1 |
| 30 | 7007542 | TUBELINE ASSY-R | | | 1 |
| 31 | 7007829 | WASHER | | | 4 |
| 32 | 7007742 | BOLT SOCKET | | | 4 |
| 33 | 7007540 | TUBE, CASE CYL | | | 1 |
| 34 | 7007830 | WASHER SPRING | | | 1 |
| 35 | 7007626 | BOLT | Was 7007625 [A] | | 1 |
| 36 | 7004992 | KIT SEAL | W/Ref. 8-10, 12-14 & 17-21 | | 1 |

Page 413 - OSS# 2089524 - All rights reserved by Bobcat Company - 05/11/2012 - 06:30:39 - Produced by Ken Cook Co. with mediaioff

# ARTICULATED BOOM
## (Upper Boom Cylinder)
## (EMEA)

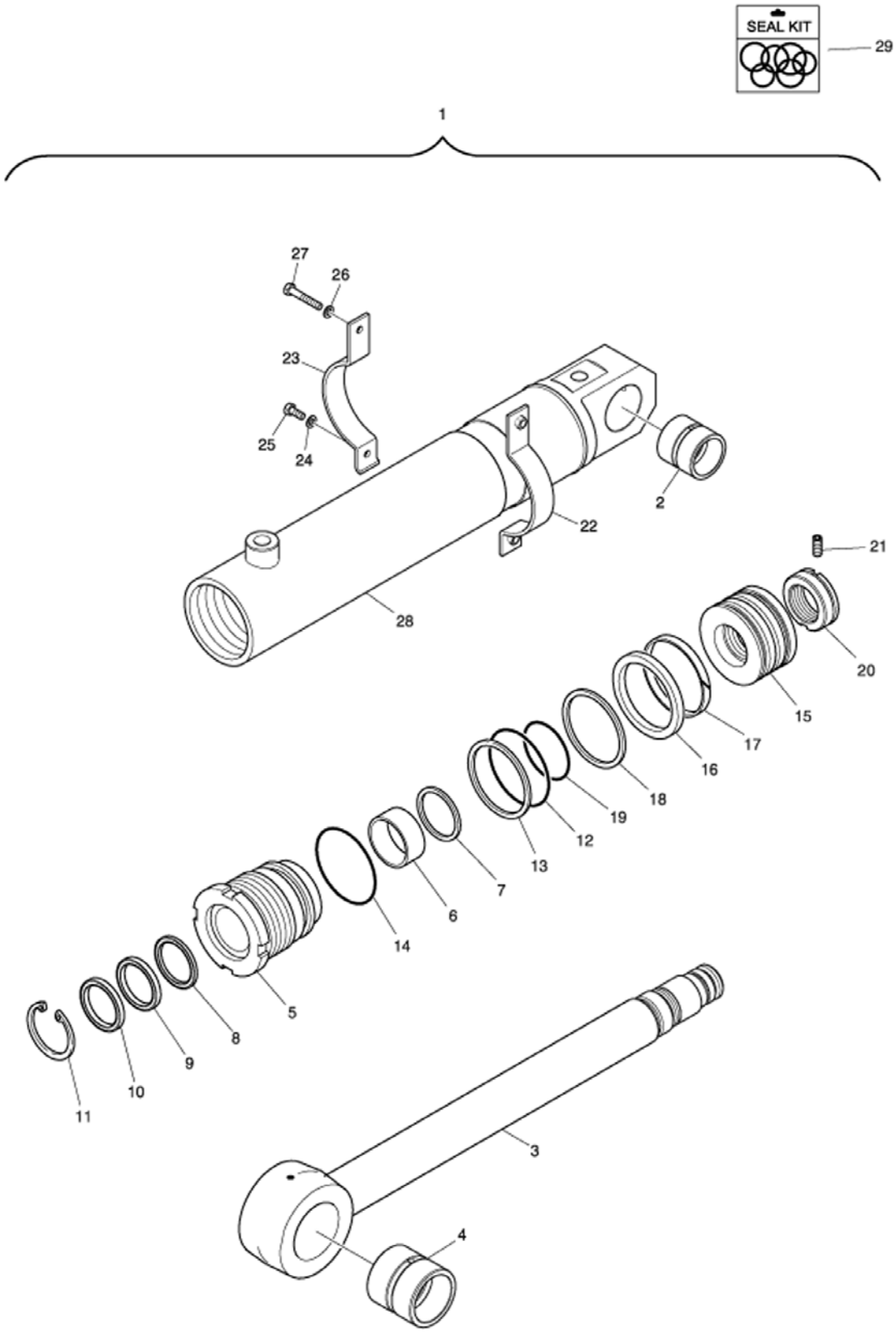


EM7003



Page 414 - OSS# 2089524 - All rights reserved by Bobcat Company - 05/11/2012 - 06:30:39 - Produced by Ken Cook Co. with mediaIoff

## ARTICULATED BOOM (Cont'd)
## (Upper Boom Cylinder)
### (EMEA)

| Ref No | Part Number | Description | Remarks | Serial Number | Qty |
|---|---|---|---|---|---|
| 1 | 7015680 | CYLINDER,ARTI; LOCK V/V | W/Ref. 2-28 | | 1 |
| 2 | 7005752 | BUSHING | | | 1 |
| 3 | 7015677 | ROD ASSY,CYLINDER | | | 1 |
| 4 | 7006006 | BUSHING | | | 1 |
| 5 | 7015678 | COVER,ROD | | | 1 |
| 6 | 7015679 | BUSHING | | | 1 |
| 7 | 7007503 | RING RETAINING | | | 1 |
| 8 | 7007025 | SEAL BUFFER | | | 1 |
| 9 | 7003759 | SEAL | | | 1 |
| 10 | 7003792 | WIPER DUST | | | 1 |
| 11 | 7003724 | RING RETAINING | | | 1 |
| 12 | 7007944 | ORING | | | 1 |
| 13 | 7015681 | RING,BACK UP | | | 1 |
| 14 | 7007945 | ORING | | | 1 |
| 15 | 7015682 | PISTON | | | 1 |
| 16 | 7015683 | SEAL | | | 1 |
| 17 | 7006827 | RING WEAR | | | 1 |
| 18 | 7006828 | RING DUST | | | 1 |
| 19 | 7007935 | ORING | | | 1 |
| 20 | 7015684 | NUT,PISTON | | | 1 |
| 21 | 7015685 | SCREW,SET | | | 1 |
| 22 | 7015686 | BAND ASSY,PIPE | | | 1 |
| 23 | 7015947 | BAND,PIPE | | | 1 |
| 24 | 7007829 | WASHER | | | 1 |
| 25 | 7015948 | BOLT | | | 1 |
| 26 | 7007829 | WASHER | | | 1 |
| 27 | 7015949 | BOLT | | | 1 |
| 28 | 7015676 | TUBE ASSY | | | 1 |
| 29 | 7015950 | SEAL KIT;ARTI BOOM | W/Ref. 8-10, 12-14 & 16-19 | | 1 |

Page 415 - OSS# 2089524 - All rights reserved by Bobcat Company - 05/11/2012 - 06:30:39 - Produced by Ken Cook Co. with mediaioff

# ARTICULATED BOOM
## (Arm Cylinder) (W/O Lock Valve)
## (EMEA)

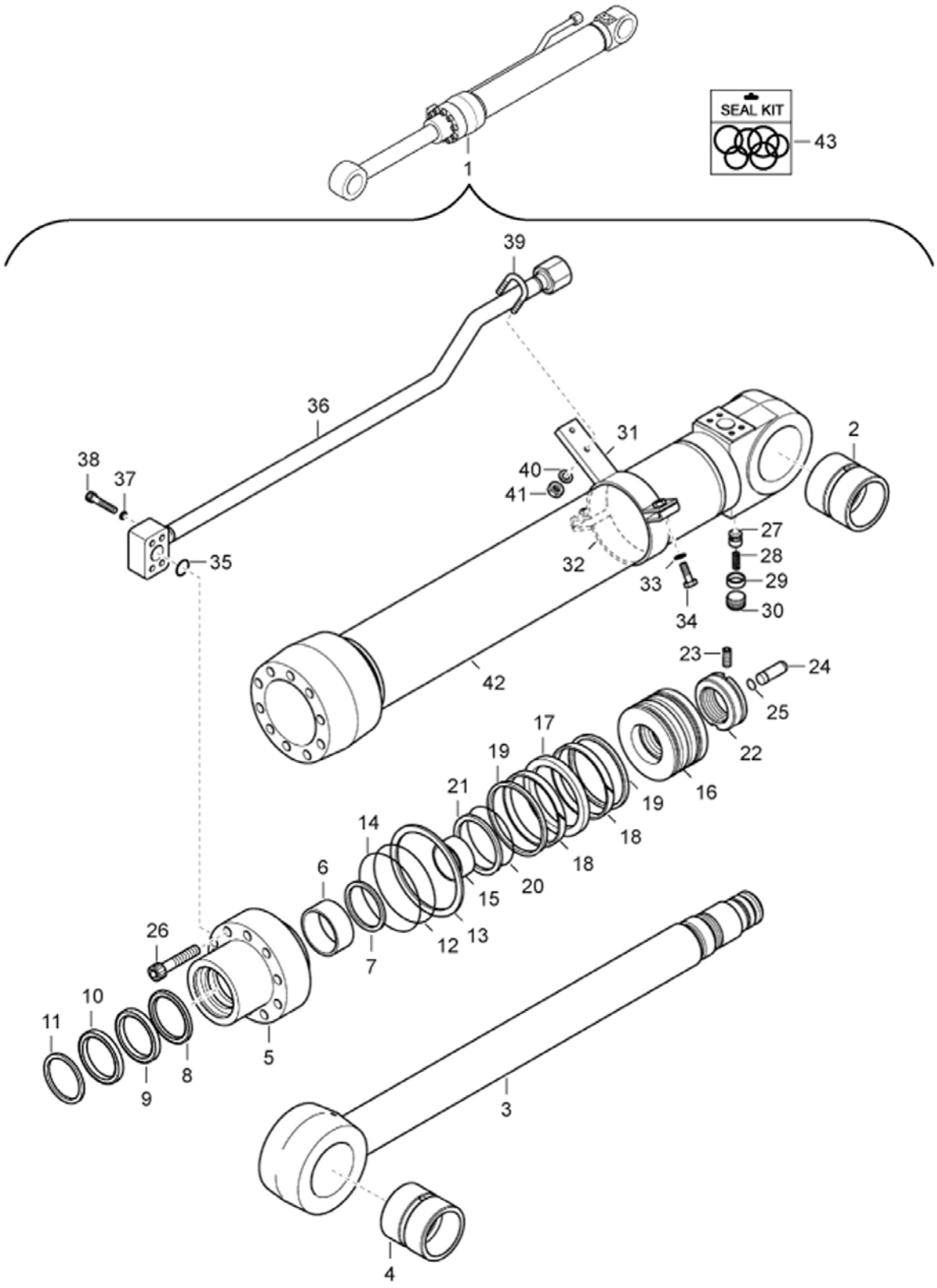


EM7179



Page 416 - OSS# 2089524 - All rights reserved by Bobcat Company - 05/11/2012 - 06:30:39 - Produced by Ken Cook Co. with mediaioff

## ARTICULATED BOOM (Cont'd)
## (Arm Cylinder) (W/O Lock Valve)
## (EMEA)

| Ref No | Part Number | Description | Remarks | Serial Number | Qty |
|---|---|---|---|---|---|
| 1 | 7006028 | CYLINDER ARM | W/Ref. 2-42 | AET311001 - 11051 | 1 |
| 1 | 7006028 | CYLINDER ARM | W/Ref. 2-42 | AETB11001 - 11051 | 1 |
| 1 | 7012247 | CYLINDER;ARM | W/Ref. 2-42 | AET311052 & Above | 1 |
| 1 | 7012247 | CYLINDER;ARM | W/Ref. 2-42 | AETB11052 & Above | 1 |
| 2 | 7006005 | BUSHING | | | 1 |
| 3 | 7007530 | ROD ASSY | | | 1 |
| 4 | 7006005 | BUSHING | | | 1 |
| 5 | 7007509 | COVER ROD | | | 1 |
| 6 | 7003709 | BUSHING DD | | | 1 |
| 7 | 7003722 | RING RETAINING | | | 1 |
| 8 | 7003788 | SEAL BUFFER | | | 1 |
| 9 | 7003758 | SEAL | | | 1 |
| 10 | 7003791 | WIPER DUST | | | 1 |
| 11 | 7003862 | RING RETAINING | | | 1 |
| 12 | 7007944 | ORING | | | 1 |
| 13 | 7003766 | RING BACK-UP | | | 1 |
| 14 | 7007945 | ORING | | | 1 |
| 15 | 7006835 | RING CUSHION | | | 1 |
| 16 | 7006847 | PISTON | | | 1 |
| 17 | 7003947 | SEAL SLIPPER | | | 1 |
| 18 | 7007507 | RING WEAR | | | 2 |
| 19 | 7007502 | RING DUST | | | 2 |
| 20 | 7003755 | ORING | | | 1 |
| 21 | 7006829 | RING BACK-UP | | | 2 |
| 22 | 7006830 | NUT PISTON | | | 1 |
| 23 | 7007792 | SCREW SET | | | 1 |
| 24 | 7003836 | DIAPHRAGM PLUNGER CUSHION | | | 1 |
| 25 | 7003728 | RING STOP | | | 1 |
| 26 | 7007772 | BOLT HEX SOCKET | | | 10 |
| 27 | 7003826 | VALVE CHECK | | | 1 |
| 28 | 7003742 | SPRING | | | 1 |
| 29 | 7003824 | PLATE THRUST | | | 1 |
| 30 | 7004674 | PLUG PT3/8 | | | 1 |
| 31 | 7007532 | TUBELINE BAND ASSY | | | 1 |
| 32 | 7007508 | BAND TUBELINE | | | 1 |
| 33 | 7007830 | WASHER SPRING | | | 2 |
| 34 | 7007669 | BOLT | Was 7014864 [D] | | 2 |
| 35 | 7007912 | ORING | | | 1 |
| 36 | 7007531 | TUBELINE ASSY-R | | | 1 |
| 37 | 7007829 | WASHER | | | 4 |
| 38 | 7007740 | BOLT SOCKET M8X45 | | | 4 |
| 39 | 7007505 | U-BOLT | | | 1 |
| 40 | 7007829 | WASHER | | | 2 |
| 41 | 7007769 | BOLT SOCKET | | | 2 |
| 42 | 7007529 | TUBELINE ASSY | | | 1 |
| 43 | 7007412 | KIT SEAL | W/Ref. 8-10, 12-14 & 17-21 | | |



Page 417 - OSS# 2089524 - All rights reserved by Bobcat Company - 05/11/2012 - 06:30:39 - Produced by Ken Cook Co. with mediaioff

## ARTICULATED BOOM
## (Arm Cylinder) (W/Lock Valve)
## (EMEA)

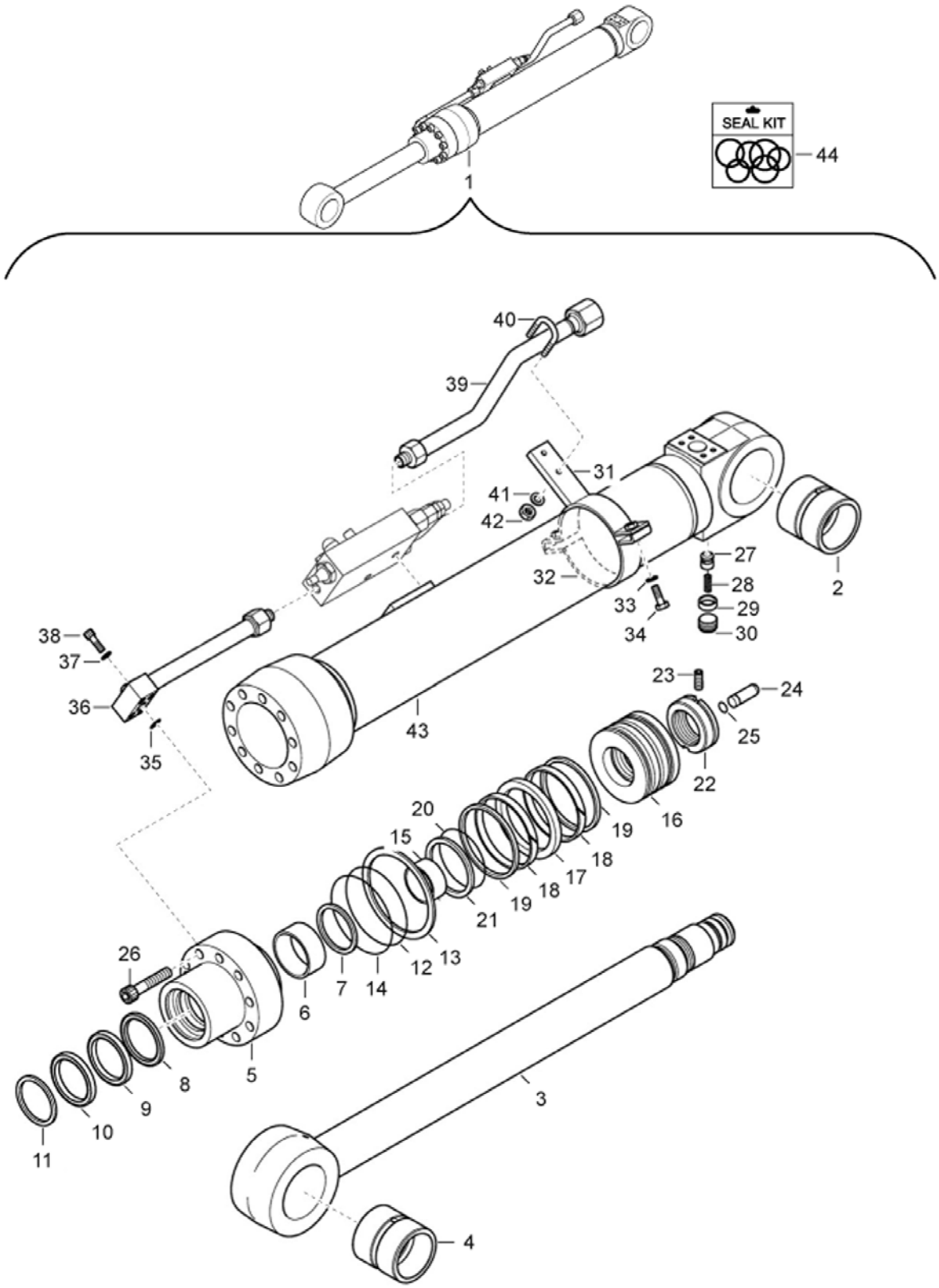


EM7180



Page 418 - OSS# 2089524 - All rights reserved by Bobcat Company - 05/11/2012 - 06:30:39 - Produced by Ken Cook Co. with mediaIoff

## ARTICULATED BOOM (Cont'd)
## (Arm Cylinder) (W/Lock Valve)
## (EMEA)

| Ref No | Part Number | Description | Remarks | Serial Number | Qty |
|---|---|---|---|---|---|
| 1 | 7006799 | CYLINDER ARM LOCK VALVE | W/Lock valve - W/Ref. 2-43 | AET311001 - 11051 | 1 |
| 1 | 7006799 | CYLINDER ARM LOCK VALVE | W/Lock valve - W/Ref. 2-43 | AETB11001 - 11051 | 1 |
| 1 | 7012248 | CYLINDER;ARM | W/Ref. 2-43 | AET311052 & Above | 1 |
| 1 | 7012248 | CYLINDER;ARM | W/Ref. 2-43 | AETB11052 & Above | 1 |
| 2 | 7006005 | BUSHING | | | 1 |
| 3 | 7007530 | ROD ASSY | | | 1 |
| 4 | 7006005 | BUSHING | | | 1 |
| 5 | 7007509 | COVER ROD | | | 1 |
| 6 | 7003709 | BUSHING DD | | | 1 |
| 7 | 7003722 | RING RETAINING | | | 1 |
| 8 | 7003788 | SEAL BUFFER | | | 1 |
| 9 | 7003758 | SEAL | | | 1 |
| 10 | 7003791 | WIPER DUST | | | 1 |
| 11 | 7003862 | RING RETAINING | | | 1 |
| 12 | 7007944 | ORING | | | 1 |
| 13 | 7003766 | RING BACK-UP | | | 1 |
| 14 | 7007945 | ORING | | | 1 |
| 15 | 7006835 | RING CUSHION | | | 1 |
| 16 | 7006847 | PISTON | | | 1 |
| 17 | 7003947 | SEAL SLIPPER | | | 1 |
| 18 | 7007507 | RING WEAR | | | 2 |
| 19 | 7007502 | RING DUST | | | 2 |
| 20 | 7003755 | ORING | | | 1 |
| 21 | 7006829 | RING BACK-UP | | | 2 |
| 22 | 7006830 | NUT PISTON | | | 1 |
| 23 | 7007792 | SCREW SET | | | 1 |
| 24 | 7003836 | DIAPHRAGM PLUNGER CUSHION | | | 1 |
| 25 | 7003728 | RING STOP | | | 1 |
| 26 | 7007772 | BOLT HEX SOCKET | | | 10 |
| 27 | 7003826 | VALVE CHECK | | | 1 |
| 28 | 7003742 | SPRING | | | 1 |
| 29 | 7003824 | PLATE THRUST | | | 1 |
| 30 | 7004674 | PLUG PT3/8 | | | 1 |
| 31 | 7007532 | TUBELINE BAND ASSY | | | 1 |
| 32 | 7007508 | BAND TUBELINE | | | 1 |
| 33 | 7007830 | WASHER SPRING | | | 2 |
| 34 | 7007669 | BOLT | Was 7014864 [D] | | 2 |
| 35 | 7007912 | ORING | | | 1 |
| 36 | 7008290 | TUBELINE ASSY | | | 1 |
| 37 | 7007829 | WASHER | | | 4 |
| 38 | 7007740 | BOLT SOCKET M8X45 | | | 4 |
| 39 | 7008291 | TUBELINE ASSY | | | 1 |
| 40 | 7007505 | U-BOLT | | | 1 |
| 41 | 7007829 | WASHER | | | 2 |
| 42 | 7007769 | BOLT SOCKET | | | 2 |
| 43 | 7007529 | TUBELINE ASSY | | | 1 |
| 44 | 7007412 | KIT SEAL | W/Ref. 8-10, 12-14 & 17-21 | | |



Page 419 - OSS# 2089524 - All rights reserved by Bobcat Company - 05/11/2012 - 06:30:39 - Produced by Ken Cook Co. with mediaioff

# ARTICULATED BOOM
## (Counterweight)
## (EMEA)

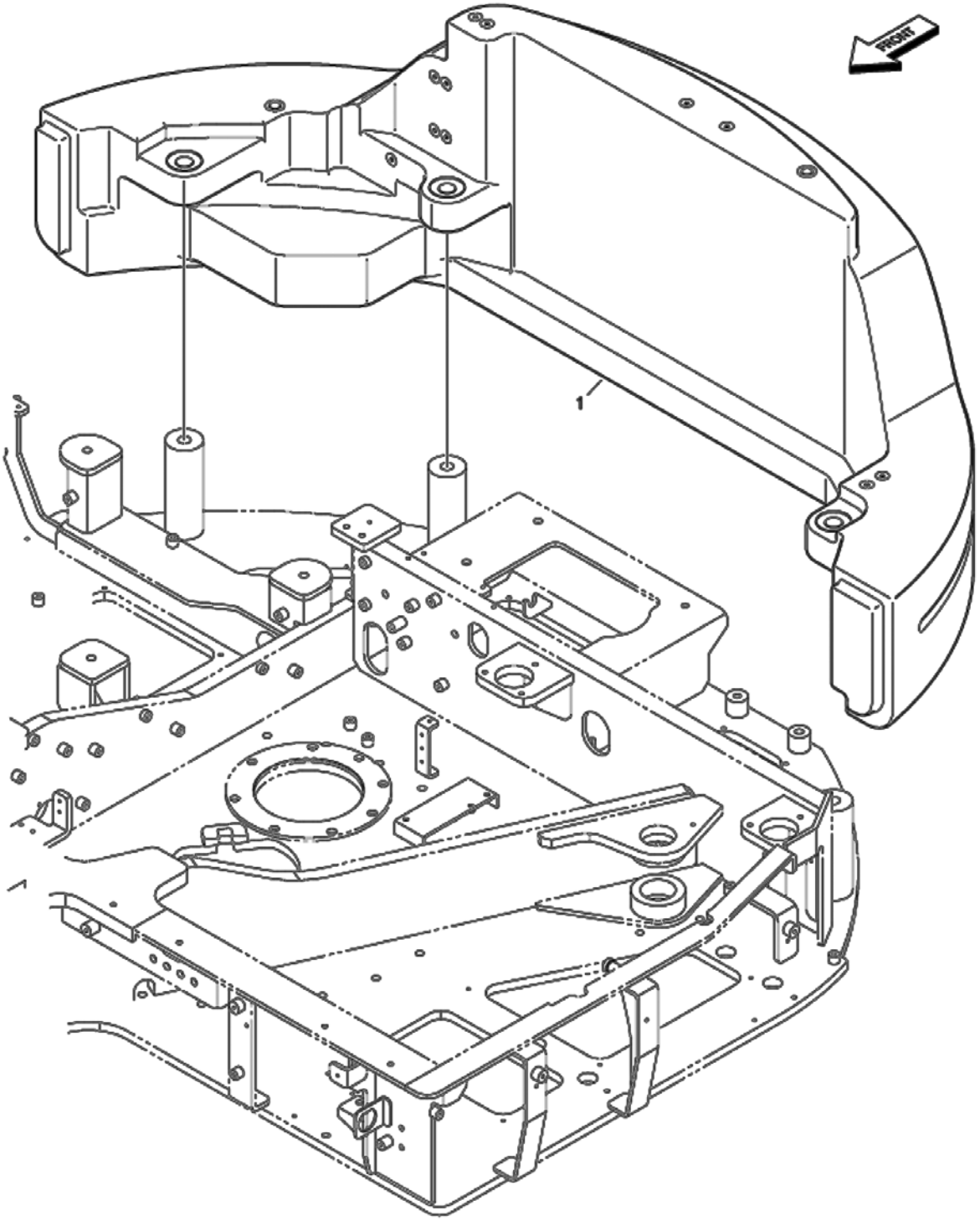


EM6275



Page 420 - OSS# 2089524 - All rights reserved by Bobcat Company - 05/11/2012 - 06:30:39 - Produced by Ken Cook Co. with mediaIoff

| Ref No | Part Number | Description | Remarks | Serial Number | Qty |
|---|---|---|---|---|---|
| 1 | 7017307 | COUNTERWEIGHT | | | 1 |

Page 421 - OSS# 2089524 - All rights reserved by Bobcat Company - 05/11/2012 - 06:30:39 - Produced by Ken Cook Co. with mediaioff

# ARTICULATED BOOM
## (Floormat)
## (EMEA)

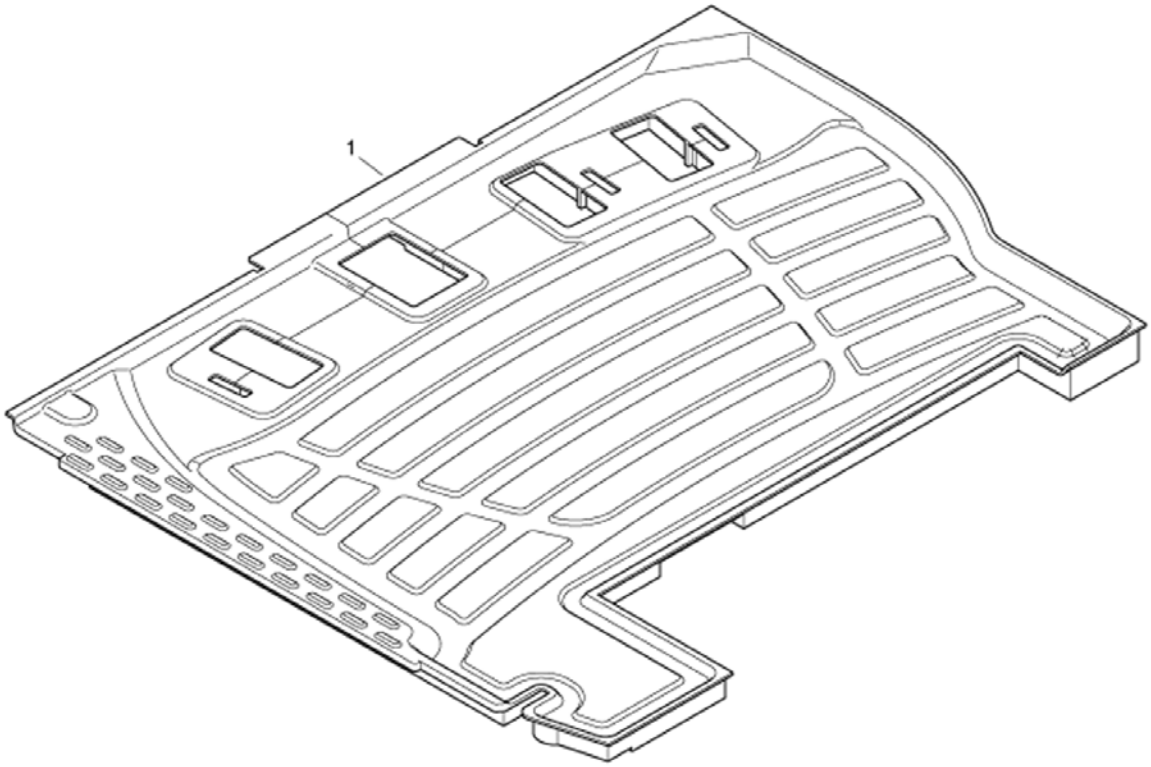


EM6279



Page 422 - OSS# 2089524 - All rights reserved by Bobcat Company - 05/11/2012 - 06:30:39 - Produced by Ken Cook Co. with mediaIoff

| Ref No | Part Number | Description | Remarks | Serial Number | Qty |
|---|---|---|---|---|---|
| 1 | 7015952 | MAT, FLOOR | | | 1 |

Page 423 - OSS# 2089524 - All rights reserved by Bobcat Company - 05/11/2012 - 06:30:39 - Produced by Ken Cook Co. with mediaioff

# ARTICULATED BOOM
## (Working Lamp)
## (EMEA)

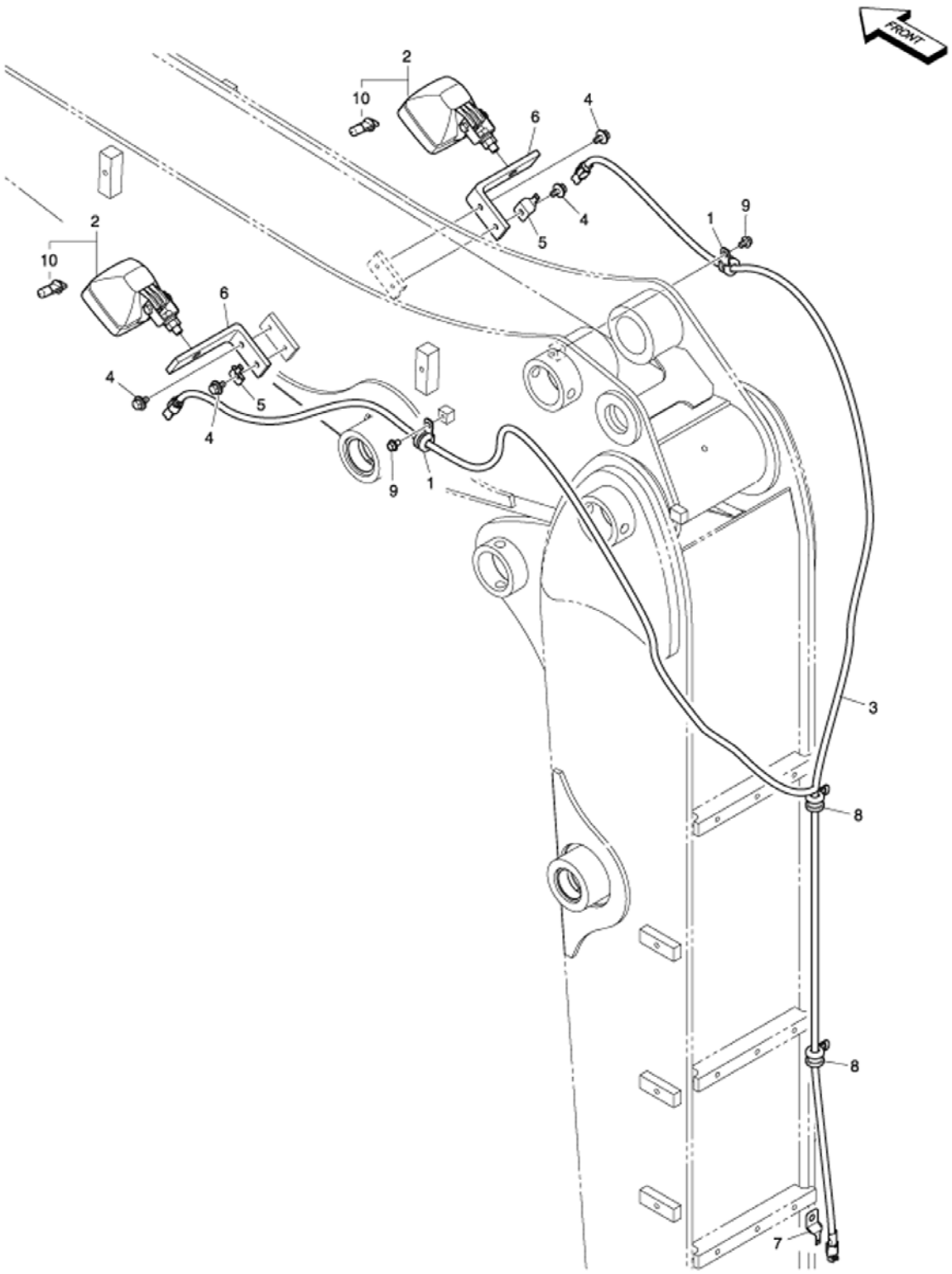


EM6299



Page 424 - OSS# 2089524 - All rights reserved by Bobcat Company - 05/11/2012 - 06:30:39 - Produced by Ken Cook Co. with mediaIoff

## ARTICULATED BOOM (Cont'd)
## (Working Lamp)
## (EMEA)

| Ref No | Part Number | Description | Remarks | Serial Number | Qty |
|---|---|---|---|---|---|
| 1 | 7003894 | CLIP | | | 2 |
| 2 | 7005713 | LAMP WORK | | | 2 |
| 3 | 7015982 | HARNESS;WORK LAMP | | | 1 |
| 4 | 7005129 | BOLT SET | | | 4 |
| 5 | 7004826 | BRACKET HOUSING | | | 2 |
| 6 | 7003971 | BRACKET LAMP | | | 2 |
| 7 | 7005803 | BRACKET | | | 1 |
| 8 | 7003893 | CLIP | | | 2 |
| 9 | 7005629 | BOLT | | | 2 |
| 10 | 7004886 | LIGHT BULB 12V 55W | 12V/55W | | 1 |

Page 425 - OSS# 2089524 - All rights reserved by Bobcat Company - 05/11/2012 - 06:30:39 - Produced by Ken Cook Co. with mediaioff

# BLADE CYLINDER KIT
## (W/Lock Valve)

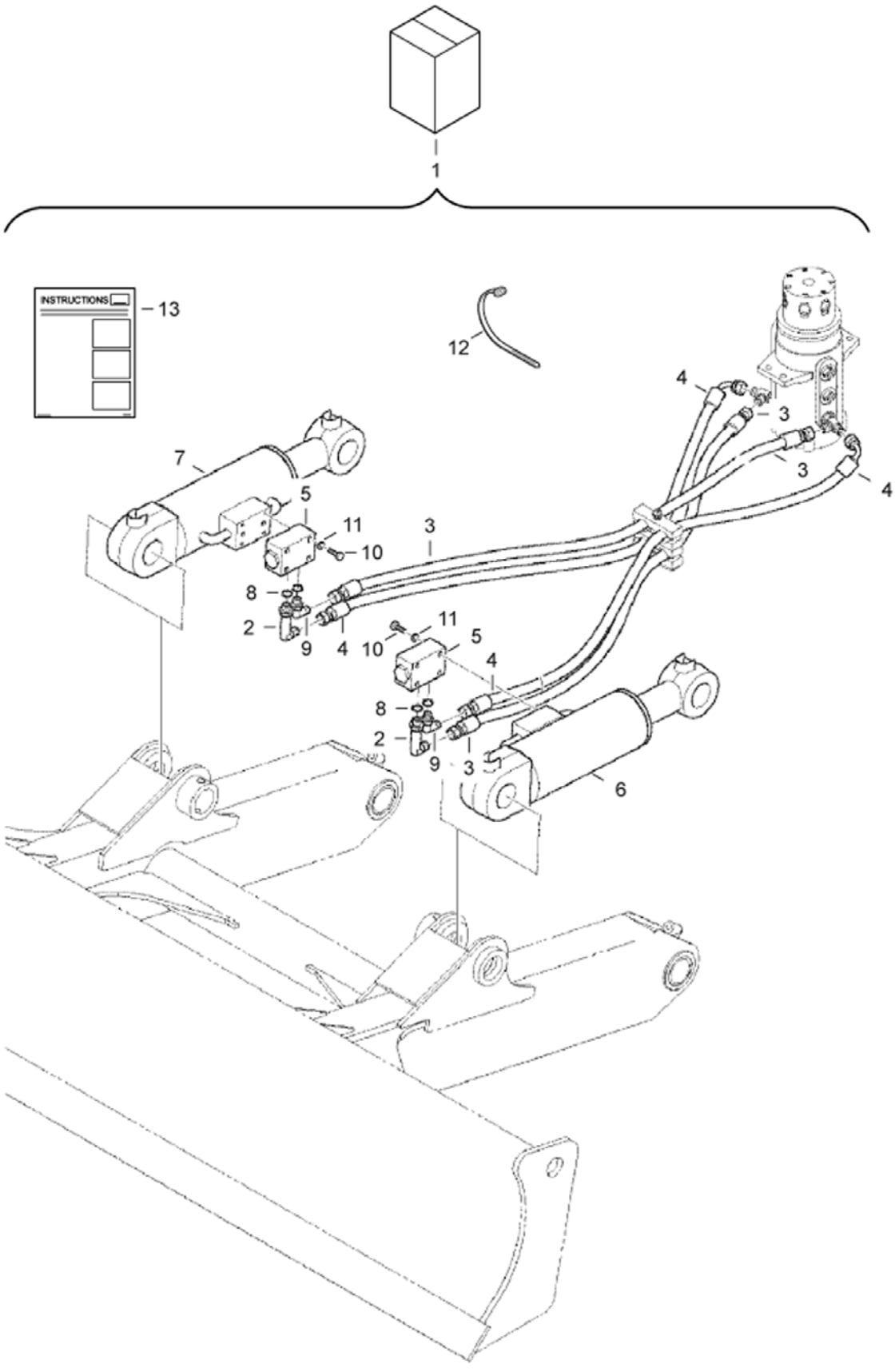




Page 426 - OSS# 2089524 - All rights reserved by Bobcat Company - 05/11/2012 - 06:30:39 - Produced by Ken Cook Co. with mediaIoff

## BLADE CYLINDER KIT (Cont'd)
## (W/Lock Valve)

| Ref No | Part Number | Description | Remarks | Serial Number | Qty |
|---|---|---|---|---|---|
| 1 | 7178239 | KIT, LOAD HOLD BLADE | W/lock valve - W/Ref. 2-13 | | 1 |
| 2 | 7004722 | ELBOW | | | 2 |
| 3 | 7005152 | HOSE | | | 2 |
| 4 | 7005202 | HOSE | | | 2 |
| 5 | 7006513 | VALVE CHECK | | | 2 |
| 6 | 7006547 | CYLINDER DOZER LH | | | 1 |
| 7 | 7006548 | CYLINDER DOZER RH | | | 1 |
| 8 | 7007909 | ORING | | | 4 |
| 9 | 7004716 | ELBOW | | | 2 |
| 10 | 7007660 | BOLT | | | 8 |
| 11 | 7007834 | WASHER SPRING | | | 8 |
| 12 | 6624289 | STRAP, TIE | | | 4 |
| 13 | 6987381 | INSTRUCTIONS | | | 1 |

Page 427 - OSS# 2089524 - All rights reserved by Bobcat Company - 05/11/2012 - 06:30:39 - Produced by Ken Cook Co. with mediaioff

# DECALS
## (Inside) (EMEA)

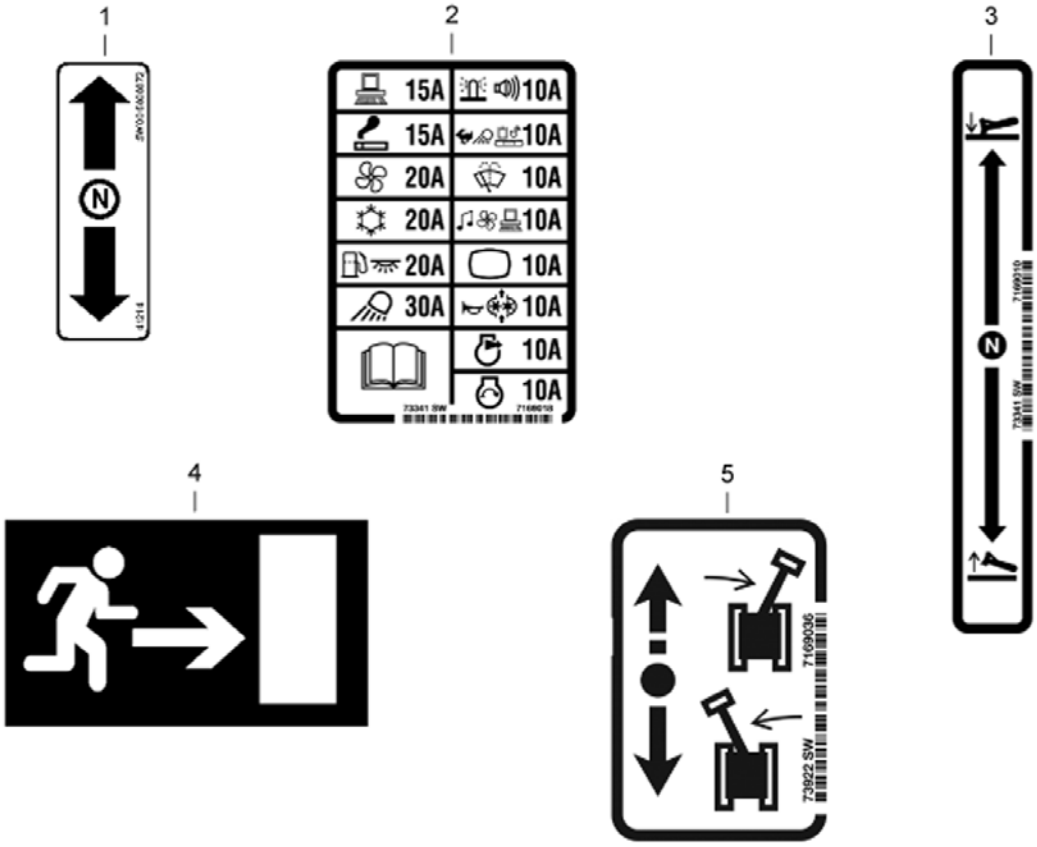


EM6005



Page 428 - OSS# 2089524 - All rights reserved by Bobcat Company - 05/11/2012 - 06:30:39 - Produced by Ken Cook Co. with mediaIoff

## DECALS (Cont'd)
## (Inside) (EMEA)

| Ref No | Part Number | Description | Remarks | Serial Number | Qty |
|---|---|---|---|---|---|
| 1 | 6808872 | DECAL | travel | | 2 |
| 2 | 7169018 | DECAL, FUSE | fuse | | 1 |
| 3 | 7169010 | DECAL, CONTROL | control | | 1 |
| 4 | 7169014 | DECAL, EXIT | exit | | 1 |
| 5 | 7169036 | DECAL, BOOM SWING | boom swing | | 1 |
| 6 | 7168996 | DECAL, WARNING | warning | | 1 |

Page 429 - OSS# 2089524 - All rights reserved by Bobcat Company - 05/11/2012 - 06:30:39 - Produced by Ken Cook Co. with mediaioff

# DECALS
## (Inside) (US)

1




2

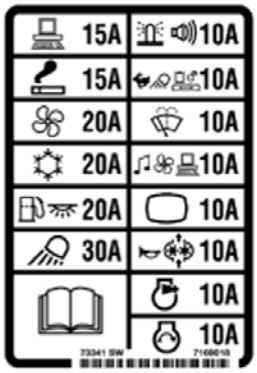


3




4



5



6

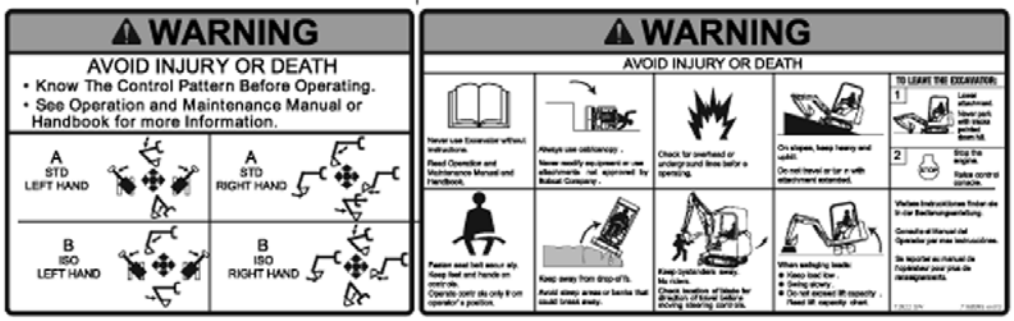


EM6007



Page 430 - OSS# 2089524 - All rights reserved by Bobcat Company - 05/11/2012 - 06:30:39 - Produced by Ken Cook Co. with mediaIoff

## DECALS (Cont'd)
## (Inside) (US)

| Ref No | Part Number | Description | Remarks | Serial Number | Qty |
|---|---|---|---|---|---|
| 1 | 6808872 | DECAL | travel | | 2 |
| 2 | 7169018 | DECAL, FUSE | fuse | | 1 |
| 3 | 7169010 | DECAL, CONTROL | control | | 1 |
| 4 | 7169014 | DECAL, EXIT | exit | | 1 |
| 5 | 7169036 | DECAL, BOOM SWING | boom swing | | 1 |
| 6 | 7168995 | DECAL, WARNING | warning | | 1 |

Page 431 - OSS# 2089524 - All rights reserved by Bobcat Company - 05/11/2012 - 06:30:39 - Produced by Ken Cook Co. with mediaioff

# DECALS
## (Outside) (EMEA)

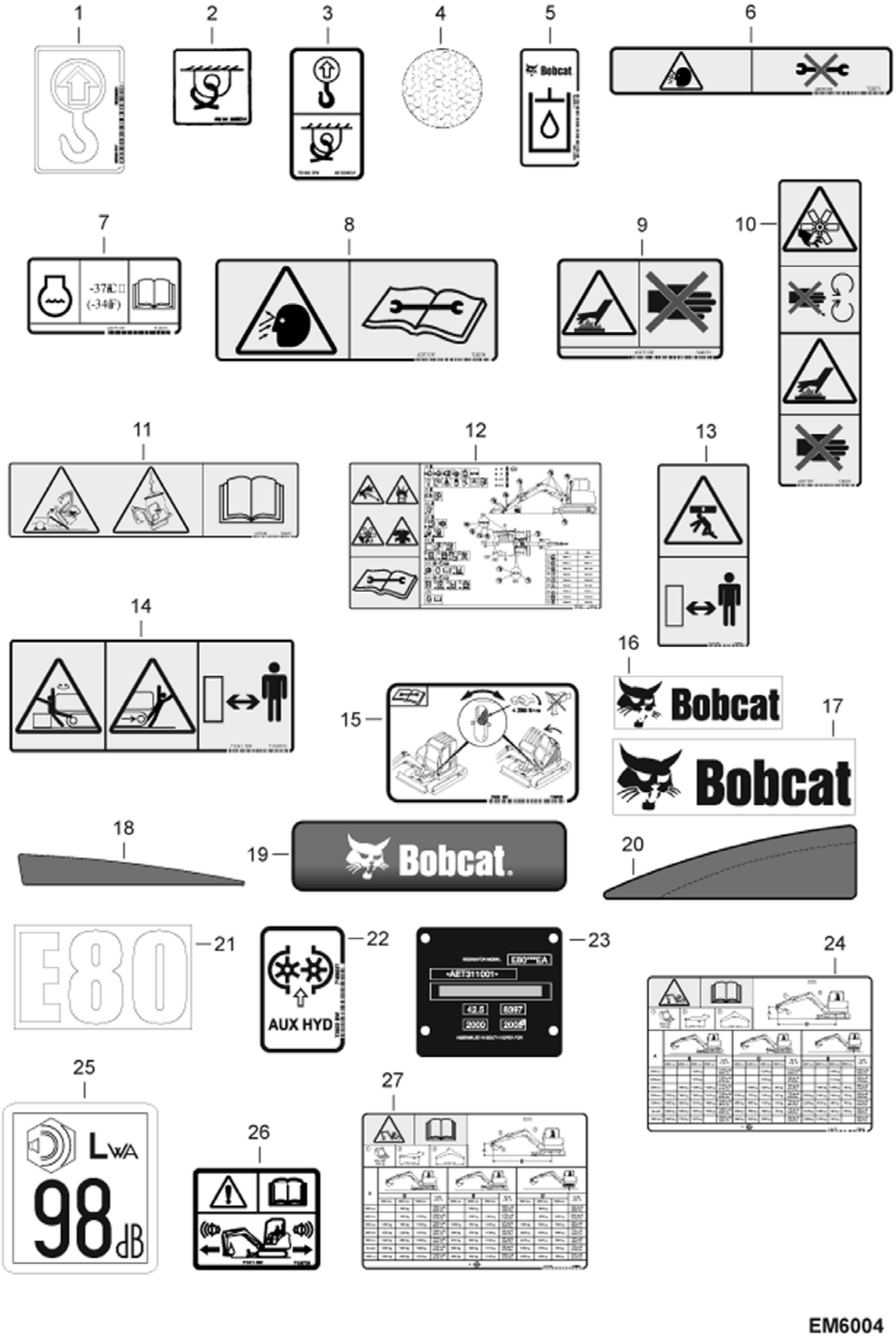


EM6004



Page 432 - OSS# 2089524 - All rights reserved by Bobcat Company - 05/11/2012 - 06:30:39 - Produced by Ken Cook Co. with mediaIoff

## DECALS (Cont'd)
## (Outside) (EMEA)

| Ref No | Part Number | Description | Remarks | Serial Number | Qty |
|---|---|---|---|---|---|
| 1 | 6533898 | DECAL | hook | | 1 |
| 2 | 6595014 | DECAL | tie down | | 1 |
| 3 | 6815993 | DECAL | lift / tie down | | 2 |
| 4 | 7106627 | DECAL | reflective | | 2 |
| 5 | 7120570 | DECAL | hydraulic oil | | 1 |
| 6 | 7120571 | DECAL | warning | | 4 |
| 7 | 7120573 | DECAL | engine coolant | | 1 |
| 8 | 7120574 | DECAL | warning | | 2 |
| 9 | 7120575 | DECAL | warning | | 1 |
| 10 | 7120579 | DECAL | warning | | 1 |
| 11 | 7120577 | DECAL | warning - no-text | | 1 |
| 12 | 7189181 | DECAL | service Was 7169003 [C] | | 1 |
| 13 | 7169007 | DECAL, STAY CLEAR | stay clear | | 2 |
| 14 | 7169009 | DECAL, STAY CLEAR | stay clear | | 2 |
| 15 | 7169020 | DECAL, CAB TILT | cab tilt | | 1 |
| 16 | 7169023 | DECAL, LOGO | logo | | 2 |
| 17 | 7169024 | DECAL, LOGO | logo | | 2 |
| 18 | 7169031 | DECAL | RH cover | | 1 |
| 19 | 7169032 | DECAL, LOGO | logo | | 1 |
| 20 | 7169030 | DECAL | LH cover | | 1 |
| 21 | 7169035 | DECAL, MODEL | model | | 2 |
| 22 | 7169037 | DECAL, AUX HYD | aux. hydraulics | | 1 |
| 23 | | PLATE | NAP | | 1 |
| 24 | 7169015 | DECAL, CAPACITY | lift capacity - long arm | | 1 |
| 25 | 7012590 | PLATE;NAME | sound power (LWA) | | 1 |
| 26 | 7136738 | DECAL WARNING | warning - W/ motion alarm option only | | 1 |
| 27 | 7169000 | DECAL, CAPACITY | lift capacity - short arm | | 1 |

Page 433 - OSS# 2089524 - All rights reserved by Bobcat Company - 05/11/2012 - 06:30:39 - Produced by Ken Cook Co. with mediaioff

# DECALS
## (Outside) (US)

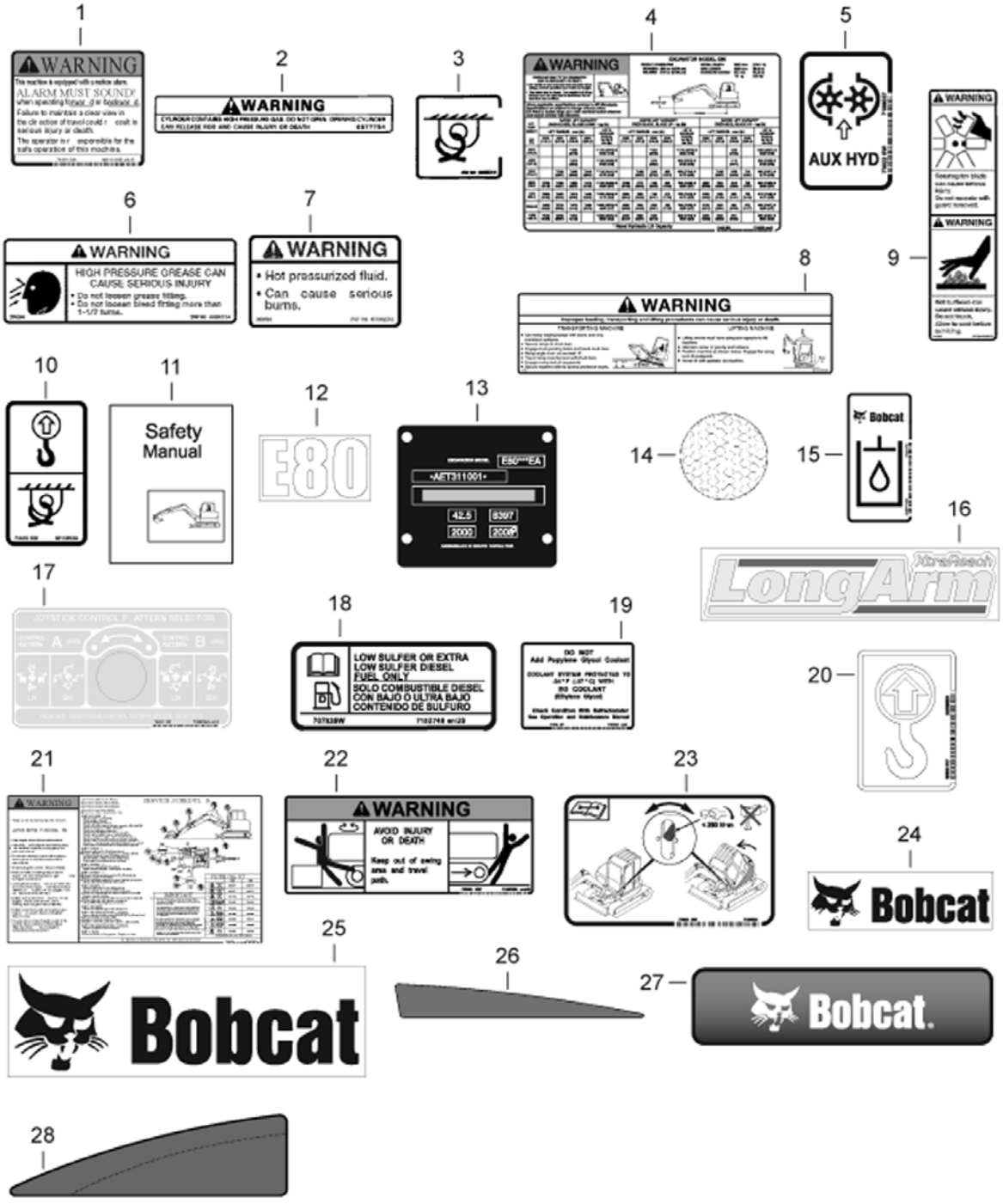


EM6006



Page 434 - OS$# 2089524 - All rights reserved by Bobcat Company - 05/11/2012 - 06:30:39 - Produced by Ken Cook Co. with mediaioff

## DECALS (Cont'd)
## (Outside) (US)

| Ref No | Part Number | Description | Remarks | Serial Number | Qty |
|---|---|---|---|---|---|
| 1 | 6810004 | DECAL, WARNING | warning - W/ motion alarm option only | | 1 |
| 2 | 6577754 | DECAL, WARNING | gas spring | | 4 |
| 3 | 6595014 | DECAL | tie down | | 1 |
| 4 | 7168999 | DECAL, CAPACITY | lift capacity | | 1 |
| 5 | 7169037 | DECAL, AUX HYD | aux. hydraulics | | 1 |
| 6 | 6804114 | DECAL, WARNING | high pressure grease | | 2 |
| 7 | 6804233 | DECAL | warning | | 1 |
| 8 | 6808185 | DECAL | warning - text | | 1 |
| 9 | 6809832 | DECAL | warning fan/hot | | 1 |
| 10 | 6815993 | DECAL | lift / tie down | | 2 |
| 11 | 6901951 | HANDBOOK | | | 1 |
| 12 | 7169035 | DECAL, MODEL | model | | 2 |
| 13 | | PLATE | S/N - NAP | | 1 |
| 14 | 7106627 | DECAL | reflective | | 2 |
| 15 | 7120570 | DECAL | hydraulic oil | | 1 |
| 16 | 7147433 | DECAL, ARM LONG | long arm | | 1 |
| 17 | 7169008 | DECAL, STD/ISO | STD/ISO | | 1 |
| 18 | 7152748 | DECAL, FUEL DIESEL | low sulfur | | 1 |
| 19 | 7157847 | DECAL, WARNING | eg coolant | | 1 |
| 20 | 6533898 | DECAL | hook | | 1 |
| 21 | 7189180 | DECAL SERVICE | service Was 7169002 [C] | | 1 |
| 22 | 7169006 | DECAL, STAY CLEAR | stay clear | | 2 |
| 23 | 7169020 | DECAL, CAB TILT | cab tilt | | 1 |
| 24 | 7169023 | DECAL, LOGO | logo | | 2 |
| 25 | 7169024 | DECAL, LOGO | logo | | 2 |
| 26 | 7169031 | DECAL | RH cover | | 1 |
| 27 | 7169032 | DECAL, LOGO | logo | | 1 |
| 28 | 7169030 | DECAL | LH cover | | 1 |

Page 435 - OSS# 2089524 - All rights reserved by Bobcat Company - 05/11/2012 - 06:30:39 - Produced by Ken Cook Co. with mediaioff

# FUEL TRANSFER PUMP KIT
# (US)

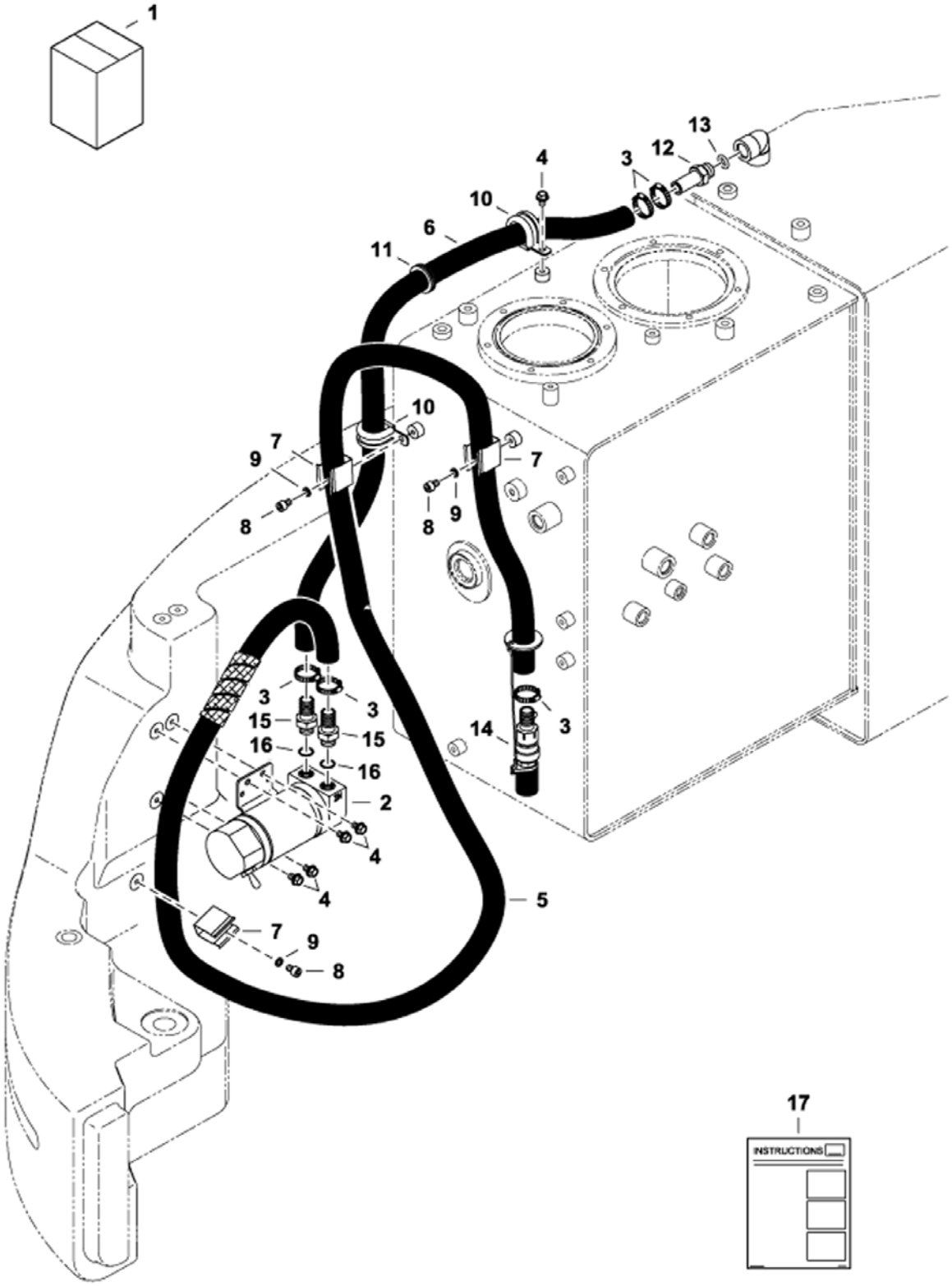


NA1578



Page 436 - OSS# 2089524 - All rights reserved by Bobcat Company - 05/11/2012 - 06:30:39 - Produced by Ken Cook Co. with mediaIoff

## FUEL TRANSFER PUMP KIT (Cont'd)
## (US)

| Ref No | Part Number | Description | Remarks | Serial Number | Qty |
|---|---|---|---|---|---|
| 1 | 7178251 | KIT, PUMP TRANSFER | W/Ref. 2-17 | | 1 |
| 2 | 7006285 | PUMP FUEL FILLER | | | 1 |
| 3 | 7008303 | CLAMP, HOSE | | | 4 |
| 4 | 7005629 | BOLT | | | 1 |
| 5 | 7008266 | HOSE, FUEL | | | 1 |
| 6 | 7006756 | HOSE FUEL | | | 1 |
| 7 | 7006747 | CLAMP | | | 3 |
| 8 | 7007732 | BOLT SOCKET | | | 3 |
| 9 | 7007842 | WASHER SPRING | | | 3 |
| 10 | 7003897 | CLIP | | | 2 |
| 11 | 7004609 | BUSHING RUBBER | | | 1 |
| 12 | 7004748 | ADAPTER | | | 1 |
| 13 | 7007911 | ORING | | | 1 |
| 14 | 7008276 | VALVE, CHECK | | | 1 |
| 15 | 7004763 | ADAPTER | | | 2 |
| 16 | 7007971 | SEAL RING | | | 2 |
| 17 | 6987456 | INSTRUCTIONS | | | 1 |

Page 437 - OSS# 2089524 - All rights reserved by Bobcat Company - 05/11/2012 - 06:30:39 - Produced by Ken Cook Co. with mediaioff

# FUEL TRANSFER PUMP & CHECK VALVE
# (US)

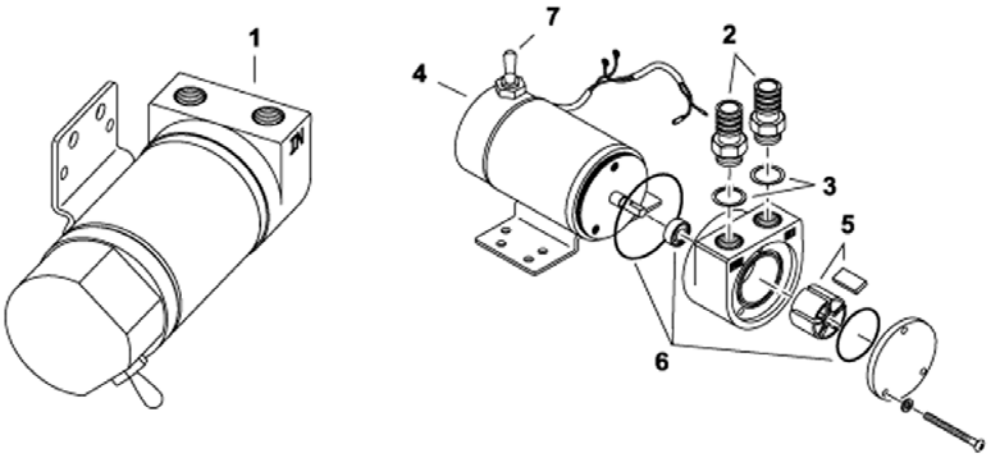


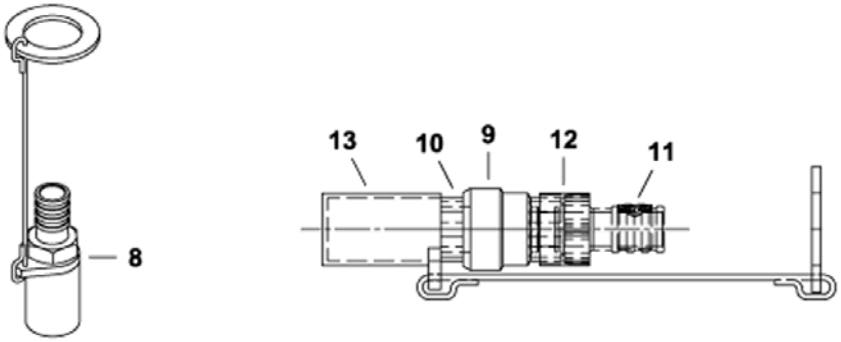


NA2347



Page 438 - OSS# 2089524 - All rights reserved by Bobcat Company - 05/11/2012 - 06:30:39 - Produced by Ken Cook Co. with mediaioff

## FUEL TRANSFER PUMP & CHECK VALVE (Cont'd)
## (US)

| Ref No | Part Number | Description | Remarks | Serial Number | Qty |
|---|---|---|---|---|---|
| 1 | 7006285 | PUMP FUEL FILLER | W/Ref. 2-7 | | 1 |
| 2 | 7004763 | ADAPTER | | | 2 |
| 3 | 7007971 | SEAL RING | | | 2 |
| 4 | 7005007 | MOTOR FUEL TRANSFER | | | 1 |
| 5 | 7004967 | KIT VANE | | | 1 |
| 6 | 7004857 | KIT SEAL | | | 1 |
| 7 | 7008149 | SWITCH, TOGGLE | | | 1 |
| 8 | 7008276 | VALVE, CHECK | W/Ref. 9-13 | | 1 |
| 9 | 7004860 | VALVE CHECK | | | 1 |
| 10 | 7004878 | FILTER STRAINER | | | 1 |
| 11 | 7004763 | ADAPTER | | | 1 |
| 12 | 7007971 | SEAL RING | | | 1 |
| 13 | 7004621 | CAP STRAINER | | | 1 |

Page 439 - OSS# 2089524 - All rights reserved by Bobcat Company - 05/11/2012 - 06:30:39 - Produced by Ken Cook Co. with mediaioff

# ISO SELECTOR VALVE TOOL
# (US)

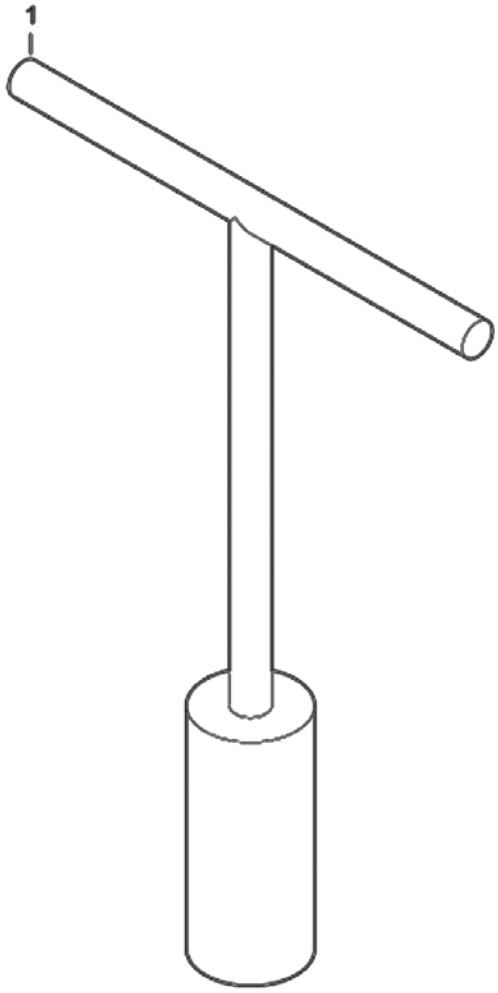


EM6014



Page 440 - OSS# 2089524 - All rights reserved by Bobcat Company - 05/11/2012 - 06:30:39 - Produced by Ken Cook Co. with mediaioff

## ISO SELECTOR VALVE TOOL (Cont'd)
## (US)

| Ref No | Part Number | Description | Remarks | Serial Number | Qty |
|---|---|---|---|---|---|
| 1 | 7012276 | SOCKET,WRENCH;T-HANDLE | | | 1 |

Page 441 - OSS# 2089524 - All rights reserved by Bobcat Company - 05/11/2012 - 06:30:39 - Produced by Ken Cook Co. with mediaioff

# MOTION ALARM

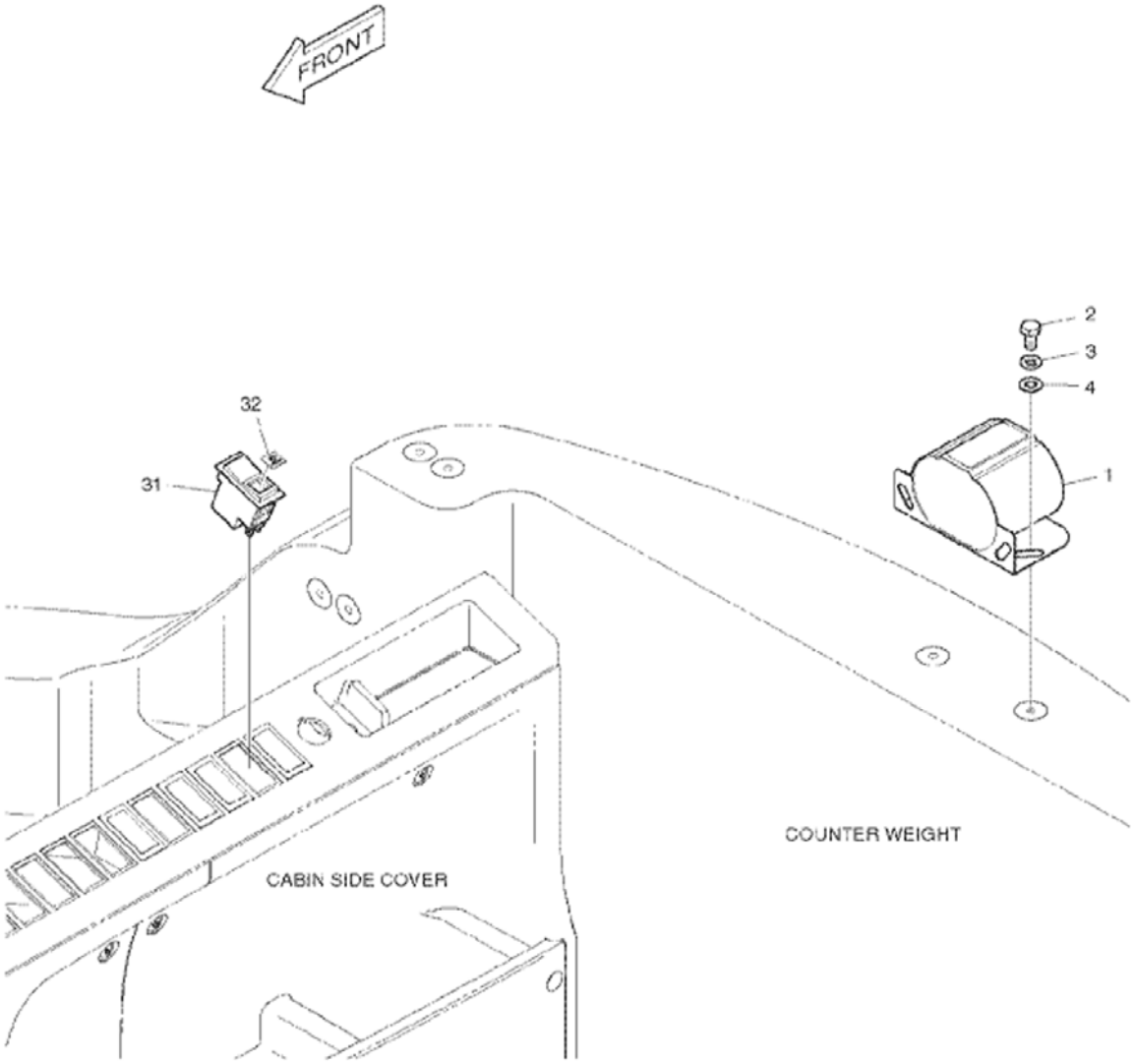


E80-6170



Page 442 - OSS# 2089524 - All rights reserved by Bobcat Company - 05/11/2012 - 06:30:39 - Produced by Ken Cook Co. with mediaioff

| Ref No | Part Number | Description | Remarks | Serial Number | Qty |
|---|---|---|---|---|---|
| 1 | 7005006 | ALARM | | | 1 |
| 2 | 7007615 | BOLT | | | 2 |
| 3 | 7007834 | WASHER SPRING | | | 2 |
| 4 | 7007816 | WASHER | | | 2 |
| 31 | 7004916 | SWITCH ROCKER 12V | | | 1 |
| 32 | 7004822 | INSERT TRAVEL ALARM | | | 1 |

Page 443 - OSS# 2089524 - All rights reserved by Bobcat Company - 05/11/2012 - 06:30:39 - Produced by Ken Cook Co. with mediaioff

# MOTION ALARM KIT

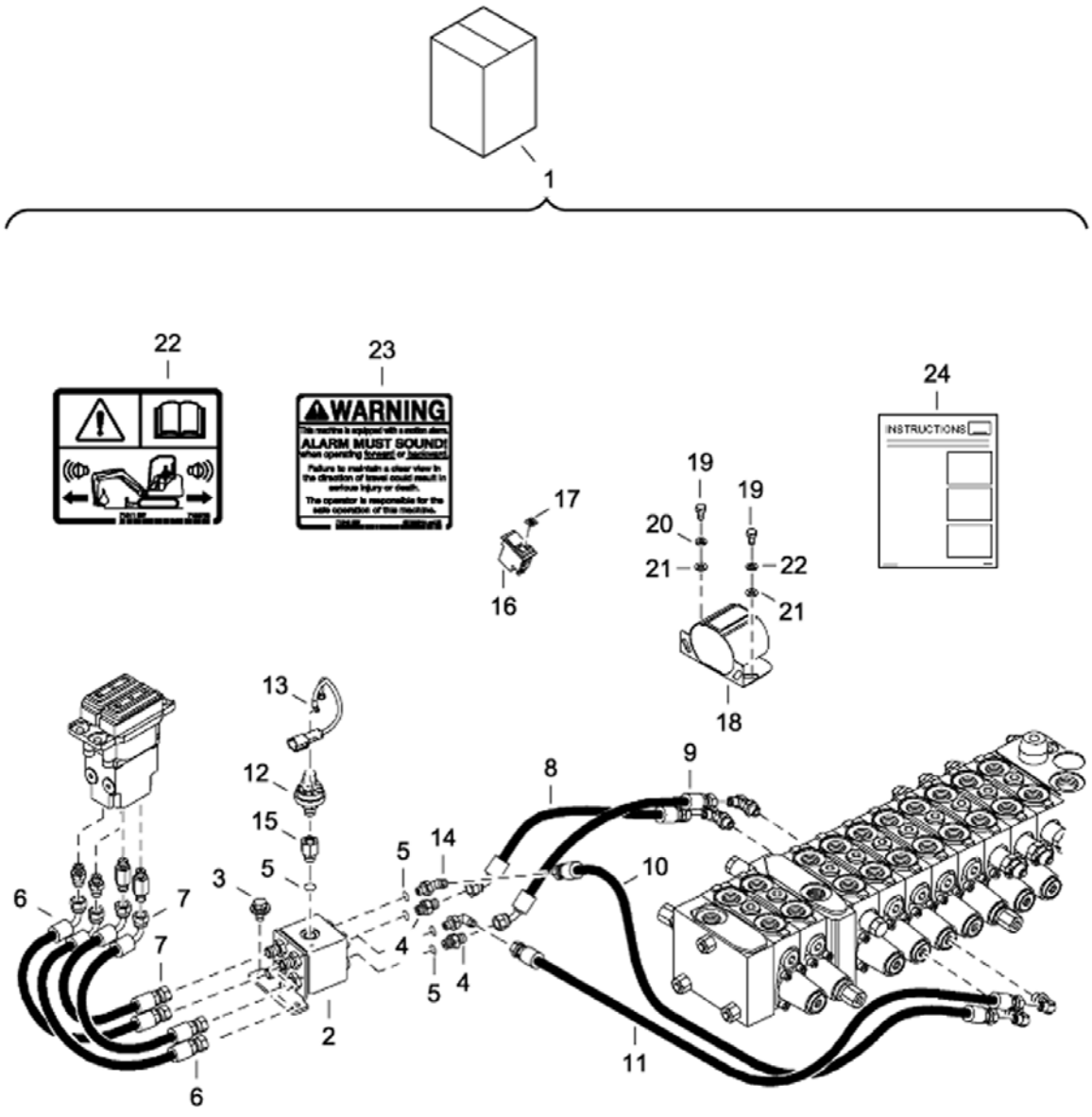


EM5529



Page 444 - OSS# 2089524 - All rights reserved by Bobcat Company - 05/11/2012 - 06:30:39 - Produced by Ken Cook Co. with mediaIoff

# MOTION ALARM KIT (Cont'd)

| Ref No | Part Number | Description | Remarks | Serial Number | Qty |
|---|---|---|---|---|---|
| 1 | 7178247 | KIT, ALARM MOTION | W/Ref. 2-24 | | 1 |
| 2 | 7008274 | VALVE, SHUTTLE | | | 1 |
| 3 | 7005135 | BOLT | | | 2 |
| 4 | 7004683 | ADAPTER | | | 2 |
| 5 | 7007906 | ORING | | | 5 |
| 6 | 7005358 | HOSE PF1/4-330L | | | 2 |
| 7 | 7005361 | HOSE PF1/4-310L | | | 2 |
| 8 | 7005289 | HOSE PF1/4-380L | | | 1 |
| 9 | 7005263 | HOSE | | | 1 |
| 10 | 7005474 | HOSE PF1/4-650L | | | 1 |
| 11 | 7005488 | HOSE | | | 1 |
| 12 | 7005031 | SWITCH PRESSURE | | | 1 |
| 13 | 7005012 | HARNESS JOINT | | | 1 |
| 14 | 7004713 | ELBOW | | | 2 |
| 15 | 7005554 | REDUCER | | | 1 |
| 16 | 7004916 | SWITCH ROCKER 12V | | | 1 |
| 17 | 7004822 | INSERT TRAVEL ALARM | | | 1 |
| 18 | 7005006 | ALARM | | | 1 |
| 19 | 7007614 | BOLT | Was 7007615 [B] | | 2 |
| 20 | 7007834 | WASHER SPRING | | | 2 |
| 21 | 7007816 | WASHER | | | 2 |
| 22 | 7136738 | DECAL WARNING | warning | | 1 |
| 23 | 6810004 | DECAL, WARNING | warning | | 1 |
| 24 | 6987384 | INSTRUCTIONS | | | 1 |

Page 445 - OSS# 2089524 - All rights reserved by Bobcat Company - 05/11/2012 - 06:30:39 - Produced by Ken Cook Co. with mediaioff

# QUICK COUPLER KIT
# (BQC - Type MS) (EMEA)

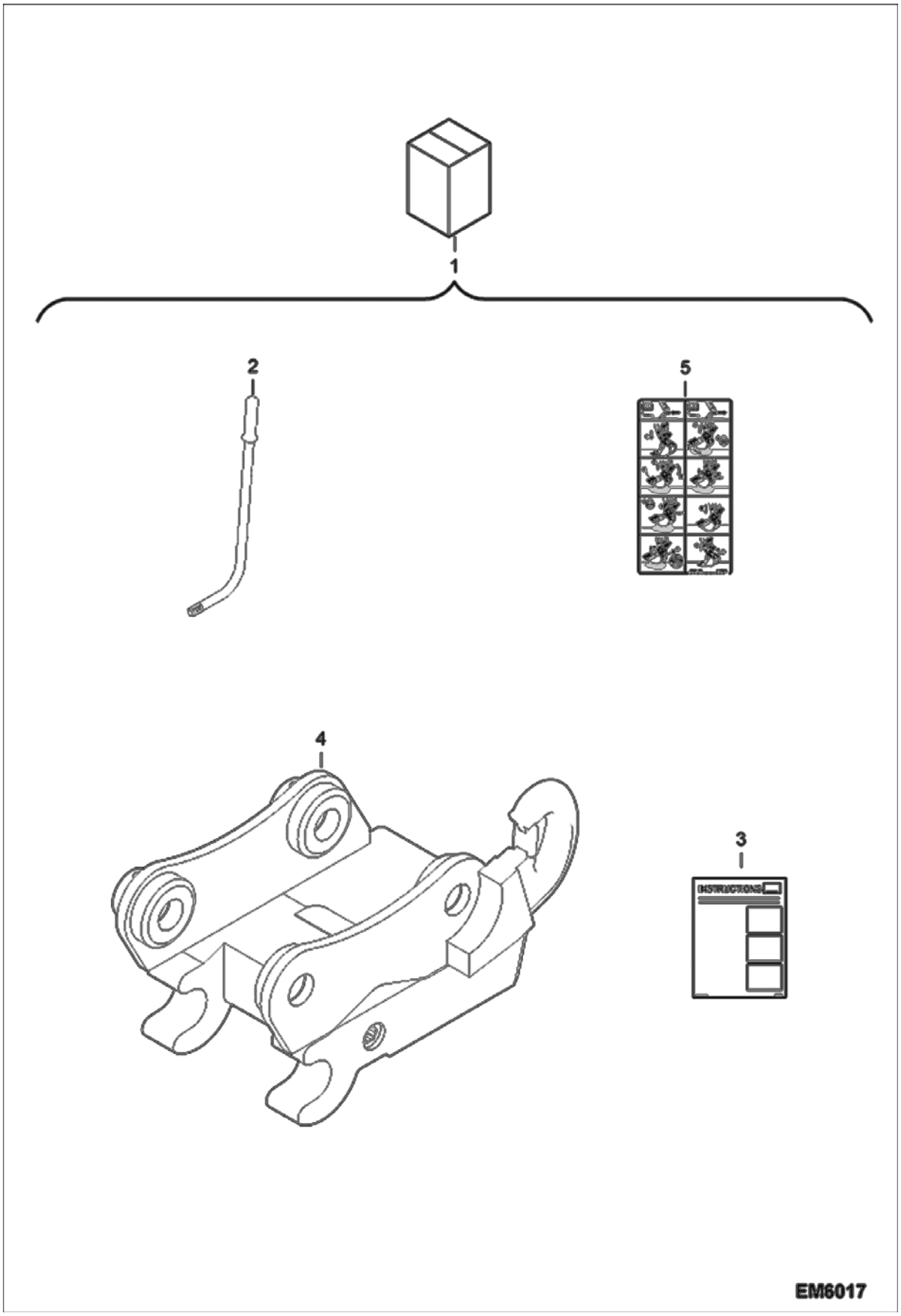




Page 446 - OSS# 2089524 - All rights reserved by Bobcat Company - 05/11/2012 - 06:30:39 - Produced by Ken Cook Co. with mediaIoff

## QUICK COUPLER KIT (Cont'd)
## (BQC - Type MS) (EMEA)

| Ref No | Part Number | Description | Remarks | Serial Number | Qty |
|---|---|---|---|---|---|
| 1 | 7173020 | KIT, QUICK COUPLER | W/Ref. 2-5 | | 1 |
| 2 | 6684361 | WRENCH, SOCKET | | | 1 |
| 3 | 6987333 | INSTRUCTIONS, INSTALL | INSTRUCTIONS, INSTALL | | 1 |
| 4 | 7171655 | COUPLER | | | 1 |
| 5 | 7174309 | DECAL | using coupler | | 1 |

Page 447 - OSS# 2089524 - All rights reserved by Bobcat Company - 05/11/2012 - 06:30:39 - Produced by Ken Cook Co. with mediaioff

## QUICK COUPLER KIT
## (BQC - Type K) (EMEA)

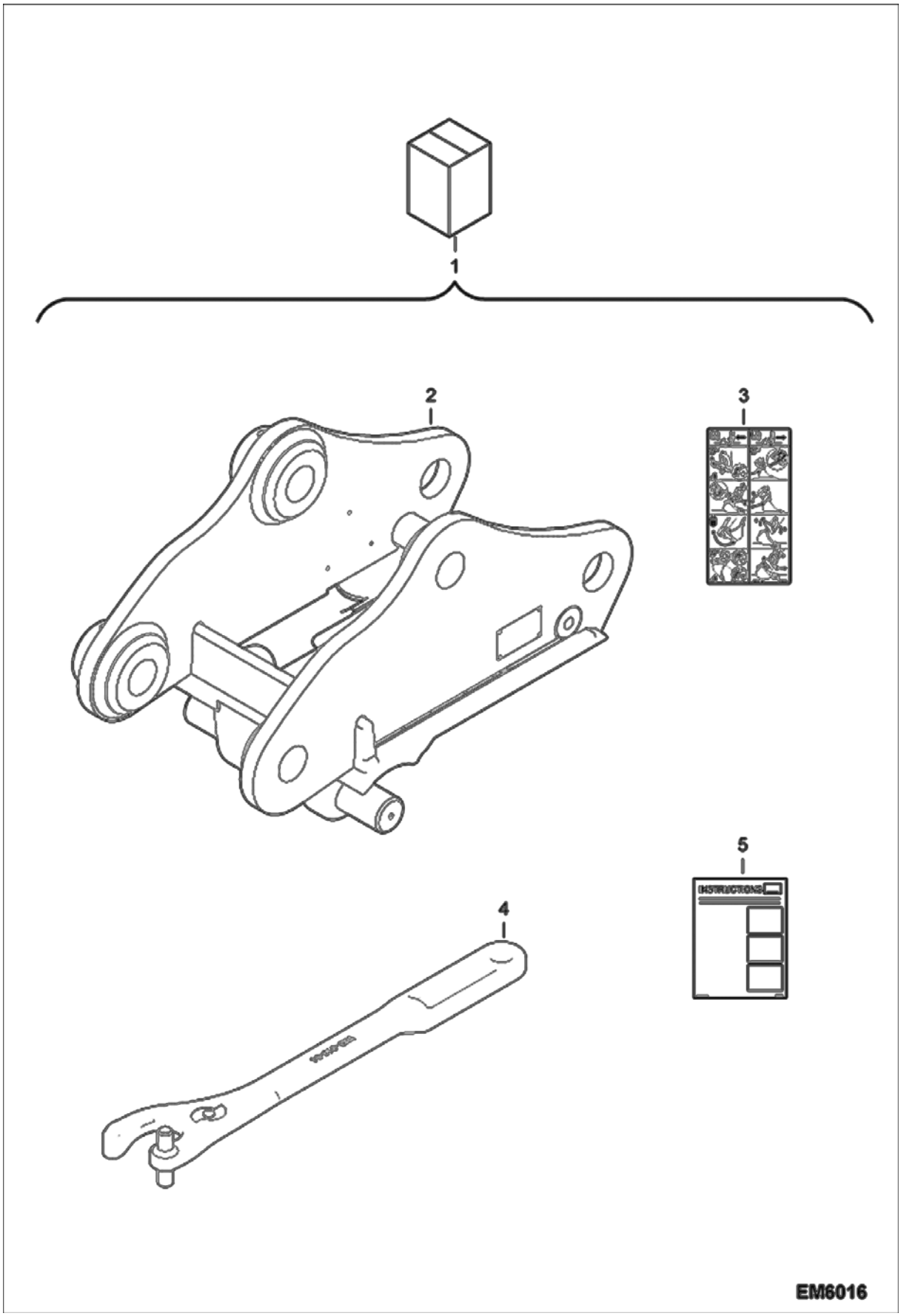




Page 448 - OSS# 2089524 - All rights reserved by Bobcat Company - 05/11/2012 - 06:30:39 - Produced by Ken Cook Co. with mediaioff

## QUICK COUPLER KIT (Cont'd)
## (BQC - Type K) (EMEA)

| Ref No | Part Number | Description | Remarks | Serial Number | Qty |
|---|---|---|---|---|---|
| 1 | 7171769 | KIT, QUICK COUPLER | W/Ref. 2-5 | | 1 |
| 2 | 7174157 | COUPLER | | | 1 |
| 3 | 7139000 | DECAL, USING CPLR | using coupler | | 1 |
| 4 | 6692783 | KEY | | | 1 |
| 5 | 6987344 | INTRUCTIONS, INSTALLATION | INTRUCTIONS, INSTALLATION | | 1 |

Page 449 - OSS# 2089524 - All rights reserved by Bobcat Company - 05/11/2012 - 06:30:39 - Produced by Ken Cook Co. with mediaioff

## ROTATING BEACON KIT
## (EMEA)

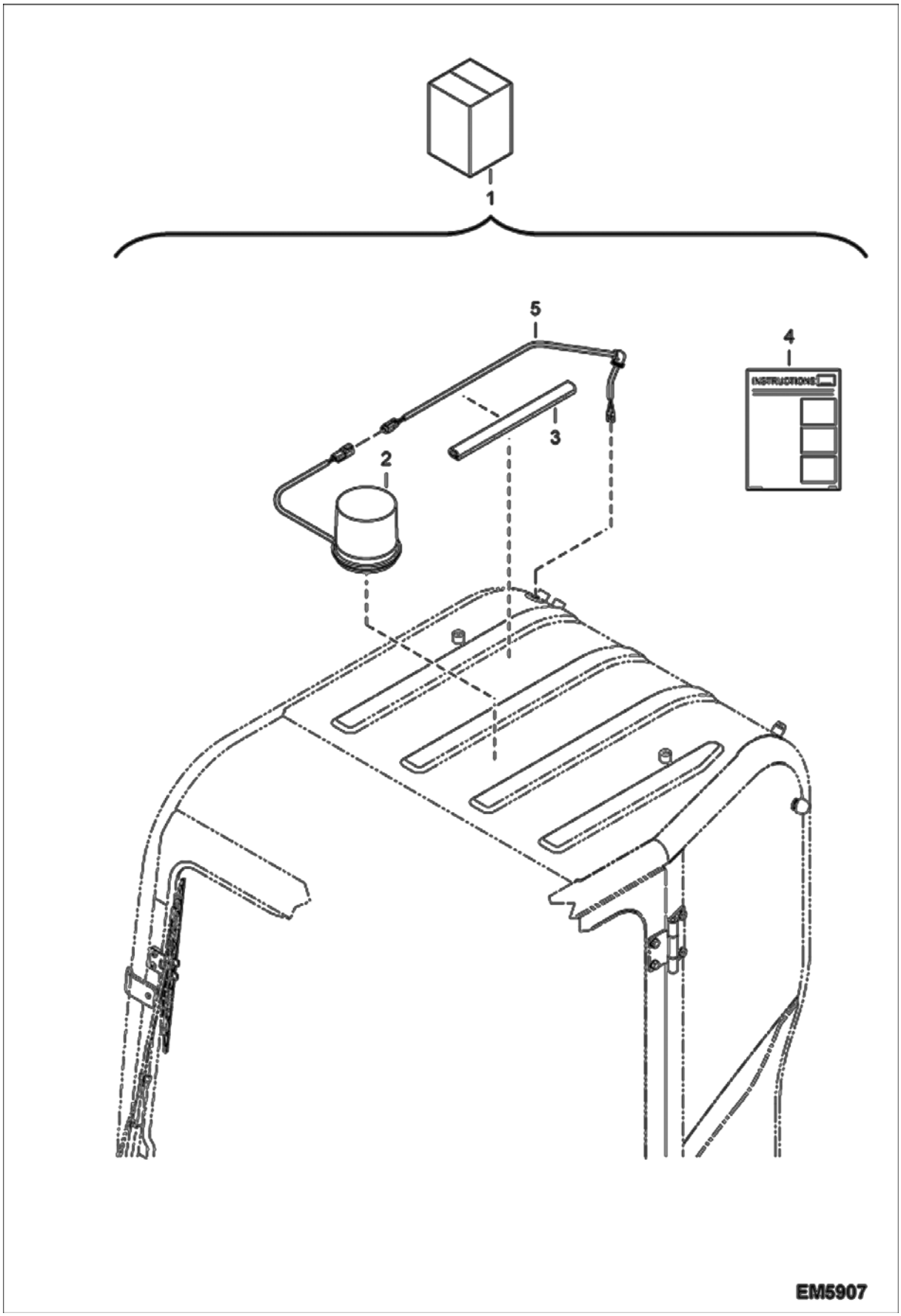




Page 450 - OSS# 2089524 - All rights reserved by Bobcat Company - 05/11/2012 - 06:30:39 - Produced by Ken Cook Co. with mediaioff

## ROTATING BEACON KIT (Cont'd)
## (EMEA)

| Ref No | Part Number | Description | Remarks | Serial Number | Qty |
|---|---|---|---|---|---|
| 1 | 7174742 | KIT, BEACON LIGHT | W/Ref. 2-5 | | 1 |
| 2 | 6675523 | BEACON | | | 1 |
| 3 | 6682740 | RETAINER, WIRE | | | 1 |
| 4 | 6987380 | INSTRUCTIONS | | | 1 |
| 5 | 7174629 | HARNESS, BEACON/STROBE | | | 1 |

Page 451 - OSS# 2089524 - All rights reserved by Bobcat Company - 05/11/2012 - 06:30:39 - Produced by Ken Cook Co. with mediaioff

# ROTATING BEACON KIT
# (US)

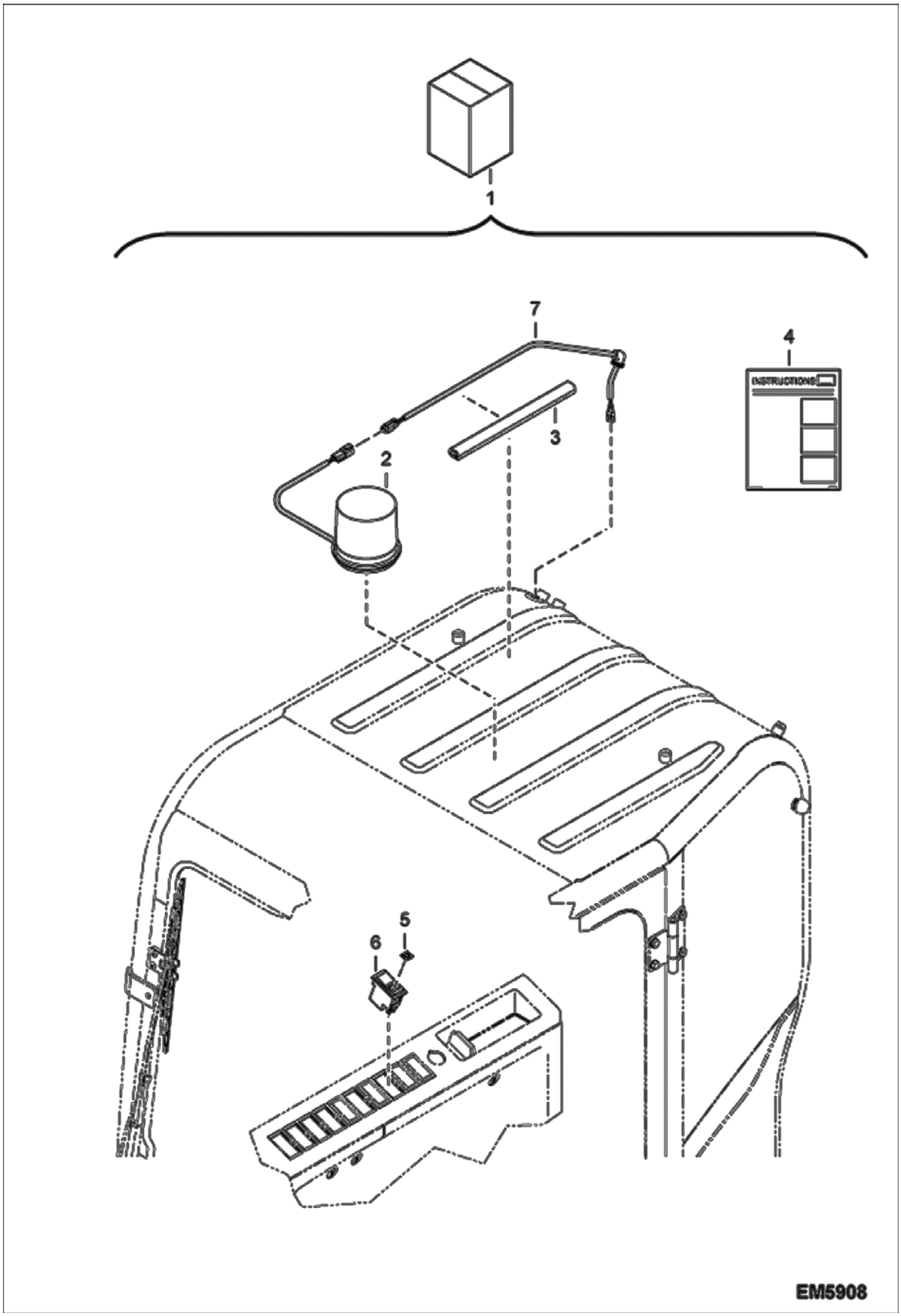




Page 452 - OSS# 2089524 - All rights reserved by Bobcat Company - 05/11/2012 - 06:30:39 - Produced by Ken Cook Co. with mediaIoff

## ROTATING BEACON KIT (Cont'd)
## (US)

| Ref No | Part Number | Description | Remarks | Serial Number | Qty |
|---|---|---|---|---|---|
| 1 | 7179686 | KIT, BEACON LIGHT | W/Ref. 2-7 | | 1 |
| 2 | 6675523 | BEACON | | | 1 |
| 3 | 6682740 | RETAINER, WIRE | | | 1 |
| 4 | 6987380 | INSTRUCTIONS | | | 1 |
| 5 | 7004802 | INSERT ROTATING BEACON | | | 1 |
| 6 | 7004916 | SWITCH ROCKER 12V | | | 1 |
| 7 | 7174629 | HARNESS, BEACON/STROBE | | | 1 |

Page 453 - OSS# 2089524 - All rights reserved by Bobcat Company - 05/11/2012 - 06:30:39 - Produced by Ken Cook Co. with mediaioff

# SEATBELT KIT
# (3" Wide)

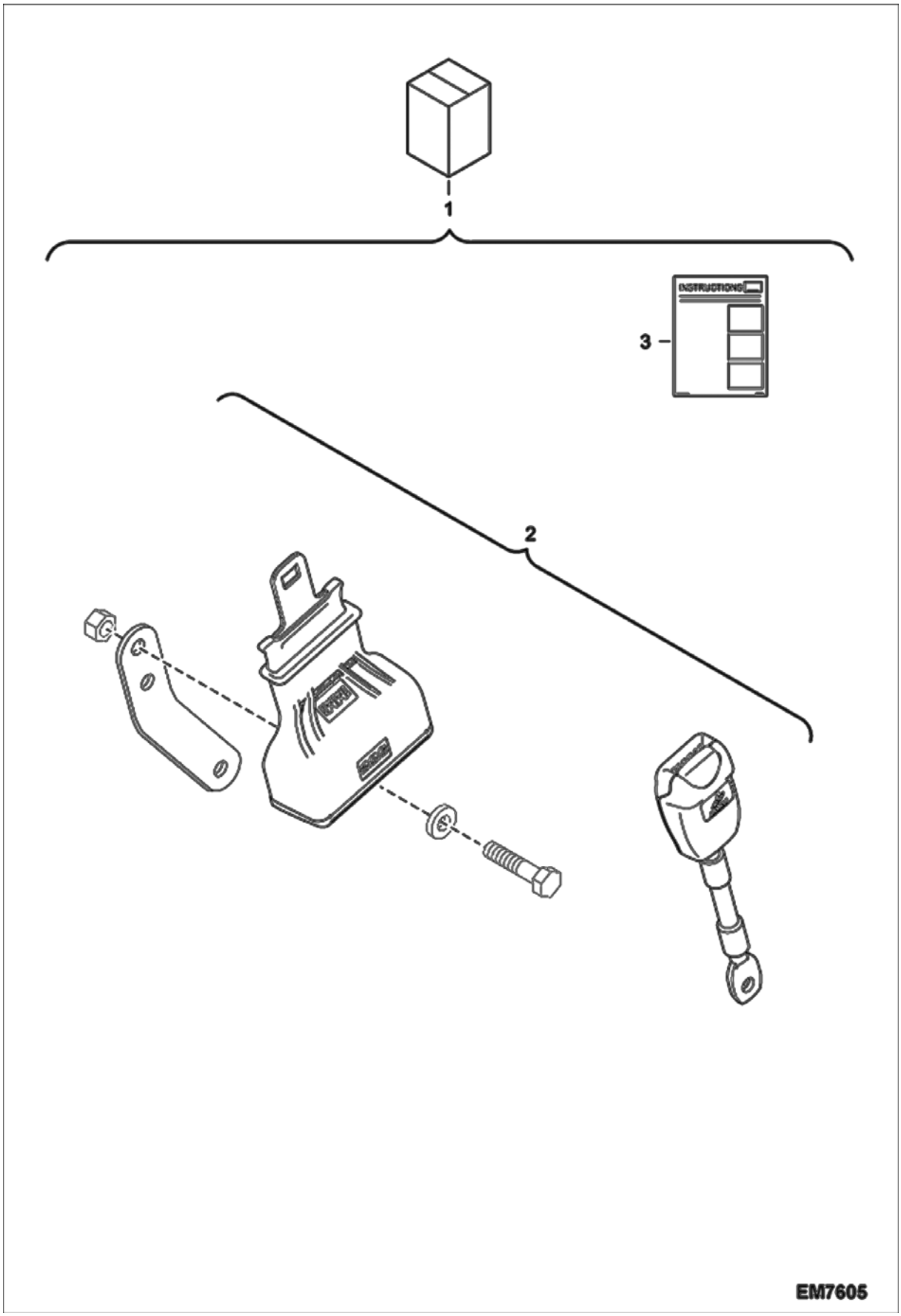




Page 454 - OSS# 2089524 - All rights reserved by Bobcat Company - 05/11/2012 - 06:30:39 - Produced by Ken Cook Co. with mediaIoff

## SEATBELT KIT (Cont'd)
## (3" Wide)

| Ref No | Part Number | Description | Remarks | Serial Number | Qty |
|---|---|---|---|---|---|
| 1 | 7188069 | KIT, SEATBELT | 3" - W/Ref. 2-3 | | 1 |
| 2 | 7010699 | SEATBELT ASSY | 3" | | 1 |
| 3 | 6989528 | INSTRUCTIONS, INSTALL | | | 1 |

Page 455 - OSS# 2089524 - All rights reserved by Bobcat Company - 05/11/2012 - 06:30:39 - Produced by Ken Cook Co. with mediaioff

## SPECIAL APPLICATION
## (FOGS + Roof Guard)

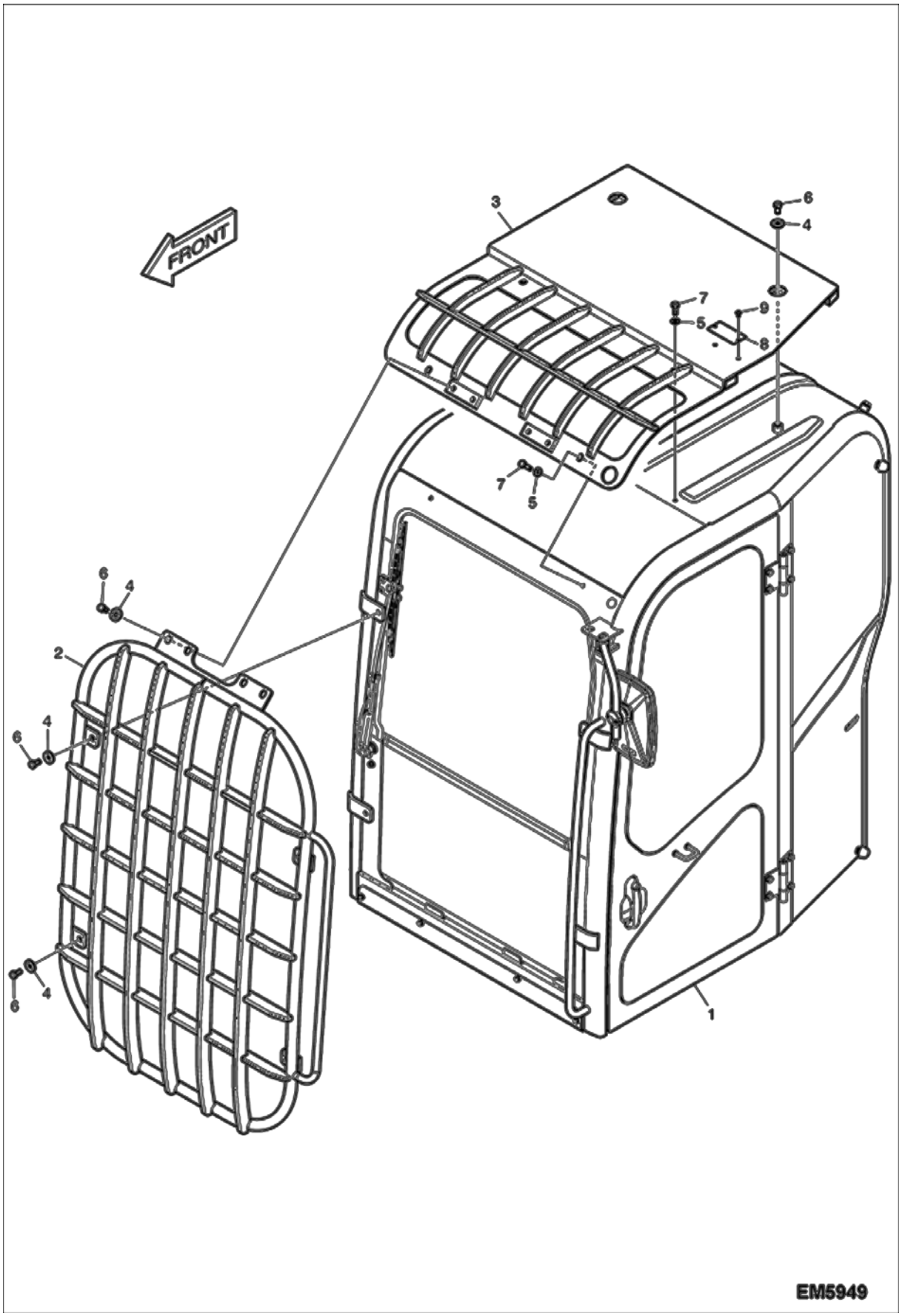




Page 456 - OSS# 2089524 - All rights reserved by Bobcat Company - 05/11/2012 - 06:30:39 - Produced by Ken Cook Co. with mediaioff

## SPECIAL APPLICATION (Cont'd)
## (FOGS + Roof Guard)

| Ref No | Part Number | Description | Remarks | Serial Number | Qty |
|---|---|---|---|---|---|
| 1 | | CAB ASSY | NLA Was 7006507 [A] | AET311001 - 11172 | 1 |
| 1 | | CAB ASSY | NLA Was 7006507 [A] | AETB11001 - 11172 | 1 |
| 1 | | CAB ASSY, FOGS | NLA Was 7012579 [A] | AET311001 - 11196 | 1 |
| 1 | | CAB ASSY, FOGS | NLA Was 7012579 [A] | AETB11001 - 11196 | 1 |
| 1 | 7015629 | CABIN ASSY;FOGS | | AET311001 & Above | 1 |
| 1 | 7015629 | CABIN ASSY;FOGS | | AETB11001 & Above | 1 |
| 2 | 7006504 | GUARD FOGS | | | 1 |
| 3 | 7006503 | COVER GUARD ROOF | | | 1 |
| 4 | 7004510 | WASHER | | | 10 |
| 5 | 7004509 | WASHER | | | 4 |
| 6 | 7004537 | BOLT | | | 10 |
| 7 | 7004541 | BOLT | | | 4 |
| 8 | 7010376 | PLATE NSS | | | 1 |
| 9 | 7004507 | WASHER PLAIN | | | 2 |

Page 457 - OSS# 2089524 - All rights reserved by Bobcat Company - 05/11/2012 - 06:30:39 - Produced by Ken Cook Co. with mediaioff

## SPECIAL APPLICATION KIT
## (FOGS + Roof Guard)

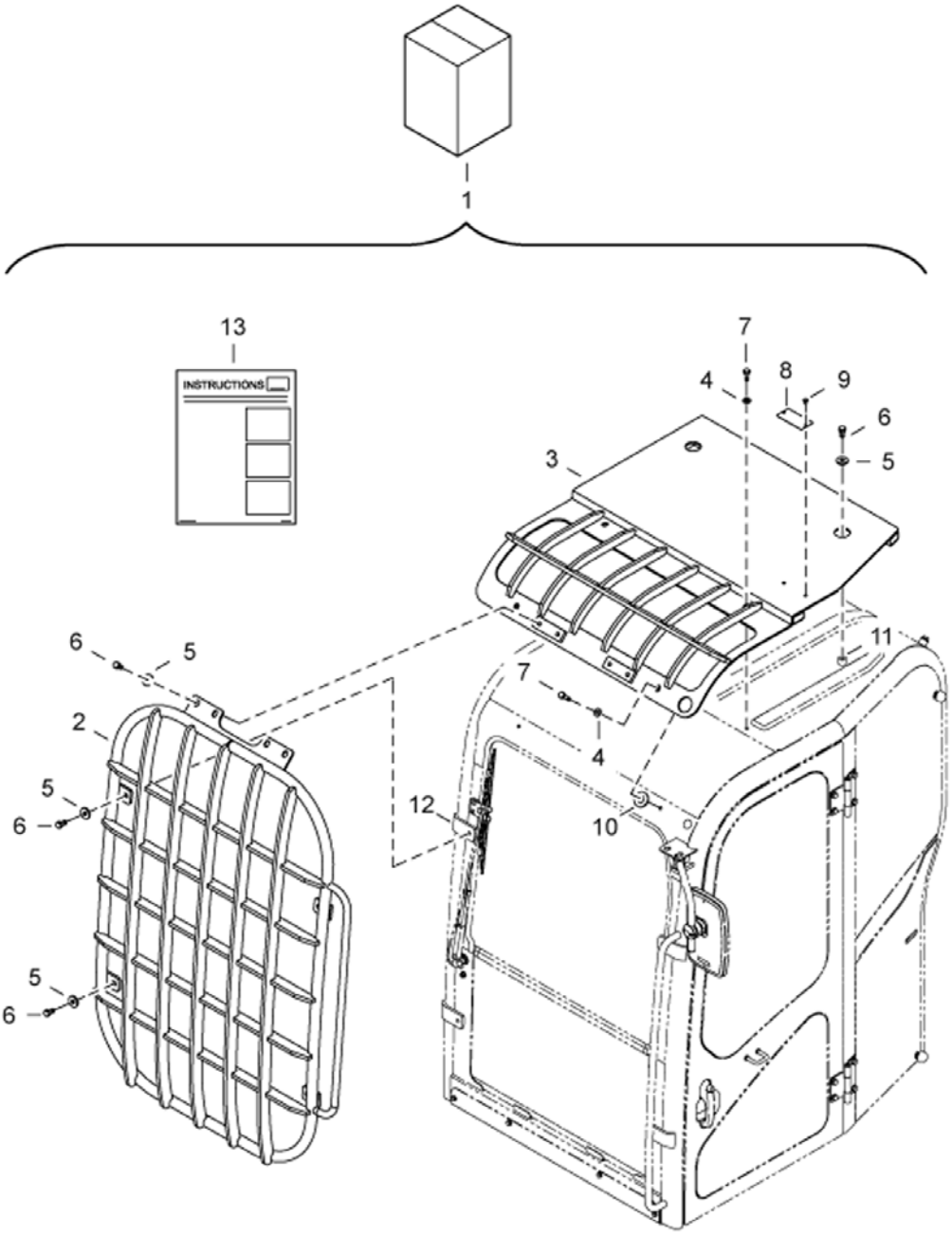


EM7620



Page 458 - OSS# 2089524 - All rights reserved by Bobcat Company - 05/11/2012 - 06:30:39 - Produced by Ken Cook Co. with mediaIoff

## SPECIAL APPLICATION KIT (Cont'd)
## (FOGS + Roof Guard)

| Ref No | Part Number | Description | Remarks | Serial Number | Qty |
|---|---|---|---|---|---|
| 1 | 7176910 | KIT, FOGS/ROOF GUARD | W/Ref. 2-13 | | 1 |
| 2 | 7006504 | GUARD FOGS | | | 1 |
| 3 | 7006503 | COVER GUARD ROOF | | | 1 |
| 4 | 7004509 | WASHER | | | 4 |
| 5 | 7004510 | WASHER | | | 10 |
| 6 | 7004537 | BOLT | | | 10 |
| 7 | 7004541 | BOLT | | | 4 |
| 8 | 7008273 | DECAL, FOGS | | | 1 |
| 9 | 7004547 | BOLT | | | 2 |
| 10 | 7010377 | PAD, RUBBER | | | 4 |
| 11 | 7010378 | SET SCREW | | | 2 |
| 12 | 7010379 | PLATE | | | 4 |
| 13 | 6987458 | INSTRUCTIONS | | | 1 |

Page 459 - OSS# 2089524 - All rights reserved by Bobcat Company - 05/11/2012 - 06:30:39 - Produced by Ken Cook Co. with mediaioff

## SPECIAL APPLICATION KIT
## (Roof Guard)

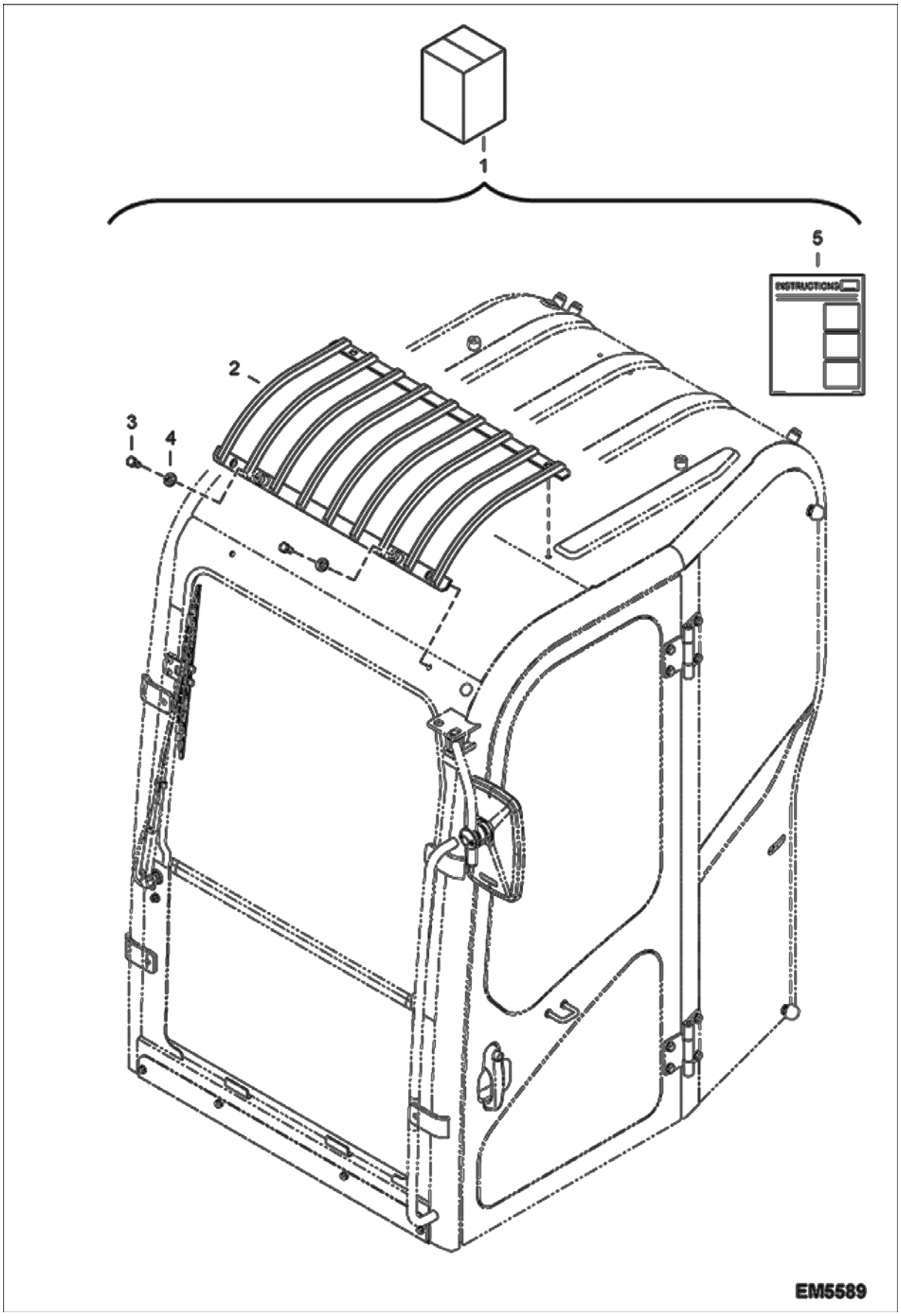




Page 460 - OSS# 2089524 - All rights reserved by Bobcat Company - 05/11/2012 - 06:30:39 - Produced by Ken Cook Co. with mediaioff

## SPECIAL APPLICATION KIT (Cont'd)
## (Roof Guard)

| Ref No | Part Number | Description | Remarks | Serial Number | Qty |
|---|---|---|---|---|---|
| 1 | 7178255 | KIT, ROOF GUARD | W/Ref. 2-5 | | 1 |
| 2 | 7006268 | GUARD, ROOF | | | 1 |
| 3 | 7004537 | BOLT | | | 2 |
| 4 | 7004514 | WASHER | | | 2 |
| 5 | 6987459 | INSTRUCTIONS | | | 1 |

Page 461 - OSS# 2089524 - All rights reserved by Bobcat Company - 05/11/2012 - 06:30:39 - Produced by Ken Cook Co. with mediaioff

# STROBE LIGHT KIT
# (EMEA)

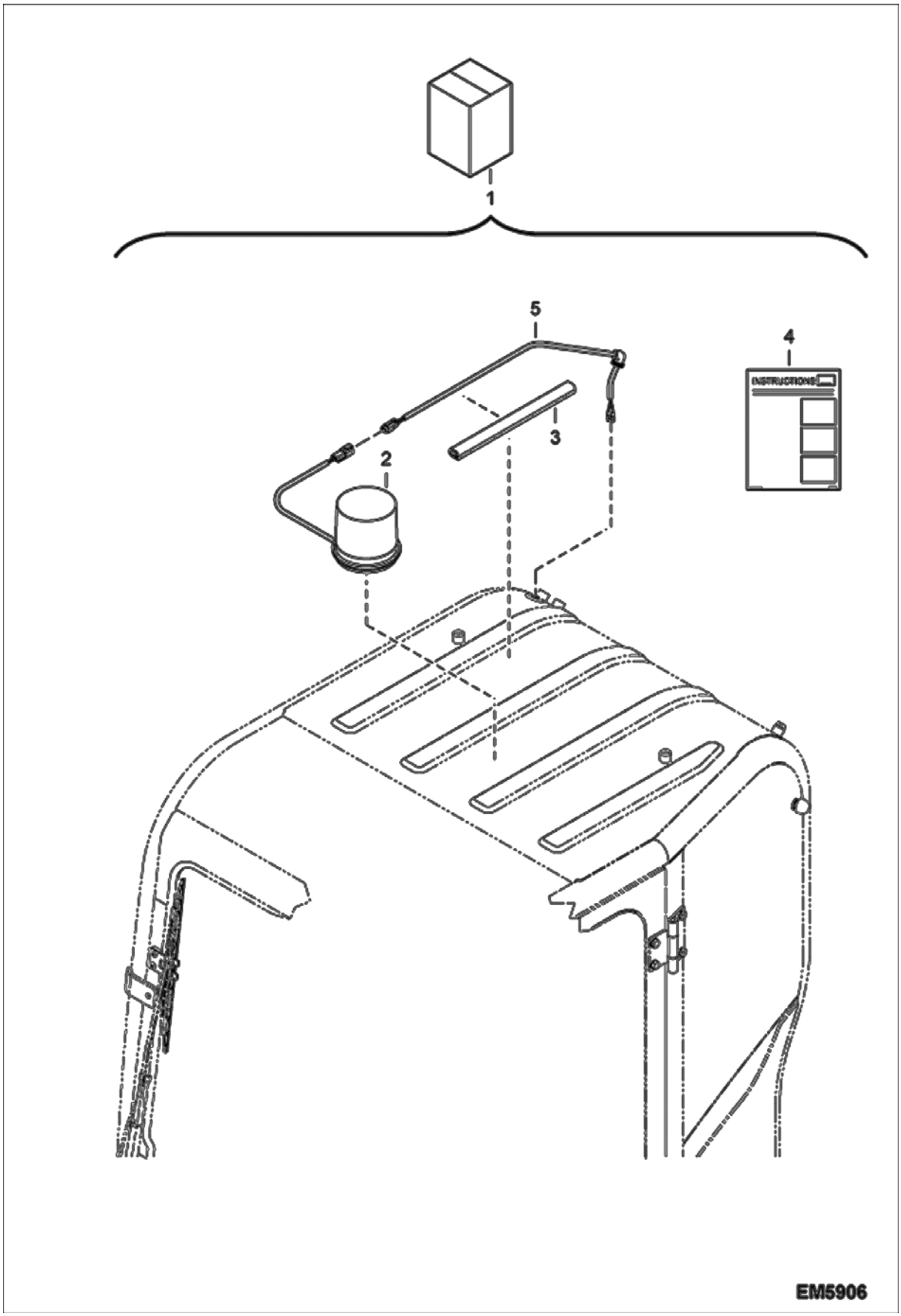




Page 462 - OSS# 2089524 - All rights reserved by Bobcat Company - 05/11/2012 - 06:30:39 - Produced by Ken Cook Co. with mediaIoff

## STROBE LIGHT KIT (Cont'd)
## (EMEA)

| Ref No | Part Number | Description | Remarks | Serial Number | Qty |
|---|---|---|---|---|---|
| 1 | 7174734 | KIT, STROBE LIGHT | W/Ref. 2-5 | | 1 |
| 2 | 6675522 | STROBE | | | 1 |
| 3 | 6682740 | RETAINER, WIRE | | | 1 |
| 4 | 6987380 | INSTRUCTIONS | | | 1 |
| 5 | 7174629 | HARNESS, BEACON/STROBE | | | 1 |

Page 463 - OSS# 2089524 - All rights reserved by Bobcat Company - 05/11/2012 - 06:30:39 - Produced by Ken Cook Co. with mediaioff

# STROBE LIGHT KIT
# (US)

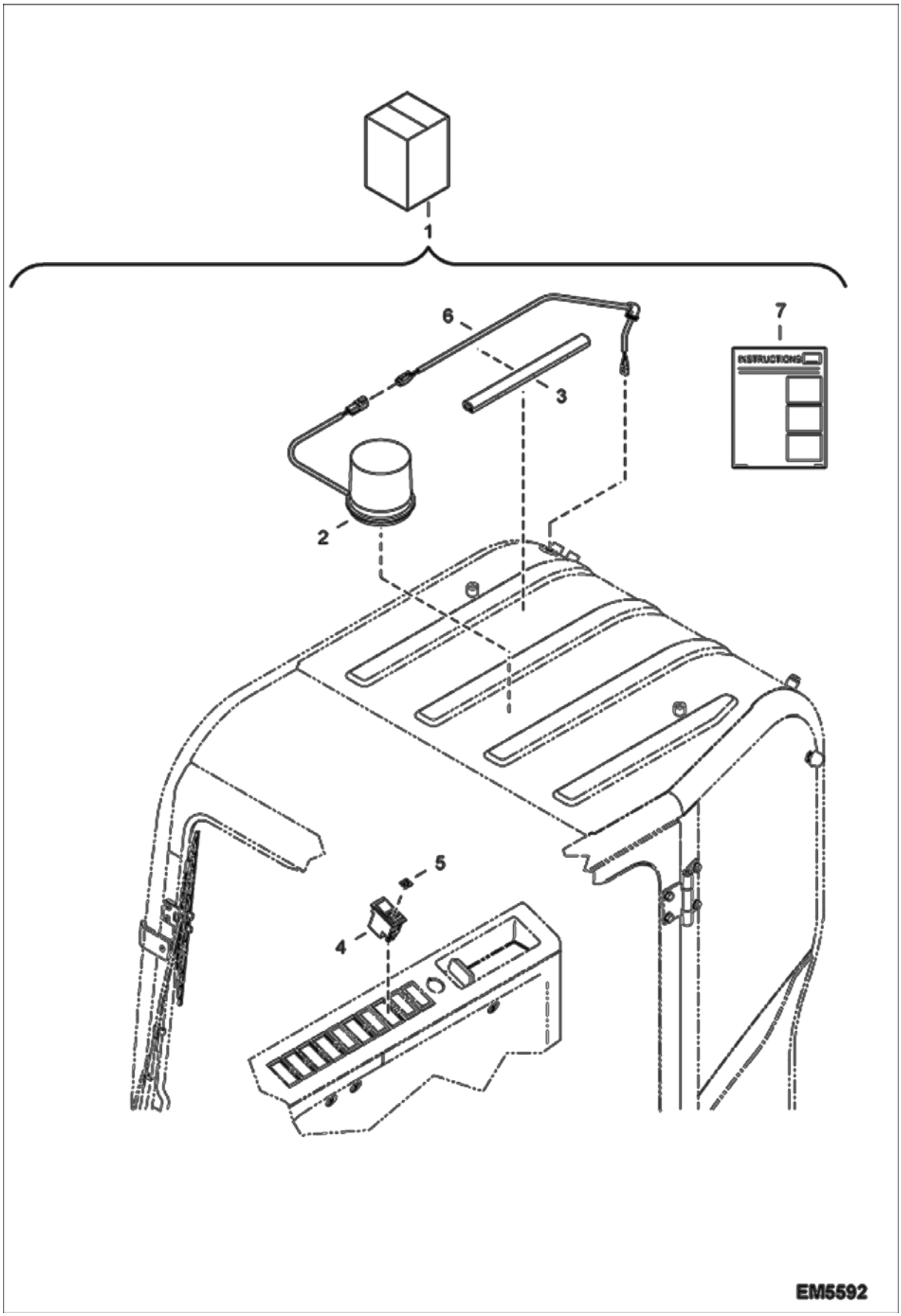




Page 464 - OSS# 2089524 - All rights reserved by Bobcat Company - 05/11/2012 - 06:30:39 - Produced by Ken Cook Co. with mediaioff

## STROBE LIGHT KIT (Cont'd)
## (US)

| Ref No | Part Number | Description | Remarks | Serial Number | Qty |
|---|---|---|---|---|---|
| 1 | 7179688 | KIT, STROBE LIGHT | W/Ref. 2-7 | | 1 |
| 2 | 6675522 | STROBE | | | 1 |
| 3 | 6682740 | RETAINER, WIRE | | | 1 |
| 4 | 7004916 | SWITCH ROCKER 12V | | | 1 |
| 5 | 7004802 | INSERT ROTATING BEACON | | | 1 |
| 6 | 7174629 | HARNESS, BEACON/STROBE | | | 1 |
| 7 | 6987380 | INSTRUCTIONS | | | 1 |

Page 465 - OSS# 2089524 - All rights reserved by Bobcat Company - 05/11/2012 - 06:30:39 - Produced by Ken Cook Co. with mediaioff

# TRACK KIT
# (Rubber)

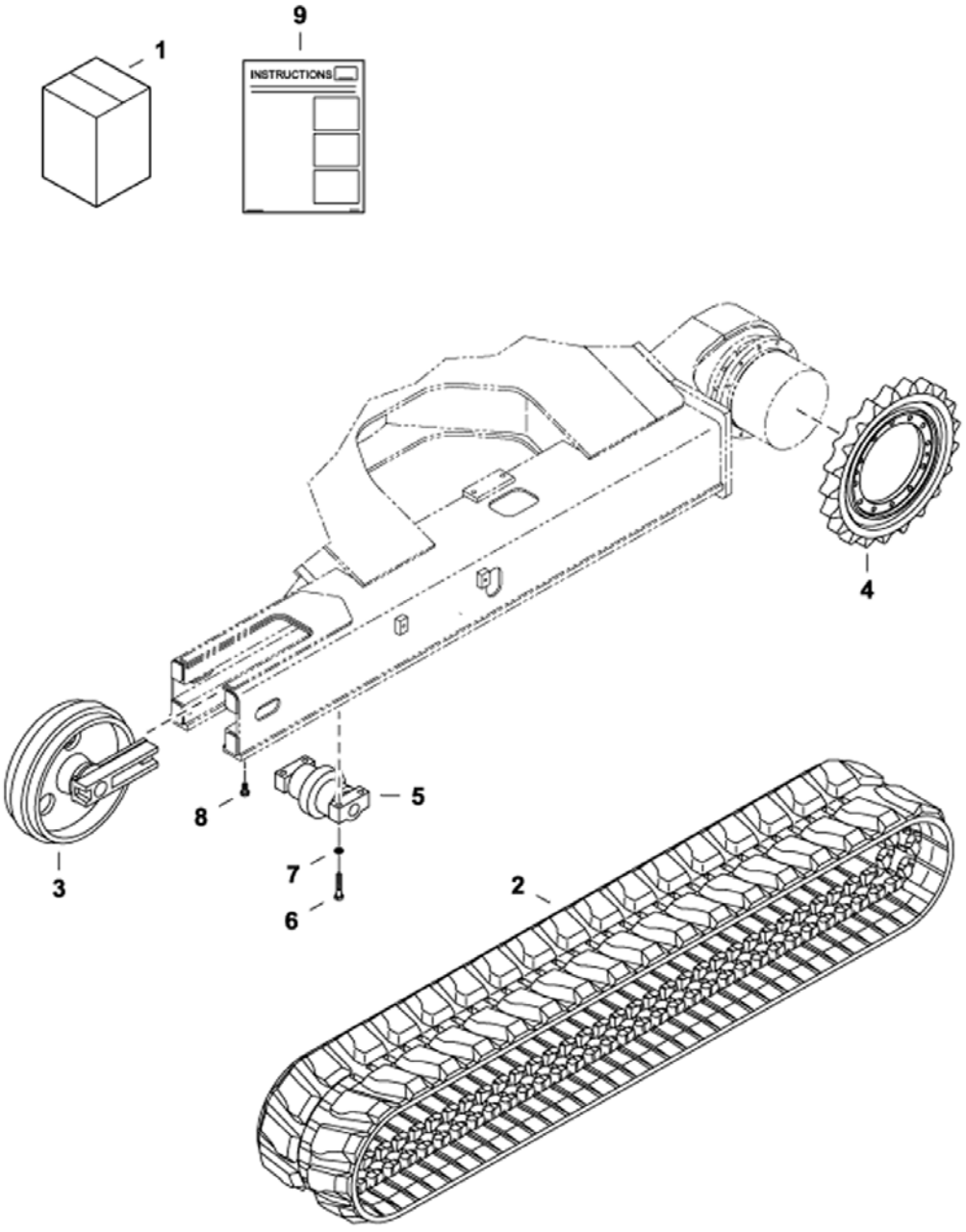


NA1592



Page 466 - OSS# 2089524 - All rights reserved by Bobcat Company - 05/11/2012 - 06:30:39 - Produced by Ken Cook Co. with mediaIoff

## TRACK KIT (Cont'd)
## (Rubber)

| Ref No | Part Number | Description | Remarks | Serial Number | Qty |
|---|---|---|---|---|---|
| 1 | 7174584 | KIT, TRACK RUBBER | W/Ref. 2-9 | | 1 |
| 2 | 7006332 | TRACK, RUBBER (450X84X76) 18" BOBCAT | | | 2 |
| 3 | 7004844 | IDLER ASSY | See Illustration FRONT IDLER/ E80-2120 | | 2 |
| 4 | 7004454 | SPROCKET | | | 2 |
| 5 | 7004933 | ROLLER LOWER | See Illustration TRACK ROLLER/ E80-2150 | | 10 |
| 6 | 7007697 | BOLT | | | 40 |
| 7 | 7007837 | WASHER | | | 40 |
| 8 | 7007644 | BOLT | | | 12 |
| 9 | 6987385 | INSTRUCTIONS | | | 1 |

Page 467 - OSS# 2089524 - All rights reserved by Bobcat Company - 05/11/2012 - 06:30:39 - Produced by Ken Cook Co. with mediaioff

# TRACK KIT
## (Steel)

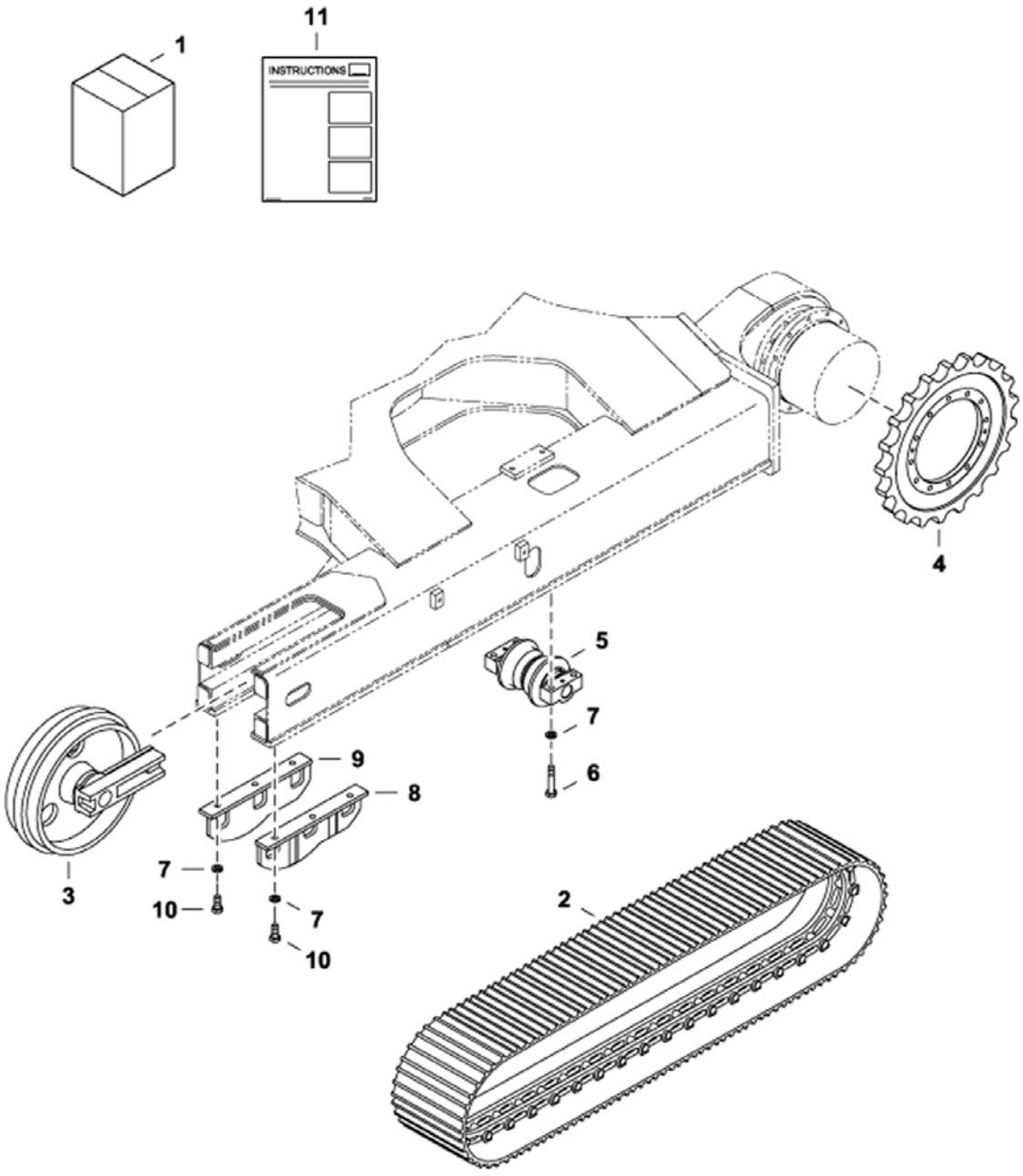


NA1590



Page 468 - OSS# 2089524 - All rights reserved by Bobcat Company - 05/11/2012 - 06:30:39 - Produced by Ken Cook Co. with mediaIoff

## TRACK KIT (Cont'd)
## (Steel)

| Ref No | Part Number | Description | Remarks | Serial Number | Qty |
|---|---|---|---|---|---|
| 1 | 7174585 | KIT, TRACK STEEL | W/Ref. 2-11 | | 1 |
| 2 | 7008209 | SHOE, TRACK ASSY 450MM | See Illustration TRACK/ E80-6210 | | 2 |
| 3 | 7008151 | IDLER ASSY | | | 2 |
| 4 | 7008133 | SPROCKET | | | 2 |
| 5 | 7008152 | ROLLER, LOWER | | | 10 |
| 6 | 7007696 | BOLT | | | 40 |
| 7 | 7007837 | WASHER | | | 52 |
| 8 | 7008229 | GUARD, TRACK | | | 2 |
| 9 | 7007645 | BOLT | | | 12 |
| 10 | 7008230 | GUARD, TRACK | | | 2 |
| 11 | 6987386 | INSTRUCTIONS | | | 1 |

Page 469 - OSS# 2089524 - All rights reserved by Bobcat Company - 05/11/2012 - 06:30:39 - Produced by Ken Cook Co. with mediaioff

## 2ND AUXILIARY HYDRAULICS KIT
## (Long Arm) (US)

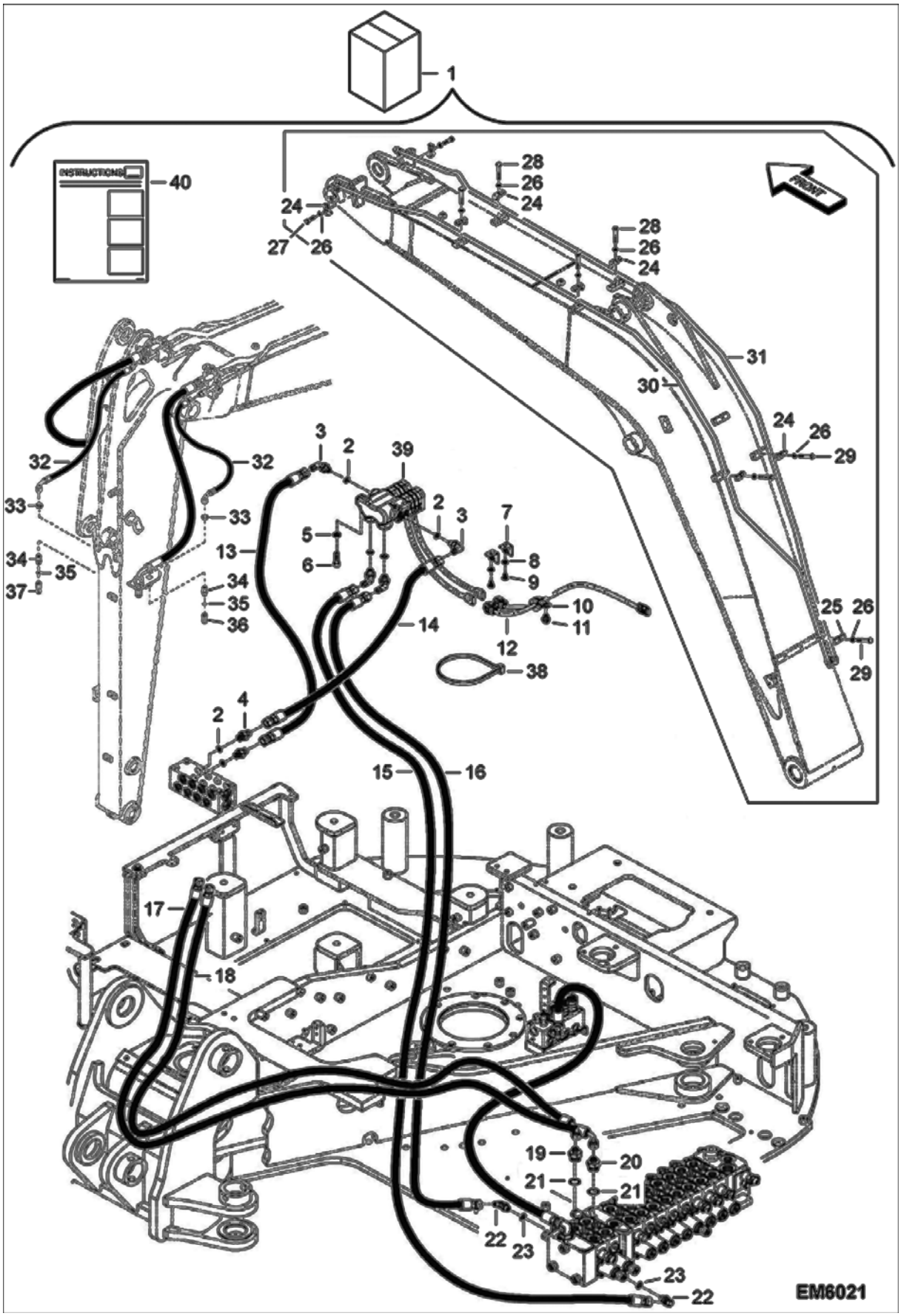




Page 470 - OSS# 2089524 - All rights reserved by Bobcat Company - 05/11/2012 - 06:30:39 - Produced by Ken Cook Co. with mediaIoff

# 2ND AUXILIARY HYDRAULICS KIT (Cont'd)
# (Long Arm) (US)

| Ref No | Part Number | Description | Remarks | Serial Number | Qty |
|---|---|---|---|---|---|
| 1 | 7178245 | KIT, AUX 2ND | W/Ref. 2-40 | | 1 |
| 2 | 7007906 | ORING | | | 6 |
| 3 | 7004713 | ELBOW | Was 7008144 [B,D] | | 4 |
| 4 | 7004683 | ADAPTER | | | 2 |
| 5 | 7007842 | WASHER SPRING | | | 2 |
| 6 | 7008297 | BOLT, SOCKET M8X1.25X30 | | | 2 |
| 7 | 7004824 | BRACKET HOUSING | | | 2 |
| 8 | 7007833 | WASHER SPRING | | | 2 |
| 9 | 7007602 | BOLT | | | 2 |
| 10 | 7003894 | CLIP | | | 1 |
| 11 | 7005629 | BOLT | | | 1 |
| 12 | 7006627 | HARNESS JOINT | | | 1 |
| 13 | 7005469 | HOSE | | | 1 |
| 14 | 7005471 | HOSE | | | 1 |
| 15 | 7005476 | HOSE | | | 1 |
| 16 | 7005491 | HOSE | | | 1 |
| 17 | 7011048 | HOSE, HYD | | | 1 |
| 18 | 7011047 | HOSE, HYD | | | 1 |
| 19 | 7004677 | ADAPTER | | | 1 |
| 20 | 7005543 | ADAPTER | | | 1 |
| 21 | 7010449 | ORING | Was 7004628 [B,D] | | 2 |
| 22 | 7005558 | ELBOW | | | 2 |
| 23 | 7007961 | ORING | | | 2 |
| 24 | 7005920 | CLAMP | | | 8 |
| 25 | 7005921 | CLAMP | | | 1 |
| 26 | 7007835 | WASHER SPRING | | | 9 |
| 27 | 7007671 | BOLT | | | 2 |
| 28 | 7007677 | BOLT | | | 4 |
| 29 | 7007678 | BOLT | | | 3 |
| 30 | 7006039 | TUBELINE | | | 1 |
| 31 | 7006040 | TUBELINE | | | 1 |
| 32 | 7005394 | HOSE | | | 2 |
| 33 | 7010969 | NUT | Was 7003875 [B,D] | | 2 |
| 34 | 7010024 | ADAPTER | | | 2 |
| 35 | 7009947 | O-RING | | | 2 |
| 36 | 6672960 | COUPLER, FF FEMALE | straight | | 1 |
| 37 | 6674688 | COUPLER, FF MALE | straight | | 1 |
| 38 | 6624289 | STRAP, TIE | | | 8 |
| 39 | 7008284 | VALVE, SOLENOID | | | 1 |
| 40 | 6987468 | INSTRUCTIONS | | | 1 |

Page 471 - OSS# 2089524 - All rights reserved by Bobcat Company - 05/11/2012 - 06:30:39 - Produced by Ken Cook Co. with mediaioff

## 3RD AUXILIARY HYDRAULICS KIT
## (Long Arm/Clamshell)

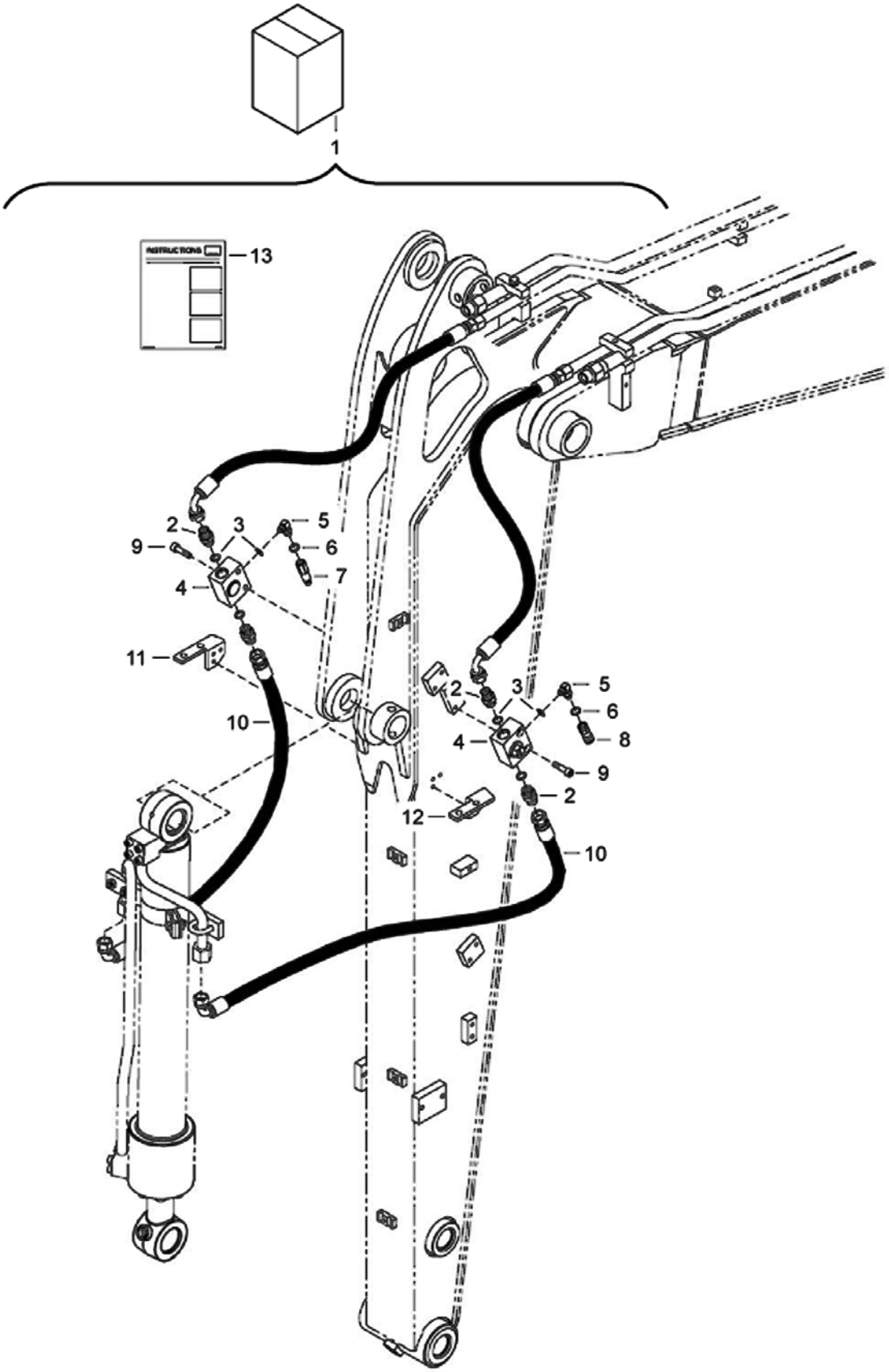


EM6019



Page 472 - OSS# 2089524 - All rights reserved by Bobcat Company - 05/11/2012 - 06:30:39 - Produced by Ken Cook Co. with mediaioff

## 3RD AUXILIARY HYDRAULICS KIT (Cont'd)
## (Long Arm/Clamshell)

| Ref No | Part Number | Description | Remarks | Serial Number | Qty |
|---|---|---|---|---|---|
| 1 | 7178237 | KIT, AUX 3RD | Long Arm - W/Ref. 2-14 | | 1 |
| 2 | 7004699 | ADAPTER | | | 4 |
| 3 | 7007911 | ORING | | | 6 |
| 4 | 7004981 | VALVE SWITCH | | | 2 |
| 5 | 7009943 | ELBOW | | | 2 |
| 6 | 7009947 | O-RING | | | 2 |
| 7 | 6674688 | COUPLER, FF MALE | straight | | 1 |
| 8 | 6672960 | COUPLER, FF FEMALE | straight | | 1 |
| 9 | 7007751 | BOLT SOCKET M10X1.5X40 | | | 4 |
| 10 | 7005463 | HOSE | | | 2 |
| 11 | 7009946 | BRACKET | | | 1 |
| 12 | 7009945 | BRACKET | | | 1 |
| 13 | 6987467 | INSTRUCTIONS | | | 1 |

Page 473 - OSS# 2089524 - All rights reserved by Bobcat Company - 05/11/2012 - 06:30:39 - Produced by Ken Cook Co. with mediaioff

## 3RD AUXILIARY HYDRAULICS KIT
## (Short Arm/Clamshell) (EMEA)

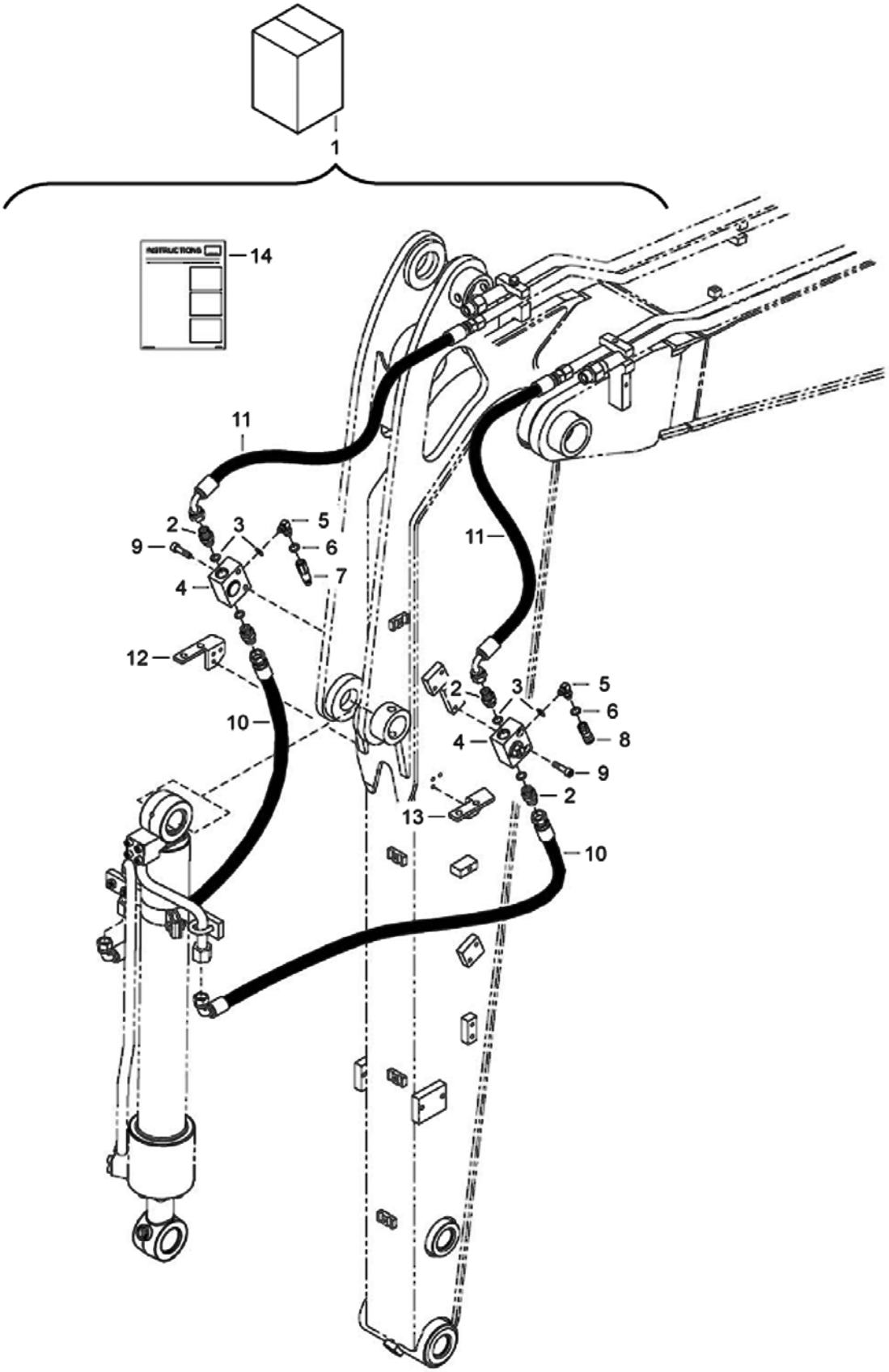


EM6018



Page 474 - OSS# 2089524 - All rights reserved by Bobcat Company - 05/11/2012 - 06:30:39 - Produced by Ken Cook Co. with mediaioff

## 3RD AUXILIARY HYDRAULICS KIT (Cont'd)
## (Short Arm/Clamshell) (EMEA)

| Ref No | Part Number | Description | Remarks | Serial Number | Qty |
|---|---|---|---|---|---|
| 1 | 7178235 | KIT, 3RD AUXILIARY HYDRAULICS | Short arm - W/Ref. 2-14 | | 1 |
| 2 | 7004699 | ADAPTER | | | 4 |
| 3 | 7007911 | ORING | | | 6 |
| 4 | 7004981 | VALVE SWITCH | | | 2 |
| 5 | 7009943 | ELBOW | | | 2 |
| 6 | 7009947 | O-RING | | | 2 |
| 7 | 6674688 | COUPLER, FF MALE | straight | | 1 |
| 8 | 6672960 | COUPLER, FF FEMALE | straight | | 1 |
| 9 | 7007751 | BOLT SOCKET M10X1.5X40 | | | 4 |
| 10 | 7005462 | HOSE | | | 2 |
| 11 | 7005444 | HOSE | | | 2 |
| 12 | 7009946 | BRACKET | | | 1 |
| 13 | 7009945 | BRACKET | | | 1 |
| 14 | 6987467 | INSTRUCTIONS | | | 1 |

Page 475 - OSS# 2089524 - All rights reserved by Bobcat Company - 05/11/2012 - 06:30:39 - Produced by Ken Cook Co. with mediaioff

# BULK ITEMS

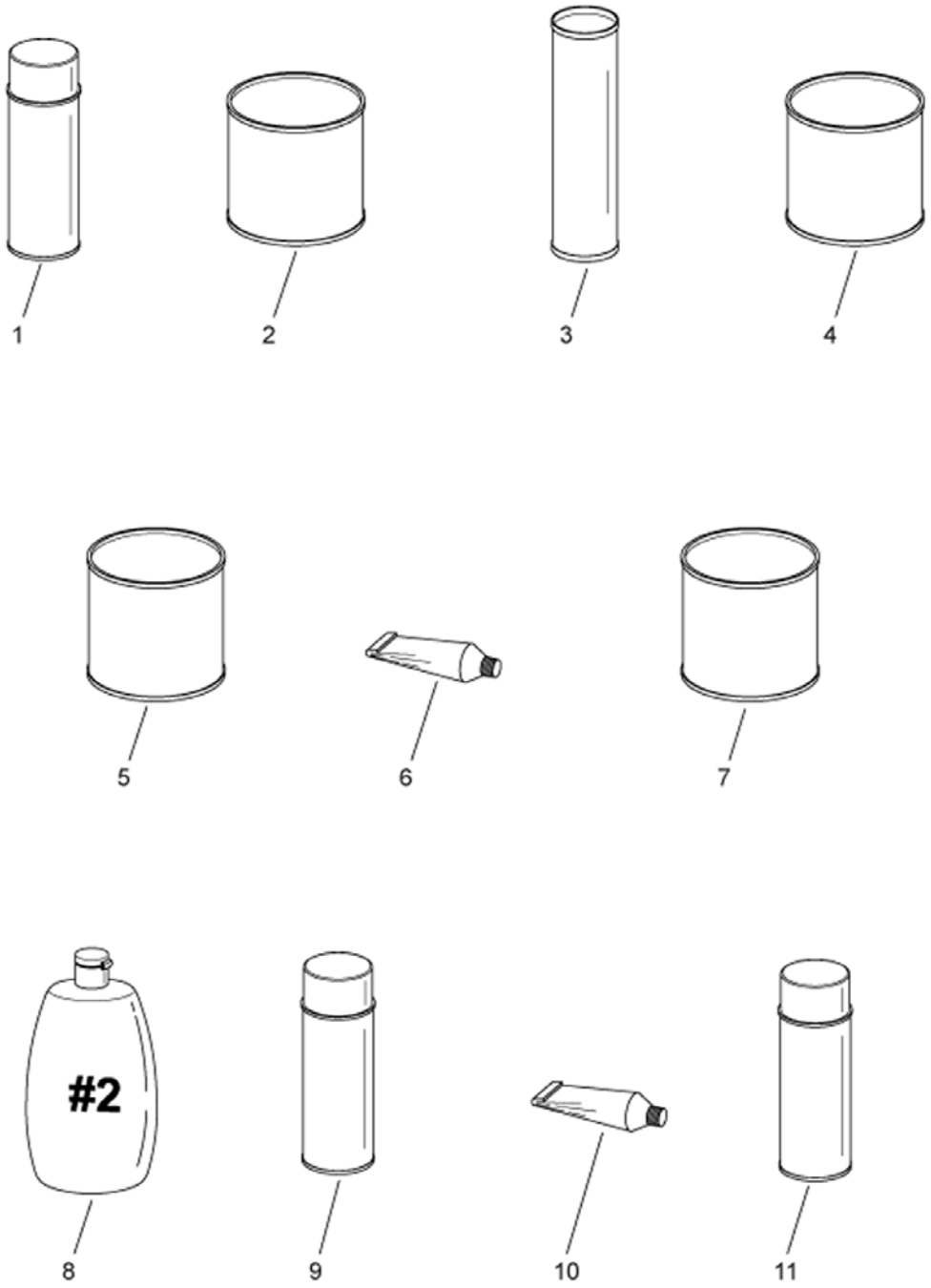


EM5903



Page 476 - OSS# 2089524 - All rights reserved by Bobcat Company - 05/11/2012 - 06:30:39 - Produced by Ken Cook Co. with mediaioff

| Ref No | Part Number | Description | Remarks | Serial Number | Qty |
|---|---|---|---|---|---|
| 1 | 6902228 | PAINT, ORANGE SPRAY CAN 6 | orange - spray can - sold per 6 cans | | x |
| 1 | 6902229 | PAINT, CHARCOAL SPRAY CAN 6 | charcoal - spray can - sold per 6 cans | | x |
| 1 | 6987603 | PAINT | white - spray can - sold per 6 cans | | x |
| 2 | 6902233 | PAINT, ORANGE QT 6 | orange - QT Was 6722782 [A] | | x |
| 2 | 6902234 | PAINT, CHARCOAL QT 6 | charcoal - QT Was 6722785 [A] | | x |
| 2 | 6902235 | PAINT, WHITE QT 6 | white - QT Was 6722788 [A] | | x |
| 2 | 6987604 | PAINT | white - 1 liter can | | x |
| 3 | 6633583 | SEALANT | chaincase covers - cartridge | | x |
| 4 | | REDUCER | GAL - NAP | | x |
| 5 | 6902236 | PRIMER QT. 6 | QT - sold per 6 containers Was 6653519 [A] | | x |
| 6 | 6599360 | SEALANT | electrical - 3 OZ tube | | x |
| 7 | 6903121 | LUBE, GEAR 12 | QT- Sold per 12 containers Was 6634393 [A] | | x |
| 8 | 6630189 | POLISH | window scratch remover - 8 OZ | | x |
| 9 | 6675380 | ADHESIVE | insulation - spray can Was 6652818 [A] | | x |
| 10 | 6650388 | SEALANT | 1 OZ tube - flange | | x |
| 11 | 6736644 | PAINT | orange - 5 OZ spray can - sold per 6 cans | | x |
| 11 | 6736641 | PAINT | charcoal - 5 OZ spray can - sold per 6 cans | | x |
| 11 | 6736645 | PAINT | red - 5 OZ spray can - sold per 6 cans | | x |

Page 477 - OSS# 2089524 - All rights reserved by Bobcat Company - 05/11/2012 - 06:30:39 - Produced by Ken Cook Co. with mediaioff

Page 478 - OSS# 2089524 - All rights reserved by Bobcat Company - 05/11/2012 - 06:30:39 - Produced by Ken Cook Co. with mediaioff

| Part No. | Description | Was | Code | Page |
|---|---|---|---|---|
| 2185-1776D20 | HOSE, HYD | 7005155 | A | 184 |
| 2185-1776D20 | HOSE, HYD | 7005501 | A | 184 |
| 2185-1776D20 | HOSE, HYD | 7005186 | A | 184 |
| 6533898 | DECAL | | | 421, 422, 424 |
| 6577754 | DECAL, WARNING | | | 424 |
| 6595014 | DECAL | | | 422, 424 |
| 6599360 | SEALANT | | | 466 |
| 6624289 | STRAP, TIE | | | 416, 460 |
| 6625575 | FUSE, 20A | 7004895 | A | 2, 8, 300 |
| 6625575 | FUSE, 20A | | | 2, 8, 300 |
| 6630189 | POLISH | | | 466 |
| 6633583 | SEALANT | | | 466 |
| 6650388 | SEALANT | | | 466 |
| 6654805 | FUSE 10A | 7004893 | A | 2, 8, 300 |
| 6654805 | FUSE 10A | | | 2, 8, 300 |
| 6654806 | FUSE, 15A | | | 2, 8, 300 |
| 6654806 | FUSE, 15A | 7004894 | A | 2, 8, 300 |
| 6666333 | FILTER, AIR OUTER | | | 2, 8, 332 |
| 6666333 | FILTER, AIR OUTER | 7005000 | A | 2, 8, 332 |
| 6666334 | FILTER, AIR INNER | 7005001 | A | 2, 8, 332 |
| 6666334 | FILTER, AIR INNER | | | 2, 8, 332 |
| 6672960 | COUPLER, FF FEMALE | | | 168, 170, 172, 174, 176, 178, 460, 462, 464 |
| 6674688 | COUPLER, FF MALE | | | 168, 170, 172, 174, 176, 178, 460, 462, 464 |
| 6675380 | ADHESIVE | 6652818 | A | 466 |
| 6675522 | STROBE | | | 452, 454 |
| 6675523 | BEACON | | | 440, 442 |
| 6682740 | RETAINER, WIRE | | | 440, 442, 452, 454 |
| 6684361 | WRENCH, SOCKET | | | 436 |
| 6687120 | BOBCAT TRANS/DIFFERENTIAL FLUID 12 | | | 34 |
| 6687884 | GREASE, HD SUPREME 10 | | | 4, 10, 12, 14, 22, 24, 26, 32, 34 |
| 6687885 | GREASE, HP EXTREME - 10 | | | 4, 10, 12, 14, 22, 24, 26, 32, 34 |
| 6692783 | KEY | | | 438 |
| 6718034 | FUSE, 30A | 7004897 | A | 300 |
| 6736641 | PAINT | | | 466 |
| 6736644 | PAINT | | | 466 |
| 6736645 | PAINT | | | 466 |
| 6804114 | DECAL, WARNING | | | 424 |
| 6804233 | DECAL | | | 424 |
| 6808185 | DECAL | | | 424 |
| 6808872 | DECAL | | | 417, 418, 419, 420 |
| 6809832 | DECAL | | | 424 |
| 6810004 | DECAL, WARNING | | | 423, 424, 434 |
| 6815993 | DECAL | | | 422, 424 |
| 6901951 | HANDBOOK | | | 424 |
| 6902228 | PAINT, ORANGE SPRAY CAN 6 | | | 465, 466 |
| 6902229 | PAINT, CHARCOAL SPRAY CAN 6 | | | 466 |
| 6902233 | PAINT, ORANGE QT 6 | 6722782 | A | 466 |

**Code for disposition of old part number**

**A -- Use up**
**B -- Use on other application (See PNI)**
**C -- File PDR Report with Bobcat Parts Sales**
**D -- Part Number Error**



Page 479 - OSS# 2089524 - All rights reserved by Bobcat Company - 05/11/2012 - 06:30:39 - Produced by Ken Cook Co. with mediaioff

| Part No. | Description | Was | Code | Page |
|---|---|---|---|---|
| 6902234 | PAINT, CHARCOAL QT 6 | 6722785 | A | 466 |
| 6902235 | PAINT, WHITE QT 6 | 6722788 | A | 466 |
| 6902236 | PRIMER QT. 6 | 6653519 | A | 466 |
| 6903105 | OIL, 15W40 QT. 12 | | | 8, 24 |
| 6903106 | OIL, 15W40 GAL. 6 | | | 8, 24 |
| 6903107 | OIL, 10W30 QT. 12 | | | 8, 24 |
| 6903108 | OIL, 10W30 GAL. 6 | | | 8, 24 |
| 6903109 | OIL 30W QT. 12 | | | 8, 24 |
| 6903110 | OIL, 30W GAL. 6 | | | 8, 24 |
| 6903111 | OIL 30W 2.5 GAL 2 | | | 8, 24 |
| 6903112 | OIL, 10W30 2.5 GAL 2 | | | 8, 24 |
| 6903113 | OIL, 15W40 2.5 GAL. 2 | | | 8, 24 |
| 6903117 | FLUID, OIL HYD 2.5 GAL 2 | | | 8, 38 |
| 6903118 | FLUID, OIL HYD 5 GAL | | | 8, 38 |
| 6903119 | FLUID, OIL HYD 55 GAL | | | 8, 38 |
| 6903121 | LUBE, GEAR 12 | 6634393 | A | 4, 8, 16, 18, 466 |
| 6903121 | LUBE, GEAR 12 | | | 4, 8, 16, 18, 466 |
| 6903122 | GREASE, MULTI PURPOSE #2 - 10 | | | 4, 8, 9, 10, 11, 12, 13, 14, 21, 22, 23, 24, 26, 31, 32, 33, 34 |
| 6904840A | OIL, 10W30 5 L | | | 2, 22 |
| 6904840B | OIL, 10W30 25L | | | 2, 22 |
| 6904840C | OIL, 10W30 209L | | | 2, 22 |
| 6904840D | OIL, ENGINE SAE 10W/30, 1000L | | | 2, 22 |
| 6904841A | OIL, 15W40 5L | | | 2, 22 |
| 6904841B | OIL, 15W40 25L | | | 2, 22 |
| 6904841C | OIL, 15W40 209L | | | 2, 22 |
| 6904841D | OIL, ENGINE SAE 15W/40, 1000L | | | 2, 22 |
| 6904842A | FLUID, OIL HYD 5L | | | 2, 36 |
| 6904842B | FLUID, OIL HYD 25L | | | 2, 3, 4, 36 |
| 6904842C | FLUID, OIL HYD 209L | | | 4, 36 |
| 6904842D | FLUID, OIL HYD 1000L | | | 4, 36 |
| 6904843A | FLUID, OIL HYD BIO 5L | | | 2, 36 |
| 6904843B | FLUID, OIL HYD BIO 25L | | | 4, 36 |
| 6904843C | FLUID, OIL HYD BIO 209L | | | 4, 36 |
| 6904843D | FLUID, OIL HYD BIO 1000L | | | 4, 36 |
| 6904845A | TRANSMISSION OIL, 5L | | | 32 |
| 6904845B | TRANSMISSION OIL, 25L | | | 32 |
| 6904845C | TRANSMISSION OIL, 209L | | | 32 |

**Code for disposition of old part number**

**A -- Use up**
**B -- Use on other application (See PNI)**
**C -- File PDR Report with Bobcat Parts Sales**
**D -- Part Number Error**



Page 480 - OSS# 2089524 - All rights reserved by Bobcat Company - 05/11/2012 - 06:30:39 - Produced by Ken Cook Co. with mediaioff

| Part No. | Description | Was | Code | Page |
|---|---|---|---|---|
| 6904845D | TRANSMISSION OIL, 1000L | | | 32 |
| 6987193 | MANUAL OPERATION E80 EXCAVATOR | | | 4, 10 |
| 6987194 | MANUAL SERVICE E80 EXCAVATOR | | | 4, 10 |
| 6987195 | MANUAL, PARTS E80 EXCAVATOR | | | 4, 5, 6, 10 |
| 6987195-CD | MANUAL, PARTS E80 EXCAVATOR CD | | | 10 |
| 6987304 | HANDBOOK, OPERATION & MAINTENANCE | | | 6, 10 |
| 6987333 | INSTRUCTIONS, INSTALL | | | 436 |
| 6987344 | INTRUCTIONS, INSTALLATION | | | 438 |
| 6987380 | INSTRUCTIONS | | | 440, 442, 452, 454 |
| 6987381 | INSTRUCTIONS | | | 416 |
| 6987383 | INSTRUCTIONS | | | 378, 380 |
| 6987384 | INSTRUCTIONS | | | 434 |
| 6987385 | INSTRUCTIONS | | | 456 |
| 6987386 | INSTRUCTIONS | | | 458 |
| 6987456 | INSTRUCTIONS | | | 426 |
| 6987458 | INSTRUCTIONS | | | 448 |
| 6987459 | INSTRUCTIONS | | | 450 |
| 6987467 | INSTRUCTIONS | | | 462, 464 |
| 6987468 | INSTRUCTIONS | | | 460 |
| 6987500A | OIL 30W 5L | | | 2, 22 |
| 6987500B | OIL, 30 W 25L | | | 2, 22 |
| 6987500C | OIL, 30W 209L | | | 2, 22 |
| 6987500D | OIL, ENGINE SAE 0W/30, 1000L | | | 2, 22 |
| 6987501A | OIL, ENGINE SAE 20W/50, 5L | | | 2, 22 |
| 6987501B | OIL, ENGINE SAE 20W/50, 25L | | | 2, 22 |
| 6987501C | OIL, ENGINE SAE 20W/50, 209L | | | 2, 22 |
| 6987501D | OIL, ENGINE SAE 20W/50, 1000L | | | 2, 22 |
| 6987596A | EG COOLANT, ANTIFREEZE -36 DEGREE CELCIUS | | | 4, 27, 28, 39, 40 |
| 6987596B | EG COOLANT, ANTIFREEZE -36 DEGREE CELCIUS | | | 4, 28, 40 |
| 6987596C | EG COOLANT, ANTIFREEZE -36 DEGREE CELCIUS | | | 4, 28, 40 |
| 6987596D | EG COOLANT, ANTIFREEZE -36 DEGREE CELCIUS | | | 4, 28, 40 |

**Code for disposition of old part number**

**A -- Use up**
**B -- Use on other application (See PNI)**
**C -- File PDR Report with Bobcat Parts Sales**
**D -- Part Number Error**



Page 481 - OSS# 2089524 - All rights reserved by Bobcat Company - 05/11/2012 - 06:30:39 - Produced by Ken Cook Co. with mediaioff

| Part No. | Description | Was | Code | Page |
|---|---|---|---|---|
| 6987597A | EG COOLANT, ANTIFREEZE -36 DEGREE CELCIUS | | | 4, 28, 40 |
| 6987597B | EG COOLANT, ANTIFREEZE -36 DEGREE CELCIUS | | | 4, 28, 40 |
| 6987597C | EG COOLANT, ANTIFREEZE -36 DEGREE CELCIUS | | | 4, 28, 40 |
| 6987597D | EG COOLANT, ANTIFREEZE -36 DEGREE CELCIUS | | | 4, 28, 40 |
| 6987600 | BATTERY, 100AH | | | 2, 309, 310 |
| 6987603 | PAINT | | | 466 |
| 6987604 | PAINT | | | 466 |
| 6988096 | ANTIFREEZE,EG PREMIX 1 GAL (6) | | | 8, 29, 30, 41, 42 |
| 6988097 | ANTIFREEZE, EG CONCENTR 1 GAL (6) | | | 8, 30, 42 |
| 6988098 | TRANS/DIFFERENTIAL FLUID 1 GAL (6) | | | 34 |
| 6988099 | TRANS/DIFFERENTIAL FLUID 2.5 GAL (2) | | | 34 |
| 6989528 | INSTRUCTIONS, INSTALL | | | 444 |
| 7003700 | BEARING BALL | | | 238 |
| 7003705 | BUSHING | | | 292 |
| 7003706 | BUSHING | | | 284, 286, 288, 290 |
| 7003708 | BUSHING DD | | | 280, 402 |
| 7003709 | BUSHING DD | | | 276, 278, 406, 408 |
| 7003710 | BUSHING DD | | | 282 |
| 7003711 | BUSHING | | | 232 |
| 7003712 | BUSHING | | | 234 |
| 7003714 | BUSHING | | | 122 |
| 7003716 | SHIM | | | 232 |
| 7003717 | WASHER | | | 292 |
| 7003722 | RING RETAINING | | | 276, 278, 406, 408 |
| 7003724 | RING RETAINING | | | 282, 404 |
| 7003728 | RING STOP | | | 276, 278, 406, 408 |
| 7003730 | RING RETAINING | | | 284, 286, 288, 290, 292 |
| 7003731 | BOLT | | | 234 |
| 7003733 | NUT HEX | | | 232 |
| 7003735 | NUT PISTON | | | 280, 402 |
| 7003736 | NUT | | | 284, 286, 288, 290, 292 |
| 7003738 | NUT PISTON | | | 282 |
| 7003741 | PIN | | | 122 |
| 7003742 | SPRING | | | 276, 278, 406, 408 |
| 7003743 | SPRING | | | 232 |
| 7003749 | COUPLER JOINT ASSY | | | 232 |
| 7003750 | BOOT | | | 232 |
| 7003751 | CAP ROUND | | | 232 |
| 7003752 | CAP PEANUT | | | 232 |

**Code for disposition of old part number**

**A -- Use up**
**B -- Use on other application (See PNI)**
**C -- File PDR Report with Bobcat Parts Sales**
**D -- Part Number Error**



Page 482 - OSS# 2089524 - All rights reserved by Bobcat Company - 05/11/2012 - 06:30:39 - Produced by Ken Cook Co. with mediaioff

| Part No. | Description | Was | Code | Page |
|---|---|---|---|---|
| 7003754 | ORING | | | 280, 402 |
| 7003755 | ORING | | | 276, 278, 406, 408 |
| 7003758 | SEAL | | | 276, 278, 406, 408 |
| 7003759 | SEAL | | | 282, 404 |
| 7003761 | SEAL | | | 284, 286, 288, 290, 292 |
| 7003762 | RING BACK-UP | 7012803 | A | 292 |
| 7003765 | RING BACK-UP | | | 280, 402 |
| 7003766 | RING BACK-UP | | | 276, 278, 406, 408 |
| 7003772 | RING BACK-UP | | | 284, 286, 288, 290 |
| 7003776 | RING GLYD | | | 292 |
| 7003779 | RING GLYD | | | 280, 402 |
| 7003783 | RING WEAR | | | 280, 402 |
| 7003787 | SEAL BUFFER | | | 284, 286, 288, 290, 292 |
| 7003788 | SEAL BUFFER | | | 276, 278, 406, 408 |
| 7003789 | WIPER DUST | | | 280, 402 |
| 7003791 | WIPER DUST | | | 276, 278, 406, 408 |
| 7003792 | WIPER DUST | | | 282, 404 |
| 7003795 | RING DUST | | | 292 |
| 7003796 | RING WEAR | | | 292 |
| 7003797 | SEAL | | | 280, 402 |
| 7003799 | PLUG | | | 228, 234 |
| 7003804 | SUPPORT SPRING | | | 276, 278 |
| 7003807 | SHAFT | | | 122 |
| 7003808 | COLLAR | | | 122 |
| 7003809 | LEVER | | | 234 |
| 7003819 | PLATE | | | 232 |
| 7003820 | PLATE FRICTION | | | 238, 244 |
| 7003821 | PLATE MATING | | | 238, 244 |
| 7003822 | PLATE SWASH | | | 232 |
| 7003824 | PLATE THRUST | | | 406, 408 |
| 7003826 | VALVE CHECK | | | 276, 278, 406, 408 |
| 7003836 | DIAPHRAGM PLUNGER CUSHION | | | 276, 278, 406, 408 |
| 7003837 | SEAT SPRING | | | 232 |
| 7003840 | ROD PUSH | | | 232 |
| 7003842 | GUIDE | | | 234 |
| 7003848 | COIL | | | 218, 224 |
| 7003851 | SUPPORT | | | 120 |
| 7003852 | BUSHING | | | 120 |
| 7003857 | SHAFT | | | 120 |
| 7003859 | SHIM | | | 188, 374 |
| 7003860 | SPACER | | | 154 |
| 7003862 | RING RETAINING | | | 276, 278, 406, 408 |
| 7003864 | RING RETAINING | | | 280, 284, 286, 288, 290, 292, 402 |
| 7003865 | WIPER DUST | | | 284, 286, 288, 290, 292 |
| 7003867 | LOCK STOP | | | 66 |
| 7003868 | GAUGE LEVEL | | | 188 |
| 7003870 | BOLT STUD | | | 306 |
| 7003871 | BOLT STUD | | | 306 |
| 7003875 | NUT | | | 172, 174 |
| 7003876 | NUT | | | 170, 184, 384 |
| 7003878 | NUT | | | 48, 184, 200, 386, 388 |
| 7003882 | PIN | | | 136 |
| 7003883 | PIN | | | 136 |
| 7003884 | PIN | | | 136, 382 |

**Code for disposition of old part number**

**A -- Use up**
**B -- Use on other application (See PNI)**
**C -- File PDR Report with Bobcat Parts Sales**
**D -- Part Number Error**



Page 483 - OSS# 2089524 - All rights reserved by Bobcat Company - 05/11/2012 - 06:30:39 - Produced by Ken Cook Co. with mediaioff

| Part No. | Description | Was | Code | Page |
|---|---|---|---|---|
| 7003885 | PIN | | | 136 |
| 7003886 | PIN | | | 136, 382 |
| 7003887 | PIN | | | 132, 134, 378, 380 |
| 7003888 | PIN | | | 132, 134, 378, 380 |
| 7003889 | PIN | | | 132, 134, 378, 380 |
| 7003891 | CLAMP | | | 332 |
| 7003892 | CLIP | | | 322 |
| 7003893 | CLIP | | | 306, 372, 414 |
| 7003894 | CLIP | | | 152, 218, 300, 306, 324, 370, 413, 414, 460 |
| 7003895 | CLIP | | | 82, 83, 84, 164, 300, 306 |
| 7003896 | CLIP | | | 84, 190, 300, 306 |
| 7003897 | CLIP | | | 190, 300, 306, 376, 426 |
| 7003901 | CLIP | | | 84, 192, 200 |
| 7003902 | CLIP | | | 160, 210, 370 |
| 7003903 | CLIP | | | 152, 202, 210 |
| 7003904 | CLIP | | | 152 |
| 7003905 | CLIP | | | 84, 306 |
| 7003907 | CLIP | | | 84 |
| 7003908 | CLAMP | | | 190 |
| 7003913 | WIRE | | | 72 |
| 7003914 | HANDLE GRIP | | | 208 |
| 7003919 | LINK GUIDE RH | | | 132, 134, 378, 380 |
| 7003920 | LINK GUIDE LH | | | 132, 134, 378, 380 |
| 7003922 | CAP | | | 44 |
| 7003923 | CAP GREASE NIPPLE | | | 132, 134, 136, 378, 380, 382 |
| 7003927 | STOP | | | 232 |
| 7003928 | STOP SLIDE DOOR | | | 66, 72, 94 |
| 7003929 | STOP RUBBER | | | 74 |
| 7003931 | PAD | | | 190 |
| 7003937 | PEDAL RUBBER LH | | | 144 |
| 7003938 | PEDAL RUBBER RH | | | 144 |
| 7003939 | ORING | | | 132, 134, 378, 380 |
| 7003940 | SEAL FLOATING | | | 120 |
| 7003941 | SEAL OIL | | | 124 |
| 7003942 | GASKET | | | 310, 336, 354 |
| 7003945 | SEAL | | | 116 |
| 7003947 | SEAL SLIPPER | | | 276, 278, 284, 286, 288, 290, 406, 408 |
| 7003948 | SEAL BUFFER | | | 280, 402 |
| 7003949 | ADAPTER | | | 182, 386 |
| 7003950 | ADAPTER | | | 184, 384 |
| 7003952 | REDUCER | | | 47, 48 |
| 7003955 | PLUG | | | 230 |
| 7003959 | TEE SHUTTLE | | | 192 |
| 7003962 | HOSE 340L | | | 326 |
| 7003968 | BRACKET | | | 182, 386 |
| 7003970 | BRACKET LAMP | | | 107, 108 |
| 7003971 | BRACKET LAMP | | | 108, 414 |
| 7003977 | PINION ASSY | | | 316 |
| 7003978 | PULLEY | | | 314 |
| 7003980 | PULLEY V | | | 350 |
| 7003986 | BEARING BALL | | | 314 |
| 7003987 | ROLLER | | | 238 |
| 7003998 | BEARING BALL | | | 316 |
| 7004003 | KEY | | | 350, 352 |

**Code for disposition of old part number**

**A -- Use up**
**B -- Use on other application (See PNI)**
**C -- File PDR Report with Bobcat Parts Sales**
**D -- Part Number Error**



Page 484 - OSS# 2089524 - All rights reserved by Bobcat Company - 05/11/2012 - 06:30:39 - Produced by Ken Cook Co. with mediaioff

| Part No. | Description | Was | Code | Page |
|---|---|---|---|---|
| 7004012 | SPACER | | | 314 |
| 7004013 | SPACER FAN | | | 354 |
| 7004015 | WASHER | | | 238, 244 |
| 7004018 | WASHER | | | 350 |
| 7004019 | WASHER SEAL | | | 336, 348, 368 |
| 7004020 | WASHER | | | 364 |
| 7004062 | RING SNAP | | | 350 |
| 7004078 | BOLT M6X30 | | | 354 |
| 7004080 | BOLT PLATED M8X45 | | | 338, 356 |
| 7004081 | BOLT M4X14 | | | 366 |
| 7004082 | BOLT | | | 316 |
| 7004083 | BOLT M12X25 | | | 316 |
| 7004084 | BOLT M8X25 | | | 314 |
| 7004085 | BOLT | | | 340 |
| 7004086 | BOLT PLATED M8X16 | | | 338, 342, 348, 352 |
| 7004087 | BOLT PLATED M8X20 | | | 328, 338, 362 |
| 7004088 | BOLT M8X30 | | | 362, 368 |
| 7004089 | BOLT PLATED M8X40 | | | 338, 342, 356 |
| 7004090 | BOLT PLATED M8X70 | | | 338 |
| 7004091 | BOLT PLATED M10X70 | | | 346 |
| 7004092 | BOLT PLATED M10X35 | | | 346 |
| 7004093 | BOLT M8X12 | | | 346, 348, 354 |
| 7004094 | BOLT M8X80 | | | 354, 356 |
| 7004095 | BOLT M8X22 | | | 358 |
| 7004096 | BOLT PLATED M8X55 | | | 352, 354 |
| 7004099 | BOLT M8X110 | | | 314 |
| 7004100 | BOLT | | | 314 |
| 7004103 | BOLT JOINT | | | 348 |
| 7004104 | BOLT STUD | | | 338 |
| 7004105 | SCREW TAPPING | | | 344 |
| 7004109 | BOLT | | | 314 |
| 7004110 | SCREW VALVE | | | 342 |
| 7004140 | SCREW VALVE BRIDGE | | | 342 |
| 7004141 | STUD M8X22 | | | 342 |
| 7004142 | BOLT FLANGE RETAINER | | | 342 |
| 7004143 | BOLT | | | 352 |
| 7004144 | BOLT V-PULLEY | | | 350 |
| 7004146 | NUT M8 | | | 342 |
| 7004147 | NUT | | | 366 |
| 7004148 | NUT M6 | | | 366 |
| 7004149 | NUT | | | 364 |
| 7004161 | NUT | | | 314, 338 |
| 7004164 | PIN | | | 366 |
| 7004168 | PIN PARALLEL | | | 238, 242 |
| 7004182 | CLAMP | | | 368 |

**Code for disposition of old part number**

**A -- Use up**
**B -- Use on other application (See PNI)**
**C -- File PDR Report with Bobcat Parts Sales**
**D -- Part Number Error**



Page 485 - OSS# 2089524 - All rights reserved by Bobcat Company - 05/11/2012 - 06:30:39 - Produced by Ken Cook Co. with mediaioff

| Part No. | Description | Was | Code | Page |
|---|---|---|---|---|
| 7004183 | CLIP CIRCLIP | | | 364 |
| 7004186 | CLAMP | | | 368 |
| 7004193 | SPRING | | | 238 |
| 7004195 | SPRING | | | 366 |
| 7004200 | SPRING RETAINER | | | 238 |
| 7004203 | GUIDE VALVE BRIDGE | | | 342 |
| 7004204 | HANDLE KNOB | | | 344 |
| 7004206 | TUBELINE FUEL ASSY | | | 368 |
| 7004207 | TUBELINE ASSY RETURN | | | 368 |
| 7004209 | FLYWHEEL ASSY | | | 350 |
| 7004210 | GUARD NOZZLE | | | 336, 342 |
| 7004211 | GUARD FUEL TUBELINE | | | 368 |
| 7004212 | FOAM | | | 338 |
| 7004214 | BEARING THRUST | | | 352 |
| 7004215 | GASKET | | | 336, 354 |
| 7004216 | GASKET ROUND | | | 336, 354 |
| 7004217 | GASKET | | | 336, 354 |
| 7004219 | GASKET HOUSING | | | 336, 354 |
| 7004221 | ORING | | | 242 |
| 7004222 | ORING | | | 238 |
| 7004223 | ORING | | | 238 |
| 7004226 | ORING | | | 336, 350 |
| 7004231 | SEAL WASHER | | | 336, 346 |
| 7004274 | SEAL OIL | | | 338 |
| 7004275 | SEAL | | | 336, 338 |
| 7004276 | SEAL VALVE STEM | | | 336, 342 |
| 7004277 | SEAL TUBELINE | | | 366 |
| 7004278 | SEAL | | | 336, 368 |
| 7004292 | PLUG | | | 340 |
| 7004293 | PLUG | | | 342 |
| 7004294 | PLUG PT8/3 STEEL | | | 354 |
| 7004295 | PLUG | | | 340 |
| 7004296 | PLUG | | | 340 |
| 7004298 | PLUG DRAIN | | | 354 |
| 7004299 | PLUG DRAIN | | | 346 |
| 7004300 | PLUG | | | 238 |
| 7004303 | PLUG | | | 238, 242 |
| 7004312 | TUBELINE | | | 368 |
| 7004313 | BRACKET ASSY REAR | | | 314 |
| 7004314 | BRACKET AJUSTER | | | 314 |
| 7004315 | BRACKET ASSY FRONT | | | 314 |
| 7004316 | CLIP | | | 348 |
| 7004320 | PIN COTTER ASSY | | | 342 |
| 7004328 | RETAINER VALVE | | | 342 |
| 7004329 | CLUTCH ASSY | | | 316 |
| 7004331 | SHAFT PINION | | | 316 |
| 7004332 | COVER ASSY | | | 338 |
| 7004333 | BOLT JOINT ASSY | | | 348 |
| 7004334 | BOLT | | | 368 |

**Code for disposition of old part number**

**A -- Use up**
**B -- Use on other application (See PNI)**
**C -- File PDR Report with Bobcat Parts Sales**
**D -- Part Number Error**



Page 486 - OSS# 2089524 - All rights reserved by Bobcat Company - 05/11/2012 - 06:30:39 - Produced by Ken Cook Co. with mediaIoff

| Part No. | Description | Was | Code | Page |
|---|---|---|---|---|
| 7004335 | HOSE | | | 368 |
| 7004336 | BOLT STUD | | | 356 |
| 7004356 | GEAR IDLER ASSY | | | 352 |
| 7004358 | GEAR RING | | | 350 |
| 7004368 | ROTOR ASSY | | | 314 |
| 7004370 | BUSHING CAMSHAFT | | | 340 |
| 7004371 | BUSHING IDLE GEAR | | | 352 |
| 7004372 | PISTON | | | 238 |
| 7004384 | PLATE STOP | | | 366 |
| 7004397 | KIT PINION STOP | | | 316 |
| 7004404 | HOUSING GEAR | | | 338 |
| 7004406 | VALVE BRIDGE ASSY | | | 342 |
| 7004407 | SEAT NOZZLE | | | 336, 342 |
| 7004408 | SEAT | | | 366 |
| 7004418 | GUIDE OIL GAUGE | | | 347, 348 |
| 7004419 | TAPPET | | | 351, 352 |
| 7004421 | CAP FLYWHEEL COVER | | | 346 |
| 7004422 | COVER | | | 338 |
| 7004423 | COVER TERMINAL | | | 316 |
| 7004425 | HOUSING FLYWHEEL | | | 346 |
| 7004441 | DIAPHRAGM BAFFLE | | | 344 |
| 7004446 | PIVOT | | | 238 |
| 7004448 | SUPPORT | | | 342 |
| 7004449 | FAN COOLING | | | 354 |
| 7004451 | BELT V | | | 2, 8, 354 |
| 7004454 | SPROCKET | | | 126, 456 |
| 7004456 | BUSHING | | | 116 |
| 7004457 | BUSHING | | | 230 |
| 7004458 | BUSHING DU | | | 228 |
| 7004460 | BUSHING | | | 140 |
| 7004468 | WASHER | | | 54 |
| 7004469 | WASHER | | | 56 |
| 7004470 | WASHER PLAIN | | | 182, 184, 386, 388 |
| 7004479 | SHIM | | | 140 |
| 7004482 | SHIM | | | 132, 134, 378, 380 |
| 7004483 | SHIM | | | 132, 134, 378, 380 |
| 7004487 | SHIM | | | 74 |
| 7004491 | SHIM | | | 44 |
| 7004492 | SHIM | | | 138 |
| 7004493 | SHIM | | | 44 |
| 7004494 | SHIM | | | 138 |
| 7004497 | SHIM | | | 56 |
| 7004498 | SHIM | | | 138 |
| 7004501 | SHIM | | | 116 |
| 7004502 | WASHER | | | 44 |
| 7004507 | WASHER PLAIN | | | 116, 164, 446 |
| 7004509 | WASHER | | | 52, 68, 144, 446, 448 |
| 7004510 | WASHER | | | 446, 448 |
| 7004512 | WASHER PLAIN | | | 66, 70, 72, 76 |

**Code for disposition of old part number**

**A -- Use up**
**B -- Use on other application (See PNI)**
**C -- File PDR Report with Bobcat Parts Sales**
**D -- Part Number Error**



Page 487 - OSS# 2089524 - All rights reserved by Bobcat Company - 05/11/2012 - 06:30:39 - Produced by Ken Cook Co. with mediaioff

| Part No. | Description | Was | Code | Page |
|---|---|---|---|---|
| 7004513 | WASHER | | | 112 |
| 7004514 | WASHER | | | 54, 450 |
| 7004515 | WASHER | | | 51, 52, 62, 66, 70, 72, 74, 76, 78, 140, 142, 144, 146, 400 |
| 7004516 | WASHER PLAIN | | | 88, 90, 114 |
| 7004518 | WASHER PLAIN | | | 54 |
| 7004519 | WASHER | | | 56 |
| 7004520 | WASHER PLAIN | | | 72 |
| 7004521 | WASHER SPRING | | | 60 |
| 7004522 | WASHER | | | 52 |
| 7004523 | WASHER | | | 140 |
| 7004526 | BOLT | | | 118 |
| 7004527 | BOLT | | | 310 |
| 7004529 | BOLT | | | 76 |
| 7004530 | BOLT M10X1.5X30 | | | 52 |
| 7004531 | BOLT | | | 88 |
| 7004532 | BOLT | | | 76 |
| 7004534 | BOLT | | | 52, 70, 72, 144 |
| 7004537 | BOLT | | | 54, 446, 448, 450 |
| 7004538 | BOLT | | | 90 |
| 7004539 | BOLT | | | 112 |
| 7004540 | BOLT | | | 66 |
| 7004541 | BOLT | | | 446, 448 |
| 7004542 | BOLT | | | 54 |
| 7004544 | BOLT | | | 68 |
| 7004546 | BOLT | | | 66, 72, 74, 76, 78, 140, 142, 144, 146, 400 |
| 7004547 | BOLT | | | 52, 72, 76, 88, 90, 448 |
| 7004548 | BOLT | | | 70, 74, 90, 140, 142 |
| 7004549 | BOLT GREEN | | | 88, 140 |
| 7004550 | BOLT | | | 88 |
| 7004551 | BOLT | | | 70 |
| 7004552 | BOLT | | | 144 |
| 7004553 | SCREW M6X1.0X10 | | | 114 |
| 7004554 | BOLT STUD | | | 84, 324 |
| 7004555 | BOLT SET | | | 322 |
| 7004559 | NUT | | | 118 |
| 7004561 | NUT | | | 306, 328, 330, 344, 358 |
| 7004561 | NUT | 7004160 | A | 306, 328, 330, 344, 358 |
| 7004562 | NUT | | | 74, 140 |
| 7004563 | NUT | | | 66, 72 |
| 7004564 | NUT CAP | | | 112 |
| 7004566 | NUT | | | 54, 56 |
| 7004567 | NUT LOCK | | | 54 |
| 7004569 | PIN | | | 94, 98, 100, 104 |
| 7004584 | LOCK | | | 66 |
| 7004587 | CLAMP | | | 154 |
| 7004591 | LOCK BACK | | | 72 |
| 7004593 | SPRING | | | 188 |
| 7004595 | SPRING | | | 72 |
| 7004600 | HOOK CATCH DOOR | | | 70 |
| 7004603 | BUSHING RUBBER | | | 78 |
| 7004604 | BUSHING RUBBER | | | 52 |
| 7004609 | BUSHING RUBBER | | | 376, 426 |
| 7004615 | CAP BATT TML + | | | 308 |

**Code for disposition of old part number**

**A -- Use up**
**B -- Use on other application (See PNI)**
**C -- File PDR Report with Bobcat Parts Sales**
**D -- Part Number Error**



Page 488 - OSS# 2089524 - All rights reserved by Bobcat Company - 05/11/2012 - 06:30:39 - Produced by Ken Cook Co. with mediaioff

| Part No. | Description | Was | Code | Page |
|---|---|---|---|---|
| 7004616 | CAP BATT TML - | | | 304 |
| 7004617 | BUSHING RUBBER | | | 70 |
| 7004618 | BUSHING RUBBER | | | 306 |
| 7004620 | BUSHING RUBBER | | | 66 |
| 7004621 | CAP STRAINER | | | 376, 428 |
| 7004623 | STRIP | | | 66 |
| 7004624 | STOP RUBBER | | | 66 |
| 7004625 | STOP | | | 140 |
| 7004626 | CAP RUBBER | | | 52 |
| 7004627 | STOP GLASS | | | 66 |
| 7004628 | ORING | | | 148, 150, 160, 162, 392 |
| 7004630 | ORING | | | 150 |
| 7004631 | ORING | | | 180, 384 |
| 7004632 | ORING | | | 150 |
| 7004633 | ORING | | | 190 |
| 7004635 | ORING | | | 374 |
| 7004637 | SEAL DUST | | | 132, 134, 378, 380 |
| 7004638 | SEAL DUST | | | 132, 134, 378, 380, 382 |
| 7004639 | SEAL DUST | | | 132, 134, 378, 380, 382 |
| 7004640 | SEAL DUST | | | 132, 134, 136, 138, 378, 380, 382 |
| 7004641 | SEAL DUST | | | 132, 134, 378, 380 |
| 7004643 | SEAL | | | 116 |
| 7004649 | ORING | | | 220 |
| 7004654 | ORING | | | 220 |
| 7004658 | ORING | | | 244 |
| 7004659 | ORING | | | 244 |
| 7004660 | ORING | | | 244 |
| 7004661 | ORING | | | 244 |
| 7004663 | ORING | | | 230 |
| 7004664 | WASHER SEAL | | | 82 |
| 7004665 | SEAL FLOATING | | | 122 |
| 7004667 | ADAPTER | | | 180 |
| 7004668 | ADAPTER | | | 164 |
| 7004669 | ADAPTER | | | 48, 180 |
| 7004671 | PLUG PT 1/8 | | | 120, 124, 232, 238, 246 |
| 7004673 | PLUG | | | 122, 188, 230, 236, 342, 374 |
| 7004674 | PLUG PT3/8 | | | 236, 246, 276, 278, 340, 342, 406, 408 |
| 7004675 | PLUG | | | 244 |
| 7004677 | ADAPTER | | | 148, 150, 162, 392, 460 |
| 7004683 | ADAPTER | | | 148, 150, 154, 164, 182, 184, 192, 198, 200, 204, 206, 208, 210, 218, 386, 388, 394, 434, 460 |
| 7004686 | ADAPTER | | | 182, 184, 388 |
| 7004690 | ADAPTER | | | 190 |
| 7004693 | ADAPTER | | | 150, 166 |
| 7004694 | ADAPTER | | | 210 |
| 7004695 | ADAPTER | | | 206 |
| 7004696 | ADAPTER | | | 210 |
| 7004699 | ADAPTER | | | 154, 168, 170, 176, 178, 180, 184, 384, 388, 462, 464 |
| 7004700 | ADAPTER | | | 150, 154, 164, 192 |
| 7004702 | ADAPTER | | | 210 |
| 7004705 | ELBOW | | | 48 |
| 7004708 | ELBOW | | | 190 |
| 7004709 | ELBOW | | | 192 |

**Code for disposition of old part number**

**A -- Use up**
**B -- Use on other application (See PNI)**
**C -- File PDR Report with Bobcat Parts Sales**
**D -- Part Number Error**



Page 489 - OSS# 2089524 - All rights reserved by Bobcat Company - 05/11/2012 - 06:30:39 - Produced by Ken Cook Co. with mediaioff

| Part No. | Description | Was | Code | Page |
|---|---|---|---|---|
| 7004710 | ELBOW | | | 148, 160, 162, 164, 190, 384 |
| 7004713 | ELBOW | | | 150, 204, 208, 210, 218, 434, 460 |
| 7004713 | ELBOW | 7008144 | B,D | 150, 204, 208, 210, 218, 434, 460 |
| 7004714 | ELBOW | | | 192 |
| 7004715 | ELBOW | | | 150 |
| 7004716 | ELBOW | | | 148, 156, 158, 416 |
| 7004717 | ELBOW | | | 190 |
| 7004718 | ADAPTER | | | 164 |
| 7004719 | ELBOW | | | 166 |
| 7004721 | ELBOW | | | 208, 388 |
| 7004722 | ELBOW | | | 158, 416 |
| 7004723 | ELBOW | | | 164 |
| 7004725 | ELBOW | | | 190 |
| 7004727 | PLUG | | | 230 |
| 7004729 | PLUG RO | | | 238, 239, 240 |
| 7004732 | PLUG | | | 210, 244 |
| 7004733 | PLUG | | | 180, 384 |
| 7004735 | PLUG | | | 200 |
| 7004736 | PLUG | | | 374 |
| 7004738 | TEE | | | 154, 210, 213, 214 |
| 7004739 | TEE | | | 166 |
| 7004741 | TEE | | | 154, 166 |
| 7004742 | TEE | | | 190 |
| 7004746 | TEE | | | 166 |
| 7004748 | ADAPTER | | | 376, 426 |
| 7004750 | TEE | | | 214 |
| 7004751 | TEE | | | 154 |
| 7004754 | PLUG | | | 152 |
| 7004755 | ELBOW | | | 206, 211, 212 |
| 7004756 | ELBOW | | | 148, 166 |
| 7004757 | ELBOW | | | 190 |
| 7004763 | ADAPTER | | | 376, 426, 428 |
| 7004764 | PLUG | | | 200 |
| 7004765 | PLUG | | | 164 |
| 7004768 | TEE | | | 215, 216, 388, 394 |
| 7004771 | ADAPTER | | | 150 |
| 7004775 | ADAPTER | | | 182, 184, 388 |
| 7004777 | FLANGE | | | 180, 384 |
| 7004781 | HOSE | | | 166 |
| 7004783 | HOSE | | | 190 |
| 7004784 | HOSE | | | 322 |
| 7004786 | HOSE 700L | | | 326 |
| 7004787 | HOSE | | | 324 |
| 7004789 | HOSE RUBBER | | | 82 |
| 7004791 | HOSE | | | 82 |
| 7004792 | HOSE RUBBER | | | 84 |
| 7004793 | HOSE RUBBER | | | 82 |
| 7004796 | HOSE LIQUID | | | 82 |
| 7004801 | FITTING COCK | | | 374 |
| 7004802 | INSERT ROTATING BEACON | | | 442, 454 |
| 7004803 | INSERT WIPER | | | 298 |
| 7004804 | INSERT WASHER | | | 298 |
| 7004805 | INSERT AUTO SPEED | | | 298 |

**Code for disposition of old part number**

**A -- Use up**
**B -- Use on other application (See PNI)**
**C -- File PDR Report with Bobcat Parts Sales**
**D -- Part Number Error**



Page 490 - OSS# 2089524 - All rights reserved by Bobcat Company - 05/11/2012 - 06:30:39 - Produced by Ken Cook Co. with mediaioff

| Part No. | Description | Was | Code | Page |
|---|---|---|---|---|
| 7004807 | INSERT RADIO | | | 298 |
| 7004808 | INSERT OVERLOAD WARNING | | | 318 |
| 7004809 | INSERT CAB LAMP SW | | | 298 |
| 7004817 | PLATE NAME RELAY | | | 296, 297, 298 |
| 7004818 | PLATE NAME RELAY | | | 296 |
| 7004819 | PLATE NAME RELAY | | | 296 |
| 7004820 | INSERT AUTO IDLE SW | | | 298 |
| 7004822 | INSERT TRAVEL ALARM | | | 432, 434 |
| 7004823 | BRACKET | | | 310 |
| 7004824 | BRACKET HOUSING | | | 218, 306, 460 |
| 7004825 | BRACKET HOUSING | | | 304 |
| 7004826 | BRACKET HOUSING | | | 108, 300, 304, 305, 306, 414 |
| 7004838 | TOOL HAMMER | | | 66 |
| 7004841 | RECEIVER DRIER | | | 82 |
| 7004842 | COMPRESSOR ASSY | | | 85, 86 |
| 7004844 | IDLER ASSY | | | 119, 120, 126, 456 |
| 7004857 | KIT SEAL | | | 376, 428 |
| 7004858 | ADAPTER | | | 76 |
| 7004860 | VALVE CHECK | | | 376, 428 |
| 7004870 | VALVE BYPASS | | | 188 |
| 7004876 | ACCUMULATOR | | | 192 |
| 7004878 | FILTER STRAINER | | | 376, 428 |
| 7004882 | COVER | | | 188 |
| 7004884 | FILTER RETURN | | | 2, 8, 19, 20, 25, 26, 36, 38, 188 |
| 7004886 | LIGHT BULB 12V 55W | | | 110, 414 |
| 7004887 | LIGHT BULB 12V/10W | | | 2, 8, 76 |
| 7004890 | ALARM PILOT | | | 294 |
| 7004891 | CONDENSER ASSY | | | 82 |
| 7004896 | LINK FUSIBLE | | | 2, 8, 304 |
| 7004898 | BREAKER CIRCUIT | | | 310 |
| 7004899 | METER HOUR | | | 298 |
| 7004907 | LAMP WORK | | | 109, 110 |
| 7004908 | SPEAKER | | | 76 |
| 7004909 | RELAY BATTERY | | | 310 |
| 7004910 | RELAY | | | 110, 294, 296 |
| 7004911 | SENDER WATER TEMP | | | 310 |
| 7004912 | SENSOR PRESSURE | | | 317, 318 |
| 7004913 | RESITOR DIODE | | | 304 |
| 7004916 | SWITCH ROCKER 12V | | | 298, 318, 432, 434, 442, 454 |
| 7004917 | TERMINAL BATTERY + | | | 308 |
| 7004919 | CABLE BATTERY | | | 304 |
| 7004921 | CABLE BATTERY | | | 304 |

**Code for disposition of old part number**

**A -- Use up**
**B -- Use on other application (See PNI)**
**C -- File PDR Report with Bobcat Parts Sales**
**D -- Part Number Error**



Page 491 - OSS# 2089524 - All rights reserved by Bobcat Company - 05/11/2012 - 06:30:39 - Produced by Ken Cook Co. with mediaioff

| Part No. | Description | Was | Code | Page |
|---|---|---|---|---|
| 7004923 | CABLE BATT-BATT RY | | | 304 |
| 7004926 | COVER GREASE | | | 116 |
| 7004927 | COVER | | | 116 |
| 7004928 | COVER LH | | | 116 |
| 7004929 | COVER RH | | | 116 |
| 7004930 | COVER | | | 90 |
| 7004931 | BAR | | | 66 |
| 7004932 | ROLLER | | | 74 |
| 7004933 | ROLLER LOWER | | | 121, 122, 126, 456 |
| 7004961 | TANK WINDOW WASHER | | | 310 |
| 7004963 | PUMP ASSY | | | 219, 220, 334 |
| 7004967 | KIT VANE | | | 376, 428 |
| 7004970 | NOZZLE WIPER MOTOR | | | 76 |
| 7004972 | STOP RUBBER | | | 76 |
| 7004976 | VALVE SWITCH | | | 148 |
| 7004977 | VALVE | | | 118 |
| 7004978 | VALVE SHUTTLE | | | 199, 200 |
| 7004980 | VALVE LOCK | | | 182, 184, 278, 386, 388 |
| 7004981 | VALVE SWITCH | | | 175, 176, 177, 178, 462, 464 |
| 7004985 | BLOCK | | | 192 |
| 7004992 | KIT SEAL | | | 280, 402 |
| 7004993 | KIT SEAL | | | 282 |
| 7004995 | FILTER FUEL STRAINER | | | 374 |
| 7004997 | COVER | | | 188 |
| 7005002 | GENERATOR | | | 313, 314 |
| 7005004 | LIGHT BULB | | | 300 |
| 7005005 | HORN HIGH | | | 310 |
| 7005006 | ALARM | | | 431, 432, 434 |
| 7005007 | MOTOR FUEL TRANSFER | | | 376, 428 |
| 7005009 | FUSIBLE LINK | | | 2, 8, 304 |
| 7005010 | GAUGE W/TEMP | | | 300 |
| 7005011 | GAUGE FUEL | | | 300 |
| 7005012 | HARNESS JOINT | | | 204, 434 |
| 7005013 | HARNESS STARTER SWITCH | | | 302 |
| 7005019 | SOCKET LIGHT BULB | | | 300 |
| 7005022 | LAMP ROOM | | | 75, 76 |
| 7005026 | ARM WIPER MOTOR | | | 76 |
| 7005027 | ANTENNA | | | 76 |
| 7005029 | LIGHT LIGHTER CIGAR | | | 298 |
| 7005030 | RESISTOR DIODE ASSY 3A | | | 304 |
| 7005031 | SWITCH PRESSURE | | | 204, 434 |
| 7005033 | SWITCH ROCKER | | | 298 |
| 7005034 | SWITCH ROCKER | | | 298 |
| 7005036 | CABLE E/G EARTH | | | 304 |
| 7005040 | GUARD SUN VISOR | | | 113, 114 |
| 7005042 | PLATE WIPER | | | 76 |

**Code for disposition of old part number**

**A -- Use up**
**B -- Use on other application (See PNI)**
**C -- File PDR Report with Bobcat Parts Sales**
**D -- Part Number Error**



Page 492 - OSS# 2089524 - All rights reserved by Bobcat Company - 05/11/2012 - 06:30:39 - Produced by Ken Cook Co. with mediaIoff

| Part No. | Description | Was | Code | Page |
|---|---|---|---|---|
| 7005043 | PLATE | | | 138 |
| 7005046 | STOP RUBBER | | | 66 |
| 7005047 | STEP | | | 116 |
| 7005051 | CAP | | | 326 |
| 7005052 | SEAL OIL | | | 346 |
| 7005053 | BOLT HEAD | | | 340 |
| 7005054 | BEARING SET MAIN STD | | | 340 |
| 7005055 | RETAINER SPRING | | | 342 |
| 7005056 | VALVE INTAKE | | | 342 |
| 7005057 | VALVE EXHAUST | | | 342 |
| 7005058 | SPRING VALVE | | | 342 |
| 7005059 | SHAFT ROCKER ARM | | | 342 |
| 7005060 | SUPPORT A | | | 342 |
| 7005061 | SUPPORT B | | | 342 |
| 7005062 | SHAFT ARM ROCKER ASSY | | | 342 |
| 7005063 | ARM ASSY ROCKER | | | 342 |
| 7005064 | ARM ASSY ROCKER | | | 342 |
| 7005065 | GUIDE VALVE | | | 342 |
| 7005066 | SEAL INTAKE MANIFOLD | | | 336, 355, 356 |
| 7005067 | GASKET EXHAUST MAINFOLD | | | 336, 358 |
| 7005068 | GEAR CAM SHAFT | | | 352 |
| 7005069 | ROD PUSH | | | 352 |
| 7005070 | GEAR CRANK SHAFT | | | 350 |
| 7005071 | SHAFT CRANK ASSY | | | 349, 350 |
| 7005072 | PIN PISTON | | | 350 |
| 7005073 | BOLT ROD | | | 350 |
| 7005074 | BUSHING PISTON PIN | | | 350 |
| 7005075 | PUMP OIL ASSY | | | 338 |
| 7005076 | SWITCH OIL PRESS | | | 348 |
| 7005077 | PLUG M16 | | | 354 |
| 7005078 | THERMOSTAT | | | 354 |
| 7005079 | CLAMP | | | 368 |
| 7005082 | PLUG DRAIN | | | 368 |
| 7005083 | PLUG BREATHER | | | 368 |
| 7005084 | SEAL BREATHER | | | 368 |
| 7005085 | SEAL SPACER | | | 368 |
| 7005086 | ORING | | | 368 |
| 7005087 | SEAL VALVE STEM | | | 336, 342 |
| 7005088 | GASKET CYL HEAD COVER | | | 336, 344 |
| 7005089 | HONE, FLEX | | | 336 |
| 7005090 | WASHER THRUST STD | | | 340 |
| 7005091 | BEARING MAIN 0.25 | | | 340 |
| 7005092 | WASHER THRUST 0.25 | | | 340 |

**Code for disposition of old part number**

**A -- Use up**
**B -- Use on other application (See PNI)**
**C -- File PDR Report with Bobcat Parts Sales**
**D -- Part Number Error**



Page 493 - OSS# 2089524 - All rights reserved by Bobcat Company - 05/11/2012 - 06:30:39 - Produced by Ken Cook Co. with mediaioff

| Part No. | Description | Was | Code | Page |
|---|---|---|---|---|
| 7005093 | SEAT A VALVE BRIDGE | | | 342 |
| 7005094 | BOLT M8X80 | | | 342 |
| 7005095 | WASHER | | | 342 |
| 7005096 | DIAPHRAGM BREATHER | | | 344 |
| 7005097 | PLATE CENTER | | | 344 |
| 7005098 | PLATE BREATHER | | | 344 |
| 7005099 | SPRING DIAPHRAGM | | | 344 |
| 7005100 | PLUG | | | 344 |
| 7005101 | SHAFT IDLER GEAR | | | 352 |
| 7005102 | PIN PARALLEL | | | 350 |
| 7005103 | PIN PARALLEL | | | 350 |
| 7005104 | BOLT FLYWHEEL | | | 350 |
| 7005105 | BEARING ASSY STD. | | | 350 |
| 7005106 | BEARING CON ROD 0.25 | | | 350 |
| 7005107 | CAP LUB OIL | | | 338, 344 |
| 7005108 | TUBELINE FUEL | | | 368 |
| 7005109 | TUBELINE | | | 338 |
| 7005110 | GASKET | | | 336, 356 |
| 7005111 | GASKET | | | 336, 356 |
| 7005112 | HEATER AIR | | | 356 |
| 7005113 | STUD OIL FILTER | | | 348 |
| 7005114 | GASKET THERMOSTAT | | | 336, 354 |
| 7005116 | BOLT M10X1.5X220 | | | 310 |
| 7005117 | BOLT | | | 44 |
| 7005120 | BOLT SET | | | 98, 104, 160 |
| 7005121 | BOLT SET | | | 96, 98, 104, 322 |
| 7005122 | BOLT SET | | | 188 |
| 7005124 | BOLT SET | | | 86, 100, 104 |
| 7005128 | BOLT SET | | | 44, 86, 104, 310, 324 |
| 7005129 | BOLT SET | | | 44, 82, 94, 96, 98, 100, 102, 104, 108, 147, 148, 190, 310, 322, 332, 370, 414 |
| 7005129 | BOLT SET | 7005129 | A | 44, 82, 94, 96, 98, 100, 102, 104, 108, 147, 148, 190, 310, 322, 332, 370, 414 |
| 7005130 | BOLT SET | | | 116 |
| 7005131 | BOLT M8X1.25X15 | | | 326 |
| 7005132 | BOLT SET | | | 100, 104, 105, 106, 198, 310 |
| 7005133 | BOLT M8X1.25X22 | | | 332 |
| 7005135 | BOLT | | | 46, 204, 372, 434 |
| 7005136 | BOLT SET | | | 94, 98, 100, 102, 104 |
| 7005138 | BOLT M10X1.5X25 | | | 370 |
| 7005139 | BOLT M6X1.0X20 | | | 310, 370 |
| 7005141 | NUT LOCK | | | 320 |
| 7005143 | CYLINDER GAS | | | 140 |
| 7005144 | CYLINDER GAS | | | 74 |
| 7005145 | HOSE UNF1 3/16-510L | | | 150 |
| 7005146 | HOSE UNF13/16-630L | | | 150, 151, 152 |
| 7005147 | HOSE | | | 150 |

**Code for disposition of old part number**

**A -- Use up**
**B -- Use on other application (See PNI)**
**C -- File PDR Report with Bobcat Parts Sales**
**D -- Part Number Error**



Page 494 - OSS# 2089524 - All rights reserved by Bobcat Company - 05/11/2012 - 06:30:39 - Produced by Ken Cook Co. with mediaioff

| Part No. | Description | Was | Code | Page |
|---|---|---|---|---|
| 7005148 | HOSE UNF13/16-530L | | | 150 |
| 7005150 | HOSE | | | 180 |
| 7005151 | HOSE | | | 180 |
| 7005152 | HOSE | | | 158, 416 |
| 7005153 | HOSE | | | 166 |
| 7005154 | HOSE | | | 190 |
| 7005159 | HOSE | | | 156 |
| 7005162 | HOSE | | | 182 |
| 7005163 | HOSE | | | 190 |
| 7005175 | HOSE | | | 190 |
| 7005176 | HOSE | | | 190 |
| 7005177 | HOSE | | | 180 |
| 7005182 | HOSE | | | 154 |
| 7005187 | HOSE | | | 170 |
| 7005194 | HOSE | | | 156 |
| 7005195 | HOSE | | | 182 |
| 7005202 | HOSE | | | 158, 416 |
| 7005204 | HOSE | | | 190 |
| 7005226 | HOSE | | | 148 |
| 7005229 | HOSE PF1/2-990L | | | 148 |
| 7005230 | HOSE PF1/2-800L | | | 148 |
| 7005231 | HOSE PF1/2-830L | | | 148 |
| 7005261 | HOSE PF1/4-1880L | | | 196 |
| 7005263 | HOSE | | | 204, 434 |
| 7005264 | HOSE PF1/4-2350L | | | 208 |
| 7005265 | HOSE | | | 214 |
| 7005269 | HOSE | | | 210 |
| 7005270 | HOSE PF1/4-1150L | | | 208 |
| 7005271 | HOSE PF1/4-1000L | | | 208 |
| 7005273 | HOSE PF1/4-2590L | | | 208 |
| 7005274 | HOSE PF1/4-1180L | | | 208 |
| 7005276 | HOSE PF3/8-1300L | | | 154 |
| 7005279 | HOSE PF1/4-1950L | | | 196 |
| 7005281 | HOSE | | | 214 |
| 7005282 | HOSE | | | 194 |
| 7005283 | HOSE PF1/4-2800L | | | 208 |
| 7005284 | HOSE | | | 193, 194 |
| 7005285 | HOSE | | | 210 |
| 7005288 | HOSE | | | 166 |
| 7005289 | HOSE PF1/4-380L | | | 204, 434 |
| 7005295 | HOSE | | | 210 |
| 7005300 | HOSE PF1/4-1110L | | | 202, 208 |
| 7005301 | HOSE PF1/4-1700L | | | 196 |
| 7005304 | HOSE | | | 198 |
| 7005306 | HOSE | | | 202 |
| 7005315 | HOSE PF1/4-620L | | | 48, 200 |
| 7005318 | HOSE PF1/4-2320L | | | 200 |
| 7005323 | HOSE | | | 202 |
| 7005326 | HOSE PF1/4-1530L | | | 206 |
| 7005327 | HOSE PF1/4-3530L | | | 210 |
| 7005328 | HOSE PF1/4-980L | | | 198 |
| 7005330 | HOSE PF1/4-600L | | | 210 |
| 7005331 | HOSE PF1/4-1750L | | | 206 |
| 7005332 | HOSE PF1/4-2570L | | | 216 |

**Code for disposition of old part number**

**A -- Use up**
**B -- Use on other application (See PNI)**
**C -- File PDR Report with Bobcat Parts Sales**
**D -- Part Number Error**



Page 495 - OSS# 2089524 - All rights reserved by Bobcat Company - 05/11/2012 - 06:30:39 - Produced by Ken Cook Co. with mediaioff

| Part No. | Description | Was | Code | Page |
|---|---|---|---|---|
| 7005341 | HOSE PF1/4-1200L | | | 200 |
| 7005344 | HOSE | | | 200 |
| 7005345 | HOSE PF1/4-2500L | | | 194 |
| 7005346 | HOSE | | | 194 |
| 7005348 | HOSE | | | 202 |
| 7005350 | HOSE | | | 212, 214 |
| 7005354 | HOSE PF1/4-1650L | | | 195, 196 |
| 7005355 | HOSE | | | 48 |
| 7005358 | HOSE PF1/4-330L | | | 204, 434 |
| 7005359 | HOSE PF1/4-700L | | | 394 |
| 7005361 | HOSE PF1/4-310L | | | 204, 434 |
| 7005363 | HOSE PF3/8-630L | | | 164 |
| 7005366 | HOSE PF1/4-1000L | | | 198 |
| 7005375 | HOSE | | | 48 |
| 7005378 | HOSE PF3/8-430L | | | 192 |
| 7005380 | HOSE PF1/4-410L | | | 152 |
| 7005381 | HOSE PF1/4-1560L | | | 206 |
| 7005391 | HOSE | | | 171, 172 |
| 7005394 | HOSE | | | 173, 174, 460 |
| 7005406 | HOSE PF1/4-760L | | | 198 |
| 7005412 | HOSE | | | 210 |
| 7005426 | HOSE | | | 160 |
| 7005429 | HOSE | | | 192 |
| 7005430 | HOSE | | | 148 |
| 7005432 | HOSE | | | 150 |
| 7005436 | HOSE PF1/2-1080L | | | 148 |
| 7005437 | HOSE PF1/4-1740L | | | 150 |
| 7005441 | HOSE PF3/8-950L | | | 148 |
| 7005442 | HOSE PF3/8-830L | | | 148 |
| 7005443 | HOSE | | | 168 |
| 7005444 | HOSE | | | 176, 464 |
| 7005445 | HOSE PF1/4-1380L | | | 154 |
| 7005447 | HOSE | | | 190 |
| 7005462 | HOSE | | | 176, 464 |
| 7005463 | HOSE | | | 178, 462 |
| 7005466 | HOSE | | | 166 |
| 7005469 | HOSE | | | 218, 460 |
| 7005471 | HOSE | | | 218, 460 |
| 7005473 | HOSE | | | 192 |
| 7005474 | HOSE PF1/4-650L | | | 204, 434 |
| 7005476 | HOSE | | | 218, 460 |
| 7005480 | HOSE PF1/4-1950L | | | 210 |
| 7005486 | HOSE PF1/4-2130L | | | 210 |
| 7005488 | HOSE | | | 204, 434 |
| 7005490 | HOSE PF1/4-2575L | | | 208 |
| 7005491 | HOSE | | | 218, 460 |
| 7005506 | HOSE PF1/4-1800L | | | 210 |
| 7005511 | HOSE | | | 154 |
| 7005515 | HOSE | | | 166 |
| 7005516 | HOSE PF1/4-3330L | | | 210, 394 |
| 7005517 | HOSE PF1/4-3700L | | | 216 |
| 7005528 | HOSE FUEL | | | 369, 370 |
| 7005529 | HOSE FUEL | | | 370 |
| 7005533 | HOSE FUEL | | | 370 |

**Code for disposition of old part number**

**A -- Use up**
**B -- Use on other application (See PNI)**
**C -- File PDR Report with Bobcat Parts Sales**
**D -- Part Number Error**



Page 496 - OSS# 2089524 - All rights reserved by Bobcat Company - 05/11/2012 - 06:30:39 - Produced by Ken Cook Co. with mediaioff

| Part No. | Description | Was | Code | Page |
|---|---|---|---|---|
| 7005535 | HOSE FUEL | | | 370 |
| 7005537 | HOSE FUEL | | | 370 |
| 7005538 | HOSE | | | 370 |
| 7005539 | HOSE | | | 370 |
| 7005542 | ADAPTER | | | 148, 160, 392 |
| 7005543 | ADAPTER | | | 148, 150, 392, 460 |
| 7005546 | ADAPTER | | | 148, 160, 392 |
| 7005552 | ADAPTER | | | 182, 184, 386, 388 |
| 7005554 | REDUCER | | | 204, 434 |
| 7005556 | ADAPTER | | | 82 |
| 7005557 | ELBOW | | | 48 |
| 7005558 | ELBOW | | | 200, 212, 216, 218, 392, 394, 460 |
| 7005560 | ELBOW | | | 190 |
| 7005561 | ELBOW | | | 318 |
| 7005563 | TEE | | | 150 |
| 7005565 | TEE | | | 190 |
| 7005566 | ADAPTER | | | 170 |
| 7005567 | ADAPTER | | | 184, 388 |
| 7005568 | TEE | | | 190 |
| 7005569 | TEE | | | 150 |
| 7005570 | ELBOW | | | 164 |
| 7005573 | CLIP | | | 182 |
| 7005574 | PLUG | | | 150 |
| 7005575 | PLUG | | | 188 |
| 7005576 | PLUG | | | 152 |
| 7005577 | BELT COMPRESSOR | | | 2, 8, 86 |
| 7005581 | BUSHING RUBBER | | | 44 |
| 7005584 | GROMMET | | | 44 |
| 7005586 | BUSHING RUBBER | | | 44 |
| 7005588 | BUSHING RUBBER | | | 68 |
| 7005590 | BUSHING RUBBER | | | 46 |
| 7005592 | BUSHING RUBBER | | | 44 |
| 7005595 | BUSHING RUBBER | | | 46 |
| 7005596 | BUSHING RUBBER | | | 46 |
| 7005597 | SHIM | | | 94, 98, 104 |
| 7005598 | SHIM | | | 94, 98, 104 |
| 7005601 | SHIM | | | 138 |
| 7005604 | SHIM 1.0T | | | 132, 134, 378, 380 |
| 7005605 | SHIM 1.6T | | | 132, 134, 378, 380 |
| 7005606 | SHIM 1.0T | | | 132, 134, 378, 380 |
| 7005607 | SHIM 1.6T | | | 132, 134, 378, 380 |
| 7005612 | SHIM 1.0T | | | 136, 382 |
| 7005613 | SHIM 1.3T | | | 136, 382 |
| 7005614 | SHIM 1.6T | | | 136, 382 |
| 7005615 | SHIM 1.0T | | | 132, 134, 136, 378, 380, 382 |
| 7005616 | SHIM 1.6T | | | 132, 134, 136, 378, 380, 382 |
| 7005617 | SHIM 1.0T | | | 136, 382 |
| 7005618 | SHIM 1.3T | | | 136, 382 |
| 7005619 | SHIM 1.6T | | | 136, 382 |
| 7005620 | SHIM 1.0T | | | 132, 134, 378, 380 |
| 7005621 | SHIM 1.6T | | | 132, 134, 378, 380 |
| 7005622 | PAD | | | 150 |
| 7005623 | ADAPTER | | | 44, 386 |
| 7005627 | RESITOR DIODE | | | 304 |

**Code for disposition of old part number**

**A -- Use up**
**B -- Use on other application (See PNI)**
**C -- File PDR Report with Bobcat Parts Sales**
**D -- Part Number Error**



Page 497 - OSS# 2089524 - All rights reserved by Bobcat Company - 05/11/2012 - 06:30:39 - Produced by Ken Cook Co. with mediaioff

| Part No. | Description | Was | Code | Page |
|---|---|---|---|---|
| 7005629 | BOLT | | | 84, 152, 164, 190, 192, 200, 201, 202, 206, 208, 210, 218, 300, 306, 322, 323, 324, 330, 370, 376, 414, 426, 460 |
| 7005631 | SWITCH TOGGLE | | | 298 |
| 7005634 | VALVE SELECT | | | 197, 198 |
| 7005638 | GUIDE RAIL | | | 60 |
| 7005639 | GUARD | | | 160 |
| 7005641 | CAP FUEL | | | 374 |
| 7005643 | NOZZLE | | | 90 |
| 7005644 | PAD RUBBER PEDAL | | | 146 |
| 7005648 | RIVET | | | 76 |
| 7005653 | PAD | | | 44 |
| 7005656 | ORING | | | 84 |
| 7005657 | ORING | | | 84 |
| 7005658 | CAP RUBBER | | | 100 |
| 7005659 | SHIM | | | 56, 74, 140 |
| 7005661 | ROLLER | | | 140 |
| 7005662 | RING | 7007891 | D | 140 |
| 7005663 | RING | | | 140 |
| 7005668 | TUBELINE | | | 370, 371, 372 |
| 7005670 | DIAL ENGINE CONTROL | | | 298 |
| 7005671 | FITTING COCK DRAIN | | | 326 |
| 7005672 | HANDLE GRIP | | | 144 |
| 7005673 | SWITCH PILOT CUT OFF | | | 302 |
| 7005674 | HANDLE GRIP | | | 140 |
| 7005675 | COVER SPEAKER | | | 76 |
| 7005676 | HOOK COAT | | | 76 |
| 7005679 | VALVE BYPASS 2.5K | | | 188 |
| 7005680 | GROMMET | | | 76 |
| 7005681 | EDGE RUBBER | | | 76 |
| 7005682 | NUT LOCK | | | 154 |
| 7005684 | MOTOR WIPER | | | 76 |
| 7005694 | INDEX INDICATOR DUST | | | 332 |
| 7005712 | BATTERY 100AH | | | 2, 8, 310 |
| 7005713 | LAMP WORK | | | 108, 414 |
| 7005714 | CONTROLLER A/C | | | 80 |
| 7005742 | BLOCK | | | 210 |
| 7005748 | BUSHING | | | 132, 134, 378, 380 |
| 7005752 | BUSHING | | | 282, 382, 404 |
| 7005768 | PLATE TRIM | 7005767 | A | 74 |
| 7005773 | HOUSING LOWER | | | 142 |
| 7005777 | DUCT REAR | | | 88 |
| 7005779 | COVER SWITCH | | | 89, 90 |
| 7005780 | DUCT CONTROL | | | 90 |
| 7005781 | DUCT REAR | | | 90 |
| 7005782 | DUCT FACE | | | 90 |
| 7005783 | DUCT DEF | | | 90 |
| 7005784 | COVER SIDE FRONT | | | 90 |
| 7005793 | FUSE BOX | | | 298 |

**Code for disposition of old part number**

**A -- Use up**
**B -- Use on other application (See PNI)**
**C -- File PDR Report with Bobcat Parts Sales**
**D -- Part Number Error**



Page 498 - OSS# 2089524 - All rights reserved by Bobcat Company - 05/11/2012 - 06:30:39 - Produced by Ken Cook Co. with mediaioff

| Part No. | Description | Was | Code | Page |
|---|---|---|---|---|
| 7005795 | COVER CATCH | | | 70 |
| 7005803 | BRACKET | | | 108, 414 |
| 7005808 | VALVE | | | 82 |
| 7005813 | SEAL EXTRUSION | 7006016 | A | 70 |
| 7005820 | BRACKET ENGINE MOUNT | | | 320 |
| 7005822 | BRACKET ENGINE MOUNT | | | 320 |
| 7005823 | CONDITIONER AIR | | | 79, 80 |
| 7005841 | BUSHING RUBBER | | | 52 |
| 7005857 | SEAL EXTRUSION | | | 66 |
| 7005880 | DUCT REAR | | | 52 |
| 7005881 | DUCT REAR | | | 90 |
| 7005891 | BRACKET | | | 86 |
| 7005893 | PLATE | | | 140, 142 |
| 7005894 | PLATE | | | 140, 142 |
| 7005895 | HOUSING UPPER RH | | | 142 |
| 7005902 | DUCT CONTROL | | | 90 |
| 7005920 | CLAMP | | | 186, 390, 460 |
| 7005921 | CLAMP | | | 186, 390, 460 |
| 7005925 | BRACKET LH | | | 170, 184, 384 |
| 7005926 | BRACKET RH | | | 170 |
| 7005927 | PANEL GAUGE | | | 298 |
| 7005945 | COVER CASSETTE | | | 88 |
| 7005947 | COVER STAND RH | | | 142 |
| 7005948 | COVER POCKET | | | 90 |
| 7005949 | COUPLER JOINT HOSE | | | 84 |
| 7005953 | COVER HOLE | | | 90 |
| 7005959 | BOOM MACH 3.38M | | | 135, 136 |
| 7005961 | BUSHING RUBBER | | | 78 |
| 7005962 | BUSHING RUBBER | | | 78 |
| 7005963 | BUSHING RUBBER | | | 78 |
| 7005990 | HARNESS CONTROL STAND RH | | | 302 |
| 7005992 | PLATE | | | 72 |
| 7006000 | BUSHING | | | 136, 382 |
| 7006001 | BUSHING | | | 132, 134, 378, 380 |
| 7006002 | BUSHING | | | 132, 134, 378, 380 |
| 7006003 | BUSHING | | | 132, 134, 378, 380 |
| 7006004 | BUSHING | | | 280, 402 |
| 7006005 | BUSHING | | | 276, 278, 406, 408 |
| 7006006 | BUSHING | | | 282, 382, 404 |
| 7006011 | LINK PUSH | | | 132, 134, 378, 380 |
| 7006013 | GLASS DOOR | | | 70 |
| 7006014 | GLASS DOOR LOWER | | | 70 |
| 7006015 | HINGE | | | 70 |
| 7006017 | COVER | | | 70 |
| 7006018 | DAMPER | 7006191 | D | 66, 70 |
| 7006018 | DAMPER | | | 66, 70 |
| 7006019 | DAMPER | | | 70 |

**Code for disposition of old part number**

**A -- Use up**
**B -- Use on other application (See PNI)**
**C -- File PDR Report with Bobcat Parts Sales**
**D -- Part Number Error**



Page 499 - OSS# 2089524 - All rights reserved by Bobcat Company - 05/11/2012 - 06:30:39 - Produced by Ken Cook Co. with mediaioff

| Part No. | Description | Was | Code | Page |
|---|---|---|---|---|
| 7006022 | FRAME SASH ASSY RH | | | 66 |
| 7006028 | CYLINDER ARM | | | 179, 180, 275, 276, 405, 406 |
| 7006030 | TUBELINE | | | 180 |
| 7006031 | TUBELINE | | | 180 |
| 7006032 | TUBELINE | | | 180 |
| 7006033 | TUBELINE | | | 180 |
| 7006034 | TUBELINE | | | 180 |
| 7006035 | TUBELINE | | | 180 |
| 7006036 | CLAMP | | | 180 |
| 7006037 | CLAMP | | | 180, 384 |
| 7006038 | FRAME DOOR SLIDE ASSY | | | 73, 74 |
| 7006039 | TUBELINE | | | 185, 186, 460 |
| 7006040 | TUBELINE | | | 186, 460 |
| 7006061 | COVER TANK | | | 188 |
| 7006067 | EYE JOINT CENTER | | | 153, 154, 235, 236 |
| 7006068 | MOTOR TRAVEL | | | 116 |
| 7006075 | MOUNT CAB RUBBER | | | 54 |
| 7006077 | GLASS SLIDE DOOR | | | 74 |
| 7006078 | DAMPER | 7006194 | D | 66, 72, 74 |
| 7006078 | DAMPER | | | 66, 72, 74 |
| 7006078 | DAMPER | 7006192 | D | 66, 72, 74 |
| 7006078 | DAMPER | 7006193 | D | 66, 72, 74 |
| 7006079 | EDGE RUBBER | | | 74 |
| 7006080 | LATCH SLIDE DOOR | | | 74 |
| 7006081 | PIN | | | 74 |
| 7006082 | BRACKET STAY MIRROR | | | 111, 112 |
| 7006085 | FILTER A/C | | | 2, 8, 52 |
| 7006086 | COVER | | | 374 |
| 7006095 | CYLINDER DOZER LH | | | 155, 156, 283, 284 |
| 7006096 | CYLINDER DOZER RH | | | 156, 285, 286 |
| 7006097 | COVER PUMP | | | 333, 334 |
| 7006098 | COUPLER | | | 334 |
| 7006106 | ENGINE ASSY | | | 328 |
| 7006113 | FOAM DUCT | | | 90 |
| 7006114 | FOAM DUCT | | | 90 |
| 7006115 | FOAM DUCT | | | 90 |
| 7006132 | BRACKET | | | 332 |
| 7006136 | BRACKET | | | 56 |
| 7006137 | LINK | | | 56 |
| 7006138 | PIN | | | 56 |
| 7006140 | TUBELINE SUCTION | | | 188 |
| 7006141 | PIN | | | 132, 134, 378, 380 |
| 7006145 | PLATE | | | 76 |
| 7006146 | BRACKET | | | 184, 388 |
| 7006154 | COVER SIDE RH | | | 44 |
| 7006155 | CYLINDER BOOM SWING | | | 138, 291, 292 |
| 7006161 | COVER | | | 116 |
| 7006162 | COVER | | | 116 |

**Code for disposition of old part number**

**A -- Use up**
**B -- Use on other application (See PNI)**
**C -- File PDR Report with Bobcat Parts Sales**
**D -- Part Number Error**



Page 500 - OSS# 2089524 - All rights reserved by Bobcat Company - 05/11/2012 - 06:30:39 - Produced by Ken Cook Co. with mediaioff

| Part No. | Description | Was | Code | Page |
|---|---|---|---|---|
| 7006167 | PLATE | | | 54 |
| 7006168 | PLATE | | | 54 |
| 7006169 | BOLT STUD | | | 54 |
| 7006170 | MOUNT ASSY | | | 53, 54 |
| 7006172 | GLASS LOWER | | | 66 |
| 7006173 | GLAS SUPPER | | | 66 |
| 7006174 | GLASS LH | | | 72 |
| 7006175 | GLASS REAR | | | 66 |
| 7006176 | GLASS LOWER RH | | | 66 |
| 7006178 | BRACKET LEVER | | | 72 |
| 7006179 | LEVER BACK LOCK | | | 72 |
| 7006180 | COVER LEVER | | | 72 |
| 7006182 | COVER ROOF | | | 76 |
| 7006183 | EDGE RUBBER | | | 66 |
| 7006185 | SEAL EXTRUSION | | | 74 |
| 7006186 | BRACKET | | | 76 |
| 7006187 | COVER FRONT | | | 66 |
| 7006188 | BRACKET | | | 76 |
| 7006189 | BAR SLIDE DOOR RH | | | 74 |
| 7006190 | BAR SLIDE DOOR LH | | | 74 |
| 7006195 | PIN | | | 74 |
| 7006196 | FILTER AIR CLEANER | | | 331, 332 |
| 7006201 | SEAT, SUSPENSION | | | 61, 62, 63, 64 |
| 7006206 | PLATE ASSY | | | 55, 56 |
| 7006207 | BRACKET | | | 54 |
| 7006208 | BRACKET | | | 54 |
| 7006219 | HARNESS CAB SUB | | | 76 |
| 7006221 | BRACKET GUAGE PANEL | | | 298 |
| 7006223 | SWITCH PRESSURE | | | 150 |
| 7006226 | COVER | | | 298 |
| 7006227 | CAP MONITOR | | | 298 |
| 7006231 | PEDAL | | | 399, 400 |
| 7006232 | LATCH | | | 146, 400 |
| 7006233 | CORE ASSY | | | 80 |
| 7006234 | MOTOR BLOWER ASSY | | | 80 |
| 7006235 | RESISTOR BOX ASSY | | | 80 |
| 7006236 | HOSE FUEL LEVEL | | | 374 |
| 7006238 | ORING | | | 80, 84 |
| 7006239 | ORING | | | 80, 84 |
| 7006241 | COUNTERWEIGHT | | | 44 |
| 7006246 | FOAM POLYURETHANE | | | 66 |
| 7006251 | PIN | | | 138 |
| 7006252 | PIN | | | 138 |
| 7006253 | PIN | | | 138 |
| 7006254 | PLATE | | | 138 |
| 7006256 | PAD RUBBER | | | 90 |
| 7006257 | BUSHING, LOWER | | | 138 |
| 7006260 | HOUSING UPPER LH | | | 139, 140 |

**Code for disposition of old part number**

**A -- Use up**
**B -- Use on other application (See PNI)**
**C -- File PDR Report with Bobcat Parts Sales**
**D -- Part Number Error**



Page 501 - OSS# 2089524 - All rights reserved by Bobcat Company - 05/11/2012 - 06:30:39 - Produced by Ken Cook Co. with mediaioff

| Part No. | Description | Was | Code | Page |
|---|---|---|---|---|
| 7006261 | HOUSING LOWER | | | 140 |
| 7006262 | COVER REAR | | | 87, 88 |
| 7006263 | COVER PILLAR | | | 88 |
| 7006266 | COVER | | | 88 |
| 7006268 | GUARD, ROOF | | | 450 |
| 7006277 | PLATE | | | 160 |
| 7006278 | DAMPER | | | 66 |
| 7006280 | DECAL E/G STOP | | | 298 |
| 7006281 | PLATE | | | 54 |
| 7006282 | BOLT | | | 88 |
| 7006283 | BUSHING | | | 46 |
| 7006284 | BLADE WIPER | | | 76 |
| 7006285 | PUMP FUEL FILLER | | | 375, 376, 426, 427, 428 |
| 7006288 | SWING BEARING | | | 116 |
| 7006289 | STRIKER DOOR | | | 72 |
| 7006290 | PLATE | | | 72 |
| 7006291 | FOAM | | | 68 |
| 7006294 | HOSE | | | 190 |
| 7006299 | COVER LOWER | | | 49, 50 |
| 7006300 | COVER LOWER | | | 50 |
| 7006301 | COVER LOWER | | | 50 |
| 7006302 | COVER LOWER | | | 50 |
| 7006303 | COVER LOWER | | | 50 |
| 7006305 | TUBELINE SUCTION | | | 189, 190 |
| 7006306 | BUSHING, UPPER | | | 138 |
| 7006307 | DUCT PILLAR | | | 88 |
| 7006320 | SENSOR FUEL | | | 374 |
| 7006324 | PIN | | | 140 |
| 7006325 | PLATE | | | 140 |
| 7006326 | LEVER | | | 140 |
| 7006328 | LEVER ASSYSAFETY | | | 140 |
| 7006332 | TRACK, RUBBER (450X84X76) 18" BOBCAT | | | 125, 126, 456 |
| 7006334 | HOSE WATER | | | 322 |
| 7006335 | TUBELINE WATER | | | 322, 327, 328 |
| 7006337 | COVER | | | 52 |
| 7006338 | PLATE | | | 59, 60 |
| 7006347 | BRACKET | | | 94 |
| 7006351 | PAD | | | 44 |
| 7006353 | TUBELINE EXHAUST | | | 328 |
| 7006354 | STRAP | | | 322 |
| 7006362 | BAR | | | 56 |
| 7006365 | COVER | | | 46 |
| 7006374 | COVER SIDE REAR | | | 90 |
| 7006377 | MOUNT ENGINE RUBBER | | | 320 |
| 7006381 | COVER | | | 86 |
| 7006398 | BRACKET | | | 370 |
| 7006408 | TUBELINE SUCTION | | | 190 |
| 7006425 | TUBELINE | | | 190 |
| 7006438 | PAD | | | 160 |
| 7006442 | BRACKET | | | 146 |

**Code for disposition of old part number**

**A -- Use up**
**B -- Use on other application (See PNI)**
**C -- File PDR Report with Bobcat Parts Sales**
**D -- Part Number Error**



Page 502 - OSS# 2089524 - All rights reserved by Bobcat Company - 05/11/2012 - 06:30:39 - Produced by Ken Cook Co. with mediaioff

| Part No. | Description | Was | Code | Page |
|---|---|---|---|---|
| 7006447 | JOYSTICK LH | | | 205, 206, 231, 232 |
| 7006448 | JOYSTICK RH | | | 207, 208, 232 |
| 7006460 | HANDLE DOOR | | | 70 |
| 7006462 | FILTER SUCTION | | | 188 |
| 7006463 | WASHER | | | 320 |
| 7006465 | BRACKET | | | 86 |
| 7006469 | HARNESS CAB | | | 298 |
| 7006471 | BRACKET | | | 82 |
| 7006472 | MAT FLOOR | | | 57, 58 |
| 7006474 | HARNESS MAIN | | | 303, 304 |
| 7006475 | HOSE DISCHARGE | | | 82 |
| 7006478 | HOSE SUCTION | | | 82 |
| 7006479 | HOSE A/C | | | 82 |
| 7006503 | COVER GUARD ROOF | | | 446, 448 |
| 7006504 | GUARD FOGS | | | 446, 448 |
| 7006506 | HARNESS CONTROL STAND LH | | | 301, 302 |
| 7006513 | VALVE CHECK | | | 158, 416 |
| 7006518 | PLATE | | | 154 |
| 7006522 | SHIM | | | 188, 374 |
| 7006523 | GUARD PROTECTOR | | | 190, 210 |
| 7006524 | SHIM | | | 138 |
| 7006526 | DIAPHRAGM BAFFLE | | | 322 |
| 7006527 | HOSE WATER | | | 322 |
| 7006530 | MOTOR MIX | | | 88, 92 |
| 7006531 | PLATE | | | 322 |
| 7006536 | BUSHING | | | 44, 45, 46 |
| 7006541 | CLAMP HOSE | | | 160 |
| 7006542 | CLAMP HOSE | | | 160 |
| 7006544 | FLANGE | | | 149, 150 |
| 7006547 | CYLINDER DOZER LH | | | 157, 158, 287, 288, 416 |
| 7006548 | CYLINDER DOZER RH | | | 158, 289, 290, 416 |
| 7006554 | TUBELINE | | | 150 |
| 7006555 | TUBELINE | | | 192 |
| 7006556 | PIN | | | 138 |
| 7006557 | PULLEY | | | 86 |
| 7006562 | CLAMP | | | 150 |
| 7006563 | PAD | | | 150 |
| 7006564 | CLAMP | | | 150 |
| 7006565 | CLAMP | | | 150 |
| 7006566 | BRACKET | | | 148 |
| 7006570 | CLIP | | | 210 |
| 7006571 | CLIP | | | 206, 208, 210 |
| 7006572 | GUARD PROTECTOR | | | 206, 208, 210 |
| 7006576 | VALVE, PEDAL | | | 210, 227, 228, 393, 394 |
| 7006577 | JOYSTICK DOZER | | | 208, 233, 234 |
| 7006578 | COVER BAFFLE | | | 46 |
| 7006582 | GROMMET | | | 150 |

**Code for disposition of old part number**

**A -- Use up**
**B -- Use on other application (See PNI)**
**C -- File PDR Report with Bobcat Parts Sales**
**D -- Part Number Error**



Page 503 - OSS# 2089524 - All rights reserved by Bobcat Company - 05/11/2012 - 06:30:39 - Produced by Ken Cook Co. with mediaioff

| Part No. | Description | Was | Code | Page |
|---|---|---|---|---|
| 7006583 | GROMMET | | | 150 |
| 7006585 | BRACKET PEDAL LH | | | 143, 144 |
| 7006586 | BRACKET PEDAL RH | | | 144 |
| 7006594 | TUBELINE A/C SUCTION | | | 80 |
| 7006597 | TUBELINE A/C LIQUID | | | 80 |
| 7006598 | HOSE HEATER | | | 80 |
| 7006599 | HOSE HEATER | | | 80 |
| 7006600 | COUPLER JOINT HOSE | | | 81, 82 |
| 7006601 | PAD | | | 160 |
| 7006608 | CLIP | | | 210 |
| 7006611 | PIN | | | 140 |
| 7006621 | SCREW SET | | | 76 |
| 7006627 | HARNESS JOINT | | | 218, 460 |
| 7006629 | HOSE AIR | | | 332 |
| 7006630 | PIN | | | 116 |
| 7006631 | HARNESS WORK LAMP | | | 108 |
| 7006632 | PIN | | | 116 |
| 7006633 | PIN | | | 116 |
| 7006636 | BRACKET ENGINE MOUNT | | | 319, 320 |
| 7006644 | HINGE | | | 100, 104 |
| 7006646 | STRIKER | | | 100, 104 |
| 7006647 | EDGE | | | 68 |
| 7006648 | MOUNT CAB RUBBER | | | 54 |
| 7006649 | PIN | | | 164 |
| 7006652 | DIAPHRAGM BAFFLE | | | 322 |
| 7006662 | STRAP | | | 100, 104 |
| 7006665 | PLATE | | | 100 |
| 7006666 | HOSE AIR | | | 332 |
| 7006668 | PLATE | | | 100, 104 |
| 7006676 | BRACKET | | | 100, 101, 102 |
| 7006677 | BRACKET | | | 102 |
| 7006678 | BRACKET | | | 102, 104 |
| 7006680 | SEAL EXTRUSION | | | 94, 98 |
| 7006681 | SEAL EXTRUSION | | | 100, 104 |
| 7006685 | PLATE | | | 102, 104 |
| 7006689 | PLATE | | | 100, 104 |
| 7006690 | KEY LOCK | | | 100, 104 |
| 7006691 | STRIP WEATHER | | | 324 |
| 7006694 | MOTOR SWING | | | 163, 164, 243, 244 |
| 7006695 | LEVER LH | | | 144 |
| 7006696 | LEVER RH | | | 144 |
| 7006698 | BRACKET | | | 310 |
| 7006702 | PEDAL RUBBER | | | 146 |
| 7006704 | HOUSING CONTROL | | | 293, 294 |
| 7006706 | PEDAL ASSY | | | 145, 146 |
| 7006716 | FOAM | | | 68 |


**Code for disposition of old part number**

**A -- Use up**

**B -- Use on other application (See PNI)**

**C -- File PDR Report with Bobcat Parts Sales**

**D -- Part Number Error**



Page 504 - OSS# 2089524 - All rights reserved by Bobcat Company - 05/11/2012 - 06:30:39 - Produced by Ken Cook Co. with mediaioff

| Part No. | Description | Was | Code | Page |
|---|---|---|---|---|
| 7006717 | PLATE | | | 140 |
| 7006719 | VALVE REDUCING | | | 150 |
| 7006720 | HOSE AIR | | | 332 |
| 7006721 | HOSE AIR | | | 332 |
| 7006735 | FOAM | | | 52 |
| 7006736 | FOAM | | | 46 |
| 7006737 | FOAM | | | 46 |
| 7006738 | FOAM | | | 46 |
| 7006739 | COVER BAFFLE | | | 46 |
| 7006740 | CATCH DOOR INNER | | | 70 |
| 7006741 | COVER BAFFLE | | | 46 |
| 7006742 | COVER BAFFLE | | | 46 |
| 7006746 | ELBOW | | | 150 |
| 7006747 | CLAMP | | | 376, 426 |
| 7006749 | COVER BATTERY | | | 310 |
| 7006753 | BRACKET RH | | | 184, 384 |
| 7006754 | SPACER | | | 198 |
| 7006756 | HOSE FUEL | | | 376, 426 |
| 7006757 | VALVE BYPASS | | | 190 |
| 7006762 | PLATE | | | 100, 106 |
| 7006765 | PLATE SHEET ANTI VIBRATION | | | 160 |
| 7006782 | GLASS | | | 66 |
| 7006783 | GLASS | | | 66 |
| 7006795 | SPRING | | | 118 |
| 7006796 | FOAM | | | 52 |
| 7006799 | CYLINDER ARM LOCK VALVE | | | 181, 182, 277, 278, 407, 408 |
| 7006801 | SWITCH STARTER | | | 302 |
| 7006802 | KEY SWITCH STARTER | | | 70, 302 |
| 7006805 | MIRROR SIDE | | | 112 |
| 7006806 | FILTER, AIR BREATHER | | | 2, 8, 20, 26, 188 |
| 7006806 | FILTER, AIR BREATHER | 7006808 | A | 2, 8, 20, 26, 188 |
| 7006807 | FILTER BREATHER AIR | | | 188 |
| 7006811 | FILTER STRAINER SUCTION | | | 2, 8, 35, 36, 37, 38, 188 |
| 7006816 | SPRING | | | 234 |
| 7006819 | SEAL ROD | | | 232 |
| 7006820 | HANDLE ASSY LH | | | 232 |
| 7006821 | HANDLE ASSY RH | | | 232 |
| 7006822 | BOOT | | | 232 |
| 7006823 | CONNECTOR ASSY | | | 232 |
| 7006824 | SPOOL SOLENOID | 7008132 | A | 224 |
| 7006825 | BOOT | | | 234 |
| 7006826 | KIT SEAL | | | 234 |
| 7006827 | RING WEAR | | | 284, 286, 288, 290, 404 |
| 7006828 | RING DUST | | | 284, 286, 288, 290, 404 |
| 7006829 | RING BACK-UP | | | 276, 278, 406, 408 |
| 7006830 | NUT PISTON | | | 276, 278, 406, 408 |
| 7006832 | RING RETAINING | | | 280, 402 |

**Code for disposition of old part number**

**A -- Use up**
**B -- Use on other application (See PNI)**
**C -- File PDR Report with Bobcat Parts Sales**
**D -- Part Number Error**



Page 505 - OSS# 2089524 - All rights reserved by Bobcat Company - 05/11/2012 - 06:30:39 - Produced by Ken Cook Co. with mediaioff

| Part No. | Description | Was | Code | Page |
|---|---|---|---|---|
| 7006833 | RING BACK-UP | | | 280, 402 |
| 7006834 | RING DUST | | | 280, 402 |
| 7006835 | RING CUSHION | | | 276, 278, 406, 408 |
| 7006837 | GASKET CYLINDER HEAD | | | 336, 340 |
| 7006838 | PAN OIL ASSY | | | 346 |
| 7006839 | GEAR INJ PUMP DRIVE | | | 352 |
| 7006840 | FLANGE | | | 352 |
| 7006842 | ROD CONNECTING ASSY | | | 350 |
| 7006843 | DIPSTICK | | | 348 |
| 7006844 | SEAL HOUSING | | | 363, 364 |
| 7006845 | BOLT M6X25 PLATED | | | 364 |
| 7006846 | GASKET SILENCER | | | 336 |
| 7006847 | PISTON | | | 276, 278, 406, 408 |
| 7006848 | PLUG | | | 220 |
| 7006852 | PLUG PF3/8 | | | 232 |
| 7006880 | KIT SPOOL | | | 228 |
| 7006884 | KIT PLUG | | | 228 |
| 7006886 | COVER | | | 228 |
| 7006887 | CAM | | | 228 |
| 7006888 | PIN | | | 228 |
| 7006889 | SCREW ADJUST | | | 228 |
| 7006890 | DIAPHRAGM BELLOWS | | | 228 |
| 7006891 | COVER | | | 234 |
| 7006892 | PIN | | | 234 |
| 7006893 | RING SNAP | | | 234 |
| 7006897 | BRACKET | | | 367, 368 |
| 7006898 | CLAMP TUBELINE | | | 366 |
| 7006899 | PUMP FUEL FEED | | | 368, 370 |
| 7006923 | BOLT M8X25 | | | 312, 364 |
| 7006924 | GASKET LIQUID | | | 336 |
| 7006931 | SPRING | | | 238 |
| 7006932 | SPOOL | | | 238 |
| 7006933 | RING CUSHION | | | 280, 402 |
| 7006946 | GASKET | | | 188 |
| 7006947 | STABILIZER SUSPENSION | | | 64 |
| 7006948 | HEAD REST | | | 64 |
| 7006949 | ARM REST LH | | | 64 |
| 7006950 | ARM REST RH | | | 64 |
| 7006951 | BAG DOCUMENT | | | 64 |
| 7006952 | BELT SEAT | | | 64 |
| 7007022 | RING DUST | | | 282 |
| 7007024 | RING GLYD | | | 282 |
| 7007025 | SEAL BUFFER | | | 282, 404 |
| 7007027 | SPOOL | | | 230 |
| 7007028 | WASHER | | | 230 |
| 7007029 | WASHER | | | 230 |
| 7007030 | SPRING | | | 230 |
| 7007032 | SPRING SEAT | | | 230 |
| 7007033 | SPRING | | | 230 |

**Code for disposition of old part number**

**A -- Use up**
**B -- Use on other application (See PNI)**
**C -- File PDR Report with Bobcat Parts Sales**
**D -- Part Number Error**



Page 506 - OSS# 2089524 - All rights reserved by Bobcat Company - 05/11/2012 - 06:30:39 - Produced by Ken Cook Co. with mediaioff

| Part No. | Description | Was | Code | Page |
|---|---|---|---|---|
| 7007034 | PISTON | | | 230 |
| 7007035 | ROD PUSH | | | 230 |
| 7007036 | PLUG | | | 230 |
| 7007038 | SEAL | | | 230 |
| 7007039 | CAP GREASE | | | 230 |
| 7007040 | SHAFT CAM | | | 230 |
| 7007041 | DIAPHRAGM BELLOWS | | | 230 |
| 7007042 | CAM | | | 230 |
| 7007043 | KIT SPOOL | | | 234 |
| 7007044 | PLUG KIT | | | 234 |
| 7007045 | TUBELINE AIR HEATER | | | 356 |
| 7007047 | PULLEY WATER PUMP | | | 354 |
| 7007048 | PLATE BAFFLE | | | 344 |
| 7007049 | DIAPHRAGM BAFFLE | | | 344 |
| 7007050 | COVER THERMOSTAT | | | 354 |
| 7007051 | TUBELINE ASSY | | | 348 |
| 7007052 | BOLT | | | 356 |
| 7007054 | WASHER | | | 244 |
| 7007091 | PAD CUSHION | | | 312 |
| 7007092 | BOLT M8X90 | | | 358 |
| 7007097 | BRACKET | | | 366 |
| 7007098 | TUBELINE FUEL | | | 368 |
| 7007099 | BOLT STUD M8X100 | | | 358 |
| 7007100 | TUBELINE | | | 368 |
| 7007101 | STUD BOLT M8X20 | | | 358 |
| 7007105 | CAMSHAFT ASSY | | | 352 |
| 7007106 | BONNET ASSY | | | 344 |
| 7007107 | CYLINDER HEAD ASSY | | | 342 |
| 7007108 | MANIFOLD INTAKE | | | 356 |
| 7007109 | MANIFOLD INTAKE ASSY | | | 356 |
| 7007110 | MANIFOLD EXHAUST | | | 358 |
| 7007111 | MANIFOLD EXHAUST ASSY | | | 357, 358 |
| 7007112 | TUBELINE | | | 358 |
| 7007113 | GASKET EGR TUBELINE | | | 336, 358 |
| 7007114 | VALVE EGR | | | 358 |
| 7007115 | GASKET EGR IN | | | 336, 358 |
| 7007116 | GASKET EGR OUT | | | 336, 358 |
| 7007117 | RING SET PISTON | | | 350 |
| 7007118 | PISTON ASSY | | | 350 |
| 7007119 | TUBELINE OIL ASSY | | | 348 |
| 7007120 | PUMP WATER ASSY | | | 353, 354 |
| 7007121 | SENDER, TEMP ENG | | | 354 |
| 7007122 | TUBELINE ASSY | | | 354 |
| 7007123 | TUBELINE ASSY | | | 354 |
| 7007124 | BRACKET | | | 362 |

**Code for disposition of old part number**

**A -- Use up**
**B -- Use on other application (See PNI)**
**C -- File PDR Report with Bobcat Parts Sales**
**D -- Part Number Error**



Page 507 - OSS# 2089524 - All rights reserved by Bobcat Company - 05/11/2012 - 06:30:39 - Produced by Ken Cook Co. with mediaioff

| Part No. | Description | Was | Code | Page |
|---|---|---|---|---|
| 7007129 | NOZZLE HOLDER ASSY | | | 366 |
| 7007130 | NOZZLE ASSY | | | 366 |
| 7007131 | TUBELINE FUEL RETURN | | | 368 |
| 7007132 | TUBELINE INJECTION ASSY | | | 366 |
| 7007133 | TUBELINE INJECTION ASSY | | | 366 |
| 7007134 | TUBELINE INJECTION ASSY | | | 366 |
| 7007135 | TUBELINE INJECTION ASSY | | | 366 |
| 7007136 | HOUSING GOVERNOR | | | 364 |
| 7007137 | GOVERNOR HOUSING ASSY | | | 364 |
| 7007138 | LINK | | | 364 |
| 7007139 | LEVER GOVERNOR | | | 364 |
| 7007140 | ACTUATOR | | | 364 |
| 7007141 | BOLT | | | 364 |
| 7007142 | PLATE ECU | | | 312 |
| 7007143 | COLLAR | | | 312 |
| 7007144 | PIN | | | 364 |
| 7007145 | STARTER | | | 315, 316 |
| 7007146 | ARMATURE ASSY | | | 316 |
| 7007147 | COIL ASSY FIELD | | | 316 |
| 7007148 | BOLT | | | 316 |
| 7007149 | ORING | | | 316 |
| 7007150 | BRUSH + | | | 316 |
| 7007151 | COVER REAR | | | 316 |
| 7007152 | HOLDER BRUSH | | | 316 |
| 7007153 | SPRING BRUSH | | | 316 |
| 7007154 | BRUSH - | | | 316 |
| 7007155 | SWITCH ASSY MAGNETIC | | | 316 |
| 7007156 | HOUSING GEAR | | | 316 |
| 7007157 | RETAINER | | | 316 |
| 7007158 | KIT SHIFT LEVER | | | 316 |
| 7007159 | COVER DUST | | | 316 |
| 7007160 | BOLT THROUGHT | | | 316 |
| 7007161 | BOLT M6X20 | | | 316 |
| 7007162 | BOLT | | | 316 |
| 7007163 | HOUSING GEAR | | | 338 |
| 7007164 | TUBELINE ASSY FUEL | | | 368 |
| 7007167 | GEAR SENSOR | | | 364 |
| 7007168 | SHAFT | | | 364 |
| 7007169 | BOLT | | | 364 |
| 7007170 | SPACER LEVER | | | 364 |
| 7007171 | SPRING | | | 364 |
| 7007172 | BRACKET | | | 364 |
| 7007173 | SENSOR | | | 364 |
| 7007175 | CLIP | | | 344 |
| 7007177 | CLIP CIRCLIP | | | 364 |

**Code for disposition of old part number**

**A -- Use up**
**B -- Use on other application (See PNI)**
**C -- File PDR Report with Bobcat Parts Sales**
**D -- Part Number Error**



Page 508 - OSS# 2089524 - All rights reserved by Bobcat Company - 05/11/2012 - 06:30:39 - Produced by Ken Cook Co. with mediaioff

| Part No. | Description | Was | Code | Page |
|---|---|---|---|---|
| 7007178 | PIN | | | 364 |
| 7007179 | BOLT | | | 312 |
| 7007180 | CLIP | | | 354 |
| 7007181 | GASKET | | | 364 |
| 7007182 | ORING | | | 364 |
| 7007183 | ORING | | | 364 |
| 7007186 | BOLT M8X75 PLATED | | | 338 |
| 7007187 | BOLT M10X30 | | | 358 |
| 7007188 | BOLT M10X95 | | | 358 |
| 7007189 | BOLT M 5X10 | | | 364 |
| 7007193 | BLOCK CYLINDER ASSY | | | 339, 340 |
| 7007194 | PISTON ASSY 0.25 | | | 350 |
| 7007195 | RING SET PISTON 0.25 | | | 350 |
| 7007196 | INJECTOR ASSYFUEL | | | 365, 366 |
| 7007197 | GASKET SET | | | 335, 336 |
| 7007198 | PUMP INJECTION ASSY | | | 359, 360 |
| 7007199 | PLUG | | | 244 |
| 7007203 | COLLAR HALF | | | 244 |
| 7007204 | CARRIER NO.1 | | | 244 |
| 7007206 | RING NO.1 INNER | | | 246 |
| 7007208 | GEAR NO.1 PLANET | | | 246 |
| 7007210 | GEAR NO.1 SUN | | | 246 |
| 7007212 | WASHER NO.1 THRUST | | | 246 |
| 7007213 | PLATE THRUST | | | 246 |
| 7007218 | ROLLER PLUNGER | | | 244 |
| 7007219 | SPRING CHECK | | | 244 |
| 7007230 | BEARING TAPER ROLLER | | | 244 |
| 7007233 | BEARING NEEDLE | | | 246 |
| 7007234 | BEARING ROLLER | | | 244 |
| 7007235 | VALVE RELIEF | | | 244 |
| 7007241 | DISTRIBUTOR ASSY | | | 368, 370 |
| 7007242 | CUP ASSY | | | 368 |
| 7007245 | THERMOSTAT ASSY | | | 354 |
| 7007325 | WASHER THRUST | | | 246 |
| 7007326 | BOLT | | | 246 |
| 7007331 | TANK ASSY RESERVE | | | 322, 354 |
| 7007332 | BRACKET | | | 322, 354 |
| 7007333 | BUSHING DU | | | 284, 286, 288, 290 |
| 7007334 | EXCHANGER COOLER FUEL | | | 370 |
| 7007339 | ORING | | | 222 |
| 7007340 | PIN DOWEL | | | 222 |
| 7007341 | SPRING | | | 222 |
| 7007342 | WASHER THRUST | | | 222 |
| 7007343 | SEAL SHAFT | | | 222 |
| 7007344 | ORING | | | 222 |
| 7007345 | ORING | | | 222 |

**Code for disposition of old part number**

**A -- Use up**
**B -- Use on other application (See PNI)**
**C -- File PDR Report with Bobcat Parts Sales**
**D -- Part Number Error**



Page 509 - OSS# 2089524 - All rights reserved by Bobcat Company - 05/11/2012 - 06:30:39 - Produced by Ken Cook Co. with mediaioff

| Part No. | Description | Was | Code | Page |
|---|---|---|---|---|
| 7007346 | CAP INSULATION | | | 220 |
| 7007347 | SPRING | | | 222 |
| 7007348 | SHIM | | | 222 |
| 7007349 | CARRIER LR | | | 220 |
| 7007350 | PISTON COUNTER | | | 222 |
| 7007351 | PISTON CONTROL | | | 222 |
| 7007352 | HOUSING CONTROL | | | 222 |
| 7007353 | HOUSING PUMP | | | 222 |
| 7007354 | RING SEEGER V | | | 222 |
| 7007355 | PISTON ASSY | | | 222 |
| 7007356 | SHIM | | | 222 |
| 7007357 | BALL RETAINING | | | 222 |
| 7007358 | RING SAFETY | | | 222 |
| 7007359 | BEARING SET | | | 222 |
| 7007360 | COUPLER GEAR SHAFT | | | 222 |
| 7007361 | FITTING GREASE | | | 220 |
| 7007362 | RING SPACER | | | 220 |
| 7007363 | PLATE SWASH | | | 222 |
| 7007364 | TUBELINE ASSY | | | 220 |
| 7007365 | PLUG | | | 222 |
| 7007366 | PLATE RETAINING | | | 222 |
| 7007367 | PLATE DISTRIBUTOR | | | 222 |
| 7007368 | ROTATOR ASSY | | | 221, 222 |
| 7007369 | PLATE PORT | | | 222 |
| 7007370 | PIN PRESSURE | | | 222 |
| 7007371 | CYLINDER | | | 222 |
| 7007372 | SHAFT DRIVE | | | 222 |
| 7007373 | VALVE PILOT | | | 220 |
| 7007374 | VALVE PILOT | | | 220 |
| 7007375 | PUMP GEAR | | | 220 |
| 7007376 | WASHER | | | 222 |
| 7007377 | TANK RESERVOIR SUB ASSY | | | 354 |
| 7007378 | CAP | | | 354 |
| 7007379 | GASKET | | | 354 |
| 7007380 | TUBELINE | | | 354 |
| 7007381 | CLAMP | | | 354 |
| 7007382 | LIFTER ENGINE | | | 341, 342 |
| 7007383 | MUFFLER | | | 328 |
| 7007384 | BRACKET MUFFLER | | | 328 |
| 7007385 | LIFTER ENGINE | | | 342 |
| 7007386 | STUD M8X40 | | | 328 |
| 7007387 | PLATE RETAINER | | | 244 |
| 7007388 | BALL THRUST | | | 244 |
| 7007389 | ROLLER | | | 244 |
| 7007390 | SPRING | | | 244 |
| 7007391 | SPRING BRAKE | | | 244 |
| 7007392 | SHAFT DRIVE | | | 244 |
| 7007393 | PISTON BRAKE | | | 244 |
| 7007394 | HOUSING VALVE | | | 244 |
| 7007395 | PLATE VALVE | | | 244 |
| 7007396 | COVER BEARING | | | 244 |
| 7007397 | CARRIER NO.2 | | | 244 |

**Code for disposition of old part number**

**A -- Use up**
**B -- Use on other application (See PNI)**
**C -- File PDR Report with Bobcat Parts Sales**
**D -- Part Number Error**



Page 510 - OSS# 2089524 - All rights reserved by Bobcat Company - 05/11/2012 - 06:30:39 - Produced by Ken Cook Co. with mediaioff

| Part No. | Description | Was | Code | Page |
|---|---|---|---|---|
| 7007398 | RING INNER NO.2 | | | 244, 245, 246 |
| 7007399 | GEAR PLANET NO.2 | | | 246 |
| 7007400 | GEAR SUN NO.2 | | | 246 |
| 7007401 | SHAFT PINION | | | 244 |
| 7007402 | PLATE SHOE | | | 244 |
| 7007403 | BEARING BALL | | | 244 |
| 7007404 | SEAL OIL | | | 244 |
| 7007405 | BEARING TAPER ROLLER | | | 244 |
| 7007406 | SEAL OIL | | | 244 |
| 7007407 | BEARING NEEDLE | | | 246 |
| 7007408 | VALVE BRAKE | | | 244 |
| 7007409 | GAUGE OIL LEVEL | | | 244 |
| 7007410 | PISTON ASSY | | | 244 |
| 7007411 | BLOCK CYLINDER | | | 244 |
| 7007412 | KIT SEAL | | | 276, 278, 406, 408 |
| 7007413 | KIT SEAL | | | 236 |
| 7007414 | KIT SEAL | | | 284, 286, 288, 290 |
| 7007415 | KIT SEAL | | | 246 |
| 7007416 | SPRING | | | 230 |
| 7007417 | BAR HANDLE | | | 232 |
| 7007418 | PLUG KIT PORT 1 & 3 | | | 232 |
| 7007419 | PLUG KIT PORT 2 & 4 | | | 232 |
| 7007420 | HANDLE KIT LH | | | 232 |
| 7007421 | HANDLE KIT RH | | | 232 |
| 7007424 | SHROUD | | | 326 |
| 7007425 | GUARD FAN | | | 326 |
| 7007454 | KIT SPOOL PORT 1 & 3 | | | 232 |
| 7007455 | KIT SPOOL PORT 2 & 4 | | | 232 |
| 7007456 | HUB | | | 242 |
| 7007457 | WASHER THRUST | | | 242 |
| 7007458 | WASHER THRUST | | | 242 |
| 7007459 | COVER | | | 242 |
| 7007460 | NUT RING | | | 242 |
| 7007461 | BEARING BALL | | | 242 |
| 7007462 | BEARING NEEDLE ROLLER | | | 242 |
| 7007463 | BEARING NEEDLE ROLLER | | | 242 |
| 7007464 | RING INNER | | | 242 |
| 7007465 | RING INNER | | | 242 |
| 7007466 | SPINDLE | | | 242 |
| 7007467 | MOTOR TRAVEL | | | 237, 238 |
| 7007468 | SHAFT | | | 238 |
| 7007469 | PLATE SWASH | | | 238 |
| 7007470 | PLATE TIMING | | | 238 |
| 7007471 | PLUG | | | 238 |
| 7007472 | GEAR REDUCTION | | | 241, 242 |
| 7007473 | CARRIER | | | 242 |
| 7007474 | GEAR SUN 1 | | | 242 |

**Code for disposition of old part number**

**A -- Use up**
**B -- Use on other application (See PNI)**
**C -- File PDR Report with Bobcat Parts Sales**
**D -- Part Number Error**



Page 511 - OSS# 2089524 - All rights reserved by Bobcat Company - 05/11/2012 - 06:30:39 - Produced by Ken Cook Co. with mediaioff

| Part No. | Description | Was | Code | Page |
|---|---|---|---|---|
| 7007475 | GEAR PLANETARY 1 | | | 242 |
| 7007476 | GEAR SUN 2 | | | 242 |
| 7007477 | GEAR PLANETARY 2 | | | 242 |
| 7007478 | VALVE RELIEF | | | 238 |
| 7007479 | FLANGE REAR ASSY | | | 238 |
| 7007480 | FLANGE REAR KIT | | | 238 |
| 7007481 | SPRING | | | 238 |
| 7007482 | KIT SEAL | | | 240 |
| 7007483 | BALL THRUST | | | 238 |
| 7007484 | PISTON ASSY | | | 238 |
| 7007485 | SPRING | | | 238 |
| 7007486 | PLATE RETAINER | | | 238 |
| 7007487 | SPRING | | | 238 |
| 7007488 | PISTON ASSY | | | 238 |
| 7007489 | CYLINDER & PISTON KIT | | | 238 |
| 7007490 | COLLAR THRUST | | | 242 |
| 7007491 | BEARING BALL | | | 238 |
| 7007492 | PLUG | | | 242 |
| 7007493 | WASHER THRUST | | | 242 |
| 7007494 | VALVE | | | 238 |
| 7007495 | SPRING | | | 238 |
| 7007496 | RING | | | 242 |
| 7007497 | SCREW SET | | | 242 |
| 7007498 | RING BACK-UP | | | 238 |
| 7007499 | SEAL FLOATING | | | 242 |
| 7007500 | SEAL OIL | | | 238 |
| 7007501 | RING CUSHION | | | 282 |
| 7007502 | RING DUST | | | 276, 278, 406, 408 |
| 7007503 | RING RETAINING | | | 282, 404 |
| 7007504 | RING BACK-UP | | | 282 |
| 7007505 | U-BOLT | | | 276, 278, 282, 406, 408 |
| 7007506 | RING WEAR | | | 282 |
| 7007507 | RING WEAR | | | 276, 278, 406, 408 |
| 7007508 | BAND TUBELINE | | | 276, 278, 406, 408 |
| 7007509 | COVER ROD | | | 276, 278, 406, 408 |
| 7007510 | SPACER | | | 282 |
| 7007512 | PISTON | | | 280, 402 |
| 7007513 | COVER ROD | | | 284, 286 |
| 7007514 | PISTON | | | 284, 286 |
| 7007515 | TUBELINE ASSY RH | | | 286 |
| 7007516 | TUBELINE ASSY LH | | | 284 |
| 7007517 | ROD ASSY | | | 284, 286, 288, 290 |
| 7007518 | COVER ROD | | | 288, 290 |
| 7007519 | PISTON | | | 288, 290 |
| 7007520 | TUBELINE ASSY RH | | | 290 |
| 7007521 | TUBELINE ASSY LH | | | 288 |
| 7007522 | COVER ROD | | | 282 |
| 7007523 | PISTON | | | 282 |
| 7007524 | TUBELINE ASSY | | | 282 |
| 7007525 | ROD ASSY | | | 282 |

**Code for disposition of old part number**

**A -- Use up**
**B -- Use on other application (See PNI)**
**C -- File PDR Report with Bobcat Parts Sales**
**D -- Part Number Error**



Page 512 - OSS# 2089524 - All rights reserved by Bobcat Company - 05/11/2012 - 06:30:39 - Produced by Ken Cook Co. with mediaioff

| Part No. | Description | Was | Code | Page |
|---|---|---|---|---|
| 7007526 | TUBELINE BAND ASSY | | | 282 |
| 7007527 | TUBELINE ASSY-H | | | 282 |
| 7007528 | TUBELINE ASSY-R | | | 282 |
| 7007529 | TUBELINE ASSY | | | 276, 278, 406, 408 |
| 7007530 | ROD ASSY | | | 276, 278, 406, 408 |
| 7007531 | TUBELINE ASSY-R | | | 276, 406 |
| 7007532 | TUBELINE BAND ASSY | | | 276, 278, 406, 408 |
| 7007535 | ROD COVER | | | 280, 402 |
| 7007537 | ROD ASSY | | | 280, 402 |
| 7007540 | TUBE, CASE CYL | | | 280, 402 |
| 7007541 | TUBELINE ASSY-H | | | 280, 402 |
| 7007542 | TUBELINE ASSY-R | | | 280, 402 |
| 7007543 | COIL | | | 226 |
| 7007545 | SPOOL SOLENOID | | | 226 |
| 7007547 | TUBELINE ASSY | | | 292 |
| 7007548 | ROD ASSY | | | 292 |
| 7007549 | COVER ROD | | | 292 |
| 7007550 | PISTON | | | 292 |
| 7007551 | BUSHING DU | | | 292 |
| 7007556 | BRACKET | | | 326 |
| 7007557 | BRACKET | | | 326 |
| 7007558 | COVER LOCKING | | | 250, 252, 254, 256, 260, 272, 398 |
| 7007559 | KIT SEAL LS RELIEF VALVE | | | 250 |
| 7007560 | KIT SEAL | | | 250, 252, 254, 256, 258, 260, 262, 264, 270, 272, 398 |
| 7007561 | PLUG | | | 258, 262, 264, 270 |
| 7007562 | THROTTLE TRANS | | | 262 |
| 7007563 | VALVE CHECK | | | 252, 254, 256, 258, 260, 266, 270, 272, 398 |
| 7007564 | VALVE L/S PRESSURE RELIEF | | | 250 |
| 7007565 | KIT SEAL | | | 252, 254, 256, 258, 260, 262, 268, 270, 272, 274, 398 |
| 7007566 | FILTER FLOW REGULATOR | | | 250 |
| 7007567 | FILTER FLOW REGULAR FILTER | | | 250 |
| 7007568 | KIT SEAL | | | 266 |
| 7007569 | KIT SEAL FLOWING REGULATOR | | | 250 |
| 7007570 | VALVE ANTI CAVITATION | | | 266 |
| 7007571 | VALVE RELIEF, 340 BAR | | | 250, 252, 254, 256, 272 |
| 7007572 | VALVE | | | 252, 254, 256, 258, 260, 262, 264, 266, 272, 398 |
| 7007573 | VALVE CHECK | | | 262, 264 |
| 7007574 | KIT STROKE LIMIT | | | 260, 270, 272, 398 |
| 7007575 | KIT REGULATION | | | 250 |
| 7007576 | CAP PLUNGER KIT | | | 252, 254, 256, 258, 262, 264, 266 |
| 7007577 | CAP PLUNGER KIT | | | 260, 270, 272, 398 |
| 7007578 | VALVE | | | 270 |
| 7007579 | KIT SEAL | | | 264 |

**Code for disposition of old part number**

**A -- Use up**
**B -- Use on other application (See PNI)**
**C -- File PDR Report with Bobcat Parts Sales**
**D -- Part Number Error**



Page 513 - OSS# 2089524 - All rights reserved by Bobcat Company - 05/11/2012 - 06:30:39 - Produced by Ken Cook Co. with mediaioff

| Part No. | Description | Was | Code | Page |
|---|---|---|---|---|
| 7007580 | KIT SEAL | | | 250 |
| 7007582 | KIT SEAL | | | 252, 254, 256, 258, 260, 262, 264, 266, 270, 272, 398 |
| 7007583 | BLOCK DOZER | | | 248, 257, 258, 396 |
| 7007585 | BLOCK BOOM SWING | | | 248, 265, 266, 396 |
| 7007586 | BLOCK INLET | | | 248, 267, 268, 396 |
| 7007587 | BLOCK ARM | | | 248, 255, 256, 396 |
| 7007588 | BLOCK SWING | | | 248, 269, 270, 396 |
| 7007589 | BLOCK INLET | | | 248, 249, 250, 396 |
| 7007590 | BLOCK OUTLET | | | 248, 273, 274 |
| 7007591 | BLOCK BOOM | | | 248, 251, 252, 396 |
| 7007592 | BLOCK BUCKET | | | 248, 253, 254, 396 |
| 7007593 | BLOCK TRAVEL LH | | | 248, 261, 262, 396 |
| 7007594 | BLOCK TRAVEL RH | | | 248, 263, 264, 396 |
| 7007595 | VALVE RELIEF | | | 150 |
| 7007597 | BLOCK ROTATING | | | 248, 271, 272, 396 |
| 7007598 | ROD TIE 611L | | | 248, 396 |
| 7007600 | BOLT | | | 306 |
| 7007601 | BOLT | | | 140 |
| 7007602 | BOLT | | | 218, 306, 310, 460 |
| 7007603 | BOLT | | | 322 |
| 7007605 | BOLT | | | 324 |
| 7007608 | BOLT | | | 310 |
| 7007609 | BOLT | | | 80, 92 |
| 7007610 | BOLT | | | 206, 208 |
| 7007611 | BOLT | | | 82 |
| 7007612 | BOLT | | | 160 |
| 7007614 | BOLT | 7007615 | B | 434 |
| 7007615 | BOLT | | | 310, 432 |
| 7007617 | BOLT | | | 242 |
| 7007618 | BOLT | | | 184, 388 |
| 7007623 | BOLT | | | 304 |
| 7007626 | BOLT | | | 116, 170, 184, 242, 280, 384, 402 |
| 7007626 | BOLT | 7007625 | A | 116, 170, 184, 242, 280, 384, 402 |
| 7007628 | BOLT | | | 188, 374 |
| 7007629 | BOLT | | | 236, 334 |
| 7007630 | BOLT | | | 320 |
| 7007635 | BOLT M12X1.75X16 | | | 188, 374 |
| 7007639 | BOLT | | | 124 |
| 7007640 | BOLT | | | 116 |
| 7007643 | BOLT | | | 160 |
| 7007644 | BOLT | | | 126, 456 |
| 7007645 | BOLT | | | 128, 458 |
| 7007647 | BOLT M16X2.0X35 | | | 56, 138 |
| 7007648 | BOLT | | | 334 |
| 7007649 | BOLT | | | 116 |
| 7007650 | BOLT | | | 116, 138 |
| 7007651 | BOLT | | | 208 |
| 7007652 | BOLT | | | 82 |
| 7007657 | BOLT | | | 150 |
| 7007660 | BOLT | | | 104, 148, 416 |
| 7007661 | BOLT | | | 182, 386 |
| 7007663 | BOLT | | | 184, 388 |
| 7007665 | BOLT | | | 370 |

**Code for disposition of old part number**

**A -- Use up**
**B -- Use on other application (See PNI)**
**C -- File PDR Report with Bobcat Parts Sales**
**D -- Part Number Error**



Page 514 - OSS# 2089524 - All rights reserved by Bobcat Company - 05/11/2012 - 06:30:39 - Produced by Ken Cook Co. with mediaioff

| Part No. | Description | Was | Code | Page |
|---|---|---|---|---|
| 7007667 | BOLT | | | 210 |
| 7007669 | BOLT | 7014864 | D | 154, 168, 170, 276, 278, 282, 406, 408 |
| 7007669 | BOLT | | | 154, 168, 170, 276, 278, 282, 406, 408 |
| 7007669 | BOLT | 7007668 | A | 154, 168, 170, 276, 278, 282, 406, 408 |
| 7007671 | BOLT | | | 186, 384, 390, 460 |
| 7007672 | BOLT | | | 180, 388 |
| 7007673 | BOLT | | | 384 |
| 7007674 | BOLT | | | 180, 384 |
| 7007675 | BOLT | | | 182, 386 |
| 7007677 | BOLT | | | 186, 460 |
| 7007678 | BOLT | | | 186, 390, 460 |
| 7007680 | BOLT | | | 154 |
| 7007686 | BOLT | 7007685 | B | 160 |
| 7007687 | BOLT | | | 374 |
| 7007690 | BOLT | | | 150 |
| 7007691 | BOLT | | | 150 |
| 7007695 | BOLT | | | 116 |
| 7007696 | BOLT | | | 128, 458 |
| 7007697 | BOLT | | | 126, 456 |
| 7007698 | BOLT | | | 116 |
| 7007703 | BOLT | | | 164 |
| 7007704 | BOLT M16X2.0X70 | | | 116 |
| 7007708 | BOLT | | | 132, 134, 378, 380 |
| 7007709 | BOLT | | | 132, 134, 378, 380, 382 |
| 7007710 | BOLT | | | 132, 134, 136, 138, 378, 380, 382 |
| 7007711 | BOLT M16X2.0X130 | | | 54 |
| 7007712 | BOLT | | | 116 |
| 7007713 | BOLT | | | 44 |
| 7007718 | BOLT | | | 320 |
| 7007719 | BOLT | | | 188 |
| 7007721 | SCREW SOCKET | | | 220 |
| 7007723 | BOLT SOCKET | | | 228 |
| 7007724 | BOLT | | | 192 |
| 7007725 | SCREW SOCKET | | | 220 |
| 7007726 | BOLT | | | 190 |
| 7007727 | SCREW SOCKET | | | 220 |
| 7007728 | BOLT SOCKET | | | 188 |
| 7007729 | BOLT | | | 234 |
| 7007730 | BOLT SOCKET | | | 230 |
| 7007731 | BOLT SOCKET | | | 244 |
| 7007732 | BOLT SOCKET | | | 376, 426 |
| 7007735 | BOLT | | | 52, 60, 62 |
| 7007737 | BOLT | | | 210, 394 |
| 7007740 | BOLT SOCKET M8X45 | | | 276, 278, 406, 408 |
| 7007742 | BOLT SOCKET | | | 280, 282, 402 |
| 7007743 | BOLT | | | 192 |
| 7007746 | BOLT HEX SOCKET M10X5L | | | 222 |
| 7007748 | BOLT SOCKET M10X1.5X30 | | | 180, 210, 384 |
| 7007750 | BOLT SOCKET M10X1.5X35 | | | 82 |
| 7007751 | BOLT SOCKET M10X1.5X40 | | | 86, 176, 178, 462, 464 |

**Code for disposition of old part number**

**A -- Use up**
**B -- Use on other application (See PNI)**
**C -- File PDR Report with Bobcat Parts Sales**
**D -- Part Number Error**



Page 515 - OSS# 2089524 - All rights reserved by Bobcat Company - 05/11/2012 - 06:30:39 - Produced by Ken Cook Co. with mediaioff

| Part No. | Description | Was | Code | Page |
|---|---|---|---|---|
| 7007752 | BOLT | | | 150 |
| 7007754 | BOLT SOCKET | 7007753 | A | 280, 402 |
| 7007754 | BOLT SOCKET | 7007753 | D | 280, 402 |
| 7007757 | BOLT SOCKET | | | 244 |
| 7007760 | BOLT SOCKET | | | 238, 246 |
| 7007761 | BOLT M12X1.75X35 | | | 190 |
| 7007767 | BOLT HEX SOCKET | | | 282 |
| 7007769 | BOLT SOCKET | | | 406, 408 |
| 7007770 | SCREW SOCKET | | | 222 |
| 7007771 | BOLT | | | 190 |
| 7007772 | BOLT HEX SOCKET | | | 276, 278, 406, 408 |
| 7007773 | BOLT SOCKET | | | 334 |
| 7007774 | BOLT | | | 164 |
| 7007775 | BOLT HEX SOCKET | | | 280, 402 |
| 7007777 | BOLT | | | 80, 298 |
| 7007778 | BOLT | | | 76 |
| 7007779 | SCREW M5X0.8X10 | | | 296 |
| 7007780 | BOLT M5X0.8X12 | | | 374 |
| 7007781 | BOLT | | | 298 |
| 7007784 | SCREW M6X1.0X10 | | | 294 |
| 7007785 | SCREW M6X1.0X12 | | | 66, 294 |
| 7007786 | BOLT | | | 100, 104 |
| 7007787 | BOLT | | | 298 |
| 7007788 | BOLT | | | 298 |
| 7007789 | BOLT | | | 140, 142 |
| 7007790 | BOLT SOCKET | | | 228 |
| 7007791 | BOLT | | | 230 |
| 7007792 | SCREW SET | | | 276, 278, 280, 282, 284, 286, 288, 290, 292, 402, 406, 408 |
| 7007794 | NUT | | | 306 |
| 7007796 | NUT | | | 70, 86, 104, 276, 278, 282, 306, 328 |
| 7007797 | NUT | | | 152 |
| 7007798 | NUT M10X1.5 | | | 52, 98, 104, 310 |
| 7007800 | NUT M14 | | | 116, 232 |
| 7007801 | NUT M16X1.0 | | | 132, 134, 136, 138, 378, 380, 382 |
| 7007803 | NUT | | | 234 |
| 7007804 | NUT | | | 124 |
| 7007808 | WASHER | | | 66 |
| 7007809 | WASHER PLAIN | | | 80 |
| 7007810 | WASHER | | | 76, 140, 298, 306 |
| 7007811 | WASHER PLAIN | | | 298 |
| 7007814 | WASHER | | | 82, 188, 206, 208, 322, 324 |
| 7007815 | WASHER PLAIN | | | 148, 150 |
| 7007816 | WASHER | | | 94, 98, 100, 104, 210, 306, 310, 370, 432, 434 |
| 7007818 | WASHER PLAIN M10 | | | 86, 98, 304 |
| 7007819 | WASHER PLAIN | | | 48, 374 |
| 7007820 | WASHER SPRING | | | 150, 160 |
| 7007821 | WASHER | | | 160, 320 |
| 7007822 | WASHER SPRING | | | 164 |
| 7007823 | WASHER PLAIN | | | 54, 56, 138 |
| 7007826 | WASHER SPRING | | | 298 |
| 7007827 | WASHER SPRING | | | 296, 306, 374 |
| 7007828 | WASHER SPRING | | | 298, 322 |
| 7007829 | WASHER | | | 148, 150, 160, 276, 278, 280, 282, 324, 402, 404, 406, 408 |

**Code for disposition of old part number**

**A -- Use up**
**B -- Use on other application (See PNI)**
**C -- File PDR Report with Bobcat Parts Sales**
**D -- Part Number Error**



Page 516 - OSS# 2089524 - All rights reserved by Bobcat Company - 05/11/2012 - 06:30:39 - Produced by Ken Cook Co. with mediaioff

| Part No. | Description | Was | Code | Page |
|---|---|---|---|---|
| 7007830 | WASHER SPRING | | | 276, 278, 280, 282, 402, 406, 408 |
| 7007831 | WASHER SPRING | | | 310 |
| 7007832 | WASHER SPRING | | | 298 |
| 7007833 | WASHER SPRING | | | 66, 67, 68, 80, 82, 100, 104, 188, 206, 208, 218, 294, 298, 306, 310, 460 |
| 7007834 | WASHER SPRING | | | 182, 184, 210, 306, 310, 328, 370, 386, 388, 416, 432, 434 |
| 7007835 | WASHER SPRING | | | 116, 154, 168, 170, 180, 182, 184, 186, 188, 210, 236, 304, 320, 334, 374, 384, 386, 388, 390, 460 |
| 7007836 | WASHER SPRING M12 | | | 116, 150, 154, 159, 160, 374 |
| 7007837 | WASHER | | | 116, 126, 128, 160, 190, 456, 458 |
| 7007839 | WASHER SPRING | | | 116, 138, 164, 334 |
| 7007842 | WASHER SPRING | | | 210, 218, 376, 394, 426, 460 |
| 7007843 | WASHER SPRING | | | 82 |
| 7007844 | WASHER | | | 86 |
| 7007845 | WASHER SPRING | | | 190 |
| 7007847 | WASHER | | | 334 |
| 7007848 | PIN PARALLEL | | | 238, 244 |
| 7007851 | PIN PARALLEL | | | 337, 338, 345, 346 |
| 7007854 | PIN SPLIT | | | 84 |
| 7007855 | PIN SELF LOCKING | | | 220 |
| 7007856 | PIN SPRING | | | 234 |
| 7007857 | PIN SELF LOCKING | | | 220 |
| 7007859 | PIN SPRING | | | 232 |
| 7007860 | PIN SPRING | | | 340 |
| 7007862 | PIN SPRING | | | 120 |
| 7007865 | BEARING BALL | | | 124 |
| 7007866 | BEARING BALL | | | 124 |
| 7007867 | RING SNAP | | | 124 |
| 7007868 | BALL | | | 238 |
| 7007871 | BALL STEEL | | | 230 |
| 7007872 | BALL STEEL | | | 242 |
| 7007873 | RING SNAP | | | 244 |
| 7007876 | RING SNAP | | | 118, 124 |
| 7007877 | RING RETAINING | | | 242 |
| 7007879 | RING RETAINER | | | 236 |
| 7007884 | RING SNAP | | | 244 |
| 7007887 | RING SNAP | | | 124 |
| 7007888 | RING SNAP | | | 238 |
| 7007889 | RING SNAP | | | 74 |
| 7007890 | RING RETAINING | | | 56 |
| 7007895 | NIPPLE | | | 44, 138 |
| 7007897 | FITTING GREASE | | | 136 |
| 7007902 | ORING | | | 242 |
| 7007903 | ORING | | | 228, 230, 234 |
| 7007906 | ORING | 7015968 | A | 148, 150, 154, 164, 182, 184, 192, 198, 200, 204, 206, 208, 210, 212, 214, 218, 230, 238, 244, 318, 386, 388, 394, 434, 460 |
| 7007906 | ORING | | | 148, 150, 154, 164, 182, 184, 192, 198, 200, 204, 206, 208, 210, 212, 214, 218, 230, 238, 244, 318, 386, 388, 394, 434, 460 |
| 7007907 | ORING | | | 336, 342, 344 |

**Code for disposition of old part number**

**A -- Use up**
**B -- Use on other application (See PNI)**
**C -- File PDR Report with Bobcat Parts Sales**
**D -- Part Number Error**



Page 517 - OSS# 2089524 - All rights reserved by Bobcat Company - 05/11/2012 - 06:30:39 - Produced by Ken Cook Co. with mediaioff

| Part No. | Description | Was | Code | Page |
|---|---|---|---|---|
| 7007909 | ORING | | | 148, 150, 154, 156, 158, 164, 166, 192, 210, 228, 232, 234, 240, 242, 336, 338, 416 |
| 7007910 | ORING | | | 244, 368 |
| 7007911 | ORING | | | 148, 154, 160, 162, 164, 168, 170, 176, 178, 180, 184, 190, 192, 238, 374, 376, 384, 426, 462, 464 |
| 7007912 | ORING | | | 230, 238, 276, 278, 280, 282, 336, 338, 348, 402, 406, 408 |
| 7007913 | ORING | | | 232 |
| 7007915 | ORING | | | 190 |
| 7007916 | ORING | | | 164, 180, 188, 190 |
| 7007917 | ORING | | | 150, 182, 184, 386, 388 |
| 7007918 | ORING | | | 238 |
| 7007919 | ORING | | | 280, 402 |
| 7007920 | ORING | | | 190 |
| 7007921 | ORING | | | 336, 338, 344 |
| 7007925 | ORING | | | 282 |
| 7007927 | ORING | | | 236 |
| 7007931 | ORING | | | 232, 238 |
| 7007932 | ORING | | | 238 |
| 7007933 | ORING | | | 122 |
| 7007935 | ORING | | | 120, 284, 286, 288, 290, 292, 404 |
| 7007936 | ORING | 7007926 | A | 188 |
| 7007938 | ORING | | | 124 |
| 7007939 | ORING | | | 282 |
| 7007941 | ORING | | | 282 |
| 7007943 | ORING | | | 236 |
| 7007944 | ORING | | | 276, 278, 284, 286, 288, 290, 404, 406, 408 |
| 7007945 | ORING | | | 276, 278, 284, 286, 288, 290, 404, 406, 408 |
| 7007946 | ORING | | | 188 |
| 7007948 | ORING | | | 292 |
| 7007950 | ORING | | | 280, 292, 402 |
| 7007951 | ORING | | | 280, 402 |
| 7007955 | ORING | | | 188 |
| 7007956 | ORING | | | 188 |
| 7007957 | ORING | | | 242 |
| 7007959 | ORING | | | 150 |
| 7007960 | ORING | | | 150, 182, 184, 192, 386, 388 |
| 7007961 | ORING | | | 150, 165, 166, 200, 212, 214, 216, 218, 394, 460 |
| 7007962 | ORING | | | 190 |
| 7007963 | ORING | | | 166 |
| 7007964 | RING BACK-UP | | | 238 |
| 7007968 | RING BACK-UP | | | 282 |
| 7007970 | RING BACK-UP | | | 284, 286, 288, 290 |
| 7007971 | SEAL RING | | | 376, 426, 428 |
| 7007973 | CLAMP | | | 322, 370, 374 |
| 7007974 | CLAMP | | | 80 |
| 7007975 | CLAMP | | | 82 |
| 7007976 | CLAMP HOSE | | | 190 |
| 7007977 | CLAMP | | | 324 |
| 7007979 | CLAMP HOSE | | | 332 |
| 7007982 | CLAMP | | | 190 |
| 7007983 | CLAMP | | | 328 |
| 7008133 | SPROCKET | | | 128, 458 |

**Code for disposition of old part number**

**A -- Use up**
**B -- Use on other application (See PNI)**
**C -- File PDR Report with Bobcat Parts Sales**
**D -- Part Number Error**



Page 518 - OSS# 2089524 - All rights reserved by Bobcat Company - 05/11/2012 - 06:30:39 - Produced by Ken Cook Co. with mediaioff

| Part No. | Description | Was | Code | Page |
|---|---|---|---|---|
| 7008134 | BUSHING, TRACK | | | 130 |
| 7008135 | BUSHING, MASTER | | | 130 |
| 7008136 | SPACER | | | 130 |
| 7008137 | BOLT | | | 130 |
| 7008138 | NUT | | | 130 |
| 7008139 | PIN, TRACK | | | 130 |
| 7008140 | PIN, MASTER | | | 130 |
| 7008141 | PIN, COTTER | | | 130 |
| 7008144 | ELBOW | | | 160, 162, 392 |
| 7008146 | HOSE, PF1/2-1100L | | | 160, 162 |
| 7008148 | FILTER, ADAPTER | | | 192 |
| 7008149 | SWITCH, TOGGLE | | | 376, 428 |
| 7008150 | TERMINAL, BATTERY(-) | | | 308 |
| 7008151 | IDLER ASSY | | | 128, 458 |
| 7008152 | ROLLER, LOWER | | | 128, 458 |
| 7008153 | LINK, TRACK LH | | | 130 |
| 7008154 | LINK, MASTER RH | | | 130 |
| 7008155 | LINK, MASTER LH | | | 130 |
| 7008156 | LINK, TRACK RH | | | 130 |
| 7008157 | SHOE | | | 130 |
| 7008158 | VALVE, RELIEF | | | 224 |
| 7008160 | BOLT, SET | | | 322 |
| 7008172 | HOSE | | | 150 |
| 7008178 | HOSE | | | 150 |
| 7008180 | SHIM, 2T | | | 54 |
| 7008181 | GUARD, PROTECTOR SLEEVE | | | 376 |
| 7008184 | COVER, SWITCH | | | 90 |
| 7008205 | PLATE | | | 77, 78 |
| 7008208 | PLATE | | | 54 |
| 7008209 | SHOE, TRACK ASSY 450MM | | | 127, 128, 129, 130, 458 |
| 7008215 | PLATE, FLOOR | | | 52 |
| 7008218 | DIAPHRAGM, BAFFLE | | | 100 |
| 7008225 | PLATE | | | 160 |
| 7008229 | GUARD, TRACK | | | 128, 458 |
| 7008230 | GUARD, TRACK | | | 128, 458 |
| 7008233 | VALVE, PEDAL | | | 209, 210, 229, 230 |
| 7008240 | COVER ASSY | | | 99, 100 |
| 7008241 | COVER, BATTERY ASSY | | | 100, 104 |
| 7008242 | COVER, SIDE | | | 100 |
| 7008243 | COVER, ROOF | | | 100, 104 |
| 7008244 | HINGE | | | 94 |
| 7008245 | STRIKER | | | 94 |
| 7008246 | DIAPHRAGM, BAFFLE | | | 322 |
| 7008247 | PLATE | | | 94, 104 |
| 7008248 | PLATE | | | 100, 104 |
| 7008250 | BRACKET | | | 100 |
| 7008251 | BRACKET | | | 100 |
| 7008252 | PLATE | | | 100 |

**Code for disposition of old part number**

**A -- Use up**
**B -- Use on other application (See PNI)**
**C -- File PDR Report with Bobcat Parts Sales**
**D -- Part Number Error**



Page 519 - OSS# 2089524 - All rights reserved by Bobcat Company - 05/11/2012 - 06:30:39 - Produced by Ken Cook Co. with mediaioff

| Part No. | Description | Was | Code | Page |
|---|---|---|---|---|
| 7008253 | STRIP, WEATHER | | | 100, 104 |
| 7008254 | PLATE | | | 100 |
| 7008255 | HINGE | | | 100, 104 |
| 7008257 | VALVE, PILOT | | | 191, 192, 223, 224 |
| 7008260 | COVER, BAFFLE | | | 332 |
| 7008262 | MAT, GLASS | | | 328 |
| 7008263 | MAT, GLASS | | | 328 |
| 7008265 | MAT, GLASS | | | 328 |
| 7008266 | HOSE, FUEL | | | 376, 426 |
| 7008267 | CYLINDER, GAS SPRING | | | 94, 98 |
| 7008268 | BRACKET | | | 94 |
| 7008269 | BRACKET | | | 96 |
| 7008273 | DECAL, FOGS | | | 448 |
| 7008274 | VALVE, SHUTTLE | | | 203, 204, 434 |
| 7008276 | VALVE, CHECK | | | 376, 426, 428 |
| 7008283 | CYLINDER, GAS SPRING | | | 94, 98 |
| 7008284 | VALVE, SOLENOID | | | 217, 218, 460 |
| 7008285 | COVER | | | 230 |
| 7008289 | SPOOL, SOLENOID | | | 218 |
| 7008290 | TUBELINE ASSY | | | 278, 408 |
| 7008291 | TUBELINE ASSY | | | 278, 408 |
| 7008297 | BOLT, SOCKET M8X1.25X30 | | | 218, 460 |
| 7008301 | WASHER | | | 190, 192 |
| 7008302 | WASHER, SPRING M10 | | | 150 |
| 7008303 | CLAMP, HOSE | | | 376, 426 |
| 7009943 | ELBOW | | | 176, 178, 462, 464 |
| 7009945 | BRACKET | | | 170, 176, 462, 464 |
| 7009946 | BRACKET | | | 170, 176, 462, 464 |
| 7009947 | O-RING | | | 168, 170, 172, 174, 176, 178, 460, 462, 464 |
| 7010024 | ADAPTER | | | 172, 174, 460 |
| 7010246 | FITTING, GREASE | 7007894 | A | 48 |
| 7010247 | FITTING, GREASE | 7007893 | A | 56, 132, 134, 136, 284, 286, 288, 290, 378, 380, 382 |
| 7010247 | FITTING, GREASE | 7007893 | D | 56, 132, 134, 136, 284, 286, 288, 290, 378, 380, 382 |
| 7010249 | FITTING, GREASE | 7007896 | A | 116 |
| 7010295 | CONTROLLER ECU COMPLETE | 7008799 | A | 310, 311, 312 |
| 7010295 | CONTROLLER ECU COMPLETE | | | 310, 311, 312 |
| 7010311 | GASKET, THERMOSTAT | 7004218 | A | 336, 354 |
| 7010347 | FILTER, OIL | 7004996 | A | 1, 2, 7, 8, 22, 24, 348 |
| 7010351 | FILTER, FUEL | 7006269 | A | 2, 8, 15, 16, 17, 18, 26, 368 |
| 7010351 | FILTER, FUEL | 7006269 | D | 2, 8, 15, 16, 17, 18, 26, 368 |
| 7010376 | PLATE NSS | | | 446 |
| 7010377 | PAD, RUBBER | | | 448 |
| 7010378 | SET SCREW | | | 448 |
| 7010379 | PLATE | | | 448 |
| 7010449 | ORING | 7004628 | B,D | 460 |
| 7010540 | HOSE | | | 170, 178 |

**Code for disposition of old part number**

**A -- Use up**
**B -- Use on other application (See PNI)**
**C -- File PDR Report with Bobcat Parts Sales**
**D -- Part Number Error**



Page 520 - OSS# 2089524 - All rights reserved by Bobcat Company - 05/11/2012 - 06:30:39 - Produced by Ken Cook Co. with mediaioff

| Part No. | Description | Was | Code | Page |
|---|---|---|---|---|
| 7010541 | HOSE | | | 170 |
| 7010543 | BRACKET | | | 168 |
| 7010544 | BRACKET | | | 168 |
| 7010545 | HOSE | | | 168 |
| 7010546 | BRACKET, BATTERY | 7006612 | B, D | 310 |
| 7010699 | SEATBELT ASSY | | | 444 |
| 7010969 | NUT | 7003875 | B,D | 164, 460 |
| 7010969 | NUT | 7003875 | A | 164, 460 |
| 7011040 | VALVE, BPV | 7005423 | C | 160 |
| 7011041 | HOSE, HYD | 7005500 | C | 148 |
| 7011042 | HOSE, HYD | 7005425 | C | 160 |
| 7011043 | HOSE, HYD | 7011076 | D | 160, 392 |
| 7011043 | HOSE, HYD | 7005427 | C | 160, 392 |
| 7011044 | HOSE, HYD | 7005438 | C | 148 |
| 7011045 | HOSE, HYD | 7005424 | C | 160 |
| 7011046 | HOSE, HYD | 7005428 | C | 160 |
| 7011047 | HOSE, HYD | 7010382 | D | 162, 392, 460 |
| 7011047 | HOSE, HYD | | | 162, 392, 460 |
| 7011047 | HOSE, HYD | 7005440 | C | 162, 392, 460 |
| 7011048 | HOSE, HYD | 7010381 | D | 162, 392, 460 |
| 7011048 | HOSE, HYD | 7005439 | C | 162, 392, 460 |
| 7011048 | HOSE, HYD | | | 162, 392, 460 |
| 7012018 | MAIN CONTROL VALVE | 7006686 | D | 160, 161, 162, 247, 248 |
| 7012018 | MAIN CONTROL VALVE | 7006687 | D | 160, 161, 162, 247, 248 |
| 7012228 | BOLT,FLANGE | | | 96, 102, 106, 324, 332 |
| 7012229 | BOLT;FLANGE | | | 50, 324 |
| 7012229 | BOLT;FLANGE | 7005129 | A | 50, 324 |
| 7012244 | BOLT,FLANGE | | | 116 |
| 7012246 | CYLINDER,BOOM | | | 183, 184, 279, 280, 387, 388, 401, 402 |
| 7012246 | CYLINDER,BOOM | 7006045 | A | 183, 184, 279, 280, 387, 388, 401, 402 |
| 7012247 | CYLINDER;ARM | | | 384, 406 |
| 7012248 | CYLINDER;ARM | | | 385, 386, 408 |
| 7012249 | CYLINDER;BUCKET | | | 167, 168, 169, 170, 281, 282 |
| 7012249 | CYLINDER;BUCKET | 7006049 | A | 167, 168, 169, 170, 281, 282 |
| 7012251 | SUPPORT ASSY | | | 100 |
| 7012252 | TANK,FUEL | 7008198 | A | 373, 374 |
| 7012253 | SPRING ASSY,TRACK | 7004598 | A | 117, 118 |
| 7012254 | TANK,OIL | 7006124 | A | 187, 188 |
| 7012255 | VALVE,WATER;HEATER | 7006247 | A | 82 |
| 7012272 | PIN,DOWEL | | | 44 |
| 7012273 | FRAME,TRACK | 7006083 | A | 115, 116 |
| 7012274 | BLADE,DOZER | 7006092 | A | 116 |
| 7012275 | ROLLER,UPPER | 7006091 | A | 123, 124 |
| 7012276 | SOCKET,WRENCH;T-HANDLE | | | 429, 430 |
| 7012496 | STOPPER;RUBBER | | | 72 |
| 7012590 | PLATE;NAME | | | 422 |
| 7012732 | MUFFLER | | | 329, 330 |
| 7012734 | BAND;MUFFLER | | | 330 |
| 7012735 | CLAMP | | | 330 |

**Code for disposition of old part number**

**A -- Use up**
**B -- Use on other application (See PNI)**
**C -- File PDR Report with Bobcat Parts Sales**
**D -- Part Number Error**



Page 521 - OSS# 2089524 - All rights reserved by Bobcat Company - 05/11/2012 - 06:30:39 - Produced by Ken Cook Co. with mediaioff

| Part No. | Description | Was | Code | Page |
|---|---|---|---|---|
| 7012736 | PIPE;WATER | | | 330 |
| 7012737 | MAT;GLASS | | | 330 |
| 7012738 | MAT;GLASS | | | 330 |
| 7012739 | MAT;GLASS | | | 330 |
| 7012740 | CLAMP;HOSE | | | 330 |
| 7012744 | BRACKET | | | 370 |
| 7012745 | BRACKET | | | 372 |
| 7012746 | FOAM | | | 324 |
| 7012749 | CATCH | 7005859 | D | 94, 98, 100, 104 |
| 7012749 | CATCH | 7005859 | A | 94, 98, 100, 104 |
| 7012753 | ENGINE ASS'Y | | | 330 |
| 7012754 | PIPE,EXHAUST | | | 330 |
| 7012755 | BRACKET;MOUNTIN G | | | 320 |
| 7012756 | COOLING ASSY | | | 322, 326 |
| 7012804 | WASHER | 7004016 | D | 238 |
| 7012805 | BOLT | 7004097 | D | 354 |
| 7012809 | CLAMP | 7007978 | D | 322 |
| 7013148 | FILTER | 7005081 | A | 2, 8, 26, 368 |
| 7013148 | FILTER | | | 2, 8, 26, 368 |
| 7013204 | VALVE SOLENOID | | | 225, 226 |
| 7013229 | VALVE, RELIEF | | | 226 |
| 7013230 | VALVE, CHECK | | | 226 |
| 7013231 | VALVE, CHECK | 7008292 | D | 224 |
| 7013236 | HOSE, WATER | 7006336 | A | 322 |
| 7013241 | LINK | | | 56 |
| 7013242 | BAR | | | 56 |
| 7013264 | KIT SEAL | 7004994 | A | 292 |
| 7013265 | WASHER PLAIN | 7007825 | A | 82, 154 |
| 7013266 | SHIM ASSY | 7004227 | A | 366 |
| 7013267 | MUFFLER SILENCER INTAKE | 7004311 | A | 332 |
| 7013268 | BOLT PLATED M8X60 | 7004098 | A | 342, 343, 344, 354 |
| 7013286 | HOOK, CATCH DOOR | | | 70 |
| 7013287 | PLATE, STOPPER | | | 140 |
| 7013288 | PLATE ASSY | | | 56 |
| 7015402 | BONNET ASSY | | | 94 |
| 7015403 | HINGE | | | 94 |
| 7015404 | BRACKET | | | 94, 98 |
| 7015405 | SPONGE | | | 96 |
| 7015406 | BRACKET | | | 96 |
| 7015407 | STRIKER | | | 94 |
| 7015409 | SPONGE | | | 102, 106 |
| 7015410 | FOAM | | | 102 |
| 7015411 | SEAL | | | 102 |
| 7015412 | FOAM | | | 102 |
| 7015413 | SEAL | | | 102 |
| 7015414 | FOAM | | | 102 |
| 7015415 | FOAM | | | 102 |
| 7015416 | SHIM | | | 102, 106 |
| 7015417 | BAFFLE | | | 322 |
| 7015418 | BUSHING, RUBBER | | | 324 |
| 7015419 | SEAL | | | 324 |

**Code for disposition of old part number**

**A -- Use up**
**B -- Use on other application (See PNI)**
**C -- File PDR Report with Bobcat Parts Sales**
**D -- Part Number Error**



Page 522 - OSS# 2089524 - All rights reserved by Bobcat Company - 05/11/2012 - 06:30:39 - Produced by Ken Cook Co. with mediaioff

| Part No. | Description | Was | Code | Page |
|---|---|---|---|---|
| 7015420 | STRIP, WEATHER | | | 324 |
| 7015421 | COOLING | | | 326 |
| 7015422 | COOLING, OIL | | | 326 |
| 7015423 | SHROUD, FAN | | | 326 |
| 7015424 | GUARD, FAN | | | 326 |
| 7015426 | PULLEY, FAN | | | 328 |
| 7015429 | HOSE | | | 166 |
| 7015431 | COVER | | | 44 |
| 7015432 | PLATE | | | 124 |
| 7015433 | ADAPTER | | | 168, 170 |
| 7015434 | NUT | | | 168, 170 |
| 7015585 | DUCT,CONTROL | | | 90 |
| 7015586 | DUCT,CONTROL | | | 90 |
| 7015588 | NOZZLE;DUCT | 7005654 | A | 88, 90 |
| 7015611 | RELAY 70A | 7005683 | A | 310 |
| 7015612 | LAMP;WORKING | | | 108 |
| 7015616 | COVER,SIDE;S/W COVER | | | 90 |
| 7015618 | HARNESS;CONTROL STAND | | | 302 |
| 7015629 | CABIN ASSY;FOGS | | | 446 |
| 7015631 | HARNESS,CONTROL STAND(R.H) | | | 302 |
| 7015632 | INDICATOR,DUST | | | 332 |
| 7015633 | HOSE | | | 184 |
| 7015634 | HOSE | | | 184 |
| 7015635 | HOSE | | | 184 |
| 7015638 | ARM,MACHINE;THUMB(1.7M) | | | 131, 132, 378 |
| 7015638 | ARM,MACHINE;THUMB(1.7M) | 7010542 | A | 131, 132, 378 |
| 7015639 | ARM,MACHINE;THUMB(2.25M) | | | 133, 134, 380 |
| 7015639 | ARM,MACHINE;THUMB(2.25M) | 7010539 | A | 133, 134, 380 |
| 7015640 | BOOM,UPPER | | | 382 |
| 7015642 | HOSE | | | 384 |
| 7015643 | HOSE | | | 384 |
| 7015644 | HOSE | | | 384 |
| 7015645 | HOSE | | | 384 |
| 7015646 | HOSE | | | 390 |
| 7015649 | HOSE PF1/2-790L | | | 388 |
| 7015650 | HOSE PF1/2-850L | | | 388 |
| 7015653 | PIN;ARM/LINK TO BUCKET | 7004571 | A | 132, 134, 378, 380 |
| 7015657 | ARM 1.7M | | | 132, 378 |
| 7015658 | BOOM,LOWER | | | 381, 382 |
| 7015670 | BLOCK;OPTION | 7007584 | A | 248, 259, 260, 396 |
| 7015670 | BLOCK;OPTION | | | 248, 259, 260, 396 |
| 7015671 | VALVE;RELIEF;310BAR | | | 398 |
| 7015672 | VALVE,CONTROL;ARTI&ROTATING | | | 391, 392, 395, 396 |
| 7015673 | BLOCK;ROTATING/ARTI | | | 396, 397, 398 |

**Code for disposition of old part number**

**A -- Use up**
**B -- Use on other application (See PNI)**
**C -- File PDR Report with Bobcat Parts Sales**
**D -- Part Number Error**



Page 523 - OSS# 2089524 - All rights reserved by Bobcat Company - 05/11/2012 - 06:30:39 - Produced by Ken Cook Co. with mediaioff

| Part No. | Description | Was | Code | Page |
|---|---|---|---|---|
| 7015674 | ROD KIT,TIE | | | 396 |
| 7015676 | TUBE ASSY | | | 404 |
| 7015677 | ROD ASSY,CYLINDER | | | 404 |
| 7015678 | COVER,ROD | | | 404 |
| 7015679 | BUSHING | | | 404 |
| 7015680 | CYLINDER,ARTI;LOCK V/V | | | 388, 403, 404 |
| 7015681 | RING,BACK UP | | | 404 |
| 7015682 | PISTON | | | 404 |
| 7015683 | SEAL | | | 404 |
| 7015684 | NUT,PISTON | | | 404 |
| 7015685 | SCREW,SET | | | 404 |
| 7015686 | BAND ASSY,PIPE | | | 404 |
| 7015947 | BAND,PIPE | | | 404 |
| 7015948 | BOLT | | | 404 |
| 7015949 | BOLT | | | 404 |
| 7015950 | SEAL KIT;ARTI BOOM | | | 404 |
| 7015951 | HOSE | | | 392 |
| 7015952 | MAT, FLOOR | | | 411, 412 |
| 7015953 | PIN;ARTI CYL HEAD | | | 382 |
| 7015954 | PIN;ARTI CYL ROD | | | 382 |
| 7015955 | PIN | | | 382 |
| 7015956 | PIN | | | 382 |
| 7015957 | STOPPER | | | 382 |
| 7015958 | STOPPER | | | 382 |
| 7015959 | SHIM 51X85X1.0T | | | 382 |
| 7015960 | SHIM 51X85X1.6T | | | 382 |
| 7015961 | SHIM 56X90X1.0T | | | 382 |
| 7015962 | SHIM 56X90X1.6T | | | 382 |
| 7015963 | O-RING | | | 392 |
| 7015964 | PIPE | | | 389, 390 |
| 7015965 | PIPE | | | 390 |
| 7015966 | PIPE | | | 390 |
| 7015967 | PIPE | | | 390 |
| 7015969 | VALVE;LOCK | | | 388 |
| 7015970 | BRACKET | | | 388 |
| 7015971 | SEAL | | | 388 |
| 7015972 | HOSE(ST-ST) | | | 388 |
| 7015973 | HOSE(ST-90) | | | 388 |
| 7015974 | HOSE PF1/4-1385L | | | 388 |
| 7015975 | HOSE PF1/4-1440L | | | 388 |
| 7015976 | HOSE PF1/4-2140L | | | 388 |
| 7015977 | HOSE PF1/4-2000L | | | 388 |
| 7015978 | ADAPTER | | | 388 |
| 7015979 | HOSE PF1/4-830L | | | 386 |
| 7015980 | HOSE PF1/4-1730L | | | 386 |
| 7015981 | HOSE 1/4 1860L | | | 386 |
| 7015982 | HARNESS;WORK LAMP | | | 414 |
| 7016116 | VALVE RELIEF, 210 BAR | 7007571 | A | 260 |
| 7017284 | HOSE | | | 394 |
| 7017285 | HOSE | | | 394 |

**Code for disposition of old part number**

**A -- Use up**
**B -- Use on other application (See PNI)**
**C -- File PDR Report with Bobcat Parts Sales**
**D -- Part Number Error**



Page 524 - OSS# 2089524 - All rights reserved by Bobcat Company - 05/11/2012 - 06:30:39 - Produced by Ken Cook Co. with mediaioff

| Part No. | Description | Was | Code | Page |
|---|---|---|---|---|
| 7017286 | PIPE | | | 383, 384 |
| 7017287 | PIPE | | | 384 |
| 7017288 | PIPE | | | 384 |
| 7017289 | PIPE | | | 384 |
| 7017290 | PIPE | | | 384 |
| 7017291 | PIPE | | | 384 |
| 7017292 | PIPE | | | 384 |
| 7017293 | PIPE | | | 384 |
| 7017294 | PIPE | | | 384 |
| 7017295 | PIPE | | | 384 |
| 7017296 | PIPE | | | 384 |
| 7017297 | CLAMP,PIPE | | | 384 |
| 7017298 | CLAMP,PIPE | | | 384 |
| 7017299 | CLAMP,PIPE | | | 384 |
| 7017300 | CLAMP,PIPE | | | 384 |
| 7017301 | HOSE (ST-90) | | | 384 |
| 7017302 | HOSE (ST-45) | | | 384 |
| 7017303 | HOSE (ST-ST) | | | 384 |
| 7017304 | HOSE | | | 394 |
| 7017305 | BRACKET, STAND | 7005771 | A | 141, 142 |
| 7017306 | BRACKET, STAND | 7006264 | A | 140 |
| 7017307 | COUNTERWEIGHT | | | 409, 410 |
| 7017309 | PIPE | | | 384 |
| 7017366 | BRACKET | | | 90, 91, 92 |
| 7017367 | DUCT, CONTROL | | | 88 |
| 7017368 | CAB ASSY | | | 66 |
| 7017369 | DOOR ASSY | | | 70 |
| 7017370 | BRACKET | | | 70, 71, 72 |
| 7017371 | HARNESS, MAIN | | | 304 |
| 7017372 | BRACKET | | | 306, 307, 308 |
| 7017373 | HARNESS, MAIN | | | 304 |
| 7017374 | HARNESS WARNING | | | 318 |
| 7017375 | RELAY | | | 294, 295, 296 |
| 7017376 | PLATE, NAME | | | 296 |
| 7017377 | HARNESS, CABIN | | | 298, 299, 300 |
| 7017378 | HOSE, FUEL | | | 370 |
| 7017379 | BRACKET | | | 370 |
| 7017380 | BRACKET | | | 310 |
| 7017381 | HORN, HIGH | | | 310 |
| 7017382 | HOSE, LIQUID | | | 82 |
| 7017383 | HOSE, LIQUID | | | 82 |
| 7017384 | ORING | | | 84 |
| 7017385 | CLIP | | | 84 |
| 7017386 | FRAME, MAIN | | | 44 |
| 7017387 | BONNET ASSY | | | 97, 98 |
| 7017388 | HINGE | | | 98 |
| 7017389 | FOAM | | | 98 |
| 7017390 | BRACKET | | | 98 |
| 7017391 | BOLT, SET | | | 98 |
| 7017392 | STRIKER | | | 98 |
| 7017393 | COVER ASSY | | | 103, 104 |
| 7017394 | SEAL | | | 104 |
| 7017395 | PLATE | | | 104 |
| 7017396 | PLATE | | | 104 |

**Code for disposition of old part number**

**A -- Use up**
**B -- Use on other application (See PNI)**
**C -- File PDR Report with Bobcat Parts Sales**
**D -- Part Number Error**



Page 525 - OSS# 2089524 - All rights reserved by Bobcat Company - 05/11/2012 - 06:30:39 - Produced by Ken Cook Co. with mediaioff

| Part No. | Description | Was | Code | Page |
|---|---|---|---|---|
| 7017397 | BOLT | | | 104 |
| 7017398 | COVER, SIDE | | | 104 |
| 7017399 | SIDE, ARCH ASSY | | | 104 |
| 7017400 | BRACKET | | | 104 |
| 7017401 | BRACKET | | | 104 |
| 7017402 | STRIP, WEATHER | | | 104 |
| 7017403 | BRACKET | | | 104 |
| 7017404 | BAFFLE | | | 104 |
| 7017405 | PLUG | | | 104 |
| 7017406 | SHIM | | | 106 |
| 7017407 | PIN, KNOCK | | | 106 |
| 7017408 | BRACKET, SWING | | | 138 |
| 7017409 | COVER, BAFFLE | 7006330 | A | 44 |
| 7018014 | PEDAL | | | 400 |
| 7019247 | O-RING | | | 246 |
| 7020395 | SEAL KIT | 7004597 | A | 118 |
| 7106627 | DECAL | | | 422, 424 |
| 7120570 | DECAL | | | 422, 424 |
| 7120571 | DECAL | | | 422 |
| 7120573 | DECAL | | | 422 |
| 7120574 | DECAL | | | 422 |
| 7120575 | DECAL | | | 422 |
| 7120577 | DECAL | | | 422 |
| 7120579 | DECAL | | | 422 |
| 7136738 | DECAL WARNING | | | 422, 434 |
| 7139000 | DECAL, USING CPLR | | | 438 |
| 7147433 | DECAL, ARM LONG | | | 424 |
| 7152748 | DECAL, FUEL DIESEL | | | 424 |
| 7157847 | DECAL, WARNING | | | 424 |
| 7168995 | DECAL, WARNING | | | 420 |
| 7168996 | DECAL, WARNING | | | 418 |
| 7168999 | DECAL, CAPACITY | | | 424 |
| 7169000 | DECAL, CAPACITY | | | 422 |
| 7169006 | DECAL, STAY CLEAR | | | 424 |
| 7169007 | DECAL, STAY CLEAR | | | 422 |
| 7169008 | DECAL, STD/ISO | | | 424 |
| 7169009 | DECAL, STAY CLEAR | | | 422 |
| 7169010 | DECAL, CONTROL | | | 418, 420 |
| 7169014 | DECAL, EXIT | | | 418, 420 |
| 7169015 | DECAL, CAPACITY | | | 422 |
| 7169018 | DECAL, FUSE | | | 418, 420 |
| 7169020 | DECAL, CAB TILT | | | 422, 424 |
| 7169023 | DECAL, LOGO | | | 422, 424 |
| 7169024 | DECAL, LOGO | | | 422, 424 |
| 7169030 | DECAL | | | 422, 424 |
| 7169031 | DECAL | | | 422, 424 |
| 7169032 | DECAL, LOGO | | | 422, 424 |
| 7169035 | DECAL, MODEL | | | 422, 424 |
| 7169036 | DECAL, BOOM SWING | | | 418, 420 |

**Code for disposition of old part number**

**A -- Use up**

**B -- Use on other application (See PNI)**

**C -- File PDR Report with Bobcat Parts Sales**

**D -- Part Number Error**



Page 526 - OSS# 2089524 - All rights reserved by Bobcat Company - 05/11/2012 - 06:30:39 - Produced by Ken Cook Co. with mediaioff

| Part No. | Description | Was | Code | Page |
|---|---|---|---|---|
| 7169037 | DECAL, AUX HYD | | | 422, 424 |
| 7171655 | COUPLER | | | 436 |
| 7171769 | KIT, QUICK COUPLER | | | 437, 438 |
| 7173020 | KIT, QUICK COUPLER | | | 435, 436 |
| 7174157 | COUPLER | | | 438 |
| 7174309 | DECAL | | | 436 |
| 7174584 | KIT, TRACK RUBBER | | | 455, 456 |
| 7174585 | KIT, TRACK STEEL | | | 457, 458 |
| 7174629 | HARNESS, BEACON/STROBE | | | 440, 442, 452, 454 |
| 7174734 | KIT, STROBE LIGHT | | | 451, 452 |
| 7174742 | KIT, BEACON LIGHT | | | 439, 440 |
| 7176910 | KIT, FOGS/ROOF GUARD | | | 447, 448 |
| 7178235 | KIT, 3RD AUXILIARY HYDRAULICS | | | 463, 464 |
| 7178237 | KIT, AUX 3RD | | | 461, 462 |
| 7178239 | KIT, LOAD HOLD BLADE | | | 415, 416 |
| 7178241 | KIT, ARM LONG | | | 379, 380 |
| 7178243 | KIT, ARM | | | 377, 378 |
| 7178245 | KIT, AUX 2ND | | | 459, 460 |
| 7178247 | KIT, ALARM MOTION | | | 433, 434 |
| 7178251 | KIT, PUMP TRANSFER | | | 425, 426 |
| 7178255 | KIT, ROOF GUARD | | | 449, 450 |
| 7179686 | KIT, BEACON LIGHT | | | 441, 442 |
| 7179688 | KIT, STROBE LIGHT | | | 453, 454 |
| 7188069 | KIT, SEATBELT | | | 443, 444 |
| 7189180 | DECAL SERVICE | 7169002 | C | 424 |
| 7189181 | DECAL | 7169003 | C | 422 |

**Code for disposition of old part number**

**A -- Use up**
**B -- Use on other application (See PNI)**
**C -- File PDR Report with Bobcat Parts Sales**
**D -- Part Number Error**



Page 527 - OSS# 2089524 - All rights reserved by Bobcat Company - 05/11/2012 - 06:30:39 - Produced by Ken Cook Co. with mediaioff