VOLVO
Construction Equipment

Service Information

Document Title: **Frame and track unit, description**	Function Group: **700**	Information Type: **Service Information**	Date: **2015/9/15**
Profile: **EXC, EC220D LR [GB]**			

Frame and track unit, description

Upper frame type

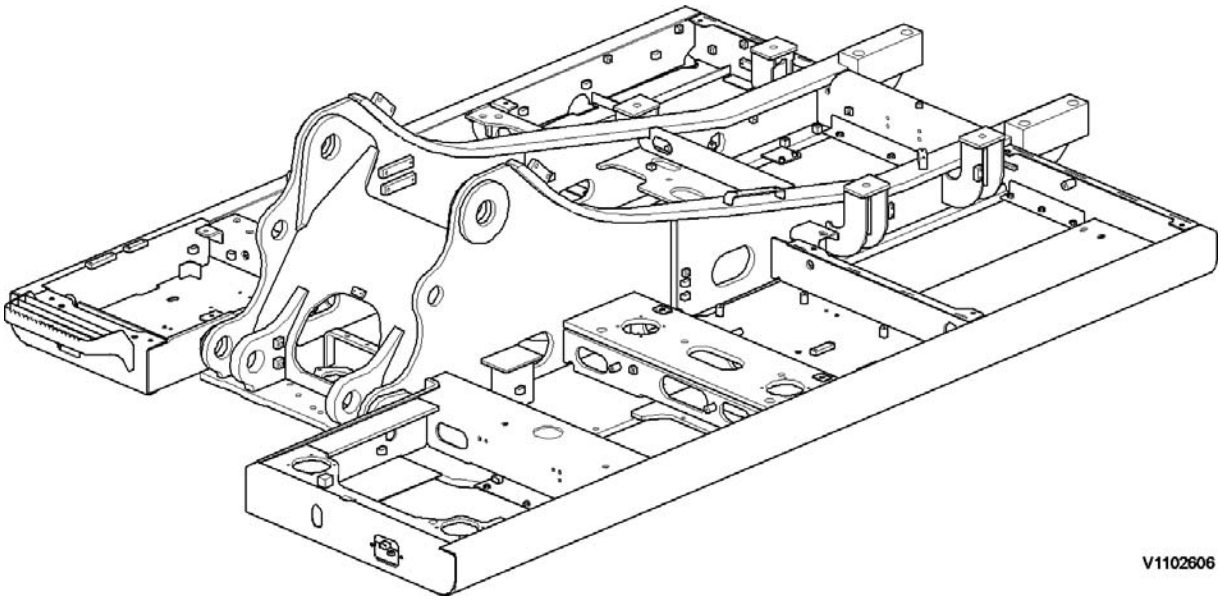

Figure 1
Upper frame

- Upper frame, weight: 1810 kg (3990 lbs)

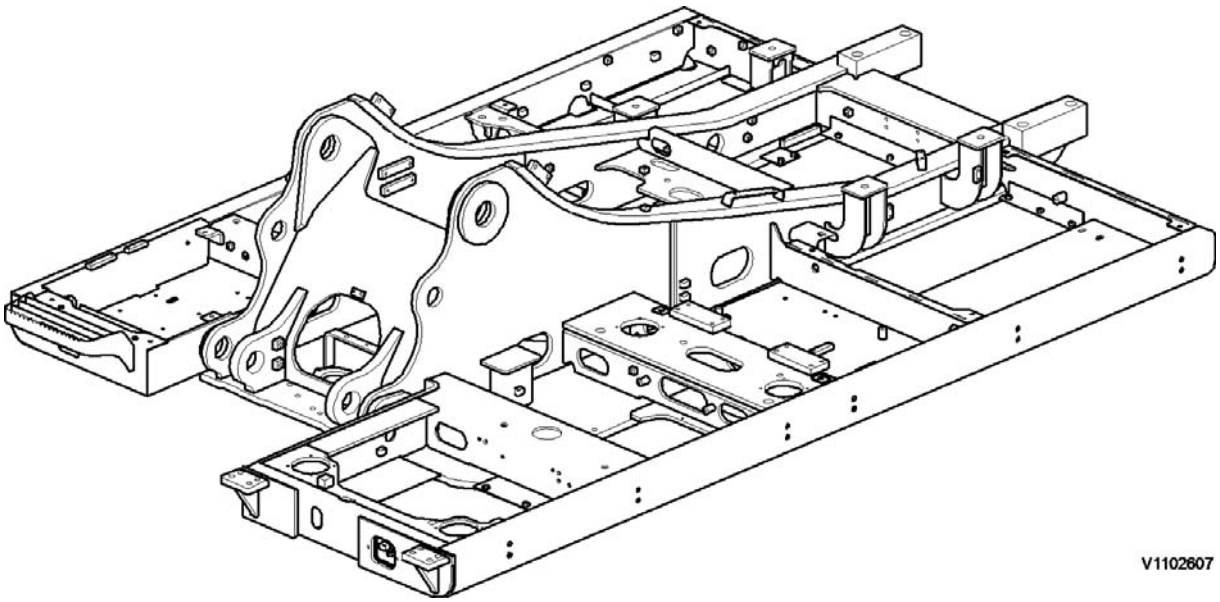

Figure 2
Upper frame

- With FOG sips, weight: 1840 kg (4057 lbs)

Lower frame type

NOTE!

See 7181 Undercarriage, description.

Document Title: **Superstructure, removing**	Function Group: **710**	Information Type: **Service Information**	Date: **2015/9/15**
Profile: **EXC, EC220D LR [GB]**			

Superstructure, removing

Op nbr 710-001

1. Park the machine in the service position D. See 091 Service positions.
   Position the machine on flat, firm and level ground, free from any obstructions or interference.
   When the engine is running, the hydraulic line is under high pressure. Stop the engine, and remove the residual pressure inside the hydraulic line by operating the control lever smoothly 3-4 timeswith the ignition key at "ON" position. Turn the ignition key to "OFF" position.

2. Remove the hydraulic oil hoses, stopper screw, seal cover fixing screws, clamp and seal covers from center passage.

   NOTICE

   When a hose has been disconnected, plug both the hose and the connection immediately. The hoses should be marked for correct connection.

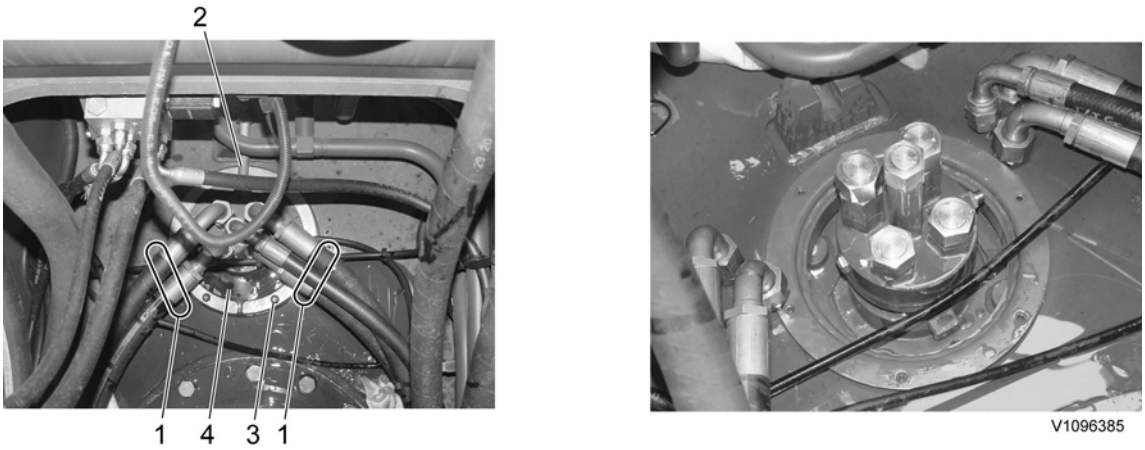

Figure 1
Removal, hydraulic hoses

1. Hydraulic oil hoses
2. Stopper screw
3. Seal cover fixing screw
4. Seal cover

3. Remove the two lifting points covers from the top of counterweight. See 716 Counterweight, removing.



Figure 2
Lifting points type

4. **WARNING**
Risk of personal injury. Very heavy object.

WARNING
The parts are heavy. Take appropriate safety cautions when handling them.

WARNING
Never lift the machine with a person in the cab.

WARNING
Always use classified cables, lifting straps, shackles and hooks with sufficient lifting capacity.

Hold the superstructure with wire ropes (cables).
Check the superstructure weight. See 710 Machine weight, specifications
Check the wire ropes length (cables). Refer to the operators manual for further operation or decal in cab. See Operating instructions, Transporting machine, Lifting machine

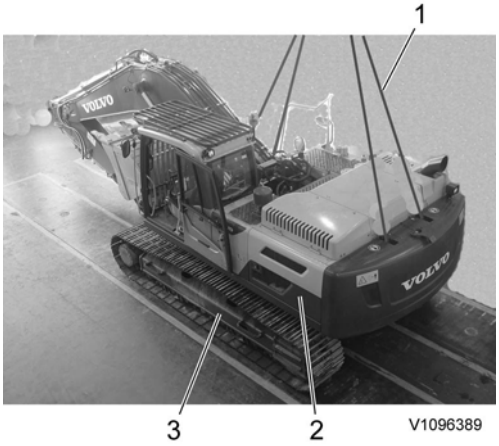

Figure 3
Lifting superstructure

1. Wire rope (cable)
2. Superstructure
3. Undercarriage

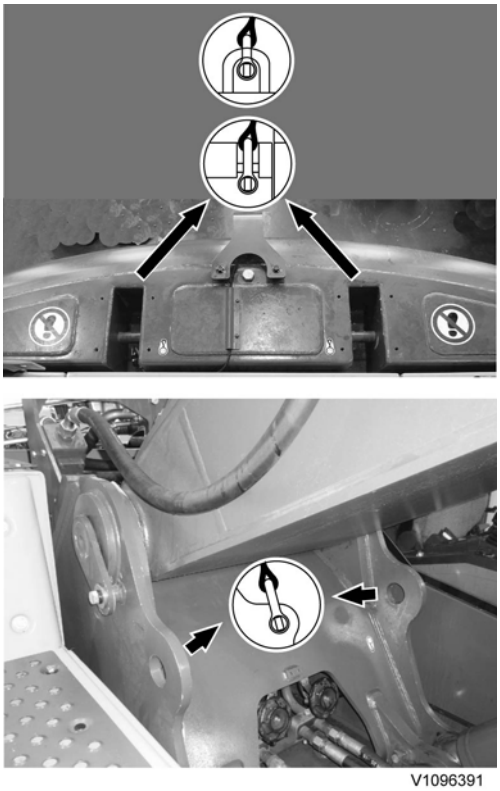

Figure 4
Lifting points
NOTE!
As shown in the decal for lifting, connect lifting wire ropes (cables) or slings with sufficient strength for the machine weight at the lifting points correctly.

After installation of all hoisting equipment, lift the machine a little to check its balance, if satisfactory, lift it slowly and evenly.

5. Remove the superstructure mounting screws from the swing ring gear.

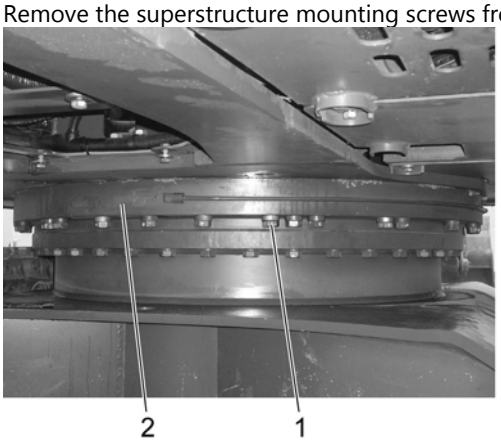



Figure 5
Removal, superstructure mounting screws

1. Superstructure mounting screw
2. Swing ring gear

6. **WARNING**

The superstructure is heavy. Pay attention to safe footing and the area around the crane before proceeding to remove or install the superstructure.

Remove the superstructure slowly and lower onto the 4 jacks safely.
Maintain good visibility of the machine at all times during the lift. And continuously check that the machine is level.

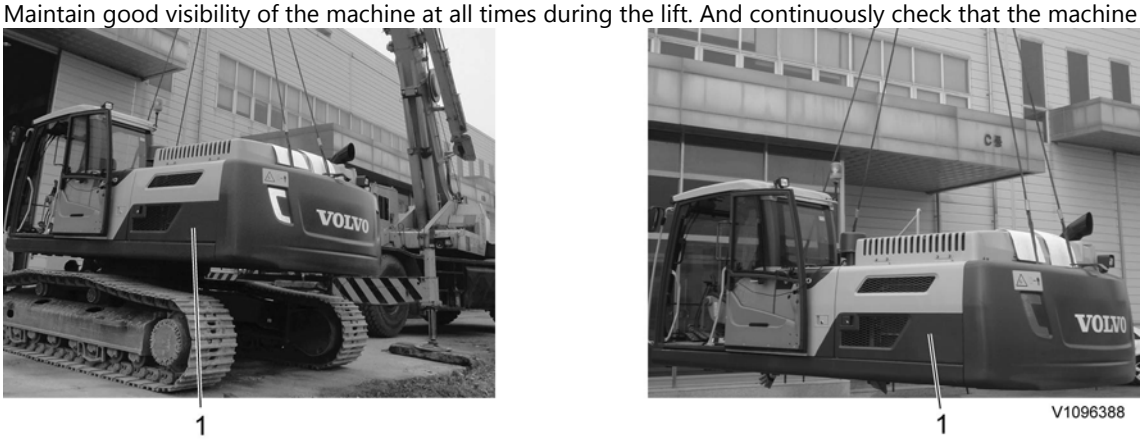

Figure 6
Removal, lifting superstructure (1)

Document Title: **Superstructure, installing**	Function Group: **710**	Information Type: **Service Information**	Date: **2015/9/15**
Profile: **EXC, EC220D LR [GB]**			

Superstructure, installing

Op nbr 710-002

1. **WARNING**
   Risk of personal injury. Very heavy object.

   WARNING
   The parts are heavy. Take appropriate safety cautions when handling them.

   WARNING
   Never lift the machine with a person in the cab.

   WARNING
   Always use classified cables, lifting straps, shackles and hooks with sufficient lifting capacity.

   Hold the superstructure with wires (cables).
   Check the superstructure's weight. See 710 Machine weight, specifications.
   Wires' length (cables). Refer to the Operator's Manual for further operation or cab in lifting machine decal. See Operating instructions, Transporting machine, Lifting machine.

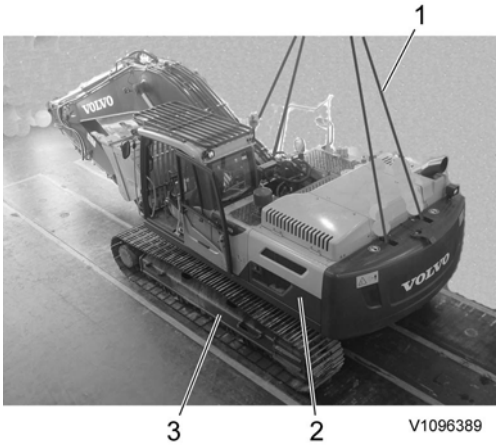

Figure 1
Lifting superstructure

1. Wire (cable)
2. Superstructure
3. Undercarriage

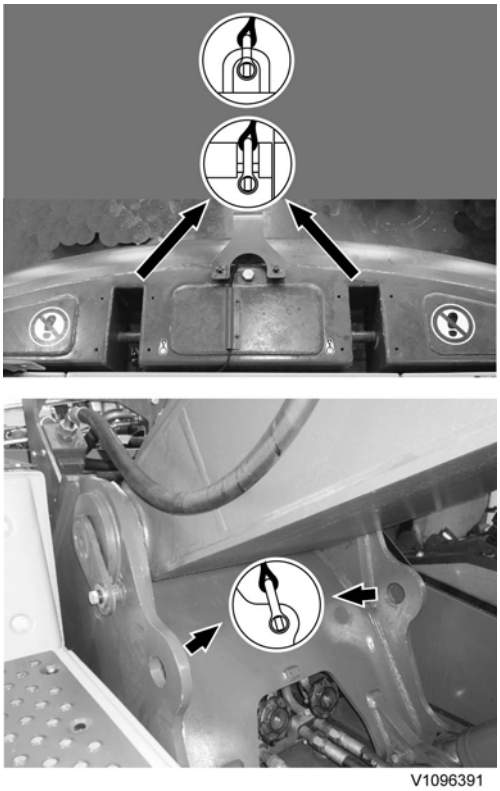

Figure 2
Lifting points
NOTE!
As shown in the decal for lifting, connect lifting wires (cables) or slings with sufficient strength for the machine weight correctly at the lifting points.

After installation of all hoisting equipment, lift the machine a little to check its balance, if satisfactory, lift it slowly and evenly.

2. Clean the mounting surface thoroughly.
   Before replacing the superstructure, apply sealing compound to the mounting surface.
   NOTE!
   If impurities remain, adhesion with bond agent will not be good.

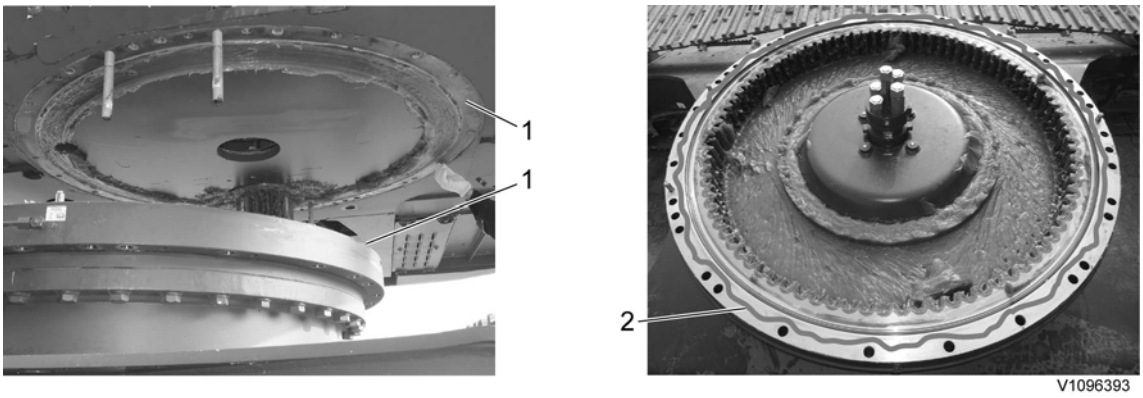

Figure 3
Clean the mounting surface

1. Clean the mounting surface
2. Sealing compound

3. **WARNING**

The superstructure is heavy. Pay attention to safe footing and the area around the crane before proceeding to remove or install the superstructure.

Lift the superstructure and install it to the swing ring gear.
Maintain good visibility of the machine at all times during the lift. Check continuously that the machine is level.
NOTE!
Match the "S" mark (soft zone position) on inner race and the plug on outer race.

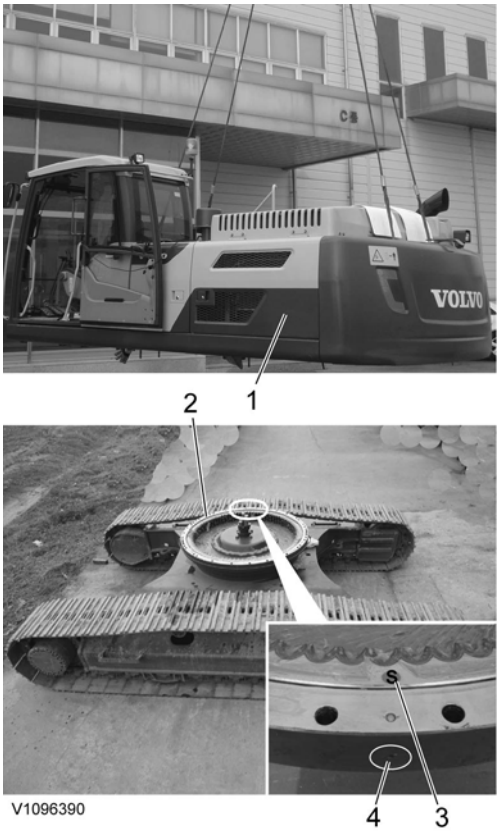

Figure 4
Installation, superstructure

1. Superstructure
2. Swing ring gear
3. "S" mark inner race (soft zone position)
4. Plug outer race

4. Install the superstructure's attaching bolts for the swing ring gear. Tightening torque. See 492 Swing ring gear, description. Apply Loctite #277 or equivalent locking fluid.



Figure 5
Installation, superstructure attaching bolts

1. Superstructure, attaching bolt
2. Swing ring gear

5. Remove the wires (cables) at the lifting points.
   Install the seal covers, seal cover bolts, stop screw, clamp, and hydraulic oil hoses for the center passage.
   Tightening torque, seal cover bolt: 22.6 ±1.96 Nm (2.3 ±0.2 kgf m) (16.6 ±1.4 lbf ft)
   Apply Loctite #277 or equivalent locking fluid.

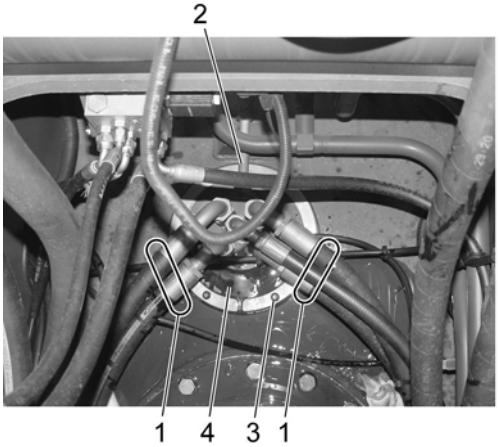



Figure 6
Installation, hydraulic hoses

1. Hydraulic oil hoses
2. Stop screw: 242.2 ±24.5 Nm (24.7 ±2.5 kgf m) (178.3 ±18 lbf ft)
3. Seal cover bolts
4. Seal cover
5. Stop screw: 15 mm (0.59 inch)

6. Install the two lifting points' covers on the top of counterweight. See tightening torque. 716 Counterweight, tightening torques

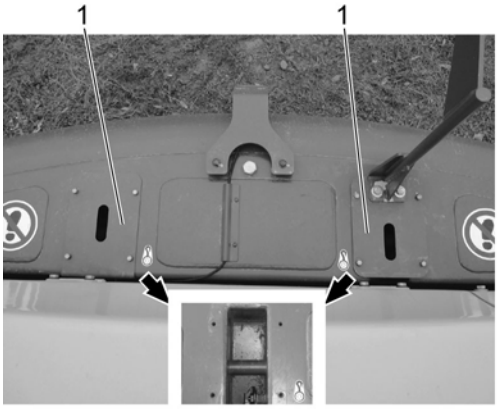



Figure 7
Lifting points type

7. Check the function of the swing, hydraulic oil hoses, and swing ring gear's attaching bolts.

VOLVO
Construction Equipment

Service Information

Document Title: **Tightening torque, specifications**	Function Group: **715**	Information Type: **Service Information**	Date: **2015/9/15**
Profile: **EXC, EC220D LR [GB]**			

Tightening torque, specifications

Protection plates

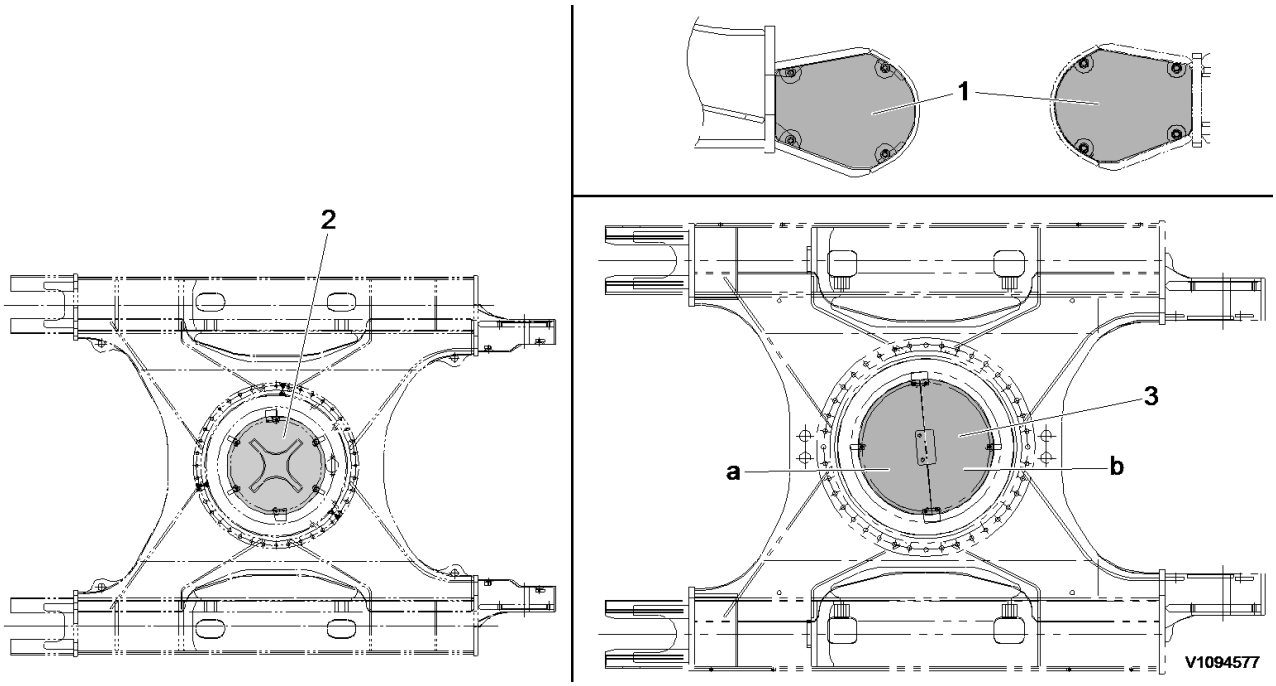

Figure 1
Machine view, protecting plate

Tightening torque: Nm (kgf m) (lbf ft)

No.	Items	Weight: kg (lbs)	Tightening torque: Nm (kgf m) (lbf ft)
1	Track motor protection cover (LH, RH)	LH: 11.8 (26) RH: 11.8 (26)	700 Undercarriage, tightening torque
2	Undercover standard (mud) Apply Loctite #277 or equivalent locking fluid	20.2 (44.5)	265 ±29 (27 ±3) (195 ±22)
3	Undercover heavy duty (mud) Apply Loctite #277 or equivalent locking fluid	a: 28.4 (62.6) b: 22.1 (48.7)	

Document Title: **Counterweight, description**	Function Group: **716**	Information Type: **Service Information**	Date: **2015/9/15**
Profile: **EXC, EC220D LR [GB]**			

Counterweight, description

Fabrication type

The counterweight is a counterbalancing weight that is located at the rear of the machine. The counterweight is designed in order to give the machine extra weight in the back end in order to counter the weight that is located at the front of the machine, in particular the boom and dipper arm.

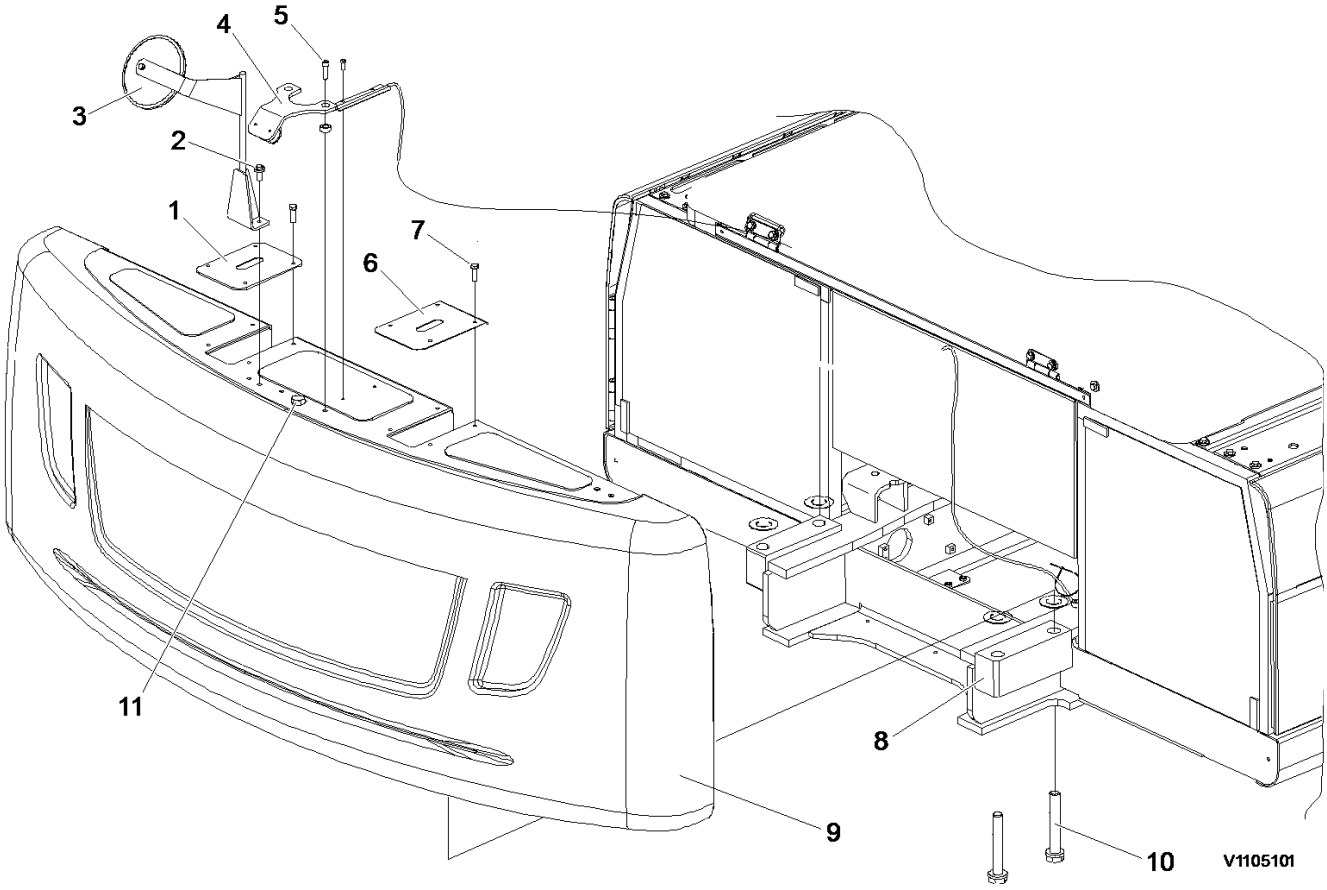

Figure 1
Counterweight, structure

1	Cover	5	Screws	9	Counterweight
2	Screws	6	Cover	10	Screws
3	Reflector assembly	7	Screws	11	Screw
4	Camera assembly	8	Upper frame		

Document Title: **Counterweight, replacing**	Function Group: **716**	Information Type: **Service Information**	Date: **2015/9/15**
Profile: **EXC, EC220D LR [GB]**			

Counterweight, replacing

Fabrication type

Op nbr 716-003

WARNING

The parts are heavy. Take appropriate safety cautions when handling them.

1. Park the machine in the service position B. See 091 Service positions.
2. Remove the two lifting points screws, covers and a reflect bracket from the top of counterweight.

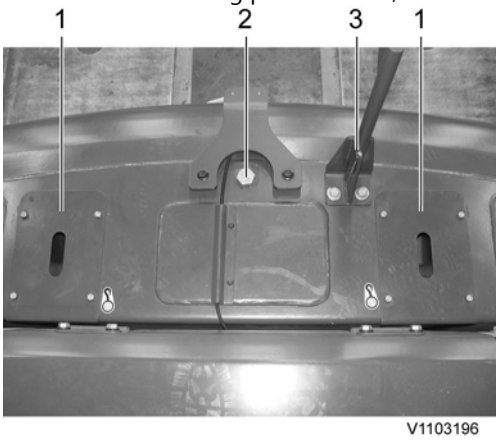

Figure 1
Removal, lifting points covers

1. Lifting points covers
2. Eye bolt lifting points
3. Reflect bracket

3. Remove the wire harness connector.

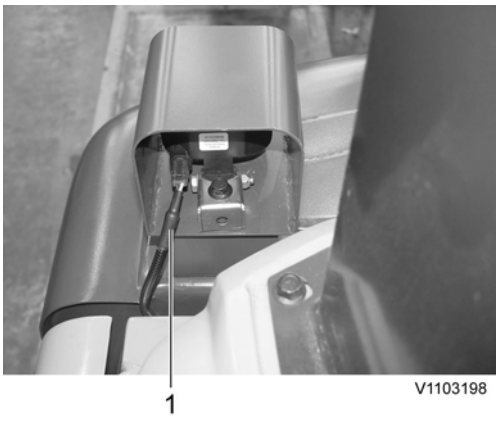

Figure 2
Removal, wire harness connector

1. Working light wire harness connector

4. Hold the counterweight with cables and remove the counterweight. See counterweight weight 716 Counterweight, specifications

NOTE!

For fabrication type, the rate of the length for lifting cables and balance cables is 1 : 0.7.

Remove the four mounting screws, using socket wrench or power wrench. See 716 Counterweight, tightening torques.

Maintain the clearance. See 716 Counterweight, tightening torques.

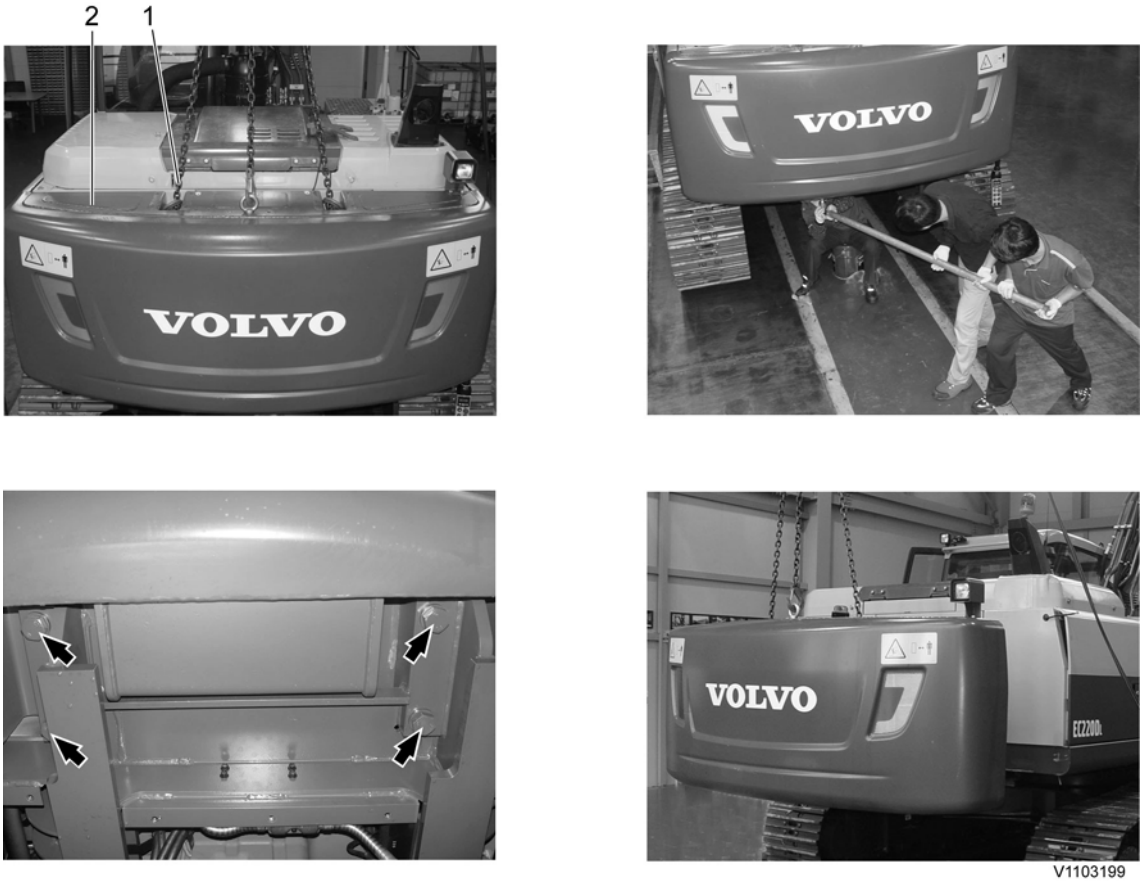

Figure 3
Removal, mounting screw

1. Lifting cable
2. Counterweight

5. Move and assemble the working light and rear view camera of removed the counterweight to the new counterweight.

WARNING

The parts are heavy. Take appropriate safety cautions when handling them.

6. Hold the counterweight with cable and install the counterweight. See counterweight weight 716 Counterweight, specifications

NOTE!

For fabrication type, the rate of the length for lifting cables and balance cables is 1 : 0.7.

Install the four mounting screws, using socket wrench or power wrench. See 716 Counterweight, tightening torques.

Maintain the clearance. See 716 Counterweight, tightening torques.

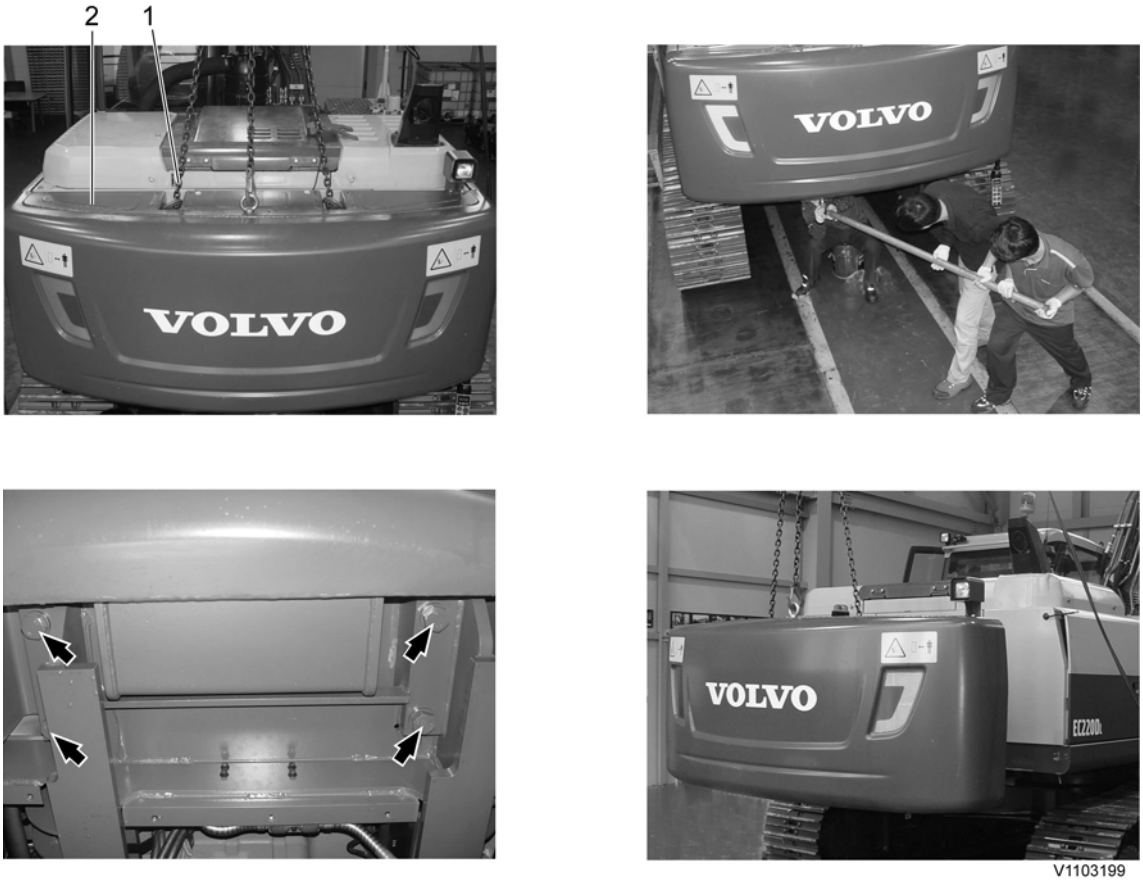

Figure 4
Installation, mounting screw

1. Lifting cable
2. Counterweight

7. Install the wire harness connector.

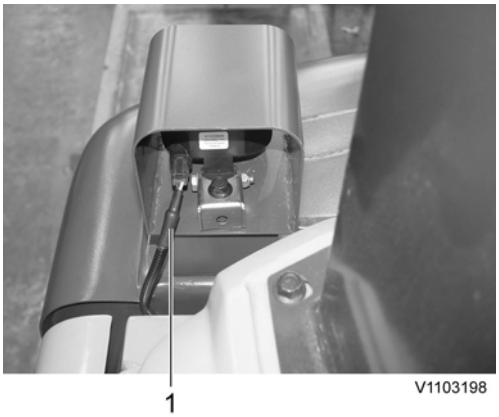

Figure 5
Installation, wire harness connector

1. Working light wire harness connector

8. Install the two lifting points covers, screws and a mirror bracket from the top of counterweight.

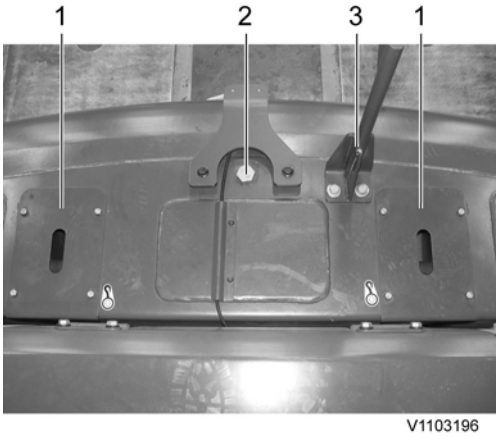

Figure 6
Installation, lifting points covers

1. Lifting points cover
2. Eye bolt lifting points
3. Reflect bracket

Thank you very much for your reading.

Please Click Here Then Get More Information.