RUTHZIL TRATOR COMERCIAL DE PEÇAS LTDA 11 97083-6812 ROLANDO CITRANGULO

EC55B

Ref. No. VOE 74H9920019

Construction Equipment

RECYCLABLE PAPER

LABEL FOR STEELBINDER

PARTS CATALOG
EC55B

CUT HERE

PARTS CATALOG VOLVO EC55B

PARTS CATALOG

EC55B

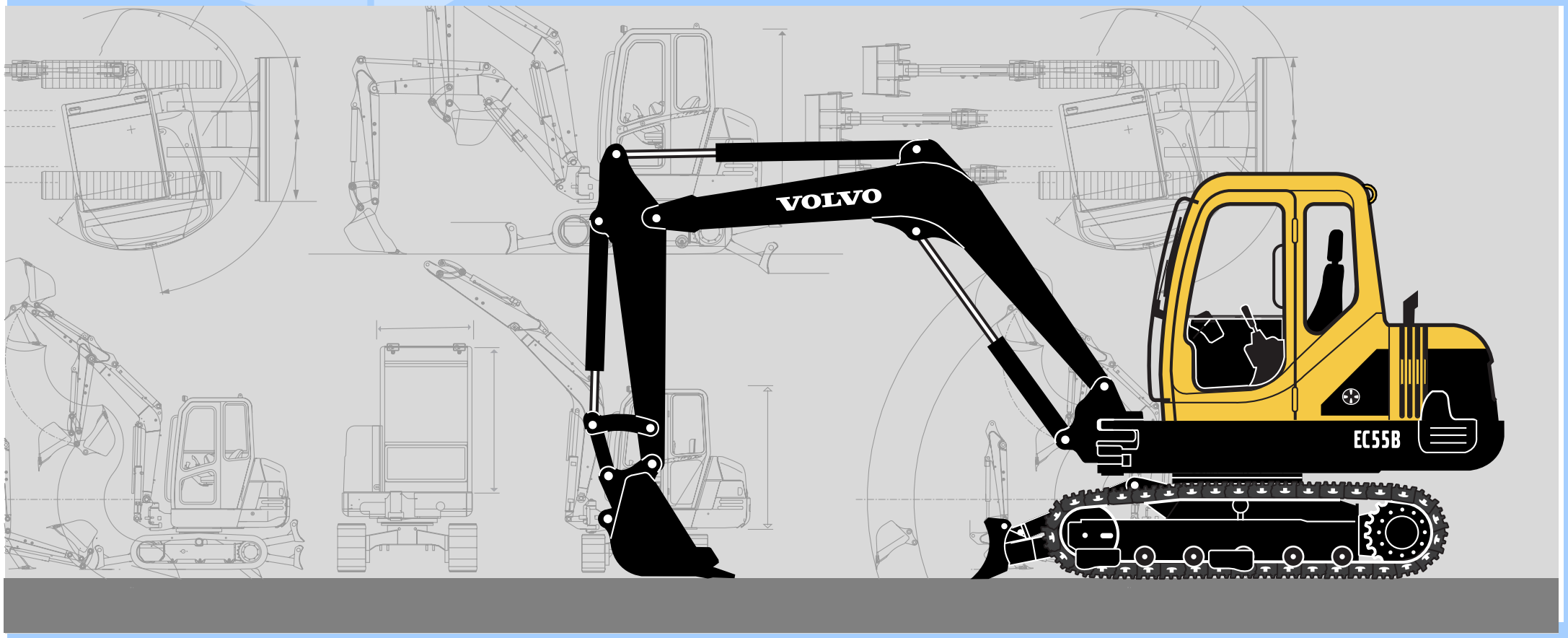

PARTS CATALOG

EC55B

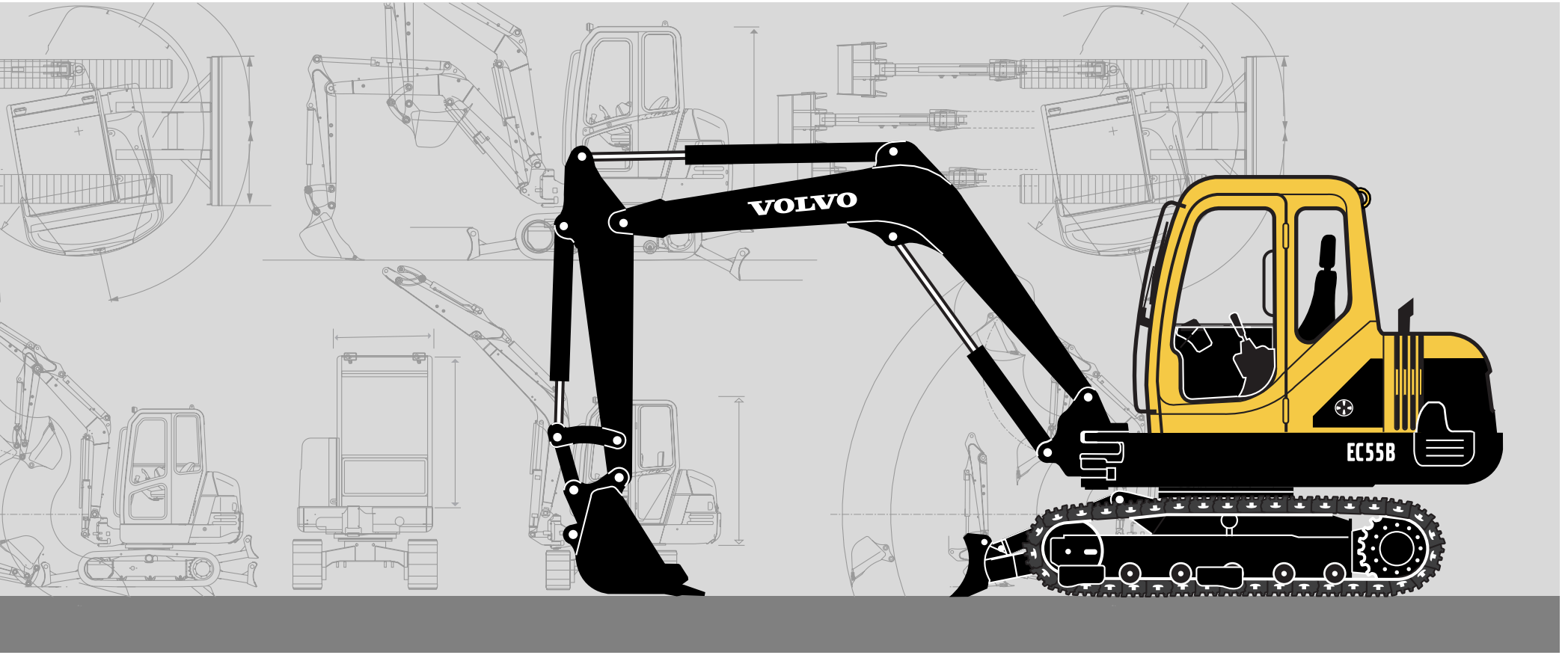

Publ. No. VOE 74H9920019

VOLVO

Construction Equipment

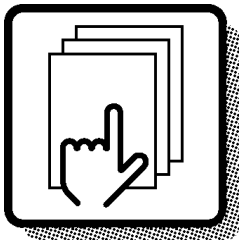

1

Preface and instructions
Préface et instructions
Vorwort und Anweisungen
머리말 및 지침
Prefacio e instrucciones

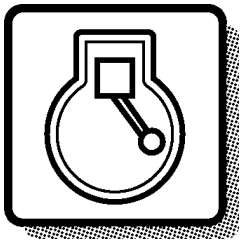

2

Engine
Moteur
Motor
엔진
Motor

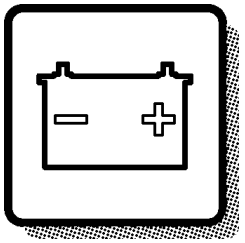

3

Electrical systems and instruments
Système électrique et instruments
Elektrisches System und Instrumente
전기장치 및 계기판
Sistema eléctrico e instrumentos

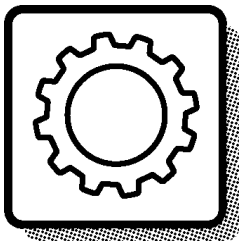

4

Power transmission
Transmission de force
Kraftübertragung
트랜스미션
Transmisión de fuerza

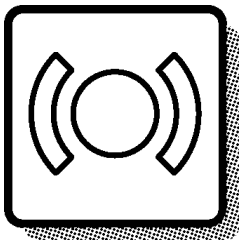

5

Track brake
Frein de déplacement
Fahrbremse
브레이크
Freno de transporte

Frame and crawler unit
Bâti et unité des chenilles
Rahmen und Fahrwerk
프레임 및 언더케리지
Bastidor y unidad de orugas

7

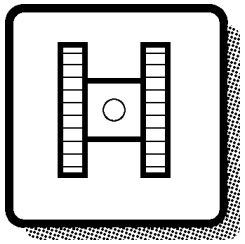

Body with associated parts
Carrosserie avec détails
Aufbau mit Zubehörteilen
본체 구성품
Carroceria con detalles

8

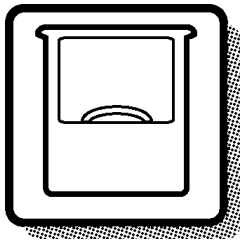

Miscellaneous equipment
Equipments divers
Übrige Ausrüstung
유압 및 작업장치
Equipo diverso

9

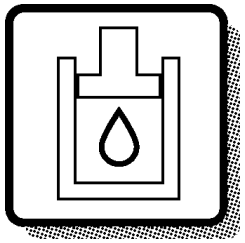

Numerical index
Répertoire numérique
Nummernverzeichnis
부품번호 색인
Indice numérico

10

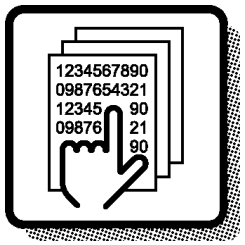

1	2	3	4	5	7	8	9	10	

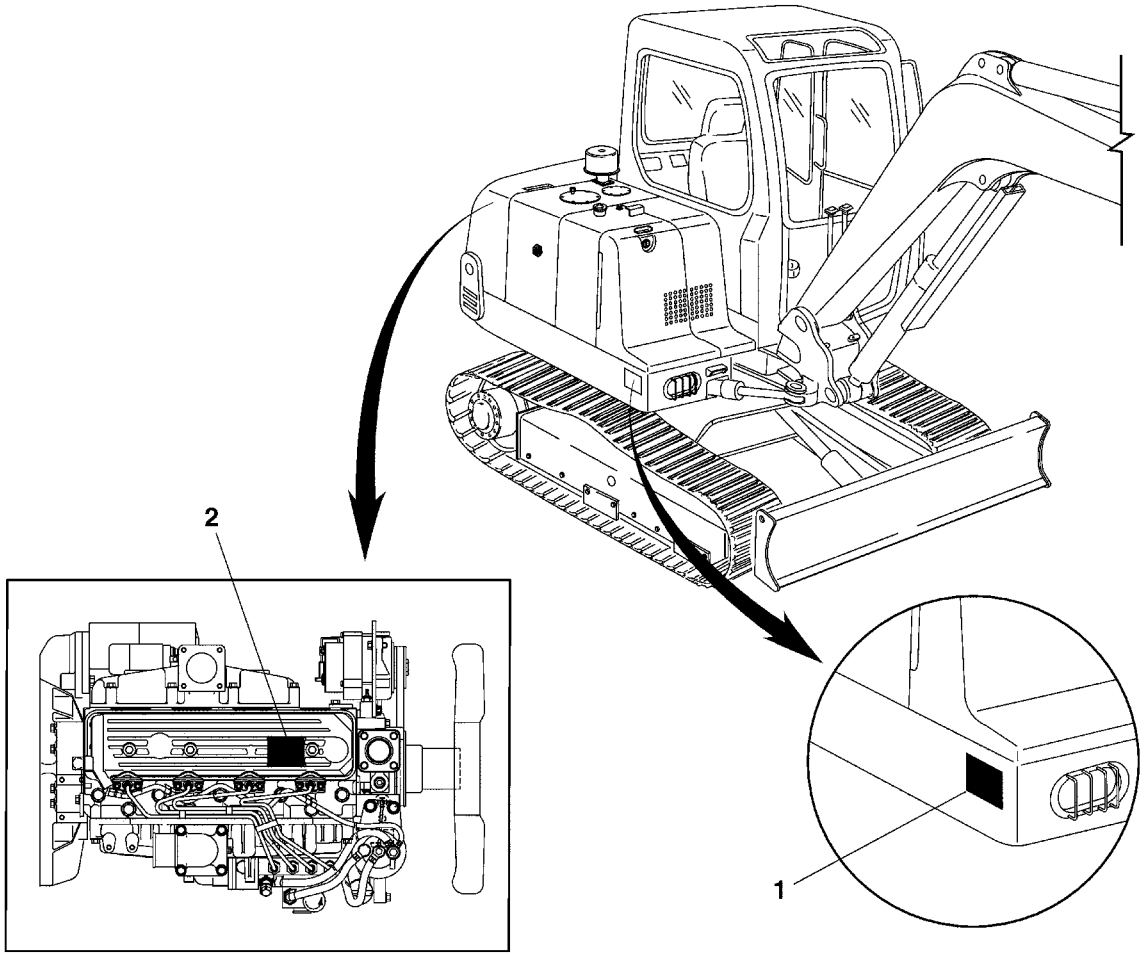
2
1

GBR	FRA	DEU	KOR	ESP
1 Product sign plate	1 Enseigne de produit	1 Produktschild	1 장비 명판 (일련번호)	1 Muestra del producto
2 Engine sign plate	2 Enseigne de moteur	2 Motorschild	2 엔진 명판	2 Muestra de motor

Only genuine parts are presented in this catalogue. These parts have been subjected to the necessary function and endurance tests, and they comply with the high quality and safety requirements that have been set for Volvo Construction Equipment. You should note that warranties do not cover damages that are caused or aggravated by the fact that a non-genuine part was fitted.

The illustrations shown in the catalogues should not be used as assembly or workshop instructions. Separate literature for the various specific subject areas is available for that purpose.

The owner of the machine or equipment should state the model designation, manufacturing number, part number, quantity, and the name, or description, of the part when ordering parts.

For location of the model and engine designation plates, etc, see page 4.

Market-adapted equipment entered in catalogue, can be seen on page 26.

See page 12 for a ”Catalogue Guide” on how to use the parts catalogue.

See page 22 for table of abbreviations.

This catalogue has been produced by Volvo Construction Equipment Korea Ltd. Customer Support. If you have any point of views regarding the catalogue, or if you detect any errors in the catalogue, please take a copy of the page in question, indicate the error(s), and send it to us at the following address:

Volvo Construction Equipment Korea Ltd.
Customer Support
214-1, Doil-dong, Pyongtaek-city, Kyunggi-do, Korea
Telefax: +82 31 610 7819
E-mail: vce.parts.catalog@volvo.com

EXCAVATOR VOLVO EC55B
This catalogue lists the spare parts for Excavator EC55B.

BASIC MACHINE
PROD NO 8278796 EC55B, KOR, SER NO 34476 -
PROD NO 8278796 EC55B, CHN, SER NO 50130 -

ENGINE
Part No. 14540360, 4TNV94L-XVC1U, Emission Certificated from EPA
Part No. 14540360, 4TNV94L-XVC1E, Emission Certificated from EU
Part No. 14540365, 4TNV94L-XVC1K, Without label

BUCKETS
Bucket GP. ESCO. 0,15/0,176 - F24
Description:
GP = General purpose. (RB)= Rock bucket.
ESCO = Type of bucket tooth, Esco.
0,15 = Volume CECE cubic meter.
0,176 = Volume SAE cubic meter.
S1 = Quick fit bucket.
F24 = Direct-mounted (pin-on) bucket.

TRACK ASSEMBLY
Track TRK 380SR X 39
Description:
TRK = Track
380 = Width of track
S = Symmetrical track
R = Clearing hole
39 = Number of track shoes

FRA

Seules les pièces d'origine sont présentées dans les catalogues des pièces de rechange. Toutes ces pièces ont été soumises à des tests de fonctionnement et de longévité pour être conformes aux exigences sévères de qualité et de sécurité posées par Volvo Construction Equipment. Notez que les garanties ne couvrent pas les dégâts et les dommages causés par le montage de pièces autres que des pièces d'origine.

Les illustrations dans le catalogue ne doivent pas être utilisées comme notice de montage ni comme instructions d'atelier. Pour ceci, nous vous renvoyons à la documentation spécifiquement éditée dans ce but.

Pour toute commande de pièces de rechange, indiquez la désignation du modèle, le numéro de fabrication, le numéro de référence, la quantité ainsi que la désignation del la pièce.

Le placement des plaques de designation de modèle et de moteur etc. ressort de la figure ci-contre 4.

Equipment adapté au marché et indiqué dans la catalogue, priére de voir la liste en page 26.

Guide pour l'utilisation de catalogues de pièces de rechange, voir page 14.

Pour la liste des abréviations employées, prière de voir en page 22.

Ce catalogue est édité par Volvo Construction Equipment Korea Ltd. Customer Support. Si vous avez des commentaires ou si vous découvrez des erreurs dans ce catalogue, nous vous serions reconnaissants de bien vouloir photocopier cette page, de la remplier et de nous la renvoyer.

Volvo Construction Equipment Korea Ltd.Customer Support
214-1, Doil-dong, Pyongtaek-city, Kyunggi-do, Korea
Telefax: +82 31 610 7819
E-mail: vce.parts.catalog@volvo.com

PELLE HYDRAULIQUE VOLVO EC55B
Ce catalogue contient les pièces de rechange pour la pelle hydraulique EC55B.

MACHINE DE BASE
NO DE RÉF. 8278796 EC55B, KOR, NO DE SÉRIE 34476 -
NO DE RÉF. 8278796 EC55B, CHN, NO DE SÉRIE 50130 -

MOTEUR
Numéro de référence 14540360, 4TNV94L-XVC1U, Émissions homologuées par l'EPA
Numéro de référence 14540360, 4TNV94L-XVC1E, Émissions homologuées par l'UE
Numéro de référence 14540365, 4TNV94L-XVC1K, Sans label

GODET RÉTRO
Godet rétro GP.
ESCO. 0,15/0,176 - F24
Description:
GP = Utilisation générale. (RB)= Godet roche.
ESCO = Type de dent, Esco.
0,15 = Volume CECE en mètres cubes.
0,176 = Volume SAE en mètres cubes.
S1 = Porte-outil à accouplement rapide
F24 = Montage direct

CHENILLES
Chenilles TRK 380SR x 39
Description:
TRK = Chenilles
380 = Largeur des patins
S = Patins symétriques
R = Orifice de nettoyage
39 = Nombre de patins

In den Ersatzteilkatalogen sind nur Originalteile verzeichnet. Diese Teile haben die notwendigen Funktions- und Lebensdauertests durchlaufen und erfüllen die hohen Qualitäts- und Sicherheitsanforderungen von Volvo Construction Equipment. Beachten Sie bitte, dass die Garantien keine Schäden umfassen, die durch die Montage eines fremden Teils verursacht oder verschlimmert wurden.

Die Abbildungen in dem Katalog dürfen nicht als Montageanweisungen oder Werkstattanleitungen verwendet werden. Wir verweisen statt dessen auf die separate Literatur für diesen Zweck.

Der Maschinenbesitzer muss bei der Bestellung von Ersatzteilen die Modellbezeichnung, Fabriksnummer, Artikelnummer sowie Anzahl und Bezeichnung des Teils angeben.

Die Anbringung der Schilder für Modell- und Motorbezeichnung usw. geht aus dem Bild auf Seite 4 hervor.

Für den Markt angepasste Ausrüstung wurde in den Katalog aufgenommen, Seite 26.

Die Anweisung auf Seite 16 hilft Ihnen sich im Ersatzteilkatalog zurechtzufinden.

Abkürzungsverzeichnis, siehe Seite 22.

Dieser Katalog wurde von Volvo Construction Equipment Korea Ltd. Customer Support AB herausgegeben. Wenn Sie Kommentare zu diesem Katalog haben oder Fehler darin finden, kopieren Sie bitte die entsprechende Seite, machen Sie eine Notiz und schicken Sie diese ein an:

Volvo Construction Equipment Korea Ltd.
Customer Support
214-1, Doil-dong, Pyongtaek-city, Kyunggi-do, Korea
Telefax: +82 31 610 7819
E-mail: vce.parts.catalog@volvo.com

RAUPENBAGGER VOLVO EC55B
Dieser Katalog enthält ein Ersatzteilverzeichnis für Raupenbagger EC55B.

GRUNDMASCHINE
PROD. NR 8278796 EC55B, KOR, SERIENNR. 34476 -
PROD. NR 8278796 EC55B, CHN, SERIENNR. 50130 -

MOTOR
Bestellnummer 14540360, 4TNV94L-XVC1U, Emissionszertifiziert gemäß EPA
Bestellnummer 14540360, 4TNV94L-XVC1E, Emissionszertifiziert gemäß EU
Bestellnummer 14540365, 4TNV94L-XVC1K, Without label

LÖFFEL
Tieflöffel GP. ESCO. 0,15/0,176 - F24
Beschreibung:
GP = Allgemeiner Einsatz. (RB) = Felslöffel.
ESCO = Aufsteckzahn, Esco.
0,15 = Fassungsvermögen in CECE Kubikmeter.
0,176 = Fassungsvermögen in SAE Kubikmeter.
S1 = Für Schnellwechsler
F24 = Direktmontierter Löffel.

KETTENBAND
Kettenband TRK 380SR X 39
Beschreibung:
TRK = Kettenband
380 = Bodenplattenbreite
S = Symmetrische Bodenplatten
R = Reinigungsloch
39 = Anzahl Platten

KOR

이 부품카탈로그에 수록된 부품은 순정부품으로서 성능검사 및 내구성 시험을 거쳤고 또한 당사의 건설기계 안전 및 고품질 검사 규정에 합격한 부품입니다 . 비순정부품을 장착하여 발생하는 모든 고장 및 성능 저하에 대한 문제를 당사에서는 보증하지 않습니다 .

이 부품카탈로그에 사용한 입체 그림은 조립용이나 정비 목적으로 사용할 수 없으며 각 쪽에 설명된 내용은 그 입체 그림에 관한 정보로 활용할 수 있습니다 .

부품을 주문하실 때는 모델명 , 장비 일련번호 , 부품번호 , 필요 수량 및 부품 명칭을 알려 주셔야 합니다 .

모델명 , 장비 일련번호 및 엔진 일련번호가 각인된 위치에 대해서는 4 쪽을 참고 하십시오 .

부품카탈로그에 소개되어 있는 판매사양은 26 쪽을 참고 하십시오 .

부품카탈로그를 보는 방법은 18 쪽을 참고 하십시오 .

부품 명칭 약어에 대해서는 22 쪽 약어 일람표를 참고 하십시오 .

이 부품카탈로그는 볼보건설기계코리아㈜ 서비스엔지니어링팀에서 제작 하였으며 , 부품카탈로그와 관련하여 어떤 오류를 발견 하시면 , 해당 오류 내용을 표시하여 아래 주소로 보내 주시기 바랍니다 .

볼보건설기계코리아㈜
서비스엔지니어링팀
경기도 평택시 도일동 214-1 (우편번호 459-090)
FAX : 031 610 7819
이메일 : vce.parts.catalog@volvo.com

볼보굴삭기 EC55B
이 부품카탈로그는 EC55B 의 서비스 부품목록을 수록하고 있습니다 .

장비본체 (BASIC MACHINE)
제조번호 : 8278796 , EC55B, 한국공장 일련번호 34476 호기부터 ~
제조번호 : 8278796 , EC55B, 중국공장 일련번호 50130 호기부터 ~

엔진 (ENGINE)
부품번호 : 14540360, 형식 : 4TNV94L-XVC1U, EPA 라벨 부착
부품번호 : 14540360, 형식 : 4TNV94L-XVC1E, EU 라벨 부착
부품번호 : 14540365, 형식 : 4TNV94L-XVC1K, 라벨 미 부착

버켓 (BUCKET)
버킷 GP,ESCO,BKT 0.15/0.176㎥-F24
내용 . GP 일반 작업용 , (RB) 암반용
ESCO = 버킷 투스 형식 , Esco. 0.15 = 용량 (CECE ㎥)
0.176 = 용량 (SAE ㎥)
S1= 퀵핏 버킷 .
F24 = 직접 장착 (핀온) 버킷

트랙 어셈블리 (TRACK ASSEMBLY)
트랙 TRK 380SR X 39
내용 :
TRK = 트랙
380 = 트랙 폭
S = 대칭형 트랙
R = 구멍이 있는 슈 타입
39 = 트랙슈 수량

ESP

ESP

En los catálogos de repuestos se presentan únicamente piezas originales que han sido sometidas a las necesarias pruebas de funcionamiento y duración y que cumplen las elevadas exigencias de seguridad y calidad de Volvo Construction Equipment. Recuerde que las garantías no cubren los daños ocasionados o agravados por no haber montado una pieza original.

Las ilustraciones del catálogo no deben utilizarse como base para el montaje ni como instrucciones de taller. Para ello recomendamos utilizar los manuales de taller editados a propósito.

Al hacer el pedido de repuestos, el propietario de la máquina debe indicar el modelo de la misma, su número de fabricación, la referencia de la pieza, la cantidad y la denominación.

La ubícación de letreros con las denominaciones de modelo y motor etc., puede verse en la página 4. La lista de equipos de adaptación según mercado, introducidos en el catálogo, puede verse en la página 26.

La guía para el uso del catálogo, puede verse en la página 20.

La tabla de abreviaturas puede verse en la página 22.

Este catálogo ha sido editado por Volvo Construction Equipment Korea Ltd. Customer Support. Si tiene algún comentario que hacer sobre el catálogo, o detectaalgún error, le rogamos que haga una copia de la página en cuestión y nos la remita junto con sus comentarios a:

Volvo Construction Equipment Korea Ltd.
Customer Support
214-1, Doil-dong, Pyongtaek-city, Kyunggi-do, Korea
Telefax: +82 31 610 7819
E-mail: vce.parts.catalog@volvo.com

EXCAVADORA HIDRAULICA VOLVO EC55B
Este catálogo contiene las piezas de repuesto para excavadora hidráulica EC55B.

MAQUINA BASICA
PROD NO 8278796 EC55B, KOR, SER NO 34476 -
PROD NO 8278796 EC55B, CHN, SER NO 50130 -

MOTOR
Referencia 14540360, 4TNV94L-XVC1U, Certificado de emisiones EPA
Referencia 14540360, 4TNV94L-XVC1E, Certificado de emisiones EU
Referencia 14540365, 4TNV94L-XVC1K, Without label

CUCHARAS
Cuchara de retro GP. ESCO. 0,15/0,176 - F24
Descripcion:
GP = Empleo general. (RB)= Cuchara para roca
ESCO = Tipo de dientes, Esco.
0,15 = Volumen en metro cubico CECE.
0,176 = Volumen en metros cubicos SAE.
S1 = Cucharas de acoplamiento rapido
F24 = Fijacion directa.

ORUGAS
Orugas TRK 380SR X 39
Descripcion:
TRK = Orugas
380 = Ancho de zapatas de orugas
S = Zapatas de orugas simetricas
R = Agujero de limpieza
39 = Numero de zapatas de oruga

VOLVO

Construction Equipment

Fig.	Part No.	Quantity 1	2	3	PS	KIT	Description	Dénomination	Bezeichnung	품명	Denominatición	Notes
	SA 1146-00030	1					Bucket Cylinder	Verin Godet	Löffelzylinder	버켓 실린더	Cilind Cuchara	STD
												See group 924, page 625
1		1			NS		•Tube	•Tuyau	•Rohr	튜브	•Tubo	
2	**SA 9624-11617**	2					•Bushing	•Bague	•Buchse	부싱	•Casquillo	
3	**SA 9481-10003**	2					•Nipple	•Raccord	•Nippel	니플	•Niple	
4	**SA 9561-08010**	4					•Seal	•Joint	•Dichtung	시일	•Reten	
5	**SA 14501183**	1					•Rod	•Tige piston	•Kolbenstange	로드	•Varilla piston	(1146-00530)
6	**SA 9568-01200**	2				K	•Seal	•Joint	•Dichtung	시일	•Reten	
7	**SA 9023-10802**	1					•Set Screw	•Vis Butee	•Anschlagschraub	세트스크류	•Tornillo Tope	
8	**SA 1146-06870**	1					•Pad	•Patin	•Belag	패드	•Pastilla	
9	**SA 1146-00610**	1					•Head	•Tete	•Kopf	헤드	•Capo	
10	**SA 9612-08040**	1				K	•Bushing	•Bague	•Buchse	부싱	•Casquillo	
11	**SA 9557-07000**	1					•Ring	•Anneau	•Ring	링	•Anillo	87,6 x 15
12	**SA 9556-08000**	1					•Ring	•Anneau	•Ring	링	•Anillo	
13	**SA 1146-00220**	1					•Cushion	•Coussin	•Sitzkissen	쿠션	•Cojin	
14	**SA 1146-00620**	1					•Piston	•Piston	•Kolben	피스톤	•Piston	
15	**SA 9216-06520**	1					•Washer	•Rondelle	•Scheibe	와셔	•Arandela	66 x 95
16	**SA 1146-06880**	1					•Lock Nut	•Contre-ecrou	•Sicher Mutter	로크너트	•Contratuerca	
17	**SA 9016-21612**	12					•Bolt	•Boulon	•Bolzen	볼트	•Perno	M16 x 60
18	**SA 9564-20800**	1				K	•Seal	•Joint	•Dichtung	시일	•Reten	
19	**SA 9567-20801**	1				K	•Ring	•Anneau	•Ring	링	•Anillo	
20	**SA 9563-20801**	1				K	•Seal	•Joint	•Dichtung	시일	•Reten	
21	**SA 1146-07960**	1				K	•Seal	•Joint	•Dichtung	시일	•Reten	
22	**SA 9566-31100**	1				K	•Ring	•Anneau	•Ring	링	•Anillo	
23	**SA 9566-11100**	1				K	•Ring	•Anneau	•Ring	링	•Anillo	
100	**SA 8148-10071**	1				K	Sealing kit	Jeu joints	Dichtungssatz	시일	Juego retenes	1)

7 8 9 10 11 3 1 2 12 6 4 13 5

1) **GB:** Replacement version **FR:** Version piéce de rechange. **DE:** Ersatzteil-ausführung. **KR:** 신규발행판으로 교환 **ES:** Version piezas de repuesto.

1	**DD17G001**	**Cilindro de cazo** **버켓 실린더** **Schaufelzylinder** **Vérin de godet** **Bucket cylinder**	Catalogue id **56001**	Group **975**
2				
3			Illustr. No **SA296**	Section **1000**
4				
5		**STD**	Issue **VOE 74C995601**	Page **655**

VOLVO

In addition to part numbers, the Parts Catalogue also includes a vast amount of essential information which you, the operator, should be acquainted with.
With the ”Catalogue Guide”, we want to show clearly how the catalogues are arranged and what sort of information is presented therein.

Group 1 Preface and Instructions
Here you can find the following information:
- Title page and publication number
- Group index
- Product signs
- Preface
- List of items of equipment adapted to market requirements that have been introduced
- Catalogue Guide
- Table of abbreviations

Group 2 - 9 Text and illustration pages

- The table of contents shows the division of the main groups into sub-groups, with reference to page number and section.
- Illustration page. The position number of the illustration refers to the text page.
- Text page
  1. Heading.
  2. Additional text which limits the validity of the section. An example is information relating to manufacturing numbers and equipment adapted to market requirements.
  3. Designation for quantity columns.
  4. Illustrations.
  5. Group, section, page, which you should use when you search for information in the catalogue.
  6. Catalogue identification and issue designation.
  7. Position number of the part on the associated drawing.
  8. Part number
  9. Quantity. The column designation indicates the version which is shown in each column. The quantity stated refers to the quantity for each machine or, where appropriate, for each complete unit.
     ”REQ” refers to the required amount. See also ”Notes” column.
  10. PS (Parts Status) indicates the status code of the part.
      ”NS” means that the part is not kept in stock.
      ”OP” means that the part is no longer in stock.
      ”SE” means that an alternative part shall be used.
      ”SS” means that the part has been replaced.
      Refer to Group 10 Replaced parts for further information.
  11. KIT. Parts that are marked with a ”K” are included in a kit. The number of the kit is often indicated after other part numbers.
  12. Description. The indentations indicate if one or more parts are included in the assembled unit described above. The parts are included when a complete unit is ordered.
  13. Notes. Other information relating to a particular part is given here.
      - Footnote number (3001 for example) is given at the bottom of the page.
      - Replaced parts (1146-00530, for example).
      - Product or manufacturing number.
      - Abbreviations and technical information.
      - Reference to page and group.

Group 10 Replaced parts / Number index

- Replaced parts. The part numbers of parts marked with ”SS” (in the PS column) are indicated here, together with their replacement numbers.
  The replacement parts may in turn be also replaced, and so on.
- Number index. All parts included in the catalogue are indicated here, together with a reference to group, section and page.

Continued improvements and successes in design could result in modifications to your equipment which are not covered by this publication. Each publication is revised when required to include these modifications in later issues. For additional information, you should contact Volvo Construction Equipment Korea, Customer Support, Business Planning Department.

Any unauthorized reproduction of any part of this document would be in violation of Volvo Construction Equipment Korea, Customer Support's rights and will be prosecuted to the fullest extent allowed by law. We reserve the right to make changes without prior notice.
Volvo Construction Equipment Korea, Customer Support

Fig.	Part No.	Quantity 1	2	3	PS	KIT	Description	Dénomination	Bezeichnung	품명	Denominatición	Notes
	SA 1146-00030	1					Bucket Cylinder	Verin Godet	Löffelzylinder	버켓 실린더	Cilind Cuchara	STD
												See group 924, page 625
1		1			NS		•Tube	•Tuyau	•Rohr	튜브	•Tubo	
2	**SA 9624-11617**	2					•Bushing	•Bague	•Buchse	부싱	•Casquillo	
3	**SA 9481-10003**	2					•Nipple	•Raccord	•Nippel	니플	•Niple	
4	**SA 9561-08010**	4					•Seal	•Joint	•Dichtung	시일	•Reten	
5	**SA 14501183**	1					•Rod	•Tige piston	•Kolbenstange	로드	•Varilla piston	(1146-00530)
6	**SA 9568-01200**	2				K	•Seal	•Joint	•Dichtung	시일	•Reten	
7	**SA 9023-10802**	1					•Set Screw	•Vis Butee	•Anschlagschraub	세트스크류	•Tornillo Tope	
8	**SA 1146-06870**	1					•Pad	•Patin	•Belag	패드	•Pastilla	
9	**SA 1146-00610**	1					•Head	•Tete	•Kopf	헤드	•Capo	
10	**SA 9612-08040**	1				K	•Bushing	•Bague	•Buchse	부싱	•Casquillo	
11	**SA 9557-07000**	1					•Ring	•Anneau	•Ring	링	•Anillo	87,6 x 15
12	**SA 9556-08000**	1					•Ring	•Anneau	•Ring	링	•Anillo	
13	**SA 1146-00220**	1					•Cushion	•Coussin	•Sitzkissen	쿠션	•Cojin	
14	**SA 1146-00620**	1					•Piston	•Piston	•Kolben	피스톤	•Piston	
15	**SA 9216-06520**	1					•Washer	•Rondelle	•Scheibe	와셔	•Arandela	66 x 95
16	**SA 1146-06880**	1					•Lock Nut	•Contre-ecrou	•Sicher Mutter	로크너트	•Contratuerca	
17	**SA 9016-21612**	12					•Bolt	•Boulon	•Bolzen	볼트	•Perno	M16 x 60
18	**SA 9564-20800**	1				K	•Seal	•Joint	•Dichtung	시일	•Reten	
19	**SA 9567-20801**	1				K	•Ring	•Anneau	•Ring	링	•Anillo	
20	**SA 9563-20801**	1				K	•Seal	•Joint	•Dichtung	시일	•Reten	
21	**SA 1146-07960**	1				K	•Seal	•Joint	•Dichtung	시일	•Reten	
22	**SA 9566-31100**	1				K	•Ring	•Anneau	•Ring	링	•Anillo	
23	**SA 9566-11100**	1				K	•Ring	•Anneau	•Ring	링	•Anillo	
100	**SA 8148-10071**	1				K	Sealing kit	Jeu joints	Dichtungssatz	시일	Juego retenes	1)

7 8 9 10 11 3 1 2 12 6 4 13 5

1) **GB:** Replacement version **FR:** Version piéce de rechange. **DE:** Ersatzteil-ausführung. **KR:** 신규발행판으로 교환 **ES:** Version piezas de repuesto.

1	**DD17G001**	**Cilindro de cazo** **버켓 실린더** **Schaufelzylinder** **Vérin de godet** **Bucket cylinder**	Catalogue id **56001**	Group **975**
2				
3			Illustr. No **SA296**	Section **1000**
4				
5		**STD**	Issue **VOE 74C995601**	Page **655**

VOLVO

FRA

Le catalogue de pièces de rechange présente, non seulement les numéros de référence, mais également d'autres informations qu'il est important de connaître. Ce guide de catalogue vous indique, d'une façon générale, comment sont conçus nos catalogues et quelles informations ils vous apportent.

Groupe 1 Avant-propos et instructions
Sous ce groupe, vous trouvez:
- La page de titre avec le numéro de publication
- Le registre des groupes
- Le plaques de produit
- Un avant-propos
- Une liste des équipements introduits suivant les pays
- Un guide de catalogue
- Un tableau des abréviations

Groupes 2 - 9 Pages de texte et d'illustration
- Le sommaire indique la division des groupes principaux en sous-groupes avec des renvois aux pages et aux sections.
- La page d'illustration. L'illustration donne les numéros de position qui renvoient à la page de texte.
- La page de texte
  1. Rubrique
  2. Texte supplémentaire qui limite la validité de la rubrique, par exemple numéro de série et équipements adaptés aux pays
  3. Désignation des modèles pour les différentes colonnes
  4. N° d'illustration
  5. Groupe, section, page, utilisés pour la recherche dans le catalogue
  6. Identification du catalogue et de l'édition
  7. Numéro de position de la pièce sur l'illustration afférente
  8. Numéro de référence
  9. Quantité. La désignation des colonnes indique le modèle qui se réfère à chaque colonne. La quantité indiquée correspond à la quantité par engin ou, suivant les cas, par unité complète. ”REQ” signifie quantité nécessaire, voir la colonne Notes
  10. PS (Parts Status) indique le code d'état de la pièce.
      -”NS” signifie que la pièce n'existe pas en magasin.
      -”SS” signifie que la pièce a été remplacée.
      Voir le groupe 10, pièces remplacées pour de plus amples informations.
  11. KIT. Les pièces marquées ”K” font partie d'un kit. Le numéro du kit est le plus souvent indiqué après les autres numéros de référence.
  12. Désignation. Le décalage indique si une ou plusieurs pièces font partie de l'unité complète indiquée au-dessus. Ces pièces sont envoyées pour une commande d'une unité complète.
  13. Notes (Remarques). Diverses informations pour une pièce:
      - Numéro de renvoi. Par exemple 3001) indication en bas de page.
      - Pièces remplacées. Par exemple (1146-00530).
      - Numéro de produit ou numéro de fabrication.
      - Abréviations et explications techniques.
      - Renvoi aux pages et aux groupes.

Groupe 10 Pièces remplacées/Registre des numéros

- Pièces remplacées. Les numéros de référence marquées ”SS” (dans la colonne PS) sont repris ici avec leur numéro de remplacement. Ces pièces remplacées peuvent, à leur tour, être remplacées par d'autres, etc.
- Registre des numéros. Tous les numéros de référence du catalogue se retrouvent ici avec un renvoi au groupe, à la section et à la page.

Les perfectionnements continus et les progrès réalisés au point de vue construction peuvent entraîner, sur votre engin, des modifications qui ne sont pas prises en compte dans cette publication. Chaque publication est remise à jour suivant les besoins pour inclure toutes ces modifications dans les dernières édition. Pour de plus amples renseignements, prenez contact avec la division Catalogue de Volvo Construction Equipment Korea Customer Support, Business Planning Department.

La reproduction non autorisée de toute partie de ce document constitue une violation des droits d'auteur de Volvo Construction Equipment Korea, Customer Support, Business Planning Department et entraînera une poursuite légale aux termes de la loi. Nous nous réservons le droit d'apporter des modifications sans préavis.
Volvo Construction Equipment Korea Customer Support

Fig.	Part No.	Quantity 1	2	3	PS	KIT	Description	Dénomination	Bezeichnung	품명	Denominatición	Notes
	SA 1146-00030	1					Bucket Cylinder	Verin Godet	Löffelzylinder	버켓 실린더	Cilind Cuchara	STD
												See group 924, page 625
1		1			NS		•Tube	•Tuyau	•Rohr	튜브	•Tubo	
2	**SA 9624-11617**	2					•Bushing	•Bague	•Buchse	부싱	•Casquillo	
3	**SA 9481-10003**	2					•Nipple	•Raccord	•Nippel	니플	•Niple	
4	**SA 9561-08010**	4					•Seal	•Joint	•Dichtung	시일	•Reten	
5	**SA 14501183**	1					•Rod	•Tige piston	•Kolbenstange	로드	•Varilla piston	(1146-00530)
6	**SA 9568-01200**	2				K	•Seal	•Joint	•Dichtung	시일	•Reten	
7	**SA 9023-10802**	1					•Set Screw	•Vis Butee	•Anschlagschraub	세트스크류	•Tornillo Tope	
8	**SA 1146-06870**	1					•Pad	•Patin	•Belag	패드	•Pastilla	
9	**SA 1146-00610**	1					•Head	•Tete	•Kopf	헤드	•Capo	
10	**SA 9612-08040**	1				K	•Bushing	•Bague	•Buchse	부싱	•Casquillo	
11	**SA 9557-07000**	1					•Ring	•Anneau	•Ring	링	•Anillo	87,6 x 15
12	**SA 9556-08000**	1					•Ring	•Anneau	•Ring	링	•Anillo	
13	**SA 1146-00220**	1					•Cushion	•Coussin	•Sitzkissen	쿠션	•Cojin	
14	**SA 1146-00620**	1					•Piston	•Piston	•Kolben	피스톤	•Piston	
15	**SA 9216-06520**	1					•Washer	•Rondelle	•Scheibe	와셔	•Arandela	66 x 95
16	**SA 1146-06880**	1					•Lock Nut	•Contre-ecrou	•Sicher Mutter	로크너트	•Contratuerca	
17	**SA 9016-21612**	12					•Bolt	•Boulon	•Bolzen	볼트	•Perno	M16 x 60
18	**SA 9564-20800**	1				K	•Seal	•Joint	•Dichtung	시일	•Reten	
19	**SA 9567-20801**	1				K	•Ring	•Anneau	•Ring	링	•Anillo	
20	**SA 9563-20801**	1				K	•Seal	•Joint	•Dichtung	시일	•Reten	
21	**SA 1146-07960**	1				K	•Seal	•Joint	•Dichtung	시일	•Reten	
22	**SA 9566-31100**	1				K	•Ring	•Anneau	•Ring	링	•Anillo	
23	**SA 9566-11100**	1				K	•Ring	•Anneau	•Ring	링	•Anillo	
100	**SA 8148-10071**	1				K	Sealing kit	Jeu joints	Dichtungssatz	시일	Juego retenes	1)

7 8 9 10 11 3 1 2 12 6 4 13 5

1) **GB:** Replacement version **FR:** Version piéce de rechange. **DE:** Ersatzteil-ausführung. **KR:** 신규발행판으로 교환 **ES:** Version piezas de repuesto.

1	**DD17G001**	**Cilindro de cazo** **버켓 실린더** **Schaufelzylinder** **Vérin de godet** **Bucket cylinder**	Catalogue id **56001**	Group **975**
2				
3			Illustr. No **SA296**	Section **1000**
4				
5		**STD**	Issue **VOE 74C995601**	Page **655**

VOLVO

Im Ersatzteilkatalog sind außer den Artikelnummern auch eine Reihe von Informationen aufgeführt, die man unbedingt kennen sollte.
Mit der Kataloganweisung wollen wir auf eine überschaubare Art und Weise zeigen, wie unsere Kataloge aufgebaut und welche Informationen hier enthalten sind.

Gruppe 1 Vorwort und Anweisungen
Hier findet man folgendes:
- Titelseite mit Publikationsnummer
- Gruppenregister
- Produktschilder
- Vorwort
- Verzeichnis über eingeführte marktangepaßte Ausrüstungen
- Kataloganweisung
- Abkürzungstabelle

Gruppe 2 - 9 Text- und Bildseiten

- Das Inhaltsverzeichnis zeigt die Einteilung der Hauptgruppe in Untergruppen mit Hinweis auf Seite und Abschnitt.
- Bildseite. Die Positionsnummer der Abbildung weist auf die Textseite hin.
- Textseite.
  1. Überschrift
  2. Zusatztext, der die Gültigkeit des Abschnitts begrenzt, z.B. Information über Herstellungsnummer und marktangepaßte Ausrüstungen.
  3. Bezeichnung für die Anzahl-Spalten
  4. Abbildungsnummer
  5. Gruppe, Abschnitt, Seite, die bei der Suche im Katalog verwendet werden.
  6. Kataloganweisung und Ausgabebezeichnung
  7. Positionsnummer des Artikels mit dazugehöriger Abbildung.
  8. Artikelnummer
  9. Anzahl. Die Spaltenbezeichnung zeigt, welche Ausführung per Spalte aufgeführt ist. Die angegebene Anzahl betrifft Anzahl pro Maschine oder ggf. pro komplette Einheit. ”REQ” bezeichnet die erforderliche Menge, siehe Anmerkungsspalte.
  10. PS (Parts Status) zeigt den Statuscode des Artikels.
      -”NS” bedeutet, daß der Artikel nicht mehr auf Lager gehalten wird.
      -”SS” bedeutet, daß der Artikel ersetzt wurde.
      Siehe Gruppe 10, Ersetzte Artikel, für weitere Information.
  11. KIT. Artikel, die mit einem ”K” gekennzeichnet sind, gehören zu einem Satz. Die Nummer des Satzes wird in den meisten Fällen nach den übrigen Artikelnummern angegeben.
  12. Bezeichnung. Die Stufenverschiebung zeigt, daß ein oder mehrere Artikel in einer oben aufgeführten zusammengesetzten Einheit enthalten sind. Die Artikel folgen bei der Bestellung der kompletten Einheit mit.
  13. Notes (Anmerkung). Hier werden übrige Informationen für einen Artikel aufgeführt:
      - Fußnotennummer, Beispiel (3001), wird ganz unten auf der Seite angegeben.
      - Ersetzte Artikel, Beispiel (1146-00530)
      - Produkt- oder Herstellungsnummer
      - Abkürzungen oder technische Informationen
      - Seiten- und Gruppenhinweis

Gruppe 10 Ersetzte Artikel / Nummernregister

- Ersetzte Artikel. Hier sind die mit ”SS” markierten (in der PS-Spalte) Artikelnummern mit ihrem Ersatz aufgeführt. Die ersetzten Artikel können wiederum ersetzt worden sein.
- Nummernregister. Hier sind alle im Katalog vorkommenden Artikel aufgeführt, und zwar mit Hinweis auf Gruppe, Abschnitt, Seite.

Fortlaufende Verbesserungen und Fortschritte in der Konstruktion können auch bei Ihrer Maschine zu Änderungen führen, die nicht von dieser Schrift umfaßt werden. Jede Ausgabe wird bei Bedarf überarbeitet, um diese Veränderungen bei späteren Ausgaben mit zu berücksichtigen.
Weitere Informationen erhalten Sie von Volvo Construction Equipment Korea Customer Support, Business Planning Department.

Jegliche Reproduktion dieses Dokumentes in Auszügen oder in vollem Umfang stellt eine Verletzung der Rechte von Volvo Construction Equipment Korea Customer Support, Business Planning Department dar und wird unter voller Ausschöpfung der gesetzlichen Möglichkeiten strafrechtlich verfolgt. Wir behalten uns das Recht auf Änderungen ohne vorherige Ankündigung vor.
Volvo Construction Equipment Korea Customer Support

Fig.	Part No.	Quantity 1	2	3	PS	KIT	Description	Dénomination	Bezeichnung	품명	Denominatición	Notes
	SA 1146-00030	1					Bucket Cylinder	Verin Godet	Löffelzylinder	버켓 실린더	Cilind Cuchara	STD
												See group 924, page 625
1		1			NS		•Tube	•Tuyau	•Rohr	튜브	•Tubo	
2	**SA 9624-11617**	2					•Bushing	•Bague	•Buchse	부싱	•Casquillo	
3	**SA 9481-10003**	2					•Nipple	•Raccord	•Nippel	니플	•Niple	
4	**SA 9561-08010**	4					•Seal	•Joint	•Dichtung	시일	•Reten	
5	**SA 14501183**	1					•Rod	•Tige piston	•Kolbenstange	로드	•Varilla piston	(1146-00530)
6	**SA 9568-01200**	2				K	•Seal	•Joint	•Dichtung	시일	•Reten	
7	**SA 9023-10802**	1					•Set Screw	•Vis Butee	•Anschlagschraub	세트스크류	•Tornillo Tope	
8	**SA 1146-06870**	1					•Pad	•Patin	•Belag	패드	•Pastilla	
9	**SA 1146-00610**	1					•Head	•Tete	•Kopf	헤드	•Capo	
10	**SA 9612-08040**	1				K	•Bushing	•Bague	•Buchse	부싱	•Casquillo	
11	**SA 9557-07000**	1					•Ring	•Anneau	•Ring	링	•Anillo	87,6 x 15
12	**SA 9556-08000**	1					•Ring	•Anneau	•Ring	링	•Anillo	
13	**SA 1146-00220**	1					•Cushion	•Coussin	•Sitzkissen	쿠션	•Cojin	
14	**SA 1146-00620**	1					•Piston	•Piston	•Kolben	피스톤	•Piston	
15	**SA 9216-06520**	1					•Washer	•Rondelle	•Scheibe	와셔	•Arandela	66 x 95
16	**SA 1146-06880**	1					•Lock Nut	•Contre-ecrou	•Sicher Mutter	로크너트	•Contratuerca	
17	**SA 9016-21612**	12					•Bolt	•Boulon	•Bolzen	볼트	•Perno	M16 x 60
18	**SA 9564-20800**	1				K	•Seal	•Joint	•Dichtung	시일	•Reten	
19	**SA 9567-20801**	1				K	•Ring	•Anneau	•Ring	링	•Anillo	
20	**SA 9563-20801**	1				K	•Seal	•Joint	•Dichtung	시일	•Reten	
21	**SA 1146-07960**	1				K	•Seal	•Joint	•Dichtung	시일	•Reten	
22	**SA 9566-31100**	1				K	•Ring	•Anneau	•Ring	링	•Anillo	
23	**SA 9566-11100**	1				K	•Ring	•Anneau	•Ring	링	•Anillo	
100	**SA 8148-10071**	1				K	Sealing kit	Jeu joints	Dichtungssatz	시일	Juego retenes	1)

7 8 9 10 11 3 1 2 12 6 4 13 5

1) **GB:** Replacement version **FR:** Version piéce de rechange. **DE:** Ersatzteil-ausführung. **KR:** 신규발행판으로 교환 **ES:** Version piezas de repuesto.

1	**DD17G001**	**Cilindro de cazo** **버켓 실린더** **Schaufelzylinder** **Vérin de godet** **Bucket cylinder**	Catalogue id **56001**	Group **975**
2				
3			Illustr. No **SA296**	Section **1000**
4				
5		**STD**	Issue **VOE 74C995601**	Page **655**

VOLVO

부품 카탈로그 보는 법 (PARTS CATALOGUE INSTRUCTIONS)

부품 카탈로그에는 부품 번호 이외에도 장비 사용자가 알아야 할 필수 정보가 많이 수록되어 있습니다 .
이 쪽에서는 부품 카탈로그가 어떻게 작성되었고 또한 어떤 정보들이 수록되어 있는지를 알 수 있습니다 .

그룹 1 머리말 및 지침

다음의 정보를 찾을 수 있습니다 .
- 장비 그림과 발행 번호
- 그룹 색인표
- 제조 명판 부착 위치
- 머리글
- 판매 사양용 구성품 목록
- 부품 카탈로그 보는 법
- 약어 일람표

그룹 2-9 부품 목록 및 입체그림 페이지

내용의 표는 대분류 항목을 중분류하여 소분류 , 쪽번호를 나타내고 있으며 입체 그림의 번호는 부품목록과 일치하고 있습니다 .
- 부품 목록 쪽의 내용

1. 부품목록 제목
2. 시장별 판매사양에 관련된 제조번호 및 장치를 나타내는 것으로 해당 쪽의 부품 목록은 해당 판매사양에만 적용됩니다 .
3. 부품별 적용 수량에 관련되는 정보
4. 입체 그림
5. 부품 카탈로그에서 정보를 찾고자 할 때 이용하는 그룹으로 중분류 (Group), 소분류 (Section), 쪽번호
6. 부품 카탈로그 고유번호 및 개정 번호
7. 입체 그림에서 부품 번호의 위치
8. 부품 번호
9. 이 수량은 아래의 표 왼쪽에 표시된 번호 (1~5) 와 연관되어 각각 정보에 해당하는 수량을 나타내고 있습니다 .
부품별 수량은 한대의 장비에 필요한 수량이거나 또는 해당 조립체에 소요되는 수량입니다 .
“REQ” 는 필요한 수량으로 비고 (Note) 를 참고 하십시오 .

10. PS(Parts Status) 는 부품의 상태 코드를 지칭합니다 .
‘NS’ 는 공급불가 부품을 의미하고 ,
‘SS’ 는 설변된 부품을 의미합니다 .
더 상세한 정보를 원할 경우엔 그룹 10 대체 부품 목록을 참고 바랍니다 .
11. ” K” 마크가 표시된 부품은 킷 (kit) 에 포함되며 , 킷 번호는 부품목록 맨 아래에 표기되어 있습니다 .
12. 부품 명칭을 나타내며 항목번호 (Fig) 가 없는 상위의 조립체를 요청 시 아래의 부품이 모두 포함되어 있습니다 .
13. 비고 (Notes) 에 특별 부품과 관련된 여러 정보를 수록합니다 .
- 참고번호 (Footnote number) 예를 들면 3001 에 관련된 내용을 표의 바로 위에 기록하였습니다 .
- 대체된 부품 (예 :SA 1146-00530)
- 제품 / 제조 번호
- 약어 및 기술정보
- 중분류 (Group) 및 쪽에 관련된 정보

그룹 10 대체 부품 / 부품 번호 색인

- PS 칸에 “SS’ 로 표시된 부품은 대체된 부품으로서 대체 부품번호와 대체전 부품번호와 함께 기록하였습니다 .
대체된 부품이 다시 변경 된 경우에도 기록하였습니다 .
- 부품 번호 색인에는 부품 카탈로그에 포함된 모든 부품을 표시하였으며 , 중분류 (Group), 소분류 (Section) 및 쪽번호도 표시 하였습니다 .

지속적인 품질 향상 및 성능 개선에 의한 변경 내용이 이 카탈로그에반영되지 않고 발간 될 수도 있습니다 .
필요시 이러한 변경사항이 반영된 개정판이 발행됩니다 .
더 자세한 정보를 원할 경우에는 볼보 건설 기계 코리아㈜ 서비스엔지니어링팀으로 문의하여 주시기 바랍니다 .

Fig.	Part No.	Quantity 1	2	3	PS	KIT	Description	Dénomination	Bezeichnung	품명	Denominatición	Notes
	SA 1146-00030	1					Bucket Cylinder	Verin Godet	Löffelzylinder	버켓 실린더	Cilind Cuchara	STD
												See group 924, page 625
1		1			NS		•Tube	•Tuyau	•Rohr	튜브	•Tubo	
2	**SA 9624-11617**	2					•Bushing	•Bague	•Buchse	부싱	•Casquillo	
3	**SA 9481-10003**	2					•Nipple	•Raccord	•Nippel	니플	•Niple	
4	**SA 9561-08010**	4					•Seal	•Joint	•Dichtung	시일	•Reten	
5	**SA 14501183**	1					•Rod	•Tige piston	•Kolbenstange	로드	•Varilla piston	(1146-00530)
6	**SA 9568-01200**	2				K	•Seal	•Joint	•Dichtung	시일	•Reten	
7	**SA 9023-10802**	1					•Set Screw	•Vis Butee	•Anschlagschraub	세트스크류	•Tornillo Tope	
8	**SA 1146-06870**	1					•Pad	•Patin	•Belag	패드	•Pastilla	
9	**SA 1146-00610**	1					•Head	•Tete	•Kopf	헤드	•Capo	
10	**SA 9612-08040**	1				K	•Bushing	•Bague	•Buchse	부싱	•Casquillo	
11	**SA 9557-07000**	1					•Ring	•Anneau	•Ring	링	•Anillo	87,6 x 15
12	**SA 9556-08000**	1					•Ring	•Anneau	•Ring	링	•Anillo	
13	**SA 1146-00220**	1					•Cushion	•Coussin	•Sitzkissen	쿠션	•Cojin	
14	**SA 1146-00620**	1					•Piston	•Piston	•Kolben	피스톤	•Piston	
15	**SA 9216-06520**	1					•Washer	•Rondelle	•Scheibe	와셔	•Arandela	66 x 95
16	**SA 1146-06880**	1					•Lock Nut	•Contre-ecrou	•Sicher Mutter	로크너트	•Contratuerca	
17	**SA 9016-21612**	12					•Bolt	•Boulon	•Bolzen	볼트	•Perno	M16 x 60
18	**SA 9564-20800**	1				K	•Seal	•Joint	•Dichtung	시일	•Reten	
19	**SA 9567-20801**	1				K	•Ring	•Anneau	•Ring	링	•Anillo	
20	**SA 9563-20801**	1				K	•Seal	•Joint	•Dichtung	시일	•Reten	
21	**SA 1146-07960**	1				K	•Seal	•Joint	•Dichtung	시일	•Reten	
22	**SA 9566-31100**	1				K	•Ring	•Anneau	•Ring	링	•Anillo	
23	**SA 9566-11100**	1				K	•Ring	•Anneau	•Ring	링	•Anillo	
100	**SA 8148-10071**	1				K	Sealing kit	Jeu joints	Dichtungssatz	시일	Juego retenes	1)

7 8 9 10 11 3 1 2 12 6 4 13 5

1) **GB:** Replacement version **FR:** Version piéce de rechange. **DE:** Ersatzteil-ausführung. **KR:** 신규발행판으로 교환 **ES:** Version piezas de repuesto.

1	**DD17G001**	**Cilindro de cazo** **버켓 실린더** **Schaufelzylinder** **Vérin de godet** **Bucket cylinder**	Catalogue id **56001**	Group **975**
2				
3			Illustr. No **SA296**	Section **1000**
4				
5		**STD**	Issue **VOE 74C995601**	Page **655**

VOLVO

En el catálogo de repuestos se incluye, además de los números de artículo, numerosa información muy útil.
El propósito de la guía es explicar la estructura de los catálogos y la información que se ofrece en los mismos.

Grupo 1 Prefacio e instrucciones
Se encontrará aquí:
- El título y el número de publicación
- El índice de grupos
- Los letreros de producto
- El prefacio
- Una lista sobre los equipos adaptados a los mercados
- La guía al catálogo
- Una tabla de abreviaturas

Grupo 2 - 9 páginas con texto e ilustraciones

- El índice muestra la clasificación de los grupos principales en subgrupos con remisiones a páginas y secciones.
- Página de ilustraciones. Los números de posición de las ilustraciones. Remisiones a páginas de texto.
- Páginas de texto
  1. Rúbrica
  2. Texto adicional que delimita la validez de la sección, por ejemplo, información sobre números de fabricación y equipos según mercado.
  3. Designación para columnas de cantidades.
  4. Número de ilustración.
  5. Grupo, sección, página. Se utilizan al manejar el catálogo
  6. Identificación e indicación de la edición del catálogo.
  7. Números de posición en la ilustración correspondiente.
  8. Números de artículo
  9. Cantidad. Se indica en esta columna la ejecución. El número indicado se refiere a la cantidad por máquina o, si procede, por unidad completa. ”REQ” significa la cantidad necesaria, véase la columna de las notas.
  10. PS (Parts Status) indica el código de estado del artículo.
      -”NS” indica que el artículo no se tiene en stock.
      -”SS” indica que el artículo ha sido sustituido.
      Para más información, véase el grupo 10, artículos sustituidos.
  11. KIT. Los artículos marcados con una ”K” forman parte de un juego. El número de juego suele indicarse detrás de los demás números de artículo.
  12. Denominación. El desplazamiento indica que en la unidad indicada se incluyen uno o varios artículos. Estos se incluyen en la unidad completa pedida.
  13. Notas. Aparecen aquí diversas informaciones relativas a los artículos:
      - Números de notas de pie de página; ej. 3001) aparece al final de la página.
      - Artículos sustituidos. Ej. (1146-00530)
      - Números de producto o fabricación.
      - Abreviaturas e infomación técnica.
      - Remisiones a páginas y grupos.

Grupo 10 Artículos sustituidos/Indice de números

- Artículos sustituidos. Se marcan aquí con ”SS” (en la columna PS) los números de artículo con sus sustituciones. Los artículos sustituidos, a su vez, pueden haber sido sustituidos, etc.
- Indice de números. Aparecen aquí todos los artículos existentes en el catálogo con remisión a grupo, sección y página.

En su modelo de máquina pueden haberse introducido mejoras que no aparecen en esta publicación. Las publicaciones son revisadas para incluir las mejoras en ediciones posteriores. Para más información, diríjase a Volvo Construction Equipment Korea Customer Support, Business Planning Department.

Este documento está protegido por los derechos de autor y por lo tanto está prohibida su copia, impresión o cualquier otro tipo de reproducción indebida. La infracción de esta prohibición será penalizada. Reservado el derecho a introducir modificaciones.
Volvo Construction Equipment Korea Customer Support

TABLE OF ABBREVIATION 약어 일람표

POUR LA LISTE DES ABRÉVIATIONS EMPLOYÉES **PABLO DE ABREVIATIONS**

ABKÜRZUNGSVERZEICHNIS

ABBREVIATION	ENGLISH	FRANÇAIS	DEUTSCH	KOREAN	ESPAÑOL
A	ampere	ampère	Ampere	전류	amperio
ALT	alternative	alternative	wahlweise	대체사양	alternativa
AWD	All Wheel Drive	Toutes roues motrices	Allradantrieb	상시 4 륜 구동	Tracción en las todas las ruedas
AX ####-	as from axle No.	à partir du N° d'essieu	ab Achsennr.	액슬 일련번호 ~ 부터	a partir del eje nro
AX - ####	up to and incl. axle No.	jusqu'au N° d'essieu	bis Achsennr.	액슬 일련번호 ~ 까지	hasta el eje nro
BL	black	noir	schwarz	검정색	negro
BLUE	blue	bleu	blau	파랑색	azul
BR	brown	brun	braun	갈색	marrón
BRA	Brazil	Brésil	Brasilien	브라질	Brasil
CAB #### -	as from cab No.	à partir du N° de cabine	ab Kabinen-herstellnr.	캡 일련번호 ~ 부터	a partir de la cabina
CAB - ####	up to and incl. cab No.	jusqu'au N° de cabine	bis Kabinen-herstellnr.	캡 일련번호 ~ 까지	hasta la cabina nro
CAN	Canada	Canada	Kanada	캐나다	Canadá
CENT	centre	au milieu	Mittere	중앙	central
CHN	China	Chine	China	중국	China
CIN	component identification number	Numéro de référence de sous-ensemble	Bauteil-Identifizierungsnummer	기능품 식별 번호	Número de identificación del componente
CPL	complete	complet	komplett	조립체	completo
CU M	cubic metre	mètre cube	Kubikmeter	입방미터	metro cúbico
DEG	numbers of degrees, C°	nombres de degré de chaleur, C°	Anzahl in Graden C°	섭씨 온도 번호	numero de grado de calor, C°
DELETED	deleted	supprimé	Nicht mehr lieferbar	삭제	Retirado
DEU	Germany	Allemagne	Deutschland	독일	Alemania
DNK	Denmark	Danemark	Dänemark	덴마크	Dinamarca
EEC	European Economic Community (EEC)	pays du marche commun (EEC)	EU-Markt (EEC)	유럽경제공동체 번호	el mercado común (EEC)
ENG	Engine	moteur	Motor	엔진	motor
ENG #### -	as from engine No.	à partir du N° de moteur	ab Motornr.	엔진 일련번호 ~ 부터	a partir del motor nro
ENG - ####	up to and incl. engine No.	jusqu'au N° de moteur	bis Motornr.	엔진 일련번호 ~ 까지	hasta el motor nro
E PROD	early production	production antérieure	Frühere Ausführung	양산전	producción anterior
ESP	Spain	Espagne	Spanien	스페인	España
EU	European Union	Union Européenne	Europäische Union	유럽 연합	Unión Europea
EXC ### -	as from excavator unit No.	à partir du N° d'excavateur	Ab Bagger-Aggregatnr.	작업장치 일련번호 ~ 부터 번호	a partir de agregado excavador nro
EXC - ###	up to and incl. excavator unit No.	jusqu'au N° d'excavateur	bis Bagger-Aggregatnr	작업장치 일련번호 ~ 까지 번호	hasta el agregado excavador nro
EXCL	excluding	exclus	auschliesslich	제외	exclusivo
FIN	Finland	Finlande	Finnland	핀란드	Finlandia

ABBREVIATION	ENGLISH	FRANÇAIS	DEUTSCH	KOREAN	ESPAÑOL
FORW	forward	avant	vordere	전진	delante
FRA	France	France	Frankreich	프랑스	Francia
GBR	Great Britain	Angleterre	England	영국	Inglaterra
GRAM	gram	gramme	Gramm	그램	gramo
GREEN	green	vert	grün	녹색	verde
GREY	grey	gris	grau	회색	gris
HT #### -	as from hydraulic transmission No.	à partir du transmission hydraulique Nº	ab Hydraulikgetriebe	트랜스미션 일련번호 ~ 부터 번호	a partir de transmisión hidráulico nro
HT - ####	up to and incl. hydraulic transmission No.	jusqu'au transmission hydraulique Nº	bis Hydraulikgetriebe	트랜스미션 일련번호 ~ 까지 번호	hasta el transmisión hidráulico nro
ID	diameter, inner	diamètre, intérieur	Innendurchmesser	내경	diámetro, interior
IN	inch(es)	pouce	Zoll	인치	pulgada
INCL	inclusive	inclus	einschliesslich	포함	inclusive
INCL IN	included in	inclus dans	gehört zur	포함	forma parte de
INLET	inlet	entrée	Einlass	흡입	entrada
INNER	inner	intérieur	innen	내측	interior
IRN	Iran	Iran	Iran	이란	Iran
ITA	Italy	Italie	Italien	이태리	Italia
ITEM NO	see item No.	voir position	siehe Position Nr.	품번 참조	véase posición
K	included in parts kits	fait partie du jeu complet de réparation	gehört zur Satzverpackung	부품 킷에 포함 번호	forma parte del juego por juego
KOR	Korea	Corée	Korea	한국	Corea
L	litre, length	litre, longueur	Liter, Länge	리터 , 길이	litros, longitud
LH	left	gauche	links	왼쪽	izquierdo
LOAD #### -	as from loading unit No.	à partir du N° de chargeur	ab Hubaggregatnr.	인양장치 일련번호 ~ 부터 번호	a partir du unibad carga nro
LOAD - ####	up to and incl. loading unit No.	jusqu'au N° de chargeur	bis Hubaggregatnr.	인양장치 일련번호 ~ 까지 번호	hasta unidad carga nro
LOW	lower	dessous	unten	하부	inferior
L PROD	late production	production postérieure	jetzige Ausführung	양산후	producción posterior
MARKED	marked	marque de	gekennzeichnet mit	표시	marcado
MODEL	model designation	Désignation de modèle	Modellbezeichnung	모델 명칭	Designación de modelo
ML	millilitre	millilitre	Milliliter	밀리리터	milílitro
MM	millimetre	millimètre	Millimeter	밀리미터	milimetros
NLD	Netherlands	Pays-Bas	Holland	네델란드	Holanda
NO	number	numéro	Nummer	번호	número
NOR	Norway	Norvège	Norwegen	노르웨이	Noruega

TABLE OF ABBREVIATION 약어 일람표

POUR LA LISTE DES ABRÉVIATIONS EMPLOYÉES **PABLO DE ABREVIATIONS**

ABKÜRZUNGSVERZEICHNIS

ABBREVIATION	ENGLISH	FRANÇAIS	DEUTSCH	KOREAN	ESPAÑOL
NS	part not stocked as spare part	n`est pas stocké comme pièce de rechange	nicht als Ersatzteil vorrätig	공급불가 부품 번호	no disponible como repuesto pieza de repuesto
OP	The part is no longer in stock				
O SZ	over size	côte supérieur	Übergrösse	오버 사이즈	sobredimensión
OD	diameter, outer	diamètre extérieur	Aussendurchmesser	외경	diámetro, exterior
OR	orange	orange	orange	주황색	naranja
ORDER	order	commander	bestellen	순서	hacer un pedido
OUTER	outer	extérieur	aussen	외측	exterior
OUTLET	outlet	échappement	Auslass	배기	escape
PAGE	see page	voir page	siehe Seite	~ 쪽 참조	véase página
PAIR	pair	paire	Paar	짝	par
PCS	piece(s)	pièce	Stück	갯수	cada uno
PIN	product identification number	Numéro d'identification de produit	Produktidentifizierungs-Nummer	제품 식별 번호 번호	Número de identificación del producto
PINK	pink	rose	rosa	분홍색	rosa
PROD NO	product No.	N° de produit	Produktnr.	장비 본체번호	nro de producto
PRT	Portugal	Portugal	Portugal	포르투갈	Portugal
Q	Quantity l/min	Quantité l/min	Quantität l/min	유량 (L/MIN)	Cantidad l/min
REAR	rear	arrière	hinten	뒤쪽	detrás
RED	red	rouge	rot	빨강색	rojo
REPL BY -	replaced by	remplacé par	ersetzt durch	~ 에 대체된	substituido por
REQ#	order as required,	quantité nécessaire,	erforderliche Anzahl	소요량 만큼 주문	cantidad necesaria,
RH	right	droite	rechts	오른쪽	derecha
SE	alternative spare part version exists	une version pièce de rechange existe également	Alternative Ersatzteilausführung lieferbar	대체 예비부품 버전 있음 번호	Existen otras versiones de las piezas de repuesto
SEE GROUP	see group	voir groupe	siehe Gruppe	그룹 참조	véase grupo
SEE SB	see Service Bulletin	voir bulletin de service	siehe Kundendienstmitteilung	서비스 회보 참조	ver boletin de servicio
SER NO # -	as from serial No.	à partir du N° de fabrication	ab Fabrikationsnr.	장비 일련번호 ~ 부터	a partir de fabric. nro
SER NO - #	up to and incl.serial No.	jusqu'au N° de fabrication	bis Fabrikationsnr.	장비 일련번호 ~ 까지	hasta el fabric. nro
S/N #### -	as from serial No.	à partir du N° de série	ab Fabrikationsnr.	장비 일련번호 ~ 부터	a partir de fabricación nro.
S/N - ####	up to and incl. serial No.	jusqu'au N° de série	bis Fabrikationsnr.	장비 일련번호 ~ 까지	hasta el fabricación nro.
SUPPL	supplementary details, no spare part	indication compléter	zuzätliche Angaben	보조 부품 , 예비부품이 아님	parte completar
SPECIAL	special model	construction spéciale	Sonderausführung	주문사양	modelo especial
SQ MM	square millimeters	millimètre carré	Quadratmillimeter	평방미터	milimetros cuadrados
SS	superseded part	pièce remplacée	ersetztes Teil	교체된 부품	pieza substituida
STD	standard version	version standard	Standardausführung	표준사양	versión standard

ABBREVIATION	ENGLISH	FRANÇAIS	DEUTSCH	KOREAN	ESPAÑOL
SWE	Sweden	Suède	Schweden	스웨덴	Suecia
THICK	thickness	épaisseur	Dicke	두께	espesor
TM NO # -	as from transmission No.	à partir du N° de transmission	ab Getriebenr.	트랜스미션 일련번호 ~ 부터	a partir de transmisión nro
TM NO - #	up to and incl. transmission No.	jusqu'au N° de transmission	bis Getriebenr.	트랜스미션 일련번호 ~ 까지	hasta el de transmisión nro
UPPER	upper	supérieur	oben	상부	superior
USA	United States of America	États-Unis	Vereinigte Staaten	미국	Estados Unidos
U SZ	under size	côte interieur	Untergrösse	언더 사이즈	subdimensión
V	volt	volt	Volt	전압	voltio
VIOL	violet	violet	violett	보라색	violeta
W	Watt	watt	Watt	와트	watio
WHITE	white	blanc	weiss	흰색	blanco
WID	width	largeur	Breite	폭	ancho
YELL	yellow	jaune	gelb	노란색	amarillo
ZAF	South Africa	Afrique du Sud	Südafrika	남아프리카	Sudáfrica

Equipment	Kit No	Description
8277147		Control joystick - Wrist control, 3 switch. Levier de commande-commande par poignet Steuerhebel, kurz 조종 조이스틱 -3 스위치 Palanca universal de mando-mando de muñeca
8278796		Basic Machine Machine de base Grundmaschine 본체 Máquina básica *EC55B*
8278797		Engine with Eu label Moteur avec étiquette Eu Verbrennungsmotor mit Eu Etikett 엔진 -EU 라벨 부착 Motor con etiqueta Eu *EMISSION CERTIFICATED FROM EU*
8278798		Engine without Epa label Moteur sans étiquette Epa Verbrennungsmotor ohne Epa Etikett 엔진 -EPA 라벨 미부착 Motor sin etiqueta Epa *INT AND KOREAN MARKET*
8278799		Engine with Epa label Moteur avec étiquette Epa Verbrennungsmotor mit Epa Etikett 엔진 -EPA 라벨 부착 Motor con etiqueta Epa *EMISSION CERTIFICATED FROM EPA*
8278800		Fuel filling pump, not equipped with Sans Pompe de remplissage de carburant Ohne Kraftstoffpumpe 연료 주유 펌프 미장착 Sin Bomba de repostaje
8278801		Fuel filling pump Pompe de remplissage de carburant Kraftstoffpumpe 연료 주유 펌프 Bomba de repostaje *35LPM*
8278802		Extra lamp Lampe supplémentaire Zusatzscheinwerfer 보조 램프 Lámpara extra *FRONT*
8278803		Extra lamp Lampe supplémentaire Zusatzscheinwerfer 보조 램프 Lámpara extra *REAR*
8278804		Travel alarm Alarme de conduite Fahralarm 후진 경고 장치 Alarma de traslación

Equipment	Kit No	Description
8278805		Rotating beacon Phare rotatif Rotierende Warnleuchte 경광등 Lámpara rotatoria de advertencia
8278806		Cab Cabine Fahrerhaus 운전실 Cabina *FIXED GLASS*
8278807		Cab Cabine Fahrerhaus 운전실 Cabina *SLIDE GLASS*
8278808		Cab Cabine Fahrerhaus 운전실 Cabina *ROPS AND TOPS*
8278809		Cab Cabine Fahrerhaus 운전실 Cabina *TOPS*
8278810		Operator seat Siege conduteur Fahrersitz 운전석 Asiento conductor *FABRIC*
8278811		Operator seat, heated, air suspended Siege conduteur, chauffe, suspension air Fahrersitzbeheizung, luftgefedert 운전석 – 시트 가열장치 ; 에어쿠션 설치 Asiento conductor, termico, suspension aire *FABRIC*
8278812		Control joystick - semi long Levier de commande-semi-long Steuerhebel, halblang 조종 조이스틱 – 세미 롱 Palanca universal de mando-semilarga
8278813		Control joystick - semi long Levier de commande-semi-long Steuerhebel, halblang 조종 조이스틱 – 세미 롱 Palanca universal de mando-semilarga
8278815		Without air conditioning Sans Conditionnement d'air Ohne Klimaanlage 에어콘 미장착 Sin Acondicionador de aire

Equipment	Kit No	Description
8278816		Air conditioning, cooler Conditionnement d'air Klimaanlage 에어콘 Acondicionador de aire
8278817		Air conditioning, heater Conditionnement d'air, chaufferette Klimaanlage, Heizgerät 히터 Acondicionador de aire, calefactor
8278818		Air conditioning, heater and cooler. Conditionnement d'air Klimaanlage 에어콘 및 히터 겸용 Acondicionador de aire
8278819		Specific Key. Combination Clé Spécifique Einzeltaste 호기별 열쇠 Llave específica
8278820		Master Key Clé Principale Haupttaste 전모델 공용 열쇠 Llave maestra
8278821		Without Cassette radio Sans radio-cassette Ohne Kassettenrecorder 카세트 라디오 없음 Sin radiocasete
8278822		Cassette radio, Korea and INT Radio-cassette Kassettenrecorder 카세트 라디오 – 국내 및 기타지역 Radiocasete *INT AND ASIAN MARKET*
8278823		Cassette radio, Usa Radio-cassette Kassettenrecorder 카세트 라디오 – 미주용 Radiocasete
8278824		Cassette radio, Europe Radio-cassette Kassettenrecorder 카세트 라디오 – 유럽용 Radiocasete
8278825		Rear-view mirror Rétroviseur Rückspiegel 리어 뷰 미러 Retrovisor
8278826		Fall protection Protection anti-chute Fallschutz 포그 – 낙하물 보호 장치 Protección contra caídas *FOG = FALLING OBJECT GUARD*

Equipment	Kit No	Description
8278827		Fops Fops Fops 폽스 – 낙하물 보호 장치 Fops *FOPS = FALLING OBJECT PROTECTION STRUCTURE*
8278828		Under cover 2,3t for superstructure Couvercle inférieur 2.3t pour superstructure Untere Haube 2,3 t für Oberwagen 언더 커버 –2,3t ; 상부 프레임 Cubierta inf. 2,3 t para superestructura
8278829		Hd Under cover 4,5t for superstructure Couvercle inférieur Hd 4.5t pour superstructure Hd untere Haube 4,5 t für Oberwagen 언더 커버 – 강화형 4,5t ; 상부 프레임 Cubierta inf. Hd 4,5 t para superestructura
8278830		Anti theft packing Dispositif antivol Diebstahlschutzdichtung 도난방지장치 세트 Empaquetadura antirrobo
8278831		Crawler track, rubber shoe Chenilles, tuille chenilles, caoutchouc Raupen, Bodenplatten macht von Gummi 트랙 – 고무 슈 Orugas, placa de orugas, goma *400MM*
8278832		Crawler track, track shoe x 39, 380 mm Chenilles, tuille chenilles x 39, 380 mm Raupen, Bodenplatte x 39, 380 mm 트랙 –380mm 트랙 슈 x 39 Orugas, placa de orugas x 39, 380 mm
8278833		Crawler track, track shoe x 39, 350 mm Chenilles, tuille chenilles x 39, 350 mm Raupen, Bodenplatte x 39, 350 mm 트랙 –350mm 트랙 슈 x 39 Orugas, placa de orugas x 39, 350 mm
8278834		Boom cylinder, std seal Vérin de flèche Auslegerzylinder 붐 실린더 – 표준형 시일 Cilindro de pluma *SWING TYPE WITH CYLINDER COVER, EUROPE*
8278835		Bucket - None Sans godet Ohne Löffel 버켓 미장착 No cazo *USA*
8278836		Hammer/shears and upper frame, double-acting Marteau - cisaille et bâti supérieur, double effet Hammer - Schere und oberer Rahmen, doppelwirkend 해머 – 시어 및 상부프레임 , 양방향 작동형 Martillo/cizalla y bastidor superior, doble efecto *OFFSET TYPE*

Equipment	Kit No	Description
8278837		Hammer/shears and upper frame, single-acting Marteau - cisaille et bâti supérieur, simple effet Hammer - Schere und oberer Rahmen, einfachwirkend 해머 – 시어 및 상부프레임 , 한방향 작동형 Martillo/cizalla y bastidor superior, simple efecto *OFFSET TYPE*
8278838		Hammer/shears and upper frame, single-acting Marteau - cisaille et bâti supérieur, simple effet Hammer - Schere und oberer Rahmen, einfachwirkend 해머 – 시어 및 상부프레임 , 한방향 작동형 Martillo/cizalla y bastidor superior, simple efecto *FIXED TYPE*
8278839		Hammer/shears and upper frame, log grapple Marteau - cisaille et bâti supérieur, pince à grumes Hammer - Schere und oberer Rahmen, Rundholzgriff 해머 – 시어 및 상부프레임 , 우드그립 Martillo/cizalla y bastidor superior, cargadora de tronco *FIXED TYPE*
8278840		Boom with leak seat Flèche avec siège de fuite Ausleger mit leckeinsitz 붐 – 배관용 브라켓 설치 Pluma con asiento de fuga *3,03M*
8278842		Boom with leak seat Flèche avec siège de fuite Ausleger mit leckeinsitz 붐 – 배관용 브라켓 설치 Pluma con asiento de fuga *3,03M WOOD-GRIP*
8278843		Dipper arm with leak seat Bras avec siège de fuite Stiel mit leckeinsitz 디퍼 암 – 배관용 브라켓 설치 Brazo con asiento de fuga *1,5M FOR KOREA*
8278844		Dipper arm with leak seat Bras avec siège de fuite Stiel mit leckeinsitz 디퍼 암 – 배관용 브라켓 설치 Brazo con asiento de fuga *1,5M FOR USA*
8278845		Dipper arm with leak seat Bras avec siège de fuite Stiel mit leckeinsitz 디퍼 암 – 배관용 브라켓 설치 Brazo con asiento de fuga *1,5M FOR EUROPE*
8278846		Hd Dipper arm with leak seat Bras Hd avec siège de fuite Hd-stiel mit leckeinsitz 디퍼 암 – 배관용 브라켓 설치 ; 강화형 Brazo Hd con asiento de fuga *1,5M FOR KOREA*
8278847		Hd Dipper arm with leak seat Bras Hd avec siège de fuite Hd-stiel mit leckeinsitz 디퍼 암 – 배관용 브라켓 설치 ; 강화형 Brazo Hd con asiento de fuga *1,5M FOR USA*

Equipment	Kit No	Description
8278848		Hd Dipper arm with leak seat Bras Hd avec siège de fuite Hd-stiel mit leckeinsitz 디퍼 암 – 배관용 브라켓 설치 ; 강화형 Brazo Hd con asiento de fuga *1,5M WOOD-GRIP*
8278849		Linkage for standard Articulation standard Gelenk für Standardausleger 버켓 커넥팅 로드 – 표준형 Articulación para pluma estándar
8278850		Linkage for standard Articulation standard Gelenk für Standardausleger 버켓 커넥팅 로드 – 표준형 Articulación para pluma estándar *EUROPE*
8278851		Boom cylinder, std seal Vérin de flèche Auslegerzylinder 붐 실린더 – 표준형 시일 Cilindro de pluma *FIXED TYPE*
8278852		Boom cylinder, std seal Vérin de flèche Auslegerzylinder 붐 실린더 – 표준형 시일 Cilindro de pluma *FIXED TYPE WITH CYLINDER COVER*
8278853		Boom cylinder, std seal Vérin de flèche Auslegerzylinder 붐 실린더 – 표준형 시일 Cilindro de pluma *SWING TYPE WITH CYLINDER COVER*
8278854		Dipper arm cylinder, std seal Vérin de bras Stielzylinder 디퍼 암 실린더 – 표준형 시일 Cilindro de brazo
8278855		Dipper arm cylinder, std seal Vérin de bras Stielzylinder 디퍼 암 실린더 – 표준형 시일 Cilindro de brazo *EUROPE*
8278856		Bucket cylinder Vérin de godet Löffelzylinder 버켓 실린더 Cilindro de cazo
8278857		Boom swing cylinder Vérin d'orientation, flèche Auslegerschwenkzylinder 붐 선회 실린더 Cilindro de giro, pluma

Equipment	Kit No	Description
8278862		Grapple manoeuvre. Leak-off line on dip. arm Commande de grappin, fuite hydr. sur le bras Leckrohr für Greiferfunktion auf Stiel 클램셸 배관 – 디퍼 암 측 Fuga de aceite hidr. accion. garras en brazo *1,5M*
8278863		Lever Pattern Change Échange, fonction levier Wechseln, Hebelfunktion 레버 패턴 변경 Cambio, función para palanca *NOT EQUIPPED WITH*
8278864		Lever Pattern Change Échange, fonction levier Wechseln, Hebelfunktion 레버 패턴 변경 Cambio, función para palanca
8278865		Hydr. leak-off line for hammer-shear. Fuite hydraulique marteau-ciseaux. Leckrohr für Hammer-schere. 브레이커 및 크러셔 배관 Fuga hidr. para martillo-cizalla. *OFFSET TYPE*
8278866		Hydr. leak-off line for hammer-shear. Fuite hydraulique marteau-ciseaux. Leckrohr für Hammer-schere. 브레이커 및 크러셔 배관 Fuga hidr. para martillo-cizalla. *FIXED TYPE*
8278867		Hydr. leak-off line for hammer-shear. Fuite hydraulique marteau-ciseaux. Leckrohr für Hammer-schere. 브레이커 및 크러셔 배관 Fuga hidr. para martillo-cizalla. *OFFSET TYPE*
8278868		Hydr. leak-off line for hammer-shear. Fuite hydraulique marteau-ciseaux. Leckrohr für Hammer-schere. 브레이커 및 크러셔 배관 Fuga hidr. para martillo-cizalla. *WOOD-GRIP*
8278869		Quickfit hydraulic, single-acting Porte-outil hydraulique, simple effet Schnellwechsler, hydraulisch, einfachwirkend 퀵 핏 배관 , 한방향 작동형 Portaimplementos hidráulico, simple efecto *OFFSET TYPE*
8278870		Quickfit hydraulic, double-acting Porte-outil hydraulique, double effet Schnellwechsler, hydraulisch, doppeltwirkend 퀵 핏 배관 , 양방향 작동형 Portaimplementos hidráulico, doble efecto *FIXED TYPE FOR KOREAN MARKET*
8278871		Quickfit hydraulic, double-acting Porte-outil hydraulique, double effet Schnellwechsler, hydraulisch, doppeltwirkend 퀵 핏 배관 , 양방향 작동형 Portaimplementos hidráulico, doble efecto *OFFSET TYPE FOR KOREAN MARKET*

Equipment	Kit No	Description
8278872		Quickfit hydraulic, double-acting Porte-outil hydraulique, double effet Schnellwechsler, hydraulisch, doppeltwirkend 퀵 핏 배관 , 양방향 작동형 Portaimplementos hidráulico, doble efecto *OFFSET TYPE*
8278873		Boom cylinder leak without Hose rupture Fuite vérin de flèche sans rupture Flexible Auslegerzylinder Leckrohr ohne Schlauchbruchventil 붐 실린더 배관 – 낙하 방지장치 미설치 Fuga cilindro de pluma sin rotura de manguera *OFFSET TYPE*
8278874		Boom leak with Hose rupture Conduit fuite sur flèche avec rupture flexible Leckölrohr auf Ausleger mit Schlauchbruchventil 유압 배관 – 붐 ; 낙하방지장치 Tubo retorno en pluma con rotura manguera *OFFSET TYPE*
8278876		Dipper arm leak without hose rupture Conduit fuite sur bras sans rupture flexible Leckölleitung auf Stiel ohne Schlauchbruchventil 유압 배관 – 디퍼 암 ; 낙하방지장치 없음 Tubo salida aceite en brazo sin rotura de manguer *OFFSET TYPE*
8278877		Dipper arm leak with hose rupture Conduit fuite sur bras avec rupture flexible Leckölleitung auf Stiel mit Schlauchbruchventil 유압 배관 – 디퍼 암 ; 낙하방지장치 Tubo salida aceite en brazo con rotura de manguer *OFFSET TYPE*
8278878		Dipper arm leak without hose rupture Conduit fuite sur bras sans rupture flexible Leckölleitung auf Stiel ohne Schlauchbruchventil 유압 배관 – 디퍼 암 ; 낙하방지장치 없음 Tubo salida aceite en brazo sin rotura de manguer *FIXED TYPE*
8278879		Dozer blade, 1870mm Lame bulldozer Frontschar 도자 블레이드 –1870mm Hoja diagonal
8278880		Dozer blade, 1920 mm Lame bulldozer, 1 920 mm Frontschar, 1920 mm 도자 블레이드 –1920mm Hoja de bulldozer, 1920 mm
8278881		Bucket - None Sans godet Ohne Löffel 버켓 미장착 No cazo *EUROPE*
8278882		Bucket, open hook Godet, crochet ouvert Löffel, offen Haken 버켓 – 개방형 훅 장착 Cuchara, gancho deslapado *0,15 CU M CECE*

Equipment	Kit No	Description
8278883		Bucket, closed hook Godet, crochet fermer Löffel, verschlossen Haken 버켓 , 폐쇄형 후크 Cuchara, gancho cerrado *0,176 CU M CECE*
8278884		Bucket, without hook Godet, sans crochet Löffel, ohne Haken 버켓 , 후크 미 장착 Cuchara, sin gancho *0,15 CU M CECE*
8278885		Bucket, narrow, open hook Godet, étroit, crochet ouvert Löffel, Schmal, offen Haken 협소용 버켓 – 개방형 훅 장착 Cuchara, delgado, gancho deslapado *0,06 CU M CECE*
8278886		Bucket, narrow, closed hook Godet, étroit, crochet fermer Löffel, Schmal, verschlossen Haken 협소용 버켓 – 폐쇄형 훅 장착 Cuchara, delgado, gancho cerrado *0,06 CU M CECE*
8278887		Bucket, narrow, without hook Godet, étroit, sans crochet Löffel, Schmal, ohne Haken 협소용 버켓 – 훅 미장착 Cuchara, delgado, sin gancho *0,06 CU M CECE*
8278888		Tool kit Outillage Werkzeugsatz 공구 세트 Juego de herramientas *FULL SCALE*
8278889		Tool kit Outillage Werkzeugsatz 공구 세트 Juego de herramientas *DAILY MAINTENANCE*
8278890		Spare parts kit Kit de pièces de rechange Ersatzteil-kit 스페어 파트 킷 Juego de piezas de repuesto
8278892		Decals,Korea Autocollants Aufkleber 데칼 – 국내용 Pegatinas
8278893		Decals,usa Autocollants,usa Aufkleber,usa 데칼 – 미주용 Pegatinas,usa

Equipment	Kit No	Description
8278894		Decals,europe Autocollants,europe Aufkleber,europe 데칼 – 유럽용 Pegatinas,europe
8278895		Leak bracket for slope,rot.,quick fit,hose rupture Fuite fix-descentes,rotator,r rapide,rupt flexible Leckr. Träger-bösch.,drehvorr.,schnellw.,br.ventil 배관 브라켓 – 슬로프 ; 로테이터 ; 퀵 핏 ; 낙하방지장치 Fuga soporte-talud.,rot.,eng. ráp., rotura mang.
8278896		Grease can bracket Fixation pour burette à huile Halterung für Ölspritzkanne 그리스 캔 장착 브라켓 Fijación para grasa de lata
8278897		Emergency piping Conduite de secours Reserverohrleitung 비상 배관 Tubería emergencia
8279079		Dipper arm with leak seat Bras avec siège de fuite Stiel mit leckeinsitz 디퍼 암 – 배관용 브라켓 설치 Brazo con asiento de fuga *1,9M FOR EUROPE*
8279080		Grapple manoeuvre. Leak-off line on dip. arm Commande de grappin, fuite hydr. sur le bras Leckrohr für Greiferfunktion auf Stiel 클램셸 배관 – 디퍼 암 측 Fuga de aceite hidr. accion. garras en brazo *1,9M*
8279081		Grapple manoeuvre. Leak-off line on dip. arm Commande de grappin, fuite hydr. sur le bras Leckrohr für Greiferfunktion auf Stiel 클램셸 배관 – 디퍼 암 측 Fuga de aceite hidr. accion. garras en brazo *NOT EQUIPPED WITH 1,9M ARM*
8279082		Hydr. leak-off line for hammer-shear. Fuite hydraulique marteau-ciseaux. Leckrohr für Hammer-schere. 브레이커 및 크러셔 배관 Fuga hidr. para martillo-cizalla. *OFFSET TYPE WITH 1,9M ARM*
8279083		Quickfit hydraulic, single-acting Porte-outil hydraulique, simple effet Schnellwechsler, hydraulisch, einfachwirkend 퀵 핏 배관 , 한방향 작동형 Portaimplementos hidráulico, simple efecto *OFFSET TYPE WITH 1,9M ARM*
8279084		Quickfit hydraulic, double-acting Porte-outil hydraulique, double effet Schnellwechsler, hydraulisch, doppeltwirkend 퀵 핏 배관 , 양방향 작동형 Portaimplementos hidráulico, doble efecto *OFFSET TYPE WITH 1,9M ARM*

Equipment	Kit No	Description
8279318		Cooling system Système de refroidissement Kühlanlage 냉각장치 – 표준형 Sistema de refrigeración
8279319		Cooling system for tropical Système de refroidissement pour climat tropical Kühlanlage für Tropik 냉각장치 – 열대형 Sistema de refrigeración tropical
8279369		Grapple manoeuvre. Leak-off line on dip. arm Commande de grappin, fuite hydr. sur le bras Leckrohr für Greiferfunktion auf Stiel 클램셸 배관 – 디퍼 암 측 Fuga de aceite hidr. accion. garras en brazo *NOT EQUIPPED WITH 1,5M ARM*
8279415		Decals, China Autocollants, Chine Aufkleber, China 데칼 , 중국 Letreros, China
8279576		Hydraulic pump Pompe hydraulique Hydraulikpumpe 유압 펌프 Bomba hidraulica
8279577		Hydraulic pump Pompe hydraulique Hydraulikpumpe 유압 펌프 Bomba hidraulica
8279584		Bucket, narrow, open hook Godet, étroit, crochet ouvert Löffel, Schmal, offen Haken 협소용 버켓 – 개방형 훅 장착 Cuchara, delgado, gancho deslapado *0,06 CU M CECE*
8279585		Bucket, closed hook Godet, crochet fermer Löffel, verschlossen Haken 버켓 , 폐쇄형 후크 Cuchara, gancho cerrado *0,176 CU M CECE*
8279951		Decals,Korea Autocollants Aufkleber 데칼 – 국내용 Pegatinas
8280523		Boom cylinder, std seal Vérin de flèche Auslegerzylinder 붐 실린더 – 표준형 시일 Cilindro de pluma *FIXED TYPE*
8280524		Boom cylinder, std seal Vérin de flèche Auslegerzylinder 붐 실린더 – 표준형 시일 Cilindro de pluma *FIXED TYPE WITH CYLINDER COVER*

Equipment	Kit No	Description	Equipment	Kit No	Description
8280525		Boom cylinder, std seal Vérin de flèche Auslegerzylinder 붐 실린더 – 표준형 시일 Cilindro de pluma *SWING TYPE WITH CYLINDER COVER*			
8280828		Exhaust system Système d'échappement Abgasanlage 배기 시스템 Sistema de escape *KOREAN MARKET*			
8280829		Exhaust system Système d'échappement Abgasanlage 배기 시스템 Sistema de escape *EU AND NA MARKET*			

VOLVO

Construction Equipment

GROUP		Section	Page
210	Engine	100	45
210	Repair kits for engine	200	47
211	Cylinder head	100	51
211	Valve cover	200	53
212	Cylinder block	100	55
212	Flywheel housing	300	57
212	Lifting eye	500	59
213	Connecting rod and piston	100	61
214	Rocker arm	200	63
215	Camshaft	100	65
215	Timing gear casing	200	67
215	Timing gear	250	69
216	Crankshaft	100	71
216	Flywheel	200	73
217	Oil sump	100	75
218	Engine mount	100	77
220	Lubricating oil system	300	79
234	Fuel tank with fitting parts	100	81
234	Fuel filling pump	300	83
235	Fuel pipe - Fuel tank	100	85
235	Fuel pipes, fuel injec.pump-fuel filter	200	89
235	Fuel pipes-injector	300	93
236	Injection pump	100	95
237	Injector	100	97
251	Exhaust manifold	100	99
251	Inlet manifold	200	101
252	Exhaust system	100	103
256	Inlet system	100	105
261	Cooling system	100	107
261	Cooling system FOR CHINA	110	109
261	Radiator	300	111
261	Radiator FOR CHINA	310	113
262	Thermostat housing	200	115
263	Fan drive	100	117
263	Cooling fan mounting	300	119
263	Cooling fan mounting FOR CHINA	310	121
275	Speed control	100	123

TABLE DES MATIÈRES

GROUPE		Section	Page
210	Moteur	100	45
210	Jeu pour moteur	200	47
211	Culasse	100	51
211	Couvre-culasse	200	53
212	Bloc cylindres	100	55
212	Carter de volant	300	57
212	Fixation de levage	500	59
213	Bielle et piston	100	61
214	Culbuteur	200	63
215	Arbre à cames	100	65
215	Carter de la distribution	200	67
215	Transmission à roues	250	69
216	Vilebrequin	100	71
216	Volant	200	73
217	Carter d'huile	100	75
218	Support moteur	100	77
220	Système de graissage	300	79
234	Réservoir de carburant avec pièces de montage	100	81
234	Pompe de remplissage en carburant	300	83
235	Conduit de carburant - Réservoir de carburant	100	85
235	Conduits de carburant, pompe d'inj de carburant- Filtre à carburant	200	89
235	Conduits de carburant - Injecteur complet	300	93
236	Pompe d'injection	100	95
237	Injecteur complet	100	97
251	Tubulure d'échappement	100	99
251	Tubulure d'admission	200	101
252	Système d'échappement	100	103
256	Système d'aspiration	100	105
261	Système de refroidissement	100	107
261	Système de refroidissement FOR CHINA	110	109
261	Radiateur	300	111
261	Radiateur FOR CHINA	310	113
262	Boîtier de thermostat	200	115
263	Entraînement de ventilateur	100	117
263	Ventilateur, montage	300	119
263	Ventilateur, montage FOR CHINA	310	121
275	Commande de vitesse	100	123

GRUPPE		Abschnitt	Seite
210	Motor	100	45
210	Motorsätze	200	47
211	Zylinderkopf	100	51
211	Ventilkammerdeckel	200	53
212	Zylinderblock	100	55
212	Schwungradgehäuse	300	57
212	Hebezeug	500	59
213	Verbindungsstange und Kolben	100	61
214	Kipphebel	200	63
215	Nockenwelle	100	65
215	Steuergehäuse	200	67
215	Rädergetriebe	250	69
216	Kurbelwelle	100	71
216	Schwungrad	200	73
217	Ölwanne	100	75
218	Motorbefestigung	100	77
220	Schmierölsystem	300	79
234	Kraftstofftank mit Anbauteilen	100	81
234	Betankungspumpe	300	83
235	Kraftstoffrohr - Kraftstofftank	100	85
235	Kraftstoffrohre, Einspritzpumpe - Kraftstoff	200	89
235	Kraftstoffrohre, Einspritzdüse	300	93
236	Einspritzpumpe	100	95
237	Einspritzdüse	100	97
251	Auspuffkrümmer	100	99
251	Einlassrohr	200	101
252	Auspuffanlage	100	103
256	Ansaugsystem	100	105
261	Kühlanlage	100	107
261	Kühlanlage FOR CHINA	110	109
261	Kühler	300	111
261	Kühler FOR CHINA	310	113
262	Thermostatgehäuse	200	115
263	Lüftermotor	100	117
263	Sauglüfter, Montage	300	119
263	Sauglüfter, Montage FOR CHINA	310	121
275	Geschwindigkeitsregler	100	123

목차

그룹		절	페이지
210	엔진	100	45
210	엔진 수리 부품	200	47
211	실린더 헤드	100	51
211	밸브 커버	200	53
212	실린더 블록	100	55
212	플라이휠 하우징	300	57
212	리프팅 브라켓	500	59
213	커넥팅 로드 및 피스톤	100	61
214	로커 암	200	63
215	캠 축	100	65
215	타이밍 기어 케이싱	200	67
215	타이밍 기어	250	69
216	크랭크 샤프트	100	71
216	플라이휠	200	73
217	오일 팬	100	75
218	엔진 장착 부품	100	77
220	윤활 장치	300	79
234	연료 탱크 및 장착 부품	100	81
234	연료 주유 펌프	300	83
235	연료 흡입 및 리턴 배관	100	85
235	배관 , 연료 분사펌프에서 연료 필터	200	89
235	연료 인젝터 배관	300	93
236	연료 분사 펌프	100	95
237	인젝터	100	97
251	배기 매니홀드	100	99
251	흡기 매니홀드	200	101
252	배기 장치	100	103
256	흡기 장치	100	105
261	냉각장치	100	107
261	냉각장치	110	109
261	라디에이터	300	111
261	라디에이터	310	113
262	항온기 하우징	200	115
263	팬 드라이브	100	117
263	냉각 팬 장착	300	119
263	냉각 팬 장착	310	121
275	속도 제어 장치	100	123

GRUPO		Sección	Página
210	Motor	100	45
210	Juegos para el motor	200	47
211	Culata	100	51
211	Tapa de válvulas	200	53
212	Bloque de cilindros	100	55
212	Carcasa del volante	300	57
212	Soporte elevador	500	59
213	Biela y pistón	100	61
214	Balancín	200	63
215	Eje de levas	100	65
215	Tapa del engranaje de distribución	200	67
215	Engranaje de distribución	250	69
216	Cigüeñal	100	71
216	Volante	200	73
217	Cárter de aceite	100	75
218	Suspensión del motor	100	77
220	Sistema de lubricación	300	79
234	Depósito de combustible con accesorios de montaje	100	81
234	Bomba de repostaje	300	83
235	Tubo de combustible - Depósito de combustible	100	85
235	Tubos de combustible, bomba de inyección de comb.-filtro de co	200	89
235	Tubos de combustible-inyector	300	93
236	Bomba de inyección	100	95
237	Inyector	100	97
251	Colector de escape	100	99
251	Tubo de admisión	200	101
252	Sistema de escape	100	103
256	Sistema de aspiración	100	105
261	Sistema de refrigeración	100	107
261	Sistema de refrigeración FOR CHINA	110	109
261	Radiador	300	111
261	Radiador FOR CHINA	310	113
262	Caja de termostato	200	115
263	Accionamiento del ventilador	100	117
263	Ventilador, montaje	300	119
263	Ventilador, montaje FOR CHINA	310	121
275	Control de velocidad	100	123

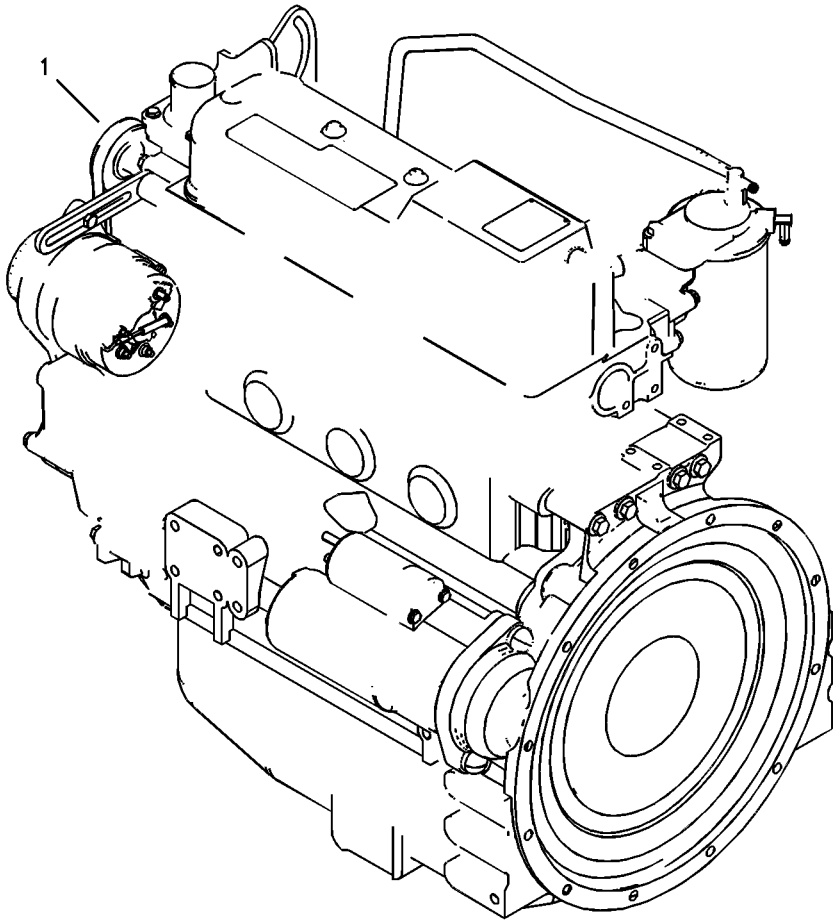
1

Fig.	Part No.	Quantity 1	2	3	PS	KIT	Description	Dénomination	Bezeichnung	품명	Denominación	Notes
1	**VOE 14517926**	1			SS		Engine	Moteur	Verbrenn Motor	엔진	Motor	With EU label SER NO 30001-32002
	VOE 14524464	1			SS		Engine	Moteur	Verbrenn Motor	엔진	Motor	SER NO 32003-33292
	VOE 14533407	1			OP		Engine	Moteur	Verbrenn Motor	엔진	Motor	SER NO 33293-33895
	VOE 14535610	1			SS		Engine	Moteur	Verbrenn Motor	엔진	Motor	SER NO 33896-34475 SER NO 50001-50129
	VOE 14540360	1					Engine	Moteur	Verbrenn Motor	엔진	Motor	SER NO 34476- SER NO 50130-
	VOE 14520057		1				Engine	Moteur	Verbrenn Motor	엔진	Motor	Without labels SER NO 30001-33452
	VOE 14533406		1		OP		Engine	Moteur	Verbrenn Motor	엔진	Motor	SER NO 33453-33895 SER NO 50001-50093
	VOE 14535609		1				Engine	Moteur	Verbrenn Motor	엔진	Motor	SER NO 33896-34475 SER NO 50094-50129
	VOE 14540365		1				Engine	Moteur	Verbrenn Motor	엔진	Motor	SER NO 34476- SER NO 50130-
	VOE 14520058			1	SS		Engine	Moteur	Verbrenn Motor	엔진	Motor	With EPA label SER NO 30001-32189
	VOE 14524464			1	SS		Engine	Moteur	Verbrenn Motor	엔진	Motor	SER NO 32190-33292
	VOE 14533407			1	OP		Engine	Moteur	Verbrenn Motor	엔진	Motor	SER NO 33293-33895
	VOE 14535610			1	SS		Engine	Moteur	Verbrenn Motor	엔진	Motor	SER NO 33896-34475 SER NO 50001-50129
	VOE 14540360			1			Engine	Moteur	Verbrenn Motor	엔진	Motor	SER NO 34476- SER NO 50130-

1	**8278797**	**Motor** 엔진 **Motor** **Moteur** **Engine**	Catalogue id **20019**	Group **210**
2	**8278798**			
3	**8278799**		Illustr. No **1006949**	Section **100**
4				
5			Issue **VOE 74H9920019**	Page **45**

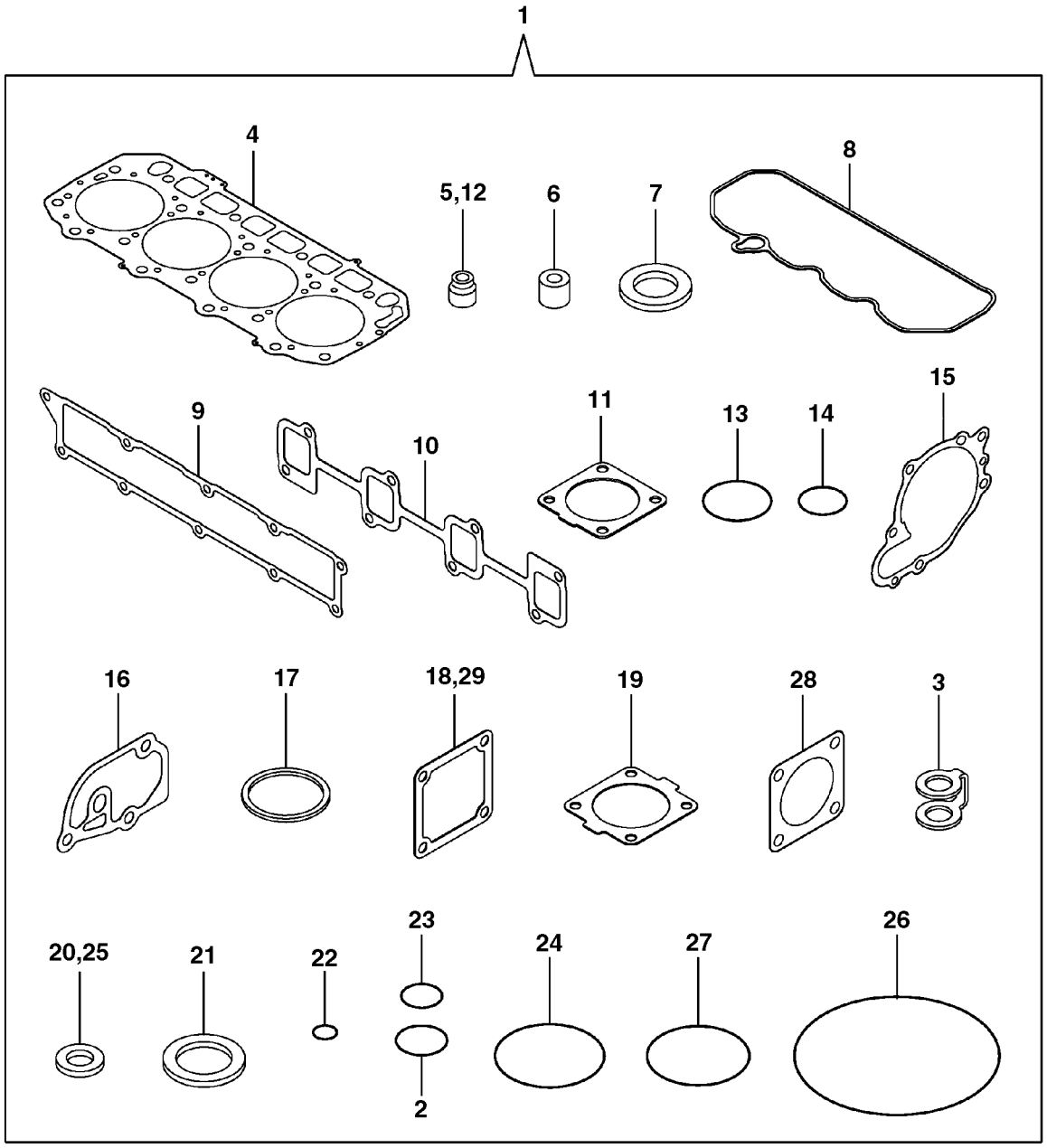

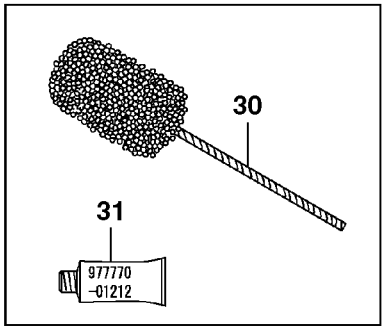

Volvo Construction Equipment
1006950

Fig.	Part No.	Quantity 1	2	3	PS	KIT	Description	Dénomination	Bezeichnung	품명	Denominación	Notes
1	**VOE 14521640**	1	1	1			Gasket	Joint	Dichtung	가스켓	Junta	Optional part
2	**VOE 14521588**	1	1	1			•O-ring	•Joint Torique	•O-Ring	• 오링	•Junta torica	
3	**VOE 14521606**	5	5	5			•Packing	•Joint	•Dichtung	• 패킹	•Empaquetadura	
4	**VOE 14521505**	1	1	1			•Gasket	•Joint	•Dichtung	• 가스켓	•Junta	
5	**VOE 14521527**	8	8	8			•Seal	•Joint	•Dichtring	• 시일	•Junta	
6	**VOE 14521532**	4	4	4			•Protector	•Protection	•Schutz	• 프로텍터	•Protector	
7	**SA 8210-08770**	4	4	4	SS		•Seat	•Siege	•Sitz	• 시트	•Asiento	
8	**VOE 14521552**	1	1	1			•Gasket	•Joint	•Dichtung	• 가스켓	•Junta	
9	**VOE 14521554**	1	1	1			•Packing	•Joint	•Dichtung	• 패킹	•Empaquetadura	
10	**SA 8210-04570**	1	1	1			•Gasket	•Joint	•Dichtung	• 가스켓	•Junta	
11	**VOE 14520599**	1	1	1			•Gasket	•Joint	•Dichtung	• 가스켓	•Junta	
12	**VOE 14521528**	8	8	8			•Valve Seal	•Joint Soupape	•Ventildichtung	• 밸브 시일	•Reten Valvula	
13	**SA 8210-04770**	2	2	2			•O-ring	•Joint Torique	•O-Ring	• 오링	•Junta torica	
14	**SA 8210-04780**	1	1	1			•O-ring	•Joint Torique	•O-Ring	• 오링	•Junta torica	
15	**SA 8210-04820**	1	1	1			•Gasket	•Joint	•Dichtung	• 가스켓	•Junta	
16	**SA 8210-04840**	1	1	1			•Gasket	•Joint	•Dichtung	• 가스켓	•Junta	
17	**SA 8210-02790**	1	1	1			•Packing	•Joint	•Dichtung	• 패킹	•Empaquetadura	
18	**SA 8210-02840**	1	1	1			•Gasket	•Joint	•Dichtung	• 가스켓	•Junta	
19	**SA 8210-02780**	1	1	1			•Gasket	•Joint	•Dichtung	• 가스켓	•Junta	
20	**VOE 11714477**	3	3	3			•Gasket	•Joint	•Dichtung	• 가스켓	•Junta	(SA 8210-05580)
21	**VOE 11714478**	2	2	2			•Gasket	•Joint	•Dichtung	• 가스켓	•Junta	(SA 8210-03370)
22	**SA 8210-08860**	1	1	1			•O-ring	•Joint Torique	•O-Ring	• 오링	•Junta torica	
23	**VOE 11714386**	8	8	8			•O-ring	•Joint Torique	•O-Ring	• 오링	•Junta torica	(SA 8210-08870)
24	**VOE 11714371**	3	3	3			•O-ring	•Joint Torique	•O-Ring	• 오링	•Junta torica	(SA 8210-08880)
25	**VOE 11714476**	7	7	7			•Seal	•Joint	•Dichtring	• 시일	•Junta	(SA 8240-01020)
26	**VOE 14509382**	1	1	1			•O-ring	•Joint Torique	•O-Ring	• 오링	•Junta torica	
27	**VOE 14521512**	1	1	1			•Packing	•Joint	•Dichtung	• 패킹	•Empaquetadura	
28	**VOE 14521514**	1	1	1			•Gasket	•Joint	•Dichtung	• 가스켓	•Junta	
29	**SA 8210-01870**	1	1	1			•Gasket	•Joint	•Dichtung	• 가스켓	•Junta	
30	**VOE 14521641**	1	1	1			Brush	Balai	Bürste	브러시	Escobilla	Optional part

1	**8278797**
2	**8278798**
3	**8278799**
4	
5	

Juegos para el motor
엔진 수리 부품
Motorsätze
Jeu pour moteur
Repair kits for engine

Catalogue id **20019**	Group **210**
Illustr. No **1006950**	Section **200**
Issue **VOE 74H9920019**	Page **47**

VOLVO

EC55B

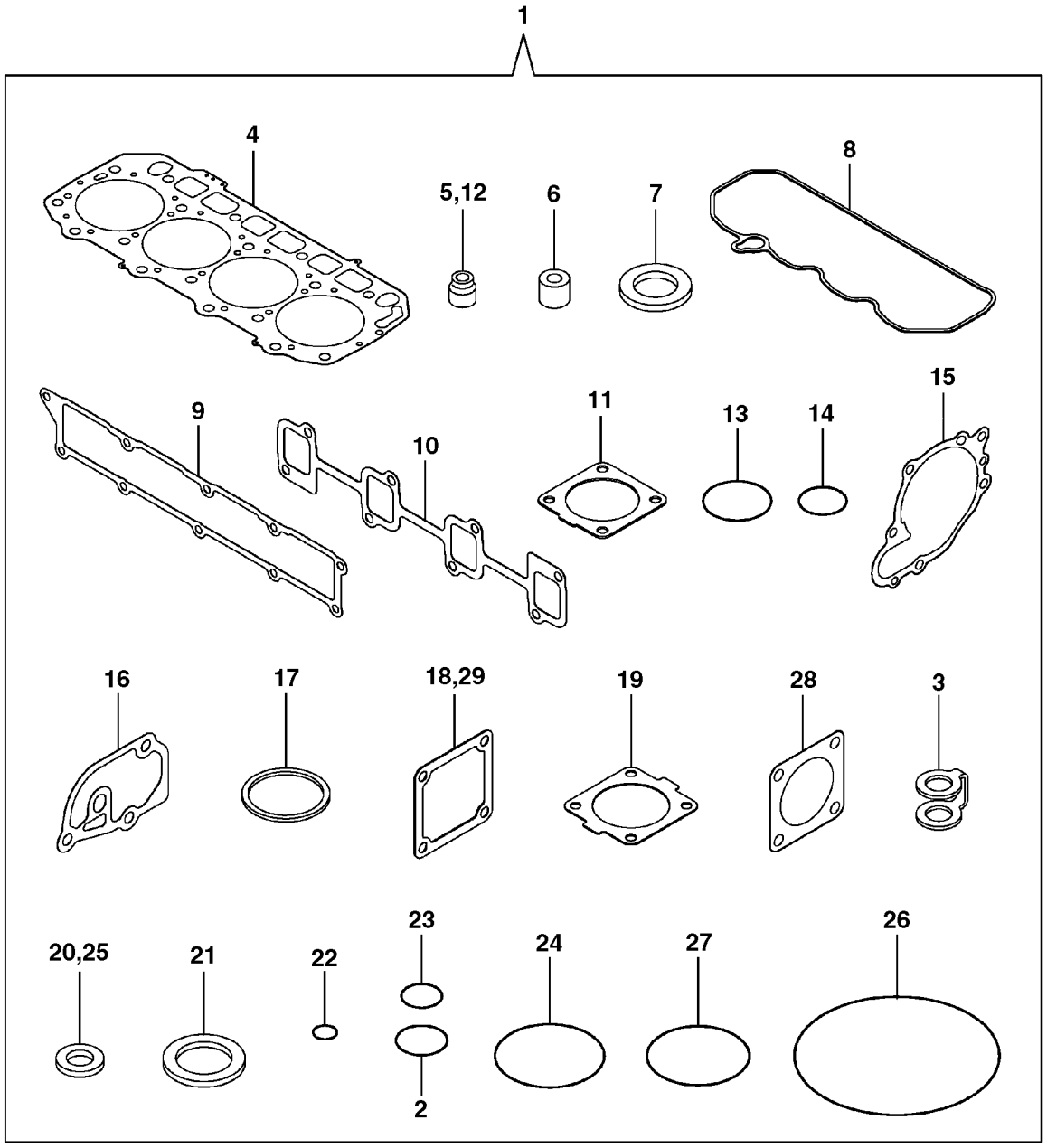

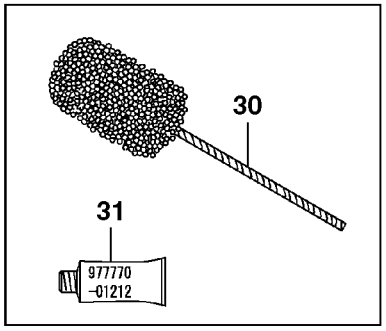

Volvo Construction Equipment
1006950

Fig.	Part No.	Quantity 1	2	3	PS	KIT	Description	Dénomination	Bezeichnung	품명	Denominación	Notes
31	**SA 8240-02760**	1	1	1			Gasket	Joint	Dichtung	가스켓	Junta	Optional part

1	**8278797**
2	**8278798**
3	**8278799**
4	
5	

Juegos para el motor
엔진 수리 부품
Motorsätze
Jeu pour moteur
Repair kits for engine

Catalogue id **20019**	Group **210**
Illustr. No **1006950**	Section **200**
Issue **VOE 74H9920019**	Page **49**

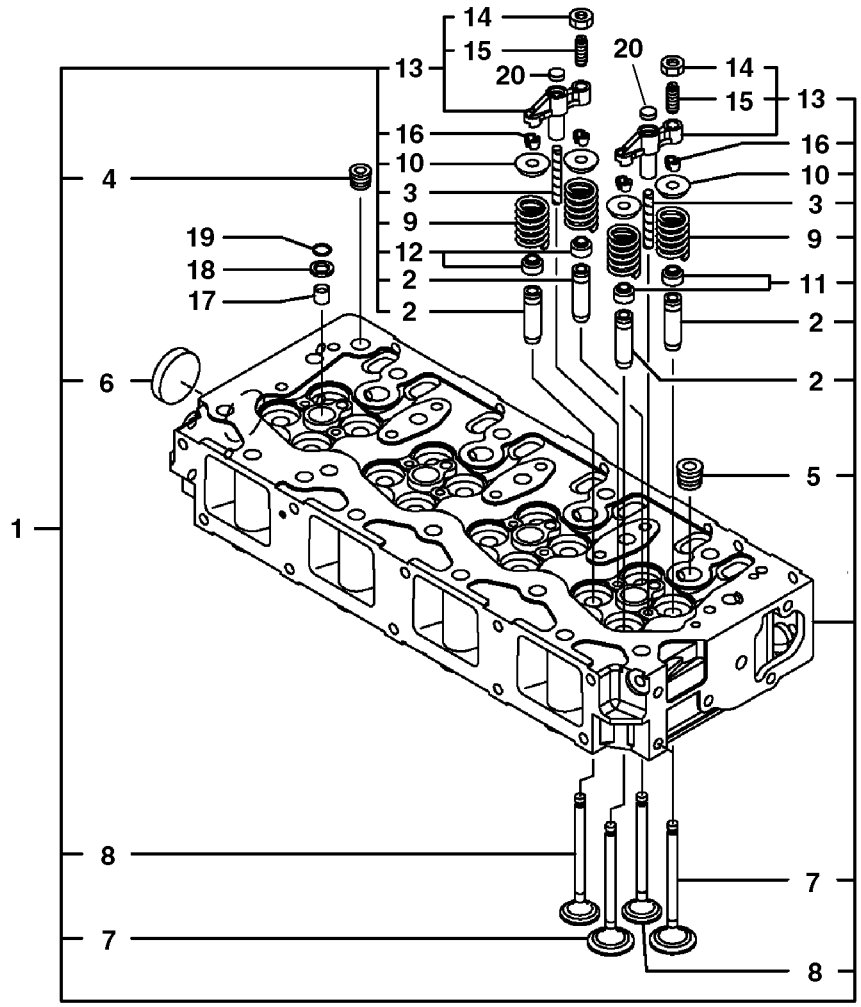
14
15
20
13
16
10
4
3
9
19
12
18
2
17
2
6
1
8
7
20
14
15
13
16
10
3
9
11
2
2
5
7
8

Fig.	Part No.	Quantity 1	2	3	PS	KIT	Description	Dénomination	Bezeichnung	품명	Denominación	Notes
1	**VOE 14521519**	1	1	1			Cylinder head	Culasse	Zylinderkopf	실린더 헤드	Culata	
2	**VOE 14521520**	16	16	16			•Guide	•Rail	•Führung	• 가이드	•Guia	
3	**VOE 14521521**	8	8	8			•Guide	•Rail	•Führung	• 가이드	•Guia	
4	**VOE 14521522**	1	1	1			•Plug	•Bouchon	•Stopfen	• 플러그	•Tapon	
5	**VOE 14521504**	4	4	4			•Plug	•Tampon	•Stopfen	• 플러그	•Tapon	
6	**VOE 11714379**	1	1	1			•Plug	•Bouchon	•Stopfen	• 플러그	•Tapon	(SA 8210-05840)
7	**VOE 14521523**	8	8	8			•Valve	•Soupape	•Ventil	• 밸브	•Valvula	
8	**VOE 14521524**	8	8	8			•Valve	•Soupape	•Ventil	• 밸브	•Valvula	
9	**VOE 14521525**	16	16	16			•Spring	•Ressort	•Feder	• 스프링	•Muelle	
10	**VOE 14521526**	16	16	16			•Retainer	•Retenue	•Halter	• 리테이너	•Soporte	
11	**VOE 14521527**	8	8	8			•Seal	•Joint	•Dichtring	• 시일	•Junta	
12	**VOE 14521528**	8	8	8			•Valve Seal	•Joint Soupape	•Ventildichtung	• 밸브 시일	•Reten Valvula	
13	**VOE 14521529**	8	8	8			•Bridge	•Pont	•Brücke	• 브리지	•Puente	
14	**VOE 11714380**	8	8	8			••Nut	••Ecrou	••Mutter	•• 너트	••Tuerca	(SA 8210-03680)
15	**VOE 14521530**	8	8	8			••Screw	••Vis	••Schraube	•• 스크류	••Tornillo	
16	**VOE 14521531**	16	16	16			•Valve Collet	•Clavette soupape	•Ventilschloss	• 밸브 콜릿	•Cierre Valvula	
17	**VOE 14521532**	4	4	4			Protector	Protection	Schutz	프로텍터	Protector	
18	**SA 8210-08770**	4	4	4	SS		Seat	Siege	Sitz	시트	Asiento	
19	**VOE 11714386**	4	4	4			O-ring	Joint Torique	O-Ring	오링	Junta torica	(SA 8210-08870)
20	**VOE 14521518**	8	8	8			Thrust Washer	Rondelle Butee	Druckscheibe	스러스트 와셔	Arandela Presio	

1	**8278797**	**Culata** 실린더 헤드 **Zylinderkopf** **Culasse** **Cylinder head**	Catalogue id **20019** / Group **211**
2	**8278798**		
3	**8278799**		Illustr. No **1006951** / Section **100**
4			
5			Issue **VOE 74H9920019** / Page **51**

VOLVO

EC55B

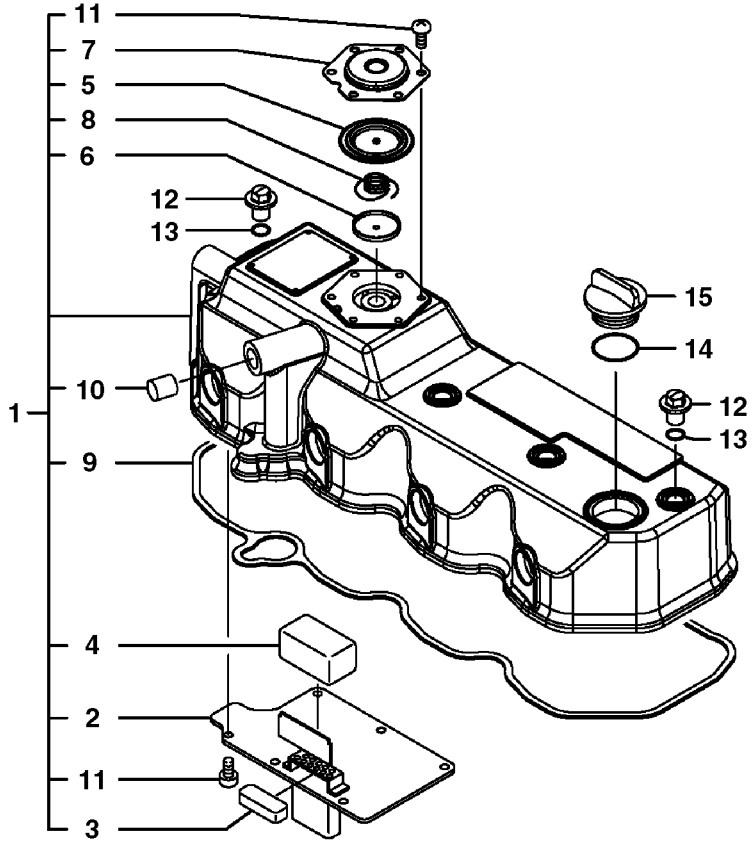
11
7
5
8
6
12
13
15
14
12
13
10
1
9
4
2
11
3

Fig.	Part No.	Quantity 1	2	3	PS	KIT	Description	Dénomination	Bezeichnung	품명	Denominación	Notes
1	**VOE 14521544**	1	1	1			Cover	Capot	Haube	커버	Capo	
2	**VOE 14521545**	1	1	1			•Plate	•Plaque	•Platte	• 플레이트	•Placa	
3	**VOE 14521546**	1	1	1			•Baffle	•Paroi Intermed.	•Spritzwand	• 배플	•Pared Intermed.	
4	**VOE 14521547**	1	1	1			•Filter	•Filtre	•Filter	• 필터	•Filtro	
5	**VOE 14521548**	1	1	1			•Diaphragm	•Diaphragme	•Membrane	• 다이어프램	•Diafragma	
6	**VOE 14521549**	1	1	1			•Plate	•Plaque	•Platte	• 플레이트	•Placa	
7	**VOE 14521550**	1	1	1			•Plate	•Plaque	•Platte	• 플레이트	•Placa	
8	**VOE 14521551**	1	1	1			•Spring	•Ressort	•Feder	• 스프링	•Muelle	
9	**VOE 14521552**	1	1	1			•Gasket	•Joint	•Dichtung	• 가스켓	•Junta	
10	**VOE 14521553**	1	1	1			•Plug	•Bouchon	•Stopfen	• 플러그	•Tapon	
11	**SA 8210-08850**	12	12	12			•Screw	•Vis	•Schraube	• 스크류	•Tornillo	
12	**VOE 11714385**	4	4	4			Knob	Bouton	Knauf	손잡이	Boton	(SA 8210-03250)
13	**VOE 11714386**	4	4	4			O-ring	Joint Torique	O-Ring	오링	Junta torica	(SA 8210-08870)
14	**VOE 11714371**	1	1	1			O-ring	Joint Torique	O-Ring	오링	Junta torica	(SA 8210-08880)
15	**VOE 11714383**	1	1	1			Cap	Chapeau	Kappe	캡	Caperuza	(SA 8210-03240)

1	**8278797**
2	**8278798**
3	**8278799**
4	
5	

Tapa de válvulas
밸브 커버
Ventilkammerdeckel
Couvre-culasse
Valve cover

Catalogue id **20019**	Group **211**
Illustr. No **1006952**	Section **200**
Issue **VOE 74H9920019**	Page **53**

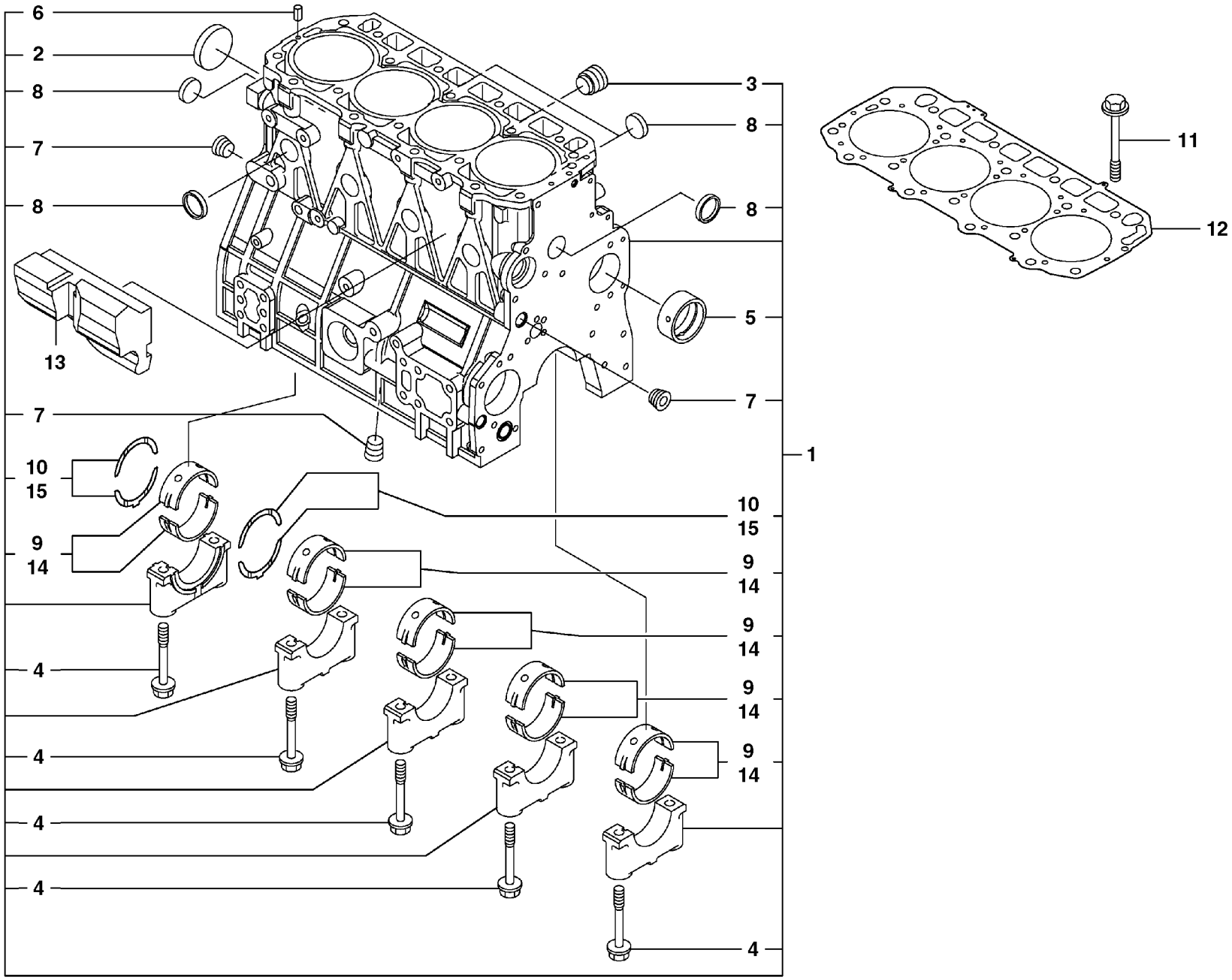

Volvo Construction Equipment

1006953

Fig.	Part No.	Quantity 1	2	3	PS	KIT	Description	Dénomination	Bezeichnung	품명	Denominación	Notes
1	**VOE 14521502**	1	1	1			Cylinder Block	Bloc-cylindres	Zylinderblock	실린더 블록	Bloque Cilindro	
2	**VOE 14521503**	1	1	1			•Plug	•Bouchon	•Stopfen	• 플러그	•Tapon	
3	**SA 8210-05320**	1	1	1	SS		•Plug	•Bouchon	•Stopfen	• 플러그	•Tapon	
4	**SA 8210-04340**	10	10	10			•Bolt	•Boulon	•Bolzen	• 볼트	•Perno	
5	**SA 8210-04360**	1	1	1			•Bushing	•Bague	•Buchse	• 부싱	•Casquillo	
6	**VOE 11714387**	2	2	2			•Spring Pin	•Axe de ressort	•Federstift	• 스프링 핀	•Pasador Resorte	(SA 8240-01340)
7	**VOE 14521504**	3	3	3			•Plug	•Tampon	•Stopfen	• 플러그	•Tapon	
8	**VOE 11714369**	8	8	8			•Plug	•Bouchon	•Stopfen	• 플러그	•Tapon	(SA 8210-06750)
9	**SA 8210-04370**	5	5	5	SS		•Bearing	•Palier	•Lager	• 베어링	•Cojinete	
10	**SA 8210-04380**	2	2	2			•Bearing	•Palier	•Lager	• 베어링	•Cojinete	
11	**SA 8210-04270**	18	18	18			Bolt	Boulon	Bolzen	볼트	Perno	
12	**VOE 14521505**	1	1	1			Gasket	Joint	Dichtung	가스켓	Junta	
13	**VOE 14521506**	1	1	1			Spacer	Partie Intermédiaire	Zwischenstück	스페이서	Espaciador	
14	**SA 8210-04350**	5	5	5			Bearing	Palier	Lager	베어링	Cojinete	0,25 U SZ
15	**SA 8210-04390**	2	2	2			Bearing	Palier	Lager	베어링	Cojinete	0,25 O SZ

1	**8278797**
2	**8278798**
3	**8278799**
4	
5	

Bloque de cilindros
실린더 블록
Zylinderblock
Bloc cylindres
Cylinder block

Catalogue id **20019**	Group **212**
Illustr. No **1006953**	Section **100**
Issue **VOE 74H9920019**	Page **55**

VOLVO

EC55B

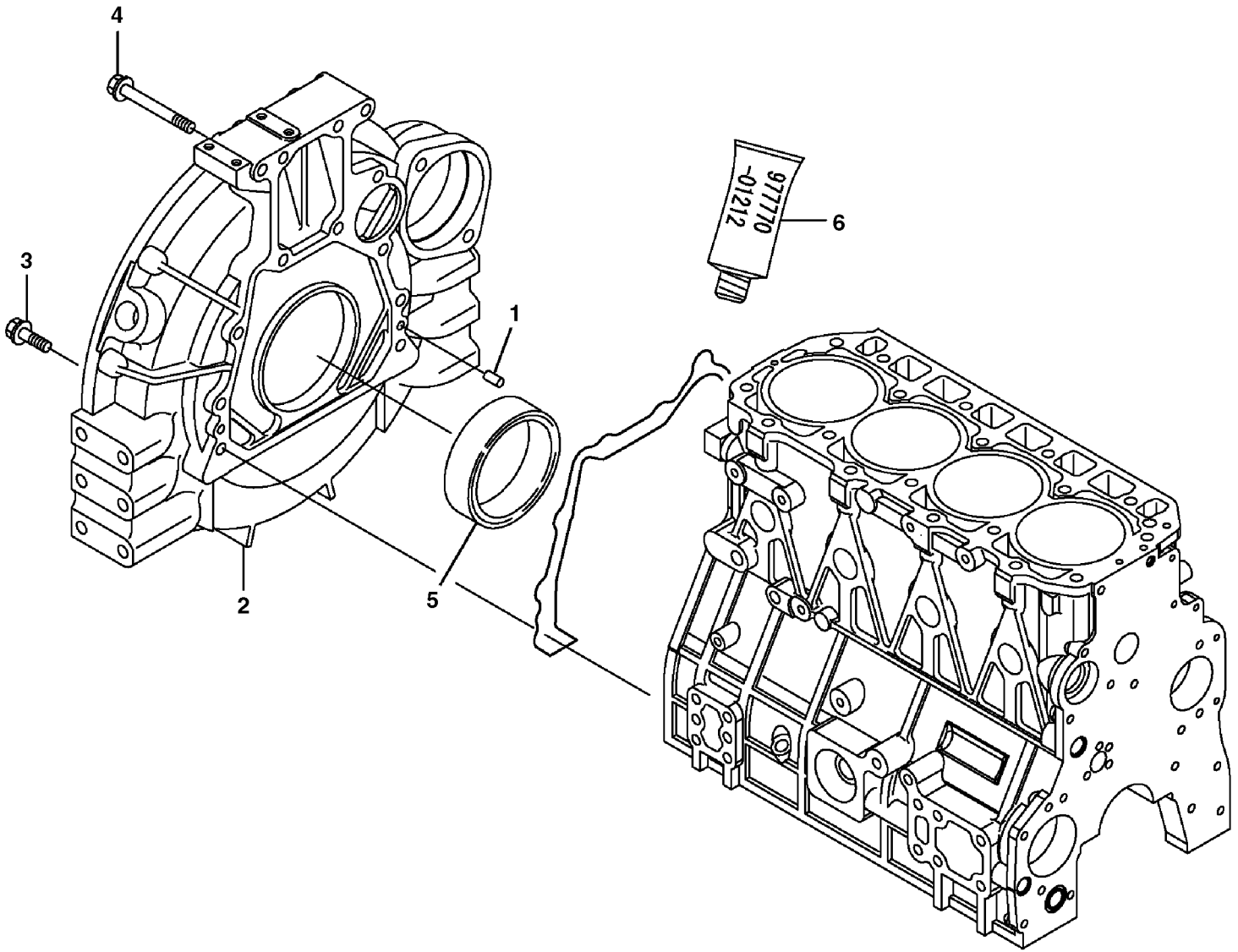
4
3
1
2
5
6
97770-01212

Fig.	Part No.	Quantity 1	2	3	PS	KIT	Description	Dénomination	Bezeichnung	품명	Denominación	Notes
1	**VOE 11714376**	2	2	2			Pin	Goupille	Stift	핀	Pasador	(SA 8210-03530)
2	**SA 8210-04290**	1	1	1			Cover	Capot	Haube	커버	Capo	
3	**VOE 11714763**	9	9	9			Screw	Vis	Schraube	스크류	Tornillo	(SA 8240-01980)
4	**VOE 11714764**	4	4	4			Screw	Vis	Schraube	스크류	Tornillo	(SA 8240-01990)
5	**VOE 14514458**	1	1	1			Seal	Joint	Dichtung	실	Reten	
6	**SA 8240-02760**	1	1	1			Gasket	Joint	Dichtung	가스켓	Junta	Optional part

1	**8278797**
2	**8278798**
3	**8278799**
4	
5	

Carcasa del volante
플라이휠 하우징
Schwungradgehäuse
Carter de volant
Flywheel housing

Catalogue id **20019**	Group **212**
Illustr. No **1006954**	Section **300**
Issue **VOE 74H9920019**	Page **57**

VOLVO

EC55B

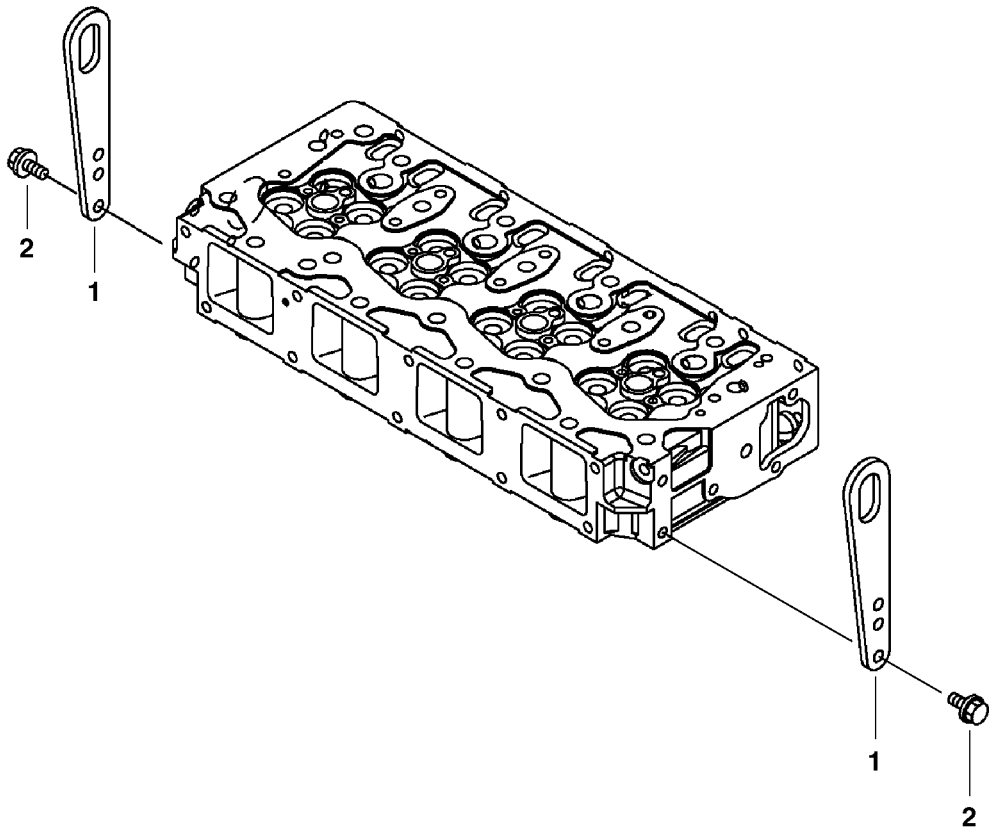
2
1
1
2

Fig.	Part No.	Quantity 1	2	3	PS	KIT	Description	Dénomination	Bezeichnung	품명	Denominación	Notes
1	**VOE 11714378**	2	2	2			Lift	Levage	Hebezeug	리프트	Elevador	(SA 8210-04400)
2	**VOE 11714372**	4	4	4			Screw	Vis	Schraube	스크류	Tornillo	(SA 8240-01680)

1	**8278797**
2	**8278798**
3	**8278799**
4	
5	

Soporte elevador
리프팅 브라켓
Hebezeug
Fixation de levage
Lifting eye

Catalogue id **20019**	Group **212**
Illustr. No **1006955**	Section **500**
Issue **VOE 74H9920019**	Page **59**

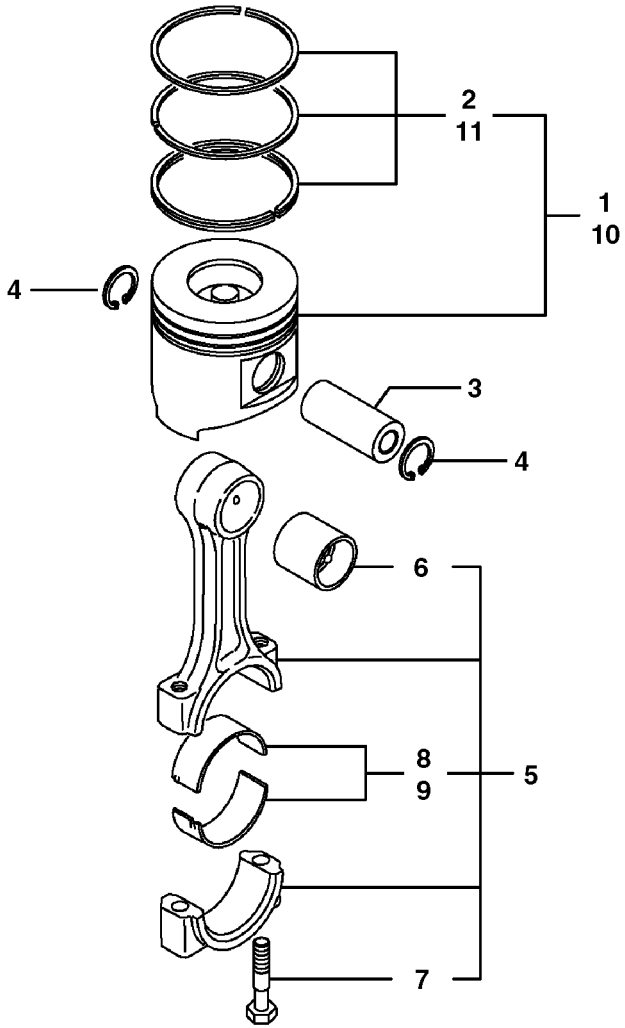
2
11
1
10
4
3
4
6
8
9
5
7

Fig.	Part No.	Quantity 1	2	3	PS	KIT	Description	Dénomination	Bezeichnung	품명	Denominación	Notes
1	**VOE 14521566**	4	4	4			Piston	Piston	Kolben	피스톤	Piston	
2	**VOE 14521567**	4	4	4			•Ring	•Anneau	•Ring	• 링	•Anillo	
3	**SA 8210-02170**	4	4	4			Pin	Goupille	Zapfen	핀	Pasador	
4	**SA 8240-01140**	8	8	8			Ring	Anneau	Ring	링	Anillo	
5	**SA 8210-04680**	4	4	4			Connecting Rod	Bielle	Pleuel	커넥팅 로드	Biela	
6	**SA 8210-04720**	1	1	1			•Bushing	•Bague	•Buchse	• 부싱	•Casquillo	Repair part
7	**SA 8210-04690**	2	2	2			•Bolt	•Boulon	•Bolzen	• 볼트	•Perno	
8	**SA 8210-04700**	1	1	1			•Bushing	•Bague	•Buchse	• 부싱	•Casquillo	
9	**SA 8210-04710**	4	4	4			Bearing	Palier	Lager	베어링	Cojinete	0,25 U SZ
10	**VOE 14521568**	4	4	4			Piston	Piston	Kolben	피스톤	Piston	0,25 O SZ
11	**VOE 14521569**	4	4	4			•Ring	•Anneau	•Ring	• 링	•Anillo	0,25 O SZ

1	**8278797**	**Biela y pistón** 커넥팅 로드 및 피스톤 **Verbindungsstange und Kolben** **Bielle et piston** **Connecting rod and piston**	Catalogue id **20019**	Group **213**
2	**8278798**		Illustr. No **1006956**	Section **100**
3	**8278799**		Issue **VOE 74H9920019**	Page **61**
4				
5				

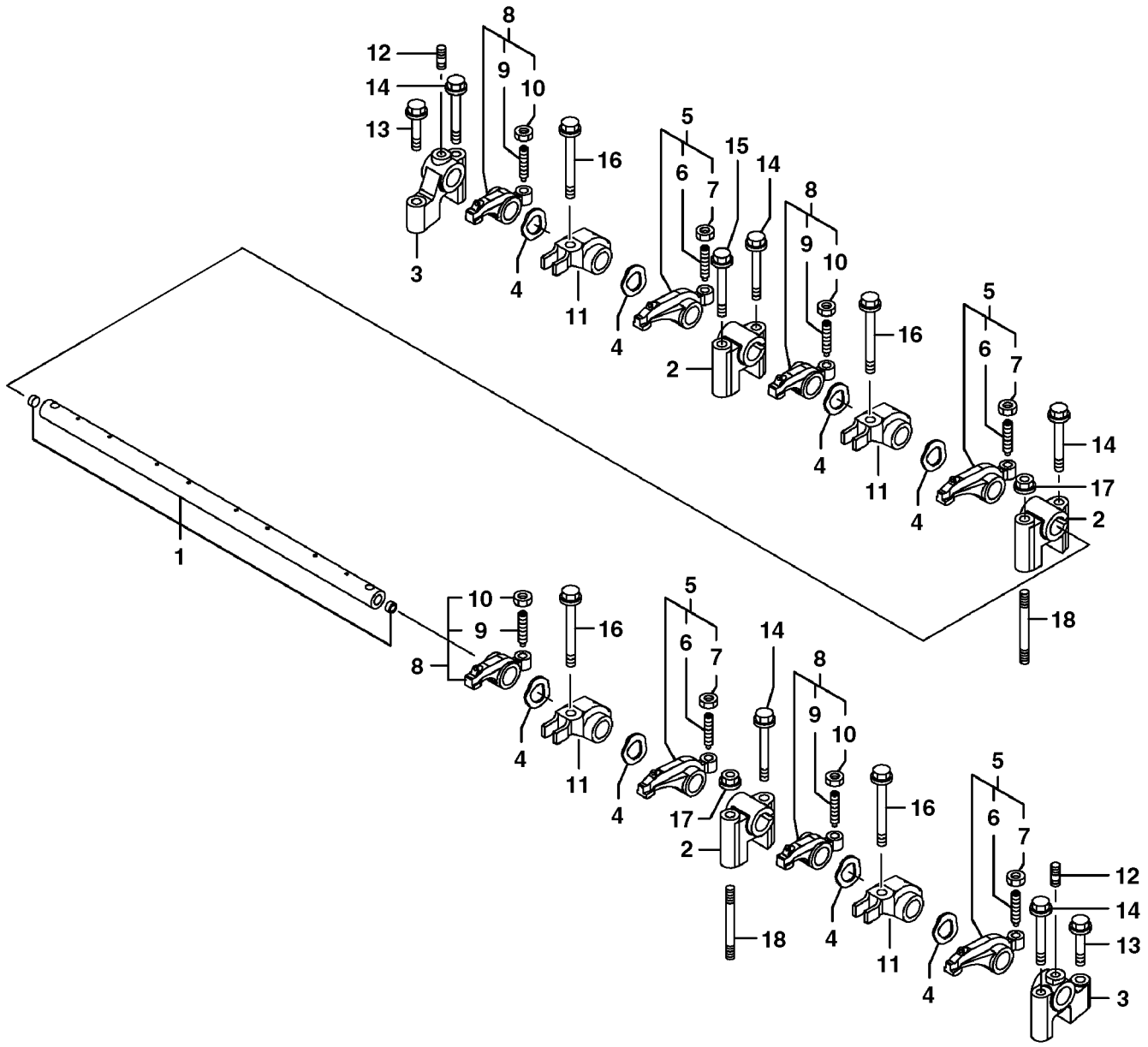
1
2
3
4
5
6
7
8
9
10
11
12
13
14
15
16
17
18

Fig.	Part No.	Quantity 1	2	3	PS	KIT	Description	Dénomination	Bezeichnung	품명	Denominación	Notes
1	**VOE 14521534**	1	1	1	SS		Support	Support	Stütze	서포트	Apoyo	
	VOE 14521535	1	1	1			•Shaft	•Arbre	•Welle	• 샤프트	•Arbol	
2	**VOE 14521536**	3	3	3			•Support	•Support	•Stütze	• 서포트	•Apoyo	
3	**VOE 14521537**	2	2	2			•Support	•Support	•Stütze	• 서포트	•Apoyo	
4	**VOE 14521538**	8	8	8			•Washer	•Rondelle	•Scheibe	• 와셔	•Arandela	
5	**VOE 14521539**	4	4	4			•Rocker Arm	•Culbuteur	•Kipphebel	• 로커 암	•Balancin	
6	**SA 8210-03660**	1	1	1			••Screw	••Vis	••Schraube	•• 스크류	••Tornillo	
7	**VOE 11714380**	1	1	1			••Nut	••Ecrou	••Mutter	•• 너트	••Tuerca	(SA 8210-03680)
8	**VOE 14521540**	4	4	4			•Rocker Arm	•Culbuteur	•Kipphebel	• 로커 암	•Balancin	
9	**SA 8210-03660**	1	1	1			••Screw	••Vis	••Schraube	•• 스크류	••Tornillo	
10	**VOE 11714380**	1	1	1			••Nut	••Ecrou	••Mutter	•• 너트	••Tuerca	(SA 8210-03680)
11	**VOE 14521541**	4	4	4			•Retainer	•Retenue	•Halter	• 리테이너	•Soporte	
12	**VOE 14521542**	2	2	2			•Bolt	•Boulon	•Bolzen	• 볼트	•Perno	
13	**VOE 11714487**	2	2	2			Bolt	Boulon	Bolzen	볼트	Perno	(SA 8240-01710)
14	**SA 8240-01740**	5	5	5			Bolt	Boulon	Bolzen	볼트	Perno	
15	**SA 8240-01750**	1	1	1			Bolt	Boulon	Bolzen	볼트	Perno	
16	**SA 8240-01770**	4	4	4			Bolt	Boulon	Bolzen	볼트	Perno	
17	**VOE 14521543**	2	2	2			Nut	Ecrou	Mutter	너트	Tuerca	
18	**VOE 14521533**	2	2	2			Bolt	Boulon	Bolzen	볼트	Perno	

1	**8278797**	**Balancín** 로커 암 **Kipphebel** **Culbuteur** **Rocker arm**	Catalogue id **20019** / Group **214**
2	**8278798**		Illustr. No **1006957** / Section **200**
3	**8278799**		Issue **VOE 74H9920019** / Page **63**
4			
5			

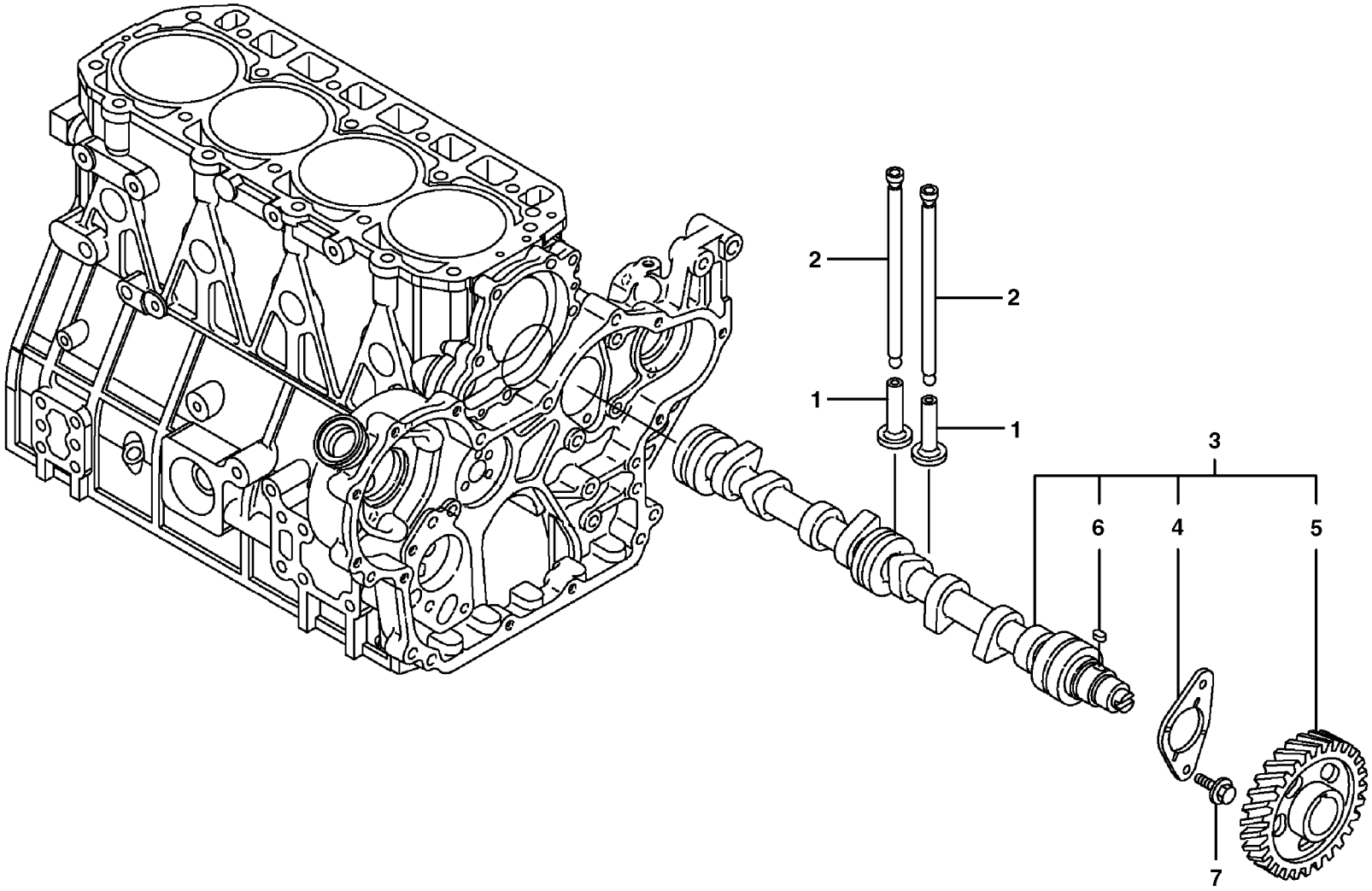

Volvo Construction Equipment
1006958

Fig.	Part No.	Quantity 1	2	3	PS	KIT	Description	Dénomination	Bezeichnung	품명	Denominación	Notes
1	**SA 8210-08810**	8	8	8	SS		Tappet	Poussoir Pompe	Pumpdrucker	태핏	Balancin	
2	**VOE 14521559**	8	8	8			Rod	Monture	Fuhler	로드	Varilla	
3	**VOE 14521560**	1	1	1			Camshaft	Arbre a cames	Nockenwelle	캠축	Eje de levas	
4	**VOE 11714486**	1	1	1			•Thrust Washer	•Rondelle Butee	•Druckscheibe	• 스러스트 와셔	•Arandela Presio	(SA 8210-03640)
5	**SA 8210-04580**	1	1	1			•Gear	•Pignon	•Zahnradgetriebe	• 기어	•Engranaje	
6	**VOE 11714468**	1	1	1			•Key	•Clavette	•Keil	• 키	•Llave (cuna)	(SA 8210-05520)
7	**VOE 11714372**	2	2	2			Screw	Vis	Schraube	스크류	Tornillo	(SA 8240-01680)

1	**8278797**
2	**8278798**
3	**8278799**
4	
5	

Eje de levas
캠 축
Nockenwelle
Arbre à cames
Camshaft

Catalogue id **20019**	Group **215**
Illustr. No **1006958**	Section **100**
Issue **VOE 74H9920019**	Page **65**

VOLVO

EC55B

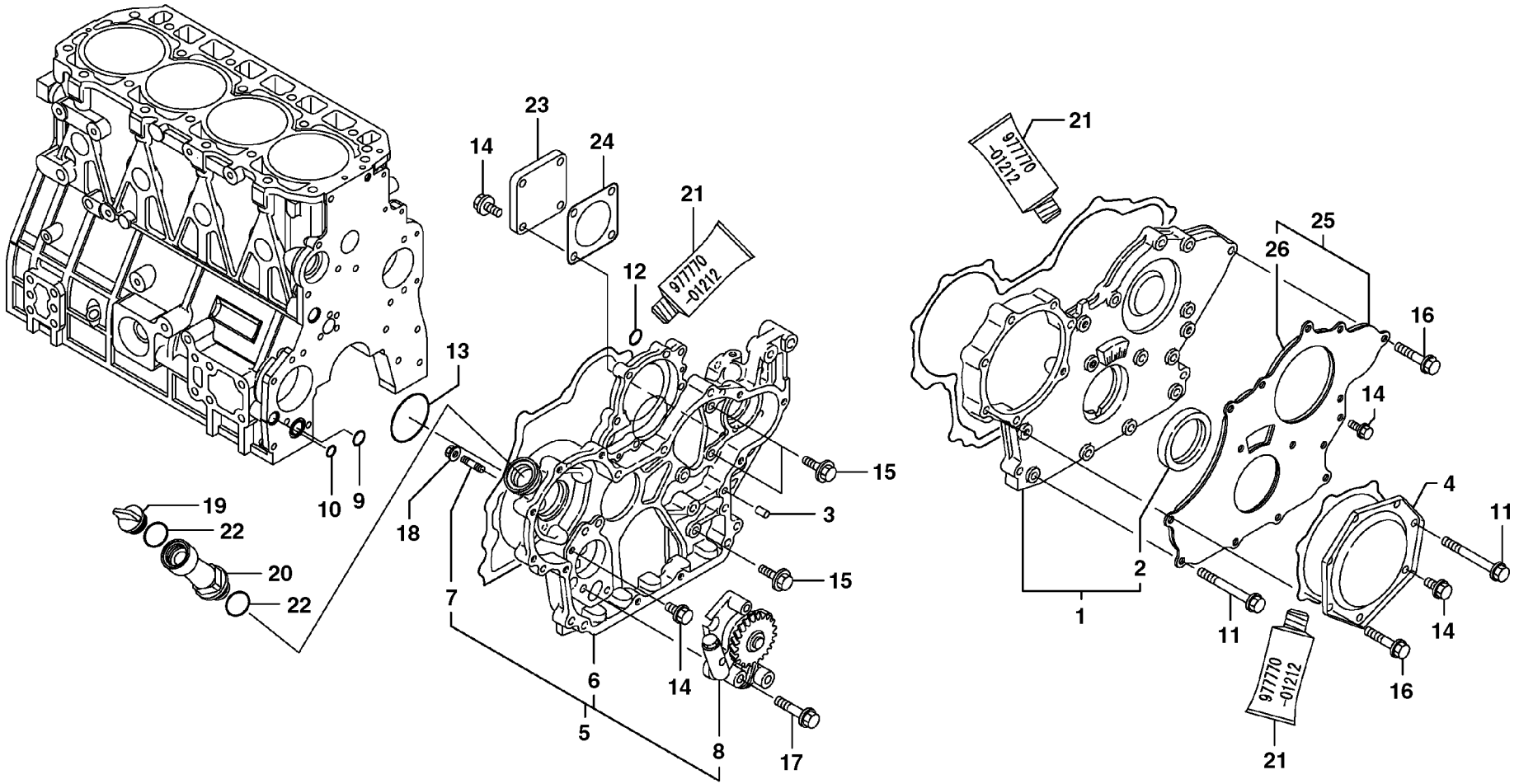

Volvo Construction Equipment

1006959

Fig.	Part No.	Quantity 1	2	3	PS	KIT	Description	Dénomination	Bezeichnung	품명	Denominación	Notes
1	**VOE 14521507**	1	1	1			Housing	Carter	Gehäuse	하우징	Carter	
2	**VOE 14514867**	1	1	1			•Seal	•Joint	•Dichtring	• 시일	•Junta	
3	**VOE 11714376**	4	4	4			Pin	Goupille	Stift	핀	Pasador	(SA 8210-03530)
4	**SA 8210-04300**	1	1	1			Cover	Capot	Haube	커버	Capo	
5	**VOE 14521508**	1	1	1	SS		Case	Etui	Futteral	케이스	Funda	
6	**VOE 14521183**	1	1	1			•Case	•Etui	•Futteral	• 케이스	•Funda	
7	**SA 8210-02620**	4	4	4			•Stud	•Goujon	•Stiftschraube	• 스터드	•Esparrago	
8	**VOE 14521509**	1	1	1			•Pump	•Pompe	•Pumpe	• 펌프	•Bomba	
9	**SA 8210-04770**	1	1	1			O-ring	Joint Torique	O-Ring	오링	Junta torica	
10	**SA 8210-04780**	1	1	1			O-ring	Joint Torique	O-Ring	오링	Junta torica	
11	**VOE 14521510**	7	7	7			Bolt	Boulon	Bolzen	볼트	Perno	
12	**VOE 14521511**	1	1	1	SS		O-ring	Joint Torique	O-Ring	오링	Junta torica	
13	**VOE 14521512**	1	1	1			Packing	Joint	Dichtung	패킹	Empaquetadura	
14	**VOE 11714372**	9	9	9			Screw	Vis	Schraube	스크류	Tornillo	(SA 8240-01680)
15	**VOE 11714388**	3	3	3			Bolt	Boulon	Bolzen	볼트	Perno	(SA 8240-01700)
16	**VOE 11714487**	10	10	10			Bolt	Boulon	Bolzen	볼트	Perno	(SA 8240-01710)
17	**VOE 11714377**	3	3	3			Bolt	Boulon	Bolzen	볼트	Perno	(SA 8240-01720)
18	**VOE 14521513**	4	4	4			Nut	Ecrou	Mutter	너트	Tuerca	
19	**VOE 11714383**	1	1	1			Cap	Chapeau	Kappe	캡	Caperuza	(SA 8210-03240)
20	**SA 8210-05300**	1	1	1			Pipe	Canalisation	Rohrleitung	파이프	Canalizacion	
21	**SA 8240-02760**	1	1	1			Gasket	Joint	Dichtung	가스켓	Junta	Optional part
22	**VOE 11714371**	2	2	2			O-ring	Joint Torique	O-Ring	오링	Junta torica	(SA 8210-08880)
23	**VOE 11714370**	1	1	1			Cover	Capot	Haube	커버	Capo	(SA 8210-03280)
24	**VOE 14521514**	1	1	1			Gasket	Joint	Dichtung	가스켓	Junta	
25	**VOE 14521515**	1	1	1			Cover	Capot	Haube	커버	Capo	
26	**VOE 14521516**	1	1	1			•Sponge	•Eponge	•Schwamm	• 스폰지	•Esponja	

1	**8278797**	**Tapa del engranaje de distribución** 타이밍 기어 케이싱 **Steuergehäuse** **Carter de la distribution** **Timing gear casing**	Catalogue id **20019** / Group **215**
2	**8278798**		Illustr. No **1006959** / Section **200**
3	**8278799**		Issue **VOE 74H9920019** / Page **67**
4			
5			

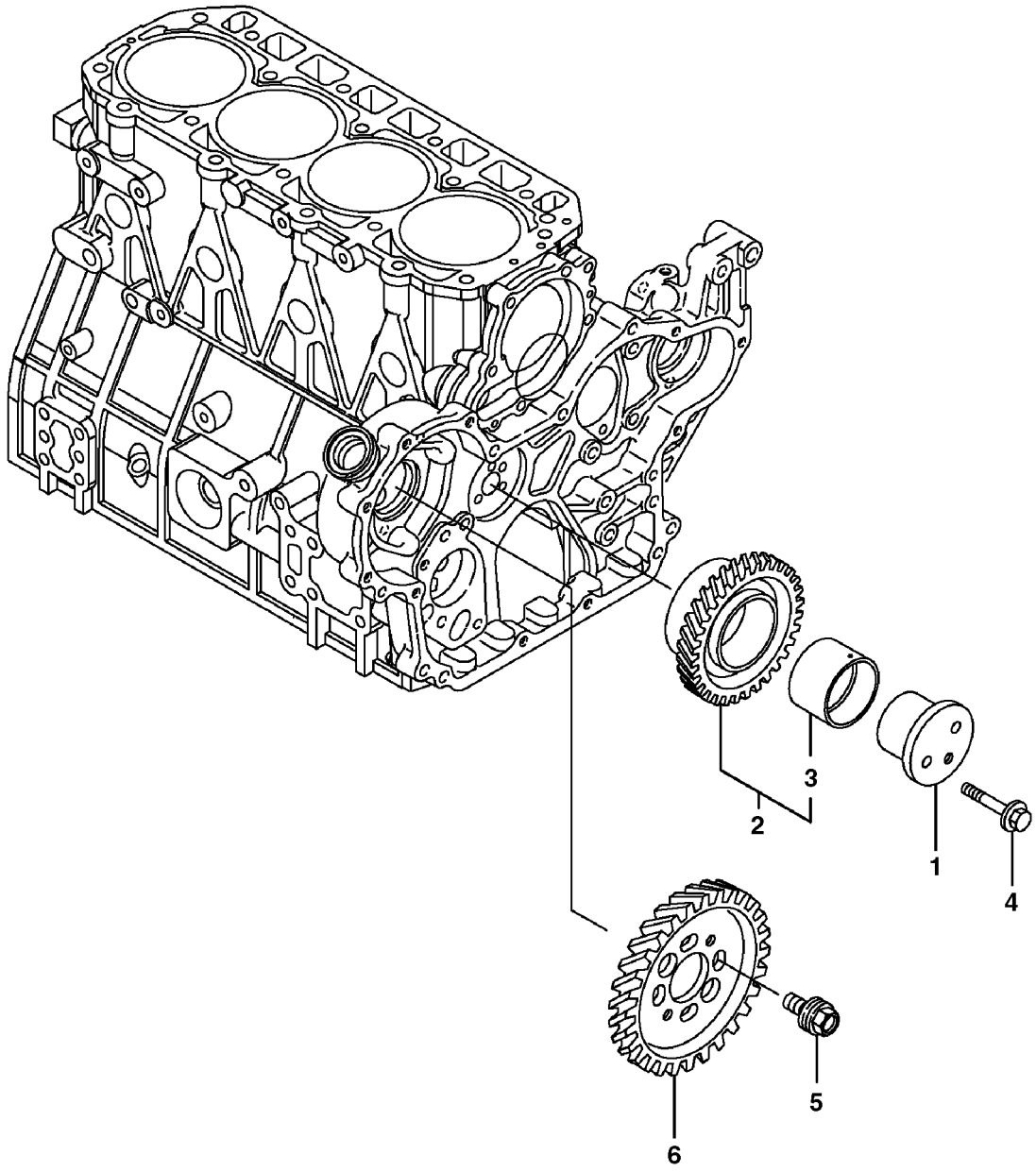
1
2
3
4
5
6

Fig.	Part No.	Quantity 1	2	3	PS	KIT	Description	Dénomination	Bezeichnung	품명	Denominación	Notes
1	**VOE 14521561**	1	1	1			Shaft	Arbre	Welle	샤프트	Arbol	
2	**SA 8210-04740**	1	1	1			Gear	Pignon	Zahnradgetriebe	기어	Engranaje	
3	**SA 8210-03700**	1	1	1			•Bushing	•Bague	•Buchse	• 부싱	•Casquillo	Repair part
4	**VOE 11714373**	3	3	3			Bolt	Boulon	Bolzen	볼트	Perno	(SA 8240-01730)
5	**VOE 14521562**	4	4	4			Bolt	Boulon	Bolzen	볼트	Perno	
6	**VOE 14521563**	1	1	1			Gear	Pignon	Zahnradgetriebe	기어	Engranaje	

1	**8278797**
2	**8278798**
3	**8278799**
4	
5	

Engranaje de distribución
타이밍 기어
Rädergetriebe
Transmission à roues
Timing gear

Catalogue id **20019**	Group **215**
Illustr. No **1006960**	Section **250**
Issue **VOE 74H9920019**	Page **69**

VOLVO

EC55B

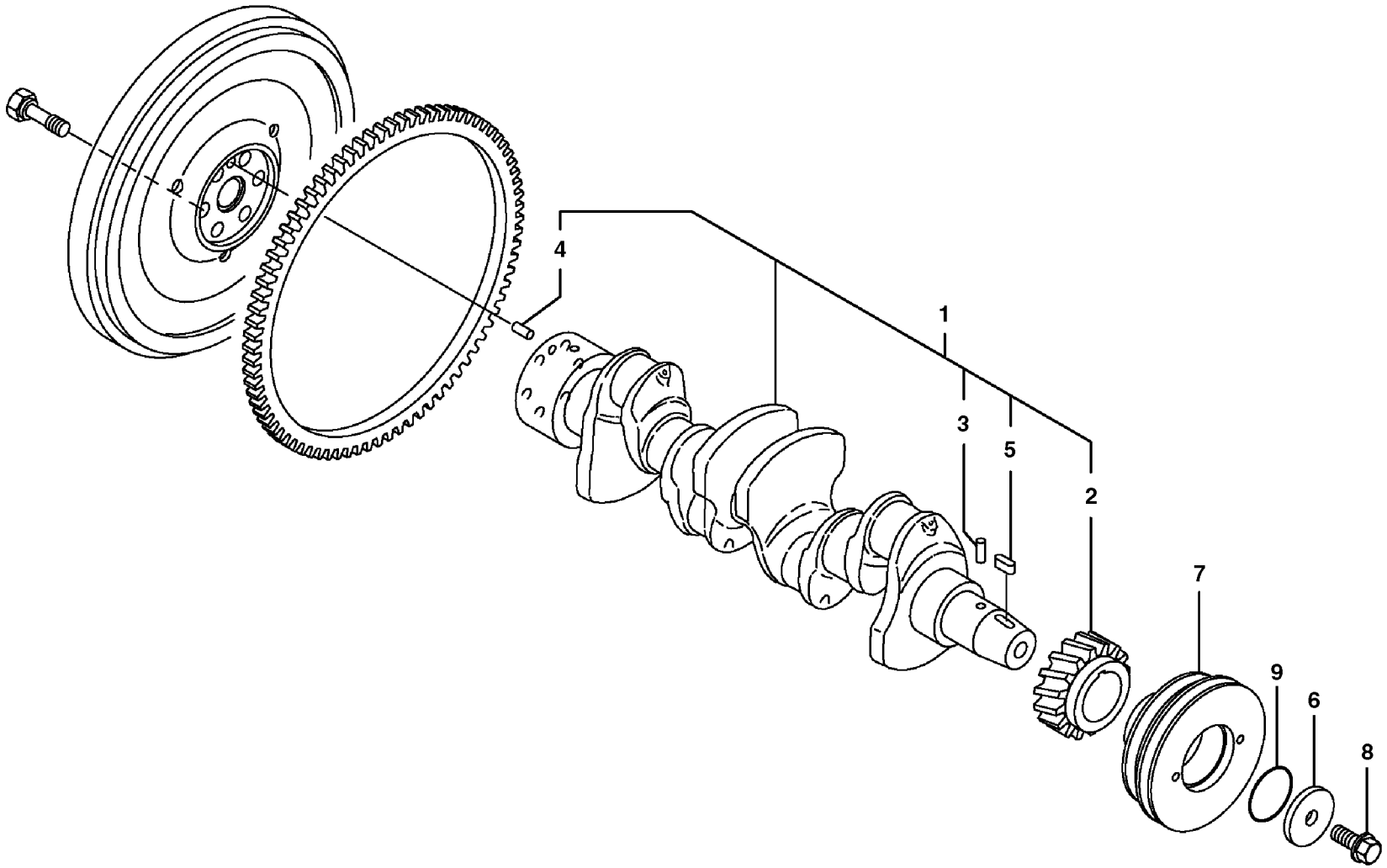
4
1
3
5
2
7
9
6
8

Fig.	Part No.	Quantity 1	2	3	PS	KIT	Description	Dénomination	Bezeichnung	품명	Denominación	Notes
1	**VOE 14521564**	1	1	1			Crankshaft	Vilebrequin	Kurbelwelle	크랭크 샤프트	Ciguenal	
2	**SA 8210-04620**	1	1	1			•Gear	•Pignon	•Zahnradgetriebe	• 기어	•Engranaje	
3	**SA 8210-02710**	1	1	1			•Pin	•Goupille	•Zapfen	• 핀	•Pasador	
4	**SA 8210-02740**	1	1	1			•Pin	•Goupille	•Zapfen	• 핀	•Pasador	
5	**VOE 11714468**	1	1	1			•Key	•Clavette	•Keil	• 키	•Llave (cuna)	(SA 8210-05520)
6	**VOE 14509381**	1	1	1			Washer	Rondelle	Scheibe	와셔	Arandela	
7	**VOE 14517628**	1	1	1			Pulley	Poulie	Z-riemenscheibe	풀리	Polea Corr Dent	
8	**VOE 14517969**	1	1	1			Bolt	Boulon	Bolzen	볼트	Perno	
9	**VOE 14509382**	1	1	1			O-ring	Joint Torique	O-Ring	오링	Junta torica	

1	**8278797**
2	**8278798**
3	**8278799**
4	
5	

Cigüeñal
크랭크 샤프트
Kurbelwelle
Vilebrequin
Crankshaft

Catalogue id **20019**	Group **216**
Illustr. No **1006961**	Section **100**
Issue **VOE 74H9920019**	Page **71**

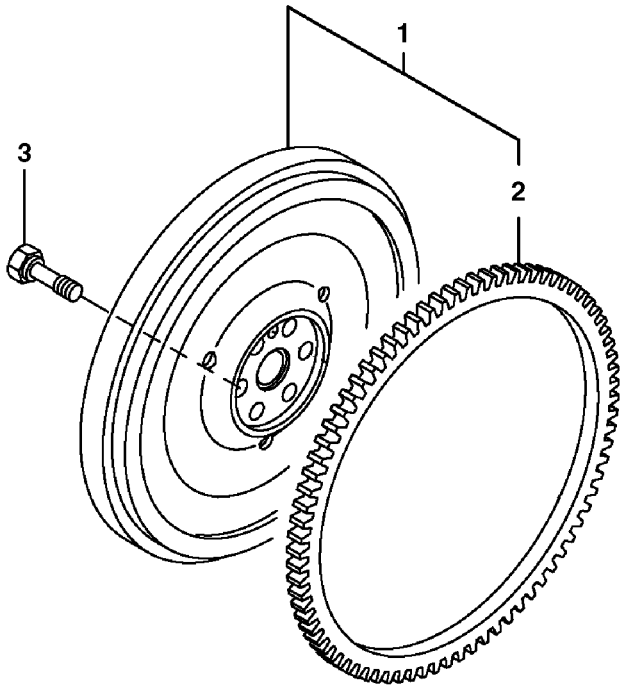
1
2
3

Fig.	Part No.	Quantity 1	2	3	PS	KIT	Description	Dénomination	Bezeichnung	품명	Denominación	Notes
1	**VOE 14521565**	1	1	1	SS		Flywheel	Volant	Schwungrad	플라이 휠	Volante	
2	**SA 8210-04630**	1	1	1			•Gear	•Pignon	•Zahnradgetriebe	• 기어	•Engranaje	
3	**VOE 11714793**	6	6	6			Screw	Vis	Schraube	스크류	Tornillo	(SA 8210-02690)

1	**8278797**
2	**8278798**
3	**8278799**
4	
5	

Volante
플라이휠
Schwungrad
Volant
Flywheel

Catalogue id **20019**	Group **216**
Illustr. No **1006962**	Section **200**
Issue **VOE 74H9920019**	Page **73**

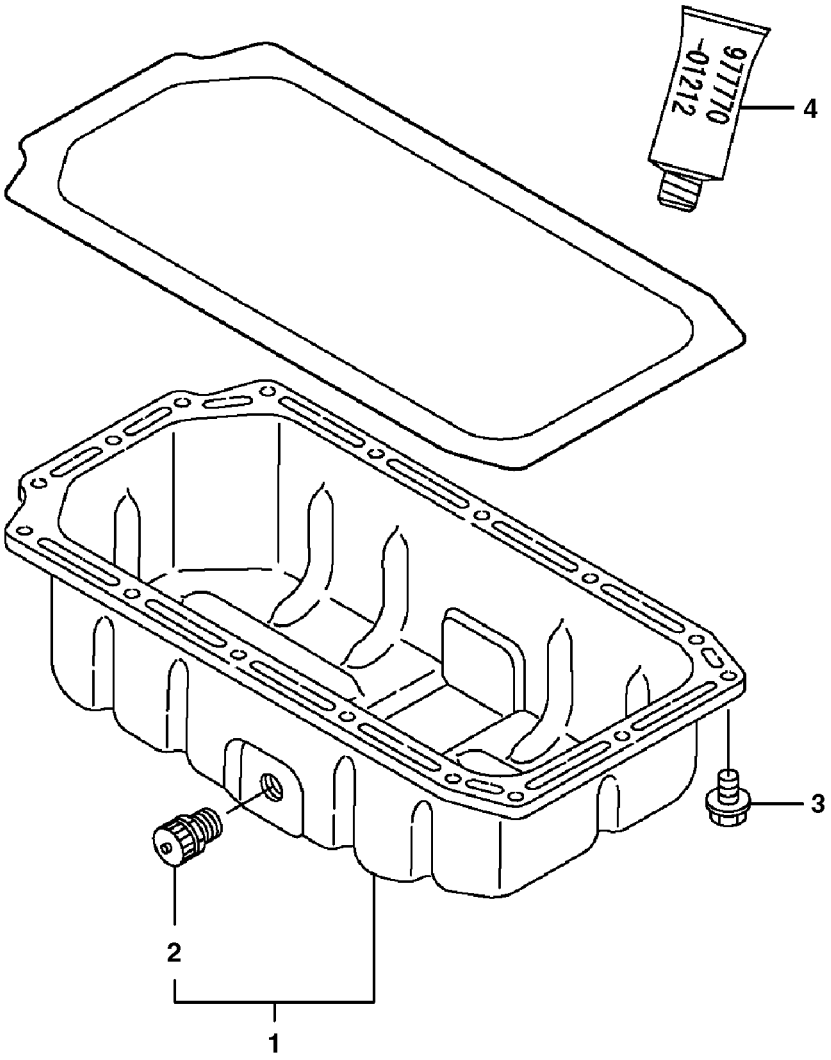
4
3
2
1

Fig.	Part No.	Quantity 1	2	3	PS	KIT	Description	Dénomination	Bezeichnung	품명	Denominación	Notes
1	**VOE 14521517**	1	1	1			Pump	Pompe	Pumpe	펌프	Bomba	
2	**VOE 14521185**	1	1	1			•Valve	•Soupape	•Ventil	• 밸브	•Valvula	
3	**VOE 11714490**	16	16	16			Screw	Vis	Schraube	스크류	Tornillo	(SA 8240-01670)
4	**SA 8240-02760**	1	1	1			Gasket	Joint	Dichtung	가스켓	Junta	Optional part

1	**8278797**	**Cárter de aceite** 오일 팬 **Ölwanne** **Carter d'huile** **Oil sump**	Catalogue id **20019**	Group **217**
2	**8278798**		Illustr. No **1006963**	Section **100**
3	**8278799**		Issue **VOE 74H9920019**	Page **75**
4				
5				

VOLVO

EC55B

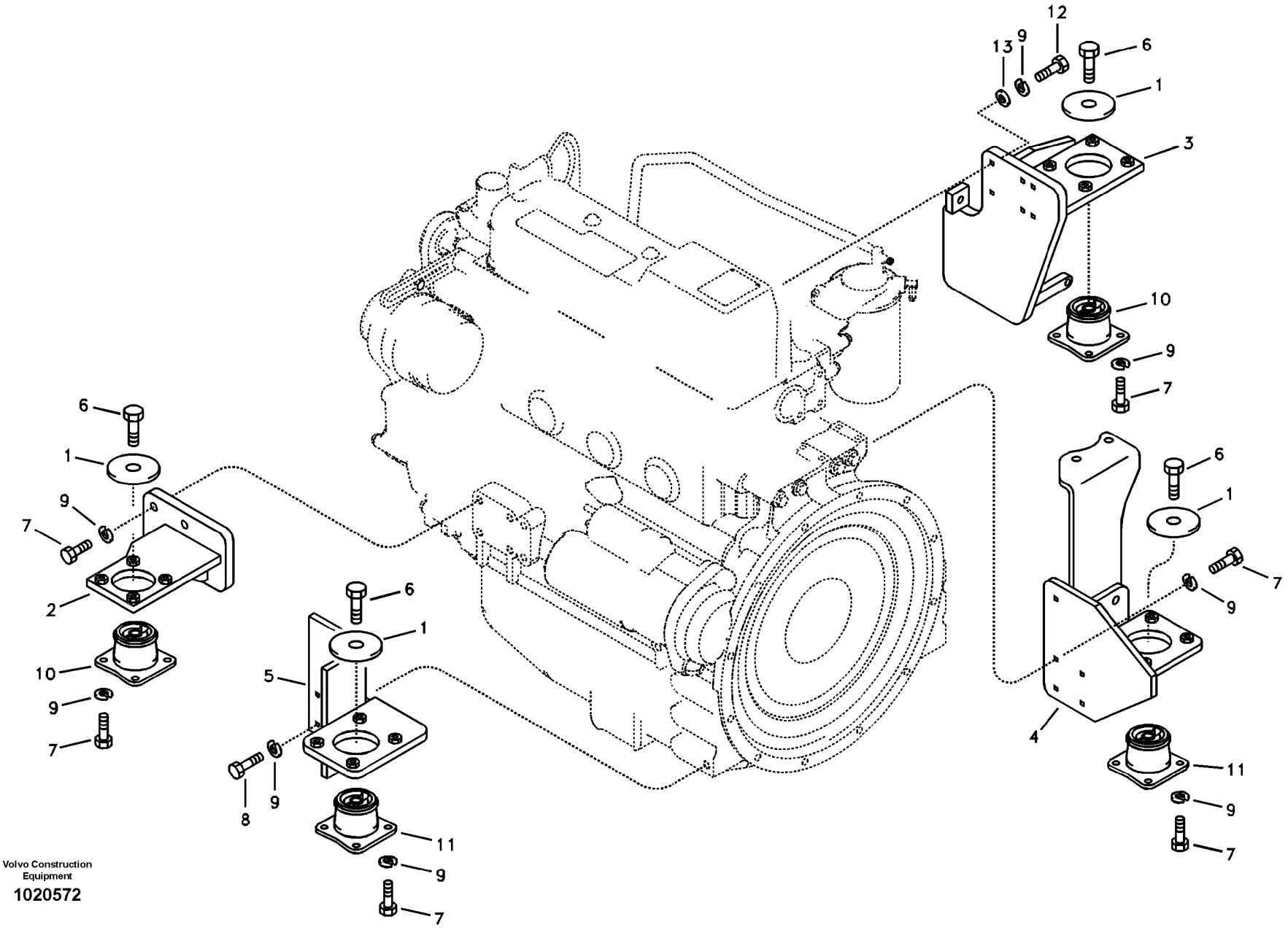

Volvo Construction Equipment

1020572

Fig.	Part No.	Quantity 1	2	3	PS	KIT	Description	Dénomination	Bezeichnung	품명	Denominación	Notes
1	**SA 1112-00830**	4					Plate	Plaque	Platte	플레이트	Placa	
2	**SA 1112-30382**	1					Bracket	Console	Konsole	브라켓	Ménsula	Front LH
3	**VOE 14520059**	1					Bracket	Console	Konsole	브라켓	Ménsula	Front RH SER NO 30001-33458
	VOE 14531319	1					Bracket	Console	Konsole	브라켓	Ménsula	SER NO 33459-
4	**VOE 14520060**	1					Bracket	Console	Konsole	브라켓	Ménsula	REAR RH SER NO 30001-33895 SER NO 50001-50093
	VOE 14535069	1					Bracket	Console	Konsole	브라켓	Ménsula	SER NO 33896- SER NO 50094-
5	**VOE 14518132**	1					Bracket	Console	Konsole	브라켓	Ménsula	Rear LH
6	**VOE 978941**	4					Hexagon screw	Vis a tête hexagonale	Sechskantschr.	육각 나사	Tornillo hexago	
7	**VOE 983252**	24					Screw	Vis	Schraube	스크류	Tornillo	
8	**VOE 983254**	4					Hexagon screw	Vis a tête hexagonale	Sechskantschr.	육각 나사	Tornillo hexago	
9	**VOE 955922**	34					Spring Washer	Rondelle élastique	Federscheibe	스프링 와셔	Arandela flexible	
10	**SA 1112-30340**	2					Cushion	Coussin	Sitzkissen	쿠션	Cojin	
11	**SA 1112-30350**	2					Cushion	Coussin	Sitzkissen	쿠션	Cojin	
12	**VOE 983252**	6					Screw	Vis	Schraube	스크류	Tornillo	SER NO 30001-33458
	SA 9011-11007	6					Bolt	Boulon	Bolzen	볼트	Perno	SER NO 33459-
13	**SA 9211-10000**	6					Washer	Rondelle	Scheibe	와셔	Arandela	SER NO 33459-

1	**8278796**	**Suspensión del motor** 엔진 장착 부품 **Motorbefestigung** **Support moteur** **Engine mount**	Catalogue id **20019**	Group **218**
2				
3			Illustr. No **1020572**	Section **100**
4				
5			Issue **VOE 74H9920019**	Page **77**

VOLVO

EC55B

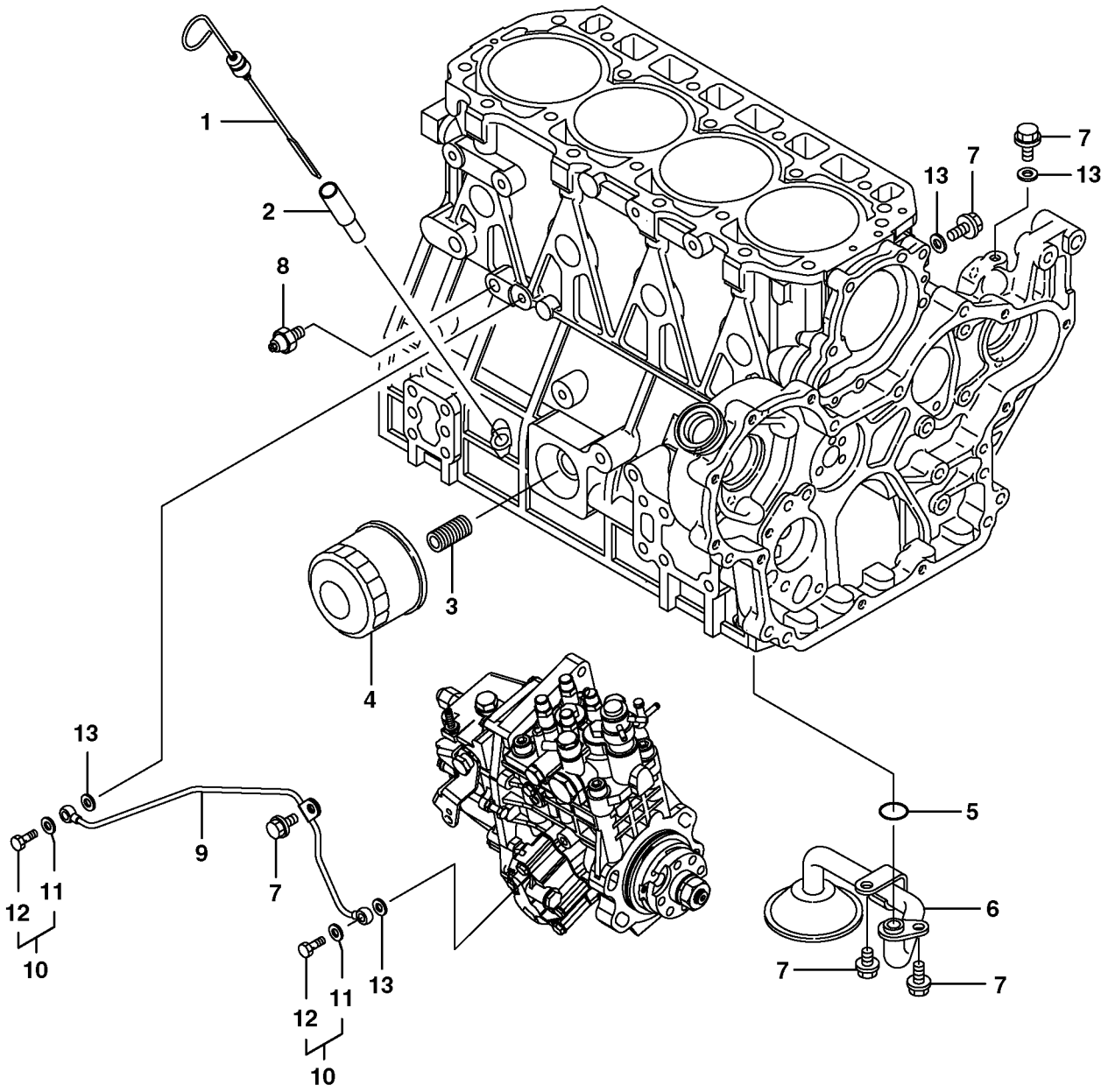

Volvo Construction Equipment

1006965

Fig.	Part No.	Quantity 1	2	3	PS	KIT	Description	Dénomination	Bezeichnung	품명	Denominación	Notes
1	**VOE 14521179**	1	1	1			Dipstick	Jauge	Messtab	딥스틱	Varill Medic	
2	**SA 8210-03930**	1	1	1			Giude	Guide	Fuhrung	가이드	Guia	
3	**SA 8210-00920**	1	1	1			Stud	Goujon	Stiftschraube	스터드	Esparrago	
4	**VOE 14528387**	1	1	1			Oil Filter	Filtre Huile	Ölfilter	오일 필터	Filtro Aceite	
5	**SA 8210-04770**	1	1	1			O-ring	Joint Torique	O-Ring	오링	Junta torica	
6	**SA 8210-04790**	1	1	1			Pipe	Canalisation	Rohrleitung	파이프	Canalizacion	
7	**VOE 11714490**	5	5	5			Screw	Vis	Schraube	스크류	Tornillo	(SA 8240-01670)
8	**VOE 14520582**	1	1	1			Switch	Commutateur	Schalter	스위치	Contactor	
9	**VOE 14521570**	1	1	1			Pipe	Canalisation	Rohrleitung	파이프	Canalizacion	
10	**VOE 14521571**	2	2	2			Hollow Screw	Vis Creuse	Hohlschraube	스크류	Tornillo hueco	
11	**VOE 11714476**	1	1	1			•Seal	•Joint	•Dichtring	• 시일	•Junta	(SA 8240-01020)
12	**SA 8210-05600**	1	1	1			•Bolt	•Boulon	•Bolzen	• 볼트	•Perno	
13	**VOE 11714476**	4	4	4			Seal	Joint	Dichtring	시일	Junta	(SA 8240-01020)

1	**8278797**
2	**8278798**
3	**8278799**
4	
5	

Sistema de lubricación
윤활 장치
Schmierölsystem
Système de graissage
Lubricating oil system

Catalogue id	Group
20019	**220**
Illustr. No **1006965**	Section **300**
Issue **VOE 74H9920019**	Page **79**

VOLVO

EC55B

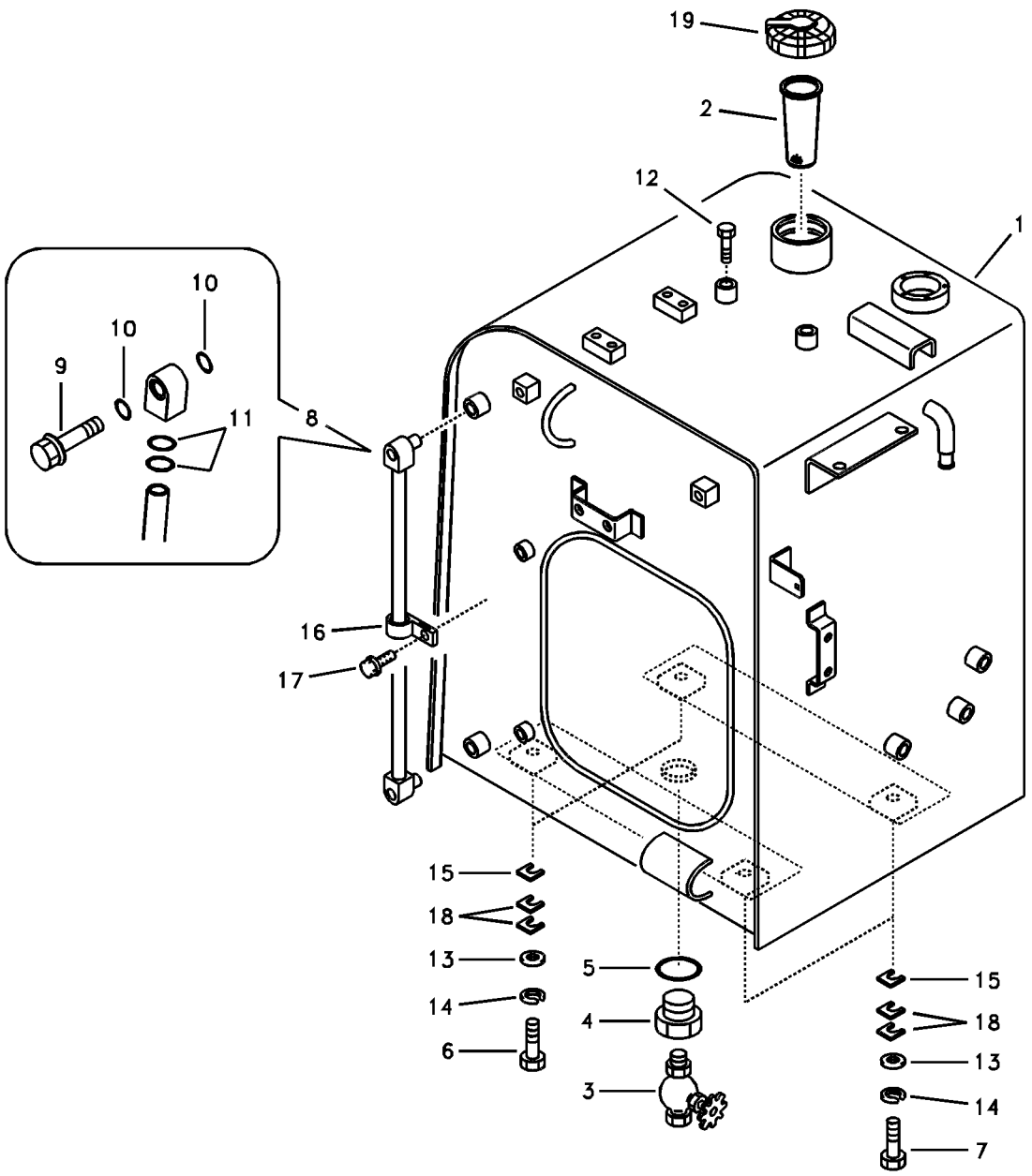
19
2
12
1
10
10
9
11
8
16
17
15
18
13
14
6
5
4
3
15
18
13
14
7

Fig.	Part No.	Quantity 1	2	3	PS	KIT	Description	Dénomination	Bezeichnung	품명	Denominación	Notes
1	**VOE 14519779**	1					Fuel tank	Réservoir carburant	Kraftstofftank	연료 탱크	Deposit combust	
2	**VOE 14528386**	1					Screen	Ecran	Schirm	스크린	Pantalla	
3	**SA P4100875**	1			SS		Shut-off Cock	Robinet Fermet.	Absperrhahn	셧 – 오프 콕	Grifo Cierre	
4	**SA 1116-30080**	1					Plug	Bouchon	Stopfen	플러그	Tapon	
5	**SA 9511-12044**	1					O-ring	Joint Torique	O-Ring	오링	Junta torica	
6	**SA 9011-11407**	2					Bolt	Boulon	Bolzen	볼트	Perno	
7	**SA 9011-11409**	2					Bolt	Boulon	Bolzen	볼트	Perno	
8	**VOE 14517105**	1					Gauge	Calibre	Schablone	게이지	Plantilla	SER NO 30001-34257 SER NO 50001-50100
	VOE 14539977	1					Level Indicator	Indicateur de niveau	Niveauanzeige	레벨 지시기	Indicador Nivel	SER NO 34258- SER NO 50101-
9	**VOE 14517557**	2					•Bolt	•Boulon	•Bolzen	• 볼트	•Perno	
10	**SA 9511-12010**	4					•O-ring	•Joint Torique	•O-Ring	• 오링	•Junta torica	
11	**SA 9511-12018**	4			SS		•O-ring	•Joint Torique	•O-Ring	• 오링	•Junta torica	
12	**SA 9011-11203**	2					Bolt	Boulon	Bolzen	볼트	Perno	SER NO 30001-32389 SER NO 50001-50042
13	**SA 9211-14000**	4					Washer	Rondelle	Scheibe	와셔	Arandela	
14	**SA 9213-14000**	4					Washer	Rondelle	Scheibe	와셔	Arandela	
15	**SA 1040-20290**	2					Shim	Cale d'épaisseur	Passcheibe	심	Arandela Ajuste	
16	**VOE 14500294**	1					Clip	Clip	Klemme	클립	Clip	
17	**VOE 946471**	1					Flange screw	Vis à bride	Flanschschraube	플랜지 스크류	Torn embridado	
18	**SA 1040-20270**	4					Shim	Cale d'épaisseur	Passcheibe	심	Arandela Ajuste	
19	**SA 1116-00240**		1	1	SS		Cap	Chapeau	Kappe	캡	Caperuza	SER NO 30001-32631
	VOE 14529069		1	1			Cap	Chapeau	Verschlusskappe	캡	Caperuza	SER NO 32632-

1	**8278796**
2	**8278819**
3	**8278820**
4	
5	

Depósito de combustible con accesorios de montaje
연료 탱크 및 장착 부품
Kraftstofftank mit Anbauteilen
Réservoir de carburant avec pièces de montage
Fuel tank with fitting parts

Catalogue id **20019**	Group **234**
Illustr. No **1014319**	Section **100**
Issue **VOE 74H9920019**	Page **81**

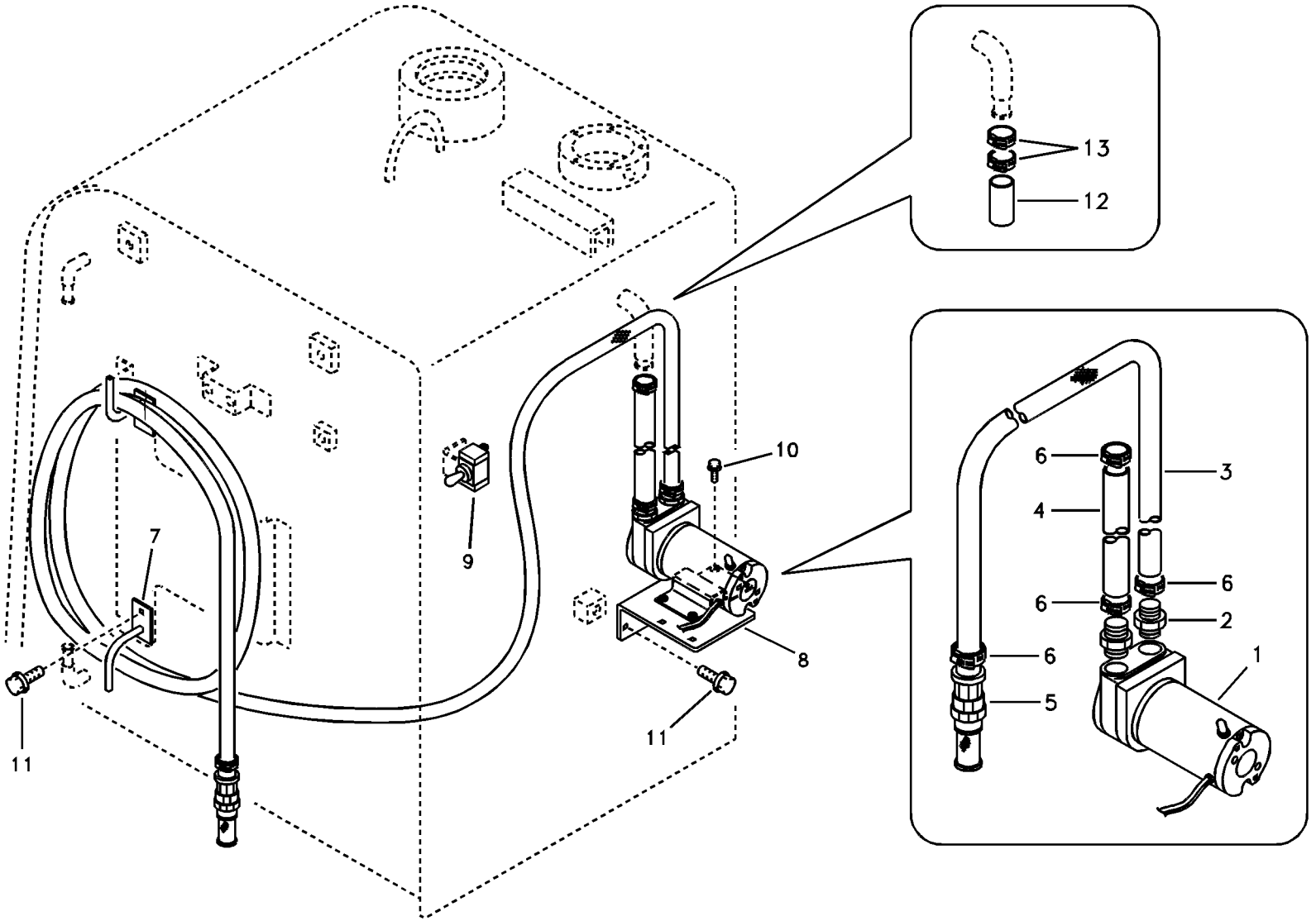

Volvo Construction Equipment

1006967

Fig.	Part No.	Quantity 1	2	3	PS	KIT	Description	Dénomination	Bezeichnung	품명	Denominación	Notes
	VOE 14514655		1				Fuel Fill Pump	Pompe de remplissa	Tankpumpe	연료 주유 펌프	Bomba Llenado	35LPM
1	**VOE 14517821**		1		SS		•Fuel Fill Pump	•Pompe de rempliss	•Tankpumpe	• 연료 주유 펌프	•Bomba Llenado	
2	**VOE 14517747**		2				•Adapter	•Raccord Reduct.	•Verbind Stutzen	• 어댑터	•Adaptador	
3	**VOE 14517808**		1				•Hose	•Durit	•Schlauch	• 호스	•Tubo flexible	
4	**VOE 14517820**		1				•Hose	•Durit	•Schlauch	• 호스	•Tubo flexible	
5	**VOE 14517753**		1				•Valve	•Soupape	•Ventil	• 밸브	•Valvula	
6	**VOE 14517754**		4				•Clip	•Clip	•Klemme	• 클립	•Clip	
7	**VOE 14529313**		2				Stop	Arrêt	Anschlag	스톱	Parada	
8	**VOE 14529314**		1				Bracket	Console	Konsole	브라켓	Ménsula	
9	**VOE 14502170**		1				Toggle switch	Interru.bascule	Wippschalter	토글 스위치	Interrup bascul	
10	**VOE 946544**		4		SS		Screw	Vis	Schraube	스크류	Tornillo	
11	**VOE 946471**		3				Flange screw	Vis à bride	Flanschschraube	플랜지 스크류	Torn embridado	
12	**VOE 14529315**	1					Grommet	Passe fil	Durchführung	그로메트	Aislador pasapanel	
13	**SA 9312-00008**	2					Clamp	Pince Serrage	Klemme	클램프	Abrazadera	

1	**8278800**	**Bomba de repostaje** 연료 주유 펌프 **Betankungspumpe** **Pompe de remplissage en carburant** **Fuel filling pump**	Catalogue id **20019**	Group **234**
2	**8278801**		Illustr. No **1006967**	Section **300**
3			Issue **VOE 74H9920019**	Page **83**
4				
5				

VOLVO

EC55B

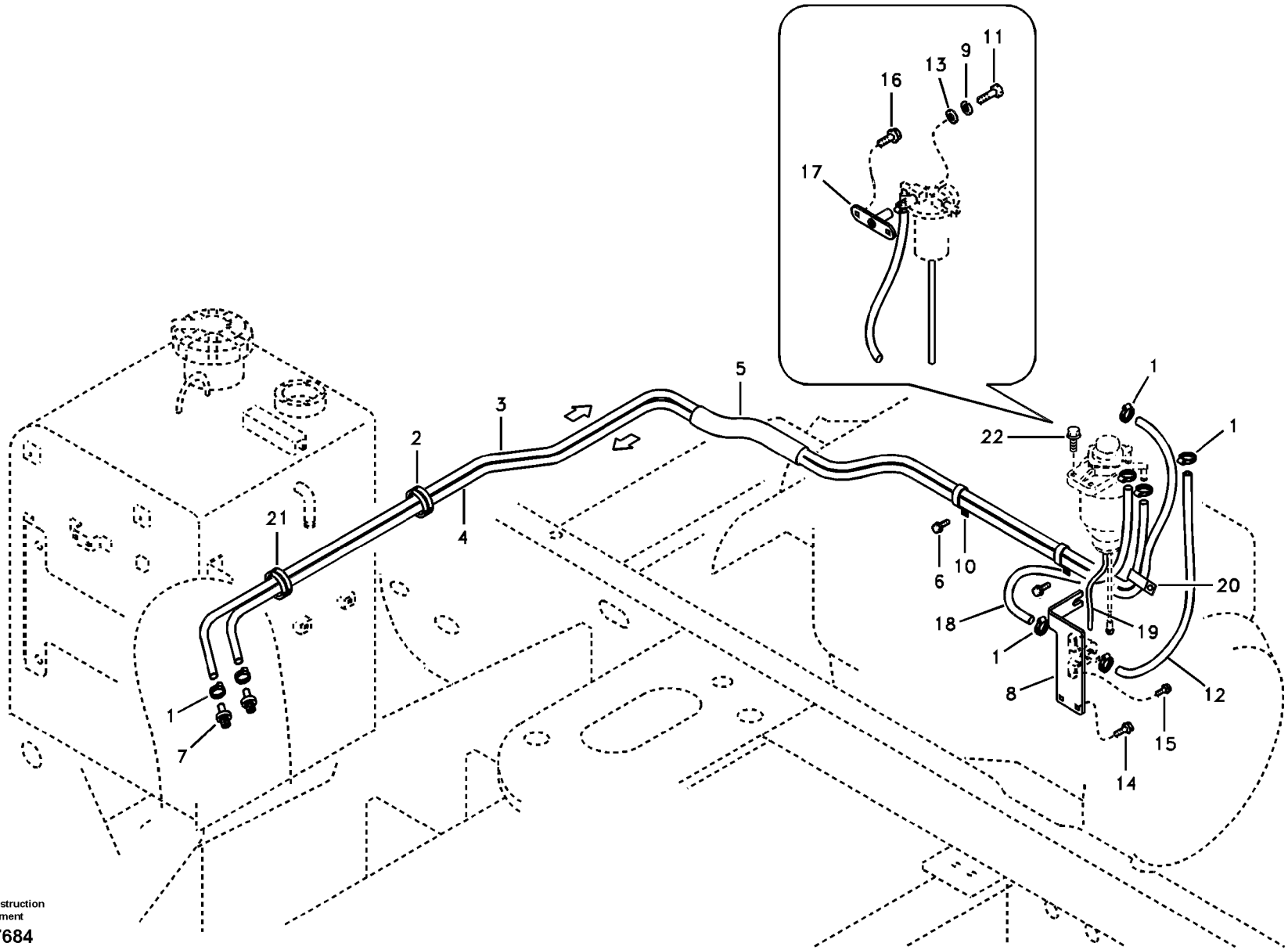

Volvo Construction Equipment

1017684

Fig.	Part No.	Quantity 1	2	3	PS	KIT	Description	Dénomination	Bezeichnung	품명	Denominación	Notes
1	**SA 9312-00004**	8					Clamp	Pince Serrage	Klemme	클램프	Abrazadera	
2	**SA 9751-33606**	2					Grommet	Passe fil	Durchführung	그로메트	Aislador pasapanel	
3	**VOE 14881090**	1					Fuel hose	Flexi.carburant	Kraftstoffschlauch	연료 호스	Manguera comb.	
4	**VOE 14881091**	1					Fuel hose	Flexi.carburant	Kraftstoffschlauch	연료 호스	Manguera comb.	
5	**SA 9443-30505**	1			OP		Guard	Protection	Schutz	가드	Protección	
6	**VOE 946471**	3					Flange screw	Vis à bride	Flanschschraube	플랜지 스크류	Torn embridado	
7	**VOE 14519083**	2					Connector	Raccord	Anschluss	커넥터	Union	
8	**VOE 14520065**	1					Bracket	Console	Konsole	브라켓	Ménsula	SER NO 30001-31076
	VOE 14523964	1					Bracket	Console	Konsole	브라켓	Ménsula	SER NO 31077-33895 SER NO 50001-50093
	VOE 14535606	1					Bracket	Console	Konsole	브라켓	Ménsula	SER NO 33896- SER NO 50094-
9	**VOE 955921**	1					Spring Washer	Rondelle élastique	Federscheibe	스프링 와셔	Arandela flexible	SER NO 30001-33895 SER NO 50001-50093
10	**VOE 14512153**	2					Clip	Clip	Klemme	클립	Clip	
11	**VOE 983249**	1					Hexagon screw	Vis a tête hexagonale	Sechskantschr.	육각 나사	Tornillo hexago	SER NO 30001-33895 SER NO 50001-50093
12	**VOE 14881085**	1					Hose	Durit	Schlauch	호스	Tubo flexible	
13	**SA 9211-08000**	1					Washer	Rondelle	Scheibe	와셔	Arandela	SER NO 30001-33895 SER NO 50001-50093
14	**VOE 946441**	2					Flange screw	Vis à bride	Flanschschraube	플랜지 스크류	Torn embridado	
15	**VOE 965175**	2			SS		Screw	Vis	Schraube	스크류	Tornillo	
16	**VOE 946173**	2			SS		Screw	Vis	Schraube	스크류	Tornillo	SER NO 30001-33895 SER NO 50001-50093
17	**VOE 14520115**	1					Bracket	Console	Konsole	브라켓	Ménsula	SER NO 30001-33895 SER NO 50001-50093
18	**SA 9951-08008**	1			SS		Hose	Durit	Schlauch	호스	Tubo flexible	SER NO 30001-31076
	VOE 14881085	1					Hose	Durit	Schlauch	호스	Tubo flexible	SER NO 31077-33895 SER NO 50001-50093

1	**8278796**	**Tubo de combustible - Depósito de combustible** 연료 흡입 및 리턴 배관 **Kraftstoffrohr - Kraftstofftank** **Conduit de carburant - Réservoir de carburant** **Fuel pipe - Fuel tank**	Catalogue id **20019**	Group **235**
2			Illustr. No **1017684**	Section **100**
3			Issue **VOE 74H9920019**	Page **85**
4				
5				



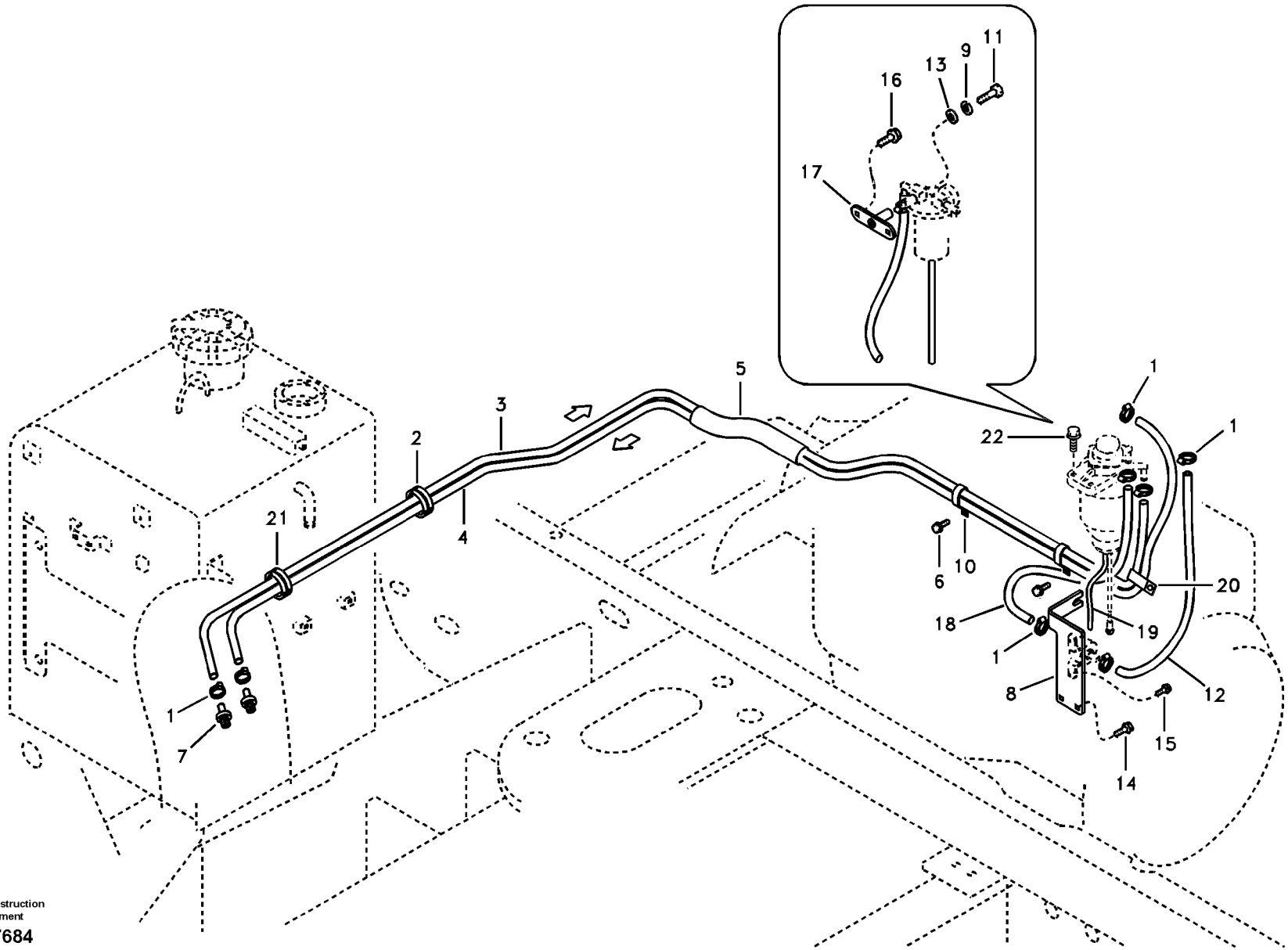

Volvo Construction Equipment

1017684

Fig.	Part No.	Quantity 1	2	3	PS	KIT	Description	Dénomination	Bezeichnung	품명	Denominación	Notes
	VOE 14881086	1					Fuel hose	Flexi.carburant	Kraftstoffschlauch	연료 호스	Manguera comb	SER NO 33896- SER NO 50094-
19	**VOE 14881121**	1					Hose	Durit	Schlauch	호스	Tubo flexible	SER NO 30001-33895 SER NO 50001-50093
	VOE 14881192	1					Hose	Durit	Schlauch	호스	Tubo flexible	SER NO 33896- SER NO 50094-
20	**VOE 14500293**	1					Clip	Clip	Klemme	클립	Clip	
21	**SA 9751-33606**	1					Grommet	Passe fil	Durchführung	그로메트	Aislador pasapanel	SER NO 30001-30666
	SA 9751-13606	1					Grommet	Passe fil	Durchführung	그로메트	Aislador pasapanel	SER NO 30667- SER NO 50001-
22	**VOE 947760**	2			SS		Flange screw	Vis à bride	Flanschschraube	플랜지 스크류	Torn embridado	SER NO 33896- SER NO 50094-

1	**8278796**	**Tubo de combustible - Depósito de combustible** 연료 흡입 및 리턴 배관 **Kraftstoffrohr - Kraftstofftank** **Conduit de carburant - Réservoir de carburant** **Fuel pipe - Fuel tank**	Catalogue id **20019**	Group **235**
2			Illustr. No **1017684**	Section **100**
3			Issue **VOE 74H9920019**	Page **87**
4				
5				

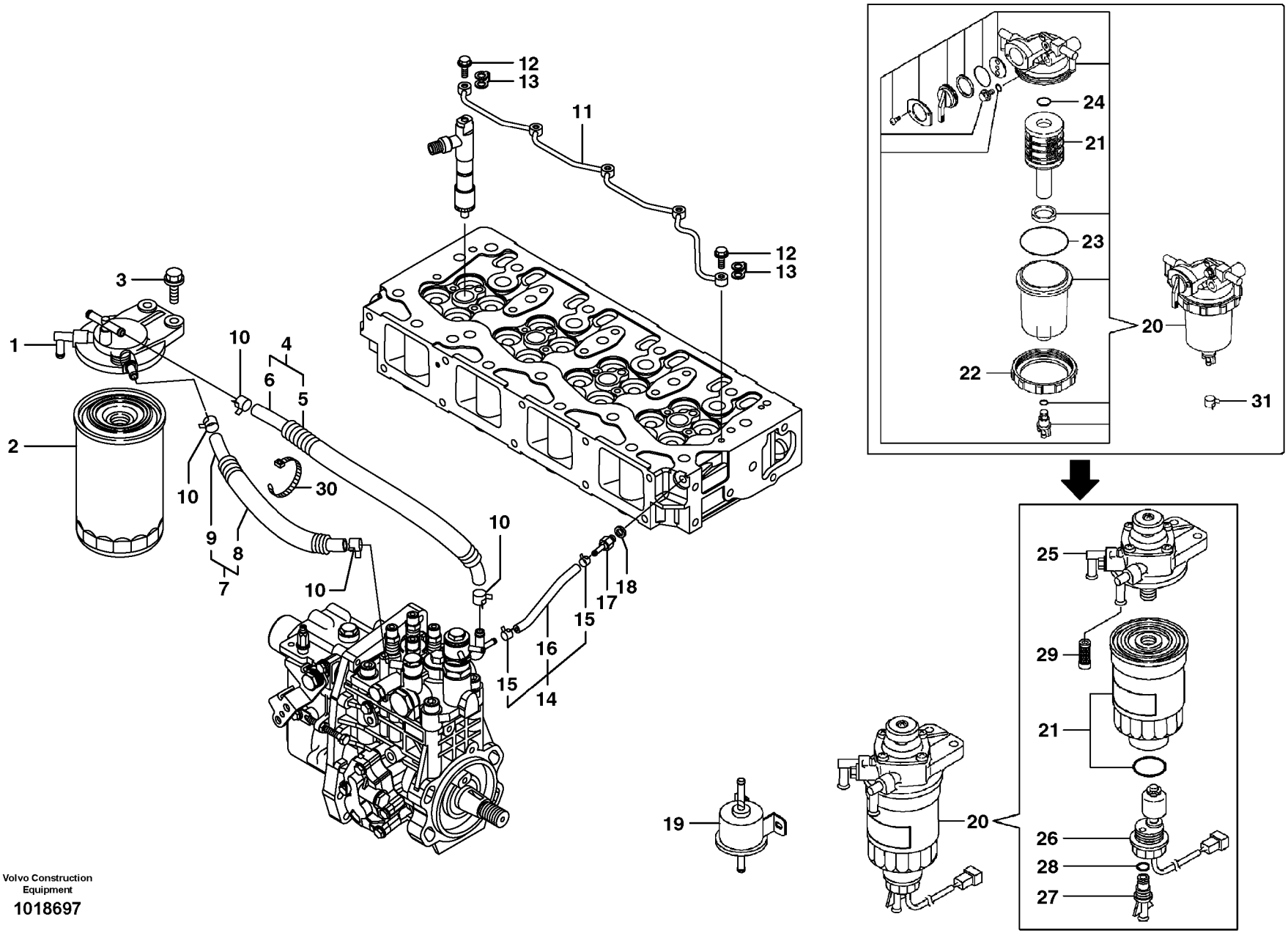

Volvo Construction Equipment

1018697

Fig.	Part No.	Quantity 1	2	3	PS	KIT	Description	Dénomination	Bezeichnung	품명	Denominación	Notes
1	**VOE 14521599**	1	1	1			Bracket	Console	Konsole	브라켓	Ménsula	
2	**VOE 14520578**	1	1	1	SS		Fuel Filter	Filtre carburant	Kraftstoffilter	연료 필터	Filtro Combust	
3	**SA 8210-08890**	2	2	2	SS		Bolt	Boulon	Bolzen	볼트	Perno	
4	**VOE 14521175**	1	1	1			Pipe	Canalisation	Rohrleitung	파이프	Canalizacion	
5	**VOE 14521600**	1	1	1			•Protector	•Protection	•Schutz	• 프로텍터	•Protector	
6	**VOE 14521601**	1	1	1			•Pipe	•Canalisation	•Rohrleitung	• 파이프	•Canalizacion	
7		1	1	1	NS		Pipe	Canalisation	Rohrleitung	파이프	Canalizacion	
8	**VOE 14521602**	1	1	1			•Tube	•Tube	•Rohr	• 튜브	•Tubo	
9	**VOE 14521603**	1	1	1			•Pipe	•Canalisation	•Rohrleitung	• 파이프	•Canalizacion	
10	**VOE 14521604**	4	4	4			Clamp	Pince Serrage	Klemme	클램프	Abrazadera	
11	**VOE 14521177**	1	1	1			Pipe	Canalisation	Rohrleitung	파이프	Canalizacion	
12	**VOE 14521605**	5	5	5			Bolt	Boulon	Bolzen	볼트	Perno	
13	**VOE 14521606**	5	5	5			Packing	Joint	Dichtung	패킹	Empaquetadura	
14	**VOE 14521178**	1	1	1			Pipe	Canalisation	Rohrleitung	파이프	Canalizacion	
15	**VOE 14521580**	2	2	2			•Clamp	•Pince Serrage	•Klemme	• 클램프	•Abrazadera	
16	**VOE 14521607**	1	1	1			•Pipe	•Canalisation	•Rohrleitung	• 파이프	•Canalizacion	
17	**VOE 14521608**	1	1	1			Joint Nipple	Raccord	Verbind Nippel	조인트 니플	Niple Union	
18	**VOE 11714476**	1	1	1			Seal	Joint	Dichtring	시일	Junta	(SA 8240-01020)
19	**VOE 14520577**	1	1	1			Pump	Pompe	Pumpe	펌프	Bomba	
20	**VOE 14521186**	1	1	1			Water Separator	Separateur Eau	Wasserabscheidr	수분 분리기	Separador Agua	SER NO 30001-33895 SER NO 50001-50093
	VOE 14538918	1	1	1			Water Separator	Separateur Eau	Wasserabscheidr	수분 분리기	Separador Agua	SER NO 33896- SER NO 50094-
21	**VOE 14521609**	1	1	1			•Element	•Elément	•Element	• 엘리멘트	•Elemento	SER NO 30001-33895 SER NO 50001-50093
	VOE 14536511	1	1	1			•Filter	•Filtre	•Filter	• 필터	•Filtro	SER NO 33896- SER NO 50094-
22		1	1	1			•Ring	•Anneau	•Ring	• 링	•Anillo	SER NO 30001-33895 SER NO 50001-50093

1	**8278797**
2	**8278798**
3	**8278799**
4	
5	

Tubos de combustible, bomba de inyección de comb.-filtro de co
배관 , 연료 분사펌프에서 연료 필터
Kraftstoffrohre, Einspritzpumpe - Kraftstoff
Conduits de carburant, pompe d'inj de carburant- Filtre à carburant
Fuel pipes, fuel injec.pump-fuel filter

Catalogue id	Group
20019	**235**
Illustr. No **1018697**	Section **200**
Issue **VOE 74H9920019**	Page **89**

VOLVO

EC55B

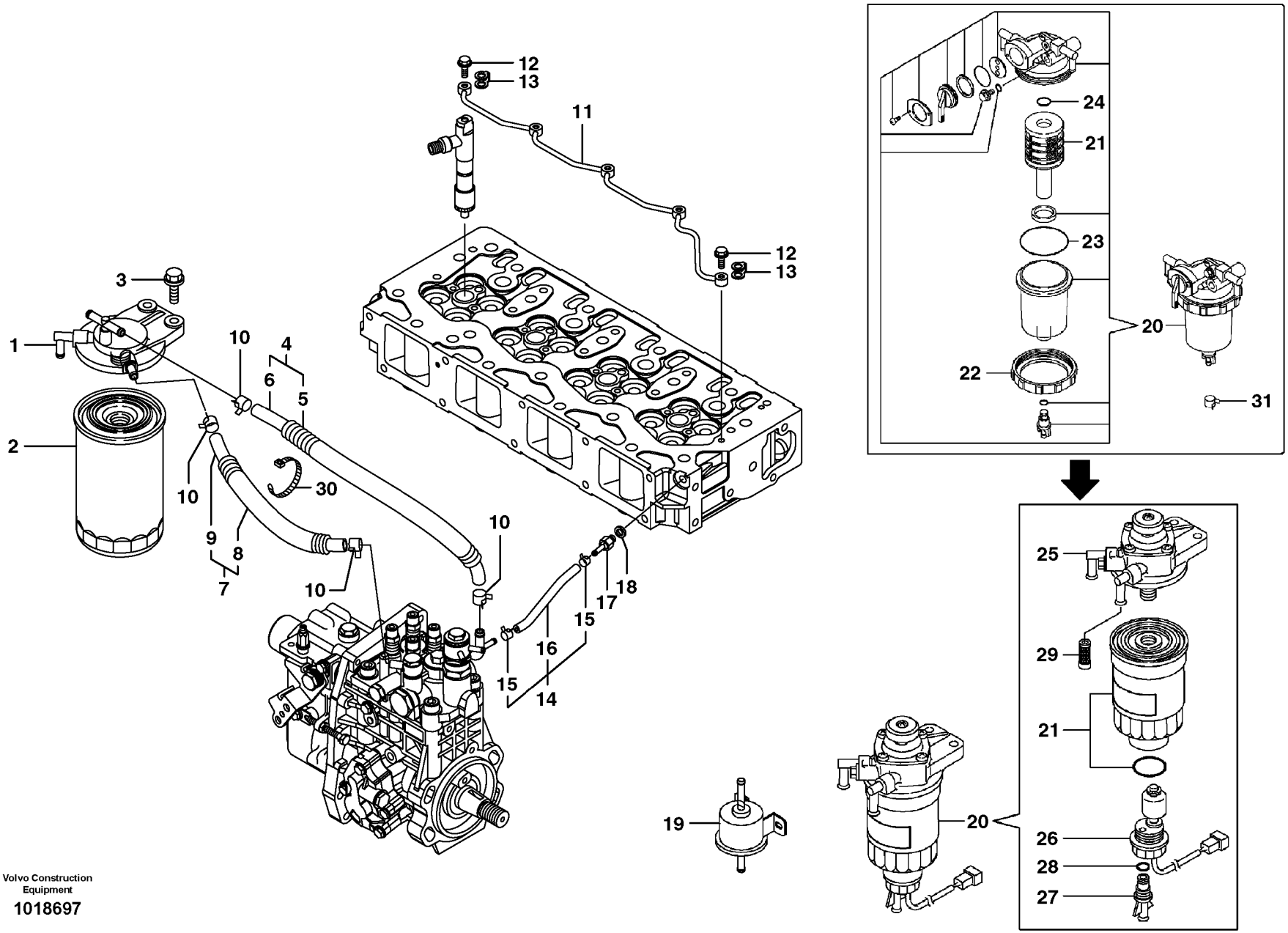

Volvo Construction Equipment

1018697

Fig.	Part No.	Quantity 1	2	3	PS	KIT	Description	Dénomination	Bezeichnung	품명	Denominación	Notes
23		1	1	1	SS		•O-ring	•Joint Torique	•O-Ring	• 오링	•Junta torica	SER NO 30001-33895 SER NO 50001-50093
24		1	1	1			•O-ring	•Joint Torique	•O-Ring	• 오링	•Junta torica	SER NO 30001-33895 SER NO 50001-50093
25		1	1	1			•Body	•Carcasse	•Rumpf	• 본체	•Cuerpo	SER NO 33896- SER NO 50094-
26		1	1	1			•Sensor	•Capteur	•Geber	• 센서	•Captador	SER NO 33896- SER NO 50094-
27		1	1	1			•Plug	•Bouchon	•Stopfen	• 플러그	•Tapon	SER NO 33896- SER NO 50094-
28		1	1	1			•O-ring	•Joint Torique	•O-Ring	• 오링	•Junta torica	SER NO 33896- SER NO 50094-
29		1	1	1			•Filter	•Filtre	•Filter	• 필터	•Filtro	SER NO 33896- SER NO 50094-
30	**SA 8210-08800**	1	1	1			Strip Clamp	Ruban Serrage	Kabelbinder	스트립 클램프	Abraz Cinta	
31	**VOE 14521580**	1	1	1			Clamp	Pince Serrage	Klemme	클램프	Abrazadera	

1	**8278797**
2	**8278798**
3	**8278799**
4	
5	

Tubos de combustible, bomba de inyección de comb.-filtro de co
배관 , 연료 분사펌프에서 연료 필터
Kraftstoffrohre, Einspritzpumpe - Kraftstoff
Conduits de carburant, pompe d'inj de carburant- Filtre à carburant
Fuel pipes, fuel injec.pump-fuel filter

Catalogue id **20019**	Group **235**
Illustr. No **1018697**	Section **200**
Issue **VOE 74H9920019**	Page **91**

VOLVO

EC55B

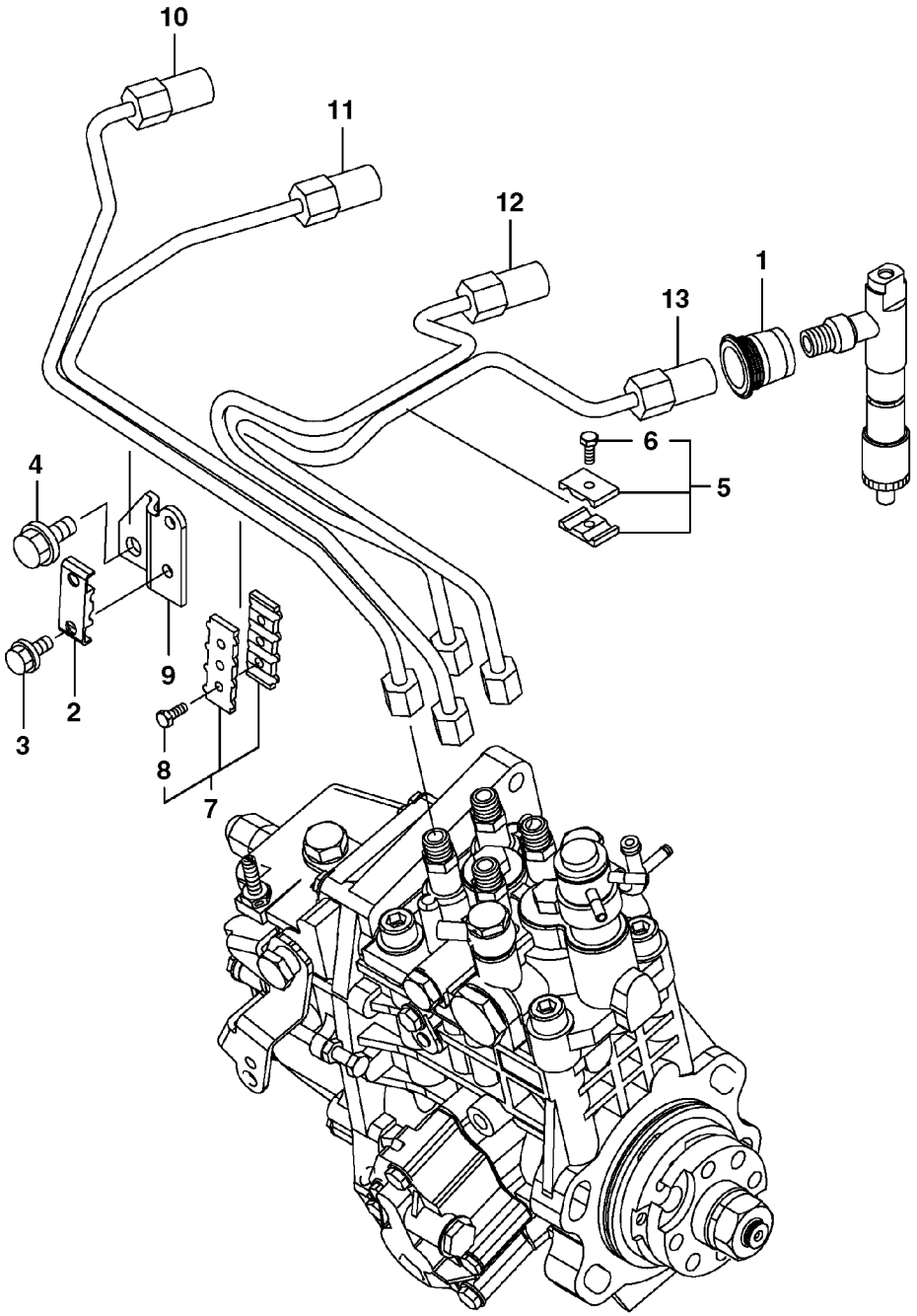
10
11
12
1
13
6
5
4
9
2
3
8
7

Fig.	Part No.	Quantity 1	2	3	PS	KIT	Description	Dénomination	Bezeichnung	품명	Denominación	Notes
1	**VOE 14521592**	4	4	4			Seal	Joint	Dichtring	시일	Junta	
2	**VOE 14521593**	2	2	2			Retainer	Retenue	Halter	리테이너	Soporte	
3	**VOE 11714374**	2	2	2			Bolt	Boulon	Bolzen	볼트	Perno	(SA 8240-01600)
4	**SA 8240-01690**	1	1	1			Bolt	Boulon	Bolzen	볼트	Perno	
5	**SA 8210-01950**	1	1	1			Retainer	Retenue	Halter	리테이너	Soporte	
6	**VOE 11714506**	2	2	2			•Bolt	•Boulon	•Bolzen	• 볼트	•Perno	(SA 8210-03750)
7	**VOE 11714507**	1	1	1			Retainer	Retenue	Halter	리테이너	Soporte	(SA 8210-04030)
8	**VOE 11714506**	2	2	2			•Bolt	•Boulon	•Bolzen	• 볼트	•Perno	(SA 8210-03750)
9	**VOE 14521594**	1	1	1			Pipe	Canalisation	Rohrleitung	파이프	Canalizacion	
10	**VOE 14521595**	1	1	1			Pipe	Canalisation	Rohrleitung	파이프	Canalizacion	
11	**VOE 14521596**	1	1	1			Pipe	Canalisation	Rohrleitung	파이프	Canalizacion	
12	**VOE 14521597**	1	1	1			Pipe	Canalisation	Rohrleitung	파이프	Canalizacion	
13	**VOE 14521598**	1	1	1			Pipe	Canalisation	Rohrleitung	파이프	Canalizacion	

1	**8278797**
2	**8278798**
3	**8278799**
4	
5	

Tubos de combustible-inyector
연료 인젝터 배관
Kraftstoffrohre, Einspritzdüse
Conduits de carburant - Injecteur complet
Fuel pipes-injector

Catalogue id **20019**	Group **235**
Illustr. No **1006970**	Section **300**
Issue **VOE 74H9920019**	Page **93**

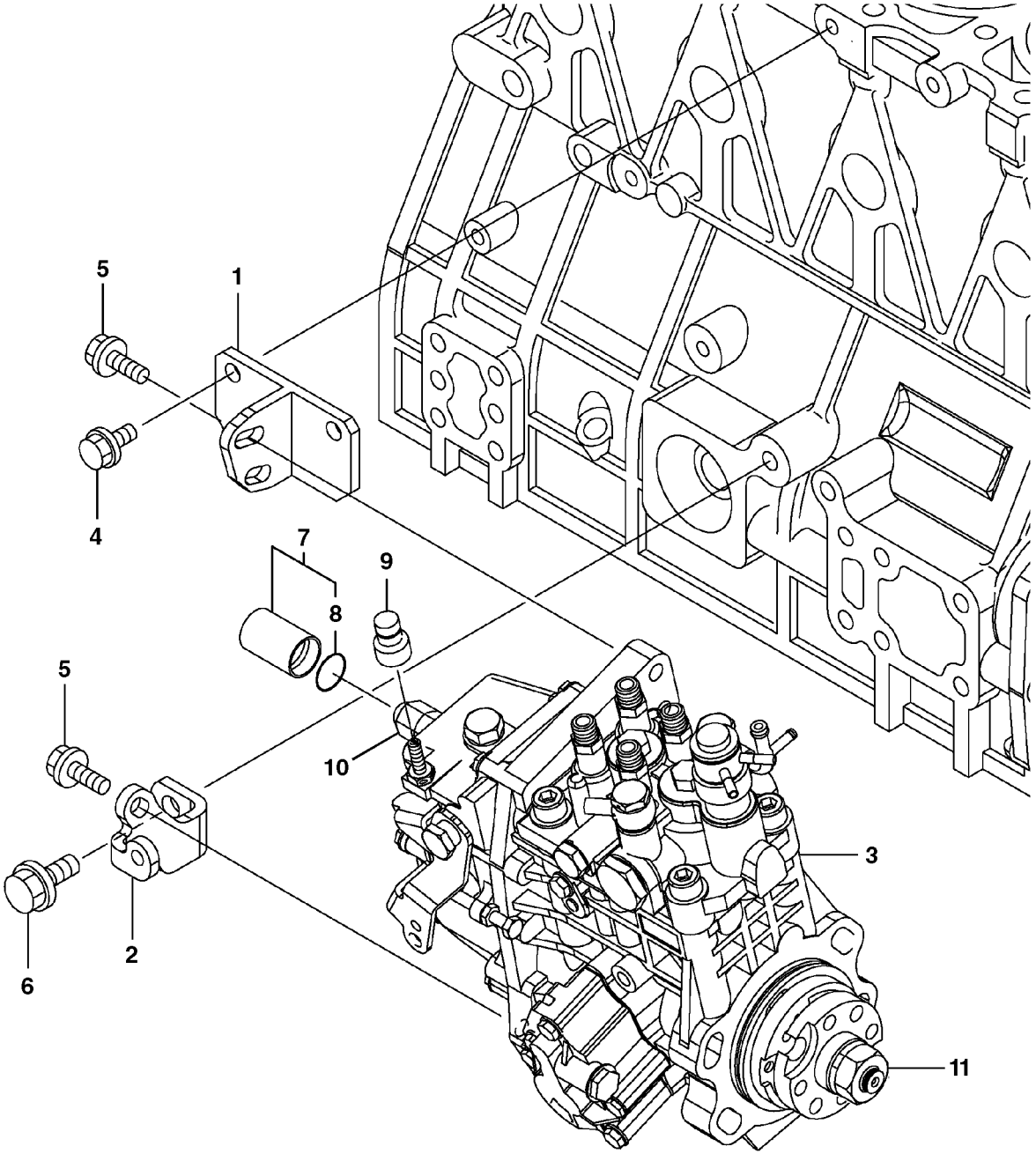

Volvo Construction Equipment

1006971

Fig.	Part No.	Quantity 1	2	3	PS	KIT	Description	Dénomination	Bezeichnung	품명	Denominación	Notes
1	**VOE 14521584**	1	1	1			Retainer	Retenue	Halter	리테이너	Soporte	
2	**VOE 14521585**	1	1	1			Retainer	Retenue	Halter	리테이너	Soporte	
3	**VOE 14521173**	1	1	1			Pump	Pompe	Pumpe	펌프	Bomba	
4	**VOE 11714372**	2	2	2			Screw	Vis	Schraube	스크류	Tornillo	(SA 8240-01680)
5	**VOE 14521586**	3	3	3			Bolt	Boulon	Bolzen	볼트	Perno	
6	**VOE 11714755**	1	1	1			Screw	Vis	Schraube	스크류	Tornillo	(SA 8240-01830)
7	**VOE 14521587**	1	1	1			Case	Etui	Futteral	케이스	Funda	
8	**VOE 14521588**	1	1	1			•O-ring	•Joint Torique	•O-Ring	• 오링	•Junta torica	
9	**VOE 14521589**	1	1	1			Cap	Chapeau	Kappe	캡	Caperuza	Repair part
10	**VOE 14521915**	1	1	1			Solenoid valve	Vanne electrom.	Magnetventil	솔레노이드 밸브	Electrovalvula	
11	**SA 8240-02230**	1	1	1			Lock nut	Contre-ecrou	Sicherungsmutter	록 너트	Contratuerca	
	SA 8240-01070	1	1	1			Spring Washer	Rondelle élastique	Federscheibe	스프링 와셔	Arandela flexible	

1	**8278797**
2	**8278798**
3	**8278799**
4	
5	

Bomba de inyección
연료 분사 펌프
Einspritzpumpe
Pompe d'injection
Injection pump

Catalogue id **20019**	Group **236**
Illustr. No **1006971**	Section **100**
Issue **VOE 74H9920019**	Page **95**

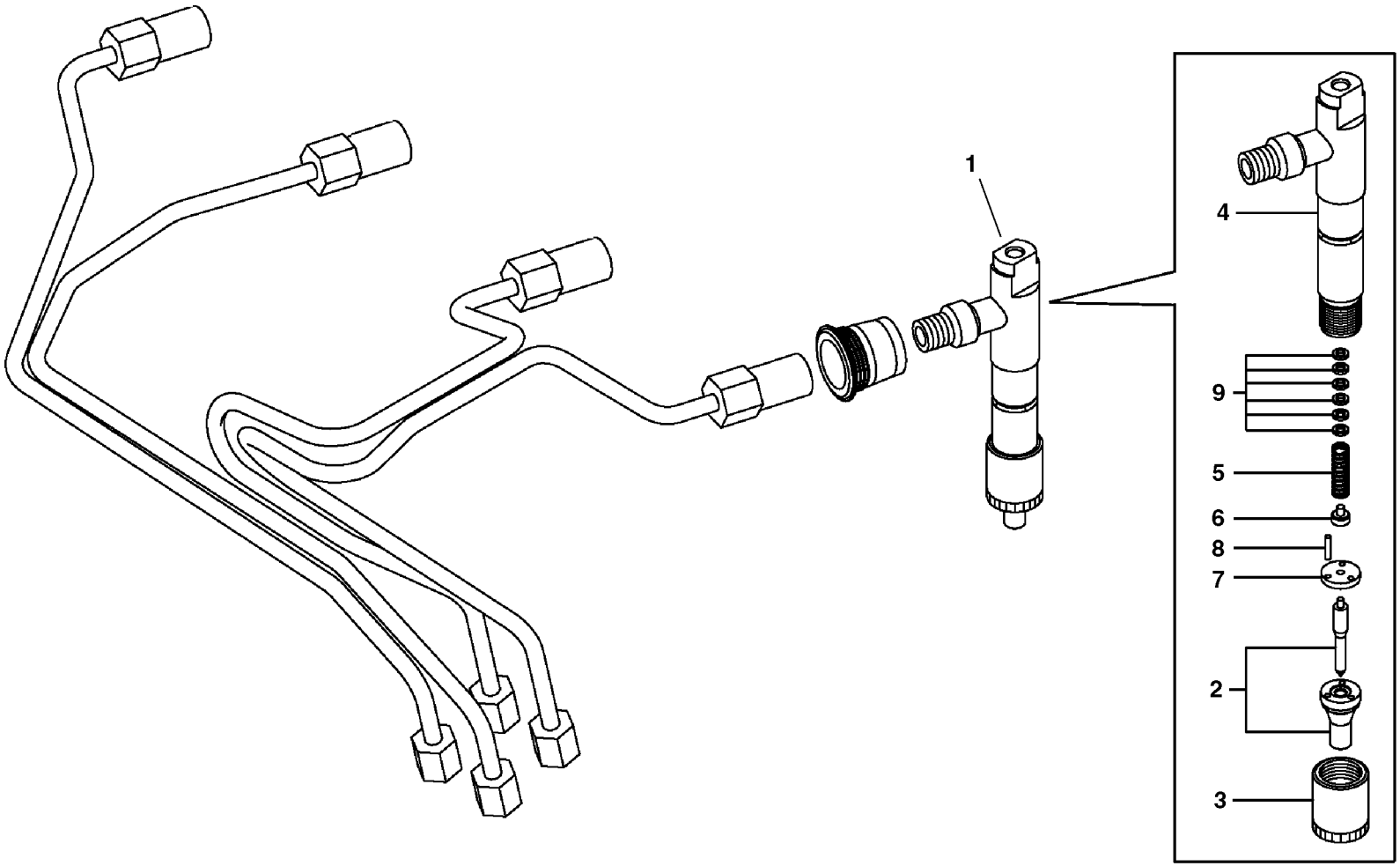
1
4
9
5
6
8
7
2
3

Fig.	Part No.	Quantity 1	2	3	PS	KIT	Description	Dénomination	Bezeichnung	품명	Denominación	Notes
1	**VOE 14520576**	4	4	4			Nozzle	Nez D'injecteur	Einspritzduse	노즐	Tobera	
2	**VOE 14521590**	1	1	1			•Nozzle	•Nez D'injecteur	•Einspritzduse	• 노즐	•Tobera	
3	**SA 8210-00380**	1	1	1			•Nut	•Ecrou	•Mutter	• 너트	•Tuerca	
4	**VOE 14521591**	1	1	1			•Holder	•Retenue	•Halter	• 홀더	•Soporte	
5	**SA 8210-00390**	1	1	1			•Spring	•Ressort	•Feder	• 스프링	•Muelle	
6	**SA 8210-00400**	1	1	1			•Spring	•Ressort	•Feder	• 스프링	•Muelle	
7	**SA 8210-00410**	1	1	1			•Plate	•Plaque	•Platte	• 플레이트	•Placa	
8	**SA 8210-00420**	3	3	3			•Pin	•Goupille	•Zapfen	• 핀	•Pasador	
9	**SA 8210-00430**	1	1	1			•Shim	•Cale d'épaisseur	•Passcheibe	• 심	•Arandela Ajuste	

1	**8278797**	**Inyector** 인젝터 **Einspritzdüse** **Injecteur complet** **Injector**	Catalogue id **20019**	Group **237**
2	**8278798**			
3	**8278799**		Illustr. No **1006972**	Section **100**
4				
5			Issue **VOE 74H9920019**	Page **97**

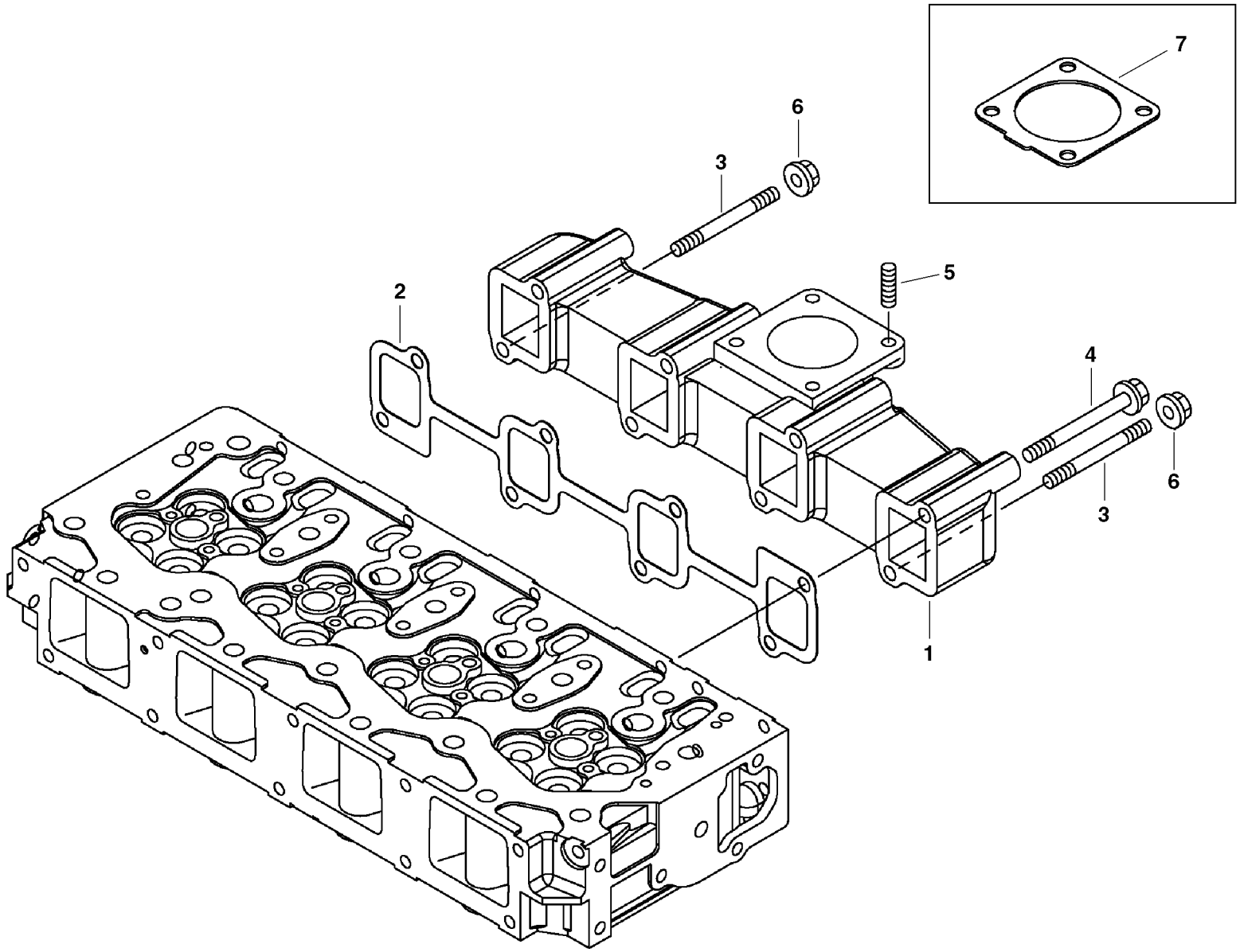

Volvo Construction Equipment

1006973

Fig.	Part No.	Quantity 1	2	3	PS	KIT	Description	Dénomination	Bezeichnung	품명	Denominación	Notes
1	**SA 8210-05110**	1	1	1			Manifold	Tubulure	Verzweigung	매니홀드	Bifurcacion	
2	**SA 8210-04570**	1	1	1			Gasket	Joint	Dichtung	가스켓	Junta	
3	**VOE 14521556**	2	2	2			Bolt	Boulon	Bolzen	볼트	Perno	
4	**VOE 11714632**	6	6	6			Bolt	Boulon	Bolzen	볼트	Perno	(VOE 14521557)
5	**VOE 14521558**	4	4	4			Bolt	Boulon	Bolzen	볼트	Perno	
6	**VOE 14521543**	2	2	2			Nut	Ecrou	Mutter	너트	Tuerca	
7	**VOE 14520599**	1	1	1			Gasket	Joint	Dichtung	가스켓	Junta	

1	**8278797**	**Colector de escape** 배기 매니홀드 **Auspuffkrümmer** **Tubulure d'échappement** **Exhaust manifold**	Catalogue id **20019**	Group **251**
2	**8278798**		Illustr. No **1006973**	Section **100**
3	**8278799**		Issue **VOE 74H9920019**	Page **99**
4				
5				

VOLVO

EC55B

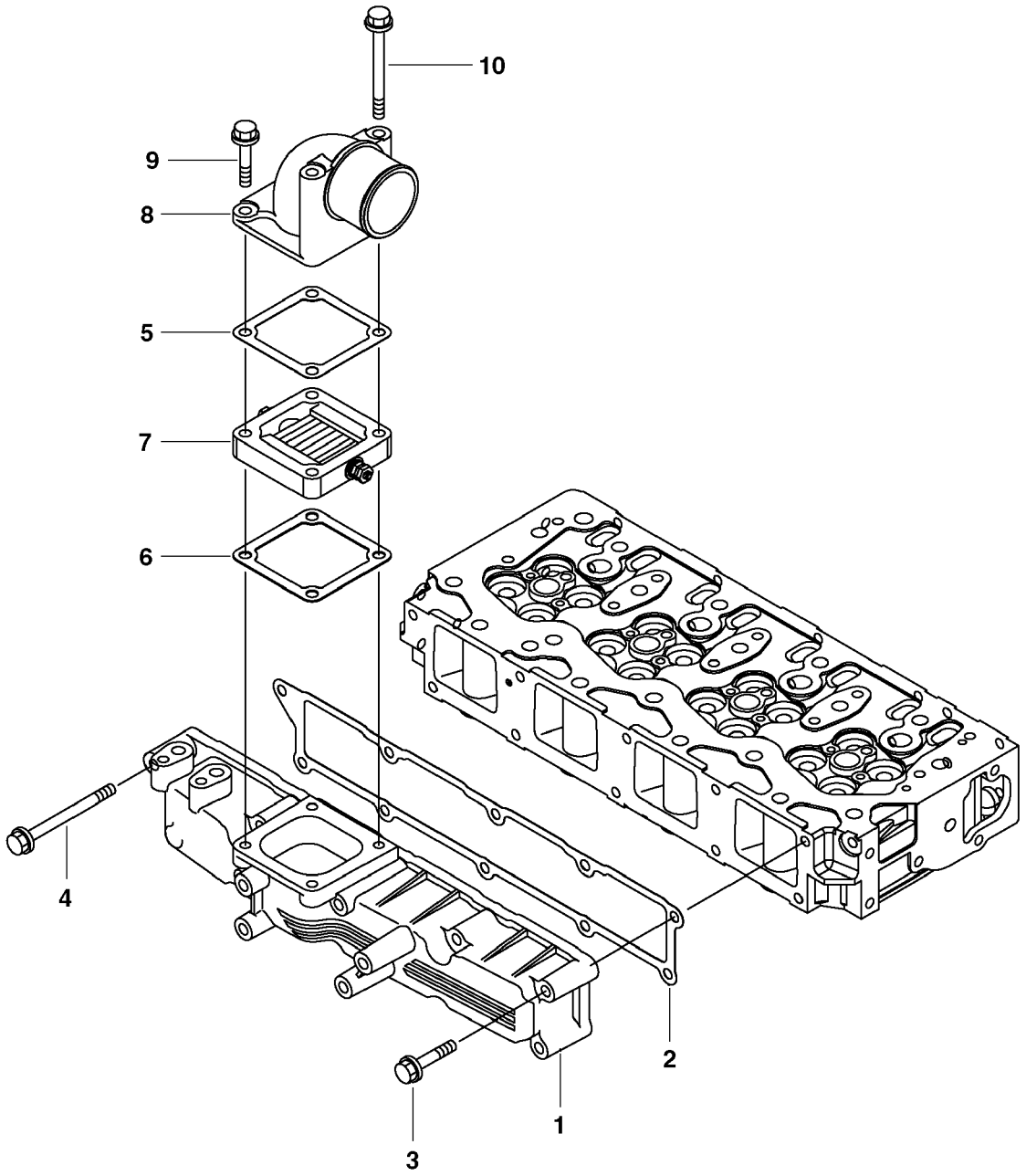
10
9
8
5
7
6
4
2
1
3

Fig.	Part No.	Quantity 1	2	3	PS	KIT	Description	Dénomination	Bezeichnung	품명	Denominación	Notes
1	**VOE 14521184**	1	1	1			Inlet manifold	Tubulure admission	Einlassrohr	흡입 매니폴드	Tubo admision	
2	**VOE 14521554**	1	1	1			Packing	Joint	Dichtung	패킹	Empaquetadura	
3	**VOE 11714373**	9	9	9			Bolt	Boulon	Bolzen	볼트	Perno	(SA 8240-01730)
4	**SA 8240-01790**	1	1	1			Bolt	Boulon	Bolzen	볼트	Perno	
5	**SA 8210-01870**	1	1	1			Gasket	Joint	Dichtung	가스켓	Junta	
6	**SA 8210-02840**	1	1	1			Gasket	Joint	Dichtung	가스켓	Junta	
7	**SA 8210-01680**	1	1	1			Air Heater	Chauffe-air	Luftwärmer	에어 히터	Calentador Aire	
8	**VOE 14521187**	1	1	1			Pipe	Canalisation	Rohrleitung	파이프	Canalizacion	
9	**SA 8240-01740**	2	2	2			Bolt	Boulon	Bolzen	볼트	Perno	
10	**VOE 14521555**	2	2	2			Bolt	Boulon	Bolzen	볼트	Perno	

1	**8278797**	**Tubo de admisión** 흡기 매니홀드 **Einlassrohr** **Tubulure d'admission** **Inlet manifold**	Catalogue id **20019**	Group **251**
2	**8278798**		Illustr. No **1006974**	Section **200**
3	**8278799**		Issue **VOE 74H9920019**	Page **101**
4				
5				

VOLVO

EC55B

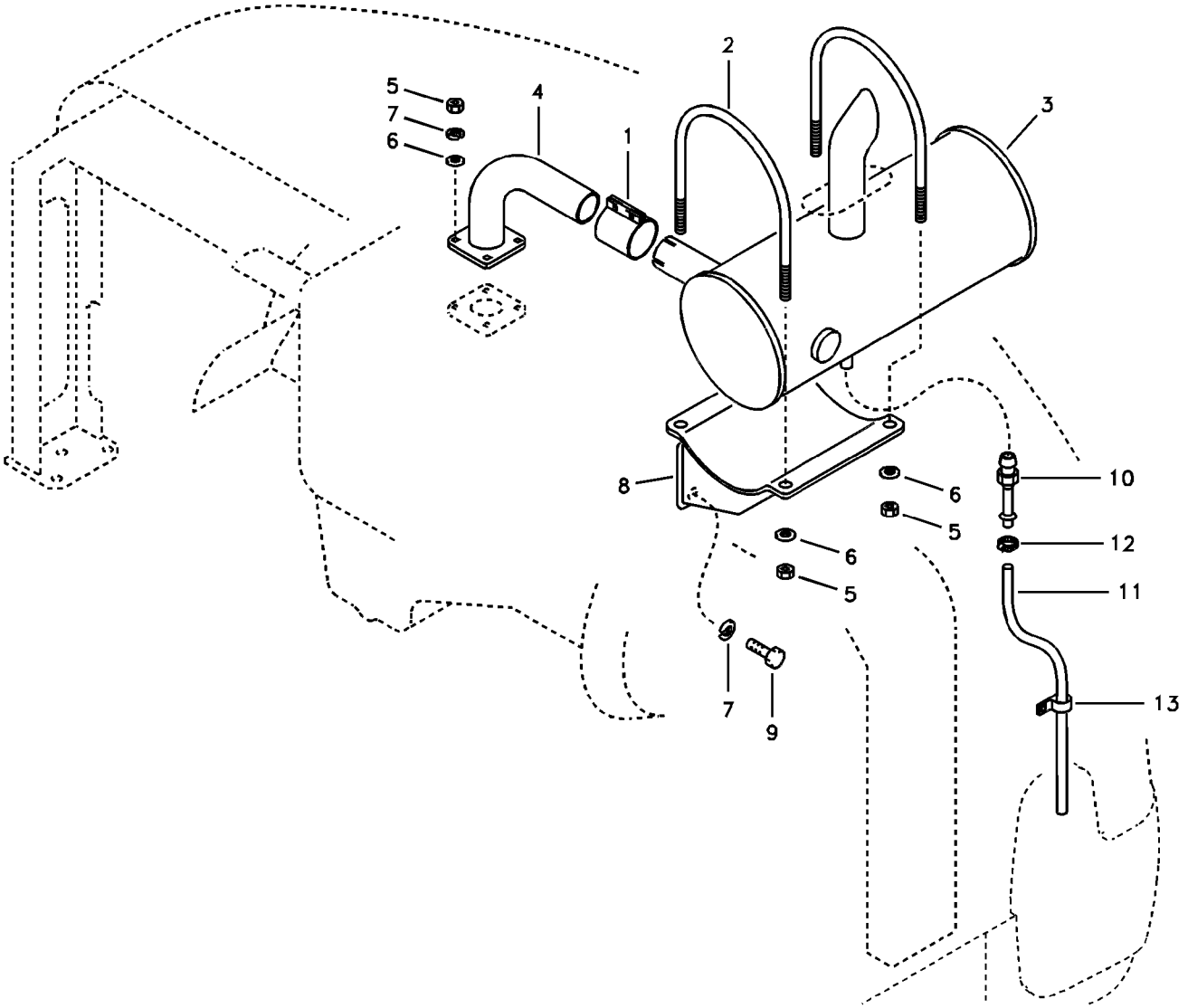
1
2
3
4
5
6
7
8
9
10
11
12
13

Fig.	Part No.	Quantity 1	2	3	PS	KIT	Description	Dénomination	Bezeichnung	품명	Denominación	Notes
1	**VOE 14518748**	1	1	1			Clamp	Pince Serrage	Klemme	클램프	Abrazadera	
2	**VOE 14518139**	2	2	2			U-bolt	Etrier Ressort	Federbride	유 볼트	Abrazadera-u	
3	**VOE 14518141**	1					Muffler	Silencieux	Schalldämpfer	소음기	Silencioso	
	VOE 14543180		1				Muffler	Silencieux	Schalldämpfer	소음기	Silencioso	
	VOE 14539553			1			Muffler	Silencieux	Schalldämpfer	소음기	Silencioso	
4	**VOE 14518143**	1	1	1			Pipe	Canalisation	Rohrleitung	파이프	Canalizacion	
5	**VOE 983303**	12	12	12			Nut	Ecrou	Mutter	너트	Tuerca	
6	**SA 9211-08000**	8	8	8			Washer	Rondelle	Scheibe	와셔	Arandela	
7	**VOE 955921**	8	8	8			Spring Washer	Rondelle élastique	Federscheibe	스프링 와셔	Arandela flexible	
8	**VOE 14520064**	1	1	1			Bracket	Console	Konsole	브라켓	Ménsula	
9	**VOE 983242**	4	4	4			Screw	Vis	Schraube	스크류	Tornillo	
10	**VOE 14541712**		1	1			Connector	Raccord	Anschluss	커넥터	Union	
11	**VOE 14880584**		1	1			Hose	Durit	Schlauch	호스	Tubo flexible	
12	**SA 9312-00004**		1	1			Clamp	Pince Serrage	Klemme	클램프	Abrazadera	
13	**SA 9315-01002**		1	1			Clip	Clip	Klemme	클립	Clip	SER NO 34676- SER NO 50150-

2265) Kor S/n 30001-34475 / Chn S/n 50001-50129
2266) Kor S/n 34476- / Chn S/n 50130-

1	**2265) 8278796**
2	**2266) 8280828**
3	**8280829 S/N 34476-**
4	
5	

Sistema de escape
배기 장치
Auspuffanlage
Système d'échappement
Exhaust system

Catalogue id **20019**	Group **252**
Illustr. No **1018752**	Section **100**
Issue **VOE 74H9920019**	Page **103**

VOLVO

EC55B

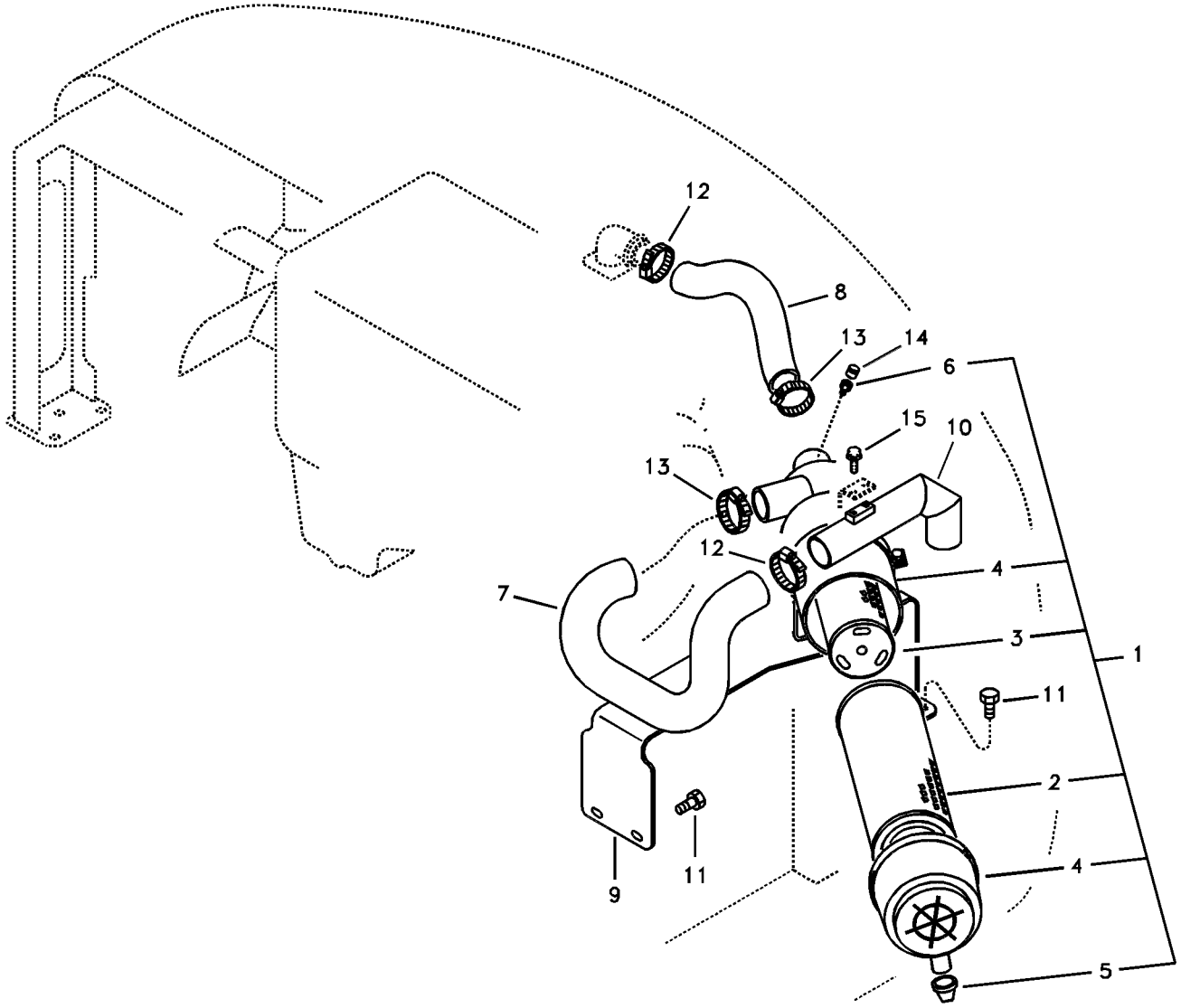
12
8
13
14
6
15
10
13
12
4
7
3
1
11
2
4
9
11
5

Fig.	Part No.	Quantity 1	2	3	PS	KIT	Description	Dénomination	Bezeichnung	품명	Denominación	Notes
1	**VOE 14518135**	1					Air Cleaner	Filtre Air	Luftfilter	에어크리너	Filtro Aire	
2	**VOE 14519261**	1					•Filter	•Filtre	•Filter	• 필터	•Filtro	Main
3	**VOE 14519262**	1					•Filter	•Filtre	•Filter	• 필터	•Filtro	Safety
4	**VOE 14519263**	1					•Cover	•Capot	•Haube	• 커버	•Capo	
5	**VOE 14519264**	1					•Vacuator	•Evacuation	•Vacuator	• 진공기	•Vaciador	
6	**VOE 14522129**	1					•Cap	•Chapeau	•Kappe	• 캡	•Caperuza	
7	**VOE 14522064**	1					Hose	Durit	Schlauch	호스	Tubo flexible	
8	**VOE 14520091**	1					Hose	Durit	Schlauch	호스	Tubo flexible	
9	**VOE 14518138**	1					Bracket	Console	Konsole	브라켓	Ménsula	
10	**VOE 14522065**	1					Pipe	Canalisation	Rohrleitung	파이프	Canalizacion	SER NO 30001-30666
	VOE 14522775	1			SS		Pipe	Canalisation	Rohrleitung	파이프	Canalizacion	SER NO 30667-33003
												SER NO 50001-
	VOE 14528516	1					Pipe	Canalisation	Rohrleitung	파이프	Canalizacion	SER NO 33004-
11	**VOE 946329**	4					Flange screw	Vis à bride	Flanschschraube	플랜지 스크류	Torn embridado	
12	**SA 9312-10300**	2					Clamp	Pince Serrage	Klemme	클램프	Abrazadera	
13	**SA 9312-10350**	2					Clamp	Pince Serrage	Klemme	클램프	Abrazadera	
14	**VOE 14881082**	1					Indicator	Indicateur	Indikator	인디케이터	Indicador	
15	**VOE 946471**	2					Flange screw	Vis à bride	Flanschschraube	플랜지 스크류	Torn embridado	

1	**8278796**	**Sistema de aspiración** 흡기 장치 **Ansaugsystem** **Système d'aspiration** **Inlet system**	Catalogue id **20019**	Group **256**
2			Illustr. No **1014320**	Section **100**
3			Issue **VOE 74H9920019**	Page **105**
4				
5				

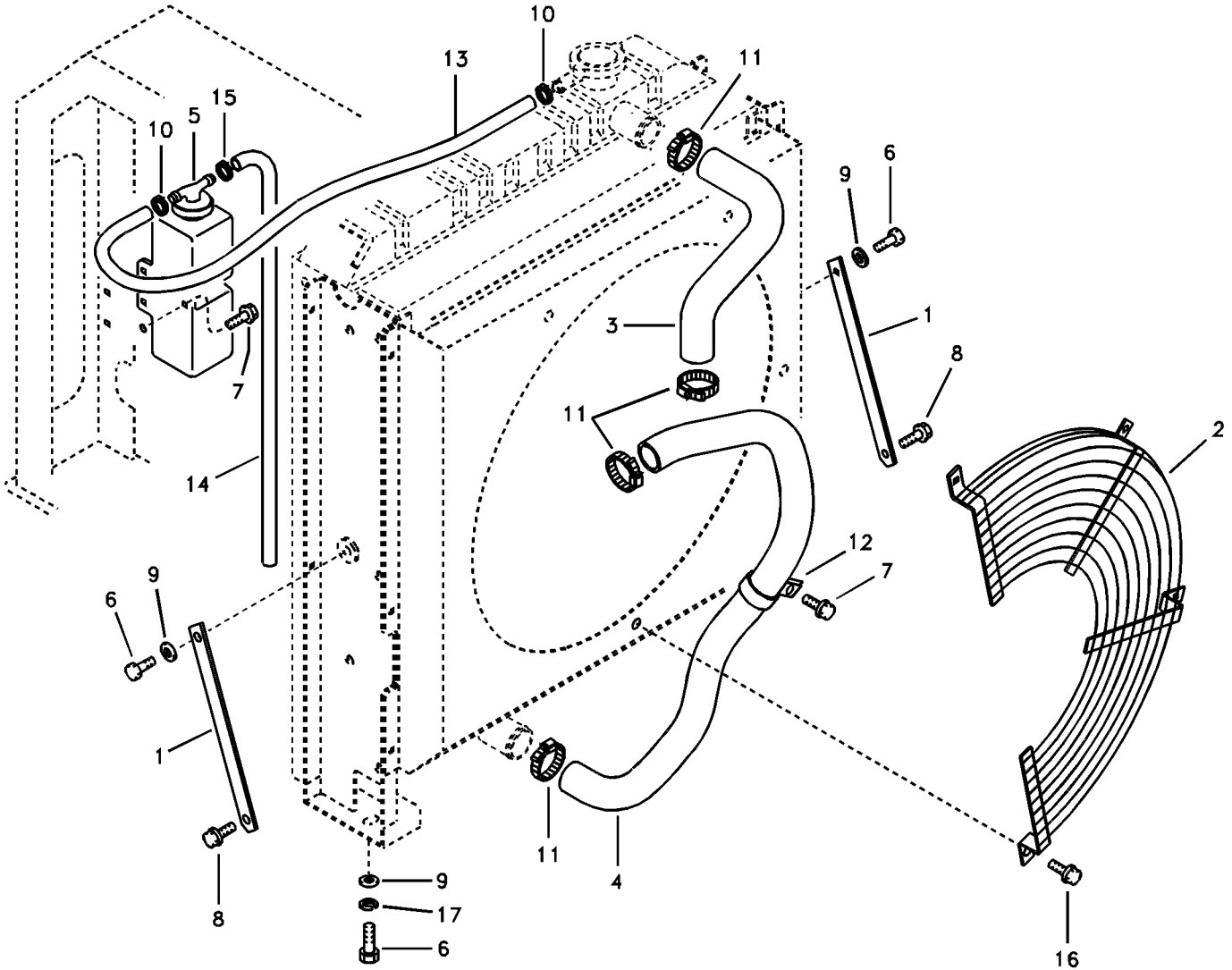
10
13
11
15
10
5
9
6
1
3
8
7
11
2
14
12
9
6
7
1
8
9
17
6
11
4
16

Fig.	Part No.	Quantity 1	2	3	4	5	PS	KIT	Description	Dénomination	Bezeichnung	품명	Denominación	Notes
1	**SA 1115-30130**	2							Stay	Tirant	Strebe	스테이	Barra	
2	**SA 1115-30220**		1	1					Guard	Protection	Schutz	가드	Protección	
	VOE 14522958				1				Guard	Protection	Schutz	가드	Protección	
3	**VOE 14503559**	1							Hose	Durit	Schlauch	호스	Tubo flexible	SER NO 30001-34475
	VOE 14542491	1							Hose	Durit	Schlauch	호스	Tubo flexible	SER NO 34476-
4	**VOE 14503561**	1							Hose	Durit	Schlauch	호스	Tubo flexible	
5	**VOE 14504668**	1							Tank	Resérvoir	Behälter	탱크	Depósito	SER NO 30001-34728
	VOE 14546444	1							Tank	Resérvoir	Behälter	탱크	Depósito	SER NO 34729-
6	**VOE 983252**	2	2	2					Screw	Vis	Schraube	스크류	Tornillo	
	VOE 983253				2				Hexagon screw	Vis tête hexagonale	Sechskantschraub	스크류	Tornillo hexago	
7	**VOE 946440**	6							Flange screw	Vis à bride	Flanschschraube	플랜지 스크류	Torn embridado	
8	**VOE 965191**	2					SS		Screw	Vis	Schraube	스크류	Tornillo	
9	**SA 9211-10000**	2	2	2	2				Washer	Rondelle	Scheibe	와셔	Arandela	
10	**SA 9312-00004**	2							Clamp	Pince Serrage	Klemme	클램프	Abrazadera	
11	**SA 9312-10250**	4							Clamp	Pince Serrage	Klemme	클램프	Abrazadera	
12	**SA 9315-16001**	1							Clip	Clip	Klemme	클립	Clip	
13	**VOE 14881087**	1							Fuel hose	Flexi.carburant	Kraftstoffschlauch	연료 호스	Manguera comb	SER NO 30001-34475
	VOE 14881123	1							Fuel hose	Flexi.carburant	Kraftstoffschlauch	연료 호스	Manguera comb	SER NO 34476-
14	**VOE 14881183**	1							Hose	Durit	Schlauch	호스	Tubo flexible	SER NO 30001-34475
	VOE 14880596	1							Hose	Durit	Schlauch	호스	Tubo flexible	SER NO 34476-
15	**SA 9312-00005**	1							Clamp	Pince Serrage	Klemme	클램프	Abrazadera	
16	**VOE 946173**	4					SS		Screw	Vis	Schraube	스크류	Tornillo	SER NO 30667-
17	**VOE 955922**		2	2	2				Spring Washer	Rondelle élastique	Federscheibe	스프링 와셔	Arandela flexible	

1	**8278796**
2	**8278796 S/N -31106**
3	**8279318 S/N 31107-**
4	**8279319 S/N 31107-**
5	

Sistema de refrigeración
냉각장치
Kühlanlage
Système de refroidissement
Cooling system

Catalogue id **20019**	Group **261**
Illustr. No **1008338**	Section **100**
Issue **VOE 74H9920019**	Page **107**

VOLVO

EC55B

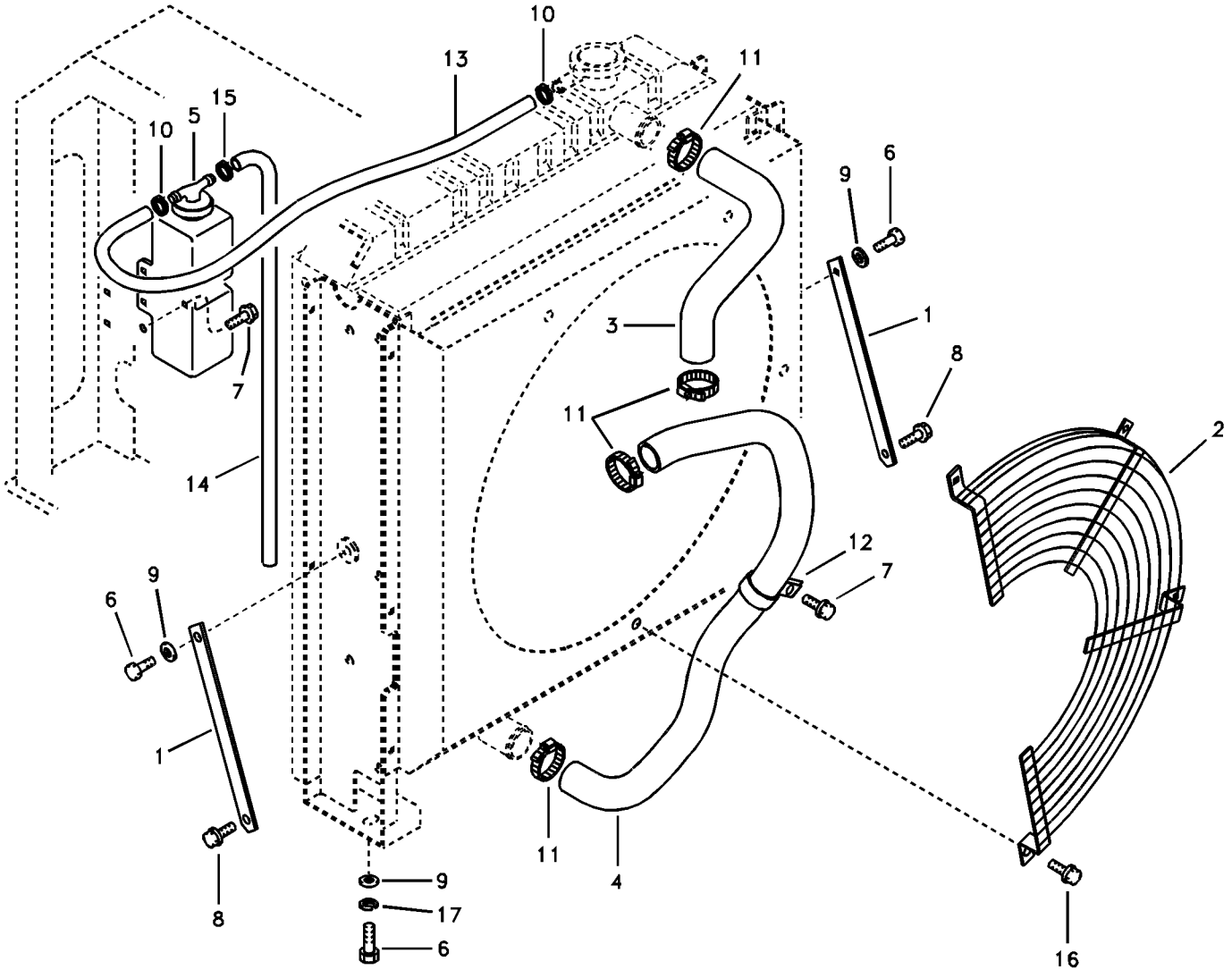
10
13
11
15
10
5
9
6
1
3
8
7
11
2
14
12
9
6
7
1
8
9
17
6
11
4
16

Fig.	Part No.	Quantity 1	2	3	PS	KIT	Description	Dénomination	Bezeichnung	품명	Denominación	Notes
1	**SA 1115-30130**	2					Stay	Tirant	Strebe	스테이	Barra	
2	**SA 1115-30220**		1				Guard	Protection	Schutz	가드	Protección	
	VOE 14522958			1			Guard	Protection	Schutz	가드	Protección	
3	**VOE 14503559**	1					Hose	Durit	Schlauch	호스	Tubo flexible	SER NO 50001-50129
	VOE 14542491	1					Hose	Durit	Schlauch	호스	Tubo flexible	SER NO 50130-
4	**VOE 14503561**	1					Hose	Durit	Schlauch	호스	Tubo flexible	
5	**VOE 14504668**	1					Tank	Resérvoir	Behälter	탱크	Depósito	SER NO 50001-50144
	VOE 14546444	1					Tank	Resérvoir	Behälter	탱크	Depósito	SER NO 50145-
6	**VOE 983252**	2	2				Screw	Vis	Schraube	스크류	Tornillo	
	VOE 983253			2			Hexagon screw	Vis tête hexagonale	Sechskantschraube	스크류	Tornillo hexago	
7	**VOE 946440**	6					Flange screw	Vis à bride	Flanschschraube	플랜지 스크류	Torn embridado	
8	**VOE 965191**	2			SS		Screw	Vis	Schraube	스크류	Tornillo	
9	**SA 9211-10000**	2	2	2			Washer	Rondelle	Scheibe	와셔	Arandela	
10	**SA 9312-00004**	2					Clamp	Pince Serrage	Klemme	클램프	Abrazadera	
11	**SA 9312-10250**	4					Clamp	Pince Serrage	Klemme	클램프	Abrazadera	
12	**SA 9315-16001**	1					Clip	Clip	Klemme	클립	Clip	
13	**VOE 14881087**	1					Fuel hose	Flexi.carburant	Kraftstoffschlauch	연료 호스	Manguera comb	SER NO 50001-50129
	VOE 14881123	1					Fuel hose	Flexi.carburant	Kraftstoffschlauch	연료 호스	Manguera comb	SER NO 50130-
14	**VOE 14881183**	1					Hose	Durit	Schlauch	호스	Tubo flexible	SER NO 50001-50129
	VOE 14880596	1					Hose	Durit	Schlauch	호스	Tubo flexible	SER NO 50130-
15	**SA 9312-00005**	1					Clamp	Pince Serrage	Klemme	클램프	Abrazadera	
16	**VOE 946173**	4			SS		Screw	Vis	Schraube	스크류	Tornillo	
17	**VOE 955922**		2	2			Spring Washer	Rondelle élastique	Federscheibe	스프링 와셔	Arandela flexible	

1	**8278796**	**Sistema de refrigeración** 냉각장치 **Kühlanlage** **Système de refroidissement** **Cooling system**	Catalogue id **20019**	Group **261**
2	**8279318**			
3	**8279319**		Illustr. No **1008338**	Section **110**
4				
5		**FOR CHINA**	Issue **VOE 74H9920019**	Page **109**

VOLVO

EC55B

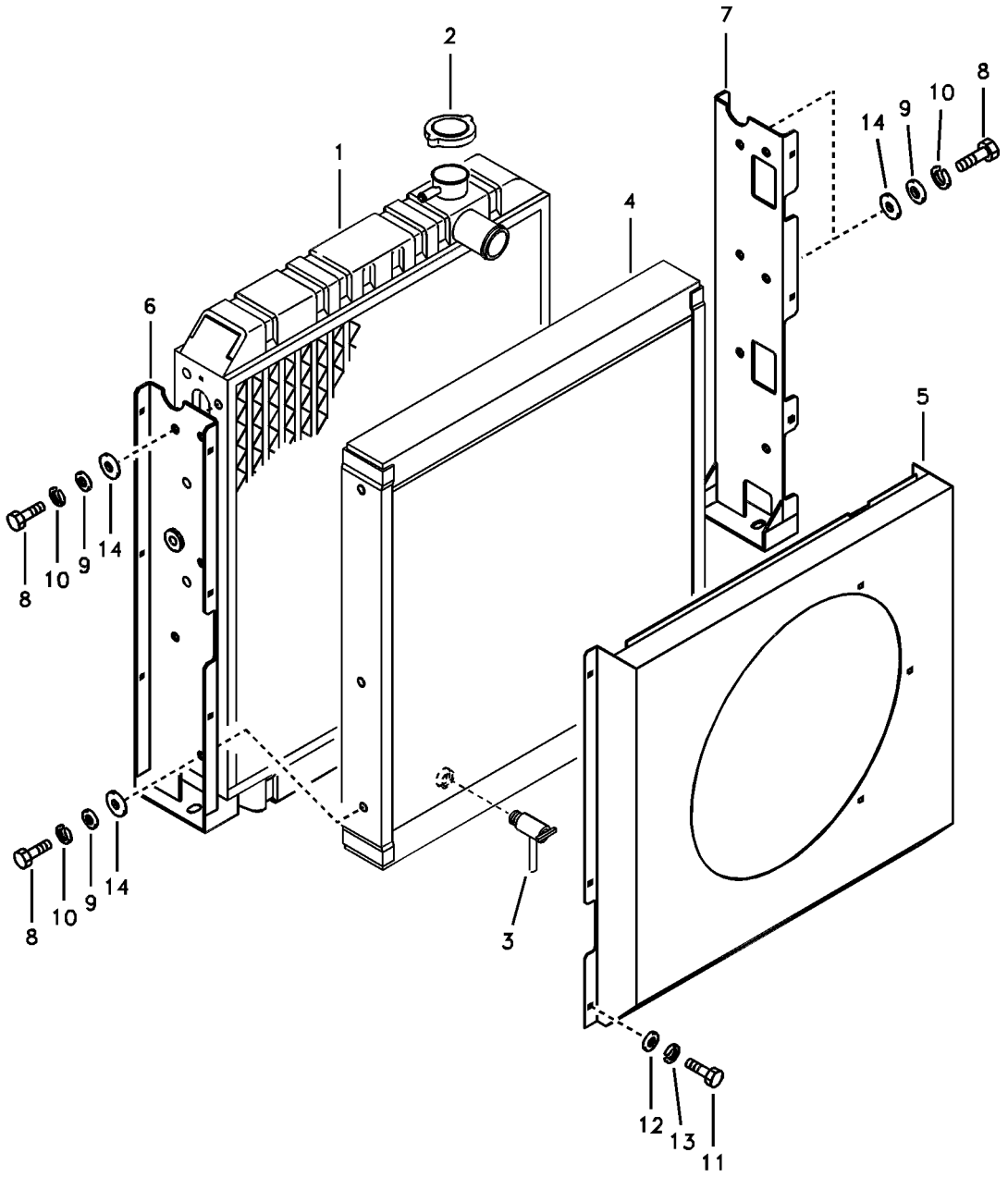
1
2
3
4
5
6
7
8
9
10
11
12
13
14

Fig.	Part No.	Quantity 1	2	3	PS	KIT	Description	Dénomination	Bezeichnung	품명	Denominación	Notes
	VOE 14521810	1	1				Radiator	Radiateur	Kuhler	라디에이터	Radiador	
				1	NS		Radiator	Radiateur	Kuhler	라디에이터	Radiador	
1	**VOE 14503550**	1	1		SS		•Radiator	•Radiateur	•Radiator	• 라디에이터	•Radiador	SER NO 30001-30799
	VOE 14523887	1	1				•Radiator	•Radiateur	•Radiator	• 라디에이터	•Radiador	SER NO 30800-
	VOE 14522957			1			•Radiator	•Radiateur	•Radiator	• 라디에이터	•Radiador	
2	**SA 1015-00820**	1	1	1			••Cap	••Chapeau	••Kappe	•• 캡	••Caperuza	
3	**SA 8240-01380**	1	1	1			••Shut-off Cock	••Robinet Fermet.	••Absperrhahn	•• 셧 – 오프 콕	••Grifo Cierre	
4	**VOE 14518315**	1	1	1			•Oil Cooler	•Refroidisseur huile	•Ölkühler	• 오일 쿨러	•Enfriadores aceite	
5	**VOE 14521811**	1	1	1			•Fan Shroud	•Carter de ventilateur	•Lufterhaube	• 휀 슈라우드	•Cubiert Ventila	
6	**VOE 14521812**	1	1	1			•Bracket	•Ferrure-support	•Tragstütze	• 브라켓	•Hierro Apoyo	
7	**VOE 14521813**	1	1	1			•Bracket	•Ferrure-support	•Tragstütze	• 브라켓	•Hierro Apoyo	
8	**VOE 983251**	10	10	10			•Hexagon screw	•Vis tête hexagonale	•Sechskantschraube	• 스크류	•Tornillo hexago	
9	**SA 9211-10000**	10	10	10			•Washer	•Rondelle	•Scheibe	• 와셔	•Arandela	
10	**VOE 955922**	10	10	10			•Spring Washer	•Rondelle élastique	•Federscheibe	• 스프링 와셔	•Arandela flexible	
11	**VOE 983242**	6	6	6			•Screw	•Vis	•Schraube	• 스크류	•Tornillo	
12	**SA 9211-08000**	6	6	6			•Washer	•Rondelle	•Scheibe	• 와셔	•Arandela	
13	**VOE 955921**	6	6	6			•Spring Washer	•Rondelle élastique	•Federscheibe	• 스프링 와셔	•Arandela flexible	
14	**VOE 14521837**	6	6	6			•Spacer	•Partie Intermédiaire	•Zwischenstück	• 스페이서	•Espaciador	

1	**8278796 S/N -31106**	**Radiador** 라디에이터 **Kühler** **Radiateur** **Radiator**	Catalogue id **20019**	Group **261**
2	**8279318 S/N 31107-**		Illustr. No **1006978**	Section **300**
3	**8279319 S/N 31107-**		Issue **VOE 74H9920019**	Page **111**
4				
5				

VOLVO

EC55B

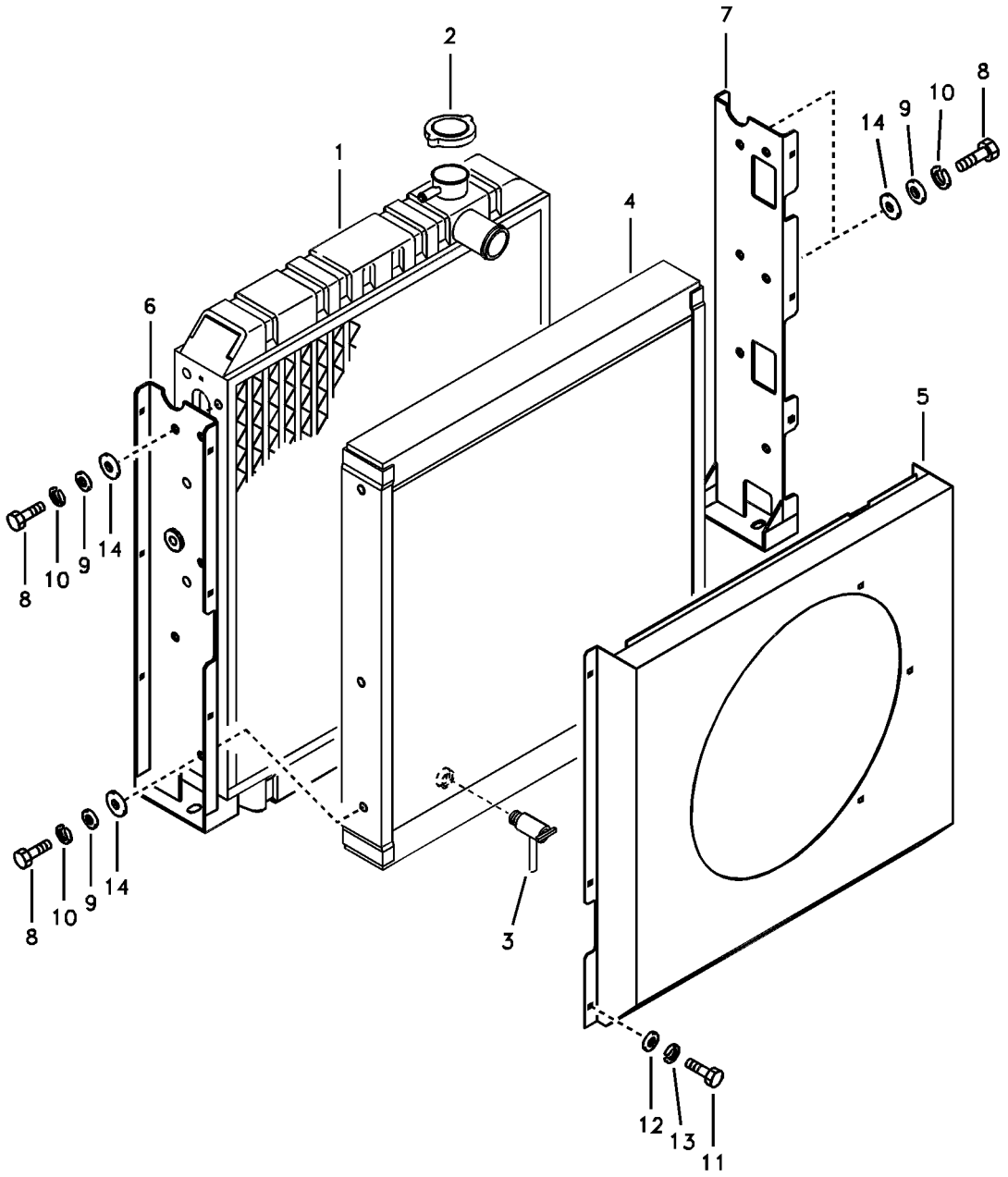
1
2
3
4
5
6
7
8
9
10
11
12
13
14

Fig.	Part No.	Quantity 1	2	3	PS	KIT	Description	Dénomination	Bezeichnung	품명	Denominación	Notes
	VOE 14521810	1					Radiator	Radiateur	Kuhler	라디에이터	Radiador	
			1		NS		Radiator	Radiateur	Kuhler	라디에이터	Radiador	
1	**VOE 14523887**	1					•Radiator	•Radiateur	•Radiator	• 라디에이터	•Radiador	
	VOE 14522957		1				•Radiator	•Radiateur	•Radiator	• 라디에이터	•Radiador	
2	**SA 1015-00820**	1	1				••Cap	••Chapeau	••Kappe	•• 캡	••Caperuza	
3	**SA 8240-01380**	1	1				••Shut-off Cock	••Robinet Fermet.	••Absperrhahn	•• 셧 – 오프 콕	••Grifo Cierre	
4	**VOE 14518315**	1	1				•Oil Cooler	•Refroidisseur huile	•Ölkühler	• 오일 쿨러	•Enfriadores aceite	
5	**VOE 14521811**	1	1				•Fan Shroud	•Carter de ventilateur	•Lufterhaube	• 휀 슈라우드	•Cubiert Ventila	
6	**VOE 14521812**	1	1				•Bracket	•Ferrure-support	•Tragstütze	• 브라켓	•Hierro Apoyo	
7	**VOE 14521813**	1	1				•Bracket	•Ferrure-support	•Tragstütze	• 브라켓	•Hierro Apoyo	
8	**VOE 983251**	10	10				•Hexagon screw	•Vis tête hexagonale	•Sechskantschraube	• 스크류	•Tornillo hexago	
9	**SA 9211-10000**	10	10				•Washer	•Rondelle	•Scheibe	• 와셔	•Arandela	
10	**VOE 955922**	10	10				•Spring Washer	•Rondelle élastique	•Federscheibe	• 스프링 와셔	•Arandela flexible	
11	**VOE 983242**	6	6				•Screw	•Vis	•Schraube	• 스크류	•Tornillo	
12	**SA 9211-08000**	6	6				•Washer	•Rondelle	•Scheibe	• 와셔	•Arandela	
13	**VOE 955921**	6	6				•Spring Washer	•Rondelle élastique	•Federscheibe	• 스프링 와셔	•Arandela flexible	
14	**VOE 14521837**	6	6				•Spacer	•Partie Intermédiaire	•Zwischenstück	• 스페이서	•Espaciador	

1	**8279318**	**Radiador** 라디에이터 **Kühler** **Radiateur** **Radiator**	Catalogue id **20019**	Group **261**
2	**8279319**		Illustr. No **1006978**	Section **310**
3			Issue **VOE 74H9920019**	Page **113**
4				
5		**FOR CHINA**		

VOLVO

EC55B

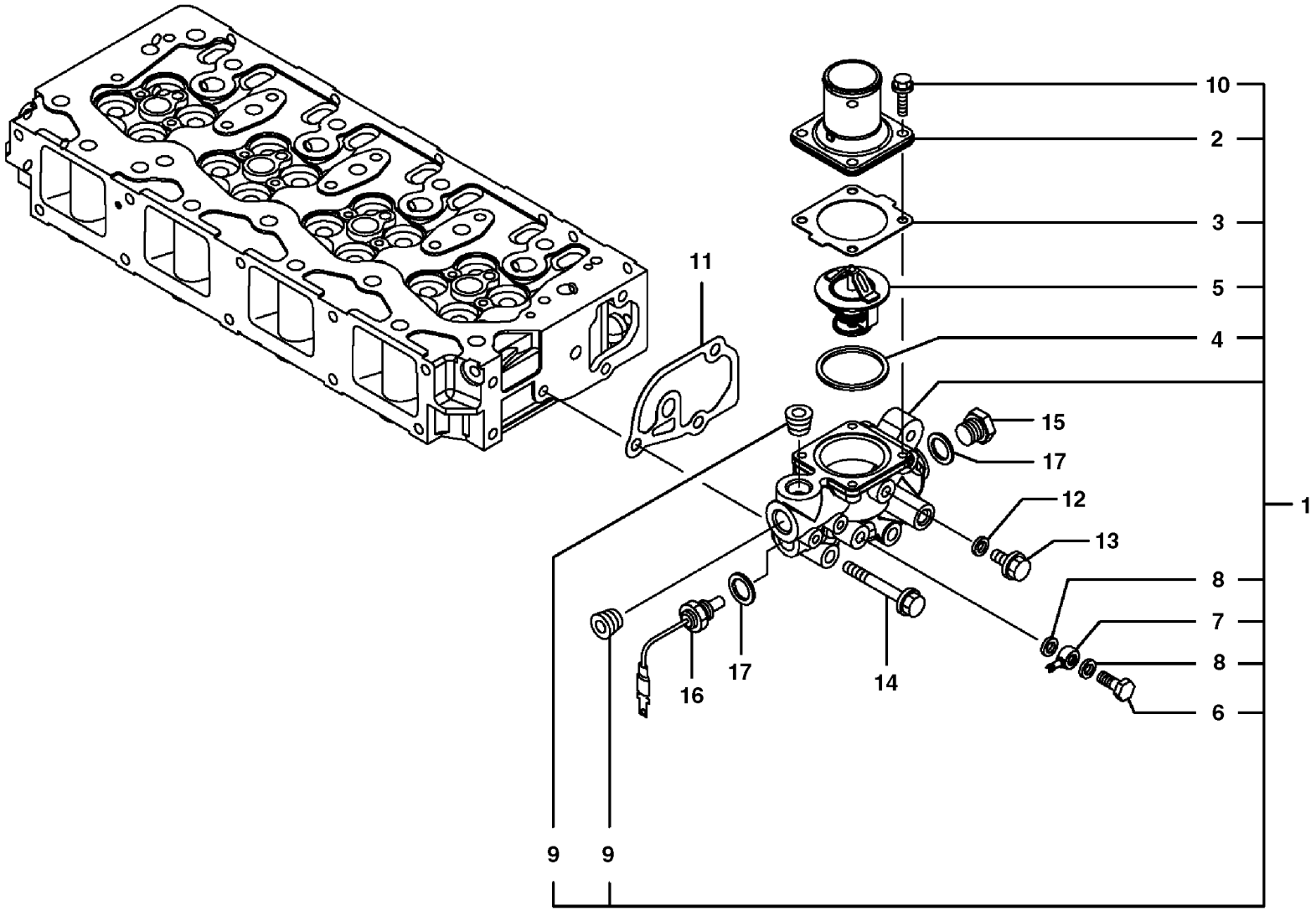
10
2
3
5
4
11
15
17
12
13
1
8
7
8
6
16
17
14
9
9

Fig.	Part No.	Quantity 1	2	3	PS	KIT	Description	Dénomination	Bezeichnung	품명	Denominación	Notes
1	**VOE 14521573**	1	1	1			Case	Etui	Futteral	케이스	Funda	
2	**VOE 14520587**	1	1	1			•Cover	•Capot	•Haube	• 커버	•Capo	
3	**SA 8210-02780**	1	1	1			•Gasket	•Joint	•Dichtung	• 가스켓	•Junta	
4	**SA 8210-02790**	1	1	1			•Packing	•Joint	•Dichtung	• 패킹	•Empaquetadura	
5	**VOE 14515351**	1	1	1			•Thermostat	•Thermostat	•Thermostat	• 항온기	•Termostato	
6	**VOE 14521574**	1	1	1			•Bolt	•Boulon	•Bolzen	• 볼트	•Perno	
7	**VOE 14521575**	1	1	1			•Joint	•Cardan	•Gelenk	• 조인트	•Junta	
8	**VOE 11714477**	1	1	1			•Gasket	•Joint	•Dichtung	• 가스켓	•Junta	(SA 8210-05580)
9	**VOE 14521576**	2	2	2			•Plug	•Bouchon	•Stopfen	• 플러그	•Tapon	
10	**VOE 14521577**	4	4	4			•Bolt	•Boulon	•Bolzen	• 볼트	•Perno	
11	**SA 8210-04840**	1	1	1			Gasket	Joint	Dichtung	가스켓	Junta	
12	**VOE 11714477**	2	2	2			Gasket	Joint	Dichtung	가스켓	Junta	(SA 8210-05580)
13	**VOE 11714490**	1	1	1			Screw	Vis	Schraube	스크류	Tornillo	(SA 8240-01670)
14	**SA 8240-01740**	3	3	3			Bolt	Boulon	Bolzen	볼트	Perno	
15	**VOE 11714492**	1	1	1			Plug	Bouchon	Stopfen	플러그	Tapon	(SA 8210-02520)
16	**VOE 14500477**	1	1	1			Sensor	Capteur	Geber	센서	Captador	Engine pre heating
17	**VOE 11714478**	2	2	2			Gasket	Joint	Dichtung	가스켓	Junta	(SA 8210-03370)

1	**8278797**
2	**8278798**
3	**8278799**
4	
5	

Caja de termostato
항온기 하우징
Thermostatgehäuse
Boîtier de thermostat
Thermostat housing

Catalogue id **20019**	Group **262**
Illustr. No **1006979**	Section **200**
Issue **VOE 74H9920019**	Page **115**

VOLVO

EC55B

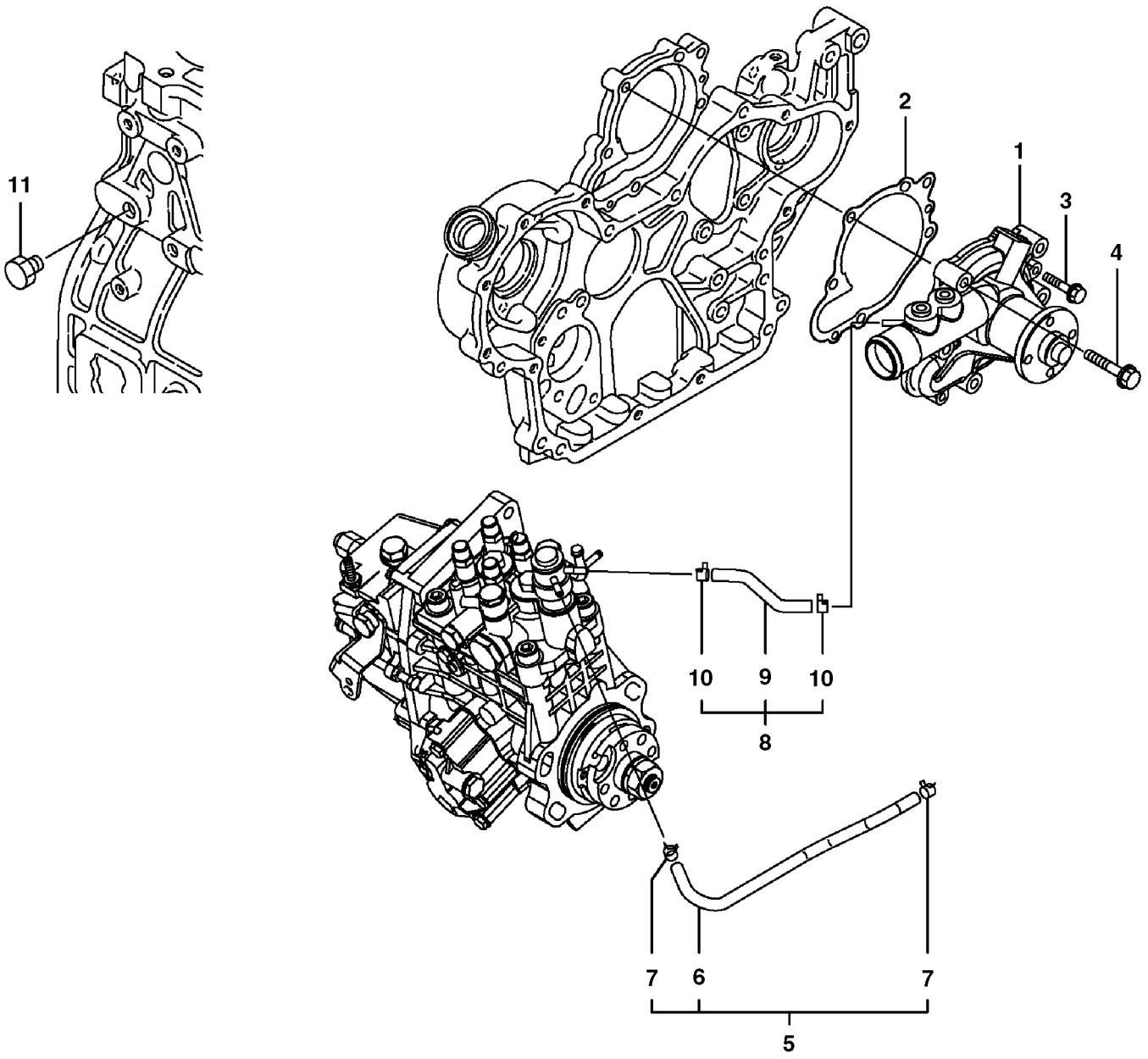
11
2
1
3
4
10
9
10
8
7
6
7
5

Fig.	Part No.	Quantity 1	2	3	PS	KIT	Description	Dénomination	Bezeichnung	품명	Denominación	Notes
1	**VOE 14521180**	1	1	1			Water Pump	Pompe a eau	Wasserpumpe	워터펌프	Bomba de agua	
2	**SA 8210-04820**	1	1	1			Gasket	Joint	Dichtung	가스켓	Junta	
3	**VOE 11714491**	2	2	2			Bolt	Boulon	Bolzen	볼트	Perno	(SA 8240-01630)
4	**VOE 11714373**	5	5	5			Bolt	Boulon	Bolzen	볼트	Perno	(SA 8240-01730)
5	**VOE 14521578**	1	1	1			Hose	Durit	Schlauch	호스	Tubo flexible	
6	**VOE 14521579**	1	1	1			•Pipe	•Canalisation	•Rohrleitung	• 파이프	•Canalizacion	
7	**VOE 14521580**	2	2	2			•Clamp	•Pince Serrage	•Klemme	• 클램프	•Abrazadera	
8	**VOE 14521581**	1	1	1			Hose	Durit	Schlauch	호스	Tubo flexible	
9	**VOE 14521582**	1	1	1			•Pipe	•Canalisation	•Rohrleitung	• 파이프	•Canalizacion	
10	**VOE 14521580**	2	2	2			•Clamp	•Pince Serrage	•Klemme	• 클램프	•Abrazadera	
11	**VOE 14521583**	1	1	1			Plug	Bouchon	Stopfen	플러그	Tapon	

1	**8278797**
2	**8278798**
3	**8278799**
4	
5	

Accionamiento del ventilador
팬 드라이브
Lüftermotor
Entraînement de ventilateur
Fan drive

Catalogue id **20019**	Group **263**
Illustr. No **1008339**	Section **100**
Issue **VOE 74H9920019**	Page **117**

VOLVO

EC55B

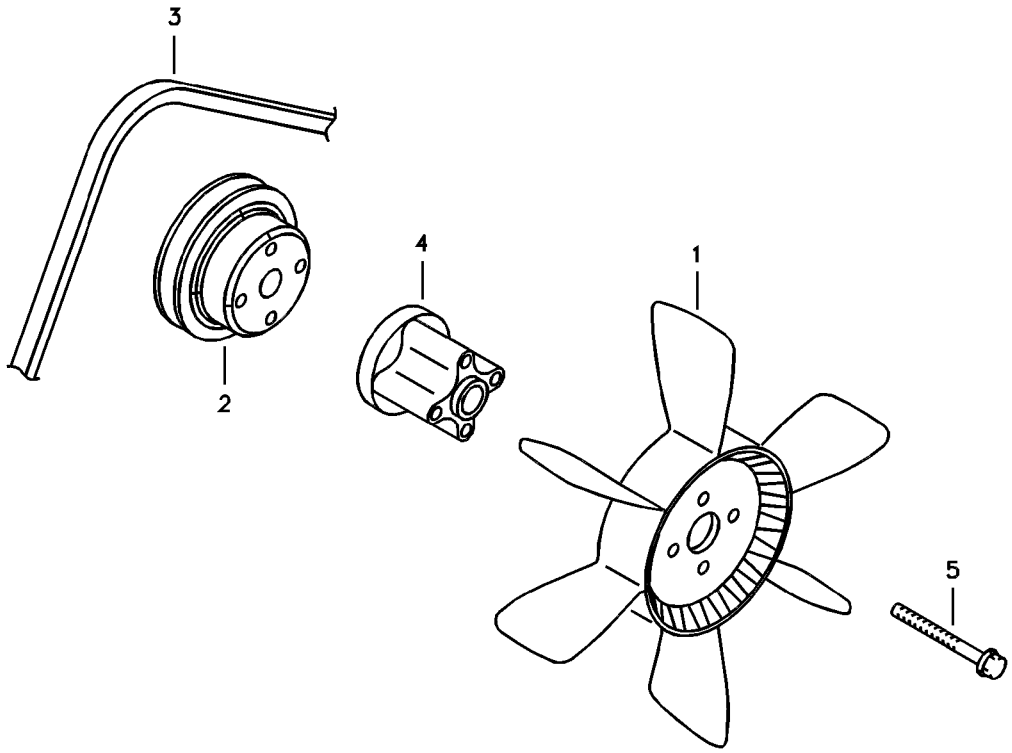
3
2
4
1
5

Fig.	Part No.	Quantity 1	2	3	PS	KIT	Description	Dénomination	Bezeichnung	품명	Denominación	Notes
1	**SA 8210-05120**	1					Fan	Ventilateur	Ventilator	팬	Ventilador	
	SA 8210-05120		1				Fan	Ventilateur	Ventilator	팬	Ventilador	SER NO 31107-34475
	VOE 14522199		1				Fan	Ventilateur	Ventilator	팬	Ventilador	SER NO 34476-
	VOE 14518146			1			Fan	Ventilateur	Ventilator	팬	Ventilador	SER NO 31107-34475
	VOE 14522199			1			Fan	Ventilateur	Ventilator	팬	Ventilador	SER NO 34476-
2	**VOE 14520586**	1	1				Pulley	Poulie	Z-riemenscheibe	풀리	Polea Corr Dent	
	VOE 14523905			1			Pulley	Poulie	Z-riemenscheibe	풀리	Polea Corr Dent	
3	**VOE 14519063**	1	1				V-belt	Courroie Trape.	Keilriemen	V 벨트	Correa Trapez	
	VOE 14524878			1			Belt	Courroie	Riemen	벨트	Correa	
4	**SA 8210-01860**	1					Spacer	Entretoise	Abstandkörper	스페이서	Distanciador	
	SA 8210-01860		1	1			Spacer	Entretoise	Abstandkörper	스페이서	Distanciador	SER NO 31107-34475
	VOE 14522200		1	1			Spacer	Partie Intermédiaire	Zwischenstück	스페이서	Espaciador	SER NO 34476-
5	**VOE 14521572**	4					Bolt	Boulon	Bolzen	볼트	Perno	
	VOE 14521572		4	4			Bolt	Boulon	Bolzen	볼트	Perno	SER NO 31107-34475
	VOE 965184		4	4	SS		Screw	Vis	Schraube	스크류	Tornillo	SER NO 34476-

1	**8278796 S/N -31106**	**Ventilador, montaje** 냉각 팬 장착 **Sauglüfter, Montage** **Ventilateur, montage** **Cooling fan mounting**	Catalogue id **20019**	Group **263**
2	**8279318 S/N 31107-**		Illustr. No **1018202**	Section **300**
3	**8279319 S/N 31107-**		Issue **VOE 74H9920019**	Page **119**
4				
5				

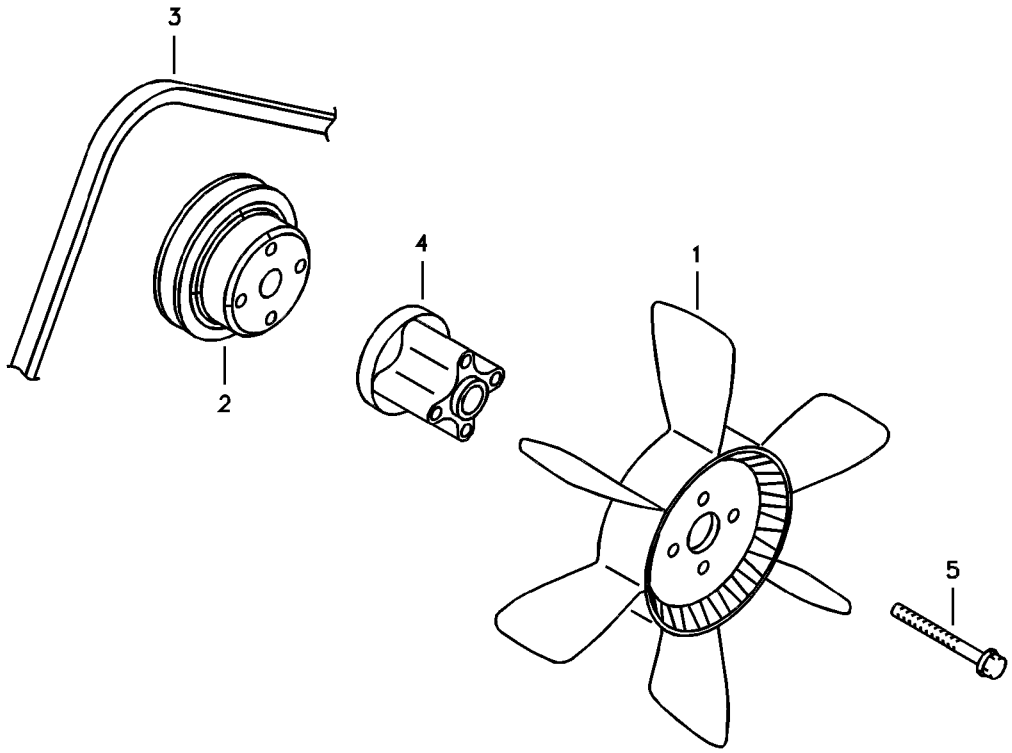
3
2
4
1
5

Fig.	Part No.	Quantity 1	2	3	PS	KIT	Description	Dénomination	Bezeichnung	품명	Denominación	Notes
1	**SA 8210-05120**	1					Fan	Ventilateur	Ventilator	팬	Ventilador	SER NO 50001-50129
	VOE 14522199	1					Fan	Ventilateur	Ventilator	팬	Ventilador	SER NO 50130-
	VOE 14518146		1				Fan	Ventilateur	Ventilator	팬	Ventilador	SER NO 50001-50129
	VOE 14522199		1				Fan	Ventilateur	Ventilator	팬	Ventilador	SER NO 50130-
2	**VOE 14520586**	1					Pulley	Poulie	Z-riemenscheibe	풀리	Polea Corr Dent	
	VOE 14523905		1				Pulley	Poulie	Z-riemenscheibe	풀리	Polea Corr Dent	
3	**VOE 14519063**	1					V-belt	Courroie Trape.	Keilriemen	V 벨트	Correa Trapez	
	VOE 14524878		1				Belt	Courroie	Riemen	벨트	Correa	
4	**SA 8210-01860**	1	1				Spacer	Entretoise	Abstandkörper	스페이서	Distanciador	SER NO 50001-50129
	VOE 14522200	1	1				Spacer	Partie Intermédiaire	Zwischenstück	스페이서	Espaciador	SER NO 50130-
5	**VOE 14521572**	4	4				Bolt	Boulon	Bolzen	볼트	Perno	SER NO 50001-50129
	VOE 965184	4	4		SS		Screw	Vis	Schraube	스크류	Tornillo	SER NO 50130-

1	**8279318**	**Ventilador, montaje** 냉각 팬 장착 **Sauglüfter, Montage** **Ventilateur, montage** **Cooling fan mounting**	Catalogue id **20019**	Group **263**
2	**8279319**			
3			Illustr. No **1018202**	Section **310**
4				
5		**FOR CHINA**	Issue **VOE 74H9920019**	Page **121**

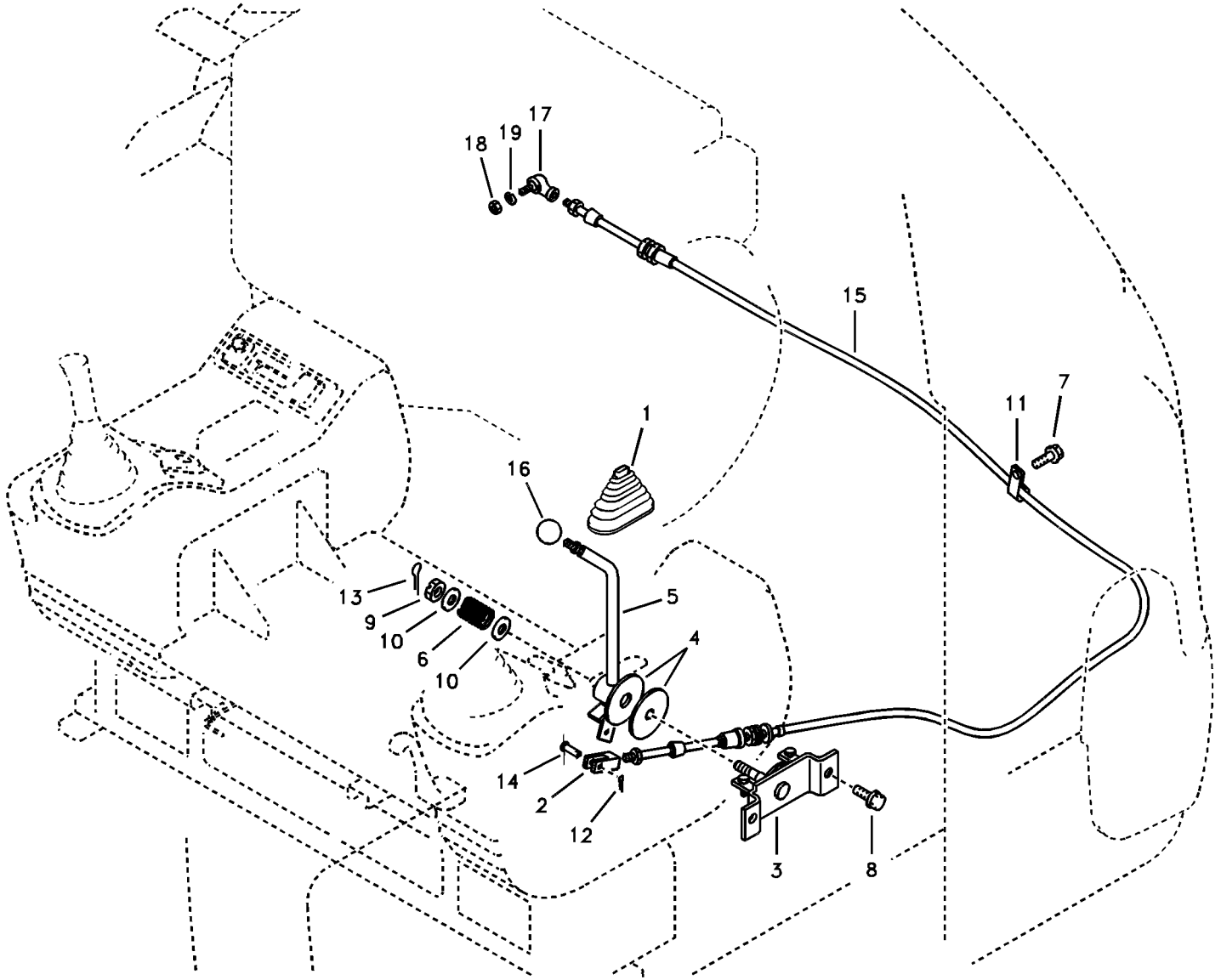
18
19
17
15
11
7
1
16
13
9
10
6
10
5
4
14
2
12
3
8

Fig.	Part No.	Quantity 1	2	3	PS	KIT	Description	Dénomination	Bezeichnung	품명	Denominación	Notes
1	**SA 1018-00660**	1					Boot	Soufflet	Manschette	부트	Proteccion	
2	**SA 1018-00850**	1					Yoke	Chape	Joch	요크	Horquilla	
3	**SA 1018-01673**	1					Bracket	Console	Konsole	브라켓	Ménsula	
4	**SA 1018-02590**	1					Clutch Facing	Garnitur.disque	Lamellenbelag	클러치 페이싱	Forros Disc Emb	
5	**VOE 14518149**	1					Lever	Levier	Hebel	레버	Palanca	
6	**SA 3018-00910**	1					Spring	Ressort	Feder	스프링	Muelle	
7	**VOE 946471**	1					Flange screw	Vis à bride	Flanschschraube	플랜지 스크류	Torn embridado	
8	**VOE 946329**	2					Flange screw	Vis à bride	Flanschschraube	플랜지 스크류	Torn embridado	
9	**VOE 14880601**	1					Castle Nut	Ecrou a creneau	Kronenmutter	캐슬 너트	Tuerca entallada	
10	**SA 9211-12000**	2					Washer	Rondelle	Scheibe	와셔	Arandela	
11	**VOE 14500292**	1					Clip	Clip	Klemme	클립	Clip	
12	**SA 9321-20609**	1					Clevis Pin	Vis A Oeuillet	Zylinderbolzen	클레비스 핀	Espiga	
13	**SA 9323-02912**	1					Split Pin	Goupille Fendue	Splint	분할 핀	Chaveta Hendida	
14	**SA 9326-06000**	1					Pin	Goupille	Zapfen	핀	Pasador	
15	**VOE 14881058**	1					Cable	Câble	Seil	케이블	Cable	
16	**VOE 14881068**	1					Knob	Bouton	Knopf	버턴	Boton	
17	**VOE 14880991**	1					Rod End	Rotul.angulaire	Winkelgelenk	로드 엔드	Rotula Angular	
18	**SA 9111-10500**	1					Nut	Ecrou	Mutter	너트	Tuerca	
19	**SA 9213-05000**	1			SS		Washer	Rondelle	Scheibe	와셔	Arandela	

1	**8278796**	**Control de velocidad** 속도 제어 장치 **Geschwindigkeitsregler** **Commande de vitesse** **Speed control**	Catalogue id **20019**	Group **275**
2			Illustr. No **1006982**	Section **100**
3			Issue **VOE 74H9920019**	Page **123**
4				
5				

VOLVO

EC55B

VOLVO

Construction Equipment

GROUP		Section	Page
310	Battery with assembling details	100	131
321	Alternator with assembling details	100	133
331	Starter motor, mounting	100	135
352	Lighting, front	100	137
356	Working lamp on boom	100	139
356	Working lamp on boom FOR CHINA	110	141
356	Work lights, extra	300	143
362	Rotating beacon	100	145
362	Back-up warning unit	200	147
362	Horn	300	149
363	Windshield wiper	100	151
363	Windshield wiper FOR CHINA	110	153
363	Windshield washer	200	155
364	Switch	100	157
364	Key system	200	159
364	Key system FOR CHINA	210	161
369	Switch, quickfit control	100	163
369	Switch, quickfit control	150	165
369	Switch, quickfit control FOR CHINA	160	167
371	Cables, battery	100	169
371	Cable and wire harness, main	200	171
371	Cable harness, engine	400	173
371	Cable and wire harness, instrument panel	500	175
371	Cable harnesses, cab	800	177
371	Cable harnesses, cab FOR CHINA	810	179
372	Electrical distribution box	100	181
386	Electrical sensor	100	183
387	Instrument panel, warning unit and information unit	100	185
393	Cassette radio recorder with mounting details	100	187
393	Cassette radio recorder with mounting details FOR CHINA	110	189

TABLE DES MATIÈRES

GROUPE		Section	Page
310	Batterie avec pièces d'assemblage	100	131
321	Alternateur avec pièces d'assemblage	100	133
331	Démarreur, montage	100	135
352	Eclairage, avant	100	137
356	Projecteur de travail sur la flèche	100	139
356	Projecteur de travail sur la flèche FOR CHINA	110	141
356	Projecteurs de travail, supplémentaires	300	143
362	Détecteur rotatif	100	145
362	Unité d'alerte de secours	200	147
362	Avertisseur sonore	300	149
363	Essuie-glace du pare-brise	100	151
363	Essuie-glace du pare-brise FOR CHINA	110	153
363	Lave - glace	200	155
364	Interrupteur	100	157
364	Système de clé	200	159
364	Système de clé FOR CHINA	210	161
369	Interrupteur, raccord rapide	100	163
369	Interrupteur, raccord rapide	150	165
369	Interrupteur, raccord rapide FOR CHINA	160	167
371	Câbles, batterie	100	169
371	Câble et faisceau de câbles, principal	200	171
371	Faisceau de câbles, moteur	400	173
371	Câble et faisceau de câbles, tableau de bord	500	175
371	Faisceaux de câbles, cabine	800	177
371	Faisceaux de câbles, cabine FOR CHINA	810	179
372	Unité de distribution électrique	100	181
386	Capteur électrique	100	183
387	Tableau de bord, unités d'alerte et d'information	100	185
393	Lecteur de cassettes auto-radio avec pièces de montage	100	187
393	Lecteur de cassettes auto-radio avec pièces de montage FOR CHINA	110	189

GRUPPE		Abschnitt	Seite	GRUPPE		Abschnitt	Seite
310	Batterie mit Anbauteilen	100	131				
321	Generator mit Anbauteilen	100	133				
331	Anlasser, Befestigung	100	135				
352	Beleuchtung, vorne	100	137				
356	Arbeitsscheinwerfer auf Ausleger	100	139				
356	Arbeitsscheinwerfer auf Ausleger FOR CHINA	110	141				
356	Arbeitsbeleuchtung, extra	300	143				
362	Rotierende Warnleuchte	100	145				
362	Reserve-warneinheit	200	147				
362	Signalhorn	300	149				
363	Scheibenwischer	100	151				
363	Scheibenwischer FOR CHINA	110	153				
363	Scheibenwaschanlage	200	155				
364	Schalter	100	157				
364	Schlüsselsystem	200	159				
364	Schlüsselsystem FOR CHINA	210	161				
369	Schalter, Schnellwechsler	100	163				
369	Schalter, Schnellwechsler	150	165				
369	Schalter, Schnellwechsler FOR CHINA	160	167				
371	Batteriekabel	100	169				
371	Hauptkabel und -leitungen	200	171				
371	Kabelbündel, Motor	400	173				
371	Kabel und Leitungen, Armaturenbrett	500	175				
371	Kabelbündel, Kabine	800	177				
371	Kabelbündel, Kabine FOR CHINA	810	179				
372	Elektrozentrale	100	181				
386	Elektr. Sensor	100	183				
387	Armaturenbrett, Warneinheit und Informations	100	185				
393	Kassettenrecorder mit Montageteilen	100	187				
393	Kassettenrecorder mit Montageteilen FOR CHINA	110	189				

그룹		절	페이지
310	밧데리 및 장착 부품	100	131
321	알터네이터 및 장착 부품	100	133
331	시동 모터 및 장착 부품	100	135
352	전조등	100	137
356	붐 작업등	100	139
356	붐 작업등	110	141
356	보조 작업등	300	143
362	경광등	100	145
362	후진 경보 장치	200	147
362	경음기	300	149
363	와이퍼	100	151
363	와이퍼	110	153
363	차창 유리 와셔	200	155
364	스위치	100	157
364	키이 장치	200	159
364	키이 장치	210	161
369	퀵 핏 제어 스위치	100	163
369	퀵 핏 제어 스위치	150	165
369	퀵 핏 제어 스위치	160	167
371	밧데리 케이블	100	169
371	메인 배선 케이블	200	171
371	엔진 배선 케이블	400	173
371	계기판 배선 케이블	500	175
371	운전실 배선 케이블	800	177
371	운전실 배선 케이블	810	179
372	배전 박스 및 휴즈 박스	100	181
386	전기 장치 센서	100	183
387	경고장치 및 게이지 계기판	100	185
393	카세트 라디오	100	187
393	카세트 라디오	110	189

GRUPO		Sección	Página
310	Batería con accesorios de montaje	100	131
321	Alternador con accesorios de montaje	100	133
331	Motor de arranque, montaje	100	135
352	Alumbrado, frontal	100	137
356	Lêmpara de trabajo en pluma	100	139
356	Lêmpara de trabajo en pluma FOR CHINA	110	141
356	Luces de trabajo, extra	300	143
362	Luz giratoria de advertencia	100	145
362	Unidad de advertencia de reserva	200	147
362	Bocina	300	149
363	Limpiaparabrisas	100	151
363	Limpiaparabrisas FOR CHINA	110	153
363	Lavaparabrisas	200	155
364	Interruptor	100	157
364	Sistema de llave	200	159
364	Sistema de llave FOR CHINA	210	161
369	Interruptor, control de enganche rápido	100	163
369	Interruptor, control de enganche rápido	150	165
369	Interruptor, control de enganche rápido FOR CHINA	160	167
371	Cables, batería	100	169
371	Haz de cables, principal	200	171
371	Haz de cables, motor	400	173
371	Haz de cables, panel de instrumentos	500	175
371	Haz de cables, motor	800	177
371	Haz de cables, motor FOR CHINA	810	179
372	Unidad de distribución eléctrica	100	181
386	Sensor eléctrico	100	183
387	Panel de instrumentos, unidad de advertencia y unidad de informa	100	185
393	Radiocasete con accesorios de montaje	100	187
393	Radiocasete con accesorios de montaje FOR CHINA	110	189

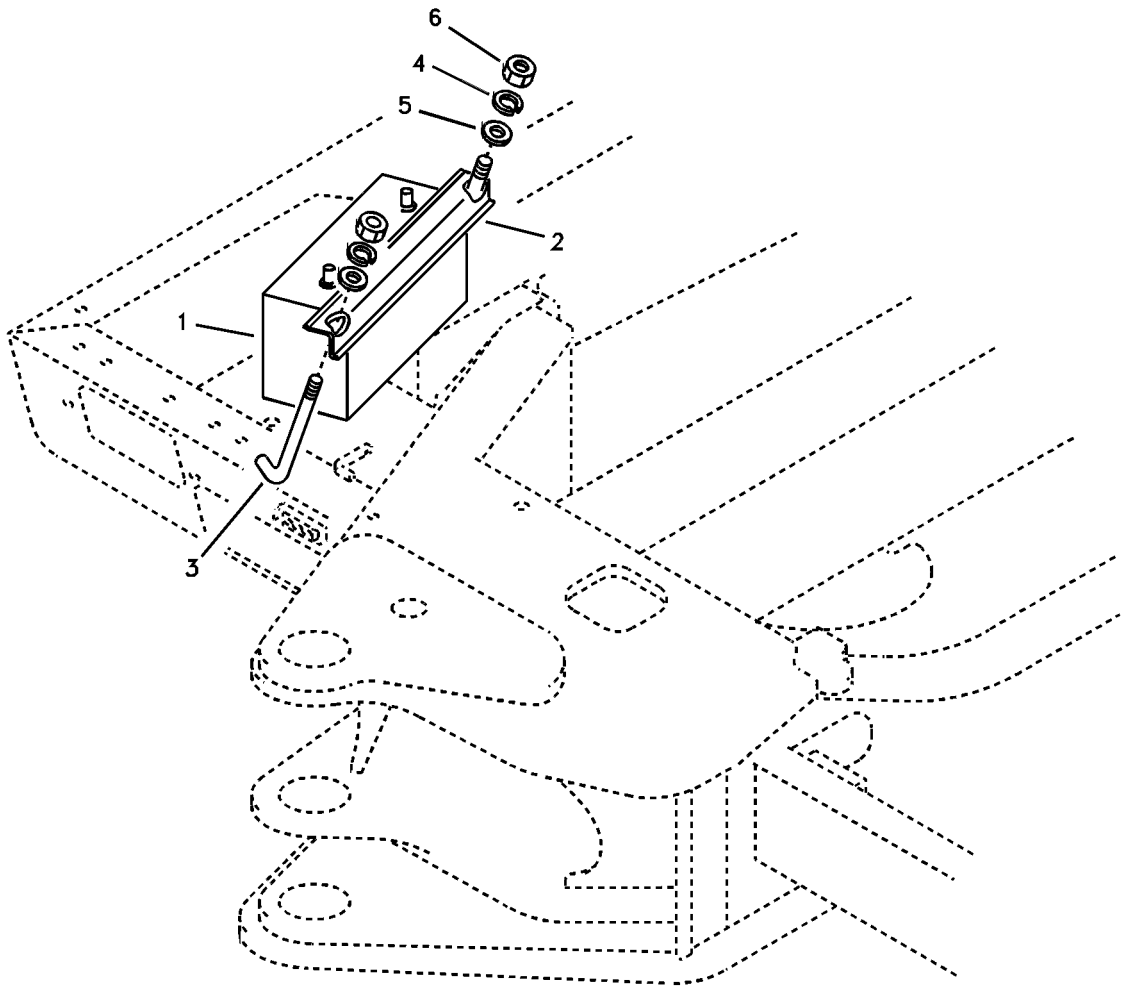
6
4
5
2
1
3

Fig.	Part No.	Quantity 1	2	3	PS	KIT	Description	Dénomination	Bezeichnung	품명	Denominación	Notes
1	**VOE 14511102**	1					Battery	Batterie	Batterie	밧데리	Bateria	12V,100A
2	**VOE 14501876**	1					Angle	Tige Angulaire	Winkelstange	앵글	Barra Angular	
3	**VOE 14529083**	2					Bolt	Boulon	Bolzen	볼트	Perno	
4	**VOE 955922**	2					Spring Washer	Rondelle élastique	Federscheibe	스프링 와셔	Arandela flexible	
5	**VOE 960148**	2			SS		Washer	Rondelle	Scheibe	와셔	Arandela	
6	**VOE 971095**	2			SS		Nut	Ecrou	Mutter	너트	Tuerca	

1	**8278796**	**Batería con accesorios de montaje** 밧데리 및 장착 부품 **Batterie mit Anbauteilen** **Batterie avec pièces d'assemblage** **Battery with assembling details**	Catalogue id **20019**	Group **310**
2			Illustr. No **1006983**	Section **100**
3			Issue **VOE 74H9920019**	Page **131**
4				
5				

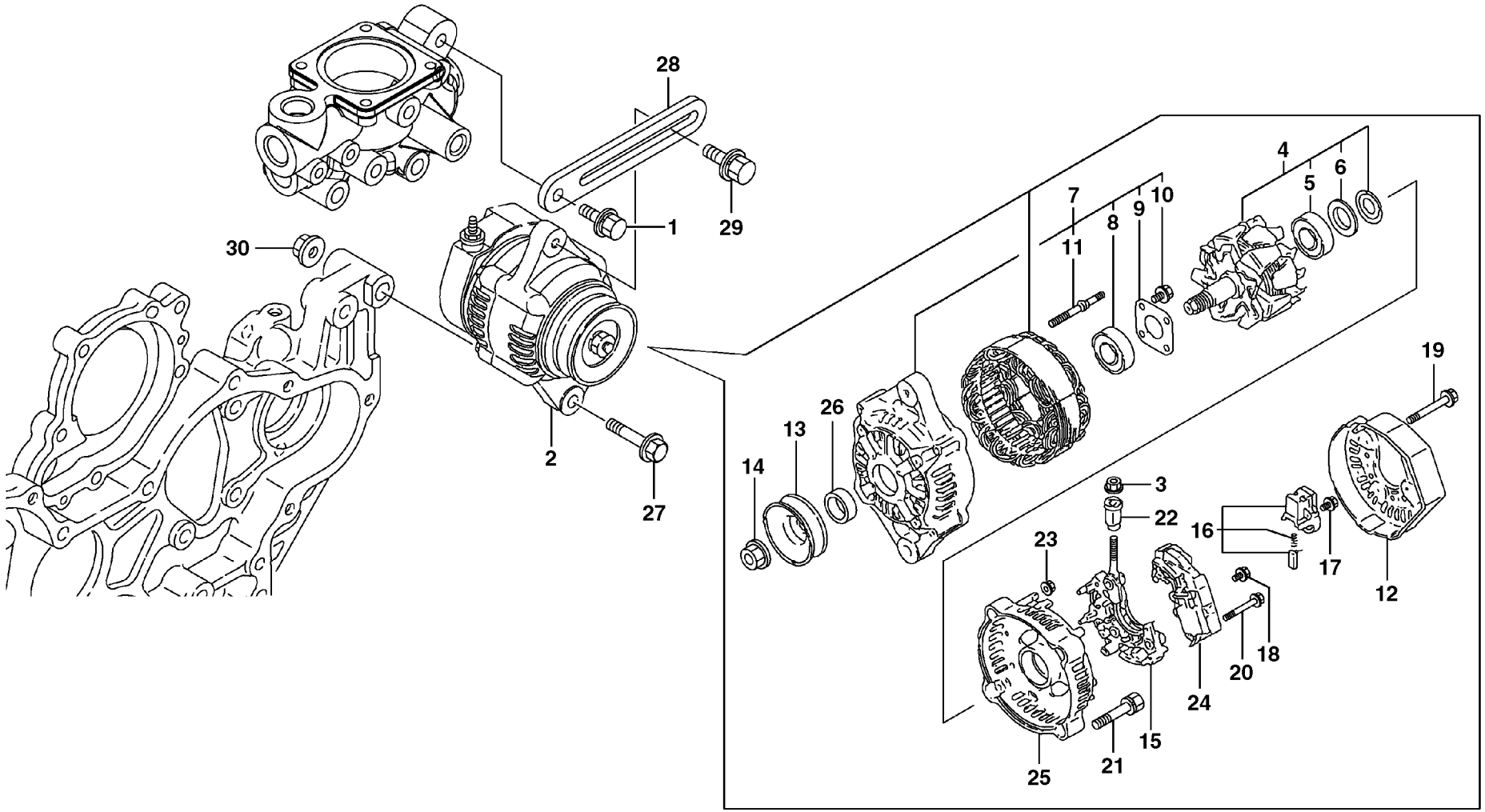

Volvo Construction Equipment

1006984

Fig.	Part No.	Quantity 1	2	3	PS	KIT	Description	Dénomination	Bezeichnung	품명	Denominación	Notes
1	**VOE 14521613**	1	1	1			Bolt	Boulon	Bolzen	볼트	Perno	
2	**VOE 14520588**	1	1	1			Alternator	Alternateur	Lichtmaschine	알터네이터	Alternador	
3	**VOE 14521614**	1	1	1			•Nut	•Ecrou	•Mutter	• 너트	•Tuerca	
4	**VOE 14521615**	1	1	1			•Rotator	•Rotateur	•Rotator	• 로테이터	•Rotator	
5	**VOE 14521616**	1	1	1			••Ball Bearing	••Roulemen.billes	••Kugellager	•• 볼 베어링	••Cojinete Bolas	
6	**VOE 14521617**	1	1	1			••Cover	••Capot	••Haube	•• 커버	••Capo	
7	**VOE 14521618**	1	1	1			•Frame	•Chassis	•Rahmen	• 프레임	•Bastidor	
8	**VOE 14521619**	1	1	1			••Ball Bearing	••Roulemen.billes	••Kugellager	•• 볼 베어링	••Cojinete Bolas	
9	**VOE 14521620**	1	1	1			••Plate	••Plaque	••Platte	•• 플레이트	••Placa	
10	**VOE 14521621**	4	4	4			••Screw	••Vis	••Schraube	•• 스크류	••Tornillo	
11	**VOE 14521622**	2	2	2			••Bolt	••Boulon	••Bolzen	•• 볼트	••Perno	
12	**VOE 14521623**	1	1	1			•Frame	•Chassis	•Rahmen	• 프레임	•Bastidor	
13	**VOE 14521624**	1	1	1			•Pulley	•Poulie	•Z-riemenscheibe	• 풀리	•Polea Corr Dent	
14	**VOE 14521625**	1	1	1			•Nut	•Ecrou	•Mutter	• 너트	•Tuerca	
15	**VOE 14521626**	1	1	1			•Holder	•Retenue	•Halter	• 홀더	•Soporte	
16	**VOE 14521627**	1	1	1			•Holder	•Retenue	•Halter	• 홀더	•Soporte	
17	**VOE 14521628**	6	6	6			•Screw	•Vis	•Schraube	• 스크류	•Tornillo	
18	**VOE 14521629**	1	1	1			•Screw	•Vis	•Schraube	• 스크류	•Tornillo	
19	**VOE 14521630**	3	3	3			•Bolt	•Boulon	•Bolzen	• 볼트	•Perno	
20	**VOE 14521631**	2	2	2			•Screw	•Vis	•Schraube	• 스크류	•Tornillo	
21	**VOE 14521632**	2	2	2			•Bolt	•Boulon	•Bolzen	• 볼트	•Perno	
22	**VOE 14521633**	1	1	1			•Bushing	•Bague	•Buchse	• 부싱	•Casquillo	
23	**VOE 14521634**	2	2	2			•Nut	•Ecrou	•Mutter	• 너트	•Tuerca	
24	**VOE 14521635**	1	1	1			•Regulator	•Regulateur	•Regler	• 레귤레이터	•Regulador	
25	**VOE 14521636**	1	1	1			•Cover	•Capot	•Haube	• 커버	•Capo	
26	**VOE 14521637**	1	1	1			•Collar	•Collier	•Bördel	• 칼러	•Collar	
27	**VOE 14521638**	1	1	1			Bolt	Boulon	Bolzen	볼트	Perno	
28	**SA 8210-04900**	1	1	1			Adj Device	Disposi.reglage	Nachst Vorrtg	조정기	Disposit Ajuste	
29	**SA 8240-01520**	1	1	1			Bolt	Boulon	Bolzen	볼트	Perno	
30	**VOE 14521513**	1	1	1			Nut	Ecrou	Mutter	너트	Tuerca	

1	**8278797**
2	**8278798**
3	**8278799**
4	
5	

Alternador con accesorios de montaje
알터네이터 및 장착 부품
Generator mit Anbauteilen
Alternateur avec pièces d'assemblage
Alternator with assembling details

Catalogue id **20019**	Group **321**
Illustr. No **1006984**	Section **100**
Issue **VOE 74H9920019**	Page **133**



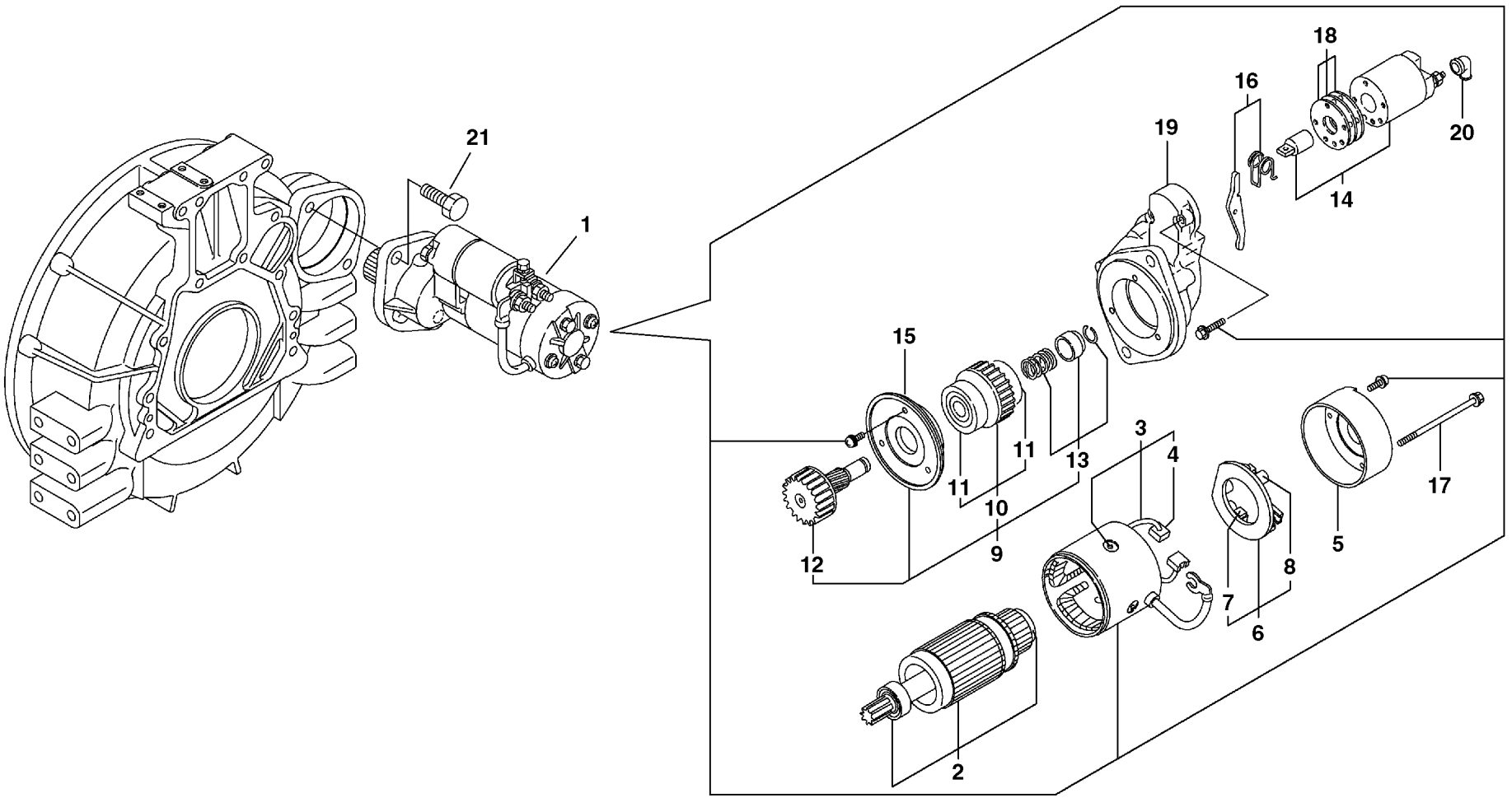
21
1
18
16
19
20
14
15
3
4
11
13
11
10
9
12
5
17
8
7
6
2

Fig.	Part No.	Quantity 1	2	3	PS	KIT	Description	Dénomination	Bezeichnung	품명	Denominación	Notes
1	**VOE 14522114**	1	1	1			Starter Motor	Demarreur	Anlasser	시동 모터	Motor de arranque	12V-3,0Kw
2	**VOE 14522143**	1	1	1			•Armature	•Bobine Stator	•Ständerwicklung	• 아마츄어	•Bobina Estator	
3	**VOE 14522144**	1	1	1			•Coil	•Spirale	•Spirale	• 코일	•Espiral	
4	**VOE 14522145**	2	2	2			••Brush	••Balai	••Bürste	•• 브러시	••Escobilla	
5	**VOE 14522146**	1	1	1			•Cover	•Capot	•Haube	• 커버	•Capo	
6	**VOE 14522147**	1	1	1			•Holder	•Retenue	•Halter	• 홀더	•Soporte	
7	**VOE 14522145**	2	2	2			••Brush	••Balai	••Bürste	•• 브러시	••Escobilla	
8	**VOE 14522157**	4	4	4			••Spring	••Ressort	••Feder	•• 스프링	••Muelle	
9	**VOE 14522148**	1	1	1			•Pinion	•Pignon	•Ritzel	• 피니온	•Pinon	
10	**VOE 14522149**	1	1	1			••Clutch	••Embrayage	••Kupplung	•• 클러치	••Embrague	
11	**VOE 14522150**	2	2	2			•••Ball Bearing	•••Roulemen.billes	•••Kugellager	••• 볼 베어링	•••Cojinete Bolas	
12	**VOE 14522151**	1	1	1			••Shaft	••Arbre	••Welle	•• 샤프트	••Arbol	
13	**VOE 14522152**	1	1	1			••Stopper	••Bouchon	••Anschlag	•• 스토퍼	••Obturador	
14	**SA 8210-05000**	1	1	1			•Switch	•Commutateur	•Schalter	• 스위치	•Contactor	
15	**VOE 14522153**	1	1	1			•Retainer	•Retenue	•Halter	• 리테이너	•Soporte	
16	**SA 8210-05010**	1	1	1			•Lever	•Levier	•Hebel	• 레버	•Palanca	
17	**VOE 14522154**	2	2	2			•Bolt	•Boulon	•Bolzen	• 볼트	•Perno	
18	**VOE 14522155**	1	1	1			•Cover	•Capot	•Haube	• 커버	•Capo	
19	**VOE 14522156**	1	1	1			•Housing	•Carter	•Gehäuse	• 하우징	•Carter	
20	**SA 8210-05290**	1	1	1			•Cover	•Capot	•Haube	• 커버	•Capo	
21	**SA 8210-08900**	2	2	2			Bolt	Boulon	Bolzen	볼트	Perno	

1	**8278797**	**Motor de arranque, montaje** 시동 모터 및 장착 부품 **Anlasser, Befestigung** **Démarreur, montage** **Starter motor, mounting**	Catalogue id **20019**	Group **331**
2	**8278798**			
3	**8278799**		Illustr. No **1006986**	Section **100**
4				
5			Issue **VOE 74H9920019**	Page **135**

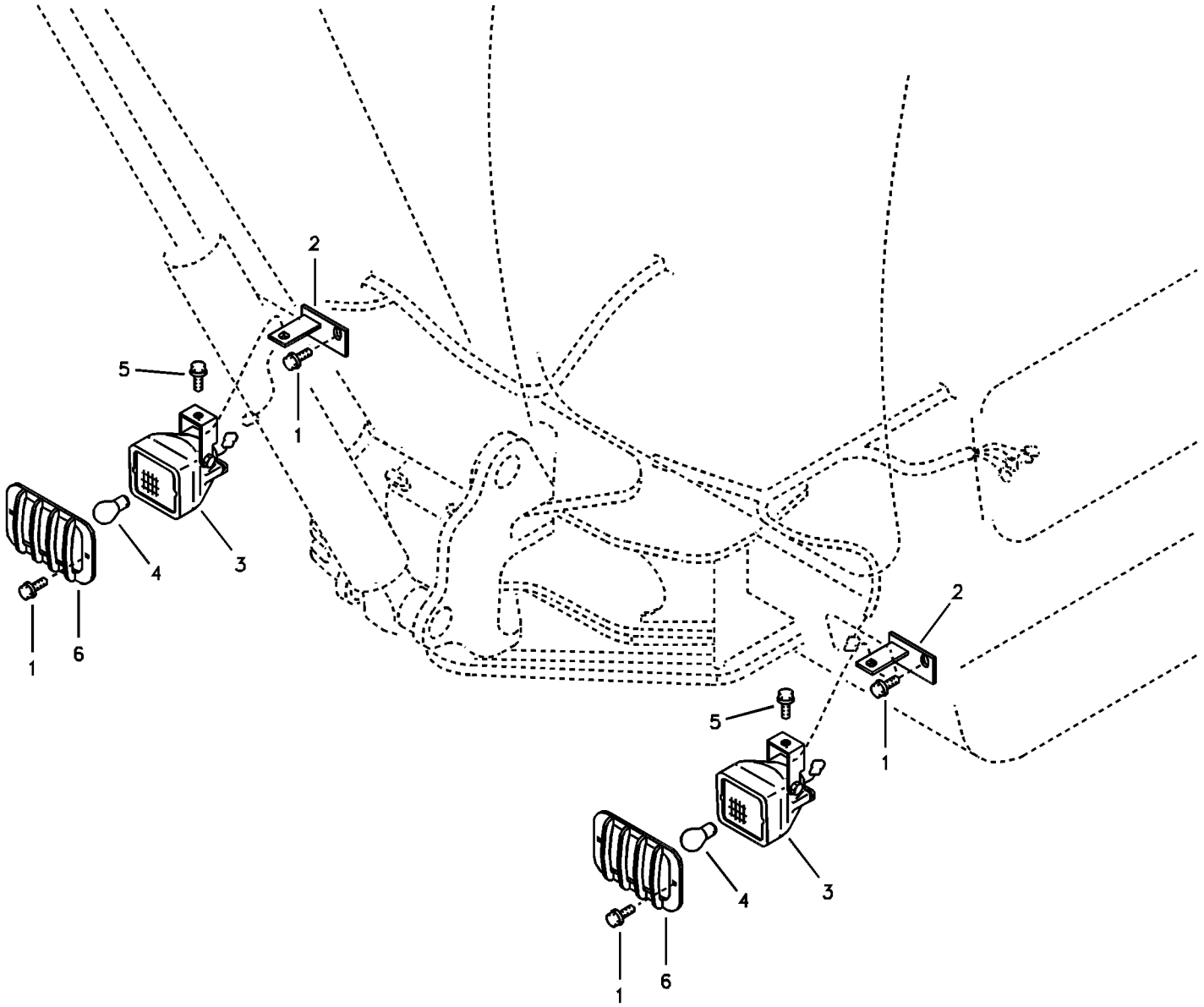
2
5
1
4
3
1
6
2
5
1
4
3
1
6

Fig.	Part No.	Quantity 1	2	3	PS	KIT	Description	Dénomination	Bezeichnung	품명	Denominación	Notes
1	**VOE 946441**	4					Flange screw	Vis à bride	Flanschschraube	플랜지 스크류	Torn embridado	
2	**VOE 14513037**	2					Bracket	Console	Konsole	브라켓	Ménsula	
3	**VOE 11039856**	2					Work Lamp	Lampe Travail	Arbeitslampe	작업등	Lampara Trabajo	
4	**SA 1122-01230**	1					•Bulb	•Ampoule	•Glühlampe	• 전구	•Ampolla	12V,55W
5	**VOE 946471**	2					Flange screw	Vis à bride	Flanschschraube	플랜지 스크류	Torn embridado	
6	**VOE 14529103**	2					Guard	Protection	Schutz	가드	Protección	

1	**8278796**	**Alumbrado, frontal** 전조등 **Beleuchtung, vorne** **Eclairage, avant** **Lighting, front**	Catalogue id **20019**	Group **352**
2			Illustr. No **1006987**	Section **100**
3			Issue **VOE 74H9920019**	Page **137**
4				
5				

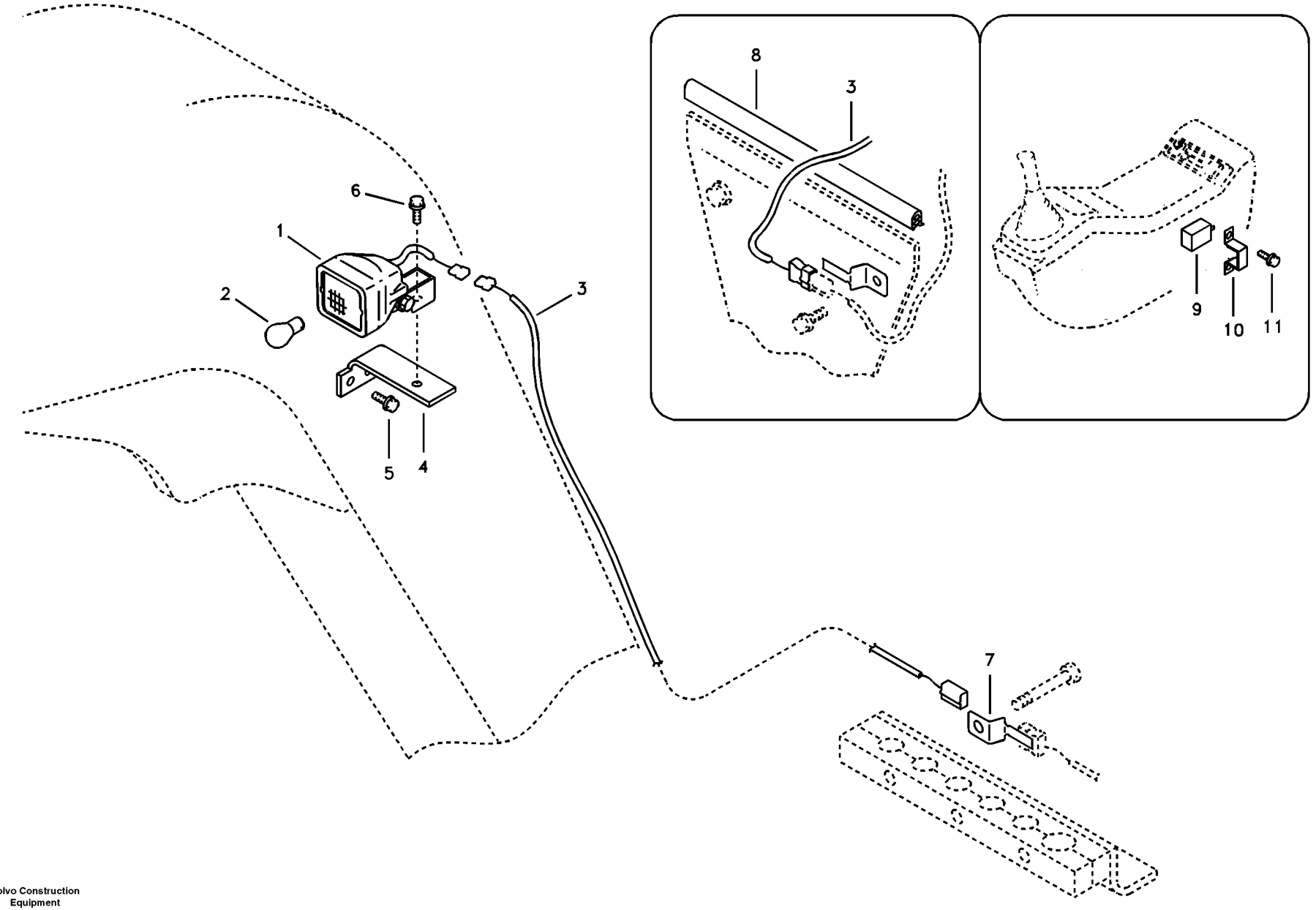

Volvo Construction Equipment

1006988

Fig.	Part No.	Quantity 1	2	3	4	5	PS	KIT	Description	Dénomination	Bezeichnung	품명	Denominación	Notes
1	**VOE 11039847**	1	1	1	1				Work Lamp	Lampe Travail	Arbeitslampe	작업등	Lampara Trabajo	
2	**SA 1122-01230**	1	1	1	1				•Bulb	•Ampoule	•Glühlampe	• 전구	•Ampolla	12V,55W
3	**VOE 14513031**	1	1	1	1				Wire harness	Faisceau electriqu	Kabelbaum	배선	Manojo cables	
4	**VOE 14513035**	1	1	1	1				Bracket	Support	Halter	브래킷	Soporte	
5	**VOE 946441**	2	2	2	2				Flange screw	Vis à bride	Flanschschraube	플랜지 스크류	Torn embridado	
6	**VOE 965185**	1	1	1	1				Flange screw	Vis à bride	Flanschschraube	플랜지 스크류	Torn embridado	
7	**VOE 14881252**	1	1	1	1				Clip	Clip	Klemme	클립	Clip	
8	**VOE 14880936**	1	1						Weatherstrip	Leche-vitre	Abstreifleiste	웨더스트립	Lamelunas	
9	**VOE 14507736**	1	1						Relay	Relais	Relais	릴레이	Rele	
10	**VOE 14507738**	1	1						Clip	Clip	Klemme	클립	Clip	
11	**VOE 965175**	2	2				SS		Screw	Vis	Schraube	스크류	Tornillo	

1	**8278836**
2	**8278837**
3	**8278838**
4	**8278839**
5	

Lêmpara de trabajo en pluma
붐 작업등
Arbeitsscheinwerfer auf Ausleger
Projecteur de travail sur la flèche
Working lamp on boom

Catalogue id **20019**	Group **356**
Illustr. No **1006988**	Section **100**
Issue **VOE 74H9920019**	Page **139**

VOLVO

EC55B

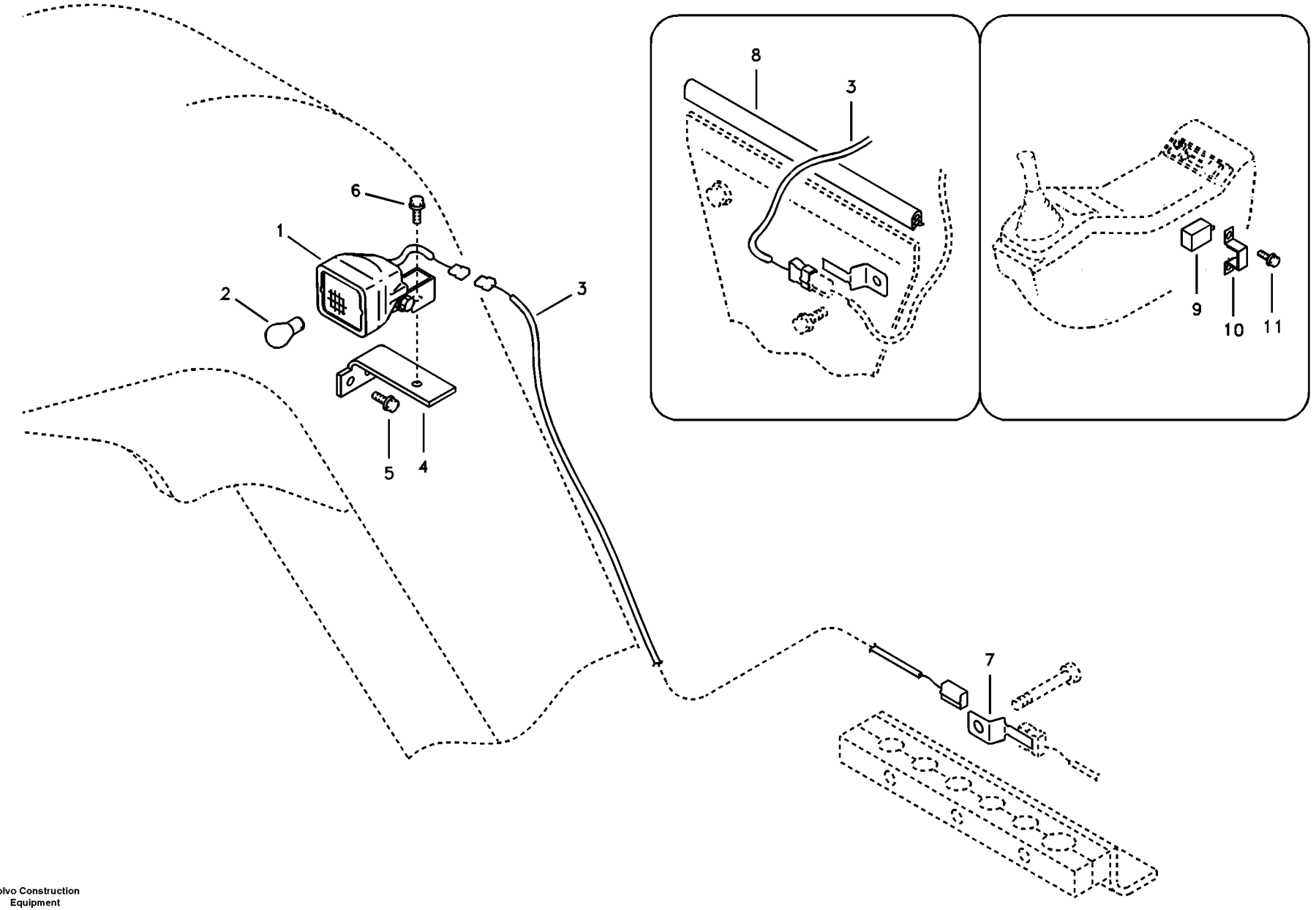

Volvo Construction Equipment

1006988

Fig.	Part No.	Quantity 1	2	3	PS	KIT	Description	Dénomination	Bezeichnung	품명	Denominación	Notes
1	**VOE 11039847**	1					Work Lamp	Lampe Travail	Arbeitslampe	작업등	Lampara Trabajo	
2	**SA 1122-01230**	1					•Bulb	•Ampoule	•Glühlampe	• 전구	•Ampolla	12V,55W
3	**VOE 14513031**	1					Wire harness	Faisceau electrique	Kabelbaum	배선	Manojo cables	
4	**VOE 14513035**	1					Bracket	Support	Halter	브래킷	Soporte	
5	**VOE 946441**	2					Flange screw	Vis à bride	Flanschschraube	플랜지 스크류	Torn embridado	
6	**VOE 965185**	1					Flange screw	Vis à bride	Flanschschraube	플랜지 스크류	Torn embridado	
7	**VOE 14881252**	1					Clip	Clip	Klemme	클립	Clip	
8	**VOE 14880936**	1					Weatherstrip	Leche-vitre	Abstreifleiste	웨더스트립	Lamelunas	
9	**VOE 14507736**	1					Relay	Relais	Relais	릴레이	Rele	
10	**VOE 14507738**	1					Clip	Clip	Klemme	클립	Clip	
11	**VOE 965175**	2			SS		Screw	Vis	Schraube	스크류	Tornillo	

1	**8278837**	**Lêmpara de trabajo en pluma** **붐 작업등** **Arbeitsscheinwerfer auf Ausleger** **Projecteur de travail sur la flèche** **Working lamp on boom**	Catalogue id **20019**	Group **356**
2			Illustr. No **1006988**	Section **110**
3			Issue **VOE 74H9920019**	Page **141**
4				
5		**FOR CHINA**		

VOLVO

EC55B

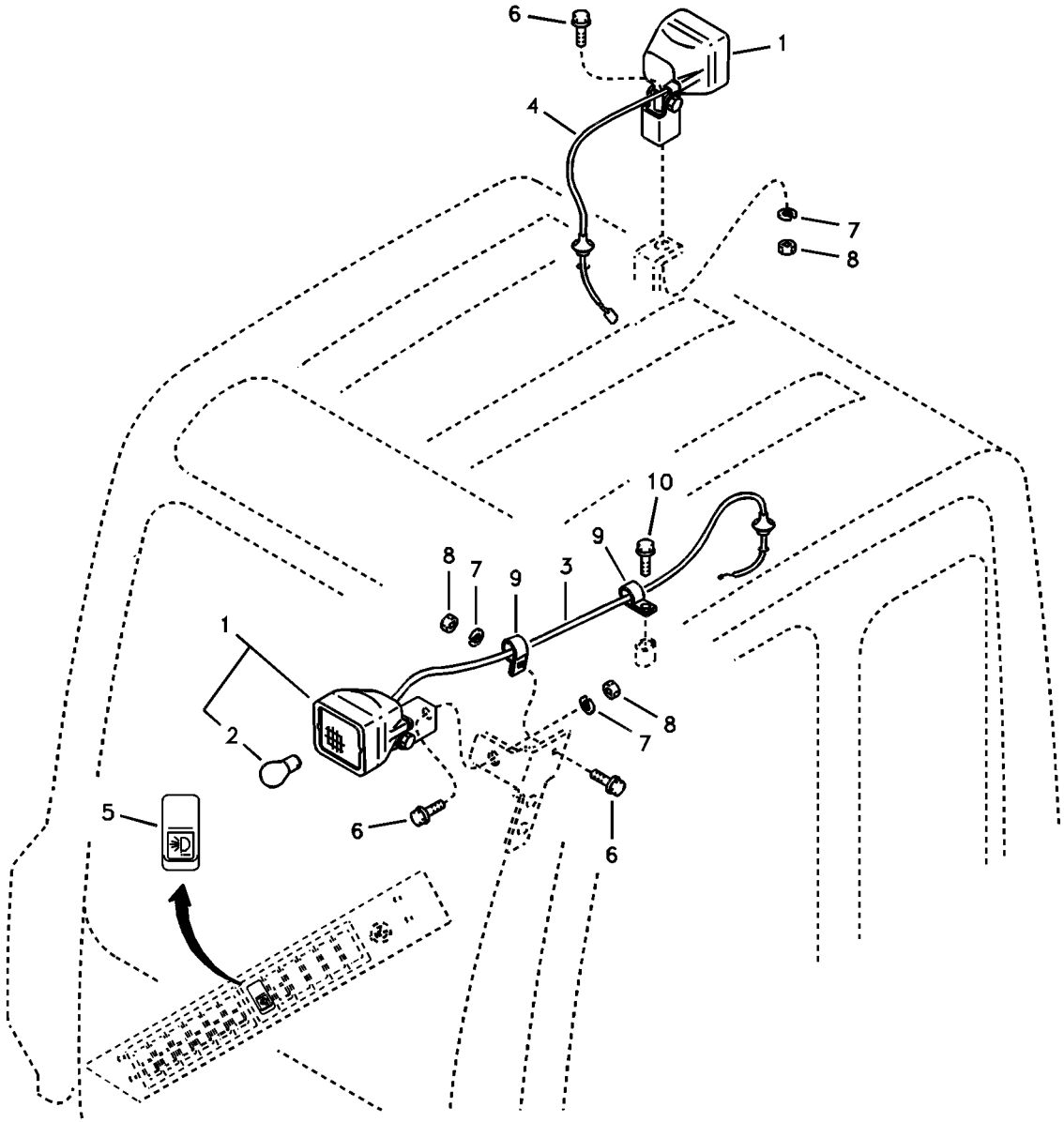
6
1
4
7
8
10
9
8
7
9
3
1
2
5
6
8
7
6

Fig.	Part No.	Quantity 1	2	3	PS	KIT	Description	Dénomination	Bezeichnung	품명	Denominación	Notes
1	**VOE 11039847**	1	1				Work Lamp	Lampe Travail	Arbeitslampe	작업등	Lampara Trabajo	
2	**SA 1122-01230**	1	1				•Bulb	•Ampoule	•Glühlampe	• 전구	•Ampolla	12V,55W
3	**VOE 14519981**	1					Wire harness	Faisceau electrique	Kabelbaum	배선	Manojo cables	SER NO 30001-34475 SER NO 50001-50129
	VOE 14540330	1					Wire harness	Faisceau electrique	Kabelbaum	배선	Manojo cables	SER NO 34476- SER NO 50130-
4	**VOE 14513052**		1				Wire harness	Faisceau electrique	Kabelbaum	배선	Manojo cables	
5	**VOE 14504268**	1	1				Switch	Commutateur	Schalter	스위치	Contactor	
6	**VOE 946441**	2	1				Flange screw	Vis à bride	Flanschschraube	플랜지 스크류	Torn embridado	
7	**VOE 955922**	2	1				Spring Washer	Rondelle élastique	Federscheibe	스프링 와셔	Arandela flexible	
8	**VOE 983304**	2	1				Hexagon Nut	Ecrou Hexagonal	Sechskantmutter	너트	Tuerca Hexagon	
9	**VOE 14500290**	2					Clip	Clip	Klemme	클립	Clip	
10	**VOE 965191**	1			SS		Screw	Vis	Schraube	스크류	Tornillo	

1	**8278802**	**Luces de trabajo, extra** 보조 작업등 **Arbeitsbeleuchtung, extra** **Projecteurs de travail, supplémentaires** **Work lights, extra**	Catalogue id **20019** / Group **356**
2	**8278803**		Illustr. No **1006989** / Section **300**
3			Issue **VOE 74H9920019** / Page **143**
4			
5			

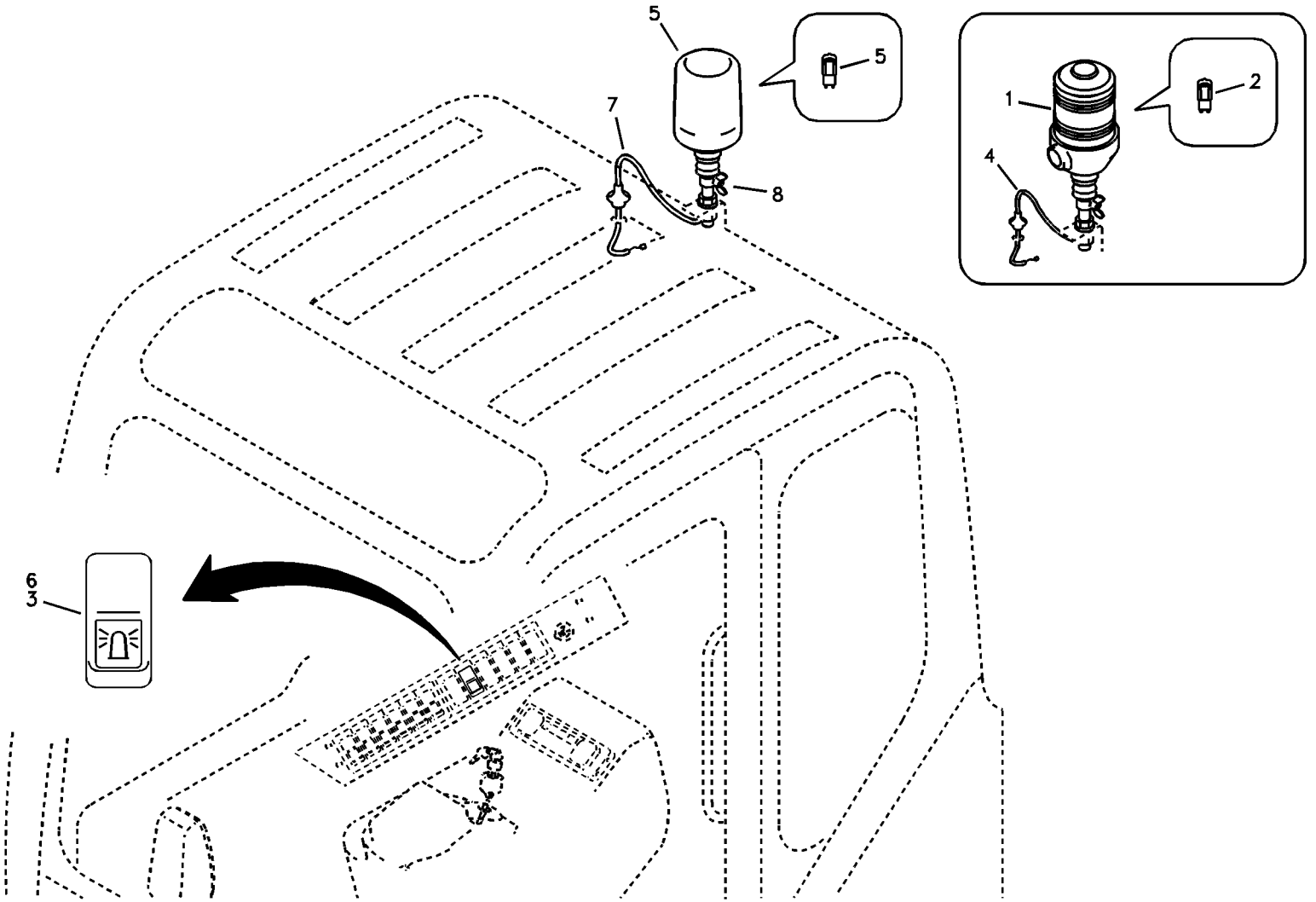

Volvo Construction Equipment

1014321

Fig.	Part No.	Quantity 1	2	3	PS	KIT	Description	Dénomination	Bezeichnung	품명	Denominación	Notes
1	**VOE 14503277**	1					Rotating Beacon	Gyrophare	Rundumkennleuchte	경광등	Luz Rotativa Emerge.	SER NO 30001-32325 SER NO 50001-50026
2	**VOE 14510156**	1					•Bulb	•Ampoule	•Glühlampe	• 전구	•Ampolla	SER NO 30001-32325 SER NO 50001-50026
3	**VOE 14504269**	1					Switch	Commutateur	Schalter	스위치	Contactor	SER NO 30001-32325 SER NO 50001-50026
4	**VOE 14519988**	1					Wire harness	Faisceau electrique	Kabelbaum	배선	Manojo cables	SER NO 30001-32325 SER NO 50001-50026
5	**VOE 11170103**	1					Rotating Beacon	Gyrophare	Rundumkennleuchte	경광등	Luz Rotativa Emerge.	SER NO 32326- SER NO 50027-
	VOE 14524752	1					•Lamp	•Lampe	•Leuchte	• 램프	•Lampara	SER NO 32326- SER NO 50027-
	VOE 14524753	1					•Bulb	•Ampoule	•Glühlampe	• 전구	•Ampolla	SER NO 32326- SER NO 50027-
	VOE 14524755	1					•Belt	•Courroie	•Riemen	• 벨트	•Correa	SER NO 32326- SER NO 50027-
	VOE 14524756	1					•Pad	•Patin	•Belag	• 패드	•Pastilla	SER NO 32326- SER NO 50027-
6	**VOE 14504269**	1					Switch	Commutateur	Schalter	스위치	Contactor	SER NO 32326- SER NO 50027-
7	**VOE 14528616**	1					Wire harness	Faisceau electrique	Kabelbaum	배선	Manojo cables	SER NO 32326- SER NO 50027-
8	**VOE 14522952**	1					Bracket	Console	Konsole	브라켓	Ménsula	SER NO 32326- SER NO 50027-

1	**8278805**	**Luz giratoria de advertencia** 경광등 **Rotierende Warnleuchte** **Détecteur rotatif** **Rotating beacon**	Catalogue id **20019**	Group **362**
2				
3			Illustr. No **1014321**	Section **100**
4				
5			Issue **VOE 74H9920019**	Page **145**

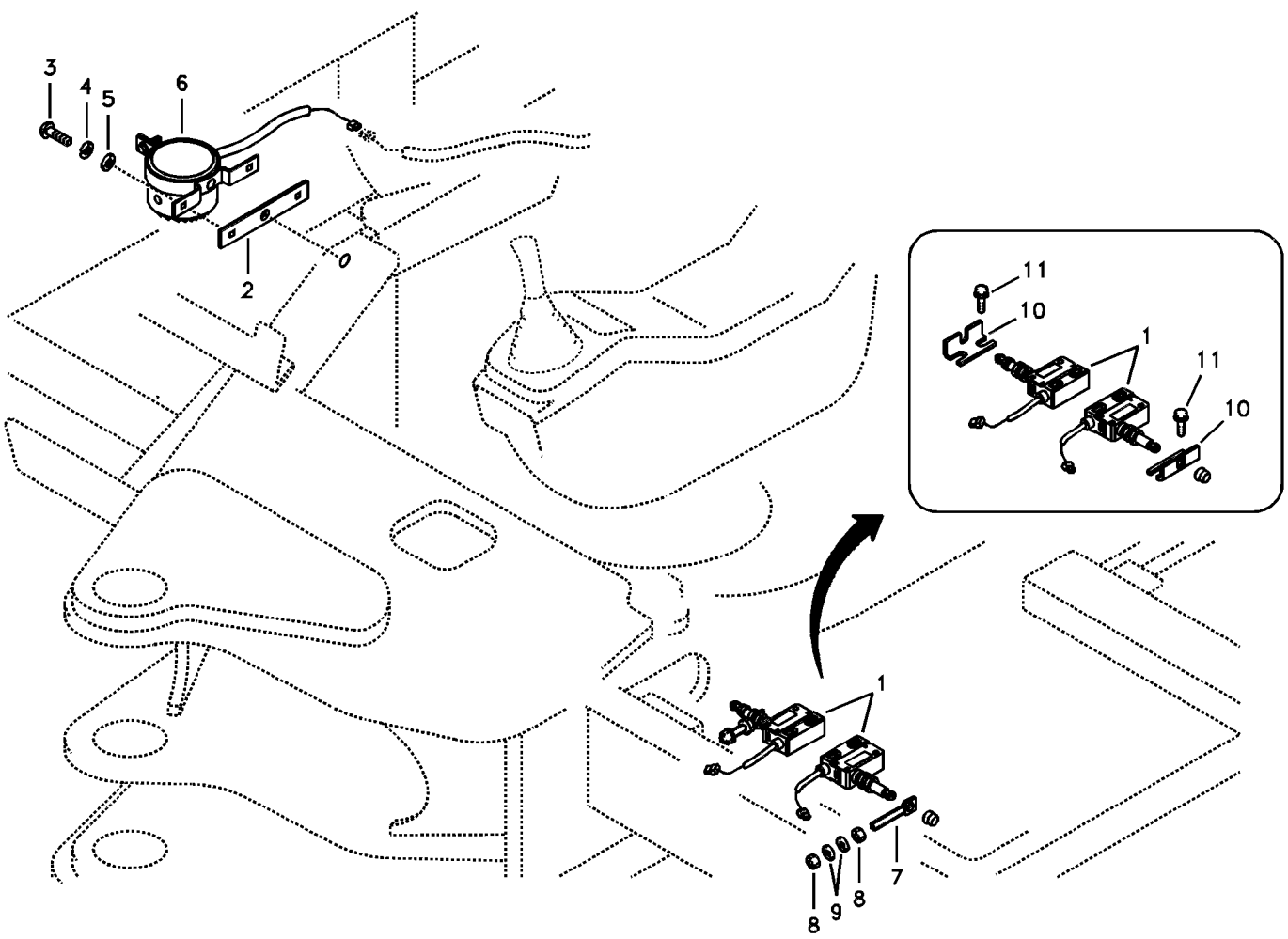
3
4
5
6
2
0
11
10
1
11
10
1
8
9
8
7

Fig.	Part No.	Quantity 1	2	3	PS	KIT	Description	Dénomination	Bezeichnung	품명	Denominación	Notes
1	**VOE 14529130**	2					Switch	Commutateur	Schalter	스위치	Contactor	SER NO 32632-
2	**VOE 14529131**	1					Bracket	Console	Konsole	브라켓	Ménsula	SER NO 32632-
3	**VOE 969422**	2					6-pt skt screw	Vis creuse de 6	Hohlschraube	6 포인트 소켓 스크류	Racor 6-dientes	
4	**VOE 955919**	2					Spring Washer	Rondelle élastique	Federscheibe	스프링 와셔	Arandela flexible	
5	**VOE 955892**	2					Washer	Rondelle	Scheibe	와셔	Arandela	
6	**VOE 14519134**	1					Alarm	Alarme	Alarm Richtung	알람	Alarma	
7	**VOE 14522741**	2					Bracket	Console	Konsole	브라켓	Ménsula	SER NO 30667-33102 SER NO 50001-
8	**VOE 979019**	4					Hexagon Nut	Ecrou Hexagonal	Sechskantmutter	너트	Tuerca Hexagon	SER NO 30667-33102 SER NO 50001-
9	**VOE 955897**	4			SS		Washer	Rondelle	Scheibe	와셔	Arandela	SER NO 30667-33102 SER NO 50001-
10	**VOE 14525496**	2					Bracket	Console	Konsole	브라켓	Ménsula	SER NO 33103-
11	**VOE 946441**	4					Flange screw	Vis à bride	Flanschschraube	플랜지 스크류	Torn embridado	SER NO 33103-

1	**8278804**	**Unidad de advertencia de reserva** 후진 경보 장치 **Reserve-warneinheit** **Unité d'alerte de secours** **Back-up warning unit**	Catalogue id **20019**	Group **362**
2			Illustr. No **1016683**	Section **200**
3			Issue **VOE 74H9920019**	Page **147**
4				
5				

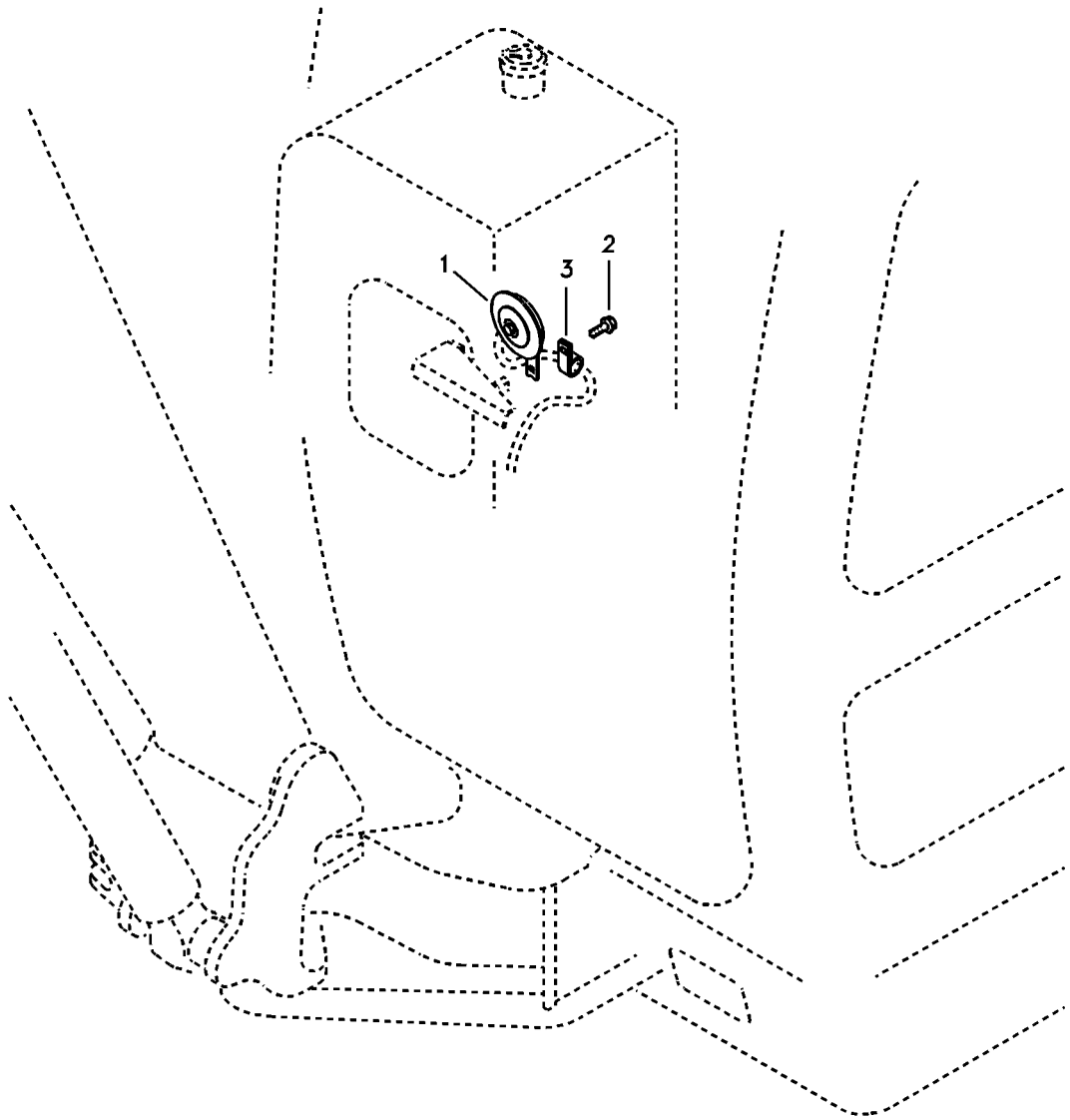
1
3
2

Fig.	Part No.	Quantity 1	2	3	P S	K I T	Description	Dénomination	Bezeichnung	품명	Denominación	Notes
1	**VOE 14515040**	1					Horn	Avertisseur sonore	Signalhorn	경음기	Avisador sonoro	SER NO 30001-33826
	VOE 11305113	1					Horn	Avertisseur	Signalhorn	경음기	Bocina	SER NO 33827-
2	**VOE 946173**	1			SS		Screw	Vis	Schraube	스크류	Tornillo	
3	**VOE 14500291**	1					Clip	Clip	Klemme	클립	Clip	

1	**8278796**	**Bocina** 경음기 **Signalhorn** **Avertisseur sonore** **Horn**	Catalogue id **20019**	Group **362**
2			Illustr. No **1006992**	Section **300**
3			Issue **VOE 74H9920019**	Page **149**
4				
5				

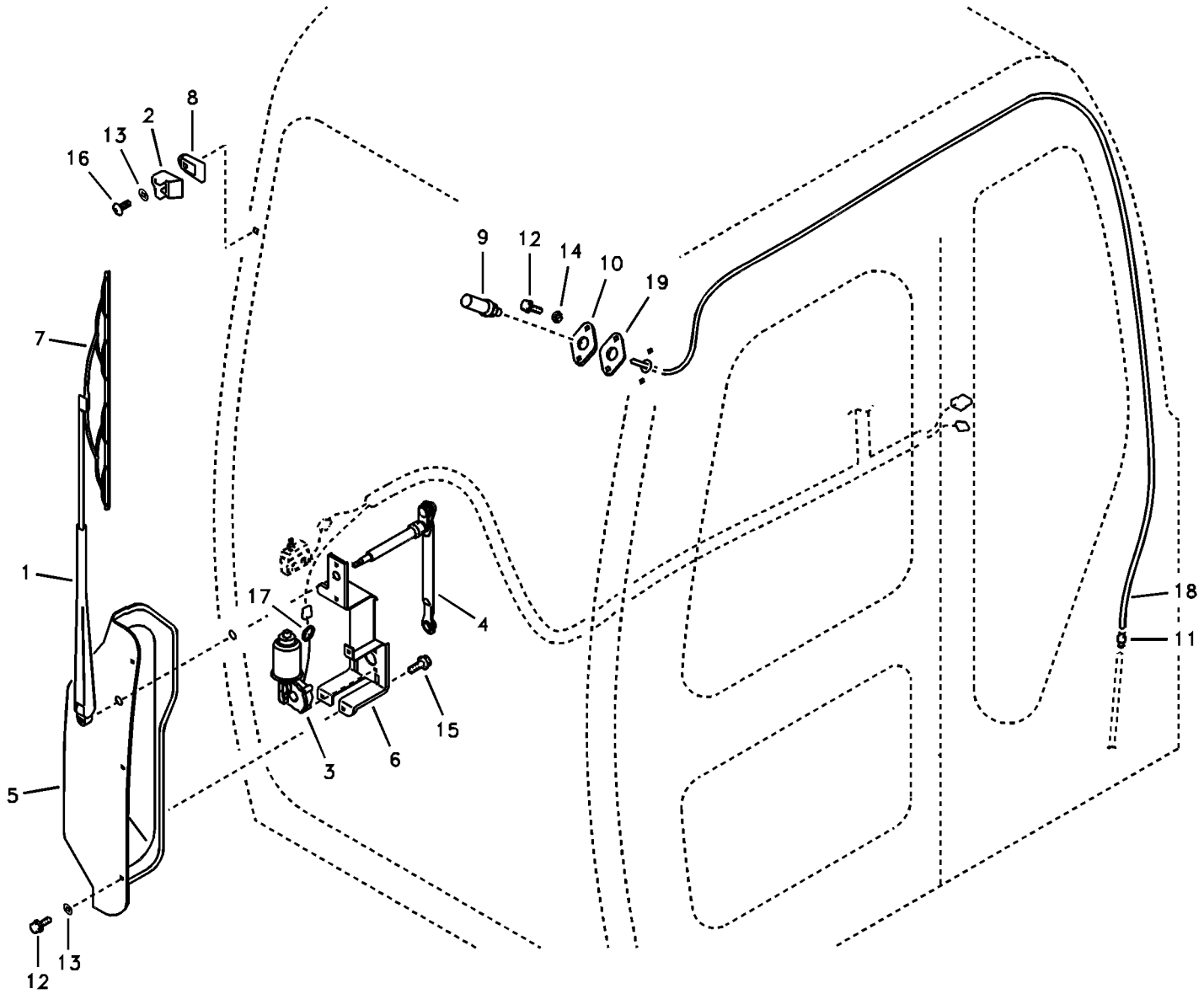

Volvo Construction Equipment

1006993

Fig.	Part No.	Quantity 1	2	3	4	5	PS	KIT	Description	Dénomination	Bezeichnung	품명	Denominación	Notes
1	**VOE 14529141**	1	1	1	1				Wiper Arm	Bras Essu.glac.	Wischerarm	와이퍼 암	Brazo Limpiapar.	
2	**VOE 14529151**	1	1	1	1				Stop	Arrêt	Anschlag	스톱	Parada	
3	**VOE 14529159**	1	1	1	1				Wiper Motor	Moteur essuie glac.	Wischermotor	와이퍼 모터	Motor l.p.	
4	**VOE 14529160**	1	1	1	1				Link	Articulation	Gelenk	링크	Articulacion	
5	**VOE 14529161**	1	1	1	1				Guard	Protection	Schutz	가드	Protección	
6	**VOE 14529168**	1	1	1	1				Bracket	Console	Konsole	브라켓	Ménsula	
7	**VOE 14529172**	1	1	1	1				Wiper blade	Balai essuie glace	Wischerblatt	와이퍼 블레이드	Escobilla l.p.	
8	**VOE 14529201**	1	1	1	1				Grommet	Passe fil	Durchführung	그로메트	Aislador pasapanel.	
9	**VOE 14529209**	1	1	1	1				Nozzle	Nez D'injecteur	Einspritzduse	노즐	Tobera	
10	**VOE 14529210**	1	1	1	1				Bracket	Ferrure-support	Tragstütze	브라켓	Hierro Apoyo	
11	**VOE 14529354**	1	1	1	1				Connector	Raccord	Anschluss	커넥터	Union	
12	**VOE 946544**	8	8	8	8		SS		Screw	Vis	Schraube	스크류	Tornillo	
13	**VOE 955892**	7	7	7	7				Washer	Rondelle	Scheibe	와셔	Arandela	
14	**VOE 955919**	2	2	2	2				Spring Washer	Rondelle élastique	Federscheibe	스프링 와셔	Arandela flexible	
15	**VOE 965175**	5	5	5	5		SS		Screw	Vis	Schraube	스크류	Tornillo	
16	**VOE 969587**	1	1	1	1				6-pt skt screw	Vis creuse de 6	Hohlschraube	6 포인트 소켓 스크류	Racor 6-dientes	
17	**SA 9751-12504**	2	2	2	2				Grommet	Passe fil	Durchführung	그로메트	Aislador pasapanel.	
18	**VOE 14881147**	1	1	1	1				Hose	Durit	Schlauch	호스	Tubo flexible	
19	**VOE 14529038**	1	1	1	1				Plate	Plaque	Platte	플레이트	Placa	

1	**8278806**
2	**8278807**
3	**8278808**
4	**8278809**
5	

Limpiaparabrisas
와이퍼
Scheibenwischer
Essuie-glace du pare-brise
Windshield wiper

Catalogue id **20019**	Group **363**
Illustr. No **1006993**	Section **100**
Issue **VOE 74H9920019**	Page **151**

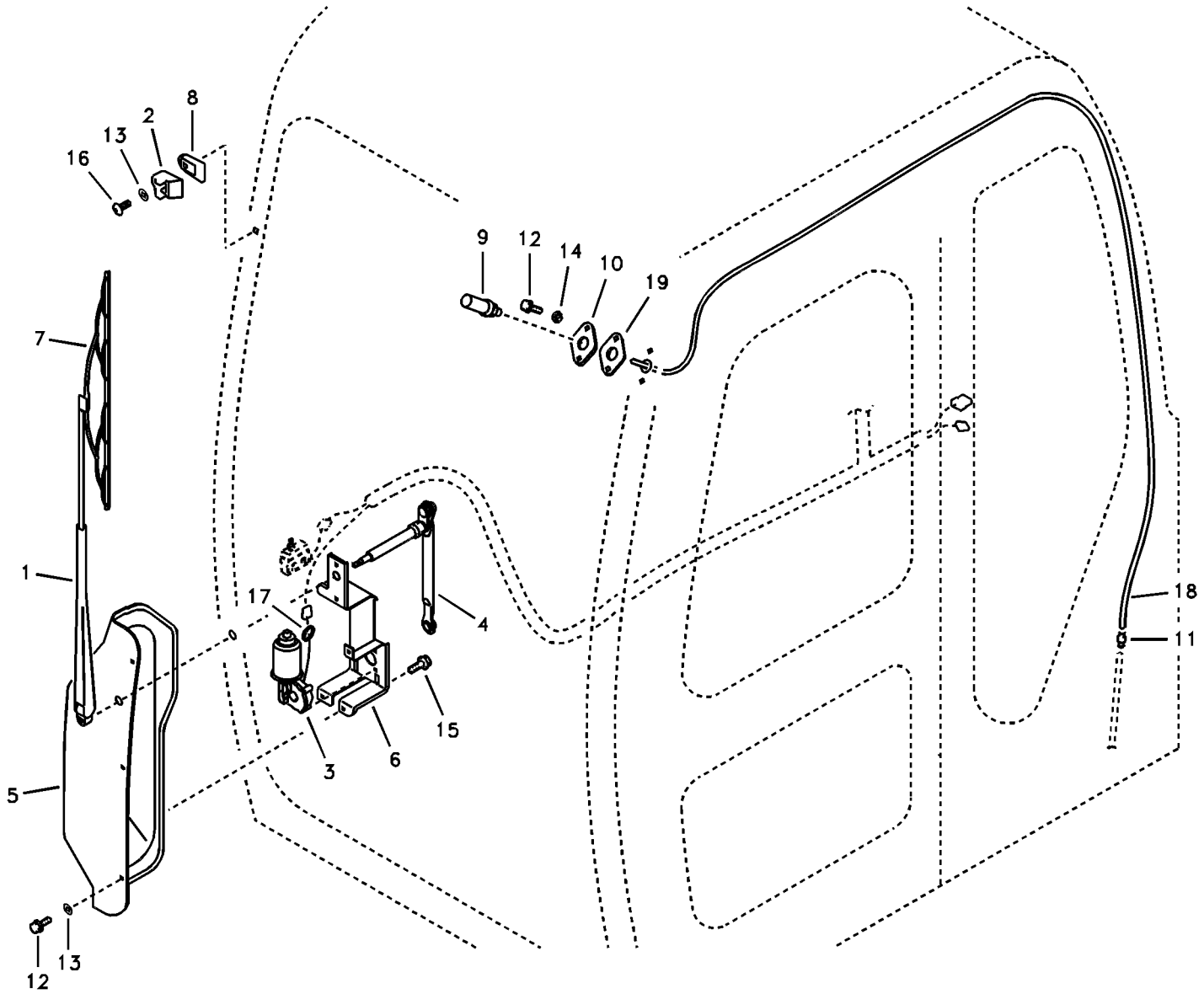

Volvo Construction Equipment

1006993

Fig.	Part No.	Quantity 1	2	3	PS	KIT	Description	Dénomination	Bezeichnung	품명	Denominación	Notes
1	**VOE 14529141**	1	1				Wiper Arm	Bras Essu.glac.	Wischerarm	와이퍼 암	Brazo Limpiapar	
2	**VOE 14529151**	1	1				Stop	Arrêt	Anschlag	스톱	Parada	
3	**VOE 14529159**	1	1				Wiper Motor	Moteur essuie glace	Wischermotor	와이퍼 모터	Motor l.p	
4	**VOE 14529160**	1	1				Link	Articulation	Gelenk	링크	Articulacion	
5	**VOE 14529161**	1	1				Guard	Protection	Schutz	가드	Protección	
6	**VOE 14529168**	1	1				Bracket	Console	Konsole	브라켓	Ménsula	
7	**VOE 14529172**	1	1				Wiper blade	Balai essuie glace	Wischerblatt	와이퍼 블레이드	Escobilla l.p	
8	**VOE 14529201**	1	1				Grommet	Passe fil	Durchführung	그로메트	Aislador pasapanel	
9	**VOE 14529209**	1	1				Nozzle	Nez D'injecteur	Einspritzduse	노즐	Tobera	
10	**VOE 14529210**	1	1				Bracket	Ferrure-support	Tragstütze	브라켓	Hierro Apoyo	
11	**VOE 14529354**	1	1				Connector	Raccord	Anschluss	커넥터	Union	
12	**VOE 946544**	8	8		SS		Screw	Vis	Schraube	스크류	Tornillo	
13	**VOE 955892**	7	7				Washer	Rondelle	Scheibe	와셔	Arandela	
14	**VOE 955919**	2	2				Spring Washer	Rondelle élastique	Federscheibe	스프링 와셔	Arandela flexible	
15	**VOE 965175**	5	5		SS		Screw	Vis	Schraube	스크류	Tornillo	
16	**VOE 969587**	1	1				6-pt skt screw	Vis creuse de 6	Hohlschraube	6 포인트 소켓 스크류	Racor 6-dientes	
17	**SA 9751-12504**	2	2				Grommet	Passe fil	Durchführung	그로메트	Aislador pasapanel	
18	**VOE 14881147**	1	1				Hose	Durit	Schlauch	호스	Tubo flexible	
19	**VOE 14529038**	1	1				Plate	Plaque	Platte	플레이트	Placa	

1	**8278808**	**Limpiaparabrisas** 와이퍼 **Scheibenwischer** **Essuie-glace du pare-brise** **Windshield wiper**	Catalogue id **20019**	Group **363**
2	**8278809**		Illustr. No **1006993**	Section **110**
3			Issue **VOE 74H9920019**	Page **153**
4				
5		**FOR CHINA**		

VOLVO

EC55B

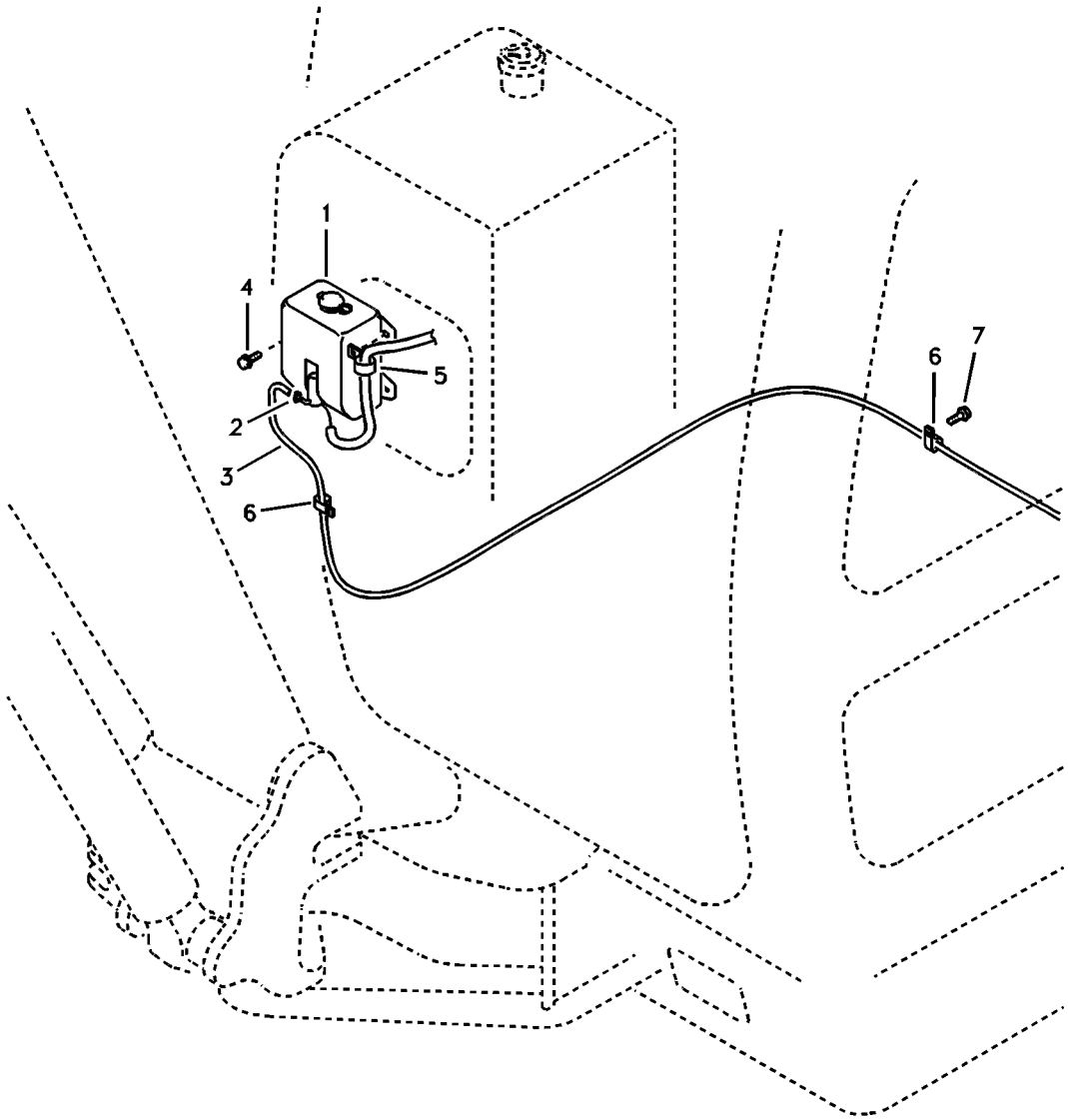
1
4
5
2
3
6
6
7

Fig.	Part No.	Quantity 1	2	3	PS	KIT	Description	Dénomination	Bezeichnung	품명	Denominación	Notes
1	**VOE 14529045**	1					Washer Pump	Pomp.lave-glace	Spulpumpe	와셔 펌프	Bomba Rociador	
2	**SA 9312-00004**	1					Clamp	Pince Serrage	Klemme	클램프	Abrazadera	
3	**VOE 14881146**	1			SS		Hose	Durit	Schlauch	호스	Tubo flexible	
4	**VOE 946440**	3					Flange screw	Vis à bride	Flanschschraube	플랜지 스크류	Torn embridado	
5	**VOE 14500291**	1					Clip	Clip	Klemme	클립	Clip	
6	**VOE 14500292**	2					Clip	Clip	Klemme	클립	Clip	
7	**VOE 946471**	1					Flange screw	Vis à bride	Flanschschraube	플랜지 스크류	Torn embridado	

1	**8278796**	**Lavaparabrisas** 차창 유리 와셔 **Scheibenwaschanlage** **Lave - glace** **Windshield washer**	Catalogue id **20019**	Group **363**
2			Illustr. No **1006994**	Section **200**
3			Issue **VOE 74H9920019**	Page **155**
4				
5				

VOLVO

EC55B

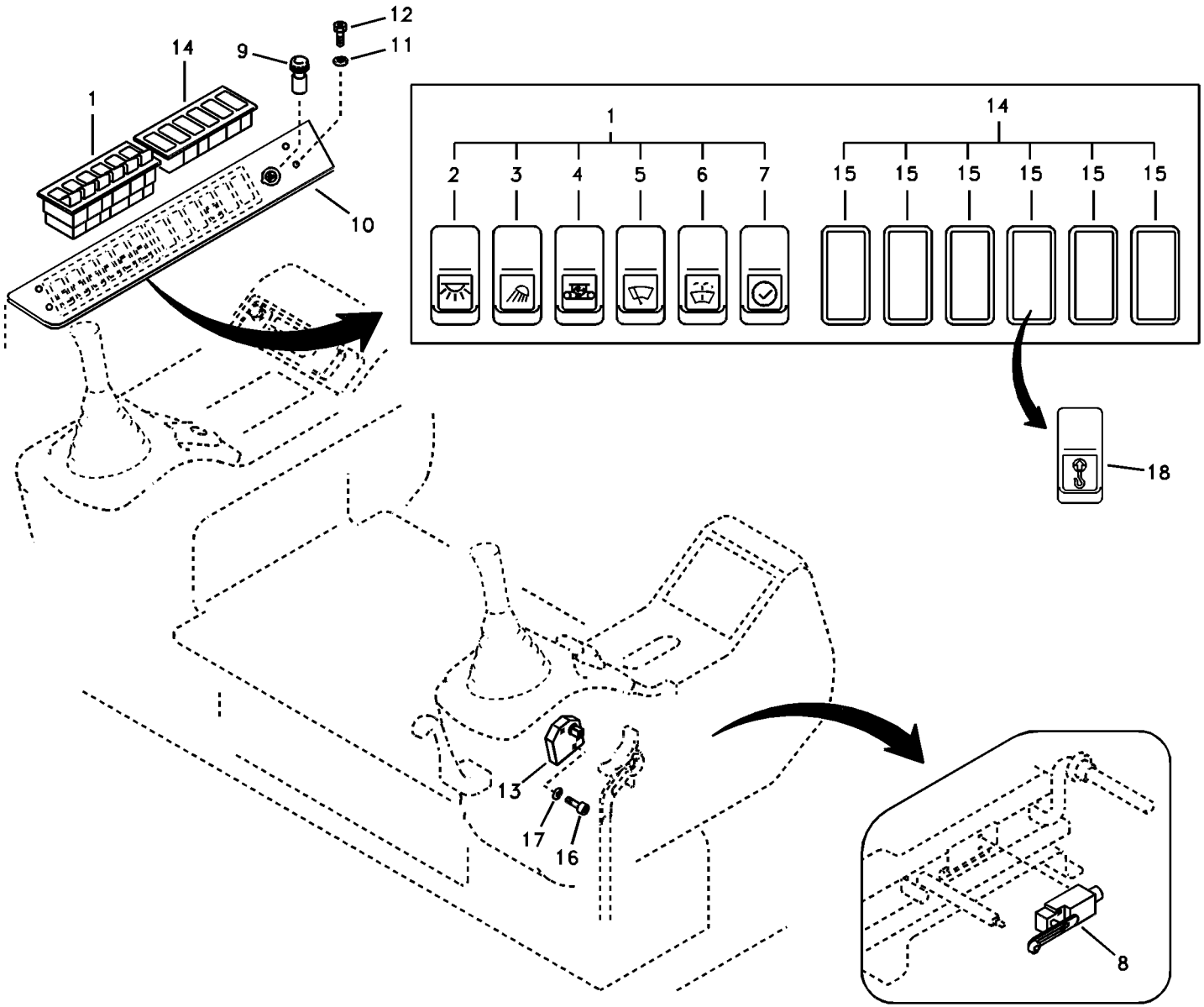
12
11
9
14
1
10
1
14
2
3
4
5
6
7
15
15
15
15
15
15
18
13
17
16
8

Fig.	Part No.	Quantity 1	2	3	PS	KIT	Description	Dénomination	Bezeichnung	품명	Denominación	Notes
1	**VOE 14504200**	1					Switch	Commutateur	Schalter	스위치	Contactor	
2	**VOE 14529195**	1					•Switch	•Commutateur	•Schalter	• 스위치	•Contactor	
3	**VOE 14529196**	1					•Switch	•Commutateur	•Schalter	• 스위치	•Contactor	
4	**VOE 14529197**	1					•Switch	•Commutateur	•Schalter	• 스위치	•Contactor	
5	**VOE 14529192**	1					•Switch	•Commutateur	•Schalter	• 스위치	•Contactor	
6	**VOE 14529193**	1					•Switch	•Commutateur	•Schalter	• 스위치	•Contactor	
7	**VOE 14529194**	1					•Switch	•Commutateur	•Schalter	• 스위치	•Contactor	
8	**SA 1123-01530**	1			SS		Switch	Commutateur	Schalter	스위치	Contactor	SER NO 30001-31222
	VOE 14526157	1					Switch	Commutateur	Schalter	스위치	Contactor	SER NO 31223- SER NO 50001-
9	**VOE 14529037**	1					Cig Lighter	Allume cigare	Zig Anzünder	시가 라이터	Encendfdor cigarro	
10	**VOE 14507593**	1					Plate, switch	Plate_switch	Plate, switch	스위치 플레이트	Plate, switch	
11	**VOE 955892**	4					Washer	Rondelle	Scheibe	와셔	Arandela	
12	**VOE 965175**	4			SS		Screw	Vis	Schraube	스크류	Tornillo	
13	**VOE 14502722**	1					Switch	Commutateur	Schalter	스위치	Contactor	
14	**VOE 14504201**	1					Blank	Contact factice	Blinddeckel	블랭크	Toma ficticia	
15	**VOE 14529148**	6					•Cover	•Capot	•Haube	• 커버	•Capo	
16	**SA 9016-10503**	3					Bolt	Boulon	Bolzen	볼트	Perno	
17	**VOE 940090**	3			SS		Washer	Rondelle	Scheibe	와셔	Arandela	
18	**VOE 14508697**		1				Switch	Commutateur	Schalter	스위치	Contactor	

1	**8278796**
2	**8278874**
3	
4	
5	

Interruptor
스위치
Schalter
Interrupteur
Switch

Catalogue id **20019**	Group **364**
Illustr. No **1006995**	Section **100**
Issue **VOE 74H9920019**	Page **157**

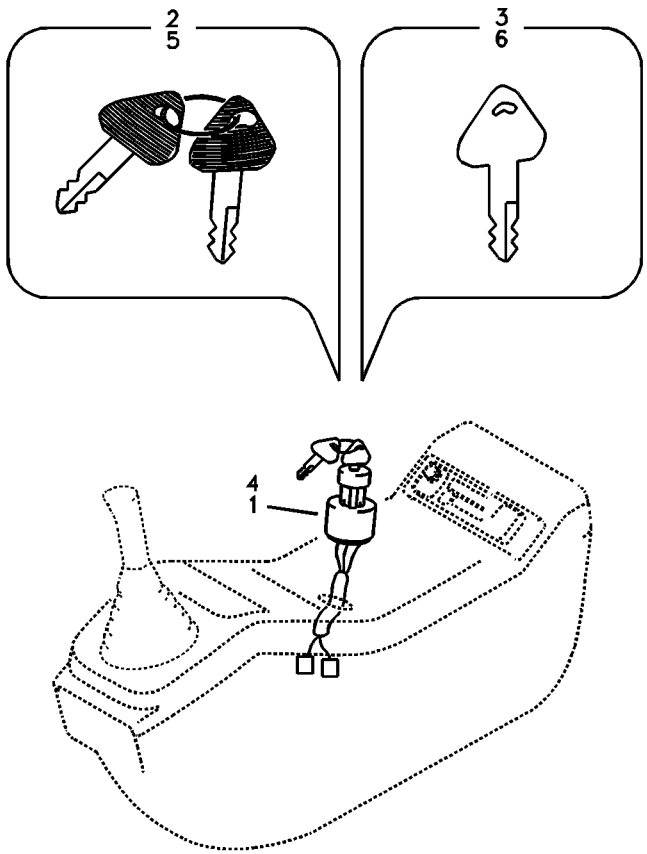
2
5
3
6
4
1

Fig.	Part No.	Quantity 1	2	3	PS	KIT	Description	Dénomination	Bezeichnung	품명	Denominación	Notes
1	**VOE 14529152**	1					Starter Switch	Commutat. demarreu	Anlasschalter	시동 스위치	Contact Arranq	
2		2			NS		•Key	•Clavette	•Keil	• 키	•Llave (cuna)	
3		1			NS		•Key	•Clavette	•Keil	• 키	•Llave (cuna)	
4	**VOE 14526158**		1				Starter Switch	Commutat. demarreu	Anlasschalter	시동 스위치	Contact Arranq	
5	**VOE 14529178**		2				•Key	•Clavette	•Keil	• 키	•Llave (cuna)	
6	**VOE 14529180**		1		OP		•Key	•Clavette	•Keil	• 키	•Llave (cuna)	

1	**8278819**	**Sistema de llave** 키이 장치 **Schlüsselsystem** **Système de clé** **Key system**	Catalogue id **20019**	Group **364**
2	**8278820**		Illustr. No **1014322**	Section **200**
3			Issue **VOE 74H9920019**	Page **159**
4				
5				

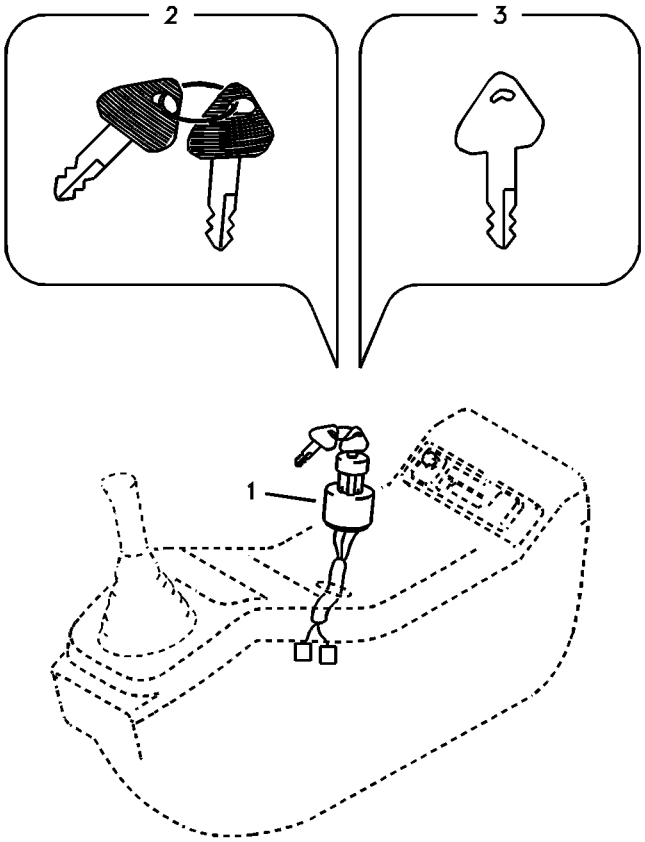
2
3
1

Fig.	Part No.	Quantity 1	2	3	PS	KIT	Description	Dénomination	Bezeichnung	품명	Denominación	Notes
1	**VOE 14526158**	1					•Starter Switch	•Commutat. demarre	•Anlasschalter	• 시동 스위치	•Contact Arranq	
2	**VOE 14529178**	2					••Key	••Clavette	••Keil	•• 키	••Llave (cuna)	
3	**VOE 14529180**	1			OP		••Key	••Clavette	••Keil	•• 키	••Llave (cuna)	

1	**8278820**	**Sistema de llave** 키이 장치 **Schlüsselsystem** **Système de clé** **Key system**	Catalogue id **20019**	Group **364**
2			Illustr. No **1014323**	Section **210**
3			Issue **VOE 74H9920019**	Page **161**
4				
5		**FOR CHINA**		

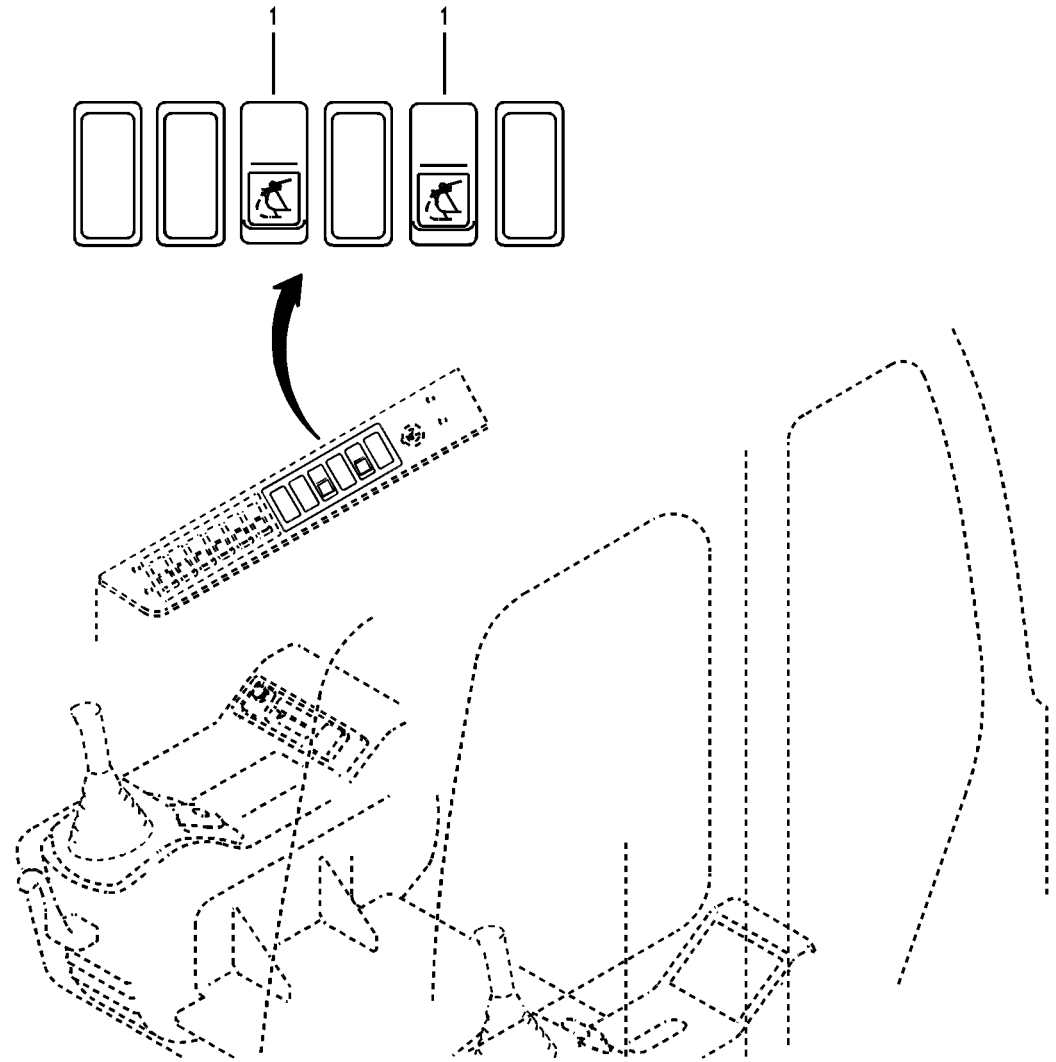
1
1

Fig.	Part No.	Quantity 1	2	3	4	5	PS	KIT	Description	Dénomination	Bezeichnung	품명	Denominación	Notes
1	**VOE 14508696**	2	2	2	2				Switch	Commutateur	Schalter	스위치	Contactor	

1	**8278869**	**Interruptor, control de enganche rápido** 퀵 핏 제어 스위치 **Schalter, Schnellwechsler** **Interrupteur, raccord rapide** **Switch, quickfit control**	Catalogue id **20019**	Group **369**
2	**8278872**			
3	**8279083 S/N 30824-**		Illustr. No **1006996**	Section **100**
4	**8279084 S/N 30824-**			
5			Issue **VOE 74H9920019**	Page **163**

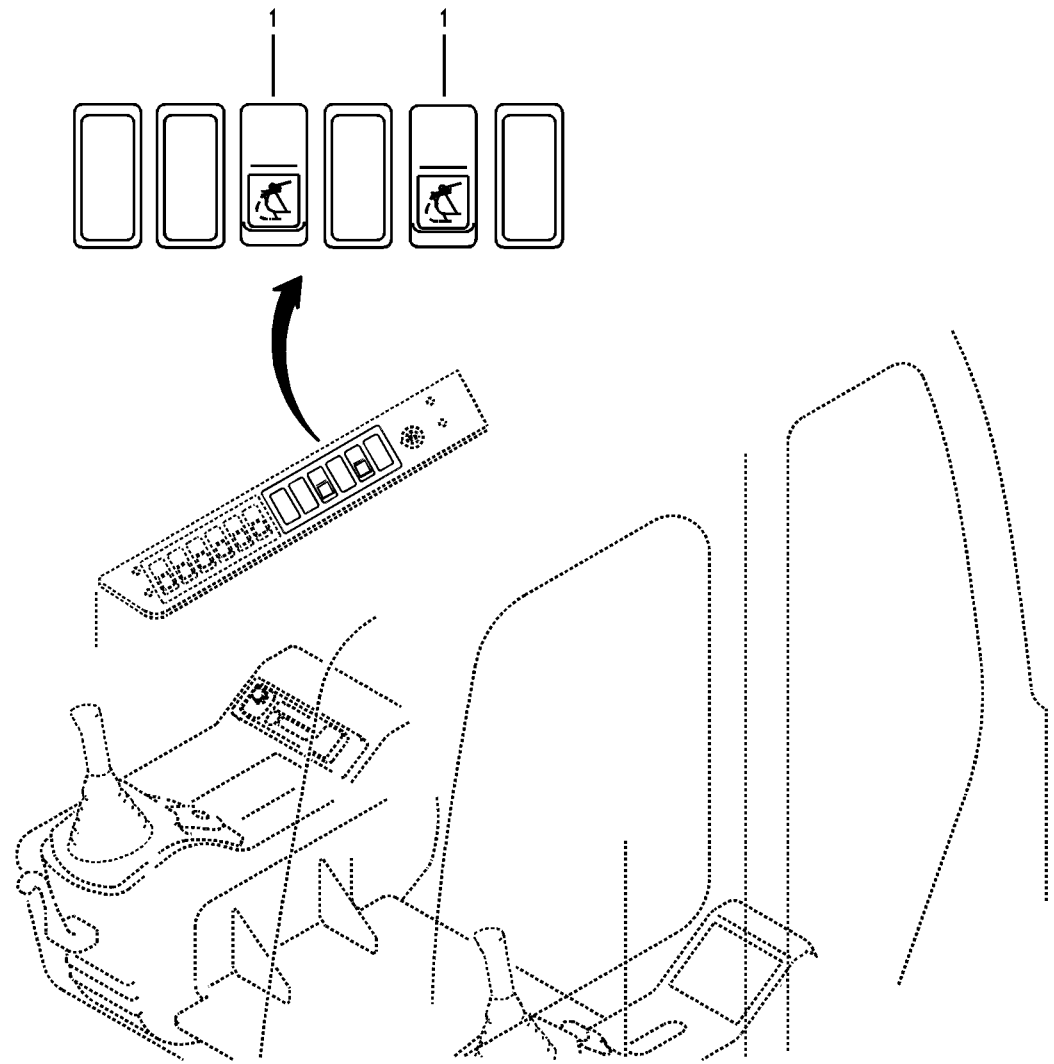
1
1

Fig.	Part No.	Quantity 1	2	3	PS	KIT	Description	Dénomination	Bezeichnung	품명	Denominación	Notes
1	**VOE 14529226**	2	2				Switch	Commutateur	Schalter……	스위치	Contactor.....	

1	**8278870**	**Interruptor, control de enganche rápido** 퀵 핏 제어 스위치 **Schalter, Schnellwechsler** **Interrupteur, raccord rapide** **Switch, quickfit control**	Catalogue id **20019**	Group **369**
2	**8278871**		Illustr. No **1008342**	Section **150**
3			Issue **VOE 74H9920019**	Page **165**
4				
5				

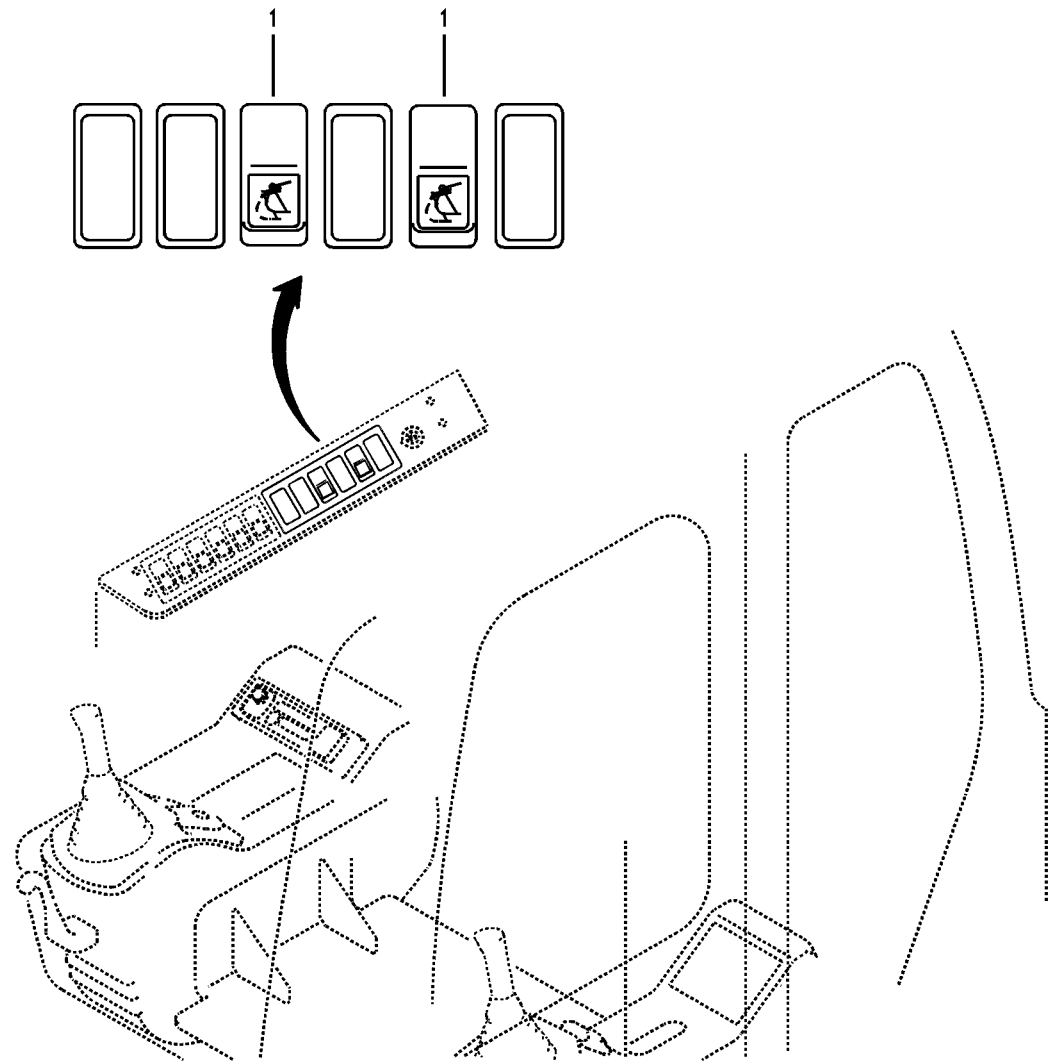
1
1

Fig.	Part No.	Quantity 1	2	3	PS	KIT	Description	Dénomination	Bezeichnung	품명	Denominación	Notes
1	**VOE 14529226**	2					Switch	Commutateur	Schalter……	스위치	Contactor.....	

1	**8278871**	**Interruptor, control de enganche rápido** 퀵 핏 제어 스위치 **Schalter, Schnellwechsler** **Interrupteur, raccord rapide** **Switch, quickfit control**	Catalogue id **20019**	Group **369**
2				
3			Illustr. No **1008342**	Section **160**
4				
5		**FOR CHINA**	Issue **VOE 74H9920019**	Page **167**

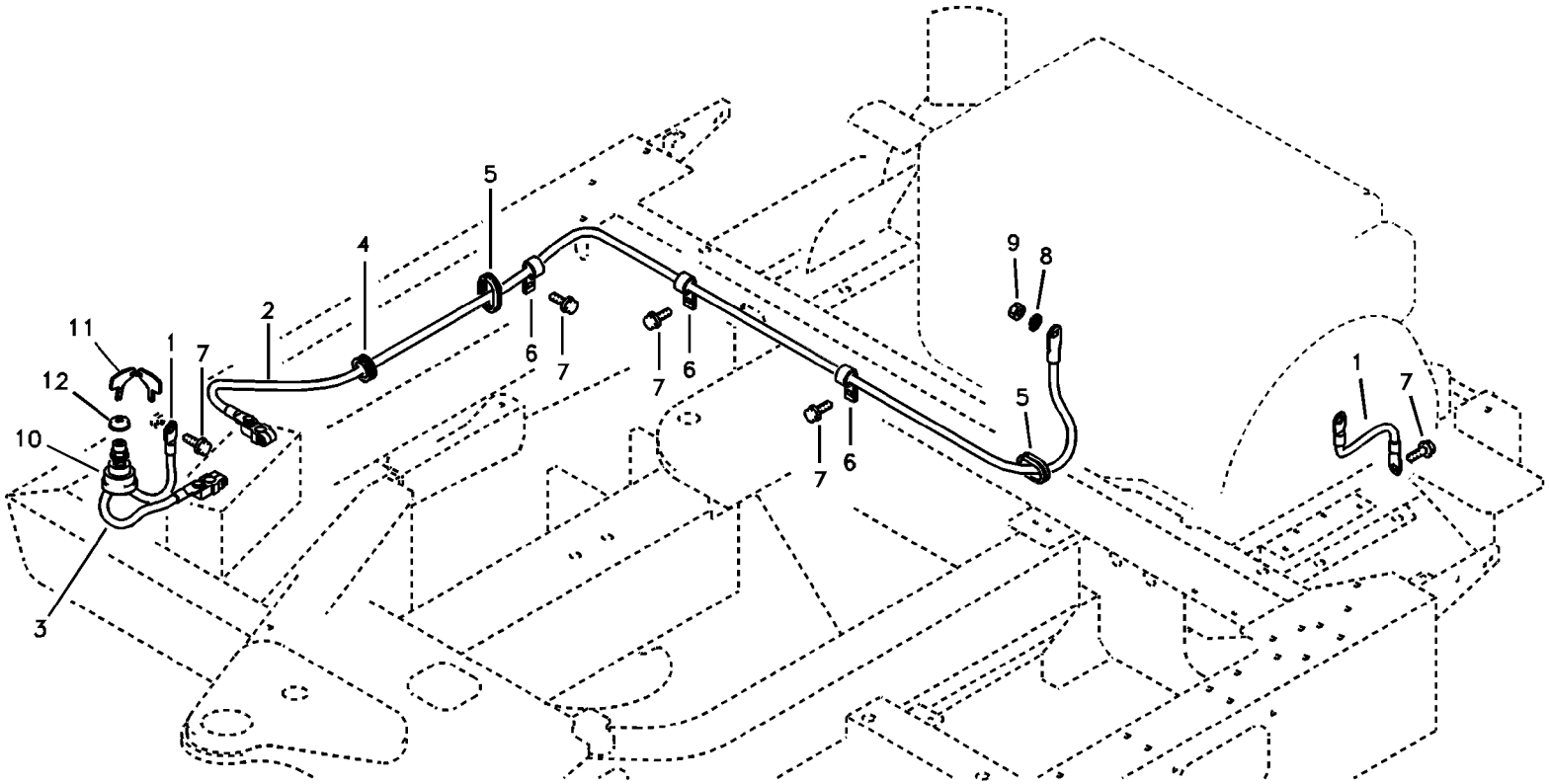
11
12
10
3
1
7
2
4
5
6
7
7
6
7
6
9
8
5
1
7

Fig.	Part No.	Quantity 1	2	3	PS	KIT	Description	Dénomination	Bezeichnung	품명	Denominación	Notes
1	**VOE 14529026**	2					Earth strap	Bande de masse	Masseband	접지 스트랩	Cinta de masa	
2	**VOE 14529079**	1					Battery Cable	Câble batterie	Batterieleitung	밧데리 케이블	Cable Bateria	
3	**VOE 14529082**	1					Battery Cable	Câble batterie	Batterieleitung	밧데리 케이블	Cable Bateria	
4	**SA 9751-13606**	1					Grommet	Passe fil	Durchführung	그로메트	Aislador pasapanel	
5	**SA 9751-33606**	2					Grommet	Passe fil	Durchführung	그로메트	Aislador pasapanel	
6	**VOE 14500293**	3					Clip	Clip	Klemme	클립	Clip	
7	**VOE 946471**	5					Flange screw	Vis à bride	Flanschschraube	플랜지 스크류	Torn embridado	
8	**VOE 955921**	1					Spring Washer	Rondelle élastique	Federscheibe	스프링 와셔	Arandela flexible	
9	**VOE 983303**	1					Nut	Ecrou	Mutter	너트	Tuerca	
10	**VOE 14529076**	1					Switch	Commutateur	Schalter	스위치	Contactor	
11	**SA 8240-00500**	2					•Key	•Clavette	•Keil	• 키	•Llave (cuna)	
12	**VOE 14529928**	2					Cover	Capot	Haube	커버	Capo	SER NO 33668-

1	**8278796**	**Cables, batería** 밧데리 케이블 **Batteriekabel** **Câbles, batterie** **Cables, battery**	Catalogue id **20019**	Group **371**
2			Illustr. No **1017361**	Section **100**
3			Issue **VOE 74H9920019**	Page **169**
4				
5				



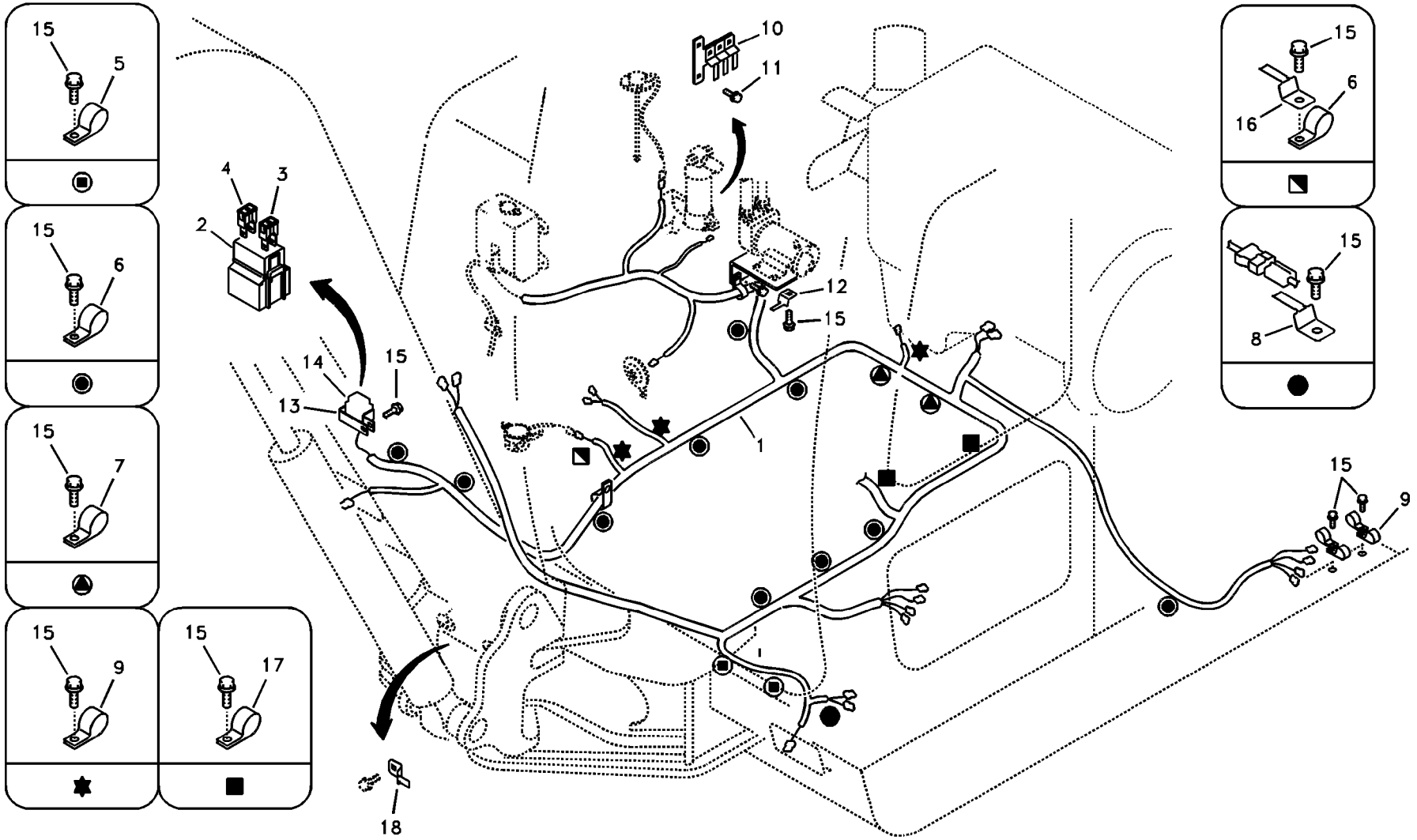

Volvo Construction Equipment

1018998

Fig.	Part No.	Quantity 1	2	3	PS	KIT	Description	Dénomination	Bezeichnung	품명	Denominación	Notes
1	**VOE 14521127**	1					Wire harness	Faisceau electrique	Kabelbaum	배선	Manojo cables	SER NO 30001-33826
	VOE 14529035	1					Wire harness	Faisceau electrique	Kabelbaum	배선	Manojo cables	SER NO 33827-34475
	VOE 14543387	1					Wire harness	Faisceau electrique	Kabelbaum	배선	Manojo cables	SER NO 34476-
	VOE 14500395	8			SS		•Diode	•Diode	•Diode	• 다이오드	•Diodo	
2	**SA 1122-00940**	1					•Block	•Bloc	•Block	• 블록	•Bloque	
3	**SA 9879-10600**	1					•Fuse	•Fusible	•Schmelzsicherung	• 휴즈	•Fusible	60A,Orange
4	**SA 9879-10800**	1					•Fuse	•Fusible	•Schmelzsicherung	• 휴즈	•Fusible	80A,Black
5	**VOE 14500292**	2					Clip	Clip	Klemme	클립	Clip	
6	**VOE 14500293**	10					Clip	Clip	Klemme	클립	Clip	
7	**VOE 14500294**	2					Clip	Clip	Klemme	클립	Clip	
8	**VOE 14881250**	2					Clip	Clip	Klemme	클립	Clip	
9	**VOE 14529345**	7					Clip	Clip	Klemme	클립	Clip	
10	**VOE 14519884**	1					Bracket	Console	Konsole	브라켓	Ménsula	
11	**VOE 946934**	2			SS		Screw	Vis	Schraube	스크류	Tornillo	
12	**VOE 14529136**	1					Clip	Clip	Klemme	클립	Clip	
13	**VOE 14529099**	1					Bracket	Ferrure-support	Tragstütze	브라켓	Hierro Apoyo	
14	**VOE 14529100**	1					Bracket	Ferrure-support	Tragstütze	브라켓	Hierro Apoyo	
15	**VOE 946471**	23					Flange screw	Vis à bride	Flanschschraube	플랜지 스크류	Torn embridado	
16	**VOE 14510011**	1					Clip	Clip	Klemme	클립	Clip	
17	**VOE 14500295**	2					Clip	Clip	Klemme	클립	Clip	
18	**VOE 14881250**	1					Clip	Clip	Klemme	클립	Clip	SER NO 34476- SER NO 50130-

1	**8278796**	**Haz de cables, principal** 메인 배선 케이블 **Hauptkabel und -leitungen** **Câble et faisceau de câbles, principal** **Cable and wire harness, main**	Catalogue id **20019**	Group **371**
2			Illustr. No **1018998**	Section **200**
3			Issue **VOE 74H9920019**	Page **171**
4				
5				

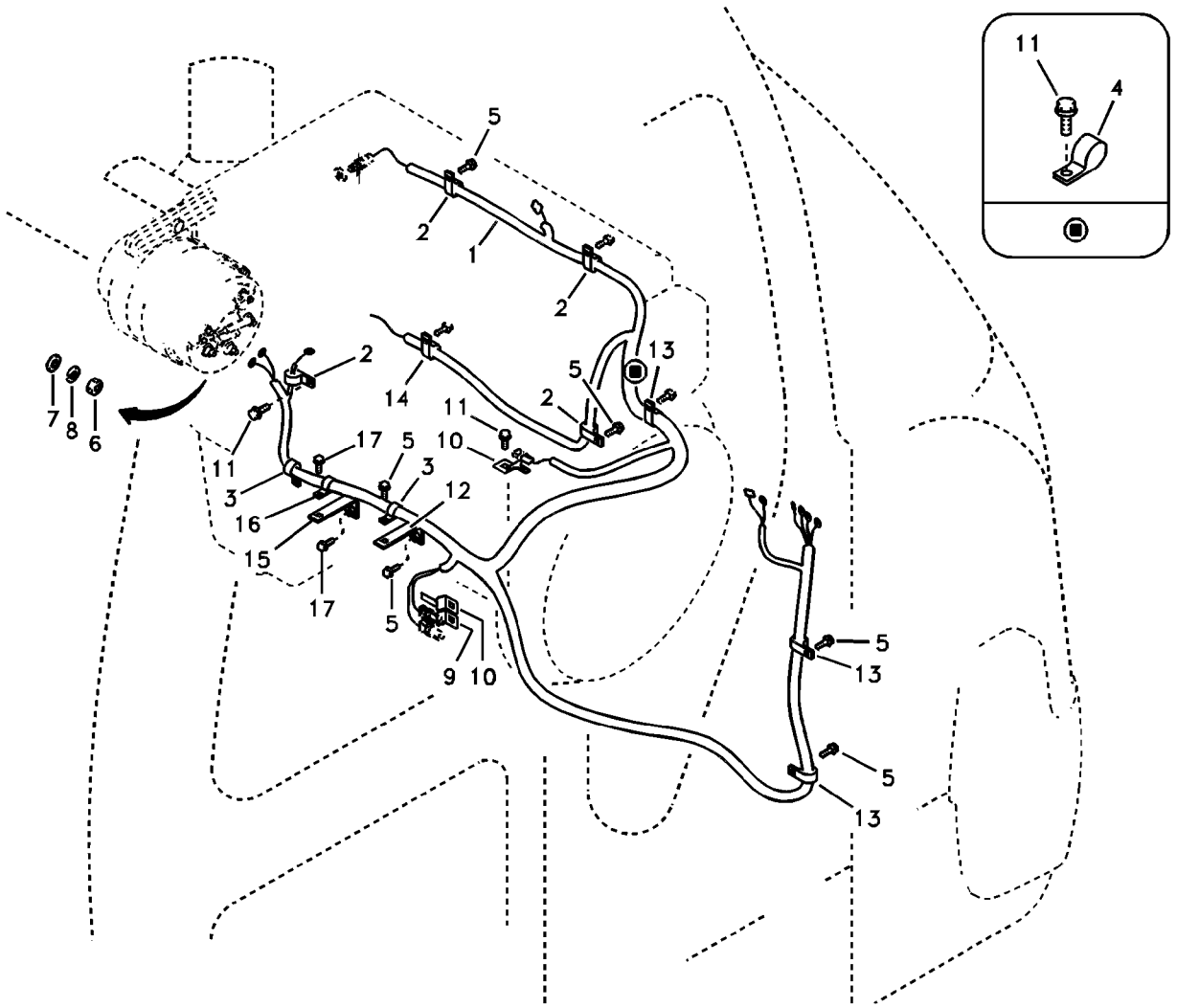
11
4
5
2
1
2
13
2
14
5
11
2
10
17
5
3
3
12
16
15
17
5
9
10
7
8
6
11
5
13
5
13

Fig.	Part No.	Quantity 1	2	3	PS	KIT	Description	Dénomination	Bezeichnung	품명	Denominación	Notes
1	**VOE 14521145**	1					Wire harness	Faisceau electrique	Kabelbaum	배선	Manojo cables	SER NO 30001-33895 SER NO 50001-50093
	VOE 14525605	1					Wire harness	Faisceau electrique	Kabelbaum	배선	Manojo cables	SER NO 33896- SER NO 50094-
	VOE 14500395	1			SS		•Diode	•Diode	•Diode	• 다이오드	•Diodo	
2	**VOE 14500291**	4					Clip	Clip	Klemme	클립	Clip	
3	**VOE 14500292**	2					Clip	Clip	Klemme	클립	Clip	
4	**VOE 14500293**	1					Clip	Clip	Klemme	클립	Clip	
5	**VOE 946471**	7					Flange screw	Vis à bride	Flanschschraube	플랜지 스크류	Torn embridado	
6	**VOE 983302**	1					Nut	Ecrou	Mutter	너트	Tuerca	
7	**VOE 955892**	1					Washer	Rondelle	Scheibe	와셔	Arandela	
8	**VOE 955919**	1					Spring Washer	Rondelle élastique	Federscheibe	스프링 와셔	Arandela flexible	
9	**VOE 14510011**	1					Clip	Clip	Klemme	클립	Clip	
10	**VOE 14881252**	2					Clip	Clip	Klemme	클립	Clip	
11	**VOE 947107**	3					Flange screw	Vis à bride	Flanschschraube	플랜지 스크류	Torn embridado	
12	**VOE 14510983**	1					Bracket	Console	Konsole	브라켓	Ménsula	
13	**VOE 14500294**	4					Clip	Clip	Klemme	클립	Clip	
14	**VOE 14529345**	1					Clip	Clip	Klemme	클립	Clip	
15	**VOE 14529393**	1					Bracket	Console	Konsole	브라켓	Ménsula	SER NO 33896- SER NO 50094-
16	**VOE 14500295**	1					Clip	Clip	Klemme	클립	Clip	SER NO 33896- SER NO 50094-
17	**VOE 946471**	2					Flange screw	Vis à bride	Flanschschraube	플랜지 스크류	Torn embridado	SER NO 33896- SER NO 50094-

1	**8278796**	**Haz de cables, motor** 엔진 배선 케이블 **Kabelbündel, Motor** **Faisceau de câbles, moteur** **Cable harness, engine**	Catalogue id **20019**	Group **371**
2			Illustr. No **1017682**	Section **400**
3			Issue **VOE 74H9920019**	Page **173**
4				
5				

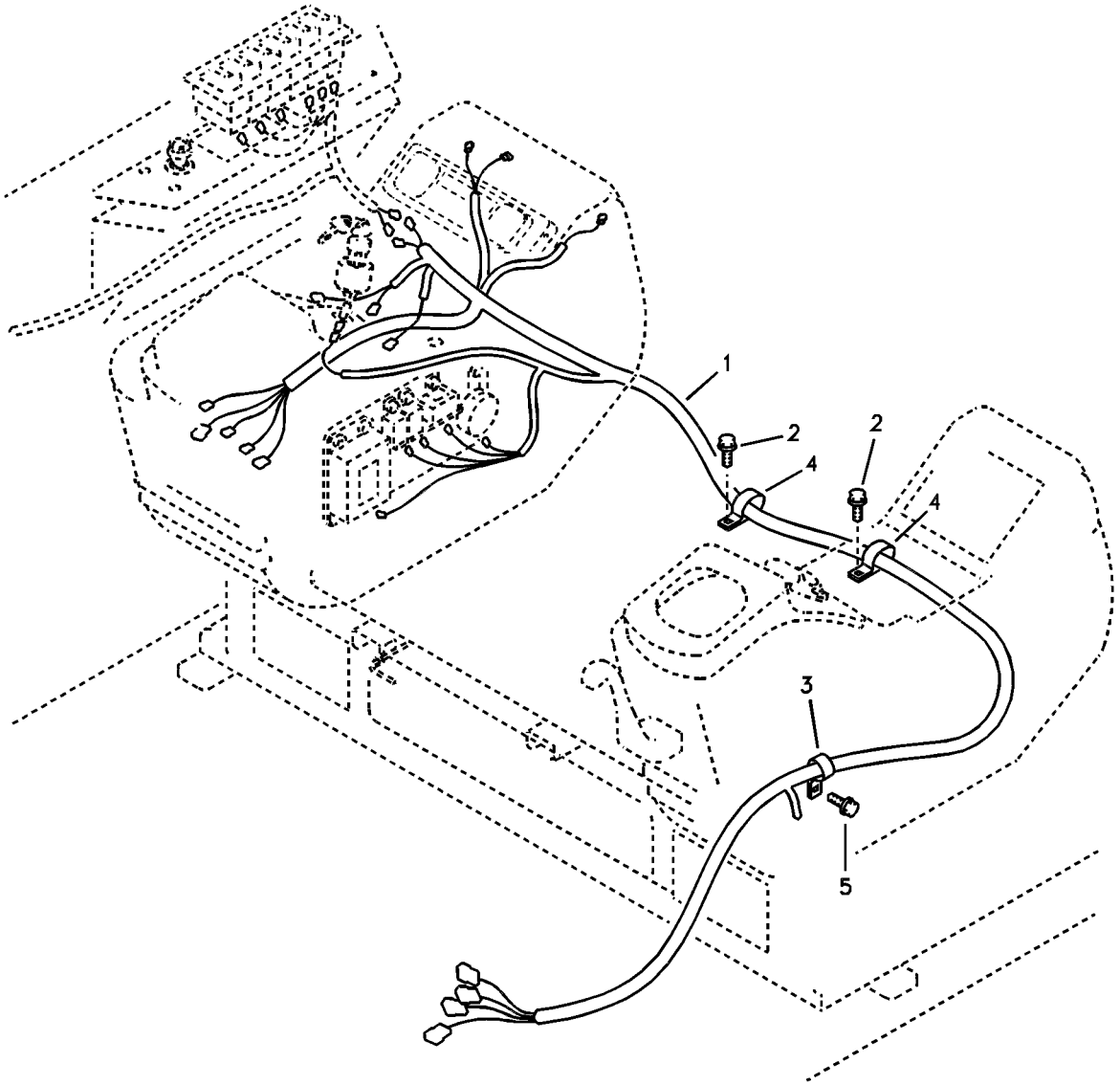
1
2
2
4
4
3
5

Fig.	Part No.	Quantity 1	2	3	PS	KIT	Description	Dénomination	Bezeichnung	품명	Denominación	Notes
1	**VOE 14521130**	1					Wire harness	Faisceau electrique	Kabelbaum	배선	Manojo cables	SER NO 30001-33352
	VOE 14530612	1					Wire harness	Faisceau electrique	Kabelbaum	배선	Manojo cables	SER NO 33353-33895
	VOE 14535877	1					Wire harness	Faisceau electrique	Kabelbaum	배선	Manojo cables	SER NO 33896-34136 SER NO 50001-50093
	VOE 14535885	1					Wire harness	Faisceau electrique	Kabelbaum	배선	Manojo cables	SER NO 34137- SER NO 50094-
	SA 1122-03610	2			SS		•Diode	•Diode	•Diode	• 다이오드	•Diodo	
2	**VOE 946441**	2					Flange screw	Vis à bride	Flanschschraube	플랜지 스크류	Torn embridado	
3	**VOE 14500295**	1					Clip	Clip	Klemme	클립	Clip	
4	**SA 9316-03601**	2					Clip	Clip	Klemme	클립	Clip	
5	**VOE 946471**	1					Flange screw	Vis à bride	Flanschschraube	플랜지 스크류	Torn embridado	

1	**8278796**	**Haz de cables, panel de instrumentos** 계기판 배선 케이블 **Kabel und Leitungen, Armaturenbrett** **Câble et faisceau de câbles, tableau de bord** **Cable and wire harness, instrument panel**	Catalogue id **20019**	Group **371**
2			Illustr. No **1007000**	Section **500**
3			Issue **VOE 74H9920019**	Page **175**
4				
5				

VOLVO

EC55B

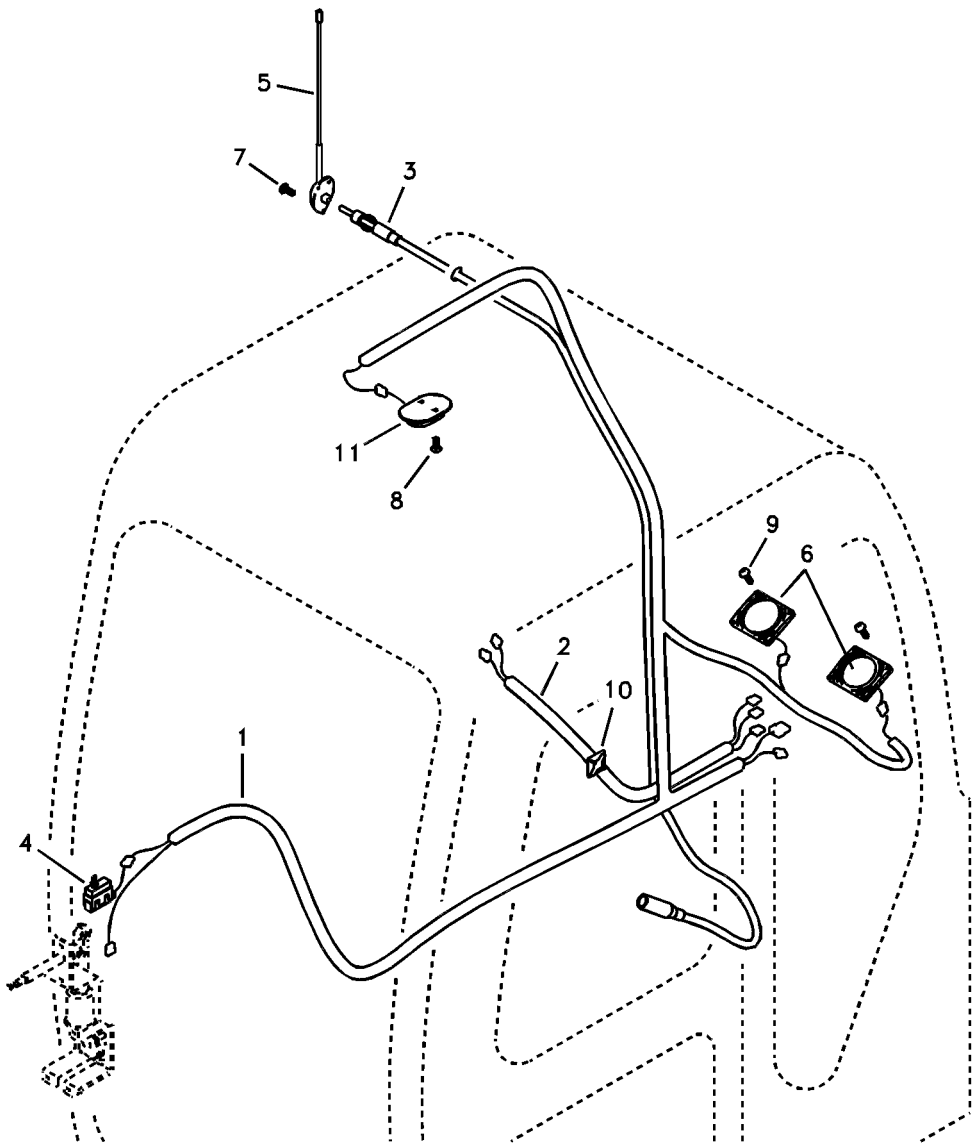
5
7
3
11
8
9
6
2
10
1
4

Fig.	Part No.	Quantity 1	2	3	4	5	PS	KIT	Description	Dénomination	Bezeichnung	품명	Denominación	Notes
1	**VOE 14518270**	1	1	1	1				Wire harness	Faisceau electriqu	Kabelbaum	배선	Manojo cables	SER NO 30001-32325
	VOE 14527251	1	1	1	1				Wire harness	Faisceau electriqu	Kabelbaum	배선	Manojo cables	SER NO 32326-
2	**VOE 14521783**	1	1	1	1				Wire harness	Faisceau electriqu	Kabelbaum	배선	Manojo cables	SER NO 30001-33895
	VOE 14535284	1	1	1	1				Wire harness	Faisceau electriqu	Kabelbaum	배선	Manojo cables	SER NO 33896-
3	**VOE 14529061**	1	1	1	1				Cable	Câble	Kabel	케이블	Cable	
4	**VOE 14529138**	1	1	1	1				Switch	Commutateur	Schalter	스위치	Contactor	
5	**VOE 14529181**	1	1	1	1		SS		Antenna	Antenne	Antenne	안테나	Antena	SER NO 30001-33714
	VOE 14535346	1	1	1	1				Antenna	Antenne	Antenne	안테나	Antena	SER NO 33715-
6	**VOE 14529230**	2	2	2	2				Speaker	Haut-parleur	Lautsprecher	스피커	Altavoz	
7	**SA 9025-04003**	3	3	3	3				Screw	Vis	Schraube	스크류	Tornillo	
8	**VOE 969408**	2	2	2	2				6-pt skt screw	Vis creuse de 6	Hohlschraube	6 포인트 소켓 스크류	Racor 6-dientes	
9	**VOE 969407**	8	8	8	8				6-pt skt screw	Vis creuse de 6	Hohlschraube	6 포인트 소켓 스크류	Racor 6-dientes	
10	**VOE 14529068**	6	6	6	6				Strip Clamp	Ruban Serrage	Kabelbinder	스트립 클램프	Abraz Cinta	
11	**VOE 14529089**	1	1	1	1				Lamp	Lampe	Leuchte	램프	Lampara	

1	**8278806**
2	**8278807**
3	**8278808**
4	**8278809**
5	

Haz de cables, motor
운전실 배선 케이블
Kabelbündel, Kabine
Faisceaux de câbles, cabine
Cable harnesses, cab

Catalogue id **20019**	Group **371**
Illustr. No **1007001**	Section **800**
Issue **VOE 74H9920019**	Page **177**



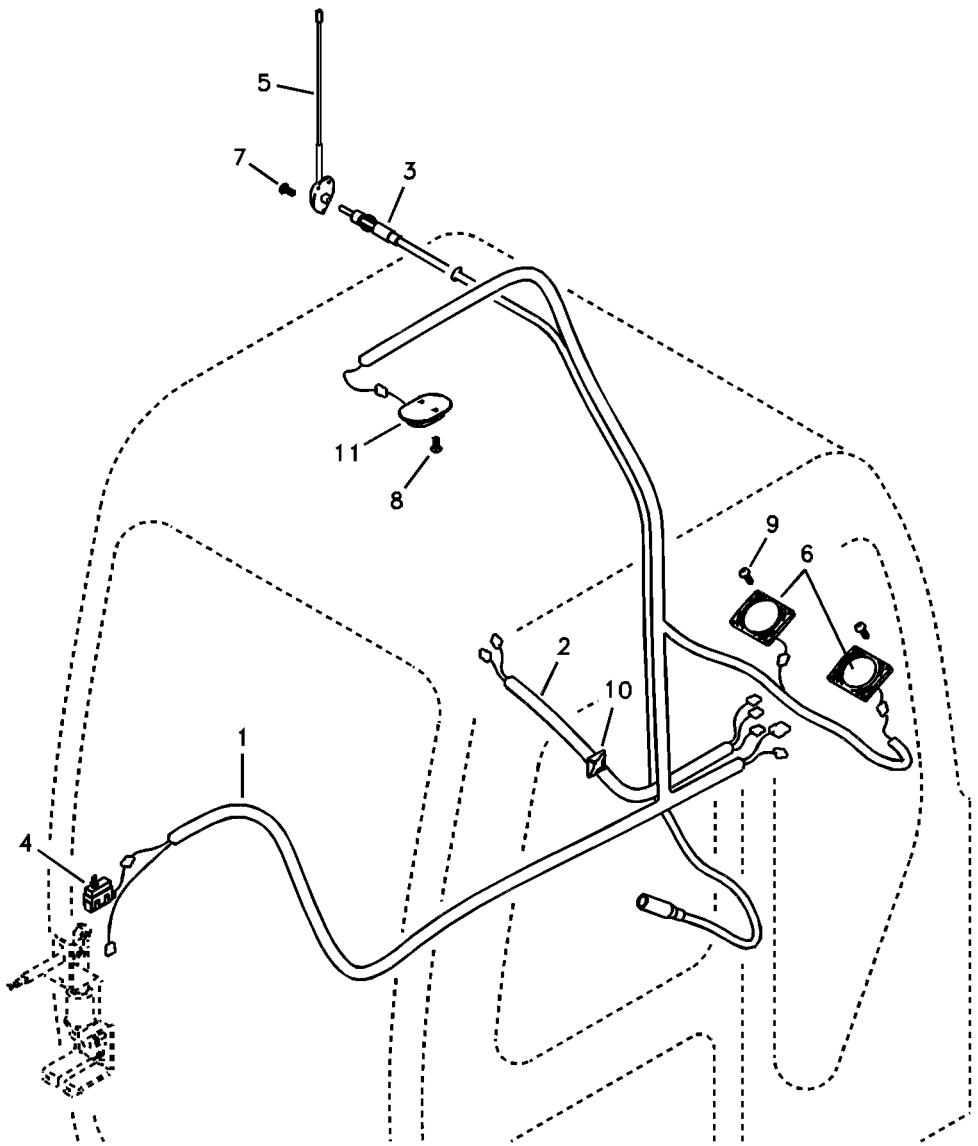
5
7
3
11
8
9
6
2
10
1
4

Fig.	Part No.	Quantity 1	2	3	PS	KIT	Description	Dénomination	Bezeichnung	품명	Denominación	Notes
1	**VOE 14518270**	1	1				Wire harness	Faisceau electrique	Kabelbaum	배선	Manojo cables	SER NO 50001-50004
	VOE 14527251	1	1				Wire harness	Faisceau electrique	Kabelbaum	배선	Manojo cables	SER NO 50005-
2	**VOE 14521783**	1	1				Wire harness	Faisceau electrique	Kabelbaum	배선	Manojo cables	
3	**VOE 14529061**	1	1				Cable	Câble	Kabel	케이블	Cable	
4	**VOE 14529138**	1	1				Switch	Commutateur	Schalter	스위치	Contactor	
5	**VOE 14529181**	1	1		SS		Antenna	Antenne	Antenne	안테나	Antena	
6	**VOE 14529230**	2	2				Speaker	Haut-parleur	Lautsprecher	스피커	Altavoz	
7	**SA 9025-04003**	3	3				Screw	Vis	Schraube	스크류	Tornillo	
8	**VOE 969408**	2	2				6-pt skt screw	Vis creuse de 6	Hohlschraube	6 포인트 소켓 스크류	Racor 6-dientes	
9	**VOE 969407**	8	8				6-pt skt screw	Vis creuse de 6	Hohlschraube	6 포인트 소켓 스크류	Racor 6-dientes	
10	**VOE 14529068**	6	6				Strip Clamp	Ruban Serrage	Kabelbinder	스트립 클램프	Abraz Cinta	
11	**VOE 14529089**	1	1				Lamp	Lampe	Leuchte	램프	Lampara	

1	**8278808**	**Haz de cables, motor** 운전실 배선 케이블 **Kabelbündel, Kabine** **Faisceaux de câbles, cabine** **Cable harnesses, cab**	Catalogue id **20019**	Group **371**
2	**8278809**		Illustr. No **1007001**	Section **810**
3			Issue **VOE 74H9920019**	Page **179**
4				
5		**FOR CHINA**		

VOLVO

EC55B

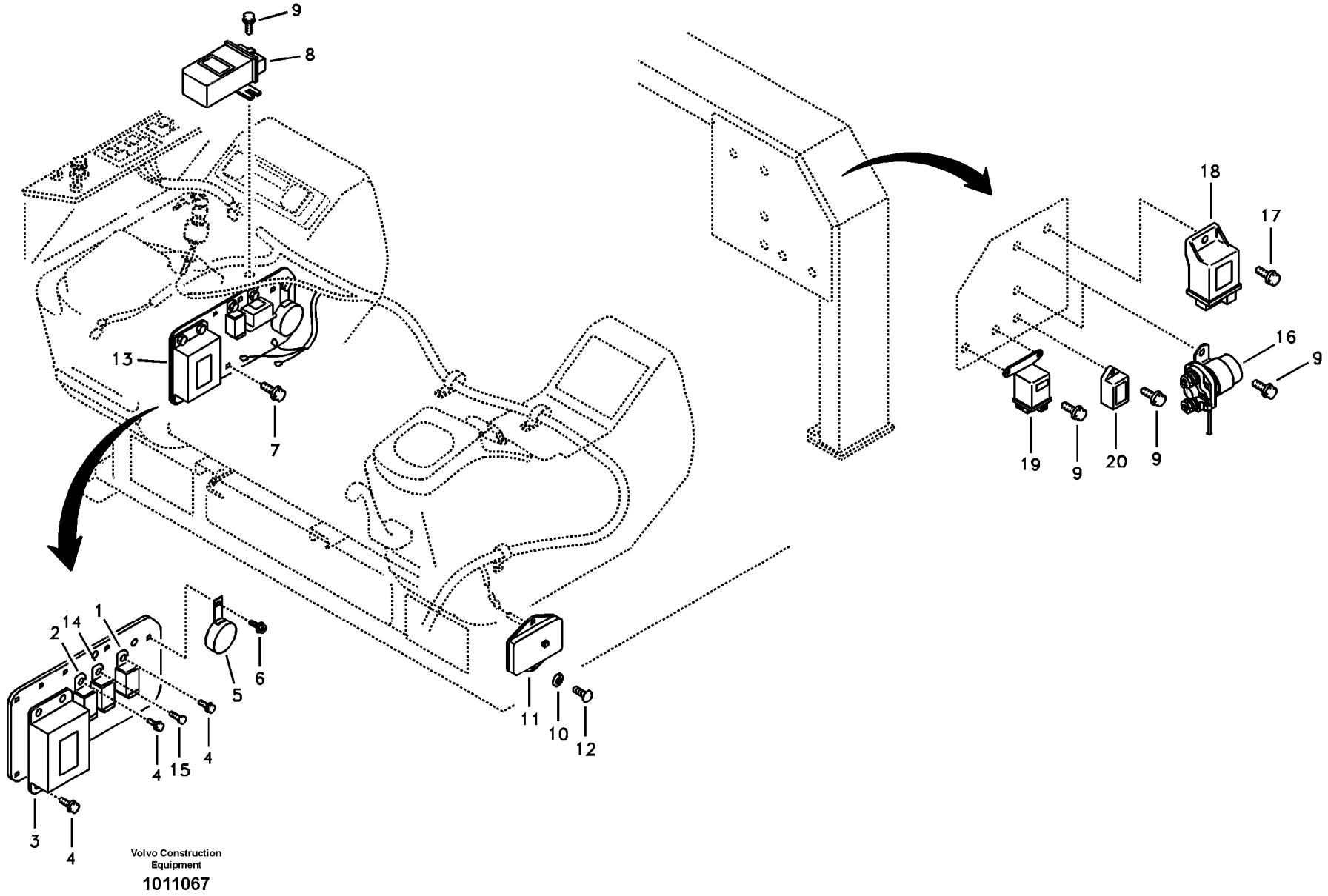

Volvo Construction Equipment

1011067

Fig.	Part No.	Quantity 1	2	3	4	5	PS	KIT	Description	Dénomination	Bezeichnung	품명	Denominación	Notes
1	**VOE 14529036**	1							Relay	Relais	Relais	릴레이	Rele	Horn SER NO 30001-33352
	VOE 14529155	1							Relay	Relais	Relais	릴레이	Rele	SER NO 33353-
2	**VOE 14529155**	1							Relay	Relais	Relais	릴레이	Rele	Three points
3	**VOE 14529145**	1							Control Unit	Unité de command	Steuereinheit	제어장치	Unidad de mando	Wiper
4	**VOE 965175**	6					SS		Screw	Vis	Schraube	스크류	Tornillo	
5	**VOE 14507752**	1							Buzzer	Répétiteur acoustiq	Summer	부저	Zumbador	
6	**VOE 14880561**	1							Bolt	Boulon	Bolzen	볼트	Perno	
7	**VOE 946440**	2							Flange screw	Vis à bride	Flanschschraube	플랜지 스크류	Torn embridado	
8	**VOE 14529040**	1							Control Unit	Unité de command	Steuereinheit	제어장치	Unidad de mando	Pre-heater
9	**VOE 946544**	7					SS		Screw	Vis	Schraube	스크류	Tornillo	
10	**VOE 940090**	2					SS		Washer	Rondelle	Scheibe	와셔	Arandela	
11	**VOE 14518305**	1					SS		Fuse box	Boite a fusibles	Sicherungsdose	휴즈 박스	Caja de fusibles	SER NO 30001-30307
	VOE 14522923	1							Fuse box	Boite a fusibles	Sicherungsdose	휴즈 박스	Caja de fusibles	SER NO 30308-34136 SER NO 50001-50093
	VOE 14535886	1							Fuse box	Boite a fusibles	Sicherungsdose	휴즈 박스	Caja de fusibles	SER NO 34137- SER NO 50094-
12	**VOE 969407**	2							6-pt skt screw	Vis creuse de 6	Hohlschraube	6 포인트 소켓 스크류	Racor 6-dientes	
13	**VOE 14519873**	1							Bracket	Console	Konsole	브라켓	Ménsula	
14	**VOE 14519234**	1							Relay	Relais	Relais	릴레이	Rele	Main
15	**SA 9011-10502**	1							Bolt	Boulon	Bolzen	볼트	Perno	
16	**VOE 14529031**	1							Relay	Relais	Relais	릴레이	Rele	Air heater
17	**VOE 946934**	1					SS		Screw	Vis	Schraube	스크류	Tornillo	
18	**VOE 14521639**		1	1	1				Relay	Relais	Relais	릴레이	Rele	Safety
19	**VOE 14524242**		1	1	1				Relay	Relais	Relais	릴레이	Rele	Fuel shut-off
20	**VOE 14524243**		1	1	1				Timer	Chronometre	Zeitschaltwerk	타이머	Reloj Programad	

1	**8278796**
2	**8278797**
3	**8278798**
4	**8278799**
5	

Unidad de distribución eléctrica
배전 박스 및 휴즈 박스
Elektrozentrale
Unité de distribution électrique
Electrical distribution box

Catalogue id **20019**	Group **372**
Illustr. No **1011067**	Section **100**
Issue **VOE 74H9920019**	Page **181**

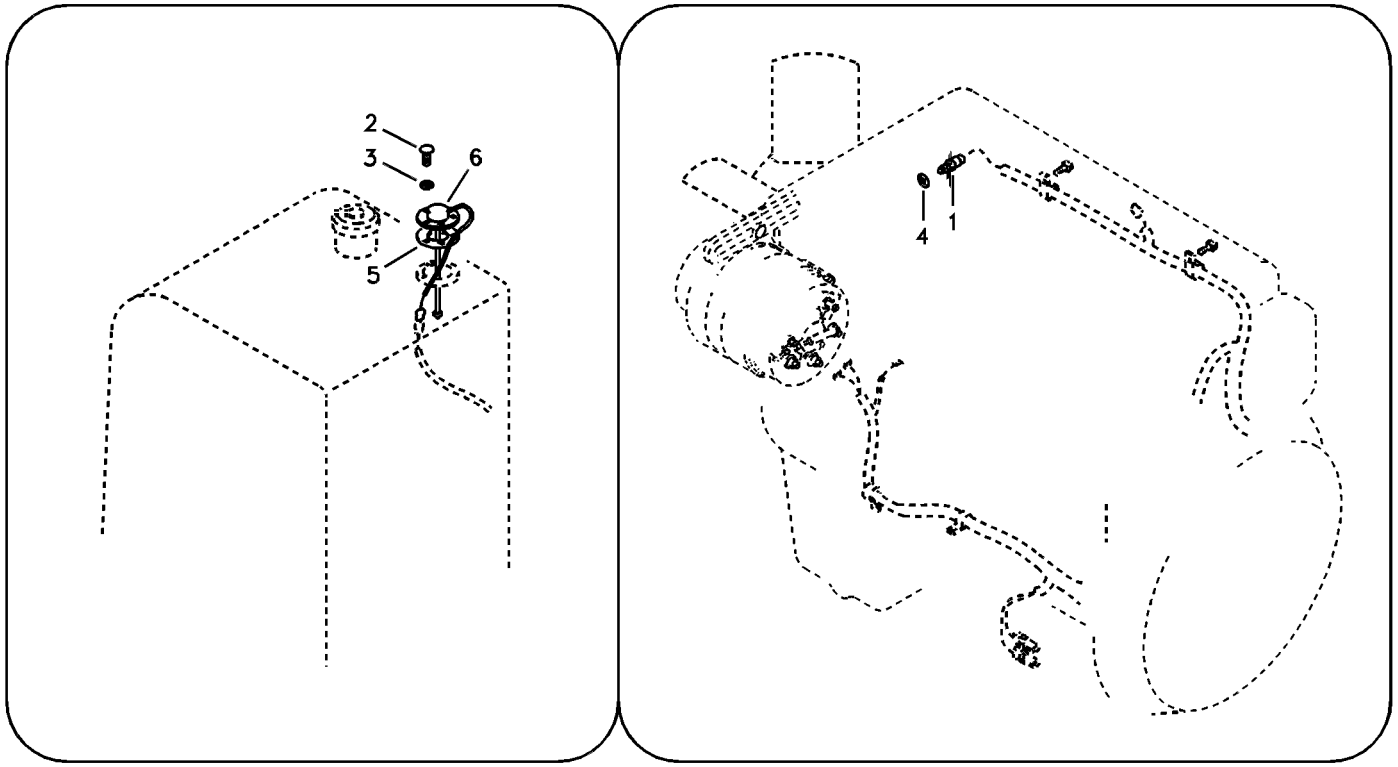
2
3
6
5
4
1

Fig.	Part No.	Quantity 1	2	3	PS	KIT	Description	Dénomination	Bezeichnung	품명	Denominación	Notes
1	**VOE 14529397**	1					Sender	Détecteur	Sender	센더	Emisor	Engine temperature
2	**VOE 969407**	5					6-pt skt screw	Vis creuse de 6	Hohlschraube	6 포인트 소켓 스크류	Racor 6-dientes	
3	**VOE 955918**	5					Spring Washer	Rondelle élastique	Federscheibe	스프링 와셔	Arandela flexible	
4	**SA 9426-20020**	1					Gasket	Joint	Dichtung	가스켓	Junta	
5	**VOE 14529332**	1					Gasket	Joint	Dichtung	가스켓	Junta	
6	**VOE 14511654**	1					Sensor	Capteur	Geber	센서	Captador	SER NO 30001-34682 SER NO 50001-50129
	VOE 14546516	1					Sensor	Capteur	Geber	센서	Captador	SER NO 34683- SER NO 50130-

1	**8278796**	**Sensor eléctrico** 전기 장치 센서 **Elektr. Sensor** **Capteur électrique** **Electrical sensor**	Catalogue id **20019**	Group **386**
2				
3			Illustr. No **1007003**	Section **100**
4				
5			Issue **VOE 74H9920019**	Page **183**

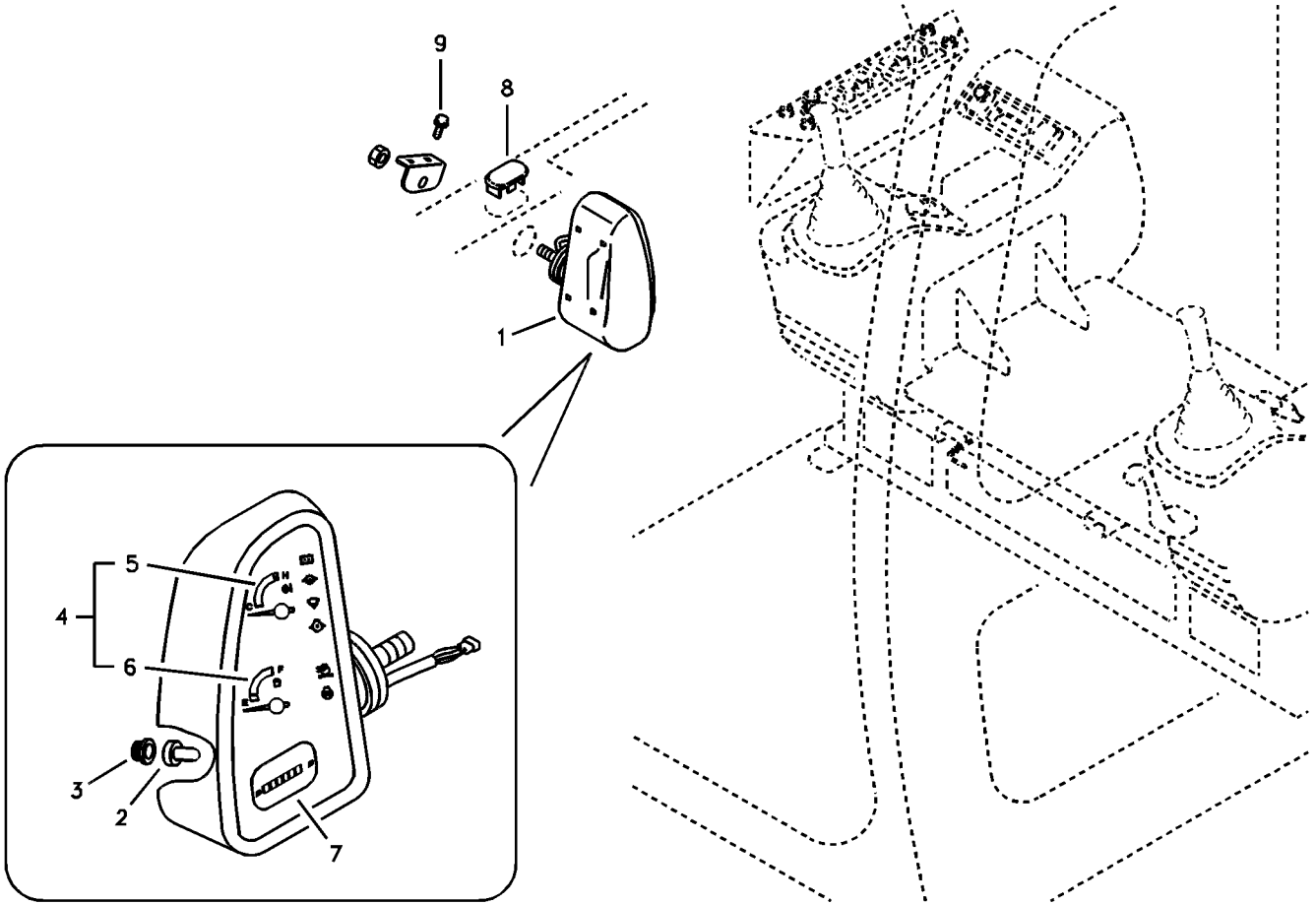
9
8
1
5
4
6
3
2
7

Fig.	Part No.	Quantity 1	2	3	PS	KIT	Description	Dénomination	Bezeichnung	품명	Denominación	Notes
1	**VOE 14521240**	1			SS		Instr Panel	Planche de bord	Instr Tafel	계기판	Panel Instrum	SER NO 30001-33649 SER NO 50001-50064
	VOE 14531836	1			SS		Instr Panel	Planche de bord	Instr Tafel	계기판	Panel Instrum	SER NO 33650-33895 SER NO 50065-50093
	VOE 14535876	1					Instr Panel	Planche de bord	Instr Tafel	계기판	Panel Instrum	SER NO 33896- SER NO 50094-
2	**SA 9861-00100**	11					•Bulb	•Ampoule	•Glühlampe	• 전구	•Ampolla	12V,0.10A
3	**SA 9861-00200**	2					•Bulb	•Ampoule	•Glühlampe	• 전구	•Ampolla	12V,0.15A
4	**VOE 14521362**	1					•Movement	•Mouvement	•Bewegung	• 무브먼트	•Movimiento	
5	**VOE 14529165**	1					••Movement	••Mouvement	••Bewegung	•• 무브먼트	••Movimiento	
6	**VOE 14529166**	1			OP		••Gauge	••Calibre	••Schablone	•• 게이지	••Plantilla	
7	**VOE 14529042**	1					•Hour counter	•Compteur horaire	•Stundenzähler	• 아워 미터	•Contador horario	
8	**VOE 14529167**	1					Cap	Chapeau	Kappe	캡	Caperuza	
9	**VOE 946440**	2					Flange screw	Vis à bride	Flanschschraube	플랜지 스크류	Torn embridado	

1	**8278796**	**Panel de instrumentos, unidad de advertencia y unidad de informa** 경고장치 및 게이지 계기판 **Armaturenbrett, Warneinheit und Informations** **Tableau de bord, unités d'alerte et d'information** **Instrument panel, warning unit and information unit**	Catalogue id **20019**	Group **387**
2			Illustr. No **1007004**	Section **100**
3			Issue **VOE 74H9920019**	Page **185**
4				
5				

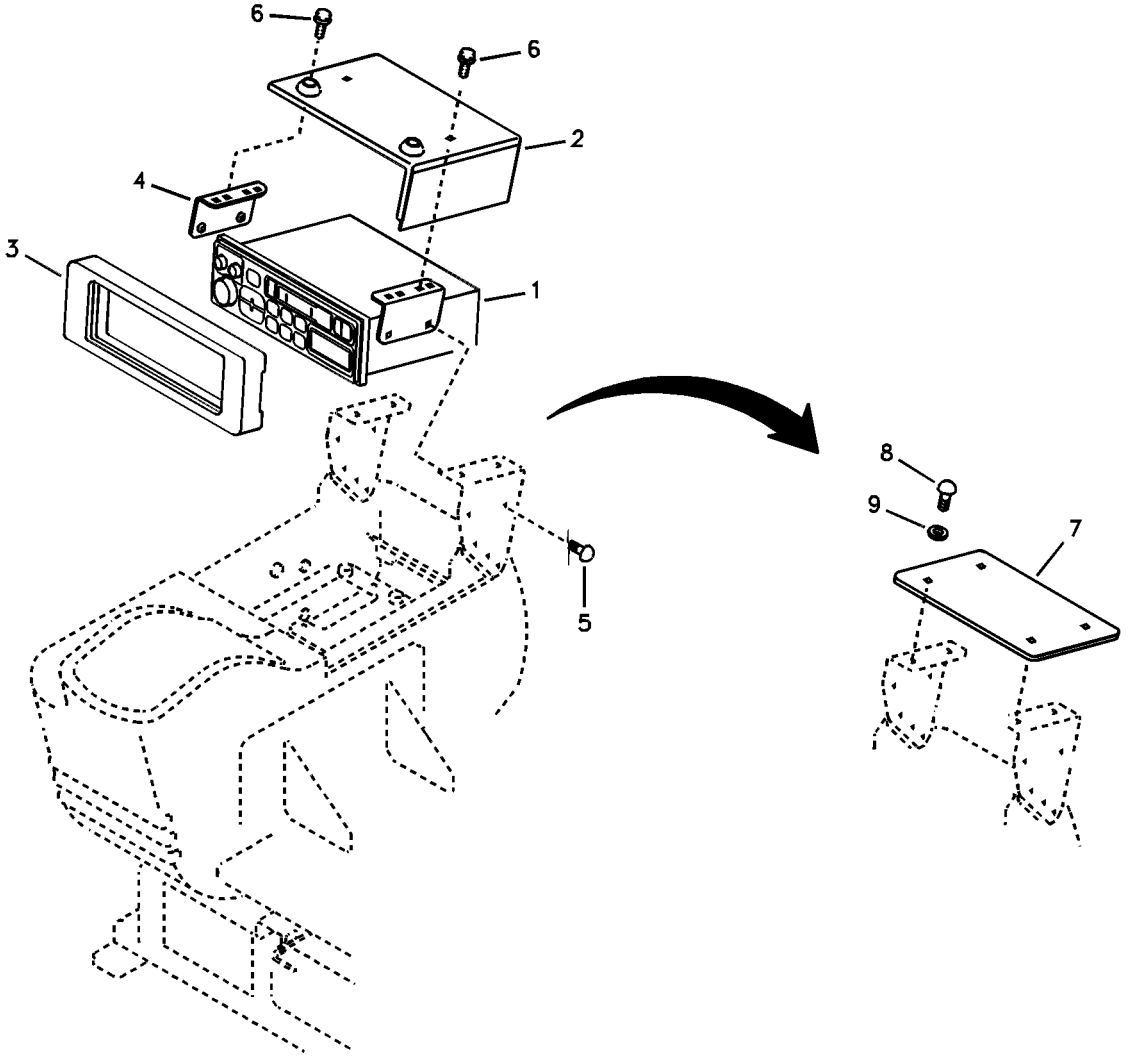
6
6
2
4
3
1
5
8
9
7

Fig.	Part No.	Quantity 1	2	3	4	5	PS	KIT	Description	Dénomination	Bezeichnung	품명	Denominación	Notes
1	**VOE 14526160**		1				SS		Cassette	Cassette	Kassette	카세트	Cassette	SER NO 30001-31904
	VOE 14527150		1						Cassette	Cassette	Kassette	카세트	Cassette	SER NO 31905-
	VOE 14526161			1			SS		Cassette	Cassette	Kassette	카세트	Cassette	SER NO 30001-32053
	VOE 14527151			1					Cassette	Cassette	Kassette	카세트	Cassette	SER NO 32054-
	SA 1123-04320				1				Cassette	Cassette	Kassette	카세트	Cassette	SER NO 30001-32028
	VOE 14527152				1				Cassette	Cassette	Kassette	카세트	Cassette	SER NO 32029-
2	**SA 1123-04180**		1						Cover	Capot	Haube	커버	Capo	SER NO 30001-31904
	VOE 14527153		1						Cover	Capot	Haube	커버	Capo	SER NO 31905-
	SA 1123-04180			1					Cover	Capot	Haube	커버	Capo	SER NO 30001-32053
	VOE 14527153			1					Cover	Capot	Haube	커버	Capo	SER NO 32054-
	SA 1123-04180				1				Cover	Capot	Haube	커버	Capo	SER NO 30001-32028
	VOE 14527153				1				Cover	Capot	Haube	커버	Capo	SER NO 32029-
3	**VOE 14526162**		1	1	1				Cover	Capot	Haube	커버	Capo	
4	**VOE 14529212**		2	2	2				Bracket	Console	Konsole	브라켓	Ménsula	
5	**SA 9027-10401**		4	4	4				Screw	Vis	Schraube	스크류	Tornillo	
6	**VOE 965175**		4	4	4		SS		Screw	Vis	Schraube	스크류	Tornillo	
7	**VOE 14516484**	1							Cover	Capot	Haube	커버	Capo	
8	**VOE 969407**	4							6-pt skt screw	Vis creuse de 6	Hohlschraube	6 포인트 소켓 스크류	Racor 6-dientes	
9	**VOE 940090**	4					SS		Washer	Rondelle	Scheibe	와셔	Arandela	

1	**8278821**
2	**8278822**
3	**8278823**
4	**8278824**
5	

Radiocasete con accesorios de montaje
카세트 라디오
Kassettenrecorder mit Montageteilen
Lecteur de cassettes auto-radio avec pièces de montage
Cassette radio recorder with mounting details

Catalogue id **20019**	Group **393**
Illustr. No **1007005**	Section **100**
Issue **VOE 74H9920019**	Page **187**

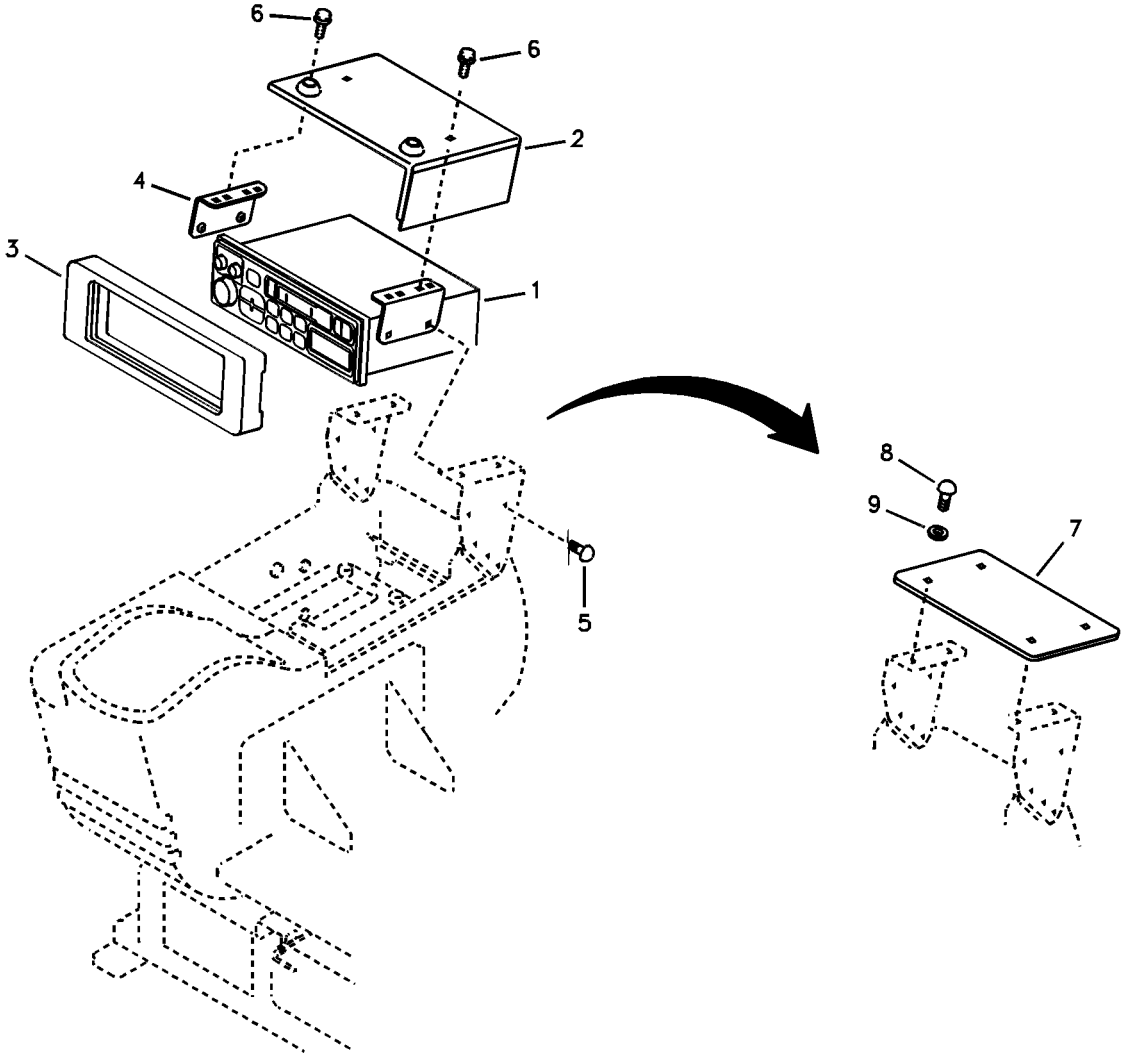
6
6
2
4
3
1
5
8
9
7

Fig.	Part No.	Quantity 1	2	3	PS	KIT	Description	Dénomination	Bezeichnung	품명	Denominación	Notes
1	**VOE 14526160**		1		SS		Cassette	Cassette	Kassette	카세트	Cassette	SER NO 50001-50004
	VOE 14527150		1				Cassette	Cassette	Kassette	카세트	Cassette	SER NO 50005-
2	**SA 1123-04180**		1				Cover	Capot	Haube	커버	Capo	SER NO 50001-50004
	VOE 14527153		1				Cover	Capot	Haube	커버	Capo	SER NO 50005-
3	**VOE 14526162**		1				Cover	Capot	Haube	커버	Capo	
4	**VOE 14529212**		2				Bracket	Console	Konsole	브라켓	Ménsula	
5	**SA 9027-10401**		4				Screw	Vis	Schraube	스크류	Tornillo	
6	**VOE 965175**		4		SS		Screw	Vis	Schraube	스크류	Tornillo	
7	**VOE 14516484**	1					Cover	Capot	Haube	커버	Capo	
8	**VOE 969407**	4					6-pt skt screw	Vis creuse de 6	Hohlschraube	6 포인트 소켓 스크류	Racor 6-dientes	
9	**VOE 940090**	4			SS		Washer	Rondelle	Scheibe	와셔	Arandela	

1	**8278821**	**Radiocasete con accesorios de montaje** 카세트 라디오 **Kassettenrecorder mit Montageteilen** **Lecteur de cassettes auto-radio avec pièces de montage** **Cassette radio recorder with mounting details**	Catalogue id **20019**	Group **393**
2	**8278822**		Illustr. No **1007005**	Section **110**
3				
4			Issue **VOE 74H9920019**	Page **189**
5		**FOR CHINA**		

VOLVO

EC55B

VOLVO

Construction Equipment

GROUP		Section	Page
431	Travel gearbox	100	197
431	Swing gearbox	300	199
431	Pump gearbox with assembling parts	400	203
431	Pump gearbox with assembling parts FOR CHINA	410	205
441	Travel motor with mounting parts	100	207
441	Travel motor	200	209
441	Swing motor with mounting parts	500	215
441	Swing motor	600	217
443	Turning joint, mounting	100	221
443	Turning joint	200	223
492	Swing system	100	225

TABLE DES MATIÈRES

GROUPE		Section	Page
431	Boîte de vitesses de conduite	100	197
431	Boîte de vitesses de pivotement	300	199
431	Boîte de vitesses de la pompe avec pièces d'assemblage	400	203
431	Boîte de vitesses de la pompe avec pièces d'assemblage FOR CHINA	410	205
441	Moteur de conduite avec pièces de montage	100	207
441	Moteur de conduite	200	209
441	Moteur d'orientation avec pièces de montage	500	215
441	Moteur d'orientation	600	217
443	Articulation de rotation avec piéces de montage	100	221
443	Articulation de rotation	200	223
492	Système de pivotement	100	225

GRUPPE		Abschnitt	Seite
431	Fahrgetriebe	100	197
431	Schwenkgetriebe	300	199
431	Pumpengetriebe mit Anbauteilen	400	203
431	Pumpengetriebe mit Anbauteilen FOR CHINA	410	205
441	Fahrmotor mit Montageteilen	100	207
441	Fahrmotor	200	209
441	Schwenkmotor mit Anbauteilen	500	215
441	Schwenkmotor	600	217
443	Drehgelenk mit anbauteilen	100	221
443	Drehgelenk	200	223
492	Schwenksystem	100	225

그룹		절	페이지
431	주행 기어박스	100	197
431	선회 기어박스	300	199
431	펌프 기어박스 및 커플링	400	203
431	펌프 기어박스 및 커플링	410	205
441	주행모터 및 장착 부품	100	207
441	주행모터	200	209
441	선회 모터 및 장착 부품	500	215
441	선회 모터	600	217
443	터닝조인트 장착	100	221
443	터닝조인트	200	223
492	선회 장치	100	225

431	Caja de cambios de traslación	100	197
431	Caja de engranaje de giro	300	199
431	Caja de engranaje de bomba con piezas de montaje	400	203
431	Caja de engranaje de bomba con piezas de montaje FOR CHINA	410	205
441	Motor de traslación con piezas de montaje	100	207
441	Motor de traslación	200	209
441	Motor de giro con piezas de montaje	500	215
441	Motor de giro	600	217
443	Articulación de giro con accesorios de montaje	100	221
443	Articulación de giro	200	223
492	Sistema de oscilación	100	225

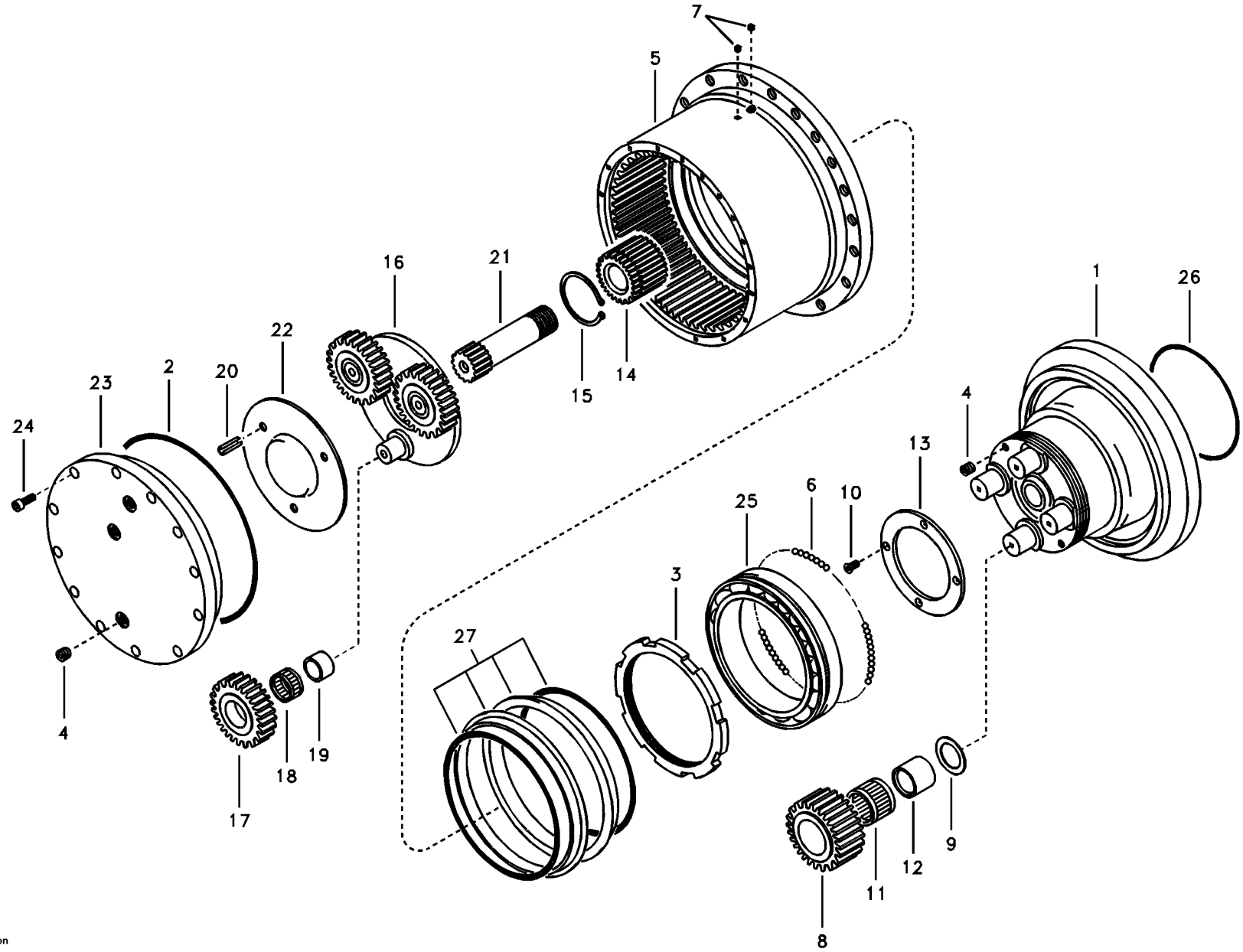
7
5
16
21
22
2
20
23
24
15
14
1
26
4
13
6
10
25
3
27
4
18
19
17
12
9
11
8

Fig.	Part No.	Quantity 1	2	3	PS	KIT	Description	Dénomination	Bezeichnung	품명	Denominación	Notes
		1			NS		Gearbox	Boite vitesses	Schaltgetriebe	기어박스	Caja velocidades	
1	**VOE 14505080**	1					•Flange	•Flasque	•Flansch	• 플랜지	•Brida	
2	**SA 9511-12200**	1					•O-ring	•Joint Torique	•O-Ring	• 오링	•Junta torica	
3	**VOE 14505077**	1					•Ring	•Anneau	•Ring	• 링	•Anillo	
4	**SA 9415-43032**	7					•Plug	•Bouchon	•Stopfen	• 플러그	•Tapon	
5	**VOE 14505076**	1					•Housing	•Carter	•Gehäuse	• 하우징	•Carter	
6	**SA 9676-14000**	104			SS		•Ball	•Bille	•Kugel	• 볼	•Bola	
7	**SA 9415-43012**	3					•Plug	•Bouchon	•Stopfen	• 플러그	•Tapon	
8	**VOE 14505075**	4					•Gear	•Pignon	•Zahnradgetriebe	• 기어	•Engranaje	
9	**VOE 14505074**	4					•Washer	•Rondelle	•Scheibe	• 와셔	•Arandela	
10	**VOE 14505073**	4					•Screw	•Vis	•Schraube	• 스크류	•Tornillo	
11	**VOE 14505072**	4					•Bearing	•Palier	•Lager	• 베어링	•Cojinete	
12	**VOE 14505071**	4					•Collar	•Collier	•Bördel	• 칼러	•Collar	
13	**VOE 14505070**	1					•Plate	•Plaque	•Platte	• 플레이트	•Placa	
14	**VOE 14505069**	1					•Gear	•Pignon	•Zahnradgetriebe	• 기어	•Engranaje	
15	**VOE 14505068**	1					•Ring	•Anneau	•Ring	• 링	•Anillo	
16	**VOE 14505067**	1					•Holder	•Retenue	•Halter	• 홀더	•Soporte	
17	**VOE 14505066**	3					•Gear	•Pignon	•Zahnradgetriebe	• 기어	•Engranaje	
18	**VOE 14505065**	3					•Bearing	•Palier	•Lager	• 베어링	•Cojinete	
19	**VOE 14505064**	3					•Race	•Bague	•Laufrille	• 레이스	•Pista	
20	**VOE 14505063**	3					•Pin	•Goupille	•Zapfen	• 핀	•Pasador	
21	**VOE 14505062**	1					•Gear	•Pignon	•Zahnradgetriebe	• 기어	•Engranaje	
22	**VOE 14505061**	1					•Plate	•Plaque	•Platte	• 플레이트	•Placa	
23	**VOE 14505060**	1					•Cover	•Capot	•Haube	• 커버	•Capo	
24	**VOE 14505059**	12			SS		•Bolt	•Boulon	•Bolzen	• 볼트	•Perno	
25	**VOE 14505058**	1					•Bearing	•Palier	•Lager	• 베어링	•Cojinete	
26	**VOE 14505057**	1			SS		•O-ring	•Joint Torique	•O-Ring	• 오링	•Junta torica	
27	**VOE 14505079**	1					•Sealing Kit	•Jeu Joints	•Dichtungssatz	• 시일 킷	•Juego Retenes	

1	**8278796**	**Caja de cambios de traslación** 주행 기어박스 **Fahrgetriebe** **Boîte de vitesses de conduite** **Travel gearbox**	Catalogue id **20019**	Group **431**
2			Illustr. No **1007006**	Section **100**
3			Issue **VOE 74H9920019**	Page **197**
4				
5				



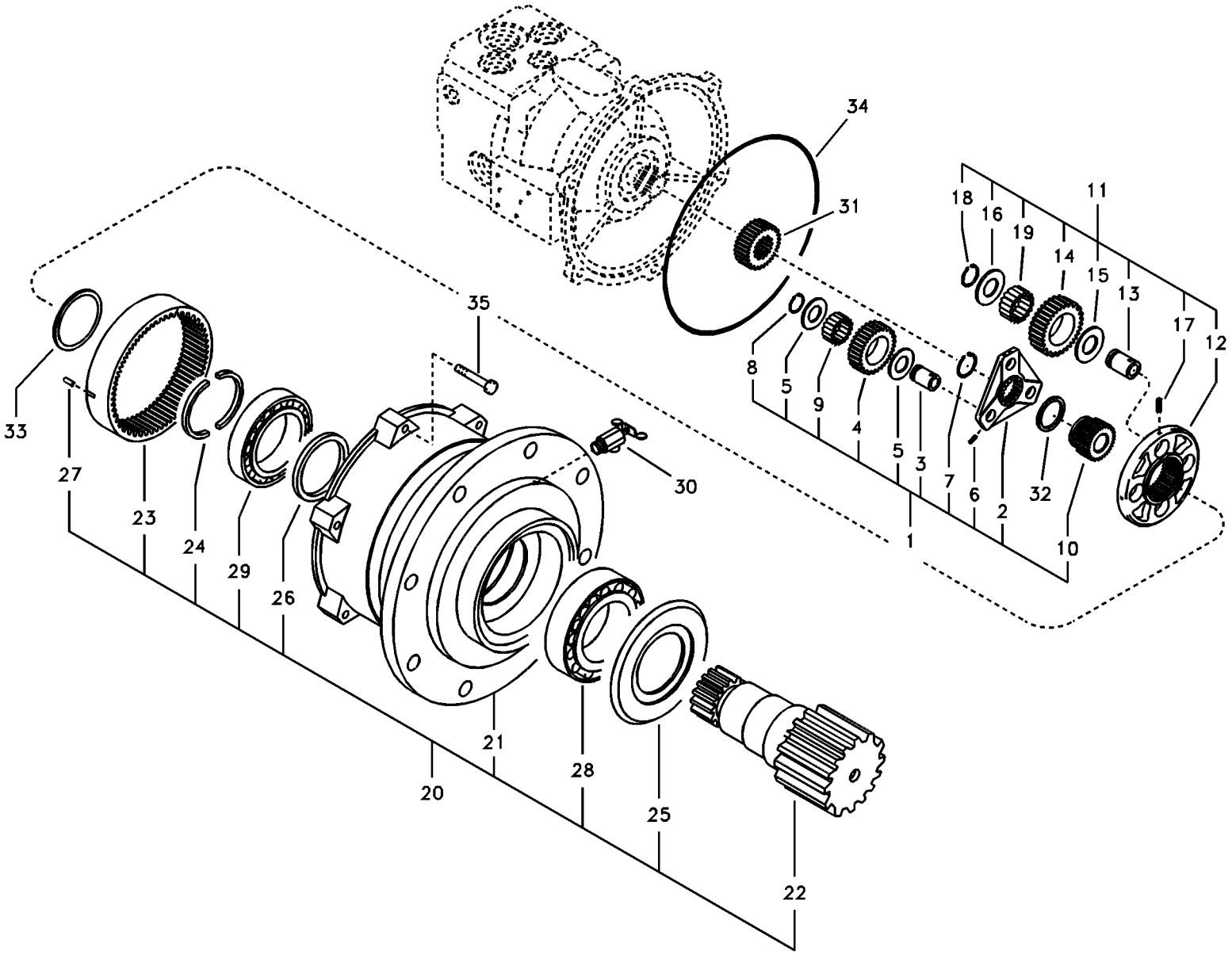
34
31
18
16
19
11
14
15
13
17
12
8
5
9
4
5
3
7
6
2
32
10
1
35
33
27
23
24
29
26
30
21
28
20
25
22

Fig.	Part No.	Quantity 1	2	3	PS	KIT	Description	Dénomination	Bezeichnung	품명	Denominación	Notes
	VOE 14529547	1					Reduction Gear	Pigno.reducteur	Langsamgang	감속 기어	Reduccion	
1	**VOE 14503948**	1					•Carrier	•Support	•Träger	• 캐리어	•Soporte	
2		1			NS		••Carrier	••Support	••Träger	•• 캐리어	••Soporte	
3		3			NS		••Pin	••Goupille	••Zapfen	•• 핀	••Pasador	
4	**VOE 14503933**	3					••Gear	••Pignon	••Zahnradgetriebe	•• 기어	••Engranaje	
5		6			NS		••Spacer	••Partie Intermédiaire	••Zwischenstück	•• 스페이서	••Espaciador	
6	**VOE 14503939**	3					••Pin	••Goupille	••Zapfen	•• 핀	••Pasador	
7	**VOE 14503944**	1					••Ring	••Anneau	••Ring	•• 링	••Anillo	
8	**VOE 14503946**	3					••Ring	••Anneau	••Ring	•• 링	••Anillo	
9		48			NS		••Bearing	••Palier	••Lager	•• 베어링	••Cojinete	
10	**VOE 14503932**	1					••Gear	••Pignon	••Zahnradgetriebe	•• 기어	••Engranaje	
11	**VOE 14503947**	1					•Carrier	•Support	•Träger	• 캐리어	•Soporte	
12		1			NS		••Carrier	••Support	••Träger	•• 캐리어	••Soporte	
13		4			NS		••Pin	••Goupille	••Zapfen	•• 핀	••Pasador	
14	**VOE 14503931**	4					••Gear	••Pignon	••Zahnradgetriebe	•• 기어	••Engranaje	
15		4			NS		••Spacer	••Partie Intermédiaire	••Zwischenstück	•• 스페이서	••Espaciador	
16		4			NS		••Spacer	••Partie Intermédiaire	••Zwischenstück	•• 스페이서	••Espaciador	
17	**VOE 14503940**	4					••Pin	••Goupille	••Zapfen	•• 핀	••Pasador	
18	**VOE 14503945**	4					••Ring	••Anneau	••Ring	•• 링	••Anillo	
19		96			NS		••Bearing	••Palier	••Lager	•• 베어링	••Cojinete	
20	**VOE 14503949**	1					•Shaft	•Arbre	•Welle	• 샤프트	•Arbol	
21		1			NS		••Case	••Etui	••Futteral	•• 케이스	••Funda	
22		1			NS		••Shaft	••Arbre	••Welle	•• 샤프트	••Arbol	
23		1			NS		••Gear	••Pignon	••Zahnradgetriebe	•• 기어	••Engranaje	
24		2			NS		••Key	••Clavette	••Keil	•• 키	••Llave (cuna)	
25	**VOE 14503937**	1					••Seal	••Joint	••Dichtring	•• 시일	••Junta	
26	**VOE 14503938**	1					••Seal	••Joint	••Dichtring	•• 시일	••Junta	
27		2			NS		••Pin	••Goupille	••Zapfen	•• 핀	••Pasador	
28	**VOE 14503941**	1					••Bearing	••Palier	••Lager	•• 베어링	••Cojinete	
29	**VOE 14503942**	1					••Bearing	••Palier	••Lager	•• 베어링	••Cojinete	

1	**8278796**	**Caja de engranaje de giro** 선회 기어박스 **Schwenkgetriebe** **Boîte de vitesses de pivotement** **Swing gearbox**	Catalogue id **20019**	Group **431**
2				
3			Illustr. No **1007007**	Section **300**
4				
5			Issue **VOE 74H9920019**	Page **199**

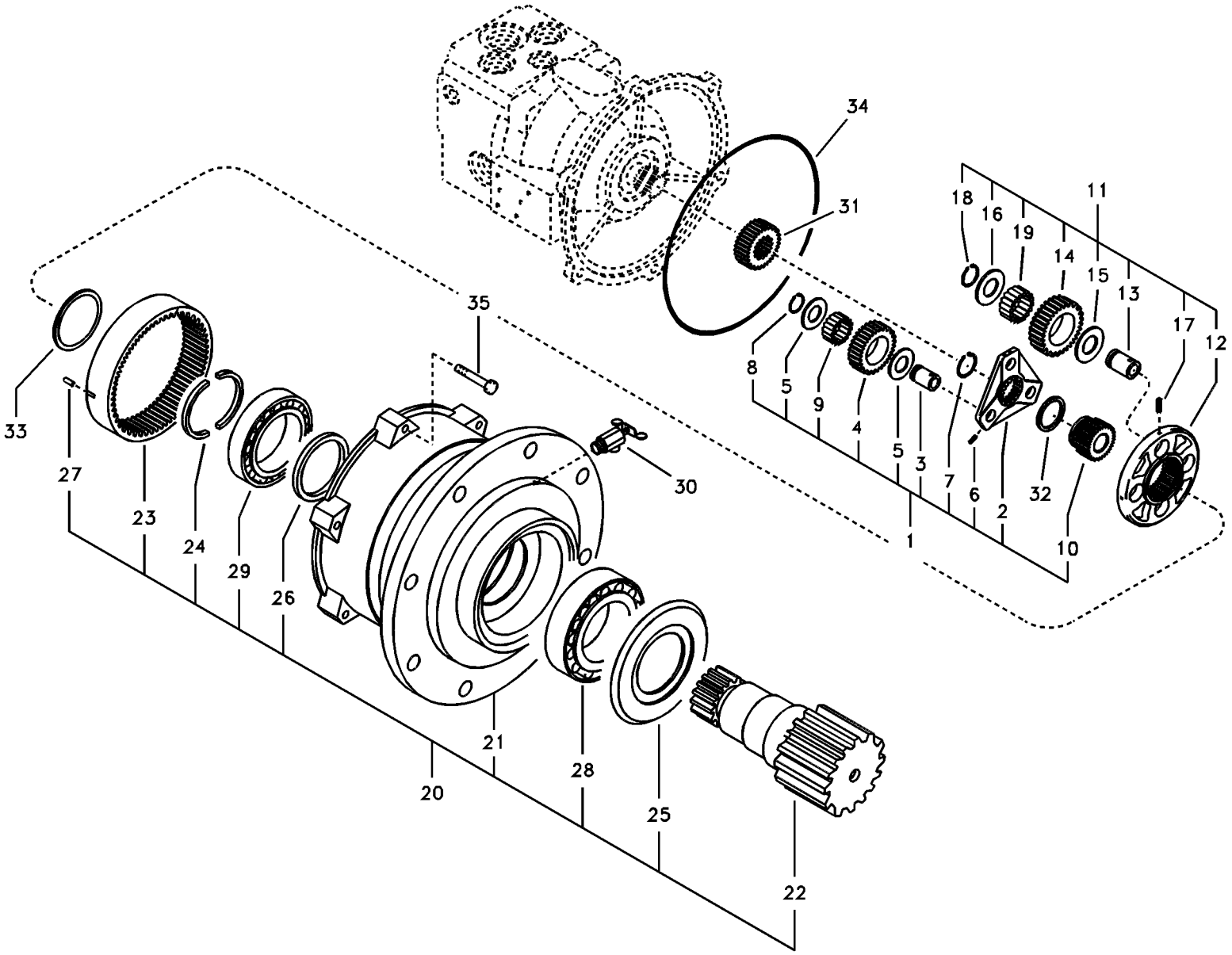
34
31
18
16
19
11
14
15
13
17
12
8
5
9
4
5
3
7
6
2
32
10
1
35
33
27
23
24
29
26
30
21
28
20
25
22

Fig.	Part No.	Quantity 1	2	3	PS	KIT	Description	Dénomination	Bezeichnung	품명	Denominación	Notes
30	**VOE 14529015**	1					•Valve	•Soupape	•Ventil	• 밸브	•Valvula	
31	**VOE 14503934**	1					•Gear	•Pignon	•Zahnradgetriebe	• 기어	•Engranaje	
32	**VOE 14503935**	1					•Collar	•Collier	•Bördel	• 칼러	•Collar	
33	**VOE 14503936**	1					•Collar	•Collier	•Bördel	• 칼러	•Collar	
34	**SA 8230-27020**	1					•O-ring	•Joint Torique	•O-Ring	• 오링	•Junta torica	
35	**SA 8230-32040**	6					•Screw	•Vis	•Schraube	• 스크류	•Tornillo	

1	**8278796**	**Caja de engranaje de giro** 선회 기어박스 **Schwenkgetriebe** **Boîte de vitesses de pivotement** **Swing gearbox**	Catalogue id **20019**	Group **431**
2			Illustr. No **1007007**	Section **300**
3			Issue **VOE 74H9920019**	Page **201**
4				
5				

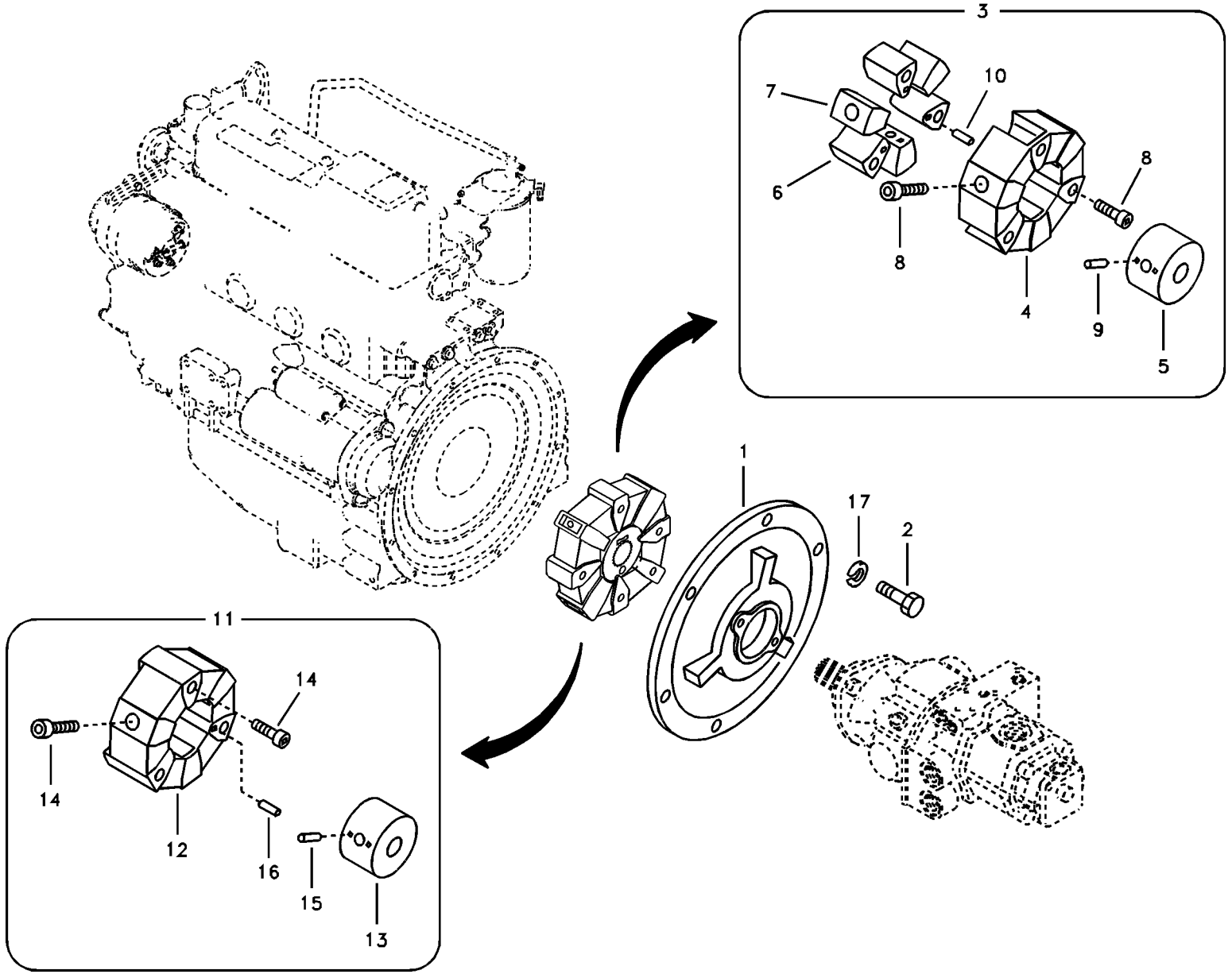
3
7
10
6
8
8
4
9
5
1
17
2
11
14
14
12
16
15
13

Fig.	Part No.	Quantity 1	2	3	PS	KIT	Description	Dénomination	Bezeichnung	품명	Denominación	Notes
1	**VOE 14520061**	1		1			Flange	Flasque	Flansch	플랜지	Brida	
	SA 1112-30030		1				Flange	Flasque	Flansch	플랜지	Brida	
2	**VOE 983252**	6	6	6			Screw	Vis	Schraube	스크류	Tornillo	
3	**SA 1112-30290**	1					Coupling	Accouplement	Kupplung	커플링	Acoplamiento	SER NO 30001-30209
4	**SA 1112-30440**	1					•Element	•Elément	•Element	• 엘리멘트	•Elemento	SER NO 30001-30209
5	**SA 1112-30450**	1			SS		•Hub	•Bossage	•Nabe	• 허브	•Asiento	SER NO 30001-30209
6	**SA 1112-30460**	3			SS		•Clutch	•Embrayage	•Kupplung	• 클러치	•Embrague	SER NO 30001-30209
7	**SA 1112-30470**	3			SS		•Clutch	•Embrayage	•Kupplung	• 클러치	•Embrague	SER NO 30001-30209
8	**SA 9016-11408**	6					•Bolt	•Boulon	•Bolzen	• 볼트	•Perno	SER NO 30001-30209
9	**SA 9325-05005**	6					•Spring Pin	•Axe de ressort	•Federstift	• 스프링 핀	•Pasador Resorte	SER NO 30001-30209
10	**VOE 951970**	3					•Spring Pin	•Axe de ressort	•Federstift	• 스프링 핀	•Pasador Resorte	(SA 9325-05020) SER NO 30001-30209
11	**VOE 14522374**	1	1	1			Coupling	Accouplement	Kupplung	커플링	Acoplamiento	SER NO 30210-
12	**VOE 14522414**	1	1	1			•Element	•Elément	•Element	• 엘리멘트	•Elemento	SER NO 30210-
13	**VOE 14522413**	1	1	1			•Hub	•Bossage	•Nabe	• 허브	•Asiento	SER NO 30210-
14	**SA 9016-11408**	6	6	6			•Bolt	•Boulon	•Bolzen	• 볼트	•Perno	SER NO 30210-
15	**SA 9325-05005**	6	6	6			•Spring Pin	•Axe de ressort	•Federstift	• 스프링 핀	•Pasador Resorte	SER NO 30210-
16	**VOE 951970**	3	3	3			•Spring Pin	•Axe de ressort	•Federstift	• 스프링 핀	•Pasador Resorte	(SA 9325-05020) SER NO 30210-
17	**VOE 955922**	6	6	6			Spring Washer	Rondelle élastique	Federscheibe	스프링 와셔	Arandela flexible	

1	**8278796 S/N -33292**
2	**8279576 S/N 33293-**
3	**8279577 S/N 33293-**
4	
5	

Caja de engranaje de bomba con piezas de montaje
펌프 기어박스 및 커플링
Pumpengetriebe mit Anbauteilen
Boîte de vitesses de la pompe avec pièces d'assemblage
Pump gearbox with assembling parts

Catalogue id **20019**	Group **431**
Illustr. No **1008194**	Section **400**
Issue **VOE 74H9920019**	Page **203**

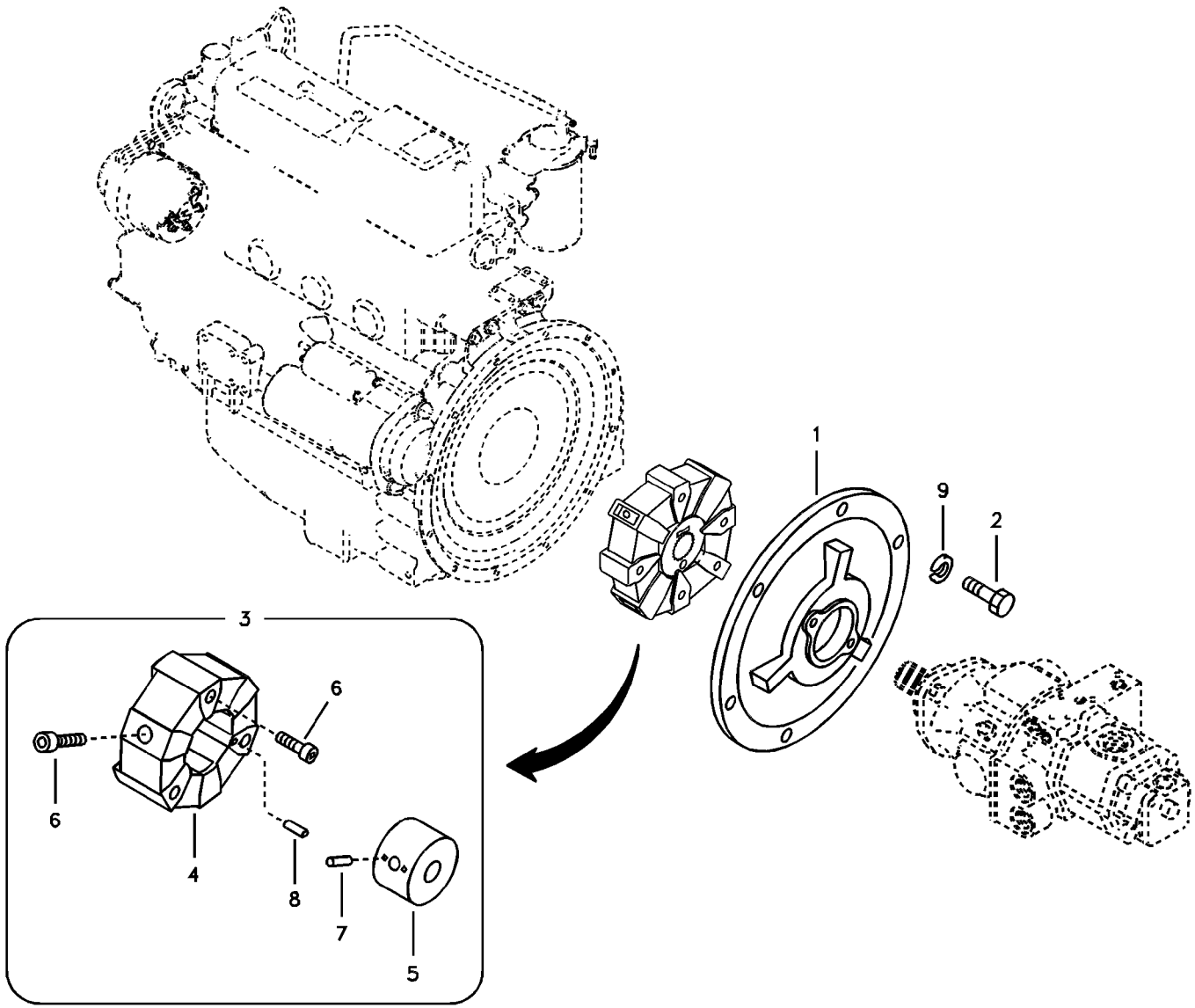
1
9
2
3
6
6
4
8
7
5

Fig.	Part No.	Quantity 1	2	3	PS	KIT	Description	Dénomination	Bezeichnung	품명	Denominación	Notes
1	**VOE 14520061**	1					Flange	Flasque	Flansch	플랜지	Brida	
2	**VOE 983252**	6					Screw	Vis	Schraube	스크류	Tornillo	
3	**VOE 14522374**	1					Coupling	Accouplement	Kupplung	커플링	Acoplamiento	
4	**VOE 14522414**	1					•Element	•Elément	•Element	• 엘리멘트	•Elemento	
5	**VOE 14522413**	1					•Hub	•Bossage	•Nabe	• 허브	•Asiento	
6	**SA 9016-11408**	6					•Bolt	•Boulon	•Bolzen	• 볼트	•Perno	
7	**SA 9325-05005**	6					•Spring Pin	•Axe de ressort	•Federstift	• 스프링 핀	•Pasador Resorte	
8	**VOE 951970**	3					•Spring Pin	•Axe de ressort	•Federstift	• 스프링 핀	•Pasador Resorte	(SA 9325-05020)
9	**VOE 955922**	6					Spring Washer	Rondelle élastique	Federscheibe	스프링 와셔	Arandela flexible	

1	**8278796**	**Caja de engranaje de bomba con piezas de montaje** 펌프 기어박스 및 커플링 **Pumpengetriebe mit Anbauteilen** **Boîte de vitesses de la pompe avec pièces d'assemblage** **Pump gearbox with assembling parts**	Catalogue id **20019**	Group **431**
2			Illustr. No **1011068**	Section **410**
3				
4			Issue **VOE 74H9920019**	Page **205**
5		**FOR CHINA**		

VOLVO

EC55B

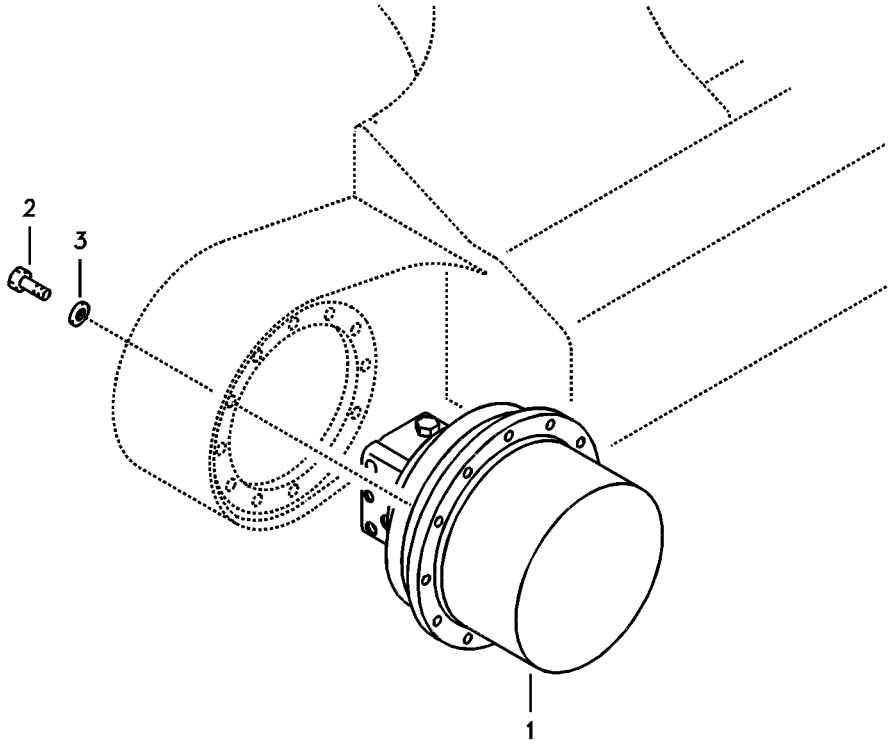
2
3
1

Fig.	Part No.	Quantity 1	2	3	PS	KIT	Description	Dénomination	Bezeichnung	품명	Denominación	Notes
1	**VOE 14500160**	2					Drive Unit	Unite Commande	Antr Aggregat	드라이브 유니트	Und Propulsora	
		1			NS		•Travel motor	•Moteur conduite	•Fahrmotor	• 주행 모터	•Motor traslation	See group 441, Page 209
		1			NS		•Gearbox	•Boite vitesses	•Schaltgetriebe	• 기어박스	•Caja velocidades	See group 431, Page 197
2	**SA 9011-11408**	24					Bolt	Boulon	Bolzen	볼트	Perno	
3	**SA 9213-14000**	24					Washer	Rondelle	Scheibe	와셔	Arandela	

1	**8278796**	**Motor de traslación con piezas de montaje** 주행모터 및 장착 부품 **Fahrmotor mit Montageteilen** **Moteur de conduite avec pièces de montage** **Travel motor with mounting parts**	Catalogue id **20019**	Group **441**
2			Illustr. No **1014325**	Section **100**
3			Issue **VOE 74H9920019**	Page **207**
4				
5				

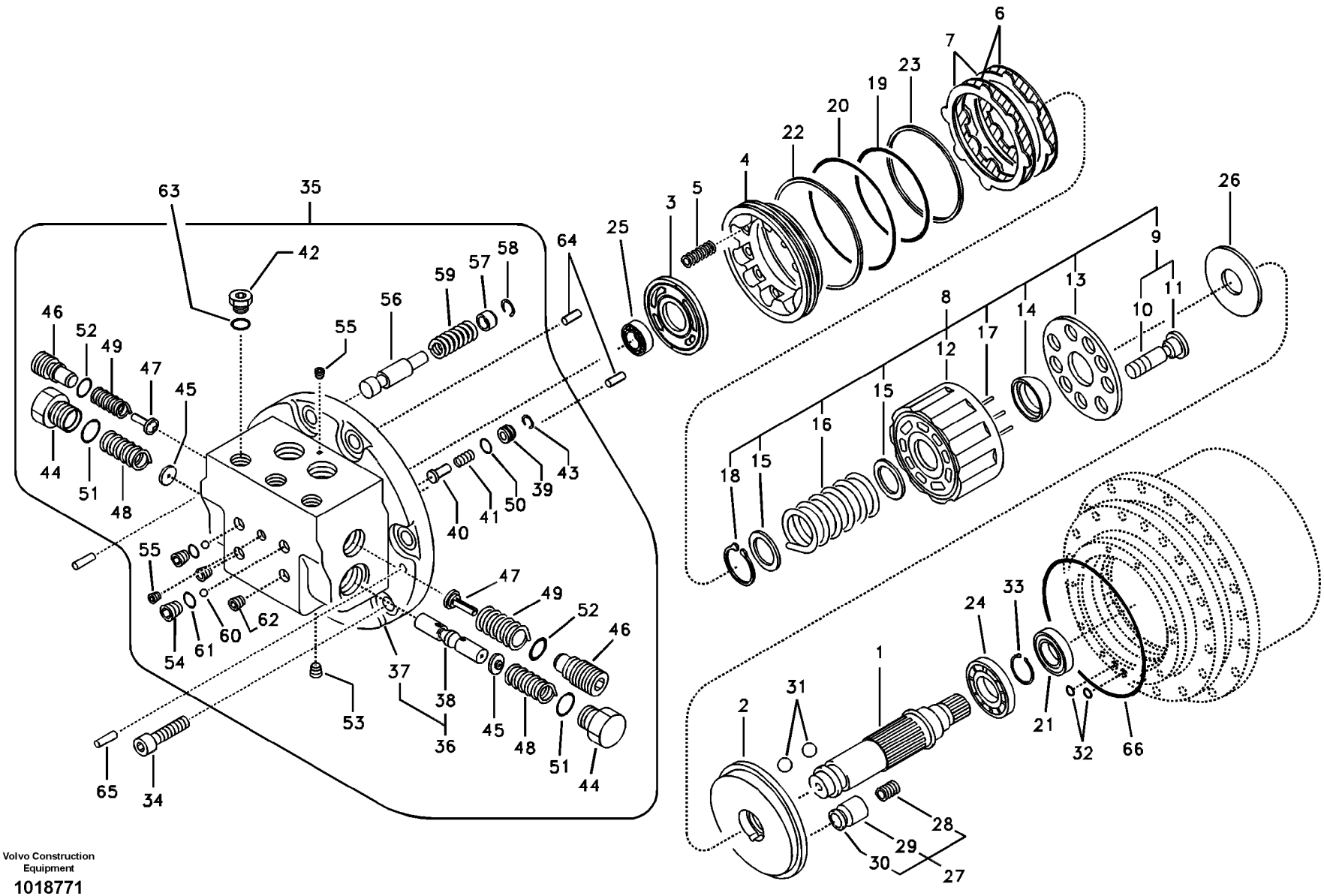

Volvo Construction Equipment

1018771

Fig.	Part No.	Quantity 1	2	3	PS	KIT	Description	Dénomination	Bezeichnung	품명	Denominación	Notes
		1			NS		Travel motor	Moteur conduite	Fahrmotor	주행 모터	Motor traslation	
1	**VOE 14505039**	1					•Shaft	•Arbre	•Welle	• 샤프트	•Arbol	
2	**VOE 14505038**	1					•Plate	•Plaque	•Platte	• 플레이트	•Placa	
3	**SA 8230-23420**	1					•Plate	•Plaque	•Platte	• 플레이트	•Placa	
4	**VOE 14505037**	1					•Piston	•Piston	•Kolben	• 피스톤	•Piston	
5	**VOE 14505036**	8					•Spring	•Ressort	•Feder	• 스프링	•Muelle	
6	**SA 8230-33740**	2					•Plate	•Plaque	•Platte	• 플레이트	•Placa	
7	**SA 8230-22960**	2					•Plate	•Plaque	•Platte	• 플레이트	•Placa	
8	**VOE 14505042**	1					•Cylinder	•Verin	•Zylinder	• 실린더	•Cilindro	
9	**VOE 14516671**	9					••Piston	••Piston	••Kolben	•• 피스톤	••Piston	
10	**SA 8230-30560**	9			OP		•••Piston	•••Piston	•••Kolben	••• 피스톤	•••Piston	
11	**SA 8230-30570**	9			OP		•••Track Shoe	•••Tuile chenilles	•••Bodenplatte	••• 트랙 슈	•••Placa De Orugas	
12	**SA 8230-23570**	1					••Block	••Bloc	••Block	•• 블록	••Bloque	
13	**SA 8230-23580**	1					••Plate	••Plaque	••Platte	•• 플레이트	••Placa	
14	**SA 8230-23120**	1					••Ball	••Bille	••Kugel	•• 볼	••Bola	
15	**SA 8230-23520**	2					••Washer	••Rondelle	••Scheibe	•• 와셔	••Arandela	
16	**SA 8230-23130**	1					••Spring	••Ressort	••Feder	•• 스프링	••Muelle	
17	**VOE 14505041**	3					••Roller	••Galet	••Rolle	•• 롤러	••Rodillo	
18	**VOE 14505033**	1					••Ring	••Anneau	••Ring	•• 링	••Anillo	
19	**VOE 14505034**	1				K	•O-ring	•Joint Torique	•O-Ring	• 오링	•Junta torica	
20	**SA 9511-22140**	1				K	•O-ring	•Joint Torique	•O-Ring	• 오링	•Junta torica	
21	**SA 8230-33730**	1				K	•Seal	•Joint	•Dichtring	• 시일	•Junta	
22	**VOE 14505032**	1				K	•Ring	•Anneau	•Ring	• 링	•Anillo	
23	**VOE 14505031**	1				K	•Ring	•Anneau	•Ring	• 링	•Anillo	
24	**VOE 14505030**	1					•Bearing	•Palier	•Lager	• 베어링	•Cojinete	
25	**SA 8230-30660**	1					•Ball Bearing	•Roulemen.billes	•Kugellager	• 볼 베어링	•Cojinete Bolas	
26	**SA 8230-23720**	1					•Pressure Plate	•Platea.pression	•Druckplatte	• 압력 플레이트	•Placa Presion	
27	**SA 8230-33760**	1					•Piston	•Piston	•Kolben	• 피스톤	•Piston	
28	**SA 8230-10010**	1					••Spring	••Ressort	••Feder	•• 스프링	••Muelle	
29		1			NS		••Piston	••Piston	••Kolben	•• 피스톤	••Piston	

1	**8278796**	**Motor de traslación** 주행모터 **Fahrmotor** **Moteur de conduite** **Travel motor**	Catalogue id **20019**	Group **441**
2			Illustr. No **1018771**	Section **200**
3			Issue **VOE 74H9920019**	Page **209**
4				
5				

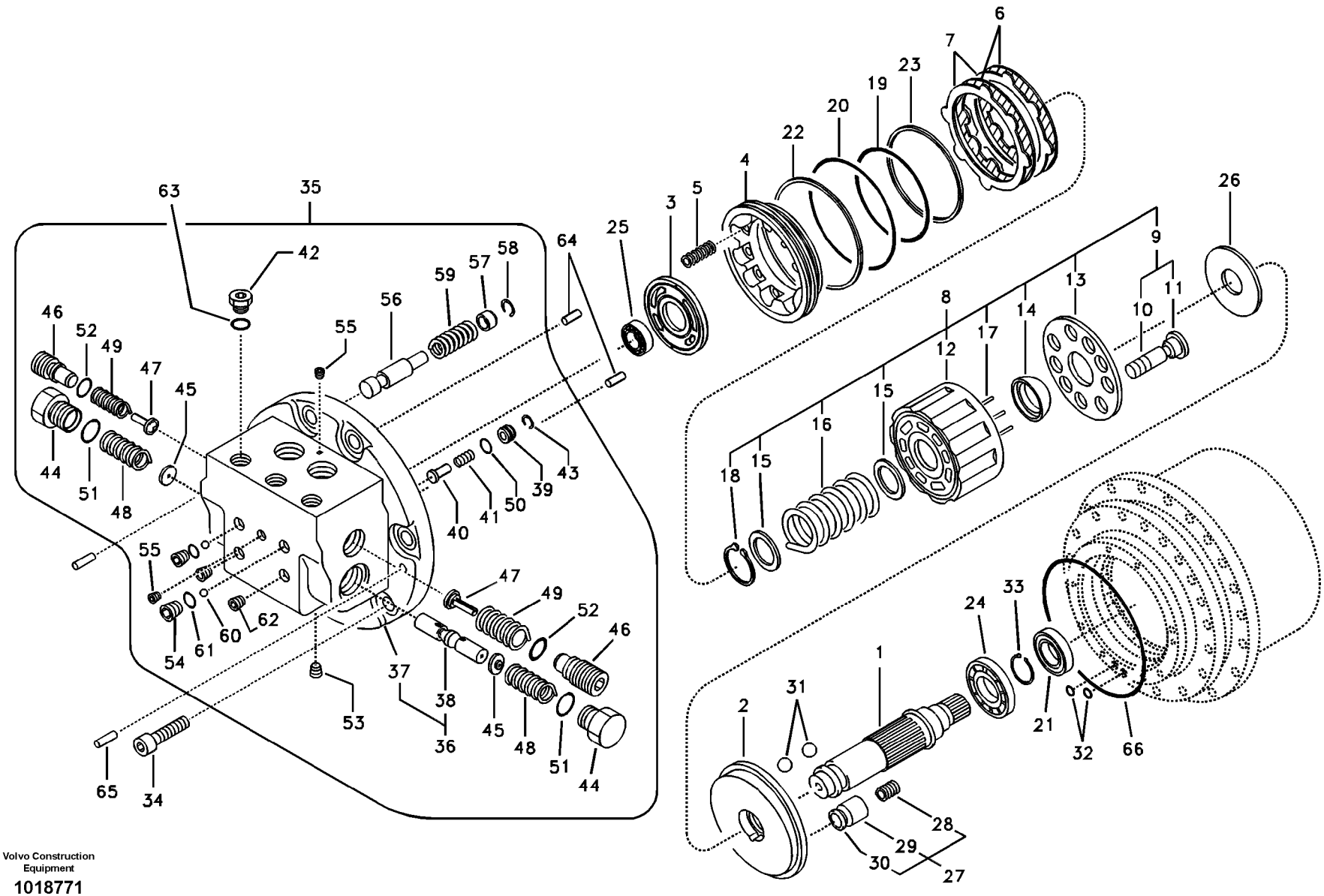

Volvo Construction Equipment

1018771

Fig.	Part No.	Quantity 1	2	3	PS	KIT	Description	Dénomination	Bezeichnung	품명	Denominación	Notes
30	**SA 8230-28930**	1					••Seat	••Siege	••Sitz	•• 시트	••Asiento	
31	**SA 8230-37330**	2					•Ball	•Bille	•Kugel	• 볼	•Bola	
32	**SA 9511-12007**	2				K	•O-ring	•Joint Torique	•O-Ring	• 오링	•Junta torica	
33	**VOE 14505028**	1					•Ring	•Anneau	•Ring	• 링	•Anillo	
34	**VOE 14505046**	8					•Bolt	•Boulon	•Bolzen	• 볼트	•Perno	
35	**SA 8230-33790**	1					•Flange	•Flasque	•Flansch	• 플랜지	•Brida	
36	**SA 8230-33800**	1					••Flange	••Flasque	••Flansch	•• 플랜지	••Brida	
37		1			NS		•••Flange	•••Flasque	•••Flansch	••• 플랜지	•••Brida	
38		1			NS		•••Slide	•••Tiroir	•••Schieber	••• 슬라이드	•••Corredera	
39	**VOE 14505054**	1					••Seat	••Siege	••Sitz	•• 시트	••Asiento	
40	**VOE 14505053**	1					••Valve	••Soupape	••Ventil	•• 밸브	••Valvula	
41	**VOE 14505052**	1					••Spring	••Ressort	••Feder	•• 스프링	••Muelle	
42	**VOE 14505051**	1					••Plug	••Bouchon	••Stopfen	•• 플러그	••Tapon	
43	**SA 8230-02690**	1					••Ring	••Anneau	••Ring	•• 링	••Anillo	
44	**SA 8230-23430**	2					••Plug	••Bouchon	••Stopfen	•• 플러그	••Tapon	
45	**VOE 14505050**	2					••Retainer	••Retenue	••Halter	•• 리테이너	••Soporte	
46	**SA 8230-23440**	2					••Plug	••Bouchon	••Stopfen	•• 플러그	••Tapon	
47	**SA 8230-23450**	2					••Valve	••Soupape	••Ventil	•• 밸브	••Valvula	
48	**SA 8230-23470**	2					••Spring	••Ressort	••Feder	•• 스프링	••Muelle	
49	**SA 8230-23460**	2					••Spring	••Ressort	••Feder	•• 스프링	••Muelle	
50	**SA 9511-12009**	1				K	••O-ring	••Joint Torique	••O-Ring	•• 오링	••Junta torica	
51	**SA 9511-12026**	2				K	••O-ring	••Joint Torique	••O-Ring	•• 오링	••Junta torica	
52	**SA 9511-12016**	2				K	••O-ring	••Joint Torique	••O-Ring	•• 오링	••Junta torica	
53	**SA 9415-43012**	1					••Plug	••Bouchon	••Stopfen	•• 플러그	••Tapon	
54	**SA 8230-19210**	2					••Plug	••Bouchon	••Stopfen	•• 플러그	••Tapon	
55	**VOE 14505049**	5					••Plug	••Bouchon	••Stopfen	•• 플러그	••Tapon	
56	**SA 8230-07020**	1					••Valve	••Soupape	••Ventil	•• 밸브	••Valvula	
57	**SA 8230-09990**	1					••Stop	••Arrêt	••Anschlag	•• 스톱	••Parada	
58	**SA 8230-10000**	1					••Ring	••Anneau	••Ring	•• 링	••Anillo	
59	**SA 8230-10010**	1					••Spring	••Ressort	••Feder	•• 스프링	••Muelle	

1	**8278796**	**Motor de traslación** 주행모터 **Fahrmotor** **Moteur de conduite** **Travel motor**	Catalogue id **20019**	Group **441**
2				
3			Illustr. No **1018771**	Section **200**
4				
5			Issue **VOE 74H9920019**	Page **211**

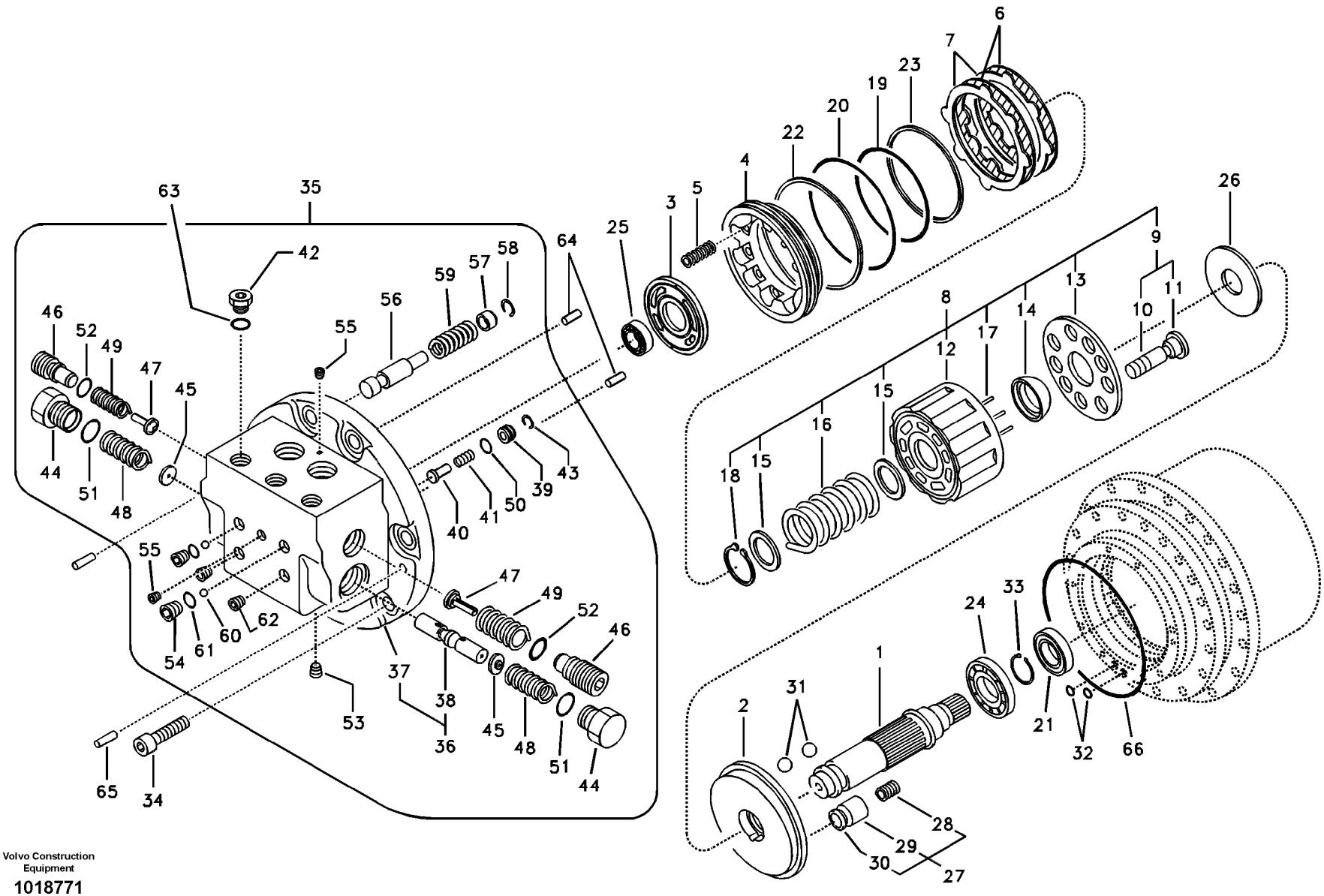

Volvo Construction Equipment

1018771

Fig.	Part No.	Quantity 1	2	3	PS	KIT	Description	Dénomination	Bezeichnung	품명	Denominación	Notes
60	**SA 9676-51600**	2					••Ball	••Bille	••Kugel	•• 볼	••Bola	
61	**VOE 983502**	2				K	•O-ring	•Joint Torique	•O-Ring	• 오링	•Junta torica	
62	**SA 9415-43022**	2					•Plug	•Bouchon	•Stopfen	• 플러그	•Tapon	
63	**SA 9511-12014**	1				K	•O-ring	•Joint Torique	•O-Ring	• 오링	•Junta torica	
64	**VOE 14505048**	2					•Pin	•Goupille	•Zapfen	• 핀	•Pasador	
65	**VOE 14505047**	2					•Pin	•Goupille	•Zapfen	• 핀	•Pasador	
66	**VOE 14505057**	1			SS	K	•O-ring	•Joint Torique	•O-Ring	• 오링	•Junta torica	
100	**VOE 14505082**	1					Sealing Kit	Jeu Joints	Dichtungssatz	시일 킷	Juego Retenes	

1	**8278796**	**Motor de traslación** 주행모터 **Fahrmotor** **Moteur de conduite** **Travel motor**	Catalogue id **20019**	Group **441**
2			Illustr. No **1018771**	Section **200**
3			Issue **VOE 74H9920019**	Page **213**
4				
5				

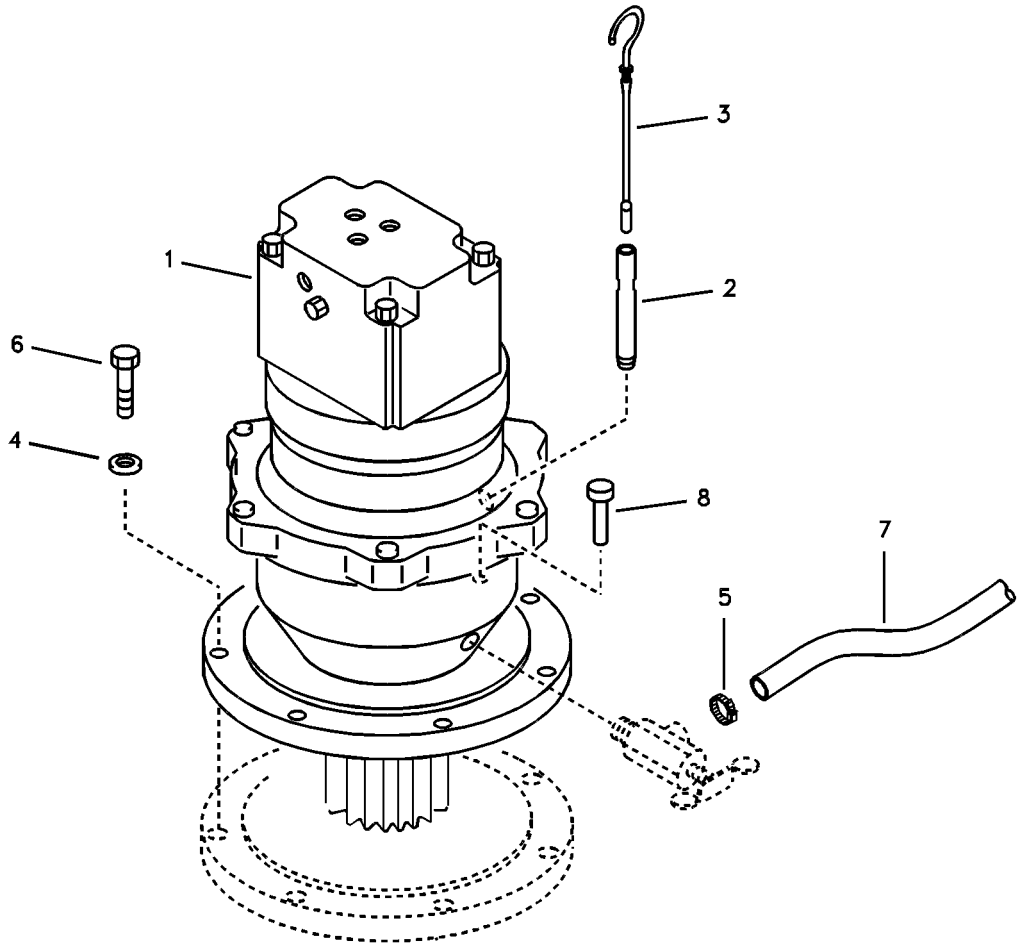
1
2
3
4
5
6
7
8

Fig.	Part No.	Quantity 1	2	3	PS	KIT	Description	Dénomination	Bezeichnung	품명	Denominación	Notes
1	**VOE 14513821**	1					Drive Unit	Unite Commande	Antr Aggregat	드라이브 유니트	Und Propulsora	SER NO 30001-33657
	VOE 14532628	1					Swing Motor	Moteur orientat	Schwenkmotor	선회 모터	Motor de giro	SER NO 33658-
	VOE 14514261	1					•Swing Motor	•Moteur orientat	•Schwenkmotor	• 선회 모터	•Motor de giro	SER NO 30001-33657 See group 441, Page 217
	VOE 14532629	1					•Swing Motor	•Moteur orientat	•Schwenkmotor	• 선회 모터	•Motor de giro	SER NO 33658-
	VOE 14529547	1					•Reduction Gear	•Pigno.reducteur	•Langsamgang	• 감속 기어	•Reduccion	See group 431, Page 199
2	**VOE 14513823**	1					Pipe	Canalisation	Rohrleitung	파이프	Canalizacion	SER NO 30001-33192
	VOE 14530846	1					Pipe	Canalisation	Rohrleitung	파이프	Canalizacion	SER NO 33193-
3	**SA 7118-30600**	1					Gauge	Calibre	Schablone	게이지	Plantilla	
4	**VOE 14880474**	7					Washer	Rondelle	Scheibe	와셔	Arandela	
5	**SA 9313-00033**	1					Clamp	Pince Serrage	Klemme	클램프	Abrazadera	
6	**VOE 978938**	1					Hexagon screw	Vis tête hexagonale	Sechskantschraube	스크류	Tornillo hexago	
7	**VOE 14881113**	1					Fuel hose	Flexi.carburant	Kraftstoffschlauch	연료 호스	Manguera comb	
8	**VOE 14521092**	1					Pin	Goupille	Zapfen	핀	Pasador	

1	**8278796**	**Motor de giro con piezas de montaje** 선회 모터 및 장착 부품 **Schwenkmotor mit Anbauteilen** **Moteur d'orientation avec pièces de montage** **Swing motor with mounting parts**	Catalogue id **20019**	Group **441**
2			Illustr. No **1007011**	Section **500**
3				
4			Issue **VOE 74H9920019**	Page **215**
5				

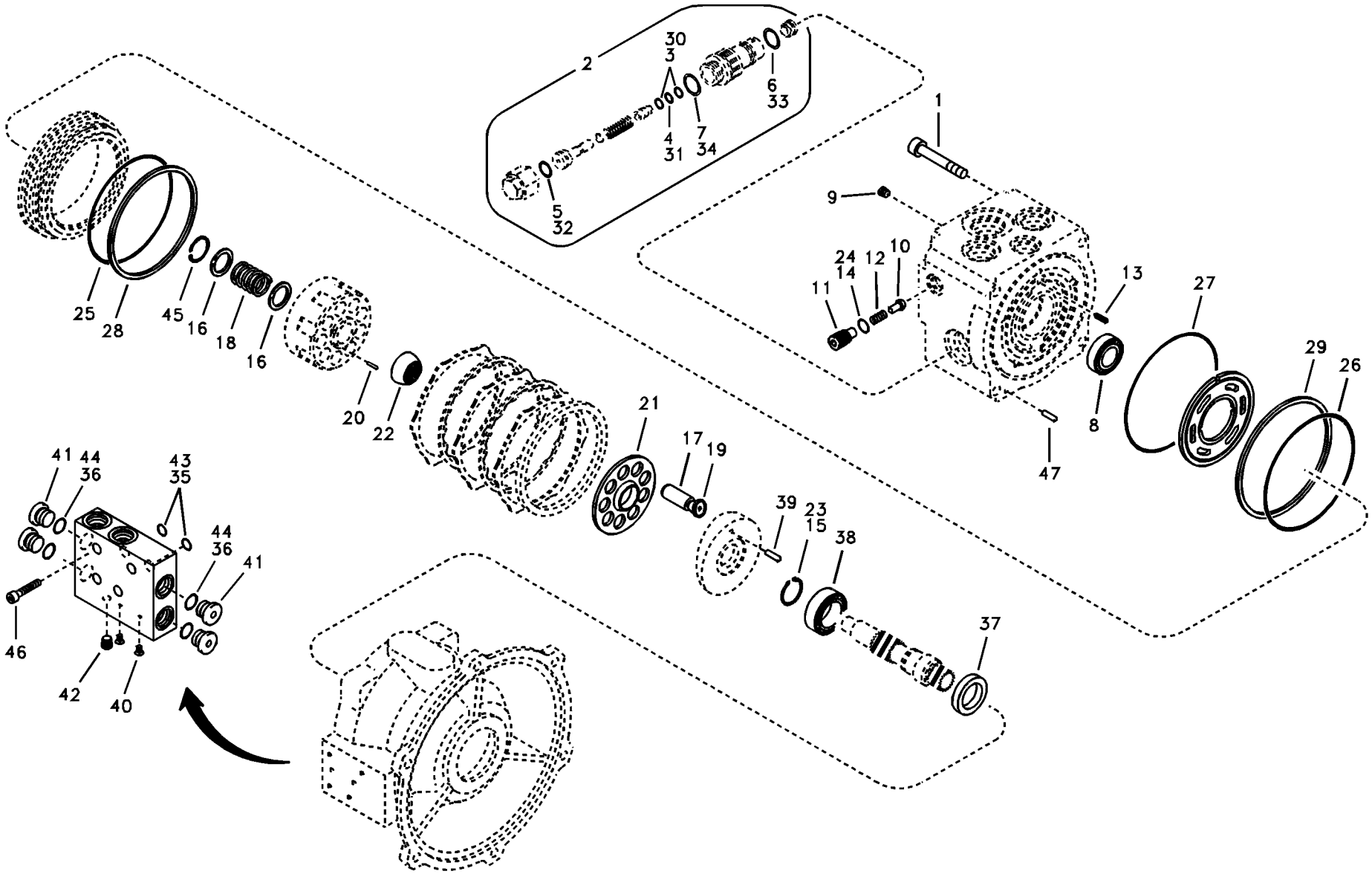

Volvo Construction Equipment

1007012

Fig.	Part No.	Quantity 1	2	3	PS	KIT	Description	Dénomination	Bezeichnung	품명	Denominación	Notes
	VOE 14514261	1					Swing Motor	Moteur orientat	Schwenkmotor	선회 모터	Motor de giro	SER NO 30001-33657
	VOE 14532629	1					Swing Motor	Moteur orientat	Schwenkmotor	선회 모터	Motor de giro	SER NO 33658-
1	**VOE 14516649**	5					•Screw	•Vis	•Schraube	• 스크류	•Tornillo	
2	**VOE 14516650**	1					•Relief valve	•Limiteur - pression	•Druckbegrenzer	• 릴리프 밸브	•Limitador presion	SER NO 30001-33657
	VOE 14536825	1					•Relief valve	•Limiteur - pression	•Druckbegrenzer	• 릴리프 밸브	•Limitador presion	SER NO 33658-
3	**VOE 14516651**	2			SS		••Ring	••Anneau	••Ring	•• 링	••Anillo	
4	**SA 9511-12014**	1					••O-ring	••Joint Torique	••O-Ring	•• 오링	••Junta torica	
5	**SA 9511-12018**	1			SS		••O-ring	••Joint Torique	••O-Ring	•• 오링	••Junta torica	
6	**SA 9511-12022**	1					••O-ring	••Joint Torique	••O-Ring	•• 오링	••Junta torica	
7	**SA 9511-12028**	1					••O-ring	••Joint Torique	••O-Ring	•• 오링	••Junta torica	
	VOE 14516652	1					•Body	•Carcasse	•Rumpf	• 본체	•Cuerpo	
8	**SA 8230-00010**	1			SS		••Bearing	••Palier	••Lager	•• 베어링	••Cojinete	
9	**SA 8230-27190**	2					••Plug	••Bouchon	••Stopfen	•• 플러그	••Tapon	
10		2			NS		••Check valve	••Valve antiretour	••Rückschlagventil	•• 체크 밸브	••Válvula de retención	
11		2			NS		••Plug	••Bouchon	••Stopfen	•• 플러그	••Tapon	
12		2			NS		••Spring	••Ressort	••Feder	•• 스프링	••Muelle	
13	**SA 8230-31860**	1					••Spring Pin	••Axe de ressort	••Federstift	•• 스프링 핀	••Pasador Resorte	
14	**VOE 983502**	2					••O-ring	••Joint Torique	••O-Ring	•• 오링	••Junta torica	
	VOE 14516653	1					•Barrel	•Cylindre	•Zyl. Laufbuchse	• 배럴	•Cilindro	
15	**SA 8210-06420**	1					••Ring	••Anneau	••Ring	•• 링	••Anillo	
16	**SA 8230-31640**	2			OP		••Retainer	••Retenue	••Halter	•• 리테이너	••Soporte	
17	**SA 8230-31650**	9			OP		••Piston	••Piston	••Kolben	•• 피스톤	••Piston	
18	**SA 8230-31670**	1			OP		••Spring	••Ressort	••Feder	•• 스프링	••Muelle	
19	**SA 8230-31880**	9			OP		••Track Shoe	••Tuile chenilles	••Bodenplatte	•• 트랙 슈	••Placa De Orugas	
20	**SA 8230-31890**	3			OP		••Pin	••Goupille	••Zapfen	•• 핀	••Pasador	
21	**SA 8230-31900**	1			OP		••Cage	••Support	••Halter	•• 케이지	••Soporte	
22	**SA 8230-31910**	1			OP		••Cage	••Support	••Halter	•• 케이지	••Soporte	
	VOE 14516654	1					•Plate	•Plaque	•Platte	• 플레이트	•Placa	
23	**SA 8210-06420**	1					••Ring	••Anneau	••Ring	•• 링	••Anillo	
	VOE 14516657	1					•Seal	•Joint	•Dichtring	• 시일	•Junta	

1	**8278796**	**Motor de giro** 선회 모터 **Schwenkmotor** **Moteur d'orientation** **Swing motor**	Catalogue id **20019**	Group **441**
2				
3			Illustr. No **1007012**	Section **600**
4				
5			Issue **VOE 74H9920019**	Page **217**



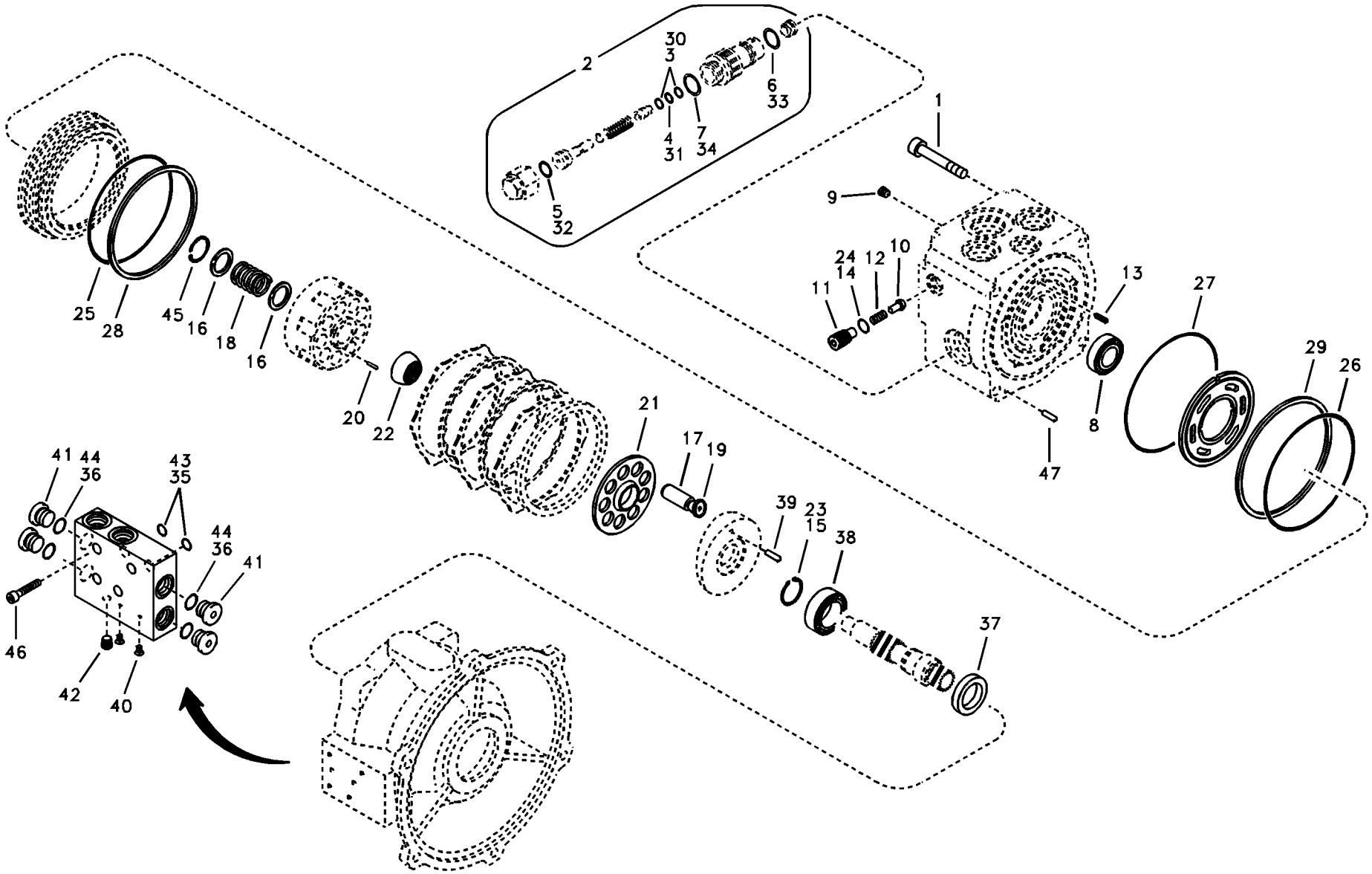

Volvo Construction Equipment

1007012

Fig.	Part No.	Quantity 1	2	3	PS	KIT	Description	Dénomination	Bezeichnung	품명	Denominación	Notes
		1			NS		••Seal	••Joint	••Dichtring	•• 시일	••Junta	
24	**VOE 983502**	2					•••O-ring	•••Joint Torique	•••O-Ring	••• 오링	•••Junta torica	
25	**SA 9511-22115**	1					•••O-ring	•••Joint Torique	•••O-Ring	••• 오링	•••Junta torica	
26	**SA 9511-22125**	1					•••O-ring	•••Joint Torique	•••O-Ring	••• 오링	•••Junta torica	
27	**SA 9511-22135**	1					•••O-ring	•••Joint Torique	•••O-Ring	••• 오링	•••Junta torica	
28	**SA 9566-41100**	1					•••Ring	•••Anneau	•••Ring	••• 링	•••Anillo	
29	**SA 9566-41250**	1					•••Ring	•••Anneau	•••Ring	••• 링	•••Anillo	
		1			NS		••Seal	••Joint	••Dichtring	•• 시일	••Junta	
30	**VOE 14516651**	2			SS		•••Ring	•••Anneau	•••Ring	••• 링	•••Anillo	
31	**SA 9511-12014**	1					•••O-ring	•••Joint Torique	•••O-Ring	••• 오링	•••Junta torica	
32	**SA 9511-12018**	1			SS		•••O-ring	•••Joint Torique	•••O-Ring	••• 오링	•••Junta torica	
33	**SA 9511-12022**	1					•••O-ring	•••Joint Torique	•••O-Ring	••• 오링	•••Junta torica	
34	**SA 9511-12028**	1					•••O-ring	•••Joint Torique	•••O-Ring	••• 오링	•••Junta torica	
	SA 8230-24780	1					••Closing stamp	••Plomb	••Plombe	•• 마감 스탬프	••Plomo	
35	**SA 9511-12007**	2					•••O-ring	•••Joint Torique	•••O-Ring	••• 오링	•••Junta torica	
36	**VOE 983502**	4					•••O-ring	•••Joint Torique	•••O-Ring	••• 오링	•••Junta torica	
37	**SA 8230-32000**	1					••Seal	••Joint	••Dichtring	•• 시일	••Junta	
38	**SA 8230-00020**	1			SS		•Bearing	•Palier	•Lager	• 베어링	•Cojinete	
39	**SA 8230-26680**	1					•Pin	•Goupille	•Zapfen	• 핀	•Pasador	
	SA 8230-28220	1					•Valve	•Soupape	•Ventil	• 밸브	•Valvula	
40	**SA 8230-06530**	2					••Plug	••Bouchon	••Stopfen	•• 플러그	••Tapon	
41	**SA 8230-24890**	4					••Plug	••Bouchon	••Stopfen	•• 플러그	••Tapon	
42	**SA 8230-27200**	1					••Plug	••Bouchon	••Stopfen	•• 플러그	••Tapon	
43	**SA 9511-12007**	2					••O-ring	••Joint Torique	••O-Ring	•• 오링	••Junta torica	
44	**VOE 983502**	4					••O-ring	••Joint Torique	••O-Ring	•• 오링	••Junta torica	
45	**SA 8230-31930**	1			SS		•Ring	•Anneau	•Ring	• 링	•Anillo	
46	**SA 8230-32030**	4			OP		•Screw	•Vis	•Schraube	• 스크류	•Tornillo	
47	**SA 8230-32170**	1					•Pin	•Goupille	•Zapfen	• 핀	•Pasador	

1	**8278796**	**Motor de giro** 선회 모터 **Schwenkmotor** **Moteur d'orientation** **Swing motor**	Catalogue id **20019**	Group **441**
2			Illustr. No **1007012**	Section **600**
3				
4			Issue **VOE 74H9920019**	Page **219**
5				

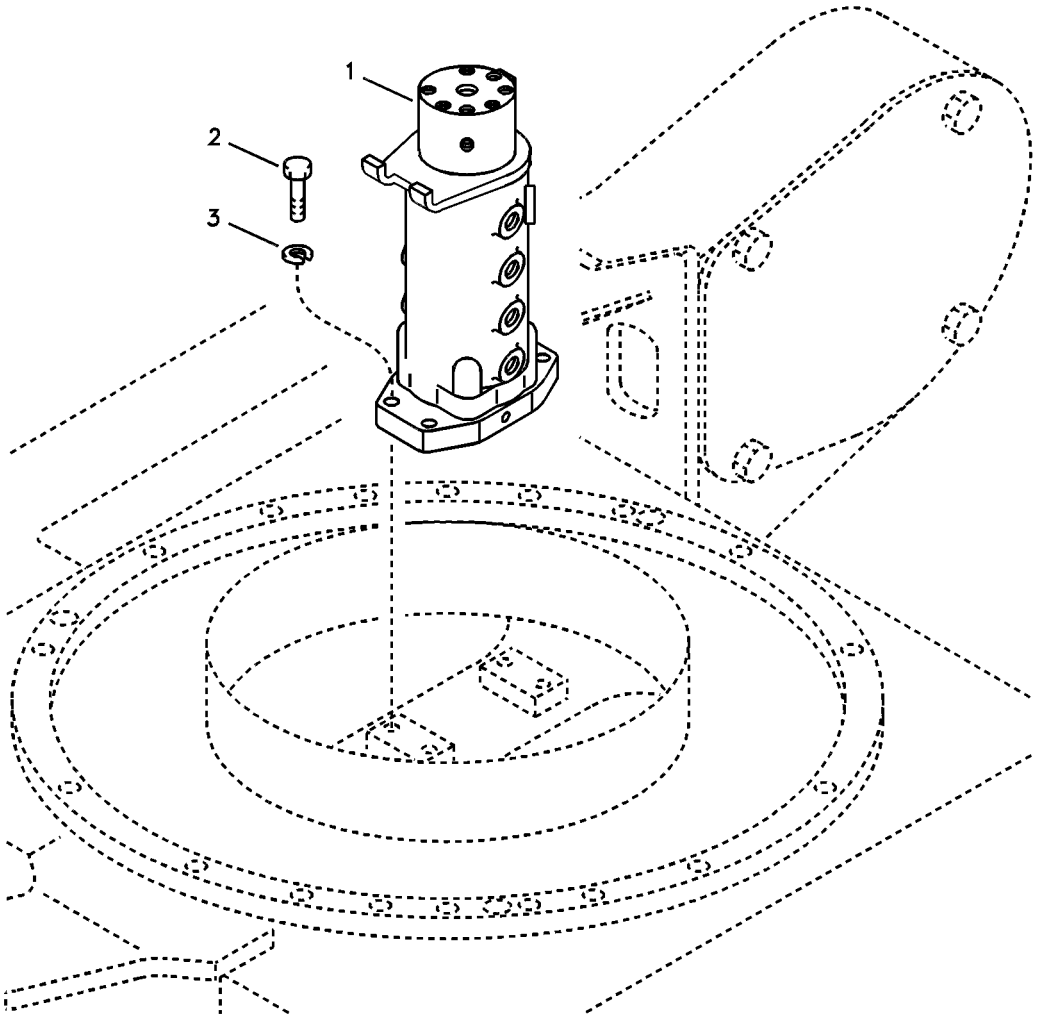
1
2
3

Fig.	Part No.	Quantity 1	2	3	PS	KIT	Description	Dénomination	Bezeichnung	품명	Denominación	Notes
1	**SA 1146-01610**	1					Turning Joint	Artic Rotation	Drehgelenk	터닝조인트	Junta Giratoria	SER NO 30001-35333 SER NO 50001-20227 See group 443, Page 223
	VOE 14524403	1					Turning Joint	Artic Rotation	Drehgelenk	터닝조인트	Junta Giratoria	SER NO 35334- SER NO 50228- See group 443, Page 223
2	**VOE 978934**	4					Hexagon screw	Vis tête hexagonale	Sechskantschraube	스크류	Tornillo hexago	
3	**VOE 955923**	4					Spring Washer	Rondelle élastique	Federscheibe	스프링 와셔	Arandela flexible	

1	**8278796**	**Articulación de giro con accesorios de montaje** 터닝조인트 장착 **Drehgelenk mit anbauteilen** **Articulation de rotation avec piéces de montage** **Turning joint, mounting**	Catalogue id **20019**	Group **443**
2			Illustr. No **1007013**	Section **100**
3			Issue **VOE 74H9920019**	Page **221**
4				
5				

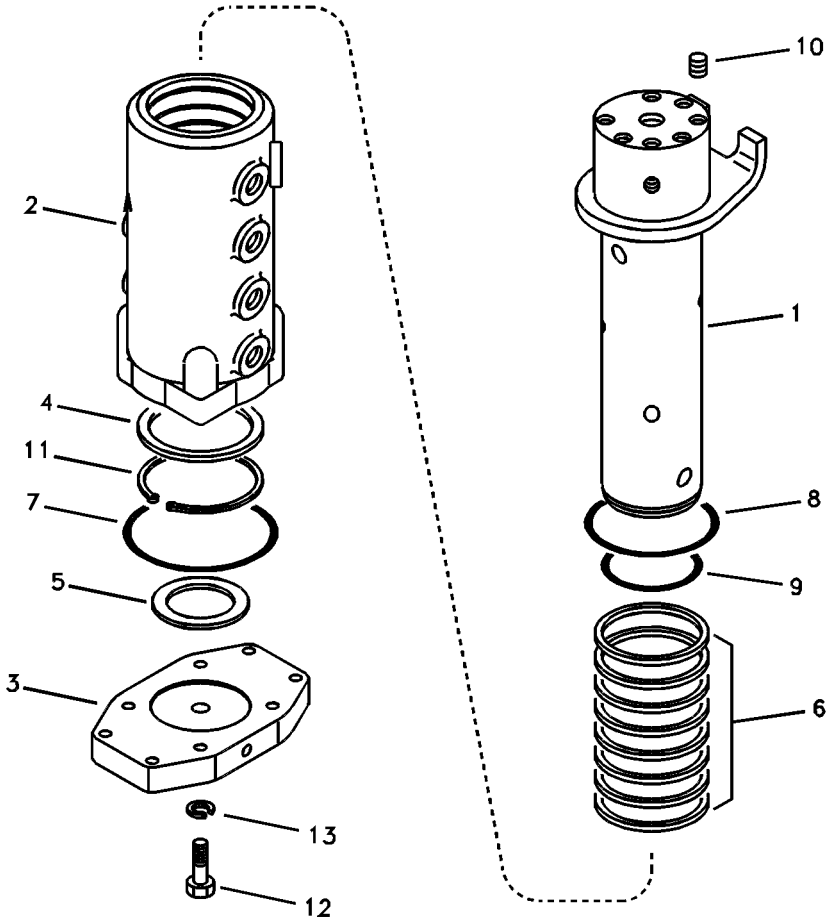
10
2
1
4
11
8
7
9
5
6
3
13
12

Fig.	Part No.	Quantity 1	2	3	PS	KIT	Description	Dénomination	Bezeichnung	품명	Denominación	Notes
	SA 1146-01610	1					Turning Joint	Artic Rotation	Drehgelenk	터닝조인트	Junta Giratoria	SER NO 30001-35333 SER NO 50001-50227
	VOE 14524403	1					Turning Joint	Artic Rotation	Drehgelenk	터닝조인트	Junta Giratoria	SER NO 35334- SER NO 50228-
1	**SA 1146-02120**	1			OP		•Shaft	•Arbre	•Welle	• 샤프트	•Arbol	
2	**SA 1146-02130**	1			OP		•Hub	•Bossage	•Nabe	• 허브	•Asiento	
3	**SA 1146-02140**	1					•Cover	•Capot	•Haube	• 커버	•Capo	
4	**SA 1046-01370**	1					•Spacer	•Partie Intermédiaire	•Zwischenstück	• 스페이서	•Espaciador	
5	**SA 1046-01380**	1					•Shim	•Cale d'épaisseur	•Passcheibe	• 심	•Arandela Ajuste	
6	**VOE 14525445**	8				K	•Seal	•Joint	•Dichtring	• 시일	•Junta	
7	**VOE 990595**	1				K	•O-ring	•Joint Torique	•O-Ring	• 오링	•Junta torica	
8	**VOE 990642**	1				K	•O-ring	•Joint Torique	•O-Ring	• 오링	•Junta torica	
9	**VOE 990638**	1				K	•O-ring	•Joint Torique	•O-Ring	• 오링	•Junta torica	
10	**SA 9415-43032**	4					•Plug	•Bouchon	•Stopfen	• 플러그	•Tapon	
11	**VOE 914480**	1					•Snap Ring	•Circlip	•Nutring	• 스냅 링	•Circlip	(SA 9541-01070)
12	**VOE 983253**	4					•Hexagon screw	•Vis tête hexagonale	•Sechskantschraube	• 스크류	•Tornillo hexago	
13	**VOE 955922**	4					•Spring Washer	•Rondelle élastique	•Federscheibe	• 스프링 와셔	•Arandela flexible	
100	**VOE 14527183**	1					Sealing Kit	Jeu Joints	Dichtungssatz	시일 킷	Juego Retenes	

1	**8278796**	**Articulación de giro** 터닝조인트 **Drehgelenk** **Articulation de rotation** **Turning joint**	Catalogue id **20019**	Group **443**
2				
3			Illustr. No **1007014**	Section **200**
4				
5			Issue **VOE 74H9920019**	Page **223**

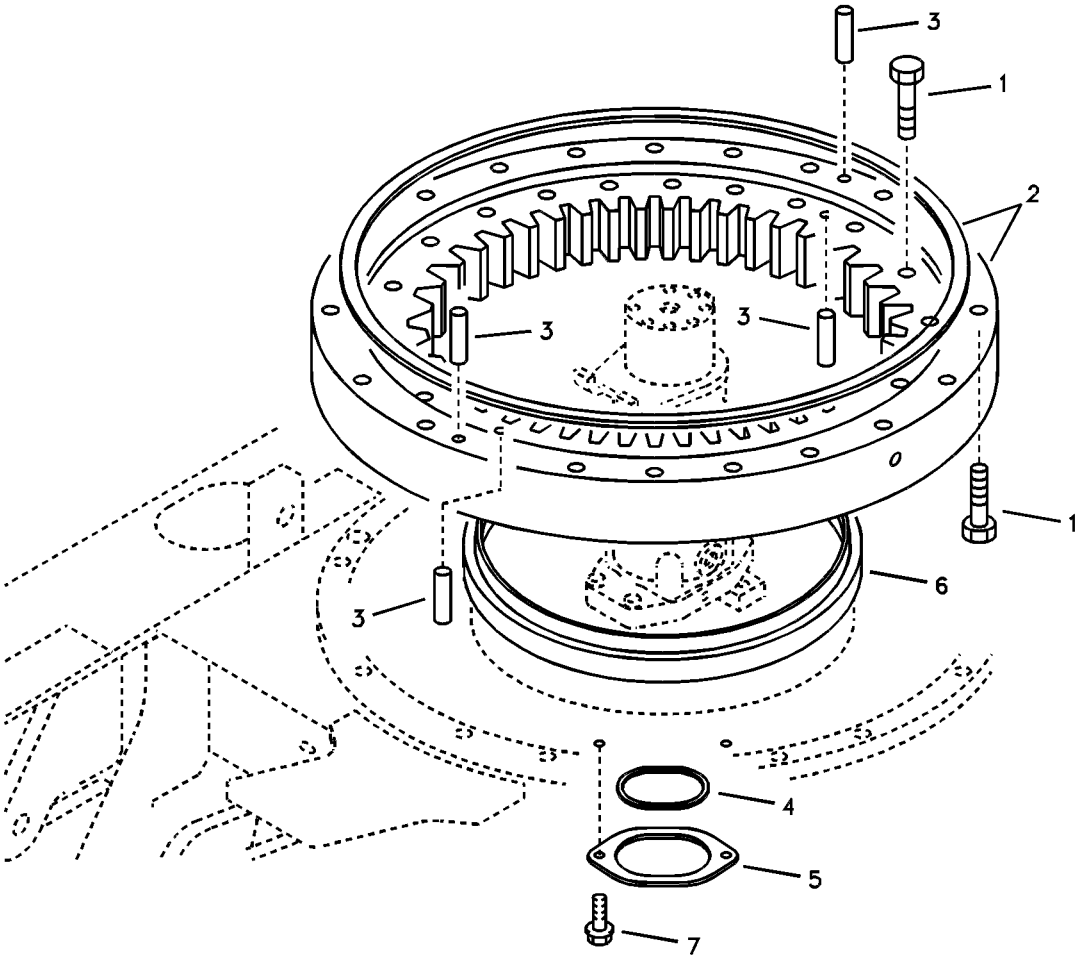
3
1
2
3
3
1
6
3
4
5
7

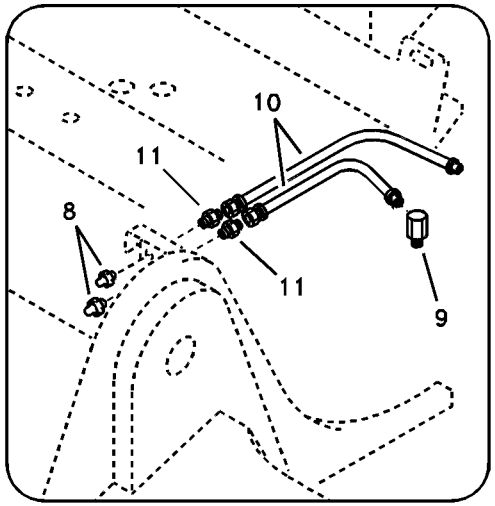
10
11
8
11
9

Fig.	Part No.	Quantity 1	2	3	PS	KIT	Description	Dénomination	Bezeichnung	품명	Denominación	Notes
1	**SA 1055-00320**	40					Bolt	Boulon	Bolzen	볼트	Perno	SER NO 30001-32353
	VOE 978940	40					Hexagon screw	Vis a tête hexagonale	Sechskantschr.	육각 나사	Tornillo hexago	SER NO 32354-
2	**SA 1050-20110**	1					Swing Gear	Réducteur d'orientati	Drehwe.getriebe	선회 기어	Cambio Girator	SER NO 30001-32363
	VOE 14530319	1					Swing Gear	Réducteur d'orientati	Drehwe.getriebe	선회 기어	Cambio Girator	SER NO 32364-
	SA 8059-00070	1			SS		•Seal	•Joint	•Dichtring	• 시일	•Junta	SER NO 30001-32363
	VOE 14530856	1					•Seal	•Joint	•Dichtring	• 시일	•Junta	SER NO 32364-
3	**VOE 14531017**	4					Pin	Goupille	Stift	핀	Pasador	
4	**VOE 14503342**	1					Gasket	Joint	Dichtung	가스켓	Junta	
5	**VOE 14503343**	1					Cover	Capot	Haube	커버	Capo	
6	**VOE 14503344**	1					Seal	Joint	Dichtring	시일	Junta	
7	**VOE 946441**	2					Flange screw	Vis à bride	Flanschschraube	플랜지 스크류	Torn embridado	
8	**SA 9481-11003**	2	2	2			Nipple	Raccord	Nippel	니플	Niple	SER NO 30001-33292
9	**SA 9411-91970**	1	1	1			Connector	Raccord	Anschluss	커넥터	Union	SER NO 30001-33292
10	**VOE 14880640**	2	2	2			Hose	Durit	Schlauch	호스	Tubo flexible	SER NO 30001-33292
11	**SA 9412-43010**	2	2	2			Connector	Raccord	Anschluss	커넥터	Union	SER NO 30001-33292

1	**8278796**
2	**8279576 S/N 33293-**
3	**8279577 S/N 33293-**
4	
5	

Sistema de oscilación
선회 장치
Schwenksystem
Système de pivotement
Swing system

Catalogue id **20019**	Group **492**
Illustr. No **1007015**	Section **100**
Issue **VOE 74H9920019**	Page **225**

VOLVO

Construction Equipment

GROUP		Section	Page
660	Control links, travel	100	233
660	Steering linkage	200	235
660	Steering linkage FOR CHINA	210	237
660	Steering linkage	300	239



GROUPE		Section	Page
660	Bielle de direction, ”de travail”	100	233
660	Bielle de direction	200	235
660	Bielle de direction FOR CHINA	210	237
660	Bielle de direction	300	239

GRUPPE		Abschnitt	Seite	GRUPPE		Abschnitt	Seite
660	Steuerglied," Fahren"	100	233				
660	Steuerglied	200	235				
660	Steuerglied FOR CHINA	210	237				
660	Steuerglied	300	239				

그룹		절	페이지
660	주행 제어링크	100	233
660	제어링크	200	235
660	제어링크	210	237
660	제어링크	300	239

GRUPO		Sección	Página
660	Articulación de dirección, ”manejo”	100	233
660	Articulación de dirección	200	235
660	Articulación de dirección FOR CHINA	210	237
660	Articulación de dirección	300	239

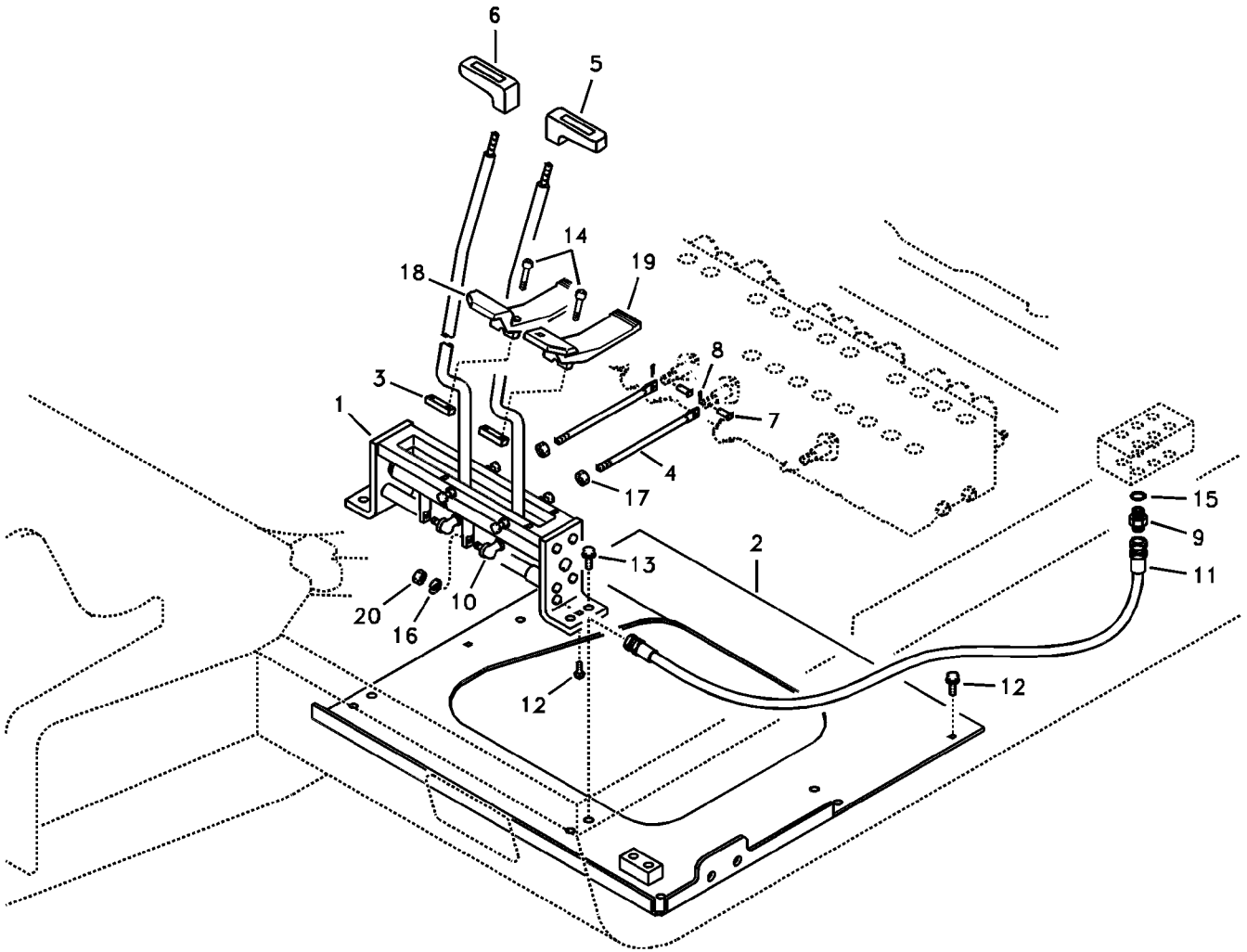
6
5
14
18
19
3
1
8
7
4
17
15
9
11
2
13
20
16
10
12
12

Fig.	Part No.	Quantity 1	2	3	PS	KIT	Description	Dénomination	Bezeichnung	품명	Denominación	Notes
1	**VOE 14521115**	1			SS		Lever	Levier	Hebel	레버	Palanca	SER NO 30001-30666
	VOE 14522742	1			SS		Lever	Levier	Hebel	레버	Palanca	SER NO 30667-33102
												SER NO 50001-
	VOE 14525490	1					Lever	Levier	Hebel	레버	Palanca	SER NO 33103-
2	**VOE 14517988**	1			SS		Plate	Plaque	Platte	플레이트	Placa	SER NO 30001-33102
	VOE 14530446	1					Plate	Plaque	Platte	플레이트	Placa	SER NO 33103-
3	**VOE 14517992**	2					Plate	Plaque	Platte	플레이트	Placa	
4	**SA 1038-00570**	2					Rod	Monture	Fuhler	로드	Varilla	
5	**VOE 14523005**	1					Knob	Bouton	Knauf	손잡이	Boton	
6	**VOE 14523006**	1					Knob	Bouton	Knauf	손잡이	Boton	
7	**SA 9321-20408**	2					Clevis Pin	Vis A Oeuillet	Zylinderbolzen	클레비스 핀	Espiga	
8	**SA 9326-05000**	2					Pin	Goupille	Zapfen	핀	Pasador	
9	**SA 9412-11020**	1					Connector	Raccord	Anschluss	커넥터	Union	
10	**SA 9646-31080**	2			SS		Rod End	Rotul.angulaire	Winkelgelenk	로드 엔드	Rotula Angular	SER NO 30001-30666
11	**SA 9451-02222**	1					Hose	Durit	Schlauch	호스	Tubo flexible	
12	**VOE 946329**	7					Flange screw	Vis à bride	Flanschschraube	플랜지 스크류	Torn embridado	
13	**VOE 946472**	4					Flange screw	Vis à bride	Flanschschraube	플랜지 스크류	Torn embridado	
14	**VOE 948400**	4			SS		Screw	Vis	Schraube	스크류	Tornillo	SER NO 30001-30666
	VOE 984077	4					Allen Hd Screw	Vis A 6 Pans Cr	Inbusschraube	스크류	Torn Hex Embut	SER NO 30667-
												SER NO 50001-
15	**SA 9511-12011**	1					O-ring	Joint Torique	O-Ring	오링	Junta torica	
16	**VOE 955921**	2					Spring Washer	Rondelle élastique	Federscheibe	스프링 와셔	Arandela flexible	SER NO 30001-30666
17	**VOE 983303**	2					Nut	Ecrou	Mutter	너트	Tuerca	
18	**VOE 11802679**	1					Plastic pedal	Pédale plastique	Kunststoffpedal	플래스틱 페달	Pedal de plástico	(PJ 5270600) RH
19	**VOE 11802680**	1					Plastic pedal	Pédale plastique	Kunststoffpedal	플래스틱 페달	Pedal de plástico	(PJ 5270601) LH
20	**VOE 983303**	2					Nut	Ecrou	Mutter	너트	Tuerca	SER NO 30001-30666

1	**8278796**	**Articulación de dirección, ”manejo”** 주행 제어링크 **Steuerglied,” Fahren”** **Bielle de direction, ”de travail”** **Control links, travel**	Catalogue id **20019** / Group **660**
2			Illustr. No **1016684** / Section **100**
3			
4			Issue **VOE 74H9920019** / Page **233**
5			

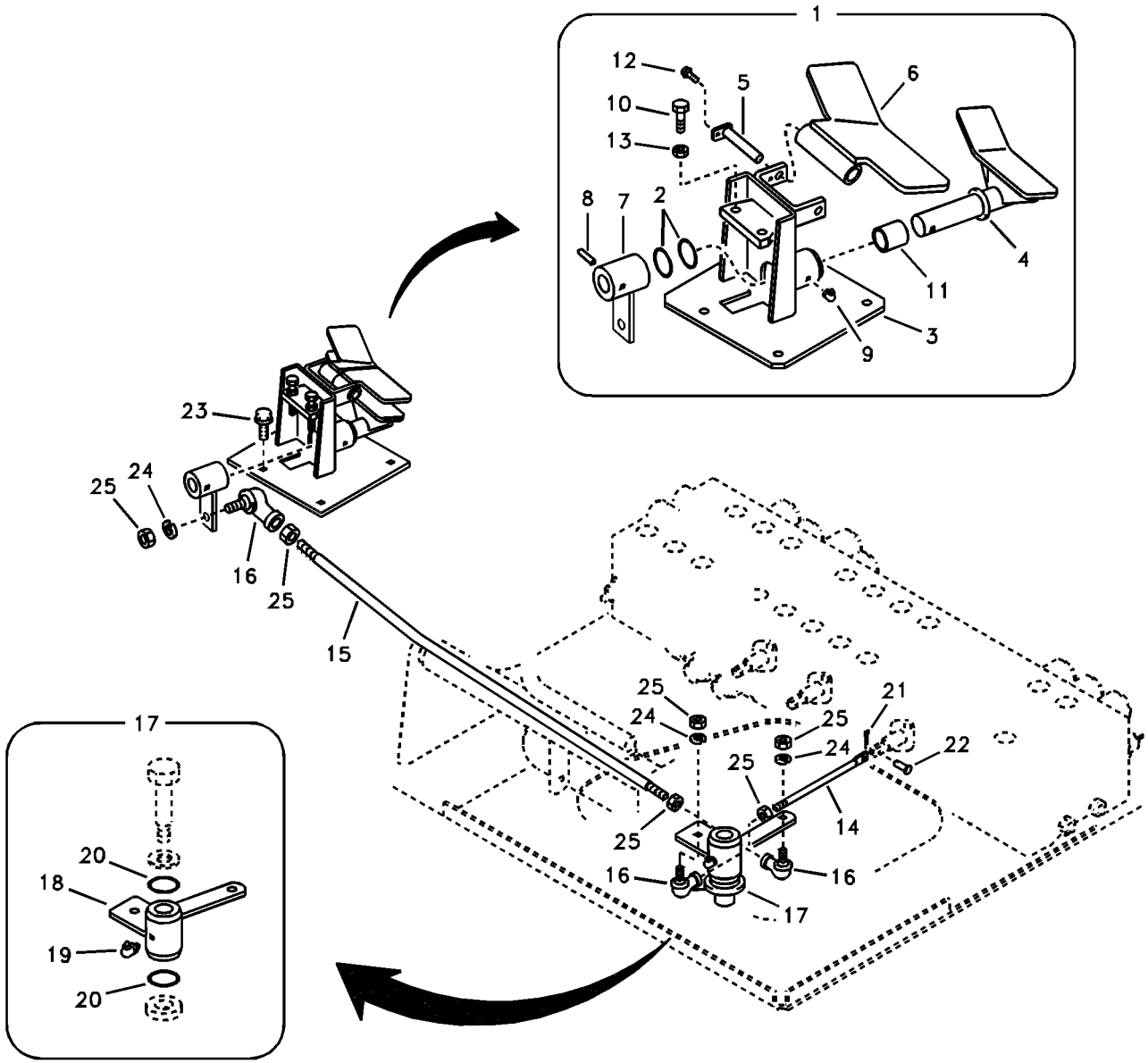
1
12
5
6
10
13
8
7
2
4
11
3
9
23
24
25
16
25
15
17
20
18
19
20
25
24
25
21
24
22
25
14
25
16
16
17

Fig.	Part No.	Quantity 1	2	3	PS	KIT	Description	Dénomination	Bezeichnung	품명	Denominación	Notes
1	**VOE 14519739**	1	1				Pedal	Pedale	Pedal	페달	Pedal	
2	**SA 1038-00230**	2	2				•O-ring	•Joint Torique	•O-Ring	• 오링	•Junta torica	
3	**VOE 14504437**	1	1				•Bracket	•Console	•Konsole	• 브라켓	•Ménsula	
4	**VOE 14504434**	1	1				•Pedal	•Pedale	•Pedal	• 페달	•Pedal	
5	**VOE 14504433**	1	1				•Pin	•Goupille	•Zapfen	• 핀	•Pasador	
6	**VOE 14519740**	1	1				•Cover	•Capot	•Haube	• 커버	•Capo	
7	**VOE 14504439**	1	1				•Lever	•Levier	•Hebel	• 레버	•Palanca	
8	**SA 9325-05018**	1	2				•Spring Pin	•Axe de ressort	•Federstift	• 스프링 핀	•Pasador Resorte	
9	**SA 9481-21002**	1	1				•Nipple	•Raccord	•Nippel	• 니플	•Niple	
10	**SA 9011-10811**	2	1				•Bolt	•Boulon	•Bolzen	• 볼트	•Perno	
11	**SA 14880946**	2	2				•Bushing	•Bague	•Buchse	• 부싱	•Casquillo	
12	**VOE 965175**	1	1		SS		•Screw	•Vis	•Schraube	• 스크류	•Tornillo	
13	**VOE 983303**	2	2				•Nut	•Ecrou	•Mutter	• 너트	•Tuerca	
14	**SA 1038-00570**	1	1				Rod	Monture	Fuhler	로드	Varilla	
15	**VOE 14519742**	1					Rod	Monture	Fuhler	로드	Varilla	
	VOE 14517995		1				Rod	Monture	Fuhler	로드	Varilla	
16	**VOE 14880992**	3	3				Stay	Tirant	Strebe	스테이	Barra	
17	**VOE 14519741**	1	1				Link	Articulation	Gelenk	링크	Articulacion	
18	**VOE 14529560**	1	1				•Link	•Articulation	•Gelenk	• 링크	•Articulacion	
19	**SA 9481-21002**	1	1				•Nipple	•Raccord	•Nippel	• 니플	•Niple	
20	**SA 1038-00230**	1	1				•O-ring	•Joint Torique	•O-Ring	• 오링	•Junta torica	
21	**SA 9326-05000**	1	1				Pin	Goupille	Zapfen	핀	Pasador	
22	**SA 9321-20408**	1	1				Clevis Pin	Vis A Oeuillet	Zylinderbolzen	클레비스 핀	Espiga	
23	**VOE 946441**	4	4				Flange screw	Vis à bride	Flanschschraube	플랜지 스크류	Torn embridado	
24	**VOE 955921**	3	3				Spring Washer	Rondelle élastique	Federscheibe	스프링 와셔	Arandela flexible	
25	**VOE 983303**	6	6				Nut	Ecrou	Mutter	너트	Tuerca	

1	**8278837**	**Articulación de dirección** 제어링크 **Steuerglied** **Bielle de direction** **Steering linkage**	Catalogue id **20019**	Group **660**
2	**8278868**		Illustr. No **1007017**	Section **200**
3			Issue **VOE 74H9920019**	Page **235**
4				
5				

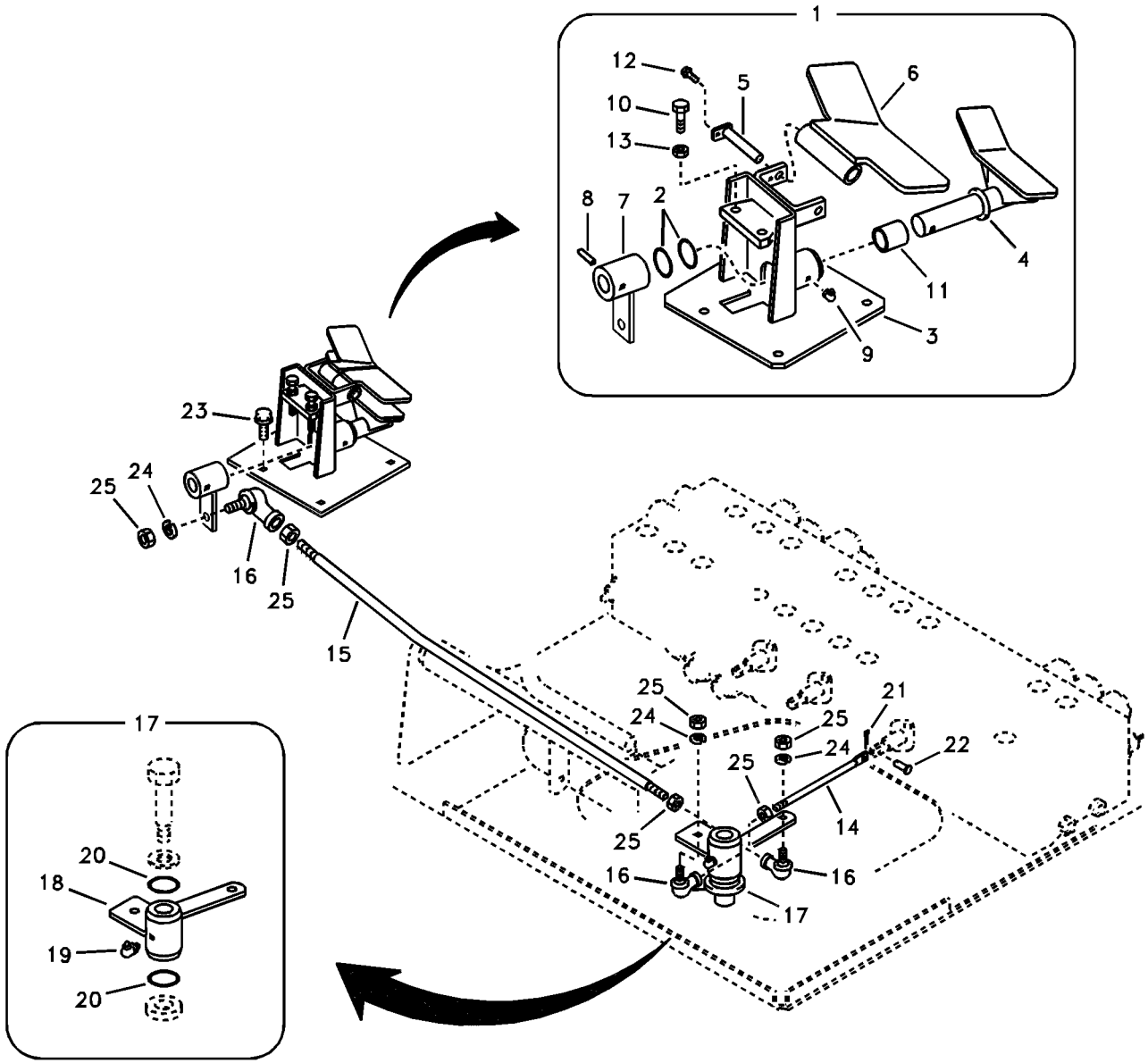
1
12
5
6
10
13
8
7
2
4
11
3
9
23
24
25
16
25
15
17
20
18
19
20
25
24
25
21
24
22
25
14
25
16
16
17

Fig.	Part No.	Quantity 1	2	3	PS	KIT	Description	Dénomination	Bezeichnung	품명	Denominación	Notes
1	**VOE 14519739**	1					Pedal	Pedale	Pedal	페달	Pedal	
2	**SA 1038-00230**	2					•O-ring	•Joint Torique	•O-Ring	• 오링	•Junta torica	
3	**VOE 14504437**	1					•Bracket	•Console	•Konsole	• 브라켓	•Ménsula	
4	**VOE 14504434**	1					•Pedal	•Pedale	•Pedal	• 페달	•Pedal	
5	**VOE 14504433**	1					•Pin	•Goupille	•Zapfen	• 핀	•Pasador	
6	**VOE 14519740**	1					•Cover	•Capot	•Haube	• 커버	•Capo	
7	**VOE 14504439**	1					•Lever	•Levier	•Hebel	• 레버	•Palanca	
8	**SA 9325-05018**	1					•Spring Pin	•Axe de ressort	•Federstift	• 스프링 핀	•Pasador Resorte	
9	**SA 9481-21002**	1					•Nipple	•Raccord	•Nippel	• 니플	•Niple	
10	**SA 9011-10811**	2					•Bolt	•Boulon	•Bolzen	• 볼트	•Perno	
11	**SA 14880946**	2					•Bushing	•Bague	•Buchse	• 부싱	•Casquillo	
12	**VOE 965175**	1			SS		•Screw	•Vis	•Schraube	• 스크류	•Tornillo	
13	**VOE 983303**	2					•Nut	•Ecrou	•Mutter	• 너트	•Tuerca	
14	**SA 1038-00570**	1					Rod	Monture	Fuhler	로드	Varilla	
15	**VOE 14519742**	1					Rod	Monture	Fuhler	로드	Varilla	
16	**VOE 14880992**	3					Stay	Tirant	Strebe	스테이	Barra	
17	**VOE 14519741**	1					Link	Articulation	Gelenk	링크	Articulacion	
18	**VOE 14529560**	1					•Link	•Articulation	•Gelenk	• 링크	•Articulacion	
19	**SA 9481-21002**	1					•Nipple	•Raccord	•Nippel	• 니플	•Niple	
20	**SA 1038-00230**	1					•O-ring	•Joint Torique	•O-Ring	• 오링	•Junta torica	
21	**SA 9326-05000**	1					Pin	Goupille	Zapfen	핀	Pasador	
22	**SA 9321-20408**	1					Clevis Pin	Vis A Oeuillet	Zylinderbolzen	클레비스 핀	Espiga	
23	**VOE 946441**	4					Flange screw	Vis à bride	Flanschschraube	플랜지 스크류	Torn embridado	
24	**VOE 955921**	3					Spring Washer	Rondelle élastique	Federscheibe	스프링 와셔	Arandela flexible	
25	**VOE 983303**	6					Nut	Ecrou	Mutter	너트	Tuerca	

1	**8278837**	**Articulación de dirección** 제어링크 **Steuerglied** **Bielle de direction** **Steering linkage**	Catalogue id **20019**	Group **660**
2				
3			Illustr. No **1007017**	Section **210**
4				
5		**FOR CHINA**	Issue **VOE 74H9920019**	Page **237**

VOLVO

EC55B



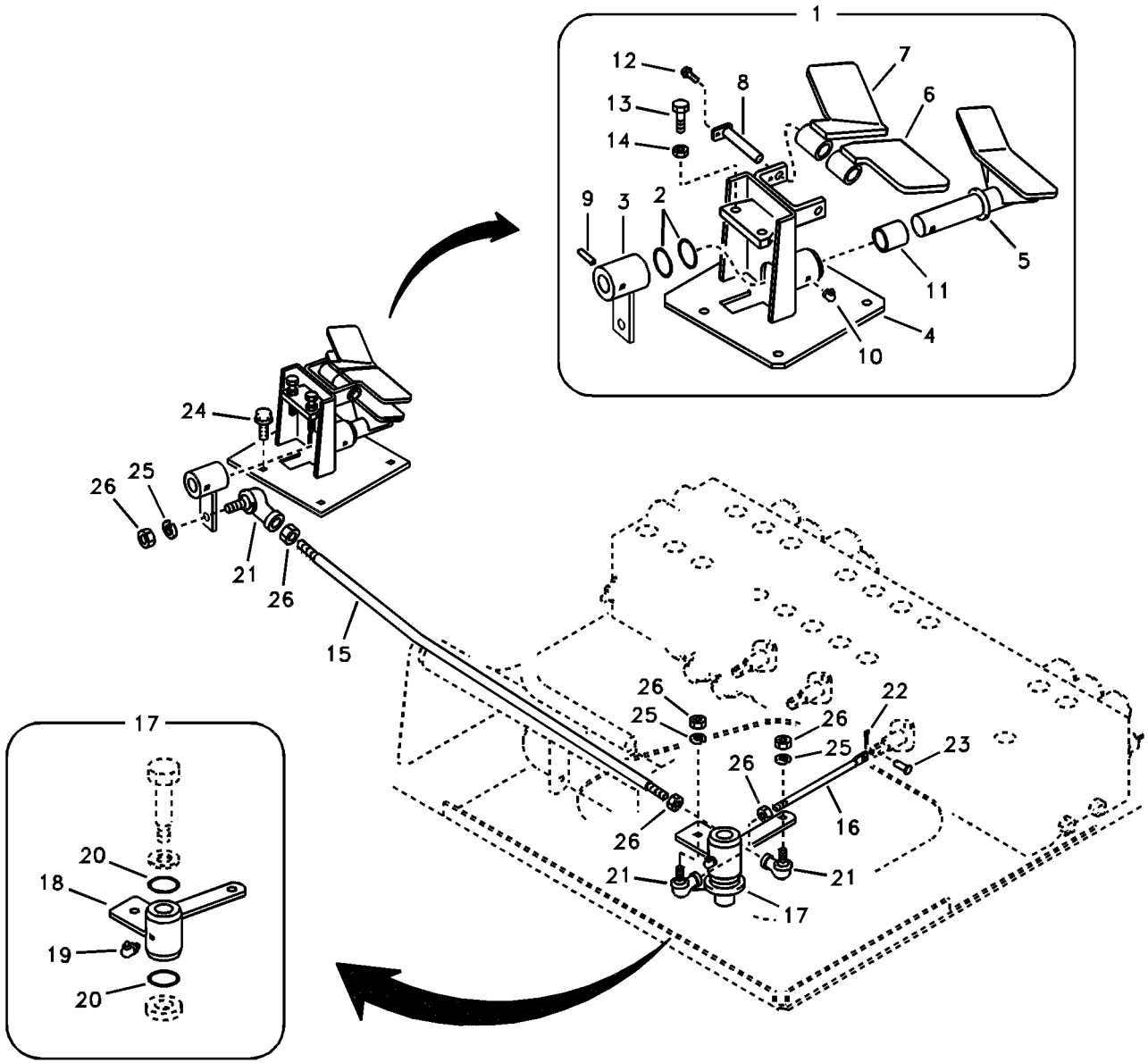
1
12
13
14
8
7
6
9
3
2
5
11
4
10
24
25
26
21
26
15
17
20
18
19
20
26
25
26
22
25
23
26
16
26
21
21
17

Fig.	Part No.	Quantity 1	2	3	PS	KIT	Description	Dénomination	Bezeichnung	품명	Denominación	Notes
1	**VOE 14504438**	1	1				Pedal	Pedale	Pedal	페달	Pedal	
2	**SA 1038-00230**	2	2				•O-ring	•Joint Torique	•O-Ring	• 오링	•Junta torica	
3	**VOE 14504439**	1	1				•Lever	•Levier	•Hebel	• 레버	•Palanca	
4	**VOE 14504437**	1	1				•Bracket	•Console	•Konsole	• 브라켓	•Ménsula	
5	**VOE 14504434**	1	1				•Pedal	•Pedale	•Pedal	• 페달	•Pedal	
6	**VOE 14504435**	1	1				•Cover	•Capot	•Haube	• 커버	•Capo	
7	**VOE 14504436**	1	1				•Cover	•Capot	•Haube	• 커버	•Capo	
8	**VOE 14504433**	1	1				•Pin	•Goupille	•Zapfen	• 핀	•Pasador	
9	**SA 9325-05018**	1	1				•Spring Pin	•Axe de ressort	•Federstift	• 스프링 핀	•Pasador Resorte	
10	**SA 9481-21002**	1	1				•Nipple	•Raccord	•Nippel	• 니플	•Niple	
11	**SA 14880946**	2	2				•Bushing	•Bague	•Buchse	• 부싱	•Casquillo	
12	**SA 9041-10602**	1	1		SS		•Bolt	•Boulon	•Bolzen	• 볼트	•Perno	
13	**SA 9011-20811**	2	2				•Bolt	•Boulon	•Bolzen	• 볼트	•Perno	
14	**SA 9111-10800**	2	2		SS		•Nut	•Ecrou	•Mutter	• 너트	•Tuerca	
15	**VOE 14517995**	1	1				Rod	Monture	Fuhler	로드	Varilla	
16	**SA 1038-00570**	1	1				Rod	Monture	Fuhler	로드	Varilla	
17	**VOE 14519741**	1	1				Link	Articulation	Gelenk	링크	Articulacion	
18	**SA 14529560**	1	1				•Link	•Articulation	•Gelenk	• 링크	•Articulacion	
19	**SA 9481-21002**	1	1				•Nipple	•Raccord	•Nippel	• 니플	•Niple	
20	**SA 1038-00230**	1	1				•O-ring	•Joint Torique	•O-Ring	• 오링	•Junta torica	
21	**VOE 14880992**	3	3				Stay	Tirant	Strebe	스테이	Barra	
22	**SA 9326-05000**	1	1				Pin	Goupille	Zapfen	핀	Pasador	
23	**SA 9321-20408**	1	1				Clevis Pin	Vis A Oeuillet	Zylinderbolzen	클레비스 핀	Espiga	
24	**VOE 946441**	4	4				Flange screw	Vis à bride	Flanschschraube	플랜지 스크류	Torn embridado	
25	**VOE 955921**	3	3				Spring Washer	Rondelle élastique	Federscheibe	스프링 와셔	Arandela flexible	
26	**VOE 983303**	6	6				Nut	Ecrou	Mutter	너트	Tuerca	

1	**8278865**	**Articulación de dirección** 제어링크 **Steuerglied** **Bielle de direction** **Steering linkage**	Catalogue id **20019**	Group **660**
2	**8279082 S/N 30824-**		Illustr. No **1007018**	Section **300**
3			Issue **VOE 74H9920019**	Page **239**
4				
5				

VOLVO

Construction Equipment

GROUP		Section	Page
715	Protecting plate	100	247
715	Protective plate for travel motor	200	249
716	Counterweights	100	251
718	Undercarriage frame	100	253
718	Upper frame	500	255
718	Upper frame	600	257
775	Undercarriage, track with shoes	100	259
775	Undercarriage, track guards	500	261
775	Undercarriage, spring package	700	263
775	Front idler	800	265
775	Top roller	900	269
775	Bottom roller	1000	271
775	Bottom roller	1100	273
775	Sprocket	1200	275

TABLE DES MATIÈRES

GROUPE		Section	Page
715	Plaque de protection	100	247
715	Tôle de protection pour moteur de translation	200	249
716	Contrepoids	100	251
718	Cadre du chariot inférieur	100	253
718	Cadre supérieur	500	255
718	Cadre supérieur	600	257
775	Châssis, chaîne avec berceau	100	259
775	Châssis porteur, protection de chenilles	500	261
775	Châssis porteur, jeu de ressorts	700	263
775	Roue AV	800	265
775	Rouleau supérieur	900	269
775	Rouleau inférieur	1000	271
775	Rouleau inférieur	1100	273
775	Barbotin	1200	275

GRUPPE		Abschnitt	Seite	GRUPPE		Abschnitt	Seite
715	Schutzblech	100	247				
715	Schutzblech für Fahrmotor	200	249				
716	Gegengewicht	100	251				
718	Laufwerksrahmen	100	253				
718	Oberwagen	500	255				
718	Oberwagen	600	257				
775	Unterwagen, Kette mit Platten	100	259				
775	Unterwagen, Raupenschutz	500	261				
775	Unterwagen, Federpaket	700	263				
775	Vorderrad	800	265				
775	Tragrolle	900	269				
775	Laufrolle	1000	271				
775	Laufrolle	1100	273				
775	Kettentrieb	1200	275				

목차

그룹		절	페이지
715	보호 플레이트	100	247
715	보호 플레이트 , 주행모터	200	249
716	카운터웨이트	100	251
718	하부 프레임	100	253
718	상부 프레임	500	255
718	상부 프레임	600	257
775	언더캐리지 , 트랙 및 트랙 슈	100	259
775	언더캐리지 , 트랙 가드	500	261
775	언더캐리지 , 리코일 스프링	700	263
775	아이들러	800	265
775	상부 롤러	900	269
775	하부 롤러	1000	271
775	하부 롤러	1100	273
775	스프로켓	1200	275

GRUPO		Sección	Página
715	Placa de protección	100	247
715	Placa de protección para el motor de transporte	200	249
716	Contrapesos	100	251
718	Bastidor del carro inferior	100	253
718	Bastidor de la superestructura	500	255
718	Bastidor de la superestructura	600	257
775	Carro inferior, orugas con zapatas	100	259
775	Carro inferior, protección de orugas	500	261
775	Carro inferior, paquete de muelles	700	263
775	Ruedas de guía delanteras	800	265
775	Rodillo superior	900	269
775	Rodillo inferior	1000	271
775	Rodillo inferior	1100	273
775	Rueda motriz	1200	275

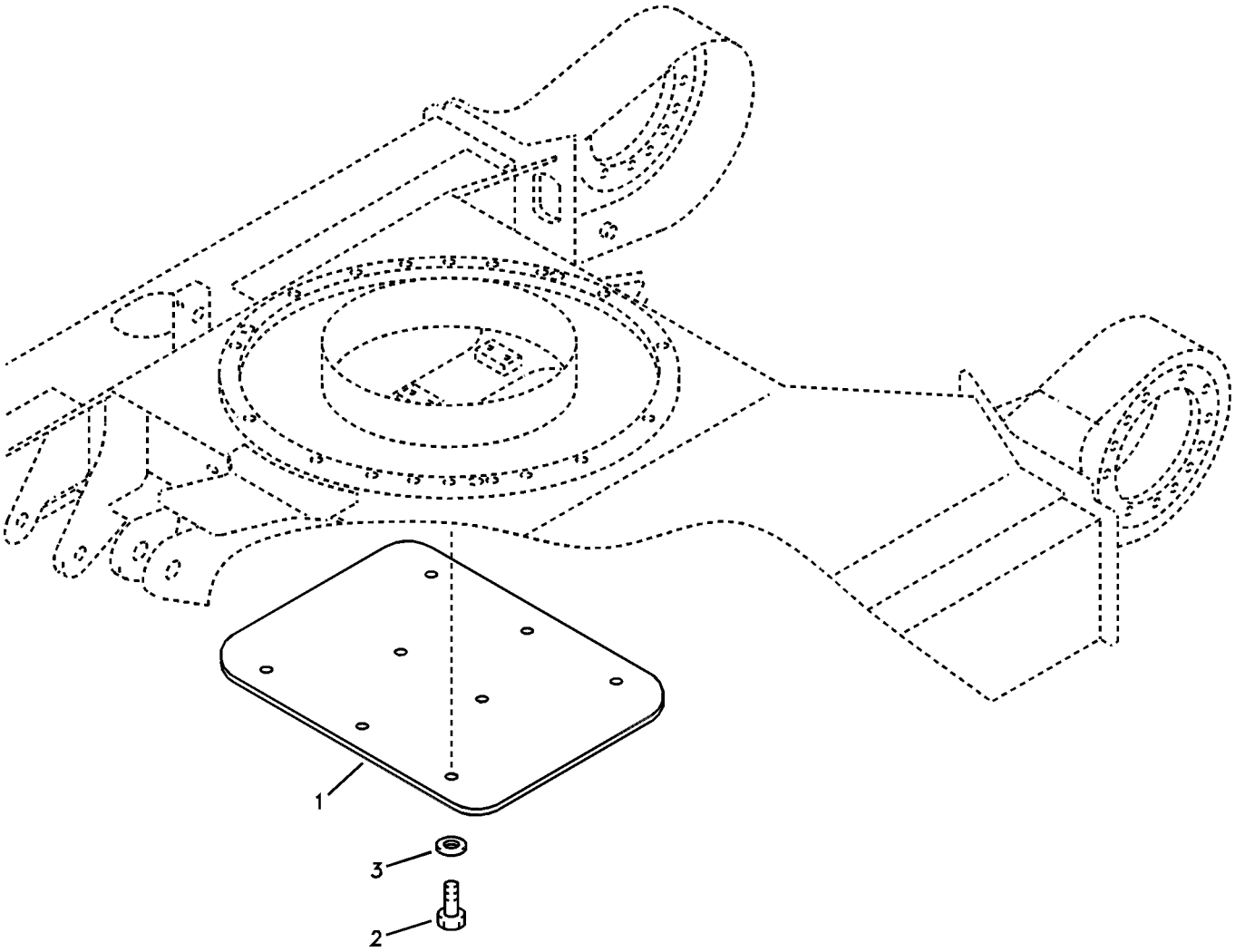
1
3
2

Fig.	Part No.	Quantity 1	2	3	PS	KIT	Description	Dénomination	Bezeichnung	품명	Denominación	Notes
1	**VOE 14519125**	1					Cover	Capot	Haube	커버	Capo	
	VOE 14520056		1				Cover	Capot	Haube	커버	Capo	
2	**VOE 978932**	6	6				Screw	Vis	Schraube	스크류	Tornillo	
3	**SA 9211-12000**	6	6				Washer	Rondelle	Scheibe	와셔	Arandela	

1	**8278828**	**Placa de protección** 보호 플레이트 **Schutzblech** **Plaque de protection** **Protecting plate**	Catalogue id **20019**	Group **715**
2	**8278829**		Illustr. No **1007019**	Section **100**
3			Issue **VOE 74H9920019**	Page **247**
4				
5				

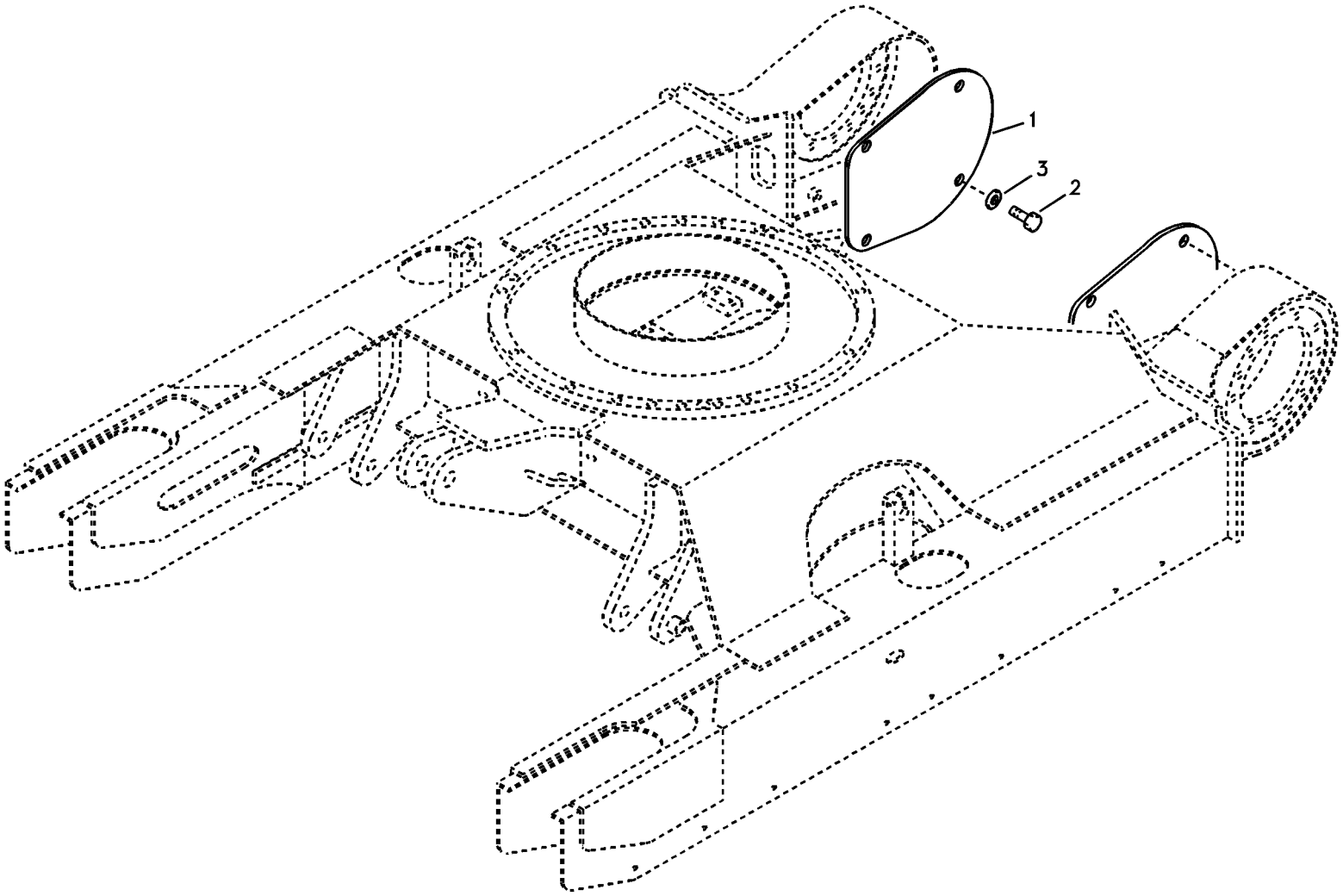
1
3
2

Fig.	Part No.	Quantity 1	2	3	PS	KIT	Description	Dénomination	Bezeichnung	품명	Denominación	Notes
1	**VOE 14519900**	2					Cover	Capot	Haube	커버	Capo	
2	**VOE 978932**	8					Screw	Vis	Schraube	스크류	Tornillo	
3	**SA 9211-12000**	8					Washer	Rondelle	Scheibe	와셔	Arandela	

1	**8278796**	**Placa de protección para el motor de transporte** 보호 플레이트 , 주행모터 **Schutzblech für Fahrmotor** **Tôle de protection pour moteur de translation** **Protective plate for travel motor**	Catalogue id **20019**	Group **715**
2			Illustr. No **1007020**	Section **200**
3			Issue **VOE 74H9920019**	Page **249**
4				
5				

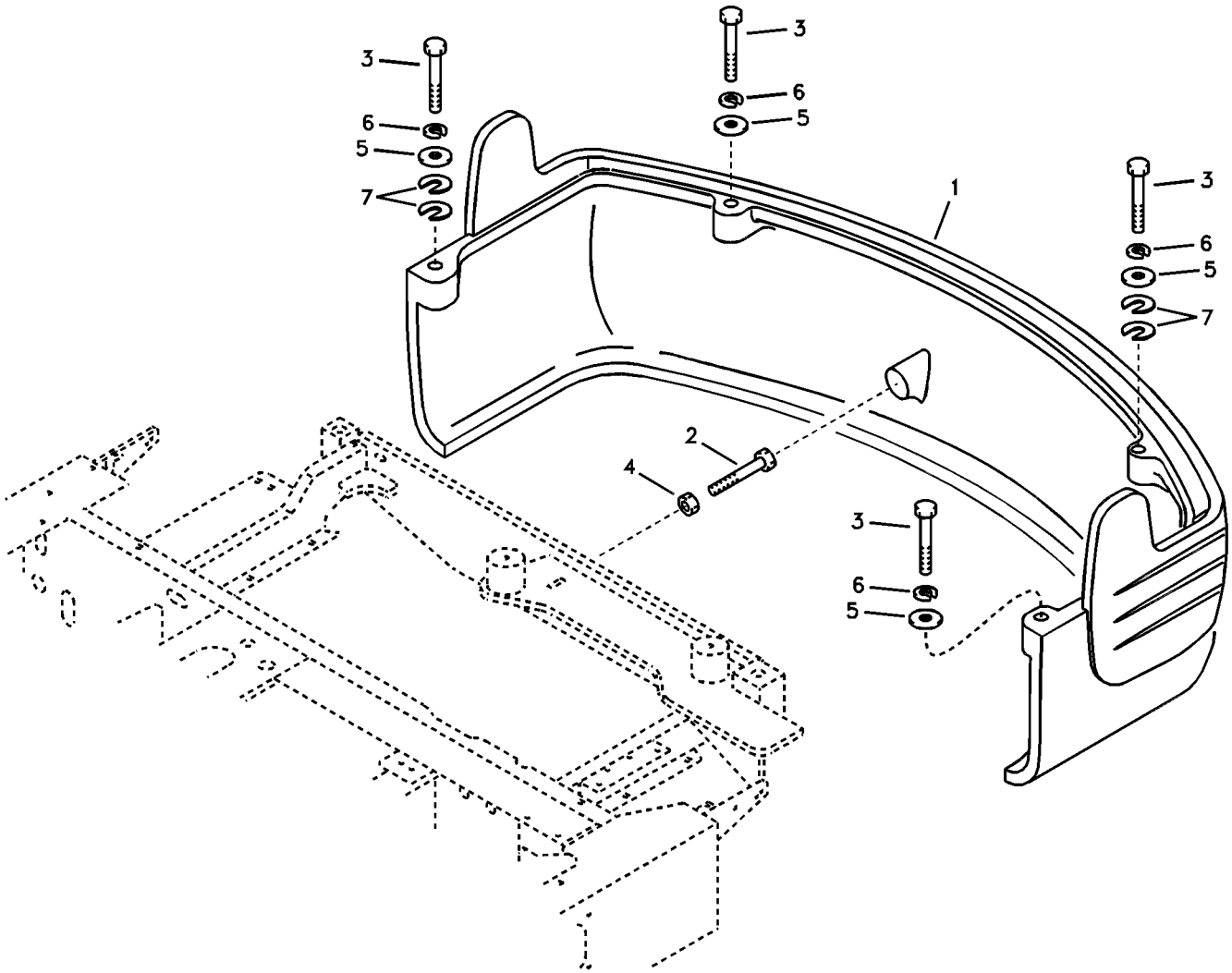
3
6
5
7
1
2
4

Fig.	Part No.	Quantity 1	2	3	PS	KIT	Description	Dénomination	Bezeichnung	품명	Denominación	Notes
1	**VOE 14501541**	1					Counterweight	Contrepoids	Gegengewicht	카운터웨이트	Contrapeso	SER NO 30001-34475 SER NO 50001-50129
	VOE 14543546	1					Counterweight	Contrepoids	Gegengewicht	카운터웨이트	Contrapeso	SER NO 34476- SER NO 50130-
2	**VOE 14881196**	1					Bolt	Boulon	Bolzen	볼트	Perno	
3	**VOE 978941**	4					Hexagon screw	Vis a tête hexagonale	Sechskantschr.	육각 나사	Tornillo hexago	
4	**VOE 979021**	1					Hexagon Nut	Ecrou Hexagonal	Sechskantmutter	너트	Tuerca Hexagon	
5	**SA 2073-00920**	4					Washer	Rondelle	Scheibe	와셔	Arandela	
6	**VOE 955926**	4					Spring Washer	Rondelle élastique	Federscheibe	스프링 와셔	Arandela flexible	
7	**VOE 14881065**	4					Shim	Cale d'épaisseur	Passcheibe	심	Arandela Ajuste	

1	**8278796**	**Contrapesos** 카운터웨이트 **Gegengewicht** **Contrepoids** **Counterweights**	Catalogue id **20019**	Group **716**
2			Illustr. No **1007021**	Section **100**
3			Issue **VOE 74H9920019**	Page **251**
4				
5				

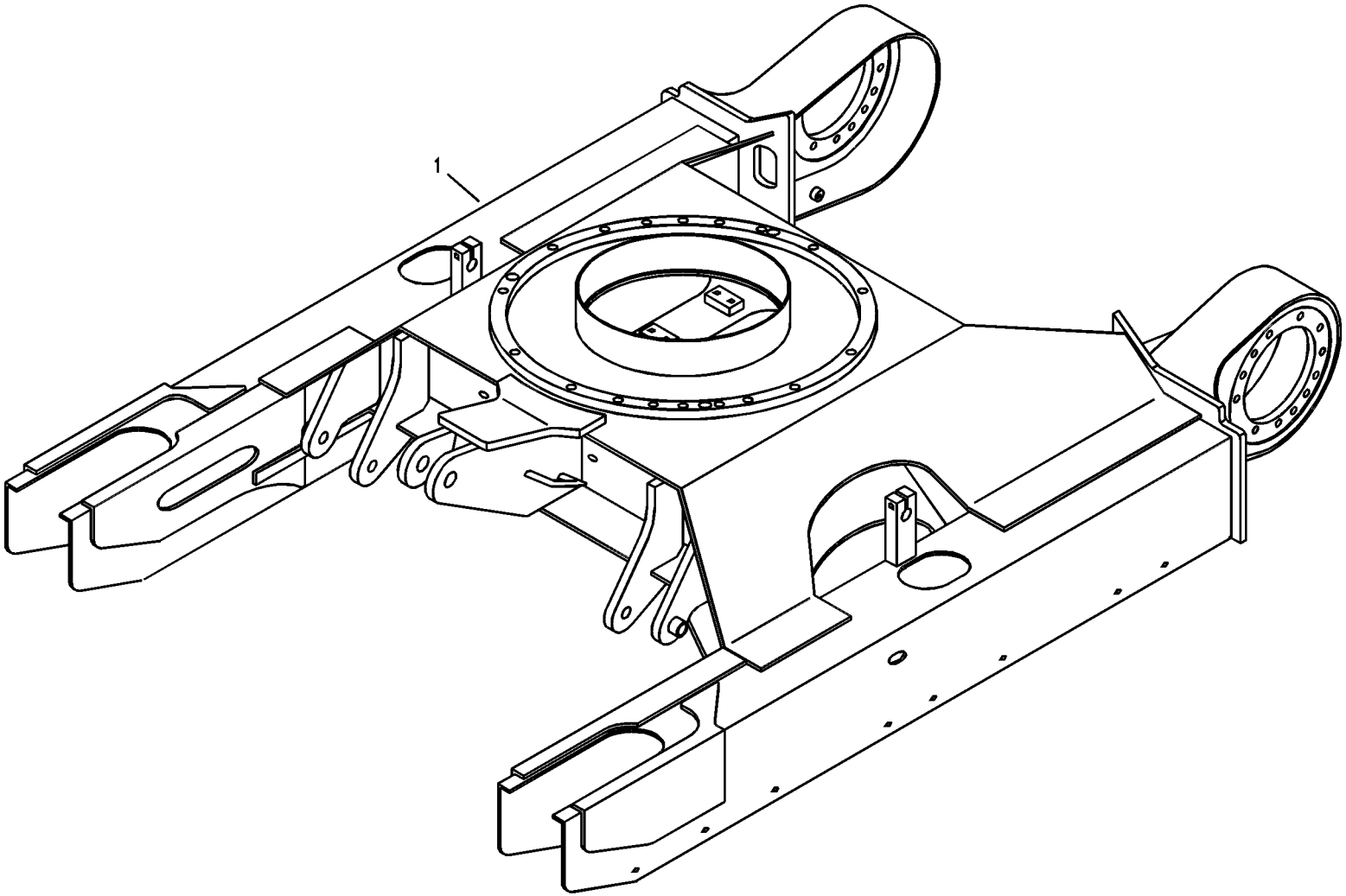
1

Fig.	Part No.	Quantity 1	2	3	PS	KIT	Description	Dénomination	Bezeichnung	품명	Denominación	Notes
1	**VOE 14519895**	1					Frame	Chassis	Rahmen	프레임	Bastidor	SER NO 30001-33331
	VOE 14531601	1					Frame	Chassis	Rahmen	프레임	Bastidor	SER NO 33332-34475 SER NO 50001-50129
	VOE 14543599	1					Frame	Chassis	Rahmen	프레임	Bastidor	SER NO 34476- SER NO 50130-

1	**8278796**	**Bastidor del carro inferior** 하부 프레임 **Laufwerksrahmen** **Cadre du chariot inférieur** **Undercarriage frame**	Catalogue id **20019**	Group **718**
2			Illustr. No **1007022**	Section **100**
3			Issue **VOE 74H9920019**	Page **253**
4				
5				

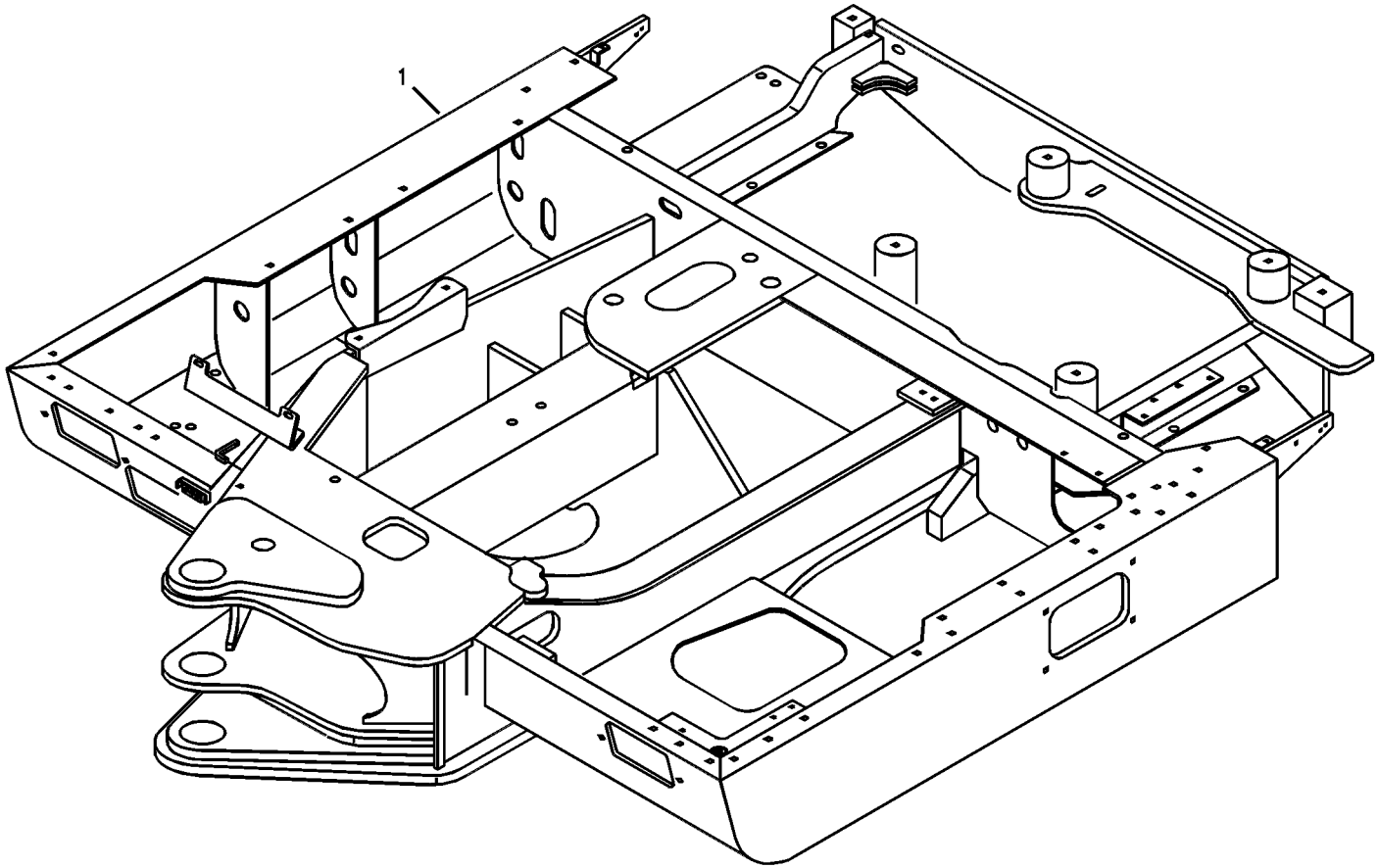
1

Fig.	Part No.	Quantity 1	2	3	P S	K I T	Description	Dénomination	Bezeichnung	품명	Denominación	Notes
1	**VOE 14519658**	1	1				Frame	Chassis	Rahmen	프레임	Bastidor	SER NO 30001-32574
	VOE 14527675	1	1				Frame	Chassis	Rahmen	프레임	Bastidor	SER NO 32575-34475 SER NO 50001-50129
	VOE 14532520	1	1				Frame	Chassis	Rahmen	프레임	Bastidor	SER NO 34476- SER NO 50130-

1	**8278836**	**Bastidor de la superestructura** 상부 프레임 **Oberwagen** **Cadre supérieur** **Upper frame**	Catalogue id **20019**	Group **718**
2	**8278837**		Illustr. No **1007023**	Section **500**
3			Issue **VOE 74H9920019**	Page **255**
4				
5				

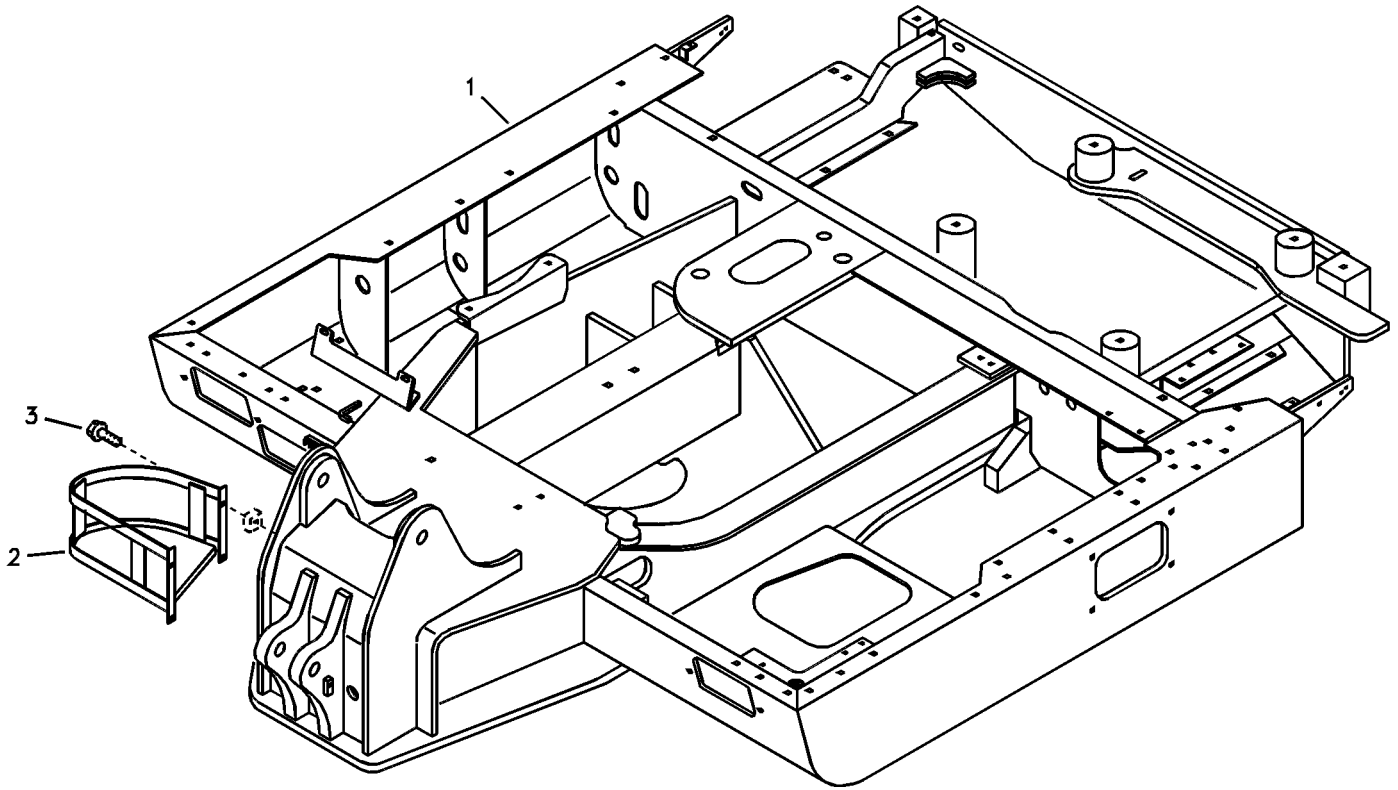
1
2
3

Fig.	Part No.	Quantity 1	2	3	PS	KIT	Description	Dénomination	Bezeichnung	품명	Denominación	Notes
1	**VOE 14519657**	1					Frame	Chassis	Rahmen	프레임	Bastidor	SER NO 30001-34475 SER NO 50001-50129
	VOE 14534295	1					Frame	Chassis	Rahmen	프레임	Bastidor	SER NO 34476- SER NO 50130-
	VOE 14519907		1				Frame	Chassis	Rahmen	프레임	Bastidor	SER NO 30001-34475 SER NO 50001-50129
	VOE 14540381		1				Frame	Chassis	Rahmen	프레임	Bastidor	SER NO 34476- SER NO 50130-
2	**VOE 14521116**			1			Bracket	Console	Konsole	브라켓	Ménsula	
3	**VOE 946441**			4			Flange screw	Vis à bride	Flanschschraube	플랜지 스크류	Torn embridado	

1	**8278838**
2	**8278839**
3	**8278896**
4	
5	

Bastidor de la superestructura
상부 프레임
Oberwagen
Cadre supérieur
Upper frame

Catalogue id **20019**	Group **718**
Illustr. No **1007024**	Section **600**
Issue **VOE 74H9920019**	Page **257**

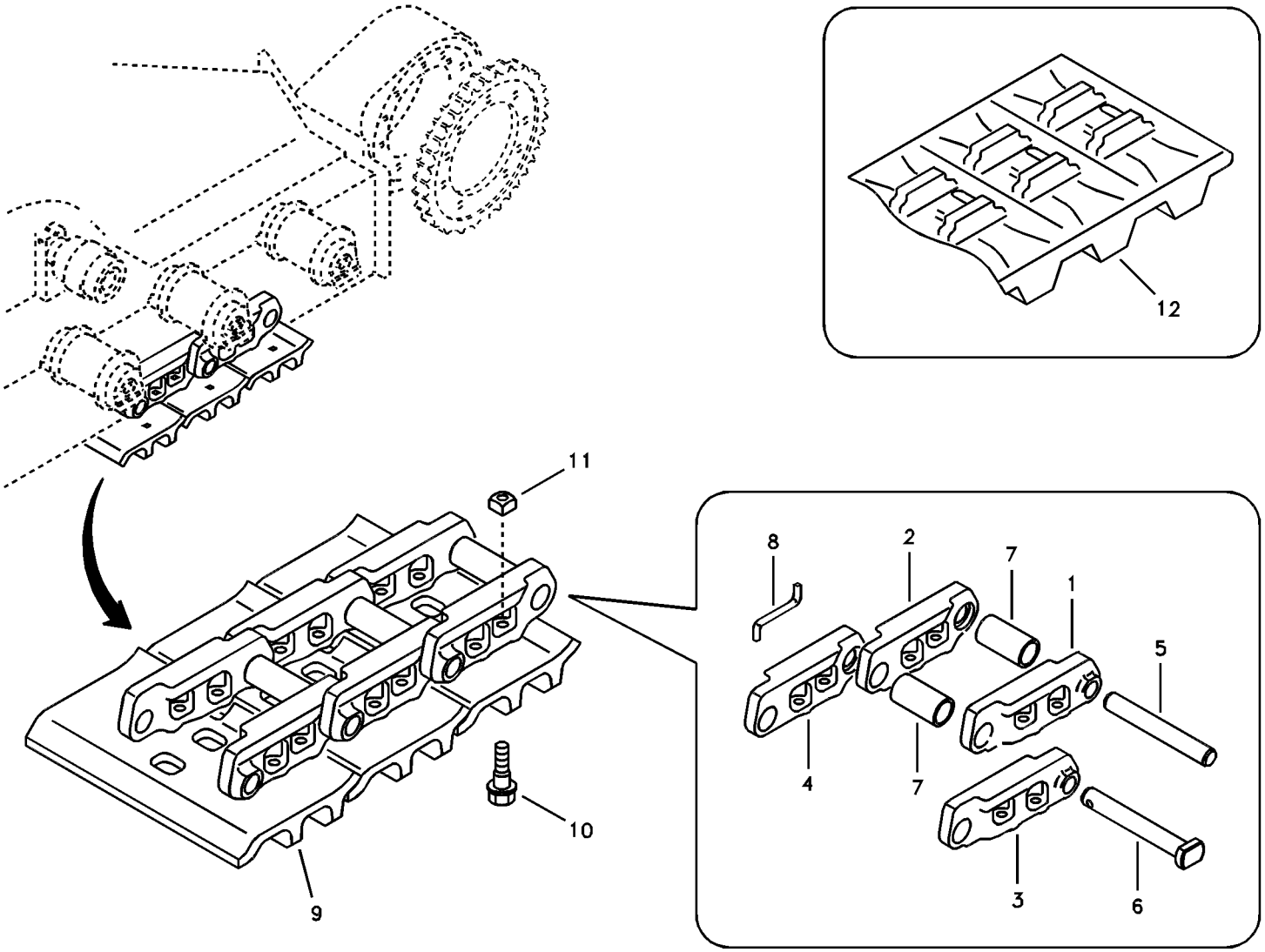
12
11
8
2
7
1
5
4
7
10
9
3
6

Fig.	Part No.	Quantity 1	Quantity 2	Quantity 3	PS	KIT	Description	Dénomination	Bezeichnung	품명	Denominación	Notes
	VOE 14532457		2	2			Link	Articulation	Gelenk	링크	Articulacion	
1	**SA 1182-00160**		38	38			•Link	•Articulation	•Gelenk	• 링크	•Articulacion	LH
2	**SA 1182-00170**		38	38			•Link	•Articulation	•Gelenk	• 링크	•Articulacion	RH
3	**SA 1182-00180**		1	1			•Link	•Articulation	•Gelenk	• 링크	•Articulacion	Master,LH
4	**SA 1182-00190**		1	1			•Link	•Articulation	•Gelenk	• 링크	•Articulacion	Master,RH
5	**VOE 14532458**		38	38			•Pin	•Goupille	•Zapfen	• 핀	•Pasador	
6	**VOE 14532459**		1	1			•Pin	•Goupille	•Zapfen	• 핀	•Pasador	
7	**VOE 14532460**		39	39			•Bushing	•Bague	•Buchse	• 부싱	•Casquillo	
8	**SA 1182-00230**		1	1			•Pin	•Goupille	•Zapfen	• 핀	•Pasador	
9	**VOE 14532461**		78				Track Shoe	Tuile chenilles	Bodenplatte	트랙 슈	Placa De Orugas	380mm
	VOE 14532462			78			Track Shoe	Tuile chenilles	Bodenplatte	트랙 슈	Placa De Orugas	350mm
10	**VOE 14880551**		312	312			Bolt	Boulon	Bolzen	볼트	Perno	
11	**VOE 14880572**		312	312			Nut	Ecrou	Mutter	너트	Tuerca	
12	**VOE 14532474**	2					Track Shoe	Tuile chenilles	Bodenplatte	트랙 슈	Placa De Orugas	Rubber

1	**8278831**	**Carro inferior, orugas con zapatas** 언더캐리지 , 트랙 및 트랙 슈 **Unterwagen, Kette mit Platten** **Châssis, chaîne avec berceau** **Undercarriage, track with shoes**	Catalogue id **20019**	Group **775**
2	**8278832**		Illustr. No **1007025**	Section **100**
3	**8278833**		Issue **VOE 74H9920019**	Page **259**
4				
5				

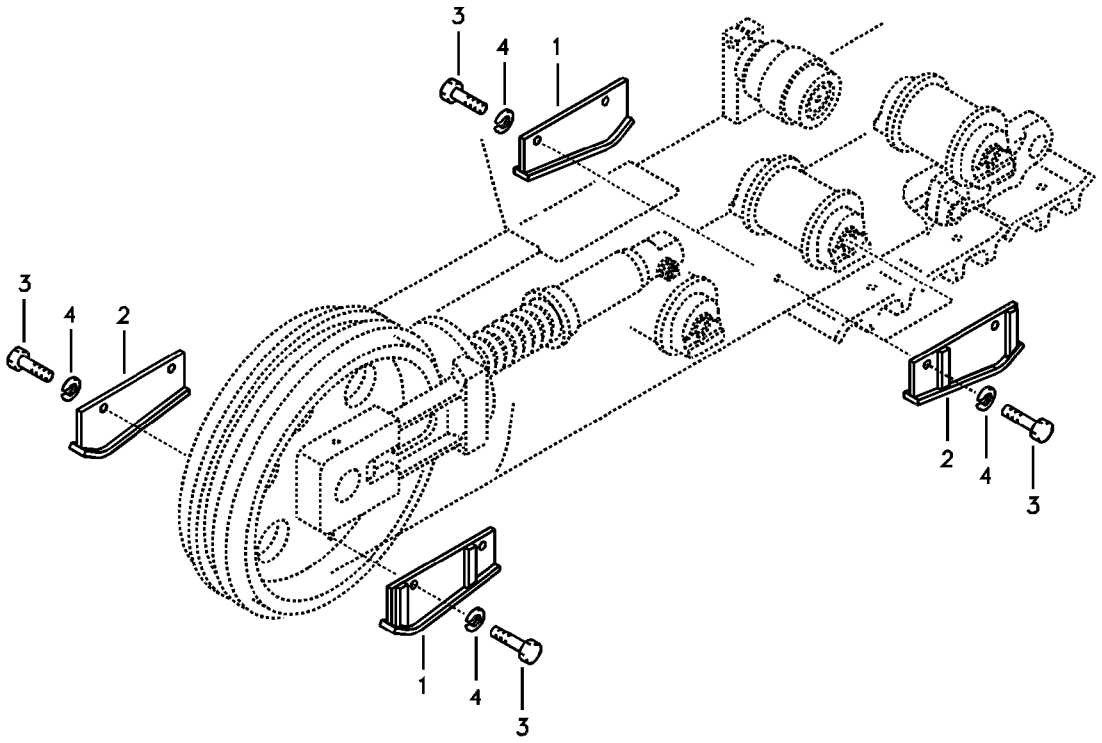
3
4
1
3
4
2
2
4
3
1
4
3

Fig.	Part No.	Quantity 1	2	3	PS	KIT	Description	Dénomination	Bezeichnung	품명	Denominación	Notes
1	**VOE 14532405**	4	4				Guard	Protection	Schutz	가드	Protección	SER NO 30001-34475 SER NO 50001-50129
	VOE 14545100	4	4				Guard	Protection	Schutz	가드	Protección	SER NO 34476- SER NO 50130-
2	**VOE 14532414**	4	4				Guard	Protection	Schutz	가드	Protección	SER NO 30001-34475 SER NO 50001-50129
	VOE 14545101	4	4				Guard	Protection	Schutz	가드	Protección	SER NO 34476- SER NO 50130-
3	**SA 9011-11608**	16	16		SS		Bolt	Boulon	Bolzen	볼트	Perno	
4	**VOE 955926**	16	16				Spring Washer	Rondelle élastique	Federscheibe	스프링 와셔	Arandela flexible	

1	**8278832**
2	**8278833**
3	
4	
5	

Carro inferior, protección de orugas
언더캐리지 , 트랙 가드
Unterwagen, Raupenschutz
Châssis porteur, protection de chenilles
Undercarriage, track guards

Catalogue id **20019**	Group **775**
Illustr. No **1018754**	Section **500**
Issue **VOE 74H9920019**	Page **261**

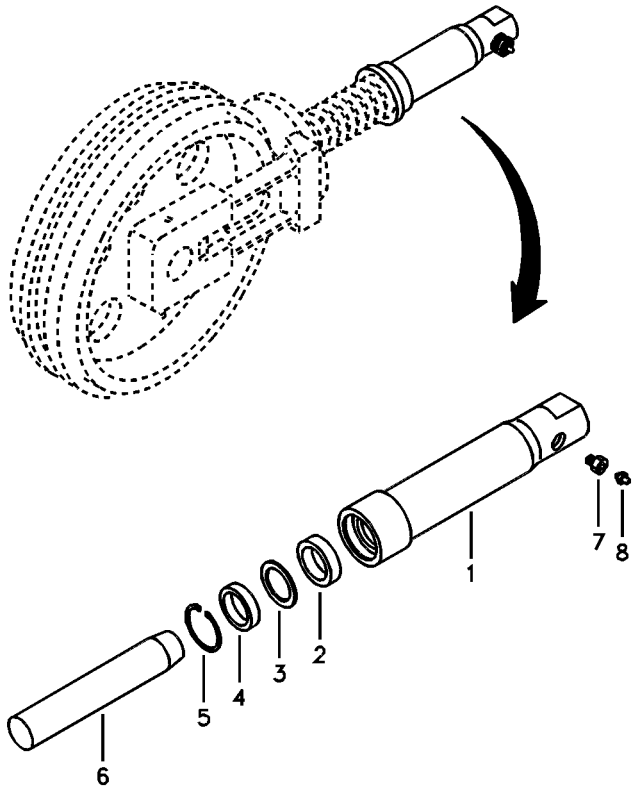
7
8
1
2
3
4
5
6

Fig.	Part No.	Quantity 1	2	3	PS	KIT	Description	Dénomination	Bezeichnung	품명	Denominación	Notes
	VOE 14521214	2			SS		Cylinder	Verin	Zylinder	실린더	Cilindro	SER NO 30001-31725
	VOE 14526402	2					Cylinder	Verin	Zylinder	실린더	Cilindro	SER NO 31726-34475
	VOE 14520944	2					Cylinder	Verin	Zylinder	실린더	Cilindro	SER NO 34476-
1		1			NS		•Body	•Carcasse	•Rumpf	• 본체	•Cuerpo	
2	**SA 9563-20402**	1				K	•Sealing ring	•Bague d'étanchéité	•Runddichtring	• 시일 링	•Anillo reten	SER NO 30001-34475
		1			NS	K	•Seal	•Joint	•Dichtring	• 시일	•Junta	SER NO 34476-
3	**SA 8230-24800**	1				K	•Ring	•Anneau	•Ring	• 링	•Anillo	SER NO 30001-34475
		1			NS	K	•Ring	•Anneau	•Ring	• 링	•Anillo	SER NO 34476-
4	**SA 8240-02840**	1			SS	K	•Seal	•Joint	•Dichtring	• 시일	•Junta	SER NO 30001-34475
		1			NS	K	•Seal	•Joint	•Dichtring	• 시일	•Junta	SER NO 34476-
5	**SA 9556-04000**	1			SS		•Ring	•Anneau	•Ring	• 링	•Anillo	SER NO 30001-34475
	SA 9556-05000	1					•Ring	•Anneau	•Ring	• 링	•Anillo	SER NO 34476-
6	**SA 1030-20300**	1			SS		•Piston	•Piston	•Kolben	• 피스톤	•Piston	SER NO 30001-33281
	VOE 14532261	1					•Piston	•Piston	•Kolben	• 피스톤	•Piston	SER NO 33282-34475
	VOE 14521244	1					•Piston	•Piston	•Kolben	• 피스톤	•Piston	SER NO 34476-
7	**SA 3081-00560**	1			SS		•Valve	•Soupape	•Ventil	• 밸브	•Valvula	SER NO 30001-31725
	VOE 14526406	1					•Valve	•Soupape	•Ventil	• 밸브	•Valvula	SER NO 31726-
8	**SA 9481-11003**	1					••Nipple	••Raccord	••Nippel	•• 니플	••Niple	
100	**SA 8230-02810**	1					Sealing Kit	Jeu Joints	Dichtungssatz	시일 킷	Juego Retenes	SER NO 30001-34475
	VOE 14530832	1					Sealing Kit	Jeu Joints	Dichtungssatz	시일 킷	Juego Retenes	SER NO 34476-

1	**8278796**	**Carro inferior, paquete de muelles** 언더캐리지 , 리코일 스프링 **Unterwagen, Federpaket** **Châssis porteur, jeu de ressorts** **Undercarriage, spring package**	Catalogue id **20019**	Group **775**
2				
3			Illustr. No **1007027**	Section **700**
4				
5			Issue **VOE 74H9920019**	Page **263**

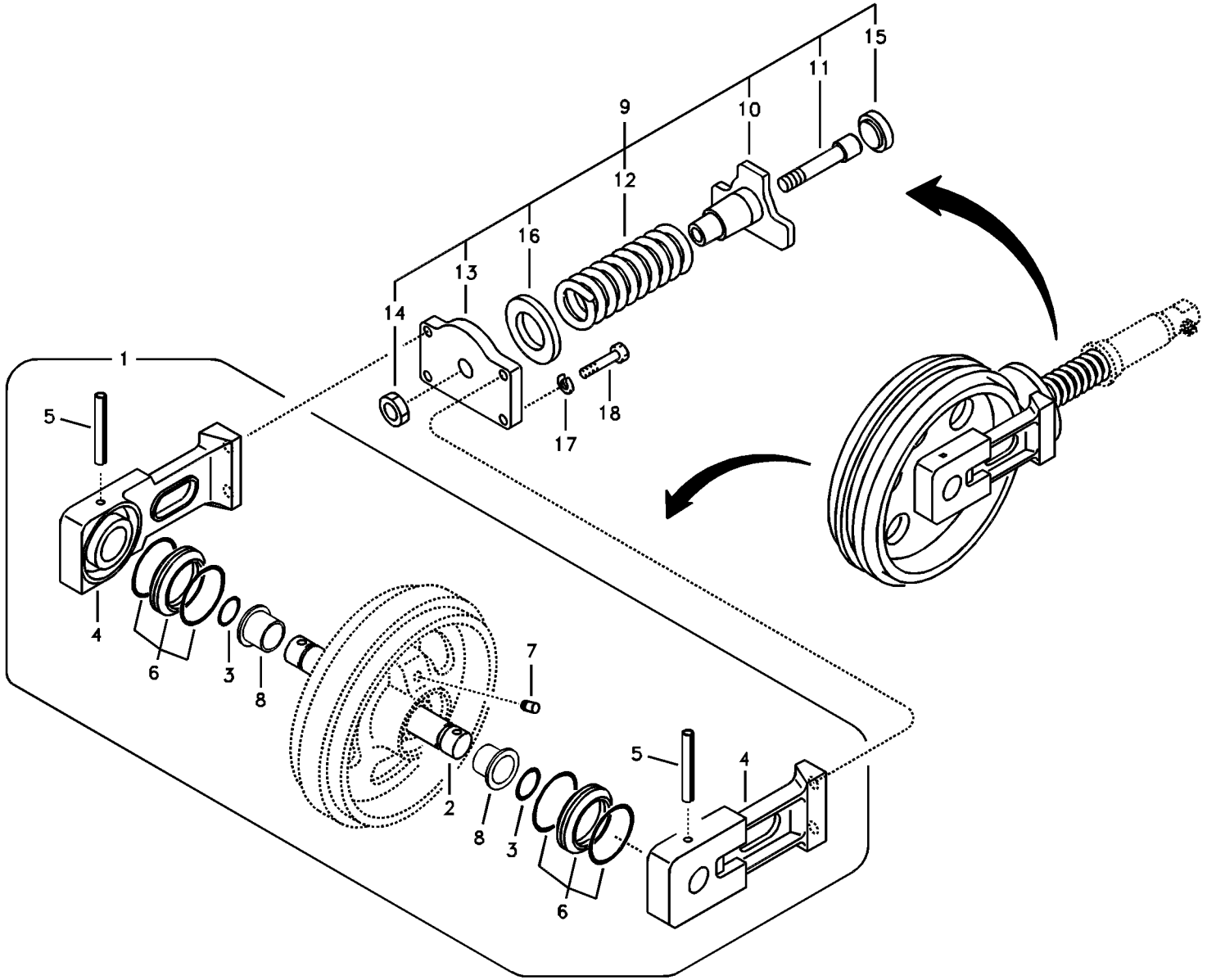
1
2
3
4
5
6
7
8
9
10
11
12
13
14
15
16
17
18

Fig.	Part No.	Quantity 1	2	3	PS	KIT	Description	Dénomination	Bezeichnung	품명	Denominación	Notes
	VOE 14501411	2			OP		Idler	Pignon Fou	Vorgelegerad	아이들러	Pinon Intermed	
	VOE 14501410		2	2	SS		Idler	Pignon Fou	Vorgelegerad	아이들러	Pinon Intermed	
1	**SA 1181-00620**	1			SS		•Idler	•Pignon Fou	•Vorgelegerad	• 아이들러	•Pinon Intermed	SER NO 30001-33281 SER NO 50001-50063
	VOE 14532415	1					•Idler	•Pignon Fou	•Vorgelegerad	• 아이들러	•Pinon Intermed	SER NO 33282- SER NO 50064-
	SA 1181-00450		1	1	SS		•Idler	•Pignon Fou	•Vorgelegerad	• 아이들러	•Pinon Intermed	SER NO 30001-33281 SER NO 50001-50063
	VOE 14532404		1	1			•Idler	•Pignon Fou	•Vorgelegerad	• 아이들러	•Pinon Intermed	SER NO 33282- SER NO 50064-
2	**SA 1181-00550**	1	1	1			••Shaft	••Arbre	••Welle	•• 샤프트	••Arbol	
3	**SA 1081-01560**	2	2	2	SS		••O-ring	••Joint Torique	••O-Ring	•• 오링	••Junta torica	
4	**SA 1181-00560**	2	2	2	SS		••Bracket	••Console	••Konsole	•• 브라켓	••Ménsula	
5	**SA 9325-10045**	2	2	2			••Spring Pin	••Axe de ressort	••Federstift	•• 스프링 핀	••Pasador Resorte	
6	**SA 1081-01570**	2	2	2			••Seal	••Joint	••Dichtring	•• 시일	••Junta	
7	**SA 9415-43012**	1	1	1			••Plug	••Bouchon	••Stopfen	•• 플러그	••Tapon	
8	**SA 1081-01510**	2	2	2			••Bushing	••Bague	••Buchse	•• 부싱	••Casquillo	
9	**SA 1181-00690**	1			SS		•Recoil Spring	•Ressort Rappel	•Ruckzugsfeder	• 리코일 스프링	•Muelle Retroc	SER NO 30001-33281 SER NO 50001-50063
	VOE 14532420	1					•Recoil Spring	•Ressort Rappel	•Ruckzugsfeder	• 리코일 스프링	•Muelle Retroc	SER NO 33282- SER NO 50064-
	SA 1181-00990		1	1	SS		•Recoil Spring	•Ressort Rappel	•Ruckzugsfeder	• 리코일 스프링	•Muelle Retroc	SER NO 30001-33281 SER NO 50001-50063
	VOE 14532427		1	1			•Recoil Spring	•Ressort Rappel	•Ruckzugsfeder	• 리코일 스프링	•Muelle Retroc	SER NO 33282- SER NO 50064-
10	**SA 1081-01121**	1	1	1			••Spring	••Ressort	••Feder	•• 스프링	••Muelle	
11	**SA 1181-01001**	1	1	1			••Rod	••Monture	••Fuhler	•• 로드	••Varilla	
12	**SA 1081-01140**	1	1	1			••Spring	••Ressort	••Feder	•• 스프링	••Muelle	
13	**SA 1081-01150**	1	1	1			••Plate	••Plaque	••Platte	•• 플레이트	••Placa	
14	**SA 9111-32400**	1	1	1			••Nut	••Ecrou	••Mutter	•• 너트	••Tuerca	

1	**8278831**
2	**8278832**
3	**8278833**
4	
5	

Ruedas de guía delanteras
아이들러
Vorderrad
Roue AV
Front idler

Catalogue id	Group
20019	**775**
Illustr. No **1014326**	Section **800**
Issue **VOE 74H9920019**	Page **265**

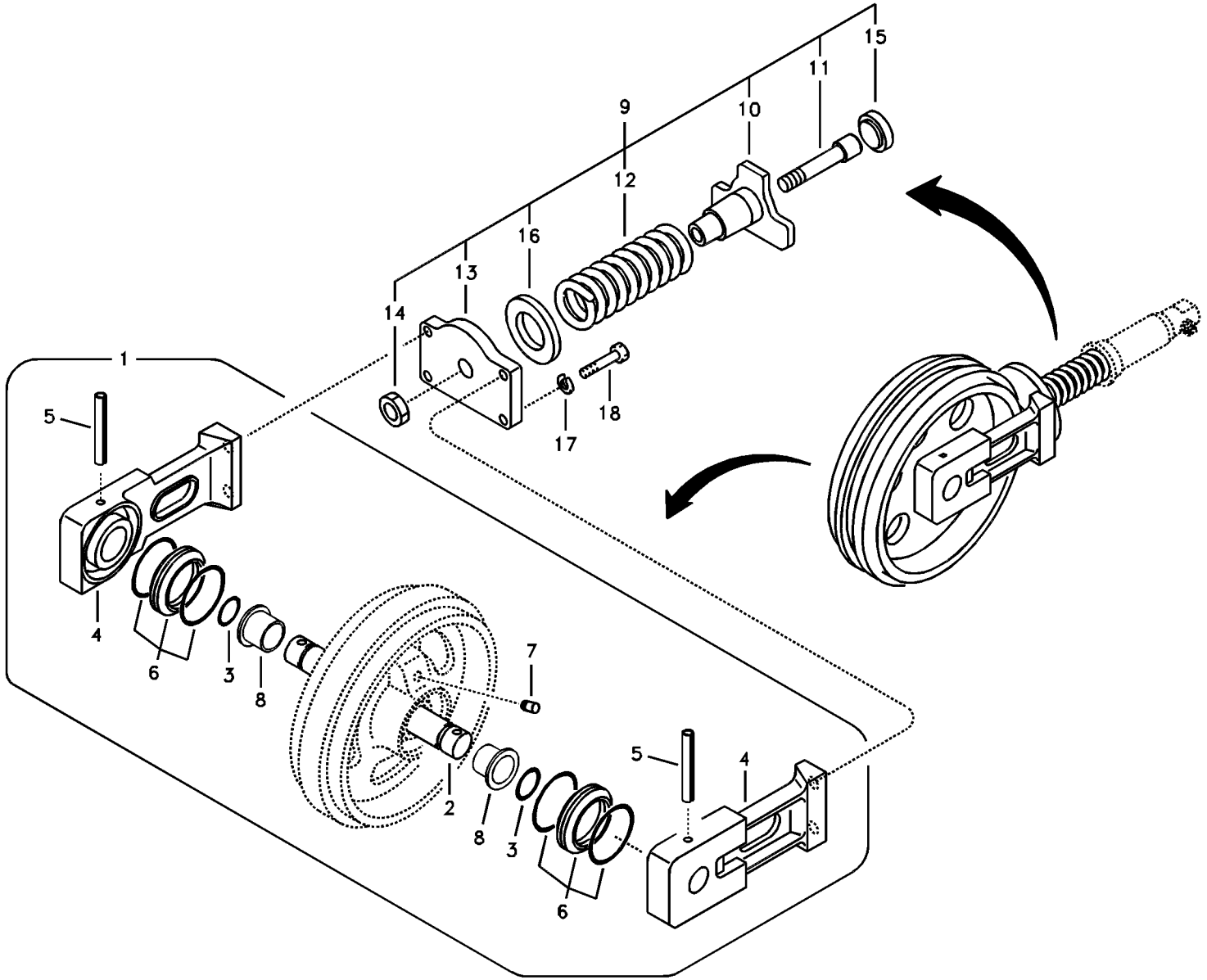
1
2
3
4
5
6
7
8
9
10
11
12
13
14
15
16
17
18

Fig.	Part No.	Quantity 1	2	3	PS	KIT	Description	Dénomination	Bezeichnung	품명	Denominación	Notes
15	**SA 1081-01170**	1	1	1			••Base	••Pied	••Fuss	•• 베이스	••Base	
16	**SA 1181-00700**	1			SS		••Plate	••Plaque	••Platte	•• 플레이트	••Placa	
17	**VOE 955923**	4	4	4			•Spring Washer	•Rondelle élastique	•Federscheibe	• 스프링 와셔	•Arandela flexible	
18	**VOE 978933**	4	4	4			•Screw	•Vis	•Schraube	• 스크류	•Tornillo	

1	**8278831**
2	**8278832**
3	**8278833**
4	
5	

Ruedas de guía delanteras
아이들러
Vorderrad
Roue AV
Front idler

Catalogue id **20019**	Group **775**
Illustr. No **1014326**	Section **800**
Issue **VOE 74H9920019**	Page **267**

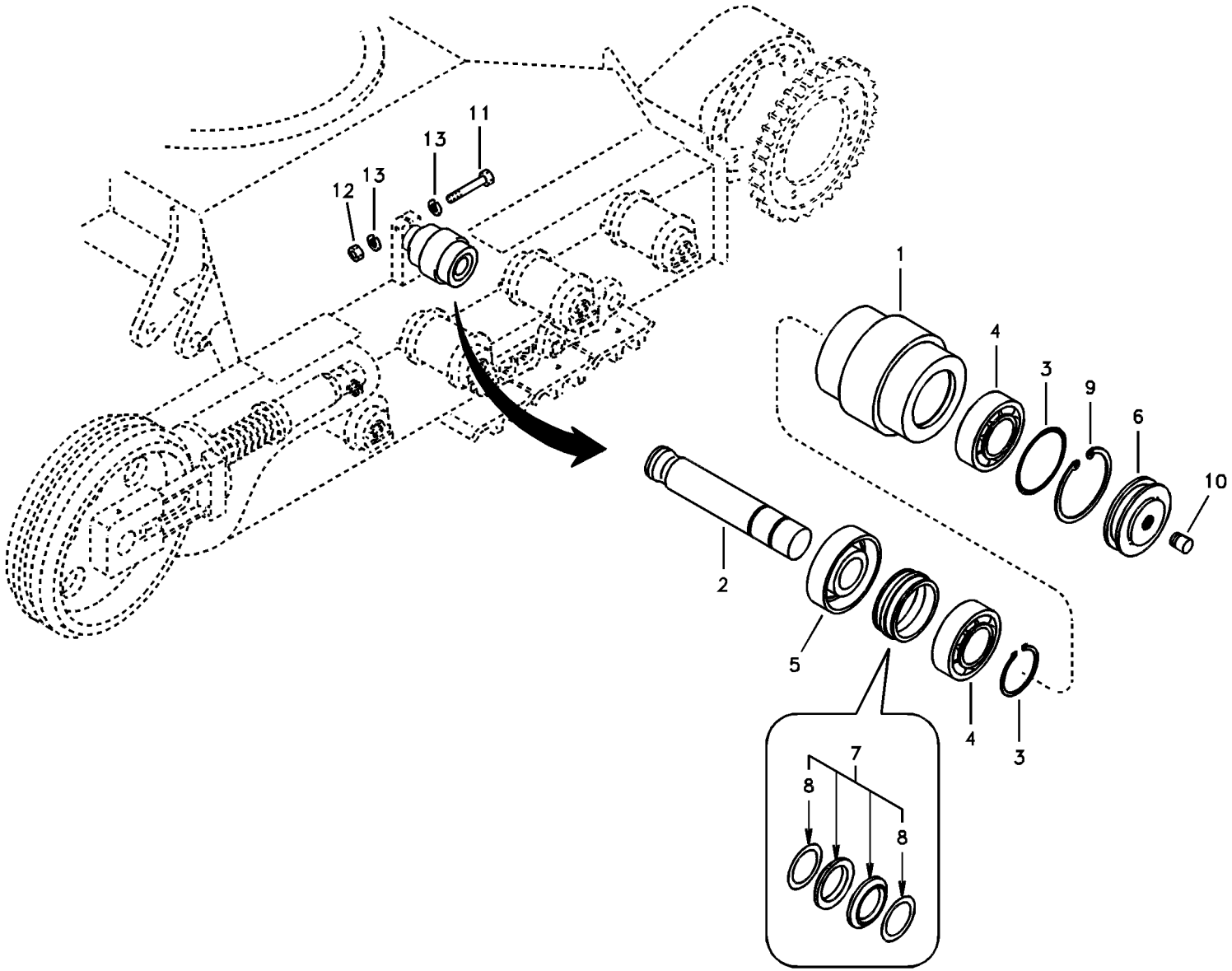
11
13
13
12
1
4
3
9
6
10
2
5
4
3
7
8
8

Fig.	Part No.	Quantity 1	2	3	PS	KIT	Description	Dénomination	Bezeichnung	품명	Denominación	Notes
	SA 1181-00440	2					Roller	Galet	Rolle	롤러	Rodillo	SER NO 30001-33331
	VOE 14531278	2					Roller	Galet	Rolle	롤러	Rodillo	SER NO 33332-
1		1			NS		•Roller	•Galet	•Rolle	• 롤러	•Rodillo	
2	**SA 1181-00471**	1					•Shaft	•Arbre	•Welle	• 샤프트	•Arbol	SER NO 30001-33331
	VOE 14531401	1					•Shaft	•Arbre	•Welle	• 샤프트	•Arbol	SER NO 33332-
3	**SA 1081-01460**	1					•O-ring	•Joint Torique	•O-Ring	• 오링	•Junta torica	SER NO 30001-33331
	VOE 14531406	1					•O-ring	•Joint Torique	•O-Ring	• 오링	•Junta torica	SER NO 33332-
4	**SA 1081-01420**	2					•Bearing	•Palier	•Lager	• 베어링	•Cojinete	SER NO 30001-33331
	VOE 14531426	2					•Bearing	•Palier	•Lager	• 베어링	•Cojinete	SER NO 33332-
5	**SA 1081-01440**	1					•Retainer	•Retenue	•Halter	• 리테이너	•Soporte	SER NO 30001-33331
	VOE 14531428	1					•Retainer	•Retenue	•Halter	• 리테이너	•Soporte	SER NO 33332-
6	**SA 1081-01450**	1					•Cover	•Capot	•Haube	• 커버	•Capo	SER NO 30001-33331
	VOE 14531429	1					•Cover	•Capot	•Haube	• 커버	•Capo	SER NO 33332-
7	**SA 1081-01430**	1					•Seal	•Joint	•Dichtring	• 시일	•Junta	SER NO 30001-33331
	VOE 14531427	1					•Seal	•Joint	•Dichtring	• 시일	•Junta	SER NO 33332-
8		2			NS		••O-ring	••Joint Torique	••O-Ring	•• 오링	••Junta torica	
9	**SA 9541-02062**	1					•Ring	•Anneau	•Ring	• 링	•Anillo	
10	**SA 9415-43012**	1					•Plug	•Bouchon	•Stopfen	• 플러그	•Tapon	
11	**SA 9011-21214**	2					Bolt	Boulon	Bolzen	볼트	Perno	
12	**VOE 979019**	2					Hexagon Nut	Ecrou Hexagonal	Sechskantmutter	너트	Tuerca Hexagon	
13	**VOE 955923**	4					Spring Washer	Rondelle élastique	Federscheibe	스프링 와셔	Arandela flexible	

1	**8278796**	**Rodillo superior** 상부 롤러 **Tragrolle** **Rouleau supérieur** **Top roller**	Catalogue id **20019** / Group **775**
2			Illustr. No **1007029** / Section **900**
3			Issue **VOE 74H9920019** / Page **269**
4			
5			

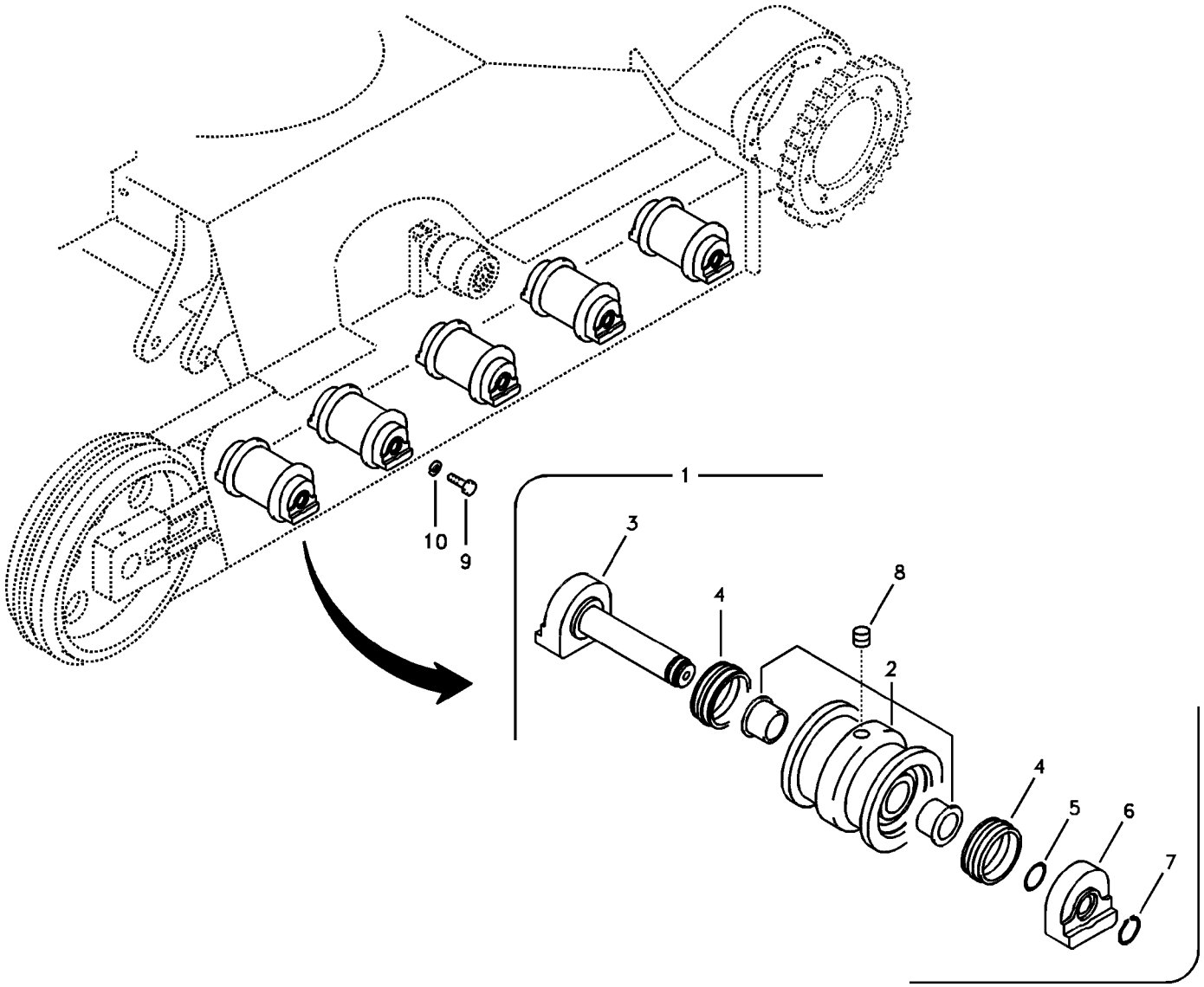
1
2
3
4
4
5
6
7
8
9
10

Fig.	Part No.	Quantity 1	2	3	PS	KIT	Description	Dénomination	Bezeichnung	품명	Denominación	Notes
1	**VOE 14532403**	4	10	10			Roller	Galet	Rolle	롤러	Rodillo	SER NO 30001-34833 SER NO 50001-50130
	VOE 14543561	4	10	10			Roller	Galet	Rolle	롤러	Rodillo	SER NO 34834- SER NO 50131-
2		1	1	1	NS		•Shell	•Enveloppe	•Schale	• 셸	•Casco	
	VOE 14543564	2	2	2			••Bushing	••Bague	••Buchse	•• 부싱	••Casquillo	
3	**VOE 14532407**	1	1	1			•Collar	•Collier	•Bördel	• 칼러	•Collar	
4	**VOE 14532304**	2	2	2			•Seal	•Joint	•Dichtring	• 시일	•Junta	
5	**VOE 14532302**	1	1	1			•O-ring	•Joint Torique	•O-Ring	• 오링	•Junta torica	
6	**VOE 14532408**	1	1	1			•Collar	•Collier	•Bördel	• 칼러	•Collar	
7	**SA 9541-01030**	1	1	1			•Ring	•Anneau	•Ring	• 링	•Anillo	
8	**SA 9415-43012**	1	1	1			•Plug	•Bouchon	•Stopfen	• 플러그	•Tapon	
9	**SA 9011-11608**	8	20	20	SS		Bolt	Boulon	Bolzen	볼트	Perno	
10	**VOE 955926**	8	20	20			Spring Washer	Rondelle élastique	Federscheibe	스프링 와셔	Arandela flexible	

1	**8278831**
2	**8278832**
3	**8278833**
4	
5	

Rodillo inferior
하부 롤러
Laufrolle
Rouleau inférieur
Bottom roller

Catalogue id	Group
20019	**775**
Illustr. No **1020491**	Section **1000**
Issue **VOE 74H9920019**	Page **271**

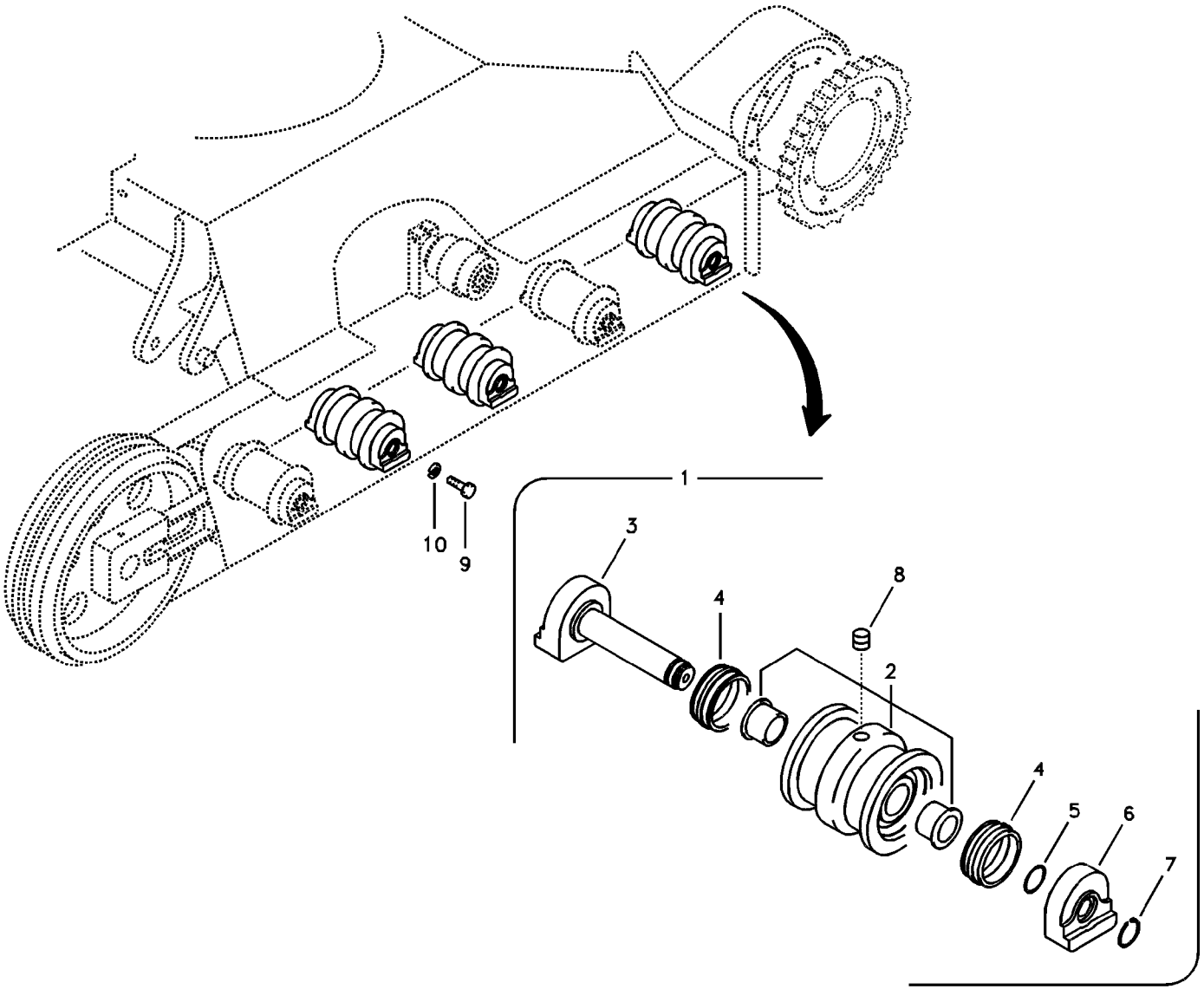
1
3
4
8
2
4
5
6
7
10
9

Fig.	Part No.	Quantity 1	2	3	PS	KIT	Description	Dénomination	Bezeichnung	품명	Denominación	Notes
1	**VOE 14532416**	6					Roller	Galet	Rolle	롤러	Rodillo	SER NO 30001-34833 SER NO 50001-50130
	VOE 14543565	6					Roller	Galet	Rolle	롤러	Rodillo	SER NO 34834- SER NO 50131-
2		1			NS		•Shell	•Enveloppe	•Schale	• 셸	•Casco	
	VOE 14543564	2					••Bushing	••Bague	••Buchse	•• 부싱	••Casquillo	
3	**VOE 14532407**	1					•Collar	•Collier	•Bördel	• 칼러	•Collar	
4	**VOE 14532304**	2					•Seal	•Joint	•Dichtring	• 시일	•Junta	
5	**VOE 14532302**	1					•O-ring	•Joint Torique	•O-Ring	• 오링	•Junta torica	
6	**VOE 14532408**	1					•Collar	•Collier	•Bördel	• 칼러	•Collar	
7	**SA 9541-01030**	1					•Ring	•Anneau	•Ring	• 링	•Anillo	
8	**SA 9415-43012**	1					•Plug	•Bouchon	•Stopfen	• 플러그	•Tapon	
9	**SA 9011-11608**	12			SS		Bolt	Boulon	Bolzen	볼트	Perno	
10	**VOE 955926**	12					Spring Washer	Rondelle élastique	Federscheibe	스프링 와셔	Arandela flexible	

1	**8278831**	**Rodillo inferior** 하부 롤러 **Laufrolle** **Rouleau inférieur** **Bottom roller**	Catalogue id **20019**	Group **775**
2				
3			Illustr. No **1020492**	Section **1100**
4				
5			Issue **VOE 74H9920019**	Page **273**

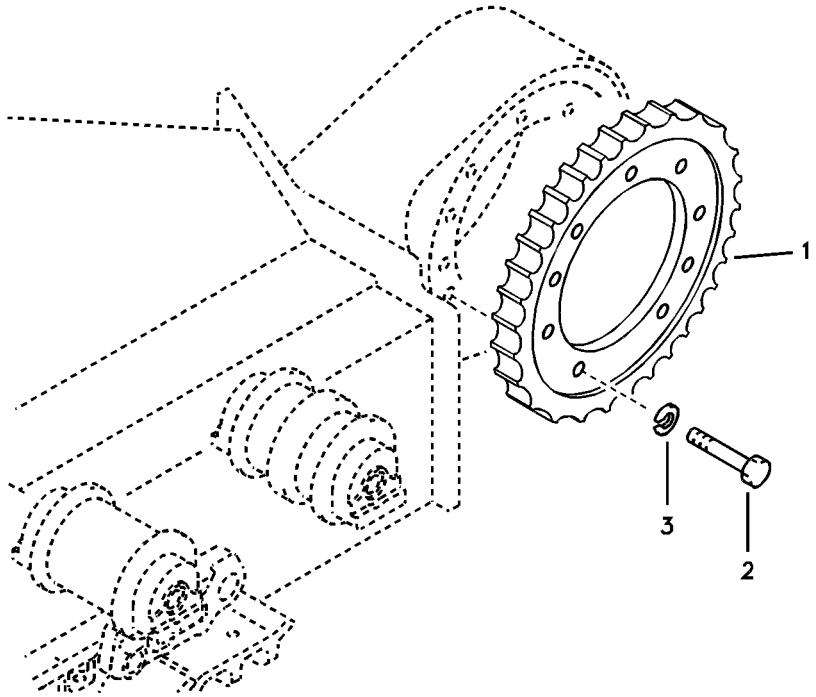
1
2
3

Fig.	Part No.	Quantity 1	2	3	PS	KIT	Description	Dénomination	Bezeichnung	품명	Denominación	Notes
1	**VOE 14507728**	2					Sprocket	Barbotin	Kettenrad	스프로켓	Rueda de cadena	
2	**SA 9011-11407**	24					Bolt	Boulon	Bolzen	볼트	Perno	
3	**SA 9213-14000**	24					Washer	Rondelle	Scheibe	와셔	Arandela	

1	**8278796**	**Rueda motriz** 스프로켓 **Kettentrieb** **Barbotin** **Sprocket**	Catalogue id **20019**	Group **775**
2			Illustr. No **1007032**	Section **1200**
3			Issue **VOE 74H9920019**	Page **275**
4				
5				

VOLVO

Construction Equipment

GROUP		Section	Page
810	Cab mount	100	283
810	Cab mount FOR CHINA	110	287
810	Operator's cab	400	289
810	Operator's cab FOR CHINA	410	291
810	Operator's cab	500	293
810	Operator's cab FOR CHINA	510	295
810	Operator's cab	600	297
810	Operator's cab FOR CHINA	610	301
810	Operator's cab	700	305
810	Operator's cab FOR CHINA	710	307
821	Cowl frame	100	309
821	Cowl frame, cover and hood	200	311
821	Cowl frame, cover and hood FOR CHINA	210	315
821	Cowl frame, cover and hood	250	319
830	Door, operator's cab	100	321
830	Door, operator's cab FOR CHINA	110	323
830	Door, operator's cab	200	325
837	Cabin floor	100	329
837	Hatches under engine, hydr.pumps, cooler, m.valve and fuel tank.	200	331
841	Rear view mirror	100	335
843	Windows	100	339
843	Windows FOR CHINA	110	341
843	Windshield	200	343
843	Windshield FOR CHINA	210	345
852	Operator seat with fitting parts	100	347
860	Falling object guards	200	349
860	Fops, protecting equipment	300	351
870	Air conditioning line, cooling and heater	100	353
873	Heating line	100	357
874	Air conditioning unit line	100	359
874	Air duct in cabin and cabin floor	200	363
874	Air duct in cabin and cabin floor	250	365
874	Air duct in cabin and cabin floor FOR CHINA	260	367
881	Instrument panel, control panel	100	369
896	Tool	100	373
896	Spare parts kit	200	377
897	Decal, outer location	100	379
897	Decal, inner location	200	383

TABLE DES MATIÈRES

GROUPE		Section	Page
810	Fixation de cabine	100	283
810	Fixation de cabine FOR CHINA	110	287
810	Cabine conducteur	400	289
810	Cabine conducteur FOR CHINA	410	291
810	Cabine conducteur	500	293
810	Cabine conducteur FOR CHINA	510	295
810	Cabine conducteur	600	297
810	Cabine conducteur FOR CHINA	610	301
810	Cabine conducteur	700	305
810	Cabine conducteur FOR CHINA	710	307
821	Bâti	100	309
821	Cadre, couvercle et capot d'auvent	200	311
821	Cadre, couvercle et capot d'auvent FOR CHINA	210	315
821	Cadre, couvercle et capot d'auvent	250	319
830	Porte, cabine conducteur	100	321
830	Porte, cabine conducteur FOR CHINA	110	323
830	Porte, cabine conducteur	200	325
837	Plancher de cabine	100	329
837	Trappes sous moteur, pompes hydr., radiateur, valves et réservoir carbura	200	331
841	Rétroviseur	100	335
843	Fenêtres	100	339
843	Fenêtres FOR CHINA	110	341
843	Pare-brise	200	343
843	Pare-brise FOR CHINA	210	345
852	Siège conducteur avec pièces de montage	100	347
860	Equipement anti-chute	200	349
860	Fops, équipement de protection	300	351
870	Conduite de conditionnement d'air, refroidissement et chauffage	100	353
873	Chaufferette de voiture	100	357
874	Unité de conditionnement d'air	100	359
874	Conduit d'air dans la cabine et dans le plancher de cabine	200	363
874	Conduit d'air dans la cabine et dans le plancher de cabine	250	365
874	Conduit d'air dans la cabine et dans le plancher de cabine FOR CHINA	260	367
881	Panneau d'instruments, panneau de commande	100	369
896	Outil	100	373
896	Kit pièce de rechange	200	377
897	Autocollant, extérieur	100	379
897	Autocollant, intérieur	200	383

GRUPPE		Abschnitt	Seite
810	Kabinenausstattung	100	283
810	Kabinenausstattung FOR CHINA	110	287
810	Fahrerkabine	400	289
810	Fahrerkabine FOR CHINA	410	291
810	Fahrerkabine	500	293
810	Fahrerkabine FOR CHINA	510	295
810	Fahrerkabine	600	297
810	Fahrerkabine FOR CHINA	610	301
810	Fahrerkabine	700	305
810	Fahrerkabine FOR CHINA	710	307
821	Stativ	100	309
821	Motorhaube, Rahmen und Abdeckung	200	311
821	Motorhaube, Rahmen und Abdeckung FOR CHINA	210	315
821	Motorhaube, Rahmen und Abdeckung	250	319
830	Tür, Fahrerkabine	100	321
830	Tür, Fahrerkabine FOR CHINA	110	323
830	Tür, Fahrerkabine	200	325
837	Kabinenboden	100	329
837	Luken unter Motor, Hyd.pumpen, Kühler, M.ventil und Tank	200	331
841	Rückspiegel	100	335
843	Fenster	100	339
843	Fenster FOR CHINA	110	341
843	Frontscheibe	200	343
843	Frontscheibe FOR CHINA	210	345
852	Fahrersitz mit Anbauteilen	100	347
860	Fallschutzausrüstung	200	349
860	Fops, Schutzausrüstung	300	351
870	Leitungsrohr für Klimaanlage, Kühler und Heizung	100	353
873	Heizungsrohr	100	357
874	Klimaanlage, Leitung	100	359
874	Luftkanal in Kabine und Kabinenboden	200	363
874	Luftkanal in Kabine und Kabinenboden	250	365
874	Luftkanal in Kabine und Kabinenboden FOR CHINA	260	367
881	Armaturenbrett, Bedientafel	100	369
896	Werkzeug	100	373
896	Ersatzteilsatz	200	377
897	Aufkleber, aussen	100	379
897	Aufkleber, innen	200	383

목차

그룹		절	페이지
810	운전실 장착 부품	100	283
810	운전실 장착 부품	110	287
810	운전실	400	289
810	운전실	410	291
810	운전실	500	293
810	운전실	510	295
810	운전실	600	297
810	운전실	610	301
810	운전실	700	305
810	운전실	710	307
821	카울 프레임	100	309
821	카울 프레임 , 커버 및 후드	200	311
821	카울 프레임 , 커버 및 후드	210	315
821	카울 프레임 , 커버 및 후드	250	319
830	운전실 도어	100	321
830	운전실 도어	110	323
830	운전실 도어	200	325
837	운전실 플로어	100	329
837	보텀 커버 플레이트	200	331
841	후사경	100	335
843	운전실 글라스	100	339
843	운전실 글라스	110	341
843	앞 유리창	200	343
843	앞 유리창	210	345
852	운전석 및 장착 부품	100	347
860	낙하물 보호장치 ; 포그	200	349
860	낙하물 보호장치 ; 폽스	300	351
870	에어콘 유니트 배관 , 쿨러 및 히터 겸용	100	353
873	히터 배관	100	357
874	에어콘 유니트 배관	100	359
874	에어 분기장치	200	363
874	에어 분기장치	250	365
874	에어 분기장치	260	367
881	계기판 , 제어 패널	100	369
896	공구	100	373
896	스페어 파트	200	377
897	데칼 , 외부	100	379
897	데칼 , 내부	200	383

GRUPO		Sección	Página
810	Accesorio de cabina	100	283
810	Accesorio de cabina FOR CHINA	110	287
810	Cabina del conductor	400	289
810	Cabina del conductor FOR CHINA	410	291
810	Cabina del conductor	500	293
810	Cabina del conductor FOR CHINA	510	295
810	Cabina del conductor	600	297
810	Cabina del conductor FOR CHINA	610	301
810	Cabina del conductor	700	305
810	Cabina del conductor FOR CHINA	710	307
821	Bastidor	100	309
821	Bastidor de capó, cubierta y capó	200	311
821	Bastidor de capó, cubierta y capó FOR CHINA	210	315
821	Bastidor de capó, cubierta y capó	250	319
830	Puerta, cabina	100	321
830	Puerta, cabina FOR CHINA	110	323
830	Puerta, cabina	200	325
837	Suelo de cabina	100	329
837	Tapas bajo el motor, bombas hidr., enfriador, válvula p. y dep	200	331
841	Espejo retrovisor	100	335
843	Ventanas	100	339
843	Ventanas FOR CHINA	110	341
843	Parabrisas	200	343
843	Parabrisas FOR CHINA	210	345
852	Asiento del conductor con piezas de montaje	100	347
860	Equipo de protección contra caídas	200	349
860	Fops, equipo de protección	300	351
870	Tubería de aire acondicionado, refrigeración y calefacción	100	353
873	Calefacción tubería	100	357
874	Tubería de unidad de aire acondicionado	100	359
874	Conducto de aire en cabina y suelo de cabina	200	363
874	Conducto de aire en cabina y suelo de cabina	250	365
874	Conducto de aire en cabina y suelo de cabina FOR CHINA	260	367
881	Panel de instrumentos, panel de mandos	100	369
896	Herramienta	100	373
896	Kit recambios	200	377
897	Pegatina, ubicación exterior	100	379
897	Pegatina, ubicación interior	200	383

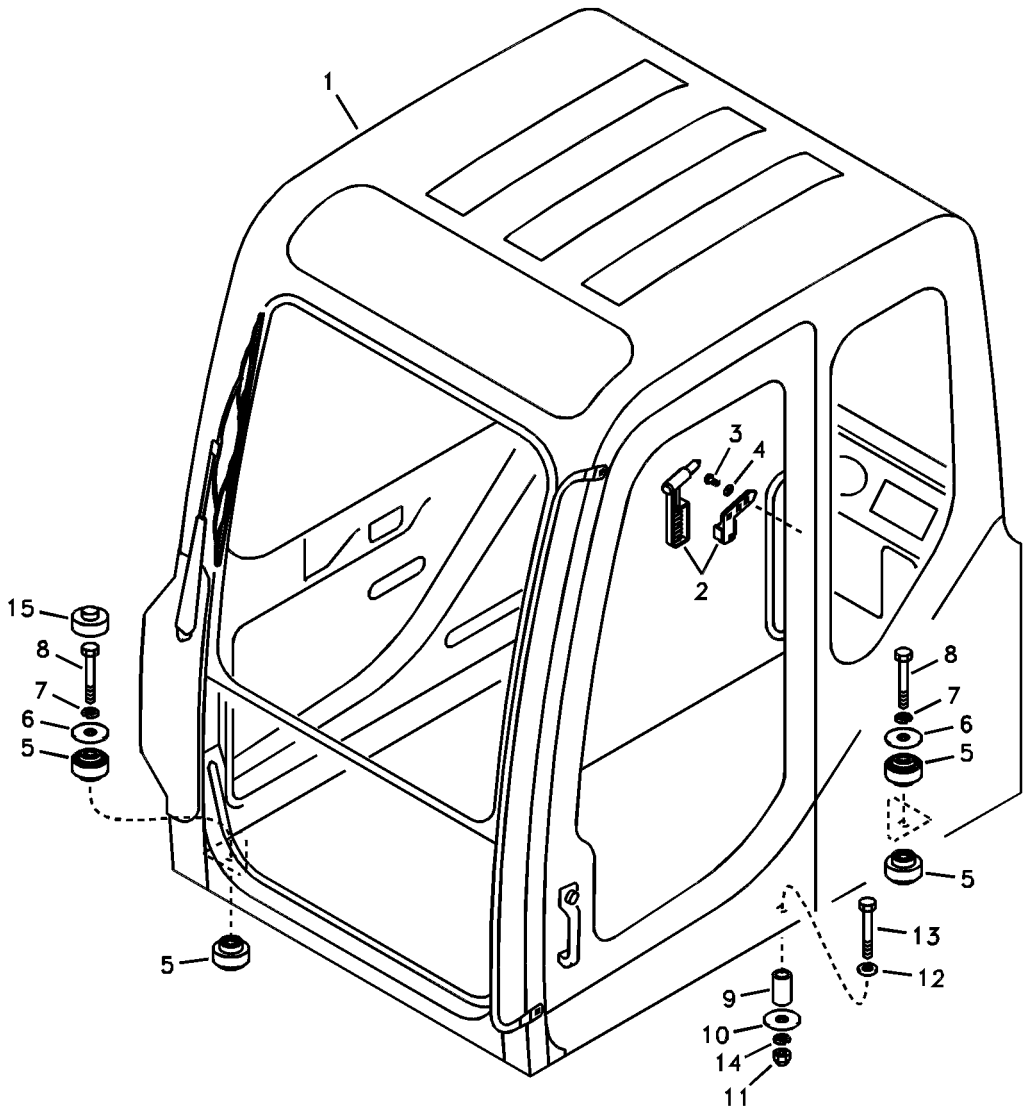
1
2
3
4
5
5
5
5
6
6
7
7
8
8
9
10
11
12
13
14
15

Fig.	Part No.	Quantity 1	2	3	4	5	PS	KIT	Description	Dénomination	Bezeichnung	품명	Denominación	Notes
1	**VOE 14520036**	1							Cab	Cabine	Kabine	운전실	Cabina	SER NO 30001-30666
	VOE 14522811	1					SS		Cab	Cabine	Kabine	운전실	Cabina	SER NO 30667-33895
	VOE 14530982	1							Cab	Cabine	Kabine	운전실	Cabina	SER NO 33896-
	VOE 14520043		1				SS		Cab	Cabine	Kabine	운전실	Cabina	SER NO 30001-30666
	VOE 14522812		1						Cab	Cabine	Kabine	운전실	Cabina	SER NO 30667-33895
	VOE 14530983		1						Cab	Cabine	Kabine	운전실	Cabina	SER NO 33896-
	VOE 14519923			1			SS		Cab	Cabine	Kabine	운전실	Cabina	SER NO 30001-30666
	VOE 14522809			1			SS		Cab	Cabine	Kabine	운전실	Cabina	SER NO 30667-33895
	VOE 14530980			1					Cab	Cabine	Kabine	운전실	Cabina	SER NO 33896-
	VOE 14519919				1		SS		Cab	Cabine	Kabine	운전실	Cabina	SER NO 30001-30666
	VOE 14522810				1				Cab	Cabine	Kabine	운전실	Cabina	SER NO 30667-33895 SER NO 50001-50093
	VOE 14530981				1				Cab	Cabine	Kabine	운전실	Cabina	SER NO 33896- SER NO 50094-
2	**VOE 14522184**	1	1	1	1				•Hammer	•Marteau	•Hammer	• 망치	•Martillo	
3	**SA 9021-10402**	3	3	3	3				•Screw	•Vis	•Schraube	• 스크류	•Tornillo	
4	**VOE 14880426**	3	3	3	3				•Washer	•Rondelle	•Scheibe	• 와셔	•Arandela	
5	**VOE 14520066**	8	8	8	8		SS		Isolator	Isolateur	Isolator	아이솔레이터	Aislamiento	SER NO 30001-33338
	VOE 14527542	8	8	8	8				Isolator	Isolateur	Isolator	아이솔레이터	Aislamiento	SER NO 33339-
6	**VOE 14520067**	4	4	4	4		SS		Washer	Rondelle	Scheibe	와셔	Arandela	SER NO 30001-30666
	VOE 14522804	4	4	4	4				Washer	Rondelle	Scheibe	와셔	Arandela	SER NO 30667-
7	**VOE 955926**	4	4	4	4				Spring Washer	Rondelle élastique	Federscheibe	스프링 와셔	Arandela flexible	
8	**VOE 980465**	4	4	4	4				Screw	Vis	Schraube	스크류	Tornillo	
9	**VOE 14520008**	1	1	1	1		SS		Boss	Bossage	Warze	보스	Teton	SER NO 30001-30666
	VOE 14522891	1	1	1	1				Boss	Bossage	Warze	보스	Teton	SER NO 30667-
10	**SA 2015-00370**	1	1	1	1				Washer	Rondelle	Scheibe	와셔	Arandela	SER NO 30001-33714
	VOE 14532476	1	1	1	1				Washer	Rondelle	Scheibe	와셔	Arandela	SER NO 33715-
11	**VOE 14880599**	1	1	1	1				Nut	Ecrou	Mutter	너트	Tuerca	
12	**VOE 960148**	1	1	1	1		SS		Washer	Rondelle	Scheibe	와셔	Arandela	
13	**VOE 983256**	1	1	1	1				Hexagon screw	Vis a tête hexagona	Sechskantschr	육각 나사	Tornillo hexago	

1	**8278806**	**Accesorio de cabina** 운전실 장착 부품 **Kabinenausstattung** **Fixation de cabine** **Cab mount**	Catalogue id **20019** / Group **810** Illustr. No **1007033** / Section **100** Issue **VOE 74H9920019** / Page **283**
2	**8278807**		
3	**8278808**		
4	**8278809**		
5			

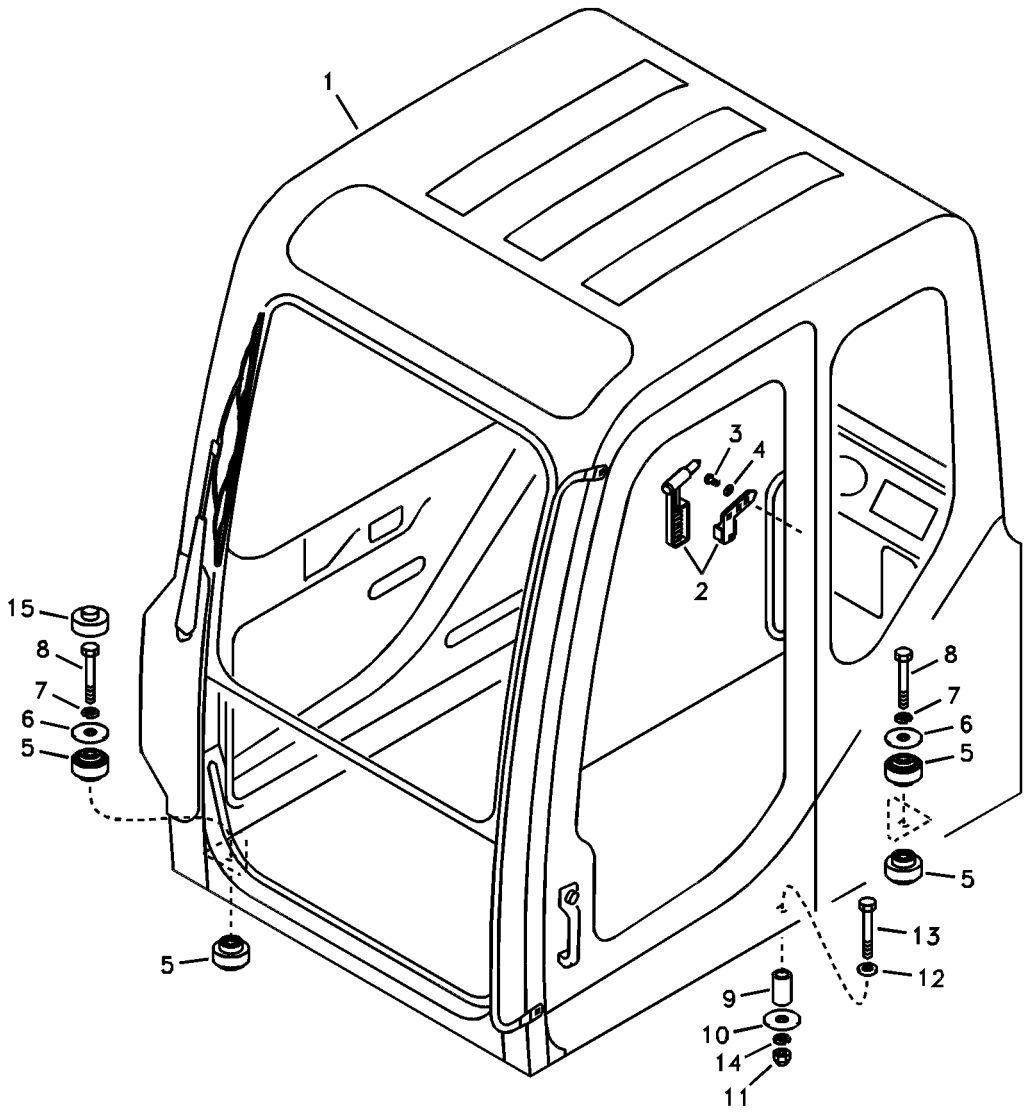
1
2
3
4
5
5
5
5
6
6
7
7
8
8
9
10
11
12
13
14
15

Fig.	Part No.	Quantity 1	2	3	4	5	PS	KIT	Description	Dénomination	Bezeichnung	품명	Denominación	Notes
14	**VOE 955922**	1	1	1	1				Spring Washer	Rondelle élastique	Federscheibe	스프링 와셔	Arandela flexible	
15	**VOE 14521825**	2	2	2	2				Cover	Capot	Haube	커버	Capo	

1	**8278806**
2	**8278807**
3	**8278808**
4	**8278809**
5	

Accesorio de cabina
운전실 장착 부품
Kabinenausstattung
Fixation de cabine
Cab mount

Catalogue id **20019**	Group **810**
Illustr. No **1007033**	Section **100**
Issue **VOE 74H9920019**	Page **285**

VOLVO

EC55B

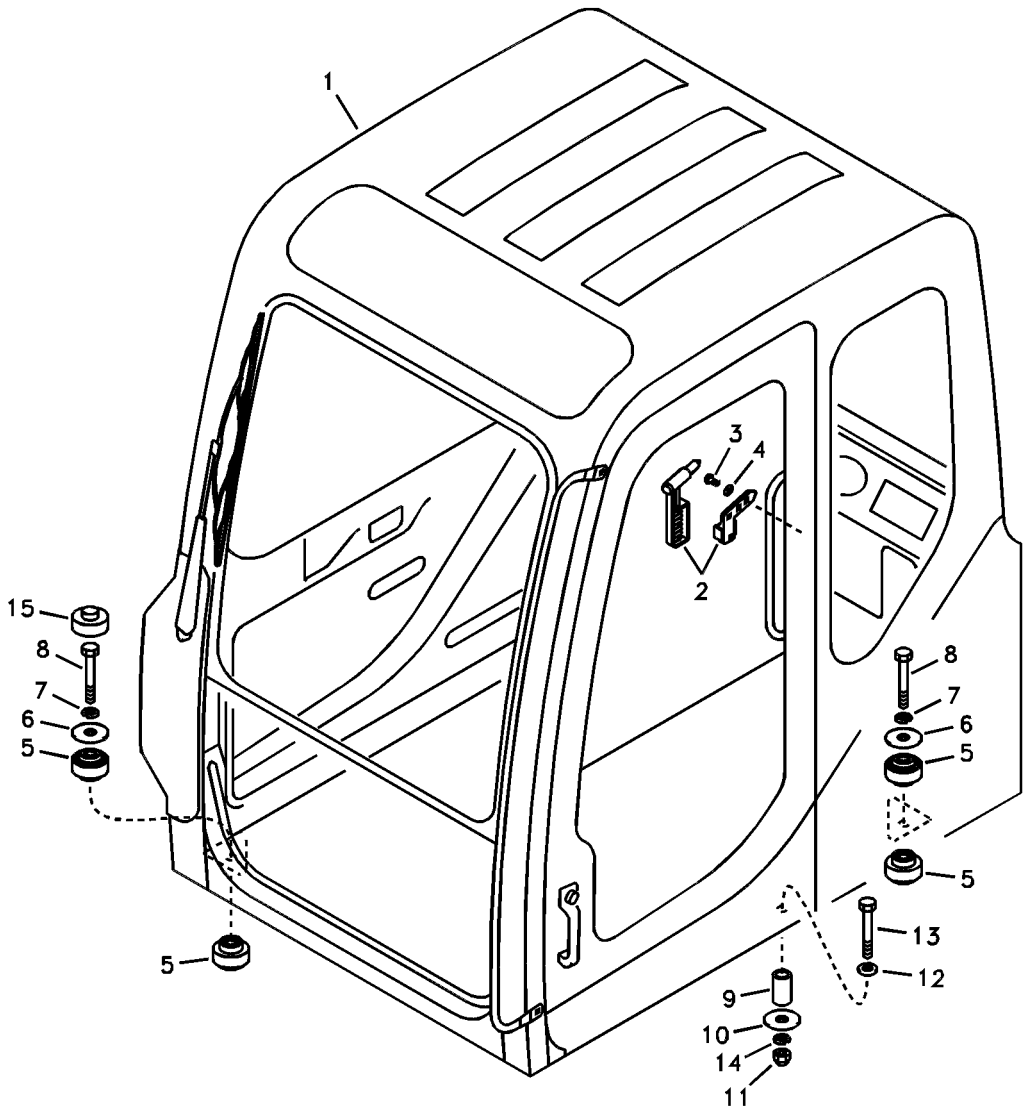
1
2
3
4
5
5
5
5
6
6
7
7
8
8
9
10
11
12
13
14
15

Fig.	Part No.	Quantity 1	2	3	PS	KIT	Description	Dénomination	Bezeichnung	품명	Denominación	Notes
1	**VOE 14522809**	1			SS		Cab	Cabine	Kabine	운전실	Cabina	
	VOE 14522810		1				Cab	Cabine	Kabine	운전실	Cabina	
2	**VOE 14522184**	1	1				•Hammer	•Marteau	•Hammer	• 망치	•Martillo	
3	**SA 9021-10402**	3	3				•Screw	•Vis	•Schraube	• 스크류	•Tornillo	
4	**VOE 14880426**	3	3				•Washer	•Rondelle	•Scheibe	• 와셔	•Arandela	
5	**VOE 14520066**	8	8		SS		Isolator	Isolateur	Isolator	아이솔레이터	Aislamiento	
6	**VOE 14522804**	4	4				Washer	Rondelle	Scheibe	와셔	Arandela	
7	**VOE 955926**	4	4				Spring Washer	Rondelle élastique	Federscheibe	스프링 와셔	Arandela flexible	
8	**VOE 980465**	4	4				Screw	Vis	Schraube	스크류	Tornillo	
9	**VOE 14522891**	1	1				Boss	Bossage	Warze	보스	Teton	
10	**SA 2015-00370**	1	1				Washer	Rondelle	Scheibe	와셔	Arandela	
11	**VOE 14880599**	1	1				Nut	Ecrou	Mutter	너트	Tuerca	
12	**VOE 960148**	1	1		SS		Washer	Rondelle	Scheibe	와셔	Arandela	
13	**VOE 983256**	1	1				Hexagon screw	Vis a tête hexagonale	Sechskantschr.	육각 나사	Tornillo hexago	
14	**VOE 955922**	1	1				Spring Washer	Rondelle élastique	Federscheibe	스프링 와셔	Arandela flexible	
15	**VOE 14521825**	2	2				Cover	Capot	Haube	커버	Capo	

1	**8278808**	**Accesorio de cabina** 운전실 장착 부품 **Kabinenausstattung** **Fixation de cabine** **Cab mount**	Catalogue id **20019**	Group **810**
2	**8278809**			
3			Illustr. No **1007033**	Section **110**
4				
5		**FOR CHINA**	Issue **VOE 74H9920019**	Page **287**

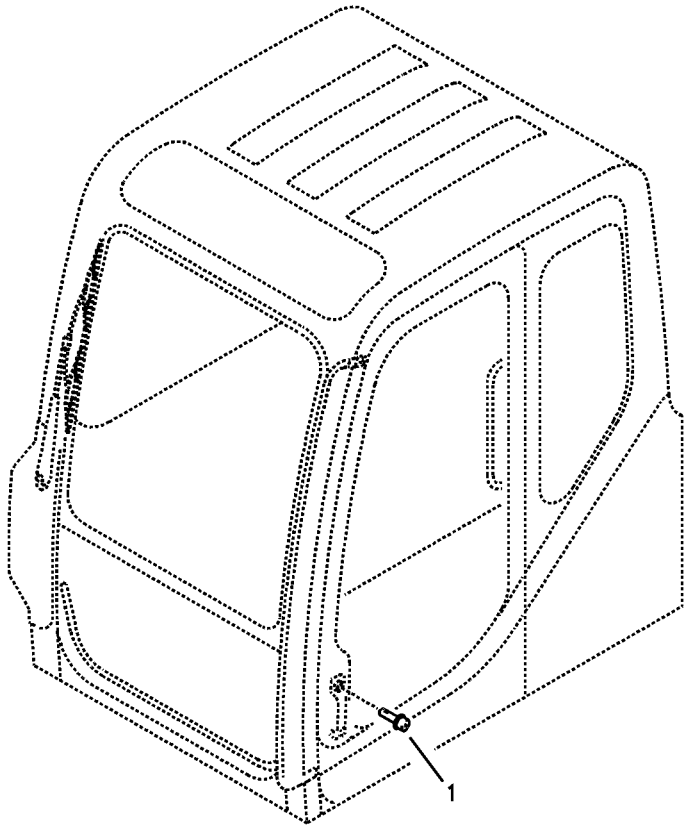
1

Fig.	Part No.	Quantity 1	2	3	PS	KIT	Description	Dénomination	Bezeichnung	품명	Denominación	Notes
1	**VOE 14527557**	1					Pusher	Poussoir	Stossel	푸셔	Empujador	
	VOE 14527562		1				Pusher	Poussoir	Stossel	푸셔	Empujador	

1	**8278819**	**Cabina del conductor** 운전실 **Fahrerkabine** **Cabine conducteur** **Operator's cab**	Catalogue id **20019**	Group **810**
2	**8278820**		Illustr. No **1014327**	Section **400**
3			Issue **VOE 74H9920019**	Page **289**
4				
5				

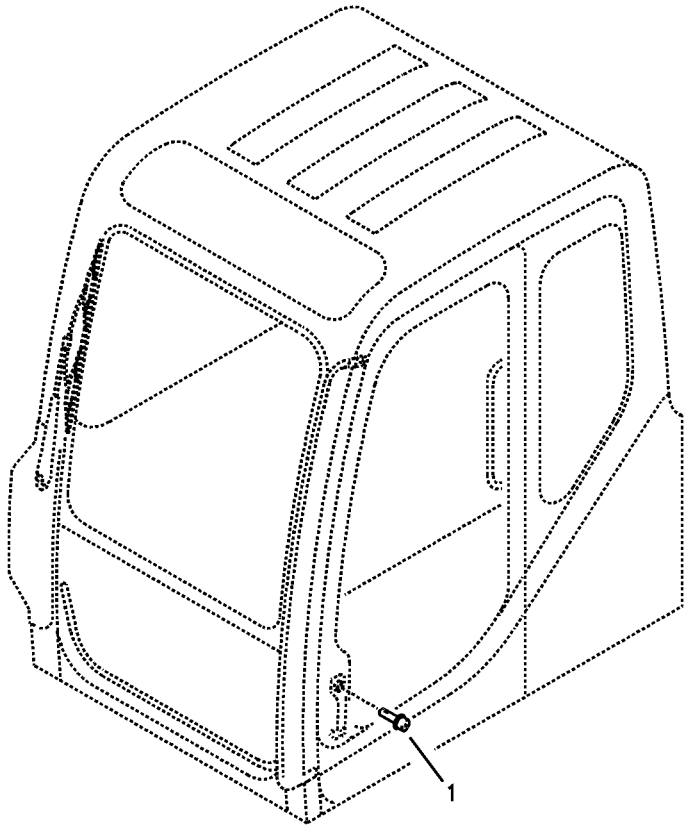
1

Fig.	Part No.	Quantity 1	2	3	PS	KIT	Description	Dénomination	Bezeichnung	품명	Denominación	Notes
1	**VOE 14527562**	1					Pusher.....	Poussoir	Stossel ……	푸셔	Empujador.....	

1	**8278820**	**Cabina del conductor** 운전실 **Fahrerkabine** **Cabine conducteur** **Operator's cab**	Catalogue id **20019**	Group **810**
2			Illustr. No **1014327**	Section **410**
3			Issue **VOE 74H9920019**	Page **291**
4				
5		**FOR CHINA**		

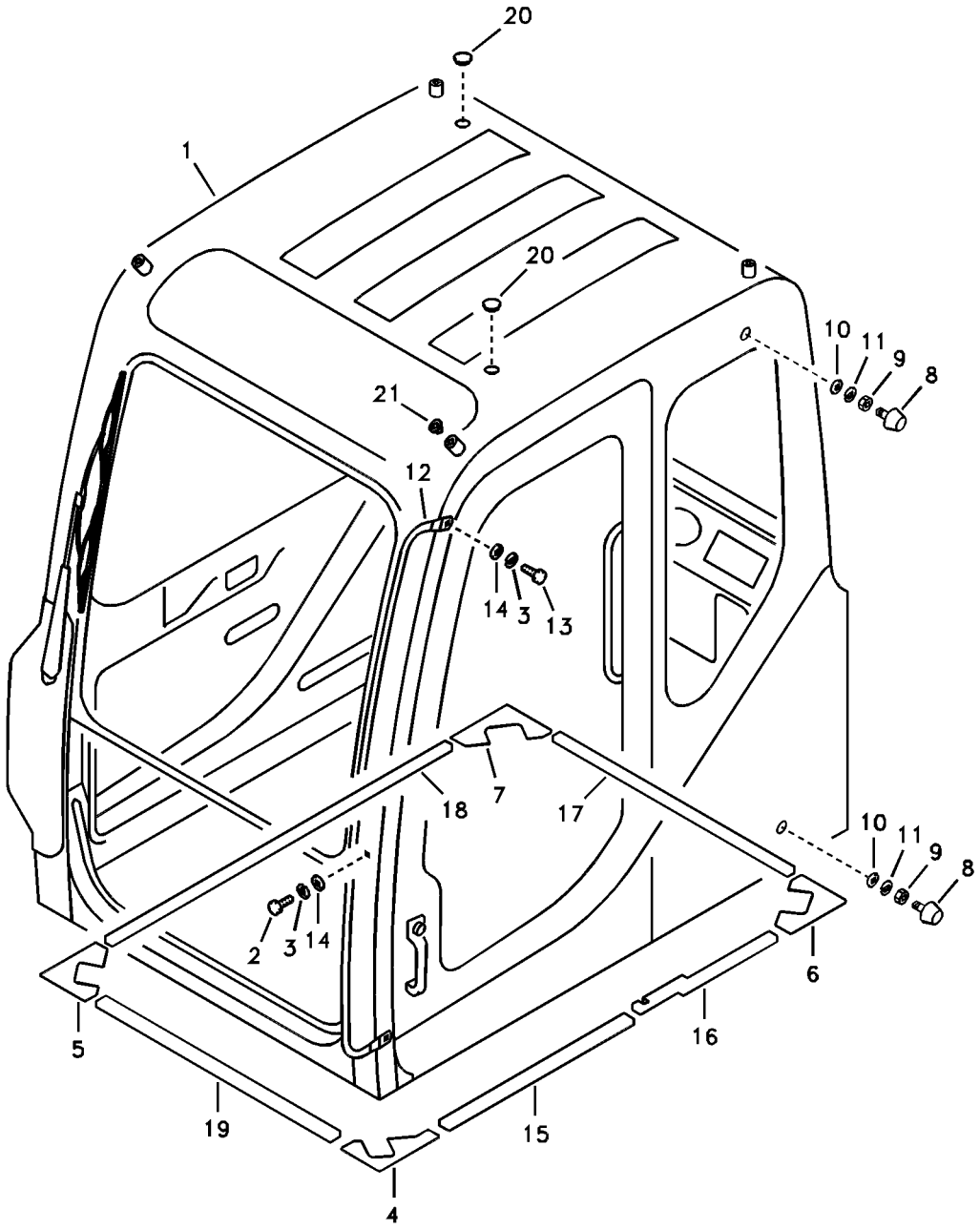
20
1
20
21
10
11
9
8
12
14
3
13
18
7
17
10
11
9
8
2
3
14
6
5
16
19
15
4

Fig.	Part No.	Quantity 1	2	3	4	5	PS	KIT	Description	Dénomination	Bezeichnung	품명	Denominación	Notes
1		1	1	1	1		NS		Cab	Cabine	Kabine	운전실	Cabina	
2	**VOE 983250**	1	1	1	1				Hexagon screw	Vis tête hexagonale	Sechskantschraub	스크류	Tornillo hexago	
3	**VOE 955922**	3	3	3	3				Spring Washer	Rondelle élastique	Federscheibe	스프링 와셔	Arandela flexible	
4	**VOE 14519977**	1	1	1	1		SS		Sponge	Eponge	Schwamm	스폰지	Esponja	SER NO 30001-30666
	VOE 14522787	1	1	1	1				Sponge	Eponge	Schwamm	스폰지	Esponja	SER NO 30667-
5	**VOE 14519978**	1	1	1	1		SS		Sponge	Eponge	Schwamm	스폰지	Esponja	SER NO 30001-30666
	VOE 14522794	1	1	1	1				Sponge	Eponge	Schwamm	스폰지	Esponja	SER NO 30667-
6	**VOE 14519979**	1	1	1	1		SS		Sponge	Eponge	Schwamm	스폰지	Esponja	SER NO 30001-30666
	VOE 14522790	1	1	1	1				Sponge	Eponge	Schwamm	스폰지	Esponja	SER NO 30667-
7	**VOE 14519980**	1	1	1	1		SS		Sponge	Eponge	Schwamm	스폰지	Esponja	SER NO 30001-30666
	VOE 14522792	1	1	1	1				Sponge	Eponge	Schwamm	스폰지	Esponja	SER NO 30667-
8	**SA 3066-05060**	2	2	2	2		SS		Bumper	Pare-chocs	Stossfänger	범퍼	Parachoques	
9	**VOE 983303**	2	2	2	2				Nut	Ecrou	Mutter	너트	Tuerca	
10	**VOE 955894**	2	2	2	2		SS		Washer	Rondelle	Scheibe	와셔	Arandela	
11	**VOE 955921**	2	2	2	2				Spring Washer	Rondelle élastique	Federscheibe	스프링 와셔	Arandela flexible	
12	**VOE 14519983**	1	1	1	1				Handle	Poignee	Handgriff	핸들	Manilla	
13	**VOE 983252**	2	2	2	2				Screw	Vis	Schraube	스크류	Tornillo	
14	**VOE 960148**	3	3	3	4		SS		Washer	Rondelle	Scheibe	와셔	Arandela	
15	**VOE 14519985**	1	1	1	1		SS		Sponge	Eponge	Schwamm	스폰지	Esponja	SER NO 30001-30666
	VOE 14522788	1	1	1	1				Sponge	Eponge	Schwamm	스폰지	Esponja	SER NO 30667-
16	**VOE 14519986**	1	1	1	1		SS		Sponge	Eponge	Schwamm	스폰지	Esponja	SER NO 30001-30666
	VOE 14522789	1	1	1	1				Sponge	Eponge	Schwamm	스폰지	Esponja	SER NO 30667-
17	**VOE 14519987**	1	1	1	1		SS		Sponge	Eponge	Schwamm	스폰지	Esponja	SER NO 30001-30666
	VOE 14522791	1	1	1	1				Sponge	Eponge	Schwamm	스폰지	Esponja	SER NO 30667-
18	**VOE 14519989**	1	1	1	1		SS		Sponge	Eponge	Schwamm	스폰지	Esponja	SER NO 30001-30666
	VOE 14522793	1	1	1	1				Sponge	Eponge	Schwamm	스폰지	Esponja	SER NO 30667-
19	**VOE 14519990**	1	1	1	1		SS		Sponge	Eponge	Schwamm	스폰지	Esponja	SER NO 30001-30666
	VOE 14522795	1	1	1	1				Sponge	Eponge	Schwamm	스폰지	Esponja	SER NO 30667-
20	**SA 0941501008**	2	2	2	2				Grommet	Passe fil	Durchführung	그로메트	Aislador pasapanel	
21	**VOE 14514654**	1	1	4	5				Plug	Bouchon	Stopfen	플러그	Tapon	

1	**8278806**
2	**8278807**
3	**8278808**
4	**8278809**
5	

Cabina del conductor
운전실
Fahrerkabine
Cabine conducteur
Operator's cab

Catalogue id **20019**	Group **810**
Illustr. No **1007034**	Section **500**
Issue **VOE 74H9920019**	Page **293**

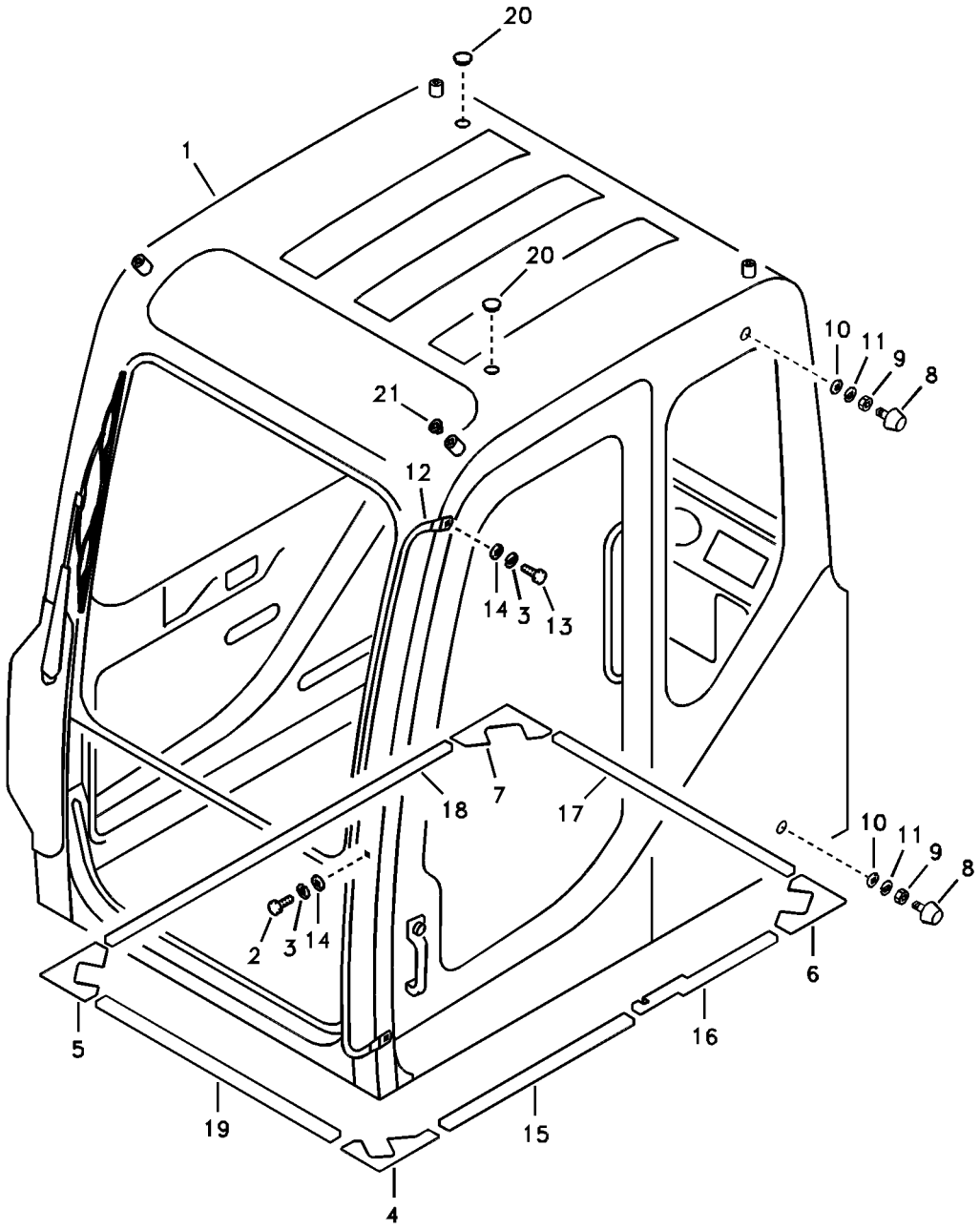
20
1
20
21
10
11
9
8
12
14
3
13
18
7
17
10
11
9
8
2
3
14
6
5
16
19
15
4

Fig.	Part No.	Quantity 1	2	3	PS	KIT	Description	Dénomination	Bezeichnung	품명	Denominación	Notes
1		1	1		NS		Cab	Cabine	Kabine	운전실	Cabina	
2	**VOE 983250**	1	1				Hexagon screw	Vis tête hexagonale	Sechskantschraube	스크류	Tornillo hexago	
3	**VOE 955922**	3	3				Spring Washer	Rondelle élastique	Federscheibe	스프링 와셔	Arandela flexible	
4	**VOE 14522787**	1	1				Sponge	Eponge	Schwamm	스폰지	Esponja	
5	**VOE 14522794**	1	1				Sponge	Eponge	Schwamm	스폰지	Esponja	
6	**VOE 14522790**	1	1				Sponge	Eponge	Schwamm	스폰지	Esponja	
7	**VOE 14522792**	1	1				Sponge	Eponge	Schwamm	스폰지	Esponja	
8	**SA 3066-05060**	2	2		SS		Bumper	Pare-chocs	Stossfänger	범퍼	Parachoques	
9	**VOE 983303**	2	2				Nut	Ecrou	Mutter	너트	Tuerca	
10	**VOE 955894**	2	2		SS		Washer	Rondelle	Scheibe	와셔	Arandela	
11	**VOE 955921**	2	2				Spring Washer	Rondelle élastique	Federscheibe	스프링 와셔	Arandela flexible	
12	**VOE 14519983**	1	1				Handle	Poignee	Handgriff	핸들	Manilla	
13	**VOE 983252**	2	2				Screw	Vis	Schraube	스크류	Tornillo	
14	**VOE 960148**	3	3		SS		Washer	Rondelle	Scheibe	와셔	Arandela	
15	**VOE 14522788**	1	1				Sponge	Eponge	Schwamm	스폰지	Esponja	
16	**VOE 14522789**	1	1				Sponge	Eponge	Schwamm	스폰지	Esponja	
17	**VOE 14522791**	1	1				Sponge	Eponge	Schwamm	스폰지	Esponja	
18	**VOE 14522793**	1	1				Sponge	Eponge	Schwamm	스폰지	Esponja	
19	**VOE 14522795**	1	1				Sponge	Eponge	Schwamm	스폰지	Esponja	
20	**SA 0941501008**	2	2				Grommet	Passe fil	Durchführung	그로메트	Aislador pasapanel	
21	**VOE 14514654**	4	5				Plug	Bouchon	Stopfen	플러그	Tapon	

1	**8278808**	**Cabina del conductor** 운전실 **Fahrerkabine** **Cabine conducteur** **Operator's cab**	Catalogue id **20019**	Group **810**
2	**8278809**		Illustr. No **1007034**	Section **510**
3			Issue **VOE 74H9920019**	Page **295**
4				
5		**FOR CHINA**		

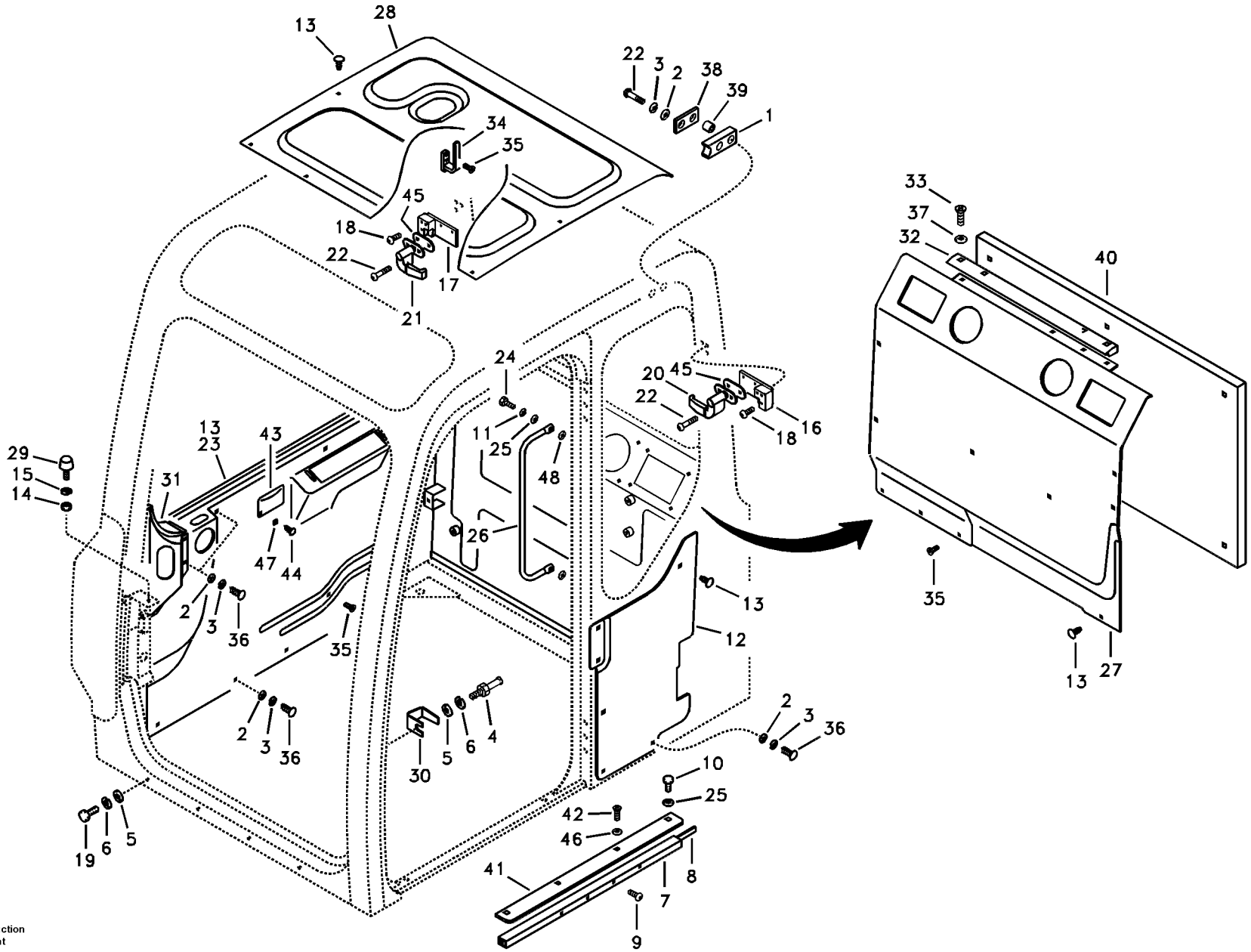

Volvo Construction Equipment

1014328

Fig.	Part No.	Quantity 1	2	3	4	5	PS	KIT	Description	Dénomination	Bezeichnung	품명	Denominación	Notes
1	**VOE 14519976**	2	2	2	2				Bumper	Pare-chocs	Stossfänger	범퍼	Parachoques	
2	**VOE 955892**	16	16	16	16				Washer	Rondelle	Scheibe	와셔	Arandela	
3	**VOE 955919**	16	16	16	16				Spring Washer	Rondelle élastique	Federscheibe	스프링 와셔	Arandela flexible	
4	**VOE 14527405**	1	1	1	1				Striker Plate	Gache	Schliesskeil	스트라이커 플레이트	Placa Bloqueo	
5	**VOE 955897**	1	1	5	5		SS		Washer	Rondelle	Scheibe	와셔	Arandela	
6	**VOE 955923**	1	1	5	5				Spring Washer	Rondelle élastique	Federscheibe	스프링 와셔	Arandela flexible	
7	**VOE 14527657**	1	1	1	1				Seal	Joint	Dichtring	시일	Junta	
8	**VOE 14527537**	1	1	1	1				Plate	Plaque	Platte	플레이트	Placa	
9	**SA 9021-10402**	4	4	4	4				Screw	Vis	Schraube	스크류	Tornillo	
10	**VOE 983250**	1	1	1	1				Hexagon screw	Vis tête hexagonale	Sechskantschraub	스크류	Tornillo hexago	
11	**VOE 955922**	2	2	2	2				Spring Washer	Rondelle élastique	Federscheibe	스프링 와셔	Arandela flexible	
12	**VOE 14519982**	1	1	1	1				Trim	Garniture	Verkleidung	트림	Tapizado	
13	**VOE 14527553**	21	21	21	21				Clip	Clip	Klemme	클립	Clip	
14	**VOE 983303**	2	2	2	2				Nut	Ecrou	Mutter	너트	Tuerca	
15	**VOE 955921**	2	2	2	2				Spring Washer	Rondelle élastique	Federscheibe	스프링 와셔	Arandela flexible	
16	**VOE 14527415**	1	1	1	1				Handle	Poignee	Handgriff	핸들	Manilla	
17	**VOE 14527416**	1	1	1	1				Handle	Poignee	Handgriff	핸들	Manilla	
18	**VOE 969408**	4	4	4	4				6-pt skt screw	Vis creuse de 6	Hohlschraube	6 포인트 소켓 스크류	Racor 6-dientes	
19	**VOE 978932**			4	4				Screw	Vis	Schraube	스크류	Tornillo	
20	**VOE 14527560**	1	1	1	1				Fixture	Support	Spannvorrichta	픽스처	Dispositivo	
21	**VOE 14527561**	1	1	1	1				Fixture	Support	Spannvorrichta	픽스처	Dispositivo	
22	**VOE 969589**	10	10	10	10				6-pt skt screw	Vis creuse de 6	Hohlschraube	6 포인트 소켓 스크류	Racor 6-dientes	
23	**VOE 14519993**	1	1	1	1				Trim	Garniture	Verkleidung	트림	Tapizado	
24	**VOE 983252**	2		2	2				Screw	Vis	Schraube	스크류	Tornillo	
	VOE 983252		2						Screw	Vis	Schraube	스크류	Tornillo	SER NO 30001-33338
	VOE 983254		2						Hexagon screw	Vis a tête hexagona	Sechskantschr	육각 나사	Tornillo hexago	SER NO 33339-
25	**VOE 960148**	3	3	3	3		SS		Washer	Rondelle	Scheibe	와셔	Arandela	
26	**VOE 14501499**	1	1	1	1				Handle	Poignee	Handgriff	핸들	Manilla	
27	**VOE 14519984**	1	1	1	1				Trim	Garniture	Verkleidung	트림	Tapizado	
28	**VOE 14501504**	1	1	1	1				Trim	Garniture	Verkleidung	트림	Tapizado	SER NO 30001-30666

1	**8278806**
2	**8278807**
3	**8278808**
4	**8278809**
5	

Cabina del conductor
운전실
Fahrerkabine
Cabine conducteur
Operator's cab

Catalogue id	Group
20019	**810**
Illustr. No **1014328**	Section **600**
Issue **VOE 74H9920019**	Page **297**

VOLVO

EC55B

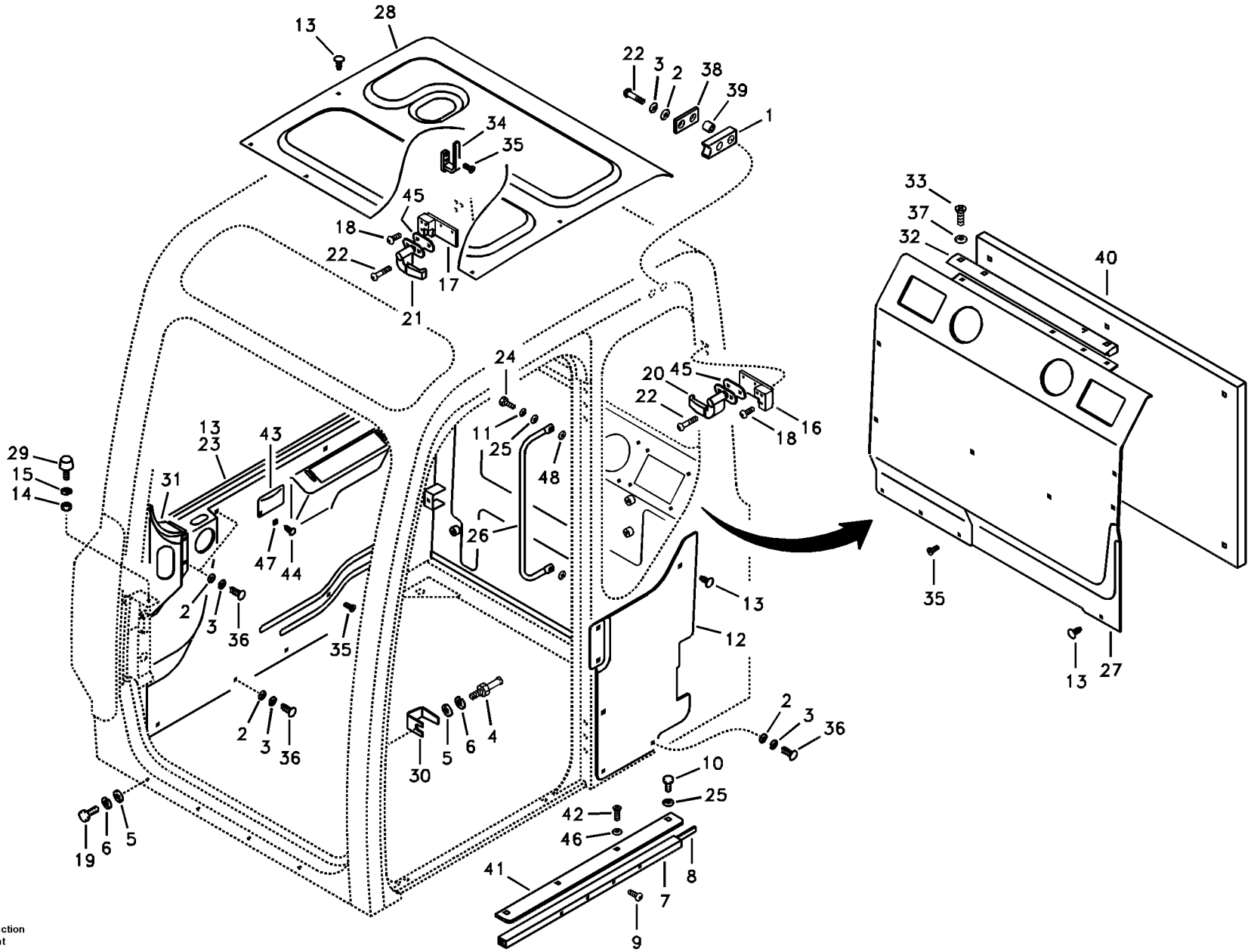

Volvo Construction Equipment

1014328

Fig.	Part No.	Quantity 1	2	3	4	5	PS	KIT	Description	Dénomination	Bezeichnung	품명	Denominación	Notes
	VOE 14522802	1	1	1	1				Trim	Garniture	Verkleidung	트림	Tapizado	SER NO 30667-
29	**VOE 14527549**	2	2	2	2				Bumper	Pare-chocs	Stossfänger	범퍼	Parachoques	
30	**VOE 14527655**	1	1	1	1				Striker	Butee	Hammer	스트라이커	Cerrojo	
31	**VOE 14501500**	1	1	1	1				Duct	Conduit	Leitung	덕트	Conducto	
32	**SA 1166-01800**	1	1	1	1				Stop	Arrêt	Anschlag	스톱	Parada	
33	**VOE 969841**	4	4	4	4				6-pt skt screw	Vis creuse de 6	Hohlschraube	6 포인트 소켓 스크류	Racor 6-dientes	
34	**VOE 14506863**	1	1	1	1				Coat hanger	Porte manteau	Kleiderhaken	옷걸이	Percha	SER NO 30001-34475
	VOE 11078015	1	1	1	1				Coat hanger	Porte manteau	Kleiderhaken	옷걸이	Percha	SER NO 34476-
35	**VOE 14880446**	10	10	10	10				Screw	Vis	Schraube	스크류	Tornillo	
36	**VOE 969422**	12	12	12	12				6-pt skt screw	Vis creuse de 6	Hohlschraube	6 포인트 소켓 스크류	Racor 6-dientes	
37	**VOE 942767**	4	4	4	4				Toothed Washer	Rondelle Dentee	Zahnscheibe	이붙이 와셔	Arandela Dentad	
38	**VOE 14519991**	2	2	2	2				Plate	Plaque	Platte	플레이트	Placa	
39	**VOE 14519992**	4	4	4	4				Boss	Bossage	Warze	보스	Teton	
40	**VOE 14520088**	1	1	1	1				Sponge	Eponge	Schwamm	스폰지	Esponja	
41	**SA 1166-02490**	1	1	1	1				Cover	Capot	Haube	커버	Capo	
42	**VOE 969737**	2	2	2	2				6-pt skt screw	Vis creuse de 6	Hohlschraube	6 포인트 소켓 스크류	Racor 6-dientes	
43	**VOE 14526153**	1	1	1	1				Ashtray	Cendrier	Aschenbecher	재떨이	Cenicero	
44	**VOE 969405**	2	2	2	2				6-pt skt screw	Vis creuse de 6	Hohlschraube	6 포인트 소켓 스크류	Racor 6-dientes	
45	**VOE 14509139**	6	6	6	6				Shim	Cale d'épaisseur	Passcheibe	심	Arandela Ajuste	
46	**VOE 942605**	2	2	2	2				Toothed Washer	Rondelle Dentee	Zahnscheibe	이붙이 와셔	Arandela Dentad	
47	**VOE 940090**	2	2	2	2		SS		Washer	Rondelle	Scheibe	와셔	Arandela	
48	**VOE 14528425**	2		2	2				Spacer	Entretoise	Abstandkörper	스페이서	Distanciador	4.5 Thick SER NO 33339-
	VOE 14528426		2						Spacer	Entretoise	Abstandkörper	스페이서	Distanciador	25 Thick SER NO 33339-

1	**8278806**	**Cabina del conductor** 운전실 **Fahrerkabine** **Cabine conducteur** **Operator's cab**	Catalogue id **20019**	Group **810**
2	**8278807**			
3	**8278808**		Illustr. No **1014328**	Section **600**
4	**8278809**			
5			Issue **VOE 74H9920019**	Page **299**

VOLVO

EC55B

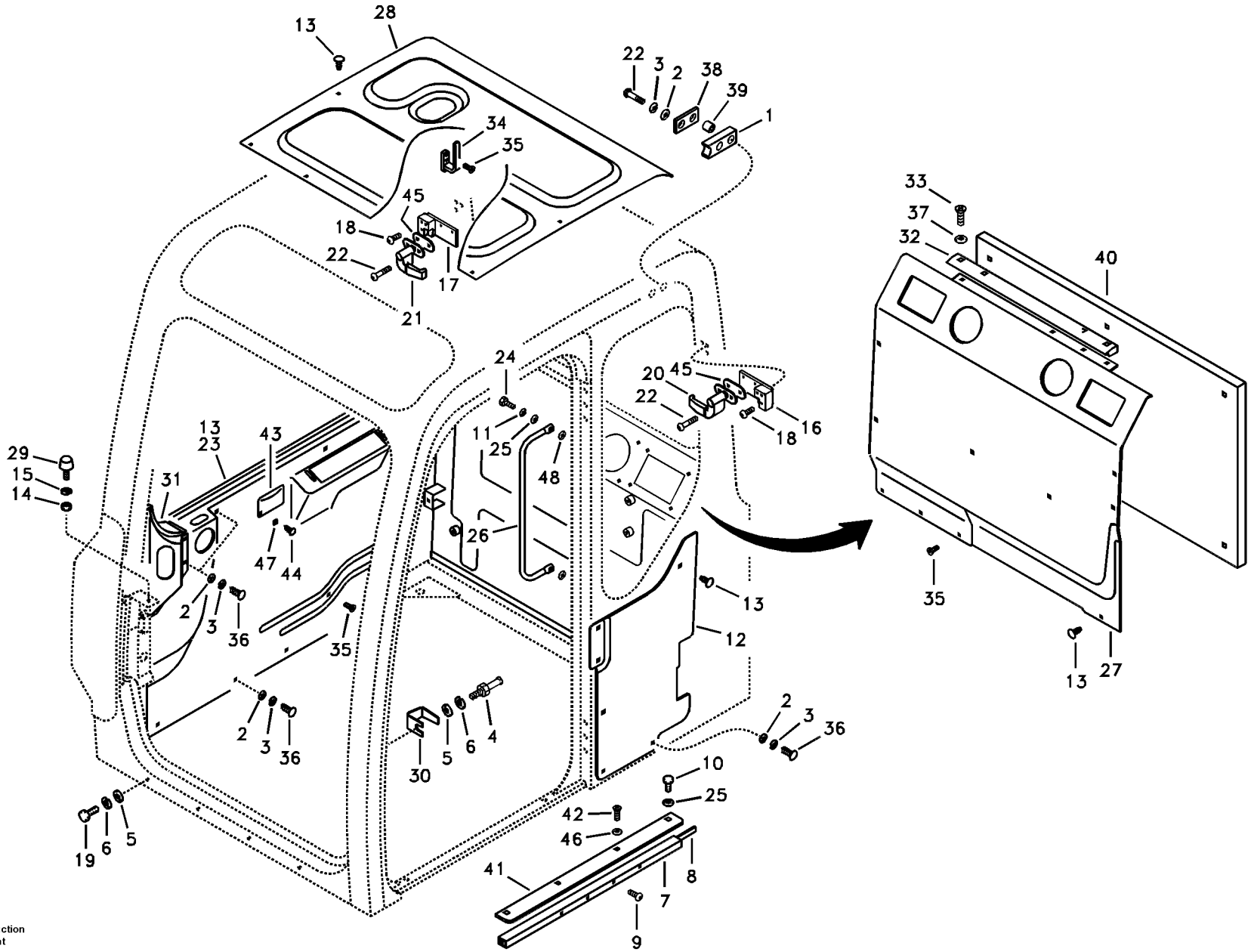

Volvo Construction Equipment

1014328

Fig.	Part No.	Quantity 1	2	3	PS	KIT	Description	Dénomination	Bezeichnung	품명	Denominación	Notes
1	**VOE 14519976**	2	2				Bumper	Pare-chocs	Stossfänger	범퍼	Parachoques	
2	**VOE 955892**	16	16				Washer	Rondelle	Scheibe	와셔	Arandela	
3	**VOE 955919**	16	16				Spring Washer	Rondelle élastique	Federscheibe	스프링 와셔	Arandela flexible	
4	**VOE 14527405**	1	1				Striker Plate	Gache	Schliesskeil	스트라이커 플레이트	Placa Bloqueo	
5	**VOE 955897**	5	5		SS		Washer	Rondelle	Scheibe	와셔	Arandela	
6	**VOE 955923**	5	5				Spring Washer	Rondelle élastique	Federscheibe	스프링 와셔	Arandela flexible	
7	**VOE 14527657**	1	1				Seal	Joint	Dichtring	시일	Junta	
8	**VOE 14527537**	1	1				Plate	Plaque	Platte	플레이트	Placa	
9	**SA 9021-10402**	4	4				Screw	Vis	Schraube	스크류	Tornillo	
10	**VOE 983250**	1	1				Hexagon screw	Vis tête hexagonale	Sechskantschraube	스크류	Tornillo hexago	
11	**VOE 955922**	2	2				Spring Washer	Rondelle élastique	Federscheibe	스프링 와셔	Arandela flexible	
12	**VOE 14519982**	1	1				Trim	Garniture	Verkleidung	트림	Tapizado	
13	**VOE 14527553**	21	21				Clip	Clip	Klemme	클립	Clip	
14	**VOE 983303**	2	2				Nut	Ecrou	Mutter	너트	Tuerca	
15	**VOE 955921**	2	2				Spring Washer	Rondelle élastique	Federscheibe	스프링 와셔	Arandela flexible	
16	**VOE 14527415**	1	1				Handle	Poignee	Handgriff	핸들	Manilla	
17	**VOE 14527416**	1	1				Handle	Poignee	Handgriff	핸들	Manilla	
18	**VOE 969408**	4	4				6-pt skt screw	Vis creuse de 6	Hohlschraube	6 포인트 소켓 스크류	Racor 6-dientes	
19	**VOE 978932**	4	4				Screw	Vis	Schraube	스크류	Tornillo	
20	**VOE 14527560**	1	1				Fixture	Support	Spannvorrichta	픽스처	Dispositivo	
21	**VOE 14527561**	1	1				Fixture	Support	Spannvorrichta	픽스처	Dispositivo	
22	**VOE 969589**	10	10				6-pt skt screw	Vis creuse de 6	Hohlschraube	6 포인트 소켓 스크류	Racor 6-dientes	
23	**VOE 14519993**	1	1				Trim	Garniture	Verkleidung	트림	Tapizado	
24	**VOE 983252**	2	2				Screw	Vis	Schraube	스크류	Tornillo	
25	**VOE 960148**	3	3		SS		Washer	Rondelle	Scheibe	와셔	Arandela	
26	**VOE 14501499**	1	1				Handle	Poignee	Handgriff	핸들	Manilla	
27	**VOE 14519984**	1	1				Trim	Garniture	Verkleidung	트림	Tapizado	
28	**VOE 14522802**	1	1				Trim	Garniture	Verkleidung	트림	Tapizado	
29	**VOE 14527549**	2	2				Bumper	Pare-chocs	Stossfänger	범퍼	Parachoques	
30	**VOE 14527655**	1	1				Striker	Butee	Hammer	스트라이커	Cerrojo	

1	**8278808**	**Cabina del conductor** 운전실 **Fahrerkabine** **Cabine conducteur** **Operator's cab**	Catalogue id **20019**	Group **810**
2	**8278809**		Illustr. No **1014328**	Section **610**
3			Issue **VOE 74H9920019**	Page **301**
4				
5		**FOR CHINA**		

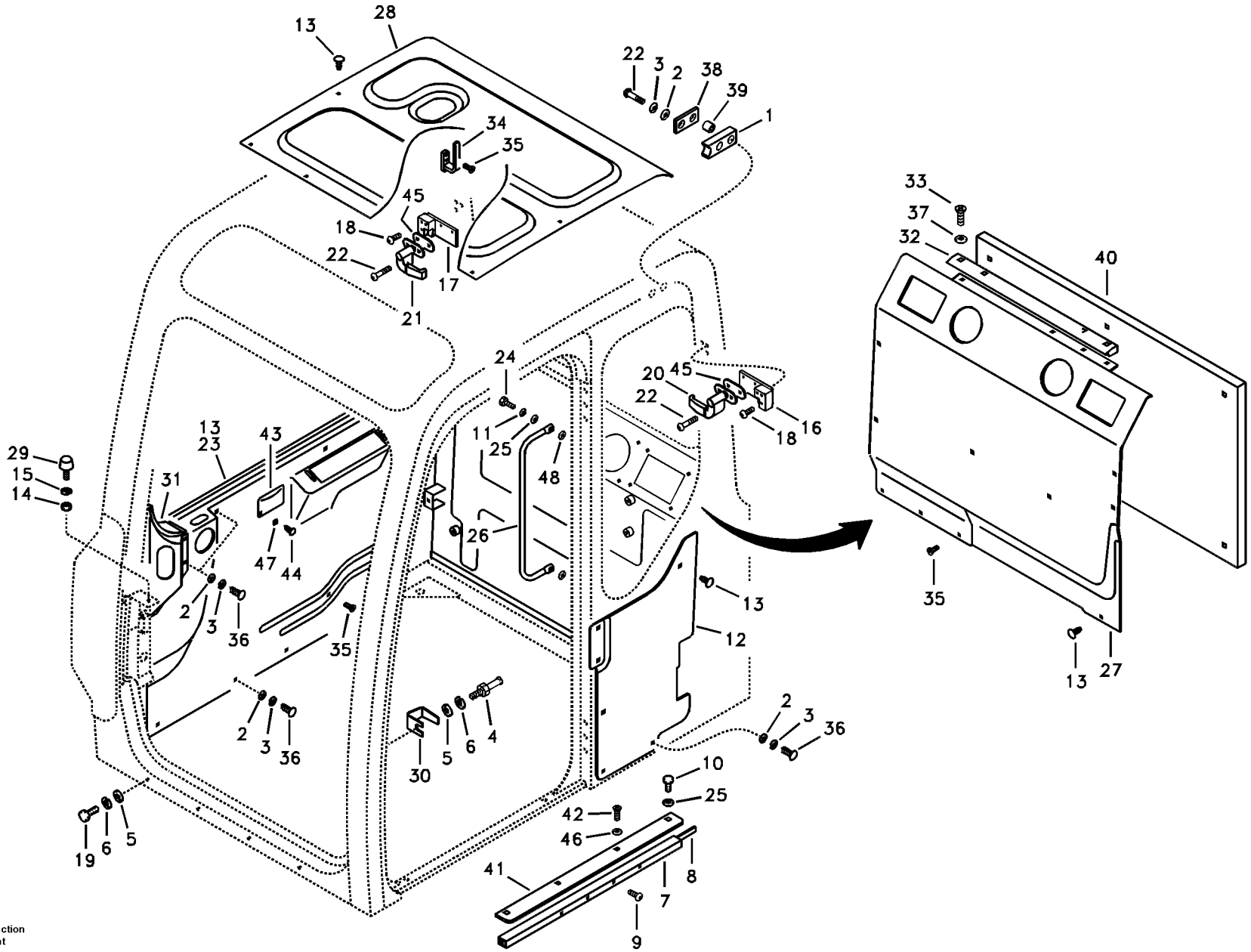

Volvo Construction Equipment

1014328

Fig.	Part No.	Quantity 1	2	3	PS	KIT	Description	Dénomination	Bezeichnung	품명	Denominación	Notes
31	**VOE 14501500**	1	1				Duct	Conduit	Leitung	덕트	Conducto	
32	**SA 1166-01800**	1	1				Stop	Arrêt	Anschlag	스톱	Parada	
33	**VOE 969841**	4	4				6-pt skt screw	Vis creuse de 6	Hohlschraube	6 포인트 소켓 스크류	Racor 6-dientes	
34	**VOE 14506863**	1	1				Coat hanger	Porte manteau	Kleiderhaken	옷걸이	Percha	SER NO 50001-50129
	VOE 11078015	1	1				Coat hanger	Porte manteau	Kleiderhaken	옷걸이	Percha	SER NO 50130-
35	**VOE 14880446**	10	10				Screw	Vis	Schraube	스크류	Tornillo	
36	**VOE 969422**	12	12				6-pt skt screw	Vis creuse de 6	Hohlschraube	6 포인트 소켓 스크류	Racor 6-dientes	
37	**VOE 942767**	4	4				Toothed Washer	Rondelle Dentee	Zahnscheibe	이붙이 와셔	Arandela Dentad	
38	**VOE 14519991**	2	2				Plate	Plaque	Platte	플레이트	Placa	
39	**VOE 14519992**	4	4				Boss	Bossage	Warze	보스	Teton	
40	**VOE 14520088**	1	1				Sponge	Eponge	Schwamm	스폰지	Esponja	
41	**SA 1166-02490**	1	1				Cover	Capot	Haube	커버	Capo	
42	**VOE 969737**	2	2				6-pt skt screw	Vis creuse de 6	Hohlschraube	6 포인트 소켓 스크류	Racor 6-dientes	
43	**VOE 14526153**	1	1				Ashtray	Cendrier	Aschenbecher	재떨이	Cenicero	
44	**VOE 969405**	2	2				6-pt skt screw	Vis creuse de 6	Hohlschraube	6 포인트 소켓 스크류	Racor 6-dientes	
45	**VOE 14509139**	6	6				Shim	Cale d'épaisseur	Passcheibe	심	Arandela Ajuste	
46	**VOE 942605**	2	2				Toothed Washer	Rondelle Dentee	Zahnscheibe	이붙이 와셔	Arandela Dentad	
47	**VOE 940090**	2	2		SS		Washer	Rondelle	Scheibe	와셔	Arandela	
48	**VOE 14528425**	2	2				Spacer	Entretoise	Abstandkörper	스페이서	Distanciador	

1	**8278808**	**Cabina del conductor** 운전실 **Fahrerkabine** **Cabine conducteur** **Operator's cab**	Catalogue id **20019**	Group **810**
2	**8278809**		Illustr. No **1014328**	Section **610**
3			Issue **VOE 74H9920019**	Page **303**
4				
5		**FOR CHINA**		

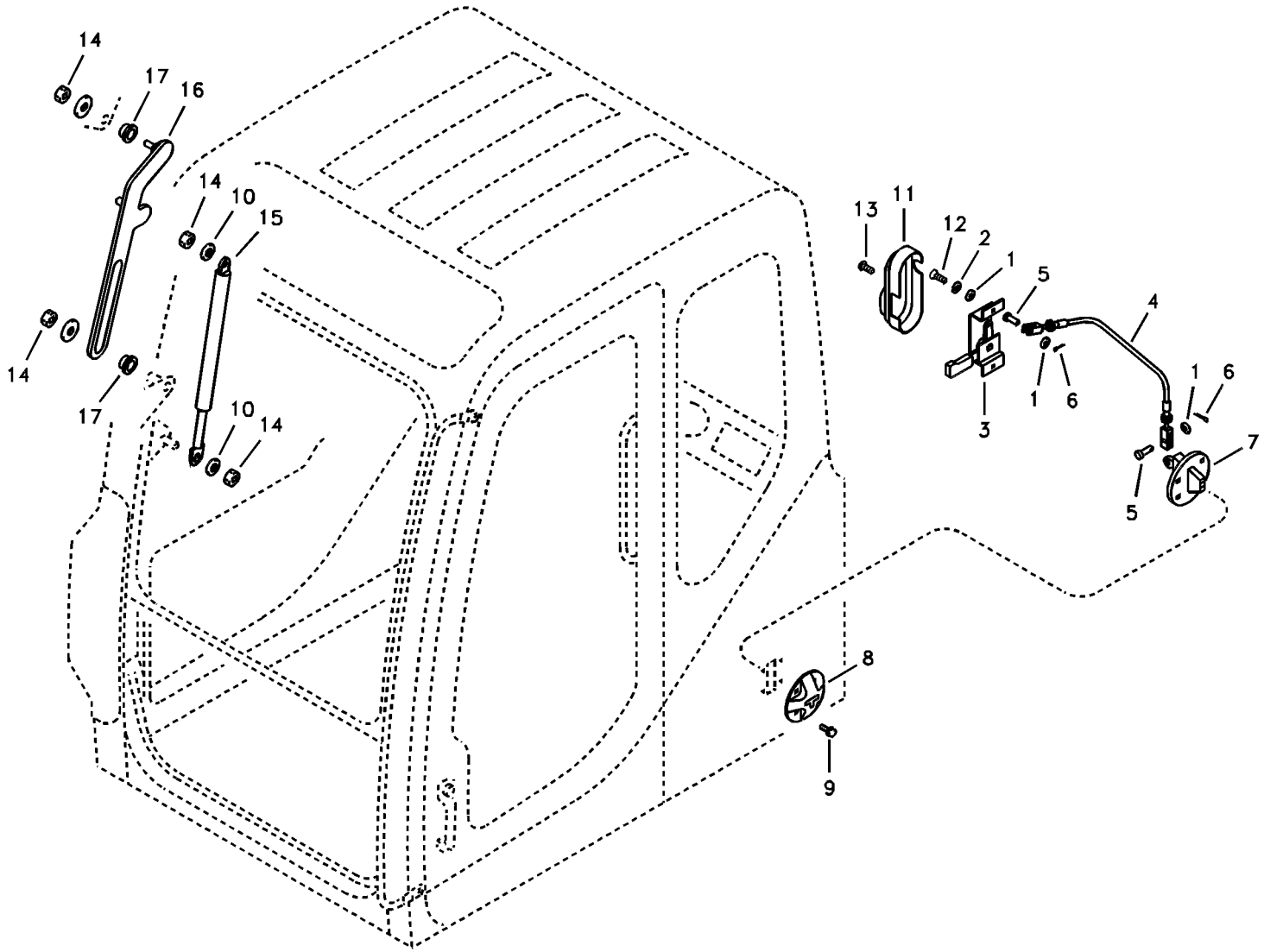
14
17
16
14
10
15
14
17
10
14
13
11
12
2
1
5
4
3
1
6
1
6
5
7
8
9

Fig.	Part No.	Quantity 1	2	3	4	5	PS	KIT	Description	Dénomination	Bezeichnung	품명	Denominación	Notes
1	**VOE 955892**	4	4	4	4				Washer	Rondelle	Scheibe	와셔	Arandela	
2	**VOE 955919**	2	2	2	2				Spring Washer	Rondelle élastique	Federscheibe	스프링 와셔	Arandela flexible	
3	**SA 1166-31300**	1	1	1	1				Lever	Levier	Hebel	레버	Palanca	
4	**VOE 14527538**	1	1	1	1				Cable	Câble	Seil	케이블	Cable	
5	**SA 9321-20609**	2	2	2	2				Clevis Pin	Vis A Oeuillet	Zylinderbolzen	클레비스 핀	Espiga	
6	**VOE 14880451**	2	2	2	2				Split Pin	Goupille Fendue	Splint	분할 핀	Chaveta Hendida	
7	**VOE 14527402**	1	1	1	1				Catch	Disque Blocage	Sperrplatte	캐치	Disco Bloqueo	
8	**VOE 14527539**	1	1	1	1				Cover	Capot	Haube	커버	Capo	
9	**VOE 947542**	4	4	4	4		SS		Screw	Vis	Schraube	스크류	Tornillo	
10	**SA 9285-16000**	2	2	2	2				Washer	Rondelle	Scheibe	와셔	Arandela	
11	**VOE 14527608**	1	1	1	1				Cover	Capot	Haube	커버	Capo	
12	**VOE 969422**	2	2	2	2				6-pt skt screw	Vis creuse de 6	Hohlschraube	6 포인트 소켓 스크류	Racor 6-dientes	
13	**VOE 969420**	1	1	1	1				6-pt skt screw	Vis creuse de 6	Hohlschraube	6 포인트 소켓 스크류	Racor 6-dientes	
14	**VOE 14880450**	4	4	4	4				Lock nut	Contre-ecrou	Sicherungsmutter	록 너트	Contratuerca	
15	**VOE 14519994**	1	1	1	1				Gas Spring	Ressort Gaz	Gasfeder	개스 스프링	Resorte A Gas	SER NO 30001-33338
	VOE 14527695	1	1	1	1				Gas Spring	Ressort Gaz	Gasfeder	개스 스프링	Resorte A Gas	SER NO 33339-
16	**VOE 14519995**	1	1	1	1		SS		Plate	Plaque	Platte	플레이트	Placa	SER NO 30001-33338
	VOE 14527911	1	1	1	1				Plate	Plaque	Platte	플레이트	Placa	SER NO 33339-
17	**VOE 14519996**	2	2	2	2				Bushing	Bague	Buchse	부싱	Casquillo	

1	**8278806**
2	**8278807**
3	**8278808**
4	**8278809**
5	

Cabina del conductor
운전실
Fahrerkabine
Cabine conducteur
Operator's cab

Catalogue id **20019**	Group **810**
Illustr. No **1007036**	Section **700**
Issue **VOE 74H9920019**	Page **305**

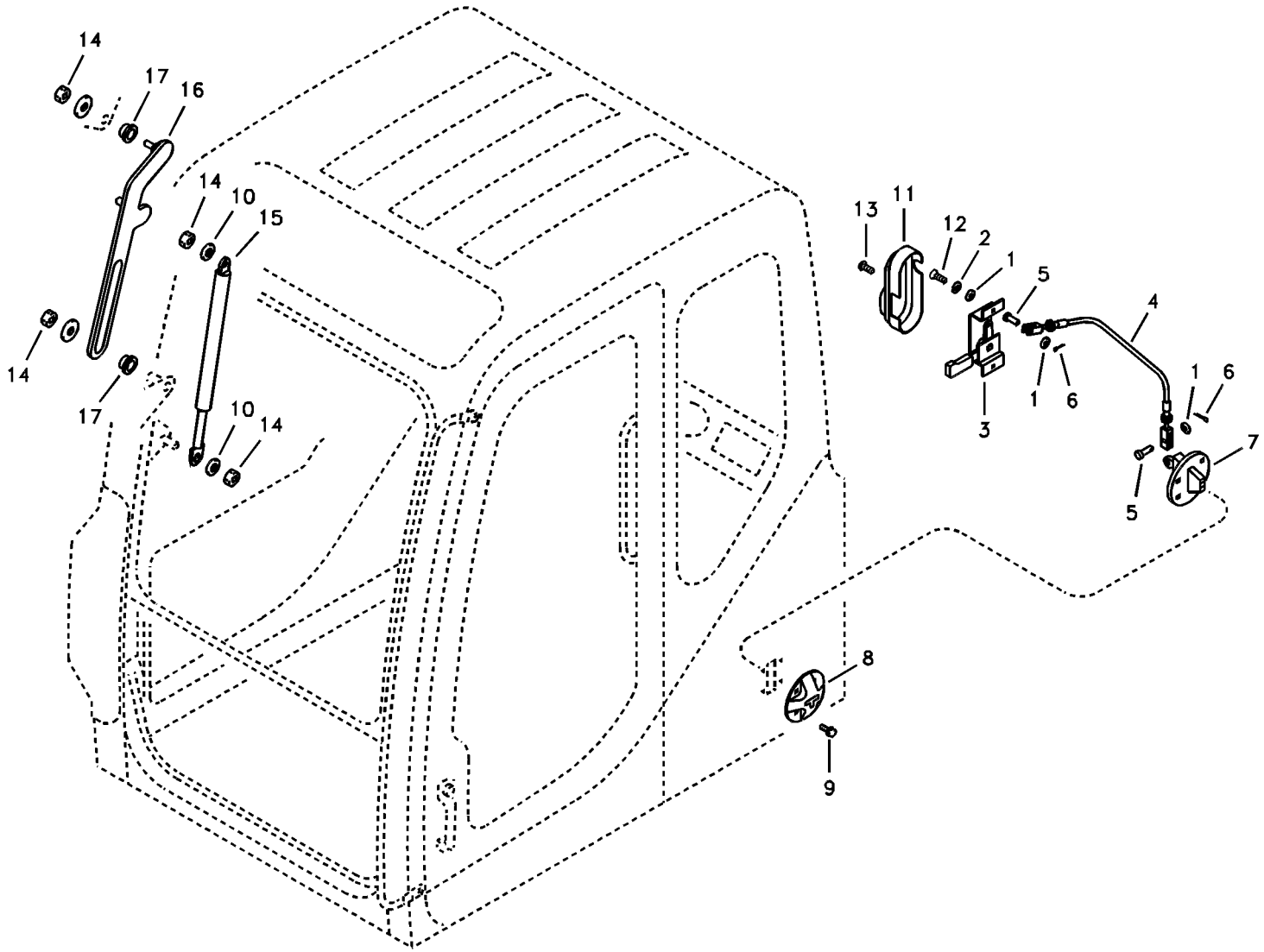
14
17
16
14
10
15
14
17
10
14
13
11
12
2
1
5
4
3
1
6
1
6
5
7
8
9

Fig.	Part No.	Quantity 1	2	3	PS	KIT	Description	Dénomination	Bezeichnung	품명	Denominación	Notes
1	**VOE 955892**	4	4				Washer	Rondelle	Scheibe	와셔	Arandela	
2	**VOE 955919**	2	2				Spring Washer	Rondelle élastique	Federscheibe	스프링 와셔	Arandela flexible	
3	**SA 1166-31300**	1	1				Lever	Levier	Hebel	레버	Palanca	
4	**VOE 14527538**	1	1				Cable	Câble	Seil	케이블	Cable	
5	**SA 9321-20609**	2	2				Clevis Pin	Vis A Oeuillet	Zylinderbolzen	클레비스 핀	Espiga	
6	**VOE 14880451**	2	2				Split Pin	Goupille Fendue	Splint	분할 핀	Chaveta Hendida	
7	**VOE 14527402**	1	1				Catch	Disque Blocage	Sperrplatte	캐치	Disco Bloqueo	
8	**VOE 14527539**	1	1				Cover	Capot	Haube	커버	Capo	
9	**VOE 947542**	4	4		SS		Screw	Vis	Schraube	스크류	Tornillo	
10	**SA 9285-16000**	2	2				Washer	Rondelle	Scheibe	와셔	Arandela	
11	**VOE 14527608**	1	1				Cover	Capot	Haube	커버	Capo	
12	**VOE 969422**	2	2				6-pt skt screw	Vis creuse de 6	Hohlschraube	6 포인트 소켓 스크류	Racor 6-dientes	
13	**VOE 969420**	1	1				6-pt skt screw	Vis creuse de 6	Hohlschraube	6 포인트 소켓 스크류	Racor 6-dientes	
14	**VOE 14880450**	4	4				Lock nut	Contre-ecrou	Sicherungsmutter	록 너트	Contratuerca	
15	**VOE 14519994**	1	1				Gas Spring	Ressort Gaz	Gasfeder	개스 스프링	Resorte A Gas	
16	**VOE 14519995**	1	1		SS		Plate	Plaque	Platte	플레이트	Placa	
17	**VOE 14519996**	2	2				Bushing	Bague	Buchse	부싱	Casquillo	

1	**8278808**	**Cabina del conductor** 운전실 **Fahrerkabine** **Cabine conducteur** **Operator's cab**	Catalogue id **20019**	Group **810**
2	**8278807**		Illustr. No **1007036**	Section **710**
3			Issue **VOE 74H9920019**	Page **307**
4				
5		**FOR CHINA**		

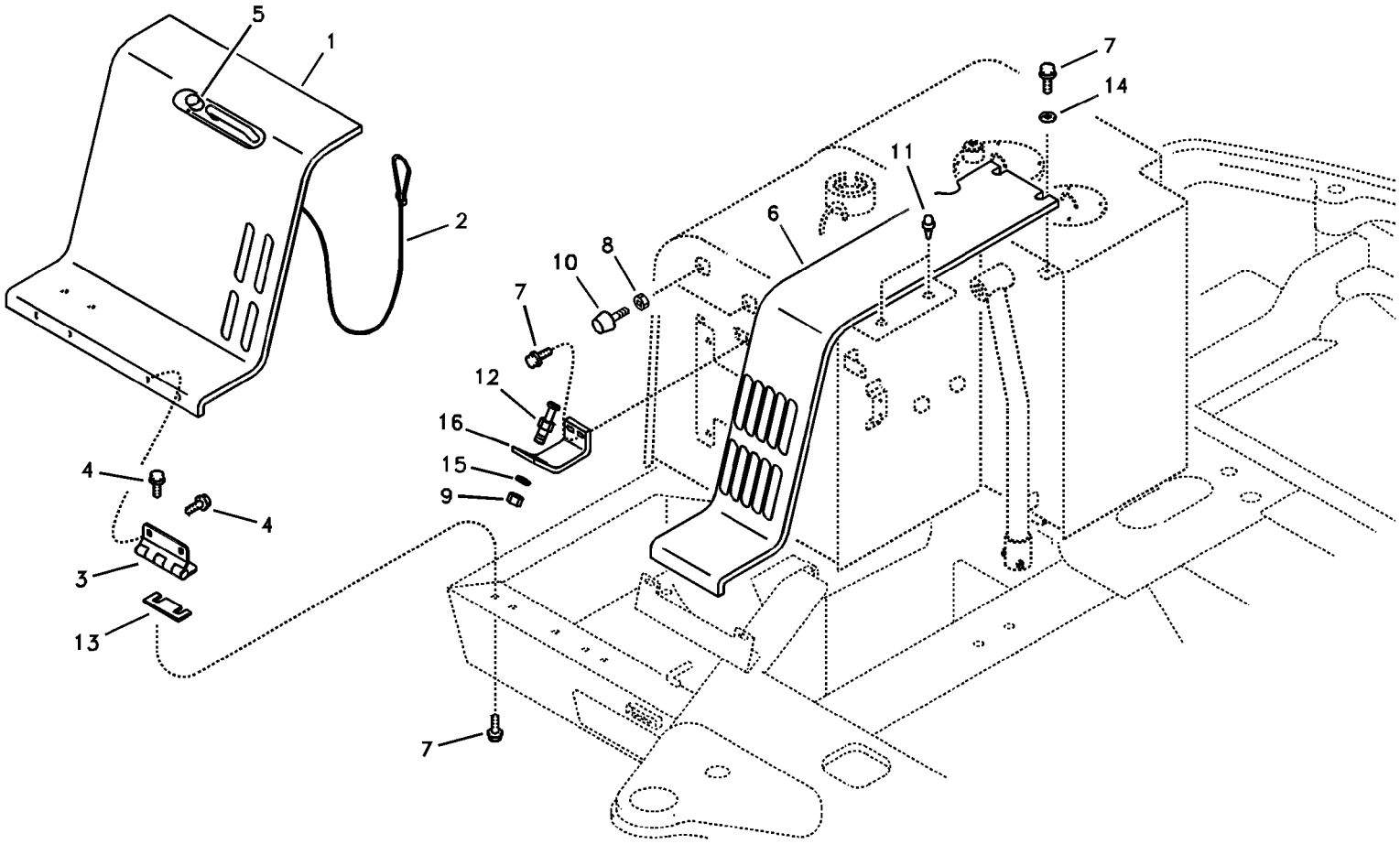
5
1
2
4
4
3
13
7
12
16
15
9
10
8
7
6
11
7
14
7

Fig.	Part No.	Quantity 1	2	3	PS	KIT	Description	Dénomination	Bezeichnung	품명	Denominación	Notes
1	**VOE 14502065**	1					Cover	Capot	Haube	커버	Capo	
2	**VOE 14506948**	1					•Wire	•Fil	•Draht	• 와이어	•Alambre	
3	**VOE 14512489**	2					•Hinge	•Charniere	•Scharnier	• 힌지	•Bisagra	
4	**VOE 946440**	12					•Flange screw	•Vis à bride	•Flanschschraube	• 플랜지 스크류	•Torn embridado	
5	**VOE 14527481**	1					•Pusher	•Poussoir	•Stossel	• 푸셔	•Empujador	
6	**VOE 14502068**	1					Cover	Capot	Haube	커버	Capo	
	VOE 14527620	3					•Cushion	•Coussin	•Sitzkissen	• 쿠션	•Cojin	
7	**VOE 946173**	10			SS		Screw	Vis	Schraube	스크류	Tornillo	
8	**VOE 983303**	2					Nut	Ecrou	Mutter	너트	Tuerca	
9	**VOE 979019**	1					Hexagon Nut	Ecrou Hexagonal	Sechskantmutter	너트	Tuerca Hexagon	
10	**VOE 14501963**	2					Bumper	Pare-chocs	Stossfänger	범퍼	Parachoques	
11	**VOE 14527620**	2					Cushion	Coussin	Sitzkissen	쿠션	Cojin	
12	**VOE 14527482**	1					Striker	Butee	Hammer	스트라이커	Cerrojo	
13	**VOE 14881060**	2					Shim	Cale d'épaisseur	Passcheibe	심	Arandela Ajuste	
14	**VOE 14880429**	4					Washer	Rondelle	Scheibe	와셔	Arandela	
15	**SA 9211-12000**	1					Washer	Rondelle	Scheibe	와셔	Arandela	
16	**SA 1164-30221**	1					Bracket	Console	Konsole	브라켓	Ménsula	

1	**8278796**	**Bastidor** 카울 프레임 **Stativ** **Bâti** **Cowl frame**	Catalogue id **20019**	Group **821**
2			Illustr. No **1020471**	Section **100**
3			Issue **VOE 74H9920019**	Page **309**
4				
5				

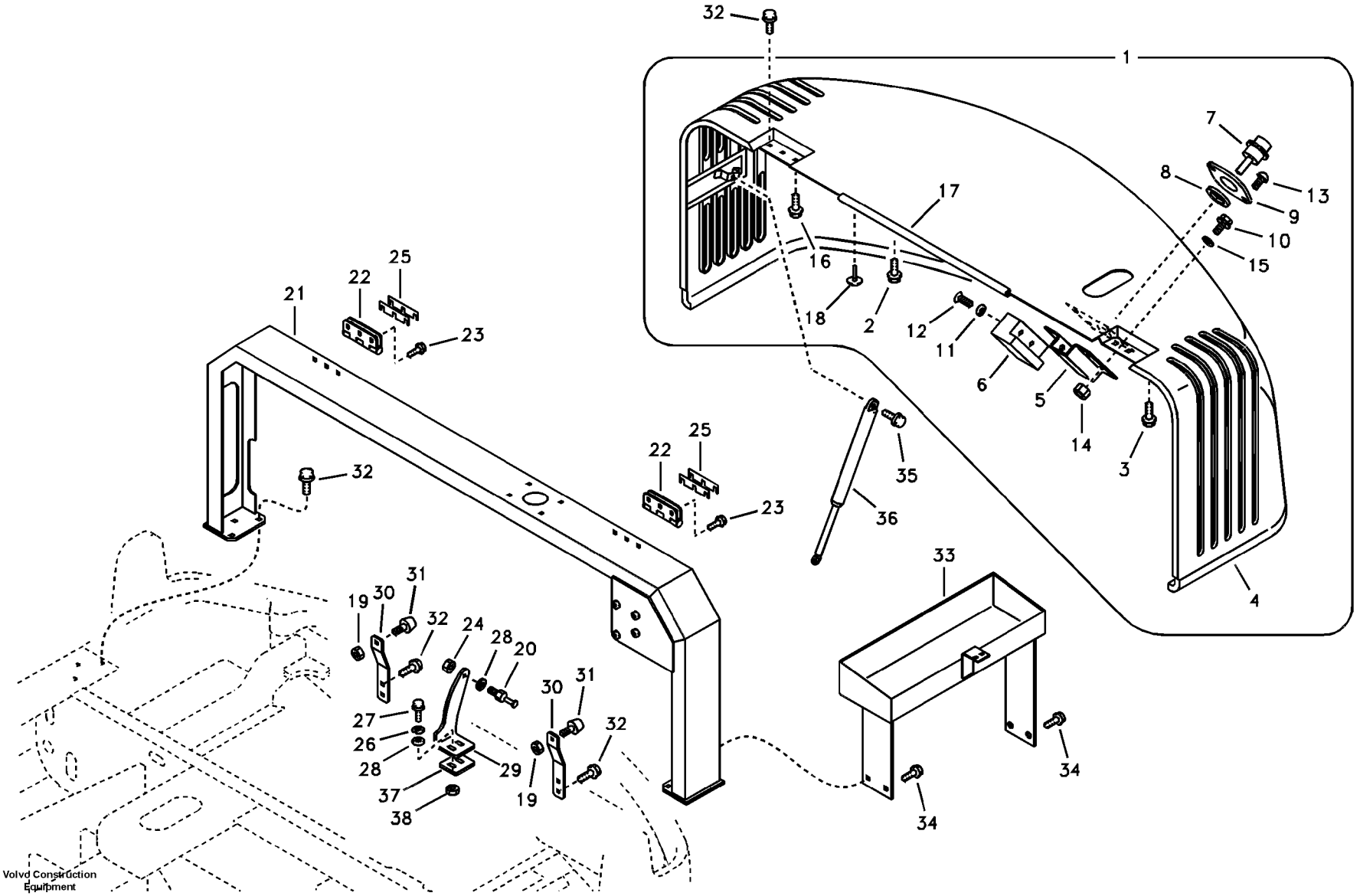
Volvo Construction Equipment
1018203

Fig.	Part No.	Quantity 1	2	3	4	5	PS	KIT	Description	Dénomination	Bezeichnung	품명	Denominación	Notes
1	**VOE 14518129**	1					SS		Hood	Capot Moteur	Motorhaube	후드	Tapa motor	SER NO 30001-31106
	VOE 14518129		1				SS		Hood	Capot Moteur	Motorhaube	후드	Tapa motor	SER NO 31107-34475
	VOE 14540954		1						Hood	Capot Moteur	Motorhaube	후드	Tapa motor	SER NO 34476-
	VOE 14524546			1					Hood	Capot Moteur	Motorhaube	후드	Tapa motor	SER NO 31107-34475
	VOE 14537082			1					Hood	Capot Moteur	Motorhaube	후드	Tapa motor	SER NO 34476-
2	**VOE 946544**	3	3	3			SS		•Screw	•Vis	•Schraube	• 스크류	•Tornillo	
3	**VOE 946329**	12	12	12					•Flange screw	•Vis à bride	•Flanschschraube	• 플랜지 스크류	•Torn embridado	
4	**VOE 14880926**	1	1						•Weatherstrip	•Leche-vitre	•Abstreifleiste	• 웨더스트립	•Lamelunas	
	VOE 14880926			1					•Weatherstrip	•Leche-vitre	•Abstreifleiste	• 웨더스트립	•Lamelunas	SER NO 31107-34475
	VOE 14533342			1					•Weatherstrip	•Leche-vitre	•Abstreifleiste	• 웨더스트립	•Lamelunas	SER NO 34476-
5	**VOE 14507402**	1	1	1					•Bracket	•Ferrure-support	•Tragstütze	• 브라켓	•Hierro Apoyo	
6	**VOE 14527477**	1	1	1					•Catch	•Disque Blocage	•Sperrplatte	• 캐치	•Disco Bloqueo	
7	**VOE 14527481**	1	1	1					•Pusher	•Poussoir	•Stossel	• 푸셔	•Empujador	
8	**VOE 14523601**	1	1	1					•Washer	•Rondelle	•Scheibe	• 와셔	•Arandela	
9	**VOE 14517369**	1	1	1					•Cover	•Verrou de volet	•Abdeckung	• 커버	•Cubierta	
10	**VOE 13948356**	4	4						•Flange screw	•Vis à bride	•Flanschschraube	• 플랜지 스크류	•Torn embridado	
	VOE 13948356			4					•Flange screw	•Vis à bride	•Flanschschraube	• 플랜지 스크류	•Torn embridado	SER NO 31107-34475
	VOE 947542			4			SS		•Screw	•Vis	•Schraube	• 스크류	•Tornillo	SER NO 34476-
11	**VOE 942767**	2	2	2					•Toothed Washer	•Rondelle Dentee	•Zahnscheibe	• 이붙이 와셔	•Arandela Dentad	
12	**VOE 969846**	2	2	2					•Screw	•Vis	•Schraube	• 스크류	•Tornillo	
13	**VOE 969408**	2	2	2					•6-pt skt screw	•Vis creuse de 6	•Hohlschraube	•6 포인트 소켓 스크류	•Racor 6-dientes	
14	**VOE 14880449**	4	4	4					•Lock nut	•Contre-ecrou	•Sicherungsmutter	• 록 너트	•Contratuerca	
15	**VOE 955892**	4	4	4					•Washer	•Rondelle	•Scheibe	• 와셔	•Arandela	
16	**VOE 946441**			2					•Flange screw	•Vis à bride	•Flanschschraube	• 플랜지 스크류	•Torn embridado	SER NO 31107-34475
17	**VOE 14533343**			1					•Weatherstrip	•Leche-vitre	•Abstreifleiste	• 웨더스트립	•Lamelunas	SER NO 34476-
18	**VOE 14520977**			17					•Cap	•Chapeau	•Kappe	• 캡	•Caperuza	SER NO 34476-
19	**VOE 983303**	2							Nut	Ecrou	Mutter	너트	Tuerca	
20	**VOE 14527482**	1							Striker	Butee	Hammer	스트라이커	Cerrojo	
21	**VOE 14520968**	1							Hood	Capot Moteur	Motorhaube	후드	Tapa motor	
22	**VOE 14881053**	2							•Hinge	•Charniere	•Scharnier	• 힌지	•Bisagra	

1	**8278796**
2	**8279318 S/N 31107-**
3	**8279319 S/N 31107-**
4	**8278828**
5	**8278829**

Bastidor de capó, cubierta y capó
카울 프레임 , 커버 및 후드
Motorhaube, Rahmen und Abdeckung
Cadre, couvercle et capot d'auvent
Cowl frame, cover and hood

Catalogue id **20019**	Group **821**
Illustr. No **1018203**	Section **200**
Issue **VOE 74H9920019**	Page **311**

VOLVO

EC55B

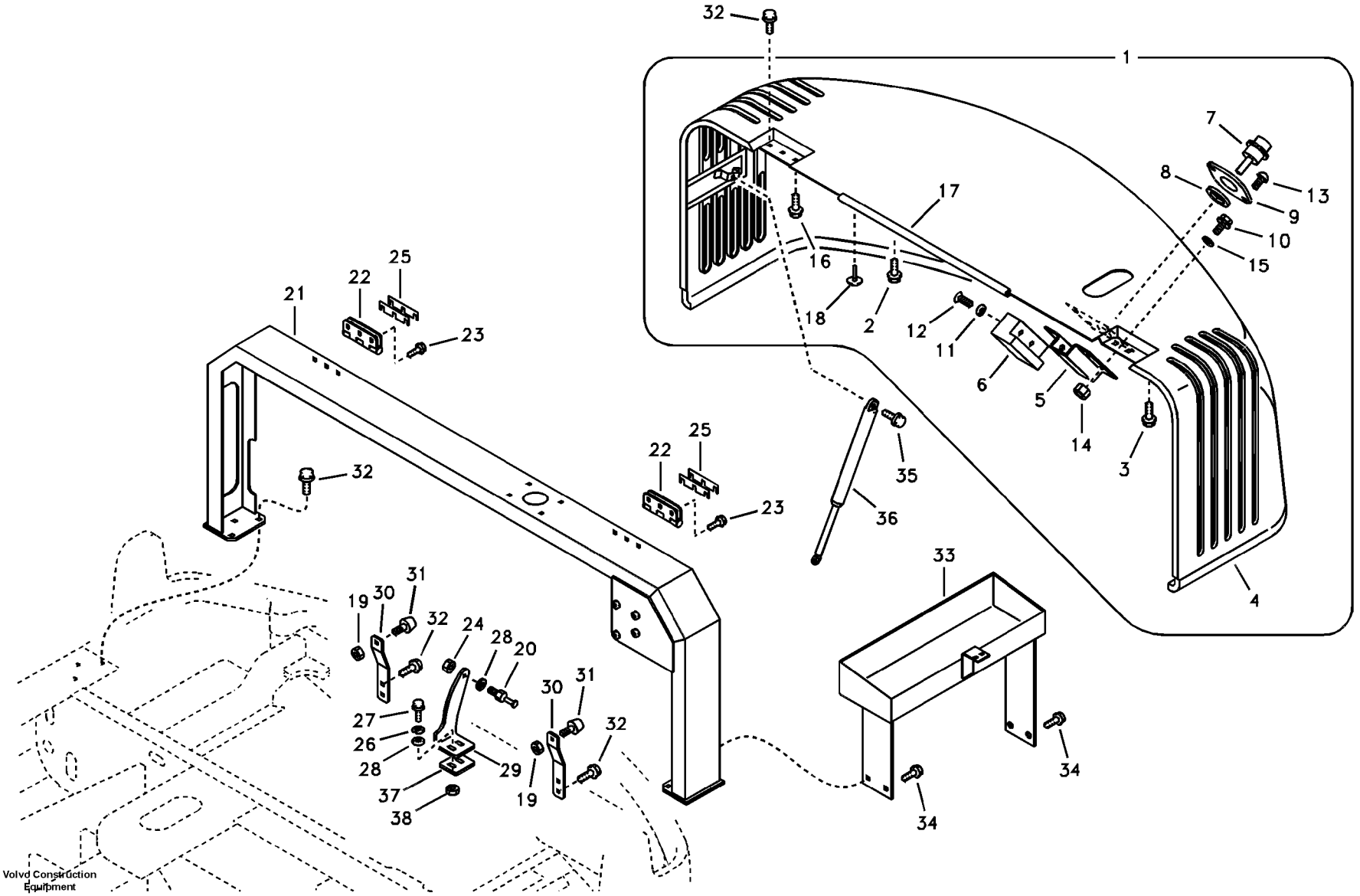
Volvo Construction Equipment
1018203

Fig.	Part No.	Quantity 1	2	3	4	5	PS	KIT	Description	Dénomination	Bezeichnung	품명	Denominación	Notes
23	**VOE 965191**	6					SS		•Screw	•Vis	•Schraube	• 스크류	•Tornillo	
24	**VOE 979019**	1							Hexagon Nut	Ecrou Hexagonal	Sechskantmutter	너트	Tuerca Hexagon	
25	**VOE 14881062**	4							Shim	Cale d'épaisseur	Passcheibe	심	Arandela Ajuste	SER NO 30001-31106
	VOE 14881062		4	4					Shim	Cale d'épaisseur	Passcheibe	심	Arandela Ajuste	SER NO 31107-
26	**VOE 955923**	2							Spring Washer	Rondelle élastique	Federscheibe	스프링 와셔	Arandela flexible	
27	**VOE 965193**	2					SS		Screw	Vis	Schraube	스크류	Tornillo	
28	**SA 9211-12000**	3							Washer	Rondelle	Scheibe	와셔	Arandela	
29	**VOE 14527474**	1							Bracket	Console	Konsole	브라켓	Ménsula	
30	**VOE 14527484**	2							Bracket	Console	Konsole	브라켓	Ménsula	
31	**VOE 14501962**	2							Bumper	Pare-chocs	Stossfänger	범퍼	Parachoques	
32	**VOE 965191**	16					SS		Screw	Vis	Schraube	스크류	Tornillo	SER NO 30001-31106
	VOE 965191	10					SS		Screw	Vis	Schraube	스크류	Tornillo	SER NO 31107-
	VOE 965191		6	6			SS		Screw	Vis	Schraube	스크류	Tornillo	SER NO 31107-
33	**VOE 14522088**				1	1			Plate	Tôle	Blech	플레이트	Chapa	SER NO 30001-30666
	VOE 14522774				1	1			Plate	Tôle	Blech	플레이트	Chapa	SER NO 30667-
34	**VOE 946441**				4	4			Flange screw	Vis à bride	Flanschschraube	플랜지 스크류	Torn embridado	
35	**VOE 946544**	8					SS		Screw	Vis	Schraube	스크류	Tornillo	
36	**VOE 14527401**	2							Gas Spring	Ressort Gaz	Gasfeder	개스 스프링	Resorte A Gas	
37	**VOE 14540955**	1							Seat	Siege	Sitz	시트	Asiento	SER NO 34476-
38	**VOE 979019**	2							Hexagon Nut	Ecrou Hexagonal	Sechskantmutter	너트	Tuerca Hexagon	SER NO 30001-34475

1	**8278796**
2	**8279318 S/N 31107-**
3	**8279319 S/N 31107-**
4	**8278828**
5	**8278829**

Bastidor de capó, cubierta y capó
카울 프레임 , 커버 및 후드
Motorhaube, Rahmen und Abdeckung
Cadre, couvercle et capot d'auvent
Cowl frame, cover and hood

Catalogue id **20019**	Group **821**
Illustr. No **1018203**	Section **200**
Issue **VOE 74H9920019**	Page **313**

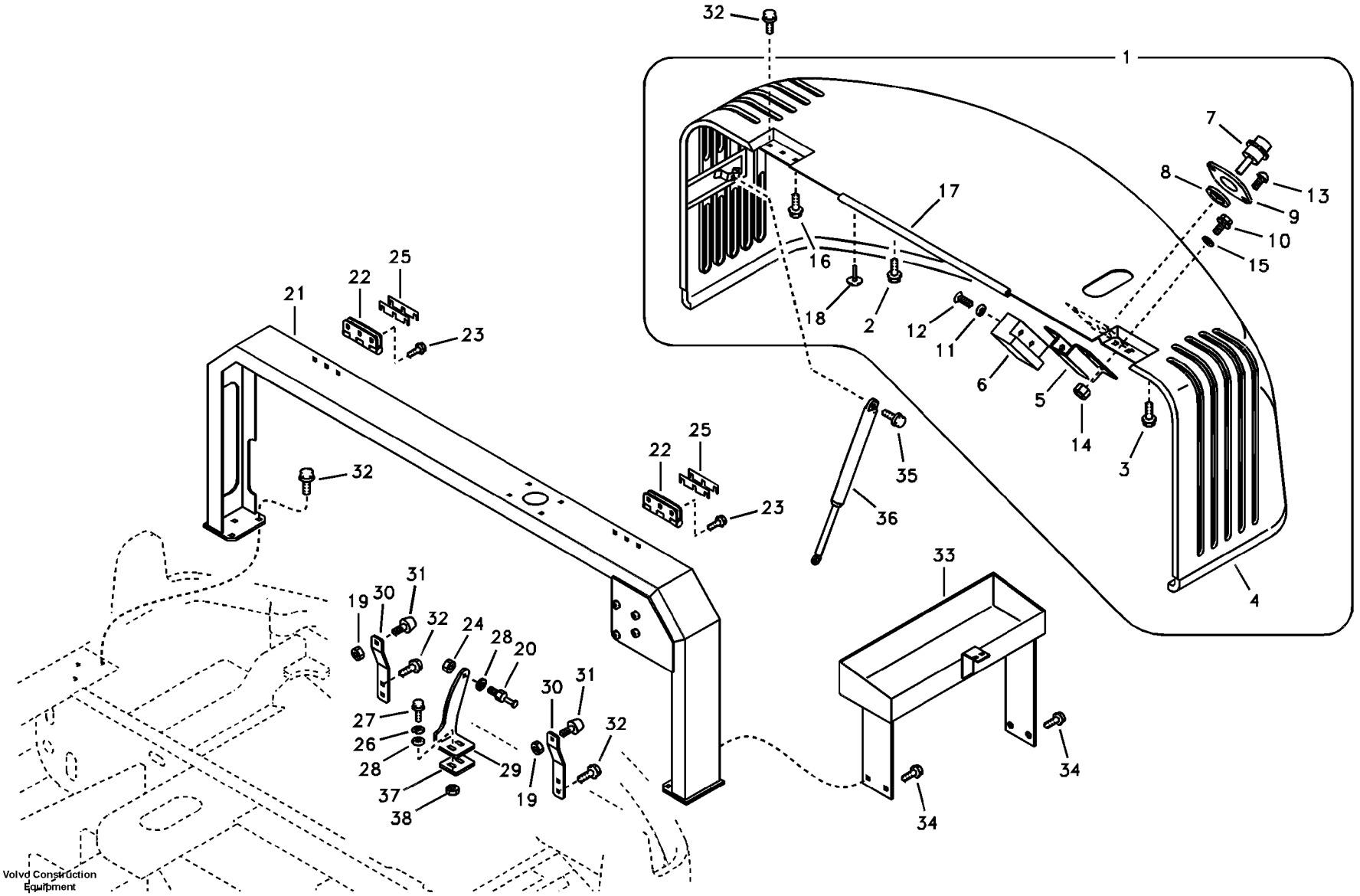
Volvo Construction Equipment
1018203

Fig.	Part No.	Quantity 1	2	3	4	5	PS	KIT	Description	Dénomination	Bezeichnung	품명	Denominación	Notes
1	**VOE 14518129**		1				SS		Hood	Capot Moteur	Motorhaube	후드	Tapa motor	SER NO 50001-50129
	VOE 14540954		1						Hood	Capot Moteur	Motorhaube	후드	Tapa motor	SER NO 50130-
	VOE 14524546			1					Hood	Capot Moteur	Motorhaube	후드	Tapa motor	SER NO 50001-50129
	VOE 14537082			1					Hood	Capot Moteur	Motorhaube	후드	Tapa motor	SER NO 50130-
2	**VOE 946544**		3	3			SS		•Screw	•Vis	•Schraube	• 스크류	•Tornillo	
3	**VOE 946329**		12	12					•Flange screw	•Vis à bride	•Flanschschraube	• 플랜지 스크류	•Torn embridado	
4	**VOE 14880926**		1						•Weatherstrip	•Leche-vitre	•Abstreifleiste	• 웨더스트립	•Lamelunas	
	VOE 14880926			1					•Weatherstrip	•Leche-vitre	•Abstreifleiste	• 웨더스트립	•Lamelunas	SER NO 50001-50129
	VOE 14533342			1					•Weatherstrip	•Leche-vitre	•Abstreifleiste	• 웨더스트립	•Lamelunas	SER NO 50130-
5	**VOE 14507402**		1	1					•Bracket	•Ferrure-support	•Tragstütze	• 브라켓	•Hierro Apoyo	
6	**VOE 14527477**		1	1					•Catch	•Disque Blocage	•Sperrplatte	• 캐치	•Disco Bloqueo	
7	**VOE 14527481**		1	1					Pusher	Poussoir	Stossel	푸셔	Empujador	
8	**VOE 14523601**		1	1					•Washer	•Rondelle	•Scheibe	• 와셔	•Arandela	
9	**VOE 14517369**		1	1					•Cover	•Verrou de volet	•Abdeckung	• 커버	•Cubierta	
10	**SA 9041-10607**		4						•Bolt	•Boulon	•Bolzen	• 볼트	•Perno	
	SA 9041-10607			4					•Bolt	•Boulon	•Bolzen	• 볼트	•Perno	SER NO 50001-50129
	VOE 947542			4			SS		•Screw	•Vis	•Schraube	• 스크류	•Tornillo	SER NO 50130-
11	**VOE 942767**		2	2					•Toothed Washer	•Rondelle Dentee	•Zahnscheibe	• 이붙이 와셔	•Arandela Dentad	
12	**VOE 969846**		2	2					•Screw	•Vis	•Schraube	• 스크류	•Tornillo	
13	**VOE 969408**		2	2					•6-pt skt screw	•Vis creuse de 6	•Hohlschraube	•6 포인트 소켓 스크류	•Racor 6-dientes	
14	**VOE 14880449**		4	4					•Lock nut	•Contre-ecrou	•Sicherungsmutter	• 록 너트	•Contratuerca	
15	**VOE 955892**		4	4					•Washer	•Rondelle	•Scheibe	• 와셔	•Arandela	
16	**VOE 946441**			2					•Flange screw	•Vis à bride	•Flanschschraube	• 플랜지 스크류	•Torn embridado	SER NO 50001-50129
17	**VOE 14533343**			1					•Weatherstrip	•Leche-vitre	•Abstreifleiste	• 웨더스트립	•Lamelunas	SER NO 50130-
18	**VOE 14520977**			17					•Cap	•Chapeau	•Kappe	• 캡	•Caperuza	SER NO 50130-
19	**VOE 983303**	2							Nut	Ecrou	Mutter	너트	Tuerca	
20	**VOE 14527482**	1							Striker	Butee	Hammer	스트라이커	Cerrojo	
21	**VOE 14520968**	1							Hood	Capot Moteur	Motorhaube	후드	Tapa motor	
22	**VOE 14881053**	2							•Hinge	•Charniere	•Scharnier	• 힌지	•Bisagra	
23	**VOE 965191**	6					SS		•Screw	•Vis	•Schraube	• 스크류	•Tornillo	

1	**8278796**	**Bastidor de capó, cubierta y capó** 카울 프레임 , 커버 및 후드 **Motorhaube, Rahmen und Abdeckung** **Cadre, couvercle et capot d'auvent** **Cowl frame, cover and hood**	Catalogue id **20019**	Group **821**
2	**8279318**			
3	**8279319**		Illustr. No **1018203**	Section **210**
4	**8278828**			
5	**8278829**	**FOR CHINA**	Issue **VOE 74H9920019**	Page **315**

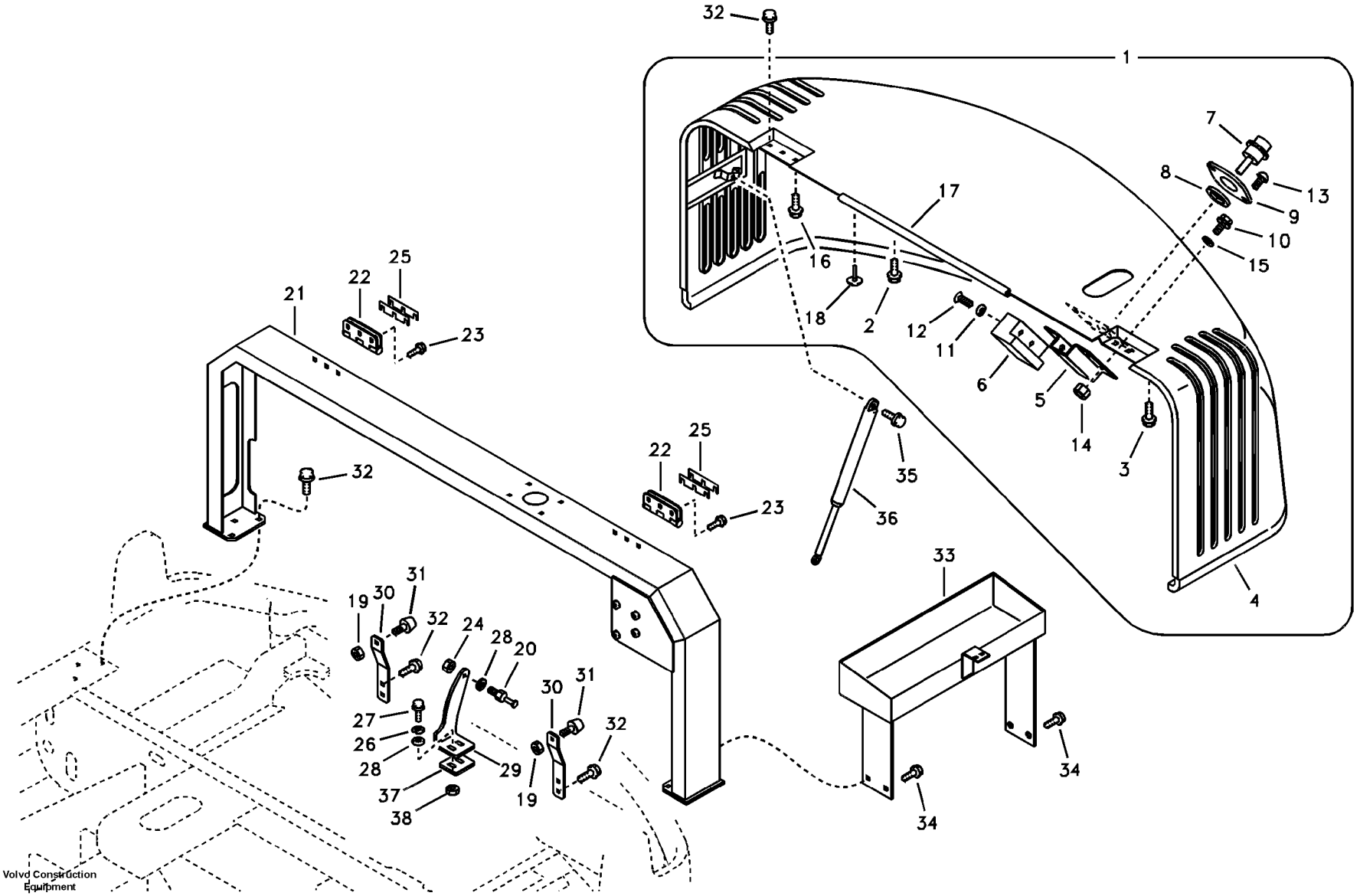
Volvo Construction Equipment
1018203

Fig.	Part No.	Quantity 1	2	3	4	5	PS	KIT	Description	Dénomination	Bezeichnung	품명	Denominación	Notes
24	**VOE 979019**	1							Hexagon Nut	Ecrou Hexagonal	Sechskantmutter	너트	Tuerca Hexagon	
25	**VOE 14881062**		4	4					Shim	Cale d'épaisseur	Passcheibe	심	Arandela Ajuste	
26	**VOE 955923**	2							Spring Washer	Rondelle élastique	Federscheibe	스프링 와셔	Arandela flexible	
27	**VOE 965193**	2					SS		Screw	Vis	Schraube	스크류	Tornillo	
28	**SA 9211-12000**	3							Washer	Rondelle	Scheibe	와셔	Arandela	
29	**VOE 14527474**	1							Bracket	Console	Konsole	브라켓	Ménsula	
30	**VOE 14527484**	2							Bracket	Console	Konsole	브라켓	Ménsula	
31	**VOE 14501962**	2							Bumper	Pare-chocs	Stossfänger	범퍼	Parachoques	
32	**VOE 965191**	10					SS		Screw	Vis	Schraube	스크류	Tornillo	
	VOE 965191		6	6			SS		Screw	Vis	Schraube	스크류	Tornillo	
33	**VOE 14522774**				1	1			Plate	Tôle	Blech	플레이트	Chapa	
34	**VOE 946441**				4	4			Flange screw	Vis à bride	Flanschschraube	플랜지 스크류	Torn embridado	
35	**VOE 946544**	8					SS		Screw	Vis	Schraube	스크류	Tornillo	
36	**VOE 14527401**	2							Gas Spring	Ressort Gaz	Gasfeder	개스 스프링	Resorte A Gas	
37	**VOE 14540955**	1							Seat	Siege	Sitz	시트	Asiento	SER NO 50130-
38	**VOE 979019**	2							Hexagon Nut	Ecrou Hexagonal	Sechskantmutter	너트	Tuerca Hexagon	SER NO 50001-50129

1	**8278796**	**Bastidor de capó, cubierta y capó** 카울 프레임 , 커버 및 후드 **Motorhaube, Rahmen und Abdeckung** **Cadre, couvercle et capot d'auvent** **Cowl frame, cover and hood**	Catalogue id **20019**	Group **821**
2	**8279318**			
3	**8279319**		Illustr. No **1018203**	Section **210**
4	**8278828**			
5	**8278829**	**FOR CHINA**	Issue **VOE 74H9920019**	Page **317**

VOLVO

EC55B

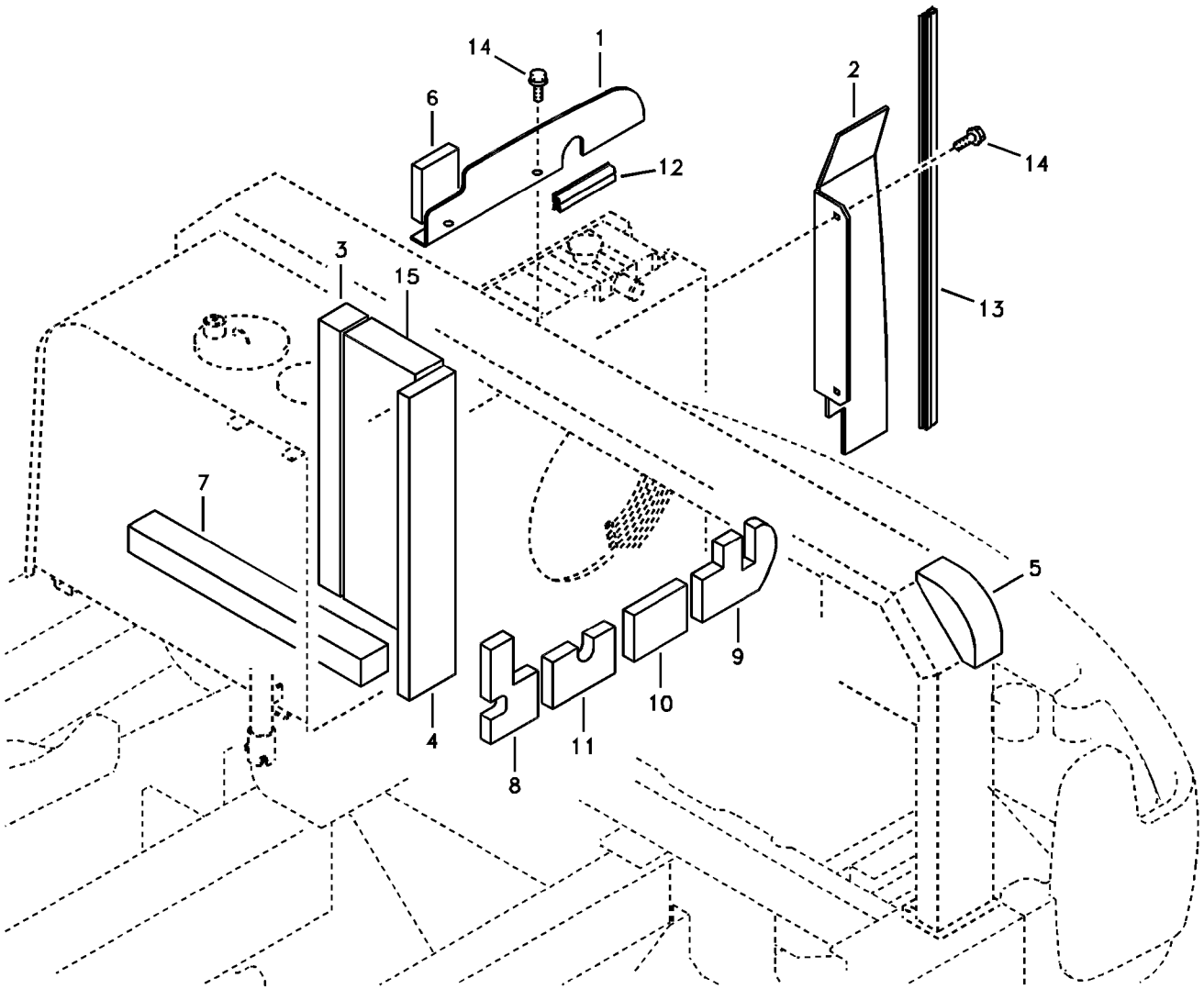
14
1
6
12
2
14
3
15
13
7
5
4
9
10
11
8

Fig.	Part No.	Quantity 1	2	3	PS	KIT	Description	Dénomination	Bezeichnung	품명	Denominación	Notes
1	**VOE 14503629**	1					Plate	Plaque	Platte	플레이트	Placa	
2	**VOE 14503630**	1					Plate	Plaque	Platte	플레이트	Placa	
3	**VOE 14527478**	1					Sponge	Eponge	Schwamm	스폰지	Esponja	
4	**VOE 14527479**	1					Sponge	Eponge	Schwamm	스폰지	Esponja	
5	**VOE 14527480**	1					Sponge	Eponge	Schwamm	스폰지	Esponja	
6	**VOE 14503677**	1					Sponge	Eponge	Schwamm	스폰지	Esponja	
7	**VOE 14527483**	1					Sponge	Eponge	Schwamm	스폰지	Esponja	
8	**VOE 14520973**	1					Sponge	Eponge	Schwamm	스폰지	Esponja	
9	**VOE 14520974**	1					Sponge	Eponge	Schwamm	스폰지	Esponja	
10	**VOE 14520975**	1					Sponge	Eponge	Schwamm	스폰지	Esponja	
11	**VOE 14520976**	1					Sponge	Eponge	Schwamm	스폰지	Esponja	
12	**VOE 14880918**	1					Weatherstrip	Leche-vitre	Abstreifleiste	웨더스트립	Lamelunas	
13	**VOE 14880922**	1					Weatherstrip	Leche-vitre	Abstreifleiste	웨더스트립	Lamelunas	
14	**VOE 946173**	4			SS		Screw	Vis	Schraube	스크류	Tornillo	
15	**VOE 14533341**	1					Sponge	Eponge	Schwamm	스폰지	Esponja	SER NO 34476- SER NO 50130-

1	**8278796**	**Bastidor de capó, cubierta y capó** 카울 프레임 , 커버 및 후드 **Motorhaube, Rahmen und Abdeckung** **Cadre, couvercle et capot d'auvent** **Cowl frame, cover and hood**	Catalogue id **20019**	Group **821**
2			Illustr. No **1018991**	Section **250**
3			Issue **VOE 74H9920019**	Page **319**
4				
5				

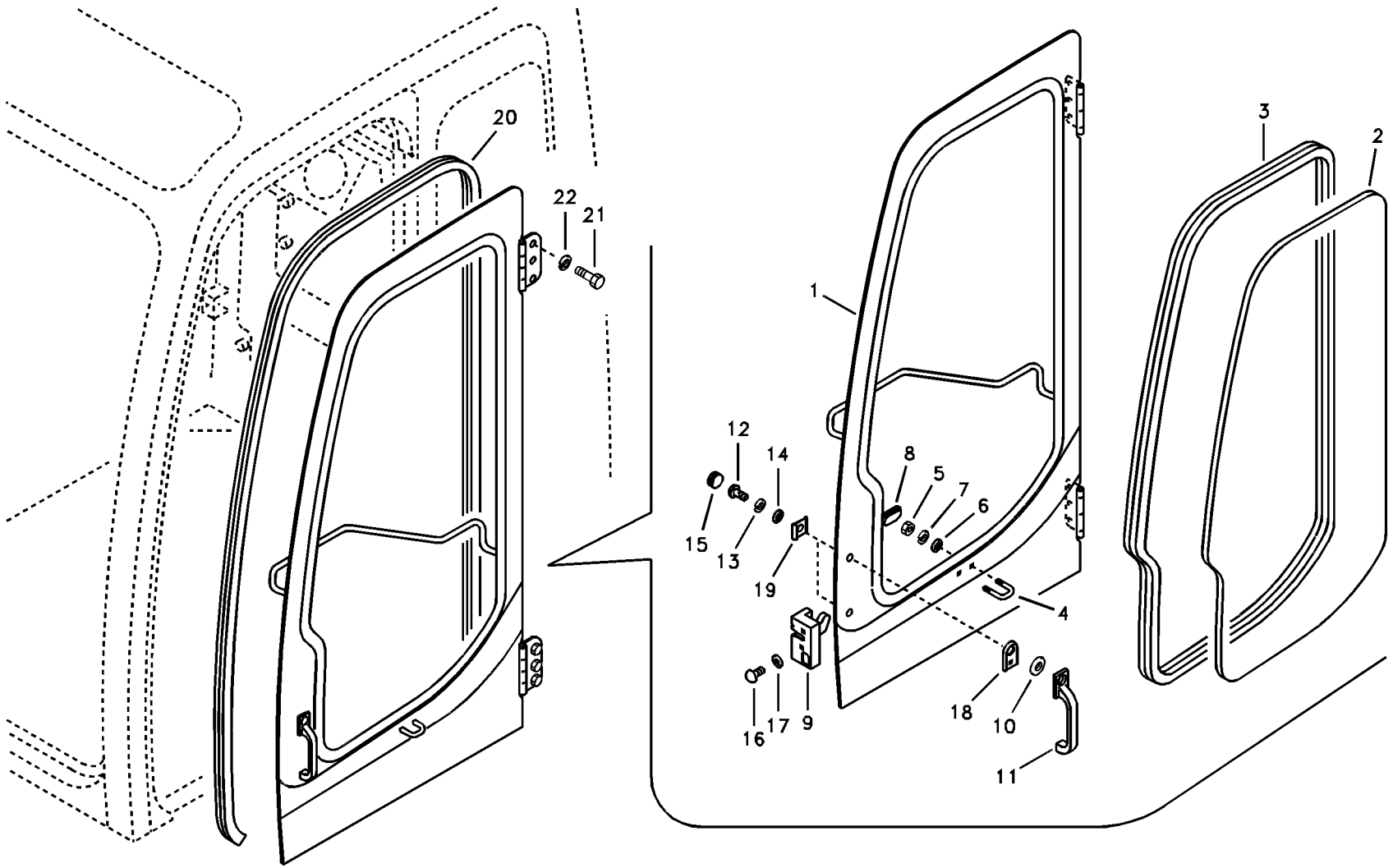
20
22
21
1
12
14
8
5
7
6
15
13
19
4
16
17
9
18
10
11
3
2

Fig.	Part No.	Quantity 1	2	3	PS	KIT	Description	Dénomination	Bezeichnung	품명	Denominación	Notes
	VOE 14501492	1	1	1			Door	Porte	Tür	도어	Puerta	
1		1	1	1	NS		•Door	•Porte	•Tür	• 도어	•Puerta	
2	**VOE 14527536**	1	1	1			•Glass	•Glace	•Scheibe	• 글라스	•Vidrio	
3	**VOE 14880916**	1	1	1			•Weatherstrip	•Leche-vitre	•Abstreifleiste	• 웨더스트립	•Lamelunas	
4	**VOE 14527552**	1	1	1			•Striker	•Butee	•Hammer	• 스트라이커	•Cerrojo	
5	**VOE 983303**	2	2	2			•Nut	•Ecrou	•Mutter	• 너트	•Tuerca	
6	**VOE 955894**	2	2	2	SS		•Washer	•Rondelle	•Scheibe	• 와셔	•Arandela	
7	**VOE 955921**	2	2	2			•Spring Washer	•Rondelle élastique	•Federscheibe	• 스프링 와셔	•Arandela flexible	
8	**VOE 14501501**	1	1	1			•Cover	•Capot	•Haube	• 커버	•Capo	
9	**VOE 14522196**	1	1	1			•Latch	•Crochet	•Haken	• 래치	•Fiador	
10	**VOE 14523601**	1	1	1			•Washer	•Rondelle	•Scheibe	• 와셔	•Arandela	
11	**VOE 14527656**	1	1	1			•Handle	•Poignee	•Handgriff	• 핸들	•Manilla	
12	**VOE 969420**	2	2	2			•6-pt skt screw	•Vis creuse de 6	•Hohlschraube	•6 포인트 소켓 스크류	•Racor 6-dientes	
13	**VOE 955919**	2	2	2			•Spring Washer	•Rondelle élastique	•Federscheibe	• 스프링 와셔	•Arandela flexible	
14	**VOE 955892**	2	2	2			•Washer	•Rondelle	•Scheibe	• 와셔	•Arandela	
15	**VOE 14523000**	2	2	2			•Cap	•Chapeau	•Kappe	• 캡	•Caperuza	
16	**VOE 969846**	2	2	2			•Screw	•Vis	•Schraube	• 스크류	•Tornillo	
17	**VOE 942767**	2	2	2			•Toothed Washer	•Rondelle Dentee	•Zahnscheibe	• 이붙이 와셔	•Arandela Dentad	
18	**VOE 14527602**	1	1	1			•Pad	•Patin	•Belag	• 패드	•Pastilla	
19	**VOE 14527604**	1	1	1			•Pad	•Patin	•Belag	• 패드	•Pastilla	
20	**VOE 14527565**	1	1	1			Weatherstrip	Leche-vitre	Abstreifleiste	웨더스트립	Lamelunas	
21	**VOE 983250**	6	6	6			Hexagon screw	Vis tête hexagonale	Sechskantschraube	스크류	Tornillo hexago	
22	**VOE 955922**	6	6	6			Spring Washer	Rondelle élastique	Federscheibe	스프링 와셔	Arandela flexible	

1	**8278806**	**Puerta, cabina** 운전실 도어 **Tür, Fahrerkabine** **Porte, cabine conducteur** **Door, operator's cab**	Catalogue id **20019** / Group **830**
2	**8278808**		Illustr. No **1007040** / Section **100**
3	**8278809**		Issue **VOE 74H9920019** / Page **321**
4			
5			

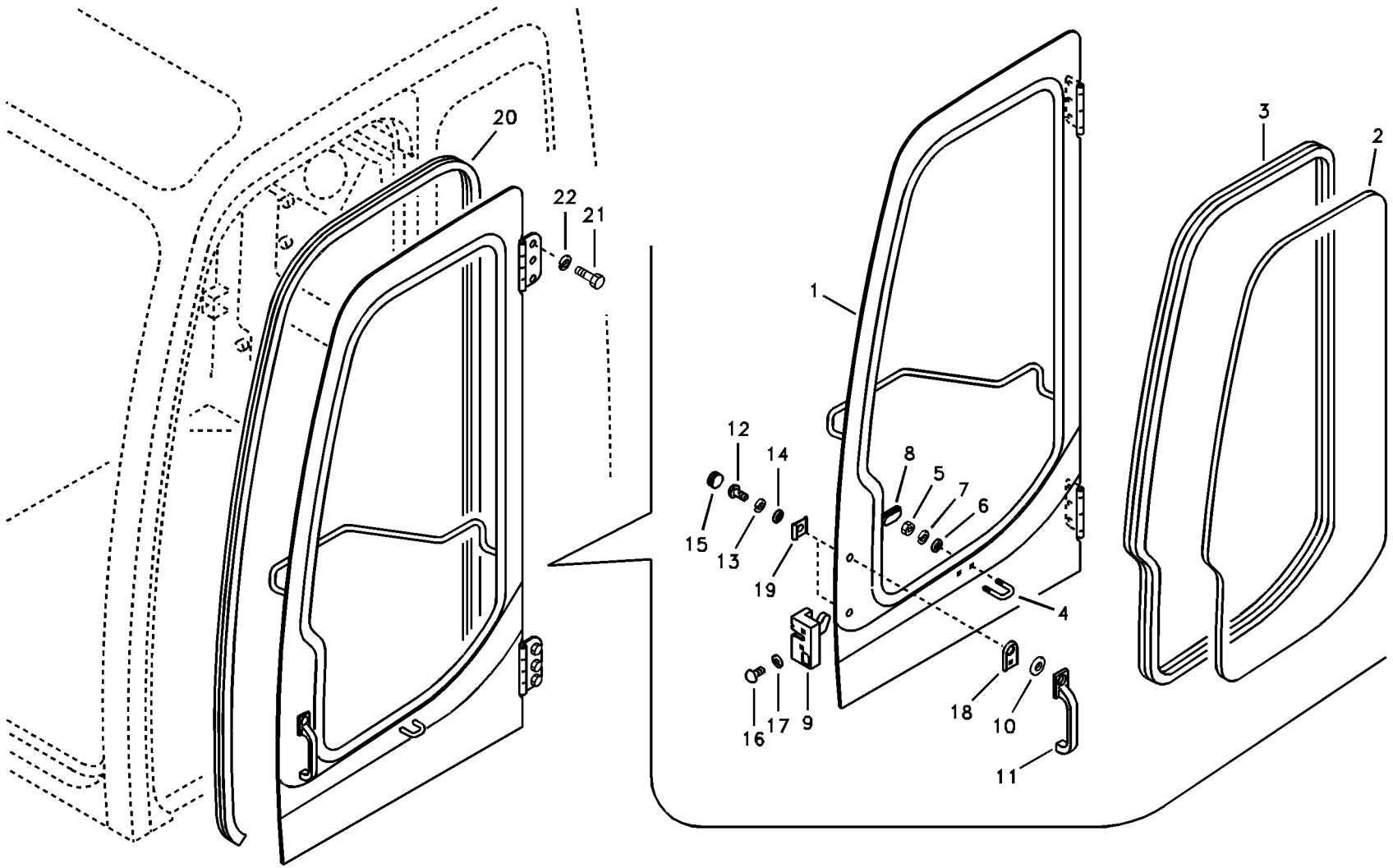
20
22
21
1
12
14
8
5
7
6
15
13
19
4
16
17
9
18
10
11
3
2

Fig.	Part No.	Quantity 1	2	3	PS	KIT	Description	Dénomination	Bezeichnung	품명	Denominación	Notes
	VOE 14501492	1	1				Door	Porte	Tür	도어	Puerta	
1		1	1		NS		•Door	•Porte	•Tür	• 도어	•Puerta	
2	**VOE 14527536**	1	1				•Glass	•Glace	•Scheibe	• 글라스	•Vidrio	
3	**VOE 14880916**	1	1				•Weatherstrip	•Leche-vitre	•Abstreifleiste	• 웨더스트립	•Lamelunas	
4	**VOE 14527552**	1	1				•Striker	•Butee	•Hammer	• 스트라이커	•Cerrojo	
5	**VOE 983303**	2	2				•Nut	•Ecrou	•Mutter	• 너트	•Tuerca	
6	**VOE 955894**	2	2		SS		•Washer	•Rondelle	•Scheibe	• 와셔	•Arandela	
7	**VOE 955921**	2	2				•Spring Washer	•Rondelle élastique	•Federscheibe	• 스프링 와셔	•Arandela flexible	
8	**VOE 14501501**	1	1				•Cover	•Capot	•Haube	• 커버	•Capo	
9	**VOE 14522196**	1	1				•Latch	•Crochet	•Haken	• 래치	•Fiador	
10	**VOE 14523601**	1	1				•Washer	•Rondelle	•Scheibe	• 와셔	•Arandela	
11	**VOE 14527656**	1	1				•Handle	•Poignee	•Handgriff	• 핸들	•Manilla	
12	**VOE 969420**	2	2				•6-pt skt screw	•Vis creuse de 6	•Hohlschraube	•6 포인트 소켓 스크류	•Racor 6-dientes	
13	**VOE 955919**	2	2				•Spring Washer	•Rondelle élastique	•Federscheibe	• 스프링 와셔	•Arandela flexible	
14	**VOE 955892**	2	2				•Washer	•Rondelle	•Scheibe	• 와셔	•Arandela	
15	**VOE 14523000**	2	2				•Cap	•Chapeau	•Kappe	• 캡	•Caperuza	
16	**VOE 969846**	2	2				•Screw	•Vis	•Schraube	• 스크류	•Tornillo	
17	**VOE 942767**	2	2				•Toothed Washer	•Rondelle Dentee	•Zahnscheibe	• 이붙이 와셔	•Arandela Dentad	
18	**VOE 14527602**	1	1				•Pad	•Patin	•Belag	• 패드	•Pastilla	
19	**VOE 14527604**	1	1				•Pad	•Patin	•Belag	• 패드	•Pastilla	
20	**VOE 14527565**	1	1				Weatherstrip	Leche-vitre	Abstreifleiste	웨더스트립	Lamelunas	
21	**VOE 983250**	6	6				Hexagon screw	Vis tête hexagonale	Sechskantschraube	스크류	Tornillo hexago	
22	**VOE 955922**	6	6				Spring Washer	Rondelle élastique	Federscheibe	스프링 와셔	Arandela flexible	

1	**8278808**	**Puerta, cabina** 운전실 도어 **Tür, Fahrerkabine** **Porte, cabine conducteur** **Door, operator's cab**	Catalogue id **20019**	Group **830**
2	**8278809**		Illustr. No **1007040**	Section **110**
3			Issue **VOE 74H9920019**	Page **323**
4				
5		**FOR CHINA**		



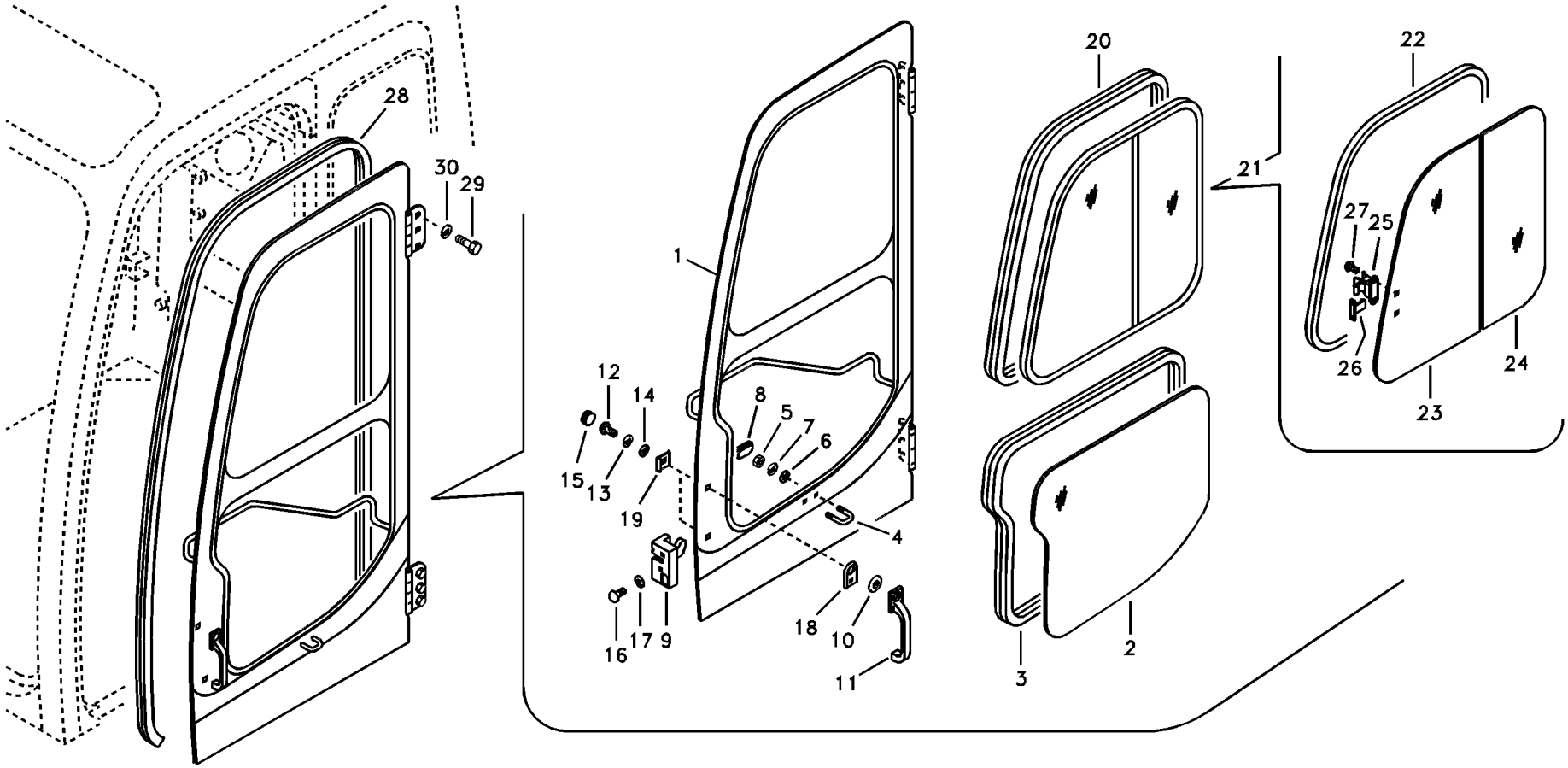

Volvo Construction Equipment

1007041

Fig.	Part No.	Quantity 1	2	3	PS	KIT	Description	Dénomination	Bezeichnung	품명	Denominación	Notes
	VOE 14508694	1					Door	Porte	Tür	도어	Puerta	
1		1			NS		•Door	•Porte	•Tür	• 도어	•Puerta	
2	**VOE 14509048**	1					•Glass	•Vitre	•Scheibe	• 유리	•Cristal	
3	**VOE 14881197**	1					•Weatherstrip	•Leche-vitre	•Abstreifleiste	• 웨더스트립	•Lamelunas	
4	**VOE 14527552**	1					•Striker	•Butee	•Hammer	• 스트라이커	•Cerrojo	
5	**VOE 983303**	2					•Nut	•Ecrou	•Mutter	• 너트	•Tuerca	
6	**VOE 955894**	2			SS		•Washer	•Rondelle	•Scheibe	• 와셔	•Arandela	
7	**VOE 955921**	2					•Spring Washer	•Rondelle élastique	•Federscheibe	• 스프링 와셔	•Arandela flexible	
8	**VOE 14501501**	1					•Cover	•Capot	•Haube	• 커버	•Capo	
9	**VOE 14522196**	1					•Latch	•Crochet	•Haken	• 래치	•Fiador	
10	**VOE 14523601**	1					•Washer	•Rondelle	•Scheibe	• 와셔	•Arandela	
11	**VOE 14527656**	1					•Handle	•Poignee	•Handgriff	• 핸들	•Manilla	
12	**VOE 969420**	2					•6-pt skt screw	•Vis creuse de 6	•Hohlschraube	•6 포인트 소켓 스크류	•Racor 6-dientes	
13	**VOE 955919**	2					•Spring Washer	•Rondelle élastique	•Federscheibe	• 스프링 와셔	•Arandela flexible	
14	**VOE 955892**	2					•Washer	•Rondelle	•Scheibe	• 와셔	•Arandela	
15	**VOE 14523000**	2					•Cap	•Chapeau	•Kappe	• 캡	•Caperuza	
16	**VOE 969846**	2					•Screw	•Vis	•Schraube	• 스크류	•Tornillo	
17	**VOE 942767**	2					•Toothed Washer	•Rondelle Dentee	•Zahnscheibe	• 이붙이 와셔	•Arandela Dentad	
18	**VOE 14527602**	1					•Pad	•Patin	•Belag	• 패드	•Pastilla	
19	**VOE 14527604**	1					•Pad	•Patin	•Belag	• 패드	•Pastilla	
20	**VOE 14880910**	1					•Weatherstrip	•Leche-vitre	•Abstreifleiste	• 웨더스트립	•Lamelunas	
21	**VOE 14509077**	1					•Window	•Vitre	•Fensterscheibe	• 윈도우	•Ventana	
22	**VOE 14509111**	1					••Frame	••Cadre	••Rahmen	•• 프레임	••Cuadro	
23	**VOE 14509112**	1					••Glass	••Glace	••Scheibe	•• 글라스	••Vidrio	
24	**VOE 14509113**	1					••Glass	••Glace	••Scheibe	•• 글라스	••Vidrio	
25	**VOE 14527407**	1					••Catch	••Disque Blocage	••Sperrplatte	•• 캐치	••Disco Bloqueo	
26	**VOE 14527409**	1					••Lock	••Serrure	••Schloß	•• 록	••Cierre	
27	**VOE 14880446**	2					••Screw	••Vis	••Schraube	•• 스크류	••Tornillo	
28	**VOE 14527565**	1					Weatherstrip	Leche-vitre	Abstreifleiste	웨더스트립	Lamelunas	
29	**VOE 983250**	6					Hexagon screw	Vis tête hexagonale	Sechskantschraube	스크류	Tornillo hexago	

1	**8278807**	**Puerta, cabina** 운전실 도어 **Tür, Fahrerkabine** **Porte, cabine conducteur** **Door, operator's cab**	Catalogue id **20019**	Group **830**
2			Illustr. No **1007041**	Section **200**
3			Issue **VOE 74H9920019**	Page **325**
4				
5				

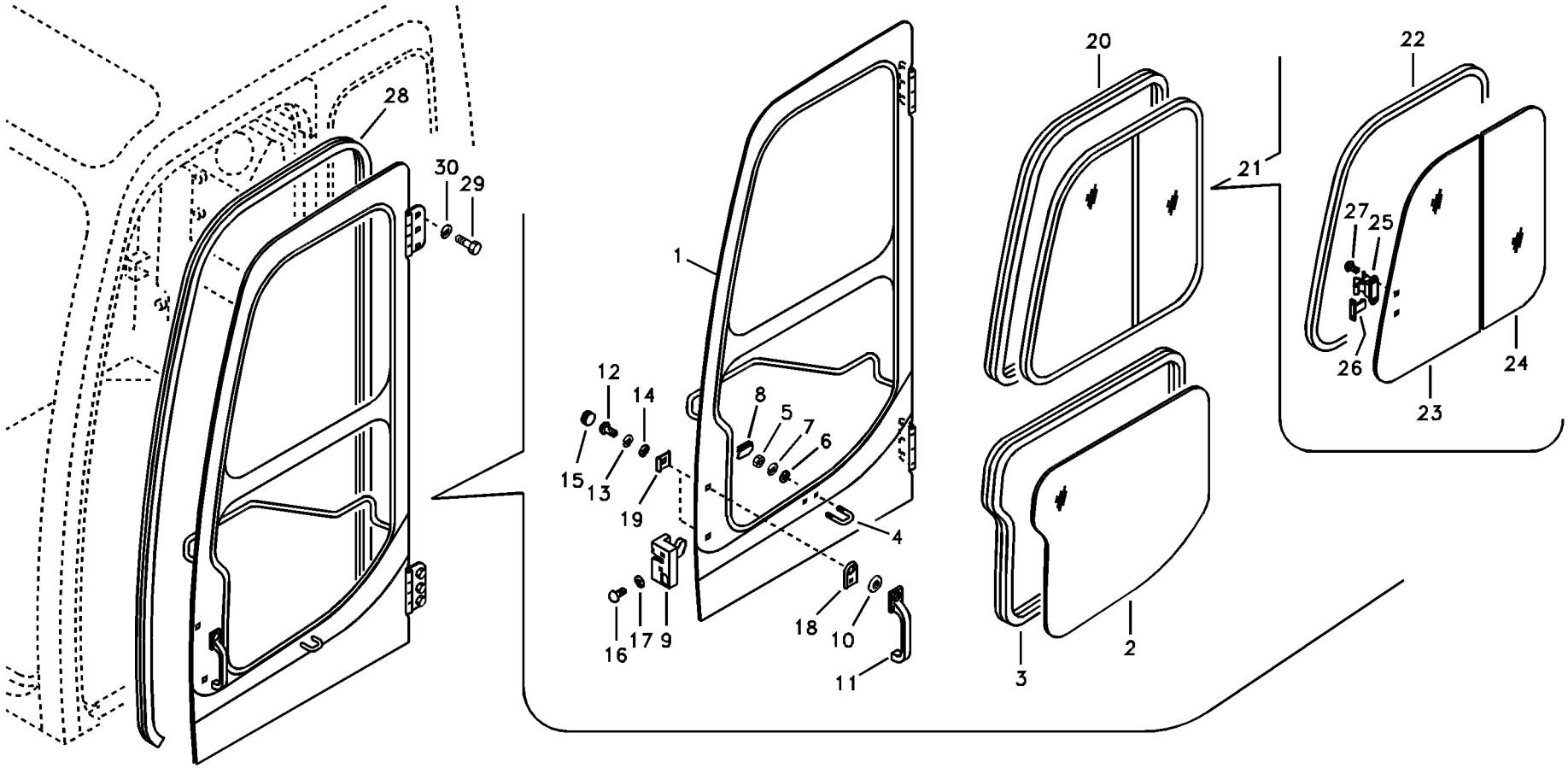

Volvo Construction Equipment

1007041

Fig.	Part No.	Quantity 1	2	3	PS	KIT	Description	Dénomination	Bezeichnung	품명	Denominación	Notes
30	**VOE 955922**	6					Spring Washer	Rondelle élastique	Federscheibe……	스프링 와셔	Arandela flexible.....	

1	**8278807**	**Puerta, cabina** 운전실 도어 **Tür, Fahrerkabine** **Porte, cabine conducteur** **Door, operator's cab**	Catalogue id **20019**	Group **830**
2			Illustr. No **1007041**	Section **200**
3			Issue **VOE 74H9920019**	Page **327**
4				
5				

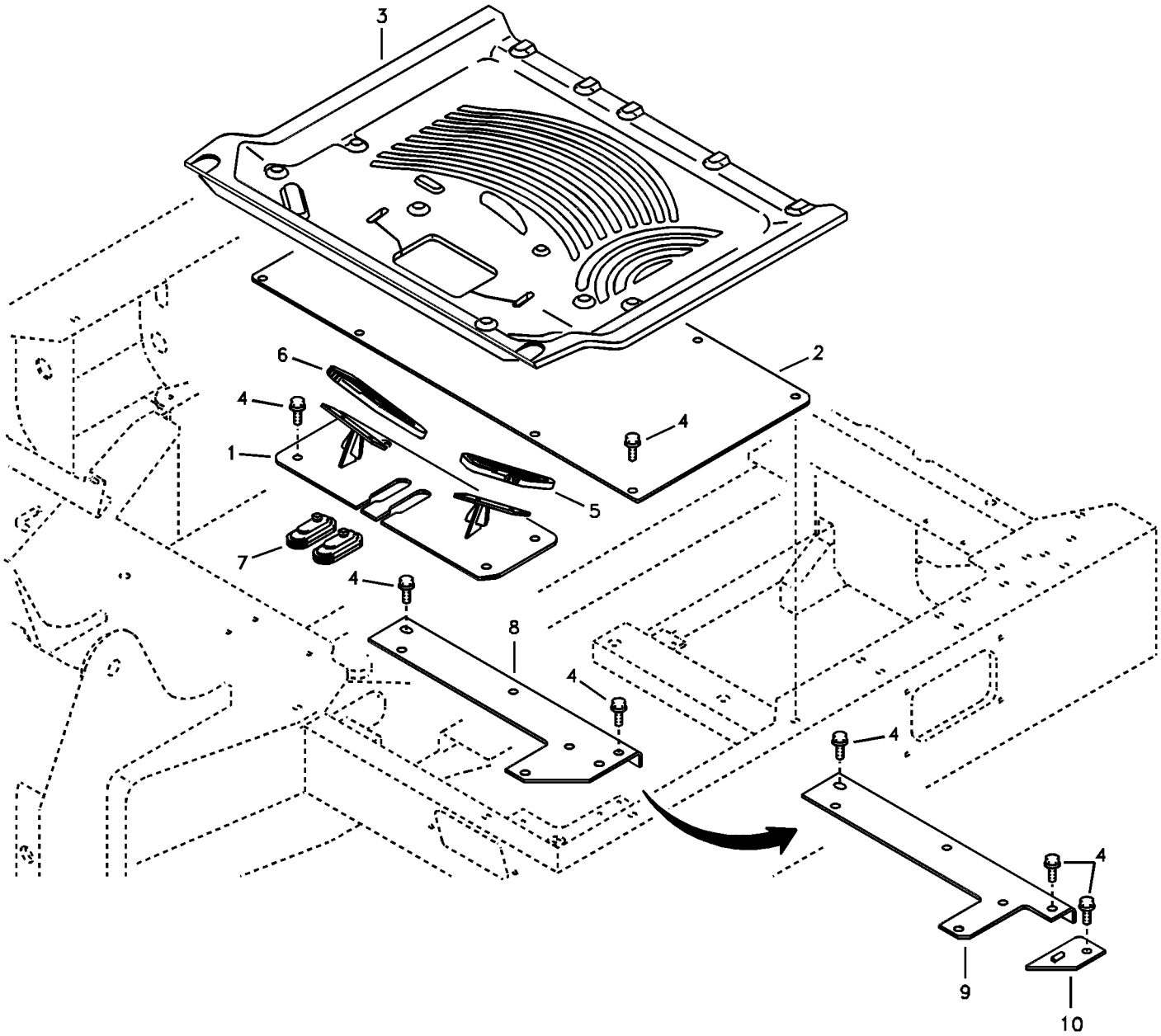
3
2
6
4
1
5
4
7
4
8
4
4
4
9
10

Fig.	Part No.	Quantity 1	2	3	PS	KIT	Description	Dénomination	Bezeichnung	품명	Denominación	Notes
1	**VOE 14518102**	1					Step	Marche Escalier	Treppenstufe	스텝	Escalon	
2	**VOE 14518103**	1					Step	Marche Escalier	Treppenstufe	스텝	Escalon	
3	**VOE 14520001**	1					Floor mat	Tapis sol	Bodenmatte	플로어 매트	Alfombra piso	
4	**VOE 946441**	12	2	3			Flange screw	Vis à bride	Flanschschraube	플랜지 스크류	Torn embridado	
5	**VOE 14527630**	1					Cover	Capot	Haube	커버	Capo	
6	**VOE 14527631**	1					Cover	Capot	Haube	커버	Capo	
7	**VOE 14518122**	2					Seal	Joint	Dichtring	시일	Junta	
8	**VOE 14518113**		1				Plate	Plaque	Platte	플레이트	Placa	
9	**VOE 14520090**			1			Plate	Plaque	Platte	플레이트	Placa	
10	**VOE 14520092**			1			Plate	Plaque	Platte	플레이트	Placa	

1	**8278796**
2	**8278863**
3	**8278864**
4	
5	

Suelo de cabina
운전실 플로어
Kabinenboden
Plancher de cabine
Cabin floor

Catalogue id **20019**	Group **837**
Illustr. No **1007042**	Section **100**
Issue **VOE 74H9920019**	Page **329**

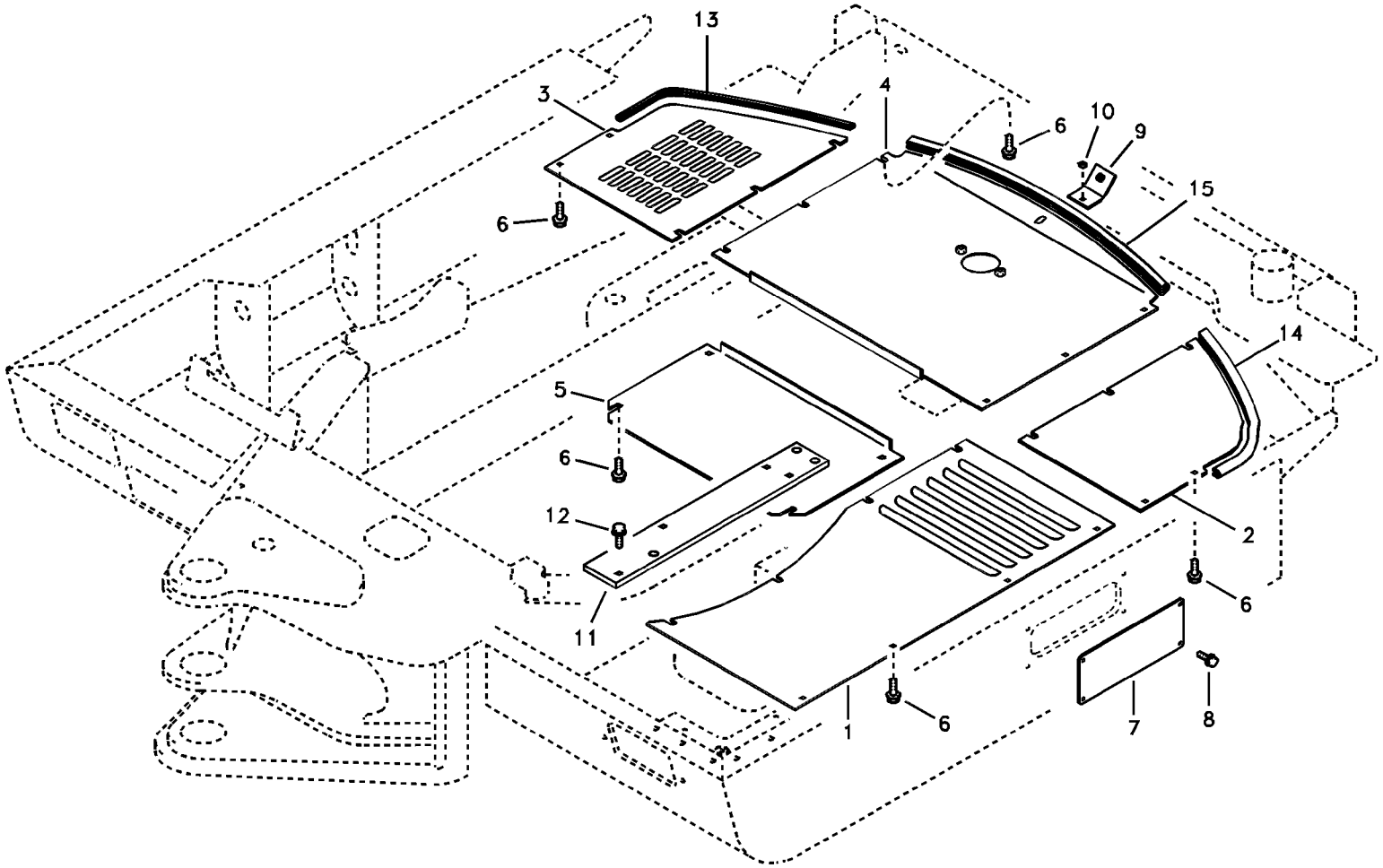
13
3
4
6
10
9
15
6
14
5
6
12
2
6
11
1
6
7
8

Fig.	Part No.	Quantity 1	2	3	PS	KIT	Description	Dénomination	Bezeichnung	품명	Denominación	Notes
1	**VOE 14521042**	1					Cover	Capot	Haube	커버	Capo	SER NO 30001-34475 SER NO 50001-50129
	VOE 14535263	1					Cover	Capot	Haube	커버	Capo	SER NO 34476- SER NO 50130-
	VOE 14521038		1				Cover	Capot	Haube	커버	Capo	
2	**VOE 14519930**	1					Cover	Capot	Haube	커버	Capo	SER NO 30001-34475 SER NO 50001-50129
	VOE 14538683	1					Cover	Capot	Haube	커버	Capo	SER NO 34476- SER NO 50130-
	VOE 14519925		1				Cover	Capot	Haube	커버	Capo	SER NO 30001-34475 SER NO 50001-50129
	VOE 14538689		1				Cover	Capot	Haube	커버	Capo	SER NO 34476- SER NO 50130-
3	**VOE 14519931**	1					Cover	Capot	Haube	커버	Capo	SER NO 30001-34475 SER NO 50001-50129
	VOE 14538685	1					Cover	Capot	Haube	커버	Capo	SER NO 34476- SER NO 50130-
	VOE 14519927		1				Cover	Capot	Haube	커버	Capo	SER NO 30001-34475 SER NO 50001-50129
	VOE 14538690		1				Cover	Capot	Haube	커버	Capo	SER NO 34476- SER NO 50130-
4	**VOE 14519998**	1					Cover	Capot	Haube	커버	Capo	SER NO 30001-34475 SER NO 50001-50129
	VOE 14538684	1					Cover	Capot	Haube	커버	Capo	SER NO 34476- SER NO 50130-
	VOE 14519926		1				Cover	Capot	Haube	커버	Capo	
5	**SA 1164-30051**	1					Cover	Capot	Haube	커버	Capo	
	VOE 14521039		1				Cover	Capot	Haube	커버	Capo	
6	**VOE 946441**	29	29				Flange screw	Vis à bride	Flanschschraube	플랜지 스크류	Torn embridado	
7	**VOE 14521140**	1	1		SS		Cover	Capot	Haube	커버	Capo	SER NO 30001-30666

1	**8278828**
2	**8278829**
3	
4	
5	

Tapas bajo el motor, bombas hidr., enfriador, válvula p. y dep
보텀 커버 플레이트
Luken unter Motor, Hyd.pumpen, Kühler, M.ventil und Tank
Trappes sous moteur, pompes hydr., radiateur, valves et réservoir carbura
Hatches under engine, hydr.pumps, cooler, m.valve and fuel tank.

Catalogue id	Group
20019	**837**
Illustr. No	Section
1018204	**200**
Issue	Page
VOE 74H9920019	**331**

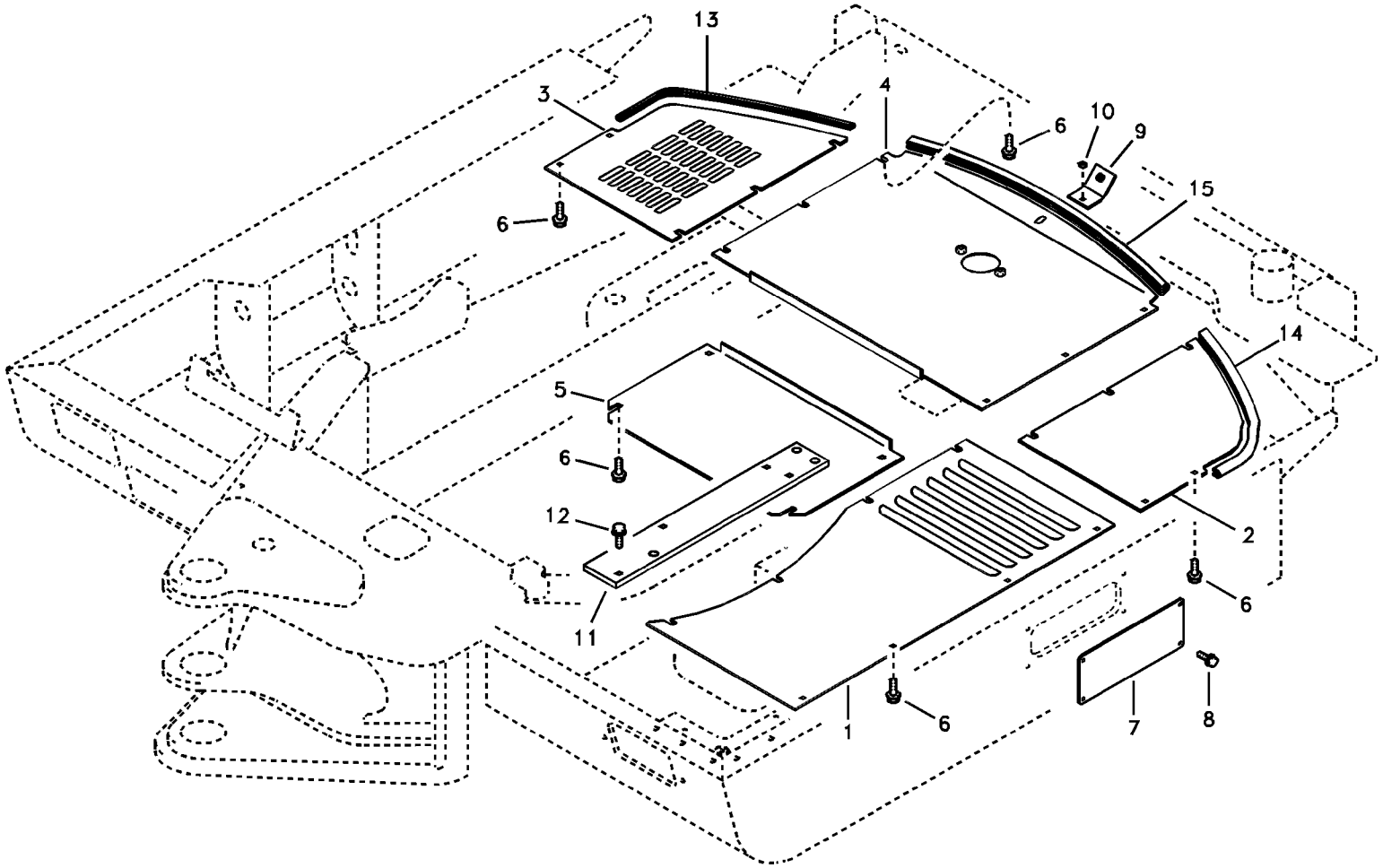
13
3
4
6
10
9
15
6
14
5
6
12
2
6
11
1
6
7
8

Fig.	Part No.	Quantity 1	2	3	PS	KIT	Description	Dénomination	Bezeichnung	품명	Denominación	Notes
	VOE 14522554	1	1				Cover	Capot	Haube	커버	Capo	SER NO 30667- SER NO 50001-
8	**VOE 946173**	4	4		SS		Screw	Vis	Schraube	스크류	Tornillo	
9	**SA 1164-30170**	1	1				Plate	Plaque	Platte	플레이트	Placa	SER NO 30001-34475 SER NO 50001-50129
	VOE 14535262	1	1				Plate	Plaque	Platte	플레이트	Placa	SER NO 34476- SER NO 50130-
10	**VOE 979021**	1	1				Hexagon Nut	Ecrou Hexagonal	Sechskantmutter	너트	Tuerca Hexagon	SER NO 30001-34475 SER NO 50001-50129
11	**VOE 14518163**	1	1				Cover	Capot	Haube	커버	Capo	
12	**VOE 946329**	3	3				Flange screw	Vis à bride	Flanschschraube	플랜지 스크류	Torn embridado	
13	**VOE 14880503**	1	1				Weatherstrip	Leche-vitre	Abstreifleiste	웨더스트립	Lamelunas	SER NO 34476- SER NO 50130-
14	**VOE 14880504**	1	1				Weatherstrip	Leche-vitre	Abstreifleiste	웨더스트립	Lamelunas	SER NO 34476- SER NO 50130-
15	**VOE 14880505**	1	1				Weatherstrip	Leche-vitre	Abstreifleiste	웨더스트립	Lamelunas	SER NO 34476- SER NO 50130-

1	**8278828**
2	**8278829**
3	
4	
5	

Tapas bajo el motor, bombas hidr., enfriador, válvula p. y dep
보텀 커버 플레이트
Luken unter Motor, Hyd.pumpen, Kühler, M.ventil und Tank
Trappes sous moteur, pompes hydr., radiateur, valves et réservoir carbura
Hatches under engine, hydr.pumps, cooler, m.valve and fuel tank.

Catalogue id **20019**	Group **837**
Illustr. No **1018204**	Section **200**
Issue **VOE 74H9920019**	Page **333**

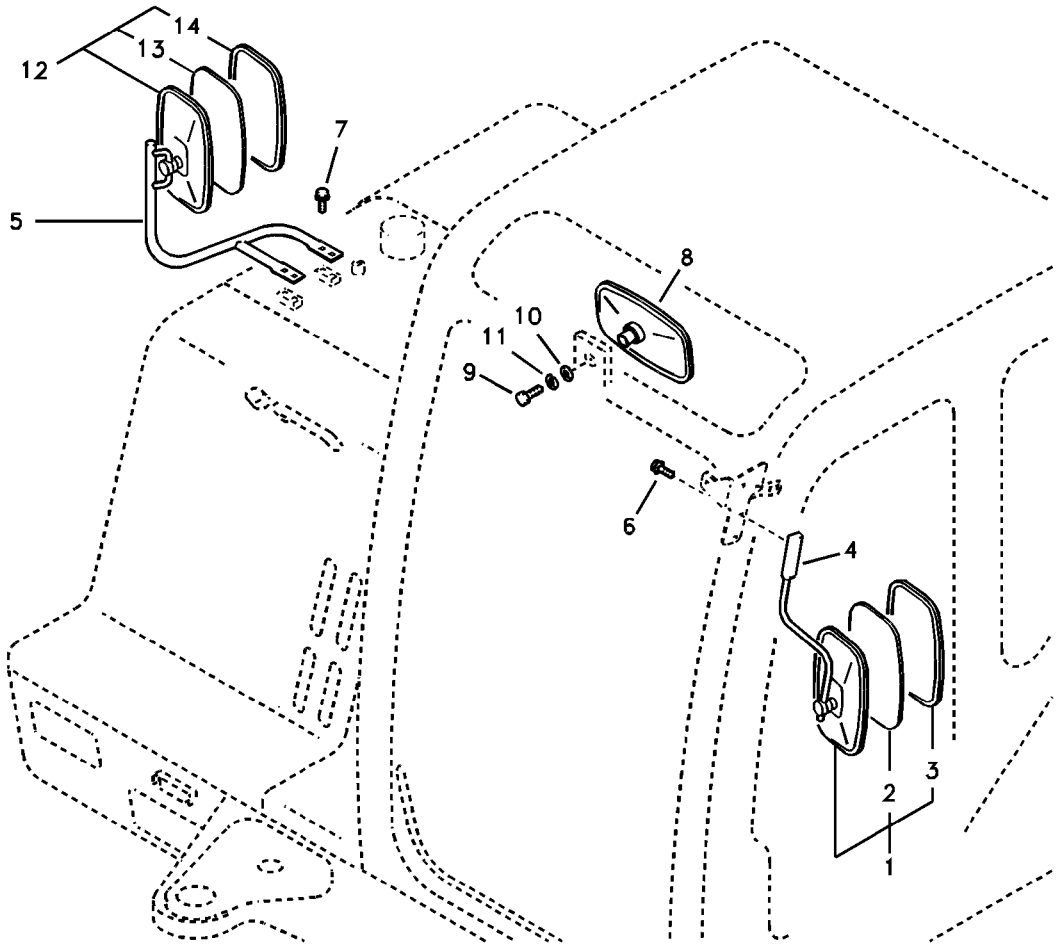
14
13
12
7
5
8
10
11
9
6
4
2
3
1

Fig.	Part No.	Quantity 1	2	3	PS	KIT	Description	Dénomination	Bezeichnung	품명	Denominación	Notes
1	**VOE 14521278**	1			SS		Mirror	Miroir	Spiegel	미러	Espejo	SER NO 30001-30018
	VOE 14513749	1					Mirror	Miroir	Spiegel	미러	Espejo	SER NO 30019-34170 SER NO 50001-
	VOE 14524680	1					Mirror	Miroir	Spiegel	미러	Espejo	SER NO 34171-34361
	VOE 14537087	1					Mirror	Miroir	Spiegel	미러	Espejo	SER NO 34362-
2	**VOE 14517743**	1					•Mirror	•Miroir	•Spiegel	• 미러	•Espejo	
3	**VOE 14517744**	1					•Rubber	•Caoutchouc	•Gummi	• 고무	•Caucho	
4	**VOE 14521286**	1			SS		Support	Support	Stütze	서포트	Apoyo	SER NO 30001-30018
	VOE 14522195	1					Support	Support	Stütze	서포트	Apoyo	SER NO 30019- SER NO 50001-
5	**VOE 14527584**	1					Support	Support	Stütze	서포트	Apoyo	SER NO 30001-34475 SER NO 50001-50129
	VOE 14540953	1					Support	Support	Stütze	서포트	Apoyo	SER NO 34476- SER NO 50130-
6	**VOE 946440**	2					Flange screw	Vis à bride	Flanschschraube	플랜지 스크류	Torn embridado	
7	**VOE 946441**	4					Flange screw	Vis à bride	Flanschschraube	플랜지 스크류	Torn embridado	SER NO 30001-34475 SER NO 50001-50129
	VOE 946329	4					Flange screw	Vis à bride	Flanschschraube	플랜지 스크류	Torn embridado	SER NO 34476- SER NO 50130-
8	**VOE 11164488**	1					Mirror	Miroir	Spiegel	미러	Espejo	SER NO 30667- SER NO 50001-
9	**VOE 983241**	1					Hexagon screw	Vis a tête hexagonale	Sechskantschr.	육각 나사	Tornillo hexago	SER NO 30667- SER NO 50001-
10	**VOE 955894**	1			SS		Washer	Rondelle	Scheibe	와셔	Arandela	SER NO 30667- SER NO 50001-
11	**VOE 955921**	1					Spring Washer	Rondelle élastique	Federscheibe	스프링 와셔	Arandela flexible	SER NO 30667- SER NO 50001-
12	**VOE 14513749**	1					Mirror	Miroir	Spiegel	미러	Espejo	SER NO 30001-33428
	VOE 14524680	1					Mirror	Miroir	Spiegel	미러	Espejo	SER NO 33429-34361
	VOE 14537087	1					Mirror	Miroir	Spiegel	미러	Espejo	SER NO 34362-

1	**8278825**	**Espejo retrovisor** 후사경 **Rückspiegel** **Rétroviseur** **Rear view mirror**	Catalogue id **20019** / Group **841**
2			Illustr. No **1017554** / Section **100**
3			
4			Issue **VOE 74H9920019** / Page **335**
5			

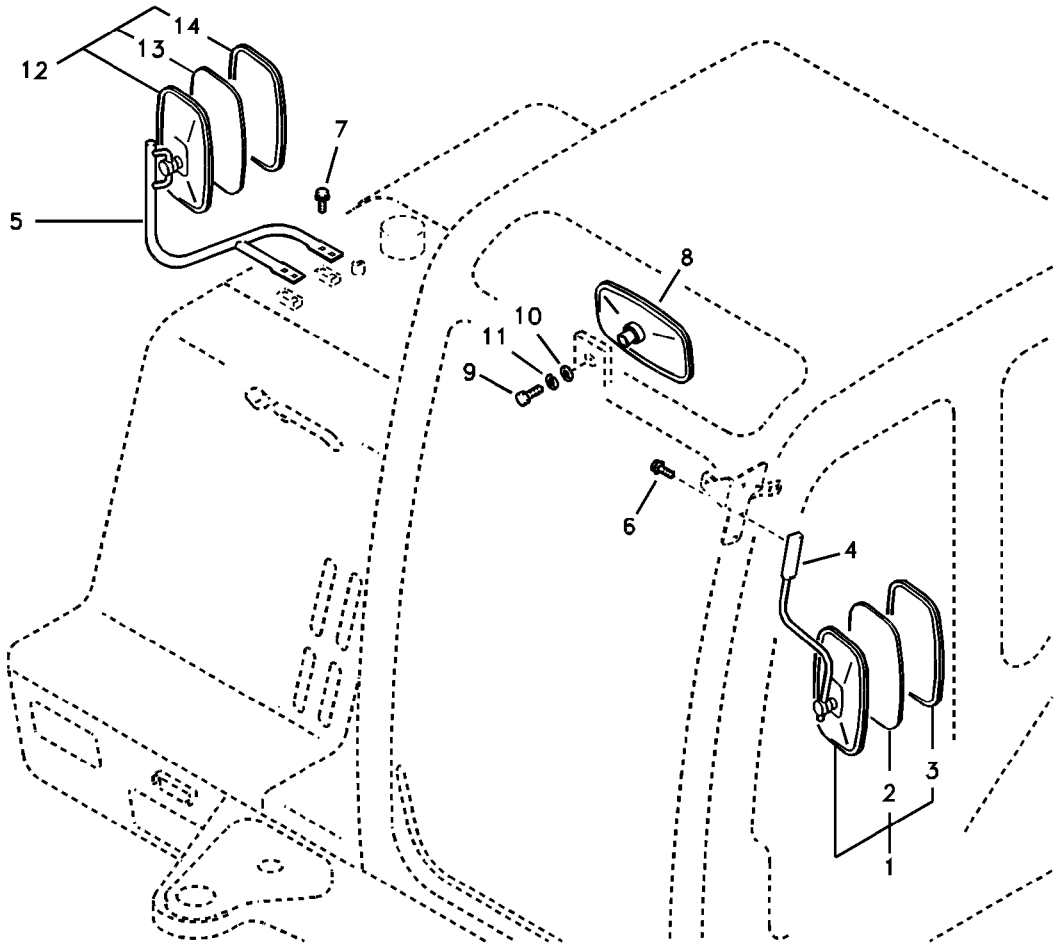
14
13
12
7
5
8
10
11
9
6
4
2
3
1

Fig.	Part No.	Quantity 1	2	3	PS	KIT	Description	Dénomination	Bezeichnung	품명	Denominación	Notes
13	**VOE 14517743**	1					•Mirror	•Miroir	•Spiegel	• 미러	•Espejo	
14	**VOE 14517744**	1					•Rubber	•Caoutchouc	•Gummi	• 고무	•Caucho	

1	**8278825**	**Espejo retrovisor** 후사경 **Rückspiegel** **Rétroviseur** **Rear view mirror**	Catalogue id **20019**	Group **841**
2			Illustr. No **1017554**	Section **100**
3			Issue **VOE 74H9920019**	Page **337**
4				
5				

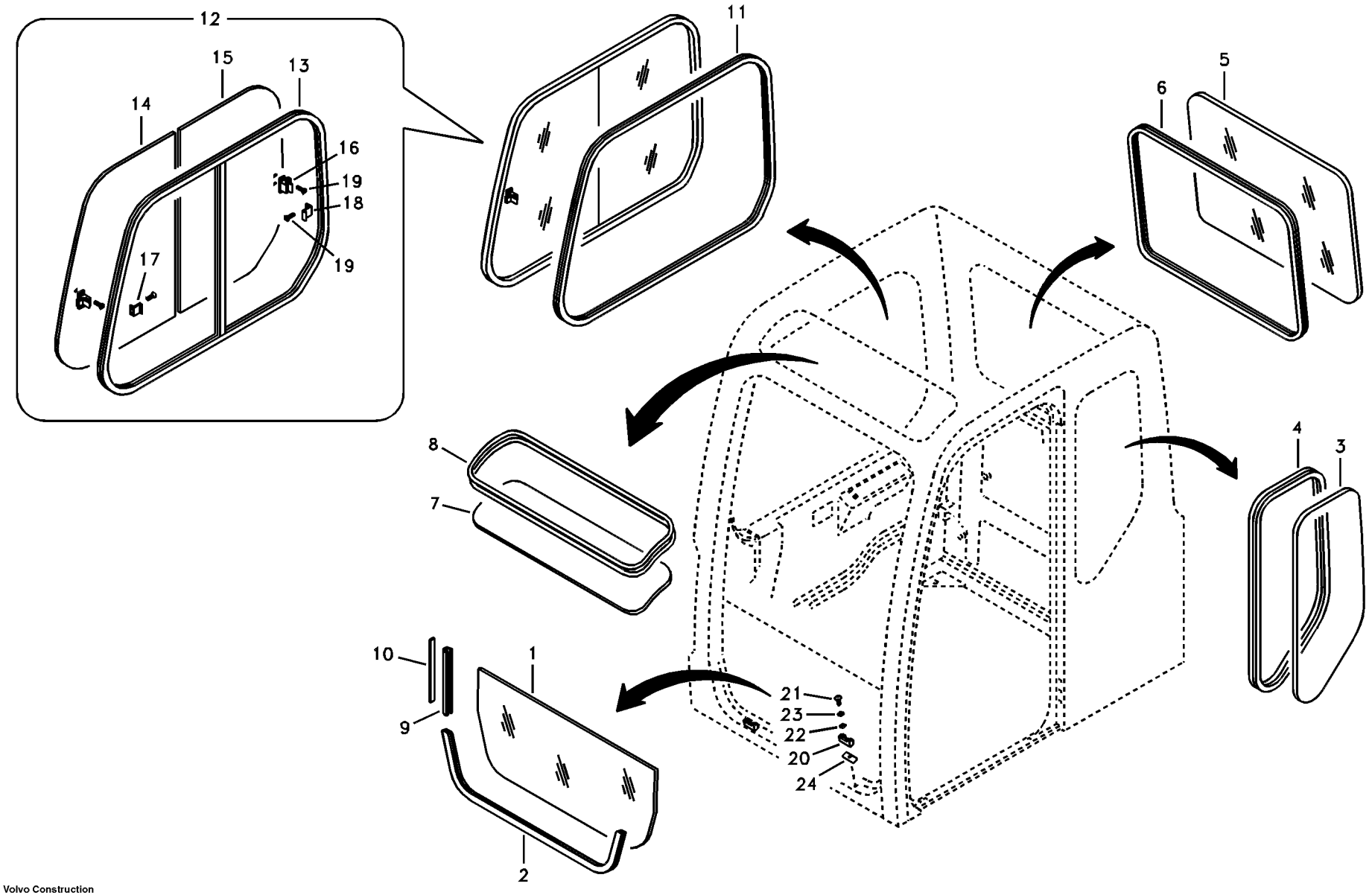

Volvo Construction Equipment

1007045

Fig.	Part No.	Quantity 1	2	3	4	5	PS	KIT	Description	Dénomination	Bezeichnung	품명	Denominación	Notes
1	**VOE 14504140**	1	1	1	1				Glass	Glace	Scheibe	글라스	Vidrio	
2	**VOE 14527564**	1	1	1	1				Weatherstrip	Leche-vitre	Abstreifleiste	웨더스트립	Lamelunas	
3	**VOE 14527540**	1	1	1	1				Glass	Glace	Scheibe	글라스	Vidrio	
4	**VOE 14880914**	1	1	1	1				Weatherstrip	Leche-vitre	Abstreifleiste	웨더스트립	Lamelunas	
5	**VOE 14527541**	1	1	1	1				Glass	Glace	Scheibe	글라스	Vidrio	
6	**VOE 14880915**	1	1	1	1				Weatherstrip	Leche-vitre	Abstreifleiste	웨더스트립	Lamelunas	
7	**SA 1166-01550**	1	1	1	1		SS		Glass	Glace	Scheibe	글라스	Vidrio	SER NO 30001-30666
	VOE 14522853	1	1	1	1				Glass	Glace	Scheibe	글라스	Vidrio	SER NO 30667-
8	**SA 9571-72250**	1	1	1	1		SS		Weatherstrip	Leche-vitre	Abstreifleiste	웨더스트립	Lamelunas	SER NO 30001-30666
	VOE 14522886	1	1	1	1				Weatherstrip	Leche-vitre	Abstreifleiste	웨더스트립	Lamelunas	SER NO 30667-31732
	VOE 14881197	1	1	1	1				Weatherstrip	Leche-vitre	Abstreifleiste	웨더스트립	Lamelunas	SER NO 31733-
9	**VOE 14880940**	2	2	2	2				Weatherstrip	Leche-vitre	Abstreifleiste	웨더스트립	Lamelunas	
10	**VOE 14527414**	2	2	2	2				Rubber	Caoutchouc	Gummi	고무	Caucho	
11	**VOE 14880911**	1	1	1	1				Weatherstrip	Leche-vitre	Abstreifleiste	웨더스트립	Lamelunas	
12	**VOE 14527703**	1	1	1	1				Window	Vitre	Fensterscheibe	윈도우	Ventana	
13		1	1	1	1		NS		•Frame	•Chassis	•Rahmen	• 프레임	•Bastidor	
14	**VOE 14527544**	1	1	1	1				•Glass	•Glace	•Scheibe	• 글라스	•Vidrio	
15	**VOE 14527545**	1	1	1	1				•Glass	•Glace	•Scheibe	• 글라스	•Vidrio	
16	**VOE 14527408**	2	2	2	2				•Lock	•Serrure	•Schloss	• 록	•Cierre	
17	**VOE 14527407**	1	1	1	1				•Catch	•Disque Blocage	•Sperrplatte	• 캐치	•Disco Bloqueo	
18	**VOE 14527409**	1	1	1	1				•Lock	•Serrure	•Schloß	• 록	•Cierre	
19	**VOE 14880446**	4	4	4	4				•Screw	•Vis	•Schraube	• 스크류	•Tornillo	
20	**VOE 14527418**	2	2	2	2				Support	Support	Stütze	서포트	Apoyo	
21	**VOE 969423**	2	2	2	2				6-pt skt screw	Vis creuse de 6	Hohlschraube	6 포인트 소켓 스크류	Racor 6-dientes	
22	**VOE 955892**	2	2	2	2				Washer	Rondelle	Scheibe	와셔	Arandela	
23	**VOE 955919**	2	2	2	2				Spring Washer	Rondelle élastique	Federscheibe	스프링 와셔	Arandela flexible	
24	**VOE 14527578**	2	2	2	2				Pad	Patin	Belag	패드	Pastilla	

1	**8278806**	**Ventanas** 운전실 글라스 **Fenster** **Fenêtres** **Windows**	Catalogue id **20019**	Group **843**
2	**8278807**			
3	**8278808**		Illustr. No **1007045**	Section **100**
4	**8278809**			
5			Issue **VOE 74H9920019**	Page **339**

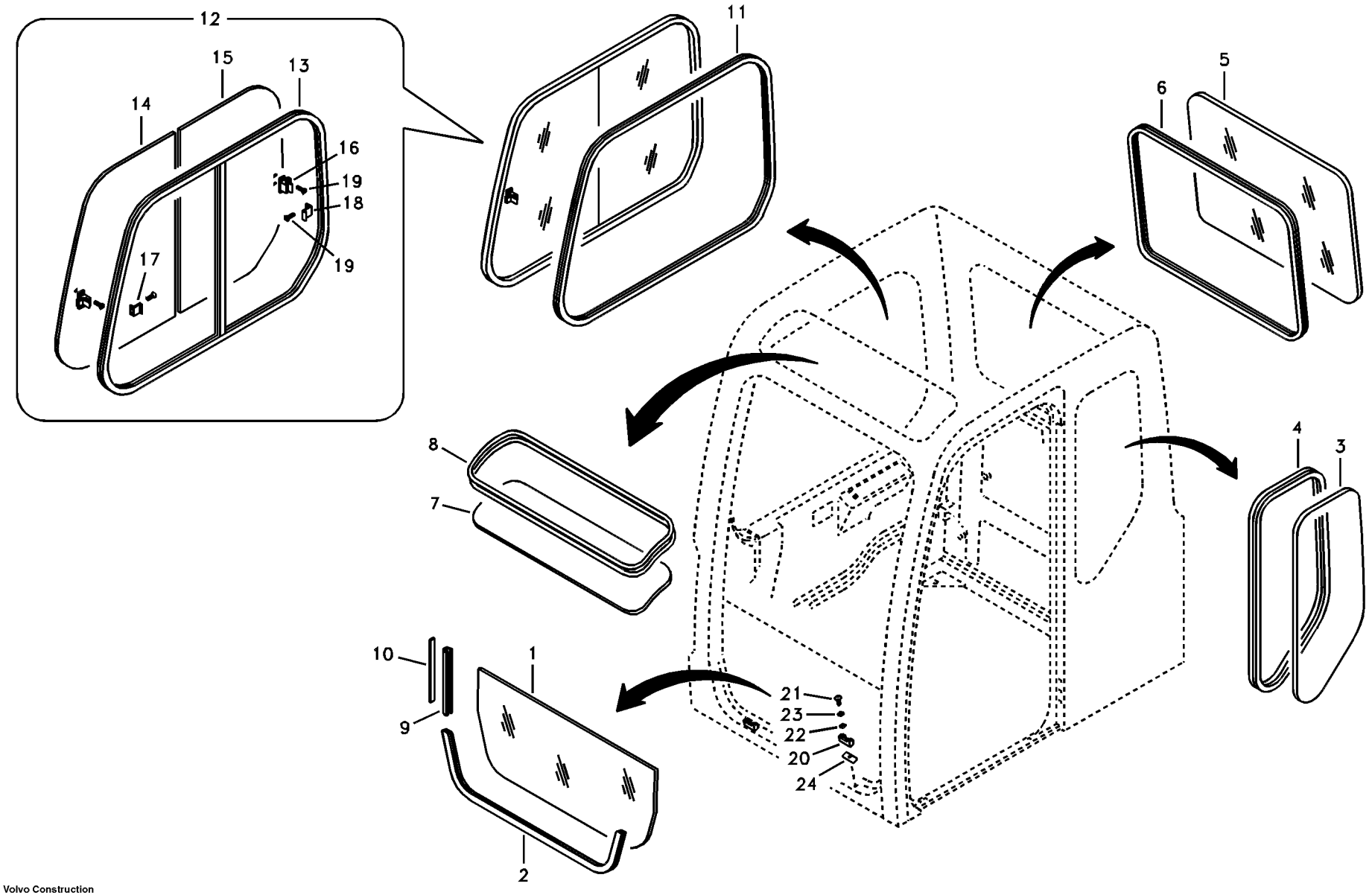

Volvo Construction Equipment

1007045

Fig.	Part No.	Quantity 1	2	3	PS	KIT	Description	Dénomination	Bezeichnung	품명	Denominación	Notes
1	**VOE 14504140**	1	1				Glass	Glace	Scheibe	글라스	Vidrio	
2	**VOE 14527564**	1	1				Weatherstrip	Leche-vitre	Abstreifleiste	웨더스트립	Lamelunas	
3	**VOE 14527540**	1	1				Glass	Glace	Scheibe	글라스	Vidrio	
4	**VOE 14880914**	1	1				Weatherstrip	Leche-vitre	Abstreifleiste	웨더스트립	Lamelunas	
5	**VOE 14527541**	1	1				Glass	Glace	Scheibe	글라스	Vidrio	
6	**VOE 14880915**	1	1				Weatherstrip	Leche-vitre	Abstreifleiste	웨더스트립	Lamelunas	
7	**VOE 14522853**	1	1				Glass	Glace	Scheibe	글라스	Vidrio	
8	**VOE 14522886**	1	1				Weatherstrip	Leche-vitre	Abstreifleiste	웨더스트립	Lamelunas	
9	**VOE 14880940**	2	2				Weatherstrip	Leche-vitre	Abstreifleiste	웨더스트립	Lamelunas	
10	**VOE 14527414**	2	2				Rubber	Caoutchouc	Gummi	고무	Caucho	
11	**VOE 14880911**	1	1				Weatherstrip	Leche-vitre	Abstreifleiste	웨더스트립	Lamelunas	
12	**VOE 14527703**	1	1				Window	Vitre	Fensterscheibe	윈도우	Ventana	
13		1	1		NS		•Frame	•Chassis	•Rahmen	• 프레임	•Bastidor	
14	**VOE 14527544**	1	1				•Glass	•Glace	•Scheibe	• 글라스	•Vidrio	
15	**VOE 14527545**	1	1				•Glass	•Glace	•Scheibe	• 글라스	•Vidrio	
16	**VOE 14527408**	2	2				•Lock	•Serrure	•Schloss	• 록	•Cierre	
17	**VOE 14527407**	1	1				•Catch	•Disque Blocage	•Sperrplatte	• 캐치	•Disco Bloqueo	
18	**VOE 14527409**	1	1				•Lock	•Serrure	•Schloß	• 록	•Cierre	
19	**VOE 14880446**	4	4				•Screw	•Vis	•Schraube	• 스크류	•Tornillo	
20	**VOE 14527418**	2	2				Support	Support	Stütze	서포트	Apoyo	
21	**VOE 969423**	2	2				6-pt skt screw	Vis creuse de 6	Hohlschraube	6 포인트 소켓 스크류	Racor 6-dientes	
22	**VOE 955892**	2	2				Washer	Rondelle	Scheibe	와셔	Arandela	
23	**VOE 955919**	2	2				Spring Washer	Rondelle élastique	Federscheibe	스프링 와셔	Arandela flexible	
24	**VOE 14527578**	2	2				Pad	Patin	Belag	패드	Pastilla	

1	**8278808**	**Ventanas** 운전실 글라스 **Fenster** **Fenêtres** **Windows**	Catalogue id **20019**	Group **843**
2	**8278809**			
3			Illustr. No **1007045**	Section **110**
4				
5		**FOR CHINA**	Issue **VOE 74H9920019**	Page **341**

VOLVO

EC55B

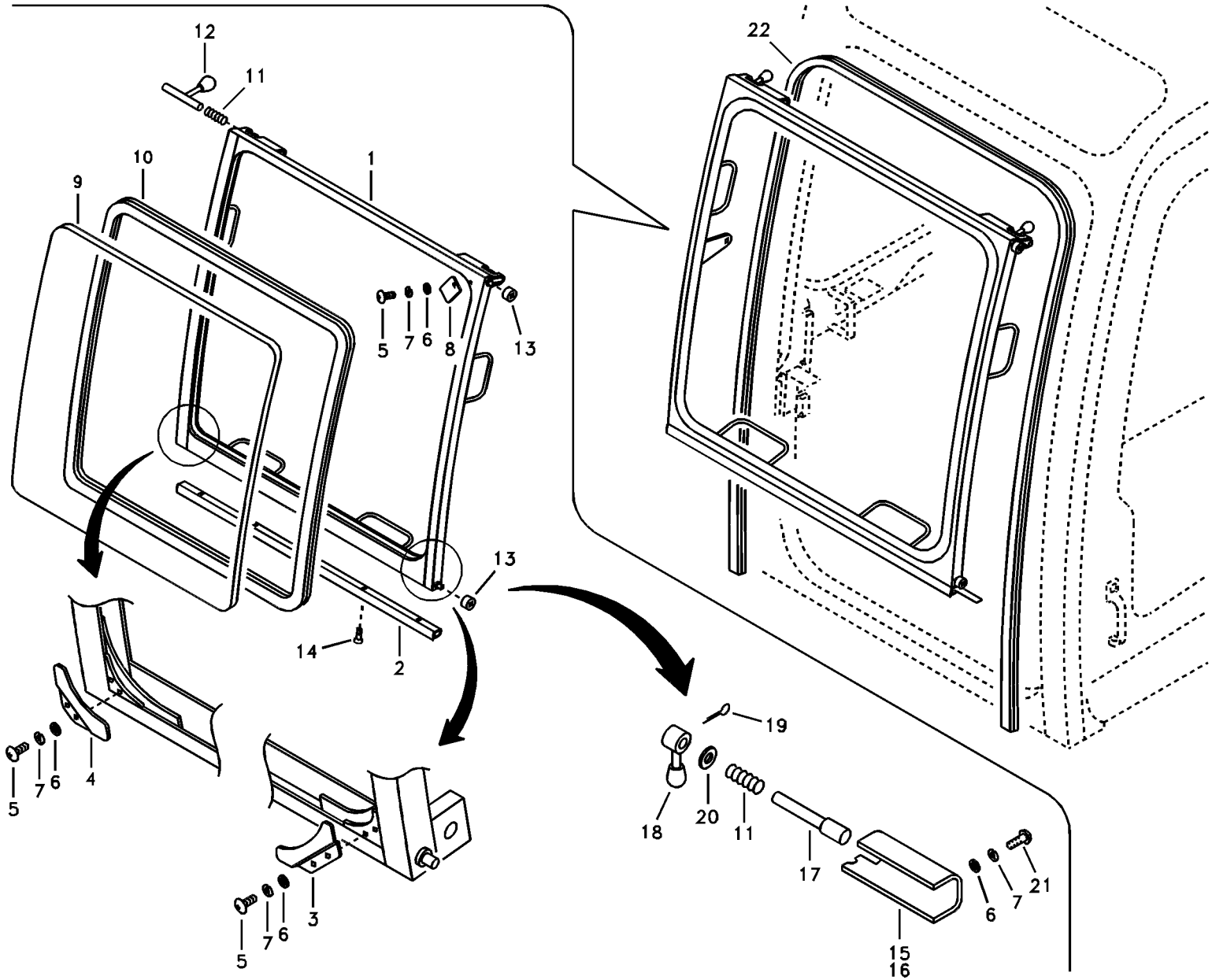

Volvo Construction Equipment

1007046

Fig.	Part No.	Quantity 1	2	3	4	5	PS	KIT	Description	Dénomination	Bezeichnung	품명	Denominación	Notes
		1	1	1	1		NS		Shield	Tole-ecran	Schirmblech	실드	Placa Guardab	
1	**VOE 14520003**	1	1	1	1				•Shield	•Tole-ecran	•Schirmblech	• 실드	•Placa Guardab	
2	**VOE 14527571**	1	1	1	1				•Weatherstrip	•Leche-vitre	•Abstreifleiste	• 웨더스트립	•Lamelunas	
3	**VOE 14527576**	1	1	1	1				•Bracket	•Console	•Konsole	• 브라켓	•Ménsula	
4	**VOE 14527577**	1	1	1	1		SS		•Bracket	•Console	•Konsole	• 브라켓	•Ménsula	
5	**VOE 969422**	6	6	6	6				•6-pt skt screw	•Vis creuse de 6	•Hohlschraube	•6 포인트 소켓 스크류	•Racor 6-dientes	
6	**VOE 955892**	10	10	10	10				•Washer	•Rondelle	•Scheibe	• 와셔	•Arandela	
7	**VOE 955919**	10	10	10	10				•Spring Washer	•Rondelle élastiqu	•Federscheibe	• 스프링 와셔	•Arandela flexible	
8	**SA 1166-03170**	2	2	2	2				•Bracket	•Ferrure-support	•Tragstütze	• 브라켓	•Hierro Apoyo	
9	**VOE 14504141**	1	1	1	1				•Glass	•Glace	•Scheibe	• 글라스	•Vidrio	
10	**VOE 14504142**	1	1	1	1				•Weatherstrip	•Leche-vitre	•Abstreifleiste	• 웨더스트립	•Lamelunas	
11	**VOE 14527551**	4	4	4	4				•Spring	•Ressort	•Feder	• 스프링	•Muelle	
12	**VOE 14527550**	2	2	2	2				•Pin	•Goupille	•Zapfen	• 핀	•Pasador	
13	**VOE 14509459**	4	4	4	4				•Roller	•Galet	•Rolle	• 롤러	•Rodillo	
14	**SA 9027-10401**	2	2	2	2				•Screw	•Vis	•Schraube	• 스크류	•Tornillo	
15	**VOE 14520004**	1	1	1	1				•Channel	•Barre U	•U-träger	• 찬넬	•Barra-u	
16	**VOE 14520005**	1	1	1	1				•Channel	•Barre U	•U-träger	• 찬넬	•Barra-u	
17	**VOE 14520006**	2	2	2	2		SS		•Shaft	•Arbre	•Welle	• 샤프트	•Arbol	SER NO 30001-30666
	VOE 14522800	2	2	2	2				•Shaft	•Arbre	•Welle	• 샤프트	•Arbol	SER NO 30667-
18	**VOE 14520007**	2	2	2	2		SS		•Handle	•Poignee	•Handgriff	• 핸들	•Manilla	SER NO 30001-30666
	VOE 14522801	2	2	2	2				•Handle	•Poignee	•Handgriff	• 핸들	•Manilla	SER NO 30667-
19	**SA 9323-02910**	2	2	2	2		SS		•Split Pin	•Goupille Fendue	•Splint	• 분할 핀	•Chaveta Hendida	SER NO 30001-30666
	VOE 14522820	2	2	2	2				•Split Pin	•Goupille Fendue	•Splint	• 분할 핀	•Chaveta Hendida	SER NO 30667-
20	**VOE 955894**	2	2	2	2		SS		•Washer	•Rondelle	•Scheibe	• 와셔	•Arandela	
21	**VOE 969420**	4	4	4	4				•6-pt skt screw	•Vis creuse de 6	•Hohlschraube	•6 포인트 소켓 스크류	•Racor 6-dientes	
22	**VOE 14527563**	1	1	1	1				Weatherstrip	Leche-vitre	Abstreifleiste	웨더스트립	Lamelunas	

1	**8278806**	**Parabrisas** 앞 유리창 **Frontscheibe** **Pare-brise** **Windshield**	Catalogue id **20019**	Group **843**
2	**8278807**			
3	**8278808**		Illustr. No **1007046**	Section **200**
4	**8278809**			
5			Issue **VOE 74H9920019**	Page **343**

VOLVO

EC55B

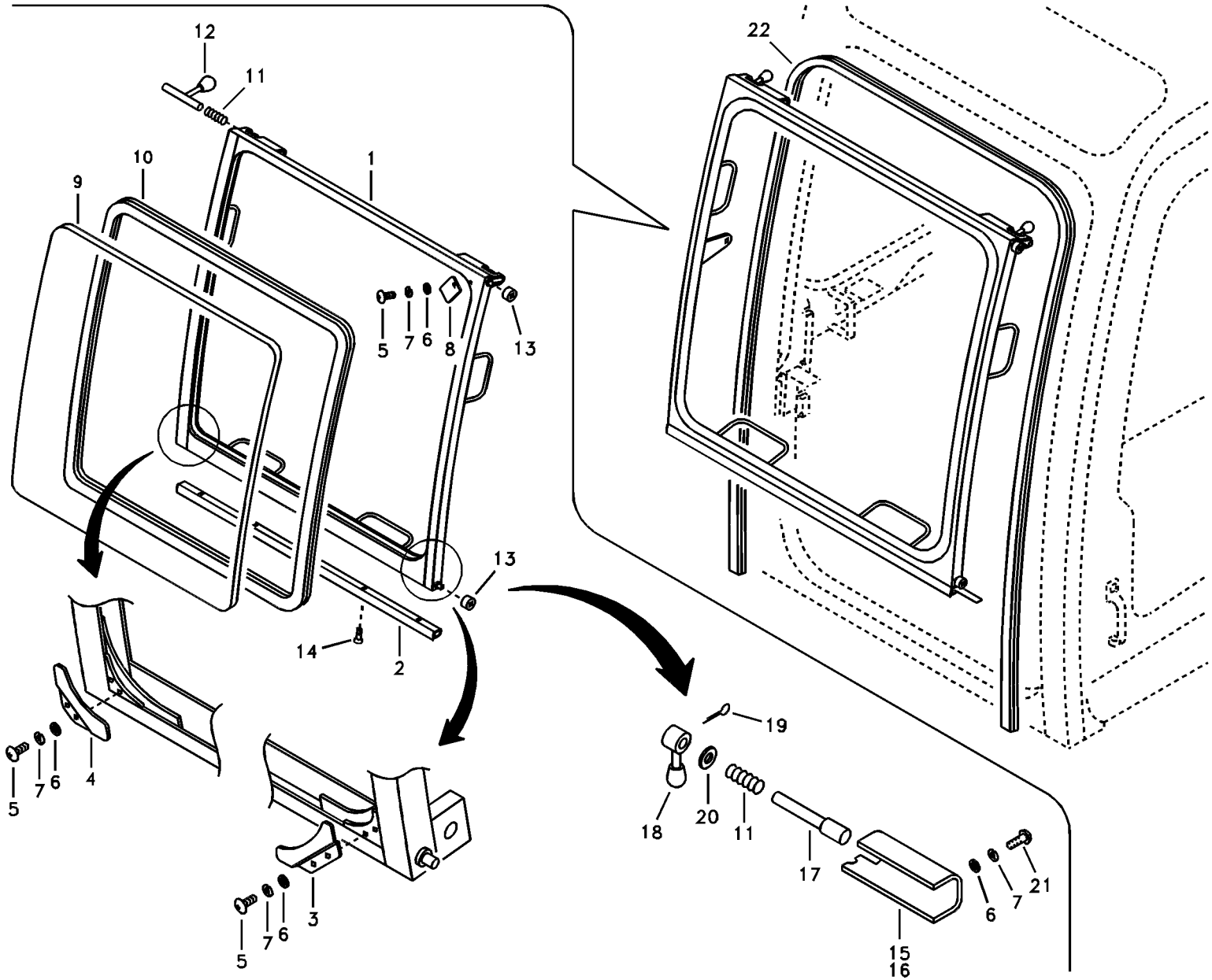

Volvo Construction Equipment

1007046

Fig.	Part No.	Quantity 1	2	3	PS	KIT	Description	Dénomination	Bezeichnung	품명	Denominación	Notes
		1	1		NS		Shield	Tole-ecran	Schirmblech	실드	Placa Guardab	
1	**VOE 14520003**	1	1				•Shield	•Tole-ecran	•Schirmblech	• 실드	•Placa Guardab	
2	**VOE 14527571**	1	1				•Weatherstrip	•Leche-vitre	•Abstreifleiste	• 웨더스트립	•Lamelunas	
3	**VOE 14527576**	1	1				•Bracket	•Console	•Konsole	• 브라켓	•Ménsula	
4	**VOE 14527577**	1	1		SS		•Bracket	•Console	•Konsole	• 브라켓	•Ménsula	
5	**VOE 969422**	6	6				•6-pt skt screw	•Vis creuse de 6	•Hohlschraube	•6 포인트 소켓 스크류	•Racor 6-dientes	
6	**VOE 955892**	10	10				•Washer	•Rondelle	•Scheibe	• 와셔	•Arandela	
7	**VOE 955919**	10	10				•Spring Washer	•Rondelle élastique	•Federscheibe	• 스프링 와셔	•Arandela flexible	
8	**SA 1166-03170**	2	2				•Bracket	•Ferrure-support	•Tragstütze	• 브라켓	•Hierro Apoyo	
9	**VOE 14504141**	1	1				•Glass	•Glace	•Scheibe	• 글라스	•Vidrio	
10	**VOE 14504142**	1	1				•Weatherstrip	•Leche-vitre	•Abstreifleiste	• 웨더스트립	•Lamelunas	
11	**VOE 14527551**	4	4				•Spring	•Ressort	•Feder	• 스프링	•Muelle	
12	**VOE 14527550**	2	2				•Pin	•Goupille	•Zapfen	• 핀	•Pasador	
13	**VOE 14509459**	4	4				•Roller	•Galet	•Rolle	• 롤러	•Rodillo	
14	**SA 9027-10401**	2	2				•Screw	•Vis	•Schraube	• 스크류	•Tornillo	
15	**VOE 14520004**	1	1				•Channel	•Barre U	•U-träger	• 찬넬	•Barra-u	
16	**VOE 14520005**	1	1				•Channel	•Barre U	•U-träger	• 찬넬	•Barra-u	
17	**VOE 14522800**	2	2				•Shaft	•Arbre	•Welle	• 샤프트	•Arbol	
18	**VOE 14522801**	2	2				•Handle	•Poignee	•Handgriff	• 핸들	•Manilla	
19	**VOE 14522820**	2	2				•Split Pin	•Goupille Fendue	•Splint	• 분할 핀	•Chaveta Hendida	
20	**VOE 955894**	2	2		SS		•Washer	•Rondelle	•Scheibe	• 와셔	•Arandela	
21	**VOE 969420**	4	4				•6-pt skt screw	•Vis creuse de 6	•Hohlschraube	•6 포인트 소켓 스크류	•Racor 6-dientes	
22	**VOE 14527563**	1	1				Weatherstrip	Leche-vitre	Abstreifleiste	웨더스트립	Lamelunas	

1	**8278808**	**Parabrisas** 앞 유리창 **Frontscheibe** **Pare-brise** **Windshield**	Catalogue id **20019**	Group **843**
2	**8278809**		Illustr. No **1007046**	Section **210**
3			Issue **VOE 74H9920019**	Page **345**
4				
5		**FOR CHINA**		

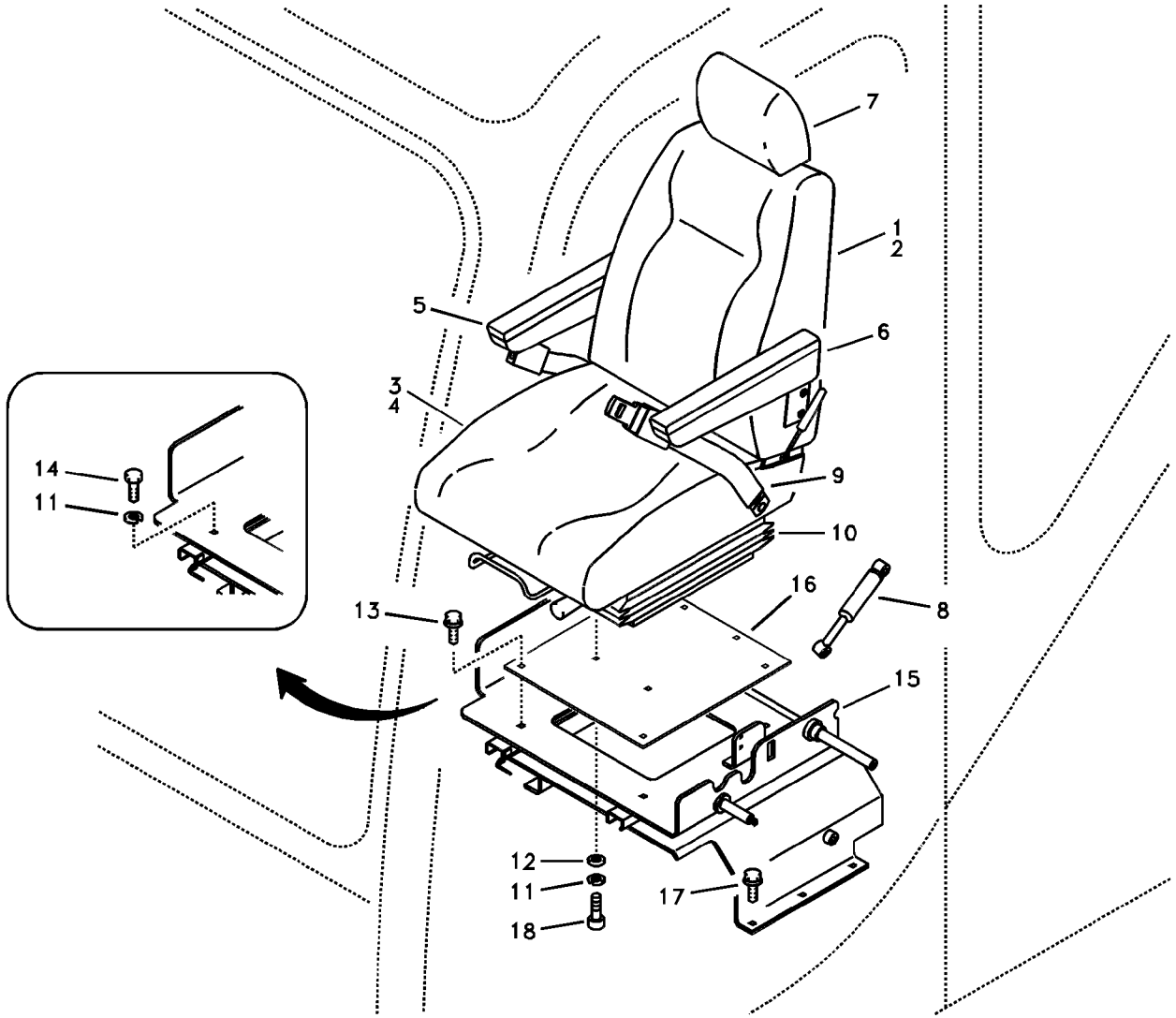
7
1
2
5
6
3
4
9
10
16
8
13
15
14
11
12
11
17
18

Fig.	Part No.	Quantity 1	2	3	PS	KIT	Description	Dénomination	Bezeichnung	품명	Denominación	Notes
	VOE 14502635	1					Seat	Siege	Sitz	시트	Asiento	
	SA 1167-00150		1		SS		Seat	Siege	Sitz	시트	Asiento	SER NO 30001-33939
	VOE 14528944		1				Operator seat	Siege conducteur	Fahrersitz	운전석	Asiento conductor	SER NO 33940-
1	**VOE 14548326**		1				•Cover	•Capot	•Haube	• 커버	•Capo	
2	**VOE 14548328**		1				•Seat	•Siege	•Sitz	• 시트	•Asiento	
3	**VOE 14548327**		1				•Cover	•Capot	•Haube	• 커버	•Capo	
4	**VOE 14548329**		1				•Seat	•Siege	•Sitz	• 시트	•Asiento	
5	**VOE 14509465**	1					•Arm Rest	•Accoudoir	•Armlehne	• 팔걸이	•Reposabrazos	RH
	VOE 14509805		1		SS	K	•Arm Rest	•Accoudoir	•Armlehne	• 팔걸이	•Reposabrazos	RH
6	**VOE 14509466**	1					•Arm Rest	•Accoudoir	•Armlehne	• 팔걸이	•Reposabrazos	LH
	VOE 14509824		1		SS	K	•Arm Rest	•Accoudoir	•Armlehne	• 팔걸이	•Reposabrazos	LH
7	**VOE 14509803**		1				•Head	•Tete	•Kopf	• 헤드	•Capo	
8	**VOE 14512980**		1		SS		•Damper	•Amortisseur	•Dämpfer	• 댐퍼	•Amortiguador	
9	**VOE 14509804**		1				•Belt	•Courroie	•Riemen	• 벨트	•Correa	
10	**VOE 14548330**		1				•Cover	•Capot	•Haube	• 커버	•Capo	
11	**VOE 955921**	4	4				Spring Washer	Rondelle élastique	Federscheibe	스프링 와셔	Arandela flexible	
12	**VOE 955894**		4		SS		Washer	Rondelle	Scheibe	와셔	Arandela	
13	**VOE 946440**		4				Flange screw	Vis à bride	Flanschschraube	플랜지 스크류	Torn embridado	
14	**VOE 984065**	4					Allen Head Screw	Vis à six pans creux	Inbusschraube	알렌 헤드 나사	Tornillo tipo Allen	
15	**VOE 14513489**	1	1				Support	Support	Stütze	서포트	Apoyo	
16	**SA 1167-00160**		1				Plate	Plaque	Platte	플레이트	Placa	
17	**VOE 965191**	5	5		SS		Screw	Vis	Schraube	스크류	Tornillo	
18	**VOE 984064**		4				Allen Hd Screw	Vis A 6 Pans Cr	Inbusschraube	스크류	Torn Hex Embut	
100	**VOE 14510130**		1				Arm Rest	Accoudoir	Armlehne	팔걸이	Reposabrazos	

1	**8278810**	**Asiento del conductor con piezas de montaje** 운전석 및 장착 부품 **Fahrersitz mit Anbauteilen** **Siège conducteur avec pièces de montage** **Operator seat with fitting parts**	Catalogue id **20019** / Group **852**
2	**8278811**		Illustr. No **1020472** / Section **100**
3			
4			Issue **VOE 74H9920019** / Page **347**
5			

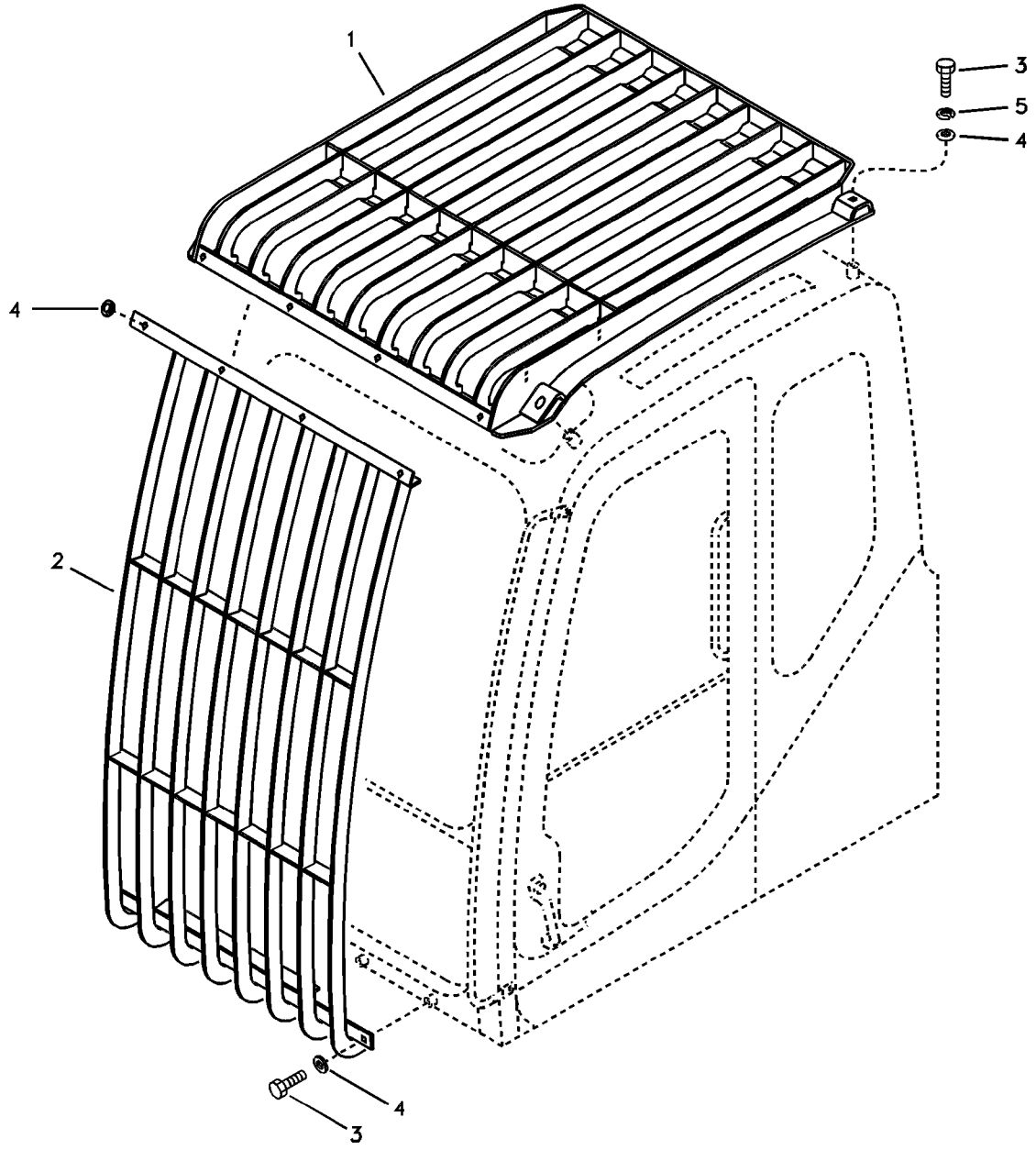

Volvo Construction Equipment

1017686

Fig.	Part No.	Quantity 1	2	3	PS	KIT	Description	Dénomination	Bezeichnung	품명	Denominación	Notes
1	**VOE 14509007**	1					Fops	Protection Fops	Fops	폽스	Fops	
2	**VOE 14509012**	1					Guard	Protection	Schutz	가드	Protección	SER NO 30001-33895
	VOE 14536379	1					Guard	Protection	Schutz	가드	Protección	SER NO 33896-
3	**VOE 978933**	4					Screw	Vis	Schraube	스크류	Tornillo	SER NO 30001-33895
	VOE 978933	8					Screw	Vis	Schraube	스크류	Tornillo	SER NO 33896-
4	**VOE 955897**	4			SS		Washer	Rondelle	Scheibe	와셔	Arandela	SER NO 30001-33895
	VOE 14522862	12					Washer	Rondelle	Scheibe	와셔	Arandela	SER NO 33896-
5	**VOE 955923**	4					Spring Washer	Rondelle élastique	Federscheibe	스프링 와셔	Arandela flexible	

1	**8278826**	**Equipo de protección contra caídas** 낙하물 보호장치 ; 포그 **Fallschutzausrüstung** **Equipement anti-chute** **Falling object guards**	Catalogue id **20019**	Group **860**
2			Illustr. No **1017686**	Section **200**
3			Issue **VOE 74H9920019**	Page **349**
4				
5				

VOLVO

EC55B

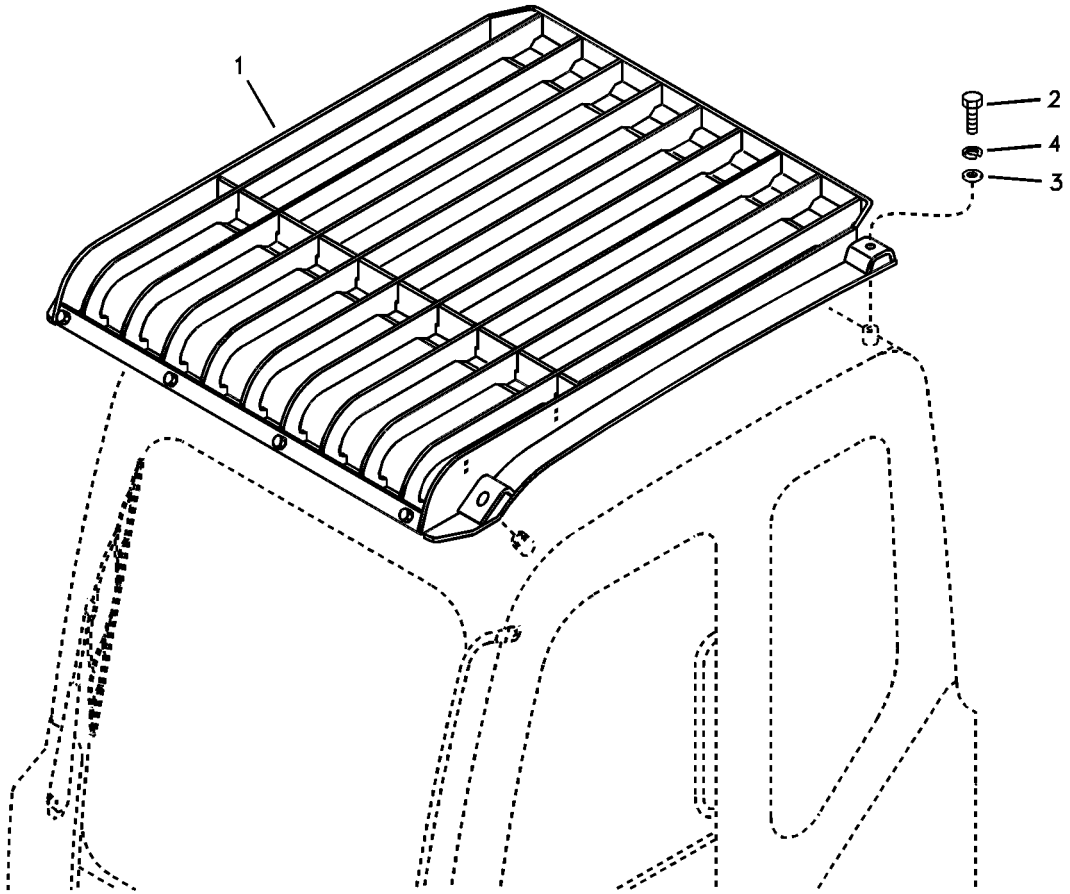
1
2
4
3

Fig.	Part No.	Quantity 1	2	3	PS	KIT	Description	Dénomination	Bezeichnung	품명	Denominación	Notes
1	**VOE 14509007**	1					Fops	Protection Fops	Fops	폽스	Fops	
2	**VOE 978933**	4					Screw	Vis	Schraube	스크류	Tornillo	
3	**VOE 955897**	4			SS		Washer	Rondelle	Scheibe	와셔	Arandela	SER NO 30001-33895
	VOE 14522862	4					Washer	Rondelle	Scheibe	와셔	Arandela	SER NO 33896-
4	**VOE 955923**	4					Spring Washer	Rondelle élastique	Federscheibe	스프링 와셔	Arandela flexible	

1	**8278827**	**Fops, equipo de protección** 낙하물 보호장치 ; 폽스 **Fops, Schutzausrüstung** **Fops, équipement de protection** **Fops, protecting equipment**	Catalogue id **20019**	Group **860**
2			Illustr. No **1007049**	Section **300**
3			Issue **VOE 74H9920019**	Page **351**
4				
5				

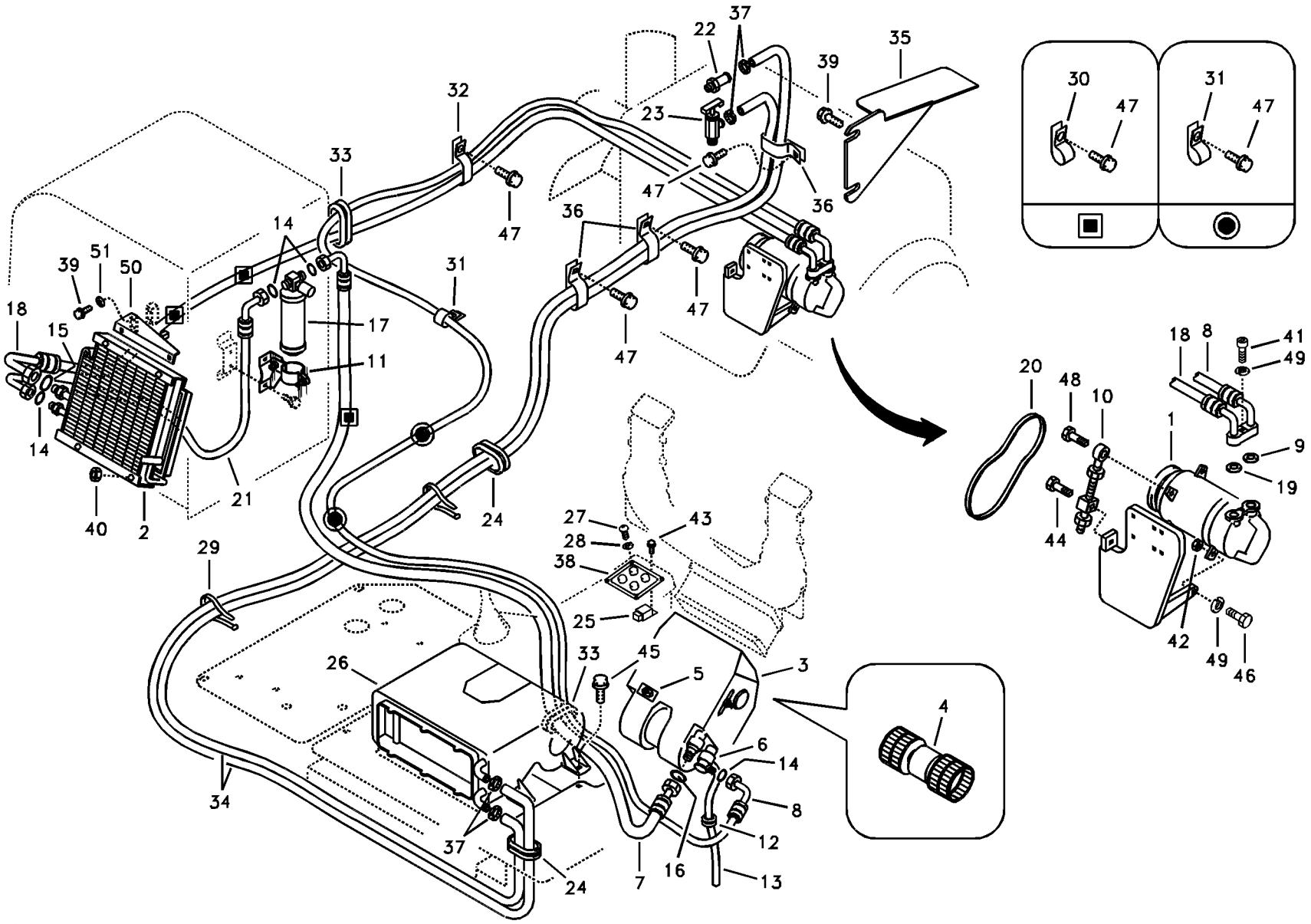

Volvo Construction Equipment

1008346

Fig.	Part No.	Quantity 1	2	3	PS	KIT	Description	Dénomination	Bezeichnung	품명	Denominación	Notes
	SA 1125-01883	1			SS		Air Cond Unit	Conditionne.air	Klimator Agg	에어콘 유니트	Unid Aire Acond	SER NO 30001-31725
	VOE 14526341	1					Air Cond Unit	Conditionne.air	Klimator Agg	에어콘 유니트	Unid Aire Acond	SER NO 31726-
1	**VOE 14526228**	1					•Compressor	•Compresseur	•Kompressor	• 압축기	•Compresor	
2	**VOE 14526229**	1					•Condenser	•Condenseur	•Kondensator	• 콘덴서	•Condensador	
3	**VOE 14529057**	1					•Cooling System	•Sys Refroidisse	•K~hlanlage	• 냉각장치	•Sist Refrigerac	SER NO 30001-33905
	VOE 14539071	1					•Cooling System	•Sys Refroidisse	•K~hlanlage	• 냉각장치	•Sist Refrigerac	SER NO 33906-
4	**VOE 14510152**	1					••Motor	••Moteur	••Motor	•• 모터	••Motor	
5	**VOE 14529060**	1					••Resistor	••Resistance	••Widerstand	•• 저항기	••Resistencia	
6	**VOE 14512743**	1					••Valve	••Soupape	••Ventil	•• 밸브	••Valvula	
7	**VOE 14529270**	1					•Hose	•Durit	•Schlauch	• 호스	•Tubo flexible	
8	**VOE 14529264**	1					•Hose	•Durit	•Schlauch	• 호스	•Tubo flexible	
9	**VOE 14512724**	1					••Washer	••Rondelle	••Scheibe	•• 와셔	••Arandela	
10	**SA 1125-03070**	1					•Adj Device	•Disposi.reglage	•Nachst Vorrtg	• 조정기	•Disposit Ajuste	SER NO 30001-32441
	VOE 14528506	1					•Adj Device	•Disposi.reglage	•Nachst Vorrtg	• 조정기	•Disposit Ajuste	SER NO 32442-
11	**VOE 14529025**	1					•Bracket	•Console	•Konsole	• 브라켓	•Ménsula	
12	**VOE 14529024**	1					•Grommet	•Passe fil	•Durchführung	• 그로메트	•Aislador pasapanel	
13	**VOE 14529049**	1					•Hose	•Durit	•Schlauch	• 호스	•Tubo flexible	
14	**VOE 14529050**	4					•O-ring	•Joint Torique	•O-Ring	• 오링	•Junta torica	
15	**VOE 14529051**	1					•O-ring	•Joint Torique	•O-Ring	• 오링	•Junta torica	
16	**VOE 14529052**	1					•O-ring	•Joint Torique	•O-Ring	• 오링	•Junta torica	
17	**VOE 14526230**	1					•Receiver Drier	•Deshydrateur	•Entfeuchter	• 리시버 드라이어	•Secador	
18	**VOE 14529282**	1					•Hose	•Durit	•Schlauch	• 호스	•Tubo flexible	
19	**VOE 14512724**	1					••Washer	••Rondelle	••Scheibe	•• 와셔	••Arandela	
20	**SA 9817-12400**	1					•V-belt	•Courroie Trape	•Keilriemen	•V 벨트	•Correa Trapez	
21	**VOE 14529263**	1					•Hose	•Durit	•Schlauch	• 호스	•Tubo flexible	
22	**VOE 14529012**	1					Nipple	Raccord	Nippel	니플	Niple	
23	**VOE 14529015**	1					Valve	Soupape	Ventil	밸브	Valvula	
24	**VOE 14529046**	2					Grommet	Passe fil	Durchführung	그로메트	Aislador pasapanel	
25	**VOE 14529155**	1					Relay	Relais	Relais	릴레이	Rele	
26	**VOE 14528972**	1					Heater	Elément de chauffag	Heizkörper	히터	Calefaccion	

1	**8278818**	**Tubería de aire acondicionado, refrigeración y calefacción** 에어콘 유니트 배관 , 쿨러 및 히터 겸용 **Leitungsrohr für Klimaanlage, Kühler und Heizung** **Conduite de conditionnement d'air, refroidissement et chauffage** **Air conditioning line, cooling and heater**	Catalogue id **20019**	Group **870**
2			Illustr. No **1008346**	Section **100**
3			Issue **VOE 74H9920019**	Page **353**
4				
5				

VOLVO

EC55B

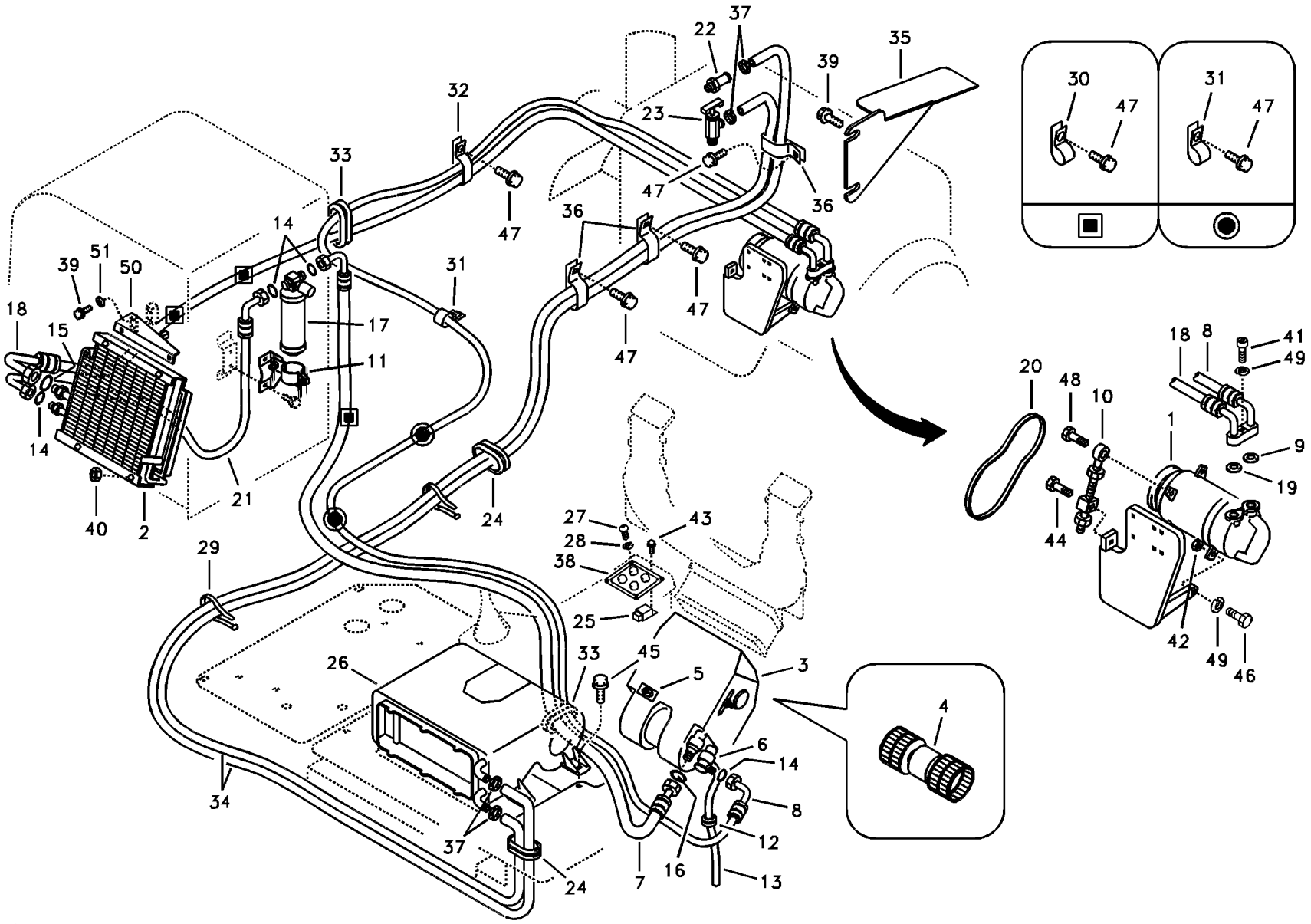

Volvo Construction Equipment

1008346

Fig.	Part No.	Quantity 1	2	3	PS	KIT	Description	Dénomination	Bezeichnung	품명	Denominación	Notes
	VOE 14530767	1					•Resistor	•Resistance	•Widerstand	• 저항기	•Resistencia	
27	**SA 9021-10403**	4					Screw	Vis	Schraube	스크류	Tornillo	
28	**VOE 14880426**	4					Washer	Rondelle	Scheibe	와셔	Arandela	
29	**SA 9314-02300**	10					Strip Clamp	Ruban Serrage	Kabelbinder	스트립 클램프	Abraz Cinta	
30	**SA 9315-03001**	2					Clip	Clip	Klemme	클립	Clip	
31	**SA 9315-03601**	3					Clip	Clip	Klemme	클립	Clip	
32	**SA 9316-03601**	1					Clip	Clip	Klemme	클립	Clip	
33	**SA 9751-33606**	2					Grommet	Passe fil	Durchführung	그로메트	Aislador pasapanel	
34	**VOE 14881145**	2					Hose	Durit	Schlauch	호스	Tubo flexible	
35	**VOE 14525308**	1					Guard	Protection	Schutz	가드	Protección	(VOE 14503526) SER NO 30001-31173
	VOE 14525308	1					Guard	Protection	Schutz	가드	Protección	SER NO 31174- SER NO 50001-
36	**SA 9316-02402**	3					Clip	Clip	Klemme	클립	Clip	
37	**VOE 14511415**	4					Clamp	Pince Serrage	Klemme	클램프	Abrazadera	
38	**VOE 14529278**	1					Switch	Commutateur	Schalter	스위치	Contactor	
39	**VOE 946440**	3					Flange screw	Vis à bride	Flanschschraube	플랜지 스크류	Torn embridado	
40	**VOE 945407**	4			SS		Flange nut	Ecrou accouple.	Bundmutter	플랜지 너트	Tuerca embridad	
41	**VOE 984082**	1					Allen Hd Screw	Vis A 6 Pans Cr	Inbusschraube	스크류	Torn Hex Embut	
42	**VOE 983304**	2					Hexagon Nut	Ecrou Hexagonal	Sechskantmutter	너트	Tuerca Hexagon	
43	**VOE 965175**	1			SS		Screw	Vis	Schraube	스크류	Tornillo	
44	**VOE 983251**	1					Hexagon screw	Vis tête hexagonale	Sechskantschraube	스크류	Tornillo hexago	
45	**VOE 945444**	4			SS		Screw	Vis	Schraube	스크류	Tornillo	
46	**VOE 983252**	2					Screw	Vis	Schraube	스크류	Tornillo	
47	**VOE 946471**	8					Flange screw	Vis à bride	Flanschschraube	플랜지 스크류	Torn embridado	
48	**VOE 983253**	1					Hexagon screw	Vis tête hexagonale	Sechskantschraube	스크류	Tornillo hexago	
49	**VOE 955922**	3					Spring Washer	Rondelle élastique	Federscheibe	스프링 와셔	Arandela flexible	
50	**VOE 14520096**	1					Bracket	Console	Konsole	브라켓	Ménsula	
51	**VOE 955894**	2			SS		Washer	Rondelle	Scheibe	와셔	Arandela	SER NO 30667- SER NO 50001-

1	**8278818**	**Tubería de aire acondicionado, refrigeración y calefacción** 에어콘 유니트 배관 , 쿨러 및 히터 겸용 **Leitungsrohr für Klimaanlage, Kühler und Heizung** **Conduite de conditionnement d'air, refroidissement et chauffage** **Air conditioning line, cooling and heater**	Catalogue id **20019**	Group **870**
2			Illustr. No **1008346**	Section **100**
3				
4			Issue **VOE 74H9920019**	Page **355**
5				

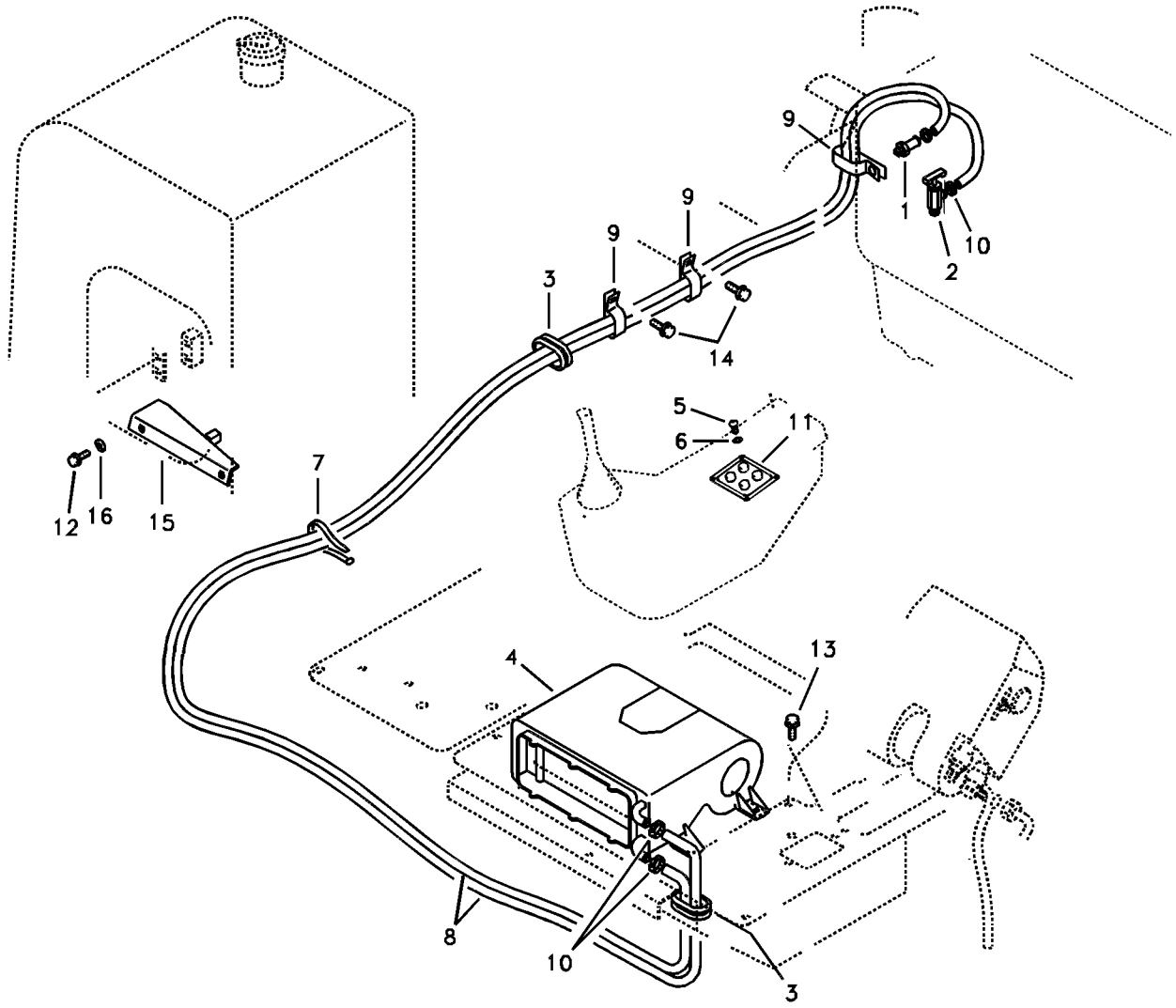
9
1
10
2
9
9
3
14
5
6
11
12
16
15
7
4
13
8
10
3

Fig.	Part No.	Quantity 1	2	3	P S	K I T	Description	Dénomination	Bezeichnung	품명	Denominación	Notes
1	**VOE 14529012**	1					Nipple	Raccord	Nippel	니플	Niple	
2	**VOE 14529015**	1					Valve	Soupape	Ventil	밸브	Valvula	
3	**VOE 14529046**	2					Grommet	Passe fil	Durchführung	그로메트	Aislador pasapanel	
4	**VOE 14528972**	1					Heater	Elément de chauffag	Heizkörper	히터	Calefaccion	(SA 1124-00040) SER NO 30001-32903
	VOE 14528972	1					Heater	Elément de chauffag	Heizkörper	히터	Calefaccion	SER NO 32904-
	VOE 14517978	1			SS		•Resistor	•Resistance	•Widerstand	• 저항기	•Resistencia	SER NO 30001-32903
	VOE 14530767	1					•Resistor	•Resistance	•Widerstand	• 저항기	•Resistencia	SER NO 32904-
5	**SA 9021-10403**	4					Screw	Vis	Schraube	스크류	Tornillo	
6	**VOE 14880426**	4					Washer	Rondelle	Scheibe	와셔	Arandela	
7	**SA 9314-02300**	10					Strip Clamp	Ruban Serrage	Kabelbinder	스트립 클램프	Abraz Cinta	
8	**VOE 14881145**	2					Hose	Durit	Schlauch	호스	Tubo flexible	
9	**SA 9316-02402**	3					Clip	Clip	Klemme	클립	Clip	
10	**VOE 14511415**	4					Clamp	Pince Serrage	Klemme	클램프	Abrazadera	
11	**VOE 14529280**	1			SS		Switch	Commutateur	Schalter	스위치	Contactor	
12	**VOE 946440**	2					Flange screw	Vis à bride	Flanschschraube	플랜지 스크류	Torn embridado	
13	**VOE 945444**	4			SS		Screw	Vis	Schraube	스크류	Tornillo	
14	**VOE 946471**	3					Flange screw	Vis à bride	Flanschschraube	플랜지 스크류	Torn embridado	
15	**VOE 14520096**	1					Bracket	Console	Konsole	브라켓	Ménsula	
16	**VOE 955894**	2			SS		Washer	Rondelle	Scheibe	와셔	Arandela	SER NO 30667- SER NO 50001-

1	**8278817**	**Calefacción tubería** 히터 배관 **Heizungsrohr** **Chaufferette de voiture** **Heating line**	Catalogue id **20019**	Group **873**
2			Illustr. No **1008347**	Section **100**
3			Issue **VOE 74H9920019**	Page **357**
4				
5				

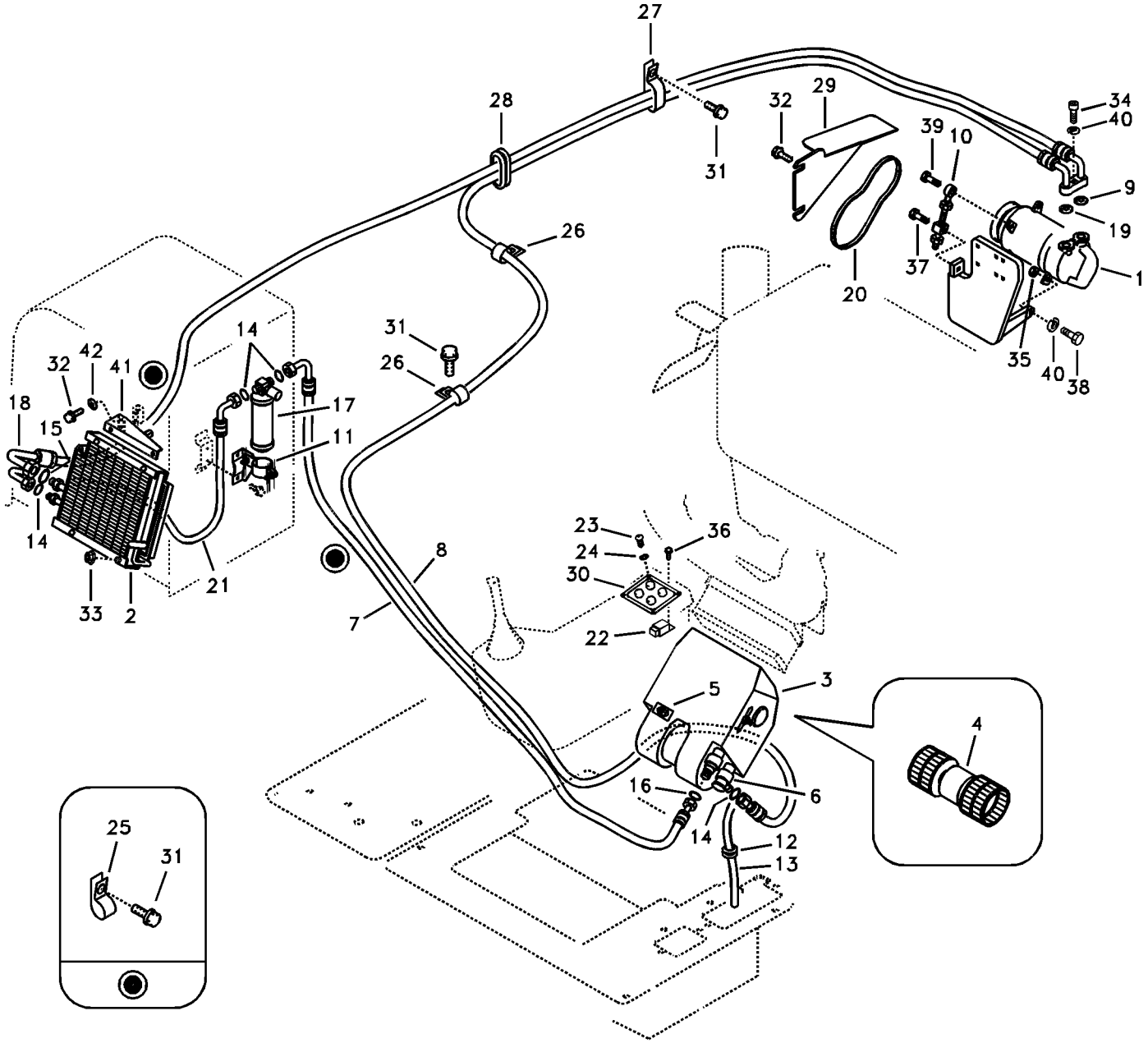
27
28
31
32
29
34
40
39
10
9
19
37
20
1
35
40
38
26
31
14
42
32
41
18
15
17
11
14
33
2
21
23
24
30
36
8
7
22
5
3
4
16
6
14
12
13
25
31

Fig.	Part No.	Quantity 1	2	3	PS	KIT	Description	Dénomination	Bezeichnung	품명	Denominación	Notes
	SA 1125-01883	1			SS		Air Cond Unit	Conditionne.air	Klimator Agg	에어콘 유니트	Unid Aire Acond	SER NO 30001-31725
	VOE 14526341	1					Air Cond Unit	Conditionne.air	Klimator Agg	에어콘 유니트	Unid Aire Acond	SER NO 31726-
1	**VOE 14526228**	1					•Compressor	•Compresseur	•Kompressor	• 압축기	•Compresor	
2	**VOE 14526229**	1					•Condenser	•Condenseur	•Kondensator	• 콘덴서	•Condensador	
3	**VOE 14529057**	1					•Cooling System	•Sys Refroidisse	•K~hlanlage	• 냉각장치	•Sist Refrigerac	SER NO 30001-33905 SER NO 50001-50087
	VOE 14539071	1					•Cooling System	•Sys Refroidisse	•K~hlanlage	• 냉각장치	•Sist Refrigerac	SER NO 33906- SER NO 50088-
4	**VOE 14510152**	1					••Motor	••Moteur	••Motor	•• 모터	••Motor	
5	**VOE 14529060**	1					••Resistor	••Resistance	••Widerstand	•• 저항기	••Resistencia	
6	**VOE 14512743**	1					••Valve	••Soupape	••Ventil	•• 밸브	••Valvula	
7	**VOE 14529270**	1					•Hose	•Durit	•Schlauch	• 호스	•Tubo flexible	
8	**VOE 14529264**	1					•Hose	•Durit	•Schlauch	• 호스	•Tubo flexible	
9	**VOE 14512724**	1					••Washer	••Rondelle	••Scheibe	•• 와셔	••Arandela	
10	**SA 1125-03070**	1					•Adj Device	•Disposi.reglage	•Nachst Vorrtg	• 조정기	•Disposit Ajuste	SER NO 30001-32441
	VOE 14528506	1					•Adj Device	•Disposi.reglage	•Nachst Vorrtg	• 조정기	•Disposit Ajuste	SER NO 32442-
11	**VOE 14529025**	1					•Bracket	•Console	•Konsole	• 브라켓	•Ménsula	
12	**VOE 14529024**	1					•Grommet	•Passe fil	•Durchführung	• 그로메트	•Aislador pasapanel	
13	**VOE 14529049**	1					•Hose	•Durit	•Schlauch	• 호스	•Tubo flexible	
14	**VOE 14529050**	4					•O-ring	•Joint Torique	•O-Ring	• 오링	•Junta torica	
15	**VOE 14529051**	1					•O-ring	•Joint Torique	•O-Ring	• 오링	•Junta torica	
16	**VOE 14529052**	1					•O-ring	•Joint Torique	•O-Ring	• 오링	•Junta torica	
17	**VOE 14526230**	1					•Receiver Drier	•Deshydrateur	•Entfeuchter	• 리시버 드라이어	•Secador	
18	**VOE 14529282**	1					•Hose	•Durit	•Schlauch	• 호스	•Tubo flexible	
19	**VOE 14512724**	1					••Washer	••Rondelle	••Scheibe	•• 와셔	••Arandela	
20	**SA 9817-12400**	1					•V-belt	•Courroie Trape	•Keilriemen	•V 벨트	•Correa Trapez	
21	**SA 1125-01092**	1					•Hose	•Durit	•Schlauch	• 호스	•Tubo flexible	
22	**SA 1123-01680**	1					Relay	Relais	Relais	릴레이	Rele	
23	**SA 9021-10403**	4					Screw	Vis	Schraube	스크류	Tornillo	
24	**SA 9211-04000**	4					Washer	Rondelle	Scheibe	와셔	Arandela	

1	**8278816**	**Tubería de unidad de aire acondicionado** 에어콘 유니트 배관 **Klimaanlage, Leitung** **Unité de conditionnement d'air** **Air conditioning unit line**	Catalogue id **20019**	Group **874**
2				
3			Illustr. No **1008348**	Section **100**
4				
5			Issue **VOE 74H9920019**	Page **359**

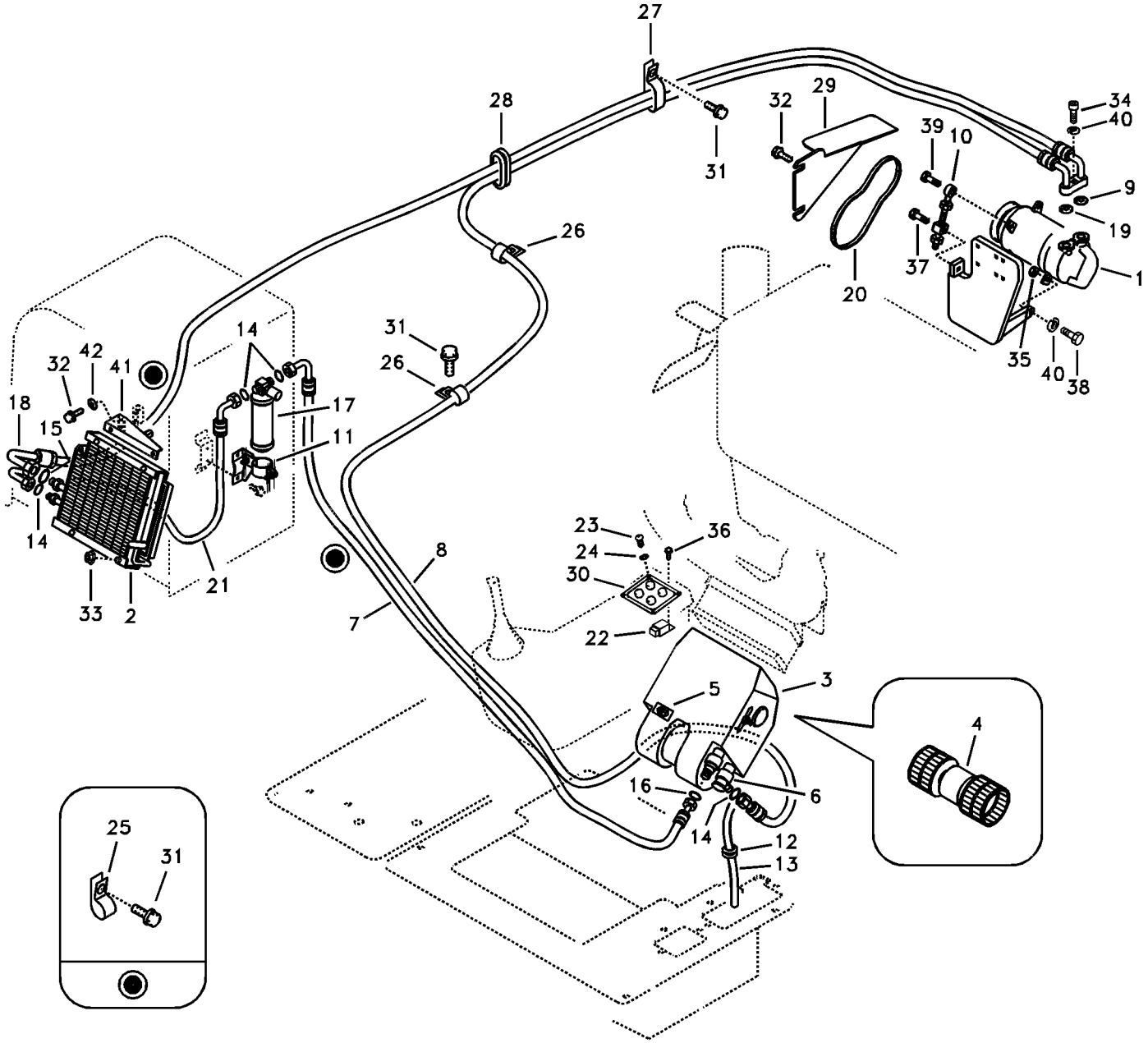
27
28
31
32
29
34
40
39
10
9
19
37
20
1
35
40
38
26
31
14
42
32
41
18
15
17
11
14
33
2
21
23
24
30
36
8
7
22
5
3
4
16
6
14
12
13
25
31

Fig.	Part No.	Quantity 1	2	3	PS	KIT	Description	Dénomination	Bezeichnung	품명	Denominación	Notes
25	**SA 9315-03001**	2					Clip	Clip	Klemme	클립	Clip	
26	**SA 9315-03601**	3					Clip	Clip	Klemme	클립	Clip	
27	**SA 9316-03601**	1					Clip	Clip	Klemme	클립	Clip	
28	**SA 9751-33606**	1					Grommet	Passe fil	Durchführung	그로메트	Aislador pasapanel	
29	**VOE 14525308**	1					Guard	Protection	Schutz	가드	Protección	(VOE 14503526) SER NO 30001-31173
	VOE 14525308	1					Guard	Protection	Schutz	가드	Protección	SER NO 31174- SER NO 50001-
30	**SA 1125-02250**	1			SS		Switch	Commutateur	Schalter	스위치	Contactor	
31	**VOE 946471**	5					Flange screw	Vis à bride	Flanschschraube	플랜지 스크류	Torn embridado	
32	**VOE 946440**	3					Flange screw	Vis à bride	Flanschschraube	플랜지 스크류	Torn embridado	
33	**VOE 945407**	4			SS		Flange nut	Ecrou accouple.	Bundmutter	플랜지 너트	Tuerca embridad	
34	**VOE 984082**	1					Allen Hd Screw	Vis A 6 Pans Cr	Inbusschraube	스크류	Torn Hex Embut	
35	**VOE 983304**	2					Hexagon Nut	Ecrou Hexagonal	Sechskantmutter	너트	Tuerca Hexagon	
36	**VOE 965175**	1			SS		Screw	Vis	Schraube	스크류	Tornillo	
37	**VOE 983251**	1					Hexagon screw	Vis tête hexagonale	Sechskantschraube	스크류	Tornillo hexago	
38	**VOE 983252**	2					Screw	Vis	Schraube	스크류	Tornillo	
39	**VOE 983253**	1					Hexagon screw	Vis tête hexagonale	Sechskantschraube	스크류	Tornillo hexago	
40	**VOE 955922**	3					Spring Washer	Rondelle élastique	Federscheibe	스프링 와셔	Arandela flexible	
41	**VOE 14520096**	1					Bracket	Console	Konsole	브라켓	Ménsula	
42	**VOE 955894**	2			SS		Washer	Rondelle	Scheibe	와셔	Arandela	SER NO 30667- SER NO 50001-

1	**8278816**	**Tubería de unidad de aire acondicionado** 에어콘 유니트 배관 **Klimaanlage, Leitung** **Unité de conditionnement d'air** **Air conditioning unit line**	Catalogue id **20019**	Group **874**
2			Illustr. No **1008348**	Section **100**
3			Issue **VOE 74H9920019**	Page **361**
4				
5				

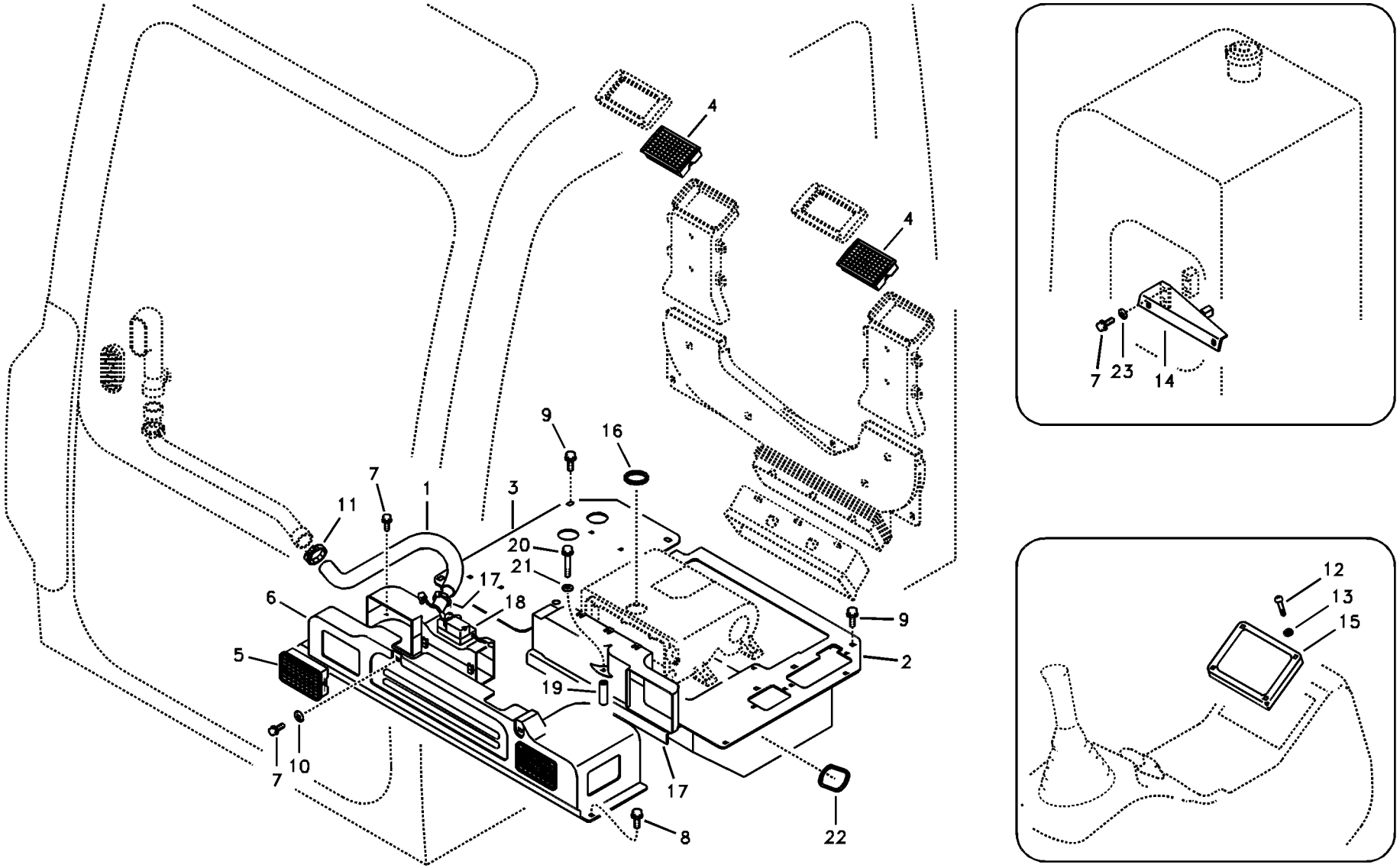

Volvo Construction Equipment

1008349

Fig.	Part No.	Quantity 1	2	3	4	5	PS	KIT	Description	Dénomination	Bezeichnung	품명	Denominación	Notes
1	**VOE 14529232**	1	1	1	1				Defroster Hose	Durit Degivreur	Entfr Schlauch	디프로스터 호스	Mang Desempan	
2	**VOE 14529237**	1	1	1	1				Bracket	Console	Konsole	브라켓	Ménsula	
3	**VOE 14529238**	1	1	1	1				Bracket	Console	Konsole	브라켓	Ménsula	
4	**VOE 14529252**	2	2	2	2				Grille	Grille	Kühlergrill	그릴	Calandra	
5	**VOE 14529277**	2	2	2	2				Grille	Grille	Kühlergrill	그릴	Calandra	
6	**VOE 14502072**	1	1	1	1				Cover	Capot	Haube	커버	Capo	
7	**VOE 946440**	4	2	2	2				Flange screw	Vis à bride	Flanschschraube	플랜지 스크류	Torn embridado	
8	**VOE 946472**	1	1	2	2				Flange screw	Vis à bride	Flanschschraube	플랜지 스크류	Torn embridado	
9	**VOE 946441**	6	6	6	6				Flange screw	Vis à bride	Flanschschraube	플랜지 스크류	Torn embridado	
10	**VOE 14880429**	2	2	2	2				Washer	Rondelle	Scheibe	와셔	Arandela	
11	**SA 9312-10200**	1	1	1	1				Clamp	Pince Serrage	Klemme	클램프	Abrazadera	
12	**SA 9021-10403**	4							Screw	Vis	Schraube	스크류	Tornillo	
13	**VOE 14880426**	4							Washer	Rondelle	Scheibe	와셔	Arandela	
14	**VOE 14520096**	1							Bracket	Console	Konsole	브라켓	Ménsula	
15	**VOE 14529281**	1					SS		Switch	Commutateur	Schalter	스위치	Contactor	
16	**VOE 14529392**	1		1					Grommet	Passe fil	Durchführung	그로메트	Aislador pasapanel	
17	**VOE 14529233**			1	1				Duct	Conduit	Leitung	덕트	Conducto	
18	**VOE 14529234**			1	1				Case	Etui	Futteral	케이스	Funda	
19	**VOE 14529242**			1	1				Spacer	Partie Intermédiair	Zwischenstück	스페이서	Espaciador	
20	**VOE 960148**			1	1		SS		Washer	Rondelle	Scheibe	와셔	Arandela	
21	**VOE 965187**			1	1				Flange screw	Vis a bride	Flanschschraube	플랜지 스크류	Torn embridado	
22	**SA 9751-33606**		1		1				Grommet	Passe fil	Durchführung	그로메트	Aislador pasapanel	
23	**VOE 955894**	2					SS		Washer	Rondelle	Scheibe	와셔	Arandela	SER NO 30667- SER NO 50001-

1	**8278815**
2	**8278816**
3	**8278817**
4	**8278818**
5	

Conducto de aire en cabina y suelo de cabina
에어 분기장치
Luftkanal in Kabine und Kabinenboden
Conduit d'air dans la cabine et dans le plancher de cabine
Air duct in cabin and cabin floor

Catalogue id **20019**	Group **874**
Illustr. No **1008349**	Section **200**
Issue **VOE 74H9920019**	Page **363**

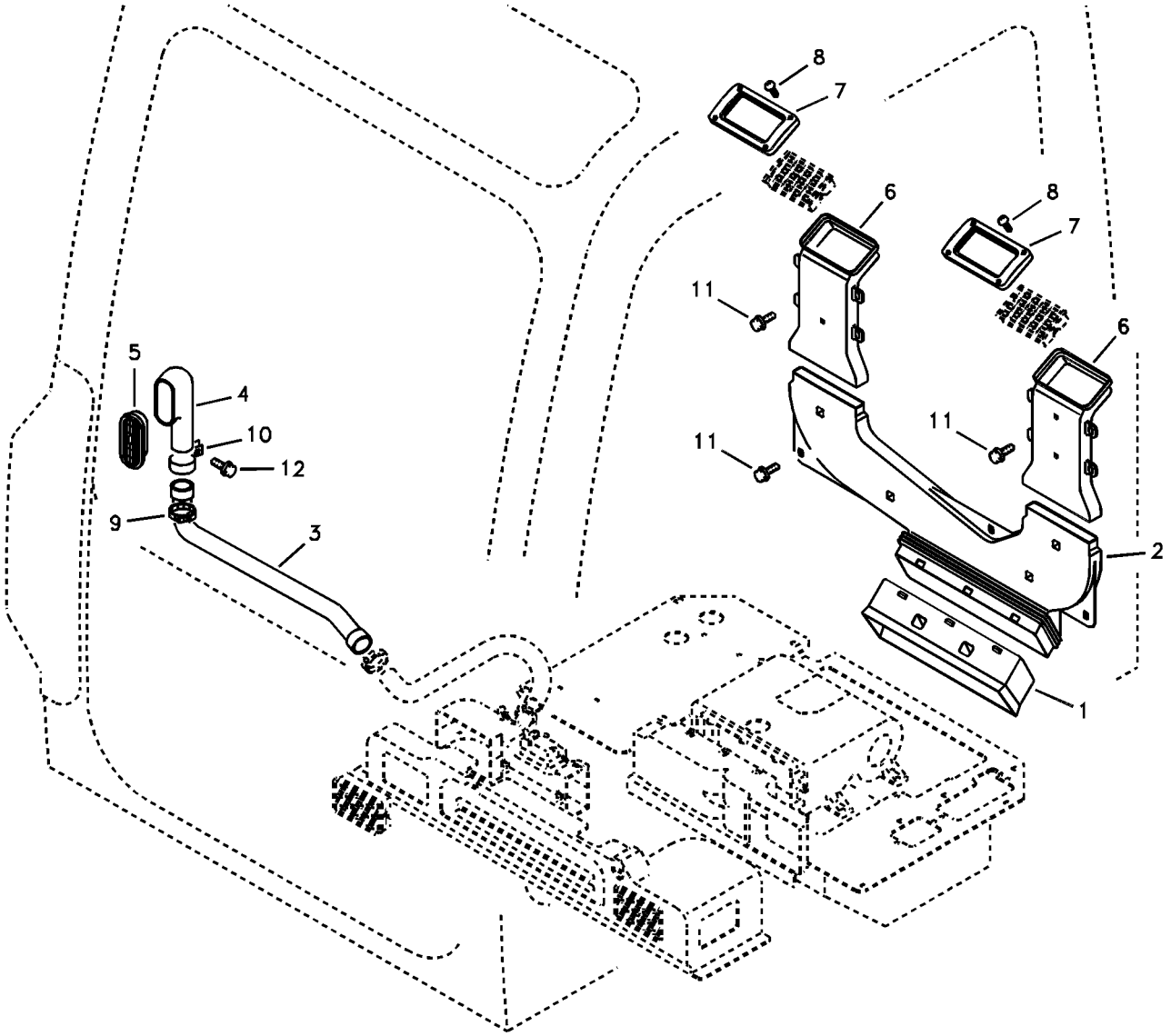
8
7
6
8
7
11
6
11
11
5
4
10
12
9
3
2
1
1

Fig.	Part No.	Quantity 1	2	3	4	5	PS	KIT	Description	Dénomination	Bezeichnung	품명	Denominación	Notes
1	**VOE 14521123**	1	1	1	1				Duct	Conduit	Leitung	덕트	Conducto	
2	**VOE 14529056**	1	1	1	1				Duct	Conduit	Leitung	덕트	Conducto	
3	**VOE 14529243**	1	1	1	1				Duct	Conduit	Leitung	덕트	Conducto	
4	**VOE 14529244**	1	1	1	1				Hose	Durit	Schlauch	호스	Tubo flexible	
5	**VOE 14529248**	1	1	1	1				Grille	Grille	Kühlergrill	그릴	Calandra	
6	**VOE 14529254**	2	2	2	2				Duct	Conduit	Leitung	덕트	Conducto	
7	**VOE 14529276**	2	2	2	2				Bracket	Console	Konsole	브라켓	Ménsula	
8	**SA 9032-10504**	8	8	8	8				Screw	Vis	Schraube	스크류	Tornillo	
9	**SA 9312-00016**	1	1	1	1				Clamp	Pince Serrage	Klemme	클램프	Abrazadera	
10	**SA 9315-04001**	1	1	1	1				Clip	Clip	Klemme	클립	Clip	
11	**VOE 946471**	11	11	11	11				Flange screw	Vis à bride	Flanschschraube	플랜지 스크류	Torn embridado	
12	**VOE 965175**	1	1	1	1		SS		Screw	Vis	Schraube	스크류	Tornillo	

1	**8278806**
2	**8278807**
3	**8278808**
4	**8278809**
5	

Conducto de aire en cabina y suelo de cabina
에어 분기장치
Luftkanal in Kabine und Kabinenboden
Conduit d'air dans la cabine et dans le plancher de cabine
Air duct in cabin and cabin floor

Catalogue id **20019**	Group **874**
Illustr. No **1007054**	Section **250**
Issue **VOE 74H9920019**	Page **365**

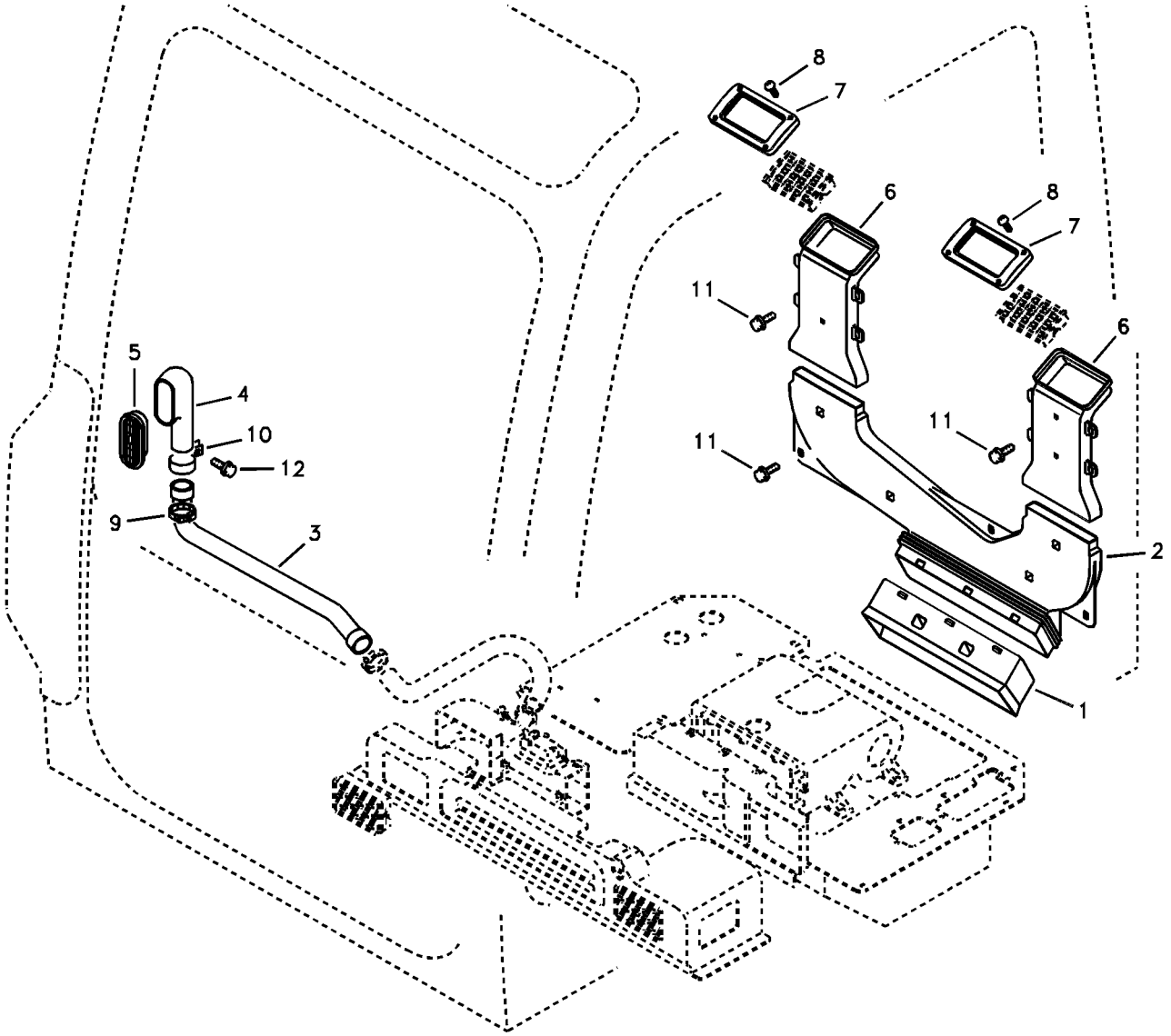
8
7
6
8
7
11
6
11
11
5
4
10
12
9
3
2
1
1

Fig.	Part No.	Quantity 1	2	3	PS	KIT	Description	Dénomination	Bezeichnung	품명	Denominación	Notes
1	**VOE 14521123**	1	1				Duct	Conduit	Leitung	덕트	Conducto	
2	**VOE 14529056**	1	1				Duct	Conduit	Leitung	덕트	Conducto	
3	**VOE 14529243**	1	1				Duct	Conduit	Leitung	덕트	Conducto	
4	**VOE 14529244**	1	1				Hose	Durit	Schlauch	호스	Tubo flexible	
5	**VOE 14529248**	1	1				Grille	Grille	Kühlergrill	그릴	Calandra	
6	**VOE 14529254**	2	2				Duct	Conduit	Leitung	덕트	Conducto	
7	**VOE 14529276**	2	2				Bracket	Console	Konsole	브라켓	Ménsula	
8	**SA 9032-10504**	8	8				Screw	Vis	Schraube	스크류	Tornillo	
9	**SA 9312-00016**	1	1				Clamp	Pince Serrage	Klemme	클램프	Abrazadera	
10	**SA 9315-04001**	1	1				Clip	Clip	Klemme	클립	Clip	
11	**VOE 946471**	11	11				Flange screw	Vis à bride	Flanschschraube	플랜지 스크류	Torn embridado	
12	**VOE 965175**	1	1		SS		Screw	Vis	Schraube	스크류	Tornillo	

1	**8278808**	**Conducto de aire en cabina y suelo de cabina** 에어 분기장치 **Luftkanal in Kabine und Kabinenboden** **Conduit d'air dans la cabine et dans le plancher de cabine** **Air duct in cabin and cabin floor**	Catalogue id **20019**	Group **874**
2	**8278809**		Illustr. No **1007054**	Section **260**
3			Issue **VOE 74H9920019**	Page **367**
4				
5		**FOR CHINA**		

VOLVO

EC55B

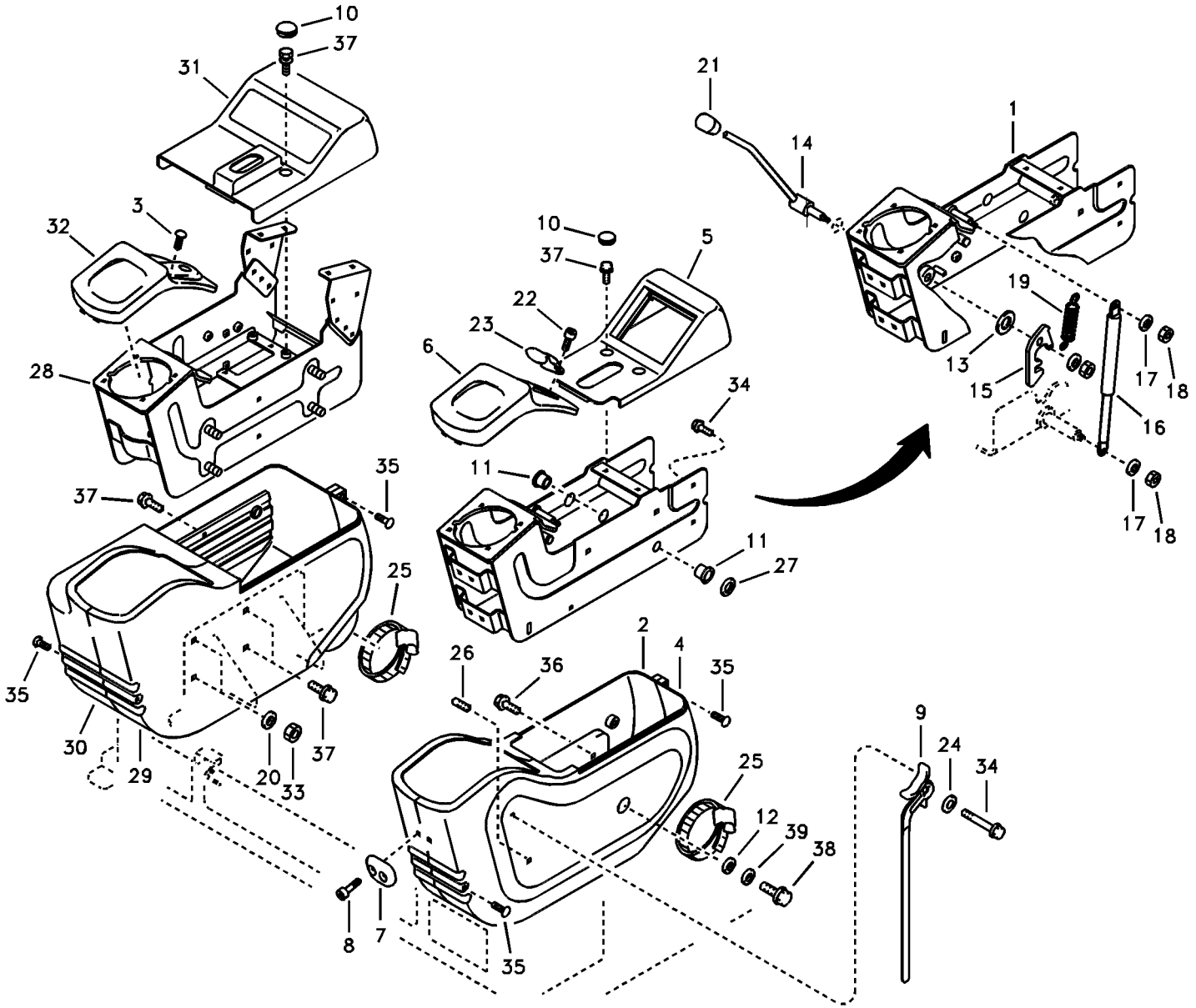

Volvo Construction Equipment

1007055

Fig.	Part No.	Quantity 1	2	3	PS	KIT	Description	Dénomination	Bezeichnung	품명	Denominación	Notes
1	**VOE 14518097**	1					Lever	Levier	Hebel	레버	Palanca	
2	**VOE 14502095**	1					Box	Boîtier	Box	박스	Caja	
3	**SA 9032-10504**	2					Screw	Vis	Schraube	스크류	Tornillo	
4	**VOE 14518098**	1					Box	Boîte	Kasten	박스	Caja	
5	**VOE 14502097**	1					Box	Boîtier	Box	박스	Caja	
6	**VOE 14502091**	1					Cover	Capot	Haube	커버	Capo	LH
7	**VOE 14518099**	1					Guide	Rail	Führung	가이드	Guia	
8	**VOE 984066**	2					Allen Hd Screw	Vis A 6 Pans Cr	Inbusschraube	스크류	Torn Hex Embut	
9	**VOE 14508324**	1					Lever	Levier	Hebel	레버	Palanca	
10	**VOE 14502098**	4					Clip	Clip	Clip	클립	Clip	
11	**VOE 14523095**	2					Bushing	Bague	Buchse	부싱	Casquillo	
12	**SA 9217-11400**	1					Washer	Rondelle	Scheibe	와셔	Arandela	
13	**VOE 14527420**	1					Bushing	Bague	Buchse	부싱	Casquillo	
14	**VOE 14513476**	1					Lever	Levier	Hebel	레버	Palanca	
15	**VOE 14513479**	1					Latch	Poignee Blocage	Knebel	래치	Mango Seguridad	
16	**VOE 14527629**	1					Gas Spring	Ressort Gaz	Gasfeder	개스 스프링	Resorte A Gas	
17	**VOE 955894**	2			SS		Washer	Rondelle	Scheibe	와셔	Arandela	
18	**VOE 14880450**	2					Lock nut	Contre-ecrou	Sicherungsmutter	록 너트	Contratuerca	
19	**VOE 14527419**	1					Spring	Ressort	Feder	스프링	Muelle	
20	**VOE 955897**	4			SS		Washer	Rondelle	Scheibe	와셔	Arandela	
21	**VOE 14527399**	1					Knob	Bouton	Knopf	버턴	Boton	
22	**SA 9016-10607**	2					Bolt	Boulon	Bolzen	볼트	Perno	
23	**VOE 14527628**	1					Handle	Poignee	Handgriff	핸들	Manilla	
24	**SA 9285-11000**	1					Washer	Rondelle	Scheibe	와셔	Arandela	
25	**SA 9312-10450**	2					Clamp	Pince Serrage	Klemme	클램프	Abrazadera	
26	**SA 9027-20605**	1					Screw	Vis	Schraube	스크류	Tornillo	
27	**VOE 14527622**	1					Shim	Cale d'épaisseur	Passcheibe	심	Arandela Ajuste	
28	**SA 1168-01371**	1			SS		Lever	Levier	Hebel	레버	Palanca	SER NO 30001-30666
	VOE 14521792	1					Lever	Levier	Hebel	레버	Palanca	SER NO 30667- SER NO 50001-

1	**8278796**	**Panel de instrumentos, panel de mandos** 계기판 , 제어 패널 **Armaturenbrett, Bedientafel** **Panneau d'instruments, panneau de commande** **Instrument panel, control panel**	Catalogue id **20019**	Group **881**
2				
3			Illustr. No **1007055**	Section **100**
4				
5			Issue **VOE 74H9920019**	Page **369**

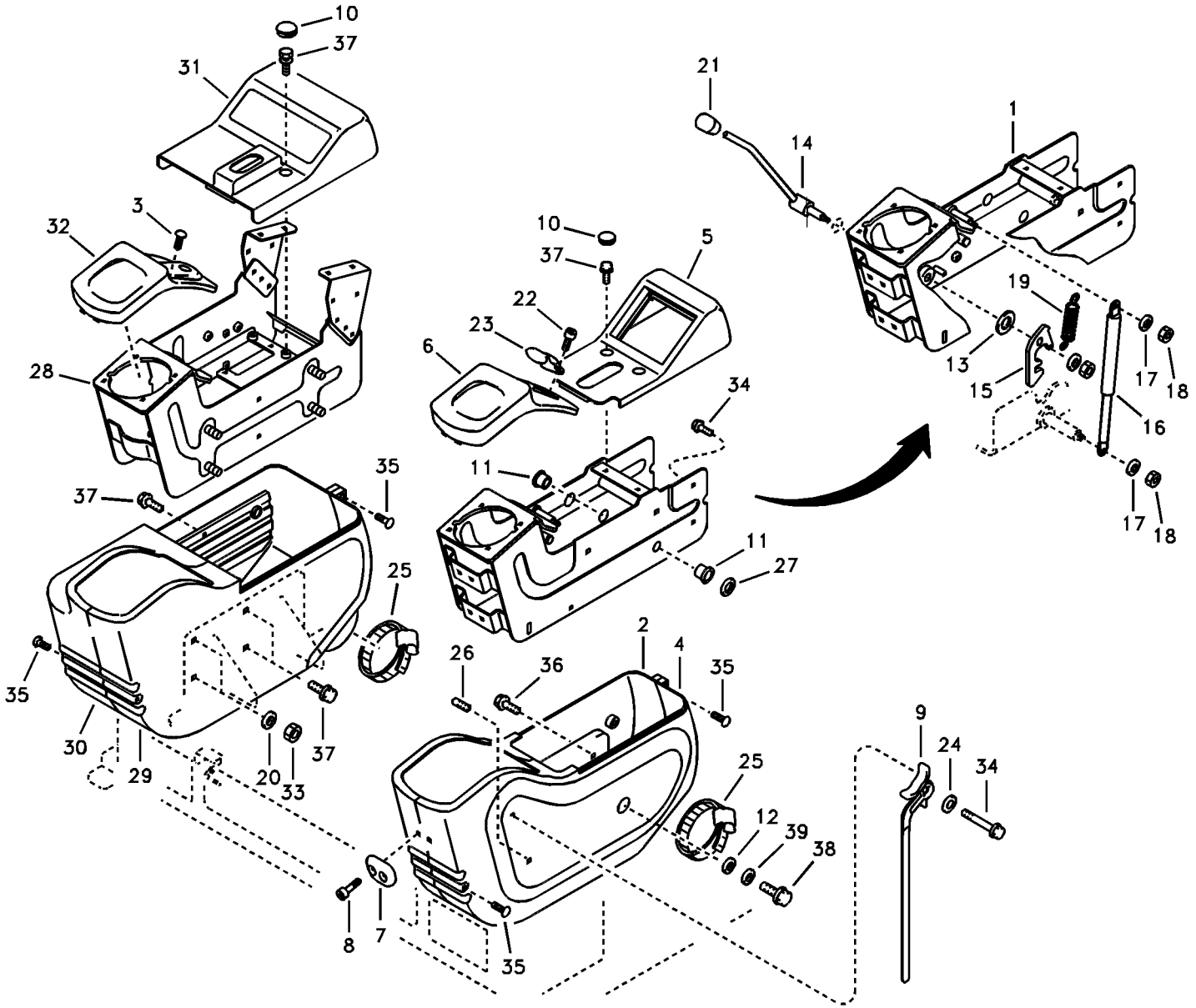

Volvo Construction Equipment

1007055

Fig.	Part No.	Quantity 1	2	3	PS	KIT	Description	Dénomination	Bezeichnung	품명	Denominación	Notes
29	**VOE 14502093**	1					Box	Boîte	Kasten	박스	Caja	
30	**VOE 14502092**	1					Box	Boîte	Kasten	박스	Caja	
31	**VOE 14502096**	1					Box	Boîte	Kasten	박스	Caja	
32	**VOE 14502090**	1					Cover	Capot	Haube	커버	Capo	RH
33	**SA 9131-11200**	4					Lock nut	Contre-ecrou	Sicherungsmutter	록 너트	Contratuerca	
34	**VOE 965175**	3			SS		Screw	Vis	Schraube	스크류	Tornillo	
35	**SA 9021-10603**	4					Screw	Vis	Schraube	스크류	Tornillo	
36	**VOE 946544**	2			SS		Screw	Vis	Schraube	스크류	Tornillo	
37	**VOE 946934**	10			SS		Screw	Vis	Schraube	스크류	Tornillo	
38	**SA 9011-11204**	1					Bolt	Boulon	Bolzen	볼트	Perno	
39	**SA 9211-12000**	1					Washer	Rondelle	Scheibe	와셔	Arandela	

1	**8278796**	**Panel de instrumentos, panel de mandos** 계기판 , 제어 패널 **Armaturenbrett, Bedientafel** **Panneau d'instruments, panneau de commande** **Instrument panel, control panel**	Catalogue id **20019**	Group **881**
2				
3			Illustr. No **1007055**	Section **100**
4				
5			Issue **VOE 74H9920019**	Page **371**

1

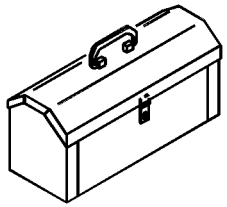

2

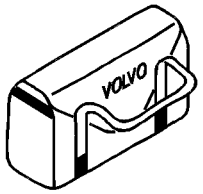

3

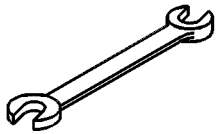

4

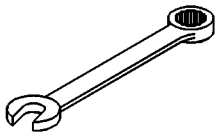

5

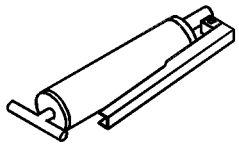

6

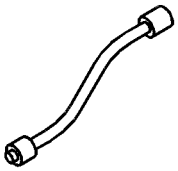

7

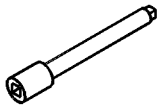

8

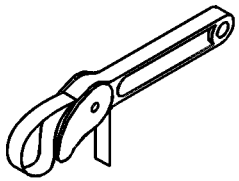

9

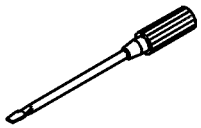

10

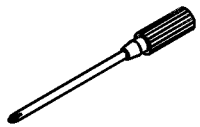

11

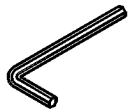

12



13

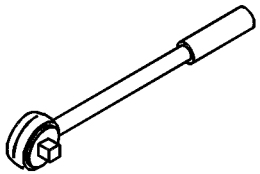

14

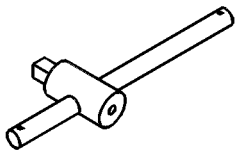

15

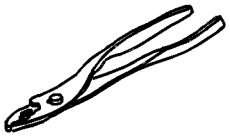

16

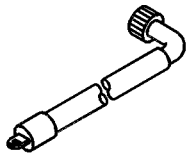

17



Fig.	Part No.	Quantity 1	2	3	PS	KIT	Description	Dénomination	Bezeichnung	품명	Denominación	Notes
	VOE 14521850	1					Tool	Outil	Werkzeug	공구	Herramienta	Full scale
	VOE 14520548		1				Tool	Outil	Gerät	공구	Aparejo	Daily maintenance
1	**VOE 14880349**	1			OP		•Tool Box	•Boite a outils	•Werkzeugkasten	• 공구 박스	•Caja herramientas	
2			1		NS		•Tool Bag	•Trousse outils	•Werkzeugtasche	• 공구 백	•Estuche herramienta	
3		1	1		NS		•Wrench	•Cle	•Schraubenschlüssel	• 렌치	•Llave	10x12
		1			NS		•Wrench	•Cle	•Schraubenschlüssel	• 렌치	•Llave	13x17
		1	1		NS		•Wrench	•Cle	•Schraubenschlüssel	• 렌치	•Llave	19x22
		1			NS		•Wrench	•Cle	•Schraubenschlüssel	• 렌치	•Llave	24x27
		1			NS		•Wrench	•Cle	•Schraubenschlüssel	• 렌치	•Llave	24x27
		1			NS		•Wrench	•Cle	•Schraubenschlüssel	• 렌치	•Llave	36x41
4		1			NS		•Wrench	•Cle	•Schraubenschlüssel	• 렌치	•Llave	12mm
		1			NS		•Wrench	•Cle	•Schraubenschlüssel	• 렌치	•Llave	16mm
		1			NS		•Wrench	•Cle	•Schraubenschlüssel	• 렌치	•Llave	18mm
5	**VOE 14881006**	1	1				•Grease Gun	•Pompe a graisse	•Fettpresse	• 그리스 건	•Bomba de grasa	500CC
6		1	1		NS		•Tool	•Outil	•Gerät	• 공구	•Aparejo	13 1/4
7		1			NS		•Bar	•Barre	•Stab	• 바	•Barra	5inch
8		1			NS		•Wrench	•Cle	•Schraubenschlüssel	• 렌치	•Llave	750mm
9		1			NS		•Screwdriver	•Tournevis	•Schraubenzieher	• 스크류드라이버	•Destornillador	3x60
			1		NS		•Screwdriver	•Tournevis	•Schraubenzieher	• 스크류드라이버	•Destornillador	6x100
		1			NS		•Screwdriver	•Tournevis	•Schraubenzieher	• 스크류드라이버	•Destornillador	8x200
10			1		NS		•Screwdriver	•Tournevis	•Schraubenzieher	• 스크류드라이버	•Destornillador	6x100
		1			NS		•Screwdriver	•Tournevis	•Schraubenzieher	• 스크류드라이버	•Destornillador	8x200
11		1			NS		•Wrench	•Cle	•Schraubenschlüssel	• 렌치	•Llave	6mm
		1			NS		•Wrench	•Cle	•Schraubenschlüssel	• 렌치	•Llave	8mm
		1			NS		•Wrench	•Cle	•Schraubenschlüssel	• 렌치	•Llave	10mm
12		1			NS		•Wrench	•Cle	•Schraubenschlüssel	• 렌치	•Llave	T20
		1			NS		•Wrench	•Cle	•Schraubenschlüssel	• 렌치	•Llave	T25
		1			NS		•Wrench	•Cle	•Schraubenschlüssel	• 렌치	•Llave	T30
		1			NS		•Wrench	•Cle	•Schraubenschlüssel	• 렌치	•Llave	T40
13		1			NS		•Ratchet Handle	•Cliquet	•Knarre	• 래칫 핸들	•Llave Carraca	10inch

1	**8278888**
2	**8278889**
3	
4	
5	

Herramienta
공구
Werkzeug
Outil
Tool

Catalogue id **20019**	Group **896**
Illustr. No **1007056**	Section **100**
Issue **VOE 74H9920019**	Page **373**

1

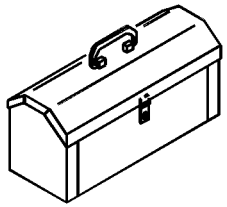

2

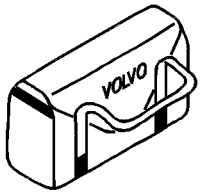

3

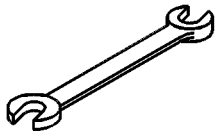

4

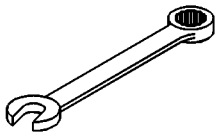

5

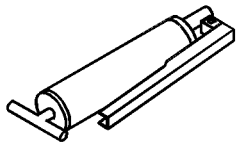

6

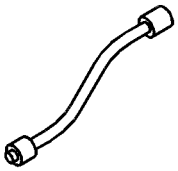

7

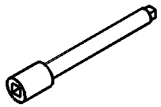

8

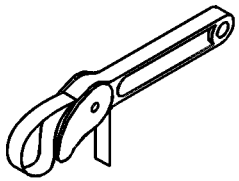

9

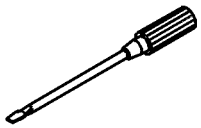

10

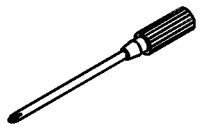

11

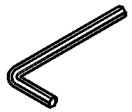

12



13

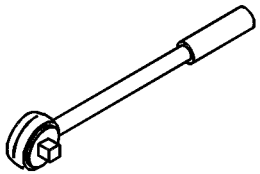

14

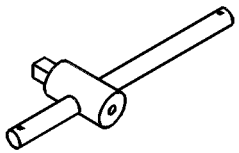

15

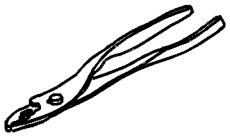

16

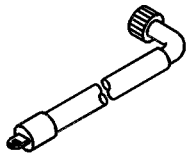

17



Fig.	Part No.	Quantity 1	2	3	PS	KIT	Description	Dénomination	Bezeichnung	품명	Denominación	Notes
14		1			NS		•Handle	•Poignee	•Handgriff	• 핸들	•Manilla	275mm
15		1			NS		•Pliers	•Pince	•Zange	• 플라이어	•Alicates	6inch
16	**VOE 14520541**	1	1				•Adapter	•Raccord Reduct.	•Verbind Stutzen	• 어댑터	•Adaptador	
17		1			NS		•Socket	•Socle	•Sockel	• 소켓	•Zocalo	8mm
		1			NS		•Socket	•Socle	•Sockel	• 소켓	•Zocalo	10mm
		1			NS		•Socket	•Socle	•Sockel	• 소켓	•Zocalo	12mm
		1			NS		•Socket	•Socle	•Sockel	• 소켓	•Zocalo	13mm
		1			NS		•Socket	•Socle	•Sockel	• 소켓	•Zocalo	14mm
		1			NS		•Socket	•Socle	•Sockel	• 소켓	•Zocalo	16mm
		1			NS		•Socket	•Socle	•Sockel	• 소켓	•Zocalo	17mm
		1			NS		•Socket	•Socle	•Sockel	• 소켓	•Zocalo	18mm
		1			NS		•Socket	•Socle	•Sockel	• 소켓	•Zocalo	19mm
		1			NS		•Socket	•Socle	•Sockel	• 소켓	•Zocalo	22mm
		1			NS		•Socket	•Socle	•Sockel	• 소켓	•Zocalo	24mm
		1			NS		•Socket	•Socle	•Sockel	• 소켓	•Zocalo	26mm

1	**8278888**	**Herramienta** 공구 **Werkzeug** **Outil** **Tool**	Catalogue id **20019**	Group **896**
2	**8278889**		Illustr. No **1007056**	Section **100**
3			Issue **VOE 74H9920019**	Page **375**
4				
5				

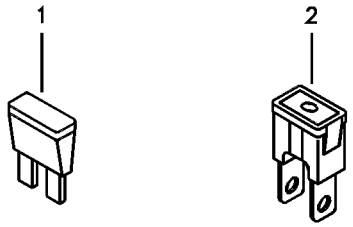
1
2

Fig.	Part No.	Quantity 1	2	3	PS	KIT	Description	Dénomination	Bezeichnung	품명	Denominación	Notes
1	**SA 9877-10000**	2			SS		Fuse	Fusible	Schmelzsicherung	휴즈	Fusible	10A,Red
	VOE 969162	2			SS		Fuse	Fusible	Schmelzsicherung	휴즈	Fusible	(SA 9877-15000) 15A,Light blue
	SA 9877-20000	2			SS		Fuse	Fusible	Schmelzsicherung	휴즈	Fusible	20A,Yellow
	SA 9877-30000	2			SS		Fuse	Fusible	Schmelzsicherung	휴즈	Fusible	30A,Light green
2	**SA 9879-10600**	1					Fuse	Fusible	Schmelzsicherung	휴즈	Fusible	60A,Orange
	SA 9879-10800	1					Fuse	Fusible	Schmelzsicherung	휴즈	Fusible	80A,Black

1	**8278890**	**Kit recambios** 스페어 파트 **Ersatzteilsatz** **Kit pièce de rechange** **Spare parts kit**	Catalogue id **20019**	Group **896**
2			Illustr. No **1007057**	Section **200**
3			Issue **VOE 74H9920019**	Page **377**
4				
5				

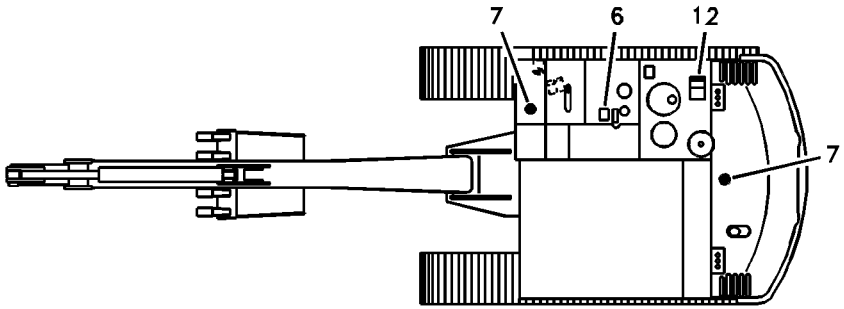
7
6
12
7

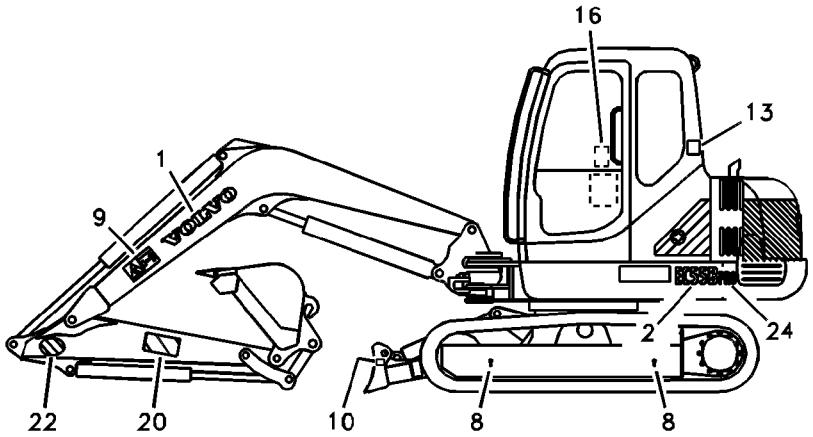
16
13
1
9
VOLVO
2
24
22
20
10
8
8

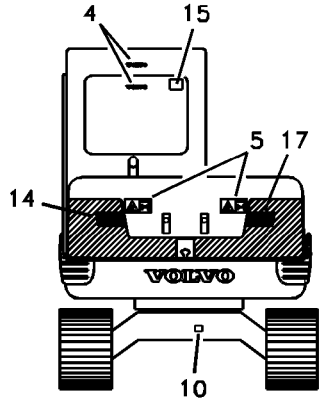
4
15
5
17
14
VOLVO
10

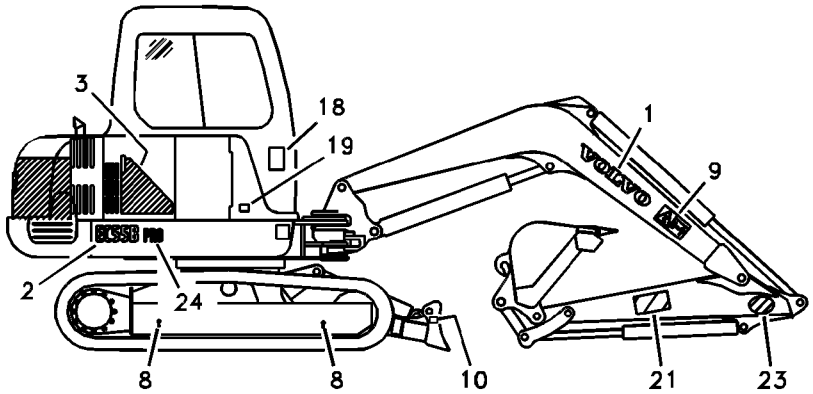
3
18
19
1
VOLVO
9
2
24
8
8
10
21
23

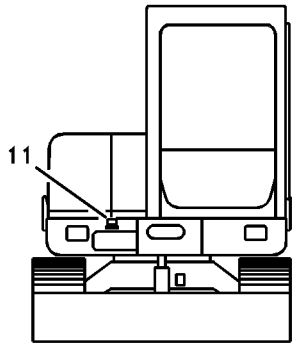
11

Fig.	Part No.	Quantity 1	2	3	4	5	PS	KIT	Description	Dénomination	Bezeichnung	품명	Denominación	Notes
1	**VOE 14501363**	2	2	2	2	2			Decal	Decalcomanie	Abziehbild	데칼	Decalcomania	
2	**VOE 14500912**	2	2	2	2	2			Decal	Decalcomanie	Abziehbild	데칼	Decalcomania	
3	**VOE 14501527**	1	1	1	1	1			Decal	Decalcomanie	Abziehbild	데칼	Decalcomania	
4	**VOE 14501366**	1	1	1	1	1			Decal	Decalcomanie	Abziehbild	데칼	Decalcomania	
5	**VOE 14502506**	2	2	2					Decal	Decalcomanie	Abziehbild	데칼	Decalcomania	SER NO 30001-34475
	VOE 14535559	2	2	2		2			Decal	Decalcomanie	Abziehbild	데칼	Decalcomania	SER NO 34476-
	VOE 14502506				2				Decal	Decalcomanie	Abziehbild	데칼	Decalcomania	SER NO 50001-50129
	VOE 14535559				2				Decal	Decalcomanie	Abziehbild	데칼	Decalcomania	SER NO 50130-
6	**SA 1192-03620**	1	1	1	1	1			Decal	Decalcomanie	Abziehbild	데칼	Decalcomania	
7	**VOE 14512078**	2	2	2	2	2			Decal	Decalcomanie	Abziehbild	데칼	Decalcomania	
8	**SA 1192-02820**	4	4	4	4	4			Decal	Decalcomanie	Abziehbild	데칼	Decalcomania	
9	**VOE 14507874**	2	2	2					Decal	Decalcomanie	Abziehbild	데칼	Decalcomania	SER NO 30001-34475
	VOE 14535560	2	2	2		2			Decal	Decalcomanie	Abziehbild	데칼	Decalcomania	SER NO 34476-
	VOE 14507874				2				Decal	Decalcomanie	Abziehbild	데칼	Decalcomania	SER NO 50001-50129
	VOE 14535560				2				Decal	Decalcomanie	Abziehbild	데칼	Decalcomania	SER NO 50130-
10	**SA 1192-02830**	3	3	3	3	3			Decal	Decalcomanie	Abziehbild	데칼	Decalcomania	
11	**VOE 14518065**	1	1	1	1	1			Decal	Decalcomanie	Abziehbild	데칼	Decalcomania	
12	**VOE 14501714**	1	1	1					Decal	Decalcomanie	Abziehbild	데칼	Decalcomania	SER NO 30001-34475
	VOE 14535562	1	1	1		1			Decal	Decalcomanie	Abziehbild	데칼	Decalcomania	SER NO 34476-
	VOE 14501714				1				Decal	Decalcomanie	Abziehbild	데칼	Decalcomania	SER NO 50001-50129
	VOE 14535562				1				Decal	Decalcomanie	Abziehbild	데칼	Decalcomania	SER NO 50130-
13	**VOE 14880288**			1					Decal	Decalcomanie	Abziehbild	데칼	Decalcomania	SER NO 30001-34475
	VOE 11180747			1			OP		Decal	Decalcomanie	Abziehbild	데칼	Decalcomania	SER NO 34476-
14	**VOE 14502649**	1	1	1	1	1			Decal	Decalcomanie	Abziehbild	데칼	Decalcomania	
15	**SA 1192-05180**	1	1	1	1	1			Decal	Decalcomanie	Abziehbild	데칼	Decalcomania	
16	**VOE 14505999**	1	1	1	1				Decal	Decalcomanie	Abziehbild	데칼	Decalcomania	
17	**VOE 14502650**	1	1	1	1	1			Decal	Decalcomanie	Abziehbild	데칼	Decalcomania	
18	**VOE 14502671**	1	1	1	1	1			Decal	Decalcomanie	Abziehbild	데칼	Decalcomania	
19	**VOE 14511914**	1	1	1	1	1			Decal	Decalcomanie	Abziehbild	데칼	Decalcomania	
20	**VOE 14507360**	1	1	1	1	1			Decal	Decalcomanie	Abziehbild	데칼	Decalcomania	

1	**8278892**
2	**8278893**
3	**8278894**
4	**8279415 S/N 50001-**
5	**8279951 S/N 34006-**

Pegatina, ubicación exterior
데칼 , 외부
Aufkleber, aussen
Autocollant, extérieur
Decal, outer location

Catalogue id	Group
20019	**897**
Illustr. No	Section
1019792	**100**
Issue	Page
VOE 74H9920019	**379**

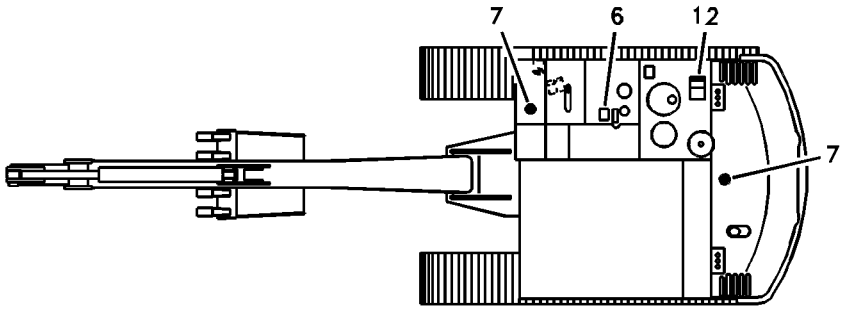
7
6
12
7

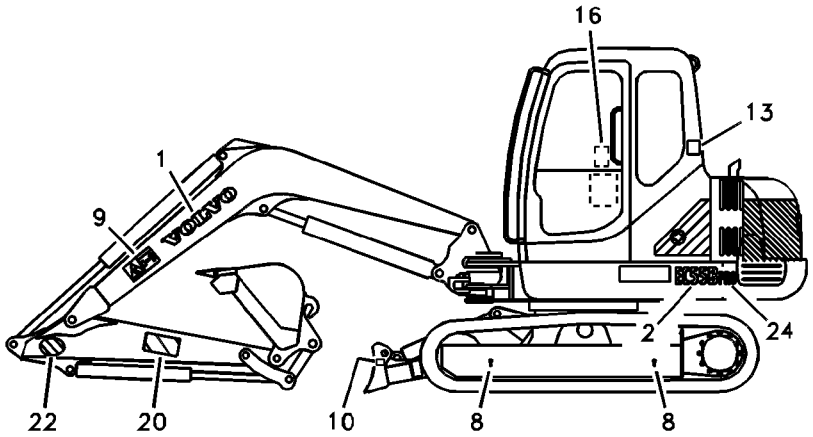
16
13
1
9
VOLVO
2
24
22
20
10
8
8

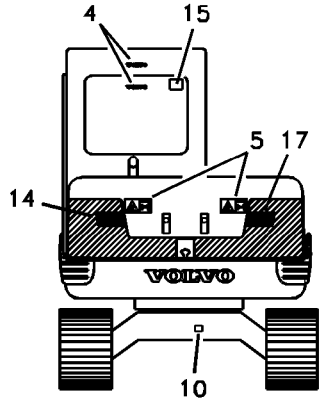
4
15
5
17
14
VOLVO
10

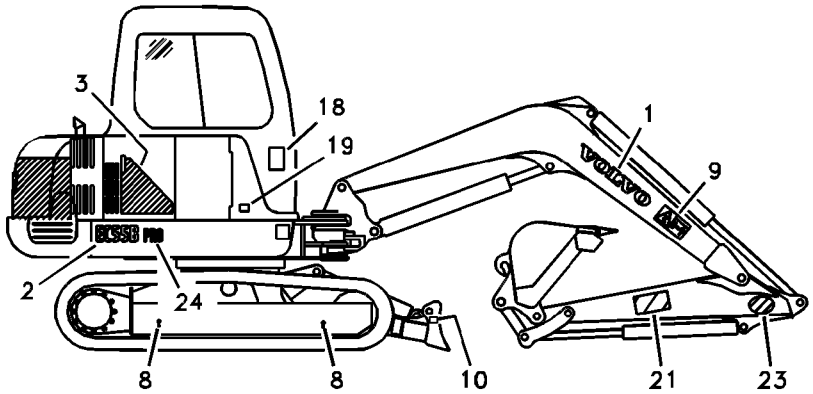
3
18
19
1
VOLVO
9
2
24
8
8
10
21
23

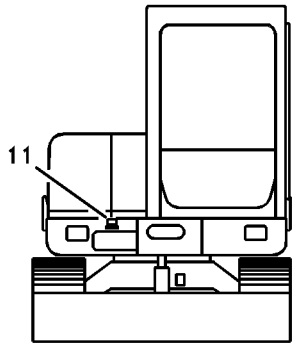
11

Fig.	Part No.	Quantity 1	2	3	4	5	PS	KIT	Description	Dénomination	Bezeichnung	품명	Denominación	Notes
21	**VOE 14507361**	1	1	1	1	1			Decal	Decalcomanie	Abziehbild	데칼	Decalcomania	
22	**VOE 14509723**	1	1	1	1	1			Decal	Decalcomanie	Abziehbild	데칼	Decalcomania	
23	**VOE 14509724**	1	1	1	1	1			Decal	Decalcomanie	Abziehbild	데칼	Decalcomania	
24	**VOE 14539637**	2	2	2		2			Decal	Decalcomanie	Abziehbild	데칼	Decalcomania	SER NO 34476-
	VOE 14539637				2				Decal	Decalcomanie	Abziehbild	데칼	Decalcomania	SER NO 50130-
100	**VOE 14506006**	1							Decal, kit	Decal_kit	Decal, kit	데칼 킷	Decal, kit	Korea,INT
														SER NO 30001-30666
	VOE 14522295	1					SS		Decal, kit	Decal_kit	Decal, kit	데칼 킷	Decal, kit	SER NO 30667-30785
	VOE 14522299	1					SS		Decal, kit	Decal_kit	Decal, kit	데칼 킷	Decal, kit	SER NO 30786-33895
	VOE 14536769	1							Decal, kit	Decal_kit	Decal, kit	데칼 킷	Decal, kit	SER NO 33896-34475
	VOE 14542494	1							Decal, kit	Decal_kit	Decal, kit	데칼 킷	Decal, kit	SER NO 34476-35028
	VOE 14548684	1							Decal, kit	Decal_kit	Decal, kit	데칼 킷	Decal, kit	SER NO 35029-
	VOE 14506009		1				SS		Decal, kit	Decal_kit	Decal, kit	데칼 킷	Decal, kit	USA,China
														SER NO 30001-32015
														SER NO 50001-50008
	VOE 14522932		1				SS		Decal, kit	Decal_kit	Decal, kit	데칼 킷	Decal, kit	SER NO 32016-33895
														SER NO 50009-
	VOE 14536768		1						Decal, kit	Decal_kit	Decal, kit	데칼 킷	Decal, kit	SER NO 33896-34475
	VOE 14542495		1						Decal, kit	Decal_kit	Decal, kit	데칼 킷	Decal, kit	SER NO 34476-35028
	VOE 14548682		1						Decal, kit	Decal_kit	Decal, kit	데칼 킷	Decal, kit	SER NO 35029-
	VOE 14506010			1			SS		Decal, kit	Decal_kit	Decal, kit	데칼 킷	Decal, kit	Europe
														SER NO 30001-32015
	VOE 14522933			1			SS		Decal, kit	Decal_kit	Decal, kit	데칼 킷	Decal, kit	SER NO 32016-33895
	VOE 14536767			1					Decal, kit	Decal_kit	Decal, kit	데칼 킷	Decal, kit	SER NO 33896-34475
	VOE 14542495			1					Decal, kit	Decal_kit	Decal, kit	데칼 킷	Decal, kit	SER NO 34476-35028
	VOE 14548682			1					Decal, kit	Decal_kit	Decal, kit	데칼 킷	Decal, kit	SER NO 35029-
	VOE 14506009				1		SS		Decal, kit	Decal_kit	Decal, kit	데칼 킷	Decal, kit	SER NO 50001-50008
	VOE 14522932				1		SS		Decal, kit	Decal_kit	Decal, kit	데칼 킷	Decal, kit	SER NO 50009-50129
	VOE 14542496				1	1			Decal, kit	Decal_kit	Decal, kit	데칼 킷	Decal, kit	SER NO 50130-

1	**8278892**	**Pegatina, ubicación exterior** 데칼 , 외부 **Aufkleber, aussen** **Autocollant, extérieur** **Decal, outer location**
2	**8278893**	
3	**8278894**	
4	**8279415 S/N 50001-**	
5	**8279951 S/N 34006-**	

Catalogue id	Group
20019	**897**
Illustr. No	Section
1019792	**100**
Issue	Page
VOE 74H9920019	**381**

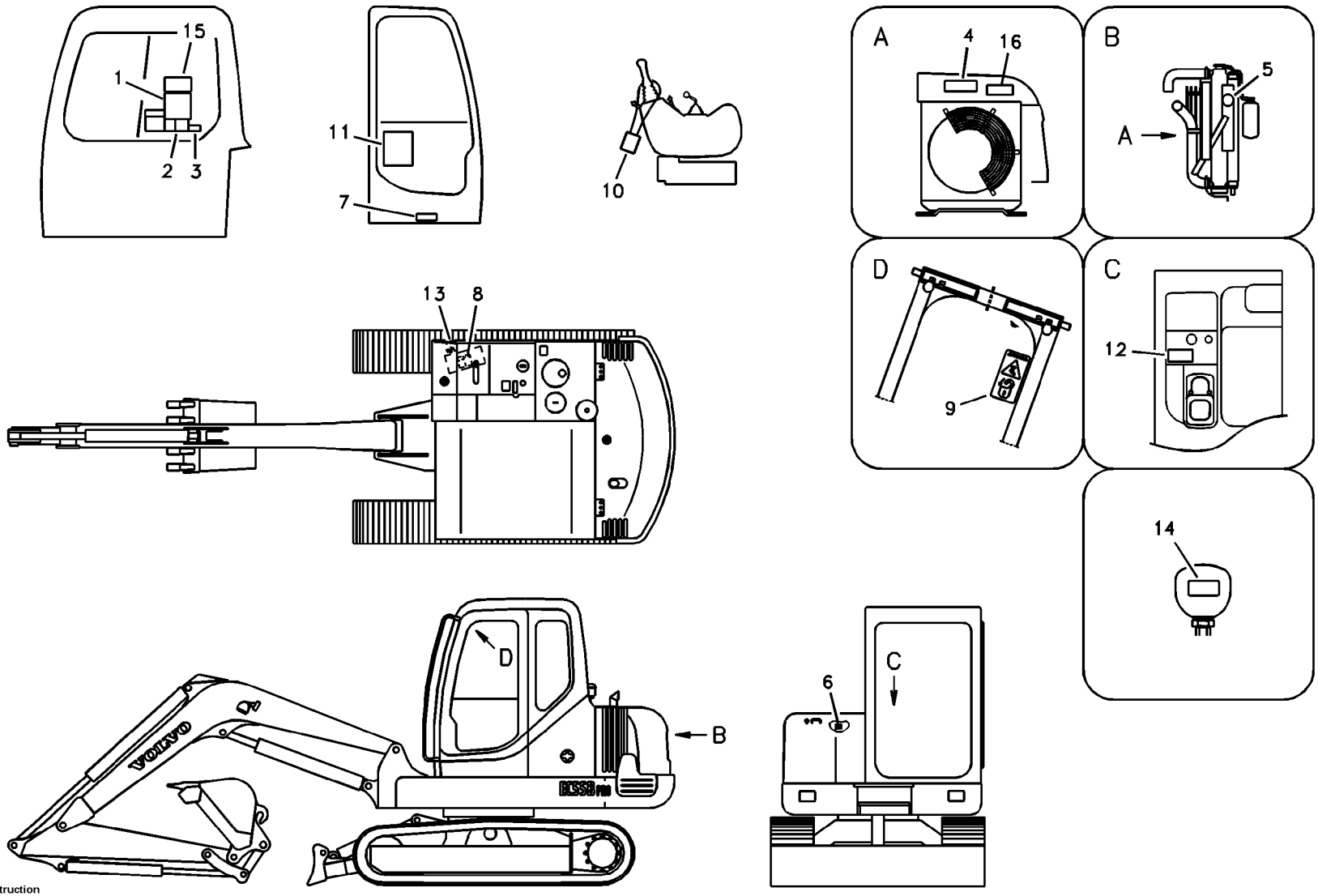

Volvo Construction Equipment

1022061

Fig.	Part No.	Quantity 1	2	3	4	5	PS	KIT	Description	Dénomination	Bezeichnung	품명	Denominación	Notes
1	**VOE 14505164**	1					SS		Decal	Decalcomanie	Abziehbild	데칼	Decalcomania	SER NO 30001-30785
	VOE 14522297	1							Decal	Decalcomanie	Abziehbild	데칼	Decalcomania	SER NO 30786-34475
	VOE 14540850	1							Decal	Decalcomanie	Abziehbild	데칼	Decalcomania	SER NO 34476-
	VOE 14505998		1						Decal	Decalcomanie	Abziehbild	데칼	Decalcomania	SER NO 30001-34475
	VOE 14542387		1						Decal	Decalcomanie	Abziehbild	데칼	Decalcomania	SER NO 34476- 5FT
	VOE 14542388		1						Decal	Decalcomanie	Abziehbild	데칼	Decalcomania	SER NO 34476- 6FT
	VOE 14514337			1			SS		Decal	Decalcomanie	Abziehbild	데칼	Decalcomania	SER NO 30001-31106
	VOE 14524956			1					Decal	Decalcomanie	Abziehbild	데칼	Decalcomania	SER NO 31107-32015
	VOE 14527217			1					Decal	Decalcomanie	Abziehbild	데칼	Decalcomania	Steel shoe SER NO 32016-34475
	VOE 14540844			1					Decal	Decalcomanie	Abziehbild	데칼	Decalcomania	SER NO 34476-
	VOE 14527238			1					Decal	Decalcomanie	Abziehbild	데칼	Decalcomania	Rubber shoe SER NO 32016-34475
	VOE 14540843			1					Decal	Decalcomanie	Abziehbild	데칼	Decalcomania	SER NO 34476-
	VOE 14536723				1				Decal	Decalcomanie	Abziehbild	데칼	Decalcomania	SER NO 50001-50129
	VOE 14542395				1	1			Decal	Decalcomanie	Abziehbild	데칼	Decalcomania	SER NO 50130-
	VOE 14536724				1				Decal	Decalcomanie	Abziehbild	데칼	Decalcomania	SER NO 50001-50129
	VOE 14542404				1	1			Decal	Decalcomanie	Abziehbild	데칼	Decalcomania	SER NO 50130-
2	**VOE 14509712**	1	1	1	1				Decal	Decalcomanie	Abziehbild	데칼	Decalcomania	
	VOE 14531899					1			Decal	Decalcomanie	Abziehbild	데칼	Decalcomania	
3	**SA 1192-03630**	1	1	1	1				Decal	Decalcomanie	Abziehbild	데칼	Decalcomania	
	VOE 14531906					1			Decal	Decalcomanie	Abziehbild	데칼	Decalcomania	
4	**SA 1192-03730**	1	1	1	1				Decal	Decalcomanie	Abziehbild	데칼	Decalcomania	
	VOE 14532112					1			Decal	Decalcomanie	Abziehbild	데칼	Decalcomania	
5	**SA 1192-05070**	1	1	1	1	1			Decal	Decalcomanie	Abziehbild	데칼	Decalcomania	
6	**SA 1192-30180**	1	1	1	1	1			Decal	Decalcomanie	Abziehbild	데칼	Decalcomania	
7	**SA 1192-02910**	1	1	1	1				Decal	Decalcomanie	Abziehbild	데칼	Decalcomania	
	VOE 14531904					1			Decal	Decalcomanie	Abziehbild	데칼	Decalcomania	

1	**8278892**
2	**8278893**
3	**8278894**
4	**8279415 S/N 50001-**
5	**8279951 S/N 34006-**

Pegatina, ubicación interior
데칼 , 내부
Aufkleber, innen
Autocollant, intérieur
Decal, inner location

Catalogue id	Group
20019	**897**
Illustr. No	Section
1022061	**200**
Issue	Page
VOE 74H9920019	**383**

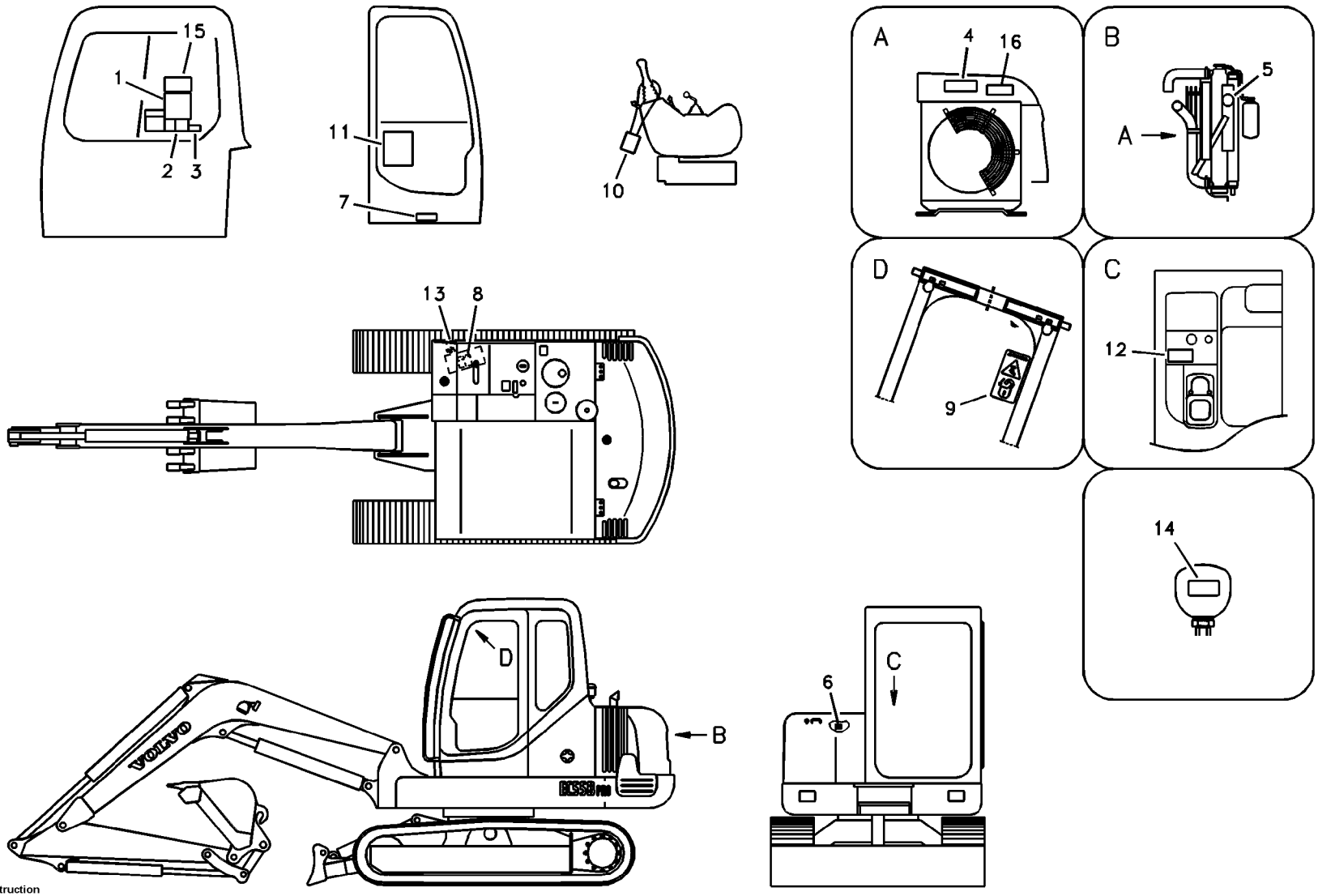

Volvo Construction Equipment

1022061

Fig.	Part No.	Quantity 1	2	3	4	5	PS	KIT	Description	Dénomination	Bezeichnung	품명	Denominación	Notes
8	**SA 1192-03820**	1	1	1	1				Decal	Decalcomanie	Abziehbild	데칼	Decalcomania	
	VOE 14532115					1			Decal	Decalcomanie	Abziehbild	데칼	Decalcomania	
9	**SA 1192-30720**	1	1	1	1				Decal	Decalcomanie	Abziehbild	데칼	Decalcomania	
	VOE 14532117					1			Decal	Decalcomanie	Abziehbild	데칼	Decalcomania	
10	**SA 1192-03760**	1	1	1	1				Decal	Decalcomanie	Abziehbild	데칼	Decalcomania	
	VOE 14532114					1			Decal	Decalcomanie	Abziehbild	데칼	Decalcomania	
11	**VOE 14518064**	1	1	1					Decal	Decalcomanie	Abziehbild	데칼	Decalcomania	SER NO 30001-34091 SER NO 50001-50093
	VOE 14536179	1	1	1	1	1			Decal	Decalcomanie	Abziehbild	데칼	Decalcomania	SER NO 34092- SER NO 50094-
12	**VOE 14505182**	1	1	1	1				Decal	Decalcomanie	Abziehbild	데칼	Decalcomania	
	VOE 14535563					1			Decal	Decalcomanie	Abziehbild	데칼	Decalcomania	
13	**VOE 14509574**	1	1	1	1	1			Decal	Decalcomanie	Abziehbild	데칼	Decalcomania	
14	**SA 1192-04690**	1	1	1	1				Decal	Decalcomanie	Abziehbild	데칼	Decalcomania	
	VOE 14532116					1			Decal	Decalcomanie	Abziehbild	데칼	Decalcomania	
15	**VOE 14542492**	1	1						Decal	Decalcomanie	Abziehbild	데칼	Decalcomania	SER NO 34476-
	VOE 14542492				1	1			Decal	Decalcomanie	Abziehbild	데칼	Decalcomania	SER NO 50130-
	VOE 11445056	1	1						Decal	Decalcomanie	Abziehbild	데칼	Decalcomania	SER NO 35029-
100	**VOE 14506006**	1							Decal, kit	Decal_kit	Decal, kit	데칼 킷	Decal, kit	Korea,INT SER NO 30001-30666
	VOE 14522295	1					SS		Decal, kit	Decal_kit	Decal, kit	데칼 킷	Decal, kit	SER NO 30667-30785
	VOE 14522299	1					SS		Decal, kit	Decal_kit	Decal, kit	데칼 킷	Decal, kit	SER NO 30786-33895
	VOE 14536769	1							Decal, kit	Decal_kit	Decal, kit	데칼 킷	Decal, kit	SER NO 33896-34475
	VOE 14542494	1							Decal, kit	Decal_kit	Decal, kit	데칼 킷	Decal, kit	SER NO 34476-35028
	VOE 14548684	1							Decal, kit	Decal_kit	Decal, kit	데칼 킷	Decal, kit	SER NO 35029-
	VOE 14506009		1				SS		Decal, kit	Decal_kit	Decal, kit	데칼 킷	Decal, kit	USA,China SER NO 30001-32015 SER NO 50001-50008
	VOE 14522932		1				SS		Decal, kit	Decal_kit	Decal, kit	데칼 킷	Decal, kit	SER NO 32016-33895 SER NO 50009-

1	**8278892**
2	**8278893**
3	**8278894**
4	**8279415 S/N 50001-**
5	**8279951 S/N 34006-**

Pegatina, ubicación interior
데칼 , 내부
Aufkleber, innen
Autocollant, intérieur
Decal, inner location

Catalogue id	Group
20019	**897**
Illustr. No	Section
1022061	**200**
Issue	Page
VOE 74H9920019	**385**

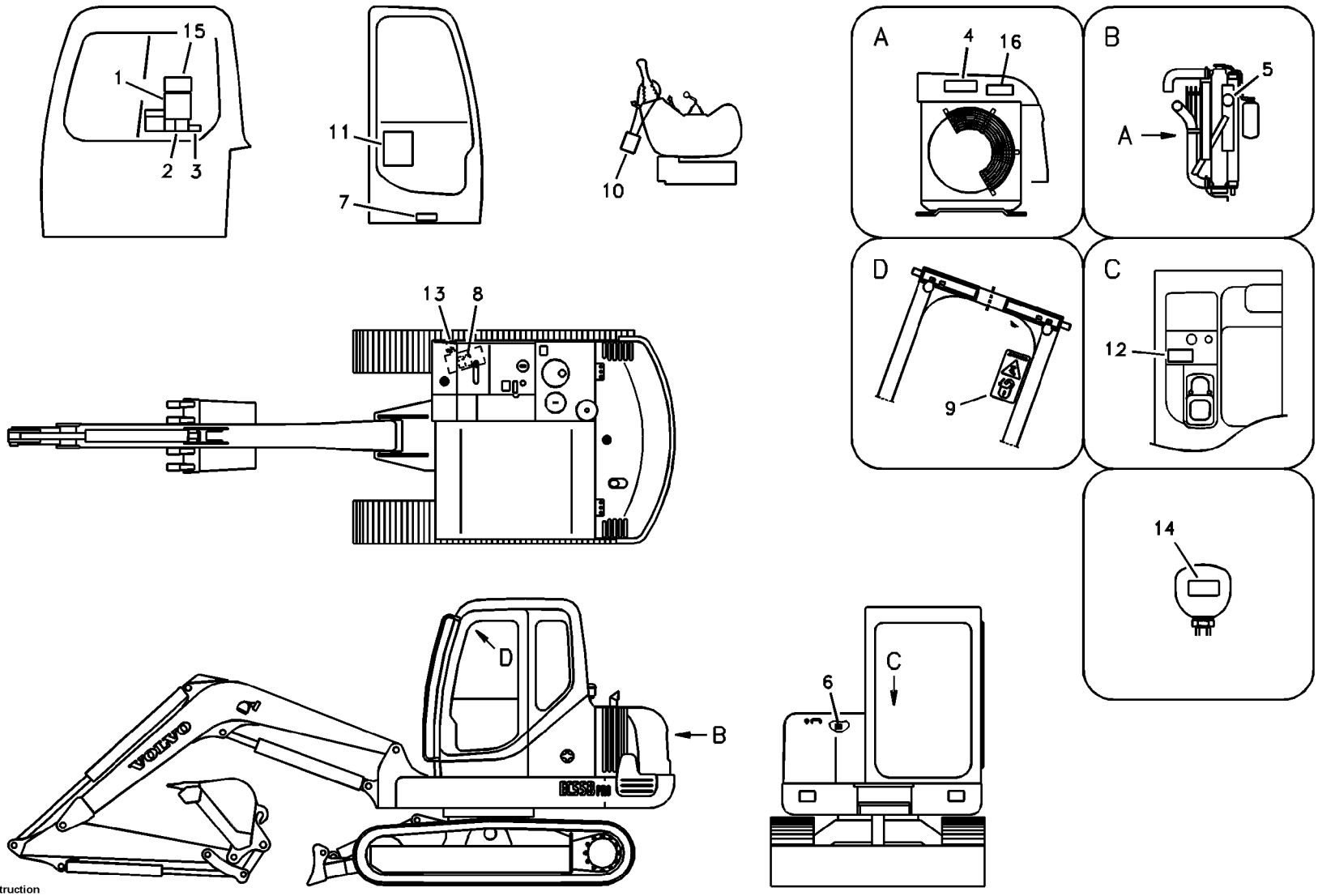

Volvo Construction Equipment

1022061

Fig.	Part No.	Quantity 1	2	3	4	5	PS	KIT	Description	Dénomination	Bezeichnung	품명	Denominación	Notes
	VOE 14536768		1						Decal, kit	Decal_kit	Decal, kit	데칼 킷	Decal, kit	SER NO 33896-34475
	VOE 14542495		1						Decal, kit	Decal_kit	Decal, kit	데칼 킷	Decal, kit	SER NO 34476-35028
	VOE 14548682		1						Decal, kit	Decal_kit	Decal, kit	데칼 킷	Decal, kit	SER NO 35029-
	VOE 14506010			1			SS		Decal, kit	Decal_kit	Decal, kit	데칼 킷	Decal, kit	Europe SER NO 30001-32015
	VOE 14522933			1			SS		Decal, kit	Decal_kit	Decal, kit	데칼 킷	Decal, kit	SER NO 32016-33895
	VOE 14536767			1					Decal, kit	Decal_kit	Decal, kit	데칼 킷	Decal, kit	SER NO 33896-34475
	VOE 14542495			1					Decal, kit	Decal_kit	Decal, kit	데칼 킷	Decal, kit	SER NO 34476-35028
	VOE 14548682			1					Decal, kit	Decal_kit	Decal, kit	데칼 킷	Decal, kit	SER NO 35029-
	VOE 14506009				1		SS		Decal, kit	Decal_kit	Decal, kit	데칼 킷	Decal, kit	SER NO 50001-50008
	VOE 14522932				1		SS		Decal, kit	Decal_kit	Decal, kit	데칼 킷	Decal, kit	SER NO 50009-50129
	VOE 14542496				1	1			Decal, kit	Decal_kit	Decal, kit	데칼 킷	Decal, kit	SER NO 50130-

1	**8278892**
2	**8278893**
3	**8278894**
4	**8279415 S/N 50001-**
5	**8279951 S/N 34006-**

Pegatina, ubicación interior
데칼 , 내부
Aufkleber, innen
Autocollant, intérieur
Decal, inner location

Catalogue id **20019**	Group **897**
Illustr. No **1022061**	Section **200**
Issue **VOE 74H9920019**	Page **387**

VOLVO

Construction Equipment

GROUP		Section	Page
911	Hydraulic oil tank	100	401
911	Turning joint line, control valve to turning joint	200	405
911	Turning joint line, turning joint to travel motor	300	407
911	Working hydraulic, dozer blade	350	409
911	Hydraulic system, control valve to boom and swing	400	411
911	Hydraulic system, control valve to boom and swing FOR CHINA	410	417
911	Hydraulic system, control valve to boom and swing FOR	420	419
911	Hydraulic system, hydraulic tank to hydraulic oil cooler	500	421
911	Hydraulic system, hydraulic tank to hydraulic pump	600	423
912	Control valve with fitting parts.	100	427
912	Control valve with fitting parts.	150	431
912	Control valve with fitting parts. FOR CHINA	160	435
912	Main control valve, inlet and boom and boom swing	200	437
912	Main control valve, inlet and boom and boom swing FOR CHINA	210	443
912	Main control valve, travel straight forward and dipper arm 1 and boom 2.	300	449
912	Main control valve, travel straight forward and dipper arm 1 and boom 2. FOR CHINA	310	455
912	Main control valve, travel Lh and mid inlet and travel Rh	400	461
912	Main control valve, travel Lh and mid inlet and travel Rh FOR CHINA	410	465
912	Main control valve, boom 1 and bucket and dipper arm 2 and outlet.	500	469
912	Main control valve, boom 1 and bucket and dipper arm 2 and outlet. FOR CHINA	510	477
913	Pump installation	100	483
913	Hydraulic pump	200	487
913	Hydraulic gear pump	250	489
914	Servo system, control valve to remote control valve	100	495
914	Servo system, control valve to remote control valve	200	497
914	Servo system, control valve to solenoid valve and swing motor.	300	499
914	Servo system, solenoid valve	900	503
914	Servo system, remote control valve	1100	505
914	Servo system, remote control valve	1150	509
914	Servo system, remote control valve	1200	515
914	Servo system, changing lever function	2100	519
914	Servo system, changing lever function	2150	521
914	Servo system, breaker and crusher	4000	523
916	Working hydraulic, dipper arm cylinder on boom.	100	525
916	Working hydraulic, dipper arm cylinder on boom. FOR CHINA	110	527
916	Working hydraulic, boom rupture	300	529
916	Working hydraulic, boom rupture	350	533
916	Working hydraulic, boom cylinder	900	535
916	Working hydraulic, dipper arm rupture	1200	537
916	Working hydraulic, dipper arm rupture	1250	539
916	Working hydraulic, dipper arm rupture	1300	541
916	Working hydraulic, hammer and shear for boom	2000	545
916	Working hydraulic, hammer and shear for boom FOR CHINA	2010	547
916	Working hydraulic, hammer and shear for boom	2100	549
916	Working hydraulic, hammer and shear for upper	2200	551
916	Working hydraulic, clamshell	4000	555
916	Working hydraulic, clamshell	4100	557
916	Working hydraulics, grab system on upper	8000	559
916	Working hydraulics, grab system on upper	8050	561
916	Working hydraulics, grab system on work equipment	8100	565
924	Quikfit hydraulic on upper. Single - acting	200	567
924	Quikfit hydraulic on upper. Double - acting	250	569
924	Quikfit hydraulic on upper. Double - acting	300	571
924	Quikfit hydraulic on upper. Double - acting FOR CHINA	310	573
924	Quikfit hydraulic on attachment. Single - acting	400	575
924	Quikfit hydraulic on attachment. Double - acting	450	581
924	Quikfit hydraulic on attachment. Double - acting SER NO 30001-32353	500	587

INDEX OF CONTENTS

INDEX OF CONTENTS	Catalogue id 20019	Group 900
	Issue VOE 74H9920019	Page 390

GROUP		Section	Page
924	Quikfit hydraulic on attachment. Double - acting FOR CHINA (SER NO 50001-50036)	510	591
924	Quikfit hydraulic on attachment. Double - acting SER NO 32354-	550	593
924	Quikfit hydraulic on attachment. Double - acting FOR CHINA (SER NO 50037-)	560	597
925	Bucket	100	601
925	Bucket	200	605
925	Linkage for no bucket	1500	609
927	Dozer blade	100	611
927	Dozer blade FOR CHINA	110	613
927	Dozer blade cylinder	500	615
927	Dozer blade cylinder FOR CHINA	510	617
971	Boom swing system	100	619
971	Boom swing system	150	621
971	Boom swing cylinder	600	623
974	Links to boom	100	625
974	Links to boom FOR CHINA	110	627
974	Links to boom	150	629
974	Links to boom	200	631
974	Links to boom FOR CHINA	210	635
974	Links to boom	250	639
974	Boom and grease piping	300	641
974	Boom and grease piping FOR CHINA	310	643
974	Boom cylinder	3000	645
974	Boom cylinder FOR CHINA	3010	649
974	Boom cylinder	3100	651
974	Boom cylinder	3150	655
975	Links to dipper arm	100	659
975	Links to dipper arm FOR CHINA	110	661
975	Links to dipper arm	200	663
975	Dipper arm and grease piping with piping seat	500	665
975	Dipper arm and grease piping with piping seat FOR CHINA	510	669
975	Dipper arm and grease piping with piping seat	600	671
975	Dipper arm and grease piping with piping seat FOR CHINA	610	675
975	Dipper arm and grease piping with piping seat	800	677
975	Dipper arm cylinder	1500	679
975	Dipper arm cylinder FOR CHINA	1510	683
975	Links to connecting rod	1900	687
975	Links to connecting rod FOR CHINA	1910	691
975	Bucket cylinder	2500	693
992	Antitheft system	100	695

GROUPE		Section	Page
911	Réservoir d'huile hydraulique	100	401
911	Articulation de rotation, valve de commande vers articulation de rotation	200	405
911	Articulation de rotation, articulation de rotation vers moteur de conduite	300	407
911	Hydraulique de travail, lame bulldozer.	350	409
911	Système hydraulique, valve de commande flèche et pivotement	400	411
911	Système hydraulique, valve de commande flèche et pivotement FOR CHINA	410	417
911	Système hydraulique, valve de commande flèche et pivotement FOR420		419
911	Syst. hydr, rés. hydr vers refroidisseur huile hydraulique	500	421
911	Syst. hydr, rés. hydraulique vers pompe hydraulique	600	423
912	Valve de commande avec pièces de montage.	100	427
912	Valve de commande avec pièces de montage.	150	431
912	Valve de commande avec pièces de montage. FOR CHINA	160	435
912	Valve de commande, admission, flêche et flêche d'orientation	200	437
912	Valve de commande, admission, flêche et flêche d'orientation FOR CHINA	210	443
912	Valve de commande, direction de course - droit, bras 1 et flêche 2.	300	449
912	Valve de commande, direction de course - droit, bras 1 et flêche 2. FOR CHINA	310	455
912	Valve de commande, direction de course gauche et droite, admission centrale	400	461
912	Valve de commande, direction de course gauche et droite, admission centrale FOR CHINA	410	465
912	Valve de commande, flêche 1, godet, bras 2 et sortie.	500	469
912	Valve de commande, flêche 1, godet, bras 2 et sortie. FOR CHINA	510	477
913	Installation de pompe	100	483
913	Pompe hydraulique	200	487
913	Pompe à engrenages hydraulique	250	489
914	Système servo, valve commande vers valve commande a distance.	100	495
914	Système servo, valve commande vers valve commande a distance.	200	497
914	Système servo, valve commande vers vanne el.magnet. et moteur d'orient.	300	499
914	Système servo, valve de solénoïde	900	503
914	Système servo, valve de commande télécommandée	1100	505
914	Système servo, valve de commande télécommandée	1150	509
914	Système servo, valve de commande télécommandée	1200	515
914	Système servo, sélection fonction levier	2100	519
914	Système servo, sélection fonction levier	2150	521
914	Système servo, marteau et cisaille	4000	523
916	Commande hydraulique d'outil, vérin de balancier sur la flèche	100	525
916	Commande hydraulique d'outil, vérin de balancier sur la flèche FOR CHINA	110	527
916	Hydraulique de travail, coupure flèche	300	529
916	Hydraulique de travail, coupure flèche	350	533
916	Commande hydraulique d'outil, vérin de flèche	900	535
916	Hydraulique de travail, coupure bras	1200	537
916	Hydraulique de travail, coupure bras	1250	539
916	Hydraulique de travail, coupure bras	1300	541
916	Hydraulique de travail, marteau et ciseaux pour flèche	2000	545
916	Hydraulique de travail, marteau et ciseaux pour flèche FOR CHINA	2010	547
916	Hydraulique de travail, marteau et ciseaux pour flèche	2100	549
916	Hydraulique de travail, marteau et ciseaux supérieurs	2200	551
916	Hydraulique de travail, benne preneuse	4000	555
916	Hydraulique de travail, benne preneuse	4100	557
916	Commande hydraulique d'outil, système de préhension sur tourelle	8000	559
916	Commande hydraulique d'outil, système de préhension sur tourelle	8050	561
916	Commande hydraulique d'outil, système de préhension sur équipement de travail	8100	565
924	Hydraulique de raccord rapide sur la supérier. D'action simple	200	567
924	Hydraulique de raccord rapide sur la supérier, à double effet	250	569

TABLE DES MATIÈRES

GROUPE		Section	Page
924	Hydraulique de raccord rapide sur la supérier, à double effet	300	571
924	Hydraulique de raccord rapide sur la supérier, à double effet FOR CHINA	310	573
924	Hydraulique de raccord rapide sur soporte de implementos, d'action simple	400	575
924	Hydraulique de raccord rapide sur soporte de implementos, à double effet	450	581
924	Hydraulique de raccord rapide sur soporte de implementos, à double effet SER NO 30001-32353	500	587
924	Hydraulique de raccord rapide sur soporte de implementos, à double effet FOR CHINA (SER NO 50001-50036)	510	591
924	Hydraulique de raccord rapide sur soporte de implementos, à double effet SER NO 32354-	550	593
924	Hydraulique de raccord rapide sur soporte de implementos, à double effet FOR CHINA (SER NO 50037-)	560	597
925	Godet	100	601
925	Godet	200	605
925	Articulation en l'absence de godet	1500	609
927	Lame bulldozer	100	611
927	Lame bulldozer FOR CHINA	110	613
927	Vérin hydraulique, lame bulldozer	500	615
927	Vérin hydraulique, lame bulldozer FOR CHINA	510	617
971	Système hydraulique, orientation	100	619
971	Système hydraulique, orientation	150	621
971	Flêche d'orientation - cylindre	600	623
974	Articulations, flèche	100	625
974	Articulations, flèche FOR CHINA	110	627
974	Articulations, flèche	150	629
974	Articulations, flèche	200	631
974	Articulations, flèche FOR CHINA	210	635
974	Articulations, flèche	250	639
974	Flèche et conduits de graissage	300	641
974	Flèche et conduits de graissage FOR CHINA	310	643
974	Vérin de flèche	3000	645
974	Vérin de flèche FOR CHINA	3010	649
974	Vérin de flèche	3100	651
974	Vérin de flèche	3150	655
975	Articulations de balancier	100	659
975	Articulations de balancier FOR CHINA	110	661
975	Articulations de balancier	200	663
975	Balancier et tuyauterie de lubr avec siège de tuyau	500	665
975	Balancier et tuyauterie de lubr avec siège de tuyau FOR CHINA	510	669
975	Balancier et tuyauterie de lubr avec siège de tuyau	600	671
975	Balancier et tuyauterie de lubr avec siège de tuyau FOR CHINA	610	675
975	Balancier et tuyauterie de lubr avec siège de tuyau	800	677
975	Vérin de bras	1500	679
975	Vérin de bras FOR CHINA	1510	683
975	Articulations, liaison avec la tige de piston	1900	687
975	Articulations, liaison avec la tige de piston FOR CHINA	1910	691
975	Vérin de godet	2500	693
992	Système antivol	100	695

GRUPPE		Abschnitt	Seite
911	Hydrauliköltank	100	401
911	Drehgelenkleitung, Steuerventil zu Drehgelenk	200	405
911	Drehgelenkleitung, Steuerventil zu Fahrmotor	300	407
911	Arbeitshydraulik, Frontschar.	350	409
911	Hydraulikanlage, Steuerventil zu Ausleger und Schwenken	400	411
911	Hydraulikanlage, Steuerventil zu Ausleger und Schwenken FOR CHINA	410	417
911	Hydraulikanlage, Steuerventil zu Ausleger und Schwenken FOR	420	419
911	Hydraulikanlage, von Hydrauliktank zu Ölkühler	500	421
911	Hydraulikanlage, von Hydrauliktank zu Hydraulikpumpe	600	423
912	Steuerventil mit Anbauteilen.	100	427
912	Steuerventil mit Anbauteilen.	150	431
912	Steuerventil mit Anbauteilen. FOR CHINA	160	435
912	Steuerventil, Einlass und Ausleger und Schwenk-ausleger	200	437
912	Steuerventil, Einlass und Ausleger und Schwenk-ausleger FOR CHINA	210	443
912	Steuerventil, geradeaus fahren und Stiel 1 und Ausleger 2.	300	449
912	Steuerventil, geradeaus fahren und Stiel 1 und Ausleger 2. FOR CHINA	310	455
912	Steuerventil, fahren links, Einlass Mittelteil, fahren rechts	400	461
912	Steuerventil, fahren links, Einlass Mittelteil, fahren rechts FOR CHINA	410	465
912	Steuerventil, Ausleger 1, Löffel, Stiel 2 und auslass.	500	469
912	Steuerventil, Ausleger 1, Löffel, Stiel 2 und auslass. FOR CHINA	510	477
913	Pumpeninstallation	100	483
913	Hydraulikpumpe	200	487
913	Hydraulische Zahnradpumpe	250	489
914	Servosystem, Steuerventil zu Vorsteuergerät	100	495
914	Servosystem, Steuerventil zu Vorsteuergerät	200	497
914	Servosystem, Steuerventil zu Magnetventil und Schwenkmotor	300	499
914	Servosystem, Magnetventil	900	503
914	Servosystem, Vorsteuergerät	1100	505
914	Servosystem, Vorsteuergerät	1150	509
914	Servosystem, Vorsteuergerät	1200	515
914	Servosystem, Wechsel der Hebelfunktion	2100	519
914	Servosystem, Wechsel der Hebelfunktion	2150	521
914	Servosystem, Brecher und Zerkleinerer	4000	523
916	Arbeitshydraulik, Stielzylinder auf Ausleger	100	525
916	Arbeitshydraulik, Stielzylinder auf Ausleger FOR CHINA	110	527
916	Arbeitshydraulik, Leitungsbruchventil Ausleger	300	529
916	Arbeitshydraulik, Leitungsbruchventil Ausleger	350	533
916	Arbeitshydraulik, Auslegerzylinder	900	535
916	Arbeitshydraulik, Leitungsbruchventil Stiel	1200	537
916	Arbeitshydraulik, Leitungsbruchventil Stiel	1250	539
916	Arbeitshydraulik, Leitungsbruchventil Stiel	1300	541
916	Arbeitshydraulik, Hammer und Schere für Ausl	2000	545
916	Arbeitshydraulik, Hammer und Schere für Ausl FOR CHINA	2010	547
916	Arbeitshydraulik, Hammer und Schere für Ausl	2100	549
916	Arbeitshydraulik, Hammer und Schere für oberen	2200	551
916	Arbeitshydraullik, Greifer	4000	555
916	Arbeitshydraullik, Greifer	4100	557
916	Arbeitshydraulik, Greifersystem auf Oberteil	8000	559
916	Arbeitshydraulik, Greifersystem auf Oberteil	8050	561
916	Arbeitshydraulik, Greifersystem auf Arbeitsausstattung	8100	565
924	Schnellwechslerhydraulik auf obere. Einfach wirkend	200	567
924	Schnellwechslerhydraulik auf obere. Doppelt wirkend	250	569
924	Schnellwechslerhydraulik auf obere. Doppelt wirkend	300	571
924	Schnellwechslerhydraulik auf obere. Doppelt wirkend FOR CHINA	310	573
924	Schnellwechslerhydraulik auf Geräteträger. Einfach wirkend	400	575
924	Schnellwechslerhydraulik auf Geräteträger. Doppelt wirkend	450	581
924	Schnellwechslerhydraulik auf Geräteträger. Doppelt wirkend SER NO 30001-32353	500	587

INHALTSVERZEICHNIS

INHALTSVERZEICHNIS

GRUPPE		Abschnitt	Seite
924	Schnellwechslerhydraulik auf Geräteträger. Doppelt wirkend FOR CHINA (SER NO 50001-50036)	510	591
924	Schnellwechslerhydraulik auf Geräteträger. Doppelt wirkend SER NO 32354-	550	593
924	Schnellwechslerhydraulik auf Geräteträger. Doppelt wirkend FOR CHINA (SER NO 50037-)	560	597
925	Schaufel	100	601
925	Schaufel	200	605
925	Gestänge für ohne Löffel	1500	609
927	Frontschar	100	611
927	Frontschar FOR CHINA	110	613
927	Frontscharzylinder	500	615
927	Frontscharzylinder FOR CHINA	510	617
971	Hydraulikkreis, Schwenken	100	619
971	Hydraulikkreis, Schwenken	150	621
971	Ausleger-schwenk Zylinder	600	623
974	Gelenke zu Ausleger	100	625
974	Gelenke zu Ausleger FOR CHINA	110	627
974	Gelenke zu Ausleger	150	629
974	Gelenke zu Ausleger	200	631
974	Gelenke zu Ausleger FOR CHINA	210	635
974	Gelenke zu Ausleger	250	639
974	Ausleger und Schmierleitungen	300	641
974	Ausleger und Schmierleitungen FOR CHINA	310	643
974	Auslegerzylinder	3000	645
974	Auslegerzylinder FOR CHINA	3010	649
974	Auslegerzylinder	3100	651
974	Auslegerzylinder	3150	655
975	Verbindungen zu Stiel	100	659
975	Verbindungen zu Stiel FOR CHINA	110	661
975	Verbindungen zu Stiel	200	663
975	Stiel und Schmierleitungen mit Sitz	500	665
975	Stiel und Schmierleitungen mit Sitz FOR CHINA	510	669
975	Stiel und Schmierleitungen mit Sitz	600	671
975	Stiel und Schmierleitungen mit Sitz FOR CHINA	610	675
975	Stiel und Schmierleitungen mit Sitz	800	677
975	Stielzylinder	1500	679
975	Stielzylinder FOR CHINA	1510	683
975	Gelenke zu anschließender Kolbenstange	1900	687
975	Gelenke zu anschließender Kolbenstange FOR CHINA	1910	691
975	Schaufelzylinder	2500	693
992	Diebstahlschutz	100	695

그룹		절	페이지
911	유압 탱크	100	401
911	터닝조인트 배관 , 제어밸브 에서 터닝조인트	200	405
911	터닝조인트 배관 , 터닝조인트에서 주행모터	300	407
911	도자 블레이드 배관	350	409
911	유압 배관 , 제어 밸브에서 붐 및 선회	400	411
911	유압 배관 , 제어 밸브에서 붐 및 선회	410	417
911	유압 배관 , 제어 밸브에서 붐 및 선회	420	419
911	유압 배관 , 유압 탱크에서 오일 쿨러	500	421
911	유압 배관 , 유압 탱크에서 펌프	600	423
912	제어밸브 및 장착 부품	100	427
912	제어밸브 및 장착 부품	150	431
912	제어밸브 및 장착 부품	160	435
912	제어밸브 , 입력 및 붐 및 붐 선회	200	437
912	제어밸브 , 입력 및 붐 및 붐 선회	210	443
912	제어밸브 , 주행 직진 및 디퍼 암 1 및 붐 2	300	449
912	제어밸브 , 주행 직진 및 디퍼 암 1 및 붐 2	310	455
912	제어밸브 , 좌측 주행 및 중간 입력 및 우측 주행	400	461
912	제어밸브 , 좌측 주행 및 중간 입력 및 우측 주행	410	465
912	제어밸브 , 붐 1 및 버켓 및 디퍼 암 2 및 출력	500	469
912	제어밸브 , 붐 1 및 버켓 및 디퍼 암 2 및 출력	510	477
913	유압 펌프 및 장착 부품	100	483
913	유압 펌프	200	487
913	기어 펌프	250	489
914	서보 배관 , 제어밸브 에서 원격조종밸브	100	495
914	서보 배관 , 제어밸브 에서 원격조종밸브	200	497
914	서보 배관 , 제어밸브 에서 솔레노이드 밸브 및 선회 모터	300	499
914	서보 배관 , 솔레노이드 밸브	900	503
914	서보 배관 , 원격조종밸브	1100	505
914	서보 배관 , 원격조종밸브	1150	509
914	서보 배관 , 원격조종밸브	1200	515
914	서보 배관 , 레버 작동 방향 변경	2100	519
914	서보 배관 , 레버 작동 방향 변경	2150	521
914	서보 장치 , 브레이커 및 크러셔	4000	523
916	유압 배관 , 붐측 디퍼 암 실린더	100	525
916	유압 배관 , 붐측 디퍼 암 실린더	110	527
916	낙하 방지 장치 배관 , 붐	300	529
916	낙하 방지 장치 배관 , 붐	350	533
916	유압 배관 , 붐 실린더	900	535
916	낙하 방지 장치 배관 , 디퍼 암	1200	537
916	낙하 방지 장치 배관 , 디퍼 암	1250	539
916	낙하 방지 장치 배관 , 디퍼 암	1300	541
916	해머 및 시어 배관 , 붐	2000	545
916	해머 및 시어 배관 , 붐	2010	547
916	해머 및 시어 배관 , 붐	2100	549
916	해머 및 시어 배관 , 상부	2200	551
916	클램셸 배관	4000	555
916	클램셸 배관	4100	557
916	유압 배관 , 우드 그랩 ; 상부 본체측	8000	559
916	유압 배관 , 우드 그랩 ; 상부 본체측	8050	561
916	유압 배관 , 우드 그랩 ; 작업장치측	8100	565
924	퀵 핏 배관 , 한방향 작동형 ; 본체 측	200	567
924	퀵 핏 배관 , 양방향 작동형 ; 본체 측	250	569
924	퀵 핏 배관 , 양방향 작동형 ; 본체 측	300	571
924	퀵 핏 배관 , 양방향 작동형 ; 본체 측	310	573
924	퀵 핏 배관 , 한방향 작동형 ; 작업장치 측	400	575
924	퀵 핏 배관 , 양방향 작동형 ; 작업장치 측	450	581
924	퀵 핏 배관 , 양방향 작동형 ; 작업장치 측	500	587
924	퀵 핏 배관 , 양방향 작동형 ; 작업장치 측	510	591
924	퀵 핏 배관 , 양방향 작동형 ; 작업장치 측	550	593
924	퀵 핏 배관 , 양방향 작동형 ; 작업장치 측	560	597
925	버켓	100	601
925	버켓	200	605

목차

그룹		절	페이지
925	버켓 미장착시 연결 장치	1500	609
927	도자 블레이드	100	611
927	도자 블레이드	110	613
927	도자 블레이드 실린더	500	615
927	도자 블레이드 실린더	510	617
971	붐 선회 장치	100	619
971	붐 선회 장치	150	621
971	붐 선회 실린더	600	623
974	붐 연결 장치	100	625
974	붐 연결 장치	110	627
974	붐 연결 장치	150	629
974	붐 연결 장치	200	631
974	붐 연결 장치	210	635
974	붐 연결 장치	250	639
974	붐 및 윤활 배관	300	641
974	붐 및 윤활 배관	310	643
974	붐 실린더	3000	645
974	붐 실린더	3010	649
974	붐 실린더	3100	651
974	붐 실린더	3150	655
975	디퍼 암 연결 장치	100	659
975	디퍼 암 연결 장치	110	661
975	디퍼 암 연결 장치	200	663
975	디퍼 암 및 윤활 배관 , 유압 배관 장착브라켓 포함	500	665
975	디퍼 암 및 윤활 배관 , 유압 배관 장착브라켓 포함	510	669
975	디퍼 암 및 윤활 배관 , 유압 배관 장착브라켓 포함	600	671
975	디퍼 암 및 윤활 배관 , 유압 배관 장착브라켓 포함	610	675
975	디퍼 암 및 윤활 배관 , 유압 배관 장착브라켓 포함	800	677
975	디퍼 암 실린더	1500	679
975	디퍼 암 실린더	1510	683
975	커넥팅 로드 연결 장치	1900	687
975	커넥팅 로드 연결 장치	1910	691
975	버켓 실린더	2500	693
992	도난 방지 장치	100	695

GRUPO		Sección	Página
911	Depósito de aceite hidráulico	100	401
911	Tubería de articulación de giro, válvula de control a arti	200	405
911	Tubería de articulación de giro, articulación de giro a motor de tras	300	407
911	Hidráulica de trabajo, hoja diagonal.	350	409
911	Sistema hidráulico, válvula de control para pluma y oscilaci	400	411
911	Sistema hidráulico, válvula de control para pluma y oscilaci FOR CHINA	410	417
911	Sistema hidráulico, válvula de control para pluma y oscilaci FOR	420	419
911	Sistema hidráulico, depósito hidr. a enfr. aceite hidr.	500	421
911	Sistema hidráulico, depósito hidr. a bomba hidr.	600	423
912	Válvula de mando con piezas se montaje.	100	427
912	Válvula de mando con piezas se montaje.	150	431
912	Válvula de mando con piezas se montaje. FOR CHINA	160	435
912	Válvula de mando, admision, pluma y pluma de giro	200	437
912	Válvula de mando, admision, pluma y pluma de giro FOR CHINA	210	443
912	Válvula de mando, manejar derechamento, brazo 1 y pluma 2.	300	449
912	Válvula de mando, manejar derechamento, brazo 1 y pluma 2. FOR CHINA	310	455
912	Válvula de mando, manejar izquierdo, adm. parte central, manejar derecha.	400	461
912	Válvula de mando, manejar izquierdo, adm. parte central, manejar derecha. FOR CHINA	410	465
912	Válvula de mando, pluma 1, cuchara, brazo 2 y salida.	500	469
912	Válvula de mando, pluma 1, cuchara, brazo 2 y salida. FOR CHINA	510	477
913	Instalación de bomba	100	483
913	Bomba hidráulica	200	487
913	Engranaje de bomba hidráulica	250	489
914	Servosistema, válvula de control a válvula de mando a distan	100	495
914	Servosistema, válvula de control a válvula de mando a distan	200	497
914	Servosistema, válvula de control aelectrovalvula y motor de giro	300	499
914	Servosistema, válvula solenoide	900	503
914	Servosistema, válvula de mando a distancia	1100	505
914	Servosistema, válvula de mando a distancia	1150	509
914	Servosistema, válvula de mando a distancia	1200	515
914	Servosistema, cambio de función de la palanca	2100	519
914	Servosistema, cambio de función de la palanca	2150	521
914	Servosistema, quebrantadora y machacadora	4000	523
916	Hidráulica de trabajo, cilindro del brazo en la pluma.	100	525
916	Hidráulica de trabajo, cilindro del brazo en la pluma. FOR CHINA	110	527
916	Hidráulica de trabajo, válvula de rotura de manguera en plum	300	529
916	Hidráulica de trabajo, válvula de rotura de manguera en plum	350	533
916	Hidráulica de trabajo, cilindro de la pluma.	900	535
916	Hidráulica de trabajo, válvula de rotura de manguera en braz	1200	537
916	Hidráulica de trabajo, válvula de rotura de manguera en braz	1250	539
916	Hidráulica de trabajo, válvula de rotura de manguera en braz	1300	541
916	Hidráulica de trabajo, martillo y cizalla para pluma	2000	545
916	Hidráulica de trabajo, martillo y cizalla para pluma FOR CHINA	2010	547
916	Hidráulica de trabajo, martillo y cizalla para pluma	2100	549
916	Hidráulica de trabajo, martillo y cizalla para superior	2200	551
916	Hidráulica de trabajo, cazo de almeja	4000	555
916	Hidráulica de trabajo, cazo de almeja	4100	557
916	Hidráulica de trabajo, sistema de cuchara de almeja en la parte superior	8000	559
916	Hidráulica de trabajo, sistema de cuchara de almeja en la parte superior	8050	561
916	Hidráulica de trabajo, sistema de cuchara de almeja en el equipo de trabajo	8100	565
924	Hidrálico enganche rápido en la superior. Acción simple	200	567
924	Hidrálico enganche rápido en la superior, de doble efecto	250	569
924	Hidrálico enganche rápido en la superior, de doble efecto	300	571
924	Hidrálico enganche rápido en la superior, de doble efecto FOR CHINA	310	573

INDICE

GRUPO		Sección	Página
924	Hidrálico enganche rápido sobre porte-outil. Acción simple	400	575
924	Hidrálico enganche rápido sobre porte-outil, de doble efecto	450	581
924	Hidrálico enganche rápido sobre porte-outil, de doble efecto SER NO 30001-32353	500	587
924	Hidrálico enganche rápido sobre porte-outil, de doble efecto FOR CHINA (SER NO 50001-50036)	510	591
924	Hidrálico enganche rápido sobre porte-outil, de doble efecto SER NO 32354-	550	593
924	Hidrálico enganche rápido sobre porte-outil, de doble efecto FOR CHINA (SER NO 50037-)	560	597
925	Cazo	100	601
925	Cazo	200	605
925	Varillaje para máquina sin cuchara	1500	609
927	Hoja diagonal	100	611
927	Hoja diagonal FOR CHINA	110	613
927	Cilindro hidráulico, hoja diagonal	500	615
927	Cilindro hidráulico, hoja diagonal FOR CHINA	510	617
971	Sistema hidráulico, giro	100	619
971	Sistema hidráulico, giro	150	621
971	Pluma de giro cilindro	600	623
974	Acoplamientos para la pluma	100	625
974	Acoplamientos para la pluma FOR CHINA	110	627
974	Acoplamientos para la pluma	150	629
974	Acoplamientos para la pluma	200	631
974	Acoplamientos para la pluma FOR CHINA	210	635
974	Acoplamientos para la pluma	250	639
974	Pluma y tubería de lubricación	300	641
974	Pluma y tubería de lubricación FOR CHINA	310	643
974	Cilindro de pluma	3000	645
974	Cilindro de pluma FOR CHINA	3010	649
974	Cilindro de pluma	3100	651
974	Cilindro de pluma	3150	655
975	Enlaces al brazo	100	659
975	Enlaces al brazo FOR CHINA	110	661
975	Enlaces al brazo	200	663
975	Brazos y tuberías de engrase con asiento de tuberías	500	665
975	Brazos y tuberías de engrase con asiento de tuberías FOR CHINA	510	669
975	Brazos y tuberías de engrase con asiento de tuberías	600	671
975	Brazos y tuberías de engrase con asiento de tuberías FOR CHINA	610	675
975	Brazos y tuberías de engrase con asiento de tuberías	800	677
975	Cilindro de brazo	1500	679
975	Cilindro de brazo FOR CHINA	1510	683
975	Acoplamientos para la varilla de conexión	1900	687
975	Acoplamientos para la varilla de conexión FOR CHINA	1910	691
975	Cilindro de cazo	2500	693
992	Sistema antirrobo	100	695

VOLVO

Construction Equipment

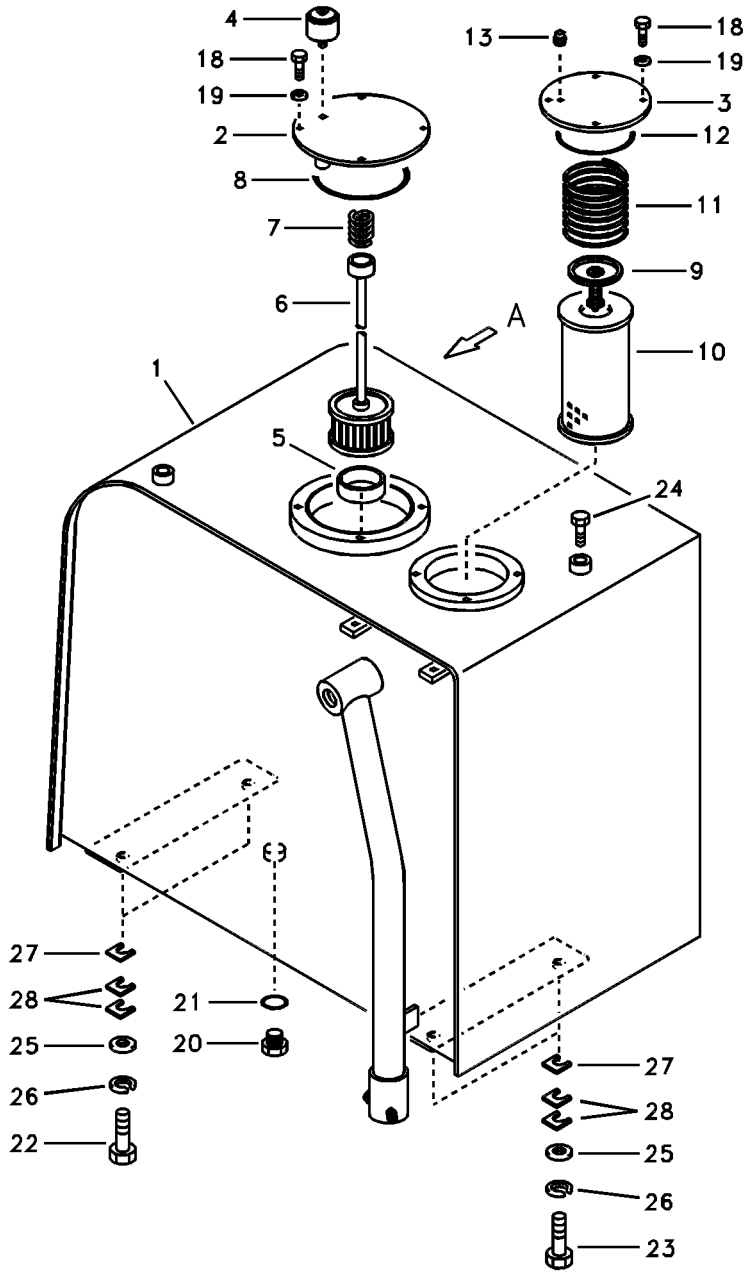
4
18
19
2
8
7
6
1
5
13
18
19
3
12
11
9
10
A
24
27
28
25
26
22
21
20
27
28
25
26
23

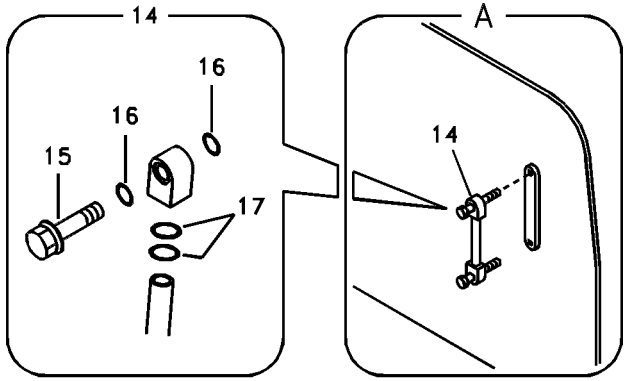
14
16
16
15
17
A
14

Fig.	Part No.	Quantity 1	2	3	PS	KIT	Description	Dénomination	Bezeichnung	품명	Denominación	Notes
1	**VOE 14521141**	1					Tank	Resérvoir	Behälter	탱크	Depósito	
2	**SA 1141-30160**	1					•Cover	•Capot	•Haube	• 커버	•Capo	
3	**SA 1040-22950**	1					•Cover	•Capot	•Haube	• 커버	•Capo	
4	**SA 1040-20311**	1					Breather	Racc Aeration	Entlufter	브리더	Respiradero	
5	**SA 1041-00341**	1					Plate	Plaque	Platte	플레이트	Placa	
6	**VOE 14531070**	1					Strainer	Crepine	Sieb	스트레이너	Colador	
	VOE 14531069	1					•Strainer	•Crépine	•Seiher	• 스트레이너	•Colador	
	VOE 14531071	1					•Rod	•Tringle	•Stange	• 로드	•Tirante	
7	**SA 1040-20360**	1					Spring	Ressort	Feder	스프링	Muelle	
8	**SA 9511-22190**	1					O-ring	Joint Torique	O-Ring	오링	Junta torica	
9	**SA 1040-23870**	1					Valve	Soupape	Ventil	밸브	Valvula	
10	**SA 1040-20410**	1					Oil Filter	Filtre Huile	Ölfilter	오일 필터	Filtro Aceite	
11	**SA 1040-20240**	1					Spring	Ressort	Feder	스프링	Muelle	
12	**SA 9511-22135**	1					O-ring	Joint Torique	O-Ring	오링	Junta torica	
13	**SA 1040-20380**	1					Plug	Bouchon	Stopfen	플러그	Tapon	
14	**VOE 14532362**	1					Gauge	Calibre	Schablone	게이지	Plantilla	
15	**VOE 14517557**	2					•Bolt	•Boulon	•Bolzen	• 볼트	•Perno	
16	**SA 9511-12010**	4					•O-ring	•Joint Torique	•O-Ring	• 오링	•Junta torica	
17	**SA 9511-12018**	4			SS		•O-ring	•Joint Torique	•O-Ring	• 오링	•Junta torica	
18	**VOE 983250**	8					Hexagon screw	Vis tête hexagonale	Sechskantschraube	스크류	Tornillo hexago	
19	**SA 9211-10000**	8					Washer	Rondelle	Scheibe	와셔	Arandela	
20	**SA 1010-60030**	1					Plug	Bouchon	Stopfen	플러그	Tapon	
21	**SA 9511-12028**	1					O-ring	Joint Torique	O-Ring	오링	Junta torica	
22	**SA 9011-11407**	2					Bolt	Boulon	Bolzen	볼트	Perno	
23	**SA 9011-11408**	2					Bolt	Boulon	Bolzen	볼트	Perno	
24	**SA 9011-11203**	2					Bolt	Boulon	Bolzen	볼트	Perno	SER NO 30001-32389 SER NO 50001-50042
25	**SA 9211-14000**	4					Washer	Rondelle	Scheibe	와셔	Arandela	
26	**SA 9213-14000**	4					Washer	Rondelle	Scheibe	와셔	Arandela	
27	**SA 1040-20290**	2					Shim	Cale d'épaisseur	Passcheibe	심	Arandela Ajuste	

1	**8278796**	**Depósito de aceite hidráulico** 유압 탱크 **Hydrauliköltank** **Réservoir d'huile hydraulique** **Hydraulic oil tank**	Catalogue id **20019**	Group **911**
2			Illustr. No **1007060**	Section **100**
3			Issue **VOE 74H9920019**	Page **401**
4				
5				

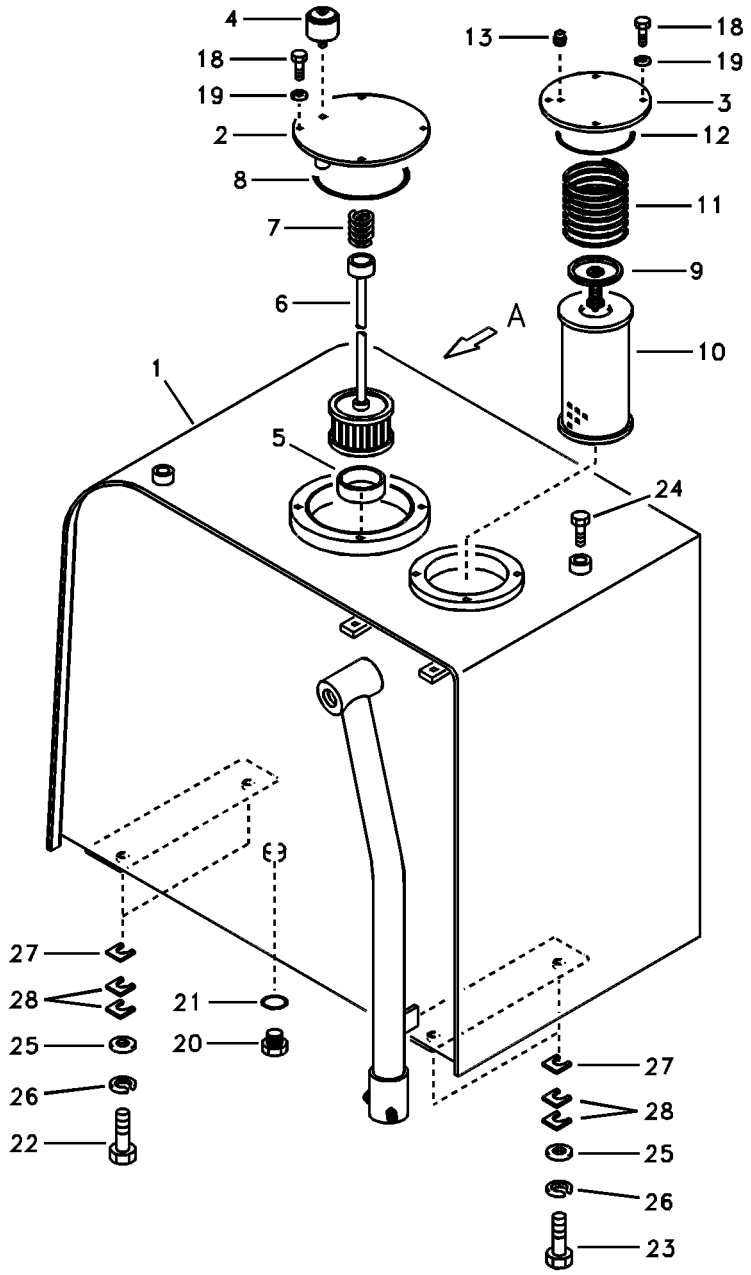
4
18
19
2
8
7
6
1
5
13
18
19
3
12
11
9
10
A
24
27
28
25
26
22
21
20
27
28
25
26
23

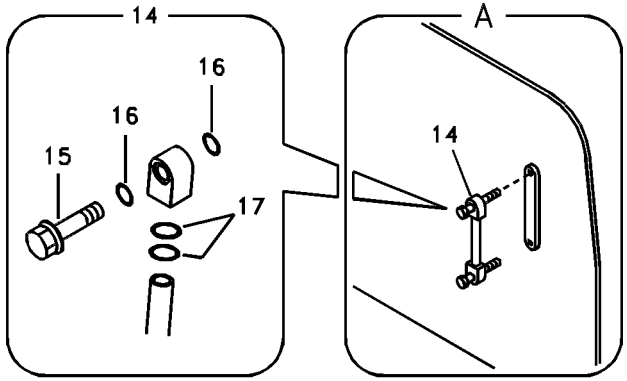
14
16
16
15
17
A
14

Fig.	Part No.	Quantity 1	2	3	PS	KIT	Description	Dénomination	Bezeichnung	품명	Denominación	Notes
28	**SA 1040-20270**	4					Shim	Cale d'épaisseur	Passcheibe	심	Arandela Ajuste	

1	**8278796**	**Depósito de aceite hidráulico** 유압 탱크 **Hydrauliköltank** **Réservoir d'huile hydraulique** **Hydraulic oil tank**	Catalogue id **20019**	Group **911**
2			Illustr. No **1007060**	Section **100**
3			Issue **VOE 74H9920019**	Page **403**
4				
5				

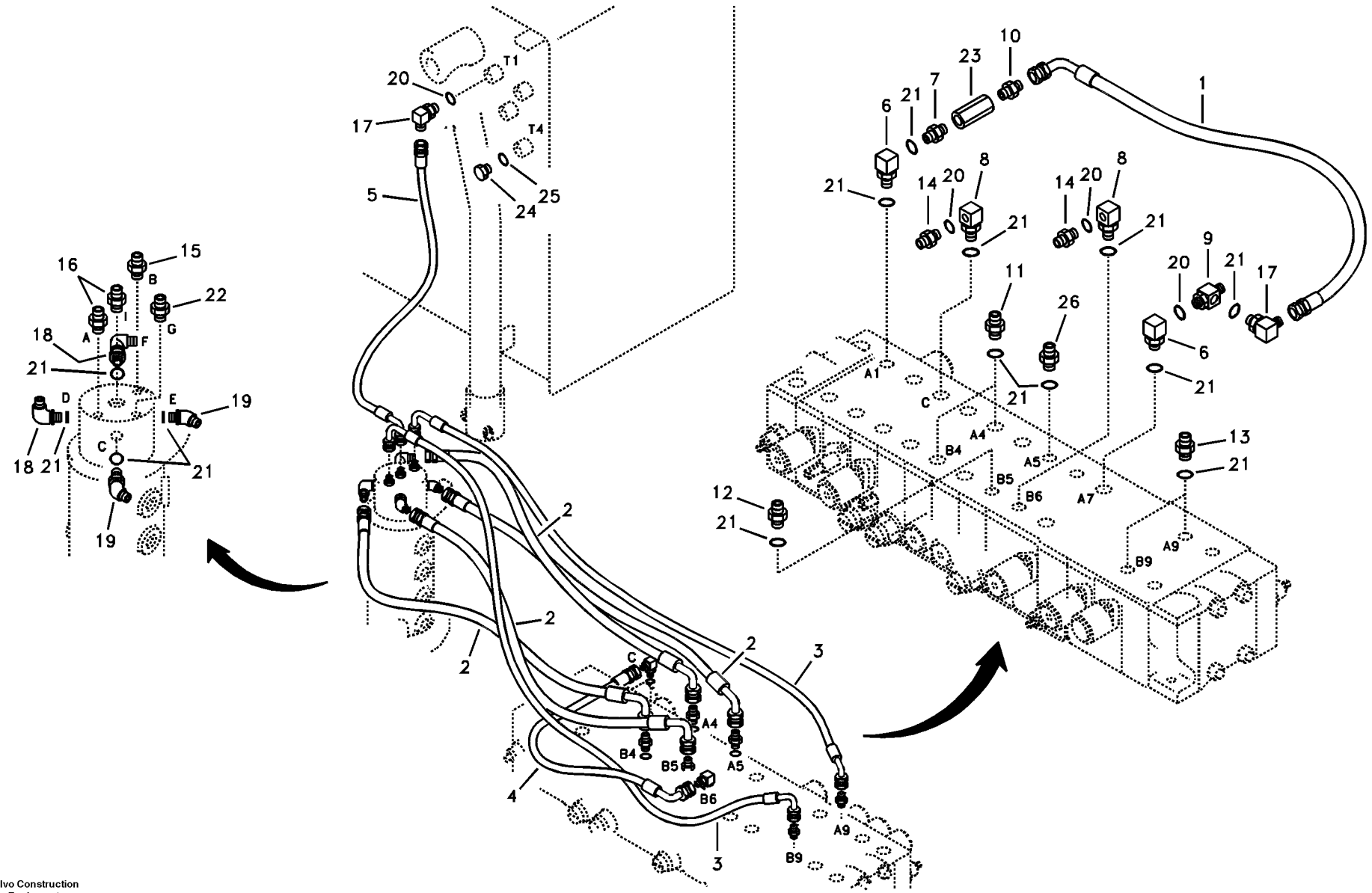

Volvo Construction Equipment

1014329

Fig.	Part No.	Quantity 1	2	3	PS	KIT	Description	Dénomination	Bezeichnung	품명	Denominación	Notes
1	**SA 9453-03709**	1	1	1			Hose	Durit	Schlauch	호스	Tubo flexible	
2	**SA 9453-04713**	4	4	4			Hose	Durit	Schlauch	호스	Tubo flexible	
3	**SA 9455-03719**	2	2	2			Hose	Durit	Schlauch	호스	Tubo flexible	
4	**SA 9453-03705**	1	1	1			Hose	Durit	Schlauch	호스	Tubo flexible	
5	**SA 9453-03123**	1	1	1			Hose	Durit	Schlauch	호스	Tubo flexible	
6	**SA 9411-95160**	2	2	2			Elbow	Coude	Winkelstueck	엘보	Tubo acodado	
7	**SA 9411-95180**	1	1	1			Connector	Raccord	Anschluss	커넥터	Union	
8	**SA 9411-95150**	2	2	2			Elbow	Coude	Winkelstueck	엘보	Tubo acodado	
9	**SA 9411-93621**	1	1	1			Tee	Connexion en T	T-stuck	티	Acoplamiento T	
10	**SA 9412-43150**	1	1	1			Connector	Raccord	Anschluss	커넥터	Union	
11	**SA 9412-11045**	2	2	2			Connector	Raccord	Anschluss	커넥터	Union	
12	**SA 9412-11044**	1	1	1			Connector	Raccord	Anschluss	커넥터	Union	
13	**SA 9412-11150**	2	2	2			Connector	Raccord	Anschluss	커넥터	Union	
14	**SA 9412-11030**	2	2	2			Connector	Raccord	Anschluss	커넥터	Union	
15	**SA 9412-43030**	1	1	1			Connector	Raccord	Anschluss	커넥터	Union	
16	**SA 9412-43090**	2	2	2			Connector	Raccord	Anschluss	커넥터	Union	
17	**SA 9413-11020**	2	2	2			Elbow	Coude	Winkelstueck	엘보	Tubo acodado	
18	**SA 9413-11030**	2	2	2			Elbow	Coude	Winkelstueck	엘보	Tubo acodado	
19	**SA 9414-11030**	2	2	2			Elbow	Coude	Winkelstueck	엘보	Tubo acodado	
20	**SA 9511-12014**	4	4	4			O-ring	Joint Torique	O-Ring	오링	Junta torica	
21	**SA 9511-12018**	16	16	16	SS		O-ring	Joint Torique	O-Ring	오링	Junta torica	
22	**SA 9412-43020**	1	1	1			Connector	Raccord	Anschluss	커넥터	Union	
23	**SA 14530999**	1	1	1			Check valve	Valve antiretour	Rückschlagventil	체크 밸브	Válvula de retención	
24	**SA 9415-11021**	1	1	1			Plug	Bouchon	Stopfen	플러그	Tapon	
25	**SA 9511-12011**	1	1	1			O-ring	Joint Torique	O-Ring	오링	Junta torica	
26	**SA 9412-11044**	1					Connector	Raccord	Anschluss	커넥터	Union	SER NO 30001-32939
	SA 9412-11040	1	1	1			Connector	Raccord	Anschluss	커넥터	Union	SER NO 32940-

1	**8278796 S/N -33292**
2	**8279576 S/N 33293-**
3	**8279577 S/N 33293-**
4	
5	

Tubería de articulación de giro, válvula de control a arti
터닝조인트 배관 , 제어밸브 에서 터닝조인트
Drehgelenkleitung, Steuerventil zu Drehgelenk
Articulation de rotation, valve de commande vers articulation de rotation
Turning joint line, control valve to turning joint

Catalogue id **20019**	Group **911**
Illustr. No **1014329**	Section **200**
Issue **VOE 74H9920019**	Page **405**

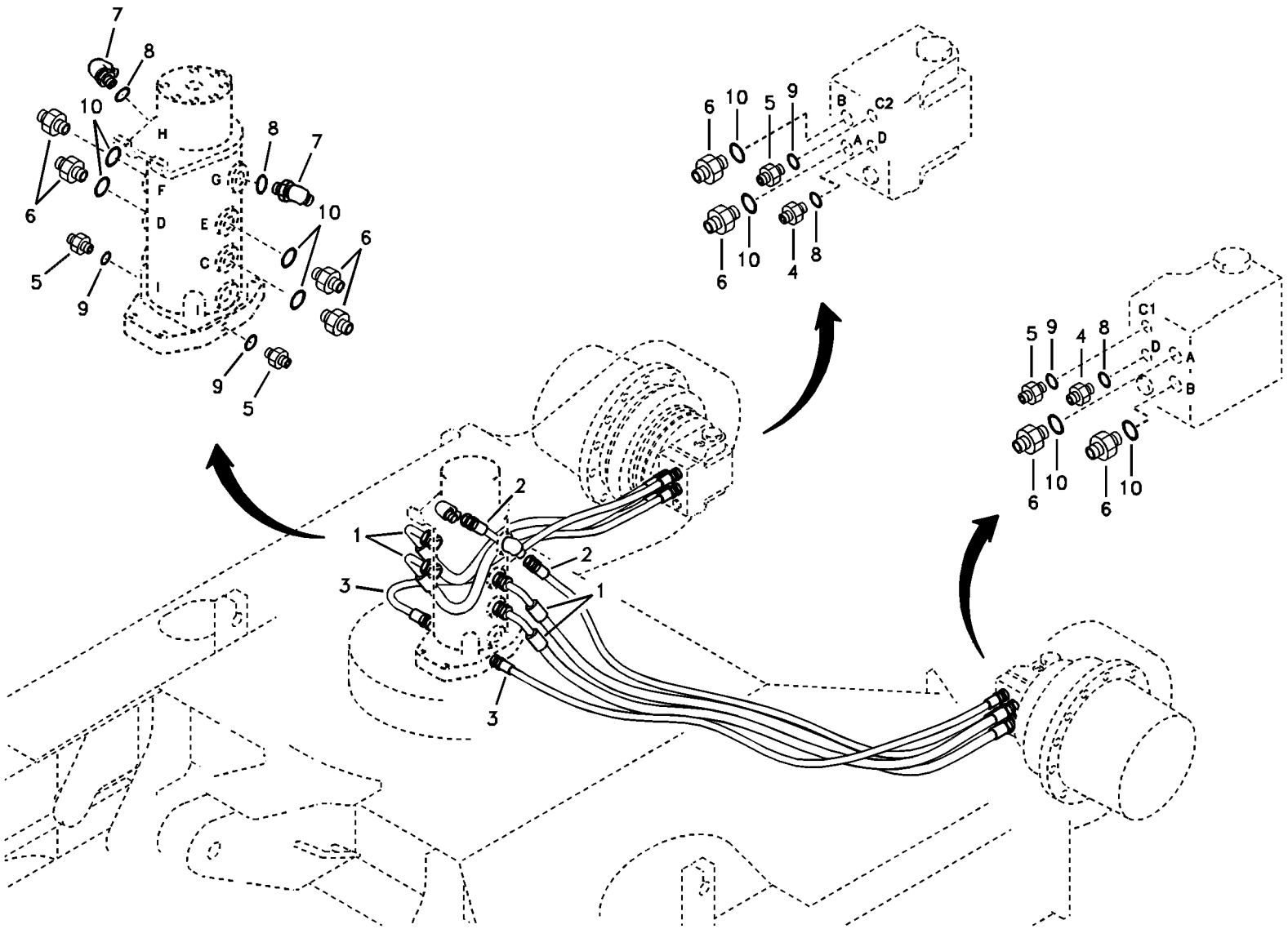
7
8
10
H
F
G
D
E
C
I
6
5
9
6
10
5
9
B
C2
A
D
6
10
4
8
C1
5
9
4
8
D
A
B
6
10
6
10
1
2
3

Fig.	Part No.	Quantity 1	2	3	PS	KIT	Description	Dénomination	Bezeichnung	품명	Denominación	Notes
1	**SA 9453-14725**	4					Hose	Durit	Schlauch	호스	Tubo flexible	
2	**SA 9451-12226**	2					Hose	Durit	Schlauch	호스	Tubo flexible	
3	**SA 9451-13125**	2					Hose	Durit	Schlauch	호스	Tubo flexible	
4	**SA 9412-11020**	2					Connector	Raccord	Anschluss	커넥터	Union	
5	**SA 9412-11030**	4					Connector	Raccord	Anschluss	커넥터	Union	
6	**SA 9412-11040**	8					Connector	Raccord	Anschluss	커넥터	Union	
7	**SA 9414-11010**	2					Elbow	Coude	Winkelstueck	엘보	Tubo acodado	
8	**SA 9511-12011**	4					O-ring	Joint Torique	O-Ring	오링	Junta torica	
9	**SA 9511-12014**	4					O-ring	Joint Torique	O-Ring	오링	Junta torica	
10	**SA 9511-12018**	8			SS		O-ring	Joint Torique	O-Ring	오링	Junta torica	

1	**8278796**	**Tubería de articulación de giro, articulación de giro a motor de tras** 터닝조인트 배관 , 터닝조인트에서 주행모터 **Drehgelenkleitung, Steuerventil zu Fahrmotor** **Articulation de rotation, articulation de rotation vers moteur de conduite** **Turning joint line, turning joint to travel motor**	Catalogue id **20019**	Group **911**
2			Illustr. No **1007062**	Section **300**
3				
4			Issue **VOE 74H9920019**	Page **407**
5				

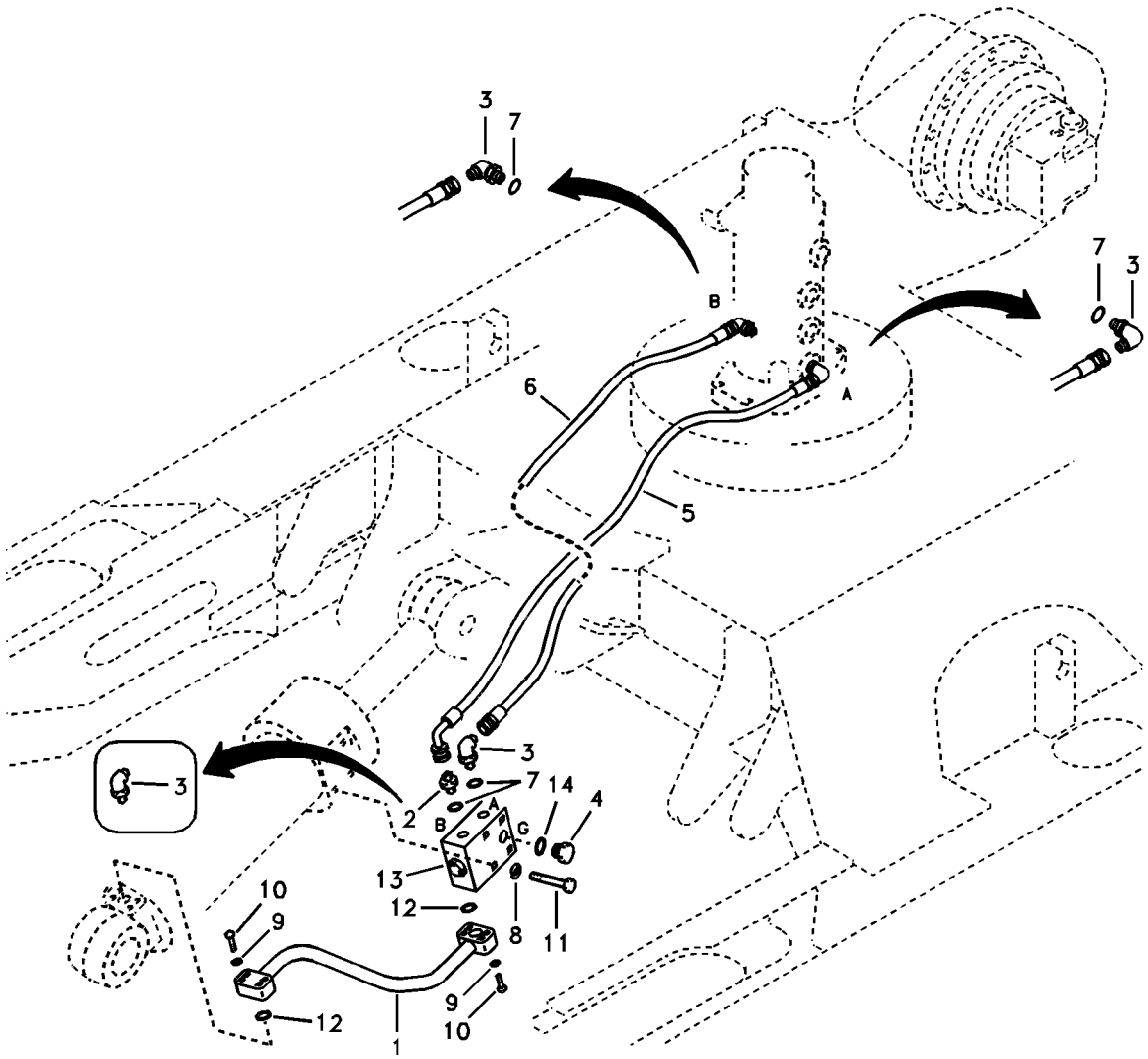
3
7
B
A
7
3
6
5
3
3
2
7
14
4
A
B
G
13
12
8
11
10
9
12
1
9
10

Fig.	Part No.	Quantity 1	2	3	PS	KIT	Description	Dénomination	Bezeichnung	품명	Denominación	Notes
1	**VOE 14518119**	1					Pipe	Canalisation	Rohrleitung	파이프	Canalizacion	
2	**SA 9412-11030**	1					Connector	Raccord	Anschluss	커넥터	Union	SER NO 30001-35500
3	**SA 9413-11020**	3					Elbow	Coude	Winkelstueck	엘보	Tubo acodado	SER NO 30001-35500
	SA 9412-11020	4					Connector	Raccord	Anschluss	커넥터	Union	SER NO 35501-
4	**SA 9415-11021**	1					Plug	Bouchon	Stopfen	플러그	Tapon	
5	**SA 9453-13724**	1					Hose	Durit	Schlauch	호스	Tubo flexible	SER NO 30001-32353
	VOE 14881076	1					Hose	Durit	Schlauch	호스	Tubo flexible	SER NO 32354-
6	**SA 9452-13724**	1					Hose	Durit	Schlauch	호스	Tubo flexible	SER NO 30001-32353
	VOE 14881194	1					Hose	Durit	Schlauch	호스	Tubo flexible	SER NO 32354-
7	**SA 9511-12014**	5					O-ring	Joint Torique	O-Ring	오링	Junta torica	
8	**VOE 955922**	4					Spring Washer	Rondelle élastique	Federscheibe	스프링 와셔	Arandela flexible	
9	**VOE 955921**	8					Spring Washer	Rondelle élastique	Federscheibe	스프링 와셔	Arandela flexible	
10	**VOE 983245**	8					Hexagon screw	Vis a tête hexagonale	Sechskantschr.	육각 나사	Tornillo hexago	
11	**VOE 983256**	4					Hexagon screw	Vis a tête hexagonale	Sechskantschr.	육각 나사	Tornillo hexago	
12	**SA 9512-02210**	2					O-ring	Joint Torique	O-Ring	오링	Junta torica	
13	**VOE 14519827**	1					Check valve	Valve antiretour	Rückschlagventil	체크 밸브	Válvula de retención	
14	**SA 9511-12011**	1					O-ring	Joint Torique	O-Ring	오링	Junta torica	

1	**8278796**	**Hidráulica de trabajo, hoja diagonal.** 도자 블레이드 배관 **Arbeitshydraulik, Frontschar.** **Hydraulique de travail, lame bulldozer.** **Working hydraulic, dozer blade**	Catalogue id **20019**	Group **911**
2			Illustr. No **1022564**	Section **350**
3			Issue **VOE 74H9920019**	Page **409**
4				
5				

VOLVO

EC55B

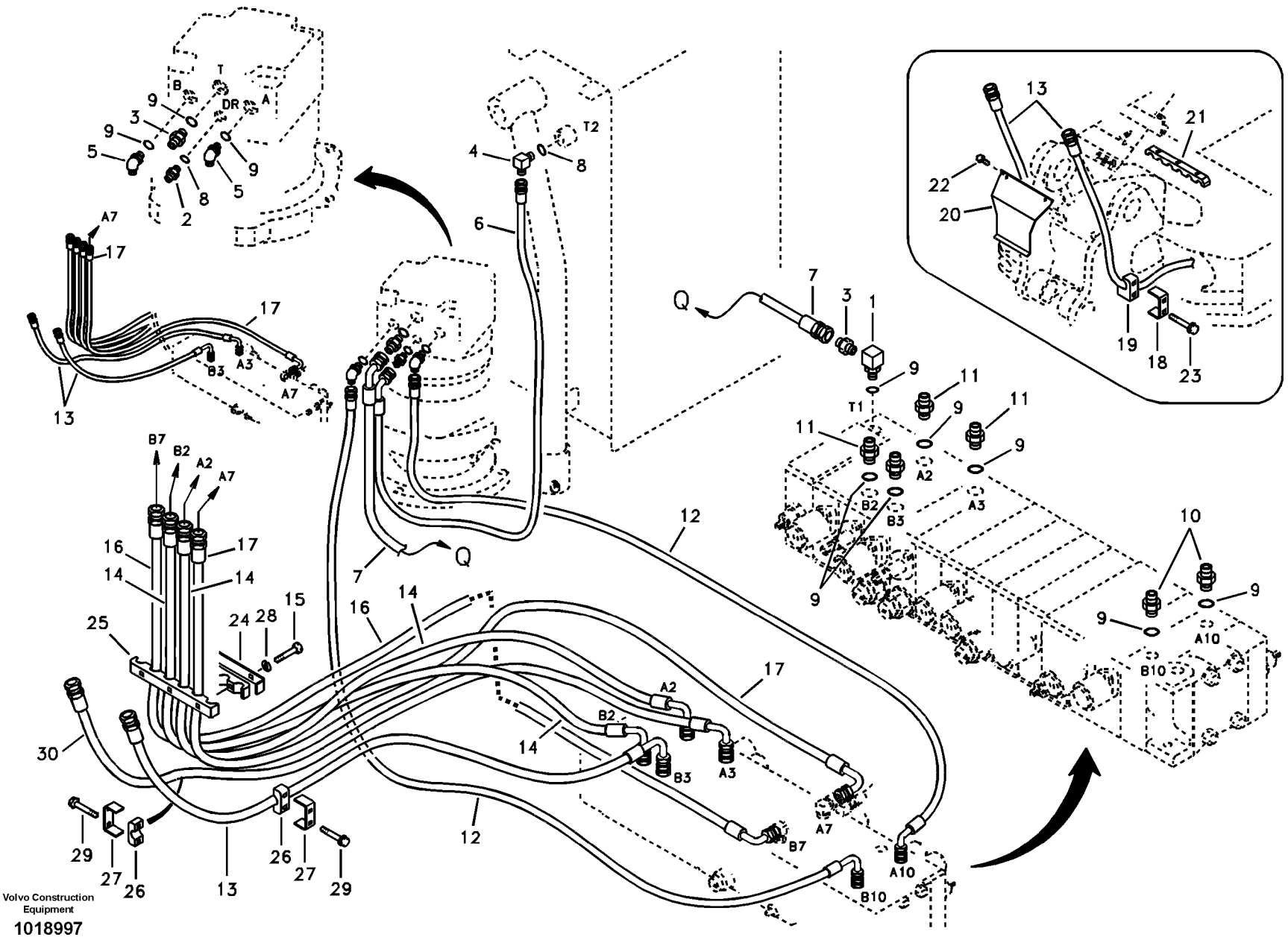
T
B
DR
A
T2
Q
A7
B7
B2
A2
A3
B3
A10
B10
T1
Volvo Construction Equipment
1018997

Fig.	Part No.	Quantity 1	2	3	4	5	PS	KIT	Description	Dénomination	Bezeichnung	품명	Denominación	Notes
1	**SA 9411-95160**	1							Elbow	Coude	Winkelstueck	엘보	Tubo acodado	
2	**SA 9412-11030**	1							Connector	Raccord	Anschluss	커넥터	Union	
3	**SA 9412-11040**	2							Connector	Raccord	Anschluss	커넥터	Union	
4	**SA 9413-11020**	1							Elbow	Coude	Winkelstueck	엘보	Tubo acodado	
5	**SA 9413-11030**	2							Elbow	Coude	Winkelstueck	엘보	Tubo acodado	
6	**SA 9453-03123**	1							Hose	Durit	Schlauch	호스	Tubo flexible	
7	**SA 9453-04114**	1							Hose	Durit	Schlauch	호스	Tubo flexible	
8	**SA 9511-12014**	2							O-ring	Joint Torique	O-Ring	오링	Junta torica	
9	**SA 9511-12018**	4	4	6	6	6	SS		O-ring	Joint Torique	O-Ring	오링	Junta torica	
10	**SA 9412-11040**			2	2	2			Connector	Raccord	Anschluss	커넥터	Union	
11	**SA 9412-11045**		4	4	4	4			Connector	Raccord	Anschluss	커넥터	Union	
12	**SA 9453-04428**			2	2	2			Hose	Durit	Schlauch	호스	Tubo flexible	
13	**SA 9453-44740**		1	1					Hose	Durit	Schlauch	호스	Tubo flexible	SER NO 30001-34475 SER NO 50001-50129
	SA 9453-44744		1	1					Hose	Durit	Schlauch	호스	Tubo flexible	SER NO 34476- SER NO 50130-
	VOE 14880337				2	2			Hose	Durit	Schlauch	호스	Tubo flexible	SER NO 30001-32353
	VOE 14881199				1	1			Hose	Durit	Schlauch	호스	Tubo flexible	SER NO 32354-
14	**VOE 14880023**		2	2					Hose	Durit	Schlauch	호스	Tubo flexible	
	SA 9459-05860				2	2			Hose	Durit	Schlauch	호스	Tubo flexible	
15	**VOE 983257**				3	3			Hexagon screw	Vis a tête hexagona	Sechskantschr.	육각 나사	Tornillo hexago	
16	**VOE 14880308**		1	1					Hose	Durit	Schlauch	호스	Tubo flexible	
	VOE 14880022				1	1			Hose	Durit	Schlauch	호스	Tubo flexible	
17	**SA 9459-05920**		1						Hose	Durit	Schlauch	호스	Tubo flexible	SER NO 30001-30666
	VOE 14880418		1						Hose	Durit	Schlauch	호스	Tubo flexible	SER NO 30667-34475 SER NO 50001-50129
	VOE 14880515		1						Hose	Durit	Schlauch	호스	Tubo flexible	SER NO 34476- SER NO 50130-
	SA 9459-05920			1					Hose	Durit	Schlauch	호스	Tubo flexible	SER NO 30001-32939

1	**8278796 S/N -33292**
2	**8278836**
3	**8278837**
4	**8278838**
5	**8278839**

Sistema hidráulico, válvula de control para pluma y oscilaci
유압 배관 , 제어 밸브에서 붐 및 선회
Hydraulikanlage, Steuerventil zu Ausleger und Schwenken
Système hydraulique, valve de commande flèche et pivotement
Hydraulic system, control valve to boom and swing

Catalogue id **20019**	Group **911**
Illustr. No **1018997**	Section **400**
Issue **VOE 74H9920019**	Page **411**

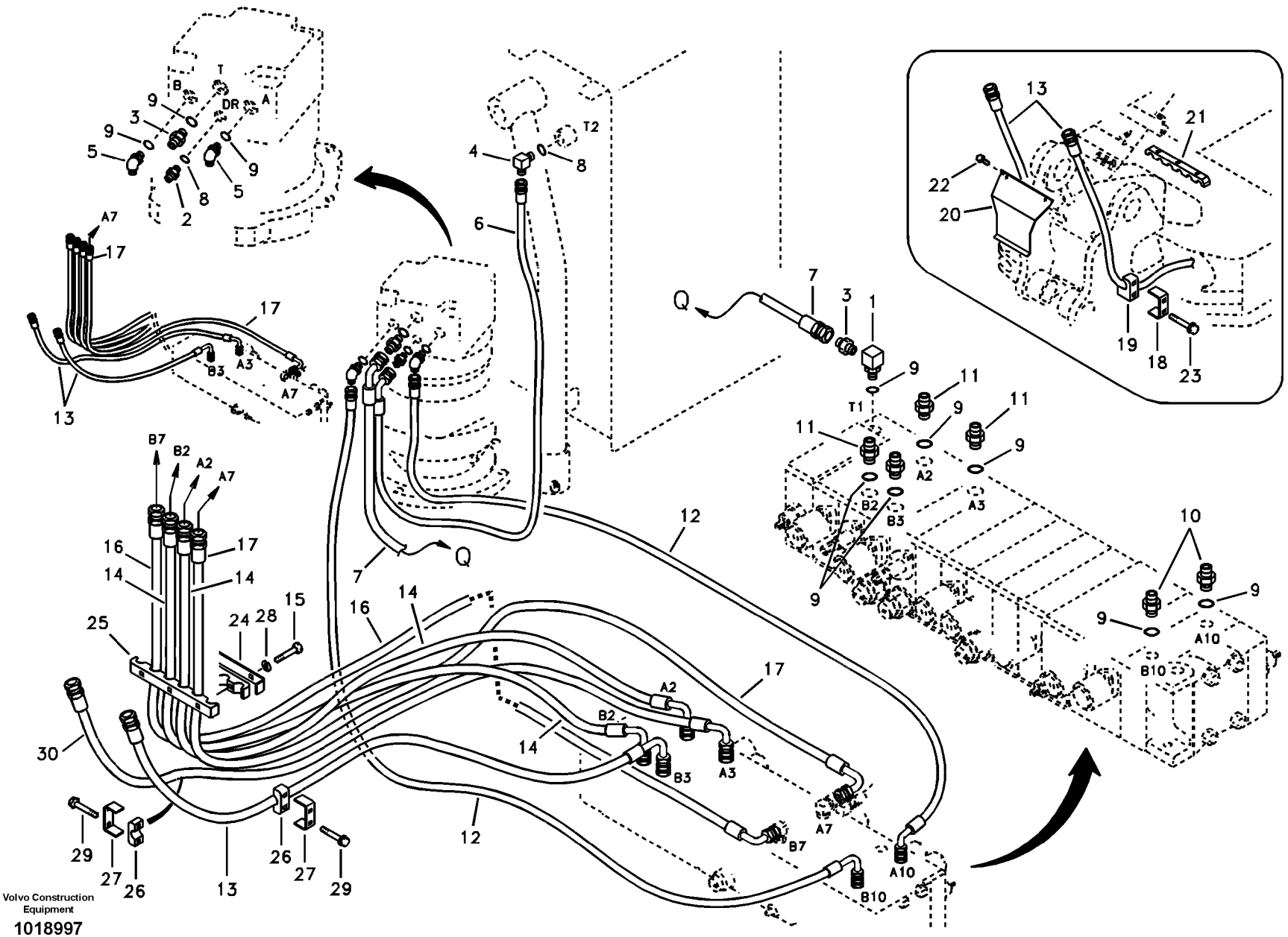
T
B
DR
A
T2
Q
A7
B7
B2
A2
A3
B3
A10
B10
T1
Volvo Construction Equipment
1018997

Fig.	Part No.	Quantity 1	2	3	4	5	PS	KIT	Description	Dénomination	Bezeichnung	품명	Denominación	Notes
	VOE 14880418			1					Hose	Durit	Schlauch	호스	Tubo flexible	SER NO 32940-34475 SER NO 50001-50129
	VOE 14880515			1					Hose	Durit	Schlauch	호스	Tubo flexible	SER NO 34476- SER NO 50130-
	SA 9459-05880				1	1			Hose	Durit	Schlauch	호스	Tubo flexible	SER NO 30001-34475 SER NO 50001-50129
	VOE 14880516				1	1			Hose	Durit	Schlauch	호스	Tubo flexible	SER NO 34476- SER NO 50130-
18	**SA 14531091**		2	2					Plate	Plaque	Platte	플레이트	Placa	SER NO 30001-34475 SER NO 50001-50129
	VOE 14504577		2	2					Plate	Plaque	Platte	플레이트	Placa	SER NO 34476- SER NO 50130-
19	**SA 1142-30160**		2	2					Clamp	Pince Serrage	Klemme	클램프	Abrazadera	SER NO 30001-34475 SER NO 50001-50129
	VOE 14504576		2	2					Clamp	Pince Serrage	Klemme	클램프	Abrazadera	SER NO 34476- SER NO 50130-
20	**SA 1142-30152**		1	1					Plate	Plaque	Platte	플레이트	Placa	SER NO 30001-34475 SER NO 50001-50129
	VOE 14535812		1	1					Plate	Plaque	Platte	플레이트	Placa	SER NO 34476- SER NO 50130-
21	**SA 1142-30142**		1	1					Clamp	Pince Serrage	Klemme	클램프	Abrazadera	
22	**VOE 946441**		2	2					Flange screw	Vis à bride	Flanschschraube	플랜지 스크류	Torn embridado	
23	**VOE 965186**		2	2			SS		Screw	Vis	Schraube	스크류	Tornillo	SER NO 30001-34475 SER NO 50001-50129
	VOE 965186		4	4			SS		Screw	Vis	Schraube	스크류	Tornillo	SER NO 34476- SER NO 50130-
24	**SA 14531090**				1	1			Plate	Plaque	Platte	플레이트	Placa	
25	**SA 1142-30132**				2	2			Clamp	Pince Serrage	Klemme	클램프	Abrazadera	
26	**VOE 14504576**				2	2			Clamp	Pince Serrage	Klemme	클램프	Abrazadera	
27	**VOE 14504577**				2	2			Plate	Plaque	Platte	플레이트	Placa	

1	**8278796 S/N -33292**
2	**8278836**
3	**8278837**
4	**8278838**
5	**8278839**

Sistema hidráulico, válvula de control para pluma y oscilaci
유압 배관 , 제어 밸브에서 붐 및 선회
Hydraulikanlage, Steuerventil zu Ausleger und Schwenken
Système hydraulique, valve de commande flèche et pivotement
Hydraulic system, control valve to boom and swing

Catalogue id **20019**	Group **911**
Illustr. No **1018997**	Section **400**
Issue **VOE 74H9920019**	Page **413**

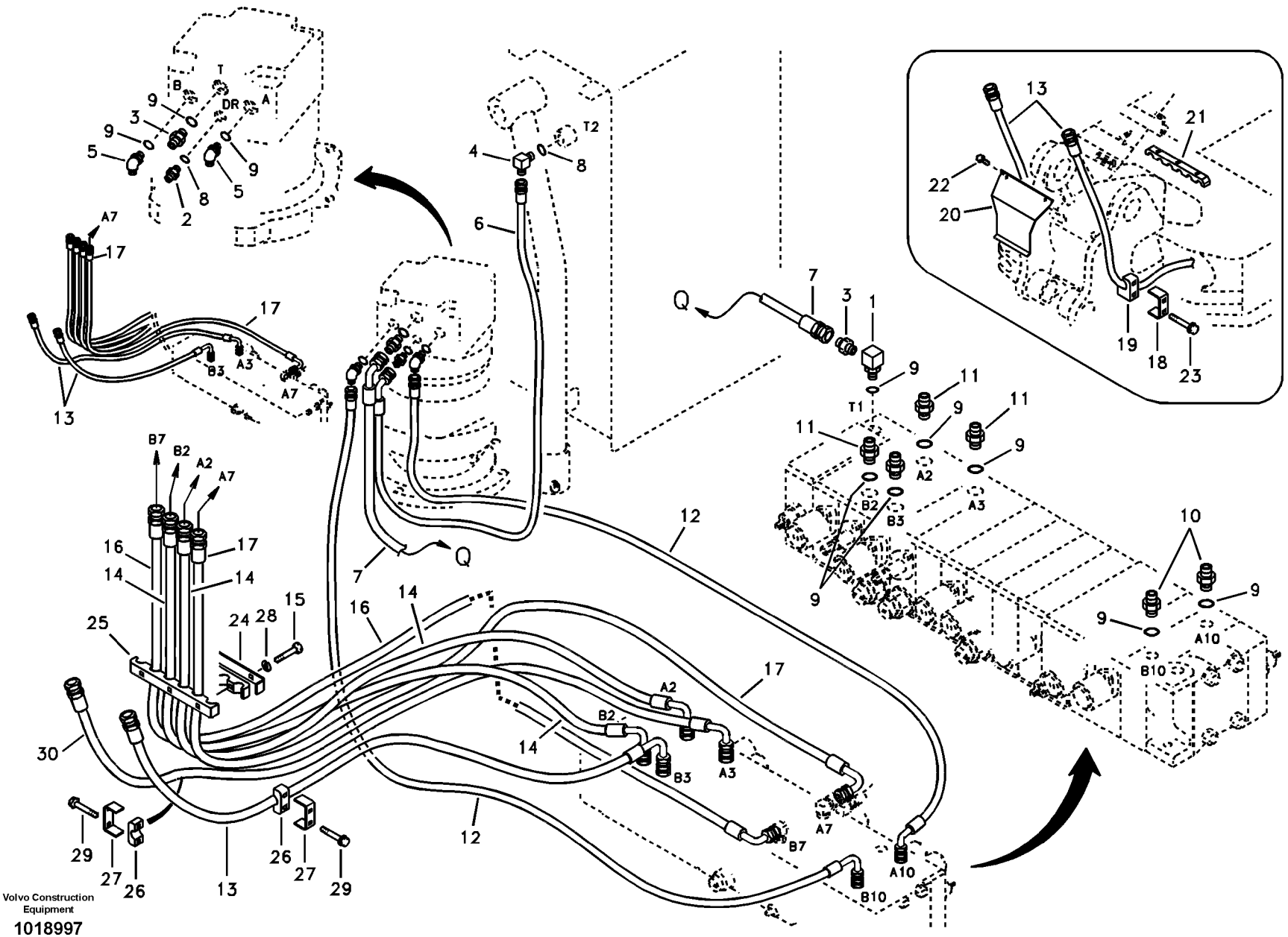
T
B
DR
A
T2
Q
A7
B7
B2
A2
A3
B3
A10
B10
T1
Volvo Construction Equipment
1018997

Fig.	Part No.	Quantity 1	2	3	4	5	PS	KIT	Description	Dénomination	Bezeichnung	품명	Denominación	Notes
28	**VOE 955922**				3	3			Spring Washer	Rondelle élastique	Federscheibe	스프링 와셔	Arandela flexible	
29	**VOE 965186**				4	4	SS		Screw	Vis	Schraube	스크류	Tornillo	
30	**SA 9453-44744**		1	1					Hose	Durit	Schlauch	호스	Tubo flexible	SER NO 30001-34475 SER NO 50001-50129
	SA 9453-44740		1	1					Hose	Durit	Schlauch	호스	Tubo flexible	SER NO 34476- SER NO 50130-
	VOE 14881199				1	1			Hose	Durit	Schlauch	호스	Tubo flexible	SER NO 30001-34475 SER NO 50001-50129
	VOE 14880517				1	1			Hose	Durit	Schlauch	호스	Tubo flexible	SER NO 34476- SER NO 50130-

1	**8278796 S/N -33292**
2	**8278836**
3	**8278837**
4	**8278838**
5	**8278839**

Sistema hidráulico, válvula de control para pluma y oscilaci
유압 배관 , 제어 밸브에서 붐 및 선회
Hydraulikanlage, Steuerventil zu Ausleger und Schwenken
Système hydraulique, valve de commande flèche et pivotement
Hydraulic system, control valve to boom and swing

Catalogue id **20019**	Group **911**
Illustr. No **1018997**	Section **400**
Issue **VOE 74H9920019**	Page **415**

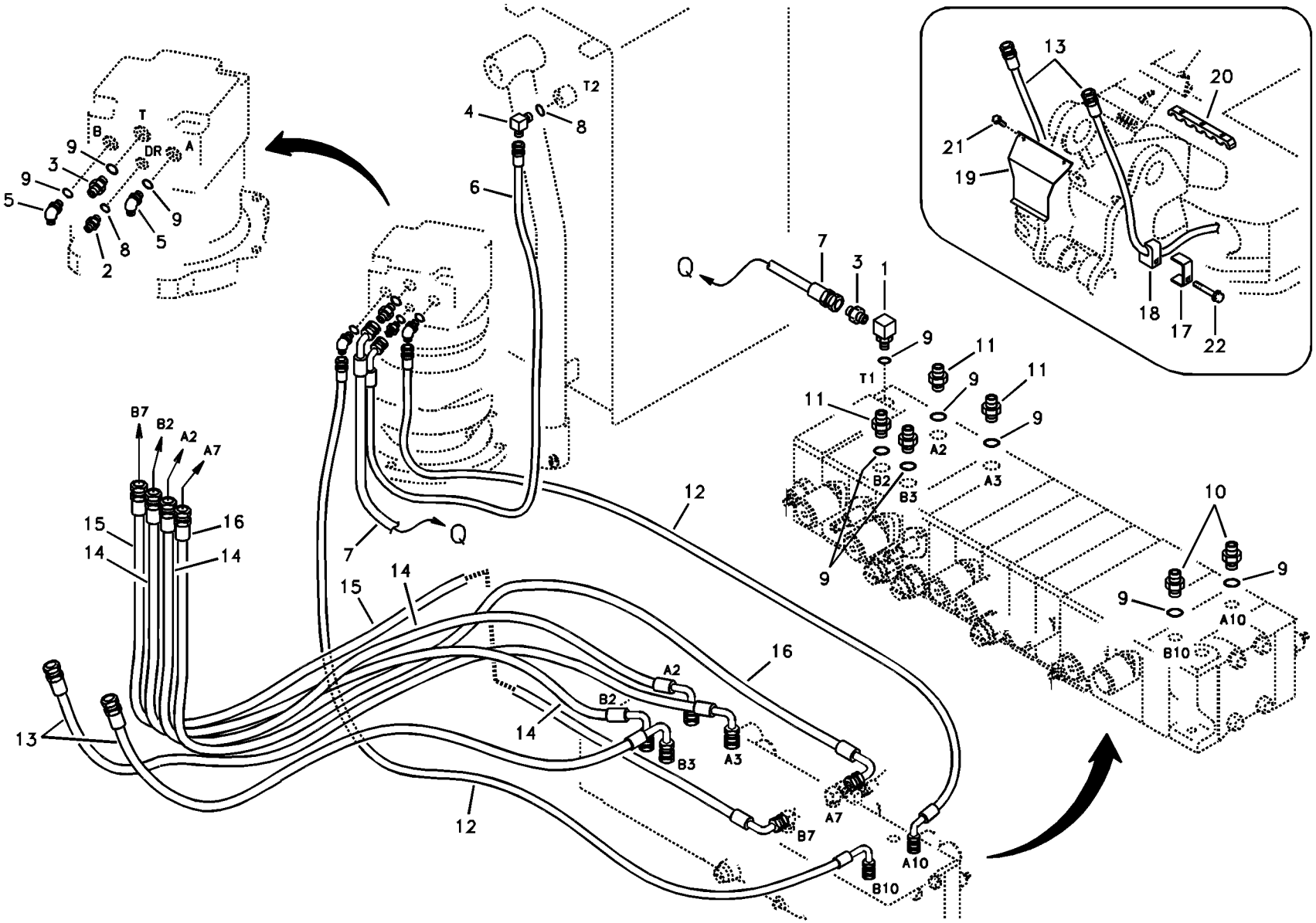

Volvo Construction Equipment

1008362

Fig.	Part No.	Quantity 1	2	3	PS	KIT	Description	Dénomination	Bezeichnung	품명	Denominación	Notes
1	**SA 9411-95160**	1					Elbow	Coude	Winkelstueck	엘보	Tubo acodado	
2	**SA 9412-11030**	1					Connector	Raccord	Anschluss	커넥터	Union	
3	**SA 9412-11040**	2					Connector	Raccord	Anschluss	커넥터	Union	
4	**SA 9413-11020**	1					Elbow	Coude	Winkelstueck	엘보	Tubo acodado	
5	**SA 9413-11030**	2					Elbow	Coude	Winkelstueck	엘보	Tubo acodado	
6	**SA 9453-03123**	1					Hose	Durit	Schlauch	호스	Tubo flexible	
7	**SA 9453-04114**	1					Hose	Durit	Schlauch	호스	Tubo flexible	
8	**SA 9511-12014**	2					O-ring	Joint Torique	O-Ring	오링	Junta torica	
9	**SA 9511-12018**	4	6		SS		O-ring	Joint Torique	O-Ring	오링	Junta torica	
10	**SA 9412-11040**		2				Connector	Raccord	Anschluss	커넥터	Union	
11	**SA 9412-11045**		4				Connector	Raccord	Anschluss	커넥터	Union	
12	**SA 9453-04428**		2				Hose	Durit	Schlauch	호스	Tubo flexible	
13	**SA 9453-44740**		2				Hose	Durit	Schlauch	호스	Tubo flexible	
14	**VOE 14880023**		2				Hose	Durit	Schlauch	호스	Tubo flexible	
15	**VOE 14880308**		1				Hose	Durit	Schlauch	호스	Tubo flexible	
16	**SA 9459-05920**		1				Hose	Durit	Schlauch	호스	Tubo flexible	
17	**SA 14531091**		2				Plate	Plaque	Platte	플레이트	Placa	
18	**SA 1142-30160**		2				Clamp	Pince Serrage	Klemme	클램프	Abrazadera	
19	**SA 1142-30152**		1				Plate	Plaque	Platte	플레이트	Placa	
20	**SA 1142-30142**		1				Clamp	Pince Serrage	Klemme	클램프	Abrazadera	
21	**VOE 946441**		2				Flange screw	Vis à bride	Flanschschraube	플랜지 스크류	Torn embridado	
22	**VOE 965186**		2		SS		Screw	Vis	Schraube	스크류	Tornillo	

1	**8278796**	**Sistema hidráulico, válvula de control para pluma y oscilaci** 유압 배관 , 제어 밸브에서 붐 및 선회 **Hydraulikanlage, Steuerventil zu Ausleger und Schwenken** **Système hydraulique, valve de commande flèche et pivotement** **Hydraulic system, control valve to boom and swing**	Catalogue id **20019**	Group **911**
2	**8278837**		Illustr. No **1008362**	Section **410**
3			Issue **VOE 74H9920019**	Page **417**
4				
5		**FOR CHINA**		

VOLVO

EC55B

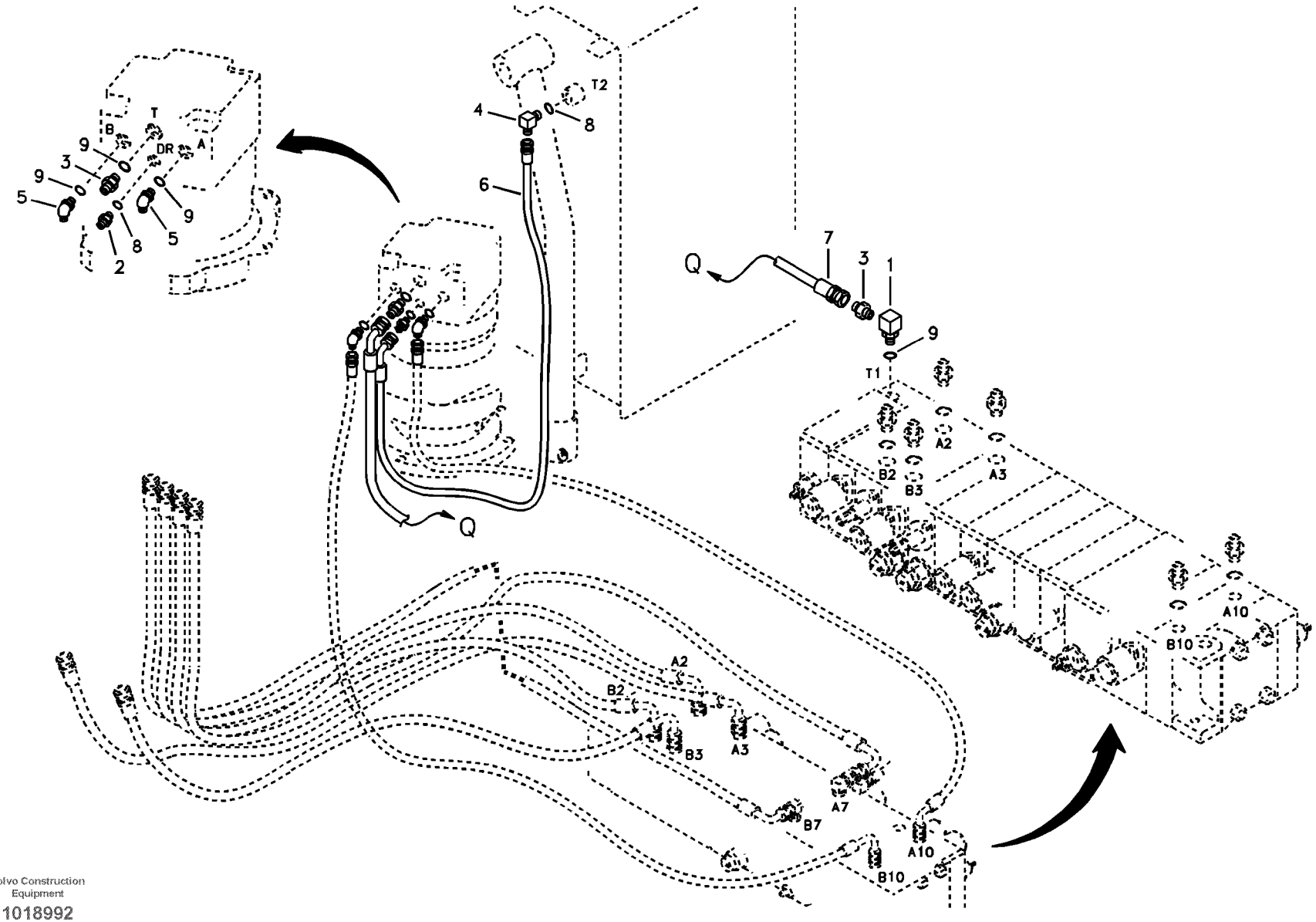
T
B
DR
A
9
3
9
5
2
8
5
9
T2
4
8
6
Q
7
3
1
9
T1
A2
B2
B3
A3
A10
B10
Q
A2
B2
B3
A3
A7
B7
A10
B10

Fig.	Part No.	Quantity 1	2	3	PS	KIT	Description	Dénomination	Bezeichnung	품명	Denominación	Notes
1	**SA 9411-95160**	1	1				Elbow	Coude	Winkelstueck	엘보	Tubo acodado	
2	**SA 9412-11030**	1	1				Connector	Raccord	Anschluss	커넥터	Union	
3	**SA 9412-11040**	2	2				Connector	Raccord	Anschluss	커넥터	Union	
4	**SA 9413-11020**	1	1				Elbow	Coude	Winkelstueck	엘보	Tubo acodado	
5	**SA 9413-11030**	2	2				Elbow	Coude	Winkelstueck	엘보	Tubo acodado	
6	**SA 9453-03123**	1	1				Hose	Durit	Schlauch	호스	Tubo flexible	
7	**SA 9453-04114**	1	1				Hose	Durit	Schlauch	호스	Tubo flexible	
8	**SA 9511-12014**	2	2				O-ring	Joint Torique	O-Ring	오링	Junta torica	
9	**SA 9511-12018**	4	4		SS		O-ring	Joint Torique	O-Ring	오링	Junta torica	

1	**8279576 S/N 33293-**	**Sistema hidráulico, válvula de control para pluma y oscilaci** 유압 배관 , 제어 밸브에서 붐 및 선회 **Hydraulikanlage, Steuerventil zu Ausleger und Schwenken** **Système hydraulique, valve de commande flèche et pivotement** **Hydraulic system, control valve to boom and swing**	Catalogue id **20019**	Group **911**
2	**8279577 S/N 33293-**			
3			Illustr. No **1018992**	Section **420**
4				
5		**FOR**	Issue **VOE 74H9920019**	Page **419**

VOLVO

EC55B

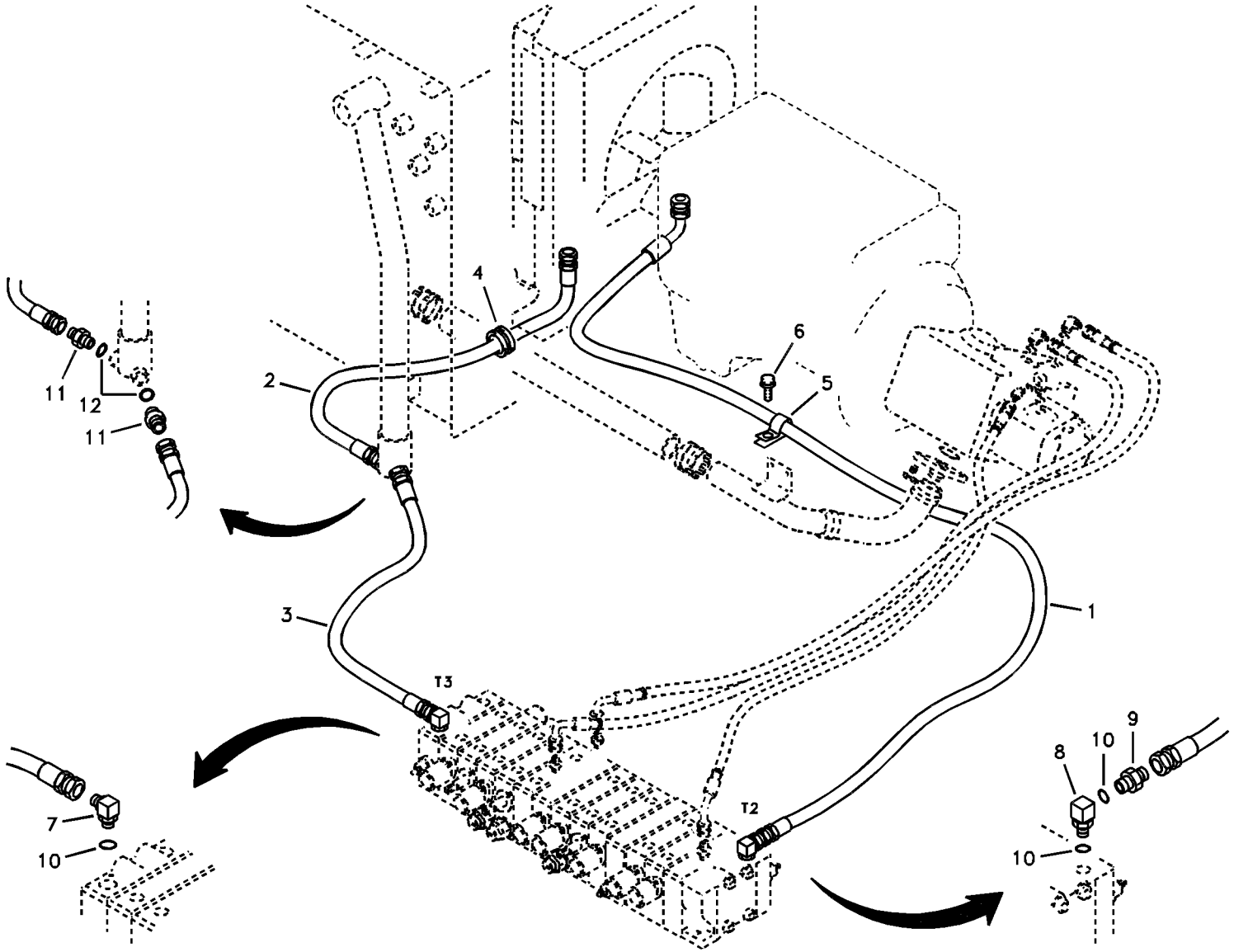

Volvo Construction Equipment

1007065

Fig.	Part No.	Quantity 1	2	3	PS	KIT	Description	Dénomination	Bezeichnung	품명	Denominación	Notes
1	**SA 9452-35264**	1	1	1			Hose	Durit	Schlauch	호스	Tubo flexible	
2	**SA 9451-35235**	1	1	1			Hose	Durit	Schlauch	호스	Tubo flexible	
3	**SA 9451-05214**	1	1	1			Hose	Durit	Schlauch	호스	Tubo flexible	
4	**SA 9751-15016**	1	1	1			Grommet	Passe fil	Durchführung	그로메트	Aislador pasapanel	
5	**SA 9315-03601**	1	1	1			Clip	Clip	Klemme	클립	Clip	
6	**VOE 946471**	1	1	1			Flange screw	Vis à bride	Flanschschraube	플랜지 스크류	Torn embridado	
7	**VOE 14880309**	1	1	1			Elbow	Coude	Winkelstueck	엘보	Tubo acodado	
8	**SA 9411-95160**	1	1	1			Elbow	Coude	Winkelstueck	엘보	Tubo acodado	
9	**SA 9412-11160**	1	1	1			Connector	Raccord	Anschluss	커넥터	Union	
10	**SA 9511-12018**	3	3	3	SS		O-ring	Joint Torique	O-Ring	오링	Junta torica	
11	**SA 9412-11050**	2	2	2			Connector	Raccord	Anschluss	커넥터	Union	
12	**SA 9511-12024**	2	2	2			O-ring	Joint Torique	O-Ring	오링	Junta torica	

1	**8278796 S/N -33292**	**Sistema hidráulico, depósito hidr. a enfr. aceite hidr.** 유압 배관 , 유압 탱크에서 오일 쿨러 **Hydraulikanlage, von Hydrauliktank zu Ölkühler** **Syst. hydr, rés. hydr vers refroidisseur huile hydraulique** **Hydraulic system, hydraulic tank to hydraulic oil cooler**	Catalogue id **20019**	Group **911**
2	**8279576 S/N 33293-**		Illustr. No **1007065**	Section **500**
3	**8279577 S/N 33293-**		Issue **VOE 74H9920019**	Page **421**
4				
5				

VOLVO

EC55B

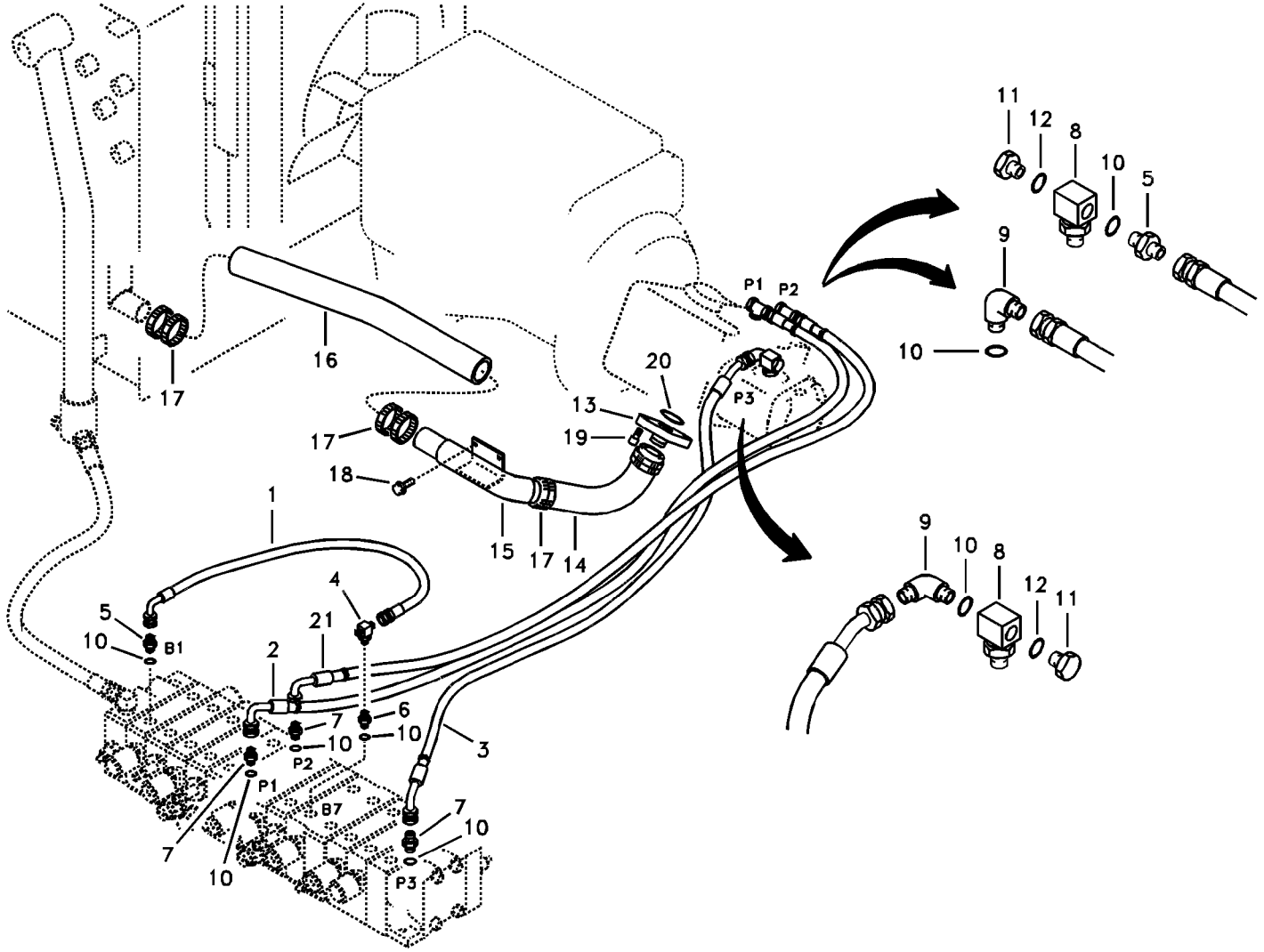
11
12
8
10
5
9
10
P1
P2
P3
16
17
20
13
19
17
18
15
17
14
1
4
21
5
10
B1
2
6
7
10
10
P2
P1
B7
7
10
7
10
P3
3
9
10
8
12
11

Fig.	Part No.	Quantity 1	2	3	PS	KIT	Description	Dénomination	Bezeichnung	품명	Denominación	Notes
1	**SA 9453-04712**	1					Hose	Durit	Schlauch	호스	Tubo flexible	SER NO 30001-30666
	SA 9453-04713	1	1	1			Hose	Durit	Schlauch	호스	Tubo flexible	SER NO 30667-
2	**VOE 14880416**	1					Hose	Durit	Schlauch	호스	Tubo flexible	SER NO 50001- (VOE 14880335) SER NO 30001-32939
	VOE 14881325	1	1	1			Hose	Durit	Schlauch	호스	Tubo flexible	SER NO 32940-
3	**VOE 14880336**	1	1	1			Hose	Durit	Schlauch	호스	Tubo flexible	
4	**SA 9411-92200**	1	1	1			Tee	Connexion en T	T-stuck	티	Acoplamiento T	
5	**SA 9412-11040**	3	3	1			Connector	Raccord	Anschluss	커넥터	Union	
6	**SA 9412-11042**	1	1	1			Connector	Raccord	Anschluss	커넥터	Union	
7	**SA 9412-11045**	3	3	3			Connector	Raccord	Anschluss	커넥터	Union	
8	**VOE 14880310**	3	3	1			Tee	Connexion en T	T-stuck	티	Acoplamiento T	
9	**SA 9413-11030**	1	1	3			Elbow	Coude	Winkelstueck	엘보	Tubo acodado	
10	**SA 9511-12018**	11	3	3	SS		O-ring	Joint Torique	O-Ring	오링	Junta torica	
11	**SA 9415-11021**	3	3	3			Plug	Bouchon	Stopfen	플러그	Tapon	
12	**SA 9511-12011**	3	3	3			O-ring	Joint Torique	O-Ring	오링	Junta torica	
13	**VOE 14517855**	1					Flange	Flasque	Flansch	플랜지	Brida	SER NO 30001-33192
	VOE 14530847	1	1				Flange	Flasque	Flansch	플랜지	Brida	SER NO 33193-
	VOE 14532631			1			Flange	Flasque	Flansch	플랜지	Brida	
14	**VOE 14517854**	1	1				Hose	Durit	Schlauch	호스	Tubo flexible	
	SA 1142-30051			1			Hose	Durit	Schlauch	호스	Tubo flexible	
15	**VOE 14508990**	1	1				Pipe	Conduit	Leitung	파이프	Tubo	
	VOE 14507708			1			Tube assembly	Tuyau	Rohrleitung	튜브 조립체	Tubo	
16	**SA 1142-30191**	1	1	1			Hose	Durit	Schlauch	호스	Tubo flexible	
17	**SA 9312-10250**	8	8	8			Clamp	Pince Serrage	Klemme	클램프	Abrazadera	
18	**VOE 946329**	2	2	2			Flange screw	Vis à bride	Flanschschraube	플랜지 스크류	Torn embridado	
19	**VOE 984082**	4	4				Allen Hd Screw	Vis A 6 Pans Cr	Inbusschraube	스크류	Torn Hex Embut	
	VOE 965191			4	SS		Screw	Vis	Schraube	스크류	Tornillo	
20	**SA 9512-02222**	1	1				O-ring	Joint Torique	O-Ring	오링	Junta torica	
	SA 9512-02225			1			O-ring	Joint Torique	O-Ring	오링	Junta torica	

1	**8278796 S/N -33292**
2	**8279576 S/N 33293-**
3	**8279577 S/N 33293-**
4	
5	

Sistema hidráulico, depósito hidr. a bomba hidr.
유압 배관 , 유압 탱크에서 펌프
Hydraulikanlage, von Hydrauliktank zu Hydraulikpumpe
Syst. hydr, rés. hydraulique vers pompe hydraulique
Hydraulic system, hydraulic tank to hydraulic pump

Catalogue id **20019**	Group **911**
Illustr. No **1018993**	Section **600**
Issue **VOE 74H9920019**	Page **423**

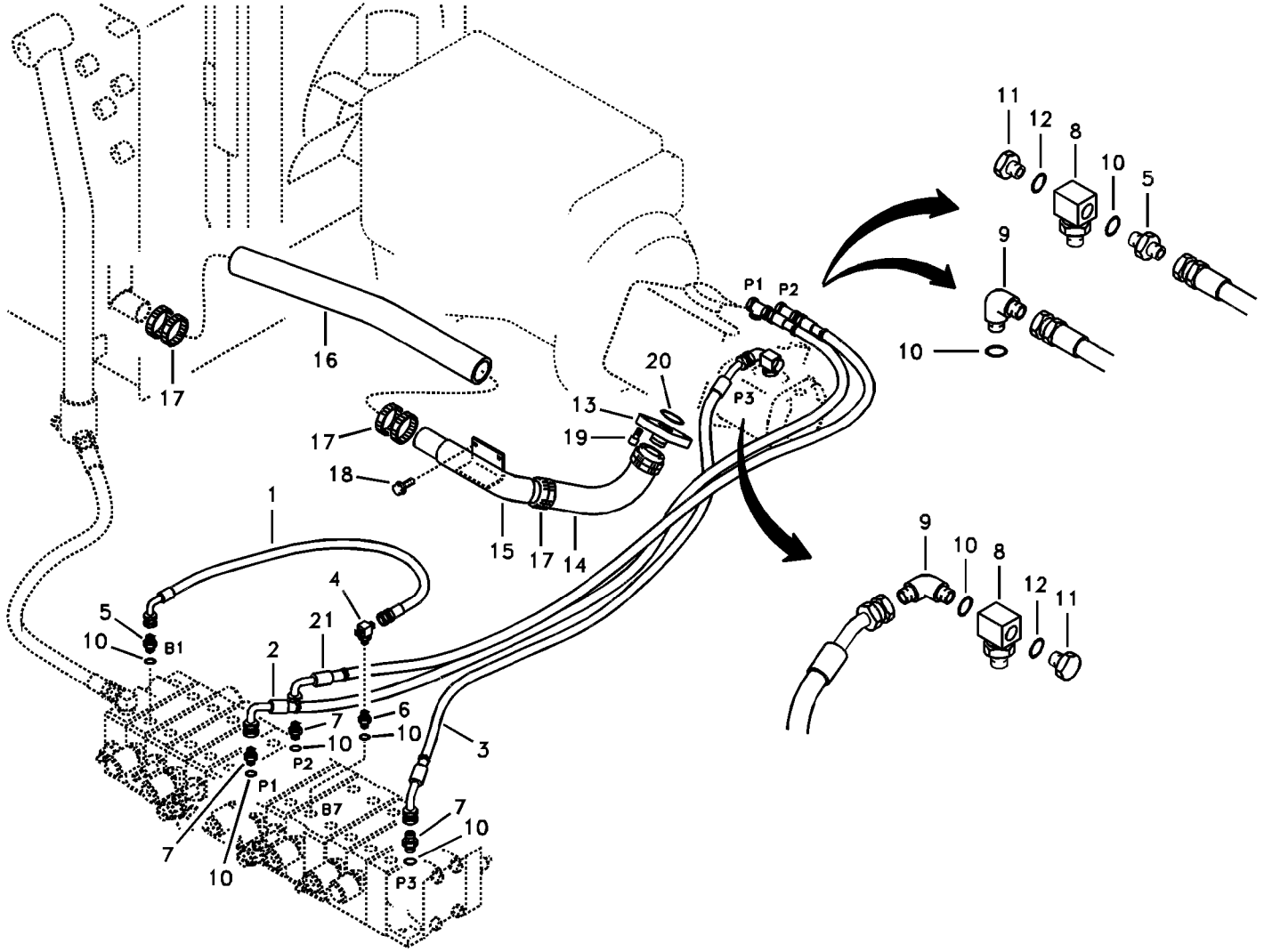
11
12
8
10
5
9
10
P1
P2
P3
16
17
20
13
19
17
18
15
17
14
1
4
21
5
10
B1
2
6
7
10
10
P2
P1
B7
7
10
7
10
P3
3
9
10
8
12
11

Fig.	Part No.	Quantity 1	2	3	PS	KIT	Description	Dénomination	Bezeichnung	품명	Denominación	Notes
21	**VOE 14880416**	1					Hose	Durit	Schlauch	호스	Tubo flexible	(VOE 14880335) SER NO 30001-32939
	VOE 14881324	1	1				Hose	Durit	Schlauch	호스	Tubo flexible	SER NO 32940-
	VOE 14881325			1			Hose	Durit	Schlauch	호스	Tubo flexible	

1	**8278796 S/N -33292**	**Sistema hidráulico, depósito hidr. a bomba hidr.** 유압 배관 , 유압 탱크에서 펌프 **Hydraulikanlage, von Hydrauliktank zu Hydraulikpumpe** **Syst. hydr, rés. hydraulique vers pompe hydraulique** **Hydraulic system, hydraulic tank to hydraulic pump**	Catalogue id **20019**	Group **911**
2	**8279576 S/N 33293-**		Illustr. No **1018993**	Section **600**
3	**8279577 S/N 33293-**		Issue **VOE 74H9920019**	Page **425**
4				
5				

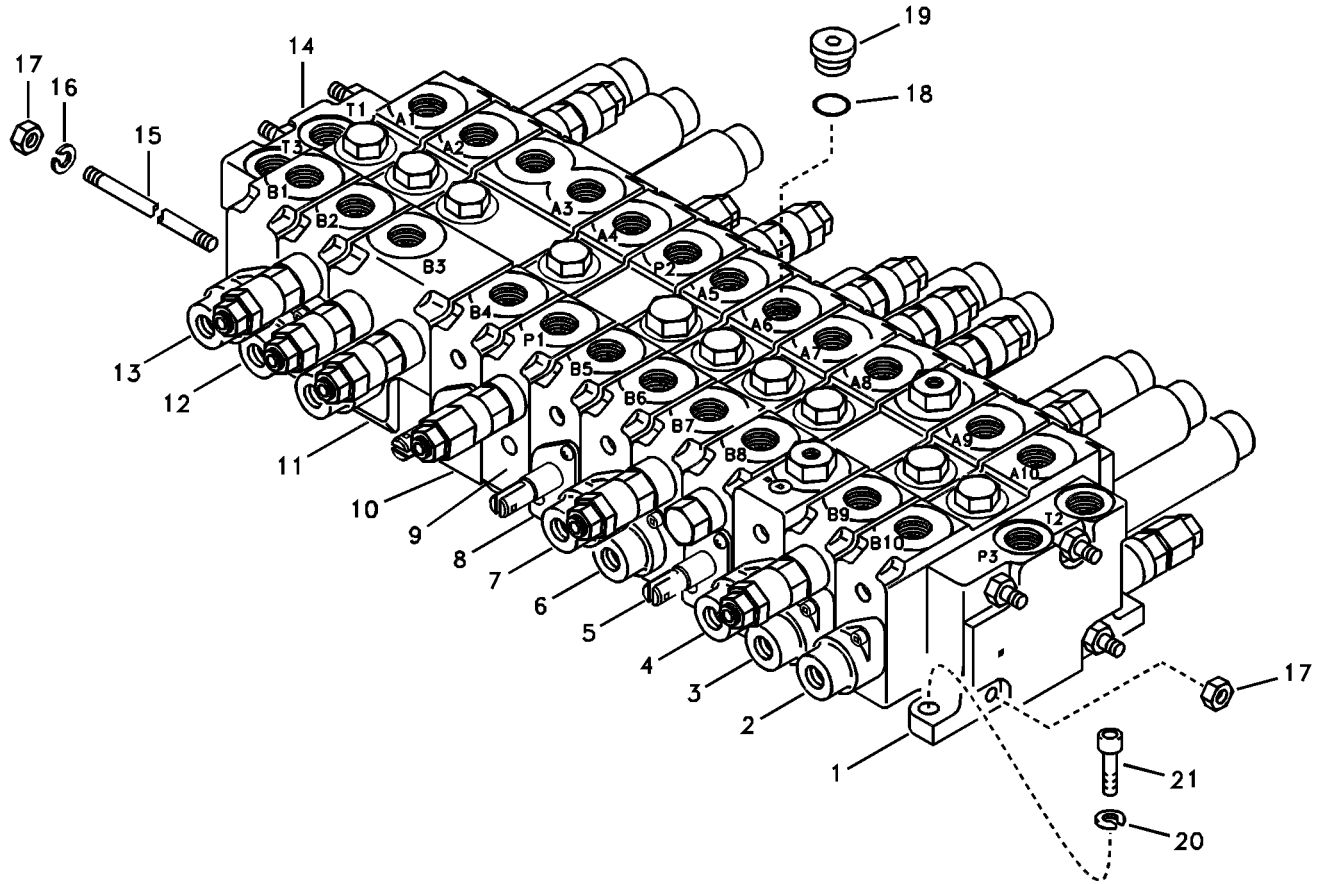
17
16
15
14
19
18
T1
A1
A2
T3
B1
B2
A3
A4
B3
P2
A5
B4
P1
A6
A7
B5
A8
B6
B7
A9
B8
A10
B9
T2
B10
P3
13
12
11
10
9
8
7
6
5
4
3
2
1
17
21
20

Fig.	Part No.	Quantity 1	2	3	PS	KIT	Description	Dénomination	Bezeichnung	품명	Denominación	Notes
	VOE 14519719	1	1				Control valve	Valve controle	Steuerventil	제어 밸브	Válvula control	SER NO 30001-34475 SER NO 50001-50129
	VOE 14536844	1	1				Control valve	Valve controle	Steuerventil	제어 밸브	Válvula control	SER NO 34476- SER NO 50130- (14536846M)
1	**SA 7250-21711**	1	1				•Valve	•Soupape	•Ventil	• 밸브	•Valvula	SER NO 30001-30417 See group 912, Page 437
	VOE 14522260	1	1				•Valve	•Soupape	•Ventil	• 밸브	•Valvula	SER NO 30418- See group 912, Page 437
2	**VOE 14514639**	1	1		SS		•Valve	•Soupape	•Ventil	• 밸브	•Valvula	See group 912, Page 437
3	**VOE 14519804**	1	1		SS		•Valve	•Soupape	•Ventil	• 밸브	•Valvula	SER NO 30001-34475 SER NO 50001-50129 See group 912, Page 437
	VOE 14536848	1	1				•Valve	•Soupape	•Ventil	• 밸브	•Valvula	SER NO 34476- SER NO 50130- (14536848M)
4	**VOE 14519806**	1	1		SS		•Valve	•Soupape	•Ventil	• 밸브	•Valvula	SER NO 30001-34475 SER NO 50001-50129 See group 912, Page 449
	VOE 14536846	1	1				•Valve	•Soupape	•Ventil	• 밸브	•Valvula	SER NO 34476- SER NO 50130- (14536846M)
5	**SA 14503974M**	1	1				•valve body	•bloc-soupapes	•ventilgruppe	•	•cuerpo valvula	(VOE 14503974) See group 912, Page 461
6	**VOE 14519807**	1	1		SS		•Valve	•Soupape	•Ventil	• 밸브	•Valvula	See group 912, Page 449
7	**SA 7250-21774**	1	1				•Valve	•Soupape	•Ventil	• 밸브	•Valvula	SER NO 30001-30417 See group 912, Page 449
	VOE 14522262	1	1				•Valve	•Soupape	•Ventil	• 밸브	•Valvula	SER NO 30418- See group 912, Page 449
8	**SA 7250-21784**	1	1		SS		•Valve	•Soupape	•Ventil	• 밸브	•Valvula	See group 912, Page 461

1	**8278836**
2	**8278839**
3	
4	
5	

Válvula de mando con piezas se montaje.
제어밸브 및 장착 부품
Steuerventil mit Anbauteilen.
Valve de commande avec pièces de montage.
Control valve with fitting parts.

Catalogue id **20019**	Group **912**
Illustr. No **1007067**	Section **100**
Issue **VOE 74H9920019**	Page **427**

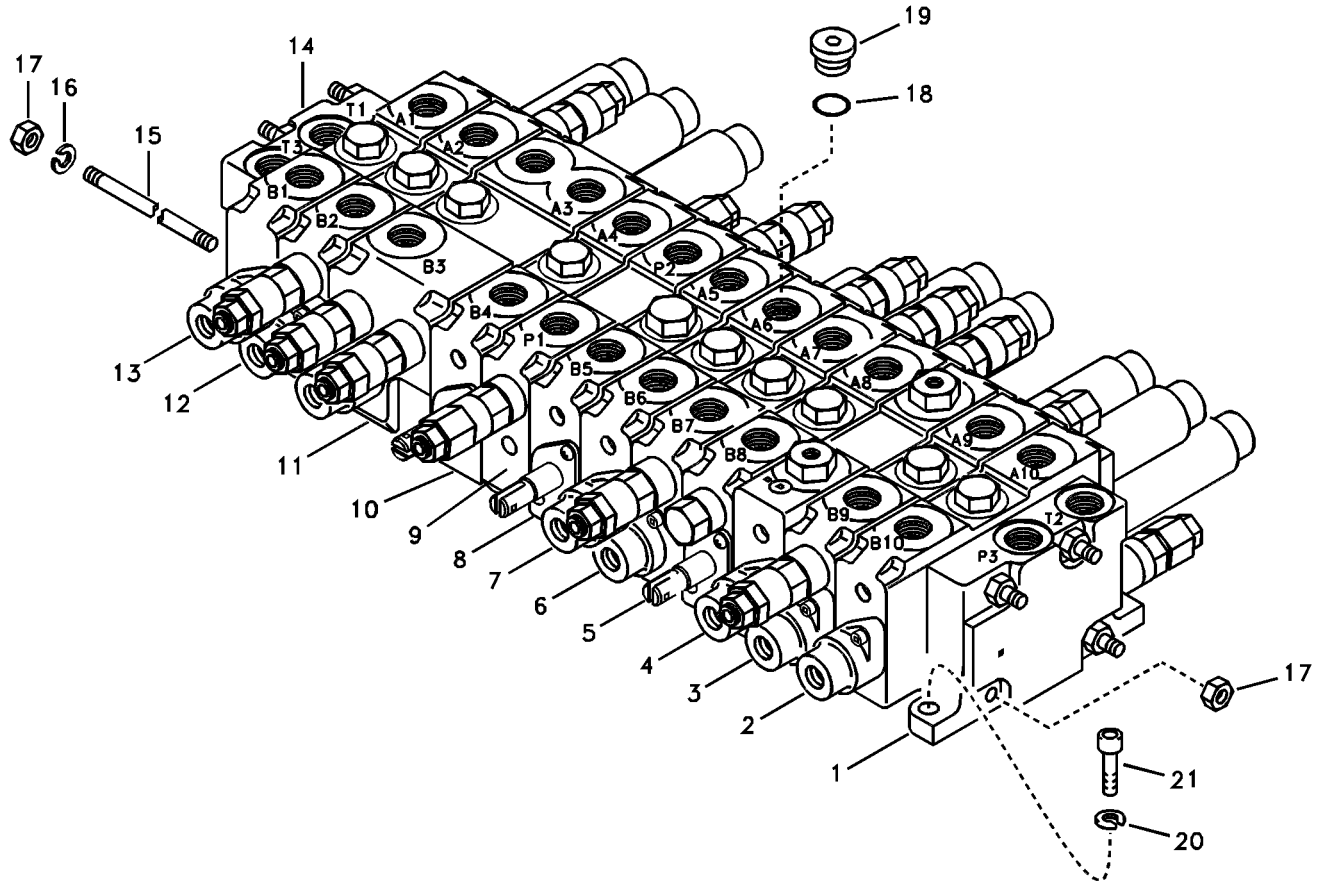
17
16
15
14
19
18
T1
A1
A2
T3
B1
B2
A3
A4
B3
P2
A5
B4
P1
A6
A7
B5
A8
B6
B7
A9
B8
A10
B9
T2
B10
P3
13
12
11
10
9
8
7
6
5
4
3
2
1
17
21
20

Fig.	Part No.	Quantity 1	2	3	PS	KIT	Description	Dénomination	Bezeichnung	품명	Denominación	Notes
9	**VOE 14507455**	1	1				•Valve	•Soupape	•Ventil	• 밸브	•Valvula	See group 912, Page 461
10	**SA 7250-21804**	1	1				•Valve	•Soupape	•Ventil	• 밸브	•Valvula	See group 912, Page 461
11	**SA 7250-21814**	1	1		SS		•Valve	•Soupape	•Ventil	• 밸브	•Valvula	SER NO 30001-30417 See group 912, Page 469
	VOE 14522263	1	1		SS		•Valve	•Soupape	•Ventil	• 밸브	•Valvula	SER NO 30418-34475 SER NO 50001-50129 See group 912, Page 469
	VOE 14540307	1	1				•Valve	•Soupape	•Ventil	• 밸브	•Valvula	SER NO 34476- SER NO 50130- (14540307M)
12	**SA 7250-21824**	1	1		SS		•Valve	•Soupape	•Ventil	• 밸브	•Valvula	SER NO 30001-30417 See group 912, Page 469
	VOE 14522264	1	1				•Valve	•Soupape	•Ventil	• 밸브	•Valvula	SER NO 30418- See group 912, Page 469
13	**VOE 14519805**	1	1		SS		•Valve	•Soupape	•Ventil	• 밸브	•Valvula	See group 912, Page 469
14	**SA 7250-21842**	1	1				•Valve	•Soupape	•Ventil	• 밸브	•Valvula	See group 912, Page 469
15	**SA 9051-40580**	4	4				•Stud	•Goujon	•Stiftschraube	• 스터드	•Esparrago	
16	**VOE 955922**	4	4				•Spring Washer	•Rondelle élastique	•Federscheibe	• 스프링 와셔	•Arandela flexible	
17	**SA 9111-31000**	8	8				•Nut	•Ecrou	•Mutter	• 너트	•Tuerca	
18	**VOE 990557**	1	1				•O-ring	•Joint Torique	•O-Ring	• 오링	•Junta torica	
19	**SA 9415-11041**	1	1				•Plug	•Bouchon	•Stopfen	• 플러그	•Tapon	
20	**VOE 955922**	3	3				Spring Washer	Rondelle élastique	Federscheibe	스프링 와셔	Arandela flexible	
21	**VOE 984080**	3	3				Allen Hd Screw	Vis A 6 Pans Cr	Inbusschraube	스크류	Torn Hex Embut	

1	**8278836**
2	**8278839**
3	
4	
5	

Válvula de mando con piezas se montaje.
제어밸브 및 장착 부품
Steuerventil mit Anbauteilen.
Valve de commande avec pièces de montage.
Control valve with fitting parts.

Catalogue id **20019**	Group **912**
Illustr. No **1007067**	Section **100**
Issue **VOE 74H9920019**	Page **429**

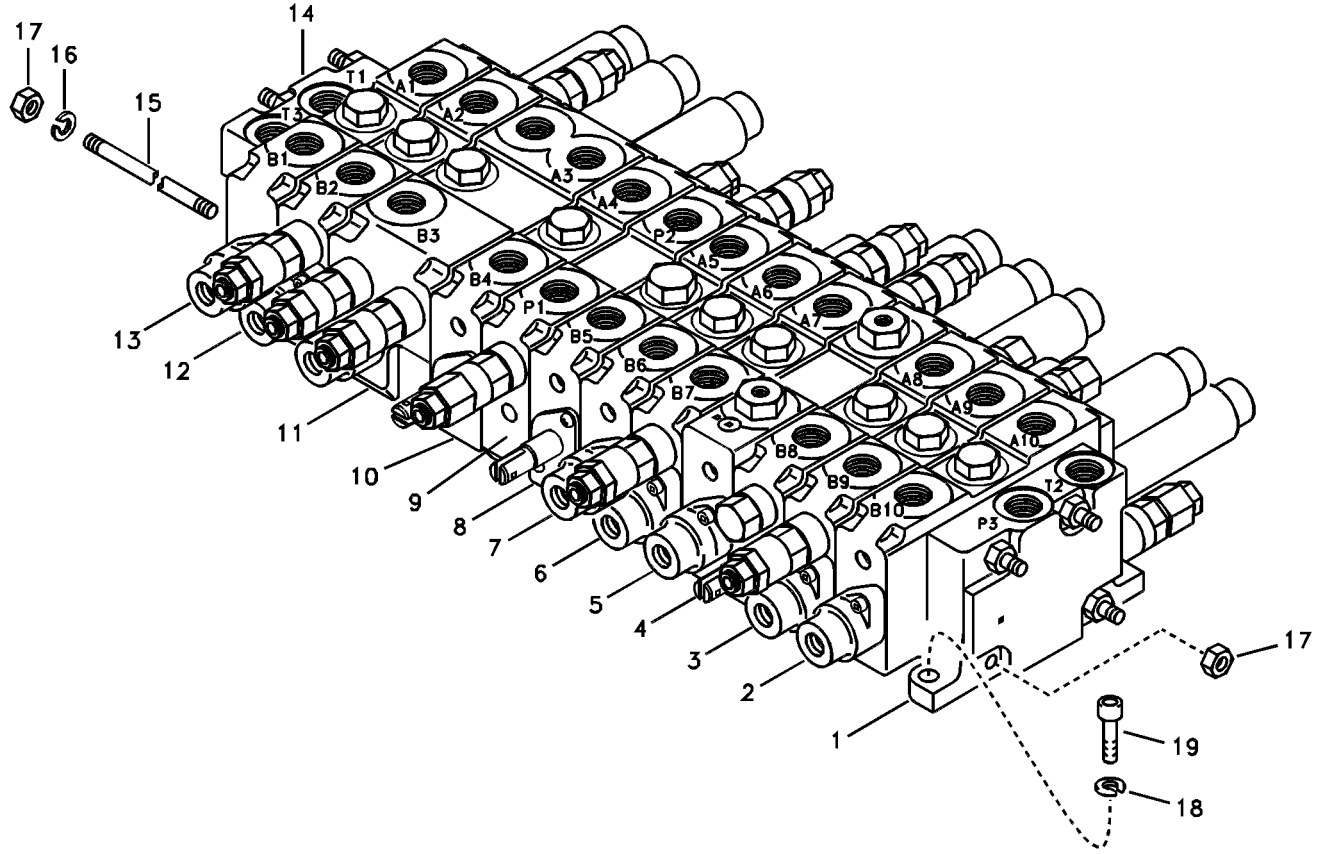
17
16
15
14
T1
A1
A2
T3
B1
B2
A3
A4
B3
P2
A5
A6
B4
P1
A7
13
12
B5
B6
A8
B7
A9
11
A10
B8
B9
T2
10
B10
P3
9
8
7
6
5
4
3
2
1
17
19
18

Fig.	Part No.	Quantity 1	2	3	PS	KIT	Description	Dénomination	Bezeichnung	품명	Denominación	Notes
	VOE 14519717	1					Control valve	Valve controle	Steuerventil	제어 밸브	Válvula control	SER NO 30001-34475 SER NO 50001-50129
	VOE 14536842	1					Control valve	Valve controle	Steuerventil	제어 밸브	Válvula control	SER NO 34476- SER NO 50130-
	VOE 14519718		1				Control valve	Valve controle	Steuerventil	제어 밸브	Válvula control	SER NO 30001-34475 SER NO 50001-50129
	VOE 14536843		1				Control valve	Valve controle	Steuerventil	제어 밸브	Válvula control	SER NO 34476- SER NO 50130-
1	**SA 7250-21711**	1	1				•Valve	•Soupape	•Ventil	• 밸브	•Valvula	SER NO 30001-30417 See group 912, Page 437
	VOE 14522260	1	1				•Valve	•Soupape	•Ventil	• 밸브	•Valvula	SER NO 30418- See group 912, Page 437
2	**VOE 14514639**	1	1		SS		•Valve	•Soupape	•Ventil	• 밸브	•Valvula	
3	**VOE 14519804**	1	1		SS		•Valve	•Soupape	•Ventil	• 밸브	•Valvula	SER NO 30001-34475 SER NO 50001-50129 See group 912, Page 437
	VOE 14536848	1	1				•Valve	•Soupape	•Ventil	• 밸브	•Valvula	SER NO 34476- SER NO 50130- (14536848M)
4	**SA 7250-21744**	1			SS		•Valve	•Soupape	•Ventil	• 밸브	•Valvula	SER NO 30001-30417 See group 912, Page 437
	VOE 14522261	1					•Valve	•Soupape	•Ventil	• 밸브	•Valvula	SER NO 30418- See group 912, Page 437
5	**VOE 14519806**	1	1		SS		•Valve	•Soupape	•Ventil	• 밸브	•Valvula	SER NO 30001-34475 SER NO 50001-50129 See group 912, Page 449
	VOE 14536846	1	1				•Valve	•Soupape	•Ventil	• 밸브	•Valvula	SER NO 34476- SER NO 50130- (14536846M)
6	**VOE 14519807**	1	1		SS		•Valve	•Soupape	•Ventil	• 밸브	•Valvula	See group 912, Page 449

1	**8278837**
2	**8278838**
3	
4	
5	

Válvula de mando con piezas se montaje.
제어밸브 및 장착 부품
Steuerventil mit Anbauteilen.
Valve de commande avec pièces de montage.
Control valve with fitting parts.

Catalogue id **20019**	Group **912**
Illustr. No **1007068**	Section **150**
Issue **VOE 74H9920019**	Page **431**

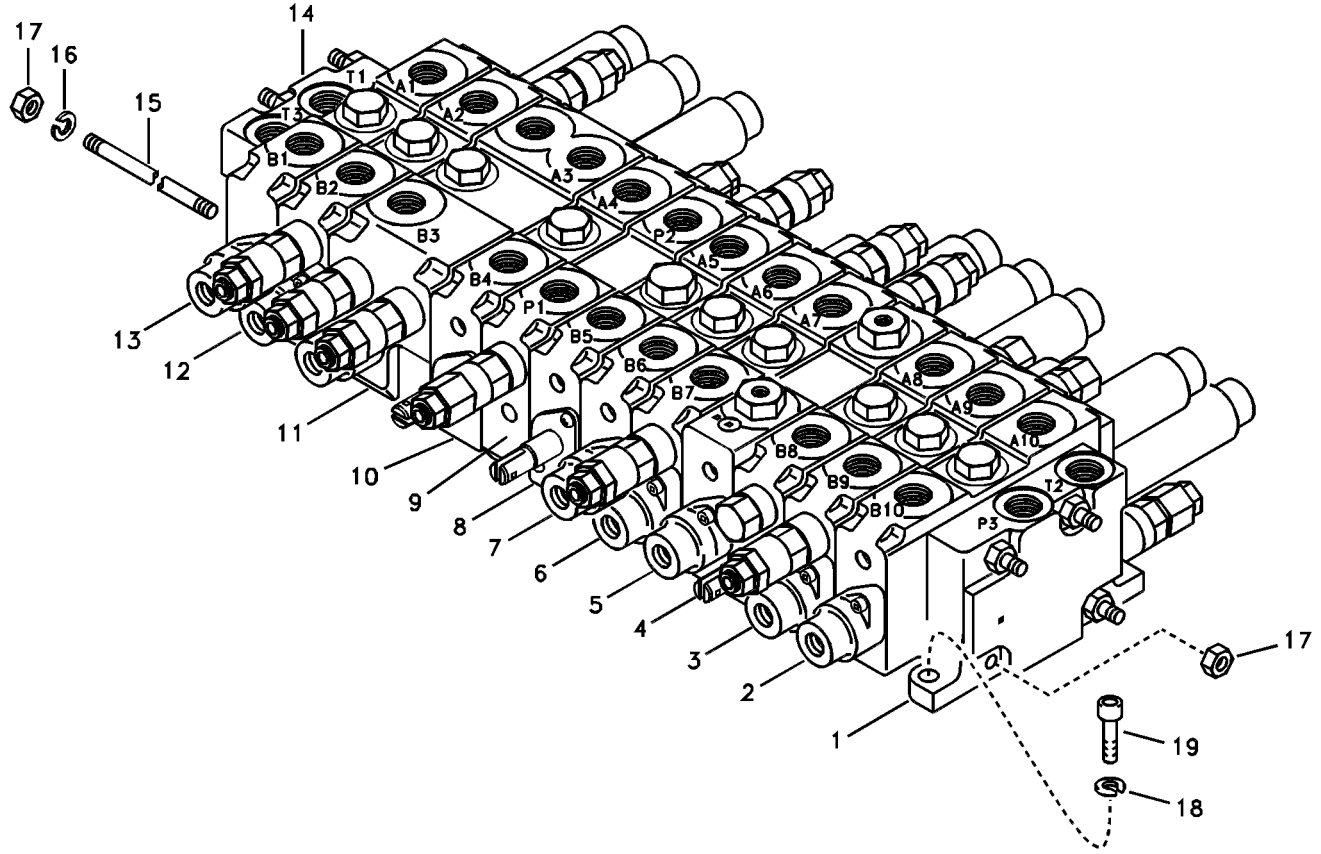
17
16
15
14
T1
A1
A2
T3
B1
B2
A3
A4
B3
P2
A5
A6
B4
P1
A7
13
12
B5
B6
A8
B7
A9
11
A10
B8
B9
T2
10
B10
P3
9
8
7
6
5
4
3
2
1
17
19
18

Fig.	Part No.	Quantity 1	2	3	PS	KIT	Description	Dénomination	Bezeichnung	품명	Denominación	Notes
7	**SA 7250-21774**	1	1				•Valve	•Soupape	•Ventil	• 밸브	•Valvula	SER NO 30001-30417 See group 912, Page 449
	VOE 14522262	1	1				•Valve	•Soupape	•Ventil	• 밸브	•Valvula	SER NO 30418- See group 912, Page 449
8	**SA 7250-21784**	1	1		SS		•Valve	•Soupape	•Ventil	• 밸브	•Valvula	See group 912, Page 461
9	**VOE 14507455**	1	1				•Valve	•Soupape	•Ventil	• 밸브	•Valvula	See group 912, Page 461
10	**SA 7250-21804**	1	1				•Valve	•Soupape	•Ventil	• 밸브	•Valvula	See group 912, Page 461
11	**SA 7250-21814**	1	1		SS		•Valve	•Soupape	•Ventil	• 밸브	•Valvula	SER NO 30001-30417 See group 912, Page 469
	VOE 14522263	1	1		SS		•Valve	•Soupape	•Ventil	• 밸브	•Valvula	SER NO 30418-34475 SER NO 50001-50129 See group 912, Page 469
	VOE 14540307	1	1				•Valve	•Soupape	•Ventil	• 밸브	•Valvula	SER NO 34476- SER NO 50130- (14540307M)
12	**SA 7250-21824**	1	1		SS		•Valve	•Soupape	•Ventil	• 밸브	•Valvula	SER NO 30001-30417 See group 912, Page 469
	VOE 14522264	1	1				•Valve	•Soupape	•Ventil	• 밸브	•Valvula	SER NO 30418- See group 912, Page 469
13	**VOE 14519805**	1	1		SS		•Valve	•Soupape	•Ventil	• 밸브	•Valvula	See group 912, Page 469
14	**SA 7250-21842**	1	1				•Valve	•Soupape	•Ventil	• 밸브	•Valvula	See group 912, Page 469
15	**SA 9051-40580**	4					•Stud	•Goujon	•Stiftschraube	• 스터드	•Esparrago	
	SA 9051-40540		4				•Stud	•Goujon	•Stiftschraube	• 스터드	•Esparrago	
16	**VOE 955922**	4	4				•Spring Washer	•Rondelle élastique	•Federscheibe	• 스프링 와셔	•Arandela flexible	
17	**SA 9111-31000**	8	8				•Nut	•Ecrou	•Mutter	• 너트	•Tuerca	
18	**VOE 955922**	3	3				Spring Washer	Rondelle élastique	Federscheibe	스프링 와셔	Arandela flexible	
19	**VOE 984080**	3	3				Allen Hd Screw	Vis A 6 Pans Cr	Inbusschraube	스크류	Torn Hex Embut	

1	**8278837**	**Válvula de mando con piezas se montaje.** 제어밸브 및 장착 부품 **Steuerventil mit Anbauteilen.** **Valve de commande avec pièces de montage.** **Control valve with fitting parts.**	Catalogue id **20019** / Group **912**
2	**8278838**		Illustr. No **1007068** / Section **150**
3			
4			Issue **VOE 74H9920019** / Page **433**
5			

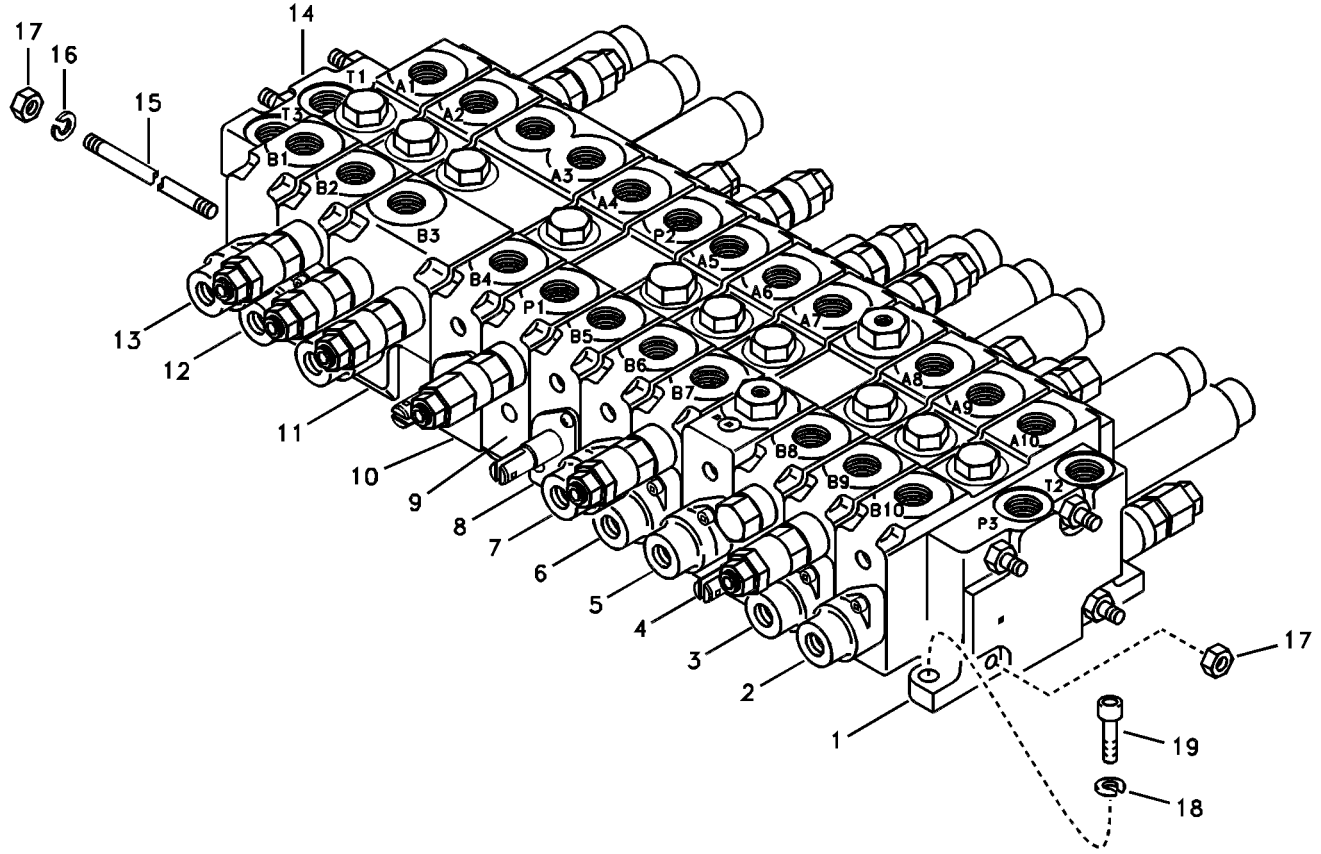
17
16
15
14
T1
A1
A2
T3
B1
B2
A3
A4
B3
P2
A5
A6
B4
P1
A7
13
12
B5
B6
A8
B7
A9
11
A10
B8
B9
T2
10
B10
P3
9
8
7
6
5
4
3
2
1
17
19
18

Fig.	Part No.	Quantity 1	2	3	PS	KIT	Description	Dénomination	Bezeichnung	품명	Denominación	Notes
	VOE 14519717	1					Control valve	Valve controle	Steuerventil	제어 밸브	Válvula control	SER NO 50001-50129
	VOE 14536842	1					Control valve	Valve controle	Steuerventil	제어 밸브	Válvula control	SER NO 50130-
1	**SA 14522260**	1					•Valve	•Soupape	•Ventil	• 밸브	•Valvula	See group 912, Page 443
2	**VOE 14514639**	1			SS		•Valve	•Soupape	•Ventil	• 밸브	•Valvula	See group 912, Page 443
3	**VOE 14519804**	1			SS		•Valve	•Soupape	•Ventil	• 밸브	•Valvula	SER NO 50001-50129 See group 912, Page 443
	VOE 14536848	1					•Valve	•Soupape	•Ventil	• 밸브	•Valvula	SER NO 50130- (14536848M)
4	**SA 14522261**	1					•Valve	•Soupape	•Ventil	• 밸브	•Valvula	See group 912, Page 443
5	**VOE 14519806**	1			SS		•Valve	•Soupape	•Ventil	• 밸브	•Valvula	SER NO 50001-50129 See group 912, Page 455
	VOE 14536846	1					•Valve	•Soupape	•Ventil	• 밸브	•Valvula	SER NO 50130- (14536846M)
6	**VOE 14519807**	1			SS		•Valve	•Soupape	•Ventil	• 밸브	•Valvula	See group 912, Page 455
7	**SA 14522262**	1					•Valve	•Soupape	•Ventil	• 밸브	•Valvula	See group 912, Page 455
8	**SA 7250-21784**	1			SS		•Valve	•Soupape	•Ventil	• 밸브	•Valvula	See group 912, Page 465
9	**VOE 14507455**	1					•Valve	•Soupape	•Ventil	• 밸브	•Valvula	See group 912, Page 465
10	**SA 7250-21804**	1					•Valve	•Soupape	•Ventil	• 밸브	•Valvula	See group 912, Page 465
11	**SA 14522263**	1			SS		•Valve	•Soupape	•Ventil	• 밸브	•Valvula	SER NO 50001-50129 See group 912, Page 477
	VOE 14540307	1					•Valve	•Soupape	•Ventil	• 밸브	•Valvula	SER NO 50130- (14540307M)
12	**SA 14522264**	1					•Valve	•Soupape	•Ventil	• 밸브	•Valvula	See group 912, Page 477
13	**VOE 14519805**	1			SS		•Valve	•Soupape	•Ventil	• 밸브	•Valvula	See group 912, Page 477
14	**SA 7250-21842**	1					•Valve	•Soupape	•Ventil	• 밸브	•Valvula	See group 912, Page 477
15	**SA 9051-40580**	4					•Stud	•Goujon	•Stiftschraube	• 스터드	•Esparrago	
16	**VOE 955922**	4					•Spring Washer	•Rondelle élastique	•Federscheibe	• 스프링 와셔	•Arandela flexible	
17	**SA 9111-31000**	8					•Nut	•Ecrou	•Mutter	• 너트	•Tuerca	
18	**VOE 955922**	3					Spring Washer	Rondelle élastique	Federscheibe	스프링 와셔	Arandela flexible	
19	**VOE 984080**	3					Allen Hd Screw	Vis A 6 Pans Cr	Inbusschraube	스크류	Torn Hex Embut	

1	**8278837**	**Válvula de mando con piezas se montaje.** 제어밸브 및 장착 부품 **Steuerventil mit Anbauteilen.** **Valve de commande avec pièces de montage.** **Control valve with fitting parts.**	Catalogue id **20019**	Group **912**
2				
3			Illustr. No **1007068**	Section **160**
4				
5		**FOR CHINA**	Issue **VOE 74H9920019**	Page **435**

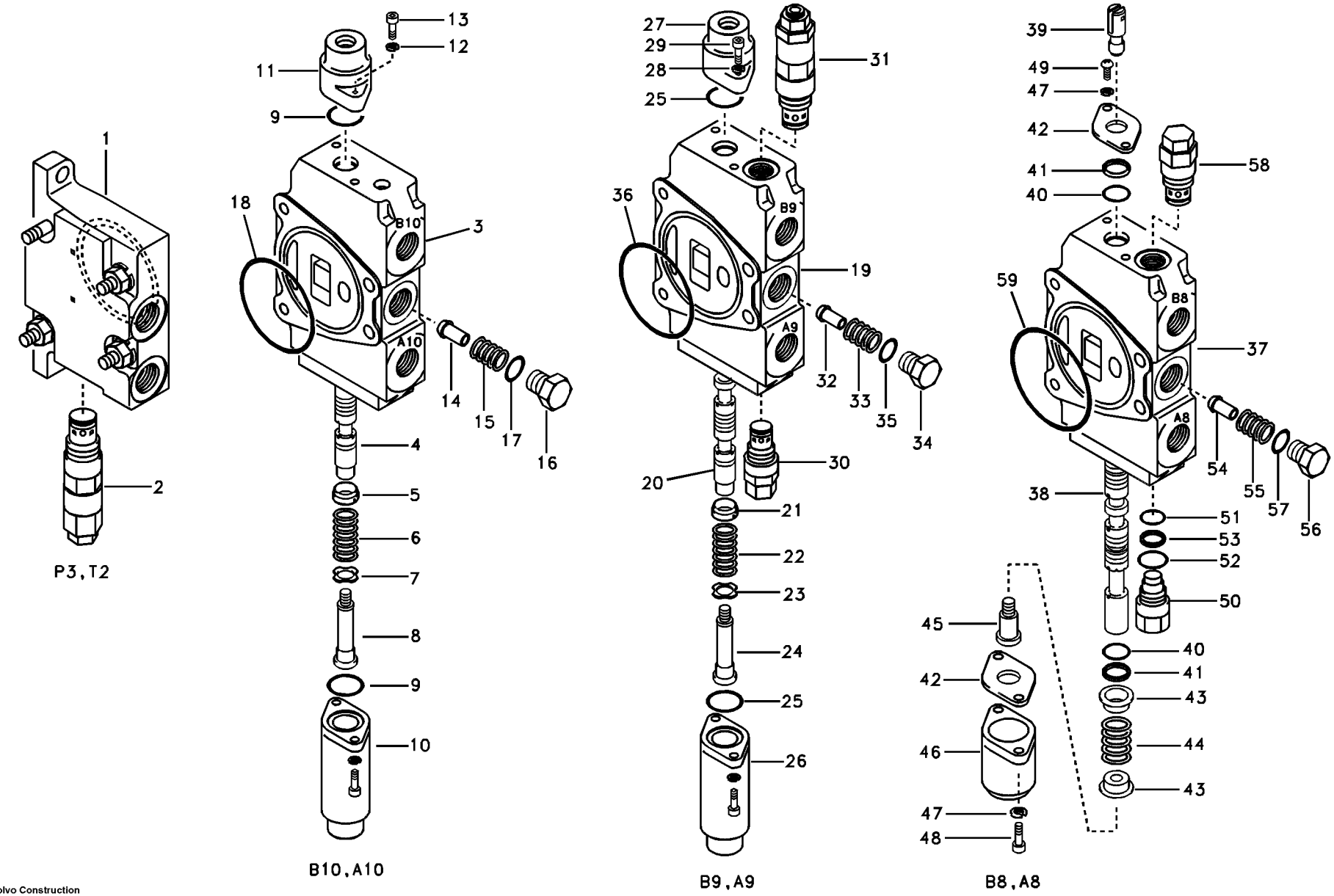
1
2
P3,T2
13
12
11
9
18
B10
3
A10
14
15
17
16
4
5
6
7
8
9
10
B10,A10
27
29
28
25
31
36
B9
19
A9
32
33
35
34
20
30
21
22
23
24
25
26
B9,A9
39
49
47
42
41
40
58
59
B8
37
A8
54
55
57
56
38
51
53
52
50
45
42
46
47
48
40
41
43
44
43
B8,A8

Fig.	Part No.	Quantity 1	2	3	4	5	PS	KIT	Description	Dénomination	Bezeichnung	품명	Denominación	Notes
	SA 7250-21711	1	1	1	1				Valve	Soupape	Ventil	밸브	Valvula	In/Out SER NO 30001-30417
	VOE 14522260	1	1	1	1				Valve	Soupape	Ventil	밸브	Valvula	In/Out SER NO 30418-
1	**SA 7251-30511**	1	1	1	1		OP		•Cover	•Capot	•Haube	• 커버	•Capo	
2	**VOE 14505436**	1	1	1	1				•Relief valve	•Limiteur - pressio ..	•Druckbegrenzer	• 릴리프 밸브	•Limitador presion	
	VOE 14514639	1	1	1	1		SS		Valve	Soupape	Ventil	밸브	Valvula	Swing
3		1	1	1	1		NS		•Body	•Carcasse	•Rumpf	• 본체	•Cuerpo	
4		1	1	1	1		NS		•Spool	•Bobine	•Schieber	• 스풀	•Bobina	
5	**SA 7253-03021**	1	1	1	1				•Guide	•Rail	•Führung	• 가이드	•Guia	
6	**VOE 14507529**	1	1	1	1				•Spring	•Ressort	•Feder	• 스프링	•Muelle	
7	**SA 7253-03041**	1	1	1	1				•Washer	•Rondelle	•Scheibe	• 와셔	•Arandela	
8	**SA 7253-03051**	1	1	1	1				•Bolt	•Boulon	•Bolzen	• 볼트	•Perno	
9	**SA 9512-02021**	2	2	2	2			K	•O-ring	•Joint Torique	•O-Ring	• 오링	•Junta torica	
10	**SA 7253-03121**	1	1	1	1				•Cap	•Chapeau	•Kappe	• 캡	•Caperuza	
11	**SA 7253-03150**	1	1	1	1				•Cap	•Chapeau	•Kappe	• 캡	•Caperuza	
12	**VOE 955919**	4	4	4	4				•Spring Washer	•Rondelle élastiqu ..	•Federscheibe	• 스프링 와셔	•Arandela flexible	
13	**SA 9016-10605**	4	4	4	4				•Bolt	•Boulon	•Bolzen	• 볼트	•Perno	
14	**SA 7253-03180**	1	1	1	1				•Stay	•Tirant	•Strebe	• 스테이	•Barra	
15	**SA 7253-03191**	1	1	1	1				•Spring	•Ressort	•Feder	• 스프링	•Muelle	
16	**SA 7253-03200**	1	1	1	1				•Cap	•Chapeau	•Kappe	• 캡	•Caperuza	
17	**SA 9511-12018**	1	1	1	1		SS	K	•O-ring	•Joint Torique	•O-Ring	• 오링	•Junta torica	
18	**SA 9511-21065**	1	1	1	1				•O-ring	•Joint Torique	•O-Ring	• 오링	•Junta torica	
	VOE 14519804	1	1	1	1		SS		Valve	Soupape	Ventil	밸브	Valvula	SER NO 30001-34475 Dozer
	VOE 14536848	1	1	1	1				Valve	Soupape	Ventil	밸브	Valvula	SER NO 34476- (14536848M)
19		1	1	1	1		NS		•Body	•Carcasse	•Rumpf	• 본체	•Cuerpo	
20		1	1	1	1		NS		•Spool	•Bobine	•Schieber	• 스풀	•Bobina	
21	**SA 7253-03021**	1	1	1	1				•Guide	•Rail	•Führung	• 가이드	•Guia	

1	**8278836**
2	**8278837**
3	**8278838**
4	**8278839**
5	

Válvula de mando, admision, pluma y pluma de giro
제어밸브 , 입력 및 붐 및 붐 선회
Steuerventil, Einlass und Ausleger und Schwenk-ausleger
Valve de commande, admission, flêche et flêche d'orientation
Main control valve, inlet and boom and boom swing

Catalogue id **20019**	Group **912**
Illustr. No **1007069**	Section **200**
Issue **VOE 74H9920019**	Page **437**

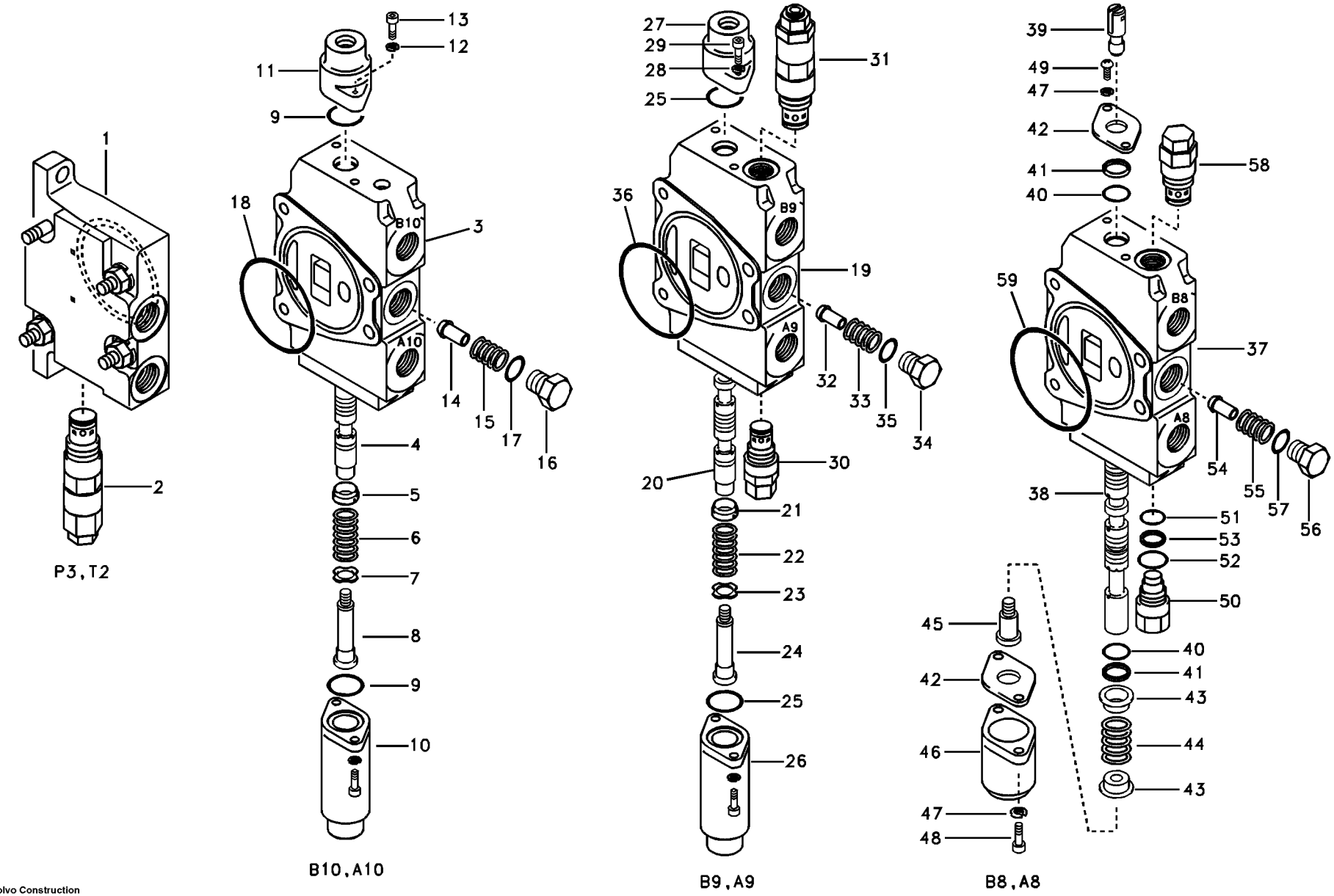
1
2
P3,T2
13
12
11
9
18
B10
3
A10
14
15
17
16
4
5
6
7
8
9
10
B10,A10
27
29
28
25
31
36
B9
19
A9
32
33
35
34
20
30
21
22
23
24
25
26
B9,A9
39
49
47
42
41
40
58
59
B8
37
A8
54
55
57
56
38
51
53
52
50
45
42
46
47
48
40
41
43
44
43
B8,A8

Fig.	Part No.	Quantity 1	2	3	4	5	PS	KIT	Description	Dénomination	Bezeichnung	품명	Denominación	Notes
22	**VOE 14507529**	1	1	1	1				•Spring	•Ressort	•Feder	• 스프링	•Muelle	
23	**SA 7253-03041**	1	1	1	1				•Washer	•Rondelle	•Scheibe	• 와셔	•Arandela	
24	**SA 7253-03051**	1	1	1	1				•Bolt	•Boulon	•Bolzen	• 볼트	•Perno	
25	**SA 9512-02021**	2	2	2	2			K	•O-ring	•Joint Torique	•O-Ring	• 오링	•Junta torica	
26	**SA 7253-03121**	1	1	1	1				•Cap	•Chapeau	•Kappe	• 캡	•Caperuza	
27	**SA 7253-03150**	1	1	1	1				•Cap	•Chapeau	•Kappe	• 캡	•Caperuza	
28	**VOE 955919**	4	4	4	4				•Spring Washer	•Rondelle élastiqu ..	•Federscheibe	• 스프링 와셔	•Arandela flexible	
29	**SA 9016-10605**	4	4	4	4				•Bolt	•Boulon	•Bolzen	• 볼트	•Perno	
30	**VOE 14504446**	1	1	1	1				•Relief valve	•Limiteur - pressio ..	•Druckbegrenzer	• 릴리프 밸브	•Limitador presion	
32	**SA 7253-03180**	1	1	1	1				•Stay	•Tirant	•Strebe	• 스테이	•Barra	
33	**SA 7253-03191**	1	1	1	1				•Spring	•Ressort	•Feder	• 스프링	•Muelle	
34	**SA 7253-03200**	1	1	1	1				•Cap	•Chapeau	•Kappe	• 캡	•Caperuza	
35	**SA 9511-12018**	1	1	1	1		SS	K	•O-ring	•Joint Torique	•O-Ring	• 오링	•Junta torica	
36	**SA 9511-21065**	1	1	1	1				•O-ring	•Joint Torique	•O-Ring	• 오링	•Junta torica	
	SA 7250-21744		1				SS		Valve	Soupape	Ventil	밸브	Valvula	Boom swing SER NO 30001-30417
	VOE 14522261		1						Valve	Soupape	Ventil	밸브	Valvula	Boom swing SER NO 30418-
37			1				NS		•Body	•Carcasse	•Rumpf	• 본체	•Cuerpo	
38			1				NS		•Spool	•Bobine	•Schieber	• 스풀	•Bobina	
39	**SA 7253-03011**		1						•Clevis	•Fourche	•Gabel	• 클레비스	•Horquilla	
40	**SA 7296-00201**		2					K	•O-ring	•Joint Torique	•O-Ring	• 오링	•Junta torica	
41	**SA 7253-02700**		2					K	•Ring	•Anneau	•Ring	• 링	•Anillo	
42	**SA 7253-03062**		2						•Plate	•Plaque	•Platte	• 플레이트	•Placa	
43	**SA 7253-03070**		2						•Guide	•Rail	•Führung	• 가이드	•Guia	
44	**SA 7253-03080**		1						•Spring	•Ressort	•Feder	• 스프링	•Muelle	
45	**SA 7253-03091**		1						•Bolt	•Boulon	•Bolzen	• 볼트	•Perno	
46	**SA 7253-03131**		1						•Cap	•Chapeau	•Kappe	• 캡	•Caperuza	
47	**VOE 955919**		4						•Spring Washer	•Rondelle élastiqu ..	•Federscheibe	• 스프링 와셔	•Arandela flexible	
48	**SA 9016-10605**		2						•Bolt	•Boulon	•Bolzen	• 볼트	•Perno	

1	**8278836**	**Válvula de mando, admision, pluma y pluma de giro** 제어밸브 , 입력 및 붐 및 붐 선회 **Steuerventil, Einlass und Ausleger und Schwenk-ausleger** **Valve de commande, admission, flêche et flêche d'orientation** **Main control valve, inlet and boom and boom swing**	Catalogue id **20019**	Group **912**
2	**8278837**		Illustr. No **1007069**	Section **200**
3	**8278838**			
4	**8278839**		Issue **VOE 74H9920019**	Page **439**
5				

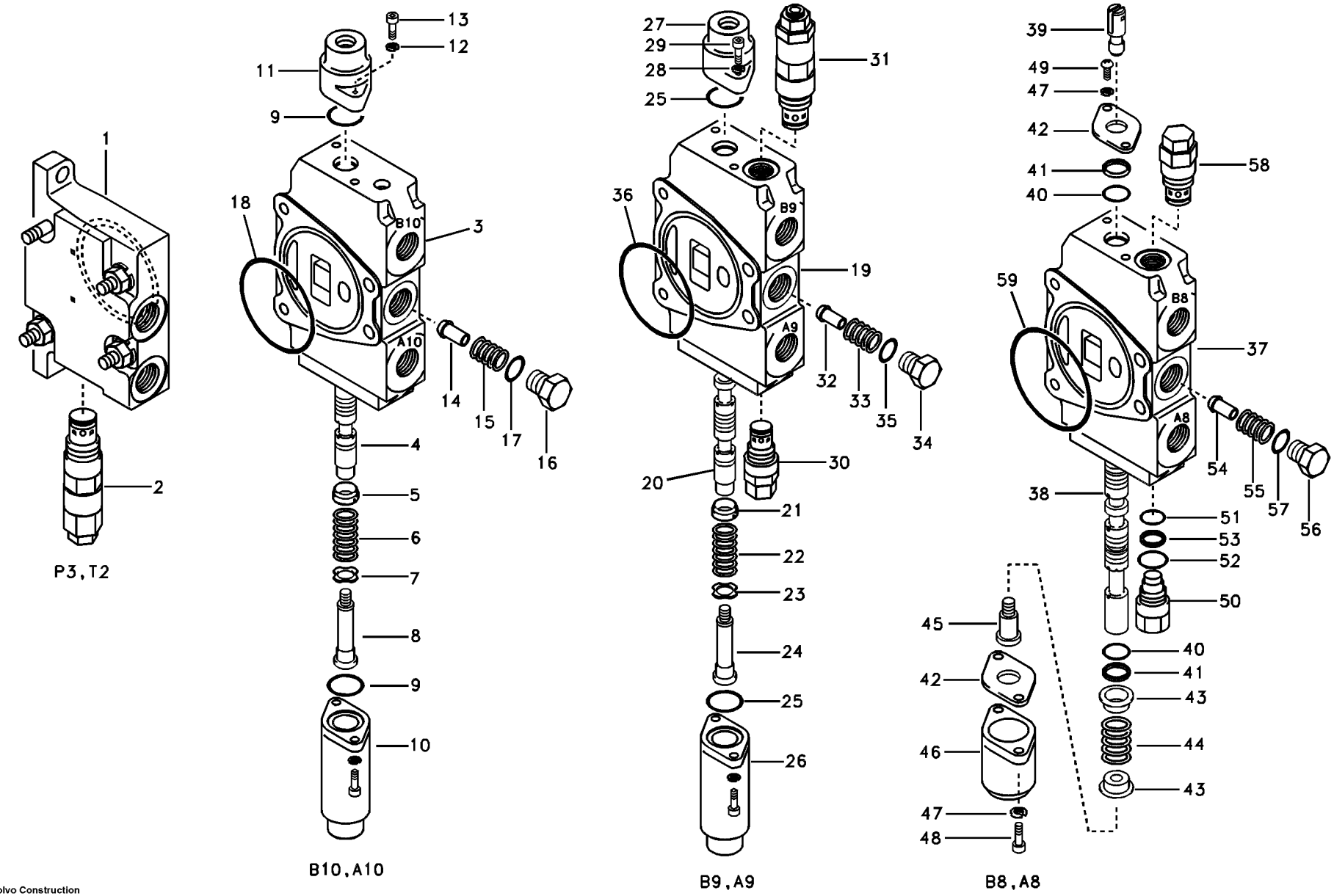
1
2
P3,T2
13
12
11
9
18
B10
3
A10
14
15
17
16
4
5
6
7
8
9
10
B10,A10
27
29
28
25
31
36
B9
19
A9
32
33
35
34
20
30
21
22
23
24
25
26
B9,A9
39
49
47
42
41
40
58
59
B8
37
A8
54
55
57
56
38
51
53
52
50
45
42
46
47
48
40
41
43
44
43
B8,A8

Fig.	Part No.	Quantity 1	2	3	4	5	PS	KIT	Description	Dénomination	Bezeichnung	품명	Denominación	Notes
49	**SA 9016-10603**		2						•Bolt	•Boulon	•Bolzen	• 볼트	•Perno	
50	**SA 7253-03171**		1						•Cap	•Chapeau	•Kappe	• 캡	•Caperuza	
51	**SA 9512-02015**		1				SS	K	•O-ring	•Joint Torique	•O-Ring	• 오링	•Junta torica	
52	**SA 9512-02020**		1					K	•O-ring	•Joint Torique	•O-Ring	• 오링	•Junta torica	
53	**SA 7253-03330**		1					K	•Ring	•Anneau	•Ring	• 링	•Anillo	
54	**SA 7253-03180**		1						•Stay	•Tirant	•Strebe	• 스테이	•Barra	
55	**SA 7253-03191**		1						•Spring	•Ressort	•Feder	• 스프링	•Muelle	
56	**SA 7253-03200**		1						•Cap	•Chapeau	•Kappe	• 캡	•Caperuza	
57	**SA 9511-12018**		1				SS	K	•O-ring	•Joint Torique	•O-Ring	• 오링	•Junta torica	
58	**VOE 14504446**		1						•Relief valve	•Limiteur - pressio ..	•Druckbegrenzer	• 릴리프 밸브	•Limitador presion	
59	**SA 9511-21065**		1						•O-ring	•Joint Torique	•O-Ring	• 오링	•Junta torica	
100	**VOE 14504879**	1	1	1	1				Sealing Kit	Jeu Joints	Dichtungssatz	시일 킷	Juego Retenes	

1	**8278836**	**Válvula de mando, admision, pluma y pluma de giro** 제어밸브 , 입력 및 붐 및 붐 선회 **Steuerventil, Einlass und Ausleger und Schwenk-ausleger** **Valve de commande, admission, flêche et flêche d'orientation** **Main control valve, inlet and boom and boom swing**	Catalogue id **20019**	Group **912**
2	**8278837**		Illustr. No **1007069**	Section **200**
3	**8278838**		Issue **VOE 74H9920019**	Page **441**
4	**8278839**			
5				

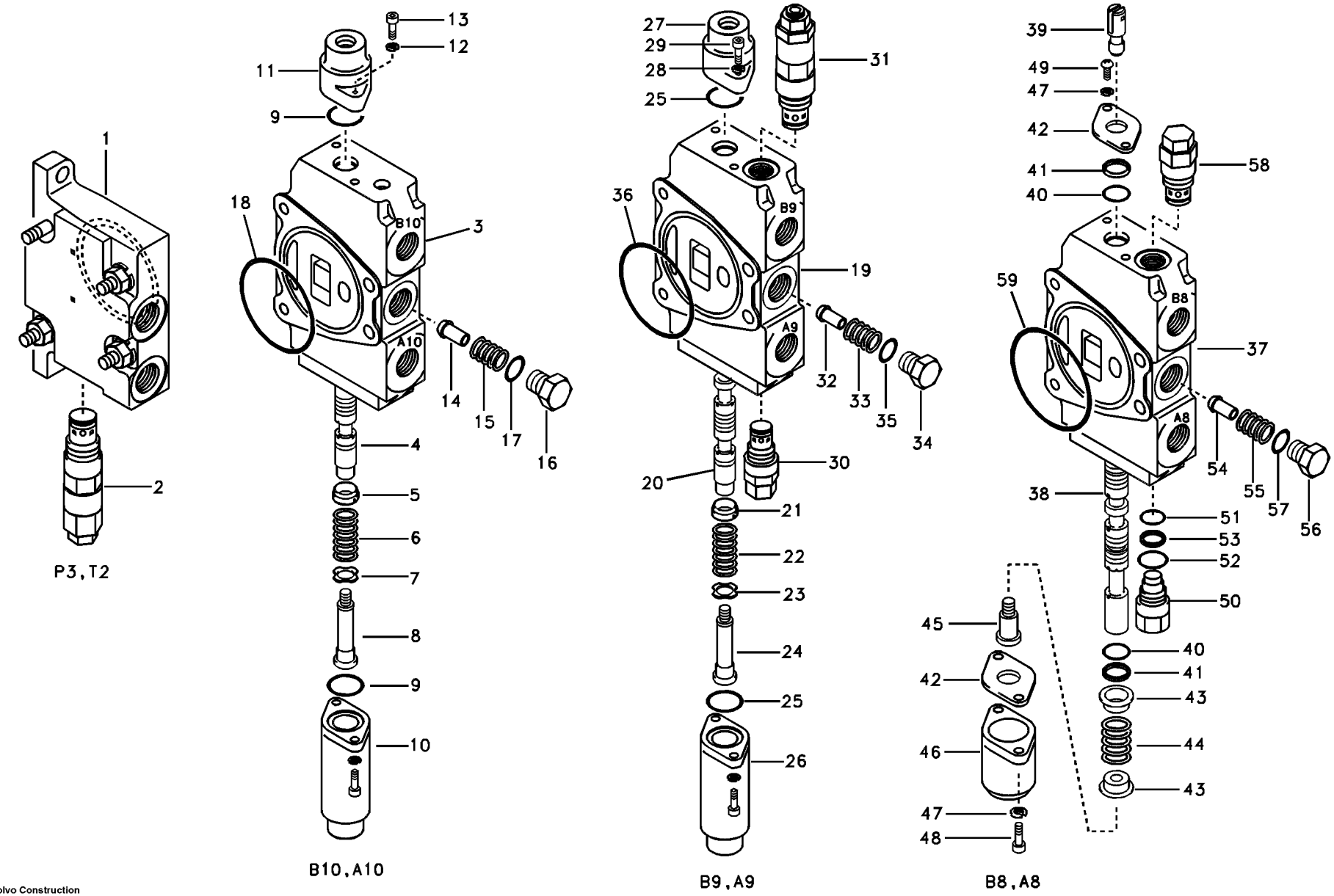
1
2
P3,T2
13
12
11
9
18
B10
3
A10
14
15
17
16
4
5
6
7
8
9
10
B10,A10
27
29
28
25
31
36
B9
19
A9
32
33
35
34
20
30
21
22
23
24
25
26
B9,A9
39
49
47
42
41
40
58
59
B8
37
A8
54
55
57
56
38
51
53
52
50
45
42
46
47
48
40
41
43
44
43
B8,A8

Fig.	Part No.	Quantity 1	2	3	PS	KIT	Description	Dénomination	Bezeichnung	품명	Denominación	Notes
	VOE 14522260	1					Valve	Soupape	Ventil	밸브	Valvula	
1	**SA 7251-30511**	1			OP		•Cover	•Capot	•Haube	• 커버	•Capo	
2	**VOE 14505436**	1					•Relief valve	•Limiteur - pression	•Druckbegrenzer	• 릴리프 밸브	•Limitador presion	
	VOE 14514639	1			SS		Valve	Soupape	Ventil	밸브	Valvula	Swing
3		1			NS		•Body	•Carcasse	•Rumpf	• 본체	•Cuerpo	
4		1			NS		•Spool	•Bobine	•Schieber	• 스풀	•Bobina	
5	**SA 7253-03021**	1					•Guide	•Rail	•Führung	• 가이드	•Guia	
6	**VOE 14507529**	1					•Spring	•Ressort	•Feder	• 스프링	•Muelle	
7	**SA 7253-03041**	1					•Washer	•Rondelle	•Scheibe	• 와셔	•Arandela	
8	**SA 7253-03051**	1					•Bolt	•Boulon	•Bolzen	• 볼트	•Perno	
9	**SA 9512-02021**	2				K	•O-ring	•Joint Torique	•O-Ring	• 오링	•Junta torica	
10	**SA 7253-03121**	1					•Cap	•Chapeau	•Kappe	• 캡	•Caperuza	
11	**SA 7253-03150**	1					•Cap	•Chapeau	•Kappe	• 캡	•Caperuza	
12	**VOE 955919**	4					•Spring Washer	•Rondelle élastique	•Federscheibe	• 스프링 와셔	•Arandela flexible	
13	**SA 9016-10605**	4					•Bolt	•Boulon	•Bolzen	• 볼트	•Perno	
14	**SA 7253-03180**	1					•Stay	•Tirant	•Strebe	• 스테이	•Barra	
15	**SA 7253-03191**	1					•Spring	•Ressort	•Feder	• 스프링	•Muelle	
16	**SA 7253-03200**	1					•Cap	•Chapeau	•Kappe	• 캡	•Caperuza	
17	**SA 9511-12018**	1			SS	K	•O-ring	•Joint Torique	•O-Ring	• 오링	•Junta torica	
18	**SA 9511-21065**	1					•O-ring	•Joint Torique	•O-Ring	• 오링	•Junta torica	
	VOE 14519804	1			SS		Valve	Soupape	Ventil	밸브	Valvula	SER NO 50001-50129 Dozer
	VOE 14536848	1					Valve	Soupape	Ventil	밸브	Valvula	SER NO 50130- (14536848M)
19		1			NS		•Body	•Carcasse	•Rumpf	• 본체	•Cuerpo	
20		1			NS		•Spool	•Bobine	•Schieber	• 스풀	•Bobina	
21	**SA 7253-03021**	1					•Guide	•Rail	•Führung	• 가이드	•Guia	
22	**VOE 14507529**	1					•Spring	•Ressort	•Feder	• 스프링	•Muelle	
23	**SA 7253-03041**	1					•Washer	•Rondelle	•Scheibe	• 와셔	•Arandela	
24	**SA 7253-03051**	1					•Bolt	•Boulon	•Bolzen	• 볼트	•Perno	

1	**8278837**	**Válvula de mando, admision, pluma y pluma de giro** 제어밸브 , 입력 및 붐 및 붐 선회 **Steuerventil, Einlass und Ausleger und Schwenk-ausleger** **Valve de commande, admission, flêche et flêche d'orientation** **Main control valve, inlet and boom and boom swing**	Catalogue id **20019**	Group **912**
2			Illustr. No **1007069**	Section **210**
3			Issue **VOE 74H9920019**	Page **443**
4				
5		**FOR CHINA**		

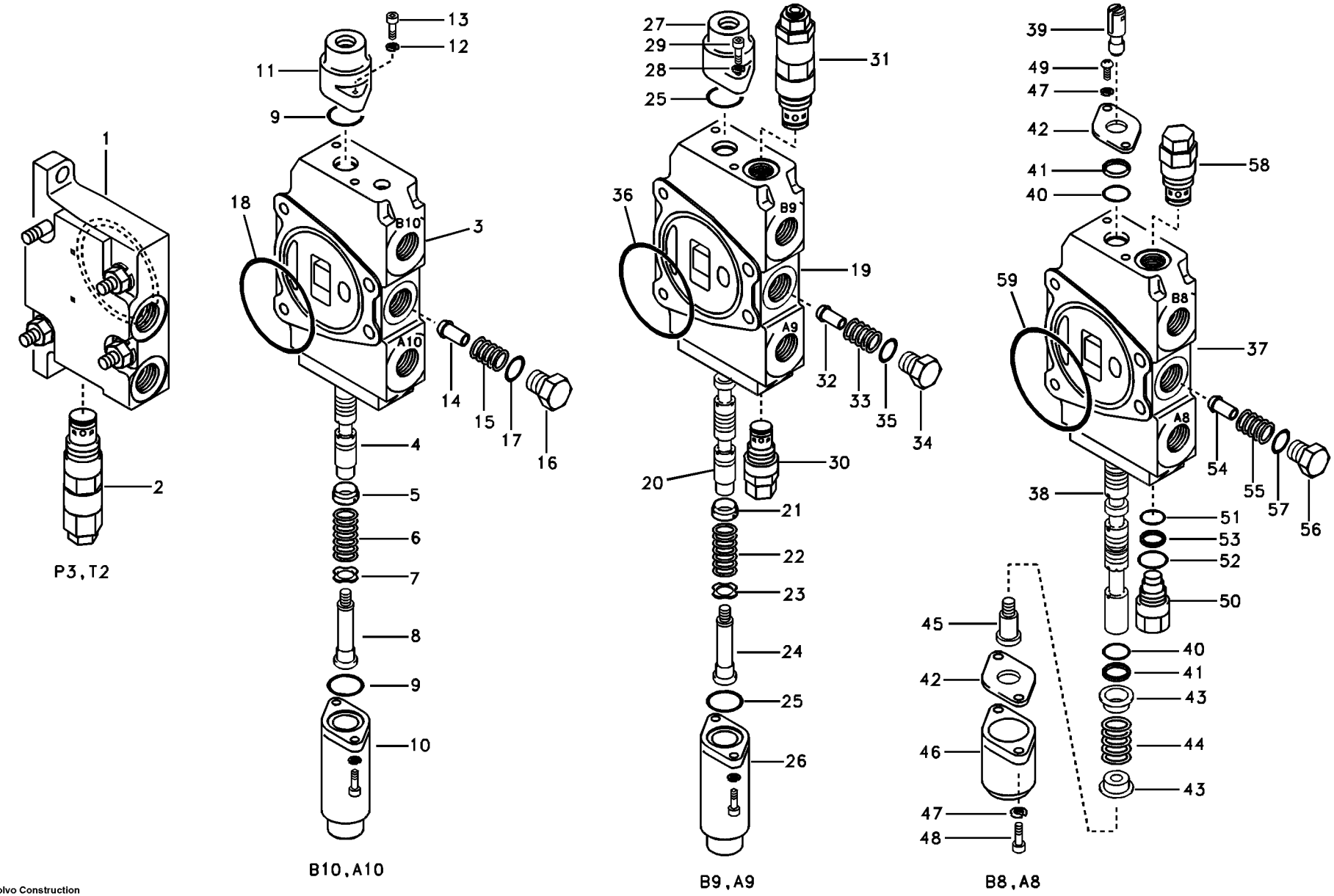
1
2
P3,T2
13
12
11
9
18
B10
3
A10
14
15
17
16
4
5
6
7
8
9
10
B10,A10
27
29
28
25
31
36
B9
19
A9
32
33
35
34
20
30
21
22
23
24
25
26
B9,A9
39
49
47
42
41
40
58
59
B8
37
A8
54
55
57
56
38
51
53
52
50
45
42
46
47
48
40
41
43
44
43
B8,A8

Fig.	Part No.	Quantity 1	2	3	PS	KIT	Description	Dénomination	Bezeichnung	품명	Denominación	Notes
25	**SA 9512-02021**	2				K	•O-ring	•Joint Torique	•O-Ring	• 오링	•Junta torica	
26	**SA 7253-03121**	1					•Cap	•Chapeau	•Kappe	• 캡	•Caperuza	
27	**SA 7253-03150**	1					•Cap	•Chapeau	•Kappe	• 캡	•Caperuza	
28	**VOE 955919**	4					•Spring Washer	•Rondelle élastique	•Federscheibe	• 스프링 와셔	•Arandela flexible	
29	**SA 9016-10605**	4					•Bolt	•Boulon	•Bolzen	• 볼트	•Perno	
30	**VOE 14504446**	1					•Relief valve	•Limiteur - pression	•Druckbegrenzer	• 릴리프 밸브	•Limitador presion	
32	**SA 7253-03180**	1					•Stay	•Tirant	•Strebe	• 스테이	•Barra	
33	**SA 7253-03191**	1					•Spring	•Ressort	•Feder	• 스프링	•Muelle	
34	**SA 7253-03200**	1					•Cap	•Chapeau	•Kappe	• 캡	•Caperuza	
35	**SA 9511-12018**	1			SS	K	•O-ring	•Joint Torique	•O-Ring	• 오링	•Junta torica	
36	**SA 9511-21065**	1					•O-ring	•Joint Torique	•O-Ring	• 오링	•Junta torica	
	VOE 14522261	1					Valve	Soupape	Ventil	밸브	Valvula	
37		1			NS		•Body	•Carcasse	•Rumpf	• 본체	•Cuerpo	
38		1			NS		•Spool	•Bobine	•Schieber	• 스풀	•Bobina	
39	**SA 7253-03011**	1					•Clevis	•Fourche	•Gabel	• 클레비스	•Horquilla	
40	**SA 7296-00201**	2				K	•O-ring	•Joint Torique	•O-Ring	• 오링	•Junta torica	
41	**SA 7253-02700**	2				K	•Ring	•Anneau	•Ring	• 링	•Anillo	
42	**SA 7253-03062**	2					•Plate	•Plaque	•Platte	• 플레이트	•Placa	
43	**SA 7253-03070**	2					•Guide	•Rail	•Führung	• 가이드	•Guia	
44	**SA 7253-03080**	1					•Spring	•Ressort	•Feder	• 스프링	•Muelle	
45	**SA 7253-03091**	1					•Bolt	•Boulon	•Bolzen	• 볼트	•Perno	
46	**SA 7253-03131**	1					•Cap	•Chapeau	•Kappe	• 캡	•Caperuza	
47	**VOE 955919**	4					•Spring Washer	•Rondelle élastique	•Federscheibe	• 스프링 와셔	•Arandela flexible	
48	**SA 9016-10605**	2					•Bolt	•Boulon	•Bolzen	• 볼트	•Perno	
49	**SA 9016-10603**	2					•Bolt	•Boulon	•Bolzen	• 볼트	•Perno	
50	**SA 7253-03171**	1					•Cap	•Chapeau	•Kappe	• 캡	•Caperuza	
51	**SA 9512-02015**	1			SS	K	•O-ring	•Joint Torique	•O-Ring	• 오링	•Junta torica	
52	**SA 9512-02020**	1				K	•O-ring	•Joint Torique	•O-Ring	• 오링	•Junta torica	
53	**SA 7253-03330**	1				K	•Ring	•Anneau	•Ring	• 링	•Anillo	
54	**SA 7253-03180**	1					•Stay	•Tirant	•Strebe	• 스테이	•Barra	

1	**8278837**	**Válvula de mando, admision, pluma y pluma de giro** 제어밸브 , 입력 및 붐 및 붐 선회 **Steuerventil, Einlass und Ausleger und Schwenk-ausleger** **Valve de commande, admission, flêche et flêche d'orientation** **Main control valve, inlet and boom and boom swing**	Catalogue id **20019**	Group **912**
2			Illustr. No **1007069**	Section **210**
3				
4			Issue **VOE 74H9920019**	Page **445**
5		**FOR CHINA**		

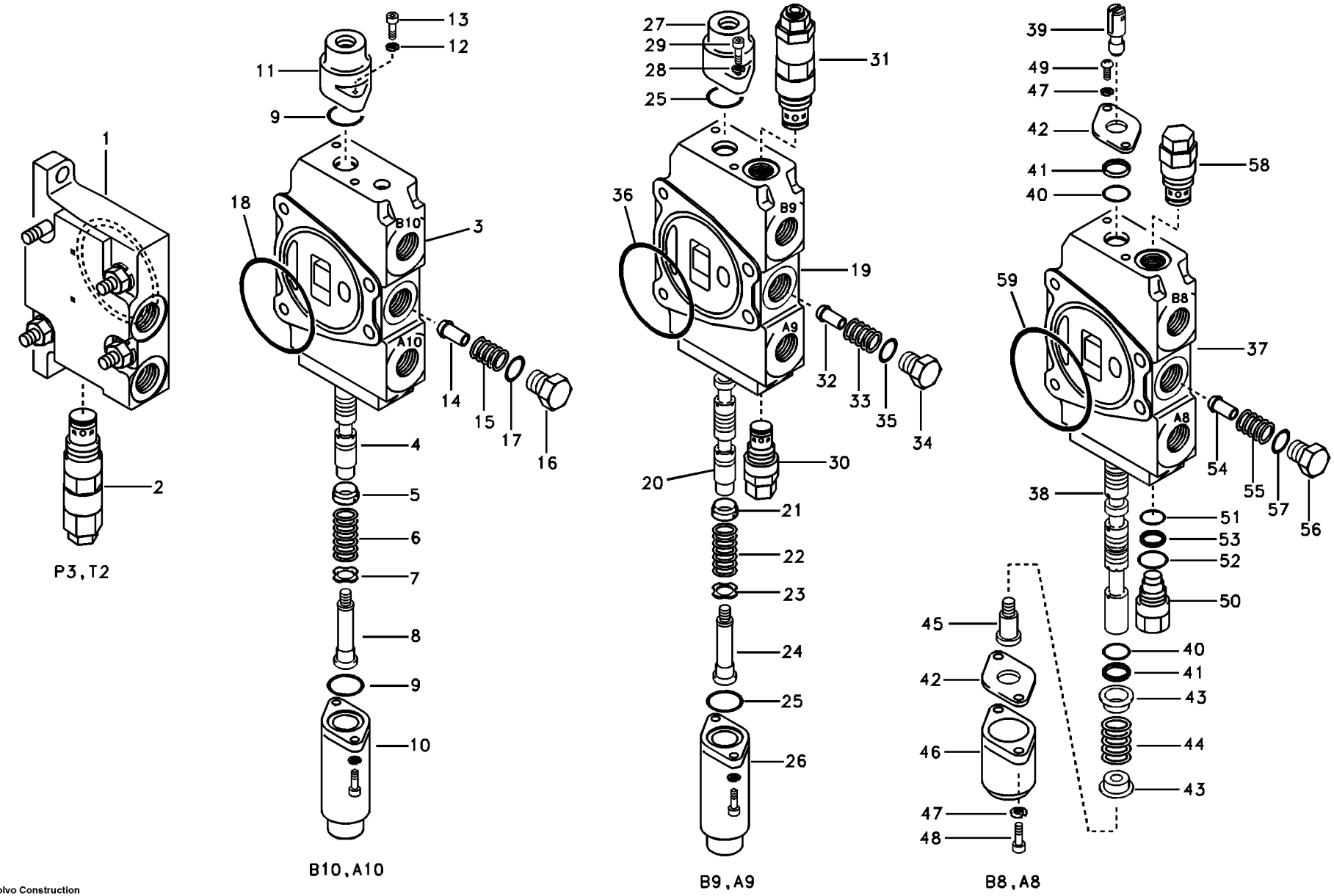
1
2
P3,T2
13
12
11
9
18
B10
3
A10
14
15
17
16
4
5
6
7
8
9
10
B10,A10
27
29
28
25
31
36
B9
19
A9
32
33
35
34
20
30
21
22
23
24
25
26
B9,A9
39
49
47
42
41
40
58
59
B8
37
A8
54
55
57
56
38
51
53
52
50
45
42
46
47
48
40
41
43
44
43
B8,A8

Fig.	Part No.	Quantity 1	2	3	PS	KIT	Description	Dénomination	Bezeichnung	품명	Denominación	Notes
55	**SA 7253-03191**	1					•Spring	•Ressort	•Feder	• 스프링	•Muelle	
56	**SA 7253-03200**	1					•Cap	•Chapeau	•Kappe	• 캡	•Caperuza	
57	**SA 9511-12018**	1			SS	K	•O-ring	•Joint Torique	•O-Ring	• 오링	•Junta torica	
58	**VOE 14504446**	1					•Relief valve	•Limiteur - pression	•Druckbegrenzer	• 릴리프 밸브	•Limitador presion	
59	**SA 9511-21065**	1					•O-ring	•Joint Torique	•O-Ring	• 오링	•Junta torica	
100	**VOE 14504879**	1					Sealing Kit	Jeu Joints	Dichtungssatz	시일 킷	Juego Retenes	

1	**8278837**	**Válvula de mando, admision, pluma y pluma de giro** 제어밸브 , 입력 및 붐 및 붐 선회 **Steuerventil, Einlass und Ausleger und Schwenk-ausleger** **Valve de commande, admission, flêche et flêche d'orientation** **Main control valve, inlet and boom and boom swing**	Catalogue id **20019**	Group **912**
2			Illustr. No **1007069**	Section **210**
3				
4			Issue **VOE 74H9920019**	Page **447**
5		**FOR CHINA**		

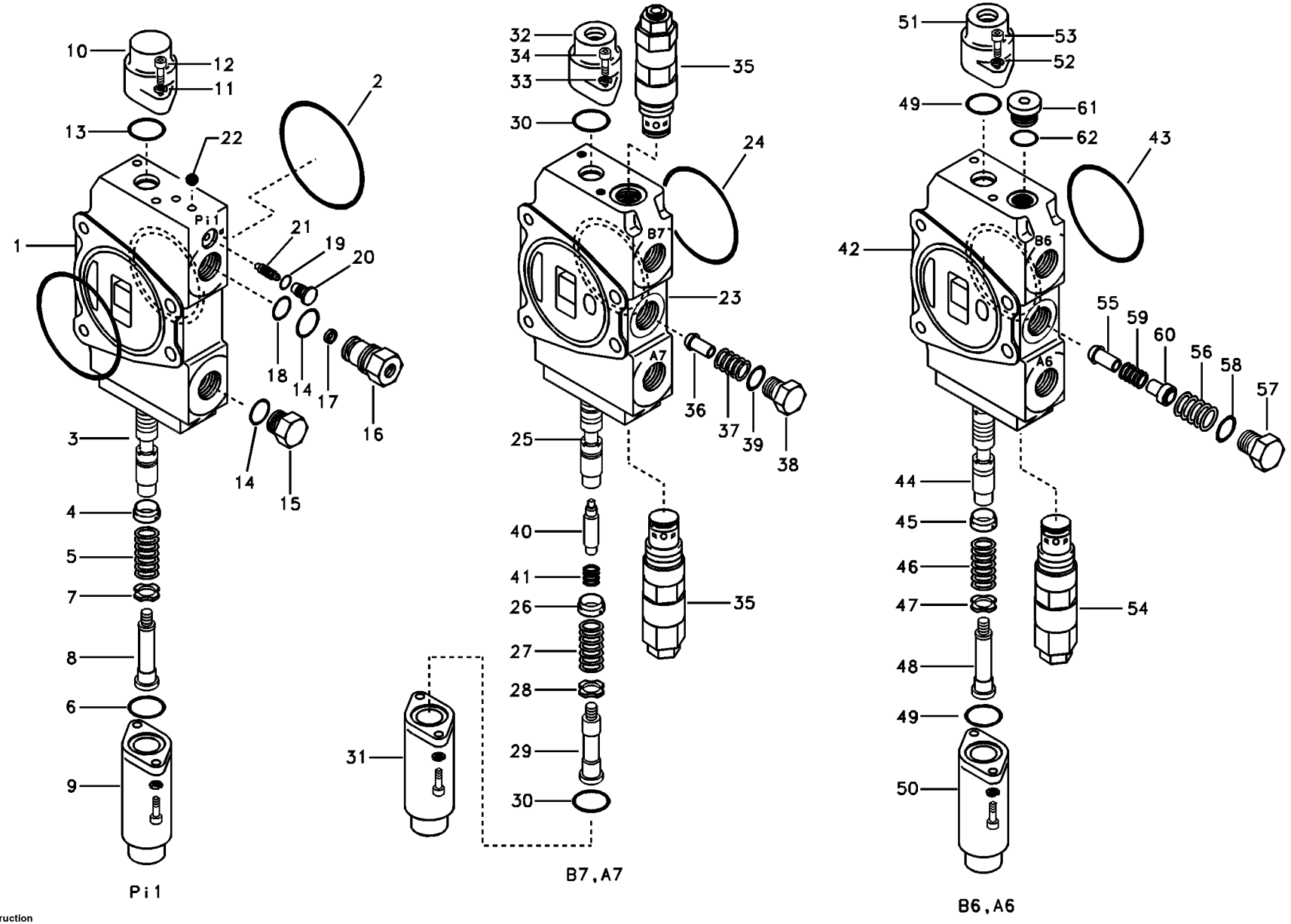
Pi1
B7,A7
B6,A6

Fig.	Part No.	Quantity 1	2	3	4	5	PS	KIT	Description	Dénomination	Bezeichnung	품명	Denominación	Notes
	VOE 14519806	1	1	1	1		SS		Valve	Soupape	Ventil	밸브	Valvula	SER NO 30001-34475 SER NO 50001-50129
	VOE 14536846	1	1	1	1				Valve	Soupape	Ventil	밸브	Valvula	SER NO 34476- SER NO 50130- (14536846M)
1		1	1	1	1		NS		•Body	•Carcasse	•Rumpf	• 본체	•Cuerpo	
2	**SA 9511-21065**	2	2	2	2				•O-ring	•Joint Torique	•O-Ring	• 오링	•Junta torica	
3		1	1	1	1		NS		•Spool	•Bobine	•Schieber	• 스풀	•Bobina	
4	**SA 7253-03021**	1	1	1	1				•Guide	•Rail	•Führung	• 가이드	•Guia	
5	**SA 7253-03100**	1	1	1	1				•Spring	•Ressort	•Feder	• 스프링	•Muelle	
6	**SA 9512-02021**	1	1	1	1			K	•O-ring	•Joint Torique	•O-Ring	• 오링	•Junta torica	
7	**SA 7253-03041**	1	1	1	1				•Washer	•Rondelle	•Scheibe	• 와셔	•Arandela	
8	**SA 7253-03051**	1	1	1	1				•Bolt	•Boulon	•Bolzen	• 볼트	•Perno	
9	**VOE 14518320**	1	1	1	1				•Cap	•Chapeau	•Kappe	• 캡	•Caperuza	
10	**VOE 14519874**	1	1	1	1				•Cap	•Chapeau	•Kappe	• 캡	•Caperuza	
11	**VOE 955919**	4	4	4	4				•Spring Washer	•Rondelle élastiqu ..	•Federscheibe	• 스프링 와셔	•Arandela flexible	
12	**SA 9016-10605**	4	4	4	4				•Bolt	•Boulon	•Bolzen	• 볼트	•Perno	
13	**SA 9512-02020**	1	1	1	1			K	•O-ring	•Joint Torique	•O-Ring	• 오링	•Junta torica	
14	**SA 9511-12018**	2	2	2	2		SS	K	•O-ring	•Joint Torique	•O-Ring	• 오링	•Junta torica	
15	**SA 9415-11041**	1	1	1	1				•Plug	•Bouchon	•Stopfen	• 플러그	•Tapon	
16	**SA 7253-03242**	1	1	1	1				•Cap	•Chapeau	•Kappe	• 캡	•Caperuza	
17	**SA 7273-03220**	1	1	1	1		SS		•Filter	•Filtre	•Filter	• 필터	•Filtro	SER NO 30001-34475 SER NO 50001-50129
	VOE 14522265	1	1	1	1				•Filter	•Filtre	•Filter	• 필터	•Filtro	SER NO 34476- SER NO 50130-
18	**SA 9511-12011**	1	1	1	1			K	•O-ring	•Joint Torique	•O-Ring	• 오링	•Junta torica	
19	**SA 9511-12008**	1	1	1	1			K	•O-ring	•Joint Torique	•O-Ring	• 오링	•Junta torica	
20	**SA 9415-11012**	1	1	1	1				•Plug	•Bouchon	•Stopfen	• 플러그	•Tapon	
21	**SA 7253-03390**	1	1	1	1				•Stay	•Tirant	•Strebe	• 스테이	•Barra	
22		5	5	5	5		NS		•Plug	•Bouchon	•Stopfen	• 플러그	•Tapon	

1	**8278836**
2	**8278837**
3	**8278838**
4	**8278839**
5	

Válvula de mando, manejar derechamento, brazo 1 y pluma 2.
제어밸브 , 주행 직진 및 디퍼 암 1 및 붐 2
Steuerventil, geradeaus fahren und Stiel 1 und Ausleger 2.
Valve de commande, direction de course - droit, bras 1 et flêche 2.
Main control valve, travel straight forward and dipper arm 1 and boom 2.

Catalogue id **20019**	Group **912**
Illustr. No **1007070**	Section **300**
Issue **VOE 74H9920019**	Page **449**

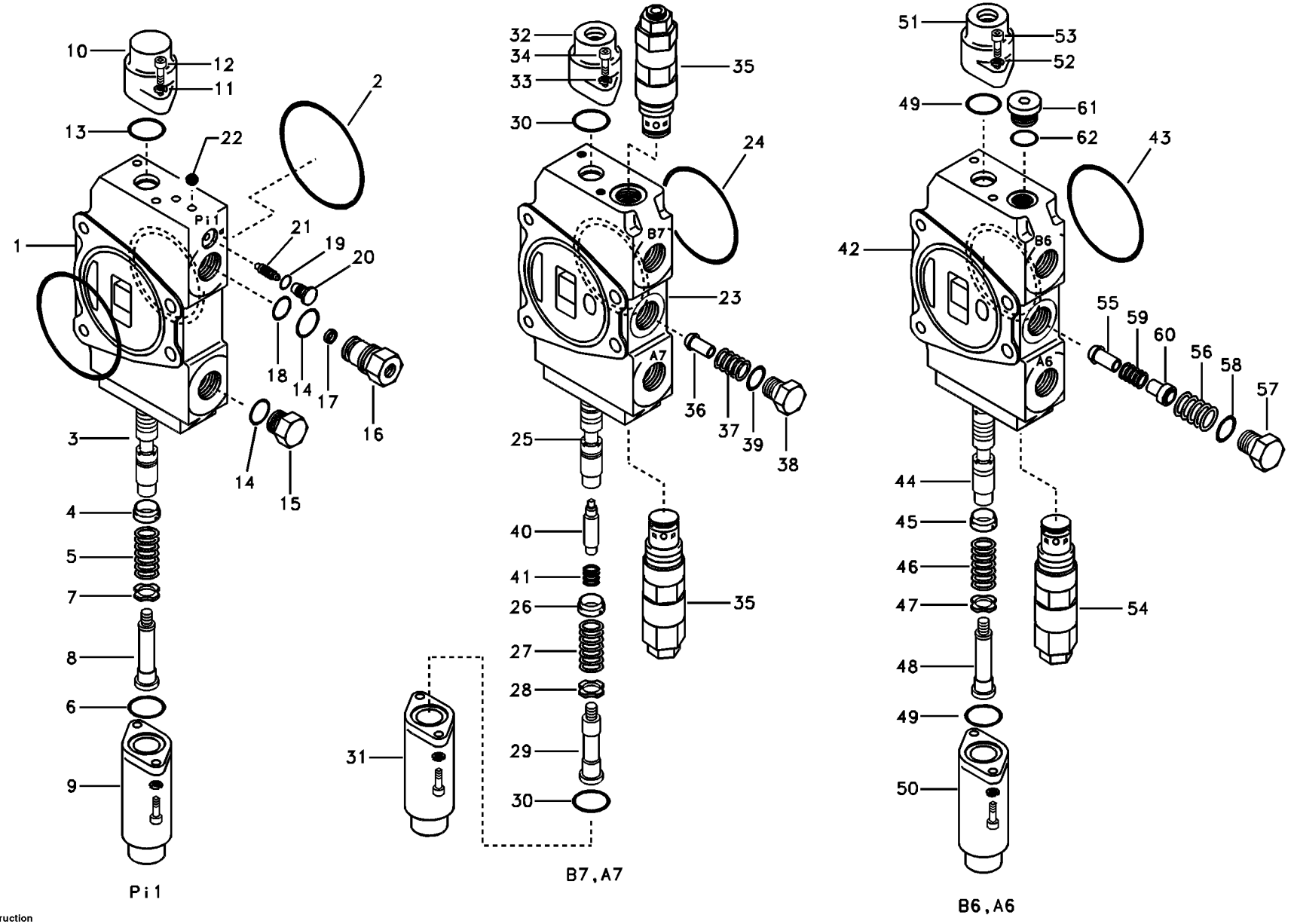
Pi1
B7,A7
B6,A6

Fig.	Part No.	Quantity 1	2	3	4	5	PS	KIT	Description	Dénomination	Bezeichnung	품명	Denominación	Notes
23		1	1	1	1		NS		•Body	•Carcasse	•Rumpf	• 본체	•Cuerpo	
24	**SA 9511-21065**	1	1	1	1				•O-ring	•Joint Torique	•O-Ring	• 오링	•Junta torica	
25		1	1	1	1		NS		•Spool	•Bobine	•Schieber	• 스풀	•Bobina	
26	**SA 7253-03021**	1	1	1	1				•Guide	•Rail	•Führung	• 가이드	•Guia	
27	**VOE 14507529**	1	1	1	1				•Spring	•Ressort	•Feder	• 스프링	•Muelle	
28	**SA 7253-03041**	1	1	1	1				•Washer	•Rondelle	•Scheibe	• 와셔	•Arandela	
29	**VOE 14515542**	1	1	1	1				•Bolt	•Boulon	•Bolzen	• 볼트	•Perno	
30	**SA 9512-02021**	2	2	2	2			K	•O-ring	•Joint Torique	•O-Ring	• 오링	•Junta torica	
31	**SA 7253-03121**	1	1	1	1				•Cap	•Chapeau	•Kappe	• 캡	•Caperuza	
32	**SA 7253-03150**	1	1	1	1				•Cap	•Chapeau	•Kappe	• 캡	•Caperuza	
33	**VOE 955919**	4	4	4	4				•Spring Washer	•Rondelle élastiqu ..	•Federscheibe	• 스프링 와셔	•Arandela flexible	
34	**SA 9016-10605**	4	4	4	4				•Bolt	•Boulon	•Bolzen	• 볼트	•Perno	
35	**SA 7257-00230**	2	2	2	2				•Relief valve	•Limiteur - pressio ..	•Druckbegrenzer	• 릴리프 밸브	•Limitador presion	
36	**SA 7253-03180**	1	1	1	1				•Stay	•Tirant	•Strebe	• 스테이	•Barra	
37	**SA 7253-03191**	1	1	1	1				•Spring	•Ressort	•Feder	• 스프링	•Muelle	
38	**SA 7253-03200**	1	1	1	1				•Cap	•Chapeau	•Kappe	• 캡	•Caperuza	
39	**SA 9511-12018**	1	1	1	1		SS	K	•O-ring	•Joint Torique	•O-Ring	• 오링	•Junta torica	
40	**VOE 14515541**	1	1	1	1				•Poppet	•Clapet champigno .	•Niete	• 포핏	•Vástago	
41	**SA 7273-11420**	1	1	1	1				•Spring	•Ressort	•Feder	• 스프링	•Muelle	
	SA 7250-21774	1	1	1	1				Valve	Soupape	Ventil	밸브	Valvula	Boom 2 SER NO 30001-30417
	VOE 14522262	1	1	1	1				Valve	Soupape	Ventil	밸브	Valvula	SER NO 30418-
42		1	1	1	1		NS		•Body	•Carcasse	•Rumpf	• 본체	•Cuerpo	
43	**SA 9511-21065**	1	1	1	1				•O-ring	•Joint Torique	•O-Ring	• 오링	•Junta torica	
44		1	1	1	1		NS		•Spool	•Bobine	•Schieber	• 스풀	•Bobina	
45	**SA 7253-03021**	1	1	1	1				•Guide	•Rail	•Führung	• 가이드	•Guia	
46	**SA 7253-03111**	1	1	1	1				•Spring	•Ressort	•Feder	• 스프링	•Muelle	
47	**SA 7253-03041**	1	1	1	1				•Washer	•Rondelle	•Scheibe	• 와셔	•Arandela	
48	**SA 7253-03051**	1	1	1	1				•Bolt	•Boulon	•Bolzen	• 볼트	•Perno	
49	**SA 9512-02021**	2	2	2	2			K	•O-ring	•Joint Torique	•O-Ring	• 오링	•Junta torica	

1	**8278836**	**Válvula de mando, manejar derechamento, brazo 1 y pluma 2.** 제어밸브 , 주행 직진 및 디퍼 암 1 및 붐 2 **Steuerventil, geradeaus fahren und Stiel 1 und Ausleger 2.** **Valve de commande, direction de course - droit, bras 1 et flêche 2.** **Main control valve, travel straight forward and dipper arm 1 and boom 2.**	Catalogue id **20019** / Group **912** Illustr. No **1007070** / Section **300** Issue **VOE 74H9920019** / Page **451**
2	**8278837**		
3	**8278838**		
4	**8278839**		
5			

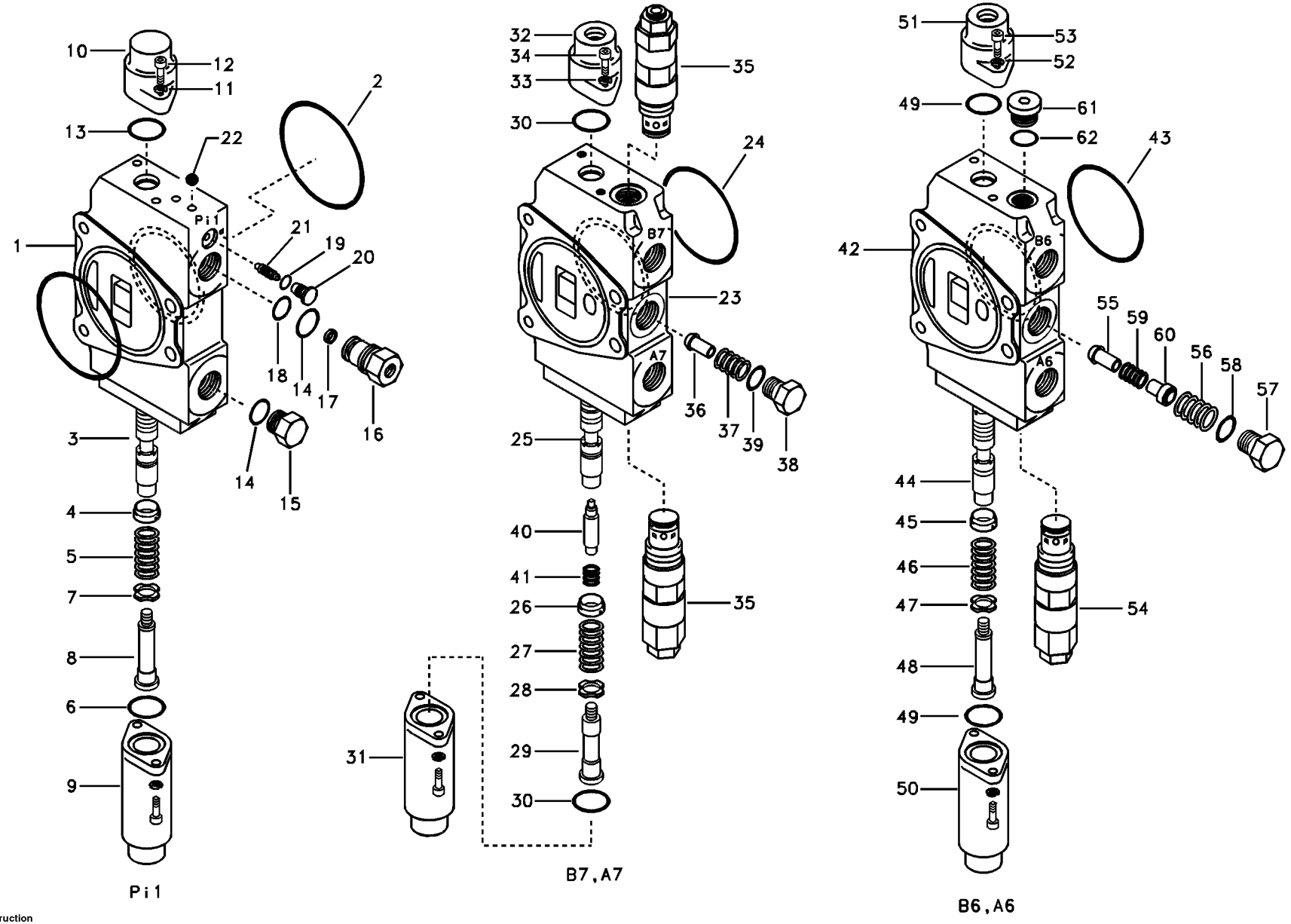
Pi1
B7,A7
B6,A6

Fig.	Part No.	Quantity 1	2	3	4	5	PS	KIT	Description	Dénomination	Bezeichnung	품명	Denominación	Notes
50	**SA 7253-03121**	1	1	1	1				•Cap	•Chapeau	•Kappe	• 캡	•Caperuza	
51	**SA 7253-03150**	1	1	1	1				•Cap	•Chapeau	•Kappe	• 캡	•Caperuza	
52	**VOE 955919**	4	4	4	4				•Spring Washer	•Rondelle élastiqu ..	•Federscheibe	• 스프링 와셔	•Arandela flexible	
53	**SA 9016-10605**	4	4	4	4				•Bolt	•Boulon	•Bolzen	• 볼트	•Perno	
54	**SA 7257-00230**	1	1	1	1				•Relief valve	•Limiteur - pressio ..	•Druckbegrenzer	• 릴리프 밸브	•Limitador presion	
55	**SA 7253-03211**	1	1	1	1				•Stay	•Tirant	•Strebe	• 스테이	•Barra	
56	**SA 7253-03191**	1	1	1	1				•Spring	•Ressort	•Feder	• 스프링	•Muelle	
57	**SA 7253-03200**	1	1	1	1				•Cap	•Chapeau	•Kappe	• 캡	•Caperuza	
58	**SA 9511-12018**	1	1	1	1		SS	K	•O-ring	•Joint Torique	•O-Ring	• 오링	•Junta torica	
59	**SA 7253-03221**	1	1	1	1				•Spring	•Ressort	•Feder	• 스프링	•Muelle	
60	**SA 7253-03231**	1	1	1	1				•Stay	•Tirant	•Strebe	• 스테이	•Barra	
61	**SA 9415-11022**	1	1	1	1				•Plug	•Bouchon	•Stopfen	• 플러그	•Tapon	
62	**SA 9511-12011**	1	1	1	1			K	•O-ring	•Joint Torique	•O-Ring	• 오링	•Junta torica	
100	**VOE 14504879**	1	1	1	1				Sealing Kit	Jeu Joints	Dichtungssatz	시일 킷	Juego Retenes	

1	**8278836**	**Válvula de mando, manejar derechamento, brazo 1 y pluma 2.** 제어밸브 , 주행 직진 및 디퍼 암 1 및 붐 2 **Steuerventil, geradeaus fahren und Stiel 1 und Ausleger 2.** **Valve de commande, direction de course - droit, bras 1 et flêche 2.** **Main control valve, travel straight forward and dipper arm 1 and boom 2.**	Catalogue id **20019**	Group **912**
2	**8278837**			
3	**8278838**		Illustr. No **1007070**	Section **300**
4	**8278839**			
5			Issue **VOE 74H9920019**	Page **453**

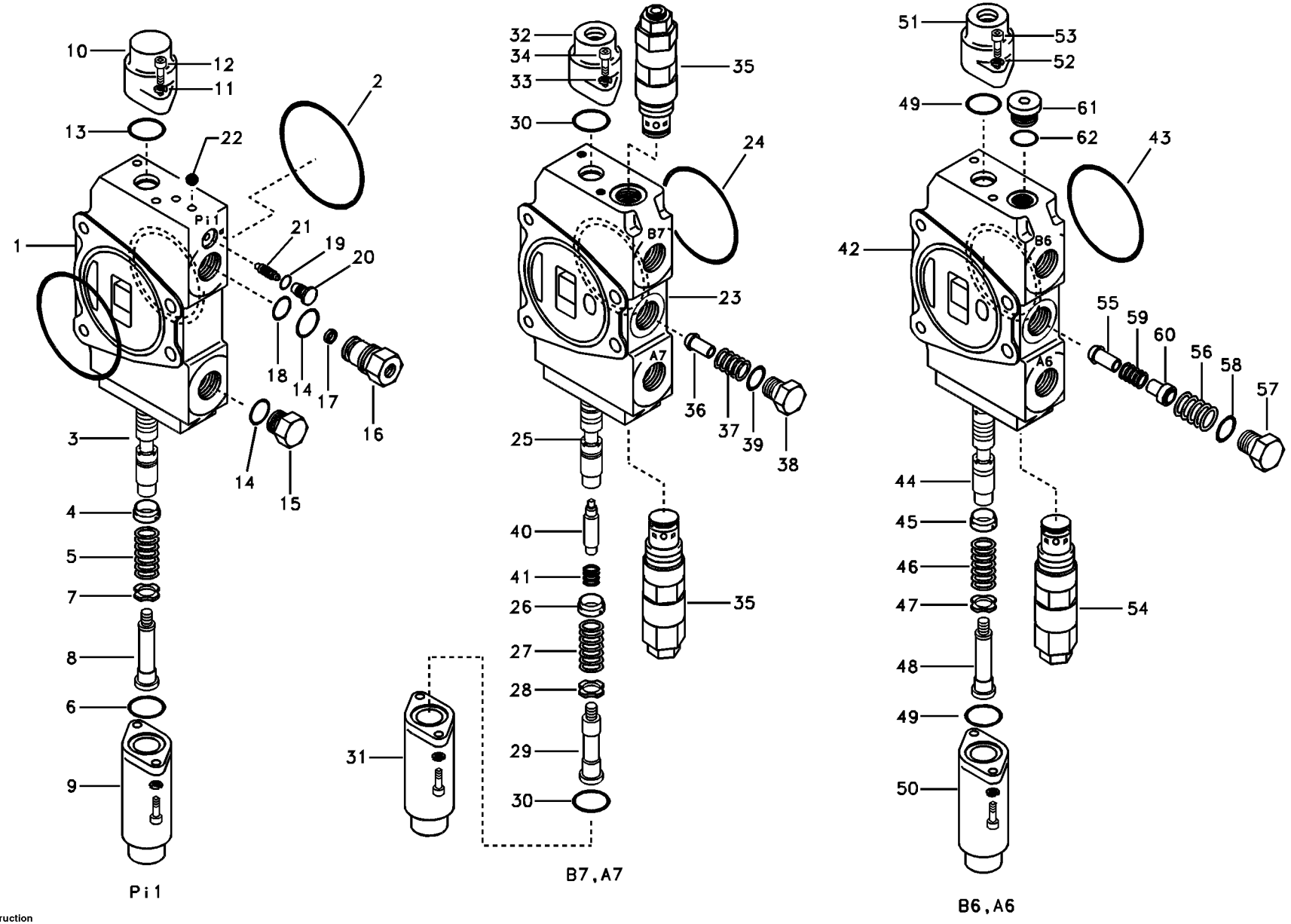
Pi1
B7,A7
B6,A6

Fig.	Part No.	Quantity 1	2	3	PS	KIT	Description	Dénomination	Bezeichnung	품명	Denominación	Notes
	VOE 14519806	1			SS		Valve	Soupape	Ventil	밸브	Valvula	SER NO 50001-50129
	VOE 14536846	1					Valve	Soupape	Ventil	밸브	Valvula	SER NO 50130- (14536846M)
1		1			NS		•Body	•Carcasse	•Rumpf	• 본체	•Cuerpo	
2	**SA 9511-21065**	2					•O-ring	•Joint Torique	•O-Ring	• 오링	•Junta torica	
3		1			NS		•Spool	•Bobine	•Schieber	• 스풀	•Bobina	
4	**SA 7253-03021**	1					•Guide	•Rail	•Führung	• 가이드	•Guia	
5	**SA 7253-03100**	1					•Spring	•Ressort	•Feder	• 스프링	•Muelle	
6	**SA 9512-02021**	1				K	•O-ring	•Joint Torique	•O-Ring	• 오링	•Junta torica	
7	**SA 7253-03041**	1					•Washer	•Rondelle	•Scheibe	• 와셔	•Arandela	
8	**SA 7253-03051**	1					•Bolt	•Boulon	•Bolzen	• 볼트	•Perno	
9	**VOE 14518320**	1					•Cap	•Chapeau	•Kappe	• 캡	•Caperuza	
10	**VOE 14519874**	1					•Cap	•Chapeau	•Kappe	• 캡	•Caperuza	
11	**VOE 955919**	4					•Spring Washer	•Rondelle élastique	•Federscheibe	• 스프링 와셔	•Arandela flexible	
12	**SA 9016-10605**	4					•Bolt	•Boulon	•Bolzen	• 볼트	•Perno	
13	**SA 9512-02020**	1				K	•O-ring	•Joint Torique	•O-Ring	• 오링	•Junta torica	
14	**SA 9511-12018**	2			SS	K	•O-ring	•Joint Torique	•O-Ring	• 오링	•Junta torica	
15	**SA 9415-11041**	1					•Plug	•Bouchon	•Stopfen	• 플러그	•Tapon	
16	**SA 7253-03242**	1					•Cap	•Chapeau	•Kappe	• 캡	•Caperuza	
17	**SA 7273-03220**	1			SS		•Filter	•Filtre	•Filter	• 필터	•Filtro	SER NO 50001-50129
	VOE 14522265	1					•Filter	•Filtre	•Filter	• 필터	•Filtro	SER NO 50130-
18	**SA 9511-12011**	1				K	•O-ring	•Joint Torique	•O-Ring	• 오링	•Junta torica	
19	**SA 9511-12008**	1				K	•O-ring	•Joint Torique	•O-Ring	• 오링	•Junta torica	
20	**SA 9415-11012**	1					•Plug	•Bouchon	•Stopfen	• 플러그	•Tapon	
21	**SA 7253-03390**	1					•Stay	•Tirant	•Strebe	• 스테이	•Barra	
22	**SA 9446-30400**	5			OP		•Plug	•Bouchon	•Stopfen	• 플러그	•Tapon	
	VOE 14519807	1			SS		Valve	Soupape	Ventil	밸브	Valvula	Arm 1
23		1			NS		•Body	•Carcasse	•Rumpf	• 본체	•Cuerpo	
24	**SA 9511-21065**	1					•O-ring	•Joint Torique	•O-Ring	• 오링	•Junta torica	
25		1			NS		•Spool	•Bobine	•Schieber	• 스풀	•Bobina	

1	**8278837**	**Válvula de mando, manejar derechamento, brazo 1 y pluma 2.** 제어밸브 , 주행 직진 및 디퍼 암 1 및 붐 2 **Steuerventil, geradeaus fahren und Stiel 1 und Ausleger 2.** **Valve de commande, direction de course - droit, bras 1 et flêche 2.** **Main control valve, travel straight forward and dipper arm 1 and boom 2.**	Catalogue id **20019**	Group **912**
2				
3			Illustr. No **1007070**	Section **310**
4				
5		**FOR CHINA**	Issue **VOE 74H9920019**	Page **455**

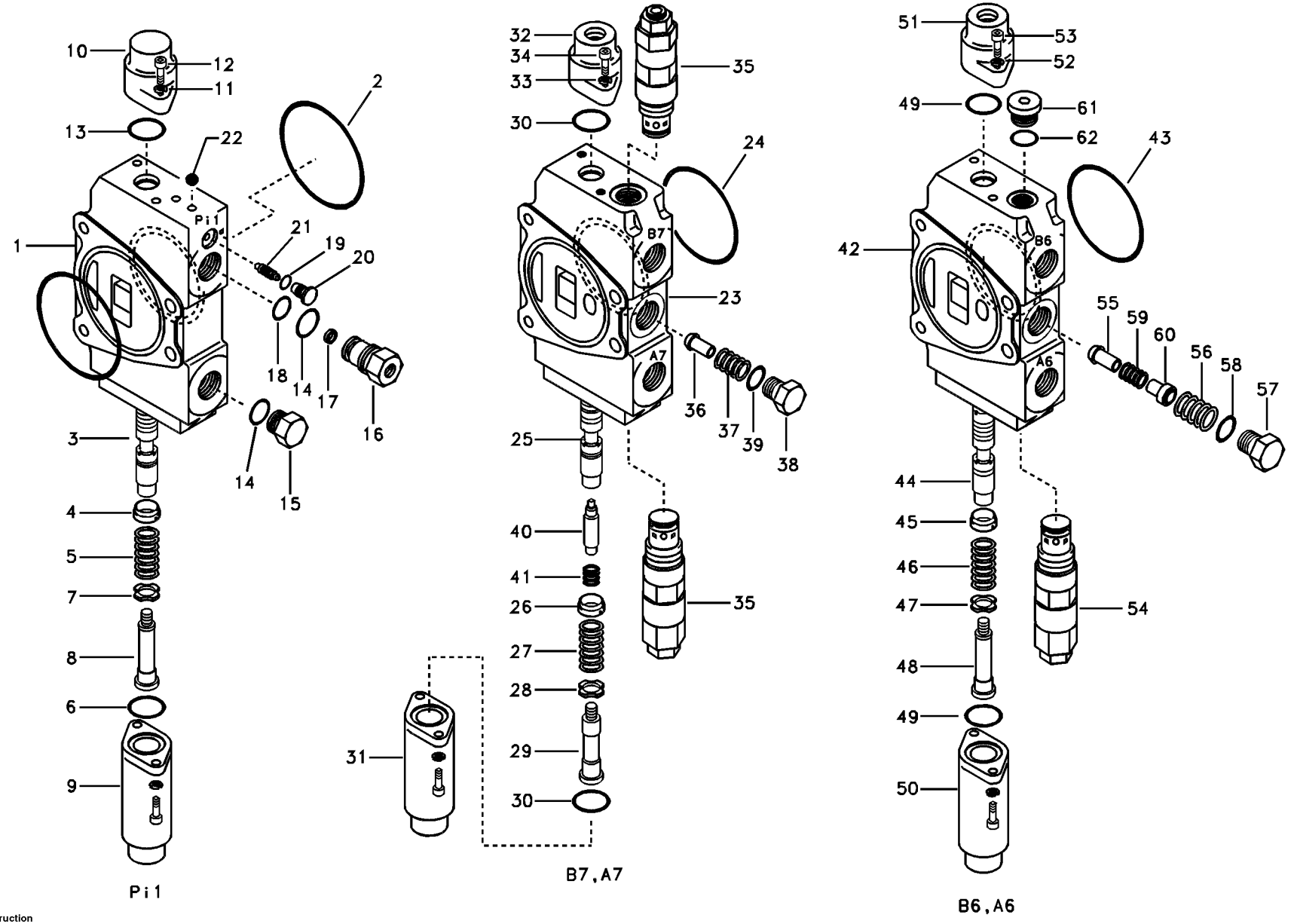
Pi1
B7,A7
B6,A6

Fig.	Part No.	Quantity 1	2	3	PS	KIT	Description	Dénomination	Bezeichnung	품명	Denominación	Notes
26	**SA 7253-03021**	1					•Guide	•Rail	•Führung	• 가이드	•Guia	
27	**VOE 14507529**	1					•Spring	•Ressort	•Feder	• 스프링	•Muelle	
28	**SA 7253-03041**	1					•Washer	•Rondelle	•Scheibe	• 와셔	•Arandela	
29	**VOE 14515542**	1					•Bolt	•Boulon	•Bolzen	• 볼트	•Perno	
30	**SA 9512-02021**	2				K	•O-ring	•Joint Torique	•O-Ring	• 오링	•Junta torica	
31	**SA 7253-03121**	1					•Cap	•Chapeau	•Kappe	• 캡	•Caperuza	
32	**SA 7253-03150**	1					•Cap	•Chapeau	•Kappe	• 캡	•Caperuza	
33	**VOE 955919**	4					•Spring Washer	•Rondelle élastique	•Federscheibe	• 스프링 와셔	•Arandela flexible	
34	**SA 9016-10605**	4					•Bolt	•Boulon	•Bolzen	• 볼트	•Perno	
35	**SA 7257-00230**	2					•Relief valve	•Limiteur - pression	•Druckbegrenzer	• 릴리프 밸브	•Limitador presion	
36	**SA 7253-03180**	1					•Stay	•Tirant	•Strebe	• 스테이	•Barra	
37	**SA 7253-03191**	1					•Spring	•Ressort	•Feder	• 스프링	•Muelle	
38	**SA 7253-03200**	1					•Cap	•Chapeau	•Kappe	• 캡	•Caperuza	
39	**SA 9511-12018**	1			SS	K	•O-ring	•Joint Torique	•O-Ring	• 오링	•Junta torica	
40	**VOE 14515541**	1					•Poppet	•Clapet champignon	•Niete	• 포핏	•Vástago	
41	**SA 7273-11420**	1					•Spring	•Ressort	•Feder	• 스프링	•Muelle	
	VOE 14522262	1					Valve	Soupape	Ventil	밸브	Valvula	
42		1			NS		•Body	•Carcasse	•Rumpf	• 본체	•Cuerpo	
43	**SA 9511-21065**	1					•O-ring	•Joint Torique	•O-Ring	• 오링	•Junta torica	
44		1			NS		•Spool	•Bobine	•Schieber	• 스풀	•Bobina	
45	**SA 7253-03021**	1					•Guide	•Rail	•Führung	• 가이드	•Guia	
46	**SA 7253-03111**	1					•Spring	•Ressort	•Feder	• 스프링	•Muelle	
47	**SA 7253-03041**	1					•Washer	•Rondelle	•Scheibe	• 와셔	•Arandela	
48	**SA 7253-03051**	1					•Bolt	•Boulon	•Bolzen	• 볼트	•Perno	
49	**SA 9512-02021**	2				K	•O-ring	•Joint Torique	•O-Ring	• 오링	•Junta torica	
50	**SA 7253-03121**	1					•Cap	•Chapeau	•Kappe	• 캡	•Caperuza	
51	**SA 7253-03150**	1					•Cap	•Chapeau	•Kappe	• 캡	•Caperuza	
52	**VOE 955919**	4					•Spring Washer	•Rondelle élastique	•Federscheibe	• 스프링 와셔	•Arandela flexible	
53	**SA 9016-10605**	4					•Bolt	•Boulon	•Bolzen	• 볼트	•Perno	
54	**SA 7257-00230**	1					•Relief valve	•Limiteur - pression	•Druckbegrenzer	• 릴리프 밸브	•Limitador presion	

1	**8278837**	**Válvula de mando, manejar derechamento, brazo 1 y pluma 2.** 제어밸브 , 주행 직진 및 디퍼 암 1 및 붐 2 **Steuerventil, geradeaus fahren und Stiel 1 und Ausleger 2.** **Valve de commande, direction de course - droit, bras 1 et flêche 2.** **Main control valve, travel straight forward and dipper arm 1 and boom 2.**	Catalogue id **20019**	Group **912**
2				
3			Illustr. No **1007070**	Section **310**
4				
5		**FOR CHINA**	Issue **VOE 74H9920019**	Page **457**

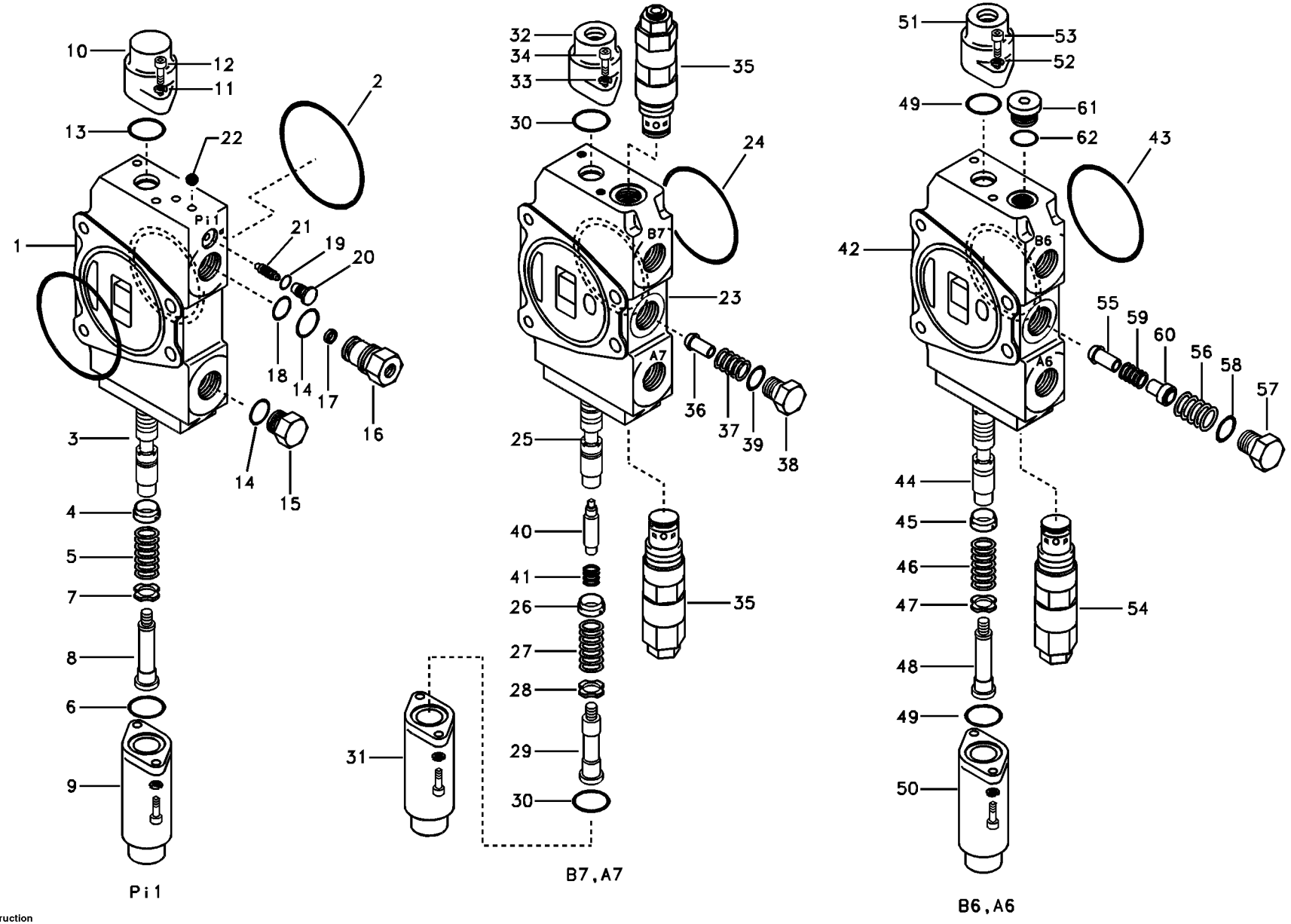
Pi1
B7,A7
B6,A6

Fig.	Part No.	Quantity 1	2	3	PS	KIT	Description	Dénomination	Bezeichnung	품명	Denominación	Notes
55	**SA 7253-03211**	1					•Stay	•Tirant	•Strebe	• 스테이	•Barra	
56	**SA 7253-03191**	1					•Spring	•Ressort	•Feder	• 스프링	•Muelle	
57	**SA 7253-03200**	1					•Cap	•Chapeau	•Kappe	• 캡	•Caperuza	
58	**SA 9511-12018**	1			SS	K	•O-ring	•Joint Torique	•O-Ring	• 오링	•Junta torica	
59	**SA 7253-03221**	1					•Spring	•Ressort	•Feder	• 스프링	•Muelle	
60	**SA 7253-03231**	1					•Stay	•Tirant	•Strebe	• 스테이	•Barra	
61	**SA 9415-11022**	1					•Plug	•Bouchon	•Stopfen	• 플러그	•Tapon	
62	**SA 9511-12011**	1				K	•O-ring	•Joint Torique	•O-Ring	• 오링	•Junta torica	
100	**VOE 14504879**	1					Sealing Kit	Jeu Joints	Dichtungssatz	시일 킷	Juego Retenes	

1	**8278837**	**Válvula de mando, manejar derechamento, brazo 1 y pluma 2.** 제어밸브 , 주행 직진 및 디퍼 암 1 및 붐 2 **Steuerventil, geradeaus fahren und Stiel 1 und Ausleger 2.** **Valve de commande, direction de course - droit, bras 1 et flêche 2.** **Main control valve, travel straight forward and dipper arm 1 and boom 2.**	Catalogue id **20019**	Group **912**
2				
3			Illustr. No **1007070**	Section **310**
4				
5		**FOR CHINA**	Issue **VOE 74H9920019**	Page **459**

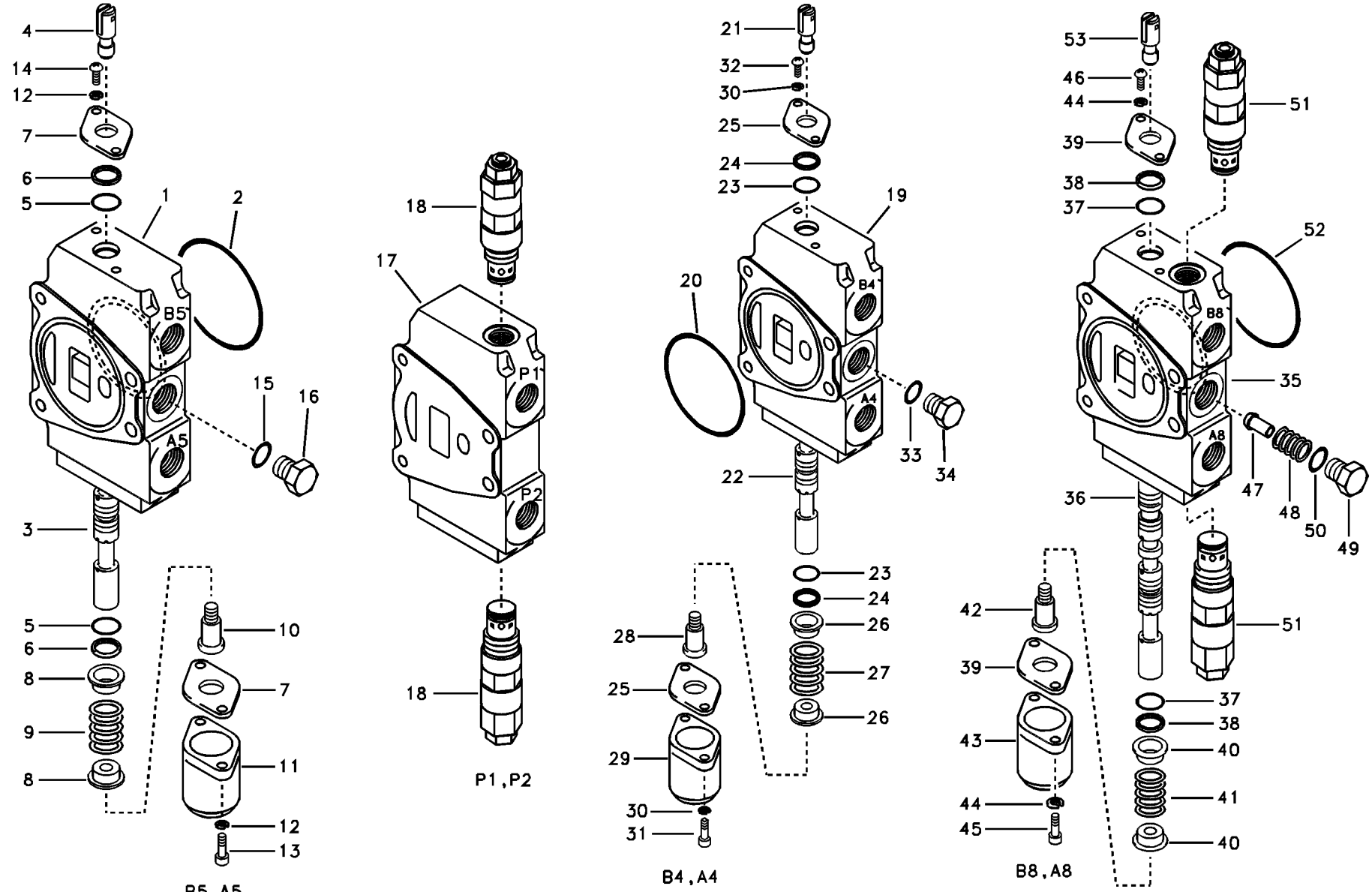
4
14
12
7
6
5
1
2
B5
A5
15
16
3
5
6
8
9
8
10
7
11
12
13
B5,A5
18
17
P1
P2
18
P1,P2
21
32
30
25
24
23
19
20
B4
A4
33
34
22
23
24
26
27
26
28
25
29
30
31
B4,A4
53
46
44
39
38
37
51
52
B8
A8
35
47
48
50
49
36
51
37
38
40
41
40
42
39
43
44
45
B8,A8

Fig.	Part No.	Quantity 1	2	3	4	5	PS	KIT	Description	Dénomination	Bezeichnung	품명	Denominación	Notes
	SA 7250-21784	1	1	1	1		SS		Valve	Soupape	Ventil	밸브	Valvula	Travel LH
1		1	1	1	1		NS		•Body	•Carcasse	•Rumpf	• 본체	•Cuerpo	
2	**SA 9511-21065**	1	1	1	1				•O-ring	•Joint Torique	•O-Ring	• 오링	•Junta torica	
3		1	1	1	1		NS		•Spool	•Bobine	•Schieber	• 스풀	•Bobina	
4	**SA 7253-03011**	1	1	1	1				•Clevis	•Fourche	•Gabel	• 클레비스	•Horquilla	
5	**SA 7296-00201**	2	2	2	2			K	•O-ring	•Joint Torique	•O-Ring	• 오링	•Junta torica	
6	**SA 7253-02700**	2	2	2	2			K	•Ring	•Anneau	•Ring	• 링	•Anillo	
7	**SA 7253-03062**	2	2	2	2				•Plate	•Plaque	•Platte	• 플레이트	•Placa	
8	**SA 7253-03070**	2	2	2	2				•Guide	•Rail	•Führung	• 가이드	•Guia	
9	**SA 7253-03080**	1	1	1	1				•Spring	•Ressort	•Feder	• 스프링	•Muelle	
10	**SA 7253-03091**	1	1	1	1				•Bolt	•Boulon	•Bolzen	• 볼트	•Perno	
11	**SA 7253-03131**	1	1	1	1				•Cap	•Chapeau	•Kappe	• 캡	•Caperuza	
12	**VOE 955919**	4	4	4	4				•Spring Washer	•Rondelle élastiqu ..	•Federscheibe	• 스프링 와셔	•Arandela flexible	
13	**SA 9016-10605**	2	2	2	2				•Bolt	•Boulon	•Bolzen	• 볼트	•Perno	
14	**SA 9016-10603**	2	2	2	2				•Bolt	•Boulon	•Bolzen	• 볼트	•Perno	
15	**SA 9511-12018**	1	1	1	1		SS	K	•O-ring	•Joint Torique	•O-Ring	• 오링	•Junta torica	
16	**SA 9415-11041**	1	1	1	1				•Plug	•Bouchon	•Stopfen	• 플러그	•Tapon	
	VOE 14507455	1	1	1	1				Valve	Soupape	Ventil	밸브	Valvula	Inlet
17	**SA 7251-30521**	1	1	1	1				•Cover	•Capot	•Haube	• 커버	•Capo	
18	**VOE 14505436**	2	2	2	2				•Relief valve	•Limiteur - pressio ..	•Druckbegrenzer	• 릴리프 밸브	•Limitador presion	
	SA 7250-21804	1	1	1	1				Valve	Soupape	Ventil	밸브	Valvula	Travel RH
19		1	1	1	1		NS		•Body	•Carcasse	•Rumpf	• 본체	•Cuerpo	
20	**SA 9511-21065**	1	1	1	1				•O-ring	•Joint Torique	•O-Ring	• 오링	•Junta torica	
21	**SA 7253-03011**	1	1	1	1				•Clevis	•Fourche	•Gabel	• 클레비스	•Horquilla	
22		1	1	1	1		NS		•Spool	•Bobine	•Schieber	• 스풀	•Bobina	
23	**SA 7296-00201**	2	2	2	2			K	•O-ring	•Joint Torique	•O-Ring	• 오링	•Junta torica	
24	**SA 7253-02700**	2	2	2	2			K	•Ring	•Anneau	•Ring	• 링	•Anillo	
25	**SA 7253-03062**	2	2	2	2				•Plate	•Plaque	•Platte	• 플레이트	•Placa	
26	**SA 7253-03070**	2	2	2	2				•Guide	•Rail	•Führung	• 가이드	•Guia	
27	**SA 7253-03080**	1	1	1	1				•Spring	•Ressort	•Feder	• 스프링	•Muelle	

1	**8278836**	**Válvula de mando, manejar izquierdo, adm. parte central, manejar derecha.** 제어밸브 , 좌측 주행 및 중간 입력 및 우측 주행 **Steuerventil, fahren links, Einlass Mittelteil, fahren rechts** **Valve de commande, direction de course gauche et droite, admission centrale** **Main control valve, travel Lh and mid inlet and travel Rh**
2	**8278837**	
3	**8278838**	
4	**8278839**	
5		

Catalogue id	Group
20019	**912**
Illustr. No **1007071**	Section **400**
Issue **VOE 74H9920019**	Page **461**

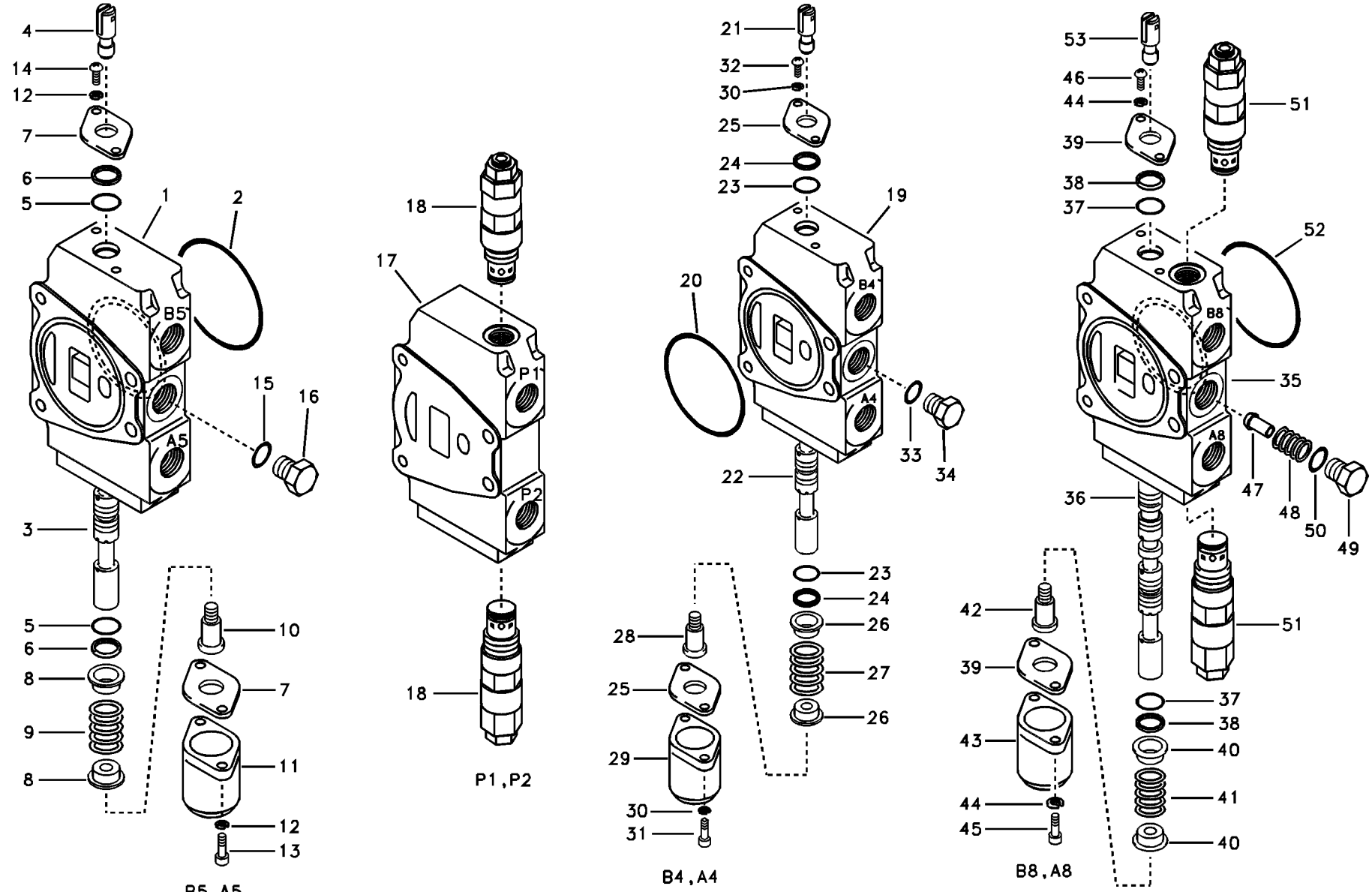
4
14
12
7
6
5
1
2
B5
A5
15
16
3
5
6
8
9
8
10
7
11
12
13
B5,A5
18
17
P1
P2
18
P1,P2
21
32
30
25
24
23
19
20
B4
A4
33
34
22
23
24
26
27
26
28
25
29
30
31
B4,A4
53
46
44
39
38
37
51
52
B8
A8
35
47
48
50
49
36
51
37
38
40
41
40
42
39
43
44
45
B8,A8

Fig.	Part No.	Quantity 1	2	3	4	5	PS	KIT	Description	Dénomination	Bezeichnung	품명	Denominación	Notes
28	**SA 7253-03091**	1	1	1	1				•Bolt	•Boulon	•Bolzen	• 볼트	•Perno	
29	**SA 7253-03131**	1	1	1	1				•Cap	•Chapeau	•Kappe	• 캡	•Caperuza	
30	**VOE 955919**	4	4	4	4				•Spring Washer	•Rondelle élastiqu ..	•Federscheibe	• 스프링 와셔	•Arandela flexible	
31	**SA 9016-10605**	2	2	2	2				•Bolt	•Boulon	•Bolzen	• 볼트	•Perno	
32	**SA 9016-10603**	2	2	2	2				•Bolt	•Boulon	•Bolzen	• 볼트	•Perno	
33	**SA 9511-12018**	1	1	1	1		SS	K	•O-ring	•Joint Torique	•O-Ring	• 오링	•Junta torica	
34	**SA 9415-11041**	1	1	1	1				•Plug	•Bouchon	•Stopfen	• 플러그	•Tapon	
	SA 14503974M	1			1				valve body	bloc-soupapes	ventilgruppe ……		cuerpo valvula	(VOE 14503974) Option
35		1			1		NS		•Body	•Carcasse	•Rumpf	• 본체	•Cuerpo	
36	**VOE 14503973**	1			1				•Spool	•Bobine	•Schieber	• 스풀	•Bobina	
37	**SA 7296-00201**	2			2			K	•O-ring	•Joint Torique	•O-Ring	• 오링	•Junta torica	
38	**SA 7253-02700**	2			2			K	•Ring	•Anneau	•Ring	• 링	•Anillo	
39	**SA 7253-03062**	2			2				•Plate	•Plaque	•Platte	• 플레이트	•Placa	
40	**SA 7253-03070**	2			2				•Guide	•Rail	•Führung	• 가이드	•Guia	
41	**SA 7253-03080**	1			1				•Spring	•Ressort	•Feder	• 스프링	•Muelle	
42	**SA 7253-03091**	1			1				•Bolt	•Boulon	•Bolzen	• 볼트	•Perno	
43	**SA 7253-03131**	1			1				•Cap	•Chapeau	•Kappe	• 캡	•Caperuza	
44	**VOE 955919**	4			4				•Spring Washer	•Rondelle élastiqu ..	•Federscheibe	• 스프링 와셔	•Arandela flexible	
45	**SA 9016-10605**	2			2				•Bolt	•Boulon	•Bolzen	• 볼트	•Perno	
46	**SA 9016-10603**	2			2				•Bolt	•Boulon	•Bolzen	• 볼트	•Perno	
47	**SA 7253-03180**	1			1				•Stay	•Tirant	•Strebe	• 스테이	•Barra	
48	**SA 7253-03191**	1			1				•Spring	•Ressort	•Feder	• 스프링	•Muelle	
49	**SA 7253-03200**	1			1				•Cap	•Chapeau	•Kappe	• 캡	•Caperuza	
50	**SA 9511-12018**	1			1		SS	K	•O-ring	•Joint Torique	•O-Ring	• 오링	•Junta torica	
51	**SA 7257-00230**	2			2				•Relief valve	•Limiteur - pressio ..	•Druckbegrenzer	• 릴리프 밸브	•Limitador presion	
52	**SA 9511-21065**	1			1				•O-ring	•Joint Torique	•O-Ring	• 오링	•Junta torica	
53	**SA 7253-03011**	1			1				•Clevis	•Fourche	•Gabel	• 클레비스	•Horquilla	
100	**VOE 14504879**	1	1	1	1				Sealing Kit	Jeu Joints	Dichtungssatz ……	시일 킷	Juego Retenes	

1	**8278836**
2	**8278837**
3	**8278838**
4	**8278839**
5	

Válvula de mando, manejar izquierdo, adm. parte central, manejar derecha.
제어밸브 , 좌측 주행 및 중간 입력 및 우측 주행
Steuerventil, fahren links, Einlass Mittelteil, fahren rechts
Valve de commande, direction de course gauche et droite, admission centrale
Main control valve, travel Lh and mid inlet and travel Rh

Catalogue id **20019**	Group **912**
Illustr. No **1007071**	Section **400**
Issue **VOE 74H9920019**	Page **463**

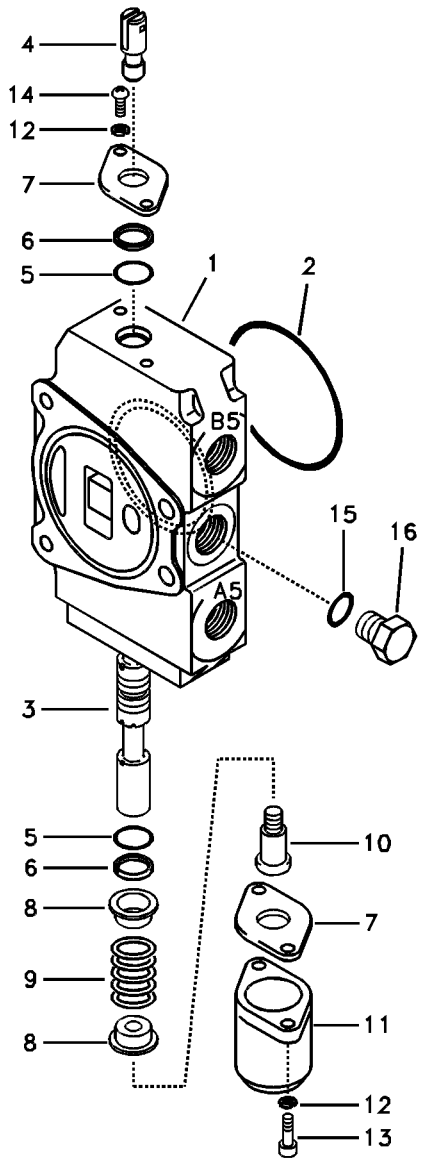

B5, A5

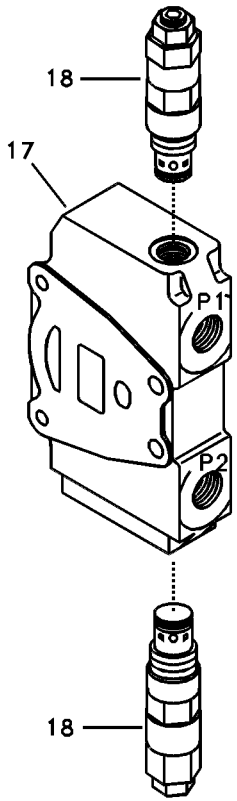

P1, P2

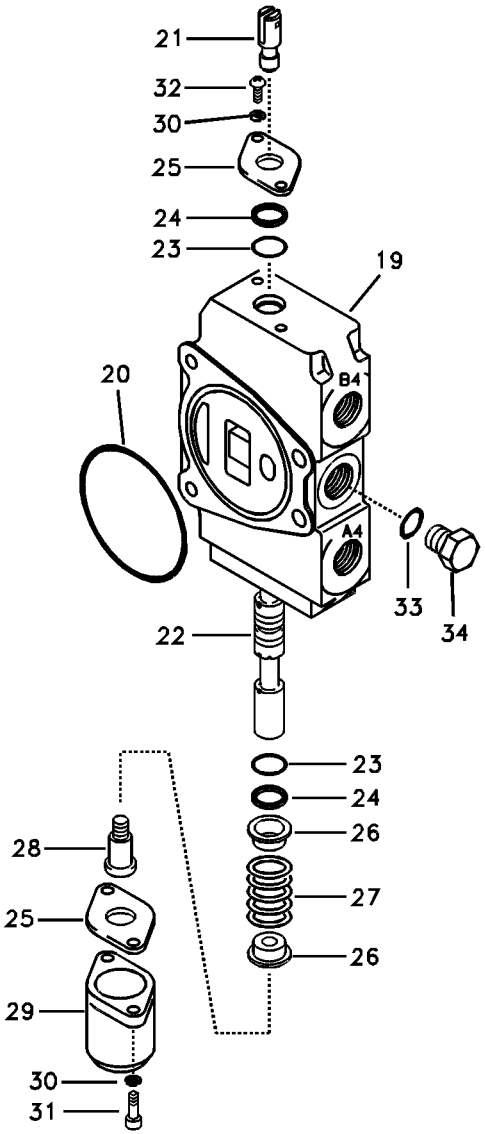

B4, A4

Fig.	Part No.	Quantity 1	2	3	PS	KIT	Description	Dénomination	Bezeichnung	품명	Denominación	Notes
	SA 7250-21784	1			SS		Valve	Soupape	Ventil	밸브	Valvula	Travel LH
1		1			NS		•Body	•Carcasse	•Rumpf	• 본체	•Cuerpo	
2	**SA 9511-21065**	1					•O-ring	•Joint Torique	•O-Ring	• 오링	•Junta torica	
3		1			NS		•Spool	•Bobine	•Schieber	• 스풀	•Bobina	
4	**SA 7253-03011**	1					•Clevis	•Fourche	•Gabel	• 클레비스	•Horquilla	
5	**SA 7296-00201**	2				K	•O-ring	•Joint Torique	•O-Ring	• 오링	•Junta torica	
6	**SA 7253-02700**	2				K	•Ring	•Anneau	•Ring	• 링	•Anillo	
7	**SA 7253-03062**	2					•Plate	•Plaque	•Platte	• 플레이트	•Placa	
8	**SA 7253-03070**	2					•Guide	•Rail	•Führung	• 가이드	•Guia	
9	**SA 7253-03080**	1					•Spring	•Ressort	•Feder	• 스프링	•Muelle	
10	**SA 7253-03091**	1					•Bolt	•Boulon	•Bolzen	• 볼트	•Perno	
11	**SA 7253-03131**	1					•Cap	•Chapeau	•Kappe	• 캡	•Caperuza	
12	**VOE 955919**	4					•Spring Washer	•Rondelle élastique	•Federscheibe	• 스프링 와셔	•Arandela flexible	
13	**SA 9016-10605**	2					•Bolt	•Boulon	•Bolzen	• 볼트	•Perno	
14	**SA 9016-10603**	2					•Bolt	•Boulon	•Bolzen	• 볼트	•Perno	
15	**SA 9511-12018**	1			SS	K	•O-ring	•Joint Torique	•O-Ring	• 오링	•Junta torica	
16	**SA 9415-11041**	1					•Plug	•Bouchon	•Stopfen	• 플러그	•Tapon	
	VOE 14507455	1					Valve	Soupape	Ventil	밸브	Valvula	Inlet
17	**SA 7251-30521**	1					•Cover	•Capot	•Haube	• 커버	•Capo	
18	**VOE 14505436**	2					•Relief valve	•Limiteur - pression	•Druckbegrenzer	• 릴리프 밸브	•Limitador presion	
	SA 7250-21804	1					Valve	Soupape	Ventil	밸브	Valvula	Travel RH
19		1			NS		•Body	•Carcasse	•Rumpf	• 본체	•Cuerpo	
20	**SA 9511-21065**	1					•O-ring	•Joint Torique	•O-Ring	• 오링	•Junta torica	
21	**SA 7253-03011**	1					•Clevis	•Fourche	•Gabel	• 클레비스	•Horquilla	
22		1			NS		•Spool	•Bobine	•Schieber	• 스풀	•Bobina	
23	**SA 7296-00201**	2				K	•O-ring	•Joint Torique	•O-Ring	• 오링	•Junta torica	
24	**SA 7253-02700**	2				K	•Ring	•Anneau	•Ring	• 링	•Anillo	
25	**SA 7253-03062**	2					•Plate	•Plaque	•Platte	• 플레이트	•Placa	
26	**SA 7253-03070**	2					•Guide	•Rail	•Führung	• 가이드	•Guia	
27	**SA 7253-03080**	1					•Spring	•Ressort	•Feder	• 스프링	•Muelle	

1	**8278837**	**Válvula de mando, manejar izquierdo, adm. parte central, manejar derecha.** 제어밸브 , 좌측 주행 및 중간 입력 및 우측 주행 **Steuerventil, fahren links, Einlass Mittelteil, fahren rechts** **Valve de commande, direction de course gauche et droite, admission centrale** **Main control valve, travel Lh and mid inlet and travel Rh**	Catalogue id **20019**	Group **912**
2				
3			Illustr. No **1008363**	Section **410**
4				
5		**FOR CHINA**	Issue **VOE 74H9920019**	Page **465**

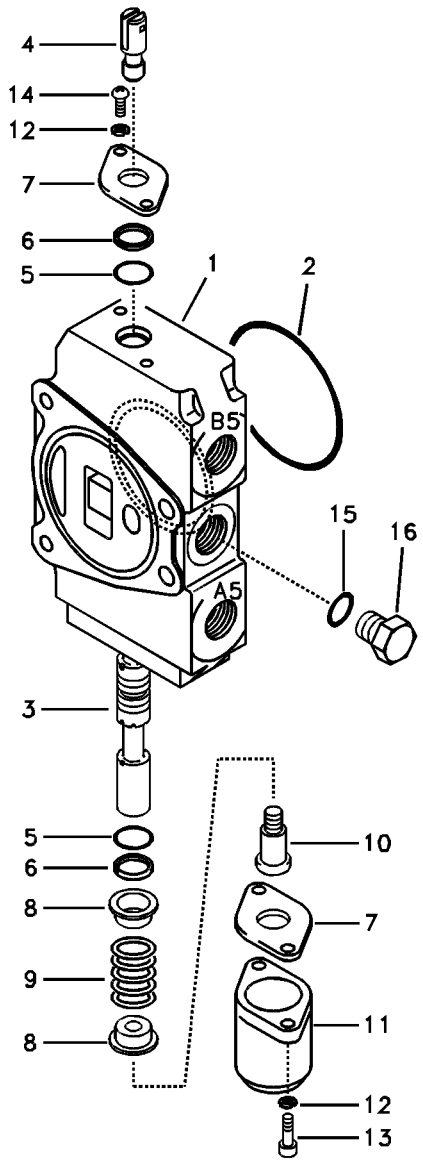

B5, A5

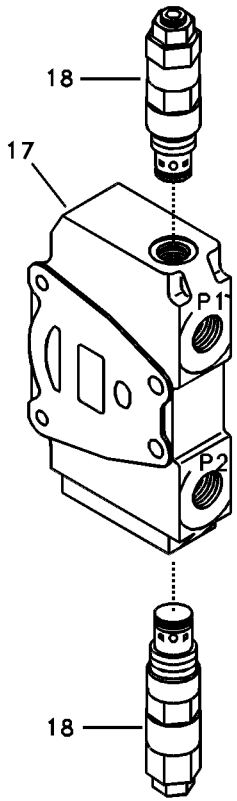

P1, P2

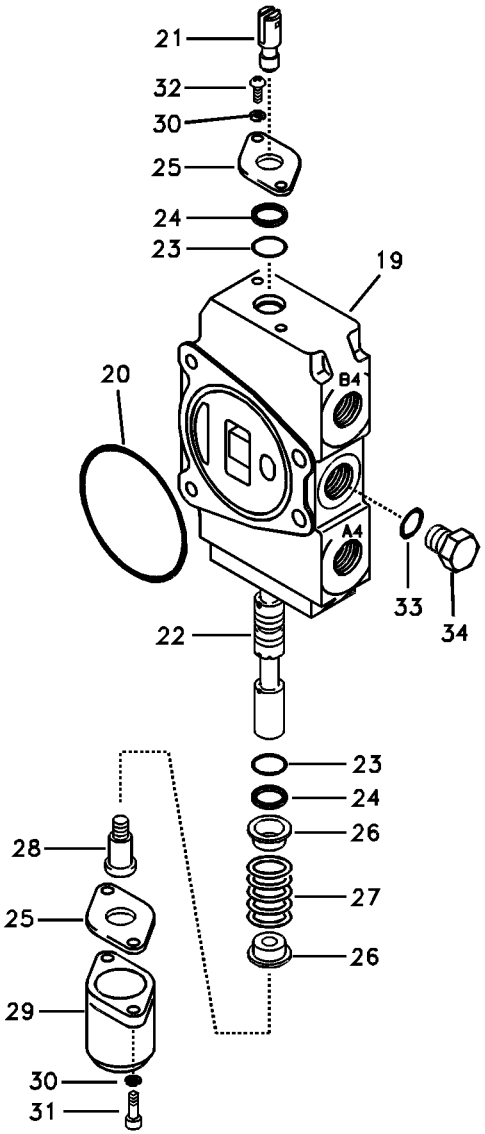

B4, A4

Fig.	Part No.	Quantity 1	2	3	PS	KIT	Description	Dénomination	Bezeichnung	품명	Denominación	Notes
28	**SA 7253-03091**	1					•Bolt	•Boulon	•Bolzen	• 볼트	•Perno	
29	**SA 7253-03131**	1					•Cap	•Chapeau	•Kappe	• 캡	•Caperuza	
30	**VOE 955919**	4					•Spring Washer	•Rondelle élastique	•Federscheibe	• 스프링 와셔	•Arandela flexible	
31	**SA 9016-10605**	2					•Bolt	•Boulon	•Bolzen	• 볼트	•Perno	
32	**SA 9016-10603**	2					•Bolt	•Boulon	•Bolzen	• 볼트	•Perno	
33	**SA 9511-12018**	1			SS	K	•O-ring	•Joint Torique	•O-Ring	• 오링	•Junta torica	
34	**SA 9415-11041**	1					•Plug	•Bouchon	•Stopfen	• 플러그	•Tapon	
100	**VOE 14504879**	1					Sealing Kit	Jeu Joints	Dichtungssatz	시일 킷	Juego Retenes	

1	**8278837**	**Válvula de mando, manejar izquierdo, adm. parte central, manejar derecha.** 제어밸브 , 좌측 주행 및 중간 입력 및 우측 주행 **Steuerventil, fahren links, Einlass Mittelteil, fahren rechts** **Valve de commande, direction de course gauche et droite, admission centrale** **Main control valve, travel Lh and mid inlet and travel Rh**	Catalogue id **20019**	Group **912**
2				
3			Illustr. No **1008363**	Section **410**
4				
5		**FOR CHINA**	Issue **VOE 74H9920019**	Page **467**

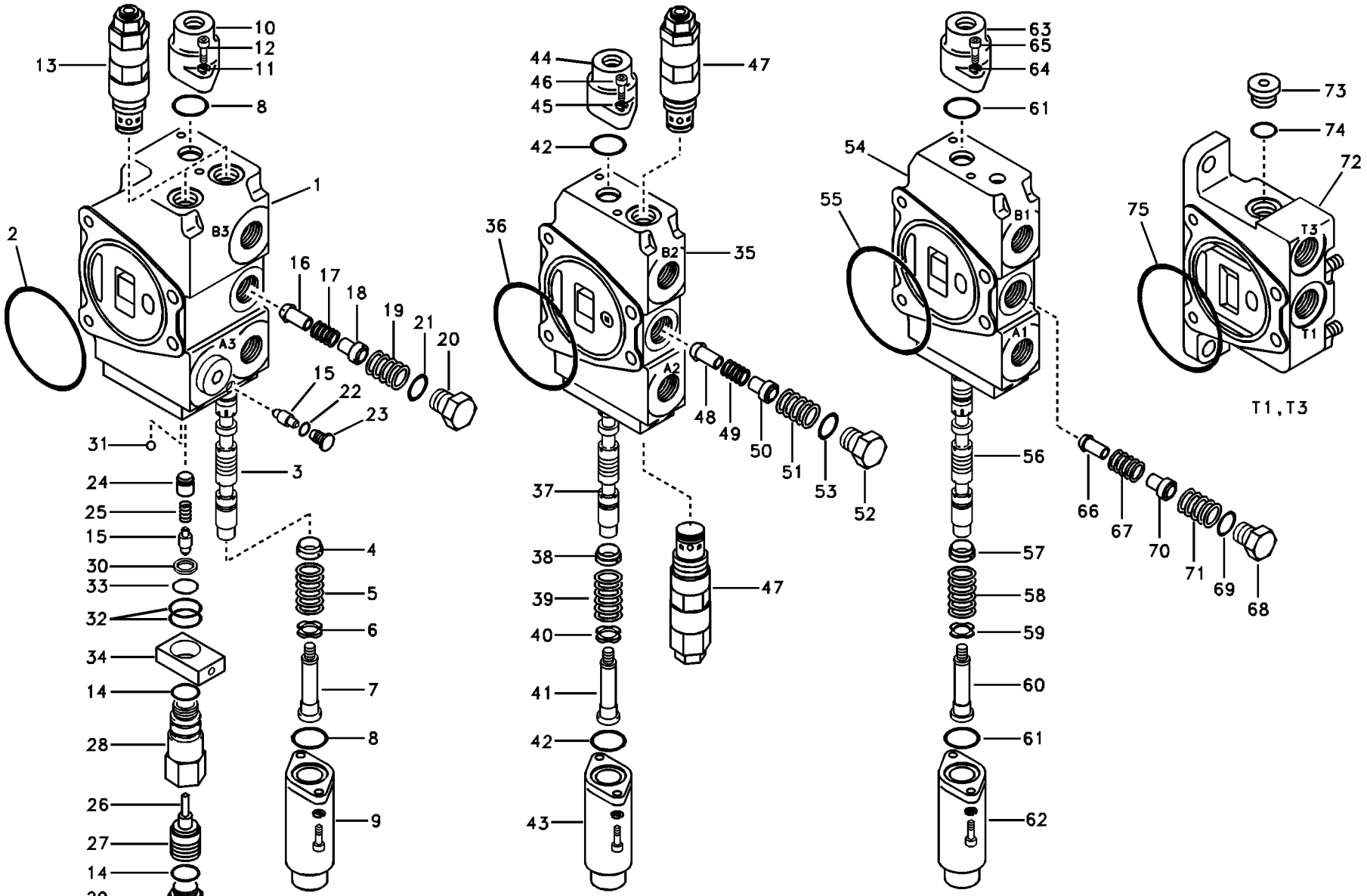

Volvo Construction Equipment

1007072

Fig.	Part No.	Quantity 1	2	3	4	5	PS	KIT	Description	Dénomination	Bezeichnung	품명	Denominación	Notes
	SA 7250-21814	1	1	1	1		SS		Valve	Soupape	Ventil	밸브	Valvula	Boom 1 SER NO 30001-30417
	VOE 14522263	1	1	1	1		SS		Valve	Soupape	Ventil	밸브	Valvula	SER NO 30418-34475 SER NO 50001-50129
	VOE 14540307	1	1	1	1				Valve	Soupape	Ventil	밸브	Valvula	SER NO 34476- SER NO 50130- (14540307M)
1		1	1	1	1		NS		•Body	•Carcasse	•Rumpf	• 본체	•Cuerpo	
2	**SA 9511-21065**	1	1	1	1				•O-ring	•Joint Torique	•O-Ring	• 오링	•Junta torica	
3		1	1	1	1		NS		•Spool	•Bobine	•Schieber	• 스풀	•Bobina	
4	**SA 7253-03021**	1	1	1	1				•Guide	•Rail	•Führung	• 가이드	•Guia	
5	**VOE 14507529**	1	1	1	1				•Spring	•Ressort	•Feder	• 스프링	•Muelle	
6	**SA 7253-03041**	1	1	1	1				•Washer	•Rondelle	•Scheibe	• 와셔	•Arandela	
7	**SA 7253-03051**	1	1	1	1				•Bolt	•Boulon	•Bolzen	• 볼트	•Perno	
8	**SA 9512-02021**	2	2	2	2			K	•O-ring	•Joint Torique	•O-Ring	• 오링	•Junta torica	
9	**SA 7253-03121**	1	1	1	1				•Cap	•Chapeau	•Kappe	• 캡	•Caperuza	
10	**SA 7253-03150**	1	1	1	1				•Cap	•Chapeau	•Kappe	• 캡	•Caperuza	
11	**VOE 955919**	4	4	4	4				•Spring Washer	•Rondelle élastiqu	•Federscheibe	• 스프링 와셔	•Arandela flexible	
12	**SA 9016-10605**	4	4	4	4				•Bolt	•Boulon	•Bolzen	• 볼트	•Perno	
13	**SA 7257-00230**	2	2	2	2				•Relief valve	•Limiteur - pressio	•Druckbegrenzer	• 릴리프 밸브	•Limitador presion	
14	**SA 9512-02020**	2	2	2	2			K	•O-ring	•Joint Torique	•O-Ring	• 오링	•Junta torica	SER NO 30001-34475 SER NO 50001-50129
15	**SA 7253-03272**	2	2	2	2				•Plunger	•Plongeur	•Plunger	• 플런저	•Piston	SER NO 30001-34475 SER NO 50001-50129
	SA 7253-03272	1	1	1	1				•Plunger	•Plongeur	•Plunger	• 플런저	•Piston	SER NO 34476- SER NO 50130-
16	**SA 7253-03211**	1	1	1	1				•Stay	•Tirant	•Strebe	• 스테이	•Barra	
17	**SA 7253-03221**	1	1	1	1				•Spring	•Ressort	•Feder	• 스프링	•Muelle	
18	**SA 7253-03231**	1	1	1	1				•Stay	•Tirant	•Strebe	• 스테이	•Barra	
19	**SA 7253-03191**	1	1	1	1				•Spring	•Ressort	•Feder	• 스프링	•Muelle	

1	**8278836**
2	**8278837**
3	**8278838**
4	**8278839**
5	

Válvula de mando, pluma 1, cuchara, brazo 2 y salida.
제어밸브 , 붐 1 및 버켓 및 디퍼 암 2 및 출력
Steuerventil, Ausleger 1, Löffel, Stiel 2 und auslass.
Valve de commande, flêche 1, godet, bras 2 et sortie.
Main control valve, boom 1 and bucket and dipper arm 2 and outlet.

Catalogue id **20019**	Group **912**
Illustr. No **1007072**	Section **500**
Issue **VOE 74H9920019**	Page **469**

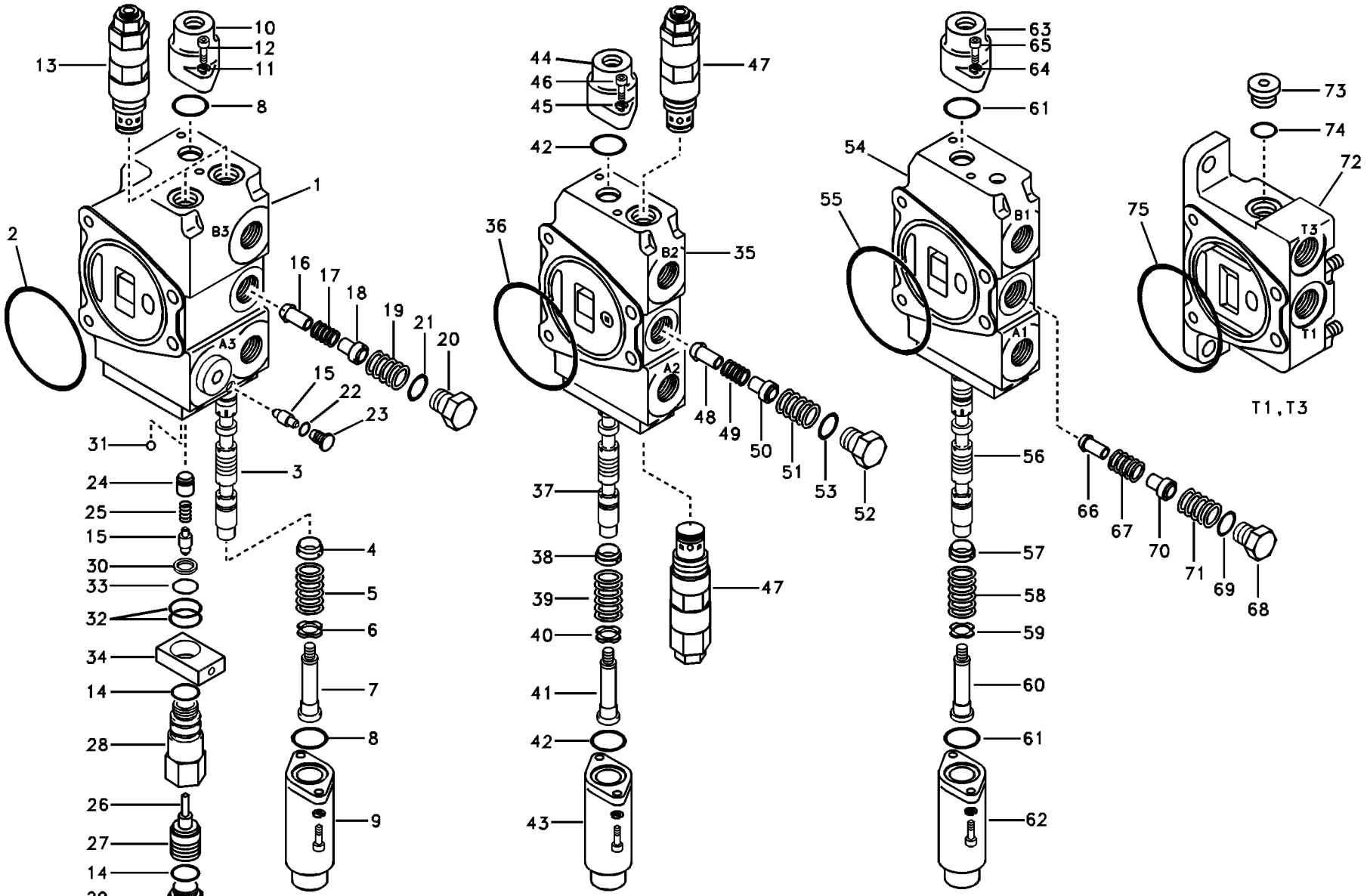

Volvo Construction Equipment

1007072

Fig.	Part No.	Quantity 1	2	3	4	5	PS	KIT	Description	Dénomination	Bezeichnung	품명	Denominación	Notes
20	**SA 7253-03200**	1	1	1	1				•Cap	•Chapeau	•Kappe	• 캡	•Caperuza	
21	**SA 9511-12018**	1	1	1	1		SS	K	•O-ring	•Joint Torique	•O-Ring	• 오링	•Junta torica	
22	**SA 9511-12008**	1	1	1	1			K	•O-ring	•Joint Torique	•O-Ring	• 오링	•Junta torica	
23	**SA 9415-11012**	1	1	1	1				•Plug	•Bouchon	•Stopfen	• 플러그	•Tapon	
24	**SA 7253-03251**	1	1	1	1				•Stay	•Tirant	•Strebe	• 스테이	•Barra	
25	**SA 7253-03260**	1	1	1	1				•Spring	•Ressort	•Feder	• 스프링	•Muelle	
26	**SA 7253-03281**	1	1	1	1				•Pin	•Goupille	•Zapfen	• 핀	•Pasador	SER NO 30001-34500
27	**SA 7253-03292**	1	1	1	1				•Plunger	•Plongeur	•Plunger	• 플런저	•Piston	SER NO 30001-34500
28	**SA 7253-03304**	1	1	1	1				•Sleeve	•Manchon	•Muffe	• 슬리브	•Manguito	SER NO 30001-34475 SER NO 50001-50129
	VOE 14540309	1	1	1	1				•Valve	•Soupape	•Ventil	• 밸브	•Valvula	SER NO 34476- SER NO 50130-
29	**SA 7253-03311**	1	1	1	1				•Cap	•Chapeau	•Kappe	• 캡	•Caperuza	SER NO 30001-34500
30	**SA 7253-03330**	1	1	1	1			K	•Ring	•Anneau	•Ring	• 링	•Anillo	SER NO 30001-34500
31		4	4	4	4		NS		•Plug	•Bouchon	•Stopfen	• 플러그	•Tapon	
32	**SA 9512-02122**	2	2	2	2		SS	K	•O-ring	•Joint Torique	•O-Ring	• 오링	•Junta torica	SER NO 30001-34500
33	**SA 9512-02015**	1	1	1	1		SS	K	•O-ring	•Joint Torique	•O-Ring	• 오링	•Junta torica	SER NO 30001-34500
34	**SA 7253-03471**	1	1	1	1				•Block	•Bloc	•Block	• 블록	•Bloque	SER NO 30001-34500
	SA 7250-21824	1	1	1	1		SS		Valve	Soupape	Ventil	밸브	Valvula	Bucket SER NO 30001-30417
	VOE 14522264	1	1	1	1				Valve	Soupape	Ventil	밸브	Valvula	SER NO 30418-
35		1	1	1	1		NS		•Body	•Carcasse	•Rumpf	• 본체	•Cuerpo	
36	**SA 9511-21065**	1	1	1	1				•O-ring	•Joint Torique	•O-Ring	• 오링	•Junta torica	
37		1	1	1	1		NS		•Spool	•Bobine	•Schieber	• 스풀	•Bobina	
38	**SA 7253-03021**	1	1	1	1				•Guide	•Rail	•Führung	• 가이드	•Guia	
39	**VOE 14507529**	1	1	1	1				•Spring	•Ressort	•Feder	• 스프링	•Muelle	
	SA 7253-03031	1	1	1	1		SS		•Spring	•Ressort	•Feder	• 스프링	•Muelle	
40	**SA 7253-03041**	1	1	1	1				•Washer	•Rondelle	•Scheibe	• 와셔	•Arandela	
41	**SA 7253-03051**	1	1	1	1				•Bolt	•Boulon	•Bolzen	• 볼트	•Perno	
42	**SA 9512-02021**	2	2	2	2			K	•O-ring	•Joint Torique	•O-Ring	• 오링	•Junta torica	

1	**8278836**
2	**8278837**
3	**8278838**
4	**8278839**
5	

Válvula de mando, pluma 1, cuchara, brazo 2 y salida.
제어밸브 , 붐 1 및 버켓 및 디퍼 암 2 및 출력
Steuerventil, Ausleger 1, Löffel, Stiel 2 und auslass.
Valve de commande, flêche 1, godet, bras 2 et sortie.
Main control valve, boom 1 and bucket and dipper arm 2 and outlet.

Catalogue id **20019**	Group **912**
Illustr. No **1007072**	Section **500**
Issue **VOE 74H9920019**	Page **471**

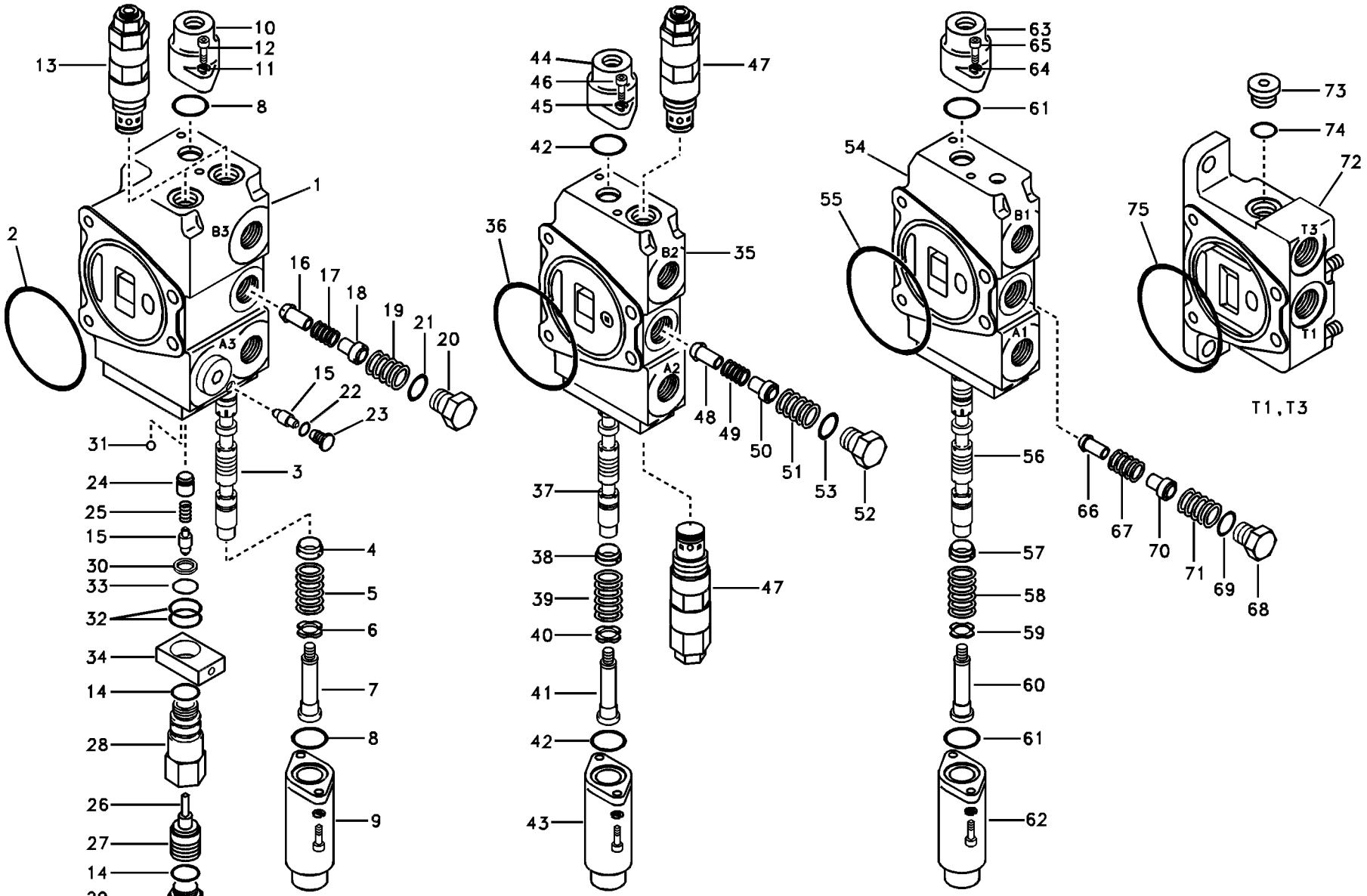

Volvo Construction Equipment

1007072

Fig.	Part No.	Quantity 1	2	3	4	5	PS	KIT	Description	Dénomination	Bezeichnung	품명	Denominación	Notes
43	**SA 7253-03121**	1	1	1	1				•Cap	•Chapeau	•Kappe	• 캡	•Caperuza	
44	**SA 7253-03150**	1	1	1	1				•Cap	•Chapeau	•Kappe	• 캡	•Caperuza	
45	**SA 9213-06000**	4	4	4	4		SS		•Washer	•Rondelle	•Scheibe	• 와셔	•Arandela	
	VOE 955919	4	4	4	4				•Spring Washer	•Rondelle élastiqu ..	•Federscheibe	• 스프링 와셔	•Arandela flexible	
46	**SA 9016-10605**	4	4	4	4				•Bolt	•Boulon	•Bolzen	• 볼트	•Perno	
47	**SA 7257-00230**	2	2	2	2				•Relief valve	•Limiteur - pressio ..	•Druckbegrenzer	• 릴리프 밸브	•Limitador presion	
48	**SA 7253-03211**	1	1	1	1				•Stay	•Tirant	•Strebe	• 스테이	•Barra	
49	**SA 7253-03221**	1	1	1	1				•Spring	•Ressort	•Feder	• 스프링	•Muelle	
50	**SA 7253-03231**	1	1	1	1				•Stay	•Tirant	•Strebe	• 스테이	•Barra	
51	**SA 7253-03191**	1	1	1	1				•Spring	•Ressort	•Feder	• 스프링	•Muelle	
52	**SA 7253-03200**	1	1	1	1				•Cap	•Chapeau	•Kappe	• 캡	•Caperuza	
53	**SA 9511-12018**	1	1	1	1		SS	K	•O-ring	•Joint Torique	•O-Ring	• 오링	•Junta torica	
	VOE 14519805	1	1	1	1		SS		Valve	Soupape	Ventil	밸브	Valvula	Arm 2
54	**VOE 14503808**	1	1	1	1		OP		•Body	•Carcasse	•Rumpf	• 본체	•Cuerpo	
55	**SA 9511-21065**	1	1	1	1				•O-ring	•Joint Torique	•O-Ring	• 오링	•Junta torica	
56		1	1	1	1		NS		•Spool	•Bobine	•Schieber	• 스풀	•Bobina	
57	**SA 7253-03021**	1	1	1	1				•Guide	•Rail	•Führung	• 가이드	•Guia	
58	**SA 7253-03111**	1	1	1	1				•Spring	•Ressort	•Feder	• 스프링	•Muelle	
59	**SA 7253-03041**	1	1	1	1				•Washer	•Rondelle	•Scheibe	• 와셔	•Arandela	
60	**SA 7253-03051**	1	1	1	1				•Bolt	•Boulon	•Bolzen	• 볼트	•Perno	
61	**SA 9512-02021**	2	2	2	2			K	•O-ring	•Joint Torique	•O-Ring	• 오링	•Junta torica	
62	**SA 7253-03121**	1	1	1	1				•Cap	•Chapeau	•Kappe	• 캡	•Caperuza	
63	**SA 7253-03150**	1	1	1	1				•Cap	•Chapeau	•Kappe	• 캡	•Caperuza	
64	**VOE 955919**	4	4	4	4				•Spring Washer	•Rondelle élastiqu ..	•Federscheibe	• 스프링 와셔	•Arandela flexible	
65	**SA 9016-10605**	4	4	4	4				•Bolt	•Boulon	•Bolzen	• 볼트	•Perno	
66	**SA 7253-03211**	1	1	1	1				•Stay	•Tirant	•Strebe	• 스테이	•Barra	
67	**SA 7253-03221**	1	1	1	1				•Spring	•Ressort	•Feder	• 스프링	•Muelle	
68	**SA 7253-03200**	1	1	1	1				•Cap	•Chapeau	•Kappe	• 캡	•Caperuza	
69	**SA 9511-12018**	1	1	1	1		SS	K	•O-ring	•Joint Torique	•O-Ring	• 오링	•Junta torica	
70	**SA 7253-03231**	1	1	1	1				•Stay	•Tirant	•Strebe	• 스테이	•Barra	

1	**8278836**
2	**8278837**
3	**8278838**
4	**8278839**
5	

Válvula de mando, pluma 1, cuchara, brazo 2 y salida.
제어밸브 , 붐 1 및 버켓 및 디퍼 암 2 및 출력
Steuerventil, Ausleger 1, Löffel, Stiel 2 und auslass.
Valve de commande, flêche 1, godet, bras 2 et sortie.
Main control valve, boom 1 and bucket and dipper arm 2 and outlet.

Catalogue id **20019**	Group **912**
Illustr. No **1007072**	Section **500**
Issue **VOE 74H9920019**	Page **473**

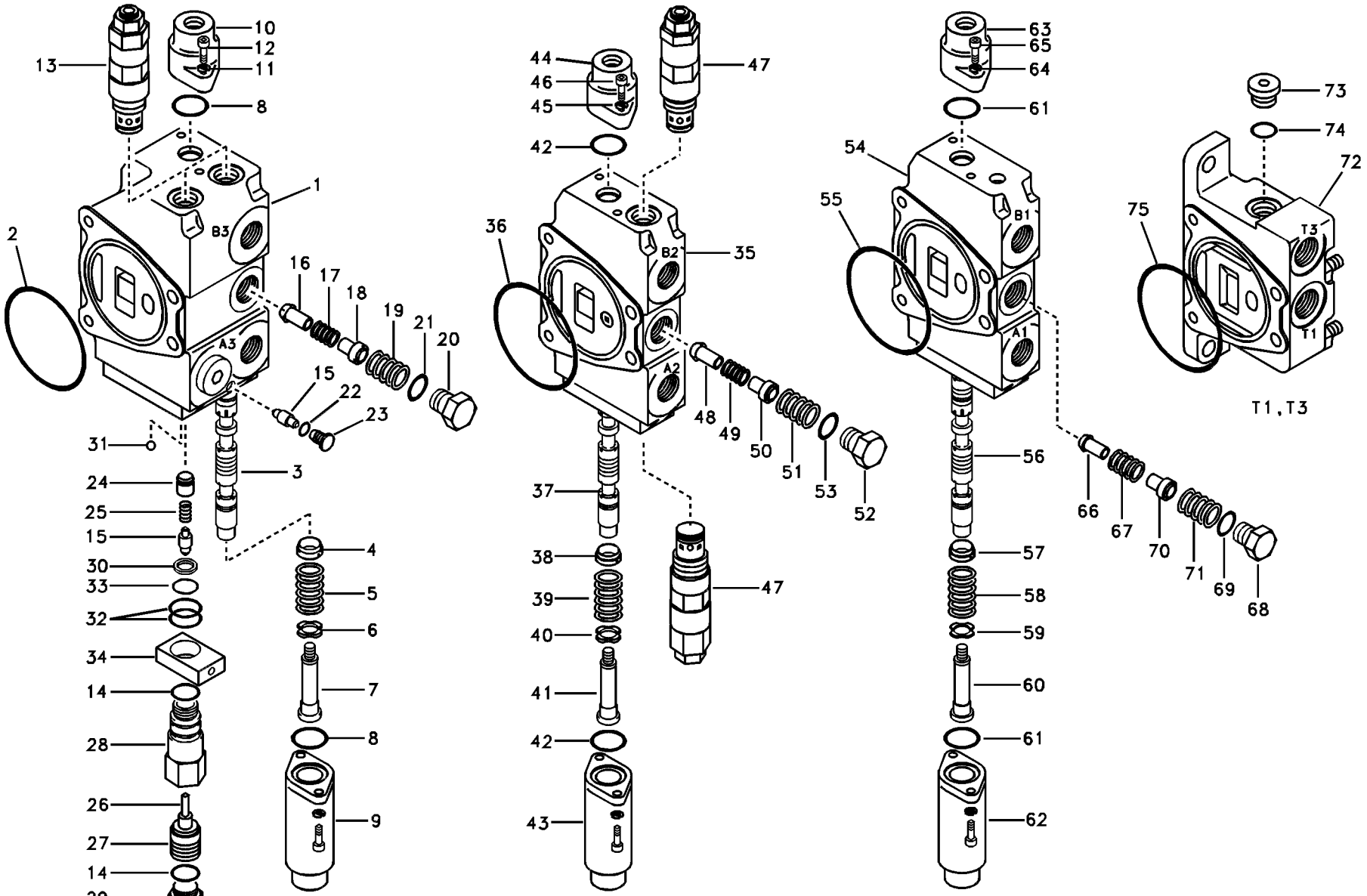

Volvo Construction Equipment

1007072

Fig.	Part No.	Quantity 1	2	3	4	5	PS	KIT	Description	Dénomination	Bezeichnung	품명	Denominación	Notes
71	**SA 7253-03191**	1	1	1	1				•Spring	•Ressort	•Feder	• 스프링	•Muelle	
	SA 7250-21842	1	1	1	1				Valve	Soupape	Ventil	밸브	Valvula	Outlet
72	**SA 7251-30531**	1	1	1	1		OP		•Cover	•Capot	•Haube	• 커버	•Capo	
73	**SA 9415-11022**	1	1	1	1				•Plug	•Bouchon	•Stopfen	• 플러그	•Tapon	
74	**SA 9511-12011**	1	1	1	1			K	•O-ring	•Joint Torique	•O-Ring	• 오링	•Junta torica	
75	**SA 9511-21065**	1	1	1	1				•O-ring	•Joint Torique	•O-Ring	• 오링	•Junta torica	
100	**VOE 14504879**	1	1	1	1				Sealing Kit	Jeu Joints	Dichtungssatz	시일 킷	Juego Retenes	

1	**8278836**
2	**8278837**
3	**8278838**
4	**8278839**
5	

Válvula de mando, pluma 1, cuchara, brazo 2 y salida.
제어밸브 , 붐 1 및 버켓 및 디퍼 암 2 및 출력
Steuerventil, Ausleger 1, Löffel, Stiel 2 und auslass.
Valve de commande, flêche 1, godet, bras 2 et sortie.
Main control valve, boom 1 and bucket and dipper arm 2 and outlet.

Catalogue id **20019**	Group **912**
Illustr. No **1007072**	Section **500**
Issue **VOE 74H9920019**	Page **475**

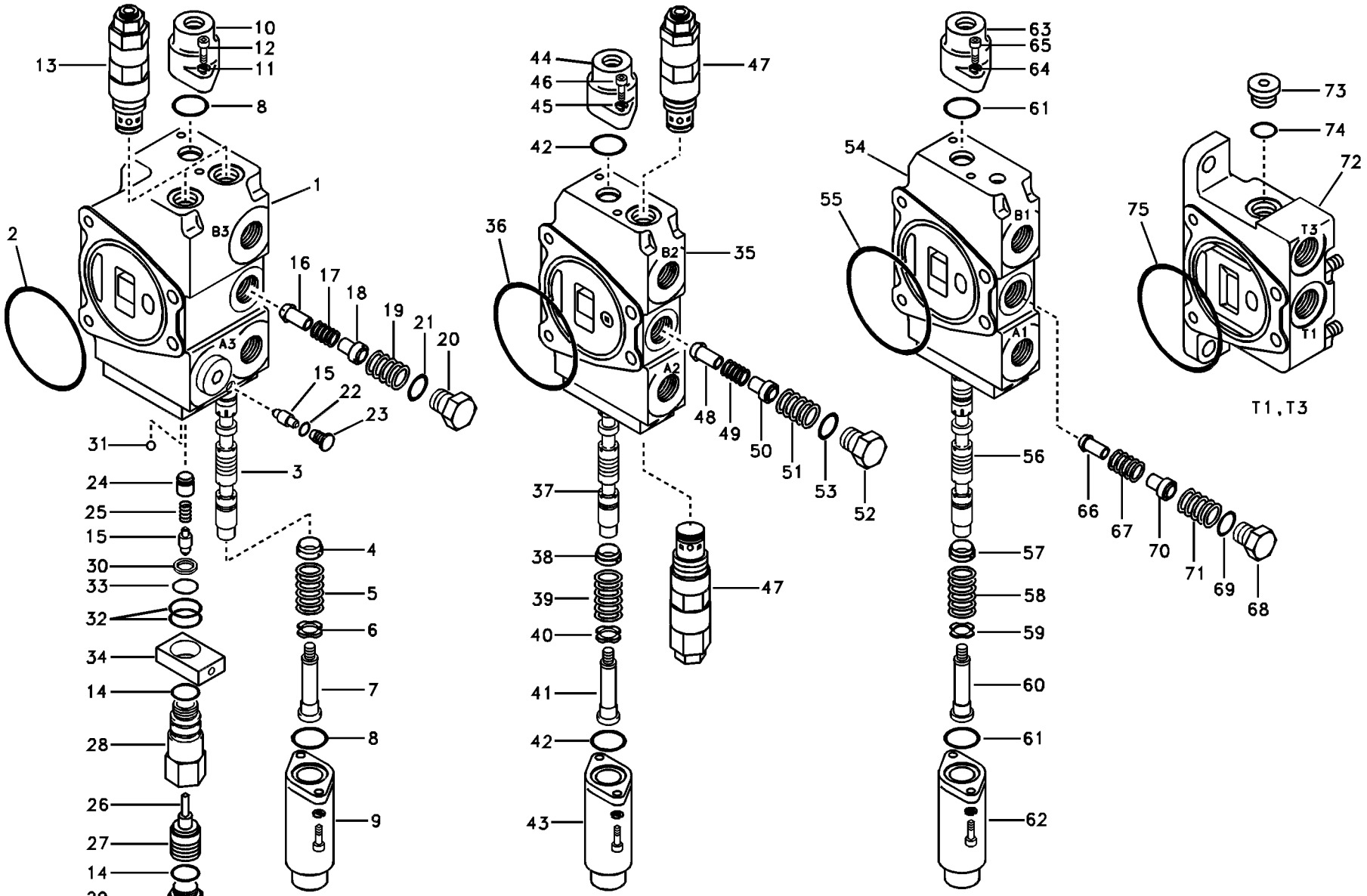

Volvo Construction Equipment

1007072

Fig.	Part No.	Quantity 1	2	3	PS	KIT	Description	Dénomination	Bezeichnung	품명	Denominación	Notes
	VOE 14522263	1			SS		Valve	Soupape	Ventil	밸브	Valvula	SER NO 50001-50129
	VOE 14540307	1					Valve	Soupape	Ventil	밸브	Valvula	SER NO 50130-
1		1			NS		•Body	•Carcasse	•Rumpf	• 본체	•Cuerpo	
2	**SA 9511-21065**	1					•O-ring	•Joint Torique	•O-Ring	• 오링	•Junta torica	
3		1			NS		•Spool	•Bobine	•Schieber	• 스풀	•Bobina	
4	**SA 7253-03021**	1					•Guide	•Rail	•Führung	• 가이드	•Guia	
5	**VOE 14507529**	1					•Spring	•Ressort	•Feder	• 스프링	•Muelle	
6	**SA 7253-03041**	1					•Washer	•Rondelle	•Scheibe	• 와셔	•Arandela	
7	**SA 7253-03051**	1					•Bolt	•Boulon	•Bolzen	• 볼트	•Perno	
8	**SA 9512-02021**	2				K	•O-ring	•Joint Torique	•O-Ring	• 오링	•Junta torica	
9	**SA 7253-03121**	1					•Cap	•Chapeau	•Kappe	• 캡	•Caperuza	
10	**SA 7253-03150**	1					•Cap	•Chapeau	•Kappe	• 캡	•Caperuza	
11	**VOE 955919**	4					•Spring Washer	•Rondelle élastique	•Federscheibe	• 스프링 와셔	•Arandela flexible	
12	**SA 9016-10605**	4					•Bolt	•Boulon	•Bolzen	• 볼트	•Perno	
13	**SA 7257-00230**	2					•Relief valve	•Limiteur - pression	•Druckbegrenzer	• 릴리프 밸브	•Limitador presion	
14	**SA 9512-02020**	2				K	•O-ring	•Joint Torique	•O-Ring	• 오링	•Junta torica	SER NO 50001-50129
15	**SA 7253-03272**	2					•Plunger	•Plongeur	•Plunger	• 플런저	•Piston	SER NO 50001-50129
	SA 7253-03272	1					•Plunger	•Plongeur	•Plunger	• 플런저	•Piston	SER NO 50130-
16	**SA 7253-03211**	1					•Stay	•Tirant	•Strebe	• 스테이	•Barra	
17	**SA 7253-03221**	1					•Spring	•Ressort	•Feder	• 스프링	•Muelle	
18	**SA 7253-03231**	1					•Stay	•Tirant	•Strebe	• 스테이	•Barra	
19	**SA 7253-03191**	1					•Spring	•Ressort	•Feder	• 스프링	•Muelle	
20	**SA 7253-03200**	1					•Cap	•Chapeau	•Kappe	• 캡	•Caperuza	
21	**SA 9511-12018**	1			SS	K	•O-ring	•Joint Torique	•O-Ring	• 오링	•Junta torica	
22	**SA 9511-12008**	1				K	•O-ring	•Joint Torique	•O-Ring	• 오링	•Junta torica	
23	**SA 9415-11012**	1					•Plug	•Bouchon	•Stopfen	• 플러그	•Tapon	
24	**SA 7253-03251**	1					•Stay	•Tirant	•Strebe	• 스테이	•Barra	
25	**SA 7253-03260**	1					•Spring	•Ressort	•Feder	• 스프링	•Muelle	
26	**SA 7253-03281**	1					•Pin	•Goupille	•Zapfen	• 핀	•Pasador	SER NO 50001-50129
27	**SA 7253-03292**	1					•Plunger	•Plongeur	•Plunger	• 플런저	•Piston	SER NO 50001-50129

1	**8278837**	**Válvula de mando, pluma 1, cuchara, brazo 2 y salida.** 제어밸브 , 붐 1 및 버켓 및 디퍼 암 2 및 출력 **Steuerventil, Ausleger 1, Löffel, Stiel 2 und auslass.** **Valve de commande, flêche 1, godet, bras 2 et sortie.** **Main control valve, boom 1 and bucket and dipper arm 2 and outlet.**	Catalogue id **20019**	Group **912**
2					
3			Illustr. No **1007072**	Section **510**
4					
5		**FOR CHINA**	Issue **VOE 74H9920019**	Page **477**

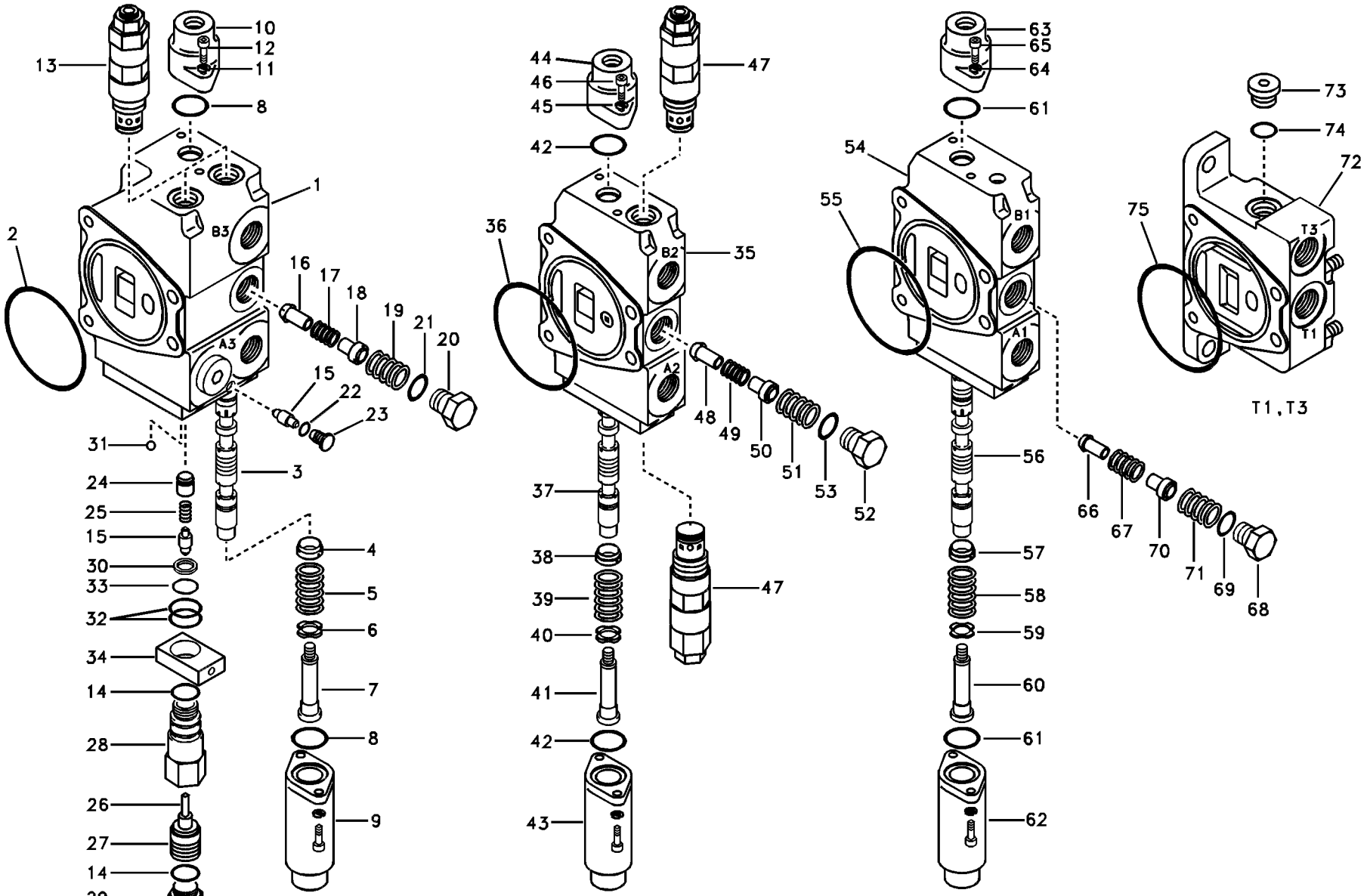

Volvo Construction Equipment

1007072

Fig.	Part No.	Quantity 1	2	3	PS	KIT	Description	Dénomination	Bezeichnung	품명	Denominación	Notes
28	**SA 7253-03304**	1					•Sleeve	•Manchon	•Muffe	• 슬리브	•Manguito	SER NO 50001-50129
	VOE 14540309	1					•Valve	•Soupape	•Ventil	• 밸브	•Valvula	SER NO 50130-
29	**SA 7253-03311**	1					•Cap	•Chapeau	•Kappe	• 캡	•Caperuza	SER NO 50001-50129
30	**SA 7253-03330**	1				K	•Ring	•Anneau	•Ring	• 링	•Anillo	SER NO 50001-50129
31	**SA 9446-30400**	4			OP		•Plug	•Bouchon	•Stopfen	• 플러그	•Tapon	
32	**SA 9512-02122**	2			SS	K	•O-ring	•Joint Torique	•O-Ring	• 오링	•Junta torica	SER NO 50001-50129
33	**SA 9512-02015**	1			SS	K	•O-ring	•Joint Torique	•O-Ring	• 오링	•Junta torica	SER NO 50001-50129
34	**SA 7253-03471**	1					•Block	•Bloc	•Block	• 블록	•Bloque	SER NO 50001-50129
	VOE 14522264	1					Valve	Soupape	Ventil	밸브	Valvula	
35		1			NS		•Body	•Carcasse	•Rumpf	• 본체	•Cuerpo	
36	**SA 9511-21065**	1					•O-ring	•Joint Torique	•O-Ring	• 오링	•Junta torica	
37		1			NS		•Spool	•Bobine	•Schieber	• 스풀	•Bobina	
38	**SA 7253-03021**	1					•Guide	•Rail	•Führung	• 가이드	•Guia	
39	**VOE 14507529**	1					•Spring	•Ressort	•Feder	• 스프링	•Muelle	
	SA 7253-03031	1			SS		•Spring	•Ressort	•Feder	• 스프링	•Muelle	
40	**SA 7253-03041**	1					•Washer	•Rondelle	•Scheibe	• 와셔	•Arandela	
41	**SA 7253-03051**	1					•Bolt	•Boulon	•Bolzen	• 볼트	•Perno	
42	**SA 9512-02021**	2				K	•O-ring	•Joint Torique	•O-Ring	• 오링	•Junta torica	
43	**SA 7253-03121**	1					•Cap	•Chapeau	•Kappe	• 캡	•Caperuza	
44	**SA 7253-03150**	1					•Cap	•Chapeau	•Kappe	• 캡	•Caperuza	
45	**SA 9213-06000**	4			SS		•Washer	•Rondelle	•Scheibe	• 와셔	•Arandela	
	VOE 955919	4					•Spring Washer	•Rondelle élastique	•Federscheibe	• 스프링 와셔	•Arandela flexible	
46	**SA 9016-10605**	4					•Bolt	•Boulon	•Bolzen	• 볼트	•Perno	
47	**SA 7257-00230**	2					•Relief valve	•Limiteur - pression	•Druckbegrenzer	• 릴리프 밸브	•Limitador presion	
48	**SA 7253-03211**	1					•Stay	•Tirant	•Strebe	• 스테이	•Barra	
49	**SA 7253-03221**	1					•Spring	•Ressort	•Feder	• 스프링	•Muelle	
50	**SA 7253-03231**	1					•Stay	•Tirant	•Strebe	• 스테이	•Barra	
51	**SA 7253-03191**	1					•Spring	•Ressort	•Feder	• 스프링	•Muelle	
52	**SA 7253-03200**	1					•Cap	•Chapeau	•Kappe	• 캡	•Caperuza	
53	**SA 9511-12018**	1			SS	K	•O-ring	•Joint Torique	•O-Ring	• 오링	•Junta torica	

1	**8278837**	**Válvula de mando, pluma 1, cuchara, brazo 2 y salida.** 제어밸브 , 붐 1 및 버켓 및 디퍼 암 2 및 출력 **Steuerventil, Ausleger 1, Löffel, Stiel 2 und auslass.** **Valve de commande, flêche 1, godet, bras 2 et sortie.** **Main control valve, boom 1 and bucket and dipper arm 2 and outlet.**	Catalogue id **20019**	Group **912**
2				
3			Illustr. No **1007072**	Section **510**
4				
5		**FOR CHINA**	Issue **VOE 74H9920019**	Page **479**



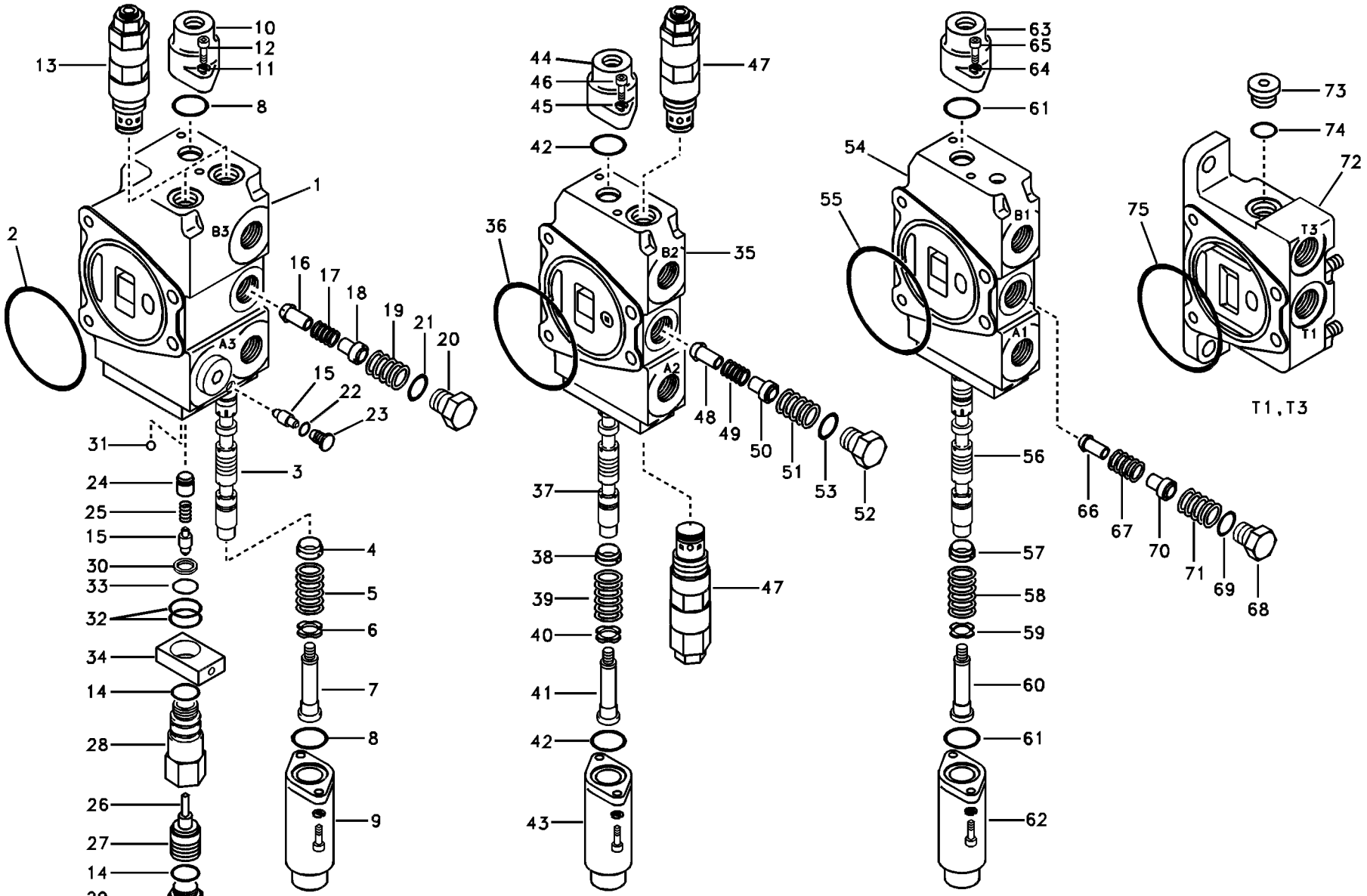

Volvo Construction Equipment

1007072

Fig.	Part No.	Quantity 1	2	3	PS	KIT	Description	Dénomination	Bezeichnung	품명	Denominación	Notes
	VOE 14519805	1			SS		Valve	Soupape	Ventil	밸브	Valvula	Arm 2
54	**VOE 14503808**	1			OP		•Body	•Carcasse	•Rumpf	• 본체	•Cuerpo	
55	**SA 9511-21065**	1					•O-ring	•Joint Torique	•O-Ring	• 오링	•Junta torica	
56		1			NS		•Spool	•Bobine	•Schieber	• 스풀	•Bobina	
57	**SA 7253-03021**	1					•Guide	•Rail	•Führung	• 가이드	•Guia	
58	**SA 7253-03111**	1					•Spring	•Ressort	•Feder	• 스프링	•Muelle	
59	**SA 7253-03041**	1					•Washer	•Rondelle	•Scheibe	• 와셔	•Arandela	
60	**SA 7253-03051**	1					•Bolt	•Boulon	•Bolzen	• 볼트	•Perno	
61	**SA 9512-02021**	2				K	•O-ring	•Joint Torique	•O-Ring	• 오링	•Junta torica	
62	**SA 7253-03121**	1					•Cap	•Chapeau	•Kappe	• 캡	•Caperuza	
63	**SA 7253-03150**	1					•Cap	•Chapeau	•Kappe	• 캡	•Caperuza	
64	**VOE 955919**	4					•Spring Washer	•Rondelle élastique	•Federscheibe	• 스프링 와셔	•Arandela flexible	
65	**SA 9016-10605**	4					•Bolt	•Boulon	•Bolzen	• 볼트	•Perno	
66	**SA 7253-03211**	1					•Stay	•Tirant	•Strebe	• 스테이	•Barra	
67	**SA 7253-03221**	1					•Spring	•Ressort	•Feder	• 스프링	•Muelle	
68	**SA 7253-03200**	1					•Cap	•Chapeau	•Kappe	• 캡	•Caperuza	
69	**SA 9511-12018**	1			SS	K	•O-ring	•Joint Torique	•O-Ring	• 오링	•Junta torica	
70	**SA 7253-03231**	1					•Stay	•Tirant	•Strebe	• 스테이	•Barra	
71	**SA 7253-03191**	1					•Spring	•Ressort	•Feder	• 스프링	•Muelle	
	SA 7250-21842	1					Valve	Soupape	Ventil	밸브	Valvula	Outlet
72	**SA 7251-30531**	1			OP		•Cover	•Capot	•Haube	• 커버	•Capo	
73	**SA 9415-11022**	1					•Plug	•Bouchon	•Stopfen	• 플러그	•Tapon	
74	**SA 9511-12011**	1				K	•O-ring	•Joint Torique	•O-Ring	• 오링	•Junta torica	
75	**SA 9511-21065**	1					•O-ring	•Joint Torique	•O-Ring	• 오링	•Junta torica	
100	**VOE 14504879**	1					Sealing Kit	Jeu Joints	Dichtungssatz	시일 킷	Juego Retenes	

1	**8278837**	**Válvula de mando, pluma 1, cuchara, brazo 2 y salida.** 제어밸브 , 붐 1 및 버켓 및 디퍼 암 2 및 출력 **Steuerventil, Ausleger 1, Löffel, Stiel 2 und auslass.** **Valve de commande, flêche 1, godet, bras 2 et sortie.** **Main control valve, boom 1 and bucket and dipper arm 2 and outlet.**	Catalogue id **20019**	Group **912**
2				
3			Illustr. No **1007072**	Section **510**
4				
5		**FOR CHINA**	Issue **VOE 74H9920019**	Page **481**



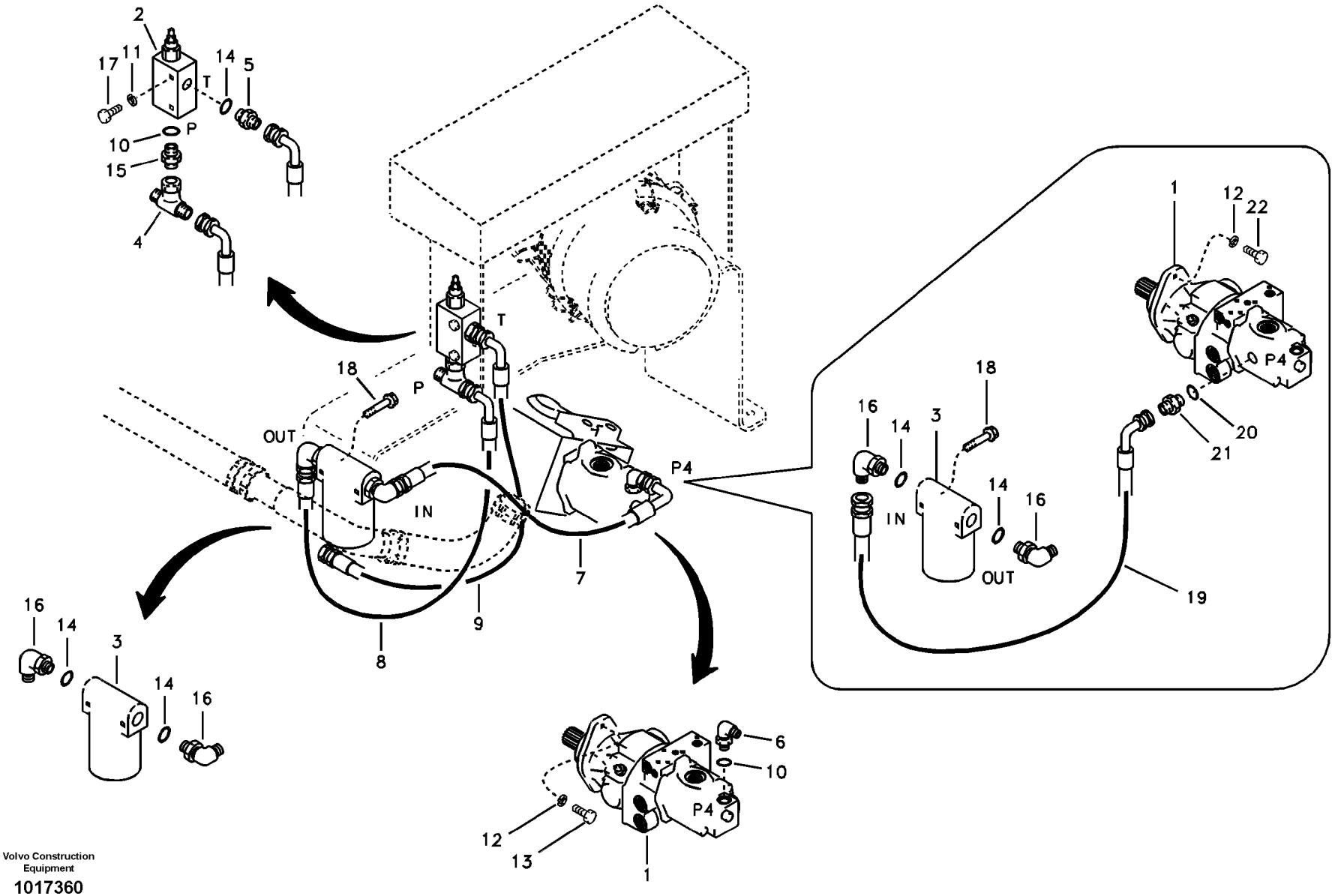

Volvo Construction Equipment

1017360

Fig.	Part No.	Quantity 1	2	3	PS	KIT	Description	Dénomination	Bezeichnung	품명	Denominación	Notes
1	**VOE 14518004**	1			SS		Pump	Pompe	Pumpe	펌프	Bomba	SER NO 30001-31385 See group 913, Page 487
	VOE 14526311	1			SS		Pump	Pompe	Pumpe	펌프	Bomba	SER NO 31386-31911 SER NO 50001-50064
	VOE 14528547	1		1			Pump	Pompe	Pumpe	펌프	Bomba	SER NO 31912- SER NO 50065- See group 913, Page 487
	VOE 14529549		1				Pump	Pompe	Pumpe	펌프	Bomba	See group 913, Page 489
2	**VOE 14517323**	1		1			Relief valve	Limiteur - pression	Druckbegrenzer	릴리프 밸브	Limitador presion	
3	**SA 1030-61400**	1			SS		Filter	Filtre	Filter	필터	Filtro	SER NO 30001-30666
	VOE 14523264	1	1	1			Filter	Filtre	Filter	필터	Filtro	SER NO 30667- SER NO 50001-
	SA 1030-61460	1	1	1			•Element	•Elément	•Element	• 엘리멘트	•Elemento	
	VOE 14511215	1	1	1			•O-ring	•Joint Torique	•O-Ring	• 오링	•Junta torica	
4	**SA 9411-92190**	1		1			Tee	Connexion en T	T-stuck	티	Acoplamiento T	
5	**SA 9412-11040**	1		1			Connector	Raccord	Anschluss	커넥터	Union	
6	**SA 9413-11020**	1		1			Elbow	Coude	Winkelstueck	엘보	Tubo acodado	
7	**SA 9453-03209**	1		1			Hose	Durit	Schlauch	호스	Tubo flexible	
8	**SA 9453-03212**	1		1			Hose	Durit	Schlauch	호스	Tubo flexible	
9	**SA 9453-04320**	1		1			Hose	Durit	Schlauch	호스	Tubo flexible	
10	**SA 9511-12014**	2		2			O-ring	Joint Torique	O-Ring	오링	Junta torica	
11	**VOE 955919**	2		2			Spring Washer	Rondelle élastique	Federscheibe	스프링 와셔	Arandela flexible	
12	**VOE 955923**	2	2	2			Spring Washer	Rondelle élastique	Federscheibe	스프링 와셔	Arandela flexible	
13	**VOE 984088**	2		2			Bolt	Boulon	Bolzen	볼트	Perno	
14	**SA 9511-12018**	3	2	3	SS		O-ring	Joint Torique	O-Ring	오링	Junta torica	
15	**SA 9412-11030**	1		1			Connector	Raccord	Anschluss	커넥터	Union	
16	**SA 9413-11190**	2	2	2			Elbow	Coude	Winkelstueck	엘보	Tubo acodado	
17	**SA 9011-20610**	2		2			Bolt	Boulon	Bolzen	볼트	Perno	
18	**VOE 965178**	2	2	2			Screw	Vis	Schraube	스크류	Tornillo	
19	**SA 9453-03208**		1				Hose	Durit	Schlauch	호스	Tubo flexible	

1	**8278796 S/N -33292**
2	**8279576 S/N 33293-**
3	**8279577 S/N 33293-**
4	
5	

Instalación de bomba
유압 펌프 및 장착 부품
Pumpeninstallation
Installation de pompe
Pump installation

Catalogue id **20019**	Group **913**
Illustr. No **1017360**	Section **100**
Issue **VOE 74H9920019**	Page **483**

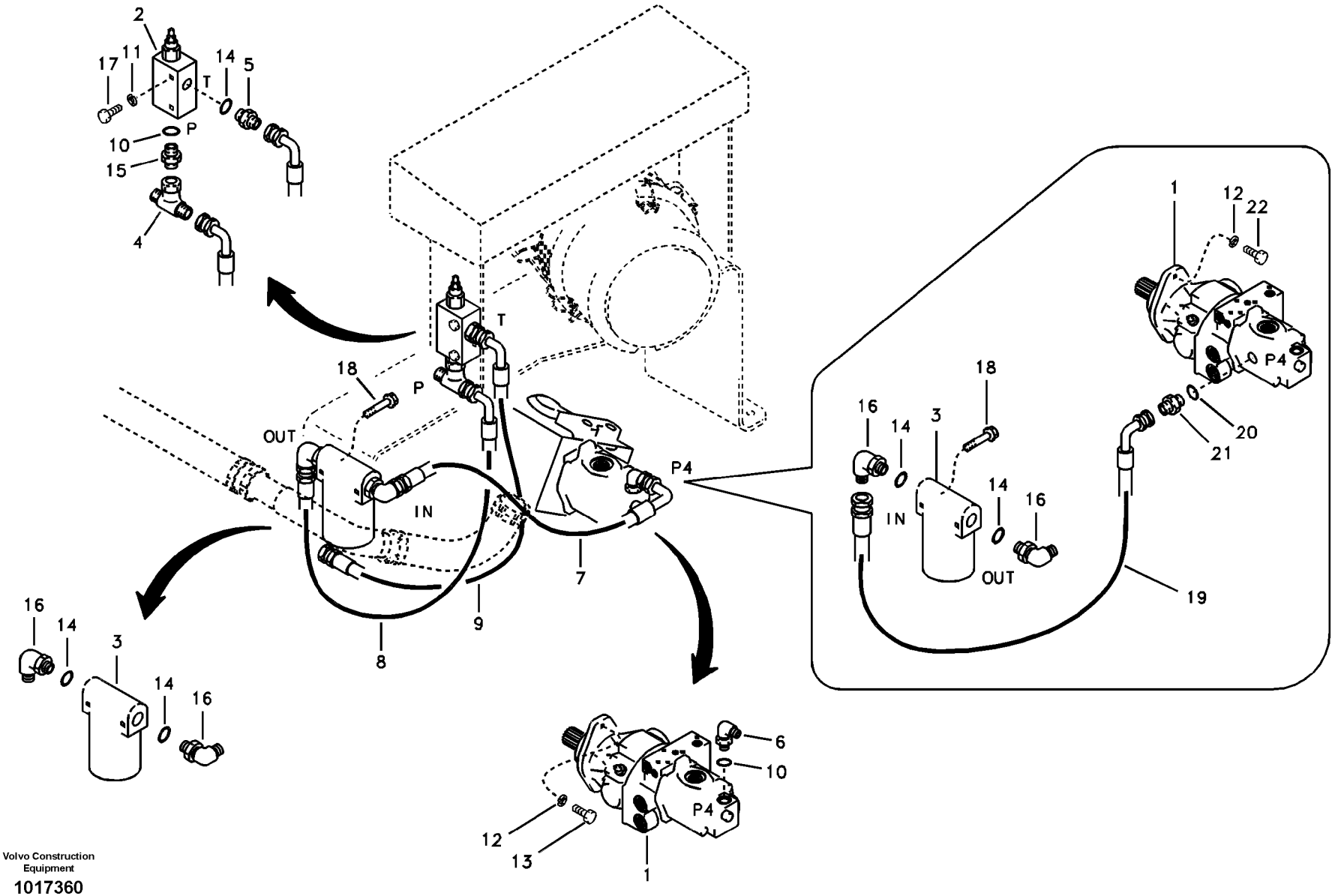

Volvo Construction Equipment

1017360

Fig.	Part No.	Quantity 1	2	3	PS	KIT	Description	Dénomination	Bezeichnung	품명	Denominación	Notes
20	**VOE 983502**		1				O-ring	Joint Torique	O-Ring	오링	Junta torica	
21	**SA 9412-11120**		1				Connector	Raccord	Anschluss	커넥터	Union	
22	**VOE 978932**		2				Screw	Vis	Schraube	스크류	Tornillo	

1	**8278796 S/N -33292**	**Instalación de bomba** 유압 펌프 및 장착 부품 **Pumpeninstallation** **Installation de pompe** **Pump installation**	Catalogue id **20019**	Group **913**
2	**8279576 S/N 33293-**		Illustr. No **1017360**	Section **100**
3	**8279577 S/N 33293-**		Issue **VOE 74H9920019**	Page **485**
4				
5				

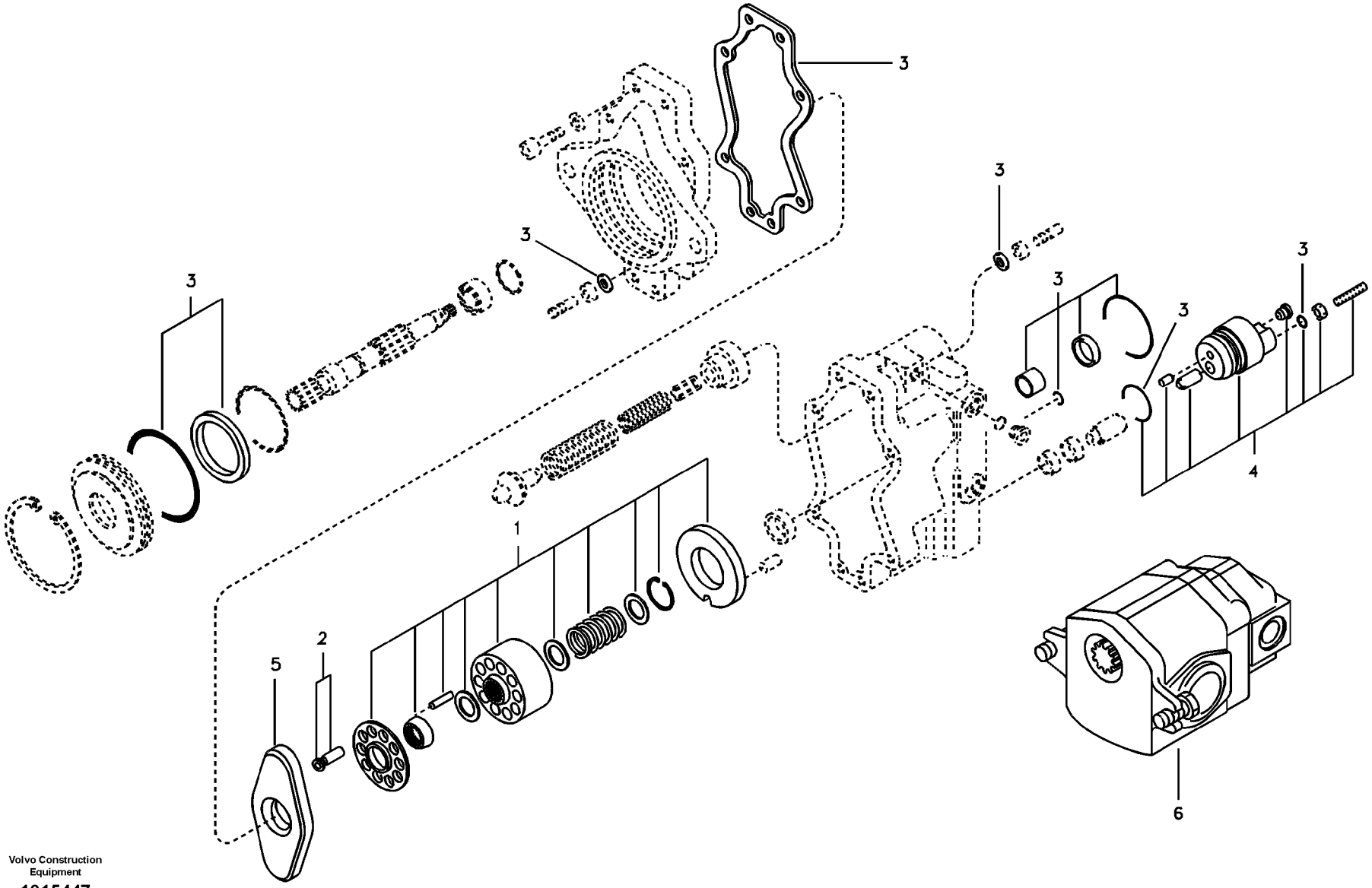

Volvo Construction Equipment

1015447

Fig.	Part No.	Quantity 1	2	3	PS	KIT	Description	Dénomination	Bezeichnung	품명	Denominación	Notes
	VOE 14518004	1			SS		Pump	Pompe	Pumpe	펌프	Bomba	SER NO 30001-31385
	VOE 14526311	1			SS		Pump	Pompe	Pumpe	펌프	Bomba	SER NO 31386-31911 SER NO 50001-50064
	VOE 14528547	1	1				Pump	Pompe	Pumpe	펌프	Bomba	SER NO 31912- SER NO 50065-
1	**VOE 14520403**	1	1				•Barrel	•Cylindre	•Zyl. Laufbuchse	• 배럴	•Cilindro	
2	**VOE 14520404**	1	1				•Piston	•Piston	•Kolben	• 피스톤	•Piston	
3	**VOE 14520405**	1	1				•Sealing Kit	•Jeu Joints	•Dichtungssatz	• 시일 킷	•Juego Retenes	
4	**VOE 14520406**	1	1				•Sleeve	•Manchon	•Muffe	• 슬리브	•Manguito	
5	**VOE 14520407**	1			SS		•Gear Pump	•Pomp.engrenages	•Zahnradpumpe	• 기어 펌프	•Bomba Engranaje	
	VOE 14533142		1				•Bushing	•Bague	•Buchse	• 부싱	•Casquillo	
6	**VOE 14533145**		1				•Gear Pump	•Pomp.engrenages	•Zahnradpumpe	• 기어 펌프	•Bomba Engranaje	
	VOE 14533146		1				•Seal	•Joint	•Dichtring	• 시일	•Junta	

1	**8278796 S/N -33292**	**Bomba hidráulica** 유압 펌프 **Hydraulikpumpe** **Pompe hydraulique** **Hydraulic pump**	Catalogue id **20019**	Group **913**
2	**8279577 S/N 33293-**		Illustr. No **1015447**	Section **200**
3			Issue **VOE 74H9920019**	Page **487**
4				
5				

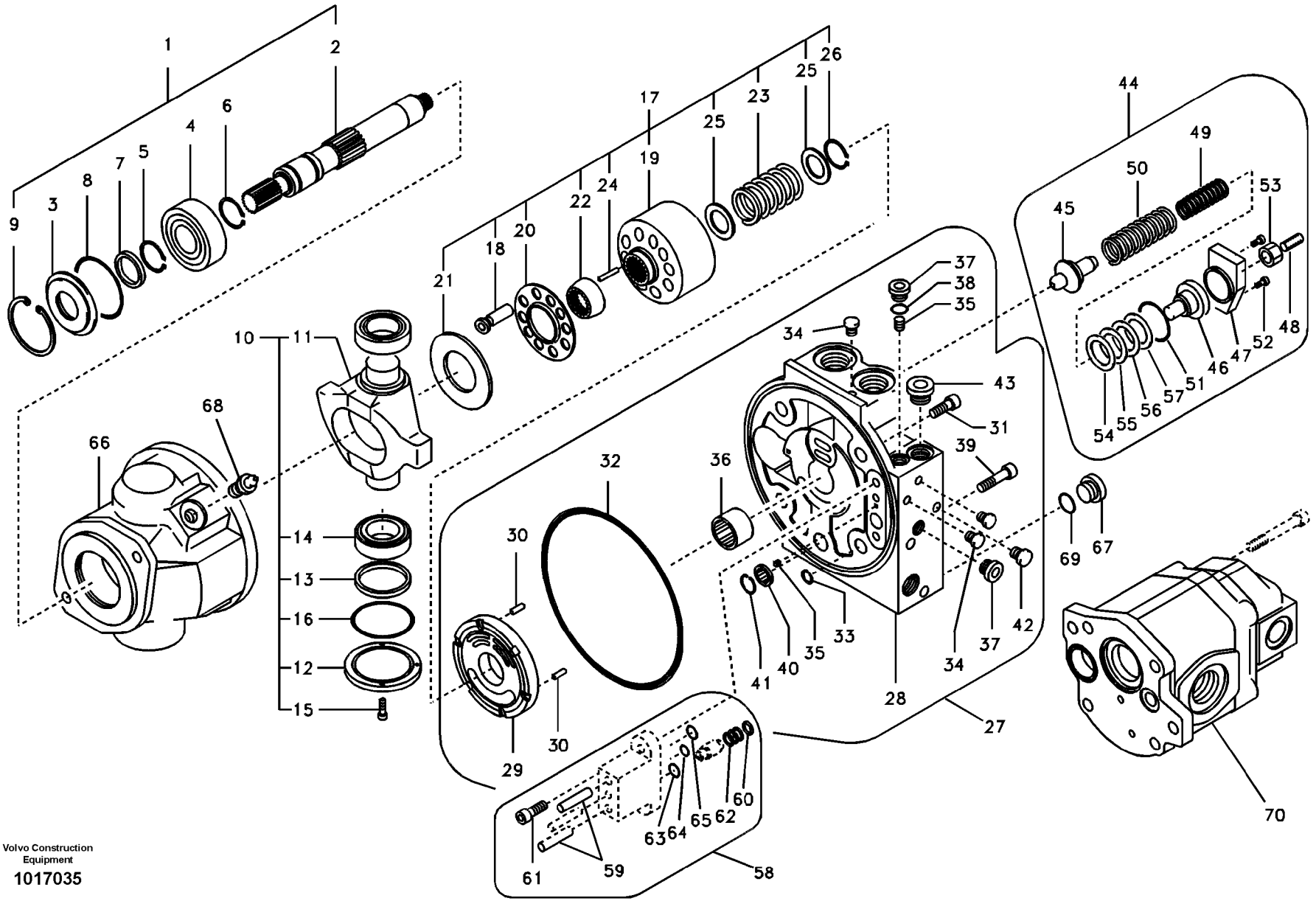

Volvo Construction Equipment

1017035

Fig.	Part No.	Quantity 1	2	3	PS	KIT	Description	Dénomination	Bezeichnung	품명	Denominación	Notes
	VOE 14529549	1					Pump	Pompe	Pumpe	펌프	Bomba	
1	**VOE 14525798**	1					•Shaft	•Arbre	•Welle	• 샤프트	•Arbol	
2	**SA 8230-03190**	1					••Shaft	••Arbre	••Welle	•• 샤프트	••Arbol	
3	**SA 8230-03170**	1					••Seal	••Joint	••Dichtring	•• 시일	••Junta	
4	**SA 8230-03180**	1					••Bearing	••Palier	••Lager	•• 베어링	••Cojinete	
5	**SA 8230-03850**	1					••Ring	••Anneau	••Ring	•• 링	••Anillo	
6	**SA 8230-03860**	1					••Ring	••Anneau	••Ring	•• 링	••Anillo	
7	**VOE 14525799**	1				K	••Seal	••Joint	••Dichtring	•• 시일	••Junta	
8	**SA 8230-03730**	1				K	••O-ring	••Joint Torique	••O-Ring	•• 오링	••Junta torica	
9	**SA 8230-03910**	1					••Ring	••Anneau	••Ring	•• 링	••Anillo	
10	**SA 8230-15520**	1					•Hanger	•Console	•Ausleger	• 행거	•Colgante	
11	**SA 8230-15530**	1					••Hanger	••Console	••Ausleger	•• 행거	••Colgante	
12	**SA 8230-02970**	1					••Plate	••Plaque	••Platte	•• 플레이트	••Placa	
13	**SA 8230-02990**	1					••Seal	••Joint	••Dichtring	•• 시일	••Junta	
14	**SA 8230-02980**	2					••Bearing	••Palier	••Lager	•• 베어링	••Cojinete	
15	**VOE 14525800**	4					••Screw	••Vis	••Schraube	•• 스크류	••Tornillo	
16	**SA 8230-03720**	1				K	••O-ring	••Joint Torique	••O-Ring	•• 오링	••Junta torica	
17	**SA 8230-15610**	1					•Rotator	•Rotateur	•Rotator	• 로테이터	•Rotator	
18	**SA 8230-15620**	10					••Piston	••Piston	••Kolben	•• 피스톤	••Piston	
19	**SA 8230-03350**	1					••Block	••Bloc	••Block	•• 블록	••Bloque	
20	**SA 8230-03340**	1					••Retainer	••Retenue	••Halter	•• 리테이너	••Soporte	
21	**SA 8230-03120**	1					••Plate	••Plaque	••Platte	•• 플레이트	••Placa	
22	**SA 8230-03010**	1					••Guide	••Rail	••Führung	•• 가이드	••Guia	
23	**SA 8230-03360**	1					••Spring	••Ressort	••Feder	•• 스프링	••Muelle	
24	**SA 8230-02950**	3					••Pin	••Goupille	••Zapfen	•• 핀	••Pasador	
25	**SA 8230-03110**	2					••Seat	••Siege	••Sitz	•• 시트	••Asiento	
26	**SA 8230-03880**	1					••Ring	••Anneau	••Ring	•• 링	••Anillo	
27	**VOE 14504578**	1					•Cover	•Capot	•Haube	• 커버	•Capo	
28	**SA 8230-03410**	1					••Cover	••Capot	••Haube	•• 커버	••Capo	
29	**SA 8230-03450**	1					••Plate	••Plaque	••Platte	•• 플레이트	••Placa	

1	**8279576 S/N 33293-**	**Engranaje de bomba hidráulica** 기어 펌프 **Hydraulische Zahnradpumpe** **Pompe à engrenages hydraulique** **Hydraulic gear pump**	Catalogue id **20019**	Group **913**
2			Illustr. No **1017035**	Section **250**
3			Issue **VOE 74H9920019**	Page **489**
4				
5				



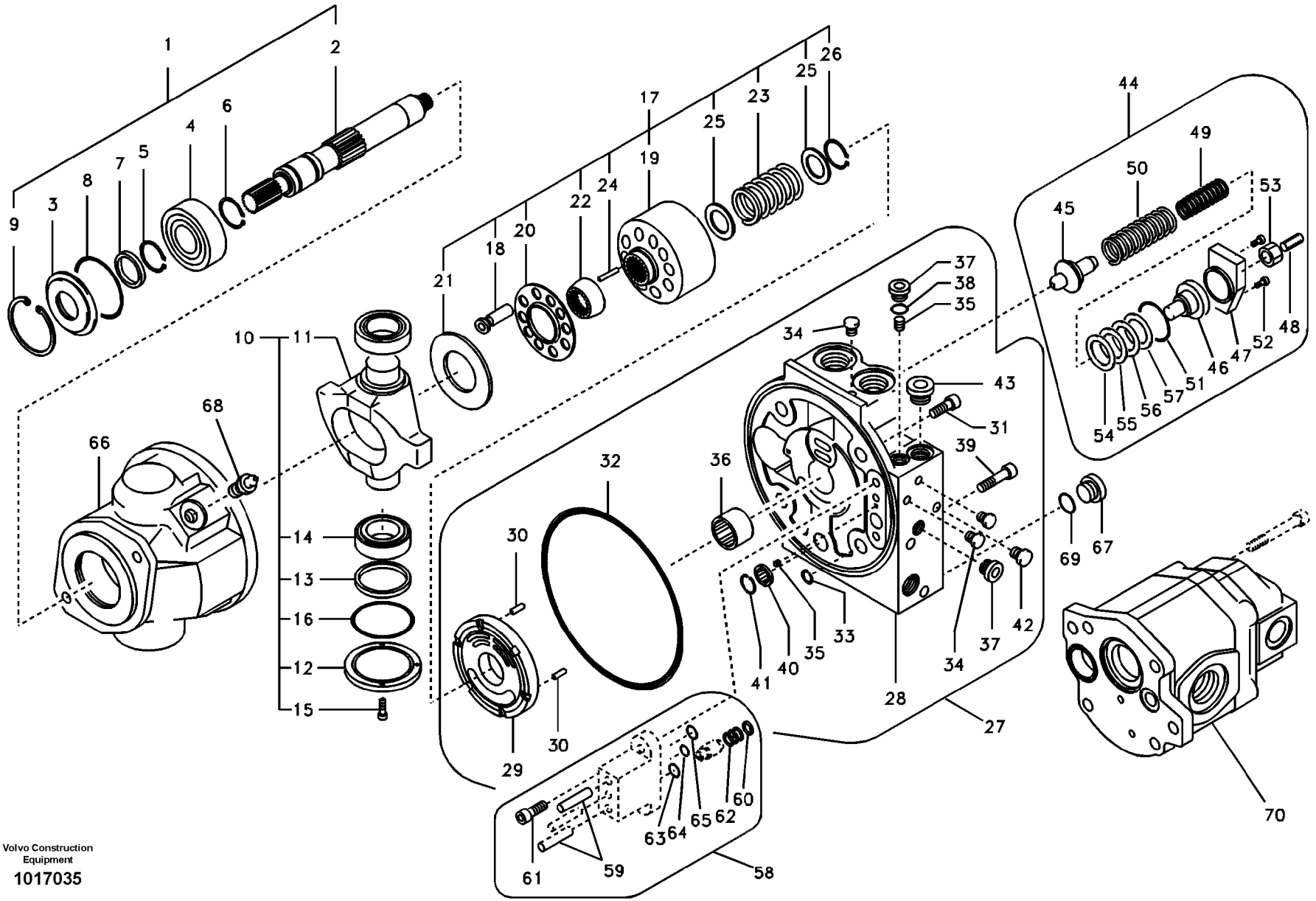

Volvo Construction Equipment

1017035

Fig.	Part No.	Quantity 1	2	3	PS	KIT	Description	Dénomination	Bezeichnung	품명	Denominación	Notes
30	**SA 8230-03890**	2					••Pin	••Goupille	••Zapfen	•• 핀	••Pasador	
31	**SA 8230-03820**	2					••Bolt	••Boulon	••Bolzen	•• 볼트	••Perno	
32	**SA 8230-03930**	1				K	••O-ring	••Joint Torique	••O-Ring	•• 오링	••Junta torica	
33	**SA 8230-06960**	4					••O-ring	••Joint Torique	••O-Ring	•• 오링	••Junta torica	
34	**SA 8230-06540**	2					••Plug	••Bouchon	••Stopfen	•• 플러그	••Tapon	
35	**SA 8230-03080**	3					••Orifice	••Orifice	••Dusenbohrung	•• 오리피스	••Orificio	
36	**SA 8230-03130**	1					••Bearing	••Palier	••Lager	•• 베어링	••Cojinete	
37	**SA 8230-15450**	2				K	••Plug	••Bouchon	••Stopfen	•• 플러그	••Tapon	
38	**VOE 14504579**	1				K	••O-ring	••Joint Torique	••O-Ring	•• 오링	••Junta torica	
39	**SA 8230-03800**	1					••Bolt	••Boulon	••Bolzen	•• 볼트	••Perno	
40	**SA 8230-03310**	1					••Filter	••Filtre	••Filter	•• 필터	••Filtro	
41	**SA 8230-03870**	1					••Ring	••Anneau	••Ring	•• 링	••Anillo	
42	**SA 8230-06550**	3					••Plug	••Bouchon	••Stopfen	•• 플러그	••Tapon	
43	**SA 8230-15460**	3					••Plug	••Bouchon	••Stopfen	•• 플러그	••Tapon	
44	**VOE 14525801**	1			OP		•Spring	•Ressort	•Feder	• 스프링	•Muelle	
45	**SA 8230-03140**	1					••Seat	••Siege	••Sitz	•• 시트	••Asiento	
46	**SA 8230-03220**	1					••Seat	••Siege	••Sitz	•• 시트	••Asiento	
47	**VOE 14525802**	1					••Cover	••Capot	••Haube	•• 커버	••Capo	
48	**SA 8230-03160**	1					••Screw	••Vis	••Schraube	•• 스크류	••Tornillo	
49	**SA 8230-03210**	1					••Spring	••Ressort	••Feder	•• 스프링	••Muelle	
50	**SA 8230-03250**	1					••Spring	••Ressort	••Feder	•• 스프링	••Muelle	
51	**SA 8230-03770**	1				K	••O-ring	••Joint Torique	••O-Ring	•• 오링	••Junta torica	
52	**SA 8230-03790**	2					••Bolt	••Boulon	••Bolzen	•• 볼트	••Perno	
53	**SA 8230-03830**	1					••Nut	••Ecrou	••Mutter	•• 너트	••Tuerca	
54	**SA 8230-06560**	2					••Shim	••Cale d'épaisseur	••Passcheibe	•• 심	••Arandela Ajuste	
55	**SA 8230-03920**	2					••Shim	••Cale d'épaisseur	••Passcheibe	•• 심	••Arandela Ajuste	
56	**SA 8230-03060**	2					••Shim	••Cale d'épaisseur	••Passcheibe	•• 심	••Arandela Ajuste	
57	**SA 8230-03070**	2					••Shim	••Cale d'épaisseur	••Passcheibe	•• 심	••Arandela Ajuste	
58	**VOE 14525803**	1					•Spring	•Ressort	•Feder	• 스프링	•Muelle	
59	**SA 8230-03380**	2					••Pin	••Goupille	••Zapfen	•• 핀	••Pasador	

1	**8279576 S/N 33293-**	**Engranaje de bomba hidráulica** 기어 펌프 **Hydraulische Zahnradpumpe** **Pompe à engrenages hydraulique** **Hydraulic gear pump**	Catalogue id **20019** / Group **913**
2			
3			Illustr. No **1017035** / Section **250**
4			
5			Issue **VOE 74H9920019** / Page **491**

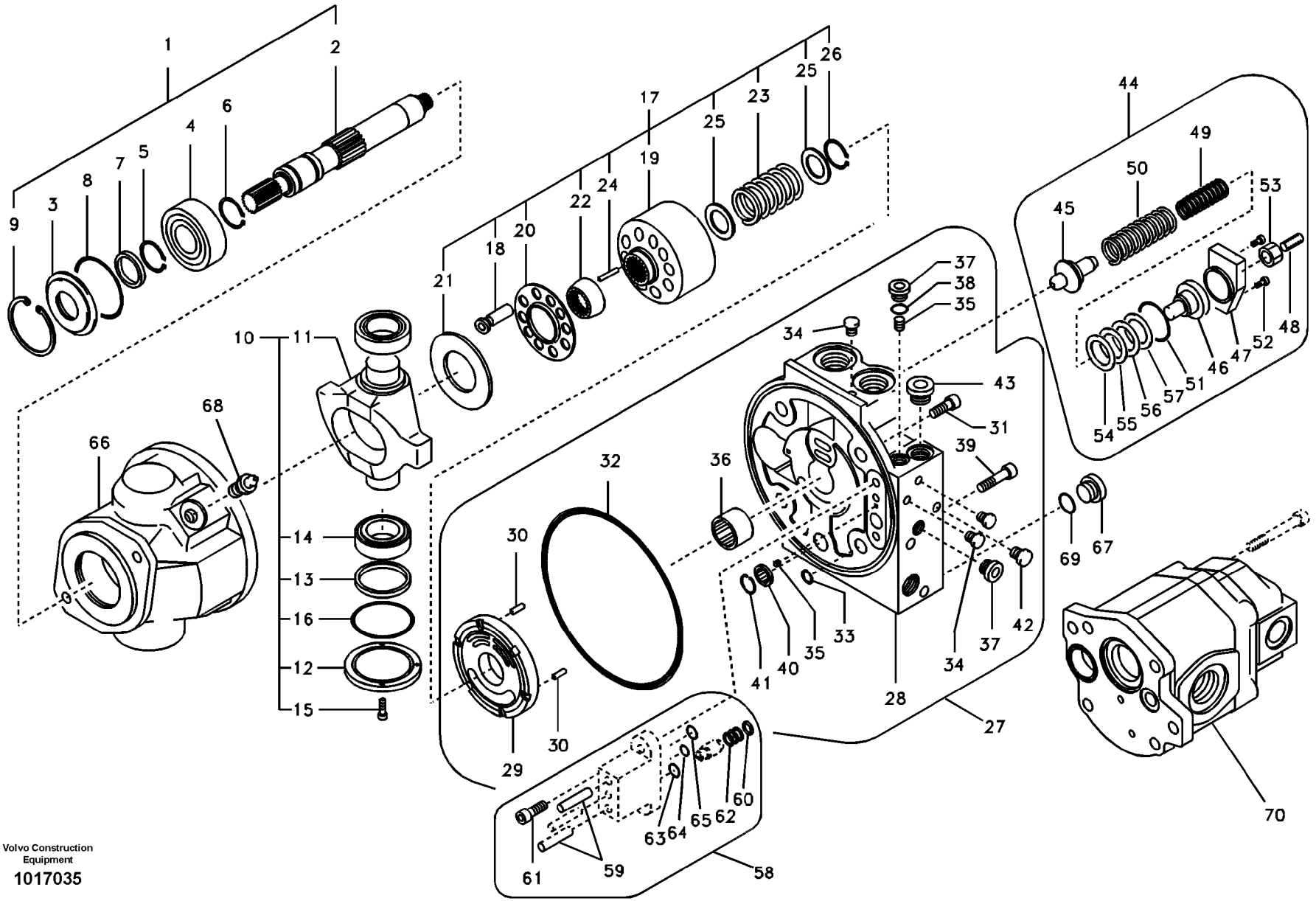

Volvo Construction Equipment

1017035

Fig.	Part No.	Quantity 1	2	3	PS	KIT	Description	Dénomination	Bezeichnung	품명	Denominación	Notes
60	**SA 8230-03440**	2					••Seat	••Siege	••Sitz	•• 시트	••Asiento	
61	**SA 8230-03780**	2					••Bolt	••Boulon	••Bolzen	•• 볼트	••Perno	
62	**SA 8230-03150**	3					••Spring	••Ressort	••Feder	•• 스프링	••Muelle	
63	**VOE 14525806**	1				K	••O-ring	••Joint Torique	••O-Ring	•• 오링	••Junta torica	
64	**VOE 14525807**	1				K	••O-ring	••Joint Torique	••O-Ring	•• 오링	••Junta torica	
65	**VOE 14525808**	1				K	••O-ring	••Joint Torique	••O-Ring	•• 오링	••Junta torica	
66	**SA 8230-03390**	1					•Housing	•Carter	•Gehäuse	• 하우징	•Carter	
67	**VOE 14505487**	1					•Plug	•Bouchon	•Stopfen	• 플러그	•Tapon	
68	**SA 8230-03400**	1					•Nipple	•Raccord	•Nippel	• 니플	•Niple	
69	**SA 8230-06960**	1					•O-ring	•Joint Torique	•O-Ring	• 오링	•Junta torica	
70	**VOE 14525811**	1					•Gear Pump	•Pomp.engrenages	•Zahnradpumpe	• 기어 펌프	•Bomba Engranaje	
	VOE 14545038	1					••Seal	••Joint	••Dichtring	•• 시일	••Junta	
100	**VOE 14525810**	1					Seal	Joint	Dichtring	시일	Junta	

1	**8279576 S/N 33293-**	**Engranaje de bomba hidráulica** 기어 펌프 **Hydraulische Zahnradpumpe** **Pompe à engrenages hydraulique** **Hydraulic gear pump**	Catalogue id **20019**	Group **913**
2			Illustr. No **1017035**	Section **250**
3			Issue **VOE 74H9920019**	Page **493**
4				
5				

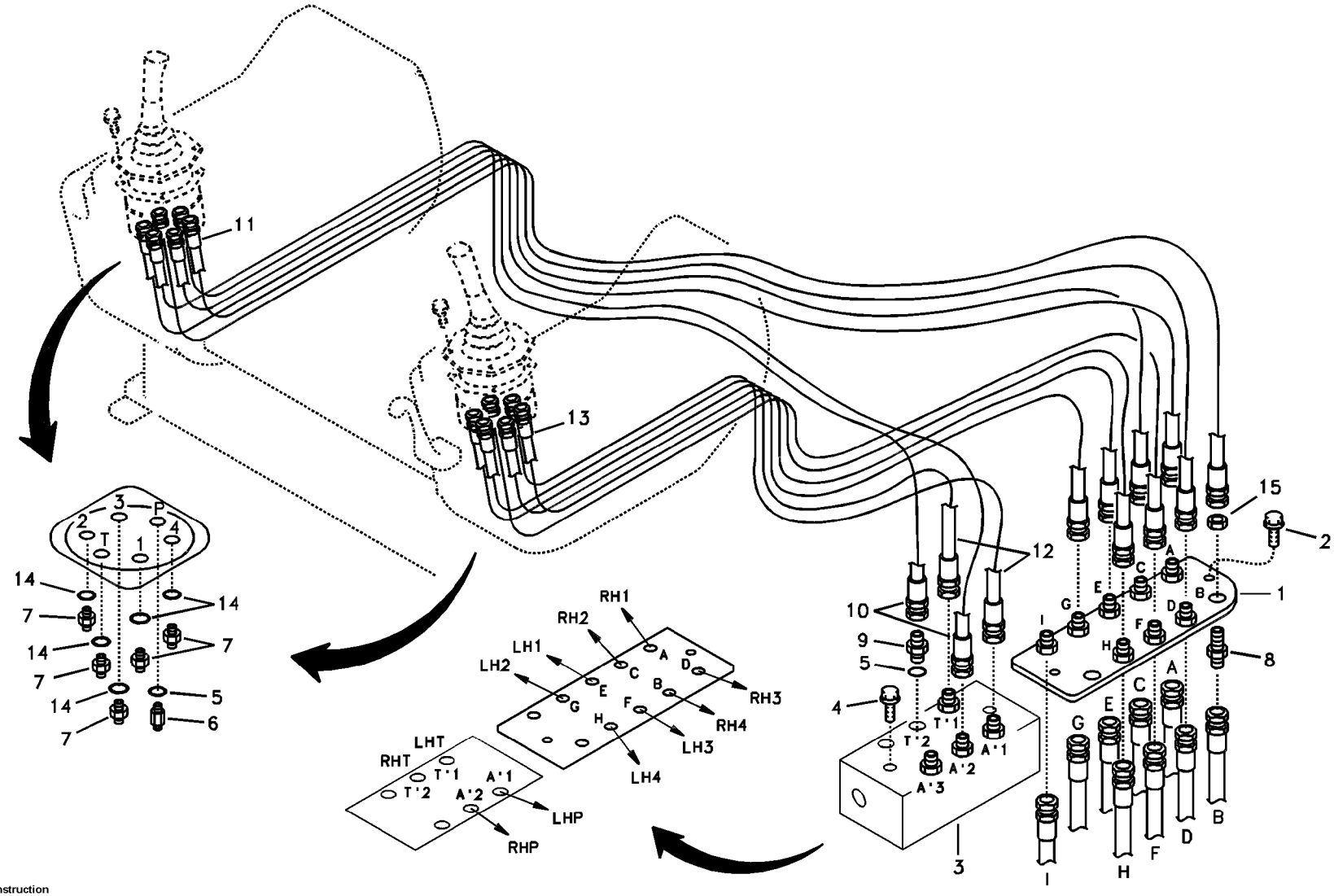

Volvo Construction Equipment

1018976

Fig.	Part No.	Quantity 1	2	3	4	5	PS	KIT	Description	Dénomination	Bezeichnung	품명	Denominación	Notes
1	**VOE 14519889**	1	1	1					Plate	Plaque	Platte	플레이트	Placa	
2	**VOE 946440**	2	2	2					Flange screw	Vis à bride	Flanschschraube	플랜지 스크류	Torn embridado	
3	**SA 11431106**	1	1	1					Block	Bloc	Block	블록	Bloque	
4	**VOE 965175**	2	2	2			SS		Screw	Vis	Schraube	스크류	Tornillo	
5	**VOE 983502**	6	6	6					O-ring	Joint Torique	O-Ring	오링	Junta torica	
6	**SA 1048-10540**	2	2	2					Connector	Raccord	Anschluss	커넥터	Union	
7	**SA 9412-11130**	10	10	10					Connector	Raccord	Anschluss	커넥터	Union	
8	**SA 9416-11091**	8	8	8					Connector	Raccord	Anschluss	커넥터	Union	
9	**SA 9412-11020**	4	4	4					Connector	Raccord	Anschluss	커넥터	Union	
10	**SA 9451-02234**	2	2	2					Hose	Durit	Schlauch	호스	Tubo flexible	
11	**SA 9451-02229**	4	4	4					Hose	Durit	Schlauch	호스	Tubo flexible	
12	**SA 9451-02216**	2	2	2					Hose	Durit	Schlauch	호스	Tubo flexible	
13	**SA 9451-02214**	4	4	4					Hose	Durit	Schlauch	호스	Tubo flexible	
14	**SA 9511-12014**	10	10	10					O-ring	Joint Torique	O-Ring	오링	Junta torica	
15	**SA 1040-80490**	8	8	8					Nut	Ecrou	Mutter	너트	Tuerca	

1	**8278796 S/N -33292**	**Servosistema, válvula de control a válvula de mando a distan** 서보 배관 , 제어밸브 에서 원격조종밸브 **Servosystem, Steuerventil zu Vorsteuergerät** **Système servo, valve commande vers valve commande a distance** **Servo system, control valve to remote control valve**	Catalogue id **20019**	Group **914**
2	**8279576 S/N 33293-**		Illustr. No **1018976**	Section **100**
3	**8279577 S/N 33293-**		Issue **VOE 74H9920019**	Page **495**
4				
5				

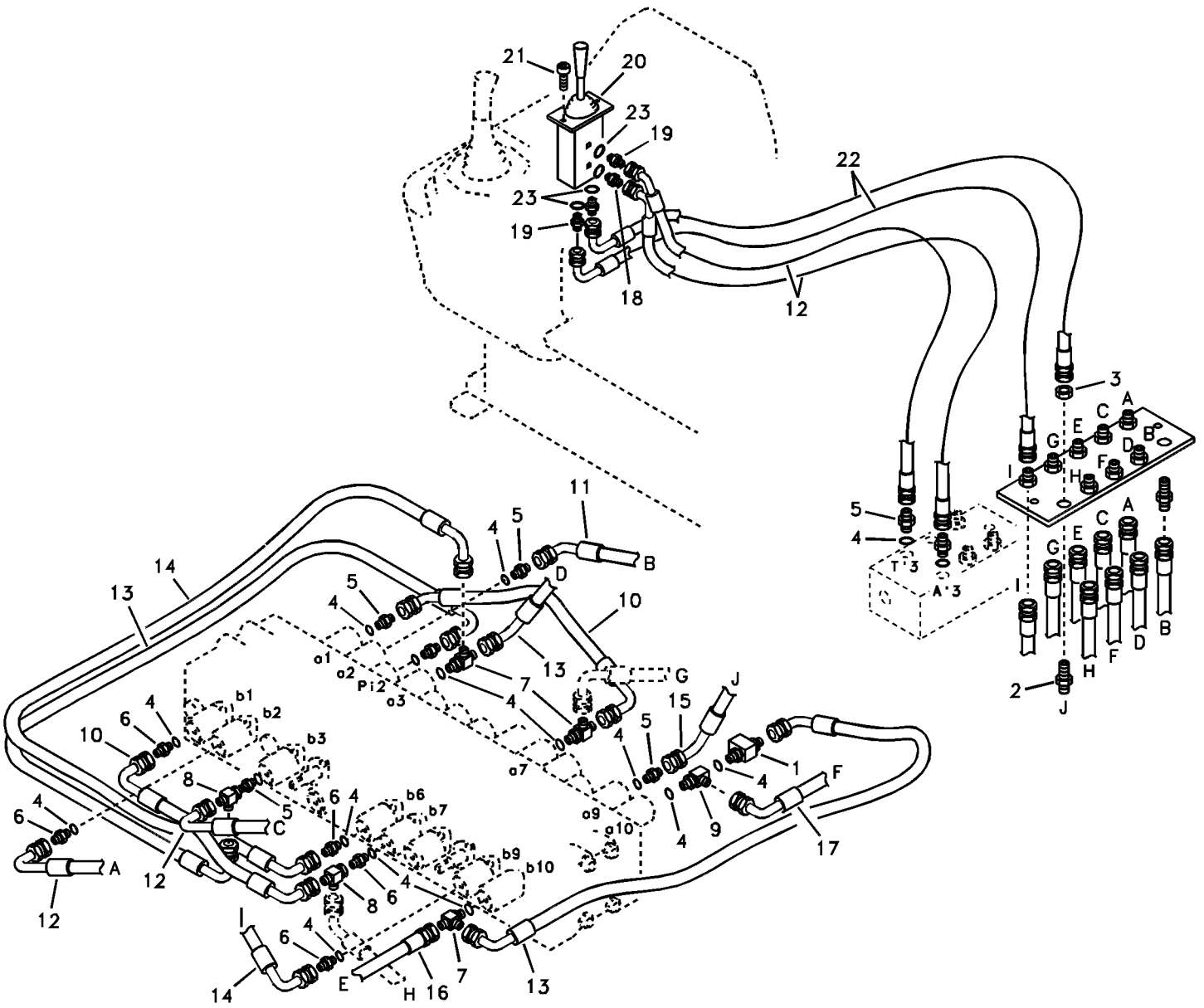

Volvo Construction Equipment

1007076

Fig.	Part No.	Quantity 1	2	3	PS	KIT	Description	Dénomination	Bezeichnung	품명	Denominación	Notes
1	**VOE 14520633**	1	1	1			Tee	Connexion en T	T-stuck	티	Acoplamiento T	
2	**SA 9416-11091**	2	2	2			Connector	Raccord	Anschluss	커넥터	Union	
3	**SA 1040-80490**	2	2	2			Nut	Ecrou	Mutter	너트	Tuerca	
4	**VOE 983502**	17	17	17			O-ring	Joint Torique	O-Ring	오링	Junta torica	
5	**SA 9412-11020**	7	7	7			Connector	Raccord	Anschluss	커넥터	Union	
6	**SA 9412-11090**	5	5	5			Connector	Raccord	Anschluss	커넥터	Union	
7	**SA 9411-92350**	4	4	4			Tee	Connexion en T	T-stuck	티	Acoplamiento T	
8	**SA 9411-95440**	2	2	2			Tee	Connexion en T	T-stuck	티	Acoplamiento T	
9	**SA 9411-93900**	1	1	1			Tee	Connexion en T	T-stuck	티	Acoplamiento T	
10	**SA 9455-02207**	10	10	10			Hose	Durit	Schlauch	호스	Tubo flexible	
11	**SA 9453-02219**	1	1	1			Hose	Durit	Schlauch	호스	Tubo flexible	
12	**SA 9453-02229**	4	4	4			Hose	Durit	Schlauch	호스	Tubo flexible	
13	**SA 9453-02217**	3	3	3			Hose	Durit	Schlauch	호스	Tubo flexible	
14	**SA 9453-02221**	2	2	2			Hose	Durit	Schlauch	호스	Tubo flexible	
15	**SA 9453-02212**	1	1	1			Hose	Durit	Schlauch	호스	Tubo flexible	
16	**SA 9453-02220**	1	1	1			Hose	Durit	Schlauch	호스	Tubo flexible	
17	**SA 9453-02246**	1	1	1			Hose	Durit	Schlauch	호스	Tubo flexible	
18	**SA 1048-10540**	1	1	1			Connector	Raccord	Anschluss	커넥터	Union	
19	**SA 9412-12020**	3	3	3			Connector	Raccord	Anschluss	커넥터	Union	
20	**SA 1040-74450**	1	1	1			Rmt Cont Valve	Comm.a Distance	Fernbet Vent	원격조종밸브	Valv Contr Dist	SER NO 33293-34399 SER NO 50001-50105
	VOE 14540716		1	1			Rmt Cont Valve	Comm.a Distance	Fernbet Vent	원격조종밸브	Valv Contr Dist	SER NO 34400- SER NO 50106-
21	**VOE 984066**	2	2	2			Allen Hd Screw	Vis A 6 Pans Cr	Inbusschraube	스크류	Torn Hex Embut	
22	**SA 9453-02225**	2	2	2			Hose	Durit	Schlauch	호스	Tubo flexible	
23	**SA 9426-10020**	4	4	4			Gasket	Joint	Dichtung	가스켓	Junta	

1	**8278796 S/N -33292**
2	**8279576 S/N 33293-**
3	**8279577 S/N 33293-**
4	
5	

Servosistema, válvula de control a válvula de mando a distan
서보 배관 , 제어밸브 에서 원격조종밸브
Servosystem, Steuerventil zu Vorsteuergerät
Système servo, valve commande vers valve commande a distance
Servo system, control valve to remote control valve

Catalogue id **20019**	Group **914**
Illustr. No **1007076**	Section **200**
Issue **VOE 74H9920019**	Page **497**

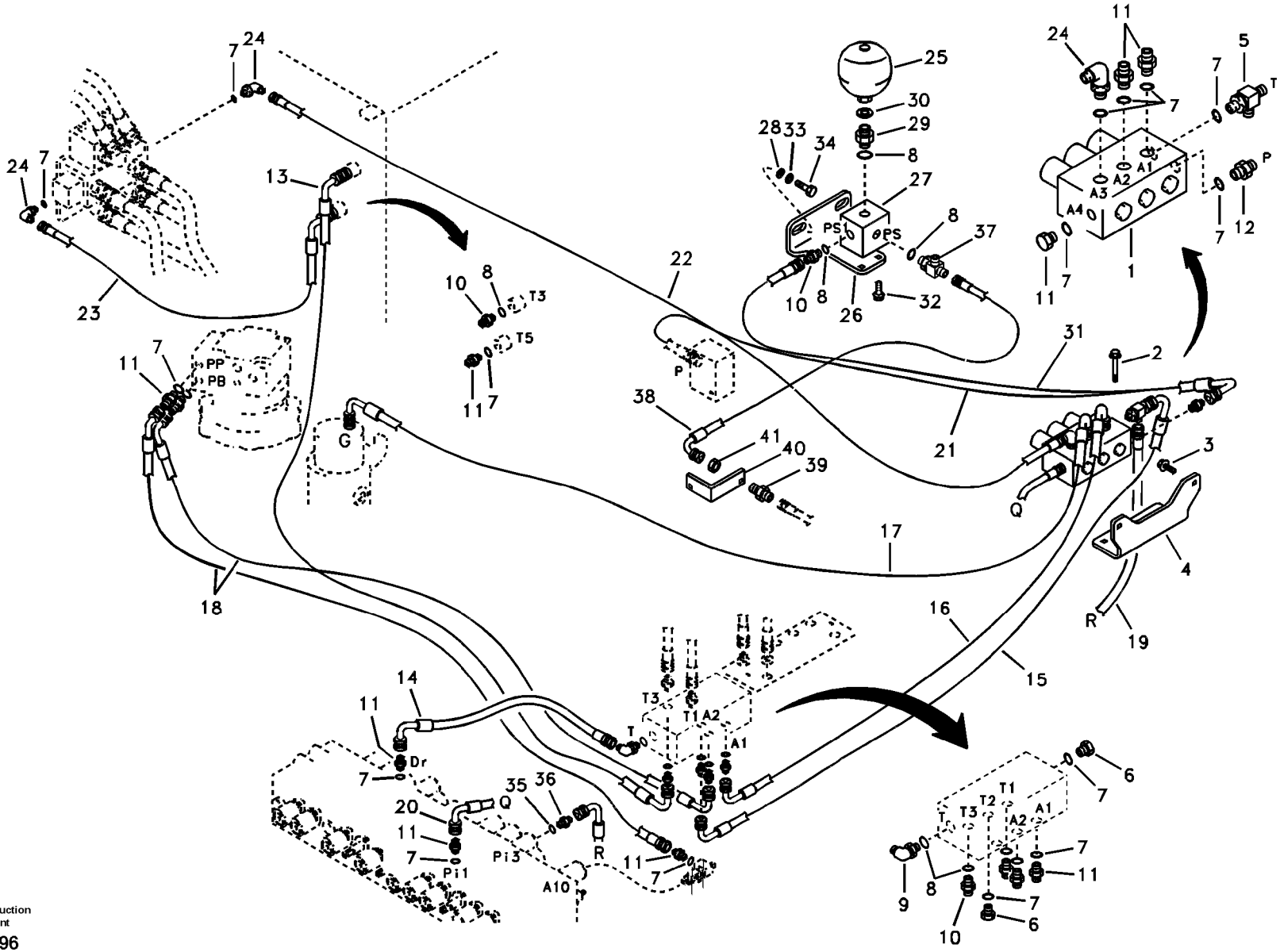

Volvo Construction Equipment

1018996

Fig.	Part No.	Quantity 1	2	3	4	5	PS	KIT	Description	Dénomination	Bezeichnung	품명	Denominación	Notes
1	**VOE 14500440**	1					SS		Solenoid valve	Vanne electrom.	Magnetventil	솔레노이드 밸브	Electrovalvula	SER NO 30001-31767 See group 914, Page 503
	VOE 14526662	1			1	1			Solenoid valve	Vanne electrom.	Magnetventil	솔레노이드 밸브	Electrovalvula	SER NO 31768- SER NO 50001- See group 914, Page 503
2	**VOE 946440**	2			2	2			Flange screw	Vis à bride	Flanschschraube	플랜지 스크류	Torn embridado	
3	**VOE 946441**	2			2	2			Flange screw	Vis à bride	Flanschschraube	플랜지 스크류	Torn embridado	
4	**VOE 14507831**	1					SS		Bracket	Console	Konsole	브라켓	Ménsula	SER NO 30001-30666
	VOE 14522776	1			1	1			Bracket	Console	Konsole	브라켓	Ménsula	SER NO 30667- SER NO 50001-
5	**SA 9411-92350**	1			1	1			Tee	Connexion en T	T-stuck	티	Acoplamiento T	
6	**SA 9415-11021**	2			2	2			Plug	Bouchon	Stopfen	플러그	Tapon	
7	**VOE 983502**	14	4		13	13			O-ring	Joint Torique	O-Ring	오링	Junta torica	
	VOE 983502			1					O-ring	Joint Torique	O-Ring	오링	Junta torica	SER NO 34476- SER NO 50130-
8	**SA 9511-12014**	3		3	3	3			O-ring	Joint Torique	O-Ring	오링	Junta torica	
9	**SA 9413-11170**	1			1	1			Elbow	Coude	Winkelstueck	엘보	Tubo acodado	
10	**SA 9412-11030**	2		2	2	2			Connector	Raccord	Anschluss	커넥터	Union	
11	**SA 9412-11020**	12	1		11	11			Connector	Raccord	Anschluss	커넥터	Union	
	SA 9412-11020			1					Connector	Raccord	Anschluss	커넥터	Union	SER NO 34476- SER NO 50130-
12	**SA 1048-10530**	1			1	1			Connector	Raccord	Anschluss	커넥터	Union	
13	**SA 9453-03136**	1			1	1			Hose	Durit	Schlauch	호스	Tubo flexible	
14	**SA 9453-02214**	1			1	1			Hose	Durit	Schlauch	호스	Tubo flexible	
15	**SA 9453-02220**	1			1	1			Hose	Durit	Schlauch	호스	Tubo flexible	
16	**SA 9453-02217**	1			1	1			Hose	Durit	Schlauch	호스	Tubo flexible	
17	**SA 9453-02237**	1			1	1			Hose	Durit	Schlauch	호스	Tubo flexible	
18	**SA 9453-02229**	2			2	2			Hose	Durit	Schlauch	호스	Tubo flexible	
19	**SA 9451-02223**	1							Hose	Durit	Schlauch	호스	Tubo flexible	SER NO 30001-30666

1	**8278796 S/N -33292**
2	**8278836**
3	**8278897**
4	**8279576 S/N 33293-**
5	**8279577 S/N 33293-**

Servosistema, válvula de control aelectrovalvula y motor de giro
서보 배관 , 제어밸브 에서 솔레노이드 밸브 및 선회 모터
Servosystem, Steuerventil zu Magnetventil und Schwenkmotor
Système servo, valve commande vers vanne el.magnet. et moteur d'orient.
Servo system, control valve to solenoid valve and swing motor.

Catalogue id **20019**	Group **914**
Illustr. No **1018996**	Section **300**
Issue **VOE 74H9920019**	Page **499**

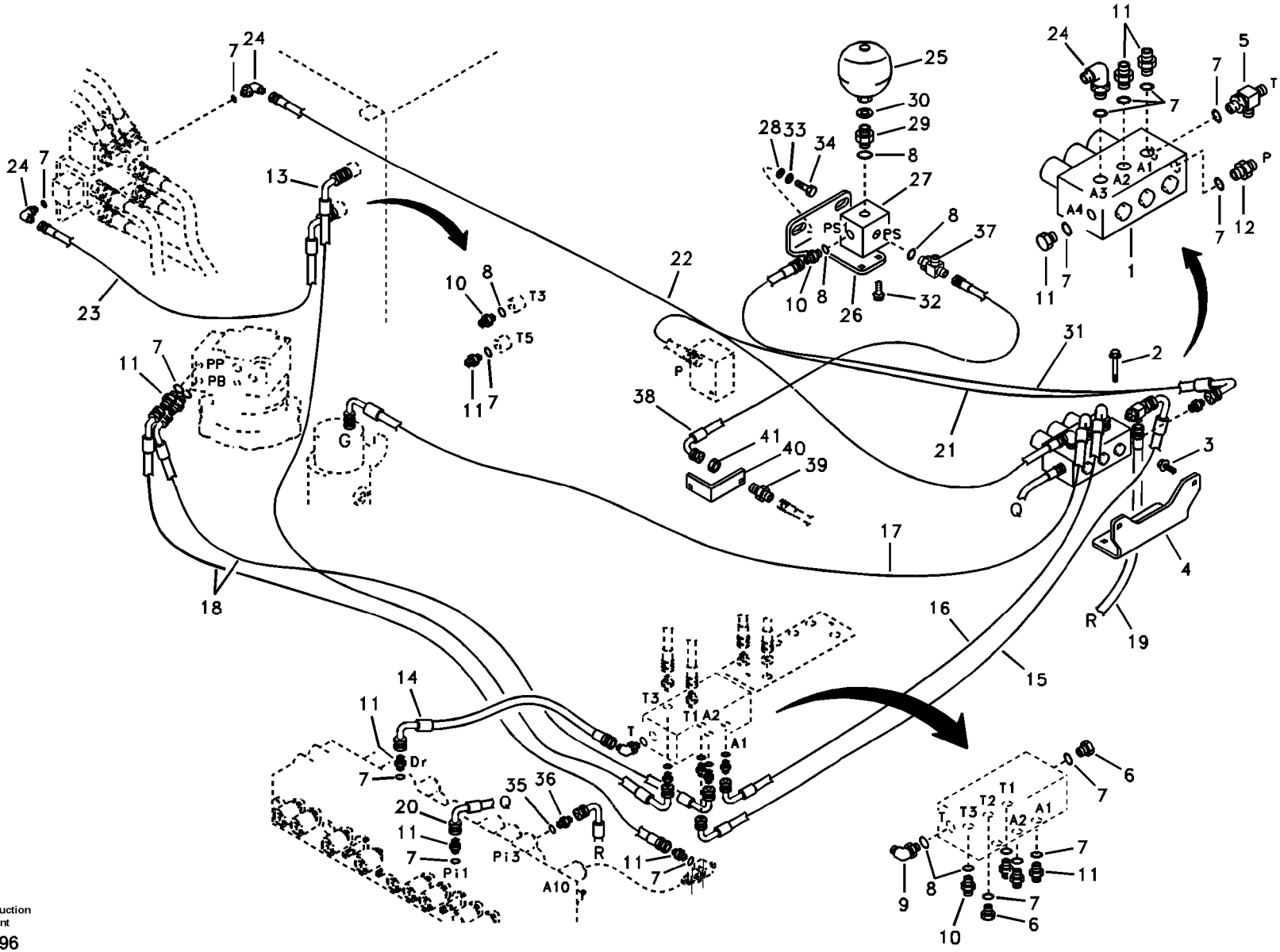

Volvo Construction Equipment

1018996

Fig.	Part No.	Quantity 1	2	3	4	5	PS	KIT	Description	Dénomination	Bezeichnung	품명	Denominación	Notes
	SA 9453-02226	1			1	1			Hose	Durit	Schlauch	호스	Tubo flexible	SER NO 30667- SER NO 50001-
20	**SA 9453-02222**	1			1	1			Hose	Durit	Schlauch	호스	Tubo flexible	
21	**SA 9453-03219**	1			1	1			Hose	Durit	Schlauch	호스	Tubo flexible	
22	**SA 9451-02236**		1						Hose	Durit	Schlauch	호스	Tubo flexible	
23	**SA 9453-02224**		1						Hose	Durit	Schlauch	호스	Tubo flexible	
24	**SA 9413-11010**		3						Elbow	Coude	Winkelstueck	엘보	Tubo acodado	
25	**SA 1048-10300**			1					Accumulator	Accumulateur	Speicher	어큐뮬레이터	Acumulador	
26	**VOE 14504427**			1					Bracket	Console	Konsole	브라켓	Ménsula	
27	**VOE 14507312**			1					Block	Bloc	Block	블록	Bloque	
28	**SA 9211-12000**			2					Washer	Rondelle	Scheibe	와셔	Arandela	
29	**SA 9412-12150**			1					Connector	Raccord	Anschluss	커넥터	Union	
30	**SA 9426-10040**			1					Gasket	Joint	Dichtung	가스켓	Junta	
31	**SA 9453-03210**			1					Hose	Durit	Schlauch	호스	Tubo flexible	
32	**VOE 946329**			2					Flange screw	Vis à bride	Flanschschraube	플랜지 스크류	Torn embridado	
33	**VOE 955923**			2					Spring Washer	Rondelle élastique	Federscheibe	스프링 와셔	Arandela flexible	
34	**SA 9011-11205**			2					Bolt	Boulon	Bolzen	볼트	Perno	
35	**VOE 983502**				1	1			O-ring	Joint Torique	O-Ring	오링	Junta torica	
36	**SA 9412-11020**				1	1			Connector	Raccord	Anschluss	커넥터	Union	
37	**VOE 14880126**			1					Tee	Connexion en T	T-stuck	티	Acoplamiento T	SER NO 34476- SER NO 50130-
38	**SA 9453-02212**			1					Hose	Durit	Schlauch	호스	Tubo flexible	SER NO 34476- SER NO 50130-
39	**SA 9416-11091**			1					Connector	Raccord	Anschluss	커넥터	Union	SER NO 34476- SER NO 50130-
40				1			NS		Bracket	Console	Konsole	브라켓	Ménsula	SER NO 34476- SER NO 50130-
41	**SA 1040-80490**			1					Nut	Ecrou	Mutter	너트	Tuerca	SER NO 34476- SER NO 50130-

1	**8278796 S/N -33292**
2	**8278836**
3	**8278897**
4	**8279576 S/N 33293-**
5	**8279577 S/N 33293-**

Servosistema, válvula de control aelectrovalvula y motor de giro
서보 배관 , 제어밸브 에서 솔레노이드 밸브 및 선회 모터
Servosystem, Steuerventil zu Magnetventil und Schwenkmotor
Système servo, valve commande vers vanne el.magnet. et moteur d'orient.
Servo system, control valve to solenoid valve and swing motor.

Catalogue id **20019**	Group **914**
Illustr. No **1018996**	Section **300**
Issue **VOE 74H9920019**	Page **501**

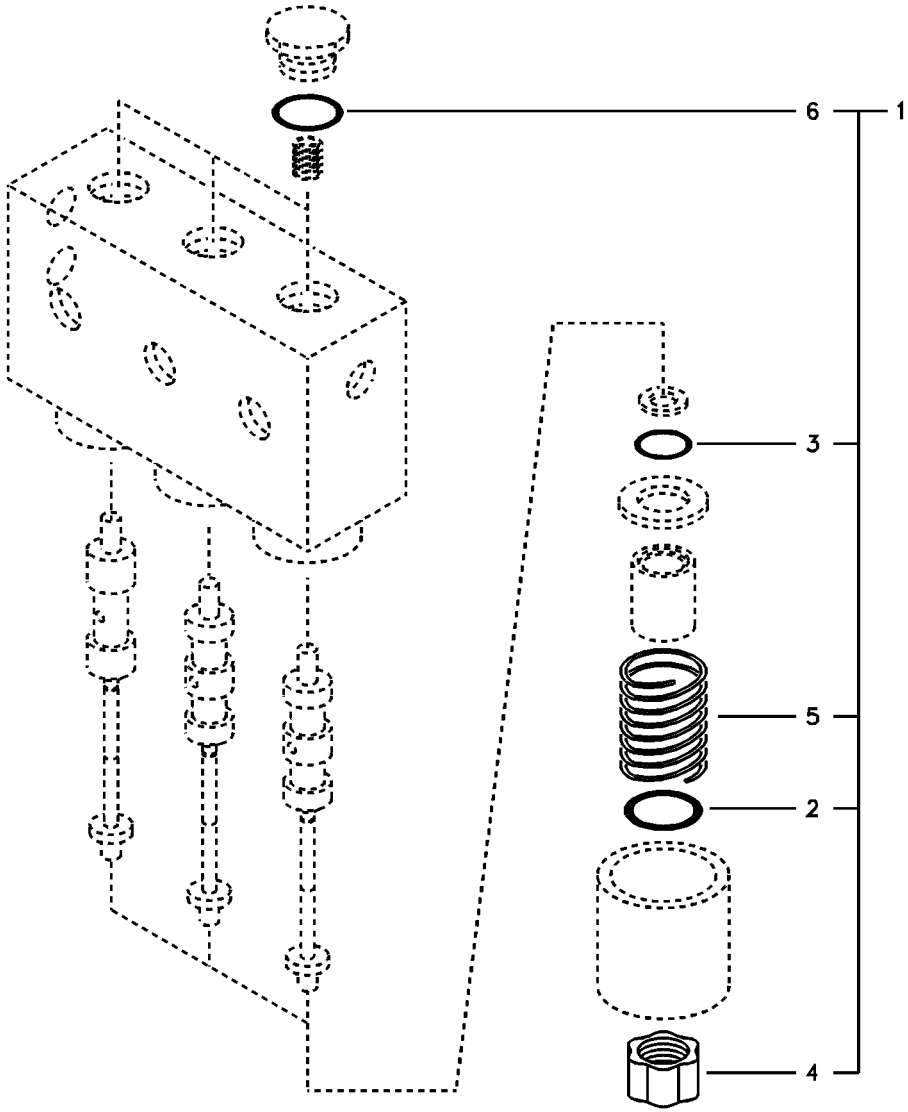
6
1
3
5
2
4

Fig.	Part No.	Quantity 1	2	3	PS	KIT	Description	Dénomination	Bezeichnung	품명	Denominación	Notes
	VOE 14500440	1			SS		Solenoid valve	Vanne electrom.	Magnetventil	솔레노이드 밸브	Electrovalvula	SER NO 30001-31767
	VOE 14526662	1					Solenoid valve	Vanne electrom.	Magnetventil	솔레노이드 밸브	Electrovalvula	SER NO 31768-
1	**VOE 14505472**	3	3	3	SS		•Kit	•Jeu	•Bausatz	• 킷	•Juego	
2		1	1	1	NS		••O-ring	••Joint Torique	••O-Ring	•• 오링	••Junta torica	
3		1	1	1	NS		••O-ring	••Joint Torique	••O-Ring	•• 오링	••Junta torica	
4		1	1	1	NS		••Nut	••Ecrou	••Mutter	•• 너트	••Tuerca	
5		1	1	1	NS		••Coil	••Spirale	••Spirale	•• 코일	••Espiral	
6	**SA 9511-12018**	2	2	2	SS		••O-ring	••Joint Torique	••O-Ring	•• 오링	••Junta torica	

1	**8278796 S/N -33292**	**Servosistema, válvula solenoide** 서보 배관 , 솔레노이드 밸브 **Servosystem, Magnetventil** **Système servo, valve de solénoïde** **Servo system, solenoid valve**	Catalogue id **20019**	Group **914**
2	**8279576 S/N 33293-**		Illustr. No **1007078**	Section **900**
3	**8279577 S/N 33293-**		Issue **VOE 74H9920019**	Page **503**
4				
5				

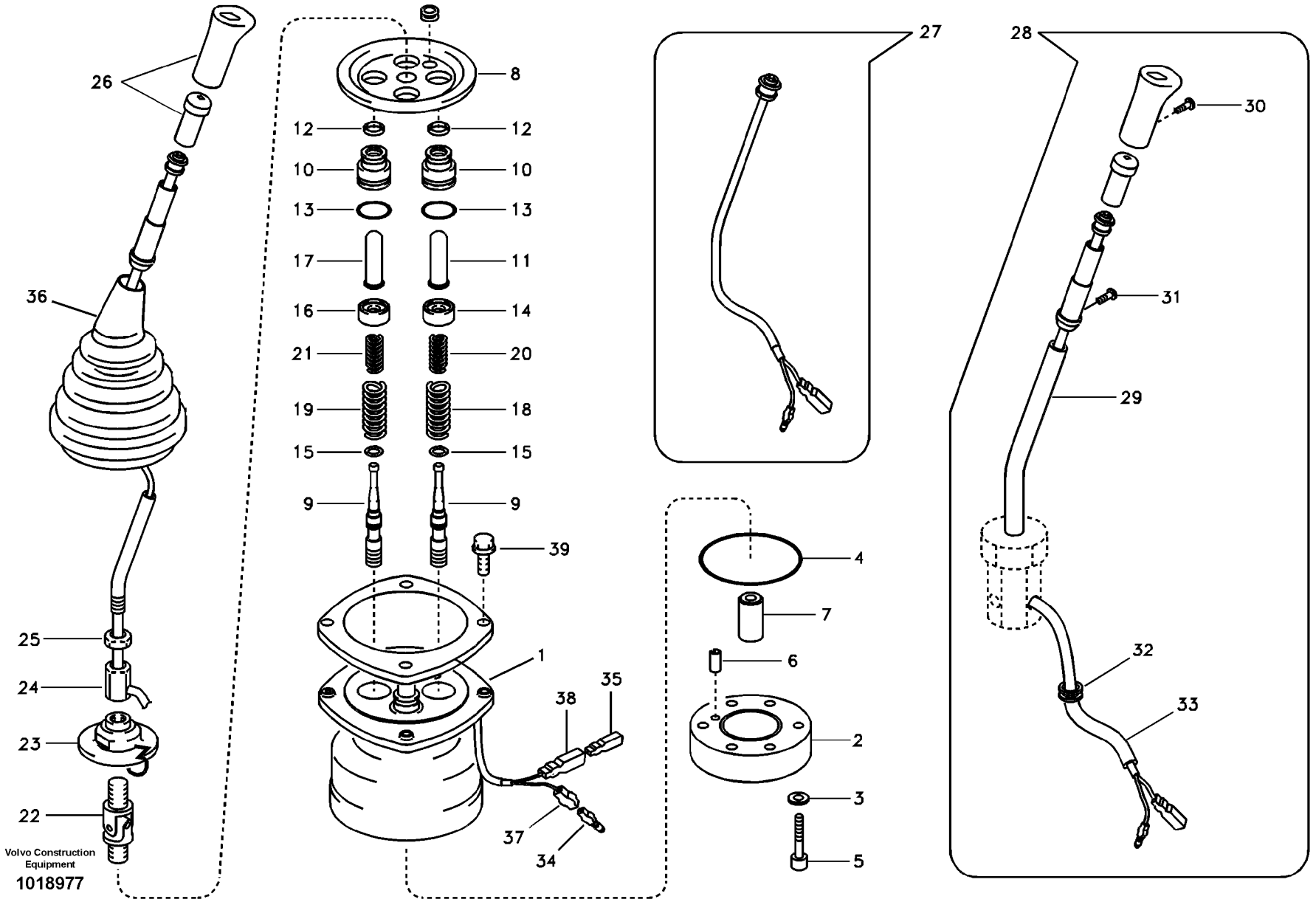
26
36
25
24
23
22
Volvo Construction Equipment
1018977
8
12
12
10
10
13
13
17
11
16
14
21
20
19
18
15
15
9
9
39
1
35
38
37
34
27
4
7
6
2
3
5
28
30
31
29
32
33

Fig.	Part No.	Quantity 1	2	3	PS	KIT	Description	Dénomination	Bezeichnung	품명	Denominación	Notes
	SA 1148-01890	1					Rmt Cont Valve	Comm.a Distance	Fernbet Vent	원격조종밸브	Valv Contr Dist	SER NO 30001-34475 SER NO 50001-50129
	VOE 14533385	1					Rmt Cont Valve	Comm.a Distance	Fernbet Vent	원격조종밸브	Valv Contr Dist	SER NO 34476- SER NO 50130-
	SA 1148-01900	1					Rmt Cont Valve	Comm.a Distance	Fernbet Vent	원격조종밸브	Valv Contr Dist	SER NO 30001-34475 SER NO 50001-50129
	VOE 14533386	1					Rmt Cont Valve	Comm.a Distance	Fernbet Vent	원격조종밸브	Valv Contr Dist	SER NO 34476- SER NO 50130-
1	**SA 8230-37050**	1			OP		•Casing	•Boitier	•Gehäuse	• 케이싱	•Cubierta	
2	**SA 8230-37150**	1					•Plate	•Plaque	•Platte	• 플레이트	•Placa	
3	**SA 8230-19730**	2			SS		•Washer	•Rondelle	•Scheibe	• 와셔	•Arandela	
4	**SA 8230-37060**	1				K	•O-ring	•Joint Torique	•O-Ring	• 오링	•Junta torica	
5	**SA 8230-36920**	2					•Screw	•Vis	•Schraube	• 스크류	•Tornillo	
6	**SA 8230-25940**	1					•Spring Pin	•Axe de ressort	•Federstift	• 스프링 핀	•Pasador Resorte	
7	**SA 8230-37100**	1					•Bushing	•Bague	•Buchse	• 부싱	•Casquillo	
8	**SA 8230-37140**	1					•Plate	•Plaque	•Platte	• 플레이트	•Placa	
9	**VOE 14500116**	4			OP		•Spool	•Bobine	•Schieber	• 스풀	•Bobina	SER NO 30001-34500 SER NO 50001-50129
	VOE 14540762	4			OP		•Spool	•Bobine	•Schieber	• 스풀	•Bobina	SER NO 34501- SER NO 50130-
10	**SA 8230-28800**	4					•Plug	•Bouchon	•Stopfen	• 플러그	•Tapon	
11	**SA 8230-19790**	2					•Rod	•Tringle	•Stange	• 로드	•Tirante	
12	**SA 8230-20110**	4				K	•Seal	•Joint	•Dichtring	• 시일	•Junta	
13	**SA 9511-12020**	4				K	•O-ring	•Joint Torique	•O-Ring	• 오링	•Junta torica	
14	**SA 8230-36650**	2					•Seat	•Siege	•Sitz	• 시트	•Asiento	
15	**SA 8230-19690**	4					•Washer	•Rondelle	•Scheibe	• 와셔	•Arandela	
16	**SA 8230-36640**	2					•Seat	•Siege	•Sitz	• 시트	•Asiento	
17	**SA 8230-19810**	2					•Rod	•Tringle	•Stange	• 로드	•Tirante	
18	**SA 8230-36750**	2					•Spring	•Ressort	•Feder	• 스프링	•Muelle	SER NO 30001-34475 SER NO 50001-50129

1	**8278812**	**Servosistema, válvula de mando a distancia** 서보 배관 , 원격조종밸브 **Servosystem, Vorsteuergerät** **Système servo, valve de commande télécommandée** **Servo system, remote control valve**	Catalogue id **20019**	Group **914**
2			Illustr. No **1018977**	Section **1100**
3			Issue **VOE 74H9920019**	Page **505**
4				
5				

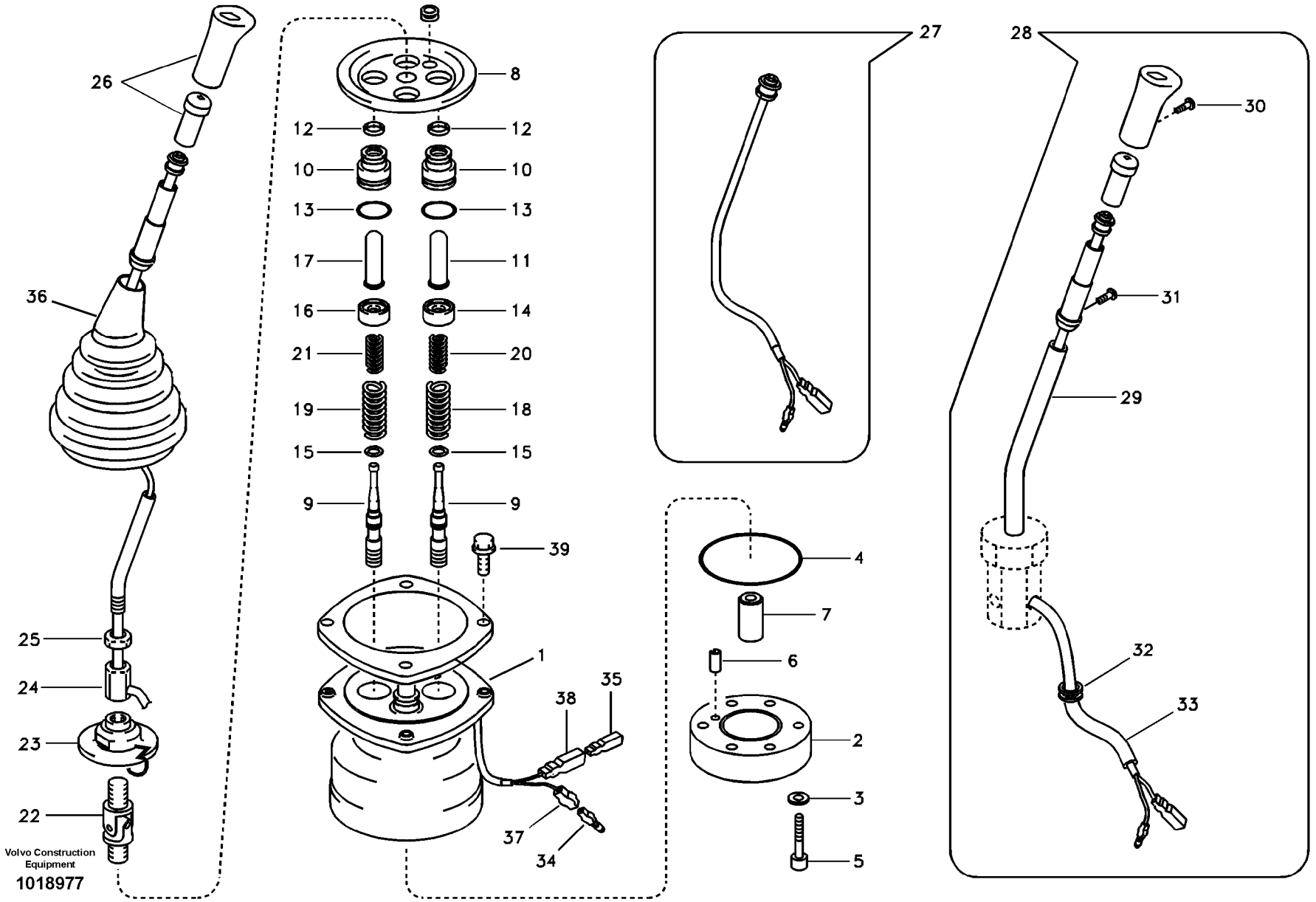
26
36
25
24
23
22
Volvo Construction Equipment
1018977
8
12
12
10
10
13
13
17
11
16
14
21
20
19
18
15
15
9
9
39
1
35
38
37
34
27
4
7
6
2
3
5
28
30
31
29
32
33

Fig.	Part No.	Quantity 1	2	3	PS	KIT	Description	Dénomination	Bezeichnung	품명	Denominación	Notes
	VOE 14540763	2			SS		•Spring	•Ressort	•Feder	• 스프링	•Muelle	SER NO 34476- SER NO 50130-
19	**SA 8230-36760**	2					•Spring	•Ressort	•Feder	• 스프링	•Muelle	SER NO 30001-34475 SER NO 50001-50129
	VOE 14512873	2					•Spring	•Ressort	•Feder	• 스프링	•Muelle	SER NO 34476- SER NO 50130-
20	**SA 8230-36770**	2					•Spring	•Ressort	•Feder	• 스프링	•Muelle	
21	**SA 8230-36780**	2					•Spring	•Ressort	•Feder	• 스프링	•Muelle	
22	**SA 8230-20040**	1					•Joint	•Cardan	•Gelenk	• 조인트	•Junta	
23	**SA 8230-37120**	1					•Plate	•Plaque	•Platte	• 플레이트	•Placa	
24	**SA 8230-20140**	1					•Nut	•Ecrou	•Mutter	• 너트	•Tuerca	
25	**SA 8230-19950**	1					•Lock nut	•Contre-ecrou	•Sicherungsmutter	• 록 너트	•Contratuerca	
26	**SA 8230-37090**	1					•Knob	•Bouton	•Knauf	• 손잡이	•Boton	LH
	VOE 14500137	1					•Knob	•Bouton	•Knauf	• 손잡이	•Boton	RH
27	**SA 8230-36940**	1					•Switch	•Commutateur	•Schalter	• 스위치	•Contactor	
28	**SA 8230-37080**	1					•Handle	•Poignee	•Handgriff	• 핸들	•Manilla	
29	**SA 8230-36320**	1					••Bar	••Barre	••Stab	•• 바	••Barra	
30	**SA 8230-32090**	1					••Screw	••Vis	••Schraube	•• 스크류	••Tornillo	
31	**SA 8230-28020**	2					••Screw	••Vis	••Schraube	•• 스크류	••Tornillo	
32	**SA 8230-37110**	1					••Bushing	••Bague	••Buchse	•• 부싱	••Casquillo	
33	**SA 8230-32100**	1					••Pipe	••Canalisation	••Rohrleitung	•• 파이프	••Canalizacion	
34	**SA 8230-20180**	1					•Terminal	•Fiche Connexion	•Anschlusstift	• 터미널	•Espiga Terminal	
35	**SA 8230-20190**	1					•Terminal	•Fiche Connexion	•Anschlusstift	• 터미널	•Espiga Terminal	
36	**SA 8230-27600**	1					•Bellows	•Capot Caoutcho.	•Gummimantel	• 벨로즈	•Cubierta Goma	
37	**VOE 14540764**	1					•Sleeve	•Manchon	•Muffe	• 슬리브	•Manguito	
38	**VOE 14540765**	1					•Sleeve	•Manchon	•Muffe	• 슬리브	•Manguito	
39	**VOE 946934**	8			SS		Screw	Vis	Schraube	스크류	Tornillo	
100	**SA 8230-36840**	1					Sealing Kit	Jeu Joints	Dichtungssatz	시일 킷	Juego Retenes	

1	**8278812**	**Servosistema, válvula de mando a distancia** 서보 배관 , 원격조종밸브 **Servosystem, Vorsteuergerät** **Système servo, valve de commande télécommandée** **Servo system, remote control valve**	Catalogue id **20019**	Group **914**
2			Illustr. No **1018977**	Section **1100**
3			Issue **VOE 74H9920019**	Page **507**
4				
5				

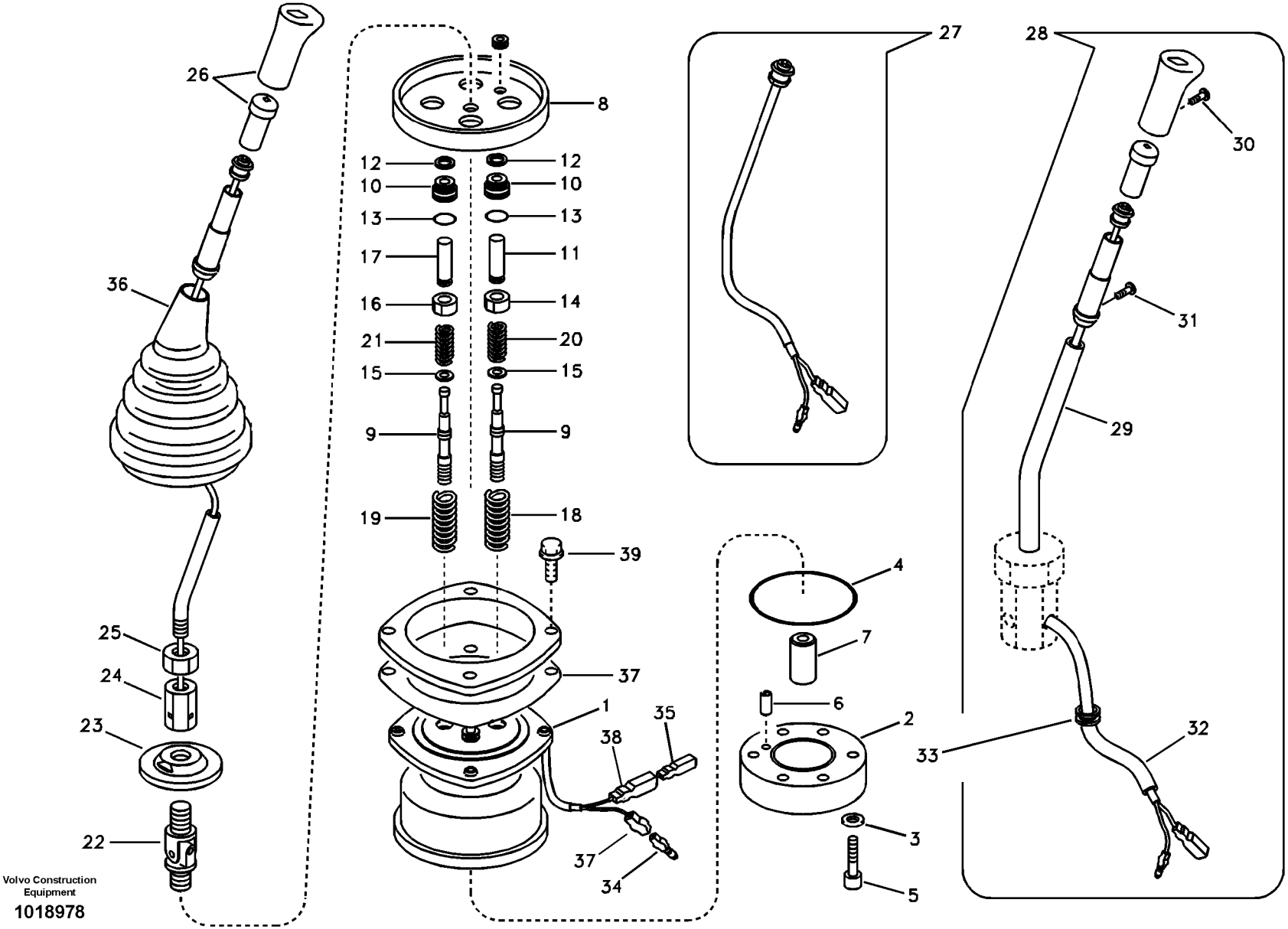

Volvo Construction Equipment

1018978

Fig.	Part No.	Quantity 1	2	3	PS	KIT	Description	Dénomination	Bezeichnung	품명	Denominación	Notes
	VOE 14507310	1					Rmt Cont Valve	Comm.a Distance	Fernbet Vent	원격조종밸브	Valv Contr Dist	SER NO 30001-34475 SER NO 50001-50129
	VOE 14538809	1					Rmt Cont Valve	Comm.a Distance	Fernbet Vent	원격조종밸브	Valv Contr Dist	SER NO 34476- SER NO 50130-
	VOE 14507311	1					Rmt Cont Valve	Comm.a Distance	Fernbet Vent	원격조종밸브	Valv Contr Dist	SER NO 30001-34475 SER NO 50001-50129
	VOE 14538808	1					Rmt Cont Valve	Comm.a Distance	Fernbet Vent	원격조종밸브	Valv Contr Dist	SER NO 34476- SER NO 50130-
1	**SA 8230-37050**	1			OP		•Casing	•Boitier	•Gehäuse	• 케이싱	•Cubierta	
2	**SA 8230-37150**	1					•Plate	•Plaque	•Platte	• 플레이트	•Placa	
3	**SA 8230-19730**	2			SS		•Washer	•Rondelle	•Scheibe	• 와셔	•Arandela	
4	**SA 8230-37060**	1				K	•O-ring	•Joint Torique	•O-Ring	• 오링	•Junta torica	
5	**SA 8230-36920**	2					•Screw	•Vis	•Schraube	• 스크류	•Tornillo	
6	**SA 8230-25940**	1					•Spring Pin	•Axe de ressort	•Federstift	• 스프링 핀	•Pasador Resorte	
7	**SA 8230-37100**	1					•Bushing	•Bague	•Buchse	• 부싱	•Casquillo	
8	**SA 8230-37140**	1					•Plate	•Plaque	•Platte	• 플레이트	•Placa	
9	**VOE 14500116**	4			OP		•Spool	•Bobine	•Schieber	• 스풀	•Bobina	SER NO 30001-34475 SER NO 50001-50129
	VOE 14540762	4			OP		•Spool	•Bobine	•Schieber	• 스풀	•Bobina	SER NO 34476- SER NO 50130-
10	**SA 8230-28800**	4					•Plug	•Bouchon	•Stopfen	• 플러그	•Tapon	
11	**SA 8230-19790**	2					•Rod	•Tringle	•Stange	• 로드	•Tirante	
12	**SA 8230-20110**	4				K	•Seal	•Joint	•Dichtring	• 시일	•Junta	
13	**SA 9511-12020**	4				K	•O-ring	•Joint Torique	•O-Ring	• 오링	•Junta torica	
14	**SA 8230-36650**	2					•Seat	•Siege	•Sitz	• 시트	•Asiento	
15	**SA 8230-19690**	4					•Washer	•Rondelle	•Scheibe	• 와셔	•Arandela	
16	**SA 8230-36640**	2					•Seat	•Siege	•Sitz	• 시트	•Asiento	
17	**SA 8230-19810**	2					•Rod	•Tringle	•Stange	• 로드	•Tirante	
18	**SA 8230-36750**	2					•Spring	•Ressort	•Feder	• 스프링	•Muelle	SER NO 30001-34475 SER NO 50001-50129

1	**8278813**	**Servosistema, válvula de mando a distancia** 서보 배관 , 원격조종밸브 **Servosystem, Vorsteuergerät** **Système servo, valve de commande télécommandée** **Servo system, remote control valve**	Catalogue id **20019**	Group **914**
2			Illustr. No **1018978**	Section **1150**
3			Issue **VOE 74H9920019**	Page **509**
4				
5				

VOLVO

EC55B

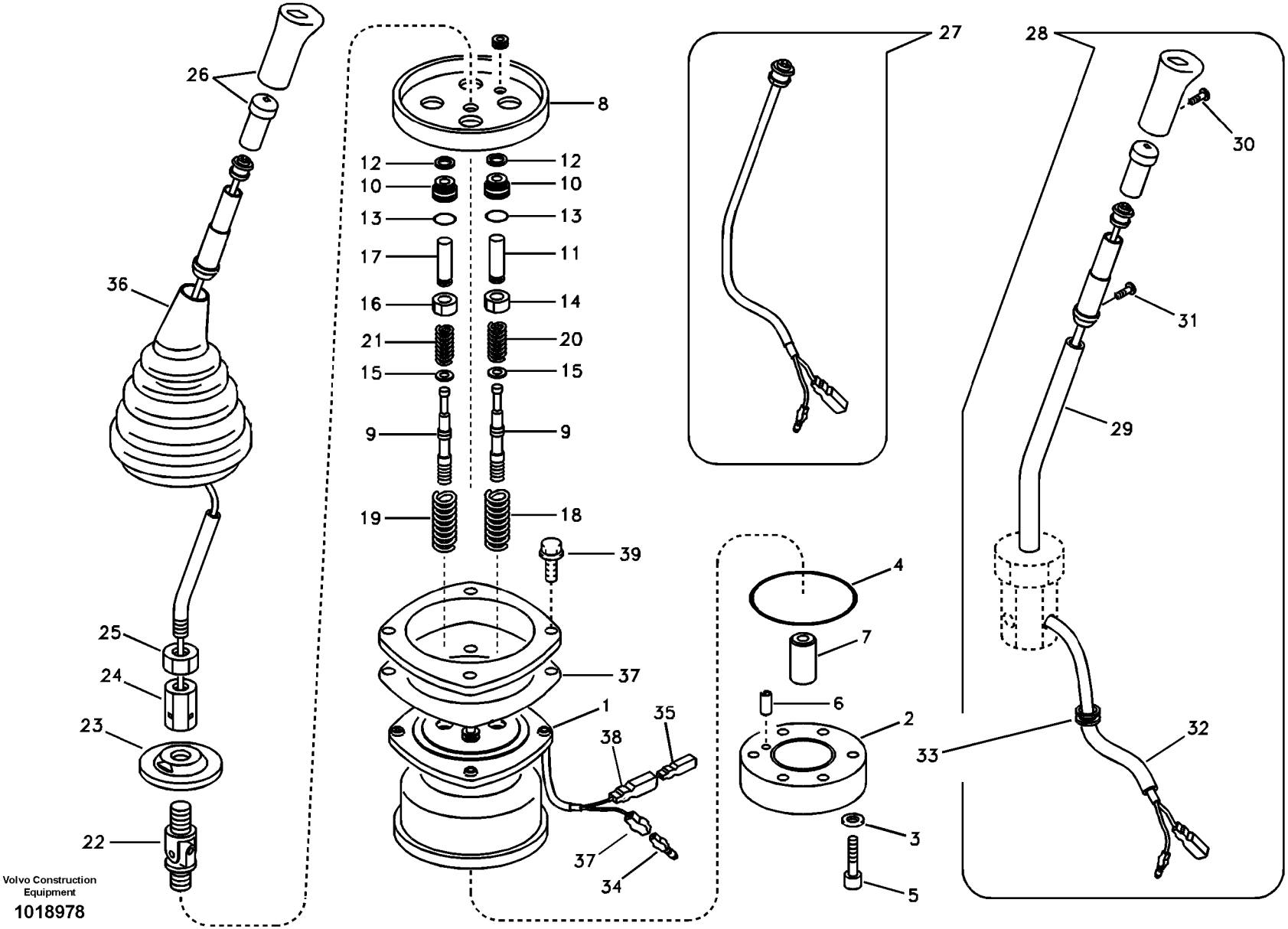

Volvo Construction Equipment

1018978

Fig.	Part No.	Quantity 1	2	3	PS	KIT	Description	Dénomination	Bezeichnung	품명	Denominación	Notes
	VOE 14540763	2			SS		•Spring	•Ressort	•Feder	• 스프링	•Muelle	SER NO 34476- SER NO 50130-
19	**SA 8230-36760**	2					•Spring	•Ressort	•Feder	• 스프링	•Muelle	SER NO 30001-34475 SER NO 50001-50129
	VOE 14512873	2					•Spring	•Ressort	•Feder	• 스프링	•Muelle	SER NO 34476- SER NO 50130-
20	**SA 8230-36770**	2					•Spring	•Ressort	•Feder	• 스프링	•Muelle	
21	**SA 8230-36780**	2					•Spring	•Ressort	•Feder	• 스프링	•Muelle	
22	**SA 8230-20040**	1					•Joint	•Cardan	•Gelenk	• 조인트	•Junta	
23	**SA 8230-37120**	1					•Plate	•Plaque	•Platte	• 플레이트	•Placa	
24	**SA 8230-20140**	1					•Nut	•Ecrou	•Mutter	• 너트	•Tuerca	
25	**SA 8230-19950**	1					•Lock nut	•Contre-ecrou	•Sicherungsmutter	• 록 너트	•Contratuerca	
26	**SA 8230-37090**	1					•Knob	•Bouton	•Knauf	• 손잡이	•Boton	LH
	VOE 14500137	1					•Knob	•Bouton	•Knauf	• 손잡이	•Boton	RH
27	**SA 8230-36940**	1					•Switch	•Commutateur	•Schalter	• 스위치	•Contactor	
28	**VOE 14509797**	1					•Handle	•Poignee	•Handgriff	• 핸들	•Manilla	LH
	VOE 14509796	1					•Handle	•Poignee	•Handgriff	• 핸들	•Manilla	RH
29	**SA 8230-36320**	1					••Bar	••Barre	••Stab	•• 바	••Barra	
30	**SA 8230-32090**	1					••Screw	••Vis	••Schraube	•• 스크류	••Tornillo	
31	**SA 8230-28020**	1					••Screw	••Vis	••Schraube	•• 스크류	••Tornillo	
32	**SA 8230-32100**	1					••Pipe	••Canalisation	••Rohrleitung	•• 파이프	••Canalizacion	
33	**SA 8230-37110**	1					•Bushing	•Bague	•Buchse	• 부싱	•Casquillo	
34	**SA 8230-20180**	1					•Terminal	•Fiche Connexion	•Anschlusstift	• 터미널	•Espiga Terminal	
35	**SA 8230-20190**	1					•Terminal	•Fiche Connexion	•Anschlusstift	• 터미널	•Espiga Terminal	
36	**SA 8230-27600**	1					•Bellows	•Capot Caoutcho.	•Gummimantel	• 벨로즈	•Cubierta Goma	
37	**VOE 14540764**	1					•Sleeve	•Manchon	•Muffe	• 슬리브	•Manguito	SER NO 34476- SER NO 50130-
38	**VOE 14540765**	1					•Sleeve	•Manchon	•Muffe	• 슬리브	•Manguito	SER NO 34476- SER NO 50130-
39	**VOE 946934**	8			SS		Screw	Vis	Schraube	…… 스크류	Tornillo	

1	**8278813**	**Servosistema, válvula de mando a distancia** 서보 배관 , 원격조종밸브 **Servosystem, Vorsteuergerät** **Système servo, valve de commande télécommandée** **Servo system, remote control valve**	Catalogue id **20019**	Group **914**
2				
3			Illustr. No **1018978**	Section **1150**
4				
5			Issue **VOE 74H9920019**	Page **511**

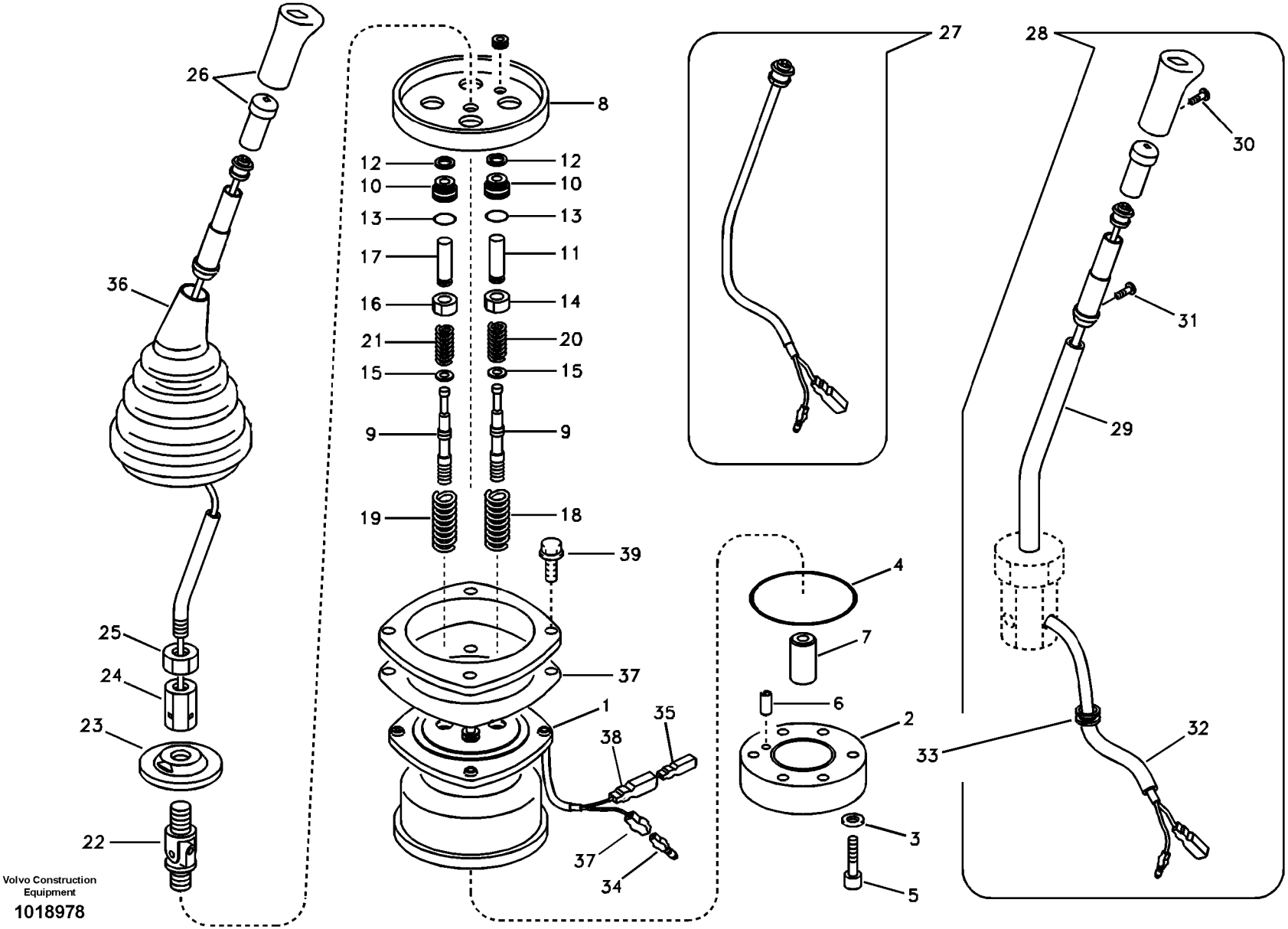

Volvo Construction Equipment

1018978

Fig.	Part No.	Quantity 1	2	3	PS	KIT	Description	Dénomination	Bezeichnung	품명	Denominación	Notes
100	**SA 8230-36840**	1					Sealing Kit	Jeu Joints	Dichtungssatz	시일 킷	Juego Retenes	

1	**8278813**	**Servosistema, válvula de mando a distancia** 서보 배관 , 원격조종밸브 **Servosystem, Vorsteuergerät** **Système servo, valve de commande télécommandée** **Servo system, remote control valve**	Catalogue id **20019**	Group **914**
2			Illustr. No **1018978**	Section **1150**
3			Issue **VOE 74H9920019**	Page **513**
4				
5				

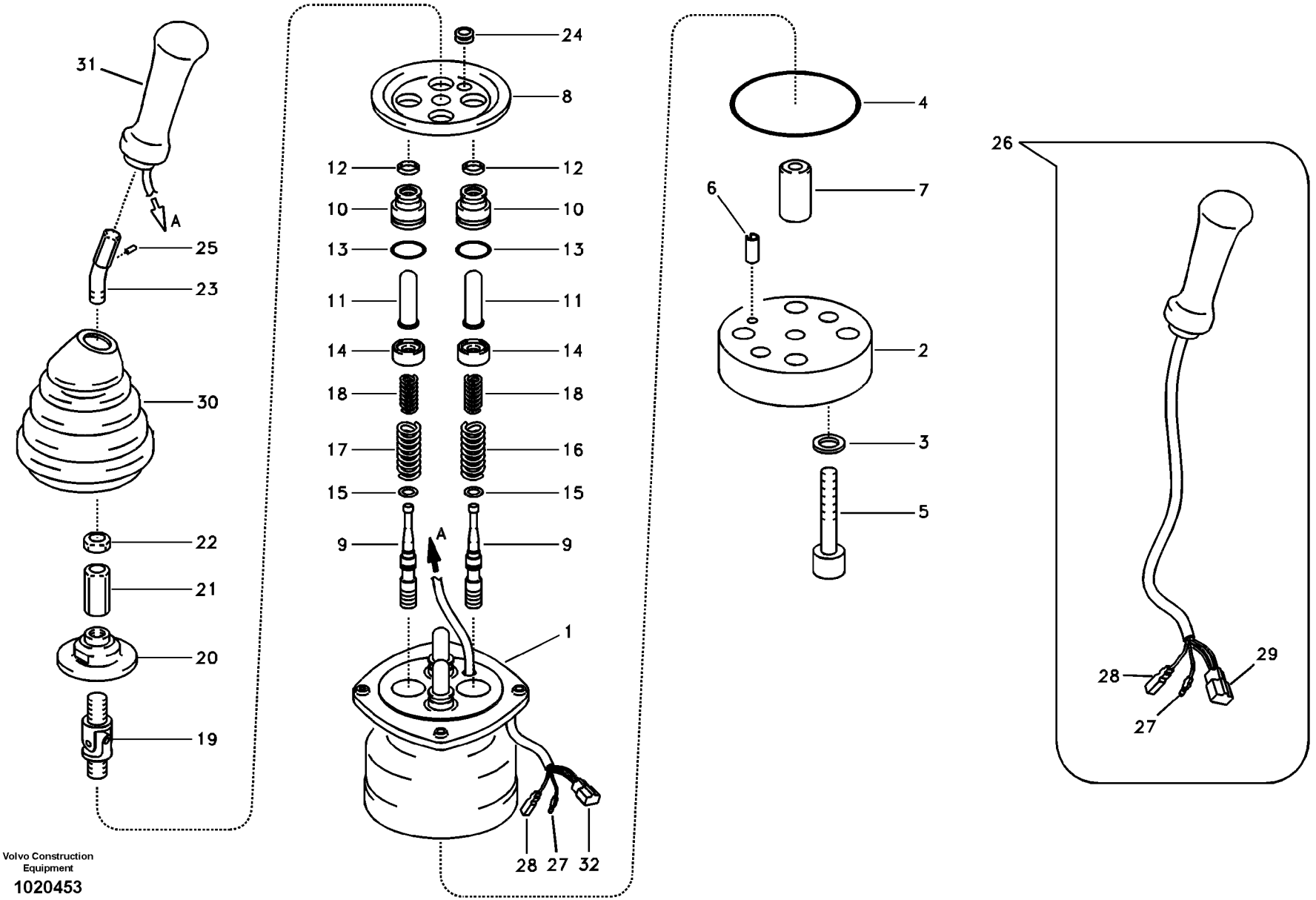

Volvo Construction Equipment

1020453

Fig.	Part No.	Quantity 1	2	3	PS	KIT	Description	Dénomination	Bezeichnung	품명	Denominación	Notes
	VOE 14510417	1					Rmt Cont Valve	Comm.a Distance	Fernbet Vent	원격조종밸브	Valv Contr Dist	LH SER NO 30001-34821
	VOE 14542244	1					Rmt Cont Valve	Comm.a Distance	Fernbet Vent	원격조종밸브	Valv Contr Dist	LH SER NO 34822-
	VOE 14510418	1					Rmt Cont Valve	Comm.a Distance	Fernbet Vent	원격조종밸브	Valv Contr Dist	RH SER NO 30001-34821
	VOE 14542245	1					Rmt Cont Valve	Comm.a Distance	Fernbet Vent	원격조종밸브	Valv Contr Dist	RH SER NO 34822-
1	**SA 8230-37050**	1			OP		•Casing	•Boitier	•Gehäuse	• 케이싱	•Cubierta	
2	**SA 8230-37150**	1					•Plate	•Plaque	•Platte	• 플레이트	•Placa	
3	**SA 8230-19731**	2					•Washer	•Rondelle	•Scheibe	• 와셔	•Arandela	
4	**SA 8230-37060**	1				K	•O-ring	•Joint Torique	•O-Ring	• 오링	•Junta torica	
5	**SA 8230-36920**	2					•Screw	•Vis	•Schraube	• 스크류	•Tornillo	
6	**SA 8230-25940**	1					•Spring Pin	•Axe de ressort	•Federstift	• 스프링 핀	•Pasador Resorte	
7	**SA 8230-37100**	1					•Bushing	•Bague	•Buchse	• 부싱	•Casquillo	
8	**SA 8230-37140**	1					•Plate	•Plaque	•Platte	• 플레이트	•Placa	
9	**VOE 14500116**	4			OP		•Spool	•Bobine	•Schieber	• 스풀	•Bobina	SER NO 30001-34821
	VOE 14540762	4			OP		•Spool	•Bobine	•Schieber	• 스풀	•Bobina	SER NO 34822-
10	**SA 8230-28800**	4					•Plug	•Bouchon	•Stopfen	• 플러그	•Tapon	
11	**SA 8230-19790**	4					•Rod	•Tringle	•Stange	• 로드	•Tirante	
12	**SA 8230-20110**	4				K	•Seal	•Joint	•Dichtring	• 시일	•Junta	
13	**SA 9511-12020**	4				K	•O-ring	•Joint Torique	•O-Ring	• 오링	•Junta torica	SER NO 30001-34821
	VOE 983509	4					•O-ring	•Joint Torique	•O-Ring	• 오링	•Junta torica	SER NO 34822-
14	**SA 8230-36650**	4					•Seat	•Siege	•Sitz	• 시트	•Asiento	
15	**SA 8230-19690**	4					•Washer	•Rondelle	•Scheibe	• 와셔	•Arandela	
16	**VOE 14512873**	2					•Spring	•Ressort	•Feder	• 스프링	•Muelle	SER NO 30001-34821
	VOE 14540766	2					•Spring	•Ressort	•Feder	• 스프링	•Muelle	SER NO 34822-
17	**VOE 14512874**	2					•Spring	•Ressort	•Feder	• 스프링	•Muelle	SER NO 30001-34821
	VOE 14541091	2					•Spring	•Ressort	•Feder	• 스프링	•Muelle	SER NO 34822-
18	**SA 8230-36770**	4					•Spring	•Ressort	•Feder	• 스프링	•Muelle	

1	**8277147**	**Servosistema, válvula de mando a distancia** 서보 배관 , 원격조종밸브 **Servosystem, Vorsteuergerät** **Système servo, valve de commande télécommandée** **Servo system, remote control valve**	Catalogue id **20019**	Group **914**
2			Illustr. No **1020453**	Section **1200**
3			Issue **VOE 74H9920019**	Page **515**
4				
5				

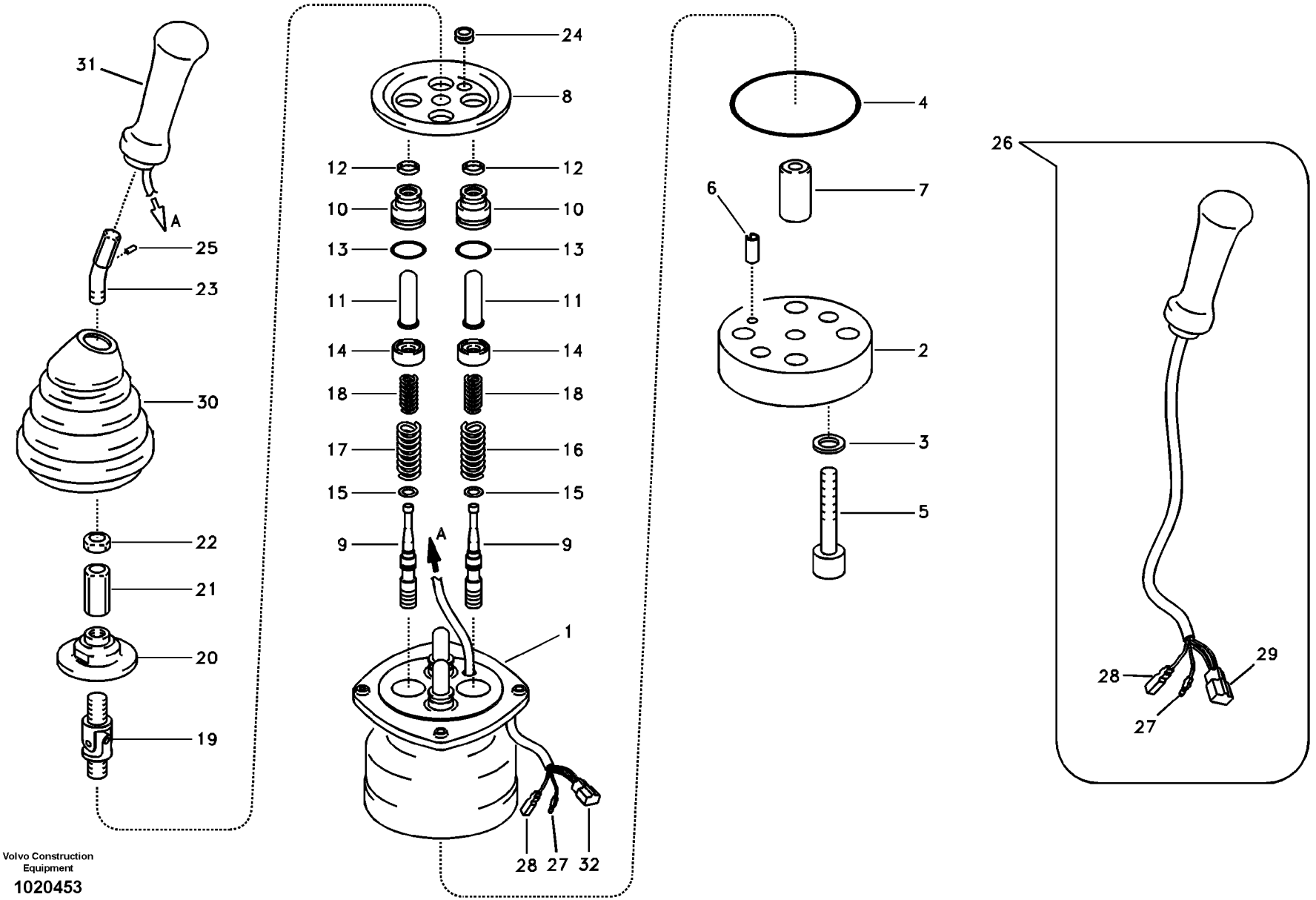

Volvo Construction Equipment

1020453

Fig.	Part No.	Quantity 1	2	3	PS	KIT	Description	Dénomination	Bezeichnung	품명	Denominación	Notes
19	**SA 8230-20040**	1					•Joint	•Cardan	•Gelenk	• 조인트	•Junta	
20	**SA 8230-37120**	1					•Plate	•Plaque	•Platte	• 플레이트	•Placa	
21	**SA 8230-19940**	1					•Nut	•Ecrou	•Mutter	• 너트	•Tuerca	
22	**SA 8230-19950**	1					•Lock nut	•Contre-ecrou	•Sicherungsmutter	• 록 너트	•Contratuerca	
23	**VOE 14500122**	1					•Lever	•Levier	•Hebel	• 레버	•Palanca	
24	**VOE 14500125**	1					•Bushing	•Bague	•Buchse	• 부싱	•Casquillo	
25	**VOE 14500124**	1					•Pin	•Goupille	•Zapfen	• 핀	•Pasador	
26	**VOE 14514021**	1					•Knob	•Bouton	•Knauf	• 손잡이	•Boton	LH SER NO 30001-34821
	VOE 14514026	1					•Knob	•Bouton	•Knauf	• 손잡이	•Boton	RH SER NO 30001-34821
27	**SA 8230-20180**	1					••Terminal	••Fiche Connexion	••Anschlusstift	•• 터미널	••Espiga Terminal	SER NO 30001-34821
	SA 8230-20180	1					•Terminal	•Fiche Connexion	•Anschlusstift	• 터미널	•Espiga Terminal	SER NO 34822-
28	**SA 8230-20190**	1					••Terminal	••Fiche Connexion	••Anschlusstift	•• 터미널	••Espiga Terminal	SER NO 30001-34821
	SA 8230-20190	1					•Terminal	•Fiche Connexion	•Anschlusstift	• 터미널	•Espiga Terminal	SER NO 34822-
29	**VOE 14500561**	1					••Housing	••Carter	••Gehäuse	•• 하우징	••Carter	SER NO 30001-34821
	VOE 14500126	1					•••Housing	•••Carter	•••Gehäuse	••• 하우징	•••Carter	SER NO 30001-34821
30	**VOE 14500130**	1					•Bellows	•Capot Caoutcho.	•Gummimantel	• 벨로즈	•Cubierta Goma	
31	**VOE 14546296**	1					•Knob	•Bouton	•Knopf	• 버턴	•Boton	SER NO 34822-
32	**VOE 14500126**	1					•Housing	•Carter	•Gehäuse	• 하우징	•Carter	SER NO 34822-
	VOE 14500127	1					•Retainer	•Retenue	•Halter	• 리테이너	•Soporte	SER NO 34822-
	VOE 14500128	4					•Terminal	•Fiche Connexion	•Anschlusstift	• 터미널	•Espiga Terminal	SER NO 34822-
	VOE 14500129	4					•Plug	•Bouchon	•Stopfen	• 플러그	•Tapon	SER NO 34822-
100	**SA 8230-36840**	1					Sealing Kit	Jeu Joints	Dichtungssatz	시일 킷	Juego Retenes	

1	**8277147**	**Servosistema, válvula de mando a distancia** 서보 배관 , 원격조종밸브 **Servosystem, Vorsteuergerät** **Système servo, valve de commande télécommandée** **Servo system, remote control valve**	Catalogue id **20019**	Group **914**
2			Illustr. No **1020453**	Section **1200**
3			Issue **VOE 74H9920019**	Page **517**
4				
5				

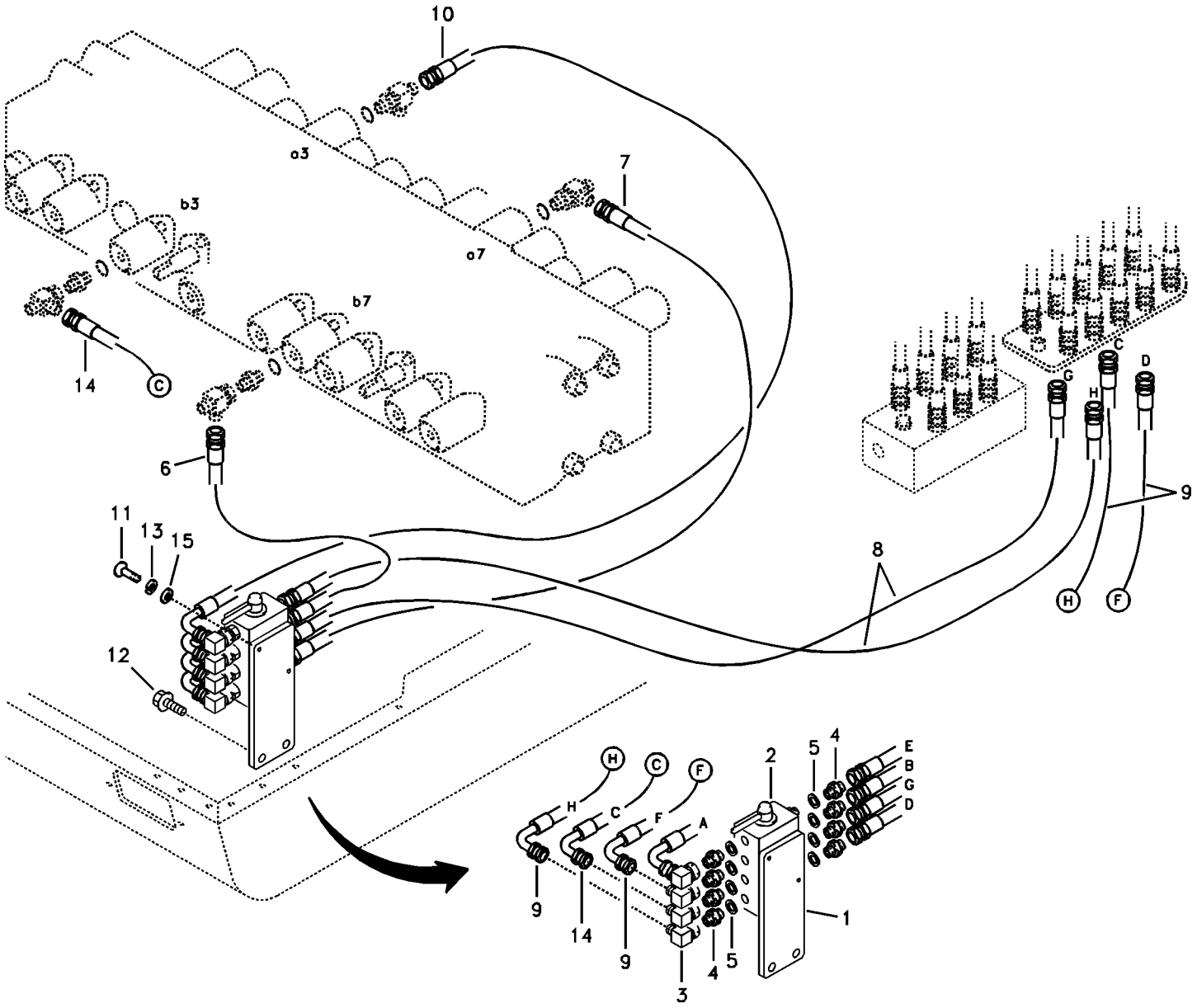
10
a3
7
b3
a7
b7
14
C
6
11
13
15
12
8
C
D
G
H
9
H
F
H
C
F
A
2
5
4
E
B
G
D
9
14
9
3
4
5
1

Fig.	Part No.	Quantity 1	2	3	PS	KIT	Description	Dénomination	Bezeichnung	품명	Denominación	Notes
1	**VOE 14514227**	1					Bracket	Console	Konsole	브라켓	Ménsula	
2	**VOE 11802737**	1					Stripper unit	Unite rotatrice	Wendevorrichtung	스트리퍼 유닛	Inversor	(PJ 5360342)
3	**SA 9411-95190**	4					Elbow	Coude	Winkelstueck	엘보	Tubo acodado	
4	**SA 9412-12020**	8					Connector	Raccord	Anschluss	커넥터	Union	
5	**SA 9426-10020**	8					Gasket	Joint	Dichtung	가스켓	Junta	
6	**SA 9451-02208**	1					Hose	Durit	Schlauch	호스	Tubo flexible	
7	**SA 9451-02214**	1					Hose	Durit	Schlauch	호스	Tubo flexible	
8	**SA 9451-02220**	2					Hose	Durit	Schlauch	호스	Tubo flexible	
9	**SA 9453-02223**	2					Hose	Durit	Schlauch	호스	Tubo flexible	
10	**SA 9453-02222**	1					Hose	Durit	Schlauch	호스	Tubo flexible	
11	**VOE 969591**	2					6-pt skt screw	Vis creuse de 6	Hohlschraube	6 포인트 소켓 스크류	Racor 6-dientes	
12	**VOE 946441**	2					Flange screw	Vis à bride	Flanschschraube	플랜지 스크류	Torn embridado	
13	**VOE 955919**	2					Spring Washer	Rondelle élastique	Federscheibe	스프링 와셔	Arandela flexible	
14	**SA 9453-02211**	1					Hose	Durit	Schlauch	호스	Tubo flexible	
15	**SA 9211-06000**	2					Washer	Rondelle	Scheibe	와셔	Arandela	

1	**8278864**	**Servosistema, cambio de función de la palanca** 서보 배관 , 레버 작동 방향 변경 **Servosystem, Wechsel der Hebelfunktion** **Système servo, sélection fonction levier** **Servo system, changing lever function**	Catalogue id **20019**	Group **914**
2			Illustr. No **1008352**	Section **2100**
3			Issue **VOE 74H9920019**	Page **519**
4				
5				

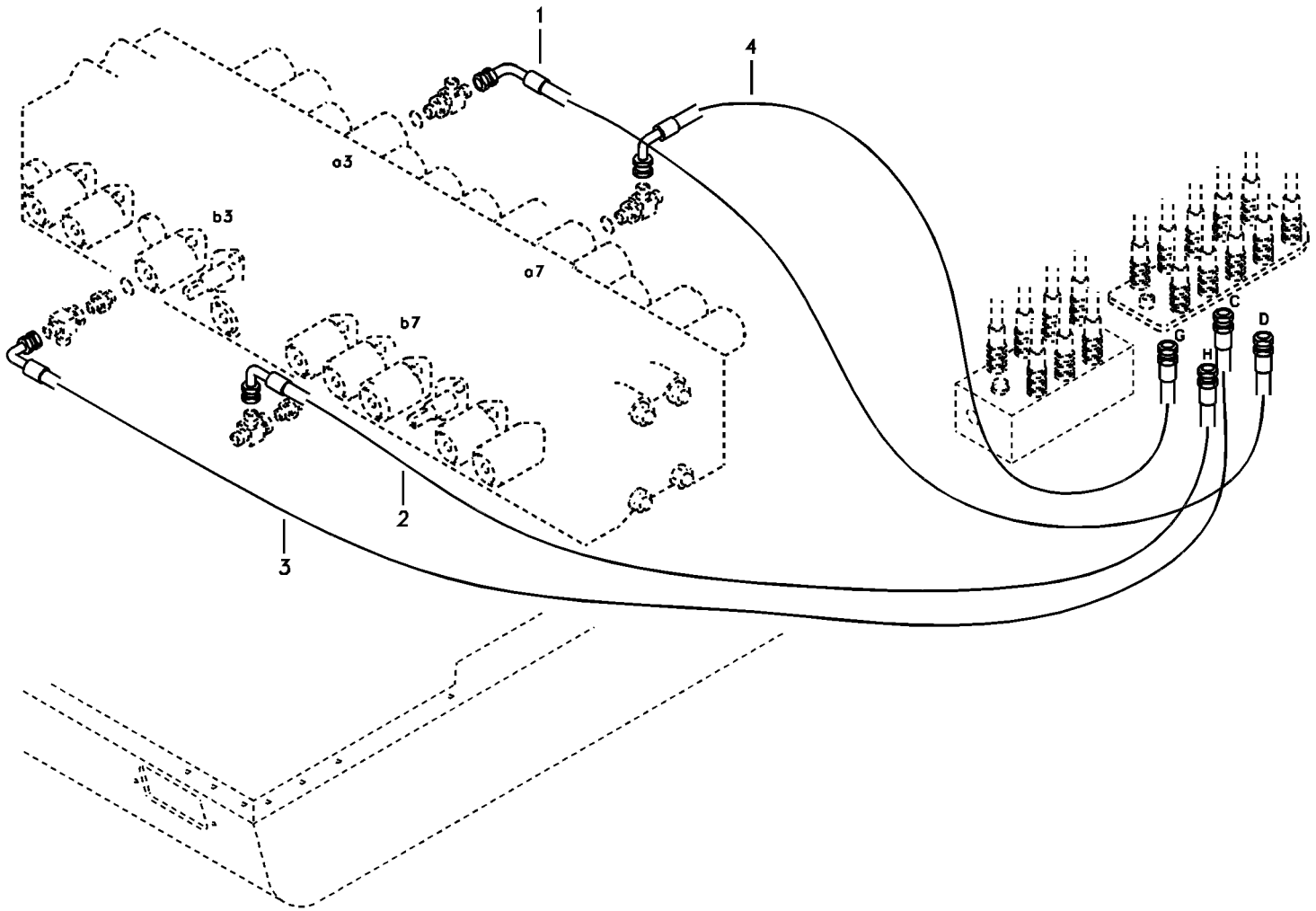
1
4
a3
b3
a7
b7
2
3
C
D
G
H

Fig.	Part No.	Quantity 1	2	3	PS	KIT	Description	Dénomination	Bezeichnung	품명	Denominación	Notes
1	**SA 9453-02217**	1					Hose	Durit	Schlauch	호스	Tubo flexible	
2	**SA 9453-02223**	1					Hose	Durit	Schlauch	호스	Tubo flexible	
3	**SA 9453-02229**	1					Hose	Durit	Schlauch	호스	Tubo flexible	
4	**SA 9453-02243**	1					Hose	Durit	Schlauch	호스	Tubo flexible	

1	**8278863**	**Servosistema, cambio de función de la palanca** 서보 배관 , 레버 작동 방향 변경 **Servosystem, Wechsel der Hebelfunktion** **Système servo, sélection fonction levier** **Servo system, changing lever function**	Catalogue id **20019**	Group **914**
2			Illustr. No **1007083**	Section **2150**
3				
4			Issue **VOE 74H9920019**	Page **521**
5				

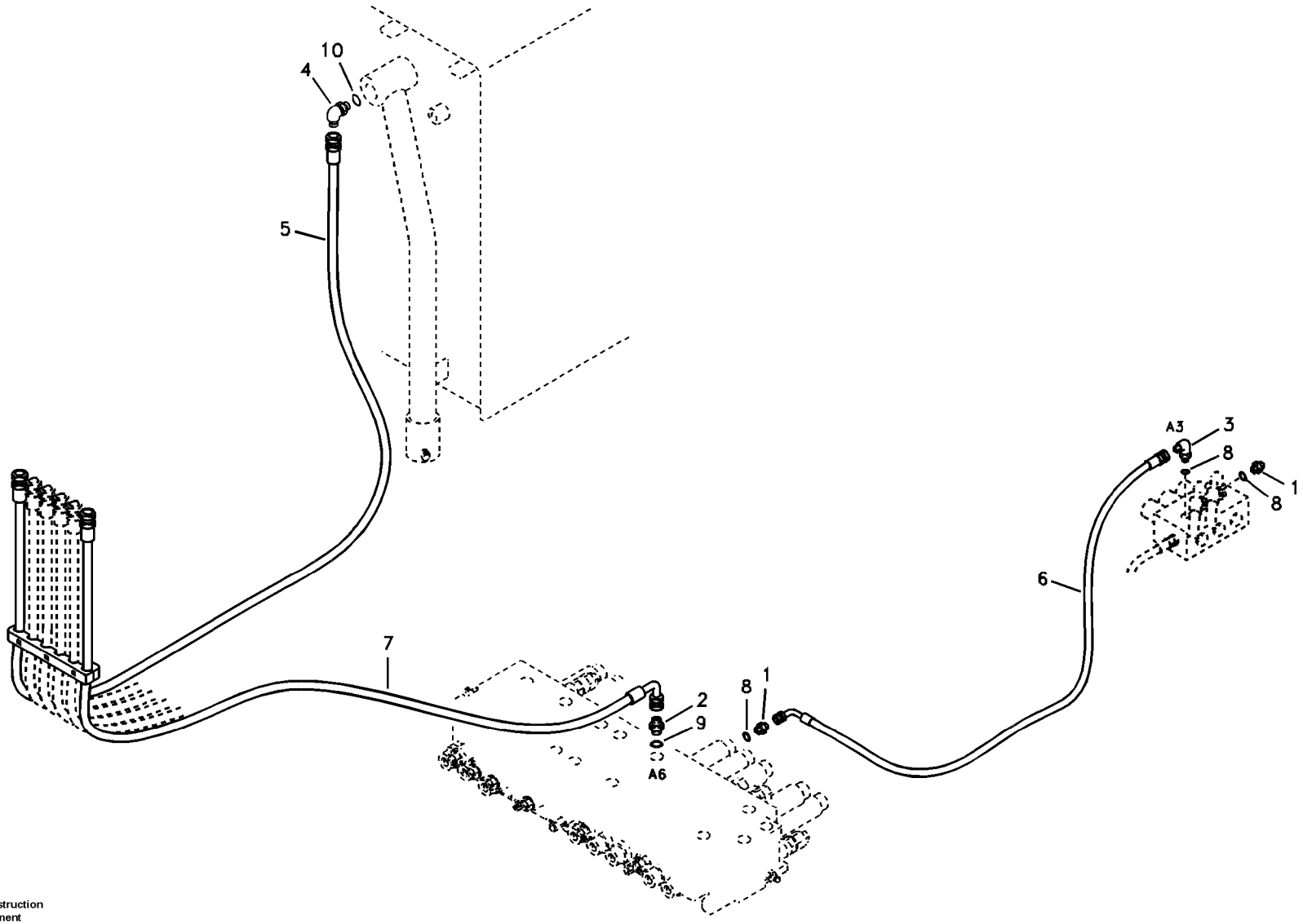

Volvo Construction Equipment

1018981

Fig.	Part No.	Quantity 1	2	3	PS	KIT	Description	Dénomination	Bezeichnung	품명	Denominación	Notes
1	**SA 9412-11020**	1	1				Connector	Raccord	Anschluss	커넥터	Union	SER NO 30001-34475 SER NO 50001-50129
	SA 9412-11020	2	2				Connector	Raccord	Anschluss	커넥터	Union	SER NO 34476- SER NO 50130-
2	**SA 9412-11040**	1	1				Connector	Raccord	Anschluss	커넥터	Union	
3	**SA 9413-11010**	1	1				Elbow	Coude	Winkelstueck	엘보	Tubo acodado	
4	**SA 9413-11230**	1	1				Elbow	Coude	Winkelstueck	엘보	Tubo acodado	
5	**SA 9451-05255**	1	1				Hose	Durit	Schlauch	호스	Tubo flexible	
6	**SA 9453-02221**	1	1				Hose	Durit	Schlauch	호스	Tubo flexible	
7	**SA 9459-05880**	1					Hose	Durit	Schlauch	호스	Tubo flexible	
	VOE 14880021		1				Hose	Durit	Schlauch	호스	Tubo flexible	
8	**SA 9511-12011**	2	2				O-ring	Joint Torique	O-Ring	오링	Junta torica	SER NO 30001-34475 SER NO 50001-50129
	VOE 983502	3	3				O-ring	Joint Torique	O-Ring	오링	Junta torica	SER NO 34476- SER NO 50130-
9	**SA 9511-12018**	1	1		SS		O-ring	Joint Torique	O-Ring	오링	Junta torica	
10	**SA 9511-12029**	1	1				O-ring	Joint Torique	O-Ring	오링	Junta torica	

1	**8278866**	**Servosistema, quebrantadora y machacadora** 서보 장치 , 브레이커 및 크러셔 **Servosystem, Brecher und Zerkleinerer** **Système servo, marteau et cisaille** **Servo system, breaker and crusher**	Catalogue id **20019**	Group **914**
2	**8278867**		Illustr. No **1018981**	Section **4000**
3			Issue **VOE 74H9920019**	Page **523**
4				
5				

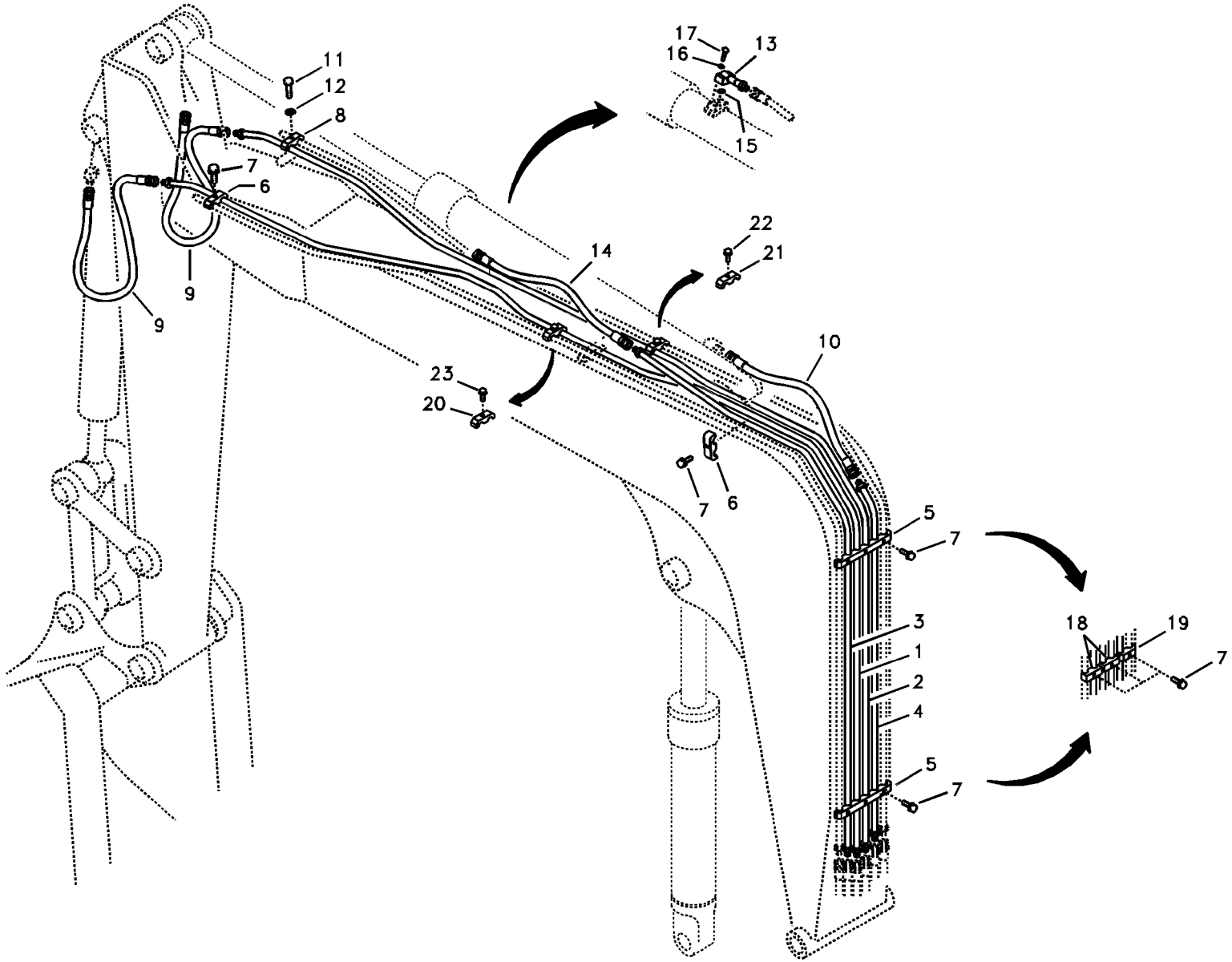

Volvo Construction Equipment

1016685

Fig.	Part No.	Quantity 1	2	3	PS	KIT	Description	Dénomination	Bezeichnung	품명	Denominación	Notes
1	**SA 1174-30012**	1	1	1			Pipe	Canalisation	Rohrleitung	파이프	Canalizacion	SER NO 30001-33627
	VOE 14532370	1	1	1			Pipe	Canalisation	Rohrleitung	파이프	Canalizacion	SER NO 33628-
2	**SA 1174-30022**	1	1	1			Pipe	Canalisation	Rohrleitung	파이프	Canalizacion	SER NO 30001-33627
	VOE 14533222	1	1	1			Pipe	Canalisation	Rohrleitung	파이프	Canalizacion	SER NO 33628-
3	**VOE 14510964**	1	1	1			Pipe	Canalisation	Rohrleitung	파이프	Canalizacion	
4	**SA 1174-30044**	1	1	1			Pipe	Canalisation	Rohrleitung	파이프	Canalizacion	
5	**SA 1174-30120**	2	2	2			Clamp	Pince Serrage	Klemme	클램프	Abrazadera	SER NO 30001-33393
6	**VOE 14881203**	2	2	2			Clamp	Pince Serrage	Klemme	클램프	Abrazadera	
7	**VOE 965186**	8	8	8	SS		Screw	Vis	Schraube	스크류	Tornillo	
8	**VOE 14881216**	1	1	1			Clamp	Pince Serrage	Klemme	클램프	Abrazadera	
9	**SA 9451-14719**	2	2	2			Hose	Durit	Schlauch	호스	Tubo flexible	SER NO 30001-31160
10	**SA 9451-05711**	1	1	1			Hose	Durit	Schlauch	호스	Tubo flexible	
11	**VOE 1629544**	1	1	1			Screw	Vis	Schraube	스크류	Tornillo	
12	**VOE 955926**	1	1	1			Spring Washer	Rondelle élastique	Federscheibe	스프링 와셔	Arandela flexible	
13	**VOE 14509710**	1					Pipe	Canalisation	Rohrleitung	파이프	Canalizacion	
14	**SA 9451-04715**	1					Hose	Durit	Schlauch	호스	Tubo flexible	SER NO 30001-30666
	SA 9451-04713	1					Hose	Durit	Schlauch	호스	Tubo flexible	SER NO 30667-
	SA 9451-04715			1			Hose	Durit	Schlauch	호스	Tubo flexible	
15	**SA 9512-02210**	1					O-ring	Joint Torique	O-Ring	오링	Junta torica	
16	**VOE 955921**	4					Spring Washer	Rondelle élastique	Federscheibe	스프링 와셔	Arandela flexible	
17	**VOE 983245**	4					Hexagon screw	Vis a tête hexagonale	Sechskantschr.	육각 나사	Tornillo hexago	
18	**VOE 14881439**	4	4	4			Clamp	Pince Serrage	Klemme	클램프	Abrazadera	SER NO 33394-
19	**VOE 14881440**	2	2	2			Clamp	Pince Serrage	Klemme	클램프	Abrazadera	SER NO 33394-
20	**VOE 14881204**	1	1	1			Clamp	Pince Serrage	Klemme	클램프	Abrazadera	SER NO 33628-
21	**VOE 14532654**	1	1	1			Clamp	Pince Serrage	Klemme	클램프	Abrazadera	SER NO 33628-
22	**VOE 965185**	1	1	1			Flange screw	Vis à bride	Flanschschraube	플랜지 스크류	Torn embridado	SER NO 33628-
23	**VOE 946472**	1	1	1			Flange screw	Vis à bride	Flanschschraube	플랜지 스크류	Torn embridado	SER NO 33628-

1	**8278876**
2	**8278877**
3	**8278878**
4	
5	

Hidráulica de trabajo, cilindro del brazo en la pluma.
유압 배관 , 붐측 디퍼 암 실린더
Arbeitshydraulik, Stielzylinder auf Ausleger
Commande hydraulique d'outil, vérin de balancier sur la flèche
Working hydraulic, dipper arm cylinder on boom.

Catalogue id **20019**	Group **916**
Illustr. No **1016685**	Section **100**
Issue **VOE 74H9920019**	Page **525**

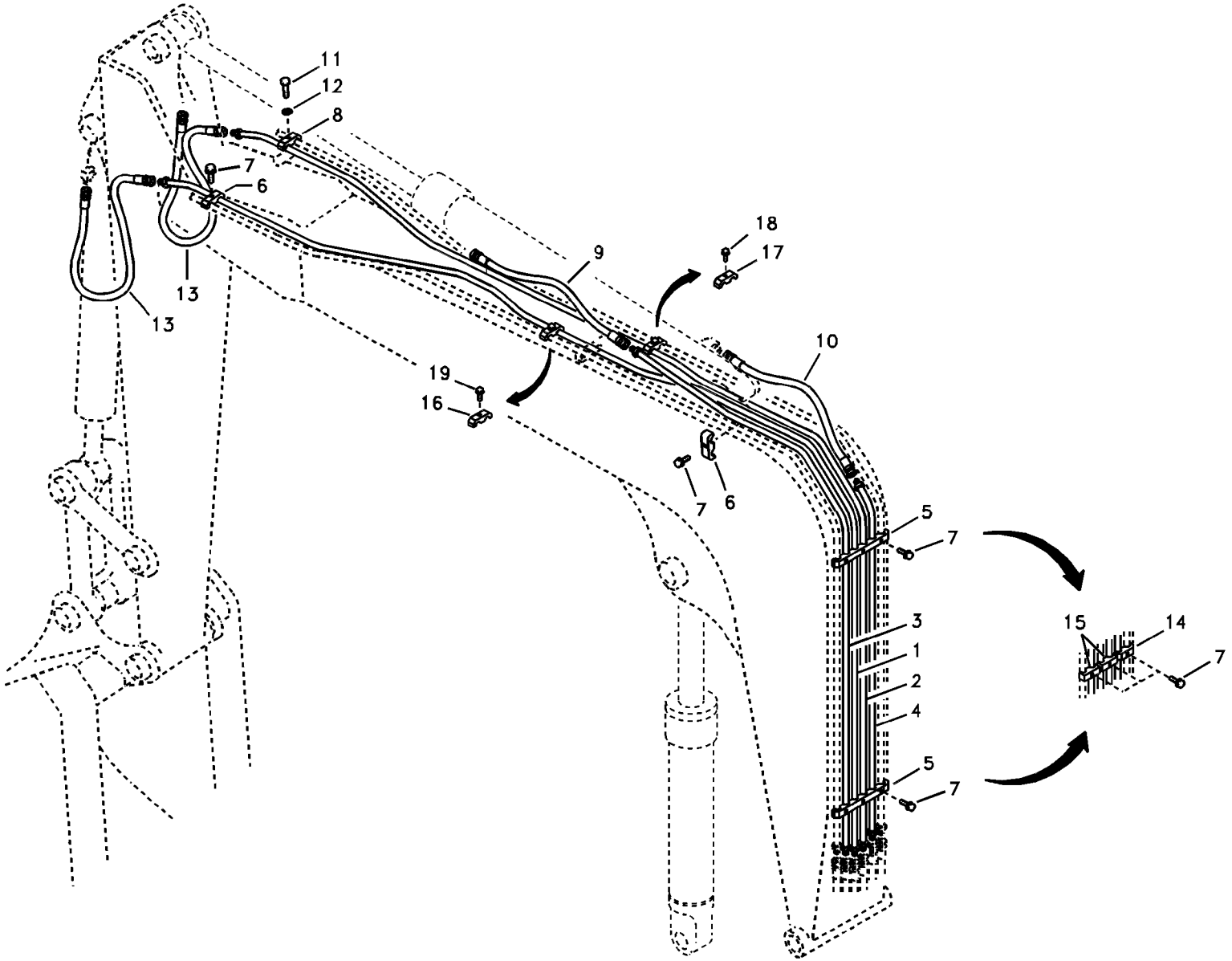

Volvo Construction Equipment

1017457

Fig.	Part No.	Quantity 1	2	3	PS	KIT	Description	Dénomination	Bezeichnung	품명	Denominación	Notes
1	**SA 1174-30012**	1					Pipe	Canalisation	Rohrleitung	파이프	Canalizacion	SER NO 50001-50064
	VOE 14532370	1					Pipe	Canalisation	Rohrleitung	파이프	Canalizacion	SER NO 50065-
2	**SA 1174-30022**	1					Pipe	Canalisation	Rohrleitung	파이프	Canalizacion	SER NO 50001-50064
	VOE 14533222	1					Pipe	Canalisation	Rohrleitung	파이프	Canalizacion	SER NO 50065-
3	**VOE 14510964**	1					Pipe	Canalisation	Rohrleitung	파이프	Canalizacion	
4	**SA 1174-30044**	1					Pipe	Canalisation	Rohrleitung	파이프	Canalizacion	
5	**SA 1174-30120**	2					Clamp	Pince Serrage	Klemme	클램프	Abrazadera	SER NO 50001-50064
6	**VOE 14881203**	2					Clamp	Pince Serrage	Klemme	클램프	Abrazadera	
7	**VOE 965186**	8			SS		Screw	Vis	Schraube	스크류	Tornillo	
8	**VOE 14881216**	1					Clamp	Pince Serrage	Klemme	클램프	Abrazadera	
9	**SA 9451-04715**	1					Hose	Durit	Schlauch	호스	Tubo flexible	
10	**SA 9451-05711**	1					Hose	Durit	Schlauch	호스	Tubo flexible	
11	**VOE 1629544**	1					Screw	Vis	Schraube	스크류	Tornillo	
12	**VOE 955926**	1					Spring Washer	Rondelle élastique	Federscheibe	스프링 와셔	Arandela flexible	
13	**SA 9451-14719**		2				Hose	Durit	Schlauch	호스	Tubo flexible	
14	**VOE 14881440**	2					Clamp	Pince Serrage	Klemme	클램프	Abrazadera	SER NO 50065-
15	**VOE 14881439**	4					Clamp	Pince Serrage	Klemme	클램프	Abrazadera	SER NO 50065-
16	**VOE 14881204**	1					Clamp	Pince Serrage	Klemme	클램프	Abrazadera	SER NO 50065-
17	**VOE 14532654**	1					Clamp	Pince Serrage	Klemme	클램프	Abrazadera	SER NO 50065-
18	**VOE 965185**	1					Flange screw	Vis à bride	Flanschschraube	플랜지 스크류	Torn embridado	SER NO 50065-
19	**VOE 946472**	1					Flange screw	Vis à bride	Flanschschraube	플랜지 스크류	Torn embridado	SER NO 50065-

1	**8278878**	**Hidráulica de trabajo, cilindro del brazo en la pluma.** 유압 배관 , 붐측 디퍼 암 실린더 **Arbeitshydraulik, Stielzylinder auf Ausleger** **Commande hydraulique d'outil, vérin de balancier sur la flèche** **Working hydraulic, dipper arm cylinder on boom.**	Catalogue id **20019**	Group **916**
2	**8279369**		Illustr. No **1017457**	Section **110**
3				
4			Issue **VOE 74H9920019**	Page **527**
5		**FOR CHINA**		

VOLVO

EC55B

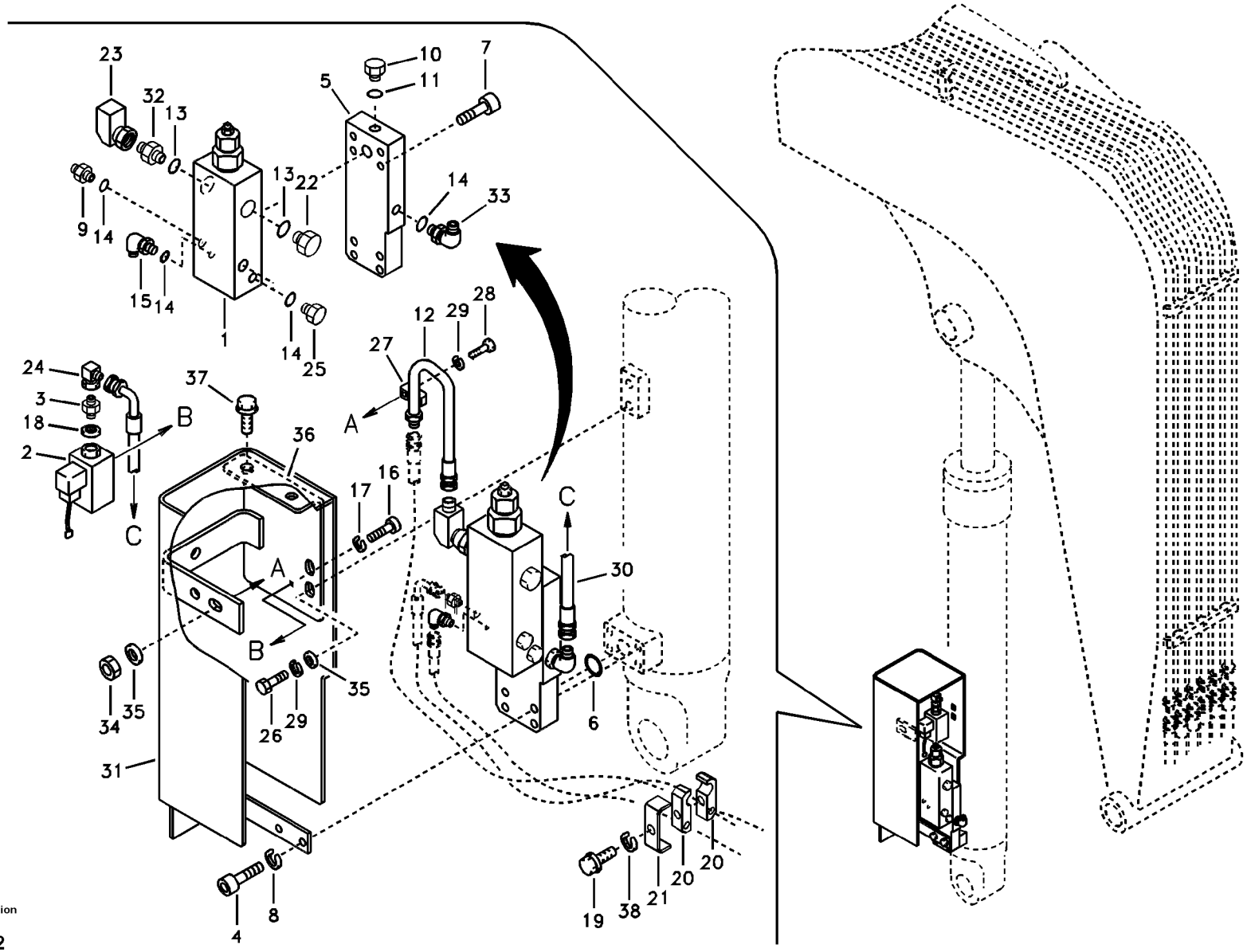

Volvo Construction Equipment

1018982

Fig.	Part No.	Quantity 1	2	3	PS	KIT	Description	Dénomination	Bezeichnung	품명	Denominación	Notes
1	**VOE 14508218**	1					Valve	Soupape	Ventil	밸브	Valvula	
2	**VOE 14515278**	1					Switch	Commutateur	Schalter	스위치	Contactor	
3	**SA 9412-12020**	1					Connector	Raccord	Anschluss	커넥터	Union	
4	**VOE 984077**	4					Allen Hd Screw	Vis A 6 Pans Cr	Inbusschraube	스크류	Torn Hex Embut	
5	**VOE 14510460**	1					Block	Bloc	Block	블록	Bloque	SER NO 30001-34475 SER NO 50001-50129
	VOE 14523032	1					Block	Bloc	Block	블록	Bloque	SER NO 34476- SER NO 50130-
6	**SA 9512-02210**	1					O-ring	Joint Torique	O-Ring	오링	Junta torica	
7	**VOE 984345**	4					Screw	Vis	Schraube	스크류	Tornillo	
8	**VOE 955921**	4					Spring Washer	Rondelle élastique	Federscheibe	스프링 와셔	Arandela flexible	
9	**SA 9412-11020**	1					Connector	Raccord	Anschluss	커넥터	Union	
10	**SA 9415-11032**	1					Plug	Bouchon	Stopfen	플러그	Tapon	
11	**SA 9511-12014**	1					O-ring	Joint Torique	O-Ring	오링	Junta torica	
12	**VOE 14508579**	1					Pipe	Canalisation	Rohrleitung	파이프	Canalizacion	
13	**SA 9511-12018**	2			SS		O-ring	Joint Torique	O-Ring	오링	Junta torica	
14	**SA 9511-12011**	5					O-ring	Joint Torique	O-Ring	오링	Junta torica	
15	**SA 9413-11010**	1					Elbow	Coude	Winkelstueck	엘보	Tubo acodado	
16	**VOE 969407**	2					6-pt skt screw	Vis creuse de 6	Hohlschraube	6 포인트 소켓 스크류	Racor 6-dientes	
17	**VOE 955918**	2					Spring Washer	Rondelle élastique	Federscheibe	스프링 와셔	Arandela flexible	
18	**SA 9426-10020**	1					Gasket	Joint	Dichtung	가스켓	Junta	
19	**VOE 965186**	1			SS		Screw	Vis	Schraube	스크류	Tornillo	SER NO 30001-34475 SER NO 50001-50129
	VOE 983256	1					Hexagon screw	Vis a tête hexagonale	Sechskantschr.	육각 나사	Tornillo hexago	SER NO 34476- SER NO 50130-
20	**VOE 14510427**	1					Clamp	Pince Serrage	Klemme	클램프	Abrazadera	SER NO 30001-34475 SER NO 50001-50129
	VOE 14523765	2					Clamp	Pince Serrage	Klemme	클램프	Abrazadera	SER NO 34476- SER NO 50130-

1	**8278874**	**Hidráulica de trabajo, válvula de rotura de manguera en plum** 낙하 방지 장치 배관 , 붐 **Arbeitshydraulik, Leitungsbruchventil Ausleger** **Hydraulique de travail, coupure flèche** **Working hydraulic, boom rupture**	Catalogue id **20019**	Group **916**
2			Illustr. No **1018982**	Section **300**
3				
4			Issue **VOE 74H9920019**	Page **529**
5				

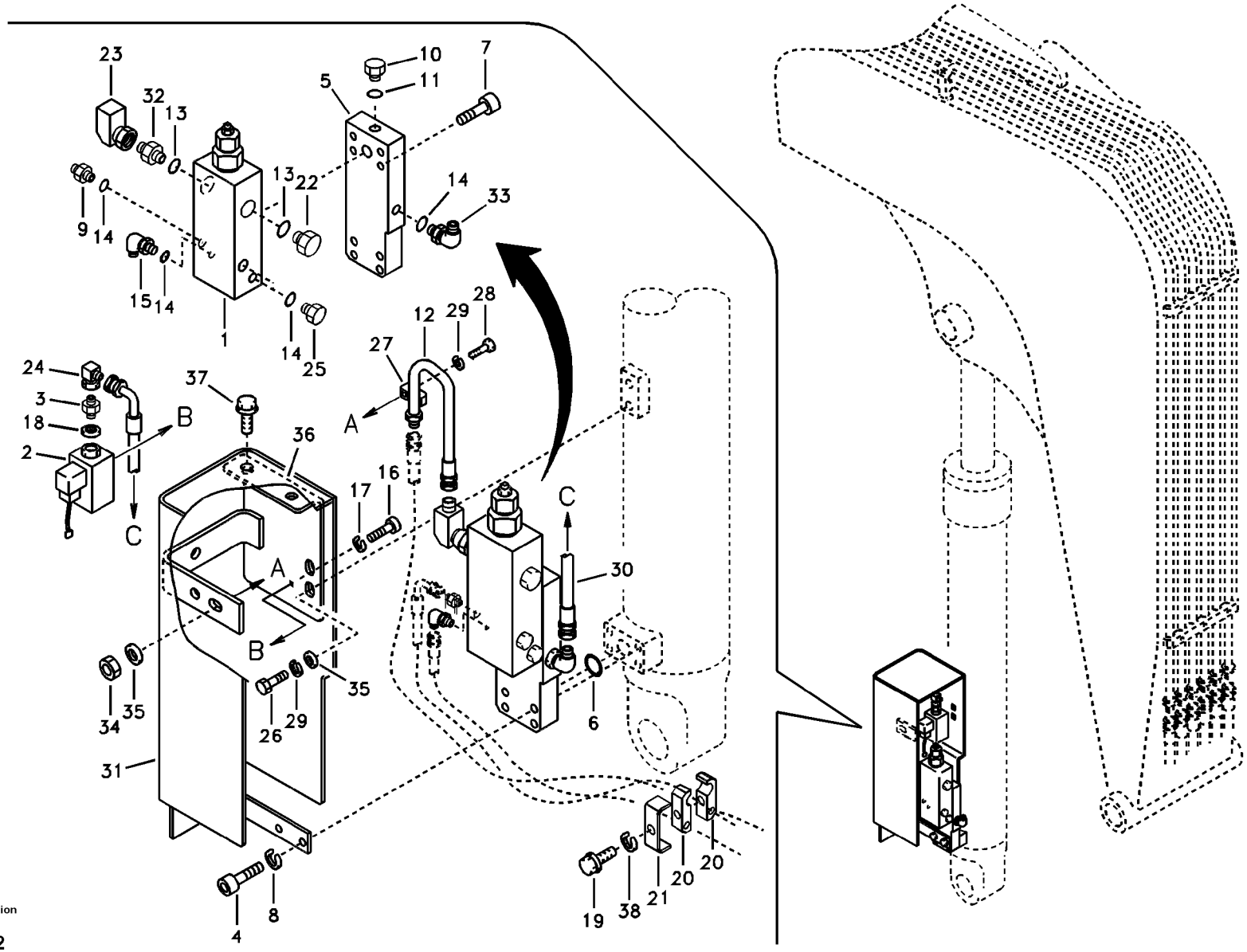

Volvo Construction Equipment

1018982

Fig.	Part No.	Quantity 1	2	3	PS	KIT	Description	Dénomination	Bezeichnung	품명	Denominación	Notes
21	**VOE 14510428**	1					Plate	Plaque	Platte	플레이트	Placa	SER NO 30001-34475 SER NO 50001-50129
	VOE 14523764	1					Plate	Plaque	Platte	플레이트	Placa	SER NO 34476- SER NO 50130-
22	**SA 9415-11042**	1					Plug	Bouchon	Stopfen	플러그	Tapon	
23	**SA 9411-90250**	1					Elbow	Coude	Winkelstueck	엘보	Tubo acodado	
24	**SA 9411-95190**	1					Elbow	Coude	Winkelstueck	엘보	Tubo acodado	
25	**SA 9415-11022**	2					Plug	Bouchon	Stopfen	플러그	Tapon	
26	**VOE 983250**	2					Hexagon screw	Vis tête hexagonale	Sechskantschraube	스크류	Tornillo hexago	
27	**VOE 14881233**	1					Clamp	Collier serrage	Klemme	클램프	Abrazadera	
28	**VOE 983254**	1					Hexagon screw	Vis a tête hexagonale	Sechskantschr.	육각 나사	Tornillo hexago	
29	**VOE 955922**	3					Spring Washer	Rondelle élastique	Federscheibe	스프링 와셔	Arandela flexible	
30	**SA 9453-02707**	1					Hose	Durit	Schlauch	호스	Tubo flexible	
31	**VOE 14512009**	1					Cover	Capot	Haube	커버	Capo	SER NO 30001-34475 SER NO 50001-50129
	VOE 14523262	1					Cover	Capot	Haube	커버	Capo	SER NO 34476- SER NO 50130-
32	**SA 9412-11040**	1					Connector	Raccord	Anschluss	커넥터	Union	
33	**SA 14531149**	1					Elbow	Coude	Winkelstueck	엘보	Tubo acodado	
34	**VOE 983304**	1					Hexagon Nut	Ecrou Hexagonal	Sechskantmutter	너트	Tuerca Hexagon	
35	**SA 9211-10000**	3					Washer	Rondelle	Scheibe	와셔	Arandela	
36	**VOE 14512008**	1					Bracket	Console	Konsole	브라켓	Ménsula	SER NO 30001-34475 SER NO 50001-50129
	VOE 14523261	1					Cover	Capot	Haube	커버	Capo	SER NO 34476- SER NO 50130-
37	**VOE 946441**	4					Flange screw	Vis à bride	Flanschschraube	플랜지 스크류	Torn embridado	
38	**VOE 955922**	1					Spring Washer	Rondelle élastique	Federscheibe	스프링 와셔	Arandela flexible	SER NO 34476- SER NO 50130-

1	**8278874**	**Hidráulica de trabajo, válvula de rotura de manguera en plum** 낙하 방지 장치 배관 , 붐 **Arbeitshydraulik, Leitungsbruchventil Ausleger** **Hydraulique de travail, coupure flèche** **Working hydraulic, boom rupture**	Catalogue id **20019**	Group **916**
2			Illustr. No **1018982**	Section **300**
3			Issue **VOE 74H9920019**	Page **531**
4				
5				

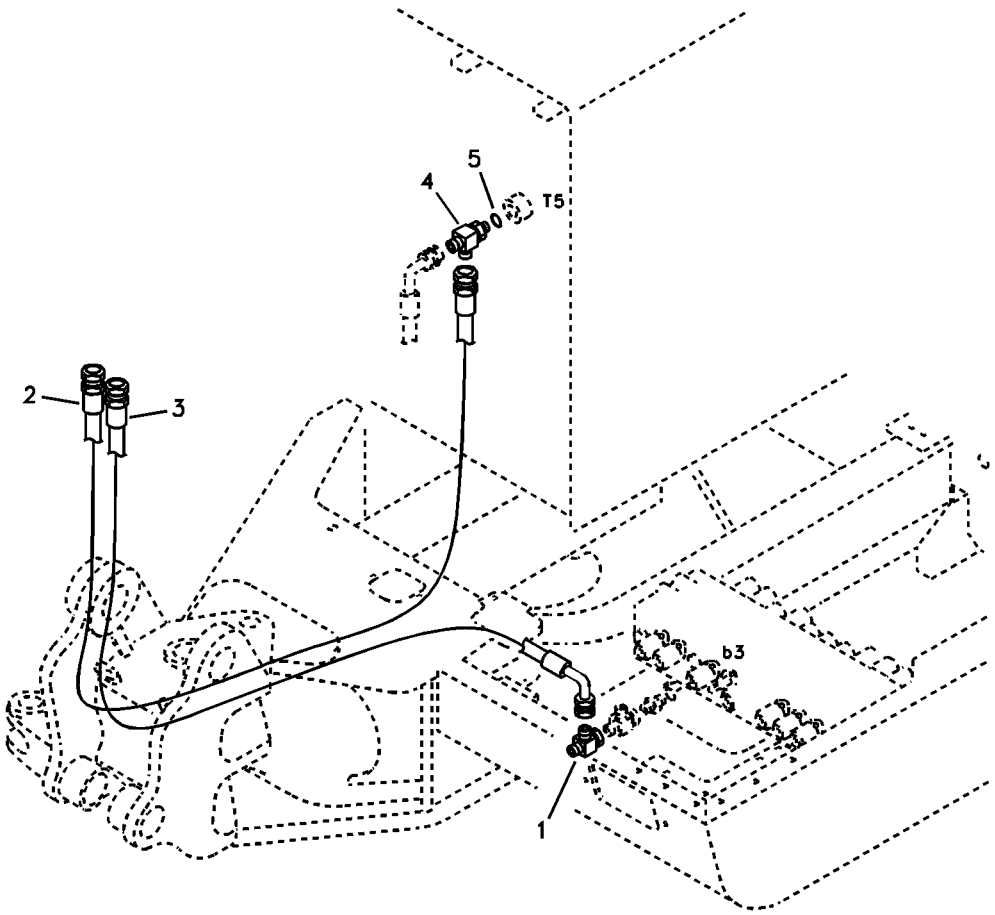
5
4
T5
2
3
b3
1

Fig.	Part No.	Quantity 1	2	3	PS	KIT	Description	Dénomination	Bezeichnung	품명	Denominación	Notes
1	**SA 9411-95440**	1					Tee	Connexion en T	T-stuck	티	Acoplamiento T	
2	**VOE 14880094**	1					Hose	Durit	Schlauch	호스	Tubo flexible	
3	**VOE 14880093**	1					Hose	Durit	Schlauch	호스	Tubo flexible	SER NO 30001-34475 SER NO 50001-50129
	VOE 14880511	1					Hose	Durit	Schlauch	호스	Tubo flexible	SER NO 34476- SER NO 50130-
4	**SA 9411-92350**	1					Tee	Connexion en T	T-stuck	티	Acoplamiento T	
5	**SA 9511-12011**	1					O-ring	Joint Torique	O-Ring	오링	Junta torica	

1	**8278874**	**Hidráulica de trabajo, válvula de rotura de manguera en plum** 낙하 방지 장치 배관 , 붐 **Arbeitshydraulik, Leitungsbruchventil Ausleger** **Hydraulique de travail, coupure flèche** **Working hydraulic, boom rupture**	Catalogue id **20019**	Group **916**
2			Illustr. No **1008196**	Section **350**
3				
4			Issue **VOE 74H9920019**	Page **533**
5				

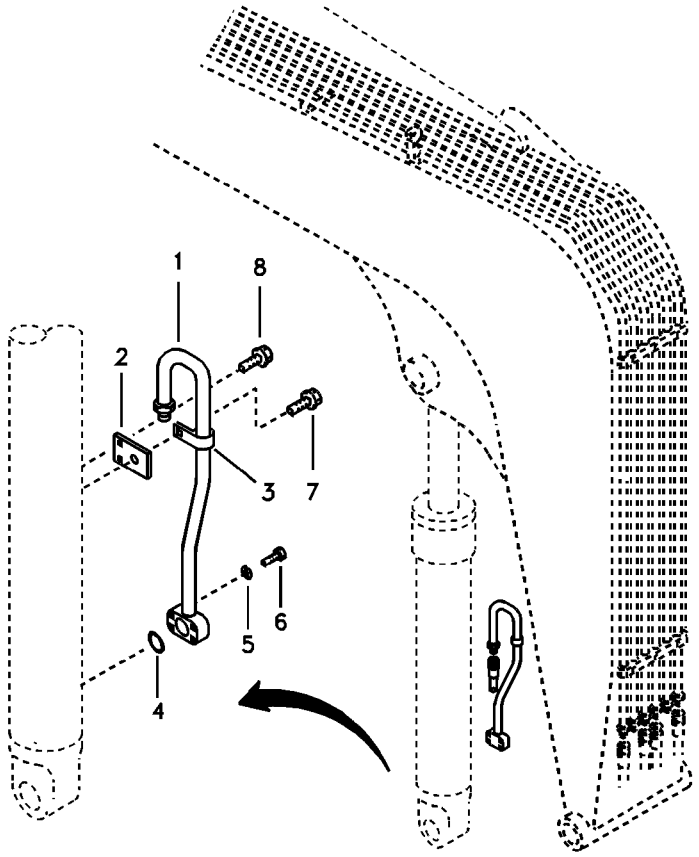
1
8
2
3
7
5
6
4

Fig.	Part No.	Quantity 1	2	3	P S	K I T	Description	Dénomination	Bezeichnung	품명	Denominación	Notes
1	**VOE 14509425**	1					Pipe	Canalisation	Rohrleitung	파이프	Canalizacion	SER NO 30001-34475 SER NO 50001-50129
	VOE 14538806	1					Pipe	Canalisation	Rohrleitung	파이프	Canalizacion	SER NO 34476- SER NO 50130-
2	**VOE 14509424**	1					Plate	Plaque	Platte	플레이트	Placa	
3	**VOE 14881233**	1					Clamp	Collier serrage	Klemme	클램프	Abrazadera	
4	**SA 9512-02210**	1					O-ring	Joint Torique	O-Ring	오링	Junta torica	
5	**VOE 955921**	4					Spring Washer	Rondelle élastique	Federscheibe	스프링 와셔	Arandela flexible	
6	**VOE 983245**	4					Hexagon screw	Vis a tête hexagonale	Sechskantschr.	육각 나사	Tornillo hexago	
7	**VOE 965186**	1			SS		Screw	Vis	Schraube	스크류	Tornillo	
8	**VOE 946471**	2					Flange screw	Vis à bride	Flanschschraube	플랜지 스크류	Torn embridado	

1	**8278873**	**Hidráulica de trabajo, cilindro de la pluma.** 유압 배관 , 붐 실린더 **Arbeitshydraulik, Auslegerzylinder** **Commande hydraulique d'outil, vérin de flèche** **Working hydraulic, boom cylinder**	Catalogue id **20019**	Group **916**
2			Illustr. No **1018983**	Section **900**
3			Issue **VOE 74H9920019**	Page **535**
4				
5				

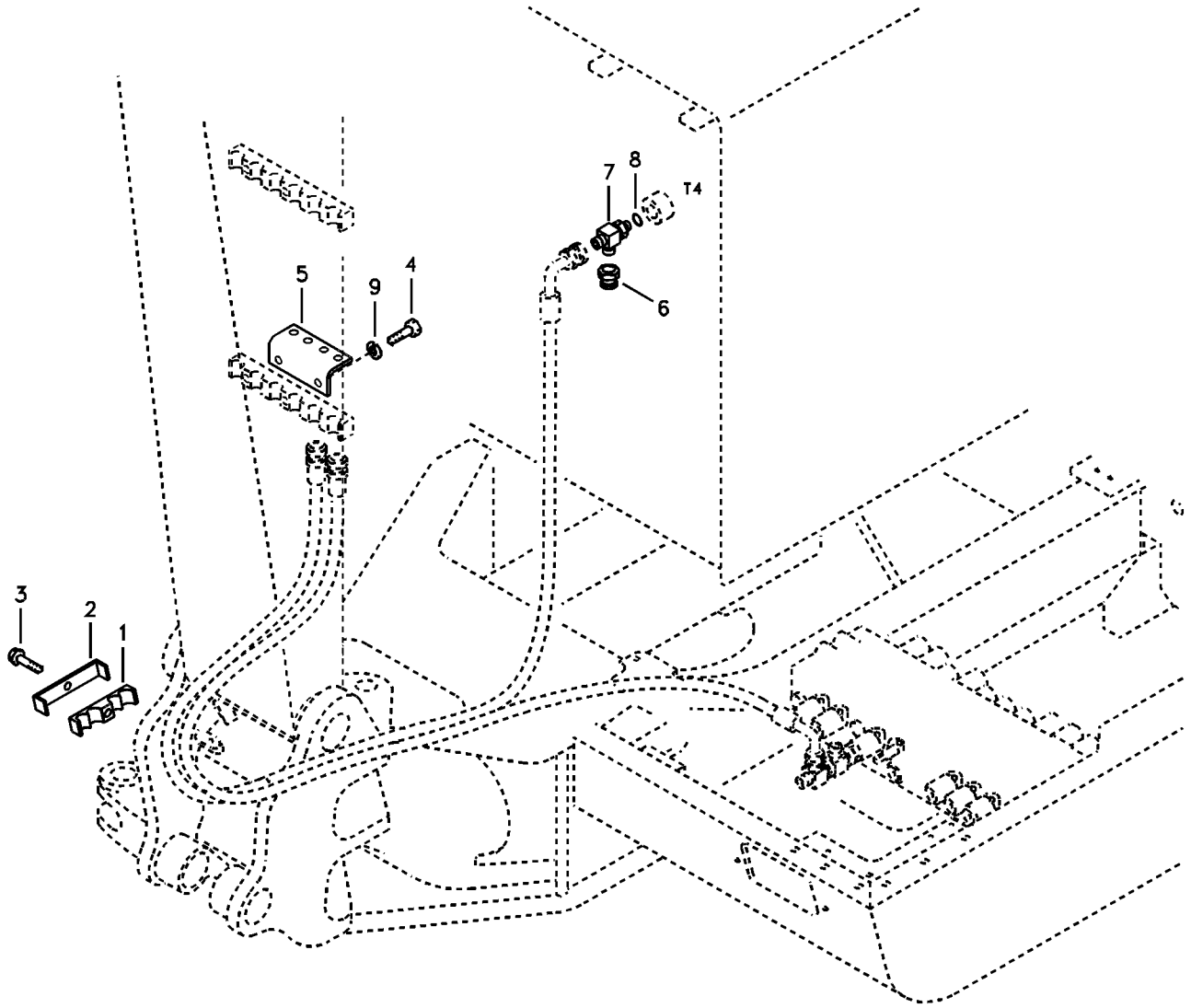
1
2
3
4
5
6
7
8
9
T4

Fig.	Part No.	Quantity 1	2	3	PS	KIT	Description	Dénomination	Bezeichnung	품명	Denominación	Notes
1	**VOE 14510429**	1					Clamp	Pince Serrage	Klemme	클램프	Abrazadera	
2	**VOE 14510430**	1					Plate	Plaque	Platte	플레이트	Placa	
3	**VOE 965185**	1					Flange screw	Vis à bride	Flanschschraube	플랜지 스크류	Torn embridado	
4	**VOE 965187**	2					Flange screw	Vis a bride	Flanschschraube	플랜지 스크류	Torn embridado	SER NO 30001-33627 SER NO 50001-50064
5	**VOE 14508709**	1					Bracket	Ferrure-support	Tragstütze	브라켓	Hierro Apoyo	SER NO 30001-32353 SER NO 50001-50036
	VOE 14527840	1					Bracket	Ferrure-support	Tragstütze	브라켓	Hierro Apoyo	SER NO 32354-33394 SER NO 50037-50064
	VOE 14522338	1					Bracket	Console	Konsole	브라켓	Ménsula	SER NO 33395-33627
6	**SA 9411-93390**	1					Plug	Bouchon	Stopfen	플러그	Tapon	
7	**SA 9411-92350**	1					Tee	Connexion en T	T-stuck	티	Acoplamiento T	
8	**SA 9511-12011**	1					O-ring	Joint Torique	O-Ring	오링	Junta torica	
9	**VOE 14501898**	2					Washer	Rondelle	Scheibe	와셔	Arandela	SER NO 30001-33627 SER NO 50001-50064

1	**8278895**	**Hidráulica de trabajo, válvula de rotura de manguera en braz** 낙하 방지 장치 배관 , 디퍼 암 **Arbeitshydraulik, Leitungsbruchventil Stiel** **Hydraulique de travail, coupure bras** **Working hydraulic, dipper arm rupture**	Catalogue id **20019**	Group **916**
2			Illustr. No **1008197**	Section **1200**
3			Issue **VOE 74H9920019**	Page **537**
4				
5				

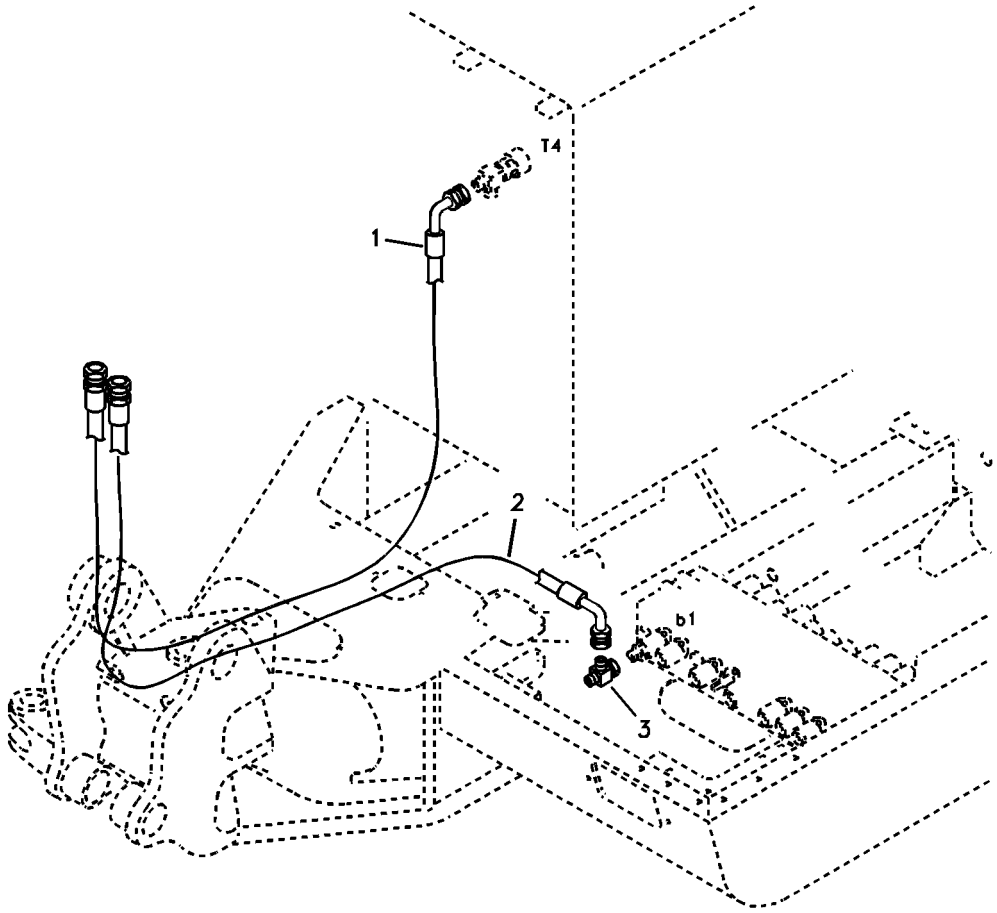
T4
1
2
b1
3

Fig.	Part No.	Quantity 1	2	3	PS	KIT	Description	Dénomination	Bezeichnung	품명	Denominación	Notes
1	**VOE 14880150**	1					Hose	Durit	Schlauch	호스	Tubo flexible	
2	**VOE 14880311**	1					Hose	Durit	Schlauch	호스	Tubo flexible	
3	**SA 9411-95440**	1					Tee	Connexion en T	T-stuck	티	Acoplamiento T	

1	**8278877**	**Hidráulica de trabajo, válvula de rotura de manguera en braz** 낙하 방지 장치 배관 , 디퍼 암 **Arbeitshydraulik, Leitungsbruchventil Stiel** **Hydraulique de travail, coupure bras** **Working hydraulic, dipper arm rupture**	Catalogue id **20019**	Group **916**
2			Illustr. No **1007090**	Section **1250**
3				
4			Issue **VOE 74H9920019**	Page **539**
5				

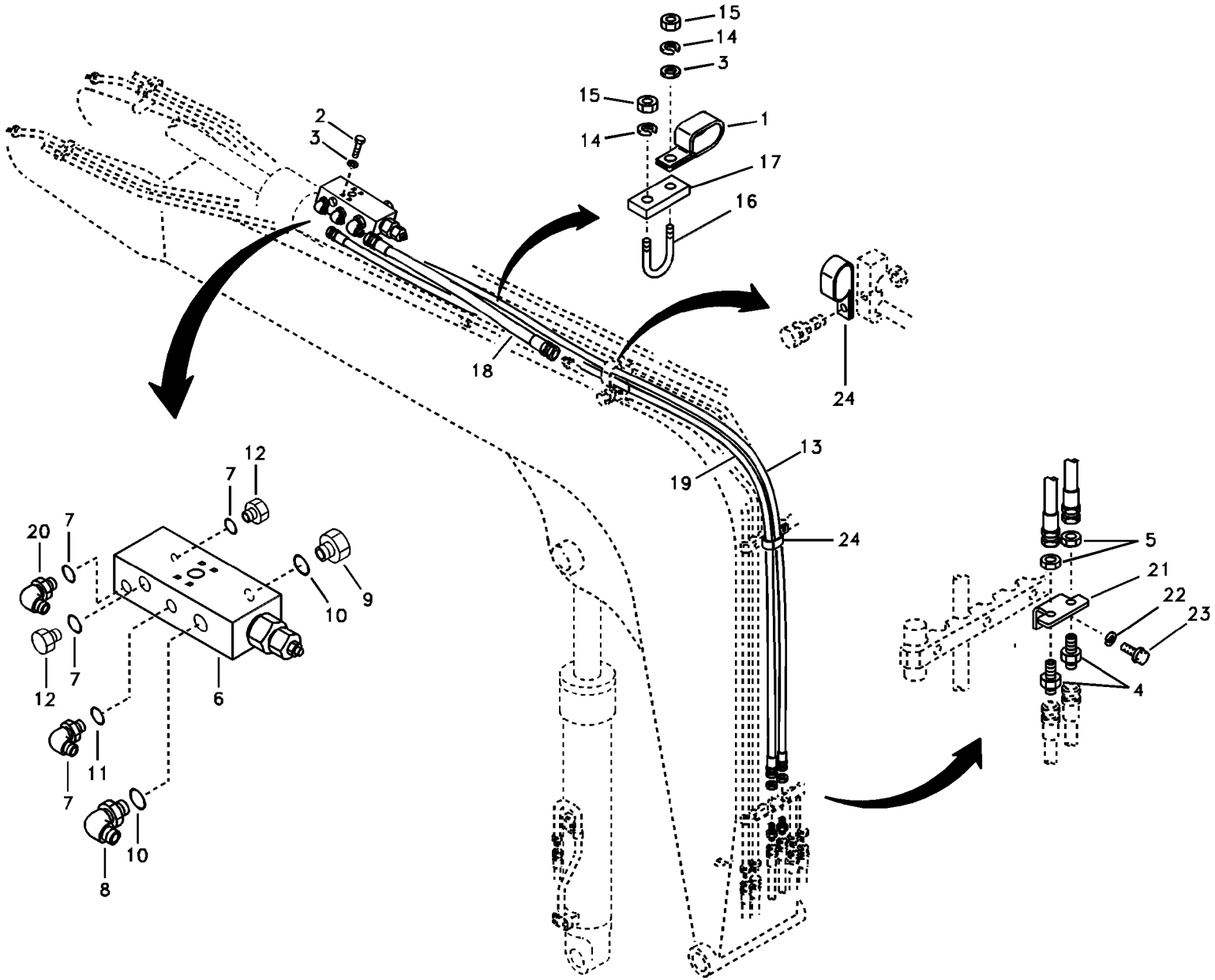

Volvo Construction Equipment

1018994

Fig.	Part No.	Quantity 1	2	3	PS	KIT	Description	Dénomination	Bezeichnung	품명	Denominación	Notes
1	**VOE 14512153**	1					Clip	Clip	Klemme	클립	Clip	SER NO 30001-34475 SER NO 50001-50129
2	**VOE 984077**	4					Allen Hd Screw	Vis A 6 Pans Cr	Inbusschraube	스크류	Torn Hex Embut	
3	**SA 9211-10000**	1					Washer	Rondelle	Scheibe	와셔	Arandela	SER NO 30001-34475 SER NO 50001-50129
4	**SA 9416-11091**	2					Connector	Raccord	Anschluss	커넥터	Union	
5	**SA 1040-80490**	2					Nut	Ecrou	Mutter	너트	Tuerca	
6	**VOE 14508218**	1					Valve	Soupape	Ventil	밸브	Valvula	
7	**SA 9511-12011**	4					O-ring	Joint Torique	O-Ring	오링	Junta torica	
8	**SA 9413-11030**	1					Elbow	Coude	Winkelstueck	엘보	Tubo acodado	
9	**SA 9415-11042**	1					Plug	Bouchon	Stopfen	플러그	Tapon	
10	**SA 9511-12018**	2			SS		O-ring	Joint Torique	O-Ring	오링	Junta torica	
11	**SA 9413-11010**	1					Elbow	Coude	Winkelstueck	엘보	Tubo acodado	
12	**SA 9415-11022**	2					Plug	Bouchon	Stopfen	플러그	Tapon	
13	**SA 9453-02253**	1					Hose	Durit	Schlauch	호스	Tubo flexible	
14	**VOE 955922**	2					Spring Washer	Rondelle élastique	Federscheibe	스프링 와셔	Arandela flexible	SER NO 30001-34475 SER NO 50001-50129
15	**SA 9111-31000**	2					Nut	Ecrou	Mutter	너트	Tuerca	SER NO 30001-34475 SER NO 50001-50129
16	**VOE 14880628**	1					U-bolt	Etrier Ressort	Federbride	유 볼트	Abrazadera-u	SER NO 30001-34475 SER NO 50001-50129
17	**VOE 14519173**	2					Plate	Plaque	Platte	플레이트	Placa	SER NO 30001-34475 SER NO 50001-50129
18	**SA 9451-04715**	1					Hose	Durit	Schlauch	호스	Tubo flexible	SER NO 30001-30666
	SA 9451-04714	1					Hose	Durit	Schlauch	호스	Tubo flexible	SER NO 30667-
19	**SA 9451-02252**	1					Hose	Durit	Schlauch	호스	Tubo flexible	
20	**SA 9412-11020**	1					Connector	Raccord	Anschluss	커넥터	Union	
21	**VOE 14522338**	1					Bracket	Console	Konsole	브라켓	Ménsula	SER NO 33628-
22	**VOE 14501898**	1					Washer	Rondelle	Scheibe	와셔	Arandela	SER NO 33628-
23	**VOE 965187**	1					Flange screw	Vis a bride	Flanschschraube	플랜지 스크류	Torn embridado	SER NO 33628-

1	**8278877**	**Hidráulica de trabajo, válvula de rotura de manguera en braz** 낙하 방지 장치 배관 , 디퍼 암 **Arbeitshydraulik, Leitungsbruchventil Stiel** **Hydraulique de travail, coupure bras** **Working hydraulic, dipper arm rupture**	Catalogue id **20019**	Group **916**
2			Illustr. No **1018994**	Section **1300**
3			Issue **VOE 74H9920019**	Page **541**
4				
5				

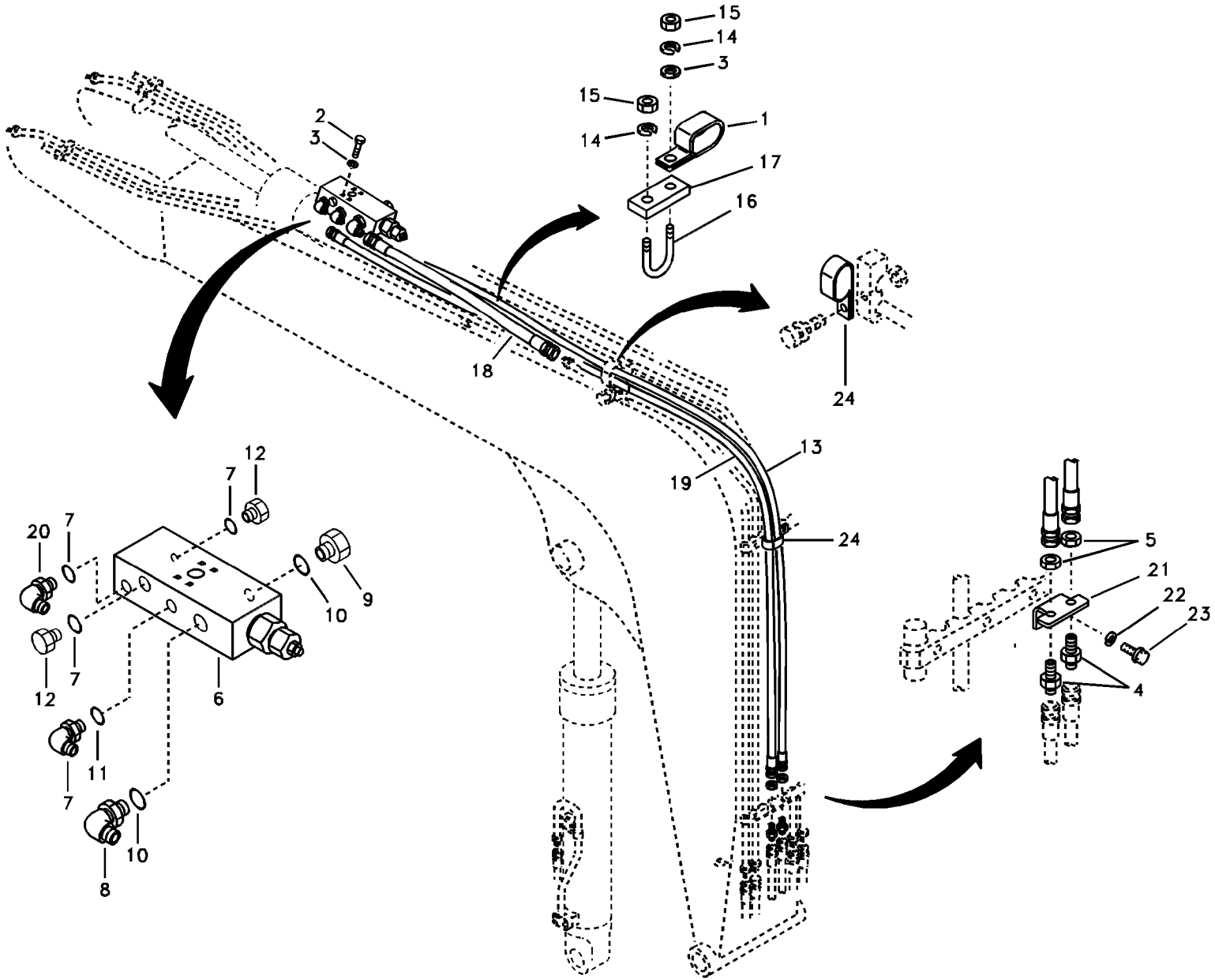

Volvo Construction Equipment

1018994

Fig.	Part No.	Quantity 1	2	3	PS	KIT	Description	Dénomination	Bezeichnung	품명	Denominación	Notes
24	**VOE 14512153**	2					Clip	Clip	Klemme	클립	Clip	

1	**8278877**	**Hidráulica de trabajo, válvula de rotura de manguera en braz** 낙하 방지 장치 배관 , 디퍼 암 **Arbeitshydraulik, Leitungsbruchventil Stiel** **Hydraulique de travail, coupure bras** **Working hydraulic, dipper arm rupture**	Catalogue id **20019**	Group **916**
2			Illustr. No **1018994**	Section **1300**
3				
4			Issue **VOE 74H9920019**	Page **543**
5				

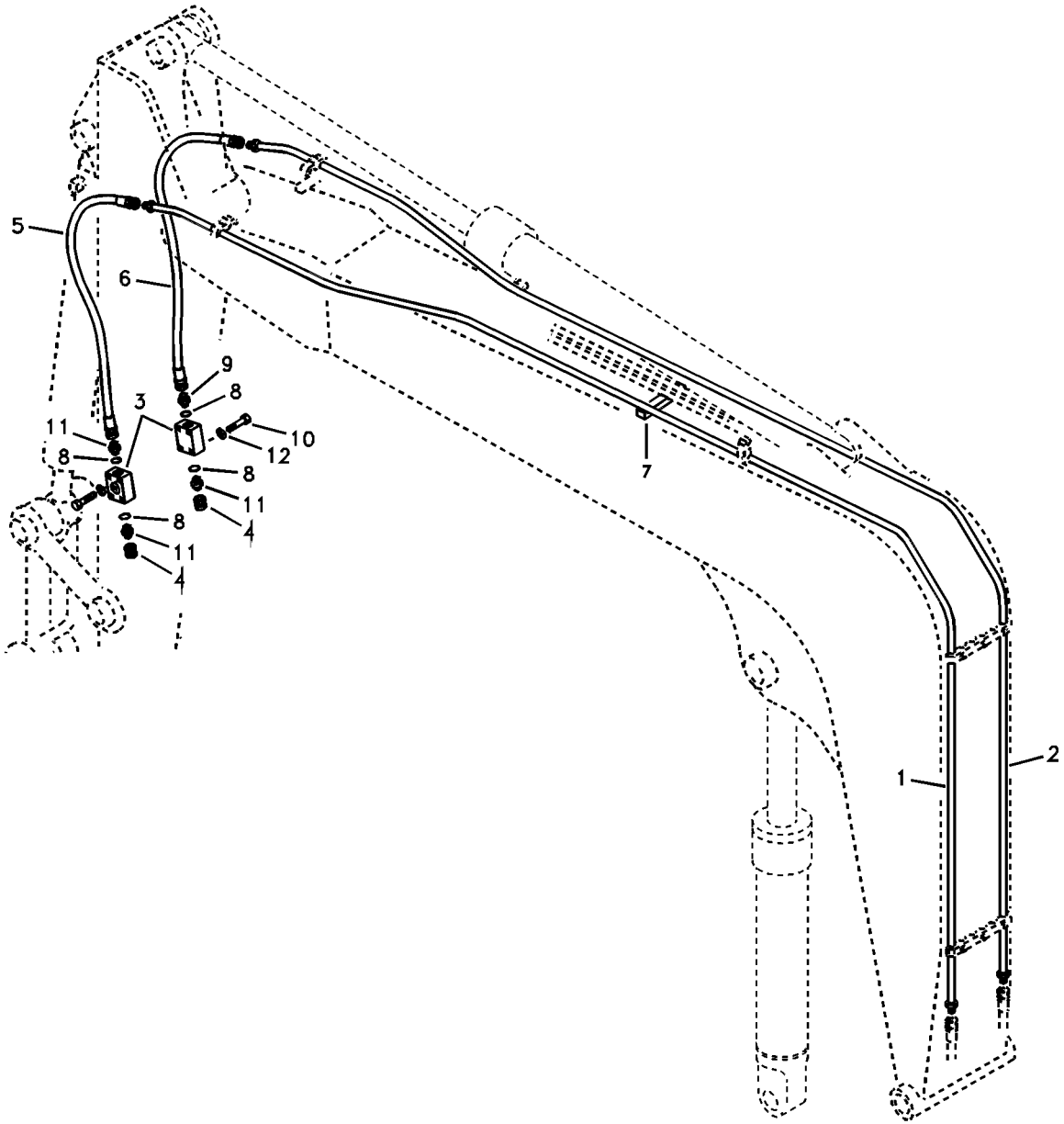
5
6
9
8
3
11
10
12
8
8
11
4
8
11
4
7
1
2

Fig.	Part No.	Quantity 1	2	3	PS	KIT	Description	Dénomination	Bezeichnung	품명	Denominación	Notes
1	**SA 1174-30052**	1	1	1			Pipe	Canalisation	Rohrleitung	파이프	Canalizacion	SER NO 30001-30666
	VOE 14522580	1	1	1			Tube	Tube	Rohr	튜브	Tubo	SER NO 30667-
2	**SA 1174-30062**	1	1	1			Pipe	Canalisation	Rohrleitung	파이프	Canalizacion	SER NO 30001-30666
	VOE 14522581	1	1	1			Tube	Tube	Rohr	튜브	Tubo	SER NO 30667-
3	**VOE 14501722**	2	2	2			Valve	Soupape	Ventil	밸브	Valvula	
4	**SA 9411-91000**	2	2	2			Plug	Bouchon	Stopfen	플러그	Tapon	
5	**SA 9451-14720**	1	1	1			Hose	Durit	Schlauch	호스	Tubo flexible	SER NO 30001-30666
	SA 9451-14721	1	1	1			Hose	Durit	Schlauch	호스	Tubo flexible	SER NO 30667-
6	**SA 9451-15720**	1	1	1			Hose	Durit	Schlauch	호스	Tubo flexible	SER NO 30001-30666
	SA 9451-15721	1	1	1			Hose	Durit	Schlauch	호스	Tubo flexible	SER NO 30667-
7	**SA 1174-30200**	1	1	1			Clamp	Pince Serrage	Klemme	클램프	Abrazadera	SER NO 50001-33627
8	**SA 9511-12024**	4	4	4			O-ring	Joint Torique	O-Ring	오링	Junta torica	
9	**SA 9412-11050**	1	1	1			Connector	Raccord	Anschluss	커넥터	Union	
10	**VOE 983256**	8	8	8			Hexagon screw	Vis a tête hexagonale	Sechskantschr.	육각 나사	Tornillo hexago	
11	**SA 9412-11170**	3	3	3			Connector	Raccord	Anschluss	커넥터	Union	
12	**VOE 955922**	8	8	8			Spring Washer	Rondelle élastique	Federscheibe	스프링 와셔	Arandela flexible	

1	**8278865**	**Hidráulica de trabajo, martillo y cizalla para pluma** 해머 및 시어 배관 , 붐 **Arbeitshydraulik, Hammer und Schere für Ausl** **Hydraulique de travail, marteau et ciseaux pour flèche** **Working hydraulic, hammer and shear for boom**	Catalogue id **20019**	Group **916**
2	**8278866**		Illustr. No **1007092**	Section **2000**
3	**8278867**		Issue **VOE 74H9920019**	Page **545**
4				
5				

VOLVO

EC55B

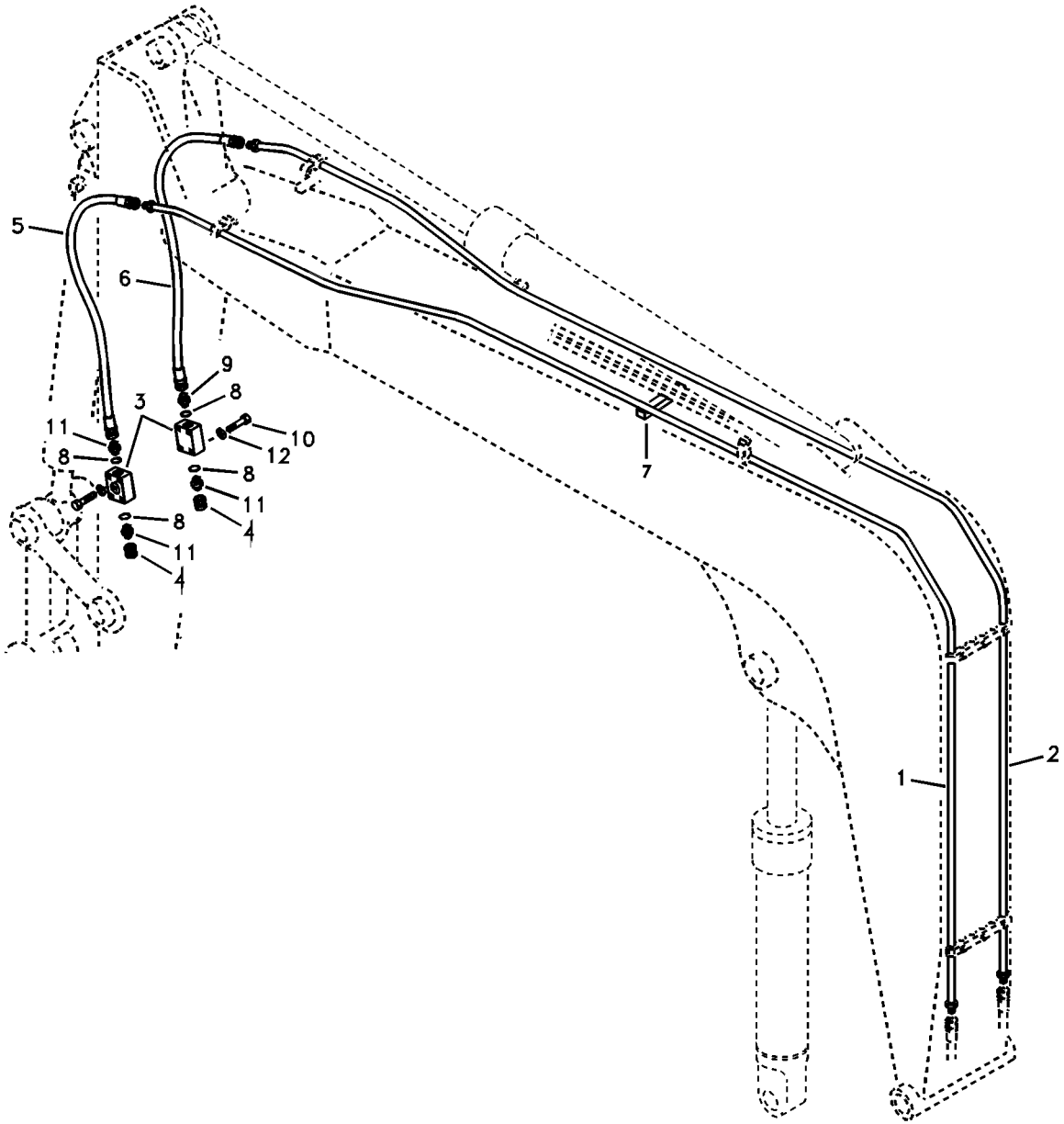
5
6
9
8
3
11
10
12
8
8
11
4
8
11
4
7
1
2

Fig.	Part No.	Quantity 1	2	3	PS	KIT	Description	Dénomination	Bezeichnung	품명	Denominación	Notes
1	**VOE 14522580**	1					Tube	Tube	Rohr	튜브	Tubo	
2	**VOE 14522581**	1					Tube	Tube	Rohr	튜브	Tubo	
3	**VOE 14501722**	2					Valve	Soupape	Ventil	밸브	Valvula	
4	**SA 9411-91000**	2					Plug	Bouchon	Stopfen	플러그	Tapon	
5	**SA 9451-14721**	1					Hose	Durit	Schlauch	호스	Tubo flexible	
6	**SA 9451-15721**	1					Hose	Durit	Schlauch	호스	Tubo flexible	
7	**SA 1174-30200**	1					Clamp	Pince Serrage	Klemme	클램프	Abrazadera	SER NO 50001-50064
8	**SA 9511-12024**	4					O-ring	Joint Torique	O-Ring	오링	Junta torica	
9	**SA 9412-11050**	1					Connector	Raccord	Anschluss	커넥터	Union	
10	**VOE 983256**	8					Hexagon screw	Vis a tête hexagonale	Sechskantschr.	육각 나사	Tornillo hexago	
11	**SA 9412-11170**	3					Connector	Raccord	Anschluss	커넥터	Union	
12	**VOE 955922**	8					Spring Washer	Rondelle élastique	Federscheibe	스프링 와셔	Arandela flexible	

1	**8278867**	**Hidráulica de trabajo, martillo y cizalla para pluma** **해머 및 시어 배관 , 붐** **Arbeitshydraulik, Hammer und Schere für Ausl** **Hydraulique de travail, marteau et ciseaux pour flèche** **Working hydraulic, hammer and shear for boom**	Catalogue id **20019**	Group **916**
2			Illustr. No **1007092**	Section **2010**
3				
4			Issue **VOE 74H9920019**	Page **547**
5		**FOR CHINA**		

VOLVO

EC55B

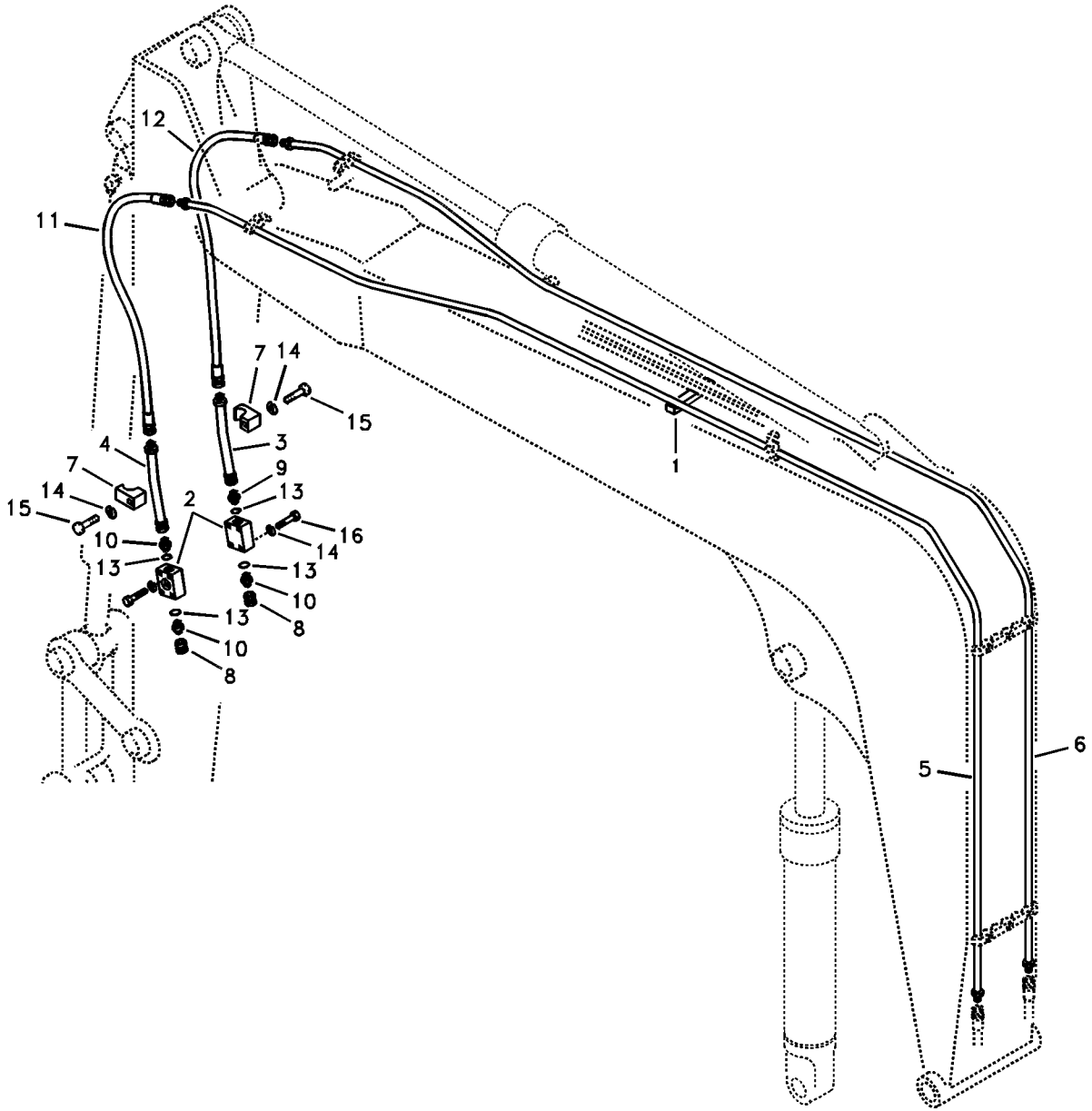
12
11
7
14
15
3
4
7
9
14
15
13
2
16
10
14
13
13
10
13
8
10
8
1
5
6

Fig.	Part No.	Quantity 1	2	3	P S	K I T	Description	Dénomination	Bezeichnung	품명	Denominación	Notes
1	**SA 1174-30200**	1					Clamp	Pince Serrage	Klemme	클램프	Abrazadera	SER NO 30001-33627
2	**VOE 14501722**	2					Valve	Soupape	Ventil	밸브	Valvula	
3	**VOE 14522047**	1					Tube	Tube	Rohr	튜브	Tubo	
4	**VOE 14522048**	1					Tube	Tube	Rohr	튜브	Tubo	
5	**VOE 14522580**	1					Tube	Tube	Rohr	튜브	Tubo	
6	**VOE 14522581**	1					Tube	Tube	Rohr	튜브	Tubo	
7	**VOE 14881233**	2					Clamp	Collier serrage	Klemme	클램프	Abrazadera	
8	**SA 9411-91000**	2					Plug	Bouchon	Stopfen	플러그	Tapon	
9	**SA 9412-11050**	1					Connector	Raccord	Anschluss	커넥터	Union	
10	**SA 9412-11170**	3					Connector	Raccord	Anschluss	커넥터	Union	
11	**SA 9451-14724**	1					Hose	Durit	Schlauch	호스	Tubo flexible	
12	**SA 9451-15724**	1					Hose	Durit	Schlauch	호스	Tubo flexible	
13	**SA 9511-12024**	4					O-ring	Joint Torique	O-Ring	오링	Junta torica	
14	**VOE 955922**	10					Spring Washer	Rondelle élastique	Federscheibe	스프링 와셔	Arandela flexible	
15	**VOE 983254**	2					Hexagon screw	Vis a tête hexagonale	Sechskantschr.	육각 나사	Tornillo hexago	
16	**VOE 983256**	8					Hexagon screw	Vis a tête hexagonale	Sechskantschr.	육각 나사	Tornillo hexago	

1	**8279082 S/N 30824-**	**Hidráulica de trabajo, martillo y cizalla para pluma** **해머 및 시어 배관 , 붐** **Arbeitshydraulik, Hammer und Schere für Ausl** **Hydraulique de travail, marteau et ciseaux pour flèche** **Working hydraulic, hammer and shear for boom**	Catalogue id **20019**	Group **916**
2			Illustr. No **1008353**	Section **2100**
3				
4			Issue **VOE 74H9920019**	Page **549**
5				

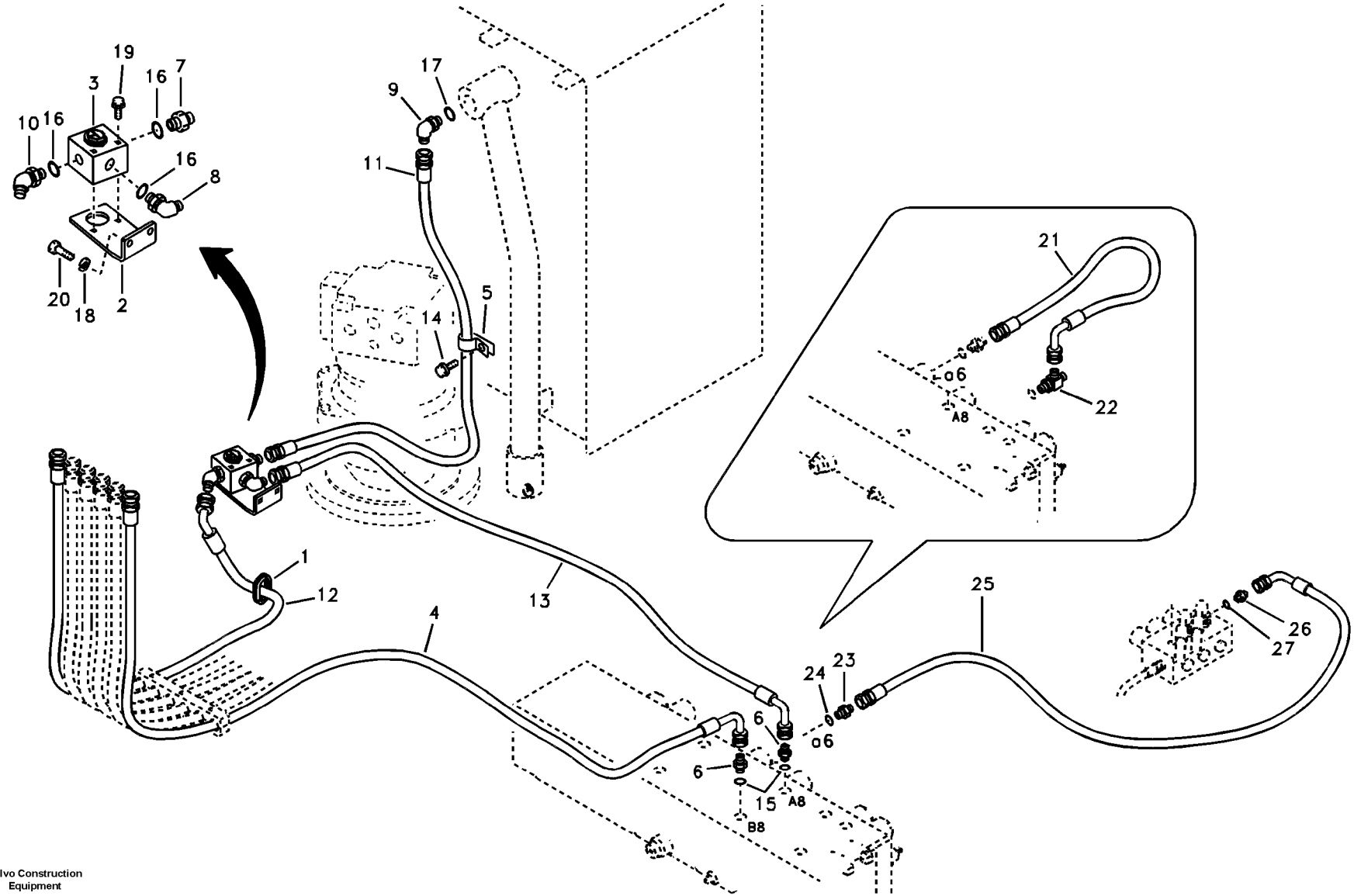

Volvo Construction Equipment

1018984

Fig.	Part No.	Quantity 1	2	3	PS	KIT	Description	Dénomination	Bezeichnung	품명	Denominación	Notes
1	**VOE 14531002**	1	1				Grommet	Passe fil	Durchführung	그로메트	Aislador pasapanel	
2	**VOE 14504425**	1			SS		Bracket	Console	Konsole	브라켓	Ménsula	SER NO 30001-34475 SER NO 50001-50129
	VOE 14538810	1					Bracket	Console	Konsole	브라켓	Ménsula	SER NO 34476- SER NO 50130-
	VOE 14504425		1		SS		Bracket	Console	Konsole	브라켓	Ménsula	SER NO 30824-34475 SER NO 50001-50129
	VOE 14538810		1				Bracket	Console	Konsole	브라켓	Ménsula	SER NO 34476- SER NO 50130-
3	**VOE 14507309**	1	1				Valve	Soupape	Ventil	밸브	Valvula	
4	**VOE 14880021**	1	1				Hose	Durit	Schlauch	호스	Tubo flexible	
5	**SA 9315-03001**	1	1				Clip	Clip	Klemme	클립	Clip	
6	**SA 9412-11040**	2	2				Connector	Raccord	Anschluss	커넥터	Union	
7	**SA 9412-11050**	1	1				Connector	Raccord	Anschluss	커넥터	Union	
8	**SA 9413-11210**	1	1				Elbow	Coude	Winkelstueck	엘보	Tubo acodado	
9	**SA 9413-11230**	1	1				Elbow	Coude	Winkelstueck	엘보	Tubo acodado	
10	**SA 9414-11040**	1	1				Elbow	Coude	Winkelstueck	엘보	Tubo acodado	
11	**SA 9451-35226**	1	1				Hose	Durit	Schlauch	호스	Tubo flexible	
12	**SA 9452-05743**	1	1				Hose	Durit	Schlauch	호스	Tubo flexible	
13	**SA 9453-34739**	1	1				Hose	Durit	Schlauch	호스	Tubo flexible	
14	**VOE 946471**	1	1				Flange screw	Vis à bride	Flanschschraube	플랜지 스크류	Torn embridado	
15	**VOE 990557**	2	2				O-ring	Joint Torique	O-Ring	오링	Junta torica	
16	**VOE 983524**	3	3				O-ring	Joint Torique	O-Ring	오링	Junta torica	
17	**VOE 983527**	1	1				O-ring	Joint Torique	O-Ring	오링	Junta torica	
18	**VOE 955923**	2	2				Spring Washer	Rondelle élastique	Federscheibe	스프링 와셔	Arandela flexible	
19	**VOE 965187**	2	2				Flange screw	Vis a bride	Flanschschraube	플랜지 스크류	Torn embridado	
20	**VOE 978932**	2	2				Screw	Vis	Schraube	스크류	Tornillo	
21	**SA 9453-02206**	1	1				Hose	Durit	Schlauch	호스	Tubo flexible	SER NO 30001-34475 SER NO 30824-34475 SER NO 50001-50129

1	**8278865**	**Hidráulica de trabajo, martillo y cizalla para superior** 해머 및 시어 배관 , 상부 **Arbeitshydraulik, Hammer und Schere für oberen** **Hydraulique de travail, marteau et ciseaux supérieurs** **Working hydraulic, hammer and shear for upper**	Catalogue id **20019** / Group **916** Illustr. No **1018984** / Section **2200** Issue **VOE 74H9920019** / Page **551**
2	**8279082 S/N 30824-**		
3			
4			
5			

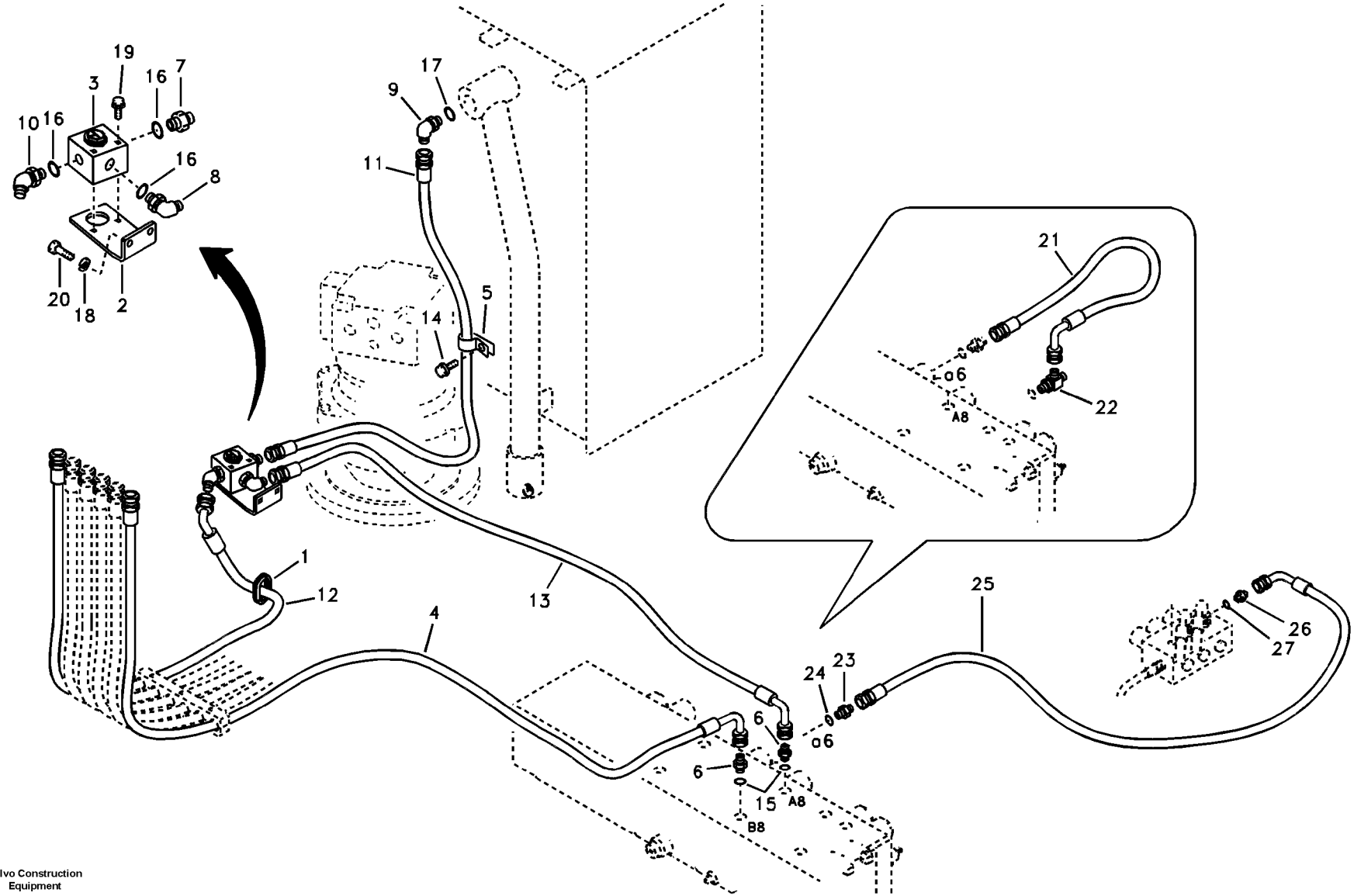

Volvo Construction Equipment

1018984

Fig.	Part No.	Quantity 1	2	3	PS	KIT	Description	Dénomination	Bezeichnung	품명	Denominación	Notes
22	**SA 9411-95440**	1	1				Tee	Connexion en T	T-stuck	티	Acoplamiento T	SER NO 30001-34475 SER NO 30824-34475 SER NO 50001-50129
23	**SA 9412-11020**	1	1				Connector	Raccord	Anschluss	커넥터	Union	
24	**SA 9511-12011**	1	1				O-ring	Joint Torique	O-Ring	오링	Junta torica	SER NO 30824-34996
	VOE 983502		1				O-ring	Joint Torique	O-Ring	오링	Junta torica	SER NO 34997-
25	**SA 9453-02226**	1	1				Hose	Durit	Schlauch	호스	Tubo flexible	SER NO 34476- SER NO 50130-
26	**SA 9511-12011**	1	1				O-ring	Joint Torique	O-Ring	오링	Junta torica	SER NO 34476-34996 SER NO 50130-
	VOE 983502		1				O-ring	Joint Torique	O-Ring	오링	Junta torica	SER NO 34997-
27	**SA 9411-92350**	1	1				Tee	Connexion en T	T-stuck	티	Acoplamiento T	SER NO 34476- SER NO 50130-

1	**8278865**
2	**8279082 S/N 30824-**
3	
4	
5	

Hidráulica de trabajo, martillo y cizalla para superior
해머 및 시어 배관 , 상부
Arbeitshydraulik, Hammer und Schere für oberen
Hydraulique de travail, marteau et ciseaux supérieurs
Working hydraulic, hammer and shear for upper

Catalogue id **20019**	Group **916**
Illustr. No **1018984**	Section **2200**
Issue **VOE 74H9920019**	Page **553**

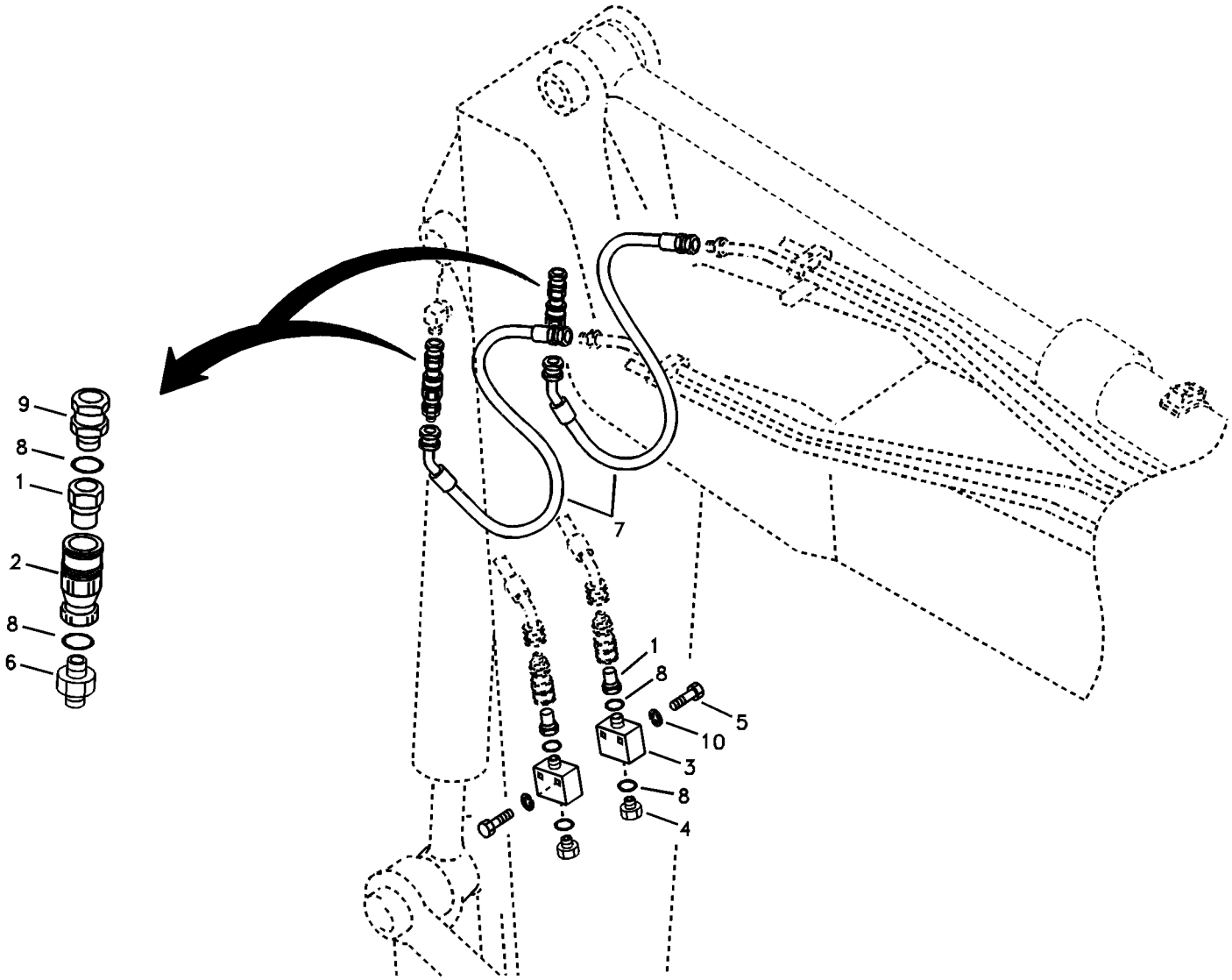
9
8
1
2
8
6
7
1
8
5
10
3
8
4

Fig.	Part No.	Quantity 1	2	3	PS	KIT	Description	Dénomination	Bezeichnung	품명	Denominación	Notes
1	**VOE 14508586**	4					Nipple	Raccord	Nippel	니플	Niple	
2	**VOE 14508588**	2					Socket	Connexion Elect	Elektroanschlus	소켓	Conexion Electr	
3	**VOE 14508585**	2					Block	Bloc	Block	블록	Bloque	
4	**SA 9415-11041**	2					Plug	Bouchon	Stopfen	플러그	Tapon	
5	**VOE 983245**	4					Hexagon screw	Vis a tête hexagonale	Sechskantschr.	육각 나사	Tornillo hexago	
6	**SA 9412-11040**	2					Connector	Raccord	Anschluss	커넥터	Union	
7	**SA 9452-14717**	2					Hose	Durit	Schlauch	호스	Tubo flexible	
8	**SA 9511-12018**	8			SS		O-ring	Joint Torique	O-Ring	오링	Junta torica	
9	**VOE 14880119**	2					Connector	Raccord	Anschluss	커넥터	Union	
10	**VOE 955921**	4					Spring Washer	Rondelle élastique	Federscheibe	스프링 와셔	Arandela flexible	

1	**8278862**	**Hidráulica de trabajo, cazo de almeja** **클램셸 배관** **Arbeitshydraullik, Greifer** **Hydraulique de travail, benne preneuse** **Working hydraulic, clamshell**	Catalogue id **20019**	Group **916**
2			Illustr. No **1007094**	Section **4000**
3			Issue **VOE 74H9920019**	Page **555**
4				
5				

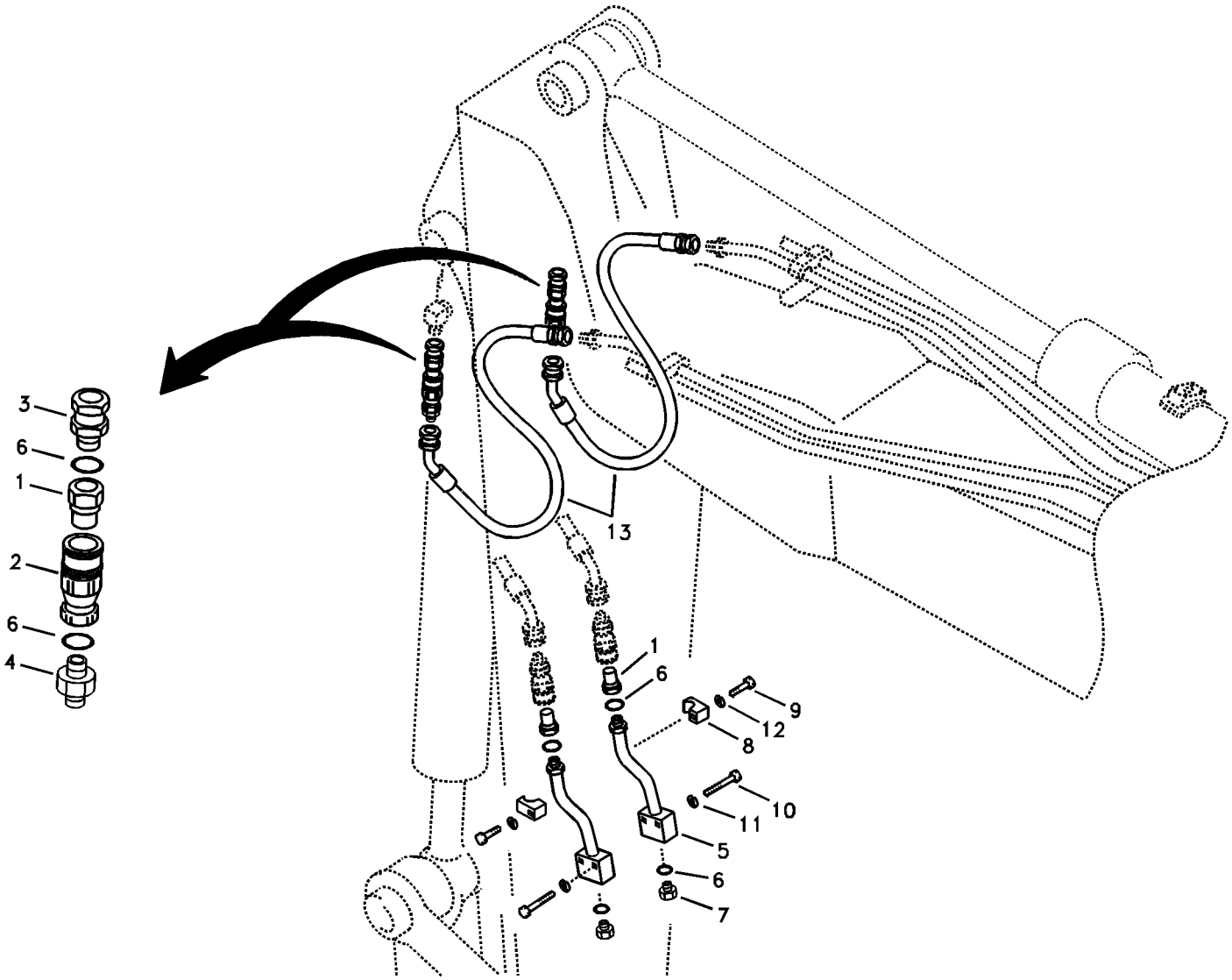
3
6
1
2
6
4
13
1
6
9
12
8
10
11
5
6
7

Fig.	Part No.	Quantity 1	2	3	PS	KIT	Description	Dénomination	Bezeichnung	품명	Denominación	Notes
1	**VOE 14508586**	4					Nipple	Raccord	Nippel	니플	Niple	
2	**VOE 14508588**	2					Socket	Connexion Elect	Elektroanschlus	소켓	Conexion Electr	
3	**VOE 14880119**	2					Connector	Raccord	Anschluss	커넥터	Union	
4	**SA 9412-11040**	2					Connector	Raccord	Anschluss	커넥터	Union	
5	**VOE 14522049**	2					Pipe	Canalisation	Rohrleitung	파이프	Canalizacion	
6	**SA 9511-12018**	8			SS		O-ring	Joint Torique	O-Ring	오링	Junta torica	
7	**SA 9415-11041**	2					Plug	Bouchon	Stopfen	플러그	Tapon	
8	**VOE 14881233**	2					Clamp	Collier serrage	Klemme	클램프	Abrazadera	
9	**SA 9011-21009**	2					Bolt	Boulon	Bolzen	볼트	Perno	
10	**VOE 983245**	4					Hexagon screw	Vis a tête hexagonale	Sechskantschr.	육각 나사	Tornillo hexago	
11	**VOE 955921**	4					Spring Washer	Rondelle élastique	Federscheibe	스프링 와셔	Arandela flexible	
12	**VOE 955922**	2					Spring Washer	Rondelle élastique	Federscheibe	스프링 와셔	Arandela flexible	
13	**SA 9452-14724**	2					Hose	Durit	Schlauch	호스	Tubo flexible	
	SA 9453-14720		2				Hose	Durit	Schlauch	호스	Tubo flexible	SER NO 30824-31106
	SA 9451-14727		2				Hose	Durit	Schlauch	호스	Tubo flexible	SER NO 31107-
	SA 9451-14719			2			Hose	Durit	Schlauch	호스	Tubo flexible	

1	**8279080 S/N 30824-**	**Hidráulica de trabajo, cazo de almeja** **클램셸 배관** **Arbeitshydraullik, Greifer** **Hydraulique de travail, benne preneuse** **Working hydraulic, clamshell**	Catalogue id **20019**	Group **916**
2	**8279081 S/N 30824-**		Illustr. No **1008354**	Section **4100**
3	**8279369 S/N 31161-**		Issue **VOE 74H9920019**	Page **557**
4				
5				

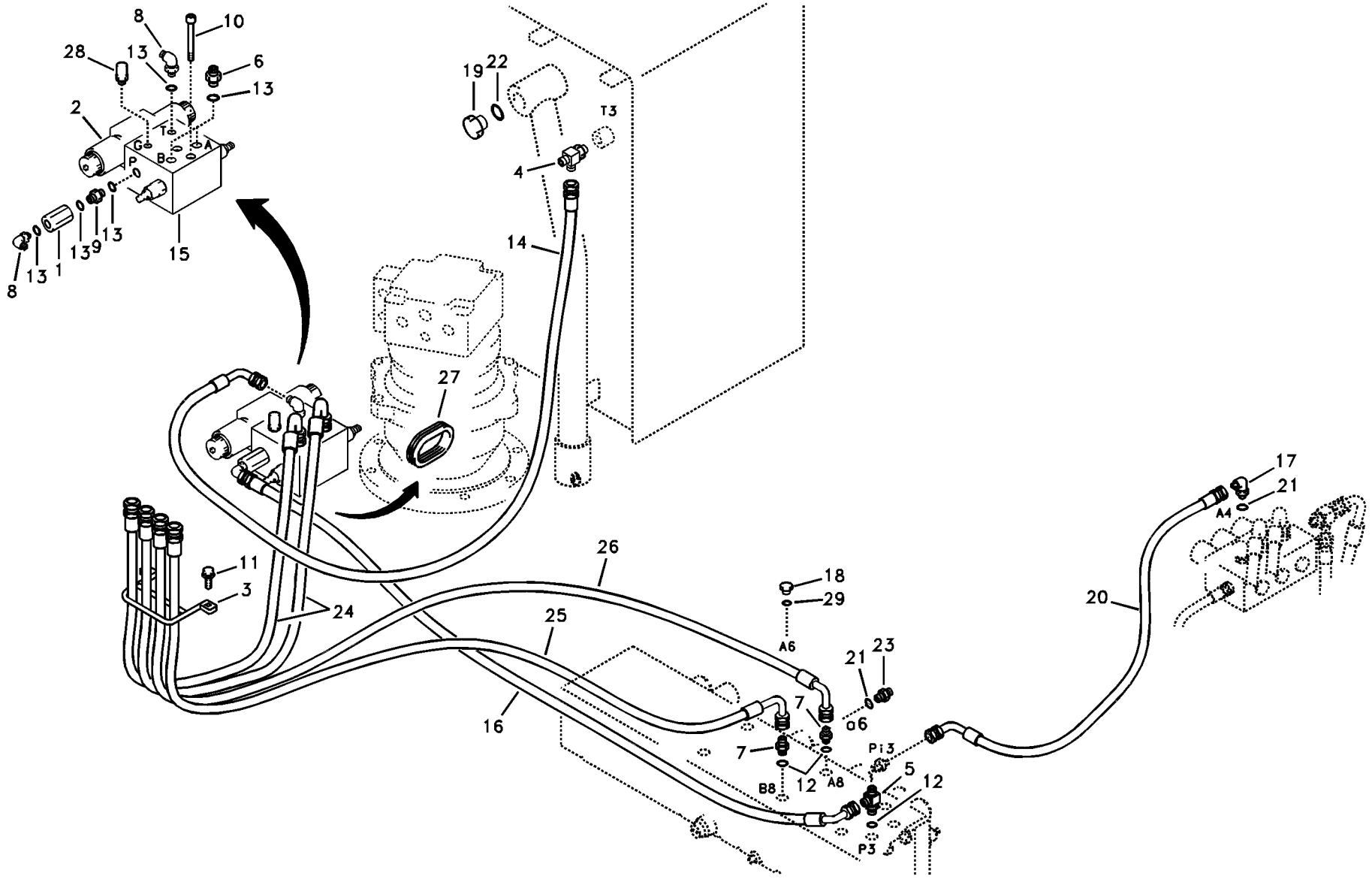

Volvo Construction Equipment

1008355

Fig.	Part No.	Quantity 1	2	3	PS	KIT	Description	Dénomination	Bezeichnung	품명	Denominación	Notes
1	**VOE 14531088**	1					Check valve	Valve antiretour	Rückschlagventil	체크 밸브	Válvula de retención	
2	**VOE 14518070**	1					Valve	Soupape	Ventil	밸브	Valvula	
3	**VOE 14521097**	1					Bracket	Console	Konsole	브라켓	Ménsula	
4	**SA 9411-92360**	1					Tee	Connexion en T	T-stuck	티	Acoplamiento T	
5	**SA 9411-96100**	1					Tee	Connexion en T	T-stuck	티	Acoplamiento T	
6	**SA 9412-11030**	2					Connector	Raccord	Anschluss	커넥터	Union	
7	**SA 9412-11150**	2					Connector	Raccord	Anschluss	커넥터	Union	
8	**SA 9413-11020**	2					Elbow	Coude	Winkelstueck	엘보	Tubo acodado	
9	**SA 9411-92280**	1					Connector	Raccord	Anschluss	커넥터	Union	
10	**VOE 984350**	2					Screw	Vis	Schraube	스크류	Tornillo	
11	**VOE 946441**	2					Flange screw	Vis à bride	Flanschschraube	플랜지 스크류	Torn embridado	
12	**SA 9511-12018**	3			SS		O-ring	Joint Torique	O-Ring	오링	Junta torica	
13	**SA 9511-12014**	6					O-ring	Joint Torique	O-Ring	오링	Junta torica	
14	**SA 9453-03231**	1					Hose	Durit	Schlauch	호스	Tubo flexible	
15	**VOE 14519833**	1					Valve	Soupape	Ventil	밸브	Valvula	
16	**SA 9452-03730**	1					Hose	Durit	Schlauch	호스	Tubo flexible	
17	**SA 9413-11010**	1					Elbow	Coude	Winkelstueck	엘보	Tubo acodado	
18	**SA 9415-11041**	1					Plug	Bouchon	Stopfen	플러그	Tapon	SER NO 30001-30666
19	**SA 9415-11061**	1					Plug	Bouchon	Stopfen	플러그	Tapon	
20	**SA 9453-02219**	1					Hose	Durit	Schlauch	호스	Tubo flexible	
21	**SA 9511-12011**	2					O-ring	Joint Torique	O-Ring	오링	Junta torica	
22	**SA 9511-12029**	1					O-ring	Joint Torique	O-Ring	오링	Junta torica	
23	**SA 9412-11020**	1					Connector	Raccord	Anschluss	커넥터	Union	
24	**VOE 14880305**	2					Hose	Durit	Schlauch	호스	Tubo flexible	
25	**VOE 14880306**	1					Hose	Durit	Schlauch	호스	Tubo flexible	
26	**VOE 14880307**	1					Hose	Durit	Schlauch	호스	Tubo flexible	
27	**VOE 14531002**	1					Grommet	Passe fil	Durchführung	그로메트	Aislador pasapanel	
28	**SA 1042-11650**	1					Quick Coupling	Accouple.rapide	Schnellkupplung	퀵 커플러	Acoplam Rapido	
29	**SA 9511-12018**	1			SS		O-ring	Joint Torique	O-Ring	오링	Junta torica	SER NO 30001-30666

2261) Kor S/n -34475 / Chn S/n -50129

1	**2261) 8278868**
2	
3	
4	
5	

Hidráulica de trabajo, sistema de cuchara de almeja en la parte superior
유압 배관 , 우드 그랩 ; 상부 본체측
Arbeitshydraulik, Greifersystem auf Oberteil
Commande hydraulique d'outil, système de préhension sur tourelle
Working hydraulics, grab system on upper

Catalogue id **20019**	Group **916**
Illustr. No **1008355**	Section **8000**
Issue **VOE 74H9920019**	Page **559**



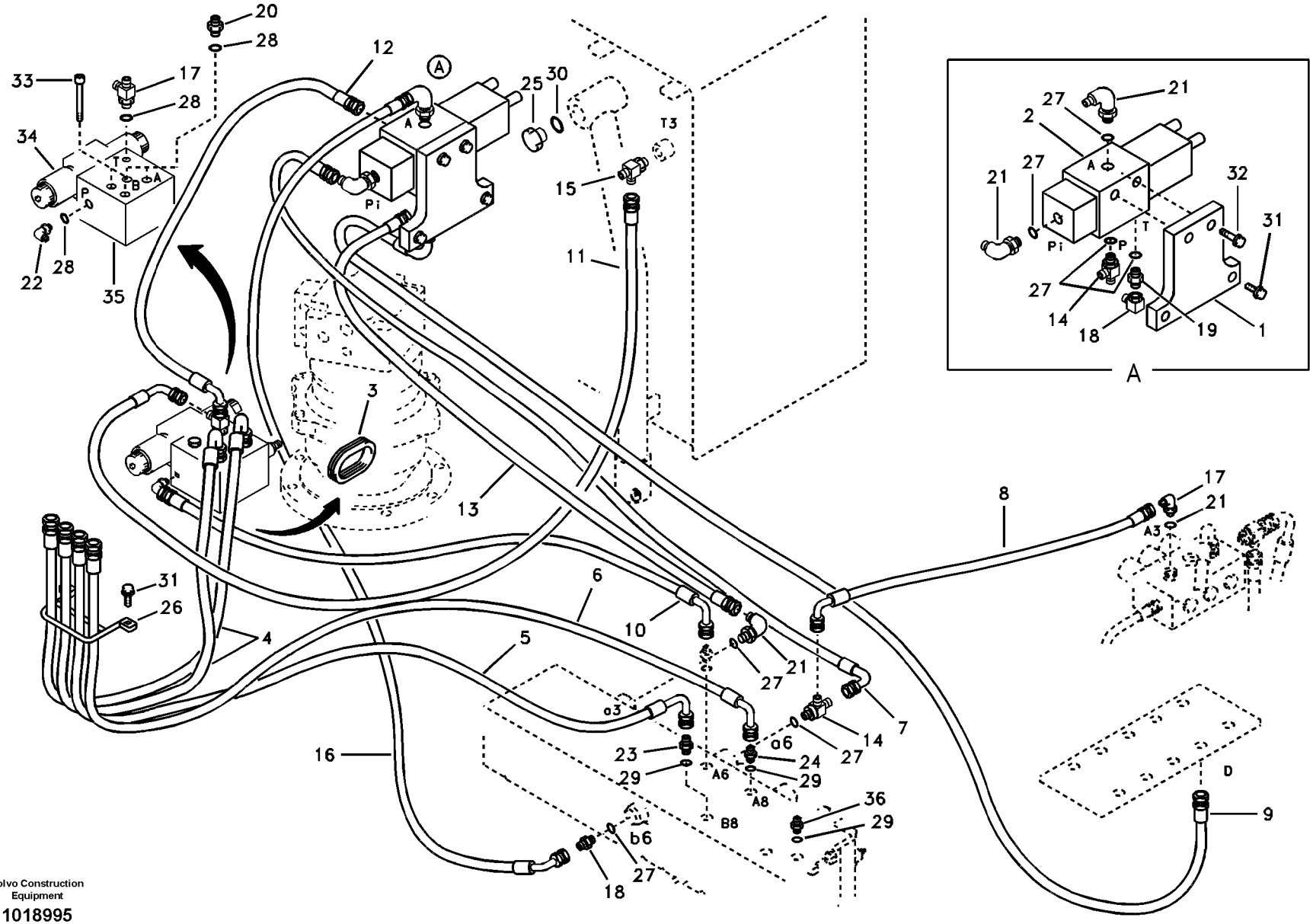

Volvo Construction Equipment

1018995

Fig.	Part No.	Quantity 1	2	3	PS	KIT	Description	Dénomination	Bezeichnung	품명	Denominación	Notes
1	**VOE 14536790**	1					Check valve	Valve antiretour	Rückschlagventil	체크 밸브	Válvula de retención	
2	**VOE 14531095**	1					Valve	Soupape	Ventil	밸브	Valvula	
3	**VOE 14531002**	1					Grommet	Passe fil	Durchführung	그로메트	Aislador pasapanel	
4	**VOE 14880305**	1					Hose	Durit	Schlauch	호스	Tubo flexible	
5	**VOE 14880306**	1					Hose	Durit	Schlauch	호스	Tubo flexible	
6	**VOE 14880307**	1					Hose	Durit	Schlauch	호스	Tubo flexible	
7	**SA 9453-02231**	1					Hose	Durit	Schlauch	호스	Tubo flexible	
8	**SA 9453-02220**	1					Hose	Durit	Schlauch	호스	Tubo flexible	
9	**SA 9453-02245**	1					Hose	Durit	Schlauch	호스	Tubo flexible	
10	**SA 9453-03727**	1					Hose	Durit	Schlauch	호스	Tubo flexible	
11	**SA 9453-03231**	1					Hose	Durit	Schlauch	호스	Tubo flexible	
12	**SA 9453-02213**	1					Hose	Durit	Schlauch	호스	Tubo flexible	
13	**SA 9451-02230**	1					Hose	Durit	Schlauch	호스	Tubo flexible	
14	**SA 9411-92350**	2					Tee	Connexion en T	T-stuck	티	Acoplamiento T	
15	**SA 9411-92360**	1					Tee	Connexion en T	T-stuck	티	Acoplamiento T	
16	**SA 9453-02237**	1					Hose	Durit	Schlauch	호스	Tubo flexible	
17	**VOE 14880126**	1					Tee	Connexion en T	T-stuck	티	Acoplamiento T	
18	**SA 9412-11020**	2					Connector	Raccord	Anschluss	커넥터	Union	SER NO 30001-30666
19	**SA 9411-95190**	1					Elbow	Coude	Winkelstueck	엘보	Tubo acodado	
20	**SA 9412-11030**	2					Connector	Raccord	Anschluss	커넥터	Union	
21	**SA 9413-11010**	4					Elbow	Coude	Winkelstueck	엘보	Tubo acodado	
22	**SA 9413-11020**	1					Elbow	Coude	Winkelstueck	엘보	Tubo acodado	
23	**SA 9412-11150**	1					Connector	Raccord	Anschluss	커넥터	Union	
24	**SA 9412-11153**	1					Connector	Raccord	Anschluss	커넥터	Union	
25	**SA 9415-11061**	1					Plug	Bouchon	Stopfen	플러그	Tapon	
26	**VOE 14521097**	1					Bracket	Console	Konsole	브라켓	Ménsula	
27	**VOE 983502**	8					O-ring	Joint Torique	O-Ring	오링	Junta torica	
28	**VOE 983505**	4					O-ring	Joint Torique	O-Ring	오링	Junta torica	
29	**VOE 990557**	3					O-ring	Joint Torique	O-Ring	오링	Junta torica	SER NO 30001-30666

2262) Kor S/n 34476- / Chn S/n 50130-

1	**2262) 8278868**
2	
3	
4	
5	

Hidráulica de trabajo, sistema de cuchara de almeja en la parte superior
유압 배관 , 우드 그랩 ; 상부 본체측
Arbeitshydraulik, Greifersystem auf Oberteil
Commande hydraulique d'outil, système de préhension sur tourelle
Working hydraulics, grab system on upper

Catalogue id **20019**	Group **916**
Illustr. No **1018995**	Section **8050**
Issue **VOE 74H9920019**	Page **561**



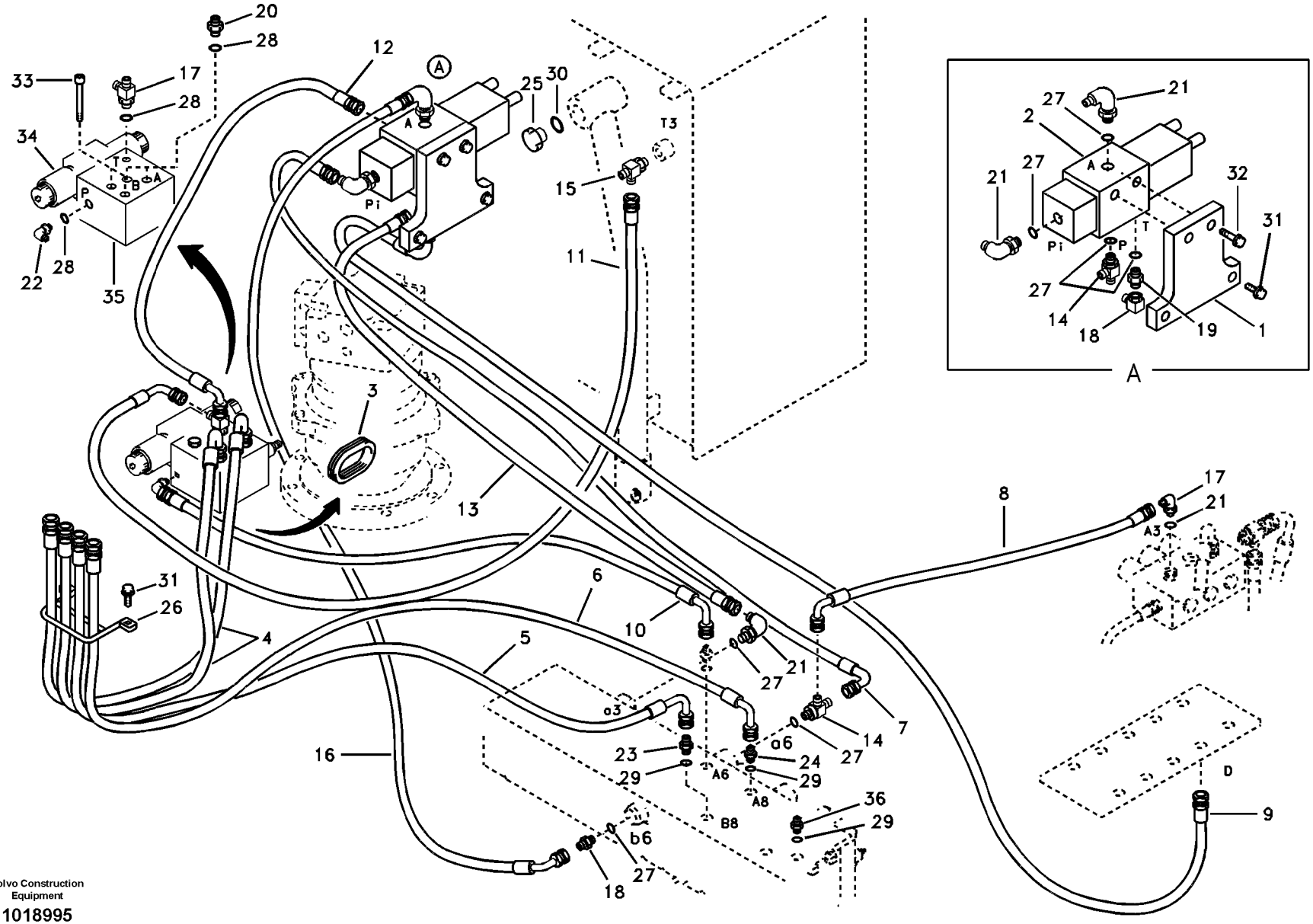

Volvo Construction Equipment

1018995

Fig.	Part No.	Quantity 1	2	3	PS	KIT	Description	Dénomination	Bezeichnung	품명	Denominación	Notes
30	**VOE 983527**	1					O-ring	Joint Torique	O-Ring	오링	Junta torica	
31	**VOE 946441**	4					Flange screw	Vis à bride	Flanschschraube	플랜지 스크류	Torn embridado	
32	**VOE 946440**	2					Flange screw	Vis à bride	Flanschschraube	플랜지 스크류	Torn embridado	
33	**VOE 984350**	2					Screw	Vis	Schraube	스크류	Tornillo	
34	**VOE 14518070**	1					Valve	Soupape	Ventil	밸브	Valvula	
35	**VOE 14540324**	1					Block	Bloc	Block	블록	Bloque	
36	**SA 9412-11045**	1					Connector	Raccord	Anschluss	커넥터	Union	

2262) Kor S/n 34476- / Chn S/n 50130-

1	**2262) 8278868**	**Hidráulica de trabajo, sistema de cuchara de almeja en la parte superior** 유압 배관 , 우드 그랩 ; 상부 본체측 **Arbeitshydraulik, Greifersystem auf Oberteil** **Commande hydraulique d'outil, système de préhension sur tourelle** **Working hydraulics, grab system on upper**	Catalogue id **20019**	Group **916**
2			Illustr. No **1018995**	Section **8050**
3				
4			Issue **VOE 74H9920019**	Page **563**
5				

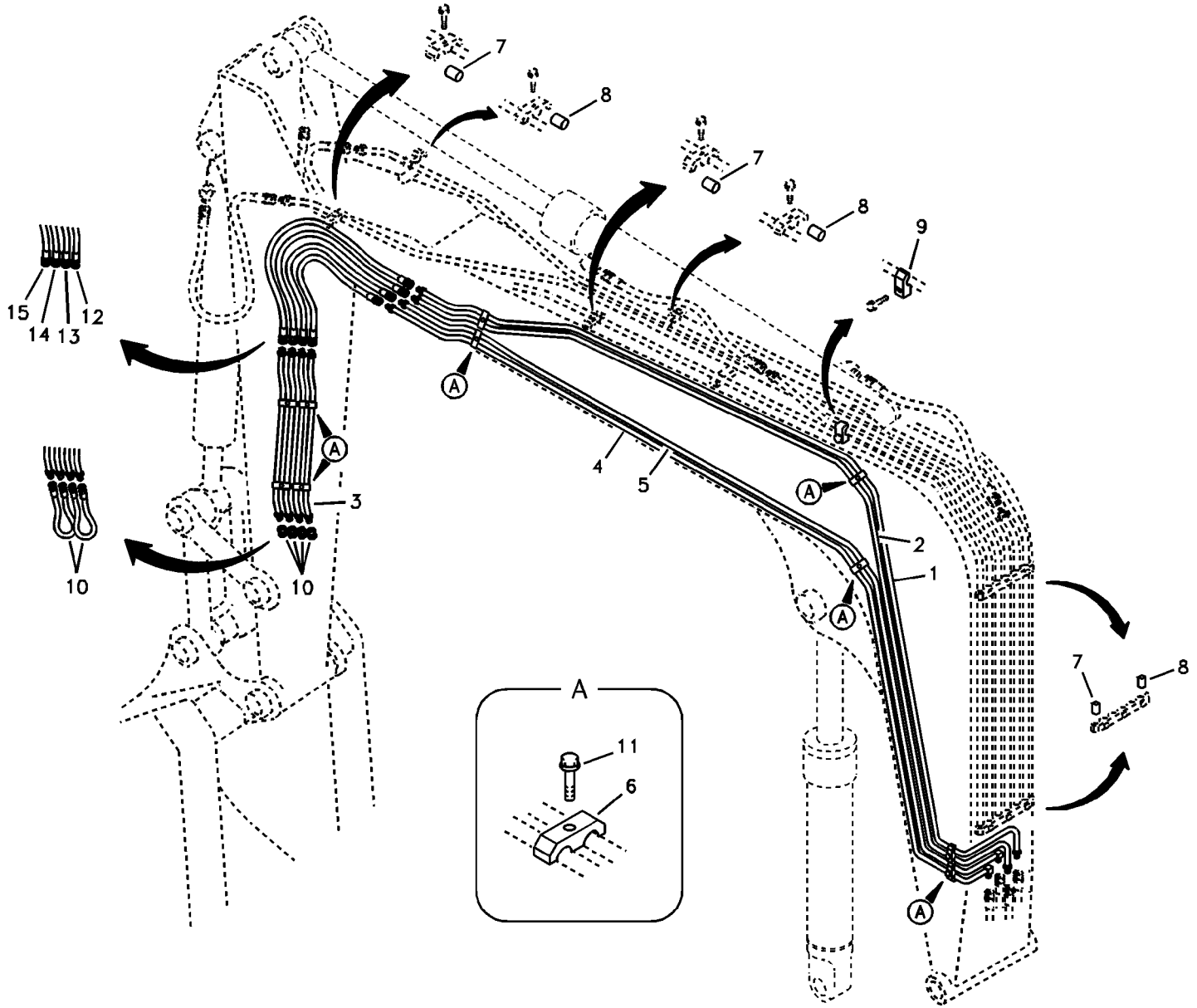
7
8
7
8
9
15
14
13
12
A
4
5
A
3
A
2
1
10
10
A
7
8
A
11
6

Fig.	Part No.	Quantity 1	2	3	PS	KIT	Description	Dénomination	Bezeichnung	품명	Denominación	Notes
1	**VOE 14518067**	1					Pipe	Canalisation	Rohrleitung	파이프	Canalizacion	
2	**VOE 14518068**	1					Pipe	Canalisation	Rohrleitung	파이프	Canalizacion	
3	**VOE 14518231**	4					Pipe	Canalisation	Rohrleitung	파이프	Canalizacion	
4	**VOE 14518232**	1					Pipe	Canalisation	Rohrleitung	파이프	Canalizacion	
5	**VOE 14518233**	1					Pipe	Canalisation	Rohrleitung	파이프	Canalizacion	
6	**VOE 14881202**	10					Clamp	Pince Serrage	Klemme	클램프	Abrazadera	
7	**VOE 14880625**	4					Bar	Barre	Stab	바	Barra	SER NO 30001-33627
	VOE 14880625	5					Bar	Barre	Stab	바	Barra	SER NO 33628-
8	**VOE 14880626**	3					Bar	Barre	Stab	바	Barra	SER NO 30001-33627
	VOE 14880626	4					Bar	Barre	Stab	바	Barra	SER NO 33628-
9	**VOE 14881233**	1					Clamp	Collier serrage	Klemme	클램프	Abrazadera	
10	**SA 9411-90410**	4					Plug	Bouchon	Stopfen	플러그	Tapon	SER NO 30001-30785
	SA 9451-03206	2					Hose	Durit	Schlauch	호스	Tubo flexible	SER NO 30786-
11	**VOE 965185**	10					Flange screw	Vis à bride	Flanschschraube	플랜지 스크류	Torn embridado	
12	**VOE 14880301**	1					Hose	Durit	Schlauch	호스	Tubo flexible	
13	**VOE 14880302**	1					Hose	Durit	Schlauch	호스	Tubo flexible	
14	**VOE 14880303**	1					Hose	Durit	Schlauch	호스	Tubo flexible	
15	**VOE 14880304**	1					Hose	Durit	Schlauch	호스	Tubo flexible	

1	**8278868**	**Hidráulica de trabajo, sistema de cuchara de almeja en el equipo de trabajo** 유압 배관 , 우드 그랩 ; 작업장치측 **Arbeitshydraulik, Greifersystem auf Arbeitsausstattung** **Commande hydraulique d'outil, système de préhension sur équipement de travail** **Working hydraulics, grab system on work equipment**	Catalogue id **20019**	Group **916**
2			Illustr. No **1017459**	Section **8100**
3				
4			Issue **VOE 74H9920019**	Page **565**
5				

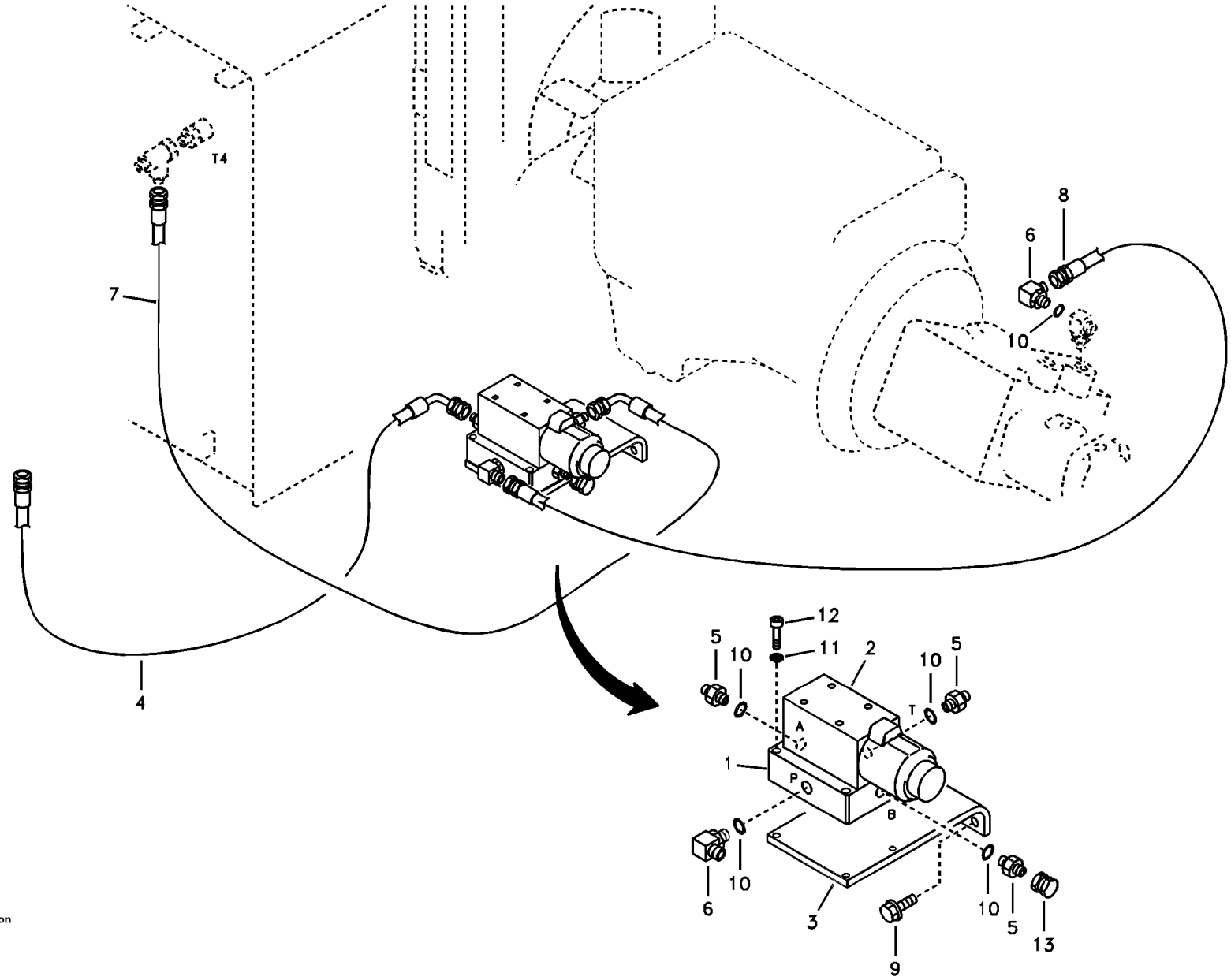
T4
7
4
8
6
10
12
11
2
5
10
5
10
T
A
1
P
B
6
10
3
9
10
5
13

Fig.	Part No.	Quantity 1	2	3	PS	KIT	Description	Dénomination	Bezeichnung	품명	Denominación	Notes
1	**SA 1040-65471**	1	1				Block	Bloc	Block	블록	Bloque	
2	**VOE 14508609**	1	1				Solenoid valve	Vanne electrom.	Magnetventil	솔레노이드 밸브	Electrovalvula	
3	**VOE 14512606**	1	1				Bracket	Support	Halter	브래킷	Soporte	
4	**VOE 14880169**	1	1				Hose	Flexible	Schlauch	호스	Manguera	
5	**SA 9412-11020**	3	3				Connector	Raccord	Anschluss	커넥터	Union	
6	**SA 9413-11010**	2	2				Elbow	Coude	Winkelstueck	엘보	Tubo acodado	
7	**SA 9453-02223**	1	1				Hose	Durit	Schlauch	호스	Tubo flexible	
8	**SA 9453-02734**	1					Hose	Durit	Schlauch	호스	Tubo flexible	SER NO 30001-33292 SER NO 50001-50064
	SA 9451-02735	1					Hose	Durit	Schlauch	호스	Tubo flexible	
	SA 9453-02734		1				Hose	Durit	Schlauch	호스	Tubo flexible	SER NO 30824-33292 SER NO 50001-50064
	SA 9451-02735		1				Hose	Durit	Schlauch	호스	Tubo flexible	SER NO 33293- SER NO 50065-
9	**VOE 946441**	2	2				Flange screw	Vis à bride	Flanschschraube	플랜지 스크류	Torn embridado	
10	**SA 9511-12011**	5	5				O-ring	Joint Torique	O-Ring	오링	Junta torica	
11	**VOE 955919**	4	4				Spring Washer	Rondelle élastique	Federscheibe	스프링 와셔	Arandela flexible	
12	**VOE 969591**	4	4				6-pt skt screw	Vis creuse de 6	Hohlschraube	6 포인트 소켓 스크류	Racor 6-dientes	
13	**SA 9411-93390**	1	1				Plug	Bouchon	Stopfen	플러그	Tapon	

1	**8278869**
2	**8279083 S/N 30824-**
3	
4	
5	

Hidrálico enganche rápido en la superior. Acción simple
퀵 핏 배관 , 한방향 작동형 ; 본체 측
Schnellwechslerhydraulik auf obere. Einfach wirkend
Hydraulique de raccord rapide sur la supérier. D'action simple
Quikfit hydraulic on upper. Single - acting

Catalogue id **20019**	Group **924**
Illustr. No **1018985**	Section **200**
Issue **VOE 74H9920019**	Page **567**

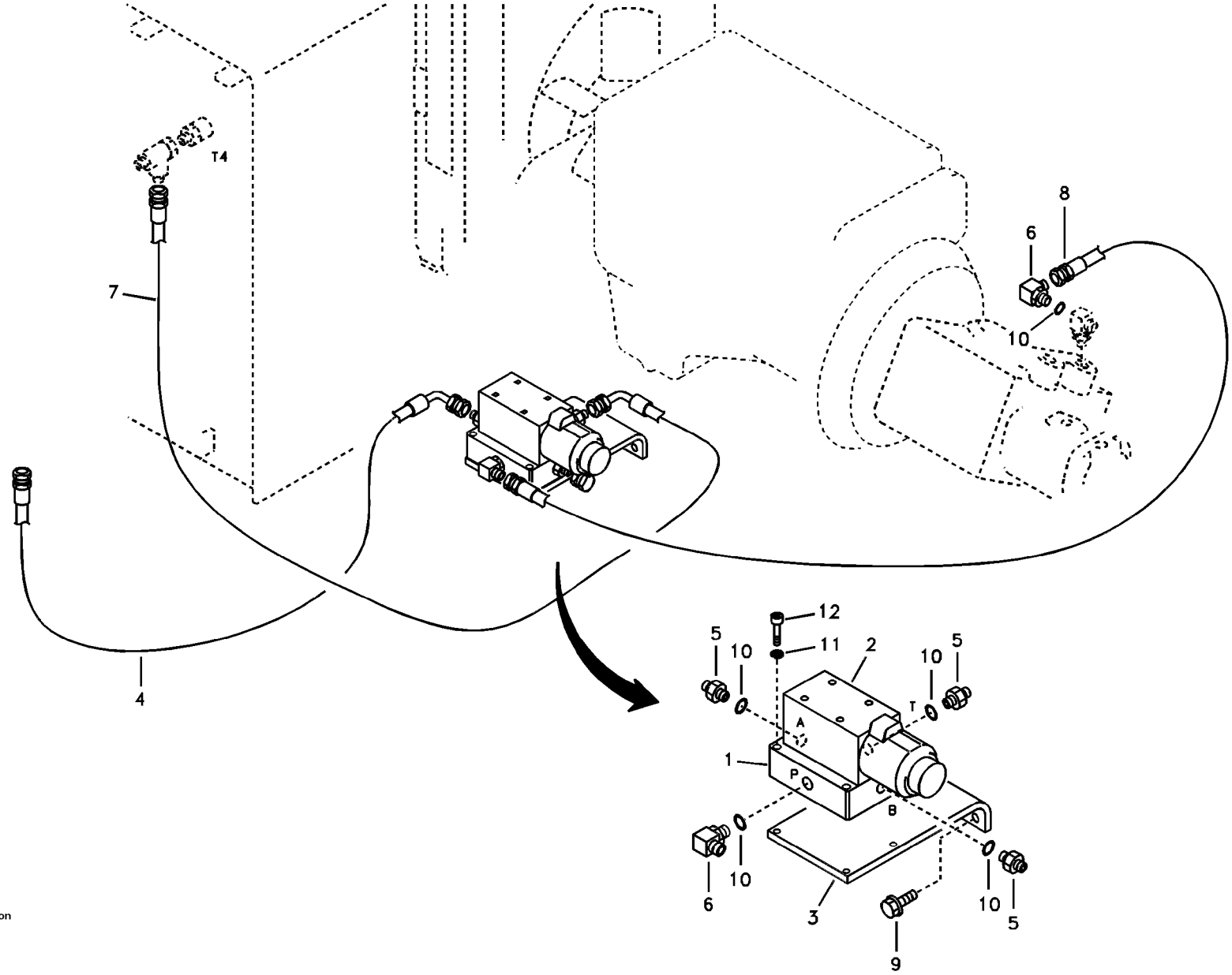
T4
7
4
8
6
10
12
11
2
5
10
5
10
T
A
1
P
B
6
10
3
9
10
5

Fig.	Part No.	Quantity 1	2	3	PS	KIT	Description	Dénomination	Bezeichnung	품명	Denominación	Notes
1	**SA 1040-65471**	1	1				Block	Bloc	Block	블록	Bloque	
2	**VOE 14508609**	1	1				Solenoid valve	Vanne electrom.	Magnetventil	솔레노이드 밸브	Electrovalvula	
3	**VOE 14512606**	1	1				Bracket	Support	Halter	브래킷	Soporte	
4	**VOE 14880169**	2	2				Hose	Flexible	Schlauch	호스	Manguera	
5	**SA 9412-11020**	3	3				Connector	Raccord	Anschluss	커넥터	Union	
6	**SA 9413-11010**	2	2				Elbow	Coude	Winkelstueck	엘보	Tubo acodado	
7	**SA 9453-02223**	1	1				Hose	Durit	Schlauch	호스	Tubo flexible	
8	**SA 9453-02434**	1					Hose	Durit	Schlauch	호스	Tubo flexible	SER NO 30001-33292 SER NO 50001-50064
	SA 9451-02735	1					Hose	Durit	Schlauch	호스	Tubo flexible	SER NO 33293- SER NO 50065-
	SA 9453-02434		1				Hose	Durit	Schlauch	호스	Tubo flexible	SER NO 30824-33292 SER NO 50001-50064
	SA 9451-02735		1				Hose	Durit	Schlauch	호스	Tubo flexible	SER NO 33293- SER NO 50065-
9	**VOE 946441**	2	2				Flange screw	Vis à bride	Flanschschraube	플랜지 스크류	Torn embridado	
10	**SA 9511-12011**	5	5				O-ring	Joint Torique	O-Ring	오링	Junta torica	
11	**VOE 955919**	4	4				Spring Washer	Rondelle élastique	Federscheibe	스프링 와셔	Arandela flexible	
12	**VOE 969591**	4	4				6-pt skt screw	Vis creuse de 6	Hohlschraube	6 포인트 소켓 스크류	Racor 6-dientes	

1	**8278872**
2	**8279084 S/N 30824-**
3	
4	
5	

Hidrálico enganche rápido en la superior, de doble efecto
퀵 핏 배관 , 양방향 작동형 ; 본체 측
Schnellwechslerhydraulik auf obere. Doppelt wirkend
Hydraulique de raccord rapide sur la supérier, à double effet
Quikfit hydraulic on upper. Double - acting

Catalogue id **20019**	Group **924**
Illustr. No **1018986**	Section **250**
Issue **VOE 74H9920019**	Page **569**

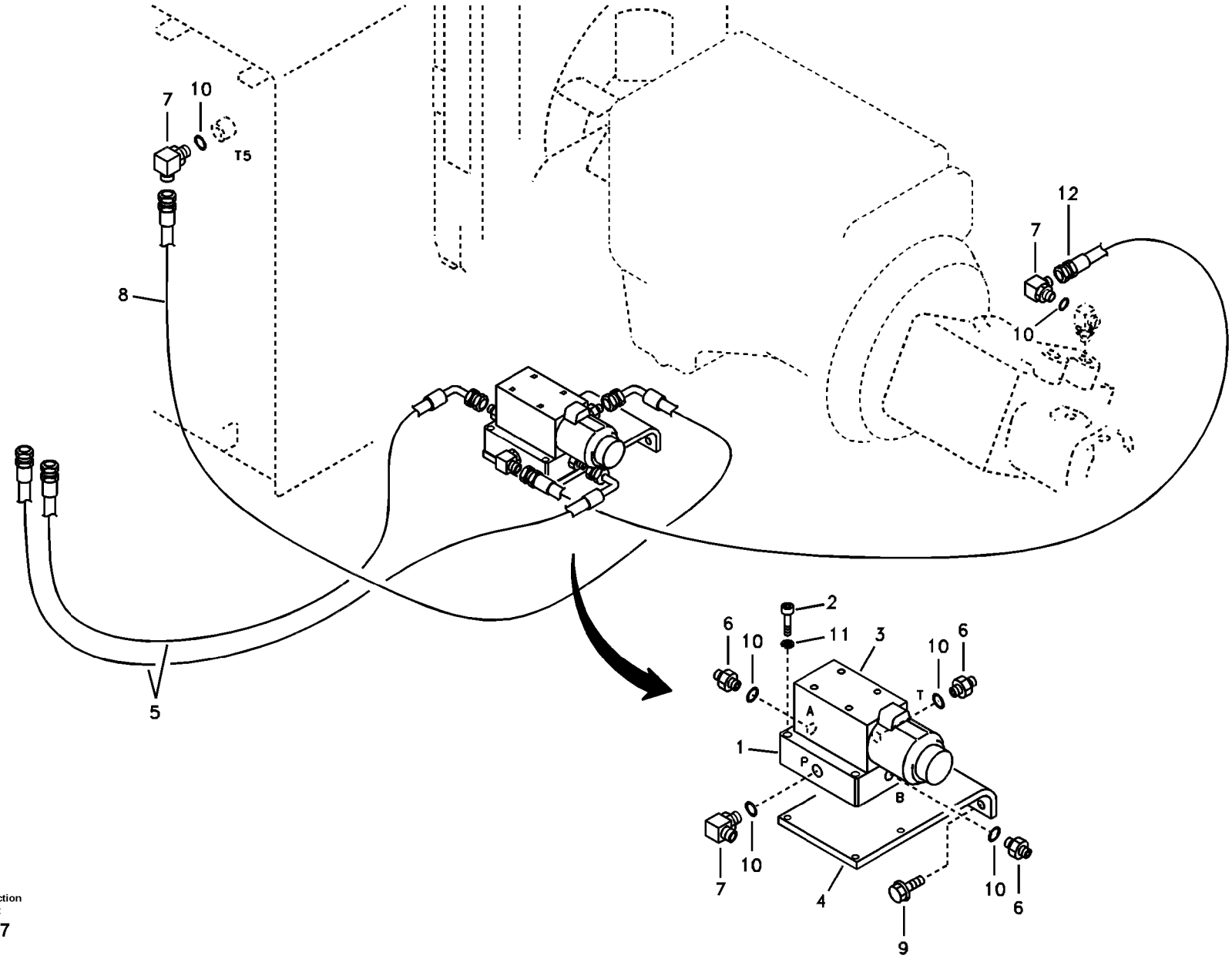

Volvo Construction Equipment

1018987

Fig.	Part No.	Quantity 1	2	3	PS	KIT	Description	Dénomination	Bezeichnung	품명	Denominación	Notes
1	**SA 1040-65471**	1	1				Block	Bloc	Block	블록	Bloque	
2	**VOE 969591**	4	4				6-pt skt screw	Vis creuse de 6	Hohlschraube	6 포인트 소켓 스크류	Racor 6-dientes	
3	**VOE 14508609**	1	1				Solenoid valve	Vanne electrom.	Magnetventil	솔레노이드 밸브	Electrovalvula	
4	**VOE 14512606**	1	1				Bracket	Support	Halter	브래킷	Soporte	
5	**VOE 14880169**	2	2				Hose	Flexible	Schlauch	호스	Manguera	
6	**SA 9412-11020**	3	3				Connector	Raccord	Anschluss	커넥터	Union	
7	**SA 9413-11010**	3	3				Elbow	Coude	Winkelstueck	엘보	Tubo acodado	
8	**SA 9453-02223**	1	1				Hose	Durit	Schlauch	호스	Tubo flexible	
9	**VOE 946441**	2	2				Flange screw	Vis à bride	Flanschschraube	플랜지 스크류	Torn embridado	
10	**SA 9511-12011**	6	6				O-ring	Joint Torique	O-Ring	오링	Junta torica	
11	**VOE 955919**	4	4				Spring Washer	Rondelle élastique	Federscheibe	스프링 와셔	Arandela flexible	
12	**SA 9453-02734**	1	1				Hose	Durit	Schlauch	호스	Tubo flexible	SER NO 30001-33292 SER NO 50001-50064
	SA 9451-02735	1	1				Hose	Durit	Schlauch	호스	Tubo flexible	SER NO 33293- SER NO 50065-

1	**8278870**
2	**8278871**
3	
4	
5	

Hidrálico enganche rápido en la superior, de doble efecto
퀵 핏 배관 , 양방향 작동형 ; 본체 측
Schnellwechslerhydraulik auf obere. Doppelt wirkend
Hydraulique de raccord rapide sur la supérier, à double effet
Quikfit hydraulic on upper. Double - acting

Catalogue id **20019**	Group **924**
Illustr. No **1018987**	Section **300**
Issue **VOE 74H9920019**	Page **571**

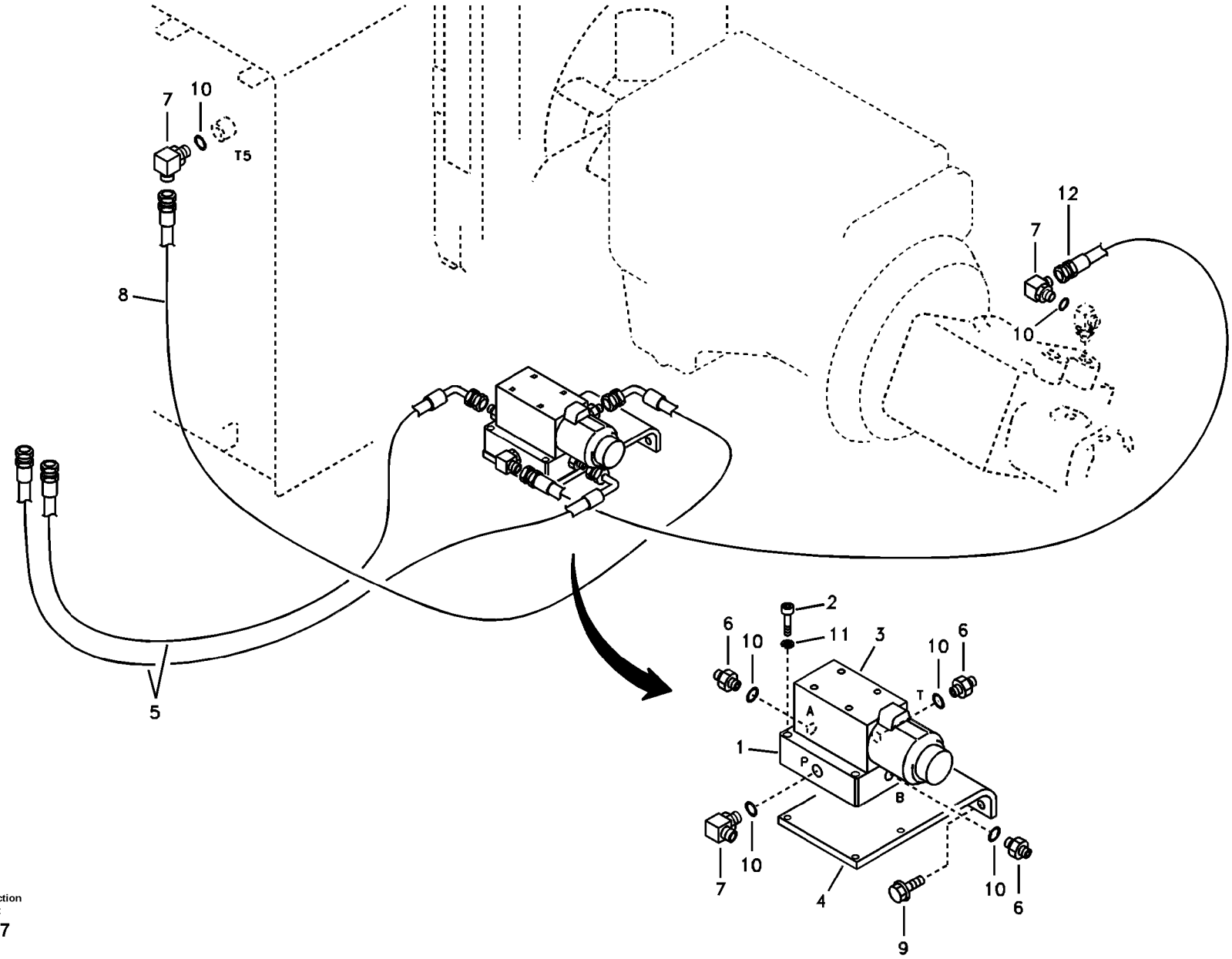

Volvo Construction Equipment

1018987

Fig.	Part No.	Quantity 1	2	3	PS	KIT	Description	Dénomination	Bezeichnung	품명	Denominación	Notes
1	**SA 1040-65471**	1					Block	Bloc	Block	블록	Bloque	
2	**VOE 969591**	4					6-pt skt screw	Vis creuse de 6	Hohlschraube	6 포인트 소켓 스크류	Racor 6-dientes	
3	**VOE 14508609**	1					Solenoid valve	Vanne electrom.	Magnetventil	솔레노이드 밸브	Electrovalvula	
4	**VOE 14512606**	1					Bracket	Support	Halter	브래킷	Soporte	
5	**VOE 14880169**	2					Hose	Flexible	Schlauch	호스	Manguera	
6	**SA 9412-11020**	3					Connector	Raccord	Anschluss	커넥터	Union	
7	**SA 9413-11010**	3					Elbow	Coude	Winkelstueck	엘보	Tubo acodado	
8	**SA 9453-02223**	1					Hose	Durit	Schlauch	호스	Tubo flexible	
9	**VOE 946441**	2					Flange screw	Vis à bride	Flanschschraube	플랜지 스크류	Torn embridado	
10	**SA 9511-12011**	6					O-ring	Joint Torique	O-Ring	오링	Junta torica	
11	**VOE 955919**	4					Spring Washer	Rondelle élastique	Federscheibe	스프링 와셔	Arandela flexible	
12	**SA 9453-02734**	1					Hose	Durit	Schlauch	호스	Tubo flexible	SER NO 50001-50064
	SA 9451-02735	1					Hose	Durit	Schlauch	호스	Tubo flexible	SER NO 50065-

1	**8278871**	**Hidrálico enganche rápido en la superior, de doble efecto** 퀵 핏 배관 , 양방향 작동형 ; 본체 측 **Schnellwechslerhydraulik auf obere. Doppelt wirkend** **Hydraulique de raccord rapide sur la supérier, à double effet** **Quikfit hydraulic on upper. Double - acting**	Catalogue id **20019**	Group **924**
2			Illustr. No **1018987**	Section **310**
3			Issue **VOE 74H9920019**	Page **573**
4				
5		**FOR CHINA**		

VOLVO

EC55B

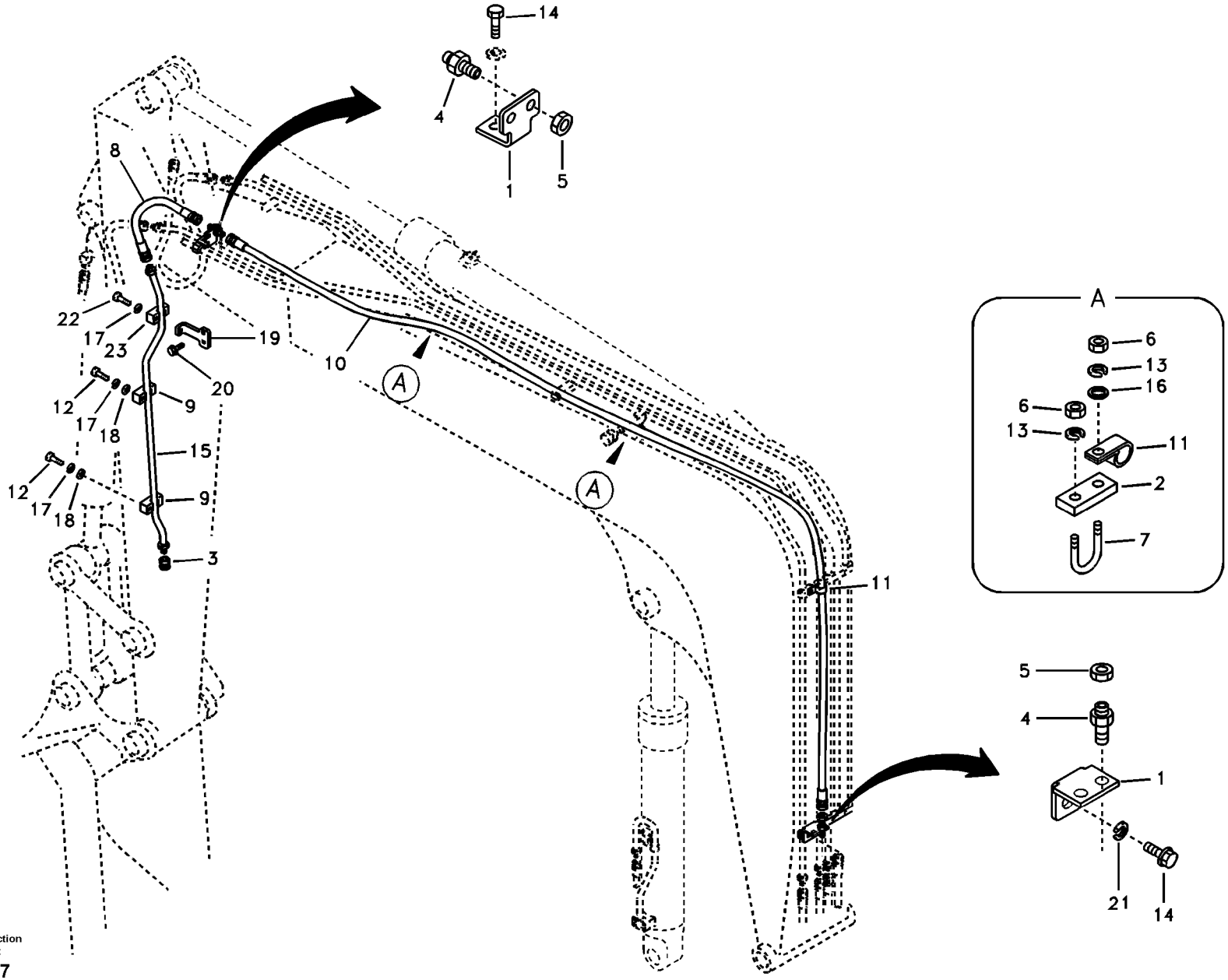

Volvo Construction Equipment

1017487

Fig.	Part No.	Quantity 1	2	3	PS	KIT	Description	Dénomination	Bezeichnung	품명	Denominación	Notes
1	**VOE 14508581**	1			SS		Bracket	Ferrure-support	Tragstütze	브라켓	Hierro Apoyo	SER NO 30001-30666
	VOE 14522105	1					Bracket	Console	Konsole	브라켓	Ménsula	SER NO 30667-33627
	VOE 14522338	1					Bracket	Console	Konsole	브라켓	Ménsula	SER NO 33628-
	VOE 14522105		1				Bracket	Console	Konsole	브라켓	Ménsula	SER NO 30824-33627
	VOE 14522338		1				Bracket	Console	Konsole	브라켓	Ménsula	SER NO 33628-
2	**VOE 14510564**	3					Plate	Plaque	Platte	플레이트	Placa	SER NO 30001-33627
	VOE 14519173	2					Plate	Plaque	Platte	플레이트	Placa	SER NO 33628-
	VOE 14510564		3				Plate	Plaque	Platte	플레이트	Placa	SER NO 30824-33627
	VOE 14519173		2				Plate	Plaque	Platte	플레이트	Placa	SER NO 33628-
3	**SA 9411-93390**	1	1				Plug	Bouchon	Stopfen	플러그	Tapon	
4	**SA 9416-11091**	2	2				Connector	Raccord	Anschluss	커넥터	Union	
5	**SA 1040-80490**	2	2				Nut	Ecrou	Mutter	너트	Tuerca	
6	**SA 9111-31000**	6					Nut	Ecrou	Mutter	너트	Tuerca	SER NO 30001-33627
	SA 9111-31000	4					Nut	Ecrou	Mutter	너트	Tuerca	SER NO 33628-
	SA 9111-31000		6				Nut	Ecrou	Mutter	너트	Tuerca	SER NO 30824-33627
	SA 9111-31000		4				Nut	Ecrou	Mutter	너트	Tuerca	SER NO 33628-
7	**VOE 14880629**	3					U-bolt	Etrier Ressort	Federbride	유 볼트	Abrazadera-u	SER NO 30001-33627
	VOE 14880628	2					U-bolt	Etrier Ressort	Federbride	유 볼트	Abrazadera-u	SER NO 33628-
	VOE 14880629		3				U-bolt	Etrier Ressort	Federbride	유 볼트	Abrazadera-u	SER NO 30824-33627
	VOE 14880628		2				U-bolt	Etrier Ressort	Federbride	유 볼트	Abrazadera-u	SER NO 33628-
8	**VOE 14880120**	1					Hose	Durit	Schlauch	호스	Tubo flexible	SER NO 30001-30666
	VOE 14880410	1					Hose	Durit	Schlauch	호스	Tubo flexible	SER NO 30667-
	VOE 14880410		1				Hose	Durit	Schlauch	호스	Tubo flexible	
9	**VOE 14881229**	2					Clamp	Collier serrage	Klemme	클램프	Abrazadera	SER NO 30001-33627
	VOE 14880477	2					Clamp	Pince Serrage	Klemme	클램프	Abrazadera	SER NO 33628-
	VOE 14881229		2				Clamp	Collier serrage	Klemme	클램프	Abrazadera	SER NO 30824-33627
	VOE 14880477		2				Clamp	Pince Serrage	Klemme	클램프	Abrazadera	SER NO 33628-
10	**SA 9451-02761**	1					Hose	Durit	Schlauch	호스	Tubo flexible	SER NO 30001-30666
	SA 9451-02760	1					Hose	Durit	Schlauch	호스	Tubo flexible	SER NO 30667-
	SA 9451-02760		1				Hose	Durit	Schlauch	호스	Tubo flexible	

1	**8278869**
2	**8279083 S/N 30824-**
3	
4	
5	

Hidrálico enganche rápido sobre porte-outil. Acción simple
퀵 핏 배관 , 한방향 작동형 ; 작업장치 측
Schnellwechslerhydraulik auf Geräteträger. Einfach wirkend
Hydraulique de raccord rapide sur soporte de implementos, d'action simple
Quikfit hydraulic on attachment. Single - acting

Catalogue id **20019**	Group **924**
Illustr. No **1017487**	Section **400**
Issue **VOE 74H9920019**	Page **575**

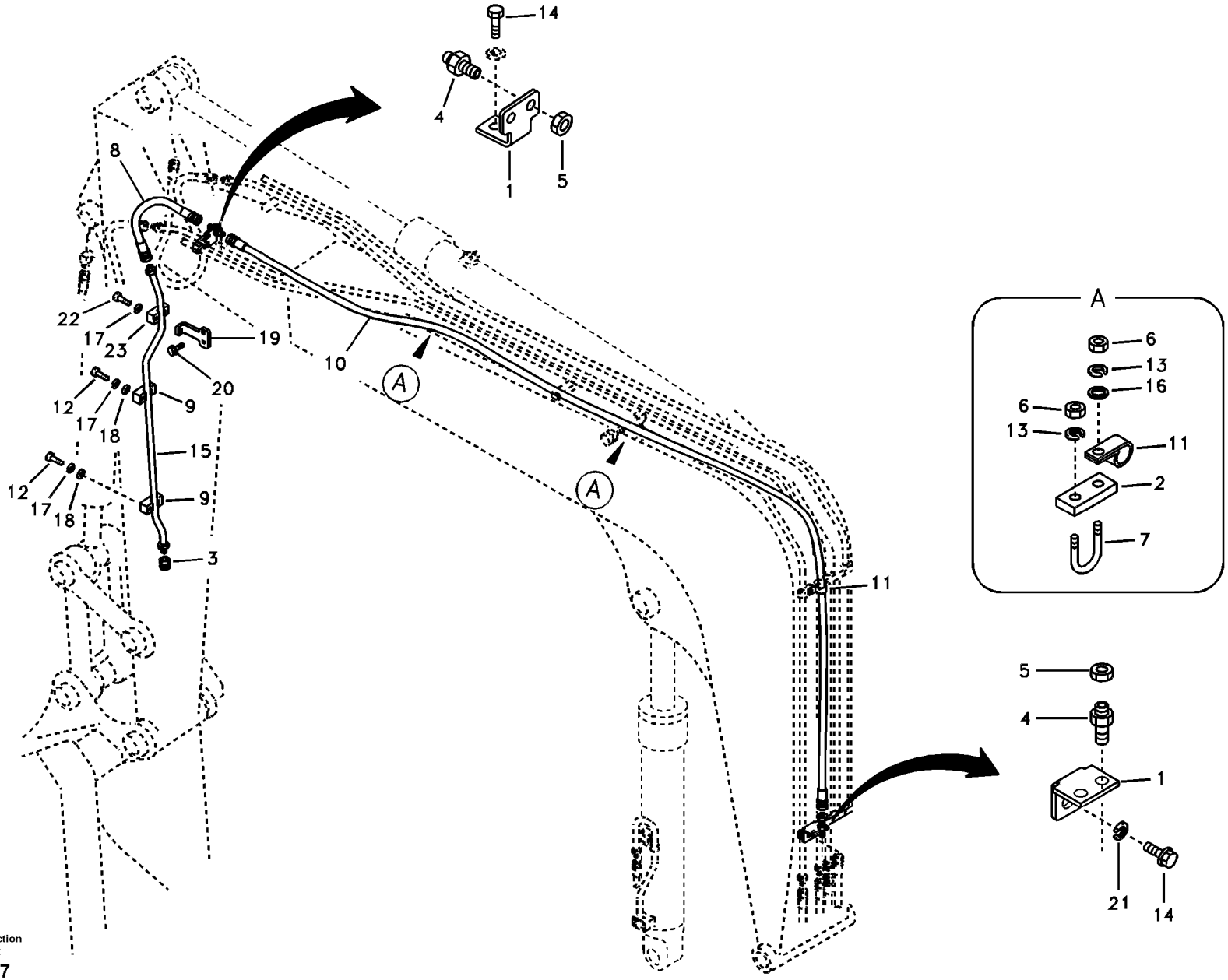

Volvo Construction Equipment

1017487

Fig.	Part No.	Quantity 1	2	3	PS	KIT	Description	Dénomination	Bezeichnung	품명	Denominación	Notes
11	**VOE 14500293**	4					Clip	Clip	Klemme	클립	Clip	SER NO 30001-33627
	VOE 14500293	3					Clip	Clip	Klemme	클립	Clip	SER NO 33628-
	VOE 14500293		4				Clip	Clip	Klemme	클립	Clip	SER NO 30824-33627
	VOE 14500293		3				Clip	Clip	Klemme	클립	Clip	SER NO 33628-
12	**VOE 983244**	3					Hexagon screw	Vis a tête hexagonale	Sechskantschr.	육각 나사	Tornillo hexago	SER NO 30001-33627
	VOE 983242	2					Screw	Vis	Schraube	스크류	Tornillo	SER NO 33628-
	VOE 983244		3				Hexagon screw	Vis a tête hexagonale	Sechskantschr.	육각 나사	Tornillo hexago	SER NO 30824-33627
	VOE 983242		2				Screw	Vis	Schraube	스크류	Tornillo	SER NO 33628-
13	**VOE 955922**	6					Spring Washer	Rondelle élastique	Federscheibe	스프링 와셔	Arandela flexible	SER NO 30001-33627
	VOE 955922	4					Spring Washer	Rondelle élastique	Federscheibe	스프링 와셔	Arandela flexible	SER NO 33628-
	VOE 955922		6				Spring Washer	Rondelle élastique	Federscheibe	스프링 와셔	Arandela flexible	SER NO 30824-33627
	VOE 955922		4				Spring Washer	Rondelle élastique	Federscheibe	스프링 와셔	Arandela flexible	SER NO 33628-
14	**VOE 978939**	1			SS		Hexagon screw	Vis a tête hexagonale	Sechskantschr.	육각 나사	Tornillo hexago	SER NO 30001-33627
	VOE 965187	1					Flange screw	Vis a bride	Flanschschraube	플랜지 스크류	Torn embridado	SER NO 33628-
	VOE 978939		1		SS		Hexagon screw	Vis a tête hexagonale	Sechskantschr.	육각 나사	Tornillo hexago	SER NO 30824-33627
	VOE 965187		1				Flange screw	Vis a bride	Flanschschraube	플랜지 스크류	Torn embridado	SER NO 33628-
15	**VOE 14517330**	1					Pipe	Canalisation	Rohrleitung	파이프	Canalizacion	SER NO 30001-33627
	VOE 14532566	1					Pipe	Canalisation	Rohrleitung	파이프	Canalizacion	SER NO 33628-
	VOE 14523245		1				Pipe	Canalisation	Rohrleitung	파이프	Canalizacion	SER NO 30824-33627
	VOE 14533507		1				Pipe	Canalisation	Rohrleitung	파이프	Canalizacion	SER NO 33628-
16	**SA 9211-10000**	3					Washer	Rondelle	Scheibe	와셔	Arandela	SER NO 30001-33627
	SA 9211-10000	2					Washer	Rondelle	Scheibe	와셔	Arandela	SER NO 33628-
	SA 9211-10000		3				Washer	Rondelle	Scheibe	와셔	Arandela	SER NO 30824-33627
	SA 9211-10000		2				Washer	Rondelle	Scheibe	와셔	Arandela	SER NO 33628-
17	**VOE 955921**	3	3				Spring Washer	Rondelle élastique	Federscheibe	스프링 와셔	Arandela flexible	
18	**SA 9211-08000**	2					Washer	Rondelle	Scheibe	와셔	Arandela	SER NO 30001-33627
	SA 9211-08000		2				Washer	Rondelle	Scheibe	와셔	Arandela	SER NO 30824-33627
19	**VOE 14522889**	1					Bracket	Console	Konsole	브라켓	Ménsula	SER NO 30824-33627
	VOE 14532523	1					Bracket	Console	Konsole	브라켓	Ménsula	SER NO 33628-
	VOE 14522889		1				Bracket	Console	Konsole	브라켓	Ménsula	SER NO 30824-33627

1	**8278869**
2	**8279083 S/N 30824-**
3	
4	
5	

Hidrálico enganche rápido sobre porte-outil. Acción simple
퀵 핏 배관 , 한방향 작동형 ; 작업장치 측
Schnellwechslerhydraulik auf Geräteträger. Einfach wirkend
Hydraulique de raccord rapide sur soporte de implementos, d'action simple
Quikfit hydraulic on attachment. Single - acting

Catalogue id **20019**	Group **924**
Illustr. No **1017487**	Section **400**
Issue **VOE 74H9920019**	Page **577**

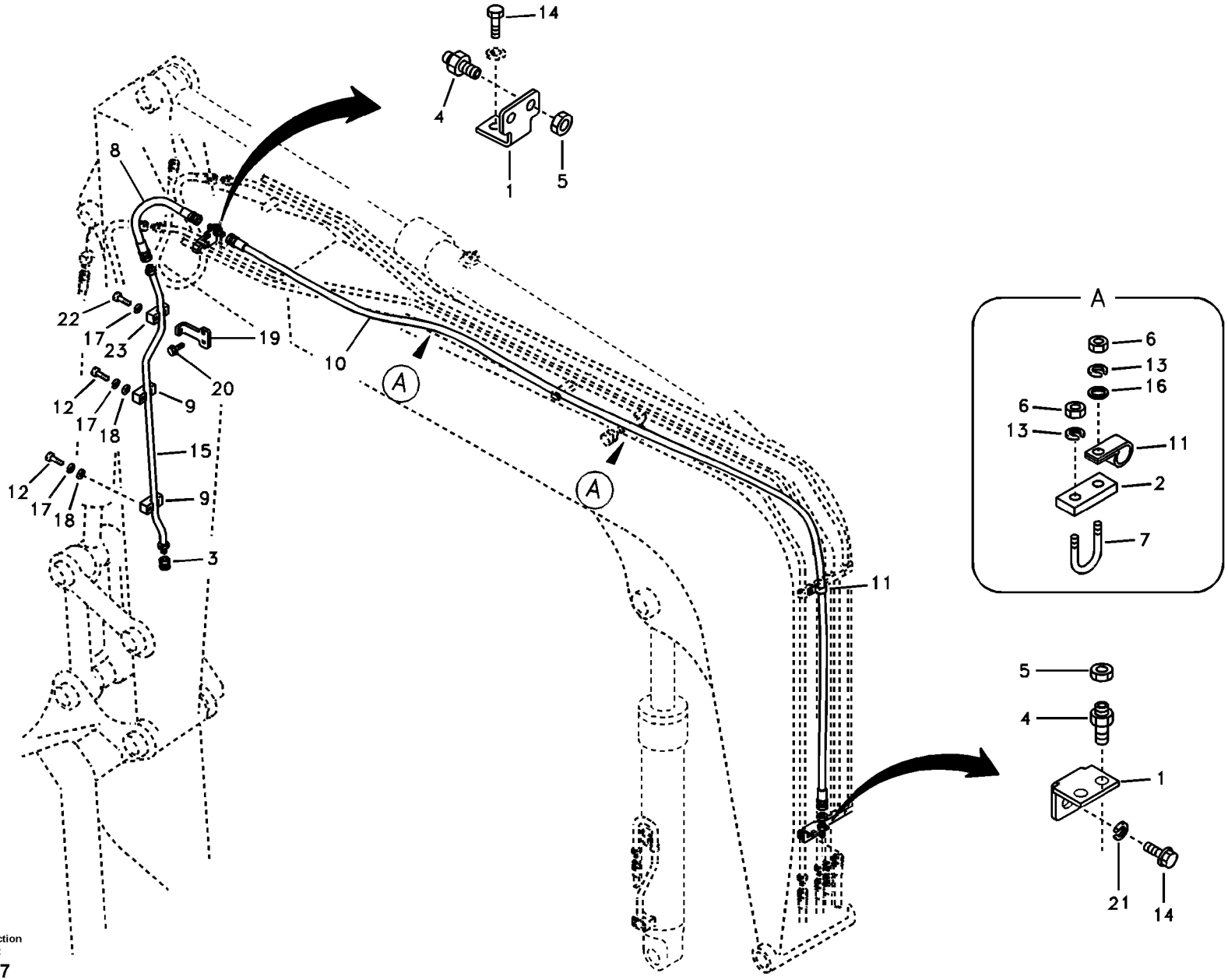

Volvo Construction Equipment

1017487

Fig.	Part No.	Quantity 1	2	3	PS	KIT	Description	Dénomination	Bezeichnung	품명	Denominación	Notes
	VOE 14532523		1				Bracket	Console	Konsole	브라켓	Ménsula	SER NO 33628-
20	**VOE 946440**	2					Flange screw	Vis à bride	Flanschschraube	플랜지 스크류	Torn embridado	SER NO 30824-
	VOE 946440		2				Flange screw	Vis à bride	Flanschschraube	플랜지 스크류	Torn embridado	
21	**VOE 14501898**	1	1				Washer	Rondelle	Scheibe	와셔	Arandela	SER NO 33628-
22	**VOE 983244**	1	1				Hexagon screw	Vis a tête hexagonale	Sechskantschr.	육각 나사	Tornillo hexago	
23	**VOE 14881229**	1	1				Clamp	Collier serrage	Klemme	클램프	Abrazadera	

1	**8278869**	**Hidrálico enganche rápido sobre porte-outil. Acción simple** 퀵 핏 배관 , 한방향 작동형 ; 작업장치 측 **Schnellwechslerhydraulik auf Geräteträger. Einfach wirkend** **Hydraulique de raccord rapide sur soporte de implementos, d'action simple** **Quikfit hydraulic on attachment. Single - acting**	Catalogue id **20019**	Group **924**
2	**8279083 S/N 30824-**		Illustr. No **1017487**	Section **400**
3				
4			Issue **VOE 74H9920019**	Page **579**
5				

VOLVO

EC55B

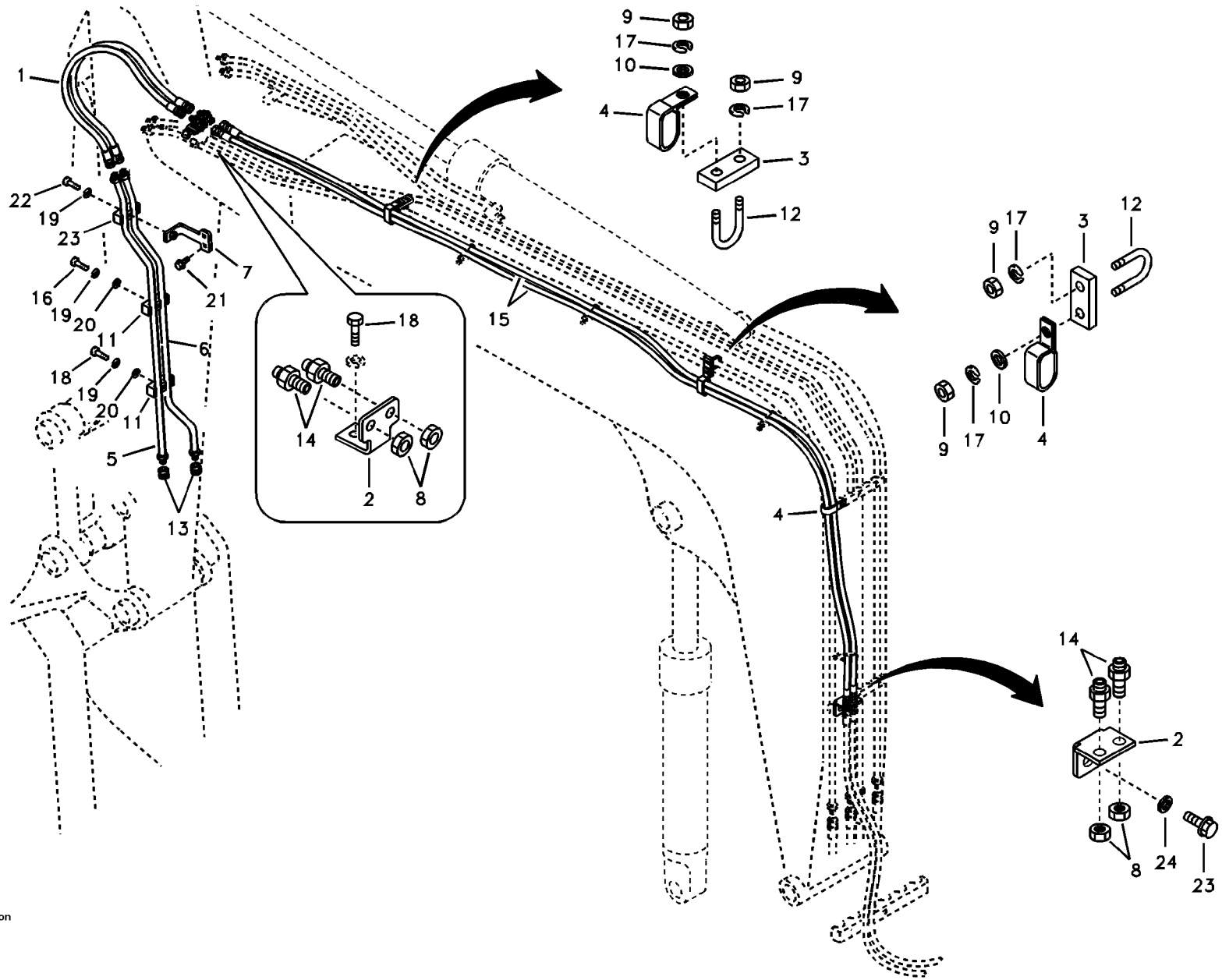
1
22
19
23
16
19
20
11
18
19
20
11
5
13
6
7
21
18
14
2
8
15
9
17
10
4
3
12
4
9
17
3
12
9
17
10
4
14
2
8
24
23

Fig.	Part No.	Quantity 1	2	3	PS	KIT	Description	Dénomination	Bezeichnung	품명	Denominación	Notes
1	**VOE 14880120**	2					Hose	Durit	Schlauch	호스	Tubo flexible	SER NO 30001-30666
	VOE 14880410	2					Hose	Durit	Schlauch	호스	Tubo flexible	SER NO 30667-
	VOE 14880410		2				Hose	Durit	Schlauch	호스	Tubo flexible	
2	**VOE 14508581**	1			SS		Bracket	Ferrure-support	Tragstütze	브라켓	Hierro Apoyo	SER NO 30001-30666
	VOE 14522105	1					Bracket	Console	Konsole	브라켓	Ménsula	SER NO 30667-33627
	VOE 14522338	2					Bracket	Console	Konsole	브라켓	Ménsula	SER NO 33628-
	VOE 14522105		1				Bracket	Console	Konsole	브라켓	Ménsula	SER NO 30824-33627
	VOE 14522338		2				Bracket	Console	Konsole	브라켓	Ménsula	SER NO 33628-
3	**VOE 14510564**	3					Plate	Plaque	Platte	플레이트	Placa	SER NO 30001-33627
	VOE 14519173	2					Plate	Plaque	Platte	플레이트	Placa	SER NO 33628-
	VOE 14510564		3				Plate	Plaque	Platte	플레이트	Placa	SER NO 30001-33627
	VOE 14519173		2				Plate	Plaque	Platte	플레이트	Placa	SER NO 33628-
4	**VOE 14512153**	4					Clip	Clip	Klemme	클립	Clip	SER NO 30001-33627
	VOE 14512153	3					Clip	Clip	Klemme	클립	Clip	SER NO 33628-
	VOE 14512153		4				Clip	Clip	Klemme	클립	Clip	SER NO 30824-33627
	VOE 14512153		3				Clip	Clip	Klemme	클립	Clip	SER NO 33628-
5	**VOE 14517329**	1					Pipe	Canalisation	Rohrleitung	파이프	Canalizacion	SER NO 30001-33627
	VOE 14532565	1					Pipe	Canalisation	Rohrleitung	파이프	Canalizacion	SER NO 33628-
	VOE 14523244		1				Pipe	Canalisation	Rohrleitung	파이프	Canalizacion	SER NO 30824-33627
	VOE 14533508		1				Pipe	Canalisation	Rohrleitung	파이프	Canalizacion	SER NO 33628-
6	**VOE 14517330**	1					Pipe	Canalisation	Rohrleitung	파이프	Canalizacion	SER NO 30001-33627
	VOE 14532566	1					Pipe	Canalisation	Rohrleitung	파이프	Canalizacion	SER NO 33628-
	VOE 14523245		1				Pipe	Canalisation	Rohrleitung	파이프	Canalizacion	SER NO 30824-33627
	VOE 14533507		1				Pipe	Canalisation	Rohrleitung	파이프	Canalizacion	SER NO 33628-
7	**VOE 14517418**	1					Plate	Plaque	Platte	플레이트	Placa	SER NO 30001-30666
	VOE 14522889	1					Bracket	Console	Konsole	브라켓	Ménsula	SER NO 30667-33627
	VOE 14532523	1					Bracket	Console	Konsole	브라켓	Ménsula	SER NO 33628-
	VOE 14522889		1				Bracket	Console	Konsole	브라켓	Ménsula	SER NO 30824-33627
	VOE 14532523		1				Bracket	Console	Konsole	브라켓	Ménsula	SER NO 33628-
8	**SA 1040-80490**	4	4				Nut	Ecrou	Mutter	너트	Tuerca	

1	**8278872**
2	**8279084 S/N 30824-**
3	
4	
5	

Hidrálico enganche rápido sobre porte-outil, de doble efecto
퀵 핏 배관 , 양방향 작동형 ; 작업장치 측
Schnellwechslerhydraulik auf Geräteträger. Doppelt wirkend
Hydraulique de raccord rapide sur soporte de implementos, à double effet
Quikfit hydraulic on attachment. Double - acting

Catalogue id **20019**	Group **924**
Illustr. No **1017488**	Section **450**
Issue **VOE 74H9920019**	Page **581**

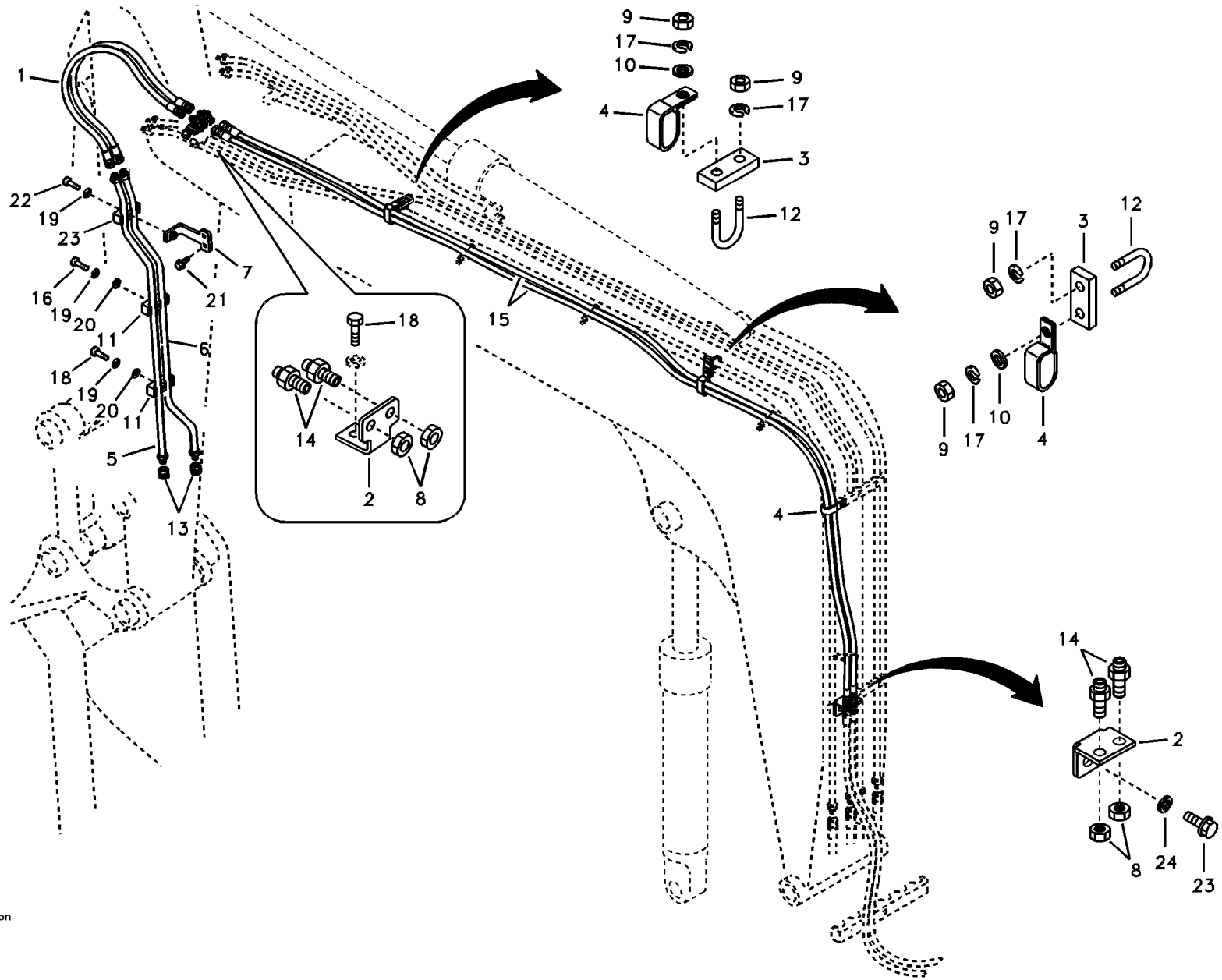
1
22
19
23
16
19
20
11
18
19
20
11
5
13
6
7
21
18
14
2
8
15
9
17
10
4
3
12
4
9
17
3
12
9
17
10
4
14
2
8
24
23

Fig.	Part No.	Quantity 1	2	3	P S	K I T	Description	Dénomination	Bezeichnung	품명	Denominación	Notes
9	**SA 9111-31000**	6					Nut	Ecrou	Mutter	너트	Tuerca	SER NO 30001-33627
	SA 9111-31000	4					Nut	Ecrou	Mutter	너트	Tuerca	SER NO 33628-
	SA 9111-31000		6				Nut	Ecrou	Mutter	너트	Tuerca	SER NO 30824-33627
	SA 9111-31000		4				Nut	Ecrou	Mutter	너트	Tuerca	SER NO 33628-
10	**SA 9211-10000**	3					Washer	Rondelle	Scheibe	와셔	Arandela	SER NO 30001-33627
	SA 9211-10000	2					Washer	Rondelle	Scheibe	와셔	Arandela	SER NO 33628-
	SA 9211-10000		3				Washer	Rondelle	Scheibe	와셔	Arandela	SER NO 30824-33627
	SA 9211-10000		2				Washer	Rondelle	Scheibe	와셔	Arandela	SER NO 33628-
11	**VOE 14881238**	2					Clamp	Collier serrage	Klemme	클램프	Abrazadera	SER NO 30001-33627
	VOE 14880475	2					Clamp	Pince Serrage	Klemme	클램프	Abrazadera	SER NO 33628-
	VOE 14881238		2				Clamp	Collier serrage	Klemme	클램프	Abrazadera	SER NO 30824-33627
	VOE 14880475		2				Clamp	Pince Serrage	Klemme	클램프	Abrazadera	SER NO 33628-
12	**VOE 14880629**	3					U-bolt	Etrier Ressort	Federbride	유 볼트	Abrazadera-u	SER NO 30001-33627
	VOE 14880628	2					U-bolt	Etrier Ressort	Federbride	유 볼트	Abrazadera-u	SER NO 33628-
	VOE 14880629		3				U-bolt	Etrier Ressort	Federbride	유 볼트	Abrazadera-u	SER NO 30824-33627
	VOE 14880628		2				U-bolt	Etrier Ressort	Federbride	유 볼트	Abrazadera-u	SER NO 33628-
13	**SA 9411-93390**	2	2				Plug	Bouchon	Stopfen	플러그	Tapon	
14	**SA 9416-11091**	4	4				Connector	Raccord	Anschluss	커넥터	Union	
15	**SA 9451-02761**	2					Hose	Durit	Schlauch	호스	Tubo flexible	SER NO 30001-30666
	SA 9451-02760	2					Hose	Durit	Schlauch	호스	Tubo flexible	SER NO 30667-
	SA 9451-02760		2				Hose	Durit	Schlauch	호스	Tubo flexible	
16	**VOE 983244**	2					Hexagon screw	Vis a tête hexagonale	Sechskantschr.	육각 나사	Tornillo hexago	SER NO 30001-33627
	VOE 983242	2					Screw	Vis	Schraube	스크류	Tornillo	SER NO 33628-
	VOE 983244		2				Hexagon screw	Vis a tête hexagonale	Sechskantschr.	육각 나사	Tornillo hexago	SER NO 30824-33627
	VOE 983242		2				Screw	Vis	Schraube	스크류	Tornillo	SER NO 33628-
17	**VOE 955922**	6					Spring Washer	Rondelle élastique	Federscheibe	스프링 와셔	Arandela flexible	SER NO 30001-33627
	VOE 955922	4					Spring Washer	Rondelle élastique	Federscheibe	스프링 와셔	Arandela flexible	SER NO 33628-
	VOE 955922		6				Spring Washer	Rondelle élastique	Federscheibe	스프링 와셔	Arandela flexible	SER NO 30824-33627
	VOE 955922		4				Spring Washer	Rondelle élastique	Federscheibe	스프링 와셔	Arandela flexible	SER NO 33628-
18	**VOE 978939**	1			SS		Hexagon screw	Vis a tête hexagonale	Sechskantschr.	육각 나사	Tornillo hexago	SER NO 30001-33627

1	**8278872**
2	**8279084 S/N 30824-**
3	
4	
5	

Hidrálico enganche rápido sobre porte-outil, de doble efecto
퀵 핏 배관 , 양방향 작동형 ; 작업장치 측
Schnellwechslerhydraulik auf Geräteträger. Doppelt wirkend
Hydraulique de raccord rapide sur soporte de implementos, à double effet
Quikfit hydraulic on attachment. Double - acting

Catalogue id **20019**	Group **924**
Illustr. No **1017488**	Section **450**
Issue **VOE 74H9920019**	Page **583**

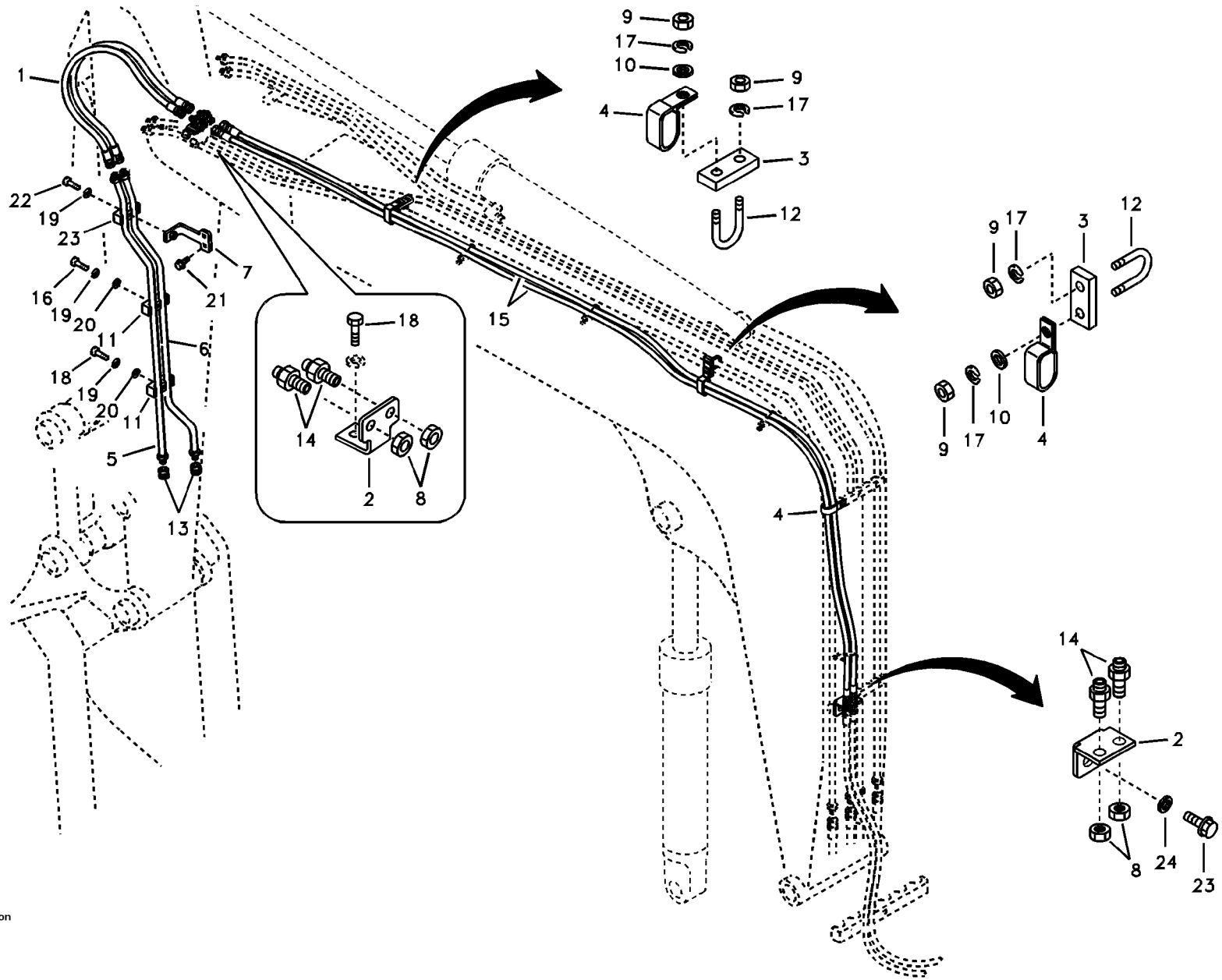
1
22
19
23
16
19
20
11
18
19
20
11
5
13
6
7
21
18
14
2
8
15
9
17
10
4
3
12
4
9
17
3
12
9
17
10
4
14
2
8
24
23

Fig.	Part No.	Quantity 1	2	3	PS	KIT	Description	Dénomination	Bezeichnung	품명	Denominación	Notes
	VOE 965187	2					Flange screw	Vis a bride	Flanschschraube	플랜지 스크류	Torn embridado	SER NO 33628-
	VOE 978939		1		SS		Hexagon screw	Vis a tête hexagonale	Sechskantschr.	육각 나사	Tornillo hexago	SER NO 30824-33627
	VOE 965187		2				Flange screw	Vis a bride	Flanschschraube	플랜지 스크류	Torn embridado	SER NO 33628-
19	**VOE 955921**	3	3				Spring Washer	Rondelle élastique	Federscheibe	스프링 와셔	Arandela flexible	
20	**SA 9211-08000**	2					Washer	Rondelle	Scheibe	와셔	Arandela	SER NO 30001-33627
	SA 9211-08000		2				Washer	Rondelle	Scheibe	와셔	Arandela	SER NO 30824-33627
21	**VOE 946440**	2					Flange screw	Vis à bride	Flanschschraube	플랜지 스크류	Torn embridado	SER NO 30667-
	VOE 946440		2				Flange screw	Vis à bride	Flanschschraube	플랜지 스크류	Torn embridado	
22	**VOE 983244**	1	1				Hexagon screw	Vis a tête hexagonale	Sechskantschr.	육각 나사	Tornillo hexago	
23	**VOE 14881238**	2	2				Clamp	Collier serrage	Klemme	클램프	Abrazadera	SER NO 33628-
24	**VOE 14501898**	1	1				Washer	Rondelle	Scheibe	와셔	Arandela	SER NO 33628-

1	**8278872**	**Hidrálico enganche rápido sobre porte-outil, de doble efecto** 퀵 핏 배관 , 양방향 작동형 ; 작업장치 측 **Schnellwechslerhydraulik auf Geräteträger. Doppelt wirkend** **Hydraulique de raccord rapide sur soporte de implementos, à double effet** **Quikfit hydraulic on attachment. Double - acting**	Catalogue id **20019**	Group **924**
2	**8279084 S/N 30824-**		Illustr. No **1017488**	Section **450**
3				
4			Issue **VOE 74H9920019**	Page **585**
5				

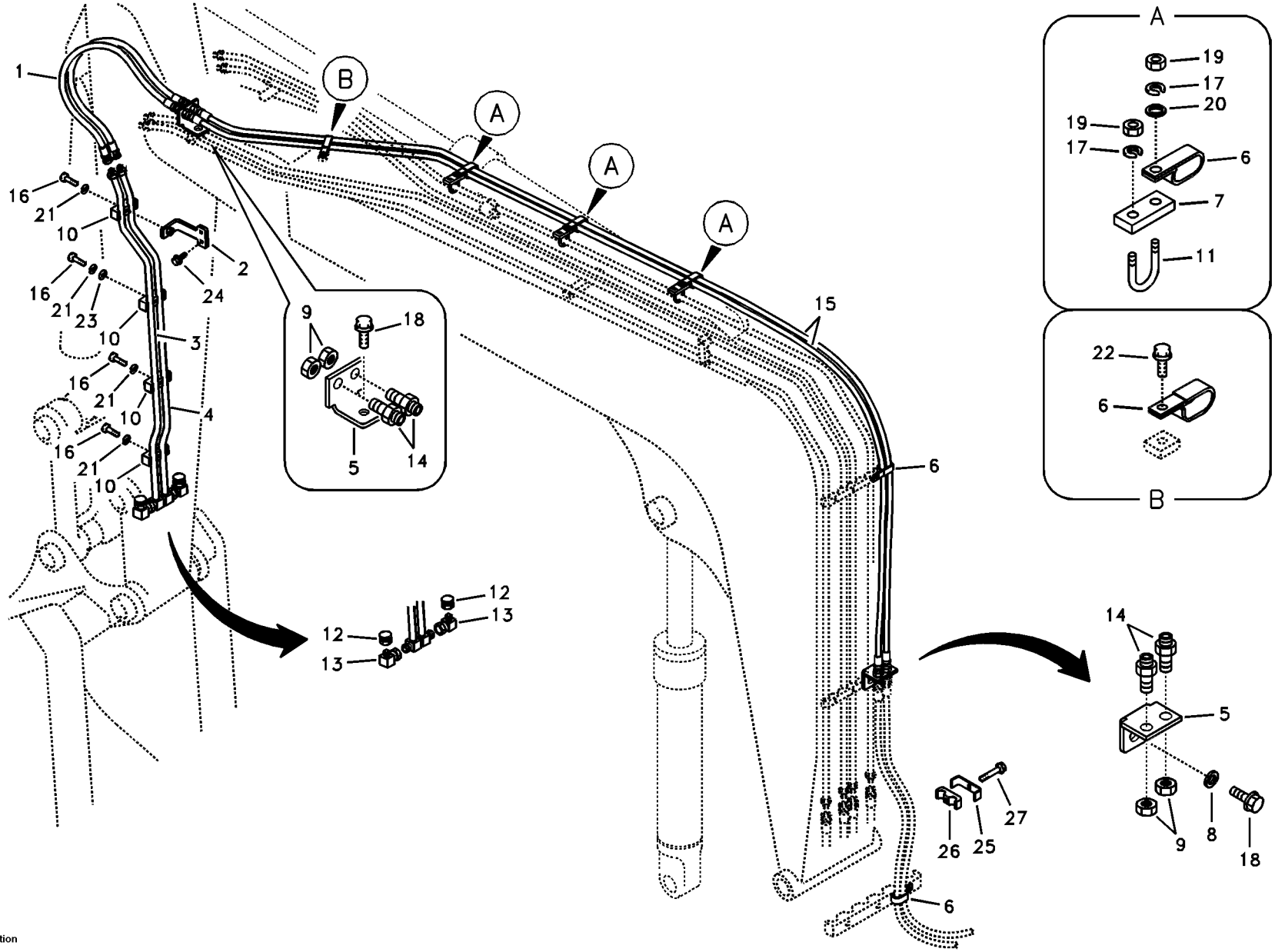

Volvo Construction Equipment

1008359

Fig.	Part No.	Quantity 1	2	3	PS	KIT	Description	Dénomination	Bezeichnung	품명	Denominación	Notes
1	**VOE 14880120**	2	2				Hose	Durit	Schlauch	호스	Tubo flexible	SER NO 30001-30666
	VOE 14880410	2	2				Hose	Durit	Schlauch	호스	Tubo flexible	SER NO 30667-
2	**VOE 14517418**	1	1				Plate	Plaque	Platte	플레이트	Placa	SER NO 30001-30666
	VOE 14522341	1	1				Bracket	Console	Konsole	브라켓	Ménsula	SER NO 30667-
3	**VOE 14520795**	1	1				Pipe	Canalisation	Rohrleitung	파이프	Canalizacion	
4	**VOE 14520796**	1	1				Pipe	Canalisation	Rohrleitung	파이프	Canalizacion	
5	**VOE 14512609**	2	2				Bracket	Support	Halter	브래킷	Soporte	SER NO 30001-30666
	VOE 14522338	2	2				Bracket	Console	Konsole	브라켓	Ménsula	SER NO 30667-
6	**VOE 14512153**	6	5				Clip	Clip	Klemme	클립	Clip	
7	**VOE 14510564**	3	3				Plate	Plaque	Platte	플레이트	Placa	
8	**VOE 14501898**	1	1				Washer	Rondelle	Scheibe	와셔	Arandela	
9	**SA 1040-80490**	4	4				Nut	Ecrou	Mutter	너트	Tuerca	
10	**VOE 14881238**	4	4				Clamp	Collier serrage	Klemme	클램프	Abrazadera	
11	**VOE 14880628**	3	3				U-bolt	Etrier Ressort	Federbride	유 볼트	Abrazadera-u	
12	**SA 9411-93390**	2	2				Plug	Bouchon	Stopfen	플러그	Tapon	
13	**SA 9411-95190**	2	2				Elbow	Coude	Winkelstueck	엘보	Tubo acodado	
14	**SA 9416-11091**	4	4				Connector	Raccord	Anschluss	커넥터	Union	
15	**SA 9451-02763**	2	2				Hose	Durit	Schlauch	호스	Tubo flexible	SER NO 30001-30666
	SA 9451-02762	2	2				Hose	Durit	Schlauch	호스	Tubo flexible	SER NO 30667-
16	**VOE 983244**	4	4				Hexagon screw	Vis a tête hexagonale	Sechskantschr.	육각 나사	Tornillo hexago	
17	**VOE 955922**	6	6				Spring Washer	Rondelle élastique	Federscheibe	스프링 와셔	Arandela flexible	
18	**VOE 965187**	2	2				Flange screw	Vis a bride	Flanschschraube	플랜지 스크류	Torn embridado	
19	**SA 9111-31000**	6	6				Nut	Ecrou	Mutter	너트	Tuerca	
20	**SA 9211-10000**	3	3				Washer	Rondelle	Scheibe	와셔	Arandela	
21	**VOE 955921**	4	4				Spring Washer	Rondelle élastique	Federscheibe	스프링 와셔	Arandela flexible	
22	**VOE 946441**	1	1				Flange screw	Vis à bride	Flanschschraube	플랜지 스크류	Torn embridado	
23	**SA 9211-08000**	1	1				Washer	Rondelle	Scheibe	와셔	Arandela	
24	**VOE 946440**	2	2				Flange screw	Vis à bride	Flanschschraube	플랜지 스크류	Torn embridado	SER NO 30667-
25	**VOE 14512610**		1				Plate	Plaque	Blech	플레이트	Placa	
26	**VOE 14512612**		1				Clamp	Pince Serrage	Klemme	클램프	Abrazadera	

1	**8278870**
2	**8278871**
3	
4	
5	

Hidrálico enganche rápido sobre porte-outil, de doble efecto
퀵 핏 배관 , 양방향 작동형 ; 작업장치 측
Schnellwechslerhydraulik auf Geräteträger. Doppelt wirkend
Hydraulique de raccord rapide sur soporte de implementos, à double effet
Quikfit hydraulic on attachment. Double - acting

SER NO 30001-32353

Catalogue id **20019**	Group **924**
Illustr. No **1008359**	Section **500**
Issue **VOE 74H9920019**	Page **587**

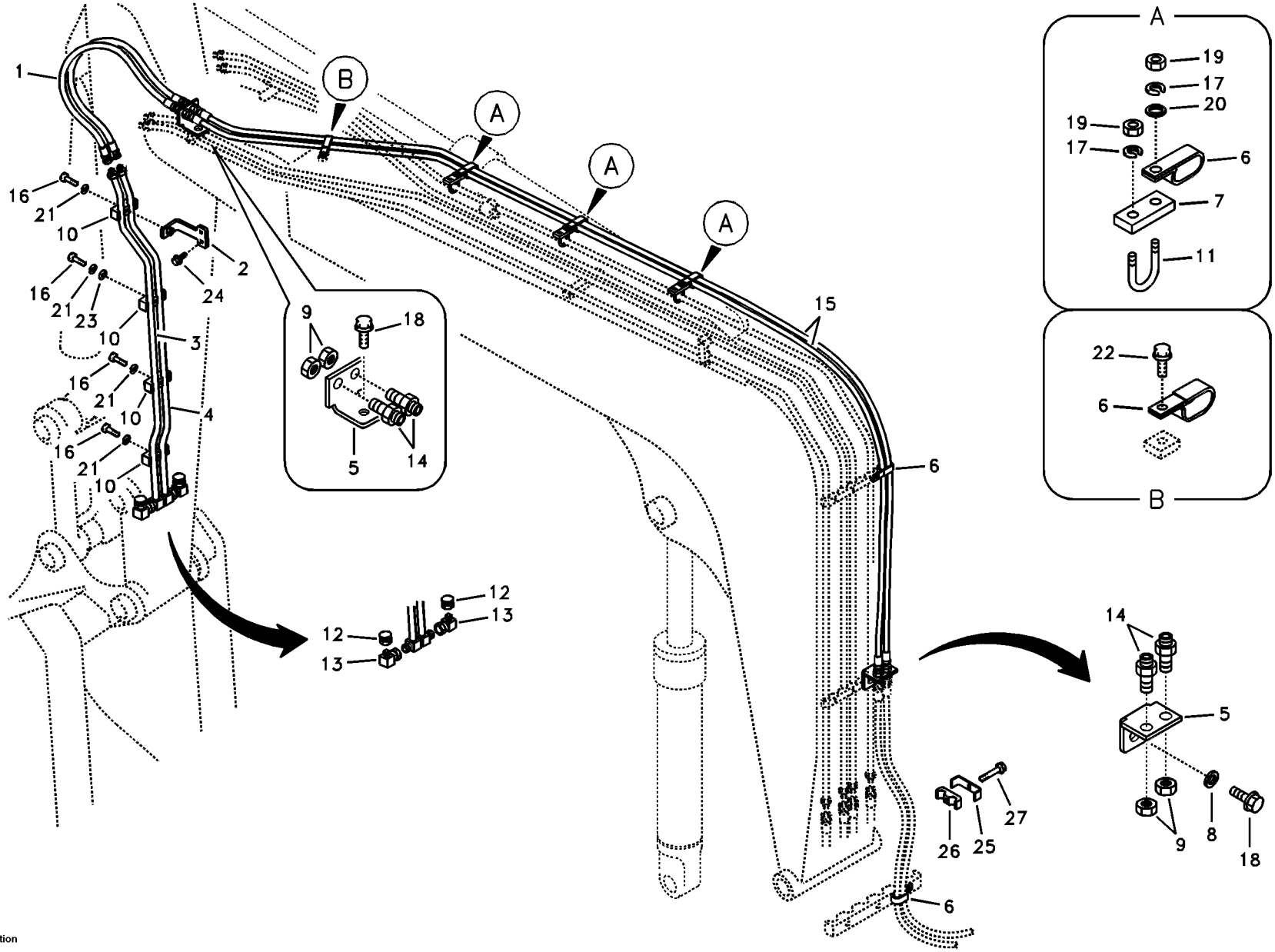

Volvo Construction Equipment

1008359

Fig.	Part No.	Quantity 1	2	3	PS	KIT	Description	Dénomination	Bezeichnung	품명	Denominación	Notes
27	**VOE 965185**		1				Flange screw.....	Vis à bride	Flanschschraube ……	플랜지 스크류	Torn embridado.....	

1	**8278870**	**Hidrálico enganche rápido sobre porte-outil, de doble efecto** 퀵 핏 배관 , 양방향 작동형 ; 작업장치 측 **Schnellwechslerhydraulik auf Geräteträger. Doppelt wirkend** **Hydraulique de raccord rapide sur soporte de implementos, à double effet** **Quikfit hydraulic on attachment. Double - acting**	Catalogue id **20019**	Group **924**
2	**8278871**			
3			Illustr. No **1008359**	Section **500**
4				
5		**SER NO 30001-32353**	Issue **VOE 74H9920019**	Page **589**

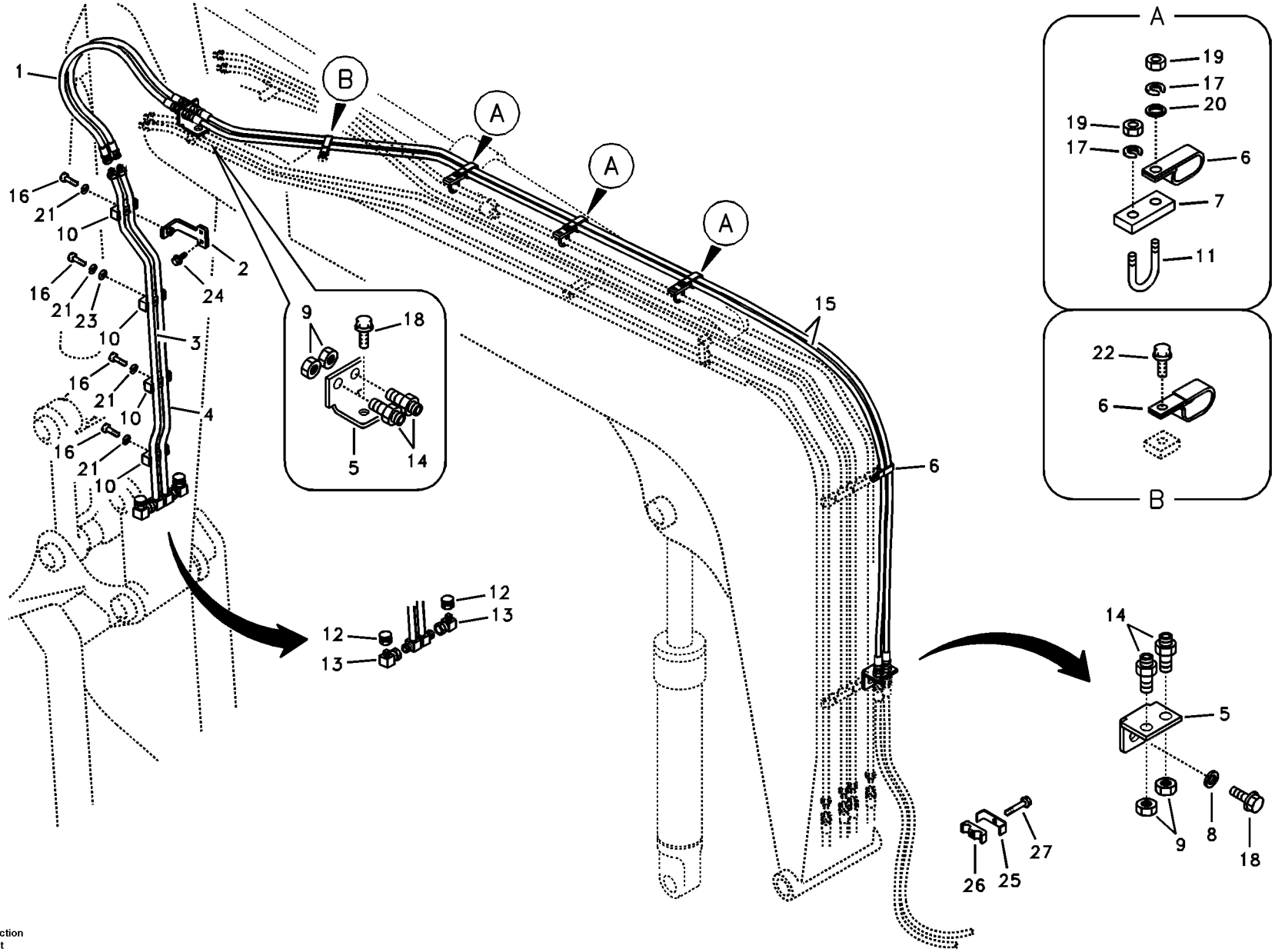

Volvo Construction Equipment

1014332

Fig.	Part No.	Quantity 1	2	3	PS	KIT	Description	Dénomination	Bezeichnung	품명	Denominación	Notes
1	**VOE 14880410**	2					Hose	Durit	Schlauch	호스	Tubo flexible	
2	**VOE 14522341**	1					Bracket	Console	Konsole	브라켓	Ménsula	
3	**VOE 14520795**	1					Pipe	Canalisation	Rohrleitung	파이프	Canalizacion	
4	**VOE 14520796**	1					Pipe	Canalisation	Rohrleitung	파이프	Canalizacion	
5	**VOE 14522338**	2					Bracket	Console	Konsole	브라켓	Ménsula	
6	**VOE 14512153**	5					Clip	Clip	Klemme	클립	Clip	
7	**VOE 14510564**	3					Plate	Plaque	Platte	플레이트	Placa	
8	**VOE 14501898**	1					Washer	Rondelle	Scheibe	와셔	Arandela	
9	**SA 1040-80490**	4					Nut	Ecrou	Mutter	너트	Tuerca	
10	**VOE 14881238**	4					Clamp	Collier serrage	Klemme	클램프	Abrazadera	
11	**VOE 14880628**	3					U-bolt	Etrier Ressort	Federbride	유 볼트	Abrazadera-u	
12	**SA 9411-93390**	2					Plug	Bouchon	Stopfen	플러그	Tapon	
13	**SA 9411-95190**	2					Elbow	Coude	Winkelstueck	엘보	Tubo acodado	
14	**SA 9416-11091**	4					Connector	Raccord	Anschluss	커넥터	Union	
15	**SA 9451-02762**	2					Hose	Durit	Schlauch	호스	Tubo flexible	
16	**VOE 983244**	4					Hexagon screw	Vis a tête hexagonale	Sechskantschr.	육각 나사	Tornillo hexago	
17	**VOE 955922**	6					Spring Washer	Rondelle élastique	Federscheibe	스프링 와셔	Arandela flexible	
18	**VOE 965187**	2					Flange screw	Vis a bride	Flanschschraube	플랜지 스크류	Torn embridado	
19	**SA 9111-31000**	6					Nut	Ecrou	Mutter	너트	Tuerca	
20	**SA 9211-10000**	3					Washer	Rondelle	Scheibe	와셔	Arandela	
21	**VOE 955921**	4					Spring Washer	Rondelle élastique	Federscheibe	스프링 와셔	Arandela flexible	
22	**VOE 946441**	1					Flange screw	Vis à bride	Flanschschraube	플랜지 스크류	Torn embridado	
23	**SA 9211-08000**	1					Washer	Rondelle	Scheibe	와셔	Arandela	
24	**VOE 946440**	2					Flange screw	Vis à bride	Flanschschraube	플랜지 스크류	Torn embridado	
25	**VOE 14512610**	1					Plate	Plaque	Blech	플레이트	Placa	
26	**VOE 14512612**	1					Clamp	Pince Serrage	Klemme	클램프	Abrazadera	
27	**VOE 965185**	1					Flange screw	Vis à bride	Flanschschraube	플랜지 스크류	Torn embridado	

1	**8278871**	**Hidrálico enganche rápido sobre porte-outil, de doble efecto** **퀵 핏 배관 , 양방향 작동형 ; 작업장치 측** **Schnellwechslerhydraulik auf Geräteträger. Doppelt wirkend** **Hydraulique de raccord rapide sur soporte de implementos, à double effet** **Quikfit hydraulic on attachment. Double - acting**	Catalogue id **20019**	Group **924**
2			Illustr. No **1014332**	Section **510**
3				
4			Issue **VOE 74H9920019**	Page **591**
5		**FOR CHINA (SER NO 50001-50036)**		

VOLVO

EC55B

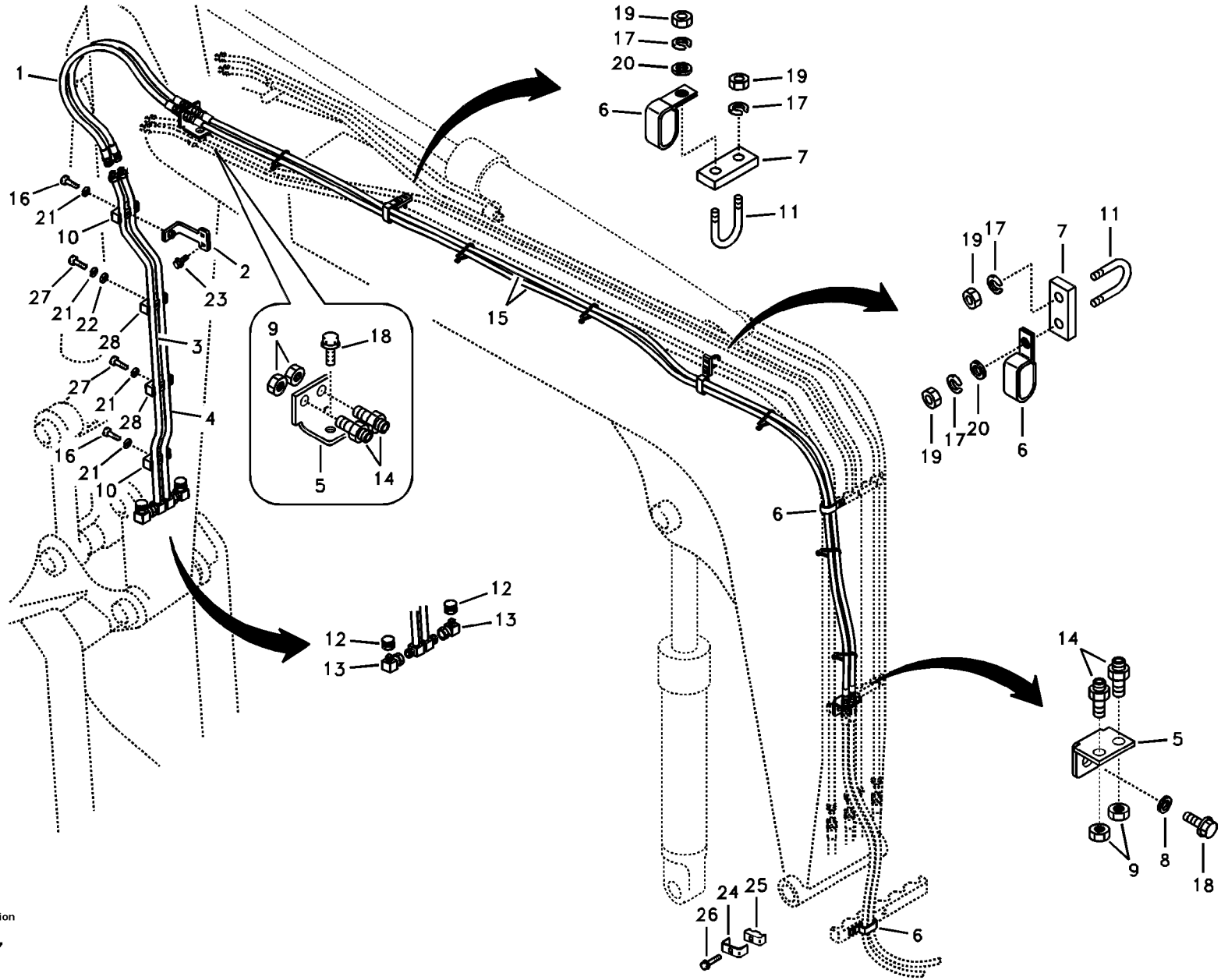

Volvo Construction Equipment

1017497

Fig.	Part No.	Quantity 1	2	3	PS	KIT	Description	Dénomination	Bezeichnung	품명	Denominación	Notes
1	**VOE 14880410**	2	2				Hose	Durit	Schlauch	호스	Tubo flexible	
2	**VOE 14522341**	1	1				Bracket	Console	Konsole	브라켓	Ménsula	SER NO 32354-33628
	VOE 14532523	1	1				Bracket	Console	Konsole	브라켓	Ménsula	SER NO 33628-
3	**VOE 14520795**	1	1				Pipe	Canalisation	Rohrleitung	파이프	Canalizacion	SER NO 32354-33627
	VOE 14532563	1	1				Pipe	Canalisation	Rohrleitung	파이프	Canalizacion	SER NO 33628-
4	**VOE 14520796**	1	1				Pipe	Canalisation	Rohrleitung	파이프	Canalizacion	SER NO 32354-33627
	VOE 14532564	1	1				Pipe	Canalisation	Rohrleitung	파이프	Canalizacion	SER NO 33628-
5	**VOE 14522338**	2	2				Bracket	Console	Konsole	브라켓	Ménsula	
6	**VOE 14512153**	4	3				Clip	Clip	Klemme	클립	Clip	
7	**VOE 14519173**	2	2				Plate	Plaque	Platte	플레이트	Placa	
8	**VOE 14501898**	1	1				Washer	Rondelle	Scheibe	와셔	Arandela	
9	**SA 1040-80490**	4	4				Nut	Ecrou	Mutter	너트	Tuerca	
10	**VOE 14881238**	2	2				Clamp	Collier serrage	Klemme	클램프	Abrazadera	
11	**VOE 14880628**	2	2				U-bolt	Etrier Ressort	Federbride	유 볼트	Abrazadera-u	
12	**SA 9411-93390**	2	2				Plug	Bouchon	Stopfen	플러그	Tapon	
13	**SA 9411-95190**	2	2				Elbow	Coude	Winkelstueck	엘보	Tubo acodado	
14	**SA 9416-11091**	4	4				Connector	Raccord	Anschluss	커넥터	Union	
15	**SA 9451-02760**	2	2				Hose	Durit	Schlauch	호스	Tubo flexible	
16	**VOE 983244**	2	2				Hexagon screw	Vis a tête hexagonale	Sechskantschr.	육각 나사	Tornillo hexago	
17	**VOE 955922**	4	4				Spring Washer	Rondelle élastique	Federscheibe	스프링 와셔	Arandela flexible	
18	**VOE 965187**	2	2				Flange screw	Vis a bride	Flanschschraube	플랜지 스크류	Torn embridado	
19	**SA 9111-31000**	4	4				Nut	Ecrou	Mutter	너트	Tuerca	
20	**SA 9211-10000**	2	2				Washer	Rondelle	Scheibe	와셔	Arandela	
21	**VOE 955921**	4	4				Spring Washer	Rondelle élastique	Federscheibe	스프링 와셔	Arandela flexible	
22	**SA 9211-08000**	1	1				Washer	Rondelle	Scheibe	와셔	Arandela	SER NO 32354-33627
23	**VOE 946440**	2	2				Flange screw	Vis à bride	Flanschschraube	플랜지 스크류	Torn embridado	
24	**VOE 14512610**		1				Plate	Plaque	Blech	플레이트	Placa	
25	**VOE 14512612**		1				Clamp	Pince Serrage	Klemme	클램프	Abrazadera	
26	**VOE 965185**		1				Flange screw	Vis à bride	Flanschschraube	플랜지 스크류	Torn embridado	
27	**VOE 983244**	2	2				Hexagon screw	Vis a tête hexagonale	Sechskantschr.	육각 나사	Tornillo hexago	SER NO 32354-33627

1	**8278870**
2	**8278871**
3	
4	
5	

Hidrálico enganche rápido sobre porte-outil, de doble efecto
퀵 핏 배관 , 양방향 작동형 ; 작업장치 측
Schnellwechslerhydraulik auf Geräteträger. Doppelt wirkend
Hydraulique de raccord rapide sur soporte de implementos, à double effet
Quikfit hydraulic on attachment. Double - acting

SER NO 32354-

Catalogue id **20019**	Group **924**
Illustr. No **1017497**	Section **550**
Issue **VOE 74H9920019**	Page **593**

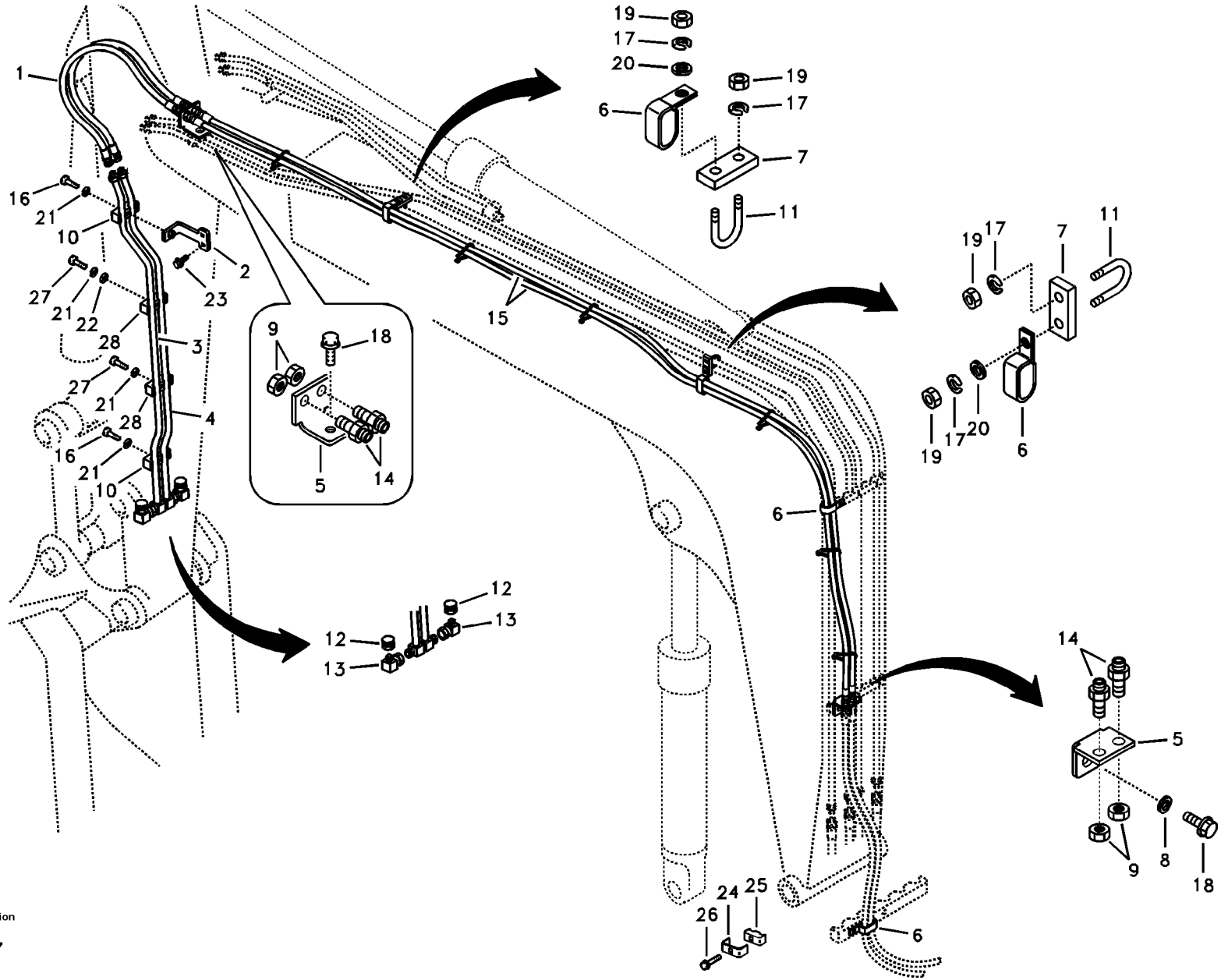

Volvo Construction Equipment

1017497

Fig.	Part No.	Quantity 1	2	3	PS	KIT	Description	Dénomination	Bezeichnung	품명	Denominación	Notes
	VOE 983242	2	2				Screw	Vis	Schraube	스크류	Tornillo	SER NO 33628-
28	**VOE 14881238**	2	2				Clamp	Collier serrage	Klemme	클램프	Abrazadera	SER NO 32354-33627
	VOE 14880475	2	2				Clamp	Pince Serrage	Klemme	클램프	Abrazadera	SER NO 33628-

1	**8278870**	**Hidrálico enganche rápido sobre porte-outil, de doble efecto** 퀵 핏 배관 , 양방향 작동형 ; 작업장치 측 **Schnellwechslerhydraulik auf Geräteträger. Doppelt wirkend** **Hydraulique de raccord rapide sur soporte de implementos, à double effet** **Quikfit hydraulic on attachment. Double - acting**	Catalogue id **20019**	Group **924**
2	**8278871**			
3			Illustr. No **1017497**	Section **550**
4				
5		**SER NO 32354-**	Issue **VOE 74H9920019**	Page **595**

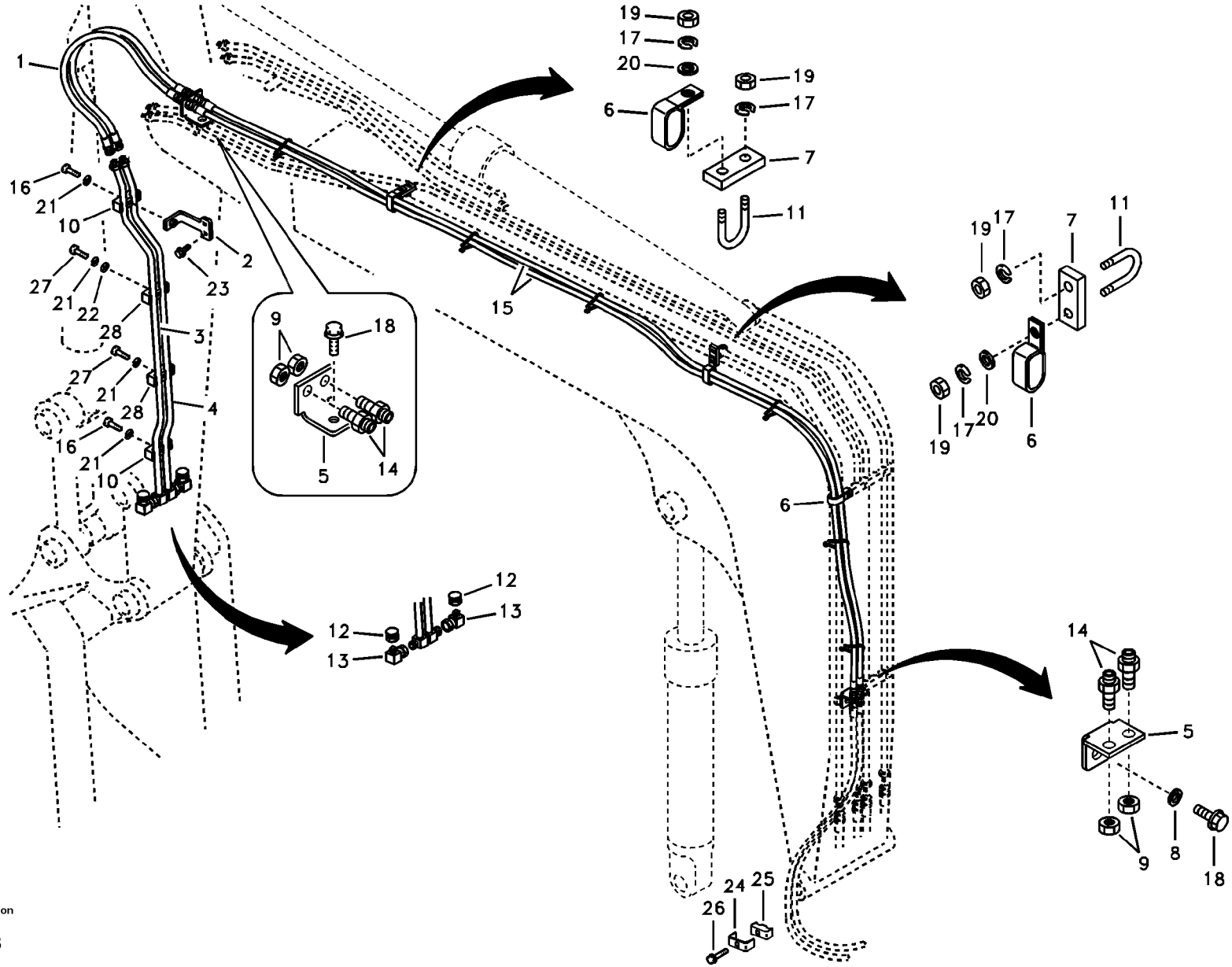

Volvo Construction Equipment

1017498

Fig.	Part No.	Quantity 1	2	3	PS	KIT	Description	Dénomination	Bezeichnung	품명	Denominación	Notes
1	**VOE 14880410**	2					Hose	Durit	Schlauch	호스	Tubo flexible	
2	**VOE 14522341**	1					Bracket	Console	Konsole	브라켓	Ménsula	SER NO 50037-50064
	VOE 14532523	1					Bracket	Console	Konsole	브라켓	Ménsula	SER NO 50065-
3	**VOE 14520795**	1					Pipe	Canalisation	Rohrleitung	파이프	Canalizacion	SER NO 50037-50064
	VOE 14532563	1					Pipe	Canalisation	Rohrleitung	파이프	Canalizacion	SER NO 50065-
4	**VOE 14520796**	1					Pipe	Canalisation	Rohrleitung	파이프	Canalizacion	SER NO 50037-50064
	VOE 14532564	1					Pipe	Canalisation	Rohrleitung	파이프	Canalizacion	SER NO 50065-
5	**VOE 14522338**	2					Bracket	Console	Konsole	브라켓	Ménsula	
6	**VOE 14512153**	3					Clip	Clip	Klemme	클립	Clip	
7	**VOE 14519173**	2					Plate	Plaque	Platte	플레이트	Placa	
8	**VOE 14501898**	1					Washer	Rondelle	Scheibe	와셔	Arandela	
9	**SA 1040-80490**	4					Nut	Ecrou	Mutter	너트	Tuerca	
10	**VOE 14881238**	2					Clamp	Collier serrage	Klemme	클램프	Abrazadera	
11	**VOE 14880628**	2					U-bolt	Etrier Ressort	Federbride	유 볼트	Abrazadera-u	
12	**SA 9411-93390**	2					Plug	Bouchon	Stopfen	플러그	Tapon	
13	**SA 9411-95190**	2					Elbow	Coude	Winkelstueck	엘보	Tubo acodado	
14	**SA 9416-11091**	4					Connector	Raccord	Anschluss	커넥터	Union	
15	**SA 9451-02760**	2					Hose	Durit	Schlauch	호스	Tubo flexible	
16	**VOE 983244**	2					Hexagon screw	Vis a tête hexagonale	Sechskantschr.	육각 나사	Tornillo hexago	
17	**VOE 955922**	4					Spring Washer	Rondelle élastique	Federscheibe	스프링 와셔	Arandela flexible	
18	**VOE 965187**	2					Flange screw	Vis a bride	Flanschschraube	플랜지 스크류	Torn embridado	
19	**SA 9111-31000**	4					Nut	Ecrou	Mutter	너트	Tuerca	
20	**SA 9211-10000**	2					Washer	Rondelle	Scheibe	와셔	Arandela	
21	**VOE 955921**	4					Spring Washer	Rondelle élastique	Federscheibe	스프링 와셔	Arandela flexible	
22	**SA 9211-08000**	1					Washer	Rondelle	Scheibe	와셔	Arandela	SER NO 50037-50064
23	**VOE 946440**	2					Flange screw	Vis à bride	Flanschschraube	플랜지 스크류	Torn embridado	
24	**VOE 14512610**	1					Plate	Plaque	Blech	플레이트	Placa	
25	**VOE 14512612**	1					Clamp	Pince Serrage	Klemme	클램프	Abrazadera	
26	**VOE 965185**	1					Flange screw	Vis à bride	Flanschschraube	플랜지 스크류	Torn embridado	
27	**VOE 983244**	2					Hexagon screw	Vis a tête hexagonale	Sechskantschr.	육각 나사	Tornillo hexago	SER NO 50037-50064

1	**8278871**	**Hidrálico enganche rápido sobre porte-outil, de doble efecto** 퀵 핏 배관 , 양방향 작동형 ; 작업장치 측 **Schnellwechslerhydraulik auf Geräteträger. Doppelt wirkend** **Hydraulique de raccord rapide sur soporte de implementos, à double effet** **Quikfit hydraulic on attachment. Double - acting**	Catalogue id **20019**	Group **924**
2				
3			Illustr. No **1017498**	Section **560**
4				
5		**FOR CHINA (SER NO 50037-)**	Issue **VOE 74H9920019**	Page **597**

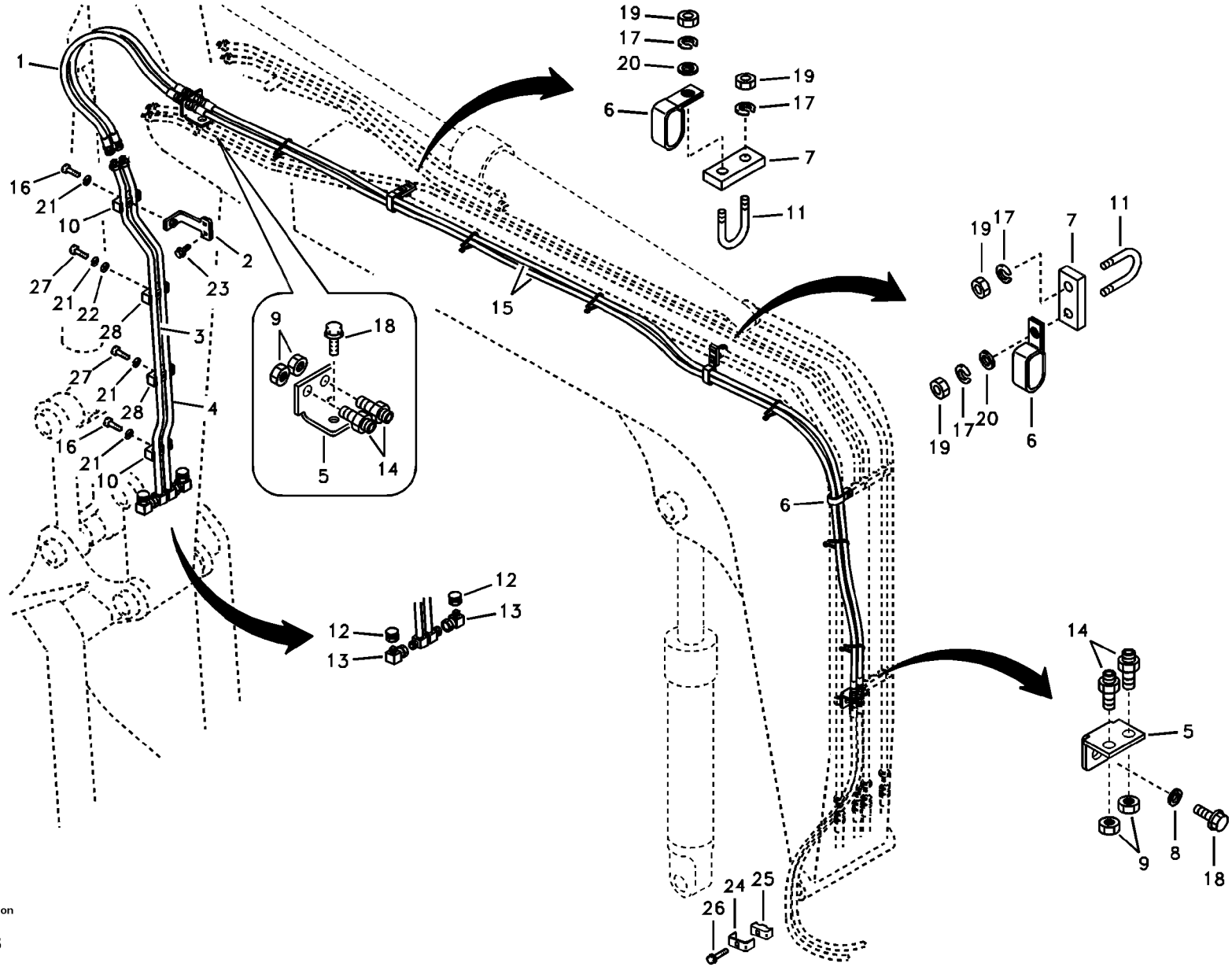

Volvo Construction Equipment

1017498

Fig.	Part No.	Quantity 1	2	3	PS	KIT	Description	Dénomination	Bezeichnung	품명	Denominación	Notes
	VOE 983242	2					Screw	Vis	Schraube	스크류	Tornillo	SER NO 50065-
28	**VOE 14881238**	2					Clamp	Collier serrage	Klemme	클램프	Abrazadera	SER NO 50037-50064
	VOE 14880475	2					Clamp	Pince Serrage	Klemme	클램프	Abrazadera	SER NO 50065-

1	**8278871**	**Hidrálico enganche rápido sobre porte-outil, de doble efecto** 퀵 핏 배관 , 양방향 작동형 ; 작업장치 측 **Schnellwechslerhydraulik auf Geräteträger. Doppelt wirkend** **Hydraulique de raccord rapide sur soporte de implementos, à double effet** **Quikfit hydraulic on attachment. Double - acting**	Catalogue id **20019**	Group **924**
2				
3			Illustr. No **1017498**	Section **560**
4				
5		**FOR CHINA (SER NO 50037-)**	Issue **VOE 74H9920019**	Page **599**

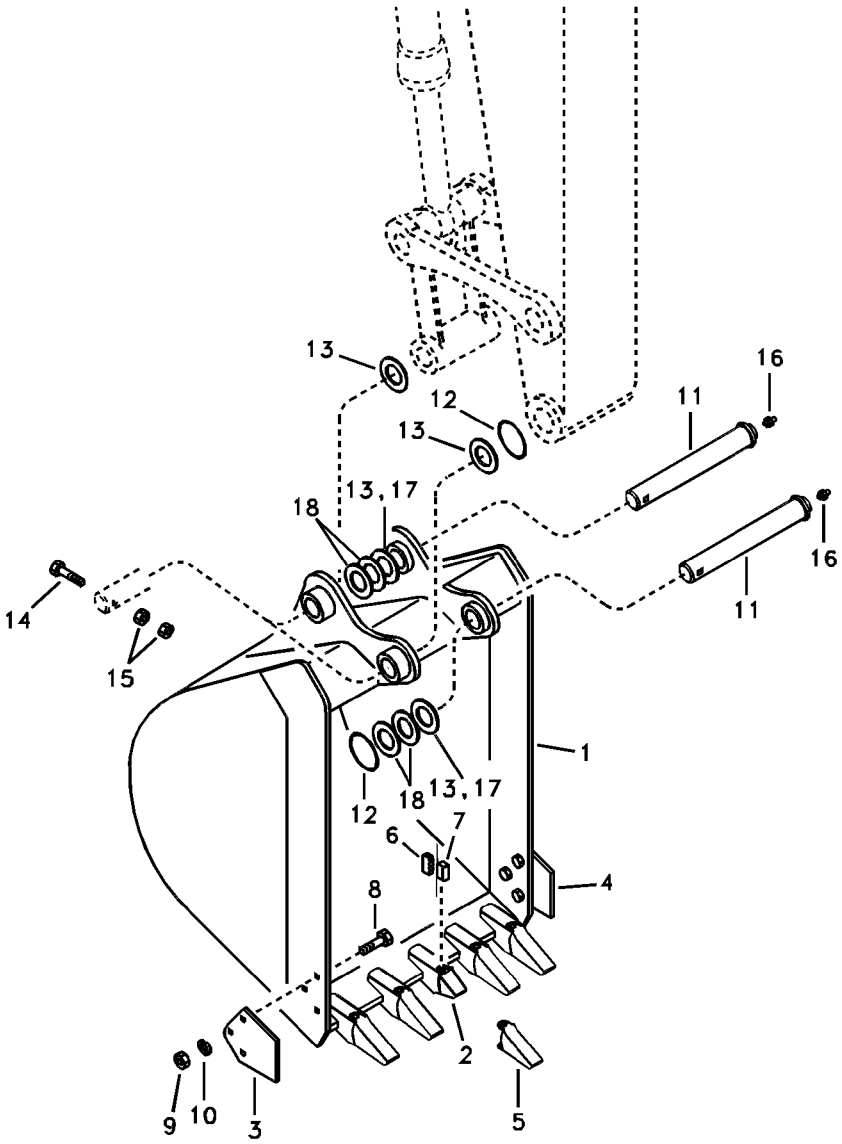
13
16
12
11
13
18
13, 17
16
14
11
15
1
12
18
13, 17
6
7
4
8
2
9
10
3
5

Fig.	Part No.	Quantity 1	2	3	4	5	PS	KIT	Description	Dénomination	Bezeichnung	품명	Denominación	Notes
1	**VOE 14501953**	1							Bucket	Godet	Löffel	버켓	Cuchara	0,15 CU M Opened hook
	VOE 14501955		1						Bucket	Godet	Löffel	버켓	Cuchara	0,15 CU M Closed hook SER NO 30001-33627
	VOE 14534335		1				SS		Bucket	Godet	Löffel	버켓	Cuchara	SER NO 33628-34005
	VOE 14537045		1				OP		Bucket	Godet	Löffel	버켓	Cuchara	SER NO 34006-
	VOE 14501957			1					Bucket	Godet	Löffel	버켓	Cuchara	0,15 CU M Without hook SER NO 30001-33627
	VOE 14534337			1			SS		Bucket	Godet	Löffel	버켓	Cuchara	SER NO 33628-34005
	VOE 14537047			1			OP		Bucket	Godet	Löffel	버켓	Cuchara	SER NO 34006-
	VOE 14532974				1		SS		Bucket	Godet	Löffel	버켓	Cuchara	SER NO 33628-34005 SER NO 50050-50087
	VOE 14537043				1				Bucket	Godet	Löffel	버켓	Cuchara	SER NO 34006- SER NO 50088-
2	**SA 1071-01850**	5	5	5	5				•Adapter	•Raccord Reduct.	•Verbind Stutzen	• 어댑터	•Adaptador	
3	**SA 1070-23180**	1	1	1	1				•Plate	•Plaque	•Platte	• 플레이트	•Placa	LH
4	**SA 1070-23190**	1	1	1	1				•Plate	•Plaque	•Platte	• 플레이트	•Placa	RH
5	**SA 1071-01840**	5	5	5	5				•Tooth	•Dent	•Zahn	• 투스	•Diente	
6	**SA 1071-01860**	5	5	5	5				•Pin	•Goupille	•Zapfen	• 핀	•Pasador	
7	**SA 1071-01870**	5	5	5	5				•Lock	•Serrure	•Schloß	• 록	•Cierre	
8	**VOE 978933**	6	6	6	6				•Screw	•Vis	•Schraube	• 스크류	•Tornillo	
9	**VOE 979019**	6	6	6	6				•Hexagon Nut	•Ecrou Hexagonal	•Sechskantmutter	• 너트	•Tuerca Hexagon	
10	**VOE 955923**	6	6	6	6				•Spring Washer	•Rondelle élastiqu	•Federscheibe	• 스프링 와셔	•Arandela flexible	
11	**VOE 14519816**	2	2	2					Pin	Goupille	Zapfen	핀	Pasador	SER NO 30001-35113 SER NO 50001-50183
			2	2			NS		Pipe	Canalisation	Rohrleitung	파이프	Canalizacion	SER NO 35114- SER NO 50184-
	VOE 14519816				2				Pin	Goupille	Zapfen	핀	Pasador	SER NO 33628-35113 SER NO 50001-50183

2235) Kor S/n 33628- / Chn S/n 50050-

1	**8278882 S/N -33627**
2	**8278883**
3	**8278884**
4	**2235) 8279585 S/N 33628-**
5	

Cazo
버켓
Schaufel
Godet
Bucket

Catalogue id **20019**	Group **925**
Illustr. No **1018988**	Section **100**
Issue **VOE 74H9920019**	Page **601**

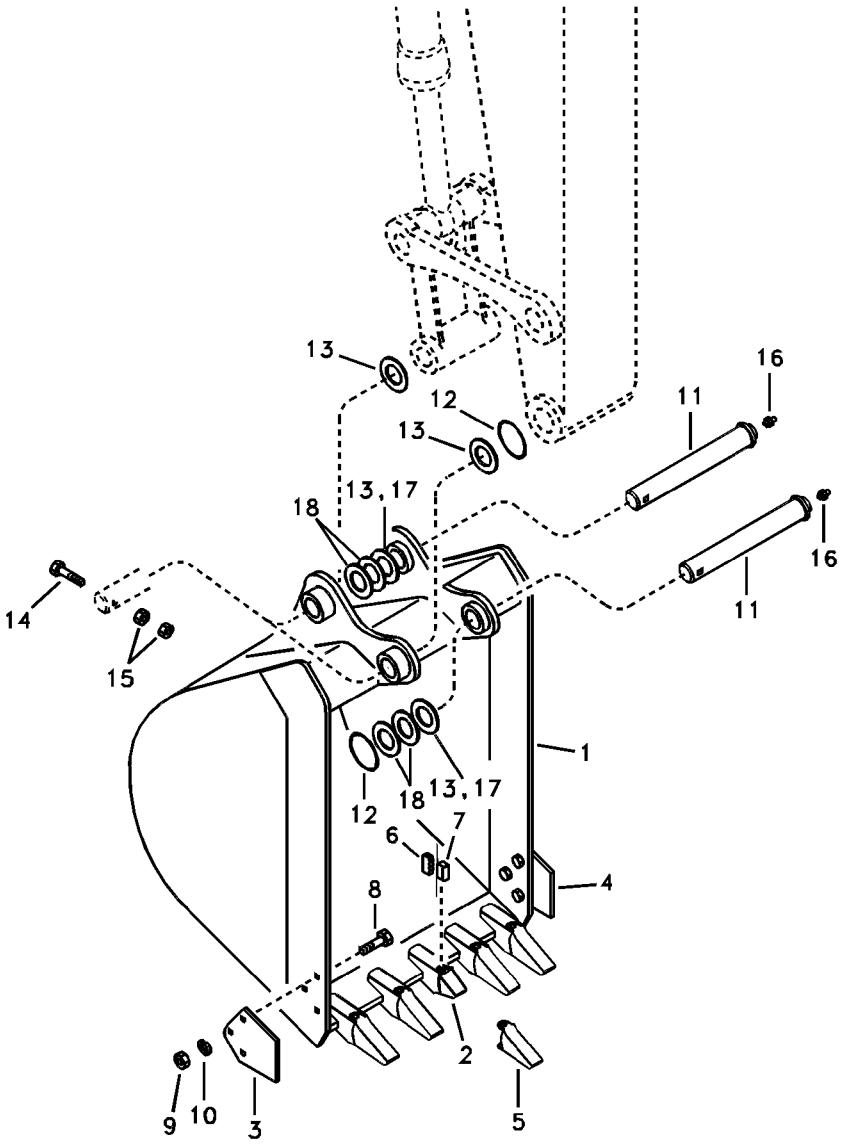
13
16
12
11
13
18
13, 17
16
14
11
15
1
12
18
13, 17
6
7
4
8
2
9
10
3
5

Fig.	Part No.	Quantity 1	2	3	4	5	PS	KIT	Description	Dénomination	Bezeichnung	품명	Denominación	Notes
					2		NS		Pipe	Canalisation	Rohrleitung	파이프	Canalizacion	SER NO 35114- SER NO 50184-
12	**SA 1071-00420**	2	2	2	2				O-ring	Joint Torique	O-Ring	오링	Junta torica	
13	**SA 1171-30600**	4	4	4					Shim	Cale d'épaisseur	Passcheibe	심	Arandela Ajuste	
14	**SA 9011-21217**	2	2	2	2				Bolt	Boulon	Bolzen	볼트	Perno	
15	**VOE 979019**	4	4	4	4				Hexagon Nut	Ecrou Hexagonal	Sechskantmutter	너트	Tuerca Hexagon	
16	**SA 9481-11003**	2	2	2	2				Nipple	Raccord	Nippel	니플	Niple	
17	**SA 1171-30600**				2				Shim	Cale d'épaisseur	Passcheibe	심	Arandela Ajuste	SER NO 33628-34475 SER NO 50050-50129
	SA 1171-30600				3				Shim	Cale d'épaisseur	Passcheibe	심	Arandela Ajuste	SER NO 34476- SER NO 50130-
18	**SA 1171-30590**				4				Shim	Cale d'épaisseur	Passcheibe	심	Arandela Ajuste	SER NO 34476- SER NO 50130-

2235) Kor S/n 33628- / Chn S/n 50050-

1	**8278882 S/N -33627**
2	**8278883**
3	**8278884**
4	**2235) 8279585 S/N 33628-**
5	

Cazo
버켓
Schaufel
Godet
Bucket

Catalogue id **20019**	Group **925**
Illustr. No **1018988**	Section **100**
Issue **VOE 74H9920019**	Page **603**

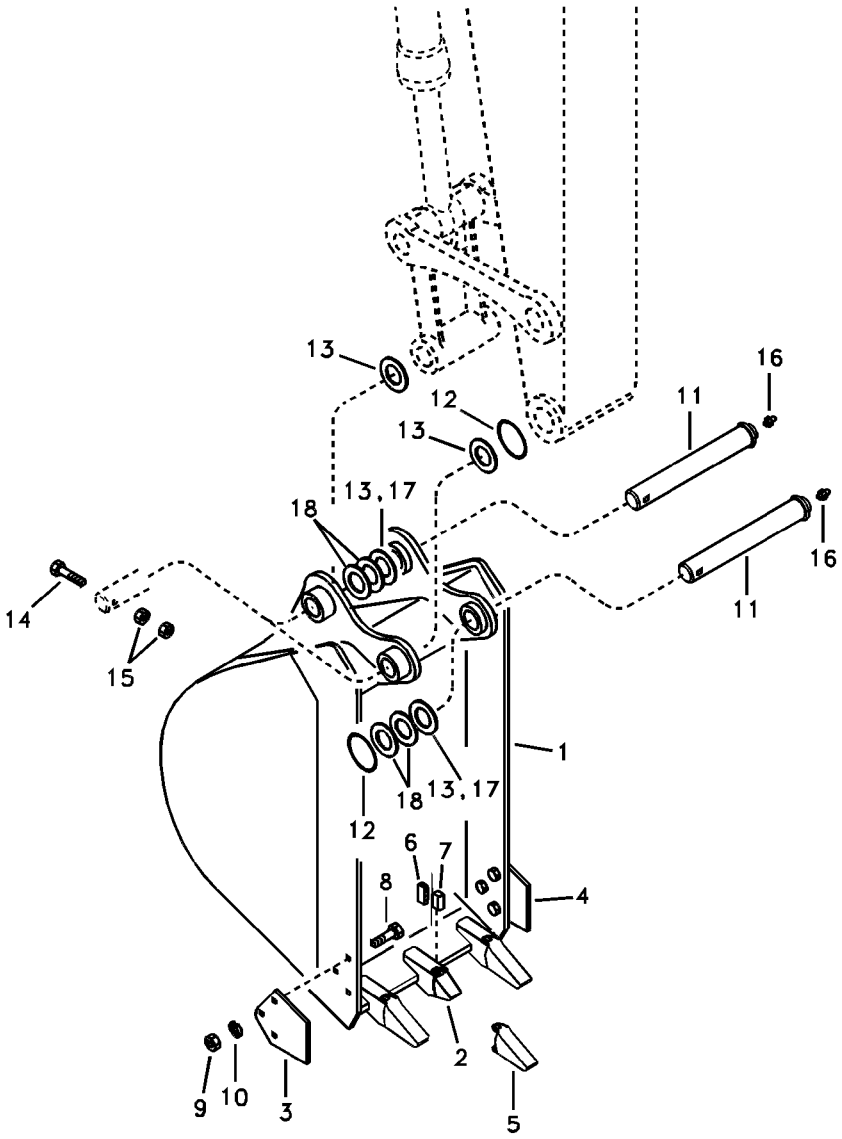
13
16
12
11
13
13,17
18
16
14
11
15
1
18
13,17
12
6
7
8
4
2
9
10
3
5

Fig.	Part No.	Quantity 1	2	3	4	5	PS	KIT	Description	Dénomination	Bezeichnung	품명	Denominación	Notes
1	**VOE 14520097**	1					OP		Bucket	Godet	Löffel	버켓	Cuchara	0,062 CU M Opened hook
	VOE 14520099		1						Bucket	Godet	Löffel	버켓	Cuchara	0,062 CU M Closed hook SER NO 30001-33627
	VOE 14534339		1						Bucket	Godet	Löffel	버켓	Cuchara	SER NO 33628-
	VOE 14520101			1			OP		Bucket	Godet	Löffel	버켓	Cuchara	0,062 CU M Without hook SER NO 30001-33627
	VOE 14534341			1					Bucket	Godet	Löffel	버켓	Cuchara	SER NO 33628-
	VOE 14532976				1				Bucket	Godet	Löffel	버켓	Cuchara	
2	**SA 1071-01850**	3	3	3	3				•Adapter	•Raccord Reduct.	•Verbind Stutzen	• 어댑터	•Adaptador	
3	**SA 1070-23180**	1	1	1	1				•Plate	•Plaque	•Platte	• 플레이트	•Placa	LH
4	**SA 1070-23190**	1	1	1	1				•Plate	•Plaque	•Platte	• 플레이트	•Placa	RH
5	**SA 1071-01840**	3	3	3	3				•Tooth	•Dent	•Zahn	• 투스	•Diente	
6	**SA 1071-01860**	3	3	3	3				•Pin	•Goupille	•Zapfen	• 핀	•Pasador	
7	**SA 1071-01870**	3	3	3	3				•Lock	•Serrure	•Schloß	• 록	•Cierre	
8	**VOE 978933**	6	6	6	3				•Screw	•Vis	•Schraube	• 스크류	•Tornillo	
9	**VOE 979019**	6	6	6	6				•Hexagon Nut	•Ecrou Hexagonal	•Sechskantmutter	• 너트	•Tuerca Hexagon	
10	**VOE 955923**	6	6	6	6				•Spring Washer	•Rondelle élastiqu	•Federscheibe	• 스프링 와셔	•Arandela flexible	
11	**VOE 14519816**	2	2	2					Pin	Goupille	Zapfen	핀	Pasador	SER NO 30001-35113 SER NO 50001-50183
			2	2			NS		Pipe	Canalisation	Rohrleitung	파이프	Canalizacion	SER NO 35114- SER NO 50184-
	VOE 14519816				2				Pin	Goupille	Zapfen	핀	Pasador	SER NO 33628-35113 SER NO 50001-50183
					2		NS		Pipe	Canalisation	Rohrleitung	파이프	Canalizacion	SER NO 35114- SER NO 50184-
12	**SA 1071-00420**	2	2	2	2				O-ring	Joint Torique	O-Ring	오링	Junta torica	
13	**SA 1171-30600**	4	4	4					Shim	Cale d'épaisseur	Passcheibe	심	Arandela Ajuste	
14	**SA 9011-21217**	2	2	2	2				Bolt	Boulon	Bolzen	볼트	Perno	
15	**VOE 979019**	4	4	4	4				Hexagon Nut	Ecrou Hexagonal	Sechskantmutter	너트	Tuerca Hexagon	
16	**SA 9481-11003**	2	2	2	2				Nipple	Raccord	Nippel	니플	Niple	

1	**8278885 S/N -33627**
2	**8278886**
3	**8278887**
4	**8279584 S/N 33628-**
5	

Cazo
버켓
Schaufel
Godet
Bucket

Catalogue id **20019**	Group **925**
Illustr. No **1018989**	Section **200**
Issue **VOE 74H9920019**	Page **605**

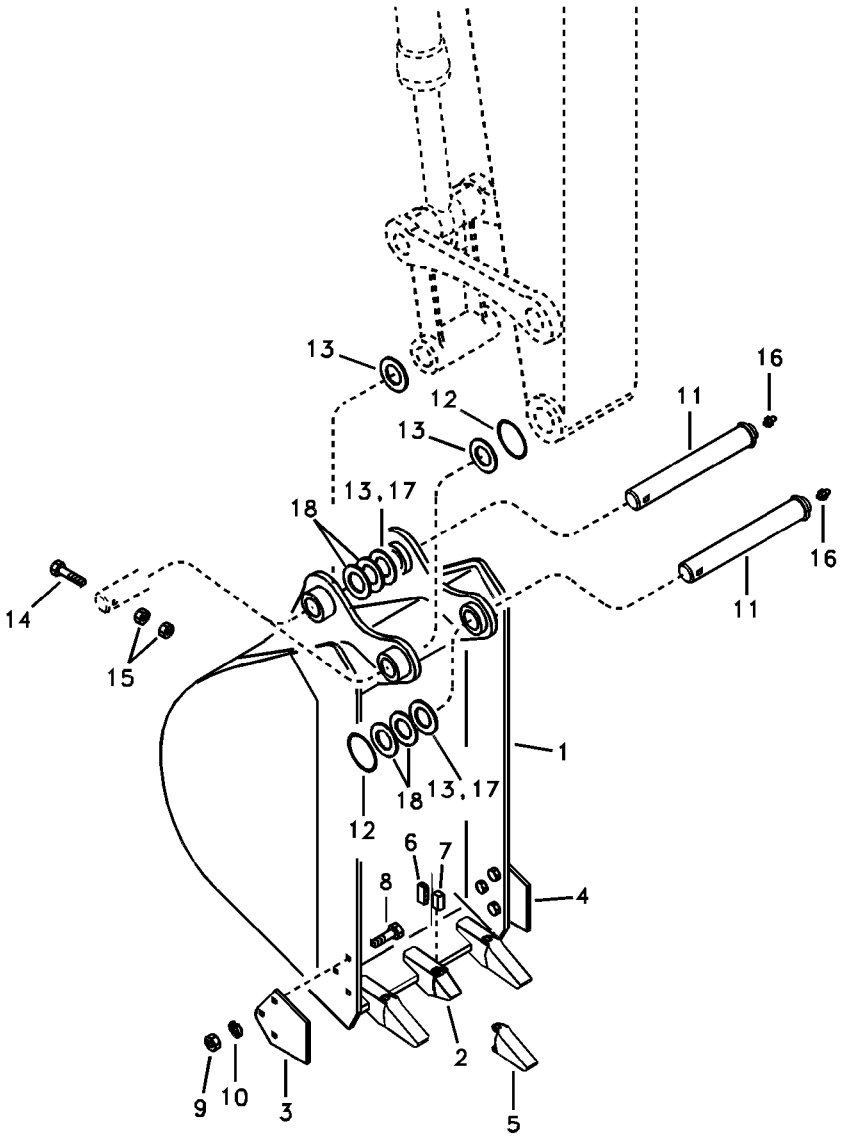
13
16
12
11
13
13,17
18
16
14
11
15
1
18
13,17
12
6
7
8
4
2
9
10
3
5

Fig.	Part No.	Quantity 1	2	3	4	5	P S	K I T	Description	Dénomination	Bezeichnung	품명	Denominación	Notes
17	**SA 1171-30060**				2				Shim	Cale d'épaisseur	Passcheibe	심	Arandela Ajuste	SER NO 33628-34475 SER NO 50050-50129
	SA 1171-30060				3				Shim	Cale d'épaisseur	Passcheibe	심	Arandela Ajuste	SER NO 34476- SER NO 50130-
18	**SA 1171-30590**				4				Shim	Cale d'épaisseur	Passcheibe	심	Arandela Ajuste	SER NO 34476- SER NO 50130-

1	**8278885 S/N -33627**
2	**8278886**
3	**8278887**
4	**8279584 S/N 33628-**
5	

Cazo
버켓
Schaufel
Godet
Bucket

Catalogue id **20019**	Group **925**
Illustr. No **1018989**	Section **200**
Issue **VOE 74H9920019**	Page **607**

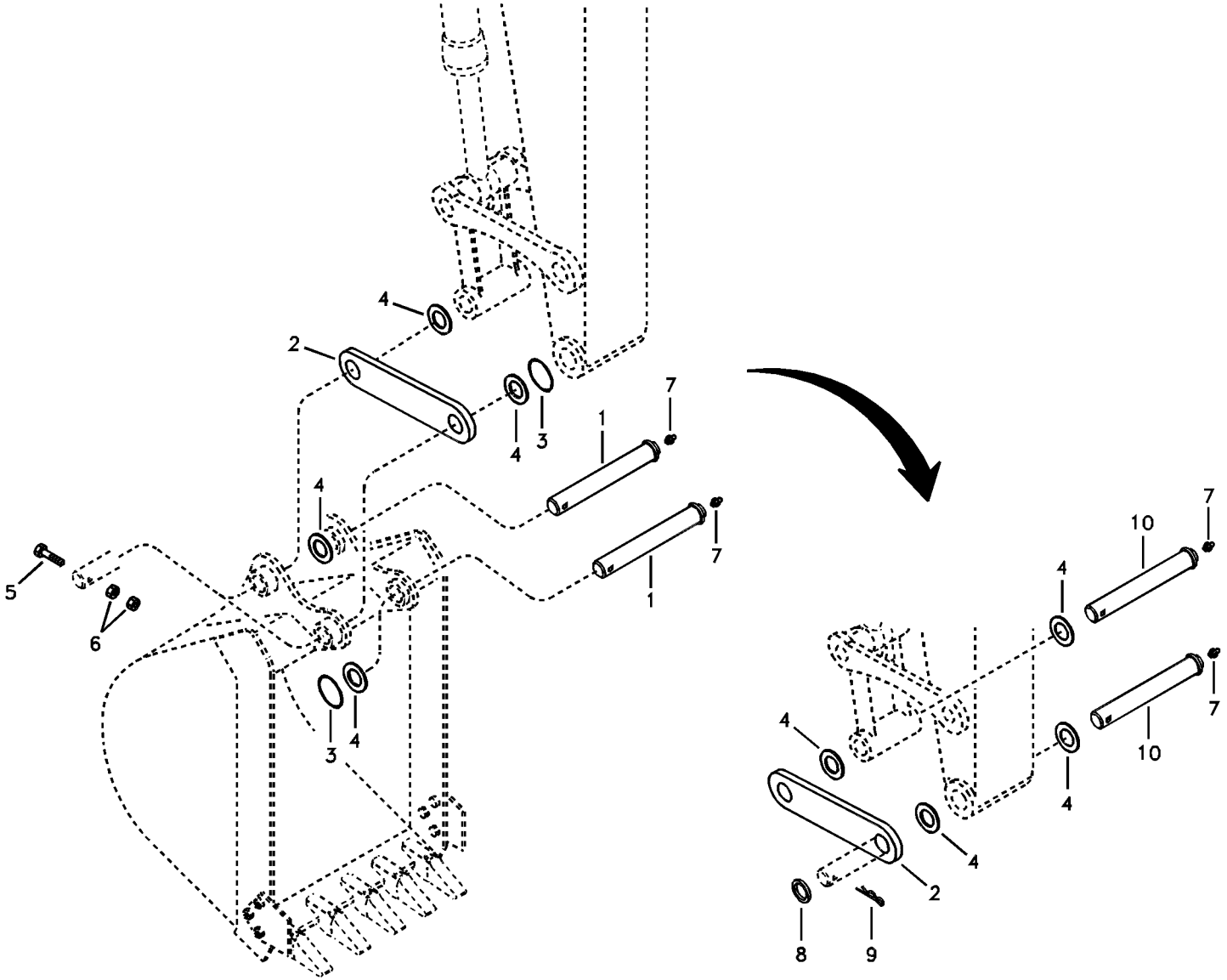
4
2
4
3
7
1
4
5
6
7
1
3
4
10
7
4
10
7
4
4
2
8
9

Fig.	Part No.	Quantity 1	2	3	PS	KIT	Description	Dénomination	Bezeichnung	품명	Denominación	Notes
1	**VOE 14519816**	2					Pin	Goupille	Zapfen	핀	Pasador	
2	**VOE 14519906**	1	1		OP		Plate	Plaque	Platte	플레이트	Placa	
3	**SA 1071-00420**	2					O-ring	Joint Torique	O-Ring	오링	Junta torica	
4	**SA 1171-30600**	4	4				Shim	Cale d'épaisseur	Passcheibe	심	Arandela Ajuste	
5	**SA 9011-21217**	2					Bolt	Boulon	Bolzen	볼트	Perno	
6	**VOE 979019**	4					Hexagon Nut	Ecrou Hexagonal	Sechskantmutter	너트	Tuerca Hexagon	
7	**SA 9481-11003**	2	2				Nipple	Raccord	Nippel	니플	Niple	
8	**VOE 14511868**		2				Washer	Rondelle	Scheibe	와셔	Arandela	
9	**SA 9323-07535**		2				Split Pin	Goupille Fendue	Splint	분할 핀	Chaveta Hendida	
10	**VOE 14519813**		2				Pin	Goupille	Zapfen	핀	Pasador	SER NO 30001-35113 SER NO 50001-50183
	VOE 14546181		2				Pin	Goupille	Zapfen	핀	Pasador	SER NO 35114- SER NO 50184-

1	**8278835 S/N -33627**	**Varillaje para máquina sin cuchara** 버켓 미장착시 연결 장치 **Gestänge für ohne Löffel** **Articulation en l'absence de godet** **Linkage for no bucket**	Catalogue id **20019**	Group **925**
2	**8278881**		Illustr. No **1007105**	Section **1500**
3			Issue **VOE 74H9920019**	Page **609**
4				
5				

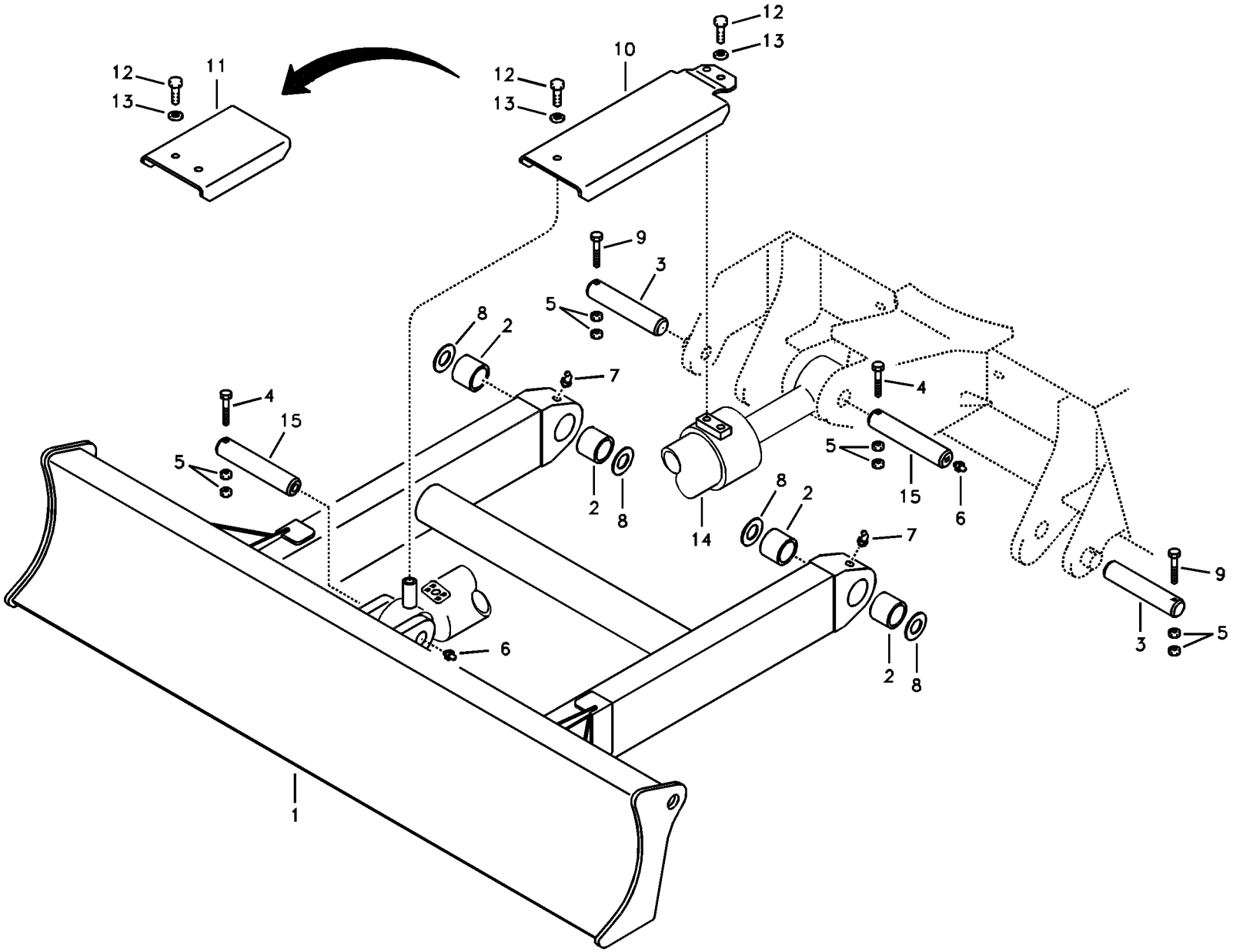

Volvo Construction Equipment

1014335

Fig.	Part No.	Quantity 1	2	3	PS	KIT	Description	Dénomination	Bezeichnung	품명	Denominación	Notes
1	**VOE 14501869**	1					Dozer Blade	Lame Bulldozer	Frontschar	도자 블레이드	Hoja Diagonal	1870mm SER NO 30001-34931 SER NO 50001-50165
	VOE 14547130	1					Dozer Blade	Lame Bulldozer	Frontschar	도자 블레이드	Hoja Diagonal	SER NO 34932- SER NO 50162-
	VOE 14520089		1				Dozer Blade	Lame Bulldozer	Frontschar	도자 블레이드	Hoja Diagonal	1920mm SER NO 30001-34931 SER NO 50001-50165
	VOE 14547125		1				Dozer Blade	Lame Bulldozer	Frontschar	도자 블레이드	Hoja Diagonal	SER NO 34932- SER NO 50166-
2	**SA 1075-00060**	4	4				•Bushing	•Bague	•Buchse	• 부싱	•Casquillo	
3	**SA 1175-30040**	2	2				Pin	Goupille	Zapfen	핀	Pasador	
4	**SA 9011-21218**	2	2				Bolt	Boulon	Bolzen	볼트	Perno	
5	**VOE 979019**	8	8				Hexagon Nut	Ecrou Hexagonal	Sechskantmutter	너트	Tuerca Hexagon	
6	**SA 9481-11003**	2	2				Nipple	Raccord	Nippel	니플	Niple	
7	**SA 9481-21002**	2	2				Nipple	Raccord	Nippel	니플	Niple	
8	**SA 1171-30590**	6	6				Shim	Cale d'épaisseur	Passcheibe	심	Arandela Ajuste	1,0mm
9	**SA 9011-21217**	2	2				Bolt	Boulon	Bolzen	볼트	Perno	
10	**VOE 14521118**	1	1				Cover	Capot	Haube	커버	Capo	SER NO 30001-32308
11	**VOE 14526756**	1	1				Cover	Capot	Haube	커버	Capo	SER NO 32309-
12	**VOE 983250**	2	2				Hexagon screw	Vis tête hexagonale	Sechskantschraube	스크류	Tornillo hexago	
13	**SA 9211-08000**	2	2				Washer	Rondelle	Scheibe	와셔	Arandela	
14	**VOE 14518032**	1	1				Cylinder	Cylindre	Zylinder	실린더	Cilindro	SER NO 30001-32308 See group 927, Page 615
	VOE 14528340	1	1				Cylinder	Cylindre	Zylinder	실린더	Cilindro	SER NO 32309- See group 927, Page 615
15	**SA 1175-30030**	2	2				Pin	Goupille	Zapfen	핀	Pasador	

1	**8278879**
2	**8278880**
3	
4	
5	

Hoja diagonal
도자 블레이드
Frontschar
Lame bulldozer
Dozer blade

Catalogue id **20019**	Group **927**
Illustr. No **1014335**	Section **100**
Issue **VOE 74H9920019**	Page **611**

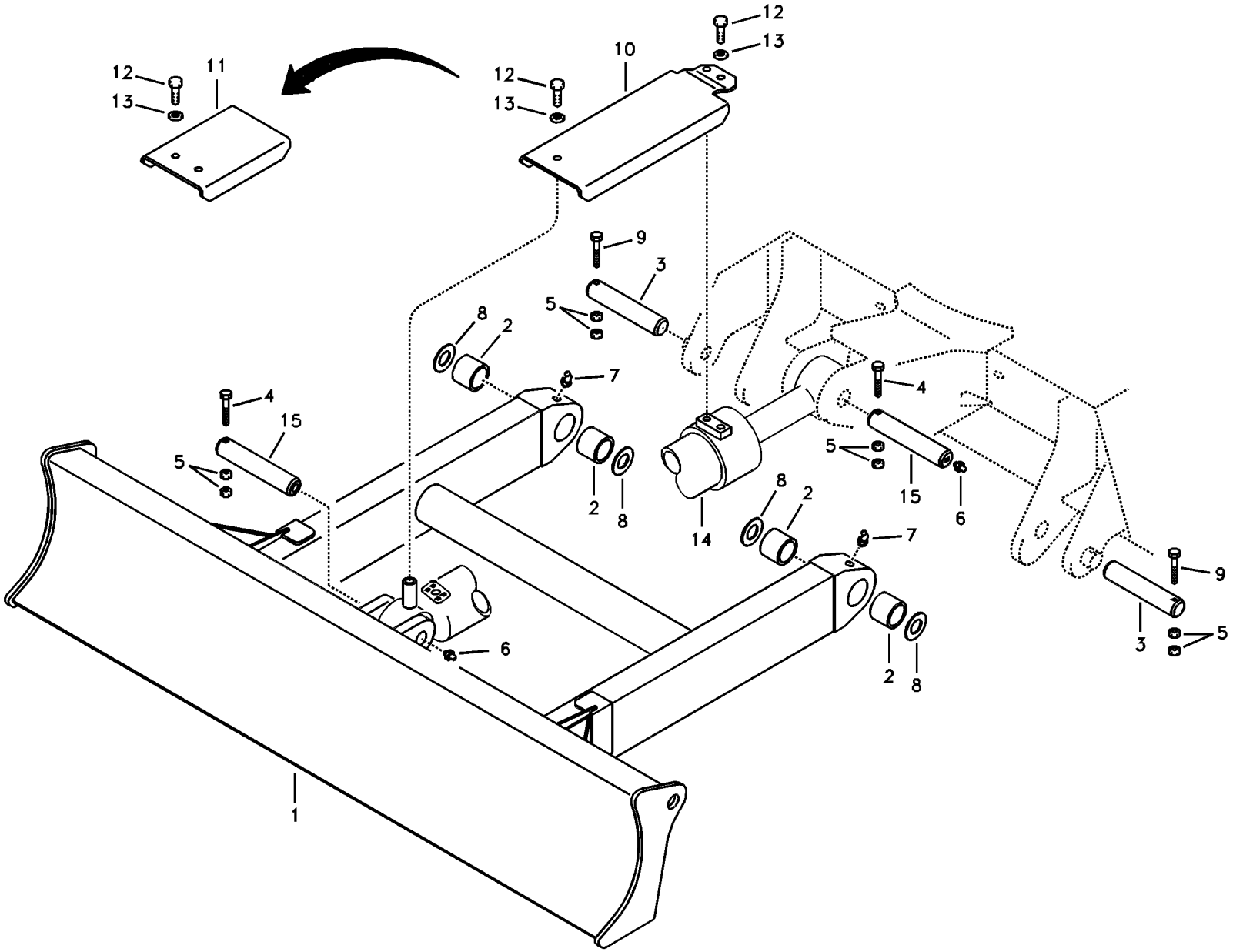

Volvo Construction Equipment

1014335

Fig.	Part No.	Quantity 1	2	3	P S	K I T	Description	Dénomination	Bezeichnung	품명	Denominación	Notes
1	**VOE 14520089**	1					Dozer Blade	Lame Bulldozer	Frontschar	도자 블레이드	Hoja Diagonal	1920mm SER NO 50001-50165
	VOE 14547125	1					Dozer Blade	Lame Bulldozer	Frontschar	도자 블레이드	Hoja Diagonal	SER NO 50166-
2	**SA 1075-00060**	4					•Bushing	•Bague	•Buchse	• 부싱	•Casquillo	
3	**SA 1175-30040**	2					Pin	Goupille	Zapfen	핀	Pasador	
4	**SA 9011-21218**	2					Bolt	Boulon	Bolzen	볼트	Perno	
5	**VOE 979019**	8					Hexagon Nut	Ecrou Hexagonal	Sechskantmutter	너트	Tuerca Hexagon	
6	**SA 9481-11003**	2					Nipple	Raccord	Nippel	니플	Niple	
7	**SA 9481-21002**	2					Nipple	Raccord	Nippel	니플	Niple	
8	**SA 1171-30590**	6					Shim	Cale d'épaisseur	Passcheibe	심	Arandela Ajuste	1,0mm
9	**SA 9011-21217**	2					Bolt	Boulon	Bolzen	볼트	Perno	
10	**VOE 14521118**	1					Cover	Capot	Haube	커버	Capo	SER NO 50001-50026
11	**VOE 14526756**	1					Cover	Capot	Haube	커버	Capo	SER NO 50027-
12	**VOE 983250**	2					Hexagon screw	Vis tête hexagonale	Sechskantschraube	스크류	Tornillo hexago	
13	**SA 9211-08000**	3					Washer	Rondelle	Scheibe	와셔	Arandela	
14	**VOE 14518032**	1					Cylinder	Cylindre	Zylinder	실린더	Cilindro	SER NO 50001-50026 See group 975, Page 665
	VOE 14528340	1					Cylinder	Cylindre	Zylinder	실린더	Cilindro	SER NO 50027- See group 975, Page 665
15	**SA 1175-30030**	2					Pin	Goupille	Zapfen	핀	Pasador	

1	**8278880**	**Hoja diagonal** 도자 블레이드 **Frontschar** **Lame bulldozer** **Dozer blade**	Catalogue id **20019**	Group **927**
2				
3			Illustr. No **1014335**	Section **110**
4				
5		**FOR CHINA**	Issue **VOE 74H9920019**	Page **613**

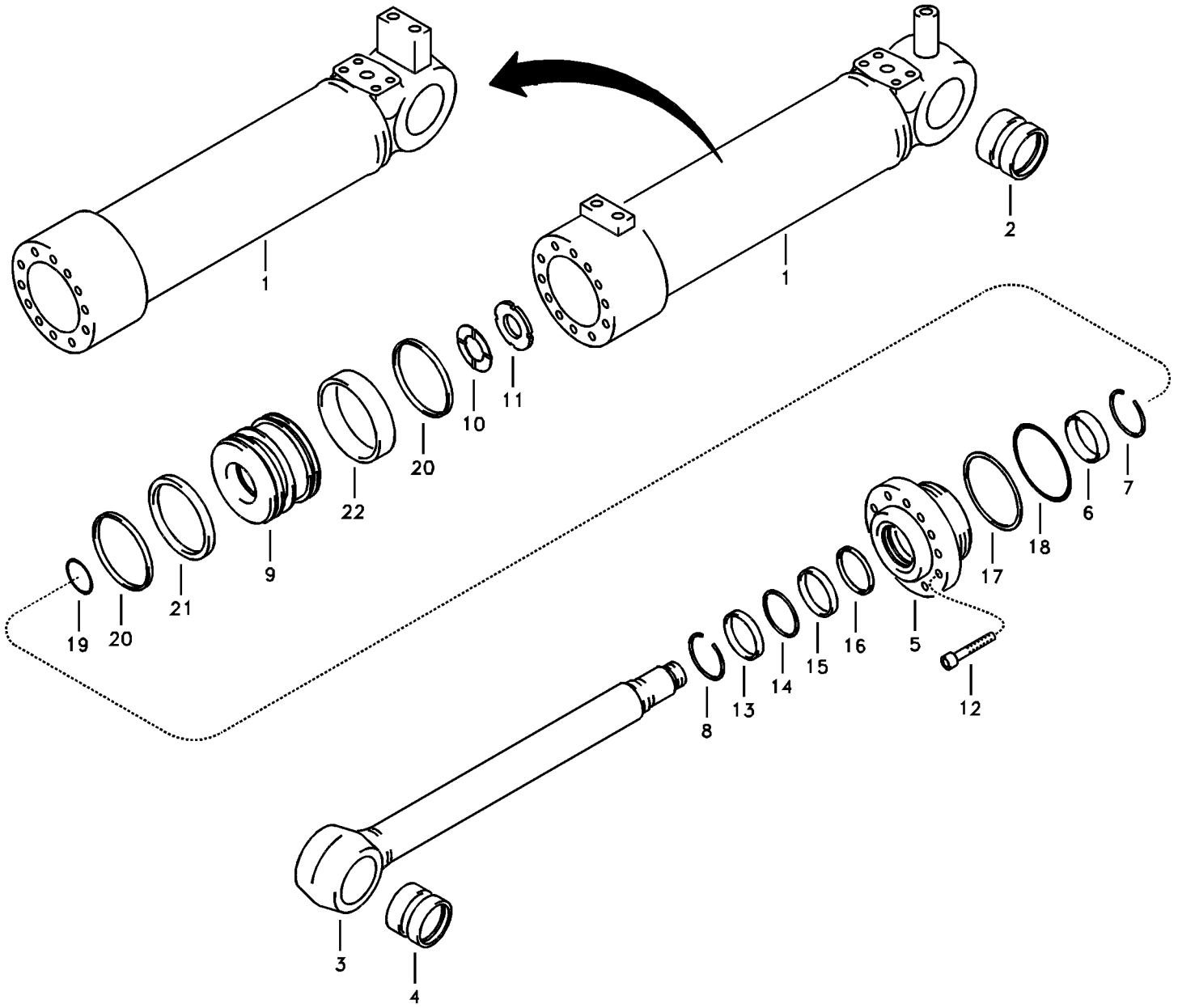
1
1
2
10
11
20
22
9
19
20
21
7
6
18
17
5
16
15
14
13
8
12
3
4

Fig.	Part No.	Quantity 1	2	3	PS	KIT	Description	Dénomination	Bezeichnung	품명	Denominación	Notes
	VOE 14518032	1	1				Cylinder	Cylindre	Zylinder	실린더	Cilindro	SER NO 30001-32308
	VOE 14528340	1	1				Cylinder	Cylindre	Zylinder	실린더	Cilindro	SER NO 32309-
1	**VOE 14518033**	1	1		OP		•Tube	•Tuyau	•Rohr	• 파이프	•Tubo	SER NO 30001-32308
	VOE 14528341	1	1		OP		•Tube	•Tuyau	•Rohr	• 파이프	•Tubo	SER NO 32309-
2	**VOE 14517951**	1	1				••Bushing	••Bague	••Buchse	•• 부싱	••Casquillo	
3	**VOE 14518037**	1	1				•Rod	•Monture	•Fuhler	• 로드	•Varilla	
4	**VOE 14517951**	1	1				••Bushing	••Bague	••Buchse	•• 부싱	••Casquillo	
5	**VOE 14518039**	1	1		OP		•Head	•Tete	•Kopf	• 헤드	•Capo	
6	**SA 9612-06035**	1	1			K	•Bushing	•Bague	•Buchse	• 부싱	•Casquillo	
7	**SA 9557-05050**	1	1				•Ring	•Anneau	•Ring	• 링	•Anillo	
8	**SA 9556-06000**	1	1				•Ring	•Anneau	•Ring	• 링	•Anillo	
9	**SA 1146-01710**	1	1		OP		•Piston	•Piston	•Kolben	• 피스톤	•Piston	
10	**SA 9216-04510**	1	1				•Washer	•Rondelle	•Scheibe	• 와셔	•Arandela	
11	**SA 1146-02950**	1	1				•Lock nut	•Contre-ecrou	•Sicherungsmutter	• 록 너트	•Contratuerca	
12	**VOE 949445**	12	12		SS		•Screw	•Vis	•Schraube	• 스크류	•Tornillo	
13	**SA 9564-20600**	1	1			K	•Seal	•Joint	•Dichtring	• 시일	•Junta	
14	**SA 9563-20600**	1	1			K	•Seal	•Joint	•Dichtring	• 시일	•Junta	
15	**SA 9567-20601**	1	1			K	•Ring	•Anneau	•Ring	• 링	•Anillo	
16	**VOE 14514878**	1	1			K	•Seal	•Joint	•Dichtring	• 시일	•Junta	
17	**SA 9511-12095**	1	1			K	•O-ring	•Joint Torique	•O-Ring	• 오링	•Junta torica	
18	**SA 9566-30950**	1	1			K	•Ring	•Anneau	•Ring	• 링	•Anillo	
19	**SA 9511-12048**	1	1			K	•O-ring	•Joint Torique	•O-Ring	• 오링	•Junta torica	
20	**SA 9568-01050**	2	2			K	•Seal	•Joint	•Dichtring	• 시일	•Junta	
21	**SA 1146-07860**	1	1			K	•Packing	•Joint	•Dichtung	• 패킹	•Empaquetadura	
22	**SA 9565-21050**	1	1			K	•Ring	•Anneau	•Ring	• 링	•Anillo	
100	**VOE 14520420**	1	1				Sealing Kit	Jeu Joints	Dichtungssatz	시일 킷	Juego Retenes	

1	**8278879**
2	**8278880**
3	
4	
5	

Cilindro hidráulico, hoja diagonal
도자 블레이드 실린더
Frontscharzylinder
Vérin hydraulique, lame bulldozer
Dozer blade cylinder

Catalogue id **20019**	Group **927**
Illustr. No **1014336**	Section **500**
Issue **VOE 74H9920019**	Page **615**

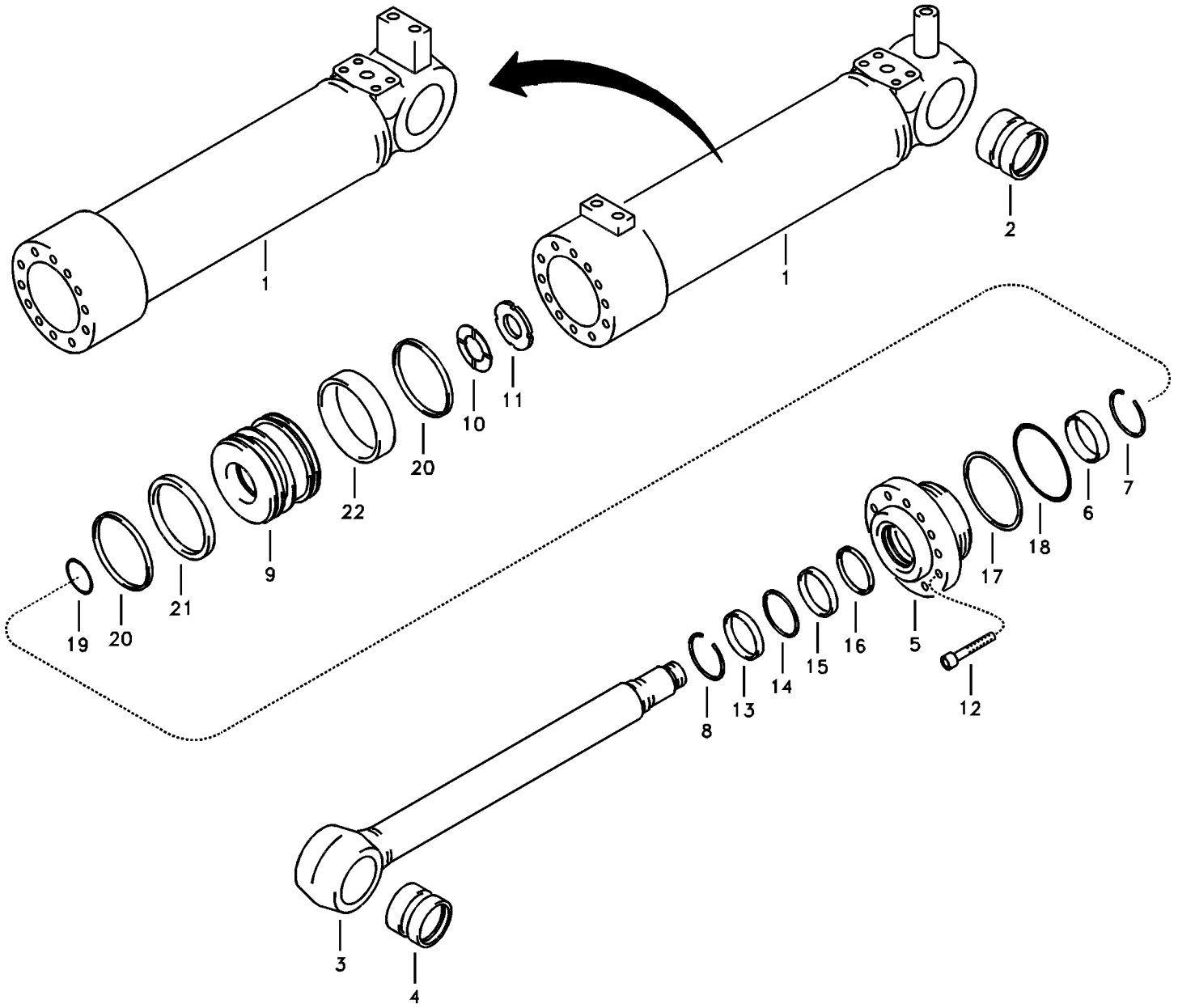
1
1
2
10
11
20
22
9
19
20
21
7
6
18
17
5
16
15
14
13
8
12
3
4

Fig.	Part No.	Quantity 1	2	3	PS	KIT	Description	Dénomination	Bezeichnung	품명	Denominación	Notes
	VOE 14518032	1					Cylinder	Cylindre	Zylinder	실린더	Cilindro	SER NO 50001-50026
	VOE 14528340	1					Cylinder	Cylindre	Zylinder	실린더	Cilindro	SER NO 50027-
1	**VOE 14518033**	1			OP		•Tube	•Tuyau	•Rohr	• 파이프	•Tubo	SER NO 50001-50026
	VOE 14528341	1			OP		•Tube	•Tuyau	•Rohr	• 파이프	•Tubo	SER NO 50027-
2	**VOE 14517951**	1					••Bushing	••Bague	••Buchse	•• 부싱	••Casquillo	
3	**VOE 14518037**	1					•Rod	•Monture	•Fuhler	• 로드	•Varilla	
4	**VOE 14517951**	1					••Bushing	••Bague	••Buchse	•• 부싱	••Casquillo	
5	**VOE 14518039**	1			OP		•Head	•Tete	•Kopf	• 헤드	•Capo	
6	**SA 9612-06035**	1				K	•Bushing	•Bague	•Buchse	• 부싱	•Casquillo	
7	**SA 9557-05050**	1					•Ring	•Anneau	•Ring	• 링	•Anillo	
8	**SA 9556-06000**	1					•Ring	•Anneau	•Ring	• 링	•Anillo	
9	**SA 1146-01710**	1			OP		•Piston	•Piston	•Kolben	• 피스톤	•Piston	
10	**SA 9216-04510**	1					•Washer	•Rondelle	•Scheibe	• 와셔	•Arandela	
11	**SA 1146-02950**	1					•Lock nut	•Contre-ecrou	•Sicherungsmutter	• 록 너트	•Contratuerca	
12	**VOE 949445**	12			SS		•Screw	•Vis	•Schraube	• 스크류	•Tornillo	
13	**SA 9564-20600**	1				K	•Seal	•Joint	•Dichtring	• 시일	•Junta	
14	**SA 9563-20600**	1				K	•Seal	•Joint	•Dichtring	• 시일	•Junta	
15	**SA 9567-20601**	1				K	•Ring	•Anneau	•Ring	• 링	•Anillo	
16	**VOE 14514878**	1				K	•Seal	•Joint	•Dichtring	• 시일	•Junta	
17	**SA 9511-12095**	1				K	•O-ring	•Joint Torique	•O-Ring	• 오링	•Junta torica	
18	**SA 9566-30950**	1				K	•Ring	•Anneau	•Ring	• 링	•Anillo	
19	**SA 9511-12048**	1				K	•O-ring	•Joint Torique	•O-Ring	• 오링	•Junta torica	
20	**SA 9568-01050**	2				K	•Seal	•Joint	•Dichtring	• 시일	•Junta	
21	**SA 1146-07860**	1				K	•Packing	•Joint	•Dichtung	• 패킹	•Empaquetadura	
22	**SA 9565-21050**	1				K	•Ring	•Anneau	•Ring	• 링	•Anillo	
100	**VOE 14520420**	1					Sealing Kit	Jeu Joints	Dichtungssatz	시일 킷	Juego Retenes	

1	**8278880**	**Cilindro hidráulico, hoja diagonal** 도자 블레이드 실린더 **Frontscharzylinder** **Vérin hydraulique, lame bulldozer** **Dozer blade cylinder**	Catalogue id **20019**	Group **927**
2			Illustr. No **1014336**	Section **510**
3			Issue **VOE 74H9920019**	Page **617**
4				
5		**FOR CHINA**		

VOLVO

EC55B

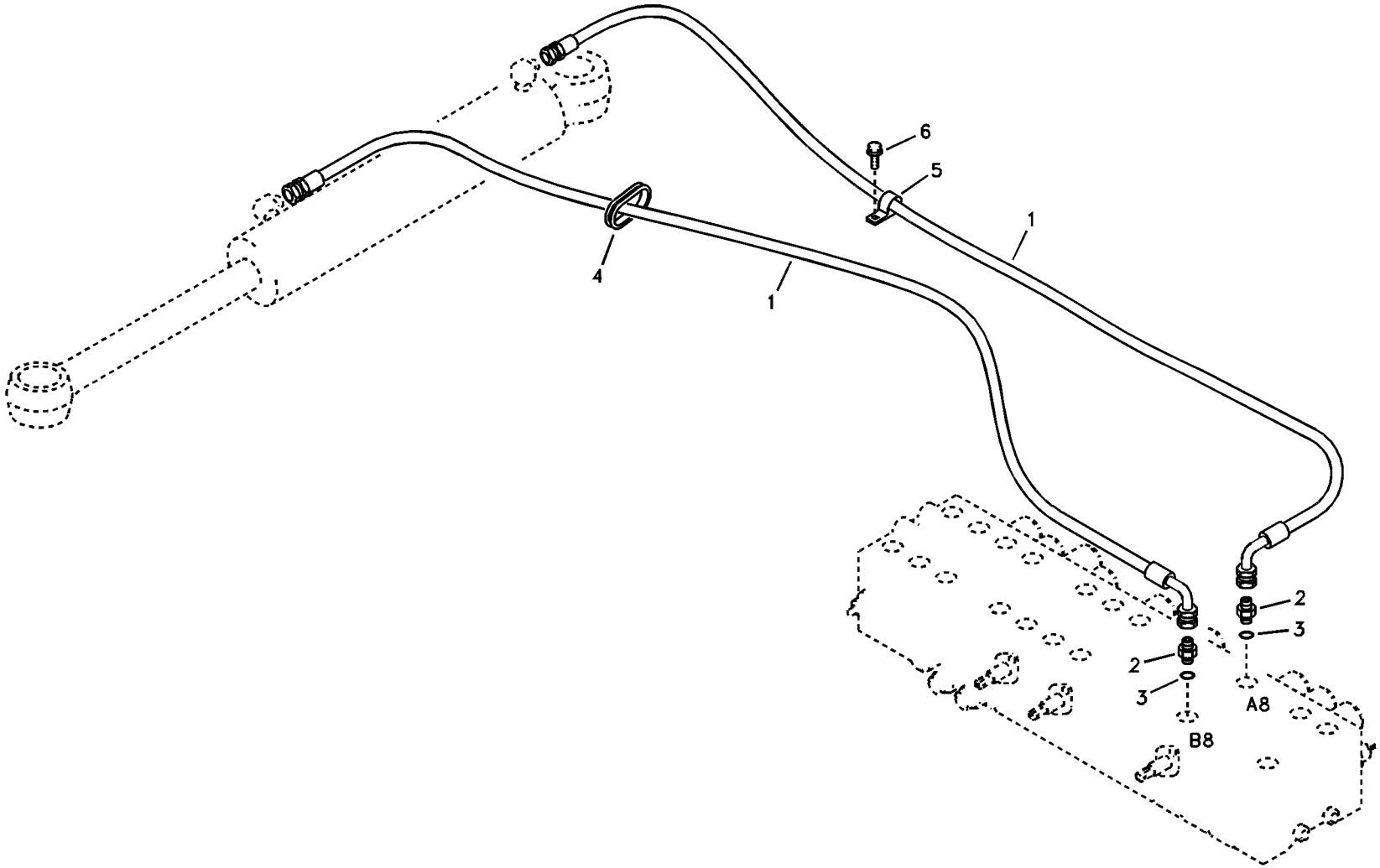
6
5
1
4
1
2
3
2
3
A8
B8

Fig.	Part No.	Quantity 1	2	3	PS	KIT	Description	Dénomination	Bezeichnung	품명	Denominación	Notes
1	**SA 9453-03734**	2					Hose	Durit	Schlauch	호스	Tubo flexible	
2	**SA 9412-11150**	2					Connector	Raccord	Anschluss	커넥터	Union	
3	**SA 9511-12018**	2			SS		O-ring	Joint Torique	O-Ring	오링	Junta torica	
4	**SA 14531002**	1					Grommet	Passe fil	Durchführung	그로메트	Aislador pasapanel	
5	**SA 9315-02201**	1					Clip	Clip	Klemme	클립	Clip	
6	**VOE 946471**	1					Flange screw	Vis à bride	Flanschschraube	플랜지 스크류	Torn embridado	

1	**8278837**	**Sistema hidráulico, giro** 붐 선회 장치 **Hydraulikkreis, Schwenken** **Système hydraulique, orientation** **Boom swing system**	Catalogue id **20019**	Group **971**
2			Illustr. No **1007108**	Section **100**
3			Issue **VOE 74H9920019**	Page **619**
4				
5				

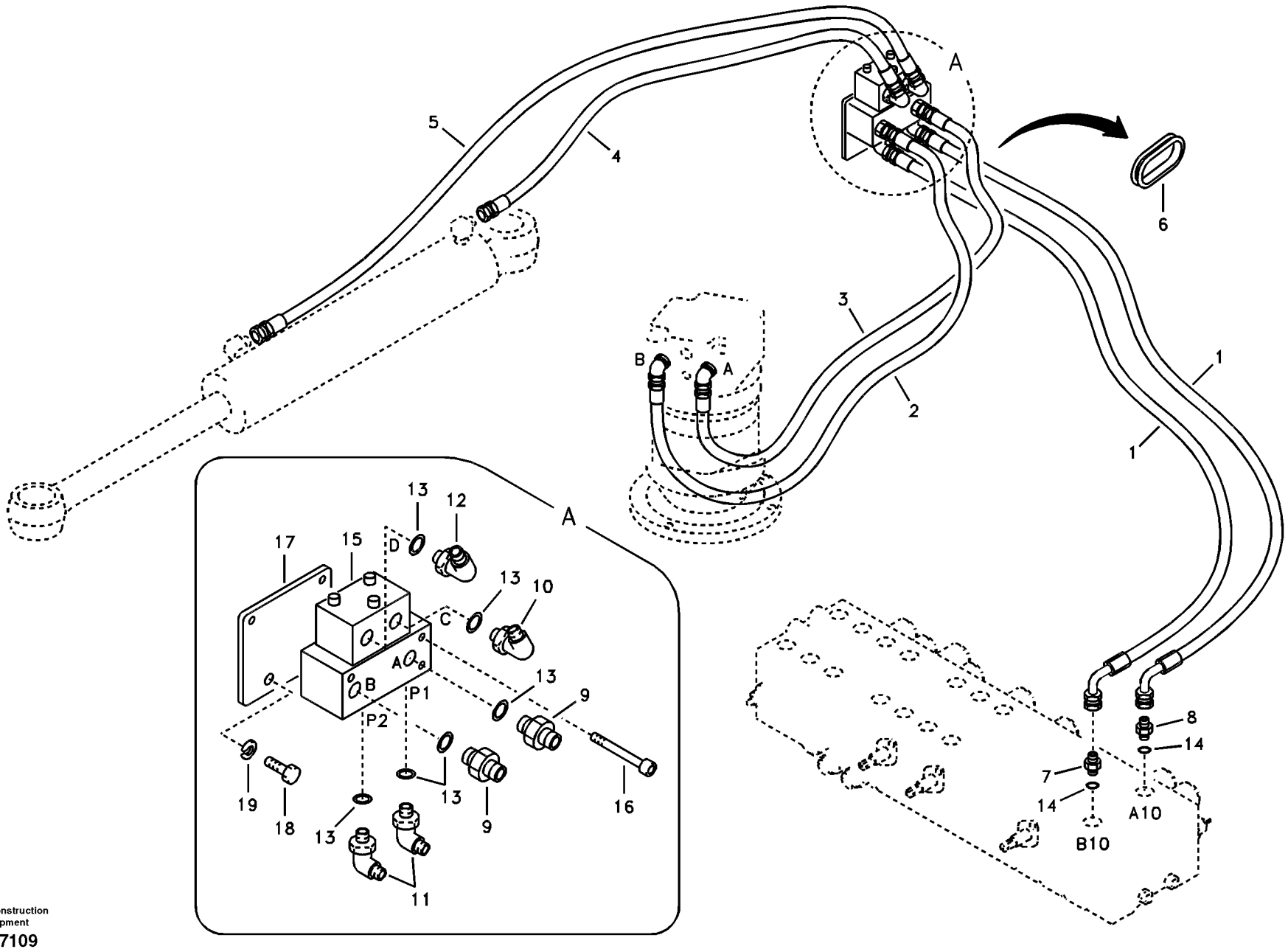
A
5
4
6
3
2
1
1
B
A
A
13
12
17
15
D
13
10
C
A
B
P1
P2
13
9
19
18
13
13
9
16
11
8
14
7
14
A10
B10

Fig.	Part No.	Quantity 1	2	3	PS	KIT	Description	Dénomination	Bezeichnung	품명	Denominación	Notes
1	**SA 9453-04438**	2					Hose	Durit	Schlauch	호스	Tubo flexible	
2	**SA 9453-04425**	1					Hose	Durit	Schlauch	호스	Tubo flexible	
3	**SA 9451-04425**	1					Hose	Durit	Schlauch	호스	Tubo flexible	
4	**SA 9451-03708**	1					Hose	Durit	Schlauch	호스	Tubo flexible	
5	**SA 9451-03723**	1					Hose	Durit	Schlauch	호스	Tubo flexible	
6	**VOE 14514580**	1					Grommet	Passe fil	Durchführung	그로메트	Aislador pasapanel	
7	**SA 9412-11042**	1					Connector	Raccord	Anschluss	커넥터	Union	
8	**SA 9412-11040**	1					Connector	Raccord	Anschluss	커넥터	Union	
9	**SA 9412-11140**	2					Connector	Raccord	Anschluss	커넥터	Union	
10	**SA 9413-11020**	1					Elbow	Coude	Winkelstueck	엘보	Tubo acodado	
11	**SA 9413-11180**	2					Elbow	Coude	Winkelstueck	엘보	Tubo acodado	
12	**SA 9414-11020**	1					Elbow	Coude	Winkelstueck	엘보	Tubo acodado	
13	**SA 9511-12014**	6					O-ring	Joint Torique	O-Ring	오링	Junta torica	
14	**SA 9511-12018**	2			SS		O-ring	Joint Torique	O-Ring	오링	Junta torica	
15	**VOE 14521856**	1					Valve	Soupape	Ventil	밸브	Valvula	
16	**VOE 984347**	3					Screw	Vis	Schraube	스크류	Tornillo	
17	**VOE 14504428**	1					Plate	Plaque	Platte	플레이트	Placa	
18	**VOE 978932**	2					Screw	Vis	Schraube	스크류	Tornillo	
19	**VOE 955923**	2					Spring Washer	Rondelle élastique	Federscheibe	스프링 와셔	Arandela flexible	

1	**8278836**	**Sistema hidráulico, giro** 붐 선회 장치 **Hydraulikkreis, Schwenken** **Système hydraulique, orientation** **Boom swing system**	Catalogue id **20019**	Group **971**
2			Illustr. No **1007109**	Section **150**
3			Issue **VOE 74H9920019**	Page **621**
4				
5				

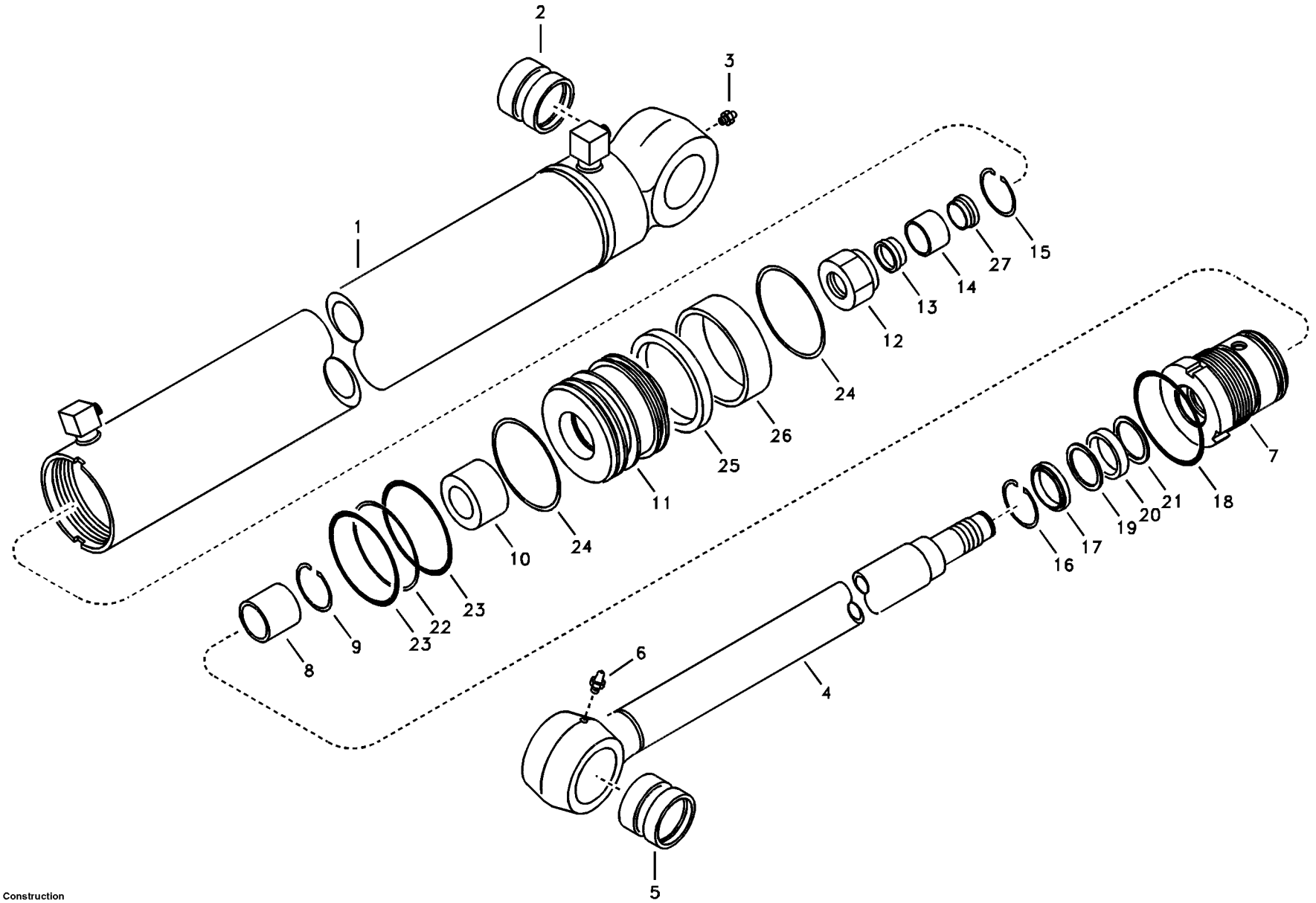

Volvo Construction Equipment

1007110

Fig.	Part No.	Quantity 1	2	3	PS	KIT	Description	Dénomination	Bezeichnung	품명	Denominación	Notes
	SA 1146-01211	1					Cylinder	Verin	Zylinder	실린더	Cilindro	
1	**VOE 14501085**	1			OP		•Pipe	•Canalisation	•Rohrleitung	• 파이프	•Canalizacion	
2	**VOE 14517955**	1					••Bushing	••Bague	••Buchse	•• 부싱	••Casquillo	
3	**SA 9481-10003**	1					••Nipple	••Raccord	••Nippel	•• 니플	••Niple	
4	**VOE 14501086**	1					•Bar	•Barre	•Stab	• 바	•Barra	
5	**VOE 14517955**	1					••Bushing	••Bague	••Buchse	•• 부싱	••Casquillo	
6	**SA 9481-10003**	2					•Nipple	•Raccord	•Nippel	• 니플	•Niple	
7	**SA 1146-02020**	1			OP		•Head	•Tete	•Kopf	• 헤드	•Capo	
8	**SA 9612-04530**	1				K	•Bushing	•Bague	•Buchse	• 부싱	•Casquillo	
9	**SA 9557-04000**	1					•Ring	•Anneau	•Ring	• 링	•Anillo	
10	**SA 1146-02040**	1					•Cushion	•Coussin	•Sitzkissen	• 쿠션	•Cojin	
11	**SA 1146-02070**	1			OP		•Piston	•Piston	•Kolben	• 피스톤	•Piston	
12	**SA 9133-12700**	1					•Lock nut	•Contre-ecrou	•Sicherungsmutter	• 록 너트	•Contratuerca	
13	**SA 1146-02080**	1					•Ring	•Anneau	•Ring	• 링	•Anillo	
14	**SA 1146-02090**	1					•Cushion	•Coussin	•Sitzkissen	• 쿠션	•Cojin	
15	**SA 1146-06630**	1					•Ring	•Anneau	•Ring	• 링	•Anillo	
16	**SA 9556-04500**	1					•Ring	•Anneau	•Ring	• 링	•Anillo	
17	**SA 9564-20450**	1				K	•Seal	•Joint	•Dichtring	• 시일	•Junta	
18	**SA 9511-22090**	1				K	•O-ring	•Joint Torique	•O-Ring	• 오링	•Junta torica	
19	**SA 9567-20450**	1				K	•Ring	•Anneau	•Ring	• 링	•Anillo	
20	**SA 9563-20450**	1				K	•Seal	•Joint	•Dichtring	• 시일	•Junta	
21	**SA 1146-08220**	1				K	•Buffer Ring	•Butee	•Puffer Ring	• 버퍼 링	•Parachoques	
22	**SA 9566-30800**	1				K	•Ring	•Anneau	•Ring	• 링	•Anillo	
23	**SA 9511-12080**	2				K	•O-ring	•Joint Torique	•O-Ring	• 오링	•Junta torica	
24	**SA 9568-00900**	2				K	•Seal	•Joint	•Dichtring	• 시일	•Junta	
25	**SA 1146-07850**	1				K	•Packing	•Joint	•Dichtung	• 패킹	•Empaquetadura	
26	**SA 9565-20900**	1				K	•Ring	•Anneau	•Ring	• 링	•Anillo	
27	**SA 1146-06950**	1					•Ring	•Anneau	•Ring	• 링	•Anillo	
100	**SA 8148-14051**	1					Sealing Kit	Jeu Joints	Dichtungssatz	시일 킷	Juego Retenes	

1	**8278857**	**Pluma de giro cilindro** 붐 선회 실린더 **Ausleger-schwenk Zylinder** **Flêche d'orientation - cylindre** **Boom swing cylinder**	Catalogue id **20019**	Group **971**
2			Illustr. No **1007110**	Section **600**
3			Issue **VOE 74H9920019**	Page **623**
4				
5				

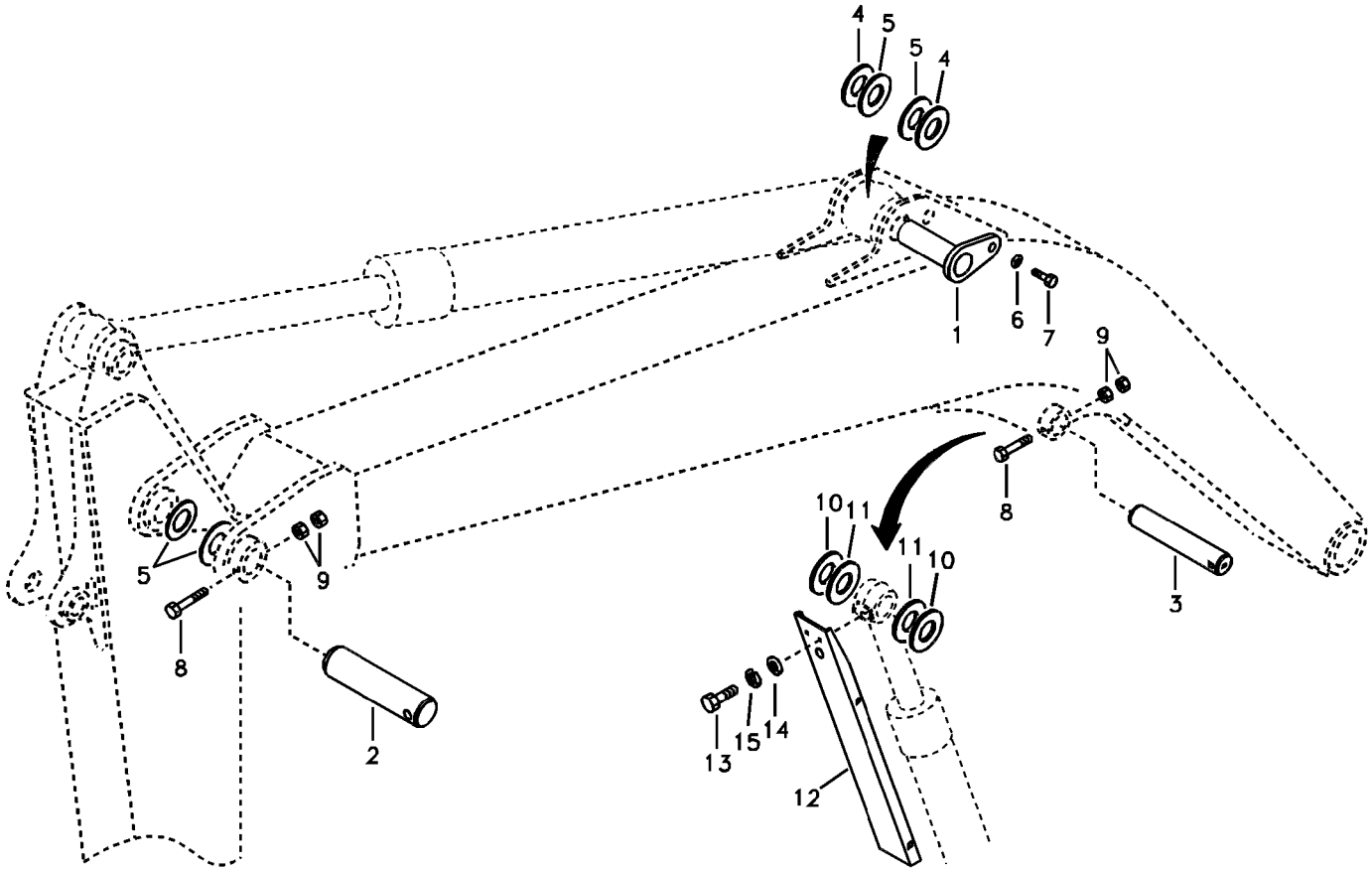
4
5
5
4
1
6
7
9
8
10
11
11
10
5
9
8
3
2
13
15
14
12

Fig.	Part No.	Quantity 1	2	3	4	5	PS	KIT	Description	Dénomination	Bezeichnung	품명	Denominación	Notes
1	**VOE 14519819**		1						Pin	Goupille	Zapfen	핀	Pasador	
2	**VOE 14517420**		1						Pin	Goupille	Zapfen	핀	Pasador	
3	**VOE 14517421**		1						Pin	Goupille	Zapfen	핀	Pasador	SER NO 30001-34475
	VOE 14543550		1						Pin	Goupille	Zapfen	핀	Pasador	SER NO 34476-
4	**SA 1171-30610**		4						Shim	Cale d'épaisseur	Passcheibe	심	Arandela Ajuste	1,0mm SER NO 30001-34475
	SA 1171-30610		2						Shim	Cale d'épaisseur	Passcheibe	심	Arandela Ajuste	SER NO 34476-
5	**SA 1171-30620**		6						Shim	Cale d'épaisseur	Passcheibe	심	Arandela Ajuste	0,5mm SER NO 30001-34475
	SA 1171-30620		4						Shim	Cale d'épaisseur	Passcheibe	심	Arandela Ajuste	SER NO 34476-
6	**SA 2051-01950**		1						Washer	Rondelle	Scheibe	와셔	Arandela	SER NO 30001-34475
	VOE 14532477		1						Washer	Rondelle	Scheibe	와셔	Arandela	SER NO 34476-
7	**SA 9011-11204**		1						Bolt	Boulon	Bolzen	볼트	Perno	
8	**SA 9011-21218**		2						Bolt	Boulon	Bolzen	볼트	Perno	
9	**VOE 979019**		4						Hexagon Nut	Ecrou Hexagonal	Sechskantmutter	너트	Tuerca Hexagon	
10	**VOE 14535809**		2						Shim	Cale d'épaisseur	Passcheibe	심	Arandela Ajuste	SER NO 34476-
11	**VOE 14535810**		2						Shim	Cale d'épaisseur	Passcheibe	심	Arandela Ajuste	SER NO 34476-
12	**SA 1173-30091**	1		1	1	1			Cover	Capot	Haube	커버	Capo	
13	**VOE 983252**	2		2	2	2			Screw	Vis	Schraube	스크류	Tornillo	
14	**SA 9285-17000**	2		2	2	2			Washer	Rondelle	Scheibe	와셔	Arandela	
15	**VOE 955922**	2		2	2	2			Spring Washer	Rondelle élastique	Federscheibe	스프링 와셔	Arandela flexible	

1	**8278834**
2	**8278840**
3	**8278842 S/N -34475**
4	**8278852 S/N -34475**
5	

Acoplamientos para la pluma
붐 연결 장치
Gelenke zu Ausleger
Articulations, flèche
Links to boom

Catalogue id **20019**	Group **974**
Illustr. No **1019794**	Section **100**
Issue **VOE 74H9920019**	Page **625**

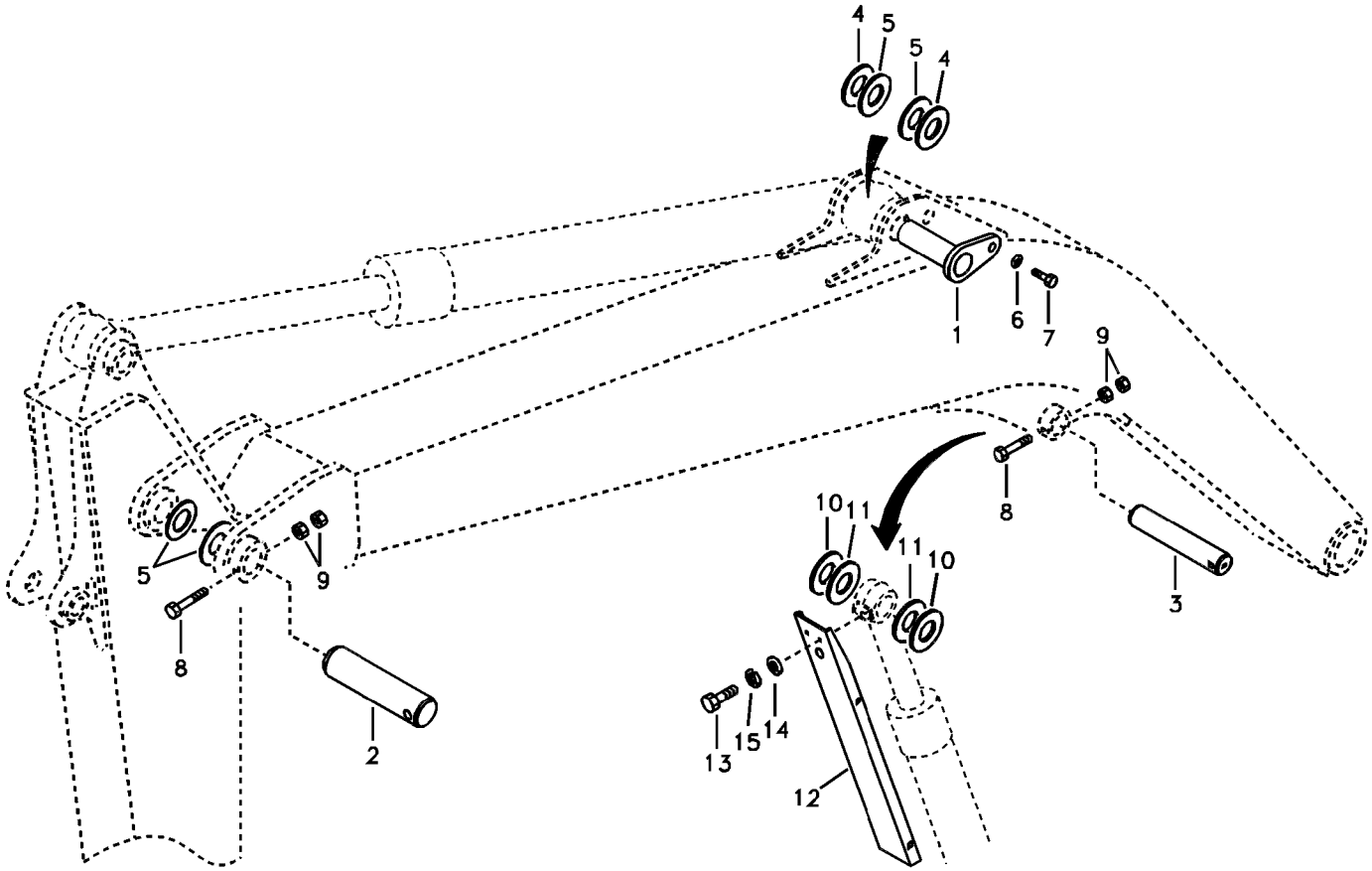
4
5
5
4
1
6
7
9
8
10
11
11
10
5
9
8
3
2
13
15
14
12

Fig.	Part No.	Quantity 1	2	3	4	5	P S	K I T	Description	Dénomination	Bezeichnung	품명	Denominación	Notes
1	**VOE 14519819**	1							Pin	Goupille	Zapfen	핀	Pasador	
2	**VOE 14517420**	1							Pin	Goupille	Zapfen	핀	Pasador	
3	**VOE 14517421**	1							Pin	Goupille	Zapfen	핀	Pasador	SER NO 50001-50129
	VOE 14543550	1							Pin	Goupille	Zapfen	핀	Pasador	SER NO 50130-
4	**SA 1171-30610**	4							Shim	Cale d'épaisseur	Passcheibe	심	Arandela Ajuste	1,0mm SER NO 50001-50129
	SA 1171-30610	2							Shim	Cale d'épaisseur	Passcheibe	심	Arandela Ajuste	SER NO 50130-
5	**SA 1171-30620**	6							Shim	Cale d'épaisseur	Passcheibe	심	Arandela Ajuste	0,5mm SER NO 50001-50129
	SA 1171-30620	4							Shim	Cale d'épaisseur	Passcheibe	심	Arandela Ajuste	SER NO 50130-
6	**SA 2051-01950**	1							Washer	Rondelle	Scheibe	와셔	Arandela	SER NO 50001-50129
	VOE 14532477	1							Washer	Rondelle	Scheibe	와셔	Arandela	SER NO 50130-
7	**SA 9011-11204**	1							Bolt	Boulon	Bolzen	볼트	Perno	
8	**SA 9011-21218**	2							Bolt	Boulon	Bolzen	볼트	Perno	
9	**VOE 979019**	4							Hexagon Nut	Ecrou Hexagonal	Sechskantmutter	너트	Tuerca Hexagon	
10	**VOE 14535809**	2							Shim	Cale d'épaisseur	Passcheibe	심	Arandela Ajuste	SER NO 50130-
11	**VOE 14535810**	2							Shim	Cale d'épaisseur	Passcheibe	심	Arandela Ajuste	SER NO 50130-
12	**SA 1173-30091**		1	1	1				Cover	Capot	Haube	커버	Capo	
13	**VOE 983252**		2	2	2				Screw	Vis	Schraube	스크류	Tornillo	
14	**SA 9285-17000**		2	2	2				Washer	Rondelle	Scheibe	와셔	Arandela	
15	**VOE 955922**		2	2	2				Spring Washer	Rondelle élastique	Federscheibe	스프링 와셔	Arandela flexible	

1	**8278840**
2	**8278853 S/N -50129**
3	**8280524 S/N 50130-**
4	**8280525 S/N 50130-**
5	

Acoplamientos para la pluma
붐 연결 장치
Gelenke zu Ausleger
Articulations, flèche
Links to boom

FOR CHINA

Catalogue id **20019**	Group **974**
Illustr. No **1019794**	Section **110**
Issue **VOE 74H9920019**	Page **627**

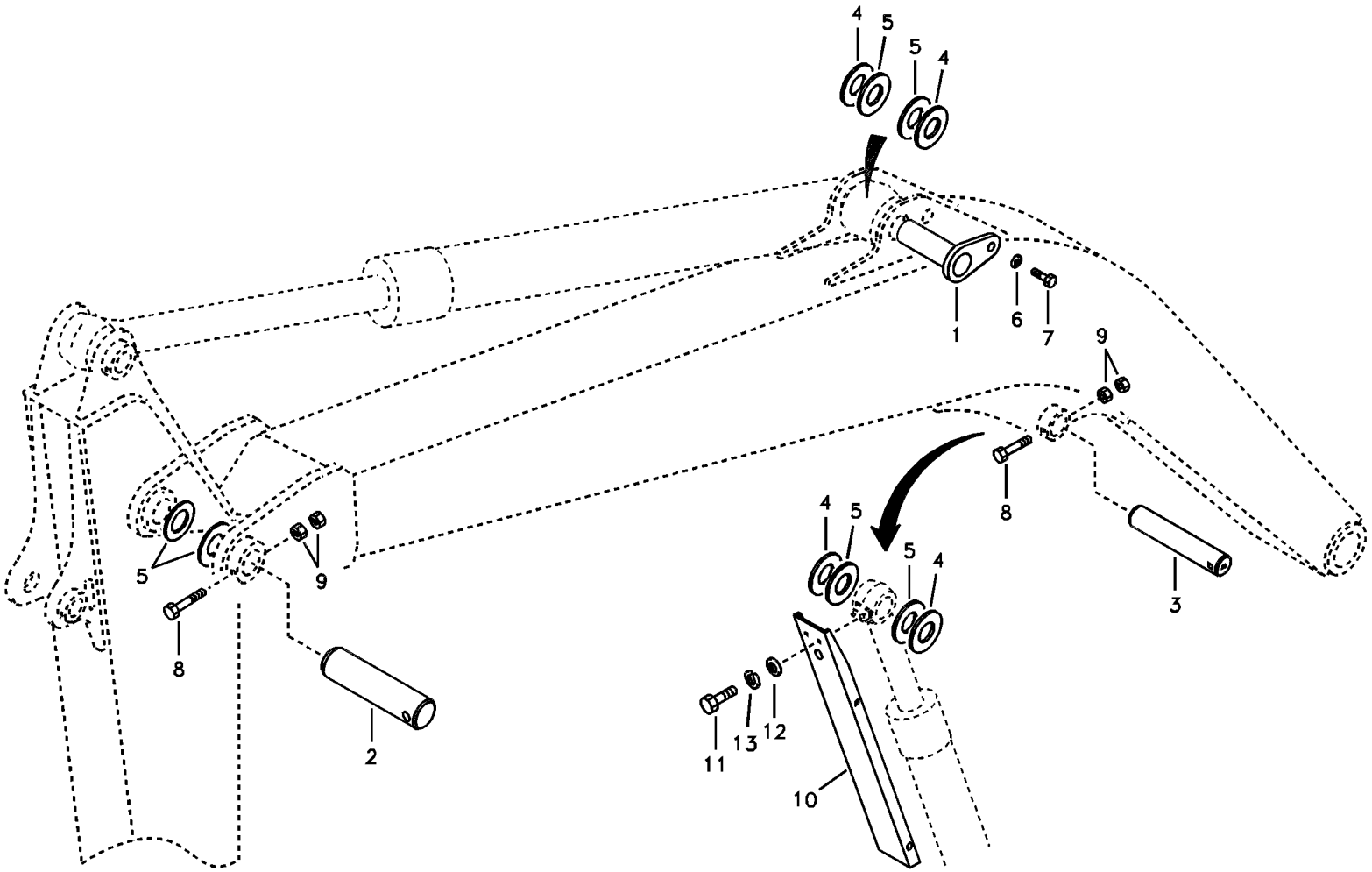

Volvo Construction Equipment

1007111

Fig.	Part No.	Quantity 1	2	3	PS	KIT	Description	Dénomination	Bezeichnung	품명	Denominación	Notes
1	**VOE 14519819**	1					Pin	Goupille	Zapfen	핀	Pasador	
2	**VOE 14517420**	1					Pin	Goupille	Zapfen	핀	Pasador	
3	**VOE 14517421**	1					Pin	Goupille	Zapfen	핀	Pasador	
4	**SA 1171-30610**	4					Shim	Cale d'épaisseur	Passcheibe	심	Arandela Ajuste	1,0mm
5	**SA 1171-30620**	6					Shim	Cale d'épaisseur	Passcheibe	심	Arandela Ajuste	0,5mm
6	**SA 2051-01950**	1					Washer	Rondelle	Scheibe	와셔	Arandela	
7	**SA 9011-11204**	1					Bolt	Boulon	Bolzen	볼트	Perno	
8	**SA 9011-21218**	2					Bolt	Boulon	Bolzen	볼트	Perno	
9	**VOE 979019**	4					Hexagon Nut	Ecrou Hexagonal	Sechskantmutter	너트	Tuerca Hexagon	
10	**SA 1173-30091**		1	1			Cover	Capot	Haube	커버	Capo	
11	**VOE 983252**		2	2			Screw	Vis	Schraube	스크류	Tornillo	
12	**SA 9285-17000**		2	2			Washer	Rondelle	Scheibe	와셔	Arandela	
13	**VOE 955922**		2	2			Spring Washer	Rondelle élastique	Federscheibe	스프링 와셔	Arandela flexible	

1	**8278842**	**Acoplamientos para la pluma** 붐 연결 장치 **Gelenke zu Ausleger** **Articulations, flèche** **Links to boom**	Catalogue id **20019**	Group **974**
2	**8280524 S/N 34476-**		Illustr. No **1007111**	Section **150**
3	**8280525 S/N 34476-**		Issue **VOE 74H9920019**	Page **629**
4				
5				

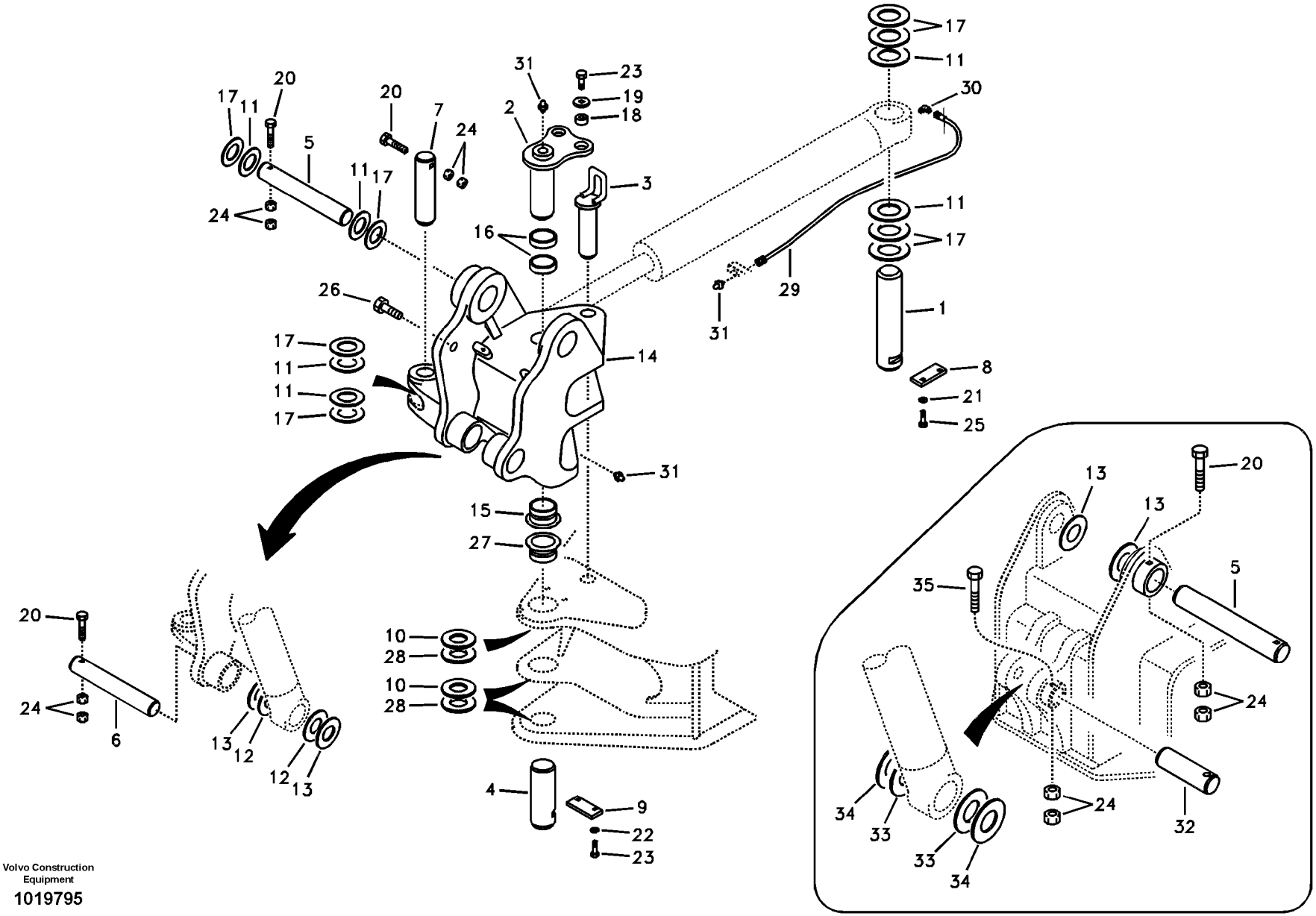

Volvo Construction Equipment

1019795

Fig.	Part No.	Quantity 1	2	3	4	5	PS	KIT	Description	Dénomination	Bezeichnung	품명	Denominación	Notes
1	**VOE 14519921**	1	1						Pin	Goupille	Zapfen	핀	Pasador	
2	**VOE 14519820**	1	1				SS		Pin	Goupille	Zapfen	핀	Pasador	SER NO 30001-32353
	VOE 14527894	1	1						Pin	Goupille	Zapfen	핀	Pasador	SER NO 32354-
3	**VOE 14507565**	1	1						Pin	Fiche	Stecker	핀	Ficha	
4	**VOE 14519821**	1	1						Pin	Goupille	Zapfen	핀	Pasador	SER NO 30001-32353
	VOE 14527895	1	1						Pin	Goupille	Zapfen	핀	Pasador	SER NO 32354-
5	**VOE 14517422**	1	1	1	1				Pin	Goupille	Zapfen	핀	Pasador	SER NO 30001-34475
	VOE 14543547			1	1				Pin	Goupille	Zapfen	핀	Pasador	SER NO 34476-
6	**VOE 14517423**	1	1				SS		Pin	Goupille	Zapfen	핀	Pasador	
7	**VOE 14519725**	1	1						Pin	Goupille	Zapfen	핀	Pasador	
8	**SA 1070-23270**	1	1						Plate	Plaque	Platte	플레이트	Placa	
9	**SA 1075-00250**	1	1						Stop	Arrêt	Anschlag	스톱	Parada	
10	**SA 1171-30440**	3	3						Shim	Cale d'épaisseur	Passcheibe	심	Arandela Ajuste	2,0mm
11	**SA 1171-30580**	4	4						Shim	Cale d'épaisseur	Passcheibe	심	Arandela Ajuste	0,5mm
12	**SA 1171-30610**	4	4	4	4				Shim	Cale d'épaisseur	Passcheibe	심	Arandela Ajuste	1,0mm
13	**SA 1171-30620**	4	4	4	4				Shim	Cale d'épaisseur	Passcheibe	심	Arandela Ajuste	0,5mm SER NO 30001-34475
	SA 1171-30620			2	2				Shim	Cale d'épaisseur	Passcheibe	심	Arandela Ajuste	SER NO 34476-
14	**VOE 14511839**	1	1				SS		Support	Support	Stütze	서포트	Apoyo	SER NO 30001-32353
	VOE 14527893	1	1						Support	Support	Stütze	서포트	Apoyo	SER NO 32354-32574
	VOE 14528502	1	1						Support	Support	Stütze	서포트	Apoyo	SER NO 32575-
15	**SA 1173-30060**	1	1				SS		•Bushing	•Bague	•Buchse	• 부싱	•Casquillo	SER NO 30001-32574
	VOE 14527896	1	1						•Bushing	•Bague	•Buchse	• 부싱	•Casquillo	SER NO 32575-
16	**VOE 14511837**	2	2				SS		•Bushing	•Bague	•Buchse	• 부싱	•Casquillo	SER NO 30001-32574
	VOE 14527892	2	2						•Bushing	•Bague	•Buchse	• 부싱	•Casquillo	SER NO 32575-
17	**SA 1171-30640**	6	6						Shim	Cale d'épaisseur	Passcheibe	심	Arandela Ajuste	
18	**SA 1173-30082**	2	2				SS		Boss	Bossage	Warze	보스	Teton	
19	**SA 2073-00920**	2	2						Washer	Rondelle	Scheibe	와셔	Arandela	
20	**SA 9011-21219**	3	3						Bolt	Boulon	Bolzen	볼트	Perno	
	SA 9011-21218			2	2				Bolt	Boulon	Bolzen	볼트	Perno	

1	**8278836 S/N -34475**
2	**8278837 S/N -34475**
3	**8278838**
4	**8278839**
5	

Acoplamientos para la pluma
붐 연결 장치
Gelenke zu Ausleger
Articulations, flèche
Links to boom

Catalogue id **20019**	Group **974**
Illustr. No **1019795**	Section **200**
Issue **VOE 74H9920019**	Page **631**

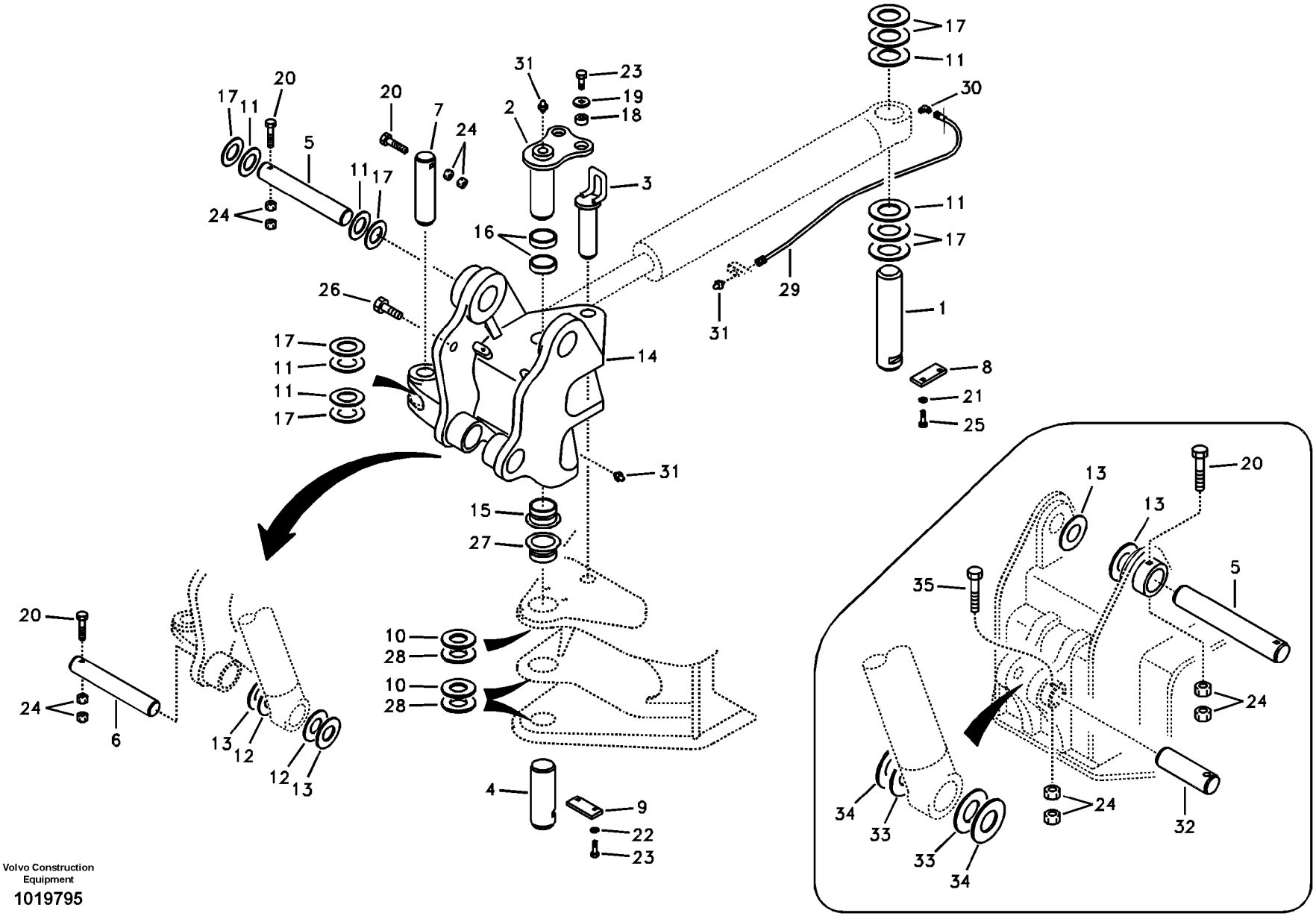

Volvo Construction Equipment

1019795

Fig.	Part No.	Quantity 1	2	3	4	5	PS	KIT	Description	Dénomination	Bezeichnung	품명	Denominación	Notes
21	**VOE 955922**	2	2						Spring Washer	Rondelle élastique	Federscheibe	스프링 와셔	Arandela flexible	
22	**VOE 955926**	2	2						Spring Washer	Rondelle élastique	Federscheibe	스프링 와셔	Arandela flexible	
23	**VOE 978936**	4	4						Hexagon screw	Vis a tête hexagona	Sechskantschr	육각 나사	Tornillo hexago	
24	**VOE 979019**	6	6	4	4				Hexagon Nut	Ecrou Hexagonal	Sechskantmutter	너트	Tuerca Hexagon	
25	**VOE 983250**	2	2						Hexagon screw	Vis tête hexagonale	Sechskantschraub	스크류	Tornillo hexago	
26	**VOE 983252**	1	1						Screw	Vis	Schraube	스크류	Tornillo	SER NO 30001-32353
27	**SA 1173-30070**	1	1				SS		Bushing	Bague	Buchse	부싱	Casquillo	SER NO 30001-32353
	VOE 14527897	1	1						Bushing	Bague	Buchse	부싱	Casquillo	SER NO 32354-
28	**SA 1171-30630**	3	3						Shim	Cale d'épaisseur	Passcheibe	심	Arandela Ajuste	
29	**VOE 14880643**	1	1						Hose	Durit	Schlauch	호스	Tubo flexible	
30	**SA 9413-43010**	1	1						Elbow	Coude	Winkelstueck	엘보	Tubo acodado	
31	**SA 9481-11003**	3	3						Nipple	Raccord	Nippel	니플	Niple	
32	**VOE 14519729**			1	1				Pin	Goupille	Zapfen	핀	Pasador	SER NO 30001-34475
	VOE 14535805			1	1				Pin	Goupille	Zapfen	핀	Pasador	SER NO 34476-
33	**SA 1171-30610**			4	4				Shim	Cale d'épaisseur	Passcheibe	심	Arandela Ajuste	SER NO 30001-34475
	VOE 14535809			2	2				Shim	Cale d'épaisseur	Passcheibe	심	Arandela Ajuste	SER NO 34476-
34	**SA 1171-30620**			2	2				Shim	Cale d'épaisseur	Passcheibe	심	Arandela Ajuste	SER NO 30001-34475
	VOE 14535810			2	2				Shim	Cale d'épaisseur	Passcheibe	심	Arandela Ajuste	SER NO 34476-
35	**SA 9011-21218**			1	1				Bolt	Boulon	Bolzen	볼트	Perno	SER NO 30001-34475
	SA 9011-21219			1	1				Bolt	Boulon	Bolzen	볼트	Perno	SER NO 34476-

1	**8278836 S/N -34475**
2	**8278837 S/N -34475**
3	**8278838**
4	**8278839**
5	

Acoplamientos para la pluma
붐 연결 장치
Gelenke zu Ausleger
Articulations, flèche
Links to boom

Catalogue id **20019**	Group **974**
Illustr. No **1019795**	Section **200**
Issue **VOE 74H9920019**	Page **633**

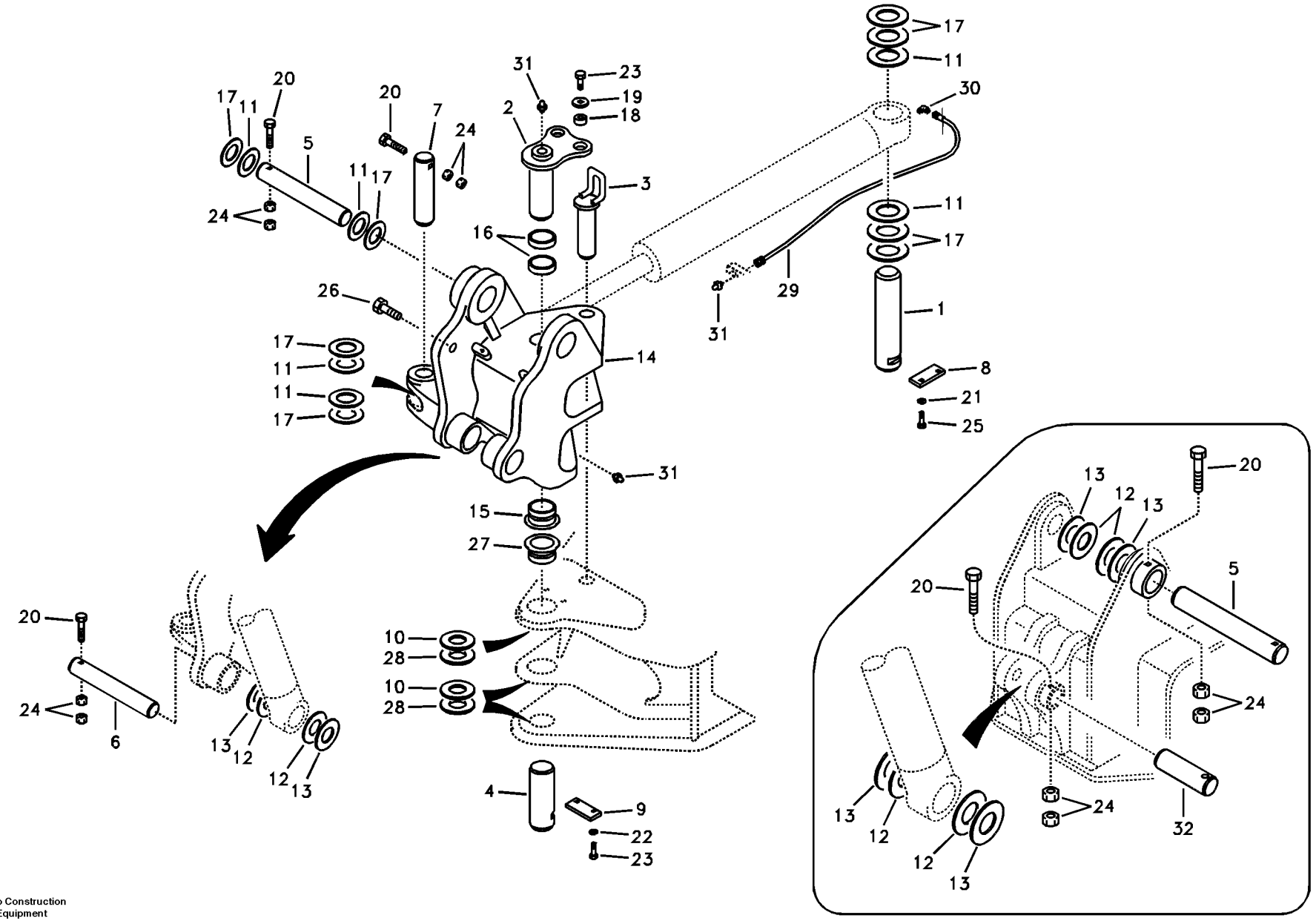

Volvo Construction Equipment

1014337

Fig.	Part No.	Quantity 1	2	3	PS	KIT	Description	Dénomination	Bezeichnung	품명	Denominación	Notes
1	**VOE 14519921**	1					Pin	Goupille	Zapfen	핀	Pasador	
2	**VOE 14519820**	1			SS		Pin	Goupille	Zapfen	핀	Pasador	SER NO 50001-50036
	VOE 14527894	1					Pin	Goupille	Zapfen	핀	Pasador	SER NO 50037-
3	**VOE 14507565**	1					Pin	Fiche	Stecker	핀	Ficha	
4	**VOE 14519821**	1					Pin	Goupille	Zapfen	핀	Pasador	SER NO 50001-50036
	VOE 14527895	1					Pin	Goupille	Zapfen	핀	Pasador	SER NO 50037-
5	**VOE 14517422**	1					Pin	Goupille	Zapfen	핀	Pasador	
6	**VOE 14517423**	1			SS		Pin	Goupille	Zapfen	핀	Pasador	
7	**VOE 14519725**	1					Pin	Goupille	Zapfen	핀	Pasador	
8	**SA 1070-23270**	1					Plate	Plaque	Platte	플레이트	Placa	
9	**SA 1075-00250**	1					Stop	Arrêt	Anschlag	스톱	Parada	
10	**SA 1171-30440**	3					Shim	Cale d'épaisseur	Passcheibe	심	Arandela Ajuste	2,0mm
11	**SA 1171-30580**	4					Shim	Cale d'épaisseur	Passcheibe	심	Arandela Ajuste	0,5mm
12	**SA 1171-30610**	4					Shim	Cale d'épaisseur	Passcheibe	심	Arandela Ajuste	1,0mm
13	**SA 1171-30620**	4					Shim	Cale d'épaisseur	Passcheibe	심	Arandela Ajuste	0,5mm
14	**VOE 14511839**	1			SS		Support	Support	Stütze	서포트	Apoyo	SER NO 50001-50036
	VOE 14527893	1					Support	Support	Stütze	서포트	Apoyo	SER NO 50037-50042
	VOE 14528502	1					Support	Support	Stütze	서포트	Apoyo	SER NO 50043-
15	**SA 1173-30060**	1			SS		•Bushing	•Bague	•Buchse	• 부싱	•Casquillo	SER NO 50001-50042
	VOE 14527896	1					•Bushing	•Bague	•Buchse	• 부싱	•Casquillo	SER NO 50043-
16	**VOE 14511837**	2			SS		•Bushing	•Bague	•Buchse	• 부싱	•Casquillo	SER NO 50001-50042
	VOE 14527892	2					•Bushing	•Bague	•Buchse	• 부싱	•Casquillo	SER NO 50043-
17	**SA 1171-30640**	6					Shim	Cale d'épaisseur	Passcheibe	심	Arandela Ajuste	
18	**SA 1173-30082**	2			SS		Boss	Bossage	Warze	보스	Teton	
19	**SA 2073-00920**	2					Washer	Rondelle	Scheibe	와셔	Arandela	
20	**SA 9011-21219**	3					Bolt	Boulon	Bolzen	볼트	Perno	
21	**VOE 955922**	2					Spring Washer	Rondelle élastique	Federscheibe	스프링 와셔	Arandela flexible	
22	**VOE 955926**	2					Spring Washer	Rondelle élastique	Federscheibe	스프링 와셔	Arandela flexible	
23	**VOE 978936**	4					Hexagon screw	Vis a tête hexagonale	Sechskantschr.	육각 나사	Tornillo hexago	
24	**VOE 979019**	6					Hexagon Nut	Ecrou Hexagonal	Sechskantmutter	너트	Tuerca Hexagon	

1	**8278837**	**Acoplamientos para la pluma** **붐 연결 장치** **Gelenke zu Ausleger** **Articulations, flèche** **Links to boom**	Catalogue id **20019**	Group **974**
2			Illustr. No **1014337**	Section **210**
3				
4			Issue **VOE 74H9920019**	Page **635**
5		**FOR CHINA**		

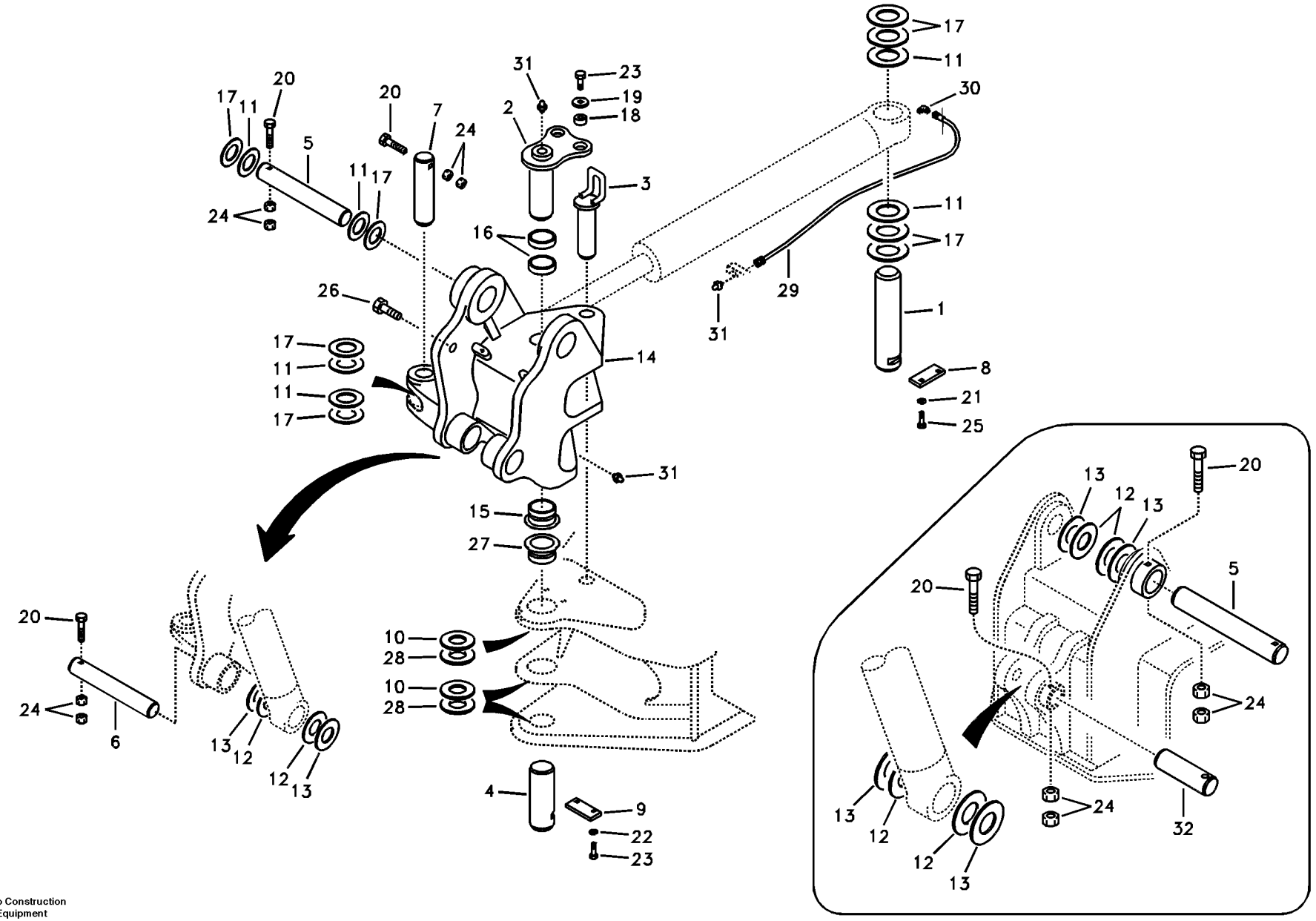

Volvo Construction Equipment

1014337

Fig.	Part No.	Quantity 1	2	3	PS	KIT	Description	Dénomination	Bezeichnung	품명	Denominación	Notes
25	**VOE 983250**	2					Hexagon screw	Vis tête hexagonale	Sechskantschraube	스크류	Tornillo hexago	
26	**VOE 983252**	1					Screw	Vis	Schraube	스크류	Tornillo	SER NO 50001-50036
27	**SA 1173-30070**	1			SS		Bushing	Bague	Buchse	부싱	Casquillo	SER NO 50001-50036
	VOE 14527897	1					Bushing	Bague	Buchse	부싱	Casquillo	SER NO 50037-
28	**SA 1171-30630**	3					Shim	Cale d'épaisseur	Passcheibe	심	Arandela Ajuste	
29	**VOE 14880643**	1					Hose	Durit	Schlauch	호스	Tubo flexible	
30	**SA 9413-43010**	1					Elbow	Coude	Winkelstueck	엘보	Tubo acodado	
31	**SA 9481-11003**	3					Nipple	Raccord	Nippel	니플	Niple	
32	**VOE 14519729**	1					Pin	Goupille	Zapfen	핀	Pasador	

1	**8278837**	**Acoplamientos para la pluma** 붐 연결 장치 **Gelenke zu Ausleger** **Articulations, flèche** **Links to boom**	Catalogue id **20019**	Group **974**
2			Illustr. No **1014337**	Section **210**
3				
4			Issue **VOE 74H9920019**	Page **637**
5		**FOR CHINA**		

VOLVO

EC55B

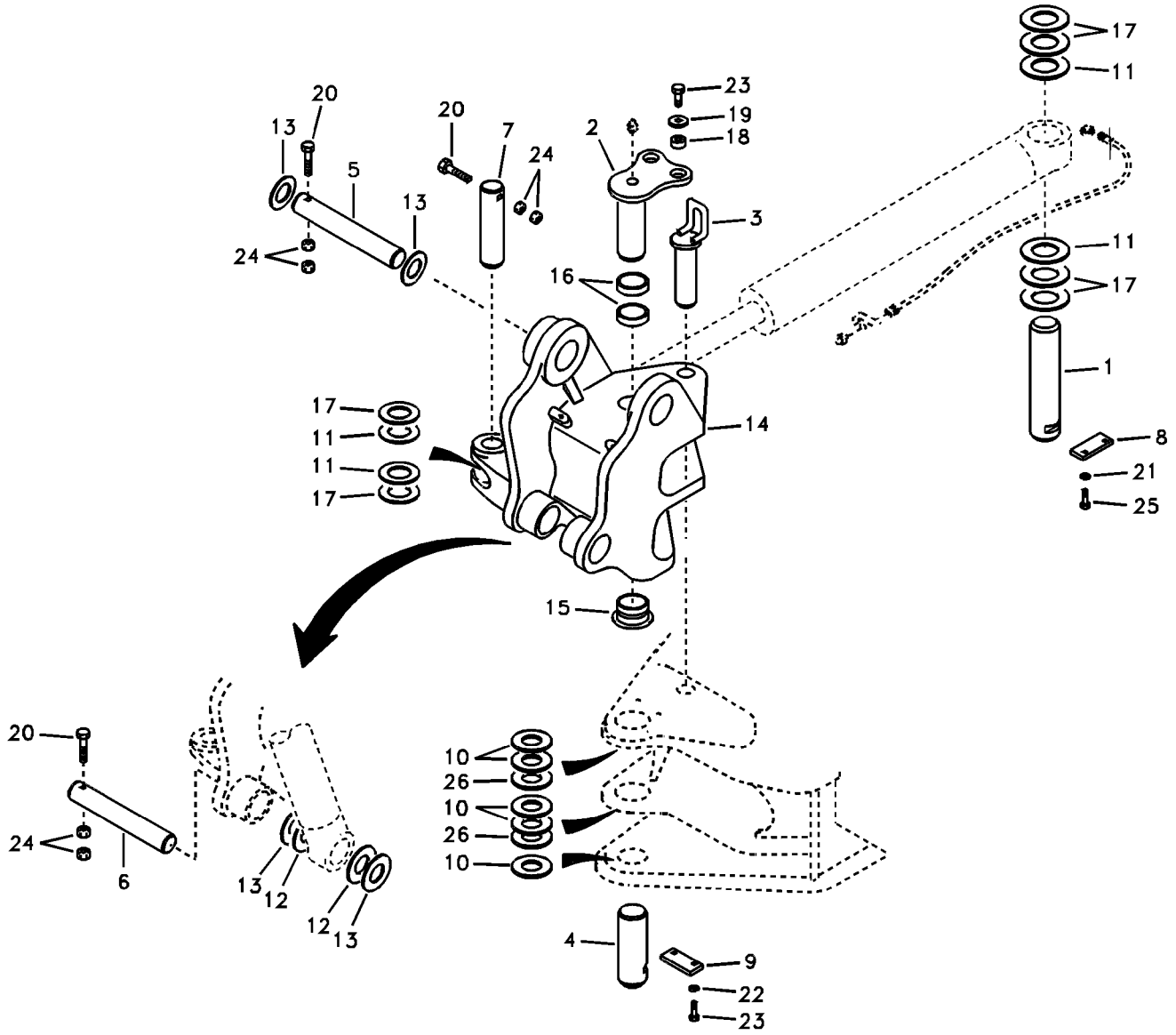
17
11
20
13
20
7
24
2
23
19
18
5
13
3
24
16
11
17
1
17
11
11
17
14
8
21
25
15
20
10
26
10
26
10
24
6
13
12
12
13
4
9
22
23

Fig.	Part No.	Quantity 1	2	3	PS	KIT	Description	Dénomination	Bezeichnung	품명	Denominación	Notes
1	**VOE 14519921**	1	1				Pin	Goupille	Zapfen	핀	Pasador	
2	**VOE 14535798**	1	1				Pin	Goupille	Zapfen	핀	Pasador	
3	**VOE 14507565**	1	1				Pin	Fiche	Stecker	핀	Ficha	
4	**VOE 14535797**	1	1				Pin	Goupille	Zapfen	핀	Pasador	
5	**VOE 14543547**	1	1				Pin	Goupille	Zapfen	핀	Pasador	
6	**VOE 14535795**	1	1				Pin	Goupille	Zapfen	핀	Pasador	
7	**VOE 14519725**	1	1				Pin	Goupille	Zapfen	핀	Pasador	
8	**SA 1070-23270**	1	1				Plate	Plaque	Platte	플레이트	Placa	
9	**VOE 14535806**	1	1				Stopper	Bouchon	Anschlag	스토퍼	Obturador	
10	**VOE 14520910**	5	5				Shim	Cale d'épaisseur	Passcheibe	심	Arandela Ajuste	2,0mm
11	**SA 1171-30580**	4	4				Shim	Cale d'épaisseur	Passcheibe	심	Arandela Ajuste	0,5mm
12	**SA 1171-30610**	4	4				Shim	Cale d'épaisseur	Passcheibe	심	Arandela Ajuste	1,0mm
13	**SA 1171-30620**	4	4				Shim	Cale d'épaisseur	Passcheibe	심	Arandela Ajuste	0,5mm
14	**VOE 14543548**	1	1				Support	Support	Stütze	서포트	Apoyo	
15	**VOE 14535804**	1	1		SS		•Bushing	•Bague	•Buchse	• 부싱	•Casquillo	
16	**VOE 14535803**	2	2		SS		•Bushing	•Bague	•Buchse	• 부싱	•Casquillo	
17	**SA 1171-30640**	6	6				Shim	Cale d'épaisseur	Passcheibe	심	Arandela Ajuste	
18	**SA 1173-30082**	2	2		SS		Boss	Bossage	Warze	보스	Teton	
19	**SA 2073-00920**	2	2				Washer	Rondelle	Scheibe	와셔	Arandela	
20	**SA 9011-21218**	2	2				Bolt	Boulon	Bolzen	볼트	Perno	
21	**VOE 955922**	2	2				Spring Washer	Rondelle élastique	Federscheibe	스프링 와셔	Arandela flexible	
22	**VOE 955926**	2	2				Spring Washer	Rondelle élastique	Federscheibe	스프링 와셔	Arandela flexible	
23	**VOE 978936**	4	4				Hexagon screw	Vis a tête hexagonale	Sechskantschr.	육각 나사	Tornillo hexago	
24	**VOE 979019**	6	6				Hexagon Nut	Ecrou Hexagonal	Sechskantmutter	너트	Tuerca Hexagon	
25	**VOE 983250**	2	2				Hexagon screw	Vis tête hexagonale	Sechskantschraube	스크류	Tornillo hexago	
26	**SA 1171-30630**	2	2				Shim	Cale d'épaisseur	Passcheibe	심	Arandela Ajuste	

1	**8278836 S/N 34476-**
2	**8278837 S/N 34476-**
3	
4	
5	

Acoplamientos para la pluma
붐 연결 장치
Gelenke zu Ausleger
Articulations, flèche
Links to boom

Catalogue id **20019**	Group **974**
Illustr. No **1018999**	Section **250**
Issue **VOE 74H9920019**	Page **639**

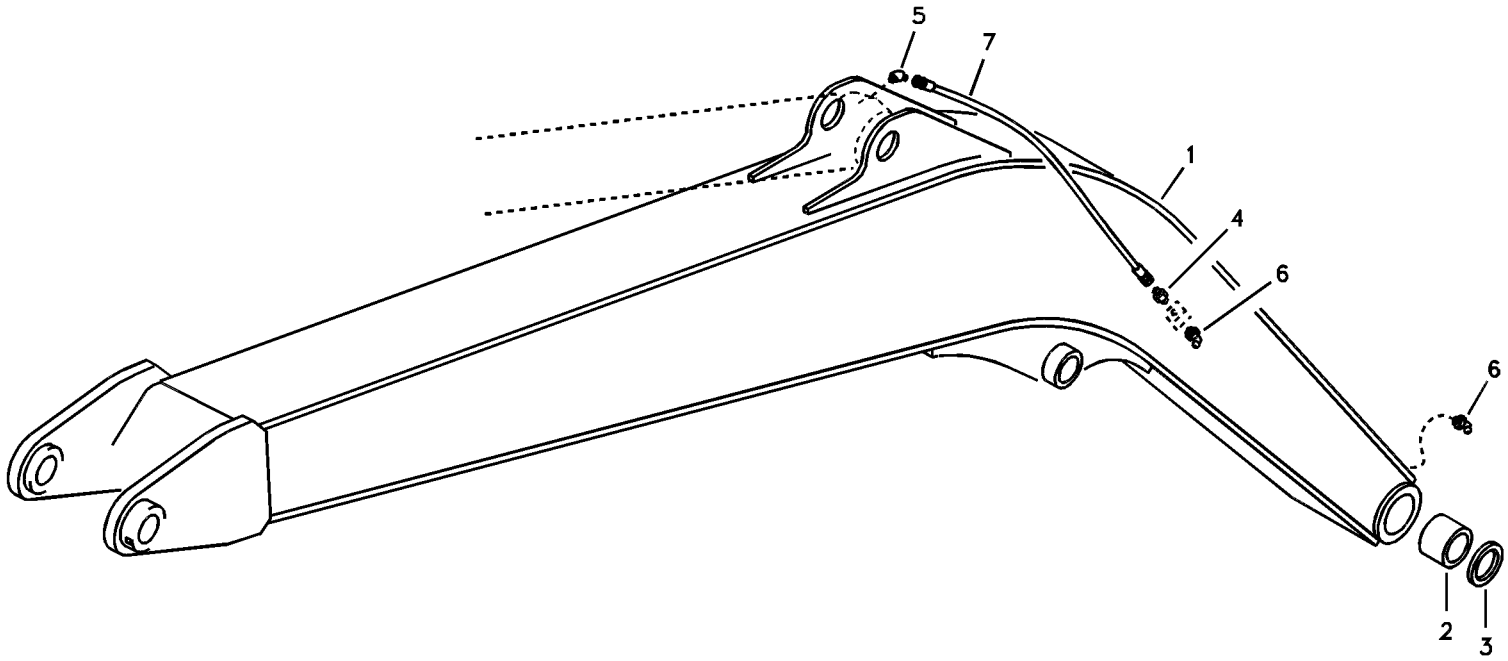
5
7
1
4
6
6
2
3

Fig.	Part No.	Quantity 1	2	3	PS	KIT	Description	Dénomination	Bezeichnung	품명	Denominación	Notes
1	**VOE 14519732**	1					Boom	Fleche	Ausleger	붐	Pluma	3,03m SER NO 30001-32353
	VOE 14528298	1					Boom	Fleche	Ausleger	붐	Pluma	SER NO 32354-33627
	VOE 14534328	1					Boom	Fleche	Ausleger	붐	Pluma	SER NO 33628-34475
	VOE 14543551	1					Boom	Fleche	Ausleger	붐	Pluma	SER NO 34476-
	VOE 14519734		1				Boom	Fleche	Ausleger	붐	Pluma	3,03m Wood-grip SER NO 30001-32353
	VOE 14528300		1				Boom	Fleche	Ausleger	붐	Pluma	SER NO 32354-33627
	VOE 14534329		1				Boom	Fleche	Ausleger	붐	Pluma	SER NO 33628-33895
	VOE 14537144		1				Boom	Fleche	Ausleger	붐	Pluma	SER NO 33896-34475 SER NO 50001-50129
	VOE 14543553		1				Boom	Fleche	Ausleger	붐	Pluma	SER NO 34476- SER NO 50130-
2	**VOE 14510771**	2	2				•Bushing	•Bague	•Buchse	• 부싱	•Casquillo	
3	**VOE 14880730**	2	2				•Seal	•Joint	•Dichtring	• 시일	•Junta	
4	**SA 9412-43110**	1	1				Connector	Raccord	Anschluss	커넥터	Union	
5	**SA 9414-43090**	1	1				Elbow	Coude	Winkelstueck	엘보	Tubo acodado	
6	**SA 9481-21002**	2	2				Nipple	Raccord	Nippel	니플	Niple	
7	**VOE 14880648**	1	1				Hose	Durit	Schlauch	호스	Tubo flexible	

1	**8278840**
2	**8278842**
3	
4	
5	

Pluma y tubería de lubricación
붐 및 윤활 배관
Ausleger und Schmierleitungen
Flèche et conduits de graissage
Boom and grease piping

Catalogue id **20019**	Group **974**
Illustr. No **1007113**	Section **300**
Issue **VOE 74H9920019**	Page **641**

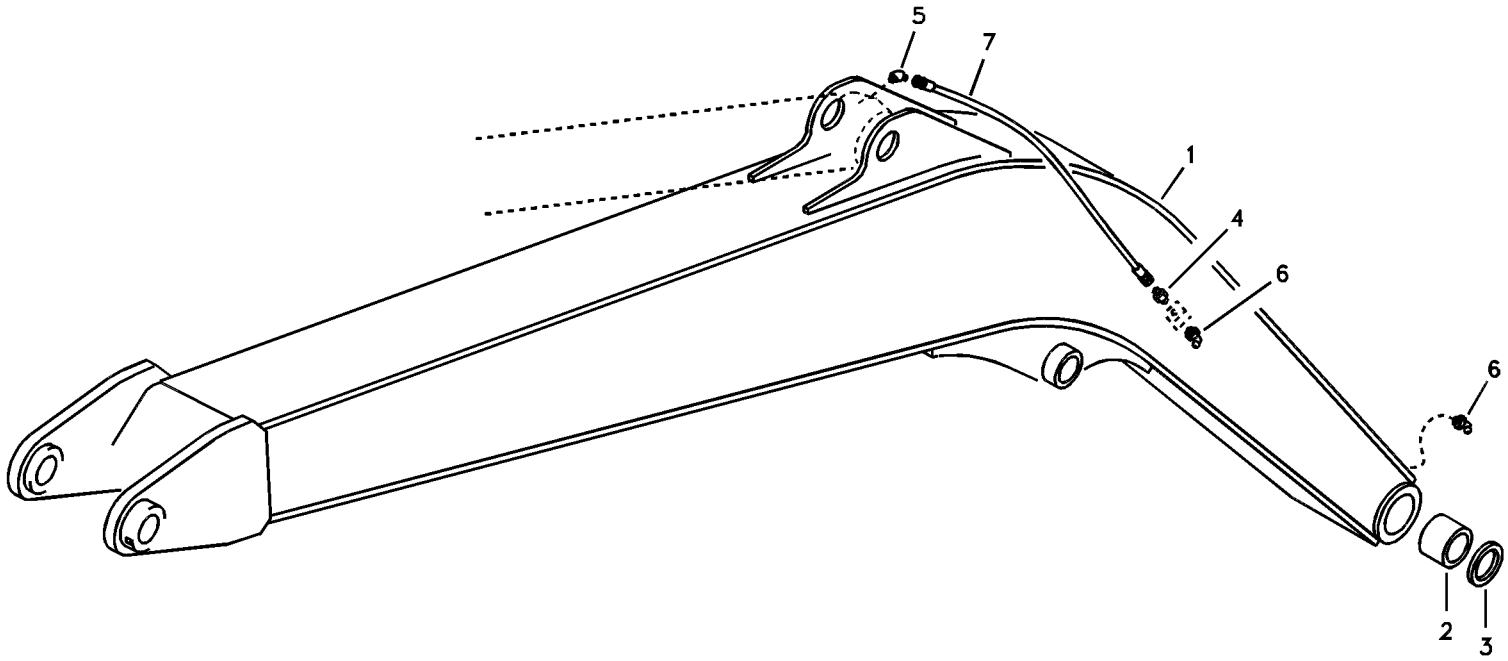
5
7
1
4
6
6
2
3

Fig.	Part No.	Quantity 1	2	3	PS	KIT	Description	Dénomination	Bezeichnung	품명	Denominación	Notes
1	**VOE 14519732**	1					Boom	Fleche	Ausleger	붐	Pluma	3,03m SER NO 50001-50036
	VOE 14528298	1					Boom	Fleche	Ausleger	붐	Pluma	SER NO 50037-50064
	VOE 14534328	1					Boom	Fleche	Ausleger	붐	Pluma	SER NO 50065-50129
	VOE 14543551	1					Boom	Fleche	Ausleger	붐	Pluma	SER NO 50130-
2	**VOE 14510771**	2					•Bushing	•Bague	•Buchse	• 부싱	•Casquillo	
3	**VOE 14880730**	2					•Seal	•Joint	•Dichtring	• 시일	•Junta	
4	**SA 9412-43110**	1					Connector	Raccord	Anschluss	커넥터	Union	
5	**SA 9414-43090**	1					Elbow	Coude	Winkelstueck	엘보	Tubo acodado	
6	**SA 9481-21002**	2					Nipple	Raccord	Nippel	니플	Niple	
7	**VOE 14880648**	1					Hose	Durit	Schlauch	호스	Tubo flexible	

1	**8278840**	**Pluma y tubería de lubricación** **붐 및 윤활 배관** **Ausleger und Schmierleitungen** **Flèche et conduits de graissage** **Boom and grease piping**	Catalogue id **20019**	Group **974**
2			Illustr. No **1007113**	Section **310**
3				
4			Issue **VOE 74H9920019**	Page **643**
5		**FOR CHINA**		

VOLVO

EC55B

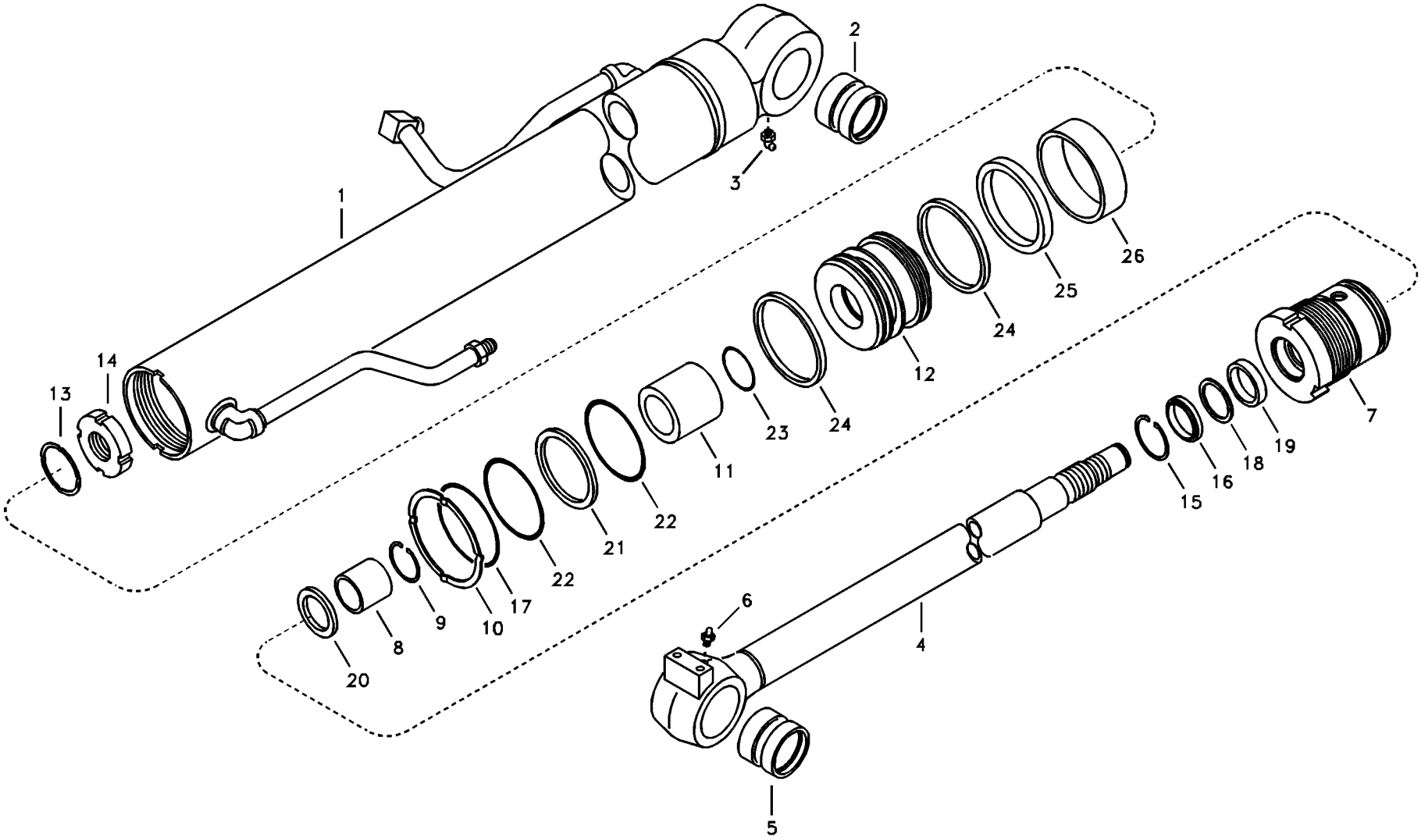

Volvo Construction Equipment

1007114

Fig.	Part No.	Quantity 1	2	3	4	5	P S	K I T	Description	Dénomination	Bezeichnung	품명	Denominación	Notes
	VOE 14507999	1					SS		Boom Cylinder	Verin de fleche	Auslegerzylinder	붐 실린더	Maquina de flecha..	SER NO 30001-31254
	VOE 14524925	1							Boom Cylinder	Verin de fleche	Auslegerzylinder	붐 실린더	Maquina de flecha..	SER NO 31255-
	VOE 14501658		1				SS		Boom Cylinder	Verin de fleche	Auslegerzylinder	붐 실린더	Maquina de flecha..	SER NO 30001-31254
	VOE 14524922		1						Boom Cylinder	Verin de fleche	Auslegerzylinder	붐 실린더	Maquina de flecha..	SER NO 31255-
	VOE 14501659			1			SS		Boom Cylinder	Verin de fleche	Auslegerzylinder	붐 실린더	Maquina de flecha..	SER NO 30001-31254
	VOE 14524923			1					Boom Cylinder	Verin de fleche	Auslegerzylinder	붐 실린더	Maquina de flecha..	SER NO 31255-
	SA 1146-06461				1		SS		Boom Cylinder	Verin de fleche	Auslegerzylinder	붐 실린더	Maquina de flecha..	SER NO 30001-31254
	VOE 14524924				1				Boom Cylinder	Verin de fleche	Auslegerzylinder	붐 실린더	Maquina de flecha..	SER NO 31255-
1	**VOE 14508000**	1							•Pipe	•Canalisation	•Rohrleitung	• 파이프	•Canalizacion	SER NO 30001-31254
	VOE 14525209	1					OP		•Tube	•Tube	•Rohr	• 튜브	•Tubo	SER NO 31255-
	VOE 14503271		1				SS		•Pipe	•Canalisation	•Rohrleitung	• 파이프	•Canalizacion	SER NO 30001-31254
	VOE 14525160		1				OP		•Tube	•Tube	•Rohr	• 튜브	•Tubo	SER NO 31255-
	VOE 14503272			1					•Pipe	•Canalisation	•Rohrleitung	• 파이프	•Canalizacion	SER NO 30001-31254
	VOE 14525162			1			OP		•Tube	•Tube	•Rohr	• 튜브	•Tubo	SER NO 31255-
	VOE 14501090				1		SS		•Pipe	•Canalisation	•Rohrleitung	• 파이프	•Canalizacion	SER NO 30001-31254
	VOE 14525207				1		OP		•Pipe	•Canalisation	•Rohrleitung	• 파이프	•Canalizacion	SER NO 31255-
2	**VOE 14519013**	1	1	1	1				••Bushing	••Bague	••Buchse	•• 부싱	••Casquillo	
3	**SA 9481-20002**	1	1	1	1				••Nipple	••Raccord	••Nippel	•• 니플	••Niple	
4	**VOE 14501080**	1		1	1				•Bar	•Barre	•Stab	• 바	•Barra	
	VOE 14501078		1						•Bar	•Barre	•Stab	• 바	•Barra	
5	**VOE 14519013**	1	1	1	1				••Bushing	••Bague	••Buchse	•• 부싱	••Casquillo	
6	**SA 9481-10003**	1	1	1	1				••Nipple	••Raccord	••Nippel	•• 니플	••Niple	
7	**SA 1146-01660**	1	1	1	1		OP		•Head	•Tete	•Kopf	• 헤드	•Capo	
8	**SA 9612-06035**	1	1	1	1			K	•Bushing	•Bague	•Buchse	• 부싱	•Casquillo	
9	**SA 9557-05050**	1	1	1	1				•Ring	•Anneau	•Ring	• 링	•Anillo	
10	**SA 7282-05870**	1	1	1	1				•Washer	•Rondelle	•Scheibe	• 와셔	•Arandela	
11	**SA 1146-01700**	1	1	1	1				•Cushion	•Coussin	•Sitzkissen	• 쿠션	•Cojin	
12	**SA 1146-01710**	1	1	1	1		OP		•Piston	•Piston	•Kolben	• 피스톤	•Piston	
13	**SA 9216-04510**	1	1	1	1				•Washer	•Rondelle	•Scheibe	• 와셔	•Arandela	
14	**SA 1146-02950**	1	1	1	1				•Lock nut	•Contre-ecrou	•Sicherungsmutter	• 록 너트	•Contratuerca	

1	**8278834 S/N -34475**
2	**8278851 S/N -34475**
3	**8278852 S/N -34475**
4	**8278853 S/N -34475**
5	

Cilindro de pluma
붐 실린더
Auslegerzylinder
Vérin de flèche
Boom cylinder

Catalogue id **20019**	Group **974**
Illustr. No **1007114**	Section **3000**
Issue **VOE 74H9920019**	Page **645**

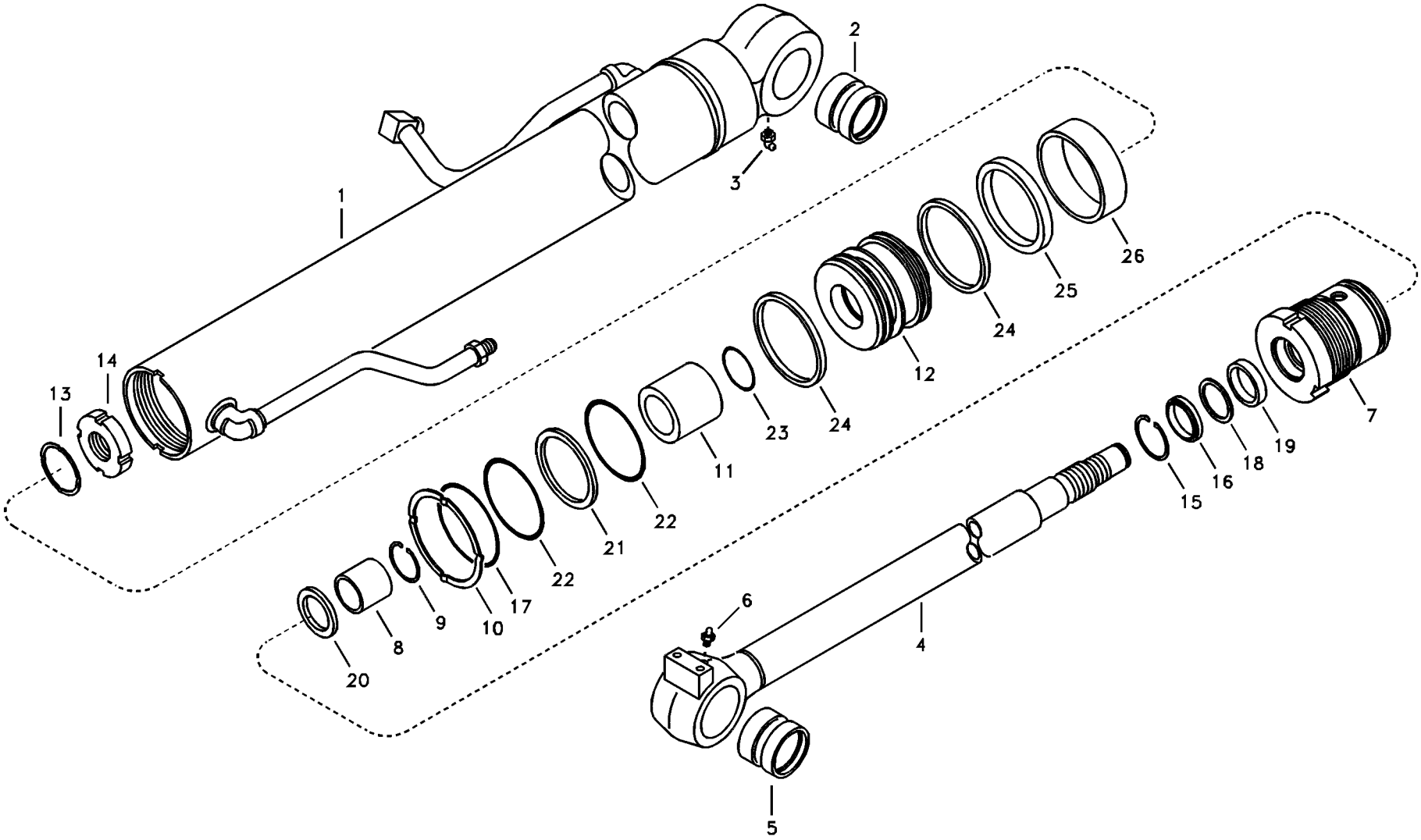

Volvo Construction Equipment

1007114

Fig.	Part No.	Quantity 1	2	3	4	5	PS	KIT	Description	Dénomination	Bezeichnung	품명	Denominación	Notes
15	**SA 9556-06000**	1	1	1	1				•Ring	•Anneau	•Ring	• 링	•Anillo	
16	**SA 9564-20600**	1	1	1	1			K	•Seal	•Joint	•Dichtring	• 시일	•Junta	
17	**SA 9511-22105**	1	1	1	1			K	•O-ring	•Joint Torique	•O-Ring	• 오링	•Junta torica	
18	**SA 9567-20601**	1	1	1	1			K	•Ring	•Anneau	•Ring	• 링	•Anillo	
19	**SA 9563-20600**	1	1	1	1			K	•Seal	•Joint	•Dichtring	• 시일	•Junta	
20	**SA 1146-08250**	1	1	1	1			K	•Buffer Ring	•Butee	•Puffer Ring	• 버퍼 링	•Parachoques	
21	**SA 9566-30950**	1	1	1	1			K	•Ring	•Anneau	•Ring	• 링	•Anillo	
22	**SA 9511-12095**	2	2	2	2			K	•O-ring	•Joint Torique	•O-Ring	• 오링	•Junta torica	
23	**SA 9511-12048**	1	1	1	1			K	•O-ring	•Joint Torique	•O-Ring	• 오링	•Junta torica	
24	**SA 9568-01050**	2	2	2	2			K	•Seal	•Joint	•Dichtring	• 시일	•Junta	
25	**SA 1146-07860**	1	1	1	1			K	•Packing	•Joint	•Dichtung	• 패킹	•Empaquetadura	
26	**SA 9565-21050**	1	1	1	1			K	•Ring	•Anneau	•Ring	• 링	•Anillo	
100	**SA 8148-14011**	1	1	1	1				Sealing Kit	Jeu Joints	Dichtungssatz	시일 킷	Juego Retenes	

1	**8278834 S/N -34475**
2	**8278851 S/N -34475**
3	**8278852 S/N -34475**
4	**8278853 S/N -34475**
5	

Cilindro de pluma
붐 실린더
Auslegerzylinder
Vérin de flèche
Boom cylinder

Catalogue id **20019**	Group **974**
Illustr. No **1007114**	Section **3000**
Issue **VOE 74H9920019**	Page **647**

VOLVO

EC55B

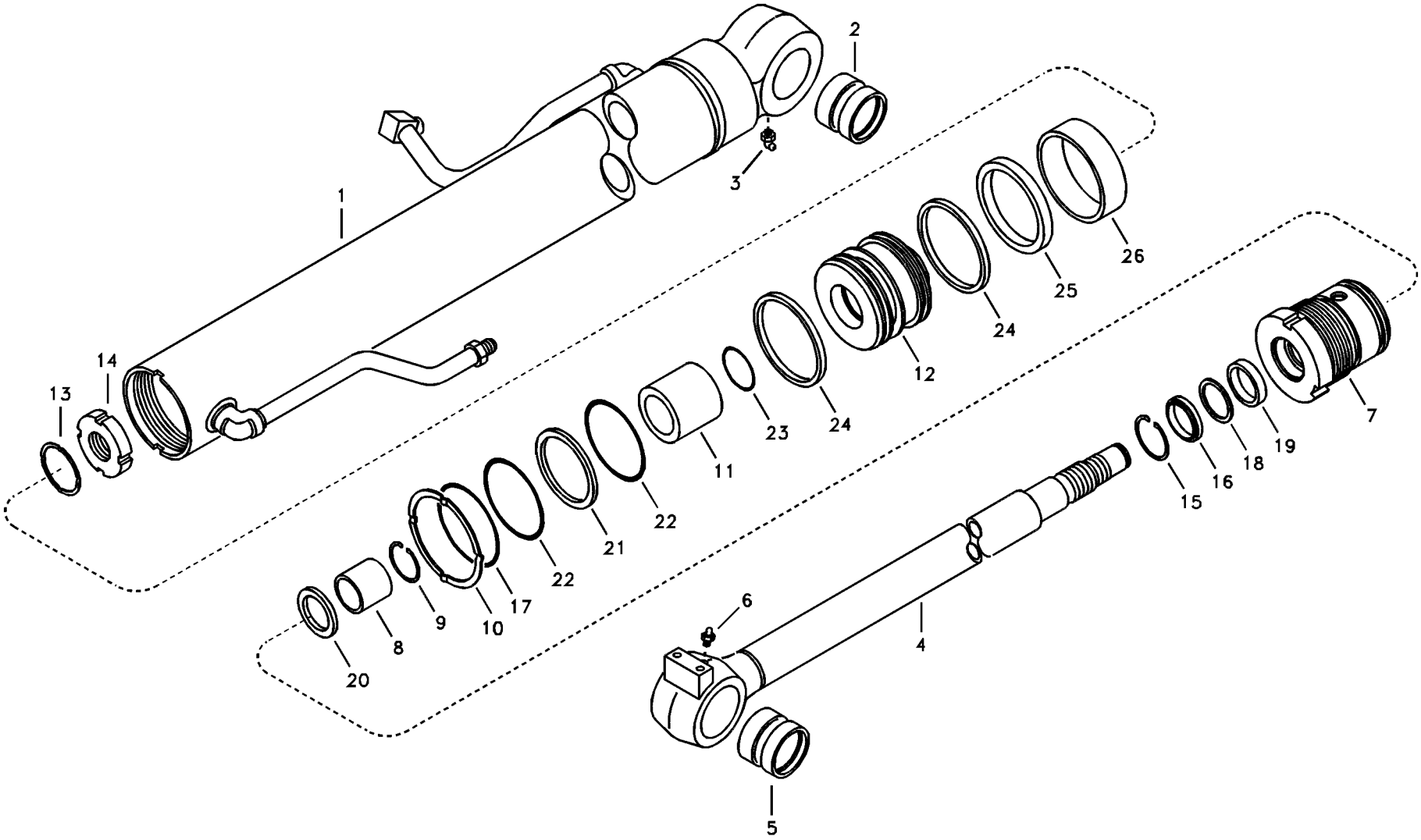

Volvo Construction Equipment

1007114

Fig.	Part No.	Quantity 1	2	3	PS	KIT	Description	Dénomination	Bezeichnung	품명	Denominación	Notes
	VOE 14524924	1					Boom Cylinder	Verin de fleche	Auslegerzylinder	붐 실린더	Maquina de flecha	
1	**VOE 14525207**	1			OP		•Pipe	•Canalisation	•Rohrleitung	• 파이프	•Canalizacion	
2	**VOE 14519013**	1					••Bushing	••Bague	••Buchse	•• 부싱	••Casquillo	
3	**SA 9481-20002**	1					••Nipple	••Raccord	••Nippel	•• 니플	••Niple	
4	**VOE 14501080**	1					•Bar	•Barre	•Stab	• 바	•Barra	
5	**VOE 14519013**	1					••Bushing	••Bague	••Buchse	•• 부싱	••Casquillo	
6	**SA 9481-10003**	1					••Nipple	••Raccord	••Nippel	•• 니플	••Niple	
7	**SA 1146-01660**	1			OP		•Head	•Tete	•Kopf	• 헤드	•Capo	
8	**SA 9612-06035**	1				K	•Bushing	•Bague	•Buchse	• 부싱	•Casquillo	
9	**SA 9557-05050**	1					•Ring	•Anneau	•Ring	• 링	•Anillo	
10	**SA 7282-05870**	1					•Washer	•Rondelle	•Scheibe	• 와셔	•Arandela	
11	**SA 1146-01700**	1					•Cushion	•Coussin	•Sitzkissen	• 쿠션	•Cojin	
12	**SA 1146-01710**	1			OP		•Piston	•Piston	•Kolben	• 피스톤	•Piston	
13	**SA 9216-04510**	1					•Washer	•Rondelle	•Scheibe	• 와셔	•Arandela	
14	**SA 1146-02950**	1					•Lock nut	•Contre-ecrou	•Sicherungsmutter	• 록 너트	•Contratuerca	
15	**SA 9556-06000**	1					•Ring	•Anneau	•Ring	• 링	•Anillo	
16	**SA 9564-20600**	1				K	•Seal	•Joint	•Dichtring	• 시일	•Junta	
17	**SA 9511-22105**	1				K	•O-ring	•Joint Torique	•O-Ring	• 오링	•Junta torica	
18	**SA 9567-20601**	1				K	•Ring	•Anneau	•Ring	• 링	•Anillo	
19	**SA 9563-20600**	1				K	•Seal	•Joint	•Dichtring	• 시일	•Junta	
20	**SA 1146-08250**	1				K	•Buffer Ring	•Butee	•Puffer Ring	• 버퍼 링	•Parachoques	
21	**SA 9566-30950**	1				K	•Ring	•Anneau	•Ring	• 링	•Anillo	
22	**SA 9511-12095**	2				K	•O-ring	•Joint Torique	•O-Ring	• 오링	•Junta torica	
23	**SA 9511-12048**	1				K	•O-ring	•Joint Torique	•O-Ring	• 오링	•Junta torica	
24	**SA 9568-01050**	2				K	•Seal	•Joint	•Dichtring	• 시일	•Junta	
25	**SA 1146-07860**	1				K	•Packing	•Joint	•Dichtung	• 패킹	•Empaquetadura	
26	**SA 9565-21050**	1				K	•Ring	•Anneau	•Ring	• 링	•Anillo	
100	**SA 8148-14011**	1					Sealing Kit	Jeu Joints	Dichtungssatz	시일 킷	Juego Retenes	

1	**8278853 S/N -50129**	**Cilindro de pluma** 붐 실린더 **Auslegerzylinder** **Vérin de flèche** **Boom cylinder**	Catalogue id **20019**	Group **974**
2			Illustr. No **1007114**	Section **3010**
3				
4			Issue **VOE 74H9920019**	Page **649**
5		**FOR CHINA**		

VOLVO

EC55B

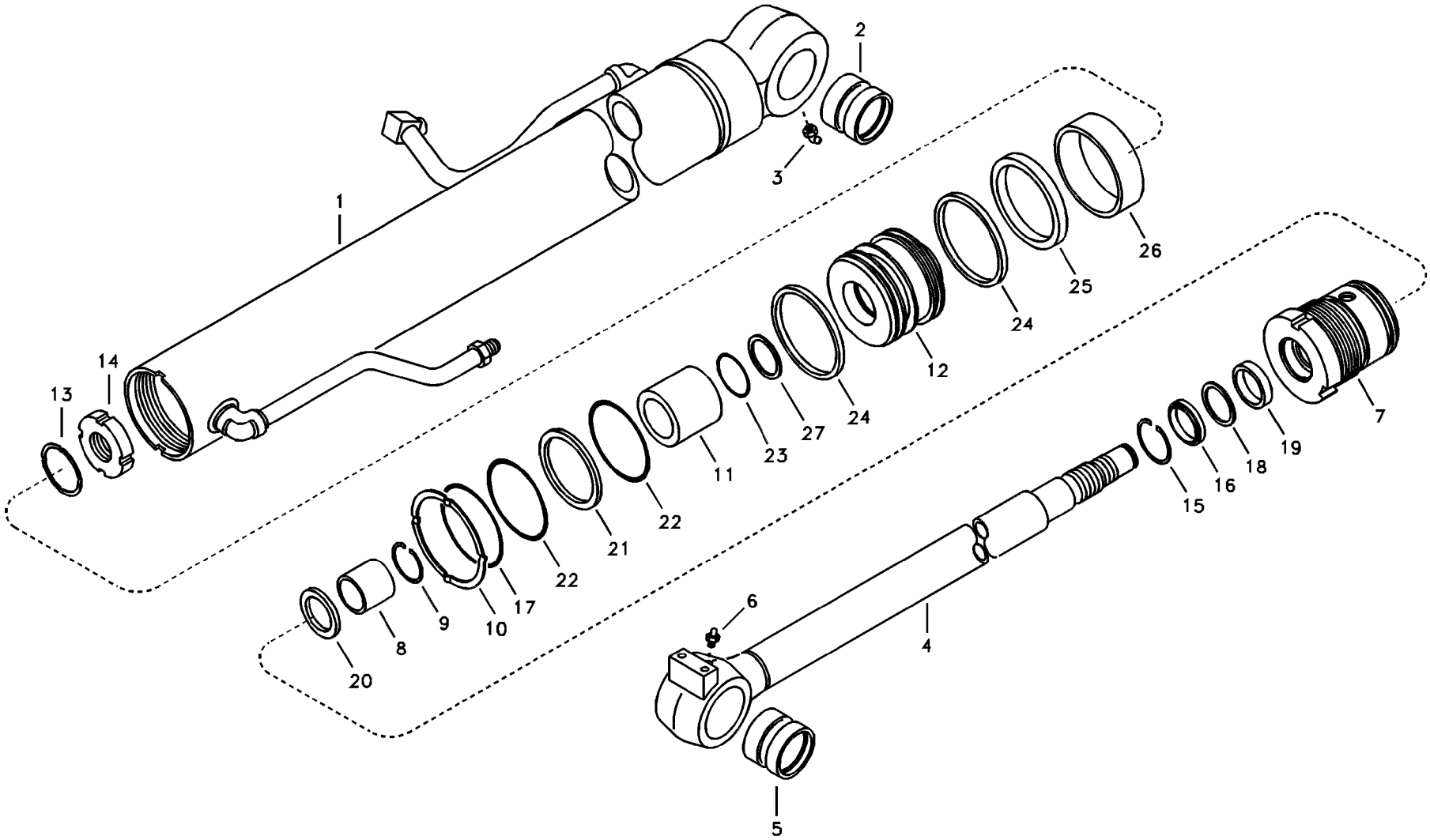

Volvo Construction Equipment

1018990

Fig.	Part No.	Quantity 1	2	3	4	5	PS	KIT	Description	Dénomination	Bezeichnung	품명	Denominación	Notes
	VOE 14533036	1							Boom Cylinder	Verin de fleche	Auslegerzylinder	붐 실린더	Maquina de flecha	
	VOE 14535784		1	1					Boom Cylinder	Verin de fleche	Auslegerzylinder	붐 실린더	Maquina de flecha	
	VOE 14540392				1				Boom Cylinder	Verin de fleche	Auslegerzylinder	붐 실린더	Maquina de flecha	
1	**VOE 14533037**	1					OP		•Tube	•Tube	•Rohr	• 튜브	•Tubo	
	VOE 14535785		1	1			OP		•Tube	•Tube	•Rohr	• 튜브	•Tubo	
	VOE 14540393				1		OP		•Tube	•Tube	•Rohr	• 튜브	•Tubo	
2	**VOE 14535605**	1	1	1	1				••Bushing	••Bague	••Buchse	•• 부싱	••Casquillo	
3	**SA 9481-20002**	1	1	1	1				••Nipple	••Raccord	••Nippel	•• 니플	••Niple	
4	**VOE 14533688**	1	1	1	1				•Rod	•Monture	•Fuhler	• 로드	•Varilla	
5	**VOE 14535605**	1	1	1	1				••Bushing	••Bague	••Buchse	•• 부싱	••Casquillo	
6	**SA 9481-10003**	1	1	1	1				••Nipple	••Raccord	••Nippel	•• 니플	••Niple	
7	**VOE 14533042**	1	1	1	1		OP		•Head	•Tete	•Kopf	• 헤드	•Capo	
8	**SA 9612-06035**	1	1	1	1			K	•Bushing	•Bague	•Buchse	• 부싱	•Casquillo	
9	**SA 9557-05050**	1	1	1	1				•Ring	•Anneau	•Ring	• 링	•Anillo	
10	**VOE 14533691**	1	1	1	1		SS		•Washer	•Rondelle	•Scheibe	• 와셔	•Arandela	
11	**VOE 1146-01700**	1	1	1	1				•Pipe	•Canalisation	•Rohrleitung	• 파이프	•Canalizacion	
12	**VOE 14533043**	1	1	1	1		OP		•Piston	•Piston	•Kolben	• 피스톤	•Piston	
13	**SA 9216-04510**	1	1	1	1				•Washer	•Rondelle	•Scheibe	• 와셔	•Arandela	
14	**SA 1146-02950**	1	1	1	1				•Lock nut	•Contre-ecrou	•Sicherungsmutter	• 록 너트	•Contratuerca	
15	**SA 9556-06000**	1	1	1	1				•Ring	•Anneau	•Ring	• 링	•Anillo	
16	**SA 9564-20600**	1	1	1	1			K	•Seal	•Joint	•Dichtring	• 시일	•Junta	
17	**SA 9511-22110**	1	1	1	1			K	•O-ring	•Joint Torique	•O-Ring	• 오링	•Junta torica	
18	**VOE 14880879**	1						K	•Ring	•Anneau	•Ring	• 링	•Anillo	
	SA 9567-20601		1	1	1			K	•Ring	•Anneau	•Ring	• 링	•Anillo	
19	**VOE 14880761**	1	1	1	1			K	•Seal	•Joint	•Dichtring	• 시일	•Junta	
20	**VOE 14519687**	1	1	1	1			K	•Seal	•Joint	•Dichtring	• 시일	•Junta	
21	**SA 9566-31000**	1	1	1	1			K	•Ring	•Anneau	•Ring	• 링	•Anillo	
22	**SA 9511-12100**	2	2	2	2			K	•O-ring	•Joint Torique	•O-Ring	• 오링	•Junta torica	
23	**VOE 990630**	1	1	1	1			K	•O-ring	•Joint Torique	•O-Ring	• 오링	•Junta torica	(SA 9511-12053)
24	**SA 9568-01050**	2						K	•Seal	•Joint	•Dichtring	• 시일	•Junta	

1	**8278834 S/N 34476-**
2	**8280523 S/N 34476-**
3	**8280524 S/N 34476-**
4	**8280525 S/N 34476-**
5	

Cilindro de pluma
붐 실린더
Auslegerzylinder
Vérin de flèche
Boom cylinder

Catalogue id **20019**	Group **974**
Illustr. No **1018990**	Section **3100**
Issue **VOE 74H9920019**	Page **651**

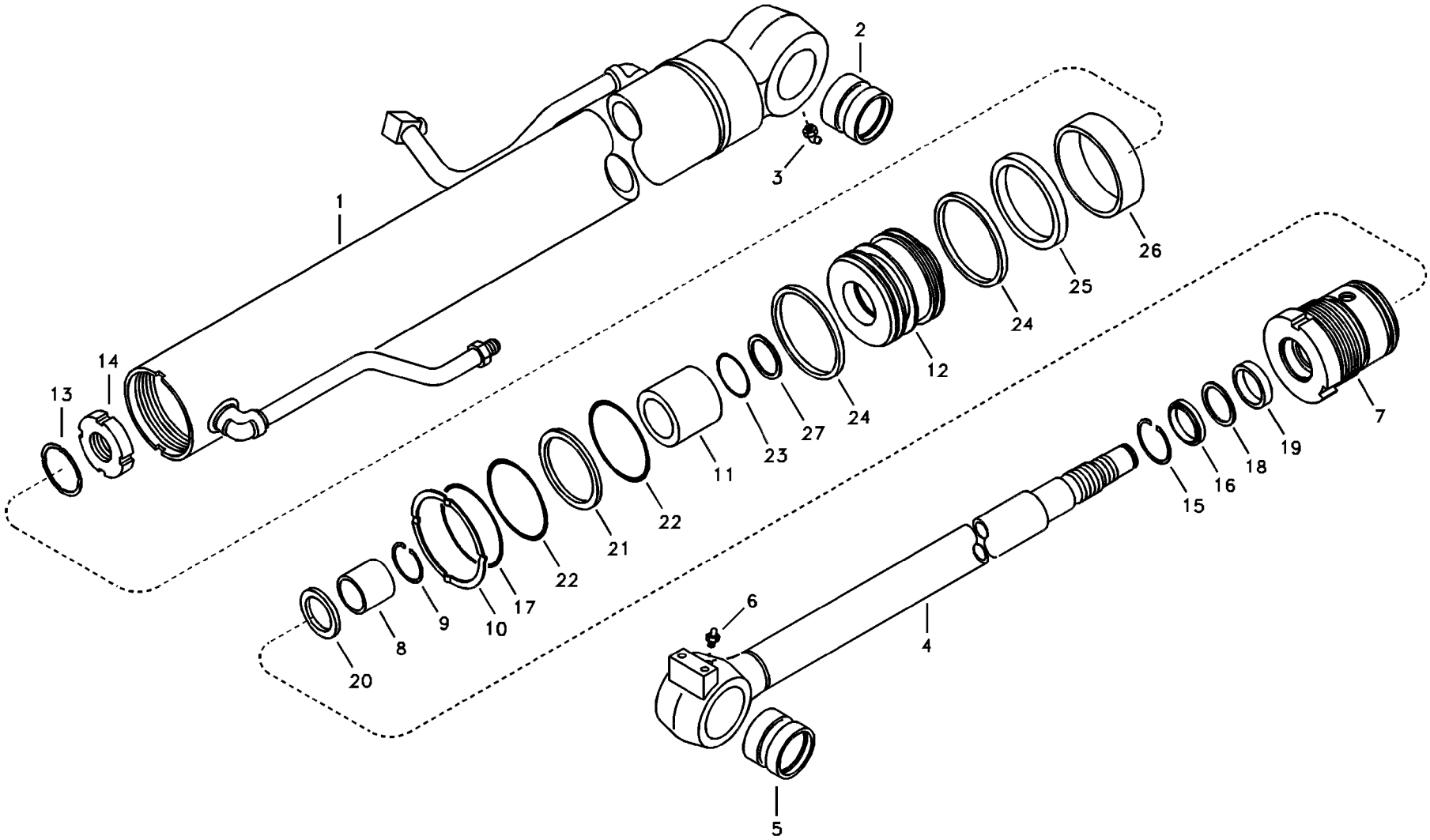

Volvo Construction Equipment

1018990

Fig.	Part No.	Quantity 1	2	3	4	5	PS	KIT	Description	Dénomination	Bezeichnung	품명	Denominación	Notes
	SA 9568-01100		2	2	2			K	•Seal	•Joint	•Dichtring	• 시일	•Junta	
25	**VOE 14512068**	1	1	1	1			K	•Seal	•Joint	•Dichtring	• 시일	•Junta	
26	**SA 9565-21100**	1	1	1	1			K	•Ring	•Anneau	•Ring	• 링	•Anillo	
27	**VOE 14881266**	1						K	•Ring	•Anneau	•Ring	• 링	•Anillo	
	SA 9565-21050		1	1	1			K	•Ring	•Anneau	•Ring	• 링	•Anillo	
100	**VOE 14540461**	1	1	1	1				Sealing Kit	Jeu Joints	Dichtungssatz	시일 킷	Juego Retenes	

1	**8278834 S/N 34476-**	**Cilindro de pluma** 붐 실린더 **Auslegerzylinder** **Vérin de flèche** **Boom cylinder**	Catalogue id **20019**	Group **974**
2	**8280523 S/N 34476-**		Illustr. No **1018990**	Section **3100**
3	**8280524 S/N 34476-**		Issue **VOE 74H9920019**	Page **653**
4	**8280525 S/N 34476-**			
5				

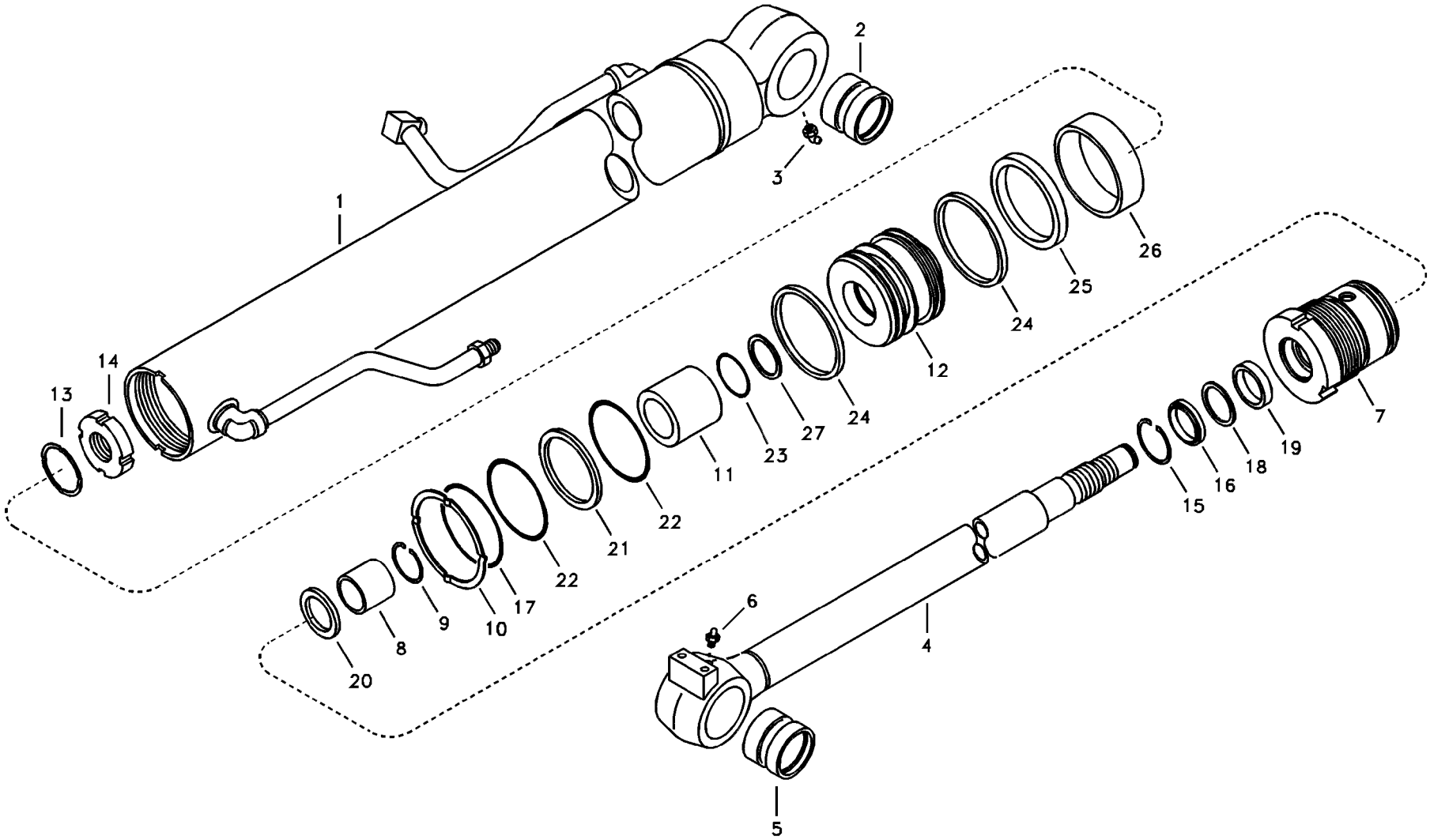

Volvo Construction Equipment

1018990

Fig.	Part No.	Quantity 1	2	3	PS	KIT	Description	Dénomination	Bezeichnung	품명	Denominación	Notes
	VOE 14535784	1	1				Boom Cylinder	Verin de fleche	Auslegerzylinder	붐 실린더	Maquina de flecha	
	VOE 14540392			1			Boom Cylinder	Verin de fleche	Auslegerzylinder	붐 실린더	Maquina de flecha	
1	**VOE 14535785**	1	1		OP		•Tube	•Tube	•Rohr	• 튜브	•Tubo	
	VOE 14540393			1	OP		•Tube	•Tube	•Rohr	• 튜브	•Tubo	
2	**VOE 14535605**	1	1	1			••Bushing	••Bague	••Buchse	•• 부싱	••Casquillo	
3	**SA 9481-20002**	1	1	1			••Nipple	••Raccord	••Nippel	•• 니플	••Niple	
4	**VOE 14533688**	1	1	1			•Rod	•Monture	•Fuhler	• 로드	•Varilla	
5	**VOE 14535605**	1	1	1			••Bushing	••Bague	••Buchse	•• 부싱	••Casquillo	
6	**SA 9481-10003**	1	1	1			••Nipple	••Raccord	••Nippel	•• 니플	••Niple	
7	**VOE 14533042**	1	1	1	OP		•Head	•Tete	•Kopf	• 헤드	•Capo	
8	**SA 9612-06035**	1	1	1		K	•Bushing	•Bague	•Buchse	• 부싱	•Casquillo	
9	**SA 9557-05050**	1	1	1			•Ring	•Anneau	•Ring	• 링	•Anillo	
10	**VOE 14533691**	1	1	1			•Washer	•Rondelle	•Scheibe	• 와셔	•Arandela	
11	**VOE 1146-01700**	1	1	1			•Pipe	•Canalisation	•Rohrleitung	• 파이프	•Canalizacion	
12	**VOE 14533043**	1	1	1	OP		•Piston	•Piston	•Kolben	• 피스톤	•Piston	
13	**SA 9216-04510**	1	1	1			•Washer	•Rondelle	•Scheibe	• 와셔	•Arandela	
14	**SA 1146-02950**	1	1	1			•Lock nut	•Contre-ecrou	•Sicherungsmutter	• 록 너트	•Contratuerca	
15	**SA 9556-06000**	1	1	1			•Ring	•Anneau	•Ring	• 링	•Anillo	
16	**SA 9564-20600**	1	1	1		K	•Seal	•Joint	•Dichtring	• 시일	•Junta	
17	**SA 9511-22110**	1	1	1		K	•O-ring	•Joint Torique	•O-Ring	• 오링	•Junta torica	
18	**SA 9567-20601**	1	1	1		K	•Ring	•Anneau	•Ring	• 링	•Anillo	
19	**VOE 14880761**	1	1	1		K	•Seal	•Joint	•Dichtring	• 시일	•Junta	
20	**VOE 14519687**	1	1	1		K	•Seal	•Joint	•Dichtring	• 시일	•Junta	
21	**SA 9566-31000**	1	1	1		K	•Ring	•Anneau	•Ring	• 링	•Anillo	
22	**SA 9511-12100**	2	2	2		K	•O-ring	•Joint Torique	•O-Ring	• 오링	•Junta torica	
23	**VOE 990630**	1	1	1		K	•O-ring	•Joint Torique	•O-Ring	• 오링	•Junta torica	(SA 9511-12053)
24	**SA 9568-01100**	2	2	2		K	•Seal	•Joint	•Dichtring	• 시일	•Junta	
25	**VOE 14512068**	1	1	1		K	•Seal	•Joint	•Dichtring	• 시일	•Junta	
26	**SA 9565-21100**	1	1	1		K	•Ring	•Anneau	•Ring	• 링	•Anillo	
27	**SA 9565-21050**	1	1	1		K	•Ring	•Anneau	•Ring	• 링	•Anillo	

1	**8280523 S/N 50130-**
2	**8280524 S/N 50130-**
3	**8280525 S/N 50130-**
4	
5	

Cilindro de pluma
붐 실린더
Auslegerzylinder
Vérin de flèche
Boom cylinder

Catalogue id **20019**	Group **974**
Illustr. No **1018990**	Section **3150**
Issue **VOE 74H9920019**	Page **655**

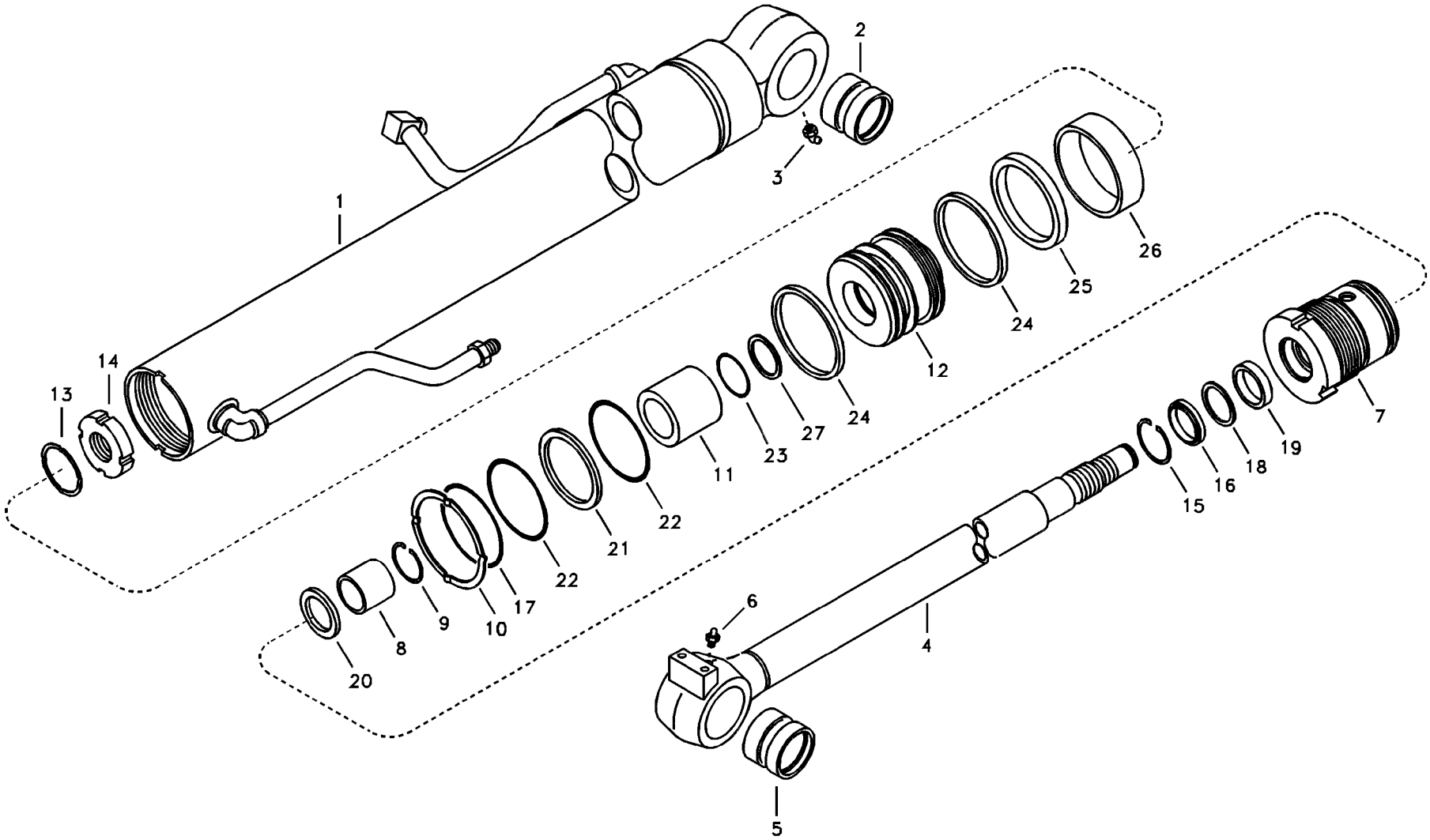

Volvo Construction Equipment

1018990

Fig.	Part No.	Quantity 1	2	3	PS	KIT	Description	Dénomination	Bezeichnung	품명	Denominación	Notes
100	**VOE 14540461**	1	1	1			Sealing Kit	Jeu Joints	Dichtungssatz	시일 킷	Juego Retenes	

1	**8280523 S/N 50130-**	**Cilindro de pluma** 붐 실린더 **Auslegerzylinder** **Vérin de flèche** **Boom cylinder**	Catalogue id **20019**	Group **974**
2	**8280524 S/N 50130-**		Illustr. No **1018990**	Section **3150**
3	**8280525 S/N 50130-**		Issue **VOE 74H9920019**	Page **657**
4				
5				

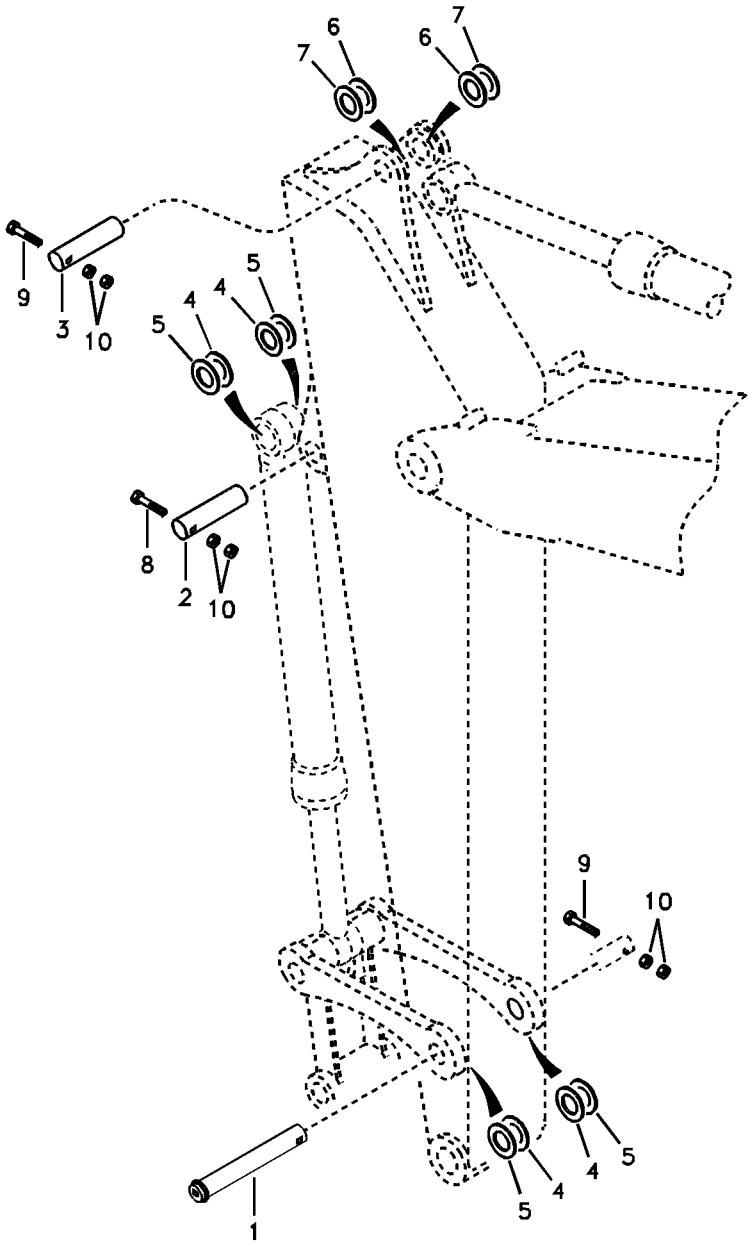
7
6
7
6
9
3
10
5
4
4
5
8
2
10
9
10
5
4
4
5
1

Fig.	Part No.	Quantity 1	2	3	4	5	PS	KIT	Description	Dénomination	Bezeichnung	품명	Denominación	Notes
1	**VOE 14519814**	1	1	1	1				Pin	Goupille	Zapfen	핀	Pasador	
2	**VOE 14519817**	1	1	1	1				Pin	Goupille	Zapfen	핀	Pasador	
3	**VOE 14519818**	1	1	1	1				Pin	Goupille	Zapfen	핀	Pasador	
4	**SA 1171-30590**	4	4	4	4				Shim	Cale d'épaisseur	Passcheibe	심	Arandela Ajuste	1,0mm
5	**SA 1171-30600**	4	4	4	4				Shim	Cale d'épaisseur	Passcheibe	심	Arandela Ajuste	0,5mm
6	**SA 1171-30610**	2	2	2	2				Shim	Cale d'épaisseur	Passcheibe	심	Arandela Ajuste	1,0mm
7	**SA 1171-30620**	2	2	2	2				Shim	Cale d'épaisseur	Passcheibe	심	Arandela Ajuste	0,5mm
8	**SA 9011-21217**	2	2	2	2				Bolt	Boulon	Bolzen	볼트	Perno	
9	**SA 9011-21218**	1	1	1	1				Bolt	Boulon	Bolzen	볼트	Perno	
10	**VOE 979019**	6	6	6	6				Hexagon Nut	Ecrou Hexagonal	Sechskantmutter	너트	Tuerca Hexagon	

1	**8278843**
2	**8278844 S/N -33627**
3	**8278845 S/N -33627**
4	**8278846**
5	

Enlaces al brazo
디퍼 암 연결 장치
Verbindungen zu Stiel
Articulations de balancier
Links to dipper arm

Catalogue id **20019**	Group **975**
Illustr. No **1007115**	Section **100**
Issue **VOE 74H9920019**	Page **659**

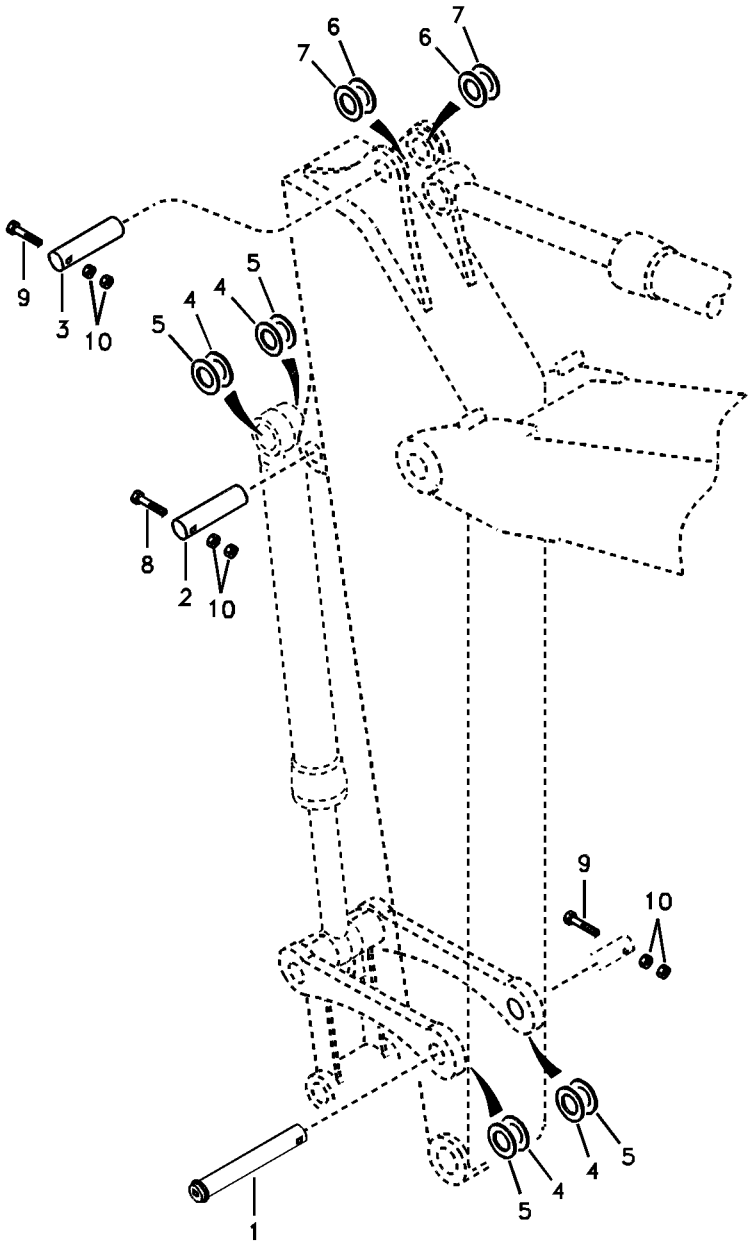
7
6
7
6
9
3
10
5
4
4
5
8
2
10
9
10
5
4
4
5
1

Fig.	Part No.	Quantity 1	2	3	PS	KIT	Description	Dénomination	Bezeichnung	품명	Denominación	Notes
1	**VOE 14519814**	1	1				Pin	Goupille	Zapfen	핀	Pasador	
2	**VOE 14519817**	1	1				Pin	Goupille	Zapfen	핀	Pasador	
3	**VOE 14519818**	1	1				Pin	Goupille	Zapfen	핀	Pasador	
4	**SA 1171-30590**	4	4				Shim	Cale d'épaisseur	Passcheibe	심	Arandela Ajuste	1,0mm
5	**SA 1171-30600**	4	4				Shim	Cale d'épaisseur	Passcheibe	심	Arandela Ajuste	0,5mm
6	**SA 1171-30610**	2	2				Shim	Cale d'épaisseur	Passcheibe	심	Arandela Ajuste	1,0mm
7	**SA 1171-30620**	2	2				Shim	Cale d'épaisseur	Passcheibe	심	Arandela Ajuste	0,5mm
8	**SA 9011-21217**	2	2				Bolt	Boulon	Bolzen	볼트	Perno	
9	**SA 9011-21218**	1	1				Bolt	Boulon	Bolzen	볼트	Perno	
10	**VOE 979019**	6	6				Hexagon Nut	Ecrou Hexagonal	Sechskantmutter	너트	Tuerca Hexagon	

1	**8278843**	**Enlaces al brazo** 디퍼 암 연결 장치 **Verbindungen zu Stiel** **Articulations de balancier** **Links to dipper arm**	Catalogue id **20019**	Group **975**
2	**8278846**		Illustr. No **1007115**	Section **110**
3			Issue **VOE 74H9920019**	Page **661**
4				
5		**FOR CHINA**		

VOLVO

EC55B

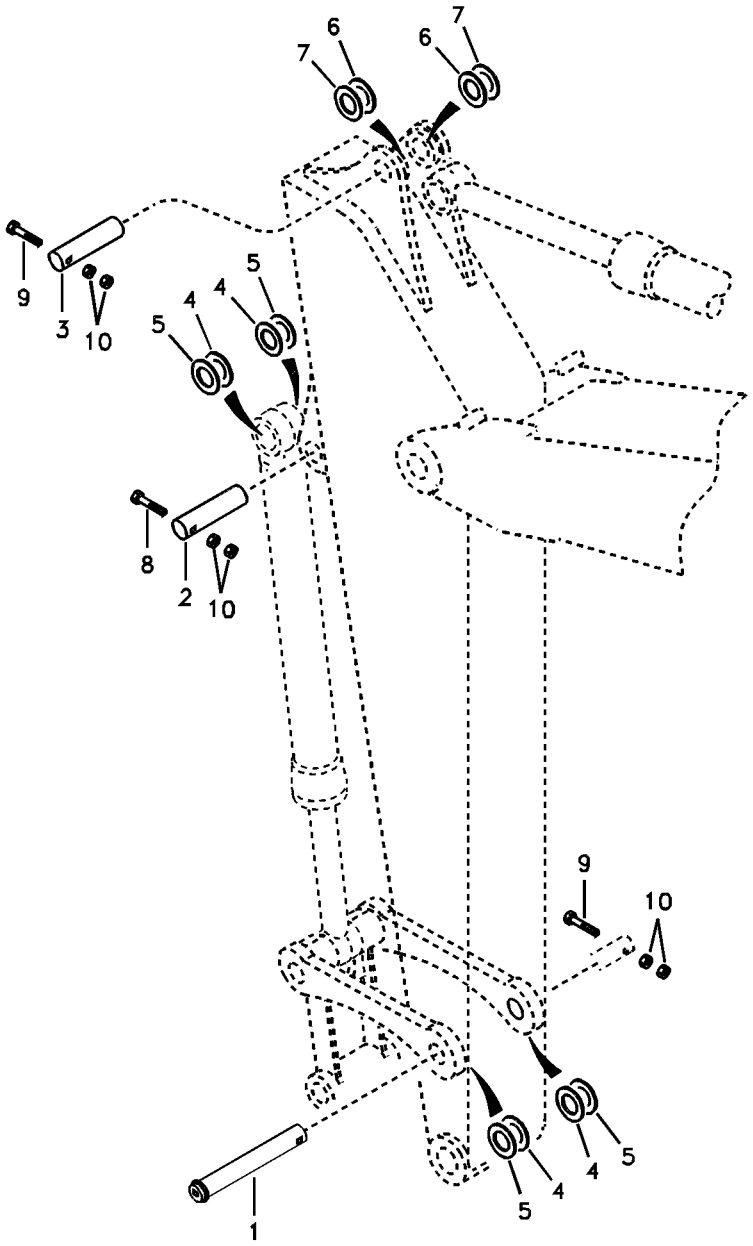
7
6
7
6
9
3
10
5
4
4
5
8
2
10
9
10
5
4
4
5
1

Fig.	Part No.	Quantity 1	2	3	PS	KIT	Description	Dénomination	Bezeichnung	품명	Denominación	Notes
1	**VOE 14519814**	1	1	1			Pin	Goupille	Zapfen	핀	Pasador	
2	**VOE 14519817**	1	1	1			Pin	Goupille	Zapfen	핀	Pasador	
3	**VOE 14519818**	1	1	1			Pin	Goupille	Zapfen	핀	Pasador	
4	**SA 1171-30590**	4	4	4			Shim	Cale d'épaisseur	Passcheibe	심	Arandela Ajuste	1,0mm
5	**SA 1171-30600**	4	4	4			Shim	Cale d'épaisseur	Passcheibe	심	Arandela Ajuste	0,5mm
6	**SA 1171-30610**	2	2	2			Shim	Cale d'épaisseur	Passcheibe	심	Arandela Ajuste	1,0mm
7	**SA 1171-30620**	2	2	2			Shim	Cale d'épaisseur	Passcheibe	심	Arandela Ajuste	0,5mm
8	**SA 9011-21217**	2	2	2			Bolt	Boulon	Bolzen	볼트	Perno	
9	**SA 9011-21218**	1	1	1			Bolt	Boulon	Bolzen	볼트	Perno	
10	**VOE 979019**	6	6	6			Hexagon Nut	Ecrou Hexagonal	Sechskantmutter	너트	Tuerca Hexagon	

1	**8278847 S/N -33627**
2	**8278848**
3	**8279079 S/N 30824-**
4	
5	

Enlaces al brazo
디퍼 암 연결 장치
Verbindungen zu Stiel
Articulations de balancier
Links to dipper arm

Catalogue id **20019**	Group **975**
Illustr. No **1007116**	Section **200**
Issue **VOE 74H9920019**	Page **663**

VOLVO

EC55B

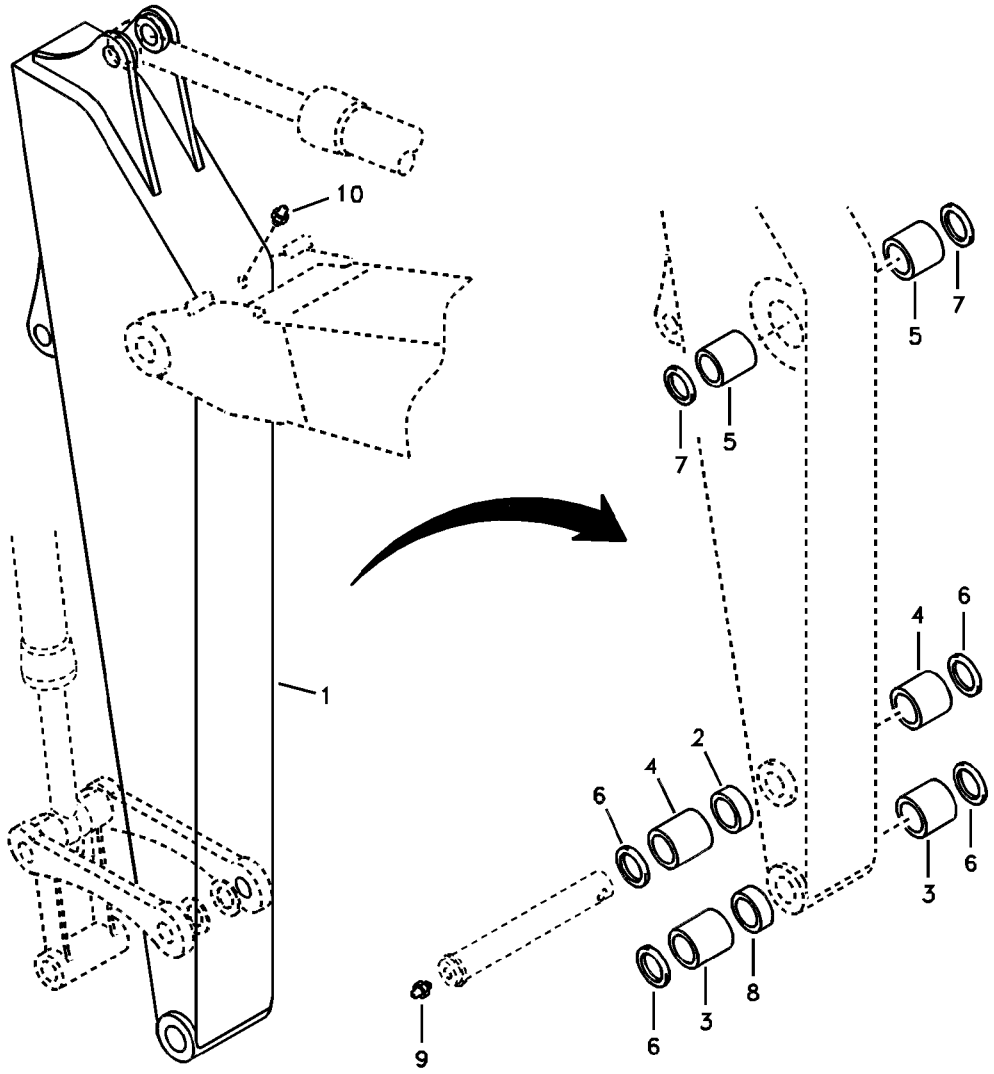
10
1
7
5
7
5
7
6
4
2
6
4
6
3
6
3
8
6
9

Fig.	Part No.	Quantity 1	2	3	PS	KIT	Description	Dénomination	Bezeichnung	품명	Denominación	Notes
1	**VOE 14519838**	1			SS		Dipper Arm	Balancier	Stiel	디퍼 암	Brazo Cuchara	1,54m SER NO 30001-30666
	VOE 14522583	1					Dipper Arm	Balancier	Stiel	디퍼 암	Brazo Cuchara	SER NO 30667-33627
	VOE 14534331	1					Dipper Arm	Balancier	Stiel	디퍼 암	Brazo Cuchara	SER NO 33628-34475 SER NO 50001-50129
	VOE 14535807	1					Dipper Arm	Balancier	Stiel	디퍼 암	Brazo Cuchara	SER NO 34476-35113 SER NO 50130-50183
	VOE 14546097	1					Arm	Bras	Arm	암	Brazo	SER NO 35114- SER NO 50184-
	VOE 14519837		1		SS		Dipper Arm	Balancier	Stiel	디퍼 암	Brazo Cuchara	1,54m SER NO 30001-30666
	VOE 14522584		1				Dipper Arm	Balancier	Stiel	디퍼 암	Brazo Cuchara	SER NO 30667-
	VOE 14519844			1	SS		Dipper Arm	Balancier	Stiel	디퍼 암	Brazo Cuchara	1,54m SER NO 30001-30666
	VOE 14522587			1			Dipper Arm	Balancier	Stiel	디퍼 암	Brazo Cuchara	SER NO 30667-
2	**SA 1070-22680**	2			SS		•Bushing	•Bague	•Buchse	• 부싱	•Casquillo	SER NO 30001-33627
	VOE 14524137	1					•Bushing	•Bague	•Buchse	• 부싱	•Casquillo	SER NO 33628-
	SA 1070-22680		1	1	SS		•Bushing	•Bague	•Buchse	• 부싱	•Casquillo	
3	**SA 1070-22670**	2			SS		•Bushing	•Bague	•Buchse	• 부싱	•Casquillo	SER NO 30001-33627
	VOE 14524136	2					•Bushing	•Bague	•Buchse	• 부싱	•Casquillo	SER NO 33628-
	SA 1070-22670		2	2	SS		•Bushing	•Bague	•Buchse	• 부싱	•Casquillo	
4	**VOE 14510769**	2	2	2			•Bushing	•Bague	•Buchse	• 부싱	•Casquillo	
5	**VOE 14510771**	2	2	2			•Bushing	•Bague	•Buchse	• 부싱	•Casquillo	
6	**VOE 14880729**	4	4	4			•Seal	•Joint	•Dichtring	• 시일	•Junta	
7	**VOE 14880730**	2	2	2			•Seal	•Joint	•Dichtring	• 시일	•Junta	
8	**VOE 14504227**	1					•Bushing	•Bague	•Buchse	• 부싱	•Casquillo	SER NO 33628-35113
	VOE 14546527	1					•Boss	•Bossage	•Warze	• 보스	•Teton	SER NO 35114-
	SA 1070-22680		1	1	SS		Bushing	Bague	Buchse	부싱	Casquillo	
9	**SA 9481-11003**	1	1	1			Nipple	Raccord	Nippel	니플	Niple	SER NO 30001-35113
	SA 9481-11003	2					Nipple	Raccord	Nippel	니플	Niple	SER NO 35114-

1	**8278843**
2	**8278844 S/N -33627**
3	**8278845 S/N -33627**
4	
5	

Brazos y tuberías de engrase con asiento de tuberías
디퍼 암 및 윤활 배관 , 유압 배관 장착브라켓 포함
Stiel und Schmierleitungen mit Sitz
Balancier et tuyauterie de lubr avec siège de tuyau
Dipper arm and grease piping with piping seat

Catalogue id **20019**	Group **975**
Illustr. No **1017039**	Section **500**
Issue **VOE 74H9920019**	Page **665**

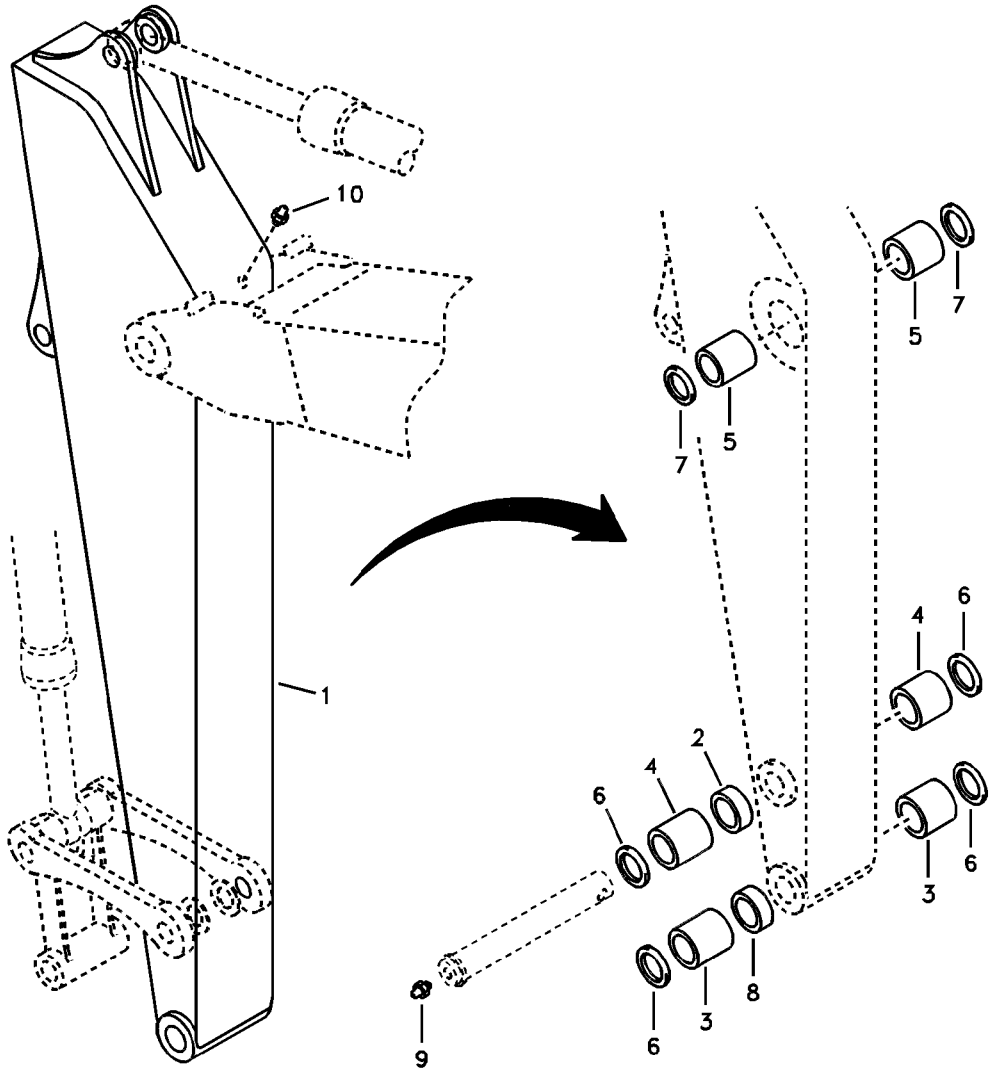
10
1
7
5
7
5
7
6
4
2
6
4
6
3
6
3
8
6
9

Fig.	Part No.	Quantity 1	2	3	P S	K I T	Description	Dénomination	Bezeichnung	품명	Denominación	Notes
10	**SA 9481-21002**	1	1	1			Nipple	Raccord	Nippel	니플	Niple	

1	**8278843**	**Brazos y tuberías de engrase con asiento de tuberías** 디퍼 암 및 윤활 배관 , 유압 배관 장착브라켓 포함 **Stiel und Schmierleitungen mit Sitz** **Balancier et tuyauterie de lubr avec siège de tuyau** **Dipper arm and grease piping with piping seat**	Catalogue id **20019**	Group **975**
2	**8278844 S/N -33627**		Illustr. No **1017039**	Section **500**
3	**8278845 S/N -33627**		Issue **VOE 74H9920019**	Page **667**
4				
5				

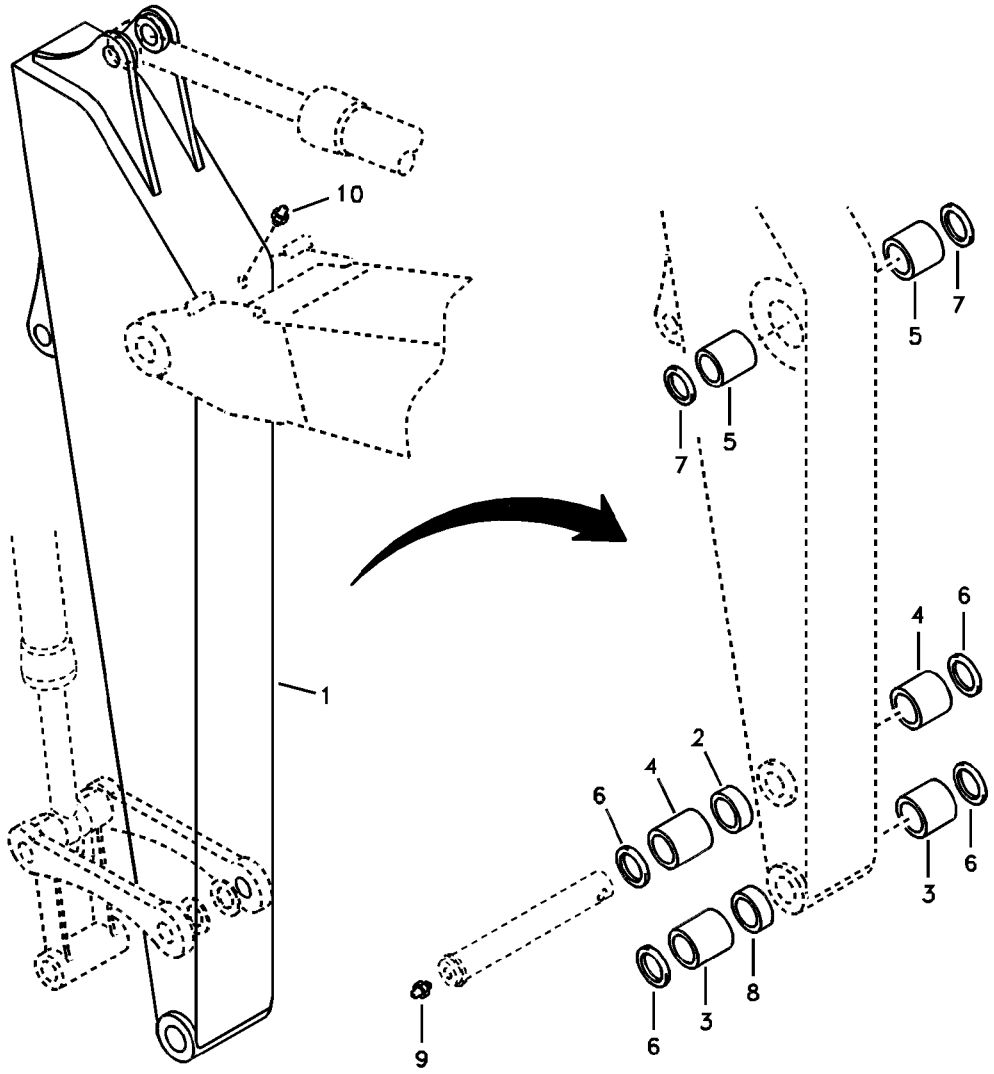
10
1
7
5
7
5
7
6
4
2
6
4
6
3
6
3
8
6
9

Fig.	Part No.	Quantity 1	2	3	PS	KIT	Description	Dénomination	Bezeichnung	품명	Denominación	Notes
1	**VOE 14522583**	1					Dipper Arm	Balancier	Stiel	디퍼 암	Brazo Cuchara	SER NO 50001-50064
	VOE 14534331	1					Dipper Arm	Balancier	Stiel	디퍼 암	Brazo Cuchara	SER NO 50065-
	VOE 14522585		1				Dipper Arm	Balancier	Stiel	디퍼 암	Brazo Cuchara	SER NO 50001-50064
	VOE 14534332		1				Dipper Arm	Balancier	Stiel	디퍼 암	Brazo Cuchara	SER NO 50065-50087
	VOE 14537145		1				Dipper Arm	Balancier	Stiel	디퍼 암	Brazo Cuchara	SER NO 50088-50183
	VOE 14546101		1				Arm	Bras	Arm	암	Brazo	SER NO 50184-
2	**SA 1070-22680**	2	2		SS		•Bushing	•Bague	•Buchse	• 부싱	•Casquillo	SER NO 50001-50064
	VOE 14524137	1	1				•Bushing	•Bague	•Buchse	• 부싱	•Casquillo	SER NO 50065-
3	**SA 1070-22670**	2	2		SS		•Bushing	•Bague	•Buchse	• 부싱	•Casquillo	SER NO 50001-50064
	VOE 14524136	2	2				•Bushing	•Bague	•Buchse	• 부싱	•Casquillo	SER NO 50065-
4	**VOE 14510769**	2	2				•Bushing	•Bague	•Buchse	• 부싱	•Casquillo	
5	**VOE 14510771**	2	2				•Bushing	•Bague	•Buchse	• 부싱	•Casquillo	
6	**VOE 14880729**	4	4				•Seal	•Joint	•Dichtring	• 시일	•Junta	
7	**VOE 14880730**	2	2				•Seal	•Joint	•Dichtring	• 시일	•Junta	
8	**VOE 14504227**	1	1				•Bushing	•Bague	•Buchse	• 부싱	•Casquillo	SER NO 50065-50183
	VOE 14546527	1	1				•Boss	•Bossage	•Warze	• 보스	•Teton	SER NO 50184-
9	**SA 9481-11003**	1	1				Nipple	Raccord	Nippel	니플	Niple	SER NO 50001-50183
	SA 9481-11003	1	1				Nipple	Raccord	Nippel	니플	Niple	SER NO 50184-
10	**SA 9481-21002**	1	1				Nipple	Raccord	Nippel	니플	Niple	

1	**8278843**	**Brazos y tuberías de engrase con asiento de tuberías** 디퍼 암 및 윤활 배관 , 유압 배관 장착브라켓 포함 **Stiel und Schmierleitungen mit Sitz** **Balancier et tuyauterie de lubr avec siège de tuyau** **Dipper arm and grease piping with piping seat**	Catalogue id **20019**	Group **975**
2	**8278846**		Illustr. No **1017039**	Section **510**
3				
4			Issue **VOE 74H9920019**	Page **669**
5		**FOR CHINA**		

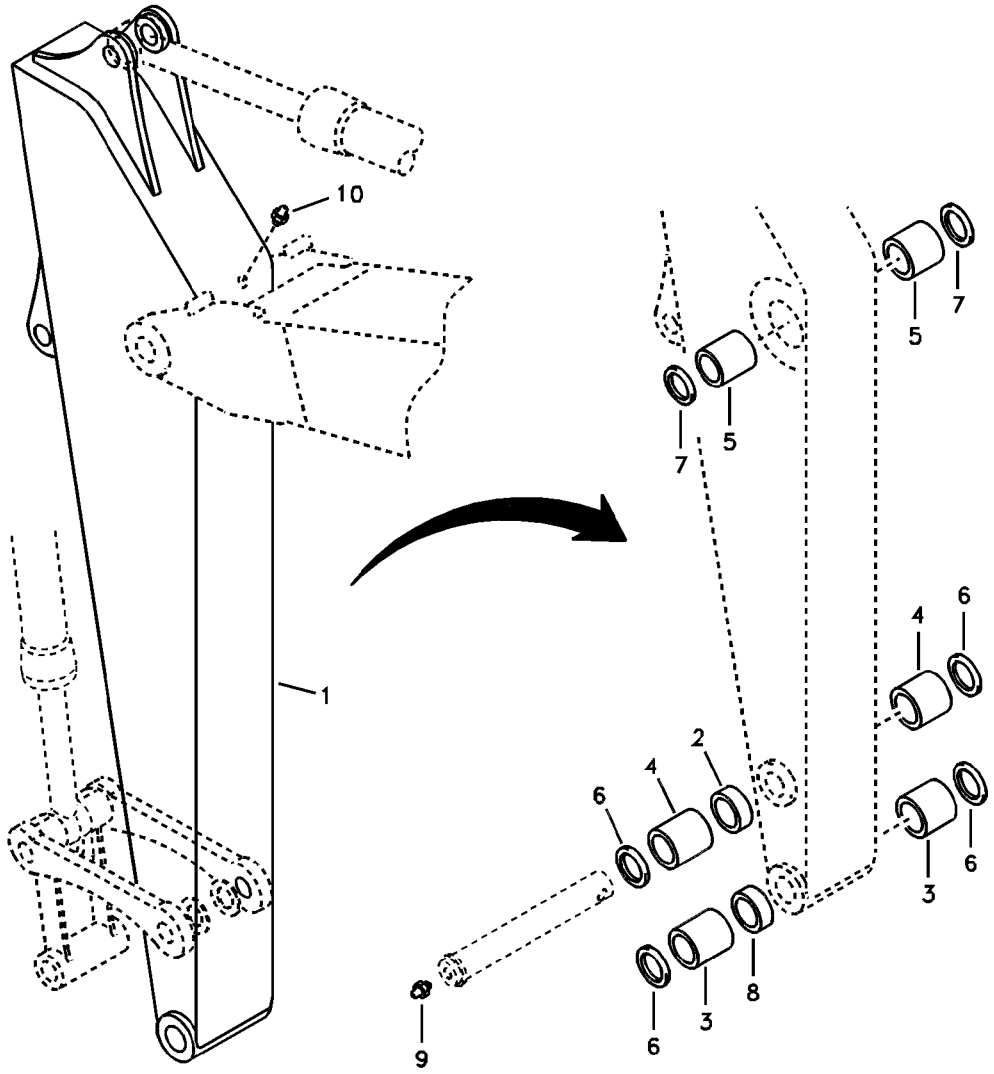
10
1
7
5
7
5
7
6
4
2
6
4
6
3
6
3
8
6
9

Fig.	Part No.	Quantity 1	2	3	PS	KIT	Description	Dénomination	Bezeichnung	품명	Denominación	Notes
1	**VOE 14519842**	1			SS		Dipper Arm	Balancier	Stiel	디퍼 암	Brazo Cuchara	1,54m SER NO 30001-30666
	VOE 14522585	1					Dipper Arm	Balancier	Stiel	디퍼 암	Brazo Cuchara	SER NO 30667-33627
	VOE 14534332	1					Dipper Arm	Balancier	Stiel	디퍼 암	Brazo Cuchara	SER NO 33628-33895
	VOE 14537145	1					Dipper Arm	Balancier	Stiel	디퍼 암	Brazo Cuchara	SER NO 33896-34475 SER NO 50001-50129
	VOE 14543557	1					Arm	Bras	Arm	암	Brazo	SER NO 34476-35113 SER NO 50130-50183
	VOE 14546101	1					Arm	Bras	Arm	암	Brazo	SER NO 35114- SER NO 50184-
	VOE 14519840		1		SS		Dipper Arm	Balancier	Stiel	디퍼 암	Brazo Cuchara	1,54m SER NO 30001-30666
	VOE 14522586		1				Dipper Arm	Balancier	Stiel	디퍼 암	Brazo Cuchara	SER NO 30667-
	VOE 14519841			1	SS		Dipper Arm	Balancier	Stiel	디퍼 암	Brazo Cuchara	1,54m SER NO 30001-30666
	VOE 14522588			1			Dipper Arm	Balancier	Stiel	디퍼 암	Brazo Cuchara	SER NO 30667-33627
	VOE 14534333			1			Dipper Arm	Balancier	Stiel	디퍼 암	Brazo Cuchara	SER NO 33628-33895
	VOE 14537146			1			Dipper Arm	Balancier	Stiel	디퍼 암	Brazo Cuchara	SER NO 33896-34475 SER NO 50001-50129
	VOE 14543555			1			Arm	Bras	Arm	암	Brazo	SER NO 34476-34702 SER NO 50130-
	VOE 14546099			1			Arm	Bras	Arm	암	Brazo	SER NO 34703-35113
	VOE 14546450			1			Arm	Bras	Arm	암	Brazo	SER NO 35114-
2	**SA 1070-22680**	2		2	SS		•Bushing	•Bague	•Buchse	• 부싱	•Casquillo	SER NO 30001-33627
	VOE 14524137	1		1			•Bushing	•Bague	•Buchse	• 부싱	•Casquillo	SER NO 33628-
	SA 1070-22680		1		SS		•Bushing	•Bague	•Buchse	• 부싱	•Casquillo	
3	**SA 1070-22670**	2		2	SS		•Bushing	•Bague	•Buchse	• 부싱	•Casquillo	SER NO 30001-33627
	VOE 14524136	2		2			•Bushing	•Bague	•Buchse	• 부싱	•Casquillo	SER NO 33628-
	SA 1070-22670		2		SS		•Bushing	•Bague	•Buchse	• 부싱	•Casquillo	
4	**VOE 14510769**	2	2	2			•Bushing	•Bague	•Buchse	• 부싱	•Casquillo	

1	**8278846**
2	**8278847 S/N -33627**
3	**8278848**
4	
5	

Brazos y tuberías de engrase con asiento de tuberías
디퍼 암 및 윤활 배관 , 유압 배관 장착브라켓 포함
Stiel und Schmierleitungen mit Sitz
Balancier et tuyauterie de lubr avec siège de tuyau
Dipper arm and grease piping with piping seat

Catalogue id	Group
20019	**975**
Illustr. No **1017039**	Section **600**
Issue **VOE 74H9920019**	Page **671**

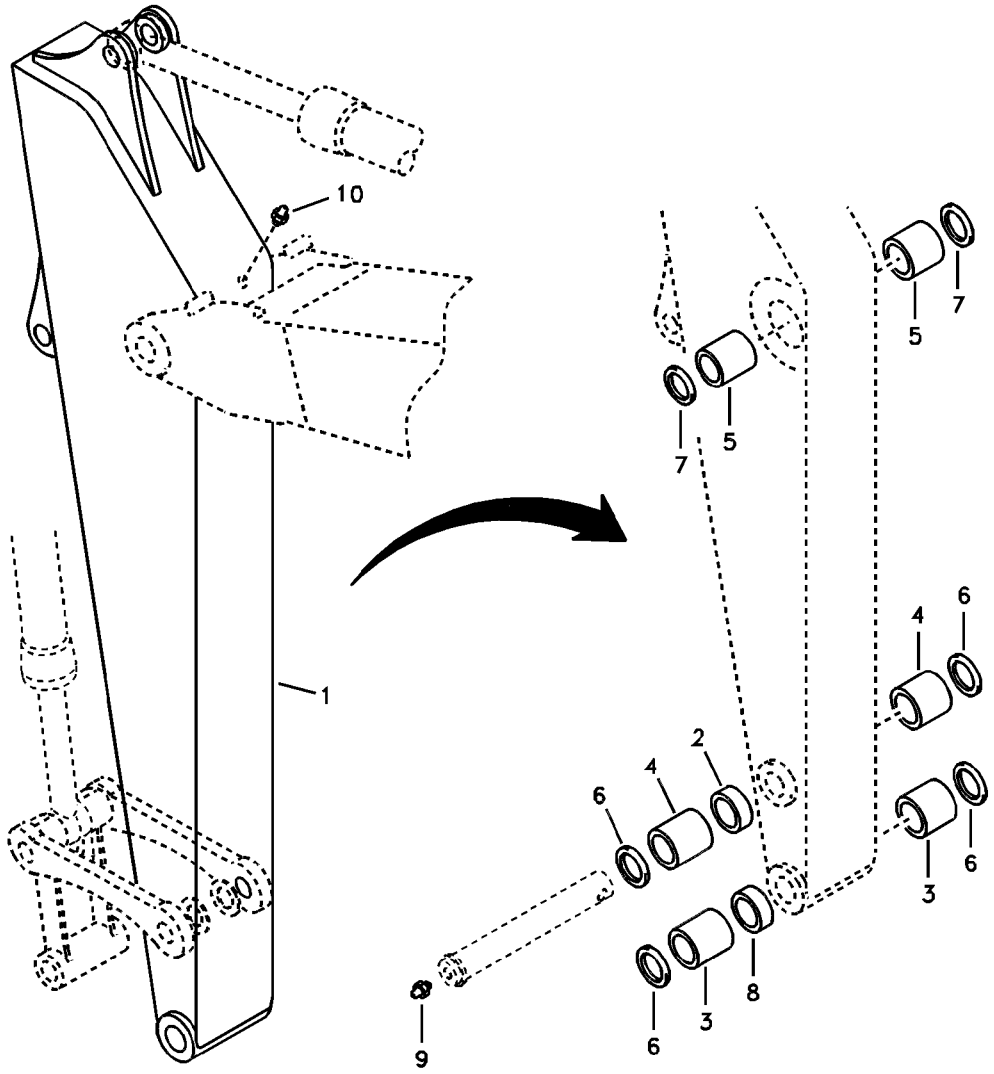
10
1
7
5
7
5
7
6
4
2
6
4
6
3
6
3
8
6
9

Fig.	Part No.	Quantity 1	2	3	PS	KIT	Description	Dénomination	Bezeichnung	품명	Denominación	Notes
5	**VOE 14510771**	2	2	2			•Bushing	•Bague	•Buchse	• 부싱	•Casquillo	
6	**VOE 14880729**	4	4	4			•Seal	•Joint	•Dichtring	• 시일	•Junta	
7	**VOE 14880730**	2	2	2			•Seal	•Joint	•Dichtring	• 시일	•Junta	
8	**VOE 14504227**	1		1			Bushing	Bague	Buchse	부싱	Casquillo	SER NO 33628-35113 SER NO 50001-50183
	VOE 14546527	1		1			Boss	Bossage	Warze	보스	Teton	SER NO 35114- SER NO 50184-
	SA 1070-22680		1		SS		Bushing	Bague	Buchse	부싱	Casquillo	
9	**SA 9481-11003**	1	1	1			Nipple	Raccord	Nippel	니플	Niple	SER NO 30001-35113 SER NO 50001-50183
	SA 9481-11003	2		2			Nipple	Raccord	Nippel	니플	Niple	SER NO 35114- SER NO 50184-
10	**SA 9481-21002**	1	1	1			Nipple	Raccord	Nippel	니플	Niple	SER NO 30001-35113 SER NO 50001-50183
	SA 9481-21002	2		2			Nipple	Raccord	Nippel	니플	Niple	SER NO 35114- SER NO 50184-

1	**8278846**
2	**8278847 S/N -33627**
3	**8278848**
4	
5	

Brazos y tuberías de engrase con asiento de tuberías
디퍼 암 및 윤활 배관 , 유압 배관 장착브라켓 포함
Stiel und Schmierleitungen mit Sitz
Balancier et tuyauterie de lubr avec siège de tuyau
Dipper arm and grease piping with piping seat

Catalogue id **20019**	Group **975**
Illustr. No **1017039**	Section **600**
Issue **VOE 74H9920019**	Page **673**

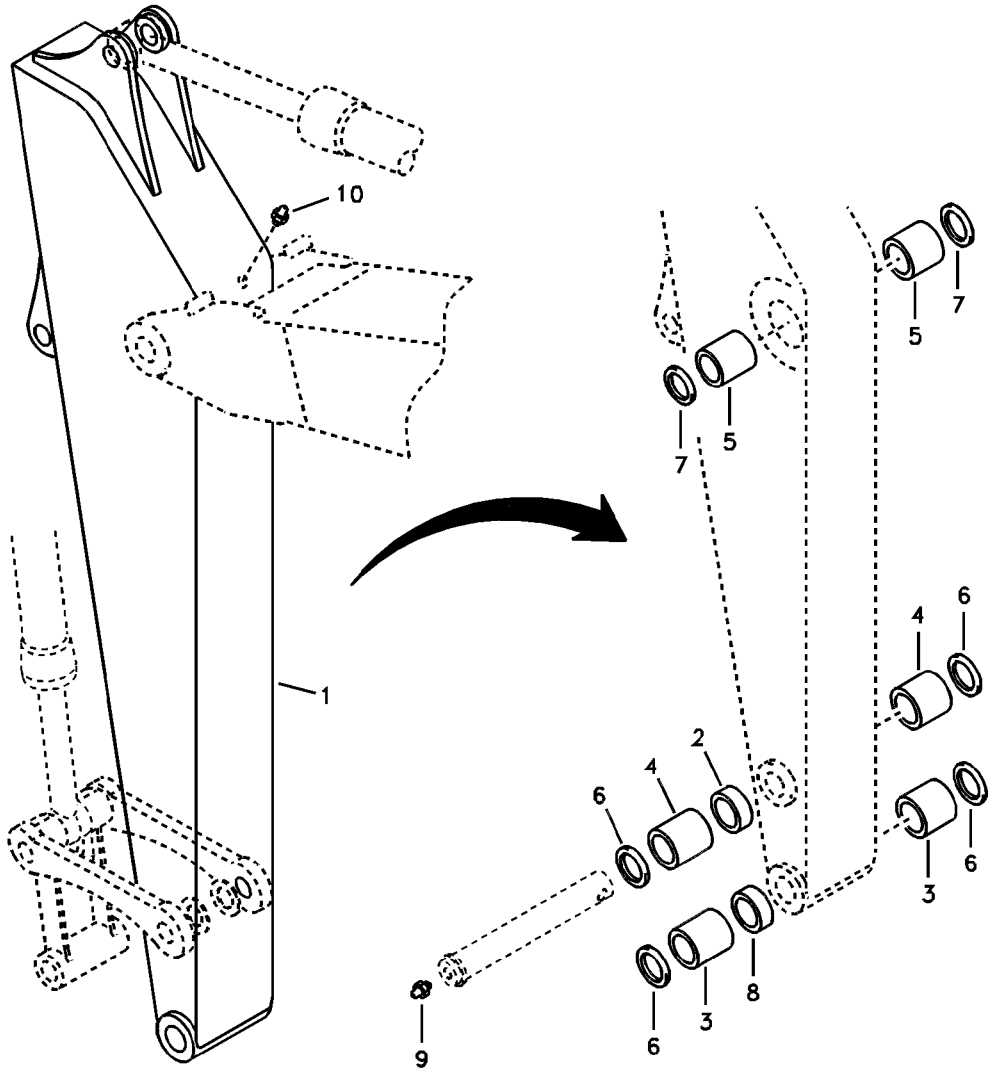
10
1
7
5
7
5
7
6
4
2
6
4
6
3
6
3
8
6
9

Fig.	Part No.	Quantity 1	2	3	PS	KIT	Description	Dénomination	Bezeichnung	품명	Denominación	Notes
1	**VOE 14522585**	1					Dipper Arm	Balancier	Stiel	디퍼 암	Brazo Cuchara	SER NO 50001-50064
	VOE 14534332	1					Dipper Arm	Balancier	Stiel	디퍼 암	Brazo Cuchara	SER NO 50065-50087
	VOE 14537145	1					Dipper Arm	Balancier	Stiel	디퍼 암	Brazo Cuchara	SER NO 50088-50129
	VOE 14543557	1					Arm	Bras	Arm	암	Brazo	SER NO 30130-
2	**SA 1070-22680**	2			SS		•Bushing	•Bague	•Buchse	• 부싱	•Casquillo	SER NO 50001-50064
	VOE 14524137	1					•Bushing	•Bague	•Buchse	• 부싱	•Casquillo	SER NO 50065-
3	**SA 1070-22670**	2			SS		•Bushing	•Bague	•Buchse	• 부싱	•Casquillo	SER NO 50001-50064
	VOE 14524136	1					•Bushing	•Bague	•Buchse	• 부싱	•Casquillo	SER NO 50065-
4	**VOE 14510769**	2					•Bushing	•Bague	•Buchse	• 부싱	•Casquillo	
5	**VOE 14510771**	2					•Bushing	•Bague	•Buchse	• 부싱	•Casquillo	
6	**VOE 14880729**	4					•Seal	•Joint	•Dichtring	• 시일	•Junta	
7	**VOE 14880730**	2					•Seal	•Joint	•Dichtring	• 시일	•Junta	
8	**VOE 14504227**	1					•Bushing	•Bague	•Buchse	• 부싱	•Casquillo	SER NO 50065-
9	**SA 9481-11003**	1					Nipple	Raccord	Nippel	니플	Niple	
10	**SA 9481-21002**	1					Nipple	Raccord	Nippel	니플	Niple	

1	**8278846**	**Brazos y tuberías de engrase con asiento de tuberías** 디퍼 암 및 윤활 배관 , 유압 배관 장착브라켓 포함 **Stiel und Schmierleitungen mit Sitz** **Balancier et tuyauterie de lubr avec siège de tuyau** **Dipper arm and grease piping with piping seat**	Catalogue id **20019**	Group **975**
2			Illustr. No **1017039**	Section **610**
3				
4			Issue **VOE 74H9920019**	Page **675**
5		**FOR CHINA**		

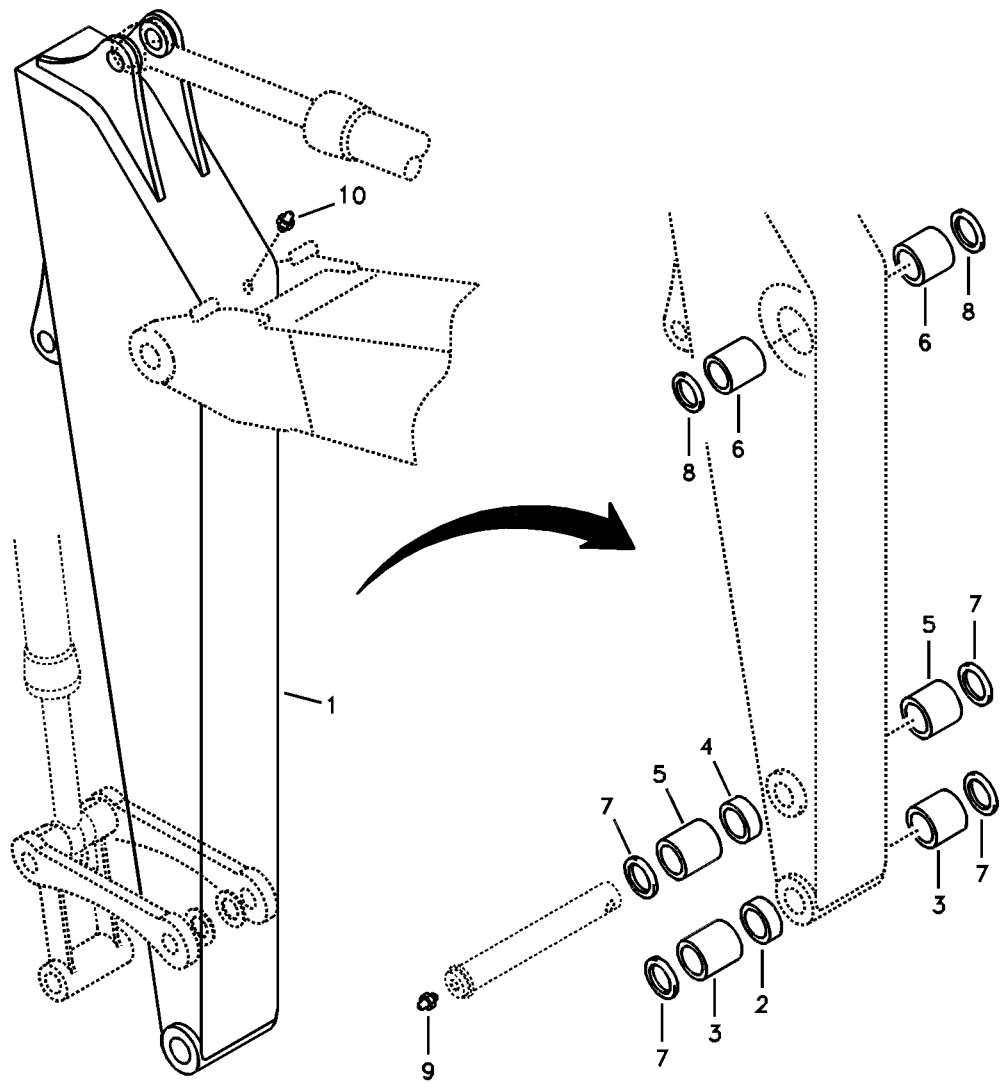
10
1
8
6
6
8
7
5
4
5
7
7
3
7
2
3
7
9

Fig.	Part No.	Quantity 1	2	3	PS	KIT	Description	Dénomination	Bezeichnung	품명	Denominación	Notes	
1	**VOE 14522158**	1					Dipper Arm	Balancier	Stiel	디퍼 암	Brazo Cuchara	SER NO 30842-33627	×
	VOE 14534334	1			SS		Dipper Arm	Balancier	Stiel	디퍼 암	Brazo Cuchara	SER NO 33628-34475 SER NO 50001-50129	
	VOE 14543559	1					Arm	Bras	Arm	암	Brazo	SER NO 34476-35113 SER NO 50130-50183	
	VOE 14546102	1					Arm	Bras	Arm	암	Brazo	SER NO 35114- SER NO 50184-	
2	**VOE 14504227**	1					•Bushing	•Bague	•Buchse	• 부싱	•Casquillo	SER NO 30001-35113 SER NO 50001-50183	
	VOE 14546527	1					•Boss	•Bossage	•Warze	• 보스	•Teton	SER NO 35114- SER NO 50184-	
3	**VOE 14524136**	2					•Bushing	•Bague	•Buchse	• 부싱	•Casquillo		
4	**VOE 14524137**	1					•Bushing	•Bague	•Buchse	• 부싱	•Casquillo		
5	**VOE 14510769**	2					•Bushing	•Bague	•Buchse	• 부싱	•Casquillo		
6	**VOE 14510771**	2					•Bushing	•Bague	•Buchse	• 부싱	•Casquillo		
7	**VOE 14880729**	4					•Seal	•Joint	•Dichtring	• 시일	•Junta		
8	**VOE 14880730**	2					•Seal	•Joint	•Dichtring	• 시일	•Junta		
9	**SA 9481-11003**	1					Nipple	Raccord	Nippel	니플	Niple	SER NO 30001-35113 SER NO 50001-50183	
	SA 9481-11003	2					Nipple	Raccord	Nippel	니플	Niple	SER NO 35113- SER NO 50184-	
10	**SA 9481-21002**	1					Nipple	Raccord	Nippel	니플	Niple		

1	**8279079 S/N 30824-**	**Brazos y tuberías de engrase con asiento de tuberías** 디퍼 암 및 윤활 배관 , 유압 배관 장착브라켓 포함 **Stiel und Schmierleitungen mit Sitz** **Balancier et tuyauterie de lubr avec siège de tuyau** **Dipper arm and grease piping with piping seat**	Catalogue id **20019**	Group **975**
2			Illustr. No **1008360**	Section **800**
3				
4			Issue **VOE 74H9920019**	Page **677**
5				

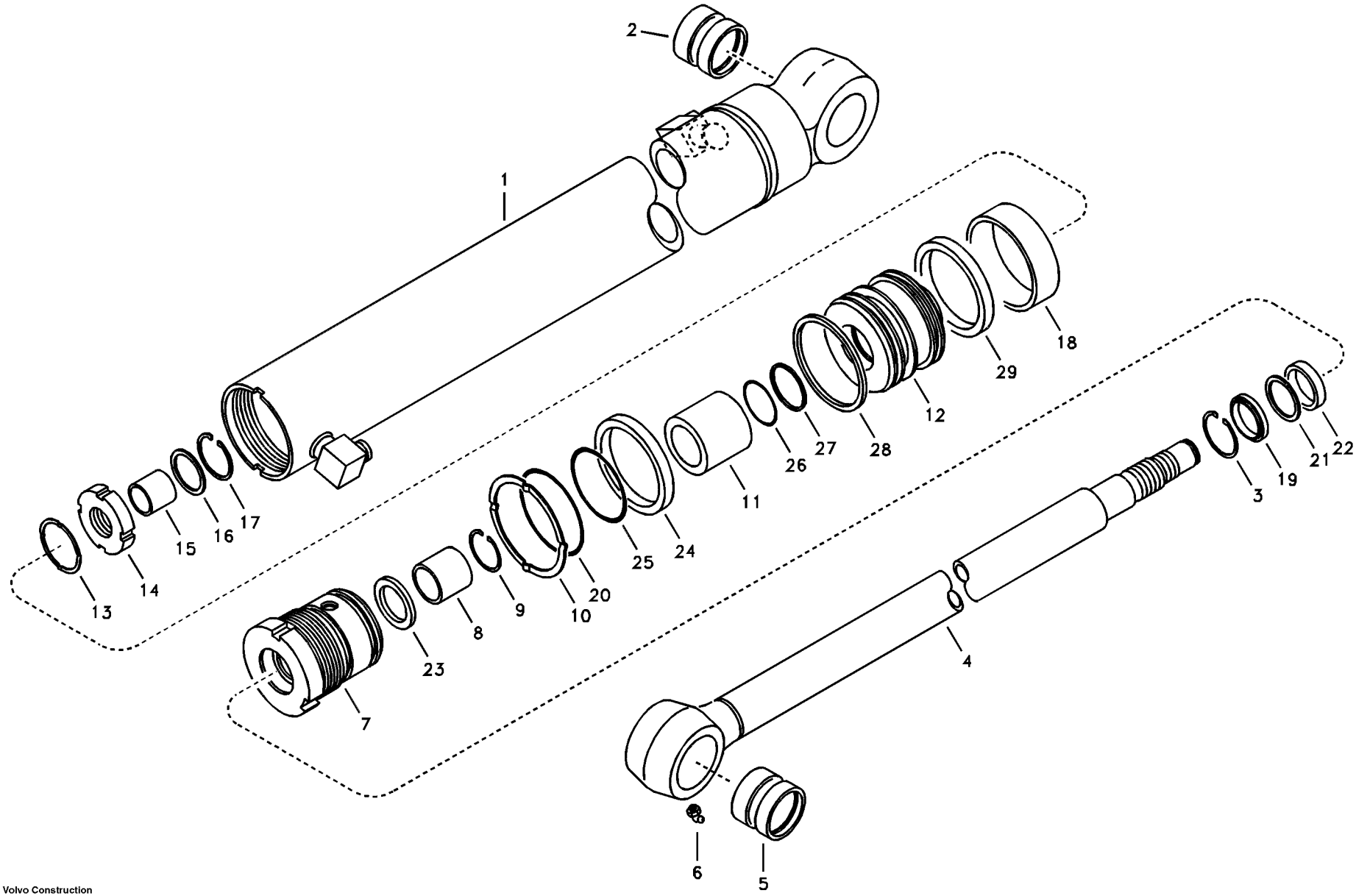

Volvo Construction Equipment

1007119

Fig.	Part No.	Quantity 1	2	3	PS	KIT	Description	Dénomination	Bezeichnung	품명	Denominación	Notes
	VOE 14503580	1					Dipper Arm Cylinder	Vérin de bras	Stielzylinder	디퍼 암 실린더	Cilindro de brazo	
	VOE 14521124		1				Dipper Arm Cylinder	Vérin de bras	Stielzylinder	디퍼 암 실린더	Cilindro de brazo	
1	**VOE 14503581**	1			OP		•Pipe	•Canalisation	•Rohrleitung	• 파이프	•Canalizacion	
	VOE 14521125		1		OP		•Pipe	•Canalisation	•Rohrleitung	• 파이프	•Canalizacion	
2	**VOE 14517953**	1	1				••Bushing	••Bague	••Buchse	•• 부싱	••Casquillo	
3	**SA 9556-05500**	1	1		SS		•Ring	•Anneau	•Ring	• 링	•Anillo	
4	**VOE 14501082**	1	1				•Bar	•Barre	•Stab	• 바	•Barra	
5	**VOE 14517952**	1	1				••Bushing	••Bague	••Buchse	•• 부싱	••Casquillo	
6	**SA 9481-20002**	1	1				••Nipple	••Raccord	••Nippel	•• 니플	••Niple	
7	**SA 1146-01760**	1	1		OP		•Head	•Tete	•Kopf	• 헤드	•Capo	
8	**SA 9612-05535**	1	1			K	•Bushing	•Bague	•Buchse	• 부싱	•Casquillo	
9	**SA 9557-05000**	1	1				•Ring	•Anneau	•Ring	• 링	•Anillo	
10	**SA 1046-01770**	1	1		SS		•Washer	•Rondelle	•Scheibe	• 와셔	•Arandela	
11	**SA 1146-01771**	1	1				•Cushion	•Coussin	•Sitzkissen	• 쿠션	•Cojin	
12	**SA 1146-02150**	1	1		OP		•Piston	•Piston	•Kolben	• 피스톤	•Piston	
13	**SA 9216-04510**	1	1				•Washer	•Rondelle	•Scheibe	• 와셔	•Arandela	
14	**SA 9125-33000**	1	1				•Lock nut	•Contre-ecrou	•Sicherungsmutter	• 록 너트	•Contratuerca	
15	**SA 1146-01800**	1	1		SS		•Cushion	•Coussin	•Sitzkissen	• 쿠션	•Cojin	
16	**SA 1146-06640**	1	1				•Guard	•Protection	•Schutz	• 가드	•Protección	
17	**SA 1146-06630**	1	1				•Ring	•Anneau	•Ring	• 링	•Anillo	
18	**SA 9565-20900**	1	1			K	•Ring	•Anneau	•Ring	• 링	•Anillo	
19	**SA 9564-20550**	1	1		SS	K	•Seal	•Joint	•Dichtring	• 시일	•Junta	
20	**SA 9511-22090**	1	1			K	•O-ring	•Joint Torique	•O-Ring	• 오링	•Junta torica	
21	**SA 9567-20551**	1	1			K	•Ring	•Anneau	•Ring	• 링	•Anillo	
22	**SA 9563-20553**	1	1			K	•Seal	•Joint	•Dichtring	• 시일	•Junta	
23	**SA 1146-08240**	1	1			K	•Buffer Ring	•Butee	•Puffer Ring	• 버퍼 링	•Parachoques	
24	**SA 9566-30800**	1	1			K	•Ring	•Anneau	•Ring	• 링	•Anillo	
25	**SA 9511-12080**	2	2			K	•O-ring	•Joint Torique	•O-Ring	• 오링	•Junta torica	
26	**SA 9511-12048**	1	1			K	•O-ring	•Joint Torique	•O-Ring	• 오링	•Junta torica	
27	**SA 9566-30480**	1	1			K	•Ring	•Anneau	•Ring	• 링	•Anillo	

1	**8278854**
2	**8278855**
3	
4	
5	

Cilindro de brazo
디퍼 암 실린더
Stielzylinder
Vérin de bras
Dipper arm cylinder

Catalogue id **20019**	Group **975**
Illustr. No **1007119**	Section **1500**
Issue **VOE 74H9920019**	Page **679**

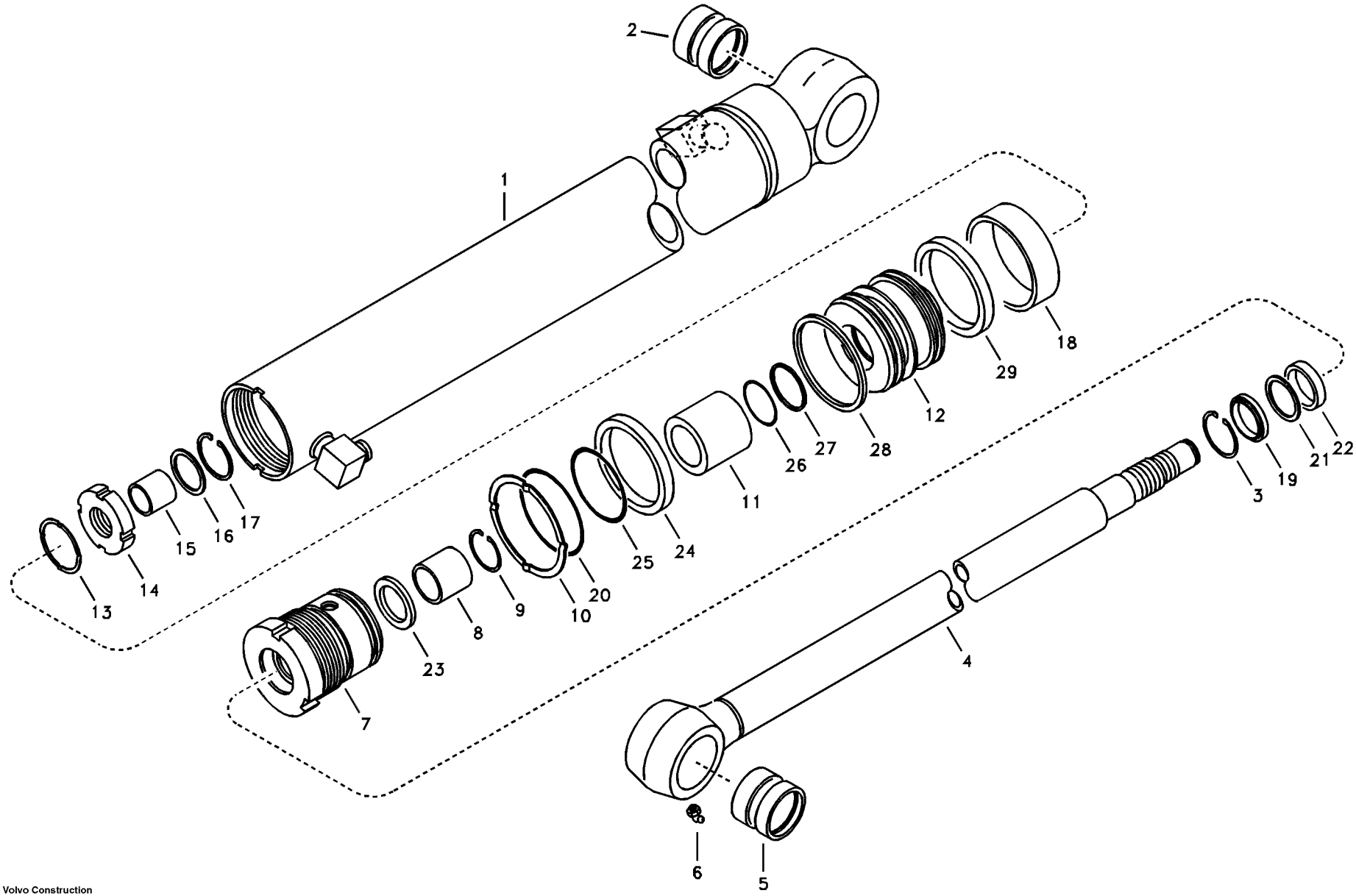

Volvo Construction Equipment

1007119

Fig.	Part No.	Quantity 1	2	3	PS	KIT	Description	Dénomination	Bezeichnung	품명	Denominación	Notes
28	**SA 9568-00900**	2	2			K	•Seal	•Joint	•Dichtring	• 시일	•Junta	
29	**SA 1146-07850**	1	1			K	•Packing	•Joint	•Dichtung	• 패킹	•Empaquetadura	
100	**SA 8148-14021**	1	1				Sealing Kit	Jeu Joints	Dichtungssatz	시일 킷	Juego Retenes	

1	**8278854**	**Cilindro de brazo** 디퍼 암 실린더 **Stielzylinder** **Vérin de bras** **Dipper arm cylinder**	Catalogue id **20019**	Group **975**
2	**8278855**		Illustr. No **1007119**	Section **1500**
3			Issue **VOE 74H9920019**	Page **681**
4				
5				

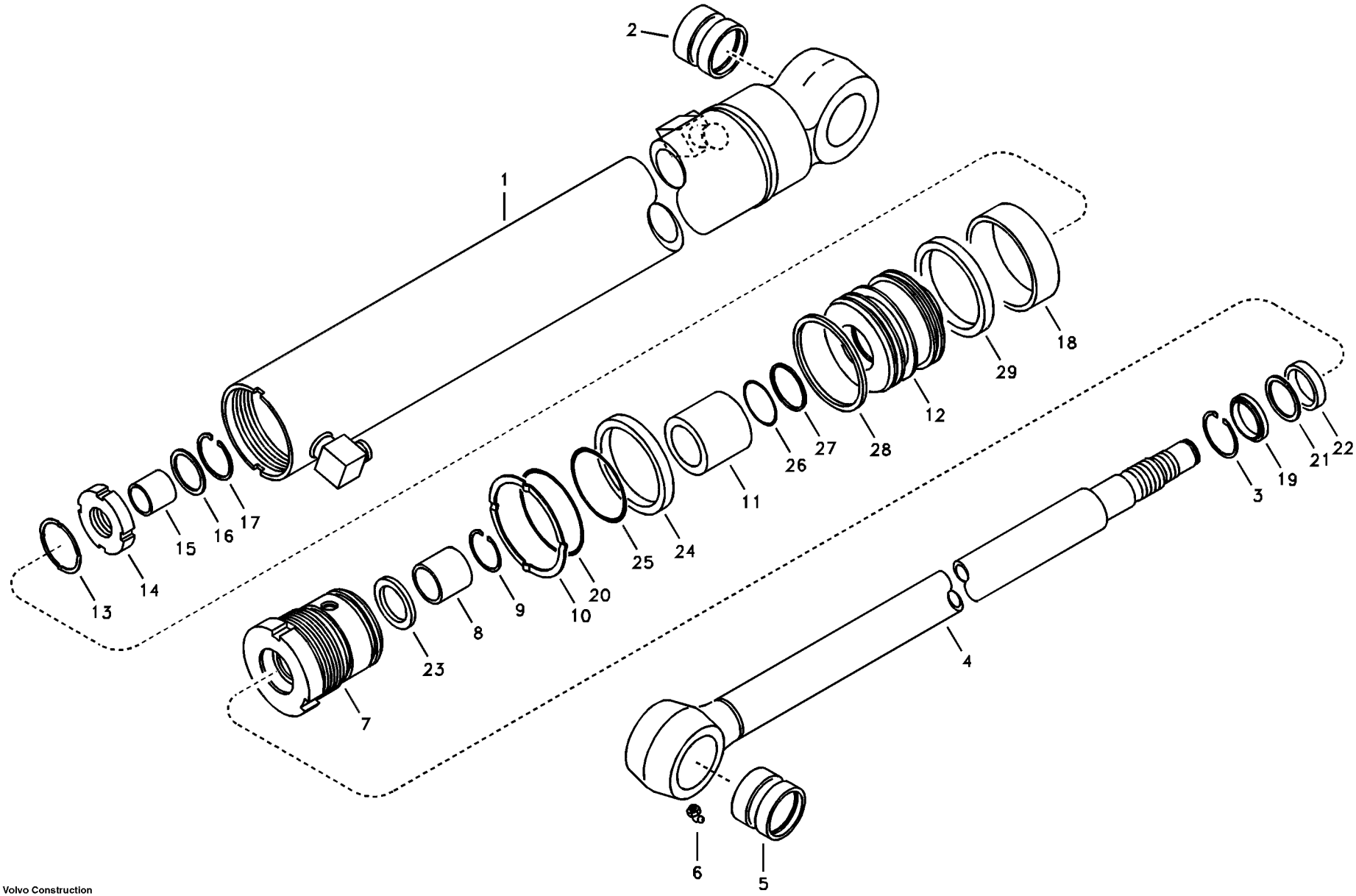

Volvo Construction Equipment

1007119

Fig.	Part No.	Quantity 1	2	3	PS	KIT	Description	Dénomination	Bezeichnung	품명	Denominación	Notes
	VOE 14503580	1					Dipper Arm Cylinder	Vérin de bras	Stielzylinder	디퍼 암 실린더	Cilindro de brazo	
1	**VOE 14503581**	1			OP		•Pipe	•Canalisation	•Rohrleitung	• 파이프	•Canalizacion	
2	**VOE 14517953**	1					••Bushing	••Bague	••Buchse	•• 부싱	••Casquillo	
3	**SA 9556-05500**	1			SS		•Ring	•Anneau	•Ring	• 링	•Anillo	
4	**VOE 14501082**	1					•Bar	•Barre	•Stab	• 바	•Barra	
5	**VOE 14517952**	1					••Bushing	••Bague	••Buchse	•• 부싱	••Casquillo	
6	**SA 9481-20002**	1					••Nipple	••Raccord	••Nippel	•• 니플	••Niple	
7	**SA 1146-01760**	1			OP		•Head	•Tete	•Kopf	• 헤드	•Capo	
8	**SA 9612-05535**	1				K	•Bushing	•Bague	•Buchse	• 부싱	•Casquillo	
9	**SA 9557-05000**	1					•Ring	•Anneau	•Ring	• 링	•Anillo	
10	**SA 1046-01770**	1			SS		•Washer	•Rondelle	•Scheibe	• 와셔	•Arandela	
11	**SA 1146-01771**	1					•Cushion	•Coussin	•Sitzkissen	• 쿠션	•Cojin	
12	**SA 1146-02150**	1			OP		•Piston	•Piston	•Kolben	• 피스톤	•Piston	
13	**SA 9216-04510**	1					•Washer	•Rondelle	•Scheibe	• 와셔	•Arandela	
14	**SA 9125-33000**	1					•Lock nut	•Contre-ecrou	•Sicherungsmutter	• 록 너트	•Contratuerca	
15	**SA 1146-01800**	1			SS		•Cushion	•Coussin	•Sitzkissen	• 쿠션	•Cojin	
16	**SA 1146-06640**	1					•Guard	•Protection	•Schutz	• 가드	•Protección	
17	**SA 1146-06630**	1					•Ring	•Anneau	•Ring	• 링	•Anillo	
18	**SA 9565-20900**	1				K	•Ring	•Anneau	•Ring	• 링	•Anillo	
19	**SA 9564-20550**	1			SS	K	•Seal	•Joint	•Dichtring	• 시일	•Junta	
20	**SA 9511-22090**	1				K	•O-ring	•Joint Torique	•O-Ring	• 오링	•Junta torica	
21	**SA 9567-20551**	1				K	•Ring	•Anneau	•Ring	• 링	•Anillo	
22	**SA 9563-20553**	1				K	•Seal	•Joint	•Dichtring	• 시일	•Junta	
23	**SA 1146-08240**	1				K	•Buffer Ring	•Butee	•Puffer Ring	• 버퍼 링	•Parachoques	
24	**SA 9566-30800**	1				K	•Ring	•Anneau	•Ring	• 링	•Anillo	
25	**SA 9511-12080**	2				K	•O-ring	•Joint Torique	•O-Ring	• 오링	•Junta torica	
26	**SA 9511-12048**	1				K	•O-ring	•Joint Torique	•O-Ring	• 오링	•Junta torica	
27	**SA 9566-30480**	1				K	•Ring	•Anneau	•Ring	• 링	•Anillo	
28	**SA 9568-00900**	2				K	•Seal	•Joint	•Dichtring	• 시일	•Junta	
29	**SA 1146-07850**	1				K	•Packing	•Joint	•Dichtung	• 패킹	•Empaquetadura	

1	**8278854**	**Cilindro de brazo** 디퍼 암 실린더 **Stielzylinder** **Vérin de bras** **Dipper arm cylinder**	Catalogue id **20019**	Group **975**
2			Illustr. No **1007119**	Section **1510**
3				
4			Issue **VOE 74H9920019**	Page **683**
5		**FOR CHINA**		

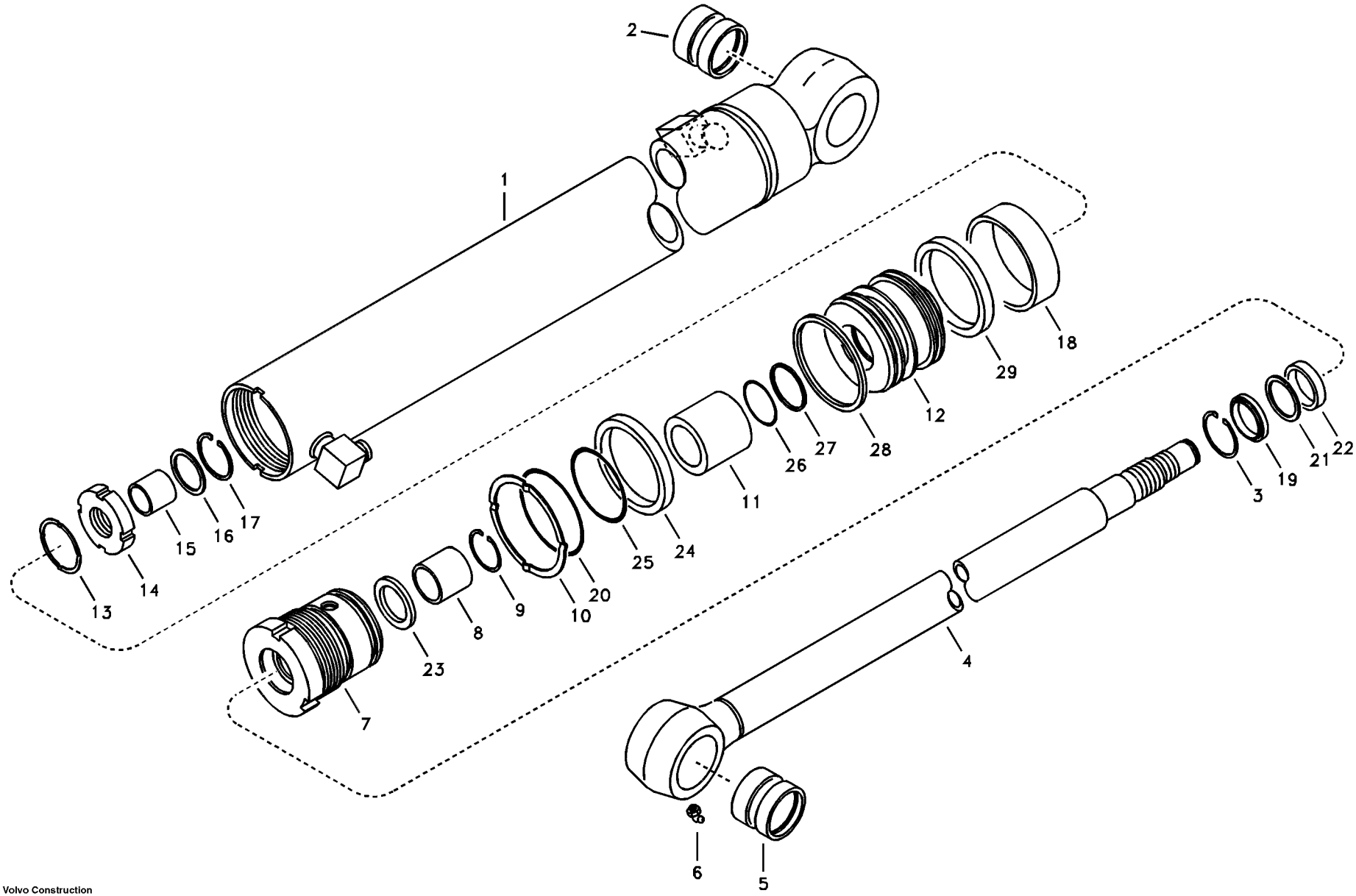

Volvo Construction Equipment

1007119

Fig.	Part No.	Quantity 1	2	3	PS	KIT	Description	Dénomination	Bezeichnung	품명	Denominación	Notes
100	**SA 8148-14021**	1					Sealing Kit	Jeu Joints	Dichtungssatz	시일 킷	Juego Retenes	

1	**8278854**	**Cilindro de brazo** 디퍼 암 실린더 **Stielzylinder** **Vérin de bras** **Dipper arm cylinder**	Catalogue id **20019**	Group **975**
2				
3			Illustr. No **1007119**	Section **1510**
4				
5		**FOR CHINA**	Issue **VOE 74H9920019**	Page **685**

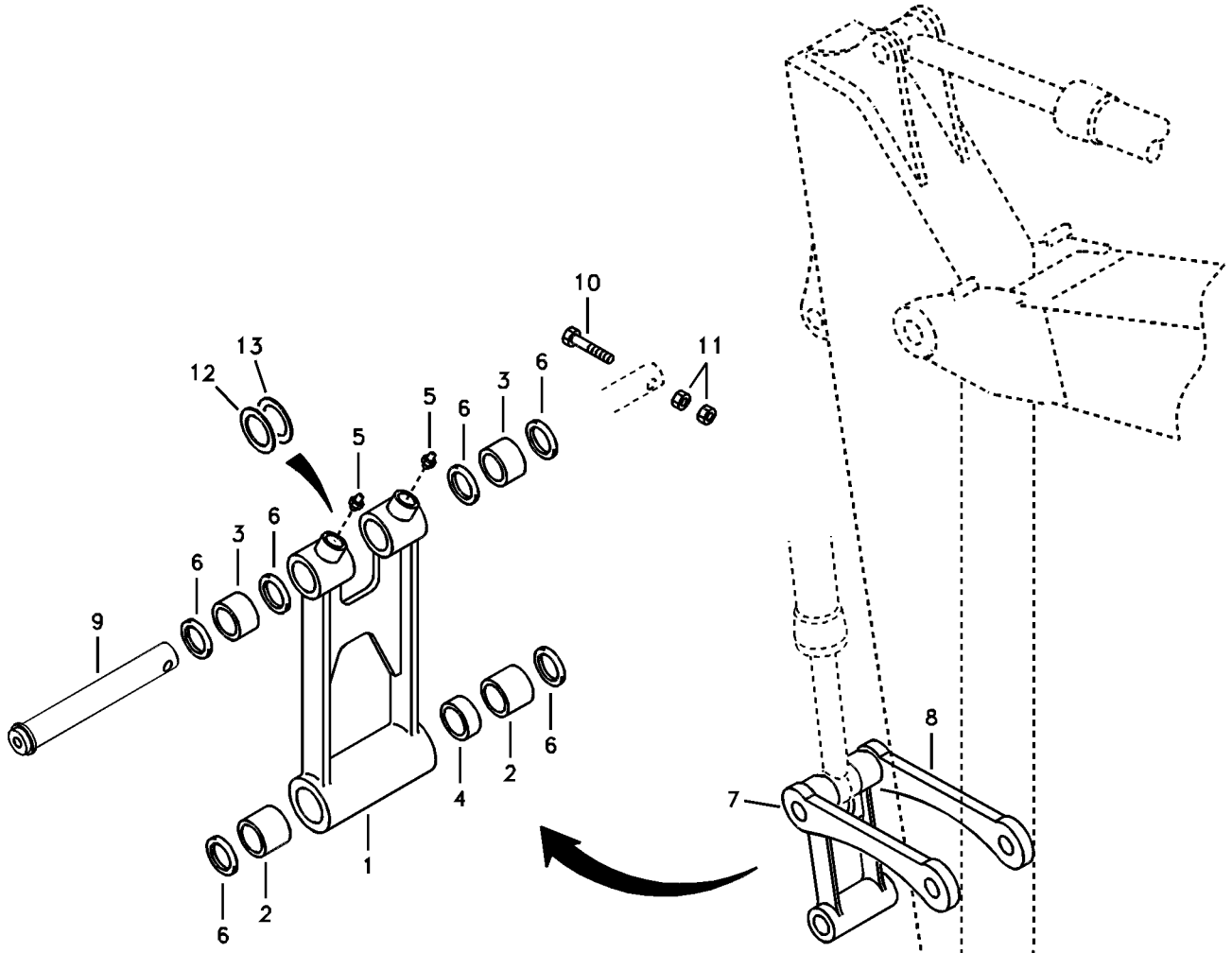
10
13
12
11
5
6
3
6
5
6
3
6
9
4
2
6
1
6
2
8
7

Fig.	Part No.	Quantity 1	2	3	PS	KIT	Description	Dénomination	Bezeichnung	품명	Denominación	Notes
	VOE 14510834	1					Connecting Rod	Bielle	Pleuel	커넥팅 로드	Biela	SER NO 30001-33627
	VOE 14532972	1					Connecting Rod	Bielle	Pleuel	커넥팅 로드	Biela	SER NO 33628-35113
	VOE 14546152	1					Connecting Rod	Bielle	Pleuel	커넥팅 로드	Biela	SER NO 35114-
	VOE 14510772		1				Connecting Rod	Bielle	Pleuel	커넥팅 로드	Biela	SER NO 30001-35113 SER NO 50001-50183
	VOE 14546154		1				Connecting Rod	Bielle	Pleuel	커넥팅 로드	Biela	SER NO 35114- SER NO 50184-
1		1			NS		•Connecting Rod	•Bielle	•Pleuel	• 커넥팅 로드	•Biela	
			1		NS		•Connecting Rod	•Bielle	•Pleuel	• 커넥팅 로드	•Biela	
2	**VOE 14510769**	2	2				•Bushing	•Bague	•Buchse	• 부싱	•Casquillo	
3	**VOE 14510770**	2	2				•Bushing	•Bague	•Buchse	• 부싱	•Casquillo	
4	**SA 1070-22680**	1			SS		•Bushing	•Bague	•Buchse	• 부싱	•Casquillo	SER NO 30001-35113
	VOE 14546527	1					•Boss	•Bossage	•Warze	• 보스	•Teton	SER NO 35114-
	VOE 14504227		1				•Bushing	•Bague	•Buchse	• 부싱	•Casquillo	SER NO 30001-35113 SER NO 50001-50183
	VOE 14546527		1				•Boss	•Bossage	•Warze	• 보스	•Teton	SER NO 35114- SER NO 50184-
5	**SA 9481-11003**	2	2				•Nipple	•Raccord	•Nippel	• 니플	•Niple	SER NO 30001-35113 SER NO 50001-50183
	SA 9481-11003	3	3				•Nipple	•Raccord	•Nippel	• 니플	•Niple	SER NO 35114- SER NO 50184-
6	**VOE 14880729**	6	6				•Seal	•Joint	•Dichtring	• 시일	•Junta	
7	**VOE 14505011**	1					Yoke	Chape	Joch	요크	Horquilla	LH
	VOE 14504211		1				Yoke	Chape	Joch	요크	Horquilla	LH
8	**VOE 14505012**	1					Yoke	Chape	Joch	요크	Horquilla	RH
	VOE 14504212		1				Yoke	Chape	Joch	요크	Horquilla	RH
9	**VOE 14519815**	1	1				Pin	Goupille	Zapfen	핀	Pasador	
10	**SA 9011-21217**	1	1				Bolt	Boulon	Bolzen	볼트	Perno	
11	**VOE 979019**	2	2				Hexagon Nut	Ecrou Hexagonal	Sechskantmutter	너트	Tuerca Hexagon	
12	**SA 1171-30590**	4	4				Shim	Cale d'épaisseur	Passcheibe	심	Arandela Ajuste	1,0mm

1	**8278849**
2	**8278850**
3	
4	
5	

Acoplamientos para la varilla de conexión
커넥팅 로드 연결 장치
Gelenke zu anschließender Kolbenstange
Articulations, liaison avec la tige de piston
Links to connecting rod

Catalogue id **20019**	Group **975**
Illustr. No **1007120**	Section **1900**
Issue **VOE 74H9920019**	Page **687**

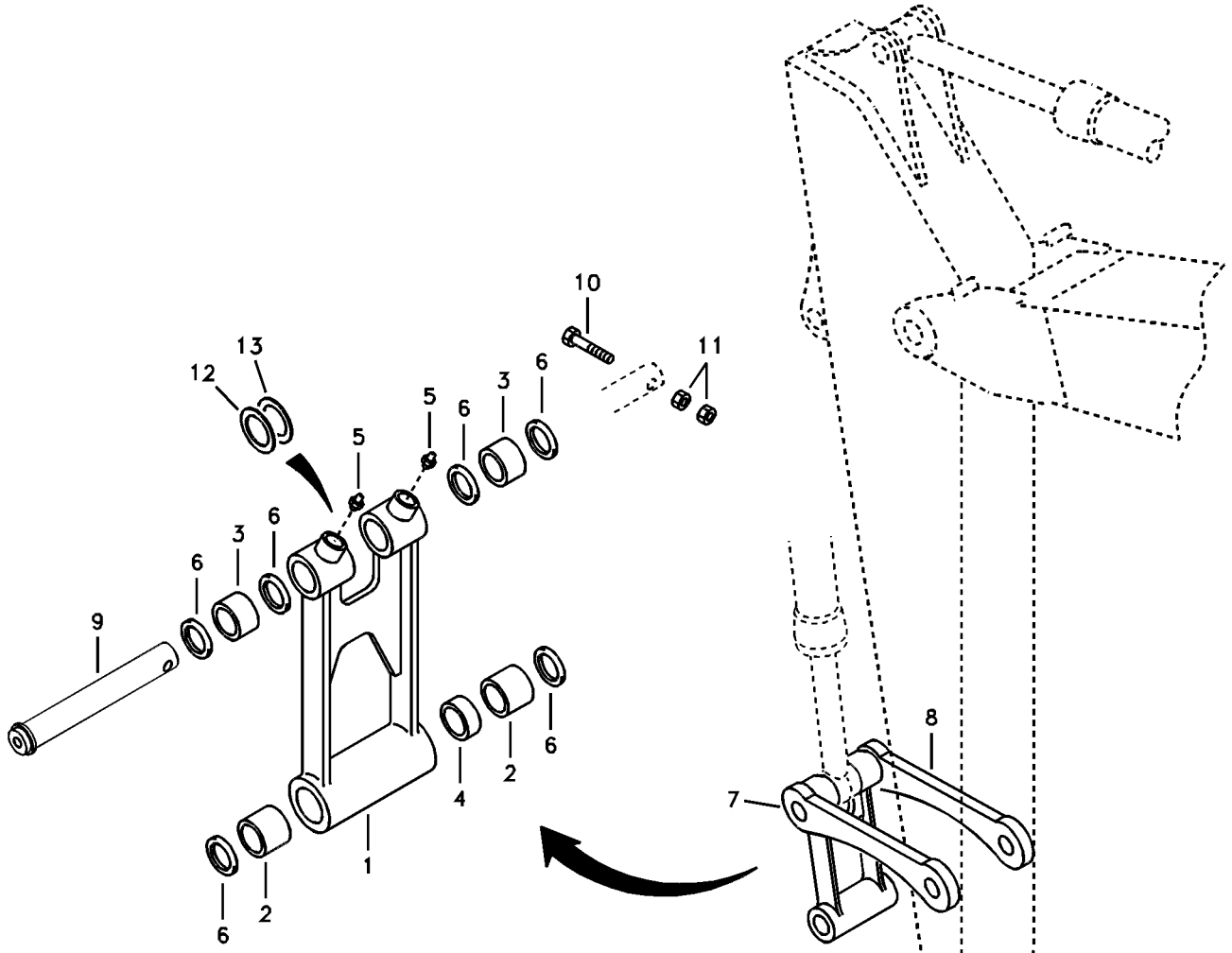
10
13
12
11
5
6
3
6
5
6
3
6
9
4
2
6
1
6
2
8
7

Fig.	Part No.	Quantity 1	2	3	PS	KIT	Description	Dénomination	Bezeichnung	품명	Denominación	Notes
13	**SA 1171-30600**	4	4				Shim	Cale d'épaisseur	Passcheibe ……	심	Arandela Ajuste	0,5mm

1	**8278849**
2	**8278850**
3	
4	
5	

Acoplamientos para la varilla de conexión
커넥팅 로드 연결 장치
Gelenke zu anschließender Kolbenstange
Articulations, liaison avec la tige de piston
Links to connecting rod

Catalogue id **20019**	Group **975**
Illustr. No **1007120**	Section **1900**
Issue **VOE 74H9920019**	Page **689**

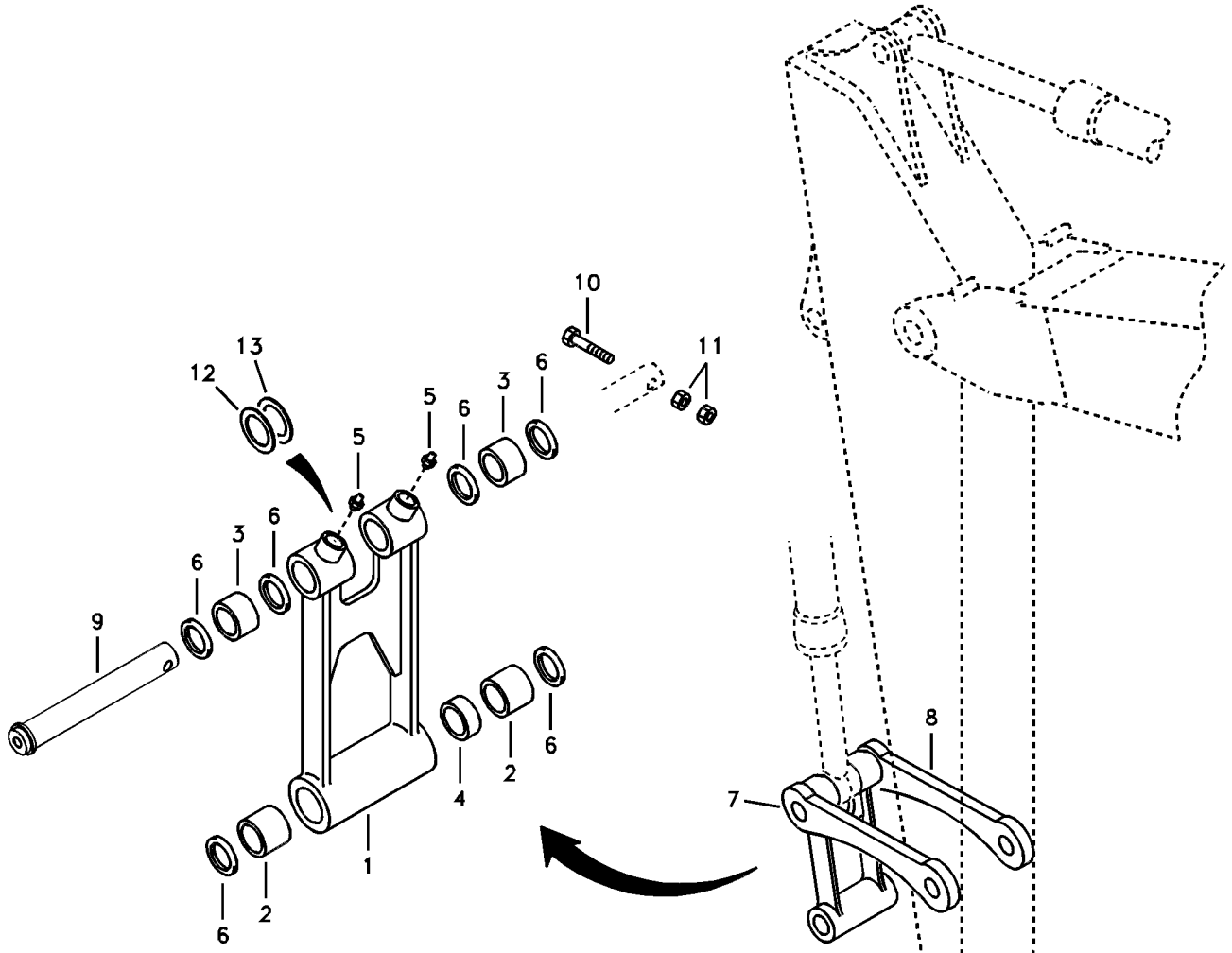
10
13
12
11
5
6
3
6
5
6
3
6
9
4
2
6
1
6
2
8
7

Fig.	Part No.	Quantity 1	2	3	PS	KIT	Description	Dénomination	Bezeichnung	품명	Denominación	Notes
	VOE 14510834	1					Connecting Rod	Bielle	Pleuel	커넥팅 로드	Biela	SER NO 50001-50064
	VOE 14532972	1					Connecting Rod	Bielle	Pleuel	커넥팅 로드	Biela	SER NO 50065-50183
	VOE 14546154	1					Connecting Rod	Bielle	Pleuel	커넥팅 로드	Biela	SER NO 50184-
1		1			NS		•Connecting Rod	•Bielle	•Pleuel	• 커넥팅 로드	•Biela	
2	**VOE 14510769**	2					•Bushing	•Bague	•Buchse	• 부싱	•Casquillo	
3	**VOE 14510770**	2					•Bushing	•Bague	•Buchse	• 부싱	•Casquillo	
4	**SA 1070-22680**	1			SS		•Bushing	•Bague	•Buchse	• 부싱	•Casquillo	SER NO 50001-50183
	VOE 14546527	1					•Boss	•Bossage	•Warze	• 보스	•Teton	SER NO 50184-
5	**SA 9481-11003**	2					•Nipple	•Raccord	•Nippel	• 니플	•Niple	SER NO 50001-50183
	SA 9481-11003	3					•Nipple	•Raccord	•Nippel	• 니플	•Niple	SER NO 50184-
6	**VOE 14880729**	6					•Seal	•Joint	•Dichtring	• 시일	•Junta	
7	**VOE 14505011**	1					Yoke	Chape	Joch	요크	Horquilla	LH
8	**VOE 14505012**	1					Yoke	Chape	Joch	요크	Horquilla	RH
9	**VOE 14519815**	1					Pin	Goupille	Zapfen	핀	Pasador	
10	**SA 9011-21217**	1					Bolt	Boulon	Bolzen	볼트	Perno	
11	**VOE 979019**	2					Hexagon Nut	Ecrou Hexagonal	Sechskantmutter	너트	Tuerca Hexagon	
12	**SA 1171-30590**	4					Shim	Cale d'épaisseur	Passcheibe	심	Arandela Ajuste	1,0mm
13	**SA 1171-30600**	4					Shim	Cale d'épaisseur	Passcheibe	심	Arandela Ajuste	0,5mm

1	**8278849**	**Acoplamientos para la varilla de conexión** 커넥팅 로드 연결 장치 **Gelenke zu anschließender Kolbenstange** **Articulations, liaison avec la tige de piston** **Links to connecting rod**	Catalogue id **20019**	Group **975**
2			Illustr. No **1007120**	Section **1910**
3				
4			Issue **VOE 74H9920019**	Page **691**
5		**FOR CHINA**		

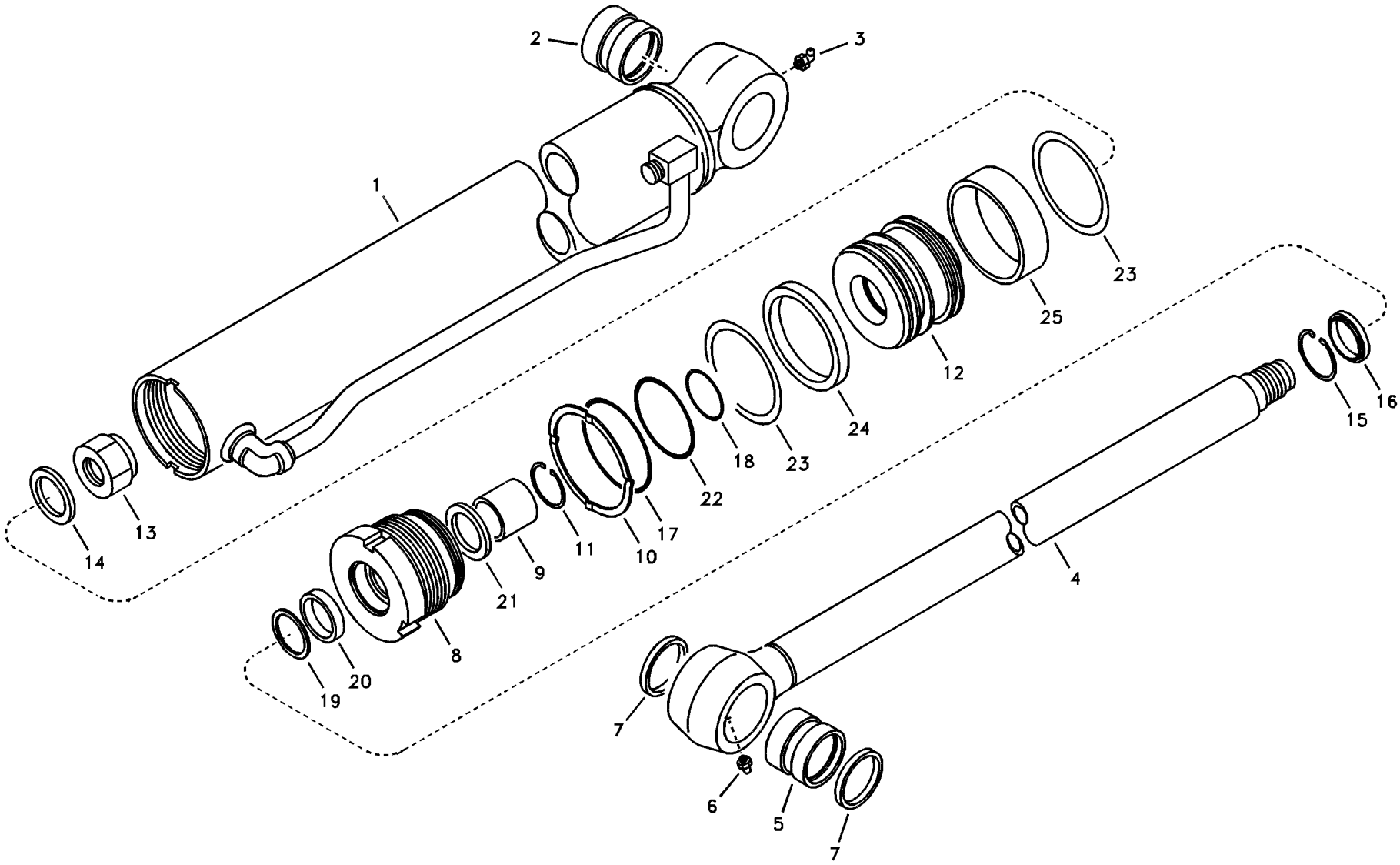

Volvo Construction Equipment

1007121

Fig.	Part No.	Quantity 1	2	3	PS	KIT	Description	Dénomination	Bezeichnung	품명	Denominación	Notes
	SA 1146-01191	1			SS		Bucket Cylinder	Verin de godet	Löffelzylinder	버켓 실린더	Maquina de copa	SER NO 30001-31254
	VOE 14524787	1					Bucket Cylinder	Verin de godet	Löffelzylinder	버켓 실린더	Maquina de copa	SER NO 31255-
1	**VOE 14501083**	1					•Tube	•Tube	•Rohr	• 튜브	•Tubo	SER NO 30001-31254
	VOE 14525210	1			OP		•Tube	•Tube	•Rohr	• 튜브	•Tubo	SER NO 31255-
2	**VOE 14517954**	1					••Bushing	••Bague	••Buchse	•• 부싱	••Casquillo	
3	**SA 9481-20002**	1					••Nipple	••Raccord	••Nippel	•• 니플	••Niple	
4	**VOE 14501084**	1					•Rod	•Monture	•Fuhler	• 로드	•Varilla	
5	**VOE 14517954**	1					••Bushing	••Bague	••Buchse	•• 부싱	••Casquillo	
6	**SA 9481-10003**	1					••Nipple	••Raccord	••Nippel	•• 니플	••Niple	
7	**SA 9561-04520**	2			SS		••Seal	••Joint	••Dichtring	•• 시일	••Junta	
8	**SA 1146-01890**	1			OP		•Head	•Tete	•Kopf	• 헤드	•Capo	
9	**SA 9612-05035**	1				K	•Bushing	•Bague	•Buchse	• 부싱	•Casquillo	
10	**SA 7282-04711**	1					•Washer	•Rondelle	•Scheibe	• 와셔	•Arandela	
11	**SA 9557-04500**	1					•Ring	•Anneau	•Ring	• 링	•Anillo	
12	**SA 1146-01910**	1			OP		•Piston	•Piston	•Kolben	• 피스톤	•Piston	
13	**SA 9125-30000**	1					•Lock nut	•Contre-ecrou	•Sicherungsmutter	• 록 너트	•Contratuerca	
14	**SA 1146-01780**	1					•Washer	•Rondelle	•Scheibe	• 와셔	•Arandela	
15	**SA 9556-05000**	1					•Ring	•Anneau	•Ring	• 링	•Anillo	
16	**SA 9564-20500**	1				K	•Seal	•Joint	•Dichtring	• 시일	•Junta	
17	**SA 9511-22075**	1				K	•O-ring	•Joint Torique	•O-Ring	• 오링	•Junta torica	
18	**SA 9511-12038**	1				K	•O-ring	•Joint Torique	•O-Ring	• 오링	•Junta torica	
19	**SA 9567-20500**	1				K	•Ring	•Anneau	•Ring	• 링	•Anillo	
20	**SA 9563-20500**	1				K	•Seal	•Joint	•Dichtring	• 시일	•Junta	
21	**SA 1146-08230**	1				K	•Buffer Ring	•Butee	•Puffer Ring	• 버퍼 링	•Parachoques	
22	**SA 9511-12070**	1				K	•O-ring	•Joint Torique	•O-Ring	• 오링	•Junta torica	
23	**SA 9568-00800**	2				K	•Seal	•Joint	•Dichtring	• 시일	•Junta	
24	**SA 1146-07840**	1				K	•Packing	•Joint	•Dichtung	• 패킹	•Empaquetadura	
25	**SA 9565-20800**	1				K	•Ring	•Anneau	•Ring	• 링	•Anillo	
100	**SA 8148-14031**	1					Sealing Kit	Jeu Joints	Dichtungssatz	시일 킷	Juego Retenes	

1	**8278856**	**Cilindro de cazo** 버켓 실린더 **Schaufelzylinder** **Vérin de godet** **Bucket cylinder**	Catalogue id **20019**	Group **975**
2				
3			Illustr. No **1007121**	Section **2500**
4				
5			Issue **VOE 74H9920019**	Page **693**

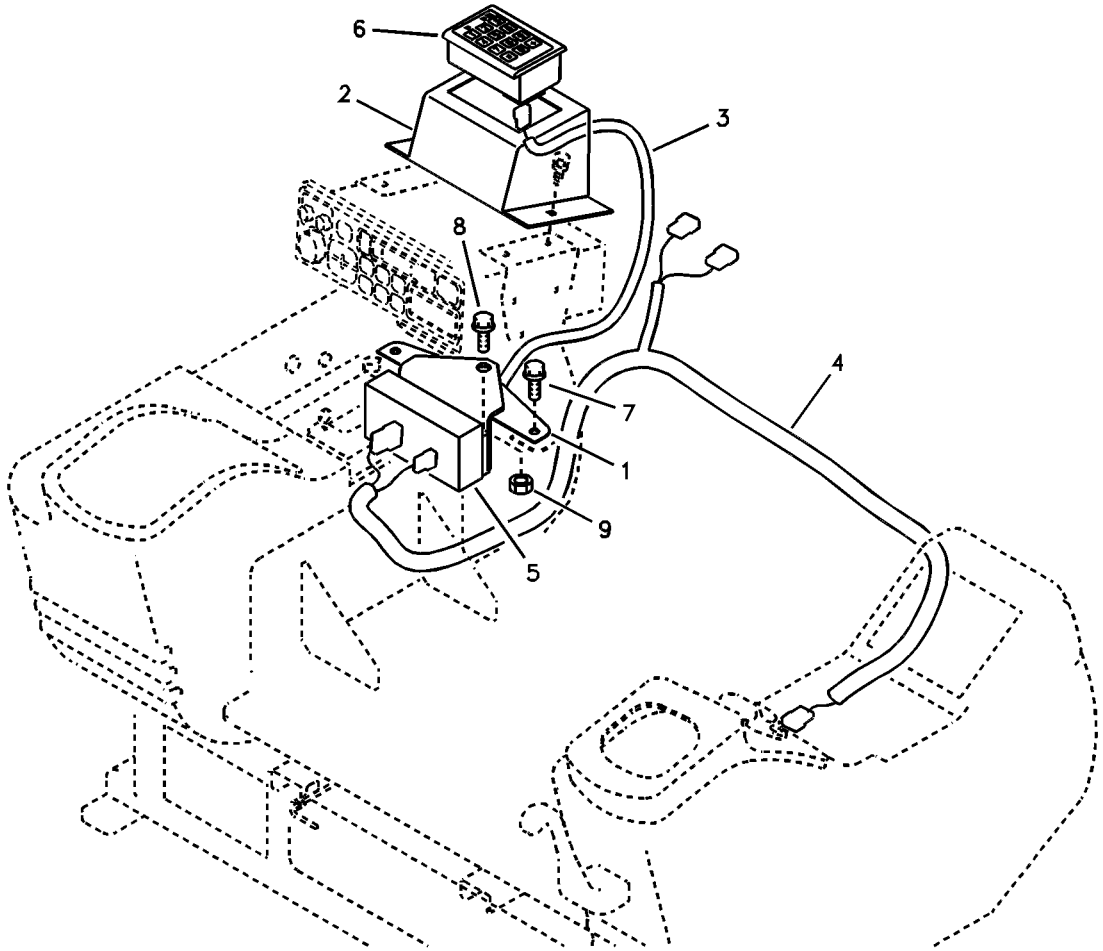
6
2
3
8
4
7
1
9
5

Fig.	Part No.	Quantity 1	2	3	PS	KIT	Description	Dénomination	Bezeichnung	품명	Denominación	Notes
1	**VOE 14510751**	1					Bracket	Ferrure-support	Tragstütze	브라켓	Hierro Apoyo	
2	**VOE 14510749**	1					Bracket	Ferrure-support	Tragstütze	브라켓	Hierro Apoyo	
3	**VOE 14510758**	1					Cable harness	Faisceau cables	Kabelbaum	배선	Manojo cables	
4	**VOE 14519635**	1					Wire harness	Faisceau electrique	Kabelbaum	배선	Manojo cables	
5	**VOE 14510776**	1					Control Unit	Unité de commande	Steuereinheit	제어장치	Unidad de mando	
6	**VOE 14510777**	1					Control Unit	Unité de commande	Steuereinheit	제어장치	Unidad de mando	
7	**VOE 946544**	2			SS		Screw	Vis	Schraube	스크류	Tornillo	
8	**VOE 946471**	1					Flange screw	Vis à bride	Flanschschraube	플랜지 스크류	Torn embridado	
9	**VOE 983304**	1					Hexagon Nut	Ecrou Hexagonal	Sechskantmutter	너트	Tuerca Hexagon	

1	**8278830**	**Sistema antirrobo** 도난 방지 장치 **Diebstahlschutz** **Système antivol** **Antitheft system**	Catalogue id **20019**	Group **992**
2			Illustr. No **1007122**	Section **100**
3				
4			Issue **VOE 74H9920019**	Page **695**
5				

VOLVO

EC55B

REPLACED PARTS 교체부품

PIÉCES PÉRIMÉES ET REMPLACÉES **PIEZAS SUBSTITUDAS**

ERSETZTE ARTIKEL

Catalogue id	Group
20019	**1000**
Issue	Page
VOE 74H9920019	**1**

Part No	Replaced by	Quantity
SA P4100875	* * * USE	
	SA 8210-06290	SS
SA 1030-20300	* * * USE	
	VOE 14532261	SS
SA 1030-61400	* * * USE	
	VOE 14523264	SS
SA 1046-01770	* * * USE	
	SA 9742-10410	SS
SA 1070-22670	* * * USE	
	VOE 14524136	SS
SA 1070-22680	* * * USE	
	VOE 14524137	SS
SA 1081-01560	* * * USE	
	SA 9511-22035	SS
SA 1112-30450	* * * USE	
	VOE 14522413	SS
SA 1112-30460	* * * USE	
	SA 1112-30440	SS
SA 1112-30470	* * * USE	
	SA 1112-30440	SS
SA 1116-00240	* * * USE	
	VOE 14523120	SS
SA 1122-03610	* * * USE	
	VOE 14500395	SS
SA 1123-01530	* * * USE	
	VOE 14526157	SS
SA 1125-01883	* * * USE	
	VOE 14526341	SS
SA 1125-02250	* * * USE	
	VOE 14529279	SS
SA 1146-01191	* * * USE	
	VOE 14524787	SS
SA 1146-01800	* * * USE	
	VOE 14529575	SS
SA 1146-06461	* * * USE	
	VOE 14524924	SS
SA 1166-01550	* * * USE	
	VOE 14522853	SS
SA 1167-00150	* * * USE	
	VOE 14528944	SS
SA 1168-01371	* * * USE	
	VOE 14521792	SS
SA 1173-30060	* * * USE	
	VOE 14527896	SS
SA 1173-30070	* * * USE	
	VOE 14527897	SS
SA 1173-30082	* * * USE	
	VOE 14521003	SS
SA 1181-00450	* * * USE	
	VOE 14532404	SS
SA 1181-00560	* * * USE	
	VOE 14532412	SS
SA 1181-00620	* * * USE	
	VOE 14532415	SS
SA 1181-00690	* * * USE	
	VOE 14532420	SS
SA 1181-00700	* * * USE	
	VOE 14532421	SS
SA 1181-00990	* * * USE	
	VOE 14532427	SS
VOE 14500395	* * * USE	
	VOE 14529132	SS
VOE 14500440	* * * USE	
	VOE 14526662	SS
VOE 14501090	* * * USE	
	VOE 14525207	SS
VOE 14501410	* * * USE	
VOE 14501658	* * * USE	
	VOE 14524922	SS
VOE 14501659	* * * USE	
	SA 1146-06461	SS
VOE 14503271	* * * USE	
	VOE 14525160	SS
VOE 14503550	* * * USE	
	VOE 14523887	SS
VOE 14504425	* * * USE	
	VOE 14538810	SS
VOE 14505057	* * * USE	
	VOE 14505034	SS
VOE 14505059	* * * USE	
	SA 9016-10804	SS
VOE 14505164	* * * USE	
	VOE 14522297	SS
VOE 14505472	* * * USE	
	VOE 14527265	SS
VOE 14506009	* * * USE	
	VOE 14522932	SS
VOE 14506010	* * * USE	
	VOE 14522933	SS
VOE 14507831	* * * USE	
	VOE 14522776	SS
VOE 14507999	* * * USE	
	VOE 14524925	SS
VOE 14508581	* * * USE	
	VOE 14512609	SS
VOE 14509805	* * * USE	
	VOE 14510130	SS
VOE 14509824	* * * USE	
	VOE 14510130	SS
VOE 14511837	* * * USE	
	VOE 14527892	SS
VOE 14511839	* * * USE	
	VOE 14528502	1.00
VOE 14512980	* * * USE	
	VOE 14527964	SS
VOE 14514337	* * * USE	
	VOE 14524956	SS
VOE 14514639	* * * USE	
	SA 14514639M	SS
VOE 14516651	* * * USE	
	SA 9566-10140	SS
VOE 14517423	* * * USE	
	VOE 14522162	SS
VOE 14517821	* * * USE	
	VOE 14514655	SS
VOE 14517926	* * * USE	
	VOE 14524464	SS
VOE 14517978	* * * USE	
	VOE 14530767	SS
VOE 14517988	* * * USE	
	VOE 14530446	SS
VOE 14518004	* * * USE	
	VOE 14526311	SS
VOE 14518129	* * * USE	
	VOE 14540954	SS
VOE 14518305	* * * USE	
	VOE 14522923	SS
VOE 14519804	* * * USE	
	VOE 14519804M	SS
VOE 14519805	* * * USE	
	SA 14519805M	SS
VOE 14519806	* * * USE	
	SA 14519806M	SS
VOE 14519807	* * * USE	
	SA 14519807M	SS
VOE 14519820	* * * USE	
	VOE 14527894	SS
VOE 14519837	* * * USE	
	VOE 14522584	SS
VOE 14519838	* * * USE	
	VOE 14522583	SS
VOE 14519840	* * * USE	
	VOE 14522586	SS
VOE 14519841	* * * USE	
	VOE 14522588	SS
VOE 14519842	* * * USE	
	VOE 14522585	SS
VOE 14519844	* * * USE	

Part No	Replaced by	Quantity	Part No	Replaced by	Quantity	Part No	Replaced by	Quantity	Part No	Replaced by	Quantity
	VOE 14522587	SS	VOE 14520067	* * * USE			VOE 14528516	SS		VOE 14540360	SS
VOE 14519919	* * * USE			VOE 14522804	SS	VOE 14522809	* * * USE			VOE 14522199	SS
	VOE 14522810	SS	VOE 14520407	* * * USE			VOE 14530980	SS		VOE 14522200	SS
VOE 14519923	* * * USE			VOE 14533143	SS	VOE 14522811	* * * USE			VOE 13965184	SS
	VOE 14522809	SS	VOE 14520578	* * * USE			VOE 14530982	SS	VOE 14535803	OLD.THAN 3 YEAR	
VOE 14519977	* * * USE			VOE 14520542	SS	VOE 14522932	* * * USE		VOE 14535804	OLD.THAN 3 YEAR	
	VOE 14522787	SS	VOE 14521115	* * * USE			VOE 14536768	SS	VOE 14540763	* * * USE	
VOE 14519978	* * * USE			VOE 14522742	SS	VOE 14522933	* * * USE			VOE 14541091	SS
	VOE 14522794	SS	VOE 14521140	* * * USE			VOE 14536767	SS	VOE 14881146	* * * USE	
VOE 14519979	* * * USE			VOE 14522554	SS	VOE 14524464	* * * USE			VOE 14881147	SS
	VOE 14522790	SS	VOE 14521214	* * * USE			VOE 14533407	SS	SA 3066-05060	* * * USE	
VOE 14519980	* * * USE			VOE 14526402	SS	VOE 14526160	* * * USE			VOE 14501963	SS
	VOE 14522792	SS	VOE 14521240	* * * USE			VOE 14527150	SS	SA 3081-00560	* * * USE	
VOE 14519985	* * * USE			VOE 14531836	SS	VOE 14526161	* * * USE			VOE 14526406	SS
	VOE 14522788	SS	VOE 14521278	* * * USE			VOE 14527151	SS	SA 7250-21744	* * * USE	
VOE 14519986	* * * USE			VOE 14513749	SS	VOE 14526311	* * * USE			SA 7250M21744	SS
	VOE 14522789	SS	VOE 14521286	* * * USE			VOE 14528547	SS	SA 7250-21784	* * * USE	
VOE 14519987	* * * USE			VOE 14522195	SS	VOE 14527577	* * * USE			SA 7250M21784	SS
	VOE 14522791	SS	VOE 14521508	* * * USE			VOE 14527576	SS	SA 7250-21814	* * * USE	
VOE 14519989	* * * USE			VOE 14521183	SS	VOE 14529181	* * * USE			SA 7250M21814	SS
	VOE 14522793	SS		VOE 14521509	SS		VOE 14535346	SS	SA 7250-21824	* * * USE	
VOE 14519990	* * * USE			SA 8210-02620	SS	VOE 14529280	* * * USE			SA 7250M21824	SS
	VOE 14522795	SS	VOE 14521511	* * * USE			VOE 14529278	SS	SA 7253-03031	* * * USE	
VOE 14519995	* * * USE			SA 8210-08860	SS	VOE 14529281	* * * USE			VOE 14507529	SS
	VOE 14524686	SS	VOE 14521534	* * * USE			VOE 14529278	SS	SA 7273-03220	* * * USE	
VOE 14520006	* * * USE			VOE 14525390	SS	VOE 14531836	* * * USE			VOE 14522265	SS
	VOE 14522800	SS	VOE 14521565	* * * USE			VOE 14535876	SS	SA 8059-00070	* * * USE	
VOE 14520007	* * * USE			VOE 14500479	SS	VOE 14532974	* * * USE			VOE 14511867	SS
	VOE 14522801	SS	SA 14522263	OLD.THAN 3 YEAR			VOE 14537043	SS	SA 8210-04370	* * * USE	
VOE 14520008	* * * USE		VOE 14522263	OLD.THAN 3 YEAR		VOE 14533691	OLD.THAN 3 YEAR			VOE 14524620	SS
	VOE 14522891	SS	VOE 14522295	* * * USE		VOE 14534334	* * * USE		SA 8210-05320	* * * USE	
VOE 14520043	* * * USE			VOE 14522299	SS		VOE 14540069	SS	SA 8210-08770	* * * USE	
	VOE 14522812	SS	VOE 14522299	* * * USE		VOE 14534335	* * * USE			SA 8210-01990	SS
VOE 14520058	* * * USE			VOE 14536769	1.00		VOE 14537045	OP	SA 8210-08810	* * * USE	
	VOE 14524464	SS	VOE 14522742	* * * USE		VOE 14534337	* * * USE			VOE 14500478	SS
VOE 14520066	* * * USE			VOE 14525490	SS		VOE 14537047	OP	SA 8210-08890	* * * USE	
	VOE 14527542	SS	VOE 14522775	* * * USE		VOE 14535610	* * * USE			SA 9041-10806	SS

REPLACED PARTS

PIÉCES PÉRIMÉES ET REMPLACÉES

ERSETZTE ARTIKEL

교체부품

PIEZAS SUBSTITUDAS

Catalogue id	Group
20019	**1000**
Issue	Page
VOE 74H9920019	**2**

REPLACED PARTS 교체부품

PIÉCES PÉRIMÉES ET REMPLACÉES **PIEZAS SUBSTITUDAS**

ERSETZTE ARTIKEL

Part No	Replaced by	Quantity
SA 8230-00010	* * * USE	
	VOE 14537188	SS
SA 8230-00020	* * * USE	
	VOE 14537187	SS
SA 8230-19730	* * * USE	
	SA 8230-19731	SS
SA 8230-31930	* * * USE	
	VOE 14503946	SS
SA 8240-02840	* * * USE	
	SA 9564-10400	SS
SA 9011-11608	* * * USE	
	PJ 4370038	SS
SA 9041-10602	* * * USE	
SA 9111-10800	* * * USE	
	VOE 983303	SS
SA 9213-05000	* * * USE	
	VOE 955918	SS
SA 9213-06000	* * * USE	
	VOE 955919	SS
SA 9323-02910	* * * USE	
	VOE 14522820	SS
VOE 940090	* * * USE	
	FOR VOLVO BM	
	VOE 13940090	SS
	FOR MICHIGAN	
	VOE 12000082	SS
VOE 945407	* * * USE	
	FOR VOLVO	
	VOE 13945407	SS
	FOR MICHIGAN	
	VOE 12000434	SS
VOE 945444	* * * USE	
	FÖR VOLVO BM	
	VOE 13945444	SS
	FÖR MICHIGAN	
	VOE 12000109	SS
VOE 946173	* * * USE	
	FOR VOLVO BM	
	VOE 13946173	SS
	FOR MICHIGAN	
	MI 11702090	SS
VOE 946544	* * * USE	
	FÖR VOLVO BM	
	VOE 13946544	SS
	FÖR MICHIGAN	
	VOE 12000515	SS
VOE 946934	* * * USE	
VOE 947542	* * * USE	
	VOE 13947542	SS
VOE 947760	* * * USE	
	FÖR VOLVO BM	
	VOE 13947760	SS
	FÖR MICHIGAN	
	VOE 12000579	SS
VOE 948400	* * * USE	
	FÖR VOLVO BM	
	VOE 13948400	SS
	FÖR MICHIGAN	
	VOE 12000612	SS
VOE 949445	* * * USE	
	FÖR VOLVO BM	
	VOE 13949445	SS
	FÖR MICHIGAN	
	VOE 12000146	SS
SA 9511-12018	* * * USE	
SA 9512-02015	* * * USE	
	VOE 990547	SS
SA 9512-02122	* * * USE	
	VOE 990563	SS
SA 9556-04000	* * * USE	
	VOE 14880696	SS
SA 9556-05500	* * * USE	
	VOE 14880699	SS
VOE 955894	* * * USE	
VOE 955897	* * * USE	
	FOR VOLVO BM	
	VOE 13955897	SS
	FOR MICHIGAN	
	VOE 12003881	SS
SA 9561-04520	* * * USE	
	VOE 14880729	SS
SA 9564-20550	* * * USE	
	VOE 14880777	SS
SA 9571-72250	* * * USE	
	VOE 14881197	SS
VOE 960148	* * * USE	
SA 9646-31080	* * * USE	
	VOE 14880992	SS
VOE 965175	* * * USE	
	FOR VOLVO BM	
	VOE 13965175	SS
	FOR MICHIGAN	
	MI 12001248	SS
VOE 965184	* * * USE	
	FOR VOLVO BM	
	VOE 13965184	SS
	FOR MICHIGAN	
	MI 12003534	SS
VOE 965186	* * * USE	
	FOR VOLVO BM	
	VOE 13965186	SS
	FOR MICHIGAN	
	MI 11702088	SS
VOE 965191	* * * USE	
	FOR VOLVO BM	
	VOE 13965191	SS
	FOR MICHIGAN	
	VOE 12001515	OP
VOE 965193	* * * USE	
	VOE 13965193	SS
SA 9676-14000	* * * USE	
	VOE 14880995	SS
VOE 969162	* * * USE	
	VOE 13969162	SS
VOE 971095	* * * USE	
	VOE 13971095	SS
VOE 978939	* * * USE	
	VOE 14881196	SS
SA 9877-10000	* * * USE	
	VOE 969161	SS
SA 9877-20000	* * * USE	
	VOE 978999	SS
SA 9877-30000	* * * USE	
	VOE 969164	SS
SA 9951-08008	* * * USE	
	VOE 14881086	SS

Part No	Group	Sect	Page
SA 0941501008	810	500	293
SA 0941501008	810	510	295
SA 1010-60030	911	100	401
SA 1015-00820	261	300	111
SA 1015-00820	261	310	113
SA 1018-00660	275	100	123
SA 1018-00850	275	100	123
SA 1018-01673	275	100	123
SA 1018-02590	275	100	123
SA 1030-20300	775	700	263
SA 1030-61400	913	100	483
SA 1030-61460	913	100	483
SA 1038-00230	660	200	235
SA 1038-00230	660	210	237
SA 1038-00230	660	300	239
SA 1038-00570	660	100	233
SA 1038-00570	660	200	235
SA 1038-00570	660	210	237
SA 1038-00570	660	300	239
SA 1040-20240	911	100	401
SA 1040-20270	234	100	81
SA 1040-20270	911	100	403
SA 1040-20290	234	100	81
SA 1040-20290	911	100	401
SA 1040-20311	911	100	401
SA 1040-20360	911	100	401
SA 1040-20380	911	100	401
SA 1040-20410	911	100	401
SA 1040-22950	911	100	401
SA 1040-23870	911	100	401
SA 1040-65471	924	200	567
SA 1040-65471	924	250	569
SA 1040-65471	924	300	571
SA 1040-65471	924	310	573
SA 1040-74450	914	200	497
SA 1040-80490	914	100	495
SA 1040-80490	914	200	497
SA 1040-80490	914	300	501
SA 1040-80490	916	1300	541
SA 1040-80490	924	400	575
SA 1040-80490	924	450	581
SA 1040-80490	924	500	587
SA 1040-80490	924	510	591
SA 1040-80490	924	550	593
SA 1040-80490	924	560	597
SA 1041-00341	911	100	401
SA 1042-11650	916	8000	559
SA 1046-01370	443	200	223
SA 1046-01380	443	200	223
SA 1046-01770	975	1500	679
SA 1046-01770	975	1510	683
SA 1048-10300	914	300	501
SA 1048-10530	914	300	499
SA 1048-10540	914	100	495
SA 1048-10540	914	200	497
SA 1050-20110	492	100	225
SA 1055-00320	492	100	225
SA 1070-22670	975	500	665
SA 1070-22670	975	510	669
SA 1070-22670	975	600	671
SA 1070-22670	975	610	675
SA 1070-22680	975	500	665
SA 1070-22680	975	510	669
SA 1070-22680	975	600	671
SA 1070-22680	975	600	673
SA 1070-22680	975	610	675
SA 1070-22680	975	1900	687
SA 1070-22680	975	1910	691
SA 1070-23180	925	100	601
SA 1070-23180	925	200	605
SA 1070-23190	925	100	601
SA 1070-23190	925	200	605
SA 1070-23270	974	200	631
SA 1070-23270	974	210	635
SA 1070-23270	974	250	639
SA 1071-00420	925	100	603
SA 1071-00420	925	200	605
SA 1071-00420	925	1500	609
SA 1071-01840	925	100	601
SA 1071-01840	925	200	605
SA 1071-01850	925	100	601
SA 1071-01850	925	200	605
SA 1071-01860	925	100	601
SA 1071-01860	925	200	605
SA 1071-01870	925	100	601
SA 1071-01870	925	200	605
SA 1075-00060	927	100	611
SA 1075-00060	927	110	613
SA 1075-00250	974	200	631
SA 1075-00250	974	210	635
SA 1081-01121	775	800	265
SA 1081-01140	775	800	265
SA 1081-01150	775	800	265
SA 1081-01170	775	800	267
SA 1081-01420	775	900	269
SA 1081-01430	775	900	269
SA 1081-01440	775	900	269
SA 1081-01450	775	900	269
SA 1081-01460	775	900	269
SA 1081-01510	775	800	265
SA 1081-01560	775	800	265
SA 1081-01570	775	800	265
SA 1112-00830	218	100	77
SA 1112-30030	431	400	203
SA 1112-30290	431	400	203
SA 1112-30340	218	100	77
SA 1112-30350	218	100	77
SA 1112-30382	218	100	77
SA 1112-30440	431	400	203
SA 1112-30450	431	400	203
SA 1112-30460	431	400	203
SA 1112-30470	431	400	203
SA 1115-30130	261	100	107
SA 1115-30130	261	110	109
SA 1115-30220	261	100	107
SA 1115-30220	261	110	109
SA 1116-00240	234	100	81
SA 1116-30080	234	100	81
SA 1122-00940	371	200	171
SA 1122-01230	352	100	137
SA 1122-01230	356	100	139
SA 1122-01230	356	110	141
SA 1122-01230	356	300	143
SA 1122-03610	371	500	175
SA 1123-01530	364	100	157
SA 1123-01680	874	100	359
SA 1123-04180	393	100	187
SA 1123-04180	393	110	189
SA 1123-04320	393	100	187
SA 1125-01092	874	100	359
SA 1125-01883	870	100	353
SA 1125-01883	874	100	359
SA 1125-02250	874	100	361
SA 1125-03070	870	100	353
SA 1125-03070	874	100	359
SA 1141-30160	911	100	401
SA 1142-30051	911	600	423
SA 1142-30132	911	400	413
SA 1142-30142	911	400	413
SA 1142-30142	911	410	417
SA 1142-30152	911	400	413
SA 1142-30152	911	410	417
SA 1142-30160	911	400	413
SA 1142-30160	911	410	417
SA 1142-30191	911	600	423
SA 11431106	914	100	495
SA 1146-01191	975	2500	693
SA 1146-01211	971	600	623
SA 1146-01610	443	100	221
SA 1146-01610	443	200	223
SA 1146-01660	974	3000	645
SA 1146-01660	974	3010	649
SA 1146-01700	974	3000	645
SA 1146-01700	974	3010	649
SA 1146-01710	927	500	615
SA 1146-01710	927	510	617
SA 1146-01710	974	3000	645
SA 1146-01710	974	3010	649
SA 1146-01760	975	1500	679
SA 1146-01760	975	1510	683
SA 1146-01771	975	1500	679
SA 1146-01771	975	1510	683
SA 1146-01780	975	2500	693
SA 1146-01800	975	1500	679
SA 1146-01800	975	1510	683
SA 1146-01890	975	2500	693
SA 1146-01910	975	2500	693
SA 1146-02020	971	600	623
SA 1146-02040	971	600	623
SA 1146-02070	971	600	623
SA 1146-02080	971	600	623
SA 1146-02090	971	600	623
SA 1146-02120	443	200	223
SA 1146-02130	443	200	223
SA 1146-02140	443	200	223

NUMERICAL INDEX

부품번호 색인

RÉPERTOIRE DE NUMÉROS

INDICE DE NÚMERO

NUMMERNREGISTER

NUMERICAL INDEX

RÉPERTOIRE DE NUMÉROS

NUMMERNREGISTER

부품번호 색인

INDICE DE NÚMERO

Catalogue id **20019** | Group **1000**

Issue **VOE 74H9920019** | Page **2**

Part No	Group	Sect	Page
SA 1146-02150	975	1500	679
SA 1146-02150	975	1510	683
SA 1146-02950	927	500	615
SA 1146-02950	927	510	617
SA 1146-02950	974	3000	645
SA 1146-02950	974	3010	649
SA 1146-02950	974	3100	651
SA 1146-02950	974	3150	655
SA 1146-06461	974	3000	645
SA 1146-06630	971	600	623
SA 1146-06630	975	1500	679
SA 1146-06630	975	1510	683
SA 1146-06640	975	1500	679
SA 1146-06640	975	1510	683
SA 1146-06950	971	600	623
SA 1146-07840	975	2500	693
SA 1146-07850	971	600	623
SA 1146-07850	975	1500	681
SA 1146-07850	975	1510	683
SA 1146-07860	927	500	615
SA 1146-07860	927	510	617
SA 1146-07860	974	3000	647
SA 1146-07860	974	3010	649
SA 1146-08220	971	600	623
SA 1146-08230	975	2500	693
SA 1146-08240	975	1500	679
SA 1146-08240	975	1510	683
SA 1146-08250	974	3000	647
SA 1146-08250	974	3010	649
SA 1148-01890	914	1100	505
SA 1148-01900	914	1100	505
SA 1164-30051	837	200	331
SA 1164-30170	837	200	333
SA 1164-30221	821	100	309
SA 1166-01550	843	100	339
SA 1166-01800	810	600	299
SA 1166-01800	810	610	303
SA 1166-02490	810	600	299
SA 1166-02490	810	610	303
SA 1166-03170	843	200	343
SA 1166-03170	843	210	345
SA 1166-31300	810	700	305
SA 1166-31300	810	710	307
SA 1167-00150	852	100	347
SA 1167-00160	852	100	347
SA 1168-01371	881	100	369
SA 1171-30060	925	200	607
SA 1171-30440	974	200	631
SA 1171-30440	974	210	635
SA 1171-30580	974	200	631
SA 1171-30580	974	210	635
SA 1171-30580	974	250	639
SA 1171-30590	925	100	603
SA 1171-30590	925	200	607
SA 1171-30590	927	100	611
SA 1171-30590	927	110	613
SA 1171-30590	975	100	659
SA 1171-30590	975	110	661
SA 1171-30590	975	200	663
SA 1171-30590	975	1900	687
SA 1171-30590	975	1910	691
SA 1171-30600	925	100	603
SA 1171-30600	925	200	605
SA 1171-30600	925	1500	609
SA 1171-30600	975	100	659
SA 1171-30600	975	110	661
SA 1171-30600	975	200	663
SA 1171-30600	975	1900	689
SA 1171-30600	975	1910	691
SA 1171-30610	974	100	625
SA 1171-30610	974	110	627
SA 1171-30610	974	150	629
SA 1171-30610	974	200	631
SA 1171-30610	974	200	633
SA 1171-30610	974	210	635
SA 1171-30610	974	250	639
SA 1171-30610	975	100	659
SA 1171-30610	975	110	661
SA 1171-30610	975	200	663
SA 1171-30620	974	100	625
SA 1171-30620	974	110	627
SA 1171-30620	974	150	629
SA 1171-30620	974	200	631
SA 1171-30620	974	200	633
SA 1171-30620	974	210	635
SA 1171-30620	974	250	639
SA 1171-30620	975	100	659
SA 1171-30620	975	110	661
SA 1171-30620	975	200	663
SA 1171-30630	974	200	633
SA 1171-30630	974	210	637
SA 1171-30630	974	250	639
SA 1171-30640	974	200	631
SA 1171-30640	974	210	635
SA 1171-30640	974	250	639
SA 1173-30060	974	200	631
SA 1173-30060	974	210	635
SA 1173-30070	974	200	633
SA 1173-30070	974	210	637
SA 1173-30082	974	200	631
SA 1173-30082	974	210	635
SA 1173-30082	974	250	639
SA 1173-30091	974	100	625
SA 1173-30091	974	110	627
SA 1173-30091	974	150	629
SA 1174-30012	916	100	525
SA 1174-30012	916	110	527
SA 1174-30022	916	100	525
SA 1174-30022	916	110	527
SA 1174-30044	916	100	525
SA 1174-30044	916	110	527
SA 1174-30052	916	2000	545
SA 1174-30062	916	2000	545
SA 1174-30120	916	100	525
SA 1174-30120	916	110	527
SA 1174-30200	916	2000	545
SA 1174-30200	916	2010	547
SA 1174-30200	916	2100	549
SA 1175-30030	927	100	611
SA 1175-30030	927	110	613
SA 1175-30040	927	100	611
SA 1175-30040	927	110	613
SA 1181-00440	775	900	269
SA 1181-00450	775	800	265
SA 1181-00471	775	900	269
SA 1181-00550	775	800	265
SA 1181-00560	775	800	265
SA 1181-00620	775	800	265
SA 1181-00690	775	800	265
SA 1181-00700	775	800	267
SA 1181-00990	775	800	265
SA 1181-01001	775	800	265
SA 1182-00160	775	100	259
SA 1182-00170	775	100	259
SA 1182-00180	775	100	259
SA 1182-00190	775	100	259
SA 1182-00230	775	100	259
SA 1192-02820	897	100	379
SA 1192-02830	897	100	379
SA 1192-02910	897	200	383
SA 1192-03620	897	100	379
SA 1192-03630	897	200	383
SA 1192-03730	897	200	383
SA 1192-03760	897	200	385
SA 1192-03820	897	200	385
SA 1192-04690	897	200	385
SA 1192-05070	897	200	383
SA 1192-05180	897	100	379
SA 1192-30180	897	200	383
SA 1192-30720	897	200	385
SA 14503974M	912	100	427
SA 14503974M	912	400	463
SA 14522260	912	160	435
SA 14522261	912	160	435
SA 14522262	912	160	435
SA 14522263	912	160	435
SA 14522264	912	160	435
SA 14529560	660	300	239
SA 14530999	911	200	405
SA 14531002	971	100	619
SA 14531090	911	400	413
SA 14531091	911	400	413
SA 14531091	911	410	417
SA 14531149	916	300	531
SA 14880946	660	200	235
SA 14880946	660	210	237
SA 14880946	660	300	239
SA 2015-00370	810	100	283
SA 2015-00370	810	110	287
SA 2051-01950	974	100	625
SA 2051-01950	974	110	627
SA 2051-01950	974	150	629
SA 2073-00920	716	100	251
SA 2073-00920	974	200	631
SA 2073-00920	974	210	635

Part No	Group	Sect	Page
SA 2073-00920	974	250	639
SA 3018-00910	275	100	123
SA 3066-05060	810	500	293
SA 3066-05060	810	510	295
SA 3081-00560	775	700	263
SA 7118-30600	441	500	215
SA 7250-21711	912	100	427
SA 7250-21711	912	150	431
SA 7250-21711	912	200	437
SA 7250-21744	912	150	431
SA 7250-21744	912	200	439
SA 7250-21774	912	100	427
SA 7250-21774	912	150	433
SA 7250-21774	912	300	451
SA 7250-21784	912	100	427
SA 7250-21784	912	150	433
SA 7250-21784	912	160	435
SA 7250-21784	912	400	461
SA 7250-21784	912	410	465
SA 7250-21804	912	100	429
SA 7250-21804	912	150	433
SA 7250-21804	912	160	435
SA 7250-21804	912	400	461
SA 7250-21804	912	410	465
SA 7250-21814	912	100	429
SA 7250-21814	912	150	433
SA 7250-21814	912	500	469
SA 7250-21824	912	100	429
SA 7250-21824	912	150	433
SA 7250-21824	912	500	471
SA 7250-21842	912	100	429
SA 7250-21842	912	150	433
SA 7250-21842	912	160	435
SA 7250-21842	912	500	475
SA 7250-21842	912	510	481
SA 7251-30511	912	200	437
SA 7251-30511	912	210	443
SA 7251-30521	912	400	461
SA 7251-30521	912	410	465
SA 7251-30531	912	500	475
SA 7251-30531	912	510	481
SA 7253-02700	912	200	439
SA 7253-02700	912	210	445
SA 7253-02700	912	400	461
SA 7253-02700	912	400	463
SA 7253-02700	912	410	465
SA 7253-03011	912	200	439
SA 7253-03011	912	210	445
SA 7253-03011	912	400	461
SA 7253-03011	912	400	463
SA 7253-03011	912	410	465
SA 7253-03021	912	200	437
SA 7253-03021	912	210	443
SA 7253-03021	912	300	449
SA 7253-03021	912	300	451
SA 7253-03021	912	310	455
SA 7253-03021	912	310	457
SA 7253-03021	912	500	469
SA 7253-03021	912	500	471
SA 7253-03021	912	500	473
SA 7253-03021	912	510	477
SA 7253-03021	912	510	479
SA 7253-03021	912	510	481
SA 7253-03031	912	500	471
SA 7253-03031	912	510	479
SA 7253-03041	912	200	437
SA 7253-03041	912	200	439
SA 7253-03041	912	210	443
SA 7253-03041	912	300	449
SA 7253-03041	912	300	451
SA 7253-03041	912	310	455
SA 7253-03041	912	310	457
SA 7253-03041	912	500	469
SA 7253-03041	912	500	471
SA 7253-03041	912	500	473
SA 7253-03041	912	510	477
SA 7253-03041	912	510	479
SA 7253-03041	912	510	481
SA 7253-03051	912	200	437
SA 7253-03051	912	200	439
SA 7253-03051	912	210	443
SA 7253-03051	912	300	449
SA 7253-03051	912	300	451
SA 7253-03051	912	310	455
SA 7253-03051	912	310	457
SA 7253-03051	912	500	469
SA 7253-03051	912	500	471
SA 7253-03051	912	500	473
SA 7253-03051	912	510	477
SA 7253-03051	912	510	479
SA 7253-03051	912	510	481
SA 7253-03062	912	200	439
SA 7253-03062	912	210	445
SA 7253-03062	912	400	461
SA 7253-03062	912	400	463
SA 7253-03062	912	410	465
SA 7253-03070	912	200	439
SA 7253-03070	912	210	445
SA 7253-03070	912	400	461
SA 7253-03070	912	400	463
SA 7253-03070	912	410	465
SA 7253-03080	912	200	439
SA 7253-03080	912	210	445
SA 7253-03080	912	400	461
SA 7253-03080	912	400	463
SA 7253-03080	912	410	465
SA 7253-03091	912	200	439
SA 7253-03091	912	210	445
SA 7253-03091	912	400	461
SA 7253-03091	912	400	463
SA 7253-03091	912	410	465
SA 7253-03091	912	410	467
SA 7253-03100	912	300	449
SA 7253-03100	912	310	455
SA 7253-03111	912	300	451
SA 7253-03111	912	310	457
SA 7253-03111	912	500	473
SA 7253-03111	912	510	481
SA 7253-03121	912	200	437
SA 7253-03121	912	200	439
SA 7253-03121	912	210	443
SA 7253-03121	912	210	445
SA 7253-03121	912	300	451
SA 7253-03121	912	300	453
SA 7253-03121	912	310	457
SA 7253-03121	912	500	469
SA 7253-03121	912	500	473
SA 7253-03121	912	510	477
SA 7253-03121	912	510	479
SA 7253-03121	912	510	481
SA 7253-03131	912	200	439
SA 7253-03131	912	210	445
SA 7253-03131	912	400	461
SA 7253-03131	912	400	463
SA 7253-03131	912	410	465
SA 7253-03131	912	410	467
SA 7253-03150	912	200	437
SA 7253-03150	912	200	439
SA 7253-03150	912	210	443
SA 7253-03150	912	210	445
SA 7253-03150	912	300	451
SA 7253-03150	912	300	453
SA 7253-03150	912	310	457
SA 7253-03150	912	500	469
SA 7253-03150	912	500	473
SA 7253-03150	912	510	477
SA 7253-03150	912	510	479
SA 7253-03150	912	510	481
SA 7253-03171	912	200	441
SA 7253-03171	912	210	445
SA 7253-03180	912	200	437
SA 7253-03180	912	200	439
SA 7253-03180	912	200	441
SA 7253-03180	912	210	443
SA 7253-03180	912	210	445
SA 7253-03180	912	300	451
SA 7253-03180	912	310	457
SA 7253-03180	912	400	463
SA 7253-03191	912	200	437
SA 7253-03191	912	200	439
SA 7253-03191	912	200	441
SA 7253-03191	912	210	443
SA 7253-03191	912	210	445
SA 7253-03191	912	210	447
SA 7253-03191	912	300	451
SA 7253-03191	912	300	453
SA 7253-03191	912	310	457
SA 7253-03191	912	310	459
SA 7253-03191	912	400	463
SA 7253-03191	912	500	469
SA 7253-03191	912	500	473
SA 7253-03191	912	500	475
SA 7253-03191	912	510	477
SA 7253-03191	912	510	479
SA 7253-03191	912	510	481

NUMERICAL INDEX 부품번호 색인

RÉPERTOIRE DE NUMÉROS **INDICE DE NÚMERO**

NUMMERNREGISTER

Catalogue id **20019** | Group **1000**

Issue **VOE 74H9920019** | Page **4**

Part No	Group	Sect	Page
SA 7253-03200	912	200	437
SA 7253-03200	912	200	439
SA 7253-03200	912	200	441
SA 7253-03200	912	210	443
SA 7253-03200	912	210	445
SA 7253-03200	912	210	447
SA 7253-03200	912	300	451
SA 7253-03200	912	300	453
SA 7253-03200	912	310	457
SA 7253-03200	912	310	459
SA 7253-03200	912	400	463
SA 7253-03200	912	500	471
SA 7253-03200	912	500	473
SA 7253-03200	912	510	477
SA 7253-03200	912	510	479
SA 7253-03200	912	510	481
SA 7253-03211	912	300	453
SA 7253-03211	912	310	459
SA 7253-03211	912	500	469
SA 7253-03211	912	500	473
SA 7253-03211	912	510	477
SA 7253-03211	912	510	479
SA 7253-03211	912	510	481
SA 7253-03221	912	300	453
SA 7253-03221	912	310	459
SA 7253-03221	912	500	469
SA 7253-03221	912	500	473
SA 7253-03221	912	510	477
SA 7253-03221	912	510	479
SA 7253-03221	912	510	481
SA 7253-03231	912	300	453
SA 7253-03231	912	310	459
SA 7253-03231	912	500	469
SA 7253-03231	912	500	473
SA 7253-03231	912	510	477
SA 7253-03231	912	510	479
SA 7253-03241	912	510	481
SA 7253-03242	912	300	449
SA 7253-03242	912	310	455
SA 7253-03251	912	500	471
SA 7253-03251	912	510	477
SA 7253-03260	912	500	471
SA 7253-03260	912	510	477
SA 7253-03272	912	500	469
SA 7253-03272	912	510	477
SA 7253-03281	912	500	471
SA 7253-03281	912	510	477
SA 7253-03292	912	500	471
SA 7253-03292	912	510	477
SA 7253-03304	912	500	471
SA 7253-03304	912	510	479
SA 7253-03311	912	500	471
SA 7253-03311	912	510	479
SA 7253-03330	912	200	441
SA 7253-03330	912	210	445
SA 7253-03330	912	500	471
SA 7253-03330	912	510	479
SA 7253-03390	912	300	449
SA 7253-03390	912	310	455
SA 7253-03471	912	500	471
SA 7253-03471	912	510	479
SA 7257-00230	912	300	451
SA 7257-00230	912	300	453
SA 7257-00230	912	310	457
SA 7257-00230	912	400	463
SA 7257-00230	912	500	469
SA 7257-00230	912	500	473
SA 7257-00230	912	510	477
SA 7257-00230	912	510	479
SA 7273-03220	912	300	449
SA 7273-03220	912	310	455
SA 7273-11420	912	300	451
SA 7273-11420	912	310	457
SA 7282-04711	975	2500	693
SA 7282-05870	974	3000	645
SA 7282-05870	974	3010	649
SA 7296-00201	912	200	439
SA 7296-00201	912	210	445
SA 7296-00201	912	400	461
SA 7296-00201	912	400	463
SA 7296-00201	912	410	465
SA 8059-00070	492	100	225
SA 8148-14011	974	3000	647
SA 8148-14011	974	3010	649
SA 8148-14021	975	1500	681
SA 8148-14021	975	1510	685
SA 8148-14031	975	2500	693
SA 8148-14051	971	600	623
SA 8210-00380	237	100	97
SA 8210-00390	237	100	97
SA 8210-00400	237	100	97
SA 8210-00410	237	100	97
SA 8210-00420	237	100	97
SA 8210-00430	237	100	97
SA 8210-00920	220	300	79
SA 8210-01680	251	200	101
SA 8210-01860	263	300	119
SA 8210-01860	263	310	121
SA 8210-01870	210	200	47
SA 8210-01870	251	200	101
SA 8210-01950	235	300	93
SA 8210-02170	213	100	61
SA 8210-02620	215	200	67
SA 8210-02710	216	100	71
SA 8210-02740	216	100	71
SA 8210-02780	210	200	47
SA 8210-02780	262	200	115
SA 8210-02790	210	200	47
SA 8210-02790	262	200	115
SA 8210-02840	210	200	47
SA 8210-02840	251	200	101
SA 8210-03660	214	200	63
SA 8210-03700	215	250	69
SA 8210-03930	220	300	79
SA 8210-04270	212	100	55
SA 8210-04290	212	300	57
SA 8210-04300	215	200	67
SA 8210-04340	212	100	55
SA 8210-04350	212	100	55
SA 8210-04360	212	100	55
SA 8210-04370	212	100	55
SA 8210-04380	212	100	55
SA 8210-04390	212	100	55
SA 8210-04570	210	200	47
SA 8210-04570	251	100	99
SA 8210-04580	215	100	65
SA 8210-04620	216	100	71
SA 8210-04630	216	200	73
SA 8210-04680	213	100	61
SA 8210-04690	213	100	61
SA 8210-04700	213	100	61
SA 8210-04710	213	100	61
SA 8210-04720	213	100	61
SA 8210-04740	215	250	69
SA 8210-04770	210	200	47
SA 8210-04770	215	200	67
SA 8210-04770	220	300	79
SA 8210-04780	210	200	47
SA 8210-04780	215	200	67
SA 8210-04790	220	300	79
SA 8210-04820	210	200	47
SA 8210-04820	263	100	117
SA 8210-04840	210	200	47
SA 8210-04840	262	200	115
SA 8210-04900	321	100	133
SA 8210-05000	331	100	135
SA 8210-05010	331	100	135
SA 8210-05110	251	100	99
SA 8210-05120	263	300	119
SA 8210-05120	263	310	121
SA 8210-05290	331	100	135
SA 8210-05300	215	200	67
SA 8210-05320	212	100	55
SA 8210-05600	220	300	79
SA 8210-06420	441	600	217
SA 8210-08770	210	200	47
SA 8210-08770	211	100	51
SA 8210-08800	235	200	91
SA 8210-08810	215	100	65
SA 8210-08850	211	200	53
SA 8210-08860	210	200	47
SA 8210-08890	235	200	89
SA 8210-08900	331	100	135
SA 8230-00010	441	600	217
SA 8230-00020	441	600	219
SA 8230-02690	441	200	211
SA 8230-02810	775	700	263
SA 8230-02950	913	250	489
SA 8230-02970	913	250	489
SA 8230-02980	913	250	489
SA 8230-02990	913	250	489
SA 8230-03010	913	250	489
SA 8230-03060	913	250	491
SA 8230-03070	913	250	491
SA 8230-03080	913	250	491

Part No	Group	Sect	Page
SA 8230-03110	913	250	489
SA 8230-03120	913	250	489
SA 8230-03130	913	250	491
SA 8230-03140	913	250	491
SA 8230-03150	913	250	493
SA 8230-03160	913	250	491
SA 8230-03170	913	250	489
SA 8230-03180	913	250	489
SA 8230-03190	913	250	489
SA 8230-03210	913	250	491
SA 8230-03220	913	250	491
SA 8230-03250	913	250	491
SA 8230-03310	913	250	491
SA 8230-03340	913	250	489
SA 8230-03350	913	250	489
SA 8230-03360	913	250	489
SA 8230-03380	913	250	491
SA 8230-03390	913	250	493
SA 8230-03400	913	250	493
SA 8230-03410	913	250	489
SA 8230-03440	913	250	493
SA 8230-03450	913	250	489
SA 8230-03720	913	250	489
SA 8230-03730	913	250	489
SA 8230-03770	913	250	491
SA 8230-03780	913	250	493
SA 8230-03790	913	250	491
SA 8230-03800	913	250	491
SA 8230-03820	913	250	491
SA 8230-03830	913	250	491
SA 8230-03850	913	250	489
SA 8230-03860	913	250	489
SA 8230-03870	913	250	491
SA 8230-03880	913	250	489
SA 8230-03890	913	250	491
SA 8230-03910	913	250	489
SA 8230-03920	913	250	491
SA 8230-03930	913	250	491
SA 8230-06530	441	600	219
SA 8230-06540	913	250	491
SA 8230-06550	913	250	491
SA 8230-06560	913	250	491
SA 8230-06960	913	250	491
SA 8230-06960	913	250	493
SA 8230-07020	441	200	211
SA 8230-09990	441	200	211
SA 8230-10000	441	200	211
SA 8230-10010	441	200	209
SA 8230-10010	441	200	211
SA 8230-15450	913	250	491
SA 8230-15460	913	250	491
SA 8230-15520	913	250	489
SA 8230-15530	913	250	489
SA 8230-15610	913	250	489
SA 8230-15620	913	250	489
SA 8230-19210	441	200	211
SA 8230-19690	914	1100	505
SA 8230-19690	914	1150	509
SA 8230-19690	914	1200	515
SA 8230-19730	914	1100	505
SA 8230-19730	914	1150	509
SA 8230-19731	914	1200	515
SA 8230-19790	914	1100	505
SA 8230-19790	914	1150	509
SA 8230-19790	914	1200	515
SA 8230-19810	914	1100	505
SA 8230-19810	914	1150	509
SA 8230-19940	914	1200	517
SA 8230-19950	914	1100	507
SA 8230-19950	914	1150	511
SA 8230-19950	914	1200	517
SA 8230-20040	914	1100	507
SA 8230-20040	914	1150	511
SA 8230-20040	914	1200	517
SA 8230-20110	914	1100	505
SA 8230-20110	914	1150	509
SA 8230-20110	914	1200	515
SA 8230-20140	914	1100	507
SA 8230-20140	914	1150	511
SA 8230-20180	914	1100	507
SA 8230-20180	914	1150	511
SA 8230-20180	914	1200	517
SA 8230-20190	914	1100	507
SA 8230-20190	914	1150	511
SA 8230-20190	914	1200	517
SA 8230-22960	441	200	209
SA 8230-23120	441	200	209
SA 8230-23130	441	200	209
SA 8230-23420	441	200	209
SA 8230-23430	441	200	211
SA 8230-23440	441	200	211
SA 8230-23450	441	200	211
SA 8230-23460	441	200	211
SA 8230-23470	441	200	211
SA 8230-23520	441	200	209
SA 8230-23570	441	200	209
SA 8230-23580	441	200	209
SA 8230-23720	441	200	209
SA 8230-24780	441	600	219
SA 8230-24800	775	700	263
SA 8230-24890	441	600	219
SA 8230-25940	914	1100	505
SA 8230-25940	914	1150	509
SA 8230-25940	914	1200	515
SA 8230-26680	441	600	219
SA 8230-27020	431	300	201
SA 8230-27190	441	600	217
SA 8230-27200	441	600	219
SA 8230-27600	914	1100	507
SA 8230-27600	914	1150	511
SA 8230-28020	914	1100	507
SA 8230-28020	914	1150	511
SA 8230-28220	441	600	219
SA 8230-28800	914	1100	505
SA 8230-28800	914	1150	509
SA 8230-28800	914	1200	515
SA 8230-28930	441	200	211
SA 8230-30560	441	200	209
SA 8230-30570	441	200	209
SA 8230-30660	441	200	209
SA 8230-31640	441	600	217
SA 8230-31650	441	600	217
SA 8230-31670	441	600	217
SA 8230-31860	441	600	217
SA 8230-31880	441	600	217
SA 8230-31890	441	600	217
SA 8230-31900	441	600	217
SA 8230-31910	441	600	217
SA 8230-31930	441	600	219
SA 8230-32000	441	600	219
SA 8230-32030	441	600	219
SA 8230-32040	431	300	201
SA 8230-32090	914	1100	507
SA 8230-32090	914	1150	511
SA 8230-32100	914	1100	507
SA 8230-32100	914	1150	511
SA 8230-32170	441	600	219
SA 8230-33730	441	200	209
SA 8230-33740	441	200	209
SA 8230-33760	441	200	209
SA 8230-33790	441	200	211
SA 8230-33800	441	200	211
SA 8230-36320	914	1100	507
SA 8230-36320	914	1150	511
SA 8230-36640	914	1100	505
SA 8230-36640	914	1150	509
SA 8230-36650	914	1100	505
SA 8230-36650	914	1150	509
SA 8230-36650	914	1200	515
SA 8230-36750	914	1100	505
SA 8230-36750	914	1150	509
SA 8230-36760	914	1100	507
SA 8230-36760	914	1150	511
SA 8230-36770	914	1100	507
SA 8230-36770	914	1150	511
SA 8230-36770	914	1200	515
SA 8230-36780	914	1100	507
SA 8230-36780	914	1150	511
SA 8230-36840	914	1100	507
SA 8230-36840	914	1150	513
SA 8230-36840	914	1200	517
SA 8230-36920	914	1100	505
SA 8230-36920	914	1150	509
SA 8230-36920	914	1200	515
SA 8230-36940	914	1100	507
SA 8230-36940	914	1150	511
SA 8230-37050	914	1100	505
SA 8230-37050	914	1150	509
SA 8230-37050	914	1200	515
SA 8230-37060	914	1100	505
SA 8230-37060	914	1150	509
SA 8230-37060	914	1200	515
SA 8230-37080	914	1100	507
SA 8230-37090	914	1100	507
SA 8230-37090	914	1150	511

NUMERICAL INDEX 부품번호 색인

RÉPERTOIRE DE NUMÉROS **INDICE DE NÚMERO**

NUMMERNREGISTER

Part No	Group	Sect	Page
SA 8230-37100	914	1100	505
SA 8230-37100	914	1150	509
SA 8230-37100	914	1200	515
SA 8230-37110	914	1100	507
SA 8230-37110	914	1150	511
SA 8230-37120	914	1100	507
SA 8230-37120	914	1150	511
SA 8230-37120	914	1200	517
SA 8230-37140	914	1100	505
SA 8230-37140	914	1150	509
SA 8230-37140	914	1200	515
SA 8230-37150	914	1100	505
SA 8230-37150	914	1150	509
SA 8230-37150	914	1200	515
SA 8230-37330	441	200	211
SA 8240-00500	371	100	169
SA 8240-01070	236	100	95
SA 8240-01140	213	100	61
SA 8240-01380	261	300	111
SA 8240-01380	261	310	113
SA 8240-01520	321	100	133
SA 8240-01690	235	300	93
SA 8240-01740	214	200	63
SA 8240-01740	251	200	101
SA 8240-01740	262	200	115
SA 8240-01750	214	200	63
SA 8240-01770	214	200	63
SA 8240-01790	251	200	101
SA 8240-02230	236	100	95
SA 8240-02760	210	200	49
SA 8240-02760	212	300	57
SA 8240-02760	215	200	67
SA 8240-02760	217	100	75
SA 8240-02840	775	700	263
SA 9011-10502	372	100	181
SA 9011-10811	660	200	235
SA 9011-10811	660	210	237
SA 9011-11007	218	100	77
SA 9011-11203	234	100	81
SA 9011-11203	911	100	401
SA 9011-11204	881	100	371
SA 9011-11204	974	100	625
SA 9011-11204	974	110	627
SA 9011-11204	974	150	629
SA 9011-11205	914	300	501
SA 9011-11407	234	100	81
SA 9011-11407	775	1200	275
SA 9011-11407	911	100	401
SA 9011-11408	441	100	207
SA 9011-11408	911	100	401
SA 9011-11409	234	100	81
SA 9011-11608	775	500	261
SA 9011-11608	775	1000	271
SA 9011-11608	775	1100	273
SA 9011-20610	913	100	483
SA 9011-20811	660	300	239
SA 9011-21009	916	4100	557
SA 9011-21214	775	900	269
SA 9011-21217	925	100	603
SA 9011-21217	925	200	605
SA 9011-21217	925	1500	609
SA 9011-21217	927	100	611
SA 9011-21217	927	110	613
SA 9011-21217	975	100	659
SA 9011-21217	975	110	661
SA 9011-21217	975	200	663
SA 9011-21217	975	1900	687
SA 9011-21217	975	1910	691
SA 9011-21218	927	100	611
SA 9011-21218	927	110	613
SA 9011-21218	974	100	625
SA 9011-21218	974	110	627
SA 9011-21218	974	150	629
SA 9011-21218	974	200	631
SA 9011-21218	974	200	633
SA 9011-21218	974	250	639
SA 9011-21218	975	100	659
SA 9011-21218	975	110	661
SA 9011-21218	975	200	663
SA 9011-21219	974	200	631
SA 9011-21219	974	200	633
SA 9011-21219	974	210	635
SA 9016-10503	364	100	157
SA 9016-10603	912	200	441
SA 9016-10603	912	210	445
SA 9016-10603	912	400	461
SA 9016-10603	912	400	463
SA 9016-10603	912	410	465
SA 9016-10603	912	410	467
SA 9016-10605	912	200	437
SA 9016-10605	912	200	439
SA 9016-10605	912	210	443
SA 9016-10605	912	210	445
SA 9016-10605	912	300	449
SA 9016-10605	912	300	451
SA 9016-10605	912	300	453
SA 9016-10605	912	310	455
SA 9016-10605	912	310	457
SA 9016-10605	912	400	461
SA 9016-10605	912	400	463
SA 9016-10605	912	410	465
SA 9016-10605	912	410	467
SA 9016-10605	912	500	469
SA 9016-10605	912	500	473
SA 9016-10605	912	510	477
SA 9016-10605	912	510	479
SA 9016-10605	912	510	481
SA 9016-10607	881	100	369
SA 9016-11408	431	400	203
SA 9016-11408	431	410	205
SA 9021-10402	810	100	283
SA 9021-10402	810	110	287
SA 9021-10402	810	600	297
SA 9021-10402	810	610	301
SA 9021-10403	870	100	355
SA 9021-10403	873	100	357
SA 9021-10403	874	100	359
SA 9021-10403	874	200	363
SA 9021-10603	881	100	371
SA 9025-04003	371	800	177
SA 9025-04003	371	810	179
SA 9027-10401	393	100	187
SA 9027-10401	393	110	189
SA 9027-10401	843	200	343
SA 9027-10401	843	210	345
SA 9027-20605	881	100	369
SA 9032-10504	874	250	365
SA 9032-10504	874	260	367
SA 9032-10504	881	100	369
SA 9041-10602	660	300	239
SA 9041-10607	821	210	315
SA 9051-40540	912	150	433
SA 9051-40580	912	100	429
SA 9051-40580	912	150	433
SA 9051-40580	912	160	435
SA 9111-10500	275	100	123
SA 9111-10800	660	300	239
SA 9111-31000	912	100	429
SA 9111-31000	912	150	433
SA 9111-31000	912	160	435
SA 9111-31000	916	1300	541
SA 9111-31000	924	400	575
SA 9111-31000	924	450	583
SA 9111-31000	924	500	587
SA 9111-31000	924	510	591
SA 9111-31000	924	550	593
SA 9111-31000	924	560	597
SA 9111-32400	775	800	265
SA 9125-30000	975	2500	693
SA 9125-33000	975	1500	679
SA 9125-33000	975	1510	683
SA 9131-11200	881	100	371
SA 9133-12700	971	600	623
SA 9211-04000	874	100	359
SA 9211-06000	914	2100	519
SA 9211-08000	235	100	85
SA 9211-08000	252	100	103
SA 9211-08000	261	300	111
SA 9211-08000	261	310	113
SA 9211-08000	924	400	577
SA 9211-08000	924	450	585
SA 9211-08000	924	500	587
SA 9211-08000	924	510	591
SA 9211-08000	924	550	593
SA 9211-08000	924	560	597
SA 9211-08000	927	100	611
SA 9211-08000	927	110	613
SA 9211-10000	218	100	77
SA 9211-10000	261	100	107
SA 9211-10000	261	110	109
SA 9211-10000	261	300	111
SA 9211-10000	261	310	113
SA 9211-10000	911	100	401
SA 9211-10000	916	300	531
SA 9211-10000	916	1300	541

Part No	Group	Sect	Page
SA 9211-10000	924	400	577
SA 9211-10000	924	450	583
SA 9211-10000	924	500	587
SA 9211-10000	924	510	591
SA 9211-10000	924	550	593
SA 9211-10000	924	560	597
SA 9211-12000	275	100	123
SA 9211-12000	715	100	247
SA 9211-12000	715	200	249
SA 9211-12000	821	100	309
SA 9211-12000	821	200	313
SA 9211-12000	821	210	317
SA 9211-12000	881	100	371
SA 9211-12000	914	300	501
SA 9211-14000	234	100	81
SA 9211-14000	911	100	401
SA 9213-05000	275	100	123
SA 9213-06000	912	500	473
SA 9213-06000	912	510	479
SA 9213-14000	234	100	81
SA 9213-14000	441	100	207
SA 9213-14000	775	1200	275
SA 9213-14000	911	100	401
SA 9216-04510	927	500	615
SA 9216-04510	927	510	617
SA 9216-04510	974	3000	645
SA 9216-04510	974	3010	649
SA 9216-04510	974	3100	651
SA 9216-04510	974	3150	655
SA 9216-04510	975	1500	679
SA 9216-04510	975	1510	683
SA 9217-11400	881	100	369
SA 9285-11000	881	100	369
SA 9285-16000	810	700	305
SA 9285-16000	810	710	307
SA 9285-17000	974	100	625
SA 9285-17000	974	110	627
SA 9285-17000	974	150	629
SA 9312-00004	235	100	85
SA 9312-00004	252	100	103
SA 9312-00004	261	100	107
SA 9312-00004	261	110	109
SA 9312-00004	363	200	155
SA 9312-00005	261	100	107
SA 9312-00005	261	110	109
SA 9312-00008	234	300	83
SA 9312-00016	874	250	365
SA 9312-00016	874	260	367
SA 9312-10200	874	200	363
SA 9312-10250	261	100	107
SA 9312-10250	261	110	109
SA 9312-10250	911	600	423
SA 9312-10300	256	100	105
SA 9312-10350	256	100	105
SA 9312-10450	881	100	369
SA 9313-00033	441	500	215
SA 9314-02300	870	100	355
SA 9314-02300	873	100	357
SA 9315-01002	252	100	103
SA 9315-02201	971	100	619
SA 9315-03001	870	100	355
SA 9315-03001	874	100	361
SA 9315-03001	916	2200	551
SA 9315-03601	870	100	355
SA 9315-03601	874	100	361
SA 9315-03601	911	500	421
SA 9315-04001	874	250	365
SA 9315-04001	874	260	367
SA 9315-16001	261	100	107
SA 9315-16001	261	110	109
SA 9316-02402	870	100	355
SA 9316-02402	873	100	357
SA 9316-03601	371	500	175
SA 9316-03601	870	100	355
SA 9316-03601	874	100	361
SA 9321-20408	660	100	233
SA 9321-20408	660	200	235
SA 9321-20408	660	210	237
SA 9321-20408	660	300	239
SA 9321-20609	275	100	123
SA 9321-20609	810	700	305
SA 9321-20609	810	710	307
SA 9323-02910	843	200	343
SA 9323-02912	275	100	123
SA 9323-07535	925	1500	609
SA 9325-05005	431	400	203
SA 9325-05005	431	410	205
SA 9325-05018	660	200	235
SA 9325-05018	660	210	237
SA 9325-05018	660	300	239
SA 9325-10045	775	800	265
SA 9326-05000	660	100	233
SA 9326-05000	660	200	235
SA 9326-05000	660	210	237
SA 9326-05000	660	300	239
SA 9326-06000	275	100	123
SA 9411-90250	916	300	531
SA 9411-90410	916	8100	565
SA 9411-91000	916	2000	545
SA 9411-91000	916	2010	547
SA 9411-91000	916	2100	549
SA 9411-91970	492	100	225
SA 9411-92190	913	100	483
SA 9411-92200	911	600	423
SA 9411-92280	916	8000	559
SA 9411-92350	914	200	497
SA 9411-92350	914	300	499
SA 9411-92350	916	350	533
SA 9411-92350	916	1200	537
SA 9411-92350	916	2200	553
SA 9411-92350	916	8050	561
SA 9411-92360	916	8000	559
SA 9411-92360	916	8050	561
SA 9411-93390	916	1200	537
SA 9411-93390	924	200	567
SA 9411-93390	924	400	575
SA 9411-93390	924	450	583
SA 9411-93390	924	500	587
SA 9411-93390	924	510	591
SA 9411-93390	924	550	593
SA 9411-93390	924	560	597
SA 9411-93621	911	200	405
SA 9411-93900	914	200	497
SA 9411-95150	911	200	405
SA 9411-95160	911	200	405
SA 9411-95160	911	400	411
SA 9411-95160	911	410	417
SA 9411-95160	911	420	419
SA 9411-95160	911	500	421
SA 9411-95180	911	200	405
SA 9411-95190	914	2100	519
SA 9411-95190	916	300	531
SA 9411-95190	916	8050	561
SA 9411-95190	924	500	587
SA 9411-95190	924	510	591
SA 9411-95190	924	550	593
SA 9411-95190	924	560	597
SA 9411-95440	914	200	497
SA 9411-95440	916	350	533
SA 9411-95440	916	1250	539
SA 9411-95440	916	2200	553
SA 9411-96100	916	8000	559
SA 9412-11020	660	100	233
SA 9412-11020	911	300	407
SA 9412-11020	911	350	409
SA 9412-11020	914	100	495
SA 9412-11020	914	200	497
SA 9412-11020	914	300	499
SA 9412-11020	914	300	501
SA 9412-11020	914	4000	523
SA 9412-11020	916	300	529
SA 9412-11020	916	1300	541
SA 9412-11020	916	2200	553
SA 9412-11020	916	8000	559
SA 9412-11020	916	8050	561
SA 9412-11020	924	200	567
SA 9412-11020	924	250	569
SA 9412-11020	924	300	571
SA 9412-11020	924	310	573
SA 9412-11030	911	200	405
SA 9412-11030	911	300	407
SA 9412-11030	911	350	409
SA 9412-11030	911	400	411
SA 9412-11030	911	410	417
SA 9412-11030	911	420	419
SA 9412-11030	913	100	483
SA 9412-11030	914	300	499
SA 9412-11030	916	8000	559
SA 9412-11030	916	8050	561
SA 9412-11040	911	200	405
SA 9412-11040	911	300	407
SA 9412-11040	911	400	411
SA 9412-11040	911	410	417
SA 9412-11040	911	420	419
SA 9412-11040	911	600	423

Part No	Group	Sect	Page
SA 9412-11040	913	100	483
SA 9412-11040	914	4000	523
SA 9412-11040	916	300	531
SA 9412-11040	916	2200	551
SA 9412-11040	916	4000	555
SA 9412-11040	916	4100	557
SA 9412-11040	971	150	621
SA 9412-11042	911	600	423
SA 9412-11042	971	150	621
SA 9412-11044	911	200	405
SA 9412-11045	911	200	405
SA 9412-11045	911	400	411
SA 9412-11045	911	410	417
SA 9412-11045	911	600	423
SA 9412-11045	916	8050	563
SA 9412-11050	911	500	421
SA 9412-11050	916	2000	545
SA 9412-11050	916	2010	547
SA 9412-11050	916	2100	549
SA 9412-11050	916	2200	551
SA 9412-11090	914	200	497
SA 9412-11120	913	100	485
SA 9412-11130	914	100	495
SA 9412-11140	971	150	621
SA 9412-11150	911	200	405
SA 9412-11150	916	8000	559
SA 9412-11150	916	8050	561
SA 9412-11150	971	100	619
SA 9412-11153	916	8050	561
SA 9412-11160	911	500	421
SA 9412-11170	916	2000	545
SA 9412-11170	916	2010	547
SA 9412-11170	916	2100	549
SA 9412-12020	914	200	497
SA 9412-12020	914	2100	519
SA 9412-12020	916	300	529
SA 9412-12150	914	300	501
SA 9412-43010	492	100	225
SA 9412-43020	911	200	405
SA 9412-43030	911	200	405
SA 9412-43090	911	200	405
SA 9412-43110	974	300	641
SA 9412-43110	974	310	643
SA 9412-43150	911	200	405
SA 9413-11010	914	300	501
SA 9413-11010	914	4000	523
SA 9413-11010	916	300	529
SA 9413-11010	916	1300	541
SA 9413-11010	916	8000	559
SA 9413-11010	916	8050	561
SA 9413-11010	924	200	567
SA 9413-11010	924	250	569
SA 9413-11010	924	300	571
SA 9413-11010	924	310	573
SA 9413-11020	911	200	405
SA 9413-11020	911	350	409
SA 9413-11020	911	400	411
SA 9413-11020	911	410	417
SA 9413-11020	911	420	419
SA 9413-11020	913	100	483
SA 9413-11020	916	8000	559
SA 9413-11020	916	8050	561
SA 9413-11020	971	150	621
SA 9413-11030	911	200	405
SA 9413-11030	911	400	411
SA 9413-11030	911	410	417
SA 9413-11030	911	420	419
SA 9413-11030	911	600	423
SA 9413-11030	916	1300	541
SA 9413-11170	914	300	499
SA 9413-11180	971	150	621
SA 9413-11190	913	100	483
SA 9413-11210	916	2200	551
SA 9413-11230	914	4000	523
SA 9413-11230	916	2200	551
SA 9413-43010	974	200	633
SA 9413-43010	974	210	637
SA 9414-11010	911	300	407
SA 9414-11020	971	150	621
SA 9414-11030	911	200	405
SA 9414-11040	916	2200	551
SA 9414-43090	974	300	641
SA 9414-43090	974	310	643
SA 9415-11012	912	300	449
SA 9415-11012	912	310	455
SA 9415-11012	912	500	471
SA 9415-11012	912	510	477
SA 9415-11021	911	200	405
SA 9415-11021	911	350	409
SA 9415-11021	911	600	423
SA 9415-11021	914	300	499
SA 9415-11022	912	300	453
SA 9415-11022	912	310	459
SA 9415-11022	912	500	475
SA 9415-11022	912	510	481
SA 9415-11022	916	300	531
SA 9415-11022	916	1300	541
SA 9415-11032	916	300	529
SA 9415-11041	912	100	429
SA 9415-11041	912	300	449
SA 9415-11041	912	310	455
SA 9415-11041	912	400	461
SA 9415-11041	912	400	463
SA 9415-11041	912	410	465
SA 9415-11041	912	410	467
SA 9415-11041	916	4000	555
SA 9415-11041	916	4100	557
SA 9415-11041	916	8000	559
SA 9415-11042	916	300	531
SA 9415-11042	916	1300	541
SA 9415-11061	916	8000	559
SA 9415-11061	916	8050	561
SA 9415-43012	431	100	197
SA 9415-43012	441	200	211
SA 9415-43012	775	800	265
SA 9415-43012	775	900	269
SA 9415-43012	775	1000	271
SA 9415-43012	775	1100	273
SA 9415-43022	441	200	213
SA 9415-43032	431	100	197
SA 9415-43032	443	200	223
SA 9416-11091	914	100	495
SA 9416-11091	914	200	497
SA 9416-11091	914	300	501
SA 9416-11091	916	1300	541
SA 9416-11091	924	400	575
SA 9416-11091	924	450	583
SA 9416-11091	924	500	587
SA 9416-11091	924	510	591
SA 9416-11091	924	550	593
SA 9416-11091	924	560	597
SA 9426-10020	914	200	497
SA 9426-10020	914	2100	519
SA 9426-10020	916	300	529
SA 9426-10040	914	300	501
SA 9426-20020	386	100	183
SA 9443-30505	235	100	85
SA 9446-30400	912	310	455
SA 9446-30400	912	510	479
SA 9451-02208	914	2100	519
SA 9451-02214	914	100	495
SA 9451-02214	914	2100	519
SA 9451-02216	914	100	495
SA 9451-02220	914	2100	519
SA 9451-02222	660	100	233
SA 9451-02223	914	300	499
SA 9451-02229	914	100	495
SA 9451-02230	916	8050	561
SA 9451-02234	914	100	495
SA 9451-02236	914	300	501
SA 9451-02252	916	1300	541
SA 9451-02735	924	200	567
SA 9451-02735	924	250	569
SA 9451-02735	924	300	571
SA 9451-02735	924	310	573
SA 9451-02760	924	400	575
SA 9451-02760	924	450	583
SA 9451-02760	924	550	593
SA 9451-02760	924	560	597
SA 9451-02761	924	400	575
SA 9451-02761	924	450	583
SA 9451-02762	924	500	587
SA 9451-02762	924	510	591
SA 9451-02763	924	500	587
SA 9451-03206	916	8100	565
SA 9451-03708	971	150	621
SA 9451-03723	971	150	621
SA 9451-04425	971	150	621
SA 9451-04713	916	100	525
SA 9451-04714	916	1300	541
SA 9451-04715	916	100	525
SA 9451-04715	916	110	527
SA 9451-04715	916	1300	541
SA 9451-05214	911	500	421
SA 9451-05255	914	4000	523

Part No	Group	Sect	Page
SA 9451-05711	916	100	525
SA 9451-05711	916	110	527
SA 9451-12226	911	300	407
SA 9451-13125	911	300	407
SA 9451-14719	916	100	525
SA 9451-14719	916	110	527
SA 9451-14719	916	4100	557
SA 9451-14720	916	2000	545
SA 9451-14721	916	2000	545
SA 9451-14721	916	2010	547
SA 9451-14724	916	2100	549
SA 9451-14727	916	4100	557
SA 9451-15720	916	2000	545
SA 9451-15721	916	2000	545
SA 9451-15721	916	2010	547
SA 9451-15724	916	2100	549
SA 9451-35226	916	2200	551
SA 9451-35235	911	500	421
SA 9452-03730	916	8000	559
SA 9452-05743	916	2200	551
SA 9452-13724	911	350	409
SA 9452-14717	916	4000	555
SA 9452-14724	916	4100	557
SA 9452-35264	911	500	421
SA 9453-02206	916	2200	551
SA 9453-02211	914	2100	519
SA 9453-02212	914	200	497
SA 9453-02212	914	300	501
SA 9453-02213	916	8050	561
SA 9453-02214	914	300	499
SA 9453-02217	914	200	497
SA 9453-02217	914	300	499
SA 9453-02217	914	2150	521
SA 9453-02219	914	200	497
SA 9453-02219	916	8000	559
SA 9453-02220	914	200	497
SA 9453-02220	914	300	499
SA 9453-02220	916	8050	561
SA 9453-02221	914	200	497
SA 9453-02221	914	4000	523
SA 9453-02222	914	300	501
SA 9453-02222	914	2100	519
SA 9453-02223	914	2100	519
SA 9453-02223	914	2150	521
SA 9453-02223	924	200	567
SA 9453-02223	924	250	569
SA 9453-02223	924	300	571
SA 9453-02223	924	310	573
SA 9453-02224	914	300	501
SA 9453-02225	914	200	497
SA 9453-02226	914	300	501
SA 9453-02226	916	2200	553
SA 9453-02229	914	200	497
SA 9453-02229	914	300	499
SA 9453-02229	914	2150	521
SA 9453-02231	916	8050	561
SA 9453-02237	914	300	499
SA 9453-02237	916	8050	561
SA 9453-02243	914	2150	521
SA 9453-02245	916	8050	561
SA 9453-02246	914	200	497
SA 9453-02253	916	1300	541
SA 9453-02434	924	250	569
SA 9453-02707	916	300	531
SA 9453-02734	924	200	567
SA 9453-02734	924	300	571
SA 9453-02734	924	310	573
SA 9453-03123	911	200	405
SA 9453-03123	911	400	411
SA 9453-03123	911	410	417
SA 9453-03123	911	420	419
SA 9453-03136	914	300	499
SA 9453-03208	913	100	483
SA 9453-03209	913	100	483
SA 9453-03210	914	300	501
SA 9453-03212	913	100	483
SA 9453-03219	914	300	501
SA 9453-03231	916	8000	559
SA 9453-03231	916	8050	561
SA 9453-03705	911	200	405
SA 9453-03709	911	200	405
SA 9453-03727	916	8050	561
SA 9453-03734	971	100	619
SA 9453-04114	911	400	411
SA 9453-04114	911	410	417
SA 9453-04114	911	420	419
SA 9453-04320	913	100	483
SA 9453-04425	971	150	621
SA 9453-04428	911	400	411
SA 9453-04428	911	410	417
SA 9453-04438	971	150	621
SA 9453-04712	911	600	423
SA 9453-04713	911	200	405
SA 9453-04713	911	600	423
SA 9453-13724	911	350	409
SA 9453-14720	916	4100	557
SA 9453-14725	911	300	407
SA 9453-34739	916	2200	551
SA 9453-44740	911	400	411
SA 9453-44740	911	400	415
SA 9453-44740	911	410	417
SA 9453-44744	911	400	411
SA 9453-44744	911	400	415
SA 9455-02207	914	200	497
SA 9455-03719	911	200	405
SA 9459-05860	911	400	411
SA 9459-05880	911	400	413
SA 9459-05880	914	4000	523
SA 9459-05920	911	400	411
SA 9459-05920	911	410	417
SA 9481-10003	971	600	623
SA 9481-10003	974	3000	645
SA 9481-10003	974	3010	649
SA 9481-10003	974	3100	651
SA 9481-10003	974	3150	655
SA 9481-10003	975	2500	693
SA 9481-11003	492	100	225
SA 9481-11003	775	700	263
SA 9481-11003	925	100	603
SA 9481-11003	925	200	605
SA 9481-11003	925	1500	609
SA 9481-11003	927	100	611
SA 9481-11003	927	110	613
SA 9481-11003	974	200	633
SA 9481-11003	974	210	637
SA 9481-11003	975	500	665
SA 9481-11003	975	510	669
SA 9481-11003	975	600	673
SA 9481-11003	975	610	675
SA 9481-11003	975	800	677
SA 9481-11003	975	1900	687
SA 9481-11003	975	1910	691
SA 9481-20002	974	3000	645
SA 9481-20002	974	3010	649
SA 9481-20002	974	3100	651
SA 9481-20002	974	3150	655
SA 9481-20002	975	1500	679
SA 9481-20002	975	1510	683
SA 9481-20002	975	2500	693
SA 9481-21002	660	200	235
SA 9481-21002	660	210	237
SA 9481-21002	660	300	239
SA 9481-21002	927	100	611
SA 9481-21002	927	110	613
SA 9481-21002	974	300	641
SA 9481-21002	974	310	643
SA 9481-21002	975	500	667
SA 9481-21002	975	510	669
SA 9481-21002	975	600	673
SA 9481-21002	975	610	675
SA 9481-21002	975	800	677
SA 9511-12007	441	200	211
SA 9511-12007	441	600	219
SA 9511-12008	912	300	449
SA 9511-12008	912	310	455
SA 9511-12008	912	500	471
SA 9511-12008	912	510	477
SA 9511-12009	441	200	211
SA 9511-12010	234	100	81
SA 9511-12010	911	100	401
SA 9511-12011	660	100	233
SA 9511-12011	911	200	405
SA 9511-12011	911	300	407
SA 9511-12011	911	350	409
SA 9511-12011	911	600	423
SA 9511-12011	912	300	449
SA 9511-12011	912	300	453
SA 9511-12011	912	310	455
SA 9511-12011	912	310	459
SA 9511-12011	912	500	475
SA 9511-12011	912	510	481
SA 9511-12011	914	4000	523
SA 9511-12011	916	300	529
SA 9511-12011	916	350	533
SA 9511-12011	916	1200	537

NUMERICAL INDEX 부품번호 색인

RÉPERTOIRE DE NUMÉROS **INDICE DE NÚMERO**

NUMMERNREGISTER

Part No	Group	Sect	Page
SA 9511-12011	916	1300	541
SA 9511-12011	916	2200	553
SA 9511-12011	916	8000	559
SA 9511-12011	924	200	567
SA 9511-12011	924	250	569
SA 9511-12011	924	300	571
SA 9511-12011	924	310	573
SA 9511-12014	441	200	213
SA 9511-12014	441	600	217
SA 9511-12014	441	600	219
SA 9511-12014	911	200	405
SA 9511-12014	911	300	407
SA 9511-12014	911	350	409
SA 9511-12014	911	400	411
SA 9511-12014	911	410	417
SA 9511-12014	911	420	419
SA 9511-12014	913	100	483
SA 9511-12014	914	100	495
SA 9511-12014	914	300	499
SA 9511-12014	916	300	529
SA 9511-12014	916	8000	559
SA 9511-12014	971	150	621
SA 9511-12016	441	200	211
SA 9511-12018	234	100	81
SA 9511-12018	441	600	217
SA 9511-12018	441	600	219
SA 9511-12018	911	100	401
SA 9511-12018	911	200	405
SA 9511-12018	911	300	407
SA 9511-12018	911	400	411
SA 9511-12018	911	410	417
SA 9511-12018	911	420	419
SA 9511-12018	911	500	421
SA 9511-12018	911	600	423
SA 9511-12018	912	200	437
SA 9511-12018	912	200	439
SA 9511-12018	912	200	441
SA 9511-12018	912	210	443
SA 9511-12018	912	210	445
SA 9511-12018	912	210	447
SA 9511-12018	912	300	449
SA 9511-12018	912	300	451
SA 9511-12018	912	300	453
SA 9511-12018	912	310	455
SA 9511-12018	912	310	457
SA 9511-12018	912	310	459
SA 9511-12018	912	400	461
SA 9511-12018	912	400	463
SA 9511-12018	912	410	465
SA 9511-12018	912	410	467
SA 9511-12018	912	500	471
SA 9511-12018	912	500	473
SA 9511-12018	912	510	477
SA 9511-12018	912	510	479
SA 9511-12018	912	510	481
SA 9511-12018	913	100	483
SA 9511-12018	914	900	503
SA 9511-12018	914	4000	523
SA 9511-12018	916	300	529
SA 9511-12018	916	1300	541
SA 9511-12018	916	4000	555
SA 9511-12018	916	4100	557
SA 9511-12018	916	8000	559
SA 9511-12018	971	100	619
SA 9511-12018	971	150	621
SA 9511-12020	914	1100	505
SA 9511-12020	914	1150	509
SA 9511-12020	914	1200	515
SA 9511-12022	441	600	217
SA 9511-12022	441	600	219
SA 9511-12024	911	500	421
SA 9511-12024	916	2000	545
SA 9511-12024	916	2010	547
SA 9511-12024	916	2100	549
SA 9511-12026	441	200	211
SA 9511-12028	441	600	217
SA 9511-12028	441	600	219
SA 9511-12028	911	100	401
SA 9511-12029	914	4000	523
SA 9511-12029	916	8000	559
SA 9511-12038	975	2500	693
SA 9511-12044	234	100	81
SA 9511-12048	927	500	615
SA 9511-12048	927	510	617
SA 9511-12048	974	3000	647
SA 9511-12048	974	3010	649
SA 9511-12048	975	1500	679
SA 9511-12048	975	1510	683
SA 9511-12070	975	2500	693
SA 9511-12080	971	600	623
SA 9511-12080	975	1500	679
SA 9511-12080	975	1510	683
SA 9511-12095	927	500	615
SA 9511-12095	927	510	617
SA 9511-12095	974	3000	647
SA 9511-12095	974	3010	649
SA 9511-12100	974	3100	651
SA 9511-12100	974	3150	655
SA 9511-12200	431	100	197
SA 9511-21065	912	200	437
SA 9511-21065	912	200	439
SA 9511-21065	912	200	441
SA 9511-21065	912	210	443
SA 9511-21065	912	210	445
SA 9511-21065	912	210	447
SA 9511-21065	912	300	449
SA 9511-21065	912	300	451
SA 9511-21065	912	310	455
SA 9511-21065	912	310	457
SA 9511-21065	912	400	461
SA 9511-21065	912	400	463
SA 9511-21065	912	410	465
SA 9511-21065	912	500	469
SA 9511-21065	912	500	471
SA 9511-21065	912	500	473
SA 9511-21065	912	500	475
SA 9511-21065	912	510	477
SA 9511-21065	912	510	479
SA 9511-21065	912	510	481
SA 9511-22075	975	2500	693
SA 9511-22090	971	600	623
SA 9511-22090	975	1500	679
SA 9511-22090	975	1510	683
SA 9511-22105	974	3000	647
SA 9511-22105	974	3010	649
SA 9511-22110	974	3100	651
SA 9511-22110	974	3150	655
SA 9511-22115	441	600	219
SA 9511-22125	441	600	219
SA 9511-22135	441	600	219
SA 9511-22135	911	100	401
SA 9511-22140	441	200	209
SA 9511-22190	911	100	401
SA 9512-02015	912	200	441
SA 9512-02015	912	210	445
SA 9512-02015	912	500	471
SA 9512-02015	912	510	479
SA 9512-02020	912	200	441
SA 9512-02020	912	210	445
SA 9512-02020	912	300	449
SA 9512-02020	912	310	455
SA 9512-02020	912	500	469
SA 9512-02020	912	510	477
SA 9512-02021	912	200	437
SA 9512-02021	912	200	439
SA 9512-02021	912	210	443
SA 9512-02021	912	210	445
SA 9512-02021	912	300	449
SA 9512-02021	912	300	451
SA 9512-02021	912	310	455
SA 9512-02021	912	310	457
SA 9512-02021	912	500	469
SA 9512-02021	912	500	471
SA 9512-02021	912	500	473
SA 9512-02021	912	510	477
SA 9512-02021	912	510	479
SA 9512-02021	912	510	481
SA 9512-02122	912	500	471
SA 9512-02122	912	510	479
SA 9512-02210	911	350	409
SA 9512-02210	916	100	525
SA 9512-02210	916	300	529
SA 9512-02210	916	900	535
SA 9512-02222	911	600	423
SA 9512-02225	911	600	423
SA 9541-01030	775	1000	271
SA 9541-01030	775	1100	273
SA 9541-02062	775	900	269
SA 9556-04000	775	700	263
SA 9556-04500	971	600	623
SA 9556-05000	775	700	263
SA 9556-05000	975	2500	693
SA 9556-05500	975	1500	679
SA 9556-05500	975	1510	683
SA 9556-06000	927	500	615

Part No	Group	Sect	Page
SA 9556-06000	927	510	617
SA 9556-06000	974	3000	647
SA 9556-06000	974	3010	649
SA 9556-06000	974	3100	651
SA 9556-06000	974	3150	655
SA 9557-04000	971	600	623
SA 9557-04500	975	2500	693
SA 9557-05000	975	1500	679
SA 9557-05000	975	1510	683
SA 9557-05050	927	500	615
SA 9557-05050	927	510	617
SA 9557-05050	974	3000	645
SA 9557-05050	974	3010	649
SA 9557-05050	974	3100	651
SA 9557-05050	974	3150	655
SA 9561-04520	975	2500	693
SA 9563-20402	775	700	263
SA 9563-20450	971	600	623
SA 9563-20500	975	2500	693
SA 9563-20553	975	1500	679
SA 9563-20553	975	1510	683
SA 9563-20600	927	500	615
SA 9563-20600	927	510	617
SA 9563-20600	974	3000	647
SA 9563-20600	974	3010	649
SA 9564-20450	971	600	623
SA 9564-20500	975	2500	693
SA 9564-20550	975	1500	679
SA 9564-20550	975	1510	683
SA 9564-20600	927	500	615
SA 9564-20600	927	510	617
SA 9564-20600	974	3000	647
SA 9564-20600	974	3010	649
SA 9564-20600	974	3100	651
SA 9564-20600	974	3150	655
SA 9565-20800	975	2500	693
SA 9565-20900	971	600	623
SA 9565-20900	975	1500	679
SA 9565-20900	975	1510	683
SA 9565-21050	927	500	615
SA 9565-21050	927	510	617
SA 9565-21050	974	3000	647
SA 9565-21050	974	3010	649
SA 9565-21050	974	3100	653
SA 9565-21050	974	3150	655
SA 9565-21100	974	3100	653
SA 9565-21100	974	3150	655
SA 9566-30480	975	1500	679
SA 9566-30480	975	1510	683
SA 9566-30800	971	600	623
SA 9566-30800	975	1500	679
SA 9566-30800	975	1510	683
SA 9566-30950	927	500	615
SA 9566-30950	927	510	617
SA 9566-30950	974	3000	647
SA 9566-30950	974	3010	649
SA 9566-31000	974	3100	651
SA 9566-31000	974	3150	655
SA 9566-41100	441	600	219
SA 9566-41250	441	600	219
SA 9567-20450	971	600	623
SA 9567-20500	975	2500	693
SA 9567-20551	975	1500	679
SA 9567-20551	975	1510	683
SA 9567-20601	927	500	615
SA 9567-20601	927	510	617
SA 9567-20601	974	3000	647
SA 9567-20601	974	3010	649
SA 9567-20601	974	3100	651
SA 9567-20601	974	3150	655
SA 9568-00800	975	2500	693
SA 9568-00900	971	600	623
SA 9568-00900	975	1500	681
SA 9568-00900	975	1510	683
SA 9568-01050	927	500	615
SA 9568-01050	927	510	617
SA 9568-01050	974	3000	647
SA 9568-01050	974	3010	649
SA 9568-01050	974	3100	651
SA 9568-01100	974	3100	653
SA 9568-01100	974	3150	655
SA 9571-72250	843	100	339
SA 9612-04530	971	600	623
SA 9612-05035	975	2500	693
SA 9612-05535	975	1500	679
SA 9612-05535	975	1510	683
SA 9612-06035	927	500	615
SA 9612-06035	927	510	617
SA 9612-06035	974	3000	645
SA 9612-06035	974	3010	649
SA 9612-06035	974	3100	651
SA 9612-06035	974	3150	655
SA 9646-31080	660	100	233
SA 9676-14000	431	100	197
SA 9676-51600	441	200	213
SA 9751-12504	363	100	151
SA 9751-12504	363	110	153
SA 9751-13606	235	100	87
SA 9751-13606	371	100	169
SA 9751-15016	911	500	421
SA 9751-33606	235	100	85
SA 9751-33606	235	100	87
SA 9751-33606	371	100	169
SA 9751-33606	870	100	355
SA 9751-33606	874	100	361
SA 9751-33606	874	200	363
SA 9817-12400	870	100	353
SA 9817-12400	874	100	359
SA 9861-00100	387	100	185
SA 9861-00200	387	100	185
SA 9877-10000	896	200	377
SA 9877-20000	896	200	377
SA 9877-30000	896	200	377
SA 9879-10600	371	200	171
SA 9879-10600	896	200	377
SA 9879-10800	371	200	171
SA 9879-10800	896	200	377
SA 9951-08008	235	100	85
SA P4100875	234	100	81
VOE 11039847	356	100	139
VOE 11039847	356	110	141
VOE 11039847	356	300	143
VOE 11039856	352	100	137
VOE 11078015	810	600	299
VOE 11078015	810	610	303
VOE 11164488	841	100	335
VOE 11170103	362	100	145
VOE 11180747	897	100	379
VOE 11305113	362	300	149
VOE 11445056	897	200	385
VOE 1146-01700	974	3100	651
VOE 1146-01700	974	3150	655
VOE 11714369	212	100	55
VOE 11714370	215	200	67
VOE 11714371	210	200	47
VOE 11714371	211	200	53
VOE 11714371	215	200	67
VOE 11714372	212	500	59
VOE 11714372	215	100	65
VOE 11714372	215	200	67
VOE 11714372	236	100	95
VOE 11714373	215	250	69
VOE 11714373	251	200	101
VOE 11714373	263	100	117
VOE 11714374	235	300	93
VOE 11714376	212	300	57
VOE 11714376	215	200	67
VOE 11714377	215	200	67
VOE 11714378	212	500	59
VOE 11714379	211	100	51
VOE 11714380	211	100	51
VOE 11714380	214	200	63
VOE 11714383	211	200	53
VOE 11714383	215	200	67
VOE 11714385	211	200	53
VOE 11714386	210	200	47
VOE 11714386	211	100	51
VOE 11714386	211	200	53
VOE 11714387	212	100	55
VOE 11714388	215	200	67
VOE 11714468	215	100	65
VOE 11714468	216	100	71
VOE 11714476	210	200	47
VOE 11714476	220	300	79
VOE 11714476	235	200	89
VOE 11714477	210	200	47
VOE 11714477	262	200	115
VOE 11714478	210	200	47
VOE 11714478	262	200	115
VOE 11714486	215	100	65
VOE 11714487	214	200	63
VOE 11714487	215	200	67
VOE 11714490	217	100	75
VOE 11714490	220	300	79
VOE 11714490	262	200	115

Part No	Group	Sect	Page
VOE 11714491	263	100	117
VOE 11714492	262	200	115
VOE 11714506	235	300	93
VOE 11714507	235	300	93
VOE 11714632	251	100	99
VOE 11714755	236	100	95
VOE 11714763	212	300	57
VOE 11714764	212	300	57
VOE 11714793	216	200	73
VOE 11802679	660	100	233
VOE 11802680	660	100	233
VOE 11802737	914	2100	519
VOE 13948356	821	200	311
VOE 14500116	914	1100	505
VOE 14500116	914	1150	509
VOE 14500116	914	1200	515
VOE 14500122	914	1200	517
VOE 14500124	914	1200	517
VOE 14500125	914	1200	517
VOE 14500126	914	1200	517
VOE 14500127	914	1200	517
VOE 14500128	914	1200	517
VOE 14500129	914	1200	517
VOE 14500130	914	1200	517
VOE 14500137	914	1100	507
VOE 14500137	914	1150	511
VOE 14500160	441	100	207
VOE 14500290	356	300	143
VOE 14500291	362	300	149
VOE 14500291	363	200	155
VOE 14500291	371	400	173
VOE 14500292	275	100	123
VOE 14500292	363	200	155
VOE 14500292	371	200	171
VOE 14500292	371	400	173
VOE 14500293	235	100	87
VOE 14500293	371	100	169
VOE 14500293	371	200	171
VOE 14500293	371	400	173
VOE 14500293	924	400	577
VOE 14500294	234	100	81
VOE 14500294	371	200	171
VOE 14500294	371	400	173
VOE 14500295	371	200	171
VOE 14500295	371	400	173
VOE 14500295	371	500	175
VOE 14500395	371	200	171
VOE 14500395	371	400	173
VOE 14500440	914	300	499
VOE 14500440	914	900	503
VOE 14500477	262	200	115
VOE 14500561	914	1200	517
VOE 14500912	897	100	379
VOE 14501078	974	3000	645
VOE 14501080	974	3000	645
VOE 14501080	974	3010	649
VOE 14501082	975	1500	679
VOE 14501082	975	1510	683
VOE 14501083	975	2500	693
VOE 14501084	975	2500	693
VOE 14501085	971	600	623
VOE 14501086	971	600	623
VOE 14501090	974	3000	645
VOE 14501363	897	100	379
VOE 14501366	897	100	379
VOE 14501410	775	800	265
VOE 14501411	775	800	265
VOE 14501492	830	100	321
VOE 14501492	830	110	323
VOE 14501499	810	600	297
VOE 14501499	810	610	301
VOE 14501500	810	600	299
VOE 14501500	810	610	303
VOE 14501501	830	100	321
VOE 14501501	830	110	323
VOE 14501501	830	200	325
VOE 14501504	810	600	297
VOE 14501527	897	100	379
VOE 14501541	716	100	251
VOE 14501658	974	3000	645
VOE 14501659	974	3000	645
VOE 14501714	897	100	379
VOE 14501722	916	2000	545
VOE 14501722	916	2010	547
VOE 14501722	916	2100	549
VOE 14501869	927	100	611
VOE 14501876	310	100	131
VOE 14501898	916	1200	537
VOE 14501898	916	1300	541
VOE 14501898	924	400	579
VOE 14501898	924	450	585
VOE 14501898	924	500	587
VOE 14501898	924	510	591
VOE 14501898	924	550	593
VOE 14501898	924	560	597
VOE 14501953	925	100	601
VOE 14501955	925	100	601
VOE 14501957	925	100	601
VOE 14501962	821	200	313
VOE 14501962	821	210	317
VOE 14501963	821	100	309
VOE 14502065	821	100	309
VOE 14502068	821	100	309
VOE 14502072	874	200	363
VOE 14502090	881	100	371
VOE 14502091	881	100	369
VOE 14502092	881	100	371
VOE 14502093	881	100	371
VOE 14502095	881	100	369
VOE 14502096	881	100	371
VOE 14502097	881	100	369
VOE 14502098	881	100	369
VOE 14502170	234	300	83
VOE 14502506	897	100	379
VOE 14502635	852	100	347
VOE 14502649	897	100	379
VOE 14502650	897	100	379
VOE 14502671	897	100	379
VOE 14502722	364	100	157
VOE 14503271	974	3000	645
VOE 14503272	974	3000	645
VOE 14503277	362	100	145
VOE 14503342	492	100	225
VOE 14503343	492	100	225
VOE 14503344	492	100	225
VOE 14503550	261	300	111
VOE 14503559	261	100	107
VOE 14503559	261	110	109
VOE 14503561	261	100	107
VOE 14503561	261	110	109
VOE 14503580	975	1500	679
VOE 14503580	975	1510	683
VOE 14503581	975	1500	679
VOE 14503581	975	1510	683
VOE 14503629	821	250	319
VOE 14503630	821	250	319
VOE 14503677	821	250	319
VOE 14503808	912	500	473
VOE 14503808	912	510	481
VOE 14503931	431	300	199
VOE 14503932	431	300	199
VOE 14503933	431	300	199
VOE 14503934	431	300	201
VOE 14503935	431	300	201
VOE 14503936	431	300	201
VOE 14503937	431	300	199
VOE 14503938	431	300	199
VOE 14503939	431	300	199
VOE 14503940	431	300	199
VOE 14503941	431	300	199
VOE 14503942	431	300	199
VOE 14503944	431	300	199
VOE 14503945	431	300	199
VOE 14503946	431	300	199
VOE 14503947	431	300	199
VOE 14503948	431	300	199
VOE 14503949	431	300	199
VOE 14503973	912	400	463
VOE 14504140	843	100	339
VOE 14504140	843	110	341
VOE 14504141	843	200	343
VOE 14504141	843	210	345
VOE 14504142	843	200	343
VOE 14504142	843	210	345
VOE 14504200	364	100	157
VOE 14504201	364	100	157
VOE 14504211	975	1900	687
VOE 14504212	975	1900	687
VOE 14504227	975	500	665
VOE 14504227	975	510	669
VOE 14504227	975	600	673
VOE 14504227	975	610	675
VOE 14504227	975	800	677
VOE 14504227	975	1900	687
VOE 14504268	356	300	143

Part No	Group	Sect	Page
VOE 14504269	362	100	145
VOE 14504425	916	2200	551
VOE 14504427	914	300	501
VOE 14504428	971	150	621
VOE 14504433	660	200	235
VOE 14504433	660	210	237
VOE 14504433	660	300	239
VOE 14504434	660	200	235
VOE 14504434	660	210	237
VOE 14504434	660	300	239
VOE 14504435	660	300	239
VOE 14504436	660	300	239
VOE 14504437	660	200	235
VOE 14504437	660	210	237
VOE 14504437	660	300	239
VOE 14504438	660	300	239
VOE 14504439	660	200	235
VOE 14504439	660	210	237
VOE 14504439	660	300	239
VOE 14504446	912	200	439
VOE 14504446	912	200	441
VOE 14504446	912	210	445
VOE 14504446	912	210	447
VOE 14504576	911	400	413
VOE 14504577	911	400	413
VOE 14504578	913	250	489
VOE 14504579	913	250	491
VOE 14504668	261	100	107
VOE 14504668	261	110	109
VOE 14504879	912	200	441
VOE 14504879	912	210	447
VOE 14504879	912	300	453
VOE 14504879	912	310	459
VOE 14504879	912	400	463
VOE 14504879	912	410	467
VOE 14504879	912	500	475
VOE 14504879	912	510	481
VOE 14505011	975	1900	687
VOE 14505011	975	1910	691
VOE 14505012	975	1900	687
VOE 14505012	975	1910	691
VOE 14505028	441	200	211
VOE 14505030	441	200	209
VOE 14505031	441	200	209
VOE 14505032	441	200	209
VOE 14505033	441	200	209
VOE 14505034	441	200	209
VOE 14505036	441	200	209
VOE 14505037	441	200	209
VOE 14505038	441	200	209
VOE 14505039	441	200	209
VOE 14505041	441	200	209
VOE 14505042	441	200	209
VOE 14505046	441	200	211
VOE 14505047	441	200	213
VOE 14505048	441	200	213
VOE 14505049	441	200	211
VOE 14505050	441	200	211
VOE 14505051	441	200	211
VOE 14505052	441	200	211
VOE 14505053	441	200	211
VOE 14505054	441	200	211
VOE 14505057	431	100	197
VOE 14505057	441	200	213
VOE 14505058	431	100	197
VOE 14505059	431	100	197
VOE 14505060	431	100	197
VOE 14505061	431	100	197
VOE 14505062	431	100	197
VOE 14505063	431	100	197
VOE 14505064	431	100	197
VOE 14505065	431	100	197
VOE 14505066	431	100	197
VOE 14505067	431	100	197
VOE 14505068	431	100	197
VOE 14505069	431	100	197
VOE 14505070	431	100	197
VOE 14505071	431	100	197
VOE 14505072	431	100	197
VOE 14505073	431	100	197
VOE 14505074	431	100	197
VOE 14505075	431	100	197
VOE 14505076	431	100	197
VOE 14505077	431	100	197
VOE 14505079	431	100	197
VOE 14505080	431	100	197
VOE 14505082	441	200	213
VOE 14505164	897	200	383
VOE 14505182	897	200	385
VOE 14505436	912	200	437
VOE 14505436	912	210	443
VOE 14505436	912	400	461
VOE 14505436	912	410	465
VOE 14505472	914	900	503
VOE 14505487	913	250	493
VOE 14505998	897	200	383
VOE 14505999	897	100	379
VOE 14506006	897	100	381
VOE 14506006	897	200	385
VOE 14506009	897	100	381
VOE 14506009	897	200	385
VOE 14506009	897	200	387
VOE 14506010	897	100	381
VOE 14506010	897	200	387
VOE 14506863	810	600	299
VOE 14506863	810	610	303
VOE 14506948	821	100	309
VOE 14507309	916	2200	551
VOE 14507310	914	1150	509
VOE 14507311	914	1150	509
VOE 14507312	914	300	501
VOE 14507360	897	100	379
VOE 14507361	897	100	381
VOE 14507402	821	200	311
VOE 14507402	821	210	315
VOE 14507455	912	100	429
VOE 14507455	912	150	433
VOE 14507455	912	160	435
VOE 14507455	912	400	461
VOE 14507455	912	410	465
VOE 14507529	912	200	437
VOE 14507529	912	200	439
VOE 14507529	912	210	443
VOE 14507529	912	300	451
VOE 14507529	912	310	457
VOE 14507529	912	500	469
VOE 14507529	912	500	471
VOE 14507529	912	510	477
VOE 14507529	912	510	479
VOE 14507565	974	200	631
VOE 14507565	974	210	635
VOE 14507565	974	250	639
VOE 14507593	364	100	157
VOE 14507708	911	600	423
VOE 14507728	775	1200	275
VOE 14507736	356	100	139
VOE 14507736	356	110	141
VOE 14507738	356	100	139
VOE 14507738	356	110	141
VOE 14507752	372	100	181
VOE 14507831	914	300	499
VOE 14507874	897	100	379
VOE 14507999	974	3000	645
VOE 14508000	974	3000	645
VOE 14508218	916	300	529
VOE 14508218	916	1300	541
VOE 14508324	881	100	369
VOE 14508579	916	300	529
VOE 14508581	924	400	575
VOE 14508581	924	450	581
VOE 14508585	916	4000	555
VOE 14508586	916	4000	555
VOE 14508586	916	4100	557
VOE 14508588	916	4000	555
VOE 14508588	916	4100	557
VOE 14508609	924	200	567
VOE 14508609	924	250	569
VOE 14508609	924	300	571
VOE 14508609	924	310	573
VOE 14508694	830	200	325
VOE 14508696	369	100	163
VOE 14508697	364	100	157
VOE 14508709	916	1200	537
VOE 14508990	911	600	423
VOE 14509007	860	200	349
VOE 14509007	860	300	351
VOE 14509012	860	200	349
VOE 14509048	830	200	325
VOE 14509077	830	200	325
VOE 14509111	830	200	325
VOE 14509112	830	200	325
VOE 14509113	830	200	325
VOE 14509139	810	600	299
VOE 14509139	810	610	303
VOE 14509381	216	100	71

Part No	Group	Sect	Page
VOE 14509382	210	200	47
VOE 14509382	216	100	71
VOE 14509424	916	900	535
VOE 14509425	916	900	535
VOE 14509459	843	200	343
VOE 14509459	843	210	345
VOE 14509465	852	100	347
VOE 14509466	852	100	347
VOE 14509574	897	200	385
VOE 14509710	916	100	525
VOE 14509712	897	200	383
VOE 14509723	897	100	381
VOE 14509724	897	100	381
VOE 14509796	914	1150	511
VOE 14509797	914	1150	511
VOE 14509803	852	100	347
VOE 14509804	852	100	347
VOE 14509805	852	100	347
VOE 14509824	852	100	347
VOE 14510011	371	200	171
VOE 14510011	371	400	173
VOE 14510130	852	100	347
VOE 14510152	870	100	353
VOE 14510152	874	100	359
VOE 14510156	362	100	145
VOE 14510417	914	1200	515
VOE 14510418	914	1200	515
VOE 14510427	916	300	529
VOE 14510428	916	300	531
VOE 14510429	916	1200	537
VOE 14510430	916	1200	537
VOE 14510460	916	300	529
VOE 14510564	924	400	575
VOE 14510564	924	450	581
VOE 14510564	924	500	587
VOE 14510564	924	510	591
VOE 14510749	992	100	695
VOE 14510751	992	100	695
VOE 14510758	992	100	695
VOE 14510769	975	500	665
VOE 14510769	975	510	669
VOE 14510769	975	600	671
VOE 14510769	975	610	675
VOE 14510769	975	800	677
VOE 14510769	975	1900	687
VOE 14510769	975	1910	691
VOE 14510770	975	1900	687
VOE 14510770	975	1910	691
VOE 14510771	974	300	641
VOE 14510771	974	310	643
VOE 14510771	975	500	665
VOE 14510771	975	510	669
VOE 14510771	975	600	673
VOE 14510771	975	610	675
VOE 14510771	975	800	677
VOE 14510772	975	1900	687
VOE 14510776	992	100	695
VOE 14510777	992	100	695
VOE 14510834	975	1900	687
VOE 14510834	975	1910	691
VOE 14510964	916	100	525
VOE 14510964	916	110	527
VOE 14510983	371	400	173
VOE 14511102	310	100	131
VOE 14511215	913	100	483
VOE 14511415	870	100	355
VOE 14511415	873	100	357
VOE 14511654	386	100	183
VOE 14511837	974	200	631
VOE 14511837	974	210	635
VOE 14511839	974	200	631
VOE 14511839	974	210	635
VOE 14511868	925	1500	609
VOE 14511914	897	100	379
VOE 14512008	916	300	531
VOE 14512009	916	300	531
VOE 14512068	974	3100	653
VOE 14512068	974	3150	655
VOE 14512078	897	100	379
VOE 14512153	235	100	85
VOE 14512153	916	1300	541
VOE 14512153	916	1300	543
VOE 14512153	924	450	581
VOE 14512153	924	500	587
VOE 14512153	924	510	591
VOE 14512153	924	550	593
VOE 14512153	924	560	597
VOE 14512489	821	100	309
VOE 14512606	924	200	567
VOE 14512606	924	250	569
VOE 14512606	924	300	571
VOE 14512606	924	310	573
VOE 14512609	924	500	587
VOE 14512610	924	500	587
VOE 14512610	924	510	591
VOE 14512610	924	550	593
VOE 14512610	924	560	597
VOE 14512612	924	500	587
VOE 14512612	924	510	591
VOE 14512612	924	550	593
VOE 14512612	924	560	597
VOE 14512724	870	100	353
VOE 14512724	874	100	359
VOE 14512743	870	100	353
VOE 14512743	874	100	359
VOE 14512873	914	1100	507
VOE 14512873	914	1150	511
VOE 14512873	914	1200	515
VOE 14512874	914	1200	515
VOE 14512980	852	100	347
VOE 14513031	356	100	139
VOE 14513031	356	110	141
VOE 14513035	356	100	139
VOE 14513035	356	110	141
VOE 14513037	352	100	137
VOE 14513052	356	300	143
VOE 14513476	881	100	369
VOE 14513479	881	100	369
VOE 14513489	852	100	347
VOE 14513749	841	100	335
VOE 14513821	441	500	215
VOE 14513823	441	500	215
VOE 14514021	914	1200	517
VOE 14514026	914	1200	517
VOE 14514227	914	2100	519
VOE 14514261	441	500	215
VOE 14514261	441	600	217
VOE 14514337	897	200	383
VOE 14514458	212	300	57
VOE 14514580	971	150	621
VOE 14514639	912	100	427
VOE 14514639	912	150	431
VOE 14514639	912	160	435
VOE 14514639	912	200	437
VOE 14514639	912	210	443
VOE 14514654	810	500	293
VOE 14514654	810	510	295
VOE 14514655	234	300	83
VOE 14514867	215	200	67
VOE 14514878	927	500	615
VOE 14514878	927	510	617
VOE 14515040	362	300	149
VOE 14515278	916	300	529
VOE 14515351	262	200	115
VOE 14515541	912	300	451
VOE 14515541	912	310	457
VOE 14515542	912	300	451
VOE 14515542	912	310	457
VOE 14516484	393	100	187
VOE 14516484	393	110	189
VOE 14516649	441	600	217
VOE 14516650	441	600	217
VOE 14516651	441	600	217
VOE 14516651	441	600	219
VOE 14516652	441	600	217
VOE 14516653	441	600	217
VOE 14516654	441	600	217
VOE 14516657	441	600	217
VOE 14516671	441	200	209
VOE 14517105	234	100	81
VOE 14517323	913	100	483
VOE 14517329	924	450	581
VOE 14517330	924	400	577
VOE 14517330	924	450	581
VOE 14517369	821	200	311
VOE 14517369	821	210	315
VOE 14517418	924	450	581
VOE 14517418	924	500	587
VOE 14517420	974	100	625
VOE 14517420	974	110	627
VOE 14517420	974	150	629
VOE 14517421	974	100	625
VOE 14517421	974	110	627
VOE 14517421	974	150	629
VOE 14517422	974	200	631

Part No	Group	Sect	Page
VOE 14517422	974	210	635
VOE 14517423	974	200	631
VOE 14517423	974	210	635
VOE 14517557	234	100	81
VOE 14517557	911	100	401
VOE 14517628	216	100	71
VOE 14517743	841	100	335
VOE 14517743	841	100	337
VOE 14517744	841	100	335
VOE 14517744	841	100	337
VOE 14517747	234	300	83
VOE 14517753	234	300	83
VOE 14517754	234	300	83
VOE 14517808	234	300	83
VOE 14517820	234	300	83
VOE 14517821	234	300	83
VOE 14517854	911	600	423
VOE 14517855	911	600	423
VOE 14517926	210	100	45
VOE 14517951	927	500	615
VOE 14517951	927	510	617
VOE 14517952	975	1500	679
VOE 14517952	975	1510	683
VOE 14517953	975	1500	679
VOE 14517953	975	1510	683
VOE 14517954	975	2500	693
VOE 14517955	971	600	623
VOE 14517969	216	100	71
VOE 14517978	873	100	357
VOE 14517988	660	100	233
VOE 14517992	660	100	233
VOE 14517995	660	200	235
VOE 14517995	660	300	239
VOE 14518004	913	100	483
VOE 14518004	913	200	487
VOE 14518032	927	100	611
VOE 14518032	927	110	613
VOE 14518032	927	500	615
VOE 14518032	927	510	617
VOE 14518033	927	500	615
VOE 14518033	927	510	617
VOE 14518037	927	500	615
VOE 14518037	927	510	617
VOE 14518039	927	500	615
VOE 14518039	927	510	617
VOE 14518064	897	200	385
VOE 14518065	897	100	379
VOE 14518067	916	8100	565
VOE 14518068	916	8100	565
VOE 14518070	916	8000	559
VOE 14518070	916	8050	563
VOE 14518097	881	100	369
VOE 14518098	881	100	369
VOE 14518099	881	100	369
VOE 14518102	837	100	329
VOE 14518103	837	100	329
VOE 14518113	837	100	329
VOE 14518119	911	350	409
VOE 14518122	837	100	329
VOE 14518129	821	200	311
VOE 14518129	821	210	315
VOE 14518132	218	100	77
VOE 14518135	256	100	105
VOE 14518138	256	100	105
VOE 14518139	252	100	103
VOE 14518141	252	100	103
VOE 14518143	252	100	103
VOE 14518146	263	300	119
VOE 14518146	263	310	121
VOE 14518149	275	100	123
VOE 14518163	837	200	333
VOE 14518231	916	8100	565
VOE 14518232	916	8100	565
VOE 14518233	916	8100	565
VOE 14518270	371	800	177
VOE 14518270	371	810	179
VOE 14518305	372	100	181
VOE 14518315	261	300	111
VOE 14518315	261	310	113
VOE 14518320	912	300	449
VOE 14518320	912	310	455
VOE 14518748	252	100	103
VOE 14519013	974	3000	645
VOE 14519013	974	3010	649
VOE 14519063	263	300	119
VOE 14519063	263	310	121
VOE 14519083	235	100	85
VOE 14519125	715	100	247
VOE 14519134	362	200	147
VOE 14519173	916	1300	541
VOE 14519173	924	400	575
VOE 14519173	924	450	581
VOE 14519173	924	550	593
VOE 14519173	924	560	597
VOE 14519234	372	100	181
VOE 14519261	256	100	105
VOE 14519262	256	100	105
VOE 14519263	256	100	105
VOE 14519264	256	100	105
VOE 14519635	992	100	695
VOE 14519657	718	600	257
VOE 14519658	718	500	255
VOE 14519687	974	3100	651
VOE 14519687	974	3150	655
VOE 14519717	912	150	431
VOE 14519717	912	160	435
VOE 14519718	912	150	431
VOE 14519719	912	100	427
VOE 14519725	974	200	631
VOE 14519725	974	210	635
VOE 14519725	974	250	639
VOE 14519729	974	200	633
VOE 14519729	974	210	637
VOE 14519732	974	300	641
VOE 14519732	974	310	643
VOE 14519734	974	300	641
VOE 14519739	660	200	235
VOE 14519739	660	210	237
VOE 14519740	660	200	235
VOE 14519740	660	210	237
VOE 14519741	660	200	235
VOE 14519741	660	210	237
VOE 14519741	660	300	239
VOE 14519742	660	200	235
VOE 14519742	660	210	237
VOE 14519779	234	100	81
VOE 14519804	912	100	427
VOE 14519804	912	150	431
VOE 14519804	912	160	435
VOE 14519804	912	200	437
VOE 14519804	912	210	443
VOE 14519805	912	100	429
VOE 14519805	912	150	433
VOE 14519805	912	160	435
VOE 14519805	912	500	473
VOE 14519805	912	510	481
VOE 14519806	912	100	427
VOE 14519806	912	150	431
VOE 14519806	912	160	435
VOE 14519806	912	300	449
VOE 14519806	912	310	455
VOE 14519807	912	100	427
VOE 14519807	912	150	431
VOE 14519807	912	160	435
VOE 14519807	912	310	455
VOE 14519813	925	1500	609
VOE 14519814	975	100	659
VOE 14519814	975	110	661
VOE 14519814	975	200	663
VOE 14519815	975	1900	687
VOE 14519815	975	1910	691
VOE 14519816	925	100	601
VOE 14519816	925	200	605
VOE 14519816	925	1500	609
VOE 14519817	975	100	659
VOE 14519817	975	110	661
VOE 14519817	975	200	663
VOE 14519818	975	100	659
VOE 14519818	975	110	661
VOE 14519818	975	200	663
VOE 14519819	974	100	625
VOE 14519819	974	110	627
VOE 14519819	974	150	629
VOE 14519820	974	200	631
VOE 14519820	974	210	635
VOE 14519821	974	200	631
VOE 14519821	974	210	635
VOE 14519827	911	350	409
VOE 14519833	916	8000	559
VOE 14519837	975	500	665
VOE 14519838	975	500	665
VOE 14519840	975	600	671
VOE 14519841	975	600	671
VOE 14519842	975	600	671
VOE 14519844	975	500	665

Part No	Group	Sect	Page
VOE 14519873	372	100	181
VOE 14519874	912	300	449
VOE 14519874	912	310	455
VOE 14519884	371	200	171
VOE 14519889	914	100	495
VOE 14519895	718	100	253
VOE 14519900	715	200	249
VOE 14519906	925	1500	609
VOE 14519907	718	600	257
VOE 14519919	810	100	283
VOE 14519921	974	200	631
VOE 14519921	974	210	635
VOE 14519921	974	250	639
VOE 14519923	810	100	283
VOE 14519925	837	200	331
VOE 14519926	837	200	331
VOE 14519927	837	200	331
VOE 14519930	837	200	331
VOE 14519931	837	200	331
VOE 14519976	810	600	297
VOE 14519976	810	610	301
VOE 14519977	810	500	293
VOE 14519978	810	500	293
VOE 14519979	810	500	293
VOE 14519980	810	500	293
VOE 14519981	356	300	143
VOE 14519982	810	600	297
VOE 14519982	810	610	301
VOE 14519983	810	500	293
VOE 14519983	810	510	295
VOE 14519984	810	600	297
VOE 14519984	810	610	301
VOE 14519985	810	500	293
VOE 14519986	810	500	293
VOE 14519987	810	500	293
VOE 14519988	362	100	145
VOE 14519989	810	500	293
VOE 14519990	810	500	293
VOE 14519991	810	600	299
VOE 14519991	810	610	303
VOE 14519992	810	600	299
VOE 14519992	810	610	303
VOE 14519993	810	600	297
VOE 14519993	810	610	301
VOE 14519994	810	700	305
VOE 14519994	810	710	307
VOE 14519995	810	700	305
VOE 14519995	810	710	307
VOE 14519996	810	700	305
VOE 14519996	810	710	307
VOE 14519998	837	200	331
VOE 14520001	837	100	329
VOE 14520003	843	200	343
VOE 14520003	843	210	345
VOE 14520004	843	200	343
VOE 14520004	843	210	345
VOE 14520005	843	200	343
VOE 14520005	843	210	345
VOE 14520006	843	200	343
VOE 14520007	843	200	343
VOE 14520008	810	100	283
VOE 14520036	810	100	283
VOE 14520043	810	100	283
VOE 14520056	715	100	247
VOE 14520057	210	100	45
VOE 14520058	210	100	45
VOE 14520059	218	100	77
VOE 14520060	218	100	77
VOE 14520061	431	400	203
VOE 14520061	431	410	205
VOE 14520064	252	100	103
VOE 14520065	235	100	85
VOE 14520066	810	100	283
VOE 14520066	810	110	287
VOE 14520067	810	100	283
VOE 14520088	810	600	299
VOE 14520088	810	610	303
VOE 14520089	927	100	611
VOE 14520089	927	110	613
VOE 14520090	837	100	329
VOE 14520091	256	100	105
VOE 14520092	837	100	329
VOE 14520096	870	100	355
VOE 14520096	873	100	357
VOE 14520096	874	100	361
VOE 14520096	874	200	363
VOE 14520097	925	200	605
VOE 14520099	925	200	605
VOE 14520101	925	200	605
VOE 14520115	235	100	85
VOE 14520403	913	200	487
VOE 14520404	913	200	487
VOE 14520405	913	200	487
VOE 14520406	913	200	487
VOE 14520407	913	200	487
VOE 14520420	927	500	615
VOE 14520420	927	510	617
VOE 14520541	896	100	375
VOE 14520548	896	100	373
VOE 14520576	237	100	97
VOE 14520577	235	200	89
VOE 14520578	235	200	89
VOE 14520582	220	300	79
VOE 14520586	263	300	119
VOE 14520586	263	310	121
VOE 14520587	262	200	115
VOE 14520588	321	100	133
VOE 14520599	210	200	47
VOE 14520599	251	100	99
VOE 14520633	914	200	497
VOE 14520795	924	500	587
VOE 14520795	924	510	591
VOE 14520795	924	550	593
VOE 14520795	924	560	597
VOE 14520796	924	500	587
VOE 14520796	924	510	591
VOE 14520796	924	550	593
VOE 14520796	924	560	597
VOE 14520910	974	250	639
VOE 14520944	775	700	263
VOE 14520968	821	200	311
VOE 14520968	821	210	315
VOE 14520973	821	250	319
VOE 14520974	821	250	319
VOE 14520975	821	250	319
VOE 14520976	821	250	319
VOE 14520977	821	200	311
VOE 14520977	821	210	315
VOE 14521038	837	200	331
VOE 14521039	837	200	331
VOE 14521042	837	200	331
VOE 14521092	441	500	215
VOE 14521097	916	8000	559
VOE 14521097	916	8050	561
VOE 14521115	660	100	233
VOE 14521116	718	600	257
VOE 14521118	927	100	611
VOE 14521118	927	110	613
VOE 14521123	874	250	365
VOE 14521123	874	260	367
VOE 14521124	975	1500	679
VOE 14521125	975	1500	679
VOE 14521127	371	200	171
VOE 14521130	371	500	175
VOE 14521140	837	200	331
VOE 14521141	911	100	401
VOE 14521145	371	400	173
VOE 14521173	236	100	95
VOE 14521175	235	200	89
VOE 14521177	235	200	89
VOE 14521178	235	200	89
VOE 14521179	220	300	79
VOE 14521180	263	100	117
VOE 14521183	215	200	67
VOE 14521184	251	200	101
VOE 14521185	217	100	75
VOE 14521186	235	200	89
VOE 14521187	251	200	101
VOE 14521214	775	700	263
VOE 14521240	387	100	185
VOE 14521244	775	700	263
VOE 14521278	841	100	335
VOE 14521286	841	100	335
VOE 14521362	387	100	185
VOE 14521502	212	100	55
VOE 14521503	212	100	55
VOE 14521504	211	100	51
VOE 14521504	212	100	55
VOE 14521505	210	200	47
VOE 14521505	212	100	55
VOE 14521506	212	100	55
VOE 14521507	215	200	67
VOE 14521508	215	200	67
VOE 14521509	215	200	67
VOE 14521510	215	200	67

Part No	Group	Sect	Page
VOE 14521511	215	200	67
VOE 14521512	210	200	47
VOE 14521512	215	200	67
VOE 14521513	215	200	67
VOE 14521513	321	100	133
VOE 14521514	210	200	47
VOE 14521514	215	200	67
VOE 14521515	215	200	67
VOE 14521516	215	200	67
VOE 14521517	217	100	75
VOE 14521518	211	100	51
VOE 14521519	211	100	51
VOE 14521520	211	100	51
VOE 14521521	211	100	51
VOE 14521522	211	100	51
VOE 14521523	211	100	51
VOE 14521524	211	100	51
VOE 14521525	211	100	51
VOE 14521526	211	100	51
VOE 14521527	210	200	47
VOE 14521527	211	100	51
VOE 14521528	210	200	47
VOE 14521528	211	100	51
VOE 14521529	211	100	51
VOE 14521530	211	100	51
VOE 14521531	211	100	51
VOE 14521532	210	200	47
VOE 14521532	211	100	51
VOE 14521533	214	200	63
VOE 14521534	214	200	63
VOE 14521535	214	200	63
VOE 14521536	214	200	63
VOE 14521537	214	200	63
VOE 14521538	214	200	63
VOE 14521539	214	200	63
VOE 14521540	214	200	63
VOE 14521541	214	200	63
VOE 14521542	214	200	63
VOE 14521543	214	200	63
VOE 14521543	251	100	99
VOE 14521544	211	200	53
VOE 14521545	211	200	53
VOE 14521546	211	200	53
VOE 14521547	211	200	53
VOE 14521548	211	200	53
VOE 14521549	211	200	53
VOE 14521550	211	200	53
VOE 14521551	211	200	53
VOE 14521552	210	200	47
VOE 14521552	211	200	53
VOE 14521553	211	200	53
VOE 14521554	210	200	47
VOE 14521554	251	200	101
VOE 14521555	251	200	101
VOE 14521556	251	100	99
VOE 14521558	251	100	99
VOE 14521559	215	100	65
VOE 14521560	215	100	65
VOE 14521561	215	250	69
VOE 14521562	215	250	69
VOE 14521563	215	250	69
VOE 14521564	216	100	71
VOE 14521565	216	200	73
VOE 14521566	213	100	61
VOE 14521567	213	100	61
VOE 14521568	213	100	61
VOE 14521569	213	100	61
VOE 14521570	220	300	79
VOE 14521571	220	300	79
VOE 14521572	263	300	119
VOE 14521572	263	310	121
VOE 14521573	262	200	115
VOE 14521574	262	200	115
VOE 14521575	262	200	115
VOE 14521576	262	200	115
VOE 14521577	262	200	115
VOE 14521578	263	100	117
VOE 14521579	263	100	117
VOE 14521580	235	200	89
VOE 14521580	235	200	91
VOE 14521580	263	100	117
VOE 14521581	263	100	117
VOE 14521582	263	100	117
VOE 14521583	263	100	117
VOE 14521584	236	100	95
VOE 14521585	236	100	95
VOE 14521586	236	100	95
VOE 14521587	236	100	95
VOE 14521588	210	200	47
VOE 14521588	236	100	95
VOE 14521589	236	100	95
VOE 14521590	237	100	97
VOE 14521591	237	100	97
VOE 14521592	235	300	93
VOE 14521593	235	300	93
VOE 14521594	235	300	93
VOE 14521595	235	300	93
VOE 14521596	235	300	93
VOE 14521597	235	300	93
VOE 14521598	235	300	93
VOE 14521599	235	200	89
VOE 14521600	235	200	89
VOE 14521601	235	200	89
VOE 14521602	235	200	89
VOE 14521603	235	200	89
VOE 14521604	235	200	89
VOE 14521605	235	200	89
VOE 14521606	210	200	47
VOE 14521606	235	200	89
VOE 14521607	235	200	89
VOE 14521608	235	200	89
VOE 14521609	235	200	89
VOE 14521613	321	100	133
VOE 14521614	321	100	133
VOE 14521615	321	100	133
VOE 14521616	321	100	133
VOE 14521617	321	100	133
VOE 14521618	321	100	133
VOE 14521619	321	100	133
VOE 14521620	321	100	133
VOE 14521621	321	100	133
VOE 14521622	321	100	133
VOE 14521623	321	100	133
VOE 14521624	321	100	133
VOE 14521625	321	100	133
VOE 14521626	321	100	133
VOE 14521627	321	100	133
VOE 14521628	321	100	133
VOE 14521629	321	100	133
VOE 14521630	321	100	133
VOE 14521631	321	100	133
VOE 14521632	321	100	133
VOE 14521633	321	100	133
VOE 14521634	321	100	133
VOE 14521635	321	100	133
VOE 14521636	321	100	133
VOE 14521637	321	100	133
VOE 14521638	321	100	133
VOE 14521639	372	100	181
VOE 14521640	210	200	47
VOE 14521641	210	200	47
VOE 14521783	371	800	177
VOE 14521783	371	810	179
VOE 14521792	881	100	369
VOE 14521810	261	300	111
VOE 14521810	261	310	113
VOE 14521811	261	300	111
VOE 14521811	261	310	113
VOE 14521812	261	300	111
VOE 14521812	261	310	113
VOE 14521813	261	300	111
VOE 14521813	261	310	113
VOE 14521825	810	100	285
VOE 14521825	810	110	287
VOE 14521837	261	300	111
VOE 14521837	261	310	113
VOE 14521850	896	100	373
VOE 14521856	971	150	621
VOE 14521915	236	100	95
VOE 14522047	916	2100	549
VOE 14522048	916	2100	549
VOE 14522049	916	4100	557
VOE 14522064	256	100	105
VOE 14522065	256	100	105
VOE 14522088	821	200	313
VOE 14522105	924	400	575
VOE 14522105	924	450	581
VOE 14522114	331	100	135
VOE 14522129	256	100	105
VOE 14522143	331	100	135
VOE 14522144	331	100	135
VOE 14522145	331	100	135
VOE 14522146	331	100	135
VOE 14522147	331	100	135
VOE 14522148	331	100	135

Part No	Group	Sect	Page
VOE 14522149	331	100	135
VOE 14522150	331	100	135
VOE 14522151	331	100	135
VOE 14522152	331	100	135
VOE 14522153	331	100	135
VOE 14522154	331	100	135
VOE 14522155	331	100	135
VOE 14522156	331	100	135
VOE 14522157	331	100	135
VOE 14522158	975	800	677
VOE 14522184	810	100	283
VOE 14522184	810	110	287
VOE 14522195	841	100	335
VOE 14522196	830	100	321
VOE 14522196	830	110	323
VOE 14522196	830	200	325
VOE 14522199	263	300	119
VOE 14522199	263	310	121
VOE 14522200	263	300	119
VOE 14522200	263	310	121
VOE 14522260	912	100	427
VOE 14522260	912	150	431
VOE 14522260	912	200	437
VOE 14522260	912	210	443
VOE 14522261	912	150	431
VOE 14522261	912	200	439
VOE 14522261	912	210	445
VOE 14522262	912	100	427
VOE 14522262	912	150	433
VOE 14522262	912	300	451
VOE 14522262	912	310	457
VOE 14522263	912	100	429
VOE 14522263	912	150	433
VOE 14522263	912	500	469
VOE 14522263	912	510	477
VOE 14522264	912	100	429
VOE 14522264	912	150	433
VOE 14522264	912	500	471
VOE 14522264	912	510	479
VOE 14522265	912	300	449
VOE 14522265	912	310	455
VOE 14522295	897	100	381
VOE 14522295	897	200	385
VOE 14522297	897	200	383
VOE 14522299	897	100	381
VOE 14522299	897	200	385
VOE 14522338	916	1200	537
VOE 14522338	916	1300	541
VOE 14522338	924	400	575
VOE 14522338	924	450	581
VOE 14522338	924	500	587
VOE 14522338	924	510	591
VOE 14522338	924	550	593
VOE 14522338	924	560	597
VOE 14522341	924	500	587
VOE 14522341	924	510	591
VOE 14522341	924	550	593
VOE 14522341	924	560	597
VOE 14522374	431	400	203
VOE 14522374	431	410	205
VOE 14522413	431	400	203
VOE 14522413	431	410	205
VOE 14522414	431	400	203
VOE 14522414	431	410	205
VOE 14522554	837	200	333
VOE 14522580	916	2000	545
VOE 14522580	916	2010	547
VOE 14522580	916	2100	549
VOE 14522581	916	2000	545
VOE 14522581	916	2010	547
VOE 14522581	916	2100	549
VOE 14522583	975	500	665
VOE 14522583	975	510	669
VOE 14522584	975	500	665
VOE 14522585	975	510	669
VOE 14522585	975	600	671
VOE 14522585	975	610	675
VOE 14522586	975	600	671
VOE 14522587	975	500	665
VOE 14522588	975	600	671
VOE 14522741	362	200	147
VOE 14522742	660	100	233
VOE 14522774	821	200	313
VOE 14522774	821	210	317
VOE 14522775	256	100	105
VOE 14522776	914	300	499
VOE 14522787	810	500	293
VOE 14522787	810	510	295
VOE 14522788	810	500	293
VOE 14522788	810	510	295
VOE 14522789	810	500	293
VOE 14522789	810	510	295
VOE 14522790	810	500	293
VOE 14522790	810	510	295
VOE 14522791	810	500	293
VOE 14522791	810	510	295
VOE 14522792	810	500	293
VOE 14522792	810	510	295
VOE 14522793	810	500	293
VOE 14522793	810	510	295
VOE 14522794	810	500	293
VOE 14522794	810	510	295
VOE 14522795	810	500	293
VOE 14522795	810	510	295
VOE 14522800	843	200	343
VOE 14522800	843	210	345
VOE 14522801	843	200	343
VOE 14522801	843	210	345
VOE 14522802	810	600	299
VOE 14522802	810	610	301
VOE 14522804	810	100	283
VOE 14522804	810	110	287
VOE 14522809	810	100	283
VOE 14522809	810	110	287
VOE 14522810	810	100	283
VOE 14522810	810	110	287
VOE 14522811	810	100	283
VOE 14522812	810	100	283
VOE 14522820	843	200	343
VOE 14522820	843	210	345
VOE 14522853	843	100	339
VOE 14522853	843	110	341
VOE 14522862	860	200	349
VOE 14522862	860	300	351
VOE 14522886	843	100	339
VOE 14522886	843	110	341
VOE 14522889	924	400	577
VOE 14522889	924	450	581
VOE 14522891	810	100	283
VOE 14522891	810	110	287
VOE 14522923	372	100	181
VOE 14522932	897	100	381
VOE 14522932	897	200	385
VOE 14522932	897	200	387
VOE 14522933	897	100	381
VOE 14522933	897	200	387
VOE 14522952	362	100	145
VOE 14522957	261	300	111
VOE 14522957	261	310	113
VOE 14522958	261	100	107
VOE 14522958	261	110	109
VOE 14523000	830	100	321
VOE 14523000	830	110	323
VOE 14523000	830	200	325
VOE 14523005	660	100	233
VOE 14523006	660	100	233
VOE 14523032	916	300	529
VOE 14523095	881	100	369
VOE 14523244	924	450	581
VOE 14523245	924	400	577
VOE 14523245	924	450	581
VOE 14523261	916	300	531
VOE 14523262	916	300	531
VOE 14523264	913	100	483
VOE 14523601	821	200	311
VOE 14523601	821	210	315
VOE 14523601	830	100	321
VOE 14523601	830	110	323
VOE 14523601	830	200	325
VOE 14523764	916	300	531
VOE 14523765	916	300	529
VOE 14523887	261	300	111
VOE 14523887	261	310	113
VOE 14523905	263	300	119
VOE 14523905	263	310	121
VOE 14523964	235	100	85
VOE 14524136	975	500	665
VOE 14524136	975	510	669
VOE 14524136	975	600	671
VOE 14524136	975	610	675
VOE 14524136	975	800	677
VOE 14524137	975	500	665
VOE 14524137	975	510	669
VOE 14524137	975	600	671
VOE 14524137	975	610	675

Part No	Group	Sect	Page
VOE 14524137	975	800	677
VOE 14524242	372	100	181
VOE 14524243	372	100	181
VOE 14524403	443	100	221
VOE 14524403	443	200	223
VOE 14524464	210	100	45
VOE 14524546	821	200	311
VOE 14524546	821	210	315
VOE 14524680	841	100	335
VOE 14524752	362	100	145
VOE 14524753	362	100	145
VOE 14524755	362	100	145
VOE 14524756	362	100	145
VOE 14524787	975	2500	693
VOE 14524878	263	300	119
VOE 14524878	263	310	121
VOE 14524922	974	3000	645
VOE 14524923	974	3000	645
VOE 14524924	974	3000	645
VOE 14524924	974	3010	649
VOE 14524925	974	3000	645
VOE 14524956	897	200	383
VOE 14525160	974	3000	645
VOE 14525162	974	3000	645
VOE 14525207	974	3000	645
VOE 14525207	974	3010	649
VOE 14525209	974	3000	645
VOE 14525210	975	2500	693
VOE 14525308	870	100	355
VOE 14525308	874	100	361
VOE 14525445	443	200	223
VOE 14525490	660	100	233
VOE 14525496	362	200	147
VOE 14525605	371	400	173
VOE 14525798	913	250	489
VOE 14525799	913	250	489
VOE 14525800	913	250	489
VOE 14525801	913	250	491
VOE 14525802	913	250	491
VOE 14525803	913	250	491
VOE 14525806	913	250	493
VOE 14525807	913	250	493
VOE 14525808	913	250	493
VOE 14525810	913	250	493
VOE 14525811	913	250	493
VOE 14526153	810	600	299
VOE 14526153	810	610	303
VOE 14526157	364	100	157
VOE 14526158	364	200	159
VOE 14526158	364	210	161
VOE 14526160	393	100	187
VOE 14526160	393	110	189
VOE 14526161	393	100	187
VOE 14526162	393	100	187
VOE 14526162	393	110	189
VOE 14526228	870	100	353
VOE 14526228	874	100	359
VOE 14526229	870	100	353
VOE 14526229	874	100	359
VOE 14526230	870	100	353
VOE 14526230	874	100	359
VOE 14526311	913	100	483
VOE 14526311	913	200	487
VOE 14526341	870	100	353
VOE 14526341	874	100	359
VOE 14526402	775	700	263
VOE 14526406	775	700	263
VOE 14526662	914	300	499
VOE 14526662	914	900	503
VOE 14526756	927	100	611
VOE 14526756	927	110	613
VOE 14527150	393	100	187
VOE 14527150	393	110	189
VOE 14527151	393	100	187
VOE 14527152	393	100	187
VOE 14527153	393	100	187
VOE 14527153	393	110	189
VOE 14527183	443	200	223
VOE 14527217	897	200	383
VOE 14527238	897	200	383
VOE 14527251	371	800	177
VOE 14527251	371	810	179
VOE 14527399	881	100	369
VOE 14527401	821	200	313
VOE 14527401	821	210	317
VOE 14527402	810	700	305
VOE 14527402	810	710	307
VOE 14527405	810	600	297
VOE 14527405	810	610	301
VOE 14527407	830	200	325
VOE 14527407	843	100	339
VOE 14527407	843	110	341
VOE 14527408	843	100	339
VOE 14527408	843	110	341
VOE 14527409	830	200	325
VOE 14527409	843	100	339
VOE 14527409	843	110	341
VOE 14527414	843	100	339
VOE 14527414	843	110	341
VOE 14527415	810	600	297
VOE 14527415	810	610	301
VOE 14527416	810	600	297
VOE 14527416	810	610	301
VOE 14527418	843	100	339
VOE 14527418	843	110	341
VOE 14527419	881	100	369
VOE 14527420	881	100	369
VOE 14527474	821	200	313
VOE 14527474	821	210	317
VOE 14527477	821	200	311
VOE 14527477	821	210	315
VOE 14527478	821	250	319
VOE 14527479	821	250	319
VOE 14527480	821	250	319
VOE 14527481	821	100	309
VOE 14527481	821	200	311
VOE 14527481	821	210	315
VOE 14527482	821	100	309
VOE 14527482	821	200	311
VOE 14527482	821	210	315
VOE 14527483	821	250	319
VOE 14527484	821	200	313
VOE 14527484	821	210	317
VOE 14527536	830	100	321
VOE 14527536	830	110	323
VOE 14527537	810	600	297
VOE 14527537	810	610	301
VOE 14527538	810	700	305
VOE 14527538	810	710	307
VOE 14527539	810	700	305
VOE 14527539	810	710	307
VOE 14527540	843	100	339
VOE 14527540	843	110	341
VOE 14527541	843	100	339
VOE 14527541	843	110	341
VOE 14527542	810	100	283
VOE 14527544	843	100	339
VOE 14527544	843	110	341
VOE 14527545	843	100	339
VOE 14527545	843	110	341
VOE 14527549	810	600	299
VOE 14527549	810	610	301
VOE 14527550	843	200	343
VOE 14527550	843	210	345
VOE 14527551	843	200	343
VOE 14527551	843	210	345
VOE 14527552	830	100	321
VOE 14527552	830	110	323
VOE 14527552	830	200	325
VOE 14527553	810	600	297
VOE 14527553	810	610	301
VOE 14527557	810	400	289
VOE 14527560	810	600	297
VOE 14527560	810	610	301
VOE 14527561	810	600	297
VOE 14527561	810	610	301
VOE 14527562	810	400	289
VOE 14527562	810	410	291
VOE 14527563	843	200	343
VOE 14527563	843	210	345
VOE 14527564	843	100	339
VOE 14527564	843	110	341
VOE 14527565	830	100	321
VOE 14527565	830	110	323
VOE 14527565	830	200	325
VOE 14527571	843	200	343
VOE 14527571	843	210	345
VOE 14527576	843	200	343
VOE 14527576	843	210	345
VOE 14527577	843	200	343
VOE 14527577	843	210	345
VOE 14527578	843	100	339
VOE 14527578	843	110	341
VOE 14527584	841	100	335
VOE 14527602	830	100	321

NUMERICAL INDEX

부품번호 색인

RÉPERTOIRE DE NUMÉROS

INDICE DE NÚMERO

NUMMERNREGISTER

NUMERICAL INDEX 부품번호 색인

RÉPERTOIRE DE NUMÉROS **INDICE DE NÚMERO**

NUMMERNREGISTER

Part No	Group	Sect	Page
VOE 14527602	830	110	323
VOE 14527602	830	200	325
VOE 14527604	830	100	321
VOE 14527604	830	110	323
VOE 14527604	830	200	325
VOE 14527608	810	700	305
VOE 14527608	810	710	307
VOE 14527620	821	100	309
VOE 14527622	881	100	369
VOE 14527628	881	100	369
VOE 14527629	881	100	369
VOE 14527630	837	100	329
VOE 14527631	837	100	329
VOE 14527655	810	600	299
VOE 14527655	810	610	301
VOE 14527656	830	100	321
VOE 14527656	830	110	323
VOE 14527656	830	200	325
VOE 14527657	810	600	297
VOE 14527657	810	610	301
VOE 14527675	718	500	255
VOE 14527695	810	700	305
VOE 14527703	843	100	339
VOE 14527703	843	110	341
VOE 14527840	916	1200	537
VOE 14527892	974	200	631
VOE 14527892	974	210	635
VOE 14527893	974	200	631
VOE 14527893	974	210	635
VOE 14527894	974	200	631
VOE 14527894	974	210	635
VOE 14527895	974	200	631
VOE 14527895	974	210	635
VOE 14527896	974	200	631
VOE 14527896	974	210	635
VOE 14527897	974	200	633
VOE 14527897	974	210	637
VOE 14527911	810	700	305
VOE 14528298	974	300	641
VOE 14528298	974	310	643
VOE 14528300	974	300	641
VOE 14528340	927	100	611
VOE 14528340	927	110	613
VOE 14528340	927	500	615
VOE 14528340	927	510	617
VOE 14528341	927	500	615
VOE 14528341	927	510	617
VOE 14528386	234	100	81
VOE 14528387	220	300	79
VOE 14528425	810	600	299
VOE 14528425	810	610	303
VOE 14528426	810	600	299
VOE 14528502	974	200	631
VOE 14528502	974	210	635
VOE 14528506	870	100	353
VOE 14528506	874	100	359
VOE 14528516	256	100	105
VOE 14528547	913	100	483
VOE 14528547	913	200	487
VOE 14528616	362	100	145
VOE 14528944	852	100	347
VOE 14528972	870	100	353
VOE 14528972	873	100	357
VOE 14529012	870	100	353
VOE 14529012	873	100	357
VOE 14529015	431	300	201
VOE 14529015	870	100	353
VOE 14529015	873	100	357
VOE 14529024	870	100	353
VOE 14529024	874	100	359
VOE 14529025	870	100	353
VOE 14529025	874	100	359
VOE 14529026	371	100	169
VOE 14529031	372	100	181
VOE 14529035	371	200	171
VOE 14529036	372	100	181
VOE 14529037	364	100	157
VOE 14529038	363	100	151
VOE 14529038	363	110	153
VOE 14529040	372	100	181
VOE 14529042	387	100	185
VOE 14529045	363	200	155
VOE 14529046	870	100	353
VOE 14529046	873	100	357
VOE 14529049	870	100	353
VOE 14529049	874	100	359
VOE 14529050	870	100	353
VOE 14529050	874	100	359
VOE 14529051	870	100	353
VOE 14529051	874	100	359
VOE 14529052	870	100	353
VOE 14529052	874	100	359
VOE 14529056	874	250	365
VOE 14529056	874	260	367
VOE 14529057	870	100	353
VOE 14529057	874	100	359
VOE 14529060	870	100	353
VOE 14529060	874	100	359
VOE 14529061	371	800	177
VOE 14529061	371	810	179
VOE 14529068	371	800	177
VOE 14529068	371	810	179
VOE 14529069	234	100	81
VOE 14529076	371	100	169
VOE 14529079	371	100	169
VOE 14529082	371	100	169
VOE 14529083	310	100	131
VOE 14529089	371	800	177
VOE 14529089	371	810	179
VOE 14529099	371	200	171
VOE 14529100	371	200	171
VOE 14529103	352	100	137
VOE 14529130	362	200	147
VOE 14529131	362	200	147
VOE 14529136	371	200	171
VOE 14529138	371	800	177
VOE 14529138	371	810	179
VOE 14529141	363	100	151
VOE 14529141	363	110	153
VOE 14529145	372	100	181
VOE 14529148	364	100	157
VOE 14529151	363	100	151
VOE 14529151	363	110	153
VOE 14529152	364	200	159
VOE 14529155	372	100	181
VOE 14529155	870	100	353
VOE 14529159	363	100	151
VOE 14529159	363	110	153
VOE 14529160	363	100	151
VOE 14529160	363	110	153
VOE 14529161	363	100	151
VOE 14529161	363	110	153
VOE 14529165	387	100	185
VOE 14529166	387	100	185
VOE 14529167	387	100	185
VOE 14529168	363	100	151
VOE 14529168	363	110	153
VOE 14529172	363	100	151
VOE 14529172	363	110	153
VOE 14529178	364	200	159
VOE 14529178	364	210	161
VOE 14529180	364	200	159
VOE 14529180	364	210	161
VOE 14529181	371	800	177
VOE 14529181	371	810	179
VOE 14529192	364	100	157
VOE 14529193	364	100	157
VOE 14529194	364	100	157
VOE 14529195	364	100	157
VOE 14529196	364	100	157
VOE 14529197	364	100	157
VOE 14529201	363	100	151
VOE 14529201	363	110	153
VOE 14529209	363	100	151
VOE 14529209	363	110	153
VOE 14529210	363	100	151
VOE 14529210	363	110	153
VOE 14529212	393	100	187
VOE 14529212	393	110	189
VOE 14529226	369	150	165
VOE 14529226	369	160	167
VOE 14529230	371	800	177
VOE 14529230	371	810	179
VOE 14529232	874	200	363
VOE 14529233	874	200	363
VOE 14529234	874	200	363
VOE 14529237	874	200	363
VOE 14529238	874	200	363
VOE 14529242	874	200	363
VOE 14529243	874	250	365
VOE 14529243	874	260	367
VOE 14529244	874	250	365
VOE 14529244	874	260	367
VOE 14529248	874	250	365
VOE 14529248	874	260	367

Part No	Group	Sect	Page
VOE 14529252	874	200	363
VOE 14529254	874	250	365
VOE 14529254	874	260	367
VOE 14529263	870	100	353
VOE 14529264	870	100	353
VOE 14529264	874	100	359
VOE 14529270	870	100	353
VOE 14529270	874	100	359
VOE 14529276	874	250	365
VOE 14529276	874	260	367
VOE 14529277	874	200	363
VOE 14529278	870	100	355
VOE 14529280	873	100	357
VOE 14529281	874	200	363
VOE 14529282	870	100	353
VOE 14529282	874	100	359
VOE 14529313	234	300	83
VOE 14529314	234	300	83
VOE 14529315	234	300	83
VOE 14529332	386	100	183
VOE 14529345	371	200	171
VOE 14529345	371	400	173
VOE 14529354	363	100	151
VOE 14529354	363	110	153
VOE 14529392	874	200	363
VOE 14529393	371	400	173
VOE 14529397	386	100	183
VOE 14529547	431	300	199
VOE 14529547	441	500	215
VOE 14529549	913	100	483
VOE 14529549	913	250	489
VOE 14529560	660	200	235
VOE 14529560	660	210	237
VOE 14529928	371	100	169
VOE 14530319	492	100	225
VOE 14530446	660	100	233
VOE 14530612	371	500	175
VOE 14530767	870	100	355
VOE 14530767	873	100	357
VOE 14530832	775	700	263
VOE 14530846	441	500	215
VOE 14530847	911	600	423
VOE 14530856	492	100	225
VOE 14530980	810	100	283
VOE 14530981	810	100	283
VOE 14530982	810	100	283
VOE 14530983	810	100	283
VOE 14531002	916	2200	551
VOE 14531002	916	8000	559
VOE 14531002	916	8050	561
VOE 14531017	492	100	225
VOE 14531069	911	100	401
VOE 14531070	911	100	401
VOE 14531071	911	100	401
VOE 14531088	916	8000	559
VOE 14531095	916	8050	561
VOE 14531278	775	900	269
VOE 14531319	218	100	77
VOE 14531401	775	900	269
VOE 14531406	775	900	269
VOE 14531426	775	900	269
VOE 14531427	775	900	269
VOE 14531428	775	900	269
VOE 14531429	775	900	269
VOE 14531601	718	100	253
VOE 14531836	387	100	185
VOE 14531899	897	200	383
VOE 14531904	897	200	383
VOE 14531906	897	200	383
VOE 14532112	897	200	383
VOE 14532114	897	200	385
VOE 14532115	897	200	385
VOE 14532116	897	200	385
VOE 14532117	897	200	385
VOE 14532261	775	700	263
VOE 14532302	775	1000	271
VOE 14532302	775	1100	273
VOE 14532304	775	1000	271
VOE 14532304	775	1100	273
VOE 14532362	911	100	401
VOE 14532370	916	100	525
VOE 14532370	916	110	527
VOE 14532403	775	1000	271
VOE 14532404	775	800	265
VOE 14532405	775	500	261
VOE 14532407	775	1000	271
VOE 14532407	775	1100	273
VOE 14532408	775	1000	271
VOE 14532408	775	1100	273
VOE 14532414	775	500	261
VOE 14532415	775	800	265
VOE 14532416	775	1100	273
VOE 14532420	775	800	265
VOE 14532427	775	800	265
VOE 14532457	775	100	259
VOE 14532458	775	100	259
VOE 14532459	775	100	259
VOE 14532460	775	100	259
VOE 14532461	775	100	259
VOE 14532462	775	100	259
VOE 14532474	775	100	259
VOE 14532476	810	100	283
VOE 14532477	974	100	625
VOE 14532477	974	110	627
VOE 14532520	718	500	255
VOE 14532523	924	400	577
VOE 14532523	924	400	579
VOE 14532523	924	450	581
VOE 14532523	924	550	593
VOE 14532523	924	560	597
VOE 14532563	924	550	593
VOE 14532563	924	560	597
VOE 14532564	924	550	593
VOE 14532564	924	560	597
VOE 14532565	924	450	581
VOE 14532566	924	400	577
VOE 14532566	924	450	581
VOE 14532628	441	500	215
VOE 14532629	441	500	215
VOE 14532629	441	600	217
VOE 14532631	911	600	423
VOE 14532654	916	100	525
VOE 14532654	916	110	527
VOE 14532972	975	1900	687
VOE 14532972	975	1910	691
VOE 14532974	925	100	601
VOE 14532976	925	200	605
VOE 14533036	974	3100	651
VOE 14533037	974	3100	651
VOE 14533042	974	3100	651
VOE 14533042	974	3150	655
VOE 14533043	974	3100	651
VOE 14533043	974	3150	655
VOE 14533142	913	200	487
VOE 14533145	913	200	487
VOE 14533146	913	200	487
VOE 14533222	916	100	525
VOE 14533222	916	110	527
VOE 14533341	821	250	319
VOE 14533342	821	200	311
VOE 14533342	821	210	315
VOE 14533343	821	200	311
VOE 14533343	821	210	315
VOE 14533385	914	1100	505
VOE 14533386	914	1100	505
VOE 14533406	210	100	45
VOE 14533407	210	100	45
VOE 14533507	924	400	577
VOE 14533507	924	450	581
VOE 14533508	924	450	581
VOE 14533688	974	3100	651
VOE 14533688	974	3150	655
VOE 14533691	974	3100	651
VOE 14533691	974	3150	655
VOE 14534295	718	600	257
VOE 14534328	974	300	641
VOE 14534328	974	310	643
VOE 14534329	974	300	641
VOE 14534331	975	500	665
VOE 14534331	975	510	669
VOE 14534332	975	510	669
VOE 14534332	975	600	671
VOE 14534332	975	610	675
VOE 14534333	975	600	671
VOE 14534334	975	800	677
VOE 14534335	925	100	601
VOE 14534337	925	100	601
VOE 14534339	925	200	605
VOE 14534341	925	200	605
VOE 14535069	218	100	77
VOE 14535262	837	200	333
VOE 14535263	837	200	331
VOE 14535284	371	800	177
VOE 14535346	371	800	177
VOE 14535559	897	100	379

NUMERICAL INDEX

부품번호 색인

RÉPERTOIRE DE NUMÉROS

INDICE DE NÚMERO

NUMMERNREGISTER

Catalogue id	Group
20019	**1000**
Issue	Page
VOE 74H9920019	**21**

VOLVO

EC55B

Part No	Group	Sect	Page
VOE 14535560	897	100	379
VOE 14535562	897	100	379
VOE 14535563	897	200	385
VOE 14535605	974	3100	651
VOE 14535605	974	3150	655
VOE 14535606	235	100	85
VOE 14535609	210	100	45
VOE 14535610	210	100	45
VOE 14535784	974	3100	651
VOE 14535784	974	3150	655
VOE 14535785	974	3100	651
VOE 14535785	974	3150	655
VOE 14535795	974	250	639
VOE 14535797	974	250	639
VOE 14535798	974	250	639
VOE 14535803	974	250	639
VOE 14535804	974	250	639
VOE 14535805	974	200	633
VOE 14535806	974	250	639
VOE 14535807	975	500	665
VOE 14535809	974	100	625
VOE 14535809	974	110	627
VOE 14535809	974	200	633
VOE 14535810	974	100	625
VOE 14535810	974	110	627
VOE 14535810	974	200	633
VOE 14535812	911	400	413
VOE 14535876	387	100	185
VOE 14535877	371	500	175
VOE 14535885	371	500	175
VOE 14535886	372	100	181
VOE 14536179	897	200	385
VOE 14536379	860	200	349
VOE 14536511	235	200	89
VOE 14536723	897	200	383
VOE 14536724	897	200	383
VOE 14536767	897	100	381
VOE 14536767	897	200	387
VOE 14536768	897	100	381
VOE 14536768	897	200	387
VOE 14536769	897	100	381
VOE 14536769	897	200	385
VOE 14536790	916	8050	561
VOE 14536825	441	600	217
VOE 14536842	912	150	431
VOE 14536842	912	160	435
VOE 14536843	912	150	431
VOE 14536844	912	100	427
VOE 14536846	912	100	427
VOE 14536846	912	150	431
VOE 14536846	912	160	435
VOE 14536846	912	300	449
VOE 14536846	912	310	455
VOE 14536848	912	100	427
VOE 14536848	912	150	431
VOE 14536848	912	160	435
VOE 14536848	912	200	437
VOE 14536848	912	210	443
VOE 14537043	925	100	601
VOE 14537045	925	100	601
VOE 14537047	925	100	601
VOE 14537082	821	200	311
VOE 14537082	821	210	315
VOE 14537087	841	100	335
VOE 14537144	974	300	641
VOE 14537145	975	510	669
VOE 14537145	975	600	671
VOE 14537145	975	610	675
VOE 14537146	975	600	671
VOE 14538683	837	200	331
VOE 14538684	837	200	331
VOE 14538685	837	200	331
VOE 14538689	837	200	331
VOE 14538690	837	200	331
VOE 14538806	916	900	535
VOE 14538808	914	1150	509
VOE 14538809	914	1150	509
VOE 14538810	916	2200	551
VOE 14538918	235	200	89
VOE 14539071	870	100	353
VOE 14539071	874	100	359
VOE 14539553	252	100	103
VOE 14539637	897	100	381
VOE 14539977	234	100	81
VOE 14540307	912	100	429
VOE 14540307	912	150	433
VOE 14540307	912	160	435
VOE 14540307	912	500	469
VOE 14540307	912	510	477
VOE 14540309	912	500	471
VOE 14540309	912	510	479
VOE 14540324	916	8050	563
VOE 14540330	356	300	143
VOE 14540360	210	100	45
VOE 14540365	210	100	45
VOE 14540381	718	600	257
VOE 14540392	974	3100	651
VOE 14540392	974	3150	655
VOE 14540393	974	3100	651
VOE 14540393	974	3150	655
VOE 14540461	974	3100	653
VOE 14540461	974	3150	657
VOE 14540716	914	200	497
VOE 14540762	914	1100	505
VOE 14540762	914	1150	509
VOE 14540762	914	1200	515
VOE 14540763	914	1100	507
VOE 14540763	914	1150	511
VOE 14540764	914	1100	507
VOE 14540764	914	1150	511
VOE 14540765	914	1100	507
VOE 14540765	914	1150	511
VOE 14540766	914	1200	515
VOE 14540843	897	200	383
VOE 14540844	897	200	383
VOE 14540850	897	200	383
VOE 14540953	841	100	335
VOE 14540954	821	200	311
VOE 14540954	821	210	315
VOE 14540955	821	200	313
VOE 14540955	821	210	317
VOE 14541091	914	1200	515
VOE 14541712	252	100	103
VOE 14542244	914	1200	515
VOE 14542245	914	1200	515
VOE 14542387	897	200	383
VOE 14542388	897	200	383
VOE 14542395	897	200	383
VOE 14542404	897	200	383
VOE 14542491	261	100	107
VOE 14542491	261	110	109
VOE 14542492	897	200	385
VOE 14542494	897	100	381
VOE 14542494	897	200	385
VOE 14542495	897	100	381
VOE 14542495	897	200	387
VOE 14542496	897	100	381
VOE 14542496	897	200	387
VOE 14543180	252	100	103
VOE 14543387	371	200	171
VOE 14543546	716	100	251
VOE 14543547	974	200	631
VOE 14543547	974	250	639
VOE 14543548	974	250	639
VOE 14543550	974	100	625
VOE 14543550	974	110	627
VOE 14543551	974	300	641
VOE 14543551	974	310	643
VOE 14543553	974	300	641
VOE 14543555	975	600	671
VOE 14543557	975	600	671
VOE 14543557	975	610	675
VOE 14543559	975	800	677
VOE 14543561	775	1000	271
VOE 14543564	775	1000	271
VOE 14543564	775	1100	273
VOE 14543565	775	1100	273
VOE 14543599	718	100	253
VOE 14545038	913	250	493
VOE 14545100	775	500	261
VOE 14545101	775	500	261
VOE 14546097	975	500	665
VOE 14546099	975	600	671
VOE 14546101	975	510	669
VOE 14546101	975	600	671
VOE 14546102	975	800	677
VOE 14546152	975	1900	687
VOE 14546154	975	1900	687
VOE 14546154	975	1910	691
VOE 14546181	925	1500	609
VOE 14546296	914	1200	517
VOE 14546444	261	100	107
VOE 14546444	261	110	109
VOE 14546450	975	600	671
VOE 14546516	386	100	183

Part No	Group	Sect	Page
VOE 14546527	975	500	665
VOE 14546527	975	510	669
VOE 14546527	975	600	673
VOE 14546527	975	800	677
VOE 14546527	975	1900	687
VOE 14546527	975	1910	691
VOE 14547125	927	100	611
VOE 14547125	927	110	613
VOE 14547130	927	100	611
VOE 14548326	852	100	347
VOE 14548327	852	100	347
VOE 14548328	852	100	347
VOE 14548329	852	100	347
VOE 14548330	852	100	347
VOE 14548682	897	100	381
VOE 14548682	897	200	387
VOE 14548684	897	100	381
VOE 14548684	897	200	385
VOE 14880021	914	4000	523
VOE 14880021	916	2200	551
VOE 14880022	911	400	411
VOE 14880023	911	400	411
VOE 14880023	911	410	417
VOE 14880093	916	350	533
VOE 14880094	916	350	533
VOE 14880119	916	4000	555
VOE 14880119	916	4100	557
VOE 14880120	924	400	575
VOE 14880120	924	450	581
VOE 14880120	924	500	587
VOE 14880126	914	300	501
VOE 14880126	916	8050	561
VOE 14880150	916	1250	539
VOE 14880169	924	200	567
VOE 14880169	924	250	569
VOE 14880169	924	300	571
VOE 14880169	924	310	573
VOE 14880288	897	100	379
VOE 14880301	916	8100	565
VOE 14880302	916	8100	565
VOE 14880303	916	8100	565
VOE 14880304	916	8100	565
VOE 14880305	916	8000	559
VOE 14880305	916	8050	561
VOE 14880306	916	8000	559
VOE 14880306	916	8050	561
VOE 14880307	916	8000	559
VOE 14880307	916	8050	561
VOE 14880308	911	400	411
VOE 14880308	911	410	417
VOE 14880309	911	500	421
VOE 14880310	911	600	423
VOE 14880311	916	1250	539
VOE 14880336	911	600	423
VOE 14880337	911	400	411
VOE 14880349	896	100	373
VOE 14880410	924	400	575
VOE 14880410	924	450	581
VOE 14880410	924	500	587
VOE 14880410	924	510	591
VOE 14880410	924	550	593
VOE 14880410	924	560	597
VOE 14880416	911	600	423
VOE 14880416	911	600	425
VOE 14880418	911	400	411
VOE 14880418	911	400	413
VOE 14880426	810	100	283
VOE 14880426	810	110	287
VOE 14880426	870	100	355
VOE 14880426	873	100	357
VOE 14880426	874	200	363
VOE 14880429	821	100	309
VOE 14880429	874	200	363
VOE 14880446	810	600	299
VOE 14880446	810	610	303
VOE 14880446	830	200	325
VOE 14880446	843	100	339
VOE 14880446	843	110	341
VOE 14880449	821	200	311
VOE 14880449	821	210	315
VOE 14880450	810	700	305
VOE 14880450	810	710	307
VOE 14880450	881	100	369
VOE 14880451	810	700	305
VOE 14880451	810	710	307
VOE 14880474	441	500	215
VOE 14880475	924	450	583
VOE 14880475	924	550	595
VOE 14880475	924	560	599
VOE 14880477	924	400	575
VOE 14880503	837	200	333
VOE 14880504	837	200	333
VOE 14880505	837	200	333
VOE 14880511	916	350	533
VOE 14880515	911	400	411
VOE 14880515	911	400	413
VOE 14880516	911	400	413
VOE 14880517	911	400	415
VOE 14880551	775	100	259
VOE 14880561	372	100	181
VOE 14880572	775	100	259
VOE 14880584	252	100	103
VOE 14880596	261	100	107
VOE 14880596	261	110	109
VOE 14880599	810	100	283
VOE 14880599	810	110	287
VOE 14880601	275	100	123
VOE 14880625	916	8100	565
VOE 14880626	916	8100	565
VOE 14880628	916	1300	541
VOE 14880628	924	400	575
VOE 14880628	924	450	583
VOE 14880628	924	500	587
VOE 14880628	924	510	591
VOE 14880628	924	550	593
VOE 14880628	924	560	597
VOE 14880629	924	400	575
VOE 14880629	924	450	583
VOE 14880640	492	100	225
VOE 14880643	974	200	633
VOE 14880643	974	210	637
VOE 14880648	974	300	641
VOE 14880648	974	310	643
VOE 14880729	975	500	665
VOE 14880729	975	510	669
VOE 14880729	975	600	673
VOE 14880729	975	610	675
VOE 14880729	975	800	677
VOE 14880729	975	1900	687
VOE 14880729	975	1910	691
VOE 14880730	974	300	641
VOE 14880730	974	310	643
VOE 14880730	975	500	665
VOE 14880730	975	510	669
VOE 14880730	975	600	673
VOE 14880730	975	610	675
VOE 14880730	975	800	677
VOE 14880761	974	3100	651
VOE 14880761	974	3150	655
VOE 14880879	974	3100	651
VOE 14880910	830	200	325
VOE 14880911	843	100	339
VOE 14880911	843	110	341
VOE 14880914	843	100	339
VOE 14880914	843	110	341
VOE 14880915	843	100	339
VOE 14880915	843	110	341
VOE 14880916	830	100	321
VOE 14880916	830	110	323
VOE 14880918	821	250	319
VOE 14880922	821	250	319
VOE 14880926	821	200	311
VOE 14880926	821	210	315
VOE 14880936	356	100	139
VOE 14880936	356	110	141
VOE 14880940	843	100	339
VOE 14880940	843	110	341
VOE 14880991	275	100	123
VOE 14880992	660	200	235
VOE 14880992	660	210	237
VOE 14880992	660	300	239
VOE 14881006	896	100	373
VOE 14881053	821	200	311
VOE 14881053	821	210	315
VOE 14881058	275	100	123
VOE 14881060	821	100	309
VOE 14881062	821	200	313
VOE 14881062	821	210	317
VOE 14881065	716	100	251
VOE 14881068	275	100	123
VOE 14881076	911	350	409
VOE 14881082	256	100	105
VOE 14881085	235	100	85
VOE 14881086	235	100	87
VOE 14881087	261	100	107

NUMERICAL INDEX

RÉPERTOIRE DE NUMÉROS

NUMMERNREGISTER

부품번호 색인

INDICE DE NÚMERO

Catalogue id	Group
20019	**1000**
Issue	Page
VOE 74H9920019	**23**

VOLVO

EC55B

NUMERICAL INDEX 부품번호 색인

RÉPERTOIRE DE NUMÉROS **INDICE DE NÚMERO**

NUMMERNREGISTER

Part No	Group	Sect	Page
VOE 14881087	261	110	109
VOE 14881090	235	100	85
VOE 14881091	235	100	85
VOE 14881113	441	500	215
VOE 14881121	235	100	87
VOE 14881123	261	100	107
VOE 14881123	261	110	109
VOE 14881145	870	100	355
VOE 14881145	873	100	357
VOE 14881146	363	200	155
VOE 14881147	363	100	151
VOE 14881147	363	110	153
VOE 14881183	261	100	107
VOE 14881183	261	110	109
VOE 14881192	235	100	87
VOE 14881194	911	350	409
VOE 14881196	716	100	251
VOE 14881197	830	200	325
VOE 14881197	843	100	339
VOE 14881199	911	400	411
VOE 14881199	911	400	415
VOE 14881202	916	8100	565
VOE 14881203	916	100	525
VOE 14881203	916	110	527
VOE 14881204	916	100	525
VOE 14881204	916	110	527
VOE 14881216	916	100	525
VOE 14881216	916	110	527
VOE 14881229	924	400	575
VOE 14881229	924	400	579
VOE 14881233	916	300	531
VOE 14881233	916	900	535
VOE 14881233	916	2100	549
VOE 14881233	916	4100	557
VOE 14881233	916	8100	565
VOE 14881238	924	450	583
VOE 14881238	924	450	585
VOE 14881238	924	500	587
VOE 14881238	924	510	591
VOE 14881238	924	550	593
VOE 14881238	924	550	595
VOE 14881238	924	560	597
VOE 14881238	924	560	599
VOE 14881250	371	200	171
VOE 14881252	356	100	139
VOE 14881252	356	110	141
VOE 14881252	371	400	173
VOE 14881266	974	3100	653
VOE 14881324	911	600	425
VOE 14881325	911	600	423
VOE 14881325	911	600	425
VOE 14881439	916	100	525
VOE 14881439	916	110	527
VOE 14881440	916	100	525
VOE 14881440	916	110	527
VOE 1629544	916	100	525
VOE 1629544	916	110	527
VOE 8277147	914	1200	515
VOE 8278796	218	100	77
VOE 8278796	234	100	81
VOE 8278796	235	100	85
VOE 8278796	252	100	103
VOE 8278796	256	100	105
VOE 8278796	261	100	107
VOE 8278796	261	110	109
VOE 8278796	261	300	111
VOE 8278796	263	300	119
VOE 8278796	275	100	123
VOE 8278796	310	100	131
VOE 8278796	352	100	137
VOE 8278796	362	300	149
VOE 8278796	363	200	155
VOE 8278796	364	100	157
VOE 8278796	371	100	169
VOE 8278796	371	200	171
VOE 8278796	371	400	173
VOE 8278796	371	500	175
VOE 8278796	372	100	181
VOE 8278796	386	100	183
VOE 8278796	387	100	185
VOE 8278796	431	100	197
VOE 8278796	431	300	199
VOE 8278796	431	400	203
VOE 8278796	431	410	205
VOE 8278796	441	100	207
VOE 8278796	441	200	209
VOE 8278796	441	500	215
VOE 8278796	441	600	217
VOE 8278796	443	100	221
VOE 8278796	443	200	223
VOE 8278796	492	100	225
VOE 8278796	660	100	233
VOE 8278796	715	200	249
VOE 8278796	716	100	251
VOE 8278796	718	100	253
VOE 8278796	775	700	263
VOE 8278796	775	900	269
VOE 8278796	775	1200	275
VOE 8278796	821	100	309
VOE 8278796	821	200	311
VOE 8278796	821	210	315
VOE 8278796	821	250	319
VOE 8278796	837	100	329
VOE 8278796	881	100	369
VOE 8278796	911	100	401
VOE 8278796	911	200	405
VOE 8278796	911	300	407
VOE 8278796	911	350	409
VOE 8278796	911	400	411
VOE 8278796	911	410	417
VOE 8278796	911	500	421
VOE 8278796	911	600	423
VOE 8278796	913	100	483
VOE 8278796	913	200	487
VOE 8278796	914	100	495
VOE 8278796	914	200	497
VOE 8278796	914	300	499
VOE 8278796	914	900	503
VOE 8278797	210	100	45
VOE 8278797	210	200	47
VOE 8278797	211	100	51
VOE 8278797	211	200	53
VOE 8278797	212	100	55
VOE 8278797	212	300	57
VOE 8278797	212	500	59
VOE 8278797	213	100	61
VOE 8278797	214	200	63
VOE 8278797	215	100	65
VOE 8278797	215	200	67
VOE 8278797	215	250	69
VOE 8278797	216	100	71
VOE 8278797	216	200	73
VOE 8278797	217	100	75
VOE 8278797	220	300	79
VOE 8278797	235	200	89
VOE 8278797	235	300	93
VOE 8278797	236	100	95
VOE 8278797	237	100	97
VOE 8278797	251	100	99
VOE 8278797	251	200	101
VOE 8278797	262	200	115
VOE 8278797	263	100	117
VOE 8278797	321	100	133
VOE 8278797	331	100	135
VOE 8278797	372	100	181
VOE 8278798	210	100	45
VOE 8278798	210	200	47
VOE 8278798	211	100	51
VOE 8278798	211	200	53
VOE 8278798	212	100	55
VOE 8278798	212	300	57
VOE 8278798	212	500	59
VOE 8278798	213	100	61
VOE 8278798	214	200	63
VOE 8278798	215	100	65
VOE 8278798	215	200	67
VOE 8278798	215	250	69
VOE 8278798	216	100	71
VOE 8278798	216	200	73
VOE 8278798	217	100	75
VOE 8278798	220	300	79
VOE 8278798	235	200	89
VOE 8278798	235	300	93
VOE 8278798	236	100	95
VOE 8278798	237	100	97
VOE 8278798	251	100	99
VOE 8278798	251	200	101
VOE 8278798	262	200	115
VOE 8278798	263	100	117
VOE 8278798	321	100	133
VOE 8278798	331	100	135
VOE 8278798	372	100	181
VOE 8278799	210	100	45
VOE 8278799	210	200	47
VOE 8278799	211	100	51

Part No	Group	Sect	Page
VOE 8278799	211	200	53
VOE 8278799	212	100	55
VOE 8278799	212	300	57
VOE 8278799	212	500	59
VOE 8278799	213	100	61
VOE 8278799	214	200	63
VOE 8278799	215	100	65
VOE 8278799	215	200	67
VOE 8278799	215	250	69
VOE 8278799	216	100	71
VOE 8278799	216	200	73
VOE 8278799	217	100	75
VOE 8278799	220	300	79
VOE 8278799	235	200	89
VOE 8278799	235	300	93
VOE 8278799	236	100	95
VOE 8278799	237	100	97
VOE 8278799	251	100	99
VOE 8278799	251	200	101
VOE 8278799	262	200	115
VOE 8278799	263	100	117
VOE 8278799	321	100	133
VOE 8278799	331	100	135
VOE 8278799	372	100	181
VOE 8278800	234	300	83
VOE 8278801	234	300	83
VOE 8278802	356	300	143
VOE 8278803	356	300	143
VOE 8278804	362	200	147
VOE 8278805	362	100	145
VOE 8278806	363	100	151
VOE 8278806	371	800	177
VOE 8278806	810	100	283
VOE 8278806	810	500	293
VOE 8278806	810	600	297
VOE 8278806	810	700	305
VOE 8278806	830	100	321
VOE 8278806	830	110	323
VOE 8278806	843	100	339
VOE 8278806	843	200	343
VOE 8278806	874	250	365
VOE 8278807	363	100	151
VOE 8278807	371	800	177
VOE 8278807	810	100	283
VOE 8278807	810	500	293
VOE 8278807	810	600	297
VOE 8278807	810	700	305
VOE 8278807	830	200	325
VOE 8278807	843	100	339
VOE 8278807	843	200	343
VOE 8278807	874	250	365
VOE 8278808	363	100	151
VOE 8278808	363	110	153
VOE 8278808	371	800	177
VOE 8278808	371	810	179
VOE 8278808	810	100	283
VOE 8278808	810	110	287
VOE 8278808	810	500	293
VOE 8278808	810	510	295
VOE 8278808	810	600	297
VOE 8278808	810	610	301
VOE 8278808	810	700	305
VOE 8278808	810	710	307
VOE 8278808	830	100	321
VOE 8278808	830	110	323
VOE 8278808	843	100	339
VOE 8278808	843	110	341
VOE 8278808	843	200	343
VOE 8278808	843	210	345
VOE 8278808	874	250	365
VOE 8278808	874	260	367
VOE 8278809	363	100	151
VOE 8278809	363	110	153
VOE 8278809	371	800	177
VOE 8278809	371	810	179
VOE 8278809	810	100	283
VOE 8278809	810	110	287
VOE 8278809	810	500	293
VOE 8278809	810	510	295
VOE 8278809	810	600	297
VOE 8278809	810	610	301
VOE 8278809	810	700	305
VOE 8278809	810	710	307
VOE 8278809	830	100	321
VOE 8278809	830	110	323
VOE 8278809	843	100	339
VOE 8278809	843	110	341
VOE 8278809	843	200	343
VOE 8278809	843	210	345
VOE 8278809	874	250	365
VOE 8278809	874	260	367
VOE 8278810	852	100	347
VOE 8278811	852	100	347
VOE 8278812	914	1100	505
VOE 8278813	914	1150	509
VOE 8278815	874	200	363
VOE 8278816	874	100	359
VOE 8278816	874	200	363
VOE 8278817	873	100	357
VOE 8278817	874	200	363
VOE 8278818	870	100	353
VOE 8278818	874	200	363
VOE 8278819	234	100	81
VOE 8278819	364	200	159
VOE 8278819	810	400	289
VOE 8278820	234	100	81
VOE 8278820	364	200	159
VOE 8278820	364	210	161
VOE 8278820	810	400	289
VOE 8278820	810	410	291
VOE 8278821	393	100	187
VOE 8278821	393	110	189
VOE 8278822	393	100	187
VOE 8278822	393	110	189
VOE 8278823	393	100	187
VOE 8278824	393	100	187
VOE 8278825	841	100	335
VOE 8278826	860	200	349
VOE 8278827	860	300	351
VOE 8278828	715	100	247
VOE 8278828	821	200	311
VOE 8278828	821	210	315
VOE 8278828	837	200	331
VOE 8278829	715	100	247
VOE 8278829	821	200	311
VOE 8278829	821	210	315
VOE 8278829	837	200	331
VOE 8278830	992	100	695
VOE 8278831	775	100	259
VOE 8278831	775	800	265
VOE 8278831	775	1000	271
VOE 8278831	775	1100	273
VOE 8278832	775	100	259
VOE 8278832	775	500	261
VOE 8278832	775	800	265
VOE 8278832	775	1000	271
VOE 8278833	775	100	259
VOE 8278833	775	500	261
VOE 8278833	775	800	265
VOE 8278833	775	1000	271
VOE 8278834	974	100	625
VOE 8278834	974	3000	645
VOE 8278834	974	3100	651
VOE 8278835	925	1500	609
VOE 8278836	356	100	139
VOE 8278836	718	500	255
VOE 8278836	911	400	411
VOE 8278836	912	100	427
VOE 8278836	912	200	437
VOE 8278836	912	300	449
VOE 8278836	912	400	461
VOE 8278836	912	500	469
VOE 8278836	914	300	499
VOE 8278836	971	150	621
VOE 8278836	974	200	631
VOE 8278836	974	250	639
VOE 8278837	356	100	139
VOE 8278837	356	110	141
VOE 8278837	660	200	235
VOE 8278837	660	210	237
VOE 8278837	718	500	255
VOE 8278837	911	400	411
VOE 8278837	911	410	417
VOE 8278837	912	150	431
VOE 8278837	912	160	435
VOE 8278837	912	200	437
VOE 8278837	912	210	443
VOE 8278837	912	300	449
VOE 8278837	912	310	455
VOE 8278837	912	400	461
VOE 8278837	912	410	465
VOE 8278837	912	500	469
VOE 8278837	912	510	477
VOE 8278837	971	100	619
VOE 8278837	974	200	631

NUMERICAL INDEX

RÉPERTOIRE DE NUMÉROS

NUMMERNREGISTER

부품번호 색인

INDICE DE NÚMERO

Catalogue id	Group
20019	**1000**
Issue	Page
VOE 74H9920019	**25**

VOLVO

EC55B

Part No	Group	Sect	Page
VOE 8278837	974	210	635
VOE 8278837	974	250	639
VOE 8278838	356	100	139
VOE 8278838	718	600	257
VOE 8278838	911	400	411
VOE 8278838	912	150	431
VOE 8278838	912	200	437
VOE 8278838	912	300	449
VOE 8278838	912	400	461
VOE 8278838	912	500	469
VOE 8278838	974	200	631
VOE 8278839	356	100	139
VOE 8278839	718	600	257
VOE 8278839	911	400	411
VOE 8278839	912	100	427
VOE 8278839	912	200	437
VOE 8278839	912	300	449
VOE 8278839	912	400	461
VOE 8278839	912	500	469
VOE 8278839	974	200	631
VOE 8278840	974	100	625
VOE 8278840	974	110	627
VOE 8278840	974	300	641
VOE 8278840	974	310	643
VOE 8278842	974	150	629
VOE 8278842	974	300	641
VOE 8278843	975	100	659
VOE 8278843	975	110	661
VOE 8278843	975	500	665
VOE 8278843	975	510	669
VOE 8278844	975	100	659
VOE 8278844	975	500	665
VOE 8278845	975	100	659
VOE 8278845	975	110	661
VOE 8278845	975	500	665
VOE 8278846	975	100	659
VOE 8278846	975	510	669
VOE 8278846	975	600	671
VOE 8278846	975	610	675
VOE 8278847	975	200	663
VOE 8278847	975	600	671
VOE 8278848	975	200	663
VOE 8278848	975	600	671
VOE 8278849	975	1900	687
VOE 8278849	975	1910	691
VOE 8278850	975	1900	687
VOE 8278851	974	3000	645
VOE 8278852	974	100	625
VOE 8278852	974	3000	645
VOE 8278853	974	100	625
VOE 8278853	974	110	627
VOE 8278853	974	3000	645
VOE 8278853	974	3010	649
VOE 8278854	975	1500	679
VOE 8278854	975	1510	683
VOE 8278855	975	1500	679
VOE 8278856	975	2500	693
VOE 8278857	971	600	623
VOE 8278862	916	4000	555
VOE 8278863	837	100	329
VOE 8278863	914	2150	521
VOE 8278864	837	100	329
VOE 8278864	914	2100	519
VOE 8278865	660	300	239
VOE 8278865	916	2000	545
VOE 8278865	916	2200	551
VOE 8278866	914	4000	523
VOE 8278866	916	2000	545
VOE 8278867	914	4000	523
VOE 8278867	916	2000	545
VOE 8278867	916	2010	547
VOE 8278868	660	200	235
VOE 8278868	916	8000	559
VOE 8278868	916	8050	561
VOE 8278868	916	8100	565
VOE 8278869	369	100	163
VOE 8278869	924	200	567
VOE 8278869	924	400	575
VOE 8278870	369	150	165
VOE 8278870	924	300	571
VOE 8278870	924	500	587
VOE 8278870	924	550	593
VOE 8278871	369	150	165
VOE 8278871	369	160	167
VOE 8278871	924	300	571
VOE 8278871	924	310	573
VOE 8278871	924	500	587
VOE 8278871	924	510	591
VOE 8278871	924	550	593
VOE 8278871	924	560	597
VOE 8278872	369	100	163
VOE 8278872	924	250	569
VOE 8278872	924	450	581
VOE 8278873	916	900	535
VOE 8278874	364	100	157
VOE 8278874	916	300	529
VOE 8278874	916	350	533
VOE 8278876	916	100	525
VOE 8278877	916	100	525
VOE 8278877	916	1250	539
VOE 8278877	916	1300	541
VOE 8278878	916	100	525
VOE 8278878	916	110	527
VOE 8278879	927	100	611
VOE 8278879	927	500	615
VOE 8278880	927	100	611
VOE 8278880	927	110	613
VOE 8278880	927	500	615
VOE 8278880	927	510	617
VOE 8278881	925	1500	609
VOE 8278882	925	100	601
VOE 8278883	925	100	601
VOE 8278884	925	100	601
VOE 8278885	925	200	605
VOE 8278886	925	200	605
VOE 8278887	925	200	605
VOE 8278888	896	100	373
VOE 8278889	896	100	373
VOE 8278890	896	200	377
VOE 8278892	897	100	379
VOE 8278892	897	200	383
VOE 8278893	897	100	379
VOE 8278893	897	200	383
VOE 8278894	897	100	379
VOE 8278894	897	200	383
VOE 8278895	916	1200	537
VOE 8278896	718	600	257
VOE 8278897	914	300	499
VOE 8279079	975	200	663
VOE 8279079	975	800	677
VOE 8279080	916	4100	557
VOE 8279081	916	4100	557
VOE 8279082	660	300	239
VOE 8279082	916	2100	549
VOE 8279082	916	2200	551
VOE 8279083	369	100	163
VOE 8279083	924	200	567
VOE 8279083	924	400	575
VOE 8279084	369	100	163
VOE 8279084	924	250	569
VOE 8279084	924	450	581
VOE 8279318	261	100	107
VOE 8279318	261	110	109
VOE 8279318	261	300	111
VOE 8279318	261	310	113
VOE 8279318	263	300	119
VOE 8279318	263	310	121
VOE 8279318	821	200	311
VOE 8279318	821	210	315
VOE 8279319	261	100	107
VOE 8279319	261	110	109
VOE 8279319	261	300	111
VOE 8279319	261	310	113
VOE 8279319	263	300	119
VOE 8279319	263	310	121
VOE 8279319	821	200	311
VOE 8279319	821	210	315
VOE 8279369	916	110	527
VOE 8279369	916	4100	557
VOE 8279415	897	100	379
VOE 8279415	897	200	383
VOE 8279576	431	400	203
VOE 8279576	492	100	225
VOE 8279576	911	200	405
VOE 8279576	911	420	419
VOE 8279576	911	500	421
VOE 8279576	911	600	423
VOE 8279576	913	100	483
VOE 8279576	913	250	489
VOE 8279576	914	100	495
VOE 8279576	914	200	497
VOE 8279576	914	300	499
VOE 8279576	914	900	503
VOE 8279577	431	400	203
VOE 8279577	492	100	225

Part No	Group	Sect	Page
VOE 8279577	911	200	405
VOE 8279577	911	420	419
VOE 8279577	911	500	421
VOE 8279577	911	600	423
VOE 8279577	913	100	483
VOE 8279577	913	200	487
VOE 8279577	914	100	495
VOE 8279577	914	200	497
VOE 8279577	914	300	499
VOE 8279577	914	900	503
VOE 8279584	925	200	605
VOE 8279585	925	100	601
VOE 8279951	897	100	379
VOE 8279951	897	200	383
VOE 8280523	974	3100	651
VOE 8280523	974	3150	655
VOE 8280524	974	110	627
VOE 8280524	974	150	629
VOE 8280524	974	3100	651
VOE 8280524	974	3150	655
VOE 8280525	974	110	627
VOE 8280525	974	150	629
VOE 8280525	974	3100	651
VOE 8280525	974	3150	655
VOE 8280828	252	100	103
VOE 8280829	252	100	103
VOE 914480	443	200	223
VOE 940090	364	100	157
VOE 940090	372	100	181
VOE 940090	393	100	187
VOE 940090	393	110	189
VOE 940090	810	600	299
VOE 940090	810	610	303
VOE 942605	810	600	299
VOE 942605	810	610	303
VOE 942767	810	600	299
VOE 942767	810	610	303
VOE 942767	821	200	311
VOE 942767	821	210	315
VOE 942767	830	100	321
VOE 942767	830	110	323
VOE 942767	830	200	325
VOE 945407	870	100	355
VOE 945407	874	100	361
VOE 945444	870	100	355
VOE 945444	873	100	357
VOE 946173	235	100	85
VOE 946173	261	100	107
VOE 946173	261	110	109
VOE 946173	362	300	149
VOE 946173	821	100	309
VOE 946173	821	250	319
VOE 946173	837	200	333
VOE 946329	256	100	105
VOE 946329	275	100	123
VOE 946329	660	100	233
VOE 946329	821	200	311
VOE 946329	821	210	315
VOE 946329	837	200	333
VOE 946329	841	100	335
VOE 946329	911	600	423
VOE 946329	914	300	501
VOE 946440	261	100	107
VOE 946440	261	110	109
VOE 946440	363	200	155
VOE 946440	372	100	181
VOE 946440	387	100	185
VOE 946440	821	100	309
VOE 946440	841	100	335
VOE 946440	852	100	347
VOE 946440	870	100	355
VOE 946440	873	100	357
VOE 946440	874	100	361
VOE 946440	874	200	363
VOE 946440	914	100	495
VOE 946440	914	300	499
VOE 946440	916	8050	563
VOE 946440	924	400	579
VOE 946440	924	450	585
VOE 946440	924	500	587
VOE 946440	924	510	591
VOE 946440	924	550	593
VOE 946440	924	560	597
VOE 946441	235	100	85
VOE 946441	352	100	137
VOE 946441	356	100	139
VOE 946441	356	110	141
VOE 946441	356	300	143
VOE 946441	362	200	147
VOE 946441	371	500	175
VOE 946441	492	100	225
VOE 946441	660	200	235
VOE 946441	660	210	237
VOE 946441	660	300	239
VOE 946441	718	600	257
VOE 946441	821	200	311
VOE 946441	821	200	313
VOE 946441	821	210	315
VOE 946441	821	210	317
VOE 946441	837	100	329
VOE 946441	837	200	331
VOE 946441	841	100	335
VOE 946441	874	200	363
VOE 946441	911	400	413
VOE 946441	911	410	417
VOE 946441	914	300	499
VOE 946441	914	2100	519
VOE 946441	916	300	531
VOE 946441	916	8000	559
VOE 946441	916	8050	563
VOE 946441	924	200	567
VOE 946441	924	250	569
VOE 946441	924	300	571
VOE 946441	924	310	573
VOE 946441	924	500	587
VOE 946441	924	510	591
VOE 946471	234	100	81
VOE 946471	234	300	83
VOE 946471	235	100	85
VOE 946471	256	100	105
VOE 946471	275	100	123
VOE 946471	352	100	137
VOE 946471	363	200	155
VOE 946471	371	100	169
VOE 946471	371	200	171
VOE 946471	371	400	173
VOE 946471	371	500	175
VOE 946471	870	100	355
VOE 946471	873	100	357
VOE 946471	874	100	361
VOE 946471	874	250	365
VOE 946471	874	260	367
VOE 946471	911	500	421
VOE 946471	916	900	535
VOE 946471	916	2200	551
VOE 946471	971	100	619
VOE 946471	992	100	695
VOE 946472	660	100	233
VOE 946472	874	200	363
VOE 946472	916	100	525
VOE 946472	916	110	527
VOE 946544	234	300	83
VOE 946544	363	100	151
VOE 946544	363	110	153
VOE 946544	372	100	181
VOE 946544	821	200	311
VOE 946544	821	200	313
VOE 946544	821	210	315
VOE 946544	821	210	317
VOE 946544	881	100	371
VOE 946544	992	100	695
VOE 946934	371	200	171
VOE 946934	372	100	181
VOE 946934	881	100	371
VOE 946934	914	1100	507
VOE 946934	914	1150	511
VOE 947107	371	400	173
VOE 947542	810	700	305
VOE 947542	810	710	307
VOE 947542	821	200	311
VOE 947542	821	210	315
VOE 947760	235	100	87
VOE 948400	660	100	233
VOE 949445	927	500	615
VOE 949445	927	510	617
VOE 951970	431	400	203
VOE 951970	431	410	205
VOE 955892	362	200	147
VOE 955892	363	100	151
VOE 955892	363	110	153
VOE 955892	364	100	157
VOE 955892	371	400	173
VOE 955892	810	600	297
VOE 955892	810	610	301
VOE 955892	810	700	305

Part No	Group	Sect	Page
VOE 955892	810	710	307
VOE 955892	821	200	311
VOE 955892	821	210	315
VOE 955892	830	100	321
VOE 955892	830	110	323
VOE 955892	830	200	325
VOE 955892	843	100	339
VOE 955892	843	110	341
VOE 955892	843	200	343
VOE 955892	843	210	345
VOE 955894	810	500	293
VOE 955894	810	510	295
VOE 955894	830	100	321
VOE 955894	830	110	323
VOE 955894	830	200	325
VOE 955894	841	100	335
VOE 955894	843	200	343
VOE 955894	843	210	345
VOE 955894	852	100	347
VOE 955894	870	100	355
VOE 955894	873	100	357
VOE 955894	874	100	361
VOE 955894	874	200	363
VOE 955894	881	100	369
VOE 955897	362	200	147
VOE 955897	810	600	297
VOE 955897	810	610	301
VOE 955897	860	200	349
VOE 955897	860	300	351
VOE 955897	881	100	369
VOE 955918	386	100	183
VOE 955918	916	300	529
VOE 955919	362	200	147
VOE 955919	363	100	151
VOE 955919	363	110	153
VOE 955919	371	400	173
VOE 955919	810	600	297
VOE 955919	810	610	301
VOE 955919	810	700	305
VOE 955919	810	710	307
VOE 955919	830	100	321
VOE 955919	830	110	323
VOE 955919	830	200	325
VOE 955919	843	100	339
VOE 955919	843	110	341
VOE 955919	843	200	343
VOE 955919	843	210	345
VOE 955919	912	200	437
VOE 955919	912	200	439
VOE 955919	912	210	443
VOE 955919	912	210	445
VOE 955919	912	300	449
VOE 955919	912	300	451
VOE 955919	912	300	453
VOE 955919	912	310	455
VOE 955919	912	310	457
VOE 955919	912	400	461
VOE 955919	912	400	463
VOE 955919	912	410	465
VOE 955919	912	410	467
VOE 955919	912	500	469
VOE 955919	912	500	473
VOE 955919	912	510	477
VOE 955919	912	510	479
VOE 955919	912	510	481
VOE 955919	913	100	483
VOE 955919	914	2100	519
VOE 955919	924	200	567
VOE 955919	924	250	569
VOE 955919	924	300	571
VOE 955919	924	310	573
VOE 955921	235	100	85
VOE 955921	252	100	103
VOE 955921	261	300	111
VOE 955921	261	310	113
VOE 955921	371	100	169
VOE 955921	660	100	233
VOE 955921	660	200	235
VOE 955921	660	210	237
VOE 955921	660	300	239
VOE 955921	810	500	293
VOE 955921	810	510	295
VOE 955921	810	600	297
VOE 955921	810	610	301
VOE 955921	830	100	321
VOE 955921	830	110	323
VOE 955921	830	200	325
VOE 955921	841	100	335
VOE 955921	852	100	347
VOE 955921	911	350	409
VOE 955921	916	100	525
VOE 955921	916	300	529
VOE 955921	916	900	535
VOE 955921	916	4000	555
VOE 955921	916	4100	557
VOE 955921	924	400	577
VOE 955921	924	450	585
VOE 955921	924	500	587
VOE 955921	924	510	591
VOE 955921	924	550	593
VOE 955921	924	560	597
VOE 955922	218	100	77
VOE 955922	261	100	107
VOE 955922	261	110	109
VOE 955922	261	300	111
VOE 955922	261	310	113
VOE 955922	310	100	131
VOE 955922	356	300	143
VOE 955922	431	400	203
VOE 955922	431	410	205
VOE 955922	443	200	223
VOE 955922	810	100	285
VOE 955922	810	110	287
VOE 955922	810	500	293
VOE 955922	810	510	295
VOE 955922	810	600	297
VOE 955922	810	610	301
VOE 955922	830	100	321
VOE 955922	830	110	323
VOE 955922	830	200	327
VOE 955922	870	100	355
VOE 955922	874	100	361
VOE 955922	911	350	409
VOE 955922	911	400	415
VOE 955922	912	100	429
VOE 955922	912	150	433
VOE 955922	912	160	435
VOE 955922	916	300	531
VOE 955922	916	1300	541
VOE 955922	916	2000	545
VOE 955922	916	2010	547
VOE 955922	916	2100	549
VOE 955922	916	4100	557
VOE 955922	924	400	577
VOE 955922	924	450	583
VOE 955922	924	500	587
VOE 955922	924	510	591
VOE 955922	924	550	593
VOE 955922	924	560	597
VOE 955922	974	100	625
VOE 955922	974	110	627
VOE 955922	974	150	629
VOE 955922	974	200	633
VOE 955922	974	210	635
VOE 955922	974	250	639
VOE 955923	443	100	221
VOE 955923	775	800	267
VOE 955923	775	900	269
VOE 955923	810	600	297
VOE 955923	810	610	301
VOE 955923	821	200	313
VOE 955923	821	210	317
VOE 955923	860	200	349
VOE 955923	860	300	351
VOE 955923	913	100	483
VOE 955923	914	300	501
VOE 955923	916	2200	551
VOE 955923	925	100	601
VOE 955923	925	200	605
VOE 955923	971	150	621
VOE 955926	716	100	251
VOE 955926	775	500	261
VOE 955926	775	1000	271
VOE 955926	775	1100	273
VOE 955926	810	100	283
VOE 955926	810	110	287
VOE 955926	916	100	525
VOE 955926	916	110	527
VOE 955926	974	200	633
VOE 955926	974	210	635
VOE 955926	974	250	639
VOE 960148	310	100	131
VOE 960148	810	100	283
VOE 960148	810	110	287
VOE 960148	810	500	293

Part No	Group	Sect	Page
VOE 960148	810	510	295
VOE 960148	810	600	297
VOE 960148	810	610	301
VOE 960148	874	200	363
VOE 965175	235	100	85
VOE 965175	356	100	139
VOE 965175	356	110	141
VOE 965175	363	100	151
VOE 965175	363	110	153
VOE 965175	364	100	157
VOE 965175	372	100	181
VOE 965175	393	100	187
VOE 965175	393	110	189
VOE 965175	660	200	235
VOE 965175	660	210	237
VOE 965175	870	100	355
VOE 965175	874	100	361
VOE 965175	874	250	365
VOE 965175	874	260	367
VOE 965175	881	100	371
VOE 965175	914	100	495
VOE 965178	913	100	483
VOE 965184	263	300	119
VOE 965184	263	310	121
VOE 965185	356	100	139
VOE 965185	356	110	141
VOE 965185	916	100	525
VOE 965185	916	110	527
VOE 965185	916	1200	537
VOE 965185	916	8100	565
VOE 965185	924	500	589
VOE 965185	924	510	591
VOE 965185	924	550	593
VOE 965185	924	560	597
VOE 965186	911	400	413
VOE 965186	911	400	415
VOE 965186	911	410	417
VOE 965186	916	100	525
VOE 965186	916	110	527
VOE 965186	916	300	529
VOE 965186	916	900	535
VOE 965187	874	200	363
VOE 965187	916	1200	537
VOE 965187	916	1300	541
VOE 965187	916	2200	551
VOE 965187	924	400	577
VOE 965187	924	450	585
VOE 965187	924	500	587
VOE 965187	924	510	591
VOE 965187	924	550	593
VOE 965187	924	560	597
VOE 965191	261	100	107
VOE 965191	261	110	109
VOE 965191	356	300	143
VOE 965191	821	200	313
VOE 965191	821	210	315
VOE 965191	821	210	317
VOE 965191	852	100	347
VOE 965191	911	600	423
VOE 965193	821	200	313
VOE 965193	821	210	317
VOE 969162	896	200	377
VOE 969405	810	600	299
VOE 969405	810	610	303
VOE 969407	371	800	177
VOE 969407	371	810	179
VOE 969407	372	100	181
VOE 969407	386	100	183
VOE 969407	393	100	187
VOE 969407	393	110	189
VOE 969407	916	300	529
VOE 969408	371	800	177
VOE 969408	371	810	179
VOE 969408	810	600	297
VOE 969408	810	610	301
VOE 969408	821	200	311
VOE 969408	821	210	315
VOE 969420	810	700	305
VOE 969420	810	710	307
VOE 969420	830	100	321
VOE 969420	830	110	323
VOE 969420	830	200	325
VOE 969420	843	200	343
VOE 969420	843	210	345
VOE 969422	362	200	147
VOE 969422	810	600	299
VOE 969422	810	610	303
VOE 969422	810	700	305
VOE 969422	810	710	307
VOE 969422	843	200	343
VOE 969422	843	210	345
VOE 969423	843	100	339
VOE 969423	843	110	341
VOE 969587	363	100	151
VOE 969587	363	110	153
VOE 969589	810	600	297
VOE 969589	810	610	301
VOE 969591	914	2100	519
VOE 969591	924	200	567
VOE 969591	924	250	569
VOE 969591	924	300	571
VOE 969591	924	310	573
VOE 969737	810	600	299
VOE 969737	810	610	303
VOE 969841	810	600	299
VOE 969841	810	610	303
VOE 969846	821	200	311
VOE 969846	821	210	315
VOE 969846	830	100	321
VOE 969846	830	110	323
VOE 969846	830	200	325
VOE 971095	310	100	131
VOE 978932	715	100	247
VOE 978932	715	200	249
VOE 978932	810	600	297
VOE 978932	810	610	301
VOE 978932	913	100	485
VOE 978932	916	2200	551
VOE 978932	971	150	621
VOE 978933	775	800	267
VOE 978933	860	200	349
VOE 978933	860	300	351
VOE 978933	925	100	601
VOE 978933	925	200	605
VOE 978934	443	100	221
VOE 978936	974	200	633
VOE 978936	974	210	635
VOE 978936	974	250	639
VOE 978938	441	500	215
VOE 978939	924	400	577
VOE 978939	924	450	583
VOE 978939	924	450	585
VOE 978940	492	100	225
VOE 978941	218	100	77
VOE 978941	716	100	251
VOE 979019	362	200	147
VOE 979019	775	900	269
VOE 979019	821	100	309
VOE 979019	821	200	313
VOE 979019	821	210	317
VOE 979019	925	100	601
VOE 979019	925	100	603
VOE 979019	925	200	605
VOE 979019	925	1500	609
VOE 979019	927	100	611
VOE 979019	927	110	613
VOE 979019	974	100	625
VOE 979019	974	110	627
VOE 979019	974	150	629
VOE 979019	974	200	633
VOE 979019	974	210	635
VOE 979019	974	250	639
VOE 979019	975	100	659
VOE 979019	975	110	661
VOE 979019	975	200	663
VOE 979019	975	1900	687
VOE 979019	975	1910	691
VOE 979021	716	100	251
VOE 979021	837	200	333
VOE 980465	810	100	283
VOE 980465	810	110	287
VOE 983241	841	100	335
VOE 983242	252	100	103
VOE 983242	261	300	111
VOE 983242	261	310	113
VOE 983242	924	400	577
VOE 983242	924	450	583
VOE 983242	924	550	595
VOE 983242	924	560	599
VOE 983244	924	400	577
VOE 983244	924	400	579
VOE 983244	924	450	583
VOE 983244	924	450	585
VOE 983244	924	500	587
VOE 983244	924	510	591

NUMERICAL INDEX 부품번호 색인

RÉPERTOIRE DE NUMÉROS **INDICE DE NÚMERO**

NUMMERNREGISTER

Part No	Group	Sect	Page
VOE 983244	924	550	593
VOE 983244	924	560	597
VOE 983245	911	350	409
VOE 983245	916	100	525
VOE 983245	916	900	535
VOE 983245	916	4000	555
VOE 983245	916	4100	557
VOE 983249	235	100	85
VOE 983250	810	500	293
VOE 983250	810	510	295
VOE 983250	810	600	297
VOE 983250	810	610	301
VOE 983250	830	100	321
VOE 983250	830	110	323
VOE 983250	830	200	325
VOE 983250	911	100	401
VOE 983250	916	300	531
VOE 983250	927	100	611
VOE 983250	927	110	613
VOE 983250	974	200	633
VOE 983250	974	210	637
VOE 983250	974	250	639
VOE 983251	261	300	111
VOE 983251	261	310	113
VOE 983251	870	100	355
VOE 983251	874	100	361
VOE 983252	218	100	77
VOE 983252	261	100	107
VOE 983252	261	110	109
VOE 983252	431	400	203
VOE 983252	431	410	205
VOE 983252	810	500	293
VOE 983252	810	510	295
VOE 983252	810	600	297
VOE 983252	810	610	301
VOE 983252	870	100	355
VOE 983252	874	100	361
VOE 983252	974	100	625
VOE 983252	974	110	627
VOE 983252	974	150	629
VOE 983252	974	200	633
VOE 983252	974	210	637
VOE 983253	261	100	107
VOE 983253	261	110	109
VOE 983253	443	200	223
VOE 983253	870	100	355
VOE 983253	874	100	361
VOE 983254	218	100	77
VOE 983254	810	600	297
VOE 983254	916	300	531
VOE 983254	916	2100	549
VOE 983256	810	100	283
VOE 983256	810	110	287
VOE 983256	911	350	409
VOE 983256	916	300	529
VOE 983256	916	2000	545
VOE 983256	916	2010	547
VOE 983256	916	2100	549
VOE 983257	911	400	411
VOE 983302	371	400	173
VOE 983303	252	100	103
VOE 983303	371	100	169
VOE 983303	660	100	233
VOE 983303	660	200	235
VOE 983303	660	210	237
VOE 983303	660	300	239
VOE 983303	810	500	293
VOE 983303	810	510	295
VOE 983303	810	600	297
VOE 983303	810	610	301
VOE 983303	821	100	309
VOE 983303	821	200	311
VOE 983303	821	210	315
VOE 983303	830	100	321
VOE 983303	830	110	323
VOE 983303	830	200	325
VOE 983304	356	300	143
VOE 983304	870	100	355
VOE 983304	874	100	361
VOE 983304	916	300	531
VOE 983304	992	100	695
VOE 983502	441	200	213
VOE 983502	441	600	217
VOE 983502	441	600	219
VOE 983502	913	100	485
VOE 983502	914	100	495
VOE 983502	914	200	497
VOE 983502	914	300	499
VOE 983502	914	300	501
VOE 983502	914	4000	523
VOE 983502	916	2200	553
VOE 983502	916	8050	561
VOE 983505	916	8050	561
VOE 983509	914	1200	515
VOE 983524	916	2200	551
VOE 983527	916	2200	551
VOE 983527	916	8050	563
VOE 984064	852	100	347
VOE 984065	852	100	347
VOE 984066	881	100	369
VOE 984066	914	200	497
VOE 984077	660	100	233
VOE 984077	916	300	529
VOE 984077	916	1300	541
VOE 984080	912	100	429
VOE 984080	912	150	433
VOE 984080	912	160	435
VOE 984082	870	100	355
VOE 984082	874	100	361
VOE 984082	911	600	423
VOE 984088	913	100	483
VOE 984345	916	300	529
VOE 984347	971	150	621
VOE 984350	916	8000	559
VOE 984350	916	8050	563
VOE 990557	912	100	429
VOE 990557	916	2200	551
VOE 990557	916	8050	561
VOE 990595	443	200	223
VOE 990630	974	3100	651
VOE 990630	974	3150	655
VOE 990638	443	200	223
VOE 990642	443	200	223