RUTHZIL TRATOR COMERCIAL DE PEÇAS LTDA 11 97083-6812 ROLANDO CITRANGULO

ECR38

Ref. No. VOE 74C99200 48

Construction Equipment

VOLVO

RECYCLABLE PAPER

LABEL FOR STEELBINDER

VOLVO

PARTS CATALOG

ECR38

TYPE 602

CUT HERE

PARTS CATALOG VOLVO ECR38

VOLVO

PARTS CATALOG

ECR38

TYPE 602



VOLVO

PARTS CATALOG

ECR38

TYPE 602

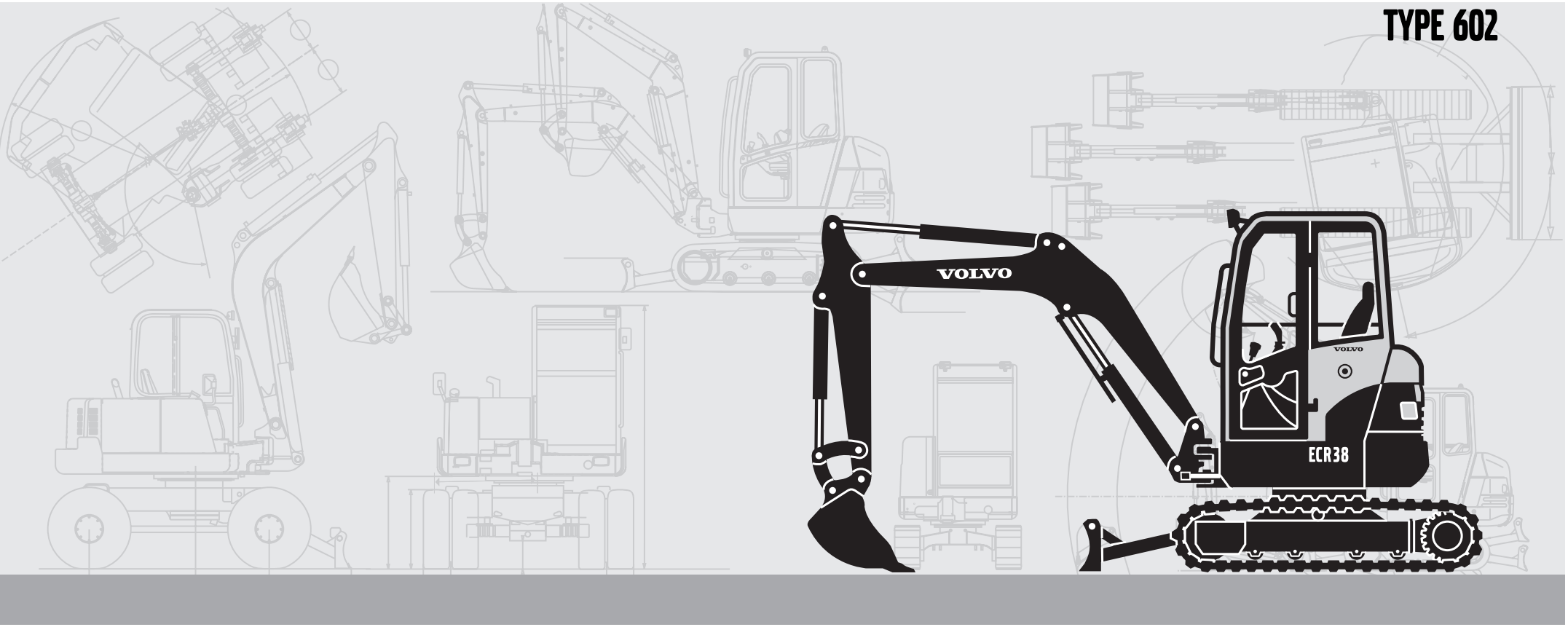

Publ. No. VOE 74C9920048

VOLVO

Construction Equipment

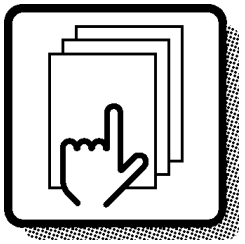

1

Preface and instructions
Préface et instructions
Vorwort und Anweisungen
머리말 및 지침
Prefacio e instrucciones

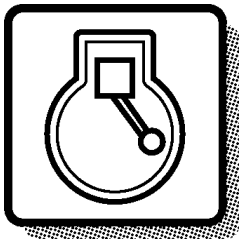

2

Engine
Moteur
Motor
엔진
Motor

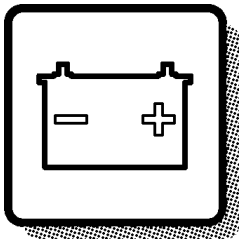

3

Electrical systems and instruments
Système électrique et instruments
Elektrisches System und Instrumente
전기장치 및 계기판
Sistema eléctrico e instrumentos

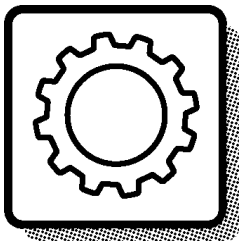

4

Power transmission
Transmission de force
Kraftübertragung
트랜스미션
Transmisión de fuerza

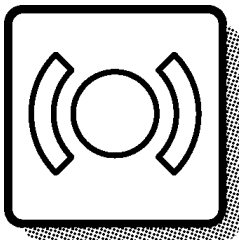

5

Track brake
Frein de déplacement
Fahrbremse
브레이크
Freno de transporte

Frame and crawler unit
Bâti et unité des chenilles
Rahmen und Fahrwerk
프레임 및 언더케리지
Bastidor y unidad de orugas

7

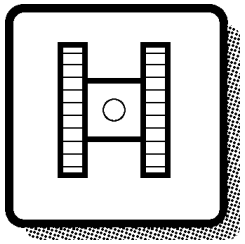

Body with associated parts
Carrosserie avec détails
Aufbau mit Zubehörteilen
본체 구성품
Carroceria con detalles

8

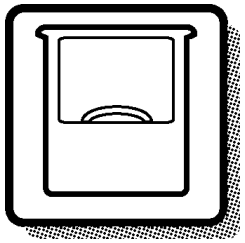

Miscellaneous equipment
Equipments divers
Übrige Ausrüstung
유압 및 작업장치
Equipo diverso

9

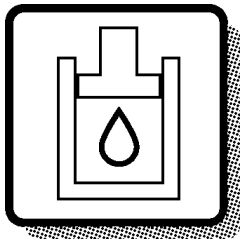

Numerical index
Répertoire numérique
Nummernverzeichnis
부품번호 색인
Indice numérico

10

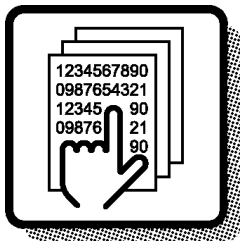

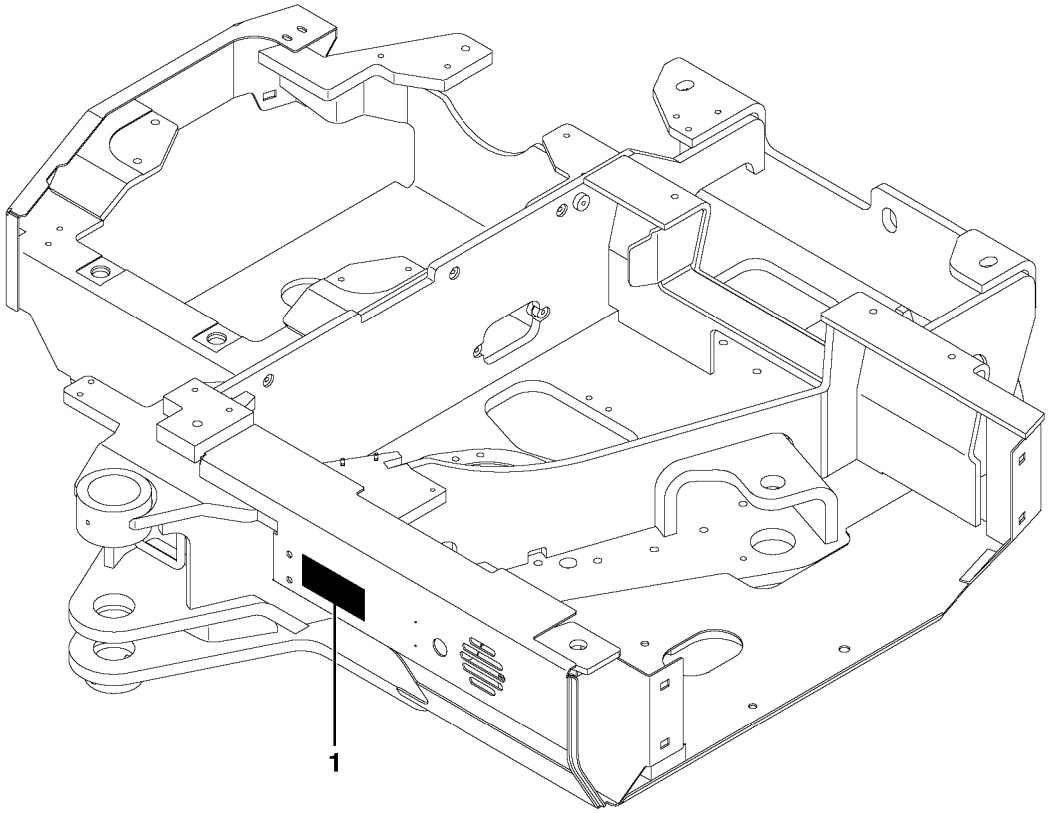

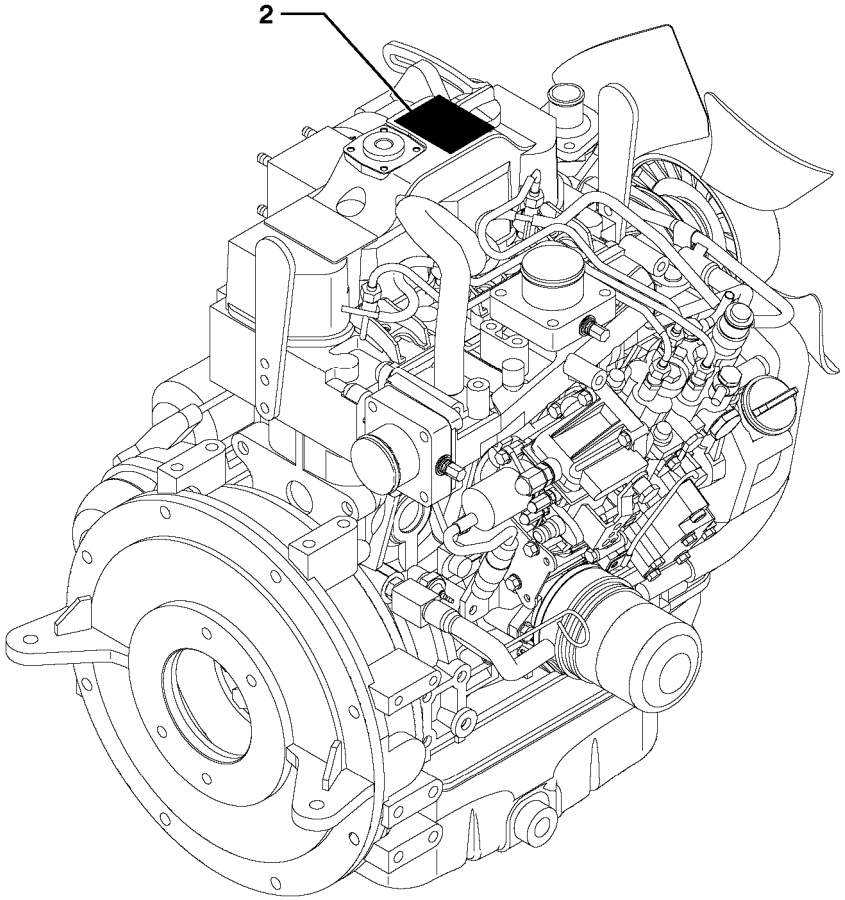

Volvo Construction Equipment

1010511

GBR	FRA	DEU	KOR	ESP
1 Product sign plate	1 Enseigne de produit	1 Produktschild	1 장비 명판 (일련번호)	1 Muestra del producto
2 Engine sign plate	2 Enseigne de moteur	2 Motorschild	2 엔진 명판	2 Muestra de motor

GBR

Only genuine parts are presented in this catalogue. These parts have been subjected to the necessary function and endurance tests, and they comply with the high quality and safety requirements that have been set for Volvo Construction Equipment. You should note that warranties do not cover damages that are caused or aggravated by the fact that a non-genuine part was fitted.

The illustrations shown in the catalogues should not be used as assembly or workshop instructions. Separate literature for the various specific subject areas is available for that purpose.

The owner of the machine or equipment should state the model designation, manufacturing number, part number, quantity, and the name, or description, of the part when ordering parts.

For location of the model and engine designation plates, etc, see page 4.

Market-adapted equipment entered in catalogue, can be seen on page 25.

See page 13 for a ”Catalogue Guide” on how to use the parts catalogue.

See page 22 for table of abbreviations.

This catalogue has been produced by
Volvo Construction Equipment Customer Support.
If you have any point of views regarding the catalogue, or if you detect any errors in the catalogue, please take a copy of the page in question, indicate the error(s), and send it to us at the following address:

Volvo Compact Equipment sas
Rue Pierre Pingon
BP 119
F 01303 Belley Cedex.....Telefax: +33(0)4 79 81 39 63
E-mail: vce.parts.catalog@volvo.com

GBR

EXCAVATOR VOLVO ECR38

BASIC MACHINE
602.10151 ECR38

ENGINE
Part No. VOE 11801176 Typ, D1.6C / D1.6A

Seules les pièces d'origine sont présentées dans les catalogues des pièces de rechange. Toutes ces pièces ont été soumises à des tests de fonctionnement et de longévité pour être conformes aux exigences sévères de qualité et de sécurité posées par Volvo Construction Equipment. Notez que les garanties ne couvrent pas les dégâts et les dommages causés par le montage de pièces autres que des pièces d'origine.

Les illustrations dans le catalogue ne doivent pas être utilisées comme notice de montage ni comme instructions d'atelier. Pour ceci, nous vous renvoyons à la documentation spécifiquement éditée dans ce but.

Pour toute commande de pièces de rechange, indiquez la désignation du modèle, le numéro de fabrication, le numéro de référence, la quantité ainsi que la désignation de la pièce.

Le placement des plaques de désignation de modèle et de moteur etc. ressort de la figure ci-contre 4.

Equipement adapté au marché et indiqué dans le catalogue, priére de voir la liste en page 25.
Guide pour l'utilisation de catalogues de pièces de rechange, voir page 15.

Pour la liste des abréviations employées, prière de voir en page 22.

Ce catalogue est édité par Volvo Construction Equipment Customer Support. Si vous avez des commentaires ou si vous découvrez des erreurs dans ce catalogue, nous vous serions reconnaissants de bien vouloir photocopier cette page, de la remplir et de nous la renvoyer.

Volvo Compact Equipment sas
Rue Pierre Pingon
BP 119
F 01303 Belley Cédex.....Telefax: +33(0)4 79 81 39 63
E-mail: vce.parts.catalog@volvo.com

FRA

PELLE HYDRAULIQUE VOLVO ECR38

MACHINE DE BASE
602.10151 ECR38

MOTEUR
No de réf. VOE 11801176 Type, D1.6C / D1.6A

In den Ersatzteilkatalogen sind nur Originalteile verzeichnet. Diese Teile haben die notwendigen Funktions- und Lebensdauertests durchlaufen und erfüllen die hohen Qualitäts- und Sicherheitsanforderungen von Volvo Construction Equipment. Beachten Sie bitte, dass die Garantien keine Schäden umfassen, die durch die Montage eines fremden Teils verursacht oder verschlimmert wurden.

Die Abbildungen in dem Katalog dürfen nicht als Montageanweisungen oder Werkstattanleitungen verwendet werden. Wir verweisen statt dessen auf die separate Literatur für diesen Zweck.

Der Maschinenbesitzer muss bei der Bestellung von Ersatzteilen die Modellbezeichnung, Fabriksnummer, Artikelnummer sowie Anzahl und Bezeichnung des Teils angeben.

Die Anbringung der Schilder für Modell- und Motorbezeichnung usw. geht aus dem Bild auf Seite 4 hervor.

Für den Markt angepasste Ausrüstung wurde in den Katalog aufgenommen, Seite 25.

Die Anweisung auf Seite 17 hilft Ihnen sich im Ersatzteilkatalog zurechtzufinden.

Abkürzungsverzeichnis, siehe Seite 22.

Dieser Katalog wurde von
Volvo Construction Equipment Customer Support
herausgegeben. Wenn Sie Kommentare zu diesem Katalog haben oder Fehler darin finden, kopieren Sie bitte die entsprechende Seite, machen Sie eine Notiz und schicken Sie diese ein an:

Volvo Compact Equipment sas
Rue Pierre Pingon
BP 119
F 01303 Belley Cedex.....Telefax: +33(0)4 79 81 39 63
E-mail: vce.parts.catalog@volvo.com

RAUPENBAGGER VOLVO ECR38

GRUNDMASCHINE
602.10151 ECR38

MOTOR
Bestellnummer VOE 11801176 Typ, D1.6C / D1.6A

이 예비부품 카탈로그에는 순정품만을 소개합니다 .
이 부품들은 필요한 기능 및 내구성에 준한 테스트를 거쳤고 ,
볼보건설기계의 높은 품질 및 안전 요구조건을 충족시킵니다 . 순정품을 사용하지 않음으로서 발생한
또는 악화된 손상에 대해서는 보증이 해당되지 않는 것에 유의하십시오 . 카탈로그의 그림은 장착설명서 또는 정비 지침으로 사용해서는 안됩니다 . 여러가지 지정된 영역에 알맞도록 제작된 별도의 설명서가 있습니다 .

기계 또는 장비의 소유주는 부품을 주문할 때 모델 명칭 , 제작 번호 , 부품번호 , 수량 및 부품 명칭을 기입해야 합니다 .

모델 및 엔진 명판의 위치 등은 xxx 페이지를 참조하십시오 .4.

카탈로그에 들어있는 시장에 적용한 장비는 25 페이지에
나옵니다 .

부품 카탈로그 사용법은 "Catalogue Guide" (카탈로그 가이드) 페이지 13 을 참조하십시오 .

약어 도표는 페이지 22 를 참조하십시오 .

카탈로그는 볼보건설기계의 고객지원부에서 제작합니다 .
카탈로그에 관련하여 관점을 가지고 계시거나 에러를 발견하신 분은 해당 페이지를 복사하고 에러를 표시한 후 다음 주소로 보내주십시오 :

Volvo Compact Equipment sas
Rue Pierre Pingon
BP 119
F 01303 Belley Cedex.....Telefax: + 33(0)4 79 81 39 63
이메일 : vce.parts.catalog@volvo.com

KOR

GB- EXCAVATOR VOLVO ECR38

기본 장비
602.10151 ECR38

엔진
부품 번호 VOE 11801176 형식 , D1.6C / D1.6A

ESP

En los catálogos de repuestos se presentan únicamente piezas originales que han sido sometidas a las necesarias pruebas de funcionamiento y duración y que cumplen las elevadas exigencias de seguridad y calidad de Volvo Construction Equipment.
Recuerde que las garantías no cubren los daños ocasionados o agravados por no haber montado una pieza original.

Las ilustraciones del catálogo no deben utilizarse como base para el montaje ni como instrucciones de taller. Para ello recomendamos utilizar los manuales de taller editados a propósito.

Al hacer el pedido de repuestos, el propietario de la máquina debe indicar el modelo de la misma, su número de fabricación, la referencia de la pieza, la cantidad y la denominación.

La ubícación de letreros con las denominaciones de modelo y motor etc., puede verse en la página 4.

La lista de equipos de adaptación según mercado, introducidos en el catálogo, puede verse en la página 25.

Guía para el uso del catálogo, puede verse en la página 19.

La tabla de abreviaturas puede verse en la página 22.

Esté catálogo ha sido editado por
Volvo Construction Equipment Customer Support.
Si tiene algún comentario que hacer sobre el catálogo, o detecta algún error, le rogamos que haga una copia de la página en cuestión y nos la remita junto con sus comentarios a:

Volvo Compact Equipment sas
Rue Pierre Pingon
BP 119
F 01303 Belley Cedex.....Telefax: +33(0)4 79 81 39 63
E-mail: vce.parts.catalog@volvo.com

ESP

EXCAVADORA VOLVO ECR38

MÁQUINA BÁSICA
602.10151 ECR38

MOTOR
Núm. de pieza VOE 11801176 Tipo, D1.6C / D1.6A

VOLVO

Construction Equipment

Fig.	Part No.	Quantity 1	2	3	PS	KIT	Description	Dénomination	Bezeichnung	품명	Denominatición	Notes
	SA 1146-00030	1					Bucket Cylinder	Verin Godet	Löffelzylinder	버켓 실린더	Cilind Cuchara	STD
												See group 924, page 625
1		1			NS		•Tube	•Tuyau	•Rohr	튜브	•Tubo	
2	**SA 9624-11617**	2					•Bushing	•Bague	•Buchse	부싱	•Casquillo	
3	**SA 9481-10003**	2					•Nipple	•Raccord	•Nippel	니플	•Niple	
4	**SA 9561-08010**	4					•Seal	•Joint	•Dichtung	시일	•Reten	
5	**SA 14501183**	1					•Rod	•Tige piston	•Kolbenstange	로드	•Varilla piston	(1146-00530)
6	**SA 9568-01200**	2				K	•Seal	•Joint	•Dichtung	시일	•Reten	
7	**SA 9023-10802**	1					•Set Screw	•Vis Butee	•Anschlagschraub	세트스크류	•Tornillo Tope	
8	**SA 1146-06870**	1					•Pad	•Patin	•Belag	패드	•Pastilla	
9	**SA 1146-00610**	1					•Head	•Tete	•Kopf	헤드	•Capo	
10	**SA 9612-08040**	1				K	•Bushing	•Bague	•Buchse	부싱	•Casquillo	
11	**SA 9557-07000**	1					•Ring	•Anneau	•Ring	링	•Anillo	87,6 x 15
12	**SA 9556-08000**	1					•Ring	•Anneau	•Ring	링	•Anillo	
13	**SA 1146-00220**	1					•Cushion	•Coussin	•Sitzkissen	쿠션	•Cojin	
14	**SA 1146-00620**	1					•Piston	•Piston	•Kolben	피스톤	•Piston	
15	**SA 9216-06520**	1					•Washer	•Rondelle	•Scheibe	와셔	•Arandela	66 x 95
16	**SA 1146-06880**	1					•Lock Nut	•Contre-ecrou	•Sicher Mutter	로크너트	•Contratuerca	
17	**SA 9016-21612**	12					•Bolt	•Boulon	•Bolzen	볼트	•Perno	M16 x 60
18	**SA 9564-20800**	1				K	•Seal	•Joint	•Dichtung	시일	•Reten	
19	**SA 9567-20801**	1				K	•Ring	•Anneau	•Ring	링	•Anillo	
20	**SA 9563-20801**	1				K	•Seal	•Joint	•Dichtung	시일	•Reten	
21	**SA 1146-07960**	1				K	•Seal	•Joint	•Dichtung	시일	•Reten	
22	**SA 9566-31100**	1				K	•Ring	•Anneau	•Ring	링	•Anillo	
23	**SA 9566-11100**	1				K	•Ring	•Anneau	•Ring	링	•Anillo	
100	**SA 8148-10071**	1				K	Sealing kit	Jeu joints	Dichtungssatz	시일	Juego retenes	1)

7 8 9 10 11 3 1 2 12 6 4 13 5

1) **GB:** Replacement version **FR:** Version piéce de rechange. **DE:** Ersatzteil-ausführung. **KR:** 신규발행판으로 교환 **ES:** Version piezas de repuesto.

1	**DD17G001**	**Cilindro de cazo** **버켓 실린더** **Schaufelzylinder** **Vérin de godet** **Bucket cylinder**	Catalogue id **56001**	Group **975**
2				
3			Illustr. No **SA296**	Section **1000**
4				
5		**STD**	Issue **VOE 74C995601**	Page **655**

VOLVO

GBR

In addition to part numbers, the Parts Catalogue also includes a vast amount of essential information which you, the operator, should be acquainted with.
With the ”Catalogue Guide”, we want to show clearly how the catalogues are arranged and what sort of information is presented therein.

Group 1 Preface and Instructions
Here you can find the following information:
- Title page and publication number
- Group index
- Product signs
- Preface
- List of items of equipment adapted to market requirements that have been introduced
- Catalogue Guide
- Table of abbreviations

Group 2 - 9 Text and illustration pages

- The table of contents shows the division of the main groups into sub-groups, with reference to page number and section.
- Illustration page. The position number of the illustration refers to the text page.
- Text page
  1. Heading.
  2. Additional text which limits the validity of the section. An example is information relating to manufacturing numbers and equipment adapted to market requirements.
  3. Designation for quantity columns.
  4. Illustrations.
  5. Group, section, page, which you should use when you search for information in the catalogue.
  6. Catalogue identification and issue designation.
  7. Position number of the part on the associated drawing.
  8. Part number
  9. Quantity. The column designation indicates the version which is shown in each column. The quantity stated refers to the quantity for each machine or, where appropriate, for each complete unit.
     ”REQ” refers to the required amount. See also ”Notes” column.
  10. PS (Parts Status) indicates the status code of the part.
      ”NS” means that the part is not kept in stock.
      ”SS” means that the part has been replaced.
      Refer to Group 10 Replaced parts for further information.
  11. KIT. Parts that are marked with a ”K” are included in a kit. The number of the kit is often indicated after other part numbers.
  12. Description. The indentations indicate if one or more parts are included in the assembled unit described above. The parts are included when a complete unit is ordered.
  13. Notes. Other information relating to a particular part is given here.
      - Footnote number (1 for example) is given at the bottom of the page.
      - Replaced parts (ZM 2099130, for example).
      - Product or manufacturing number.
      - Abbreviations and technical information.
      - Reference to page and group.

Group 10 Replaced parts / Number index

- Replaced parts. The part numbers of parts marked with ”SS” (in the PS column) are indicated here, together with their replacement numbers.
  The replacement parts may in turn be also replaced, and so on.
- Number index. All parts included in the catalogue are indicated here, together with a reference to group, section and page.

Continued improvements and successes in design could result in modifications to your equipment which are not covered by this publication. Each publication is revised when required to include these modifications in later issues. For additional information, you should contact Volvo Construction Equipment Customer Support, Catalogue Department.

Any unauthorized reproduction of any part of this document would be in violation of Volvo Construction Equipment AB, Customer Support division's rights and will be prosecuted to the fullest extent allowed by law. We reserve the right to make changes without prior notice.

Fig.	Part No.	Quantity 1	2	3	PS	KIT	Description	Dénomination	Bezeichnung	품명	Denominatición	Notes
	SA 1146-00030	1					Bucket Cylinder	Verin Godet	Löffelzylinder	버켓 실린더	Cilind Cuchara	STD
												See group 924, page 625
1		1			NS		•Tube	•Tuyau	•Rohr	튜브	•Tubo	
2	**SA 9624-11617**	2					•Bushing	•Bague	•Buchse	부싱	•Casquillo	
3	**SA 9481-10003**	2					•Nipple	•Raccord	•Nippel	니플	•Niple	
4	**SA 9561-08010**	4					•Seal	•Joint	•Dichtung	시일	•Reten	
5	**SA 14501183**	1					•Rod	•Tige piston	•Kolbenstange	로드	•Varilla piston	(1146-00530)
6	**SA 9568-01200**	2				K	•Seal	•Joint	•Dichtung	시일	•Reten	
7	**SA 9023-10802**	1					•Set Screw	•Vis Butee	•Anschlagschraub	세트스크류	•Tornillo Tope	
8	**SA 1146-06870**	1					•Pad	•Patin	•Belag	패드	•Pastilla	
9	**SA 1146-00610**	1					•Head	•Tete	•Kopf	헤드	•Capo	
10	**SA 9612-08040**	1				K	•Bushing	•Bague	•Buchse	부싱	•Casquillo	
11	**SA 9557-07000**	1					•Ring	•Anneau	•Ring	링	•Anillo	87,6 x 15
12	**SA 9556-08000**	1					•Ring	•Anneau	•Ring	링	•Anillo	
13	**SA 1146-00220**	1					•Cushion	•Coussin	•Sitzkissen	쿠션	•Cojin	
14	**SA 1146-00620**	1					•Piston	•Piston	•Kolben	피스톤	•Piston	
15	**SA 9216-06520**	1					•Washer	•Rondelle	•Scheibe	와셔	•Arandela	66 x 95
16	**SA 1146-06880**	1					•Lock Nut	•Contre-ecrou	•Sicher Mutter	로크너트	•Contratuerca	
17	**SA 9016-21612**	12					•Bolt	•Boulon	•Bolzen	볼트	•Perno	M16 x 60
18	**SA 9564-20800**	1				K	•Seal	•Joint	•Dichtung	시일	•Reten	
19	**SA 9567-20801**	1				K	•Ring	•Anneau	•Ring	링	•Anillo	
20	**SA 9563-20801**	1				K	•Seal	•Joint	•Dichtung	시일	•Reten	
21	**SA 1146-07960**	1				K	•Seal	•Joint	•Dichtung	시일	•Reten	
22	**SA 9566-31100**	1				K	•Ring	•Anneau	•Ring	링	•Anillo	
23	**SA 9566-11100**	1				K	•Ring	•Anneau	•Ring	링	•Anillo	
100	**SA 8148-10071**	1				K	Sealing kit	Jeu joints	Dichtungssatz	시일	Juego retenes	1)

7 8 9 10 11 3 1 2 12 6 4 13 5

1) **GB:** Replacement version **FR:** Version piéce de rechange. **DE:** Ersatzteil-ausführung. **KR:** 신규발행판으로 교환 **ES:** Version piezas de repuesto.

1	**DD17G001**	**Cilindro de cazo** **버켓 실린더** **Schaufelzylinder** **Vérin de godet** **Bucket cylinder**	Catalogue id **56001**	Group **975**
2				
3			Illustr. No **SA296**	Section **1000**
4				
5		**STD**	Issue **VOE 74C995601**	Page **655**

VOLVO

FRA

Le catalogue de pièces de rechange présente, non seulement les numéros de référence, mais également d'autres informations qu'il est important de connaître. Ce guide de catalogue vous indique, d'une façon générale, comment sont conçus nos catalogues et quelles informations ils vous apportent.

Groupe 1 Avant-propos et instructions
Sous ce groupe, vous trouvez:
- La page de titre avec le numéro de publication
- Le registre des groupes
- Le plaques de produit
- Un avant-propos
- Une liste des équipements introduits suivant les pays
- Un guide de catalogue
- Un tableau des abréviations

Groupes 2 - 9 Pages de texte et d'illustration
- Le sommaire indique la division des groupes principaux en sous-groupes avec des renvois aux pages et aux sections.
- La page d'illustration. L'illustration donne les numéros de position qui renvoient à la page de texte.
- La page de texte
  1. Rubrique
  2. Texte supplémentaire qui limite la validité de la rubrique, par exemple numéro de série et équipements adaptés aux pays
  3. Désignation des modèles pour les différentes colonnes
  4. N° d'illustration
  5. Groupe, section, page, utilisés pour la recherche dans le catalogue
  6. Identification du catalogue et de l'édition
  7. Numéro de position de la pièce sur l'illustration afférente
  8. Numéro de référence
  9. Quantité. La désignation des colonnes indique le modèle qui se réfère à chaque colonne. La quantité indiquée correspond à la quantité par engin ou, suivant les cas, par unité complète. ”REQ” signifie quantité nécessaire, voir la colonne Notes
  10. PS (Parts Status) indique le code d'état de la pièce.
      -”NS” signifie que la pièce n'existe pas en magasin.
      -”SS” signifie que la pièce a été remplacée.
      Voir le groupe 10, pièces remplacées pour de plus amples informations.
  11. KIT. Les pièces marquées ”K” font partie d'un kit. Le numéro du kit est le plus souvent indiqué après les autres numéros de référence.
  12. Désignation. Le décalage indique si une ou plusieurs pièces font partie de l'unité complète indiquée au-dessus. Ces pièces sont envoyées pour une commande d'une unité complète.
  13. Notes (Remarques). Diverses informations pour une pièce:
      - Numéro de renvoi. Par exemple 1) indication en bas de page.
      - Pièces remplacées. Par exemple (ZM 2099130).
      - Numéro de produit ou numéro de fabrication.
      - Abréviations et explications techniques.
      - Renvoi aux pages et aux groupes.

Groupe 10 Pièces remplacées/Registre des numéros

- Pièces remplacées. Les numéros de référence marquées ”SS” (dans la colonne PS) sont repris ici avec leur numéro de remplacement. Ces pièces remplacées peuvent, à leur tour, être remplacées par d'autres, etc.
- Registre des numéros. Tous les numéros de référence du catalogue se retrouvent ici avec un renvoi au groupe, à la section et à la page.

Les perfectionnements continus et les progrès réalisés au point de vue construction peuvent entraîner, sur votre engin, des modifications qui ne sont pas prises en compte dans cette publication. Chaque publication est remise à jour suivant les besoins pour inclure toutes ces modifications dans les dernières édition.

La reproduction non autorisée de toute partie de ce document constitue une violation des droits d'auteur de Volvo Construction Equipment AB, Customer Support Division et entraînera une poursuite légale aux termes de la loi. Nous nous réservons le droit d'apporter des modifications sans préavis.

Fig.	Part No.	Quantity 1	2	3	PS	KIT	Description	Dénomination	Bezeichnung	품명	Denominatición	Notes
	SA 1146-00030	1					Bucket Cylinder	Verin Godet	Löffelzylinder	버켓 실린더	Cilind Cuchara	STD
												See group 924, page 625
1		1			NS		•Tube	•Tuyau	•Rohr	튜브	•Tubo	
2	**SA 9624-11617**	2					•Bushing	•Bague	•Buchse	부싱	•Casquillo	
3	**SA 9481-10003**	2					•Nipple	•Raccord	•Nippel	니플	•Niple	
4	**SA 9561-08010**	4					•Seal	•Joint	•Dichtung	시일	•Reten	
5	**SA 14501183**	1					•Rod	•Tige piston	•Kolbenstange	로드	•Varilla piston	(1146-00530)
6	**SA 9568-01200**	2				K	•Seal	•Joint	•Dichtung	시일	•Reten	
7	**SA 9023-10802**	1					•Set Screw	•Vis Butee	•Anschlagschraub	세트스크류	•Tornillo Tope	
8	**SA 1146-06870**	1					•Pad	•Patin	•Belag	패드	•Pastilla	
9	**SA 1146-00610**	1					•Head	•Tete	•Kopf	헤드	•Capo	
10	**SA 9612-08040**	1				K	•Bushing	•Bague	•Buchse	부싱	•Casquillo	
11	**SA 9557-07000**	1					•Ring	•Anneau	•Ring	링	•Anillo	87,6 x 15
12	**SA 9556-08000**	1					•Ring	•Anneau	•Ring	링	•Anillo	
13	**SA 1146-00220**	1					•Cushion	•Coussin	•Sitzkissen	쿠션	•Cojin	
14	**SA 1146-00620**	1					•Piston	•Piston	•Kolben	피스톤	•Piston	
15	**SA 9216-06520**	1					•Washer	•Rondelle	•Scheibe	와셔	•Arandela	66 x 95
16	**SA 1146-06880**	1					•Lock Nut	•Contre-ecrou	•Sicher Mutter	로크너트	•Contratuerca	
17	**SA 9016-21612**	12					•Bolt	•Boulon	•Bolzen	볼트	•Perno	M16 x 60
18	**SA 9564-20800**	1				K	•Seal	•Joint	•Dichtung	시일	•Reten	
19	**SA 9567-20801**	1				K	•Ring	•Anneau	•Ring	링	•Anillo	
20	**SA 9563-20801**	1				K	•Seal	•Joint	•Dichtung	시일	•Reten	
21	**SA 1146-07960**	1				K	•Seal	•Joint	•Dichtung	시일	•Reten	
22	**SA 9566-31100**	1				K	•Ring	•Anneau	•Ring	링	•Anillo	
23	**SA 9566-11100**	1				K	•Ring	•Anneau	•Ring	링	•Anillo	
100	**SA 8148-10071**	1				K	Sealing kit	Jeu joints	Dichtungssatz	시일	Juego retenes	1)

7 8 9 10 11 3 1 2 12 6 4 13 5

1) **GB:** Replacement version **FR:** Version piéce de rechange. **DE:** Ersatzteil-ausführung. **KR:** 신규발행판으로 교환 **ES:** Version piezas de repuesto.

1	**DD17G001**	**Cilindro de cazo** **버켓 실린더** **Schaufelzylinder** **Vérin de godet** **Bucket cylinder**	Catalogue id **56001**	Group **975**
2				
3			Illustr. No **SA296**	Section **1000**
4				
5		**STD**	Issue **VOE 74C995601**	Page **655**

VOLVO

Im Ersatzteilkatalog sind außer den Artikelnummern auch eine Reihe von Informationen aufgeführt, die man unbedingt kennen sollte.
Mit der Kataloganweisung wollen wir auf eine überschaubare Art und Weise zeigen, wie unsere Kataloge aufgebaut und welche Informationen hier enthalten sind.

Gruppe 1 Vorwort und Anweisungen
Hier findet man folgendes:
- Titelseite mit Publikationsnummer
- Gruppenregister
- Produktschilder
- Vorwort
- Verzeichnis über eingeführte marktangepaßte Ausrüstungen
- Kataloganweisung
- Abkürzungstabelle

Gruppe 2 - 9 Text- und Bildseiten

- Das Inhaltsverzeichnis zeigt die Einteilung der Hauptgruppe in Untergruppen mit Hinweis auf Seite und Abschnitt.
- Bildseite. Die Positionsnummer der Abbildung weist auf die Textseite hin.
- Textseite.
  1. Überschrift
  2. Zusatztext, der die Gültigkeit des Abschnitts begrenzt, z.B. Information über Herstellungsnummer und marktangepaßte Ausrüstungen.
  3. Bezeichnung für die Anzahl-Spalten
  4. Abbildungsnummer
  5. Gruppe, Abschnitt, Seite, die bei der Suche im Katalog verwendet werden.
  6. Kataloganweisung und Ausgabebezeichnung
  7. Positionsnummer des Artikels mit dazugehöriger Abbildung.
  8. Artikelnummer
  9. Anzahl. Die Spaltenbezeichnung zeigt, welche Ausführung per Spalte aufgeführt ist. Die angegebene Anzahl betrifft Anzahl pro Maschine oder ggf. pro komplette Einheit. ”REQ” bezeichnet die erforderliche Menge, siehe Anmerkungsspalte.
  10. PS (Parts Status) zeigt den Statuscode des Artikels.
      -”NS” bedeutet, daß der Artikel nicht mehr auf Lager gehalten wird.
      -”SS” bedeutet, daß der Artikel ersetzt wurde.
      Siehe Gruppe 10, Ersetzte Artikel, für weitere Information.
  11. KIT. Artikel, die mit einem ”K” gekennzeichnet sind, gehören zu einem Satz. Die Nummer des Satzes wird in den meisten Fällen nach den übrigen Artikelnummern angegeben.
  12. Bezeichnung. Die Stufenverschiebung zeigt, daß ein oder mehrere Artikel in einer oben aufgeführten zusammengesetzten Einheit enthalten sind. Die Artikel folgen bei der Bestellung der kompletten Einheit mit.
  13. Notes (Anmerkung). Hier werden übrige Informationen für einen Artikel aufgeführt:
      - Fußnotennummer, Beispiel (1), wird ganz unten auf der Seite angegeben.
      - Ersetzte Artikel, Beispiel (ZM 2099130)
      - Produkt- oder Herstellungsnummer
      - Abkürzungen oder technische Informationen
      - Seiten- und Gruppenhinweis

Gruppe 10 Ersetzte Artikel / Nummernregister

- Ersetzte Artikel. Hier sind die mit ”SS” markierten (in der PS-Spalte) Artikelnummern mit ihrem Ersatz aufgeführt. Die ersetzten Artikel können wiederum ersetzt worden sein.
- Nummernregister. Hier sind alle im Katalog vorkommenden Artikel aufgeführt, und zwar mit Hinweis auf Gruppe, Abschnitt, Seite.

Fortlaufende Verbesserungen und Fortschritte in der Konstruktion können auch bei Ihrer Maschine zu Änderungen führen, die nicht von dieser Schrift umfaßt werden. Jede Ausgabe wird bei Bedarf überarbeitet, um diese Veränderungen bei späteren Ausgaben mit zu berücksichtigen.

Jegliche Reproduktion dieses Dokumentes in Auszügen oder in vollem Umfang stellt eine Verletzung der Rechte von Volvo Construction Equipment AB, Customer Support dar und wird unter voller Ausschöpfung der gesetzlichen Möglichkeiten strafrechtlich verfolgt. Wir behalten uns das Recht auf Änderungen ohne vorherige Ankündigung vor.

Fig.	Part No.	Quantity 1	2	3	PS	KIT	Description	Dénomination	Bezeichnung	품명	Denominatición	Notes
	SA 1146-00030	1					Bucket Cylinder	Verin Godet	Löffelzylinder	버켓 실린더	Cilind Cuchara	STD
												See group 924, page 625
1		1			NS		•Tube	•Tuyau	•Rohr	튜브	•Tubo	
2	**SA 9624-11617**	2					•Bushing	•Bague	•Buchse	부싱	•Casquillo	
3	**SA 9481-10003**	2					•Nipple	•Raccord	•Nippel	니플	•Niple	
4	**SA 9561-08010**	4					•Seal	•Joint	•Dichtung	시일	•Reten	
5	**SA 14501183**	1					•Rod	•Tige piston	•Kolbenstange	로드	•Varilla piston	(1146-00530)
6	**SA 9568-01200**	2				K	•Seal	•Joint	•Dichtung	시일	•Reten	
7	**SA 9023-10802**	1					•Set Screw	•Vis Butee	•Anschlagschraub	세트스크류	•Tornillo Tope	
8	**SA 1146-06870**	1					•Pad	•Patin	•Belag	패드	•Pastilla	
9	**SA 1146-00610**	1					•Head	•Tete	•Kopf	헤드	•Capo	
10	**SA 9612-08040**	1				K	•Bushing	•Bague	•Buchse	부싱	•Casquillo	
11	**SA 9557-07000**	1					•Ring	•Anneau	•Ring	링	•Anillo	87,6 x 15
12	**SA 9556-08000**	1					•Ring	•Anneau	•Ring	링	•Anillo	
13	**SA 1146-00220**	1					•Cushion	•Coussin	•Sitzkissen	쿠션	•Cojin	
14	**SA 1146-00620**	1					•Piston	•Piston	•Kolben	피스톤	•Piston	
15	**SA 9216-06520**	1					•Washer	•Rondelle	•Scheibe	와셔	•Arandela	66 x 95
16	**SA 1146-06880**	1					•Lock Nut	•Contre-ecrou	•Sicher Mutter	로크너트	•Contratuerca	
17	**SA 9016-21612**	12					•Bolt	•Boulon	•Bolzen	볼트	•Perno	M16 x 60
18	**SA 9564-20800**	1				K	•Seal	•Joint	•Dichtung	시일	•Reten	
19	**SA 9567-20801**	1				K	•Ring	•Anneau	•Ring	링	•Anillo	
20	**SA 9563-20801**	1				K	•Seal	•Joint	•Dichtung	시일	•Reten	
21	**SA 1146-07960**	1				K	•Seal	•Joint	•Dichtung	시일	•Reten	
22	**SA 9566-31100**	1				K	•Ring	•Anneau	•Ring	링	•Anillo	
23	**SA 9566-11100**	1				K	•Ring	•Anneau	•Ring	링	•Anillo	
100	**SA 8148-10071**	1				K	Sealing kit	Jeu joints	Dichtungssatz	시일	Juego retenes	1)

7 8 9 10 11 3 1 2 12 6 4 13 5

1) **GB:** Replacement version **FR:** Version piéce de rechange. **DE:** Ersatzteil-ausführung. **KR:** 신규발행판으로 교환 **ES:** Version piezas de repuesto.

1	**DD17G001**	**Cilindro de cazo** **버켓 실린더** **Schaufelzylinder** **Vérin de godet** **Bucket cylinder**	Catalogue id **56001**	Group **975**
2				
3			Illustr. No **SA296**	Section **1000**
4				
5		**STD**	Issue **VOE 74C995601**	Page **655**

VOLVO

KOR

부품 카탈로그에는 부품 번호 외에도 운전자가 알아야 할 많은 중요한 정보가 포함되어 있습니다.
" 카탈로그 가이드 " 에는 카탈로그의 배열
그리고 카탈로그 안에 소개된 내용의 종류에 대해 알기 쉽게 표시되어 있습니다.

그룹 1 머리말 및 소개
다음과 같은 정보가 있습니다 :
- 제목 페이지와 발행 번호
- 그룹 색인
- 제품 사인
- 머리말
- 시장의 요구조건에 맞도록
적용한 소개된 장비 도표
-"Catalogue Guide" (카탈로그 가이드)
- 약어 도표

그룹 2-9 텍스트 및 그림 페이지

- 목차는 페이지 번호와 섹션을
참조할 수 있도록 메인 그룹 부분에서
서브 그룹까지 나옵니다.
그림 페이지.
그림의 위치 번호는 참조
텍스트 페이지를 표시합니다.
- 텍스트 페이지
1. 제목.
2. 검색 섹션을 제한하는 추가 텍스트. 한가지 예는
제작 번호 및 시장의 요구조건에 맞춘 장치에 관련된 정보입니다.
3. 수량 컬럼 명칭.
4. 그림.
5. 그룹, 섹션, 페이지는
카탈로그에 있는 정보를
검색할 때 사용합니다.
6. 카탈로그 인식 및 발행물 명칭.
7. 관련된 이미지에 있는
부품 번호 위치.
8. 부품 번호
9. 숫자. 컬럼의 명칭은 각 컬럼에
표시된 버전을 표시합니다.
언급된 숫자는 각 기계의 수량
또는 각 장치를 참조합니다.
"REQ" 는 요구되는 양을 지시한다. " 주 !" 컬럼을 참조하십시오.

10. PS (부품 상태) 는 부품의 코드를표시합니다.
"NS" 는 재고 창고에 부품이 없음을 의미합니다.
"SS" 는 부품이 대체되었음을 뜻합니다.
상세 정보는
그룹 10 교환 부품을 참조하십시오.
11. 키트. "K" 로표시된 부품은 키트에 속합니다.
키트의 번호는 보통
기타 부품 번호 뒤에 표시되어 있습니다.
12. 개요. 들여쓰기는 위에 설명한 조립체에 한 개 또는 여러 개의
부품이 포함되는 것을 표시합니다. 조립체를 주문할 때 이러한 부품이 포함됩니다.
13. 주 ! 특별 부품에 관련된 기타 정보는 다음에서 찾을 수 있습니다.
- 각주 번호 (예 1) 는 페이지의 맨 아래에 주어집니다.
- 대체된 부품 (예, ZM 2099130).
- 제품 및 생산 번호.
- 약어 및 기술 정보.
- 페이지 및 그룹 참조.

그룹 10 대체 부품 / 번호 색인

- 대체된 부품. "SS" (PS 컬럼에) 표시된 부품의 번호는 여기에 교체된 번호와 함께 표시됩니다.

대체 부품도 또한 다시 대체될 수 있습니다. - 번호 색인. 카탈로그에 포함된 모든 부품이 그룹, 섹션 및 페이지 참조 사항과 함께 여기에 표시됩니다. 디자인이 지속적으로 개선되고, 이로 인해 사용자의 장비에 대한 개정 사항이 이번 호에 나와 있지 않을 수도 있습니다. 나중 호에 이 개정사항을 포함시킬 필요가 있을 때는 각 발행물을 개정해야 합니다. 상세정보는 볼보건설기계 고객지원, 카탈로그 부서로 문의하십시오. 이 문서는 저작권이 보호되고 문서의 어떠한 부분도 승인 없이 복제 및 제재작 할 수 없습니다. 이를 위반할 시에는 법적인 조치에 따릅니다. 본사는 사전 경고 없이 내용을 변경할 수 있습니다.

Fig.	Part No.	Quantity 1	2	3	PS	KIT	Description	Dénomination	Bezeichnung	품명	Denominatición	Notes
	SA 1146-00030	1					Bucket Cylinder	Verin Godet	Löffelzylinder	버켓 실린더	Cilind Cuchara	STD
												See group 924, page 625
1		1			NS		•Tube	•Tuyau	•Rohr	튜브	•Tubo	
2	**SA 9624-11617**	2					•Bushing	•Bague	•Buchse	부싱	•Casquillo	
3	**SA 9481-10003**	2					•Nipple	•Raccord	•Nippel	니플	•Niple	
4	**SA 9561-08010**	4					•Seal	•Joint	•Dichtung	시일	•Reten	
5	**SA 14501183**	1					•Rod	•Tige piston	•Kolbenstange	로드	•Varilla piston	(1146-00530)
6	**SA 9568-01200**	2				K	•Seal	•Joint	•Dichtung	시일	•Reten	
7	**SA 9023-10802**	1					•Set Screw	•Vis Butee	•Anschlagschraub	세트스크류	•Tornillo Tope	
8	**SA 1146-06870**	1					•Pad	•Patin	•Belag	패드	•Pastilla	
9	**SA 1146-00610**	1					•Head	•Tete	•Kopf	헤드	•Capo	
10	**SA 9612-08040**	1				K	•Bushing	•Bague	•Buchse	부싱	•Casquillo	
11	**SA 9557-07000**	1					•Ring	•Anneau	•Ring	링	•Anillo	87,6 x 15
12	**SA 9556-08000**	1					•Ring	•Anneau	•Ring	링	•Anillo	
13	**SA 1146-00220**	1					•Cushion	•Coussin	•Sitzkissen	쿠션	•Cojin	
14	**SA 1146-00620**	1					•Piston	•Piston	•Kolben	피스톤	•Piston	
15	**SA 9216-06520**	1					•Washer	•Rondelle	•Scheibe	와셔	•Arandela	66 x 95
16	**SA 1146-06880**	1					•Lock Nut	•Contre-ecrou	•Sicher Mutter	로크너트	•Contratuerca	
17	**SA 9016-21612**	12					•Bolt	•Boulon	•Bolzen	볼트	•Perno	M16 x 60
18	**SA 9564-20800**	1				K	•Seal	•Joint	•Dichtung	시일	•Reten	
19	**SA 9567-20801**	1				K	•Ring	•Anneau	•Ring	링	•Anillo	
20	**SA 9563-20801**	1				K	•Seal	•Joint	•Dichtung	시일	•Reten	
21	**SA 1146-07960**	1				K	•Seal	•Joint	•Dichtung	시일	•Reten	
22	**SA 9566-31100**	1				K	•Ring	•Anneau	•Ring	링	•Anillo	
23	**SA 9566-11100**	1				K	•Ring	•Anneau	•Ring	링	•Anillo	
100	**SA 8148-10071**	1				K	Sealing kit	Jeu joints	Dichtungssatz	시일	Juego retenes	1)

7 8 9 10 11 3 1 2 12 6 4 13 5

1) **GB:** Replacement version **FR:** Version piéce de rechange. **DE:** Ersatzteil-ausführung. **KR:** 신규발행판으로 교환 **ES:** Version piezas de repuesto.

1	**DD17G001**	**Cilindro de cazo** **버켓 실린더** **Schaufelzylinder** **Vérin de godet** **Bucket cylinder**	Catalogue id **56001**	Group **975**
2				
3			Illustr. No **SA296**	Section **1000**
4				
5		**STD**	Issue **VOE 74C995601**	Page **655**

VOLVO

En el catálogo de repuestos se incluye, además de los números de artículo, numerosa información muy útil.
El propósito de la guía es explicar la estructura de los catálogos y la información que se ofrece en los mismos.

Grupo 1 Prefacio e instrucciones
Se encontrará aquí:
- El título y el número de publicación
- El índice de grupos
- Los letreros de producto
- El prefacio
- Una lista sobre los equipos adaptados a los mercados
- La guía al catálogo
- Una tabla de abreviaturas

Grupo 2 - 9 páginas con texto e ilustraciones

- El índice muestra la clasificación de los grupos principales en subgrupos con remisiones a páginas y secciones.
- Página de ilustraciones. Los números de posición de las ilustraciones. Remisiones a páginas de texto.
- Páginas de texto
  1. Rúbrica
  2. Texto adicional que delimita la validez de la sección, por ejemplo, información sobre números de fabricación y equipos según mercado.
  3. Designación para columnas de cantidades.
  4. Número de ilustración.
  5. Grupo, sección, página. Se utilizan al manejar el catálogo
  6. Identificación e indicación de la edición del catálogo.
  7. Números de posición en la ilustración correspondiente.
  8. Números de artículo
  9. Cantidad. Se indica en esta columna la ejecución. El número indicado se refiere a la cantidad por máquina o, si procede, por unidad completa. ”REQ” significa la cantidad necesaria, véase la columna de las notas.
  10. PS (Parts Status) indica el código de estado del artículo.
      -”NS” indica que el artículo no se tiene en stock.
      -”SS” indica que el artículo ha sido sustituido.
      Para más información, véase el grupo 10, artículos sustituidos.
  11. KIT. Los artículos marcados con una ”K” forman parte de un juego. El número de juego suele indicarse detrás de los demás números de artículo.
  12. Denominación. El desplazamiento indica que en la unidad indicada se incluyen uno o varios artículos. Estos se incluyen en la unidad completa pedida.
  13. Notas. Aparecen aquí diversas informaciones relativas a los artículos:
      - Números de notas de pie de página; ej. 1) aparece al final de la página.
      - Artículos sustituidos. Ej. (ZM 2099130)
      - Números de producto o fabricación.
      - Abreviaturas e infomación técnica.
      - Remisiones a páginas y grupos.

Grupo 10 Artículos sustituidos/Indice de números

- Artículos sustituidos. Se marcan aquí con ”SS” (en la columna PS) los números de artículo con sus sustituciones. Los artículos sustituidos, a su vez, pueden haber sido sustituidos, etc.
- Indice de números. Aparecen aquí todos los artículos existentes en el catálogo con remisión a grupo, sección y página.

En su modelo de máquina pueden haberse introducido mejoras que no aparecen en esta publicación. Las publicaciones son revisadas para incluir las mejoras en ediciones posteriores.

Este documento está protegido por los derechos de autor y por lo tanto está prohibida su copia, impresión o cualquier otro tipo de reproducción indebida. La infracción de esta prohibición será penalizada. Reservado el derecho a introducir modificaciones.

TABLE OF ABBREVIATION 약어 일람표

POUR LA LISTE DES ABRÉVIATIONS EMPLOYÉES **PABLO DE ABREVIATIONS**

ABKÜRZUNGSVERZEICHNIS

ABBREVIATION	ENGLISH	FRANÇAIS	DEUTSCH	KOREAN	ESPAÑOL
A	ampere	ampère	Ampere	전류	amperio
ALT	alternative	alternative	wahlweise	대체사양	alternativa
AWD	All Wheel Drive	Toutes roues motrices	Allradantrieb	상시 4 륜 구동	Tracción en las todas las ruedas
AX ####-	as from axle No.	à partir du N° d'essieu	ab Achsennr.	액슬 일련번호 ~ 부터	a partir del eje nro
AX - ####	up to and incl. axle No.	jusqu'au N° d'essieu	bis Achsennr.	액슬 일련번호 ~ 까지	hasta el eje nro
BL	black	noir	schwarz	검정색	negro
BLUE	blue	bleu	blau	파랑색	azul
BR	brown	brun	braun	갈색	marrón
BRA	Brazil	Brésil	Brasilien	브라질	Brasil
CAB #### -	as from cab No.	à partir du N° de cabine	ab Kabinen-herstellnr.	캡 일련번호 ~ 부터	a partir de la cabina
CAB - ####	up to and incl. cab No.	jusqu'au N° de cabine	bis Kabinen-herstellnr.	캡 일련번호 ~ 까지	hasta la cabina nro
CAN	Canada	Canada	Kanada	캐나다	Canadá
CENT	centre	au milieu	Mittere	중앙	central
CHN	China	Chine	China	중국	China
CIN	component identification number	Numéro de référence de sous-ensemble	Bauteil-Identifizierungsnummer	기능품 식별 번호	Número de identificación del componente
CPL	complete	complet	komplett	조립체	completo
CU M	cubic metre	mètre cube	Kubikmeter	입방미터	metro cúbico
DEG	numbers of degrees, C°	nombres de degré de chaleur, C°	Anzahl in Graden C°	섭씨 온도 번호	numero de grado de calor, C°
DELETED	deleted	supprimé	Nicht mehr lieferbar	삭제	Retirado
DEU	Germany	Allemagne	Deutschland	독일	Alemania
DNK	Denmark	Danemark	Dänemark	덴마크	Dinamarca
EEC	European Economic Community (EEC)	pays du marche commun (EEC)	EU-Markt (EEC)	유럽경제공동체 번호	el mercado común (EEC)
ENG	Engine	moteur	Motor	엔진	motor
ENG #### -	as from engine No.	à partir du N° de moteur	ab Motornr.	엔진 일련번호 ~ 부터	a partir del motor nro
ENG - ####	up to and incl. engine No.	jusqu'au N° de moteur	bis Motornr.	엔진 일련번호 ~ 까지	hasta el motor nro
E PROD	early production	production antérieure	Frühere Ausführung	양산전	producción anterior
ESP	Spain	Espagne	Spanien	스페인	España
EU	European Union	Union Européenne	Europäische Union	유럽 연합	Unión Europea
EXC ### -	as from excavator unit No.	à partir du N° d'excavateur	Ab Bagger-Aggregatnr.	작업장치 일련번호 ~ 부터 번호	a partir de agregado excavador nro
EXC - ###	up to and incl. excavator unit No.	jusqu'au N° d'excavateur	bis Bagger-Aggregatnr	작업장치 일련번호 ~ 까지 번호	hasta el agregado excavador nro
EXCL	excluding	exclus	auschliesslich	제외	exclusivo
FIN	Finland	Finlande	Finnland	핀란드	Finlandia

ABBREVIATION	ENGLISH	FRANÇAIS	DEUTSCH	KOREAN	ESPAÑOL
FORW	forward	avant	vordere	전진	delante
FRA	France	France	Frankreich	프랑스	Francia
GBR	Great Britain	Angleterre	England	영국	Inglaterra
GRAM	gram	gramme	Gramm	그램	gramo
GREEN	green	vert	grün	녹색	verde
GREY	grey	gris	grau	회색	gris
HT #### -	as from hydraulic transmission No.	à partir du transmission hydraulique Nº	ab Hydraulikgetriebe	트랜스미션 일련번호 ~ 부터 번호	a partir de transmisión hidráulico nro
HT - ####	up to and incl. hydraulic transmission No.	jusqu'au transmission hydraulique Nº	bis Hydraulikgetriebe	트랜스미션 일련번호 ~ 까지 번호	hasta el transmisión hidráulico nro
ID	diameter, inner	diamètre, intérieur	Innendurchmesser	내경	diámetro, interior
IN	inche(s)	pouce	Zoll	인치	pulgada
INCL	inclusive	inclus	einschliesslich	포함	inclusive
INCL IN	included in	inclus dans	gehört zur	포함	forma parte de
INLET	inlet	entrée	Einlass	흡입	entrada
INNER	inner	intérieur	innen	내측	interior
IRN	Iran	Iran	Iran	이란	Iran
ITA	Italy	Italie	Italien	이태리	Italia
ITEM NO	see item No.	voir position	siehe Position Nr.	품번 참조	véase posición
K	included in parts kits	fait partie du jeu complet de réparation	gehört zur Satzverpackung	부품 킷에 포함 번호	forma parte del juego por juego
KOR	Korea	Corée	Korea	한국	Corea
L	litre, length	litre, longueur	Liter, Länge	리터 , 길이	litros, longitud
LH	left	gauche	links	왼쪽	izquierdo
LOAD #### -	as from loading unit No.	à partir du N° de chargeur	ab Hubaggregatnr.	인양장치 일련번호 ~ 부터 번호	a partir du unibad carga nro
LOAD - ####	up to and incl. loading unit No.	jusqu'au N° de chargeur	bis Hubaggregatnr.	인양장치 일련번호 ~ 까지 번호	hasta unidad carga nro
LOW	lower	dessous	unten	하부	inferior
L PROD	late production	production postérieure	jetzige Ausführung	양산후	producción posterior
MARKED	marked	marque de	gekennzeichnet mit	표시	marcado
MODEL	model designation	Désignation de modèle	Modellbezeichnung	모델 명칭	Designación de modelo
ML	millilitre	millilitre	Milliliter	밀리리터	milílitro
MM	millimetre	millimètre	Millimeter	밀리미터	milimetros
NLD	Netherlands	Pays-Bas	Holland	네델란드	Holanda
NO	number	numéro	Nummer	번호	número
NOR	Norway	Norvège	Norwegen	노르웨이	Noruega

TABLE OF ABBREVIATION 약어 일람표

POUR LA LISTE DES ABRÉVIATIONS EMPLOYÉES **PABLO DE ABREVIATIONS**

ABKÜRZUNGSVERZEICHNIS

ABBREVIATION	ENGLISH	FRANÇAIS	DEUTSCH	KOREAN	ESPAÑOL
NS	part not stocked as spare part	n`est pas stocké comme pièce de rechange	nicht als Ersatzteil vorrätig	공급불가 부품 번호	no disponible como repuesto pieza de repuesto
O SZ	over size	côte supérieur	Übergrösse	오버 사이즈	sobredimensión
OD	diameter, outer	diamètre extérieur	Aussendurchmesser	외경	diámetro, exterior
OR	orange	orange	orange	주황색	naranja
ORDER	order	commander	bestellen	순서	hacer un pedido
OUTER	outer	extérieur	aussen	외측	exterior
OUTLET	outlet	échappement	Auslass	배기	escape
PAGE	see page	voir page	siehe Seite	~ 쪽 참조	véase página
PAIR	pair	paire	Paar	짝	par
PCS	piece(s)	pièce	Stück	갯수	cada uno
PIN	product identification number	Numéro d'identification de produit	Produktidentifizierungs-Nummer	제품 식별 번호	Número de identificación del producto
PINK	pink	rose	rosa	분홍색	rosa
PROD NO	product No.	Nº de produit	Produktnr.	장비 본체번호	nro de producto
PRT	Portugal	Portugal	Portugal	포르투갈	Portugal
Q	Quantity l/min	Quantité l/min	Quantität l/min	유량 (L/MIN)	Cantidad l/min
REAR	rear	arrière	hinten	뒤쪽	detrás
RED	red	rouge	rot	빨강색	rojo
REPL BY -	replaced by	remplacé par	ersetzt durch	~ 에 대체된	substituido por
REQ#	order as required,	quantité nécessaire,	erforderliche Anzahl	소요량 만큼 주문	cantidad necesaria,
RH	right	droite	rechts	오른쪽	derecha
SE	alternative spare part version exists	une version pièce de rechange existe également	Alternative Ersatzteilausführung lieferbar	대체 예비부품 버전 있음 번호	Existen otras versiones de las piezas de repuesto
SEE GROUP	see group	voir groupe	siehe Gruppe	그룹 참조	véase grupo
SEE SB	see Service Bulletin	voir bulletin de service	siehe Kundendienstmitteilung	서비스 회보 참조	ver boletin de servicio
SER NO # -	as from serial No.	à partir du N° de fabrication	ab Fabrikationsnr.	장비 일련번호 ~ 부터	a partir de fabric. nro
SER NO - #	up to and incl.serial No.	jusqu'au N° de fabrication	bis Fabrikationsnr.	장비 일련번호 ~ 까지	hasta el fabric. nro
S/N #### -	as from serial No.	à partir du N° de série	ab Fabrikationsnr.	장비 일련번호 ~ 부터	a partir de fabricación nro.
S/N - ####	up to and incl. serial No.	jusqu'au N° de série	bis Fabrikationsnr.	장비 일련번호 ~ 까지	hasta el fabricación nro.
SUPPL	supplementary details, no spare part	indication compléter	zuzätliche Angaben	보조 부품 , 예비부품이 아님	parte completar
SPECIAL	special model	construction spéciale	Sonderausführung	주문사양	modelo especial
SQ MM	square millimeters	millimètre carré	Quadratmillimeter	평방미터	milimetros cuadrados
SS	superseded part	pièce remplacée	ersetztes Teil	교체된 부품	pieza substituida
STD	standard version	version standard	Standardausführung	표준사양	versión standard
STD SZ	standard size	dimension standard	Standardabmessung	표준규격	dimensión standard

ABBREVIATION	ENGLISH	FRANÇAIS	DEUTSCH	KOREAN	ESPAÑOL
THICK	thickness	épaisseur	Dicke	두께	espesor
TM NO # -	as from transmission No.	à partir du N° de transmission	ab Getriebenr.	트랜스미션 일련번호 ~ 부터	a partir de transmisión nro
TM NO - #	up to and incl. transmission No.	jusqu'au N° de transmission	bis Getriebenr.	트랜스미션 일련번호 ~ 까지	hasta el de transmisión nro
UPPER	upper	supérieur	oben	상부	superior
USA	United States of America	États-Unis	Vereinigte Staaten	미국	Estados Unidos
U SZ	under size	côte interieur	Untergrösse	언더 사이즈	subdimensión
V	volt	volt	Volt	전압	voltio
VIOL	violet	violet	violett	보라색	violeta
W	Watt	watt	Watt	와트	watio
WHITE	white	blanc	weiss	흰색	blanco
WID	width	largeur	Breite	폭	ancho
YELL	yellow	jaune	gelb	노란색	amarillo
ZAF	South Africa	Afrique du Sud	Südafrika	남아프리카	Sudáfrica

Equipment	Kit No	Description
11801121		Tool kit Outillage Werkzeugsatz 공구 세트 Juego de herramientas
11801216		Pre cleaner Prefiltre Vorreiniger Filtro de aire *5”*
11839001		Dipper arm Bras Stiel 디퍼 암 Brazo *1250MM/49.2125IN*
11839010		Canopy Cabine ouverte Canopy 캐노피 Techo
11839015		Engine acceleration control Commande d'accélération du moteur Gashebel Motor 엔진 회전속도 제어 Control de aceleración del motor
11839018	VOE 11713920	Travel alarm Alarme de conduite Fahralarm 후진 경고 장치 Alarma de traslación
11839019		Dipper arm Bras Stiel 디퍼 암 Brazo *1500MM/59.0550IN*
11839021		Vinyl seat , with suspension , safety belt Siège avec habillage vinyle , avec suspension et ceintu Sitz mit Vinylbezug, gefedert, Sicherheitsgurt 스프링 비닐 시트 , 안전 벨트 Asiento vinilo, suspensión, cinturon de seguridad *STD*
11839022		Fabric seat , with suspension , safety belt Siège avec habillage textile, avec suspension et ceintur Sitz mit Stoffbezug, gefedert, Sicherheitsgurt 스프링 직물 시트 , 안전 벨트 Asiento tapizado, suspensión, cinturon de seguridad *STD*
11839040		Vinyl seat , with suspension , safety belt Siège avec habillage vinyle , avec suspension et ceintu Sitz mit Vinylbezug, gefedert, Sicherheitsgurt 스프링 비닐 시트 , 안전 벨트 Asiento vinilo, suspensión, cinturon de seguridad *2”*
11839041		Hydraulic circuit (low pressure) Circuit hydraulique (basse pression) Hydraulikkreis (niedriger Druck) 유압 회로 (저압) Circuito hidraulico (baja presión) *STD*

Equipment	Kit No	Description
11839042		Hydraulic circuit (low pressure) Circuit hydraulique (basse pression) Hydraulikkreis (niedriger Druck) 유압 회로 (저압) Circuito hidraulico (baja presión) *USA*
11839048		Crawler track, steel Chenilles, acier Raupenband, Stahl 언더캐리지 Orugas, metal *300MM/11.8110IN*
11839049		Crawler track, rubber Chenilles, caoutchouc Raupenband, Gummi 언더캐리지 – 고무 트랙용 Orugas, goma *300MM/11.8110IN*
11839051		Cab with heater Cabine avec chauffage Kabine mit Heizung 히터 있는 운전실 Cabina con calefactor
11839053		Hydraulic circuit (optional equipment) Circuit hydraulique (équipement) Hydraulikkreis (Gerät) 유압 회로 (선택 장치) Circuito hidráulico (equipo) *STD*
11839055		Bucket with tooth Godet avec dents Löffel mit Zähnen 버켓 – 투스 장착 Cazo con dientes *600MM/23.6220IN*
11839056		Bucket with tooth Godet avec dents Löffel mit Zähnen 버켓 – 투스 장착 Cazo con dientes *600MM/23.6220IN*
11839057		Slope bucket Godet curage Böschungslöffel 경사 버켓 Cuchara articulada *1300MM/51.1810IN*
11839058		Slope bucket Godet curage Böschungslöffel 경사 버켓 Cuchara articulada *1300MM/51.1810IN*
11839059		Muffler Silencieux Schalldämpfer 소음기 Silenciador

Equipment	Kit No	Description
11839061		Vinyl seat , with suspension , safety belt Siège avec habillage vinyle , avec suspension et ceintu Sitz mit Vinylbezug, gefedert, Sicherheitsgurt 스프링 비닐 시트 , 안전 벨트 Asiento vinilo, suspensión, cinturon de seguridad *3”*
11839064		Fabric seat , with suspension , safety belt Siège avec habillage textile, avec suspension et ceintur Sitz mit Stoffbezug, gefedert, Sicherheitsgurt 스프링 직물 시트 , 안전 벨트 Asiento tapizado, suspensión, cinturon de seguridad *2”*
11839065		Fabric seat , with suspension , safety belt Siège avec habillage textile, avec suspension et ceintur Sitz mit Stoffbezug, gefedert, Sicherheitsgurt 스프링 직물 시트 , 안전 벨트 Asiento tapizado, suspensión, cinturon de seguridad *3”*
11839067		Hydraulic circuit (optional equipment) Circuit hydraulique (équipement) Hydraulikkreis (Gerät) 유압 회로 (선택 장치) Circuito hidráulico (equipo) *USA*
11839068	VOE 11713890	Materials handling equipment équipement de manutention Materialumschlag Equipo de manipulación *STD*
11839070		Materials handling equipment équipement de manutention Materialumschlag Equipo de manipulación *USA*
11839071	VOE 11713910	Materials handling equipment équipement de manutention Materialumschlag Equipo de manipulación *STD*
11839073		Materials handling equipment équipement de manutention Materialumschlag Equipo de manipulación *USA*
11839080		Hydraulic circuit (standard attachment) Circuit hydraulique (équipement standard) Hydraulikkreis (Standardgerät) Circuito hidraulico (acoplamiento estandar) *1500MM/59.0550IN*
11839081		Hydraulic circuit (hammer / double-acting) Circuit hydraulique (marteau/double effet) Hydraulikkreis (Hammer / doppeltwirkend) 유압 회로 (해머 / 2 단 작동) Circuito hydraulico (martillo / doble efecto) *1500MM/59.0550IN*

Equipment	Kit No	Description
11839082	VOE 11713874	Hydraulic circuit (hammer / double-acting / grab jaw) Circuit hydr. marteau/double effet/benne preneuse Hydraulikkreis (Hammer / doppeltwirkend / Zweischale 유압 회로 (해머 / 2 단 작동 / 그래브 조) Circuito hydraulico (martillo / doble efecto / cuchara biv *1500MM/59.0550IN*
11839083		Hydraulic circuit (standard attachment) Circuit hydraulique (équipement standard) Hydraulikkreis (Standardgerät) Circuito hidraulico (acoplamiento estandar) *1250MM/49.2125IN*
11839084	VOE 11713864	Hydraulic circuit (hammer / double-acting) Circuit hydraulique (marteau/double effet) Hydraulikkreis (Hammer / doppeltwirkend) 유압 회로 (해머 / 2 단 작동) Circuito hydraulico (martillo / doble efecto) *1250MM/49.2125IN*
11839085	VOE 11713873	Hydraulic circuit (hammer / double-acting / grab jaw) Circuit hydr. marteau/double effet/benne preneuse Hydraulikkreis (Hammer / doppeltwirkend / Zweischale 유압 회로 (해머 / 2 단 작동 / 그래브 조) Circuito hydraulico (martillo / doble efecto / cuchara biv *1250MM/49.2125IN*
11839086	VOE 11714526	Hydraulic hammer Marteau hydraulique Presshammer 유압 해머 Martillo hidráulico *MH260*
11839087	VOE 11714527	Hammer for Quickfit Marteau pour raccordement rapide Hammer, Schnellkupplung 퀵 커플링 용 해머 Hammer for Quickfit *MH260*
11839094		Plugs kit Kit bouchons Stopfens-Kit 플러그 키트 Kit de tapons
11839095	VOE 11713930	Cassette radio Radio-cassette Kassettenrecorder 카세트 라디오 - 국내용 Radiocasete
11839096	VOE 11713915	Rotating beacon Gyrophare Drehfernleuchte 경광등 Faro de advertencia giratorio
11839097		Battery cut-out Coupe-batterie Batterieabschaltung 배터리 차단기 Disyuntor de bateria
11839098	VOE 11713960	Automatic speed control Régulation automatique du régime Automatische Drehzahlregelung 자동 속도 제어 Regulación autmática del régimen

PRODUCT AND EQUIPMENT VARIANTS 판매사양

VARIANTES DE PRODUITS ET D'EQUIPMENTS **VARIANTES DE PRODUCTOS Y EQUIPAMIENTOS**

PRODUKT- UND AUSRÜSTUNGVARIANTEN

Equipment	Kit No	Description
11839100	VOE 11713951	Hydraulic circuit (single-acting) Circuit hydraulique (simple effet) Hydraulikkreis (einfachwirkend) 유압 회로 (1 단 작동) Circuito hydraulico (simple efecto) *1250MM/49.2125IN*
11839102		Hydraulic circuit (single-acting) Circuit hydraulique (simple effet) Hydraulikkreis (einfachwirkend) 유압 회로 (1 단 작동) Circuito hydraulico (simple efecto) *1500MM/59.0550IN*
11839104	VOE 11713956	Hydraulic circuit (double-acting) Circuit hydraulique (double effet) Hydraulikkreis (doppeltwirkend) 유압 회로 (2 단 작동) Circuito hydraulico (doble efecto) *1250MM/49.2125IN*
11839106		Hydraulic circuit (double-acting) Circuit hydraulique (double effet) Hydraulikkreis (doppeltwirkend) 유압 회로 (2 단 작동) Circuito hydraulico (doble efecto) *1500MM/59.0550IN*
11839108		Attachment bracket mechanical, excavator Porte outil mécanique, excavator Geräteträger,mechaische,baggeraggregat Soporte de implemento, mecànico,excavador
11839110		Drain kit Kit drain Dränage-Kit 드레인 키트 Kit de drenaje *1250MM/49.2125IN*
11839112		Drain kit Kit drain Dränage-Kit 드레인 키트 Kit de drenaje *1500MM/59.0550IN*
11839113	VOE 11713911	Working lamp on boom Phare sur fleche Scheinwerfer af Ausleger Faro sobre pluma
11839114	VOE 11713919	Work lights Phare travail Arbeitsscheinwerfer 작업등 Farol de trabajo *REAR*
11839115	VOE 11713921	Anti theft packing Dispositif antivol Diebstahlschutzdichtung 도난방지장치 세트 Empaquetadura antirrobo

Equipment	Kit No	Description
11839116		Mirror Retroviseur Ruckblickspiegel 리어 뷰 미러 Retrovisor
11839117		Potentiometer Potentiomètre Potentiometer 전위차계 Potenciómetro
11839119		Without anti-theft kit Sans joint antivol Ohne Diebstahlschutz 도난방지장치 미장착 Con paquete antirrobo
11839129		Decals Autocollants Aufkleber 데칼 Pegatinas *STD , VOLVO COLOR*
11839130		Decals Autocollants Aufkleber 데칼 Pegatinas *USA , VOLVO COLOR*
11839131		Decals Autocollants Aufkleber 데칼 Pegatinas *STD , SPECIAL COLOR*
11839132		Decals Autocollants Aufkleber 데칼 Pegatinas *USA , SPECIAL COLOR*
11839133		Decals Autocollants Aufkleber 데칼 Pegatinas *STD , VOLVO COLOR*
11839134		Decals Autocollants Aufkleber 데칼 Pegatinas *USA , VOLVO COLOR*
11839135		Decals Autocollants Aufkleber 데칼 Pegatinas *STD , SPECIAL COLOR*

Equipment	Kit No	Description
11839136		Decals Autocollants Aufkleber 데칼 Pegatinas *USA , SPECIAL COLOR*
11839148	VOE 11713953	Hydraulic circuit (single-acting) Circuit hydraulique (simple effet) Hydraulikkreis (einfachwirkend) 유압 회로 (1 단 작동) Circuito hydraulico (simple efecto) *1250MM/49.2125IN*
11839150		Hydraulic circuit (single-acting) Circuit hydraulique (simple effet) Hydraulikkreis (einfachwirkend) 유압 회로 (1 단 작동) Circuito hydraulico (simple efecto) *1500MM/59.0550IN*
11839154	VOE 11713923	Kit coupler Kit raccords Kupplungsstück-Kit 커플러 키트 Kit de acoplamiento
11839156	VOE 11713926	Kit coupler Kit raccords Kupplungsstück-Kit 커플러 키트 Kit de acoplamiento
11839158		Bucket with tooth Godet avec dents Löffel mit Zähnen 버켓 – 투스 장착 Cazo con dientes *300MM/11.8110IN*
11839159		Bucket with tooth Godet avec dents Löffel mit Zähnen 버켓 – 투스 장착 Cazo con dientes *450MM/17.7165IN*
11839160		Bucket with tooth Godet avec dents Löffel mit Zähnen 버켓 – 투스 장착 Cazo con dientes *300MM/11.8110IN*
11839161		Bucket with tooth Godet avec dents Löffel mit Zähnen 버켓 – 투스 장착 Cazo con dientes *350MM/13.7795IN*
11839162		Bucket with tooth Godet avec dents Löffel mit Zähnen 버켓 – 투스 장착 Cazo con dientes *450MM/17.7165IN*

Equipment	Kit No	Description
11839163		Bucket with tooth Godet avec dents Löffel mit Zähnen 버켓 – 투스 장착 Cazo con dientes *750MM/29.5275IN*
11839164		Bucket with tooth Godet avec dents Löffel mit Zähnen 버켓 – 투스 장착 Cazo con dientes *750MM/29.5275IN*
11839210		Bucket with tooth Godet avec dents Löffel mit Zähnen 버켓 – 투스 장착 Cazo con dientes *300MM/11.8110IN*
11839211		Bucket with tooth Godet avec dents Löffel mit Zähnen 버켓 – 투스 장착 Cazo con dientes *600MM/23.6220IN*
11839212		Slope bucket Godet curage Böschungslöffel 경사 버켓 Cuchara articulada *1300MM/51.1810IN*
11839223	VOE 11807305	Attachment bracket mechanical, excavator Porte outil mécanique, excavator Geräteträger,mechaische,baggeraggregat Soporte de implemento, mecànico,excavador
11839226	VOE 11807250	Attachment bracket hydraulic, excavator Porte outil hydraulique,excavator Geräteträger,hydraulische,baggeraggregat Soporte de implementos hidraulica,excavador

VOLVO

Construction Equipment

GROUP		Section	Page
210	Equipped engine	100	41
210	Engine gasket kit	500	43
211	Cylinder head	100	45
211	Valve cover	200	47
212	Cylinder block	100	49
212	Flywheel housing	500	51
213	Connecting rod and piston	100	53
214	Rocker arm	100	55
215	Timing gear casing	100	57
215	Timing gear	300	59
215	Camshaft	400	61
216	Crankshaft	100	63
216	Flywheel	200	65
217	Oil sump	100	67
218	Engine mounts	100	69
218	Engine mounts	110	71
220	Lubricating oil system	100	73
222	Oil filter	100	75
233	Fuel pump	100	77
233	Fuel filter	400	79
233	Sediment bowl	500	81
234	Gas-oil tank	100	83
235	Fuel circuit	100	85
235	Fuel pipes-injector	200	89
236	Injection pump	100	91
237	Injector	100	93
251	Exhaust manifold	100	95
251	Inlet manifold	400	97
252	Muffler	100	99
252	Muffler	110	101
256	Intake / air filter	100	103
256	Air filter	300	105
256	Pre-cleaner	700	107
261	Radiator (water)	100	109
261	Expansion tank	200	111
261	Cooling circuit	500	113
261	Radiator installation	800	115
262	Water pump	100	117
275	Engine acceleration control	100	121
277	Automatic Speed control	100	123
277	Automatic Speed control	110	125
277	Solenoid valve	200	127

TABLE DES MATIÈRES

GROUPE		Section	Page
210	Moteur, équipé	100	41
210	Pochette de joints pour moteur	500	43
211	Culasse	100	45
211	Couvre-culasse	200	47
212	Bloc cylindres	100	49
212	Carter de volant	500	51
213	Bielle et piston	100	53
214	Culbuteur	100	55
215	Carter de distribution	100	57
215	Transmission à roues	300	59
215	Arbre à cames	400	61
216	Vilebrequin	100	63
216	Volant	200	65
217	Carter d'huile	100	67
218	Fixations du moteur	100	69
218	Fixations du moteur	110	71
220	Système de graissage	100	73
222	Filtre à huile	100	75
233	Pompe carburant	100	77
233	Filtre à carburant	400	79
233	Décanteur de gazole	500	81
234	Réservoir de gazole	100	83
235	Circuit d'alimentation en gazole	100	85
235	Conduits de carburant - Injecteur complet	200	89
236	Pompe d'injection	100	91
237	Injecteur complet	100	93
251	Tubulure d'échappement	100	95
251	Tubulure d'admission	400	97
252	Silencieux	100	99
252	Silencieux	110	101
256	Tubulure d'admission / filtre à air	100	103
256	Filtre à air	300	105
256	Prefiltre	700	107
261	Radiateur (eau)	100	109
261	Vase expansion	200	111
261	Circuit de refroidissement	500	113
261	Mise en place du radiateur	800	115
262	Pompe à eau	100	117
275	Commande d'accélération du moteur	100	121
277	Régulation automatique du régime	100	123
277	Régulation automatique du régime	110	125
277	Soupape de solenoide	200	127

GRUPPE		Abschnitt	Seite
210	Motor ausgerüstet	100	41
210	Dichtsatz - Motor	500	43
211	Zylinderkopf	100	45
211	Ventilkammerdeckel	200	47
212	Zylinderblock	100	49
212	Schwungradgehäuse	500	51
213	Verbindungsstange und Kolben	100	53
214	Kipphebel	100	55
215	Steuergehäuse	100	57
215	Rädergetriebe	300	59
215	Nockenwelle	400	61
216	Kurbelwelle	100	63
216	Schwungrad	200	65
217	Ölwanne	100	67
218	Motorbefestigung	100	69
218	Motorbefestigung	110	71
220	Schmierölsystem	100	73
222	Ölfilter	100	75
233	Kraftstoffpumpe	100	77
233	Kraftstoffilter	400	79
233	Absetzgefäß	500	81
234	Kraftstoffbehälter	100	83
235	Kraftstoffanlage	100	85
235	Kraftstoffrohre, Einspritzdüse	200	89
236	Einspritzpumpe	100	91
237	Einspritzdüse	100	93
251	Auspuffkrümmer	100	95
251	Einlassrohr	400	97
252	Auspufftopf	100	99
252	Auspufftopf	110	101
256	Saugrohr / Luftfilter	100	103
256	Luftfilter	300	105
256	Vorreiniger	700	107
261	Kühler (Wasser)	100	109
261	Ausdehnungsgefäss	200	111
261	Kühlkreis	500	113
261	Einbau der Kühler	800	115
262	Wasserpumpe	100	117
275	Gashebel Motor	100	121
277	Automatische drehzalregelung	100	123
277	Automatische drehzalregelung	110	125
277	Solenoidventil	200	127

목차

그룹		절	페이지
210	엔진 조립체	100	41
210	엔진 개스킷 키트	500	43
211	실린더 헤드	100	45
211	밸브 커버	200	47
212	실린더 블록	100	49
212	플라이휠 하우징	500	51
213	커넥팅 로드 및 피스톤	100	53
214	로커 암	100	55
215	타이밍 기어 케이싱	100	57
215	타이밍 기어	300	59
215	캠 축	400	61
216	크랭크 샤프트	100	63
216	플라이휠	200	65
217	오일 팬	100	67
218	엔진 마운트	100	69
218	엔진 마운트	110	71
220	윤활 장치	100	73
222	오일 필터	100	75
233	연료 펌프	100	77
233	연료 필터	400	79
233	침전물 용기	500	81
234	연료 탱크	100	83
235	연료 회로	100	85
235	연료 인젝터 배관	200	89
236	연료 분사 펌프	100	91
237	인젝터	100	93
251	배기 매니홀드	100	95
251	흡기 매니홀드	400	97
252	소음기	100	99
252	소음기	110	101
256	흡입 / 공기 휠터	100	103
256	에어크리너	300	105
256	프리크리너	700	107
261	라디에이터 (냉각수)	100	109
261	팽창 탱크	200	111
261	냉각 회로	500	113
261	라디에이터 설치	800	115
262	워터펌프	100	117
275	엔진 회전속도 제어	100	121
277	자동 속도 제어	100	123
277	자동 속도 제어	110	125
277	솔레노이드 밸브	200	127

GRUPO		Sección	Página
210	Motor completo	100	41
210	Juego de juntas del motor	500	43
211	Culata	100	45
211	Tapa de válvulas	200	47
212	Bloque de cilindros	100	49
212	Carcasa del volante	500	51
213	Biela y pistón	100	53
214	Balancín	100	55
215	Carcasa del engranaje de distribución	100	57
215	Engranaje de distribución	300	59
215	Eje de levas	400	61
216	Cigüeñal	100	63
216	Volante	200	65
217	Cárter de aceite	100	67
218	Fijación del motor	100	69
218	Fijación del motor	110	71
220	Sistema de lubricación	100	73
222	Filtro de aceite	100	75
233	Bomba de combustible	100	77
233	Filtro de combustible	400	79
233	Recipiente de sedimientación	500	81
234	Depósito de gasóleo	100	83
235	Circuito de combustible	100	85
235	Tubos de combustible-inyector	200	89
236	Bomba de inyección	100	91
237	Inyector	100	93
251	Colector de escape	100	95
251	Tubo de admisión	400	97
252	Silenciador	100	99
252	Silenciador	110	101
256	Admisión / filtro de aire	100	103
256	Filtro de aire	300	105
256	Prefiltro	700	107
261	Radiador (agua)	100	109
261	Vaso expansion	200	111
261	Circuito de refrigeración	500	113
261	Instalación de radiador	800	115
262	Bomba de refrigerante	100	117
275	Control de aceleración del motor	100	121
277	Regulación autmática del régimen	100	123
277	Regulación autmática del régimen	110	125
277	Válvula de solenoide	200	127

1

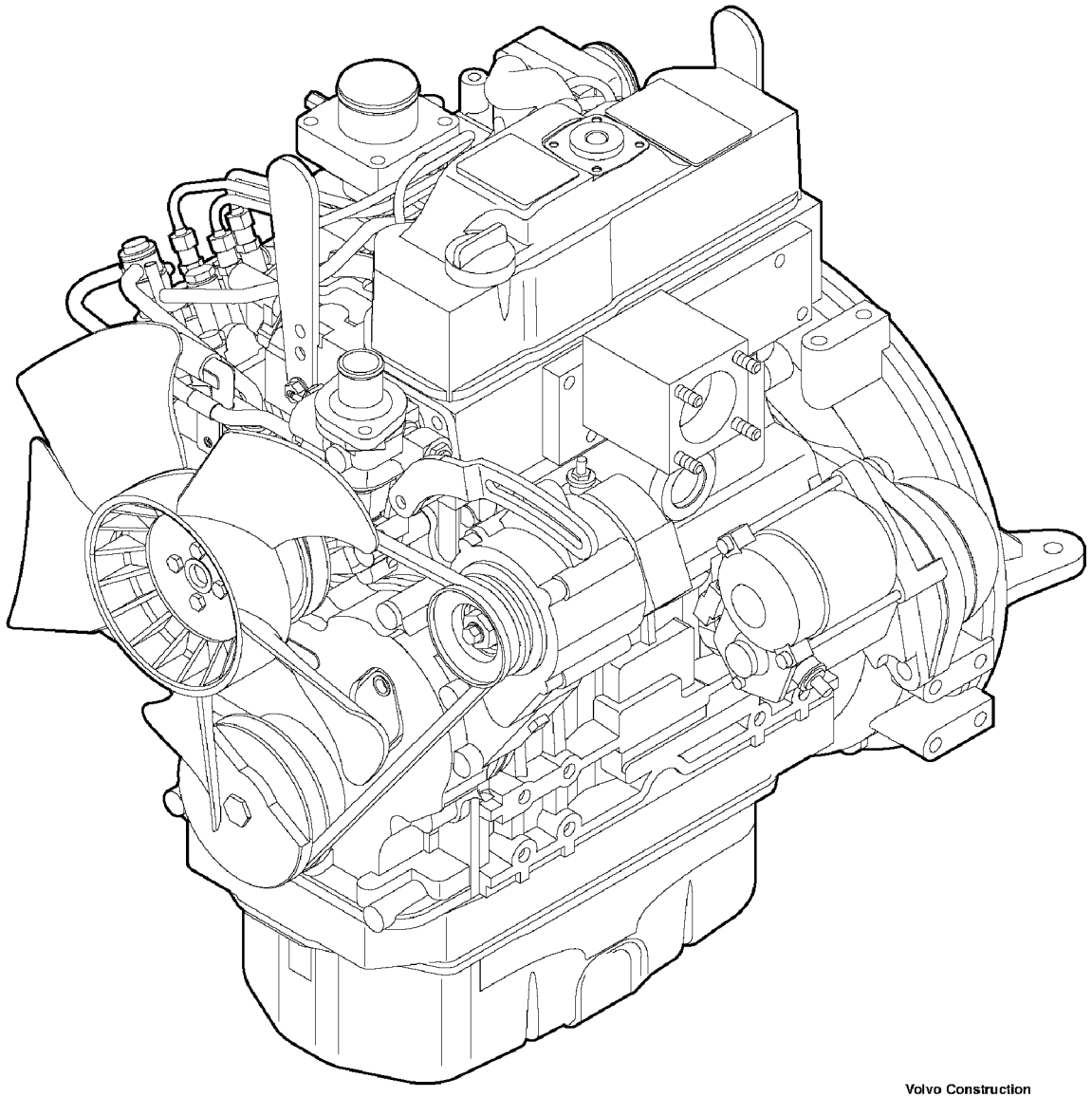

Volvo Construction Equipment

1010529

Fig.	Part No.	Quantity 1	2	3	P S	K I T	Description	Dénomination	Bezeichnung	품명	Denominación	Notes
1	**VOE 11801176**	1					Engine	Moteur	Verbrenn Motor	엔진	Motor	

1	**602.10151**		**Motor completo** 엔진 조립체 **Motor ausgerüstet** **Moteur, équipé** **Equipped engine**	Catalogue id **20048**	Group **210**
2				Illustr. No **1010529**	Section **100**
3				Issue **VOE 74C9920048**	Page **41**
4					
5					

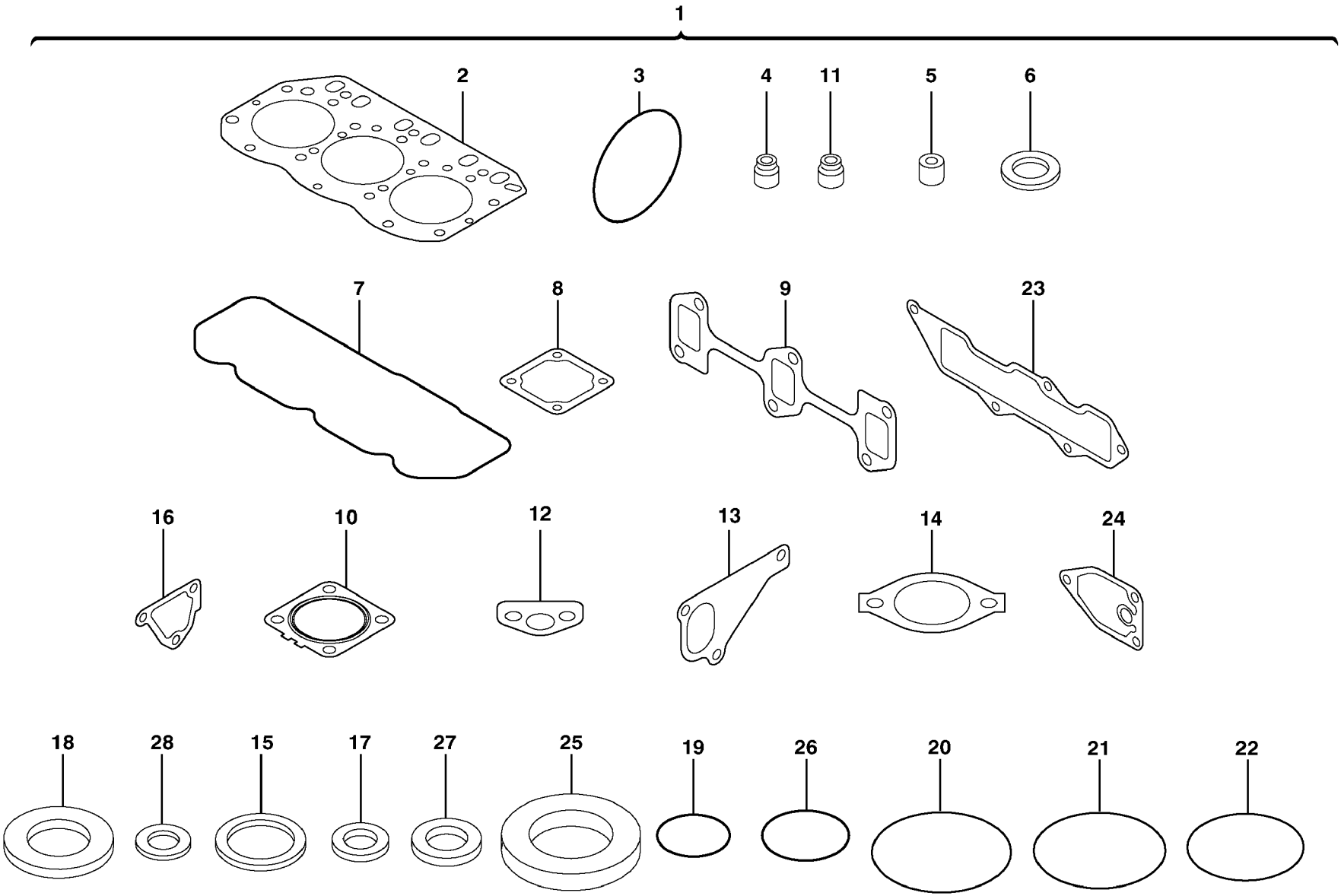

Volvo Construction Equipment

1012493

Fig.	Part No.	Quantity 1	2	3	PS	KIT	Description	Dénomination	Bezeichnung	품명	Denominación	Notes
1	**VOE 11713774**	1					Gasket Kit	Kit Joints	Dichtungssatz	가스켓 킷	Juego Juntas	
2	**VOE 11713589**	1					•Cylinder head gaske	•Joint de culasse	•Zylinderkopfdichtung	• 실린더 헤드 개스킷	•Junta de la culata	
3	**VOE 11713305**	1					•O-ring	•Joint Torique	•O-Ring	• 오링	•Junta torica	
4	**VOE 11713652**	3					•Seal	•Joint	•Dichtring	• 시일	•Junta	
5	**VOE 14521532**	3					•Protector	•Protection	•Schutz	• 프로텍터	•Protector	
6	**SA 8210-08770**	3			SS		•Seat	•Siege	•Sitz	• 시트	•Asiento	
7	**VOE 11713665**	1					•Gasket	•Joint	•Dichtung	• 가스켓	•Junta	
8	**VOE 11713674**	1					•Gasket	•Joint	•Dichtung	• 가스켓	•Junta	
9	**VOE 11713676**	1					•Gasket	•Joint	•Dichtung	• 가스켓	•Junta	
10	**VOE 11713677**	1					•Gasket	•Joint	•Dichtung	• 가스켓	•Junta	
11	**VOE 11713651**	3					•Seal	•Joint	•Dichtring	• 시일	•Junta	
12	**VOE 11713704**	1					•Gasket	•Joint	•Dichtung	• 가스켓	•Junta	
13	**VOE 11713729**	1					•Gasket	•Joint	•Dichtung	• 가스켓	•Junta	
14	**VOE 11713744**	1					•Gasket	•Joint	•Dichtung	• 가스켓	•Junta	
15	**VOE 11713743**	1					•Gasket	•Joint	•Dichtung	• 가스켓	•Junta	
16	**VOE 11713733**	1					•Gasket	•Joint	•Dichtung	• 가스켓	•Junta	
17	**VOE 11714476**	2					•Seal	•Joint	•Dichtring	• 시일	•Junta	(SA 8240-01020)
18	**VOE 11714478**	2					•Gasket	•Joint	•Dichtung	• 가스켓	•Junta	(SA 8210-03370)
19	**VOE 11714386**	3					•O-ring	•Joint Torique	•O-Ring	• 오링	•Junta torica	(SA 8210-08870)
20	**VOE 11714371**	2					•O-ring	•Joint Torique	•O-Ring	• 오링	•Junta torica	(SA 8210-08880)
21	**VOE 11713626**	1					•O-ring	•Joint Torique	•O-Ring	• 오링	•Junta torica	
22	**VOE 11713732**	1					•O-ring	•Joint Torique	•O-Ring	• 오링	•Junta torica	
23	**VOE 11713671**	1					•Gasket	•Joint	•Dichtung	• 가스켓	•Junta	
24	**VOE 11713703**	1					•Gasket	•Joint	•Dichtung	• 가스켓	•Junta	
25	**VOE 11713639**	1					•Seal	•Joint	•Dichtring	• 시일	•Junta	
26	**VOE 11713621**	4					•O-ring	•Joint Torique	•O-Ring	• 오링	•Junta torica	
27	**VOE 11713708**	2					•Seal	•Joint	•Dichtring	• 시일	•Junta	
28	**VOE 11714477**	1					•Gasket	•Joint	•Dichtung	• 가스켓	•Junta	(SA 8210-05580)

1	**602.10151**	
2		
3		
4		
5		

Juego de juntas del motor
엔진 개스킷 키트
Dichtsatz - Motor
Pochette de joints pour moteur
Engine gasket kit

Catalogue id	Group
20048	**210**
Illustr. No **1012493**	Section **500**
Issue **VOE 74C9920048**	Page **43**

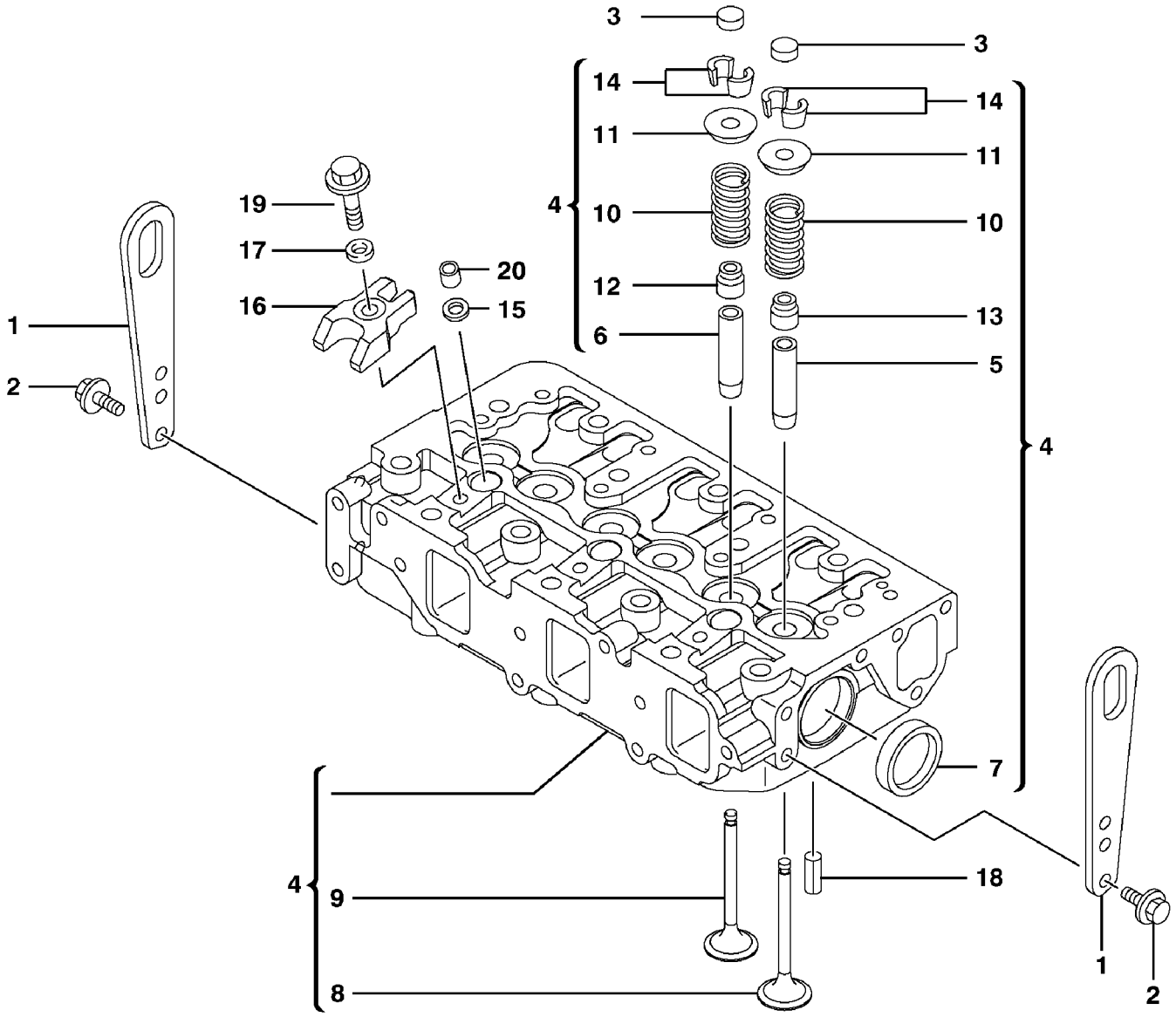

Volvo Construction Equipment

1012494

Fig.	Part No.	Quantity 1	2	3	PS	KIT	Description	Dénomination	Bezeichnung	품명	Denominación	Notes
1	**VOE 11714378**	2					Lift	Levage	Hebezeug	리프트	Elevador	(SA 8210-04400)
2	**VOE 14525410**	4					Bolt	Boulon	Bolzen	볼트	Perno	
3	**VOE 11713647**	6					Cap	Chapeau	Kappe	캡	Caperuza	
4	**VOE 11713648**	1					Cylinder head	Culasse	Zylinderkopf	실린더 헤드	Culata	
5		3			NS		•Giude	•Guide	•Fuhrung	• 가이드	•Guia	ORDER ITEM NO 4
6		3			NS		•Giude	•Guide	•Fuhrung	• 가이드	•Guia	ORDER ITEM NO 4
7		2			NS		•Plug	•Bouchon	•Stopfen	• 플러그	•Tapon	ORDER ITEM NO 4
8	**VOE 11713649**	3					•Inlet valve	•Soupape d'entrée	•Einlassventil	• 흡기 밸브	•Valvula de entrada	
9	**VOE 11713650**	3					•Exhaust Valve	•Soupape Echappem	•Auslassventil	• 배기 밸브	•Valvula Escape	
10		6			NS		•Spring	•Ressort	•Feder	• 스프링	•Muelle	ORDER ITEM NO 4
11		6			NS		•Plug	•Bouchon	•Stopfen	• 플러그	•Tapon	ORDER ITEM NO 4
12	**VOE 11713651**	3					•Seal	•Joint	•Dichtring	• 시일	•Junta	
13	**VOE 11713652**	3					•Seal	•Joint	•Dichtring	• 시일	•Junta	
14	**VOE 11713654**	6					•Valve Collet	•Clavette soupape	•Ventilschloss	• 밸브 콜릿	•Cierre Valvula	
15	**SA 8210-08770**	3			SS		Seat	Siege	Sitz	시트	Asiento	
16	**VOE 11713653**	3					Retainer	Retenue	Halter	리테이너	Soporte	
17	**VOE 11713655**	3					Washer	Rondelle	Scheibe	와셔	Arandela	
18	**VOE 11714387**	2					Spring Pin	Axe de ressort	Federstift	스프링 핀	Pasador Resorte	(SA 8240-01340)
19	**VOE 14525394**	3					Bolt	Boulon	Bolzen	볼트	Perno	
20	**VOE 14521532**	3					Protector	Protection	Schutz	프로텍터	Protector	

1	**602.10151**	
2		
3		
4		
5		

Culata
실린더 헤드
Zylinderkopf
Culasse
Cylinder head

Catalogue id	Group
20048	**211**
Illustr. No **1012494**	Section **100**
Issue **VOE 74C9920048**	Page **45**

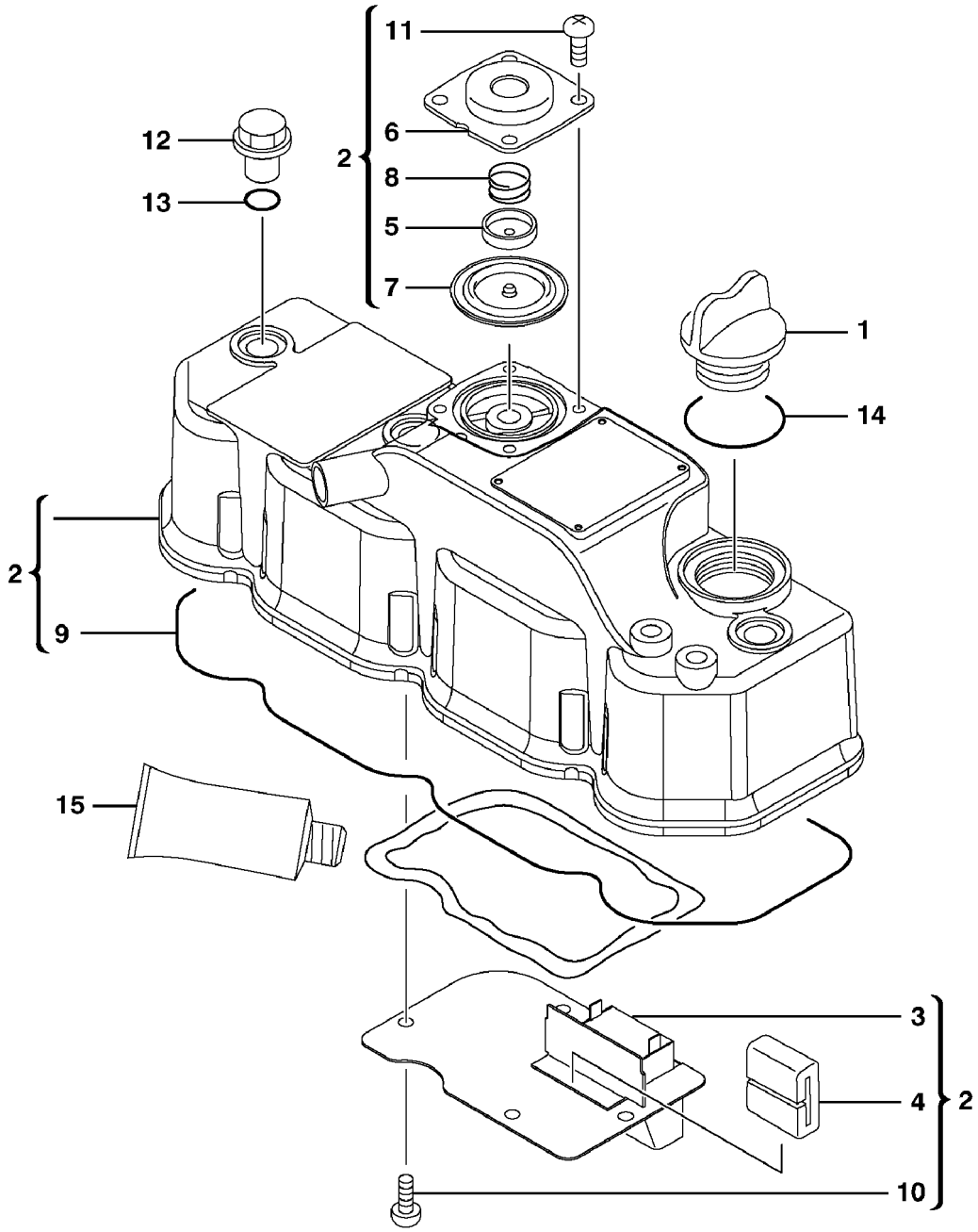

Volvo Construction Equipment

1012495

Fig.	Part No.	Quantity 1	2	3	PS	KIT	Description	Dénomination	Bezeichnung	품명	Denominación	Notes
1	**VOE 11714383**	1					Cap	Chapeau	Kappe	캡	Caperuza	(SA 8210-03240)
2	**VOE 11713656**	1					Valve Cover	Cache-soupapes	Zylkopfhaube	밸브 커버	Cubier Valvula	
3	**VOE 11713657**	1					•Plate	•Plaque	•Platte	• 플레이트	•Placa	
4	**VOE 11713658**	1					•Baffle	•Paroi Intermed.	•Spritzwand	• 배플	•Pared Intermed	
5	**VOE 11713659**	1					•Plate	•Plaque	•Platte	• 플레이트	•Placa	
6	**VOE 11713660**	1					•Cover Assy	•Couvercle	•Abdeckung, Einbau	• 커버	•Montaje de cubierta	
7	**VOE 11713661**	1					•Diaphragm	•Diaphragme	•Membrane	• 다이어프램	•Diafragma	
8	**VOE 11713662**	1					•Spring	•Ressort	•Feder	• 스프링	•Muelle	
9	**VOE 11713665**	1					•Gasket	•Joint	•Dichtung	• 가스켓	•Junta	
10	**SA 8210-08850**	4					•Screw	•Vis	•Schraube	• 스크류	•Tornillo	
11	**SA 8210-08850**	4					•Screw	•Vis	•Schraube	• 스크류	•Tornillo	
12	**VOE 11714385**	3					Knob	Bouton	Knauf	손잡이	Boton	(SA 8210-03250)
13	**VOE 11714386**	3					O-ring	Joint Torique	O-Ring	오링	Junta torica	(SA 8210-08870)
14	**VOE 11714371**	1					O-ring	Joint Torique	O-Ring	오링	Junta torica	(SA 8210-08880)
15	**SA 8240-02760**	1					Gasket	Joint	Dichtung	가스켓	Junta	

1	**602.10151**	
2		
3		
4		
5		

Tapa de válvulas
밸브 커버
Ventilkammerdeckel
Couvre-culasse
Valve cover

Catalogue id	Group
20048	**211**
Illustr. No **1012495**	Section **200**
Issue **VOE 74C9920048**	Page **47**

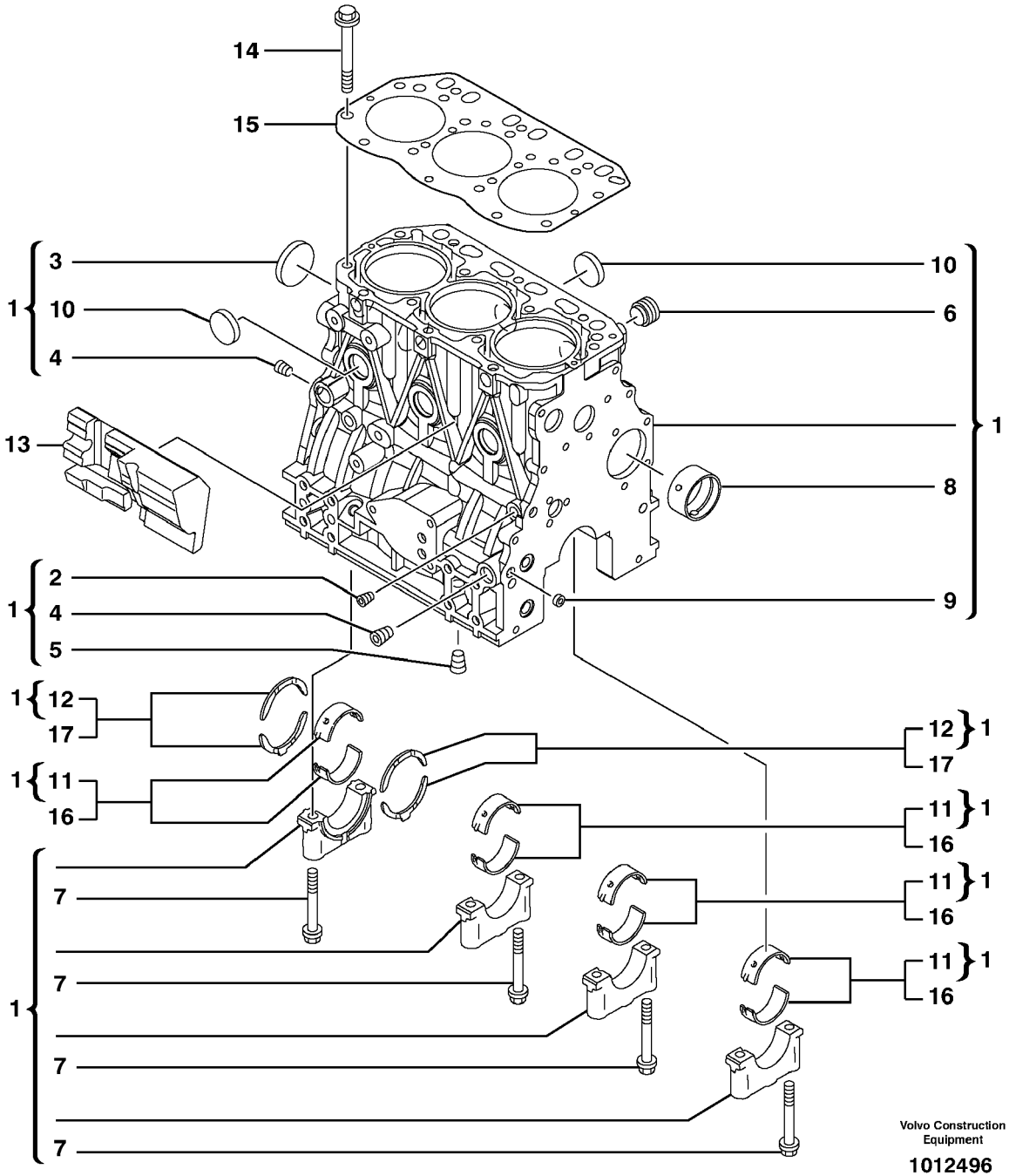
14
15
3
10
4
1
13
10
6
1
8
9
2
4
5
1
12
17
1
11
16
1
12
17
1
11
16
1
11
16
1
11
16
1
7
7
7
7
1
Volvo Construction Equipment
1012496

Fig.	Part No.	Quantity 1	2	3	PS	KIT	Description	Dénomination	Bezeichnung	품명	Denominación	Notes
1	**VOE 11713558**	1					Cylinder Block	Bloc-cylindres	Zylinderblock	실린더 블록	Bloque Cilindro	
2	**VOE 11713317**	1					•Plug	•Bouchon	•Stopfen	• 플러그	•Tapon	
3	**VOE 11713559**	1					•Plug	•Bouchon	•Stopfen	• 플러그	•Tapon	
4	**VOE 11713320**	2					•Plug	•Bouchon	•Stopfen	• 플러그	•Tapon	
5	**VOE 11713320**	1					•Plug	•Bouchon	•Stopfen	• 플러그	•Tapon	
6	**VOE 11713560**	1					•Plug	•Bouchon	•Stopfen	• 플러그	•Tapon	
7	**VOE 11713561**	8					•Bolt	•Boulon	•Bolzen	• 볼트	•Perno	
8	**VOE 11713562**	1					•Bushing	•Bague	•Buchse	• 부싱	•Casquillo	
9	**VOE 11713329**	2					•Plug	•Bouchon	•Stopfen	• 플러그	•Tapon	
10	**VOE 11714369**	6					•Plug	•Bouchon	•Stopfen	• 플러그	•Tapon	(SA 8210-06750)
11	**VOE 11713570**	4					•Bearing Bushing	•Coussinet	•Lagerbuchse	• 베어링	•Casq Cojinete	STD SZ
12	**VOE 11713573**	2					•Thrust Bearing	•Palier Butee	•Drucklager	• 스러스트 베어링	•Cojinet Presion	STD SZ
13	**VOE 11713587**	1					Spacer	Partie Intermédiaire	Zwischenstück	스페이서	Espaciador	
14	**VOE 11713588**	14					Flange screw	Vis à bride	Flanschschraube	플랜지 스크류	Torn embridado	
15	**VOE 11713589**	1					Cylinder head gasket	Joint de culasse	Zylinderkopfdichtung	실린더 헤드 개스킷	Junta de la culata	
16	**VOE 11713590**	4					Bearing Bushing	Coussinet	Lagerbuchse	베어링	Casq Cojinete	0,25mm/0.0098in
17	**VOE 11713591**	1					Thrust Bearing	Palier Butee	Drucklager	스러스트 베어링	Cojinet Presion	0,25mm/0.0098in

1	**602.10151**	
2		
3		
4		
5		

Bloque de cilindros
실린더 블록
Zylinderblock
Bloc cylindres
Cylinder block

Catalogue id	Group
20048	**212**
Illustr. No **1012496**	Section **100**
Issue **VOE 74C9920048**	Page **49**

VOLVO

ECR38

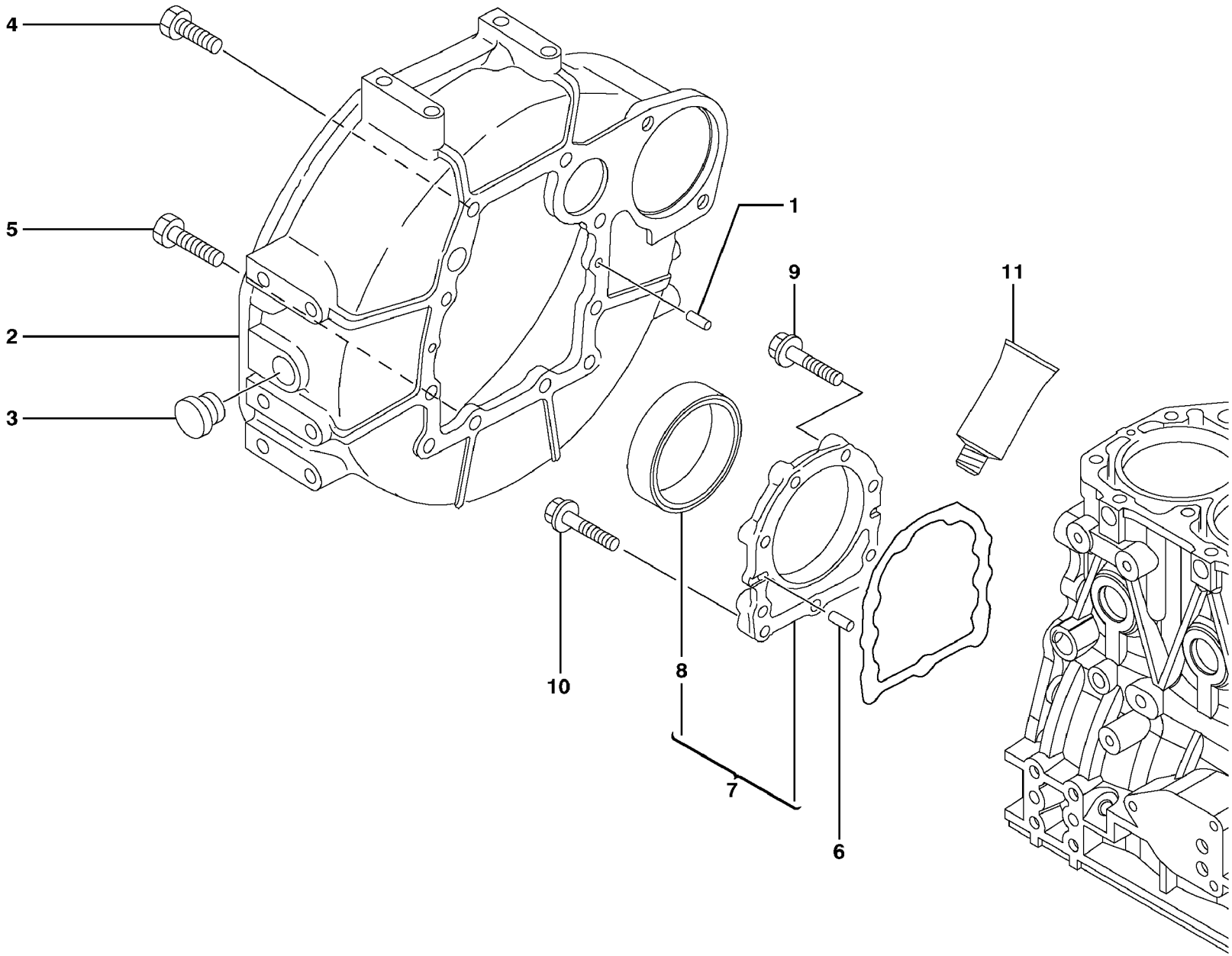

Volvo Construction Equipment

1012497

Fig.	Part No.	Quantity 1	2	3	PS	KIT	Description	Dénomination	Bezeichnung	품명	Denominación	Notes
1	**VOE 11714376**	2					Pin	Goupille	Stift	핀	Pasador	(SA 8210-03530)
2	**VOE 11713633**	1					Housing	Carter	Gehäuse	하우징	Carter	
3	**VOE 11713372**	1					Cap	Chapeau	Kappe	캡	Caperuza	
4	**VOE 11713373**	6					Bolt	Boulon	Bolzen	볼트	Perno	
5	**VOE 11713634**	4					Bolt	Boulon	Bolzen	볼트	Perno	
6	**VOE 11714376**	2					Pin	Goupille	Stift	핀	Pasador	(SA 8210-03530)
7	**VOE 11713641**	1					Spacer	Partie Intermédiaire	Zwischenstück	스페이서	Espaciador	
8	**VOE 11713642**	1					•Seal	•Joint	•Dichtring	• 시일	•Junta	
9	**VOE 11713643**	6					Bolt	Boulon	Bolzen	볼트	Perno	
10	**VOE 14525394**	3					Bolt	Boulon	Bolzen	볼트	Perno	
11	**SA 8240-02760**	1					Gasket	Joint	Dichtung	가스켓	Junta	

1	**602.10151**	
2		
3		
4		
5		

Carcasa del volante
플라이휠 하우징
Schwungradgehäuse
Carter de volant
Flywheel housing

Catalogue id	Group
20048	**212**
Illustr. No **1012497**	Section **500**
Issue **VOE 74C9920048**	Page **51**

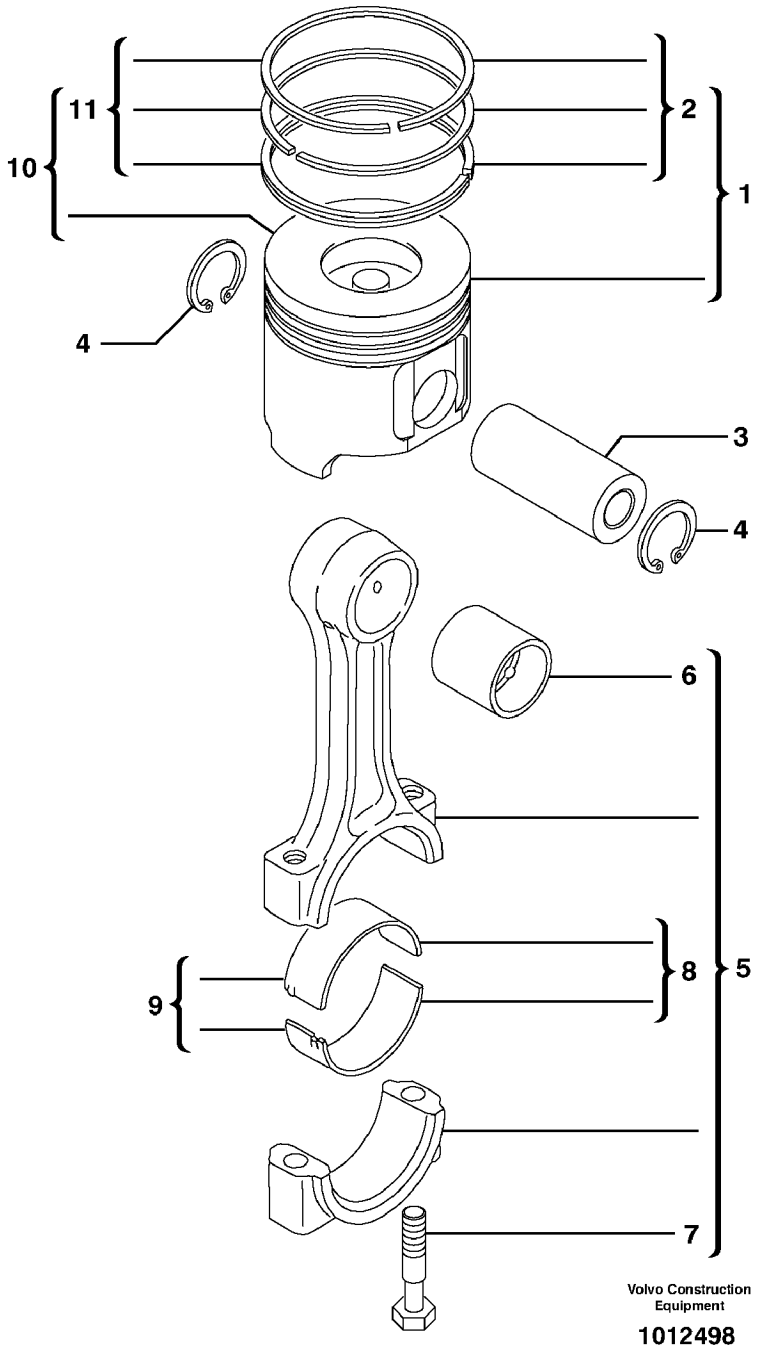
11
10
2
1
4
3
4
6
9
8
5
7
Volvo Construction Equipment
1012498

Fig.	Part No.	Quantity 1	2	3	PS	KIT	Description	Dénomination	Bezeichnung	품명	Denominación	Notes
1	**VOE 11713692**	3					Piston	Piston	Kolben	피스톤	Piston	
2	**VOE 11713693**	3					•Compression ring	•Segment compressi	•Verdichtungsring	• 압축 링	•Segmento compresi	STD SZ
3	**VOE 11713694**	3					Pin	Goupille	Zapfen	핀	Pasador	
4	**VOE 11713695**	6					Snap Ring	Circlip	Nutring	스냅 링	Circlip	
5	**VOE 11713696**	3					Connecting rod	Barre de connexion	Verbindungsstange	커넥팅 로드	Barra de connexion	
6		3			NS		•Bushing	•Bague	•Buchse	• 부싱	•Casquillo	ORDER ITEM NO 5
7	**VOE 11713697**	6					•Bolt	•Boulon	•Bolzen	• 볼트	•Perno	
8	**VOE 11713698**	3					•Bearing	•Palier	•Lager	• 베어링	•Cojinete	STD SZ
9	**VOE 11713699**	3					Bearing	Palier	Lager	베어링	Cojinete	0,25mm/0.0098in
10	**VOE 11713700**	3					Piston	Piston	Kolben	피스톤	Piston	0,25mm/0.0098in
11	**VOE 11713701**	3					•Compression ring	•Segment compressi	•Verdichtungsring	• 압축 링	•Segmento compresi	0,25mm/0.0098in

1	**602.10151**	
2		
3		
4		
5		

Biela y pistón
커넥팅 로드 및 피스톤
Verbindungsstange und Kolben
Bielle et piston
Connecting rod and piston

Catalogue id **20048**	Group **213**
Illustr. No **1012498**	Section **100**
Issue **VOE 74C9920048**	Page **53**

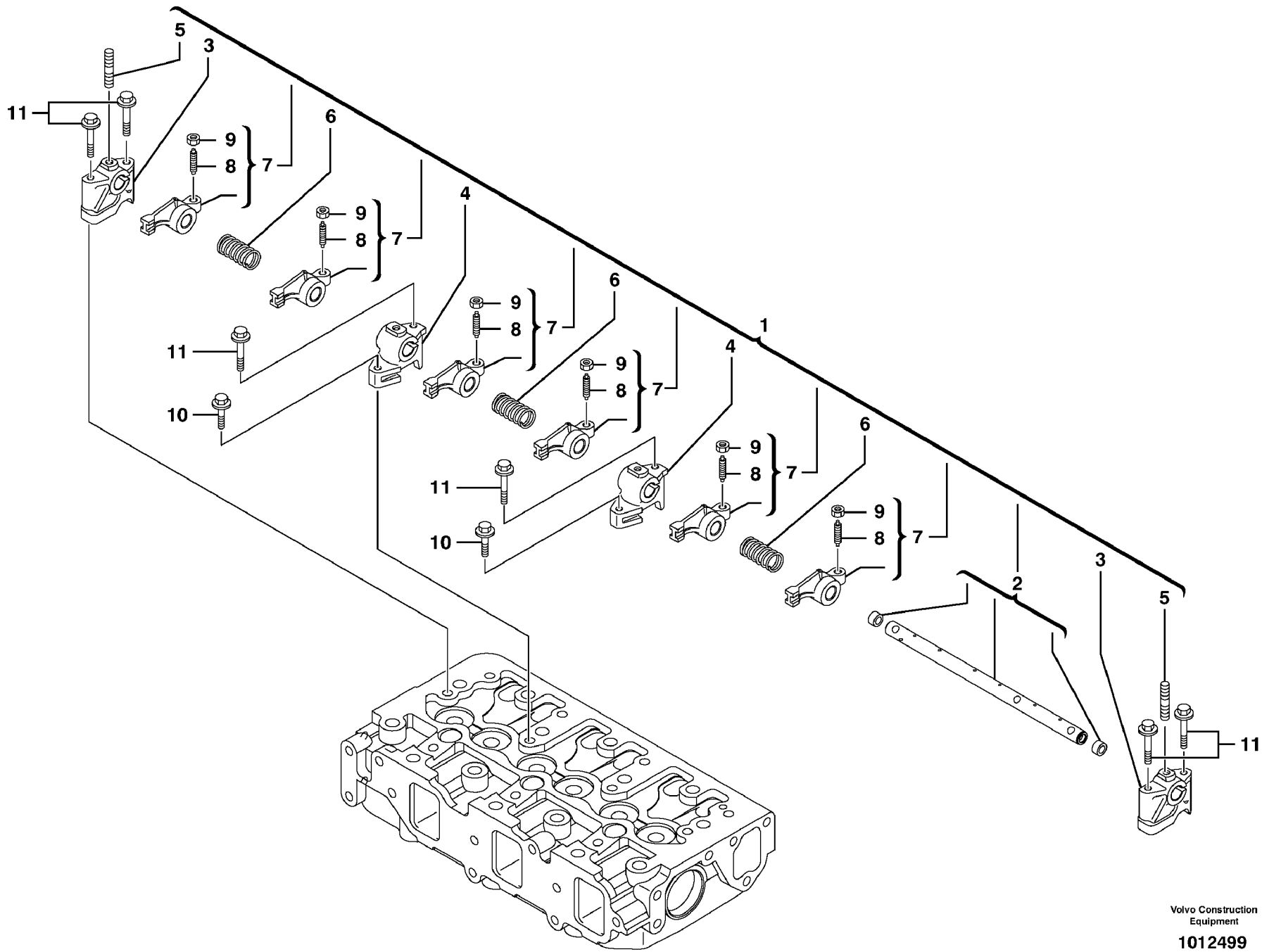

Volvo Construction Equipment

1012499

Fig.	Part No.	Quantity 1	2	3	PS	KIT	Description	Dénomination	Bezeichnung	품명	Denominación	Notes
1	**VOE 11713644**	1					Rocker Arm Kit	Kit Culbuteur	Kipphebelsatz	로커 암 킷	Juego Balancin	
2		1			NS		•Rocker Arm Shaft	•Arbre bras culbuteur	•Kipphebelwelle	• 로커샤프트	•Arbol brazo balancin	ORDER ITEM NO 1
3		2			NS		•Support	•Support	•Stütze	• 서포트	•Apoyo	ORDER ITEM NO 1
4		2			NS		•Support	•Support	•Stütze	• 서포트	•Apoyo	ORDER ITEM NO 1
5	**VOE 11713645**	3					•Stud	•Goujon	•Stiftschraube	• 스터드	•Esparrago	
6		3			NS		•Spring	•Ressort	•Feder	• 스프링	•Muelle	ORDER ITEM NO 1
7	**VOE 11713646**	6					•Rocker Arm	•Culbuteur	•Kipphebel	• 로커 암	•Balancin	
8		6			NS		••Screw	••Vis	••Schraube	•• 스크류	••Tornillo	ORDER ITEM NO 7
9		6			NS		••Nut	••Ecrou	••Mutter	•• 너트	••Tuerca	ORDER ITEM NO 7
10	**VOE 11713640**	2					Bolt	Boulon	Bolzen	볼트	Perno	
11	**VOE 11713374**	6					Bolt	Boulon	Bolzen	볼트	Perno	

1	**602.10151**	
2		
3		
4		
5		

Balancín
로커 암
Kipphebel
Culbuteur
Rocker arm

Catalogue id	Group
20048	**214**
Illustr. No **1012499**	Section **100**
Issue **VOE 74C9920048**	Page **55**

VOLVO

ECR38

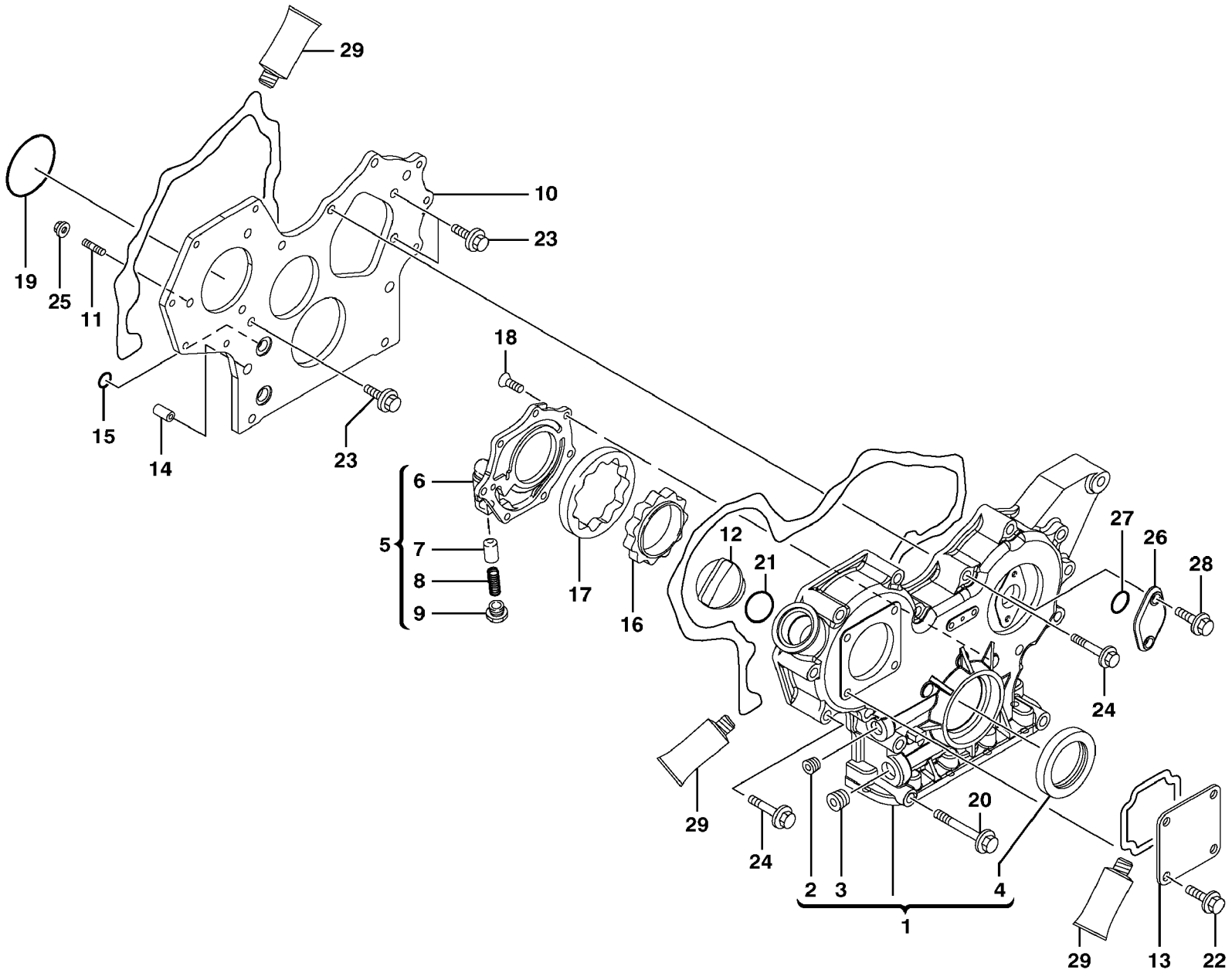

Volvo Construction Equipment

1012500

Fig.	Part No.	Quantity 1	2	3	PS	KIT	Description	Dénomination	Bezeichnung	품명	Denominación	Notes
1	**VOE 11713614**	1					Timing gear casing	Carter distribution	Steuergehäuse	타이밍 기어 케이스	Cubierta distribucion	
2	**VOE 14521504**	1					•Plug	•Tampon	•Stopfen	• 플러그	•Tapon	
3	**VOE 11713615**	1					•Plug	•Bouchon	•Stopfen	• 플러그	•Tapon	
4	**VOE 11713616**	1					•Seal	•Joint	•Dichtring	• 시일	•Junta	
5	**VOE 11713617**	1					Oil Pump	Pompe a huile	Ölpumpe	오일 펌프	Bomba de aceite	
6		1			NS		•Oil pump housing	•Carter pompe huile	•Ölpumpengehäuse	• 오일 펌프 하우징	•Caja bomba aceite	ORDER ITEM NO 5
7	**VOE 11713349**	1					•Valve	•Soupape	•Ventil	• 밸브	•Valvula	
8	**VOE 11713629**	1					•Spring	•Ressort	•Feder	• 스프링	•Muelle	
9	**VOE 11713351**	1					•Plug	•Bouchon	•Stopfen	• 플러그	•Tapon	
10	**VOE 11713618**	1					Timing gear casing	Carter distribution	Steuergehäuse	타이밍 기어 케이스	Cubierta distribucion	
11	**VOE 11713619**	3					Stud	Goujon	Stiftschraube	스터드	Esparrago	
12	**VOE 11714383**	1					Cap	Chapeau	Kappe	캡	Caperuza	(SA 8210-03240)
13	**VOE 11714370**	1					Cover	Capot	Haube	커버	Capo	(SA 8210-03280)
14	**VOE 11713620**	2					Pipe	Canalisation	Rohrleitung	파이프	Canalizacion	
15	**VOE 11713621**	4					O-ring	Joint Torique	O-Ring	오링	Junta torica	
16	**VOE 11713622**	1					Oil Pump Wheel	Pignon pompe à huil	Ölpumpenrad	오일 펌프 휠	Engr Bomb Aceit	
17	**VOE 11713623**	1					Oil Pump Wheel	Pignon pompe à huil	Ölpumpenrad	오일 펌프 휠	Engr Bomb Aceit	
18	**VOE 11713356**	7					Screw	Vis	Schraube	스크류	Tornillo	
19	**VOE 11713305**	1					O-ring	Joint Torique	O-Ring	오링	Junta torica	
20	**VOE 11713624**	3					Bolt	Boulon	Bolzen	볼트	Perno	
21	**VOE 11714371**	1					O-ring	Joint Torique	O-Ring	오링	Junta torica	(SA 8210-08880)
22	**VOE 11714372**	4					Screw	Vis	Schraube	스크류	Tornillo	(SA 8240-01680)
23	**VOE 11714372**	3					Screw	Vis	Schraube	스크류	Tornillo	(SA 8240-01680)
24	**VOE 11714373**	12					Bolt	Boulon	Bolzen	볼트	Perno	(SA 8240-01730)
25	**VOE 14521543**	3					Nut	Ecrou	Mutter	너트	Tuerca	
26	**VOE 11713625**	1					Cover	Couvercle	Deckel	커버	Tapa	
27	**VOE 11713626**	1					O-ring	Joint Torique	O-Ring	오링	Junta torica	
28	**VOE 11714374**	2					Bolt	Boulon	Bolzen	볼트	Perno	(SA 8240-01600)
29	**SA 8240-02760**	1					Gasket	Joint	Dichtung	가스켓	Junta	

1	**602.10151**	
2		
3		
4		
5		

Carcasa del engranaje de distribución
타이밍 기어 케이싱
Steuergehäuse
Carter de distribution
Timing gear casing

Catalogue id **20048**	Group **215**
Illustr. No **1012500**	Section **100**
Issue **VOE 74C9920048**	Page **57**

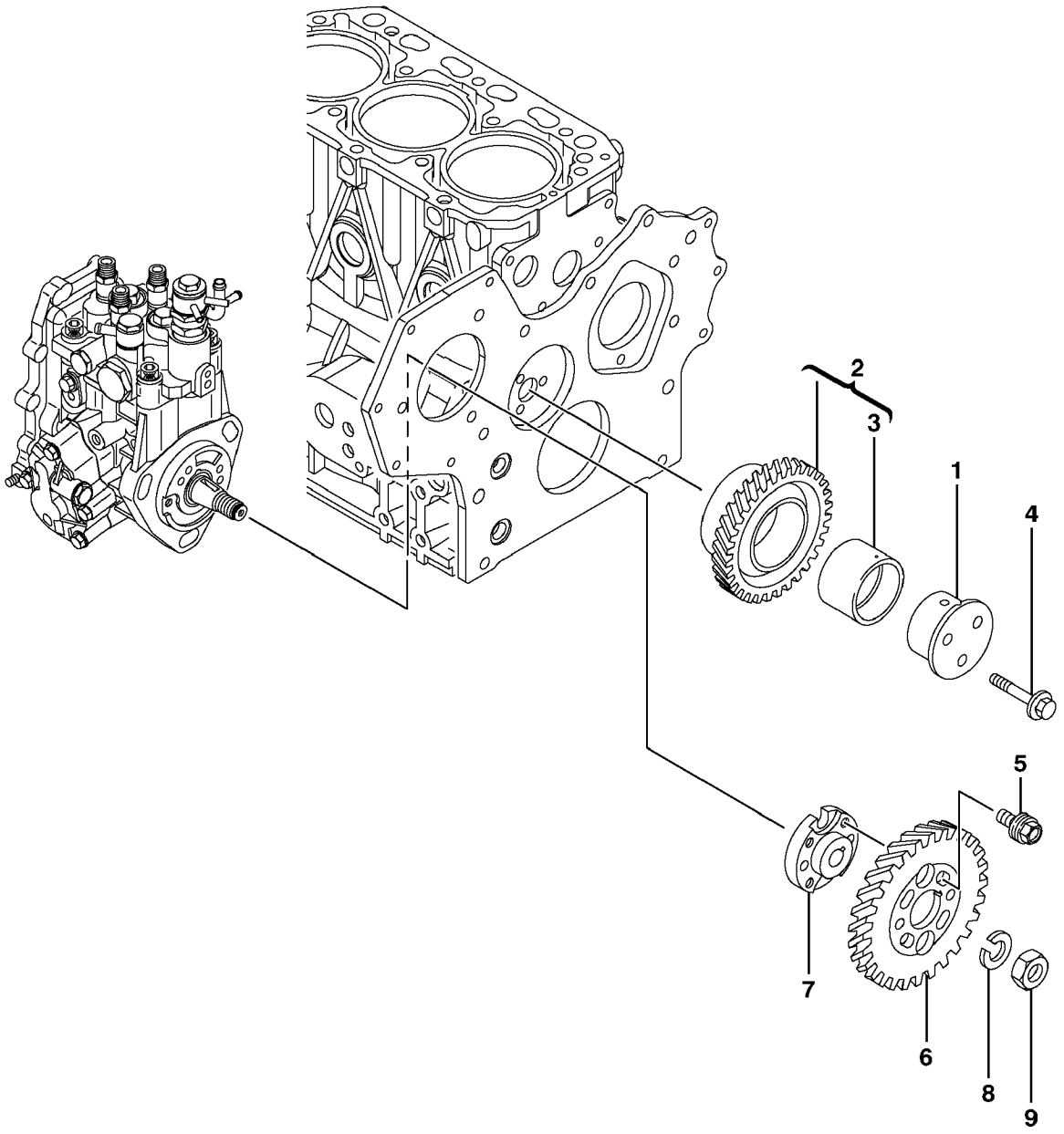

Volvo Construction Equipment

1012501

Fig.	Part No.	Quantity 1	2	3	PS	KIT	Description	Dénomination	Bezeichnung	품명	Denominación	Notes
1	**VOE 11713680**	1					Shaft	Arbre	Welle	샤프트	Arbol	
2	**VOE 11713681**	1					Gear	Pignon	Zahnradgetriebe	기어	Engranaje	
3		1			NS		•Bushing	•Bague	•Buchse	• 부싱	•Casquillo	ORDER ITEM NO 2
4	**VOE 11714487**	3					Bolt	Boulon	Bolzen	볼트	Perno	(SA 8240-01710)
5	**VOE 11713415**	4					Bolt	Boulon	Bolzen	볼트	Perno	
6	**VOE 11714338**	1					Gear	Pignon	Zahnradgetriebe	기어	Engranaje	
7		1			NS		Flange	Bride	Flansch	플랜지	Brida	
8		1			NS		Washer	Rondelle	Scheibe	와셔	Arandela	
9		1			NS		Nut	Ecrou	Mutter	너트	Tuerca	

1	**602.10151**	
2		
3		
4		
5		

Engranaje de distribución
타이밍 기어
Rädergetriebe
Transmission à roues
Timing gear

Catalogue id	Group
20048	**215**
Illustr. No **1012501**	Section **300**
Issue **VOE 74C9920048**	Page **59**

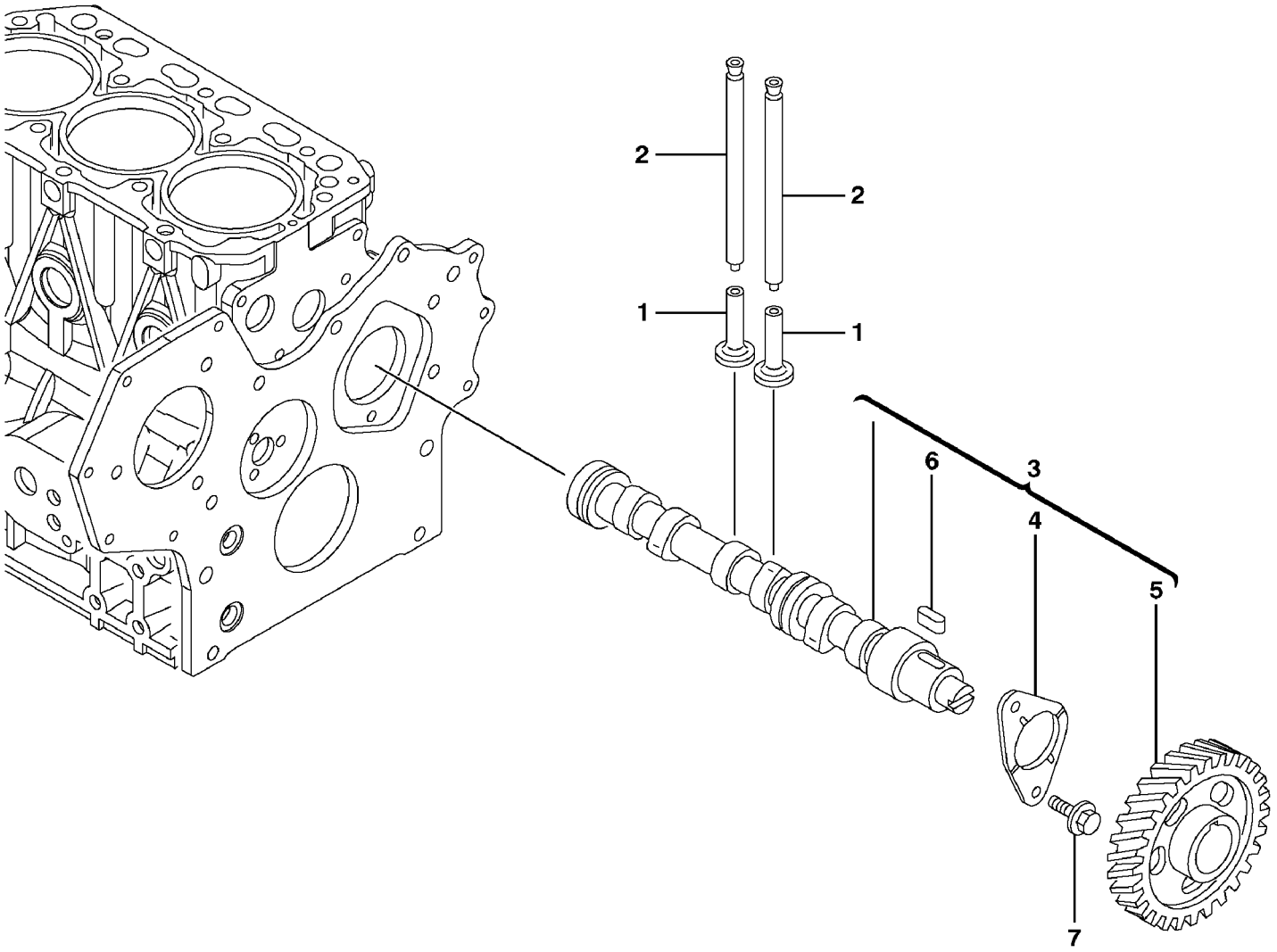

Volvo Construction Equipment

1012502

Fig.	Part No.	Quantity 1	2	3	PS	KIT	Description	Dénomination	Bezeichnung	품명	Denominación	Notes
1	**SA 8210-08810**	6			SS		Tappet	Poussoir Pompe	Pumpdrucker	태핏	Balancin	
2	**VOE 11713678**	6					Rod	Tringle	Stange	로드	Tirante	
3	**VOE 11713679**	1					Camshaft	Arbre a cames	Nockenwelle	캠축	Eje de levas	
4		1			NS		•Bearing	•Palier	•Lager	• 베어링	•Cojinete	ORDER ITEM NO 3
5		1			NS		•Gear	•Pignon	•Zahnradgetriebe	• 기어	•Engranaje	ORDER ITEM NO 3
6		1			NS		•Key	•Clavette	•Keil	• 키	•Llave (cuna)	ORDER ITEM NO 3
7	**VOE 14525410**	2					Bolt	Boulon	Bolzen	볼트	Perno	

1	**602.10151**		**Eje de levas** 캠 축 **Nockenwelle** **Arbre à cames** **Camshaft**	Catalogue id **20048**	Group **215**
2				Illustr. No **1012502**	Section **400**
3					
4				Issue **VOE 74C9920048**	Page **61**
5					

VOLVO

ECR38

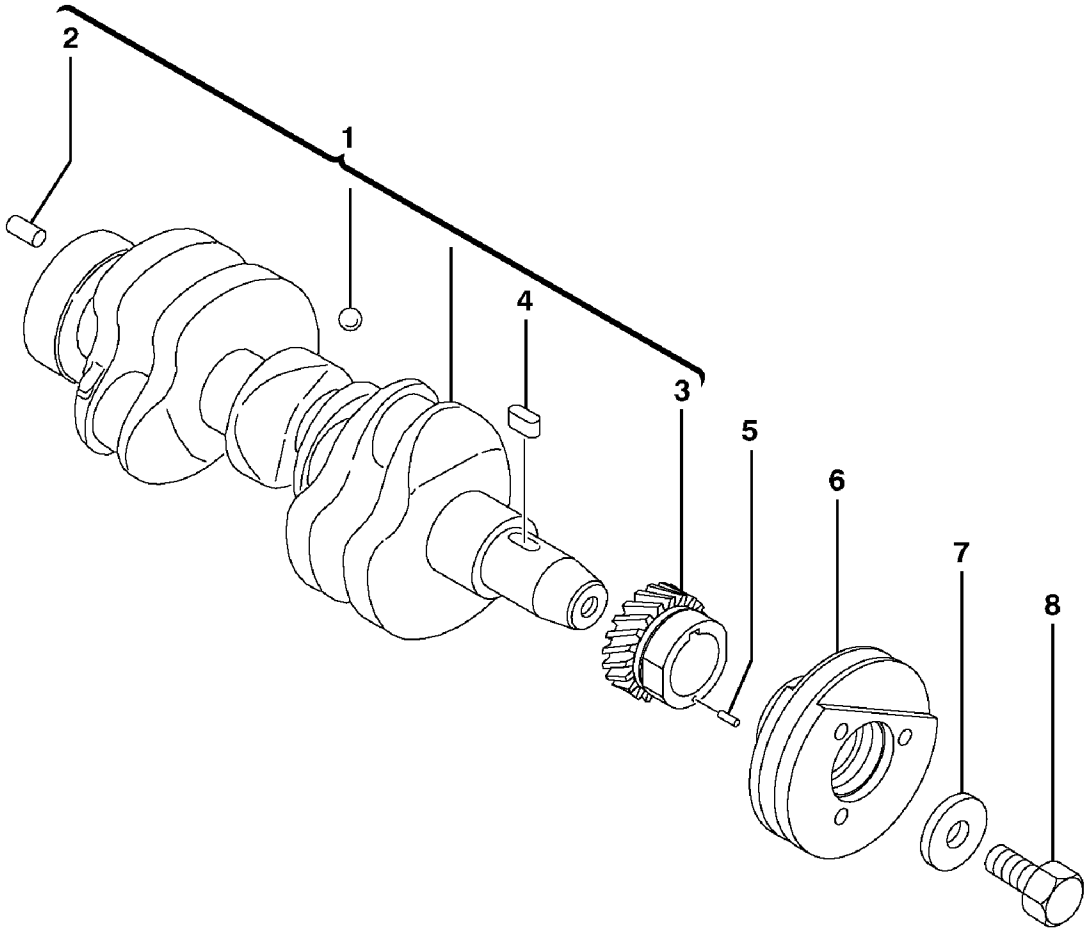

Volvo Construction Equipment

1012503

Fig.	Part No.	Quantity 1	2	3	PS	KIT	Description	Dénomination	Bezeichnung	품명	Denominación	Notes
1	**VOE 11713686**	1					Crankshaft	Vilebrequin	Kurbelwelle	크랭크 샤프트	Ciguenal	
2		1			NS		•Pin	•Goupille	•Zapfen	• 핀	•Pasador	ORDER ITEM NO 1
3		1			NS		•Gear	•Pignon	•Zahnradgetriebe	• 기어	•Engranaje	ORDER ITEM NO 1
4		1			NS		•Key	•Clavette	•Keil	• 키	•Llave (cuna)	ORDER ITEM NO 1
5	**VOE 11713687**	1					Locating pin	Goupille guide	Fuhrungsstift	로케이터 핀	Pasador guia	
6	**VOE 11713688**	1					Pulley	Poulie	Z-riemenscheibe	풀리	Polea Corr Dent	
7	**VOE 11713689**	1					Washer	Rondelle	Scheibe	와셔	Arandela	
8	**VOE 11713690**	1					Bolt	Boulon	Bolzen	볼트	Perno	

1	**602.10151**		**Cigüeñal** 크랭크 샤프트 **Kurbelwelle** **Vilebrequin** **Crankshaft**	Catalogue id **20048**	Group **216**
2				Illustr. No **1012503**	Section **100**
3				Issue **VOE 74C9920048**	Page **63**
4					
5					

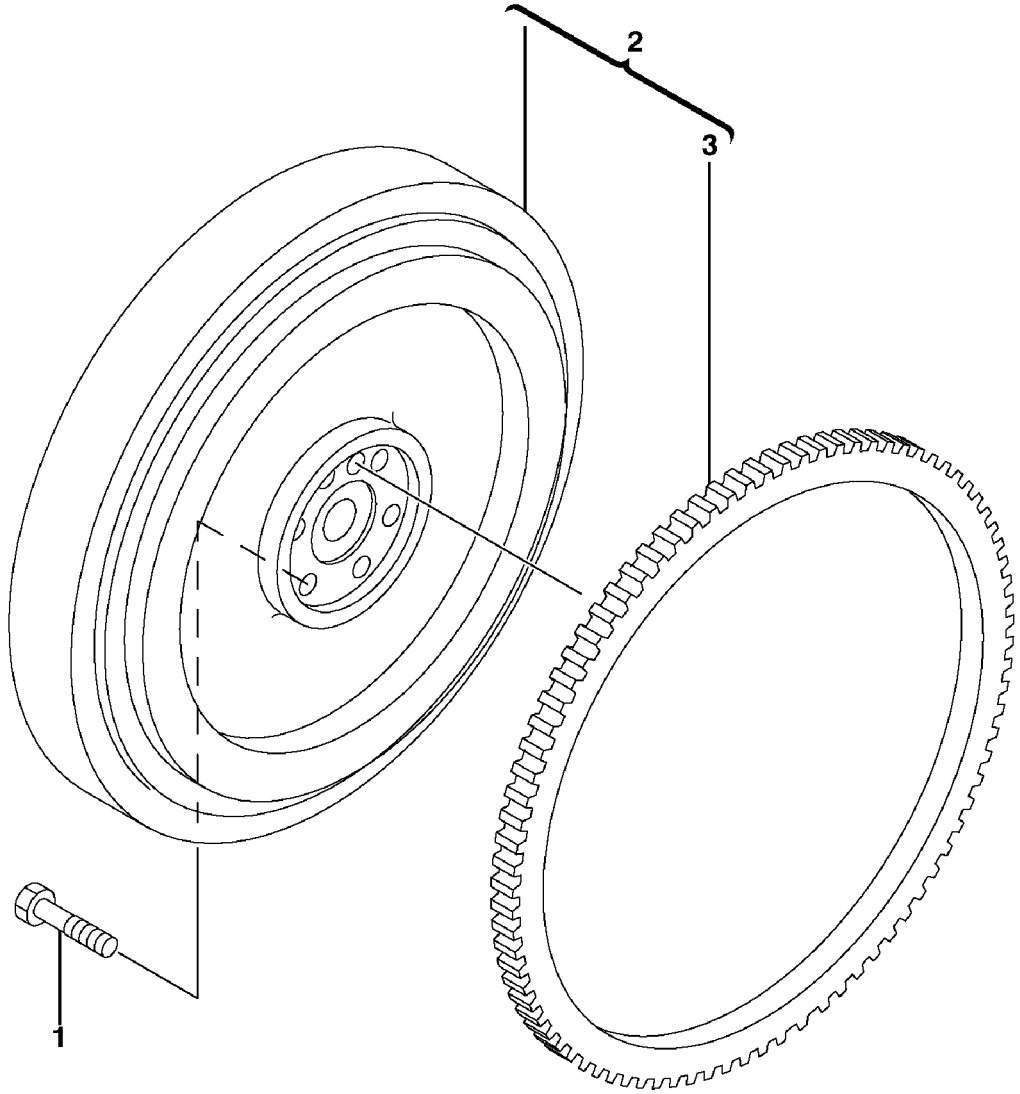

Volvo Construction Equipment

1012504

Fig.	Part No.	Quantity 1	2	3	PS	KIT	Description	Dénomination	Bezeichnung	품명	Denominación	Notes
1	**VOE 11713431**	6					Bolt	Boulon	Bolzen	볼트	Perno	
2	**VOE 11713691**	1					Flywheel	Volant	Schwungrad	플라이 휠	Volante	
3	**VOE 11713419**	1					•Gear	•Pignon	•Zahnradgetriebe	• 기어	•Engranaje	

1	**602.10151**		**Volante** **플라이휠** **Schwungrad** **Volant** **Flywheel**	Catalogue id **20048**	Group **216**
2				Illustr. No **1012504**	Section **200**
3				Issue **VOE 74C9920048**	Page **65**
4					
5					

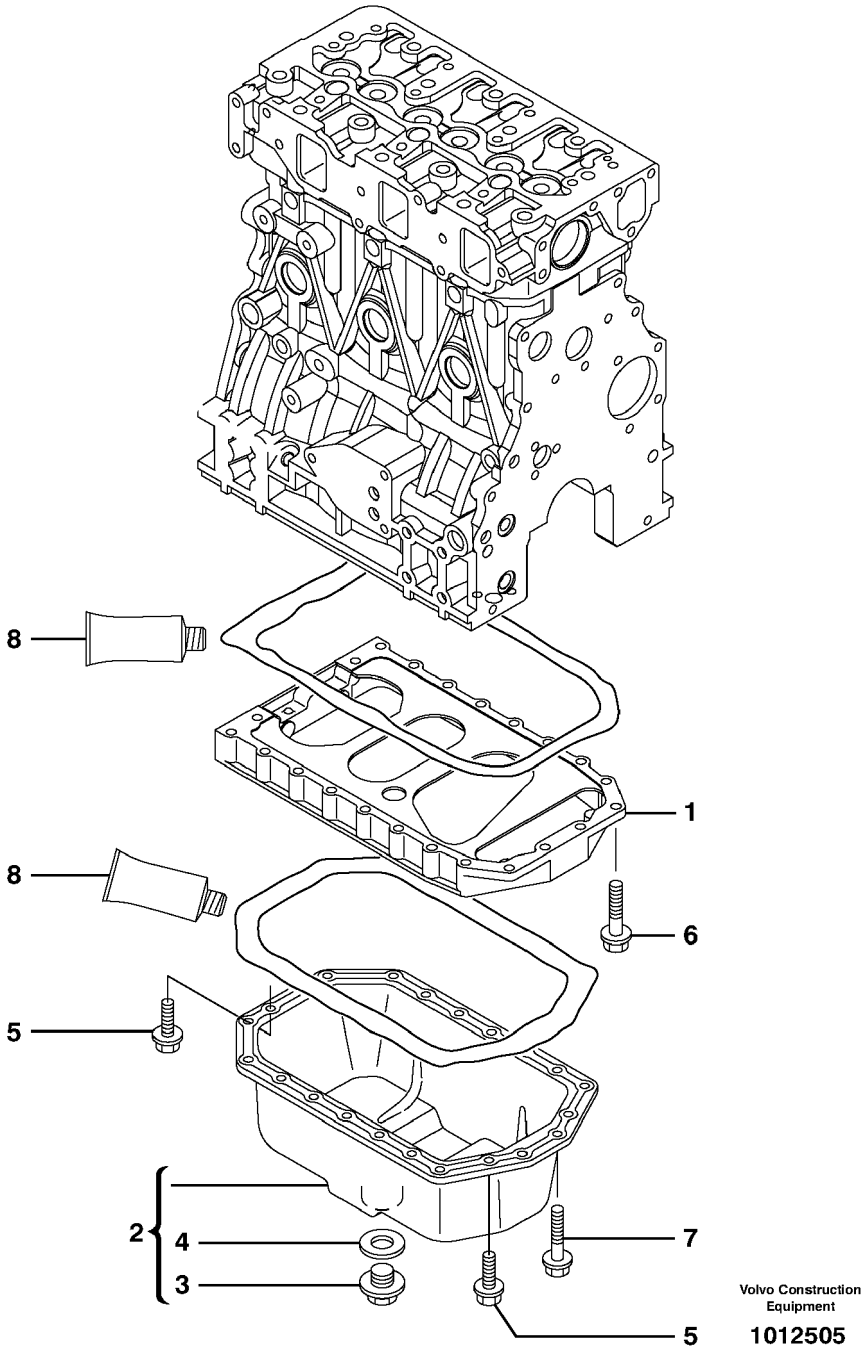

Volvo Construction Equipment

1012505

Fig.	Part No.	Quantity 1	2	3	PS	KIT	Description	Dénomination	Bezeichnung	품명	Denominación	Notes
1	**VOE 11713635**	1					Spacer	Partie Intermédiaire	Zwischenstück	스페이서	Espaciador	
2	**VOE 11713636**	1					Sump	Carter Huile	Ölwanne	섬프	Carter	
3	**VOE 11713638**	1					•Drain Plug	•Bouchon Vidange	•Ablassstopfen	•	•Tapon Drenaje	
4	**VOE 11713639**	1					•Seal	•Joint	•Dichtring	• 시일	•Junta	
5	**VOE 11714372**	4					Screw	Vis	Schraube	스크류	Tornillo	(SA 8240-01680)
6	**VOE 11713640**	2					Bolt	Boulon	Bolzen	볼트	Perno	
7	**VOE 11714377**	20					Bolt	Boulon	Bolzen	볼트	Perno	(SA 8240-01720)
8	**SA 8240-02760**	1					Gasket	Joint	Dichtung	가스켓	Junta	

1	**602.10151**		**Cárter de aceite** 오일 팬 **Ölwanne** **Carter d'huile** **Oil sump**	Catalogue id **20048**	Group **217**
2				Illustr. No **1012505**	Section **100**
3				Issue **VOE 74C9920048**	Page **67**
4					
5					

VOLVO

ECR38

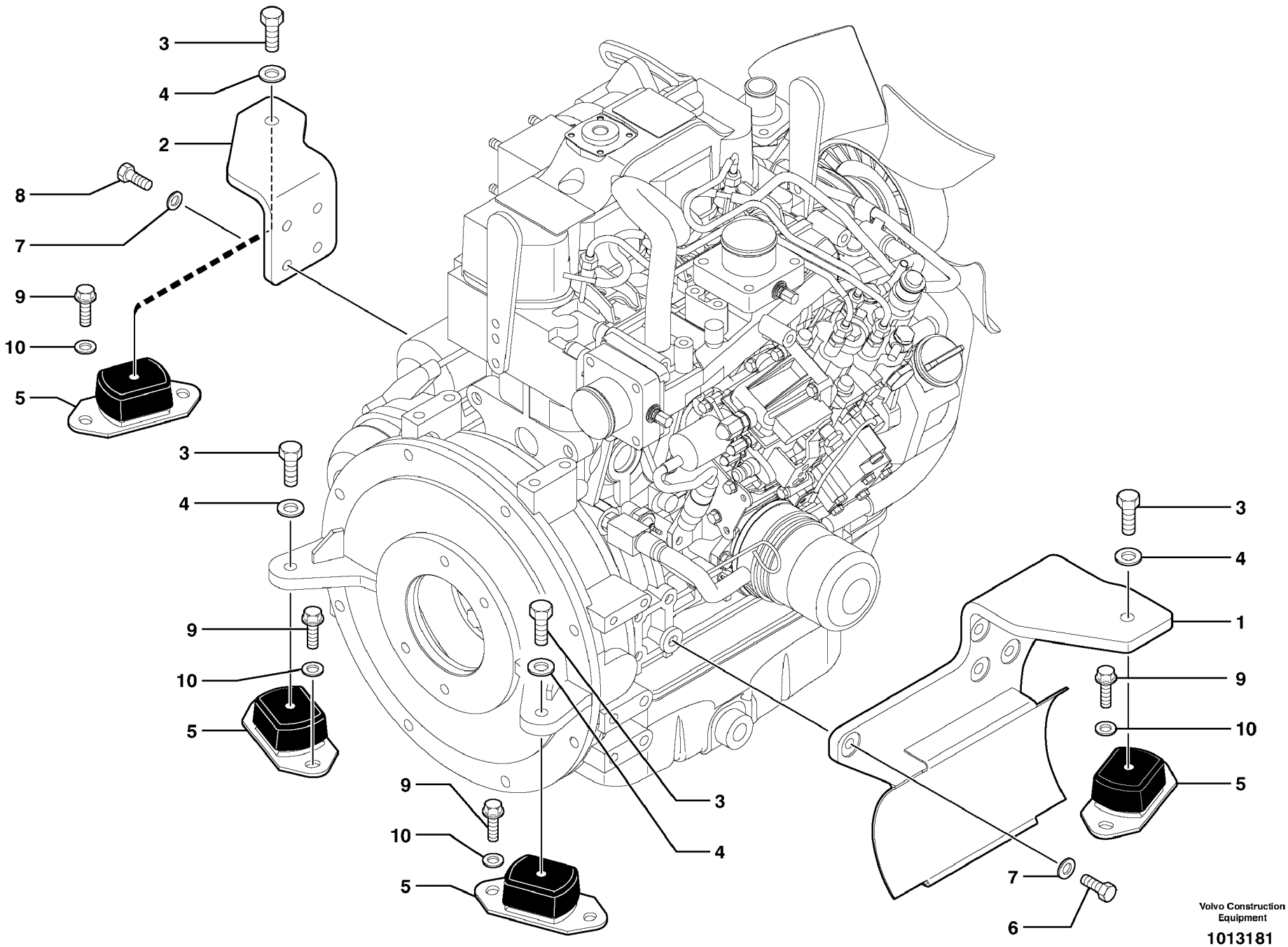

Volvo Construction Equipment

1013181

Fig.	Part No.	Quantity 1	2	3	PS	KIT	Description	Dénomination	Bezeichnung	품명	Denominación	Notes
1	**VOE 11801339**	1					Support	Support	Stütze	서포트	Apoyo	
2	**VOE 11801334**	1					Support	Support	Stütze	서포트	Apoyo	
3	**VOE 978932**	4					Screw	Vis	Schraube	스크류	Tornillo	ALT , M12X30
3	**VOE 978933**	4					Screw	Vis	Schraube	스크류	Tornillo	ALT , M12X40
4	**VOE 11050693**	4					Washer	Rondelle	Scheibe	와셔	Arandela	
5	**VOE 11800449**	4					Suspension	Suspension	Aufhängung	서스펜션	Suspension	
6	**VOE 983252**	5					Screw	Vis	Schraube	스크류	Tornillo	
7	**VOE 960148**	9					Washer	Rondelle	Scheibe	와셔	Arandela	
8	**VOE 983251**	4					Hexagon screw	Vis tête hexagonale	Sechskantschraube	스크류	Tornillo hexago	
9	**VOE 983250**	8					Hexagon screw	Vis tête hexagonale	Sechskantschraube	스크류	Tornillo hexago	
10	**VOE 11802401**	8					Washer	Rondelle	Scheibe	와셔	Arandela	

1	**602.10151** →	← **602.10668**
2		
3		
4		
5		

Fijación del motor
엔진 마운트
Motorbefestigung
Fixations du moteur
Engine mounts

Catalogue id **20048**	Group **218**
Illustr. No **1013181**	Section **100**
Issue **VOE 74C9920048**	Page **69**

VOLVO

ECR38

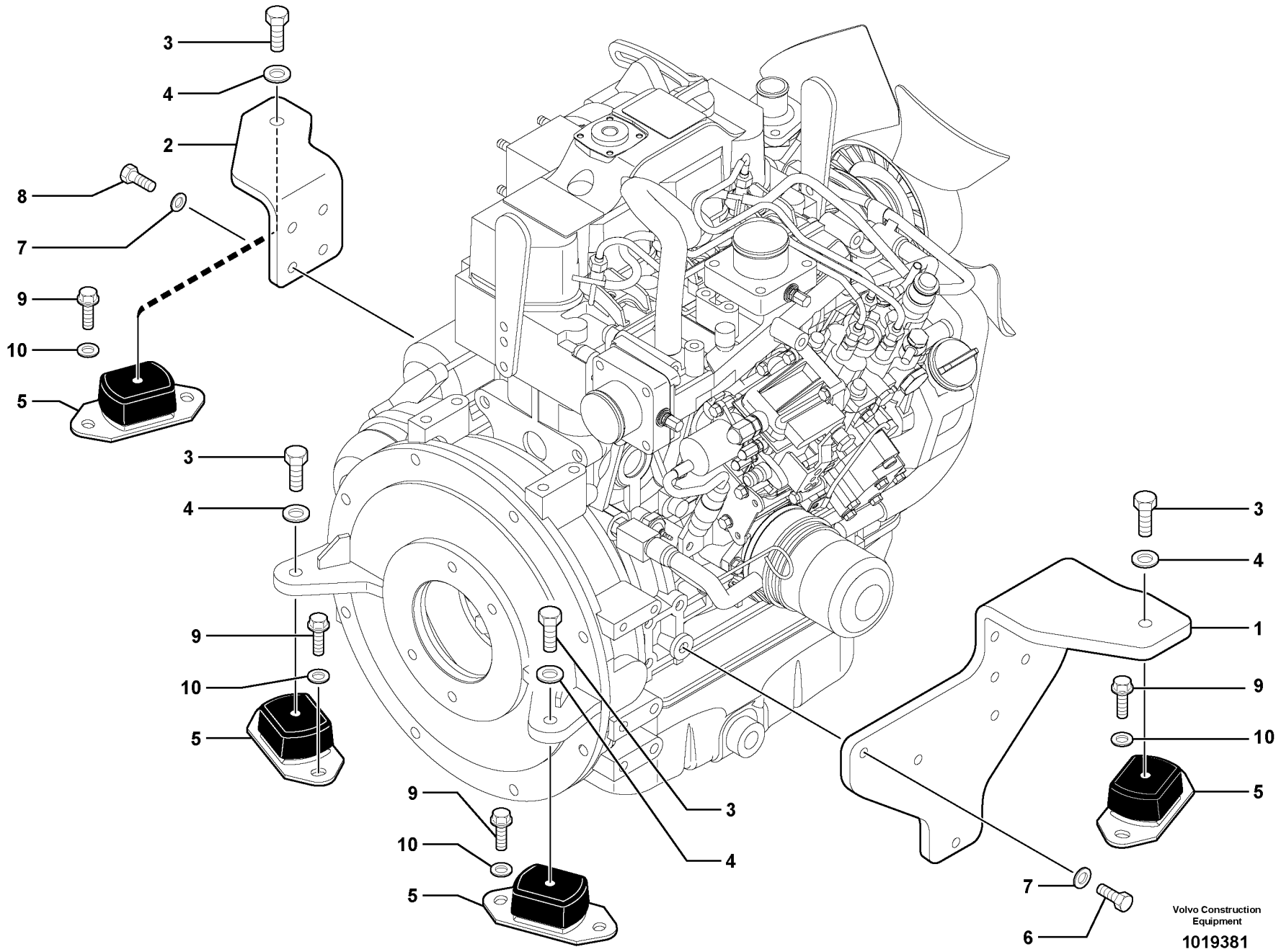
3
4
2
8
7
9
10
5
3
4
9
10
5
9
10
5
3
4
3
4
1
9
10
5
7
6
Volvo Construction Equipment
1019381

Fig.	Part No.	Quantity 1	2	3	PS	KIT	Description	Dénomination	Bezeichnung	품명	Denominación	Notes
1	**VOE 11806956**	1					Support	Support	Stütze	서포트	Apoyo	
2	**VOE 11801334**	1					Support	Support	Stütze	서포트	Apoyo	
3	**VOE 978932**	4					Screw	Vis	Schraube	스크류	Tornillo	ALT , M12X30
3	**VOE 978933**	4					Screw	Vis	Schraube	스크류	Tornillo	ALT , M12X40
4	**VOE 11050693**	4					Washer	Rondelle	Scheibe	와셔	Arandela	
5	**VOE 11800449**	4					Suspension	Suspension	Aufhängung	서스펜션	Suspension	
6	**VOE 983252**	5					Screw	Vis	Schraube	스크류	Tornillo	
7	**VOE 960148**	9					Washer	Rondelle	Scheibe	와셔	Arandela	
8	**VOE 983251**	4					Hexagon screw	Vis tête hexagonale	Sechskantschraube	스크류	Tornillo hexago	
9	**VOE 983250**	8					Hexagon screw	Vis tête hexagonale	Sechskantschraube	스크류	Tornillo hexago	
10	**VOE 11802401**	8					Washer	Rondelle	Scheibe	와셔	Arandela	

1	**602.10669**	
2		
3		
4		
5		

Fijación del motor
엔진 마운트
Motorbefestigung
Fixations du moteur
Engine mounts

Catalogue id	Group
20048	**218**
Illustr. No **1019381**	Section **110**
Issue **VOE 74C9920048**	Page **71**

VOLVO

ECR38

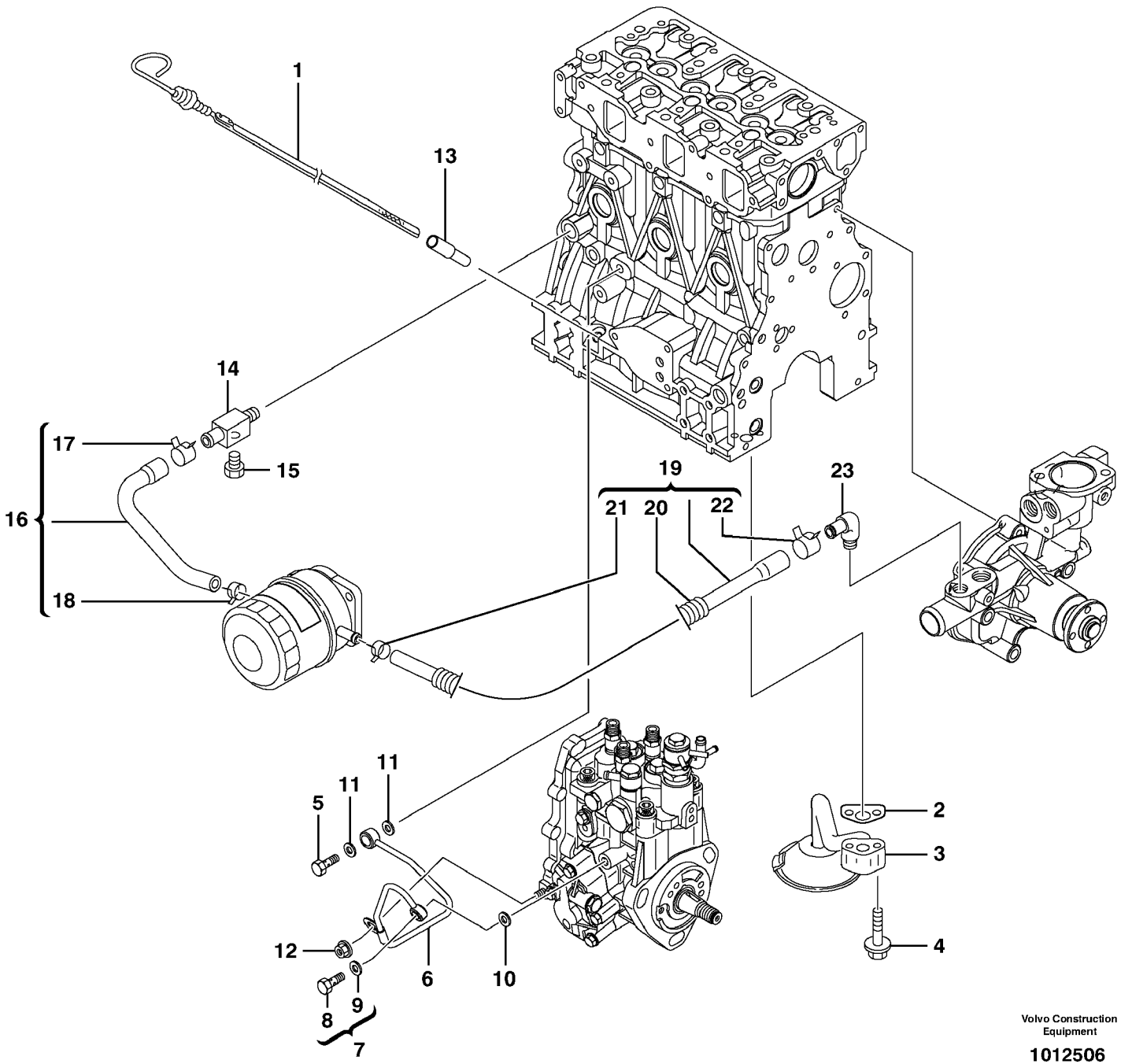

Volvo Construction Equipment

1012506

Fig.	Part No.	Quantity 1	2	3	PS	KIT	Description	Dénomination	Bezeichnung	품명	Denominación	Notes
1	**VOE 11713702**	1					Dipstick	Jauge	Messtab	딥스틱	Varill Medic	
2	**VOE 11713704**	1					Gasket	Joint	Dichtung	가스켓	Junta	
3	**VOE 11713705**	1					Oil Strainer	Crepine D'huile	Ölsieb	오일 스트레이너	Colador	
4	**VOE 14525394**	2					Bolt	Boulon	Bolzen	볼트	Perno	
5	**VOE 11713706**	1					Bolt	Boulon	Bolzen	볼트	Perno	
6	**VOE 11713707**	1					Pipe	Canalisation	Rohrleitung	파이프	Canalizacion	
7	**VOE 14521571**	1					Hollow Screw	Vis Creuse	Hohlschraube	스크류	Tornillo hueco	
8	**SA 8210-05600**	1					•Bolt	•Boulon	•Bolzen	• 볼트	•Perno	
9	**VOE 11714476**	1					•Seal	•Joint	•Dichtring	• 시일	•Junta	(SA 8240-01020)
10	**VOE 11714476**	1					Seal	Joint	Dichtring	시일	Junta	(SA 8240-01020)
11	**VOE 11713708**	2					Seal	Joint	Dichtring	시일	Junta	
12	**VOE 11713709**	1					Nut	Ecrou	Mutter	너트	Tuerca	
13	**SA 8210-03930**	1					Giude	Guide	Fuhrung	가이드	Guia	
14	**VOE 11713713**	1					Connector	Raccord	Anschluss	커넥터	Union	
15	**SA 8210-05340**	1					Plug	Bouchon	Stopfen	플러그	Tapon	
16	**VOE 11713714**	1					Pipe	Canalisation	Rohrleitung	파이프	Canalizacion	
17	**VOE 11713715**	1					•Clamp	•Pince Serrage	•Klemme	• 클램프	•Abrazadera	
18	**VOE 11713716**	1					•Clamp	•Pince Serrage	•Klemme	• 클램프	•Abrazadera	
19	**VOE 11713717**	1					Pipe	Canalisation	Rohrleitung	파이프	Canalizacion	
20	**VOE 11713721**	1					•Protecting Hose	•Protection durit	•Schutzschlauch	• 보호 호스	•Manguera Prot	
21	**VOE 11713716**	1					•Clamp	•Pince Serrage	•Klemme	• 클램프	•Abrazadera	
22	**VOE 11713723**	1					•Clamp	•Pince Serrage	•Klemme	• 클램프	•Abrazadera	
23	**VOE 11713722**	1					Elbow	Coude	Winkelstueck	엘보	Tubo acodado	

1	**602.10151**	
2		
3		
4		
5		

Sistema de lubricación
윤활 장치
Schmierölsystem
Système de graissage
Lubricating oil system

Catalogue id	Group
20048	**220**
Illustr. No **1012506**	Section **100**
Issue **VOE 74C9920048**	Page **73**

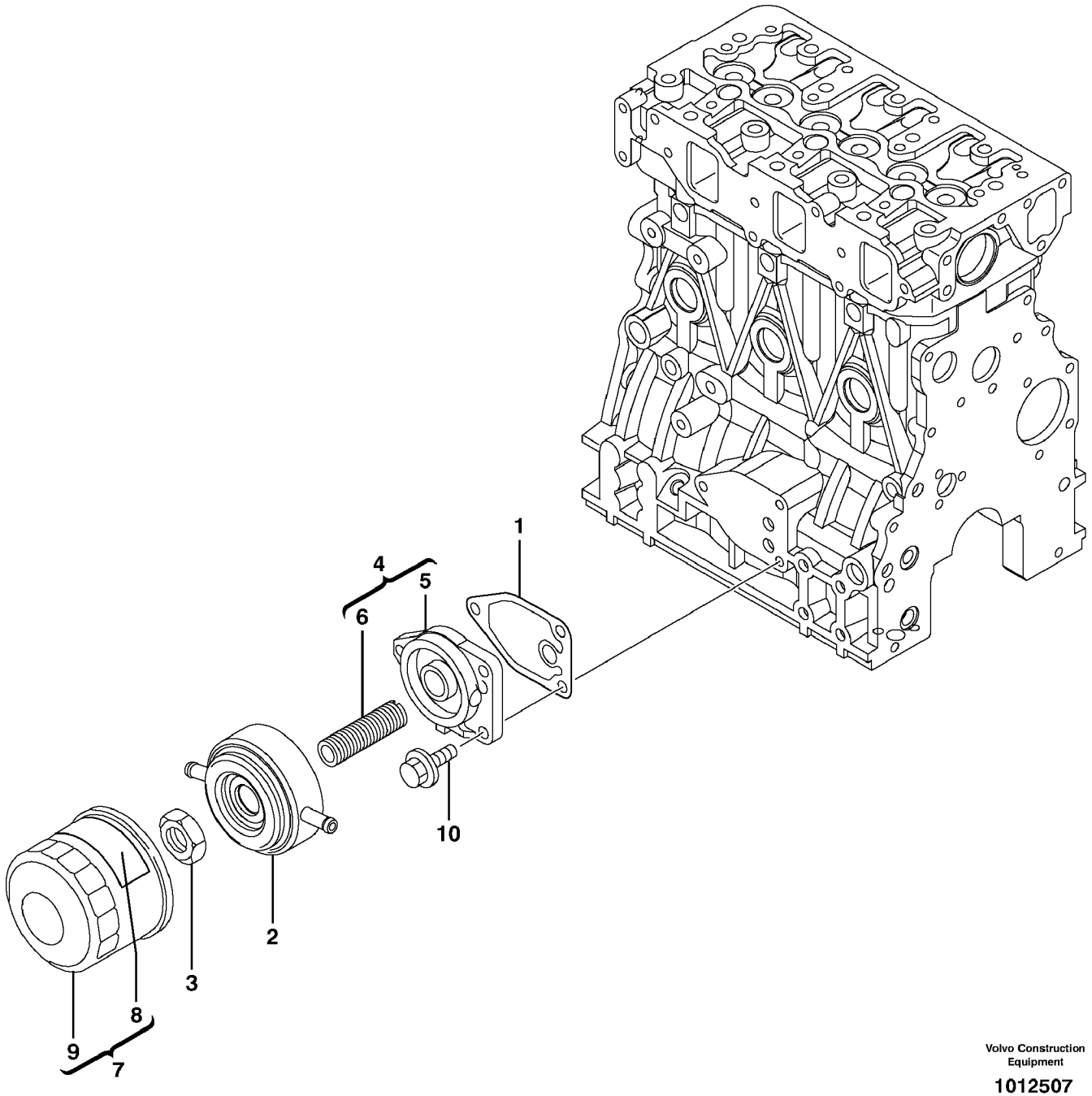

Volvo Construction Equipment

1012507

Fig.	Part No.	Quantity 1	2	3	PS	KIT	Description	Dénomination	Bezeichnung	품명	Denominación	Notes
1	**VOE 11713703**	1					Gasket	Joint	Dichtung	가스켓	Junta	
2	**VOE 11713710**	1					Oil Cooling	Refroidisseur d'huile	Ölkuhlung		Refrig Aceite	
3	**VOE 11713711**	1					Nut	Ecrou	Mutter	너트	Tuerca	
4	**VOE 11713712**	1					Bracket	Support	Halter	브래킷	Soporte	
5		1			NS		•Bracket	•Support	•Halter	• 브래킷	•Soporte	ORDER ITEM NO 4
6		1			NS		•Stud	•Goujon	•Stiftschraube	• 스터드	•Esparrago	ORDER ITEM NO 4
7	**VOE 11713229**	1					Oil Filter	Filtre Huile	Ölfilter	오일 필터	Filtro Aceite	
8		1			NS		•Label	•Etiquette	•Etikett	• 라벨	•Etiqueta	ORDER ITEM NO 7
9		1			NS		•Filter Cartridge	•Element Filtre	•Filterpatrone	• 필터 카트리지	•Patron Filtrant	ORDER ITEM NO 7
10	**VOE 11714388**	3					Bolt	Boulon	Bolzen	볼트	Perno	(SA 8240-01700)

1	**602.10151**	
2		
3		
4		
5		

Filtro de aceite
오일 필터
Ölfilter
Filtre à huile
Oil filter

Catalogue id **20048**	Group **222**
Illustr. No **1012507**	Section **100**
Issue **VOE 74C9920048**	Page **75**

VOLVO

ECR38

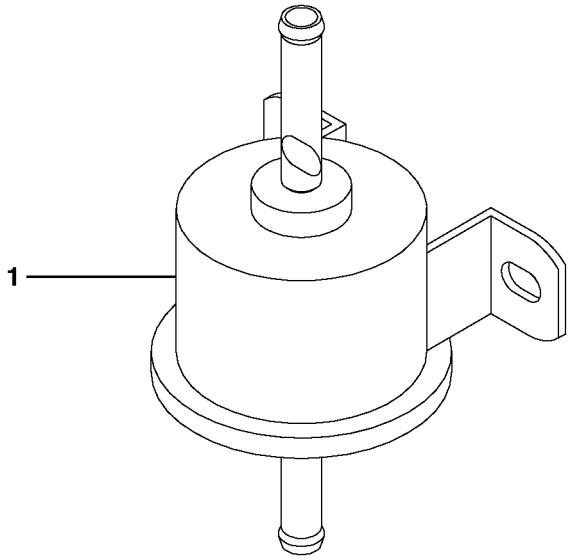

Volvo Construction Equipment

1012473

Fig.	Part No.	Quantity 1	2	3	P S	K I T	Description	Dénomination	Bezeichnung	품명	Denominación	Notes
1	**VOE 11713494**	1					Feed Pump	Pompe d'alimentatio...	Förderpumpe	피드 펌프	Bomba Aliment	

1	**602.10151**		**Bomba de combustible** 연료 펌프 **Kraftstoffpumpe** **Pompe carburant** **Fuel pump**	Catalogue id **20048**	Group **233**
2				Illustr. No **1012473**	Section **100**
3				Issue **VOE 74C9920048**	Page **77**
4					
5					

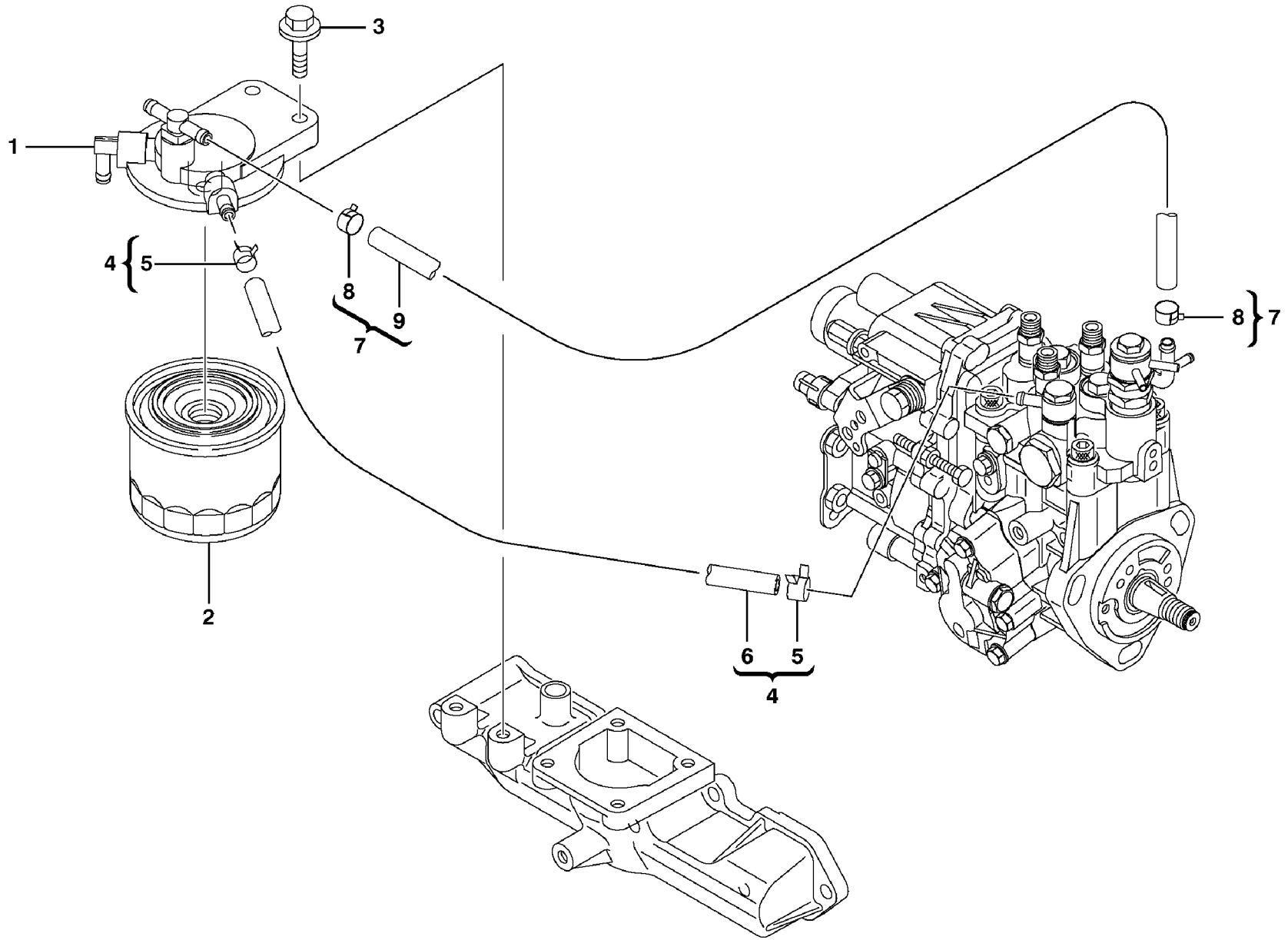

Volvo Construction Equipment

1012508

Fig.	Part No.	Quantity 1	2	3	PS	KIT	Description	Dénomination	Bezeichnung	품명	Denominación	Notes
1	**VOE 14521599**	1					Bracket	Console	Konsole	브라켓	Ménsula	
2	**VOE 11713231**	1					Filter Cartridge	Element Filtre	Filterpatrone	필터 카트리지	Patron Filtrant	
3	**SA 8210-08890**	2			SS		Bolt	Boulon	Bolzen	볼트	Perno	
4	**VOE 11713764**	1					Pipe	Canalisation	Rohrleitung	파이프	Canalizacion	
5	**VOE 11713474**	2					•Clamp	•Pince Serrage	•Klemme	• 클램프	•Abrazadera	
6	**VOE 11713765**	1					•Pipe	•Canalisation	•Rohrleitung	• 파이프	•Canalizacion	
7	**VOE 11713766**	1					Pipe	Canalisation	Rohrleitung	파이프	Canalizacion	
8	**VOE 11713474**	2					•Clamp	•Pince Serrage	•Klemme	• 클램프	•Abrazadera	
9	**VOE 11713767**	1					•Pipe	•Canalisation	•Rohrleitung	• 파이프	•Canalizacion	

1	**602.10151**	
2		
3		
4		
5		

Filtro de combustible
연료 필터
Kraftstoffilter
Filtre à carburant
Fuel filter

Catalogue id	Group
20048	**233**
Illustr. No **1012508**	Section **400**
Issue **VOE 74C9920048**	Page **79**

VOLVO

ECR38

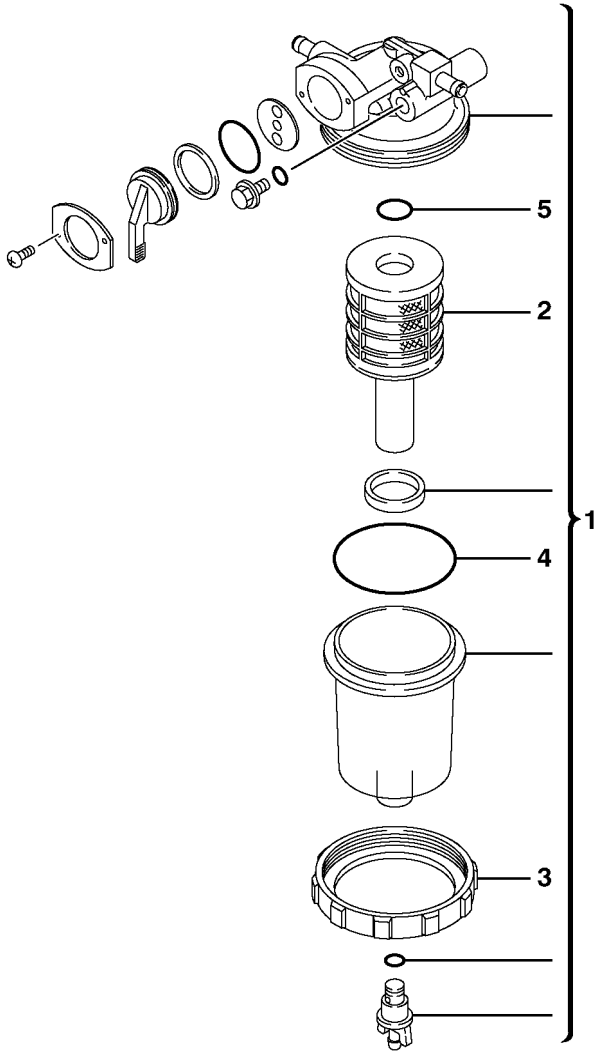

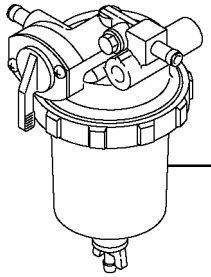

Volvo Construction Equipment

1012475

Fig.	Part No.	Quantity 1	2	3	PS	KIT	Description	Dénomination	Bezeichnung	품명	Denominación	Notes
1	**VOE 11713495**	1					Water Separator	Separateur Eau	Wasserabscheidr	수분 분리기	Separador Agua	
2	**VOE 14521609**	1					•Element	•Elément	•Element	• 엘리멘트	•Elemento	
3	**VOE 14521610**	1					•Ring	•Anneau	•Ring	• 링	•Anillo	
4	**VOE 14521611**	1			SS		•O-ring	•Joint Torique	•O-Ring	• 오링	•Junta torica	
5	**VOE 14521612**	1					•O-ring	•Joint Torique	•O-Ring	• 오링	•Junta torica	

1	**602.10151**		**Recipiente de sedimientación** 침전물 용기 **Absetzgefäß** **Décanteur de gazole** **Sediment bowl**	Catalogue id **20048**	Group **233**
2				Illustr. No **1012475**	Section **500**
3				Issue **VOE 74C9920048**	Page **81**
4					
5					

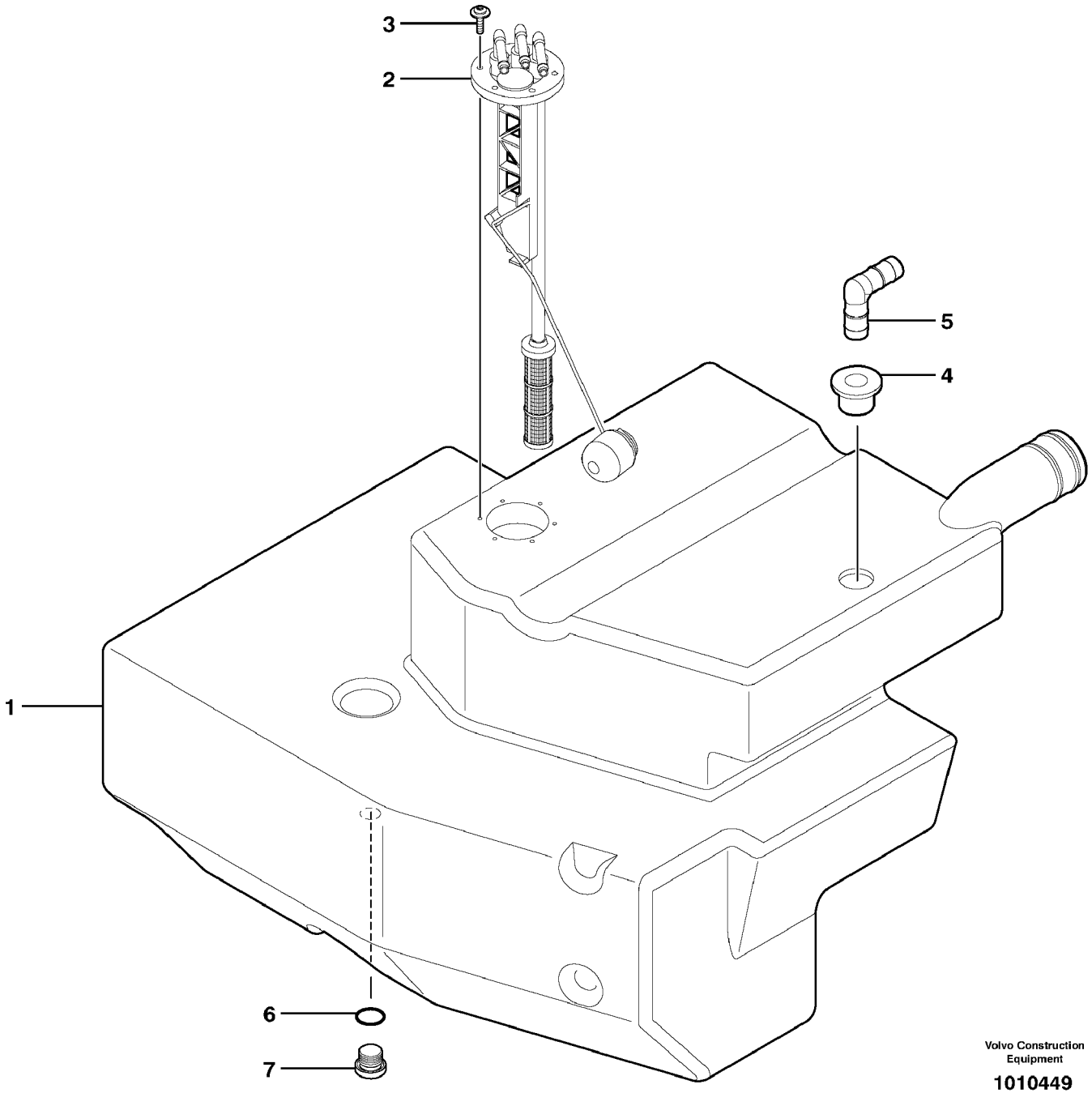

Volvo Construction Equipment

1010449

Fig.	Part No.	Quantity 1	2	3	PS	KIT	Description	Dénomination	Bezeichnung	품명	Denominación	Notes
1	**VOE 11800918**	1					Fuel tank	Réservoir carburant	Kraftstofftank	연료 탱크	Deposit combust	
2		1					Transceiver	Transmetteur	Sender/empf.	송수신기	Transreceptor	See group 386, Page 197
3		6					Screw	Vis	Schraube	스크류	Tornillo	See group 386, Page 197
4	**VOE 11803124**	1					Seal	Joint	Dichtring	시일	Junta	
5	**VOE 11803125**	1					Pipe	Canalisation	Rohrleitung	파이프	Canalizacion	
6	**VOE 11802322**	1					Seal	Joint	Dichtring	시일	Junta	
7	**VOE 11802321**	1					Plug	Bouchon	Stopfen	플러그	Tapon	

1	**602.10151**		**Depósito de gasóleo** 연료 탱크 **Kraftstoffbehälter** **Réservoir de gazole** **Gas-oil tank**	Catalogue id **20048**	Group **234**
2				Illustr. No **1010449**	Section **100**
3				Issue **VOE 74C9920048**	Page **83**
4					
5					

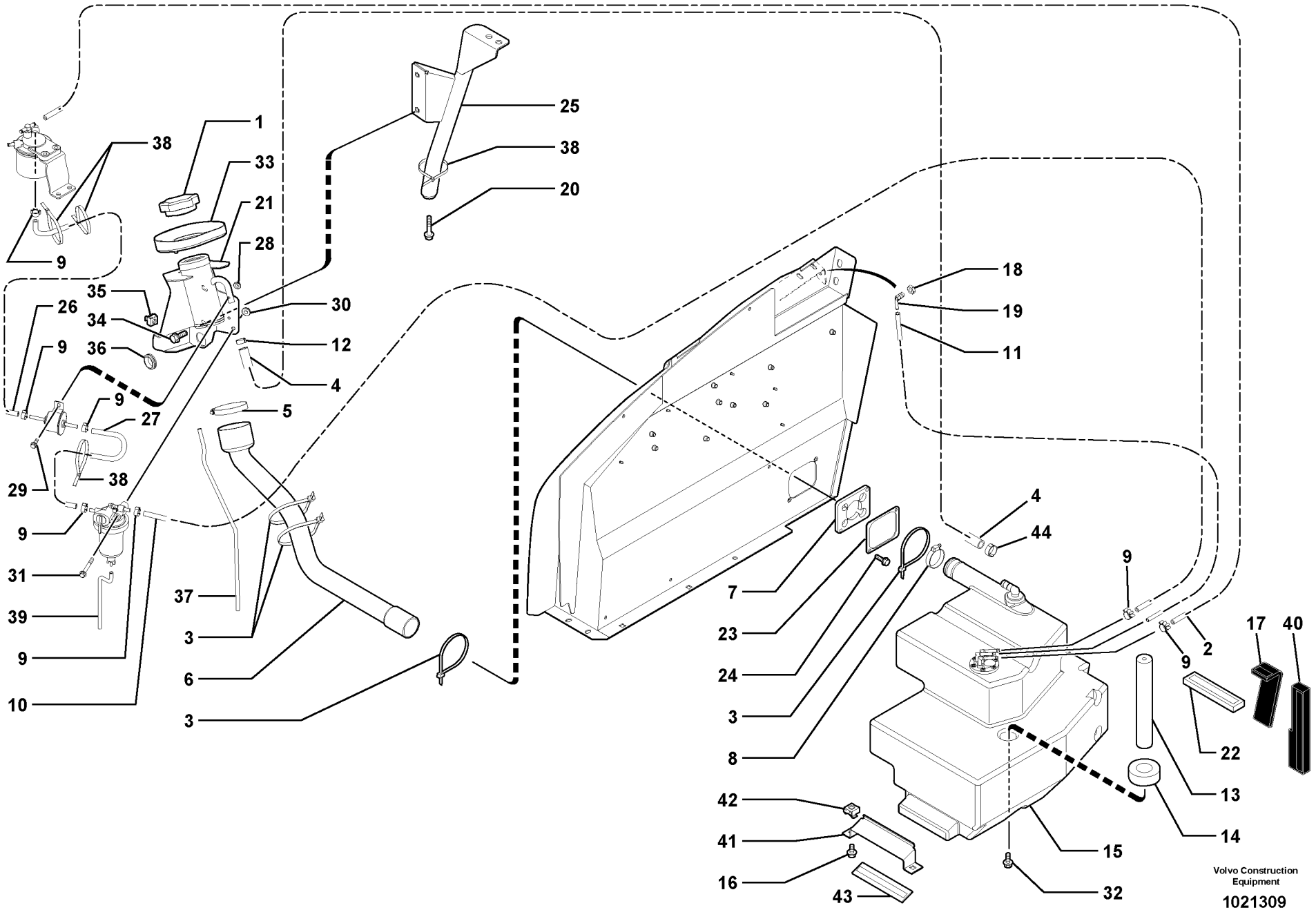
1
38
33
21
28
25
38
20
9
35
26
34
36
9
9
27
29
38
9
31
39
9
10
30
12
4
5
37
3
6
3
18
19
11
4
44
7
23
24
3
8
9
9
2
17
40
22
13
14
42
41
16
43
15
32
Volvo Construction Equipment
1021309

Fig.	Part No.	Quantity 1	2	3	PS	KIT	Description	Dénomination	Bezeichnung	품명	Denominación	Notes
1	**VOE 11802315**	1					Plug	Bouchon	Stopfen	플러그	Tapon	
2	**VOE 11803832**	1					Pipe	Canalisation	Rohrleitung	파이프	Canalizacion	
3	**VOE 4881440**	4					Strip Clamp	Ruban Serrage	Kabelbinder	스트립 클램프	Abraz Cinta	
4	**VOE 11803822**	1					Pipe	Canalisation	Rohrleitung	파이프	Canalizacion	
5	**VOE 943482**	1					Hose Clamp	Collier Serrage	Schlauchschelle	호스 클램프	Abraz Manguera	
6	**VOE 11800920**	1					Pipe	Canalisation	Rohrleitung	파이프	Canalizacion	
7	**VOE 11802201**	1					Rubber Seal	Lèvre Caoutchouc	Gummilippe	고무 시일	Labio Goma	
8	**VOE 943479**	1					Hose Clamp	Collier Serrage	Schlauchschelle	호스 클램프	Abraz Manguera	
9	**VOE 11802316**	7					Clamp	Pince Serrage	Klemme	클램프	Abrazadera	
10	**VOE 11803831**	1					Pipe	Canalisation	Rohrleitung	파이프	Canalizacion	
11	**VOE 11803828**	1					Pipe	Canalisation	Rohrleitung	파이프	Canalizacion	
12	**VOE 947520**	1					Hose Clamp	Collier Serrage	Schlauchschelle	호스 클램프	Abraz Manguera	
13	**VOE 11802203**	1					Support	Support	Stütze	서포트	Apoyo	
14	**VOE 11801961**	REQ					Spacer	Partie Intermédiaire	Zwischenstück	스페이서	Espaciador	
15		1					Fuel tank	Réservoir carburant	Kraftstofftank	연료 탱크	Deposit combust	See group 234, Page 83
16	**VOE 946329**	2					Flange screw	Vis à bride	Flanschschraube	플랜지 스크류	Torn embridado	
17	**VOE 11803368**	1					Rubber Plate	Plaque Caoutchouc	Gummiplatte	고무판	Placa Goma	
18	**VOE 11802318**	1					Nut	Ecrou	Mutter	너트	Tuerca	
19	**VOE 11802319**	1					Elbow	Coude	Winkelstueck	엘보	Tubo acodado	
20	**VOE 965193**	1			SS		Screw	Vis	Schraube	스크류	Tornillo	
21	**VOE 11802004**	1					Hood Support	Support Capot	Haubenstutze		Juego Capo	
22	**VOE 11802930**	1					Spacer	Partie Intermédiaire	Zwischenstück	스페이서	Espaciador	
23	**VOE 11802202**	1					Flange	Flasque	Flansch	플랜지	Brida	
24	**VOE 946671**	2					Flange screw	Vis à bride	Flanschschraube	플랜지 스크류	Torn embridado	
25	**VOE 11802198**	1					Support	Support	Stütze	서포트	Apoyo	
26	**VOE 11803824**	1					Pipe	Canalisation	Rohrleitung	파이프	Canalizacion	
27	**VOE 11803825**	1					Pipe	Canalisation	Rohrleitung	파이프	Canalizacion	
28	**VOE 945407**	2			SS		Flange nut	Ecrou accouple.	Bundmutter	플랜지 너트	Tuerca embridad	
29	**VOE 946934**	2					Screw	Vis	Schraube	스크류	Tornillo	
30	**VOE 945408**	1			SS		Flange Lock Nut	Contre écrou bride	Flanschmutter	플랜지 록 너트	Contratuer Embr	

1	**602.10151**		**Circuito de combustible** **연료 회로** **Kraftstoffanlage** **Circuit d'alimentation en gazole** **Fuel circuit**
2			
3			
4			
5			

Catalogue id	Group
20048	**235**
Illustr. No **1021309**	Section **100**
Issue **VOE 74C9920048**	Page **85**

VOLVO

ECR38

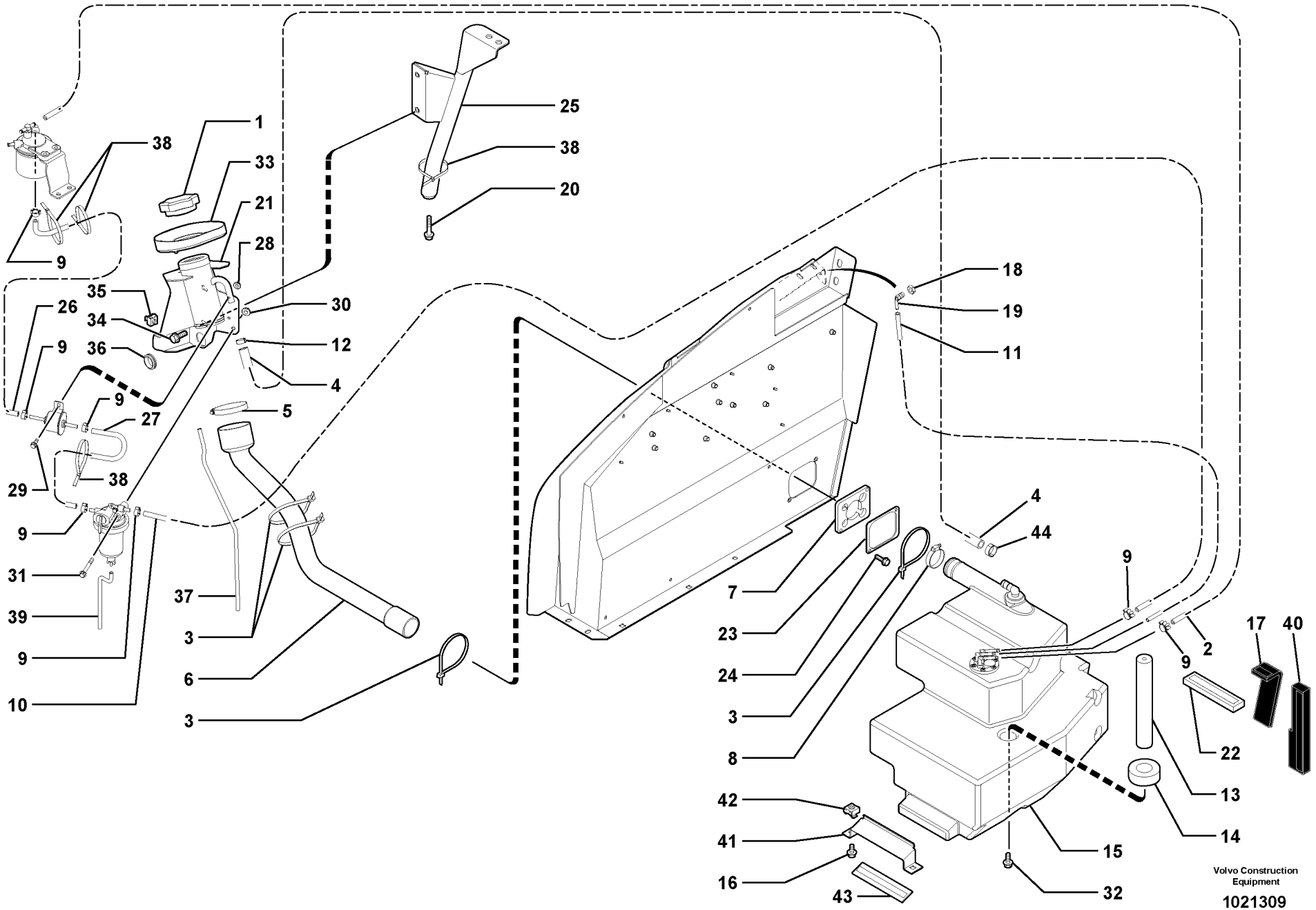
1
38
33
21
28
25
38
20
9
35
26
34
36
9
9
27
29
38
9
31
39
9
10
30
12
4
5
37
3
6
3
18
19
11
4
44
7
23
24
3
8
9
9
2
17
40
22
13
14
42
41
16
43
15
32
Volvo Construction Equipment
1021309

Fig.	Part No.	Quantity 1	2	3	PS	KIT	Description	Dénomination	Bezeichnung	품명	Denominación	Notes
31	**VOE 965181**	1			SS		Screw	Vis	Schraube	스크류	Tornillo	
32	**VOE 965191**	1			SS		Screw	Vis	Schraube	스크류	Tornillo	
33	**VOE 11801650**	1					Deflector	Deflecteur	Ablenker	디플랙터	Deflector	
34	**VOE 946441**	2					Flange screw	Vis à bride	Flanschschraube	플랜지 스크류	Torn embridado	
35	**VOE 11802303**	2					Nut	Ecrou	Mutter	너트	Tuerca	
36	**VOE 11803295**	1					Grommet	Passe fil	Durchführung	그로메트	Aislador pasapanel	
37	**VOE 11803826**	1					Pipe	Canalisation	Rohrleitung	파이프	Canalizacion	
38	**VOE 11043109**	4			SS		Cable Tie	Serre-cable	Kabelbinder	타이	Abrazadera	
39	**VOE 11803827**	1					Pipe	Canalisation	Rohrleitung	파이프	Canalizacion	
40	**VOE 11803367**	1					Rubber Plate	Plaque Caoutchouc	Gummiplatte	고무판	Placa Goma	
41	**VOE 11802323**	1					Flange	Flasque	Flansch	플랜지	Brida	
42	**VOE 11802303**	2					Nut	Ecrou	Mutter	너트	Tuerca	
43	**VOE 11802324**	1					Rubber Plate	Plaque Caoutchouc	Gummiplatte	고무판	Placa Goma	
44	**VOE 943472**	REQ			SS		Hose Clamp	Collier Serrage	Schlauchschelle	호스 클램프	Abraz Manguera	

1	**602.10151**	
2		
3		
4		
5		

Circuito de combustible
연료 회로
Kraftstoffanlage
Circuit d'alimentation en gazole
Fuel circuit

Catalogue id	Group
20048	**235**
Illustr. No	Section
1021309	**100**
Issue	Page
VOE 74C9920048	**87**

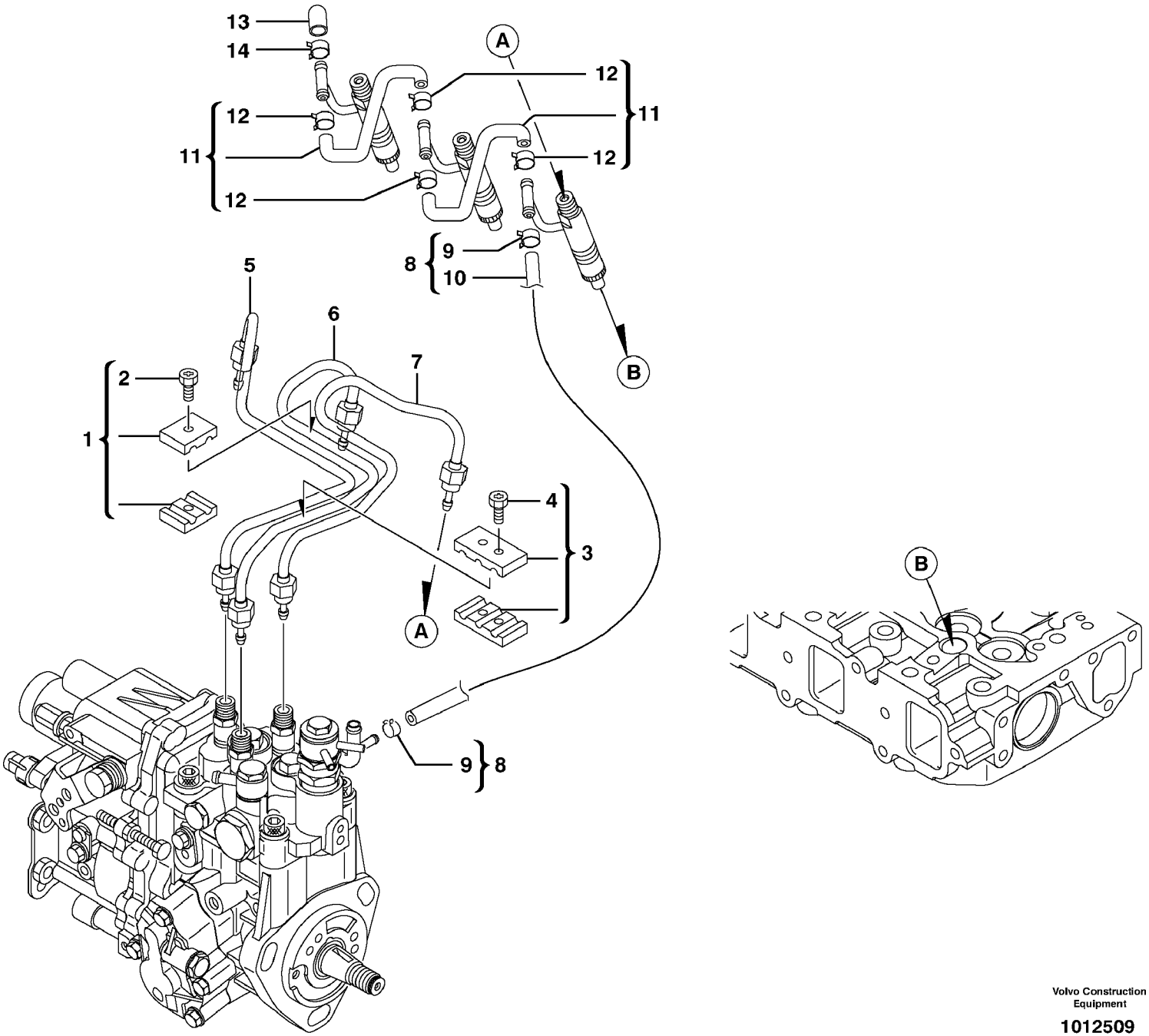
13
14
A
12
11
12
12
11
12
12
8
9
10
B
5
6
7
2
1
4
3
A
9
8
B

Fig.	Part No.	Quantity 1	2	3	PS	KIT	Description	Dénomination	Bezeichnung	품명	Denominación	Notes
1	**SA 8210-01950**	1					Retainer	Retenue	Halter	리테이너	Soporte	
2	**SA 8210-03750**	1					•Bolt	•Boulon	•Bolzen	• 볼트	•Perno	
3	**VOE 11713464**	1					Retainer	Retenue	Halter	리테이너	Soporte	
4	**SA 8210-03750**	2					•Bolt	•Boulon	•Bolzen	• 볼트	•Perno	
5	**VOE 11713757**	1					Pipe	Canalisation	Rohrleitung	파이프	Canalizacion	
6	**VOE 11713758**	1					Pipe	Canalisation	Rohrleitung	파이프	Canalizacion	
7	**VOE 11713759**	1					Pipe	Canalisation	Rohrleitung	파이프	Canalizacion	
8	**VOE 11713760**	1					Hose	Durit	Schlauch	호스	Tubo flexible	
9	**VOE 14521580**	2					•Clamp	•Pince Serrage	•Klemme	• 클램프	•Abrazadera	
10	**VOE 11713761**	1					•Pipe	•Canalisation	•Rohrleitung	• 파이프	•Canalizacion	
11	**VOE 14521178**	2					Pipe	Canalisation	Rohrleitung	파이프	Canalizacion	
12	**VOE 14521580**	4					•Clamp	•Pince Serrage	•Klemme	• 클램프	•Abrazadera	
13	**VOE 11713762**	1					Cap	Chapeau	Kappe	캡	Caperuza	
14	**VOE 11713763**	1					Clamp	Pince Serrage	Klemme	클램프	Abrazadera	

1	**602.10151**	
2		
3		
4		
5		

Tubos de combustible-inyector
연료 인젝터 배관
Kraftstoffrohre, Einspritzdüse
Conduits de carburant - Injecteur complet
Fuel pipes-injector

Catalogue id	Group
20048	**235**
Illustr. No **1012509**	Section **200**
Issue **VOE 74C9920048**	Page **89**

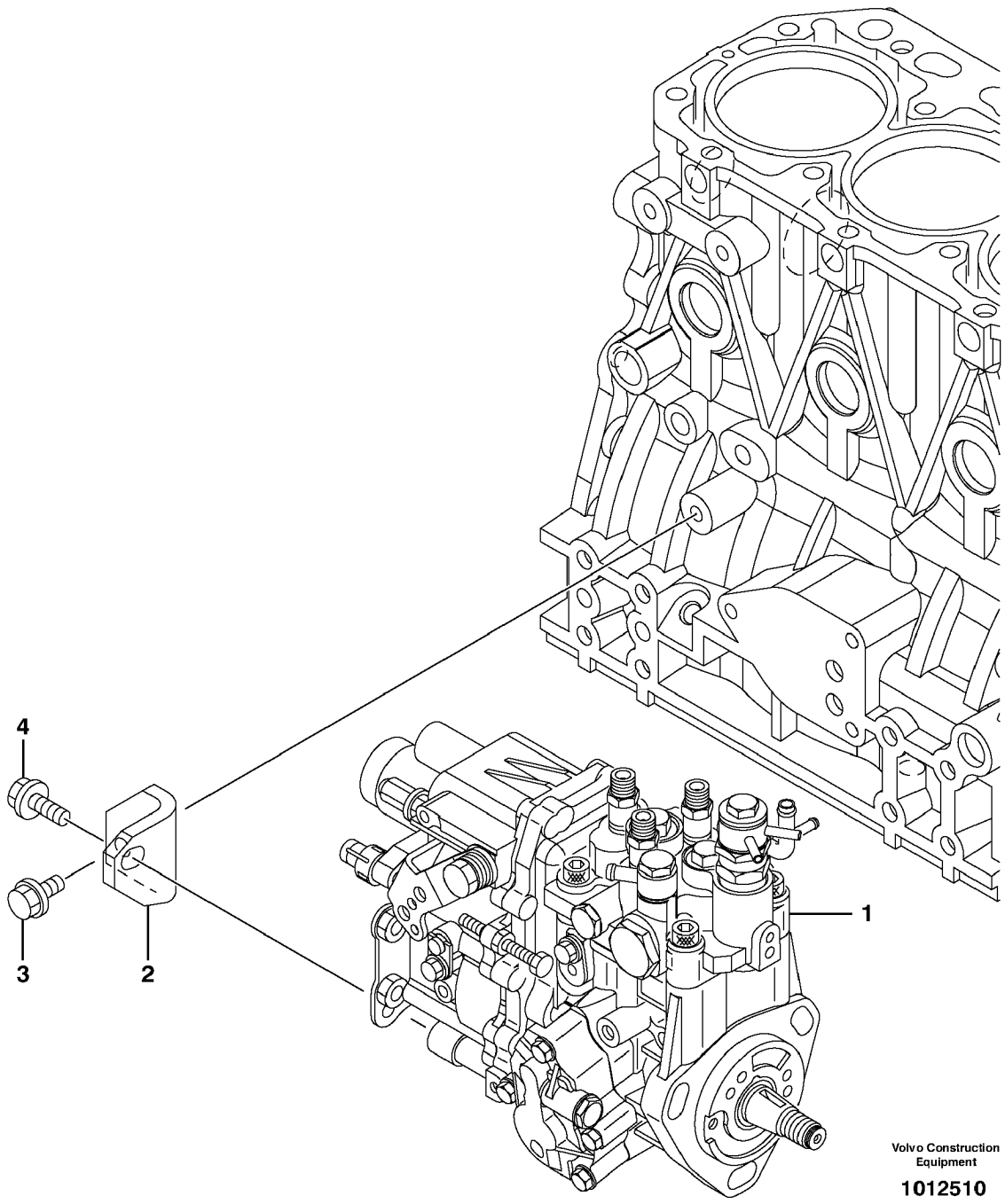
4
3
2
1
Volvo Construction Equipment
1012510

Fig.	Part No.	Quantity 1	2	3	PS	KIT	Description	Dénomination	Bezeichnung	품명	Denominación	Notes
1	**VOE 11713752**	1					Pump	Pompe	Pumpe	펌프	Bomba	
2	**VOE 11713753**	1					Bracket	Support	Halter	브래킷	Soporte	
3	**VOE 11714372**	1					Screw	Vis	Schraube	스크류	Tornillo	(SA 8240-01680)
4	**VOE 11714388**	1					Bolt	Boulon	Bolzen	볼트	Perno	(SA 8240-01700)

1	**602.10151**		**Bomba de inyección** **연료 분사 펌프** **Einspritzpumpe** **Pompe d'injection** **Injection pump**	Catalogue id **20048**	Group **236**
2				Illustr. No **1012510**	Section **100**
3				Issue **VOE 74C9920048**	Page **91**
4					
5					

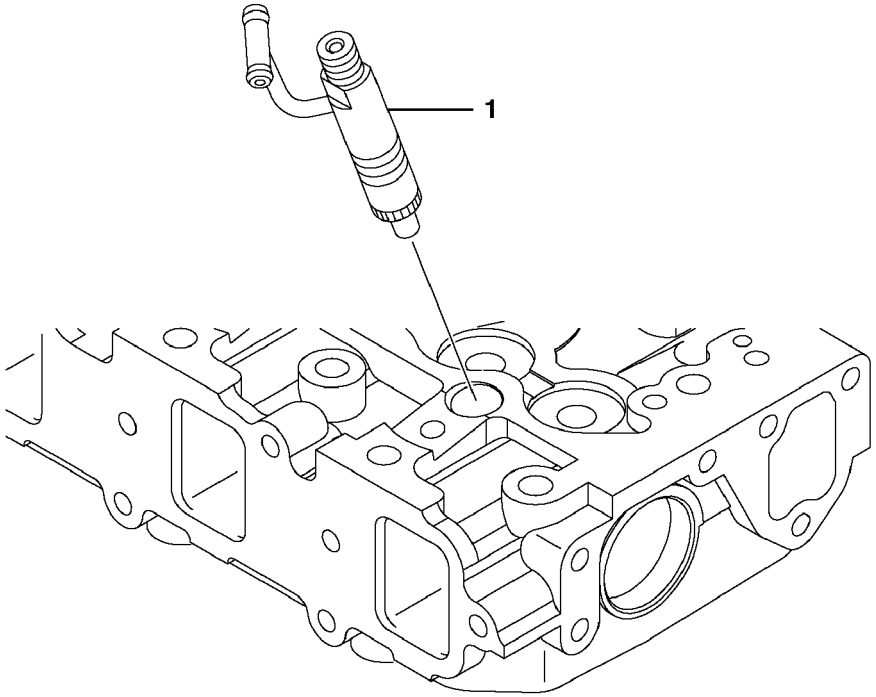

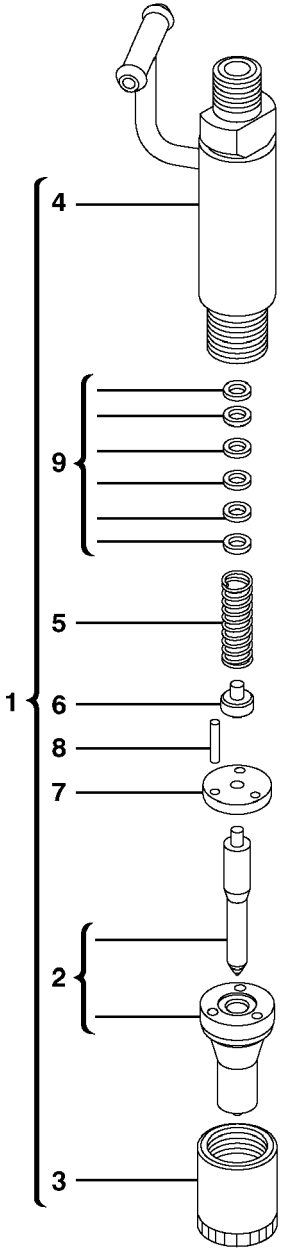

Volvo Construction Equipment

1012511

Fig.	Part No.	Quantity 1	2	3	PS	KIT	Description	Dénomination	Bezeichnung	품명	Denominación	Notes
1	**VOE 11713754**	3					Fuel Nozzle	Injecteur carburant	Kraftstoffduse	연료 노즐	Atomizador	
2	**VOE 11713755**	1					•Nozzle	•Nez D'injecteur	•Einspritzduse	• 노즐	•Tobera	
3	**SA 8210-00380**	1					•Nut	•Ecrou	•Mutter	• 너트	•Tuerca	
4	**VOE 11713756**	1					•Body	•Corps	•Körper	• 몸체	•Cuerpo	
5	**SA 8210-00390**	1					•Spring	•Ressort	•Feder	• 스프링	•Muelle	
6	**SA 8210-00400**	1					•Spring	•Ressort	•Feder	• 스프링	•Muelle	
7	**SA 8210-00410**	1					•Plate	•Plaque	•Platte	• 플레이트	•Placa	
8	**SA 8210-00420**	3					•Pin	•Goupille	•Zapfen	• 핀	•Pasador	
9	**SA 8210-00430**	1					•Shim	•Cale d'épaisseur	•Passcheibe	• 심	•Arandela Ajuste	

1	**602.10151**	
2		
3		
4		
5		

Inyector
인젝터
Einspritzdüse
Injecteur complet
Injector

Catalogue id	Group
20048	**237**
Illustr. No **1012511**	Section **100**
Issue **VOE 74C9920048**	Page **93**

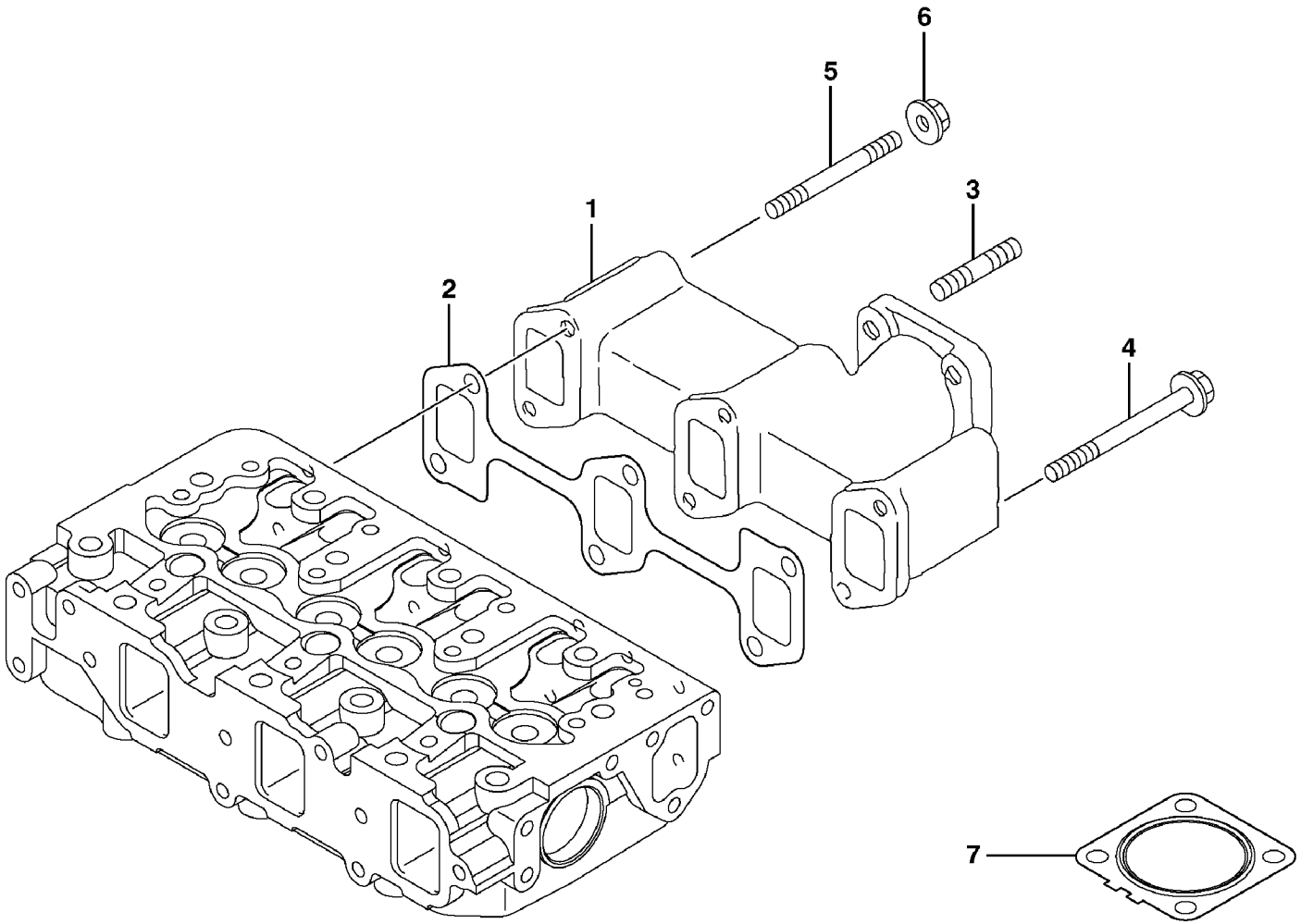

Volvo Construction Equipment

1012512

Fig.	Part No.	Quantity 1	2	3	PS	KIT	Description	Dénomination	Bezeichnung	품명	Denominación	Notes
1	**VOE 11713675**	1					Manifold	Tubulure	Verzweigung	매니홀드	Bifurcacion	
2	**VOE 11713676**	1					Gasket	Joint	Dichtung	가스켓	Junta	
3	**VOE 14521558**	4					Bolt	Boulon	Bolzen	볼트	Perno	
4	**VOE 14521557**	4					Bolt	Boulon	Bolzen	볼트	Perno	
5	**VOE 14521556**	2					Bolt	Boulon	Bolzen	볼트	Perno	
6	**VOE 14521543**	2					Nut	Ecrou	Mutter	너트	Tuerca	
7	**VOE 11713677**	1					Gasket	Joint	Dichtung	가스켓	Junta	

1	**602.10151**	
2		
3		
4		
5		

Colector de escape
배기 매니홀드
Auspuffkrümmer
Tubulure d'échappement
Exhaust manifold

Catalogue id **20048**	Group **251**
Illustr. No **1012512**	Section **100**
Issue **VOE 74C9920048**	Page **95**

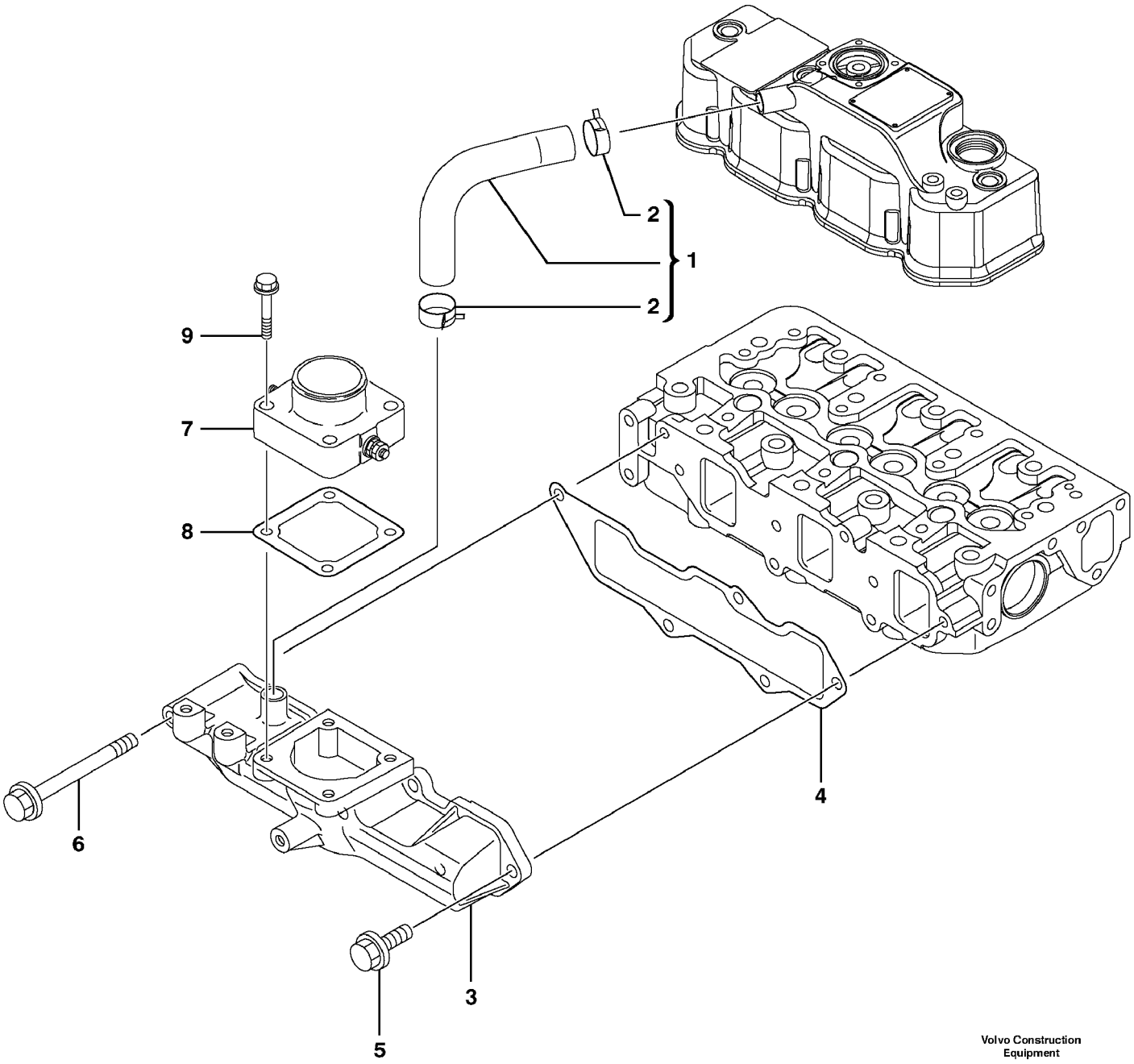

Volvo Construction Equipment

1012513

Fig.	Part No.	Quantity 1	2	3	PS	KIT	Description	Dénomination	Bezeichnung	품명	Denominación	Notes
1	**VOE 11713668**	1					Pipe	Canalisation	Rohrleitung	파이프	Canalizacion	
2	**VOE 11713669**	2					•Clamp	•Pince Serrage	•Klemme	• 클램프	•Abrazadera	
3	**VOE 11713670**	1					Manifold	Tubulure	Verzweigung	매니홀드	Bifurcacion	
4	**VOE 11713671**	1					Gasket	Joint	Dichtung	가스켓	Junta	
5	**VOE 11714388**	4					Bolt	Boulon	Bolzen	볼트	Perno	(SA 8240-01700)
6	**VOE 11713672**	1					Bolt	Boulon	Bolzen	볼트	Perno	
7	**VOE 11713673**	1					Heater	Elément de chauffag	Heizkörper	히터	Calefaccion	
8	**VOE 11713674**	1					Gasket	Joint	Dichtung	가스켓	Junta	
9	**VOE 14525394**	4					Bolt	Boulon	Bolzen	볼트	Perno	

1	**602.10151**	
2		
3		
4		
5		

Tubo de admisión
흡기 매니홀드
Einlassrohr
Tubulure d'admission
Inlet manifold

Catalogue id	Group
20048	**251**
Illustr. No **1012513**	Section **400**
Issue **VOE 74C9920048**	Page **97**

VOLVO

ECR38

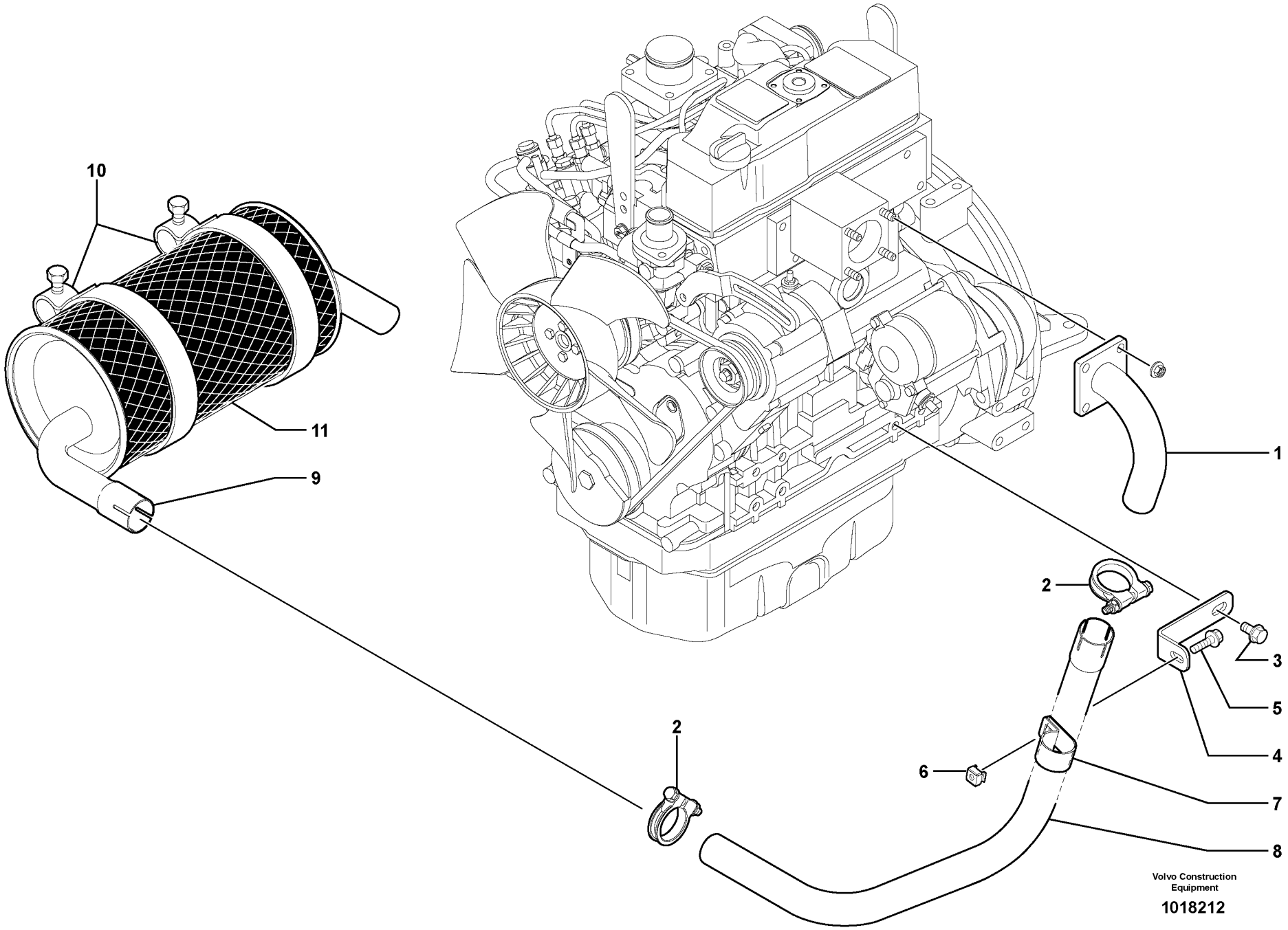
10
11
9
1
2
3
5
4
2
6
7
8
Volvo Construction Equipment
1018212

Fig.	Part No.	Quantity 1	2	3	PS	KIT	Description	Dénomination	Bezeichnung	품명	Denominación	Notes
1	**VOE 11801992**	1					Exhaust Pipe	Tuyau d'échappemen.	Auspuffrohr	배기관	Tubo Escape	
2	**VOE 11801990**	2					Clamp	Pince Serrage	Klemme	클램프	Abrazadera	
3	**VOE 946471**	1					Flange screw	Vis à bride	Flanschschraube	플랜지 스크류	Torn embridado	
4	**VOE 11801445**	1					Angle Iron	Equerre	Winkeleisen	앵글 철물	Pieza angular	
5	**VOE 945444**	1			SS		Screw	Vis	Schraube	스크류	Tornillo	
6	**VOE 11802283**	1					Nut	Ecrou	Mutter	너트	Tuerca	
7	**VOE 11801506**	1					Clamp	Pince Serrage	Klemme	클램프	Abrazadera	
8	**VOE 11802000**	1					Exhaust Pipe	Tuyau d'échappemen.	Auspuffrohr	배기관	Tubo Escape	
9	**VOE 11802189**	REQ					Muffler	Silencieux	Schalldämpfer	소음기	Silencioso	11839059
10	**VOE 11802200**	2					Clamp	Pince Serrage	Klemme	클램프	Abrazadera	
11	**VOE 11807279**	1					Fbr Glass Fill	Fibre de verre	Glasfasereinl		Rell Fibra Vidr	

1	**602.10151** →	→ **602.10668**
2		
3		
4		
5		

Silenciador
소음기
Auspufftopf
Silencieux
Muffler

Catalogue id **20048**	Group **252**
Illustr. No **1018212**	Section **100**
Issue **VOE 74C9920048**	Page **99**

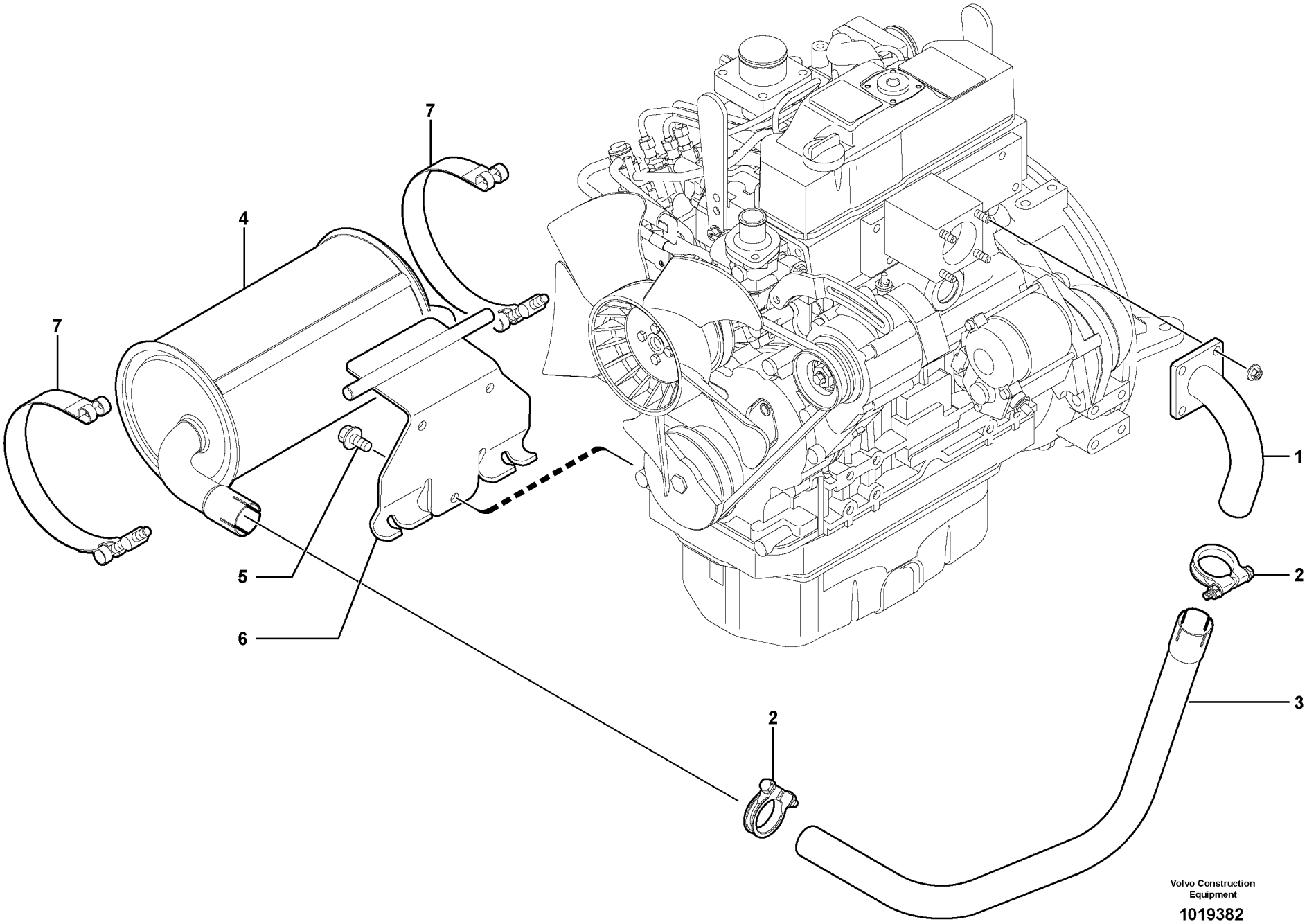
7
4
7
1
2
5
6
2
3
Volvo Construction Equipment
1019382

Fig.	Part No.	Quantity 1	2	3	PS	KIT	Description	Dénomination	Bezeichnung	품명	Denominación	Notes
1	**VOE 11801992**	1					Exhaust Pipe	Tuyau d'échappemen.	Auspuffrohr	배기관	Tubo Escape	
2	**VOE 11801990**	2					Clamp	Pince Serrage	Klemme	클램프	Abrazadera	
3	**VOE 11802000**	1					Exhaust Pipe	Tuyau d'échappemen.	Auspuffrohr	배기관	Tubo Escape	
4	**VOE 11807649**	1					Muffler	Silencieux	Schalldämpfer	소음기	Silencioso	11839059
5	**VOE 946471**	3					Flange screw	Vis à bride	Flanschschraube	플랜지 스크류	Torn embridado	
6	**VOE 11806954**	1					Support	Support	Stütze	서포트	Apoyo	
7	**VOE 11807646**	2					Clamp	Pince Serrage	Klemme	클램프	Abrazadera	

1	**602.10669**	
2		
3		
4		
5		

Silenciador
소음기
Auspufftopf
Silencieux
Muffler

Catalogue id **20048**	Group **252**
Illustr. No **1019382**	Section **110**
Issue **VOE 74C9920048**	Page **101**

VOLVO

ECR38

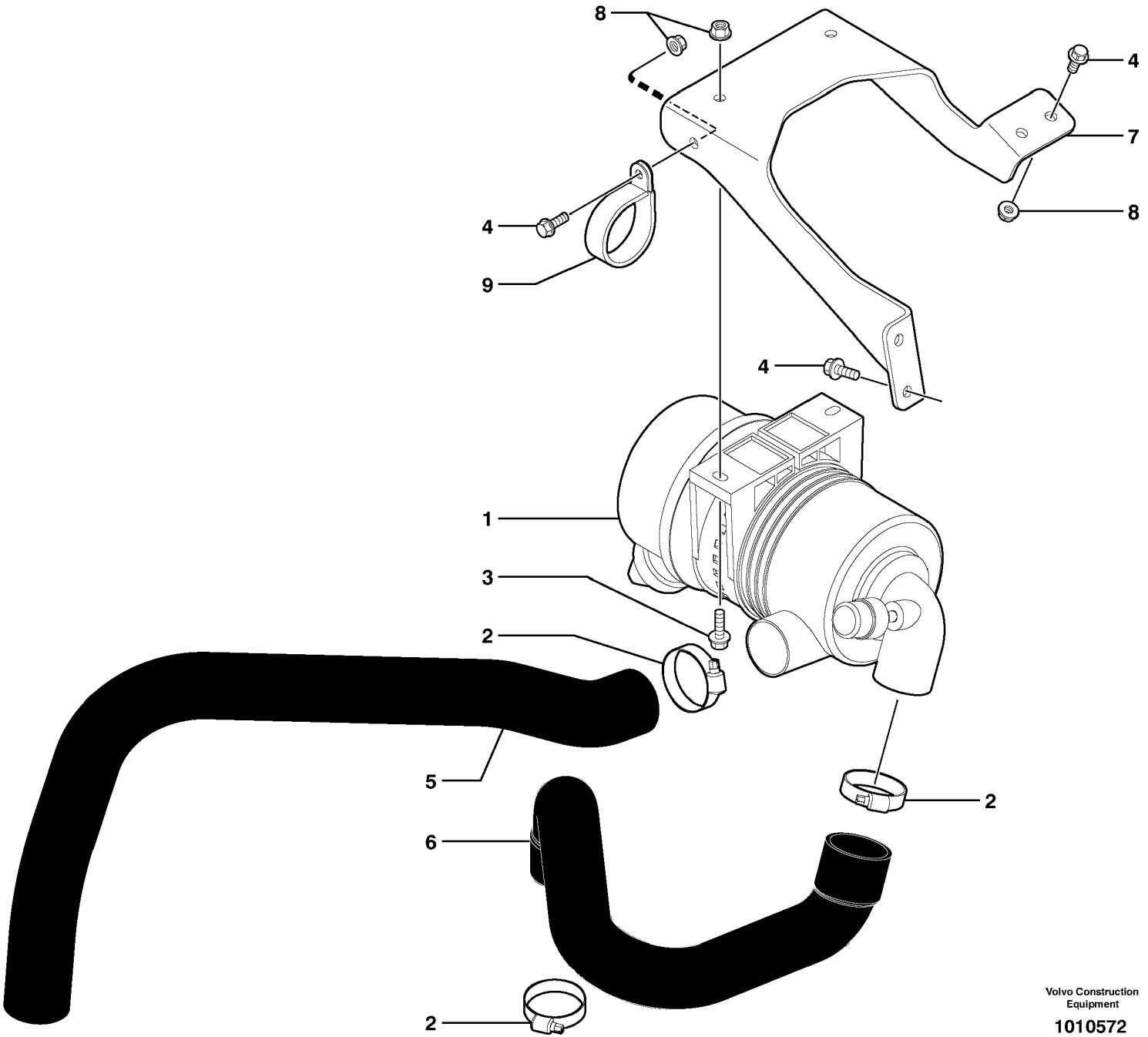

Volvo Construction Equipment

1010572

Fig.	Part No.	Quantity 1	2	3	PS	KIT	Description	Dénomination	Bezeichnung	품명	Denominación	Notes
1		1					Air filter	Filtre à air	Luftfilter	에어 필터	Filtro de aire	See group 256, Page 105
2	**VOE 943478**	3					Hose Clamp	Collier Serrage	Schlauchschelle	호스 클램프	Abraz Manguera	
3	**VOE 946671**	2					Flange screw	Vis à bride	Flanschschraube	플랜지 스크류	Torn embridado	
4	**VOE 946173**	6			SS		Screw	Vis	Schraube	스크류	Tornillo	
5	**VOE 11801345**	1					Suction hose	Durit aspiration	Saugschlauch	흡입 호스	Manguer aspirac	
6	**VOE 11801346**	1					Pressure Hose	Durit Refoulement	Druckschlauch	호스	Manguer Presion	
7	**VOE 11801432**	1					Support	Support	Stütze	서포트	Apoyo	
8	**VOE 945408**	10			SS		Flange Lock Nut	Contre écrou bride	Flanschmutter	플랜지 록 너트	Contratuer Embr	
9	**VOE 11802278**	1					Clamp attachment	Collier Fixation	Klemmhalter	클램프 어태치먼트	Suj Abrazadera	

1	**602.10151**	
2		
3		
4		
5		

Admisión / filtro de aire
흡입 / 공기 휠터
Saugrohr / Luftfilter
Tubulure d'admission / filtre à air
Intake / air filter

Catalogue id	Group
20048	**256**
Illustr. No **1010572**	Section **100**
Issue **VOE 74C9920048**	Page **103**

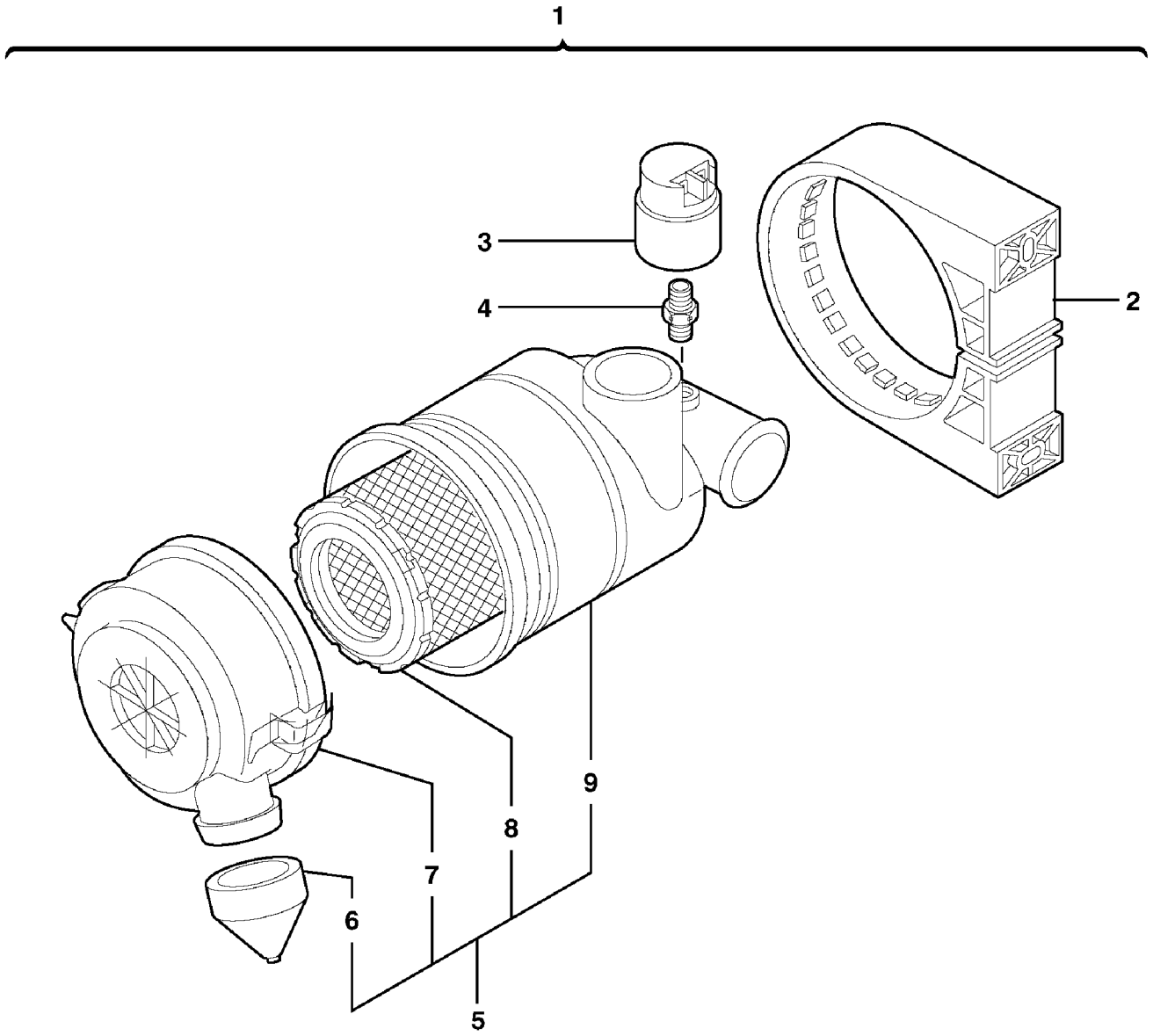

Volvo Construction Equipment

1010452

Fig.	Part No.	Quantity 1	2	3	PS	KIT	Description	Dénomination	Bezeichnung	품명	Denominación	Notes
1	**VOE 11710121**	1					Air Cleaner	Filtre Air	Luftfilter	에어크리너	Filtro Aire	(VOE 11802280)
2	**VOE 11802326**	1					•Collar	•Collier	•Bördel	• 칼러	•Collar	
3		1					•Clogging indicator	•Indicateur de colmat	•Verstopfungsanzeig	• 막힘 표시기	•Indicador de obturaci	See group 364, Page 165
4	**VOE 11802328**	1					•Support	•Support	•Stütze	• 서포트	•Apoyo	
5	**VOE 11802327**	1					•Air filter	•Filtre à air	•Luftfilter	• 에어 필터	•Filtro de aire	
6	**PJ 7417411**	1					••Draining Valve	••Valve drainage	••Ablassventil	•• 드레인 밸브	••Valvula Drenaje	
7	**PJ 7417412**	1					••Cover	••Couvercle	••Deckel	•• 커버	••Tapa	
8	**VOE 11802804**	1					••Cartridge	••Cartouche	••Patrone	•• 카트리지	••Patron	
9		1			NS		••Filter Housing	••Corps de filtre	••Filtergehäuse	•• 필터 하우징	••Cuerpo de filtro	ORDER ITEM NO 5

1	**602.10151**	
2		
3		
4		
5		

Filtro de aire
에어크리너
Luftfilter
Filtre à air
Air filter

Catalogue id **20048**	Group **256**
Illustr. No **1010452**	Section **300**
Issue **VOE 74C9920048**	Page **105**

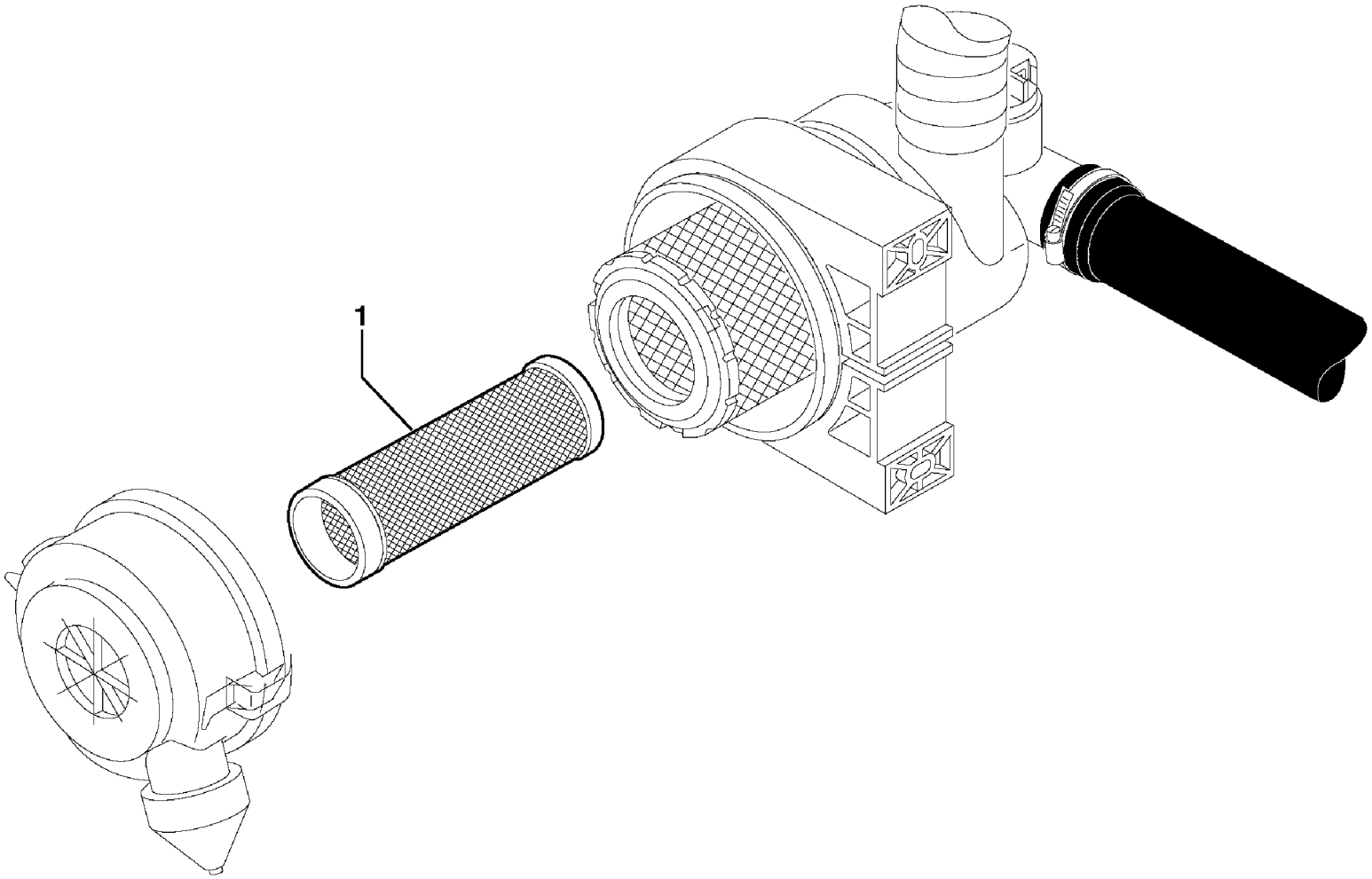

Volvo Construction Equipment

1012355

Fig.	Part No.	Quantity 1	2	3	P S	K I T	Description	Dénomination	Bezeichnung	품명	Denominación	Notes
1	**VOE 11801160**	1					Cartridge	Cartouche	Patrone	카트리지	Patron.....	11801216

1	**602.10151**		**Prefiltro** 프리크리너 **Vorreiniger** **Prefiltre** **Pre-cleaner**	Catalogue id **20048**	Group **256**
2				Illustr. No **1012355**	Section **700**
3				Issue **VOE 74C9920048**	Page **107**
4					
5					

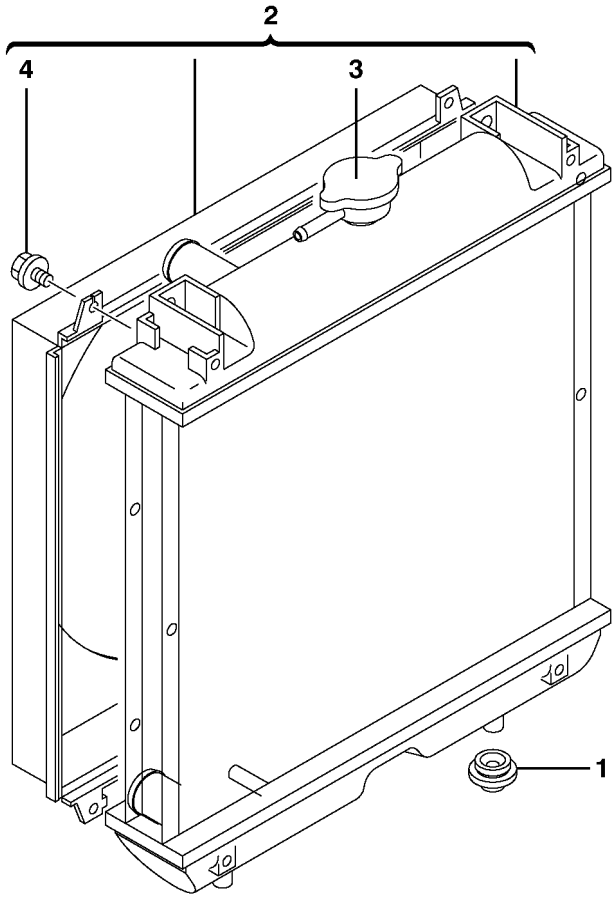

Volvo Construction Equipment

1012482

Fig.	Part No.	Quantity 1	2	3	PS	KIT	Description	Dénomination	Bezeichnung	품명	Denominación	Notes
1	**VOE 11713528**	2					Rubber	Caoutchouc	Gummi	고무	Caucho	
2	**VOE 11713529**	1					Radiator	Radiateur	Radiator	라디에이터	Radiador	
3	**VOE 11713530**	1					•Filler cap	•Bouchon Remplissa..	•Tankverschluss	• 주유구 캡	•Tapa Llenado	
4	**VOE 11713531**	4					•Bolt	•Boulon	•Bolzen	• 볼트	•Perno	

1	**602.10151** →	→	**Radiador (agua)** 라디에이터 (냉각수) **Kühler (Wasser)** **Radiateur (eau)** **Radiator (water)**	Catalogue id **20048**	Group **261**
2				Illustr. No **1012482**	Section **100**
3				Issue **VOE 74C9920048**	Page **109**
4					
5					

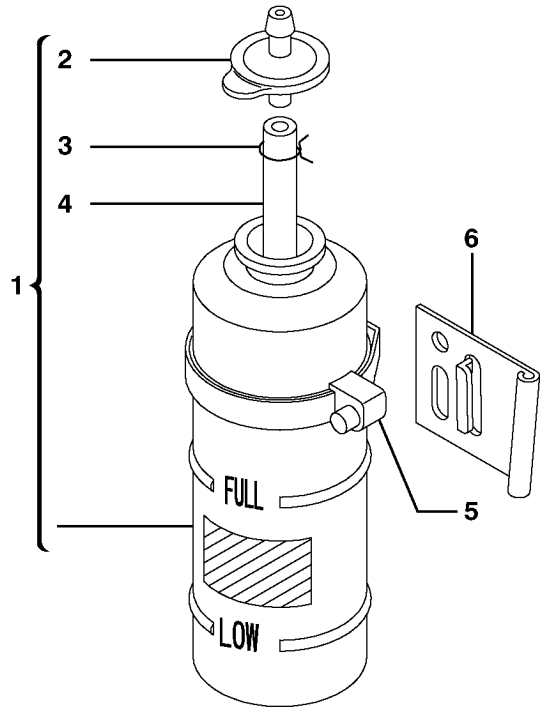

Volvo Construction Equipment

1012483

Fig.	Part No.	Quantity 1	2	3	PS	KIT	Description	Dénomination	Bezeichnung	품명	Denominación	Notes
1	**VOE 11713524**	1					Expansion Tank	Vase Expansion	Dehngefäss	냉각수 보조탱크	Tanque Expansio	
2	**VOE 11713780**	1					•Filler cap	•Bouchon Remplissa	•Tankverschluss	• 주유구 캡	•Tapa Llenado	
3		1			NS		•Clamp	•Collier serrage	•Klemme	• 클램프	•Abrazadera	ORDER ITEM NO 1
4		1			NS		•Hose	•Durit	•Schlauch	• 호스	•Tubo flexible	ORDER ITEM NO 1
5	**VOE 11714155**	1					Clamp	Pince Serrage	Klemme	클램프	Abrazadera	
6	**VOE 11713525**	1					Support	Support	Stütze	서포트	Apoyo	

1	**602.10151**		**Vaso expansion** 팽창 탱크 **Ausdehnungsgefäss** **Vase expansion** **Expansion tank**	Catalogue id **20048**	Group **261**
2				Illustr. No **1012483**	Section **200**
3				Issue **VOE 74C9920048**	Page **111**
4					
5					

VOLVO

ECR38

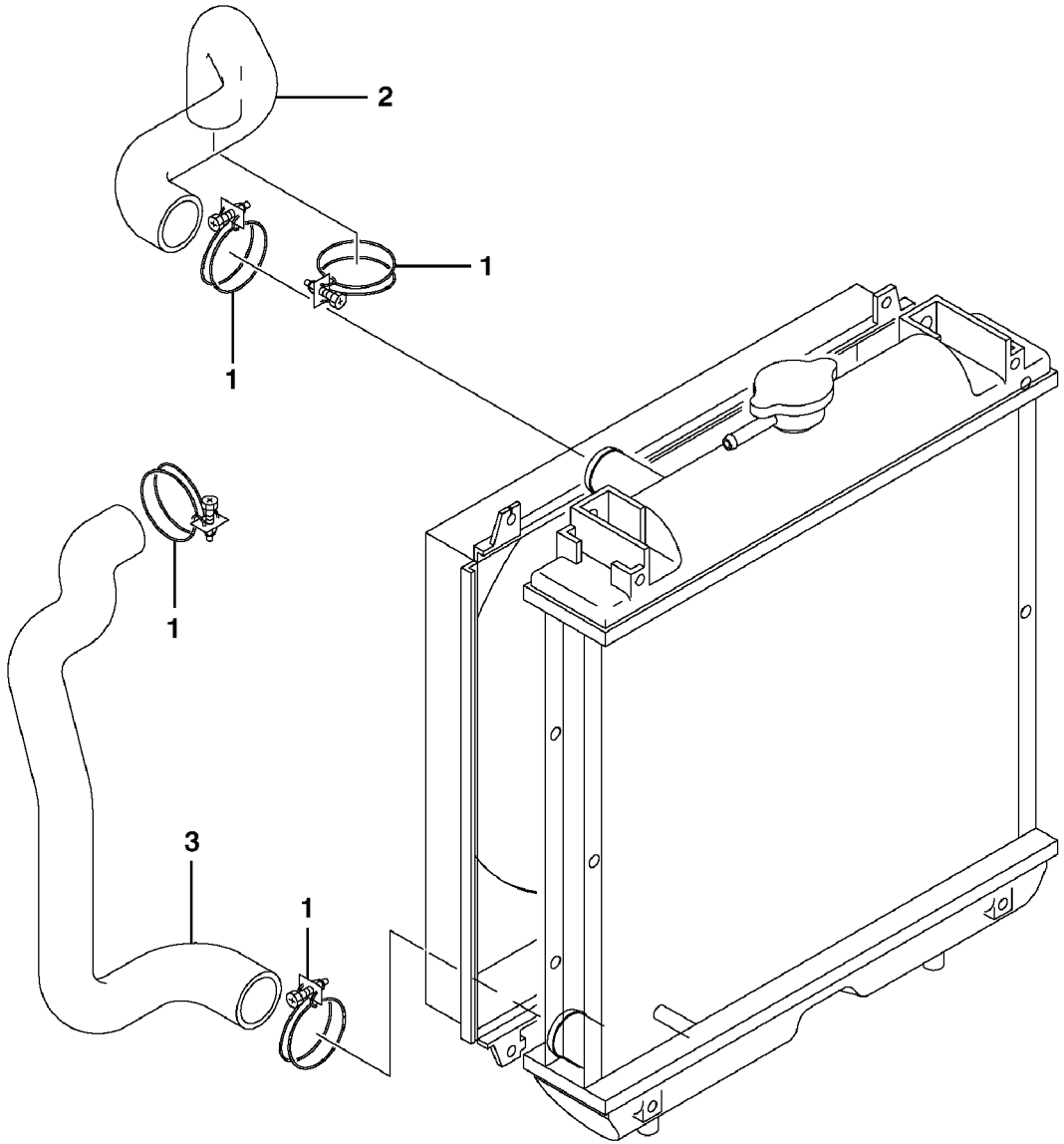

Volvo Construction Equipment

1012514

Fig.	Part No.	Quantity 1	2	3	PS	KIT	Description	Dénomination	Bezeichnung	품명	Denominación	Notes
1	**VOE 11713532**	4					Clamp	Pince Serrage	Klemme	클램프	Abrazadera	
2	**VOE 11713750**	1					Radiator Hose	Durit Radiateur	Kuhlerschlauch	라디에이터 호스	Manguera Radiad	
3	**VOE 11713751**	1					Radiator Hose	Durit Radiateur	Kuhlerschlauch	라디에이터 호스	Manguera Radiad	

1	**602.10151** →		**Circuito de refrigeración** 냉각 회로 **Kühlkreis** **Circuit de refroidissement** **Cooling circuit**	Catalogue id **20048**	Group **261**
2				Illustr. No **1012514**	Section **500**
3				Issue **VOE 74C9920048**	Page **113**
4					
5					

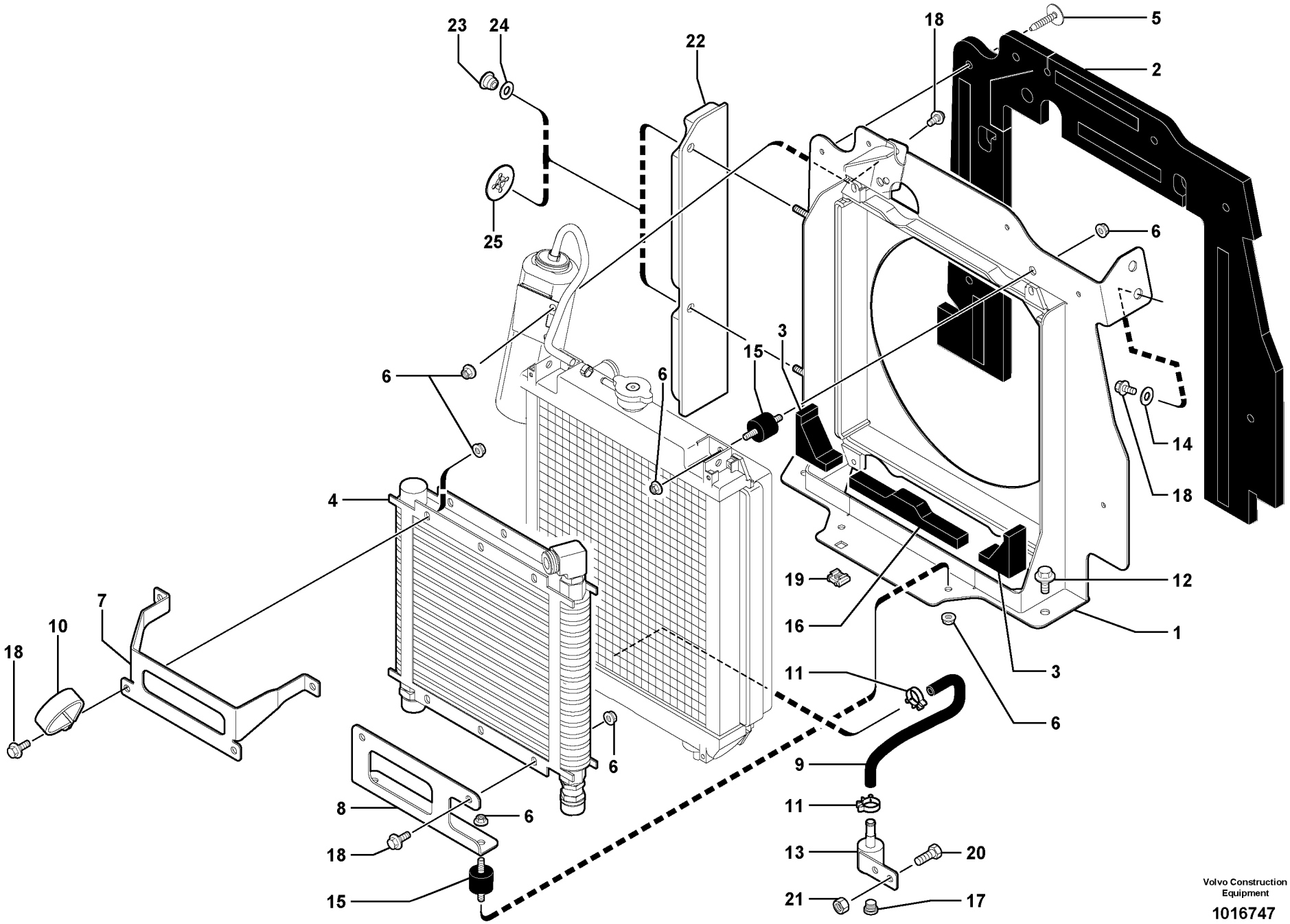

Volvo Construction Equipment

1016747

Fig.	Part No.	Quantity 1	2	3	PS	KIT	Description	Dénomination	Bezeichnung	품명	Denominación	Notes
1	**VOE 11801348**	1					Support	Support	Stütze	서포트	Apoyo	
2	**VOE 11803206**	1					Rubber Plate	Plaque Caoutchouc	Gummiplatte	고무판	Placa Goma	
3	**VOE 11801616**	2					Seal	Joint	Dichtring	시일	Junta	
4		1					Oil Cooler	Refroidisseur huile	Ölkühler	오일 쿨러	Enfriadores aceite	See group 911, Page 365
5	**VOE 11801651**	6					Rubber Button	Bouton Caoutchouc	Gummiknopf	고무 버튼	Boton Goma	
6	**VOE 945408**	14			SS		Flange Lock Nut	Contre écrou bride	Flanschmutter	플랜지 록 너트	Contratuer Embr	
7	**VOE 11802474**	1					Support	Support	Stütze	서포트	Apoyo	
8	**VOE 11802475**	1					Support	Support	Stütze	서포트	Apoyo	
9	**VOE 11803042**	1					Radiator Hose	Durit Radiateur	Kuhlerschlauch	라디에이터 호스	Manguera Radiad	
10	**VOE 11802278**	1					Clamp attachment	Collier Fixation	Klemmhalter	클램프 어태치먼트	Suj Abrazadera	
11	**VOE 11804169**	2					Hose Clamp	Collier Serrage	Schlauchschelle	호스 클램프	Abraz Manguera	
12	**VOE 946441**	3					Flange screw	Vis à bride	Flanschschraube	플랜지 스크류	Torn embridado	
13	**VOE 11804120**	1					Connector	Raccord	Anschluss	커넥터	Union	
14	**VOE 960141**	2			SS		Washer	Rondelle	Scheibe	와셔	Arandela	
15	**VOE 11802570**	4					Suspension	Suspension	Aufhängung	서스펜션	Suspension	
16	**VOE 11801613**	1					Seal	Joint	Dichtring	시일	Junta	
17	**VOE 11802284**	1					Plug	Bouchon	Stopfen	플러그	Tapon	
18	**VOE 946173**	8			SS		Screw	Vis	Schraube	스크류	Tornillo	
19	**VOE 11802303**	1					Nut	Ecrou	Mutter	너트	Tuerca	
20	**VOE 947542**	2			SS		Screw	Vis	Schraube	스크류	Tornillo	
21	**VOE 945407**	2			SS		Flange nut	Ecrou accouple.	Bundmutter	플랜지 너트	Tuerca embridad	
22	**VOE 11804286**	1					Insulation	Isolant	Isolierung	단열재	Aislante	S/N - 602.10606
22	**VOE 11807569**	1					Insulation	Isolant	Isolierung	단열재	Aislante	S/N 602.10607 -
23	**VOE 11804712**	REQ					Button	Bouton	Knopf	버튼	Boton	
24	**VOE 960148**	REQ					Washer	Rondelle	Scheibe	와셔	Arandela	
25	**VOE 977591**	REQ					Retainer	Retenue	Halter	리테이너	Soporte	

1	**602.10151**	
2		
3		
4		
5		

Instalación de radiador
라디에이터 설치
Einbau der Kühler
Mise en place du radiateur
Radiator installation

Catalogue id	Group
20048	**261**
Illustr. No **1016747**	Section **800**
Issue **VOE 74C9920048**	Page **115**

VOLVO

ECR38

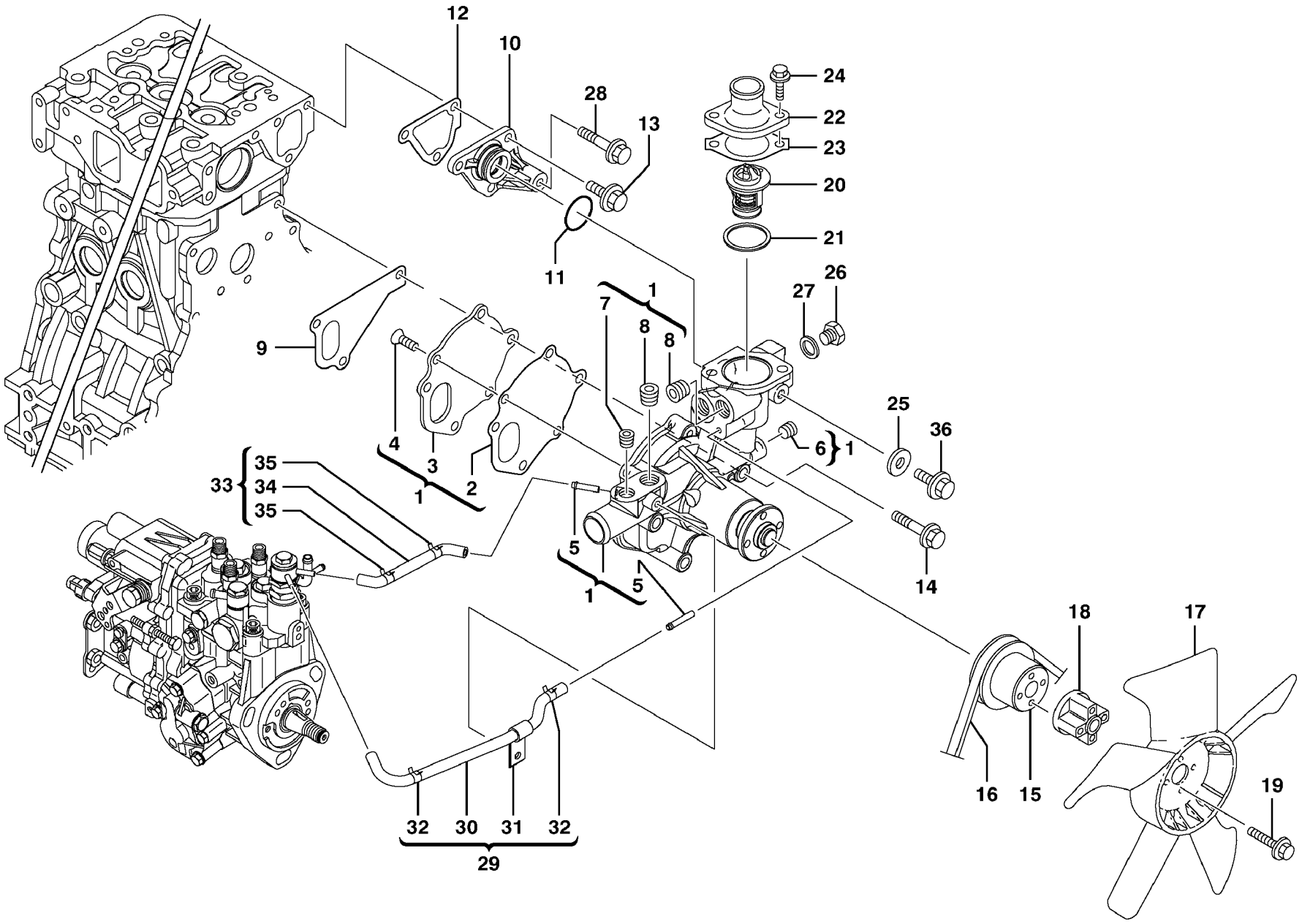

Volvo Construction Equipment

1012515

Fig.	Part No.	Quantity 1	2	3	PS	KIT	Description	Dénomination	Bezeichnung	품명	Denominación	Notes
1	**VOE 11713724**	1					Coolant Pump	Pompe a eau	Kuhlwasserpumpe	냉각수 펌프	Bomba Ag.refr	
2	**VOE 11713725**	1					•Gasket	•Joint	•Dichtung	• 가스켓	•Junta	
3	**VOE 11713726**	1					•Plate	•Plaque	•Platte	• 플레이트	•Placa	
4	**VOE 11713727**	3					•Screw	•Vis	•Schraube	• 스크류	•Tornillo	
5		2			NS		•Connector	•Raccord	•Anschluss	• 커넥터	•Union	ORDER ITEM NO 1
6		1			NS		•Plug	•Bouchon	•Stopfen	• 플러그	•Tapon	ORDER ITEM NO 1
7	**VOE 14521522**	1					•Plug	•Bouchon	•Stopfen	• 플러그	•Tapon	
8	**VOE 14521576**	2					•Plug	•Bouchon	•Stopfen	• 플러그	•Tapon	
9	**VOE 11713729**	1					Gasket	Joint	Dichtung	가스켓	Junta	
10	**VOE 11713731**	1					Joint	Cardan	Gelenk	조인트	Junta	
11	**VOE 11713732**	1					O-ring	Joint Torique	O-Ring	오링	Junta torica	
12	**VOE 11713733**	1					Gasket	Joint	Dichtung	가스켓	Junta	
13	**VOE 11714372**	3					Screw	Vis	Schraube	스크류	Tornillo	(SA 8240-01680)
14	**SA 8240-01740**	3					Bolt	Boulon	Bolzen	볼트	Perno	
15	**VOE 11713734**	1					Pulley	Poulie	Z-riemenscheibe	풀리	Polea Corr Dent	
16	**VOE 11713735**	1					V-belt	Courroie Trape.	Keilriemen	V 벨트	Correa Trapez	
17	**VOE 11713451**	1					Fan	Ventilateur	Ventilator	팬	Ventilador	
18	**VOE 11713742**	1					Spacer	Partie Intermédiaire	Zwischenstück	스페이서	Espaciador	
19	**VOE 11713453**	4					Bolt	Boulon	Bolzen	볼트	Perno	
20	**VOE 11713741**	1					Thermostat	Thermostat	Thermostat	항온기	Termostato	
21	**VOE 11713743**	1					Gasket	Joint	Dichtung	가스켓	Junta	
22	**VOE 11713454**	1					Flange	Bride	Flansch	플랜지	Brida	
23	**VOE 11713744**	1					Gasket	Joint	Dichtung	가스켓	Junta	
24	**VOE 14521586**	2					Bolt	Boulon	Bolzen	볼트	Perno	
25	**VOE 11714477**	1					Gasket	Joint	Dichtung	가스켓	Junta	(SA 8210-05580)
26	**VOE 11714492**	1					Plug	Bouchon	Stopfen	플러그	Tapon	(SA 8210-02520)
27	**VOE 11714478**	1					Gasket	Joint	Dichtung	가스켓	Junta	(SA 8210-03370)
28	**VOE 11714377**	1					Bolt	Boulon	Bolzen	볼트	Perno	(SA 8240-01720)
29	**VOE 11713745**	1					Pipe	Canalisation	Rohrleitung	파이프	Canalizacion	
30	**VOE 11713746**	1					•Pipe	•Canalisation	•Rohrleitung	• 파이프	•Canalizacion	

1	**602.10151**	
2		
3		
4		
5		

Bomba de refrigerante
워터펌프
Wasserpumpe
Pompe à eau
Water pump

Catalogue id	Group
20048	**262**
Illustr. No **1012515**	Section **100**
Issue **VOE 74C9920048**	Page **117**

VOLVO

ECR38

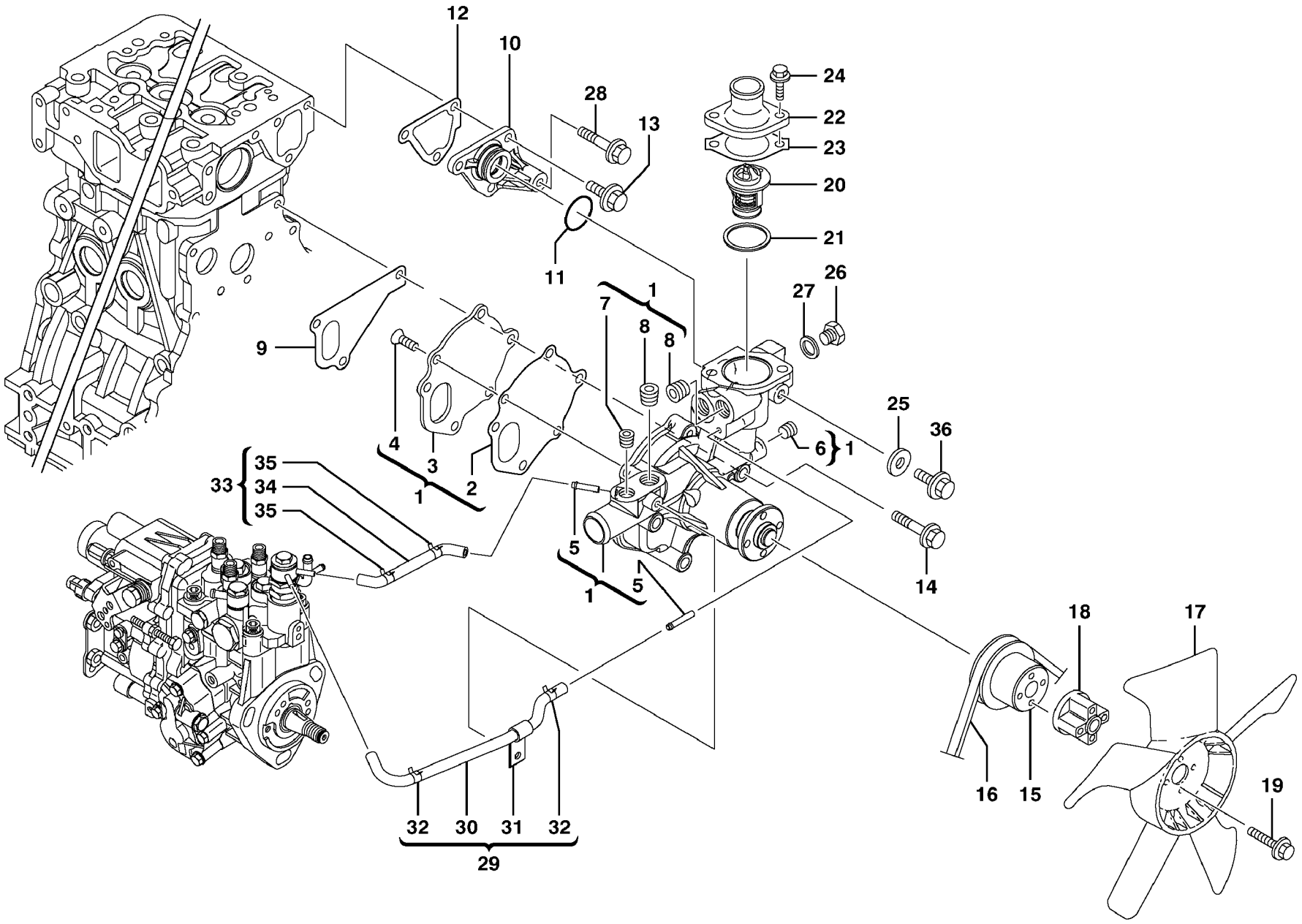

Volvo Construction Equipment

1012515

Fig.	Part No.	Quantity 1	2	3	PS	KIT	Description	Dénomination	Bezeichnung	품명	Denominación	Notes
31	**VOE 11713747**	1					•Clamp	•Pince Serrage	•Klemme	• 클램프	•Abrazadera	
32	**VOE 14521580**	2					•Clamp	•Pince Serrage	•Klemme	• 클램프	•Abrazadera	
33	**VOE 11713748**	1					Pipe	Canalisation	Rohrleitung	파이프	Canalizacion	
34	**VOE 11713749**	1					•Pipe	•Canalisation	•Rohrleitung	• 파이프	•Canalizacion	
35	**VOE 14521580**	2					•Clamp	•Pince Serrage	•Klemme	• 클램프	•Abrazadera	
36	**VOE 11714490**	1					Screw	Vis	Schraube	스크류	Tornillo	(SA 8240-01670)

1	**602.10151**	
2		
3		
4		
5		

Bomba de refrigerante
워터펌프
Wasserpumpe
Pompe à eau
Water pump

Catalogue id	Group
20048	**262**
Illustr. No **1012515**	Section **100**
Issue **VOE 74C9920048**	Page **119**

VOLVO

ECR38

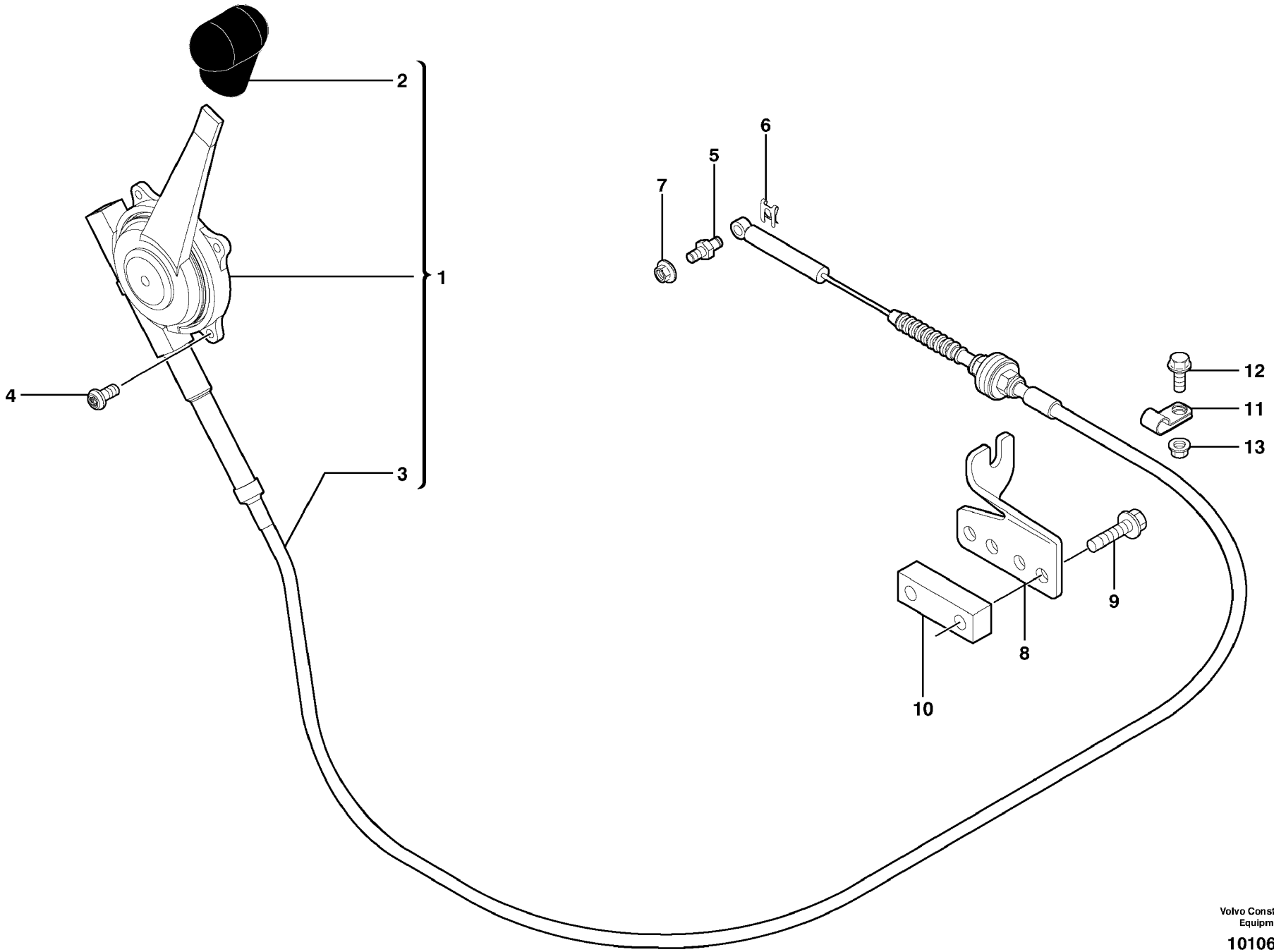

Volvo Construction Equipment

1010605

Fig.	Part No.	Quantity 1	2	3	PS	KIT	Description	Dénomination	Bezeichnung	품명	Denominación	Notes
1	**VOE 11802412**	1					Hand throttle control	Accélérateur a main	Handgasregler	핸드 쓰로틀 컨트롤	Mando manual aceler.	11839015
2	**VOE 11713125**	1					•Handle Ball	•Pommeau	•Knauf	• 핸들 볼	•Bola Mango	
3	**VOE 11714164**	1					•Throt Cont Ca	•Câble d'accélération	•Gasregelzug	• 스로틀 케이블	•Cable Acelerad	
4	**VOE 969404**	3					6-pt skt screw	Vis creuse de 6	Hohlschraube	6 포인트 소켓 스크류	Racor 6-dientes	
5	**VOE 11803426**	1					Pin	Goupille	Zapfen	핀	Pasador	
6	**VOE 11803585**	1					Lock brace	Etrier de verrouillage	Sperrklinke	록 브레이스	Brazo Seguridad	
7	**VOE 949278**	1					Nut	Ecrou	Mutter	너트	Tuerca	
8	**VOE 11801606**	1					Support	Support	Stütze	서포트	Apoyo	
9	**VOE 946671**	2					Flange screw	Vis à bride	Flanschschraube	플랜지 스크류	Torn embridado	
10	**VOE 11803220**	1					Spacer	Partie Intermédiaire	Zwischenstück	스페이서	Espaciador	
11	**VOE 949746**	1			SS		Clamp	Pince Serrage	Klemme	클램프	Abrazadera	
12	**VOE 946544**	1			SS		Screw	Vis	Schraube	스크류	Tornillo	
13	**VOE 945407**	1			SS		Flange nut	Ecrou accouple.	Bundmutter	플랜지 너트	Tuerca embridad	

1	**602.10151**	
2		
3		
4		
5		

Control de aceleración del motor
엔진 회전속도 제어
Gashebel Motor
Commande d'accélération du moteur
Engine acceleration control

Catalogue id **20048**	Group **275**
Illustr. No **1010605**	Section **100**
Issue **VOE 74C9920048**	Page **121**

VOLVO

ECR38

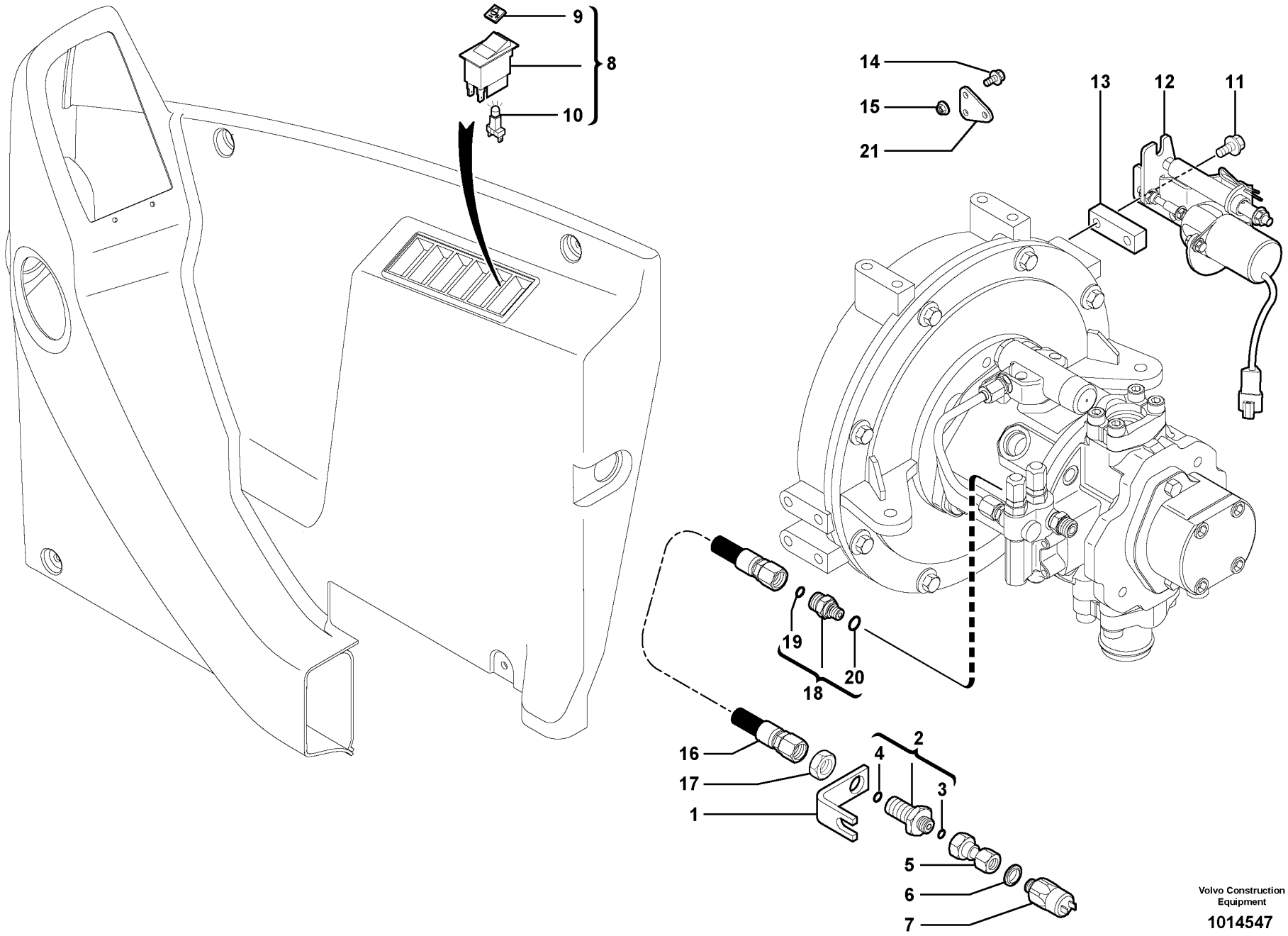

Volvo Construction Equipment

1014547

Fig.	Part No.	Quantity 1	2	3	PS	KIT	Description	Dénomination	Bezeichnung	품명	Denominación	Notes
1	**VOE 11803532**	1					Support	Support	Stütze	서포트	Apoyo	11839098
2	**VOE 11803536**	1					Connector	Raccord	Anschluss	커넥터	Union	
3	**VOE 4881722**	1					•O-ring	•Joint Torique	•O-Ring	• 오링	•Junta torica	
4	**VOE 4880492**	1					•O-ring	•Joint Torique	•O-Ring	• 오링	•Junta torica	
5	**VOE 11802909**	1					Pressure Connection	Raccord de refoulem.	Druckanschluss	압력 연결장치	Conexión de presión	
6	**VOE 943907**	1			SS		Gasket	Joint	Dichtung	가스켓	Junta	
7	**VOE 11806729**	1					Pressure Switch	Mano contact	Druckschalter	압력 스위치	Manocontacto	
8	**VOE 11803553**	1					Switch	Commutateur	Schalter	스위치	Contactor	
9	**VOE 11802798**	1					•Symbol	•Symbole	•Symbol	• 심볼	•Símbolo	
10	**PJ 5160030**	1					•Lamp holder	•Porte-lampe	•Lampenfassung	• 램프 홀더	•Portalampara	
11	**VOE 946671**	2					Flange screw	Vis à bride	Flanschschraube	플랜지 스크류	Torn embridado	
12		1					Solenoid	Solénoide	Magnet	솔레노이드	Solenoide	See group 277, Page 127
13	**VOE 11803220**	1					Spacer	Partie Intermédiaire	Zwischenstück	스페이서	Espaciador	
14	**VOE 965175**	2			SS		Screw	Vis	Schraube	스크류	Tornillo	
15	**VOE 949278**	2					Nut	Ecrou	Mutter	너트	Tuerca	
16	**VOE 11802932**	1					Hose assembly	Conduit flexible	Schlauchleitung	호스 어셈블리	Conducto	
17	**VOE 935429**	1					Lock nut	Contre-ecrou	Sicherungsmutter	록 너트	Contratuerca	
18	**VOE 935084**	1					Nipple	Raccord	Nippel	니플	Niple	
19	**VOE 4880492**	1					•O-ring	•Joint Torique	•O-Ring	• 오링	•Junta torica	
20	**VOE 932037**	1					•O-ring	•Joint Torique	•O-Ring	• 오링	•Junta torica	
21	**VOE 11803538**	1					Cable Clamp	Serre-câble	Kabelklammer	케이블 클램프	Abrazadera de cables	

1	**602.10151** →	→ **602.10524**
2		
3		
4		
5		

Regulación autmática del régimen
자동 속도 제어
Automatische drehzalregelung
Régulation automatique du régime
Automatic Speed control

Catalogue id	Group
20048	**277**
Illustr. No **1014547**	Section **100**
Issue **VOE 74C9920048**	Page **123**

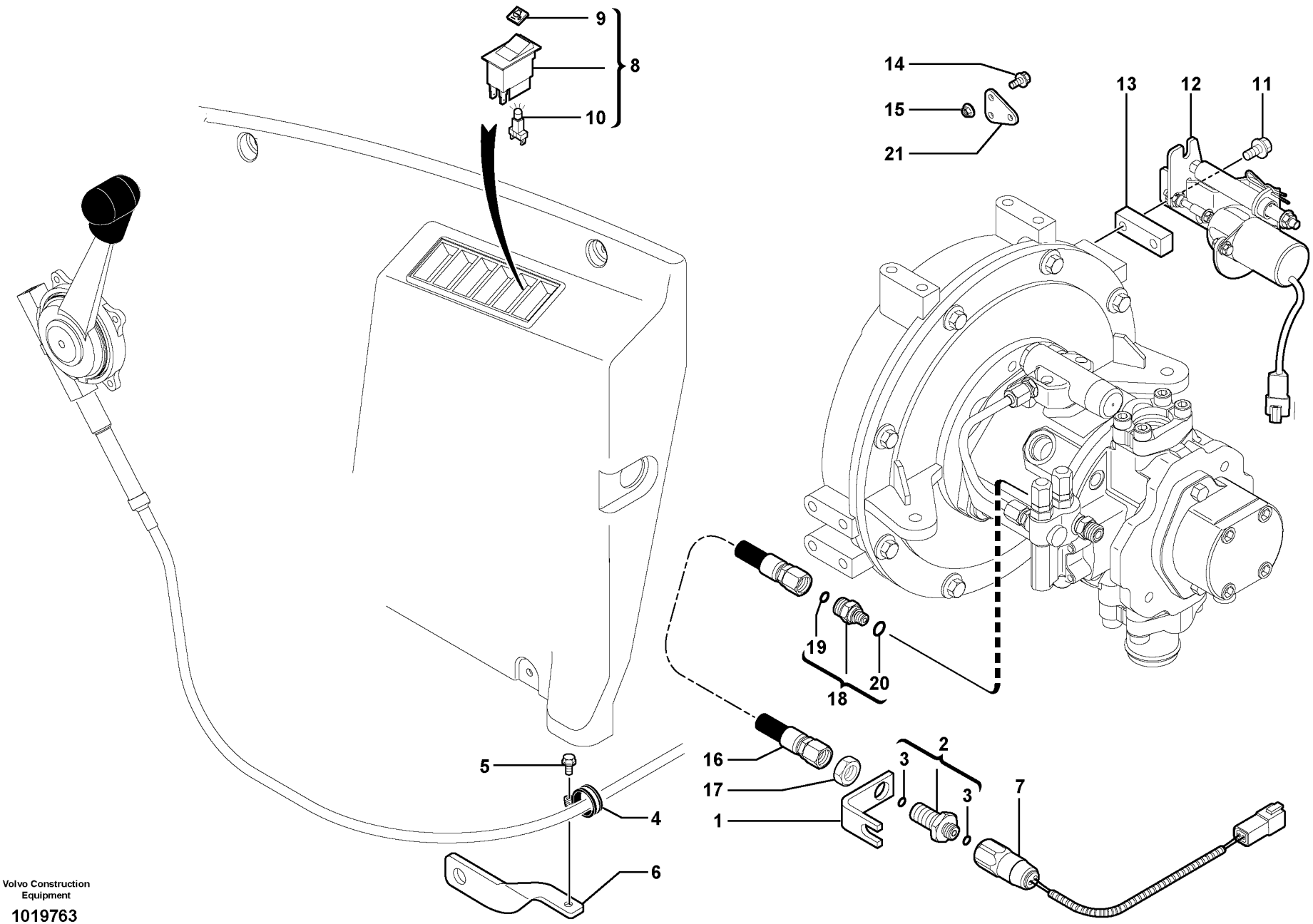

Volvo Construction Equipment

1019763

Fig.	Part No.	Quantity 1	2	3	PS	KIT	Description	Dénomination	Bezeichnung	품명	Denominación	Notes
1	**VOE 11803532**	1					Support	Support	Stütze	서포트	Apoyo	11839098
2	**VOE 935425**	1					Nipple	Raccord	Nippel	니플	Niple	
3	**VOE 4880492**	2					•O-ring	•Joint Torique	•O-Ring	• 오링	•Junta torica	
4	**VOE 952624**	1					Clamp	Pince Serrage	Klemme	클램프	Abrazadera	
5	**VOE 965175**	1			SS		Screw	Vis	Schraube	스크류	Tornillo	
6	**VOE 11806985**	1					Support	Support	Stütze	서포트	Apoyo	
7	**VOE 11806749**	1					Pressure Switch	Mano contact	Druckschalter	압력 스위치	Manocontacto	
8	**VOE 11803553**	1					Switch	Commutateur	Schalter	스위치	Contactor	
9	**VOE 11802798**	1					•Symbol	•Symbole	•Symbol	• 심볼	•Símbolo	
10	**PJ 5160030**	1					•Lamp holder	•Porte-lampe	•Lampenfassung	• 램프 홀더	•Portalampara	
11	**VOE 946671**	2					Flange screw	Vis à bride	Flanschschraube	플랜지 스크류	Torn embridado	
12		1					Solenoid	Solénoide	Magnet	솔레노이드	Solenoide	See group 277, Page 127
13	**VOE 11803220**	1					Spacer	Partie Intermédiaire	Zwischenstück	스페이서	Espaciador	
14	**VOE 965175**	2			SS		Screw	Vis	Schraube	스크류	Tornillo	
15	**VOE 949278**	2					Nut	Ecrou	Mutter	너트	Tuerca	
16	**VOE 11802932**	1					Hose assembly	Conduit flexible	Schlauchleitung	호스 어셈블리	Conducto	
17	**VOE 935429**	1					Lock nut	Contre-ecrou	Sicherungsmutter	록 너트	Contratuerca	
18	**VOE 935084**	1					Nipple	Raccord	Nippel	니플	Niple	
19	**VOE 4880492**	1					•O-ring	•Joint Torique	•O-Ring	• 오링	•Junta torica	
20	**VOE 932037**	1					•O-ring	•Joint Torique	•O-Ring	• 오링	•Junta torica	
21	**VOE 11803538**	1					Cable Clamp	Serre-câble	Kabelklammer	케이블 클램프	Abrazadera de cables	

1	**602.10525**	
2		
3		
4		
5		

Regulación autmática del régimen
자동 속도 제어
Automatische drehzalregelung
Régulation automatique du régime
Automatic Speed control

Catalogue id	Group
20048	**277**
Illustr. No **1019763**	Section **110**
Issue **VOE 74C9920048**	Page **125**

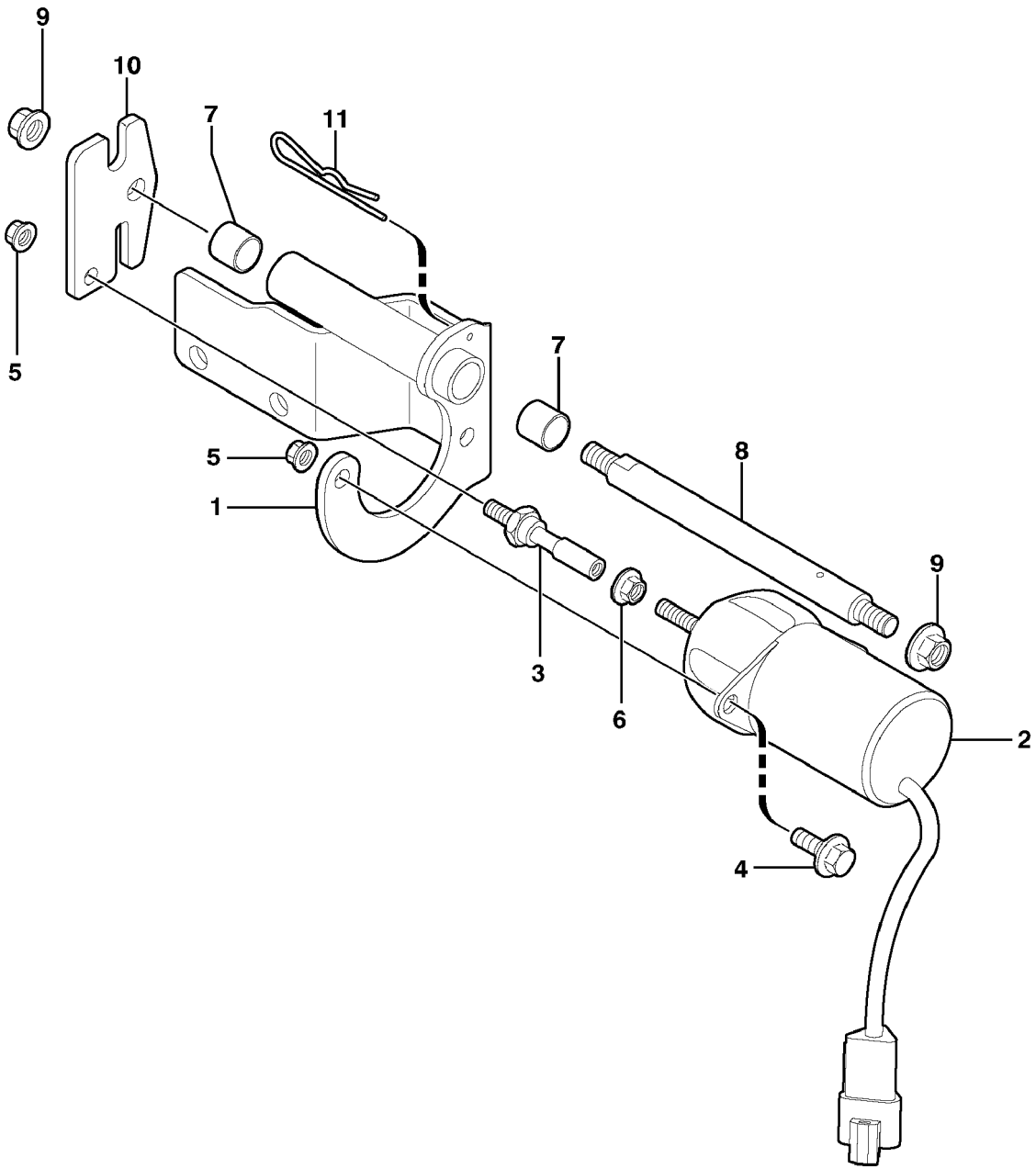

Volvo Construction Equipment

1010608

Fig.	Part No.	Quantity 1	2	3	PS	KIT	Description	Dénomination	Bezeichnung	품명	Denominación	Notes
1	**VOE 11803449**	1					Support	Support	Stütze	서포트	Apoyo	
2	**VOE 11801791**	1					Solenoid	Solénoide	Magnet	솔레노이드	Solenoide	
3	**VOE 11801793**	1					Swivel	Rotule pivot	Schwingel	스위블	Rotula pivote	
4	**VOE 946544**	2			SS		Screw	Vis	Schraube	스크류	Tornillo	
5	**VOE 949278**	3					Nut	Ecrou	Mutter	너트	Tuerca	
6	**VOE 945407**	1			SS		Flange nut	Ecrou accouple.	Bundmutter	플랜지 너트	Tuerca embridad	
7	**VOE 11802463**	2					Ring	Anneau	Ring	링	Anillo	
8	**VOE 11803450**	1					Guide	Rail	Führung	가이드	Guia	
9	**VOE 948645**	2					Flange Lock Nut	Contre écrou bride	Flanschmutter	플랜지 록 너트	Contratuer Embr.	
10	**VOE 11803448**	1					Cable Stop	Frein Cable	Seilbremse		Freno Cable	
11		1			SE		Cotter Pin	Goupille Fendue	Splint	코터 핀	Pasador Hendido	

1	**602.10151**		**Válvula de solenoide** 솔레노이드 밸브 **Solenoidventil** **Soupape de solenoide** **Solenoid valve**	Catalogue id **20048**	Group **277**
2				Illustr. No **1010608**	Section **200**
3				Issue **VOE 74C9920048**	Page **127**
4					
5					

VOLVO

Construction Equipment

GROUP		Section	Page
311	Battery	100	135
321	Alternator	100	137
331	Starter motor	100	141
334	Starting and preheating switch	100	143
334	Coded keypad (anti-start)	200	145
352	Front headlight on canopy	100	147
352	Front headlight on cab	200	149
353	Rear headlight	110	151
356	Work light on boom	100	153
362	Horn	100	155
362	Flashing light	400	157
362	Back-up warning unit	500	159
363	Cleaning system	100	161
364	Oil pressure switch	100	163
364	Clogging indicator	200	165
364	Thermal switch	300	167
364	Thermal switch	310	169
364	Instrument panel, right	400	171
364	Instrument panel, left	500	173
364	Inspection light socket	600	175
364	Potentiometer	700	177
371	Electrical system, forward / reverse switch	100	179
371	Electrical system / Canopy	210	181
371	Electrical system / cab	220	183
371	Cables, battery	400	185
371	Electrical system, handling unit	500	187
371	Electrical system, tool holder	600	189
372	Electrical distribution box	100	191
372	Electric installation on driver's seat	300	193
372	Battery cut-out	400	195
386	Transmitter	200	197
387	Control panel	100	199
393	Radio kit	100	201

TABLE DES MATIÈRES

GROUPE		Section	Page
311	Batterie	100	135
321	Alternateur	100	137
331	Démarreur	100	141
334	Contacteur de démarrage et de préchauffage	100	143
334	Clavier codé (sécurité antidémarrage)	200	145
352	Phare AV sur toit de cabine ouverte	100	147
352	Phare AV sur cabine	200	149
353	Projecteur AR	110	151
356	Projecteur de travail sur flèche	100	153
362	Avertisseur sonore	100	155
362	Gyrophare	400	157
362	Avertisseur sonore de marche arrière	500	159
363	Système de nettoyage	100	161
364	Manocontact d'huile	100	163
364	Indicateur de colmatage	200	165
364	Thermocontact	300	167
364	Thermocontact	310	169
364	Panneau d'instruments, à droite	400	171
364	Panneau d'instruments, à gauche	500	173
364	Prise pour lampe baladeuse	600	175
364	Potentiomètre	700	177
371	Système electrique, avant et arrière	100	179
371	Système électrique / Cabine ouverte	210	181
371	Système électrique / cabine	220	183
371	Cables, batterie	400	185
371	Systéme électrique, manutention	500	187
371	Systéme électrique, porte-outil	600	189
372	Unité de distribution électrique	100	191
372	Equipement électrique, poste de conduite	300	193
372	Coupe-batterie	400	195
386	Transmetteur	200	197
387	Panneau de commande	100	199
393	Kit autoradio	100	201

GRUPPE		Abschnitt	Seite
311	Batterie	100	135
321	Generator	100	137
331	Anlasser	100	141
334	Anlass- und Vorglühschalter	100	143
334	Codierte Tastatur (Wegfahrsperre)	200	145
352	Scheinwerfer Überrollbügel vorn	100	147
352	Scheinwerfer Kabine vorn	200	149
353	Hinterer Scheinwerfer	110	151
356	Arbeitsscheinwerfer auf Ausleger	100	153
362	Signalhorn	100	155
362	Rundumkennleuchte	400	157
362	Rückfahrwarner	500	159
363	Reinigungssystem	100	161
364	Druckschalter	100	163
364	Verstopfungsanzeiger	200	165
364	Thermoschalter	300	167
364	Thermoschalter	310	169
364	Armaturenbrett, rechts	400	171
364	Armaturenbrett, links	500	173
364	Handlampenanschluss	600	175
364	Potentiometer	700	177
371	El. Anlage, vorwärts- und rûckwârtsschaltung	100	179
371	Elektroanlage / Überrollbügel	210	181
371	Elektroanlage / Kabine	220	183
371	Leitungen, Batterie	400	185
371	Elekrische System, Materialumschlag	500	187
371	Elekrische System, Geräteträger	600	189
372	Elektrozentrale	100	191
372	Elektrische Installation Fahrerplatz	300	193
372	Batterieabschaltung	400	195
386	Sender	200	197
387	Bedienungstafel	100	199
393	Radio-Kit	100	201

목차

그룹		절	페이지
311	배터리	100	135
321	알터네이터	100	137
331	시동 모터	100	141
334	시동 및 예열 스위치	100	143
334	코드 키패드 (시동불가능화)	200	145
352	선루프의 정면 헤드라이트	100	147
352	운전실의 정면 헤드라이트	200	149
353	후방 헤드라이트	110	151
356	붐의 작업등	100	153
362	경음기	100	155
362	경광등	400	157
362	후진 경고장치	500	159
363	세척장치	100	161
364	오일 압력 스위치	100	163
364	막힘 표시기	200	165
364	온도감지 스위치	300	167
364	온도감지 스위치	310	169
364	계기판 , 우측	400	171
364	계기판 , 좌측	500	173
364	검사등용 소켓	600	175
364	전위차계	700	177
371		100	179
371	전기 시스템 / 선루프	210	181
371	전기 시스템 / 운전실	220	183
371	케이블 , 배터리	400	185
371	전기 시스템 , 핸들링 장치	500	187
371	전기 시스템 , 공구 홀더	600	189
372	배전 박스 및 휴즈 박스	100	191
372	운전석 전기 장착	300	193
372	배터리 차단기	400	195
386	트랜스미터	200	197
387		100	199
393	라디오 킷	100	201

GRUPO		Sección	Página
311	Batería	100	135
321	Alternador	100	137
331	Motor de arranque	100	141
334	Interruptor de arranque y precalentamiento	100	143
334	Teclado codificado (antiarranque)	200	145
352	Alumbrado delantero en la protección contra vuelcos	100	147
352	Alumbrado delantero en la cabina	200	149
353	Alumbrado trasero	110	151
356	Alumbrado de trabajo en pluma	100	153
362	Bocina	100	155
362	Luz de advertencia intermitente	400	157
362	Señal acústica de marcha atrás	500	159
363	Sistema de limpieza	100	161
364	Interruptor de presión de aceite	100	163
364	Indicador de obturación	200	165
364	Interruptor térmico	300	167
364	Interruptor térmico	310	169
364	Cuadro de instrumentos, derecho	400	171
364	Cuadro de instrumentos, izquierdos	500	173
364	Toma de lámpara de inspección	600	175
364	Potenciometro	700	177
371	Sistema eléctrico, adelante y hacia atrás	100	179
371	Sistema eléctrico / protección contra vuelcos	210	181
371	Sistema eléctrico / cabina	220	183
371	Cables, bateria	400	185
371	Sistema eléctrico, manupulacion	500	187
371	Sistema eléctrico, portaimplemento	600	189
372	Unidad de distribución eléctrica	100	191
372	Instalación eléctricaen puesto del conductor	300	193
372	Disyuntor de batería	400	195
386	Transmisor	200	197
387	Panel mando	100	199
393	Kit de radio	100	201

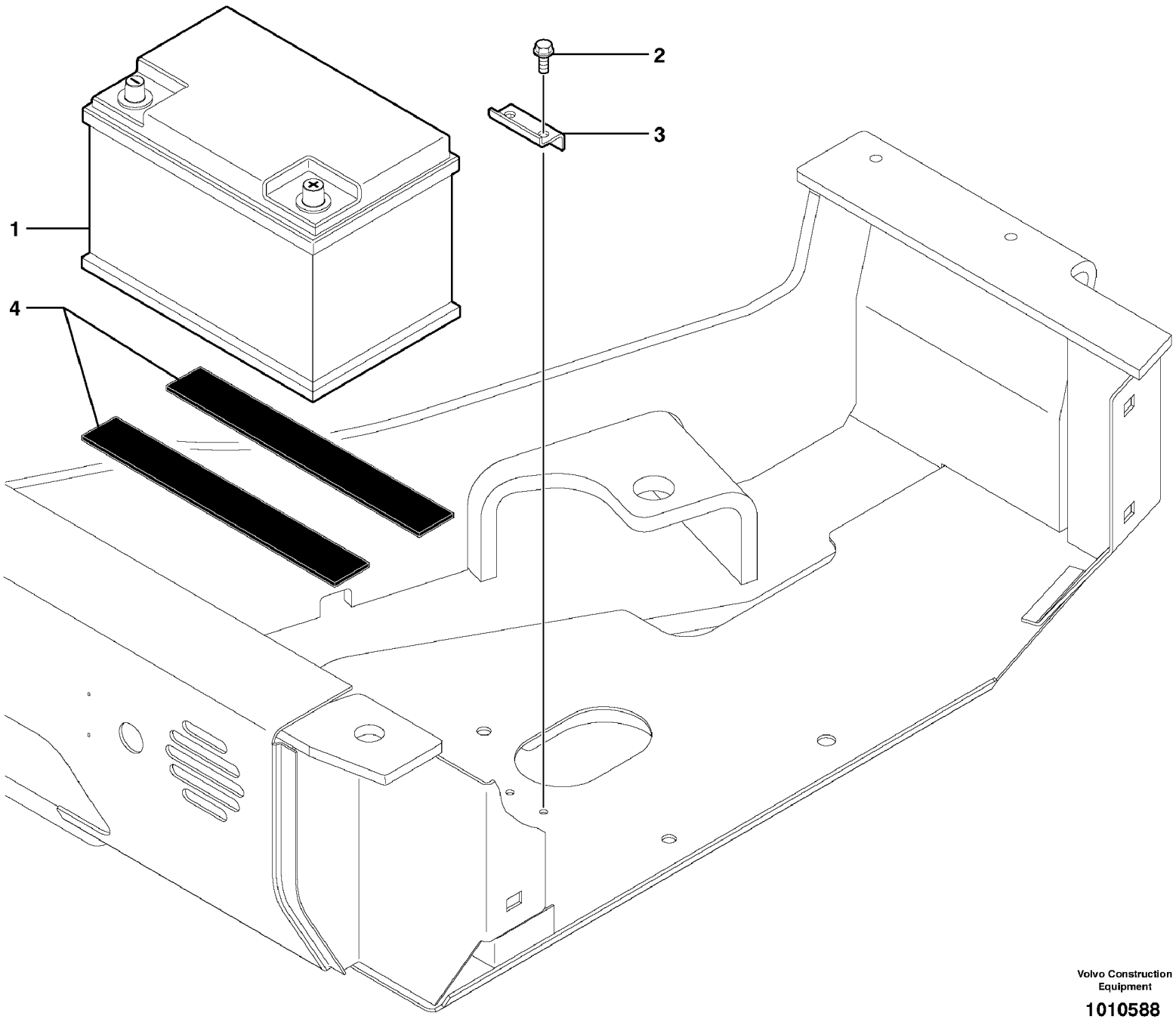

Volvo Construction Equipment

1010588

Fig.	Part No.	Quantity 1	2	3	PS	KIT	Description	Dénomination	Bezeichnung	품명	Denominación	Notes
1	**VOE 11802715**	1					Battery	Batterie	Batterie	밧데리	Bateria	
2	**VOE 946671**	2					Flange screw	Vis à bride	Flanschschraube	플랜지 스크류	Torn embridado	
3	**VOE 11800455**	1					Stop	Arrêt	Anschlag	스톱	Parada	
4	**VOE 11803128**	2					Rubber Plate	Plaque Caoutchouc	Gummiplatte	고무판	Placa Goma	

1	**602.10151**		**Batería** 배터리 **Batterie** **Batterie** **Battery**	Catalogue id **20048**	Group **311**
2				Illustr. No **1010588**	Section **100**
3				Issue **VOE 74C9920048**	Page **135**
4					
5					

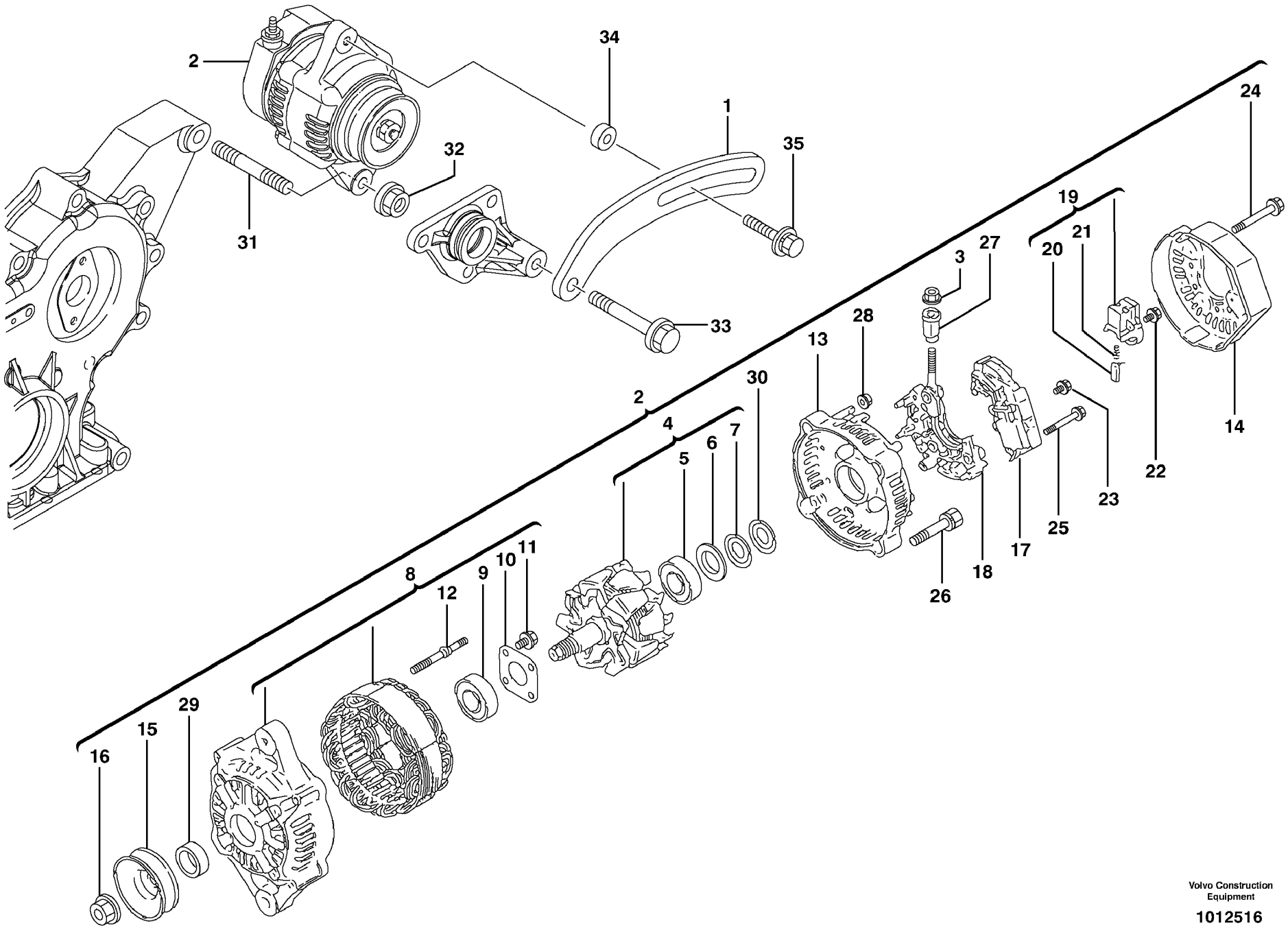

Volvo Construction Equipment

1012516

Fig.	Part No.	Quantity 1	2	3	PS	KIT	Description	Dénomination	Bezeichnung	품명	Denominación	Notes
1	**VOE 11713777**	1					Alternator Anchorage	Fixation Alternateur	Lichtmaschinenträge..		Fijacion Alternador	
2	**VOE 11713508**	1					Alternator	Alternateur	Lichtmaschine	알터네이터	Alternador	
3	**VOE 14521614**	1					•Nut	•Ecrou	•Mutter	• 너트	•Tuerca	
4		1			NS		•Rotor	•Rotor	•Rotor	• 로터	•Rotor	ORDER ITEM NO 2
5	**VOE 14521616**	1					••Ball Bearing	••Roulemen.billes	••Kugellager	•• 볼 베어링	••Cojinete Bolas	
6	**VOE 14521617**	1					••Cover	••Capot	••Haube	•• 커버	••Capo	
7		1			NS		••Washer	••Rondelle	••Scheibe	•• 와셔	••Arandela	ORDER ITEM NO 4
8		1			NS		•Cover	•Couvercle	•Deckel	• 커버	•Tapa	ORDER ITEM NO 2
9	**VOE 14521619**	1					••Ball Bearing	••Roulemen.billes	••Kugellager	•• 볼 베어링	••Cojinete Bolas	
10	**VOE 14521620**	1					••Plate	••Plaque	••Platte	•• 플레이트	••Placa	
11	**VOE 14521621**	4					••Screw	••Vis	••Schraube	•• 스크류	••Tornillo	
12	**VOE 14521622**	2					••Bolt	••Boulon	••Bolzen	•• 볼트	••Perno	
13		1			NS		•Body	•Corps	•Körper	• 몸체	•Cuerpo	ORDER ITEM NO 2
14		1			NS		•Body	•Corps	•Körper	• 몸체	•Cuerpo	ORDER ITEM NO 2
15	**VOE 14521624**	1					•Pulley	•Poulie	•Z-riemenscheibe	• 풀리	•Polea Corr Dent	
16	**VOE 14521625**	1					•Nut	•Ecrou	•Mutter	• 너트	•Tuerca	
17	**VOE 14521635**	1					•Regulator	•Regulateur	•Regler	• 레귤레이터	•Regulador	
18	**VOE 11713509**	1					•Support	•Support	•Stütze	• 서포트	•Apoyo	
19	**VOE 11713510**	1					•Brush Retainer	•Porte-balai	•Bürstenhalter	• 브러시 리테이너	•Portaescobilla	
20		2			NS		••Carbon brushes	••Charbons	••Kohlen	•• 카본 브러시	••Escobillas	ORDER ITEM NO 19
21		2			NS		••Spring	••Ressort	••Feder	•• 스프링	••Muelle	ORDER ITEM NO 19
22	**VOE 14521628**	1					•Screw	•Vis	•Schraube	• 스크류	•Tornillo	
23	**VOE 14521629**	1					•Screw	•Vis	•Schraube	• 스크류	•Tornillo	
24	**VOE 14521630**	3					•Bolt	•Boulon	•Bolzen	• 볼트	•Perno	
25	**VOE 14521631**	2					•Screw	•Vis	•Schraube	• 스크류	•Tornillo	
26	**VOE 14521632**	2					•Bolt	•Boulon	•Bolzen	• 볼트	•Perno	
27	**VOE 14521633**	1					•Bushing	•Bague	•Buchse	• 부싱	•Casquillo	
28	**VOE 14521634**	2					•Nut	•Ecrou	•Mutter	• 너트	•Tuerca	
29	**VOE 14521637**	1					•Collar	•Collier	•Bördel	• 칼러	•Collar	
30		1			NS		•Washer	•Rondelle	•Scheibe	• 와셔	•Arandela	ORDER ITEM NO 2

1	**602.10151**	
2		
3		
4		
5		

Alternador
알터네이터
Generator
Alternateur
Alternator

Catalogue id	Group
20048	**321**
Illustr. No **1012516**	Section **100**
Issue **VOE 74C9920048**	Page **137**

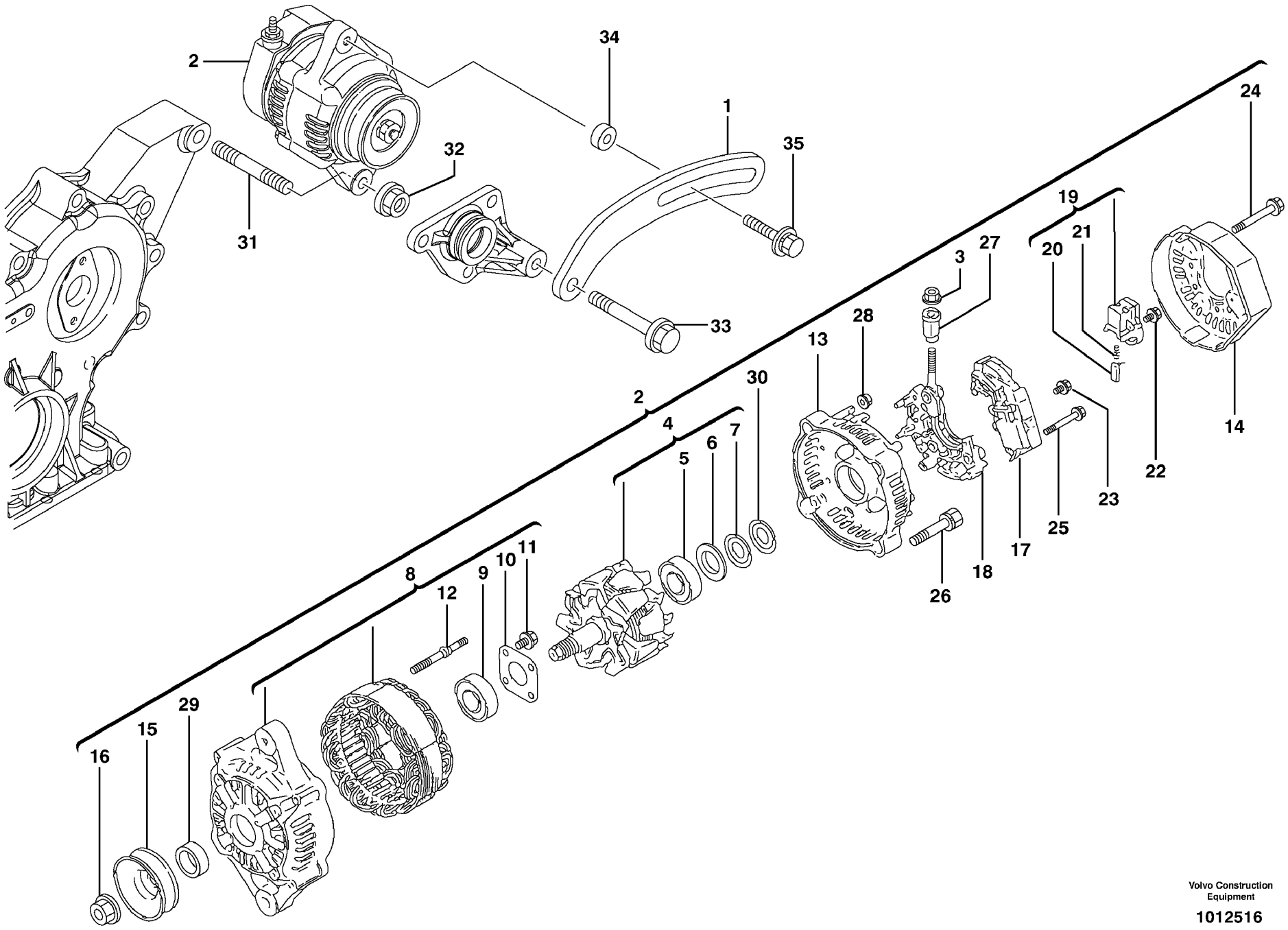

Volvo Construction Equipment

1012516

Fig.	Part No.	Quantity 1	2	3	PS	KIT	Description	Dénomination	Bezeichnung	품명	Denominación	Notes
31	**VOE 14521613**	1					Bolt	Boulon	Bolzen	볼트	Perno	
32	**VOE 14521513**	1					Nut	Ecrou	Mutter	너트	Tuerca	
33	**VOE 11714377**	1					Bolt	Boulon	Bolzen	볼트	Perno	(SA 8240-01720)
34	**VOE 11713778**	1					Spacer	Partie Intermédiaire	Zwischenstück	스페이서	Espaciador	
35	**VOE 11713779**	1					Bolt	Boulon	Bolzen	볼트	Perno	

1	**602.10151** →		**Alternador** 알터네이터 **Generator** **Alternateur** **Alternator**	Catalogue id **20048**	Group **321**
2				Illustr. No **1012516**	Section **100**
3				Issue **VOE 74C9920048**	Page **139**
4					
5					

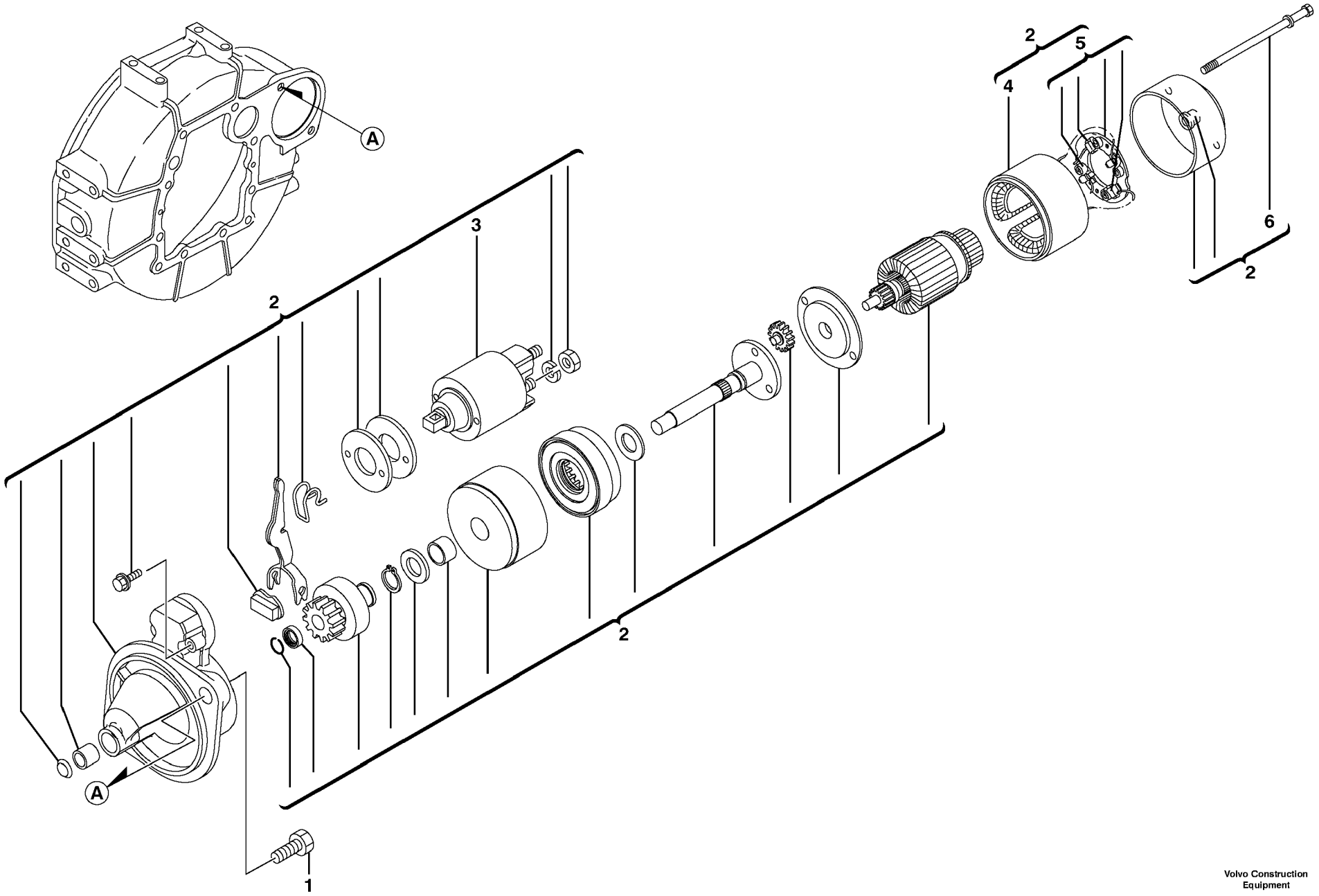

Volvo Construction Equipment

1012517

Fig.	Part No.	Quantity 1	2	3	PS	KIT	Description	Dénomination	Bezeichnung	품명	Denominación	Notes
1	**VOE 11713769**	2					Bolt	Boulon	Bolzen	볼트	Perno	
2	**VOE 11713770**	1					Starter Motor	Demarreur	Anlasser	시동 모터	Motor de arranque	
3	**VOE 11713771**	1					•Relay	•Relais	•Relais	• 릴레이	•Rele	
4	**VOE 11713772**	1					•Coil	•Bobine	•Wickel	• 코일	•Bobina	
5	**VOE 11713773**	1					•Brush Retainer	•Porte-balai	•Bürstenhalter	• 브러시 리테이너	•Portaescobilla	
6	**VOE 11713776**	2					•Bolt	•Boulon	•Bolzen	• 볼트	•Perno	

1	**602.10151**	
2		
3		
4		
5		

Motor de arranque
시동 모터
Anlasser
Démarreur
Starter motor

Catalogue id **20048**	Group **331**
Illustr. No **1012517**	Section **100**
Issue **VOE 74C9920048**	Page **141**

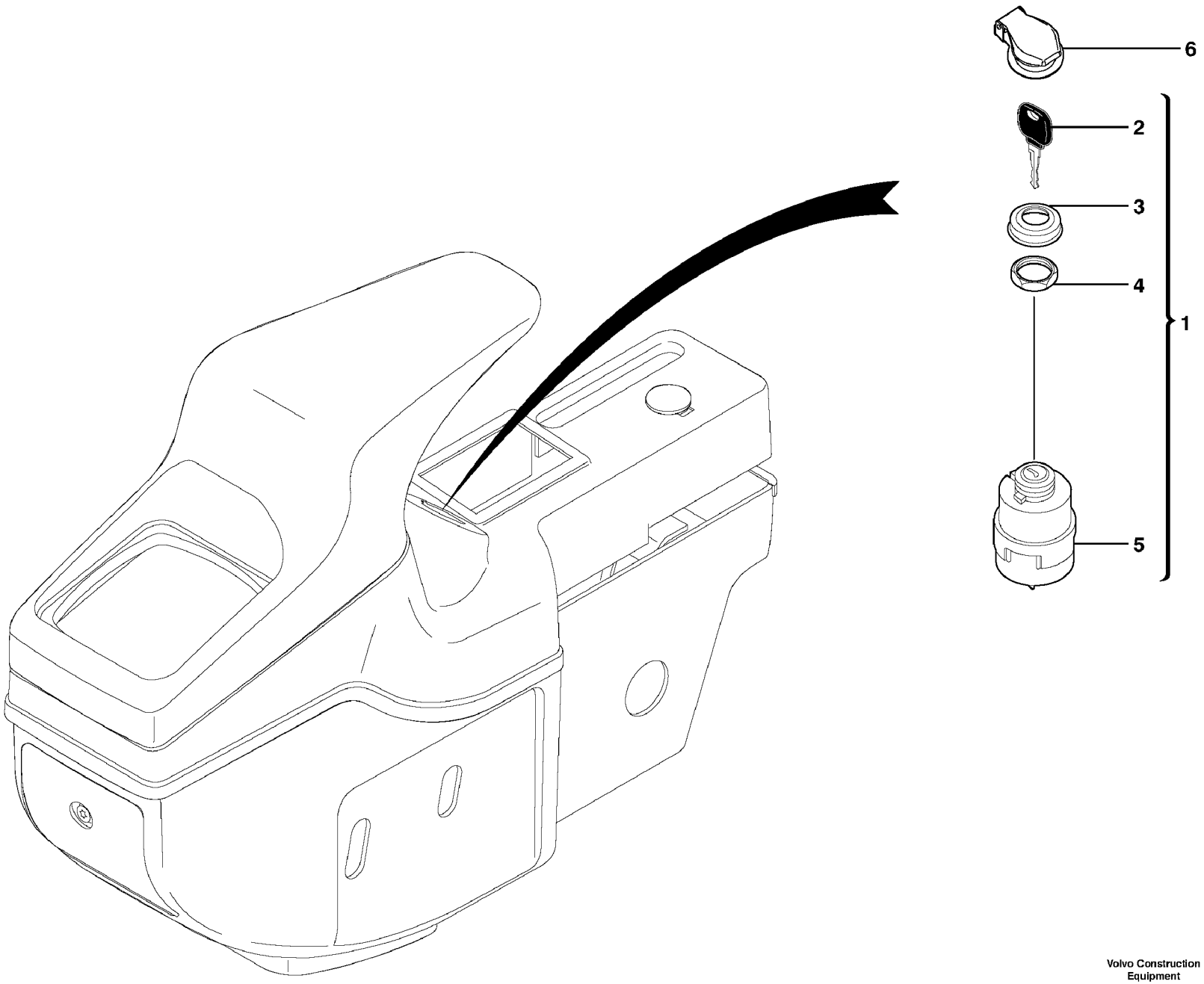

Volvo Construction Equipment

1010589

Fig.	Part No.	Quantity 1	2	3	PS	KIT	Description	Dénomination	Bezeichnung	품명	Denominación	Notes
1	**VOE 11802874**	1					Switch	Commutateur	Schalter	스위치	Contactor	
2	**VOE 11713139**	1					•Key	•Cle	•Schlüssel	• 키	•Llave	
3		1			NS		•Protective cap	•Capuchon de protect	•Schutzkappe	• 보호 캡	•Cubierta de protecci	ORDER ITEM NO 1
4		1			NS		•Nut	•Ecrou	•Mutter	• 너트	•Tuerca	ORDER ITEM NO 1
5		1			NS		•Body	•Corps	•Körper	• 몸체	•Cuerpo	ORDER ITEM NO 1
6	**VOE 11801845**	1					Cover	Couvercle	Deckel	커버	Tapa	

1	**602.10151**		**Interruptor de arranque y precalentamiento** 시동 및 예열 스위치 **Anlass- und Vorglühschalter** **Contacteur de démarrage et de préchauffage** **Starting and preheating switch**
2			
3			
4			
5			

Catalogue id	Group
20048	**334**
Illustr. No **1010589**	Section **100**
Issue **VOE 74C9920048**	Page **143**

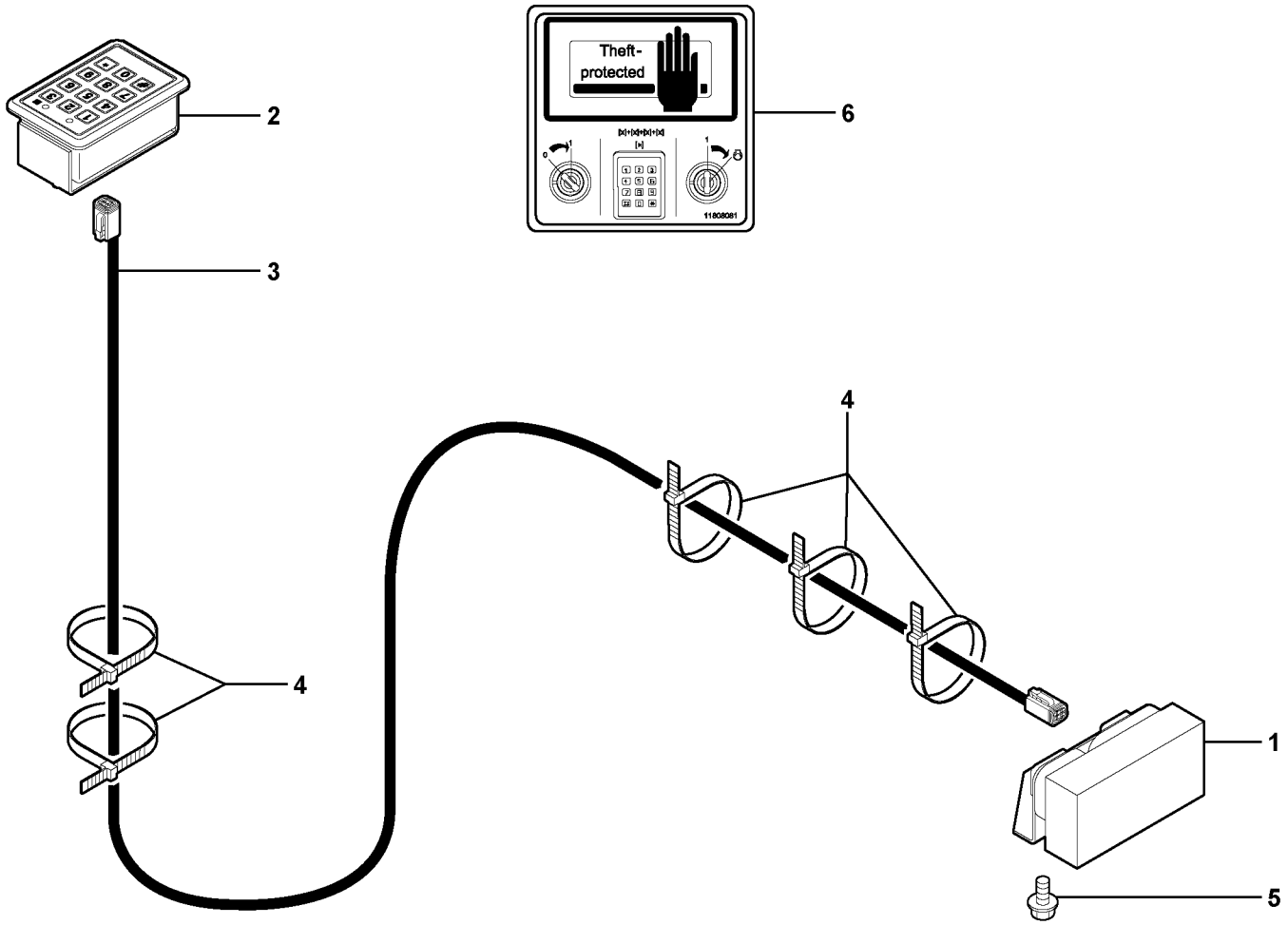

Volvo Construction Equipment

1021310

Fig.	Part No.	Quantity 1	2	3	PS	KIT	Description	Dénomination	Bezeichnung	품명	Denominación	Notes
1	**VOE 11801418**	1					Electronic unit	Unité électronique	Elektronikeinheit	전자장치	Unidad electrón	11839115
2	**VOE 11803149**	1					Coded keypad	Clavier codé	Codierte Tastatur	코드 키패드	Teclado codificado	
3	**VOE 11803912**	1					Wire harness	Faisceau electrique	Kabelbaum	배선	Manojo cables	
4	**VOE 4881440**	5					Strip Clamp	Ruban Serrage	Kabelbinder	스트립 클램프	Abraz Cinta	
5	**VOE 947107**	1					Flange screw	Vis à bride	Flanschschraube	플랜지 스크류	Torn embridado	
6	**VOE 11808081**	1					Decal	Decalcomanie	Abziehbild	데칼	Decalcomania	

1	**602.10151**		**Teclado codificado (antiarranque)** 코드 키패드 (시동불가능화) **Codierte Tastatur (Wegfahrsperre)** **Clavier codé (sécurité antidémarrage)** **Coded keypad (anti-start)**
2			
3			
4			
5			

Catalogue id **20048**	Group **334**
Illustr. No **1021310**	Section **200**
Issue **VOE 74C9920048**	Page **145**

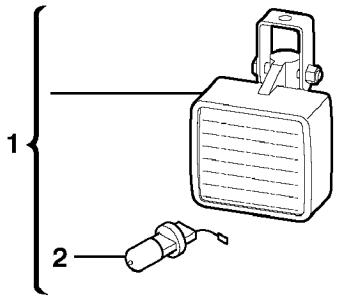

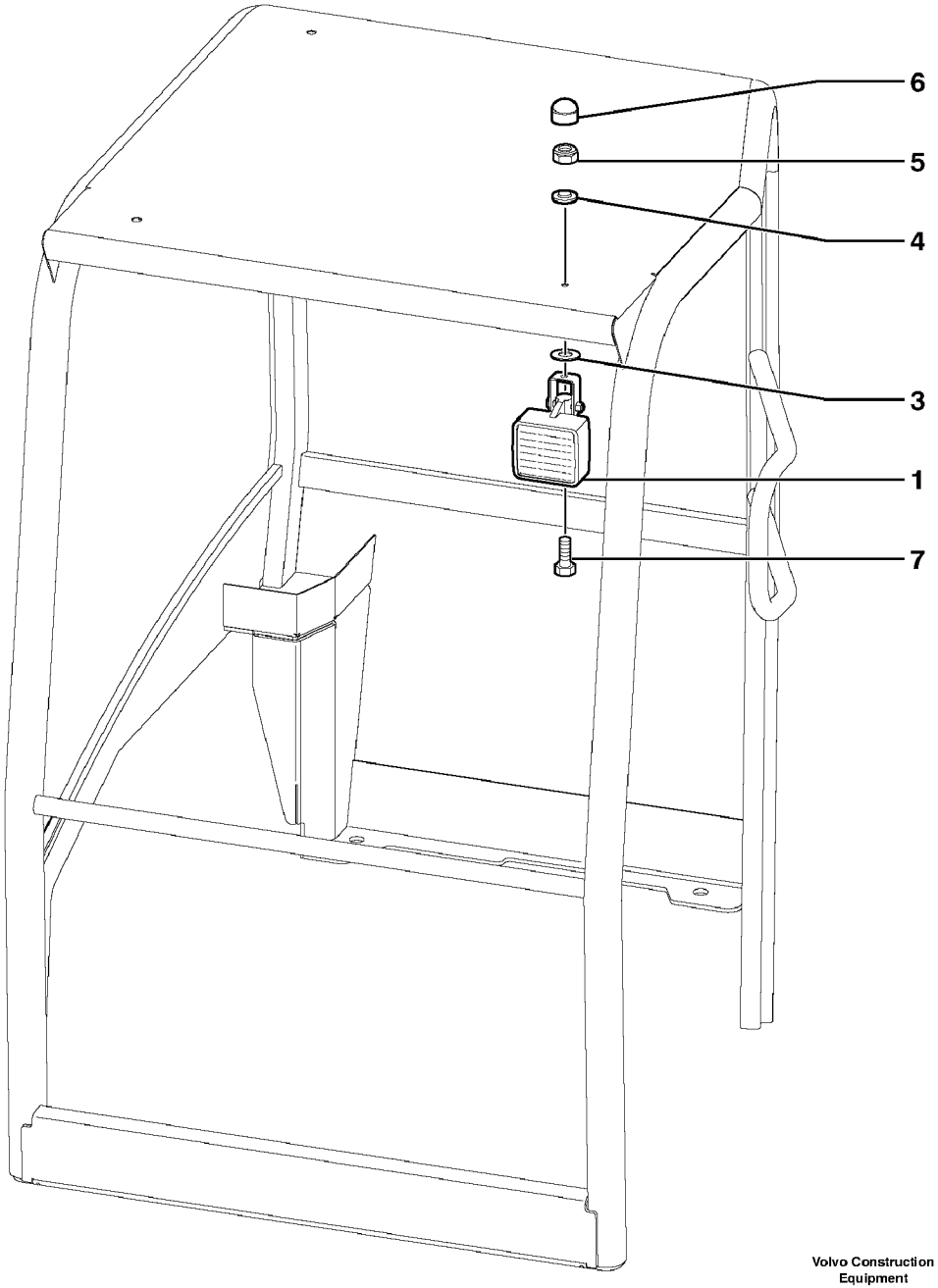

Volvo Construction Equipment

1010621

Fig.	Part No.	Quantity 1	2	3	PS	KIT	Description	Dénomination	Bezeichnung	품명	Denominación	Notes
1	**VOE 11039856**	1					Work Lamp	Lampe Travail	Arbeitslampe	작업등	Lampara Trabajo	
2	**VOE 944265**	1					•Bulb	•Ampoule	•Glühlampe	• 벌브	•Bombilla	
3	**PJ 7417422**	1					Washer	Rondelle	Scheibe	와셔	Arandela	
4	**PJ 7413711**	1					Washer	Rondelle	Scheibe	와셔	Arandela	
5	**PJ 4450008**	1			SS		Lock nut	Contre-ecrou	Sicherungsmutter	록 너트	Contratuerca	
6	**PJ 7411699**	1					Plug	Bouchon	Stopfen	플러그	Tapon	
7	**PJ 7417421**	1					Screw	Vis	Schraube	스크류	Tornillo	

1	**602.10151**	
2		
3		
4		
5		

Alumbrado delantero en la protección contra vuelcos
선루프의 정면 헤드라이트
Scheinwerfer Überrollbügel vorn
Phare AV sur toit de cabine ouverte
Front headlight on canopy

Catalogue id	Group
20048	**352**
Illustr. No **1010621**	Section **100**
Issue **VOE 74C9920048**	Page **147**

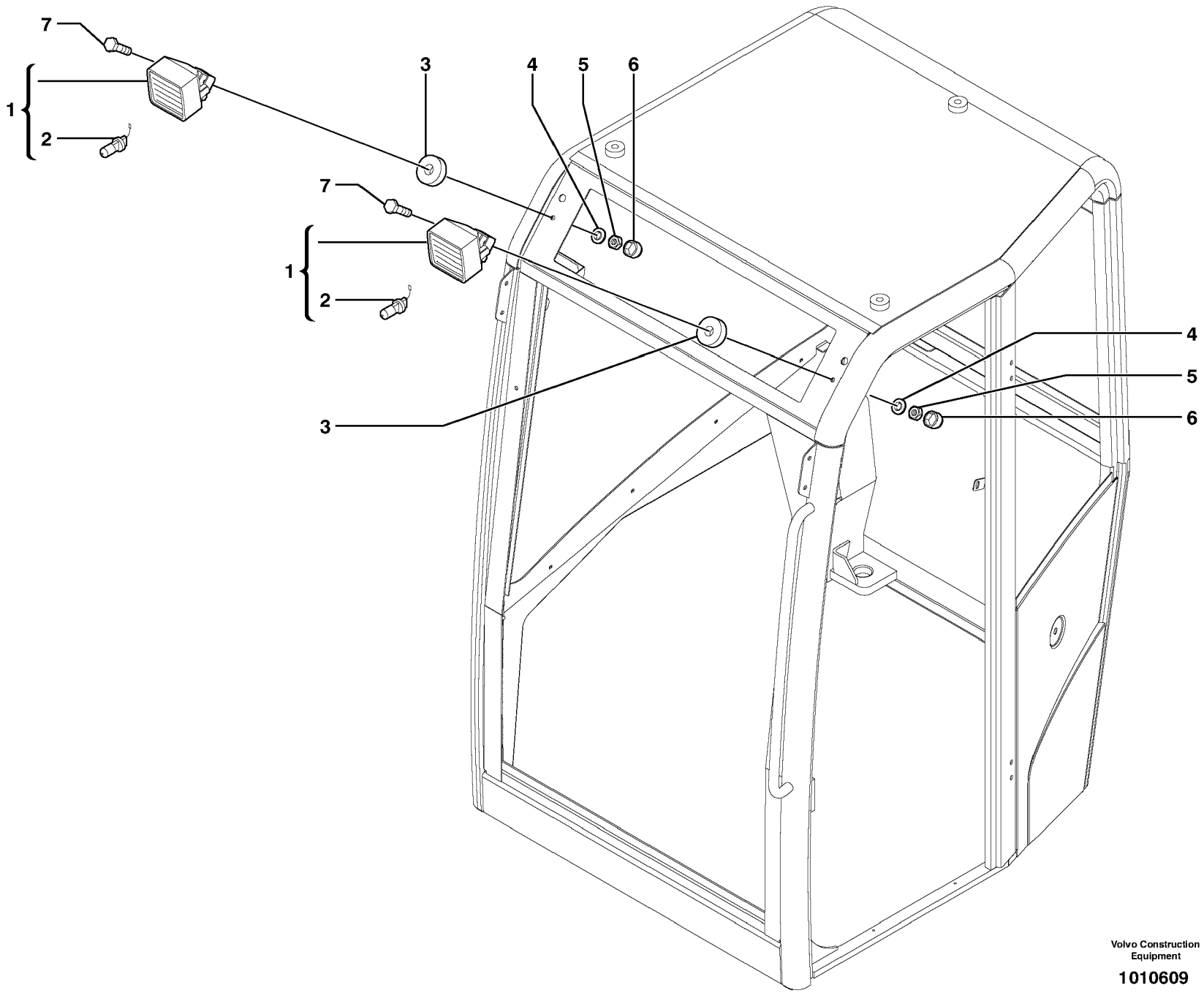

Volvo Construction Equipment

1010609

Fig.	Part No.	Quantity 1	2	3	PS	KIT	Description	Dénomination	Bezeichnung	품명	Denominación	Notes
1	**VOE 11039847**	2					Work Lamp	Lampe Travail	Arbeitslampe	작업등	Lampara Trabajo	
2	**PJ 7410521**	1					•Bulb	•Ampoule	•Glühlampe	• 전구	•Ampolla	
3	**PJ 7418399**	2					Bushing	Bague	Buchse	부싱	Casquillo	
4	**PJ 7413711**	2					Washer	Rondelle	Scheibe	와셔	Arandela	
5	**PJ 4450008**	2			SS		Lock nut	Contre-ecrou	Sicherungsmutter	록 너트	Contratuerca	
6	**PJ 7411699**	2					Plug	Bouchon	Stopfen	플러그	Tapon	
7	**PJ 7418398**	2					Screw	Vis	Schraube	스크류	Tornillo	

1	**602.10151**	
2		
3		
4		
5		

Alumbrado delantero en la cabina
운전실의 정면 헤드라이트
Scheinwerfer Kabine vorn
Phare AV sur cabine
Front headlight on cab

Catalogue id	Group
20048	**352**
Illustr. No **1010609**	Section **200**
Issue **VOE 74C9920048**	Page **149**

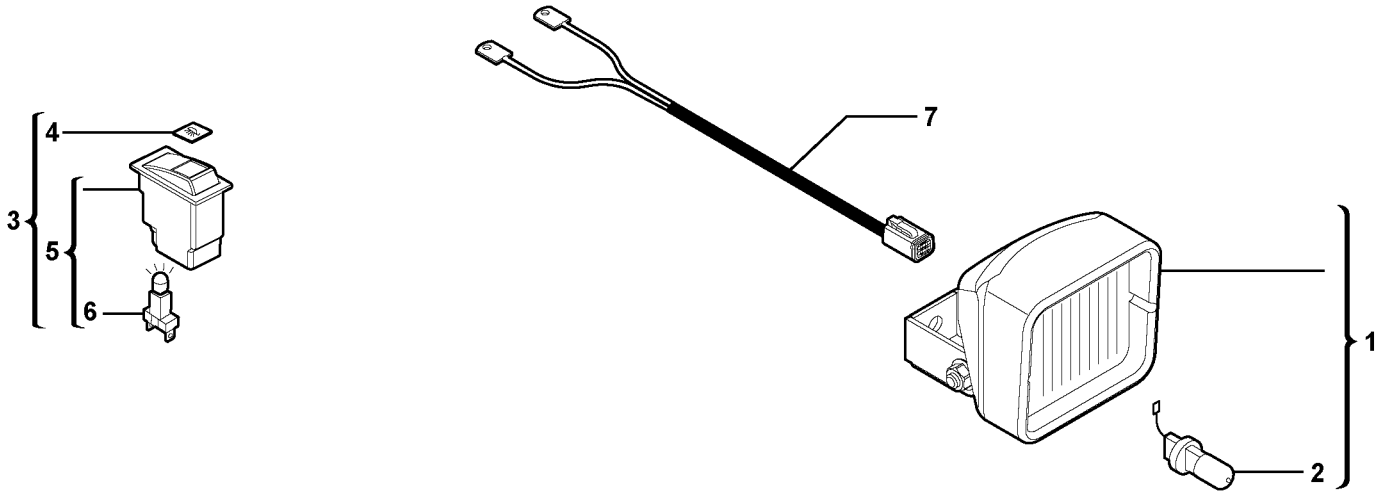
4
3
5
6
7
1
2

Fig.	Part No.	Quantity 1	2	3	PS	KIT	Description	Dénomination	Bezeichnung	품명	Denominación	Notes
1	**VOE 11039847**	1					Work Lamp	Lampe Travail	Arbeitslampe	작업등	Lampara Trabajo	11839114
2	**VOE 944265**	1					•Bulb	•Ampoule	•Glühlampe	• 벌브	•Bombilla	
3	**VOE 11710044**	1					Halogen switch	Commutateur, phare	Scheinwerferschalter	할로겐 스위치	Interruptor de faros h.	(VOE 11803423)
4	**VOE 11803422**	1					•Symbol	•Symbole	•Symbol	• 심볼	•Símbolo	
5	**VOE 11803452**	1					•Rocker Switch	•Commutateur à bas	•Wippschalter	• 로커 스위치	•Interruptor oscilante	
6	**PJ 5160030**	1					••Lamp holder	••Porte-lampe	••Lampenfassung	•• 램프 홀더	••Portalampara	
7	**VOE 11800254**	1					Wire harness	Faisceau electrique	Kabelbaum	배선	Manojo cables	

1	**602.10151**	
2		
3		
4		
5		

Alumbrado trasero
후방 헤드라이트
Hinterer Scheinwerfer
Projecteur AR
Rear headlight

Catalogue id	Group
20048	**353**
Illustr. No **1017324**	Section **110**
Issue **VOE 74C9920048**	Page **151**

VOLVO

ECR38

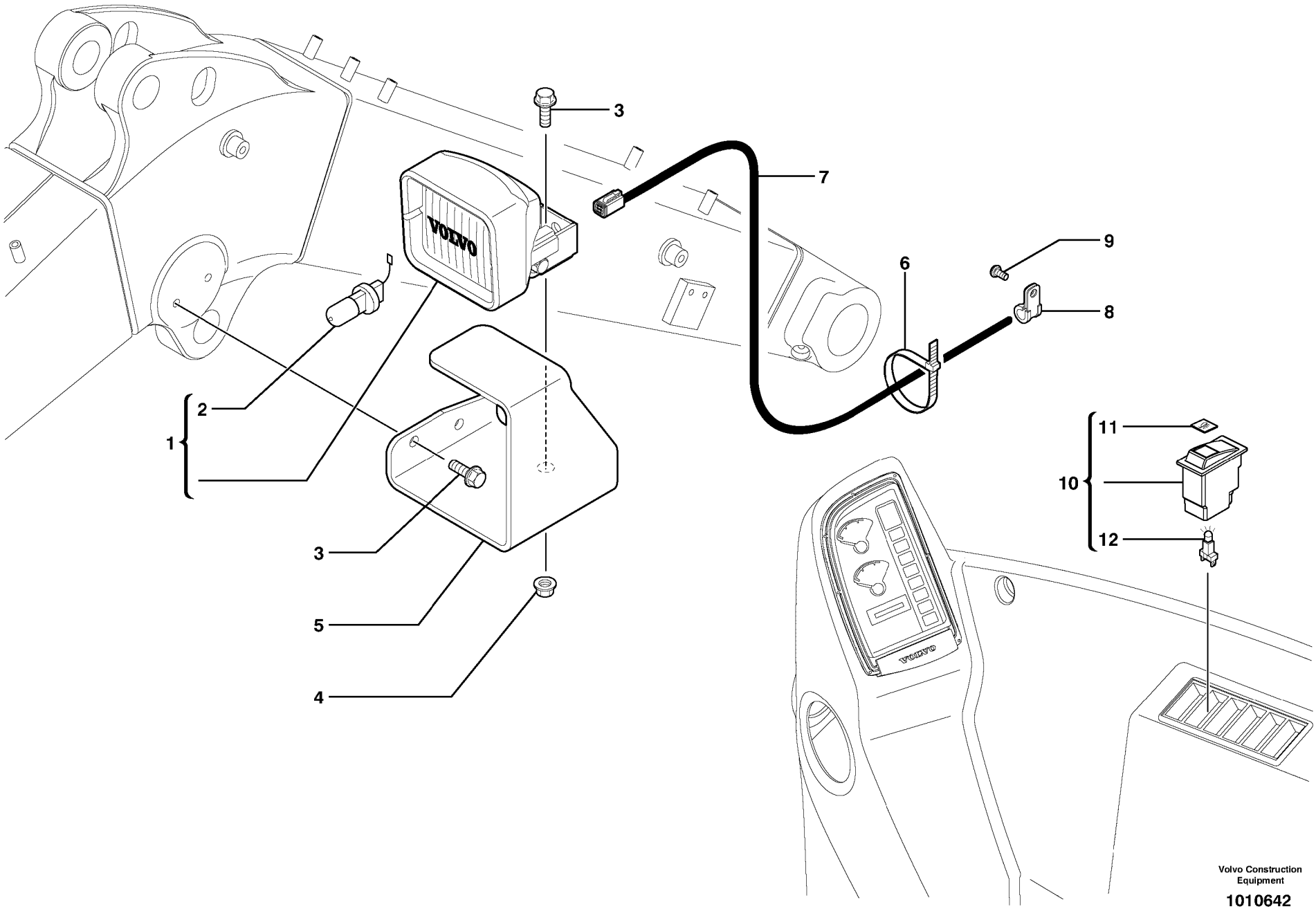

Volvo Construction Equipment

1010642

Fig.	Part No.	Quantity 1	2	3	PS	KIT	Description	Dénomination	Bezeichnung	품명	Denominación	Notes
1	**VOE 11039847**	1					Work Lamp	Lampe Travail	Arbeitslampe	작업등	Lampara Trabajo	11839113
2	**PJ 7410521**	1					•Bulb	•Ampoule	•Glühlampe	• 전구	•Ampolla	
3	**VOE 946173**	3			SS		Screw	Vis	Schraube	스크류	Tornillo	
4	**VOE 945408**	1			SS		Flange Lock Nut	Contre écrou bride	Flanschmutter	플랜지 록 너트	Contratuer Embr	
5	**VOE 11800255**	1					Support	Support	Stütze	서포트	Apoyo	
6	**VOE 4881440**	15					Strip Clamp	Ruban Serrage	Kabelbinder	스트립 클램프	Abraz Cinta	
7	**VOE 11803331**	1					Wire harness	Faisceau electrique	Kabelbaum	배선	Manojo cables	
8	**VOE 952627**	1					Clamp	Pince Serrage	Klemme	클램프	Abrazadera	
9	**VOE 969404**	1					6-pt skt screw	Vis creuse de 6	Hohlschraube	6 포인트 소켓 스크류	Racor 6-dientes	
10	**VOE 11710059**	1					Halogen switch	Commutateur, phare	Scheinwerferschalter	할로겐 스위치	Interruptor de faros h	
11	**VOE 11803360**	1					•Symbol	•Symbole	•Symbol	• 심볼	•Símbolo	
12	**PJ 5160030**	1					•Lamp holder	•Porte-lampe	•Lampenfassung	• 램프 홀더	•Portalampara	

1	**602.10151**	
2		
3		
4		
5		

Alumbrado de trabajo en pluma
붐의 작업등
Arbeitsscheinwerfer auf Ausleger
Projecteur de travail sur flèche
Work light on boom

Catalogue id **20048**	Group **356**
Illustr. No **1010642**	Section **100**
Issue **VOE 74C9920048**	Page **153**

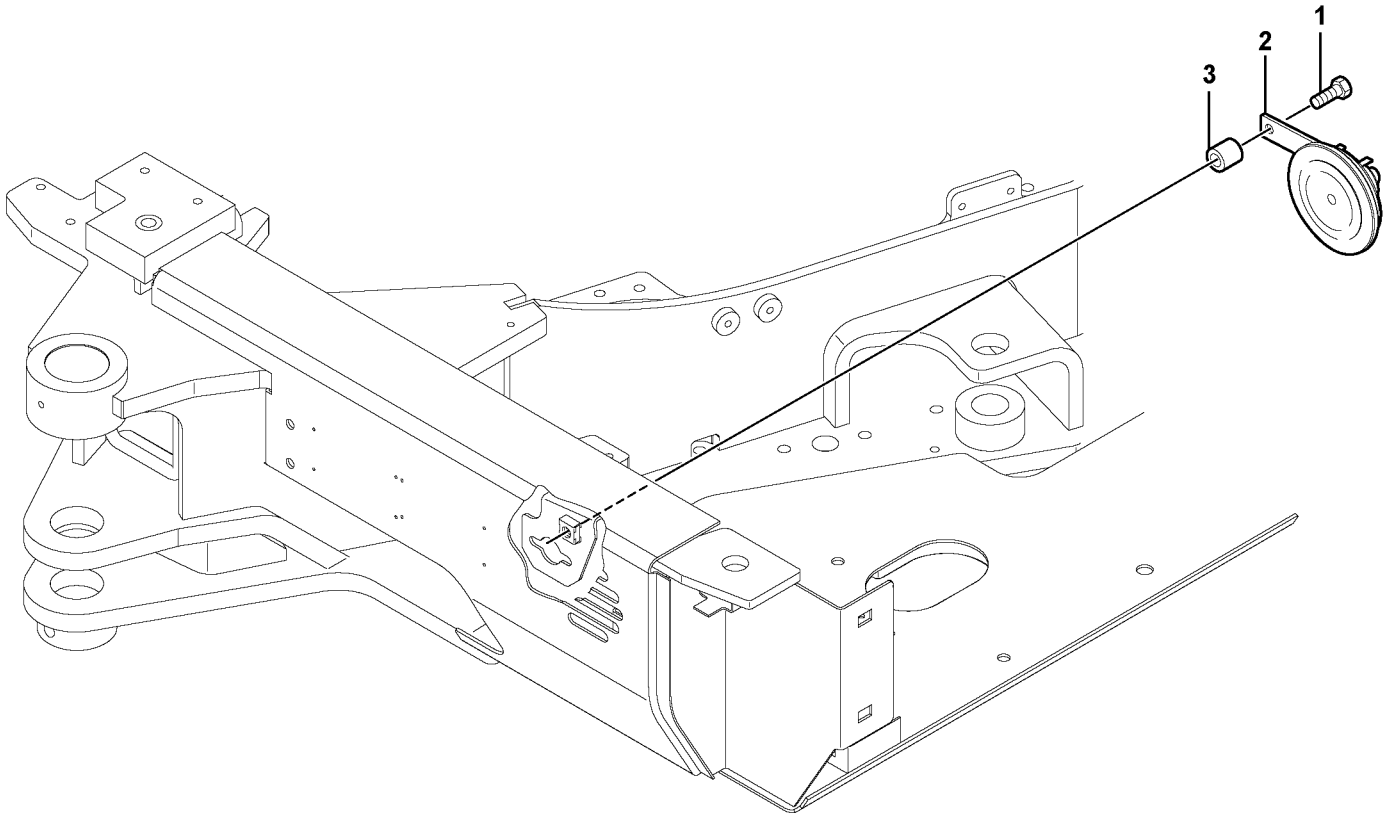

Volvo Construction Equipment

1014540

Fig.	Part No.	Quantity 1	2	3	PS	KIT	Description	Dénomination	Bezeichnung	품명	Denominación	Notes
1	**VOE 946671**	1					Flange screw	Vis à bride	Flanschschraube	플랜지 스크류	Torn embridado	
2	**VOE 11802744**	1					Horn	Avertisseur sonore	Signalhorn	경음기	Avisador sonoro	
3	**VOE 11805768**	1					Spacer	Partie Intermédiaire	Zwischenstück	스페이서	Espaciador	

1	**602.10151** →		**Bocina** 경음기 **Signalhorn** **Avertisseur sonore** **Horn**	Catalogue id **20048**	Group **362**
2				Illustr. No **1014540**	Section **100**
3				Issue **VOE 74C9920048**	Page **155**
4					
5					

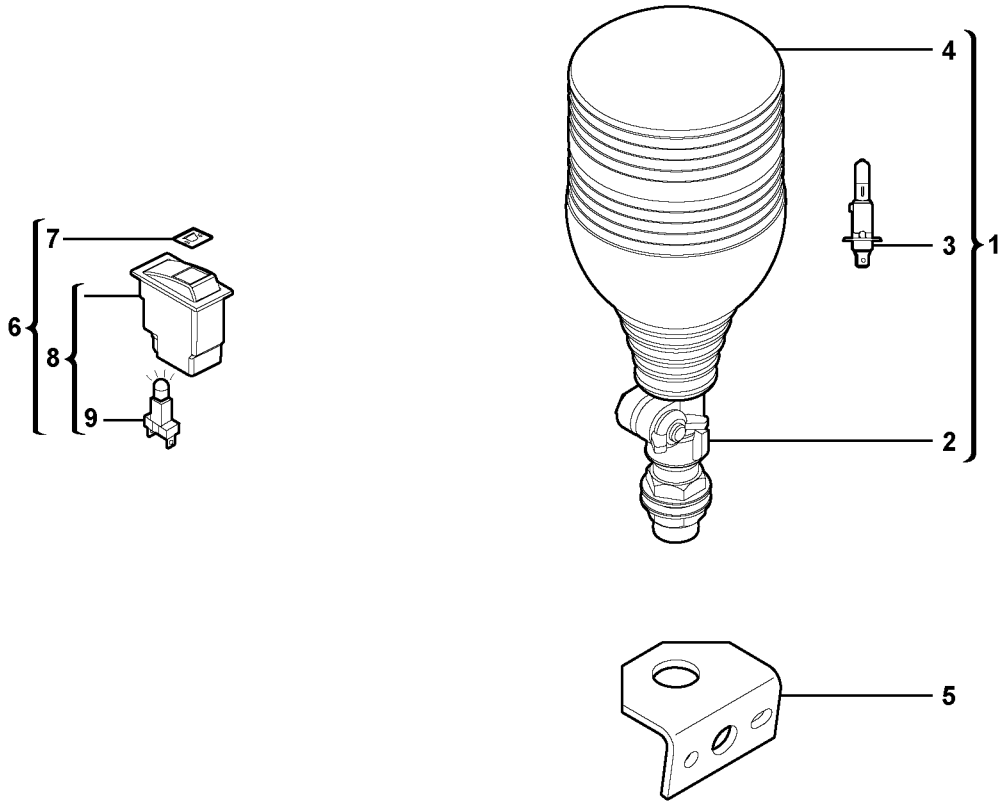

Volvo Construction Equipment

1017323

Fig.	Part No.	Quantity 1	2	3	PS	KIT	Description	Dénomination	Bezeichnung	품명	Denominación	Notes
1	**VOE 11803529**	1					Rotating Beacon	Gyrophare	Rundumkennleuchte	경광등	Luz Rotativa Emerge	11839096
2		1			NS		•Adapter	•Adaptateur	•Adapter	• 어댑터	•Adaptador	ORDER ITEM NO 1
3	**PJ 5050011**	1					•Bulb	•Ampoule	•Glühlampe	• 전구	•Ampolla	
4		1			NS		•Rotating Beacon	•Gyrophare	•Rundumkennleuchte	• 경광등	•Luz Rotativa Emerge	ORDER ITEM NO 1
5	**VOE 11803415**	1					Support	Support	Stütze	서포트	Apoyo	
6	**VOE 11710043**	1					Switch	Commutateur	Schalter	스위치	Contactor	(VOE 11803456)
7	**VOE 11803455**	1					•Symbol	•Symbole	•Symbol	• 심볼	•Símbolo	
8	**VOE 11803452**	1					•Rocker Switch	•Commutateur à bas	•Wippschalter	• 로커 스위치	•Interruptor oscilante	
9	**PJ 5160030**	1					••Lamp holder	••Porte-lampe	••Lampenfassung	•• 램프 홀더	••Portalampara	

1	**602.10151**	
2		
3		
4		
5		

Luz de advertencia intermitente
경광등
Rundumkennleuchte
Gyrophare
Flashing light

Catalogue id	Group
20048	**362**
Illustr. No **1017323**	Section **400**
Issue **VOE 74C9920048**	Page **157**

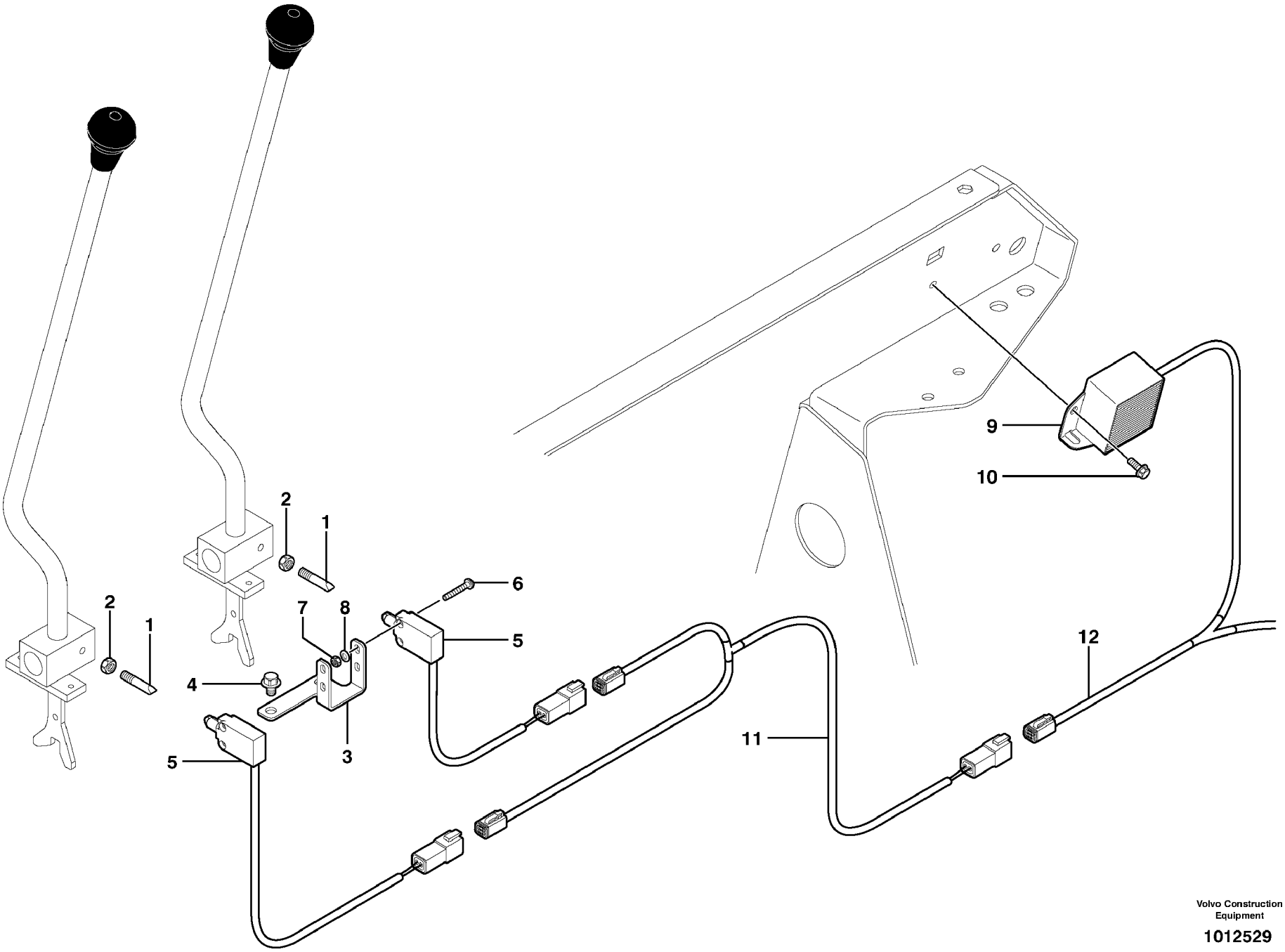

Volvo Construction Equipment

1012529

Fig.	Part No.	Quantity 1	2	3	PS	KIT	Description	Dénomination	Bezeichnung	품명	Denominación	Notes
1	**VOE 11802211**	2					Stud	Goujon	Stiftschraube	스터드	Esparrago	11839018
2	**VOE 955782**	2					Hexagon Nut	Ecrou Hexagonal	Sechskantmutter	너트	Tuerca Hexagon	
3	**VOE 11802213**	1					Support	Support	Stütze	서포트	Apoyo	
4	**VOE 947107**	2					Flange screw	Vis à bride	Flanschschraube	플랜지 스크류	Torn embridado	
5	**VOE 11803207**	2					Switch	Commutateur	Schalter	스위치	Contactor	
6	**VOE 969518**	4					6-pt skt screw	Vis creuse de 6	Hohlschraube	6 포인트 소켓 스크류	Racor 6-dientes	
7	**VOE 955779**	4					Hexagon Nut	Ecrou Hexagonal	Sechskantmutter	너트	Tuerca Hexagon	
8	**VOE 955891**	4					Washer	Rondelle	Scheibe	와셔	Arandela	
9	**VOE 11802755**	1					Buzzer	Répétiteur acoustiqu	Summer	부저	Zumbador	
10	**VOE 946544**	2			SS		Screw	Vis	Schraube	스크류	Tornillo	
11	**VOE 11803358**	1					Wire harness	Faisceau electrique	Kabelbaum	배선	Manojo cables	
12	**VOE 11803183**	1					Wire harness	Faisceau electrique	Kabelbaum	배선	Manojo cables	S/N - 602.10524
12	**VOE 11807270**	1					Wire harness	Faisceau electrique	Kabelbaum	배선	Manojo cables	S/N 602.10525 -

1	**602.10151** →	
2		
3		
4		
5		

Señal acústica de marcha atrás
후진 경고장치
Rückfahrwarner
Avertisseur sonore de marche arrière
Back-up warning unit

Catalogue id	Group
20048	**362**
Illustr. No **1012529**	Section **500**
Issue **VOE 74C9920048**	Page **159**

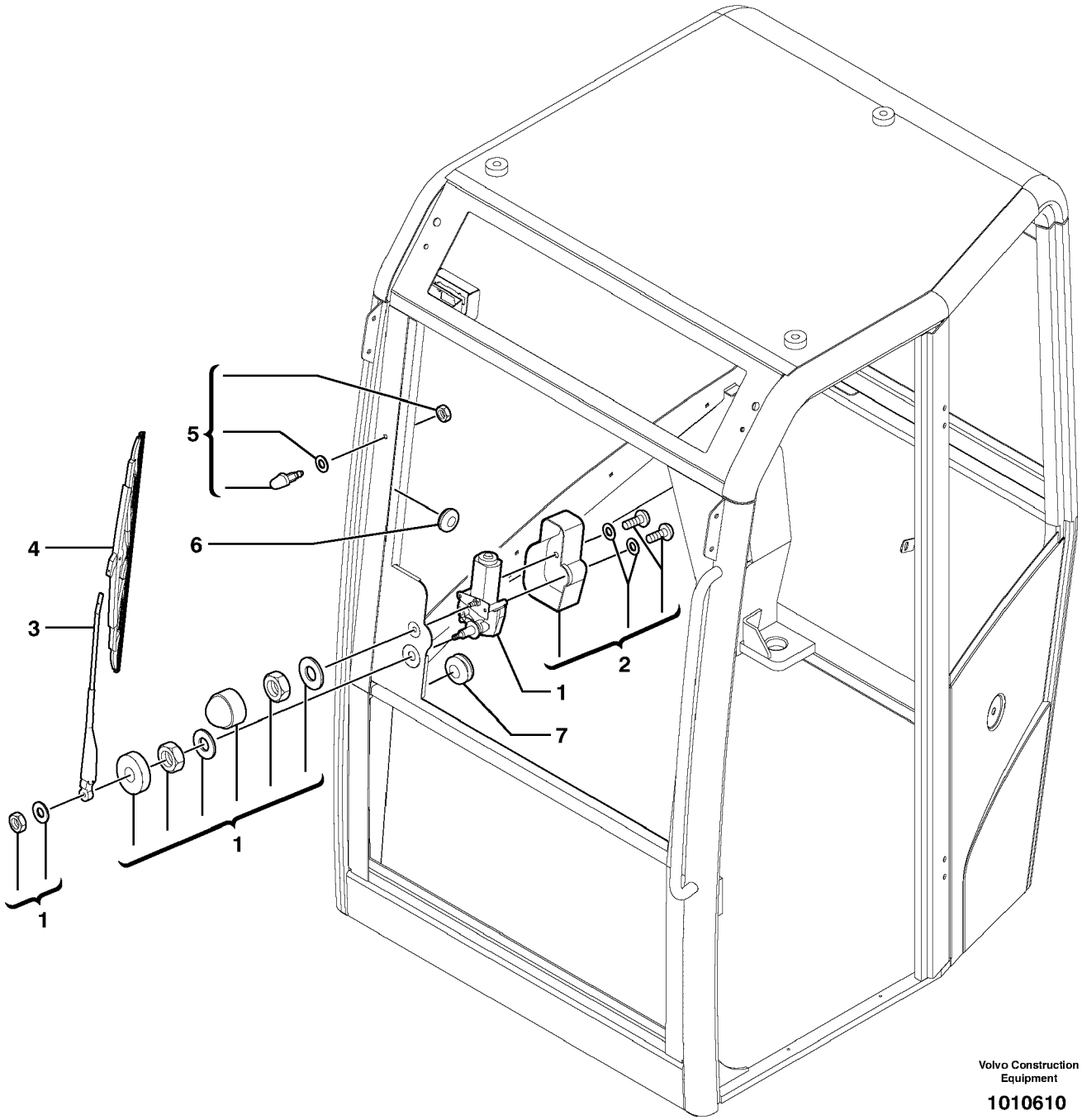

Volvo Construction Equipment

1010610

Fig.	Part No.	Quantity 1	2	3	PS	KIT	Description	Dénomination	Bezeichnung	품명	Denominación	Notes
1	**PJ 7418331**	1					Wiper Motor	Moteur essuie glace	Wischermotor	와이퍼 모터	Motor l.p	
2	**VOE 11713187**	1					Guard	Protection	Schutz	가드	Protección	
3	**PJ 7418328**	1					Brush holder	Porte-balai	Bürstenhalter	브러시 홀더	Porta-escobillas	
4	**VOE 11802575**	1					Wiper blade	Balai essuie glace	Wischerblatt	와이퍼 블레이드	Escobilla l.p	
5	**PJ 7418330**	1					Nozzle	Gicleur	Düse	노즐	Difusor	
6	**PJ 7411688**	1					Grommet	Passe fil	Durchführung	그로메트	Aislador pasapanel	
7	**PJ 7413705**	1					Grommet	Passe fil	Durchführung	그로메트	Aislador pasapanel	

1	**602.10151**	
2		
3		
4		
5		

Sistema de limpieza
세척장치
Reinigungssystem
Système de nettoyage
Cleaning system

Catalogue id	Group
20048	**363**
Illustr. No **1010610**	Section **100**
Issue **VOE 74C9920048**	Page **161**

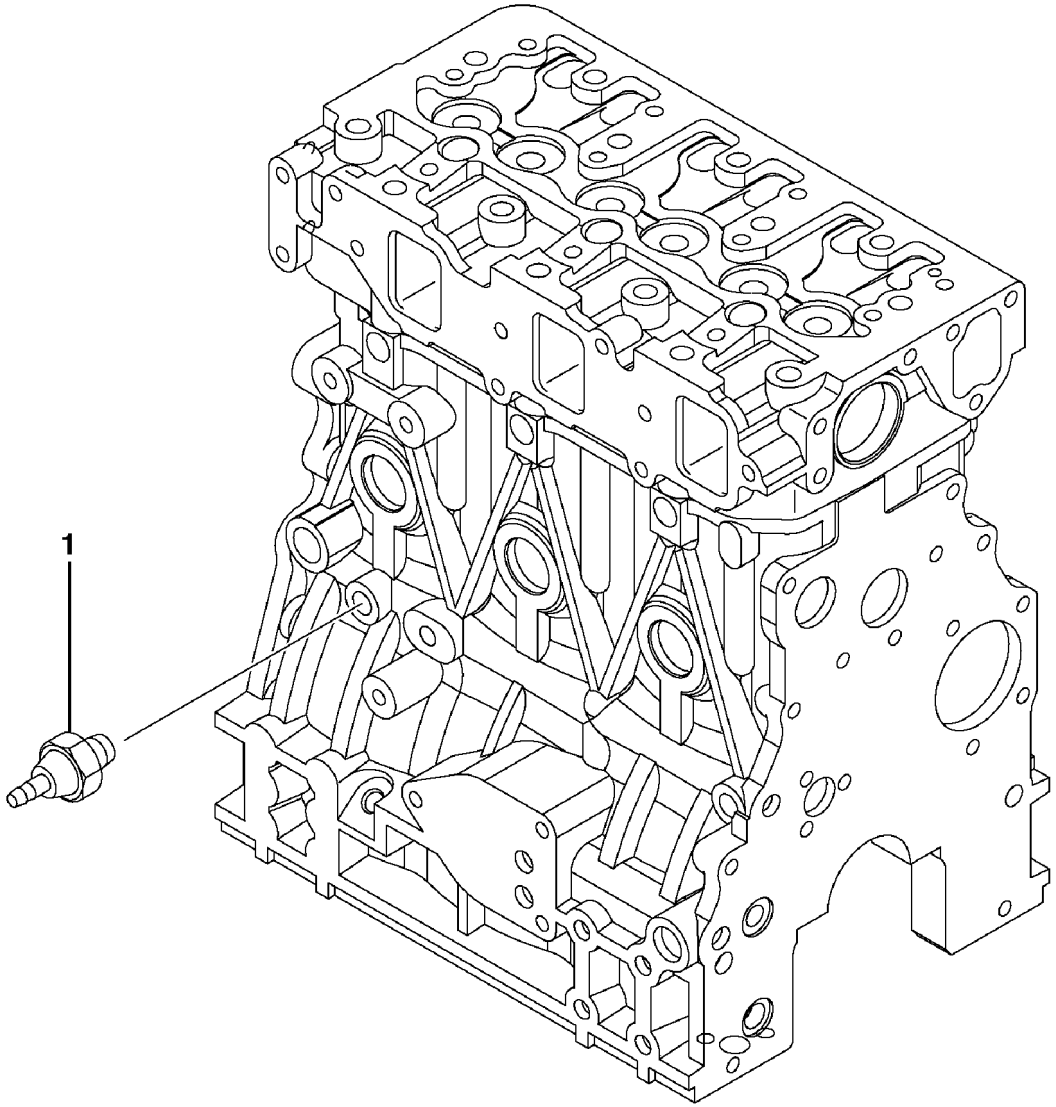

Volvo Construction Equipment

1012518

Fig.	Part No.	Quantity 1	2	3	PS	KIT	Description	Dénomination	Bezeichnung	품명	Denominación	Notes
1	**VOE 11713438**	1					Pressure Switch	Mano contact	Druckschalter	압력 스위치	Manocontacto	

1	**602.10151**		**Interruptor de presión de aceite** 오일 압력 스위치 **Druckschalter** **Manocontact d'huile** **Oil pressure switch**	Catalogue id **20048**	Group **364**
2				Illustr. No **1012518**	Section **100**
3				Issue **VOE 74C9920048**	Page **163**
4					
5					

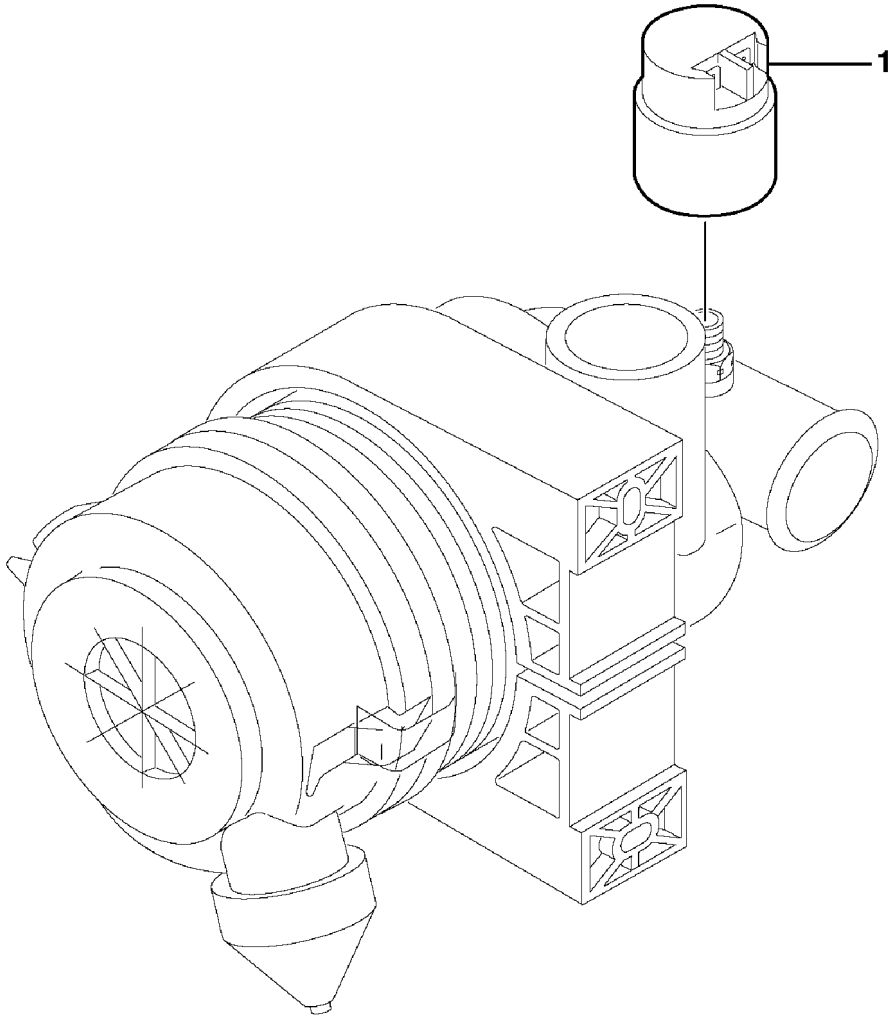

Volvo Construction Equipment

1010453

Fig.	Part No.	Quantity 1	2	3	P S	K I T	Description	Dénomination	Bezeichnung	품명	Denominación	Notes
1	**VOE 11802329**	1					Indicator	Indicateur	Indikator	인디케이터	Indicador	

1	**602.10151**		**Indicador de obturación** 막힘 표시기 **Verstopfungsanzeiger** **Indicateur de colmatage** **Clogging indicator**
2			
3			
4			
5			

Catalogue id **20048**	Group **364**
Illustr. No **1010453**	Section **200**
Issue **VOE 74C9920048**	Page **165**

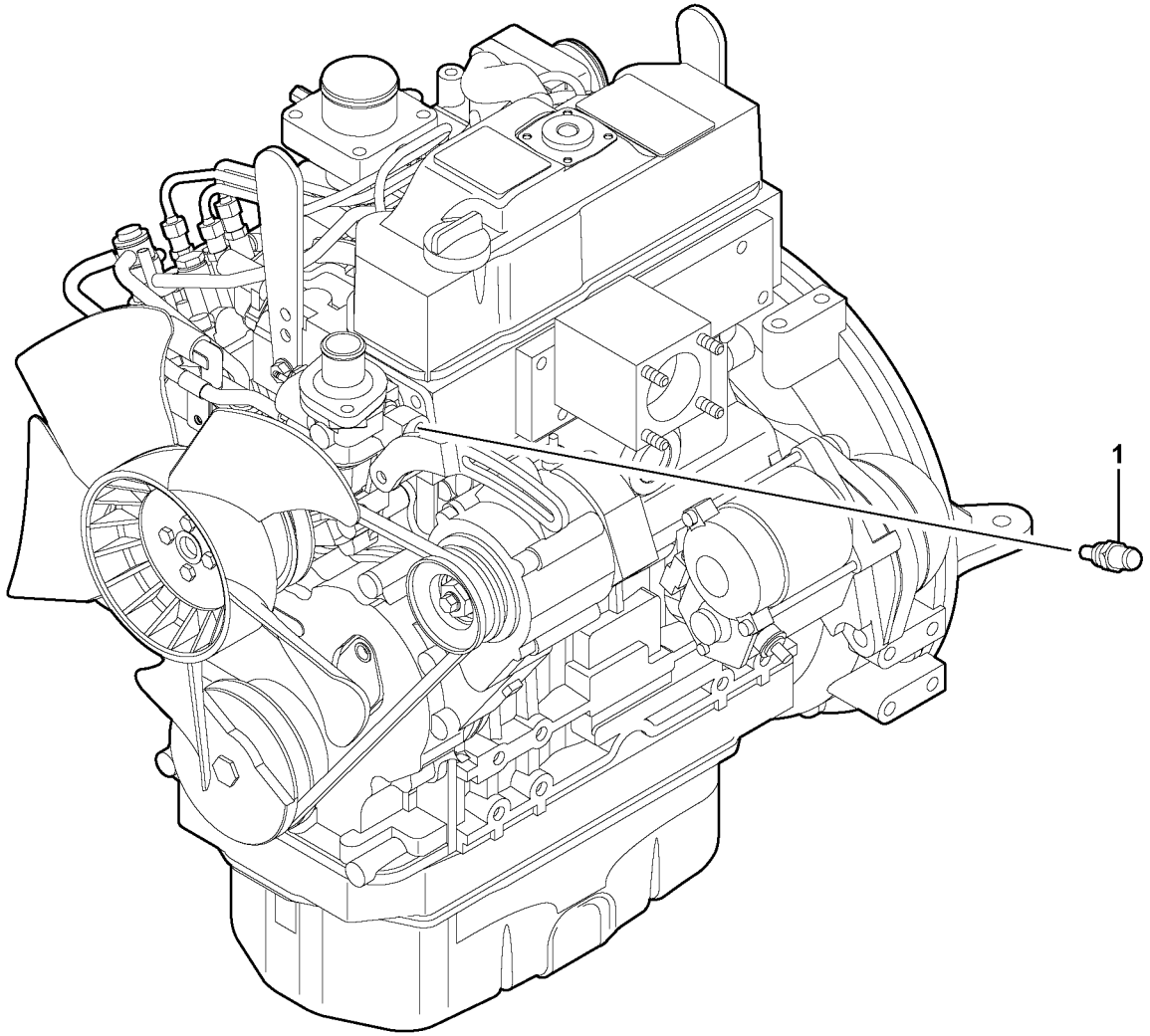

Volvo Construction Equipment

1017333

Fig.	Part No.	Quantity 1	2	3	PS	KIT	Description	Dénomination	Bezeichnung	품명	Denominación	Notes
1	**VOE 11802936**	1					Temperature sensor...	Detecteur temperatu ..	Temperaturgeber	온도 센서	Sensor temperatura...	

1	**602.10151**		**Interruptor térmico** 온도감지 스위치 **Thermoschalter** **Thermocontact** **Thermal switch**	Catalogue id **20048**	Group **364**
2				Illustr. No **1017333**	Section **300**
3				Issue **VOE 74C9920048**	Page **167**
4					
5					

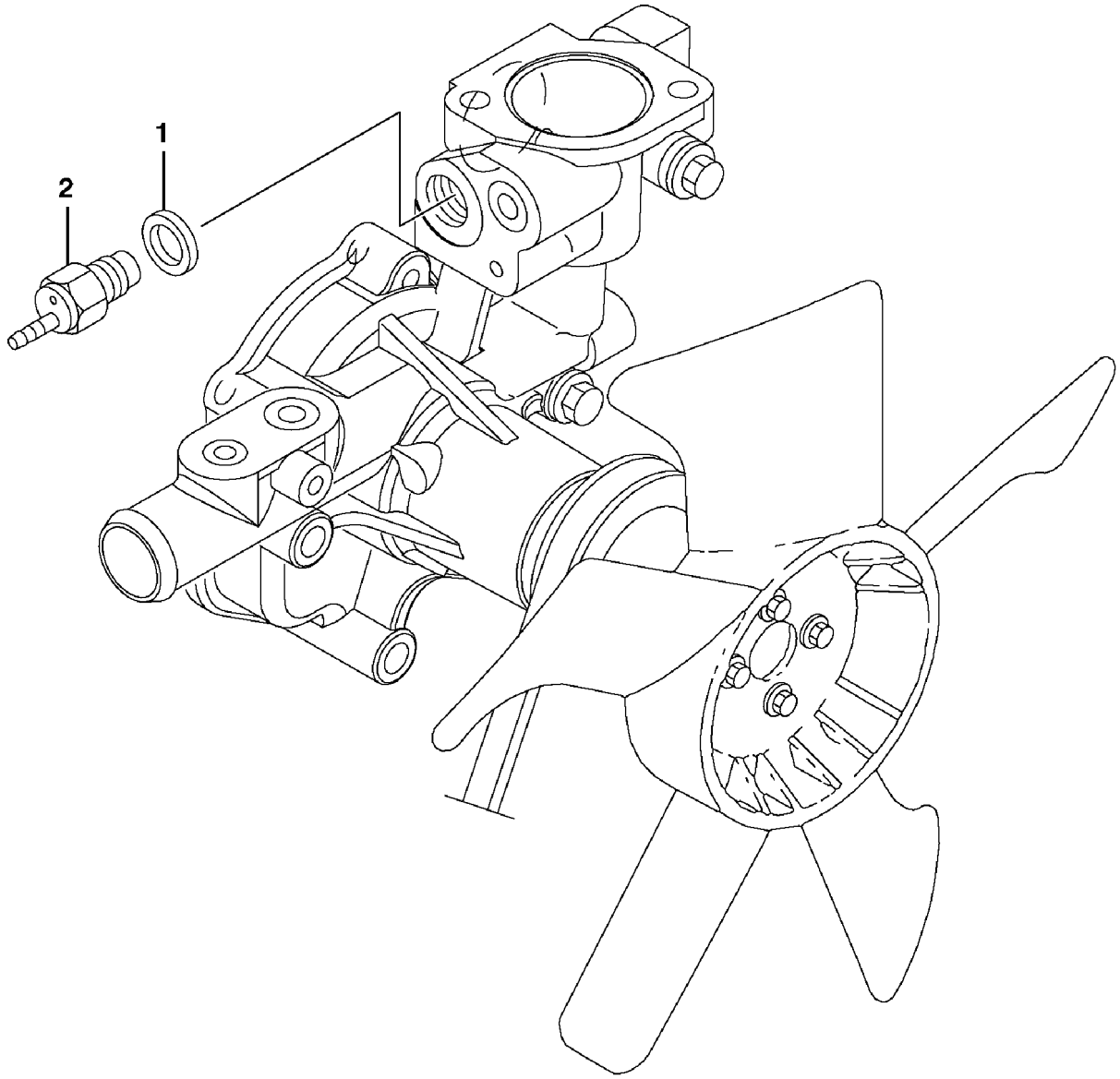

Volvo Construction Equipment

1012519

Fig.	Part No.	Quantity 1	2	3	PS	KIT	Description	Dénomination	Bezeichnung	품명	Denominación	Notes
1	**VOE 11714478**	1					Gasket	Joint	Dichtung	가스켓	Junta	(SA 8210-03370)
2	**VOE 11713456**	1					Switch	Commutateur	Schalter	스위치	Contactor	

1	**602.10151**		**Interruptor térmico** 온도감지 스위치 **Thermoschalter** **Thermocontact** **Thermal switch**	Catalogue id **20048**	Group **364**
2				Illustr. No **1012519**	Section **310**
3					
4				Issue **VOE 74C9920048**	Page **169**
5					

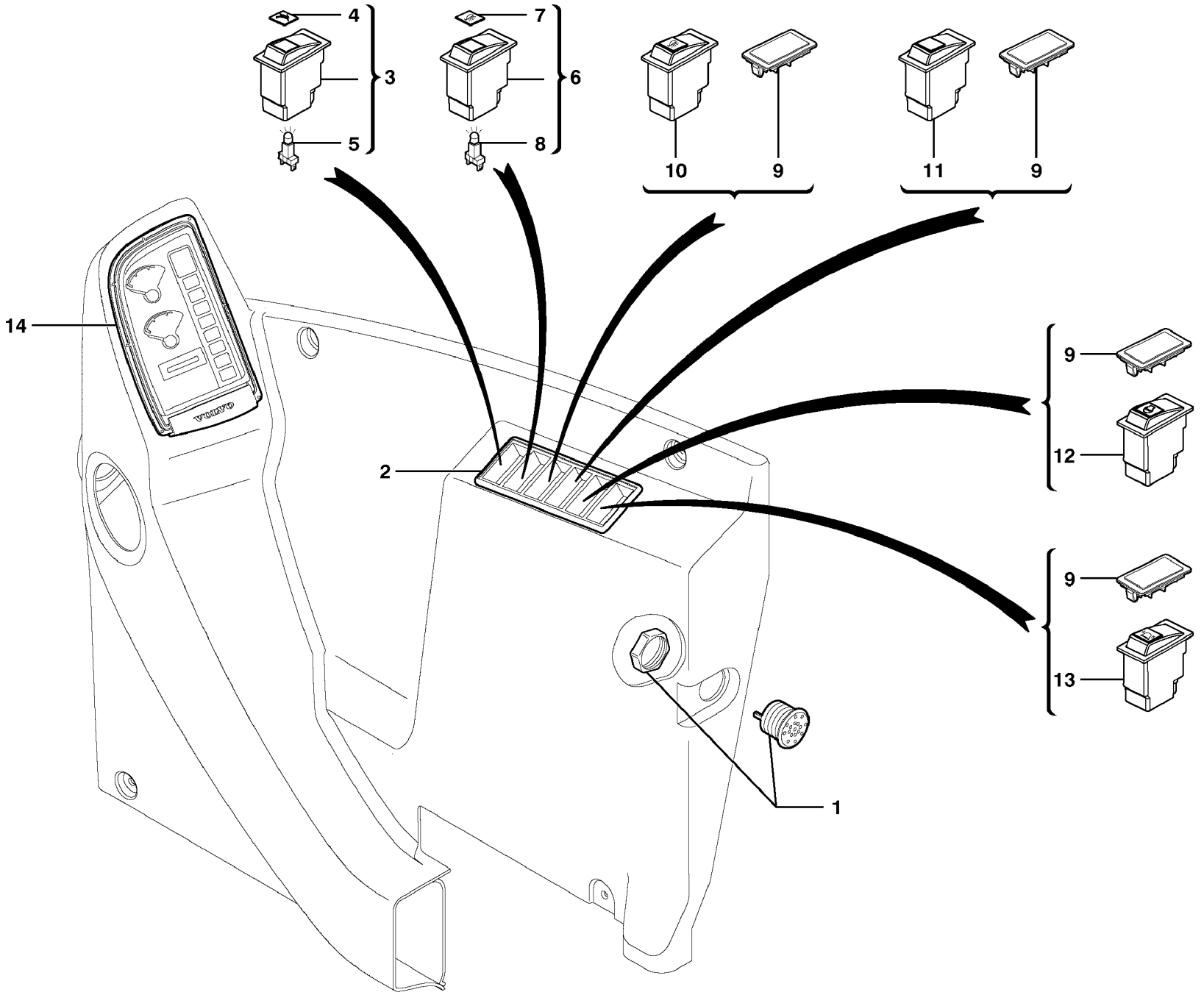

Volvo Construction Equipment

1010591

Fig.	Part No.	Quantity 1	2	3	PS	KIT	Description	Dénomination	Bezeichnung	품명	Denominación	Notes
1	**VOE 828587**	1					Buzzer	Répétiteur acoustiqu	Summer	부저	Zumbador	
2	**VOE 11802460**	1					Frame	Chassis	Rahmen	프레임	Bastidor	
3	**VOE 11710058**	1					Two-speed switch	Commutateur, 2 vites	Zweigangschalter	2 속 스위치	Interruptor de dos vel.	
4	**VOE 11803234**	1					•Symbol	•Symbole	•Symbol	• 심볼	•Símbolo	
5	**PJ 5160030**	1					•Lamp holder	•Porte-lampe	•Lampenfassung	• 램프 홀더	•Portalampara	
6	**VOE 11710059**	1					Halogen switch	Commutateur, phare	Scheinwerferschalter	할로겐 스위치	Interruptor de faros h.	
7	**VOE 11803360**	1					•Symbol	•Symbole	•Symbol	• 심볼	•Símbolo	
8	**PJ 5160030**	1					•Lamp holder	•Porte-lampe	•Lampenfassung	• 램프 홀더	•Portalampara	
9	**VOE 11803380**	REQ					Muff	Cache	Muffe	머프	Enchufe	
10		REQ					Halogen switch	Commutateur, phare	Scheinwerferschalter	할로겐 스위치	Interruptor de faros h.	See group 356, Page 153
11		REQ					Load safety switch	Commutateur, sécurit	Lastsicherungsschalt	로드 안전 스위치	Interruptor de segurid.	See group 371, Page 187
12		REQ										See group 277, Page 123
13		REQ					Flashing light switch	Commutateur, gyroph	Rundumk. schalter	경광등 스위치	Interruptor luz adverte	See group 362, Page 157
14		1					Instr Panel	Planche de bord	Instr Tafel	계기판	Panel Instrum.	See group 387, Page 199

1	**602.10151**	
2		
3		
4		
5		

Cuadro de instrumentos, derecho
계기판 , 우측
Armaturenbrett, rechts
Panneau d'instruments, à droite
Instrument panel, right

Catalogue id	Group
20048	**364**
Illustr. No **1010591**	Section **400**
Issue **VOE 74C9920048**	Page **171**

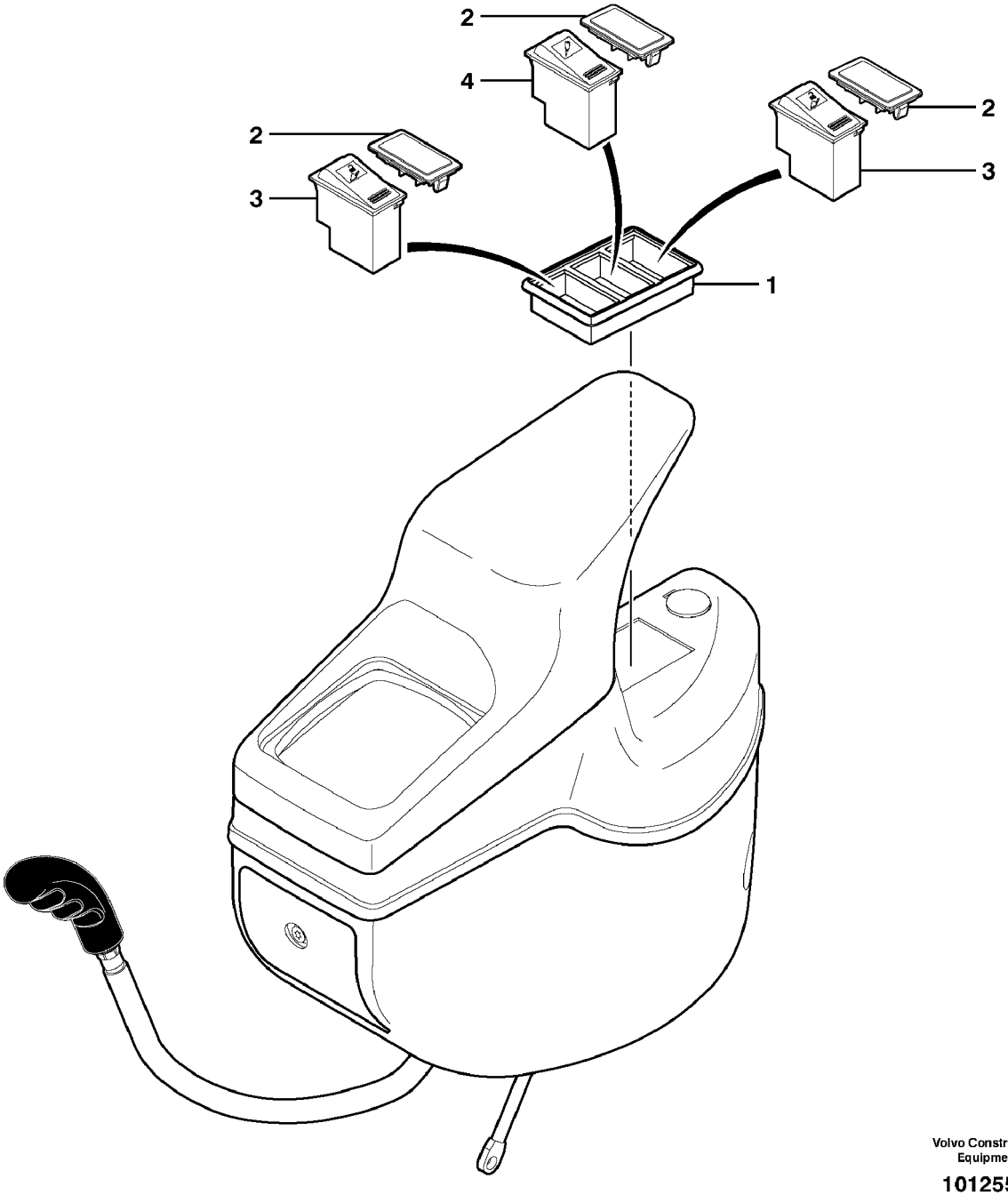

Volvo Construction Equipment

1012557

Fig.	Part No.	Quantity 1	2	3	PS	KIT	Description	Dénomination	Bezeichnung	품명	Denominación	Notes
1	**VOE 11802470**	1					Frame	Chassis	Rahmen	프레임	Bastidor	
2	**VOE 11803380**	REQ					Muff	Cache	Muffe	머프	Enchufe	
3		REQ					Locking switch	Commutateur, verroui	Werkz.entrieg.schalt	로킹 스위치	Interruptor de bloque	See group 371, Page 189
4	**VOE 11713140**	REQ					Switch	Commutateur	Schalter	스위치	Contactor	

1	**602.10151** →		**Cuadro de instrumentos, izquierdos** 계기판 , 좌측 **Armaturenbrett, links** **Panneau d'instruments, à gauche** **Instrument panel, left**	Catalogue id **20048**	Group **364**
2				Illustr. No **1012557**	Section **500**
3				Issue **VOE 74C9920048**	Page **173**
4					
5					

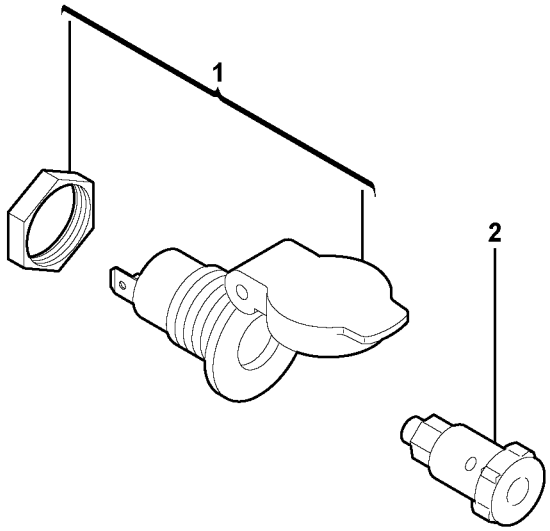
1
2

Fig.	Part No.	Quantity 1	2	3	PS	KIT	Description	Dénomination	Bezeichnung	품명	Denominación	Notes
1	**VOE 14371054**	1					Socket housing	Douille isolante.....	Steckdose	소켓 하우징	Aislador mangui.....	
2	**VOE 11806311**	1					Pin.....	Fiche	Stecker.....	핀.....	Ficha.....	

1	**602.10151**		**Toma de lámpara de inspección** 검사등용 소켓 **Handlampenanschluss** **Prise pour lampe baladeuse** **Inspection light socket**	Catalogue id **20048**	Group **364**
2				Illustr. No **1017278**	Section **600**
3				Issue **VOE 74C9920048**	Page **175**
4					
5					

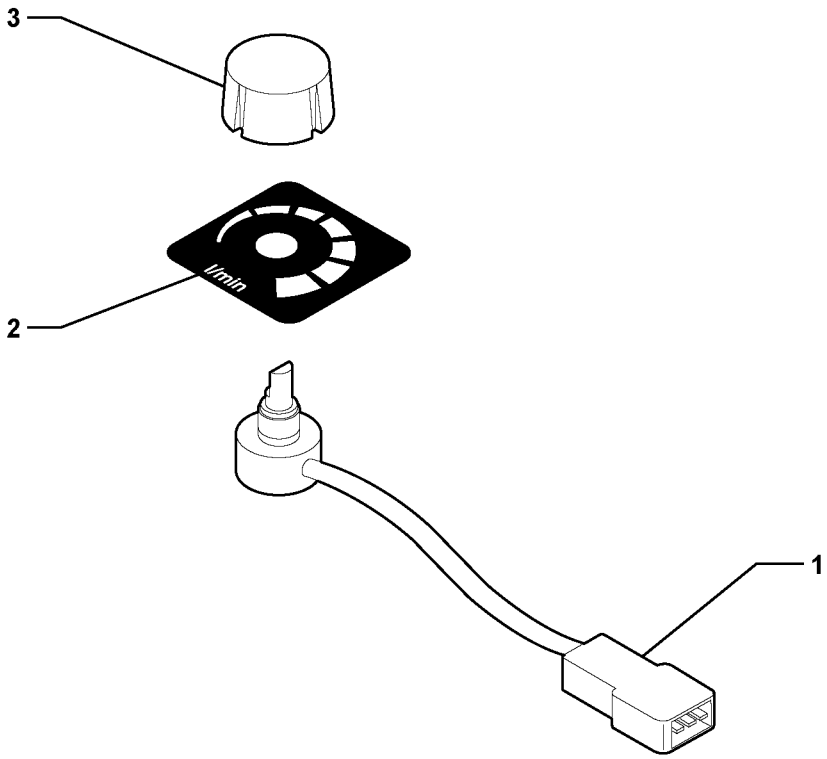

Volvo Construction Equipment

1014316

Fig.	Part No.	Quantity 1	2	3	PS	KIT	Description	Dénomination	Bezeichnung	품명	Denominación	Notes
1	**VOE 11803933**	1					Potentiometer	Potentiomètre	Potentiometer	전위차계	Potenciometro	11839117
2	**VOE 11804513**	1					Label	Etiquette	Etikett	라벨	Etiqueta	
3	**VOE 11804125**	1					Knob	Bouton	Knopf	버턴	Boton	

1	**602.10151**		**Potenciometro** 전위차계 **Potentiometer** **Potentiomètre** **Potentiometer**	Catalogue id **20048**	Group **364**
2				Illustr. No **1014316**	Section **700**
3				Issue **VOE 74C9920048**	Page **177**
4					
5					

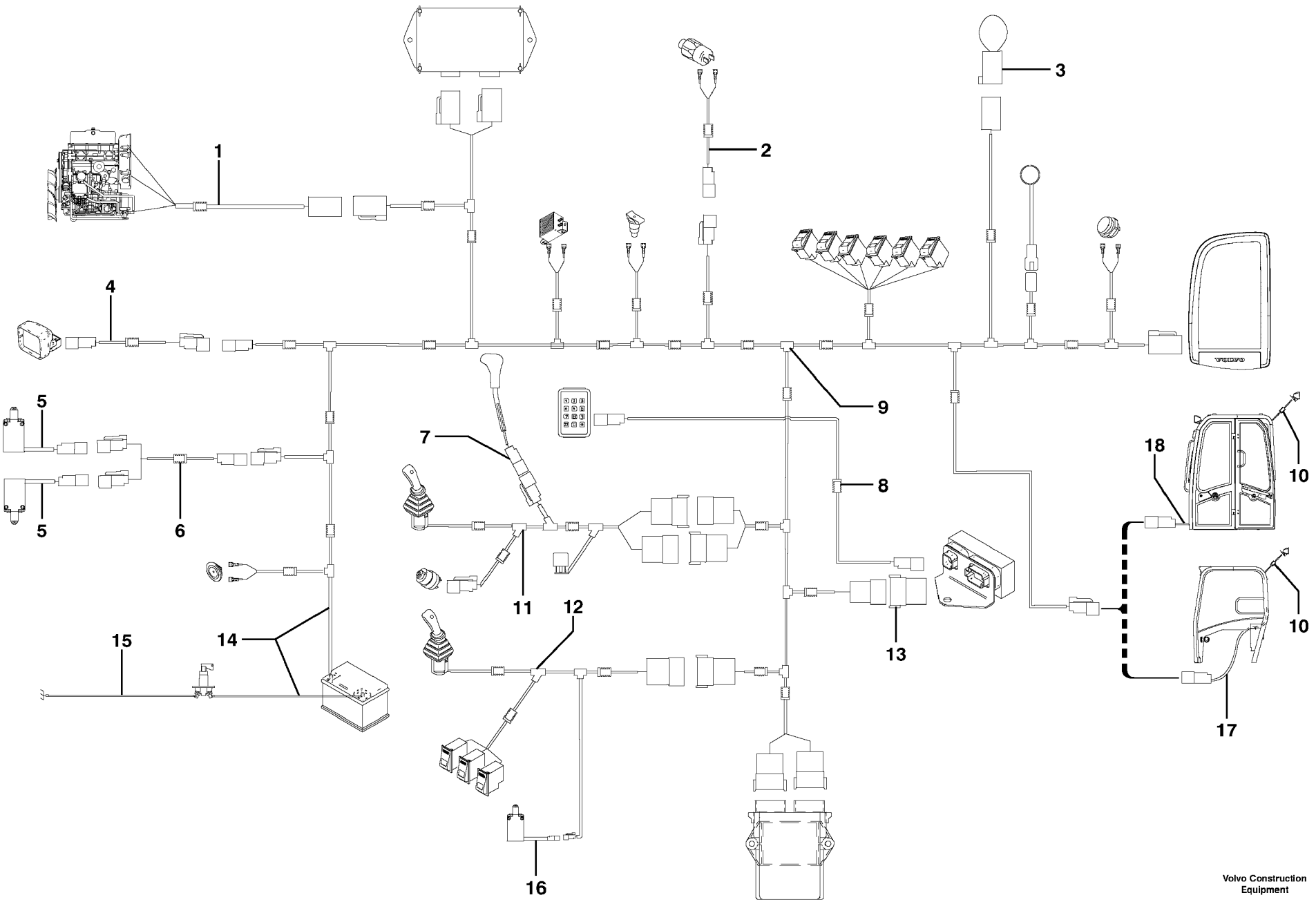

Volvo Construction Equipment

1013129

Fig.	Part No.	Quantity 1	2	3	PS	KIT	Description	Dénomination	Bezeichnung	품명	Denominación	Notes
1	**VOE 11803182**	1					Wire harness	Faisceau electrique	Kabelbaum	배선	Manojo cables	
2		1					Wire harness	Faisceau electrique	Kabelbaum	배선	Manojo cables	See group 371, Page 187
3		1					Wire harness	Faisceau electrique	Kabelbaum	배선	Manojo cables	See group 371, Page 189
4		1					Wire harness	Faisceau electrique	Kabelbaum	배선	Manojo cables	See group 356, Page 153
5		2					Wire harness	Faisceau electrique	Kabelbaum	배선	Manojo cables	See group 362, Page 159
6		1					Wire harness	Faisceau electrique	Kabelbaum	배선	Manojo cables	See group 362, Page 159
7		1					Wire harness	Faisceau electrique	Kabelbaum	배선	Manojo cables	See group 912, Page 397
8		1					Wire harness	Faisceau electrique	Kabelbaum	배선	Manojo cables	See group 334, Page 145
9		1					Wire harness	Faisceau electrique	Kabelbaum	배선	Manojo cables	See group 362, Page 159
10		1					Wire harness	Faisceau electrique	Kabelbaum	배선	Manojo cables	See group 353, Page
11	**VOE 11803185**	1					Wire harness	Faisceau electrique	Kabelbaum	배선	Manojo cables	S/N - 602.10476
11	**VOE 11807478**	1					Wire harness	Faisceau electrique	Kabelbaum	배선	Manojo cables	S/N 602.10477 -
12	**VOE 11803184**	1					Wire harness	Faisceau electrique	Kabelbaum	배선	Manojo cables	
13	**VOE 11803328**	1					Wire harness	Faisceau electrique	Kabelbaum	배선	Manojo cables	11839119
14		2					Battery cable	Câble de batterie	Batteriekabel	배터리 케이블	Cable de bateria	See group 371, Page 185
15		1					Battery cable	Câble de batterie	Batteriekabel	배터리 케이블	Cable de bateria	See group 372, Page 195
16		1					Wire harness	Faisceau electrique	Kabelbaum	배선	Manojo cables	See group 372, Page 193
17		1					Wire harness	Faisceau electrique	Kabelbaum	배선	Manojo cables	See group 371, Page 181
18		1					Wire harness	Faisceau electrique	Kabelbaum	배선	Manojo cables	See group 371, Page 183

1	**602.10151** →	→
2		
3		
4		
5		

Sistema eléctrico, adelante y hacia atrás

El. Anlage, vorwärts- und rûckwârtsschaltung
Système electrique, avant et arrière
Electrical system, forward / reverse switch

Catalogue id	Group
20048	**371**
Illustr. No **1013129**	Section **100**
Issue **VOE 74C9920048**	Page **179**

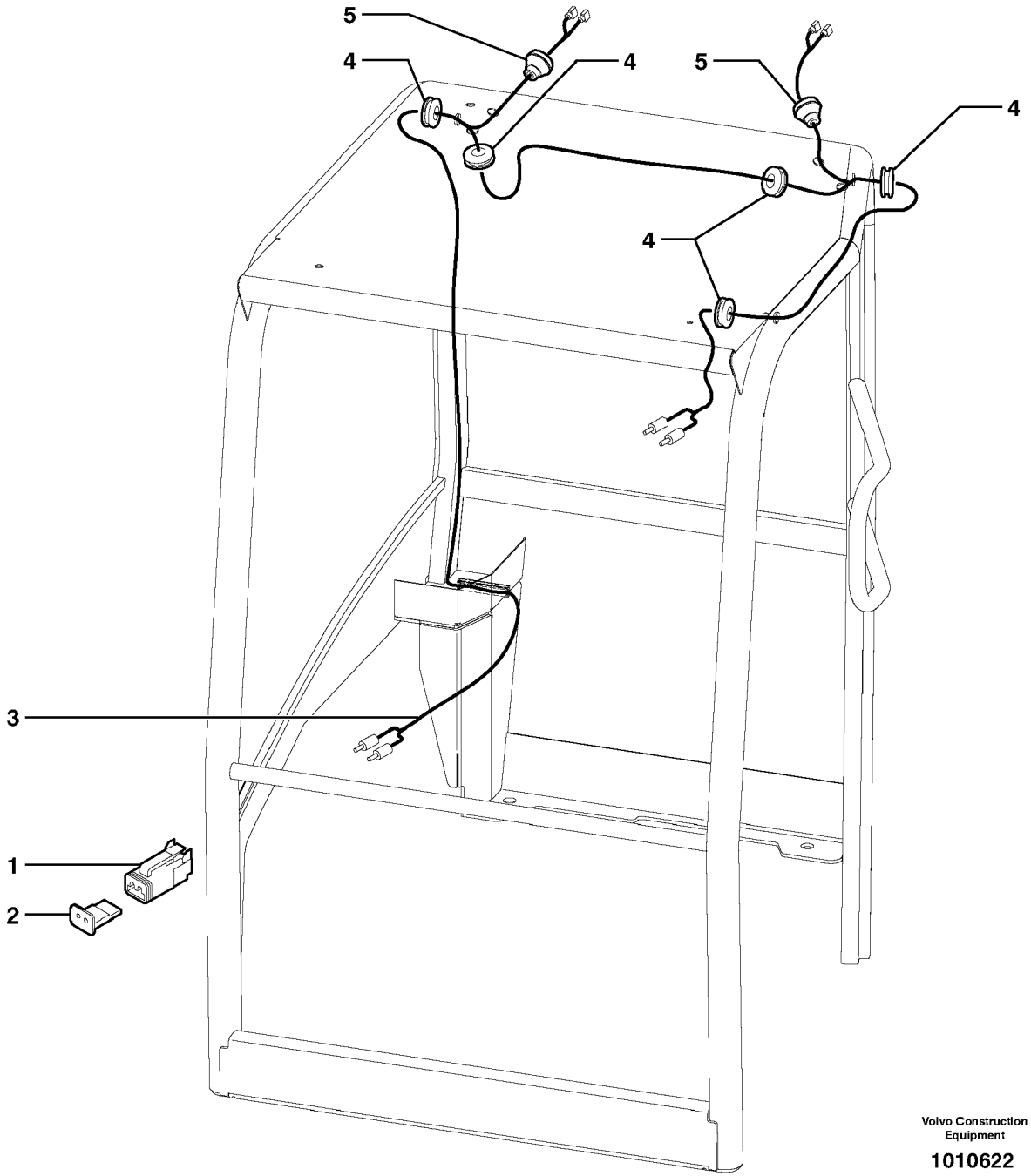

Volvo Construction Equipment

1010622

Fig.	Part No.	Quantity 1	2	3	PS	KIT	Description	Dénomination	Bezeichnung	품명	Denominación	Notes
1	**PJ 7418519**	1					Plug connector	Connecteur	Steckverbinder	플러그 커넥터	Enchufe pasadorf	
2	**PJ 7418520**	1					Latch	Poignee Blocage	Knebel	래치	Mango Seguridad	
3	**VOE 11713499**	1					Electrical cable	Fil électrique	Elektr. Leitung	전기선	Cable electrico	
4	**PJ 7418516**	5					Grommet	Passe fil	Durchführung	그로메트	Aislador pasapanel	
5	**PJ 7418517**	2					Grommet	Passe fil	Durchführung	그로메트	Aislador pasapanel	

1	**602.10151**		**Sistema eléctrico / protección contra vuelcos** 전기 시스템 / 선루프 **Elektroanlage / Überrollbügel** **Système électrique / Cabine ouverte** **Electrical system / Canopy**	Catalogue id **20048**	Group **371**
2				Illustr. No **1010622**	Section **210**
3				Issue **VOE 74C9920048**	Page **181**
4					
5					

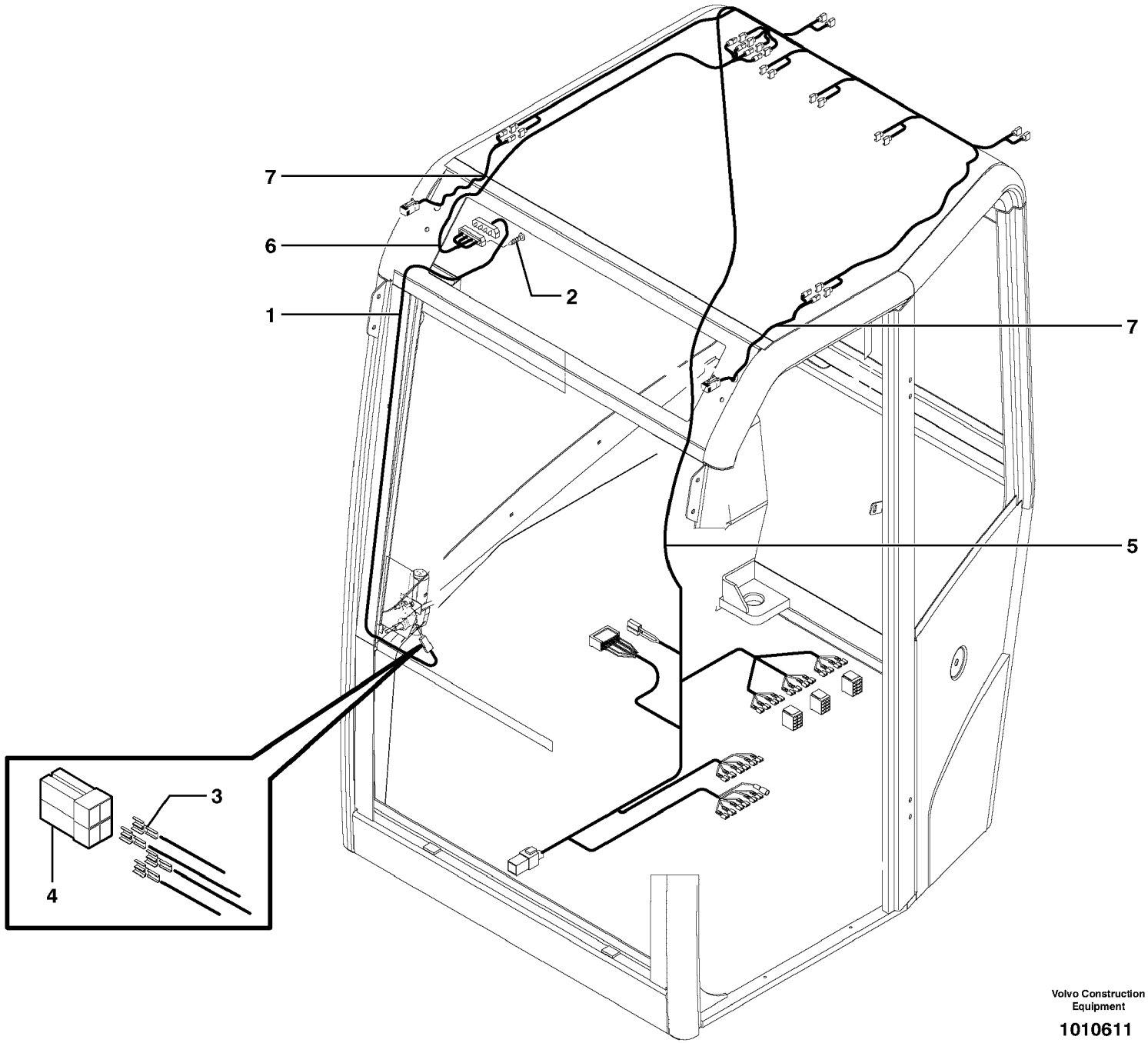

Volvo Construction Equipment

1010611

Fig.	Part No.	Quantity 1	2	3	PS	KIT	Description	Dénomination	Bezeichnung	품명	Denominación	Notes
1	**PJ 7418334**	1					Wire harness	Faisceau electrique	Kabelbaum	배선	Manojo cables	
2	**PJ 7416803**	1					Screw	Vis	Schraube	스크류	Tornillo	
3	**PJ 7418340**	4					Cable terminal	Cosse cable	Kabelschuh	케이블 단자	Terminal cable	
4	**PJ 7418339**	1					Plug connector	Connecteur	Steckverbinder	플러그 커넥터	Enchufe pasadorf	
5	**VOE 11713193**	1					Electrical cable	Fil électrique	Elektr. Leitung	전기선	Cable electrico	
6	**PJ 7418333**	1					Wire harness	Faisceau electrique	Kabelbaum	배선	Manojo cables	
7	**PJ 7418336**	2					Wire harness	Faisceau electrique	Kabelbaum	배선	Manojo cables	

1	**602.10151** →	
2		
3		
4		
5		

Sistema eléctrico / cabina
전기 시스템 / 운전실
Elektroanlage / Kabine
Système électrique / cabine
Electrical system / cab

Catalogue id **20048**	Group **371**
Illustr. No **1010611**	Section **220**
Issue **VOE 74C9920048**	Page **183**

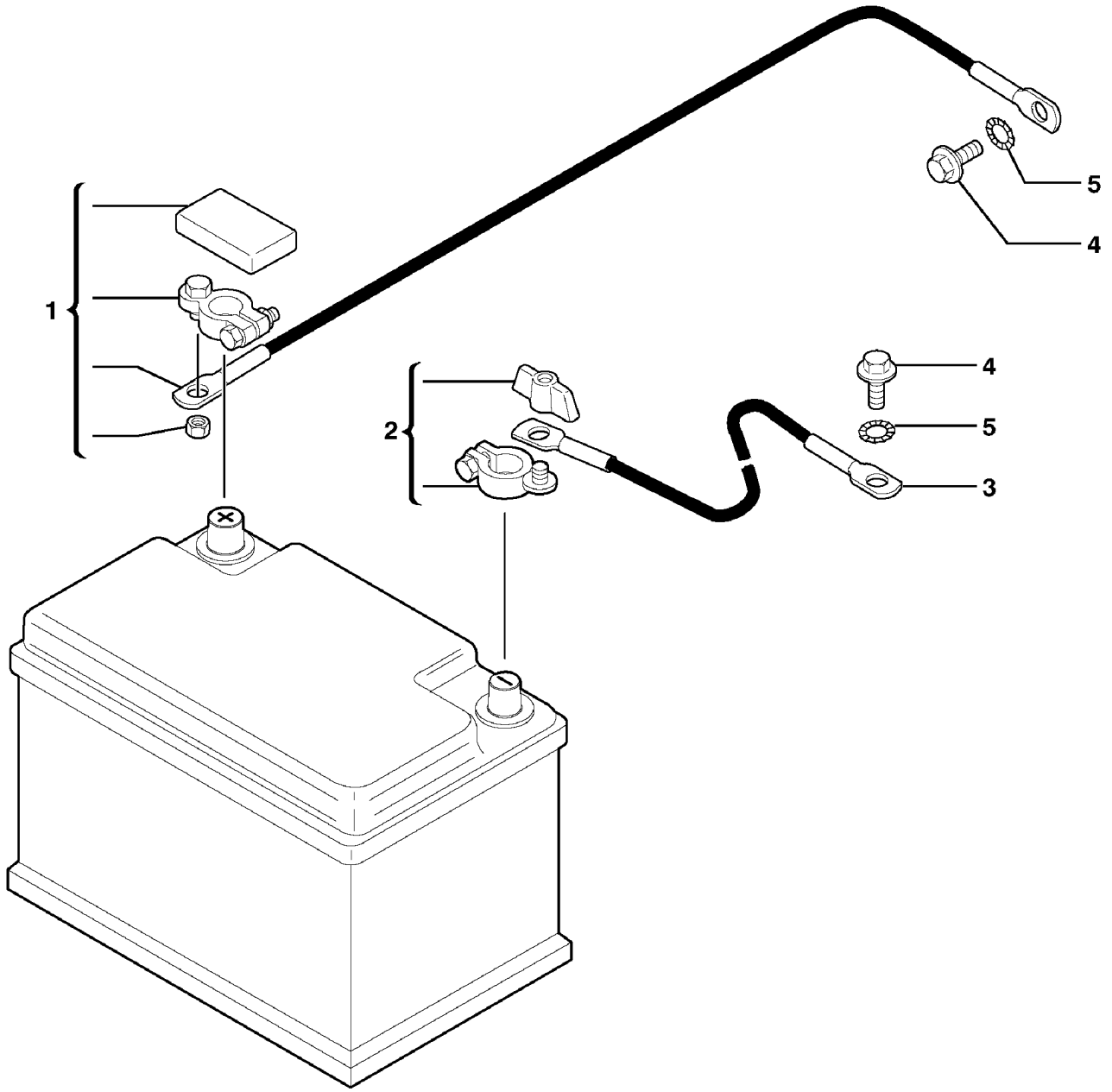

Volvo Construction Equipment

1010592

Fig.	Part No.	Quantity 1	2	3	P S	K I T	Description	Dénomination	Bezeichnung	품명	Denominación	Notes
1	**VOE 11804089**	1					Battery cable	Câble de batterie	Batteriekabel	배터리 케이블	Cable de bateria	
2	**VOE 11803192**	1					Terminal	Fiche Connexion	Anschlusstift	터미널	Espiga Terminal	
3	**VOE 11804096**	1					Battery cable	Câble de batterie	Batteriekabel	배터리 케이블	Cable de bateria	
4	**VOE 946441**	2					Flange screw	Vis à bride	Flanschschraube	플랜지 스크류	Torn embridado	
5	**VOE 945987**	2			SS		Toothed Washer	Rondelle Dentee	Zahnscheibe	이붙이 와셔	Arandela Dentad	

1	**602.10151**		**Cables, bateria** 케이블 , 배터리 **Leitungen, Batterie** **Cables, batterie** **Cables, battery**	Catalogue id **20048**	Group **371**
2				Illustr. No **1010592**	Section **400**
3				Issue **VOE 74C9920048**	Page **185**
4					
5					

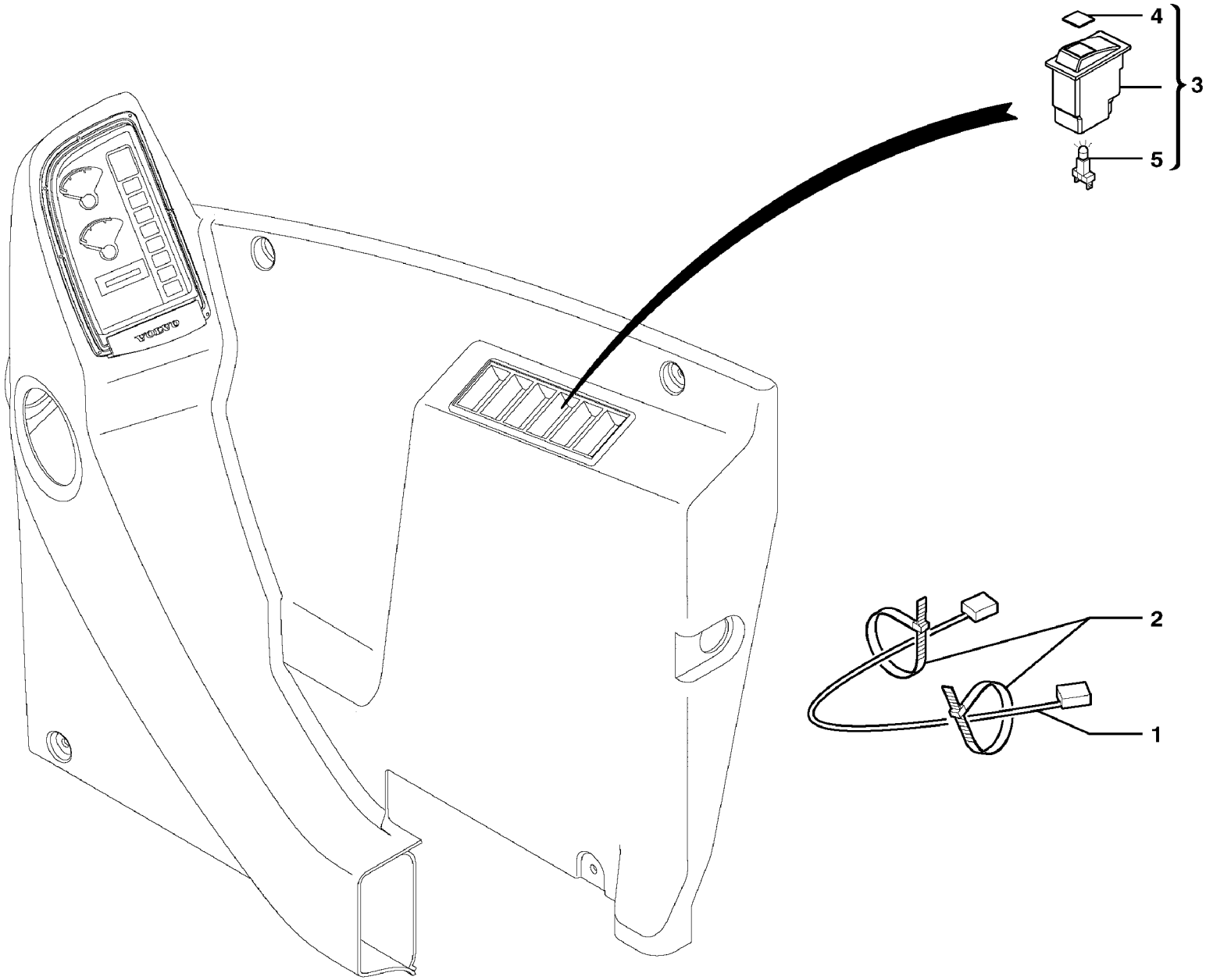

Volvo Construction Equipment

1012522

Fig.	Part No.	Quantity 1	2	3	PS	KIT	Description	Dénomination	Bezeichnung	품명	Denominación	Notes
1	**VOE 11803330**	1					Wire harness	Faisceau electrique	Kabelbaum	배선	Manojo cables	
2	**VOE 4881440**	10					Strip Clamp	Ruban Serrage	Kabelbinder	스트립 클램프	Abraz Cinta	
3	**VOE 11710484**	1					Load safety switch	Commutateur, sécurit	Lastsicherungsschalt	로드 안전 스위치	Interruptor de segurid	
4	**VOE 11803934**	1					•Symbol	•Symbole	•Symbol	• 심볼	•Símbolo	
5	**PJ 5160030**	1					•Lamp holder	•Porte-lampe	•Lampenfassung	• 램프 홀더	•Portalampara	

1	**602.10151**		**Sistema eléctrico, manupulacion** 전기 시스템 , 핸들링 장치 **Elekrische System, Materialumschlag** **Systéme électrique, manutention** **Electrical system, handling unit**	Catalogue id **20048**	Group **371**
2				Illustr. No **1012522**	Section **500**
3				Issue **VOE 74C9920048**	Page **187**
4					
5					

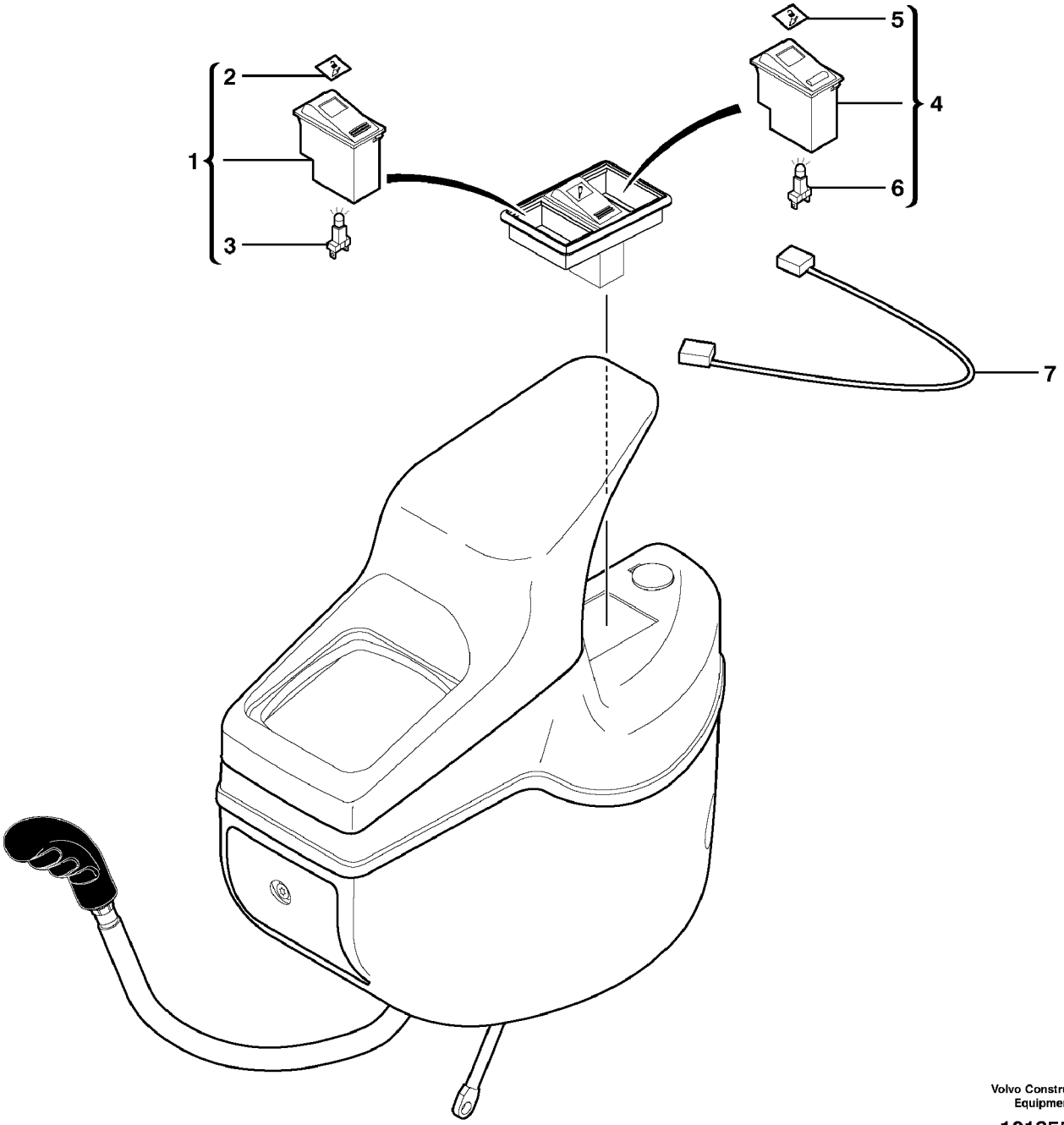

Volvo Construction Equipment

1012556

Fig.	Part No.	Quantity 1	2	3	PS	KIT	Description	Dénomination	Bezeichnung	품명	Denominación	Notes
1	**VOE 11710060**	1			SS		Locking switch	Commutateur, verroui	Werkz.entrieg.schalt	로킹 스위치	Interruptor de bloque	
2	**VOE 11804128**	1					•Symbol	•Symbole	•Symbol	• 심볼	•Símbolo	
3	**PJ 5160030**	1					•Lamp holder	•Porte-lampe	•Lampenfassung	• 램프 홀더	•Portalampara	
4	**VOE 11713376**	1			SS		Locking switch	Commutateur, verroui	Werkz.entrieg.schalt	로킹 스위치	Interruptor de bloque	
5	**VOE 11804128**	1					•Symbol	•Symbole	•Symbol	• 심볼	•Símbolo	
6	**PJ 5160030**	1					•Lamp holder	•Porte-lampe	•Lampenfassung	• 램프 홀더	•Portalampara	
7	**VOE 11803329**	1					Wire harness	Faisceau electrique	Kabelbaum	배선	Manojo cables	

1	**602.10151**		**Sistema eléctrico, portaimplemento** 전기 시스템 , 공구 홀더 **Elekrische System, Geräteträger** **Systéme électrique, porte-outil** **Electrical system, tool holder**	Catalogue id **20048**	Group **371**
2				Illustr. No **1012556**	Section **600**
3				Issue **VOE 74C9920048**	Page **189**
4					
5					

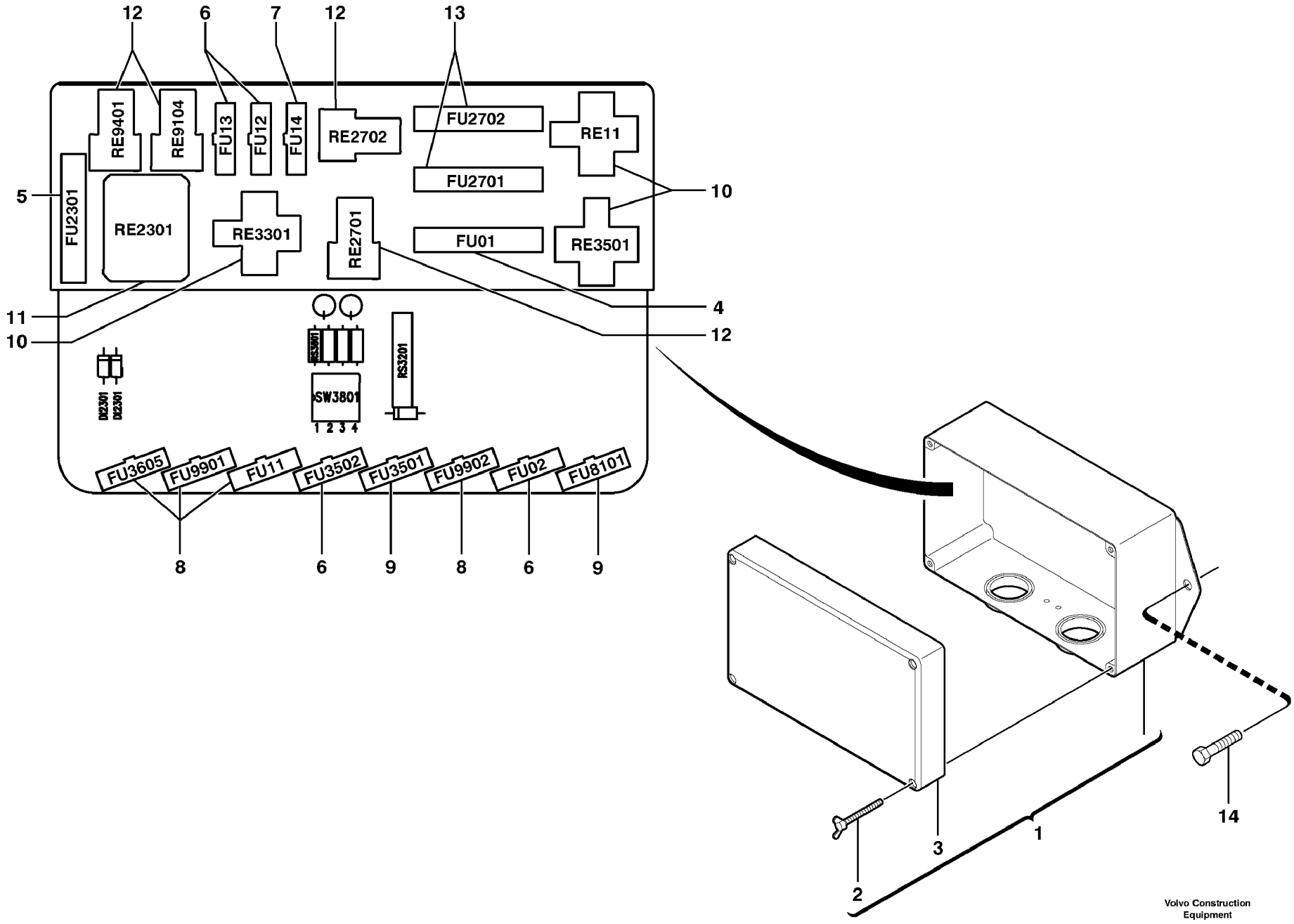
12
6
7
12
13
RE9401
RE9104
FU13
FU12
FU14
RE2702
FU2702
RE11
FU2701
5
FU2301
RE2301
RE3301
RE2701
FU01
RE3501
10
11
10
4
12
DI2301
DI2301
RS3301
SW3801
1 2 3 4
RS3201
FU3605
FU9901
FU11
FU3502
FU3501
FU9902
FU02
FU8101
8
6
9
8
6
9
14
3
1
2
Volvo Construction Equipment
1010593

Fig.	Part No.	Quantity 1	2	3	PS	KIT	Description	Dénomination	Bezeichnung	품명	Denominación	Notes
1	**VOE 11801720**	1					Box	Boîte	Kasten	박스	Caja	
2		4			NS		•Screw	•Vis	•Schraube	• 스크류	•Tornillo	ORDER ITEM NO 1
3		1			NS		•Cover	•Couvercle	•Deckel	• 커버	•Tapa	ORDER ITEM NO 1
4	**VOE 979008**	1					Fuse	Fusible	Schmelzsicherung	휴즈	Fusible	
5	**VOE 979009**	1					Fuse	Fusible	Schmelzsicherung	휴즈	Fusible	
6	**VOE 969161**	4					Fuse	Fusible	Schmelzsicherung	휴즈	Fusible	
7	**VOE 969160**	1			SS		Fuse	Fusible	Schmelzsicherung	휴즈	Fusible	
8	**VOE 981405**	4					Fuse	Fusible	Schmelzsicherung	휴즈	Fusible	
9	**VOE 969162**	2			SS		Fuse	Fusible	Schmelzsicherung	휴즈	Fusible	
10	**VOE 11305263**	3					Relay	Relais	Relais	릴레이	Rele	
11	**ZM 2810112**	1					Relay	Relais	Relais	릴레이	Rele	
12	**VOE 11803201**	4					Relay	Relais	Relais	릴레이	Rele	
13	**VOE 979007**	2					Fuse	Fusible	Schmelzsicherung	휴즈	Fusible	
14	**VOE 946671**	2					Flange screw	Vis à bride	Flanschschraube	플랜지 스크류	Torn embridado	

1	**602.10151**	
2		
3		
4		
5		

Unidad de distribución eléctrica
배전 박스 및 휴즈 박스
Elektrozentrale
Unité de distribution électrique
Electrical distribution box

Catalogue id **20048**	Group **372**
Illustr. No **1010593**	Section **100**
Issue **VOE 74C9920048**	Page **191**

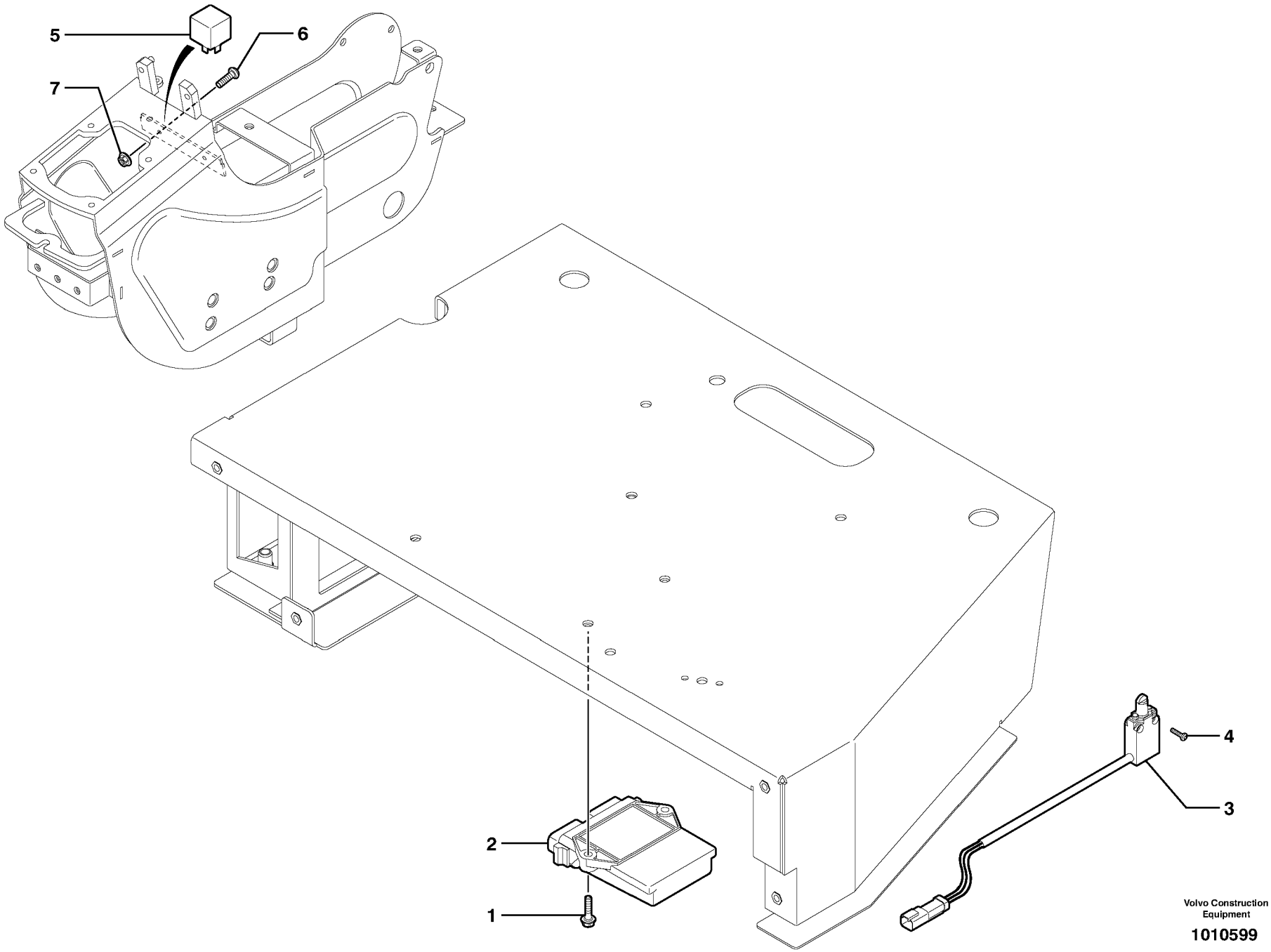

Volvo Construction Equipment

1010599

Fig.	Part No.	Quantity 1	2	3	PS	KIT	Description	Dénomination	Bezeichnung	품명	Denominación	Notes
1	**VOE 947542**	2			SS		Screw	Vis	Schraube	스크류	Tornillo	
2	**VOE 11806987**	1					Control Unit	Unité de commande	Steuereinheit	제어장치	Unidad de mando	S/N - 602.10588
2	**VOE 11807522**	1					Control Unit	Unité de commande	Steuereinheit	제어장치	Unidad de mando	S/N 602.10589 -
3	**VOE 11803207**	1					Switch	Commutateur	Schalter	스위치	Contactor	
4	**VOE 969556**	2					6-pt skt screw	Vis creuse de 6	Hohlschraube	6 포인트 소켓 스크류	Racor 6-dientes	
5	**VOE 11803201**	1					Relay	Relais	Relais	릴레이	Rele	
6	**VOE 969407**	1					6-pt skt screw	Vis creuse de 6	Hohlschraube	6 포인트 소켓 스크류	Racor 6-dientes	
7	**VOE 13965483**	1					Flange Lock Nut	Contre écrou bride	Flanschmutter	플랜지 록 너트	Contratuer Embr	

1	**602.10151** →		**Instalación eléctricaen puesto del conductor** 운전석 전기 장착 **Elektrische Installation Fahrerplatz** **Equipement électrique, poste de conduite** **Electric installation on driver's seat**
2			
3			
4			
5			

Catalogue id	Group
20048	**372**
Illustr. No **1010599**	Section **300**
Issue **VOE 74C9920048**	Page **193**

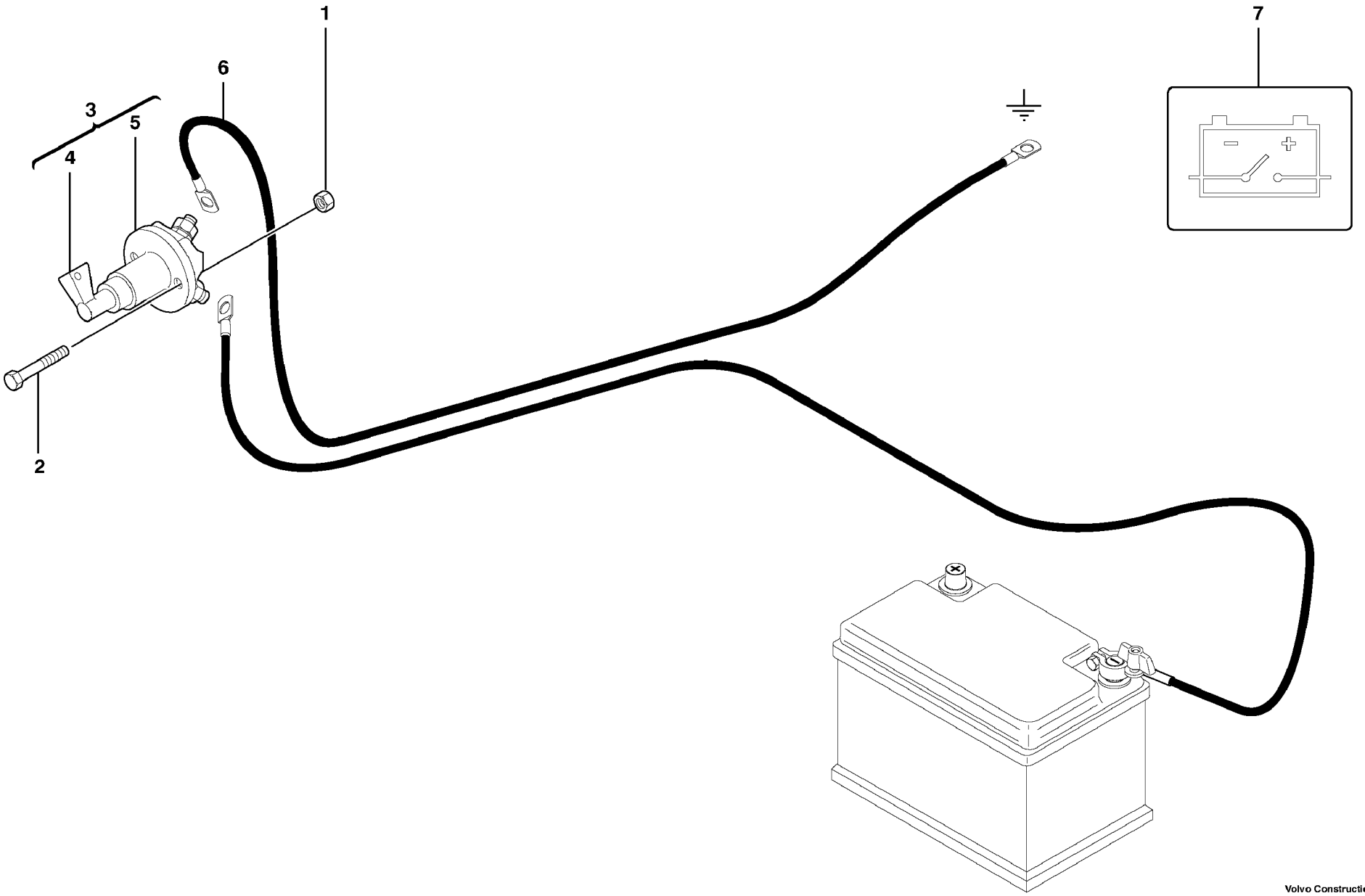

Volvo Construction Equipment

1010598

Fig.	Part No.	Quantity 1	2	3	PS	KIT	Description	Dénomination	Bezeichnung	품명	Denominación	Notes
1	**VOE 983303**	2					Nut	Ecrou	Mutter	너트	Tuerca	
2	**VOE 946173**	2			SS		Screw	Vis	Schraube	스크류	Tornillo	
3	**VOE 11802745**	1					Main Switch	Coupe-circuit pri.	Hauptschalter	메인 스위치	Interr Maestro	11839097
4	**PJ 7418213**	1					•Wrench	•Cle	•Schraubenschlüssel	• 렌치	•Llave	
5		1			NS		•Battery cut - out	•Coupe batterie	•Batterieabschaltung	• 배터리 차단기	•Desconectador bater.	ORDER ITEM NO 3
6	**VOE 11804096**	1					Battery cable	Câble de batterie	Batteriekabel	배터리 케이블	Cable de bateria	
7	**VOE 14346537**	1					Sign	Enseigne	Schild	사인	Letrero	

1	**602.10151**		**Disyuntor de batería** 배터리 차단기 **Batterieabschaltung** **Coupe-batterie** **Battery cut-out**
2			
3			
4			
5			

Catalogue id **20048**	Group **372**
Illustr. No **1010598**	Section **400**
Issue **VOE 74C9920048**	Page **195**

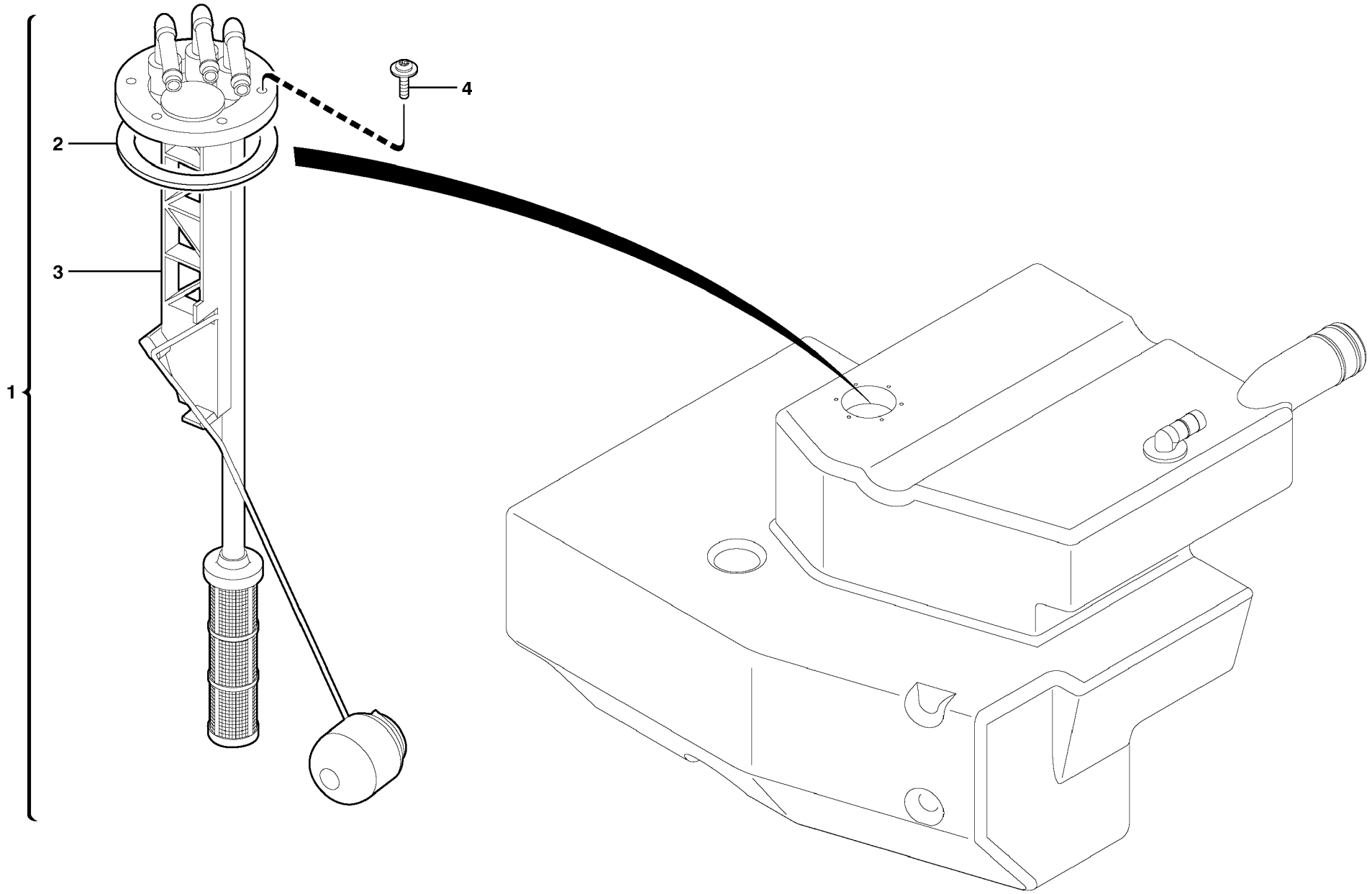

Volvo Construction Equipment

1010455

Fig.	Part No.	Quantity 1	2	3	PS	KIT	Description	Dénomination	Bezeichnung	품명	Denominación	Notes
1	**VOE 11802205**	1					Level Indicator	Indicateur de niveau	Niveauanzeige	레벨 지시기	Indicador Nivel	
2	**VOE 11713122**	1					•Gasket	•Joint	•Dichtung	• 가스켓	•Junta	
3		1			NS		•Transceiver	•Transmetteur	•Sender/empf.	• 송수신기	•Transreceptor	ORDER ITEM NO 1
4	**VOE 976155**	6					Screw	Vis	Schraube	스크류	Tornillo	

1	**602.10151**		**Transmisor** 트랜스미터 **Sender** **Transmetteur** **Transmitter**	Catalogue id **20048**	Group **386**
2				Illustr. No **1010455**	Section **200**
3				Issue **VOE 74C9920048**	Page **197**
4					
5					

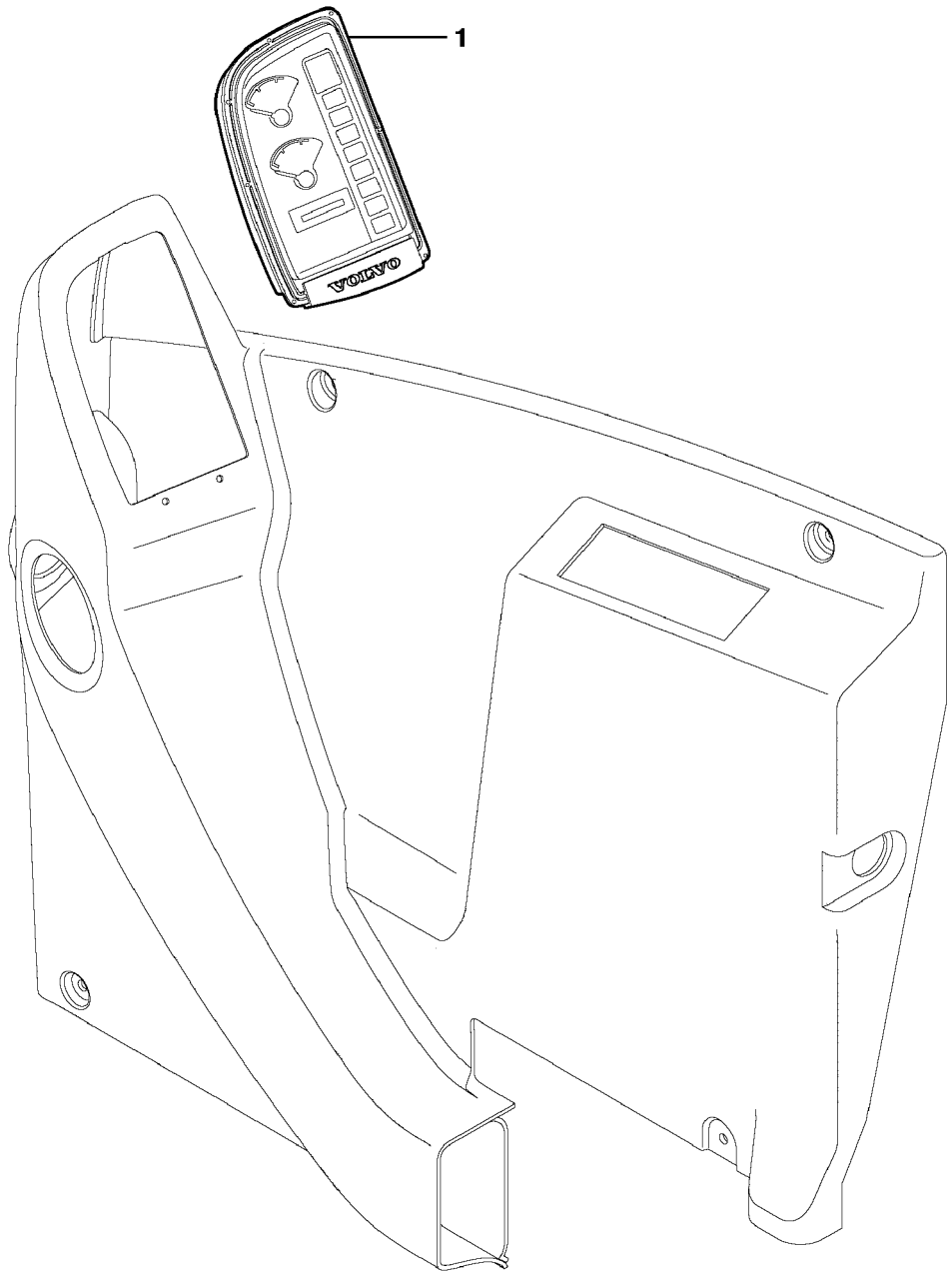

Volvo Construction Equipment

1010456

Fig.	Part No.	Quantity 1	2	3	PS	KIT	Description	Dénomination	Bezeichnung	품명	Denominación	Notes
1	**VOE 11801946**	1					Instr Panel	Planche de bord	Instr Tafel	계기판	Panel Instrum	

1	**602.10151** →	→	**Panel mando** **Bedienungstafel** **Panneau de commande** **Control panel**	Catalogue id **20048**	Group **387**
2				Illustr. No **1010456**	Section **100**
3				Issue **VOE 74C9920048**	Page **199**
4					
5					

VOLVO

ECR38

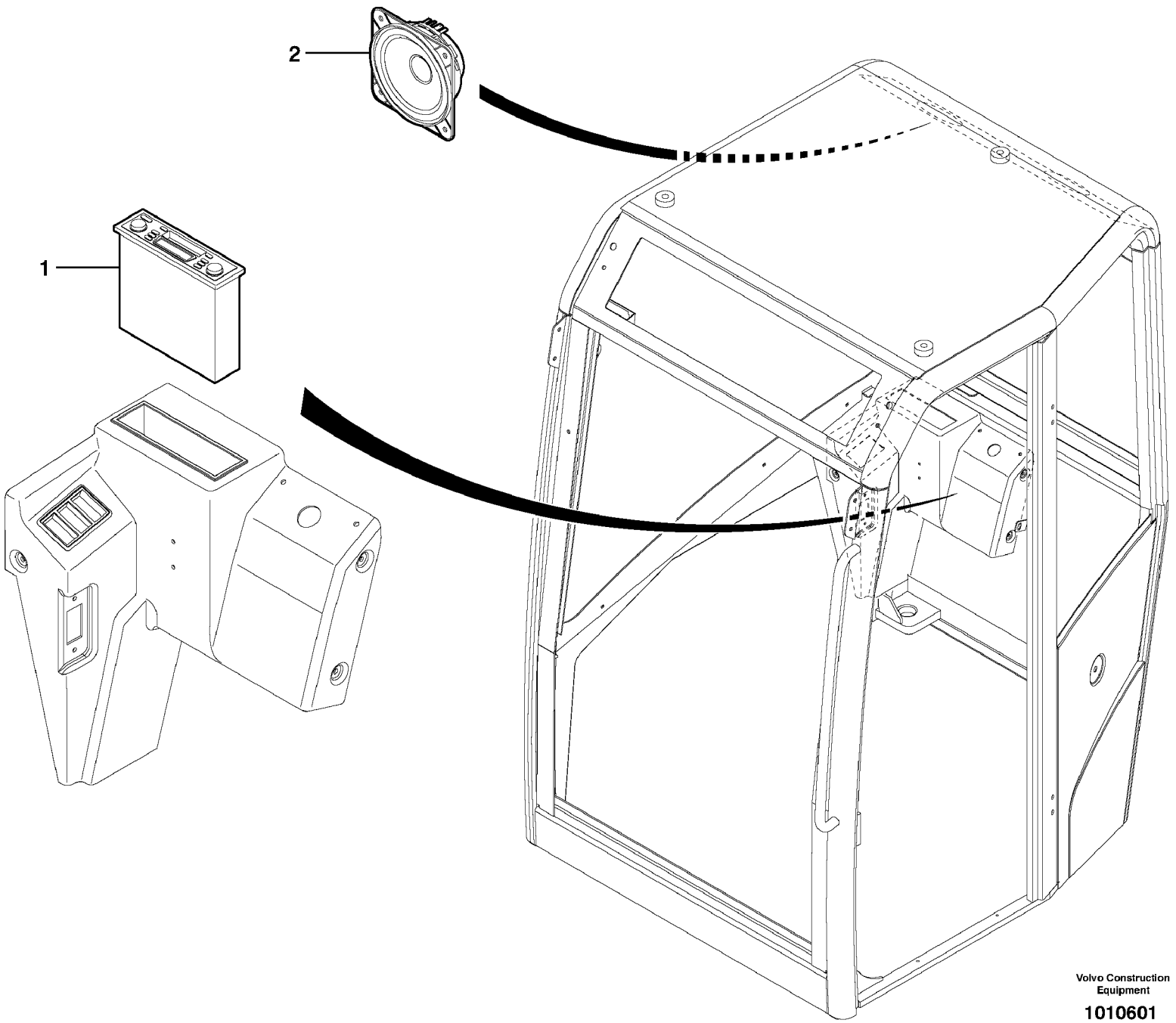

Volvo Construction Equipment

1010601

Fig.	Part No.	Quantity 1	2	3	PS	KIT	Description	Dénomination	Bezeichnung	품명	Denominación	Notes
1	**VOE 11803635**	1					Radio	Auto-radio	Radio	라디오	Radio	11839095
2	**VOE 11201898**	2					Speaker	Haut-parleur	Lautsprecher	스피커	Altavoz	

1	**602.10151**		**Kit de radio** 라디오 킷 **Radio-Kit** **Kit autoradio** **Radio kit**	Catalogue id **20048**	Group **393**
2				Illustr. No **1010601**	Section **100**
3					
4				Issue **VOE 74C9920048**	Page **201**
5					

VOLVO

Construction Equipment

GROUP		Section	Page
415	Engine coupling / hydraulic pump	100	209
441	Hydraulic travelling motor	100	211
441	Travelling gear motor assy / with brake	110	215
441	Control valve	120	217
441	Balancing valve (travelling)	130	219
441	Slewing gear motor installation	200	221
441	Slewing gear motor	210	223
443	Swivel joint equipment	100	227
443	Swivel joint	200	229
492	Slewing ring	200	231
492	Lubrication (slewing ring)	500	233

GROUPE		Section	Page
415	Dispositif d'accouplement du moteur / pompe hydraulique	100	209
441	Moteur de translation	100	211
441	Motoréducteur de translation / avec frein	110	215
441	Valve de commande	120	217
441	Valve d'équilibrage (translation)	130	219
441	Mise en place du motoréducteur d'orientation	200	221
441	Motoréducteur d'orientation	210	223
443	Mise en place du joint tournant	100	227
443	Joint tournant	200	229
492	Couronne d'orientation	200	231
492	Graissage (couronne d'orientation)	500	233

GRUPPE		Abschnitt	Seite	GRUPPE		Abschnitt	Seite
415	Motorkupplung / hydraulische Pumpe	100	209				
441	Fahrmotor	100	211				
441	Getriebemotor für die Fahrbewegung / mit Bremse	110	215				
441	Steuerventil	120	217				
441	Ausgleichventil (Fahrbewegung)	130	219				
441	Einbau des Schwenkmotors	200	221				
441	Schwenkmotor	210	223				
443	Drehverteiler kompl.	100	227				
443	Drehverteiler	200	229				
492	Drehkranz	200	231				
492	Schmierung (Drehkranz)	500	233				

그룹		절	페이지
415	엔진 커플링 / 유압 펌프	100	209
441	유압 주행 모터	100	211
441	주행 기어 모터 조립체 / 브레이크 있음	110	215
441	컨트롤 밸브	120	217
441	균형 밸브 (주행)	130	219
441	선회기어 모터 설치	200	221
441	선회기어 모터	210	223
443	스위블 조인트 장비	100	227
443	스위벨 조인트	200	229
492	선회링	200	231
492	윤활 (선회링)	500	233

GRUPO		Sección	Página
415	Acoplamiento del motor / bomba hidráulica	100	209
441	Motor de traslación hidráulico	100	211
441	Motor reductor de traslación / con freno	110	215
441	Válvula de mando	120	217
441	Válvula de equilibrio (traslación)	130	219
441	Instalación del motor reductor de giro	200	221
441	Motor reductor de giro	210	223
443	Equipo de junta de giro	100	227
443	Junta de giro	200	229
492	Corona de giro	200	231
492	Lubricación (corona de giro)	500	233

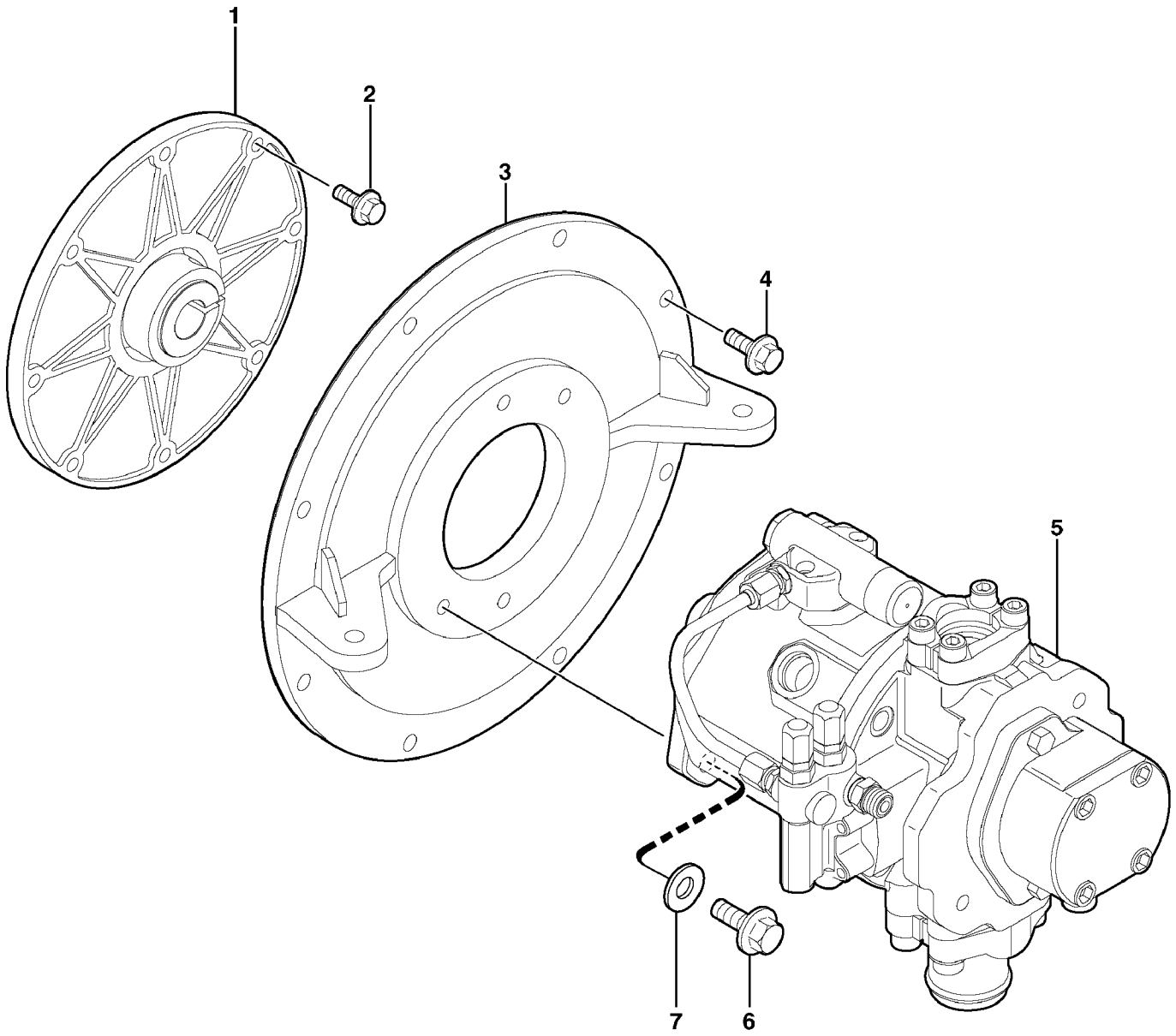

Volvo Construction Equipment

1013188

Fig.	Part No.	Quantity 1	2	3	PS	KIT	Description	Dénomination	Bezeichnung	품명	Denominación	Notes
1	**VOE 11802341**	1					Pump Companion	Accouplement pomp	Pumpenkupplung		Acomplam Bomba	
2	**VOE 945444**	8			SS		Screw	Vis	Schraube	스크류	Tornillo	
3	**VOE 11801301**	1					Bearing Shield	Flasque	Lagerschild	베어링 실드	Defensa Cojinet	S/N - 602.10795
3	**VOE 11806528**	1					Bearing Shield	Flasque	Lagerschild	베어링 실드	Defensa Cojinet	S/N 602.10796 -
4	**VOE 946329**	8					Flange screw	Vis à bride	Flanschschraube	플랜지 스크류	Torn embridado	ALT , M10X25
4	**VOE 946441**	8					Flange screw	Vis à bride	Flanschschraube	플랜지 스크류	Torn embridado	ALT , M10X20
5		1					Hydraulic Pump	Pompe Hydraulique	Hydraulikpumpe	유압 펌프	Bomba Hidraulica	See group 913, Page 399
6	**VOE 978932**	2					Screw	Vis	Schraube	스크류	Tornillo	
7	**VOE 11804249**	2					Washer	Rondelle	Scheibe	와셔	Arandela	

1	**602.10151** →	
2		
3		
4		
5		

Acoplamiento del motor / bomba hidráulica
엔진 커플링 / 유압 펌프
Motorkupplung / hydraulische Pumpe
Dispositif d'accouplement du moteur / pompe hydraulique
Engine coupling / hydraulic pump

Catalogue id	Group
20048	**415**
Illustr. No **1013188**	Section **100**
Issue **VOE 74C9920048**	Page **209**

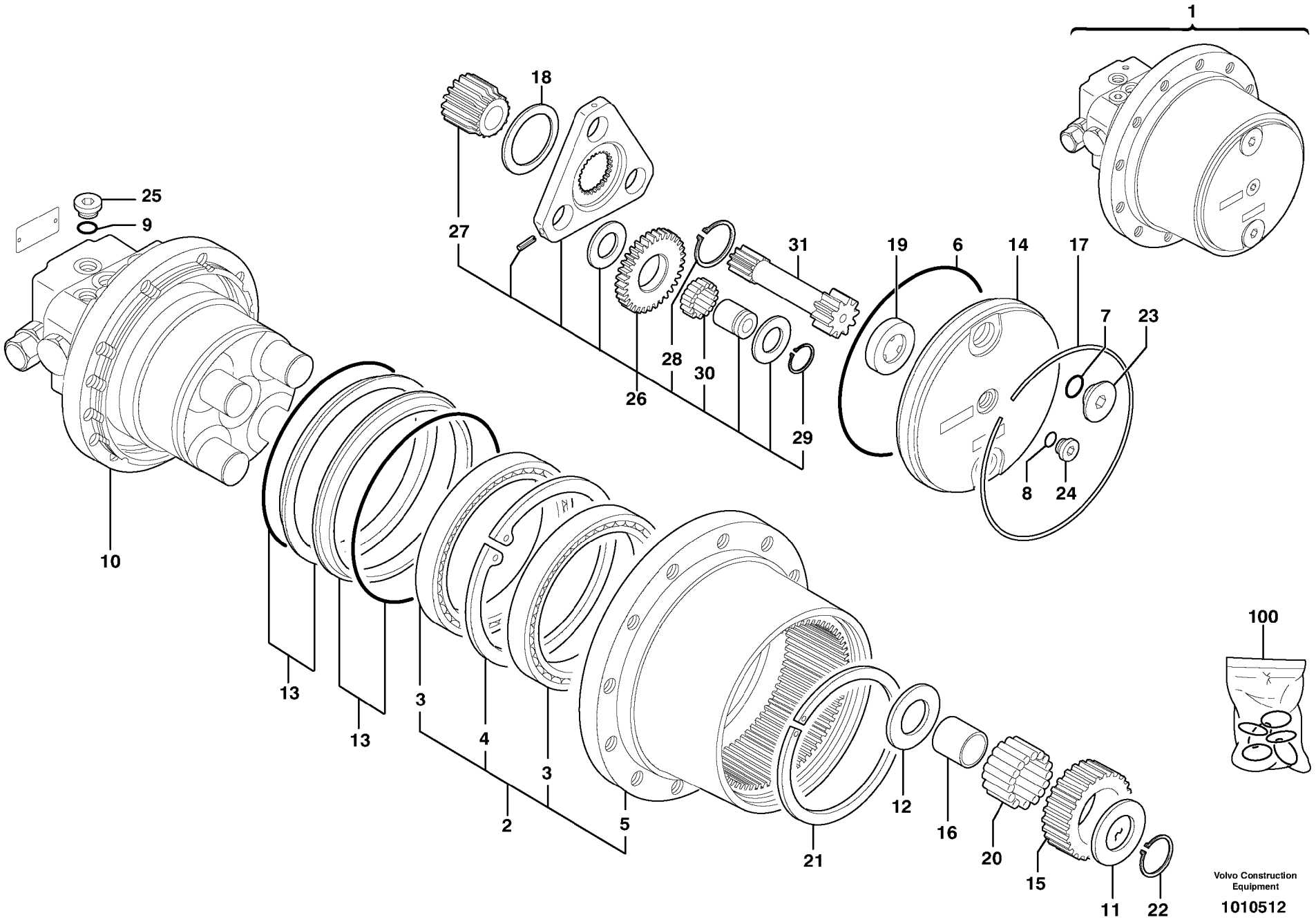

Volvo Construction Equipment

1010512

Fig.	Part No.	Quantity 1	2	3	PS	KIT	Description	Dénomination	Bezeichnung	품명	Denominación	Notes
1	**VOE 11802522**	2					Gear-motor	Motoréducteur	Getriebemotor	기어 모터	Motor reductor	
2	**PJ 7417293**	1					•Body	•Carcasse	•Rumpf	• 본체	•Cuerpo	
3	**PJ 7417276**	2					••Ball bearing	••Roulement billes	••Kugellager	•• 볼 베어링	••Rodamiento de bol	
4	**PJ 7417287**	1					••Snap Ring	••Circlip	••Nutring	•• 스냅 링	••Circlip	
5		1			NS		••Body	••Carcasse	••Rumpf	•• 본체	••Cuerpo	ORDER ITEM NO 2
6	**PJ 7417296**	1				K	•O-ring	•Joint Torique	•O-Ring	• 오링	•Junta torica	
7	**PJ 7417266**	2				K	•O-ring	•Joint Torique	•O-Ring	• 오링	•Junta torica	
8	**PJ 7416887**	1				K	•O-ring	•Joint Torique	•O-Ring	• 오링	•Junta torica	
9	**PJ 7417263**	2				K	•O-ring	•Joint Torique	•O-Ring	• 오링	•Junta torica	
10		1					•Hydraulic motor	•Moteur hydraulique	•Hydromotor	• 유압 모터	•Motor hidraulic	See group 441, Page 215
11	**PJ 7417289**	4					•Washer	•Rondelle	•Scheibe	• 와셔	•Arandela	
12	**PJ 7417288**	4					•Washer	•Rondelle	•Scheibe	• 와셔	•Arandela	
13	**PJ 7414584**	2					•Seg Retainer	•Retenue Joint	•Dichtringhalter	• 세그먼트 리테이너	•Portarreten	
14	**PJ 7417285**	1					•Cover	•Couvercle	•Deckel	• 커버	•Tapa	
15	**PJ 7417290**	4					•Pinion	•Pignon	•Ritzel	• 피니온	•Pinon	
16	**PJ 7417286**	4					•Bushing	•Bague	•Buchse	• 부싱	•Casquillo	
17	**PJ 7414578**	1					•Fuse Ring	•Circlip	•Sicherungsring	• 휴즈 링	•Anillo Fusible	
18	**PJ 7417292**	1					•Washer	•Rondelle	•Scheibe	• 와셔	•Arandela	
19	**PJ 7417238**	1					•Spacer	•Entretoise	•Abstandstueck	• 스페이서	•Casquillo distanciad	
20	**PJ 7417284**	96					•Needle bearing	•Roulement aiguilles	•Nadellager	• 니들 베어링	•Rodamiento agujas	
21	**PJ 7417278**	REQ					•Snap Ring	•Circlip	•Nutring	• 스냅 링	•Circlip	THICK = 3,9mm/0.1535in
21	**PJ 7417279**	REQ					•Snap Ring	•Circlip	•Nutring	• 스냅 링	•Circlip	THICK = 3,8mm/0.1496in
21	**PJ 7417280**	REQ					•Snap Ring	•Circlip	•Nutring	• 스냅 링	•Circlip	THICK = 3,7mm/0.1457in
21	**PJ 7417281**	REQ					•Snap Ring	•Circlip	•Nutring	• 스냅 링	•Circlip	THICK = 3,6mm/0.1417in
22	**PJ 7414632**	4					•Snap Ring	•Circlip	•Nutring	• 스냅 링	•Circlip	
23	**PJ 7415919**	2					•Plug	•Bouchon	•Stopfen	• 플러그	•Tapon	
24	**PJ 7415927**	1					•Plug	•Bouchon	•Stopfen	• 플러그	•Tapon	
25	**PJ 7414585**	2					•Plug	•Bouchon	•Stopfen	• 플러그	•Tapon	
26	**PJ 7417294**	1					•Planet Gear	•Planetaire	•Planetenrad	• 유성 기어	•Planetario	
27	**PJ 7417277**	1					••Pinion	••Pignon	••Ritzel	•• 피니온	••Pinon	

1	**602.10151**	
2		
3		
4		
5		

Motor de traslación hidráulico
유압 주행 모터
Fahrmotor
Moteur de translation
Hydraulic travelling motor

Catalogue id	Group
20048	**441**
Illustr. No **1010512**	Section **100**
Issue **VOE 74C9920048**	Page **211**

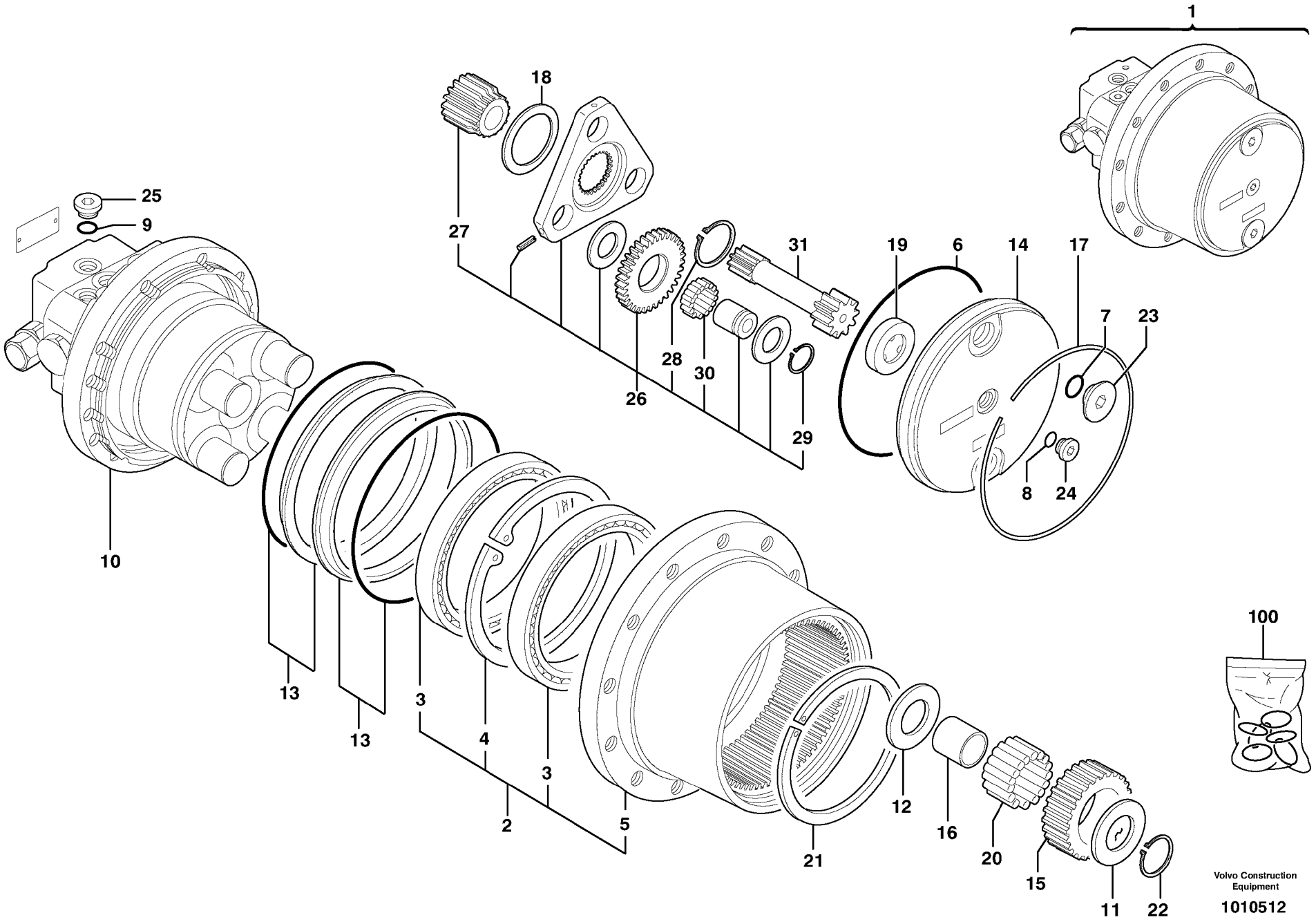

Volvo Construction Equipment

1010512

Fig.	Part No.	Quantity 1	2	3	PS	KIT	Description	Dénomination	Bezeichnung	품명	Denominación	Notes
28	**PJ 7414633**	1					••Snap Ring	••Circlip	••Nutring	•• 스냅 링	••Circlip	
29	**PJ 7414632**	3					••Snap Ring	••Circlip	••Nutring	•• 스냅 링	••Circlip	
30	**VOE 11713098**	72					••Needle Bearing	••Roule.aiguilles	••Nadellager	•• 니들 베어링	••Cojinete Agujas	
31	**PJ 7417370**	1					•Pinion shaft	•Arbre denté	•Ritzelwelle	• 피니언 샤프트	•Arbol dentado	
100	**PJ 7417295**	1					Sealing Kit	Jeu Joints	Dichtungssatz	시일 킷	Juego Retenes	KIT

1	**602.10151**		**Motor de traslación hidráulico** 유압 주행 모터 **Fahrmotor** **Moteur de translation** **Hydraulic travelling motor**
2			
3			
4			
5			

Catalogue id	Group
20048	**441**
Illustr. No **1010512**	Section **100**
Issue **VOE 74C9920048**	Page **213**

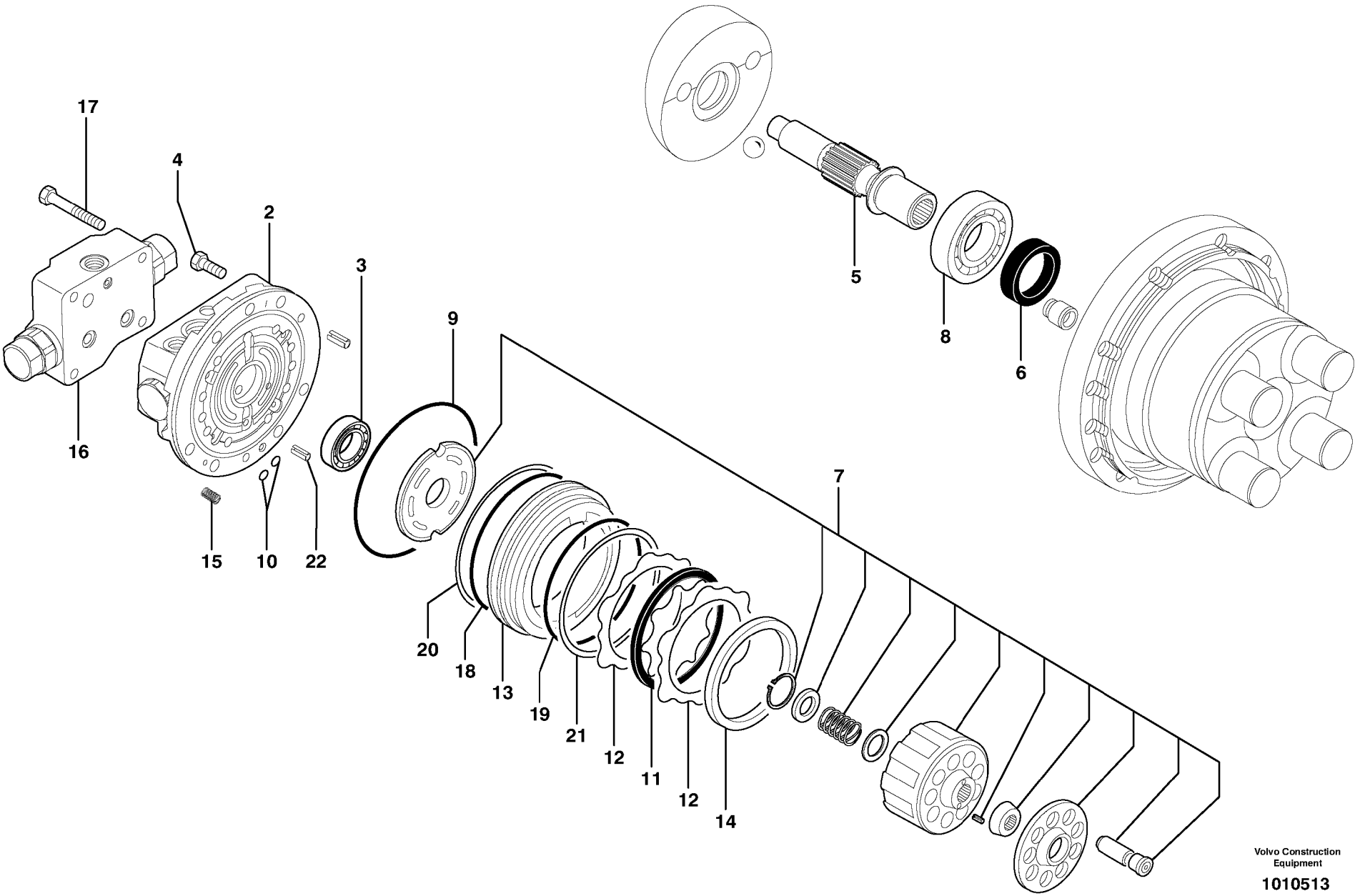

Volvo Construction Equipment

1010513

Fig.	Part No.	Quantity 1	2	3	PS	KIT	Description	Dénomination	Bezeichnung	품명	Denominación	Notes
1	**PJ 7417305**	1					Hydraulic motor	Moteur hydraulique	Hydraulikmotor	유압 모터	Motor hidráulico	
2		1					•Distributor	•Distributeur	•Verteiler	• 배전기	•Distribuidor	See group 441, Page 217
3	**PJ 7413645**	1					•Ball bearing	•Roulement billes	•Kugellager	• 볼 베어링	•Rodamiento de bola	
4	**PJ 7414614**	7					•Screw	•Vis	•Schraube	• 스크류	•Tornillo	
5	**PJ 7417229**	1					•Pinion shaft	•Arbre denté	•Ritzelwelle	• 피니언 샤프트	•Arbol dentado	
6	**PJ 7417270**	1					•Seal	•Joint	•Dichtring	• 시일	•Junta	
7	**PJ 7417304**	1					•Rotary group	•Groupe rotatif	•Triebwerkteil	• 회전 블록	•Grupo rotativo	
8	**VOE 11712914**	1					•Ball bearing	•Roulement billes	•Kugellager	• 볼 베어링	•Rodamiento de bola	
9	**PJ 7417262**	1					•O-ring	•Joint Torique	•O-Ring	• 오링	•Junta torica	
10	**PJ 7417268**	2					•O-ring	•Joint Torique	•O-Ring	• 오링	•Junta torica	
11	**PJ 7417299**	1					•Brake disk	•Disque de frein	•Bremsscheibe	• 브레이크 디스크	•Disco de freno	
12	**PJ 7417300**	2					•Disc	•Disque	•Scheibe	• 디스크	•Disco	
13	**PJ 7417301**	1					•Piston	•Piston	•Kolben	• 피스톤	•Piston	
14	**PJ 7417298**	1					•Spacer	•Entretoise	•Abstandstueck	• 스페이서	•Casquillo distanciad	
15	**PJ 7417302**	10					•Spring	•Ressort	•Feder	• 스프링	•Muelle	
16		1					•Balancing valve	•Valve d'équilibrage	•Ausgleichventil	• 균형 밸브	•Válvula de equilibrio	See group 441, Page 219
17	**PJ 7417310**	4					•Screw	•Vis	•Schraube	• 스크류	•Tornillo	
18	**PJ 7417309**	1					•O-ring	•Joint Torique	•O-Ring	• 오링	•Junta torica	
19	**PJ 7417308**	1					•O-ring	•Joint Torique	•O-Ring	• 오링	•Junta torica	
20	**PJ 7417307**	1					•Back-up ring	•Rondelle anti-extrusi	•Stützring	• 백업 링	•Anillo Apoyo	
21	**PJ 7417306**	1					•Back-up ring	•Rondelle anti-extrusi	•Stützring	• 백업 링	•Anillo Apoyo	
22	**PJ 7414655**	1					•Spring pin	•Goupille roulée	•Spannstift	• 스프링 핀	•Pasador	

1	**602.10151**	
2		
3		
4		
5		

Motor reductor de traslación / con freno
주행 기어 모터 조립체 / 브레이크 있음
Getriebemotor für die Fahrbewegung / mit Bremse
Motoréducteur de translation / avec frein
Travelling gear motor assy / with brake

Catalogue id	Group
20048	**441**
Illustr. No **1010513**	Section **110**
Issue **VOE 74C9920048**	Page **215**

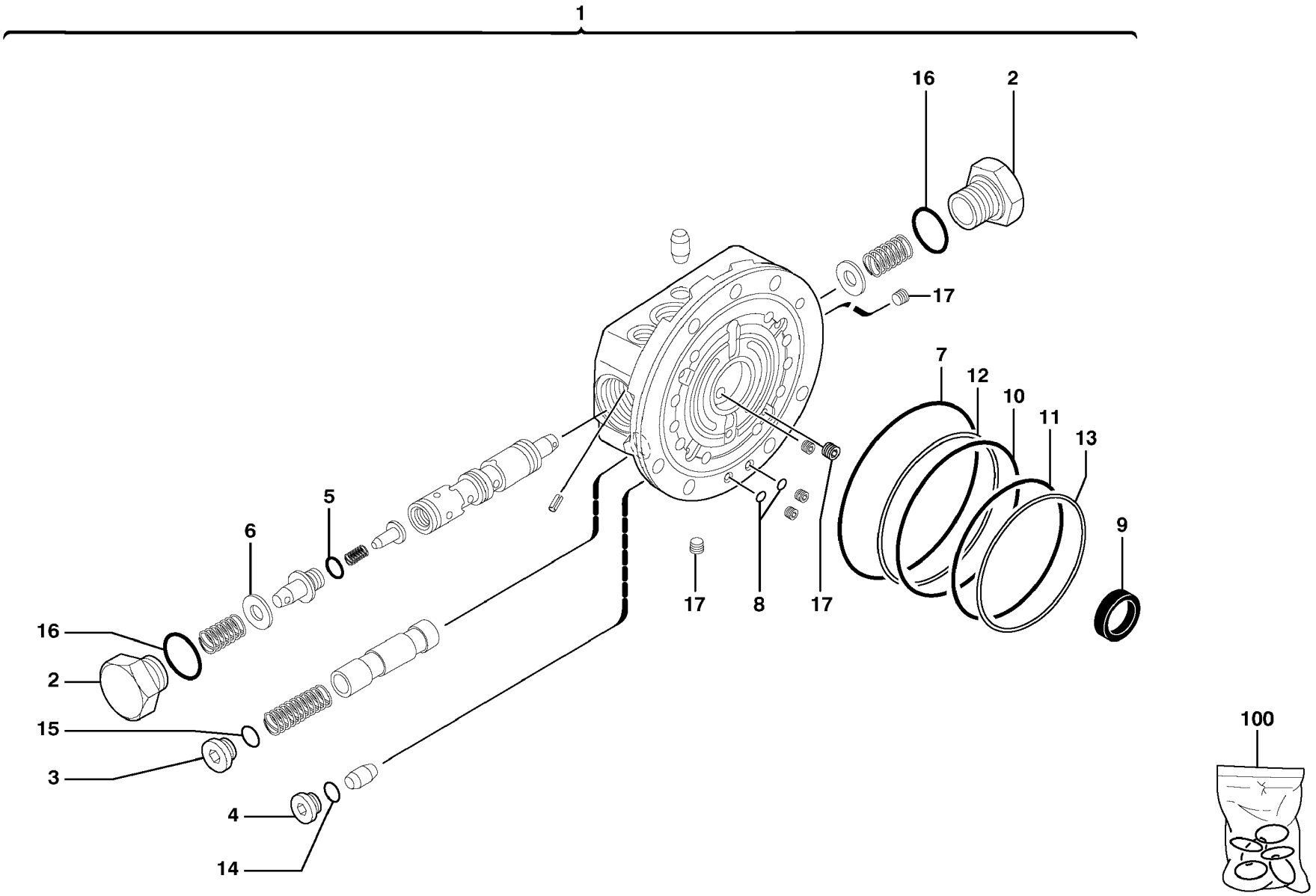
1
16
2
17
7
12
10
11
13
9
5
6
17
8
17
16
2
15
3
4
14
100

Fig.	Part No.	Quantity 1	2	3	PS	KIT	Description	Dénomination	Bezeichnung	품명	Denominación	Notes
1	**VOE 11711122**	1					Distributor	Distributeur	Verteiler	배전기	Distribuidor	
2	**PJ 7414594**	2					•Plug	•Bouchon	•Stopfen	• 플러그	•Tapon	
3	**PJ 7414595**	2					•Plug	•Bouchon	•Stopfen	• 플러그	•Tapon	
4	**PJ 7414596**	2					•Plug	•Bouchon	•Stopfen	• 플러그	•Tapon	
5	**PJ 7417264**	2					•O-ring	•Joint Torique	•O-Ring	• 오링	•Junta torica	
6	**PJ 7414597**	2					•Washer	•Rondelle	•Scheibe	• 와셔	•Arandela	
7	**PJ 7417262**	1				K	•O-ring	•Joint Torique	•O-Ring	• 오링	•Junta torica	
8	**PJ 7417268**	2				K	•O-ring	•Joint Torique	•O-Ring	• 오링	•Junta torica	
9	**PJ 7417270**	1				K	•Seal	•Joint	•Dichtring	• 시일	•Junta	
10	**PJ 7417309**	1				K	•O-ring	•Joint Torique	•O-Ring	• 오링	•Junta torica	
11	**PJ 7417308**	1				K	•O-ring	•Joint Torique	•O-Ring	• 오링	•Junta torica	
12	**PJ 7417307**	1				K	•Back-up ring	•Rondelle anti-extrusi	•Stützring	• 백업 링	•Anillo Apoyo	
13	**PJ 7417306**	1				K	•Back-up ring	•Rondelle anti-extrusi	•Stützring	• 백업 링	•Anillo Apoyo	
14	**PJ 7416887**	2				K	•O-ring	•Joint Torique	•O-Ring	• 오링	•Junta torica	
15	**PJ 7417266**	2				K	•O-ring	•Joint Torique	•O-Ring	• 오링	•Junta torica	
16	**PJ 7417267**	2				K	•O-ring	•Joint Torique	•O-Ring	• 오링	•Junta torica	
17	**PJ 7417272**	6					•Plug	•Bouchon	•Stopfen	• 플러그	•Tapon	
100	**PJ 7417312**	1					Sealing Kit	Jeu Joints	Dichtungssatz	시일 킷	Juego Retenes	KIT

1	**602.10151**	
2		
3		
4		
5		

Válvula de mando
컨트롤 밸브
Steuerventil
Valve de commande
Control valve

Catalogue id	Group
20048	**441**
Illustr. No **1010514**	Section **120**
Issue **VOE 74C9920048**	Page **217**

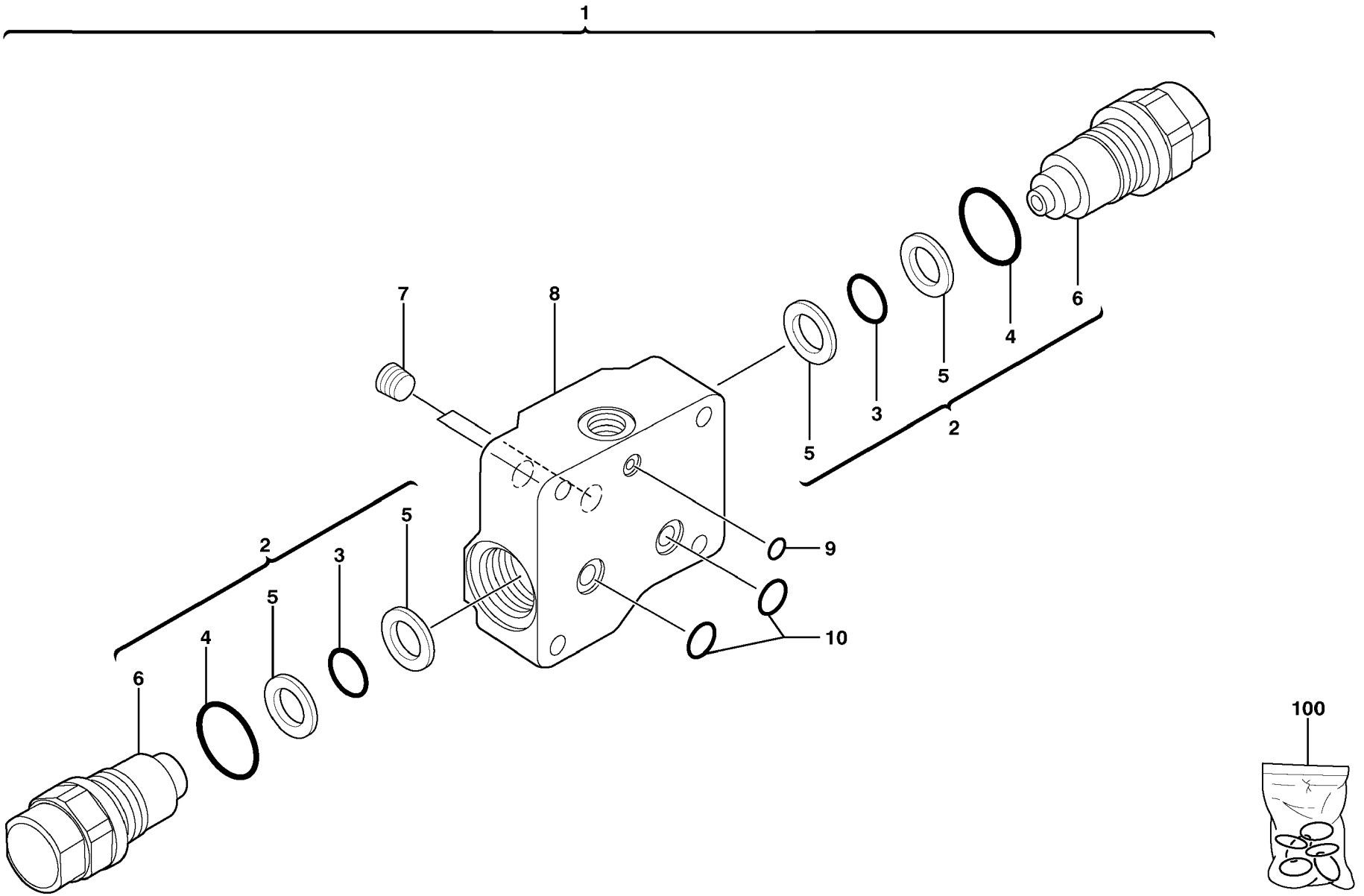
1
7
8
6
4
5
3
2
5
9
10
2
3
5
4
5
6
100

Fig.	Part No.	Quantity 1	2	3	PS	KIT	Description	Dénomination	Bezeichnung	품명	Denominación	Notes
1	**PJ 7417320**	1					Eql Valve	Valve d'equilibrage	Ausgleichventil	밸런스 밸브	Valvula equilibrio	
2	**PJ 7417319**	2					•Relief valve	•Limiteur - pression	•Druckbegrenzer	• 릴리프 밸브	•Limitador presion	
3	**PJ 7417315**	1				K	••O-ring	••Joint Torique	••O-Ring	•• 오링	••Junta torica	
4	**PJ 7417316**	1				K	••O-ring	••Joint Torique	••O-Ring	•• 오링	••Junta torica	
5	**PJ 7417314**	2				K	••Back-up ring	••Rondelle anti-extrus.	••Stützring	•• 백업 링	••Anillo Apoyo	
6		1			NS		••Relief valve	••Limiteur - pression	••Druckbegrenzer	•• 릴리프 밸브	••Limitador presion	ORDER ITEM NO 2
7	**PJ 7417317**	2					•Plug	•Bouchon	•Stopfen	• 플러그	•Tapon	
8		1			NS		•Valve Body	•Corps Valve	•Ventilkörper	• 밸브 몸체	•Cuerpo Valvula	ORDER ITEM NO 1
9	**PJ 7417268**	1				K	•O-ring	•Joint Torique	•O-Ring	• 오링	•Junta torica	
10	**PJ 7417265**	2				K	•O-ring	•Joint Torique	•O-Ring	• 오링	•Junta torica	
100	**PJ 7417318**	1					Sealing Kit	Jeu Joints	Dichtungssatz	시일 킷	Juego Retenes	KIT

1	**602.10151**		**Válvula de equilibrio (traslación)** **균형 밸브 (주행)** **Ausgleichventil (Fahrbewegung)** **Valve d'équilibrage (translation)** **Balancing valve (travelling)**
2			
3			
4			
5			

Catalogue id	Group
20048	**441**
Illustr. No **1010515**	Section **130**
Issue **VOE 74C9920048**	Page **219**

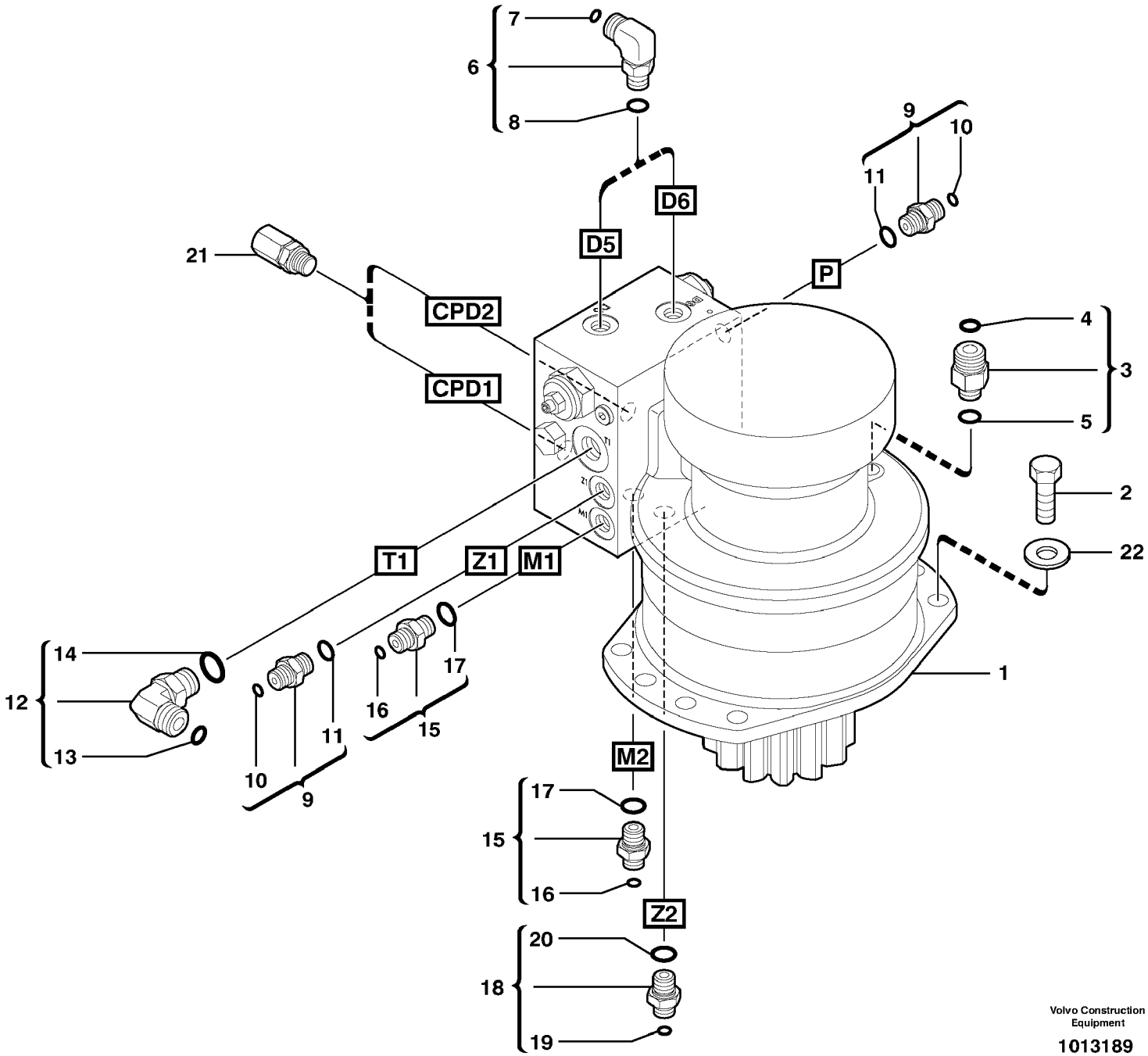

Volvo Construction Equipment

1013189

Fig.	Part No.	Quantity 1	2	3	PS	KIT	Description	Dénomination	Bezeichnung	품명	Denominación	Notes
1		1										See group 441, Page 223
2	**VOE 978932**	8					Screw	Vis	Schraube	스크류	Tornillo	
3	**VOE 935091**	1					Nipple	Raccord	Nippel	니플	Niple	
4	**VOE 4880493**	1					•O-ring	•Joint Torique	•O-Ring	• 오링	•Junta torica	
5	**VOE 932039**	1					•O-ring	•Joint Torique	•O-Ring	• 오링	•Junta torica	
6	**VOE 935069**	2					Elbow nipple	Raccord angulaire	Winkelnippel	엘보 니플	Niple angular	
7	**VOE 4881722**	1					•O-ring	•Joint Torique	•O-Ring	• 오링	•Junta torica	
8	**VOE 4880492**	1					•O-ring	•Joint Torique	•O-Ring	• 오링	•Junta torica	
9	**VOE 13933858**	2					Union	Teton Connexion	Anschlussnippel	유니언	Niple Conexcion	
10	**VOE 4881722**	1					•O-ring	•Joint Torique	•O-Ring	• 오링	•Junta torica	
11	**VOE 932039**	1					•O-ring	•Joint Torique	•O-Ring	• 오링	•Junta torica	
12	**VOE 13933868**	1					Elbow Nipple	Raccord angulaire	Winkelnippel	엘보 니플	Niple Angular	
13	**VOE 4880493**	1					•O-ring	•Joint Torique	•O-Ring	• 오링	•Junta torica	
14	**VOE 932040**	1					•O-ring	•Joint Torique	•O-Ring	• 오링	•Junta torica	
15	**VOE 11802772**	2					Restrictor	Etrangleur	Drosselung	리스트릭터	Estrangulacion	ID = 0,6mm/0.0236in
16	**VOE 4881722**	1					•O-ring	•Joint Torique	•O-Ring	• 오링	•Junta torica	
17		1			NS		•O-ring	•Joint Torique	•O-Ring	• 오링	•Junta torica	
18	**VOE 13933858**	1					Union	Teton Connexion	Anschlussnippel	유니언	Niple Conexcion	
19	**VOE 4881722**	1					•O-ring	•Joint Torique	•O-Ring	• 오링	•Junta torica	
20	**VOE 932039**	1					•O-ring	•Joint Torique	•O-Ring	• 오링	•Junta torica	
21	**VOE 936446**	2					Testing Nipple	Raccord contrôle	Prufnippel	테스트 니플	Niple Medicion	
22	**VOE 11804249**	8					Washer	Rondelle	Scheibe	와셔	Arandela	

1	**602.10151**		**Instalación del motor reductor de giro** 선회기어 모터 설치 **Einbau des Schwenkmotors** **Mise en place du motoréducteur d'orientation** **Slewing gear motor installation**	Catalogue id **20048**	Group **441**
2				Illustr. No **1013189**	Section **200**
3					
4				Issue **VOE 74C9920048**	Page **221**
5					

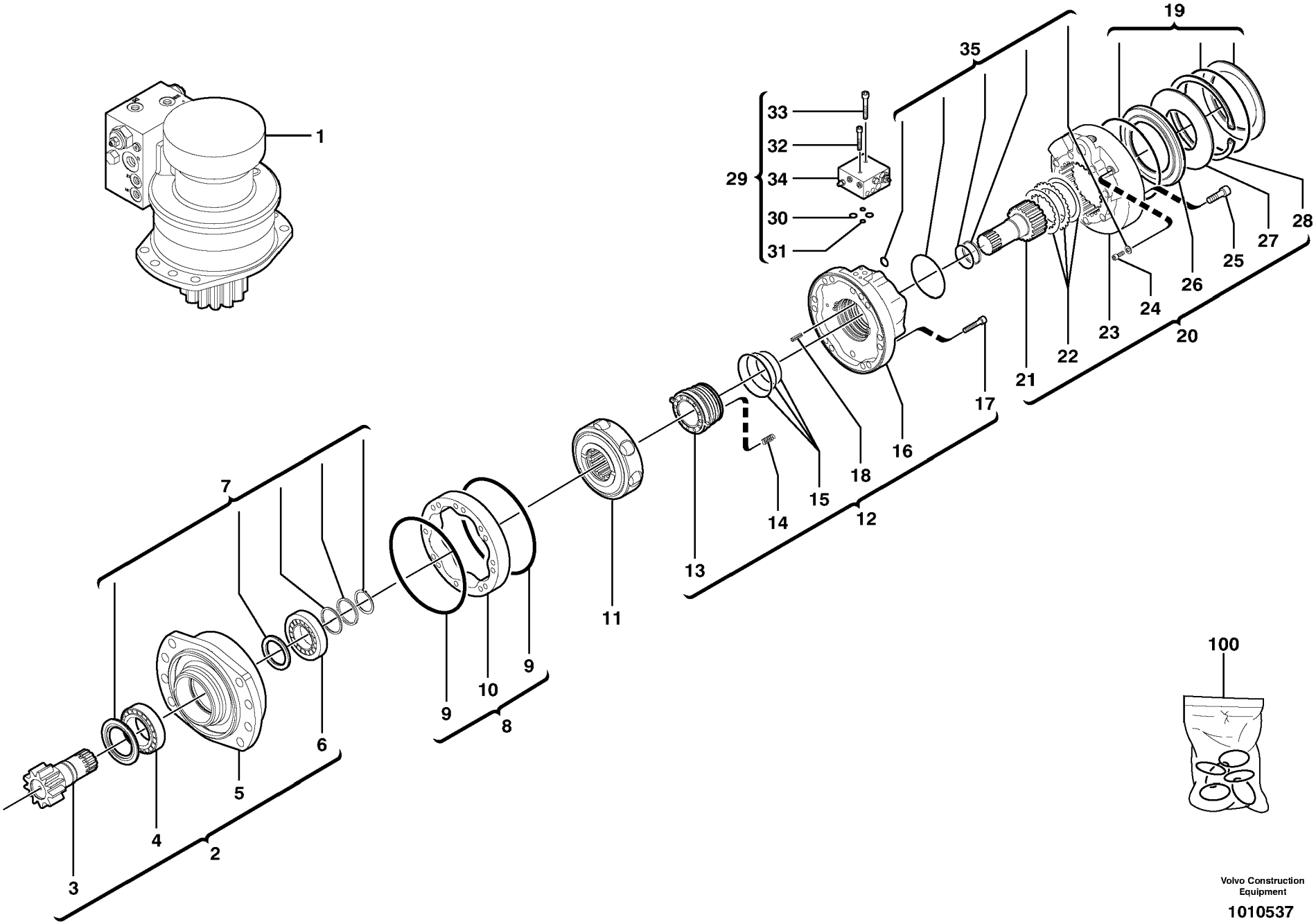

Volvo Construction Equipment

1010537

Fig.	Part No.	Quantity 1	2	3	PS	KIT	Description	Dénomination	Bezeichnung	품명	Denominación	Notes
1	**VOE 11801620**	1					Swing Motor	Moteur orientat	Schwenkmotor	선회 모터	Motor de giro	
2	**PJ 7416658**	1					•Bearing	•Palier	•Lager	• 베어링	•Cojinete	
3	**PJ 7415416**	1					••Pinion shaft	••Arbre denté	••Ritzelwelle	•• 피니언 샤프트	••Arbol dentado	
4	**PJ 7415420**	1					••Roller Bearing	••Roulement rouleaux	••Rollenlager	•• 롤러 베어링	••Cojinet Rodillo	
5		1			NS		••Bearing	••Palier	••Lager	•• 베어링	••Cojinete	ORDER ITEM NO 2
6	**PJ 7415417**	1					••Roller Bearing	••Roulement rouleaux	••Rollenlager	•• 롤러 베어링	••Cojinet Rodillo	
7	**VOE 11712927**	1				K	•Repair Kit	•Kit Réparation	•Reparatursatz	• 수리 킷	•Kit Reparacion	
8	**PJ 7416663**	1					•Cam	•Came	•Nocken	• 캠	•Leva	
9	**VOE 11715565**	2				K	••O-ring	••Joint Torique	••O-Ring	•• 오링	••Junta torica	(PJ 7417406)
10		1			NS		••Cam	••Came	••Nocken	•• 캠	••Leva	ORDER ITEM NO 8
11	**VOE 11712924**	1					•Cylinder Block	•Bloc-cylindres	•Zylinderblock	• 실린더 블록	•Bloque Cilindro	
12	**VOE 11712799**	1					•Bearing Kit	•Jeu Paliers	•Lagersatz	• 베어링 키트	•Juego Cojinetes	
13		1			NS		••Distribution block	••Distributeur	••Verteilerblock	•• 디스크 블록	••Bloque distribución	ORDER ITEM NO 12
14	**PJ 7416385**	4					••Spring	••Ressort	••Feder	•• 스프링	••Muelle	
15	**PJ 7417103**	1				K	••Sealing Kit	••Jeu Joints	••Dichtungssatz	•• 시일 킷	••Juego Retenes	
16		1			NS		••Bearing	••Palier	••Lager	•• 베어링	••Cojinete	ORDER ITEM NO 12
17	**VOE 11714982**	7					••Screw	••Vis	••Schraube	•• 스크류	••Tornillo	(PJ 7417404)
18		1			NS		••Pin	••Goupille	••Zapfen	•• 핀	••Pasador	
19	**VOE 11712930**	1				K	•Repair Kit	•Kit Réparation	•Reparatursatz	• 수리 킷	•Kit Reparacion	
20	**VOE 11712800**	1					•Repair Kit	•Kit Réparation	•Reparatursatz	• 수리 킷	•Kit Reparacion	
21	**PJ 7417403**	1					••Pinion shaft	••Arbre denté	••Ritzelwelle	•• 피니언 샤프트	••Arbol dentado	
22	**VOE 11712929**	1					••Repair Kit	••Kit Réparation	••Reparatursatz	•• 수리 킷	••Kit Reparacion	
23		1			NS		••Body	••Corps	••Körper	•• 몸체	••Cuerpo	ORDER ITEM NO 20
24	**PJ 7416380**	2					••Screw	••Vis	••Schraube	•• 스크류	••Tornillo	
25	**PJ 7417399**	7					••Screw	••Vis	••Schraube	•• 스크류	••Tornillo	
26	**VOE 11712801**	1					••Brake Piston	••Piston Frein	••Bremskolben	•• 브레이크 피스톤	••Piston Frenos	
27	**VOE 11712802**	1					••Spring Washer	••Rondelle élastique	••Federscheibe	•• 스프링 와셔	••Arandela flexible	
28	**PJ 7416347**	1					••Snap Ring	••Circlip	••Nutring	•• 스냅 링	••Circlip	
29	**VOE 11713104**	1					•Repair Kit	•Kit Réparation	•Reparatursatz	• 수리 킷	•Kit Reparacion	
30	**VOE 11712920**	2					••O-ring	••Joint Torique	••O-Ring	•• 오링	••Junta torica	

1	**602.10151**	
2		
3		
4		
5		

Motor reductor de giro
선회기어 모터
Schwenkmotor
Motoréducteur d'orientation
Slewing gear motor

Catalogue id	Group
20048	**441**
Illustr. No **1010537**	Section **210**
Issue **VOE 74C9920048**	Page **223**

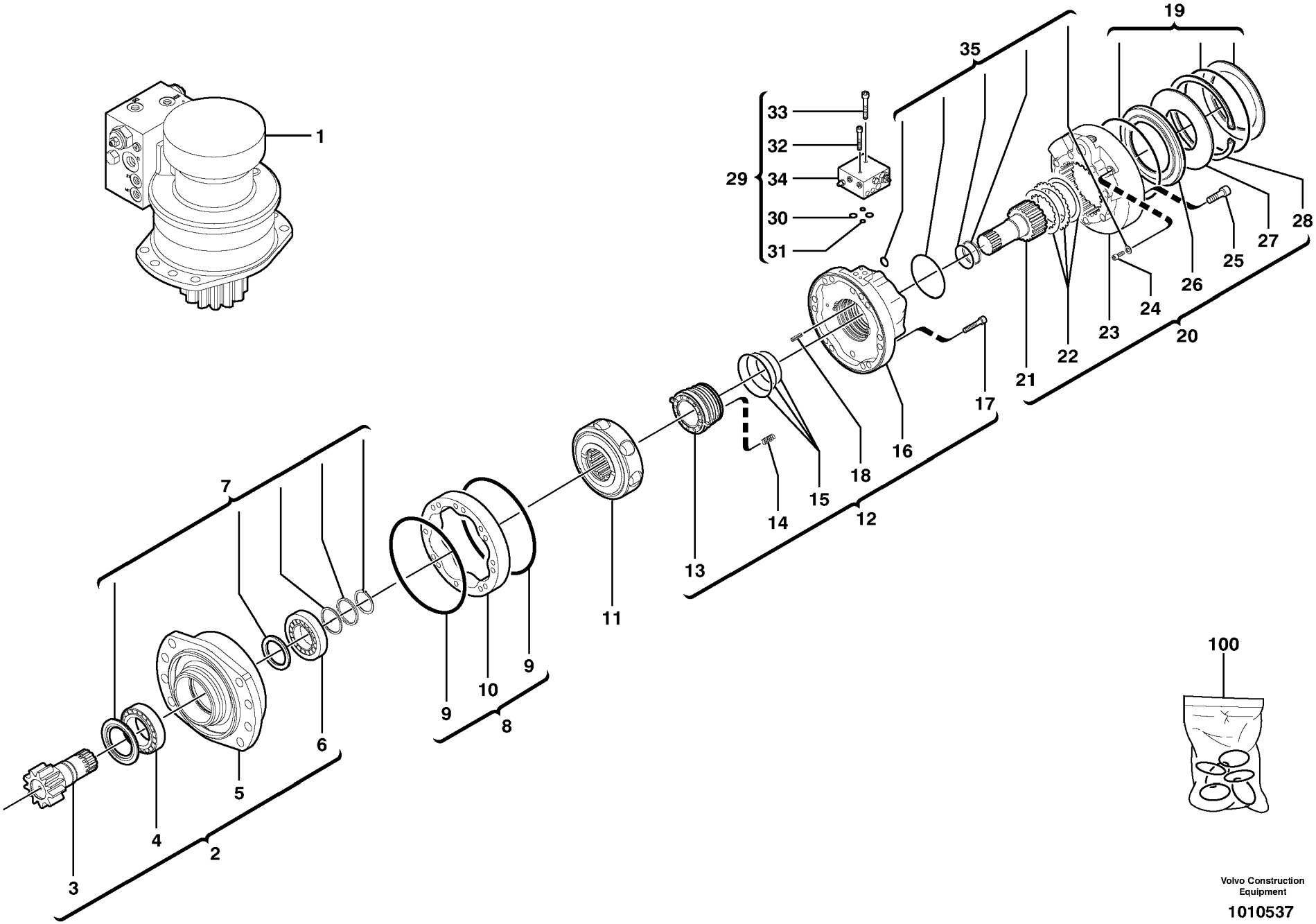

Volvo Construction Equipment

1010537

Fig.	Part No.	Quantity 1	2	3	PS	KIT	Description	Dénomination	Bezeichnung	품명	Denominación	Notes
31	**VOE 11712933**	2					••O-ring	••Joint Torique	••O-Ring	•• 오링	••Junta torica	
32	**VOE 11712919**	1					••Screw	••Vis	••Schraube	•• 스크류	••Tornillo	
33	**PJ 7416977**	1					••Screw	••Vis	••Schraube	•• 스크류	••Tornillo	
34		1			NS		••Block	••Bloc	••Block	•• 블록	••Bloque	ORDER ITEM NO 29
35	**VOE 11712804**	1				K	•Repair Kit	•Kit Réparation	•Reparatursatz	• 수리 킷	•Kit Reparacion	
100	**VOE 11712931**	1					Sealing Kit	Jeu Joints	Dichtungssatz	시일 킷	Juego Retenes	KIT

1	**602.10151**		**Motor reductor de giro** 선회기어 모터 **Schwenkmotor** **Motoréducteur d'orientation** **Slewing gear motor**	Catalogue id **20048**	Group **441**
2				Illustr. No **1010537**	Section **210**
3				Issue **VOE 74C9920048**	Page **225**
4					
5					

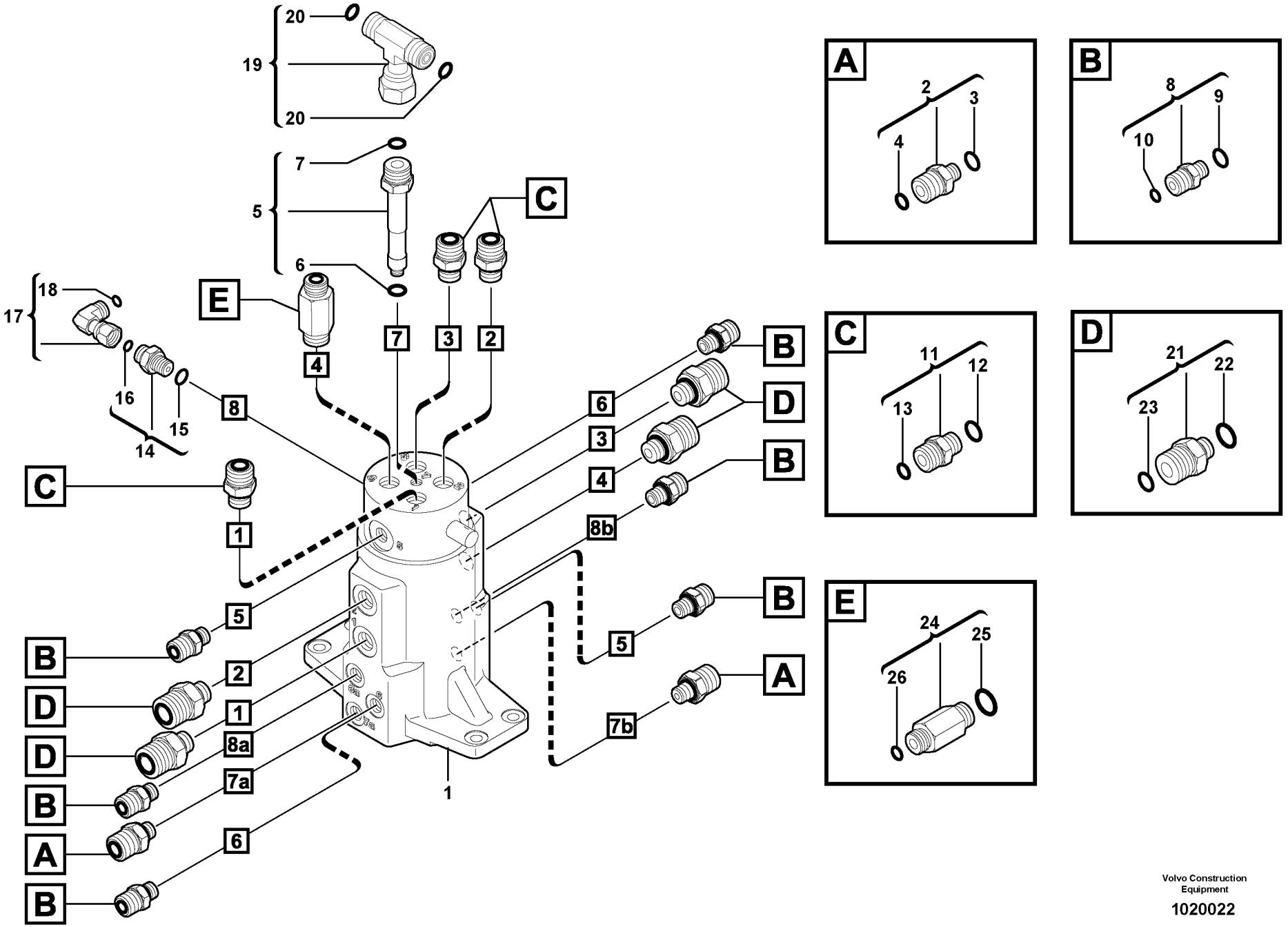

Volvo Construction Equipment

1020022

Fig.	Part No.	Quantity 1	2	3	PS	KIT	Description	Dénomination	Bezeichnung	품명	Denominación	Notes
1		1					Swivel joint	Joint tournant	Drehverteiler	스위블 조인트	Unión giratoria	See group 443, Page 229
2	**VOE 11802653**	2					Union	Teton Connexion	Anschlussnippel	유니언	Niple Conexcion	
3	**PJ 5600201**	1					•Seal	•Joint	•Dichtring	• 시일	•Junta	
4	**VOE 4880493**	1					•O-ring	•Joint Torique	•O-Ring	• 오링	•Junta torica	
5	**VOE 11802626**	1					Union	Teton Connexion	Anschlussnippel	유니언	Niple Conexcion	
6	**PJ 5600200**	1					•Seal	•Joint	•Dichtring	• 시일	•Junta	
7	**VOE 4880493**	1					•O-ring	•Joint Torique	•O-Ring	• 오링	•Junta torica	
8	**VOE 11802651**	6					Union	Teton Connexion	Anschlussnippel	유니언	Niple Conexcion	
9	**PJ 5600201**	1					•Seal	•Joint	•Dichtring	• 시일	•Junta	
10	**VOE 4880492**	1					•O-ring	•Joint Torique	•O-Ring	• 오링	•Junta torica	
11	**VOE 11802650**	3					Union	Teton Connexion	Anschlussnippel	유니언	Niple Conexcion	
12	**PJ 5600202**	1					•Seal	•Joint	•Dichtring	• 시일	•Junta	
13	**VOE 4880493**	1					•O-ring	•Joint Torique	•O-Ring	• 오링	•Junta torica	
14	**VOE 11802655**	1					Union	Teton Connexion	Anschlussnippel	유니언	Niple Conexcion	
15	**PJ 5600201**	1					•Seal	•Joint	•Dichtring	• 시일	•Junta	
16	**VOE 4881722**	1					•O-ring	•Joint Torique	•O-Ring	• 오링	•Junta torica	
17	**VOE 13933905**	1					Elbow nipple	Raccord angulaire	Winkelnippel	엘보 니플	Niple angular	
18	**VOE 4881722**	1					•O-ring	•Joint Torique	•O-Ring	• 오링	•Junta torica	
19	**VOE 13933935**	1					T-nipple	Raccord-t	T-Nippel	T- 니플	Niple T	
20	**VOE 4880493**	2					•O-ring	•Joint Torique	•O-Ring	• 오링	•Junta torica	
21	**VOE 11802652**	4					Union	Teton Connexion	Anschlussnippel	유니언	Niple Conexcion	
22	**PJ 5600202**	1					•Seal	•Joint	•Dichtring	• 시일	•Junta	
23	**VOE 4880663**	1					•O-ring	•Joint Torique	•O-Ring	• 오링	•Junta torica	
24	**VOE 11802654**	1					Union	Teton Connexion	Anschlussnippel	유니언	Niple Conexcion	
25	**PJ 5600202**	1					•Seal	•Joint	•Dichtring	• 시일	•Junta	
26	**VOE 4880493**	1					•O-ring	•Joint Torique	•O-Ring	• 오링	•Junta torica	

1	**602.10151**	
2		
3		
4		
5		

Equipo de junta de giro
스위블 조인트 장비
Drehverteiler kompl.
Mise en place du joint tournant
Swivel joint equipment

Catalogue id **20048**	Group **443**
Illustr. No **1020022**	Section **100**
Issue **VOE 74C9920048**	Page **227**

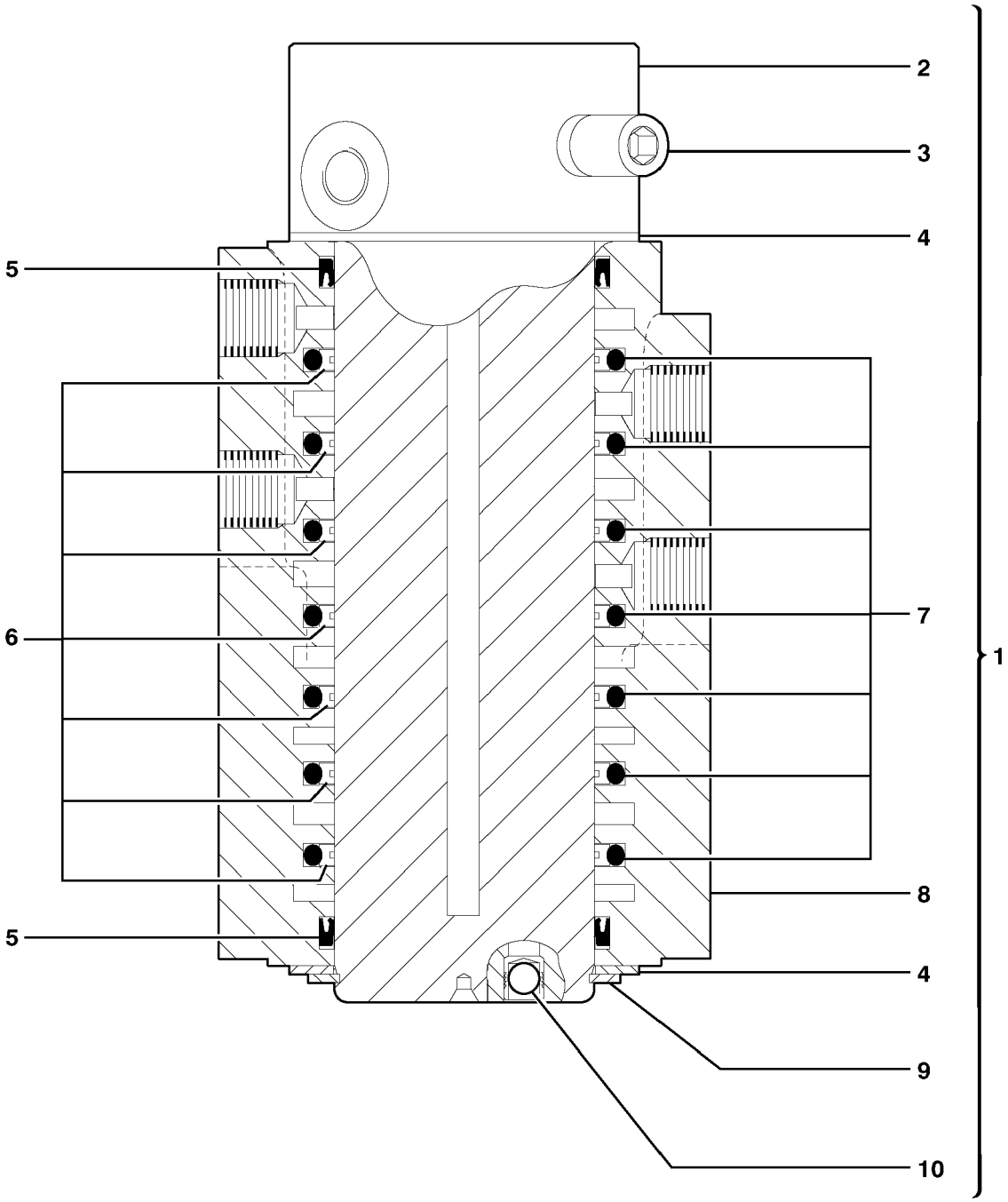

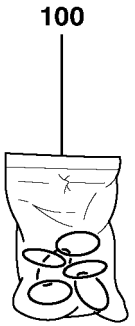

Volvo Construction Equipment

1010463

Fig.	Part No.	Quantity 1	2	3	PS	KIT	Description	Dénomination	Bezeichnung	품명	Denominación	Notes
1	**VOE 11800504**	1					Swivel joint	Joint tournant	Drehverteiler	스위블 조인트	Unión giratoria	
2		1			NS		•Shaft	•Arbre	•Welle	• 샤프트	•Arbol	ORDER ITEM NO 1
3	**VOE 11712785**	1					•Stop Screw	•Vis Butee	•Stoppschraube	• 스톱 나사	•Tornillo Tope	
4	**PJ 7418492**	2					•Thrust Washer	•Rondelle Butee	•Druckscheibe	• 스러스트 와셔	•Arandela Presio	
5		2			NS	K	•Seal	•Joint	•Dichtung	• 실	•Reten	
6		7			NS	K	•Back-up ring	•Bague support	•Stützring	• 백업 링	•Anillo apoyo	
7		7			NS	K	•O-ring	•Joint torique	•O-Ring	•O- 링	•Anillo torico	
8		1			NS		•Hub	•Bossage	•Nabe	• 허브	•Asiento	ORDER ITEM NO 1
9	**PJ 7418488**	1					•Snap Ring	•Circlip	•Nutring	• 스냅 링	•Circlip	
10	**PJ 7418487**	3					•Disc Valve	•Clapet	•Tellerventil	•	•Disco Valvula	ORDER ITEM NO 1
100	**VOE 11710895**	1					Sealing Kit	Jeu Joints	Dichtungssatz	시일 킷	Juego Retenes	KIT

1	**602.10151**	
2		
3		
4		
5		

Junta de giro
스위벨 조인트
Drehverteiler
Joint tournant
Swivel joint

Catalogue id	Group
20048	**443**
Illustr. No **1010463**	Section **200**
Issue **VOE 74C9920048**	Page **229**

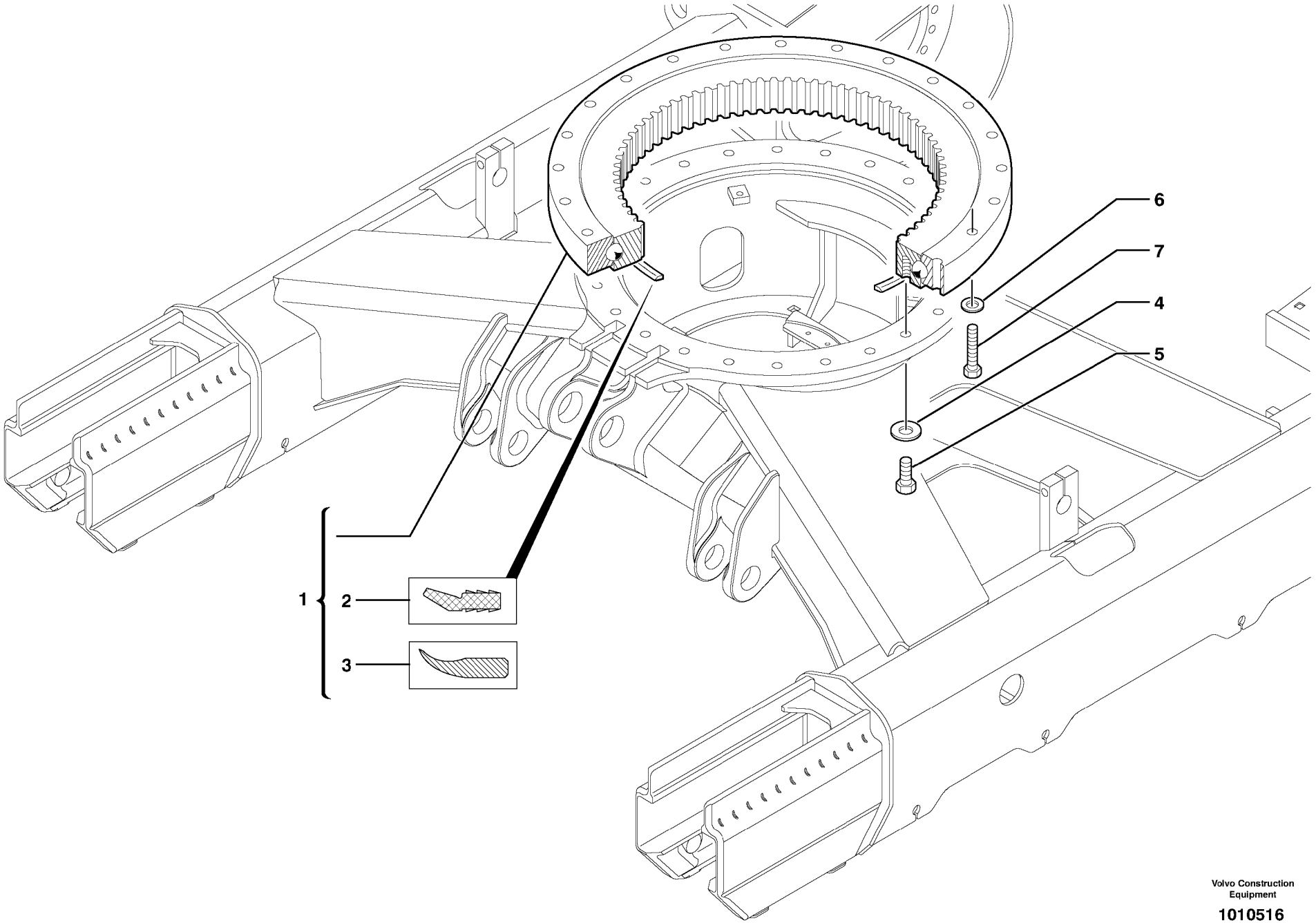

Volvo Construction Equipment

1010516

Fig.	Part No.	Quantity 1	2	3	PS	KIT	Description	Dénomination	Bezeichnung	품명	Denominación	Notes
1	**VOE 11802521**	1					Crown Wheel	Couronne	Tellerrad	크라운 휠	Corona	
2	**PJ 5600160**	REQ					•Seal	•Joint	•Dichtring	• 시일	•Junta	L = 1900mm/74.8030in
3	**VOE 11803033**	REQ					•Seal	•Joint	•Dichtring	• 시일	•Junta	L = 1900mm/74.8030in
4	**VOE 11803009**	24					Washer	Rondelle	Scheibe	와셔	Arandela	
5	**VOE 11803163**	24					Hexagon screw	Vis tête hexagonale	Sechskantschraube	스크류	Tornillo hexago	
6	**VOE 11803009**	24					Washer	Rondelle	Scheibe	와셔	Arandela	
7	**VOE 11802639**	24					Screw	Vis	Schraube	스크류	Tornillo	

1	**602.10151**	
2		
3		
4		
5		

Corona de giro
선회링
Drehkranz
Couronne d'orientation
Slewing ring

Catalogue id	Group
20048	**492**
Illustr. No **1010516**	Section **200**
Issue **VOE 74C9920048**	Page **231**

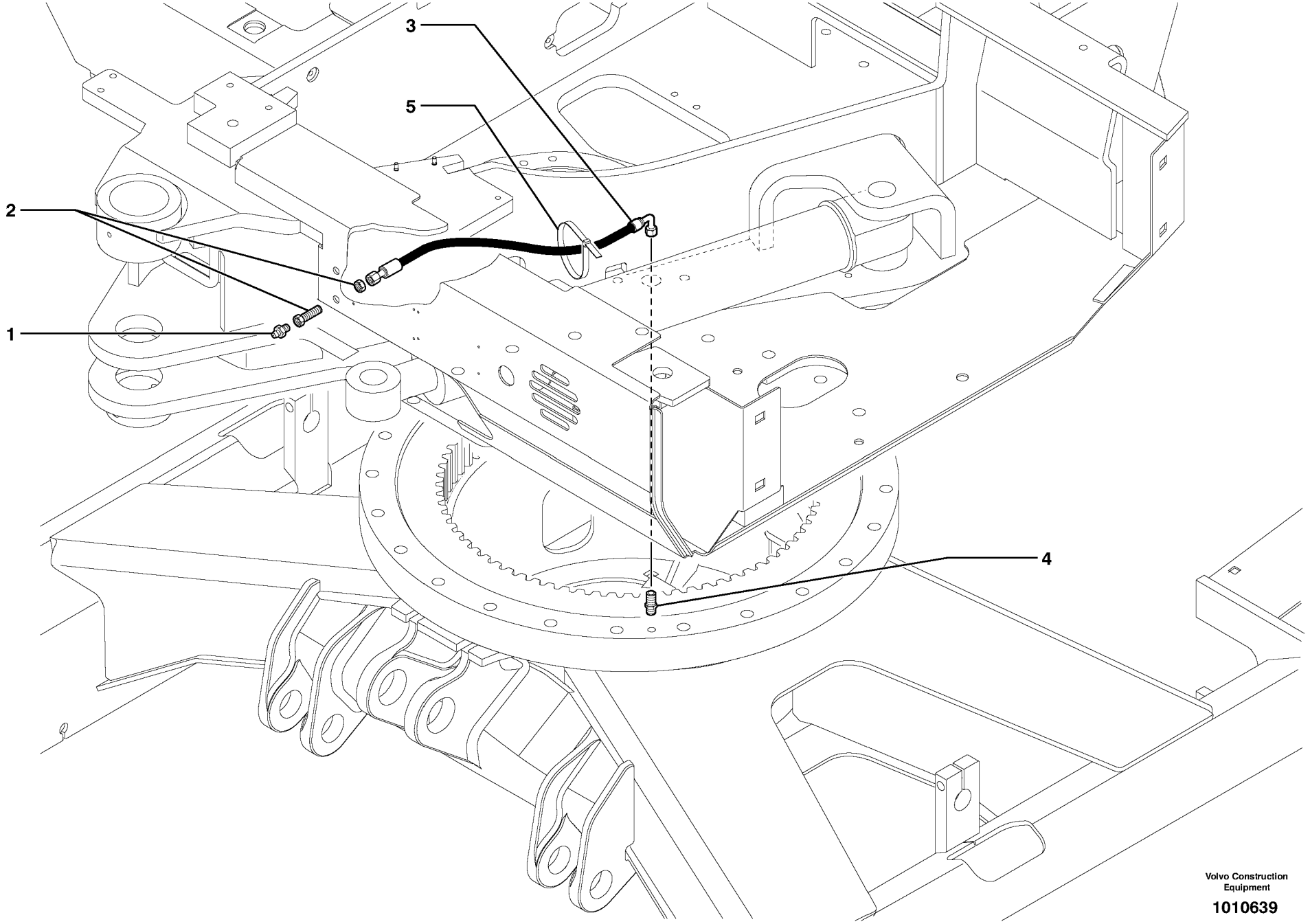

Volvo Construction Equipment

1010639

Fig.	Part No.	Quantity 1	2	3	PS	KIT	Description	Dénomination	Bezeichnung	품명	Denominación	Notes
1	**VOE 966786**	1					Lub Nipple	Graisseur	Schmiernippel	윤활용 니플	Engrasador	
2	**VOE 11802456**	1					Nipple	Raccord	Nippel	니플	Niple	
3	**VOE 11803391**	1					Hose	Durit	Schlauch	호스	Tubo flexible	
4	**VOE 11802457**	1					Union	Teton Connexion	Anschlussnippel	유니언	Niple Conexcion	
5	**VOE 11043109**	1			SS		Cable Tie	Serre-cable	Kabelbinder	타이	Abrazadera	

1	**602.10151**	
2		
3		
4		
5		

Lubricación (corona de giro)
윤활 (선회링)
Schmierung (Drehkranz)
Graissage (couronne d'orientation)
Lubrication (slewing ring)

Catalogue id **20048**	Group **492**
Illustr. No **1010639**	Section **500**
Issue **VOE 74C9920048**	Page **233**

VOLVO

Construction Equipment

GROUP		Section	Page
716	Counterweight	100	241
718	Lower frame	100	243
718	Platform	500	245
775	Track tensioning (steel tracks)	100	247
775	Track tensioning (rubber tracks)	110	249
775	Sprocket	200	251
775	Steel tracks	300	253
775	Rubber tracks	400	255
775	Upper roller (steel and rubber tracks)	500	257
775	Lower roller (steel tracks)	600	259
775	Lower roller (rubber tracks)	610	261

GROUPE		Section	Page
716	Contrepoids	100	241
718	Châssis porteur	100	243
718	Passerelle	500	245
775	Tension des chenilles (chenilles acier)	100	247
775	Tension des chenilles (chenilles caoutchouc)	110	249
775	Barbotin	200	251
775	Chenilles acier	300	253
775	Chenilles caoutchouc	400	255
775	Galet supérieur (chenilles acier et caoutchouc)	500	257
775	Galet inférieur (chenilles en acier)	600	259
775	Galet inférieur (Chenilles caoutchouc)	610	261

GRUPPE		Abschnitt	Seite
716	Gegengewicht	100	241
718	Laufwerksrahmen	100	243
718	Plattform	500	245
775	Kettenspanngabeln (Stahlraupen)	100	247
775	Kettenspanngabeln (Gummiraupen)	110	249
775	Kettentrieb	200	251
775	Stahlraupen	300	253
775	Gummiraupen	400	255
775	Obere Rolle (Stahl- und Gummiraupen)	500	257
775	Untere Rolle (Stahlraupen)	600	259
775	Untere Rolle (Gummiraupen)	610	261

그룹		절	페이지
716	카운터 중량	100	241
718	하부 프레임	100	243
718	플랫폼	500	245
775	트랙 장력 (강철 트랙)	100	247
775	트랙 장력 (고무 트랙)	110	249
775	스프로켓	200	251
775	강철 트랙	300	253
775	고무 트랙	400	255
775	상부 롤러 (강철 및 고무 트랙)	500	257
775	하부 롤러 (강철 트랙)	600	259
775	하부 롤러 (고무 트랙)	610	261

GRUPO		Sección	Página
716	Contrapeso	100	241
718	Bastidor inferior	100	243
718	Plataforma	500	245
775	Tensado de orugas (orugas de acero)	100	247
775	Tensado de orugas (orugas de caucho)	110	249
775	Rueda motriz	200	251
775	Orugas de acero	300	253
775	Orugas de caucho	400	255
775	Rodillo superior (orugas de acero y caucho)	500	257
775	Rodillo inferior (orugas de acero)	600	259
775	Rodillo inferior (orugas de caucho)	610	261

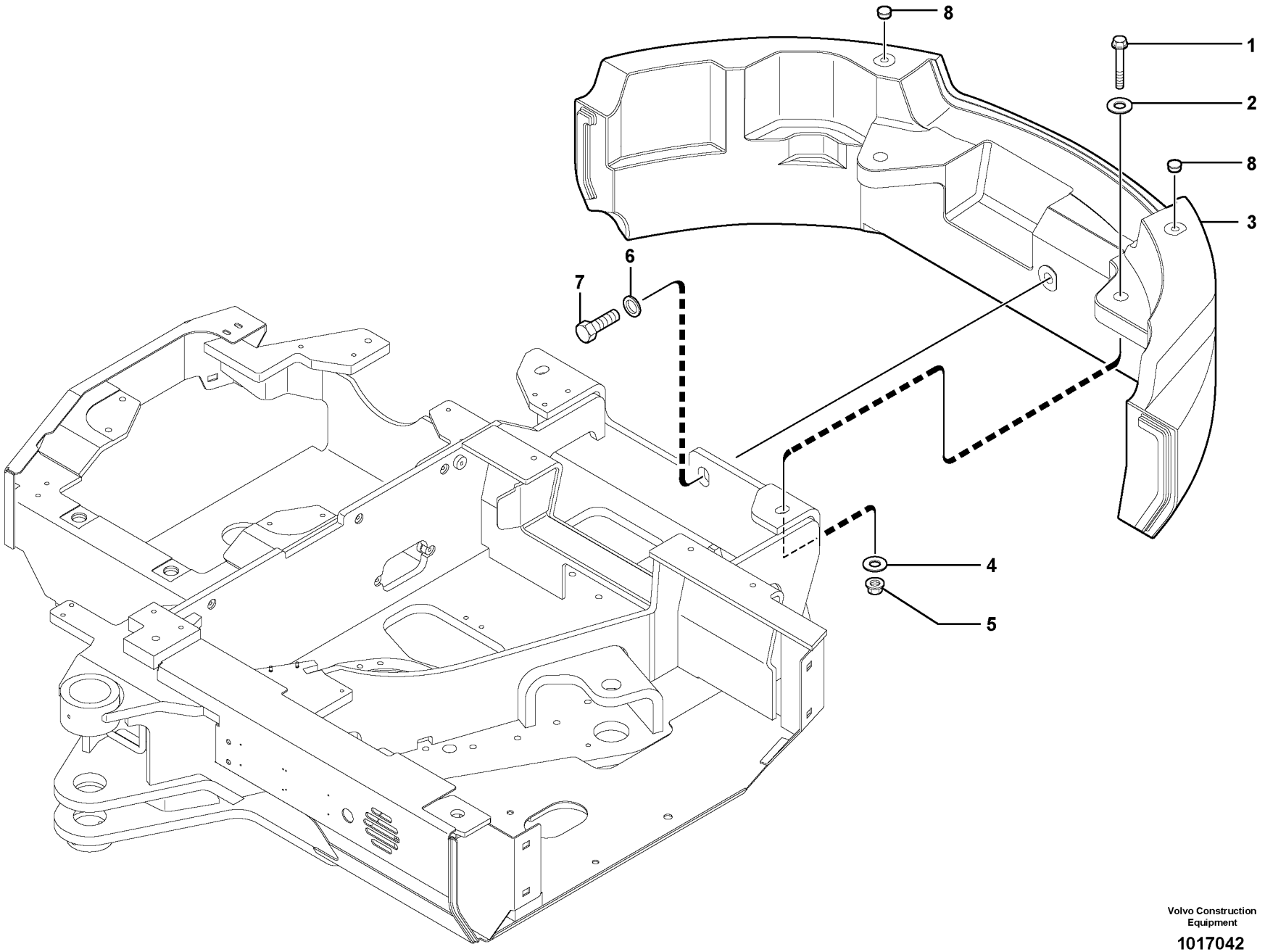

Volvo Construction Equipment

1017042

Fig.	Part No.	Quantity 1	2	3	P S	K I T	Description	Dénomination	Bezeichnung	품명	Denominación	Notes
1	**VOE 968298**	2					Flange screw	Vis à bride	Flanschschraube	플랜지 스크류	Torn embridado	
2	**VOE 983338**	2					Washer	Rondelle	Scheibe	와셔	Arandela	
3	**VOE 11801400**	1					Counterweight	Contrepoids	Gegengewicht	카운터웨이트	Contrapeso	
4	**VOE 983338**	2					Washer	Rondelle	Scheibe	와셔	Arandela	
5	**VOE 11804233**	2					Nut	Ecrou	Mutter	너트	Tuerca	
6	**VOE 983340**	1					Washer	Rondelle	Scheibe	와셔	Arandela	
7	**VOE 955405**	1			SS		Hexagon screw	Vis tête hexagonale	Sechskantschraube	스크류	Tornillo hexago	
8	**VOE 11806727**	2					Protecting Plug	Tampon Protect.	Sicher Stöpsel	보호 플러그	Tapon Protecc	

1		
2		
3		
4		
5		

Contrapeso
카운터 중량
Gegengewicht
Contrepoids
Counterweight

Catalogue id	Group
20048	**716**
Illustr. No **1017042**	Section **100**
Issue **VOE 74C9920048**	Page **241**

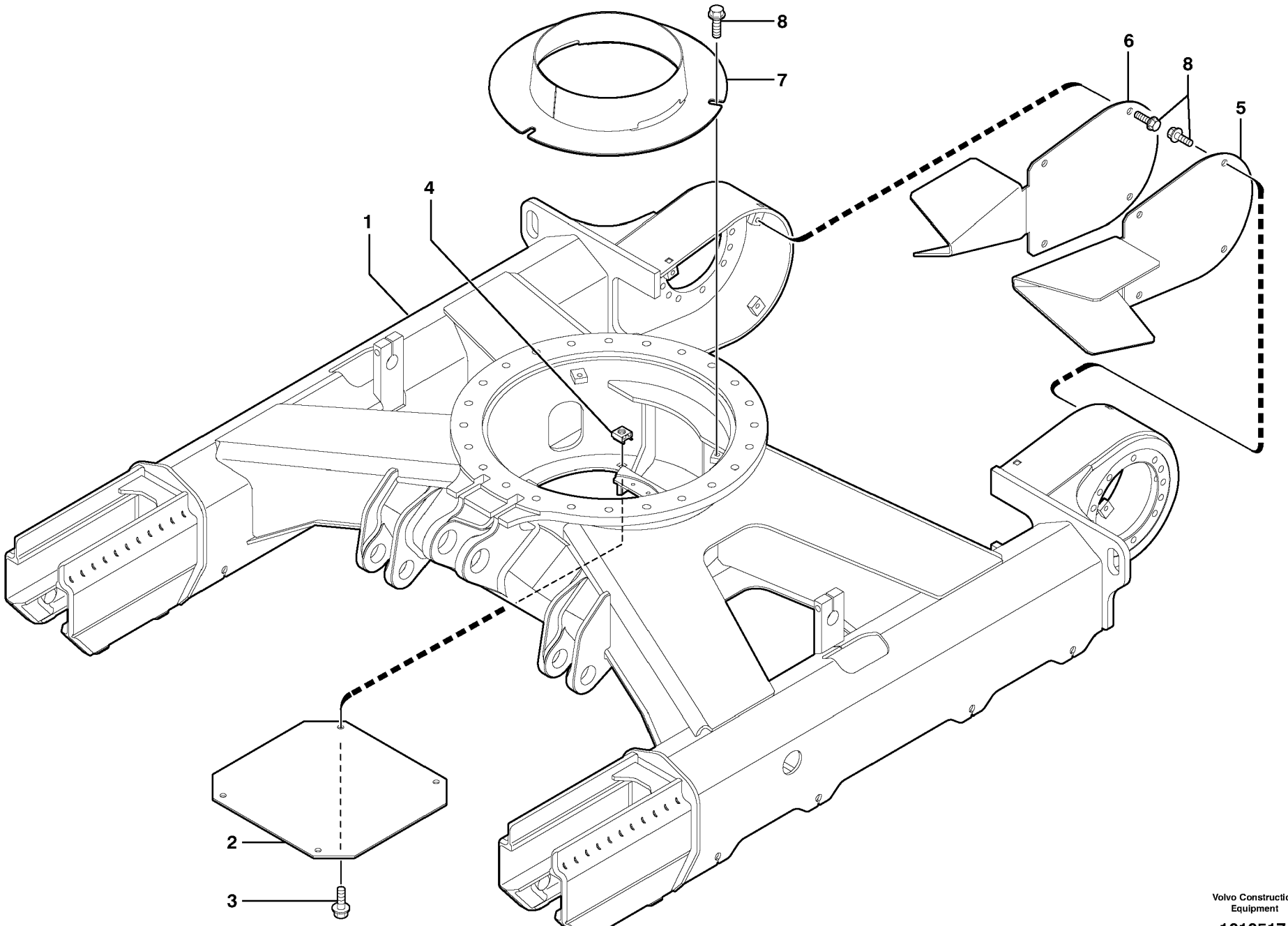

Volvo Construction Equipment

1010517

Fig.	Part No.	Quantity 1	2	3	PS	KIT	Description	Dénomination	Bezeichnung	품명	Denominación	Notes
1	**VOE 11802483**	1					Undercarriage Frame	Châssis porteur	Unterwagen	트랙 프레임	Bastidor de carro infe.	
2	**VOE 11802484**	1					Plate	Plaque	Platte	플레이트	Placa	
3	**VOE 946329**	4					Flange screw	Vis à bride	Flanschschraube	플랜지 스크류	Torn embridado	
4	**VOE 11802485**	4					Nut	Ecrou	Mutter	너트	Tuerca	
5	**VOE 11802486**	1					Cover	Capot	Haube	커버	Capo	
6	**VOE 11802487**	1					Cover	Capot	Haube	커버	Capo	
7	**VOE 11802488**	1					Ferrule	Bague Surete	Schneidring	이음관	Anillo Acoplam	
8	**VOE 11802582**	11					Screw	Vis	Schraube	스크류	Tornillo	

1	**602.10151**		**Bastidor inferior** 하부 프레임 **Laufwerksrahmen** **Châssis porteur** **Lower frame**	Catalogue id **20048**	Group **718**
2				Illustr. No **1010517**	Section **100**
3				Issue **VOE 74C9920048**	Page **243**
4					
5					

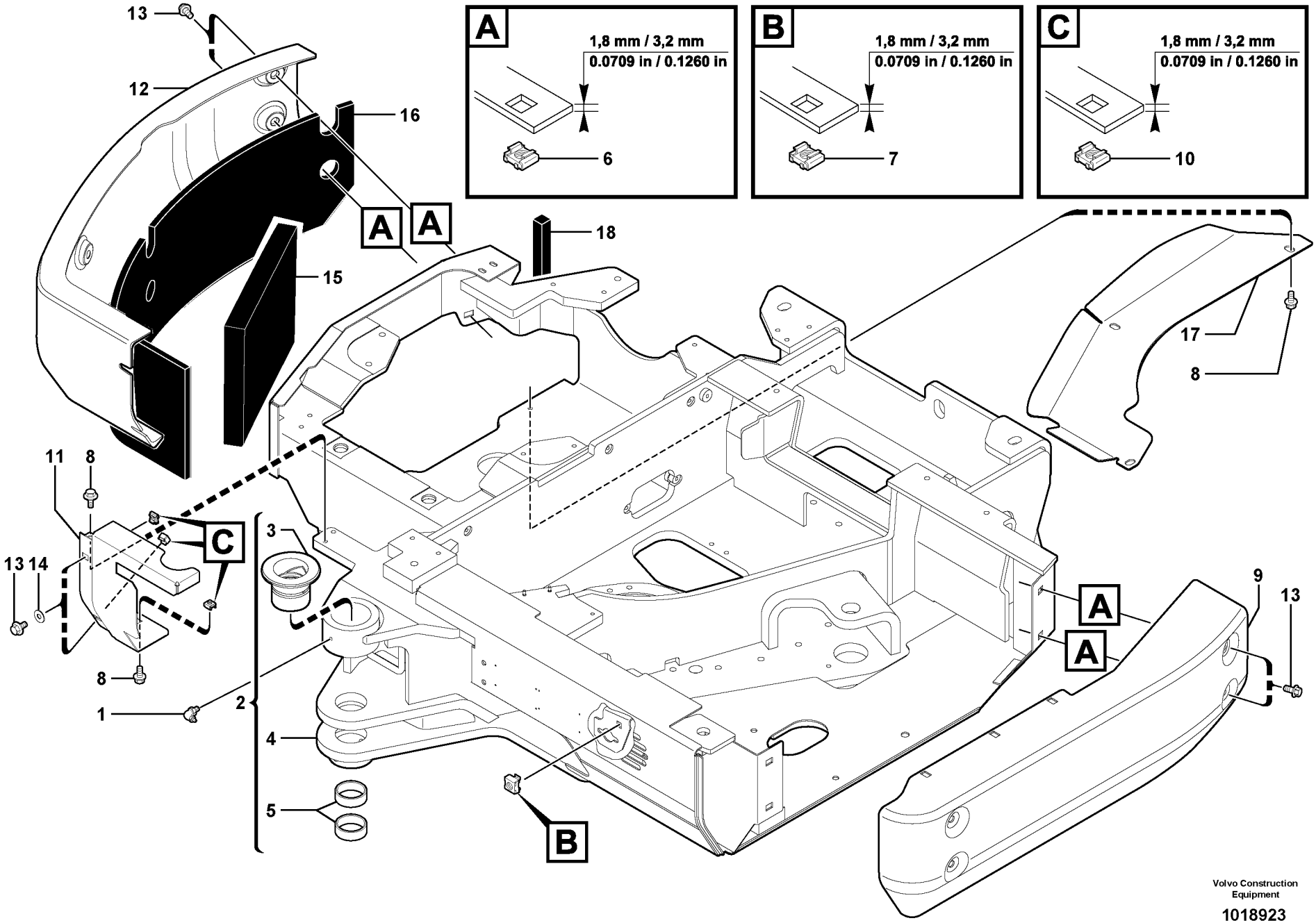
A
1,8 mm / 3,2 mm
0.0709 in / 0.1260 in
6
B
1,8 mm / 3,2 mm
0.0709 in / 0.1260 in
7
C
1,8 mm / 3,2 mm
0.0709 in / 0.1260 in
10
13
12
16
15
A
A
18
17
8
11
8
C
13
14
3
2
1
8
4
5
B
A
A
9
13
Volvo Construction Equipment
1018923

Fig.	Part No.	Quantity 1	2	3	PS	KIT	Description	Dénomination	Bezeichnung	품명	Denominación	Notes
1	**VOE 983719**	1					Lubricating nipple	Graisseur	Schmiernippel	윤활 니플	Engrasador	
2	**VOE 11801433**	1					Frame	Chassis	Rahmen	프레임	Bastidor	
3	**VOE 11802453**	1					•Bushing	•Bague	•Buchse	• 부싱	•Casquillo	
4		1			NS		•Platform	•Plate-forme	•Plattform	• 플랫홈	•Plataforma	ORDER ITEM NO 2
5	**VOE 11803606**	2					•Bushing	•Bague	•Buchse	• 부싱	•Casquillo	
6	**VOE 11802303**	8					Nut	Ecrou	Mutter	너트	Tuerca	
7	**VOE 11802283**	1					Nut	Ecrou	Mutter	너트	Tuerca	
8	**VOE 946441**	4					Flange screw	Vis à bride	Flanschschraube	플랜지 스크류	Torn embridado	
9	**VOE 11801653**	1					Body	Carcasse	Rumpf	본체	Cuerpo	
10	**VOE 11802303**	3					Nut	Ecrou	Mutter	너트	Tuerca	
11	**VOE 11801199**	1					Plate	Plaque	Platte	플레이트	Placa	
12	**VOE 11801114**	1					Body	Carcasse	Rumpf	본체	Cuerpo	
13	**VOE 946329**	10					Flange screw	Vis à bride	Flanschschraube	플랜지 스크류	Torn embridado	
14	**VOE 11806638**	2					Washer	Rondelle	Scheibe	와셔	Arandela	
15	**VOE 11804271**	1					Insulating plate	Plaque isolante	Isolierplatte	절연 플레이트	Placa aislamiento	S/N - 602.10606
16	**VOE 11807532**	1					Insulating plate	Plaque isolante	Isolierplatte	절연 플레이트	Placa aislamiento	S/N 602.10607 -
17	**VOE 11807531**	1					Plate	Plaque	Platte	플레이트	Placa	S/N 602.10607 -
18	**VOE 11807541**	1					Insulating plate	Plaque isolante	Isolierplatte	절연 플레이트	Placa aislamiento	S/N 602.10607 -

1	**602.10151**	
2		
3		
4		
5		

Plataforma
플랫폼
Plattform
Passerelle
Platform

Catalogue id	Group
20048	**718**
Illustr. No **1018923**	Section **500**
Issue **VOE 74C9920048**	Page **245**

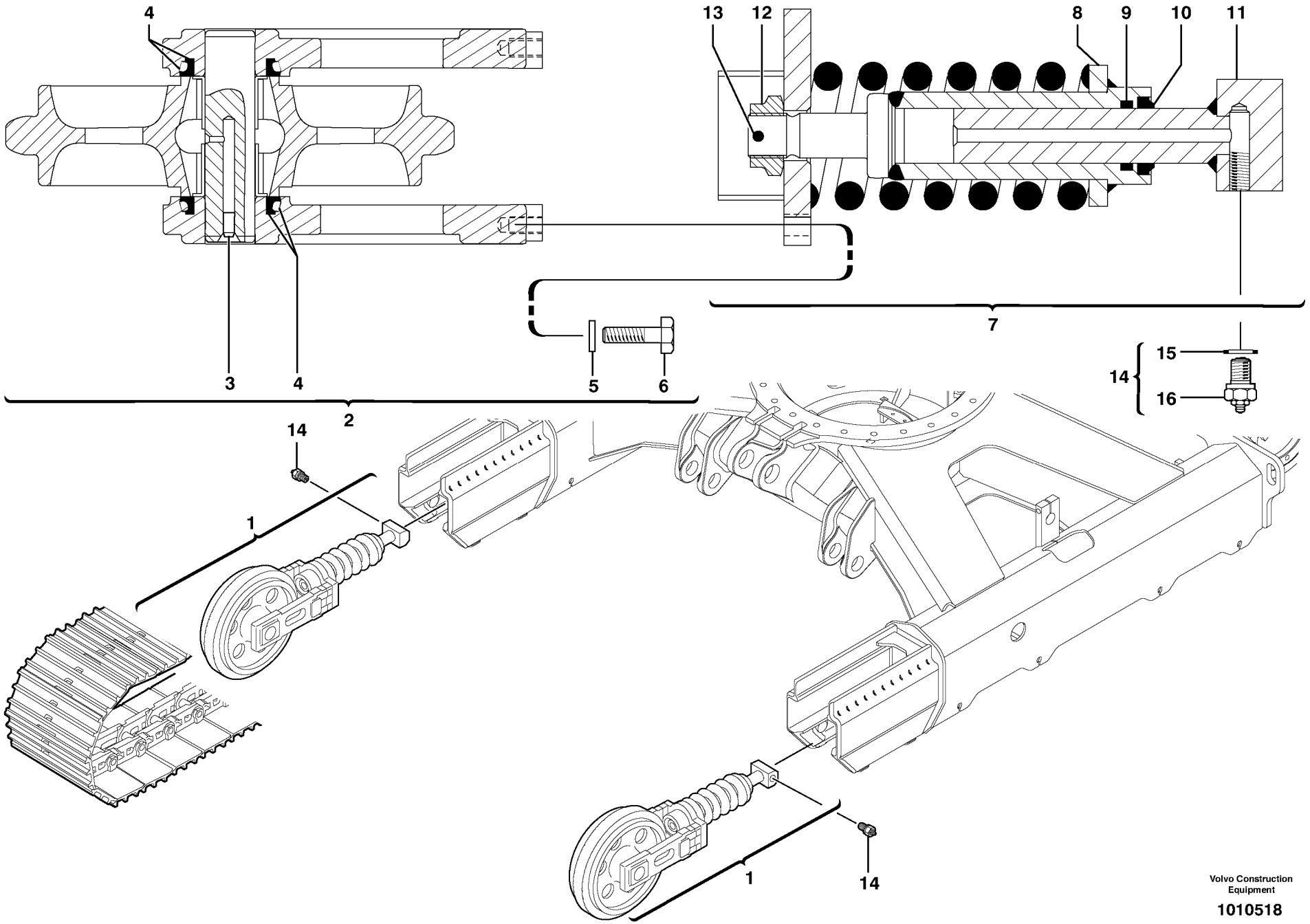

Volvo Construction Equipment

1010518

Fig.	Part No.	Quantity 1	2	3	PS	KIT	Description	Dénomination	Bezeichnung	품명	Denominación	Notes
1	**VOE 11802695**	2					Tensioner	Tendeur	Spanner	장력 조정기	Tensor	
2	**PJ 7417386**	1					•Tension wheel	•Galet tendeur	•Spannrad	• 인장바퀴	•Rueda de tensión	
3	**VOE 11713157**	1					••Plug	••Bouchon	••Stopfen	•• 플러그	••Tapon	
4	**PJ 7411504**	2					••Gasket	••Joint	••Dichtung	•• 가스켓	••Junta	
5	**PJ 4470017**	4					••Lock Washer	••Rondel.verroui.	••Sicher Scheibe	•• 록 와셔	••Arandel Segurid	
6	**PJ 7417390**	4					••Screw	••Vis	••Schraube	•• 스크류	••Tornillo	
7	**PJ 7417387**	1					•Spring carrier	•Porte-ressort	•Federträger	• 스프링 캐리어	•Portaresorte	
8	**PJ 7417384**	1					••Cylinder	••Verin	••Zylinder	•• 실린더	••Cilindro	
9	**PJ 7417385**	1					••Seal	••Joint	••Dichtring	•• 시일	••Junta	
10	**PJ 7417389**	1					••Seal	••Joint	••Dichtring	•• 시일	••Junta	
11	**PJ 7417383**	1					••Piston	••Piston	••Kolben	•• 피스톤	••Piston	
12	**PJ 7418413**	1					••Nut	••Ecrou	••Mutter	•• 너트	••Tuerca	
13	**PJ 7418414**	1					••Pin	••Goupille	••Stift	•• 핀	••Pasador	
14	**VOE 11802696**	2					Reed Valve	Clapet	Ventillamelle		Valvula Lamina	
15	**PJ 7411529**	1					•Seal	•Joint	•Dichtring	• 시일	•Junta	
16		1			NS		•Reed Valve	•Clapet	•Ventillamelle	•	•Valvula Lamina	ORDER ITEM NO 14

1	**602.10151**	
2		
3		
4		
5		

Tensado de orugas (orugas de acero)
트랙 장력 (강철 트랙)
Kettenspanngabeln (Stahlraupen)
Tension des chenilles (chenilles acier)
Track tensioning (steel tracks)

Catalogue id **20048**	Group **775**
Illustr. No **1010518**	Section **100**
Issue **VOE 74C9920048**	Page **247**

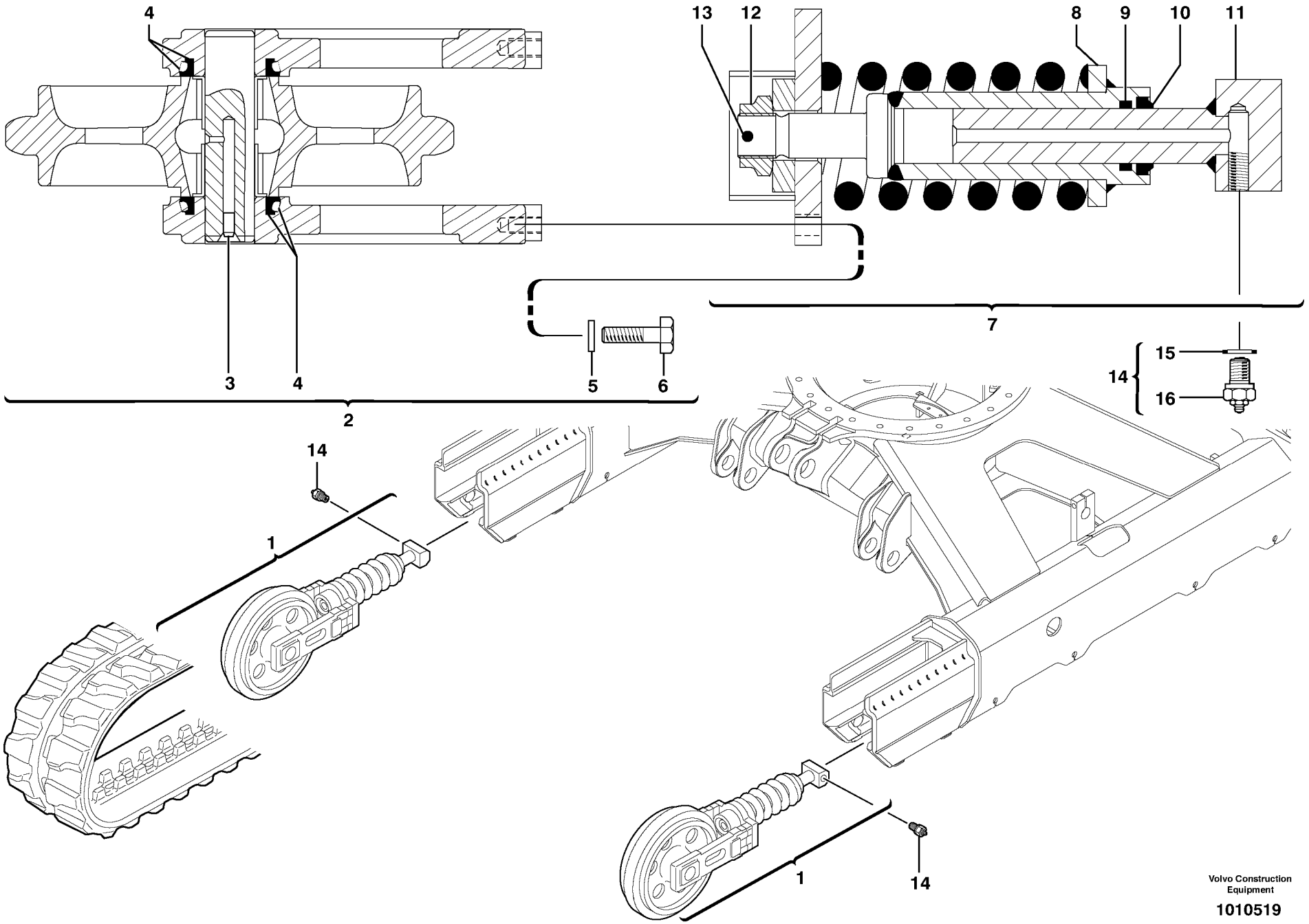

Volvo Construction Equipment

1010519

Fig.	Part No.	Quantity 1	2	3	PS	KIT	Description	Dénomination	Bezeichnung	품명	Denominación	Notes
1	**VOE 11802702**	2					Tensioner	Tendeur	Spanner	장력 조정기	Tensor	
2	**PJ 7417386**	1					•Tension wheel	•Galet tendeur	•Spannrad	• 인장바퀴	•Rueda de tensión	
3	**VOE 11713157**	1					••Plug	••Bouchon	••Stopfen	•• 플러그	••Tapon	
4	**PJ 7411504**	2					••Gasket	••Joint	••Dichtung	•• 가스켓	••Junta	
5	**PJ 4470017**	4					••Lock Washer	••Rondel.verroui.	••Sicher Scheibe	•• 록 와셔	••Arandel Segurid	
6	**PJ 7417390**	4					••Screw	••Vis	••Schraube	•• 스크류	••Tornillo	
7	**PJ 7417388**	1					•Spring carrier	•Porte-ressort	•Federträger	• 스프링 캐리어	•Portaresorte	
8	**PJ 7417384**	1					••Cylinder	••Verin	••Zylinder	•• 실린더	••Cilindro	
9	**PJ 7417385**	1					••Seal	••Joint	••Dichtring	•• 시일	••Junta	
10	**PJ 7417389**	1					••Seal	••Joint	••Dichtring	•• 시일	••Junta	
11	**PJ 7417383**	1					••Piston	••Piston	••Kolben	•• 피스톤	••Piston	
12	**PJ 7418413**	1					••Nut	••Ecrou	••Mutter	•• 너트	••Tuerca	
13	**PJ 7418414**	1					••Pin	••Goupille	••Stift	•• 핀	••Pasador	
14	**VOE 11802696**	2					Reed Valve	Clapet	Ventillamelle		Valvula Lamina	
15	**PJ 7411529**	1					•Seal	•Joint	•Dichtring	• 시일	•Junta	
16		1			NS		•Reed Valve	•Clapet	•Ventillamelle	•	•Valvula Lamina	ORDER ITEM NO 14

1	**602.10151**	
2		
3		
4		
5		

Tensado de orugas (orugas de caucho)
트랙 장력 (고무 트랙)
Kettenspanngabeln (Gummiraupen)
Tension des chenilles (chenilles caoutchouc)
Track tensioning (rubber tracks)

Catalogue id **20048**	Group **775**
Illustr. No **1010519**	Section **110**
Issue **VOE 74C9920048**	Page **249**

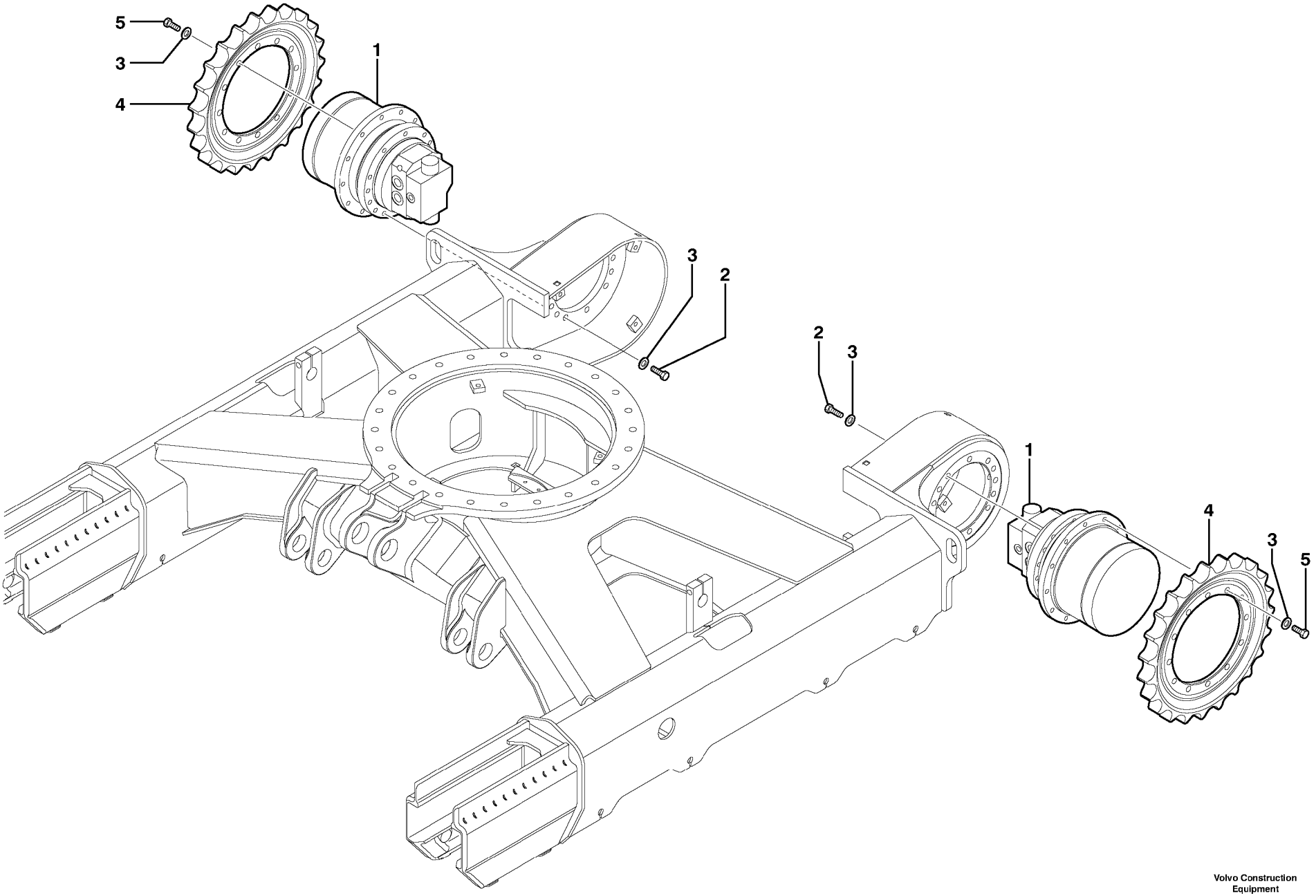

Volvo Construction Equipment

1010520

Fig.	Part No.	Quantity 1	2	3	PS	KIT	Description	Dénomination	Bezeichnung	품명	Denominación	Notes
1		2					Gear-motor	Motoréducteur	Getriebemotor	기어 모터	Motor reductor	See group 441, Page 211
2	**VOE 978933**	26					Screw	Vis	Schraube	스크류	Tornillo	
3	**VOE 955897**	50			SS		Washer	Rondelle	Scheibe	와셔	Arandela	
4	**VOE 11802523**	2					Sprocket	Barbotin	Kettenrad	스프로켓	Rueda de cadena	
5	**VOE 978932**	24					Screw	Vis	Schraube	스크류	Tornillo	

1	**602.10151**	
2		
3		
4		
5		

Rueda motriz
스프로켓
Kettentrieb
Barbotin
Sprocket

Catalogue id **20048**	Group **775**
Illustr. No **1010520**	Section **200**
Issue **VOE 74C9920048**	Page **251**

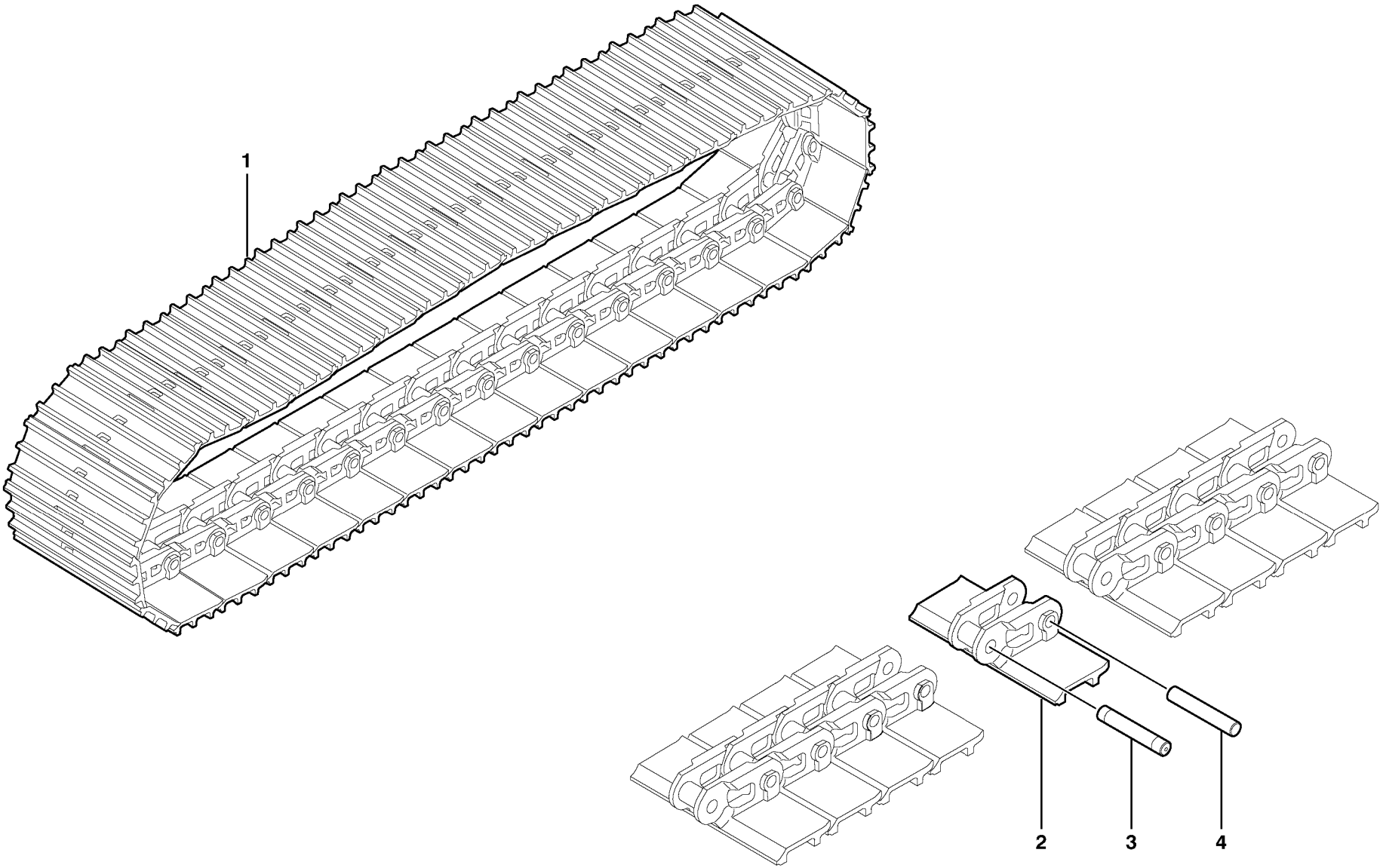
1
2
3
4

Fig.	Part No.	Quantity 1	2	3	PS	KIT	Description	Dénomination	Bezeichnung	품명	Denominación	Notes
1	**VOE 11802698**	2					Steel track	Chenille acier	Stahlraupen	강철 트랙	Orugas de acero	11839048 WID = 300mm/11.8110in
2	**PJ 7416683**	43					•Track Shoe	•Tuile chenilles	•Bodenplatte	• 트랙 슈	•Placa De Orugas	
3	**PJ 7416685**	1					•Track Bolt	•Axe de chenille	•Raupenbolzen	• 트랙 볼트	•Eje cadena oruga	MASTER
4	**PJ 7416684**	42					•Track Bolt	•Axe de chenille	•Raupenbolzen	• 트랙 볼트	•Eje cadena oruga	

1	**602.10151**	
2		
3		
4		
5		

Orugas de acero
강철 트랙
Stahlraupen
Chenilles acier
Steel tracks

Catalogue id	Group
20048	**775**
Illustr. No **1010521**	Section **300**
Issue **VOE 74C9920048**	Page **253**

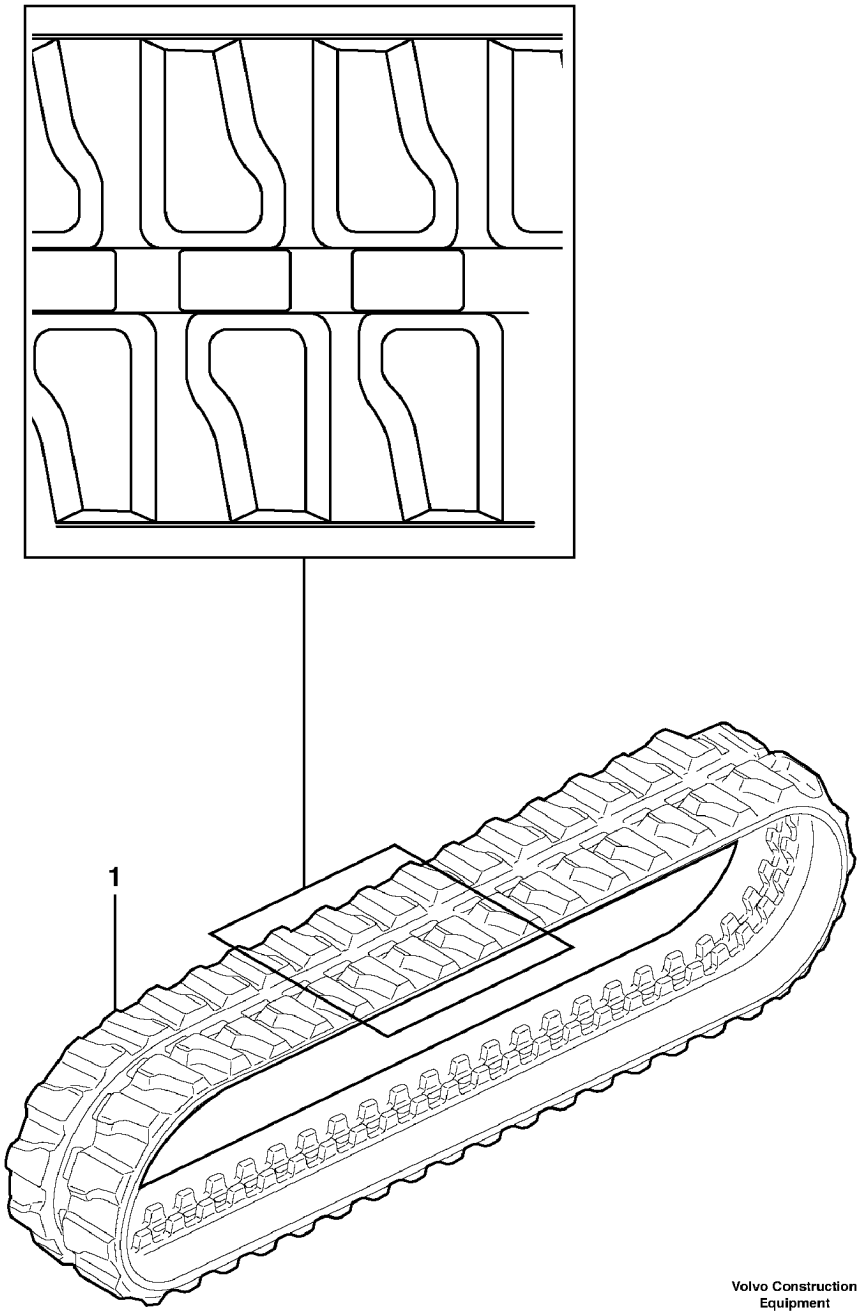

Volvo Construction Equipment

1010522

Fig.	Part No.	Quantity 1	2	3	PS	KIT	Description	Dénomination	Bezeichnung	품명	Denominación	Notes
1	**VOE 11802704**	2					Rubber tracks.....	Chenilles caoutchouc.	Gummiraupen.....	고무 트랙.....	Orugas de caucho.....	11839049 WID = 300mm/11.8110in

1	**602.10151**		**Orugas de caucho** 고무 트랙 **Gummiraupen** **Chenilles caoutchouc** **Rubber tracks**	Catalogue id **20048**	Group **775**
2				Illustr. No **1010522**	Section **400**
3				Issue **VOE 74C9920048**	Page **255**
4					
5					

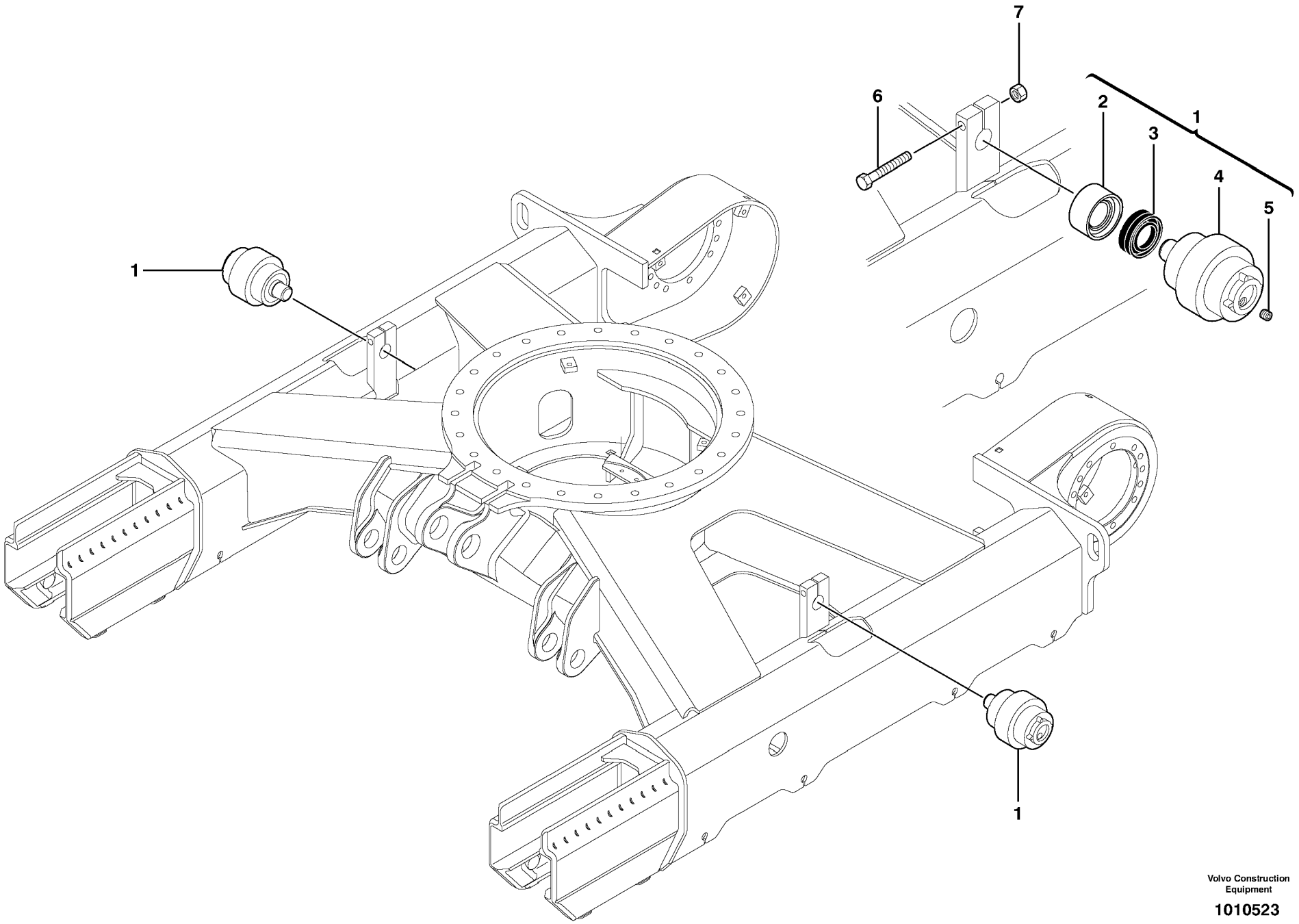

Volvo Construction Equipment

1010523

Fig.	Part No.	Quantity 1	2	3	PS	KIT	Description	Dénomination	Bezeichnung	품명	Denominación	Notes
1	**VOE 11802693**	2					Top Roller	Galet supérieur	Steutzrolle		Rodillo Superio	
2		1			NS		•Ptct Bushing	•Bague Protection	•Schutzhulse	• 보호 부싱	•Buje Proteccion	ORDER ITEM NO 1
3	**PJ 7417500**	1					•Gasket	•Joint	•Dichtung	• 가스켓	•Junta	
4		1			NS		•Body	•Corps	•Körper	• 몸체	•Cuerpo	ORDER ITEM NO 1
5	**PJ 7417372**	1					•Plug	•Bouchon	•Stopfen	• 플러그	•Tapon	
6	**VOE 13965196**	2					Screw	Vis	Schraube	스크류	Tornillo	
7	**VOE 971099**	2					Flange Lock Nut	Contre écrou bride	Flanschmutter	플랜지 록 너트	Contratuer Embr	

1	**602.10151**		**Rodillo superior (orugas de acero y caucho)** **상부 롤러 (강철 및 고무 트랙)** **Obere Rolle (Stahl- und Gummiraupen)** **Galet supérieur (chenilles acier et caoutchouc)** **Upper roller (steel and rubber tracks)**
2			
3			
4			
5			

Catalogue id	Group
20048	**775**
Illustr. No **1010523**	Section **500**
Issue **VOE 74C9920048**	Page **257**

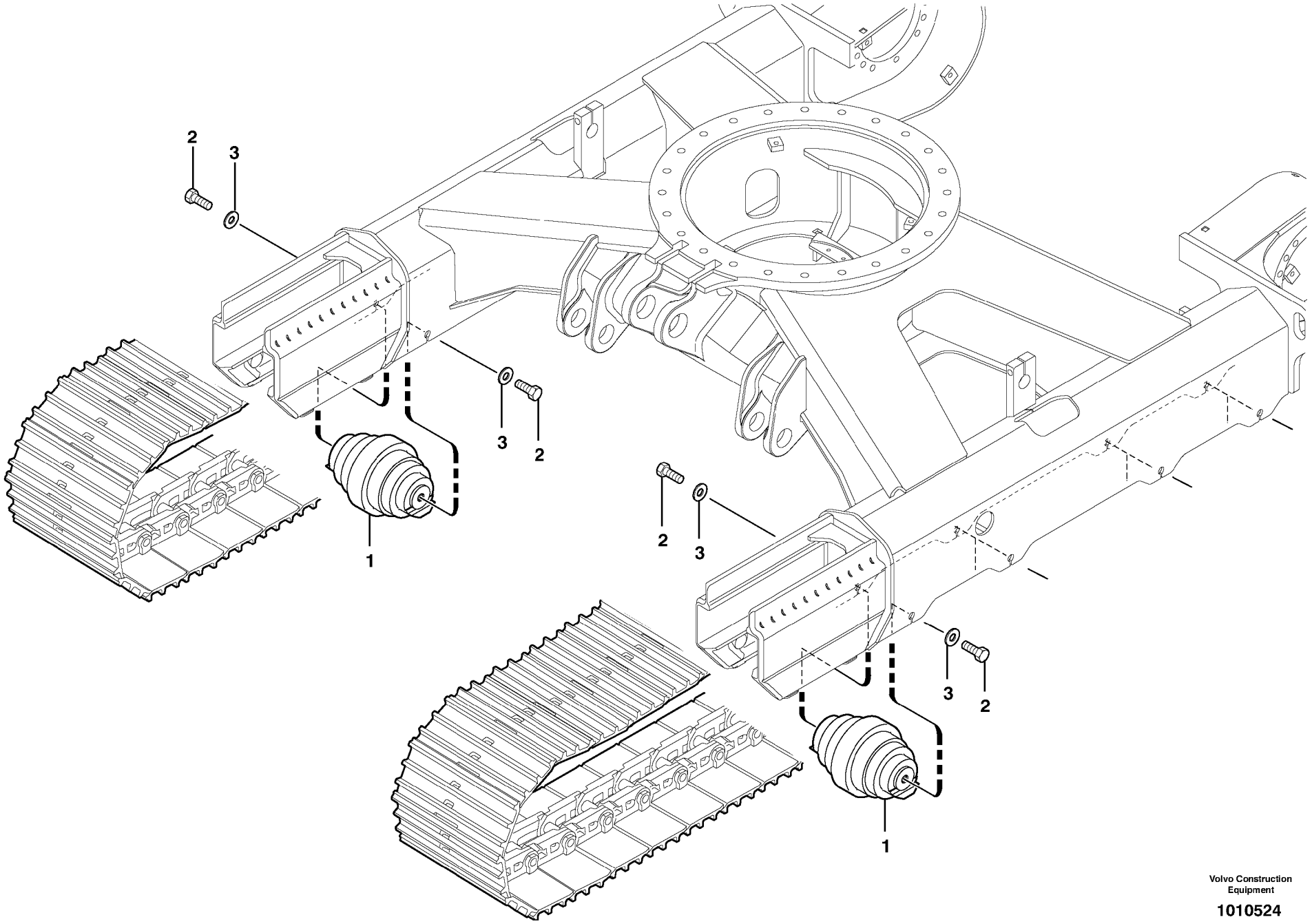

Volvo Construction Equipment

1010524

Fig.	Part No.	Quantity 1	2	3	PS	KIT	Description	Dénomination	Bezeichnung	품명	Denominación	Notes
1	**VOE 11802691**	8					Bottom Roller	Galet inférieur	Laufrolle		Rodillo Infer	
2	**VOE 11806993**	16					Hexagon screw	Vis tête hexagonale	Sechskantschraube	스크류	Tornillo hexago	
3	**VOE 983337**	16					Washer	Rondelle	Scheibe	와셔	Arandela	

1	**602.10151** →	→	**Rodillo inferior (orugas de acero)** 하부 롤러 (강철 트랙) **Untere Rolle (Stahlraupen)** **Galet inférieur (chenilles en acier)** **Lower roller (steel tracks)**
2			
3			
4			
5			

Catalogue id **20048**	Group **775**
Illustr. No **1010524**	Section **600**
Issue **VOE 74C9920048**	Page **259**

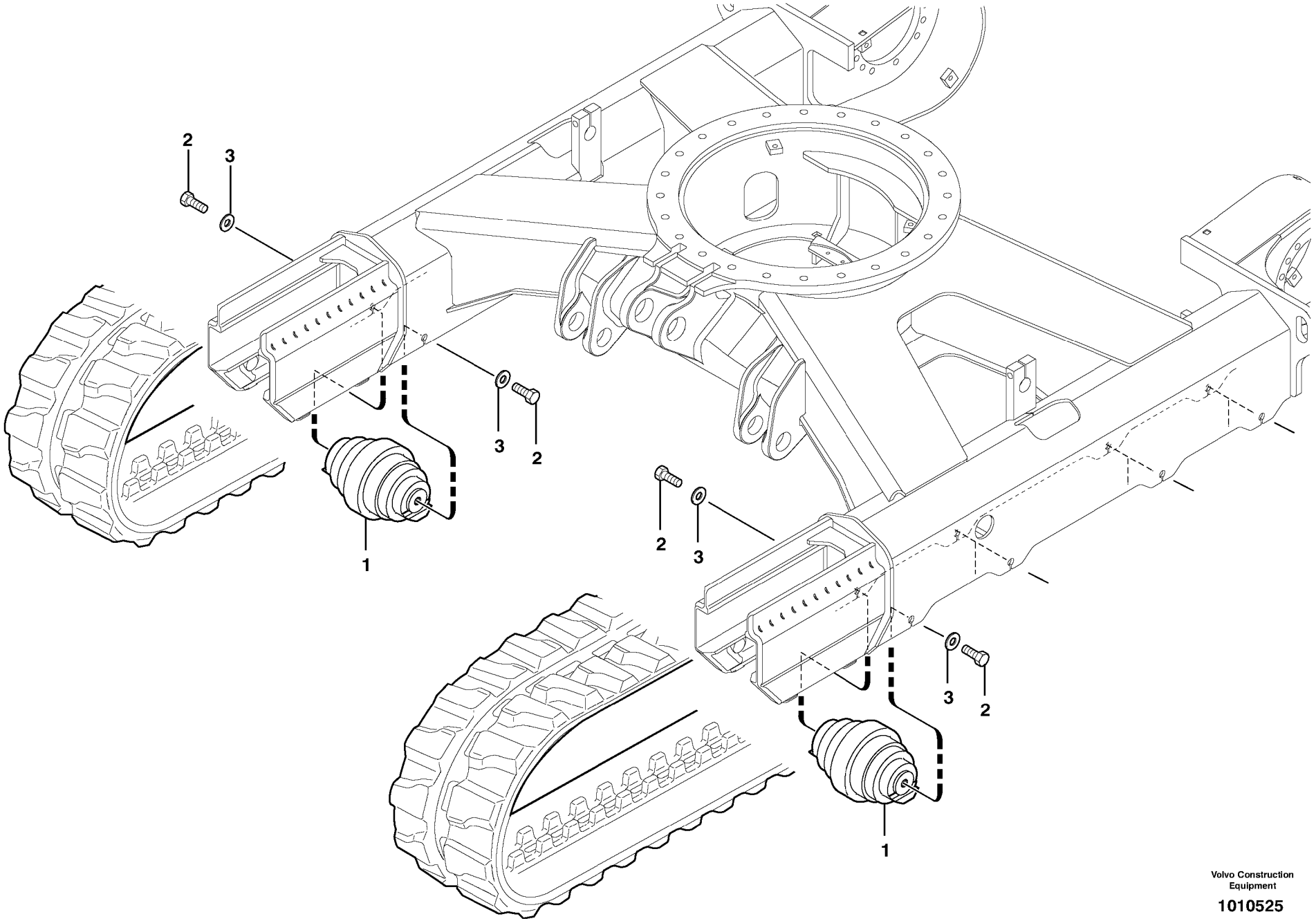

Volvo Construction Equipment

1010525

Fig.	Part No.	Quantity 1	2	3	PS	KIT	Description	Dénomination	Bezeichnung	품명	Denominación	Notes
1	**VOE 11802700**	8					Bottom Roller	Galet inférieur	Laufrolle		Rodillo Infer	
2	**VOE 11806993**	16					Hexagon screw	Vis tête hexagonale	Sechskantschraube	스크류	Tornillo hexago	
3	**VOE 983337**	16					Washer	Rondelle	Scheibe	와셔	Arandela	

1	**602.10151** →		**Rodillo inferior (orugas de caucho)** 하부 롤러 (고무 트랙) **Untere Rolle (Gummiraupen)** **Galet inférieur (Chenilles caoutchouc)** **Lower roller (rubber tracks)**
2			
3			
4			
5			

Catalogue id **20048**	Group **775**
Illustr. No **1010525**	Section **610**
Issue **VOE 74C9920048**	Page **261**

VOLVO

Construction Equipment

GROUP		Section	Page
810	Equipped cabin	100	269
810	Cab : sliding window (front)	400	271
810	Canopy	500	275
821	Engine coverage	100	277
821	Lock (engine coverage)	400	279
831	Cab : door	100	281
837	Cabin floor (standard and canopy)	100	285
837	Plating REAR	200	287
837	Protecting plates.	300	289
841	Rear-view mirrors on cab	100	291
843	Cab : glass	100	293
843	Cab : windshield	200	295
844	Cab : sliding window (right)	100	297
850	Operator's station	150	299
851	Cab : accessories	900	301
851	Cab : accessories / fastening	950	303
852	Suspended seat	150	305
852	Suspension seat assembly	200	309
852	Operator's station : plating	900	313
873	Cab heating installation	100	315
873	Heater	200	317
881	Operator's station	100	319
881	Operator's station : instrument panel (right)	200	321
881	Operator's station : instrument panel (left)	300	323
881	Instrument panel, left	400	325
881	Cab : console	500	327
882	Document compartment	550	329
884	Safety belt STD	100	331
884	Safety belt 2 ”	200	333
884	Safety belt 3 ”	300	335
896	Toolbox	100	337
896	Glue Kit for cab	200	339
896	Tools	300	341
897	Transfer : cab STD , USA	200	343
897	Transfer : canopy STD , USA	400	345

TABLE DES MATIÈRES

GROUPE		Section	Page
810	Cabine, équipée	100	269
810	Cabine : vitre coulissante (AV)	400	271
810	Toit de cabine ouverte	500	275
821	Capotage du moteur	100	277
821	Serrure (capotage moteur)	400	279
831	Cabine : porte	100	281
837	Plancher de cabine (standard et ouverte)	100	285
837	Capotage REAR	200	287
837	Tôles protectrices.	300	289
841	Retroviseurs sur la cabine	100	291
843	Cabine : vitres	100	293
843	Cabine : pare-brise	200	295
844	Cabine : vitre coulissante (côté droit)	100	297
850	Poste de conduite	150	299
851	Cabine : accessoires	900	301
851	Cabine : accessoires / fixation	950	303
852	Siège avec suspension	150	305
852	Suspension du siège	200	309
852	Poste de conduite : capotage	900	313
873	Installation du chauffage cabine	100	315
873	Chauffage	200	317
881	Poste de conduite	100	319
881	Poste de conduite : tableau de bord (côté droit)	200	321
881	Poste de conduite : tableau de bord (côté gauche)	300	323
881	Panneau d'instruments, à gauche	400	325
881	Cabine : console	500	327
882	Porte-document	550	329
884	Ceinture de sécurité STD	100	331
884	Ceinture de sécurité 2 ”	200	333
884	Ceinture de sécurité 3 ”	300	335
896	Caisse outil	100	337
896	Kit de collage pour cabine	200	339
896	Outillage	300	341
897	Autocollant : cabine STD , USA	200	343
897	Autocollant : cabine ouverte STD , USA	400	345

GRUPPE		Abschnitt	Seite
810	Kabine, kompl.	100	269
810	Kabine : Schiebefenster (vorn)	400	271
810	Überrollbügel	500	275
821	Motorhaube	100	277
821	Schloss (Motorhaube)	400	279
831	Kabine : Tür	100	281
837	Kabinenboden (Standard und Canopy)	100	285
837	Verdeck REAR	200	287
837	Schutzbleche.	300	289
841	Rückspiegel auf Kabine	100	291
843	Kabine : Glasscheiben	100	293
843	Kabine : Windschutzscheibe	200	295
844	Kabine : Schiebefenster (rechts)	100	297
850	Bedienungsstand	150	299
851	Kabine : Zubehör	900	301
851	Kabine : Zubehör / Befestigung	950	303
852	Sitz mit Federung	150	305
852	Gefederter Sitz, Einbau	200	309
852	Bedienungsstand : Verdeck	900	313
873	Einbau der Kabinenheizung	100	315
873	Heizung	200	317
881	Bedienungsstand	100	319
881	Bedienungsstand : Armaturenbrett (rechts)	200	321
881	Bedienungsstand : Armaturenbrett (links)	300	323
881	Armaturenbrett, links	400	325
881	Kabine : Konsole	500	327
882	Dokumentenfach	550	329
884	Sicherheitsgurt STD	100	331
884	Sicherheitsgurt 2 ”	200	333
884	Sicherheitsgurt 3 ”	300	335
896	Werkzeugkasten	100	337
896	Klebersatz für Kabine	200	339
896	Werkzeuge	300	341
897	Aufkleber : Kabine STD , USA	200	343
897	Aufkleber : Überrollbügel STD , USA	400	345



목차

그룹		절	페이지
810	운전실 조립체	100	269
810	운전실 : 슬라이딩 윈도우 (프런트)	400	271
810	선루프	500	275
821	후드	100	277
821	잠금장치 (후드)	400	279
831	운전실 : 도어	100	281
837	운전실 바닥 (표준 및 캐노피)	100	285
837	판금	200	287
837		300	289
841	운전실의 백미러	100	291
843	운전실 : 창유리	100	293
843	운전실 : 윈드스크린	200	295
844	운전실 : 슬라이딩 윈도우 (우측)	100	297
850	운전석	150	299
851	운전실 : 액세서리	900	301
851	운전실 : 액세서리 / 장착	950	303
852	스프링시트	150	305
852	스프링시트 조립체	200	309
852	운전석 : 판금	900	313
873	운전실 난방장치 설치	100	315
873	히터	200	317
881	운전석	100	319
881	운전석 : 계기판 (우측)	200	321
881	운전석 : 계기판 (좌측)	300	323
881	계기판 , 좌측	400	325
881	운전실 : 콘솔	500	327
882	문서 보관박스	550	329
884	안전 벨트	100	331
884	안전 벨트	200	333
884	안전 벨트	300	335
896	도구함	100	337
896	운전실용 접착제 키트	200	339
896	공구	300	341
897	트랜스퍼 (중도): 운전실	200	343
897	트랜스퍼 (중도): 선루프	400	345

GRUPO		Sección	Página
810	Cabina equipada	100	269
810	Cabina: puerta / estructura (frente)	400	271
810	Protección contra vuelcos	500	275
821	Capó	100	277
821	Cerradura (capó)	400	279
831	Cabina: puerta	100	281
837	Suelo de cabina (tipo estándar y cubierta)	100	285
837	Cubierta REAR	200	287
837	Chapas de protección.	300	289
841	Retrovisores en la cabina	100	291
843	Cabina: cristal	100	293
843	Cabina: parabrisas	200	295
844	Cabina: puerta / ventanas deslizantes (derecha)	100	297
850	Puesto de conducción	150	299
851	Cabina: accesorios	900	301
851	Cabina: accesorios / fijaciones	950	303
852	Asiento con suspensión	150	305
852	Montaje de asiento suspendido	200	309
852	Puesto de conducción : cubierta	900	313
873	Instalación del calefactor de cabina	100	315
873	Calefactor	200	317
881	Puesto de conducción	100	319
881	Puesto de conducción : tablero de instrumentos (derecho)	200	321
881	Puesto de conducción : tablero de instrumentos (izquierdo)	300	323
881	Cuadro de instrumentos, izquierdos	400	325
881	Cabina: consola	500	327
882	Compartimiento de documentos	550	329
884	Cinturón de seguridad STD	100	331
884	Cinturón de seguridad 2 ”	200	333
884	Cinturón de seguridad 3 ”	300	335
896	Caja de herramientas	100	337
896	Kit de cola para cabina	200	339
896	Herramientas	300	341
897	Calcomanía : cabina STD , USA	200	343
897	Calcomanía : protección contra vuelcos STD , USA	400	345

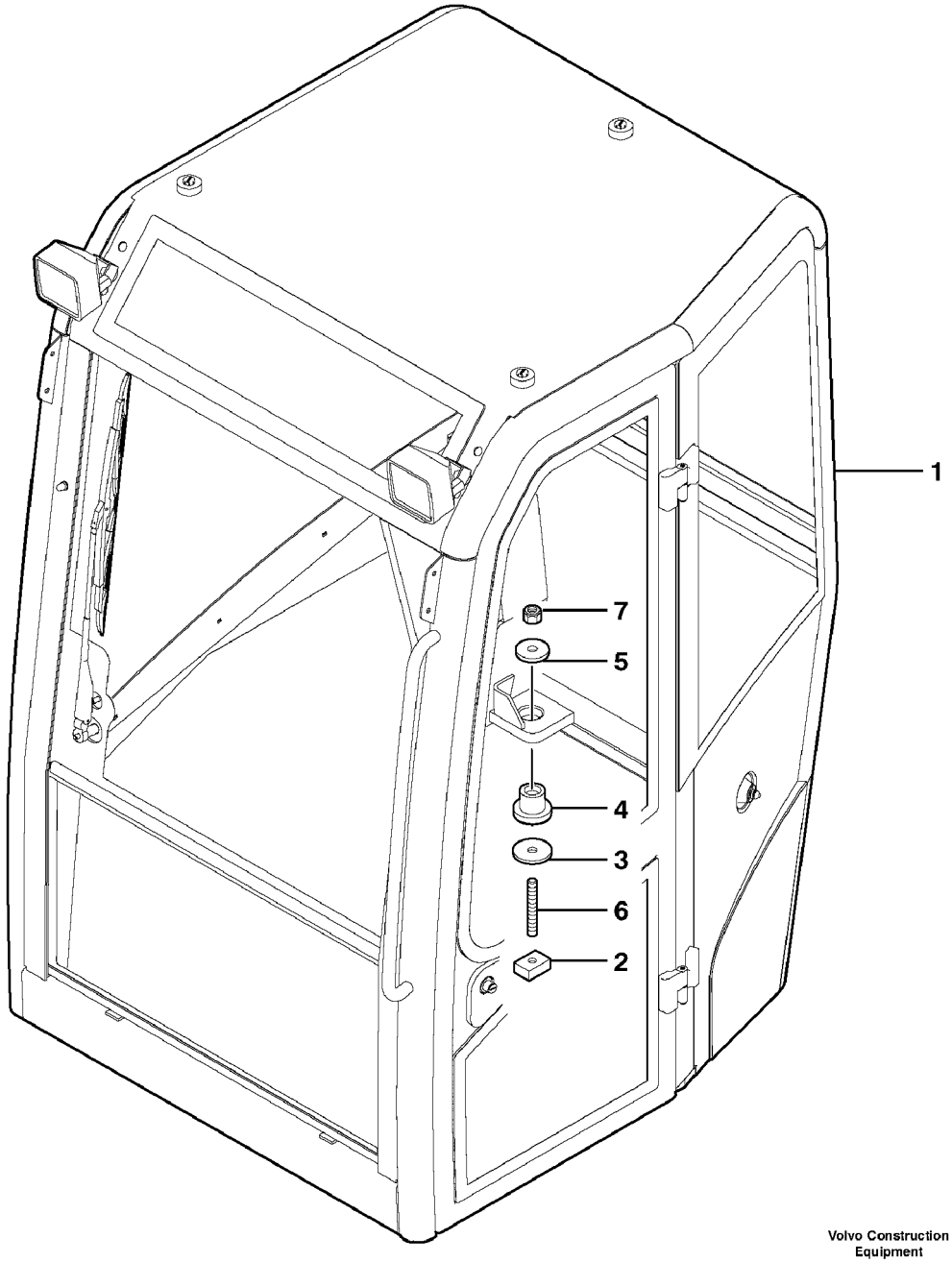

Volvo Construction Equipment

1010624

Fig.	Part No.	Quantity 1	2	3	PS	KIT	Description	Dénomination	Bezeichnung	품명	Denominación	Notes
1	**VOE 11801002**	1					Cab	Cabine	Kabine	운전실	Cabina	11839051
2	**VOE 11802302**	3					Nut	Ecrou	Mutter	너트	Tuerca	
3	**VOE 11802301**	4					Washer	Rondelle	Scheibe	와셔	Arandela	
4	**VOE 11803172**	4					Shock Absorber	Amortis.confort	Komf Stossdfr	쇼크 압쇼버	Amortiguador	
5	**VOE 11803173**	4					Washer	Rondelle	Scheibe	와셔	Arandela	
6	**VOE 11803174**	4					Stud	Goujon	Stiftschraube	스터드	Esparrago	
7	**VOE 11804233**	4					Nut	Ecrou	Mutter	너트	Tuerca	

1	**602.10151** →		**Cabina equipada** 운전실 조립체 **Kabine, kompl.** **Cabine, équipée** **Equipped cabin**
2			
3			
4			
5			

Catalogue id **20048**	Group **810**
Illustr. No **1010624**	Section **100**
Issue **VOE 74C9920048**	Page **269**

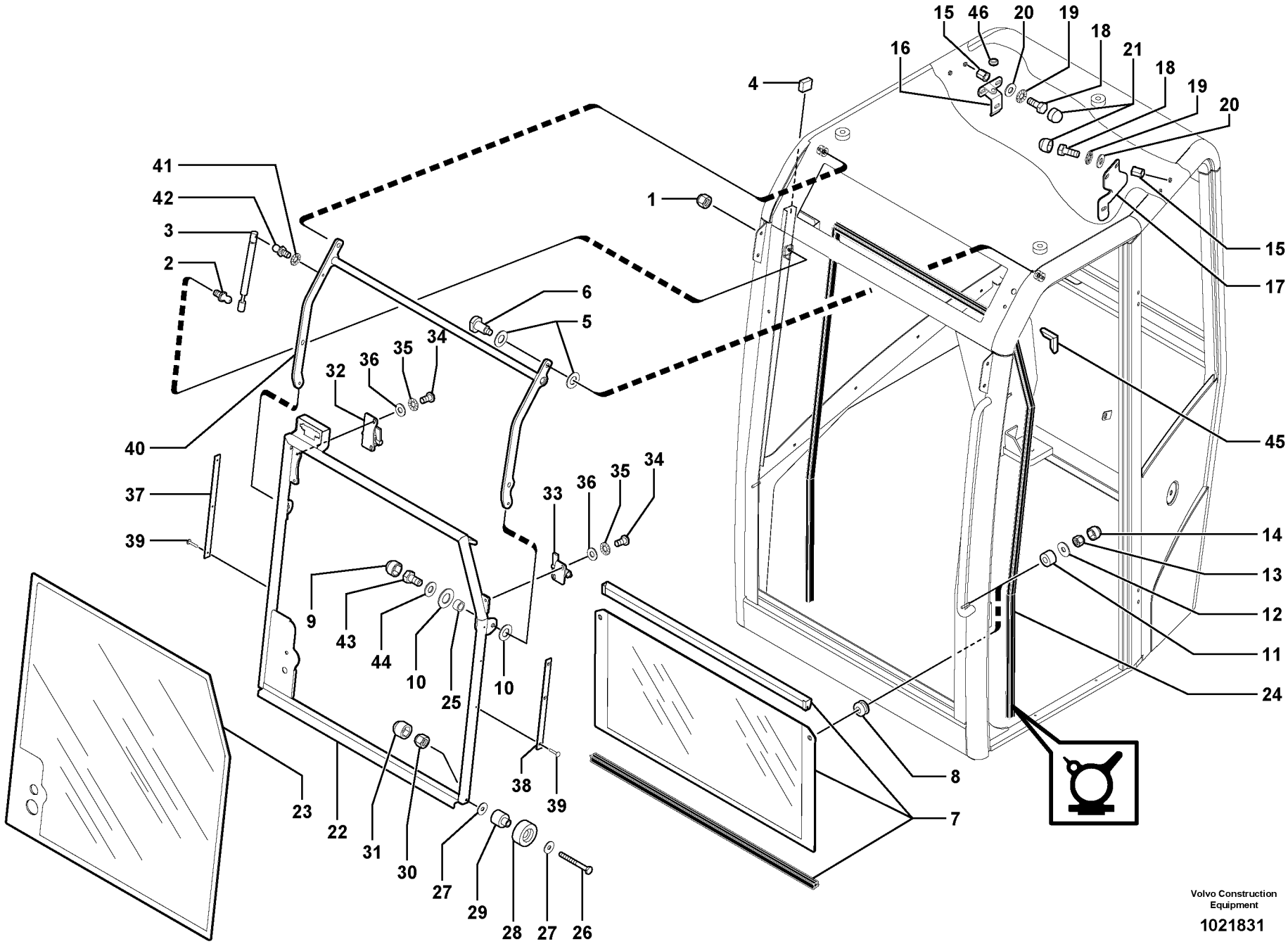

Volvo Construction Equipment

1021831

Fig.	Part No.	Quantity 1	2	3	PS	KIT	Description	Dénomination	Bezeichnung	품명	Denominación	Notes
1	**PJ 4450008**	1			SS		Lock nut	Contre-ecrou	Sicherungsmutter	록 너트	Contratuerca	
2	**PJ 7413811**	1					Link Bearing	Rotule	Gelenklager	링크 베어링	Rotula	
3	**VOE 11713186**	1					Gas Spring	Ressort Gaz	Gasfeder	개스 스프링	Resorte A Gas	
4	**VOE 11712691**	2					Stop, Shoulder	Butee	Gegenhalter	스톱 , 숄더	Tope	
5	**PJ 7412153**	4					Washer	Rondelle	Scheibe	와셔	Arandela	
6	**PJ 7412154**	2					Roller axle	Axe de galet	Rollenachse	롤러 축	Eje de rodillo	
7		1					Glass	Glace	Scheibe	글라스	Vidrio	See group 843, Page 295
8	**PJ 7415567**	2					Grommet	Passe fil	Durchführung	그로메트	Aislador pasapanel	
9	**PJ 7411700**	2					Plug	Bouchon	Stopfen	플러그	Tapon	
10	**PJ 7412153**	4					Washer	Rondelle	Scheibe	와셔	Arandela	
11	**VOE 11712650**	2					Bushing	Bague	Buchse	부싱	Casquillo	
12	**PJ 7416807**	2					Washer	Rondelle	Scheibe	와셔	Arandela	
13	**PJ 4450026**	2					Lock nut	Contre-ecrou	Sicherungsmutter	록 너트	Contratuerca	
14	**PJ 7411700**	2					Plug	Bouchon	Stopfen	플러그	Tapon	
15	**PJ 7418315**	4					Socket	Douille	Buchse	슬리브	Hembrilla	
16	**VOE 11712651**	1					Window Catch	Verrou Fenetre	Fenst Steller	윈도우 캐치	Fiador Ventana	
17	**VOE 11713180**	1					Window Catch	Verrou Fenetre	Fenst Steller	윈도우 캐치	Fiador Ventana	
18	**PJ 7417421**	4					Screw	Vis	Schraube	스크류	Tornillo	
19	**PJ 7411682**	4			SS		Lock Washer	Rondel.verroui.	Sicher Scheibe	록 와셔	Arandel Segurid	
20	**PJ 7417422**	4					Washer	Rondelle	Scheibe	와셔	Arandela	
21	**PJ 7411699**	4					Plug	Bouchon	Stopfen	플러그	Tapon	
22	**VOE 11713181**	1					Window Frame	Cadre Fenetre	Fensterrahmen	윈도우 프레임	Marco Ventana	
23		1					Windscreen	Pare brise	Frontscheibe	윈드스크린	Parabrisas	See group 843, Page 295
24	**PJ 7417856**	1					Seal	Joint	Dichtring	시일	Junta	
25	**PJ 7415584**	2					Bushing	Bague	Buchse	부싱	Casquillo	
26	**PJ 4380036**	2					Screw	Vis	Schraube	스크류	Tornillo	
27	**PJ 7416807**	4					Washer	Rondelle	Scheibe	와셔	Arandela	
28	**PJ 7415578**	2					Roller	Galet	Rolle	롤러	Rodillo	
29	**PJ 7415579**	2					Stub Axle	Axe	Steckachse	스터브 축	Gorron Eje	
30	**PJ 4450026**	2					Lock nut	Contre-ecrou	Sicherungsmutter	록 너트	Contratuerca	

1	**602.10151**	
2		
3		
4		
5		

Cabina: puerta / estructura (frente)
운전실 : 슬라이딩 윈도우 (프런트)
Kabine : Schiebefenster (vorn)
Cabine : vitre coulissante (AV)
Cab : sliding window (front)

Catalogue id	Group
20048	**810**
Illustr. No **1021831**	Section **400**
Issue **VOE 74C9920048**	Page **271**

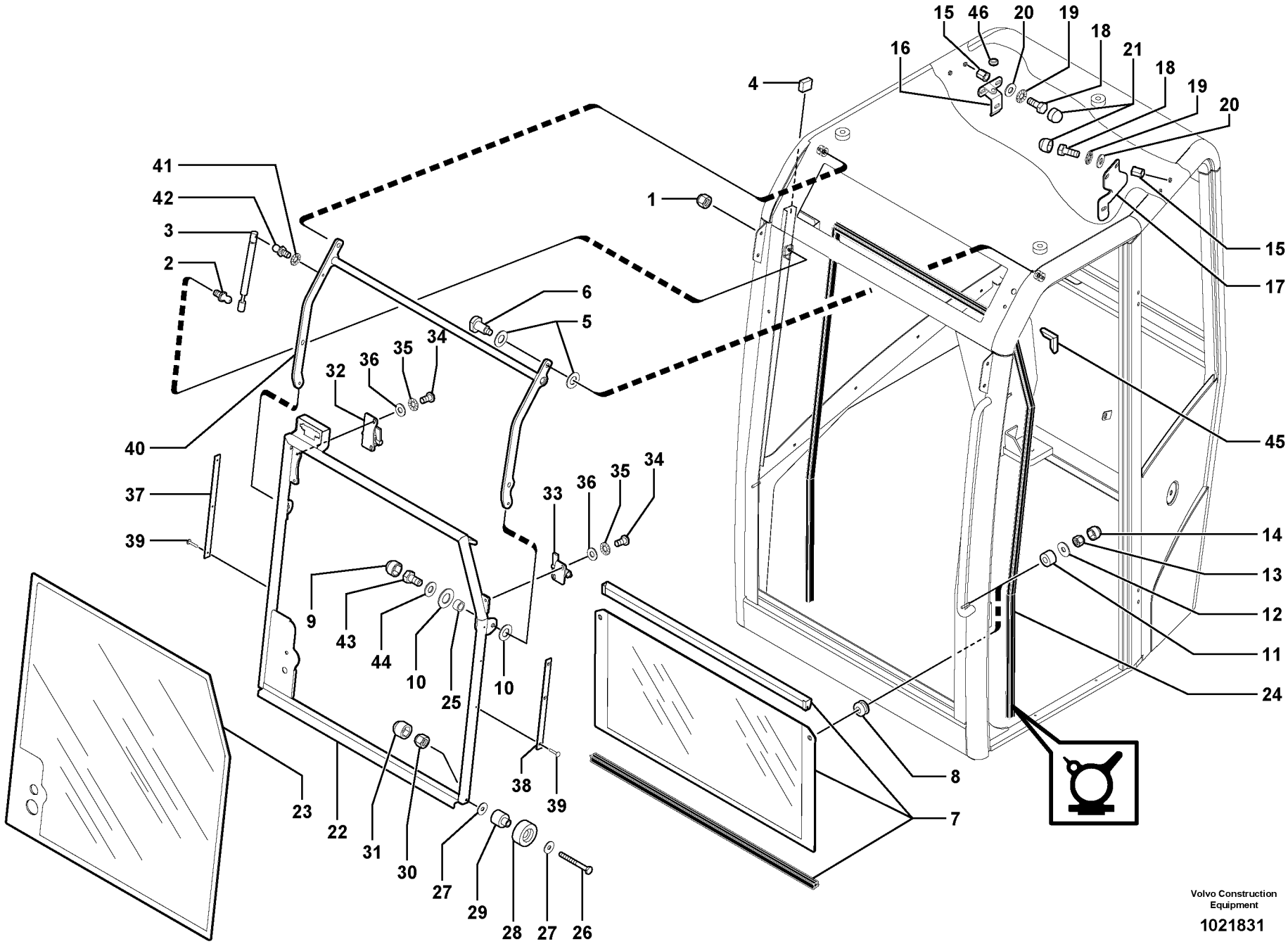

Volvo Construction Equipment

1021831

Fig.	Part No.	Quantity 1	2	3	PS	KIT	Description	Dénomination	Bezeichnung	품명	Denominación	Notes
31	**PJ 7411700**	2					Plug	Bouchon	Stopfen	플러그	Tapon	
32	**VOE 11712652**	1					Latch	Poignee Blocage	Knebel	래치	Mango Seguridad	
33	**VOE 11713183**	1					Latch	Poignee Blocage	Knebel	래치	Mango Seguridad	
34	**PJ 7418285**	4					Screw	Vis	Schraube	스크류	Tornillo	
35	**PJ 7411682**	4			SS		Lock Washer	Rondel.verroui	Sicher Scheibe	록 와셔	Arandel Segurid	
36	**PJ 7417422**	4					Washer	Rondelle	Scheibe	와셔	Arandela	
37	**PJ 7415576**	1					Plate	Plaque	Platte	플레이트	Placa	
38	**VOE 11713184**	1					Guide	Rail	Führung	가이드	Guia	
39	**VOE 11712671**	6					Rivet	Rivet	Niet	리벳	Remache	
40	**VOE 11713185**	1					Plate	Plaque	Platte	플레이트	Placa	CAB - 01/05
40	**VOE 11715807**	1					Plate	Plaque	Platte	플레이트	Placa	CAB 02/05 -
41	**PJ 7411682**	1			SS		Lock Washer	Rondel.verroui	Sicher Scheibe	록 와셔	Arandel Segurid	
42	**PJ 7413811**	1					Link Bearing	Rotule	Gelenklager	링크 베어링	Rotula	
43	**PJ 7417420**	2					Screw	Vis	Schraube	스크류	Tornillo	
44	**PJ 7417422**	2					Washer	Rondelle	Scheibe	와셔	Arandela	
45	**VOE 11714134**	REQ					Protection	Protection	Schutz	보호장치	Proteccion	
46	**PJ 7411688**	1					Grommet	Passe fil	Durchführung	그로메트	Aislador pasapanel	

1	**602.10151**	
2		
3		
4		
5		

Cabina: puerta / estructura (frente)
운전실 : 슬라이딩 윈도우 (프런트)
Kabine : Schiebefenster (vorn)
Cabine : vitre coulissante (AV)
Cab : sliding window (front)

Catalogue id	Group
20048	**810**
Illustr. No **1021831**	Section **400**
Issue **VOE 74C9920048**	Page **273**

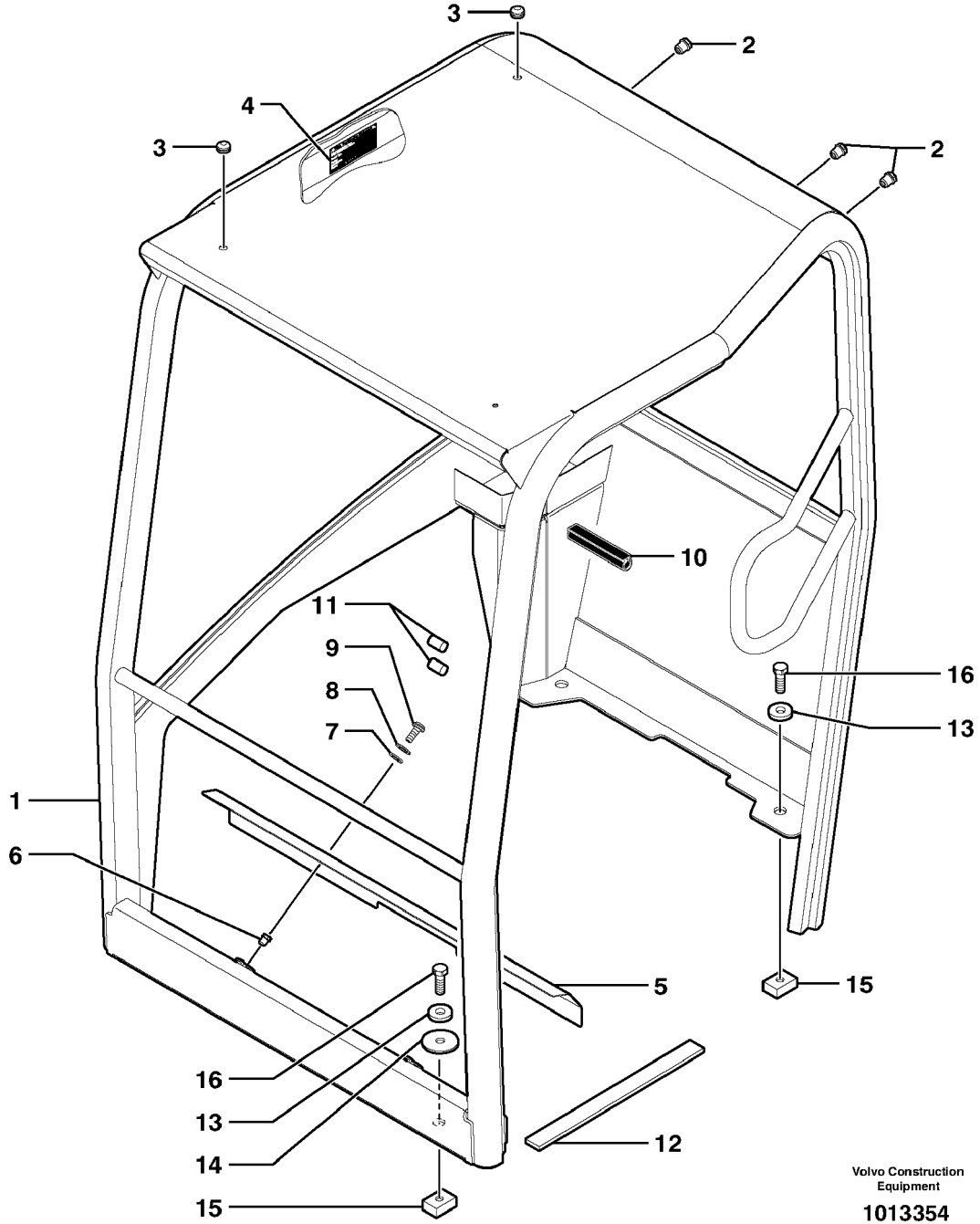

Volvo Construction Equipment

1013354

Fig.	Part No.	Quantity 1	2	3	PS	KIT	Description	Dénomination	Bezeichnung	품명	Denominación	Notes
1	**VOE 11803275**	1					Rib	Ossature	Spriegel	리브	Estructura	11839010
2	**PJ 7418515**	3					Socket	Douille	Buchse	슬리브	Hembrilla	
3	**PJ 7416921**	2					Grommet	Passe fil	Durchführung	그로메트	Aislador pasapanel	
4	**VOE 11713500**	1					Sign	Enseigne	Schild	사인	Letrero	
5	**VOE 11803180**	1					Foot Rest	Repose-pied	Fusstutze	풋 레스트	Apoyo Pie	
6	**PJ 7418315**	2					Socket	Douille	Buchse	슬리브	Hembrilla	
7	**PJ 7417422**	2					Washer	Rondelle	Scheibe	와셔	Arandela	
8	**PJ 7411682**	2			SS		Lock Washer	Rondel.verroui	Sicher Scheibe	록 와셔	Arandel Segurid	
9	**PJ 7413790**	2					Screw	Vis	Schraube	스크류	Tornillo	
10	**VOE 11803276**	1					Rubber Seal	Lèvre Caoutchouc	Gummilippe	고무 시일	Labio Goma	
11	**VOE 11803414**	2					Rubber Plate	Plaque Caoutchouc	Gummiplatte	고무판	Placa Goma	
12	**VOE 11804547**	1					Skid Protection	Anti-dérapant	Gleitschutz	미끄럼 방지	Anti-deslizante	
13	**VOE 11807071**	4					Washer	Rondelle	Scheibe	와셔	Arandela	
14	**VOE 11802301**	2					Washer	Rondelle	Scheibe	와셔	Arandela	
15	**VOE 11802302**	3					Nut	Ecrou	Mutter	너트	Tuerca	
16	**VOE 978937**	4					Hexagon screw	Vis tête hexagonale	Sechskantschraube	스크류	Tornillo hexago	

1	**602.10151**	
2		
3		
4		
5		

Protección contra vuelcos
선루프
Überrollbügel
Toit de cabine ouverte
Canopy

Catalogue id	Group
20048	**810**
Illustr. No **1013354**	Section **500**
Issue **VOE 74C9920048**	Page **275**

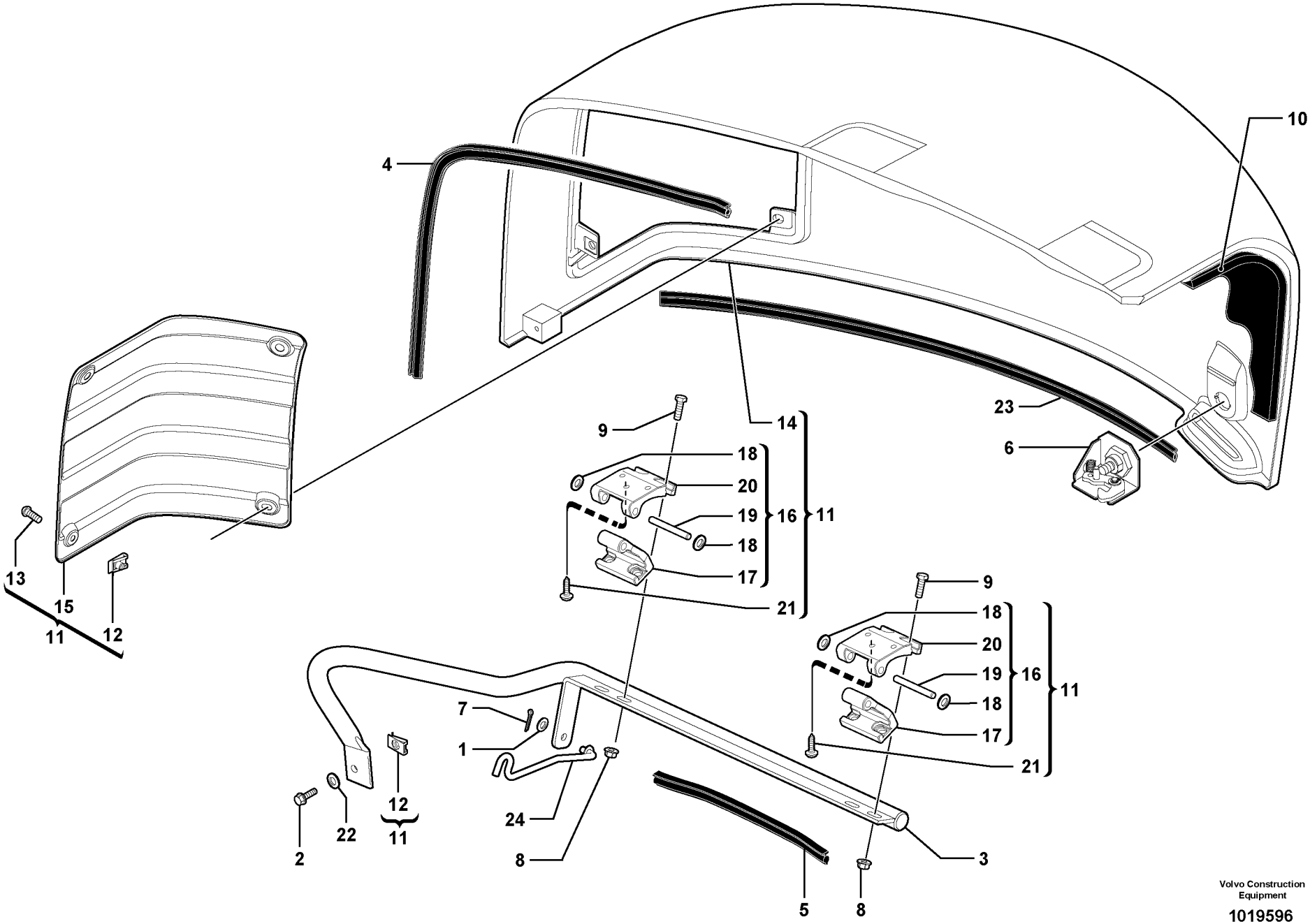

Volvo Construction Equipment

1019596

Fig.	Part No.	Quantity 1	2	3	PS	KIT	Description	Dénomination	Bezeichnung	품명	Denominación	Notes
1	**VOE 955894**	1					Washer	Rondelle	Scheibe	와셔	Arandela	
2	**VOE 946173**	1			SS		Screw	Vis	Schraube	스크류	Tornillo	
3	**VOE 11803393**	1					Reinforcement	Renfort	Verstärkung		Refuerzo	S/N - 602.10606
3	**VOE 11807505**	1					Reinforcement	Renfort	Verstärkung		Refuerzo	S/N 602.10607 -
4	**VOE 11802440**	1					Rubber Moulding	Joint Caoutchouc	Gummileiste	고무 몰딩	Liston Goma	
5	**VOE 11802439**	1					Rubber Moulding	Joint Caoutchouc	Gummileiste	고무 몰딩	Liston Goma	
6		1					Lock kit	Kit serrure	Schlossteilsatz	잠금장치 키트	Juego seguridad	See group 821, Page 279
7	**VOE 907835**	1			SS		Pin	Goupille	Stift	핀	Pasador	
8	**VOE 945408**	4			SS		Flange Lock Nut	Contre écrou bride	Flanschmutter	플랜지 록 너트	Contratuer Embr	
9	**VOE 983243**	4					Screw	Vis	Schraube	스크류	Tornillo	
10	**VOE 11801308**	1					Insulation	Isolant	Isolierung	단열재	Aislante	S/N - 602.10606
10	**VOE 11807539**	1					Insulation	Isolant	Isolierung	단열재	Aislante	S/N 602.10607 -
11	**VOE 11801304**	1					Hood	Capot Moteur	Motorhaube	후드	Tapa motor	
12	**VOE 949867**	5					•Spring Nut	•Ecrou Ressort	•Fed. Schliessmutter	• 스프링 너트	•Tuerca Resorte	
13	**VOE 969599**	4			SS		•Screw	•Vis	•Schraube	• 스크류	•Tornillo	
14	**VOE 11801302**	1					•Hood	•Capot Moteur	•Motorhaube	• 후드	•Tapa motor	
15	**VOE 11802223**	1					•Engine Cover	•Porte visite moteur	•Motorklappe	•	•Tapa Motor	
16	**VOE 11801356**	2					•Hood Hinge	•Charniere Capot	•Haubenscharnier	•	•Bisagra Capo	
17	**VOE 11801268**	1			SS		••Hinge Flange	••Demi-charniere	••Halbscharnier	•• 힌지 플랜지	••Mitad Bisagra	
18	**VOE 945718**	2					••Retainer	••Retenue	••Halter	•• 리테이너	••Soporte	
19	**VOE 950585**	1					••Pin	••Goupille	••Zapfen	•• 핀	••Pasador	
20	**VOE 11801250**	1			SS		••Hinge Flange	••Demi-charniere	••Halbscharnier	•• 힌지 플랜지	••Mitad Bisagra	
21	**VOE 11804631**	6					•Screw	•Vis	•Schraube	• 스크류	•Tornillo	
22	**VOE 960148**	1					Washer	Rondelle	Scheibe	와셔	Arandela	
23	**VOE 11802441**	1					Rubber Moulding	Joint Caoutchouc	Gummileiste	고무 몰딩	Liston Goma	
24	**VOE 11803159**	1					Support	Bequille	Stützbein	서포트	Tirante Apoyo	

1	**602.10151**	
2		
3		
4		
5		

Capó
후드
Motorhaube
Capotage du moteur
Engine coverage

Catalogue id	Group
20048	**821**
Illustr. No **1019596**	Section **100**
Issue **VOE 74C9920048**	Page **277**

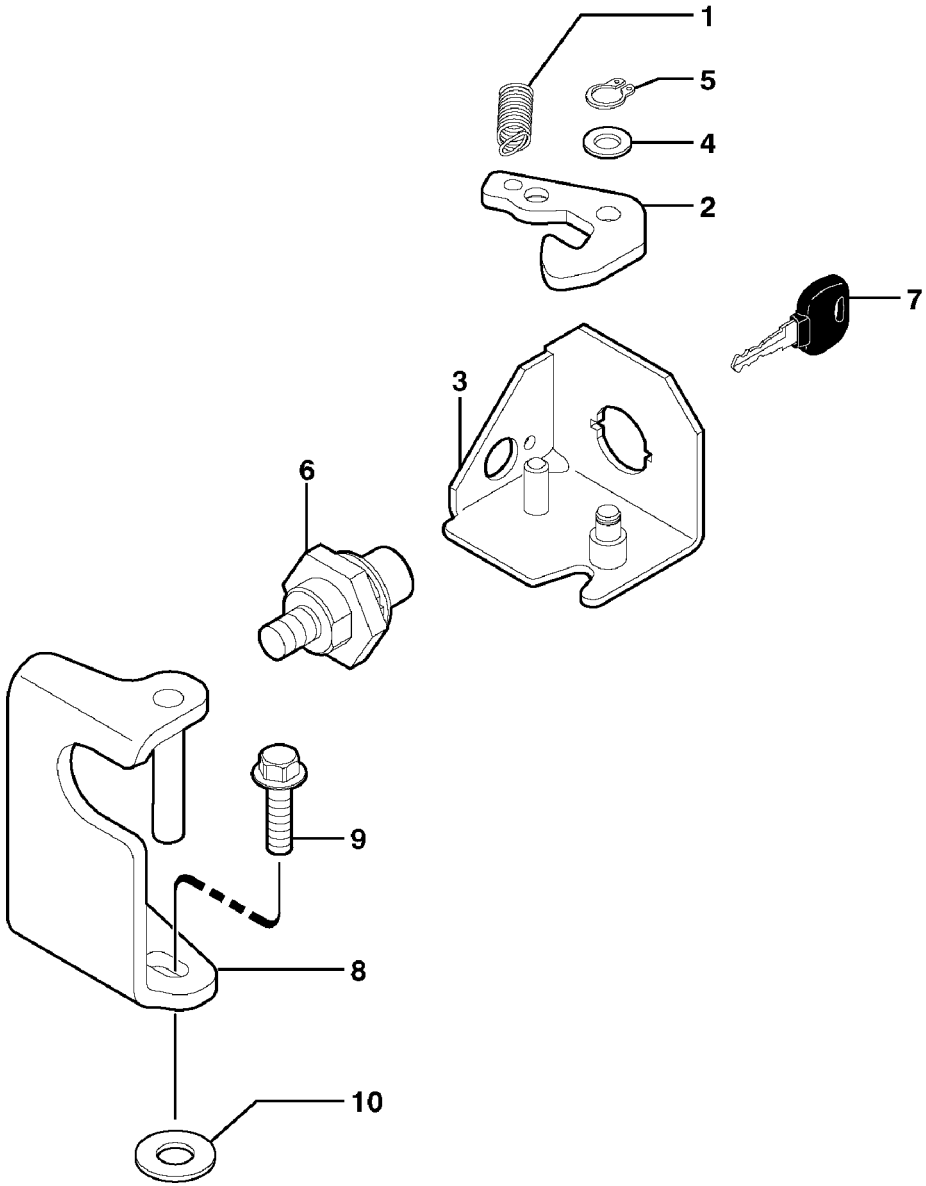

Volvo Construction Equipment

1010574

Fig.	Part No.	Quantity 1	2	3	PS	KIT	Description	Dénomination	Bezeichnung	품명	Denominación	Notes
1	**VOE 11802623**	1					Spring	Ressort	Feder	스프링	Muelle	
2	**VOE 11802608**	1					Cam	Came	Nocken	캠	Leva	
3	**VOE 11802622**	1					Cage	Support	Halter	케이지	Soporte	
4	**VOE 955894**	1					Washer	Rondelle	Scheibe	와셔	Arandela	
5	**VOE 955964**	1					Snap Ring	Circlip	Nutring	스냅 링	Circlip	
6	**VOE 11801914**	1					Lock	Serrure	Schloß	록	Cierre	
7	**VOE 11306919**	1					•Key	•Cle	•Schlüssel	• 키	•Llave	
8	**VOE 11802149**	1					Striker Plate	Gache	Schliesskeil	스트라이커 플레이트	Placa Bloqueo	
9	**VOE 946671**	2					Flange screw	Vis à bride	Flanschschraube	플랜지 스크류	Torn embridado	
10	**VOE 960143**	2			SS		Washer	Rondelle	Scheibe	와셔	Arandela	

1	**602.10151**	
2		
3		
4		
5		

Cerradura (capó)
잠금장치 (후드)
Schloss (Motorhaube)
Serrure (capotage moteur)
Lock (engine coverage)

Catalogue id **20048**	Group **821**
Illustr. No **1010574**	Section **400**
Issue **VOE 74C9920048**	Page **279**

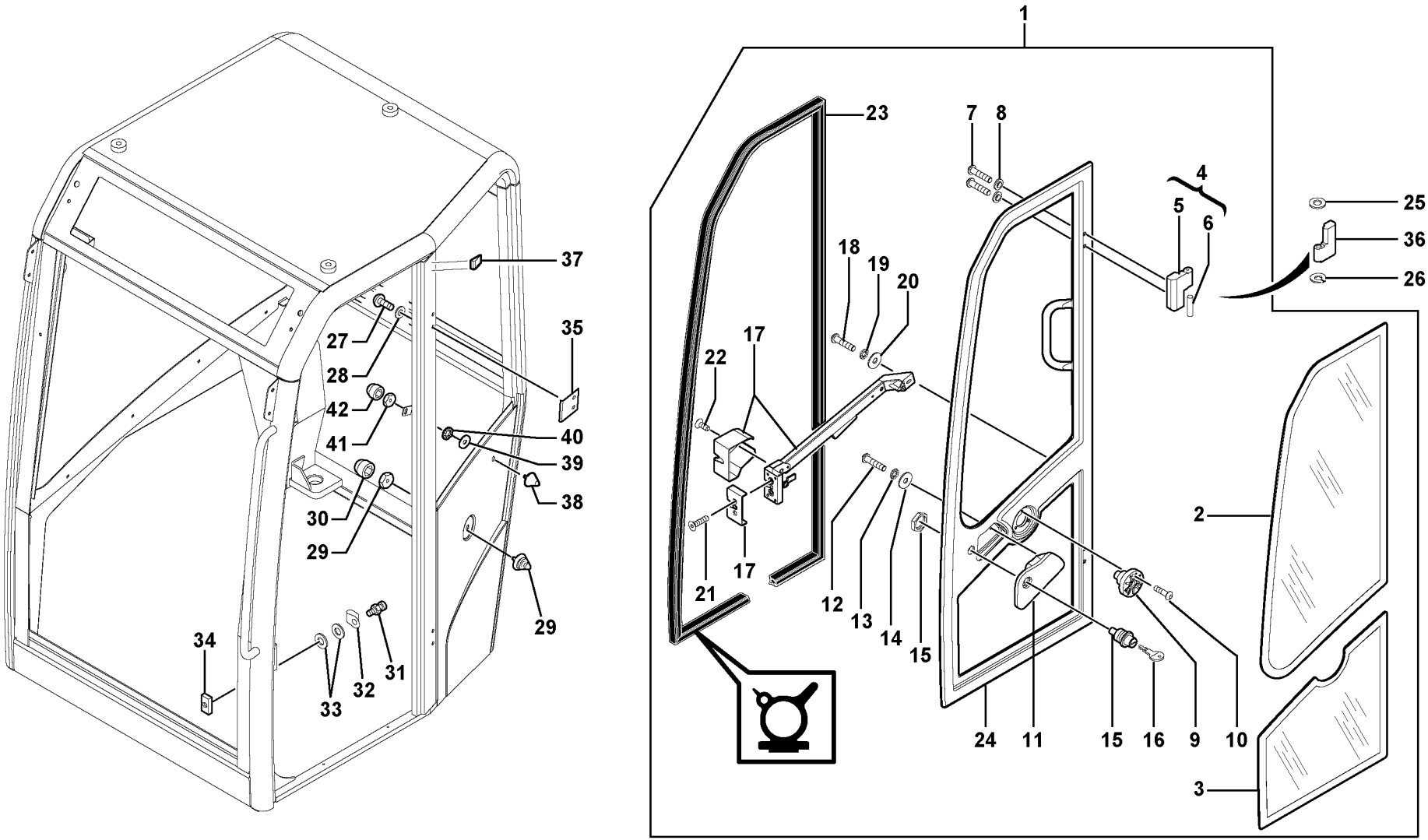

Volvo Construction Equipment

1014962

Fig.	Part No.	Quantity 1	2	3	PS	KIT	Description	Dénomination	Bezeichnung	품명	Denominación	Notes
1	**VOE 11713176**	1					Door	Porte	Tür	도어	Puerta	
2		1					•Glass	•Glace	•Scheibe	• 글라스	•Vidrio	See group 843, Page 293
3		1					•Glass	•Glace	•Scheibe	• 글라스	•Vidrio	See group 843, Page 293
4	**VOE 11713172**	2					•Hinge	•Charniere	•Scharnier	• 힌지	•Bisagra	
5		2			NS		••Hinge	••Charniere	••Scharnier	•• 힌지	••Bisagra	ORDER ITEM NO 4
6	**PJ 7412003**	2					••Stub Axle	••Axe	••Steckachse	•• 스터브 축	••Gorron Eje	
7	**PJ 7416799**	4					•Screw	•Vis	•Schraube	• 스크류	•Tornillo	
8	**PJ 7413711**	4					•Washer	•Rondelle	•Scheibe	• 와셔	•Arandela	
9	**PJ 7417900**	1					•Fastener	•Attache	•Befestigung	• 파스너	•Atadura	
10	**PJ 7417117**	3					•Screw	•Vis	•Schraube	• 스크류	•Tornillo	
11	**PJ 7416843**	1					•Door Handle	•Poignee de porte	•Türdrücker	• 도어 핸들	•Empunadura de pue.	
12	**VOE 11713173**	1					•Screw	•Vis	•Schraube	• 스크류	•Tornillo	
13	**PJ 4480005**	1					•Lock Washer	•Rondel.verroui.	•Sicher Scheibe	• 록 와셔	•Arandel Segurid.	
14	**PJ 7416807**	1					•Washer	•Rondelle	•Scheibe	• 와셔	•Arandela	
15	**VOE 11712616**	1					•Lock	•Serrure	•Schloß	• 록	•Cierre	
16	**VOE 11306919**	1					•Key	•Cle	•Schlüssel	• 키	•Llave	
17	**VOE 11713174**	1					•Lock	•Serrure	•Schloß	• 록	•Cierre	
18	**PJ 7411673**	1					•Screw	•Vis	•Schraube	• 스크류	•Tornillo	
19	**PJ 4480005**	1					•Lock Washer	•Rondel.verroui.	•Sicher Scheibe	• 록 와셔	•Arandel Segurid.	
20	**PJ 7416807**	1					•Washer	•Rondelle	•Scheibe	• 와셔	•Arandela	
21	**PJ 7411672**	2					•Screw	•Vis	•Schraube	• 스크류	•Tornillo	
22	**PJ 7411672**	1					•Screw	•Vis	•Schraube	• 스크류	•Tornillo	
23	**VOE 11713175**	1					•Sealing Moulding	•Moulure d'étanchéité.	•Dichtungsleiste	• 시일 몰딩	•Moldura de estanqui.	
24	**VOE 11713169**	1					•Door	•Porte	•Tür	• 도어	•Puerta	
25	**PJ 7415558**	2					Washer	Rondelle	Scheibe	와셔	Arandela	
26	**PJ 7412004**	2					Snap Ring	Circlip	Nutring	스냅 링	Circlip	
27	**PJ 7414947**	4					Screw	Vis	Schraube	스크류	Tornillo	
28	**PJ 7413711**	4					Washer	Rondelle	Scheibe	와셔	Arandela	
29	**PJ 7417899**	1					Door buffer	Butoir de porte	Türpuffer	도어 버퍼	Tope de puerta	
30	**PJ 7418297**	1					Plug	Bouchon	Stopfen	플러그	Tapon	

1	**602.10151**	
2		
3		
4		
5		

Cabina: puerta
운전실 : 도어
Kabine : Tür
Cabine : porte
Cab : door

Catalogue id	Group
20048	**831**
Illustr. No	Section
1014962	**100**
Issue	Page
VOE 74C9920048	**281**

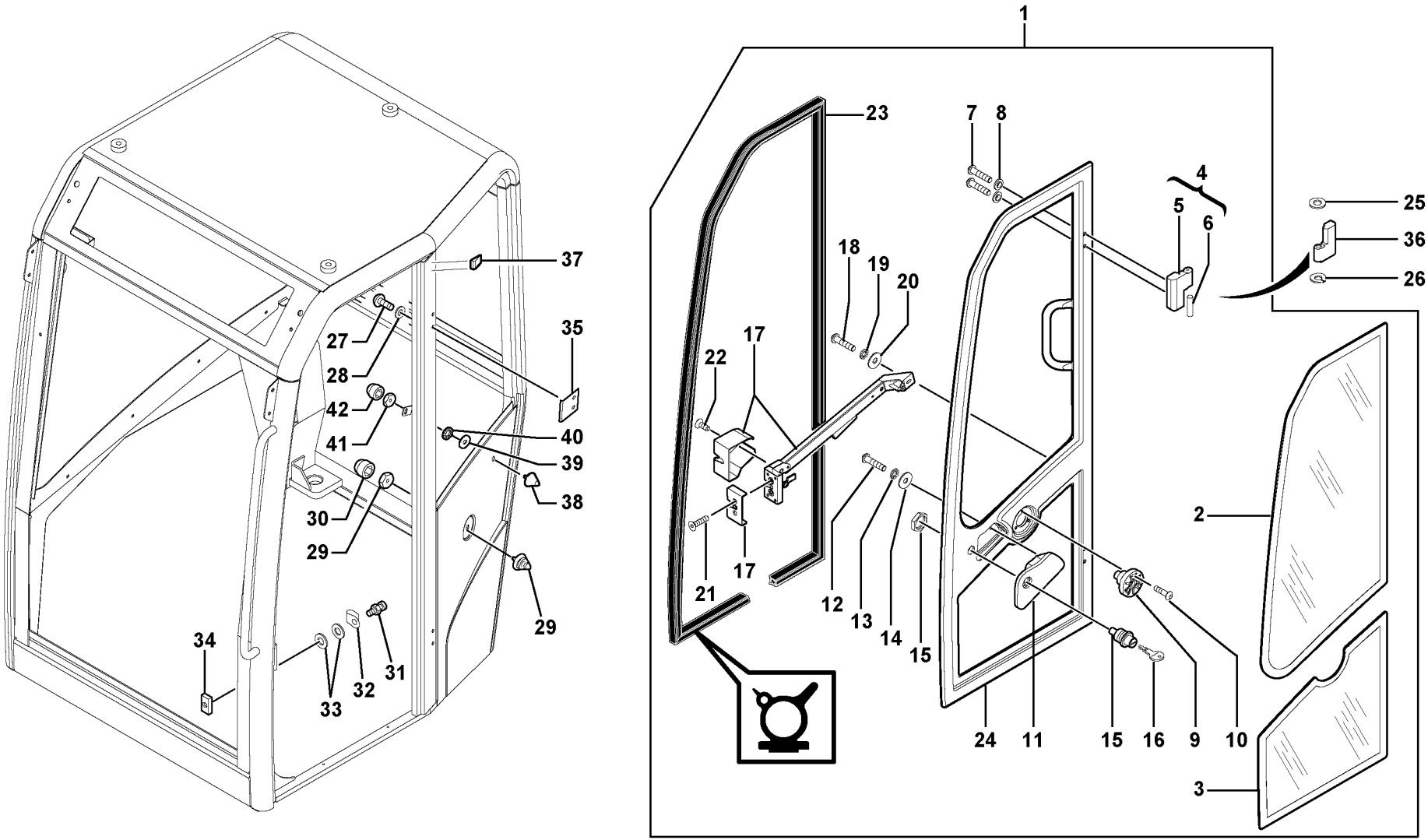

Volvo Construction Equipment

1014962

Fig.	Part No.	Quantity 1	2	3	PS	KIT	Description	Dénomination	Bezeichnung	품명	Denominación	Notes
31	**PJ 7411541**	1					Striker Plate	Gache	Schliesskeil	스트라이커 플레이트	Placa Bloqueo	
32	**PJ 7411999**	1					Trigger protector	Protège-gâche	Drückerschutz	트리거 보호기	Protección del activad	
33	**PJ 4490002**	2					Washer	Rondelle	Scheibe	와셔	Arandela	
34	**PJ 7411704**	1					Plate	Plaque	Platte	플레이트	Placa	
35	**VOE 11713196**	1					Decal	Decalcomanie	Abziehbild	데칼	Decalcomania	
36	**VOE 11713177**	2					Hinge	Charniere	Scharnier	힌지	Bisagra	
37	**VOE 11714135**	1					Spacer	Partie Intermédiaire	Zwischenstück	스페이서	Espaciador	
38	**PJ 5140147**	1					Stop, Shoulder	Butee	Gegenhalter	스톱 , 숄더	Tope	
39	**PJ 7417422**	1					Washer	Rondelle	Scheibe	와셔	Arandela	
40	**PJ 7411682**	1			SS		Lock Washer	Rondel.verroui.	Sicher Scheibe	록 와셔	Arandel Segurid	
41	**VOE 11714188**	1					Nut	Ecrou	Mutter	너트	Tuerca	
42	**PJ 7411699**	1					Plug	Bouchon	Stopfen	플러그	Tapon	

1	**602.10151**	
2		
3		
4		
5		

Cabina: puerta
운전실 : 도어
Kabine : Tür
Cabine : porte
Cab : door

Catalogue id	Group
20048	**831**
Illustr. No **1014962**	Section **100**
Issue **VOE 74C9920048**	Page **283**

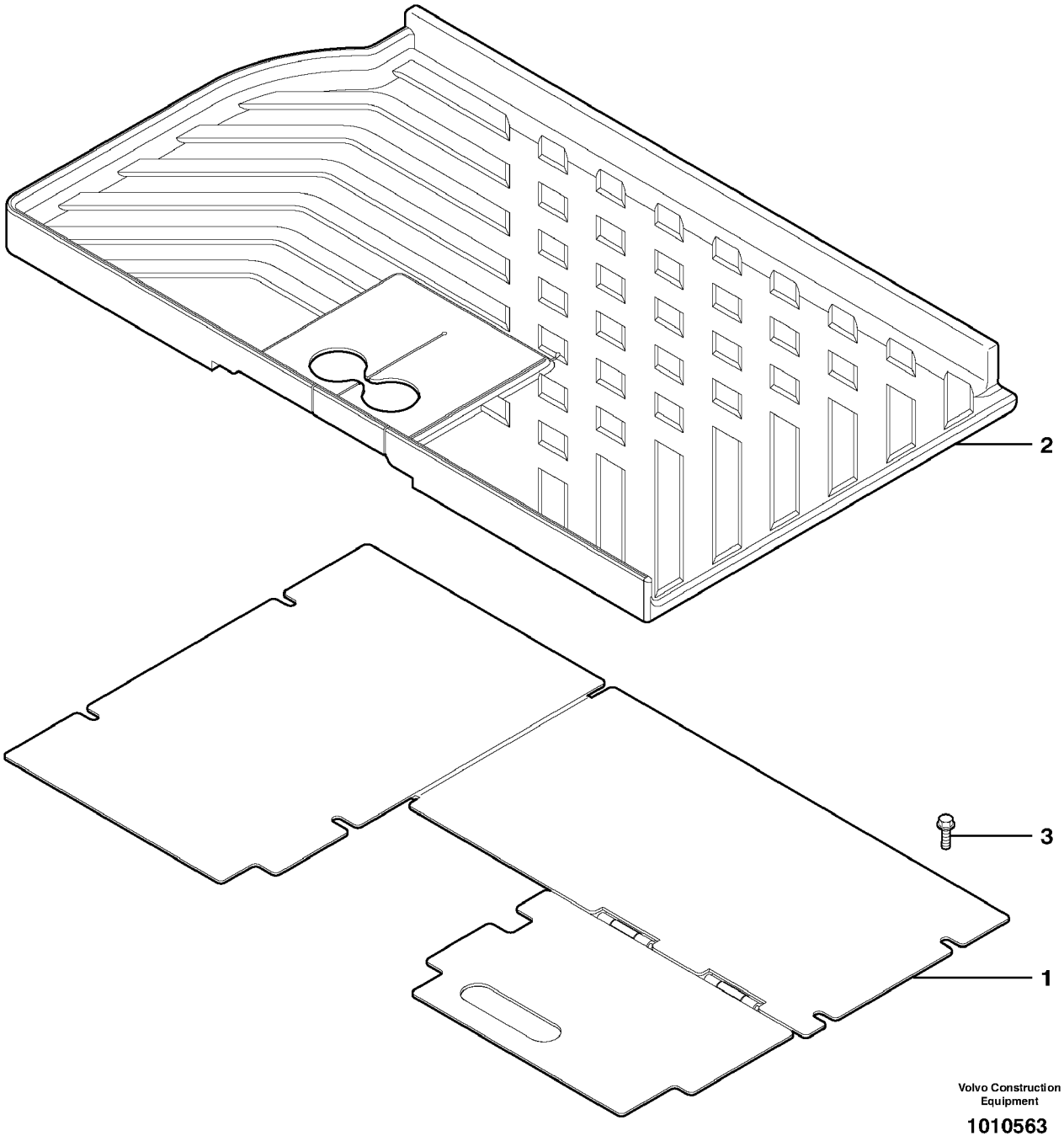

Volvo Construction Equipment

1010563

Fig.	Part No.	Quantity 1	2	3	PS	KIT	Description	Dénomination	Bezeichnung	품명	Denominación	Notes
1	**VOE 11801134**	1					Floor Plate	Plancher	Bodenbelag	플로어 플레이트	Plancha piso suelo	
2	**VOE 11802116**	1					Rubber Mat	Tapis Caoutchouc	Gummimatte	고무매트	Alfombra Goma	
3	**VOE 946173**	4			SS		Screw	Vis	Schraube	스크류	Tornillo	

1	**602.10151**		**Suelo de cabina (tipo estándar y cubierta)** 운전실 바닥 (표준 및 캐노피) **Kabinenboden (Standard und Canopy)** **Plancher de cabine (standard et ouverte)** **Cabin floor (standard and canopy)**	Catalogue id **20048**	Group **837**
2				Illustr. No **1010563**	Section **100**
3				Issue **VOE 74C9920048**	Page **285**
4					
5					

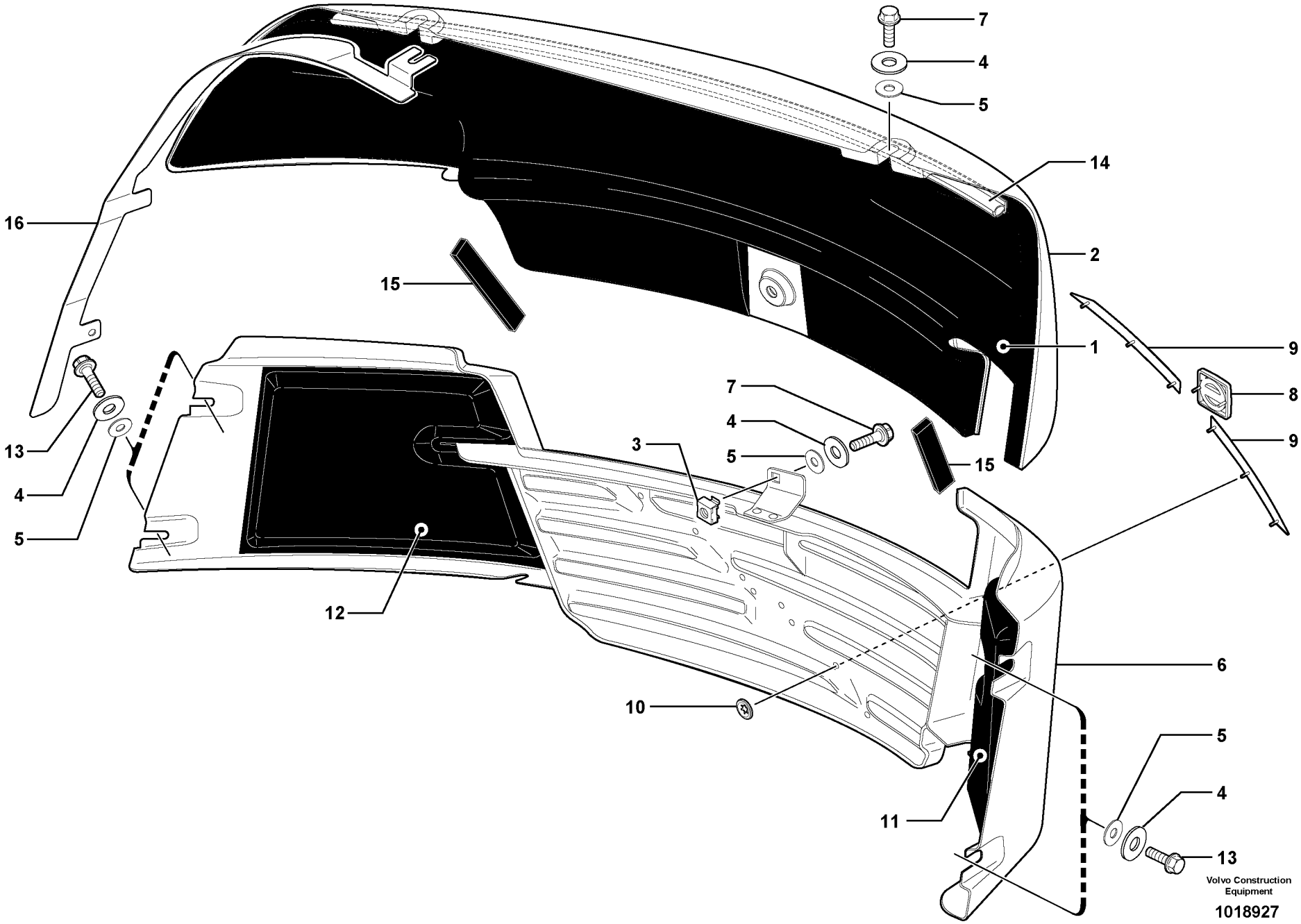
7
4
5
14
16
2
15
1
9
8
9
13
4
5
7
4
5
3
15
12
6
10
5
4
11
13
Volvo Construction Equipment
1018927

Fig.	Part No.	Quantity 1	2	3	PS	KIT	Description	Dénomination	Bezeichnung	품명	Denominación	Notes
1	**VOE 11801309**	1					Insulation	Isolant	Isolierung	단열재	Aislante	S/N - 602.10606
1	**VOE 11807540**	1					Insulation	Isolant	Isolierung	단열재	Aislante	S/N 602.10607 -
2	**VOE 11801303**	1					Hood	Capot Moteur	Motorhaube	후드	Tapa motor	
3	**VOE 11802485**	1					Nut	Ecrou	Mutter	너트	Tuerca	
4	**VOE 11806638**	7					Washer	Rondelle	Scheibe	와셔	Arandela	
5	**VOE 11806637**	7					Washer	Rondelle	Scheibe	와셔	Arandela	
6	**VOE 11801434**	1					Hood	Capot Moteur	Motorhaube	후드	Tapa motor	
7	**VOE 946472**	3					Flange screw	Vis à bride	Flanschschraube	플랜지 스크류	Torn embridado	
8	**VOE 11203358**	1					Emblem	Monogramme	Emblem	엠블렘	Emblema	
9	**VOE 11203361**	2					Emblem	Monogramme	Emblem	엠블렘	Emblema	
10	**VOE 191695**	8					Retainer	Retenue	Halter	리테이너	Soporte	
11	**VOE 11804290**	1					Insulation	Isolant	Isolierung	단열재	Aislante	S/N - 602.10606
11	**VOE 11807538**	1					Insulation	Isolant	Isolierung	단열재	Aislante	S/N 602.10607 -
12	**VOE 11804288**	1					Insulation	Isolant	Isolierung	단열재	Aislante	S/N - 602.10606
12	**VOE 11807537**	1					Insulation	Isolant	Isolierung	단열재	Aislante	S/N 602.10607 -
13	**VOE 946329**	4					Flange screw	Vis à bride	Flanschschraube	플랜지 스크류	Torn embridado	
14	**VOE 11806760**	1					Rubber Seal	Lèvre Caoutchouc	Gummilippe	고무 시일	Labio Goma	S/N - 602.10606
15	**VOE 11807542**	2					Insulation	Isolant	Isolierung	단열재	Aislante	S/N 602.10607 -
16	**VOE 11807571**	1					Bottom Plate	Tole Couverture	Bodenblech		Placa Fondo	S/N 602.10607 - S/N - 602.10669

1	**602.10151**		**Cubierta** 판금 **Verdeck** **Capotage** **Plating**	Catalogue id **20048**	Group **837**
2				Illustr. No **1018927**	Section **200**
3				Issue **VOE 74C9920048**	Page **287**
4					
5			**REAR**		

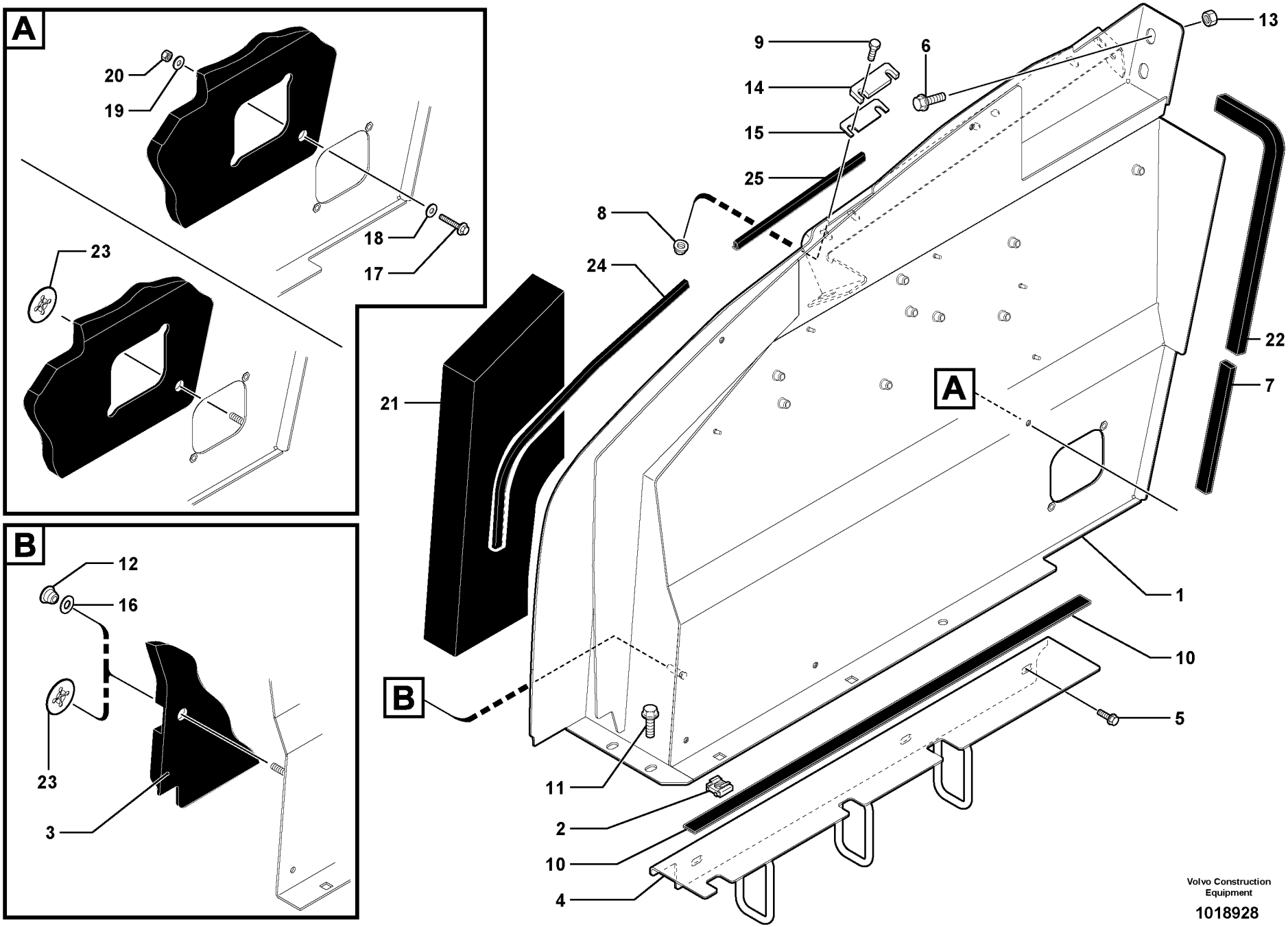

Volvo Construction Equipment

1018928

Fig.	Part No.	Quantity 1	2	3	PS	KIT	Description	Dénomination	Bezeichnung	품명	Denominación	Notes
1	**VOE 11802108**	1					Plate	Tôle	Blech	플레이트	Chapa	S/N - 602.10606
1	**VOE 11807552**	1					Plate	Tôle	Blech	플레이트	Chapa	S/N 602.10607 -
2	**VOE 11802283**	2					Nut	Ecrou	Mutter	너트	Tuerca	
3	**VOE 11801647**	1					Sound Absorber	Insonorisant	Schalldämmstoff	흡음기	Insonorizante	S/N - 602.10606
3	**VOE 11807536**	1					Sound Absorber	Insonorisant	Schalldämmstoff	흡음기	Insonorizante	S/N 602.10607 -
4	**VOE 11802252**	1					Cross member	Traverse	Querträger	크로스멤버	Travesano	
5	**VOE 945444**	3			SS		Screw	Vis	Schraube	스크류	Tornillo	
6	**VOE 965191**	2			SS		Screw	Vis	Schraube	스크류	Tornillo	
7	**VOE 11802712**	1					Rubber Seal	Lèvre Caoutchouc	Gummilippe	고무 시일	Labio Goma	
8	**VOE 945408**	6			SS		Flange Lock Nut	Contre écrou bride	Flanschmutter	플랜지 록 너트	Contratuer Embr	
9	**VOE 983243**	4					Screw	Vis	Schraube	스크류	Tornillo	
10	**VOE 11801417**	1					Rubber Strap	Bande caoutchouc	Gummischlinge	고무 스트랩	Bande caoutchouc	
11	**VOE 946472**	3					Flange screw	Vis à bride	Flanschschraube	플랜지 스크류	Torn embridado	
12	**VOE 11804712**	REQ					Button	Bouton	Knopf	버튼	Boton	
13	**VOE 971096**	2					Flange nut	Ecrou accouple.	Bundmutter	플랜지 너트	Tuerca embridad	
14	**VOE 11804409**	2					Spacer	Partie Intermédiaire	Zwischenstück	스페이서	Espaciador	
15	**VOE 11804408**	2					Spacer	Partie Intermédiaire	Zwischenstück	스페이서	Espaciador	
16	**VOE 960148**	REQ					Washer	Rondelle	Scheibe	와셔	Arandela	
17	**VOE 969591**	REQ					6-pt skt screw	Vis creuse de 6	Hohlschraube	6 포인트 소켓 스크류	Racor 6-dientes	
18	**VOE 960139**	REQ					Washer	Rondelle	Scheibe	와셔	Arandela	
19	**VOE 11804715**	REQ					Washer	Rondelle	Scheibe	와셔	Arandela	
20	**VOE 949278**	REQ					Nut	Ecrou	Mutter	너트	Tuerca	
21	**VOE 11804285**	1					Insulation	Isolant	Isolierung	단열재	Aislante	S/N - 602.10606
21	**VOE 11807553**	1					Insulation	Isolant	Isolierung	단열재	Aislante	S/N 602.10607 -
22	**VOE 11806644**	1					Rubber Seal	Lèvre Caoutchouc	Gummilippe	고무 시일	Labio Goma	
23	**VOE 977591**	REQ					Retainer	Retenue	Halter	리테이너	Soporte	
24	**VOE 11807559**	1					Seal	Joint	Dichtring	시일	Junta	S/N 602.10607 -
25	**VOE 11807560**	1					Seal	Joint	Dichtring	시일	Junta	S/N 602.10607 -

1	**602.10151**	
2		
3		
4		
5		

Chapas de protección.

Schutzbleche.
Tôles protectrices.
Protecting plates.

Catalogue id	Group
20048	**837**
Illustr. No	Section
1018928	**300**
Issue	Page
VOE 74C9920048	**289**

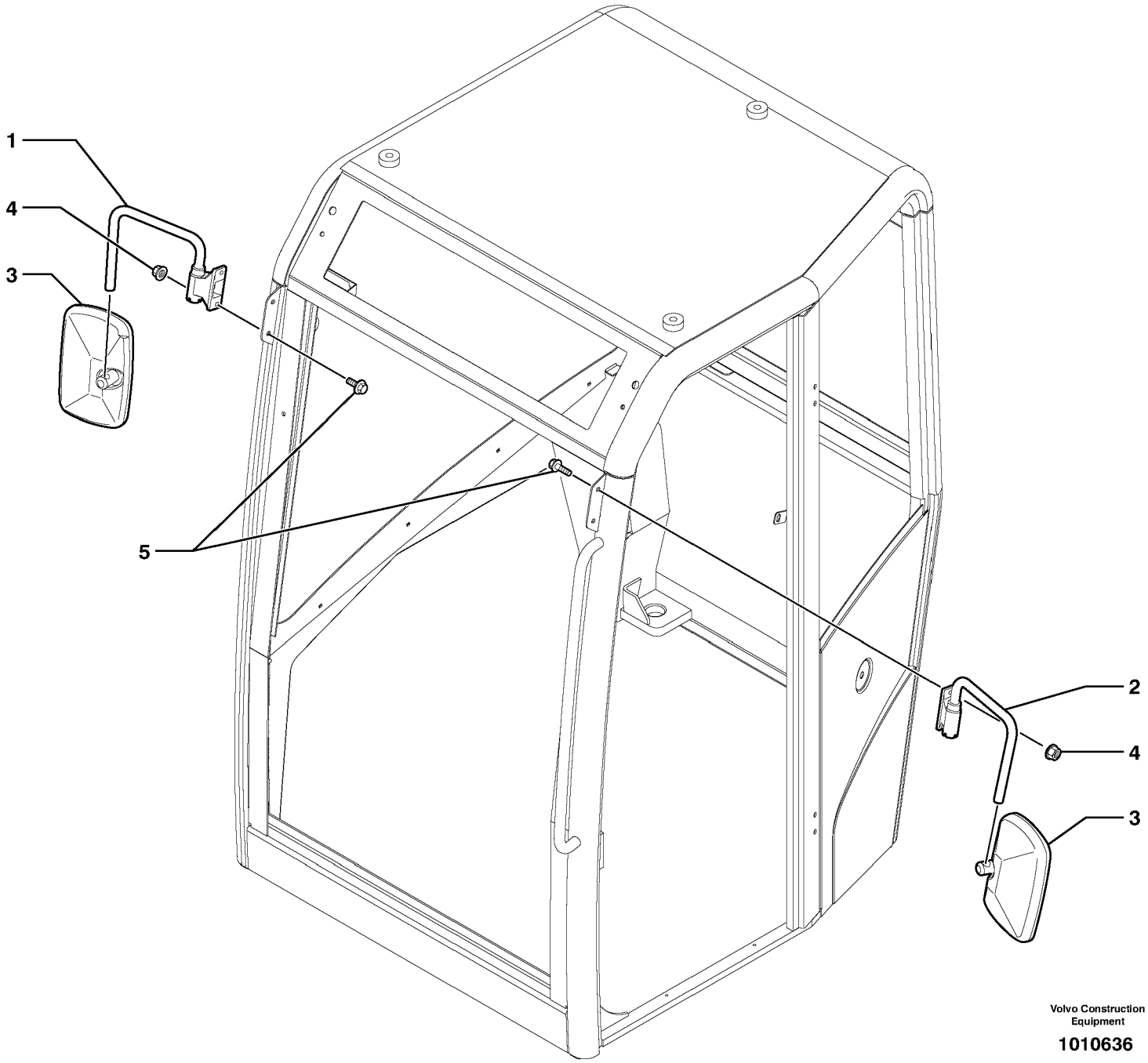

Volvo Construction Equipment

1010636

Fig.	Part No.	Quantity 1	2	3	PS	KIT	Description	Dénomination	Bezeichnung	품명	Denominación	Notes
1	**VOE 11803573**	1					Mirror Arm	Bras Miroir	Spiegelträger	미러 암	Marco Espejo	11839116
2	**VOE 11803574**	1					Mirror Arm	Bras Miroir	Spiegelträger	미러 암	Marco Espejo	
3	**ZM 2907156**	2					Mirror	Miroir	Spiegel	미러	Espejo	
4	**VOE 948645**	4					Flange Lock Nut	Contre écrou bride	Flanschmutter	플랜지 록 너트	Contratuer Embr.	
5	**VOE 946173**	4			SS		Screw	Vis	Schraube	스크류	Tornillo	

1	**602.10151**		**Retrovisores en la cabina** 운전실의 백미러 **Rückspiegel auf Kabine** **Retroviseurs sur la cabine** **Rear-view mirrors on cab**
2			
3			
4			
5			

Catalogue id **20048**	Group **841**
Illustr. No **1010636**	Section **100**
Issue **VOE 74C9920048**	Page **291**

VOLVO

ECR38

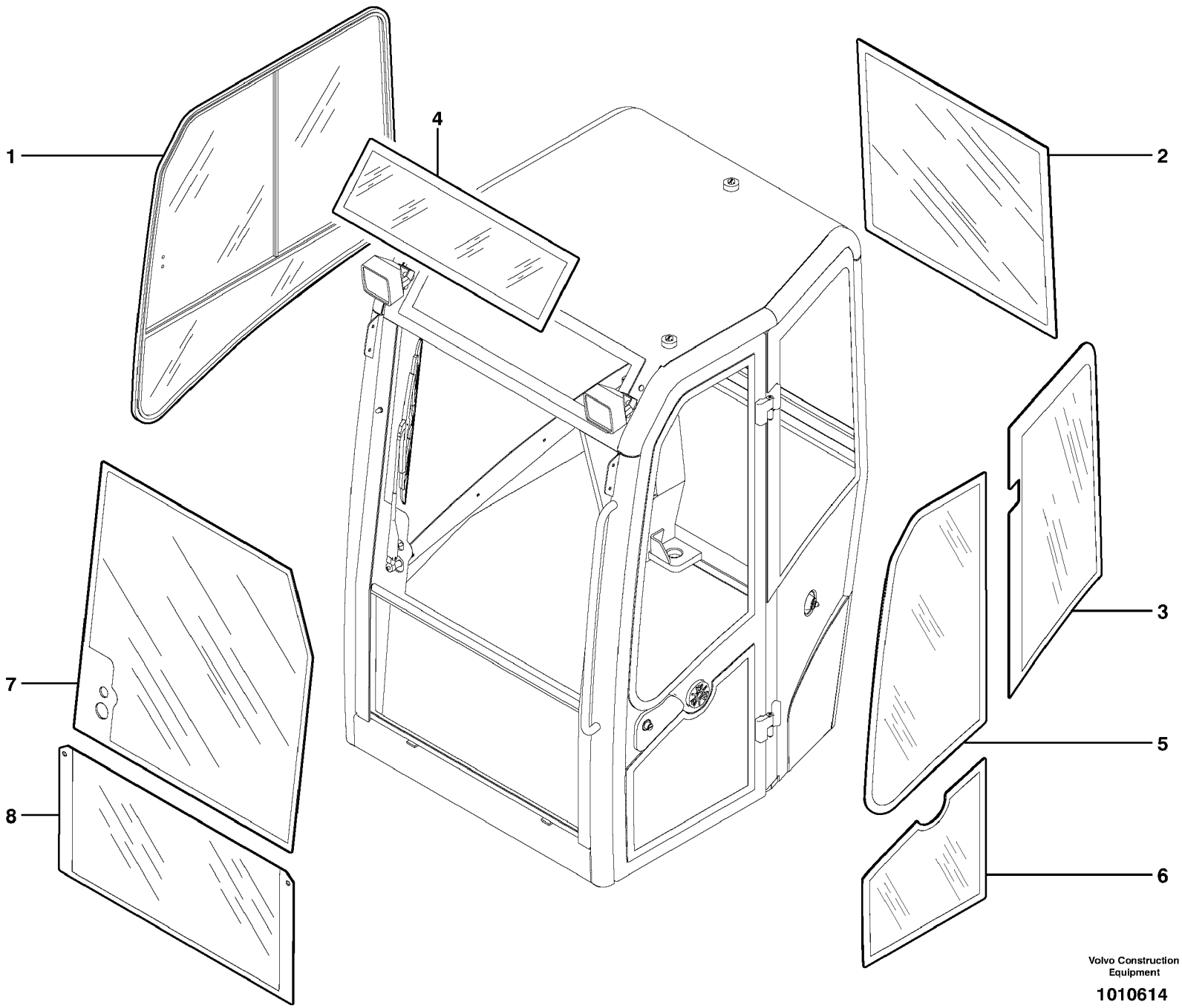

Volvo Construction Equipment

1010614

Fig.	Part No.	Quantity 1	2	3	PS	KIT	Description	Dénomination	Bezeichnung	품명	Denominación	Notes
1		1					Sliding Window	Baie coulissante	Schiebefenster	슬라이딩 윈도우	Ventana deslizante	See group 844, Page 297
2	**VOE 11713178**	1					Window	Vitre	Fensterscheibe	윈도우	Ventana	
3	**VOE 11713179**	1					Window	Vitre	Fensterscheibe	윈도우	Ventana	
4	**PJ 7418295**	1					Glass	Glace	Scheibe	글라스	Vidrio	
5	**VOE 11713170**	1					Window	Vitre	Fensterscheibe	윈도우	Ventana	
6	**VOE 11713171**	1					Window	Vitre	Fensterscheibe	윈도우	Ventana	
7		1					Windscreen	Pare brise	Frontscheibe	윈드스크린	Parabrisas	See group 843, Page 295
8		1					Glass	Glace	Scheibe	글라스	Vidrio	See group 843, Page 295

1	**602.10151**		**Cabina: cristal** 운전실 : 창유리 **Kabine : Glasscheiben** **Cabine : vitres** **Cab : glass**
2			
3			
4			
5			

Catalogue id **20048**	Group **843**
Illustr. No **1010614**	Section **100**
Issue **VOE 74C9920048**	Page **293**

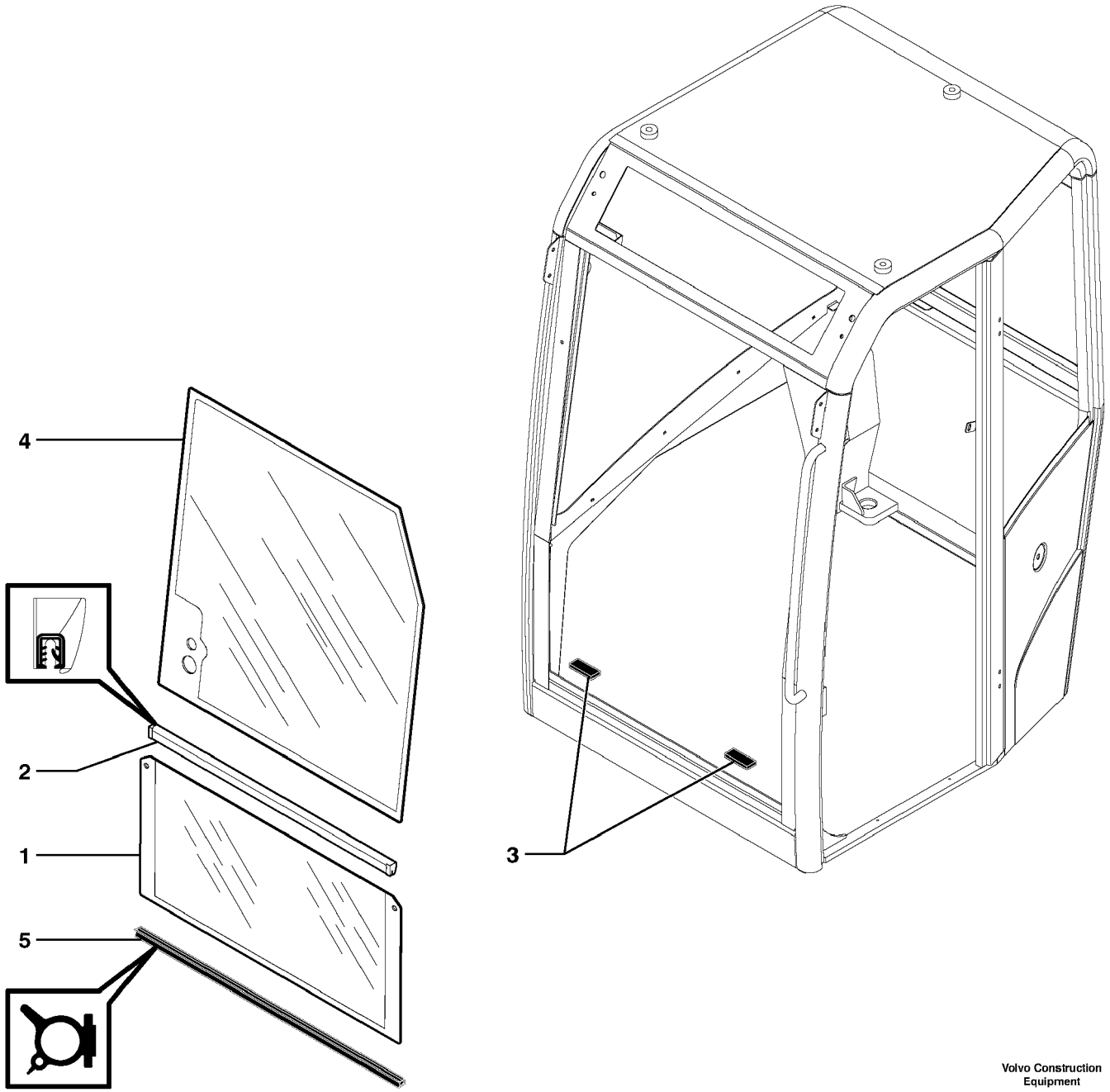

Volvo Construction Equipment

1010615

Fig.	Part No.	Quantity 1	2	3	PS	KIT	Description	Dénomination	Bezeichnung	품명	Denominación	Notes
1	**PJ 7416811**	1					Glass	Glace	Scheibe	글라스	Vidrio	
2	**PJ 7418263**	1					Seal	Joint	Dichtring	시일	Junta	
3	**PJ 7416841**	2					Shim	Cale Reglage	Nachstellblech	심	Cuna de calzar	
4	**VOE 11713182**	1					Windshield	Pare-brise	Frontscheibe	윈드실드	Parabrisas	
5	**PJ 7417857**	1					Seal	Joint	Dichtring	시일	Junta	

1	**602.10151**	
2		
3		
4		
5		

Cabina: parabrisas
운전실 : 윈드스크린
Kabine : Windschutzscheibe
Cabine : pare-brise
Cab : windshield

Catalogue id **20048**	Group **843**
Illustr. No **1010615**	Section **200**
Issue **VOE 74C9920048**	Page **295**

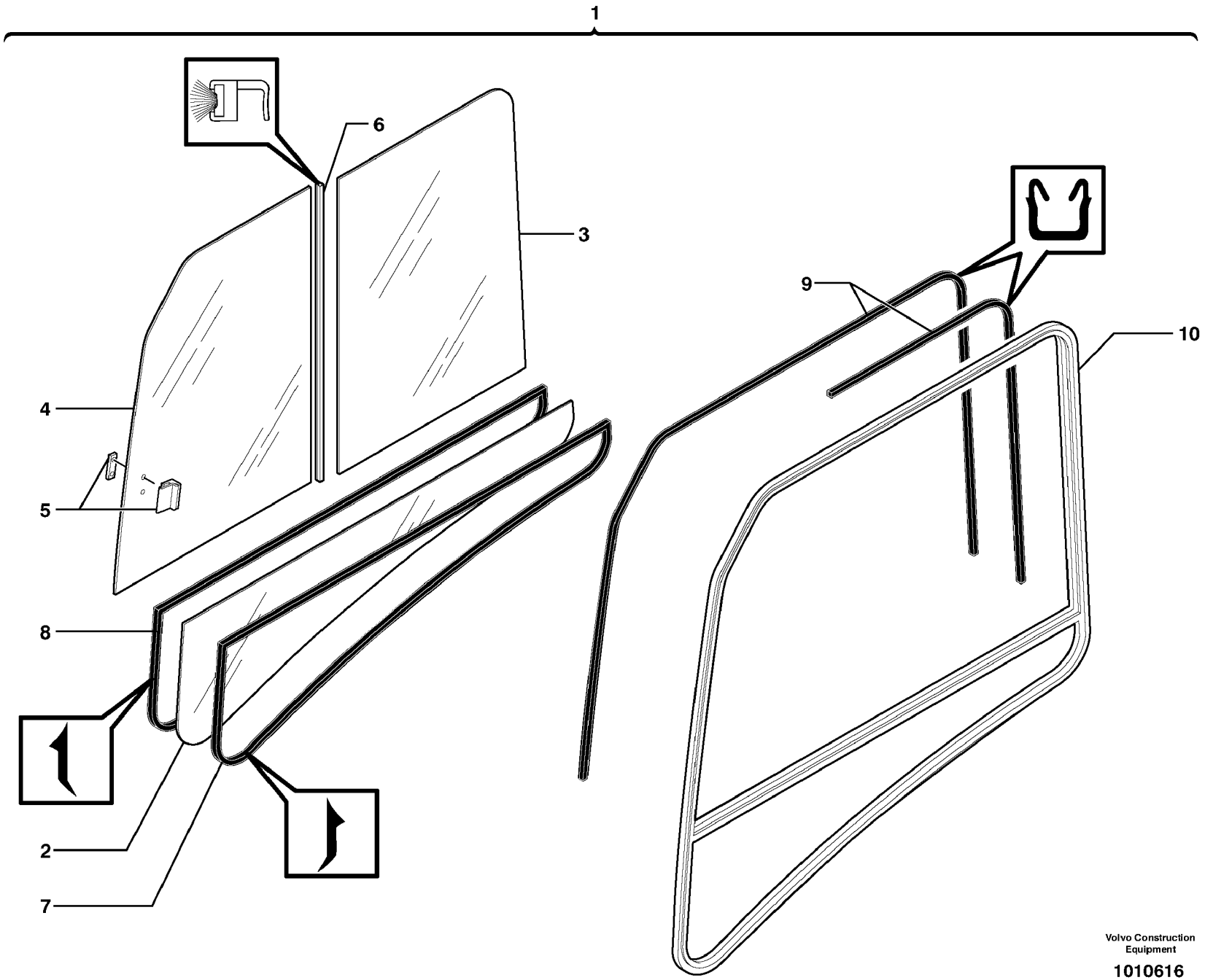

Volvo Construction Equipment

1010616

Fig.	Part No.	Quantity 1	2	3	PS	KIT	Description	Dénomination	Bezeichnung	품명	Denominación	Notes
1	**PJ 7418293**	1					Sliding Window	Baie coulissante	Schiebefenster	슬라이딩 윈도우	Ventana deslizante	
2	**PJ 7418292**	1					•Glass	•Vitre	•Fensterscheibe	• 창유리	•Cristal	
3	**PJ 7418291**	1					•Glass	•Vitre	•Fensterscheibe	• 창유리	•Cristal	
4	**PJ 7418290**	1					•Glass	•Vitre	•Fensterscheibe	• 창유리	•Cristal	
5	**PJ 7416899**	1					•Handle	•Poignee	•Handgriff	• 핸들	•Manilla	(PJ 7418294)
6	**PJ 7418288**	1					•Seal	•Joint	•Dichtring	• 시일	•Junta	
7	**PJ 7417874**	1					•Seal	•Joint	•Dichtring	• 시일	•Junta	
8	**PJ 7417875**	1					•Seal	•Joint	•Dichtring	• 시일	•Junta	
9	**PJ 7418289**	1					•Seal	•Joint	•Dichtring	• 시일	•Junta	
10		1			NS		•Frame	•Cadre	•Rahmen	• 프레임	•Cuadro	ORDER ITEM NO 1

1	**602.10151**	
2		
3		
4		
5		

Cabina: puerta / ventanas deslizantes (derecha)
운전실 : 슬라이딩 윈도우 (우측)
Kabine : Schiebefenster (rechts)
Cabine : vitre coulissante (côté droit)
Cab : sliding window (right)

Catalogue id	Group
20048	**844**
Illustr. No **1010616**	Section **100**
Issue **VOE 74C9920048**	Page **297**

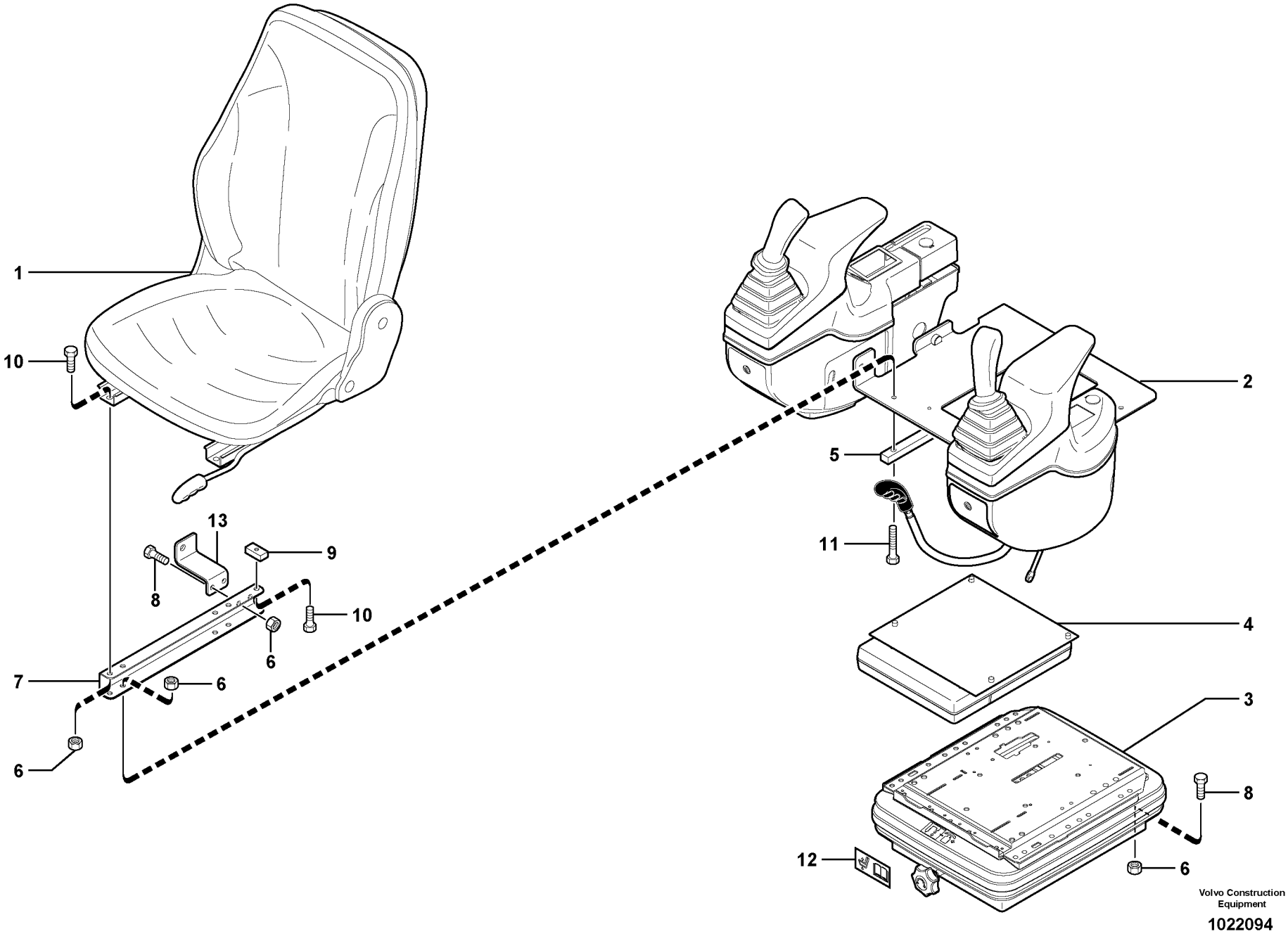

Volvo Construction Equipment

1022094

Fig.	Part No.	Quantity 1	2	3	PS	KIT	Description	Dénomination	Bezeichnung	품명	Denominación	Notes
1		1					Operator seat	Siege conducteur	Fahrersitz	운전석	Asiento conductor	11839021, 11839022 11839040, 11839061 11839064, 11839065 See group 852, Page 305
2		1					Bracket	Console	Konsole	브라켓	Consola	See group 881, Page 319
3		1					Seat suspension	Suspension siege	Sitzfederung		Resorte asiento	See group 852, Page 309
4		1					Doc Compartment	Porte-document	Dokumentenfach		Compart Docum	See group 882, Page 329
5	**VOE 11802538**	2					Plate	Plaque	Platte	플레이트	Placa	
6	**VOE 945408**	14			SS		Flange Lock Nut	Contre écrou bride	Flanschmutter	플랜지 록 너트	Contratuer Embr	
7	**VOE 11802556**	2					Plate	Plaque	Platte	플레이트	Placa	
8	**VOE 946173**	7			SS		Screw	Vis	Schraube	스크류	Tornillo	
9	**VOE 11802019**	1					Plate	Plaque	Platte	플레이트	Placa	
10	**VOE 983242**	4					Screw	Vis	Schraube	스크류	Tornillo	
11	**VOE 13947760**	4					Flange screw	Vis à bride	Flanschschraube	플랜지 스크류	Torn embridado	
12	**VOE 11803556**	1					Adhesive	Adhesif	Klebstoff	접착제	Adhesivo	
13	**VOE 11808273**	1					Plate	Plaque	Platte	플레이트	Placa	

1	**602.10151**	
2		
3		
4		
5		

Puesto de conducción
운전석
Bedienungsstand
Poste de conduite
Operator's station

Catalogue id **20048**	Group **850**
Illustr. No **1022094**	Section **150**
Issue **VOE 74C9920048**	Page **299**

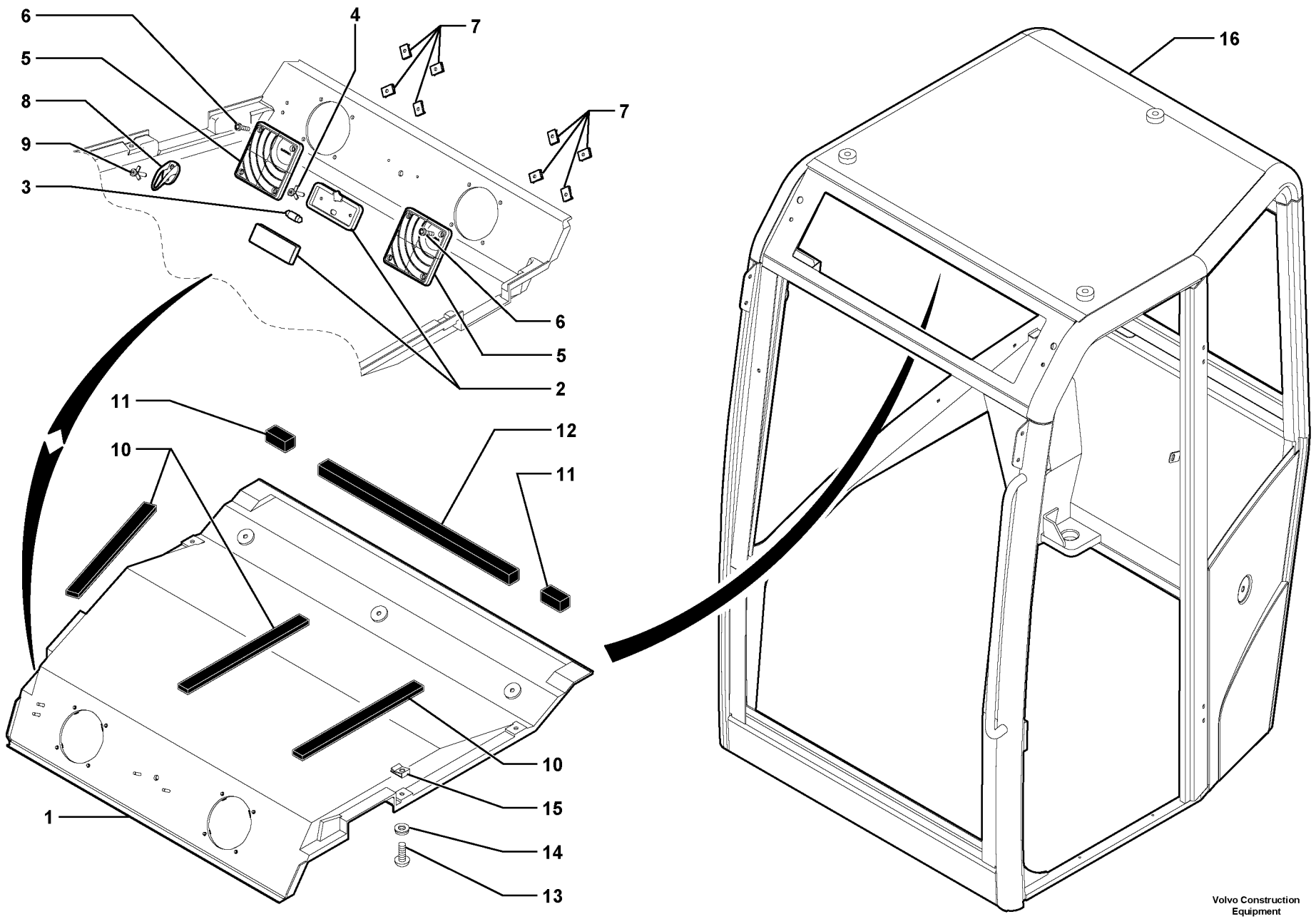

Volvo Construction Equipment

1014526

Fig.	Part No.	Quantity 1	2	3	PS	KIT	Description	Dénomination	Bezeichnung	품명	Denominación	Notes
1	**VOE 11713166**	1					Lining	Garniture	Belag	라이닝	Guarnicion	
2	**PJ 7410519**	1					Roof Lamp	Plafonnier	Deckenleuchte		Lampara Techo	
3	**PJ 7411396**	1					Bulb	Ampoule	Glühlampe	전구	Ampolla	
4	**VOE 11712661**	2					Rivet	Rivet	Niet	리벳	Remache	(PJ 7418379)
5	**VOE 11714137**	2					Grille	Grille	Kühlergrill	그릴	Calandra	
6	**PJ 7416797**	8					Screw	Vis	Schraube	스크류	Tornillo	
7	**PJ 7417449**	8					Square Nut	Ecrou Carre	Vierkantmutter		Tuerca Cuadrada	
8	**PJ 7411994**	1					Coat hanger	Porte manteau	Kleiderhaken	옷걸이	Percha	
9	**VOE 11712661**	2					Rivet	Rivet	Niet	리벳	Remache	(PJ 7418379)
10	**VOE 11712657**	3					Sealing Strip	Ruban Etanche	Dichtstreifen	시일링 스트립	Cinta Reten	
11	**VOE 11711157**	2					Gasket	Joint	Dichtung	가스켓	Junta	
12	**VOE 11711158**	1					Gasket	Joint	Dichtung	가스켓	Junta	
13	**PJ 7417117**	10					Screw	Vis	Schraube	스크류	Tornillo	
14	**PJ 7417127**	10					Washer	Rondelle	Scheibe	와셔	Arandela	
15	**PJ 7417449**	10					Square Nut	Ecrou Carre	Vierkantmutter		Tuerca Cuadrada	
16	**VOE 11713165**	1					Cab framework	Carcasse cabine	FH-Gerippe	운전실 프레임웍	Armazon cabina	

1	**602.10151**	
2		
3		
4		
5		

Cabina: accesorios
운전실 : 액세서리
Kabine : Zubehör
Cabine : accessoires
Cab : accessories

Catalogue id	Group
20048	**851**
Illustr. No **1014526**	Section **900**
Issue **VOE 74C9920048**	Page **301**

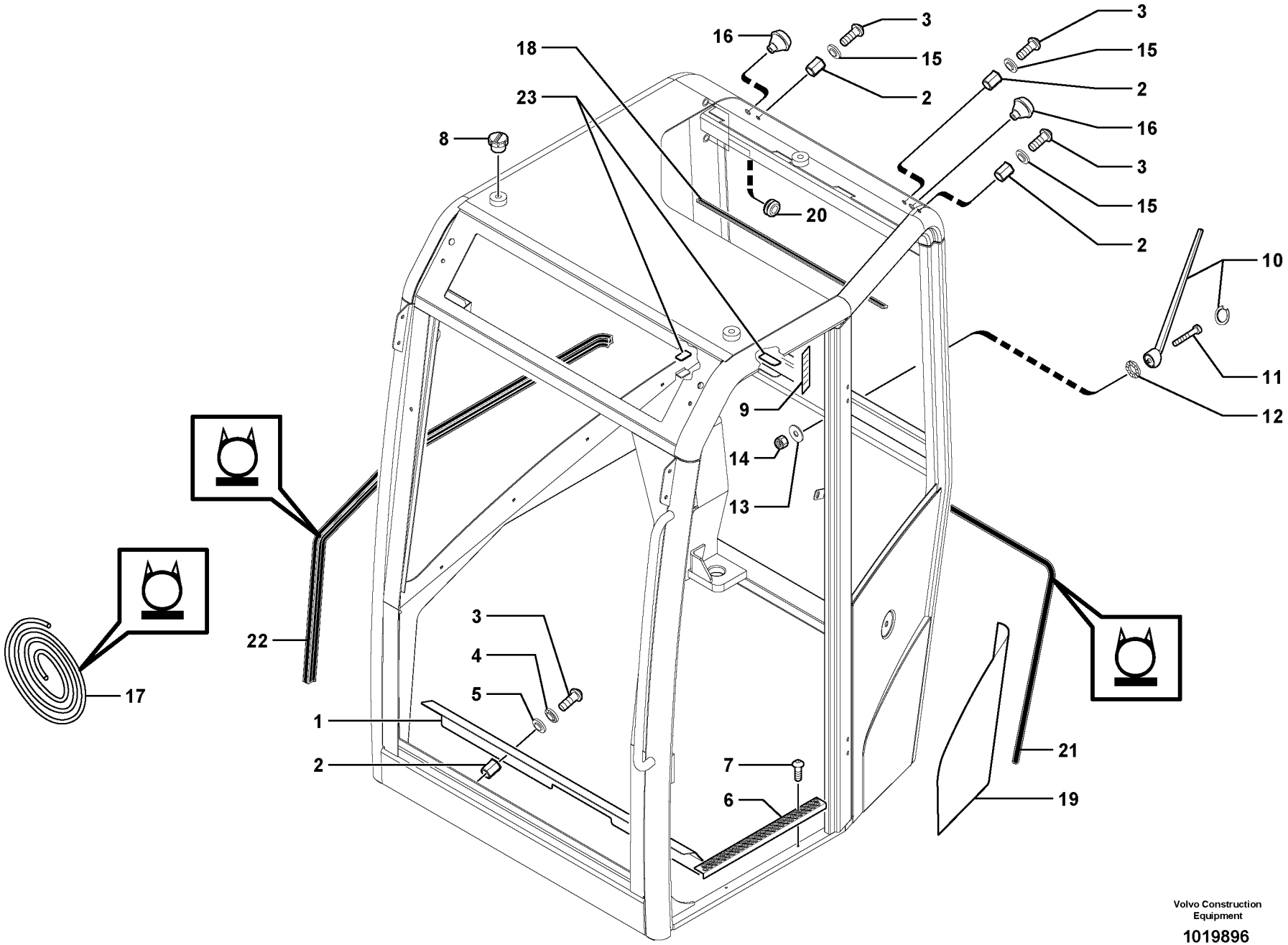

Volvo Construction Equipment

1019896

Fig.	Part No.	Quantity 1	2	3	PS	KIT	Description	Dénomination	Bezeichnung	품명	Denominación	Notes
1	**PJ 7418313**	1					Apron	Tole	Schutzblech	에이프런	Chapa protectora	
2	**PJ 7418315**	5					Socket	Douille	Buchse	슬리브	Hembrilla	
3	**PJ 7413790**	5					Screw	Vis	Schraube	스크류	Tornillo	
4	**PJ 7411682**	2			SS		Lock Washer	Rondel.verroui.	Sicher Scheibe	록 와셔	Arandel Segurid	
5	**PJ 7417422**	2					Washer	Rondelle	Scheibe	와셔	Arandela	
6	**VOE 11713189**	1					Plate	Plaque	Platte	플레이트	Placa	
7	**PJ 7411193**	2					Screw	Vis	Schraube	스크류	Tornillo	
8	**PJ 7418317**	3					Plug	Bouchon	Stopfen	플러그	Tapon	
9	**VOE 11713188**	1					Sign	Enseigne	Schild	사인	Letrero	
10	**PJ 7411993**	1					Antenna	Antenne	Antenne	안테나	Antena	
11	**PJ 7418394**	1					Screw	Vis	Schraube	스크류	Tornillo	
12	**PJ 4470017**	1					Lock Washer	Rondel.verroui.	Sicher Scheibe	록 와셔	Arandel Segurid	
13	**PJ 7416807**	1					Washer	Rondelle	Scheibe	와셔	Arandela	
14	**PJ 7418395**	1					Lock nut	Contre-ecrou	Sicherungsmutter	록 너트	Contratuerca	
15	**PJ 7413711**	3					Washer	Rondelle	Scheibe	와셔	Arandela	
16	**PJ 7416325**	2					Grommet	Passe fil	Durchführung	그로메트	Aislador pasapanel	
17	**VOE 11713190**	1					Sealing Moulding	Moulure d'étanchéité	Dichtungsleiste	시일 몰딩	Moldura de estanquid	
18	**PJ 7418312**	1					Seal	Joint	Dichtring	시일	Junta	CAB - 47/04
19	**VOE 11713195**	1					Decal	Decalcomanie	Abziehbild	데칼	Decalcomania	
20	**PJ 7413705**	2					Grommet	Passe fil	Durchführung	그로메트	Aislador pasapanel	
21	**VOE 11713191**	1					Sealing Moulding	Moulure d'étanchéité	Dichtungsleiste	시일 몰딩	Moldura de estanquid	CAB - 47/04
21	**VOE 11715808**	1					Sealing Moulding	Moulure d'étanchéité	Dichtungsleiste	시일 몰딩	Moldura de estanquid	CAB 48/04 -
22	**VOE 11713192**	1					Sealing Moulding	Moulure d'étanchéité	Dichtungsleiste	시일 몰딩	Moldura de estanquid	
23	**VOE 11715809**	2					Sealing moulding	Joint Etancheit	Dichtprofil	실링 스트립	Burlete hermético	CAB 48/04 -

1	**602.10151**	
2		
3		
4		
5		

Cabina: accesorios / fijaciones
운전실 : 액세서리 / 장착
Kabine : Zubehör / Befestigung
Cabine : accessoires / fixation
Cab : accessories / fastening

Catalogue id	Group
20048	**851**
Illustr. No **1019896**	Section **950**
Issue **VOE 74C9920048**	Page **303**

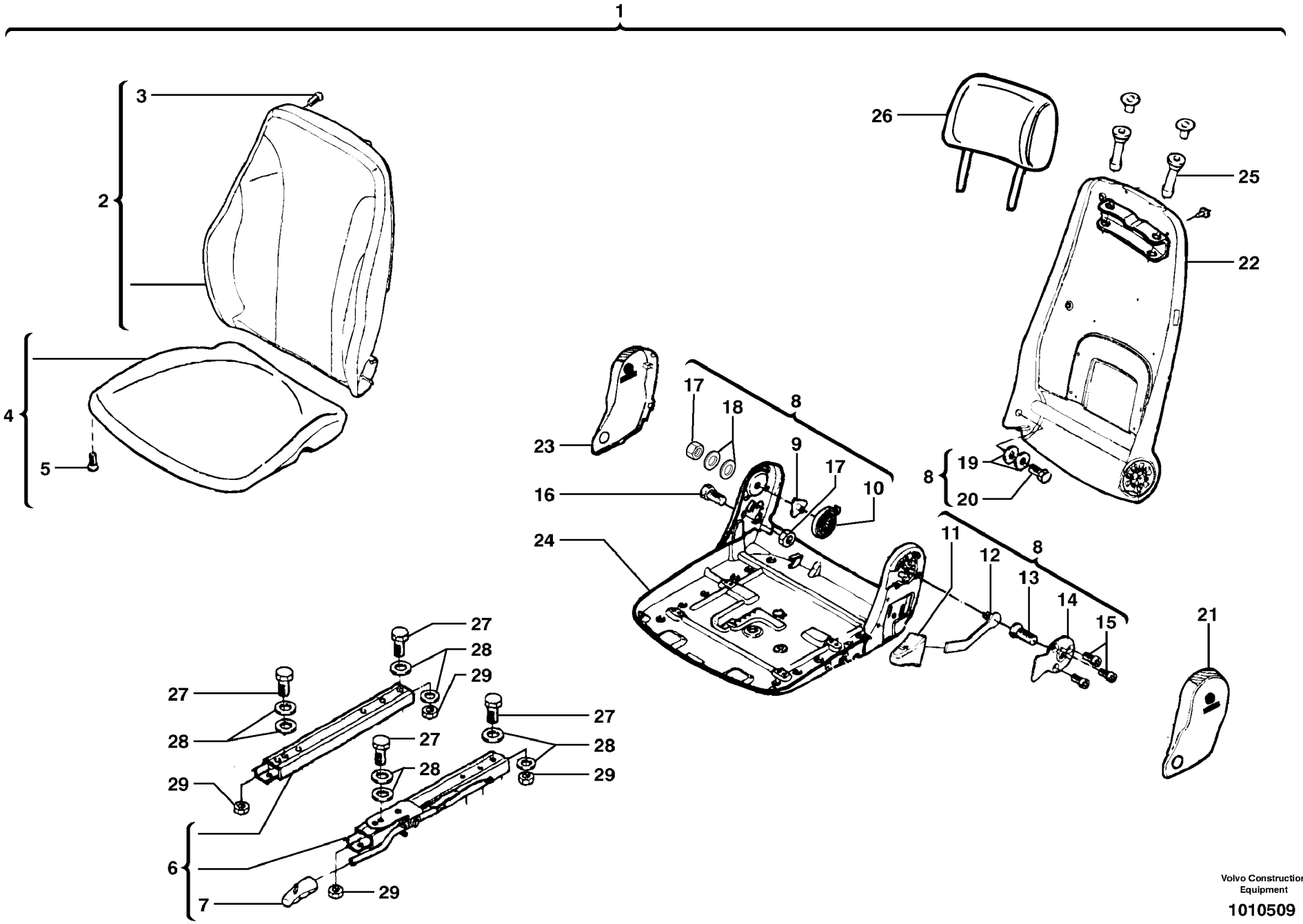
1
2
3
4
5
6
7
8
9
10
11
12
13
14
15
16
17
18
19
20
21
22
23
24
25
26
27
28
29

Fig.	Part No.	Quantity 1	2	3	PS	KIT	Description	Dénomination	Bezeichnung	품명	Denominación	Notes
1	**VOE 11803334**	1					Velvet seat	Siège en velours	Veloursitz	벨벳 시트	Asiento de terciopelo	(VOE 11802627)
1	**VOE 11803413**	1					Imitation leather seat	Siège en similicuir	Kunstledersitz	인조가죽 시트	Juego de cuero artific	(VOE 11802533)
2	**PJ 7417781**	1					•Fabric backrest	•Dossier en tissu	•Stoffrückenlehne	• 직물 등받이	•Respaldo de materi	
2	**VOE 11805666**	1					•Backrest	•Dossier	•Rucken	• 백레스트	•Respaldo	(PJ 5700073)
3		6			NS		••Screw	••Vis	••Schraube	•• 스크류	••Tornillo	
4	**PJ 7417782**	1					•Fabric cushion	•Coussin en tissu	•Stoffpolster	• 직물 쿠션	•Almohadilla de mate	
4	**VOE 11805665**	1					•Seat	•Siege	•Sitz	• 시트	•Asiento	(PJ 5700074)
5		3			NS		••Screw	••Vis	••Schraube	•• 스크류	••Tornillo	
6	**PJ 7417780**	1					•Slipper kit	•Kit glissière	•Gleitflächen-Kit	• 슬리퍼 키트	•Kit de patín	
7	**PJ 7417772**	1					••Handle	••Poignee	••Handgriff	•• 핸들	••Manilla	
8	**VOE 14522006**	1					•Bracket	•Console	•Konsole	• 브라켓	•Ménsula	
9	**PJ 7417775**	1					••Valve Cone	••Taquet	••Ventilkegelst	•• 밸브 콘	••Valvula Cono	
10	**PJ 7417770**	1					••Spring	••Ressort	••Feder	•• 스프링	••Muelle	
11	**PJ 7417776**	1					••Handle	••Poignee	••Handgriff	•• 핸들	••Manilla	
12	**PJ 7417777**	1					••Lever	••Levier	••Hebel	•• 레버	••Palanca	
13	**PJ 7417779**	1					••Screw	••Vis	••Schraube	•• 스크류	••Tornillo	
14	**PJ 7417778**	1					••Apron	••Tole	••Schutzblech	•• 에이프런	••Chapa protectora	
15	**PJ 7417771**	3					••Screw	••Vis	••Schraube	•• 스크류	••Tornillo	
16		1			NS		••Screw	••Vis	••Schraube	•• 스크류	••Tornillo	
17		2			NS		••Nut	••Ecrou	••Mutter	•• 너트	••Tuerca	
18	**VOE 14526295**	2					••Washer	••Rondelle	••Scheibe	•• 와셔	••Arandela	
19	**VOE 14526261**	2					••Washer	••Rondelle	••Scheibe	•• 와셔	••Arandela	
20	**VOE 14526300**	1					••Screw	••Vis	••Schraube	•• 스크류	••Tornillo	
21		1			NS		•Cover	•Couvercle	•Deckel	• 커버	•Tapa	
22		1			NS		•Support	•Support	•Stütze	• 서포트	•Apoyo	ORDER ITEM NO 1
23	**PJ 7417774**	1					•Cover	•Couvercle	•Deckel	• 커버	•Tapa	
24		1			NS		•Support	•Support	•Stütze	• 서포트	•Apoyo	ORDER ITEM NO 1
25	**VOE 14526309**	2					•Bushing	•Bague	•Buchse	• 부싱	•Casquillo	
26		1			NS		•Head Restraint	•Appui-tete	•Nackenstutze	• 헤드 레스트	•Respaldo Nuca	
27	**VOE 14526263**	4					•Screw	•Vis	•Schraube	• 스크류	•Tornillo	

1	**602.10151**	
2		
3		
4		
5		

Asiento con suspensión
스프링시트
Sitz mit Federung
Siège avec suspension
Suspended seat

Catalogue id	Group
20048	**852**
Illustr. No **1010509**	Section **150**
Issue **VOE 74C9920048**	Page **305**

VOLVO

ECR38

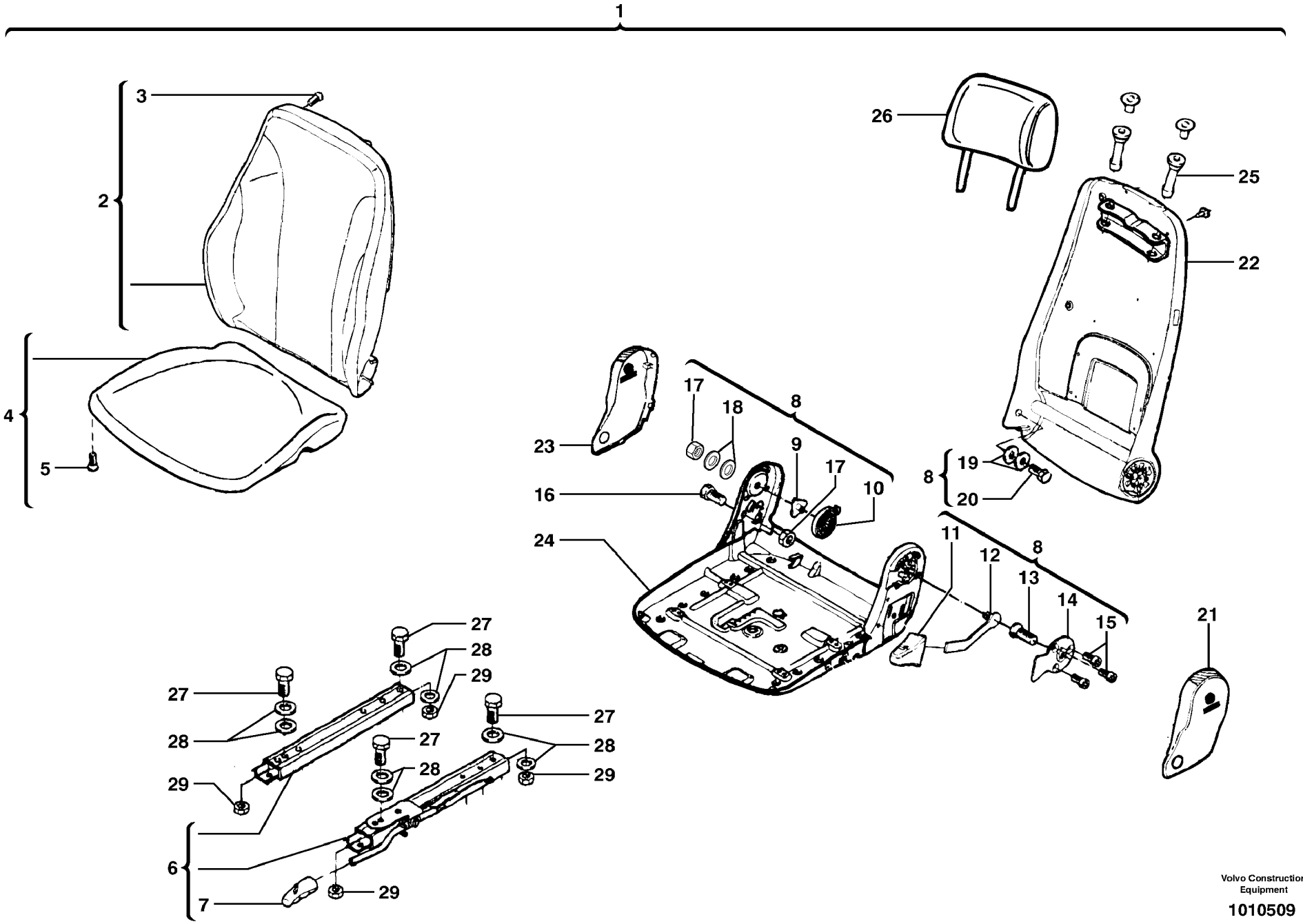
1
2
3
4
5
6
7
8
9
10
11
12
13
14
15
16
17
18
19
20
21
22
23
24
25
26
27
28
29

Fig.	Part No.	Quantity 1	2	3	PS	KIT	Description	Dénomination	Bezeichnung	품명	Denominación	Notes
28	**VOE 14526295**	8					•Washer	•Rondelle	•Scheibe	• 와셔	•Arandela	
29	**VOE 14526262**	4					•Nut	•Ecrou	•Mutter	• 너트	•Tuerca	

1	**602.10151**		**Asiento con suspensión** 스프링시트 **Sitz mit Federung** **Siège avec suspension** **Suspended seat**	Catalogue id **20048**	Group **852**
2				Illustr. No **1010509**	Section **150**
3				Issue **VOE 74C9920048**	Page **307**
4					
5					

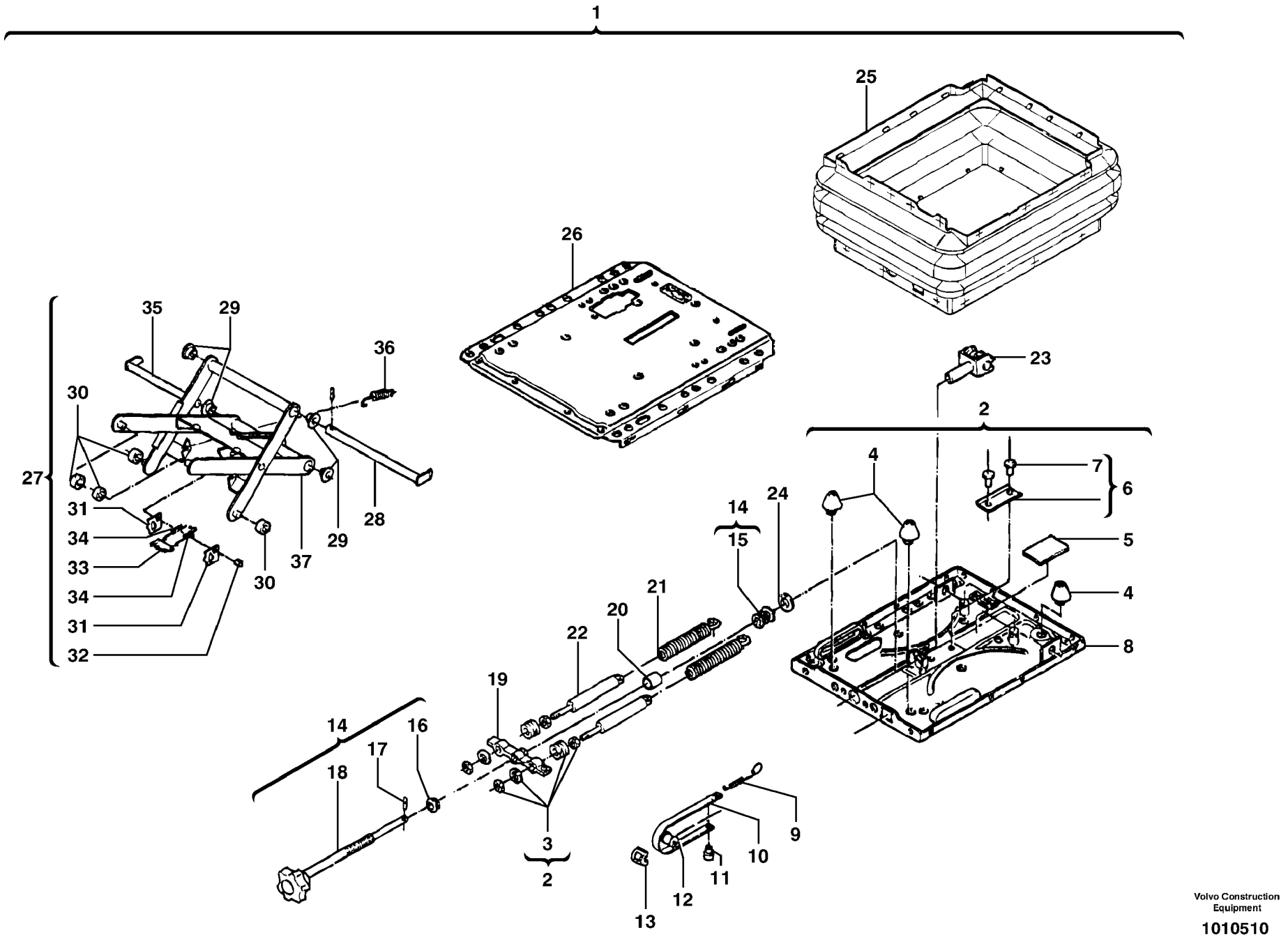
1
25
26
23
2
35
29
36
30
27
31
34
33
34
31
32
30
37
29
28
4
7
6
14
24
15
5
21
4
20
22
8
19
14
16
17
18
3
2
9
10
11
12
13

Fig.	Part No.	Quantity 1	2	3	PS	KIT	Description	Dénomination	Bezeichnung	품명	Denominación	Notes
1	**VOE 11802532**	1					Seat Spring Suspens	Suspension Siege	Sitzfederung	시트 스프링 서스펜션	Resorte Asiento	
2	**PJ 7417789**	1					•Support	•Support	•Stütze	• 서포트	•Apoyo	
3	**PJ 7417787**	2					••Set of washers	••Jeu de rondelles	••Scheibensatz	•• 와셔 세트	••Juego de arandelas	
4	**PJ 7417783**	3					••Buffer	••Butoir	••Puffer	•• 버퍼	••Parachoques	
5	**VOE 11713337**	1					••Drive Screw	••Vis Commande	••Durchsetzschr	•• 스크류	••Tornillo Motriz	
6		1			NS		••Plate	••Plaque	••Platte	•• 플레이트	••Placa	
7	**VOE 11713338**	2					•••Rivet	•••Rivet	•••Niet	••• 리벳	•••Remache	
8		1			NS		••Support	••Support	••Stütze	•• 서포트	••Apoyo	ORDER ITEM NO 2
9	**PJ 7413456**	1					•Spring	•Ressort	•Feder	• 스프링	•Muelle	
10	**VOE 14526275**	1					•Tape	•Scotch	•Klebeband	• 테이프	•Cinta	
11	**ZM 2289762**	1					•Plug	•Bouchon	•Stopfen	• 플러그	•Tapon	
12	**PJ 7416002**	1					•Pulley	•Poulie	•Riemenscheibe	• 풀리	•Polea	
13	**ZM 2114010**	1					•Guide	•Rail	•Führung	• 가이드	•Guia	
14	**PJ 7417785**	1					•Handle	•Poignée	•Drehgriff	• 손잡이	•Palanca	
15	**PJ 7416004**	1					••Stop, Shoulder	••Butee	••Gegenhalter	•• 스톱 , 숄더	••Tope	
16	**ZM 2906158**	1					••Ring	••Anneau	••Ring	•• 링	••Anillo	
17		1			NS		••Sleeve	••Manchon	••Muffe	•• 슬리브	••Manguito	
18		1			NS		••Handle	••Poignée	••Drehgriff	•• 손잡이	••Palanca	ORDER ITEM NO 14
19	**VOE 14526274**	1					•Bracket	•Console	•Konsole	• 브라켓	•Ménsula	
20	**VOE 14526887**	1					•Bushing	•Bague	•Buchse	• 부싱	•Casquillo	
21	**VOE 11713300**	2					•Spring	•Ressort	•Feder	• 스프링	•Muelle	
22	**PJ 7417786**	2					•Absorber	•Amortisseur	•Dämpfer	• 압쇼버	•Amortiguador	
23	**PJ 7416006**	1					•Yoke	•Chape	•Joch	• 요크	•Horquilla	
24	**ZM 2289753**	1					•Washer	•Rondelle	•Scheibe	• 와셔	•Arandela	
25	**PJ 7417788**	1					•Bellow	•Soufflet	•Faltenbalg	• 벨로우	•Fuelle	
26		1			NS		•Support	•Support	•Stütze	• 서포트	•Apoyo	ORDER ITEM NO 1
27		1			NS		•Arm	•Bras	•Arm	• 암	•Brazo	
28	**ZM 2289751**	1					••Pin	••Goupille	••Zapfen	•• 핀	••Pasador	
29	**PJ 7411851**	4					••Bushing	••Bague	••Buchse	•• 부싱	••Casquillo	
30		4			NS		••Roller	••Galet	••Rolle	•• 롤러	••Rodillo	

1	**602.10151**	
2		
3		
4		
5		

Montaje de asiento suspendido
스프링시트 조립체
Gefederter Sitz, Einbau
Suspension du siège
Suspension seat assembly

Catalogue id	Group
20048	**852**
Illustr. No **1010510**	Section **200**
Issue **VOE 74C9920048**	Page **309**

VOLVO

ECR38

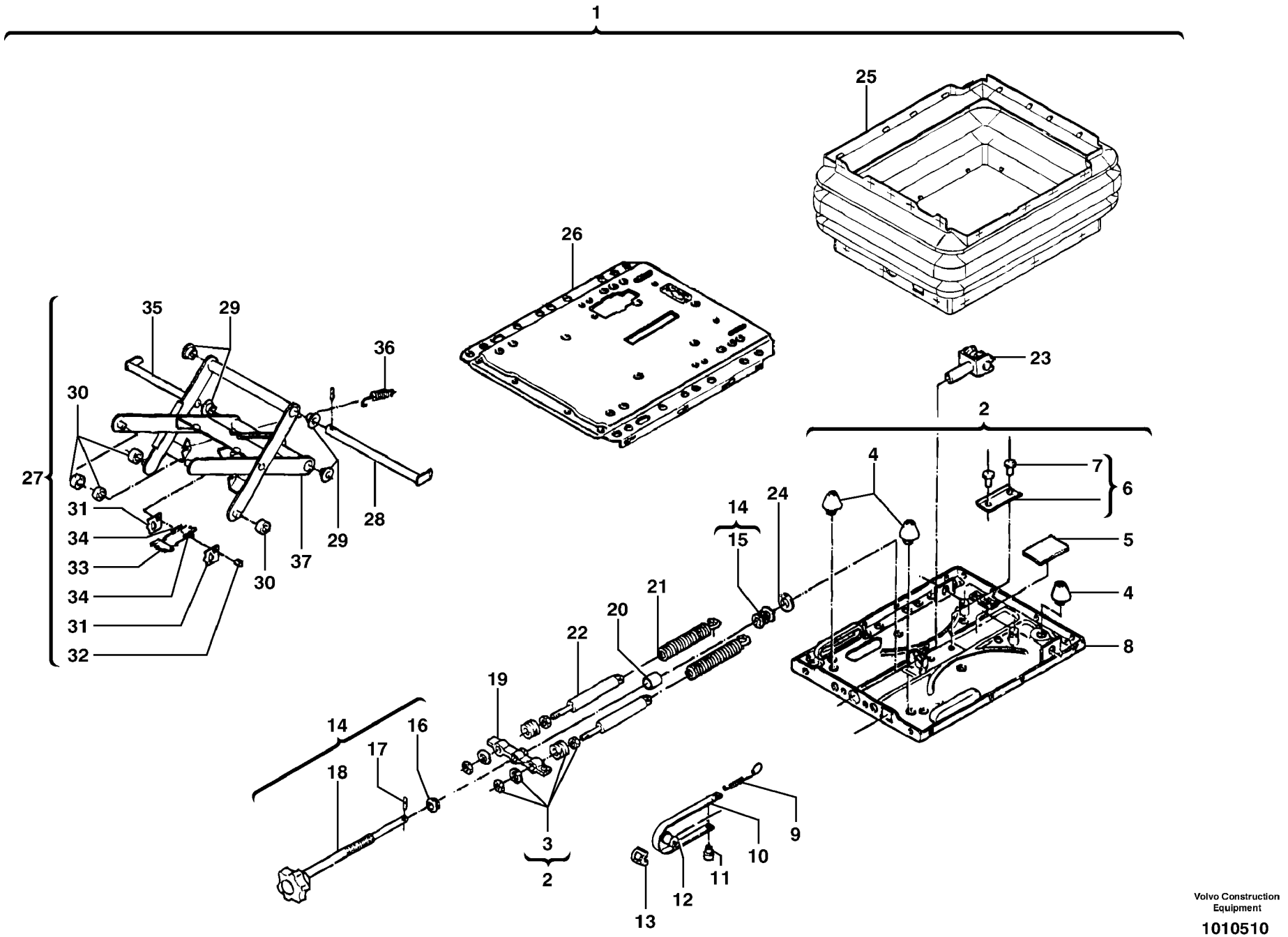
1
25
26
23
2
35
29
36
30
27
31
34
33
34
31
32
30
37
29
28
4
7
6
14
24
15
5
21
4
20
22
8
19
14
16
17
18
3
2
9
10
11
12
13

Fig.	Part No.	Quantity 1	2	3	PS	KIT	Description	Dénomination	Bezeichnung	품명	Denominación	Notes
31	**PJ 7416003**	2					••Apron	••Tole	••Schutzblech	•• 에이프런	••Chapa protectora	
32	**VOE 14526280**	1					••Bolt	••Boulon	••Bolzen	•• 볼트	••Perno	
33	**PJ 7413454**	1					••Plate	••Plaque	••Platte	•• 플레이트	••Placa	
34	**PJ 7416008**	2					••Spring	••Ressort	••Feder	•• 스프링	••Muelle	
35	**VOE 14526281**	1					••Bolt	••Boulon	••Bolzen	•• 볼트	••Perno	
36	**PJ 7417784**	1					••Spring	••Ressort	••Feder	•• 스프링	••Muelle	
37		1			NS		••Support	••Support	••Stütze	•• 서포트	••Apoyo	ORDER ITEM NO 27

1	**602.10151**		**Montaje de asiento suspendido** 스프링시트 조립체 **Gefederter Sitz, Einbau** **Suspension du siège** **Suspension seat assembly**
2			
3			
4			
5			

Catalogue id **20048**	Group **852**
Illustr. No **1010510**	Section **200**
Issue **VOE 74C9920048**	Page **311**

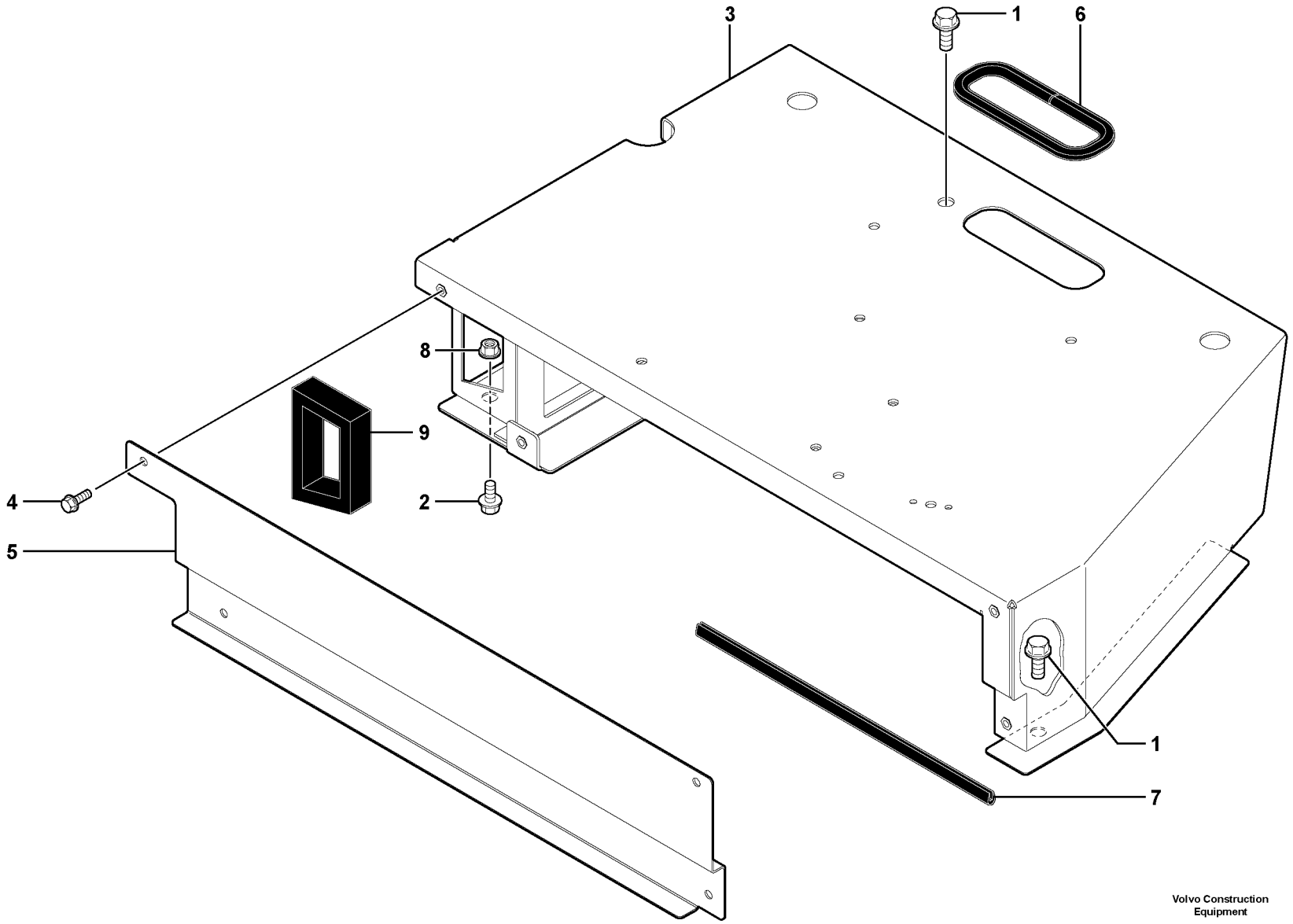

Volvo Construction Equipment

1021287

Fig.	Part No.	Quantity 1	2	3	PS	KIT	Description	Dénomination	Bezeichnung	품명	Denominación	Notes
1	**VOE 946817**	2			SS		Screw	Vis	Schraube	스크류	Tornillo	
2	**VOE 946441**	1					Flange screw	Vis à bride	Flanschschraube	플랜지 스크류	Torn embridado	
3	**VOE 11802111**	1					Box	Boîte	Kasten	박스	Caja	
4	**VOE 946173**	4			SS		Screw	Vis	Schraube	스크류	Tornillo	
5	**VOE 11802118**	1					Door	Porte	Tür	도어	Puerta	
6	**VOE 11802802**	1					Rubber Seal	Lèvre Caoutchouc	Gummilippe	고무 시일	Labio Goma	
7	**VOE 11802802**	1					Rubber Seal	Lèvre Caoutchouc	Gummilippe	고무 시일	Labio Goma	
8	**VOE 971095**	1			SS		Nut	Ecrou	Mutter	너트	Tuerca	
9	**VOE 11802119**	1					Plate	Plaque	Platte	플레이트	Placa	

1	**602.10151**	
2		
3		
4		
5		

Puesto de conducción : cubierta
운전석 : 판금
Bedienungsstand : Verdeck
Poste de conduite : capotage
Operator's station : plating

Catalogue id **20048**	Group **852**
Illustr. No **1021287**	Section **900**
Issue **VOE 74C9920048**	Page **313**

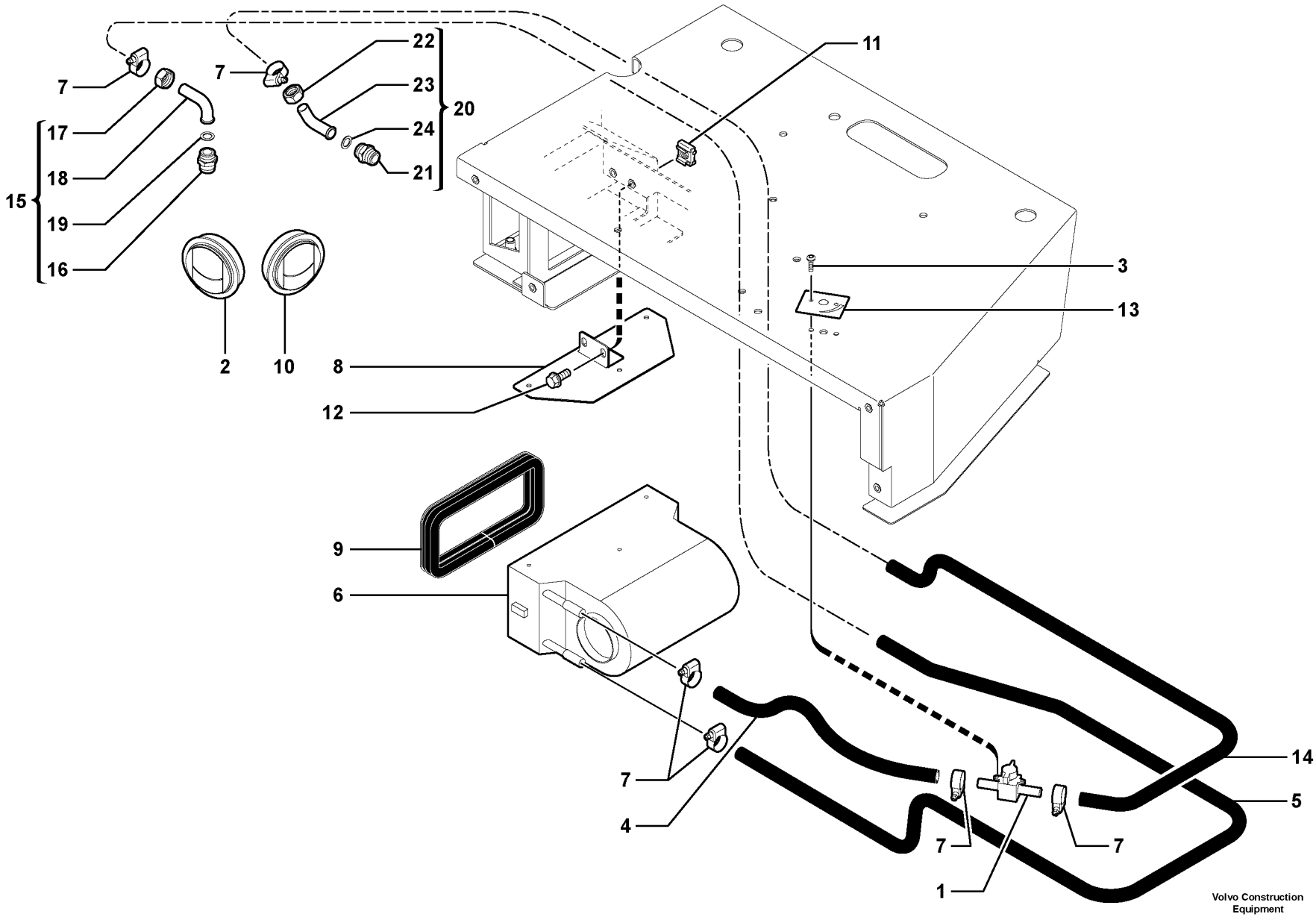
7
17
18
19
16
15
7
22
23
24
21
20
11
3
13
2
10
8
12
9
6
7
4
14
5
7
7
1
Volvo Construction Equipment
1021289

Fig.	Part No.	Quantity 1	2	3	PS	KIT	Description	Dénomination	Bezeichnung	품명	Denominación	Notes
1	**VOE 11803352**	1					Valve	Soupape	Ventil	밸브	Valvula	
2	**VOE 11104372**	1					Air Outlet	Diffuseur d'air	Luftdüse	공기 토출구	Difusor de aire	
3	**VOE 969467**	2					Screw	Vis	Schraube	스크류	Tornillo	
4	**VOE 11803353**	1					Pipe	Canalisation	Rohrleitung	파이프	Canalizacion	
5	**VOE 11802230**	1					Pipe	Canalisation	Rohrleitung	파이프	Canalizacion	
6		1					Heater unit	Chaufferette	Heizgerät	히터 유니트	Calefactor	See group 873, Page 317
7	**VOE 943472**	6			SS		Hose Clamp	Collier Serrage	Schlauchschelle	호스 클램프	Abraz Manguera	
8	**VOE 11802209**	1					Support	Support	Stütze	서포트	Apoyo	
9	**VOE 11802422**	REQ					Rubber Seal	Lèvre Caoutchouc	Gummilippe	고무 시일	Labio Goma	L = 510mm/20.0787in
10	**VOE 11104372**	1					Air Outlet	Diffuseur d'air	Luftdüse	공기 토출구	Difusor de aire	
11	**VOE 11802283**	2					Nut	Ecrou	Mutter	너트	Tuerca	
12	**VOE 946173**	2			SS		Screw	Vis	Schraube	스크류	Tornillo	
13	**VOE 11803533**	1					Adhesive	Adhesif	Klebstoff	접착제	Adhesivo	
14	**VOE 11802231**	1					Pipe	Canalisation	Rohrleitung	파이프	Canalizacion	
15	**VOE 11803362**	1					Elbow	Coude	Winkelstueck	엘보	Tubo acodado	
16	**VOE 11802860**	1					•Connector	•Raccord	•Anschluss	• 커넥터	•Union	ORDER ITEM NO 15
17	**VOE 11803402**	1					•Nut	•Ecrou	•Mutter	• 너트	•Tuerca	ORDER ITEM NO 15
18	**VOE 11803403**	1					•Pipe	•Canalisation	•Rohrleitung	• 파이프	•Canalizacion	ORDER ITEM NO 15
19	**VOE 11803401**	1					•Fiber Washer	•Rondelle Fibre	•Presstoffscheib	•	•Arandela Fibra	ORDER ITEM NO 15
20	**VOE 11803363**	1					Elbow	Coude	Winkelstueck	엘보	Tubo acodado	
21	**VOE 11802860**	1					•Connector	•Raccord	•Anschluss	• 커넥터	•Union	ORDER ITEM NO 20
22	**VOE 11803402**	1					•Nut	•Ecrou	•Mutter	• 너트	•Tuerca	ORDER ITEM NO 20
23	**VOE 11803404**	1					•Pipe	•Canalisation	•Rohrleitung	• 파이프	•Canalizacion	ORDER ITEM NO 20
24	**VOE 11803401**	1					•Fiber Washer	•Rondelle Fibre	•Presstoffscheib	•	•Arandela Fibra	ORDER ITEM NO 20

1	**602.10151**	
2		
3		
4		
5		

Instalación del calefactor de cabina
운전실 난방장치 설치
Einbau der Kabinenheizung
Installation du chauffage cabine
Cab heating installation

Catalogue id **20048**	Group **873**
Illustr. No **1021289**	Section **100**
Issue **VOE 74C9920048**	Page **315**

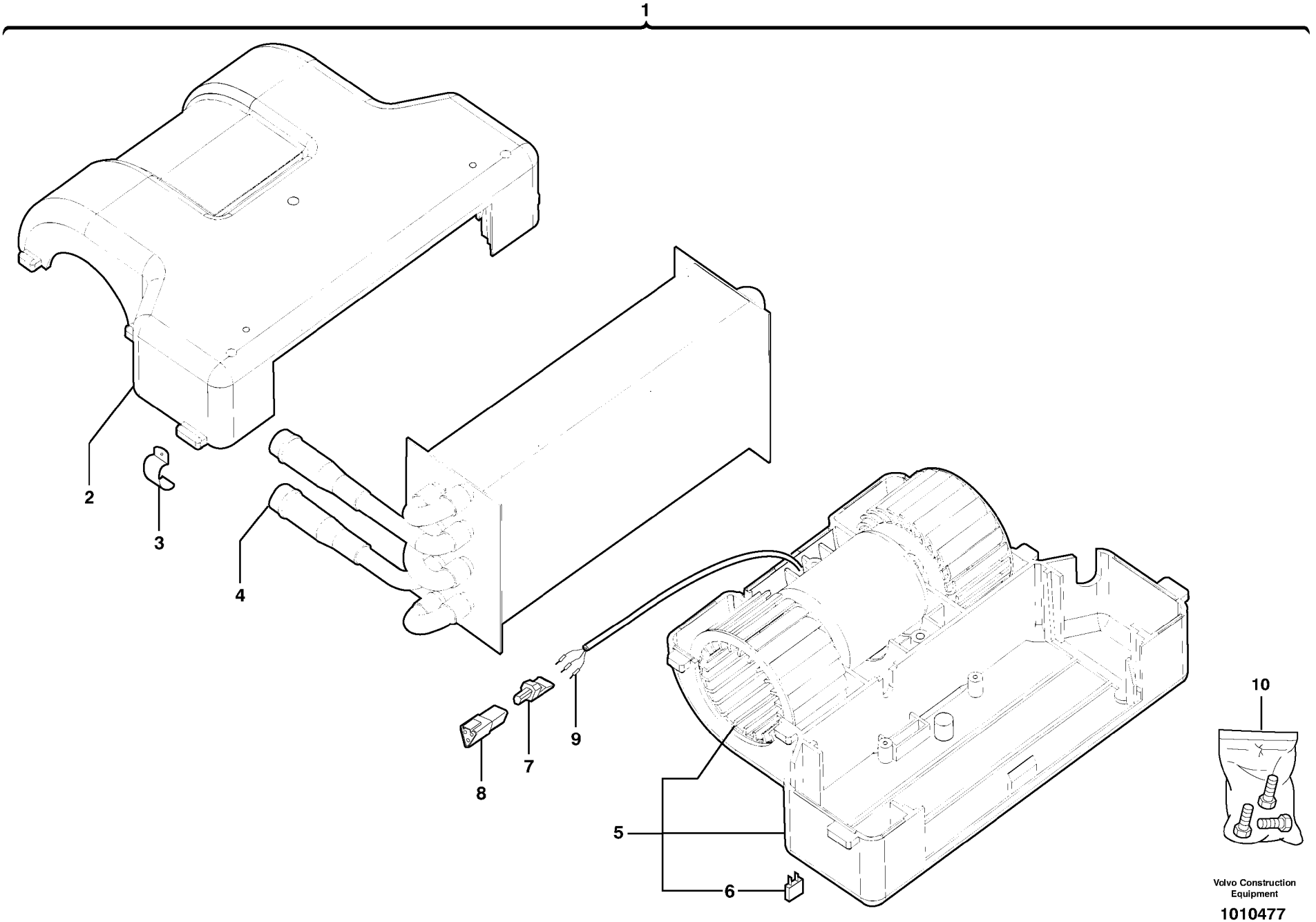

Volvo Construction Equipment

1010477

Fig.	Part No.	Quantity 1	2	3	PS	KIT	Description	Dénomination	Bezeichnung	품명	Denominación	Notes
1	**VOE 11803346**	1					Heater unit	Chaufferette	Heizgerät	히터 유니트	Calefactor	
2	**PJ 7417722**	1					•Half shell	•Demi-coquille	•Halbschale	• 하프 셸	•Mitad de caja	
3	**PJ 7417726**	7					•Fastener	•Attache	•Befestigung	• 파스너	•Atadura	
4	**VOE 11713198**	1					•Heater	•Elément de chauffag.	•Heizkörper	• 히터	•Calefaccion	
5	**PJ 7417723**	1					•Half shell	•Demi-coquille	•Halbschale	• 하프 셸	•Mitad de caja	
6	**VOE 13969160**	1					••Fuse	••Fusible	••Schmelzsicherung	•• 휴즈	••Fusible	(PJ 5120012) 5 A
7	**VOE 11802906**	1					•Lock	•Serrure	•Schloß	• 록	•Cierre	(PJ 5080100)
8	**VOE 11802905**	1					•Connector	•Raccord	•Anschluss	• 커넥터	•Union	(PJ 5080099)
9	**PJ 5090107**	3					•Pin	•Fiche	•Stecker	• 핀	•Ficha	
10	**PJ 7417724**	1					•Attachment kit	•Jeu de fixation	•Befestigungssatz	• 작업장치 키트	•Juego acoplamiento	

1	**602.10151**	
2		
3		
4		
5		

Calefactor
히터
Heizung
Chauffage
Heater

Catalogue id **20048**	Group **873**
Illustr. No **1010477**	Section **200**
Issue **VOE 74C9920048**	Page **317**

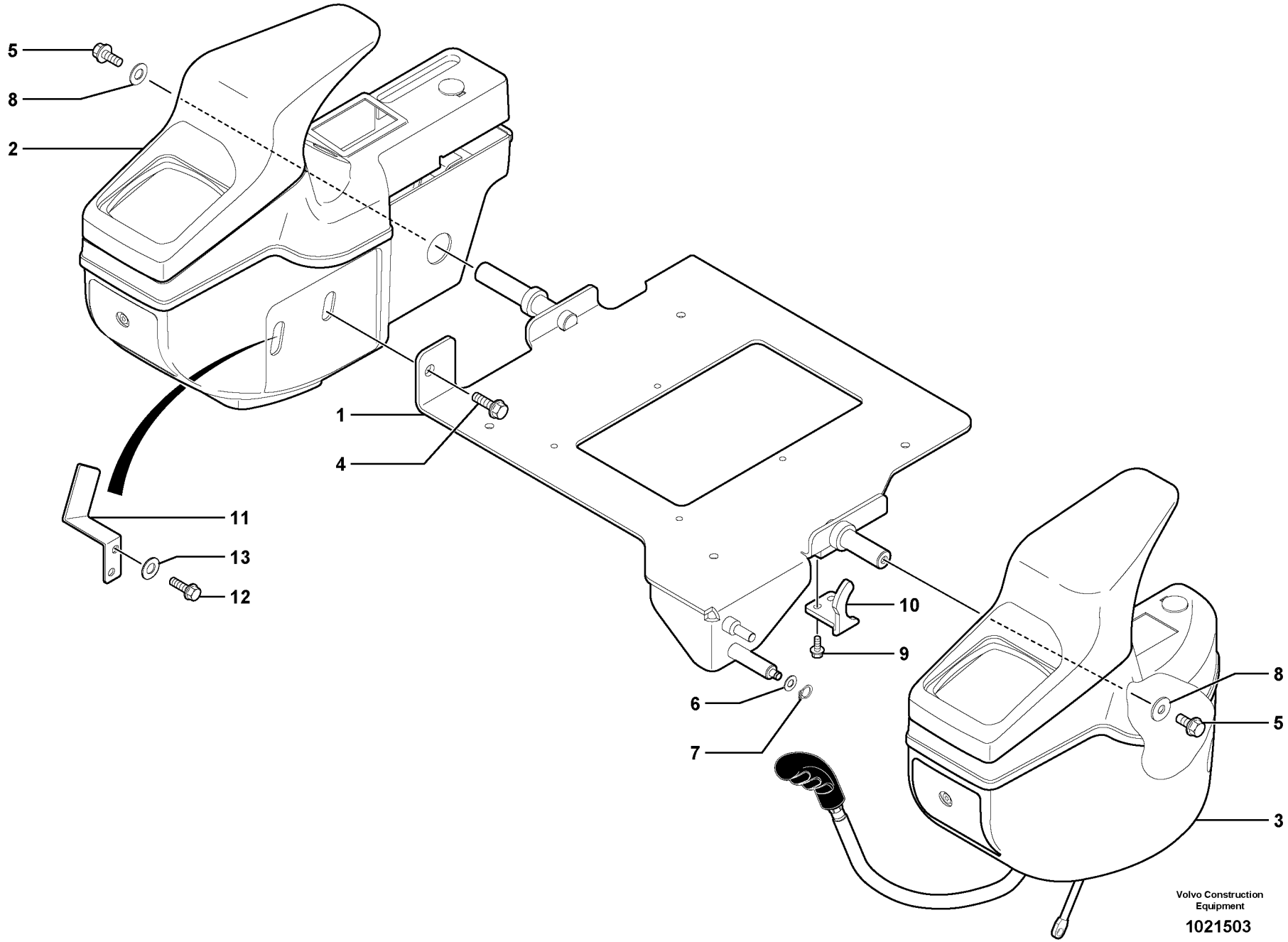
5
8
2
1
4
11
13
12
10
9
6
7
8
5
3
Volvo Construction Equipment
1021503

Fig.	Part No.	Quantity 1	2	3	PS	KIT	Description	Dénomination	Bezeichnung	품명	Denominación	Notes
1	**VOE 11802010**	1					Cage	Support	Halter	케이지	Soporte	
2		1					Bracket	Console	Konsole	브라켓	Consola	See group 881, Page 321
3		1					Bracket	Console	Konsole	브라켓	Consola	See group 881, Page 323
4	**VOE 965191**	1			SS		Screw	Vis	Schraube	스크류	Tornillo	
5	**VOE 946441**	2					Flange screw	Vis à bride	Flanschschraube	플랜지 스크류	Torn embridado	
6	**VOE 955894**	1					Washer	Rondelle	Scheibe	와셔	Arandela	
7	**VOE 955964**	1					Snap Ring	Circlip	Nutring	스냅 링	Circlip	
8	**VOE 13960143**	2					Washer	Rondelle	Scheibe	와셔	Arandela	
9	**VOE 946544**	2			SS		Screw	Vis	Schraube	스크류	Tornillo	
10	**VOE 11803123**	1					Cam	Came	Nocken	캠	Leva	
11	**VOE 11803731**	1					Plate	Plaque	Platte	플레이트	Placa	
12	**VOE 983243**	2					Screw	Vis	Schraube	스크류	Tornillo	
13	**VOE 960141**	2			SS		Washer	Rondelle	Scheibe	와셔	Arandela	

1	**602.10151**	
2		
3		
4		
5		

Puesto de conducción
운전석
Bedienungsstand
Poste de conduite
Operator's station

Catalogue id **20048**	Group **881**
Illustr. No **1021503**	Section **100**
Issue **VOE 74C9920048**	Page **319**

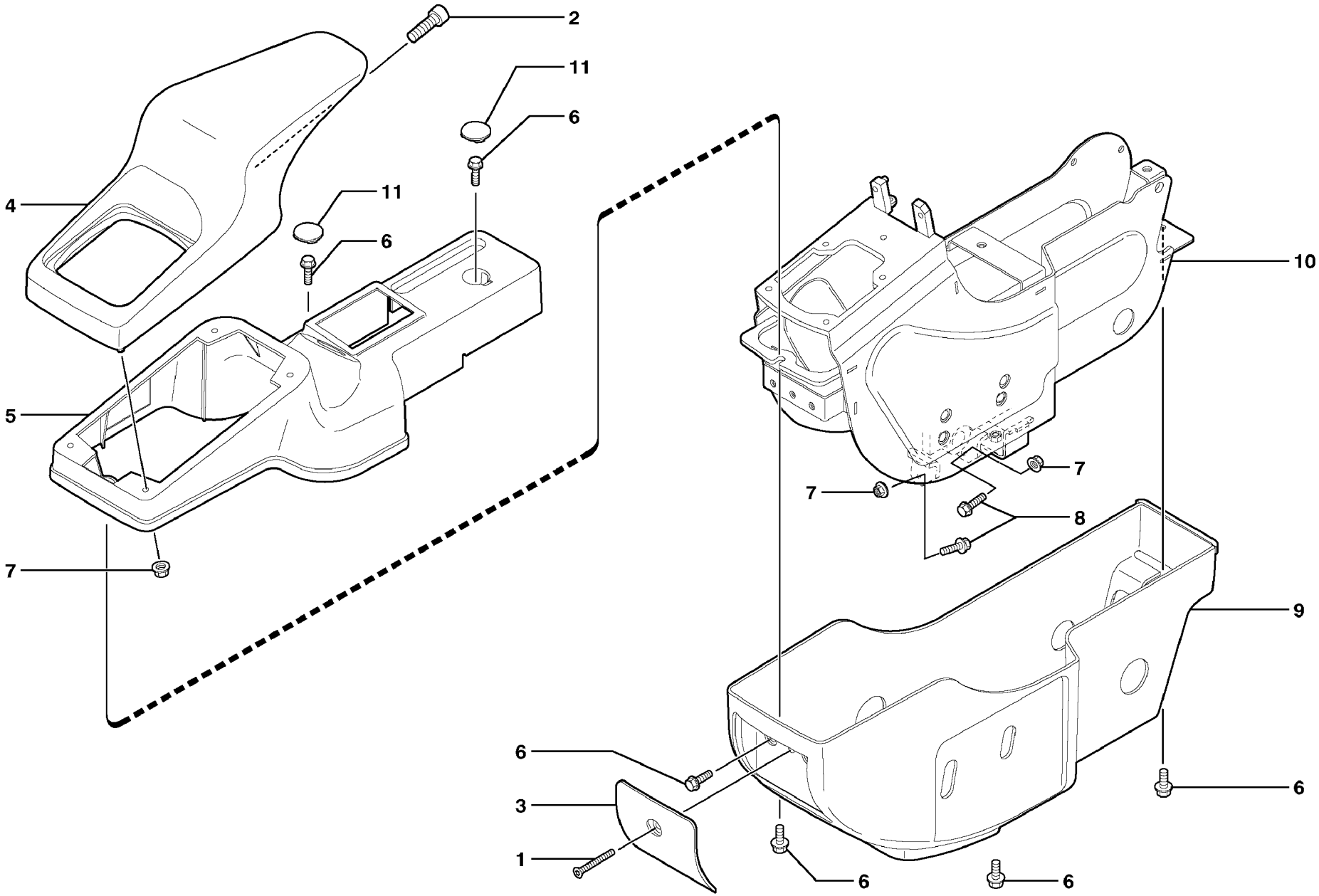

Volvo Construction Equipment

1010505

Fig.	Part No.	Quantity 1	2	3	PS	KIT	Description	Dénomination	Bezeichnung	품명	Denominación	Notes
1	**VOE 969741**	1					6-pt skt screw	Vis creuse de 6	Hohlschraube	6 포인트 소켓 스크류	Racor 6-dientes	
2	**VOE 967635**	2					Allen Hd Screw	Vis A 6 Pans Cr	Inbusschraube	스크류	Torn Hex Embut	
3	**VOE 14520227**	1					Clip	Clip	Klemme	클립	Clip	
4	**VOE 14519596**	1					Cover	Capot	Haube	커버	Capo	
5	**VOE 14519592**	1					Cover	Capot	Haube	커버	Capo	
6	**VOE 946544**	8			SS		Screw	Vis	Schraube	스크류	Tornillo	
7	**VOE 13945407**	6					Nut	Ecrou	Mutter	너트	Tuerca	
8	**VOE 13947542**	2					Screw	Vis	Schraube	스크류	Tornillo	
9	**VOE 14519594**	1					Cover	Capot	Haube	커버	Capo	
10	**VOE 14519600**	1					Plate	Plaque	Platte	플레이트	Placa	
11	**VOE 14520228**	2					Clip	Clip	Klemme	클립	Clip	

1	**602.10151**	
2		
3		
4		
5		

Puesto de conducción : tablero de instrumentos (derecho)
운전석 : 계기판 (우측)
Bedienungsstand : Armaturenbrett (rechts)
Poste de conduite : tableau de bord (côté droit)
Operator's station : instrument panel (right)

Catalogue id **20048**	Group **881**
Illustr. No **1010505**	Section **200**
Issue **VOE 74C9920048**	Page **321**

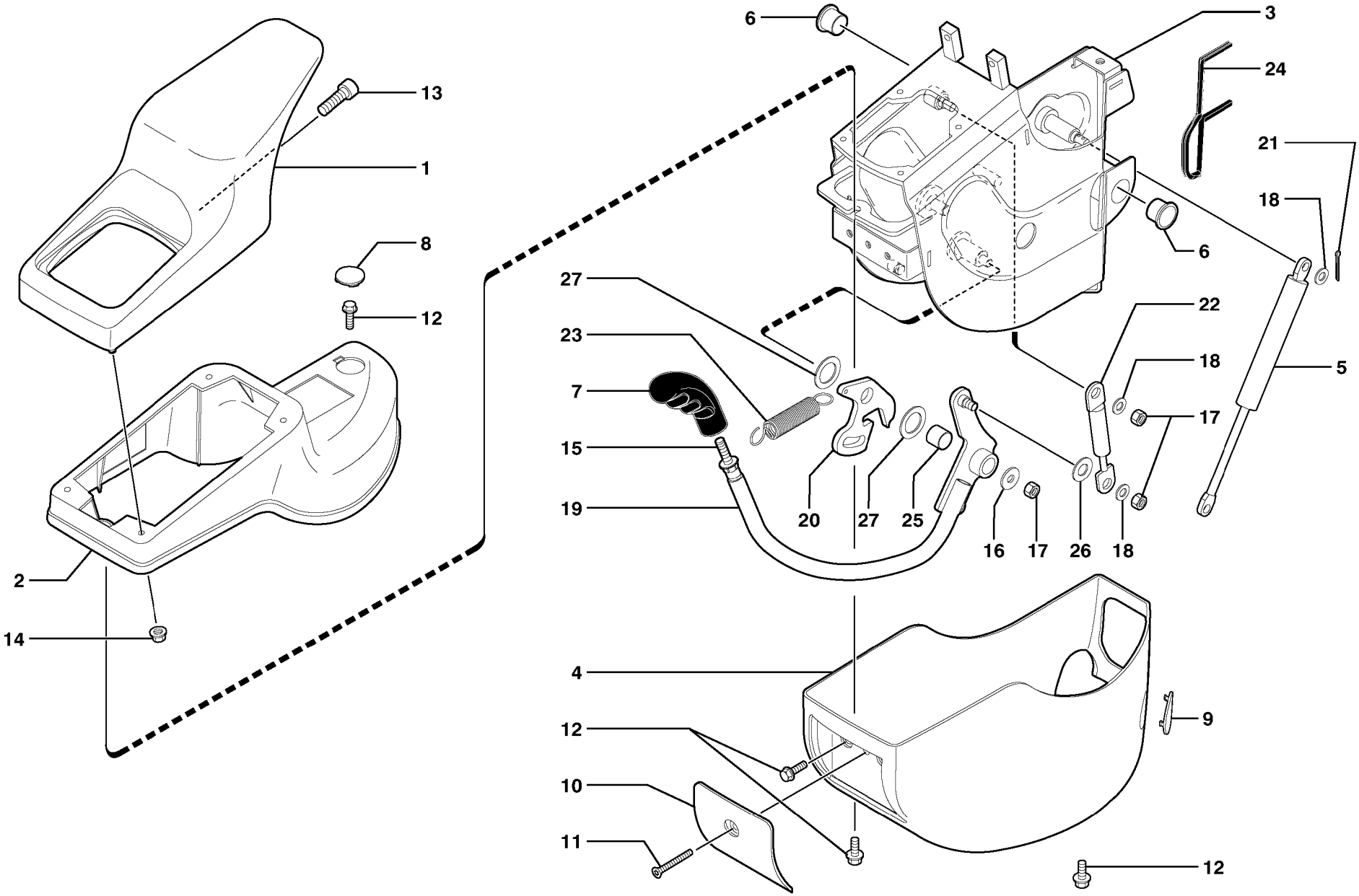

Volvo Construction Equipment

1010506

Fig.	Part No.	Quantity 1	2	3	PS	KIT	Description	Dénomination	Bezeichnung	품명	Denominación	Notes
1	**VOE 14519697**	1					Gasket	Joint	Dichtung	가스켓	Junta	
2	**VOE 14519593**	1					Cover	Capot	Haube	커버	Capo	
3	**VOE 14519599**	1					Plate	Plaque	Platte	플레이트	Placa	
4	**VOE 14519595**	1					Cover	Capot	Haube	커버	Capo	
5	**VOE 11800055**	1					Gas Spring	Ressort Gaz	Gasfeder	개스 스프링	Resorte A Gas	
6	**VOE 14523095**	2					Bushing	Bague	Buchse	부싱	Casquillo	
7	**VOE 14520086**	1					Knob	Bouton	Knopf	버턴	Boton	
8	**VOE 14520228**	1					Clip	Clip	Klemme	클립	Clip	
9	**VOE 14520229**	1					Clip	Clip	Klemme	클립	Clip	
10	**VOE 14520227**	1					Clip	Clip	Klemme	클립	Clip	
11	**VOE 969741**	1					6-pt skt screw	Vis creuse de 6	Hohlschraube	6 포인트 소켓 스크류	Racor 6-dientes	
12	**VOE 946544**	6			SS		Screw	Vis	Schraube	스크류	Tornillo	
13	**VOE 967635**	2					Allen Hd Screw	Vis A 6 Pans Cr	Inbusschraube	스크류	Torn Hex Embut	
14	**VOE 13945407**	4					Nut	Ecrou	Mutter	너트	Tuerca	
15	**VOE 945408**	1			SS		Flange Lock Nut	Contre écrou bride	Flanschmutter	플랜지 록 너트	Contratuer Embr	
16	**VOE 14880429**	1					Washer	Rondelle	Scheibe	와셔	Arandela	
17	**VOE 14880450**	3					Lock nut	Contre-ecrou	Sicherungsmutter	록 너트	Contratuerca	
18	**VOE 955894**	3					Washer	Rondelle	Scheibe	와셔	Arandela	
19	**VOE 14520083**	1					Latch	Poignee Blocage	Knebel	래치	Mango Seguridad	
20	**VOE 14520174**	1					Latch	Poignee Blocage	Knebel	래치	Mango Seguridad	
21	**VOE 14880452**	1					Split Pin	Goupille Fendue	Splint	분할 핀	Chaveta Hendida	
22	**VOE 14520133**	1					Spring	Ressort	Feder	스프링	Muelle	
23	**VOE 14523097**	1					Spring	Ressort	Feder	스프링	Muelle	
24	**VOE 14880465**	1					Weatherstrip	Leche-vitre	Abstreifleiste	웨더스트립	Lamelunas	
25	**VOE 14880458**	1					Bushing	Bague	Buchse	부싱	Casquillo	
26	**VOE 14523099**	1					Bushing	Bague	Buchse	부싱	Casquillo	
27		2			NS		Shim	Cale d'épaisseur	Passcheibe	심	Arandela Ajuste	

1	**602.10151**	
2		
3		
4		
5		

Puesto de conducción : tablero de instrumentos (izquierdo)
운전석 : 계기판 (좌측)
Bedienungsstand : Armaturenbrett (links)
Poste de conduite : tableau de bord (côté gauche)
Operator's station : instrument panel (left)

Catalogue id	Group
20048	**881**
Illustr. No	Section
1010506	**300**
Issue	Page
VOE 74C9920048	**323**

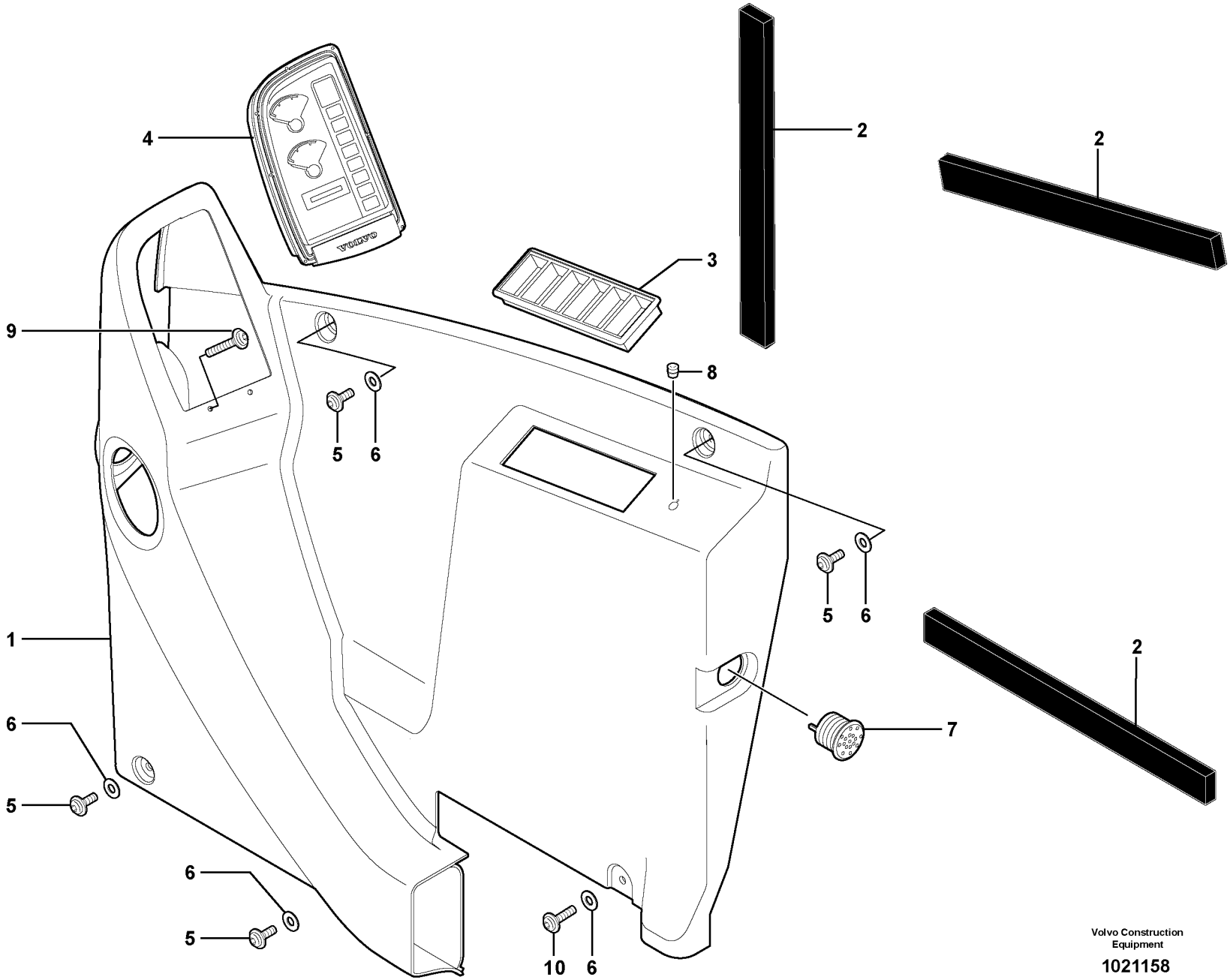

Volvo Construction Equipment

1021158

Fig.	Part No.	Quantity 1	2	3	PS	KIT	Description	Dénomination	Bezeichnung	품명	Denominación	Notes
1	**VOE 11801449**	1					Panel	Panneau	Verkleidung	패널	Plancha	
2	**VOE 11802993**	3					Seal	Joint	Dichtring	시일	Junta	
3		REQ					Switch	Commutateur	Schalter	스위치	Commutador	See group 364, Page 171
4		1					Instr Panel	Planche de bord	Instr Tafel	계기판	Panel Instrum	See group 387, Page 199
5	**VOE 969420**	4					6-pt skt screw	Vis creuse de 6	Hohlschraube	6 포인트 소켓 스크류	Racor 6-dientes	
6	**VOE 960139**	5					Washer	Rondelle	Scheibe	와셔	Arandela	
7		1					Buzzer	Répétiteur acoustiqu	Summer	부저	Zumbador	See group 364, Page 171
8	**VOE 11806643**	1					Plug	Bouchon	Stopfen	플러그	Tapon	
9	**VOE 969518**	2					6-pt skt screw	Vis creuse de 6	Hohlschraube	6 포인트 소켓 스크류	Racor 6-dientes	
10	**VOE 969147**	1					Screw	Vis	Schraube	스크류	Tornillo	

1	**602.10151**		**Cuadro de instrumentos, izquierdos** 계기판 , 좌측 **Armaturenbrett, links** **Panneau d'instruments, à gauche** **Instrument panel, left**
2			
3			
4			
5			

Catalogue id **20048**	Group **881**
Illustr. No **1021158**	Section **400**
Issue **VOE 74C9920048**	Page **325**

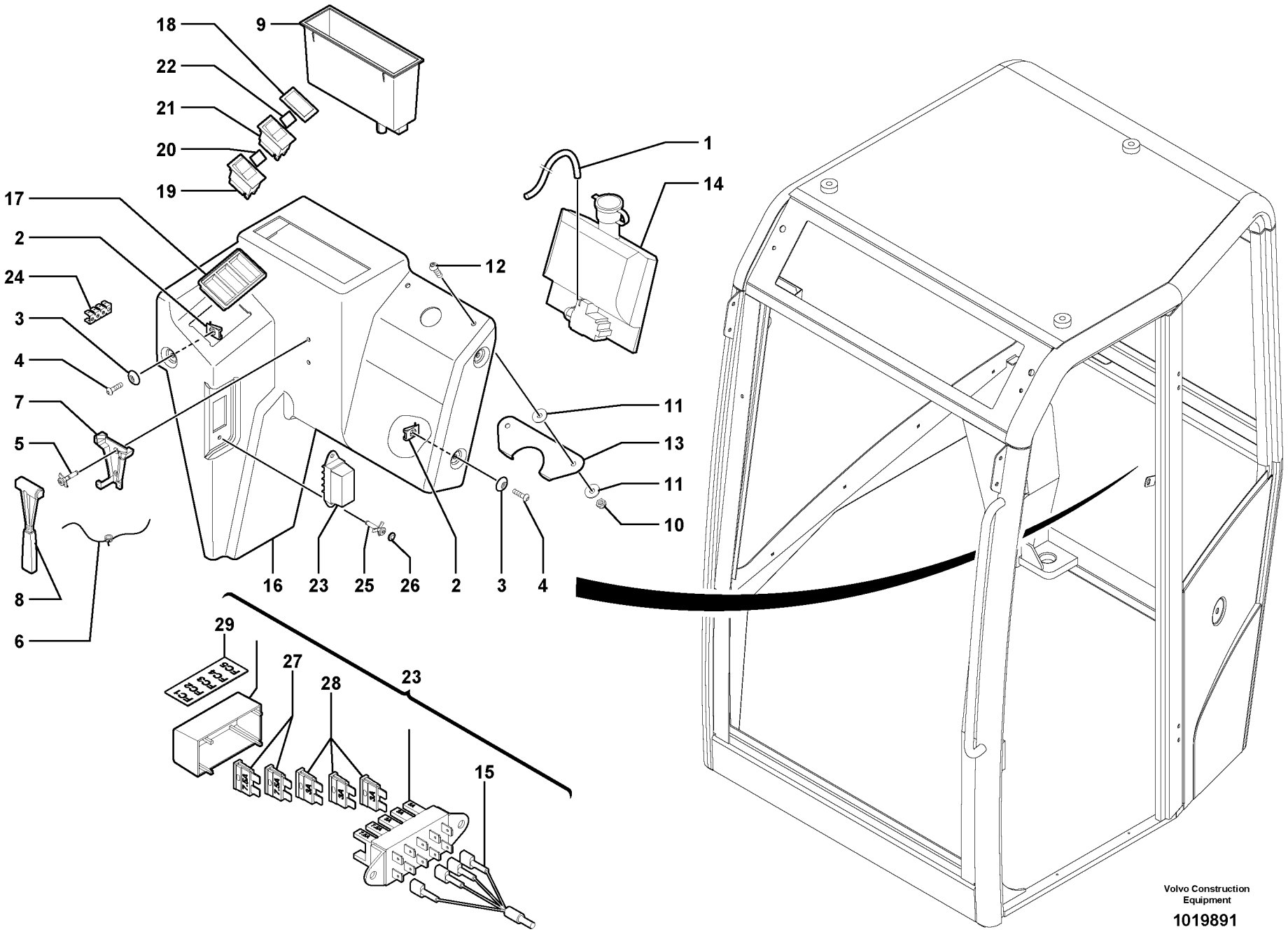
18
9
22
21
20
19
17
2
24
3
4
7
5
8
6
1
14
12
11
13
11
10
16
23
25
26
2
3
4
29
27
28
23
15
Volvo Construction Equipment
1019891

Fig.	Part No.	Quantity 1	2	3	PS	KIT	Description	Dénomination	Bezeichnung	품명	Denominación	Notes
1	**VOE 11714138**	1					Water Hose	Durite	Wasserschlauch	물 호스	Manguera Agua	
2	**PJ 7417449**	3					Square Nut	Ecrou Carre	Vierkantmutter		Tuerca Cuadrada	
3	**PJ 7417127**	3					Washer	Rondelle	Scheibe	와셔	Arandela	
4	**PJ 7417117**	3					Screw	Vis	Schraube	스크류	Tornillo	
5	**VOE 11712661**	2					Rivet	Rivet	Niet	리벳	Remache	
6	**PJ 7416834**	1					Wire	Fil	Draht	와이어	Alambre	
7	**PJ 7415569**	1					Support	Support	Stütze	서포트	Apoyo	
8	**VOE 11802257**	1					Hammer	Marteau	Hammer	망치	Martillo	(PJ 7415568)
9	**PJ 7413707**	1					Box	Boîte	Kasten	박스	Caja	
10	**PJ 4450026**	2					Lock nut	Contre-ecrou	Sicherungsmutter	록 너트	Contratuerca	
11	**PJ 7416807**	4					Washer	Rondelle	Scheibe	와셔	Arandela	
12	**PJ 7416798**	2					Screw	Vis	Schraube	스크류	Tornillo	
13	**PJ 7418326**	1					Apron	Tole	Schutzblech	에이프런	Chapa protectora	
14	**PJ 7416836**	1					Windshield washer	Lave-glace	Scheibenwascher	윈드스크린 와셔	Lavaparabrisas	
15	**VOE 11712648**	1					Electrical cable	Fil électrique	Elektr. Leitung	전기선	Cable electrico	
16	**VOE 11713167**	1					Cover	Capot	Haube	커버	Capo	
17	**PJ 7417459**	1					Support	Support	Stütze	서포트	Apoyo	
18	**PJ 7417460**	1					Sleeve	Manchon	Muffe	슬리브	Manguito	
19	**PJ 7418302**	1					Ventilation switch	Commutateur, ventila	Belüftungsschalter	환기 스위치	Interruptor de ventilad	
20	**PJ 7416323**	1					Symbol	Symbole	Symbol	심볼	Símbolo	
21	**PJ 7416831**	1					Switch	Commutateur	Schalter	스위치	Contactor	
22	**PJ 7416832**	1					Symbol	Symbole	Symbol	심볼	Símbolo	
23	**PJ 7416328**	1					Fuse box	Boite a fusibles	Sicherungsdose	휴즈 박스	Caja de fusibles	
24	**PJ 7418311**	1					Strap	Sangle	Riemen	스트랩	Cinta	
25	**VOE 11712661**	2					Rivet	Rivet	Niet	리벳	Remache	(PJ 7418379)
26	**PJ 7418354**	2					Cowl	Auvent	Windlauf	카울	Torpedo	
27	**VOE 980555**	2					Fuse	Fusible	Schmelzsicherung	휴즈	Fusible	
28	**VOE 981405**	3					Fuse	Fusible	Schmelzsicherung	휴즈	Fusible	
29	**VOE 11712647**	1					Decal	Decalcomanie	Abziehbild	데칼	Decalcomania	

1	**602.10151**	
2		
3		
4		
5		

Cabina: consola
운전실 : 콘솔
Kabine : Konsole
Cabine : console
Cab : console

Catalogue id	Group
20048	**881**
Illustr. No	Section
1019891	**500**
Issue	Page
VOE 74C9920048	**327**

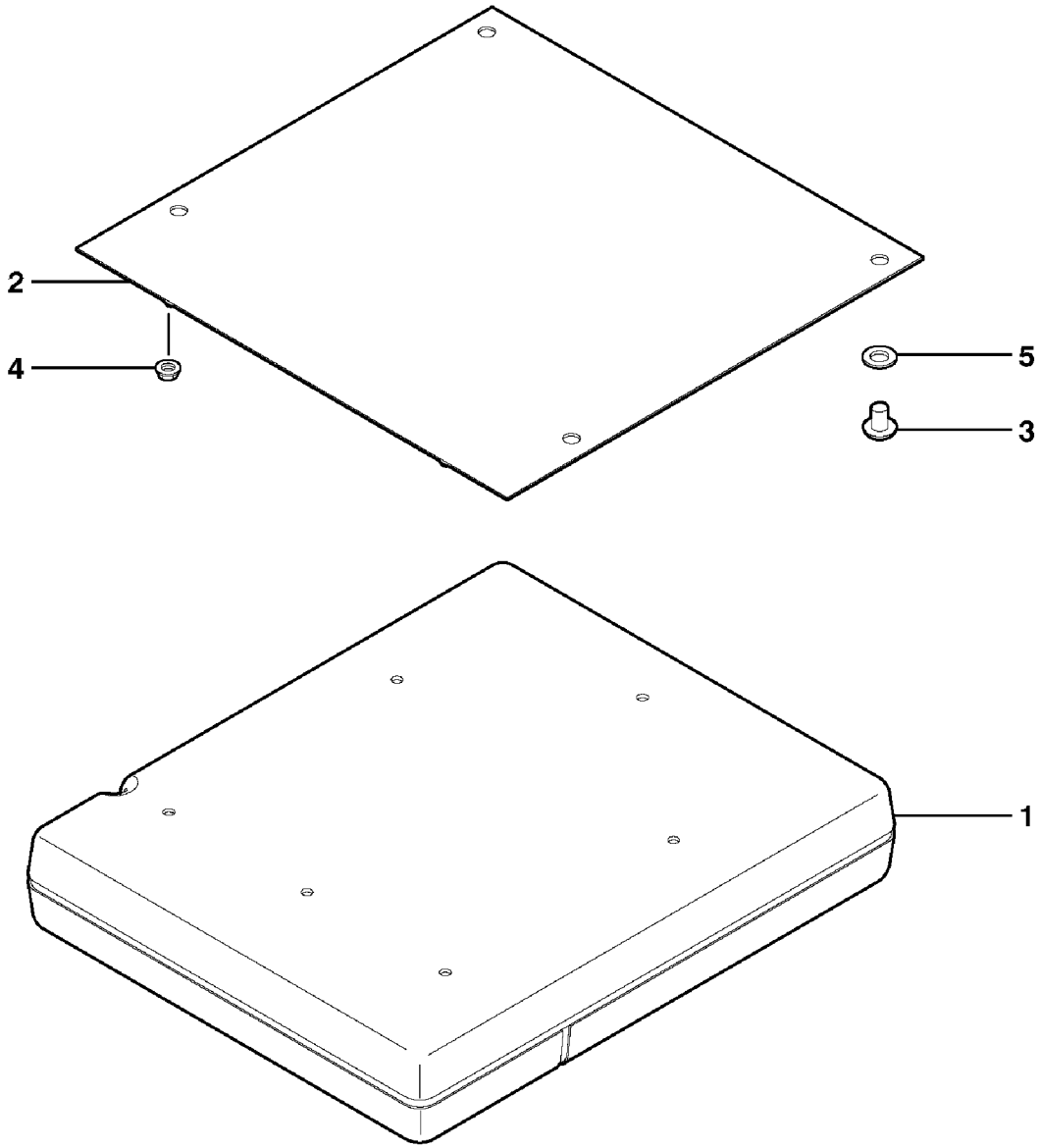

Volvo Construction Equipment

1010503

Fig.	Part No.	Quantity 1	2	3	PS	KIT	Description	Dénomination	Bezeichnung	품명	Denominación	Notes
1	**VOE 11800939**	1					Doc Compartment	Porte-document	Dokumentenfach		Compart Docum	
2	**VOE 11802926**	1					Support	Support	Stütze	서포트	Apoyo	
3	**VOE 11802135**	4					Rivet	Rivet	Niet	리벳	Remache	
4	**VOE 13965483**	3					Flange Lock Nut	Contre écrou bride	Flanschmutter	플랜지 록 너트	Contratuer Embr	
5	**VOE 955894**	4					Washer	Rondelle	Scheibe	와셔	Arandela	

1	**602.10151**		**Compartimiento de documentos** 문서 보관박스 **Dokumentenfach** **Porte-document** **Document compartment**
2			
3			
4			
5			

Catalogue id **20048**	Group **882**
Illustr. No **1010503**	Section **550**
Issue **VOE 74C9920048**	Page **329**

1

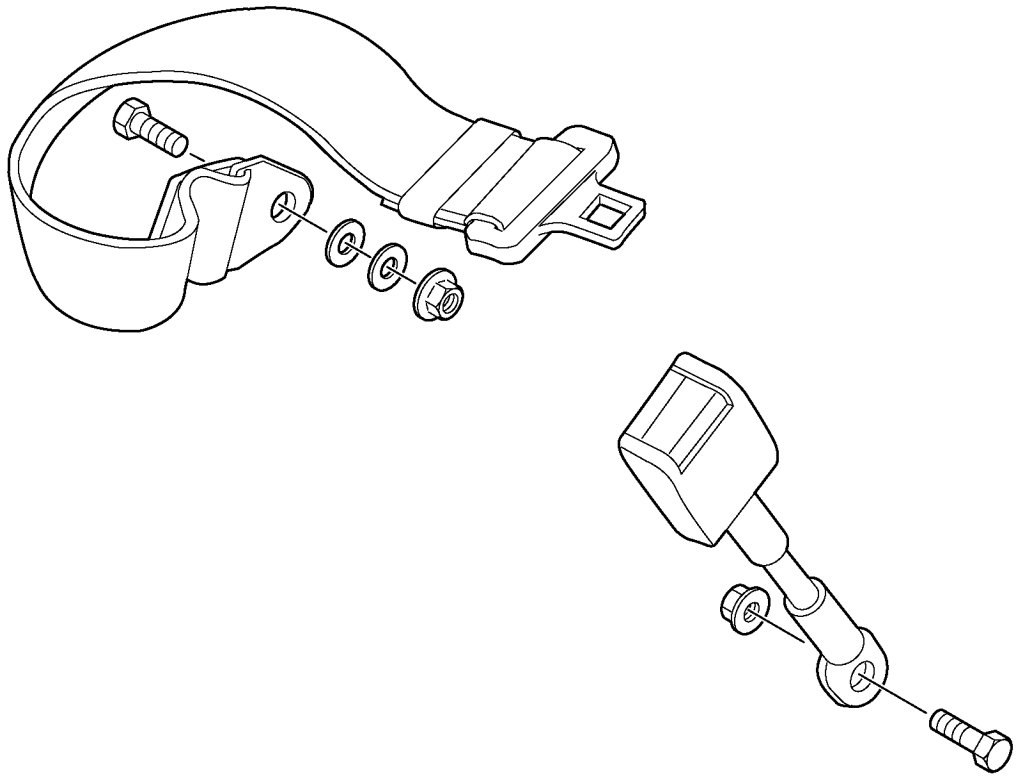

Fig.	Part No.	Quantity 1	2	3	PS	KIT	Description	Dénomination	Bezeichnung	품명	Denominación	Notes
1	**VOE 11802618**	1					Seat Belt	Ceintu.securite	Sicherheitsgurt.....	시트 벨트.....	Cint Seguridad.....	

1	**602.10151**		**Cinturón de seguridad** 안전 벨트 **Sicherheitsgurt** **Ceinture de sécurité** **Safety belt**	Catalogue id **20048**	Group **884**
2				Illustr. No **1006071**	Section **100**
3				Issue **VOE 74C9920048**	Page **331**
4					
5			**STD**		

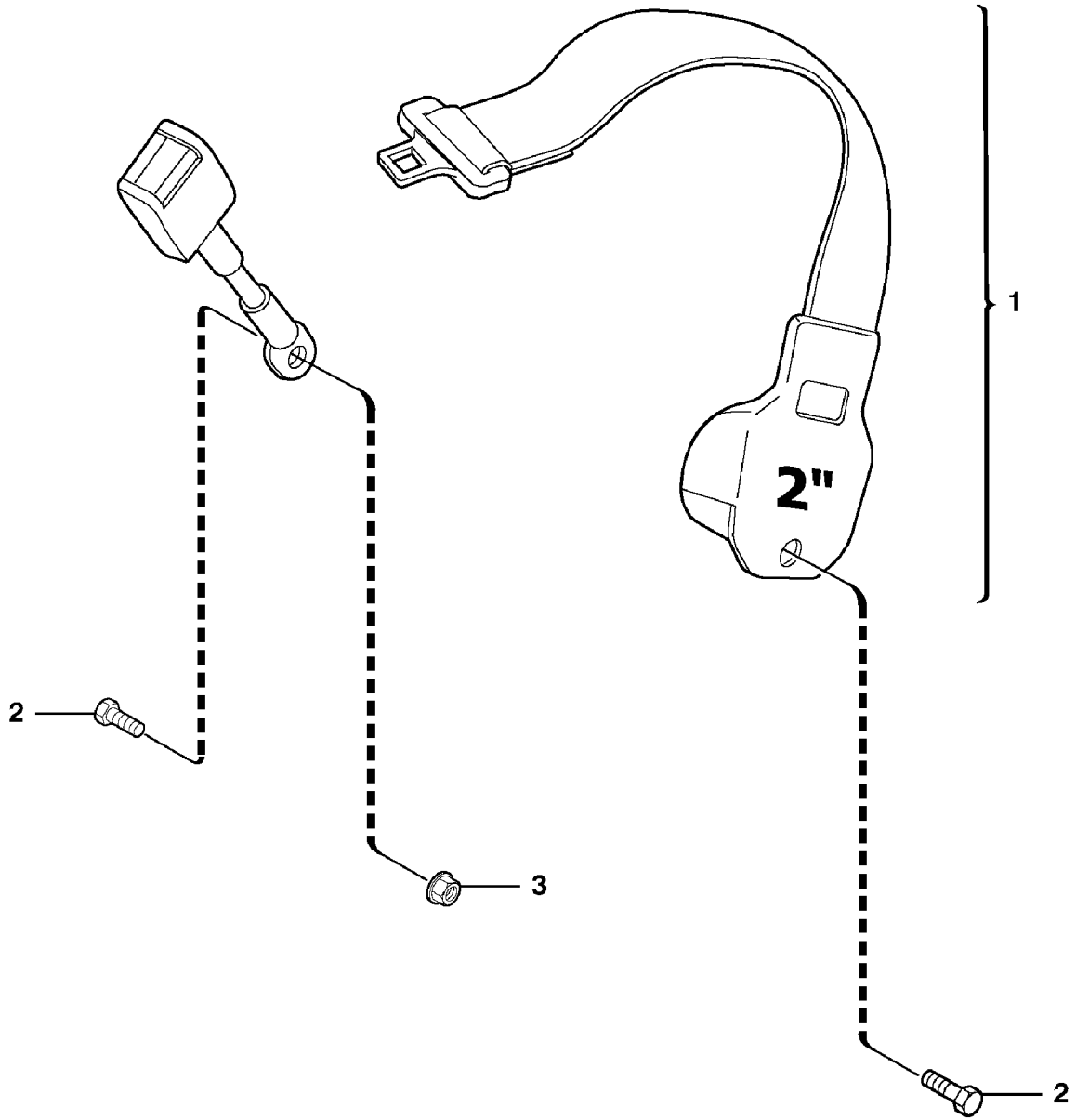

Volvo Construction Equipment

1010602

Fig.	Part No.	Quantity 1	2	3	PS	KIT	Description	Dénomination	Bezeichnung	품명	Denominación	Notes
1	**VOE 11800415**	1					Seat Belt	Ceintu.securite	Sicherheitsgurt	시트 벨트	Cint Seguridad	
2	**VOE 13965191**	2					Flange screw	Vis à bride	Flanschschraube	플랜지 스크류	Torn embridado	
3	**VOE 971096**	1					Flange nut	Ecrou accouple.	Bundmutter	플랜지 너트	Tuerca embridad	

1	**602.10151**		**Cinturón de seguridad** 안전 벨트 **Sicherheitsgurt** **Ceinture de sécurité** **Safety belt**	Catalogue id **20048**	Group **884**
2				Illustr. No **1010602**	Section **200**
3					
4				Issue **VOE 74C9920048**	Page **333**
5			**2 ”**		

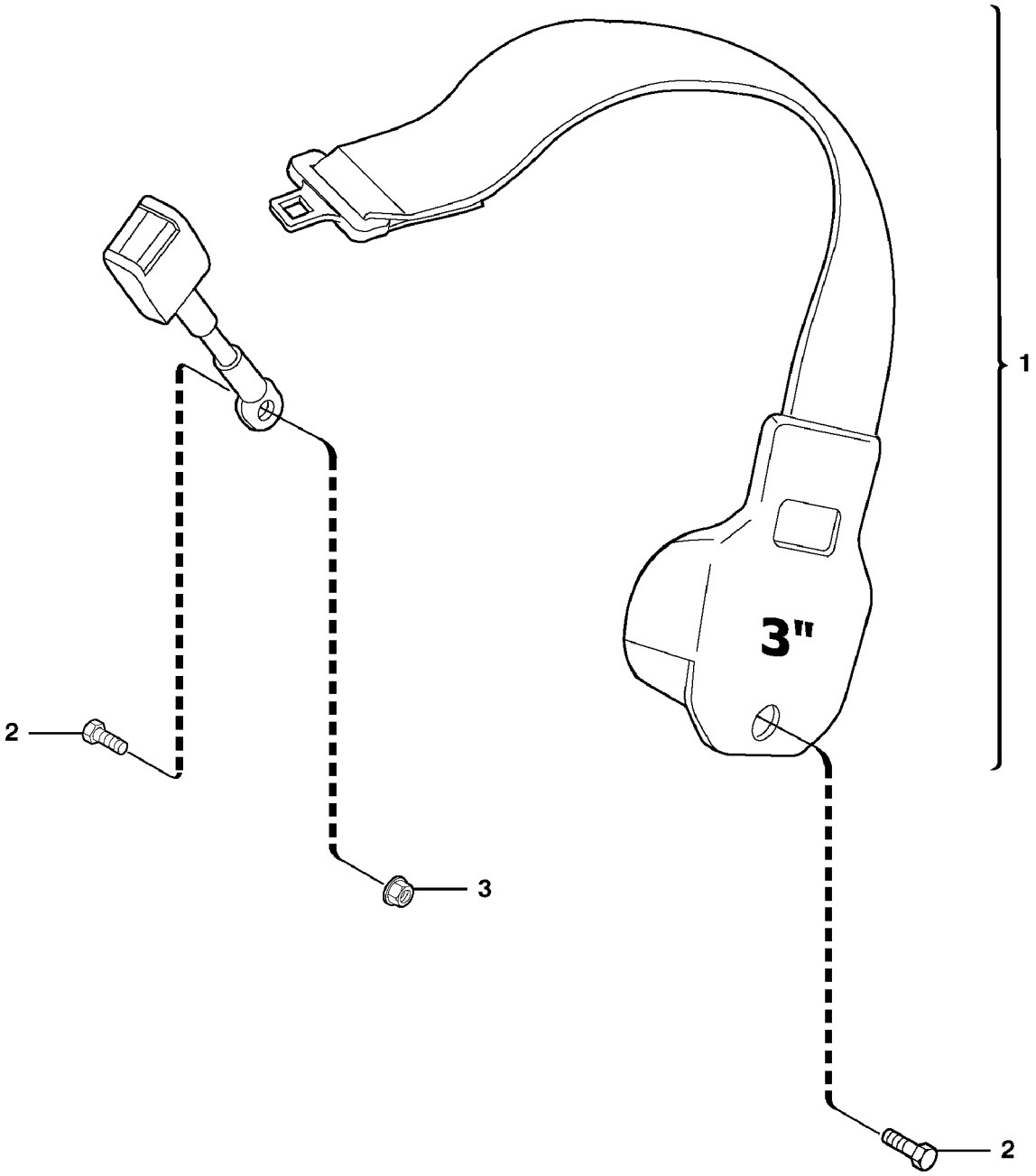

Volvo Construction Equipment

1010603

Fig.	Part No.	Quantity 1	2	3	PS	KIT	Description	Dénomination	Bezeichnung	품명	Denominación	Notes
1	**VOE 11800416**	1					Seat Belt	Ceintu.securite	Sicherheitsgurt	시트 벨트	Cint Seguridad	
2	**VOE 13965191**	2					Flange screw	Vis à bride	Flanschschraube	플랜지 스크류	Torn embridado	
3	**VOE 971096**	1					Flange nut	Ecrou accouple.	Bundmutter	플랜지 너트	Tuerca embridad	

1	**602.10151**		**Cinturón de seguridad** 안전 벨트 **Sicherheitsgurt** **Ceinture de sécurité** **Safety belt**	Catalogue id **20048**	Group **884**
2				Illustr. No **1010603**	Section **300**
3				Issue **VOE 74C9920048**	Page **335**
4					
5			**3 ”**		

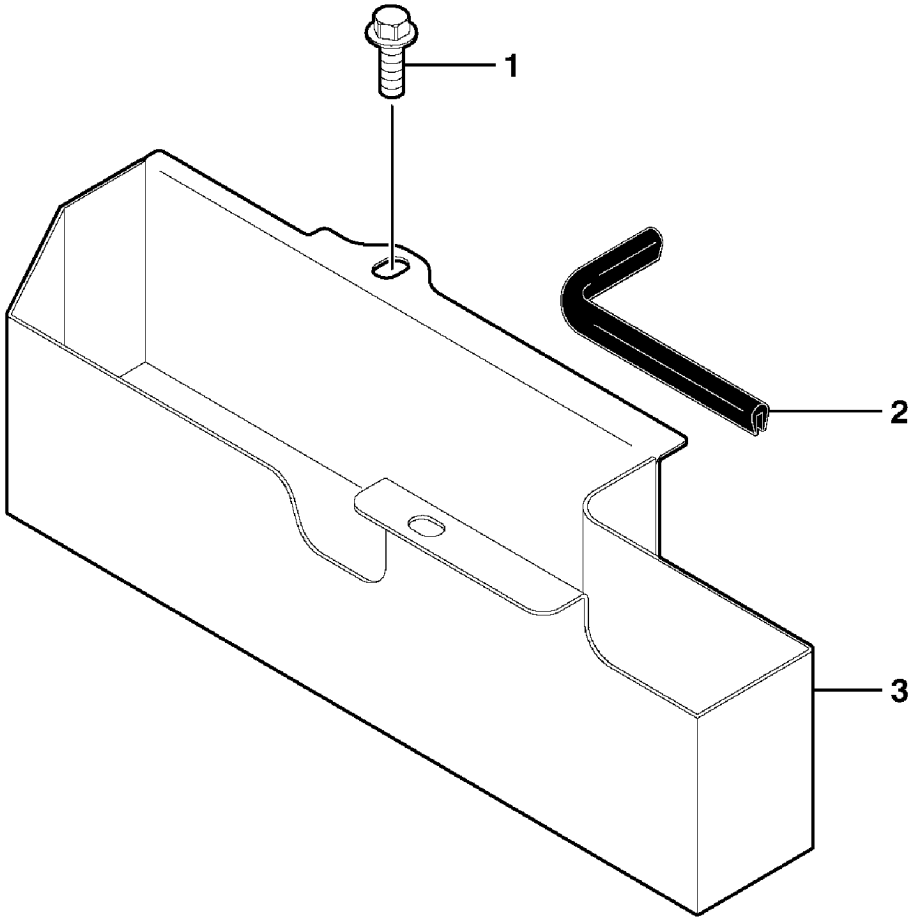

Volvo Construction Equipment

1010577

Fig.	Part No.	Quantity 1	2	3	PS	KIT	Description	Dénomination	Bezeichnung	품명	Denominación	Notes
1	**VOE 946472**	2					Flange screw	Vis à bride	Flanschschraube	플랜지 스크류	Torn embridado	
2	**VOE 11803383**	1					Rubber Seal	Lèvre Caoutchouc	Gummilippe	고무 시일	Labio Goma	
3	**VOE 11801663**	1					Tool Box	Boite a outils	Werkzeugkasten	공구 박스	Caja herramientas	

1	**602.10151**	
2		
3		
4		
5		

Caja de herramientas
도구함
Werkzeugkasten
Caisse outil
Toolbox

Catalogue id **20048**	Group **896**
Illustr. No **1010577**	Section **100**
Issue **VOE 74C9920048**	Page **337**

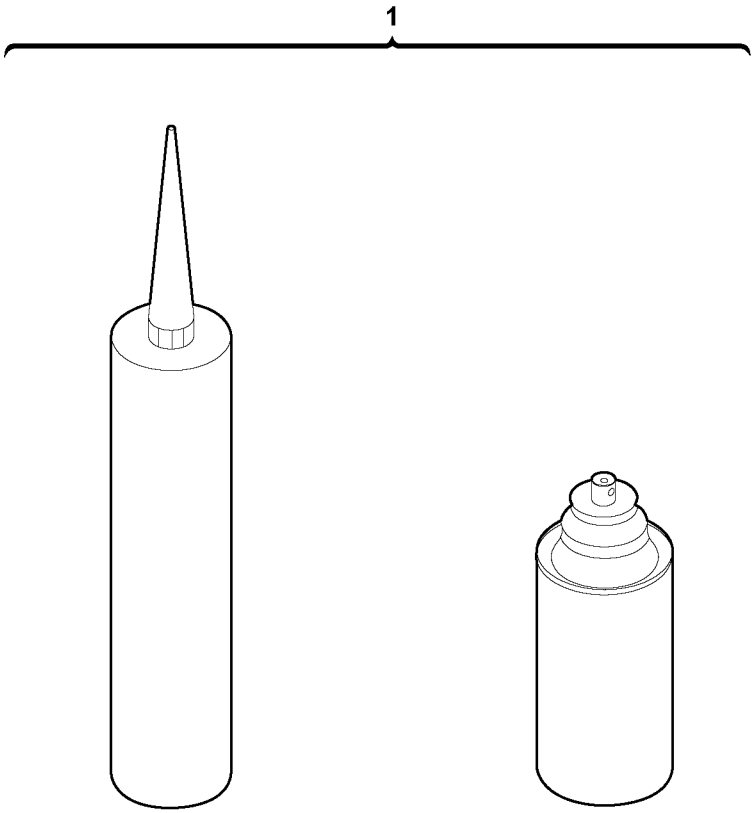

Volvo Construction Equipment

1021829

Fig.	Part No.	Quantity 1	2	3	PS	KIT	Description	Dénomination	Bezeichnung	품명	Denominación	Notes
1	**PJ 7411988**	1					Glue (kit)	Adhésif (jeu)	Kleber (Satz)	접착제 (키트)	Cola (juego)	

1	**602.10151**		**Kit de cola para cabina** 운전실용 접착제 키트 **Klebersatz für Kabine** **Kit de collage pour cabine** **Glue Kit for cab**	Catalogue id **20048**	Group **896**
2				Illustr. No **1021829**	Section **200**
3				Issue **VOE 74C9920048**	Page **339**
4					
5					

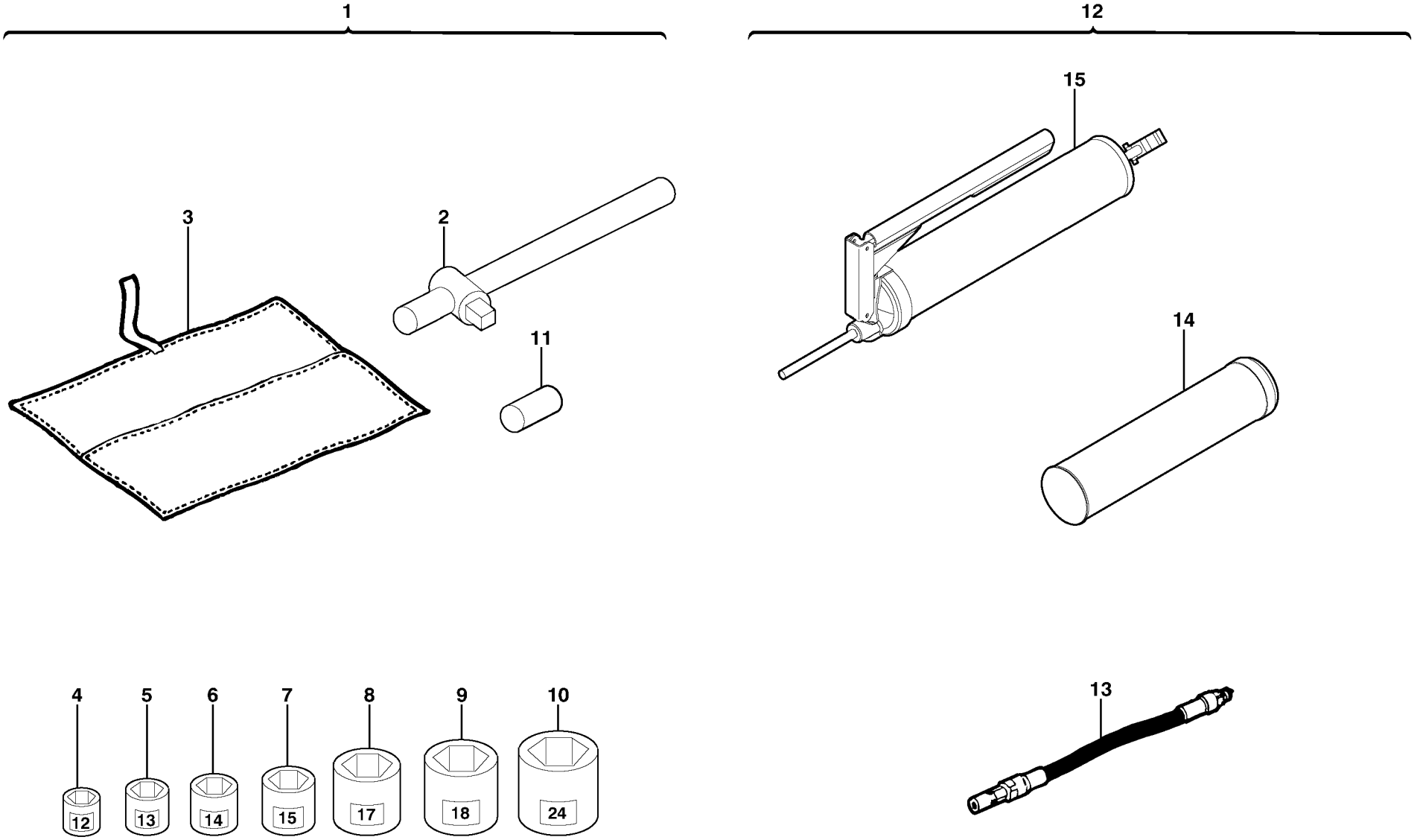
1
12
15
3
2
11
14
4
5
6
7
8
9
10
12
13
14
15
17
18
24
13

Fig.	Part No.	Quantity 1	2	3	PS	KIT	Description	Dénomination	Bezeichnung	품명	Denominación	Notes
1	**VOE 11801120**	1					Tool Bag	Trousse outils	Werkzeugtasche	공구 백	Estuche herramienta	11801121
2		1			NS		•Handle	•Poignee	•Handgriff	• 핸들	•Manilla	ORDER ITEM NO 1
3		1			NS		•Tool Bag	•Trousse outils	•Werkzeugtasche	• 공구 백	•Estuche herramienta	ORDER ITEM NO 1
4	**VOE 11801118**	1					•Socket	•Douille	•Buchse	• 슬리브	•Hembrilla	
5	**VOE 11803937**	1					•Socket	•Douille	•Buchse	• 슬리브	•Hembrilla	
6	**VOE 11801116**	1					•Socket	•Douille	•Buchse	• 슬리브	•Hembrilla	
7	**VOE 11801117**	1					•Socket	•Douille	•Buchse	• 슬리브	•Hembrilla	
8	**VOE 11803938**	1					•Socket	•Douille	•Buchse	• 슬리브	•Hembrilla	
9	**VOE 11801119**	1					•Socket	•Douille	•Buchse	• 슬리브	•Hembrilla	
10	**VOE 11803939**	1					•Socket	•Douille	•Buchse	• 슬리브	•Hembrilla	
11	**VOE 11803941**	1					•Extension Bar	•Rallonge	•Verlängerung	• 연장 바	•Alargadera	
12	**VOE 11803942**						Grease Gun	Pompe a graisse	Fettpresse	그리스 건	Bomba de grasa	
13	**VOE 11803943**	1					•Hose	•Durit	•Schlauch	• 호스	•Tubo flexible	
14	**VOE 11803945**	1					•Cartridge	•Cartouche	•Patrone	• 카트리지	•Patron	
15		1			NS		•Grease Gun	•Pompe a graisse	•Fettpresse	• 그리스 건	•Bomba de grasa	ORDER ITEM NO 12

1	**602.10151**	
2		
3		
4		
5		

Herramientas
공구
Werkzeuge
Outillage
Tools

Catalogue id	Group
20048	**896**
Illustr. No **1012479**	Section **300**
Issue **VOE 74C9920048**	Page **341**

1

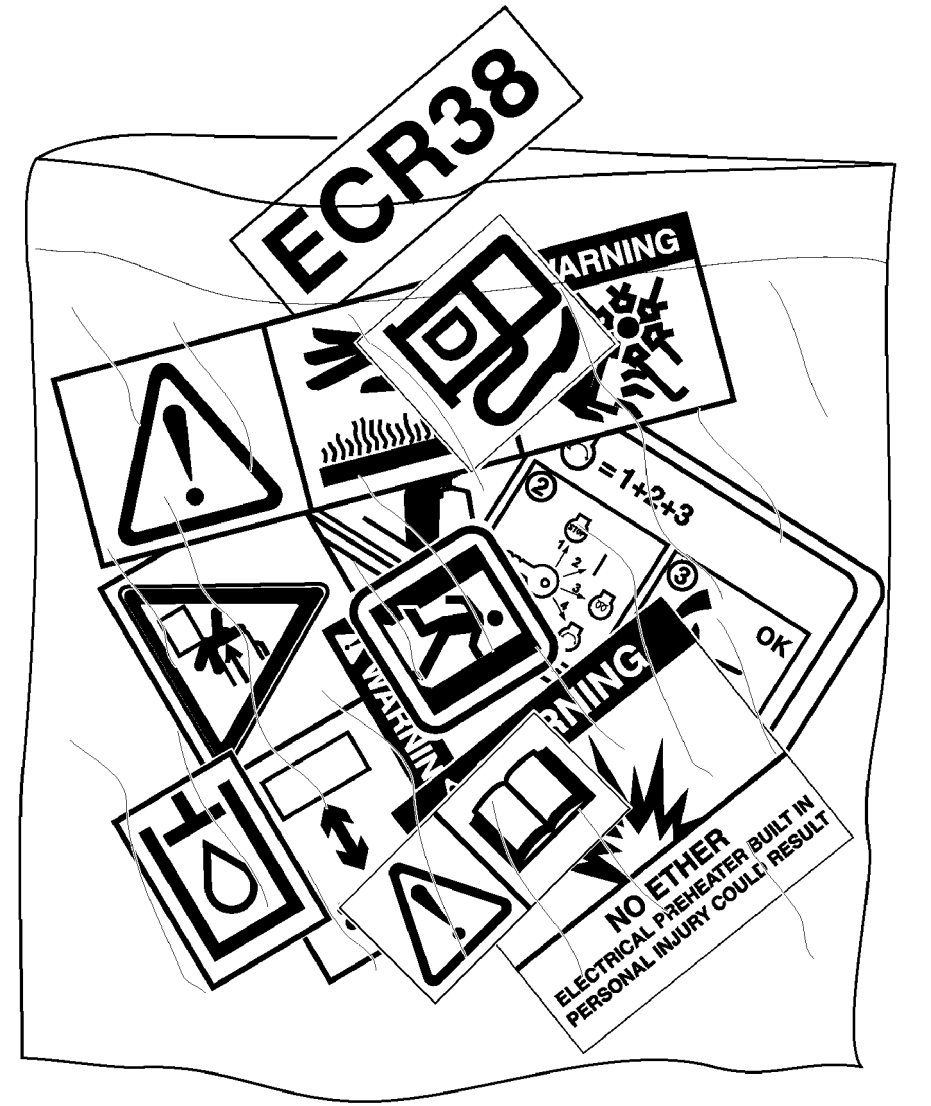

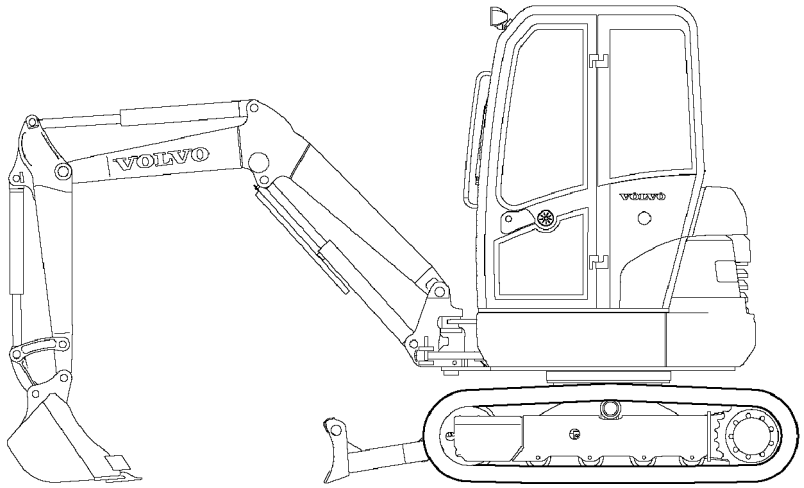

Volvo Construction Equipment

1012537

Fig.	Part No.	Quantity 1	2	3	PS	KIT	Description	Dénomination	Bezeichnung	품명	Denominación	Notes
1	**VOE 11803704**	1					Decal Set	Lot d'autocollants	Aufklebersatz	데칼 셋	Kit Calcomania	11839129 STD , VOLVO Color
1	**VOE 11803712**	1					Decal Set	Lot d'autocollants	Aufklebersatz	데칼 셋	Kit Calcomania	11839130 USA , VOLVO Color
1	**VOE 11803706**	1					Decal Set	Lot d'autocollants	Aufklebersatz	데칼 셋	Kit Calcomania	11839131 STD , Special Color
1	**VOE 11803714**	1					Decal Set	Lot d'autocollants	Aufklebersatz	데칼 셋	Kit Calcomania	11839132 USA , Special Color

1	**602.10151**		**Calcomanía : cabina** 트랜스퍼 (중도): 운전실 **Aufkleber : Kabine** **Autocollant : cabine** **Transfer : cab**	Catalogue id **20048**	Group **897**
2				Illustr. No **1012537**	Section **200**
3				Issue **VOE 74C9920048**	Page **343**
4					
5			**STD , USA**		

1

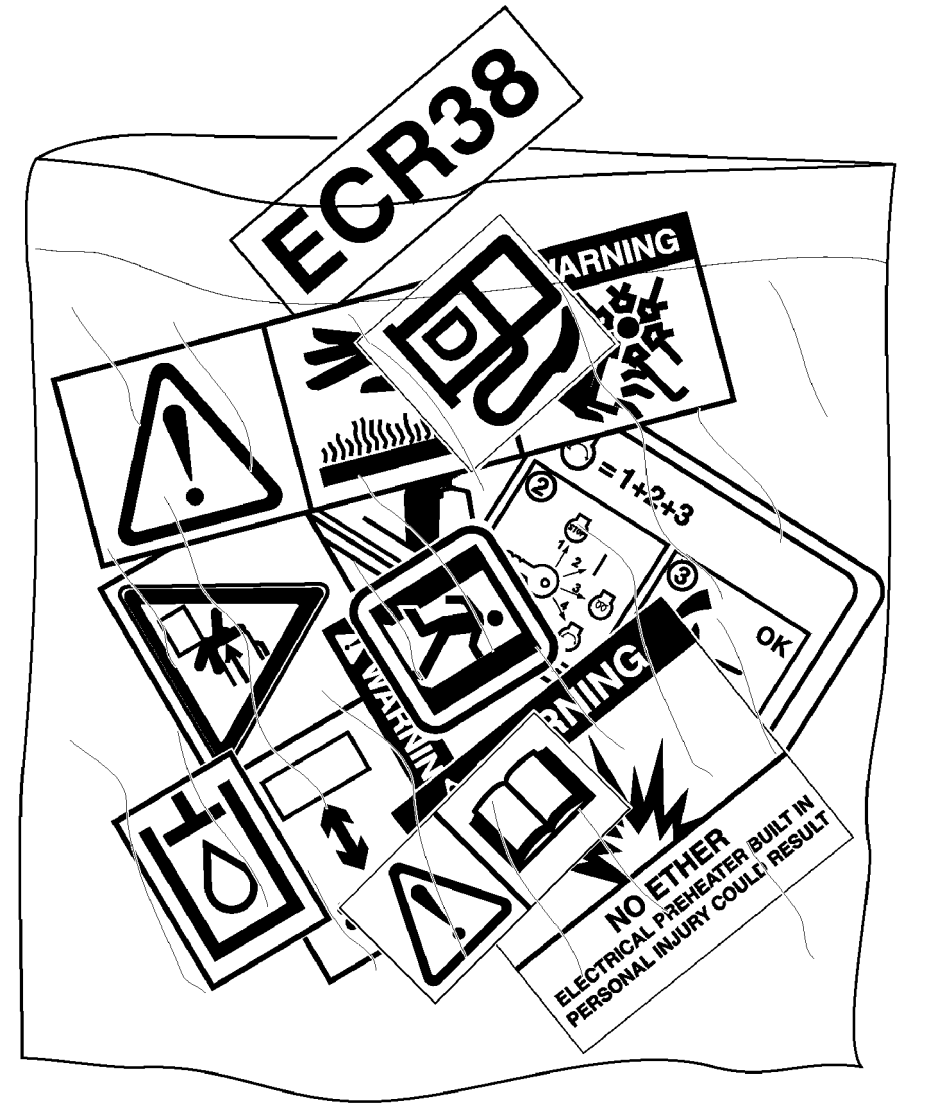

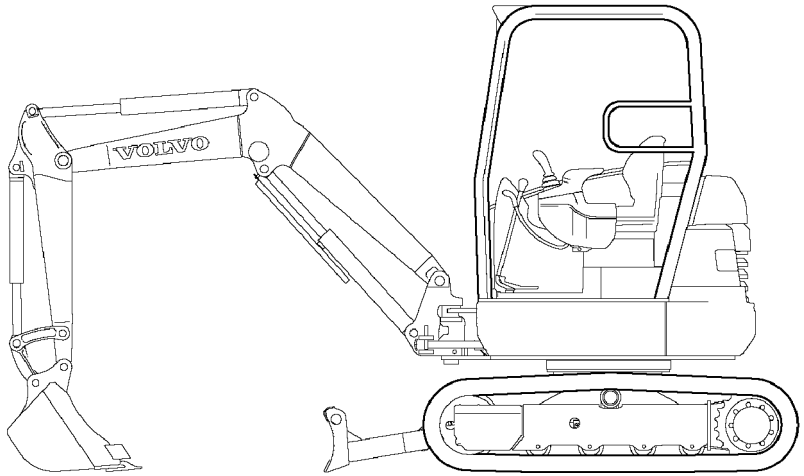

Volvo Construction Equipment

1012538

Fig.	Part No.	Quantity 1	2	3	PS	KIT	Description	Dénomination	Bezeichnung	품명	Denominación	Notes
1	**VOE 11803724**	1					Decal Set	Lot d'autocollants	Aufklebersatz	데칼 셋	Kit Calcomania	11839133 STD , VOLVO Color
1	**VOE 11803728**	1					Decal Set	Lot d'autocollants	Aufklebersatz	데칼 셋	Kit Calcomania	11839134 USA , VOLVO Color
1	**VOE 11803726**	1					Decal Set	Lot d'autocollants	Aufklebersatz	데칼 셋	Kit Calcomania	11839135 STD , Special Color
1	**VOE 11803730**	1					Decal Set	Lot d'autocollants	Aufklebersatz	데칼 셋	Kit Calcomania	11839136 USA , Special Color

1	**602.10151**		**Calcomanía : protección contra vuelcos** 트랜스퍼 (중도): 선루프 **Aufkleber : Überrollbügel** **Autocollant : cabine ouverte** **Transfer : canopy**	Catalogue id **20048**	Group **897**
2				Illustr. No **1012538**	Section **400**
3				Issue **VOE 74C9920048**	Page **345**
4					
5			**STD , USA**		

VOLVO

Construction Equipment

GROUP		Section	Page
911	Hydraulic tank	100	359
911	Hydraulic system: feed-and suction line	200	363
911	Cooling system: oil cooler	350	365
911	Hydraulic oil filter	400	367
912	Main valve assembly with fitting parts	100	369
912	Control valve : 9 spools	101	373
912	Control valve : 9 spools (continued)	102	377
912	Handling boom STD , USA	350	381
912	Handling boom , dipper STD , USA	360	385
912	Balancing valve (offset cylinder)	530	389
912	Safety valve (boom cylinder)	600	391
912	Safety valve (dipper arm cylinder)	700	393
912	Control levers : travelling	800	395
912	Control lever : dozer blade	830	397
913	Pump installation	100	399
913	Hydraulic pump	110	401
914	Electrovalve installation / Accumulator	200	403
914	Electrovalve	210	405
914	Electrovalve installation	400	407
914	Electrovalve	410	409
914	Electrovalve	420	411
914	Accumulator	500	413
914	Electrovalve installation	600	415
914	Hydraulic circuit (low pressure) STD	700	417
914	Hydraulic circuit (low pressure) USA	750	419
914	Control stick installation LH	800	423
914	Control lever : dipper arm / slewing (left)	810	425
914	Control lever : dipper arm / slewing (left)	820	427
914	Control stick installation RH , STD , USA	850	429
914	Control lever : boom / bucket (right) RH , STD , USA	860	431
914	Control lever : boom / bucket (right) RH , STD , USA	870	433
914	Control selector switch installation USA	900	435
914	Std or Iso equipment control selector switch (us) USA	910	437
916	Hydraulic circuit (lower frame)	100	439
916	Hydraulic circuit (platform/balancing valve/offset cylinder)	350	441
916	Hydraulic circuit (boom) STD , USA	400	443
916	Hydraulic circuit (dipper arm)	500	447
916	Hydraulic circuit (double-acting)	2000	449
916	Hydr. circuit. (attachment) (grab jaw)	3000	453
916	Kit coupler (accessories)	4000	457
916	Three-way valve	5000	459
916	Two-way valve	5500	461
916	Plugs kit	6000	463
924	Tool holder / mechanical control	100	465
924	Tool holder / mechanical control	110	467
924	Tool holder / hydraulic control	200	469
924	Tool holder / hydraulic control	210	471
924	Lever	300	473
924	Hydraulic circuit (snap-action attachment)	400	475
924	Hyd. circuit (quickfit/double-acting)	500	477
924	Drain kit	600	481
924	Plugs kit	700	483
924	Electrovalve installation	800	485
925	Bucket	100	487
925	Buckets for Quickfit	200	489
925	Buckets for Quickfit	210	491
925	Grading bucket	300	493
925	Grading bucket for Quickfit	400	495
925	Grading bucket for Quickfit	410	497
926	Hammer	200	499
926	Hammer for Quickfit	220	501
926	Hydraulic system, hammer	240	503

GROUP		Section	Page
926	Hammer	260	505
926	Bulk bag	900	509
927	Dozer blade	100	511
927	Dozer blade cylinder	500	513
971	Pivot pin	100	515
971	Boom offset cylinder	600	519
971	Lubrication (boom offset cylinder)	700	521
974	Boom	100	523
974	Boom cylinder	300	525
974	Cylinder rod protection	500	527
975	Dipper arm	100	529
975	Dipper arm cylinder	300	533
975	Bucket cylinder	500	535

GROUPE		Section	Page
911	Réservoir hydraulique	100	359
911	Système hydraulique: conduit alimentation et conduit retour	200	363
911	Refroidisseur d'huile	350	365
911	Filtre à huile hydraulique	400	367
912	Bloc de distribution de valves avec pièces de montage	100	369
912	Distributeur : 9 tiroirs	101	373
912	Distributeur : 9 tiroirs (suite)	102	377
912	Manutention. flèche STD , USA	350	381
912	Manutention. fléche , balancier STD , USA	360	385
912	Valve d'équilibrage (vérin de déport latéral)	530	389
912	Valve de sécurité (vérin de flèche)	600	391
912	Valve de sécurité (vérin de balancier)	700	393
912	Leviers de commande : translation	800	395
912	Levier de commande : lame niveleuse	830	397
913	Installation de pompe	100	399
913	Pompe hydraulique	110	401
914	Mise en place de l'électrovalve / Accumulateur	200	403
914	Electrovalve	210	405
914	Mise en place de l'électrovalve	400	407
914	Electrovalve	410	409
914	Electrovalve	420	411
914	Accu	500	413
914	Mise en place de l'électrovalve	600	415
914	Circuit hydraulique (basse pression) STD	700	417
914	Circuit hydraulique (basse pression) USA	750	419
914	Mise en place du levier de commande LH	800	423
914	Levier de commande : balancier / orientation (côté gauche)	810	425
914	Levier de commande : balancier / orientation (côté gauche)	820	427
914	Mise en place du levier de commande RH , STD , USA	850	429
914	Levier de commande : flèche / godet (côté droit) RH , STD , USA	860	431
914	Levier de commande : flèche / godet (côté droit) RH , STD , USA	870	433
914	Mise en place du sélecteur de commande USA	900	435
914	Sélecteur de commande pour équipement standard ou ISO (USA) USA	910	437
916	Circuit hydraulique (châssis porteur)	100	439
916	Circuit hydraulique (passerelle/valve d'équilibrage/vérin de déport)	350	441
916	Circuit hydraulique (flèche) STD , USA	400	443
916	Circuit hydraulique (balancier)	500	447
916	Circuit hydraulique, double effet	2000	449
916	Circuit hydraulique, équipement benne preneuse	3000	453
916	Kit raccords (accessoires)	4000	457
916	Robinet 3 voies	5000	459
916	Robinet à 2 voies	5500	461
916	Kit bouchons	6000	463
924	Porte-outil / commande mécanique	100	465
924	Porte-outil / commande mécanique	110	467
924	Porte-outil / commande hydraulique	200	469
924	Porte-outil / commande hydraulique	210	471
924	Levier	300	473
924	Circuit hydraulique (porte-outil à accouplement rapide)	400	475
924	Circuit hydraulique (outil/accessoire à fixation rapide / double effet)	500	477
924	Kit drain	600	481
924	Kit bouchons	700	483
924	Mise en place de l'électrovalve	800	485
925	Godet	100	487
925	Godet pour Raccords rapides	200	489
925	Godet pour Raccords rapides	210	491
925	Godet niveleur	300	493
925	Godet niveleur pour raccordement rapide	400	495
925	Godet niveleur pour raccordement rapide	410	497
926	Marteau	200	499
926	Marteau pour raccordement rapide	220	501

TABLE DES MATIÈRES

GROUPE		Section	Page
926	Système hydraulique, marteau	240	503
926	Marteau	260	505
926	Sac en tissu	900	509
927	Lame bulldozer	100	511
927	Vérin hydraulique, lame bulldozer	500	513
971	Pivot	100	515
971	Vérin de déport latéral de flèche	600	519
971	Graissage (vérin de déport latéral de flèche)	700	521
974	Flèche	100	523
974	Vérin de flèche	300	525
974	Protection de tige de vérin	500	527
975	Balancier	100	529
975	Vérin de balancier	300	533
975	Vérin de godet	500	535

GRUPPE		Abschnitt	Seite
911	Hydraulikölтank	100	359
911	Druckölsystem: Druck-und Rückauf- leitung	200	363
911	Ölkühler	350	365
911	Hydraulikkreis Ölfilter	400	367
912	Hauptventilblock mit Anbauteilen	100	369
912	Steuerblock : 9 Steuerschieber	101	373
912	Steuerblock : 9 Steuerschieber (Fortsetzung)	102	377
912	Materialumschlag.ausleger STD , USA	350	381
912	Materialumschlag.ausleger , stiel STD , USA	360	385
912	Ausgleichventil (Versetzungszylinder)	530	389
912	Sicherheitsventil (Auslegerzylinder)	600	391
912	Sicherheitsventil (Stielzylinder)	700	393
912	Steuerhebel : Fahrbewegung	800	395
912	Steuerhebel : Planierschild	830	397
913	Pumpeninstallation	100	399
913	Hydraulikpumpe	110	401
914	Einbau der Elektroventil / Speicher	200	403
914	Elektroventil	210	405
914	Einbau der Elektroventile	400	407
914	Elektroventil	410	409
914	Elektroventil	420	411
914	Speicher	500	413
914	Einbau der Elektroventile	600	415
914	Hydraulikkreis (Niedriger Druck) STD	700	417
914	Hydraulikkreis (Niedriger Druck) USA	750	419
914	Steuerhebel, Einbau LH	800	423
914	Steuerhebel : Löffelstiel / Schwenkung (links)	810	425
914	Steuerhebel : Löffelstiel / Schwenkung (links)	820	427
914	Steuerhebel, Einbau RH , STD , USA	850	429
914	Steuerhebel : Ausleger / Löffel (rechts) RH , STD , USA	860	431
914	Steuerhebel : Ausleger / Löffel (rechts) RH , STD , USA	870	433
914	Einbau der Gerätesteuerungswahlschalter USA	900	435
914	Standard- oder ISO-Gerätesteuerungswahlschalter (US) USA	910	437
916	Hydraulikkreis (Laufwerksrahmen)	100	439
916	Hydraulikkreis (Plattform/Ausgleichventil/Versetzungszylinder)	350	441
916	Hydraulikkreis (Ausleger) STD , USA	400	443
916	Hydraulikkreis (Löffelstiel)	500	447
916	Hydraulikkreis (doppeltwirkend)	2000	449
916	Hydraulikkreis (Gerät) (Zweischalengreifer)	3000	453
916	Kupplungsstück-Kit (Zubehör)	4000	457
916	Dreiwegventil	5000	459
916	Zweiwegventil	5500	461
916	Stopfens-Kit	6000	463
924	Geräteträger / mechanische Steuerung	100	465
924	Geräteträger / mechanische Steuerung	110	467
924	Geräteträger / hydraulische Steuerung	200	469
924	Geräteträger / hydraulische Steuerung	210	471
924	Umlenkhebel	300	473
924	Hydraulikkreis (Schnellwechsler)	400	475
924	Hydraulikkreis (Schnellwechsler/doppeltwirkend)	500	477
924	Dränage-Kit	600	481
924	Stopfens-Kit	700	483
924	Einbau der Elektroventile	800	485
925	Schaufel	100	487
925	Schaufeln für Schnellwechsler	200	489
925	Schaufeln für Schnellwechsler	210	491
925	Planierschaufel	300	493
925	Planierschaufel, Schnellkupplung	400	495
925	Planierschaufel, Schnellkupplung	410	497
926	Hammer	200	499
926	Hammer, Schnellkupplung	220	501
926	Hydraulikanlage, Hammer	240	503

INHALTSVERZEICHNIS

GRUPPE		Abschnitt	Seite
926	Hammer	260	505
926	Schüttgutsack	900	509
927	Frontschar	100	511
927	Frontscharzylinder	500	513
971	Lagerzapfen	100	515
971	Versetzungszylinder	600	519
971	Schmierung (Versetzungszylinder)	700	521
974	Ausleger	100	523
974	Auslegerzylinder	300	525
974	Kolbenstangenschutz	500	527
975	Löffelstiel	100	529
975	Stielzylinder	300	533
975	Schaufelzylinder	500	535

그룹		절	페이지
911	유압 탱크	100	359
911		200	363
911		350	365
911	유압 오일 휠터	400	367
912	장착 부품이 있는 메인 밸브 어셈블리	100	369
912	컨트롤 밸브 : 9 스풀	101	373
912	컨트롤 밸브 : 9 스풀 (계속)	102	377
912		350	381
912	디퍼 핸들링 붐	360	385
912	균형 밸브 (오프셋 실린더)	530	389
912	안전 벨트 (붐 실린더)	600	391
912	안전 밸브 (암 실린더)	700	393
912	조작 레버 : 주행	800	395
912	조작 레버 : 도자 삽날	830	397
913	유압 펌프 및 장착 부품	100	399
913	유압 펌프	110	401
914	전자식 밸브 설치 / 어큐뮬레이터	200	403
914	전자 밸브	210	405
914	전자식 밸브 설치	400	407
914	전자 밸브	410	409
914	전자 밸브	420	411
914	어큐뮬레이터	500	413
914	전자식 밸브 설치	600	415
914	유압 회로 (저압)	700	417
914	유압 회로 (저압)	750	419
914	컨트롤 스틱 설치	800	423
914	조작 레버 : 암 / 선회 (좌측)	810	425
914	조작 레버 : 암 / 선회 (좌측)	820	427
914	컨트롤 스틱 설치	850	429
914	조작 레버 : 붐 / 버켓 (우측)	860	431
914	조작 레버 : 붐 / 버켓 (우측)	870	433
914	제어 선택 스위치 장착	900	435
914	표준 및 ISO 컨트롤 실렉터 스위치 (미국)	910	437
916	유압 회로 (하부 프레임)	100	439
916	유압 회로 (플랫폼 / 균형 밸브 / 오프셋 실린더)	350	441
916	유압 회로 (붐)	400	443
916	유압 회로 (암)	500	447
916	유압 회로 (2 단 작동)	2000	449
916	유압 회로 (작업장치) (그래브 조)	3000	453
916	커플링 키트 (액세서리)	4000	457
916	3 방 밸브	5000	459
916	2 방 밸브	5500	461
916	플러그 키트	6000	463
924	도구 홀더 / 기계적 조정장치	100	465
924	도구 홀더 / 기계적 조정장치	110	467
924	도구 홀더 / 유압 조정장치	200	469
924	도구 홀더 / 유압 조정장치	210	471
924	레버	300	473
924	유압 회로 (퀵커플링 어태치먼트)	400	475
924	유압 회로 (퀵핏 /2 단 작동)	500	477
924	드레인 키트	600	481
924	플러그 키트	700	483
924	전자식 밸브 설치	800	485
925	버켓	100	487
925	퀵 핏 버켓	200	489
925	퀵 핏 버켓	210	491
925	그래이딩 버켓	300	493
925	퀵 커플링 용 그래이딩 버켓	400	495
925	퀵 커플링 용 그래이딩 버켓	410	497
926	햄머	200	499
926	퀵 커플링 용 해머	220	501
926	유압 시스템 , 해머	240	503

목차

그룹		절	페이지
926	햄머	260	505
926	직물 컨테이너	900	509
927	도자 블레이드	100	511
927	도자 블레이드 실린더	500	513
971	피봇 핀	100	515
971	붐 오프셋 실린더	600	519
971	윤활 (붐 오프셋 실린더)	700	521
974	붐	100	523
974	붐 실린더	300	525
974	실린더 로드 보호	500	527
975	암	100	529
975	암 실린더	300	533
975	버켓 실린더	500	535

GRUPO		Sección	Página
911	Hydraulic tank	100	359
911	Sistema hidráulica: conducto presion y conducto returno	200	363
911	Enfriador de aceute	350	365
911	Filtro de aceite hidráulico	400	367
912	Conjunta valvula principal con accesorios de montaje	100	369
912	Válvula de control : 9 correderas	101	373
912	Válvula de control : 9 correderas (continuación)	102	377
912	Manupulacion. Pluma STD , USA	350	381
912	Manupulacion.pluma , brazo STD , USA	360	385
912	Válvula de equilibrio (cilindro excéntrico)	530	389
912	Válvula de seguridad (cilindro de pluma)	600	391
912	Válvula de seguridad (cilindro de brazo)	700	393
912	Palancas de mando : traslación	800	395
912	Palanca de mando : hoja topadora	830	397
913	Instalación de bomba	100	399
913	Bomba hidráulica	110	401
914	Instalación del electrovalvula / Acumulador	200	403
914	Electroválvula	210	405
914	Instalación del electrovalvula	400	407
914	Electroválvula	410	409
914	Electroválvula	420	411
914	Acumulador	500	413
914	Instalación del electrovalvula	600	415
914	Circuito hidráulico (baja presión) STD	700	417
914	Circuito hidráulico (baja presión) USA	750	419
914	Montaje de la palanca de mando LH	800	423
914	Palanca de mando : brazo / giro (izquierda)	810	425
914	Palanca de mando : brazo / giro (izquierda)	820	427
914	Montaje de la palanca de mando RH , STD , USA	850	429
914	Palanca de mando : pluma / cuchara (derecha) RH , STD , USA	860	431
914	Palanca de mando : pluma / cuchara (derecha) RH , STD , USA	870	433
914	Instalación del selector USA	900	435
914	Selector de mando de equipo Std o Iso (us) USA	910	437
916	Circuito hidraulico (bastidor inferior)	100	439
916	Circuito hidráulico (plataforma/válvula de equilibrio/cilindro excéntrico)	350	441
916	Circuito hidráulico (pluma) STD , USA	400	443
916	Circuito hidráulico (brazo)	500	447
916	Circuito hidráulico (doble efecto)	2000	449
916	Circuito hidráulico (implemento) (cuchara bivalva)	3000	453
916	Kit de acoplamiento (accesorios)	4000	457
916	Valvula 3-vias	5000	459
916	Valvula 2-vias	5500	461
916	Kit de tapons	6000	463
924	Portaimplemento / control mecánico	100	465
924	Portaimplemento / control mecánico	110	467
924	Portaimplemento / control hidráulico	200	469
924	Portaimplemento / control hidráulico	210	471
924	Palanca	300	473
924	Circuito hidráulico (acoplamiento rápido)	400	475
924	Circuito hidráulico (enganche rápido/doble efecto)	500	477
924	Kit de drenaje	600	481
924	Kit de tapons	700	483
924	Instalación del electrovalvula	800	485
925	Cazo	100	487
925	Cazos para enganche rápido	200	489
925	Cazos para enganche rápido	210	491
925	Grading bucket	300	493
925	Grading bucket for Quickfit	400	495
925	Grading bucket for Quickfit	410	497
926	Martillo	200	499
926	Hammer for Quickfit	220	501

INDICE

GRUPO		Sección	Página
926	Sistema hidráulico, martillo	240	503
926	Martillo	260	505
926	Bulk bag	900	509
927	Hoja diagonal	100	511
927	Cilindro hidráulico, hoja diagonal	500	513
971	Pivote	100	515
971	Cilindro excéntrico de la pluma	600	519
971	Lubricación (cilindro excéntrico de la pluma)	700	521
974	Pluma	100	523
974	Cilindro de pluma	300	525
974	Protección de la varilla de cilindro	500	527
975	Brazo	100	529
975	Cilindro del brazo	300	533
975	Cilindro de cazo	500	535

VOLVO

Construction Equipment

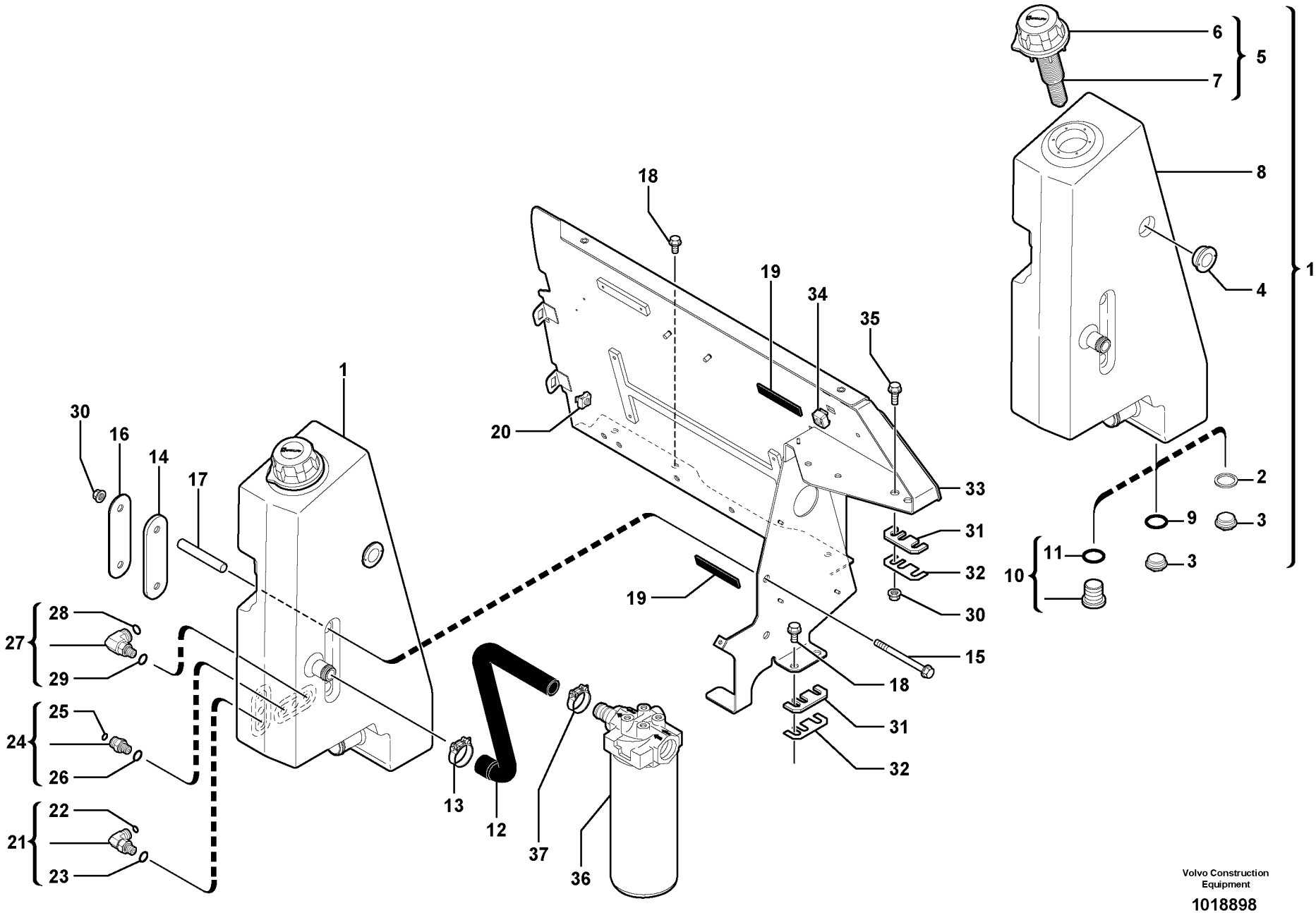

Volvo Construction Equipment

1018898

Fig.	Part No.	Quantity 1	2	3	PS	KIT	Description	Dénomination	Bezeichnung	품명	Denominación	Notes
1	**VOE 11801024**	1					Hydraulic fluid tank	Reservoir fluide hydra	Druckölbehälter	유압액 탱크	Deposito aceite hidra.	
2	**VOE 944498**	1					•Gasket	•Joint	•Dichtung	• 가스켓	•Junta	33,8 S/N - 602.10257
3	**VOE 11802436**	1					•Plug	•Bouchon	•Stopfen	• 플러그	•Tapon	G1” S/N - 602.10593
4	**VOE 11802113**	1					•Sensor	•Capteur	•Geber	• 센서	•Captador	
5	**VOE 11804131**	1					•Filler cap	•Bouchon Remplissa..	•Tankverschluss	• 주유구 캡	•Tapa Llenado	S/N - 602.10257
5	**VOE 11807358**	1					•Filler cap	•Bouchon Remplissa..	•Tankverschluss	• 주유구 캡	•Tapa Llenado	S/N 602.10258 -
6		1			NS		••Plug	••Bouchon	••Stopfen	•• 플러그	••Tapon	ORDER ITEM NO 5
7	**VOE 11804670**	1					••Strainer	••Crépine	••Seiher	•• 스트레이너	••Colador	
8		1			NS		•Hydr fluid tank	•Reservoir fluid.hydr..	•Druckölbehälter	• 유압 오일 탱크	•Dep Aceit Hidr	ORDER ITEM NO 1
9	**VOE 958229**	1					•O-ring	•Joint Torique	•O-Ring	• 오링	•Junta torica	29,2X3,5 S/N 602.10258 - S/N - 602.10593
10	**VOE 984656**	1					•Plug	•Bouchon	•Stopfen	• 플러그	•Tapon	7/8-14 UNFX16 S/N 602.10594 -
11	**VOE 983122**	1					••O-ring	••Joint Torique	••O-Ring	•• 오링	••Junta torica	19,18X2,46
12	**VOE 11800913**	1					Oil Hose	Durit Huile	Ölschlauch	오일 호스	Manguera Aceite	
13	**VOE 11802433**	1					Collar	Collier	Bördel	칼러	Collar	
14	**VOE 11801411**	1					Spacer	Partie Intermédiaire	Zwischenstück	스페이서	Espaciador	
15	**VOE 973967**	2					Flange screw	Vis à bride	Flanschschraube	플랜지 스크류	Torn embridado	
16	**VOE 11800884**	1					Plate	Plaque	Platte	플레이트	Placa	
17	**VOE 11801412**	2					Spacer	Partie Intermédiaire	Zwischenstück	스페이서	Espaciador	
18	**VOE 946502**	5					Flange screw	Vis à bride	Flanschschraube	플랜지 스크류	Torn embridado	
19	**VOE 11803176**	2					Rubber Seal	Lèvre Caoutchouc	Gummilippe	고무 시일	Labio Goma	
20	**VOE 11802303**	2					Nut	Ecrou	Mutter	너트	Tuerca	
21	**VOE 935067**	1					Elbow nipple	Raccord angulaire	Winkelnippel	엘보 니플	Niple angular	
22	**VOE 4881722**	1					•O-ring	•Joint Torique	•O-Ring	• 오링	•Junta torica	
23	**VOE 932037**	1					•O-ring	•Joint Torique	•O-Ring	• 오링	•Junta torica	
24	**VOE 935082**	1					Nipple	Raccord	Nippel	니플	Niple	

1	**602.10151**	
2		
3		
4		
5		

Hydraulic tank
유압 탱크
Hydrauliköltank
Réservoir hydraulique
Hydraulic tank

Catalogue id	Group
20048	**911**
Illustr. No **1018898**	Section **100**
Issue **VOE 74C9920048**	Page **359**

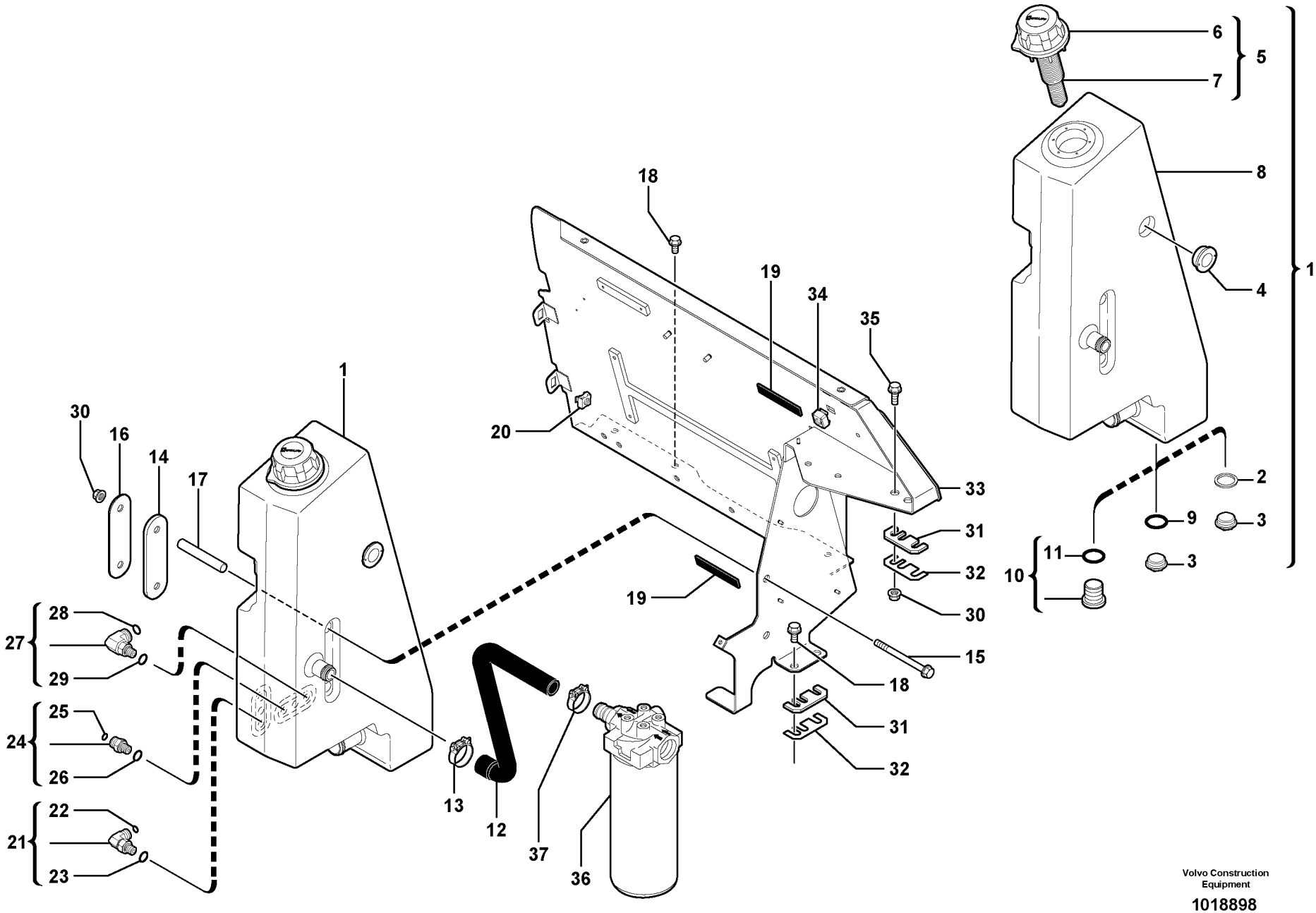

Volvo Construction Equipment

1018898

Fig.	Part No.	Quantity 1	2	3	PS	KIT	Description	Dénomination	Bezeichnung	품명	Denominación	Notes
25	**VOE 4881722**	1					•O-ring	•Joint Torique	•O-Ring	• 오링	•Junta torica	
26	**VOE 932037**	1					•O-ring	•Joint Torique	•O-Ring	• 오링	•Junta torica	
27	**VOE 935068**	1					Elbow nipple	Raccord angulaire	Winkelnippel	엘보 니플	Niple angular	
28	**VOE 4880492**	1					•O-ring	•Joint Torique	•O-Ring	• 오링	•Junta torica	
29	**VOE 932037**	1					•O-ring	•Joint Torique	•O-Ring	• 오링	•Junta torica	
30	**VOE 971096**	4					Flange nut	Ecrou accouple.	Bundmutter	플랜지 너트	Tuerca embridad	
31	**VOE 11803971**	2					Spacer	Partie Intermédiaire	Zwischenstück	스페이서	Espaciador	
32	**VOE 11804371**	2					Spacer	Partie Intermédiaire	Zwischenstück	스페이서	Espaciador	
33	**VOE 11801446**	1					Tank Bracket	Support réservoir	Tankstutze		Consola Depos	
34	**VOE 11802340**	REQ					Nut	Ecrou	Mutter	너트	Tuerca	
35	**VOE 965191**	2			SS		Screw	Vis	Schraube	스크류	Tornillo	
36		1					Oil Filter	Filtre Huile	Ölfilter	오일 필터	Filtro Aceite	See group 911, Page 367
37	**VOE 11802432**	1					Collar	Collier	Bördel	칼러	Collar	

1	**602.10151**	
2		
3		
4		
5		

Hydraulic tank
유압 탱크
Hydrauliköltank
Réservoir hydraulique
Hydraulic tank

Catalogue id	Group
20048	**911**
Illustr. No **1018898**	Section **100**
Issue **VOE 74C9920048**	Page **361**

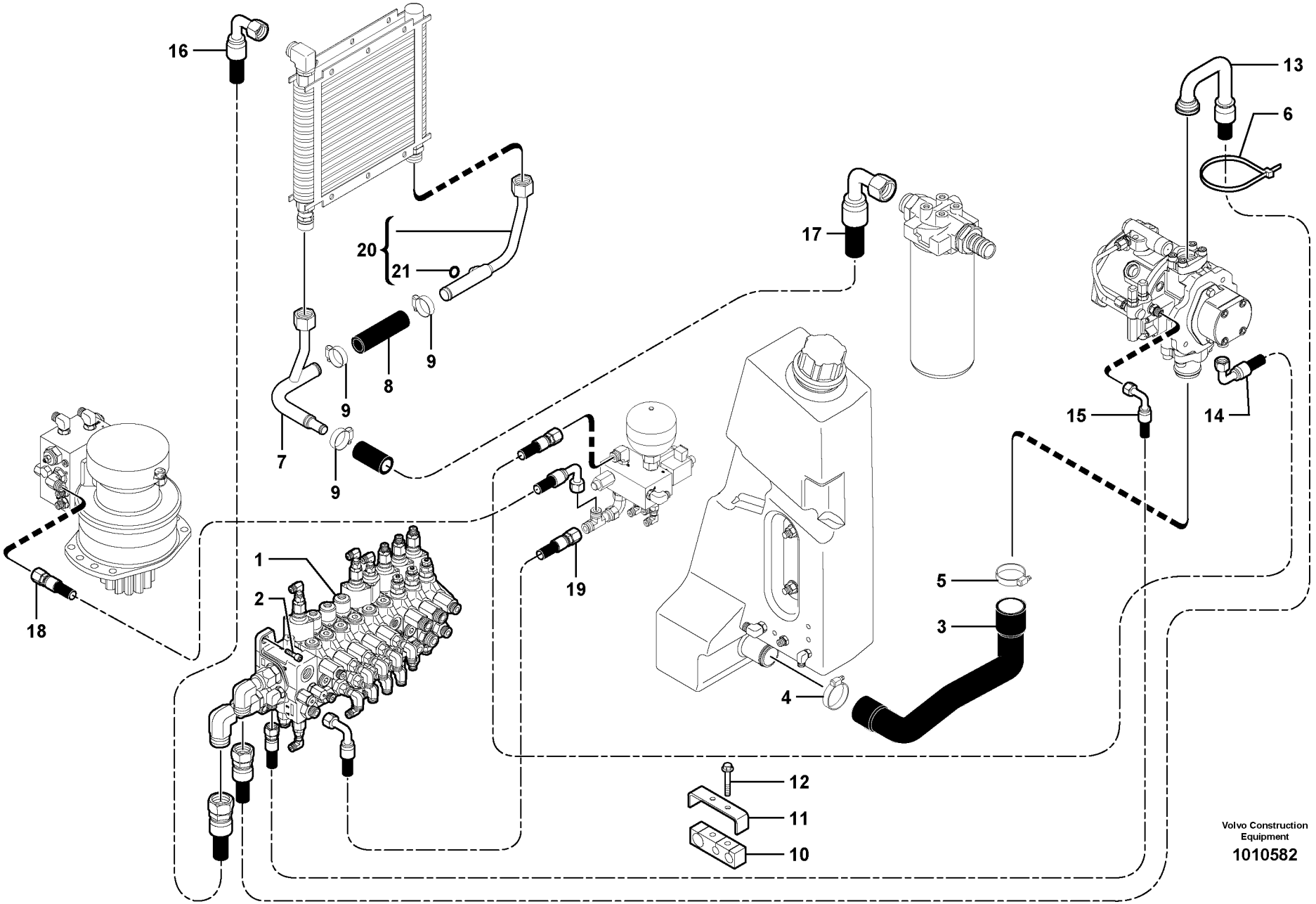
16
20
21
9
8
9
9
7
17
13
6
15
14
18
19
1
2
5
3
4
12
11
10
Volvo Construction Equipment
1010582

Fig.	Part No.	Quantity 1	2	3	PS	KIT	Description	Dénomination	Bezeichnung	품명	Denominación	Notes
1		1					Distributor	Distributeur	Verteiler	배전기	Distribuidor	See group 912, Page 369
2	**VOE 984066**	3					Allen Hd Screw	Vis A 6 Pans Cr	Inbusschraube	스크류	Torn Hex Embut	
3	**VOE 11801332**	1					Suction hose	Durit aspiration	Saugschlauch	흡입 호스	Manguer aspirac	
4	**VOE 11806708**	1					Clamp	Pince Serrage	Klemme	클램프	Abrazadera	
5	**VOE 943479**	1					Hose Clamp	Collier Serrage	Schlauchschelle	호스 클램프	Abraz Manguera	
6	**VOE 4881440**	2					Strip Clamp	Ruban Serrage	Kabelbinder	스트립 클램프	Abraz Cinta	
7	**VOE 11804640**	1					Tube	Tube	Rohr	튜브	Tubo	
8	**VOE 11802833**	1					Hose	Durit	Schlauch	호스	Tubo flexible	
9	**VOE 943475**	3					Hose Clamp	Collier Serrage	Schlauchschelle	호스 클램프	Abraz Manguera	
10	**VOE 11803584**	1					Clamp	Pince Serrage	Klemme	클램프	Abrazadera	
11	**VOE 11803332**	1					Flange	Flasque	Flansch	플랜지	Brida	
12	**VOE 965179**	2					Screw	Vis	Schraube	스크류	Tornillo	
13	**VOE 11802870**	1					Hose assembly	Conduit flexible	Schlauchleitung	호스 어셈블리	Conducto	
14	**VOE 11806524**	1					Hose assembly	Conduit flexible	Schlauchleitung	호스 어셈블리	Conducto	
15	**VOE 11803337**	1					Hose assembly	Conduit flexible	Schlauchleitung	호스 어셈블리	Conducto	
16	**VOE 11803339**	1					Hose assembly	Conduit flexible	Schlauchleitung	호스 어셈블리	Conducto	
17	**VOE 11803340**	1					Hose assembly	Conduit flexible	Schlauchleitung	호스 어셈블리	Conducto	
18	**VOE 936830**	1					Hose assembly	Conduit flexible	Schlauchleitung	호스 어셈블리	Conducto	
19	**VOE 11802829**	1					Hose assembly	Conduit flexible	Schlauchleitung	호스 어셈블리	Conducto	
20	**VOE 11800371**	1					Tube	Tube	Rohr	튜브	Tubo	
21	**VOE 4880493**	1					•O-ring	•Joint Torique	•O-Ring	• 오링	•Junta torica	

1	**602.10151**	
2		
3		
4		
5		

Sistema hidráulica: conducto presion y conducto returno

Druckölsystem: Druck-und Rückauf- leitung
Système hydraulique: conduit alimentation et conduit retour
Hydraulic system: feed-and suction line

Catalogue id	Group
20048	**911**
Illustr. No **1010582**	Section **200**
Issue **VOE 74C9920048**	Page **363**

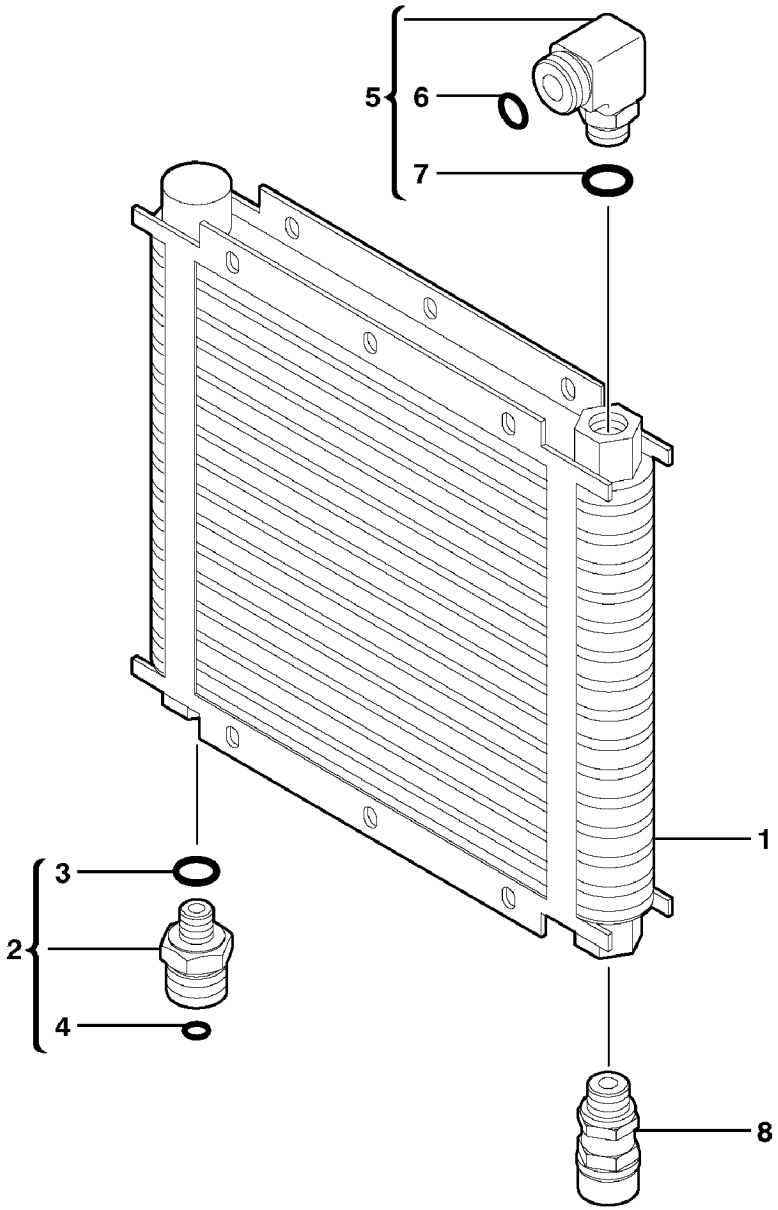

Volvo Construction Equipment

1010558

Fig.	Part No.	Quantity 1	2	3	PS	KIT	Description	Dénomination	Bezeichnung	품명	Denominación	Notes
1	**VOE 11802226**	1					Oil Cooler	Refroidisseur huile	Ölkühler	오일 쿨러	Enfriadores aceite	
2	**VOE 11802714**	1					Union	Teton Connexion	Anschlussnippel	유니언	Niple Conexcion	
3	**PJ 5600203**	1					•Seal	•Joint	•Dichtring	• 시일	•Junta	
4	**VOE 981289**	1					•O-ring	•Joint Torique	•O-Ring	• 오링	•Junta torica	
5	**VOE 11802569**	1					Elbow	Coude	Winkelstueck	엘보	Tubo acodado	
6	**VOE 981289**	1					•O-ring	•Joint Torique	•O-Ring	• 오링	•Junta torica	
7		3			NS		•Seal	•Joint	•Dichtring	• 시일	•Junta	
8	**VOE 11803385**	1					Non-return valve	Clapet antiretour	Rückschlagventil	역지 밸브	Válvula de control	4 bars , 58.00 PSI

1	**602.10151**	
2		
3		
4		
5		

Enfriador de aceute

Ölkühler
Refroidisseur d'huile
Cooling system: oil cooler

Catalogue id	Group
20048	**911**
Illustr. No **1010558**	Section **350**
Issue **VOE 74C9920048**	Page **365**

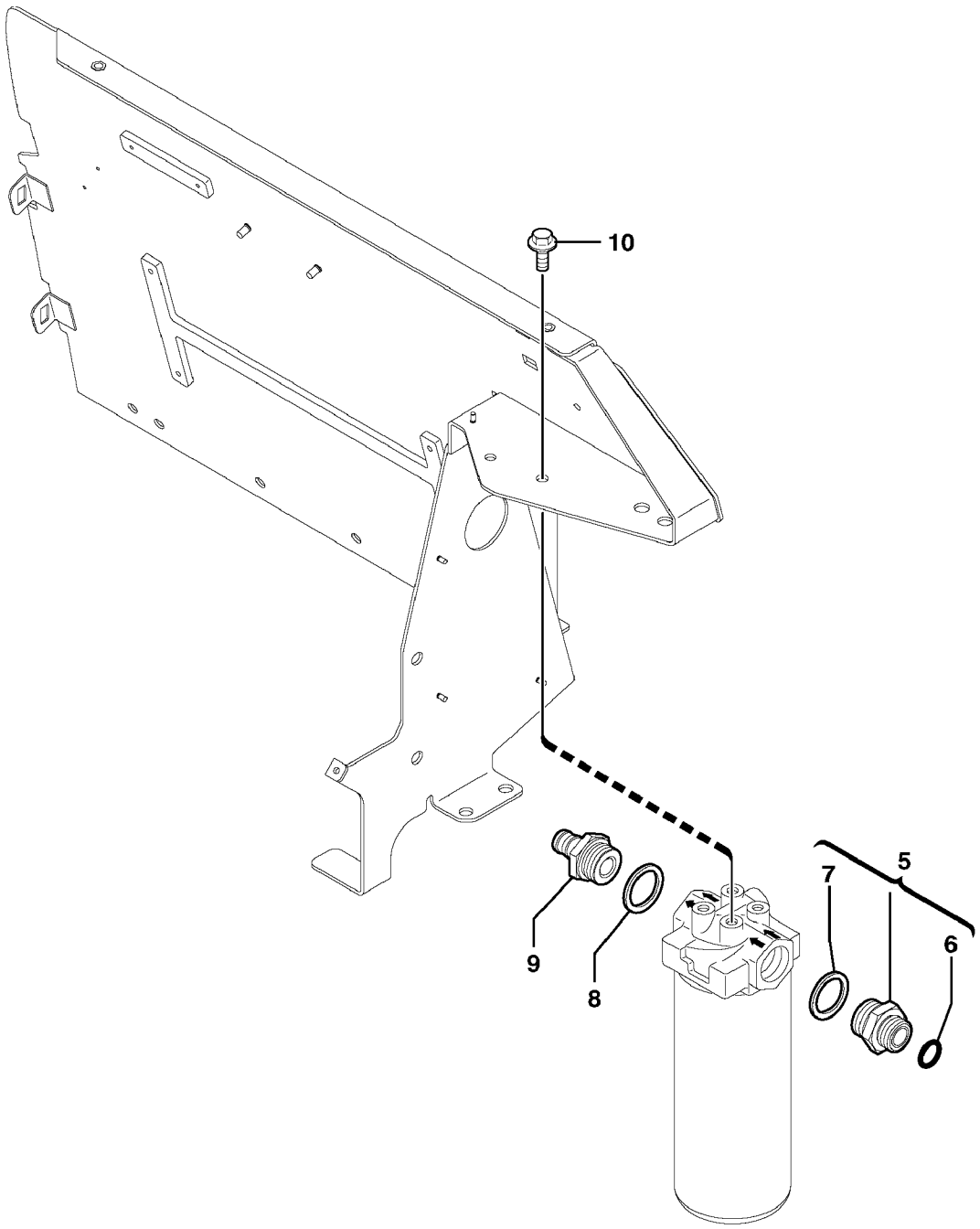
10
9
8
7
5
6

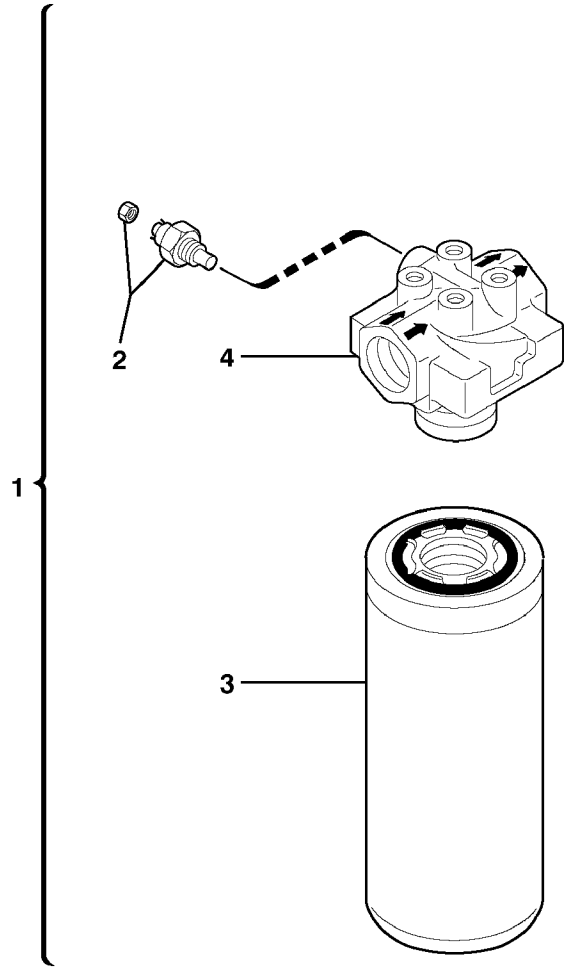
1
2
4
3

Fig.	Part No.	Quantity 1	2	3	PS	KIT	Description	Dénomination	Bezeichnung	품명	Denominación	Notes
1	**VOE 11801467**	1					Oil Filter	Filtre Huile	Ölfilter	오일 필터	Filtro Aceite	
2	**VOE 11713126**	1					•Pressure Switch	•Mano contact	•Druckschalter	• 압력 스위치	•Manocontacto	
3	**VOE 11037868**	1					•Filter Cartridge	•Element Filtre	•Filterpatrone	• 필터 카트리지	•Patron Filtrant	
4		1			NS		•Head	•Tete	•Kopf	• 헤드	•Capo	ORDER ITEM NO 1
5	**VOE 11801450**	1					Union	Teton Connexion	Anschlussnippel	유니언	Niple Conexcion	
6	**VOE 981290**	1					•O-ring	•Joint Torique	•O-Ring	• 오링	•Junta torica	
7	**PJ 5600201**	1					•Seal	•Joint	•Dichtring	• 시일	•Junta	
8	**VOE 13944499**	1			SS		Gasket	Joint	Dichtung	가스켓	Junta	
9	**VOE 11801451**	1					Socket	Douille	Buchse	슬리브	Hembrilla	
10	**VOE 946441**	2					Flange screw	Vis à bride	Flanschschraube	플랜지 스크류	Torn embridado	

1	**602.10151**		**Filtro de aceite hidráulico** 유압 오일 휠터 **Hydraulikkreis Ölfilter** **Filtre à huile hydraulique** **Hydraulic oil filter**	Catalogue id **20048**	Group **911**
2				Illustr. No **1010581**	Section **400**
3				Issue **VOE 74C9920048**	Page **367**
4					
5					

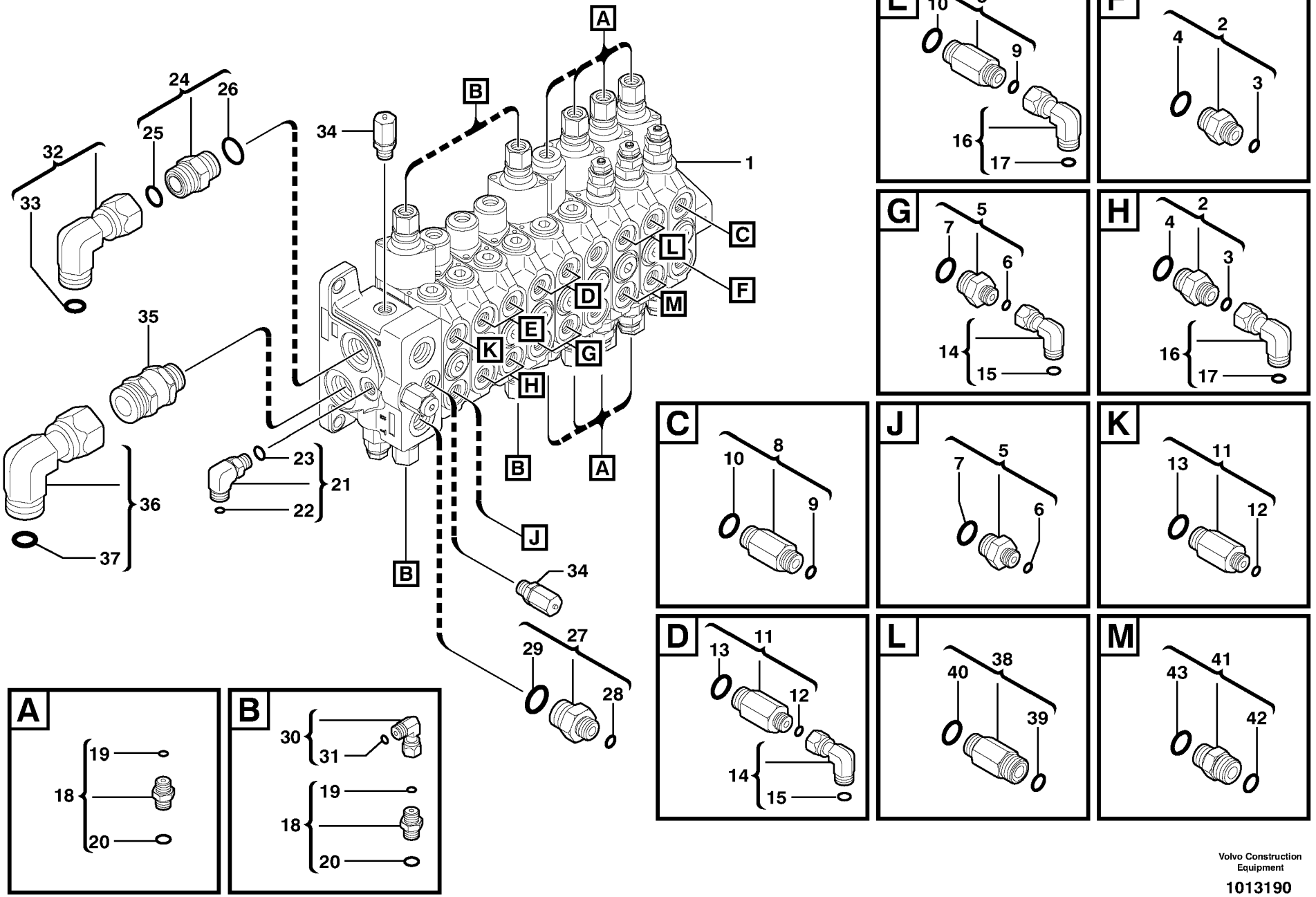

Volvo Construction Equipment

1013190

Fig.	Part No.	Quantity 1	2	3	PS	KIT	Description	Dénomination	Bezeichnung	품명	Denominación	Notes
1		1					Distributor	Distributeur	Verteiler	배전기	Distribuidor	See group 912, Page 373
2	**VOE 935092**	3					Nipple	Raccord	Nippel	니플	Niple	
3	**VOE 4880493**	1					•O-ring	•Joint Torique	•O-Ring	• 오링	•Junta torica	
4	**VOE 932041**	1					•O-ring	•Joint Torique	•O-Ring	• 오링	•Junta torica	
5	**VOE 935090**	3					Nipple	Raccord	Nippel	니플	Niple	
6	**VOE 4880492**	1					•O-ring	•Joint Torique	•O-Ring	• 오링	•Junta torica	
7	**VOE 932041**	1					•O-ring	•Joint Torique	•O-Ring	• 오링	•Junta torica	
8	**VOE 11801958**	3					Adapter	Raccord Reduct.	Verbind Stutzen	어댑터	Adaptador	
9	**VOE 4880493**	1					•O-ring	•Joint Torique	•O-Ring	• 오링	•Junta torica	
10	**VOE 932041**	1					•O-ring	•Joint Torique	•O-Ring	• 오링	•Junta torica	
11	**VOE 11801959**	3					Adapter	Raccord Reduct.	Verbind Stutzen	어댑터	Adaptador	
12	**VOE 4880492**	1					•O-ring	•Joint Torique	•O-Ring	• 오링	•Junta torica	
13	**VOE 932041**	1					•O-ring	•Joint Torique	•O-Ring	• 오링	•Junta torica	
14	**VOE 13933900**	4					Elbow nipple	Raccord angulaire	Winkelnippel	엘보 니플	Niple angular	
15	**VOE 4880492**	1					•O-ring	•Joint Torique	•O-Ring	• 오링	•Junta torica	
16	**VOE 13933872**	4					Elbow nipple	Raccord angulaire	Winkelnippel	엘보 니플	Niple angular	
17	**VOE 4880493**	1					•O-ring	•Joint Torique	•O-Ring	• 오링	•Junta torica	
18	**VOE 13933858**	12					Union	Teton Connexion	Anschlussnippel	유니언	Niple Conexcion	
19	**VOE 4881722**	1					•O-ring	•Joint Torique	•O-Ring	• 오링	•Junta torica	
20	**VOE 932039**	1					•O-ring	•Joint Torique	•O-Ring	• 오링	•Junta torica	
21	**VOE 935069**	1					Elbow nipple	Raccord angulaire	Winkelnippel	엘보 니플	Niple angular	
22	**VOE 4881722**	1					•O-ring	•Joint Torique	•O-Ring	• 오링	•Junta torica	
23	**VOE 4880492**	1					•O-ring	•Joint Torique	•O-Ring	• 오링	•Junta torica	
24	**VOE 13933862**	1					Nipple	Raccord	Nippel	니플	Niple	
25	**VOE 981289**	1					•O-ring	•Joint Torique	•O-Ring	• 오링	•Junta torica	
26	**VOE 932042**	1					•O-ring	•Joint Torique	•O-Ring	• 오링	•Junta torica	
27	**VOE 935093**	1					Union	Teton Connexion	Anschlussnippel	유니언	Niple Conexcion	
28	**VOE 4880493**	1					•O-ring	•Joint Torique	•O-Ring	• 오링	•Junta torica	
29	**VOE 932042**	1					•O-ring	•Joint Torique	•O-Ring	• 오링	•Junta torica	
30	**VOE 13933905**	4					Elbow nipple	Raccord angulaire	Winkelnippel	엘보 니플	Niple angular	

1	**602.10151**		**Conjunta valvula principal con accesorios de montaje** 장착 부품이 있는 메인 밸브 어셈블리 **Hauptventilblock mit Anbauteilen** **Bloc de distribution de valves avec pièces de montage** **Main valve assembly with fitting parts**
2			
3			
4			
5			

Catalogue id	Group
20048	**912**
Illustr. No	Section
1013190	**100**
Issue	Page
VOE 74C9920048	**369**

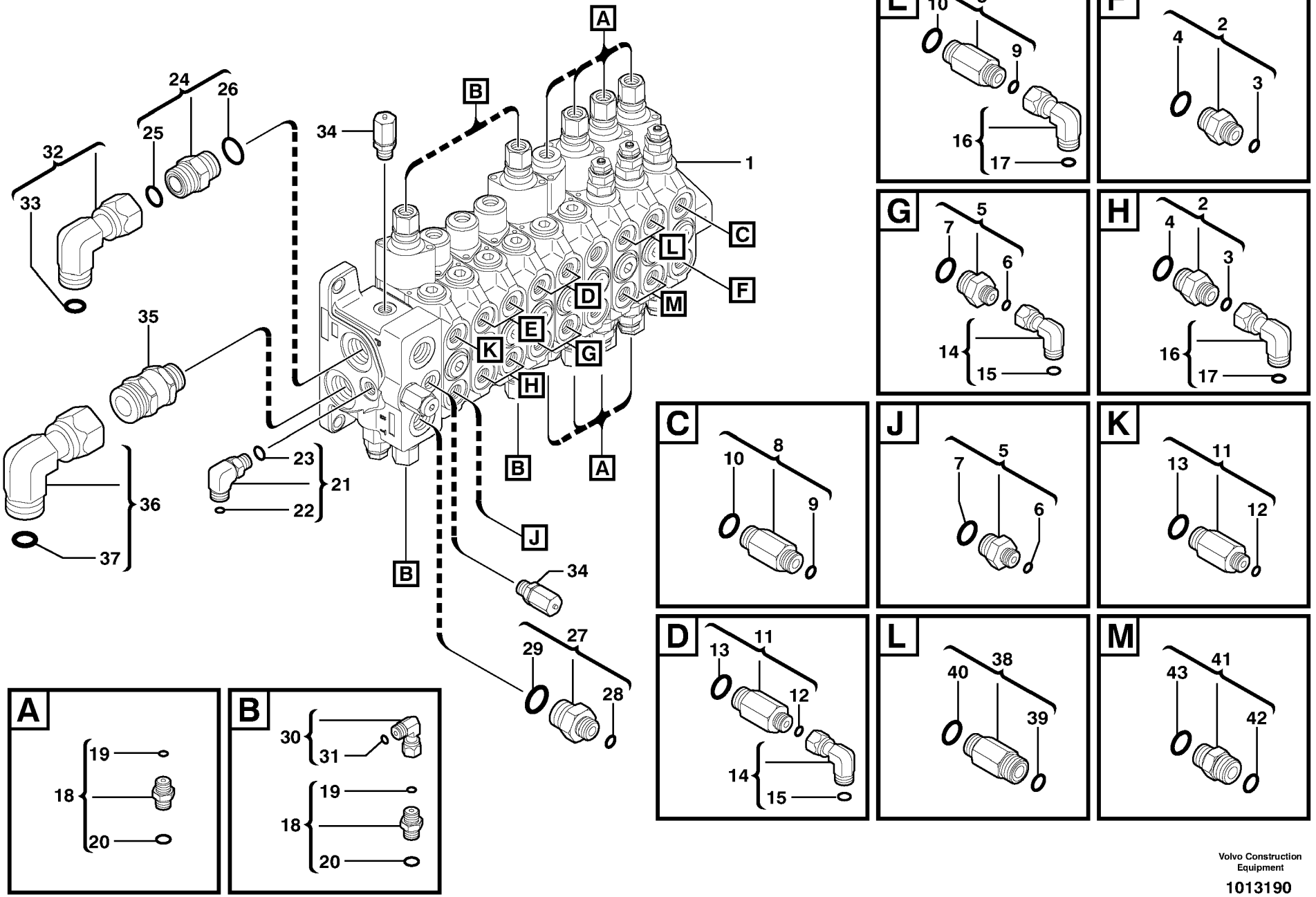

Volvo Construction Equipment

1013190

Fig.	Part No.	Quantity 1	2	3	PS	KIT	Description	Dénomination	Bezeichnung	품명	Denominación	Notes
31	**VOE 4881722**	1					•O-ring	•Joint Torique	•O-Ring	• 오링	•Junta torica	
32	**VOE 13933910**	1					Elbow Nipple	Raccord angulaire	Winkelnippel	엘보 니플	Niple Angular	
33	**VOE 981289**	1					•O-ring	•Joint Torique	•O-Ring	• 오링	•Junta torica	
34	**VOE 936446**	2					Testing Nipple	Raccord contrôle	Prufnippel	테스트 니플	Niple Medicion	
35	**VOE 11803164**	1					Non-return valve	Clapet antiretour	Rückschlagventil	역지 밸브	Válvula de control	6 bars , 87.00 PSI
36	**VOE 13933851**	1					Elbow nipple	Raccord angulaire	Winkelnippel	엘보 니플	Niple angular	
37	**VOE 981290**	1					•O-ring	•Joint Torique	•O-Ring	• 오링	•Junta torica	
38	**VOE 11801960**	2					Adapter	Raccord Reduct.	Verbind Stutzen	어댑터	Adaptador	
39	**VOE 4880663**	1					•O-ring	•Joint Torique	•O-Ring	• 오링	•Junta torica	
40	**VOE 932041**	1					•O-ring	•Joint Torique	•O-Ring	• 오링	•Junta torica	
41	**VOE 935095**	2					Nipple	Raccord	Nippel	니플	Niple	
42	**VOE 4880663**	1					•O-ring	•Joint Torique	•O-Ring	• 오링	•Junta torica	
43	**VOE 932041**	1					•O-ring	•Joint Torique	•O-Ring	• 오링	•Junta torica	

1	**602.10151**	
2		
3		
4		
5		

Conjunta valvula principal con accesorios de montaje
장착 부품이 있는 메인 밸브 어셈블리
Hauptventilblock mit Anbauteilen
Bloc de distribution de valves avec pièces de montage
Main valve assembly with fitting parts

Catalogue id	Group
20048	**912**
Illustr. No **1013190**	Section **100**
Issue **VOE 74C9920048**	Page **371**

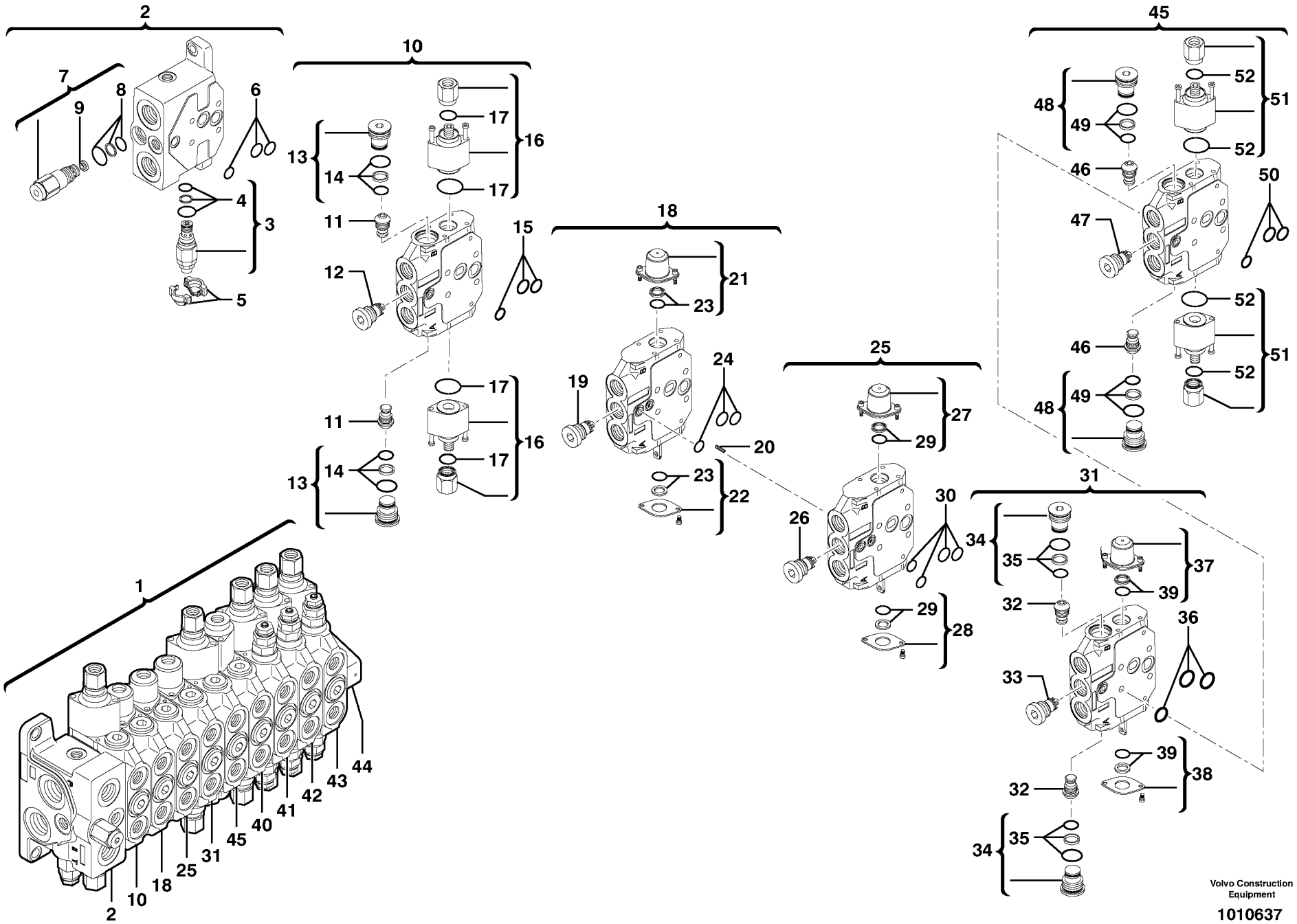

Volvo Construction Equipment

1010637

Fig.	Part No.	Quantity 1	2	3	PS	KIT	Description	Dénomination	Bezeichnung	품명	Denominación	Notes
1	**VOE 11801570**	1					Distribution block	Distributeur	Verteilerblock	디스크 블록	Bloque distribución	
2	**VOE 11713209**	1					•Element	•Elément	•Element	• 엘리멘트	•Elemento	
3	**VOE 11802877**	1					••Relief valve	••Limiteur - pression	••Druckbegrenzer	•• 릴리프 밸브	••Limitador presion	
4	**PJ 7417728**	1					••Sealing Kit	••Jeu Joints	••Dichtungssatz	•• 시일 킷	••Juego Retenes	
5	**VOE 11802878**	1					••Cowl kit (blue)	••Kit capuchon bleu	••Motorhauben-Kit, bl	•• 카울 키트 (파란색)	••Kit de taza (azul)	
6	**PJ 7417729**	1					••Sealing Kit	••Jeu Joints	••Dichtungssatz	•• 시일 킷	••Juego Retenes	
7	**PJ 7417731**	1					••Current Rgltr	••Regulat.courant	••Stromregler	••	••Regul Corriente	
8	**VOE 11988539**	1					•••Sealing Kit	•••Jeu Joints	•••Dichtungssatz	••• 시일 킷	•••Juego Retenes	
9	**VOE 11710925**	1					•••Filter	•••Filtre	•••Filter	••• 필터	•••Filtro	
10	**VOE 11713211**	1					•Element	•Elément	•Element	• 엘리멘트	•Elemento	
11	**VOE 11713066**	2					••Check valve	••Valve antiretour	••Rückschlagventil	•• 체크 밸브	••Válvula de retención	
12	**VOE 11713067**	1					••Pressure compens	••Compensateur de p	••Druckausgleicher	•• 압력 보상기	••Compensador de pr.	ORDER ITEM NO 10
13	**PJ 7410457**	2					••Plug	••Bouchon	••Stopfen	•• 플러그	••Tapon	
14	**PJ 7410425**	1					•••Sealing Kit	•••Jeu Joints	•••Dichtungssatz	••• 시일 킷	•••Juego Retenes	
15	**PJ 7417729**	1					••Sealing Kit	••Jeu Joints	••Dichtungssatz	•• 시일 킷	••Juego Retenes	
16	**VOE 11713070**	1					••Hydraulic control	••Commande hydraul	••Hydr. Steuerung	•• 유압 조정장치	••Mando hidráulico	
17	**PJ 7417727**	1					•••Sealing Kit	•••Jeu Joints	•••Dichtungssatz	••• 시일 킷	•••Juego Retenes	
18	**VOE 11713215**	1					•Element	•Elément	•Element	• 엘리멘트	•Elemento	
19	**PJ 7417732**	1					••Pressure compens	••Compensateur de p	••Druckausgleicher	•• 압력 보상기	••Compensador de pr.	ORDER ITEM NO 18
20		1			NS		••Throttle valve	••Etrangleur	••Drosselventil	•• 스로틀 밸브	••Válvula de maripos.	ORDER ITEM NO 18
21	**PJ 7410458**	1					••Spring cap	••Capsule a ressort	••Federkapsel	•• 스프링 캡	••Capsula de resorte	
22	**PJ 7418408**	1					••Mechanical control	••Commande mécani	••Mechanische Steue	•• 기계적 조정장치	••Mando mecánico	
23	**PJ 7417727**	1					•••Sealing Kit	•••Jeu Joints	•••Dichtungssatz	••• 시일 킷	•••Juego Retenes	
24	**PJ 7417729**	1					••Sealing Kit	••Jeu Joints	••Dichtungssatz	•• 시일 킷	••Juego Retenes	
25	**VOE 11713214**	1					•Element	•Elément	•Element	• 엘리멘트	•Elemento	
26	**PJ 7417732**	1					••Pressure compens	••Compensateur de p	••Druckausgleicher	•• 압력 보상기	••Compensador de pr.	ORDER ITEM NO 25
27	**PJ 7410458**	1					••Spring cap	••Capsule a ressort	••Federkapsel	•• 스프링 캡	••Capsula de resorte	
28	**PJ 7418408**	1					••Mechanical control	••Commande mécani	••Mechanische Steue	•• 기계적 조정장치	••Mando mecánico	
29	**PJ 7417727**	1					••Sealing Kit	••Jeu Joints	••Dichtungssatz	•• 시일 킷	••Juego Retenes	
30	**PJ 7418417**	1					••Seal kit	••Pochette de joints	••Dichtringe (Satz)	•• 시일 키트	••Juego de juntas	

1	**602.10151**	
2		
3		
4		
5		

Válvula de control : 9 correderas
컨트롤 밸브 : 9 스풀
Steuerblock : 9 Steuerschieber
Distributeur : 9 tiroirs
Control valve : 9 spools

Catalogue id	Group
20048	**912**
Illustr. No **1010637**	Section **101**
Issue **VOE 74C9920048**	Page **373**

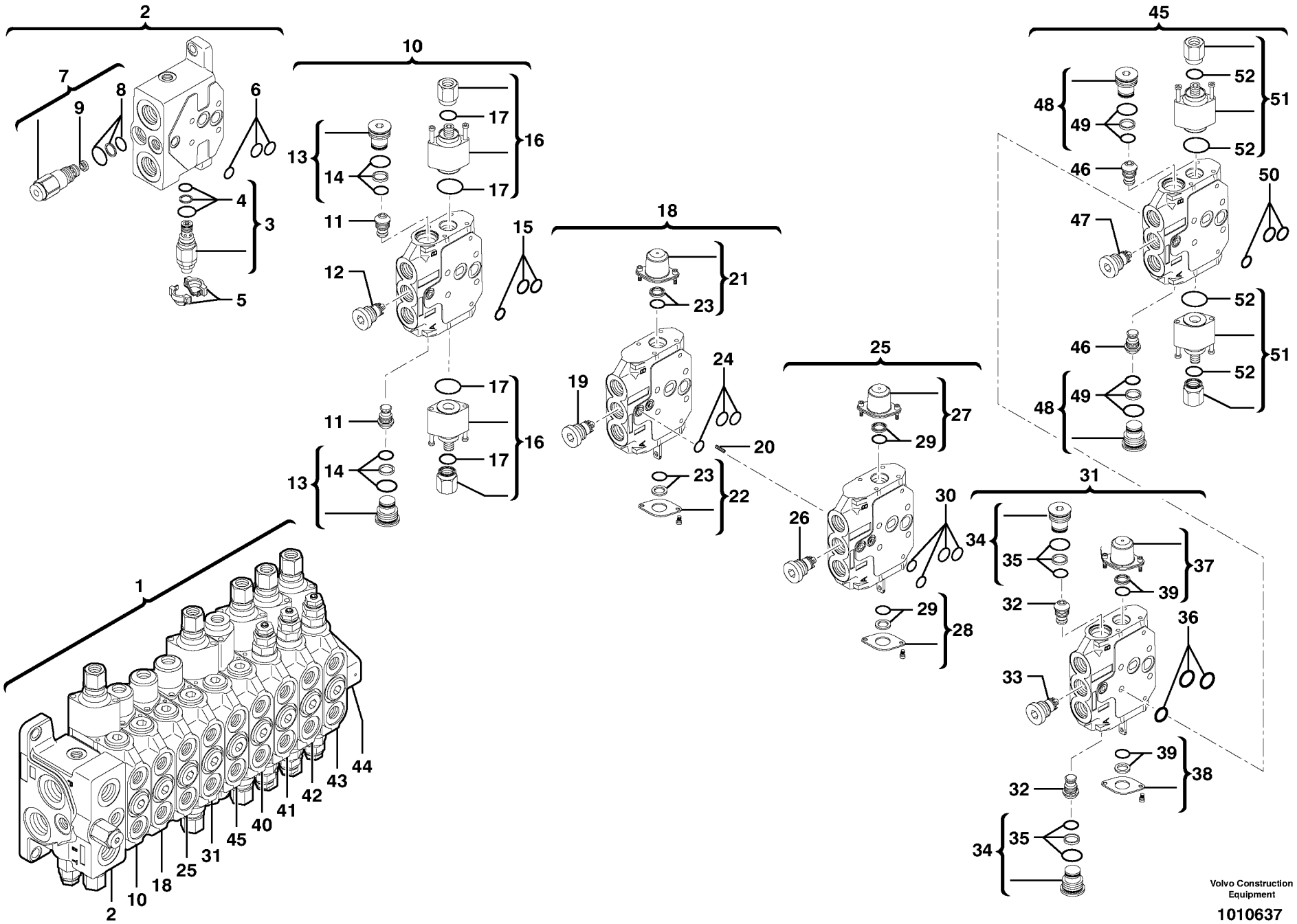

Volvo Construction Equipment

1010637

Fig.	Part No.	Quantity 1	2	3	PS	KIT	Description	Dénomination	Bezeichnung	품명	Denominación	Notes
31	**VOE 11713210**	1					•Element	•Elément	•Element	• 엘리멘트	•Elemento	
32	**VOE 11713066**	2					••Check valve	••Valve antiretour	••Rückschlagventil	•• 체크 밸브	••Válvula de retención	
33	**VOE 11713067**	1					••Pressure compens ..	••Compensateur de p.	••Druckausgleicher	•• 압력 보상기	••Compensador de pr.	ORDER ITEM NO 31
34	**PJ 7410457**	2					••Plug	••Bouchon	••Stopfen	•• 플러그	••Tapon	
35	**PJ 7410425**	1					•••Sealing Kit	•••Jeu Joints	•••Dichtungssatz	••• 시일 킷	•••Juego Retenes	
36	**PJ 7417729**	1					••Sealing Kit	••Jeu Joints	••Dichtungssatz	•• 시일 킷	••Juego Retenes	
37	**PJ 7410458**	1					••Spring cap	••Capsule a ressort	••Federkapsel	•• 스프링 캡	••Capsula de resorte..	
38	**PJ 7418408**	1					••Mechanical control ..	••Commande mécani .	••Mechanische Steue .	•• 기계적 조정장치	••Mando mecánico	
39	**PJ 7417727**	1					••Sealing Kit	••Jeu Joints	••Dichtungssatz	•• 시일 킷	••Juego Retenes	
40		1					•Element	•Elément	•Element	• 엘리멘트	•Elemento	See group 912, Page 377
41		1					•Element	•Elément	•Element	• 엘리멘트	•Elemento	See group 912, Page 377
42		1					•Element	•Elément	•Element	• 엘리멘트	•Elemento	See group 912, Page 377
43		1					•Element	•Elément	•Element	• 엘리멘트	•Elemento	See group 912, Page 377
44		1					•Element	•Elément	•Element	• 엘리멘트	•Elemento	See group 912, Page 377
45	**VOE 11713218**	1					•Element	•Elément	•Element	• 엘리멘트	•Elemento	
46	**VOE 11713066**	2					••Check valve	••Valve antiretour	••Rückschlagventil	•• 체크 밸브	••Válvula de retención	
47	**PJ 7417732**	1					••Pressure compens ..	••Compensateur de p.	••Druckausgleicher	•• 압력 보상기	••Compensador de pr.	ORDER ITEM NO 45
48	**PJ 7410457**	2					••Plug	••Bouchon	••Stopfen	•• 플러그	••Tapon	
49	**PJ 7410425**	1					•••Sealing Kit	•••Jeu Joints	•••Dichtungssatz	••• 시일 킷	•••Juego Retenes	
50	**PJ 7417729**	1					••Sealing Kit	••Jeu Joints	••Dichtungssatz	•• 시일 킷	••Juego Retenes	
51	**VOE 11713070**	1					••Hydraulic control	••Commande hydraul .	••Hydr. Steuerung	•• 유압 조정장치	••Mando hidráulico	
52	**PJ 7417727**	1					•••Sealing Kit	•••Jeu Joints	•••Dichtungssatz	••• 시일 킷	•••Juego Retenes	

1	**602.10151**	
2		
3		
4		
5		

Válvula de control : 9 correderas
컨트롤 밸브 : 9 스풀
Steuerblock : 9 Steuerschieber
Distributeur : 9 tiroirs
Control valve : 9 spools

Catalogue id	Group
20048	**912**
Illustr. No **1010637**	Section **101**
Issue **VOE 74C9920048**	Page **375**

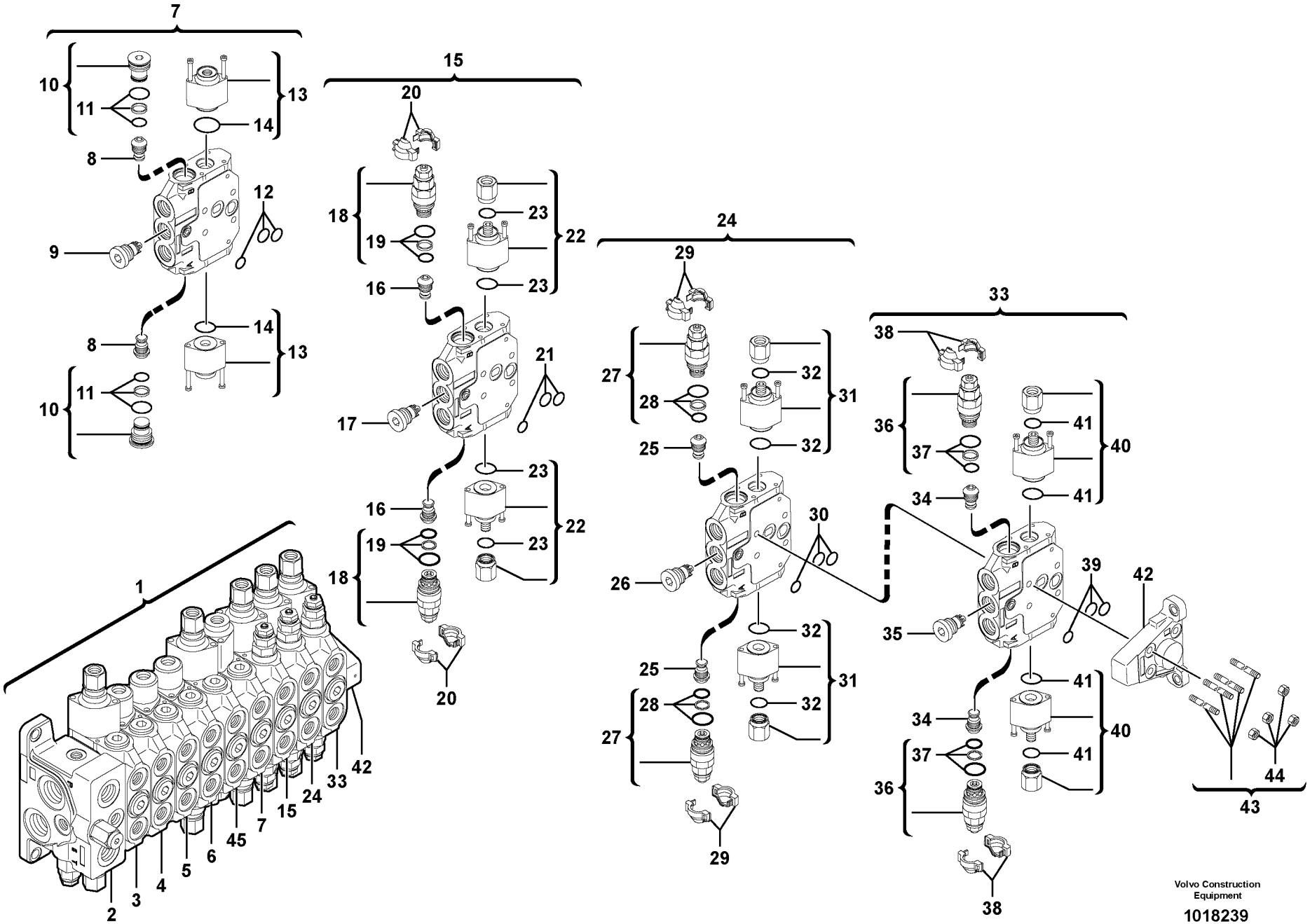

Volvo Construction Equipment

1018239

Fig.	Part No.	Quantity 1	2	3	PS	KIT	Description	Dénomination	Bezeichnung	품명	Denominación	Notes
1		1					Distribution block	Distributeur	Verteilerblock	디스크 블록	Bloque distribución	See group 912, Page 373
2		1					•Element	•Elément	•Element	• 엘리멘트	•Elemento	See group 912, Page 373
3		1					•Element	•Elément	•Element	• 엘리멘트	•Elemento	See group 912, Page 373
4		1					•Element	•Elément	•Element	• 엘리멘트	•Elemento	See group 912, Page 373
5		1					•Element	•Elément	•Element	• 엘리멘트	•Elemento	See group 912, Page 373
6		1					•Element	•Elément	•Element	• 엘리멘트	•Elemento	See group 912, Page 373
7	**VOE 11713213**	1					•Element	•Elément	•Element	• 엘리멘트	•Elemento	
8	**VOE 11713066**	2					••Check valve	••Valve antiretour	••Rückschlagventil	•• 체크 밸브	••Válvula de retención	
9	**VOE 11988362**	1					••Pressure compens ..	••Compensateur de p.	••Druckausgleicher	•• 압력 보상기	••Compensador de pr.	ORDER ITEM NO 7
10	**PJ 7410457**	2					••Plug	••Bouchon	••Stopfen	•• 플러그	••Tapon	
11	**PJ 7410425**	1					•••Sealing Kit	•••Jeu Joints	•••Dichtungssatz	••• 시일 킷	•••Juego Retenes	
12	**PJ 7417729**	1					••Sealing Kit	••Jeu Joints	••Dichtungssatz	•• 시일 킷	••Juego Retenes	
13	**VOE 11713071**	1					••Hydraulic control	••Commande hydraul .	••Hydr. Steuerung	•• 유압 조정장치	••Mando hidráulico	
14	**PJ 7417727**	1					•••Sealing Kit	•••Jeu Joints	•••Dichtungssatz	••• 시일 킷	•••Juego Retenes	
15	**VOE 11713212**	1					•Element	•Elément	•Element	• 엘리멘트	•Elemento	
16	**VOE 11713066**	2					••Check valve	••Valve antiretour	••Rückschlagventil	•• 체크 밸브	••Válvula de retención	
17	**PJ 7417732**	1					••Pressure compens ..	••Compensateur de p.	••Druckausgleicher	•• 압력 보상기	••Compensador de pr.	ORDER ITEM NO 15
18	**VOE 11802876**	2					••Relief valve	••Limiteur - pression	••Druckbegrenzer	•• 릴리프 밸브	••Limitador presion	
19	**PJ 7410425**	1					•••Sealing Kit	•••Jeu Joints	•••Dichtungssatz	••• 시일 킷	•••Juego Retenes	
20	**VOE 11802878**	2					••Cowl kit (blue)	••Kit capuchon bleu	••Motorhauben-Kit, bl .	•• 카울 키트 (파란색)	••Kit de taza (azul)	
21	**PJ 7417729**	1					••Sealing Kit	••Jeu Joints	••Dichtungssatz	•• 시일 킷	••Juego Retenes	
22	**VOE 11713070**	1					••Hydraulic control	••Commande hydraul .	••Hydr. Steuerung	•• 유압 조정장치	••Mando hidráulico	
23	**PJ 7417727**	1					•••Sealing Kit	•••Jeu Joints	•••Dichtungssatz	••• 시일 킷	•••Juego Retenes	
24	**VOE 11713216**	1					•Element	•Elément	•Element	• 엘리멘트	•Elemento	
25	**VOE 11713066**	2					••Check valve	••Valve antiretour	••Rückschlagventil	•• 체크 밸브	••Válvula de retención	
26	**PJ 7417732**	1					••Pressure compens ..	••Compensateur de p.	••Druckausgleicher	•• 압력 보상기	••Compensador de pr.	ORDER ITEM NO 24
27	**VOE 11802876**	2					••Relief valve	••Limiteur - pression	••Druckbegrenzer	•• 릴리프 밸브	••Limitador presion	
28	**PJ 7410425**	1					•••Sealing Kit	•••Jeu Joints	•••Dichtungssatz	••• 시일 킷	•••Juego Retenes	
29	**VOE 11802878**	2					••Cowl kit (blue)	••Kit capuchon bleu	••Motorhauben-Kit, bl .	•• 카울 키트 (파란색)	••Kit de taza (azul)	
30	**PJ 7417729**	1					••Sealing Kit	••Jeu Joints	••Dichtungssatz	•• 시일 킷	••Juego Retenes	

1	**602.10151**		**Válvula de control : 9 correderas (continuación)** **컨트롤 밸브 : 9 스풀 (계속)** **Steuerblock : 9 Steuerschieber (Fortsetzung)** **Distributeur : 9 tiroirs (suite)** **Control valve : 9 spools (continued)**
2			
3			
4			
5			

Catalogue id	Group
20048	**912**
Illustr. No **1018239**	Section **102**
Issue **VOE 74C9920048**	Page **377**

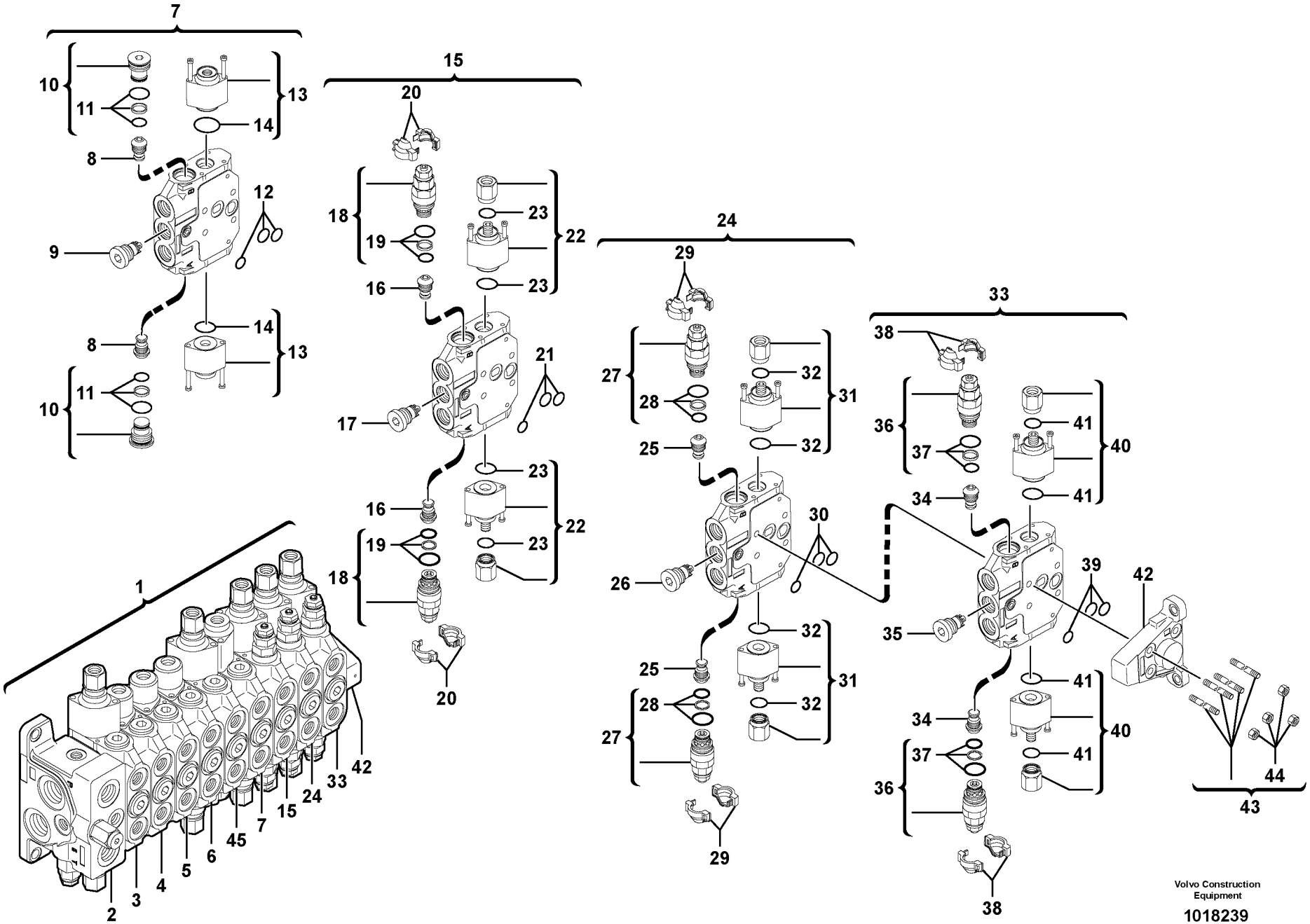

Volvo Construction Equipment

1018239

Fig.	Part No.	Quantity 1	2	3	PS	KIT	Description	Dénomination	Bezeichnung	품명	Denominación	Notes
31	**VOE 11713070**	1					••Hydraulic control	••Commande hydraul	••Hydr. Steuerung	•• 유압 조정장치	••Mando hidráulico	
32	**PJ 7417727**	1					•••Sealing Kit	•••Jeu Joints	•••Dichtungssatz	••• 시일 킷	•••Juego Retenes	
33	**VOE 11713217**	1					•Element	•Elément	•Element	• 엘리멘트	•Elemento	
34	**VOE 11713066**	2					••Check valve	••Valve antiretour	••Rückschlagventil	•• 체크 밸브	••Válvula de retención	
35	**PJ 7417732**	1					••Pressure compens	••Compensateur de p	••Druckausgleicher	•• 압력 보상기	••Compensador de pr	ORDER ITEM NO 33
36	**VOE 11802876**	2					••Relief valve	••Limiteur - pression	••Druckbegrenzer	•• 릴리프 밸브	••Limitador presion	
37	**PJ 7410425**	1					•••Sealing Kit	•••Jeu Joints	•••Dichtungssatz	••• 시일 킷	•••Juego Retenes	
38	**VOE 11802878**	2					••Cowl kit (blue)	••Kit capuchon bleu	••Motorhauben-Kit, bl	•• 카울 키트 (파란색)	••Kit de taza (azul)	
39	**PJ 7417729**	1					••Sealing Kit	••Jeu Joints	••Dichtungssatz	•• 시일 킷	••Juego Retenes	
40	**VOE 11713070**	1					••Hydraulic control	••Commande hydraul	••Hydr. Steuerung	•• 유압 조정장치	••Mando hidráulico	
41	**PJ 7417727**	1					•••Sealing Kit	•••Jeu Joints	•••Dichtungssatz	••• 시일 킷	•••Juego Retenes	
42	**PJ 7417791**	1					•Element	•Elément	•Element	• 엘리멘트	•Elemento	
43	**PJ 7417753**	1					•Tie rod (kit)	•Jeu de tirants	•Stehbolzensatz	• 타이 로드 (키트)	•Barra de acoplamien	
44		4			NS		••Lock nut	••Contre-ecrou	••Sicherungsmutter	•• 록 너트	••Contratuerca	ORDER ITEM NO 43
45		1					•Element	•Elément	•Element	• 엘리멘트	•Elemento	See group 912, Page 373

1	602.10151		**Válvula de control : 9 correderas (continuación)** 컨트롤 밸브 : 9 스풀 (계속) **Steuerblock : 9 Steuerschieber (Fortsetzung)** **Distributeur : 9 tiroirs (suite)** **Control valve : 9 spools (continued)**
2			
3			
4			
5			

Catalogue id	Group
20048	**912**
Illustr. No **1018239**	Section **102**
Issue **VOE 74C9920048**	Page **379**

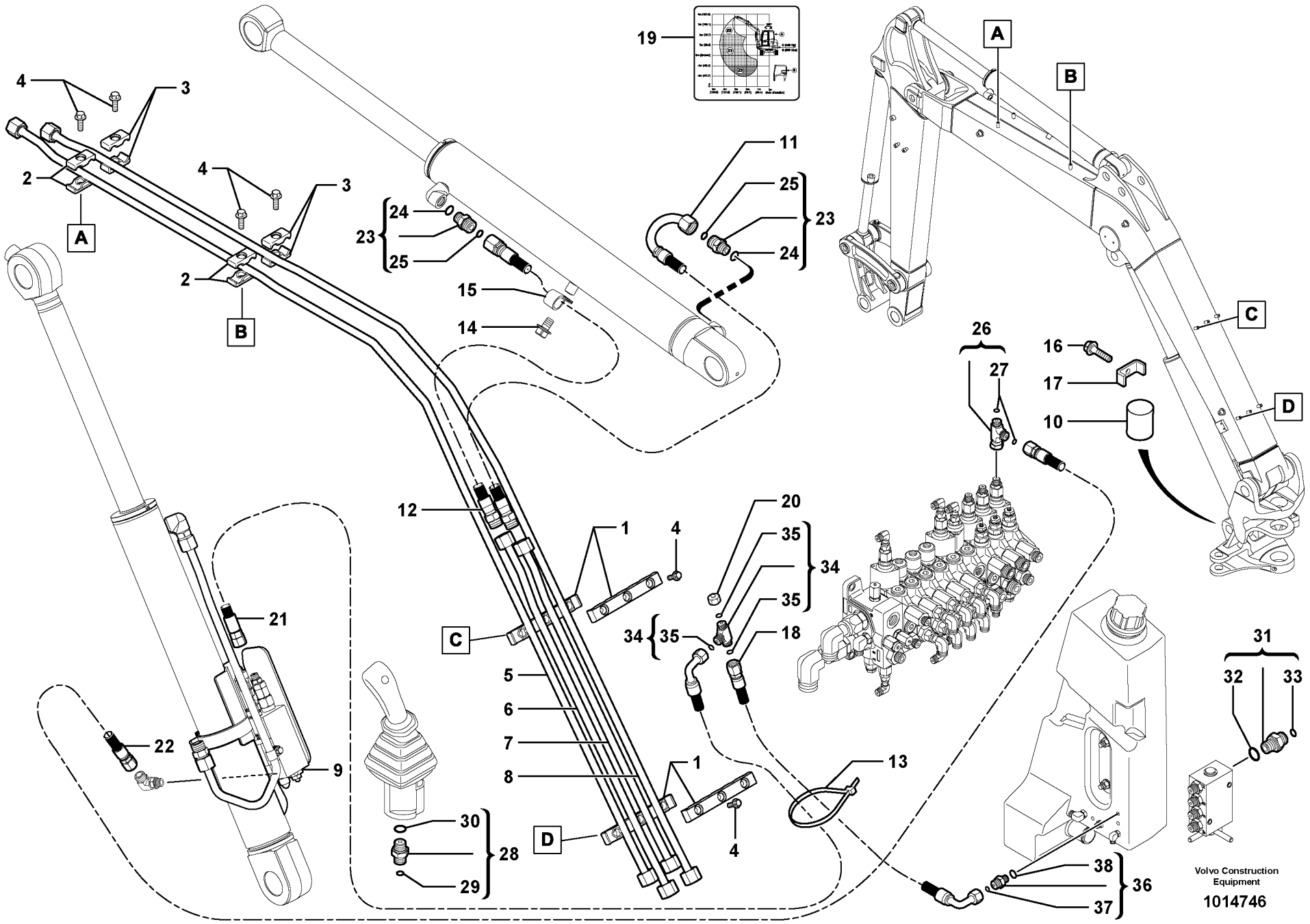
19
A
B
C
D
4
3
2
11
25
24
23
15
14
12
1
20
35
34
18
26
27
16
17
10
21
22
9
5
6
7
8
13
30
28
29
31
32
33
38
37
36
Volvo Construction Equipment
1014746

Fig.	Part No.	Quantity 1	2	3	PS	KIT	Description	Dénomination	Bezeichnung	품명	Denominación	Notes
1	**VOE 11801731**	4					Flange	Flasque	Flansch	플랜지	Brida	11839068, 11839070
2	**VOE 11801732**	4					Flange	Flasque	Flansch	플랜지	Brida	
3	**VOE 11803575**	4					Flange	Flasque	Flansch	플랜지	Brida	
4	**VOE 945444**	10			SS		Screw	Vis	Schraube	스크류	Tornillo	
5	**VOE 11801728**	1					Tube	Tube	Rohr	튜브	Tubo	
6	**VOE 11801725**	1					Tube	Tube	Rohr	튜브	Tubo	
7	**VOE 11801726**	1					Tube	Tube	Rohr	튜브	Tubo	
8	**VOE 11801727**	1					Tube	Tube	Rohr	튜브	Tubo	
9		1					Safety valve	Soupape surete	Sicherheitsvent	안전 밸브	Valv seguridad	See group 912, Page 391
10	**VOE 11803569**	1					Hose Protection	Cache-flexible	Schlauchhulle	호스 보호장치	Prot Manguera	
11	**VOE 11803587**	1					Hose assembly	Conduit flexible	Schlauchleitung	호스 어셈블리	Conducto	
12	**VOE 11803588**	1					Hose assembly	Conduit flexible	Schlauchleitung	호스 어셈블리	Conducto	
13	**VOE 4881440**	5					Strip Clamp	Ruban Serrage	Kabelbinder	스트립 클램프	Abraz Cinta	
14	**VOE 947107**	1					Flange screw	Vis à bride	Flanschschraube	플랜지 스크류	Torn embridado	
15	**VOE 967531**	1					Clamp	Pince Serrage	Klemme	클램프	Abrazadera	
16	**VOE 947107**	1					Flange screw	Vis à bride	Flanschschraube	플랜지 스크류	Torn embridado	
17	**VOE 11806392**	1					Flange	Flasque	Flansch	플랜지	Brida	
18	**VOE 11803434**	1					Hose assembly	Conduit flexible	Schlauchleitung	호스 어셈블리	Conducto	
19	**VOE 11803951**	1					Adhesive	Adhesif	Klebstoff	접착제	Adhesivo	STD
20	**VOE 11803540**	1					Plug	Bouchon	Stopfen	플러그	Tapon	
21	**VOE 11803432**	1					Hose assembly	Conduit flexible	Schlauchleitung	호스 어셈블리	Conducto	
22	**VOE 11803437**	1					Hose assembly	Conduit flexible	Schlauchleitung	호스 어셈블리	Conducto	
23	**VOE 11802734**	2					Nipple	Raccord	Nippel	니플	Niple	
24	**PJ 5600203**	1					•Seal	•Joint	•Dichtring	• 시일	•Junta	
25	**VOE 4880663**	1					•O-ring	•Joint Torique	•O-Ring	• 오링	•Junta torica	
26	**VOE 13933859**	1					Nipple	Raccord	Nippel	니플	Niple	
27	**VOE 4881722**	2					•O-ring	•Joint Torique	•O-Ring	• 오링	•Junta torica	
28	**VOE 11802772**	1					Restrictor	Etrangleur	Drosselung	리스트릭터	Estrangulacion	STD ID = 0,6mm/0.0236in
29	**VOE 4881722**	1					•O-ring	•Joint Torique	•O-Ring	• 오링	•Junta torica	

1	**602.10151**		**Manupulacion. Pluma**
2			**Materialumschlag.ausleger**
3			**Manutention. flèche**
4			**Handling boom**
5			**STD , USA**

Catalogue id	Group
20048	**912**
Illustr. No **1014746**	Section **350**
Issue **VOE 74C9920048**	Page **381**

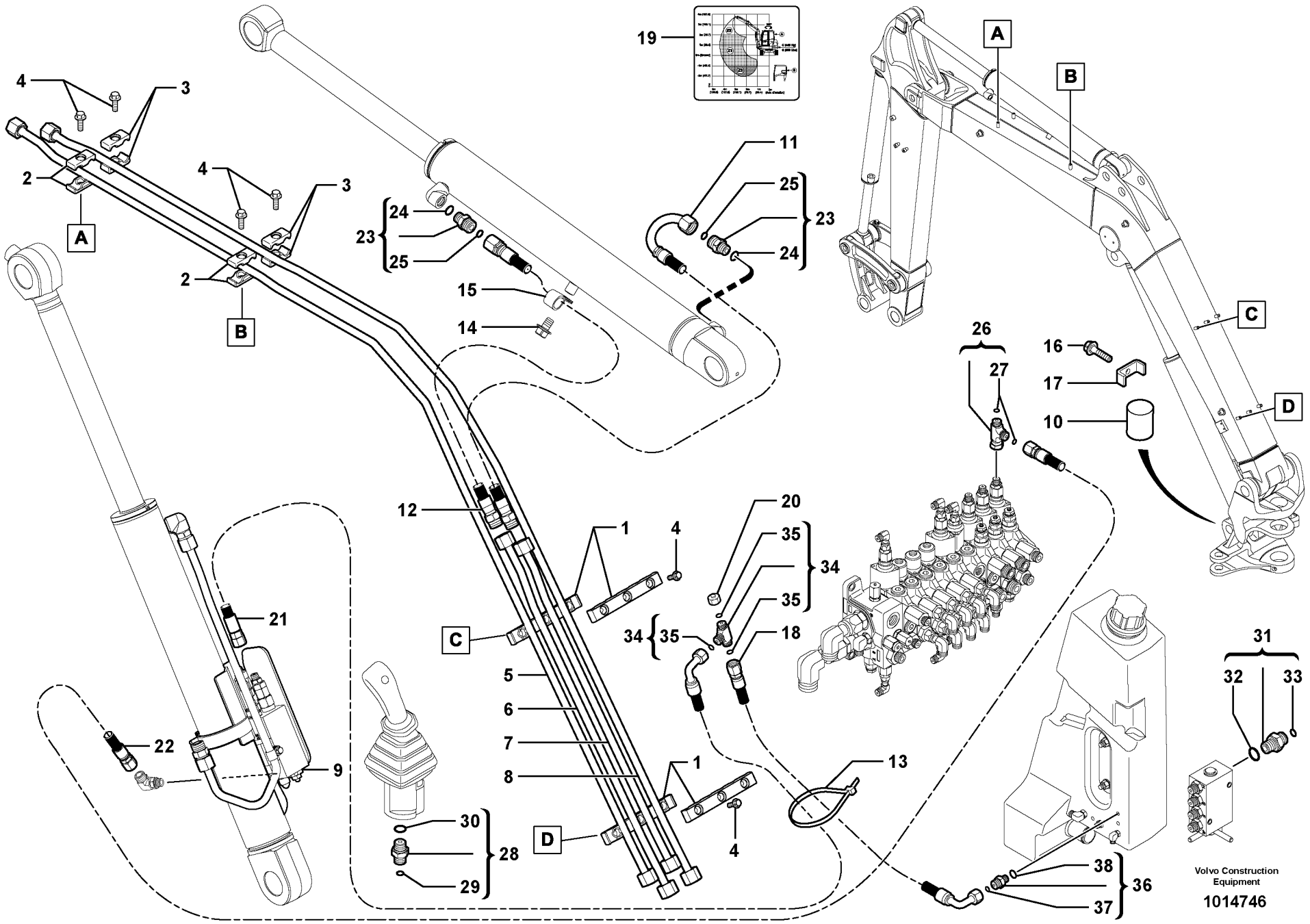
19
A
B
C
D
4
3
2
11
25
24
23
15
14
12
1
20
35
34
18
26
27
16
17
10
21
22
9
5
6
7
8
13
30
28
29
31
32
33
38
37
36
Volvo Construction Equipment
1014746

Fig.	Part No.	Quantity 1	2	3	PS	KIT	Description	Dénomination	Bezeichnung	품명	Denominación	Notes
30		1			NS		•O-ring	•Joint Torique	•O-Ring	• 오링	•Junta torica	
31	**VOE 11804536**	1					Restrictor	Etrangleur	Drosselung	리스트릭터	Estrangulacion	USA ID = 0,6mm/0.0236in
32	**PJ 5600201**	1					•Seal	•Joint	•Dichtring	• 시일	•Junta	
33	**VOE 4881722**	1					•O-ring	•Joint Torique	•O-Ring	• 오링	•Junta torica	
34	**VOE 936798**	1					T-nipple	Raccord-t	T-Nippel	T- 니플	Niple T	
35	**VOE 4881722**	3					•O-ring	•Joint Torique	•O-Ring	• 오링	•Junta torica	
36	**VOE 935082**	1					Nipple	Raccord	Nippel	니플	Niple	
37	**VOE 4881722**	1					•O-ring	•Joint Torique	•O-Ring	• 오링	•Junta torica	
38	**VOE 932037**	1					•O-ring	•Joint Torique	•O-Ring	• 오링	•Junta torica	

1	**602.10151**		**Manupulacion. Pluma**
2			**Materialumschlag.ausleger**
3			**Manutention. flèche**
4			**Handling boom**
5			**STD , USA**

Catalogue id	Group
20048	**912**
Illustr. No **1014746**	Section **350**
Issue **VOE 74C9920048**	Page **383**

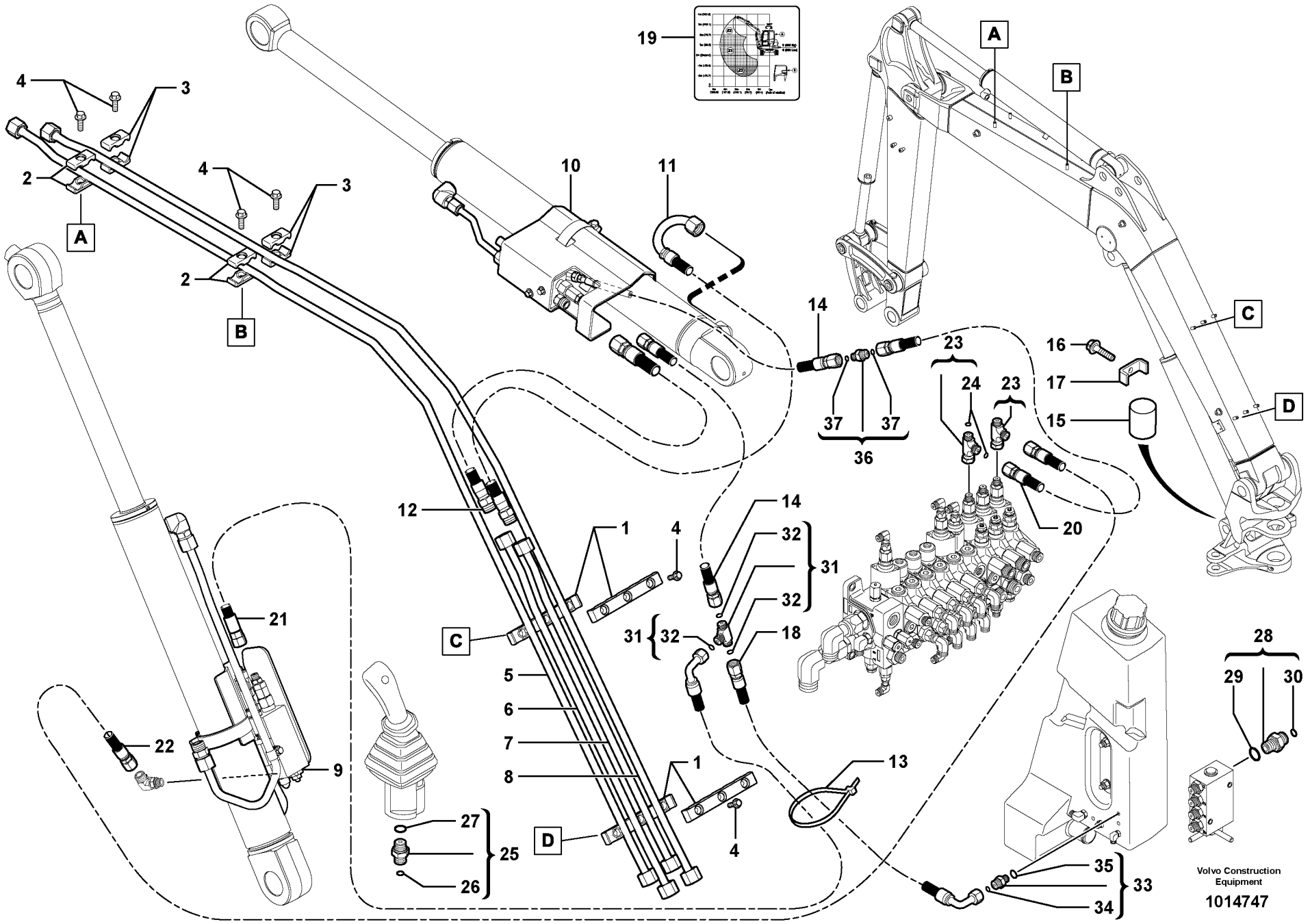

Volvo Construction Equipment

1014747

Fig.	Part No.	Quantity 1	2	3	PS	KIT	Description	Dénomination	Bezeichnung	품명	Denominación	Notes
1	**VOE 11801731**	4					Flange	Flasque	Flansch	플랜지	Brida	11839071, 11839073
2	**VOE 11801732**	4					Flange	Flasque	Flansch	플랜지	Brida	
3	**VOE 11803575**	4					Flange	Flasque	Flansch	플랜지	Brida	
4	**VOE 945444**	10			SS		Screw	Vis	Schraube	스크류	Tornillo	
5	**VOE 11801728**	1					Tube	Tube	Rohr	튜브	Tubo	
6	**VOE 11801725**	1					Tube	Tube	Rohr	튜브	Tubo	
7	**VOE 11801726**	1					Tube	Tube	Rohr	튜브	Tubo	
8	**VOE 11801727**	1					Tube	Tube	Rohr	튜브	Tubo	
9		1					Safety valve	Soupape surete	Sicherheitsvent	안전 밸브	Valv seguridad	See group 912, Page 391
10		1					Safety valve	Soupape surete	Sicherheitsvent	안전 밸브	Valv seguridad	See group 912, Page 393
11	**VOE 11803587**	1					Hose assembly	Conduit flexible	Schlauchleitung	호스 어셈블리	Conducto	
12	**VOE 11803563**	1					Hose assembly	Conduit flexible	Schlauchleitung	호스 어셈블리	Conducto	
13	**VOE 4881440**	15					Strip Clamp	Ruban Serrage	Kabelbinder	스트립 클램프	Abraz Cinta	
14	**VOE 11803436**	2					Hose assembly	Conduit flexible	Schlauchleitung	호스 어셈블리	Conducto	
15	**VOE 11803569**	1					Hose Protection	Cache-flexible	Schlauchhulle	호스 보호장치	Prot Manguera	
16	**VOE 947107**	1					Flange screw	Vis à bride	Flanschschraube	플랜지 스크류	Torn embridado	
17	**VOE 11806392**	1					Flange	Flasque	Flansch	플랜지	Brida	
18	**VOE 11803434**	1					Hose assembly	Conduit flexible	Schlauchleitung	호스 어셈블리	Conducto	
19	**VOE 11803951**	1					Adhesive	Adhesif	Klebstoff	접착제	Adhesivo	STD
20	**VOE 11806731**	1					Hose assembly	Conduit flexible	Schlauchleitung	호스 어셈블리	Conducto	
21	**VOE 11803432**	1					Hose assembly	Conduit flexible	Schlauchleitung	호스 어셈블리	Conducto	
22	**VOE 11803437**	1					Hose assembly	Conduit flexible	Schlauchleitung	호스 어셈블리	Conducto	
23	**VOE 13933859**	2					Nipple	Raccord	Nippel	니플	Niple	
24	**VOE 4881722**	2					•O-ring	•Joint Torique	•O-Ring	• 오링	•Junta torica	
25	**VOE 11802772**	1					Restrictor	Etrangleur	Drosselung	리스트릭터	Estrangulacion	STD ID = 0,6mm/0.0236in
26	**VOE 4881722**	1					•O-ring	•Joint Torique	•O-Ring	• 오링	•Junta torica	
27		1			NS		•O-ring	•Joint Torique	•O-Ring	• 오링	•Junta torica	
28	**VOE 11804536**	1					Restrictor	Etrangleur	Drosselung	리스트릭터	Estrangulacion	USA ID = 0,6mm/0.0236in

1	**602.10151**	**Manupulacion.pluma , brazo** **디퍼 핸들링 붐** **Materialumschlag.ausleger , stiel** **Manutention. fléche , balancier** **Handling boom , dipper**	Catalogue id **20048** / Group **912**
2			
3			Illustr. No **1014747** / Section **360**
4			
5		**STD , USA**	Issue **VOE 74C9920048** / Page **385**

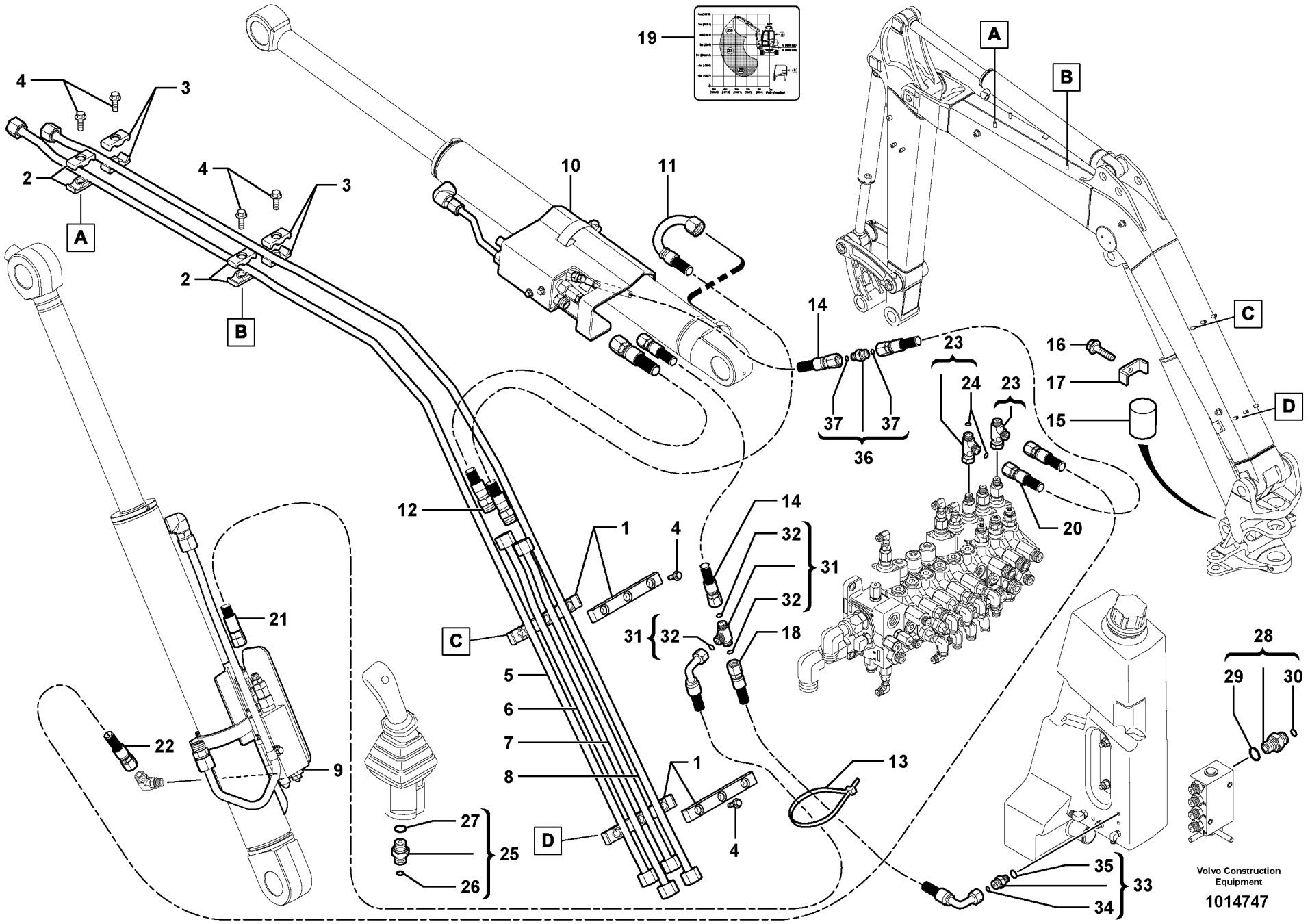

Volvo Construction Equipment

1014747

Fig.	Part No.	Quantity 1	2	3	PS	KIT	Description	Dénomination	Bezeichnung	품명	Denominación	Notes
29	**PJ 5600201**	1					•Seal	•Joint	•Dichtring	• 시일	•Junta	
30	**VOE 4881722**	1					•O-ring	•Joint Torique	•O-Ring	• 오링	•Junta torica	
31	**VOE 936798**	1					T-nipple	Raccord-t	T-Nippel	T- 니플	Niple T	
32	**VOE 4881722**	3					•O-ring	•Joint Torique	•O-Ring	• 오링	•Junta torica	
33	**VOE 935082**	1					Nipple	Raccord	Nippel	니플	Niple	
34	**VOE 4881722**	1					•O-ring	•Joint Torique	•O-Ring	• 오링	•Junta torica	
35	**VOE 932037**	1					•O-ring	•Joint Torique	•O-Ring	• 오링	•Junta torica	
36	**VOE 935436**	1					Nipple	Raccord	Nippel	니플	Niple	
37	**VOE 4881722**	2					•O-ring	•Joint Torique	•O-Ring	• 오링	•Junta torica	

1	**602.10151**		**Manupulacion.pluma , brazo** 디퍼 핸들링 붐 **Materialumschlag.ausleger , stiel** **Manutention. fléche , balancier** **Handling boom , dipper**	Catalogue id **20048**	Group **912**
2				Illustr. No **1014747**	Section **360**
3					
4				Issue **VOE 74C9920048**	Page **387**
5			**STD , USA**		

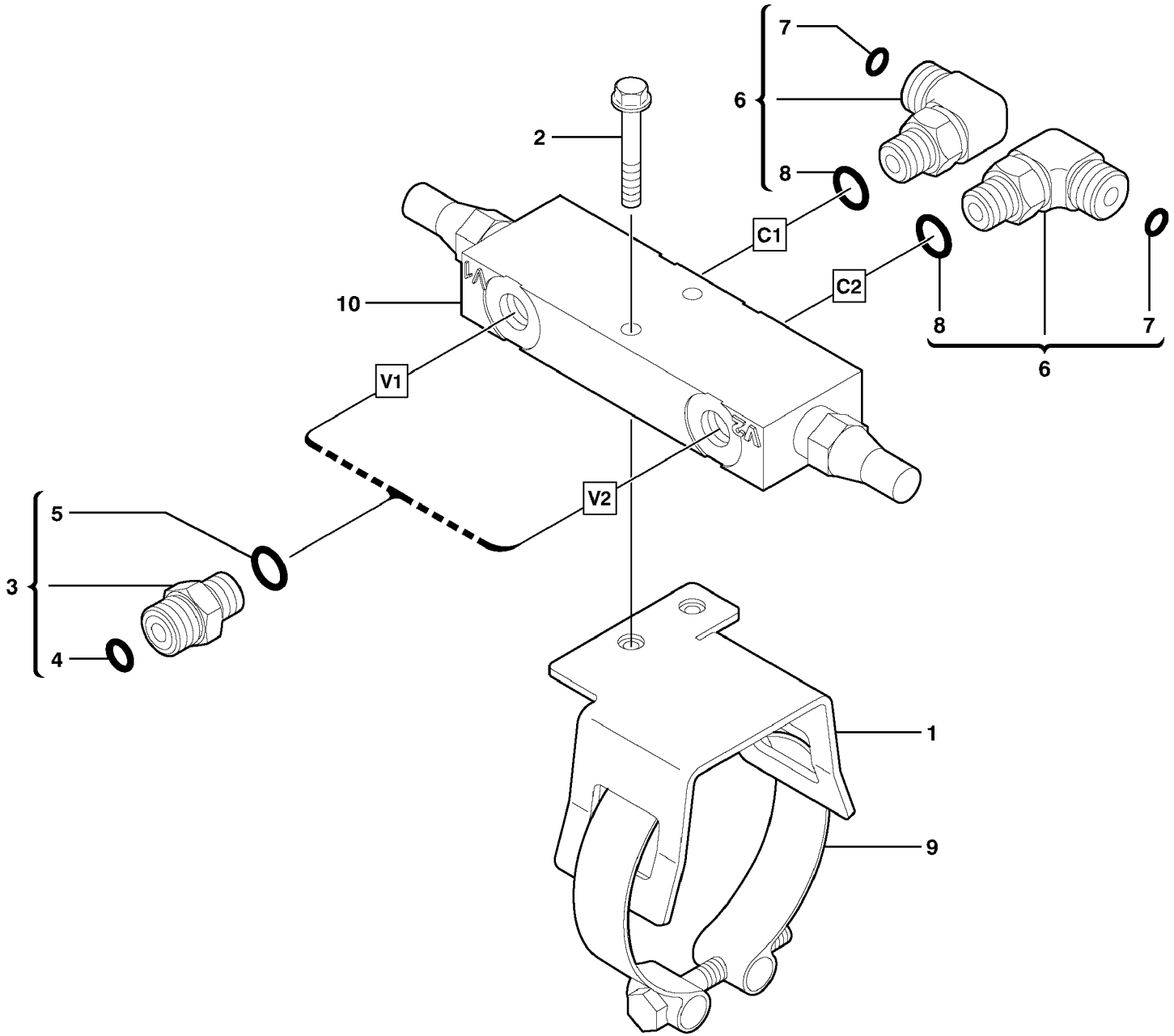

Volvo Construction Equipment

1010587

Fig.	Part No.	Quantity 1	2	3	PS	KIT	Description	Dénomination	Bezeichnung	품명	Denominación	Notes
1	**VOE 11803034**	1					Valve Support	Support Soupape	Ventilstutze		Apoyo Valvula	
2	**VOE 965212**	2					Screw	Vis	Schraube	스크류	Tornillo	
3	**VOE 935085**	2					Nipple	Raccord	Nippel	니플	Niple	
4	**VOE 4880492**	1					•O-ring	•Joint Torique	•O-Ring	• 오링	•Junta torica	
5	**VOE 932039**	1					•O-ring	•Joint Torique	•O-Ring	• 오링	•Junta torica	
6	**VOE 935069**	2					Elbow nipple	Raccord angulaire	Winkelnippel	엘보 니플	Niple angular	
7	**VOE 4881722**	1					•O-ring	•Joint Torique	•O-Ring	• 오링	•Junta torica	
8	**VOE 4880492**	1					•O-ring	•Joint Torique	•O-Ring	• 오링	•Junta torica	
9	**VOE 11804502**	1					Clamp	Pince Serrage	Klemme	클램프	Abrazadera	
10	**VOE 11802194**	1					Valve	Soupape	Ventil	밸브	Valvula	

1	**602.10151**	
2		
3		
4		
5		

Válvula de equilibrio (cilindro excéntrico)
균형 밸브 (오프셋 실린더)
Ausgleichventil (Versetzungszylinder)
Valve d'équilibrage (vérin de déport latéral)
Balancing valve (offset cylinder)

Catalogue id **20048**	Group **912**
Illustr. No **1010587**	Section **530**
Issue **VOE 74C9920048**	Page **389**

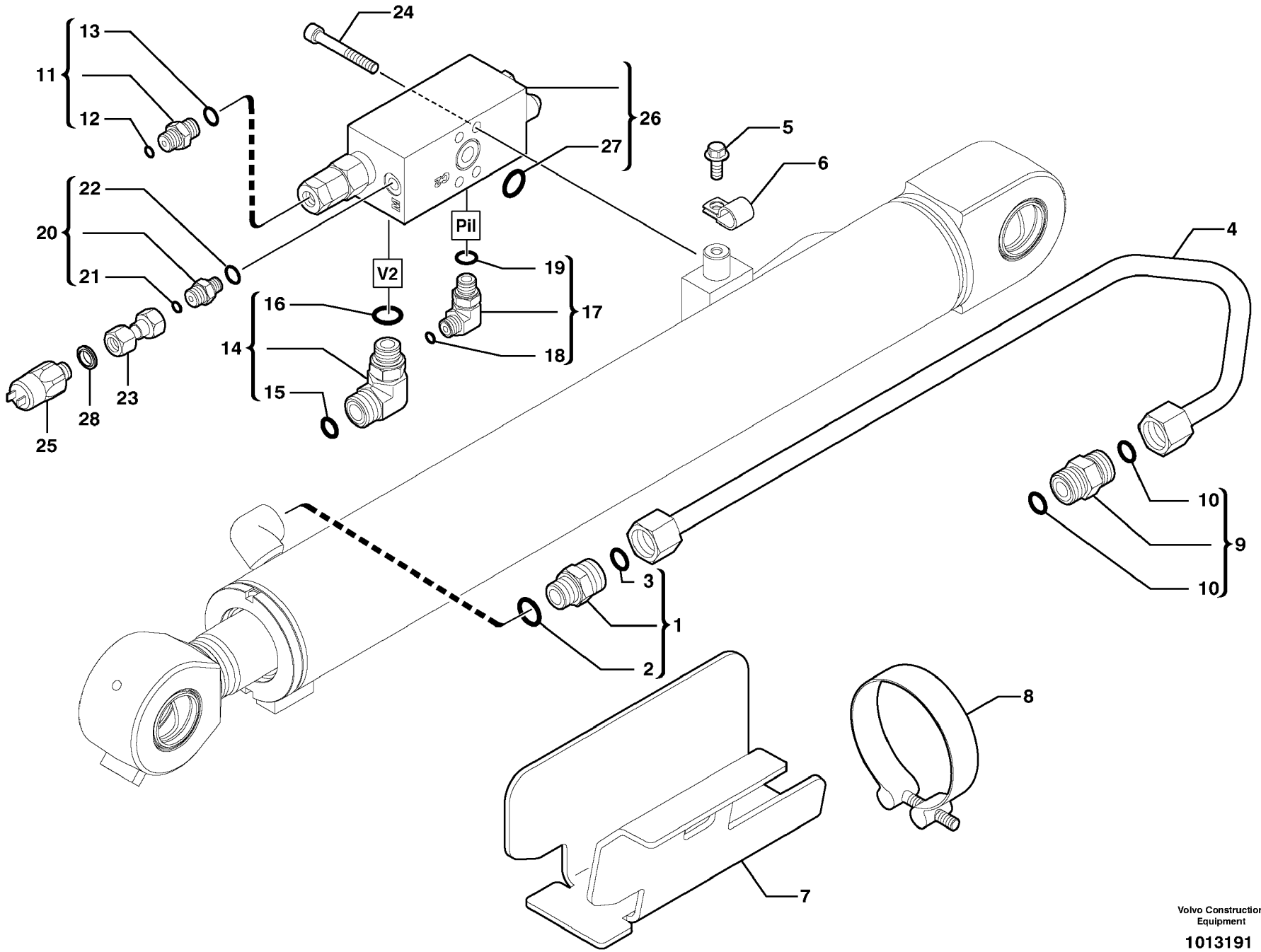

Volvo Construction Equipment

1013191

Fig.	Part No.	Quantity 1	2	3	PS	KIT	Description	Dénomination	Bezeichnung	품명	Denominación	Notes
1	**VOE 11802734**	1					Nipple	Raccord	Nippel	니플	Niple	
2	**PJ 5600203**	1					•Seal	•Joint	•Dichtring	• 시일	•Junta	
3	**VOE 4880663**	1					•O-ring	•Joint Torique	•O-Ring	• 오링	•Junta torica	
4	**VOE 11802733**	1					Tube	Tube	Rohr	튜브	Tubo	
5	**VOE 946173**	1			SS		Screw	Vis	Schraube	스크류	Tornillo	
6	**VOE 980614**	1					Clamp	Pince Serrage	Klemme	클램프	Abrazadera	
7	**VOE 11802857**	1					Valve Support	Support Soupape	Ventilstutze		Apoyo Valvula	
8	**VOE 11800738**	1					Clamp	Collier serrage	Klemme	클램프	Abrazadera	
9	**VOE 935665**	1					Nipple	Raccord	Nippel	니플	Niple	
10	**VOE 4880493**	2					•O-ring	•Joint Torique	•O-Ring	• 오링	•Junta torica	
11	**VOE 13933858**	1					Union	Teton Connexion	Anschlussnippel	유니언	Niple Conexcion	
12	**VOE 4881722**	1					•O-ring	•Joint Torique	•O-Ring	• 오링	•Junta torica	
13	**VOE 932039**	1					•O-ring	•Joint Torique	•O-Ring	• 오링	•Junta torica	
14	**VOE 935076**	1					Elbow Nipple	Raccord angulaire	Winkelnippel	엘보 니플	Niple Angular	
15	**VOE 4880663**	1					•O-ring	•Joint Torique	•O-Ring	• 오링	•Junta torica	
16	**VOE 932040**	1					•O-ring	•Joint Torique	•O-Ring	• 오링	•Junta torica	
17	**VOE 13933857**	1					Elbow Nipple	Raccord angulaire	Winkelnippel	엘보 니플	Niple Angular	
18	**VOE 4881722**	1					•O-ring	•Joint Torique	•O-Ring	• 오링	•Junta torica	
19	**VOE 932039**	1					•O-ring	•Joint Torique	•O-Ring	• 오링	•Junta torica	
20	**VOE 935082**	1					Nipple	Raccord	Nippel	니플	Niple	
21	**VOE 4881722**	1					•O-ring	•Joint Torique	•O-Ring	• 오링	•Junta torica	
22	**VOE 932037**	1					•O-ring	•Joint Torique	•O-Ring	• 오링	•Junta torica	
23	**VOE 11802909**	1					Pressure Connection	Raccord de refoulem.	Druckanschluss	압력 연결장치	Conexión de presión	
24	**VOE 984346**	1					Allen Head Screw	Vis à six pans creux	Inbusschraube	알렌 헤드 나사	Tornillo tipo Allen	
25	**VOE 11803151**	1					Pressure Switch	Mano contact	Druckschalter	압력 스위치	Manocontacto	
26	**VOE 11802856**	1					Safety valve	Soupape surete	Sicherheitsvent	안전 밸브	Valv seguridad	
27	**VOE 11713797**	1					•O-ring	•Joint Torique	•O-Ring	• 오링	•Junta torica	
28	**VOE 943907**	1			SS		Gasket	Joint	Dichtung	가스켓	Junta	

1	**602.10151**		**Válvula de seguridad (cilindro de pluma)** 안전 벨트 (붐 실린더) **Sicherheitsventil (Auslegerzylinder)** **Valve de sécurité (vérin de flèche)** **Safety valve (boom cylinder)**
2			
3			
4			
5			

Catalogue id	Group
20048	**912**
Illustr. No	Section
1013191	**600**
Issue	Page
VOE 74C9920048	**391**

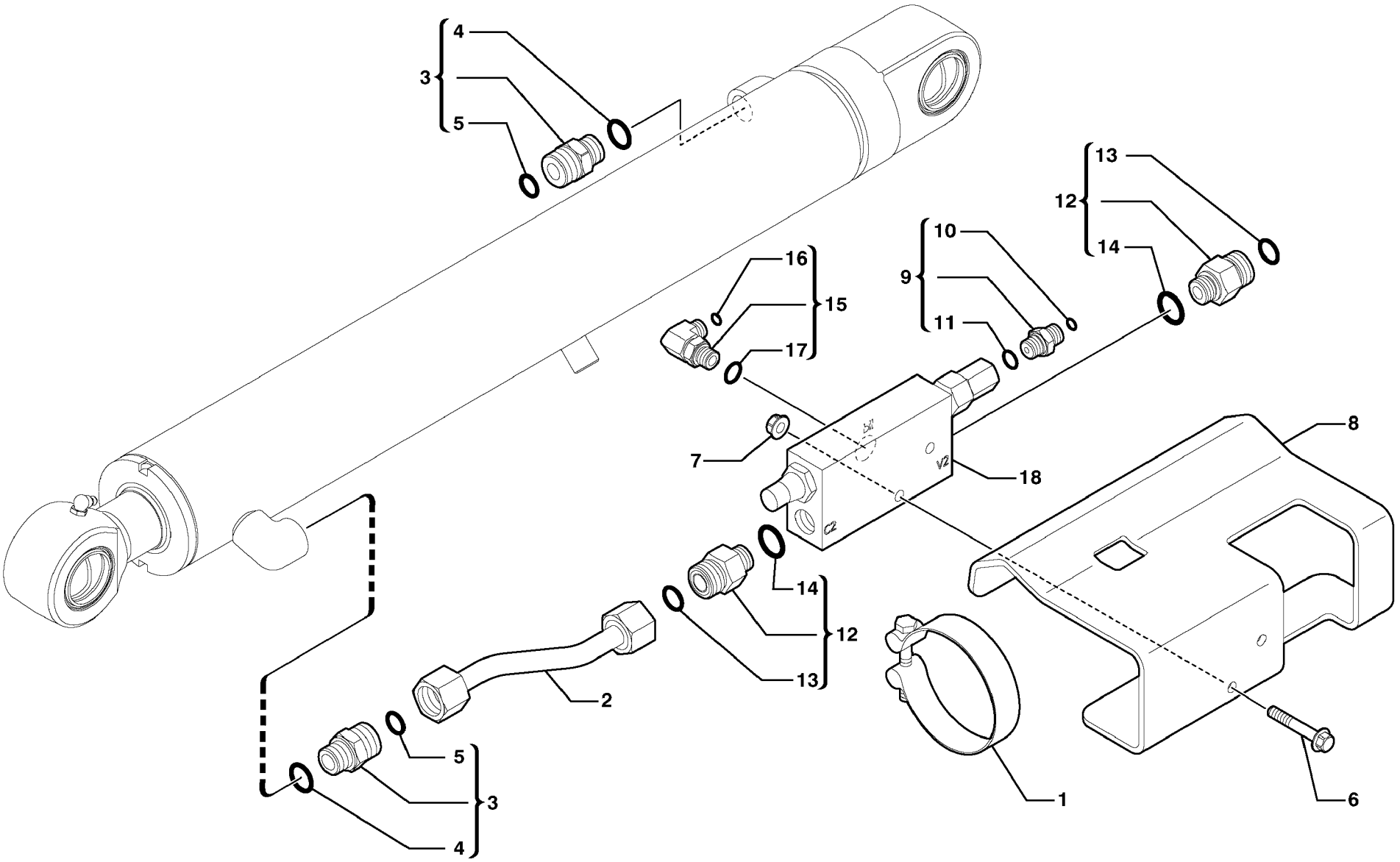

Volvo Construction Equipment

1012528

Fig.	Part No.	Quantity 1	2	3	PS	KIT	Description	Dénomination	Bezeichnung	품명	Denominación	Notes
1	**VOE 11803636**	1					Clamp	Pince Serrage	Klemme	클램프	Abrazadera	
2	**VOE 11803639**	1					Tube	Tube	Rohr	튜브	Tubo	
3	**VOE 11802734**	2					Nipple	Raccord	Nippel	니플	Niple	
4	**PJ 5600203**	1					•Seal	•Joint	•Dichtring	• 시일	•Junta	
5	**VOE 4880663**	1					•O-ring	•Joint Torique	•O-Ring	• 오링	•Junta torica	
6	**VOE 965179**	2					Screw	Vis	Schraube	스크류	Tornillo	
7	**VOE 945408**	2			SS		Flange Lock Nut	Contre écrou bride	Flanschmutter	플랜지 록 너트	Contratuer Embr.	
8	**VOE 11802855**	1					Valve Support	Support Soupape	Ventilstutze		Apoyo Valvula	
9	**VOE 13933858**	1					Union	Teton Connexion	Anschlussnippel	유니언	Niple Conexcion	
10	**VOE 4881722**	1					•O-ring	•Joint Torique	•O-Ring	• 오링	•Junta torica	
11	**VOE 932039**	1					•O-ring	•Joint Torique	•O-Ring	• 오링	•Junta torica	
12	**VOE 935094**	2					Nipple	Raccord	Nippel	니플	Niple	
13	**VOE 4880663**	1					•O-ring	•Joint Torique	•O-Ring	• 오링	•Junta torica	
14	**VOE 932040**	1					•O-ring	•Joint Torique	•O-Ring	• 오링	•Junta torica	
15	**VOE 13933857**	1					Elbow Nipple	Raccord angulaire	Winkelnippel	엘보 니플	Niple Angular	
16	**VOE 4881722**	1					•O-ring	•Joint Torique	•O-Ring	• 오링	•Junta torica	
17	**VOE 932039**	1					•O-ring	•Joint Torique	•O-Ring	• 오링	•Junta torica	
18	**VOE 11802437**	1					Valve	Soupape	Ventil	밸브	Valvula	

1	**602.10151**	
2		
3		
4		
5		

Válvula de seguridad (cilindro de brazo)
안전 밸브 (암 실린더)
Sicherheitsventil (Stielzylinder)
Valve de sécurité (vérin de balancier)
Safety valve (dipper arm cylinder)

Catalogue id **20048**	Group **912**
Illustr. No **1012528**	Section **700**
Issue **VOE 74C9920048**	Page **393**

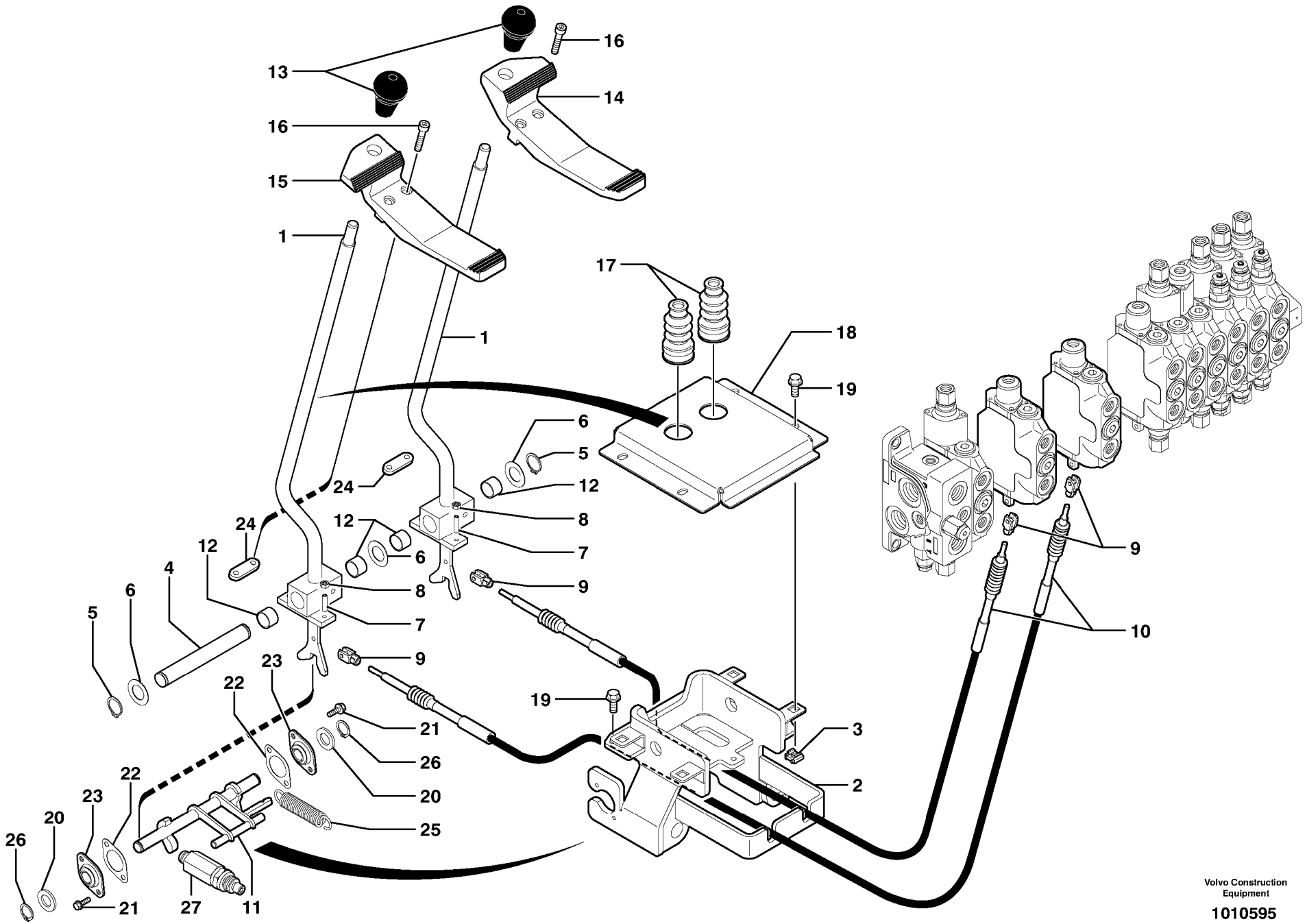

Volvo Construction Equipment

1010595

Fig.	Part No.	Quantity 1	2	3	PS	KIT	Description	Dénomination	Bezeichnung	품명	Denominación	Notes
1	**VOE 11802123**	2					Control Lever	Levier Commande	Bedienungshebel	컨트롤 레버	Palanca Mando	
2	**VOE 11802176**	1					Support	Support	Stütze	서포트	Apoyo	
3	**VOE 11802283**	4					Nut	Ecrou	Mutter	너트	Tuerca	
4	**VOE 11802173**	1					Pin	Goupille	Zapfen	핀	Pasador	
5	**VOE 914454**	2					Snap Ring	Circlip	Nutring	스냅 링	Circlip	
6	**VOE 11802678**	3					Washer	Rondelle	Scheibe	와셔	Arandela	
7	**VOE 963055**	4					Screw	Vis	Schraube	스크류	Tornillo	
8	**VOE 945407**	4			SS		Flange nut	Ecrou accouple.	Bundmutter	플랜지 너트	Tuerca embridad	
9	**VOE 11802559**	4					Yoke	Chape	Joch	요크	Horquilla	
10	**VOE 11802633**	2					Cable	Câble	Seil	케이블	Cable	
11	**VOE 11802177**	1					Relay	Relais	Relais	릴레이	Rele	
12	**VOE 11802685**	4					Bushing	Bague	Buchse	부싱	Casquillo	
13	**VOE 11803169**	2					Handle	Poignee	Handgriff	핸들	Manilla	
14	**VOE 11802679**	1					Plastic pedal	Pédale plastique	Kunststoffpedal	플래스틱 페달	Pedal de plástico	
15	**VOE 11802680**	1					Plastic pedal	Pédale plastique	Kunststoffpedal	플래스틱 페달	Pedal de plástico	
16	**VOE 984076**	4					Allen Head Screw	Vis à six pans creux	Inbusschraube	알렌 헤드 나사	Tornillo tipo Allen	
17	**VOE 11802681**	2					Bellow	Soufflet	Faltenbalg	벨로우	Fuelle	
18	**VOE 11802166**	1					Cover	Capot	Haube	커버	Capo	
19	**VOE 946173**	7			SS		Screw	Vis	Schraube	스크류	Tornillo	
20	**VOE 955900**	2			SS		Washer	Rondelle	Scheibe	와셔	Arandela	
21	**VOE 946934**	4					Screw	Vis	Schraube	스크류	Tornillo	
22	**VOE 11802682**	2					Shim	Cale d'épaisseur	Passcheibe	심	Arandela Ajuste	
23	**VOE 11802683**	2					Swing Bearing	Palier A Rotule	Schwenklager		Cojinete Movil	
24	**VOE 11802684**	2					Flange	Flasque	Flansch	플랜지	Brida	
25	**VOE 11802566**	1					Spring	Ressort	Feder	스프링	Muelle	
26	**VOE 914449**	2					Snap Ring	Circlip	Nutring	스냅 링	Circlip	
27	**VOE 14518918**	1					Cylinder	Verin	Zylinder	실린더	Cilindro	

1	**602.10151**	
2		
3		
4		
5		

Palancas de mando : traslación
조작 레버 : 주행
Steuerhebel : Fahrbewegung
Leviers de commande : translation
Control levers : travelling

Catalogue id **20048**	Group **912**
Illustr. No **1010595**	Section **800**
Issue **VOE 74C9920048**	Page **395**

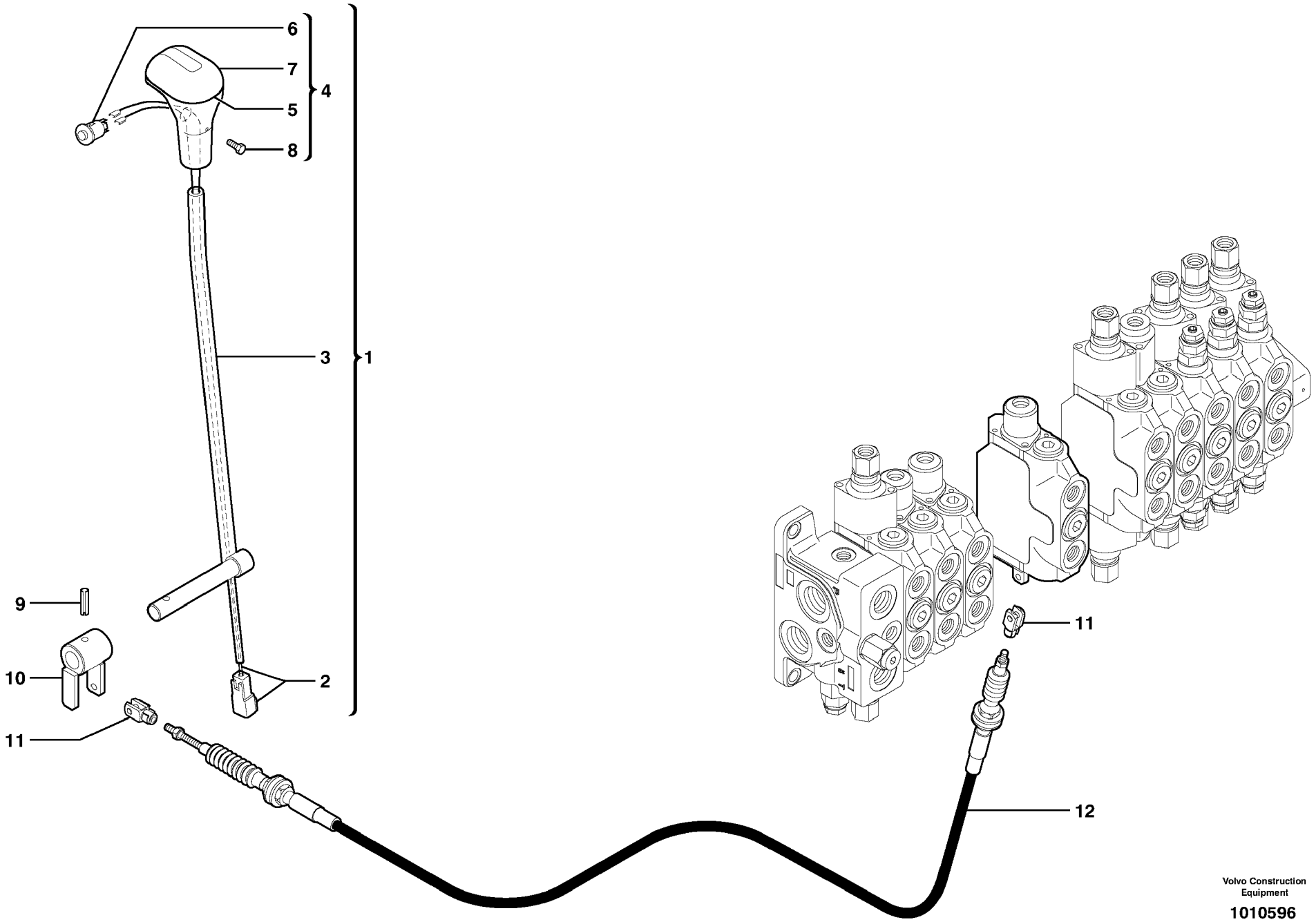

Volvo Construction Equipment

1010596

Fig.	Part No.	Quantity 1	2	3	PS	KIT	Description	Dénomination	Bezeichnung	품명	Denominación	Notes
1	**VOE 11801994**	1					Lever	Levier	Hebel	레버	Palanca	
2	**VOE 11802563**	1					•Wire harness	•Faisceau electrique	•Kabelbaum	• 배선	•Manojo cables	
3		1			NS		•Lever	•Levier	•Hebel	• 레버	•Palanca	ORDER ITEM NO 1
4	**VOE 11802562**	1					•Handle	•Poignee	•Handgriff	• 핸들	•Manilla	
5	**PJ 7413002**	1					••Seal	••Joint	••Dichtring	•• 시일	••Junta	
6	**PJ 7413003**	1					••Switch	••Commutateur	••Schalter	•• 스위치	••Contactor	
7		1			NS		••Handle	••Poignee	••Handgriff	•• 핸들	••Manilla	ORDER ITEM NO 4
8	**PJ 7413004**	1					••Screw	••Vis	••Schraube	•• 스크류	••Tornillo	
9	**VOE 951979**	1			SS		Spring pin	Goupille roulée	Spannstift	스프링 핀	Pasador	
10	**VOE 11802452**	1					Relay	Relais	Relais	릴레이	Rele	
11	**VOE 11802559**	2					Yoke	Chape	Joch	요크	Horquilla	
12	**VOE 11802444**	1					Control Cable	Câble Commande	Regelzug	제어 케이블	Alambre Mando	

1	**602.10151**	
2		
3		
4		
5		

Palanca de mando : hoja topadora
조작 레버 : 도자 삽날
Steuerhebel : Planierschild
Levier de commande : lame niveleuse
Control lever : dozer blade

Catalogue id	Group
20048	**912**
Illustr. No **1010596**	Section **830**
Issue **VOE 74C9920048**	Page **397**

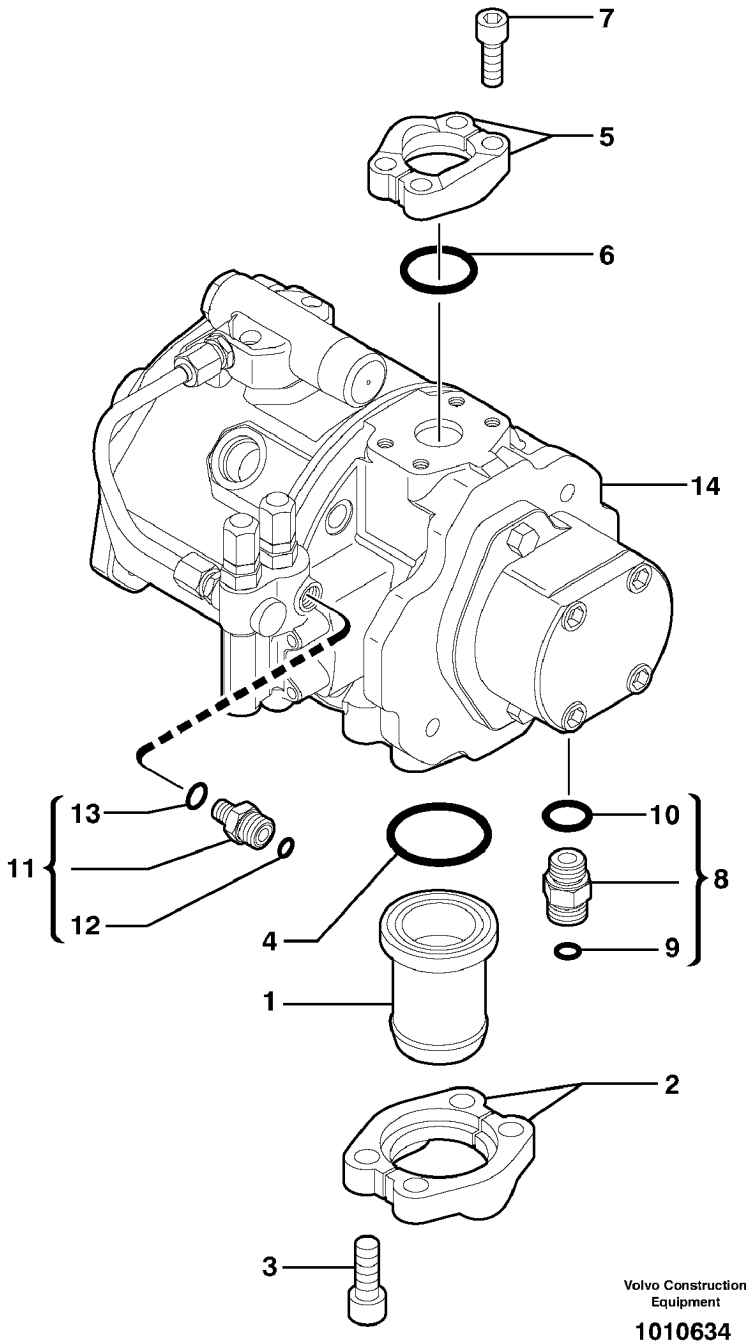
7
5
6
14
13
11
12
10
8
9
4
1
2
3
Volvo Construction Equipment
1010634

Fig.	Part No.	Quantity 1	2	3	PS	KIT	Description	Dénomination	Bezeichnung	품명	Denominación	Notes
1	**VOE 11802388**	1					Suction line	Conduit aspiration	Saugleitung		Conducto aspiracion	
2	**VOE 11803246**	2					Flange Half	Demi-bride	Flanschhälfte	플랜지 반쪽	Media brida	
3	**VOE 984088**	4					Bolt	Boulon	Bolzen	볼트	Perno	
4	**VOE 944708**	1					O-ring	Joint Torique	O-Ring	오링	Junta torica	
5	**VOE 11803245**	2					Flange Half	Demi-bride	Flanschhälfte	플랜지 반쪽	Media brida	
6	**VOE 944706**	1					O-ring	Joint Torique	O-Ring	오링	Junta torica	
7	**VOE 984080**	4					Allen Hd Screw	Vis A 6 Pans Cr	Inbusschraube	스크류	Torn Hex Embut	
8	**VOE 13933923**	1					Nipple	Raccord	Nippel	니플	Niple	
9	**VOE 4880493**	1					•O-ring	•Joint Torique	•O-Ring	• 오링	•Junta torica	
10	**VOE 932040**	1					•O-ring	•Joint Torique	•O-Ring	• 오링	•Junta torica	
11	**VOE 935084**	1					Nipple	Raccord	Nippel	니플	Niple	
12	**VOE 4880492**	1					•O-ring	•Joint Torique	•O-Ring	• 오링	•Junta torica	
13	**VOE 932037**	1					•O-ring	•Joint Torique	•O-Ring	• 오링	•Junta torica	
14		1					Hydraulic Pump	Pompe Hydraulique	Hydraulikpumpe	유압 펌프	Bomba Hidraulica	See group 913, Page 401

1	**602.10151**		**Instalación de bomba** **유압 펌프 및 장착 부품** **Pumpeninstallation** **Installation de pompe** **Pump installation**	Catalogue id **20048**	Group **913**
2				Illustr. No **1010634**	Section **100**
3				Issue **VOE 74C9920048**	Page **399**
4					
5					

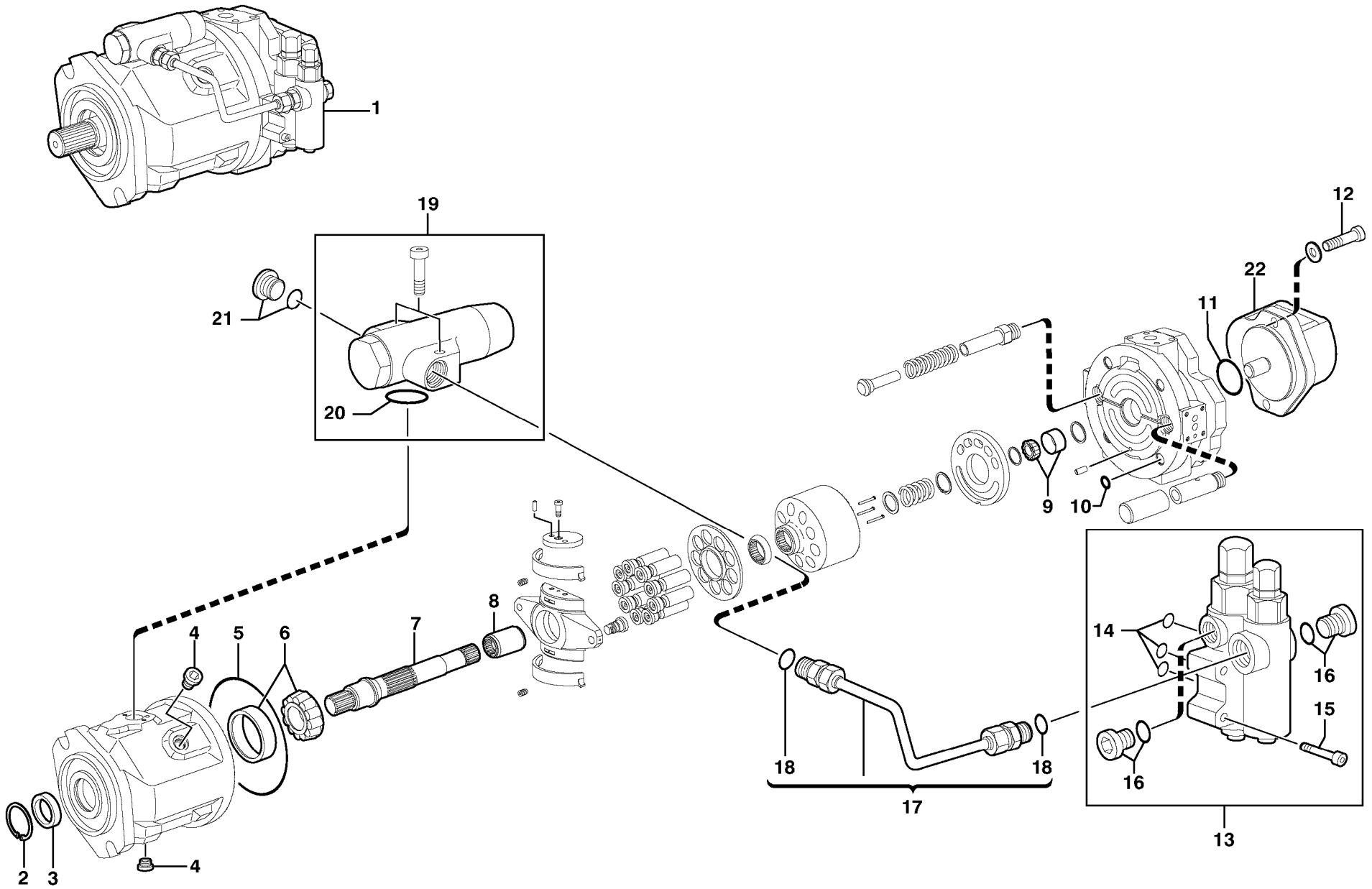

Volvo Construction Equipment

1010635

Fig.	Part No.	Quantity 1	2	3	PS	KIT	Description	Dénomination	Bezeichnung	품명	Denominación	Notes
1	**VOE 11801938**	1					Pump	Pompe	Pumpe	펌프	Bomba	
2	**VOE 11988673**	1					•Ring	•Anneau	•Ring	• 링	•Anillo	
3	**VOE 11712916**	1					•Sealing ring	•Bague d'étanchéité	•Runddichtring	• 시일 링	•Anillo reten	
4	**VOE 11708233**	2					•Plug	•Bouchon	•Stopfen	• 플러그	•Tapon	
5	**VOE 11713278**	1					•O-ring	•Joint Torique	•O-Ring	• 오링	•Junta torica	
6	**VOE 11998854**	1					•Roller Bearing	•Roulement rouleaux	•Rollenlager	• 롤러 베어링	•Cojinet Rodillo	
7	**VOE 11713276**	1					•Shaft	•Arbre	•Welle	• 샤프트	•Arbol	
8	**VOE 11713277**	1					•Bushing	•Bague	•Buchse	• 부싱	•Casquillo	
9	**VOE 11998855**	1			SS		•Roller Bearing	•Roulement rouleaux	•Rollenlager	• 롤러 베어링	•Cojinet Rodillo	
10	**VOE 11713279**	4					•O-ring	•Joint Torique	•O-Ring	• 오링	•Junta torica	
11	**VOE 11709737**	1					•O-ring	•Joint Torique	•O-Ring	• 오링	•Junta torica	
12	**VOE 11712908**	2					•Hexagon screw	•Vis tête hexagonale	•Sechskantschraube	• 스크류	•Tornillo hexago	
13	**VOE 11713271**	1					•Regulator	•Regulateur	•Regler	• 레귤레이터	•Regulador	
14	**VOE 11713272**	3					••O-ring	••Joint Torique	••O-Ring	•• 오링	••Junta torica	
15	**VOE 11713273**	4					••Screw	••Vis	••Schraube	•• 스크류	••Tornillo	
16	**VOE 11713274**	2					••Plug	••Bouchon	••Stopfen	•• 플러그	••Tapon	
17	**VOE 11704811**	1					•Tube Assembly	•Tuyauterie	•Rohrleitung	• 도관	•Tuberia	
18		2			NS		••O-ring	••Joint Torique	••O-Ring	•• 오링	••Junta torica	
19	**VOE 11709729**	1					•Control Valve	•Valve Commande	•Steuerventil	• 제어 밸브	•Valvula Mando	(VOE 11713275)
20	**VOE 11709741**	1					••O-ring	••Joint Torique	••O-Ring	•• 오링	••Junta torica	
21	**VOE 11713274**	1					•Plug	•Bouchon	•Stopfen	• 플러그	•Tapon	
22	**VOE 11712909**	1					•Gear Pump	•Pomp.engrenages	•Zahnradpumpe	• 기어 펌프	•Bomba Engranaje	

1	**602.10151**	
2		
3		
4		
5		

Bomba hidráulica
유압 펌프
Hydraulikpumpe
Pompe hydraulique
Hydraulic pump

Catalogue id	Group
20048	**913**
Illustr. No **1010635**	Section **110**
Issue **VOE 74C9920048**	Page **401**

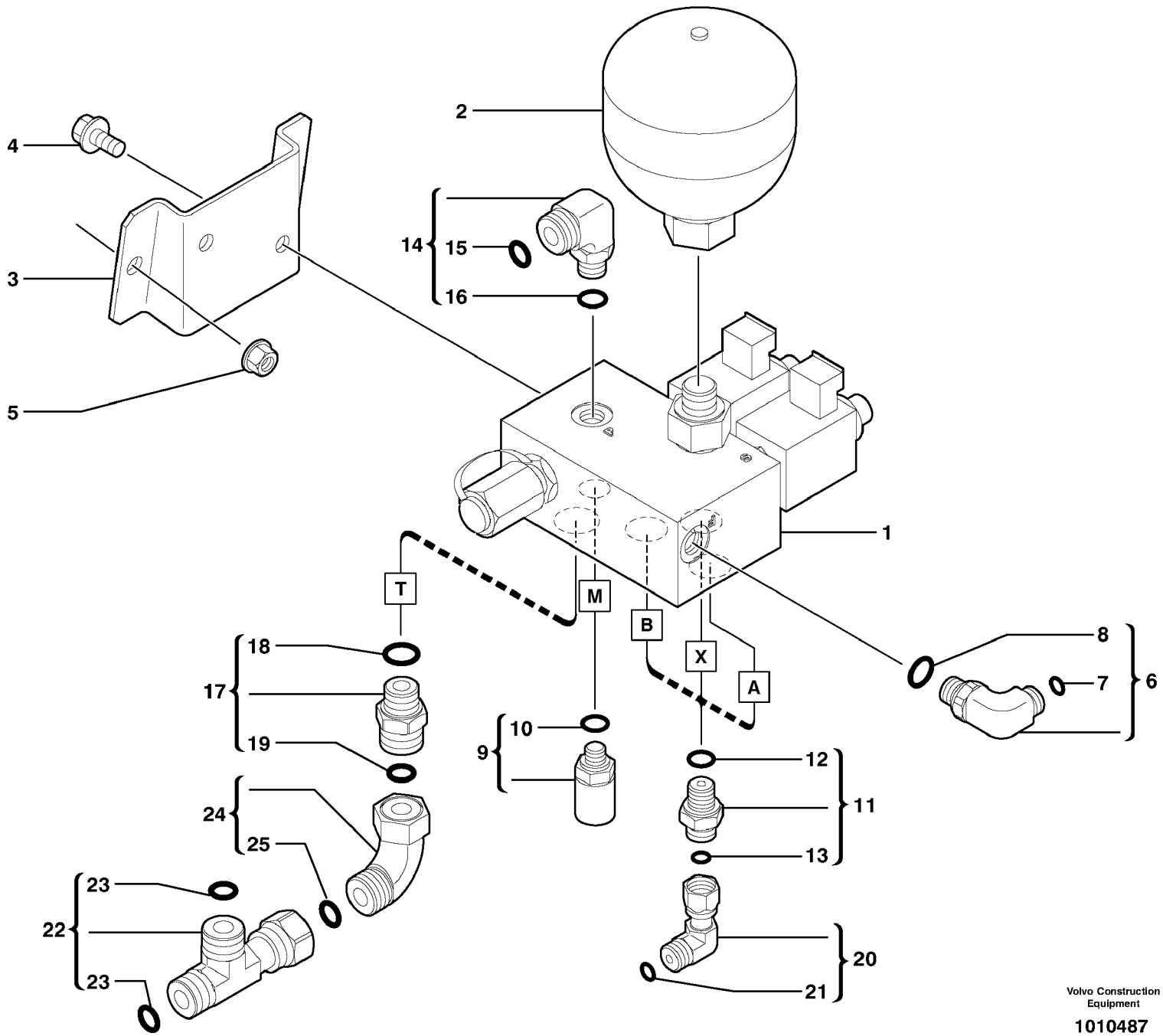

Volvo Construction Equipment

1010487

Fig.	Part No.	Quantity 1	2	3	PS	KIT	Description	Dénomination	Bezeichnung	품명	Denominación	Notes
1		1					Block	Bloc	Block	블록	Bloque	See group 914, Page 405
2		1					Accumulator	Accumulateur	Speicher	어큐뮬레이터	Acumulador	See group 914, Page 413
3	**VOE 11800888**	1					Plate	Plaque	Platte	플레이트	Placa	
4	**VOE 946440**	2					Flange screw	Vis à bride	Flanschschraube	플랜지 스크류	Torn embridado	
5	**VOE 945408**	2			SS		Flange Lock Nut	Contre écrou bride	Flanschmutter	플랜지 록 너트	Contratuer Embr	
6	**VOE 11802842**	1					Elbow	Coude	Winkelstueck	엘보	Tubo acodado	
7	**VOE 4881722**	1					•O-ring	•Joint Torique	•O-Ring	• 오링	•Junta torica	
8		3			NS		•Seal	•Joint	•Dichtring	• 시일	•Junta	
9	**VOE 936440**	1					Testing Nipple	Raccord contrôle	Prufnippel	테스트 니플	Niple Medicion	
10		1			NS		•Seal	•Joint	•Dichtring	• 시일	•Junta	
11	**VOE 11802655**	3					Union	Teton Connexion	Anschlussnippel	유니언	Niple Conexcion	
12	**PJ 5600201**	1					•Seal	•Joint	•Dichtring	• 시일	•Junta	
13	**VOE 4881722**	1					•O-ring	•Joint Torique	•O-Ring	• 오링	•Junta torica	
14	**VOE 11803153**	1					Nipple	Raccord	Nippel	니플	Niple	
15	**VOE 4880493**	1					•O-ring	•Joint Torique	•O-Ring	• 오링	•Junta torica	
16		3			NS		•Seal	•Joint	•Dichtring	• 시일	•Junta	
17	**VOE 11802650**	1					Union	Teton Connexion	Anschlussnippel	유니언	Niple Conexcion	
18	**PJ 5600202**	1					•Seal	•Joint	•Dichtring	• 시일	•Junta	
19	**VOE 4880493**	1					•O-ring	•Joint Torique	•O-Ring	• 오링	•Junta torica	
20	**VOE 13933905**	3					Elbow nipple	Raccord angulaire	Winkelnippel	엘보 니플	Niple angular	
21	**VOE 4881722**	1					•O-ring	•Joint Torique	•O-Ring	• 오링	•Junta torica	
22	**VOE 13933878**	1					Nipple	Raccord	Nippel	니플	Niple	
23	**VOE 4880493**	2					•O-ring	•Joint Torique	•O-Ring	• 오링	•Junta torica	
24	**VOE 13933872**	1					Elbow nipple	Raccord angulaire	Winkelnippel	엘보 니플	Niple angular	
25	**VOE 4880493**	1					•O-ring	•Joint Torique	•O-Ring	• 오링	•Junta torica	

1	**602.10151**	
2		
3		
4		
5		

Instalación del electrovalvula / Acumulador
전자식 밸브 설치 / 어큐뮬레이터
Einbau der Elektroventil / Speicher
Mise en place de l'électrovalve / Accumulateur
Electrovalve installation / Accumulator

Catalogue id	Group
20048	**914**
Illustr. No **1010487**	Section **200**
Issue **VOE 74C9920048**	Page **403**

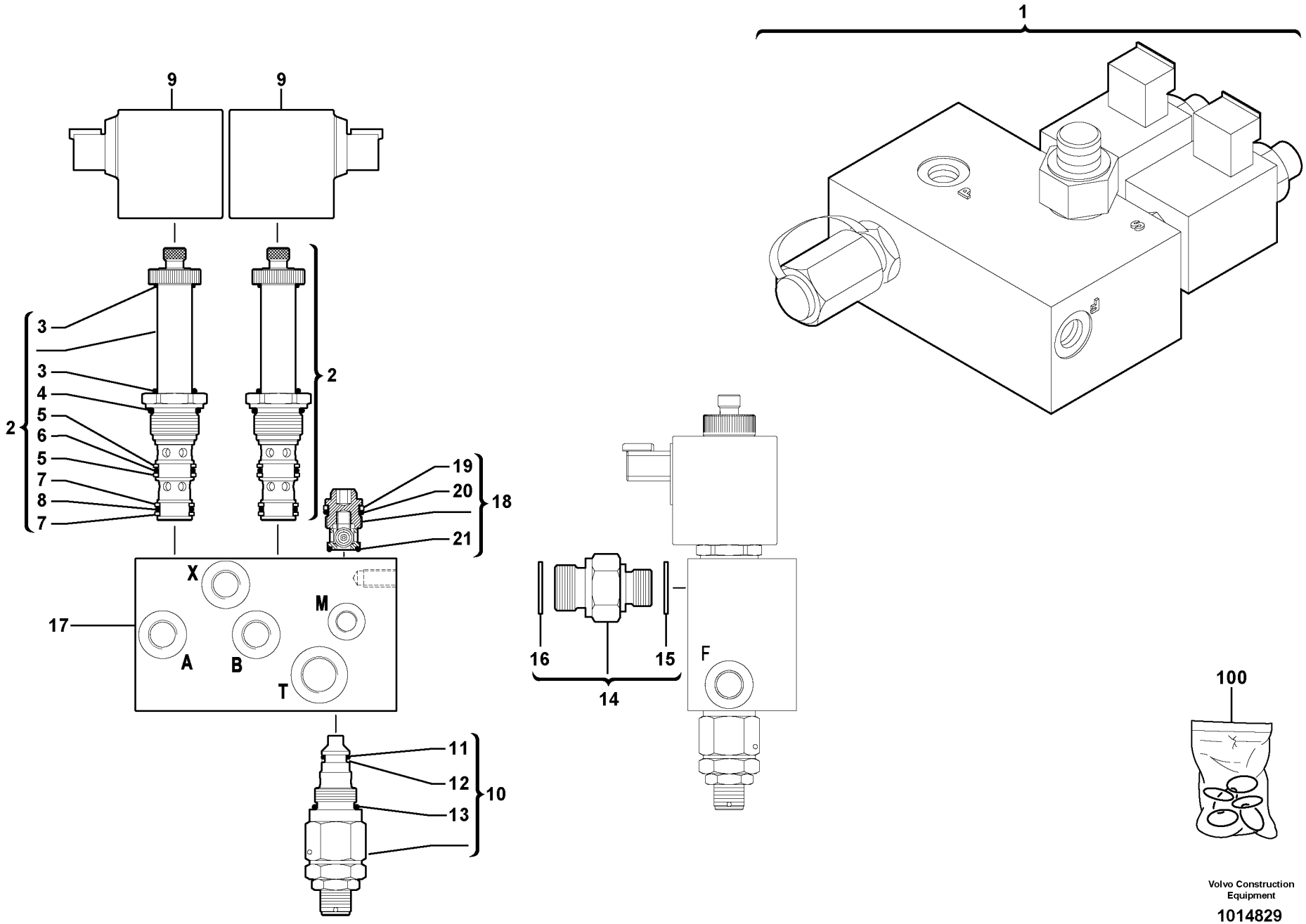

Volvo Construction Equipment

1014829

Fig.	Part No.	Quantity 1	2	3	PS	KIT	Description	Dénomination	Bezeichnung	품명	Denominación	Notes
1	**VOE 11800385**	1					Block	Bloc	Block	블록	Bloque	
2	**VOE 11710881**	2					•Solenoid valve	•Vanne electrom	•Magnetventil	• 솔레노이드 밸브	•Electrovalvula	
3		2			NS	K	••O-ring	••Joint Torique	••O-Ring	•• 오링	••Junta torica	
4		1			NS	K	••O-ring	••Joint Torique	••O-Ring	•• 오링	••Junta torica	
5		2			NS	K	••Back-up ring	••Bague support	••Stützring	•• 백업 링	••Anillo apoyo	
6		1			NS	K	••O-ring	••Joint Torique	••O-Ring	•• 오링	••Junta torica	
7		2			NS	K	••Back-up ring	••Bague support	••Stützring	•• 백업 링	••Anillo apoyo	
8		1			NS	K	••O-ring	••Joint Torique	••O-Ring	•• 오링	••Junta torica	
9	**VOE 11713199**	2					•Solenoid	•Solénoide	•Magnet	• 솔레노이드	•Solenoide	
10	**VOE 11710880**	1					•Relief valve	•Limiteur - pression	•Druckbegrenzer	• 릴리프 밸브	•Limitador presion	
11		1			NS	K	••O-ring	••Joint Torique	••O-Ring	•• 오링	••Junta torica	
12		1			NS	K	••Back-up ring	••Bague support	••Stützring	•• 백업 링	••Anillo apoyo	
13		1			NS	K	••O-ring	••Joint Torique	••O-Ring	•• 오링	••Junta torica	
14	**VOE 11713201**	1					•Nipple	•Raccord	•Nippel	• 니플	•Niple	
15		1			NS	K	••Seal	••Joint	••Dichtung	•• 실	••Reten	
16		1			NS	K	••Seal	••Joint	••Dichtung	•• 실	••Reten	
17		1			NS		•Valve Body	•Corps Valve	•Ventilkörper	• 밸브 몸체	•Cuerpo Valvula	ORDER ITEM NO 1
18		1			NS		•Non-return valve	•Clapet antiretour	•Rückschlagventil	• 역지 밸브	•Válvula de control	ORDER ITEM NO 1
19		1			NS	K	••Back-up ring	••Bague support	••Stützring	•• 백업 링	••Anillo apoyo	
20		1			NS	K	••O-ring	••Joint Torique	••O-Ring	•• 오링	••Junta torica	
21		1			NS	K	••O-ring	••Joint Torique	••O-Ring	•• 오링	••Junta torica	
100	**VOE 11710882**	1					Sealing Kit	Jeu Joints	Dichtungssatz	시일 킷	Juego Retenes	KIT

1	**602.10151**		**Electroválvula** 전자 밸브 **Elektroventil** **Electrovalve** **Electrovalve**	Catalogue id **20048**	Group **914**
2				Illustr. No **1014829**	Section **210**
3				Issue **VOE 74C9920048**	Page **405**
4					
5					

VOLVO

ECR38

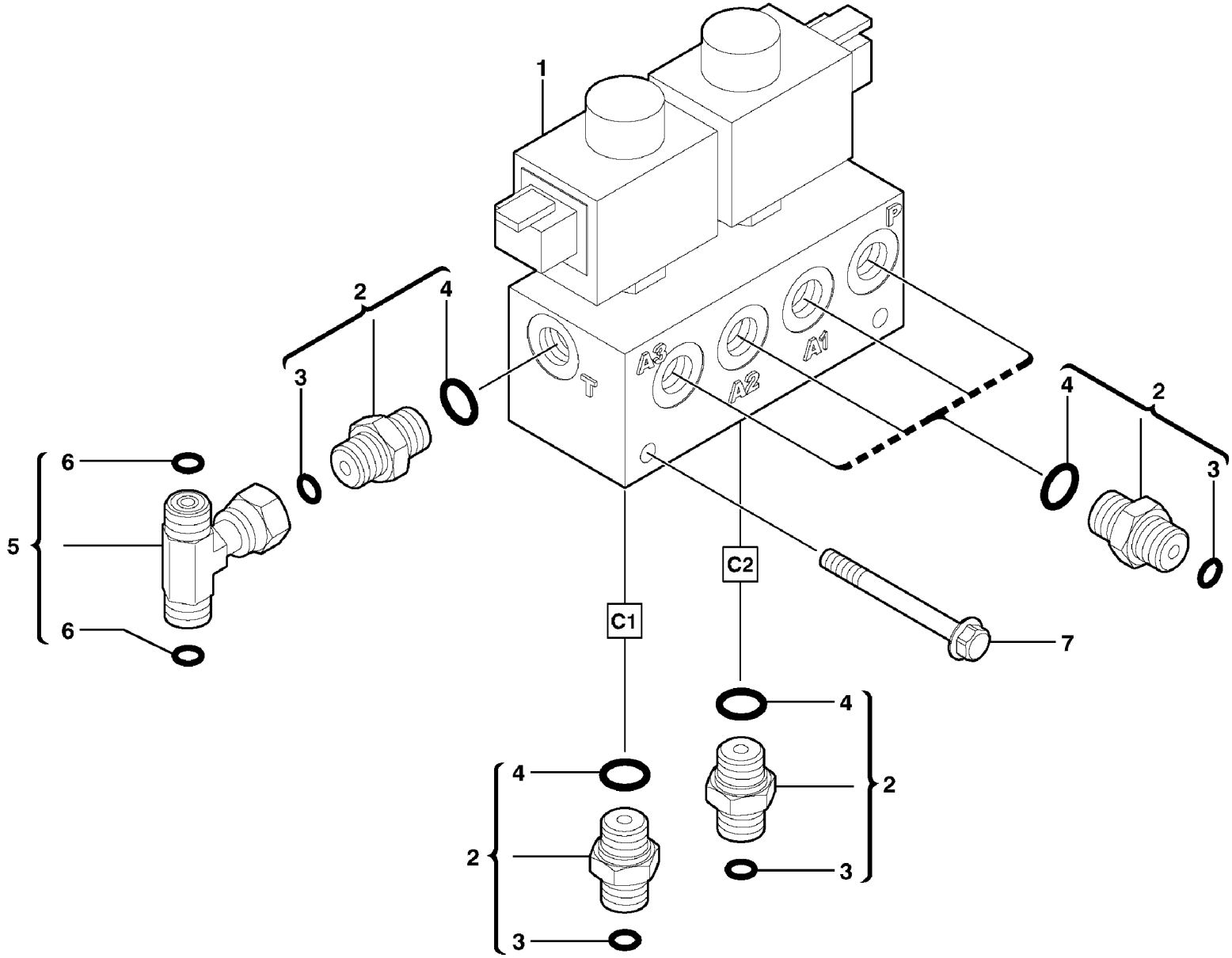

Volvo Construction Equipment

1010534

Fig.	Part No.	Quantity 1	2	3	PS	KIT	Description	Dénomination	Bezeichnung	품명	Denominación	Notes
1		1					Block	Bloc	Block	블록	Bloque	See group 914, Page 409
2	**VOE 13933858**	7					Union	Teton Connexion	Anschlussnippel	유니언	Niple Conexcion	
3	**VOE 4881722**	1					•O-ring	•Joint Torique	•O-Ring	• 오링	•Junta torica	
4	**VOE 932039**	1					•O-ring	•Joint Torique	•O-Ring	• 오링	•Junta torica	
5	**VOE 13933860**	1					T-nipple	Raccord-t	T-Nippel	T- 니플	Niple T	
6	**VOE 4881722**	2					•O-ring	•Joint Torique	•O-Ring	• 오링	•Junta torica	
7	**VOE 965178**	2					Screw	Vis	Schraube	스크류	Tornillo	

1	**602.10151**		**Instalación del electrovalvula** 전자식 밸브 설치 **Einbau der Elektroventile** **Mise en place de l'électrovalve** **Electrovalve installation**
2			
3			
4			
5			

Catalogue id **20048**	Group **914**
Illustr. No **1010534**	Section **400**
Issue **VOE 74C9920048**	Page **407**

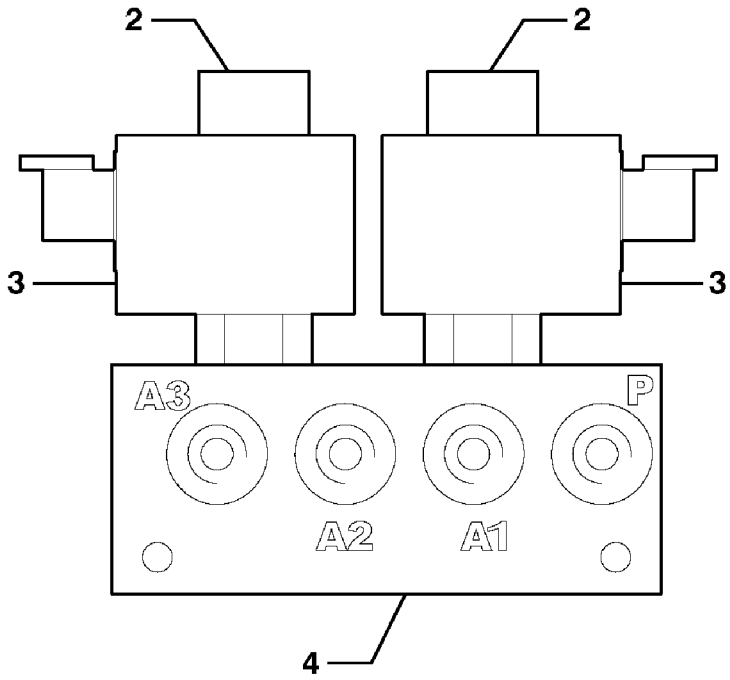

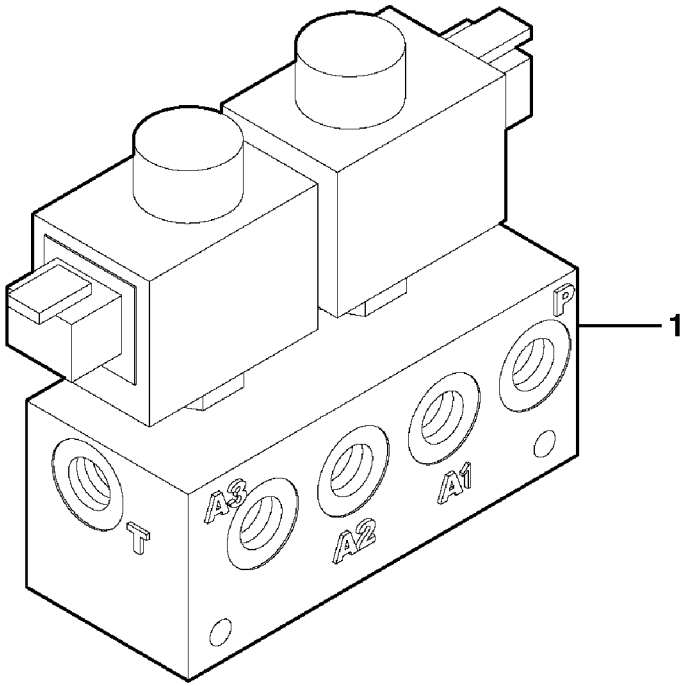

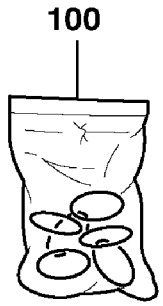

Volvo Construction Equipment

1010535

Fig.	Part No.	Quantity 1	2	3	PS	KIT	Description	Dénomination	Bezeichnung	품명	Denominación	Notes
1	**VOE 11801755**	1					Valve	Soupape	Ventil	밸브	Valvula	2250)
2	**VOE 11713202**	2					•Solenoid valve	•Vanne electrom	•Magnetventil	• 솔레노이드 밸브	•Electrovalvula	
3	**VOE 11713203**	2					•Solenoid	•Solénoide	•Magnet	• 솔레노이드	•Solenoide	
4		1			NS		•Valve Body	•Corps Valve	•Ventilkörper	• 밸브 몸체	•Cuerpo Valvula	ORDER ITEM NO 1
100	**VOE 14527754**	1					Sealing Kit	Jeu Joints	Dichtungssatz	시일 킷	Juego Retenes	

2250) Incl : S/n 602.10579, S/n 602.10580

1	**602.10151** →	**602.10567** →
2		
3		
4		
5		

Electroválvula
전자 밸브
Elektroventil
Electrovalve
Electrovalve

Catalogue id **20048**	Group **914**
Illustr. No **1010535**	Section **410**
Issue **VOE 74C9920048**	Page **409**

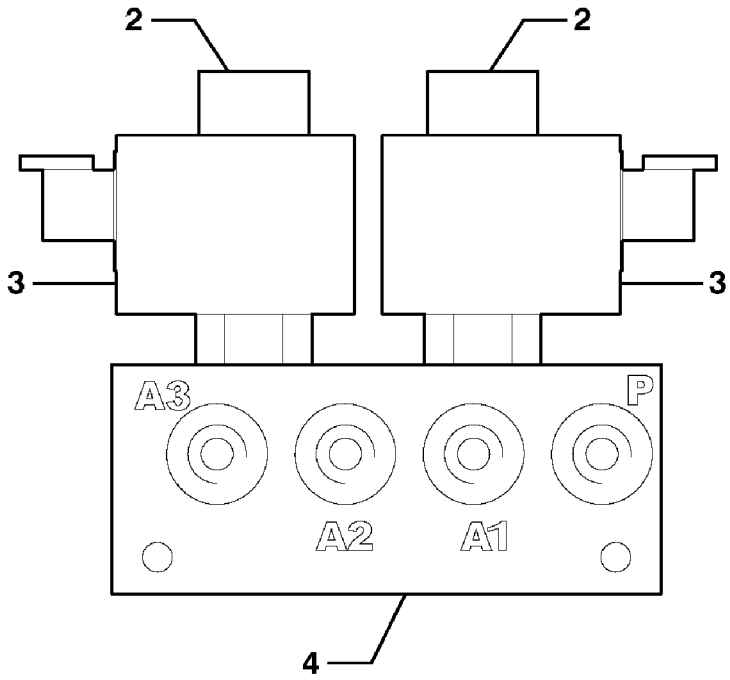

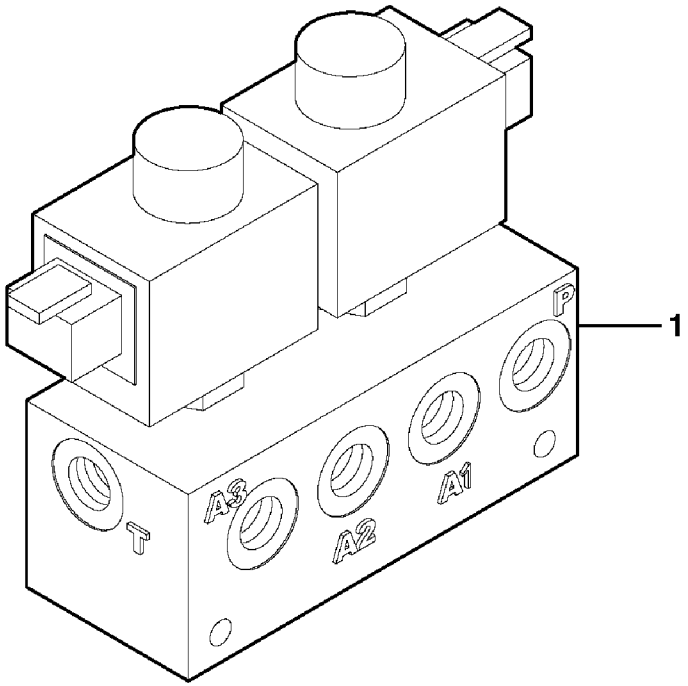

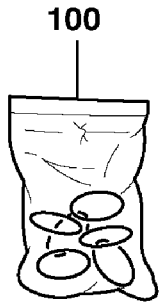

Volvo Construction Equipment

1010535

Fig.	Part No.	Quantity 1	2	3	PS	KIT	Description	Dénomination	Bezeichnung	품명	Denominación	Notes
1	**VOE 11807523**	1					Valve	Soupape	Ventil	밸브	Valvula	2249)
2	**VOE 11715569**	2					•Solenoid valve	•Vanne electrom	•Magnetventil	• 솔레노이드 밸브	•Electrovalvula	
3	**VOE 11713203**	2					•Solenoid	•Solénoide	•Magnet	• 솔레노이드	•Solenoide	
4		1			NS		•Valve Body	•Corps Valve	•Ventilkörper	• 밸브 몸체	•Cuerpo Valvula	ORDER ITEM NO 1
100	**VOE 14527754**	1					Sealing Kit	Jeu Joints	Dichtungssatz	시일 킷	Juego Retenes	

2249) Excl : S/n 602.10579, S/n 602.10580

1	**602.10568** →		**Electroválvula** 전자 밸브 **Elektroventil** **Electrovalve** **Electrovalve**
2			
3			
4			
5			

Catalogue id **20048**	Group **914**
Illustr. No **1010535**	Section **420**
Issue **VOE 74C9920048**	Page **411**

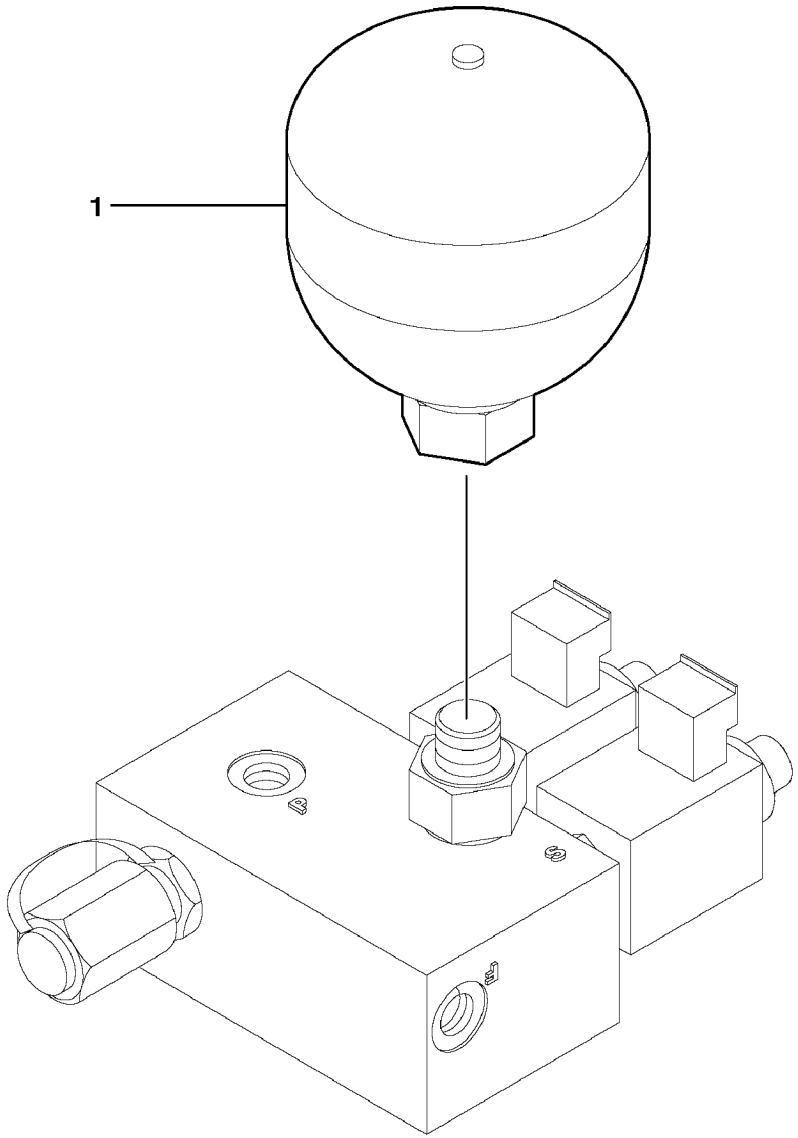

Volvo Construction Equipment

1010489

Fig.	Part No.	Quantity 1	2	3	P S	K I T	Description	Dénomination	Bezeichnung	품명	Denominación	Notes
1	**VOE 11802723**	1					Accumulator	Accumulateur	Speicher	어큐뮬레이터	Acumulador	

1	**602.10151**		**Acumulador** 어큐뮬레이터 **Speicher** **Accu** **Accumulator**	Catalogue id **20048**	Group **914**
2				Illustr. No **1010489**	Section **500**
3					
4				Issue **VOE 74C9920048**	Page **413**
5					

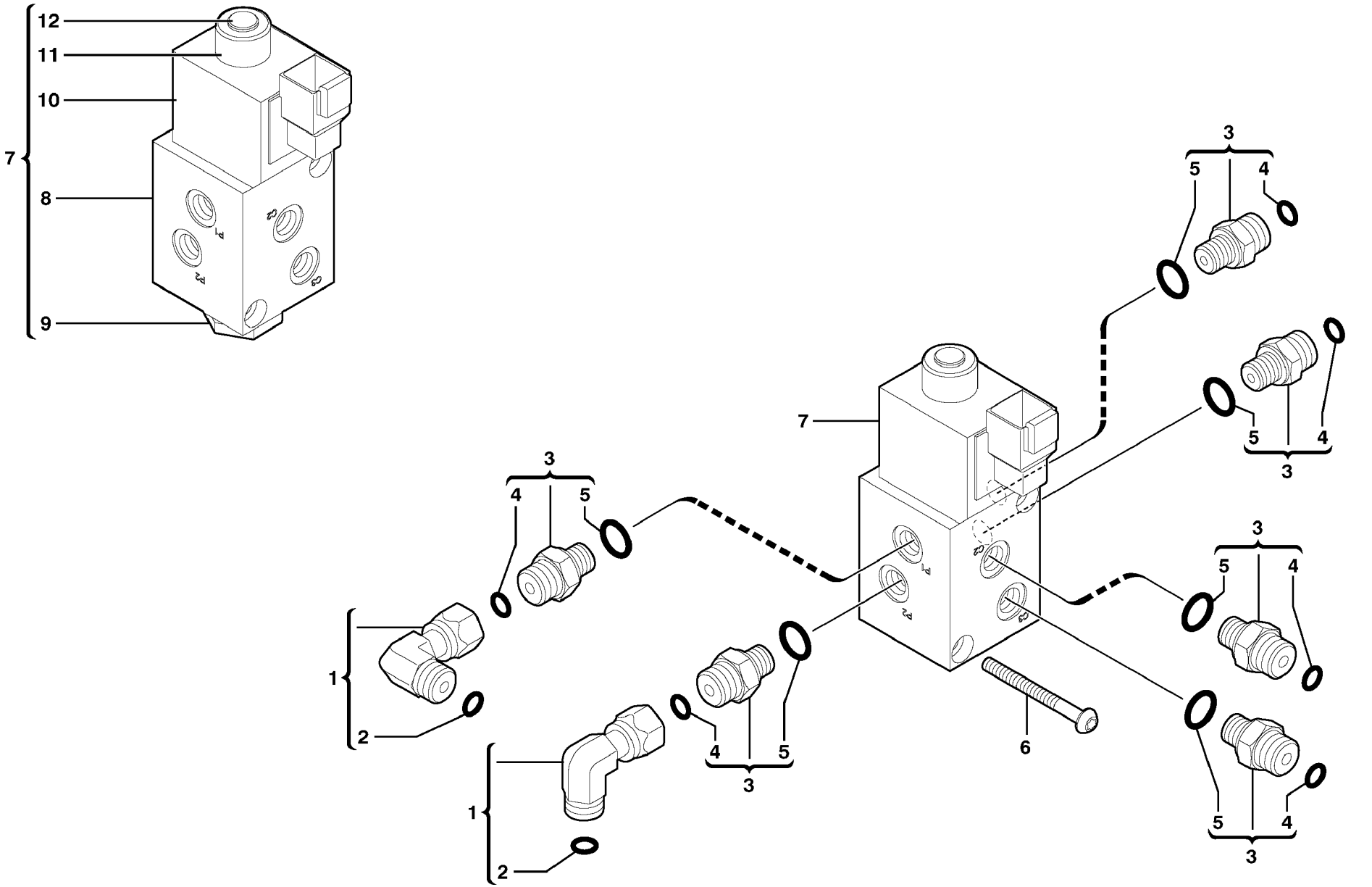

Volvo Construction Equipment

1010632

Fig.	Part No.	Quantity 1	2	3	PS	KIT	Description	Dénomination	Bezeichnung	품명	Denominación	Notes
1	**VOE 13933905**	2					Elbow nipple	Raccord angulaire	Winkelnippel	엘보 니플	Niple angular	
2	**VOE 4881722**	1					•O-ring	•Joint Torique	•O-Ring	• 오링	•Junta torica	
3	**VOE 935082**	6					Nipple	Raccord	Nippel	니플	Niple	
4	**VOE 4881722**	1					•O-ring	•Joint Torique	•O-Ring	• 오링	•Junta torica	
5	**VOE 932037**	1					•O-ring	•Joint Torique	•O-Ring	• 오링	•Junta torica	
6	**VOE 969440**	2					6-pt skt screw	Vis creuse de 6	Hohlschraube	6 포인트 소켓 스크류	Racor 6-dientes	
7	**VOE 11801687**	1					Valve	Soupape	Ventil	밸브	Valvula	
8		1			NS		•Valve Body	•Corps Valve	•Ventilkörper	• 밸브 몸체	•Cuerpo Valvula	ORDER ITEM NO 7
9	**VOE 11713204**	1					•Plug	•Bouchon	•Stopfen	• 플러그	•Tapon	
10	**VOE 11713205**	1					•Solenoid	•Solénoide	•Magnet	• 솔레노이드	•Solenoide	
11	**VOE 11713206**	1					•Nut	•Ecrou	•Mutter	• 너트	•Tuerca	
12	**VOE 11713207**	1					•Solenoid valve	•Vanne electrom	•Magnetventil	• 솔레노이드 밸브	•Electrovalvula	

1	**602.10151**		**Instalación del electrovalvula** 전자식 밸브 설치 **Einbau der Elektroventile** **Mise en place de l'électrovalve** **Electrovalve installation**
2			
3			
4			
5			

Catalogue id **20048**	Group **914**
Illustr. No **1010632**	Section **600**
Issue **VOE 74C9920048**	Page **415**

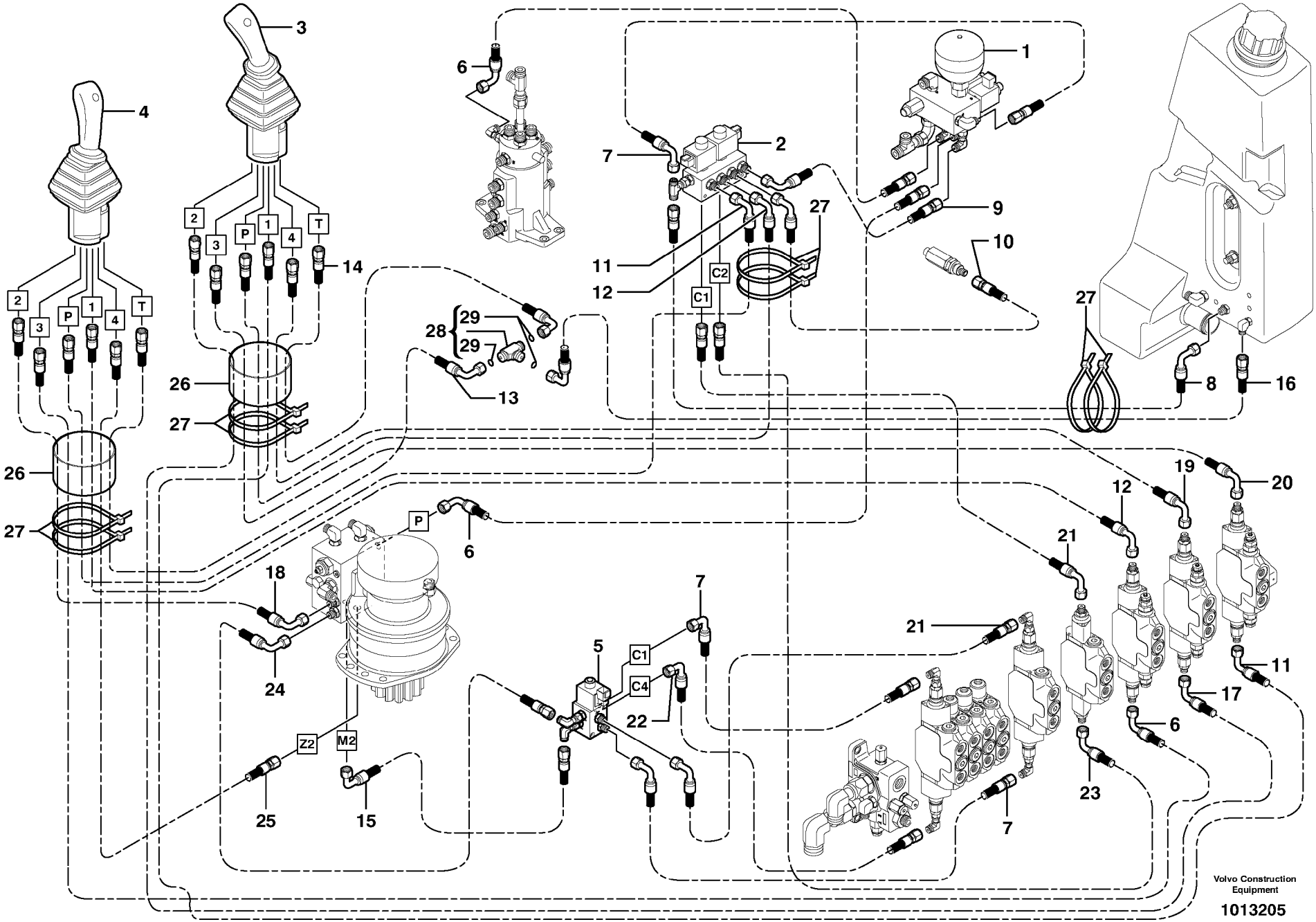
1
2
3
4
5
6
7
8
9
10
11
12
13
14
15
16
17
18
19
20
21
22
23
24
25
26
27
28
29
C1
C2
C4
M2
Z2
P
T
Volvo Construction Equipment
1013205

Fig.	Part No.	Quantity 1	2	3	PS	KIT	Description	Dénomination	Bezeichnung	품명	Denominación	Notes
1		1					Block	Bloc	Block	블록	Bloque	See group 914, Page 403
2		1					Block	Bloc	Block	블록	Bloque	See group 914, Page 407
3		1					Control lever Rh.	Levier commande Rh	Bedienungshebel Rh..		Palanca mando Rh.	See group 914, Page 429
4		1					Control lever Lh.	Levier commande Lh.	Bedienungshebel Lh...		Palanca mando Lh.	See group 914, Page 423
5		1					Selector	Selecteur	Wähler	전환기	Selector	See group 914, Page 415
6	**VOE 936817**	3					Hose assembly	Conduit flexible	Schlauchleitung	호스 어셈블리	Conducto	11839041
7	**VOE 936292**	3					Hose assembly	Conduit flexible	Schlauchleitung	호스 어셈블리	Conducto	
8	**VOE 936299**	1					Hose assembly	Conduit flexible	Schlauchleitung	호스 어셈블리	Conducto	
9	**VOE 936813**	1					Hose assembly	Conduit flexible	Schlauchleitung	호스 어셈블리	Conducto	
10	**VOE 11802850**	1					Hose assembly	Conduit flexible	Schlauchleitung	호스 어셈블리	Conducto	
11	**VOE 936821**	2					Hose assembly	Conduit flexible	Schlauchleitung	호스 어셈블리	Conducto	
12	**VOE 936825**	2					Hose assembly	Conduit flexible	Schlauchleitung	호스 어셈블리	Conducto	
13	**VOE 936814**	1					Hose assembly	Conduit flexible	Schlauchleitung	호스 어셈블리	Conducto	
14	**VOE 936816**	1					Hose assembly	Conduit flexible	Schlauchleitung	호스 어셈블리	Conducto	
15	**VOE 936862**	1					Hose assembly	Conduit flexible	Schlauchleitung	호스 어셈블리	Conducto	
16	**VOE 936291**	1					Hose assembly	Conduit flexible	Schlauchleitung	호스 어셈블리	Conducto	
17	**VOE 936684**	1					Hose assembly	Conduit flexible	Schlauchleitung	호스 어셈블리	Conducto	
18	**VOE 936827**	1					Hose assembly	Conduit flexible	Schlauchleitung	호스 어셈블리	Conducto	
19	**VOE 936829**	1					Hose assembly	Conduit flexible	Schlauchleitung	호스 어셈블리	Conducto	
20	**VOE 936871**	1					Hose assembly	Conduit flexible	Schlauchleitung	호스 어셈블리	Conducto	
21	**VOE 936861**	2					Hose assembly	Conduit flexible	Schlauchleitung	호스 어셈블리	Conducto	
22	**VOE 936290**	1					Hose assembly	Conduit flexible	Schlauchleitung	호스 어셈블리	Conducto	
23	**VOE 936294**	1					Hose assembly	Conduit flexible	Schlauchleitung	호스 어셈블리	Conducto	
24	**VOE 936851**	1					Hose assembly	Conduit flexible	Schlauchleitung	호스 어셈블리	Conducto	
25	**VOE 936684**	1					Hose assembly	Conduit flexible	Schlauchleitung	호스 어셈블리	Conducto	
26	**VOE 11803025**	2					Hose protector	Protection de flexible	Schlauchschutz	호스 보호기	Protección de mangu.	
27	**VOE 4881440**	8					Strip Clamp	Ruban Serrage	Kabelbinder	스트립 클램프	Abraz Cinta	
28	**VOE 936798**	1					T-nipple	Raccord-t	T-Nippel	T- 니플	Niple T	
29	**VOE 4881722**	3					•O-ring	•Joint Torique	•O-Ring	• 오링	•Junta torica	

1	**602.10151**		**Circuito hidráulico (baja presión)** 유압 회로 (저압) **Hydraulikkreis (Niedriger Druck)** **Circuit hydraulique (basse pression)** **Hydraulic circuit (low pressure)**
2			
3			
4			
5			**STD**

Catalogue id **20048**	Group **914**
Illustr. No **1013205**	Section **700**
Issue **VOE 74C9920048**	Page **417**

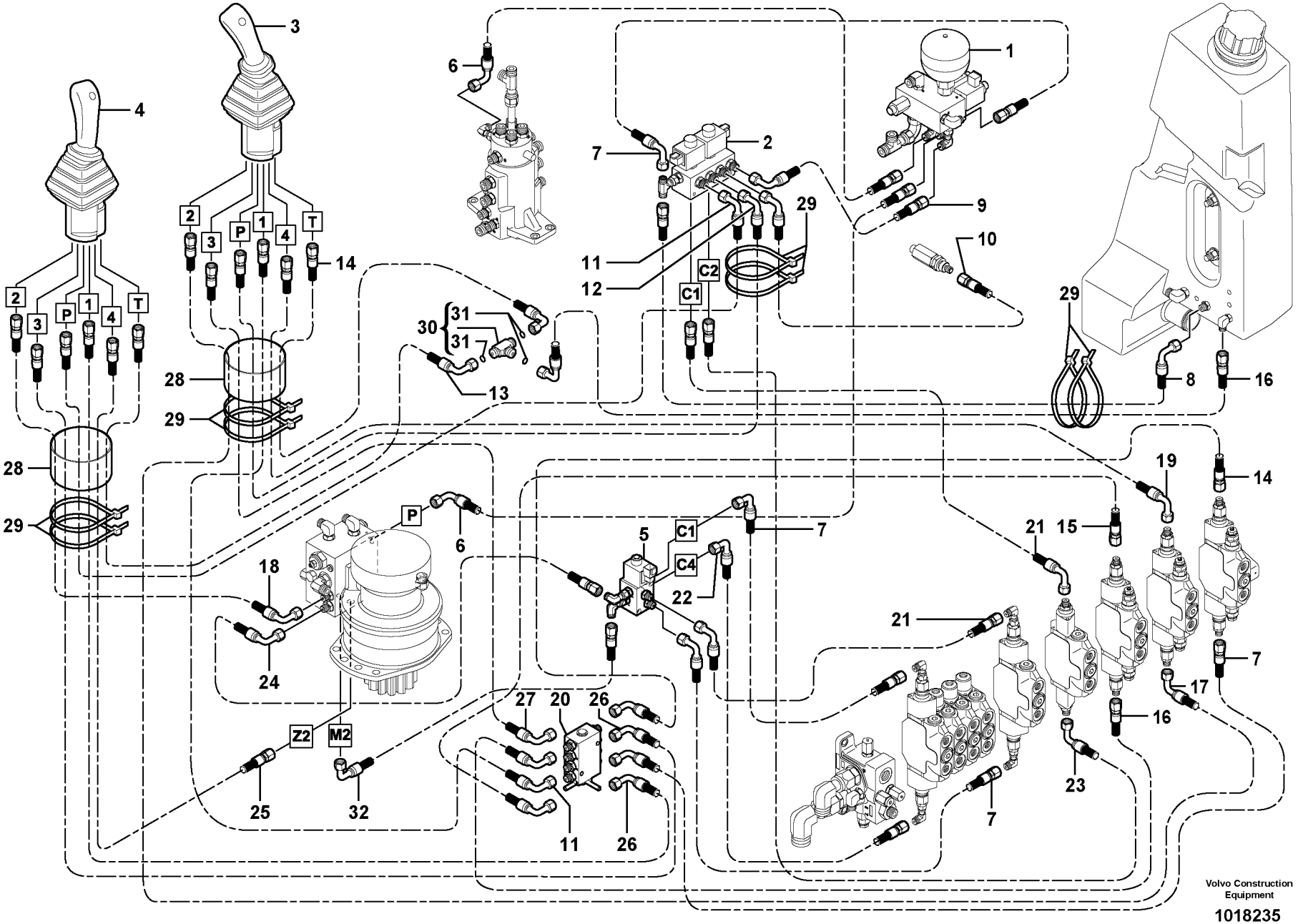
1
2
3
4
5
6
7
8
9
10
11
12
13
14
15
16
17
18
19
20
21
22
23
24
25
26
27
28
29
30
31
32
C1
C2
C4
P
T
Z2
M2
Volvo Construction Equipment
1018235

Fig.	Part No.	Quantity 1	2	3	PS	KIT	Description	Dénomination	Bezeichnung	품명	Denominación	Notes
1		1					Block	Bloc	Block	블록	Bloque	See group 914, Page 403
2		1					Block	Bloc	Block	블록	Bloque	See group 914, Page 407
3		1					Control lever Rh.	Levier commande Rh	Bedienungshebel Rh..		Palanca mando Rh.	See group 914, Page 429
4		1					Control lever Lh.	Levier commande Lh.	Bedienungshebel Lh...		Palanca mando Lh.	See group 914, Page 423
5		1					Selector	Selecteur	Wähler	전환기	Selector	See group 914, Page 415
6	**VOE 936817**	2					Hose assembly	Conduit flexible	Schlauchleitung	호스 어셈블리	Conducto	11839042
7	**VOE 936292**	4					Hose assembly	Conduit flexible	Schlauchleitung	호스 어셈블리	Conducto	
8	**VOE 936299**	1					Hose assembly	Conduit flexible	Schlauchleitung	호스 어셈블리	Conducto	
9	**VOE 936813**	1					Hose assembly	Conduit flexible	Schlauchleitung	호스 어셈블리	Conducto	
10	**VOE 11802850**	1					Hose assembly	Conduit flexible	Schlauchleitung	호스 어셈블리	Conducto	
11	**VOE 936821**	2					Hose assembly	Conduit flexible	Schlauchleitung	호스 어셈블리	Conducto	
12	**VOE 936825**	1					Hose assembly	Conduit flexible	Schlauchleitung	호스 어셈블리	Conducto	
13	**VOE 936814**	1					Hose assembly	Conduit flexible	Schlauchleitung	호스 어셈블리	Conducto	
14	**VOE 936816**	2					Hose assembly	Conduit flexible	Schlauchleitung	호스 어셈블리	Conducto	
15	**VOE 936852**	1					Hose assembly	Conduit flexible	Schlauchleitung	호스 어셈블리	Conducto	
16	**VOE 936291**	2					Hose assembly	Conduit flexible	Schlauchleitung	호스 어셈블리	Conducto	
17	**VOE 936684**	1					Hose assembly	Conduit flexible	Schlauchleitung	호스 어셈블리	Conducto	
18	**VOE 936827**	1					Hose assembly	Conduit flexible	Schlauchleitung	호스 어셈블리	Conducto	
19	**VOE 936829**	1					Hose assembly	Conduit flexible	Schlauchleitung	호스 어셈블리	Conducto	
20		1					Stripper unit	Unite rotatrice	Wendevorrichtung	스트리퍼 유닛	Inversor	See group 914, Page 435
21	**VOE 936861**	2					Hose assembly	Conduit flexible	Schlauchleitung	호스 어셈블리	Conducto	
22	**VOE 936290**	1					Hose assembly	Conduit flexible	Schlauchleitung	호스 어셈블리	Conducto	
23	**VOE 936294**	1					Hose assembly	Conduit flexible	Schlauchleitung	호스 어셈블리	Conducto	
24	**VOE 936851**	1					Hose assembly	Conduit flexible	Schlauchleitung	호스 어셈블리	Conducto	
25	**VOE 936684**	1					Hose assembly	Conduit flexible	Schlauchleitung	호스 어셈블리	Conducto	
26	**VOE 936818**	2					Hose assembly	Conduit flexible	Schlauchleitung	호스 어셈블리	Conducto	
27	**VOE 936822**	1					Hose assembly	Conduit flexible	Schlauchleitung	호스 어셈블리	Conducto	
28	**VOE 11803025**	2					Hose protector	Protection de flexible	Schlauchschutz	호스 보호기	Protección de mangu.	
29	**VOE 4881440**	10					Strip Clamp	Ruban Serrage	Kabelbinder	스트립 클램프	Abraz Cinta	
30	**VOE 936798**	1					T-nipple	Raccord-t	T-Nippel	T- 니플	Niple T	

1	**602.10151**	
2		
3		
4		
5		

Circuito hidráulico (baja presión)
유압 회로 (저압)
Hydraulikkreis (Niedriger Druck)
Circuit hydraulique (basse pression)
Hydraulic circuit (low pressure)

USA

Catalogue id	Group
20048	**914**
Illustr. No	Section
1018235	**750**
Issue	Page
VOE 74C9920048	**419**

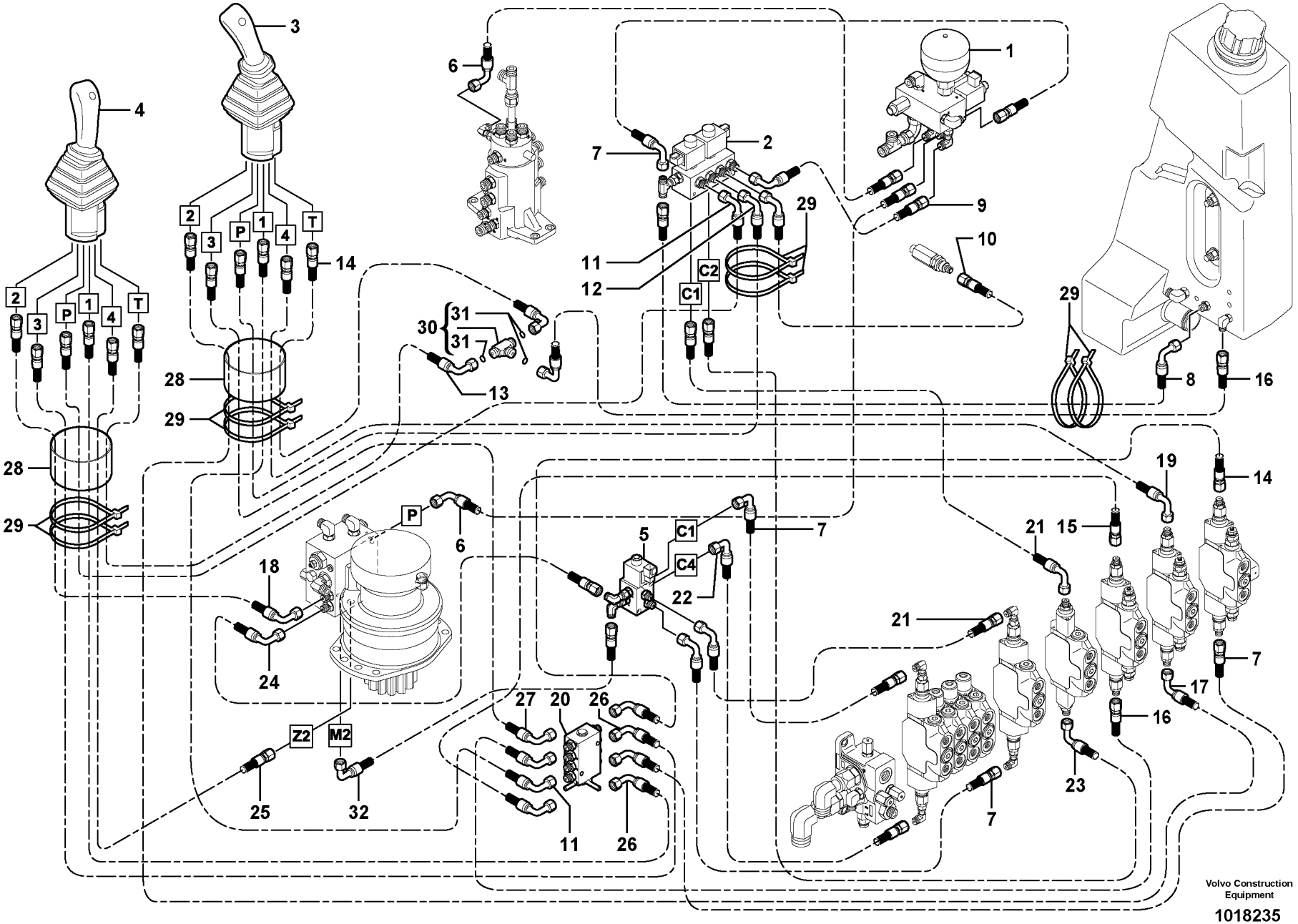
1
2
3
4
5
6
7
8
9
10
11
12
13
14
15
16
17
18
19
20
21
22
23
24
25
26
27
28
29
30
31
32
C1
C2
C4
P
T
Z2
M2
Volvo Construction Equipment
1018235

Fig.	Part No.	Quantity 1	2	3	PS	KIT	Description	Dénomination	Bezeichnung	품명	Denominación	Notes
31	**VOE 4881722**	3					•O-ring	•Joint Torique	•O-Ring	• 오링	•Junta torica	
32	**VOE 936862**	1					Hose assembly	Conduit flexible	Schlauchleitung	호스 어셈블리	Conducto	

1	**602.10151**		**Circuito hidráulico (baja presión)** 유압 회로 (저압) **Hydraulikkreis (Niedriger Druck)** **Circuit hydraulique (basse pression)** **Hydraulic circuit (low pressure)**	Catalogue id **20048**	Group **914**
2				Illustr. No **1018235**	Section **750**
3				Issue **VOE 74C9920048**	Page **421**
4					
5			**USA**		

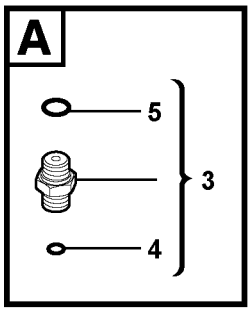
A
5
3
4

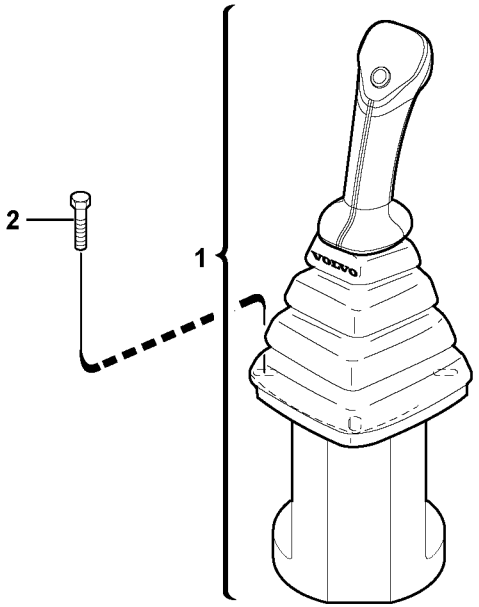
2
1

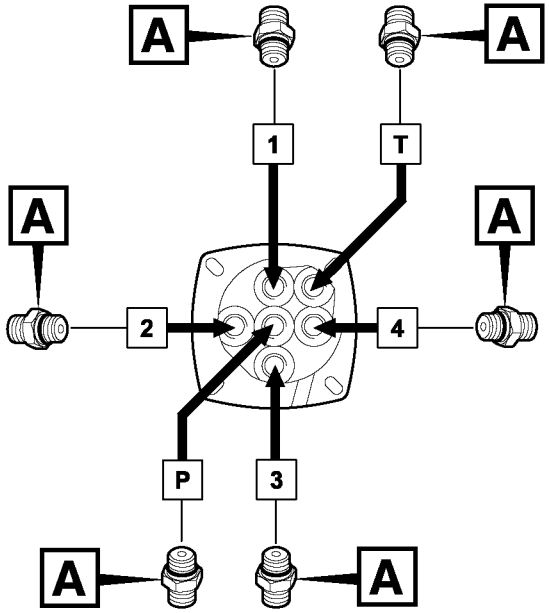
A
A
1
T
A
A
2
4
P
3
A
A

Fig.	Part No.	Quantity 1	2	3	PS	KIT	Description	Dénomination	Bezeichnung	품명	Denominación	Notes
1		1					Control lever Lh	Levier commande Lh.	Bedienungshebel Lh		Palanca mando Lh	See group 914, Page 425
2	**VOE 969423**	4					6-pt skt screw	Vis creuse de 6	Hohlschraube	6 포인트 소켓 스크류	Racor 6-dientes	
3	**VOE 13933858**	6					Union	Teton Connexion	Anschlussnippel	유니언	Niple Conexcion	
4	**VOE 4881722**	1					•O-ring	•Joint Torique	•O-Ring	• 오링	•Junta torica	
5	**VOE 932039**	1					•O-ring	•Joint Torique	•O-Ring	• 오링	•Junta torica	

1	**602.10151**		**Montaje de la palanca de mando** **컨트롤 스틱 설치** **Steuerhebel, Einbau** **Mise en place du levier de commande** **Control stick installation**	Catalogue id **20048**	Group **914**
2				Illustr. No **1019039**	Section **800**
3					
4				Issue **VOE 74C9920048**	Page **423**
5			**LH**		

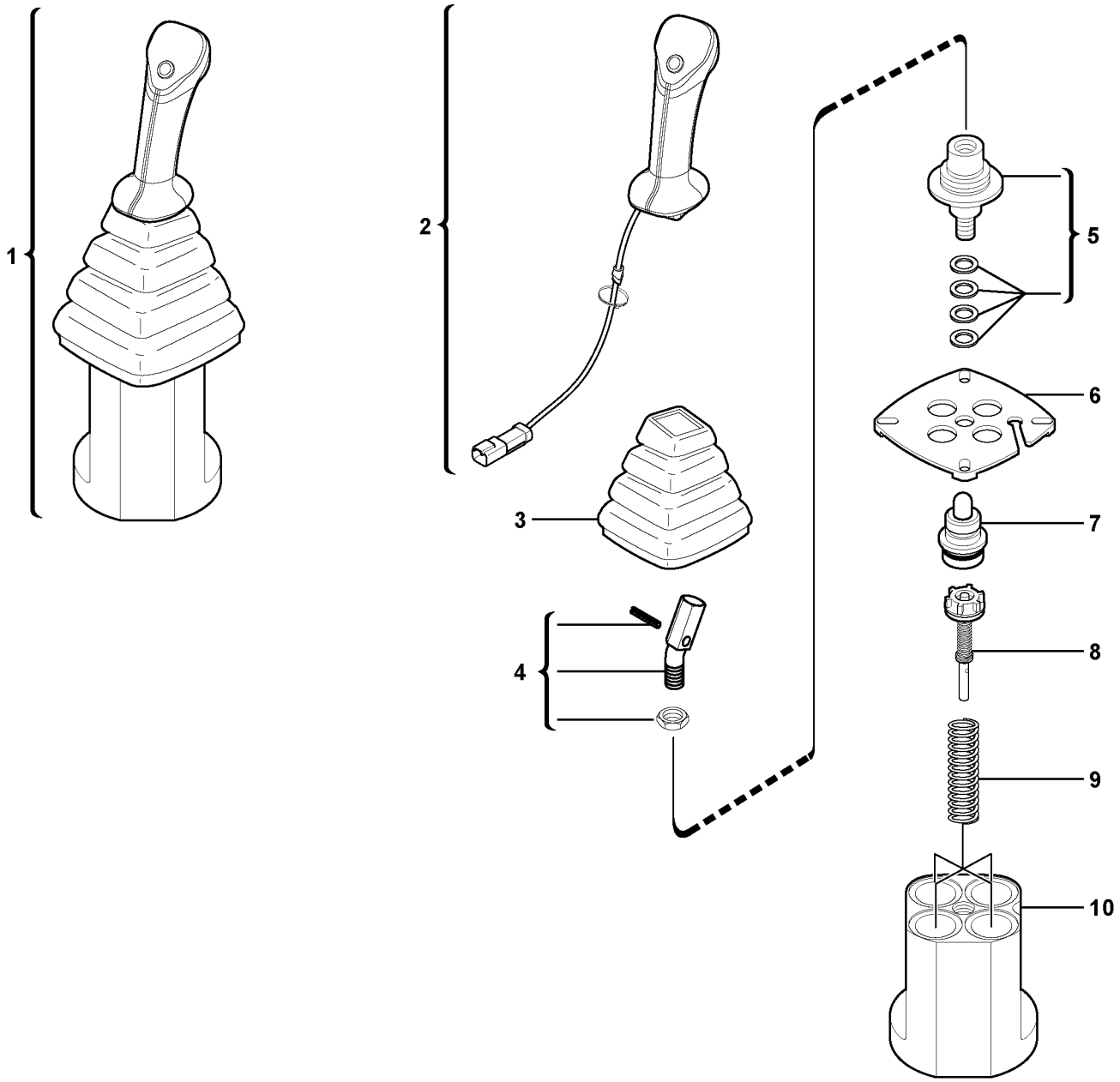

Volvo Construction Equipment

1019040

Fig.	Part No.	Quantity 1	2	3	PS	KIT	Description	Dénomination	Bezeichnung	품명	Denominación	Notes
1	**VOE 11802758**	1					Control lever Lh.....	Levier commande Lh.	Bedienungshebel Lh...	.....	Palanca mando Lh.....	
2	**VOE 11713018**	1					•Handle	•Poignee.....	•Handgriff	• 핸들	•Manilla.....	
3	**PJ 7417472**	1					•Bellow	•Soufflet.....	•Faltenbalg	• 벨로우	•Fuelle.....	
4	**VOE 11370672**	1					•Adapter	•Adaptateur	•Adapter	• 어댑터	•Adaptador.....	
5	**PJ 7417469**	1					•Propeller shafts.....	•Arbre A Cardans	•Gelenkwellen	•	•Arbol Transmisiones.	
6	**PJ 7417471**	1					•Plate	•Plaque.....	•Platte.....	• 플레이트.....	•Placa.....	
7		4			NS		•Plunger guide	•Guide de piston.....	•Stößelführung	• 플런저 가이드	•Guía de pistón.....	ORDER ITEM NO 11
8	**VOE 11713016**	4					•Regulator	•Regulateur	•Regler	• 레귤레이터	•Regulador.....	ORDER VOE 11807220
9		4			NS		•Spring	•Ressort	•Feder.....	• 스프링	•Muelle.....	ORDER ITEM NO 12
10		1			NS		•Body	•Corps	•Körper	• 몸체	•Cuerpo.....	ORDER ITEM NO 1
11	**VOE 11712323**	1					Plunger guide (kit)....	Guide de piston (jeu .	Kolbenführung (Satz) .	플런저 가이드 (키트)	Guía de pistón (kit).....	ORDER VOE 11807220
12	**VOE 11713017**	1					Springs (kit).....	Ressorts (jeu).....	Federn (Satz).....	스프링 (키트)	Muelles (juego)	

1	**602.10151** →	→ **602.10476**
2		
3		
4		
5		

Palanca de mando : brazo / giro (izquierda)
조작 레버 : 암 / 선회 (좌측)
Steuerhebel : Löffelstiel / Schwenkung (links)
Levier de commande : balancier / orientation (côté gauche)
Control lever : dipper arm / slewing (left)

Catalogue id	Group
20048	**914**
Illustr. No **1019040**	Section **810**
Issue **VOE 74C9920048**	Page **425**

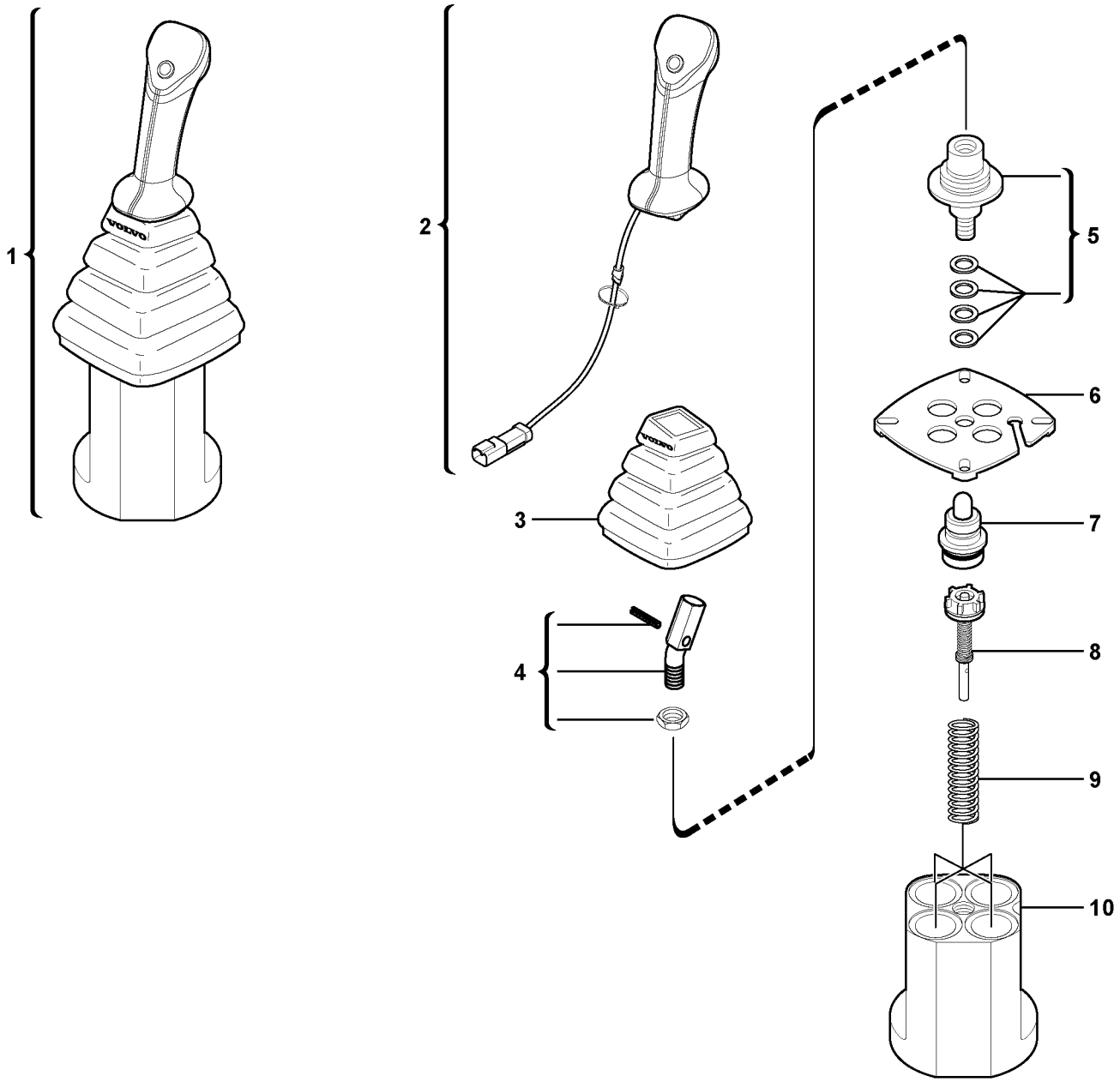

Volvo Construction Equipment

1019041

Fig.	Part No.	Quantity 1	2	3	PS	KIT	Description	Dénomination	Bezeichnung	품명	Denominación	Notes
1	**VOE 11807220**	1					Control lever Lh	Levier commande Lh.	Bedienungshebel Lh		Palanca mando Lh	
2	**VOE 11715620**	1					•Handle	•Poignee	•Handgriff	• 핸들	•Manilla	
3	**VOE 11715619**	1					•Bellow	•Soufflet	•Faltenbalg	• 벨로우	•Fuelle	
4	**VOE 11370672**	1					•Adapter	•Adaptateur	•Adapter	• 어댑터	•Adaptador	
5	**VOE 11714730**	1					•Propeller shafts	•Arbre A Cardans	•Gelenkwellen	•	•Arbol Transmisiones	
6	**VOE 11714731**	1					•Plate	•Plaque	•Platte	• 플레이트	•Placa	
7		4			NS		•Plunger guide	•Guide de piston	•Stößelführung	• 플런저 가이드	•Guía de pistón	ORDER ITEM NO 11
8	**VOE 11713016**	4					•Regulator	•Regulateur	•Regler	• 레귤레이터	•Regulador	
9		4			NS		•Spring	•Ressort	•Feder	• 스프링	•Muelle	ORDER ITEM NO 12
10		1			NS		•Body	•Corps	•Körper	• 몸체	•Cuerpo	ORDER ITEM NO 1
11	**VOE 11712323**	1					Plunger guide (kit)	Guide de piston (jeu .	Kolbenführung (Satz)	플런저 가이드 (키트)	Guía de pistón (kit)	
12	**VOE 11713017**	1					Springs (kit)	Ressorts (jeu)	Federn (Satz)	스프링 (키트)	Muelles (juego)	

1	**602.10477**	
2		
3		
4		
5		

Palanca de mando : brazo / giro (izquierda)
조작 레버 : 암 / 선회 (좌측)
Steuerhebel : Löffelstiel / Schwenkung (links)
Levier de commande : balancier / orientation (côté gauche)
Control lever : dipper arm / slewing (left)

Catalogue id **20048**	Group **914**
Illustr. No **1019041**	Section **820**
Issue **VOE 74C9920048**	Page **427**

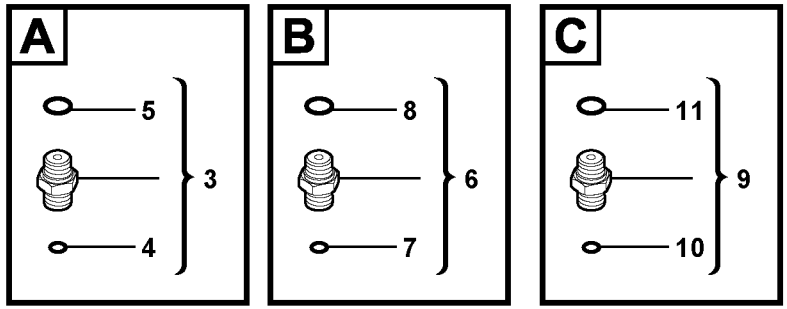
A
5
3
4
B
8
6
7
C
11
9
10

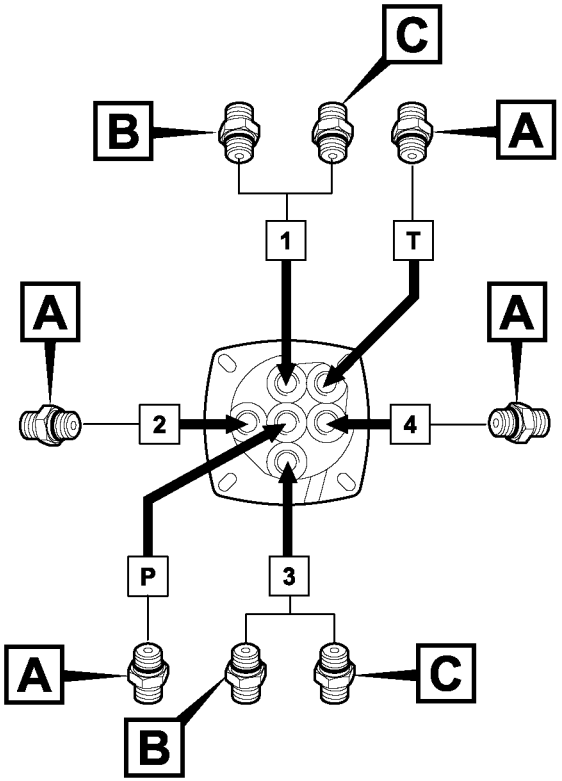
C
B
A
1
T
A
A
2
4
P
3
A
C
B

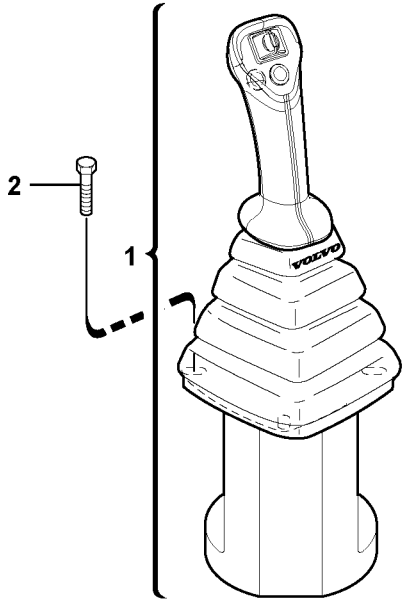
2
1

Fig.	Part No.	Quantity 1	2	3	PS	KIT	Description	Dénomination	Bezeichnung	품명	Denominación	Notes
1		1					Control lever Rh.	Levier commande Rh	Bedienungshebel Rh		Palanca mando Rh	See group 914, Page 431
2	**VOE 969423**	4					6-pt skt screw	Vis creuse de 6	Hohlschraube	6 포인트 소켓 스크류	Racor 6-dientes	
3	**VOE 13933858**	4					Union	Teton Connexion	Anschlussnippel	유니언	Niple Conexcion	STD , USA
4	**VOE 4881722**	1					•O-ring	•Joint Torique	•O-Ring	• 오링	•Junta torica	
5	**VOE 932039**	1					•O-ring	•Joint Torique	•O-Ring	• 오링	•Junta torica	
6	**VOE 11802980**	2					Restrictor	Etrangleur	Drosselung	리스트릭터	Estrangulacion	STD ID = 0,5mm/0.0197in
7	**VOE 4881722**	1					•O-ring	•Joint Torique	•O-Ring	• 오링	•Junta torica	
8		1			NS		•O-ring	•Joint Torique	•O-Ring	• 오링	•Junta torica	
9	**VOE 13933858**	2					Union	Teton Connexion	Anschlussnippel	유니언	Niple Conexcion	USA
10	**VOE 4881722**	1					•O-ring	•Joint Torique	•O-Ring	• 오링	•Junta torica	
11	**VOE 932039**	1					•O-ring	•Joint Torique	•O-Ring	• 오링	•Junta torica	

1	**602.10151**		**Montaje de la palanca de mando** 컨트롤 스틱 설치 **Steuerhebel, Einbau** **Mise en place du levier de commande** **Control stick installation** **RH , STD , USA**
2			
3			
4			
5			

Catalogue id	Group
20048	**914**
Illustr. No **1019042**	Section **850**
Issue **VOE 74C9920048**	Page **429**

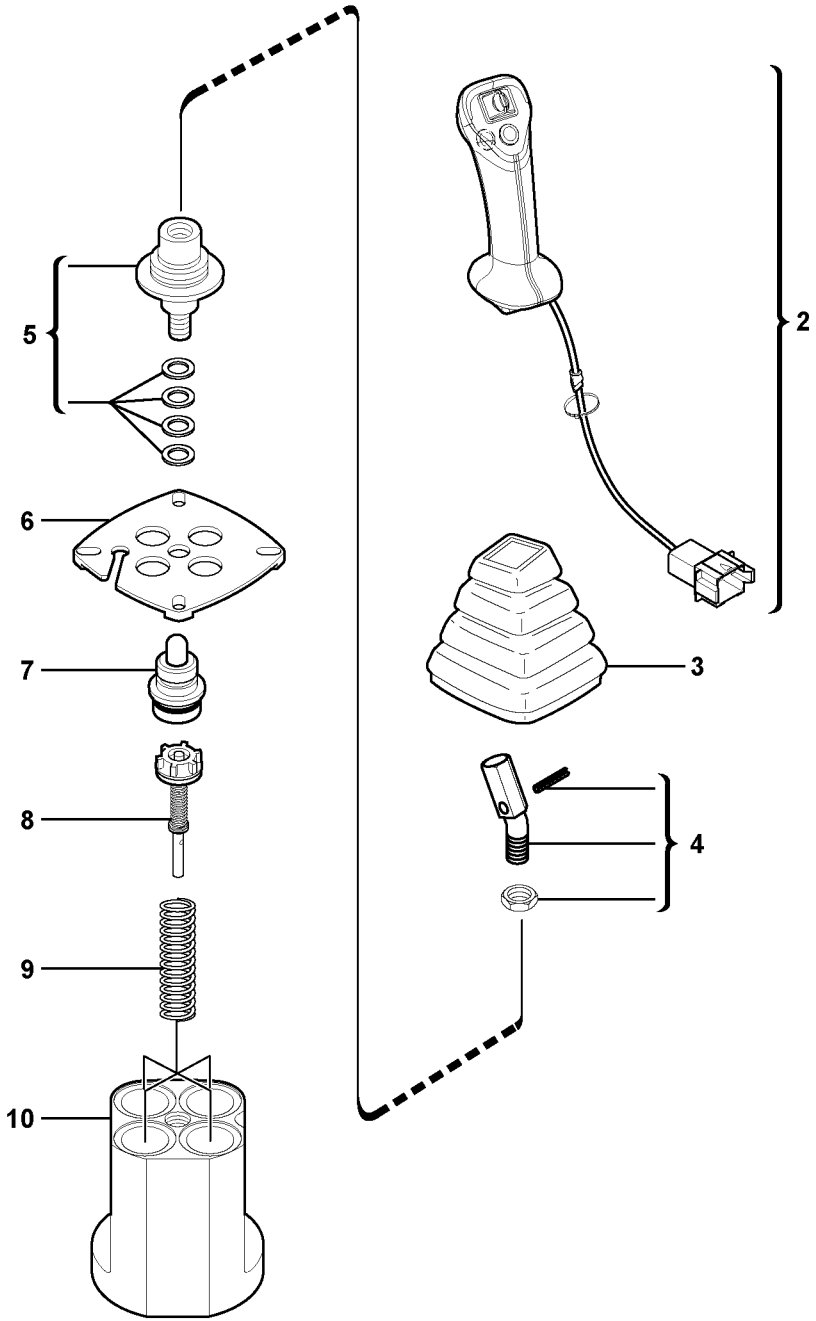

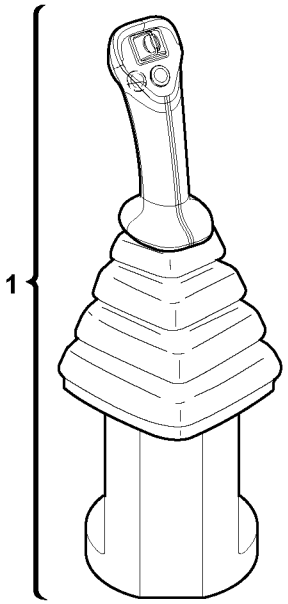

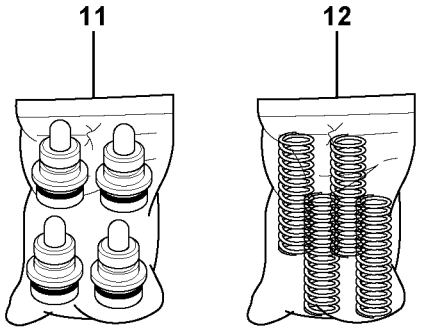

Volvo Construction Equipment

1019043

Fig.	Part No.	Quantity 1	2	3	PS	KIT	Description	Dénomination	Bezeichnung	품명	Denominación	Notes
1	**VOE 11802759**	1					Control lever Rh.	Levier commande Rh	Bedienungshebel Rh		Palanca mando Rh	
2	**VOE 11713014**	1					•Handle	•Poignee	•Handgriff	• 핸들	•Manilla	
3	**PJ 7417472**	1					•Bellow	•Soufflet	•Faltenbalg	• 벨로우	•Fuelle	
4	**VOE 11370672**	1					•Adapter	•Adaptateur	•Adapter	• 어댑터	•Adaptador	
5	**PJ 7417469**	1					•Propeller shafts	•Arbre A Cardans	•Gelenkwellen	•	•Arbol Transmisiones	
6	**PJ 7417471**	1					•Plate	•Plaque	•Platte	• 플레이트	•Placa	
7		4			NS		•Plunger guide	•Guide de piston	•Stößelführung	• 플런저 가이드	•Guía de pistón	ORDER ITEM NO 11
8	**VOE 11713016**	4					•Regulator	•Regulateur	•Regler	• 레귤레이터	•Regulador	ORDER VOE 11807221
9		4			NS		•Spring	•Ressort	•Feder	• 스프링	•Muelle	ORDER ITEM NO 12
10		1			NS		•Body	•Corps	•Körper	• 몸체	•Cuerpo	ORDER ITEM NO 1
11	**VOE 11712323**	1					Plunger guide (kit)	Guide de piston (jeu	Kolbenführung (Satz)	플런저 가이드 (키트)	Guía de pistón (kit)	ORDER VOE 11807221
12	**VOE 11713017**	1					Springs (kit)	Ressorts (jeu)	Federn (Satz)	스프링 (키트)	Muelles (juego)	

1	**602.10151** →	→ **602.10476**	**Palanca de mando : pluma / cuchara (derecha)** 조작 레버 : 붐 / 버켓 (우측) **Steuerhebel : Ausleger / Löffel (rechts)** **Levier de commande : flèche / godet (côté droit)** **Control lever : boom / bucket (right)**
2			
3			
4			
5			**RH , STD , USA**

Catalogue id **20048**	Group **914**
Illustr. No **1019043**	Section **860**
Issue **VOE 74C9920048**	Page **431**

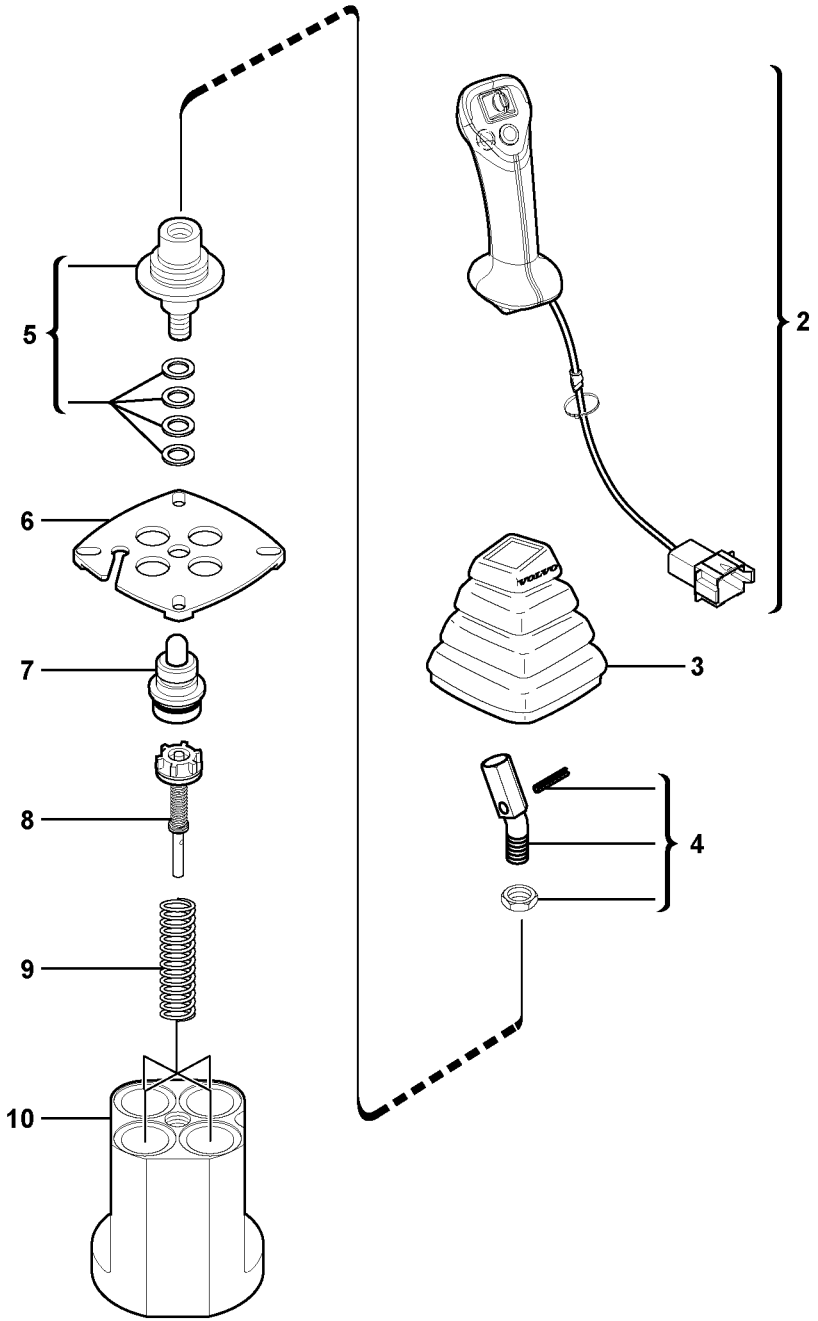

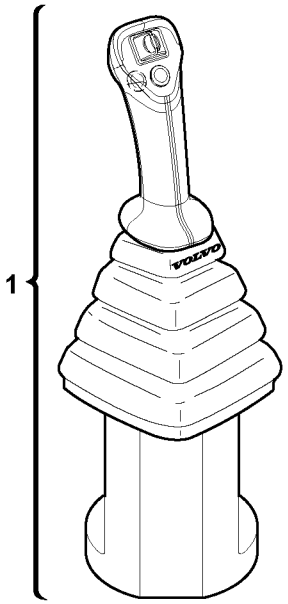

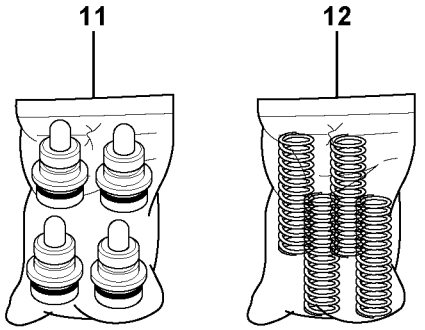

Volvo Construction Equipment

1019044

Fig.	Part No.	Quantity 1	2	3	PS	KIT	Description	Dénomination	Bezeichnung	품명	Denominación	Notes
1	**VOE 11807221**	1					Control lever Rh.	Levier commande Rh	Bedienungshebel Rh		Palanca mando Rh	
2	**VOE 11713014**	1					•Handle	•Poignee	•Handgriff	• 핸들	•Manilla	
3	**VOE 11715619**	1					•Bellow	•Soufflet	•Faltenbalg	• 벨로우	•Fuelle	
4	**VOE 11370672**	1					•Adapter	•Adaptateur	•Adapter	• 어댑터	•Adaptador	
5	**VOE 11714730**	1					•Propeller shafts	•Arbre A Cardans	•Gelenkwellen	•	•Arbol Transmisiones	
6	**VOE 11714731**	1					•Plate	•Plaque	•Platte	• 플레이트	•Placa	
7		4			NS		•Plunger guide	•Guide de piston	•Stößelführung	• 플런저 가이드	•Guía de pistón	ORDER ITEM NO 11
8	**VOE 11713016**	4					•Regulator	•Regulateur	•Regler	• 레귤레이터	•Regulador	
9		4			NS		•Spring	•Ressort	•Feder	• 스프링	•Muelle	ORDER ITEM NO 12
10		1			NS		•Body	•Corps	•Körper	• 몸체	•Cuerpo	ORDER ITEM NO 1
11	**VOE 11712323**	1					Plunger guide (kit)	Guide de piston (jeu	Kolbenführung (Satz)	플런저 가이드 (키트)	Guía de pistón (kit)	
12	**VOE 11713017**	1					Springs (kit)	Ressorts (jeu)	Federn (Satz)	스프링 (키트)	Muelles (juego)	

1	**602.10477**		**Palanca de mando : pluma / cuchara (derecha)** 조작 레버 : 붐 / 버켓 (우측) **Steuerhebel : Ausleger / Löffel (rechts)** **Levier de commande : flèche / godet (côté droit)** **Control lever : boom / bucket (right)**
2			
3			
4			
5			**RH , STD , USA**

Catalogue id **20048**	Group **914**
Illustr. No **1019044**	Section **870**
Issue **VOE 74C9920048**	Page **433**

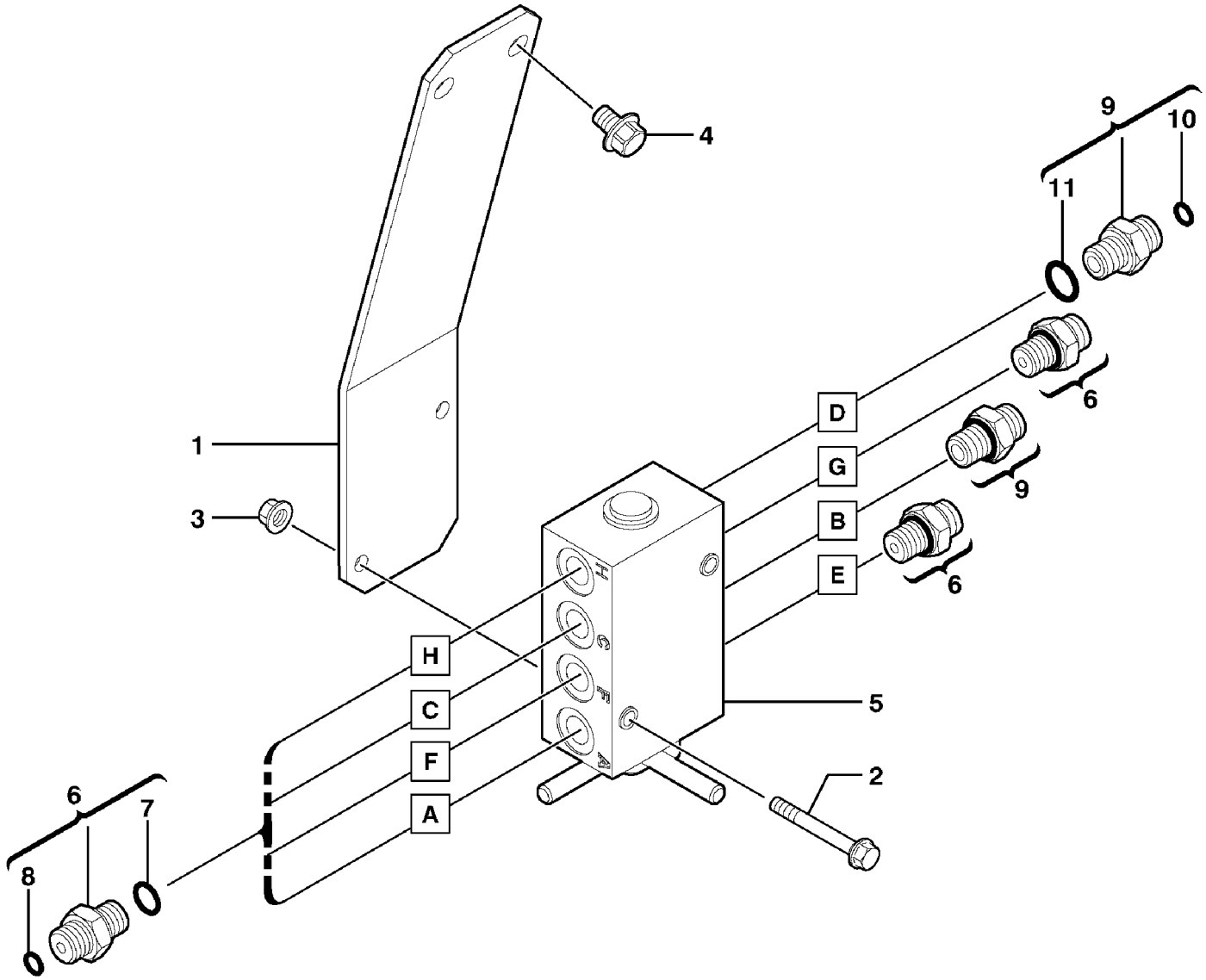

Volvo Construction Equipment

1010482

Fig.	Part No.	Quantity 1	2	3	PS	KIT	Description	Dénomination	Bezeichnung	품명	Denominación	Notes
1	**VOE 11803013**	1					Plate	Plaque	Platte	플레이트	Placa	
2	**VOE 965177**	2			SS		Screw	Vis	Schraube	스크류	Tornillo	
3	**VOE 945407**	2			SS		Flange nut	Ecrou accouple.	Bundmutter	플랜지 너트	Tuerca embridad	
4	**VOE 947107**	2					Flange screw	Vis à bride	Flanschschraube	플랜지 스크류	Torn embridado	
5		1					Stripper unit	Unite rotatrice	Wendevorrichtung	스트리퍼 유닛	Inversor	See group 914, Page 437
6	**VOE 11802655**	6					Union	Teton Connexion	Anschlussnippel	유니언	Niple Conexcion	
7	**PJ 5600201**	1					•Seal	•Joint	•Dichtring	• 시일	•Junta	
8	**VOE 4881722**	1					•O-ring	•Joint Torique	•O-Ring	• 오링	•Junta torica	
9	**VOE 11803152**	2					Restrictor	Etrangleur	Drosselung	리스트릭터	Estrangulacion	ID = 0,5mm/0.0197in
10	**VOE 4881722**	1					•O-ring	•Joint Torique	•O-Ring	• 오링	•Junta torica	
11		1			NS		•Seal	•Joint	•Dichtring	• 시일	•Junta	

1	**602.10151**		**Instalación del selector** 제어 선택 스위치 장착 **Einbau der Gerätesteuerungswahlschalter** **Mise en place du sélecteur de commande** **Control selector switch installation**	Catalogue id **20048**	Group **914**
2				Illustr. No **1010482**	Section **900**
3					
4				Issue **VOE 74C9920048**	Page **435**
5			**USA**		

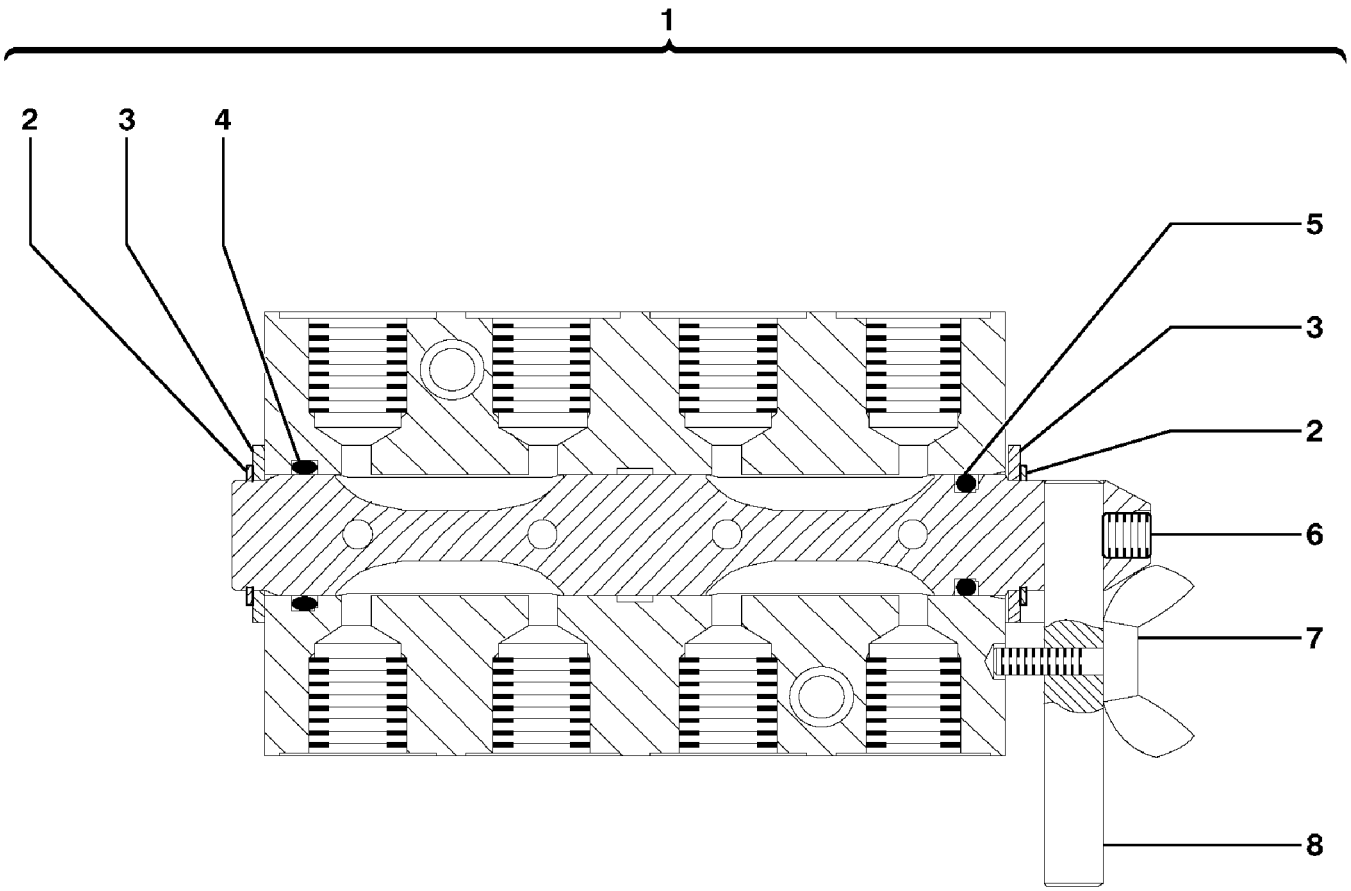

Volvo Construction Equipment

1010483

Fig.	Part No.	Quantity 1	2	3	PS	KIT	Description	Dénomination	Bezeichnung	품명	Denominación	Notes
1	**VOE 11802737**	1					Stripper unit	Unite rotatrice	Wendevorrichtung	스트리퍼 유닛	Inversor	
2	**PJ 7417865**	2					•Snap Ring	•Circlip	•Nutring	• 스냅 링	•Circlip	
3	**VOE 11713022**	2					•Washer	•Rondelle	•Scheibe	• 와셔	•Arandela	
4	**PJ 7411800**	1					•O-ring	•Joint Torique	•O-Ring	• 오링	•Junta torica	
5	**PJ 7417866**	1					•O-ring	•Joint Torique	•O-Ring	• 오링	•Junta torica	
6	**VOE 11713023**	1					•Screw	•Vis	•Schraube	• 스크류	•Tornillo	
7	**VOE 11711939**	1					•Screw	•Vis	•Schraube	• 스크류	•Tornillo	
8	**VOE 11713021**	1					•Lever	•Levier	•Hebel	• 레버	•Palanca	

1	**602.10151** →	→	**Selector de mando de equipo Std o Iso (us)** 표준 및 ISO 컨트롤 실렉터 스위치 (미국) **Standard- oder ISO-Gerätesteuerungswahlschalter (US)** **Sélecteur de commande pour équipement standard ou ISO (USA)** **Std or Iso equipment control selector switch (us)**
2			
3			
4			
5			**USA**

Catalogue id **20048**	Group **914**
Illustr. No **1010483**	Section **910**
Issue **VOE 74C9920048**	Page **437**

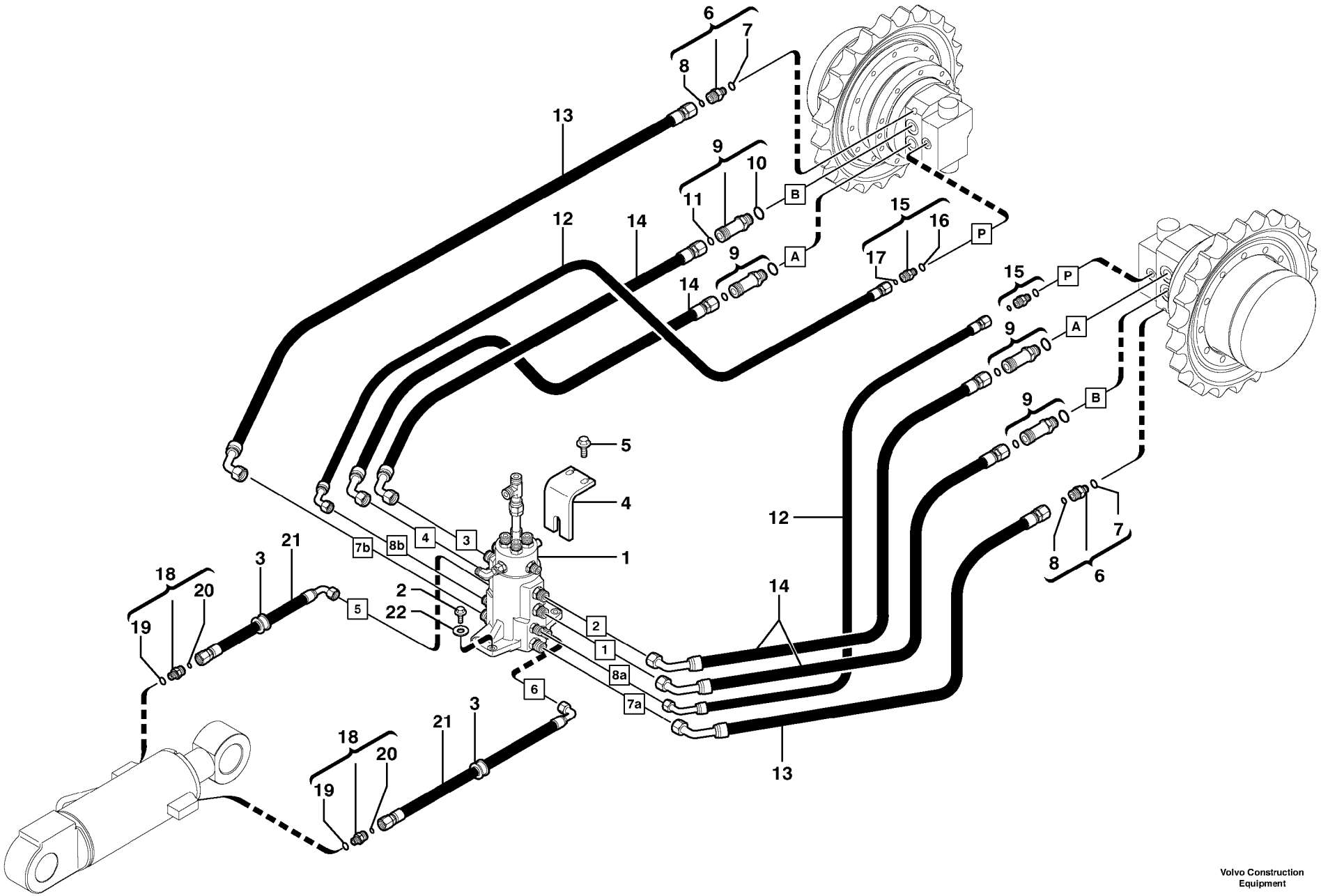

Volvo Construction Equipment

1013192

Fig.	Part No.	Quantity 1	2	3	PS	KIT	Description	Dénomination	Bezeichnung	품명	Denominación	Notes
1		1					Swivel joint	Joint tournant	Drehverteiler	스위블 조인트	Unión giratoria	See group 443, Page 227
2	**VOE 983244**	4					Hexagon screw	Vis a tête hexagonale	Sechskantschr.	육각 나사	Tornillo hexago	
3	**VOE 11802996**	2					Grommet	Passe fil	Durchführung	그로메트	Aislador pasapanel	
4	**VOE 11802406**	1					Stop	Arrêt	Anschlag	스톱	Parada	
5	**VOE 946472**	2					Flange screw	Vis à bride	Flanschschraube	플랜지 스크류	Torn embridado	
6	**VOE 11803014**	2					Union	Teton Connexion	Anschlussnippel	유니언	Niple Conexcion	
7		1			NS		•O-ring	•Joint Torique	•O-Ring	• 오링	•Junta torica	
8	**VOE 4880493**	1					•O-ring	•Joint Torique	•O-Ring	• 오링	•Junta torica	
9	**VOE 11803541**	4					Nipple	Raccord	Nippel	니플	Niple	
10	**PJ 4040250**	1					•O-ring	•Joint Torique	•O-Ring	• 오링	•Junta torica	
11	**VOE 4880663**	1					•O-ring	•Joint Torique	•O-Ring	• 오링	•Junta torica	
12	**VOE 11803550**	2					Hose assembly	Conduit flexible	Schlauchleitung	호스 어셈블리	Conducto	
13	**VOE 11803542**	2					Hose assembly	Conduit flexible	Schlauchleitung	호스 어셈블리	Conducto	
14	**VOE 11803543**	4					Hose assembly	Conduit flexible	Schlauchleitung	호스 어셈블리	Conducto	
15	**VOE 11802997**	2					Union	Teton Connexion	Anschlussnippel	유니언	Niple Conexcion	
16		1			NS		•O-ring	•Joint Torique	•O-Ring	• 오링	•Junta torica	
17	**VOE 4880492**	1					•O-ring	•Joint Torique	•O-Ring	• 오링	•Junta torica	
18	**VOE 11802651**	2					Union	Teton Connexion	Anschlussnippel	유니언	Niple Conexcion	
19	**PJ 5600201**	1					•Seal	•Joint	•Dichtring	• 시일	•Junta	
20	**VOE 4880492**	1					•O-ring	•Joint Torique	•O-Ring	• 오링	•Junta torica	
21	**VOE 11803017**	2					Hose assembly	Conduit flexible	Schlauchleitung	호스 어셈블리	Conducto	
22	**VOE 11804257**	4					Washer	Rondelle	Scheibe	와셔	Arandela	

1	**602.10151**	
2		
3		
4		
5		

Circuito hidraulico (bastidor inferior)
유압 회로 (하부 프레임)
Hydraulikkreis (Laufwerksrahmen)
Circuit hydraulique (châssis porteur)
Hydraulic circuit (lower frame)

Catalogue id	Group
20048	**916**
Illustr. No **1013192**	Section **100**
Issue **VOE 74C9920048**	Page **439**

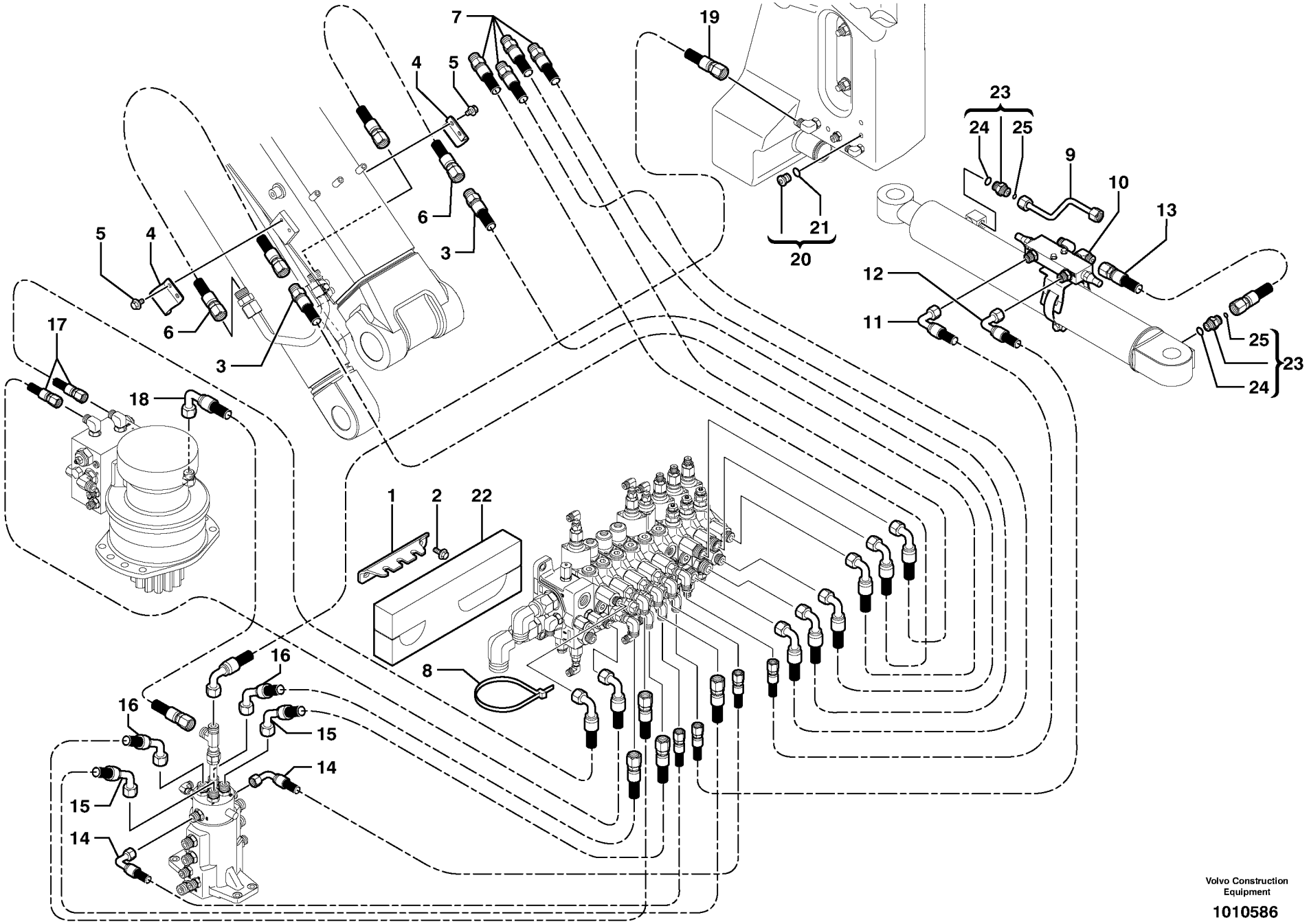

Volvo Construction Equipment

1010586

Fig.	Part No.	Quantity 1	2	3	PS	KIT	Description	Dénomination	Bezeichnung	품명	Denominación	Notes
1	**VOE 11800927**	1					Stop Plate	Plaque Butee	Stopplatte		Placa Tope	
2	**VOE 946173**	2			SS		Screw	Vis	Schraube	스크류	Tornillo	
3	**VOE 11803209**	2					Hose assembly	Conduit flexible	Schlauchleitung	호스 어셈블리	Conducto	
4	**VOE 11806699**	2					Clamp	Pince Serrage	Klemme	클램프	Abrazadera	
5	**VOE 947107**	4					Flange screw	Vis à bride	Flanschschraube	플랜지 스크류	Torn embridado	
6	**VOE 11803210**	2					Hose assembly	Conduit flexible	Schlauchleitung	호스 어셈블리	Conducto	
7	**VOE 11803208**	4					Hose assembly	Conduit flexible	Schlauchleitung	호스 어셈블리	Conducto	
8	**VOE 4881440**	1					Strip Clamp	Ruban Serrage	Kabelbinder	스트립 클램프	Abraz Cinta	
9	**VOE 11802557**	1					Tube	Tube	Rohr	튜브	Tubo	
10		1					Eql Valve	Valve d'equilibrage	Ausgleichventil	밸런스 밸브	Valvula equilibrio	See group 912, Page 389
11	**VOE 11803337**	1					Hose assembly	Conduit flexible	Schlauchleitung	호스 어셈블리	Conducto	
12	**VOE 11803337**	1					Hose assembly	Conduit flexible	Schlauchleitung	호스 어셈블리	Conducto	
13	**VOE 11803364**	1					Hose assembly	Conduit flexible	Schlauchleitung	호스 어셈블리	Conducto	
14	**VOE 11802347**	2					Hose assembly	Conduit flexible	Schlauchleitung	호스 어셈블리	Conducto	
15	**VOE 11802331**	2					Hose assembly	Conduit flexible	Schlauchleitung	호스 어셈블리	Conducto	
16	**VOE 11802332**	2					Hose assembly	Conduit flexible	Schlauchleitung	호스 어셈블리	Conducto	
17	**VOE 11803366**	2					Hose assembly	Conduit flexible	Schlauchleitung	호스 어셈블리	Conducto	
18	**VOE 11802337**	1					Hose assembly	Conduit flexible	Schlauchleitung	호스 어셈블리	Conducto	
19	**VOE 11802830**	1					Hose assembly	Conduit flexible	Schlauchleitung	호스 어셈블리	Conducto	
20	**VOE 984653**	1					Plug	Bouchon	Stopfen	플러그	Tapon	
21	**VOE 984473**	1					•O-ring	•Joint Torique	•O-Ring	• 오링	•Junta torica	
22	**VOE 11803388**	1					Insulating Material	Matériau isolant	Isolierstoff	절연재	Material de aislamien	
23	**VOE 11802742**	2					Union	Teton Connexion	Anschlussnippel	유니언	Niple Conexcion	
24	**PJ 5600202**	1					•Seal	•Joint	•Dichtring	• 시일	•Junta	
25	**VOE 4880492**	1					•O-ring	•Joint Torique	•O-Ring	• 오링	•Junta torica	

1	**602.10151**	
2		
3		
4		
5		

Circuito hidráulico (plataforma/válvula de equilibrio/cilindro excéntrico)
유압 회로 (플랫폼 / 균형 밸브 / 오프셋 실린더)
Hydraulikkreis (Plattform/Ausgleichventil/Versetzungszylinder)
Circuit hydraulique (passerelle/valve d'équilibrage/vérin de déport)
Hydraulic circuit (platform/balancing valve/offset cylinder)

Catalogue id	Group
20048	**916**
Illustr. No **1010586**	Section **350**
Issue **VOE 74C9920048**	Page **441**

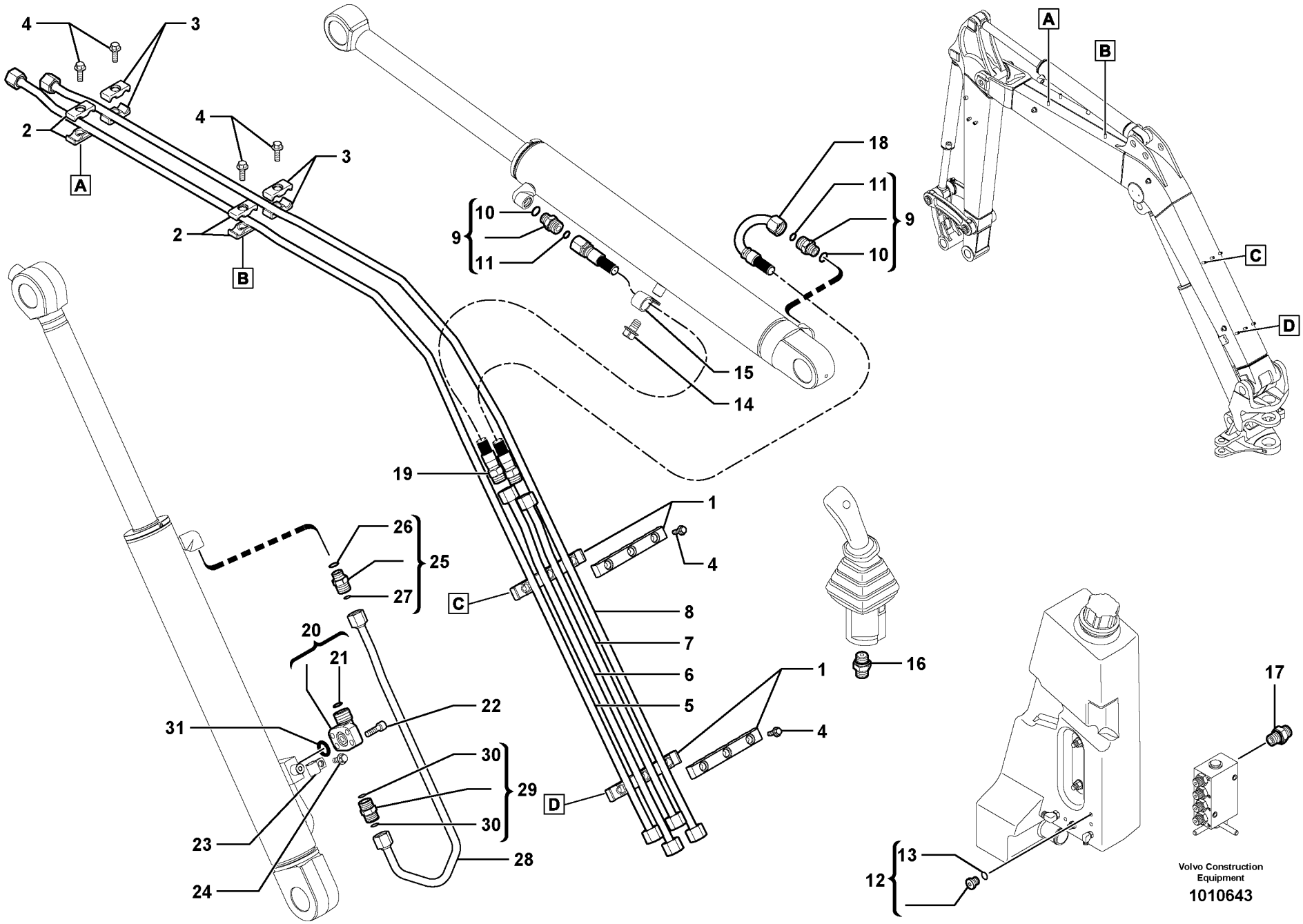
4
3
2
A
B
18
11
10
9
15
14
19
1
26
25
27
C
8
7
6
5
20
21
22
31
30
29
23
24
28
D
16
17
12
13
Volvo Construction Equipment
1010643

Fig.	Part No.	Quantity 1	2	3	PS	KIT	Description	Dénomination	Bezeichnung	품명	Denominación	Notes
1	**VOE 11801731**	4					Flange	Flasque	Flansch	플랜지	Brida	11839053, 11839067
2	**VOE 11801732**	4					Flange	Flasque	Flansch	플랜지	Brida	
3	**VOE 11803575**	4					Flange	Flasque	Flansch	플랜지	Brida	
4	**VOE 945444**	10			SS		Screw	Vis	Schraube	스크류	Tornillo	
5	**VOE 11801728**	1					Tube	Tube	Rohr	튜브	Tubo	
6	**VOE 11801725**	1					Tube	Tube	Rohr	튜브	Tubo	
7	**VOE 11801726**	1					Tube	Tube	Rohr	튜브	Tubo	
8	**VOE 11801727**	1					Tube	Tube	Rohr	튜브	Tubo	
9	**VOE 11802734**	2					Nipple	Raccord	Nippel	니플	Niple	
10	**PJ 5600203**	1					•Seal	•Joint	•Dichtring	• 시일	•Junta	
11	**VOE 4880663**	1					•O-ring	•Joint Torique	•O-Ring	• 오링	•Junta torica	
12	**VOE 984653**	1					Plug	Bouchon	Stopfen	플러그	Tapon	
13	**VOE 984473**	1					•O-ring	•Joint Torique	•O-Ring	• 오링	•Junta torica	
14	**VOE 947107**	1					Flange screw	Vis à bride	Flanschschraube	플랜지 스크류	Torn embridado	
15	**VOE 967531**	1					Clamp	Pince Serrage	Klemme	클램프	Abrazadera	
16		REQ					Restrictor	Etrangleur	Drosselung	리스트릭터	Estrangulacion	STD See group 914, Page 427
17		REQ					Restrictor	Etrangleur	Drosselung	리스트릭터	Estrangulacion	USA See group 914, Page 435
18	**VOE 11803587**	1					Hose assembly	Conduit flexible	Schlauchleitung	호스 어셈블리	Conducto	
19	**VOE 11803588**	1					Hose assembly	Conduit flexible	Schlauchleitung	호스 어셈블리	Conducto	
20	**VOE 11802728**	1					Flange	Flasque	Flansch	플랜지	Brida	
21	**VOE 4880663**	1					•O-ring	•Joint Torique	•O-Ring	• 오링	•Junta torica	
22	**VOE 984066**	4					Allen Hd Screw	Vis A 6 Pans Cr	Inbusschraube	스크류	Torn Hex Embut	
23	**VOE 980614**	1					Clamp	Pince Serrage	Klemme	클램프	Abrazadera	
24	**VOE 946173**	1			SS		Screw	Vis	Schraube	스크류	Tornillo	
25	**VOE 11802734**	1					Nipple	Raccord	Nippel	니플	Niple	
26	**PJ 5600203**	1					•Seal	•Joint	•Dichtring	• 시일	•Junta	
27	**VOE 4880663**	1					•O-ring	•Joint Torique	•O-Ring	• 오링	•Junta torica	
28	**VOE 11802733**	1					Tube	Tube	Rohr	튜브	Tubo	

1	**602.10151**	
2		
3		
4		
5		

Circuito hidráulico (pluma)
유압 회로 (붐)
Hydraulikkreis (Ausleger)
Circuit hydraulique (flèche)
Hydraulic circuit (boom)

STD , USA

Catalogue id	Group
20048	**916**
Illustr. No **1010643**	Section **400**
Issue **VOE 74C9920048**	Page **443**

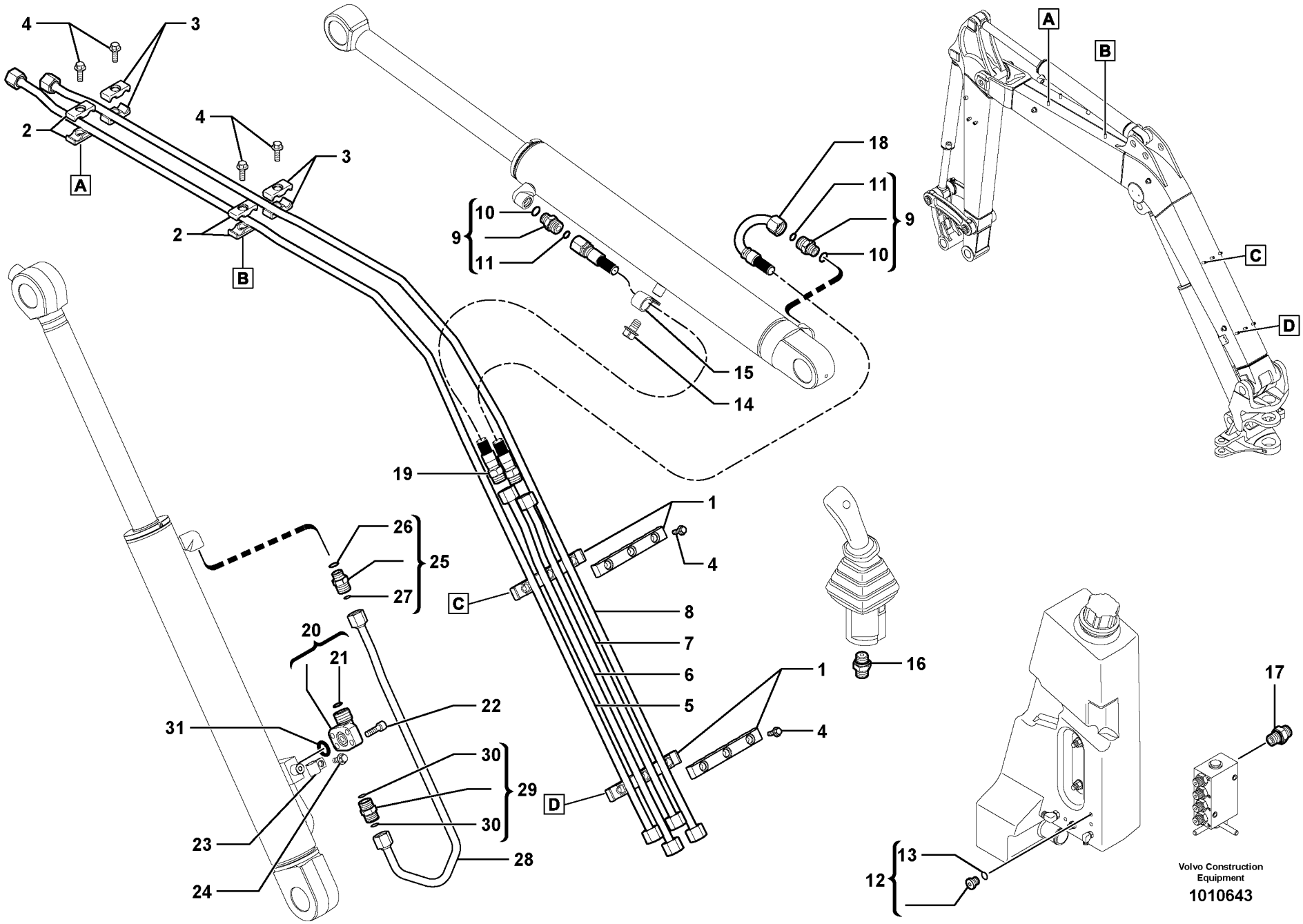
4
3
2
A
B
18
11
10
9
15
14
19
1
26
25
27
C
8
7
6
5
20
21
22
31
30
29
23
24
28
D
16
17
12
13
Volvo Construction Equipment
1010643

Fig.	Part No.	Quantity 1	2	3	PS	KIT	Description	Dénomination	Bezeichnung	품명	Denominación	Notes
29	**VOE 935665**	1					Nipple	Raccord	Nippel	니플	Niple	
30	**VOE 4880493**	2					•O-ring	•Joint Torique	•O-Ring	• 오링	•Junta torica	
31	**VOE 945777**	1					O-ring	Joint Torique	O-Ring	오링	Junta torica	

1	**602.10151**		**Circuito hidráulico (pluma)** 유압 회로 (붐) **Hydraulikkreis (Ausleger)** **Circuit hydraulique (flèche)** **Hydraulic circuit (boom)**	Catalogue id **20048**	Group **916**
2				Illustr. No **1010643**	Section **400**
3					
4				Issue **VOE 74C9920048**	Page **445**
5			**STD , USA**		

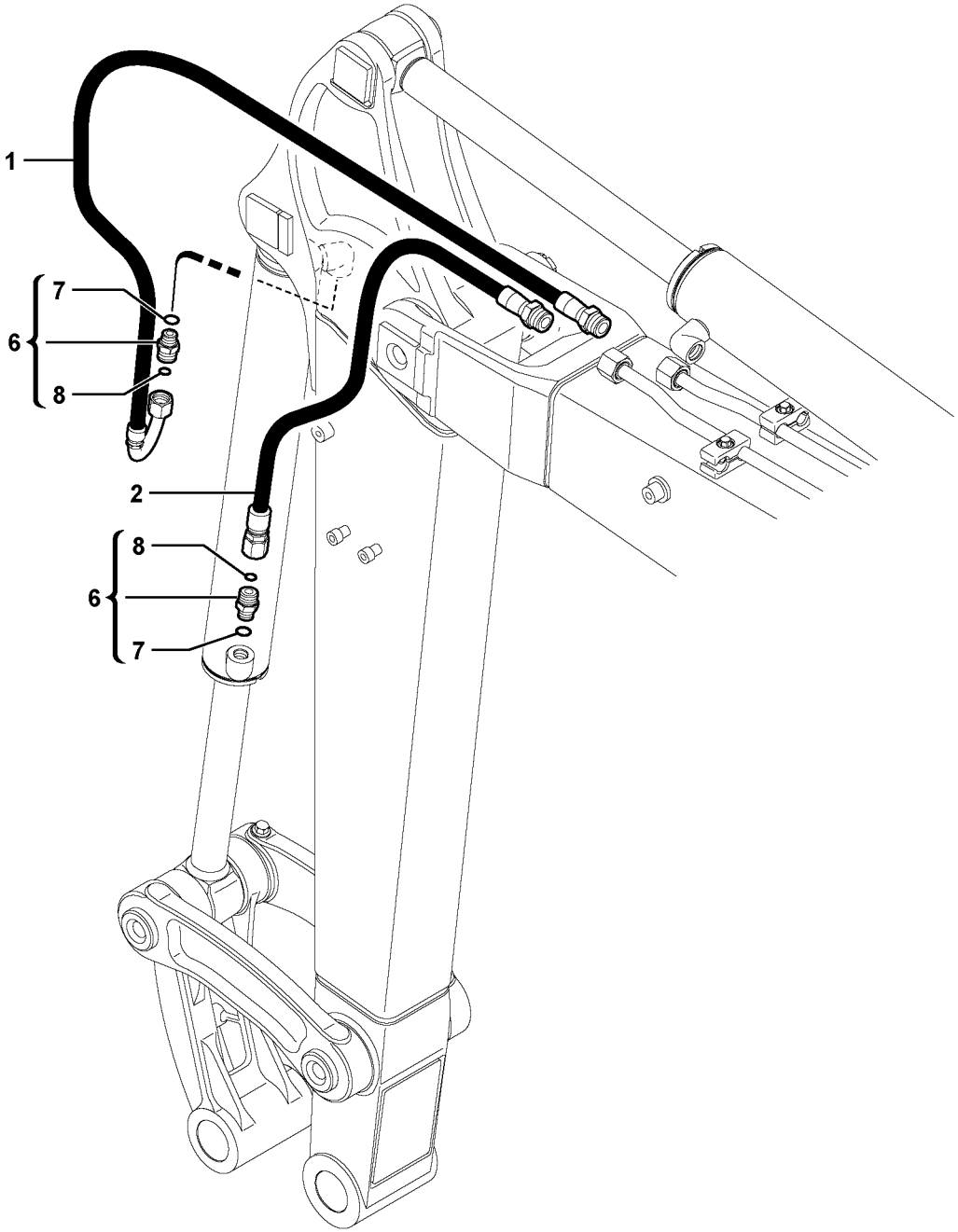

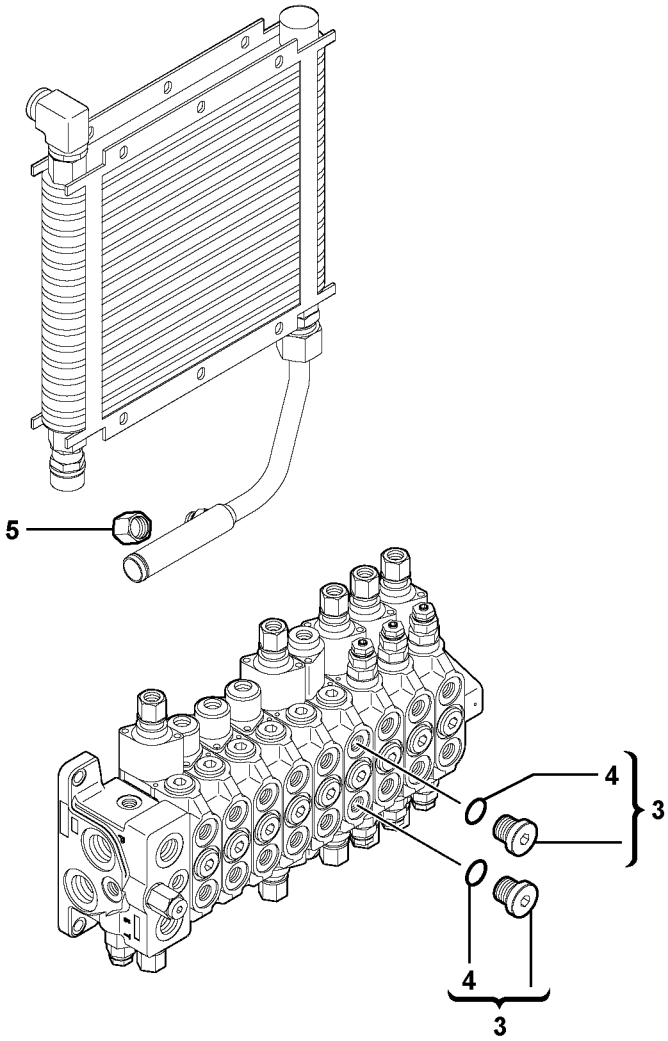

Volvo Construction Equipment

1010641

Fig.	Part No.	Quantity 1	2	3	PS	KIT	Description	Dénomination	Bezeichnung	품명	Denominación	Notes
1	**VOE 11803591**	REQ					Hose assembly	Conduit flexible	Schlauchleitung	호스 어셈블리	Conducto	11839083 L = 750mm/29.5275in
1	**VOE 11803593**	REQ					Hose assembly	Conduit flexible	Schlauchleitung	호스 어셈블리	Conducto	11839080 L = 1000mm/39.3700in
2	**VOE 11803592**	REQ					Hose assembly	Conduit flexible	Schlauchleitung	호스 어셈블리	Conducto	L = 1150mm/45.2755in
2	**VOE 11803594**	REQ					Hose assembly	Conduit flexible	Schlauchleitung	호스 어셈블리	Conducto	L = 1400mm/55.1180in
3	**VOE 984656**	2					Plug	Bouchon	Stopfen	플러그	Tapon	
4	**VOE 983122**	1					•O-ring	•Joint Torique	•O-Ring	• 오링	•Junta torica	
5	**VOE 935574**	1					Plug	Bouchon	Stopfen	플러그	Tapon	
6	**VOE 11802650**	2					Union	Teton Connexion	Anschlussnippel	유니언	Niple Conexcion	
7	**PJ 5600202**	1					•Seal	•Joint	•Dichtring	• 시일	•Junta	
8	**VOE 4880493**	1					•O-ring	•Joint Torique	•O-Ring	• 오링	•Junta torica	

1	**602.10151**	
2		
3		
4		
5		

Circuito hidráulico (brazo)
유압 회로 (암)
Hydraulikkreis (Löffelstiel)
Circuit hydraulique (balancier)
Hydraulic circuit (dipper arm)

Catalogue id **20048**	Group **916**
Illustr. No **1010641**	Section **500**
Issue **VOE 74C9920048**	Page **447**

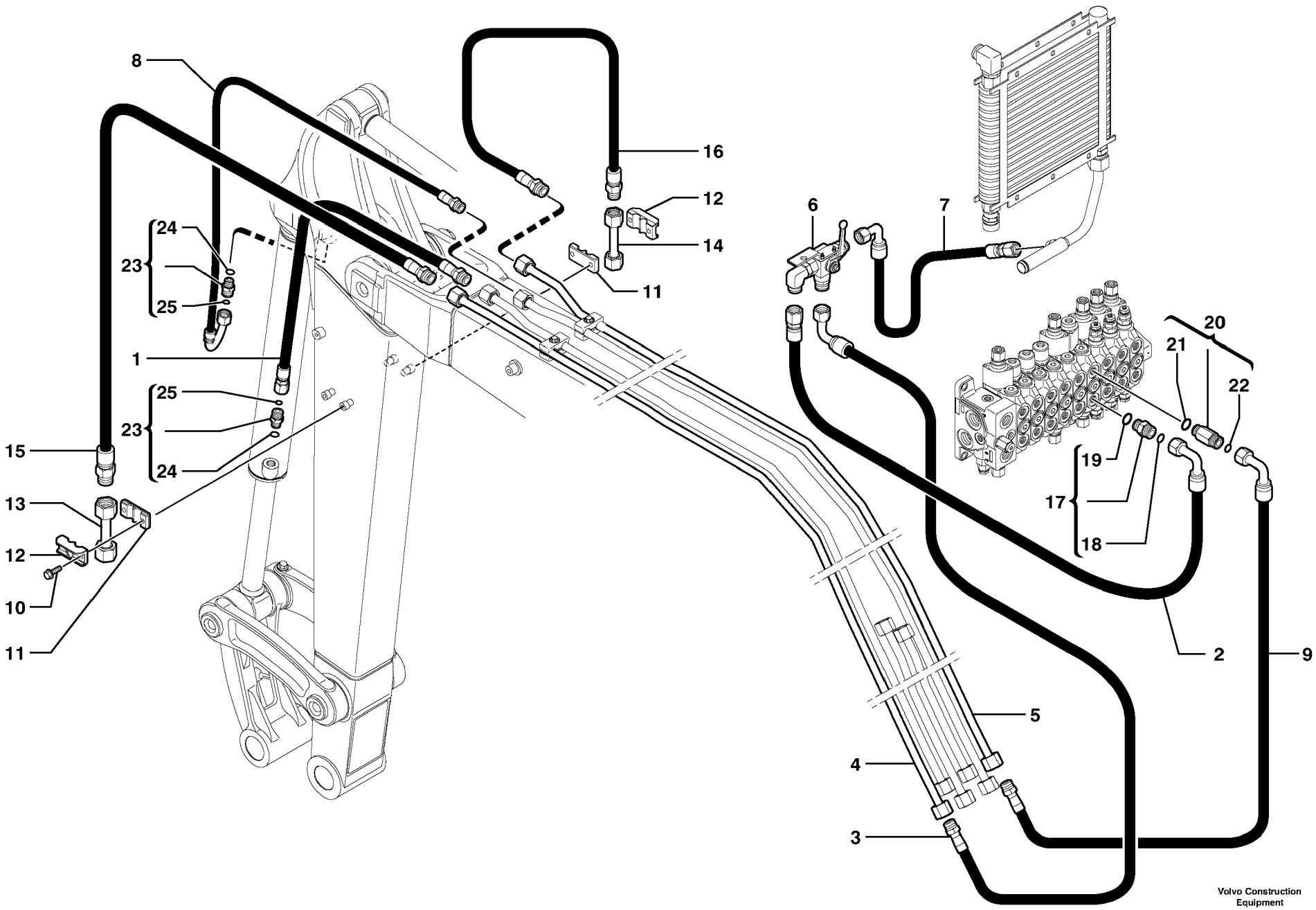

Volvo Construction Equipment

1012539

Fig.	Part No.	Quantity 1	2	3	PS	KIT	Description	Dénomination	Bezeichnung	품명	Denominación	Notes
1	**VOE 11803592**	1					Hose assembly	Conduit flexible	Schlauchleitung	호스 어셈블리	Conducto	11839084 L = 1150mm/45.2755in
1	**VOE 11803594**	1					Hose assembly	Conduit flexible	Schlauchleitung	호스 어셈블리	Conducto	11839081 L = 1400mm/55.1180in
2	**VOE 11804126**	1					Hose assembly	Conduit flexible	Schlauchleitung	호스 어셈블리	Conducto	
3	**VOE 11803221**	1					Hose assembly	Conduit flexible	Schlauchleitung	호스 어셈블리	Conducto	
4	**VOE 11801723**	1					Tube	Tube	Rohr	튜브	Tubo	
5	**VOE 11801724**	1					Tube	Tube	Rohr	튜브	Tubo	
6		1					Three-way Valve	Robinet 3 Voies	Dreiwegeventil	3 방 밸브	Grifo 3 vias	See group 916, Page 459
7	**VOE 11802922**	1					Hose assembly	Conduit flexible	Schlauchleitung	호스 어셈블리	Conducto	
8	**VOE 11803591**	1					Hose assembly	Conduit flexible	Schlauchleitung	호스 어셈블리	Conducto	L = 750mm/29.5275in
8	**VOE 11803593**	1					Hose assembly	Conduit flexible	Schlauchleitung	호스 어셈블리	Conducto	L = 1000mm/39.3700in
9	**VOE 11803208**	1					Hose assembly	Conduit flexible	Schlauchleitung	호스 어셈블리	Conducto	
10	**VOE 946470**	4					Flange screw	Vis à bride	Flanschschraube	플랜지 스크류	Torn embridado	
11	**VOE 11802916**	2					Flange	Flasque	Flansch	플랜지	Brida	
12	**VOE 11802915**	2					Flange	Flasque	Flansch	플랜지	Brida	
13	**VOE 11803583**	1					Tube	Tube	Rohr	튜브	Tubo	
14	**VOE 11803408**	1					Tube	Tube	Rohr	튜브	Tubo	
15	**VOE 11803596**	1					Hose assembly	Conduit flexible	Schlauchleitung	호스 어셈블리	Conducto	L = 675mm/26.5748in
15	**VOE 11803598**	1					Hose assembly	Conduit flexible	Schlauchleitung	호스 어셈블리	Conducto	L = 1000mm/39.3700in
16	**VOE 11803595**	1					Hose assembly	Conduit flexible	Schlauchleitung	호스 어셈블리	Conducto	L = 675mm/26.5748in
16	**VOE 11803597**	1					Hose assembly	Conduit flexible	Schlauchleitung	호스 어셈블리	Conducto	L = 1000mm/39.3700in
17	**VOE 935095**	1					Nipple	Raccord	Nippel	니플	Niple	
18	**VOE 4880663**	1					•O-ring	•Joint Torique	•O-Ring	• 오링	•Junta torica	
19	**VOE 932041**	1					•O-ring	•Joint Torique	•O-Ring	• 오링	•Junta torica	
20	**VOE 11801960**	1					Adapter	Raccord Reduct.	Verbind Stutzen	어댑터	Adaptador	
21	**VOE 932041**	1					•O-ring	•Joint Torique	•O-Ring	• 오링	•Junta torica	
22	**VOE 4880663**	1					•O-ring	•Joint Torique	•O-Ring	• 오링	•Junta torica	
23	**VOE 11802650**	2					Union	Teton Connexion	Anschlussnippel	유니언	Niple Conexcion	
24	**PJ 5600202**	1					•Seal	•Joint	•Dichtring	• 시일	•Junta	

1	**602.10151**	
2		
3		
4		
5		

Circuito hidráulico (doble efecto)
유압 회로 (2 단 작동)
Hydraulikkreis (doppeltwirkend)
Circuit hydraulique, double effet
Hydraulic circuit (double-acting)

Catalogue id	Group
20048	**916**
Illustr. No **1012539**	Section **2000**
Issue **VOE 74C9920048**	Page **449**

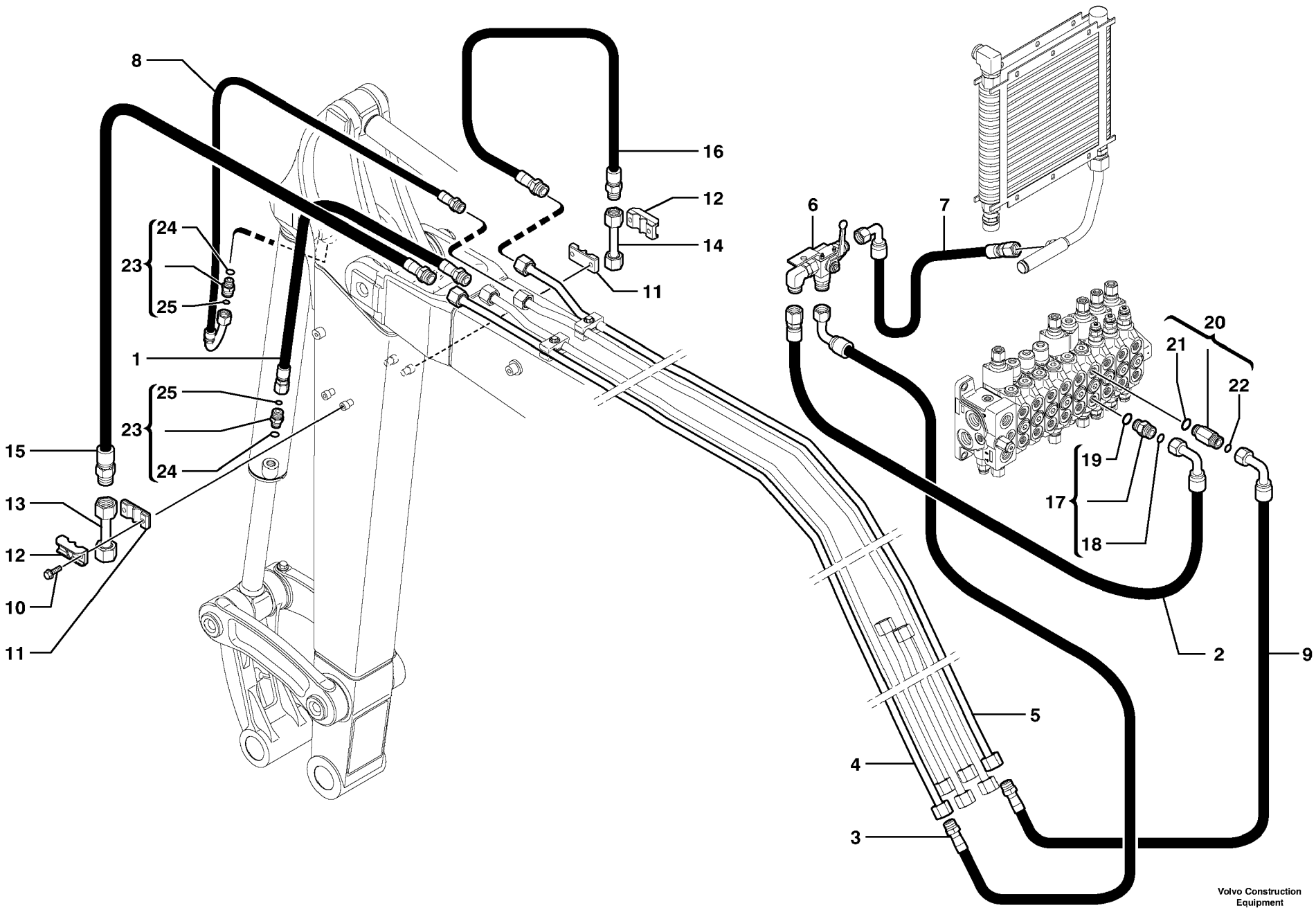

Volvo Construction Equipment

1012539

Fig.	Part No.	Quantity 1	2	3	PS	KIT	Description	Dénomination	Bezeichnung	품명	Denominación	Notes
25	**VOE 4880493**	1					•O-ring	•Joint Torique	•O-Ring	• 오링	•Junta torica	

1	**602.10151**		**Circuito hidráulico (doble efecto)** 유압 회로 (2 단 작동) **Hydraulikkreis (doppeltwirkend)** **Circuit hydraulique, double effet** **Hydraulic circuit (double-acting)**	Catalogue id **20048**	Group **916**
2					
3				Illustr. No **1012539**	Section **2000**
4					
5				Issue **VOE 74C9920048**	Page **451**

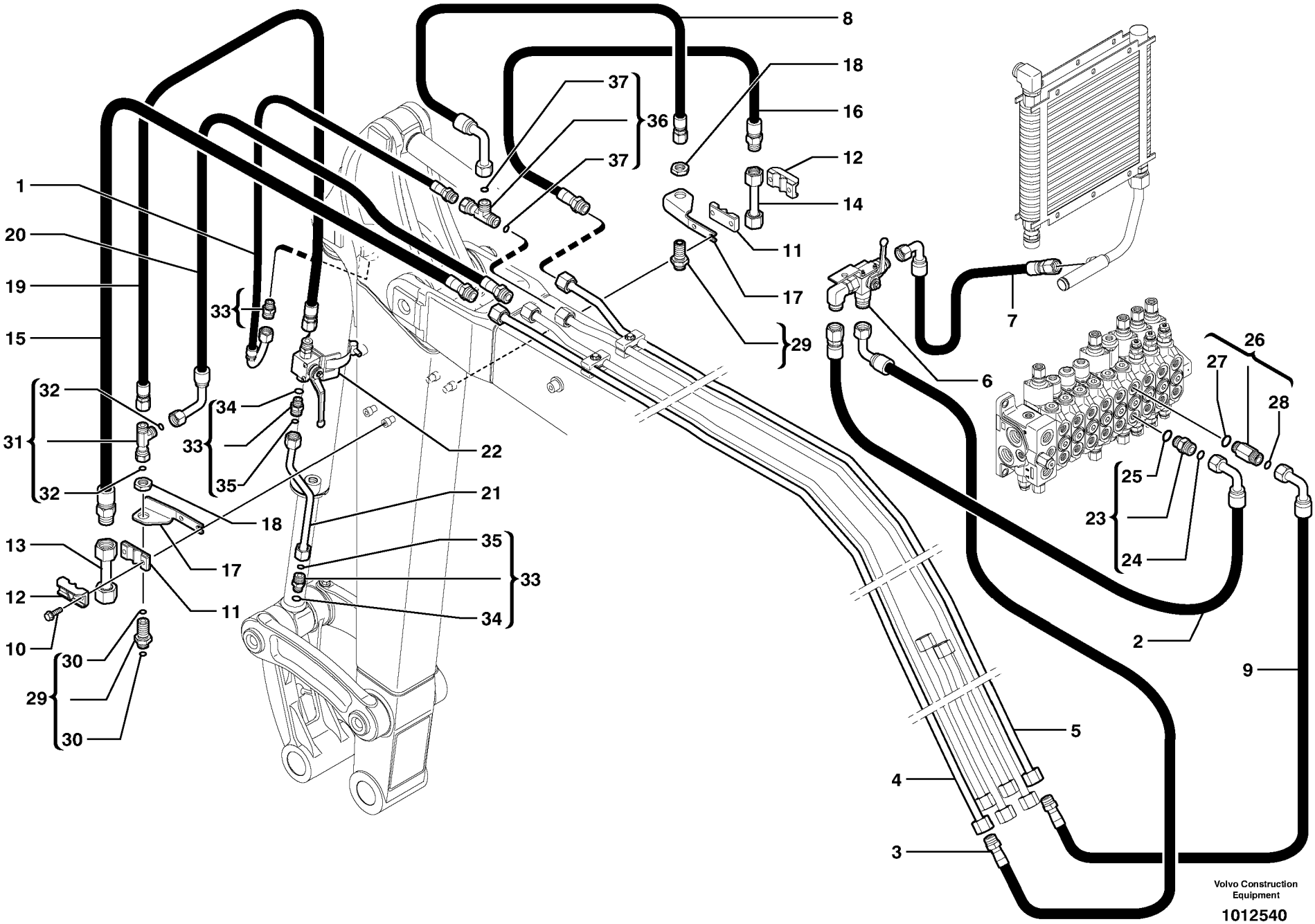
1
20
19
15
31
32
32
13
12
10
29
30
30
33
34
33
35
18
17
11
22
21
35
33
34
8
18
16
37
36
37
12
14
11
17
29
7
6
26
27
28
25
23
24
2
9
5
4
3
Volvo Construction Equipment
1012540

Fig.	Part No.	Quantity 1	2	3	PS	KIT	Description	Dénomination	Bezeichnung	품명	Denominación	Notes
1	**VOE 11803591**	1					Hose assembly	Conduit flexible	Schlauchleitung	호스 어셈블리	Conducto	11839085 L = 750mm/29.5275in
1	**VOE 11803593**	1					Hose assembly	Conduit flexible	Schlauchleitung	호스 어셈블리	Conducto	11839082 L = 1000mm/39.3700in
2	**VOE 11804126**	1					Hose assembly	Conduit flexible	Schlauchleitung	호스 어셈블리	Conducto	
3	**VOE 11803221**	1					Hose assembly	Conduit flexible	Schlauchleitung	호스 어셈블리	Conducto	
4	**VOE 11801723**	1					Tube	Tube	Rohr	튜브	Tubo	
5	**VOE 11801724**	1					Tube	Tube	Rohr	튜브	Tubo	
6		1					Three-way Valve	Robinet 3 Voies	Dreiwegeventil	3 방 밸브	Grifo 3 vias	See group 916, Page 459
7	**VOE 11802922**	1					Hose assembly	Conduit flexible	Schlauchleitung	호스 어셈블리	Conducto	
8	**VOE 11803615**	1					Hose assembly	Conduit flexible	Schlauchleitung	호스 어셈블리	Conducto	L = 825mm/32.4803in
8	**VOE 11803604**	1					Hose assembly	Conduit flexible	Schlauchleitung	호스 어셈블리	Conducto	L = 1075mm/42.3228in
9	**VOE 11803208**	1					Hose assembly	Conduit flexible	Schlauchleitung	호스 어셈블리	Conducto	
10	**VOE 13947760**	4					Flange screw	Vis à bride	Flanschschraube	플랜지 스크류	Torn embridado	
11	**VOE 11802916**	2					Flange	Flasque	Flansch	플랜지	Brida	
12	**VOE 11802915**	2					Flange	Flasque	Flansch	플랜지	Brida	
13	**VOE 11803583**	1					Tube	Tube	Rohr	튜브	Tubo	
14	**VOE 11803408**	1					Tube	Tube	Rohr	튜브	Tubo	
15	**VOE 11803596**	1					Hose assembly	Conduit flexible	Schlauchleitung	호스 어셈블리	Conducto	L = 675mm/26.5748in
15	**VOE 11803598**	1					Hose assembly	Conduit flexible	Schlauchleitung	호스 어셈블리	Conducto	L = 1000mm/39.3700in
16	**VOE 11803595**	1					Hose assembly	Conduit flexible	Schlauchleitung	호스 어셈블리	Conducto	L = 675mm/26.5748in
16	**VOE 11803597**	1					Hose assembly	Conduit flexible	Schlauchleitung	호스 어셈블리	Conducto	L = 1000mm/39.3700in
17	**VOE 11803439**	2					Plate	Plaque	Platte	플레이트	Placa	
18	**VOE 13933867**	2					Lock nut	Contre-ecrou	Sicherungsmutter	록 너트	Contratuerca	
19	**VOE 11803527**	1					Hose assembly	Conduit flexible	Schlauchleitung	호스 어셈블리	Conducto	
20	**VOE 11803614**	1					Hose assembly	Conduit flexible	Schlauchleitung	호스 어셈블리	Conducto	L = 950mm/37.4015in
20	**VOE 11803603**	1					Hose assembly	Conduit flexible	Schlauchleitung	호스 어셈블리	Conducto	L = 1200mm/37.4015in
21	**VOE 11803525**	1					Tube	Tube	Rohr	튜브	Tubo	
22		1					two-way valve	Robinet à 2 voies	Zweiwegehahn	2 방 밸브	Grifo de dos vías	See group 916, Page 461
23	**VOE 935095**	1					Nipple	Raccord	Nippel	니플	Niple	

1	**602.10151**	
2		
3		
4		
5		

Circuito hidráulico (implemento) (cuchara bivalva)
유압 회로 (작업장치) (그래브 조)
Hydraulikkreis (Gerät) (Zweischalengreifer)
Circuit hydraulique, équipement benne preneuse
Hydr. circuit. (attachment) (grab jaw)

Catalogue id	Group
20048	**916**
Illustr. No **1012540**	Section **3000**
Issue **VOE 74C9920048**	Page **453**

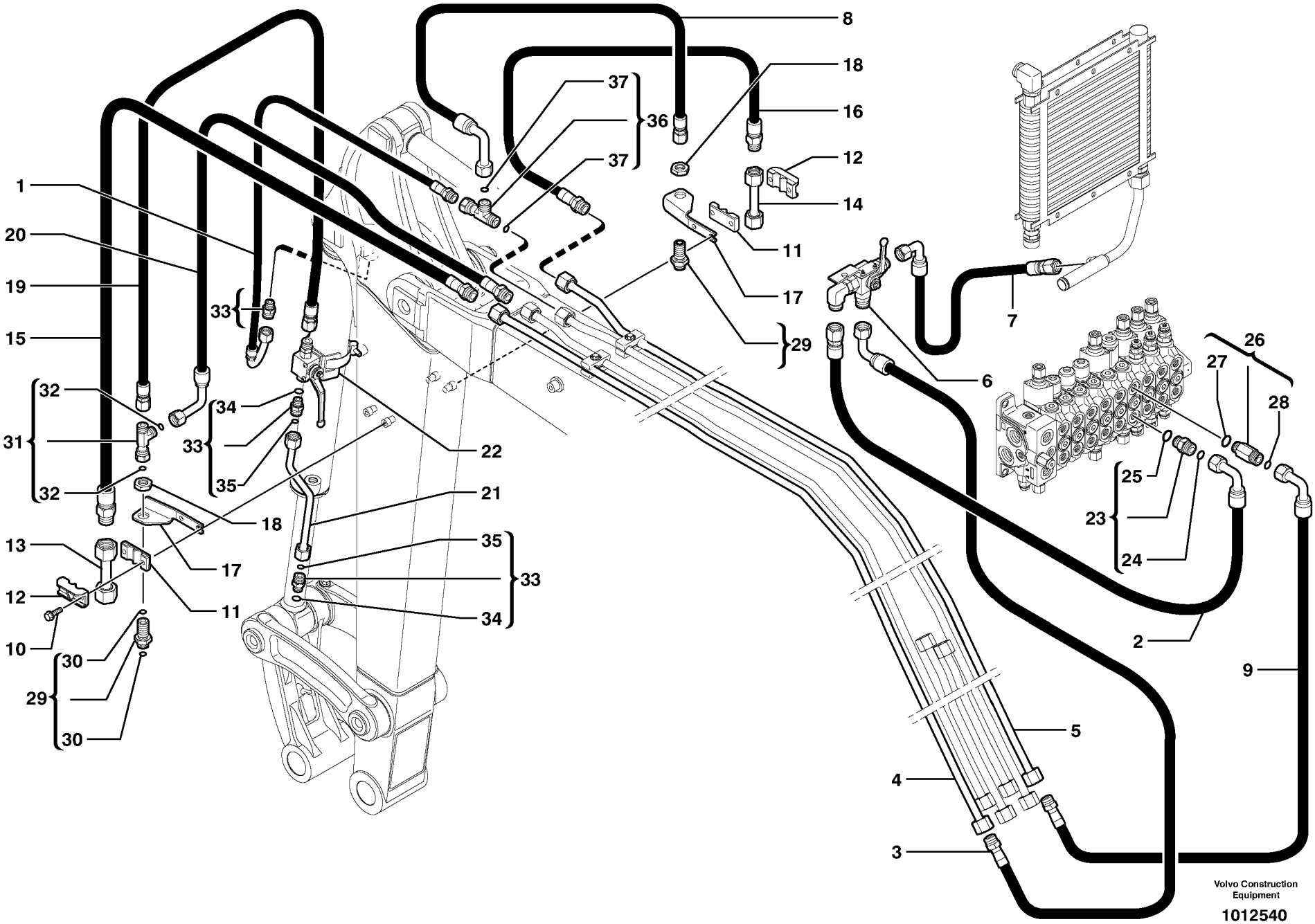
1
20
19
15
31
32
32
13
12
10
29
30
30
33
34
33
35
18
17
11
22
21
35
33
34
8
18
16
37
36
37
12
14
11
17
29
7
6
26
27
28
25
23
24
2
9
5
4
3
Volvo Construction Equipment
1012540

Fig.	Part No.	Quantity 1	2	3	PS	KIT	Description	Dénomination	Bezeichnung	품명	Denominación	Notes
24	**VOE 4880663**	1					•O-ring	•Joint Torique	•O-Ring	• 오링	•Junta torica	
25	**VOE 932041**	1					•O-ring	•Joint Torique	•O-Ring	• 오링	•Junta torica	
26	**VOE 11801960**	1					Adapter	Raccord Reduct.	Verbind Stutzen	어댑터	Adaptador	
27	**VOE 932041**	1					•O-ring	•Joint Torique	•O-Ring	• 오링	•Junta torica	
28	**VOE 4880663**	1					•O-ring	•Joint Torique	•O-Ring	• 오링	•Junta torica	
29	**VOE 13933922**	2					Nipple	Raccord	Nippel	니플	Niple	
30	**VOE 4880493**	2					•O-ring	•Joint Torique	•O-Ring	• 오링	•Junta torica	
31	**VOE 13933878**	1					Nipple	Raccord	Nippel	니플	Niple	
32	**VOE 4880493**	2					•O-ring	•Joint Torique	•O-Ring	• 오링	•Junta torica	
33	**VOE 11802650**	3					Union	Teton Connexion	Anschlussnippel	유니언	Niple Conexcion	
34	**PJ 5600202**	1					•Seal	•Joint	•Dichtring	• 시일	•Junta	
35	**VOE 4880493**	1					•O-ring	•Joint Torique	•O-Ring	• 오링	•Junta torica	
36	**VOE 935028**	1					Nipple	Raccord	Nippel	니플	Niple	
37	**VOE 4880663**	2					•O-ring	•Joint Torique	•O-Ring	• 오링	•Junta torica	

1	**602.10151**	
2		
3		
4		
5		

Circuito hidráulico (implemento) (cuchara bivalva)
유압 회로 (작업장치) (그래브 조)
Hydraulikkreis (Gerät) (Zweischalengreifer)
Circuit hydraulique, équipement benne preneuse
Hydr. circuit. (attachment) (grab jaw)

Catalogue id	Group
20048	**916**
Illustr. No **1012540**	Section **3000**
Issue **VOE 74C9920048**	Page **455**

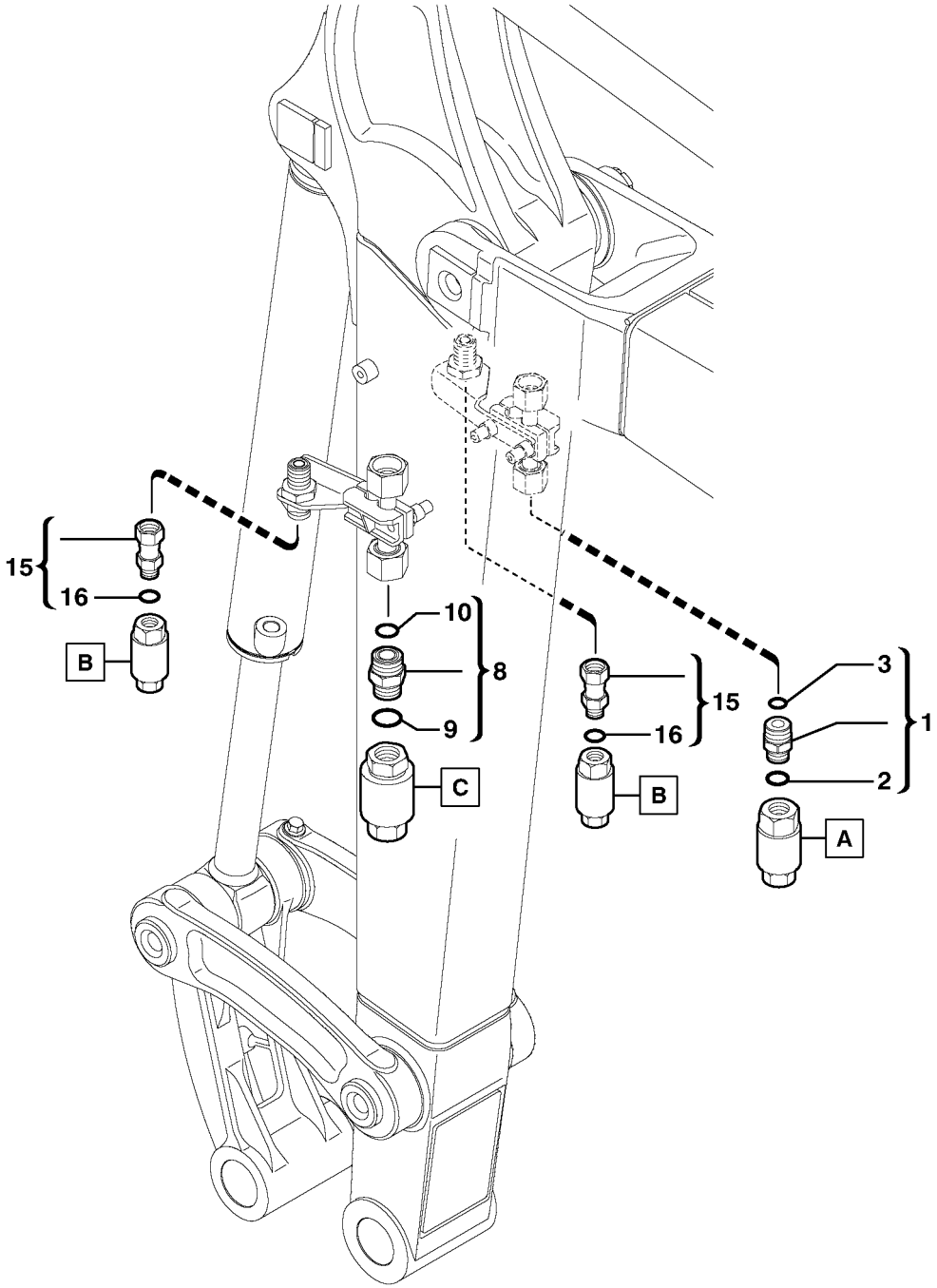

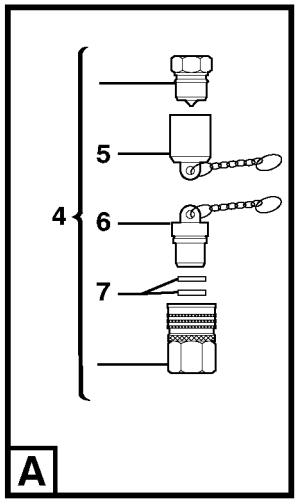

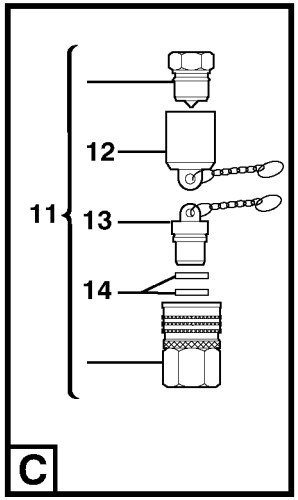

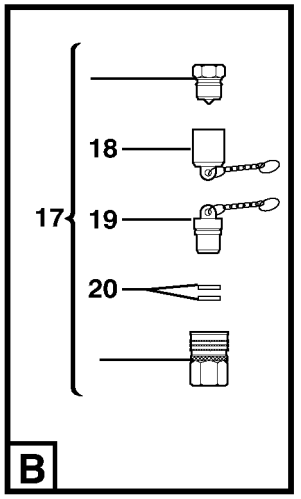

Volvo Construction Equipment

1012547

Fig.	Part No.	Quantity 1	2	3	PS	KIT	Description	Dénomination	Bezeichnung	품명	Denominación	Notes
1	**VOE 11802734**	REQ					Nipple	Raccord	Nippel	니플	Niple	
2	**PJ 5600203**	1					•Seal	•Joint	•Dichtring	• 시일	•Junta	
3	**VOE 4880663**	1					•O-ring	•Joint Torique	•O-Ring	• 오링	•Junta torica	
4	**VOE 11804074**	REQ					Quick Coupling	Accouple.rapide	Schnellkupplung	퀵 커플러	Acoplam Rapido	11839154 1/2”
5	**PJ 7416963**	1					•Cowl	•Auvent	•Windlauf	• 카울	•Torpedo	
6	**PJ 7416962**	1					•Plug	•Bouchon	•Stopfen	• 플러그	•Tapon	
7	**VOE 11710396**	1					•Sealing Kit	•Jeu Joints	•Dichtungssatz	• 시일 킷	•Juego Retenes	
8	**VOE 11802727**	REQ					Union	Teton Connexion	Anschlussnippel	유니언	Niple Conexcion	
9	**PJ 5600204**	1					•Seal	•Joint	•Dichtring	• 시일	•Junta	
10	**VOE 981289**	1					•O-ring	•Joint Torique	•O-Ring	• 오링	•Junta torica	
11	**VOE 11804110**	REQ					Quick Coupling	Accouple.rapide	Schnellkupplung	퀵 커플러	Acoplam Rapido	3/4”
12	**ZM 2814837**	1					•Dust protection	•Anti-poussières	•Staubschutz	• 방진	•Protección de polvo	
13	**ZM 2814836**	1					•Dust Cover	•Pare-poussiere	•Staubschutz	• 더스트 커버	•Prot Polvo	
14	**VOE 11710397**	1					•Sealing Kit	•Jeu Joints	•Dichtungssatz	• 시일 킷	•Juego Retenes	
15	**VOE 11804081**	2					Adapter	Raccord Reduct.	Verbind Stutzen	어댑터	Adaptador	
16	**PJ 5600202**	1					•Seal	•Joint	•Dichtring	• 시일	•Junta	
17	**VOE 11804075**	2					Quick Coupling	Accouple.rapide	Schnellkupplung	퀵 커플러	Acoplam Rapido	11839156 3/8”
18	**PJ 7417110**	1					•Cowl	•Auvent	•Windlauf	• 카울	•Torpedo	
19	**PJ 7417109**	1					•Plug	•Bouchon	•Stopfen	• 플러그	•Tapon	
20	**VOE 11710395**	1					•Sealing Kit	•Jeu Joints	•Dichtungssatz	• 시일 킷	•Juego Retenes	

1	**602.10151**	
2		
3		
4		
5		

Kit de acoplamiento (accesorios)
커플링 키트 (액세서리)
Kupplungsstück-Kit (Zubehör)
Kit raccords (accessoires)
Kit coupler (accessories)

Catalogue id	Group
20048	**916**
Illustr. No **1012547**	Section **4000**
Issue **VOE 74C9920048**	Page **457**

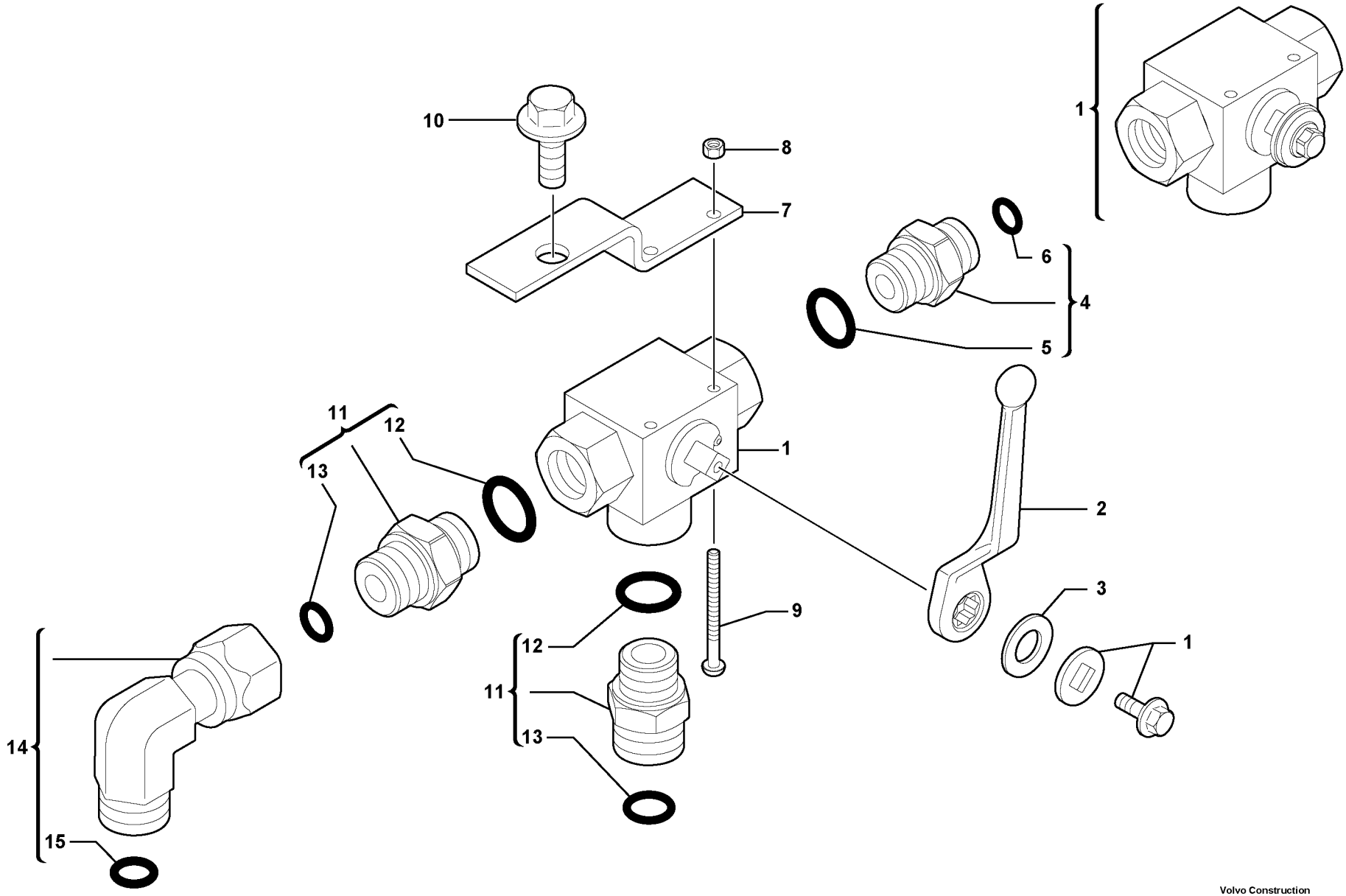

Volvo Construction Equipment

1020013

Fig.	Part No.	Quantity 1	2	3	PS	KIT	Description	Dénomination	Bezeichnung	품명	Denominación	Notes
1	**VOE 11801995**	1					Three-way Valve	Robinet 3 Voies	Dreiwegeventil	3 방 밸브	Grifo 3 vias	
2	**VOE 11802931**	1					Lever	Levier	Hebel	레버	Palanca	
3	**VOE 13955897**	1					Washer	Rondelle	Scheibe	와셔	Arandela	
4	**VOE 11802732**	1					Union	Teton Connexion	Anschlussnippel	유니언	Niple Conexcion	
5	**PJ 5600203**	1					•Seal	•Joint	•Dichtring	• 시일	•Junta	
6	**VOE 4880493**	1					•O-ring	•Joint Torique	•O-Ring	• 오링	•Junta torica	
7	**VOE 11802962**	1					Support	Support	Stütze	서포트	Apoyo	
8	**VOE 955779**	2					Hexagon Nut	Ecrou Hexagonal	Sechskantmutter	너트	Tuerca Hexagon	
9	**VOE 969523**	2					Six Point Socket Scre	Vis à six pans creux	Innensechskantschra	6 포인트 소켓 스크류	Tornillo de cabeza he	
10	**VOE 946441**	1					Flange screw	Vis à bride	Flanschschraube	플랜지 스크류	Torn embridado	
11	**VOE 11802734**	2					Nipple	Raccord	Nippel	니플	Niple	
12	**PJ 5600203**	1					•Seal	•Joint	•Dichtring	• 시일	•Junta	
13	**VOE 4880663**	1					•O-ring	•Joint Torique	•O-Ring	• 오링	•Junta torica	
14	**VOE 935423**	1					Elbow nipple	Raccord angulaire	Winkelnippel	엘보 니플	Niple angular	
15	**VOE 4880663**	1					•O-ring	•Joint Torique	•O-Ring	• 오링	•Junta torica	

1	**602.10151**	
2		
3		
4		
5		

Valvula 3-vias
3 방 밸브
Dreiwegventil
Robinet 3 voies
Three-way valve

Catalogue id	Group
20048	**916**
Illustr. No **1020013**	Section **5000**
Issue **VOE 74C9920048**	Page **459**

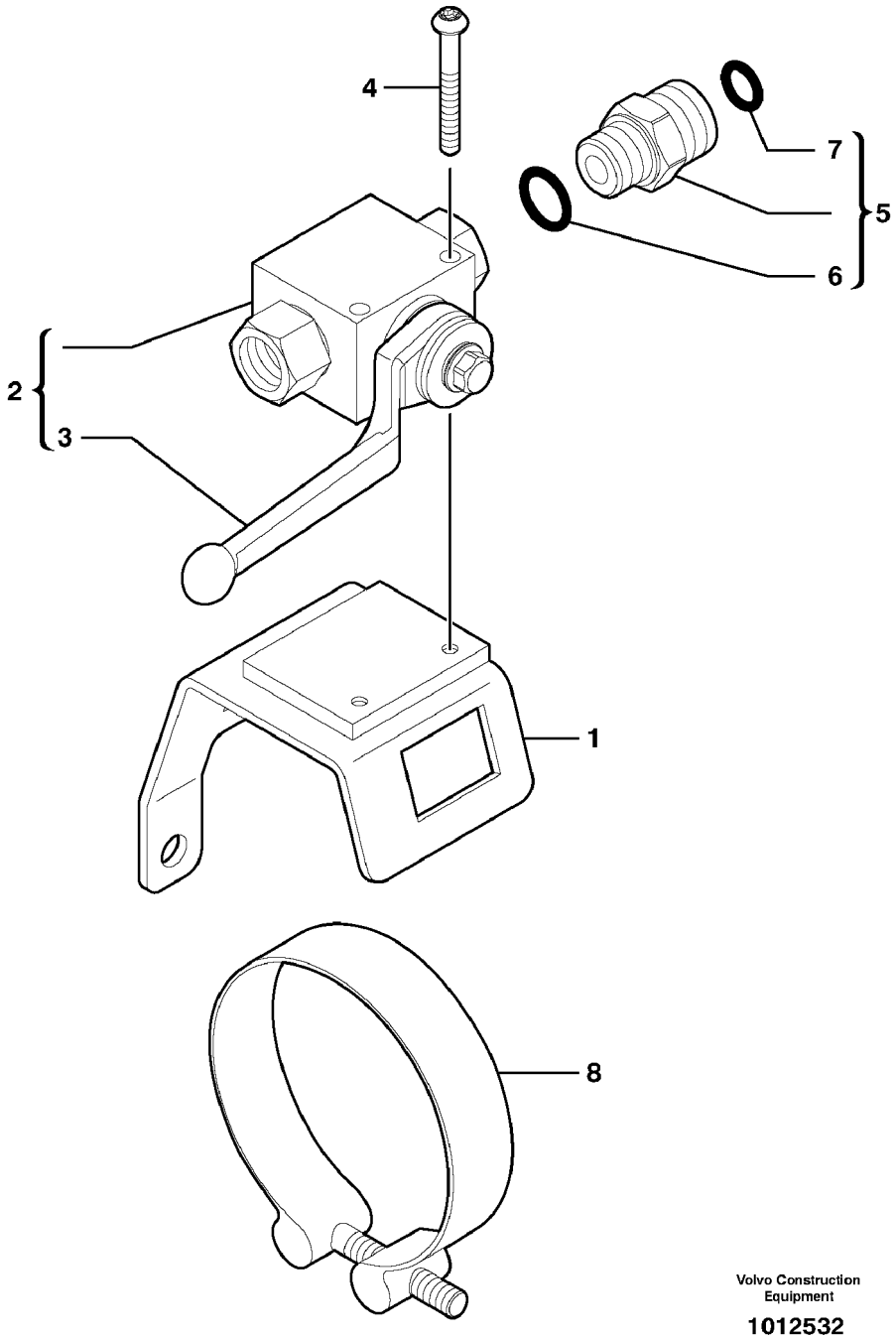

Volvo Construction Equipment

1012532

Fig.	Part No.	Quantity 1	2	3	PS	KIT	Description	Dénomination	Bezeichnung	품명	Denominación	Notes
1	**VOE 11803546**	1					Support	Support	Stütze	서포트	Apoyo	
2	**VOE 11803545**	1					two-way valve	Robinet à 2 voies	Zweiwegehahn	2 방 밸브	Grifo de dos vías	
3		1			NS		•Lever	•Levier	•Hebel	• 레버	•Palanca	ORDER ITEM NO 2
4	**VOE 969439**	2					6-pt skt screw	Vis creuse de 6	Hohlschraube	6 포인트 소켓 스크류	Racor 6-dientes	
5	**VOE 11802650**	1					Union	Teton Connexion	Anschlussnippel	유니언	Niple Conexcion	
6	**PJ 5600202**	1					•Seal	•Joint	•Dichtring	• 시일	•Junta	
7	**VOE 4880493**	1					•O-ring	•Joint Torique	•O-Ring	• 오링	•Junta torica	
8	**VOE 11803544**	1					Hose Clamp	Collier Serrage	Schlauchschelle	호스 클램프	Abraz Manguera	

1	**602.10151**	
2		
3		
4		
5		

Valvula 2-vias
2 방 밸브
Zweiwegventil
Robinet à 2 voies
Two-way valve

Catalogue id	Group
20048	**916**
Illustr. No **1012532**	Section **5500**
Issue **VOE 74C9920048**	Page **461**

VOLVO

ECR38

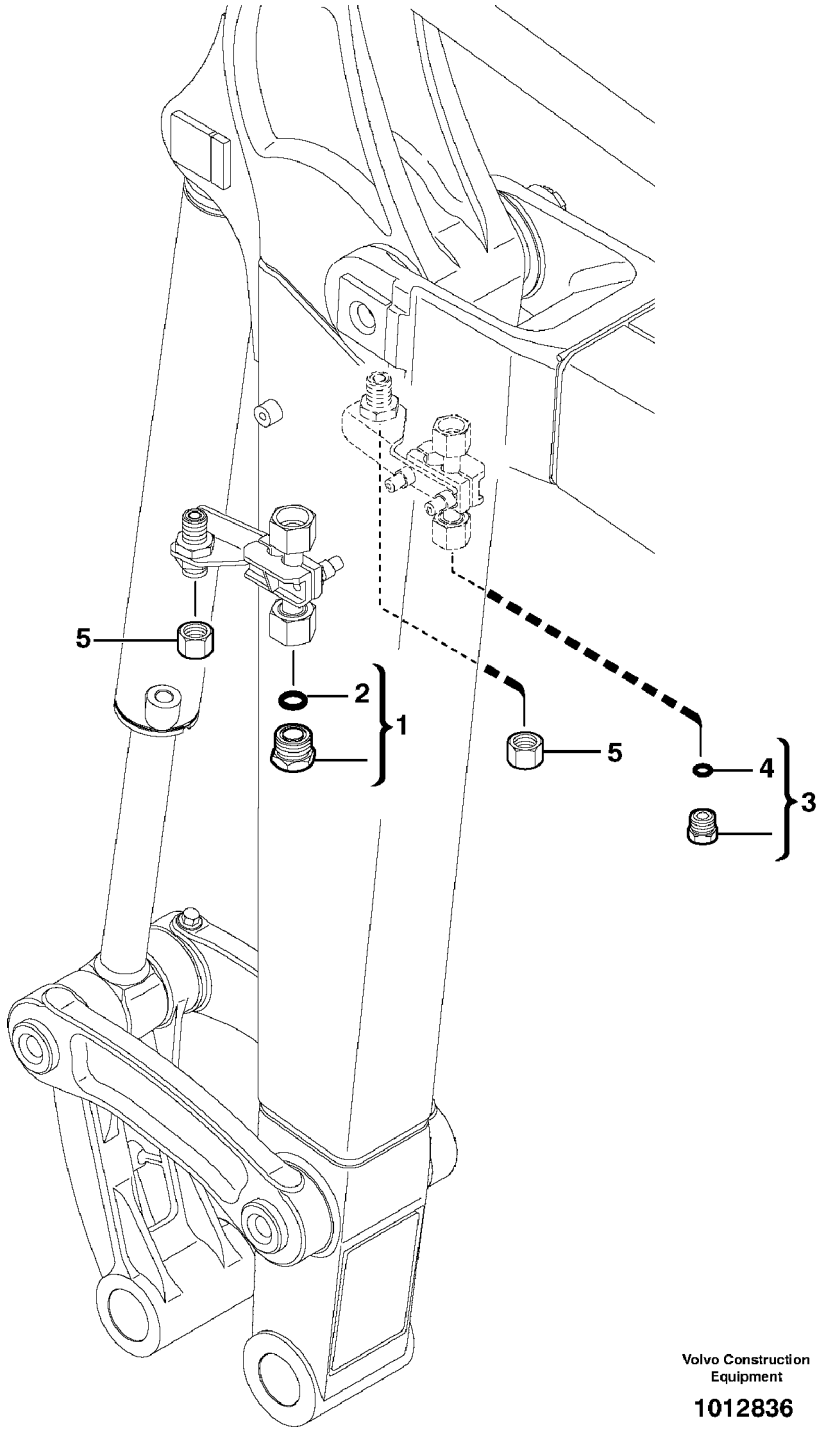

Volvo Construction Equipment

1012836

Fig.	Part No.	Quantity 1	2	3	PS	KIT	Description	Dénomination	Bezeichnung	품명	Denominación	Notes
1	**VOE 935652**	1					Plug	Bouchon	Stopfen	플러그	Tapon	
2	**VOE 981289**	1					•O-ring	•Joint Torique	•O-Ring	• 오링	•Junta torica	
3	**VOE 935644**	1					Plug	Bouchon	Stopfen	플러그	Tapon	
4	**VOE 4880663**	1					•O-ring	•Joint Torique	•O-Ring	• 오링	•Junta torica	
5	**VOE 935574**	2					Plug	Bouchon	Stopfen	플러그	Tapon	

1	**602.10151**		**Kit de tapons** 플러그 키트 **Stopfens-Kit** **Kit bouchons** **Plugs kit**	Catalogue id **20048**	Group **916**
2				Illustr. No **1012836**	Section **6000**
3				Issue **VOE 74C9920048**	Page **463**
4					
5					

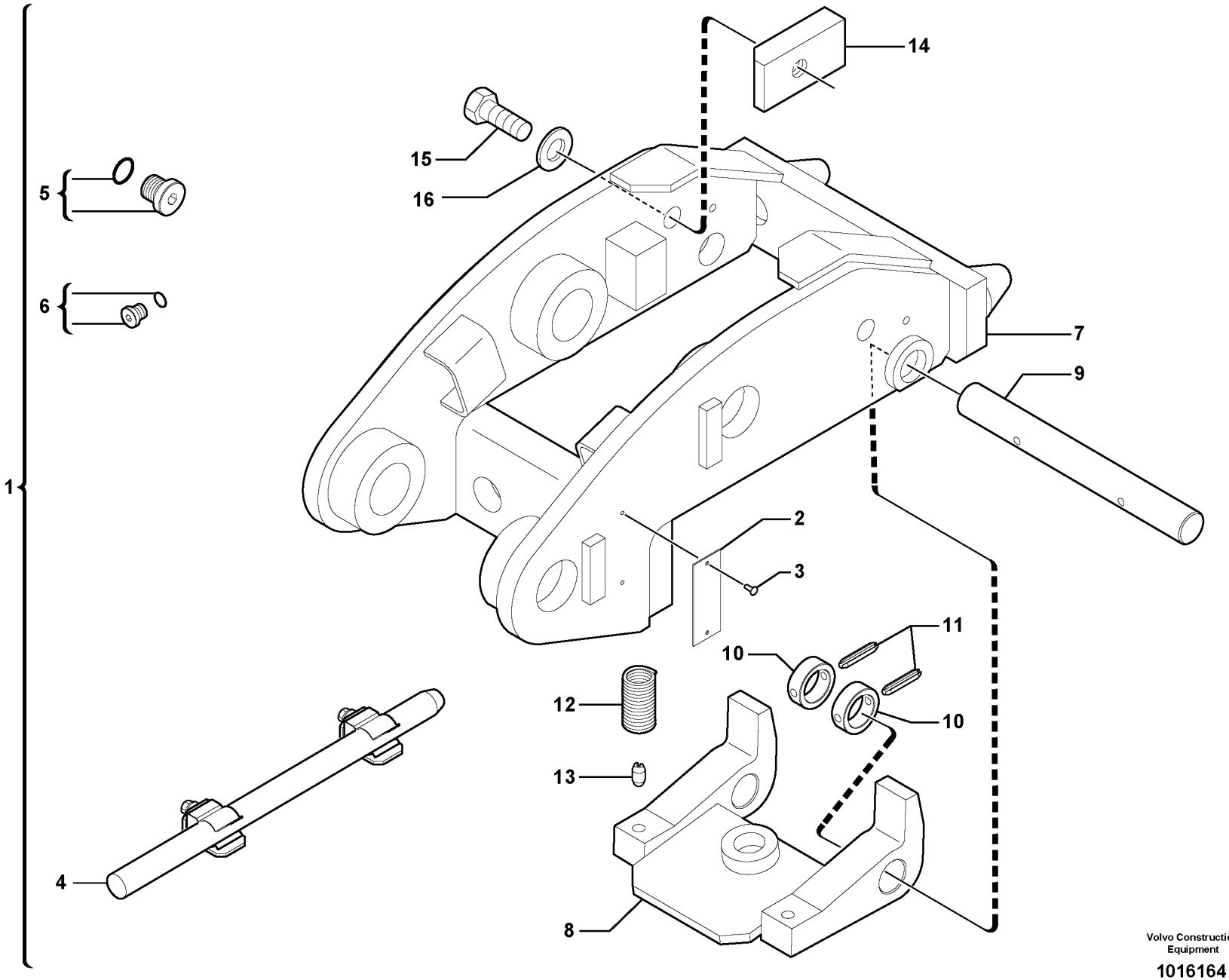

Volvo Construction Equipment

1016164

Fig.	Part No.	Quantity 1	2	3	P S	K I T	Description	Dénomination	Bezeichnung	품명	Denominación	Notes
1	**VOE 11714572**	1					Atch Bracket	Porte-outil	Geräteträger	작업장치 브라켓	Soporte Impleme	11839108
2	**VOE 11803733**	1					•Plate	•Plaque	•Platte	• 플레이트	•Placa	
3	**VOE 11803698**	2					•Rivet	•Rivet	•Niet	• 리벳	•Remache	
4		1					•Lever	•Levier	•Hebel	• 레버	•Palanca	See group 924, Page 473
5		1					•Plug	•Bouchon	•Stopfen	• 플러그	•Tapon	See group 924, Page 483
6		1					•Plug	•Bouchon	•Stopfen	• 플러그	•Tapon	See group 924, Page 483
7	**VOE 11803975**	1					•Atch Bracket	•Porte-outil	•Geräteträger	• 작업장치 브라켓	•Soporte Impleme	
8	**VOE 11803974**	1					•Detent	•Cliquet	•Ratsche	• 디텐트	•Trinquete	
9	**VOE 11803973**	1					•Stub Axle	•Axe	•Steckachse	• 스터브 축	•Gorron Eje	
10	**VOE 11803858**	2					•Stop Plate	•Plaque Butee	•Stopplatte	•	•Placa Tope	
11	**VOE 976510**	2					•Spring Pin	•Axe de ressort	•Federstift	• 스프링 핀	•Pasador Resorte	
12	**VOE 11803859**	2					•Spring	•Ressort	•Feder	• 스프링	•Muelle	
13	**VOE 11803889**	2					•Spring pin	•Goupille roulée	•Spannstift	• 스프링 핀	•Pasador	
14	**VOE 11803876**	1					•Stop Plate	•Plaque Butee	•Stopplatte	•	•Placa Tope	
15	**VOE 978936**	1					•Hexagon screw	•Vis a tête hexagonal	•Sechskantschr.	• 육각 나사	•Tornillo hexago	
16	**VOE 11803888**	1					•Washer	•Rondelle	•Scheibe	• 와셔	•Arandela	

1	**602.10151**	
2		
3		
4		
5		

Portaimplemento / control mecánico
도구 홀더 / 기계적 조정장치
Geräteträger / mechanische Steuerung
Porte-outil / commande mécanique
Tool holder / mechanical control

Catalogue id	Group
20048	**924**
Illustr. No **1016164**	Section **100**
Issue **VOE 74C9920048**	Page **465**

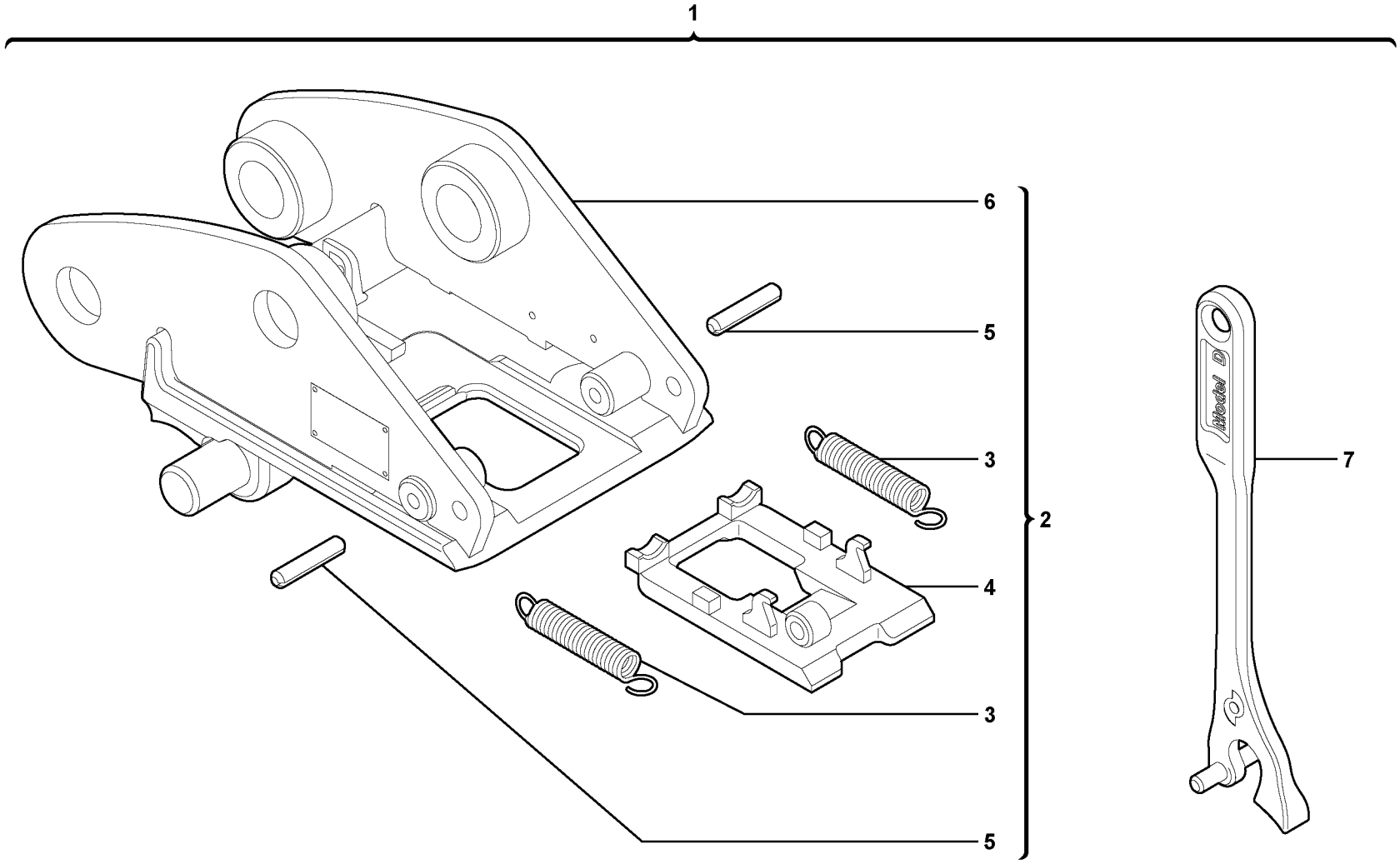

Volvo Construction Equipment

1017307

Fig.	Part No.	Quantity 1	2	3	PS	KIT	Description	Dénomination	Bezeichnung	품명	Denominación	Notes
1	**VOE 11807305**	1					Atch Bracket	Porte-outil	Geräteträger	작업장치 브라켓	Soporte Impleme	11839223
2	**VOE 11807249**	1					•Atch Bracket	•Porte-outil	•Geräteträger	• 작업장치 브라켓	•Soporte Impleme	
3	**VOE 11715483**	2					••Spring	••Ressort	••Feder	•• 스프링	••Muelle	
4	**VOE 11715485**	1					••Latch	••Poignee Blocage	••Knebel	•• 래치	••Mango Seguridad	
5	**VOE 11715487**	2					••Spring pin	••Goupille roulée	••Spannstift	•• 스프링 핀	••Pasador	
6		1			NS		••Atch Bracket	••Porte-outil	••Geräteträger	•• 작업장치 브라켓	••Soporte Impleme	
7	**VOE 11807302**	1					•Key	•Clavette	•Keil	• 키	•Llave (cuna)	

1	**602.10151**	
2		
3		
4		
5		

Portaimplemento / control mecánico
도구 홀더 / 기계적 조정장치
Geräteträger / mechanische Steuerung
Porte-outil / commande mécanique
Tool holder / mechanical control

Catalogue id	Group
20048	**924**
Illustr. No **1017307**	Section **110**
Issue **VOE 74C9920048**	Page **467**

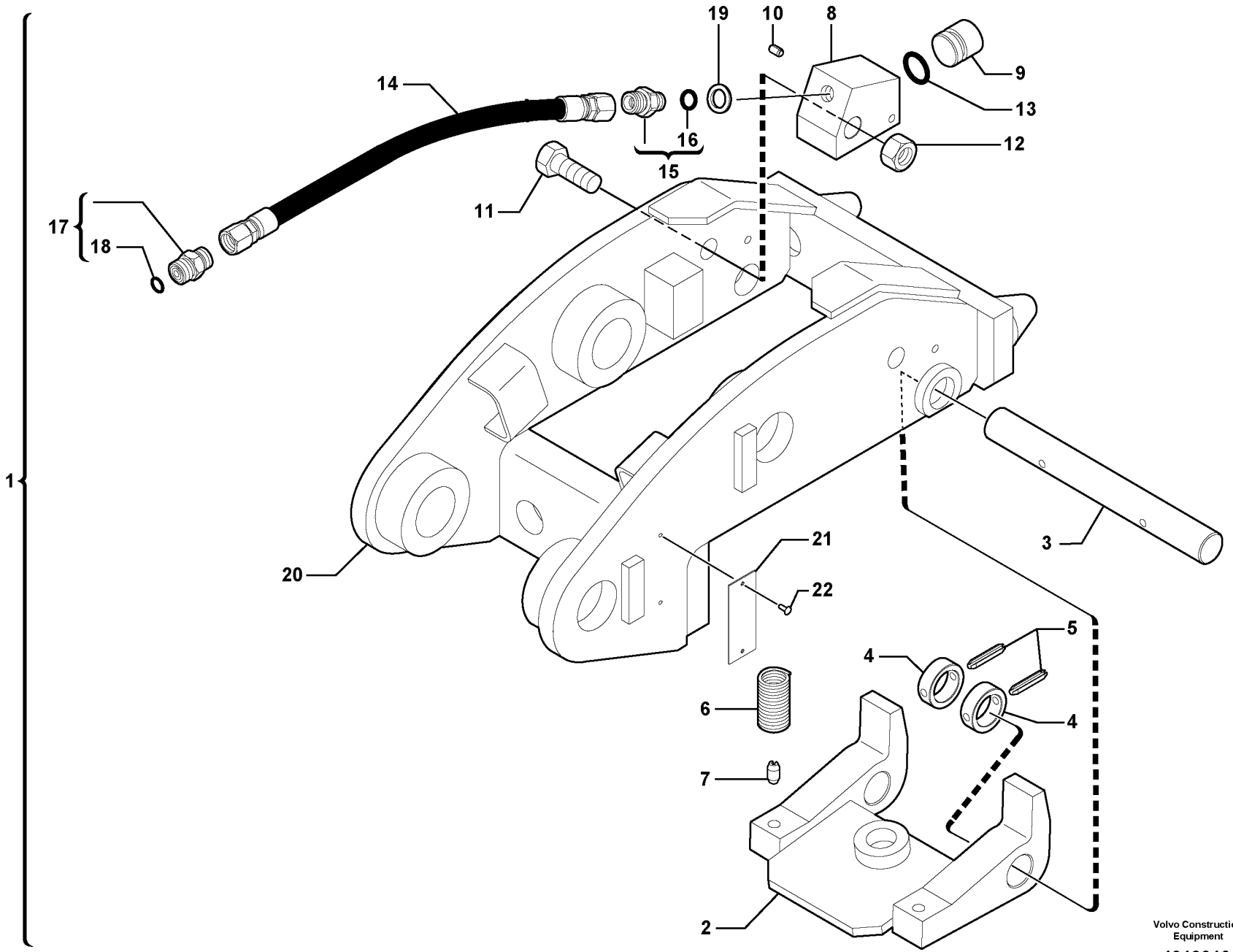

Volvo Construction Equipment

1019016

Fig.	Part No.	Quantity 1	2	3	PS	KIT	Description	Dénomination	Bezeichnung	품명	Denominación	Notes
1	**VOE 11804064**	1					Atch Bracket	Porte-outil	Geräteträger	작업장치 브라켓	Soporte Impleme	
2	**VOE 11803974**	1					•Detent	•Cliquet	•Ratsche	• 디탠트	•Trinquete	
3	**VOE 11803973**	1					•Stub Axle	•Axe	•Steckachse	• 스터브 축	•Gorron Eje	
4	**VOE 11803858**	2					•Stop Plate	•Plaque Butee	•Stopplatte	•	•Placa Tope	
5	**VOE 976510**	2					•Spring Pin	•Axe de ressort	•Federstift	• 스프링 핀	•Pasador Resorte	
6	**VOE 11803859**	2					•Spring	•Ressort	•Feder	• 스프링	•Muelle	
7	**VOE 11803889**	2					•Spring pin	•Goupille roulée	•Spannstift	• 스프링 핀	•Pasador	
8	**VOE 11803893**	1					•Cylinder	•Verin	•Zylinder	• 실린더	•Cilindro	
9	**VOE 11803891**	1					•Piston	•Piston	•Kolben	• 피스톤	•Piston	
10	**VOE 11803897**	1					•Spring pin	•Goupille roulée	•Spannstift	• 스프링 핀	•Pasador	
11	**VOE 968437**	1					•Flange screw	•Vis à bride	•Flanschschraube	• 플랜지 스크류	•Torn embridado	
12	**VOE 979021**	1					•Hexagon Nut	•Ecrou Hexagonal	•Sechskantmutter	• 너트	•Tuerca Hexagon	
13	**VOE 11803890**	1					•O-ring	•Joint Torique	•O-Ring	• 오링	•Junta torica	
14	**VOE 11804071**	1					•Hose assembly	•Conduit flexible	•Schlauchleitung	• 호스 어셈블리	•Conducto	
15	**VOE 11803894**	1					•Union	•Teton Connexion	•Anschlussnippel	• 유니언	•Niple Conexcion	
16	**PJ 4040248**	1					••O-ring	••Joint Torique	••O-Ring	•• 오링	••Junta torica	
17	**VOE 11803895**	1					•Union	•Teton Connexion	•Anschlussnippel	• 유니언	•Niple Conexcion	
18	**VOE 4880492**	1					••O-ring	••Joint Torique	••O-Ring	•• 오링	••Junta torica	
19	**VOE 943907**	1			SS		•Gasket	•Joint	•Dichtung	• 가스켓	•Junta	
20	**VOE 11803975**	1					•Atch Bracket	•Porte-outil	•Geräteträger	• 작업장치 브라켓	•Soporte Impleme	
21	**VOE 11803733**	1					•Plate	•Plaque	•Platte	• 플레이트	•Placa	
22	**VOE 11803698**	1					•Rivet	•Rivet	•Niet	• 리벳	•Remache	

1	**602.10151**	
2		
3		
4		
5		

Portaimplemento / control hidráulico
도구 홀더 / 유압 조정장치
Geräteträger / hydraulische Steuerung
Porte-outil / commande hydraulique
Tool holder / hydraulic control

Catalogue id	Group
20048	**924**
Illustr. No **1019016**	Section **200**
Issue **VOE 74C9920048**	Page **469**

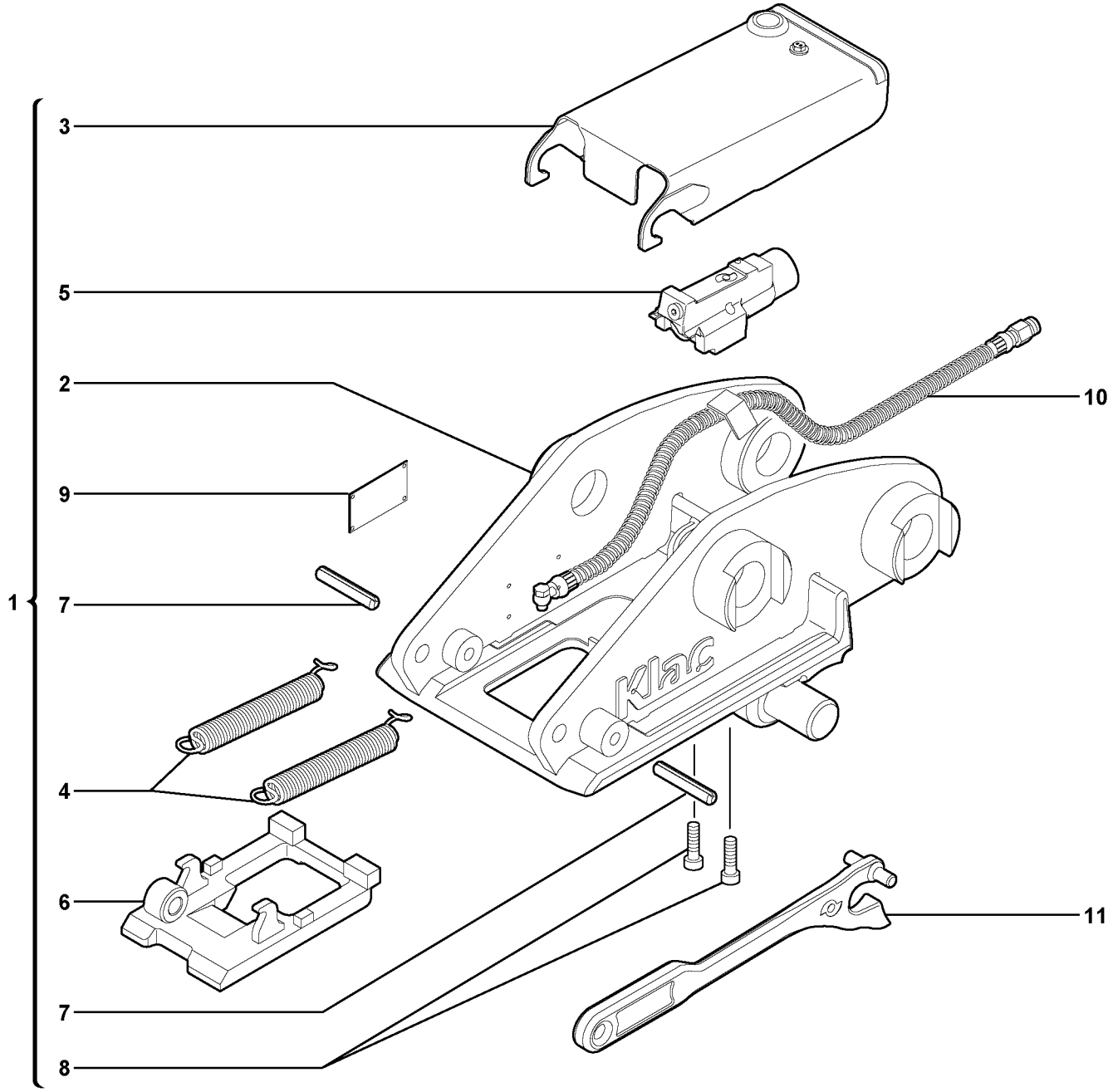

Volvo Construction Equipment

1021212

Fig.	Part No.	Quantity 1	2	3	PS	KIT	Description	Dénomination	Bezeichnung	품명	Denominación	Notes
1	**VOE 11807751**	1					Atch Bracket	Porte-outil	Geräteträger	작업장치 브라켓	Soporte Impleme	11839226
2	**VOE 11716024**	1					•Tool Holder	•Crochet Outils	•Werkzeughaken	•	•Gancho Herram	
3	**VOE 11716025**	1					•Protecting plate	•Tole protection	•Schutzblech	• 보호 플레이트	•Placa proteccion	
4	**VOE 11715483**	2					•Spring	•Ressort	•Feder	• 스프링	•Muelle	
5	**VOE 11715650**	1					•Cylinder	•Verin	•Zylinder	• 실린더	•Cilindro	
6	**VOE 11716026**	1					•Latch	•Poignee Blocage	•Knebel	• 래치	•Mango Seguridad	
7	**VOE 11715487**	2					•Spring pin	•Goupille roulée	•Spannstift	• 스프링 핀	•Pasador	
8	**VOE 11716027**	2					•Screw	•Vis	•Schraube	• 스크류	•Tornillo	
9		1			NS		•Plate	•Plaque	•Platte	• 플레이트	•Placa	
10	**VOE 11807662**	1					Hose assembly	Conduit flexible	Schlauchleitung	호스 어셈블리	Conducto	
11	**VOE 11807302**	1					Key	Clavette	Keil	키	Llave (cuna)	

1	**602.10151**	
2		
3		
4		
5		

Portaimplemento / control hidráulico
도구 홀더 / 유압 조정장치
Geräteträger / hydraulische Steuerung
Porte-outil / commande hydraulique
Tool holder / hydraulic control

Catalogue id	Group
20048	**924**
Illustr. No **1021212**	Section **210**
Issue **VOE 74C9920048**	Page **471**

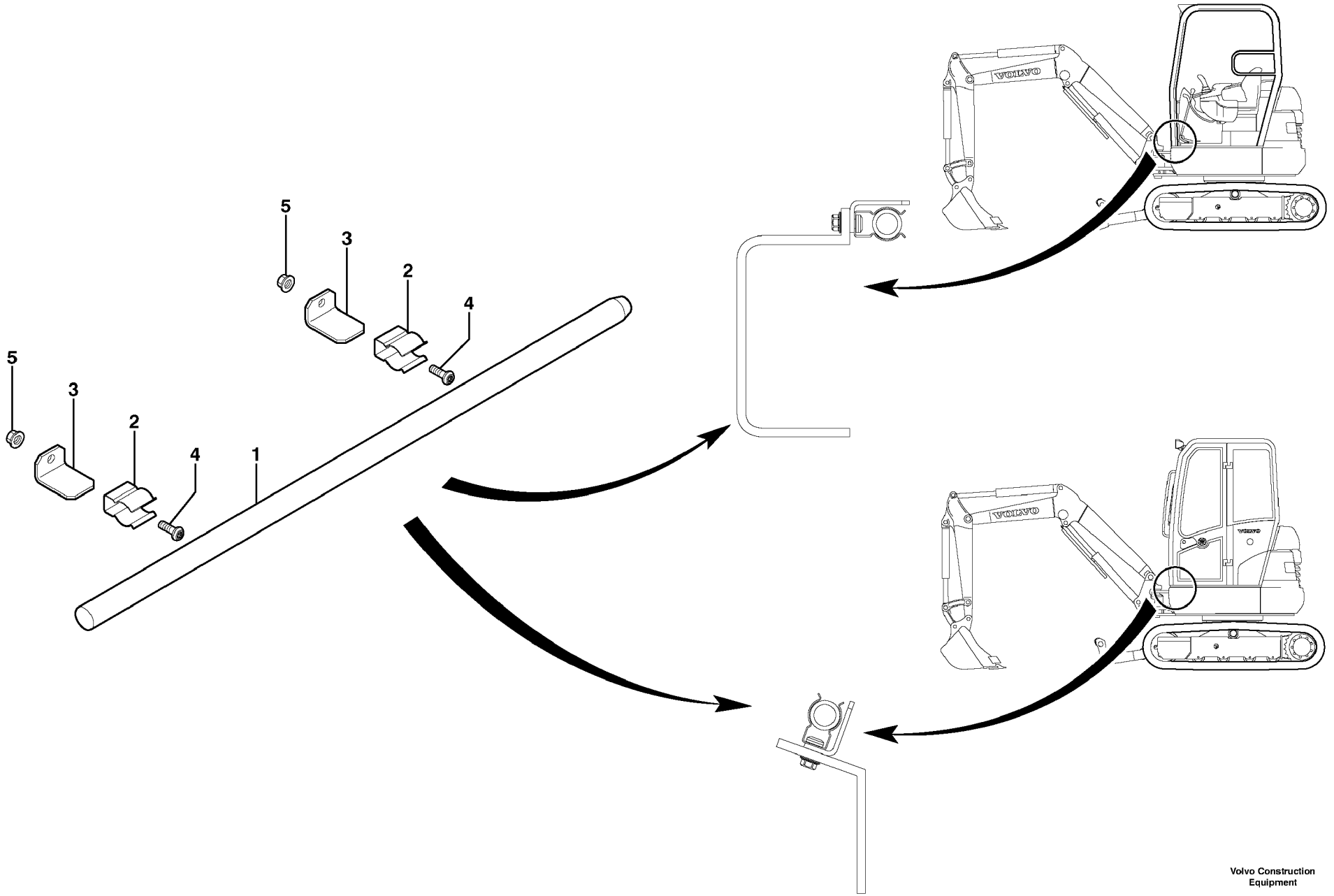

Volvo Construction Equipment

1012831

Fig.	Part No.	Quantity 1	2	3	PS	KIT	Description	Dénomination	Bezeichnung	품명	Denominación	Notes
1	**VOE 11803844**	1					Lever	Levier	Hebel	레버	Palanca	
2	**VOE 11803845**	2					Clamp	Pince Serrage	Klemme	클램프	Abrazadera	
3	**VOE 11803846**	2					Plate	Plaque	Platte	플레이트	Placa	
4	**VOE 969422**	2					6-pt skt screw	Vis creuse de 6	Hohlschraube	6 포인트 소켓 스크류	Racor 6-dientes	
5	**VOE 13945407**	2					Nut	Ecrou	Mutter	너트	Tuerca	

1	**602.10151**		**Palanca** 레버 **Umlenkhebel** **Levier** **Lever**	Catalogue id **20048**	Group **924**
2				Illustr. No **1012831**	Section **300**
3				Issue **VOE 74C9920048**	Page **473**
4					
5					

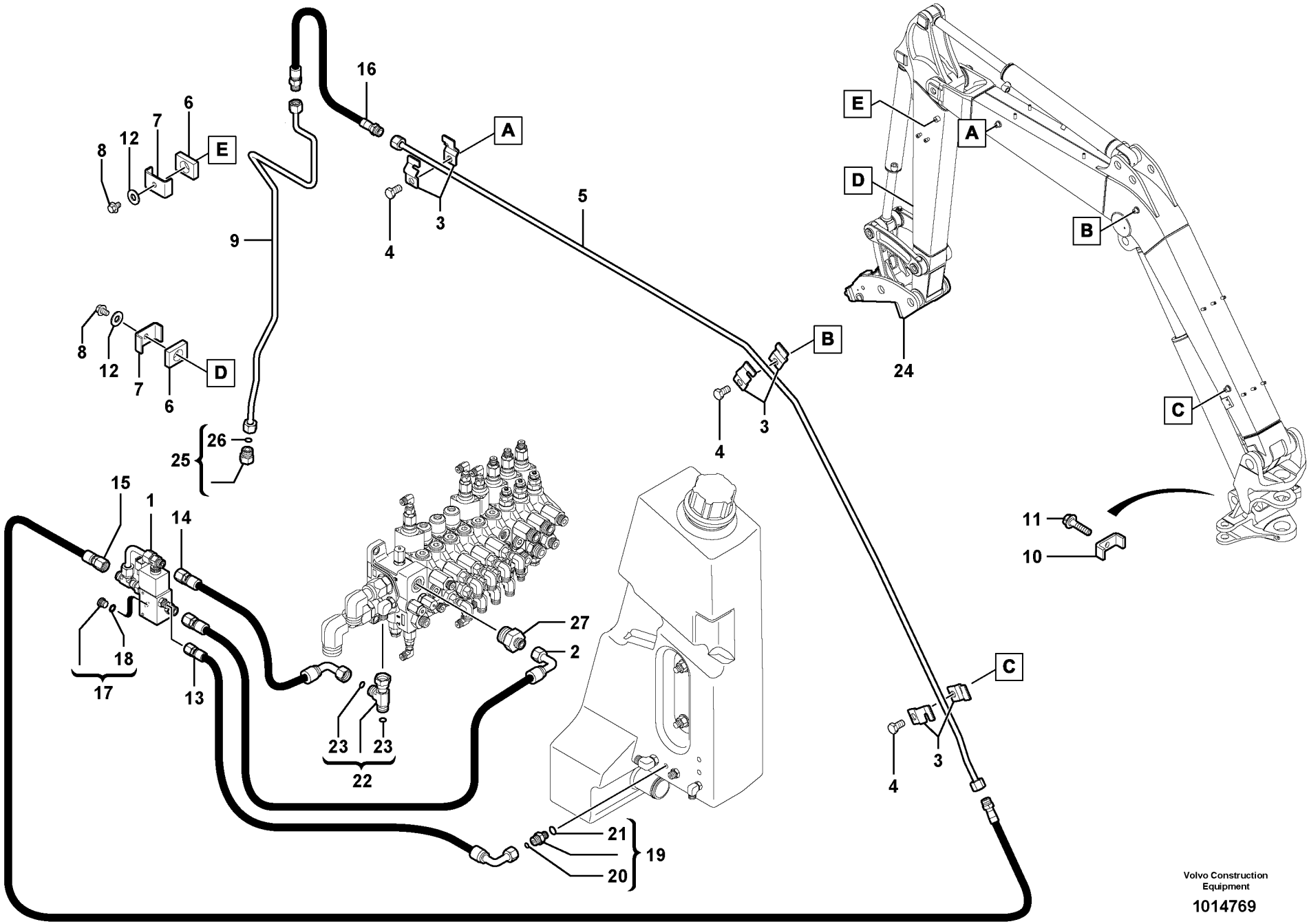

Volvo Construction Equipment

1014769

Fig.	Part No.	Quantity 1	2	3	PS	KIT	Description	Dénomination	Bezeichnung	품명	Denominación	Notes
1		1					Block	Bloc	Block	블록	Bloque	See group 924, Page 485
2	**VOE 11802821**	1					Hose assembly	Conduit flexible	Schlauchleitung	호스 어셈블리	Conducto	
3	**VOE 11802785**	6					Clamp	Pince Serrage	Klemme	클램프	Abrazadera	
4	**VOE 983250**	3					Hexagon screw	Vis tête hexagonale	Sechskantschraube	스크류	Tornillo hexago	
5	**VOE 11801729**	1					Tube	Tube	Rohr	튜브	Tubo	
6	**VOE 11803672**	2					Rubber Plate	Plaque Caoutchouc	Gummiplatte	고무판	Placa Goma	
7	**VOE 11806645**	2					Clamp	Pince Serrage	Klemme	클램프	Abrazadera	
8	**VOE 946440**	2					Flange screw	Vis à bride	Flanschschraube	플랜지 스크류	Torn embridado	
9	**VOE 11803923**	1					Tube	Tube	Rohr	튜브	Tubo	11839100, 11839148 ARM = 1250mm/41.2125in
9	**VOE 11803925**	1					Tube	Tube	Rohr	튜브	Tubo	11839102, 11839150 ARM = 1500mm/59.0550in
10	**VOE 11806393**	1					Flange	Flasque	Flansch	플랜지	Brida	
11	**VOE 947107**	1					Flange screw	Vis à bride	Flanschschraube	플랜지 스크류	Torn embridado	
12	**VOE 960143**	2			SS		Washer	Rondelle	Scheibe	와셔	Arandela	
13	**VOE 936816**	1					Hose assembly	Conduit flexible	Schlauchleitung	호스 어셈블리	Conducto	
14	**VOE 11803338**	1					Hose assembly	Conduit flexible	Schlauchleitung	호스 어셈블리	Conducto	
15	**VOE 11802960**	1					Hose assembly	Conduit flexible	Schlauchleitung	호스 어셈블리	Conducto	
16	**VOE 11802958**	1					Hose assembly	Conduit flexible	Schlauchleitung	호스 어셈블리	Conducto	
17	**VOE 984653**	1					Plug	Bouchon	Stopfen	플러그	Tapon	
18	**VOE 984473**	1					•O-ring	•Joint Torique	•O-Ring	• 오링	•Junta torica	
19	**VOE 935082**	1					Nipple	Raccord	Nippel	니플	Niple	
20	**VOE 4881722**	1					•O-ring	•Joint Torique	•O-Ring	• 오링	•Junta torica	
21	**VOE 932037**	1					•O-ring	•Joint Torique	•O-Ring	• 오링	•Junta torica	
22	**VOE 13933936**	1					T-nipple	Raccord-t	T-Nippel	T- 니플	Niple T	
23	**VOE 4880492**	2					•O-ring	•Joint Torique	•O-Ring	• 오링	•Junta torica	
24		1					Atch Bracket	Porte-outil	Geräteträger	작업장치 브라켓	Soporte Impleme	See group 924, Page 469
25	**VOE 935651**	1					Plug	Bouchon	Stopfen	플러그	Tapon	
26	**VOE 4880492**	1					•O-ring	•Joint Torique	•O-Ring	• 오링	•Junta torica	
27	**VOE 11882258**	1					Nipple	Raccord	Nippel	니플	Niple	

1	**602.10151**	
2		
3		
4		
5		

Circuito hidráulico (acoplamiento rápido)
유압 회로 (퀵커플링 어태치먼트)
Hydraulikkreis (Schnellwechsler)
Circuit hydraulique (porte-outil à accouplement rapide)
Hydraulic circuit (snap-action attachment)

Catalogue id	Group
20048	**924**
Illustr. No **1014769**	Section **400**
Issue **VOE 74C9920048**	Page **475**

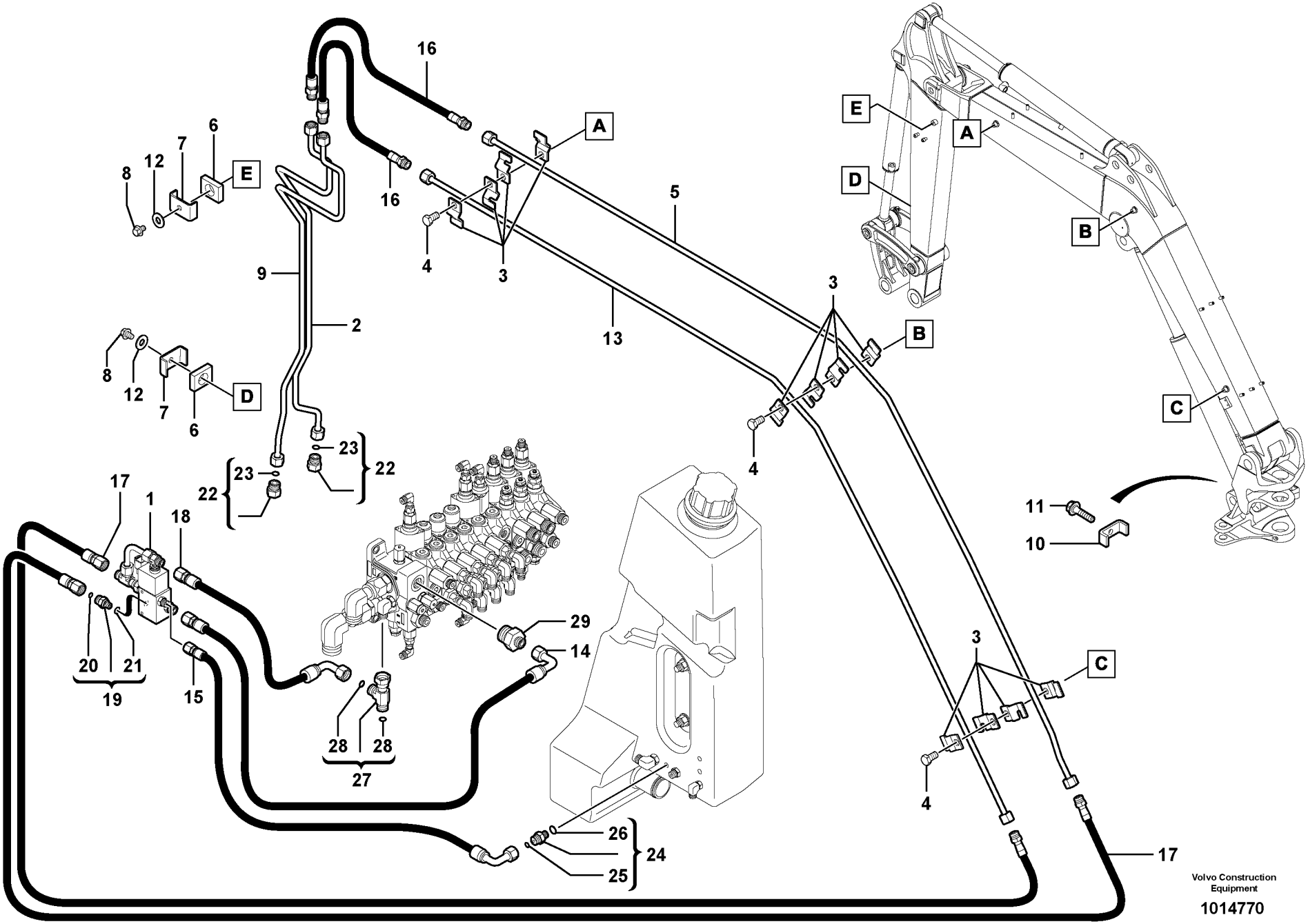
16
16
A
E
6
7
12
8
E
4
3
5
9
2
13
3
B
8
12
7
6
D
D
23
22
23
22
4
11
10
C
17
1
18
20
21
19
15
29
14
28
28
27
3
C
4
26
25
24
17
Volvo Construction Equipment
1014770

Fig.	Part No.	Quantity 1	2	3	PS	KIT	Description	Dénomination	Bezeichnung	품명	Denominación	Notes
1							Block	Bloc	Block	블록	Bloque	See group 924, Page 485
2	**VOE 11803924**	1					Tube	Tube	Rohr	튜브	Tubo	ARM = 1250mm/41.2125in
2	**VOE 11803926**	1					Tube	Tube	Rohr	튜브	Tubo	ARM = 1500mm/59.0550in
3	**VOE 11802785**	12					Clamp	Pince Serrage	Klemme	클램프	Abrazadera	
4	**VOE 983250**	3					Hexagon screw	Vis tête hexagonale	Sechskantschraube	스크류	Tornillo hexago	
5	**VOE 11801729**	1					Tube	Tube	Rohr	튜브	Tubo	
6	**VOE 11803672**	2					Rubber Plate	Plaque Caoutchouc	Gummiplatte	고무판	Placa Goma	
7	**VOE 11806645**	2					Clamp	Pince Serrage	Klemme	클램프	Abrazadera	
8	**VOE 946440**	2					Flange screw	Vis à bride	Flanschschraube	플랜지 스크류	Torn embridado	
9	**VOE 11803923**	1					Tube	Tube	Rohr	튜브	Tubo	11839104 ARM = 1250mm/41.2125in
9	**VOE 11803925**	1					Tube	Tube	Rohr	튜브	Tubo	11839106 ARM = 1500mm/59.0550in
10	**VOE 11806393**	1					Flange	Flasque	Flansch	플랜지	Brida	
11	**VOE 947107**	1					Flange screw	Vis à bride	Flanschschraube	플랜지 스크류	Torn embridado	
12	**VOE 960143**	2			SS		Washer	Rondelle	Scheibe	와셔	Arandela	
13	**VOE 11801730**	1					Tube	Tube	Rohr	튜브	Tubo	
14	**VOE 11802821**	1					Hose assembly	Conduit flexible	Schlauchleitung	호스 어셈블리	Conducto	
15	**VOE 936816**	1					Hose assembly	Conduit flexible	Schlauchleitung	호스 어셈블리	Conducto	
16	**VOE 11802958**	2					Hose assembly	Conduit flexible	Schlauchleitung	호스 어셈블리	Conducto	
17	**VOE 11802960**	2					Hose assembly	Conduit flexible	Schlauchleitung	호스 어셈블리	Conducto	
18	**VOE 11803338**	1					Hose assembly	Conduit flexible	Schlauchleitung	호스 어셈블리	Conducto	
19	**VOE 935084**	1					Nipple	Raccord	Nippel	니플	Niple	
20	**VOE 4880492**	1					•O-ring	•Joint Torique	•O-Ring	• 오링	•Junta torica	
21	**VOE 932037**	1					•O-ring	•Joint Torique	•O-Ring	• 오링	•Junta torica	
22	**VOE 935651**	2					Plug	Bouchon	Stopfen	플러그	Tapon	
23	**VOE 4880492**	1					•O-ring	•Joint Torique	•O-Ring	• 오링	•Junta torica	
24	**VOE 935082**	1					Nipple	Raccord	Nippel	니플	Niple	
25	**VOE 4881722**	1					•O-ring	•Joint Torique	•O-Ring	• 오링	•Junta torica	
26	**VOE 932037**	1					•O-ring	•Joint Torique	•O-Ring	• 오링	•Junta torica	

1	**602.10151**	
2		
3		
4		
5		

Circuito hidráulico (enganche rápido/doble efecto)
유압 회로 (퀵핏 /2 단 작동)
Hydraulikkreis (Schnellwechsler/doppeltwirkend)
Circuit hydraulique (outil/accessoire à fixation rapide / double effet)
Hyd. circuit (quickfit/double-acting)

Catalogue id	Group
20048	**924**
Illustr. No **1014770**	Section **500**
Issue **VOE 74C9920048**	Page **477**

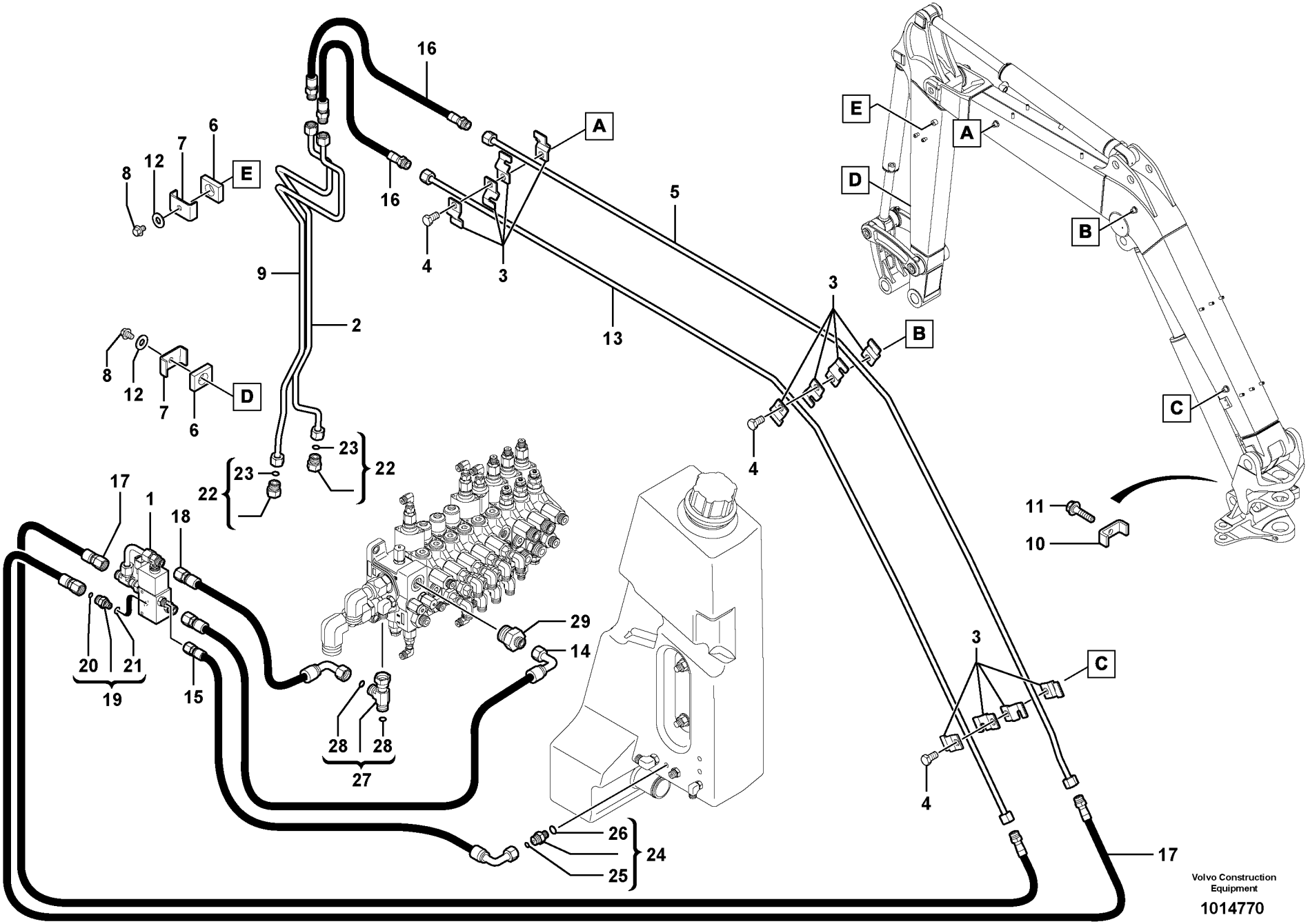
16
16
A
E
6
7
12
8
E
4
3
5
9
2
13
3
B
8
12
7
6
D
D
23
22
23
22
4
11
10
C
17
1
18
20
21
19
15
29
14
28
28
27
3
C
4
26
25
24
17
Volvo Construction Equipment
1014770

Fig.	Part No.	Quantity 1	2	3	PS	KIT	Description	Dénomination	Bezeichnung	품명	Denominación	Notes
27	**VOE 13933936**	1					T-nipple	Raccord-t	T-Nippel	T- 니플	Niple T	
28	**VOE 4880492**	2					•O-ring	•Joint Torique	•O-Ring	• 오링	•Junta torica	
29	**VOE 11882258**	1					Nipple	Raccord	Nippel	니플	Niple	

1	**602.10151**		**Circuito hidráulico (enganche rápido/doble efecto)** 유압 회로 (퀵핏 /2 단 작동) **Hydraulikkreis (Schnellwechsler/doppeltwirkend)** **Circuit hydraulique (outil/accessoire à fixation rapide / double effet)** **Hyd. circuit (quickfit/double-acting)**
2			
3			
4			
5			

Catalogue id **20048**	Group **924**
Illustr. No **1014770**	Section **500**
Issue **VOE 74C9920048**	Page **479**

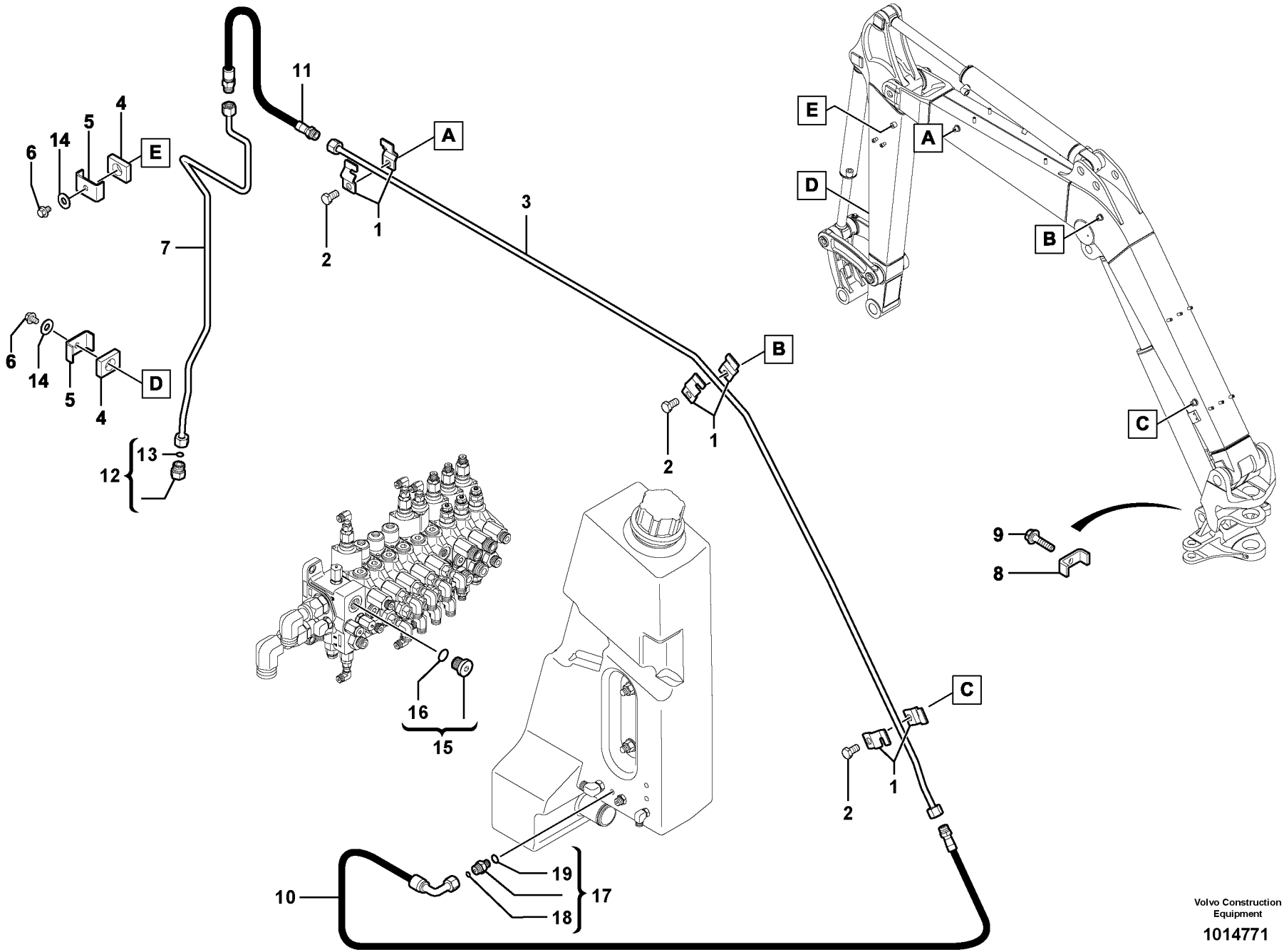

Volvo Construction Equipment

1014771

Fig.	Part No.	Quantity 1	2	3	PS	KIT	Description	Dénomination	Bezeichnung	품명	Denominación	Notes
1	**VOE 11802785**	6					Clamp	Pince Serrage	Klemme	클램프	Abrazadera	
2	**VOE 983250**	3					Hexagon screw	Vis tête hexagonale	Sechskantschraube	스크류	Tornillo hexago	
3	**VOE 11801729**	1					Tube	Tube	Rohr	튜브	Tubo	
4	**VOE 11803672**	2					Rubber Plate	Plaque Caoutchouc	Gummiplatte	고무판	Placa Goma	
5	**VOE 11806645**	2					Clamp	Pince Serrage	Klemme	클램프	Abrazadera	
6	**VOE 946440**	2					Flange screw	Vis à bride	Flanschschraube	플랜지 스크류	Torn embridado	
7	**VOE 11803923**	1					Tube	Tube	Rohr	튜브	Tubo	11839110 ARM = 1250mm/41.2125in
7	**VOE 11803925**	1					Tube	Tube	Rohr	튜브	Tubo	11839112 ARM = 1500mm/59.0550in
8	**VOE 11806393**	1					Flange	Flasque	Flansch	플랜지	Brida	
9	**VOE 947107**	1					Flange screw	Vis à bride	Flanschschraube	플랜지 스크류	Torn embridado	
10	**VOE 11803972**	1					Hose	Durit	Schlauch	호스	Tubo flexible	
11	**VOE 11802958**	1					Hose assembly	Conduit flexible	Schlauchleitung	호스 어셈블리	Conducto	
12	**VOE 935651**	1					Plug	Bouchon	Stopfen	플러그	Tapon	
13	**VOE 4880492**	1					•O-ring	•Joint Torique	•O-Ring	• 오링	•Junta torica	
14	**VOE 960143**	2			SS		Washer	Rondelle	Scheibe	와셔	Arandela	
15	**VOE 984657**	1					Plug	Bouchon	Stopfen	플러그	Tapon	
16	**VOE 983122**	1					•O-ring	•Joint Torique	•O-Ring	• 오링	•Junta torica	
17	**VOE 935082**	1					Nipple	Raccord	Nippel	니플	Niple	
18	**VOE 4881722**	1					•O-ring	•Joint Torique	•O-Ring	• 오링	•Junta torica	
19	**VOE 932037**	1					•O-ring	•Joint Torique	•O-Ring	• 오링	•Junta torica	

1	**602.10151**	
2		
3		
4		
5		

Kit de drenaje
드레인 키트
Dränage-Kit
Kit drain
Drain kit

Catalogue id	Group
20048	**924**
Illustr. No **1014771**	Section **600**
Issue **VOE 74C9920048**	Page **481**

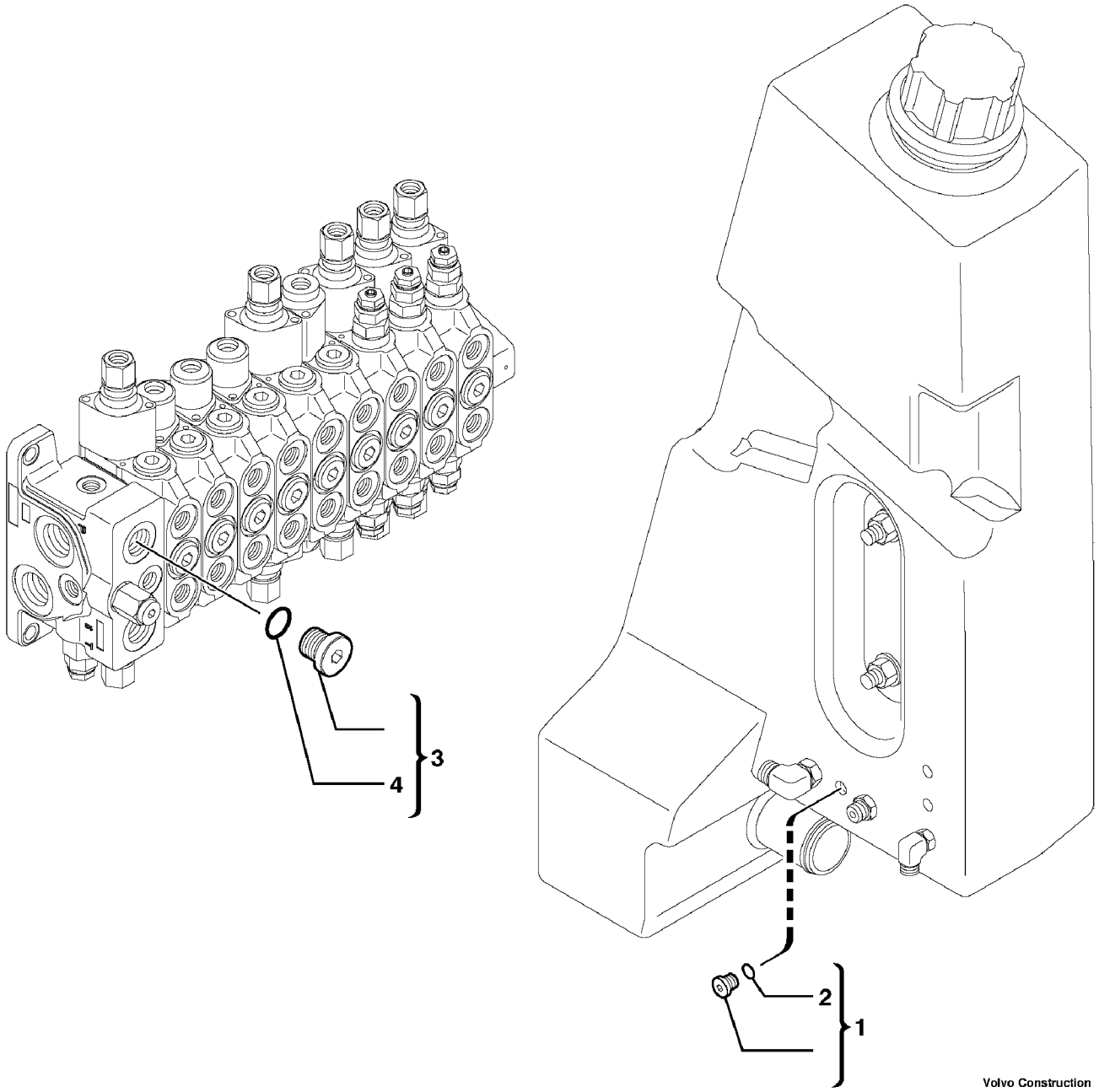

Volvo Construction Equipment

1012835

Fig.	Part No.	Quantity 1	2	3	PS	KIT	Description	Dénomination	Bezeichnung	품명	Denominación	Notes
1	**VOE 984653**	1					Plug	Bouchon	Stopfen	플러그	Tapon	11839094
2	**VOE 984473**	1					•O-ring	•Joint Torique	•O-Ring	• 오링	•Junta torica	
3	**VOE 984657**	1					Plug	Bouchon	Stopfen	플러그	Tapon	
4	**VOE 983122**	1					•O-ring	•Joint Torique	•O-Ring	• 오링	•Junta torica	

1	**602.10151**		**Kit de tapons** 플러그 키트 **Stopfens-Kit** **Kit bouchons** **Plugs kit**	Catalogue id **20048**	Group **924**
2				Illustr. No **1012835**	Section **700**
3					
4				Issue **VOE 74C9920048**	Page **483**
5					

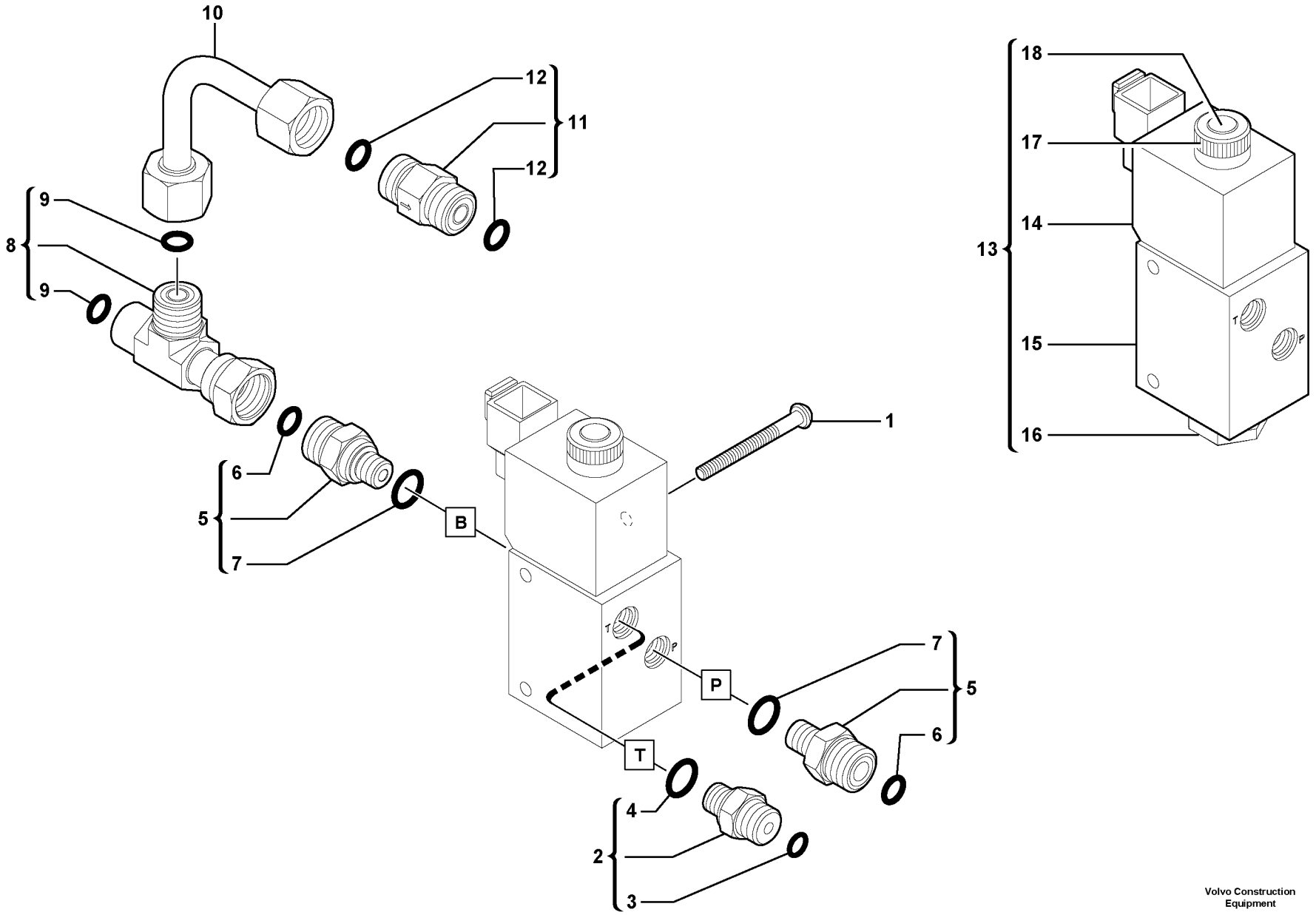

Volvo Construction Equipment

1014070

Fig.	Part No.	Quantity 1	2	3	PS	KIT	Description	Dénomination	Bezeichnung	품명	Denominación	Notes
1	**VOE 969440**	2					6-pt skt screw	Vis creuse de 6	Hohlschraube	6 포인트 소켓 스크류	Racor 6-dientes	
2	**VOE 935082**	1					Nipple	Raccord	Nippel	니플	Niple	
3	**VOE 4881722**	1					•O-ring	•Joint Torique	•O-Ring	• 오링	•Junta torica	
4	**VOE 932037**	1					•O-ring	•Joint Torique	•O-Ring	• 오링	•Junta torica	
5	**VOE 935084**	2					Nipple	Raccord	Nippel	니플	Niple	
6	**VOE 4880492**	1					•O-ring	•Joint Torique	•O-Ring	• 오링	•Junta torica	
7	**VOE 932037**	1					•O-ring	•Joint Torique	•O-Ring	• 오링	•Junta torica	
8	**VOE 13933936**	1					T-nipple	Raccord-t	T-Nippel	T- 니플	Niple T	
9	**VOE 4880492**	2					•O-ring	•Joint Torique	•O-Ring	• 오링	•Junta torica	
10	**VOE 11803651**	1					Tube	Tube	Rohr	튜브	Tubo	
11	**VOE 11803652**	1					Non-return valve	Clapet antiretour	Rückschlagventil	역지 밸브	Válvula de control	0,5 bars ,7.25 PSi
12	**VOE 4880492**	2					•O-ring	•Joint Torique	•O-Ring	• 오링	•Junta torica	
13	**VOE 11800853**	1					Valve	Soupape	Ventil	밸브	Valvula	
14	**VOE 11713205**	1					•Solenoid	•Solénoide	•Magnet	• 솔레노이드	•Solenoide	
15		1			NS		•Valve Body	•Corps Valve	•Ventilkörper	• 밸브 몸체	•Cuerpo Valvula	ORDER ITEM NO 13
16	**VOE 11713204**	1					•Plug	•Bouchon	•Stopfen	• 플러그	•Tapon	
17	**VOE 11713206**	1					•Nut	•Ecrou	•Mutter	• 너트	•Tuerca	
18	**VOE 11713207**	1					•Solenoid valve	•Vanne electrom	•Magnetventil	• 솔레노이드 밸브	•Electrovalvula	

1	**602.10151**	
2		
3		
4		
5		

Instalación del electrovalvula
전자식 밸브 설치
Einbau der Elektroventile
Mise en place de l'électrovalve
Electrovalve installation

Catalogue id	Group
20048	**924**
Illustr. No **1014070**	Section **800**
Issue **VOE 74C9920048**	Page **485**

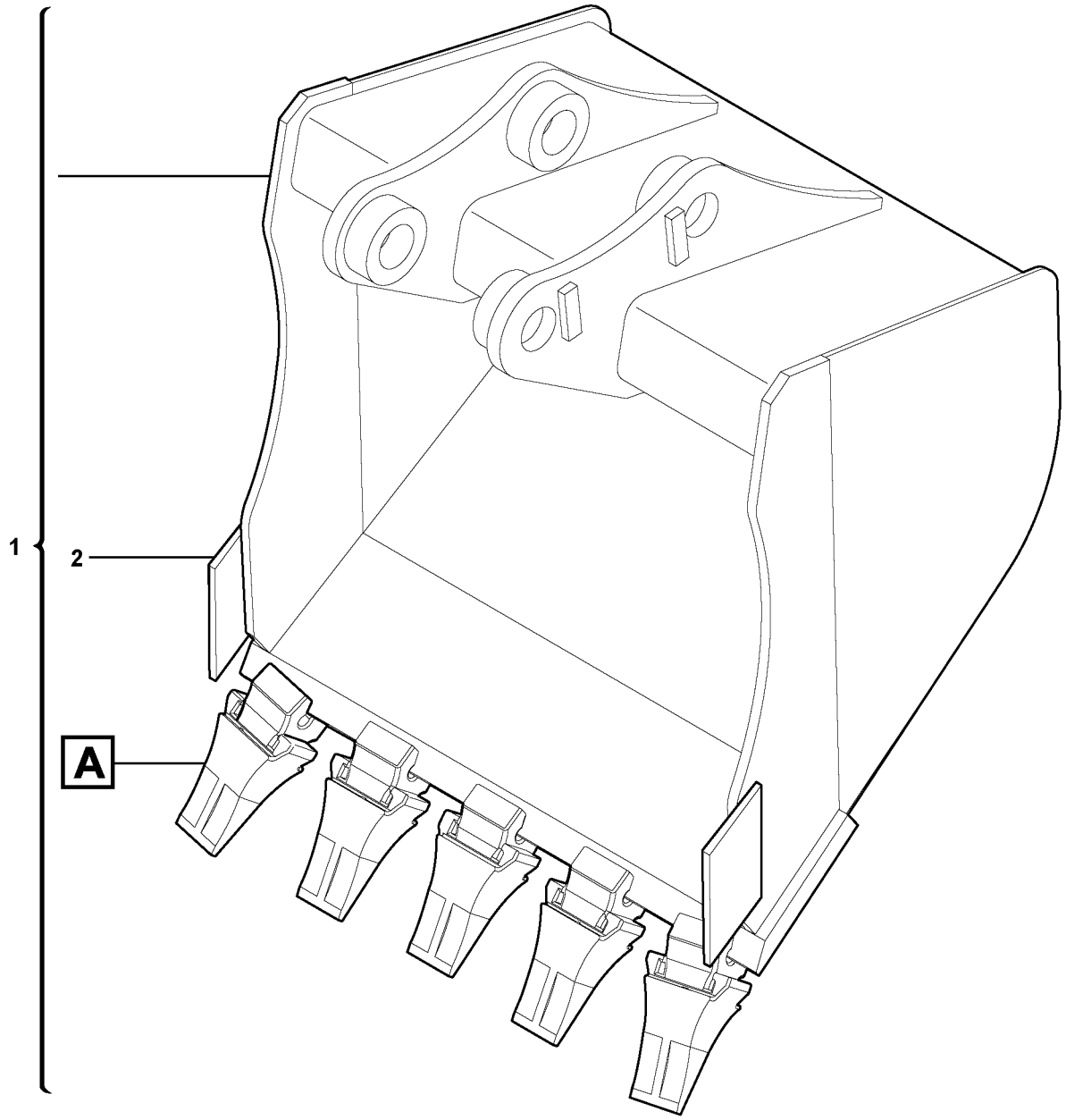

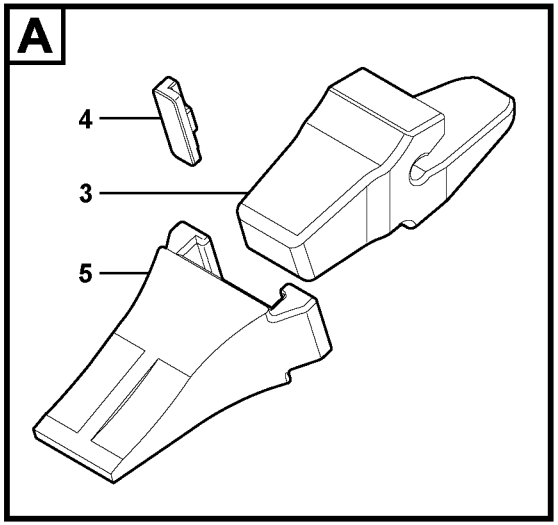

Volvo Construction Equipment

1016034

Fig.	Part No.	Quantity 1	2	3	PS	KIT	Description	Dénomination	Bezeichnung	품명	Denominación	Notes
1	**VOE 11804301**	1					Bucket	Godet	Löffel	버켓	Cuchara	11839158 WID = 300mm/11.8110in L = 29L/7.6618US gal
1	**VOE 11804295**	1					Bucket	Godet	Löffel	버켓	Cuchara	11839159 WID = 450mm/17.7165in L = 45L/11.8890US gal
1	**VOE 11802385**	1					Bucket	Godet	Löffel	버켓	Cuchara	11839056 WID = 600mm/23.6220in L = 61L/16.1162US gal
1	**VOE 11804276**	1					Bucket	Godet	Löffel	버켓	Cuchara	11839163 WID = 750mm/29.5275in L = 79L/20.8718US gal
2	**VOE 11800672**	2					•Knife	•Couteau	•Messer	•	•Cuchillo	
3	**VOE 11800639**	REQ					•Tooth Holder	•Porte dent	•Zahnhalter	• 이 홀더	•Porta-diente	
4	**VOE 11988297**	REQ					•Lock Pin	•Goupille Verro.	•Sicherungsstift	• 록 핀	•Pasador Segurid	
5	**VOE 11800638**	REQ					•Bucket Tooth	•Dent de godet	•Löffelzahn	• 버켓 투스	•Diente Cuchara	

1	**602.10151**	
2		
3		
4		
5		

Cazo
버켓
Schaufel
Godet
Bucket

Catalogue id	Group
20048	**925**
Illustr. No **1016034**	Section **100**
Issue **VOE 74C9920048**	Page **487**

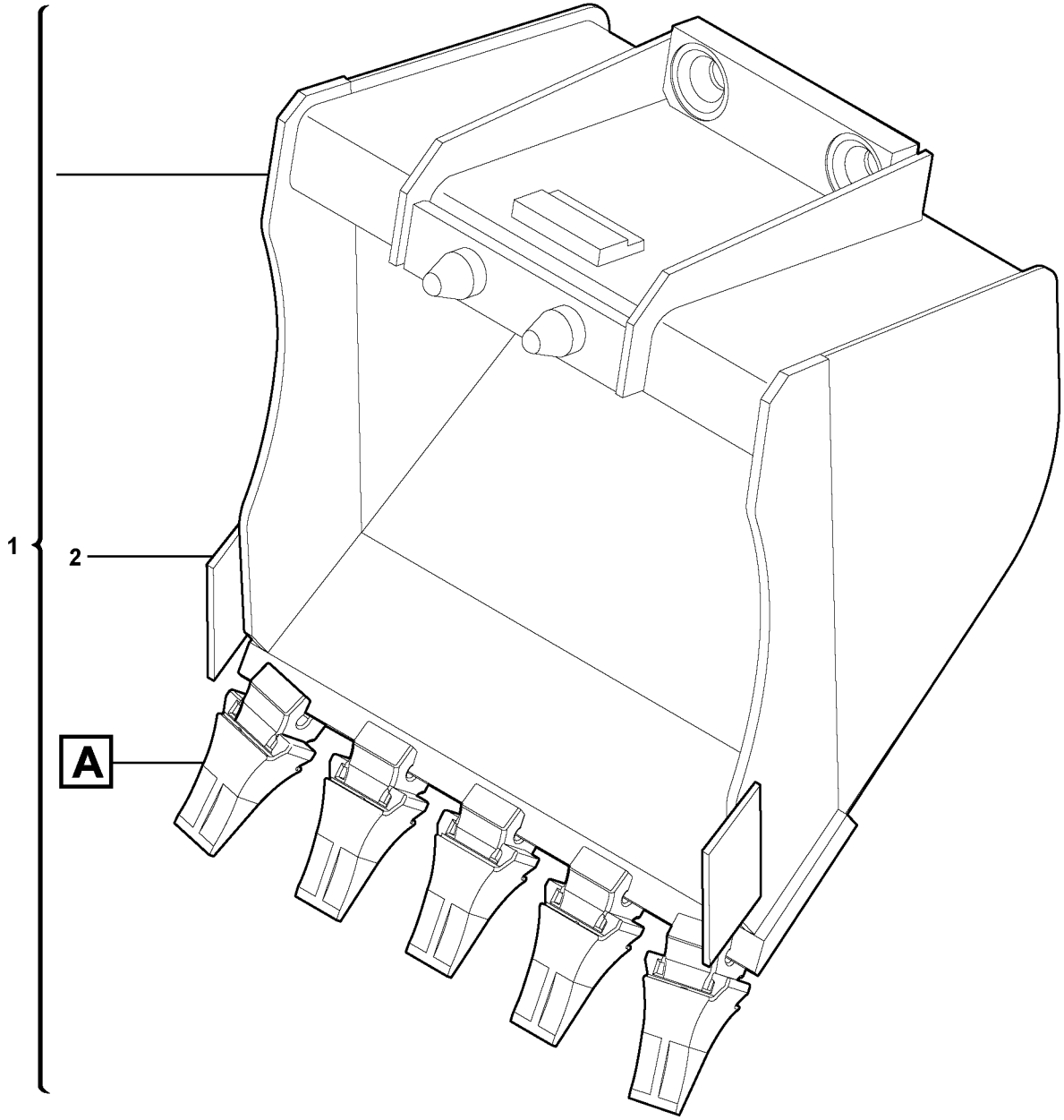

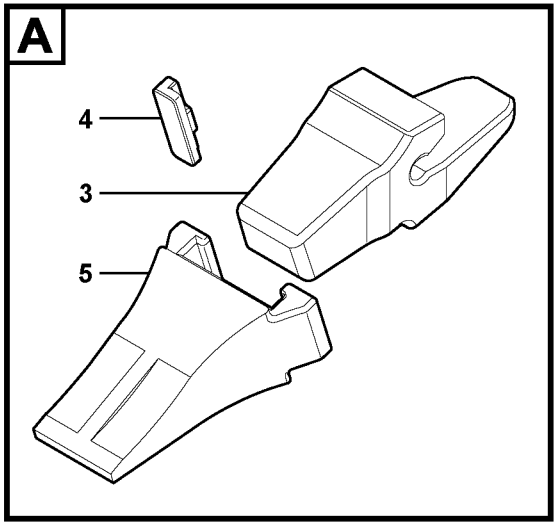

Volvo Construction Equipment

1016035

Fig.	Part No.	Quantity 1	2	3	PS	KIT	Description	Dénomination	Bezeichnung	품명	Denominación	Notes
1	**VOE 11804332**	1					Bucket	Godet	Löffel	버켓	Cuchara	11839160 WID = 300mm/11.8110in L = 29L/7.6618US gal
1	**VOE 11804326**	1					Bucket	Godet	Löffel	버켓	Cuchara	11839161 WID = 350mm/13.7795in L = 34L/8.9828US gal
1	**VOE 11804324**	1					Bucket	Godet	Löffel	버켓	Cuchara	11839162 WID = 450mm/17.7165in L = 45L/11.8890US gal
1	**VOE 11802379**	1					Bucket	Godet	Löffel	버켓	Cuchara	11839055 WID = 600mm/23.6220in L = 61L/16.1162US gal
1	**VOE 11804322**	1					Bucket	Godet	Löffel	버켓	Cuchara	11839164 WID = 750mm/29.5275in L = 79L/20.8718US gal
2	**VOE 11800672**	2					•Knife	•Couteau	•Messer	•	•Cuchillo	
3	**VOE 11800639**	REQ					•Tooth Holder	•Porte dent	•Zahnhalter	• 이 홀더	•Porta-diente	
4	**VOE 11988297**	REQ					•Lock Pin	•Goupille Verro.	•Sicherungsstift	• 록 핀	•Pasador Segurid	
5	**VOE 11800638**	REQ					•Bucket Tooth	•Dent de godet	•Löffelzahn	• 버켓 투스	•Diente Cuchara	

1	**602.10151**	
2		
3		
4		
5		

Cazos para enganche rápido
퀵 핏 버켓
Schaufeln für Schnellwechsler
Godet pour Raccords rapides
Buckets for Quickfit

Catalogue id	Group
20048	**925**
Illustr. No **1016035**	Section **200**
Issue **VOE 74C9920048**	Page **489**

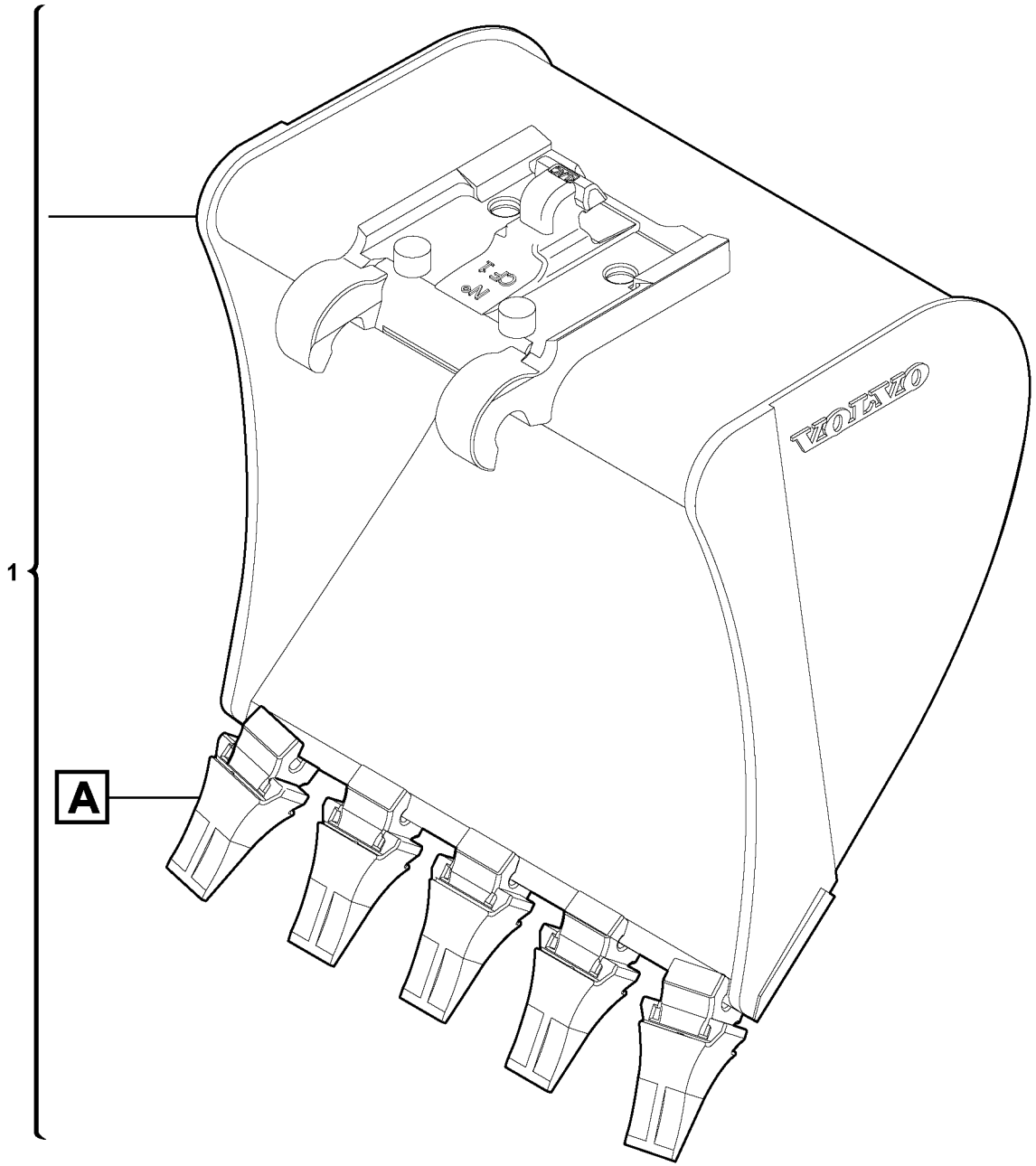

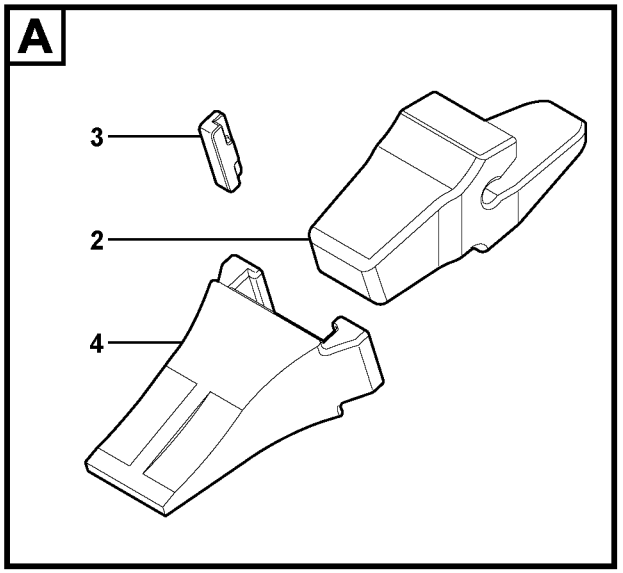

Volvo Construction Equipment

1017308

Fig.	Part No.	Quantity 1	2	3	PS	KIT	Description	Dénomination	Bezeichnung	품명	Denominación	Notes
1	**VOE 11807244**	1					Bucket	Godet	Löffel	버켓	Cuchara	11839210 WID = 300mm/11.8110in L = 33L/8.7186US gal
1	**VOE 11807246**	1					Bucket	Godet	Löffel	버켓	Cuchara	11839211 WID = 600mm/23.6220in L = 73L/19.2866US gal
2	**VOE 11800639**	REQ					•Tooth Holder	•Porte dent	•Zahnhalter	• 이 홀더	•Porta-diente	
3	**VOE 11988297**	REQ					•Lock Pin	•Goupille Verro.	•Sicherungsstift	• 록 핀	•Pasador Segurid.	
4	**VOE 11800638**	REQ					•Bucket Tooth	•Dent de godet	•Löffelzahn	• 버켓 투스	•Diente Cuchara	

1	**602.10151**	
2		
3		
4		
5		

Cazos para enganche rápido
퀵 핏 버켓
Schaufeln für Schnellwechsler
Godet pour Raccords rapides
Buckets for Quickfit

Catalogue id	Group
20048	**925**
Illustr. No **1017308**	Section **210**
Issue **VOE 74C9920048**	Page **491**

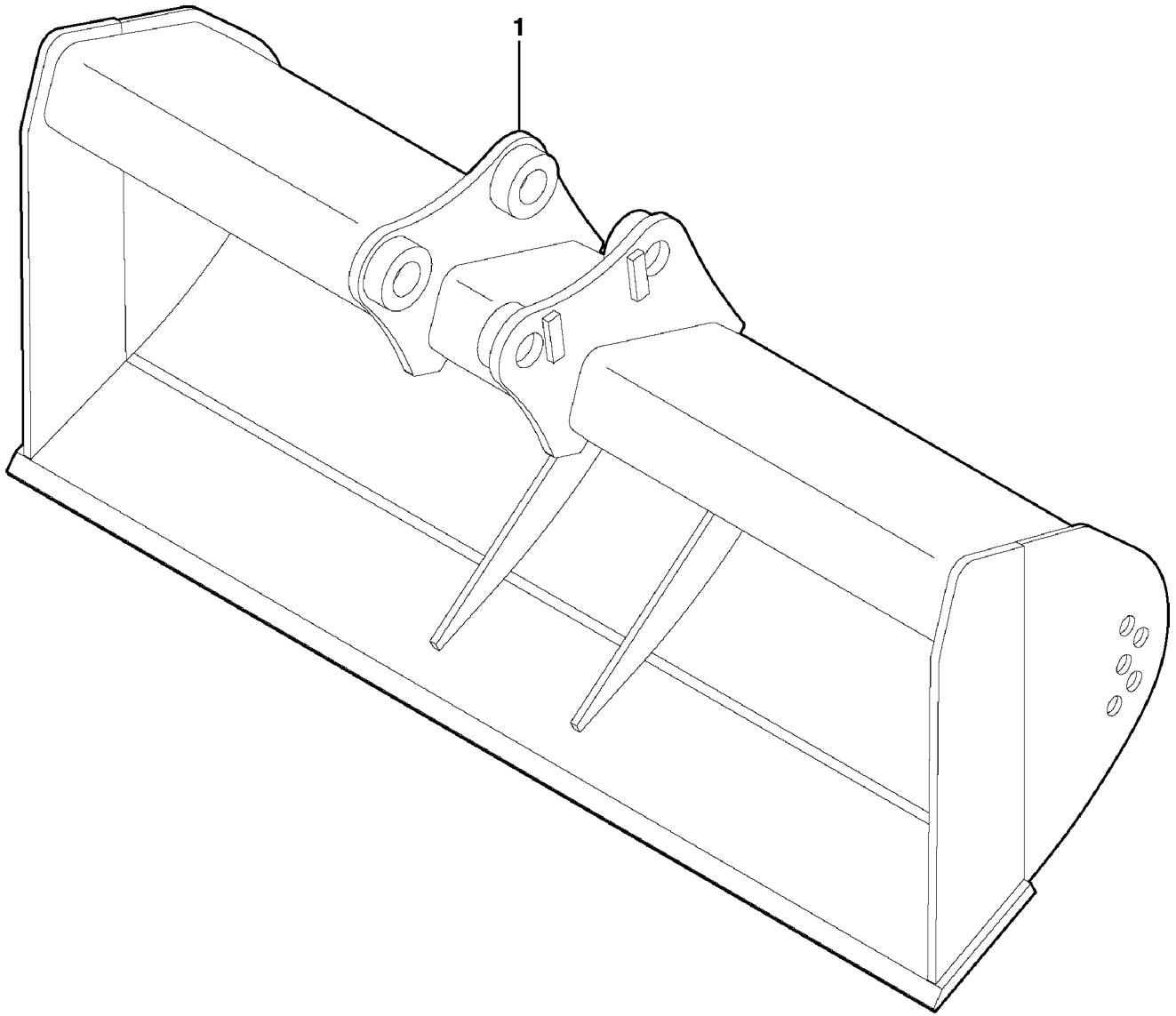

Volvo Construction Equipment

1010645

Fig.	Part No.	Quantity 1	2	3	PS	KIT	Description	Dénomination	Bezeichnung	품명	Denominación	Notes
1	**VOE 11803406**	1					Bucket	Godet	Löffel	버켓	Cuchara	11839058 WID = 1300mm/51.1810in L = 105L/27.7410US gal

1	**602.10151** →	→	**Grading bucket** 그래이딩 버켓 **Planierschaufel** **Godet niveleur** **Grading bucket**	Catalogue id **20048**	Group **925**
2				Illustr. No **1010645**	Section **300**
3				Issue **VOE 74C9920048**	Page **493**
4					
5					

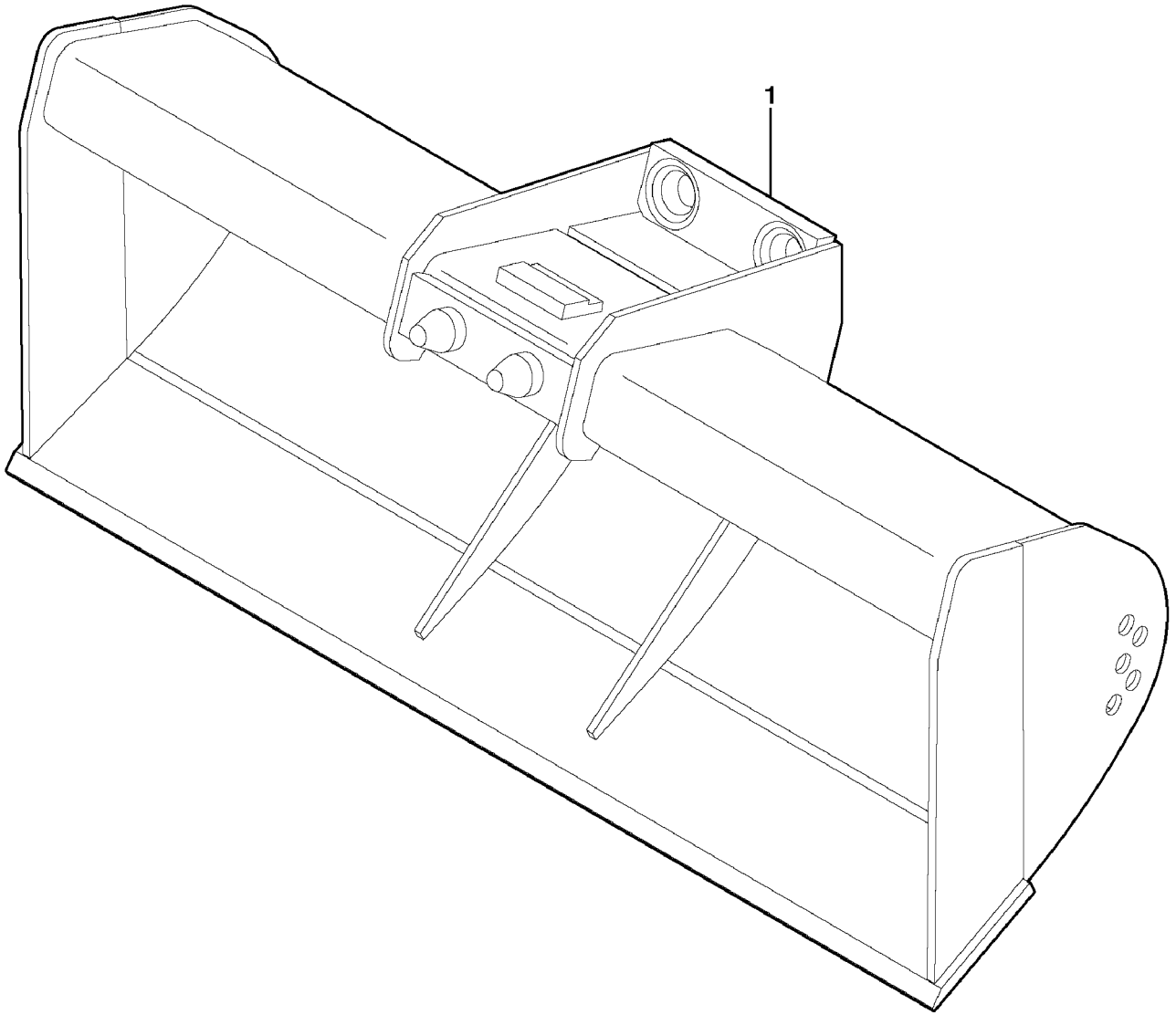

Volvo Construction Equipment

1010646

Fig.	Part No.	Quantity 1	2	3	PS	KIT	Description	Dénomination	Bezeichnung	품명	Denominación	Notes
1	**VOE 11803412**	1					Bucket	Godet	Löffel	버켓	Cuchara	11839057 WID = 1300mm/51.1810in L = 107L/28.2694US gal

1	**602.10151**		**Grading bucket for Quickfit** 퀵 커플링 용 그래이딩 버켓 **Planierschaufel, Schnellkupplung** **Godet niveleur pour raccordement rapide** **Grading bucket for Quickfit**
2			
3			
4			
5			

Catalogue id **20048**	Group **925**
Illustr. No **1010646**	Section **400**
Issue **VOE 74C9920048**	Page **495**

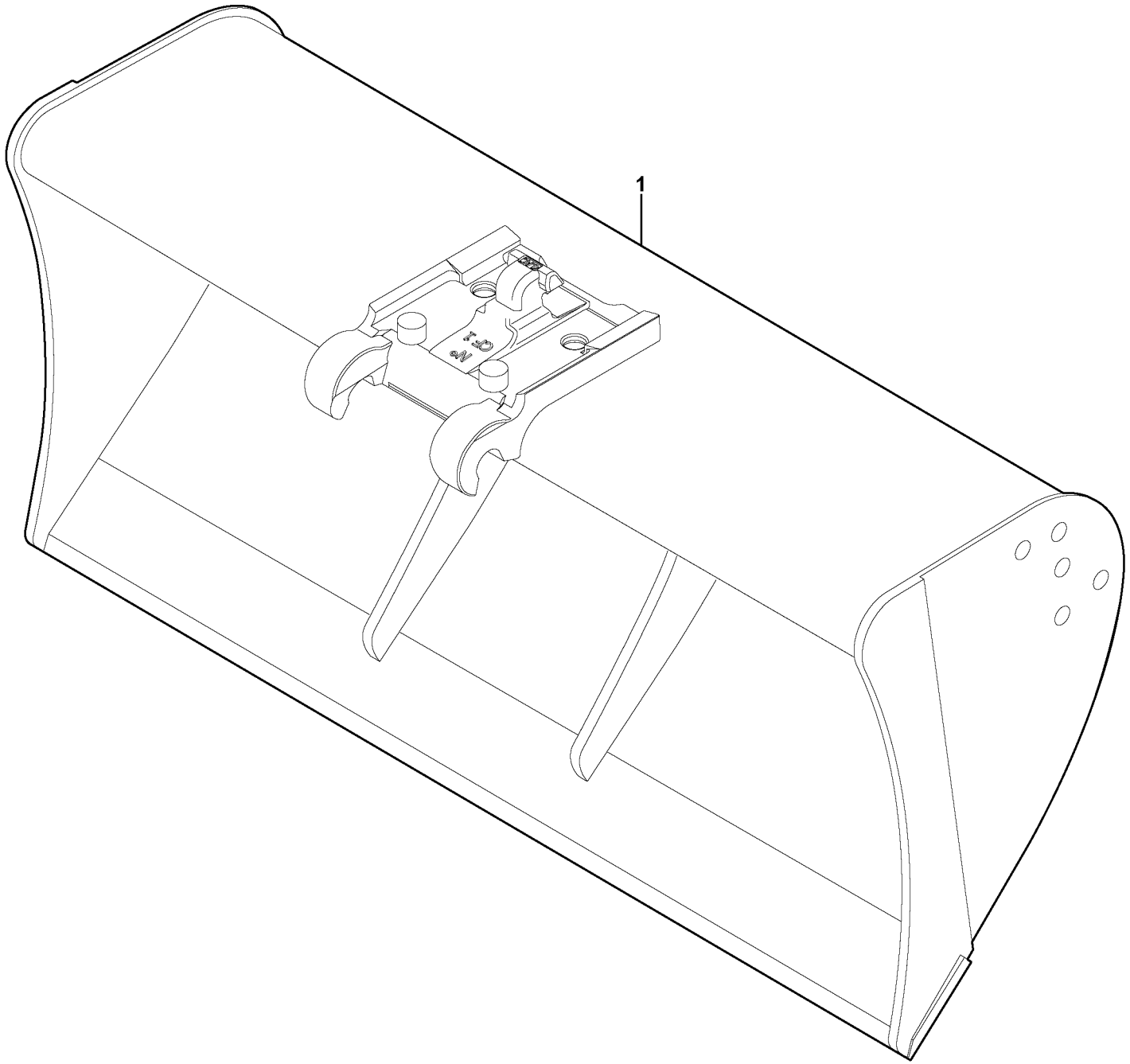

Volvo Construction Equipment

1017309

Fig.	Part No.	Quantity 1	2	3	PS	KIT	Description	Dénomination	Bezeichnung	품명	Denominación	Notes
1	**VOE 11807248**	1					Bucket	Godet	Löffel	버켓	Cuchara	11839212 WID = 1300mm/51.1810in L = 106L/28.0052US gal

1	**602.10151**		**Grading bucket for Quickfit** 퀵 커플링 용 그래이딩 버켓 **Planierschaufel, Schnellkupplung** **Godet niveleur pour raccordement rapide** **Grading bucket for Quickfit**
2			
3			
4			
5			

Catalogue id **20048**	Group **925**
Illustr. No **1017309**	Section **410**
Issue **VOE 74C9920048**	Page **497**

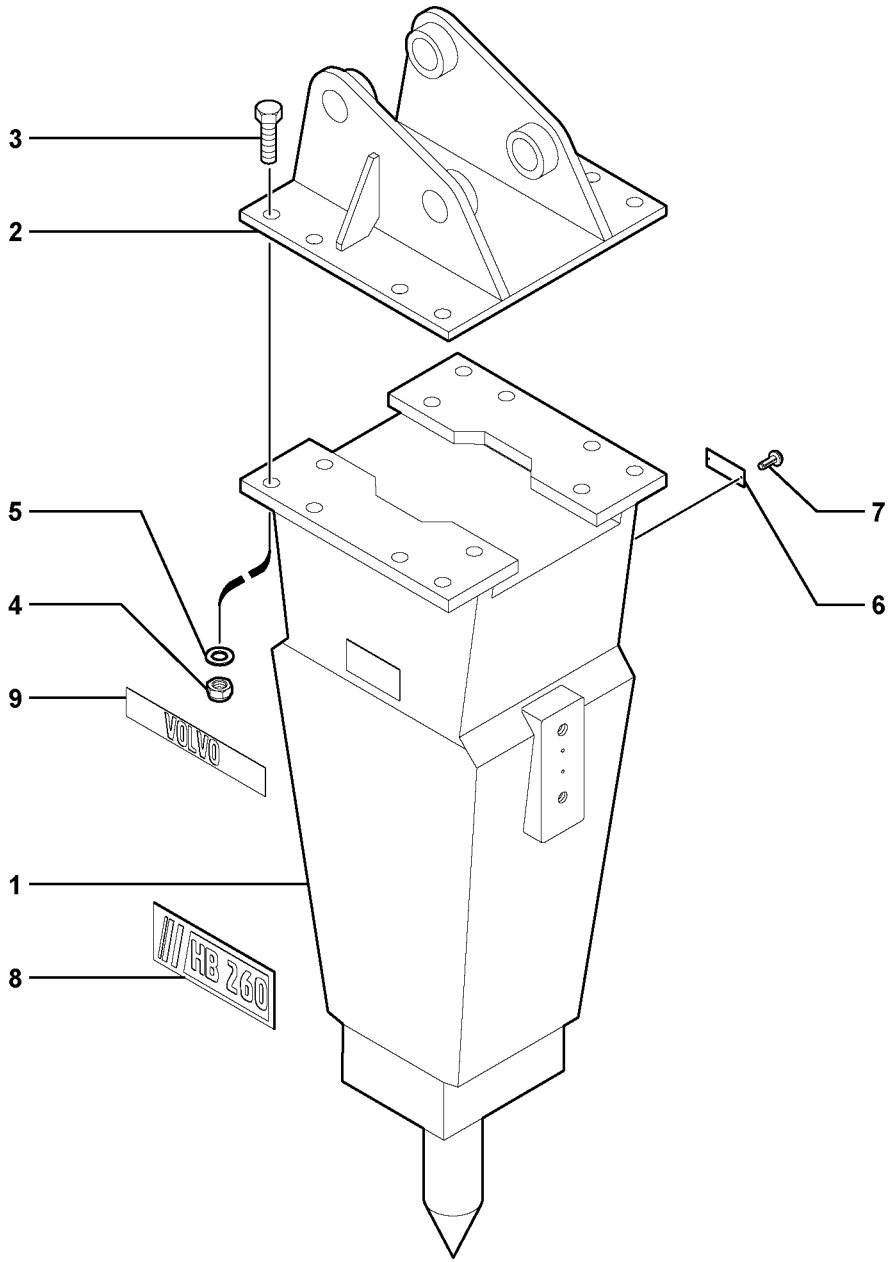

Volvo Construction Equipment

1016585

Fig.	Part No.	Quantity 1	2	3	PS	KIT	Description	Dénomination	Bezeichnung	품명	Denominación	Notes
1		1					Hammer	Marteau	Hammer	망치	Martillo	11839086
												See group 926, Page 505
2	**VOE 11805687**	1					Support	Support	Stütze	서포트	Apoyo	
3	**VOE 978949**	8					Hexagon screw	Vis a tête hexagonale	Sechskantschr.	육각 나사	Tornillo hexago	
4	**VOE 982489**	8					Lock nut	Contre-ecrou	Sicherungsmutter	록 너트	Contratuerca	
5	**VOE 955903**	8					Washer	Rondelle	Scheibe	와셔	Arandela	
6	**VOE 11803733**	1					Plate	Plaque	Platte	플레이트	Placa	
7	**VOE 11803698**	2					Rivet	Rivet	Niet	리벳	Remache	
8	**VOE 11801323**	1					Decal	Decalcomanie	Abziehbild	데칼	Decalcomania	
9	**VOE 11801327**	1					Decal	Decalcomanie	Abziehbild	데칼	Decalcomania	

1	**602.10151**	
2		
3		
4		
5		

Martillo
햄머
Hammer
Marteau
Hammer

Catalogue id **20048**	Group **926**
Illustr. No **1016585**	Section **200**
Issue **VOE 74C9920048**	Page **499**

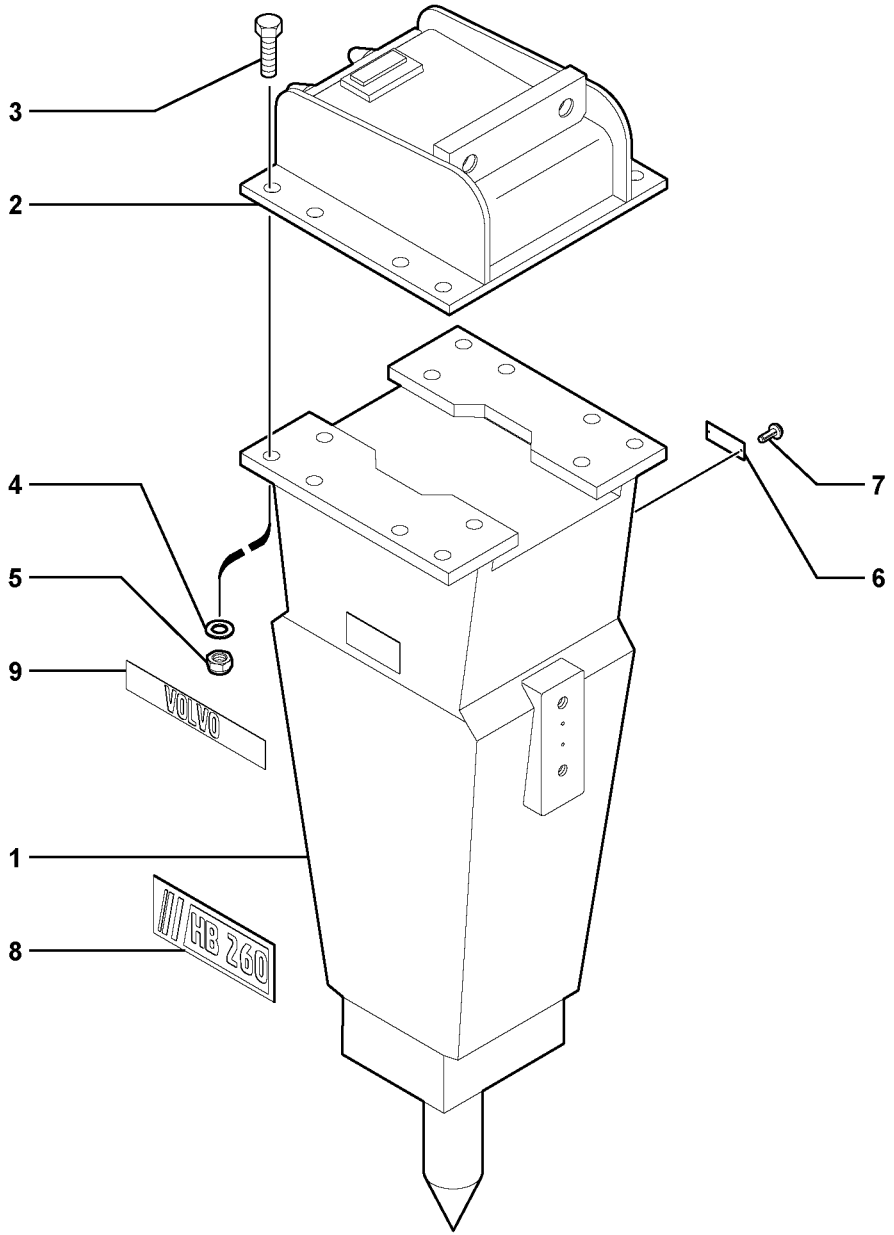

Volvo Construction Equipment

1016586

Fig.	Part No.	Quantity 1	2	3	PS	KIT	Description	Dénomination	Bezeichnung	품명	Denominación	Notes
1		1					Hammer	Marteau	Hammer	망치	Martillo	11839087
												See group 926, Page 505
2	**VOE 11805689**	1					Support	Support	Stütze	서포트	Apoyo	
3	**VOE 978949**	8					Hexagon screw	Vis a tête hexagonale	Sechskantschr.	육각 나사	Tornillo hexago	
4	**VOE 955903**	8					Washer	Rondelle	Scheibe	와셔	Arandela	
5	**VOE 982489**	8					Lock nut	Contre-ecrou	Sicherungsmutter	록 너트	Contratuerca	
6	**VOE 11803733**	1					Plate	Plaque	Platte	플레이트	Placa	
7	**VOE 11803698**	2					Rivet	Rivet	Niet	리벳	Remache	
8	**VOE 11801323**	1					Decal	Decalcomanie	Abziehbild	데칼	Decalcomania	
9	**VOE 11801327**	1					Decal	Decalcomanie	Abziehbild	데칼	Decalcomania	

1	**602.10151**		**Hammer for Quickfit** **퀵 커플링 용 해머** **Hammer, Schnellkupplung** **Marteau pour raccordement rapide** **Hammer for Quickfit**
2			
3			
4			
5			

Catalogue id **20048**	Group **926**
Illustr. No **1016586**	Section **220**
Issue **VOE 74C9920048**	Page **501**

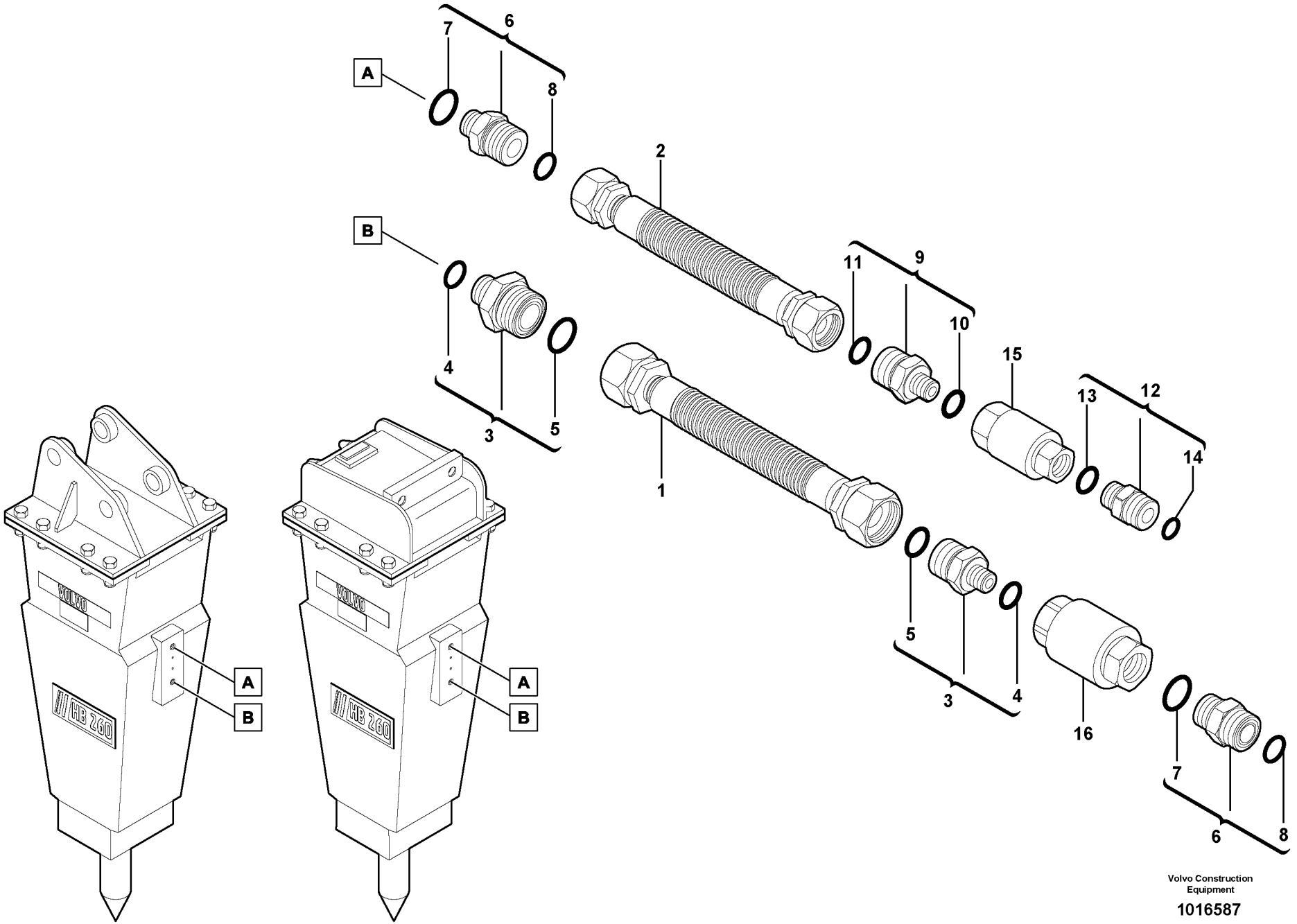

Volvo Construction Equipment

1016587

Fig.	Part No.	Quantity 1	2	3	PS	KIT	Description	Dénomination	Bezeichnung	품명	Denominación	Notes
1	**VOE 11806709**	1					Hose assembly	Conduit flexible	Schlauchleitung	호스 어셈블리	Conducto	
2	**VOE 11806724**	1					Hose assembly	Conduit flexible	Schlauchleitung	호스 어셈블리	Conducto	
3	**VOE 11806455**	2					Union	Teton Connexion	Anschlussnippel	유니언	Niple Conexcion	
4	**PJ 5600204**	1					•Seal	•Joint	•Dichtring	• 시일	•Junta	
5	**VOE 981290**	1					•O-ring	•Joint Torique	•O-Ring	• 오링	•Junta torica	
6	**VOE 11802727**	2					Union	Teton Connexion	Anschlussnippel	유니언	Niple Conexcion	
7	**PJ 5600204**	1					•Seal	•Joint	•Dichtring	• 시일	•Junta	
8	**VOE 981289**	1					•O-ring	•Joint Torique	•O-Ring	• 오링	•Junta torica	
9	**VOE 11802714**	1					Union	Teton Connexion	Anschlussnippel	유니언	Niple Conexcion	
10	**PJ 5600203**	1					•Seal	•Joint	•Dichtring	• 시일	•Junta	
11	**VOE 981289**	1					•O-ring	•Joint Torique	•O-Ring	• 오링	•Junta torica	
12	**VOE 11802734**	1					Nipple	Raccord	Nippel	니플	Niple	
13	**PJ 5600203**	1					•Seal	•Joint	•Dichtring	• 시일	•Junta	
14	**VOE 4880663**	1					•O-ring	•Joint Torique	•O-Ring	• 오링	•Junta torica	
15	**VOE 11804074**	1					Quick Coupling	Accouple.rapide	Schnellkupplung	퀵 커플러	Acoplam Rapido	See group 916, Page 457
16	**VOE 11804110**	1					Quick Coupling	Accouple.rapide	Schnellkupplung	퀵 커플러	Acoplam Rapido	See group 916, Page 457

1	**602.10151** →		**Sistema hidráulico, martillo** 유압 시스템 , 해머 **Hydraulikanlage, Hammer** **Système hydraulique, marteau** **Hydraulic system, hammer**
2			
3			
4			
5			

Catalogue id **20048**	Group **926**
Illustr. No **1016587**	Section **240**
Issue **VOE 74C9920048**	Page **503**

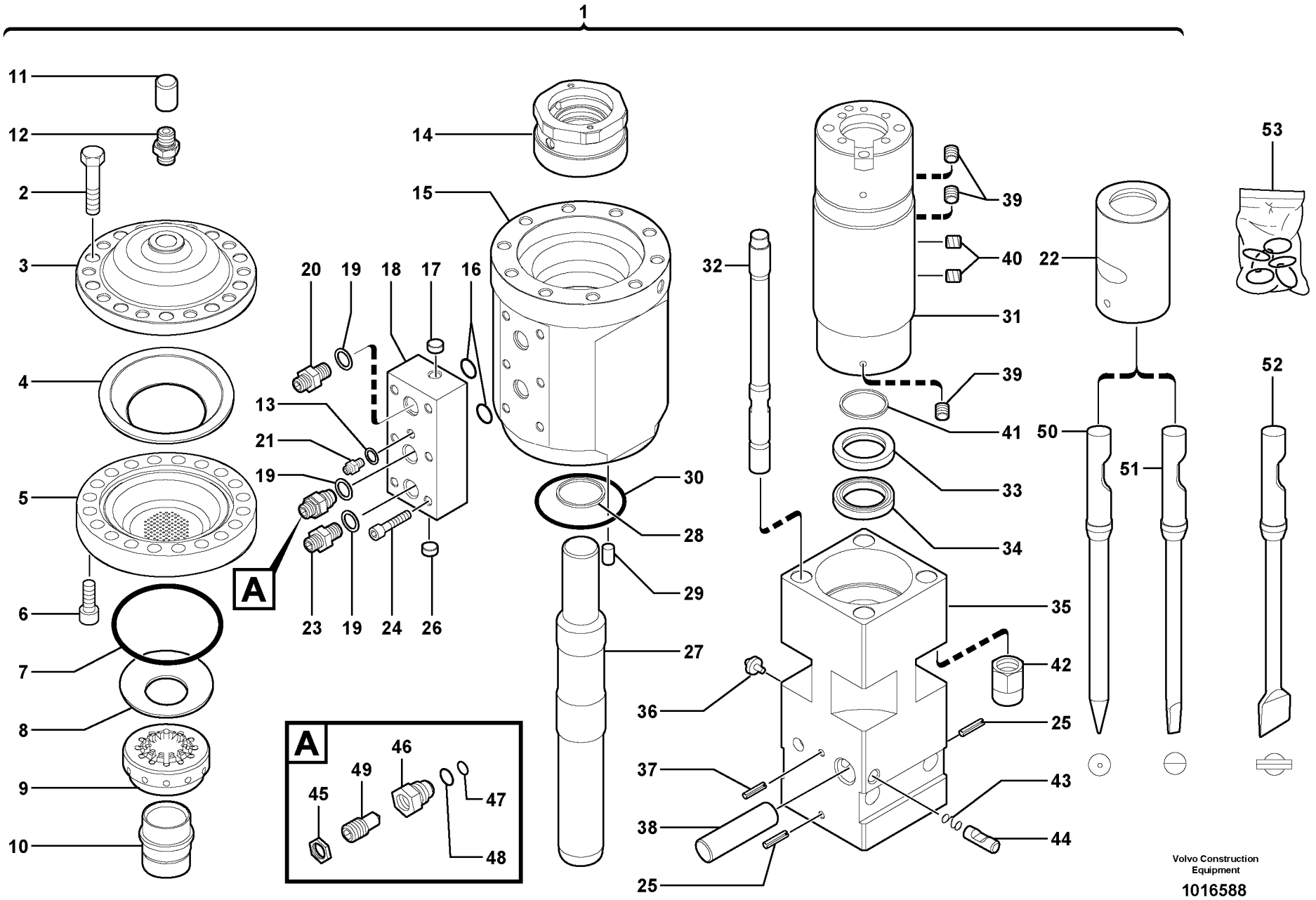
1
11
12
2
3
4
5
6
7
8
9
10
14
15
20
19
18
17
16
13
21
19
23
19
24
26
A
30
28
29
27
32
39
40
31
39
41
33
34
35
42
25
36
37
38
25
43
44
22
53
52
50
51
A
45
49
46
47
48
Volvo Construction Equipment
1016588

Fig.	Part No.	Quantity 1	2	3	PS	KIT	Description	Dénomination	Bezeichnung	품명	Denominación	Notes
1	**VOE 11806492**	1					Hammer	Marteau	Hammer	망치	Martillo	
2	**VOE 11716222**	12					•Screw	•Vis	•Schraube	• 스크류	•Tornillo	
3	**VOE 11715920**	1					•Cover	•Capot	•Haube	• 커버	•Capo	
4	**VOE 11715923**	1					•Diaphragm	•Diaphragme	•Membrane	• 다이어프램	•Diafragma	
5	**VOE 11716224**	1					•Body	•Carcasse	•Rumpf	• 본체	•Cuerpo	
6	**VOE 11714704**	12					•Screw	•Vis	•Schraube	• 스크류	•Tornillo	
7	**VOE 11713226**	1					•Seal	•Joint	•Dichtring	• 시일	•Junta	
8	**VOE 11712570**	1					•Washer	•Rondelle	•Scheibe	• 와셔	•Arandela	
9	**VOE 11716225**	1					•Valve Guide	•Guide Soupape	•Ventilführung	• 밸브 가이드	•Guia Valvula	
10	**VOE 11715877**	1					•Valve	•Soupape	•Ventil	• 밸브	•Valvula	
11	**VOE 11716166**	1					•Plug	•Bouchon	•Stopfen	• 플러그	•Tapon	
12	**VOE 11714017**	1					•Valve	•Soupape	•Ventil	• 밸브	•Valvula	
13	**VOE 11716226**	1					•Washer	•Rondelle	•Scheibe	• 와셔	•Arandela	
14	**VOE 11715878**	1					•Body	•Carcasse	•Rumpf	• 본체	•Cuerpo	
15	**VOE 11716227**	1					•Body	•Carcasse	•Rumpf	• 본체	•Cuerpo	
16	**VOE 11715013**	2					•Seal	•Joint	•Dichtring	• 시일	•Junta	
17	**VOE 11716228**	1					•Screw	•Vis	•Schraube	• 스크류	•Tornillo	
18	**VOE 11715570**	1					•Body	•Carcasse	•Rumpf	• 본체	•Cuerpo	
19	**VOE 11716199**	3					•Washer	•Rondelle	•Scheibe	• 와셔	•Arandela	
20	**VOE 11716229**	1					•Nipple	•Raccord	•Nippel	• 니플	•Niple	
21	**VOE 11716230**	1					•Pressure Connectio..	•Raccord de refoulem	•Druckanschluss	• 압력 연결장치	•Conexión de presión	
22	**VOE 11714222**	1					•Guide	•Rail	•Führung	• 가이드	•Guia	
23	**VOE 11716201**	1					•Nipple	•Raccord	•Nippel	• 니플	•Niple	
24	**VOE 11714052**	6					•Screw	•Vis	•Schraube	• 스크류	•Tornillo	
25	**VOE 11716236**	2					•Pin	•Goupille	•Zapfen	• 핀	•Pasador	
26	**VOE 11716237**	1					•Plug	•Bouchon	•Stopfen	• 플러그	•Tapon	
27	**VOE 11714221**	1					•Piston	•Piston	•Kolben	• 피스톤	•Piston	
28	**VOE 11712566**	1					•Seal	•Joint	•Dichtring	• 시일	•Junta	
29	**VOE 11716238**	1					•Pin	•Goupille	•Zapfen	• 핀	•Pasador	
30	**VOE 11716192**	1					•O-ring	•Joint Torique	•O-Ring	• 오링	•Junta torica	

1	**602.10151**	
2		
3		
4		
5		

Martillo
햄머
Hammer
Marteau
Hammer

Catalogue id	Group
20048	**926**
Illustr. No **1016588**	Section **260**
Issue **VOE 74C9920048**	Page **505**

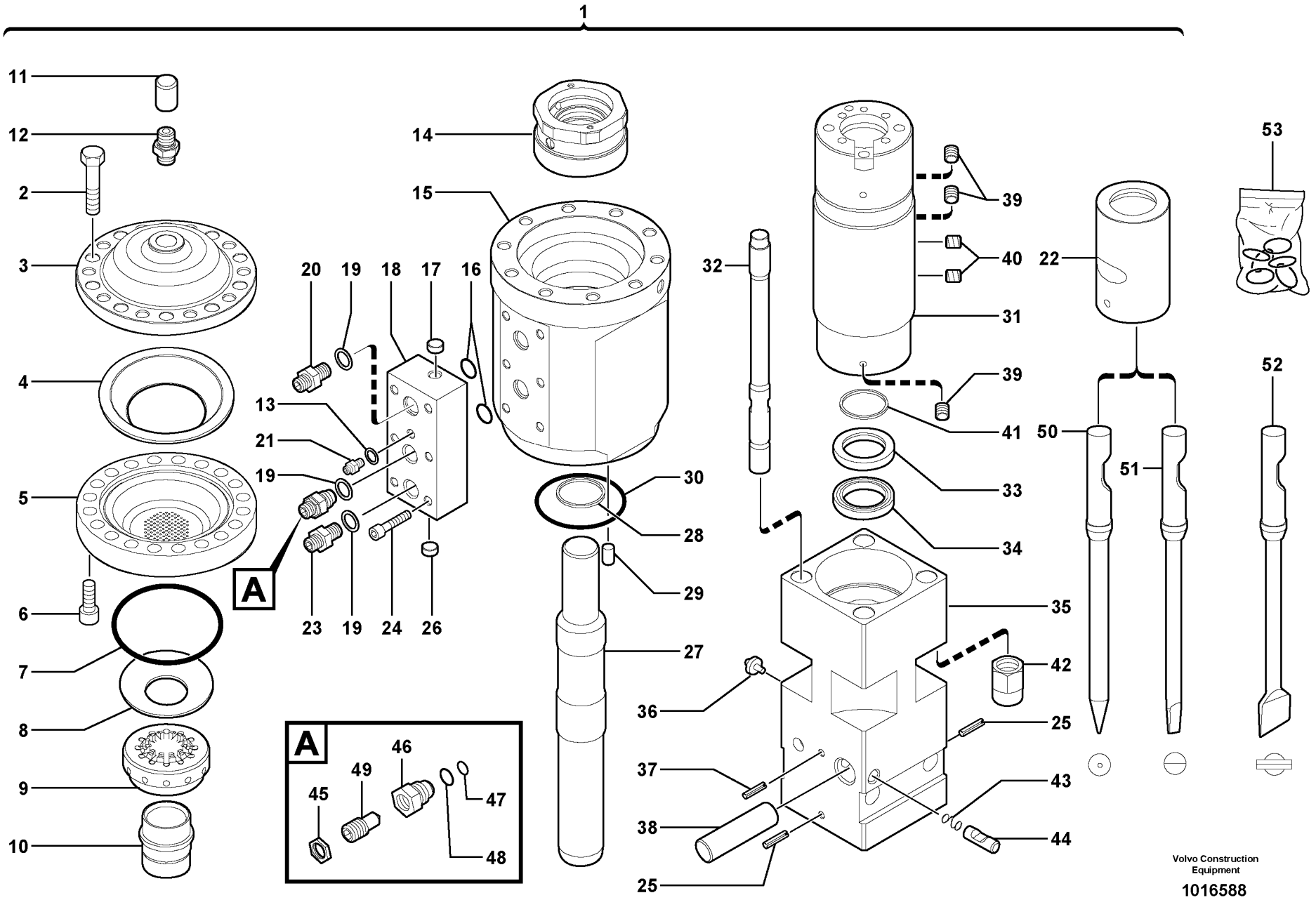
1
11
12
2
3
4
5
6
7
8
9
10
14
15
20
19
18
17
16
13
21
19
23
19
24
26
A
30
28
29
27
32
39
40
31
39
41
33
34
35
42
25
36
37
38
25
43
44
22
53
52
50
51
A
45
49
46
47
48
Volvo Construction Equipment
1016588

Fig.	Part No.	Quantity 1	2	3	PS	KIT	Description	Dénomination	Bezeichnung	품명	Denominación	Notes
31	**VOE 11713006**	1					•Cylinder	•Verin	•Zylinder	• 실린더	•Cilindro	
32	**VOE 11716239**	4					•Stay	•Tirant	•Strebe	• 스테이	•Barra	
33	**VOE 11714223**	1					•Spacer	•Partie Intermédiaire	•Zwischenstück	• 스페이서	•Espaciador	
34	**VOE 11712567**	1					•Seal	•Joint	•Dichtring	• 시일	•Junta	
35	**VOE 11712482**	1					•Body	•Carcasse	•Rumpf	• 본체	•Cuerpo	
36	**VOE 983718**	1					•Lub Nipple	•Graisseur	•Schmiernippel	• 윤활용 니플	•Engrasador	
37	**VOE 11714043**	2					•Clevis Pin	•Vis A Oeuillet	•Zylinderbolzen	• 클레비스 핀	•Espiga	
38	**VOE 11713787**	2					•Latch	•Poignee Blocage	•Knebel	• 래치	•Mango Seguridad	
39	**VOE 11716211**	4					•Screw	•Vis	•Schraube	• 스크류	•Tornillo	
40	**VOE 11716228**	2					•Screw	•Vis	•Schraube	• 스크류	•Tornillo	
41	**VOE 11716241**	1					•Seal	•Joint	•Dichtring	• 시일	•Junta	
42	**VOE 11716213**	4					•Blind Nut	•Ecrou Borgne	•Blindmutter	• 블라인드 너트	•Tuerca Ciega	
43	**VOE 11712568**	2					•Spring	•Ressort	•Feder	• 스프링	•Muelle	
44	**VOE 11714025**	2					•Pin	•Goupille	•Zapfen	• 핀	•Pasador	
45	**VOE 11716231**	1					•Nut	•Ecrou	•Mutter	• 너트	•Tuerca	
46	**VOE 11716232**	1					•Nipple	•Raccord	•Nippel	• 니플	•Niple	
47	**VOE 11716233**	1					•O-ring	•Joint Torique	•O-Ring	• 오링	•Junta torica	
48	**VOE 11716234**	1					•O-ring	•Joint Torique	•O-Ring	• 오링	•Junta torica	
49	**VOE 11716235**	1					•Relief valve	•Limiteur - pression	•Druckbegrenzer	• 릴리프 밸브	•Limitador presion	
50	**PJ 5440107**	1					•Standard pick	•Broche pic standard	•Standardstange	• 표준 피크	•Pico estándar	
51	**PJ 5440108**	1					•Transverse chisel ro	•Broche burin	•Senkrechte Meißelst	• 가로 끌 봉	•Barra de cincel trans	
52	**PJ 5440109**	1					Transverse spade ro	Broche bêche	Senkrechte Spatenst	가로 가래 봉	Barra de pala transve	
53	**VOE 11714528**	1					Sealing Kit	Jeu Joints	Dichtungssatz	시일 킷	Juego Retenes	

1	**602.10151**	
2		
3		
4		
5		

Martillo
햄머
Hammer
Marteau
Hammer

Catalogue id	Group
20048	**926**
Illustr. No	Section
1016588	**260**
Issue	Page
VOE 74C9920048	**507**

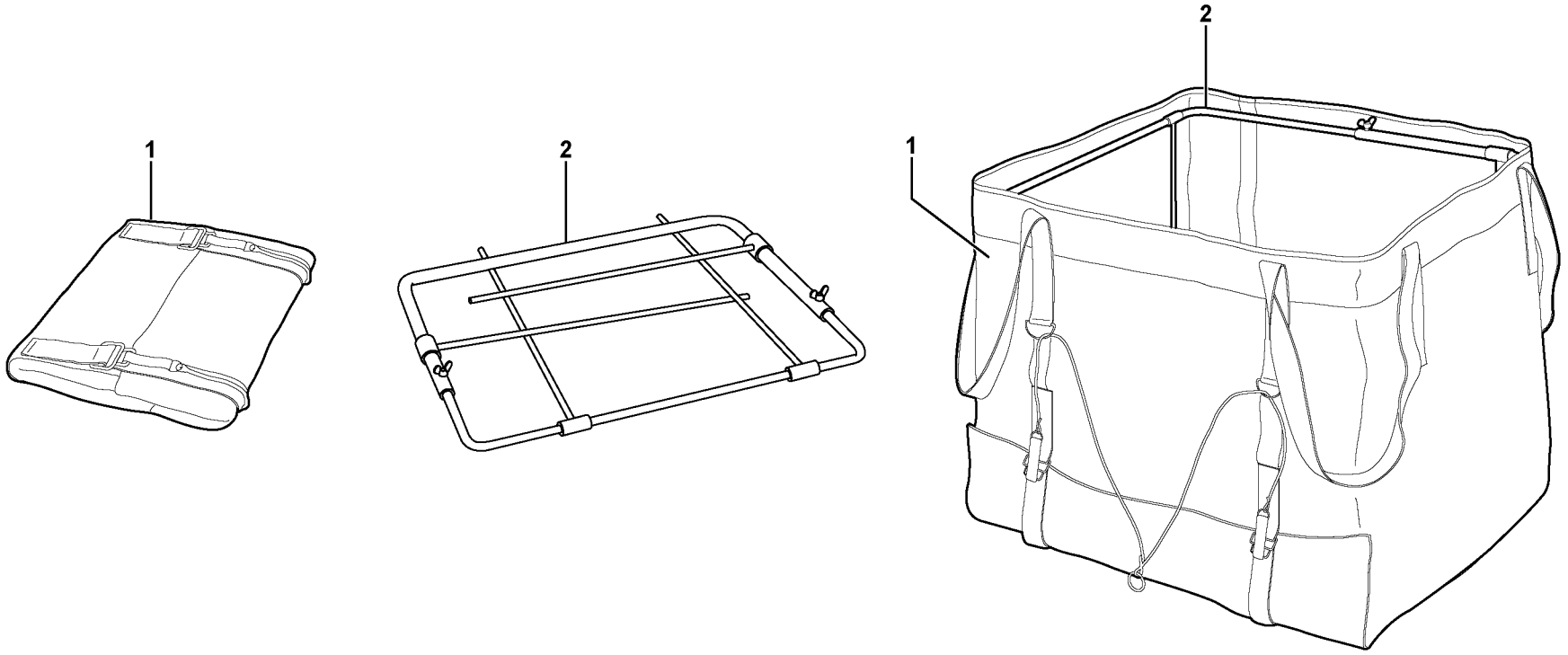

Volvo Construction Equipment

1016037

Fig.	Part No.	Quantity 1	2	3	PS	KIT	Description	Dénomination	Bezeichnung	품명	Denominación	Notes
1	**PJ 7411635**	1					Fabric Container	Sac en tissu	Container, Stoff.....	직물 컨테이너	Fabric Container.....	L = 650L/171.73US gal GRAM = 1000Kg/2205lb
2	**PJ 7411636**	1					Fitting	Armature	Beschlag	피팅	Herraje.....	

1	**602.10151**		**Bulk bag** 직물 컨테이너 **Schüttgutsack** **Sac en tissu** **Bulk bag**	Catalogue id **20048**	Group **926**
2				Illustr. No **1016037**	Section **900**
3				Issue **VOE 74C9920048**	Page **509**
4					
5					

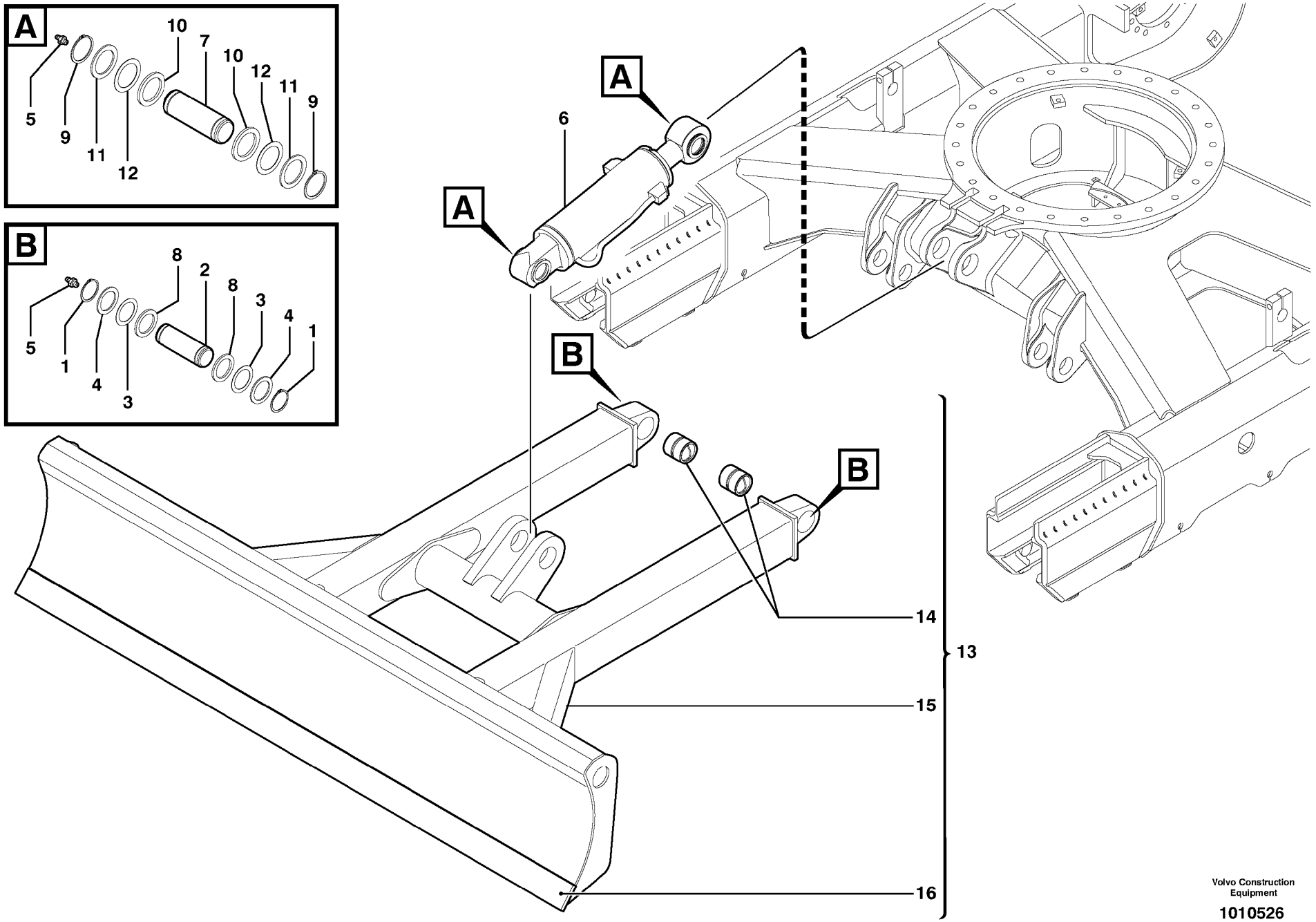

Volvo Construction Equipment

1010526

Fig.	Part No.	Quantity 1	2	3	PS	KIT	Description	Dénomination	Bezeichnung	품명	Denominación	Notes
1	**VOE 914468**	4			SS		Snap Ring	Circlip	Nutring	스냅 링	Circlip	
2	**VOE 11802525**	2					Stub Axle	Axe	Steckachse	스터브 축	Gorron Eje	
3	**VOE 11802088**	REQ					Washer	Rondelle	Scheibe	와셔	Arandela	
4	**VOE 11802091**	REQ					Washer	Rondelle	Scheibe	와셔	Arandela	
5	**VOE 983718**	4					Lub Nipple	Graisseur	Schmiernippel	윤활용 니플	Engrasador	
6		1					Dozer blade cylinder	Vérin de lame niveleu	Planierschildzylinder	도자 삽날 실린더	Cilindro de hoja topa	See group 927, Page 513
7	**VOE 11802526**	2					Stub Axle	Axe	Steckachse	스터브 축	Gorron Eje	
8	**VOE 11802261**	REQ					Washer	Rondelle	Scheibe	와셔	Arandela	
9	**VOE 914472**	4					Snap Ring	Circlip	Nutring	스냅 링	Circlip	
10	**VOE 11802529**	REQ					Washer	Rondelle	Scheibe	와셔	Arandela	
11	**VOE 11802312**	REQ					Washer	Rondelle	Scheibe	와셔	Arandela	
12	**VOE 11802528**	REQ					Washer	Rondelle	Scheibe	와셔	Arandela	
13	**VOE 11802524**	1					Dozer Blade	Lame Bulldozer	Frontschar	도자 블레이드	Hoja Diagonal	
14	**VOE 11802531**	2					•Bushing	•Bague	•Buchse	• 부싱	•Casquillo	
15		1			NS		•Dozer Blade	•Lame Bulldozer	•Frontschar	• 도자 블레이드	•Hoja Diagonal	ORDER ITEM NO 13
16	**VOE 11802545**	1					•Blade	•Tôle usure	•Verschl Klinge	• 블레이드	•Hoja	

1	**602.10151**	
2		
3		
4		
5		

Hoja diagonal
도자 블레이드
Frontschar
Lame bulldozer
Dozer blade

Catalogue id **20048**	Group **927**
Illustr. No **1010526**	Section **100**
Issue **VOE 74C9920048**	Page **511**

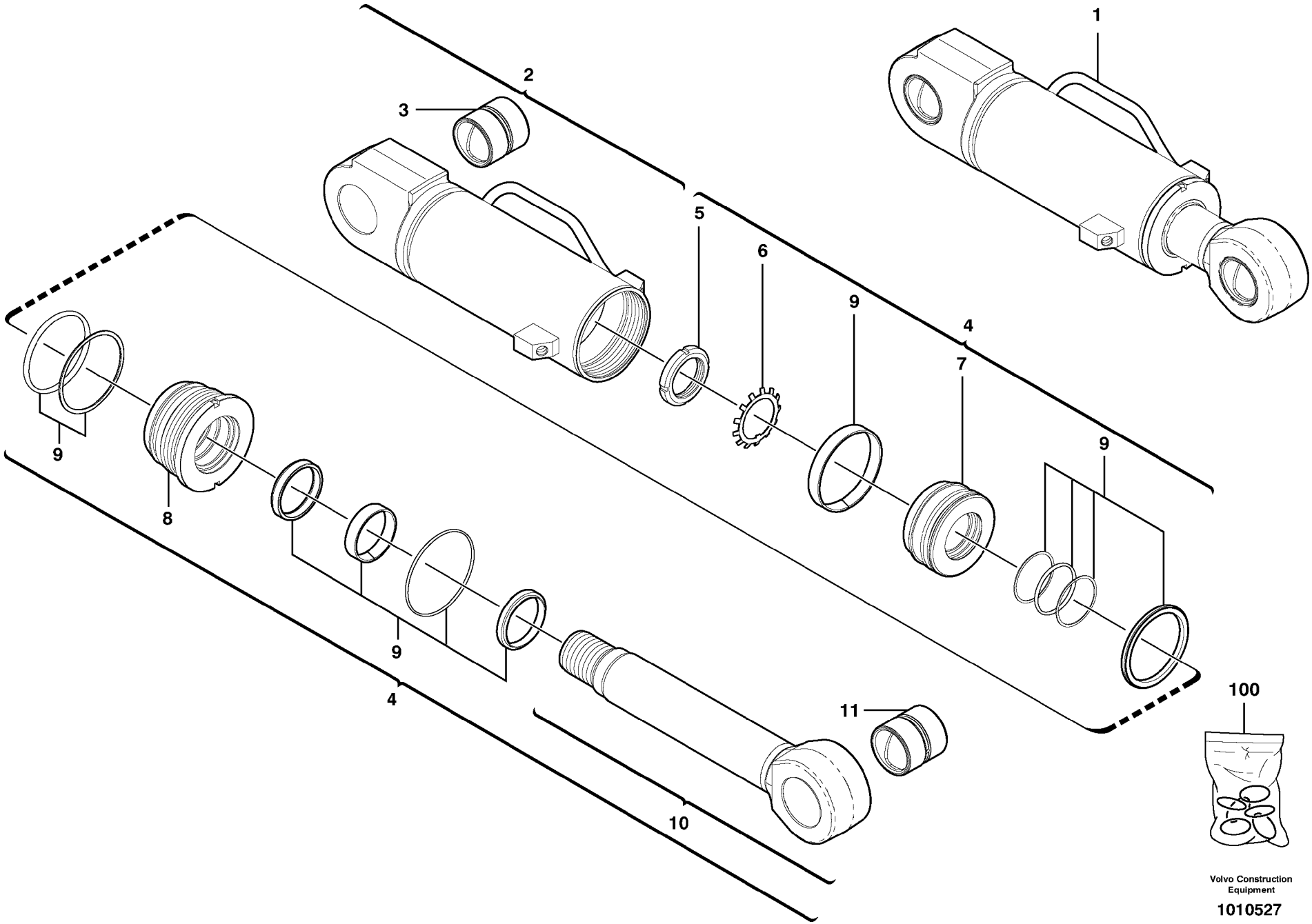

Volvo Construction Equipment

1010527

Fig.	Part No.	Quantity 1	2	3	PS	KIT	Description	Dénomination	Bezeichnung	품명	Denominación	Notes
1	**VOE 11800617**	1					Dozer blade cylinder	Vérin de lame niveleu	Planierschildzylinder	도자 삽날 실린더	Cilindro de hoja topa	
2	**VOE 11710559**	1					•Cylinder housing	•Corps de verin	•Zylindergehäuse	• 실린더 하우징	•Cuerpo de maquina	
3	**VOE 11710564**	1					••Bushing	••Bague	••Buchse	•• 부싱	••Casquillo	
4	**VOE 11710561**	1					•Kit	•Jeu	•Bausatz	• 킷	•Juego	
5	**VOE 11710565**	1					••Nut	••Ecrou	••Mutter	•• 너트	••Tuerca	
6	**VOE 11710566**	1					••Washer	••Rondelle	••Scheibe	•• 와셔	••Arandela	
7	**VOE 11710563**	1					••Piston	••Piston	••Kolben	•• 피스톤	••Piston	
8	**VOE 11710562**	1					••Head	••Tete	••Kopf	•• 헤드	••Capo	
9		11			NS	K	••Seal	••Joint	••Dichtung	•• 실	••Reten	
10	**VOE 11710560**	1					••Kit	••Jeu	••Bausatz	•• 킷	••Juego	
11	**VOE 11710564**	1					•••Bushing	•••Bague	•••Buchse	••• 부싱	•••Casquillo	
100	**VOE 11710558**	1					Sealing Kit	Jeu Joints	Dichtungssatz	시일 킷	Juego Retenes	KIT

1	**602.10151**	
2		
3		
4		
5		

Cilindro hidráulico, hoja diagonal
도자 블레이드 실린더
Frontscharzylinder
Vérin hydraulique, lame bulldozer
Dozer blade cylinder

Catalogue id	Group
20048	**927**
Illustr. No **1010527**	Section **500**
Issue **VOE 74C9920048**	Page **513**

VOLVO

ECR38

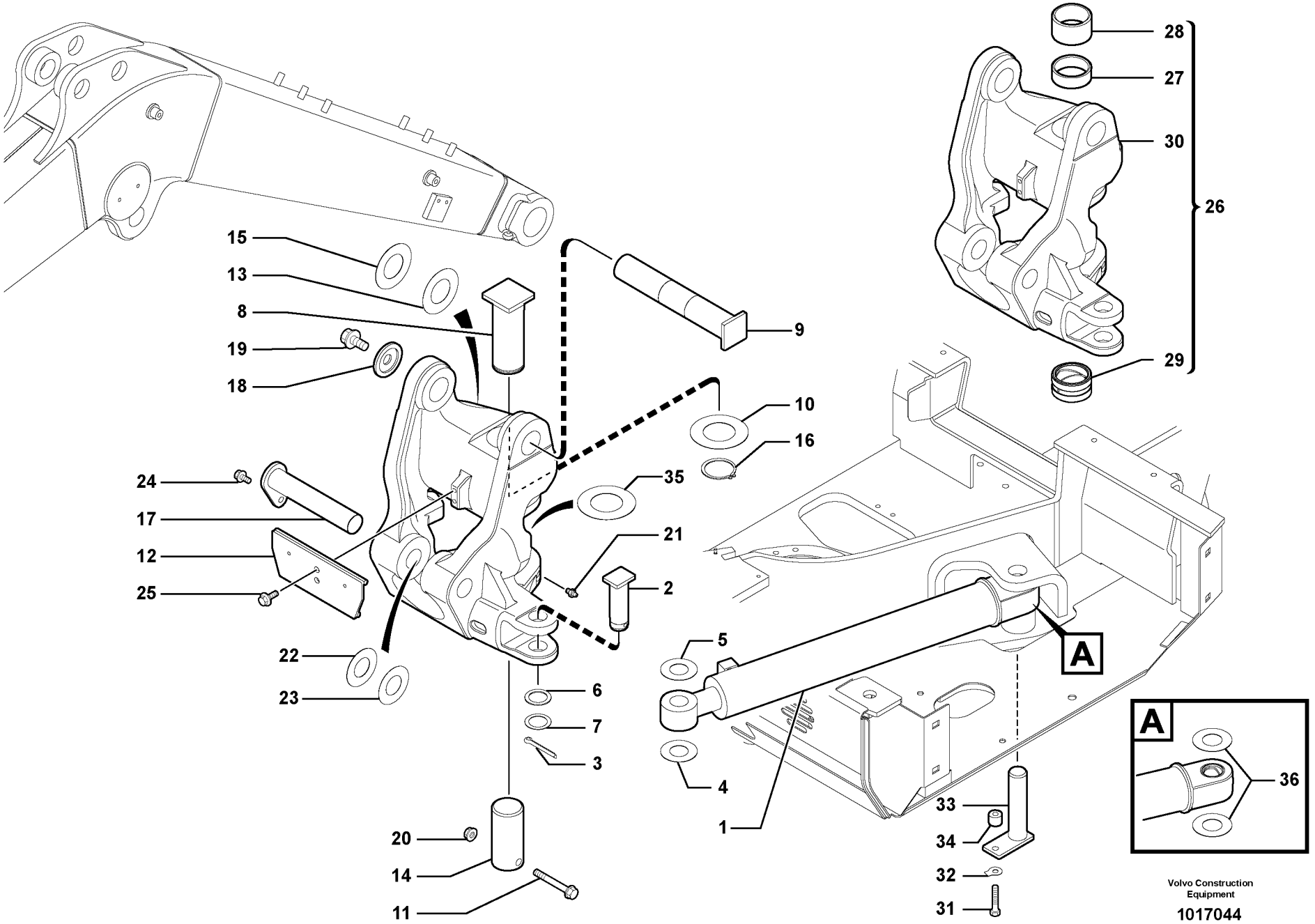

Volvo Construction Equipment

1017044

Fig.	Part No.	Quantity 1	2	3	PS	KIT	Description	Dénomination	Bezeichnung	품명	Denominación	Notes
1		1					Hydraulic cylinder	Verin hydraulique	Hydraulzylinder	유압 실린더	Cilindro hidraulico	See group 971, Page 519
2	**VOE 11801241**	1					Stub Axle	Axe	Steckachse	스터브 축	Gorron Eje	
3	**VOE 907899**	1			SS		Cotter Pin	Goupille Fendue	Splint	코터 핀	Pasador Hendido	
4	**VOE 11802344**	REQ					Washer	Rondelle	Scheibe	와셔	Arandela	
5	**VOE 11802345**	REQ					Washer	Rondelle	Scheibe	와셔	Arandela	
6	**VOE 11802240**	REQ					Washer	Rondelle	Scheibe	와셔	Arandela	
7	**VOE 11802241**	REQ					Washer	Rondelle	Scheibe	와셔	Arandela	
8	**VOE 11802027**	1					Stub Axle	Axe	Steckachse	스터브 축	Gorron Eje	
9	**VOE 11802220**	1					Stub Axle	Axe	Steckachse	스터브 축	Gorron Eje	
10	**VOE 11802346**	REQ					Washer	Rondelle	Scheibe	와셔	Arandela	
11	**VOE 13965229**	1					Flange screw	Vis à bride	Flanschschraube	플랜지 스크류	Torn embridado	
12	**VOE 11806394**	1					Hose Flange	Bride Flexible	Schlauchkupplg		Brida Manguera	
13	**VOE 11802310**	REQ					Washer	Rondelle	Scheibe	와셔	Arandela	
14	**VOE 11802028**	1					Stub Axle	Axe	Steckachse	스터브 축	Gorron Eje	
15	**VOE 11802311**	REQ					Washer	Rondelle	Scheibe	와셔	Arandela	
16	**VOE 914476**	1					Snap Ring	Circlip	Nutring	스냅 링	Circlip	
17	**VOE 11802182**	1					Stub Axle	Axe	Steckachse	스터브 축	Gorron Eje	
18	**VOE 11802882**	1					Washer	Rondelle	Scheibe	와셔	Arandela	
19	**VOE 968435**	1					Flange screw	Vis à bride	Flanschschraube	플랜지 스크류	Torn embridado	
20	**VOE 971099**	1					Flange Lock Nut	Contre écrou bride	Flanschmutter	플랜지 록 너트	Contratuer Embr	
21	**VOE 983718**	1					Lub Nipple	Graisseur	Schmiernippel	윤활용 니플	Engrasador	
22	**VOE 11802447**	REQ					Washer	Rondelle	Scheibe	와셔	Arandela	
23	**VOE 11802448**	REQ					Washer	Rondelle	Scheibe	와셔	Arandela	
24	**VOE 946441**	1					Flange screw	Vis à bride	Flanschschraube	플랜지 스크류	Torn embridado	
25	**VOE 946752**	2			SS		Screw	Vis	Schraube	스크류	Tornillo	
26	**VOE 11802030**	1					Pivot	Pivot	Lagerzapfen	피봇	Pivote	
27	**VOE 11802961**	1					•Bushing	•Bague	•Buchse	• 부싱	•Casquillo	
28	**VOE 11802031**	1					•Bushing	•Bague	•Buchse	• 부싱	•Casquillo	
29	**VOE 11802053**	1					•Bushing	•Bague	•Buchse	• 부싱	•Casquillo	
30		1			NS		•Pivot	•Pivot	•Lagerzapfen	• 피봇	•Pivote	ORDER ITEM NO 26

1		
2		
3		
4		
5		

Pivote
피봇 핀
Lagerzapfen
Pivot
Pivot pin

Catalogue id	Group
20048	**971**
Illustr. No **1017044**	Section **100**
Issue **VOE 74C9920048**	Page **515**

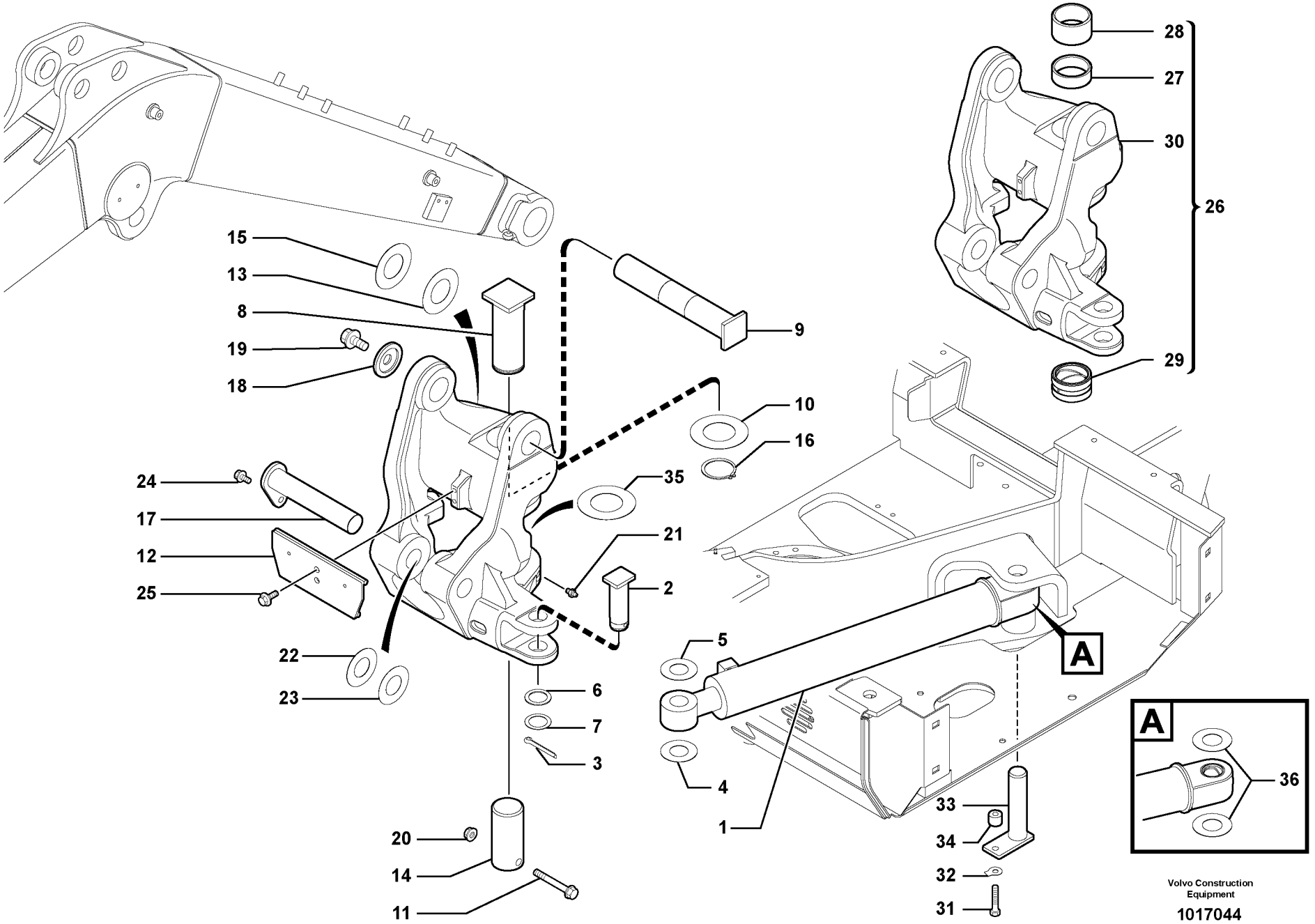

Volvo Construction Equipment

1017044

Fig.	Part No.	Quantity 1	2	3	PS	KIT	Description	Dénomination	Bezeichnung	품명	Denominación	Notes
31	**VOE 983254**	1					Hexagon screw	Vis a tête hexagonale	Sechskantschr.	육각 나사	Tornillo hexago	
32	**VOE 11802875**	1					Tab Washer	Lame Securite	Sicherungsblech	태브 와셔	Lamina Segurid	
33	**VOE 11802873**	1					Stub Axle	Axe	Steckachse	스터브 축	Gorron Eje	
34	**VOE 11802872**	1					Spacer	Partie Intermédiaire	Zwischenstück	스페이서	Espaciador	
35	**VOE 11806774**	REQ					Washer	Rondelle	Scheibe	와셔	Arandela	
36	**VOE 11802344**	2					Washer	Rondelle	Scheibe	와셔	Arandela	

1		
2		
3		
4		
5		

Pivote
피봇 핀
Lagerzapfen
Pivot
Pivot pin

Catalogue id	Group
20048	**971**
Illustr. No **1017044**	Section **100**
Issue **VOE 74C9920048**	Page **517**

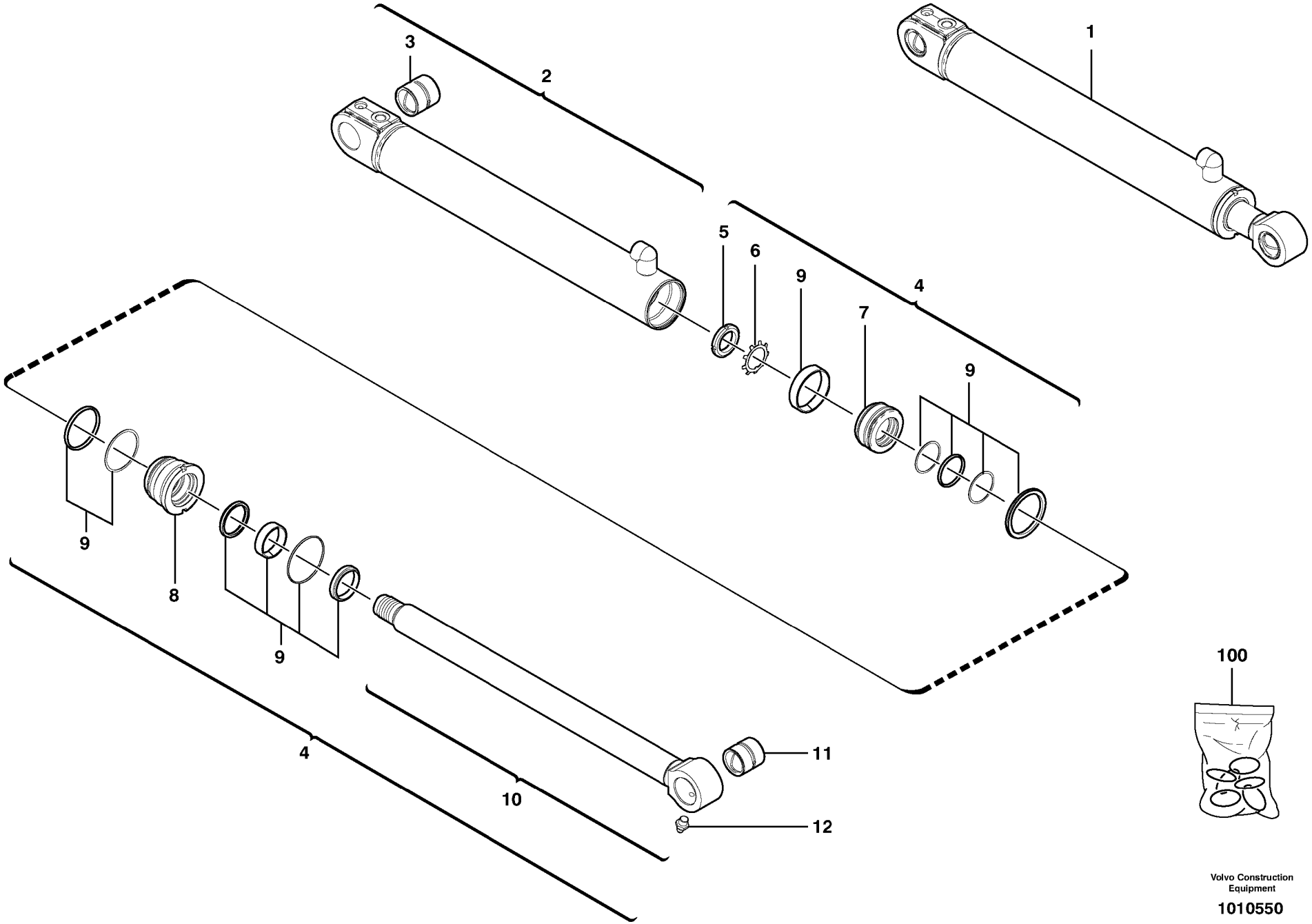

Volvo Construction Equipment

1010550

Fig.	Part No.	Quantity 1	2	3	PS	KIT	Description	Dénomination	Bezeichnung	품명	Denominación	Notes
1	**VOE 11800608**	1					Hydraulic cylinder	Verin hydraulique	Hydraulzylinder	유압 실린더	Cilindro hidraulico	
2	**VOE 11988923**	1					•Cylinder housing	•Corps de verin	•Zylindergehäuse	• 실린더 하우징	•Cuerpo de maquina	
3	**VOE 11988928**	1					••Bushing	••Bague	••Buchse	•• 부싱	••Casquillo	
4	**VOE 11988925**	1					•Kit	•Jeu	•Bausatz	• 킷	•Juego	
5	**VOE 11988948**	1					••Nut	••Ecrou	••Mutter	•• 너트	••Tuerca	
6	**VOE 11988949**	1					••Washer	••Rondelle	••Scheibe	•• 와셔	••Arandela	
7	**VOE 11988927**	1					••Piston	••Piston	••Kolben	•• 피스톤	••Piston	
8	**VOE 11988926**	1					••Head	••Tete	••Kopf	•• 헤드	••Capo	
9		11			NS	K	••Seal	••Joint	••Dichtung	•• 실	••Reten	
10	**VOE 11988924**	1					••Kit	••Jeu	••Bausatz	•• 킷	••Juego	
11	**VOE 11988460**	1					•••Bushing	•••Bague	•••Buchse	••• 부싱	•••Casquillo	
12	**VOE 983718**	1					•••Lub Nipple	•••Graisseur	•••Schmiernippel	••• 윤활용 니플	•••Engrasador	(VOE 11988862)
100	**VOE 11988359**	1					Sealing Kit	Jeu Joints	Dichtungssatz	시일 킷	Juego Retenes	KIT

1	**602.10151**	
2		
3		
4		
5		

Cilindro excéntrico de la pluma
붐 오프셋 실린더
Versetzungszylinder
Vérin de déport latéral de flèche
Boom offset cylinder

Catalogue id **20048**	Group **971**
Illustr. No **1010550**	Section **600**
Issue **VOE 74C9920048**	Page **519**

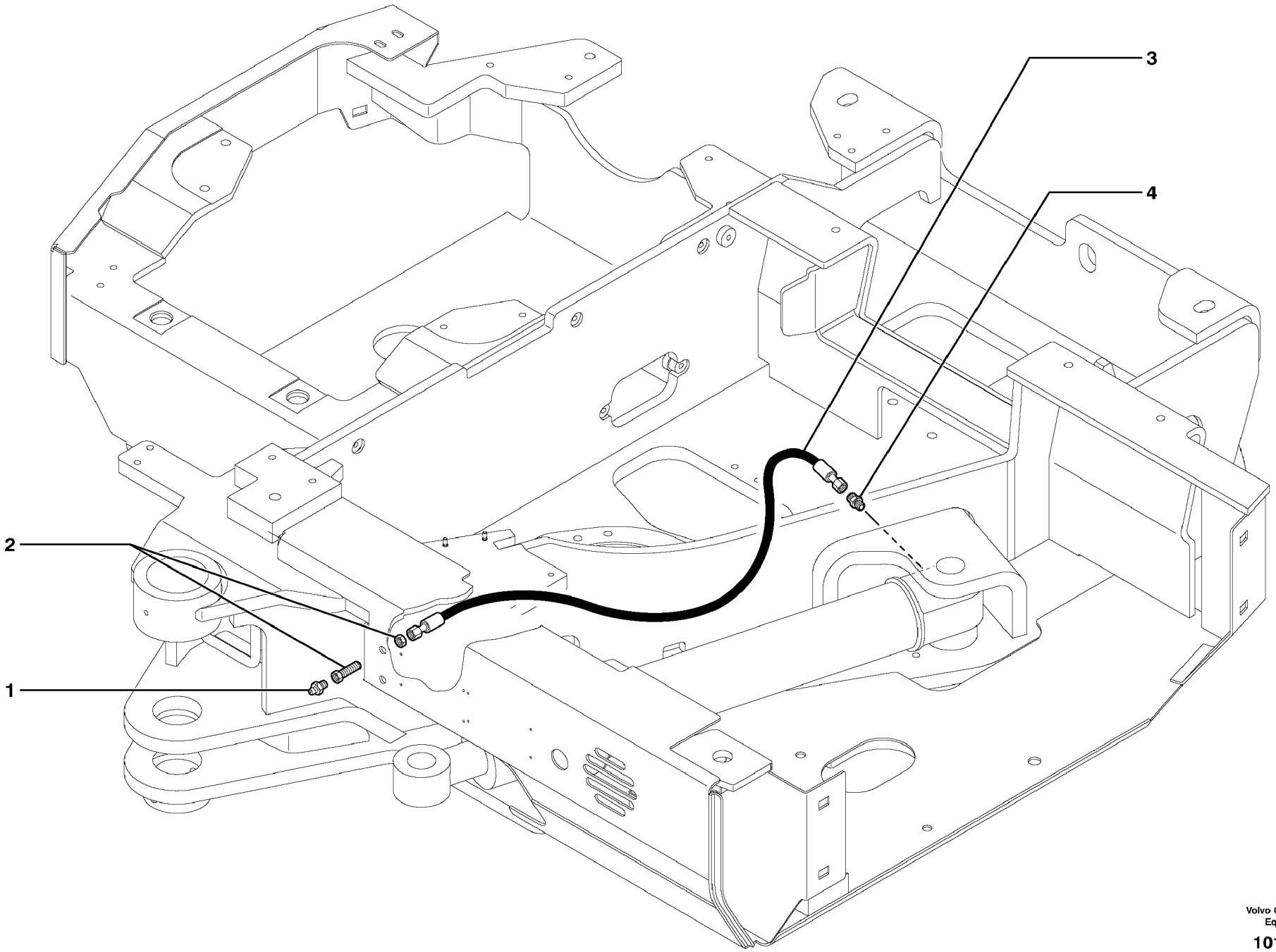

Volvo Construction Equipment

1010640

Fig.	Part No.	Quantity 1	2	3	PS	KIT	Description	Dénomination	Bezeichnung	품명	Denominación	Notes
1	**VOE 966786**	1					Lub Nipple	Graisseur	Schmiernippel	윤활용 니플	Engrasador	
2	**VOE 11802456**	1					Nipple	Raccord	Nippel	니플	Niple	
3	**VOE 11803390**	1					Hose	Durit	Schlauch	호스	Tubo flexible	
4	**VOE 11802392**	1					Union	Teton Connexion	Anschlussnippel	유니언	Niple Conexcion	

1	**602.10151**	→	**Lubricación (cilindro excéntrico de la pluma)** **윤활 (붐 오프셋 실린더)** **Schmierung (Versetzungszylinder)** **Graissage (vérin de déport latéral de flèche)** **Lubrication (boom offset cylinder)**
2			
3			
4			
5			

Catalogue id **20048**	Group **971**
Illustr. No **1010640**	Section **700**
Issue **VOE 74C9920048**	Page **521**

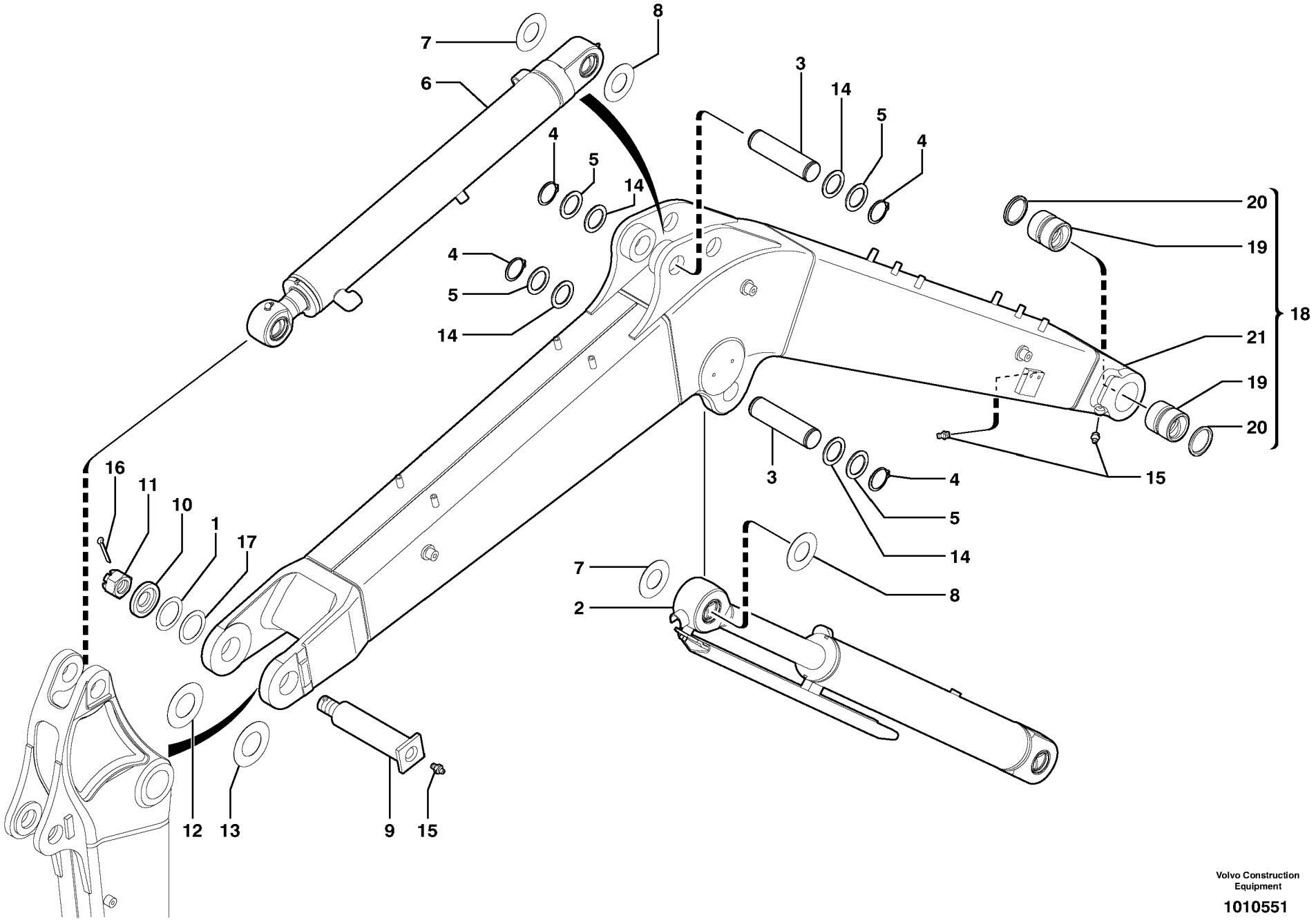

Volvo Construction Equipment

1010551

Fig.	Part No.	Quantity 1	2	3	PS	KIT	Description	Dénomination	Bezeichnung	품명	Denominación	Notes
1	**VOE 11802313**	REQ					Washer	Rondelle	Scheibe	와셔	Arandela	
2		1					Boom Cylinder	Verin de fleche	Auslegerzylinder	붐 실린더	Maquina de flecha	See group 974, Page 525
3	**VOE 11802087**	2					Stub Axle	Axe	Steckachse	스터브 축	Gorron Eje	
4	**VOE 914468**	4			SS		Snap Ring	Circlip	Nutring	스냅 링	Circlip	
5	**VOE 11802088**	REQ					Washer	Rondelle	Scheibe	와셔	Arandela	
6		1					Dipper arm cyl.	Vérin de balancier	Stielzylinder	디퍼 암 실린더	Cilindro del brazo	See group 975, Page 533
7	**VOE 11802089**	REQ					Washer	Rondelle	Scheibe	와셔	Arandela	
8	**VOE 11802090**	REQ					Washer	Rondelle	Scheibe	와셔	Arandela	
9	**VOE 11802308**	1					Stub Axle	Axe	Steckachse	스터브 축	Gorron Eje	
10	**VOE 11802309**	1					Washer	Rondelle	Scheibe	와셔	Arandela	
11	**VOE 11802093**	1					Nut	Ecrou	Mutter	너트	Tuerca	
12	**VOE 11802310**	REQ					Washer	Rondelle	Scheibe	와셔	Arandela	
13	**VOE 11802311**	REQ					Washer	Rondelle	Scheibe	와셔	Arandela	
14	**VOE 11802091**	REQ					Washer	Rondelle	Scheibe	와셔	Arandela	
15	**VOE 983718**	3					Lub Nipple	Graisseur	Schmiernippel	윤활용 니플	Engrasador	
16	**VOE 907889**	1			SS		Cotter Pin	Goupille Fendue	Splint	코터 핀	Pasador Hendido	
17	**VOE 11802312**	REQ					Washer	Rondelle	Scheibe	와셔	Arandela	
18	**VOE 11801536**	1					Boom	Fleche	Ausleger	붐	Pluma	
19	**VOE 11802100**	2					•Bushing	•Bague	•Buchse	• 부싱	•Casquillo	
20	**VOE 11802099**	2					•Seal	•Joint	•Dichtring	• 시일	•Junta	
21		1			NS		•Boom	•Fleche	•Ausleger	• 붐	•Pluma	ORDER ITEM NO 18

1	**602.10151**	
2		
3		
4		
5		

Pluma
붐
Ausleger
Flèche
Boom

Catalogue id	Group
20048	**974**
Illustr. No **1010551**	Section **100**
Issue **VOE 74C9920048**	Page **523**

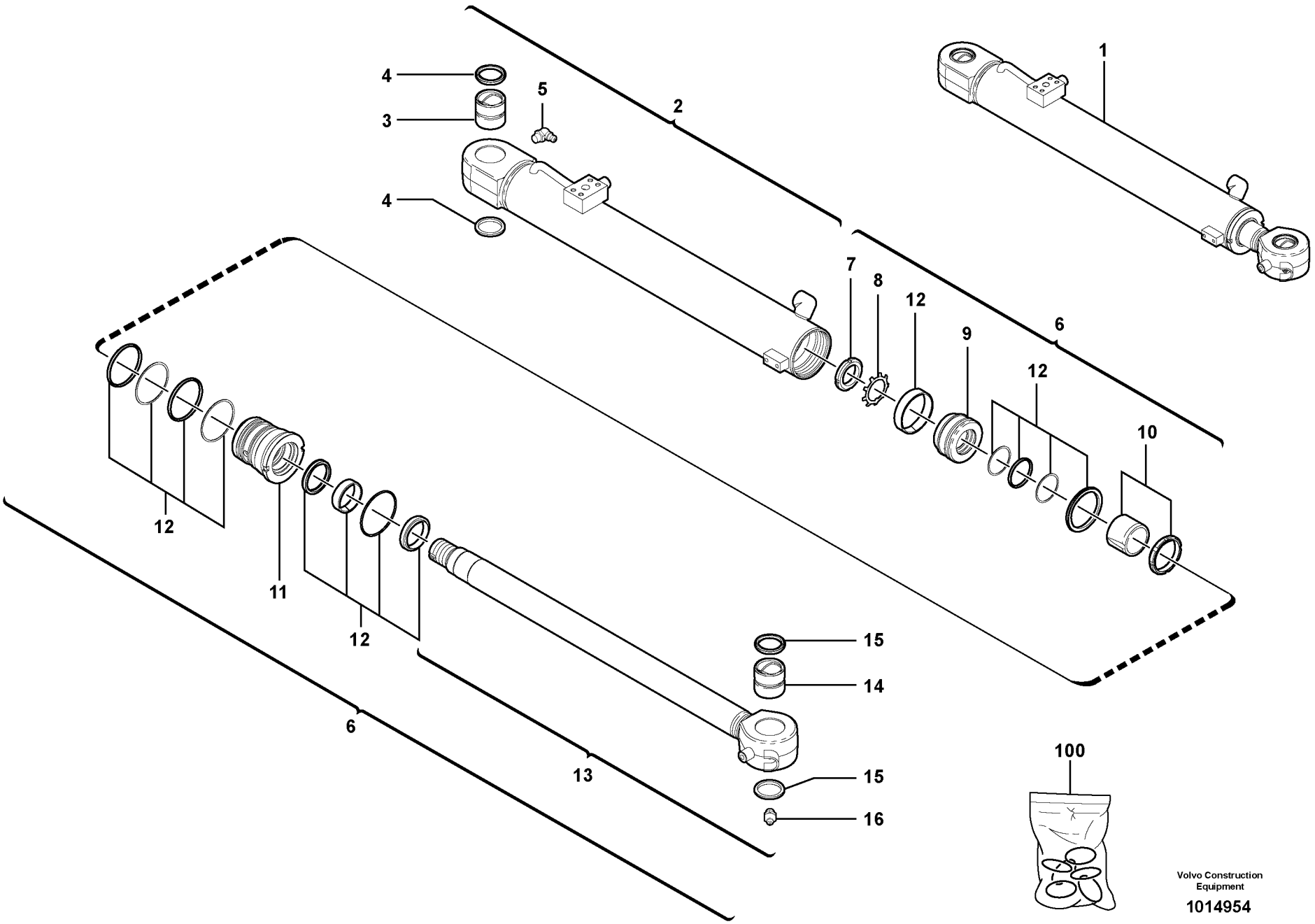

Volvo Construction Equipment

1014954

Fig.	Part No.	Quantity 1	2	3	PS	KIT	Description	Dénomination	Bezeichnung	품명	Denominación	Notes
1	**VOE 11801480**	1					Boom Cylinder	Verin de fleche	Auslegerzylinder	붐 실린더	Maquina de flecha	
2	**VOE 11713111**	1					•Cylinder housing	•Corps de verin	•Zylindergehäuse	• 실린더 하우징	•Cuerpo de maquina	
3	**VOE 11988920**	1					••Bushing	••Bague	••Buchse	•• 부싱	••Casquillo	
4	**VOE 11988937**	2					••Seal	••Joint	••Dichtring	•• 시일	••Junta	
5	**VOE 11988877**	1					••Lub Nipple	••Graisseur	••Schmiernippel	•• 윤활용 니플	••Engrasador	
6	**VOE 11713113**	1					•Kit	•Jeu	•Bausatz	• 킷	•Juego	
7	**VOE 11988921**	1					••Nut	••Ecrou	••Mutter	•• 너트	••Tuerca	
8	**VOE 11988922**	1					••Washer	••Rondelle	••Scheibe	•• 와셔	••Arandela	
9	**VOE 11713115**	1					••Piston	••Piston	••Kolben	•• 피스톤	••Piston	
10	**VOE 11988988**	1					••Spacer	••Entretoise	••Abstandstueck	•• 스페이서	••Casquillo distancia	
11	**VOE 11713114**	1					••Head	••Tete	••Kopf	•• 헤드	••Capo	
12		13			NS	K	••Seal	••Joint	••Dichtung	•• 실	••Reten	
13	**VOE 11713112**	1					••Rod	••Monture	••Fuhler	•• 로드	••Varilla	
14	**VOE 11988920**	1					•••Bushing	•••Bague	•••Buchse	••• 부싱	•••Casquillo	
15	**VOE 11988937**	2					•••Seal	•••Joint	•••Dichtring	••• 시일	•••Junta	
16	**VOE 983718**	1					•••Lub Nipple	•••Graisseur	•••Schmiernippel	••• 윤활용 니플	•••Engrasador	(VOE 11988862)
100	**VOE 11713110**	1					Sealing Kit	Jeu Joints	Dichtungssatz	시일 킷	Juego Retenes	KIT

1	**602.10151**	
2		
3		
4		
5		

Cilindro de pluma
붐 실린더
Auslegerzylinder
Vérin de flèche
Boom cylinder

Catalogue id **20048**	Group **974**
Illustr. No **1014954**	Section **300**
Issue **VOE 74C9920048**	Page **525**

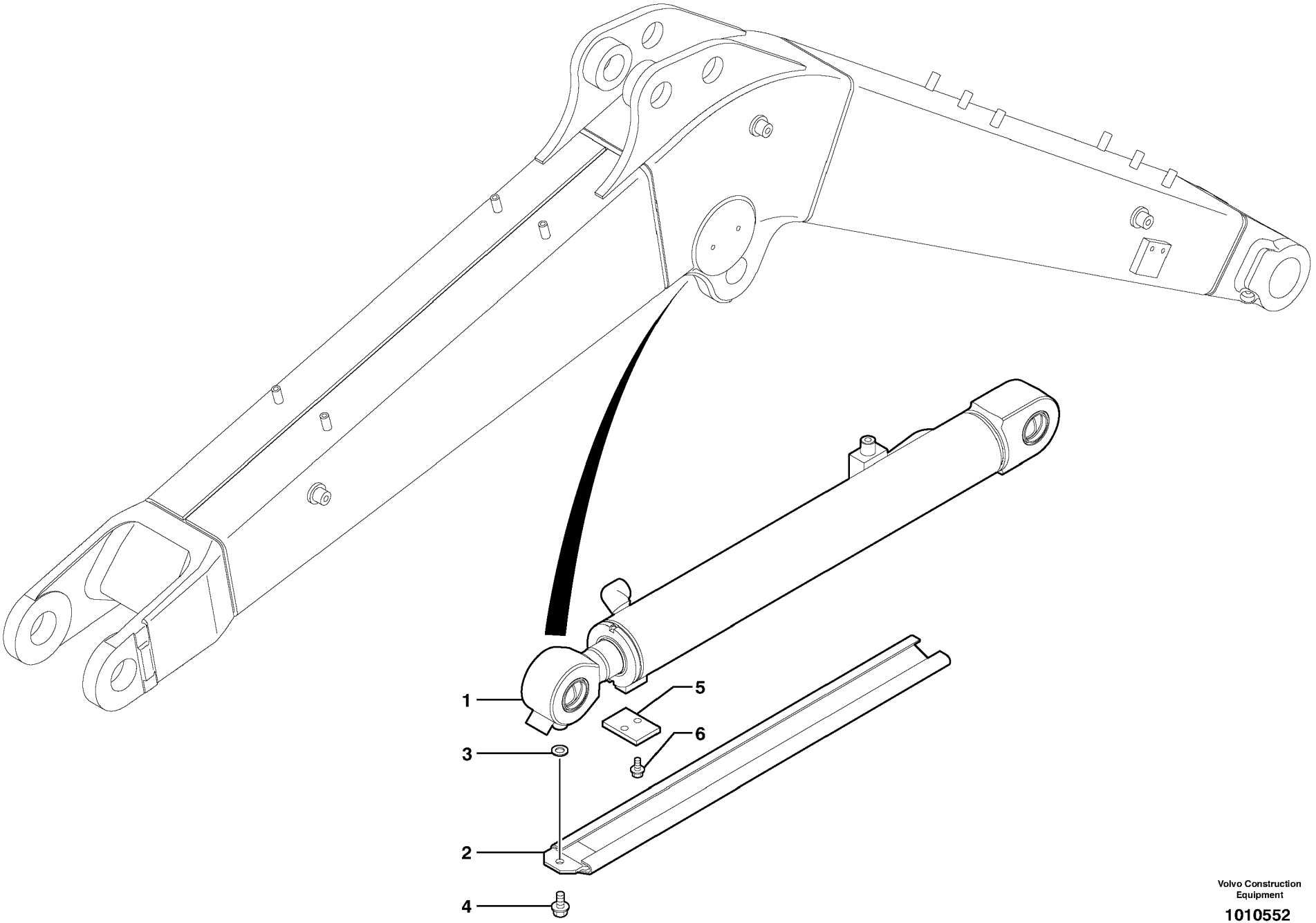

Volvo Construction Equipment

1010552

Fig.	Part No.	Quantity 1	2	3	PS	KIT	Description	Dénomination	Bezeichnung	품명	Denominación	Notes
1		1					Boom Cylinder	Verin de fleche	Auslegerzylinder	붐 실린더	Maquina de flecha	See group 974, Page 525
2	**VOE 11802095**	1					Plate	Plaque	Platte	플레이트	Placa	
3	**VOE 976945**	1					Washer	Rondelle	Scheibe	와셔	Arandela	
4	**VOE 946471**	1					Flange screw	Vis à bride	Flanschschraube	플랜지 스크류	Torn embridado	
5	**VOE 11802096**	1					Guide	Rail	Führung	가이드	Guia	
6	**VOE 946173**	2			SS		Screw	Vis	Schraube	스크류	Tornillo	

1	**602.10151**	
2		
3		
4		
5		

Protección de la varilla de cilindro
실린더 로드 보호
Kolbenstangenschutz
Protection de tige de vérin
Cylinder rod protection

Catalogue id	Group
20048	**974**
Illustr. No **1010552**	Section **500**
Issue **VOE 74C9920048**	Page **527**

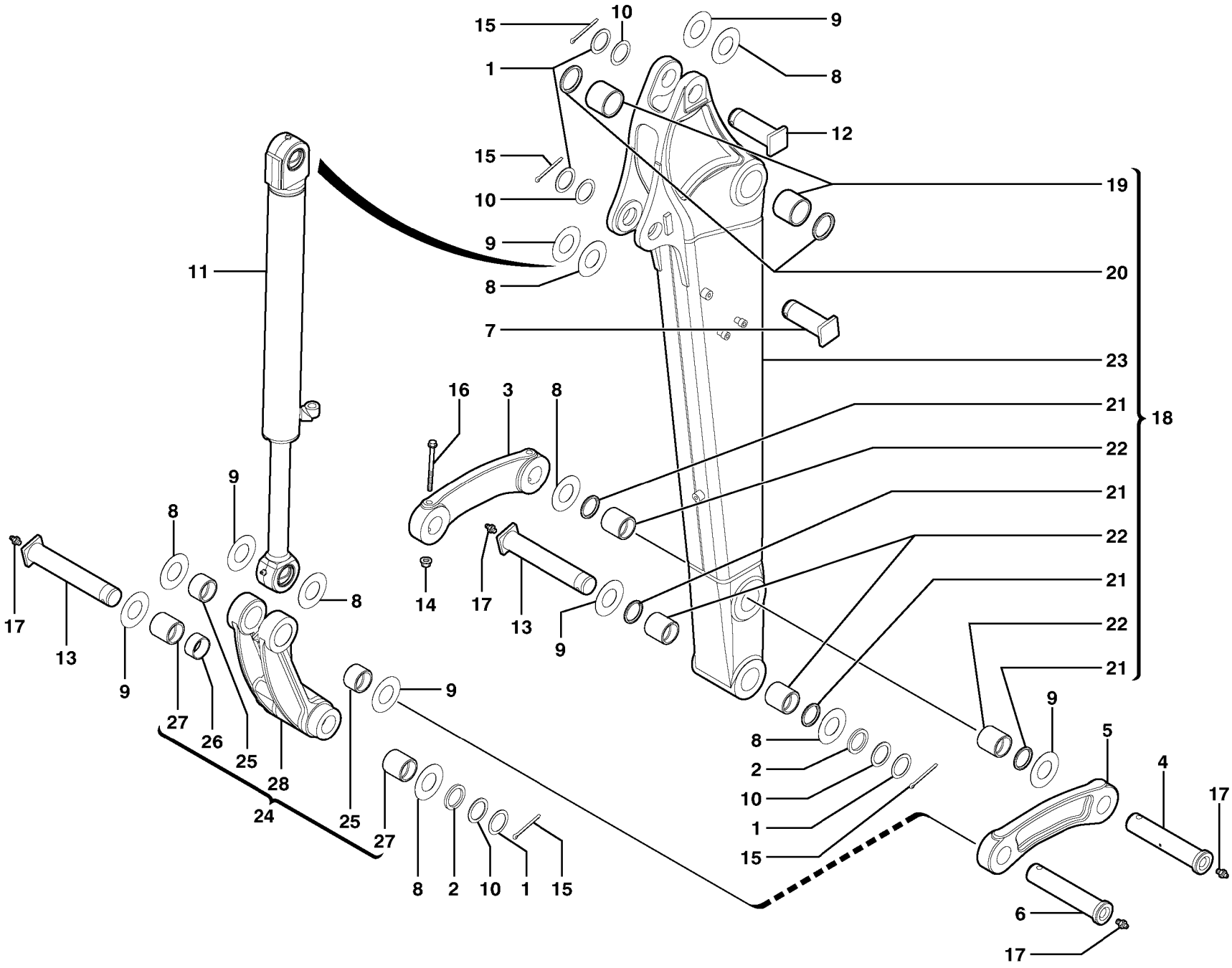

Volvo Construction Equipment

1010556

Fig.	Part No.	Quantity 1	2	3	PS	KIT	Description	Dénomination	Bezeichnung	품명	Denominación	Notes
1	**VOE 11802088**	REQ					Washer	Rondelle	Scheibe	와셔	Arandela	
2	**VOE 11802261**	REQ					Washer	Rondelle	Scheibe	와셔	Arandela	
3	**VOE 11802263**	1					Lever	Levier	Hebel	레버	Palanca	
4	**VOE 11802265**	1					Stub Axle	Axe	Steckachse	스터브 축	Gorron Eje	
5	**VOE 11802264**	1					Lever	Levier	Hebel	레버	Palanca	
6	**VOE 11802266**	1					Stub Axle	Axe	Steckachse	스터브 축	Gorron Eje	
7	**VOE 11803772**	1					Stub Axle	Axe	Steckachse	스터브 축	Gorron Eje	
8	**VOE 11802089**	REQ					Washer	Rondelle	Scheibe	와셔	Arandela	
9	**VOE 11802090**	REQ					Washer	Rondelle	Scheibe	와셔	Arandela	
10	**VOE 11802091**	REQ					Washer	Rondelle	Scheibe	와셔	Arandela	
11		1					Bucket Cylinder	Verin de godet	Löffelzylinder	버켓 실린더	Maquina de copa	See group 975, Page 535
12	**VOE 11803387**	1					Stub Axle	Axe	Steckachse	스터브 축	Gorron Eje	
13	**VOE 11802260**	2					Stub Axle	Axe	Steckachse	스터브 축	Gorron Eje	
14	**VOE 971098**	2			SS		Nut	Ecrou	Mutter	너트	Tuerca	
15	**VOE 907899**	4			SS		Cotter Pin	Goupille Fendue	Splint	코터 핀	Pasador Hendido	
16	**VOE 969313**	2					Flange screw	Vis à bride	Flanschschraube	플랜지 스크류	Torn embridado	
17	**VOE 983718**	4					Lub Nipple	Graisseur	Schmiernippel	윤활용 니플	Engrasador	
18	**VOE 11801128**	REQ					Dipper Arm	Balancier	Stiel	디퍼 암	Brazo excavador	11839001 L = 1250mm/49.2125in
18	**VOE 11801669**	REQ					Dipper Arm	Balancier	Stiel	디퍼 암	Brazo excavador	11839019 L = 1500mm/59.0550in
19	**VOE 11802269**	2					•Bushing	•Bague	•Buchse	• 부싱	•Casquillo	
20	**VOE 11802099**	2					•Seal	•Joint	•Dichtring	• 시일	•Junta	
21	**VOE 11802250**	4					•Seal	•Joint	•Dichtring	• 시일	•Junta	
22	**VOE 11802249**	4					•Bushing	•Bague	•Buchse	• 부싱	•Casquillo	
23		1			NS		•Dipper Arm	•Balancier	•Stiel	• 디퍼 암	•Brazo excavador	ORDER ITEM NO 18
24	**VOE 11802262**	1					Connecting Link	Articulation intermédi	Zwischenglied		Articul Acopl	
25	**VOE 11802255**	2					•Bushing	•Bague	•Buchse	• 부싱	•Casquillo	
26	**VOE 11802272**	1					•Spacer	•Partie Intermédiaire	•Zwischenstück	• 스페이서	•Espaciador	
27	**VOE 11802249**	2					•Bushing	•Bague	•Buchse	• 부싱	•Casquillo	

1	**602.10151**	
2		
3		
4		
5		

Brazo
암
Löffelstiel
Balancier
Dipper arm

Catalogue id	Group
20048	**975**
Illustr. No **1010556**	Section **100**
Issue **VOE 74C9920048**	Page **529**

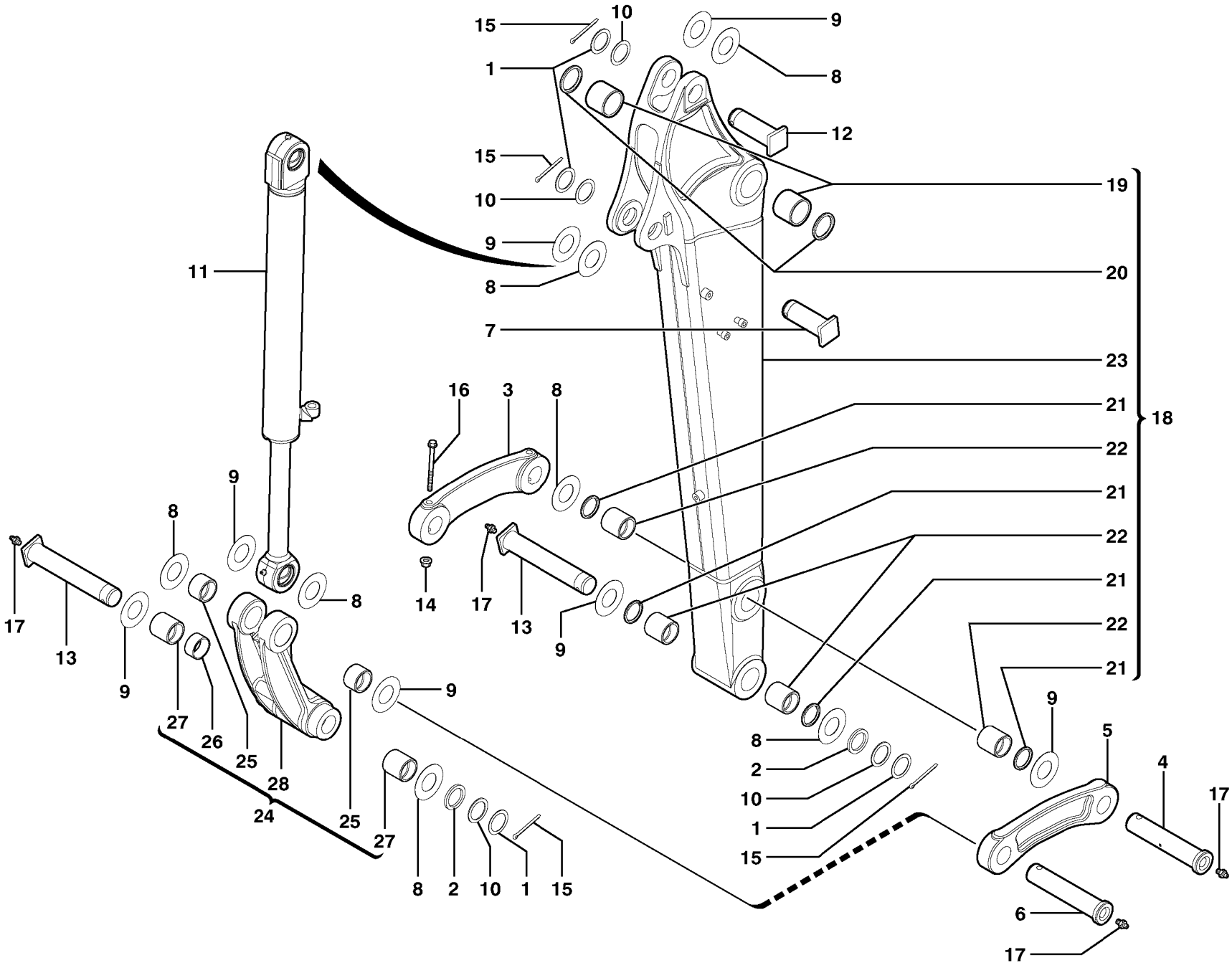

Volvo Construction Equipment

1010556

Fig.	Part No.	Quantity 1	2	3	PS	KIT	Description	Dénomination	Bezeichnung	품명	Denominación	Notes
28		1			NS		•Connecting Link.....	•Articulation intermédi	•Zwischenglied	•	•Articul Acopl.....	ORDER ITEM NO 24

1	**602.10151**		**Brazo** 암 **Löffelstiel** **Balancier** **Dipper arm**	Catalogue id **20048**	Group **975**
2				Illustr. No **1010556**	Section **100**
3				Issue **VOE 74C9920048**	Page **531**
4					
5					



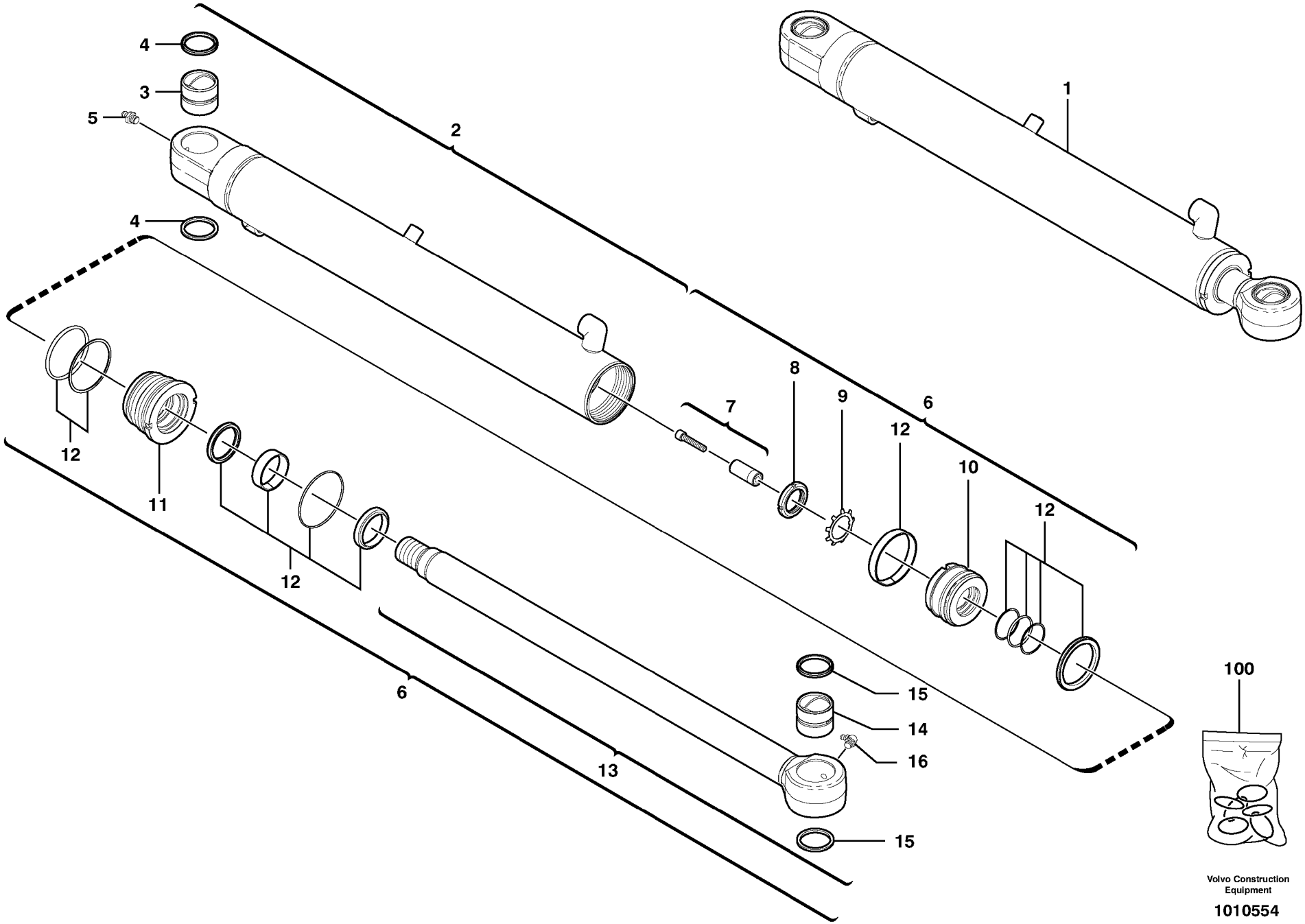

Volvo Construction Equipment

1010554

Fig.	Part No.	Quantity 1	2	3	PS	KIT	Description	Dénomination	Bezeichnung	품명	Denominación	Notes
1	**VOE 11801474**	1					Dipper arm cyl.	Vérin de balancier	Stielzylinder	디퍼 암 실린더	Cilindro del brazo	
2	**VOE 11713117**	1					•Cylinder housing	•Corps de verin	•Zylindergehäuse	• 실린더 하우징	•Cuerpo de maquina	
3	**VOE 11988934**	1					••Bushing	••Bague	••Buchse	•• 부싱	••Casquillo	
4	**VOE 11988937**	2					••Seal	••Joint	••Dichtring	•• 시일	••Junta	
5	**VOE 983718**	1					••Lub Nipple	••Graisseur	••Schmiernippel	•• 윤활용 니플	••Engrasador	(VOE 11988862)
6	**VOE 11713119**	1					•Kit	•Jeu	•Bausatz	• 킷	•Juego	
7	**VOE 11988968**	1					••Kit	••Jeu	••Bausatz	•• 킷	••Juego	
8	**VOE 11988948**	1					••Nut	••Ecrou	••Mutter	•• 너트	••Tuerca	
9	**VOE 11988949**	1					••Washer	••Rondelle	••Scheibe	•• 와셔	••Arandela	
10	**VOE 11713121**	1					••Piston	••Piston	••Kolben	•• 피스톤	••Piston	
11	**VOE 11713120**	1					••Head	••Tete	••Kopf	•• 헤드	••Capo	
12		11			NS	K	••Seal	••Joint	••Dichtung	•• 실	••Reten	
13	**VOE 11713118**	1					••Rod	••Monture	••Fuhler	•• 로드	••Varilla	
14	**VOE 11988934**	1					•••Bushing	•••Bague	•••Buchse	••• 부싱	•••Casquillo	
15	**VOE 11988937**	2					•••Seal	•••Joint	•••Dichtring	••• 시일	•••Junta	
16	**VOE 11988877**	1					•••Lub Nipple	•••Graisseur	•••Schmiernippel	••• 윤활용 니플	•••Engrasador	
100	**VOE 11713116**	1					Sealing Kit	Jeu Joints	Dichtungssatz	시일 킷	Juego Retenes	KIT

1	**602.10151**		**Cilindro del brazo** 암 실린더 **Stielzylinder** **Vérin de balancier** **Dipper arm cylinder**	Catalogue id **20048**	Group **975**
2				Illustr. No **1010554**	Section **300**
3				Issue **VOE 74C9920048**	Page **533**
4					
5					

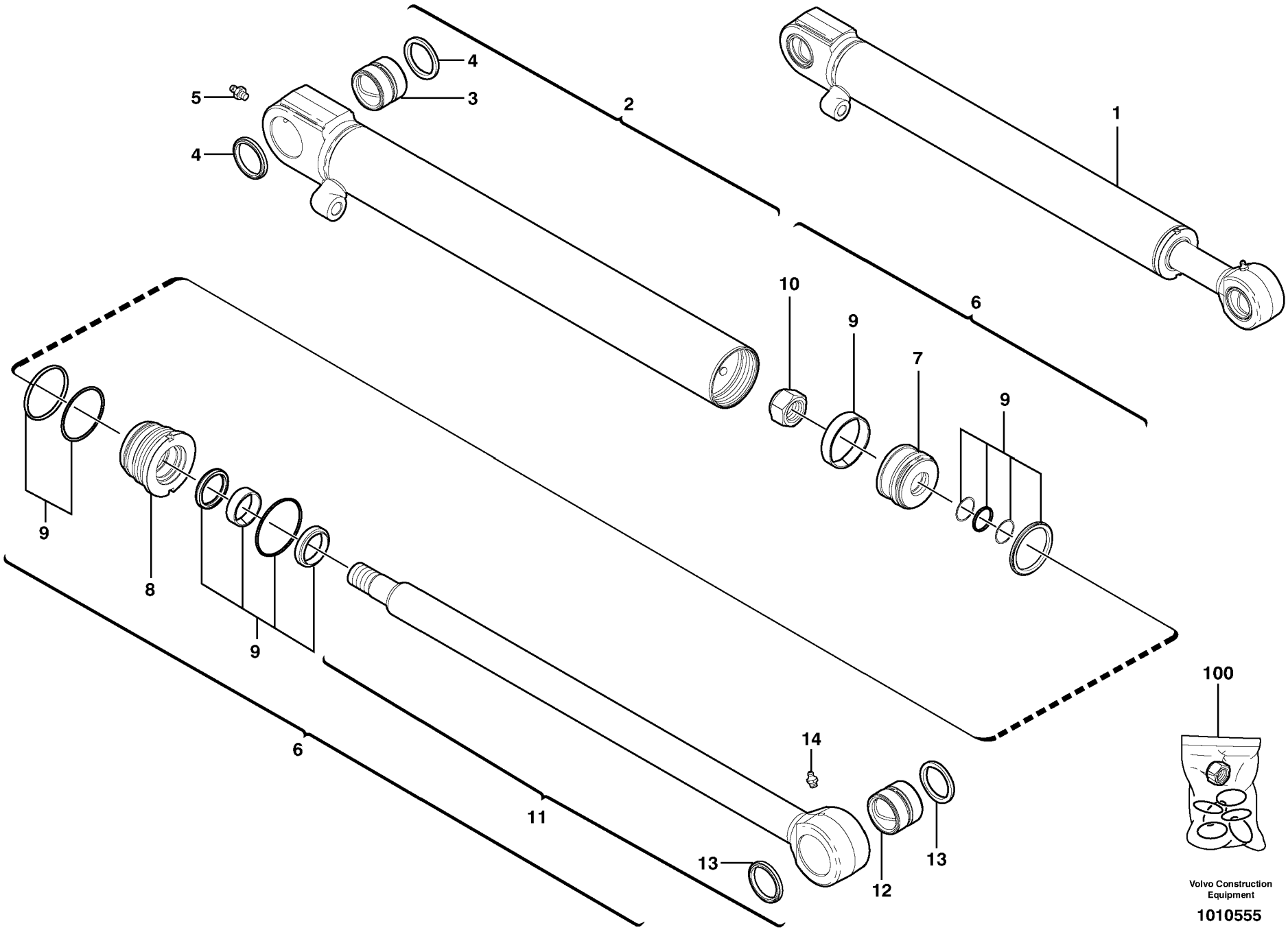

Volvo Construction Equipment

1010555

Fig.	Part No.	Quantity 1	2	3	PS	KIT	Description	Dénomination	Bezeichnung	품명	Denominación	Notes
1	**VOE 11801478**	1					Bucket Cylinder	Verin de godet	Löffelzylinder	버켓 실린더	Maquina de copa	
2	**VOE 11713254**	1					•Cylinder housing	•Corps de verin	•Zylindergehäuse	• 실린더 하우징	•Cuerpo de maquina	
3	**VOE 11988934**	1					••Bushing	••Bague	••Buchse	•• 부싱	••Casquillo	
4	**VOE 11988937**	2					••Seal	••Joint	••Dichtring	•• 시일	••Junta	
5	**VOE 983718**	1					••Lub Nipple	••Graisseur	••Schmiernippel	•• 윤활용 니플	••Engrasador	(VOE 11988862)
6	**VOE 11713256**	1					•Kit	•Jeu	•Bausatz	• 킷	•Juego	
7	**VOE 11713258**	1					••Piston	••Piston	••Kolben	•• 피스톤	••Piston	
8	**VOE 11713257**	1					••Head	••Tete	••Kopf	•• 헤드	••Capo	
9		11			NS	K	••Seal	••Joint	••Dichtung	•• 실	••Reten	
10		1			NS	K	••Nut	••Ecrou	••Mutter	•• 너트	••Tuerca	
11	**VOE 11713255**	1					••Rod	••Monture	••Fuhler	•• 로드	••Varilla	
12	**VOE 11988934**	1					•••Bushing	•••Bague	•••Buchse	••• 부싱	•••Casquillo	
13	**VOE 11988937**	2					•••Seal	•••Joint	•••Dichtring	••• 시일	•••Junta	
14	**VOE 983718**	1					•••Lub Nipple	•••Graisseur	•••Schmiernippel	••• 윤활용 니플	•••Engrasador	(VOE 11988862)
100	**VOE 11713253**	1					Sealing Kit	Jeu Joints	Dichtungssatz	시일 킷	Juego Retenes	KIT

1	**602.10151**	
2		
3		
4		
5		

Cilindro de cazo
버켓 실린더
Schaufelzylinder
Vérin de godet
Bucket cylinder

Catalogue id	Group
20048	**975**
Illustr. No **1010555**	Section **500**
Issue **VOE 74C9920048**	Page **535**

REPLACED PARTS 교체부품

PIÉCES PÉRIMÉES ET REMPLACÉES **PIEZAS SUBSTITUDAS**

ERSETZTE ARTIKEL

Catalogue id **20048** | Group **1000**

Issue **VOE 74C9920048** | Page **1**

Part No	Replaced by	Quantity
VOE 11043109	* * * USE	
	VOE 4881440	1.00
VOE 11710060	* * * USE	
	VOE 11802888	1.00
	VOE 11804128	1.00
VOE 11713376	* * * USE	
	VOE 11803240	1.00
	VOE 11804128	1.00
VOE 11801250	OLD.THAN 3 YEAR	
VOE 11801268	OLD.THAN 3 YEAR	
VOE 11998855	* * * USE	
	VOE 11992817	1.00
VOE 13944499	* * * USE	
	VOE 14013072	1.00
VOE 14521611	* * * USE	
	SA 9511-22065	1.00
PJ 4450008	* * * USE	
	VOE 948645	1.00
PJ 7411682	* * * USE	
	PJ 4470014	1.00
SA 8210-08770	* * * USE	
	SA 8210-01990	1.00
SA 8210-08810	* * * USE	
	VOE 14500478	1.00
SA 8210-08890	* * * USE	
	SA 9041-10806	SS
VOE 907835	* * * USE	
	FOR VOLVO BM	
	VOE 907838	1.00
	FOR EUCLID	
	VOE 12001433	1.00
VOE 907889	OLD.THAN 3 YEAR	
VOE 907899	OLD.THAN 3 YEAR	
VOE 914468	* * * USE	
	VOE 13914468	1.00
VOE 943472	* * * USE	
	VOE 13943472	1.00
VOE 943907	* * * USE	
	VOE 14013067	1.00
VOE 945407	* * * USE	
	FOR VOLVO	
	VOE 13945407	1.00
	FOR MICHIGAN	
	VOE 12000434	NS
VOE 945408	* * * USE	
	VOE 13945408	1.00
VOE 945444	* * * USE	
	FÖR VOLVO BM	
	VOE 13945444	1.00
	FÖR MICHIGAN	
	VOE 12000109	NS
VOE 945987	* * * USE	
	VOE 13940109	1.00
VOE 946173	* * * USE	
	FOR VOLVO BM	
	VOE 13946173	1.00
	FOR MICHIGAN	
	MI 11702090	NS
VOE 946544	* * * USE	
	FÖR VOLVO BM	
	VOE 13946544	1.00
	FÖR MICHIGAN	
	VOE 12000515	NS
VOE 946752	* * * USE	
	FOR VOLVO	
	VOE 13946752	1.00
	FOR MICHIGAN	
	VOE 12000528	1.00
VOE 946817	* * * USE	
	FÖR VOLVO BM	
	VOE 13946817	1.00
	FÖR MICHIGAN	
	VOE 12000533	1.00
VOE 947542	* * * USE	
	VOE 13947542	1.00
VOE 949746	* * * USE	
	FOR VOLVO BM	
	VOE 13949746	1.00
	FOR MICHIGAN	
	VOE 12000731	NS
VOE 951979	* * * USE	
	FÖR VOLVO BM	
	VOE 13951979	1.00
	FÖR MICHIGAN	
	VOE 12001456	SS
VOE 955405	OLD.THAN 3 YEAR	
VOE 955897	* * * USE	
	FOR VOLVO BM	
	VOE 13955897	1.00
	FOR MICHIGAN	
	VOE 12003881	1.00
VOE 955900	* * * USE	
	FOR VOLVO BM	
	VOE 13955900	1.00
	FOR MICHIGAN	
	VOE 12000814	NS
VOE 960141	* * * USE	
	FOR VOLVO BM	
	VOE 13960141	1.00
	FOR MICHIGAN	
	VOE 12000870	NS
VOE 960143	* * * USE	
	FOR VOLVO BM	
	VOE 13960143	1.00
	FOR MICHIGAN	
	VOE 12000185	1.00
VOE 965175	* * * USE	
	FOR VOLVO BM	
	VOE 13965175	1.00
	FOR MICHIGAN	
	MI 12001248	1.00
VOE 965177	* * * USE	
	FOR VOLVO	
	VOE 13965177	1.00
	FOR MICHIGAN	
	MI 12967537	1.00
VOE 965181	* * * USE	
	FÖR VOLVO BM	
	VOE 13965181	1.00
	FÖR MICHIGAN	
	MI 12001252	NS
VOE 965191	* * * USE	
	FOR VOLVO BM	
	VOE 13965191	1.00
	FOR MICHIGAN	
	VOE 12001515	1.00
VOE 965193	* * * USE	
	VOE 13965193	1.00
VOE 969160	* * * USE	
	VOE 13969160	1.00
VOE 969162	* * * USE	
	VOE 13969162	1.00
VOE 969599	* * * USE	
	VOE 13969599	1.00
VOE 971095	* * * USE	
	VOE 13971095	1.00
VOE 971098	* * * USE	
	VOE 13971098	1.00

Part No	Group	Sect	Page
PJ 4040248	924	200	469
PJ 4040250	916	100	439
PJ 4380036	810	400	271
PJ 4450008	352	100	147
PJ 4450008	352	200	149
PJ 4450008	810	400	271
PJ 4450026	810	400	271
PJ 4450026	881	500	327
PJ 4470017	775	100	247
PJ 4470017	775	110	249
PJ 4470017	851	950	303
PJ 4480005	831	100	281
PJ 4490002	831	100	283
PJ 5050011	362	400	157
PJ 5090107	873	200	317
PJ 5140147	831	100	283
PJ 5160030	277	100	123
PJ 5160030	277	110	125
PJ 5160030	353	110	151
PJ 5160030	356	100	153
PJ 5160030	362	400	157
PJ 5160030	364	400	171
PJ 5160030	371	500	187
PJ 5160030	371	600	189
PJ 5440107	926	260	507
PJ 5440108	926	260	507
PJ 5440109	926	260	507
PJ 5600160	492	200	231
PJ 5600200	443	100	227
PJ 5600201	443	100	227
PJ 5600201	911	400	367
PJ 5600201	912	350	383
PJ 5600201	912	360	387
PJ 5600201	914	200	403
PJ 5600201	914	900	435
PJ 5600201	916	100	439
PJ 5600202	443	100	227
PJ 5600202	914	200	403
PJ 5600202	916	350	441
PJ 5600202	916	500	447
PJ 5600202	916	2000	449
PJ 5600202	916	3000	455
PJ 5600202	916	4000	457
PJ 5600202	916	5500	461
PJ 5600203	911	350	365
PJ 5600203	912	350	381
PJ 5600203	912	600	391
PJ 5600203	912	700	393
PJ 5600203	916	400	443
PJ 5600203	916	4000	457
PJ 5600203	916	5000	459
PJ 5600203	926	240	503
PJ 5600204	916	4000	457
PJ 5600204	926	240	503
PJ 7410425	912	101	373
PJ 7410425	912	101	375
PJ 7410425	912	102	377
PJ 7410425	912	102	379
PJ 7410457	912	101	373
PJ 7410457	912	101	375
PJ 7410457	912	102	377
PJ 7410458	912	101	373
PJ 7410458	912	101	375
PJ 7410519	851	900	301
PJ 7410521	352	200	149
PJ 7410521	356	100	153
PJ 7411193	851	950	303
PJ 7411396	851	900	301
PJ 7411504	775	100	247
PJ 7411504	775	110	249
PJ 7411529	775	100	247
PJ 7411529	775	110	249
PJ 7411541	831	100	283
PJ 7411635	926	900	509
PJ 7411636	926	900	509
PJ 7411672	831	100	281
PJ 7411673	831	100	281
PJ 7411682	810	400	271
PJ 7411682	810	400	273
PJ 7411682	810	500	275
PJ 7411682	831	100	283
PJ 7411682	851	950	303
PJ 7411688	363	100	161
PJ 7411688	810	400	273
PJ 7411699	352	100	147
PJ 7411699	352	200	149
PJ 7411699	810	400	271
PJ 7411699	831	100	283
PJ 7411700	810	400	271
PJ 7411700	810	400	273
PJ 7411704	831	100	283
PJ 7411800	914	910	437
PJ 7411851	852	200	309
PJ 7411988	896	200	339
PJ 7411993	851	950	303
PJ 7411994	851	900	301
PJ 7411999	831	100	283
PJ 7412003	831	100	281
PJ 7412004	831	100	281
PJ 7412153	810	400	271
PJ 7412154	810	400	271
PJ 7413002	912	830	397
PJ 7413003	912	830	397
PJ 7413004	912	830	397
PJ 7413454	852	200	311
PJ 7413456	852	200	309
PJ 7413645	441	110	215
PJ 7413705	363	100	161
PJ 7413705	851	950	303
PJ 7413707	881	500	327
PJ 7413711	352	100	147
PJ 7413711	352	200	149
PJ 7413711	831	100	281
PJ 7413711	851	950	303
PJ 7413790	810	500	275
PJ 7413790	851	950	303
PJ 7413811	810	400	271
PJ 7413811	810	400	273
PJ 7414578	441	100	211
PJ 7414584	441	100	211
PJ 7414585	441	100	211
PJ 7414594	441	120	217
PJ 7414595	441	120	217
PJ 7414596	441	120	217
PJ 7414597	441	120	217
PJ 7414614	441	110	215
PJ 7414632	441	100	211
PJ 7414632	441	100	213
PJ 7414633	441	100	213
PJ 7414655	441	110	215
PJ 7414947	831	100	281
PJ 7415416	441	210	223
PJ 7415417	441	210	223
PJ 7415420	441	210	223
PJ 7415558	831	100	281
PJ 7415567	810	400	271
PJ 7415569	881	500	327
PJ 7415576	810	400	273
PJ 7415578	810	400	271
PJ 7415579	810	400	271
PJ 7415584	810	400	271
PJ 7415919	441	100	211
PJ 7415927	441	100	211
PJ 7416002	852	200	309
PJ 7416003	852	200	311
PJ 7416004	852	200	309
PJ 7416006	852	200	309
PJ 7416008	852	200	311
PJ 7416323	881	500	327
PJ 7416325	851	950	303
PJ 7416328	881	500	327
PJ 7416347	441	210	223
PJ 7416380	441	210	223
PJ 7416385	441	210	223
PJ 7416658	441	210	223
PJ 7416663	441	210	223
PJ 7416683	775	300	253
PJ 7416684	775	300	253
PJ 7416685	775	300	253
PJ 7416797	851	900	301
PJ 7416798	881	500	327
PJ 7416799	831	100	281
PJ 7416803	371	220	183
PJ 7416807	810	400	271
PJ 7416807	831	100	281
PJ 7416807	851	950	303
PJ 7416807	881	500	327
PJ 7416811	843	200	295
PJ 7416831	881	500	327
PJ 7416832	881	500	327
PJ 7416834	881	500	327
PJ 7416836	881	500	327
PJ 7416841	843	200	295
PJ 7416843	831	100	281
PJ 7416887	441	100	211

NUMERICAL INDEX

부품번호 색인

RÉPERTOIRE DE NUMÉROS

INDICE DE NÚMERO

NUMMERNREGISTER

NUMERICAL INDEX 부품번호 색인

RÉPERTOIRE DE NUMÉROS **INDICE DE NÚMERO**

NUMMERNREGISTER

Catalogue id **20048** | Group **1000**

Issue **VOE 74C9920048** | Page **2**

Part No	Group	Sect	Page
PJ 7416887	441	120	217
PJ 7416899	844	100	297
PJ 7416921	810	500	275
PJ 7416962	916	4000	457
PJ 7416963	916	4000	457
PJ 7416977	441	210	225
PJ 7417103	441	210	223
PJ 7417109	916	4000	457
PJ 7417110	916	4000	457
PJ 7417117	831	100	281
PJ 7417117	851	900	301
PJ 7417117	881	500	327
PJ 7417127	851	900	301
PJ 7417127	881	500	327
PJ 7417229	441	110	215
PJ 7417238	441	100	211
PJ 7417262	441	110	215
PJ 7417262	441	120	217
PJ 7417263	441	100	211
PJ 7417264	441	120	217
PJ 7417265	441	130	219
PJ 7417266	441	100	211
PJ 7417266	441	120	217
PJ 7417267	441	120	217
PJ 7417268	441	110	215
PJ 7417268	441	120	217
PJ 7417268	441	130	219
PJ 7417270	441	110	215
PJ 7417270	441	120	217
PJ 7417272	441	120	217
PJ 7417276	441	100	211
PJ 7417277	441	100	211
PJ 7417278	441	100	211
PJ 7417279	441	100	211
PJ 7417280	441	100	211
PJ 7417281	441	100	211
PJ 7417284	441	100	211
PJ 7417285	441	100	211
PJ 7417286	441	100	211
PJ 7417287	441	100	211
PJ 7417288	441	100	211
PJ 7417289	441	100	211
PJ 7417290	441	100	211
PJ 7417292	441	100	211
PJ 7417293	441	100	211
PJ 7417294	441	100	211
PJ 7417295	441	100	213
PJ 7417296	441	100	211
PJ 7417298	441	110	215
PJ 7417299	441	110	215
PJ 7417300	441	110	215
PJ 7417301	441	110	215
PJ 7417302	441	110	215
PJ 7417304	441	110	215
PJ 7417305	441	110	215
PJ 7417306	441	110	215
PJ 7417306	441	120	217
PJ 7417307	441	110	215
PJ 7417307	441	120	217
PJ 7417308	441	110	215
PJ 7417308	441	120	217
PJ 7417309	441	110	215
PJ 7417309	441	120	217
PJ 7417310	441	110	215
PJ 7417312	441	120	217
PJ 7417314	441	130	219
PJ 7417315	441	130	219
PJ 7417316	441	130	219
PJ 7417317	441	130	219
PJ 7417318	441	130	219
PJ 7417319	441	130	219
PJ 7417320	441	130	219
PJ 7417370	441	100	213
PJ 7417372	775	500	257
PJ 7417383	775	100	247
PJ 7417383	775	110	249
PJ 7417384	775	100	247
PJ 7417384	775	110	249
PJ 7417385	775	100	247
PJ 7417385	775	110	249
PJ 7417386	775	100	247
PJ 7417386	775	110	249
PJ 7417387	775	100	247
PJ 7417388	775	110	249
PJ 7417389	775	100	247
PJ 7417389	775	110	249
PJ 7417390	775	100	247
PJ 7417390	775	110	249
PJ 7417399	441	210	223
PJ 7417403	441	210	223
PJ 7417411	256	300	105
PJ 7417412	256	300	105
PJ 7417420	810	400	273
PJ 7417421	352	100	147
PJ 7417421	810	400	271
PJ 7417422	352	100	147
PJ 7417422	810	400	271
PJ 7417422	810	400	273
PJ 7417422	810	500	275
PJ 7417422	831	100	283
PJ 7417422	851	950	303
PJ 7417449	851	900	301
PJ 7417449	881	500	327
PJ 7417459	881	500	327
PJ 7417460	881	500	327
PJ 7417469	914	810	425
PJ 7417469	914	860	431
PJ 7417471	914	810	425
PJ 7417471	914	860	431
PJ 7417472	914	810	425
PJ 7417472	914	860	431
PJ 7417500	775	500	257
PJ 7417722	873	200	317
PJ 7417723	873	200	317
PJ 7417724	873	200	317
PJ 7417726	873	200	317
PJ 7417727	912	101	373
PJ 7417727	912	101	375
PJ 7417727	912	102	377
PJ 7417727	912	102	379
PJ 7417728	912	101	373
PJ 7417729	912	101	373
PJ 7417729	912	101	375
PJ 7417729	912	102	377
PJ 7417729	912	102	379
PJ 7417731	912	101	373
PJ 7417732	912	101	373
PJ 7417732	912	101	375
PJ 7417732	912	102	377
PJ 7417732	912	102	379
PJ 7417753	912	102	379
PJ 7417770	852	150	305
PJ 7417771	852	150	305
PJ 7417772	852	150	305
PJ 7417774	852	150	305
PJ 7417775	852	150	305
PJ 7417776	852	150	305
PJ 7417777	852	150	305
PJ 7417778	852	150	305
PJ 7417779	852	150	305
PJ 7417780	852	150	305
PJ 7417781	852	150	305
PJ 7417782	852	150	305
PJ 7417783	852	200	309
PJ 7417784	852	200	311
PJ 7417785	852	200	309
PJ 7417786	852	200	309
PJ 7417787	852	200	309
PJ 7417788	852	200	309
PJ 7417789	852	200	309
PJ 7417791	912	102	379
PJ 7417856	810	400	271
PJ 7417857	843	200	295
PJ 7417865	914	910	437
PJ 7417866	914	910	437
PJ 7417874	844	100	297
PJ 7417875	844	100	297
PJ 7417899	831	100	281
PJ 7417900	831	100	281
PJ 7418213	372	400	195
PJ 7418263	843	200	295
PJ 7418285	810	400	273
PJ 7418288	844	100	297
PJ 7418289	844	100	297
PJ 7418290	844	100	297
PJ 7418291	844	100	297
PJ 7418292	844	100	297
PJ 7418293	844	100	297
PJ 7418295	843	100	293
PJ 7418297	831	100	281
PJ 7418302	881	500	327
PJ 7418311	881	500	327
PJ 7418312	851	950	303
PJ 7418313	851	950	303
PJ 7418315	810	400	271

Part No	Group	Sect	Page
PJ 7418315	810	500	275
PJ 7418315	851	950	303
PJ 7418317	851	950	303
PJ 7418326	881	500	327
PJ 7418328	363	100	161
PJ 7418330	363	100	161
PJ 7418331	363	100	161
PJ 7418333	371	220	183
PJ 7418334	371	220	183
PJ 7418336	371	220	183
PJ 7418339	371	220	183
PJ 7418340	371	220	183
PJ 7418354	881	500	327
PJ 7418394	851	950	303
PJ 7418395	851	950	303
PJ 7418398	352	200	149
PJ 7418399	352	200	149
PJ 7418408	912	101	373
PJ 7418408	912	101	375
PJ 7418413	775	100	247
PJ 7418413	775	110	249
PJ 7418414	775	100	247
PJ 7418414	775	110	249
PJ 7418417	912	101	373
PJ 7418487	443	200	229
PJ 7418488	443	200	229
PJ 7418492	443	200	229
PJ 7418515	810	500	275
PJ 7418516	371	210	181
PJ 7418517	371	210	181
PJ 7418519	371	210	181
PJ 7418520	371	210	181
SA 8210-00380	237	100	93
SA 8210-00390	237	100	93
SA 8210-00400	237	100	93
SA 8210-00410	237	100	93
SA 8210-00420	237	100	93
SA 8210-00430	237	100	93
SA 8210-01950	235	200	89
SA 8210-03750	235	200	89
SA 8210-03930	220	100	73
SA 8210-05340	220	100	73
SA 8210-05600	220	100	73
SA 8210-08770	210	500	43
SA 8210-08770	211	100	45
SA 8210-08810	215	400	61
SA 8210-08850	211	200	47
SA 8210-08890	233	400	79
SA 8240-01740	262	100	117
SA 8240-02760	211	200	47
SA 8240-02760	212	500	51
SA 8240-02760	215	100	57
SA 8240-02760	217	100	67
VOE 11037868	911	400	367
VOE 11039847	352	200	149
VOE 11039847	353	110	151
VOE 11039847	356	100	153
VOE 11039856	352	100	147
VOE 11043109	235	100	87
VOE 11043109	492	500	233
VOE 11050693	218	100	69
VOE 11050693	218	110	71
VOE 11104372	873	100	315
VOE 11201898	393	100	201
VOE 11203358	837	200	287
VOE 11203361	837	200	287
VOE 11305263	372	100	191
VOE 11306919	821	400	279
VOE 11306919	831	100	281
VOE 11370672	914	810	425
VOE 11370672	914	820	427
VOE 11370672	914	860	431
VOE 11370672	914	870	433
VOE 11704811	913	110	401
VOE 11708233	913	110	401
VOE 11709729	913	110	401
VOE 11709737	913	110	401
VOE 11709741	913	110	401
VOE 11710043	362	400	157
VOE 11710044	353	110	151
VOE 11710058	364	400	171
VOE 11710059	356	100	153
VOE 11710059	364	400	171
VOE 11710060	371	600	189
VOE 11710121	256	300	105
VOE 11710395	916	4000	457
VOE 11710396	916	4000	457
VOE 11710397	916	4000	457
VOE 11710484	371	500	187
VOE 11710558	927	500	513
VOE 11710559	927	500	513
VOE 11710560	927	500	513
VOE 11710561	927	500	513
VOE 11710562	927	500	513
VOE 11710563	927	500	513
VOE 11710564	927	500	513
VOE 11710565	927	500	513
VOE 11710566	927	500	513
VOE 11710880	914	210	405
VOE 11710881	914	210	405
VOE 11710882	914	210	405
VOE 11710895	443	200	229
VOE 11710925	912	101	373
VOE 11711122	441	120	217
VOE 11711157	851	900	301
VOE 11711158	851	900	301
VOE 11711939	914	910	437
VOE 11712323	914	810	425
VOE 11712323	914	820	427
VOE 11712323	914	860	431
VOE 11712323	914	870	433
VOE 11712482	926	260	507
VOE 11712566	926	260	505
VOE 11712567	926	260	507
VOE 11712568	926	260	507
VOE 11712570	926	260	505
VOE 11712616	831	100	281
VOE 11712647	881	500	327
VOE 11712648	881	500	327
VOE 11712650	810	400	271
VOE 11712651	810	400	271
VOE 11712652	810	400	273
VOE 11712657	851	900	301
VOE 11712661	851	900	301
VOE 11712661	881	500	327
VOE 11712671	810	400	273
VOE 11712691	810	400	271
VOE 11712785	443	200	229
VOE 11712799	441	210	223
VOE 11712800	441	210	223
VOE 11712801	441	210	223
VOE 11712802	441	210	223
VOE 11712804	441	210	225
VOE 11712908	913	110	401
VOE 11712909	913	110	401
VOE 11712914	441	110	215
VOE 11712916	913	110	401
VOE 11712919	441	210	225
VOE 11712920	441	210	223
VOE 11712924	441	210	223
VOE 11712927	441	210	223
VOE 11712929	441	210	223
VOE 11712930	441	210	223
VOE 11712931	441	210	225
VOE 11712933	441	210	225
VOE 11713006	926	260	507
VOE 11713014	914	860	431
VOE 11713014	914	870	433
VOE 11713016	914	810	425
VOE 11713016	914	820	427
VOE 11713016	914	860	431
VOE 11713016	914	870	433
VOE 11713017	914	810	425
VOE 11713017	914	820	427
VOE 11713017	914	860	431
VOE 11713017	914	870	433
VOE 11713018	914	810	425
VOE 11713021	914	910	437
VOE 11713022	914	910	437
VOE 11713023	914	910	437
VOE 11713066	912	101	373
VOE 11713066	912	101	375
VOE 11713066	912	102	377
VOE 11713066	912	102	379
VOE 11713067	912	101	373
VOE 11713067	912	101	375
VOE 11713070	912	101	373
VOE 11713070	912	101	375
VOE 11713070	912	102	377
VOE 11713070	912	102	379
VOE 11713071	912	102	377
VOE 11713098	441	100	213
VOE 11713104	441	210	223
VOE 11713110	974	300	525
VOE 11713111	974	300	525

NUMERICAL INDEX 부품번호 색인

RÉPERTOIRE DE NUMÉROS **INDICE DE NÚMERO**

NUMMERNREGISTER

NUMERICAL INDEX

RÉPERTOIRE DE NUMÉROS

NUMMERNREGISTER

부품번호 색인

INDICE DE NÚMERO

Catalogue id **20048** | Group **1000**

Issue **VOE 74C9920048** | Page **4**

Part No	Group	Sect	Page
VOE 11713112	974	300	525
VOE 11713113	974	300	525
VOE 11713114	974	300	525
VOE 11713115	974	300	525
VOE 11713116	975	300	533
VOE 11713117	975	300	533
VOE 11713118	975	300	533
VOE 11713119	975	300	533
VOE 11713120	975	300	533
VOE 11713121	975	300	533
VOE 11713122	386	200	197
VOE 11713125	275	100	121
VOE 11713126	911	400	367
VOE 11713139	334	100	143
VOE 11713140	364	500	173
VOE 11713157	775	100	247
VOE 11713157	775	110	249
VOE 11713165	851	900	301
VOE 11713166	851	900	301
VOE 11713167	881	500	327
VOE 11713169	831	100	281
VOE 11713170	843	100	293
VOE 11713171	843	100	293
VOE 11713172	831	100	281
VOE 11713173	831	100	281
VOE 11713174	831	100	281
VOE 11713175	831	100	281
VOE 11713176	831	100	281
VOE 11713177	831	100	283
VOE 11713178	843	100	293
VOE 11713179	843	100	293
VOE 11713180	810	400	271
VOE 11713181	810	400	271
VOE 11713182	843	200	295
VOE 11713183	810	400	273
VOE 11713184	810	400	273
VOE 11713185	810	400	273
VOE 11713186	810	400	271
VOE 11713187	363	100	161
VOE 11713188	851	950	303
VOE 11713189	851	950	303
VOE 11713190	851	950	303
VOE 11713191	851	950	303
VOE 11713192	851	950	303
VOE 11713193	371	220	183
VOE 11713195	851	950	303
VOE 11713196	831	100	283
VOE 11713198	873	200	317
VOE 11713199	914	210	405
VOE 11713201	914	210	405
VOE 11713202	914	410	409
VOE 11713203	914	410	409
VOE 11713203	914	420	411
VOE 11713204	914	600	415
VOE 11713204	924	800	485
VOE 11713205	914	600	415
VOE 11713205	924	800	485
VOE 11713206	914	600	415
VOE 11713206	924	800	485
VOE 11713207	914	600	415
VOE 11713207	924	800	485
VOE 11713209	912	101	373
VOE 11713210	912	101	375
VOE 11713211	912	101	373
VOE 11713212	912	102	377
VOE 11713213	912	102	377
VOE 11713214	912	101	373
VOE 11713215	912	101	373
VOE 11713216	912	102	377
VOE 11713217	912	102	379
VOE 11713218	912	101	375
VOE 11713226	926	260	505
VOE 11713229	222	100	75
VOE 11713231	233	400	79
VOE 11713253	975	500	535
VOE 11713254	975	500	535
VOE 11713255	975	500	535
VOE 11713256	975	500	535
VOE 11713257	975	500	535
VOE 11713258	975	500	535
VOE 11713271	913	110	401
VOE 11713272	913	110	401
VOE 11713273	913	110	401
VOE 11713274	913	110	401
VOE 11713276	913	110	401
VOE 11713277	913	110	401
VOE 11713278	913	110	401
VOE 11713279	913	110	401
VOE 11713300	852	200	309
VOE 11713305	210	500	43
VOE 11713305	215	100	57
VOE 11713317	212	100	49
VOE 11713320	212	100	49
VOE 11713329	212	100	49
VOE 11713337	852	200	309
VOE 11713338	852	200	309
VOE 11713349	215	100	57
VOE 11713351	215	100	57
VOE 11713356	215	100	57
VOE 11713372	212	500	51
VOE 11713373	212	500	51
VOE 11713374	214	100	55
VOE 11713376	371	600	189
VOE 11713415	215	300	59
VOE 11713419	216	200	65
VOE 11713431	216	200	65
VOE 11713438	364	100	163
VOE 11713451	262	100	117
VOE 11713453	262	100	117
VOE 11713454	262	100	117
VOE 11713456	364	310	169
VOE 11713464	235	200	89
VOE 11713474	233	400	79
VOE 11713494	233	100	77
VOE 11713495	233	500	81
VOE 11713499	371	210	181
VOE 11713500	810	500	275
VOE 11713508	321	100	137
VOE 11713509	321	100	137
VOE 11713510	321	100	137
VOE 11713524	261	200	111
VOE 11713525	261	200	111
VOE 11713528	261	100	109
VOE 11713529	261	100	109
VOE 11713530	261	100	109
VOE 11713531	261	100	109
VOE 11713532	261	500	113
VOE 11713558	212	100	49
VOE 11713559	212	100	49
VOE 11713560	212	100	49
VOE 11713561	212	100	49
VOE 11713562	212	100	49
VOE 11713570	212	100	49
VOE 11713573	212	100	49
VOE 11713587	212	100	49
VOE 11713588	212	100	49
VOE 11713589	210	500	43
VOE 11713589	212	100	49
VOE 11713590	212	100	49
VOE 11713591	212	100	49
VOE 11713614	215	100	57
VOE 11713615	215	100	57
VOE 11713616	215	100	57
VOE 11713617	215	100	57
VOE 11713618	215	100	57
VOE 11713619	215	100	57
VOE 11713620	215	100	57
VOE 11713621	210	500	43
VOE 11713621	215	100	57
VOE 11713622	215	100	57
VOE 11713623	215	100	57
VOE 11713624	215	100	57
VOE 11713625	215	100	57
VOE 11713626	210	500	43
VOE 11713626	215	100	57
VOE 11713629	215	100	57
VOE 11713633	212	500	51
VOE 11713634	212	500	51
VOE 11713635	217	100	67
VOE 11713636	217	100	67
VOE 11713638	217	100	67
VOE 11713639	210	500	43
VOE 11713639	217	100	67
VOE 11713640	214	100	55
VOE 11713640	217	100	67
VOE 11713641	212	500	51
VOE 11713642	212	500	51
VOE 11713643	212	500	51
VOE 11713644	214	100	55
VOE 11713645	214	100	55
VOE 11713646	214	100	55
VOE 11713647	211	100	45
VOE 11713648	211	100	45
VOE 11713649	211	100	45
VOE 11713650	211	100	45

Part No	Group	Sect	Page
VOE 11713651	210	500	43
VOE 11713651	211	100	45
VOE 11713652	210	500	43
VOE 11713652	211	100	45
VOE 11713653	211	100	45
VOE 11713654	211	100	45
VOE 11713655	211	100	45
VOE 11713656	211	200	47
VOE 11713657	211	200	47
VOE 11713658	211	200	47
VOE 11713659	211	200	47
VOE 11713660	211	200	47
VOE 11713661	211	200	47
VOE 11713662	211	200	47
VOE 11713665	210	500	43
VOE 11713665	211	200	47
VOE 11713668	251	400	97
VOE 11713669	251	400	97
VOE 11713670	251	400	97
VOE 11713671	210	500	43
VOE 11713671	251	400	97
VOE 11713672	251	400	97
VOE 11713673	251	400	97
VOE 11713674	210	500	43
VOE 11713674	251	400	97
VOE 11713675	251	100	95
VOE 11713676	210	500	43
VOE 11713676	251	100	95
VOE 11713677	210	500	43
VOE 11713677	251	100	95
VOE 11713678	215	400	61
VOE 11713679	215	400	61
VOE 11713680	215	300	59
VOE 11713681	215	300	59
VOE 11713686	216	100	63
VOE 11713687	216	100	63
VOE 11713688	216	100	63
VOE 11713689	216	100	63
VOE 11713690	216	100	63
VOE 11713691	216	200	65
VOE 11713692	213	100	53
VOE 11713693	213	100	53
VOE 11713694	213	100	53
VOE 11713695	213	100	53
VOE 11713696	213	100	53
VOE 11713697	213	100	53
VOE 11713698	213	100	53
VOE 11713699	213	100	53
VOE 11713700	213	100	53
VOE 11713701	213	100	53
VOE 11713702	220	100	73
VOE 11713703	210	500	43
VOE 11713703	222	100	75
VOE 11713704	210	500	43
VOE 11713704	220	100	73
VOE 11713705	220	100	73
VOE 11713706	220	100	73
VOE 11713707	220	100	73
VOE 11713708	210	500	43
VOE 11713708	220	100	73
VOE 11713709	220	100	73
VOE 11713710	222	100	75
VOE 11713711	222	100	75
VOE 11713712	222	100	75
VOE 11713713	220	100	73
VOE 11713714	220	100	73
VOE 11713715	220	100	73
VOE 11713716	220	100	73
VOE 11713717	220	100	73
VOE 11713721	220	100	73
VOE 11713722	220	100	73
VOE 11713723	220	100	73
VOE 11713724	262	100	117
VOE 11713725	262	100	117
VOE 11713726	262	100	117
VOE 11713727	262	100	117
VOE 11713729	210	500	43
VOE 11713729	262	100	117
VOE 11713731	262	100	117
VOE 11713732	210	500	43
VOE 11713732	262	100	117
VOE 11713733	210	500	43
VOE 11713733	262	100	117
VOE 11713734	262	100	117
VOE 11713735	262	100	117
VOE 11713741	262	100	117
VOE 11713742	262	100	117
VOE 11713743	210	500	43
VOE 11713743	262	100	117
VOE 11713744	210	500	43
VOE 11713744	262	100	117
VOE 11713745	262	100	117
VOE 11713746	262	100	117
VOE 11713747	262	100	119
VOE 11713748	262	100	119
VOE 11713749	262	100	119
VOE 11713750	261	500	113
VOE 11713751	261	500	113
VOE 11713752	236	100	91
VOE 11713753	236	100	91
VOE 11713754	237	100	93
VOE 11713755	237	100	93
VOE 11713756	237	100	93
VOE 11713757	235	200	89
VOE 11713758	235	200	89
VOE 11713759	235	200	89
VOE 11713760	235	200	89
VOE 11713761	235	200	89
VOE 11713762	235	200	89
VOE 11713763	235	200	89
VOE 11713764	233	400	79
VOE 11713765	233	400	79
VOE 11713766	233	400	79
VOE 11713767	233	400	79
VOE 11713769	331	100	141
VOE 11713770	331	100	141
VOE 11713771	331	100	141
VOE 11713772	331	100	141
VOE 11713773	331	100	141
VOE 11713774	210	500	43
VOE 11713776	331	100	141
VOE 11713777	321	100	137
VOE 11713778	321	100	139
VOE 11713779	321	100	139
VOE 11713780	261	200	111
VOE 11713787	926	260	507
VOE 11713797	912	600	391
VOE 11714017	926	260	505
VOE 11714025	926	260	507
VOE 11714043	926	260	507
VOE 11714052	926	260	505
VOE 11714134	810	400	273
VOE 11714135	831	100	283
VOE 11714137	851	900	301
VOE 11714138	881	500	327
VOE 11714155	261	200	111
VOE 11714164	275	100	121
VOE 11714188	831	100	283
VOE 11714221	926	260	505
VOE 11714222	926	260	505
VOE 11714223	926	260	507
VOE 11714338	215	300	59
VOE 11714369	212	100	49
VOE 11714370	215	100	57
VOE 11714371	210	500	43
VOE 11714371	211	200	47
VOE 11714371	215	100	57
VOE 11714372	215	100	57
VOE 11714372	217	100	67
VOE 11714372	236	100	91
VOE 11714372	262	100	117
VOE 11714373	215	100	57
VOE 11714374	215	100	57
VOE 11714376	212	500	51
VOE 11714377	217	100	67
VOE 11714377	262	100	117
VOE 11714377	321	100	139
VOE 11714378	211	100	45
VOE 11714383	211	200	47
VOE 11714383	215	100	57
VOE 11714385	211	200	47
VOE 11714386	210	500	43
VOE 11714386	211	200	47
VOE 11714387	211	100	45
VOE 11714388	222	100	75
VOE 11714388	236	100	91
VOE 11714388	251	400	97
VOE 11714476	210	500	43
VOE 11714476	220	100	73
VOE 11714477	210	500	43
VOE 11714477	262	100	117
VOE 11714478	210	500	43
VOE 11714478	262	100	117
VOE 11714478	364	310	169
VOE 11714487	215	300	59

NUMERICAL INDEX

부품번호 색인

RÉPERTOIRE DE NUMÉROS

INDICE DE NÚMERO

NUMMERNREGISTER

Catalogue id	Group
20048	**1000**
Issue	Page
VOE 74C9920048	**5**

NUMERICAL INDEX

부품번호 색인

RÉPERTOIRE DE NUMÉROS

INDICE DE NÚMERO

NUMMERNREGISTER

Catalogue id **20048** | Group **1000**

Issue **VOE 74C9920048** | Page **6**

Part No	Group	Sect	Page
VOE 11714490	262	100	119
VOE 11714492	262	100	117
VOE 11714528	926	260	507
VOE 11714572	924	100	465
VOE 11714704	926	260	505
VOE 11714730	914	820	427
VOE 11714730	914	870	433
VOE 11714731	914	820	427
VOE 11714731	914	870	433
VOE 11714982	441	210	223
VOE 11715013	926	260	505
VOE 11715483	924	110	467
VOE 11715483	924	210	471
VOE 11715485	924	110	467
VOE 11715487	924	110	467
VOE 11715487	924	210	471
VOE 11715565	441	210	223
VOE 11715569	914	420	411
VOE 11715570	926	260	505
VOE 11715619	914	820	427
VOE 11715619	914	870	433
VOE 11715620	914	820	427
VOE 11715650	924	210	471
VOE 11715807	810	400	273
VOE 11715808	851	950	303
VOE 11715809	851	950	303
VOE 11715877	926	260	505
VOE 11715878	926	260	505
VOE 11715920	926	260	505
VOE 11715923	926	260	505
VOE 11716024	924	210	471
VOE 11716025	924	210	471
VOE 11716026	924	210	471
VOE 11716027	924	210	471
VOE 11716166	926	260	505
VOE 11716192	926	260	505
VOE 11716199	926	260	505
VOE 11716201	926	260	505
VOE 11716211	926	260	507
VOE 11716213	926	260	507
VOE 11716222	926	260	505
VOE 11716224	926	260	505
VOE 11716225	926	260	505
VOE 11716226	926	260	505
VOE 11716227	926	260	505
VOE 11716228	926	260	505
VOE 11716228	926	260	507
VOE 11716229	926	260	505
VOE 11716230	926	260	505
VOE 11716231	926	260	507
VOE 11716232	926	260	507
VOE 11716233	926	260	507
VOE 11716234	926	260	507
VOE 11716235	926	260	507
VOE 11716236	926	260	505
VOE 11716237	926	260	505
VOE 11716238	926	260	505
VOE 11716239	926	260	507
VOE 11716241	926	260	507
VOE 11800055	881	300	323
VOE 11800254	353	110	151
VOE 11800255	356	100	153
VOE 11800371	911	200	363
VOE 11800385	914	210	405
VOE 11800415	884	200	333
VOE 11800416	884	300	335
VOE 11800449	218	100	69
VOE 11800449	218	110	71
VOE 11800455	311	100	135
VOE 11800504	443	200	229
VOE 11800608	971	600	519
VOE 11800617	927	500	513
VOE 11800638	925	100	487
VOE 11800638	925	200	489
VOE 11800638	925	210	491
VOE 11800639	925	100	487
VOE 11800639	925	200	489
VOE 11800639	925	210	491
VOE 11800672	925	100	487
VOE 11800672	925	200	489
VOE 11800738	912	600	391
VOE 11800853	924	800	485
VOE 11800884	911	100	359
VOE 11800888	914	200	403
VOE 11800913	911	100	359
VOE 11800918	234	100	83
VOE 11800920	235	100	85
VOE 11800927	916	350	441
VOE 11800939	882	550	329
VOE 11801002	810	100	269
VOE 11801024	911	100	359
VOE 11801114	718	500	245
VOE 11801116	896	300	341
VOE 11801117	896	300	341
VOE 11801118	896	300	341
VOE 11801119	896	300	341
VOE 11801120	896	300	341
VOE 11801121	896	300	341
VOE 11801128	975	100	529
VOE 11801134	837	100	285
VOE 11801160	256	700	107
VOE 11801176	210	100	41
VOE 11801199	718	500	245
VOE 11801216	256	700	107
VOE 11801241	971	100	515
VOE 11801250	821	100	277
VOE 11801268	821	100	277
VOE 11801301	415	100	209
VOE 11801302	821	100	277
VOE 11801303	837	200	287
VOE 11801304	821	100	277
VOE 11801308	821	100	277
VOE 11801309	837	200	287
VOE 11801323	926	200	499
VOE 11801323	926	220	501
VOE 11801327	926	200	499
VOE 11801327	926	220	501
VOE 11801332	911	200	363
VOE 11801334	218	100	69
VOE 11801334	218	110	71
VOE 11801339	218	100	69
VOE 11801345	256	100	103
VOE 11801346	256	100	103
VOE 11801348	261	800	115
VOE 11801356	821	100	277
VOE 11801400	716	100	241
VOE 11801411	911	100	359
VOE 11801412	911	100	359
VOE 11801417	837	300	289
VOE 11801418	334	200	145
VOE 11801432	256	100	103
VOE 11801433	718	500	245
VOE 11801434	837	200	287
VOE 11801445	252	100	99
VOE 11801446	911	100	361
VOE 11801449	881	400	325
VOE 11801450	911	400	367
VOE 11801451	911	400	367
VOE 11801467	911	400	367
VOE 11801474	975	300	533
VOE 11801478	975	500	535
VOE 11801480	974	300	525
VOE 11801506	252	100	99
VOE 11801536	974	100	523
VOE 11801570	912	101	373
VOE 11801606	275	100	121
VOE 11801613	261	800	115
VOE 11801616	261	800	115
VOE 11801620	441	210	223
VOE 11801647	837	300	289
VOE 11801650	235	100	87
VOE 11801651	261	800	115
VOE 11801653	718	500	245
VOE 11801663	896	100	337
VOE 11801669	975	100	529
VOE 11801687	914	600	415
VOE 11801720	372	100	191
VOE 11801723	916	2000	449
VOE 11801723	916	3000	453
VOE 11801724	916	2000	449
VOE 11801724	916	3000	453
VOE 11801725	912	350	381
VOE 11801725	912	360	385
VOE 11801725	916	400	443
VOE 11801726	912	350	381
VOE 11801726	912	360	385
VOE 11801726	916	400	443
VOE 11801727	912	350	381
VOE 11801727	912	360	385
VOE 11801727	916	400	443
VOE 11801728	912	350	381
VOE 11801728	912	360	385
VOE 11801728	916	400	443
VOE 11801729	924	400	475
VOE 11801729	924	500	477

Part No	Group	Sect	Page
VOE 11801729	924	600	481
VOE 11801730	924	500	477
VOE 11801731	912	350	381
VOE 11801731	912	360	385
VOE 11801731	916	400	443
VOE 11801732	912	350	381
VOE 11801732	912	360	385
VOE 11801732	916	400	443
VOE 11801755	914	410	409
VOE 11801791	277	200	127
VOE 11801793	277	200	127
VOE 11801845	334	100	143
VOE 11801914	821	400	279
VOE 11801938	913	110	401
VOE 11801946	387	100	199
VOE 11801958	912	100	369
VOE 11801959	912	100	369
VOE 11801960	912	100	371
VOE 11801960	916	2000	449
VOE 11801960	916	3000	455
VOE 11801961	235	100	85
VOE 11801990	252	100	99
VOE 11801990	252	110	101
VOE 11801992	252	100	99
VOE 11801992	252	110	101
VOE 11801994	912	830	397
VOE 11801995	916	5000	459
VOE 11802000	252	100	99
VOE 11802000	252	110	101
VOE 11802004	235	100	85
VOE 11802010	881	100	319
VOE 11802019	850	150	299
VOE 11802027	971	100	515
VOE 11802028	971	100	515
VOE 11802030	971	100	515
VOE 11802031	971	100	515
VOE 11802053	971	100	515
VOE 11802087	974	100	523
VOE 11802088	927	100	511
VOE 11802088	974	100	523
VOE 11802088	975	100	529
VOE 11802089	974	100	523
VOE 11802089	975	100	529
VOE 11802090	974	100	523
VOE 11802090	975	100	529
VOE 11802091	927	100	511
VOE 11802091	974	100	523
VOE 11802091	975	100	529
VOE 11802093	974	100	523
VOE 11802095	974	500	527
VOE 11802096	974	500	527
VOE 11802099	974	100	523
VOE 11802099	975	100	529
VOE 11802100	974	100	523
VOE 11802108	837	300	289
VOE 11802111	852	900	313
VOE 11802113	911	100	359
VOE 11802116	837	100	285
VOE 11802118	852	900	313
VOE 11802119	852	900	313
VOE 11802123	912	800	395
VOE 11802135	882	550	329
VOE 11802149	821	400	279
VOE 11802166	912	800	395
VOE 11802173	912	800	395
VOE 11802176	912	800	395
VOE 11802177	912	800	395
VOE 11802182	971	100	515
VOE 11802189	252	100	99
VOE 11802194	912	530	389
VOE 11802198	235	100	85
VOE 11802200	252	100	99
VOE 11802201	235	100	85
VOE 11802202	235	100	85
VOE 11802203	235	100	85
VOE 11802205	386	200	197
VOE 11802209	873	100	315
VOE 11802211	362	500	159
VOE 11802213	362	500	159
VOE 11802220	971	100	515
VOE 11802223	821	100	277
VOE 11802226	911	350	365
VOE 11802230	873	100	315
VOE 11802231	873	100	315
VOE 11802240	971	100	515
VOE 11802241	971	100	515
VOE 11802249	975	100	529
VOE 11802250	975	100	529
VOE 11802252	837	300	289
VOE 11802255	975	100	529
VOE 11802257	881	500	327
VOE 11802260	975	100	529
VOE 11802261	927	100	511
VOE 11802261	975	100	529
VOE 11802262	975	100	529
VOE 11802263	975	100	529
VOE 11802264	975	100	529
VOE 11802265	975	100	529
VOE 11802266	975	100	529
VOE 11802269	975	100	529
VOE 11802272	975	100	529
VOE 11802278	256	100	103
VOE 11802278	261	800	115
VOE 11802283	252	100	99
VOE 11802283	718	500	245
VOE 11802283	837	300	289
VOE 11802283	873	100	315
VOE 11802283	912	800	395
VOE 11802284	261	800	115
VOE 11802301	810	100	269
VOE 11802301	810	500	275
VOE 11802302	810	100	269
VOE 11802302	810	500	275
VOE 11802303	235	100	87
VOE 11802303	261	800	115
VOE 11802303	718	500	245
VOE 11802303	911	100	359
VOE 11802308	974	100	523
VOE 11802309	974	100	523
VOE 11802310	971	100	515
VOE 11802310	974	100	523
VOE 11802311	971	100	515
VOE 11802311	974	100	523
VOE 11802312	927	100	511
VOE 11802312	974	100	523
VOE 11802313	974	100	523
VOE 11802315	235	100	85
VOE 11802316	235	100	85
VOE 11802318	235	100	85
VOE 11802319	235	100	85
VOE 11802321	234	100	83
VOE 11802322	234	100	83
VOE 11802323	235	100	87
VOE 11802324	235	100	87
VOE 11802326	256	300	105
VOE 11802327	256	300	105
VOE 11802328	256	300	105
VOE 11802329	364	200	165
VOE 11802331	916	350	441
VOE 11802332	916	350	441
VOE 11802337	916	350	441
VOE 11802340	911	100	361
VOE 11802341	415	100	209
VOE 11802344	971	100	515
VOE 11802344	971	100	517
VOE 11802345	971	100	515
VOE 11802346	971	100	515
VOE 11802347	916	350	441
VOE 11802379	925	200	489
VOE 11802385	925	100	487
VOE 11802388	913	100	399
VOE 11802392	971	700	521
VOE 11802401	218	100	69
VOE 11802401	218	110	71
VOE 11802406	916	100	439
VOE 11802412	275	100	121
VOE 11802422	873	100	315
VOE 11802432	911	100	361
VOE 11802433	911	100	359
VOE 11802436	911	100	359
VOE 11802437	912	700	393
VOE 11802439	821	100	277
VOE 11802440	821	100	277
VOE 11802441	821	100	277
VOE 11802444	912	830	397
VOE 11802447	971	100	515
VOE 11802448	971	100	515
VOE 11802452	912	830	397
VOE 11802453	718	500	245
VOE 11802456	492	500	233
VOE 11802456	971	700	521
VOE 11802457	492	500	233
VOE 11802460	364	400	171
VOE 11802463	277	200	127
VOE 11802470	364	500	173

NUMERICAL INDEX 부품번호 색인

RÉPERTOIRE DE NUMÉROS **INDICE DE NÚMERO**

NUMMERNREGISTER

Catalogue id **20048** | Group **1000**

Issue **VOE 74C9920048** | Page **8**

Part No	Group	Sect	Page
VOE 11802474	261	800	115
VOE 11802475	261	800	115
VOE 11802483	718	100	243
VOE 11802484	718	100	243
VOE 11802485	718	100	243
VOE 11802485	837	200	287
VOE 11802486	718	100	243
VOE 11802487	718	100	243
VOE 11802488	718	100	243
VOE 11802521	492	200	231
VOE 11802522	441	100	211
VOE 11802523	775	200	251
VOE 11802524	927	100	511
VOE 11802525	927	100	511
VOE 11802526	927	100	511
VOE 11802528	927	100	511
VOE 11802529	927	100	511
VOE 11802531	927	100	511
VOE 11802532	852	200	309
VOE 11802538	850	150	299
VOE 11802545	927	100	511
VOE 11802556	850	150	299
VOE 11802557	916	350	441
VOE 11802559	912	800	395
VOE 11802559	912	830	397
VOE 11802562	912	830	397
VOE 11802563	912	830	397
VOE 11802566	912	800	395
VOE 11802569	911	350	365
VOE 11802570	261	800	115
VOE 11802575	363	100	161
VOE 11802582	718	100	243
VOE 11802608	821	400	279
VOE 11802618	884	100	331
VOE 11802622	821	400	279
VOE 11802623	821	400	279
VOE 11802626	443	100	227
VOE 11802633	912	800	395
VOE 11802639	492	200	231
VOE 11802650	443	100	227
VOE 11802650	914	200	403
VOE 11802650	916	500	447
VOE 11802650	916	2000	449
VOE 11802650	916	3000	455
VOE 11802650	916	5500	461
VOE 11802651	443	100	227
VOE 11802651	916	100	439
VOE 11802652	443	100	227
VOE 11802653	443	100	227
VOE 11802654	443	100	227
VOE 11802655	443	100	227
VOE 11802655	914	200	403
VOE 11802655	914	900	435
VOE 11802678	912	800	395
VOE 11802679	912	800	395
VOE 11802680	912	800	395
VOE 11802681	912	800	395
VOE 11802682	912	800	395
VOE 11802683	912	800	395
VOE 11802684	912	800	395
VOE 11802685	912	800	395
VOE 11802691	775	600	259
VOE 11802693	775	500	257
VOE 11802695	775	100	247
VOE 11802696	775	100	247
VOE 11802696	775	110	249
VOE 11802698	775	300	253
VOE 11802700	775	610	261
VOE 11802702	775	110	249
VOE 11802704	775	400	255
VOE 11802712	837	300	289
VOE 11802714	911	350	365
VOE 11802714	926	240	503
VOE 11802715	311	100	135
VOE 11802723	914	500	413
VOE 11802727	916	4000	457
VOE 11802727	926	240	503
VOE 11802728	916	400	443
VOE 11802732	916	5000	459
VOE 11802733	912	600	391
VOE 11802733	916	400	443
VOE 11802734	912	350	381
VOE 11802734	912	600	391
VOE 11802734	912	700	393
VOE 11802734	916	400	443
VOE 11802734	916	4000	457
VOE 11802734	916	5000	459
VOE 11802734	926	240	503
VOE 11802737	914	910	437
VOE 11802742	916	350	441
VOE 11802744	362	100	155
VOE 11802745	372	400	195
VOE 11802755	362	500	159
VOE 11802758	914	810	425
VOE 11802759	914	860	431
VOE 11802772	441	200	221
VOE 11802772	912	350	381
VOE 11802772	912	360	385
VOE 11802785	924	400	475
VOE 11802785	924	500	477
VOE 11802785	924	600	481
VOE 11802798	277	100	123
VOE 11802798	277	110	125
VOE 11802802	852	900	313
VOE 11802804	256	300	105
VOE 11802821	924	400	475
VOE 11802821	924	500	477
VOE 11802829	911	200	363
VOE 11802830	916	350	441
VOE 11802833	911	200	363
VOE 11802842	914	200	403
VOE 11802850	914	700	417
VOE 11802850	914	750	419
VOE 11802855	912	700	393
VOE 11802856	912	600	391
VOE 11802857	912	600	391
VOE 11802860	873	100	315
VOE 11802870	911	200	363
VOE 11802872	971	100	517
VOE 11802873	971	100	517
VOE 11802874	334	100	143
VOE 11802875	971	100	517
VOE 11802876	912	102	377
VOE 11802876	912	102	379
VOE 11802877	912	101	373
VOE 11802878	912	101	373
VOE 11802878	912	102	377
VOE 11802878	912	102	379
VOE 11802882	971	100	515
VOE 11802905	873	200	317
VOE 11802906	873	200	317
VOE 11802909	277	100	123
VOE 11802909	912	600	391
VOE 11802915	916	2000	449
VOE 11802915	916	3000	453
VOE 11802916	916	2000	449
VOE 11802916	916	3000	453
VOE 11802922	916	2000	449
VOE 11802922	916	3000	453
VOE 11802926	882	550	329
VOE 11802930	235	100	85
VOE 11802931	916	5000	459
VOE 11802932	277	100	123
VOE 11802932	277	110	125
VOE 11802936	364	300	167
VOE 11802958	924	400	475
VOE 11802958	924	500	477
VOE 11802958	924	600	481
VOE 11802960	924	400	475
VOE 11802960	924	500	477
VOE 11802961	971	100	515
VOE 11802962	916	5000	459
VOE 11802980	914	850	429
VOE 11802993	881	400	325
VOE 11802996	916	100	439
VOE 11802997	916	100	439
VOE 11803009	492	200	231
VOE 11803013	914	900	435
VOE 11803014	916	100	439
VOE 11803017	916	100	439
VOE 11803025	914	700	417
VOE 11803025	914	750	419
VOE 11803033	492	200	231
VOE 11803034	912	530	389
VOE 11803042	261	800	115
VOE 11803123	881	100	319
VOE 11803124	234	100	83
VOE 11803125	234	100	83
VOE 11803128	311	100	135
VOE 11803149	334	200	145
VOE 11803151	912	600	391
VOE 11803152	914	900	435
VOE 11803153	914	200	403
VOE 11803159	821	100	277
VOE 11803163	492	200	231

Part No	Group	Sect	Page
VOE 11803164	912	100	371
VOE 11803169	912	800	395
VOE 11803172	810	100	269
VOE 11803173	810	100	269
VOE 11803174	810	100	269
VOE 11803176	911	100	359
VOE 11803180	810	500	275
VOE 11803182	371	100	179
VOE 11803183	362	500	159
VOE 11803184	371	100	179
VOE 11803185	371	100	179
VOE 11803192	371	400	185
VOE 11803201	372	100	191
VOE 11803201	372	300	193
VOE 11803206	261	800	115
VOE 11803207	362	500	159
VOE 11803207	372	300	193
VOE 11803208	916	350	441
VOE 11803208	916	2000	449
VOE 11803208	916	3000	453
VOE 11803209	916	350	441
VOE 11803210	916	350	441
VOE 11803220	275	100	121
VOE 11803220	277	100	123
VOE 11803220	277	110	125
VOE 11803221	916	2000	449
VOE 11803221	916	3000	453
VOE 11803234	364	400	171
VOE 11803245	913	100	399
VOE 11803246	913	100	399
VOE 11803275	810	500	275
VOE 11803276	810	500	275
VOE 11803295	235	100	87
VOE 11803328	371	100	179
VOE 11803329	371	600	189
VOE 11803330	371	500	187
VOE 11803331	356	100	153
VOE 11803332	911	200	363
VOE 11803334	852	150	305
VOE 11803337	911	200	363
VOE 11803337	916	350	441
VOE 11803338	924	400	475
VOE 11803338	924	500	477
VOE 11803339	911	200	363
VOE 11803340	911	200	363
VOE 11803346	873	200	317
VOE 11803352	873	100	315
VOE 11803353	873	100	315
VOE 11803358	362	500	159
VOE 11803360	356	100	153
VOE 11803360	364	400	171
VOE 11803362	873	100	315
VOE 11803363	873	100	315
VOE 11803364	916	350	441
VOE 11803366	916	350	441
VOE 11803367	235	100	87
VOE 11803368	235	100	85
VOE 11803380	364	400	171
VOE 11803380	364	500	173
VOE 11803383	896	100	337
VOE 11803385	911	350	365
VOE 11803387	975	100	529
VOE 11803388	916	350	441
VOE 11803390	971	700	521
VOE 11803391	492	500	233
VOE 11803393	821	100	277
VOE 11803401	873	100	315
VOE 11803402	873	100	315
VOE 11803403	873	100	315
VOE 11803404	873	100	315
VOE 11803406	925	300	493
VOE 11803408	916	2000	449
VOE 11803408	916	3000	453
VOE 11803412	925	400	495
VOE 11803413	852	150	305
VOE 11803414	810	500	275
VOE 11803415	362	400	157
VOE 11803422	353	110	151
VOE 11803426	275	100	121
VOE 11803432	912	350	381
VOE 11803432	912	360	385
VOE 11803434	912	350	381
VOE 11803434	912	360	385
VOE 11803436	912	360	385
VOE 11803437	912	350	381
VOE 11803437	912	360	385
VOE 11803439	916	3000	453
VOE 11803448	277	200	127
VOE 11803449	277	200	127
VOE 11803450	277	200	127
VOE 11803452	353	110	151
VOE 11803452	362	400	157
VOE 11803455	362	400	157
VOE 11803525	916	3000	453
VOE 11803527	916	3000	453
VOE 11803529	362	400	157
VOE 11803532	277	100	123
VOE 11803532	277	110	125
VOE 11803533	873	100	315
VOE 11803536	277	100	123
VOE 11803538	277	100	123
VOE 11803538	277	110	125
VOE 11803540	912	350	381
VOE 11803541	916	100	439
VOE 11803542	916	100	439
VOE 11803543	916	100	439
VOE 11803544	916	5500	461
VOE 11803545	916	5500	461
VOE 11803546	916	5500	461
VOE 11803550	916	100	439
VOE 11803553	277	100	123
VOE 11803553	277	110	125
VOE 11803556	850	150	299
VOE 11803563	912	360	385
VOE 11803569	912	350	381
VOE 11803569	912	360	385
VOE 11803573	841	100	291
VOE 11803574	841	100	291
VOE 11803575	912	350	381
VOE 11803575	912	360	385
VOE 11803575	916	400	443
VOE 11803583	916	2000	449
VOE 11803583	916	3000	453
VOE 11803584	911	200	363
VOE 11803585	275	100	121
VOE 11803587	912	350	381
VOE 11803587	912	360	385
VOE 11803587	916	400	443
VOE 11803588	912	350	381
VOE 11803588	916	400	443
VOE 11803591	916	500	447
VOE 11803591	916	2000	449
VOE 11803591	916	3000	453
VOE 11803592	916	500	447
VOE 11803592	916	2000	449
VOE 11803593	916	500	447
VOE 11803593	916	2000	449
VOE 11803593	916	3000	453
VOE 11803594	916	500	447
VOE 11803594	916	2000	449
VOE 11803595	916	2000	449
VOE 11803595	916	3000	453
VOE 11803596	916	2000	449
VOE 11803596	916	3000	453
VOE 11803597	916	2000	449
VOE 11803597	916	3000	453
VOE 11803598	916	2000	449
VOE 11803598	916	3000	453
VOE 11803603	916	3000	453
VOE 11803604	916	3000	453
VOE 11803606	718	500	245
VOE 11803614	916	3000	453
VOE 11803615	916	3000	453
VOE 11803635	393	100	201
VOE 11803636	912	700	393
VOE 11803639	912	700	393
VOE 11803651	924	800	485
VOE 11803652	924	800	485
VOE 11803672	924	400	475
VOE 11803672	924	500	477
VOE 11803672	924	600	481
VOE 11803698	924	100	465
VOE 11803698	924	200	469
VOE 11803698	926	200	499
VOE 11803698	926	220	501
VOE 11803704	897	200	343
VOE 11803706	897	200	343
VOE 11803712	897	200	343
VOE 11803714	897	200	343
VOE 11803724	897	400	345
VOE 11803726	897	400	345
VOE 11803728	897	400	345
VOE 11803730	897	400	345
VOE 11803731	881	100	319
VOE 11803733	924	100	465

NUMERICAL INDEX 부품번호 색인

RÉPERTOIRE DE NUMÉROS **INDICE DE NÚMERO**

NUMMERNREGISTER

Catalogue id **20048** | Group **1000**

Issue **VOE 74C9920048** | Page **10**

Part No	Group	Sect	Page
VOE 11803733	924	200	469
VOE 11803733	926	200	499
VOE 11803733	926	220	501
VOE 11803772	975	100	529
VOE 11803822	235	100	85
VOE 11803824	235	100	85
VOE 11803825	235	100	85
VOE 11803826	235	100	87
VOE 11803827	235	100	87
VOE 11803828	235	100	85
VOE 11803831	235	100	85
VOE 11803832	235	100	85
VOE 11803844	924	300	473
VOE 11803845	924	300	473
VOE 11803846	924	300	473
VOE 11803858	924	100	465
VOE 11803858	924	200	469
VOE 11803859	924	100	465
VOE 11803859	924	200	469
VOE 11803876	924	100	465
VOE 11803888	924	100	465
VOE 11803889	924	100	465
VOE 11803889	924	200	469
VOE 11803890	924	200	469
VOE 11803891	924	200	469
VOE 11803893	924	200	469
VOE 11803894	924	200	469
VOE 11803895	924	200	469
VOE 11803897	924	200	469
VOE 11803912	334	200	145
VOE 11803923	924	400	475
VOE 11803923	924	500	477
VOE 11803923	924	600	481
VOE 11803924	924	500	477
VOE 11803925	924	400	475
VOE 11803925	924	500	477
VOE 11803925	924	600	481
VOE 11803926	924	500	477
VOE 11803933	364	700	177
VOE 11803934	371	500	187
VOE 11803937	896	300	341
VOE 11803938	896	300	341
VOE 11803939	896	300	341
VOE 11803941	896	300	341
VOE 11803942	896	300	341
VOE 11803943	896	300	341
VOE 11803945	896	300	341
VOE 11803951	912	350	381
VOE 11803951	912	360	385
VOE 11803971	911	100	361
VOE 11803972	924	600	481
VOE 11803973	924	100	465
VOE 11803973	924	200	469
VOE 11803974	924	100	465
VOE 11803974	924	200	469
VOE 11803975	924	100	465
VOE 11803975	924	200	469
VOE 11804064	924	200	469
VOE 11804071	924	200	469
VOE 11804074	916	4000	457
VOE 11804074	926	240	503
VOE 11804075	916	4000	457
VOE 11804081	916	4000	457
VOE 11804089	371	400	185
VOE 11804096	371	400	185
VOE 11804096	372	400	195
VOE 11804110	916	4000	457
VOE 11804110	926	240	503
VOE 11804120	261	800	115
VOE 11804125	364	700	177
VOE 11804126	916	2000	449
VOE 11804126	916	3000	453
VOE 11804128	371	600	189
VOE 11804131	911	100	359
VOE 11804169	261	800	115
VOE 11804233	716	100	241
VOE 11804233	810	100	269
VOE 11804249	415	100	209
VOE 11804249	441	200	221
VOE 11804257	916	100	439
VOE 11804271	718	500	245
VOE 11804276	925	100	487
VOE 11804285	837	300	289
VOE 11804286	261	800	115
VOE 11804288	837	200	287
VOE 11804290	837	200	287
VOE 11804295	925	100	487
VOE 11804301	925	100	487
VOE 11804322	925	200	489
VOE 11804324	925	200	489
VOE 11804326	925	200	489
VOE 11804332	925	200	489
VOE 11804371	911	100	361
VOE 11804408	837	300	289
VOE 11804409	837	300	289
VOE 11804502	912	530	389
VOE 11804513	364	700	177
VOE 11804536	912	350	383
VOE 11804536	912	360	385
VOE 11804547	810	500	275
VOE 11804631	821	100	277
VOE 11804640	911	200	363
VOE 11804670	911	100	359
VOE 11804712	261	800	115
VOE 11804712	837	300	289
VOE 11804715	837	300	289
VOE 11805665	852	150	305
VOE 11805666	852	150	305
VOE 11805687	926	200	499
VOE 11805689	926	220	501
VOE 11805768	362	100	155
VOE 11806311	364	600	175
VOE 11806392	912	350	381
VOE 11806392	912	360	385
VOE 11806393	924	400	475
VOE 11806393	924	500	477
VOE 11806393	924	600	481
VOE 11806394	971	100	515
VOE 11806455	926	240	503
VOE 11806492	926	260	505
VOE 11806524	911	200	363
VOE 11806528	415	100	209
VOE 11806637	837	200	287
VOE 11806638	718	500	245
VOE 11806638	837	200	287
VOE 11806643	881	400	325
VOE 11806644	837	300	289
VOE 11806645	924	400	475
VOE 11806645	924	500	477
VOE 11806645	924	600	481
VOE 11806699	916	350	441
VOE 11806708	911	200	363
VOE 11806709	926	240	503
VOE 11806724	926	240	503
VOE 11806727	716	100	241
VOE 11806729	277	100	123
VOE 11806731	912	360	385
VOE 11806749	277	110	125
VOE 11806760	837	200	287
VOE 11806774	971	100	517
VOE 11806954	252	110	101
VOE 11806956	218	110	71
VOE 11806985	277	110	125
VOE 11806987	372	300	193
VOE 11806993	775	600	259
VOE 11806993	775	610	261
VOE 11807071	810	500	275
VOE 11807220	914	820	427
VOE 11807221	914	870	433
VOE 11807244	925	210	491
VOE 11807246	925	210	491
VOE 11807248	925	410	497
VOE 11807249	924	110	467
VOE 11807270	362	500	159
VOE 11807279	252	100	99
VOE 11807302	924	110	467
VOE 11807302	924	210	471
VOE 11807305	924	110	467
VOE 11807358	911	100	359
VOE 11807478	371	100	179
VOE 11807505	821	100	277
VOE 11807522	372	300	193
VOE 11807523	914	420	411
VOE 11807531	718	500	245
VOE 11807532	718	500	245
VOE 11807536	837	300	289
VOE 11807537	837	200	287
VOE 11807538	837	200	287
VOE 11807539	821	100	277
VOE 11807540	837	200	287
VOE 11807541	718	500	245
VOE 11807542	837	200	287
VOE 11807552	837	300	289
VOE 11807553	837	300	289
VOE 11807559	837	300	289

Part No	Group	Sect	Page
VOE 11807560	837	300	289
VOE 11807569	261	800	115
VOE 11807571	837	200	287
VOE 11807646	252	110	101
VOE 11807649	252	110	101
VOE 11807662	924	210	471
VOE 11807751	924	210	471
VOE 11808081	334	200	145
VOE 11808273	850	150	299
VOE 11839001	975	100	529
VOE 11839010	810	500	275
VOE 11839015	275	100	121
VOE 11839018	362	500	159
VOE 11839019	975	100	529
VOE 11839021	850	150	299
VOE 11839022	850	150	299
VOE 11839040	850	150	299
VOE 11839041	914	700	417
VOE 11839042	914	750	419
VOE 11839048	775	300	253
VOE 11839049	775	400	255
VOE 11839051	810	100	269
VOE 11839053	916	400	443
VOE 11839055	925	200	489
VOE 11839056	925	100	487
VOE 11839057	925	400	495
VOE 11839058	925	300	493
VOE 11839059	252	100	99
VOE 11839059	252	110	101
VOE 11839061	850	150	299
VOE 11839064	850	150	299
VOE 11839065	850	150	299
VOE 11839067	916	400	443
VOE 11839068	912	350	381
VOE 11839070	912	350	381
VOE 11839071	912	360	385
VOE 11839073	912	360	385
VOE 11839080	916	500	447
VOE 11839081	916	2000	449
VOE 11839082	916	3000	453
VOE 11839083	916	500	447
VOE 11839084	916	2000	449
VOE 11839085	916	3000	453
VOE 11839086	926	200	499
VOE 11839087	926	220	501
VOE 11839094	924	700	483
VOE 11839095	393	100	201
VOE 11839096	362	400	157
VOE 11839097	372	400	195
VOE 11839098	277	100	123
VOE 11839098	277	110	125
VOE 11839100	924	400	475
VOE 11839102	924	400	475
VOE 11839104	924	500	477
VOE 11839106	924	500	477
VOE 11839108	924	100	465
VOE 11839110	924	600	481
VOE 11839112	924	600	481
VOE 11839113	356	100	153
VOE 11839114	353	110	151
VOE 11839115	334	200	145
VOE 11839116	841	100	291
VOE 11839117	364	700	177
VOE 11839119	371	100	179
VOE 11839129	897	200	343
VOE 11839130	897	200	343
VOE 11839131	897	200	343
VOE 11839132	897	200	343
VOE 11839133	897	400	345
VOE 11839134	897	400	345
VOE 11839135	897	400	345
VOE 11839136	897	400	345
VOE 11839148	924	400	475
VOE 11839150	924	400	475
VOE 11839154	916	4000	457
VOE 11839156	916	4000	457
VOE 11839158	925	100	487
VOE 11839159	925	100	487
VOE 11839160	925	200	489
VOE 11839161	925	200	489
VOE 11839162	925	200	489
VOE 11839163	925	100	487
VOE 11839164	925	200	489
VOE 11839210	925	210	491
VOE 11839211	925	210	491
VOE 11839212	925	410	497
VOE 11839223	924	110	467
VOE 11839226	924	210	471
VOE 11882258	924	400	475
VOE 11882258	924	500	479
VOE 11988297	925	100	487
VOE 11988297	925	200	489
VOE 11988297	925	210	491
VOE 11988359	971	600	519
VOE 11988362	912	102	377
VOE 11988460	971	600	519
VOE 11988539	912	101	373
VOE 11988673	913	110	401
VOE 11988877	974	300	525
VOE 11988877	975	300	533
VOE 11988920	974	300	525
VOE 11988921	974	300	525
VOE 11988922	974	300	525
VOE 11988923	971	600	519
VOE 11988924	971	600	519
VOE 11988925	971	600	519
VOE 11988926	971	600	519
VOE 11988927	971	600	519
VOE 11988928	971	600	519
VOE 11988934	975	300	533
VOE 11988934	975	500	535
VOE 11988937	974	300	525
VOE 11988937	975	300	533
VOE 11988937	975	500	535
VOE 11988948	971	600	519
VOE 11988948	975	300	533
VOE 11988949	971	600	519
VOE 11988949	975	300	533
VOE 11988968	975	300	533
VOE 11988988	974	300	525
VOE 11998854	913	110	401
VOE 11998855	913	110	401
VOE 13933851	912	100	371
VOE 13933857	912	600	391
VOE 13933857	912	700	393
VOE 13933858	441	200	221
VOE 13933858	912	100	369
VOE 13933858	912	600	391
VOE 13933858	912	700	393
VOE 13933858	914	400	407
VOE 13933858	914	800	423
VOE 13933858	914	850	429
VOE 13933859	912	350	381
VOE 13933859	912	360	385
VOE 13933860	914	400	407
VOE 13933862	912	100	369
VOE 13933867	916	3000	453
VOE 13933868	441	200	221
VOE 13933872	912	100	369
VOE 13933872	914	200	403
VOE 13933878	914	200	403
VOE 13933878	916	3000	455
VOE 13933900	912	100	369
VOE 13933905	443	100	227
VOE 13933905	912	100	369
VOE 13933905	914	200	403
VOE 13933905	914	600	415
VOE 13933910	912	100	371
VOE 13933922	916	3000	455
VOE 13933923	913	100	399
VOE 13933935	443	100	227
VOE 13933936	924	400	475
VOE 13933936	924	500	479
VOE 13933936	924	800	485
VOE 13944499	911	400	367
VOE 13945407	881	200	321
VOE 13945407	881	300	323
VOE 13945407	924	300	473
VOE 13947542	881	200	321
VOE 13947760	850	150	299
VOE 13947760	916	3000	453
VOE 13955897	916	5000	459
VOE 13960143	881	100	319
VOE 13965191	884	200	333
VOE 13965191	884	300	335
VOE 13965196	775	500	257
VOE 13965229	971	100	515
VOE 13965483	372	300	193
VOE 13965483	882	550	329
VOE 13969160	873	200	317
VOE 14346537	372	400	195
VOE 14371054	364	600	175
VOE 14518918	912	800	395
VOE 14519592	881	200	321
VOE 14519593	881	300	323

Part No	Group	Sect	Page
VOE 14519594	881	200	321
VOE 14519595	881	300	323
VOE 14519596	881	200	321
VOE 14519599	881	300	323
VOE 14519600	881	200	321
VOE 14519697	881	300	323
VOE 14520083	881	300	323
VOE 14520086	881	300	323
VOE 14520133	881	300	323
VOE 14520174	881	300	323
VOE 14520227	881	200	321
VOE 14520227	881	300	323
VOE 14520228	881	200	321
VOE 14520228	881	300	323
VOE 14520229	881	300	323
VOE 14521178	235	200	89
VOE 14521504	215	100	57
VOE 14521513	321	100	139
VOE 14521522	262	100	117
VOE 14521532	210	500	43
VOE 14521532	211	100	45
VOE 14521543	215	100	57
VOE 14521543	251	100	95
VOE 14521556	251	100	95
VOE 14521557	251	100	95
VOE 14521558	251	100	95
VOE 14521571	220	100	73
VOE 14521576	262	100	117
VOE 14521580	235	200	89
VOE 14521580	262	100	119
VOE 14521586	262	100	117
VOE 14521599	233	400	79
VOE 14521609	233	500	81
VOE 14521610	233	500	81
VOE 14521611	233	500	81
VOE 14521612	233	500	81
VOE 14521613	321	100	139
VOE 14521614	321	100	137
VOE 14521616	321	100	137
VOE 14521617	321	100	137
VOE 14521619	321	100	137
VOE 14521620	321	100	137
VOE 14521621	321	100	137
VOE 14521622	321	100	137
VOE 14521624	321	100	137
VOE 14521625	321	100	137
VOE 14521628	321	100	137
VOE 14521629	321	100	137
VOE 14521630	321	100	137
VOE 14521631	321	100	137
VOE 14521632	321	100	137
VOE 14521633	321	100	137
VOE 14521634	321	100	137
VOE 14521635	321	100	137
VOE 14521637	321	100	137
VOE 14522006	852	150	305
VOE 14523095	881	300	323
VOE 14523097	881	300	323
VOE 14523099	881	300	323
VOE 14525394	211	100	45
VOE 14525394	212	500	51
VOE 14525394	220	100	73
VOE 14525394	251	400	97
VOE 14525410	211	100	45
VOE 14525410	215	400	61
VOE 14526261	852	150	305
VOE 14526262	852	150	307
VOE 14526263	852	150	305
VOE 14526274	852	200	309
VOE 14526275	852	200	309
VOE 14526280	852	200	311
VOE 14526281	852	200	311
VOE 14526295	852	150	305
VOE 14526295	852	150	307
VOE 14526300	852	150	305
VOE 14526309	852	150	305
VOE 14526887	852	200	309
VOE 14527754	914	410	409
VOE 14527754	914	420	411
VOE 14880429	881	300	323
VOE 14880450	881	300	323
VOE 14880452	881	300	323
VOE 14880458	881	300	323
VOE 14880465	881	300	323
VOE 191695	837	200	287
VOE 4880492	277	100	123
VOE 4880492	277	110	125
VOE 4880492	441	200	221
VOE 4880492	443	100	227
VOE 4880492	911	100	361
VOE 4880492	912	100	369
VOE 4880492	912	530	389
VOE 4880492	913	100	399
VOE 4880492	916	100	439
VOE 4880492	916	350	441
VOE 4880492	924	200	469
VOE 4880492	924	400	475
VOE 4880492	924	500	477
VOE 4880492	924	500	479
VOE 4880492	924	600	481
VOE 4880492	924	800	485
VOE 4880493	441	200	221
VOE 4880493	443	100	227
VOE 4880493	911	200	363
VOE 4880493	912	100	369
VOE 4880493	912	600	391
VOE 4880493	913	100	399
VOE 4880493	914	200	403
VOE 4880493	916	100	439
VOE 4880493	916	400	445
VOE 4880493	916	500	447
VOE 4880493	916	2000	451
VOE 4880493	916	3000	455
VOE 4880493	916	5000	459
VOE 4880493	916	5500	461
VOE 4880663	443	100	227
VOE 4880663	912	100	371
VOE 4880663	912	350	381
VOE 4880663	912	600	391
VOE 4880663	912	700	393
VOE 4880663	916	100	439
VOE 4880663	916	400	443
VOE 4880663	916	2000	449
VOE 4880663	916	3000	455
VOE 4880663	916	4000	457
VOE 4880663	916	5000	459
VOE 4880663	916	6000	463
VOE 4880663	926	240	503
VOE 4881440	235	100	85
VOE 4881440	334	200	145
VOE 4881440	356	100	153
VOE 4881440	371	500	187
VOE 4881440	911	200	363
VOE 4881440	912	350	381
VOE 4881440	912	360	385
VOE 4881440	914	700	417
VOE 4881440	914	750	419
VOE 4881440	916	350	441
VOE 4881722	277	100	123
VOE 4881722	441	200	221
VOE 4881722	443	100	227
VOE 4881722	911	100	359
VOE 4881722	911	100	361
VOE 4881722	912	100	369
VOE 4881722	912	100	371
VOE 4881722	912	350	381
VOE 4881722	912	350	383
VOE 4881722	912	360	385
VOE 4881722	912	360	387
VOE 4881722	912	530	389
VOE 4881722	912	600	391
VOE 4881722	912	700	393
VOE 4881722	914	200	403
VOE 4881722	914	400	407
VOE 4881722	914	600	415
VOE 4881722	914	700	417
VOE 4881722	914	750	421
VOE 4881722	914	800	423
VOE 4881722	914	850	429
VOE 4881722	914	900	435
VOE 4881722	924	400	475
VOE 4881722	924	500	477
VOE 4881722	924	600	481
VOE 4881722	924	800	485
VOE 828587	364	400	171
VOE 907835	821	100	277
VOE 907889	974	100	523
VOE 907899	971	100	515
VOE 907899	975	100	529
VOE 914449	912	800	395
VOE 914454	912	800	395
VOE 914468	927	100	511
VOE 914468	974	100	523
VOE 914472	927	100	511
VOE 914476	971	100	515

Part No	Group	Sect	Page
VOE 932037	277	100	123
VOE 932037	277	110	125
VOE 932037	911	100	359
VOE 932037	911	100	361
VOE 932037	912	350	383
VOE 932037	912	360	387
VOE 932037	912	600	391
VOE 932037	913	100	399
VOE 932037	914	600	415
VOE 932037	924	400	475
VOE 932037	924	500	477
VOE 932037	924	600	481
VOE 932037	924	800	485
VOE 932039	441	200	221
VOE 932039	912	100	369
VOE 932039	912	530	389
VOE 932039	912	600	391
VOE 932039	912	700	393
VOE 932039	914	400	407
VOE 932039	914	800	423
VOE 932039	914	850	429
VOE 932040	441	200	221
VOE 932040	912	600	391
VOE 932040	912	700	393
VOE 932040	913	100	399
VOE 932041	912	100	369
VOE 932041	912	100	371
VOE 932041	916	2000	449
VOE 932041	916	3000	455
VOE 932042	912	100	369
VOE 935028	916	3000	455
VOE 935067	911	100	359
VOE 935068	911	100	361
VOE 935069	441	200	221
VOE 935069	912	100	369
VOE 935069	912	530	389
VOE 935076	912	600	391
VOE 935082	911	100	359
VOE 935082	912	350	383
VOE 935082	912	360	387
VOE 935082	912	600	391
VOE 935082	914	600	415
VOE 935082	924	400	475
VOE 935082	924	500	477
VOE 935082	924	600	481
VOE 935082	924	800	485
VOE 935084	277	100	123
VOE 935084	277	110	125
VOE 935084	913	100	399
VOE 935084	924	500	477
VOE 935084	924	800	485
VOE 935085	912	530	389
VOE 935090	912	100	369
VOE 935091	441	200	221
VOE 935092	912	100	369
VOE 935093	912	100	369
VOE 935094	912	700	393
VOE 935095	912	100	371
VOE 935095	916	2000	449
VOE 935095	916	3000	453
VOE 935423	916	5000	459
VOE 935425	277	110	125
VOE 935429	277	100	123
VOE 935429	277	110	125
VOE 935436	912	360	387
VOE 935574	916	500	447
VOE 935574	916	6000	463
VOE 935644	916	6000	463
VOE 935651	924	400	475
VOE 935651	924	500	477
VOE 935651	924	600	481
VOE 935652	916	6000	463
VOE 935665	912	600	391
VOE 935665	916	400	445
VOE 936290	914	700	417
VOE 936290	914	750	419
VOE 936291	914	700	417
VOE 936291	914	750	419
VOE 936292	914	700	417
VOE 936292	914	750	419
VOE 936294	914	700	417
VOE 936294	914	750	419
VOE 936299	914	700	417
VOE 936299	914	750	419
VOE 936440	914	200	403
VOE 936446	441	200	221
VOE 936446	912	100	371
VOE 936684	914	700	417
VOE 936684	914	750	419
VOE 936798	912	350	383
VOE 936798	912	360	387
VOE 936798	914	700	417
VOE 936798	914	750	419
VOE 936813	914	700	417
VOE 936813	914	750	419
VOE 936814	914	700	417
VOE 936814	914	750	419
VOE 936816	914	700	417
VOE 936816	914	750	419
VOE 936816	924	400	475
VOE 936816	924	500	477
VOE 936817	914	700	417
VOE 936817	914	750	419
VOE 936818	914	750	419
VOE 936821	914	700	417
VOE 936821	914	750	419
VOE 936822	914	750	419
VOE 936825	914	700	417
VOE 936825	914	750	419
VOE 936827	914	700	417
VOE 936827	914	750	419
VOE 936829	914	700	417
VOE 936829	914	750	419
VOE 936830	911	200	363
VOE 936851	914	700	417
VOE 936851	914	750	419
VOE 936852	914	750	419
VOE 936861	914	700	417
VOE 936861	914	750	419
VOE 936862	914	700	417
VOE 936862	914	750	421
VOE 936871	914	700	417
VOE 943472	235	100	87
VOE 943472	873	100	315
VOE 943475	911	200	363
VOE 943478	256	100	103
VOE 943479	235	100	85
VOE 943479	911	200	363
VOE 943482	235	100	85
VOE 943907	277	100	123
VOE 943907	912	600	391
VOE 943907	924	200	469
VOE 944265	352	100	147
VOE 944265	353	110	151
VOE 944498	911	100	359
VOE 944706	913	100	399
VOE 944708	913	100	399
VOE 945407	235	100	85
VOE 945407	261	800	115
VOE 945407	275	100	121
VOE 945407	277	200	127
VOE 945407	912	800	395
VOE 945407	914	900	435
VOE 945408	235	100	85
VOE 945408	256	100	103
VOE 945408	261	800	115
VOE 945408	356	100	153
VOE 945408	821	100	277
VOE 945408	837	300	289
VOE 945408	850	150	299
VOE 945408	881	300	323
VOE 945408	912	700	393
VOE 945408	914	200	403
VOE 945444	252	100	99
VOE 945444	415	100	209
VOE 945444	837	300	289
VOE 945444	912	350	381
VOE 945444	912	360	385
VOE 945444	916	400	443
VOE 945718	821	100	277
VOE 945777	916	400	445
VOE 945987	371	400	185
VOE 946173	256	100	103
VOE 946173	261	800	115
VOE 946173	356	100	153
VOE 946173	372	400	195
VOE 946173	821	100	277
VOE 946173	837	100	285
VOE 946173	841	100	291
VOE 946173	850	150	299
VOE 946173	852	900	313
VOE 946173	873	100	315
VOE 946173	912	600	391
VOE 946173	912	800	395
VOE 946173	916	350	441

NUMERICAL INDEX 부품번호 색인

RÉPERTOIRE DE NUMÉROS **INDICE DE NÚMERO**

NUMMERNREGISTER

NUMERICAL INDEX

부품번호 색인

RÉPERTOIRE DE NUMÉROS

INDICE DE NÚMERO

NUMMERNREGISTER

Catalogue id	Group
20048	**1000**
Issue	Page
VOE 74C9920048	**14**

Part No	Group	Sect	Page
VOE 946173	916	400	443
VOE 946173	974	500	527
VOE 946329	235	100	85
VOE 946329	415	100	209
VOE 946329	718	100	243
VOE 946329	718	500	245
VOE 946329	837	200	287
VOE 946440	914	200	403
VOE 946440	924	400	475
VOE 946440	924	500	477
VOE 946440	924	600	481
VOE 946441	235	100	87
VOE 946441	261	800	115
VOE 946441	371	400	185
VOE 946441	415	100	209
VOE 946441	718	500	245
VOE 946441	852	900	313
VOE 946441	881	100	319
VOE 946441	911	400	367
VOE 946441	916	5000	459
VOE 946441	971	100	515
VOE 946470	916	2000	449
VOE 946471	252	100	99
VOE 946471	252	110	101
VOE 946471	974	500	527
VOE 946472	837	200	287
VOE 946472	837	300	289
VOE 946472	896	100	337
VOE 946472	916	100	439
VOE 946502	911	100	359
VOE 946544	275	100	121
VOE 946544	277	200	127
VOE 946544	362	500	159
VOE 946544	881	100	319
VOE 946544	881	200	321
VOE 946544	881	300	323
VOE 946671	235	100	85
VOE 946671	256	100	103
VOE 946671	275	100	121
VOE 946671	277	100	123
VOE 946671	277	110	125
VOE 946671	311	100	135
VOE 946671	362	100	155
VOE 946671	372	100	191
VOE 946671	821	400	279
VOE 946752	971	100	515
VOE 946817	852	900	313
VOE 946934	235	100	85
VOE 946934	912	800	395
VOE 947107	334	200	145
VOE 947107	362	500	159
VOE 947107	912	350	381
VOE 947107	912	360	385
VOE 947107	914	900	435
VOE 947107	916	350	441
VOE 947107	916	400	443
VOE 947107	924	400	475
VOE 947107	924	500	477
VOE 947107	924	600	481
VOE 947520	235	100	85
VOE 947542	261	800	115
VOE 947542	372	300	193
VOE 948645	277	200	127
VOE 948645	841	100	291
VOE 949278	275	100	121
VOE 949278	277	100	123
VOE 949278	277	110	125
VOE 949278	277	200	127
VOE 949278	837	300	289
VOE 949746	275	100	121
VOE 949867	821	100	277
VOE 950585	821	100	277
VOE 951979	912	830	397
VOE 952624	277	110	125
VOE 952627	356	100	153
VOE 955405	716	100	241
VOE 955779	362	500	159
VOE 955779	916	5000	459
VOE 955782	362	500	159
VOE 955891	362	500	159
VOE 955894	821	100	277
VOE 955894	821	400	279
VOE 955894	881	100	319
VOE 955894	881	300	323
VOE 955894	882	550	329
VOE 955897	775	200	251
VOE 955900	912	800	395
VOE 955903	926	200	499
VOE 955903	926	220	501
VOE 955964	821	400	279
VOE 955964	881	100	319
VOE 958229	911	100	359
VOE 960139	837	300	289
VOE 960139	881	400	325
VOE 960141	261	800	115
VOE 960141	881	100	319
VOE 960143	821	400	279
VOE 960143	924	400	475
VOE 960143	924	500	477
VOE 960143	924	600	481
VOE 960148	218	100	69
VOE 960148	218	110	71
VOE 960148	261	800	115
VOE 960148	821	100	277
VOE 960148	837	300	289
VOE 963055	912	800	395
VOE 965175	277	100	123
VOE 965175	277	110	125
VOE 965177	914	900	435
VOE 965178	914	400	407
VOE 965179	911	200	363
VOE 965179	912	700	393
VOE 965181	235	100	87
VOE 965191	235	100	87
VOE 965191	837	300	289
VOE 965191	881	100	319
VOE 965191	911	100	361
VOE 965193	235	100	85
VOE 965212	912	530	389
VOE 966786	492	500	233
VOE 966786	971	700	521
VOE 967531	912	350	381
VOE 967531	916	400	443
VOE 967635	881	200	321
VOE 967635	881	300	323
VOE 968298	716	100	241
VOE 968435	971	100	515
VOE 968437	924	200	469
VOE 969147	881	400	325
VOE 969160	372	100	191
VOE 969161	372	100	191
VOE 969162	372	100	191
VOE 969313	975	100	529
VOE 969404	275	100	121
VOE 969404	356	100	153
VOE 969407	372	300	193
VOE 969420	881	400	325
VOE 969422	924	300	473
VOE 969423	914	800	423
VOE 969423	914	850	429
VOE 969439	916	5500	461
VOE 969440	914	600	415
VOE 969440	924	800	485
VOE 969467	873	100	315
VOE 969518	362	500	159
VOE 969518	881	400	325
VOE 969523	916	5000	459
VOE 969556	372	300	193
VOE 969591	837	300	289
VOE 969599	821	100	277
VOE 969741	881	200	321
VOE 969741	881	300	323
VOE 971095	852	900	313
VOE 971096	837	300	289
VOE 971096	884	200	333
VOE 971096	884	300	335
VOE 971096	911	100	361
VOE 971098	975	100	529
VOE 971099	775	500	257
VOE 971099	971	100	515
VOE 973967	911	100	359
VOE 976155	386	200	197
VOE 976510	924	100	465
VOE 976510	924	200	469
VOE 976945	974	500	527
VOE 977591	261	800	115
VOE 977591	837	300	289
VOE 978932	218	100	69
VOE 978932	218	110	71
VOE 978932	415	100	209
VOE 978932	441	200	221
VOE 978932	775	200	251
VOE 978933	218	100	69
VOE 978933	218	110	71
VOE 978933	775	200	251

Part No	Group	Sect	Page
VOE 978936	924	100	465
VOE 978937	810	500	275
VOE 978949	926	200	499
VOE 978949	926	220	501
VOE 979007	372	100	191
VOE 979008	372	100	191
VOE 979009	372	100	191
VOE 979021	924	200	469
VOE 980555	881	500	327
VOE 980614	912	600	391
VOE 980614	916	400	443
VOE 981289	911	350	365
VOE 981289	912	100	369
VOE 981289	912	100	371
VOE 981289	916	4000	457
VOE 981289	916	6000	463
VOE 981289	926	240	503
VOE 981290	911	400	367
VOE 981290	912	100	371
VOE 981290	926	240	503
VOE 981405	372	100	191
VOE 981405	881	500	327
VOE 982489	926	200	499
VOE 982489	926	220	501
VOE 983122	911	100	359
VOE 983122	916	500	447
VOE 983122	924	600	481
VOE 983122	924	700	483
VOE 983242	850	150	299
VOE 983243	821	100	277
VOE 983243	837	300	289
VOE 983243	881	100	319
VOE 983244	916	100	439
VOE 983250	218	100	69
VOE 983250	218	110	71
VOE 983250	924	400	475
VOE 983250	924	500	477
VOE 983250	924	600	481
VOE 983251	218	100	69
VOE 983251	218	110	71
VOE 983252	218	100	69
VOE 983252	218	110	71
VOE 983254	971	100	517
VOE 983303	372	400	195
VOE 983337	775	600	259
VOE 983337	775	610	261
VOE 983338	716	100	241
VOE 983340	716	100	241
VOE 983718	926	260	507
VOE 983718	927	100	511
VOE 983718	971	100	515
VOE 983718	971	600	519
VOE 983718	974	100	523
VOE 983718	974	300	525
VOE 983718	975	100	529
VOE 983718	975	300	533
VOE 983718	975	500	535
VOE 983719	718	500	245
VOE 984066	911	200	363
VOE 984066	916	400	443
VOE 984076	912	800	395
VOE 984080	913	100	399
VOE 984088	913	100	399
VOE 984346	912	600	391
VOE 984473	916	350	441
VOE 984473	916	400	443
VOE 984473	924	400	475
VOE 984473	924	700	483
VOE 984653	916	350	441
VOE 984653	916	400	443
VOE 984653	924	400	475
VOE 984653	924	700	483
VOE 984656	911	100	359
VOE 984656	916	500	447
VOE 984657	924	600	481
VOE 984657	924	700	483
ZM 2114010	852	200	309
ZM 2289751	852	200	309
ZM 2289753	852	200	309
ZM 2289762	852	200	309
ZM 2810112	372	100	191
ZM 2814836	916	4000	457
ZM 2814837	916	4000	457
ZM 2906158	852	200	309
ZM 2907156	841	100	291

NUMERICAL INDEX

부품번호 색인

RÉPERTOIRE DE NUMÉROS

INDICE DE NÚMERO

NUMMERNREGISTER